RUTHZIL TRATOR COMERCIAL DE PEÇAS LTDA 11 97083-6812 ROLANDO CITRANGULO

PARTBOOK

GD825A-2



GD825A-2

Printed By : Dwi Iswanto (airafather6107170)

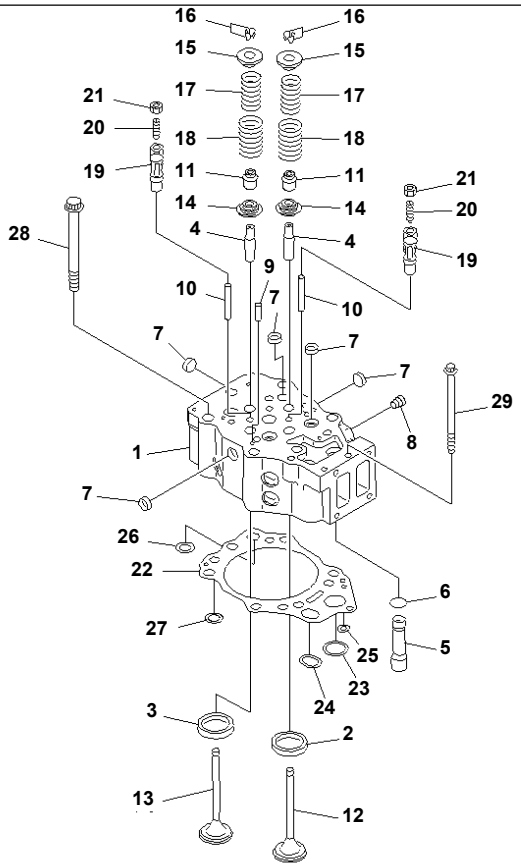

PE34759

S6D140E-2B S/N 23227-UP
CYLINDER HEAD

Item	Part No.	Description	Qty	Options
	6211-12-1100	CYLINDER HEAD ASS'Y,VALVE LESS	6	SN:23227--
1	☆	· HEAD,CYLINDER	1	SN:23227--
2	6210-11-1330	· INSERT,INTAKE VALVE (STD)	2	SN:23227--
	6210-19-1330	· INSERT¤ 0.25MM,INTAKE VALVE (OS)	2	SN:23227--
	6210-18-1330	· INSERT¤ 0.50MM,INTAKE VALVE (OS)	2	SN:23227--
	6210-17-1330	· INSERT¤ 0.75MM,INTAKE VALVE (OS)	2	SN:23227--
	6210-16-1330	· INSERT¤ 1.00MM,INTAKE VALVE (OS)	2	SN:23227--
3	6210-11-1321	· INSERT,EXHAUST VALVE (STD)	2	SN:23227--
	6210-19-1321	· INSERT¤ 0.25MM,EXHAUST VALVE (OS)	2	SN:23227--
	6210-18-1321	· INSERT¤ 0.50MM,EXHAUST VALVE (OS)	2	SN:23227--
	6210-17-1321	· INSERT¤ 0.75MM,EXHAUST VALVE (OS)	2	SN:23227--
	6210-16-1321	· INSERT¤ 1.00MM,EXHAUST VALVE (OS)	2	SN:23227--
4	6212-16-1440	· GUIDE,VALVE	4	SN:23227--
5	6210-11-1150	· PIPE	1	SN:23227--
6	07000-63025	· O-RING (K1)	1	SN:23227--
7	6162-13-1150	· PLUG,EXPANSION	13	SN:23227--
8	07043-50108	· PLUG	1	SN:23227--
9	04020-00820	· PIN,DOWEL	2	SN:23227--
10	6210-11-1140	· GUIDE,CROSSHEAD	2	SN:23227--
11	6212-41-4540	SEAL,VALVE (K1)	24	SN:23227--
12	6215-41-4110	VALVE,INTAKE	12	SN:23227--
13	6215-41-4212	VALVE,EXHAUST	12	SN:23227--
14	6210-41-4530	SEAT,LOWER	24	SN:23227--
15	6210-41-4510	SEAT,UPPER	24	SN:23227--
16	6136-41-4520	COTTER	48	SN:23227--
17	6210-41-4440	SPRING,INNER	24	SN:23227--
18	6210-41-4430	SPRING,OUTER	24	SN:23227--

Printed By : Dwi Iswanto (airafather6107170)

S6D140E-2B S/N 23227-UP
CYLINDER HEAD

Item	Part No.	Description	Qty	Options
19	6210-41-5620	CROSSHEAD	12	SN:23227--
20	6210-41-5640	SCREW	12	SN:23227--
21	6162-43-5630	NUT	12	SN:23227--
22	6210-17-1813	GASKET,HEAD (K1)	6	SN:23227--
23	6210-11-1820	· GROMMET,OIL	1	SN:23227--
24	6210-11-1830	· GROMMET,OIL	1	SN:23227--
25	6210-11-1840	· GROMMET,OIL	1	SN:23227--
26	6210-11-1962	· GROMMET,WATER	1	SN:23227--
27	6210-11-1952	· GROMMET,WATER	4	SN:23227--
28	6210-11-1610	BOLT,HEAD	36	SN:23227--
29	01438-01020	BOLT	6	SN:23227--

Printed By : Dwi Iswanto (airafather6107170)

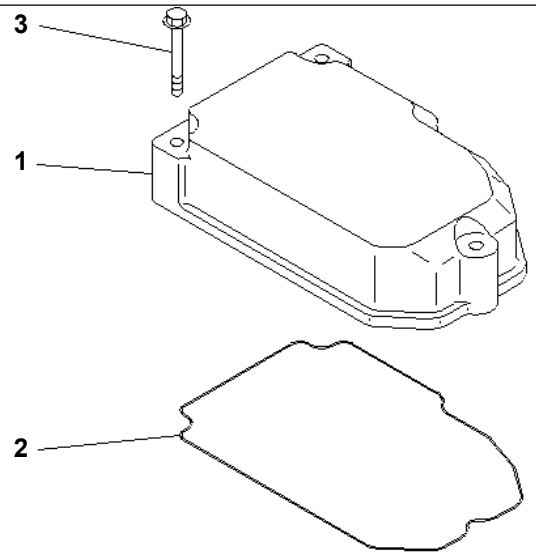

PD30137

Ref. A1110-A4A1A **Page 030020**

S6D140E-2B S/N 23227-UP
HEAD COVER(#23227-26118)

Item	Part No.	Description	Qty	Options
1	6210-11-8111	COVER,ROCKER ARM HOUSING	6	SN:23227--26118
2	6210-11-8820	GASKET (K1)	6	SN:23227--26118
3	01435-00855	BOLT	18	SN:23227--26118

Printed By : Dwi Iswanto (airafather6107170)

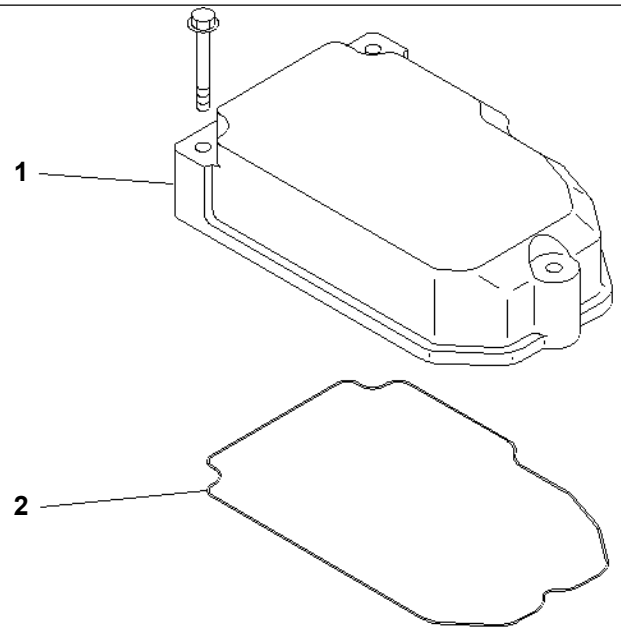

PJD4534

S6D140E-2B S/N 23227-UP

HEAD COVER (COVER AND GASKET)(#26119-)

Item	Part No.	Description	Qty	Options
1	6210-11-8111	COVER,ROCKER ARM HOUSING	6	SN:26119--
2	6210-11-8820	GASKET (K1)	6	SN:26119--

Printed By : Dwi Iswanto (airafather6107170)

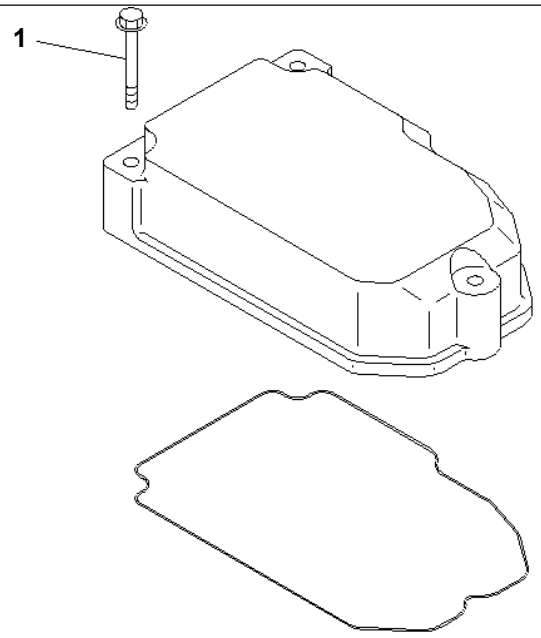

PJD4535

S6D140E-2B S/N 23227-UP

HEAD COVER MOUNTING PARTS(#26119-)

Item	Part No.	Description	Qty	Options
1	01435-00855	BOLT	18	SN:26119--

Printed By : Dwi Iswanto (airafather6107170)

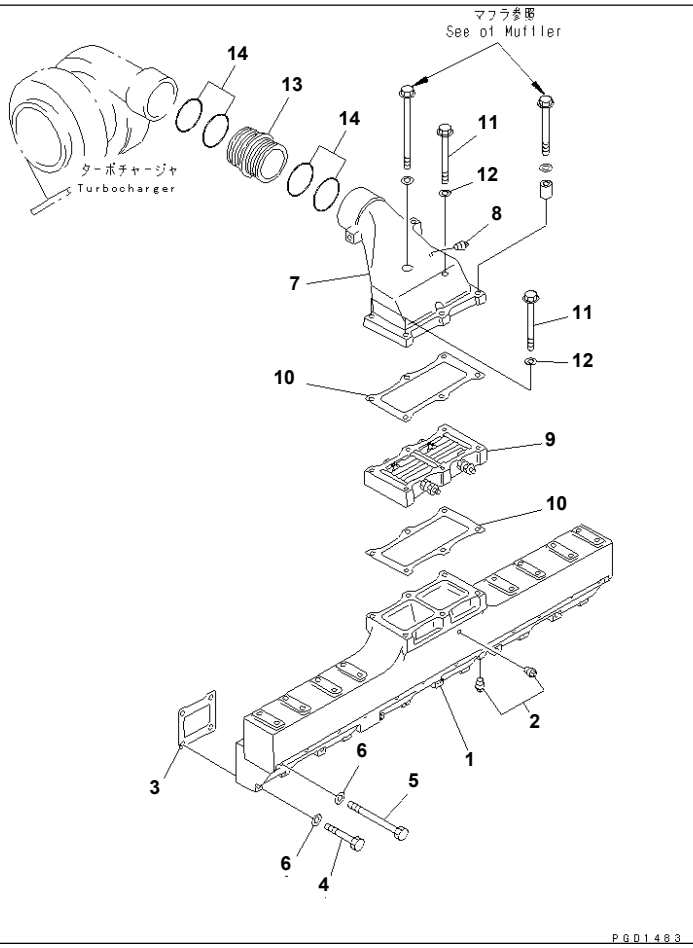

Ref. A1310-A4D9 **Page 030030**

S6D140E-2B S/N 23227-UP
AIR INTAKE MANIFOLD(#23535-)

Item	Part No.	Description	Qty	Options
1	6211-11-4120	MANIFOLD,INTAKE	1	SN:23535--
2	07042-00108	PLUG	2	SN:23535--
3	6210-11-4811	GASKET (K1)	6	SN:23535--
4	01010-81075	BOLT	12	SN:23535--
5	01011-81035	BOLT	9	SN:23535--
6	01640-21016	WASHER	21	SN:23535--
7	6211-11-4321	CONNECTOR,AIR	1	SN:23535--
8	07042-00108	PLUG	1	SN:23535--
9	600-815-4280	HEATER,RIBBON	1	SN:23535--
10	6211-11-4821	GASKET (K1)	2	SN:23535--
11	01437-01075	BOLT	3	SN:23535--
12	01641-21016	WASHER	3	SN:23535--
13	6211-11-4410	CONNECTOR	1	SN:23535--
14	02895-67075	O-RING (K1)	4	SN:23535--

Printed By : Dwi Iswanto (airafather6107170)

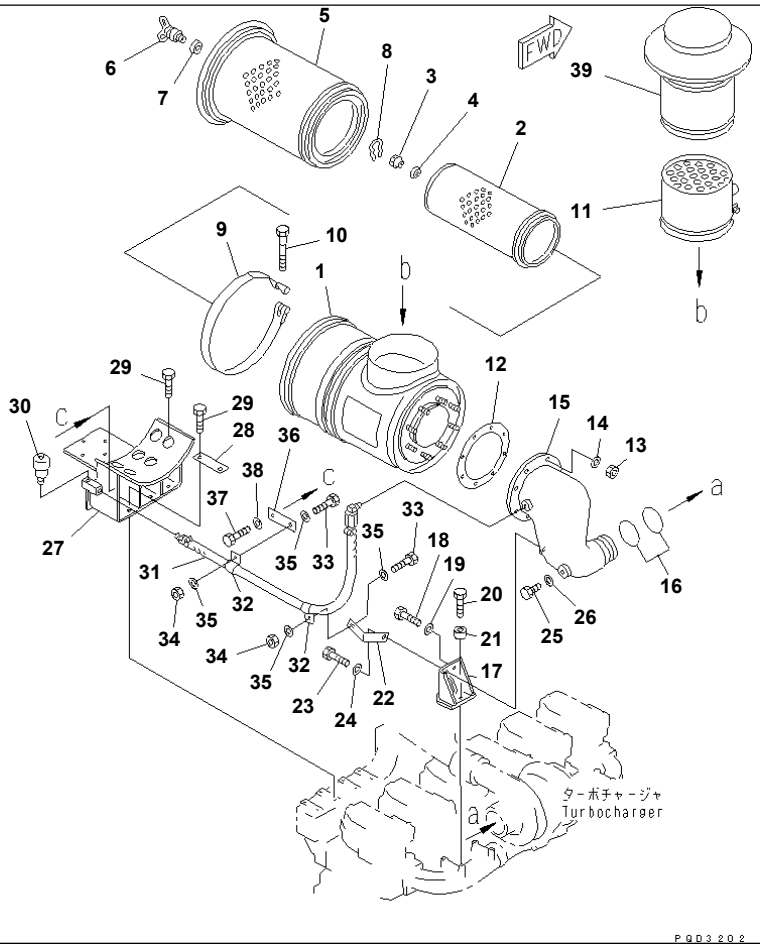

S6D140E-2B S/N 23227-UP

AIR CLEANER(#23535-)

Item	Part No.	Description	Qty	Options
1	6211-81-5110	BODY,AIR CLEANER	1	SN:23535--
	6128-81-7043	ELEMENT ASS'Y	1	SN:26031--
	□6128-81-7042	ELEMENT ASS'Y	1	SN:23535--26030
2	☆	· ELEMENT,INNER	1	SN:23535--
3	600-181-4370	· NUT	1	SN:23535--
4	600-181-7511	· WASHER,SEAL	1	SN:23535--
	600-181-4401	· ELEMENT ASS'Y,OUTER	1	SN:26031--
	□600-181-4400	· ELEMENT ASS'Y,OUTER	1	SN:23535--26030
5	☆	· · ELEMENT,OUTER	1	SN:26031--
	☆	· · ELEMENT,OUTER	1	SN:23535--26030
6	600-181-4420	· · NUT,WING	1	SN:23535--
7	600-181-4440	· · GASKET	1	SN:23535--
8	600-181-4430	· · CLIP	1	SN:23535--
9	6127-11-4360	BAND ASS'Y	1	SN:23535--
	6691-21-6550	· PIN	1	SN:23535--
	6691-21-6560	· PIN¤ WITH THREAD	1	SN:23535--
10	6643-11-4641	BOLT	1	SN:23535--
11	600-181-5710	PRE-CLEANER ASS'Y	1	SN:23535--
12	6127-81-4823	GASKET (K1)	1	SN:23535--
13	01580-11008	NUT	8	SN:23535--
14	01640-21016	WASHER	8	SN:23535--
15	6211-11-4351	CONNECTOR,AIR	1	SN:23535--
16	02895-67081	O-RING (K1)	2	SN:23535--
17	6211-11-4710	BRACKET	1	SN:23535--
18	01010-81025	BOLT	1	SN:23535--
19	01643-31032	WASHER	1	SN:23535--
20	01010-81040	BOLT	2	SN:23535--

Printed By : Dwi Iswanto (airafather6107170)

AIR CLEANER(#23535-)

Item	Part No.	Description	Qty	Options
21	6631-11-5630	SPACER	2	SN:23535--
22	6211-11-4690	BRACKET	1	SN:23535--
23	01010-81035	BOLT	1	SN:23535--
24	01643-31032	WASHER	1	SN:23535--
25	560-60-12471	PLUG	1	SN:23535--
26	6164-91-6220	GASKET	1	SN:23535--
27	6211-11-4671	BRACKET	1	SN:24603--
	◆6211-11-4670	BRACKET	1	SN:23535--24602
28	6136-81-4540	PLATE	2	SN:23535--
29	01010-81025	BOLT	6	SN:23535--
30	08670-02001	INDICATOR,DUST	1	SN:23535--
31	08671-50090	HOSE	1	SN:23535--
32	08036-91414	CLIP	2	SN:23535--
33	01010-81020	BOLT	2	SN:23535--
34	01580-11008	NUT	2	SN:23535--
35	01640-21016	WASHER	4	SN:23535--
36	6212-11-5830	PLATE	1	SN:23535--
37	01010-81020	BOLT	1	SN:23535--
38	01640-21016	WASHER	1	SN:23535--
39	600-181-4950	HOOD	1	SN:23535--

Printed By : Dwi Iswanto (airafather6107170)

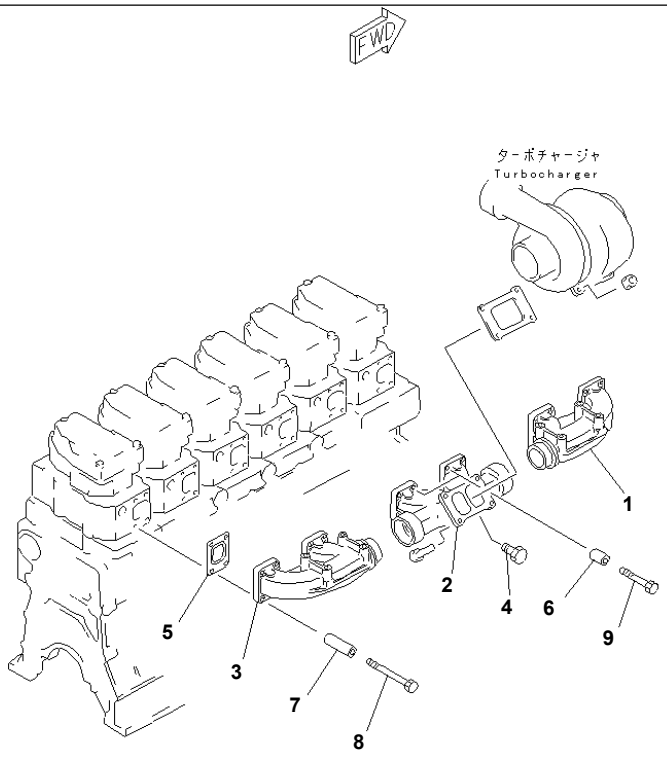

PS34203

S6D140E-2B S/N 23227-UP

EXHAUST MANIFOLD(#23535-)

Item	Part No.	Description	Qty	Options
1	6211-11-5140	MANIFOLD,EXHAUST¤ FRONT	1	SN:23535--
2	6211-11-5152	MANIFOLD,EXHAUST¤ CENTER	1	SN:23535--
3	6211-11-5160	MANIFOLD,EXHAUST¤ REAR	1	SN:23535--
4	6215-11-5920	PLUG	1	SN:23535--
5	6210-11-5881	GASKET (K1)	6	SN:23535--
6	6210-11-5820	SPACER	2	SN:23535--
7	6136-11-5120	SPACER	22	SN:23535--
8	01011-E1000	BOLT	22	SN:23535--
9	01010-E1055	BOLT	2	SN:23535--

Ref. A1510-A4A1B Page 030050

Printed By : Dwi Iswanto (airafather6107170)

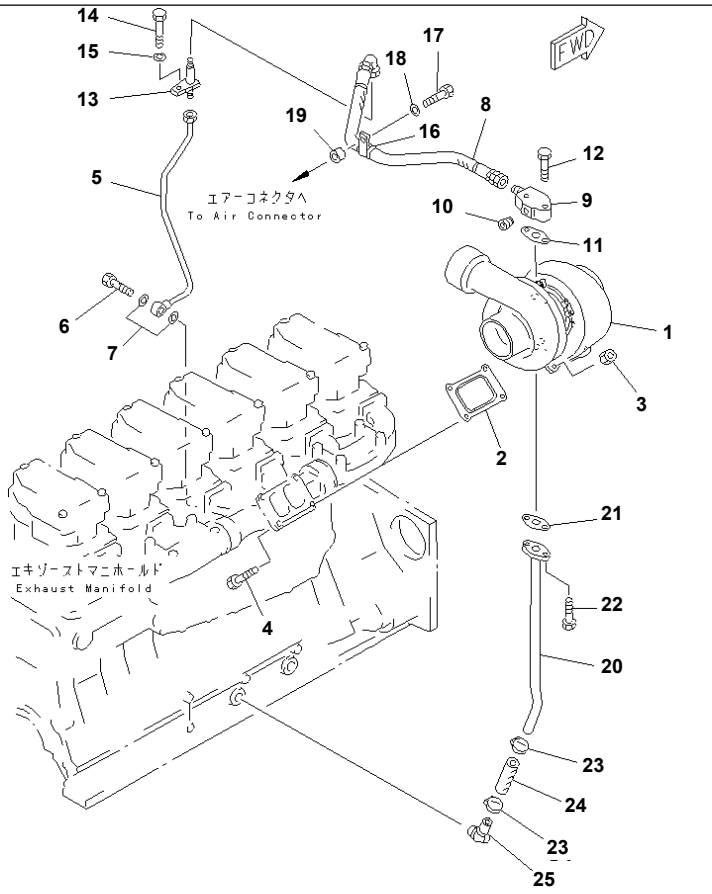

S6D140E-2B S/N 23227-UP

TURBOCHARGER MOUNTING AND LUBRICATOR

Item	Part No.	Description	Qty	Options
1	(6505-52-5440)	TURBOCHARGER ASS'Y,(SEE FIG.A1530-B4E3)	1	SN:23227--
2	6212-15-5831	GASKET (K1)	1	SN:23227--
3	6138-13-4510	BOLT	4	SN:23227--
4	6114-11-5590	NUT	4	SN:23227--
5	6211-51-8210	TUBE,OIL	1	SN:23227--
6	07206-31014	BOLT,JOINT	1	SN:23227--
7	07005-01412	GASKET (K1)	2	SN:23227--
8	6211-51-8180	HOSE	1	SN:23227--
9	6164-51-8621	FLANGE	1	SN:23227--
	(☒6164-51-8620)	FLANGE	1	SN:(23227--24187)
10	07043-00108	· PLUG	1	SN:23227--
11	6151-51-8161	GASKET (K1)	1	SN:23227--
12	01010-81035	BOLT	2	SN:23227--
13	6211-51-8220	CONNECTOR	1	SN:23227--
14	01437-01090	BOLT	1	SN:23227--
15	01643-51032	WASHER	1	SN:23227--
16	6151-53-8280	CLIP	1	SN:23227--
17	01010-81035	BOLT	1	SN:23227--
18	01643-31032	WASHER	1	SN:23227--
19	6631-11-5630	SPACER	1	SN:23227--
20	6211-51-8110	TUBE,OIL	1	SN:23227--
21	6151-51-8151	GASKET (K1)	1	SN:23227--
22	01010-81025	BOLT	2	SN:23227--
23	07281-00359	CLAMP	2	SN:23227--
24	6210-51-8110	HOSE	1	SN:23227--
25	6151-51-8130	ELBOW	1	SN:23227--

Ref. A1530-A4E3 Page 030060

Printed By : Dwi Iswanto (airafather6107170)

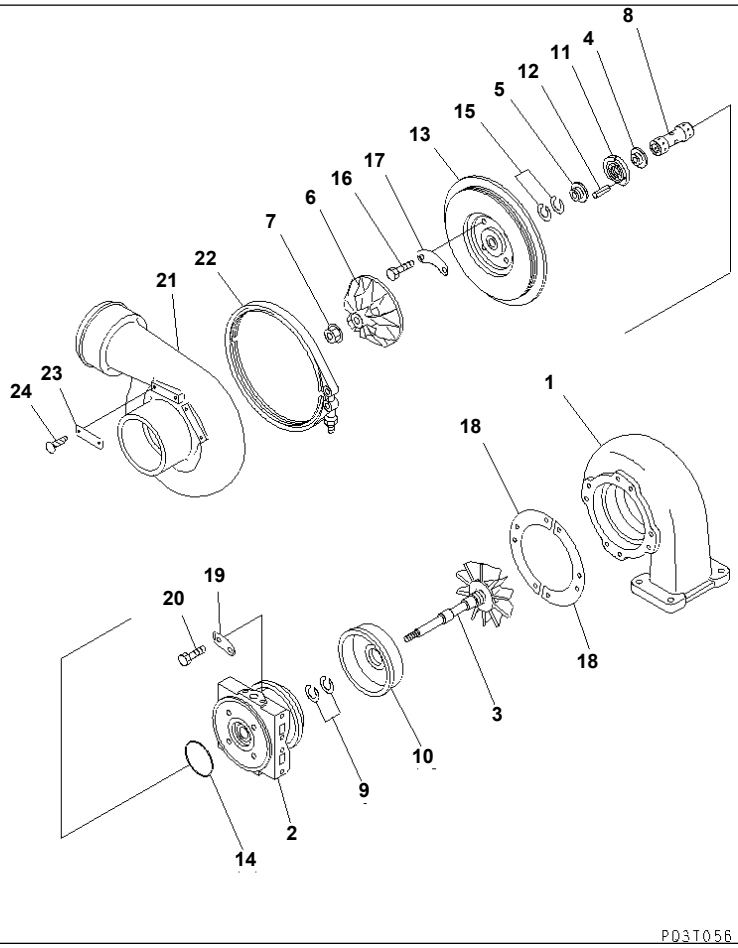

Ref. A1530-B4E3 **Page 030070**

S6D140E-2B S/N 23227-UP
TURBOCHARGER (INNER PARTS)

Item	Part No.	Description	Qty	Options
	6505-52-5440	TURBOCHARGER ASS'Y	1	SN:23227--
1	6505-11-4210	· HOUSING,TURBINE	1	SN:23227--
	6505-51-7860	· CORE ASS'Y	1	SN:23227--
2	6505-51-0011	· · HOUSING,CENTER	1	SN:23227--
	6505-51-7950	· · ROTOR ASS'Y	1	SN:23227--
3	(★6505-51-3110)	· · · ROTOR,TURBINE	1	SN:23227--
4	(★6505-51-0210)	· · · COLLAR,THRUST	1	SN:23227--
5	(★6505-51-0252)	· · · FLINGER	1	SN:23227--
6	(★6505-51-1410)	· · · IMPELLER,BLOWER	1	SN:23227--
7	(★6505-11-0410)	· · · NUT	1	SN:23227--
8	6505-51-0111	· · BEARING,JOURNAL	1	SN:23227--
9	6505-51-0310	· · RING,SEAL	2	SN:23227--
10	6505-51-0711	· · SHIELD,HEAT	1	SN:23227--
11	6505-51-0151	· · BEARING,THRUST	1	SN:23227--
12	04022-04008	· · PIN,DOWEL	1	SN:23227--
13	6505-51-0830	· · PLATE,DIFFUSER	1	SN:23227--
14	07000-E2065	· · O-RING	1	SN:23227--
15	6505-51-0351	· · RING,SEAL	2	SN:23227--
16	01010-E0816	· · BOLT	4	SN:23227--
17	6505-51-0610	· · LOCK,WASHER	2	SN:23227--
18	6505-11-0520	· LOCK,PLATE	2	SN:23227--
19	6505-11-0550	· LOCK,WASHER	4	SN:23227--
20	01020-11016	· BOLT	8	SN:23227--
21	6505-52-2410	· HOUSING,BLOWER	1	SN:23227--
22	6505-11-0450	· V-BAND	1	SN:23227--
23	6505-99-9011	· PLATE¤ NAME	1	SN:23227--
24	04418-02550	· SCREW	2	SN:23227--

Printed By : Dwi Iswanto (airafather6107170)

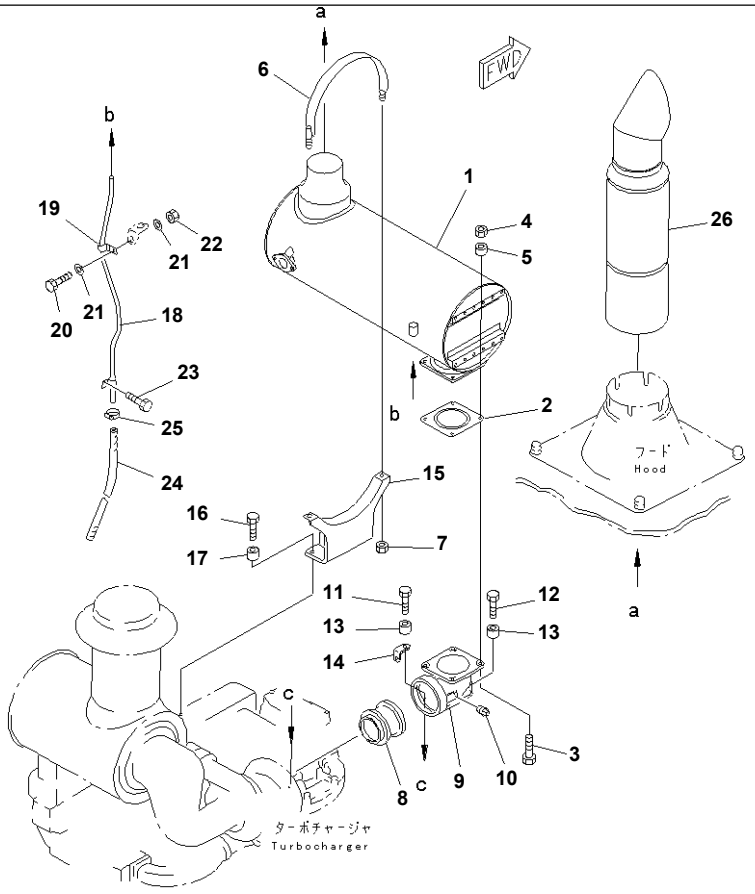

PGD1484

S6D140E-2B S/N 23227-UP

MUFFLER(#23535-)

Item	Part No.	Description	Qty	Options
1	6212-12-5390	MUFFLER	1	SN:23535--
2	6211-11-5890	GASKET (K1)	1	SN:23535--
3	01010-81055	BOLT	4	SN:23535--
4	01580-11008	NUT	4	SN:23535--
5	6631-11-5630	SPACER	4	SN:23535--
6	6215-11-5750	BAND	1	SN:23535--
7	6215-11-5740	NUT	2	SN:23535--
8	6211-11-5780	CONNECTOR	1	SN:23535--
9	6211-11-5871	ELBOW,EXHAUST	1	SN:23535--
10	6215-11-5920	PLUG	1	SN:23535--
11	01010-E1050	BOLT	1	SN:23535--
12	01010-E1045	BOLT	3	SN:23535--
13	6631-11-5630	SPACER	4	SN:23535--
14	6127-11-4421	PLATE	1	SN:23535--
15	6211-12-5820	BRACKET	1	SN:23535--
16	01010-E1050	BOLT	3	SN:23535--
17	6631-11-5630	SPACER	3	SN:23535--
18	6211-11-5861	TUBE,DRAIN	1	SN:23535--
19	6991-11-5990	CLAMP	1	SN:23535--
20	01010-81025	BOLT	1	SN:23535--
21	01640-21016	WASHER	2	SN:23535--
22	01580-11008	NUT	1	SN:23535--
23	01010-81020	BOLT	1	SN:23535--
24	07260-20971	HOSE	1	SN:23535--
25	07285-00155	CLIP	1	SN:23535--
26	6211-11-5910	PIPE,EXHAUST	1	SN:23535--

Printed By : Dwi Iswanto (airafather6107170)

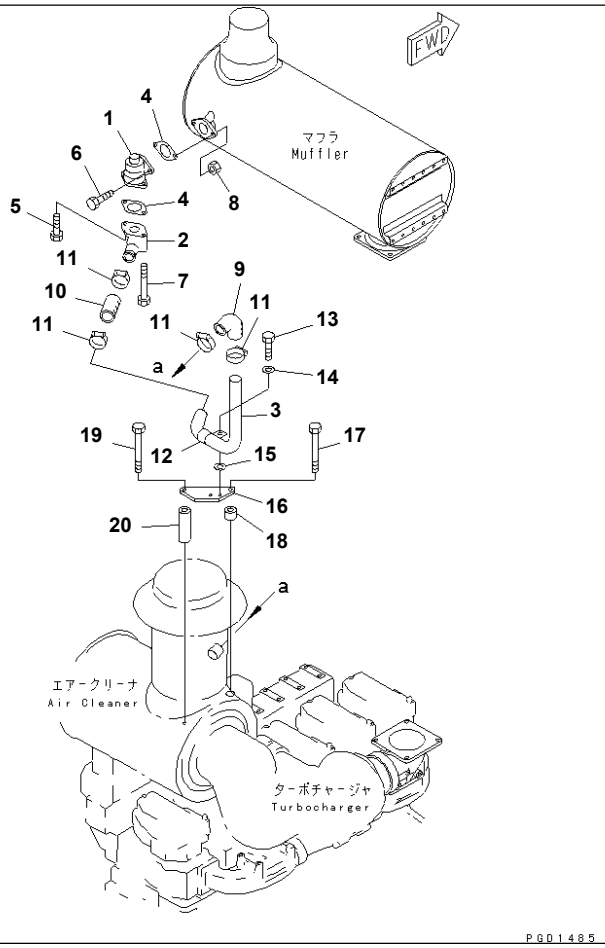

S6D140E-2B S/N 23227-UP

EJECTOR PIPING(#23535-)

Item	Part No.	Description	Qty	Options
1	6162-13-5302	VALVE ASS'Y	1	SN:23535--
	☆	· BODY	1	SN:23535--
	☆	· VALVE	1	SN:23535--
	☆	· SEAT	1	SN:23535--
2	6211-12-4770	ELBOW	1	SN:23535--
3	6211-12-4660	TUBE	1	SN:23535--
4	6162-13-5611	GASKET (K1)	2	SN:23535--
5	01010-81025	BOLT	1	SN:23535--
6	01010-81035	BOLT	2	SN:23535--
7	01010-81075	BOLT	1	SN:23535--
8	01580-11008	NUT	2	SN:23535--
9	281-03-12230	HOSE,AIR	1	SN:23535--
10	6127-11-5960	HOSE	1	SN:23535--
11	07281-00549	CLAMP	4	SN:23535--
12	6128-11-5872	CLAMP	1	SN:23535--
13	01010-81020	BOLT	1	SN:23535--
14	01640-21016	WASHER	1	SN:23535--
15	6162-13-4860	WASHER	1	SN:23535--
16	6211-12-4670	PLATE	1	SN:23535--
17	01011-81055	BOLT	1	SN:23535--
18	421-06-12780	SPACER	1	SN:23535--
19	01011-81055	BOLT	1	SN:23535--
20	6136-11-5120	SPACER	1	SN:23535--

Ref. A1610-B4D9 Page 030090

Printed By : Dwi Iswanto (airafather6107170)

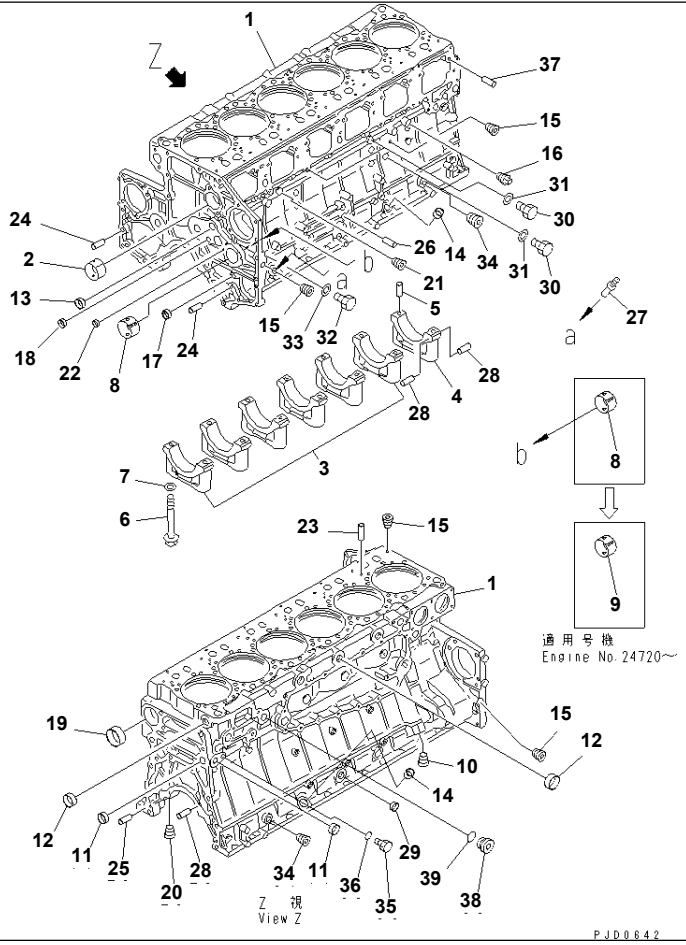

S6D140E-2B S/N 23227-UP

CYLINDER BLOCK (1/2)(#23535-26184)

Item	Part No.	Description	Qty	Options
	6211-22-1100	CYLINDER BLOCK ASS'Y	1	SN:23535--26184
1	☆	· BLOCK,CYLINDER	1	SN:23535--26184
2	6210-21-1490	· BUSHING,CAMSHAFT	7	SN:23535--26184
3	△6210-29-1210	· CAP,MAIN METAL¤ NO.1¤2¤3¤4¤5¤6	6	SN:23535--26184
4	△6210-29-1250	· CAP,MAIN METAL¤ NO.7	1	SN:23535--26184
5	04020-00514	· PIN	2	SN:23535--26184
6	6210-21-1710	· BOLT	14	SN:23535--26184
7	01643-31845	· WASHER	14	SN:23535--26184
8	6210-21-1790	· BUSHING	1	SN:24720--26184
	6210-21-1790	· BUSHING	2	SN:23535--24719
9	6210-21-1780	· BUSHING	1	SN:24720--26184
10	07043-71019	· PLUG	1	SN:23535--26184
11	6210-81-9210	· PLUG	2	SN:23535--26184
12	07046-43516	· PLUG	6	SN:23535--26184
13	07046-42516	· PLUG	2	SN:23535--26184
14	07046-42010	· PLUG	2	SN:23535--26184
15	07043-70108	· PLUG	10	SN:23535--26184
16	07042-70108	· PLUG	2	SN:23535--26184
17	07046-11816	· PLUG	2	SN:23535--26184
18	07046-41810	· PLUG	2	SN:23535--26184
19	07046-47020	· PLUG	1	SN:23535--26184
20	07043-00415	· PLUG	1	SN:23535--26184
21	07043-00211	· PLUG	1	SN:23535--26184
22	07046-41008	· PLUG	1	SN:23535--26184
23	04020-00820	· PIN	12	SN:23535--26184
24	6210-21-1910	· PIN	3	SN:23535--26184
25	6150-21-4770	· PIN	2	SN:23535--26184

Printed By : Dwi Iswanto (airafather6107170)

CYLINDER BLOCK (1/2)(#23535-26184)

Item	Part No.	Description	Qty	Options
26	04020-01024	· PIN	2	SN:23535--26184
27	6150-21-5910	· BUSHING	1	SN:23535--26184
28	6210-21-1390	· PIN	6	SN:23535--26184
29	07046-42816	· PLUG	2	SN:23535--26184
30	07040-11409	· PLUG	3	SN:23535--26184
31	07005-01412	· GASKET (K2)	3	SN:23535--26184
32	07040-11007	· PLUG	2	SN:23535--26184
33	07005-01012	· GASKET (K2)	2	SN:23535--26184
34	07043-70312	· PLUG	2	SN:23535--26184
35	07040-12012	· PLUG	2	SN:23535--26184
36	07002-32034	· O-RING (K2)	2	SN:23535--26184
37	(6150-41-2430)	· PIN	12	SN:23535--26184
38	6150-21-1180	· PLUG	1	SN:23535--26184
39	6150-21-1190	· O-RING (K2)	1	SN:23535--26184

Printed By : Dwi Iswanto (airafather6107170)

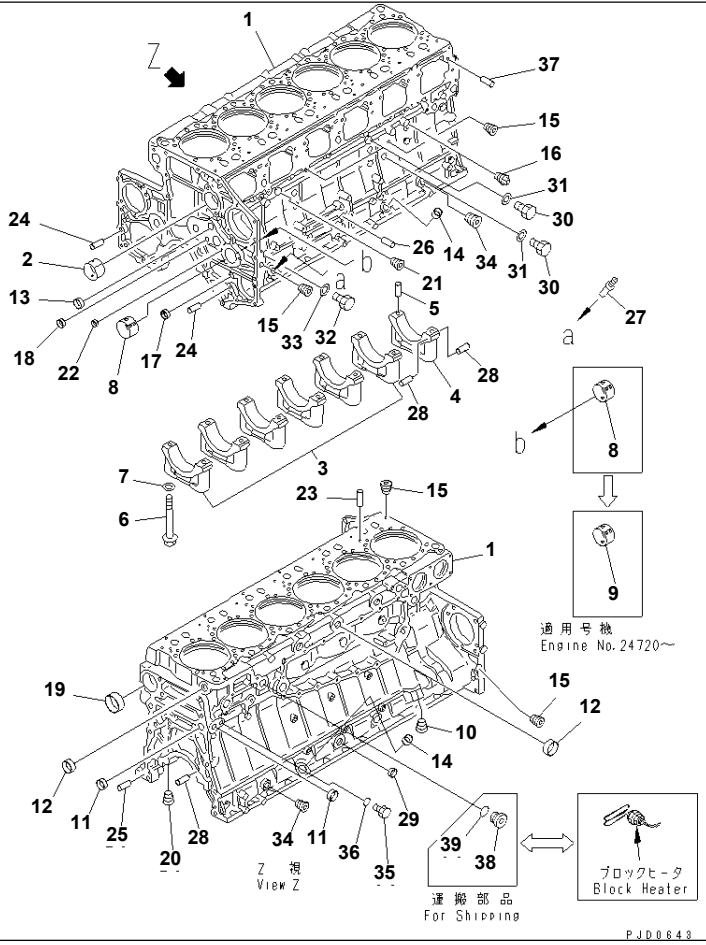

S6D140E-2B S/N 23227-UP

CYLINDER BLOCK (1/2) (WITH BLOCK HEATER)(#23535-26184)

Item	Part No.	Description	Qty	Options
	6211-22-1100	CYLINDER BLOCK ASS'Y	1	SN:23535--26184
1	☆	· BLOCK,CYLINDER	1	SN:23535--26184
2	6210-21-1490	· BUSHING,CAMSHAFT	7	SN:23535--26184
3	△6210-29-1210	· CAP,MAIN METAL¤ NO.1¤2¤3¤4¤5¤6	6	SN:23535--26184
4	△6210-29-1250	· CAP,MAIN METAL¤ NO.7	1	SN:23535--26184
5	04020-00514	· PIN	2	SN:23535--26184
6	6210-21-1710	· BOLT	14	SN:23535--26184
7	01643-31845	· WASHER	14	SN:23535--26184
8	6210-21-1790	· BUSHING	1	SN:24720--26184
	6210-21-1790	· BUSHING	2	SN:23535--27719
9	6210-21-1780	· BUSHING	1	SN:24720--26184
10	07043-71019	· PLUG	1	SN:23535--26184
11	6210-81-9210	· PLUG	2	SN:23535--26184
12	07046-43516	· PLUG	6	SN:23535--26184
13	07046-42516	· PLUG	2	SN:23535--26184
14	07046-42010	· PLUG	2	SN:23535--26184
15	07043-70108	· PLUG	10	SN:23535--26184
16	07042-70108	· PLUG	2	SN:23535--26184
17	07046-11816	· PLUG	2	SN:23535--26184
18	07046-41810	· PLUG	2	SN:23535--26184
19	07046-47020	· PLUG	1	SN:23535--26184
20	07043-00415	· PLUG	1	SN:23535--26184
21	07043-00211	· PLUG	1	SN:23535--26184
22	07046-41008	· PLUG	1	SN:23535--26184
23	04020-00820	· PIN	12	SN:23535--26184
24	6210-21-1910	· PIN	3	SN:23535--26184
25	6150-21-4770	· PIN	2	SN:23535--26184

Printed By : Dwi Iswanto (airafather6107170)

CYLINDER BLOCK (1/2) (WITH BLOCK HEATER)(#23535-26184)

Item	Part No.	Description	Qty	Options
26	04020-01024	· PIN	2	SN:23535--26184
27	6150-21-5910	· BUSHING	1	SN:23535--26184
28	6210-21-1390	· PIN	6	SN:23535--26184
29	07046-42816	· PLUG	2	SN:23535--26184
30	07040-11409	· PLUG	3	SN:23535--26184
31	07005-01412	· GASKET (K2)	3	SN:23535--26184
32	07040-11007	· PLUG	2	SN:23535--26184
33	07005-01012	· GASKET (K2)	2	SN:23535--26184
34	07043-70312	· PLUG	2	SN:23535--26184
35	07040-12012	· PLUG	2	SN:23535--26184
36	07002-32034	· O-RING (K2)	2	SN:23535--26184
37	6150-41-2430	· PIN	12	SN:23535--26184
38	6150-21-1180	· PLUG,(FOR SHIPPING)	1	SN:23535--26184
39	6150-21-1190	· O-RING,(FOR SHIPPING)	1	SN:23535--26184

Printed By : Dwi Iswanto (airafather6107170)

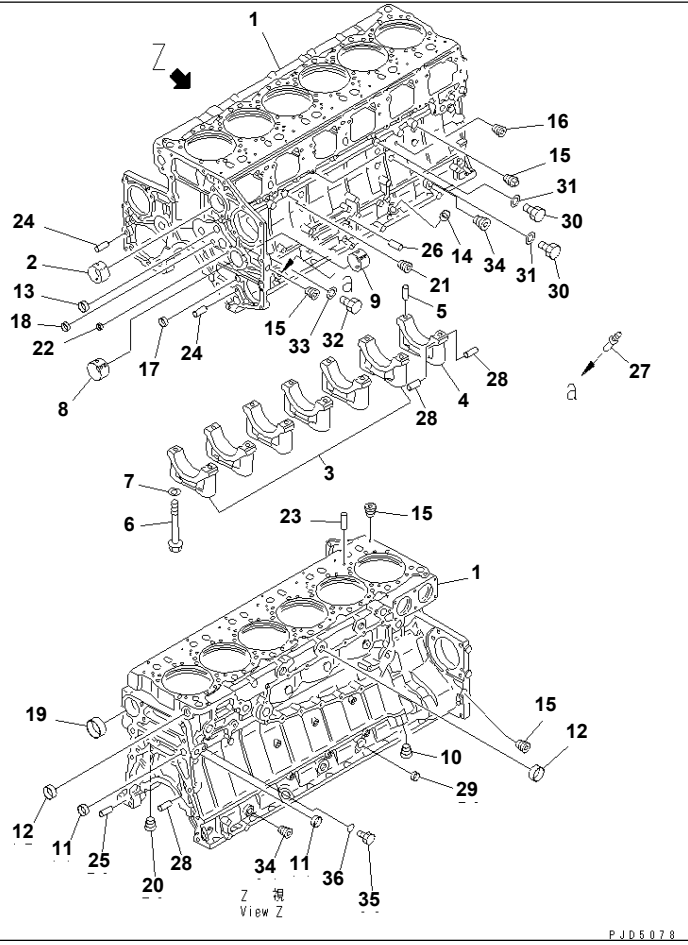

Ref. A2010-A4H9 **Page 030113**

S6D140E-2B S/N 23227-UP
CYLINDER BLOCK (1/2)(#26185-27009)

Item	Part No.	Description	Qty	Options
	6211-22-1100	CYLINDER BLOCK ASS'Y	1	SN:26185--27009
1	☆	· BLOCK,CYLINDER	1	SN:26185--27009
2	6210-21-1490	· BUSHING,CAMSHAFT	7	SN:26185--@
3	△6210-29-1210	· CAP,MAIN METAL¤ NO.1¤2¤3¤4¤5¤6	6	SN:26185--@
4	△6210-29-1250	· CAP,MAIN METAL¤ NO.7	1	SN:26185--@
5	04020-00514	· PIN,DOWEL	2	SN:26185--@
6	6210-21-1710	· BOLT	14	SN:26185--@
7	01643-31845	· WASHER	14	SN:26185--@
8	6210-21-1790	· BUSHING	1	SN:26185--@
9	6210-21-1780	· BUSHING	1	SN:26185--@
10	07043-71019	· PLUG	1	SN:26185--@
11	6210-81-9210	· PLUG	2	SN:26185--@
12	07046-43516	· PLUG	6	SN:26185--@
13	07046-42516	· PLUG	2	SN:26185--@
14	07046-42010	· PLUG	1	SN:26185--@
15	07043-70108	· PLUG	10	SN:26185--@
16	07042-70108	· PLUG	2	SN:26185--@
17	07046-11816	· PLUG	2	SN:26185--@
18	07046-41810	· PLUG	2	SN:26185--@
19	07046-47020	· PLUG	1	SN:26185--@
20	07043-00415	· PLUG	1	SN:26185--@
21	07043-00211	· PLUG	1	SN:26185--@
22	07046-41008	· PLUG	1	SN:26185--@
23	04020-00820	· PIN,DOWEL	12	SN:26185--@
24	6210-21-1910	· PIN	3	SN:26185--@
25	6150-21-4770	· PIN,DOWEL	2	SN:26185--@
26	04020-01024	· PIN,DOWEL	2	SN:26185--@

Printed By : Dwi Iswanto (airafather6107170)

CYLINDER BLOCK (1/2)(#26185-27009)

Item	Part No.	Description	Qty	Options
27	6150-21-5910	· BUSHING	1	SN:26185--@
28	6210-21-1390	· PIN	6	SN:26185--@
29	07046-42816	· PLUG	2	SN:26185--@
30	07040-11409	· PLUG	3	SN:26185--@
31	07005-01412	· GASKET (K2)	3	SN:26185--@
32	07040-11007	· PLUG	2	SN:26185--@
33	07005-01012	· GASKET (K2)	2	SN:26185--@
34	07043-70312	· PLUG	2	SN:26185--@
35	07040-12012	· PLUG	1	SN:26185--@
36	07002-32034	· O-RING	1	SN:26185--@

Printed By : Dwi Iswanto (airafather6107170)

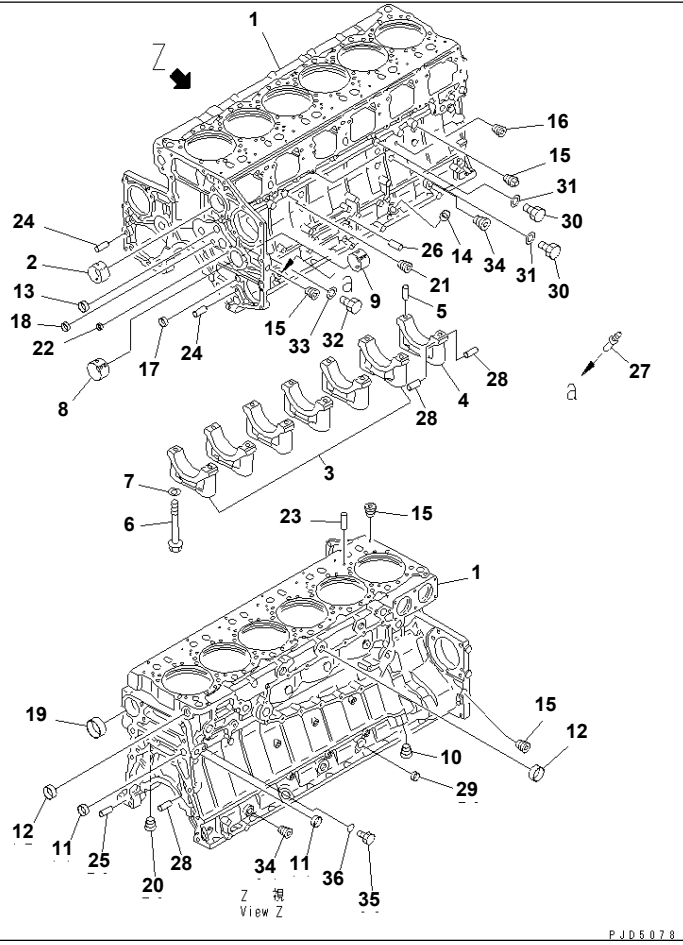

S6D140E-2B S/N 23227-UP

CYLINDER BLOCK (1/2)(#27010-)

Item	Part No.	Description	Qty	Options
	6211-22-1101	CYLINDER BLOCK ASS'Y	1	SN:27010--
1	☆	· BLOCK,CYLINDER	1	SN:27010--
2	6210-21-1490	· BUSHING,CAMSHAFT	7	SN:26185--
3	△6210-29-1210	· CAP,MAIN METAL¤ NO.1¤2¤3¤4¤5¤6	6	SN:26185--
4	△6210-29-1250	· CAP,MAIN METAL¤ NO.7	1	SN:26185--
5	04020-00514	· PIN,DOWEL	2	SN:26185--
6	6210-21-1710	· BOLT	14	SN:26185--
7	01643-31845	· WASHER	14	SN:26185--
8	6210-21-1790	· BUSHING	1	SN:26185--
9	6210-21-1780	· BUSHING	1	SN:26185--
10	07043-71019	· PLUG	1	SN:26185--
11	6210-81-9210	· PLUG	2	SN:26185--
12	07046-43516	· PLUG	6	SN:26185--
13	07046-42516	· PLUG	2	SN:26185--
14	07046-42010	· PLUG	1	SN:26185--
15	07043-70108	· PLUG	10	SN:26185--
16	07042-70108	· PLUG	2	SN:26185--
17	07046-11816	· PLUG	2	SN:26185--
18	07046-41810	· PLUG	2	SN:26185--
19	07046-47020	· PLUG	1	SN:26185--
20	07043-00415	· PLUG	1	SN:26185--
21	07043-00211	· PLUG	1	SN:26185--
22	07046-41008	· PLUG	1	SN:26185--
23	04020-00820	· PIN,DOWEL	12	SN:26185--
24	6210-21-1910	· PIN	3	SN:26185--
25	6150-21-4770	· PIN,DOWEL	2	SN:26185--
26	04020-01024	· PIN,DOWEL	2	SN:26185--

Ref. A2010-A4H9A Page 030116

Printed By : Dwi Iswanto (airafather6107170)

S6D140E-2B S/N 23227-UP

CYLINDER BLOCK (1/2)(#27010-)

Item	Part No.	Description	Qty	Options
27	6150-21-5910	· BUSHING	1	SN:26185--
28	6210-21-1390	· PIN	6	SN:26185--
29	07046-42816	· PLUG	2	SN:26185--
30	07040-11409	· PLUG	3	SN:26185--
31	07005-01412	· GASKET (K2)	3	SN:26185--
32	07040-11007	· PLUG	2	SN:26185--
33	07005-01012	· GASKET (K2)	2	SN:26185--
34	07043-70312	· PLUG	2	SN:26185--
35	07040-12012	· PLUG	1	SN:26185--
36	07002-32034	· O-RING	1	SN:26185--

Printed By : Dwi Iswanto (airafather6107170)

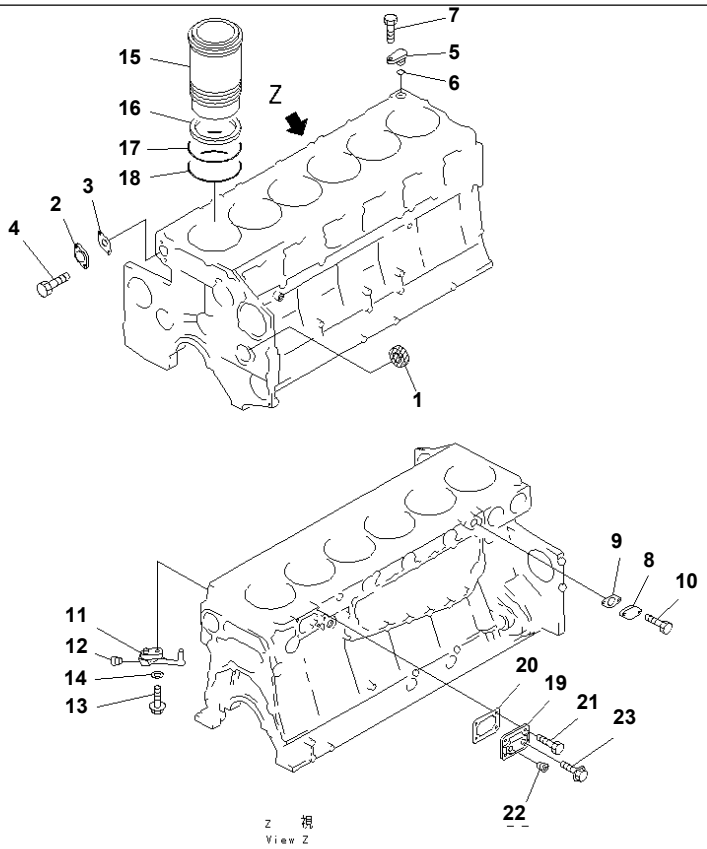

PGD1486

S6D140E-2B S/N 23227-UP

CYLINDER BLOCK (2/2)(#23535-26184)

Item	Part No.	Description	Qty	Options
1	6210-71-3281	SEAL,OIL (K2)	1	SN:25035--26184
	□6210-71-3280	SEAL,OIL (K2)	1	SN:23535--25034
2	6210-21-1950	FLANGE	1	SN:23535--26184
3	6696-61-9921	GASKET (K2)	1	SN:23535--26184
4	01010-81225	BOLT	2	SN:23535--26184
5	6210-21-1940	COVER	1	SN:23535--26184
6	07000-03025	O-RING (K2)	1	SN:23535--26184
7	01010-81020	BOLT	1	SN:23535--26184
8	6210-21-1820	PLATE	1	SN:23535--26184
9	6210-61-6551	GASKET (K2)	1	SN:23535--26184
10	01010-81025	BOLT	2	SN:23535--26184
	6211-21-1800	NOZZLE ASS'Y,PISTON COOLING	6	SN:23535--26184
11	6211-21-1810	· NOZZLE	1	SN:23535--26184
12	02720-40104	· PLUG	1	SN:23535--26184
13	01437-01025	BOLT	6	SN:23535--26184
14	01641-21016	WASHER	6	SN:23535--26184
15	6211-22-2220	LINER,CYLINDER	6	SN:23535--26184
16	6210-21-2270	SEAL,CREVICE (K2)	6	SN:23535--26184
17	6210-21-2240	O-RING,CENTER (K2)	6	SN:23535--26184
18	6210-21-2230	O-RING,LOWER (K2)	6	SN:23535--26184
19	6210-21-1960	COVER	1	SN:23535--26184
20	6210-21-1971	GASKET (K2)	1	SN:23535--26184
21	01010-81025	BOLT	4	SN:23535--26184
22	07043-00415	PLUG	1	SN:23535--26184
23	287-35-11470	PLUG	1	SN:23535--26184

Printed By : Dwi Iswanto (airafather6107170)

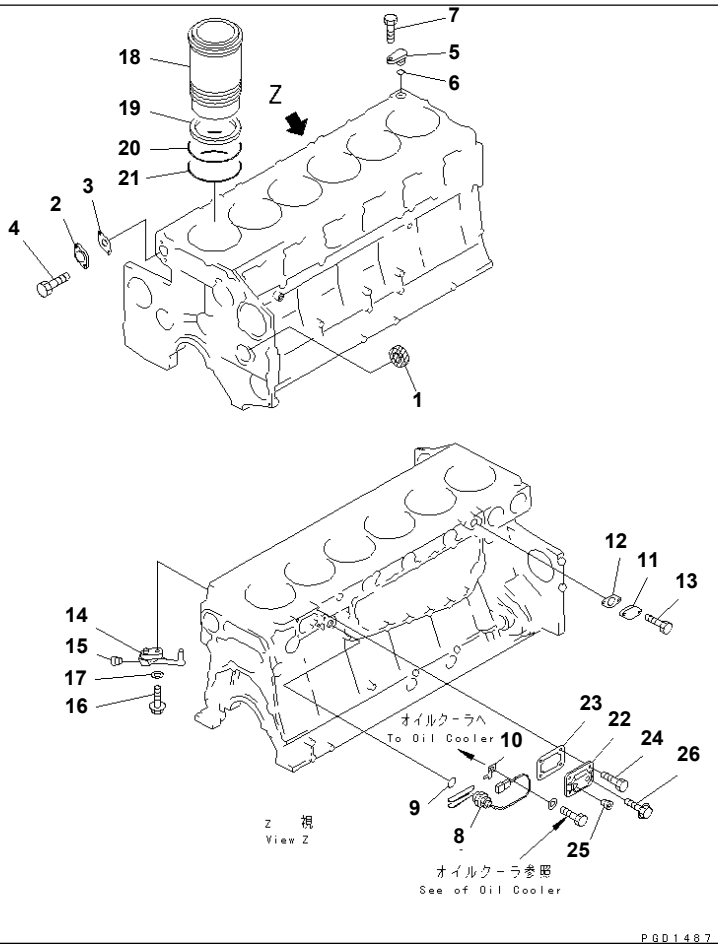

Ref. A2010-B4F6 **Page 030130**

S6D140E-2B S/N 23227-UP
CYLINDER BLOCK (2/2) (WITH BLOCK HEATER)(#23535-26184)

Item	Part No.	Description	Qty	Options
1	6210-71-3281	SEAL,OIL (K2)	1	SN:25035--26184
	□6210-71-3280	SEAL,OIL (K2)	1	SN:23535--25034
2	6210-21-1950	FLANGE	1	SN:23535--26184
3	6696-61-9921	GASKET (K2)	1	SN:23535--26184
4	01010-81225	BOLT	2	SN:23535--26184
5	6210-21-1940	COVER	1	SN:23535--26184
6	07000-03025	O-RING (K2)	1	SN:23535--26184
7	01010-81020	BOLT	1	SN:23535--26184
8	600-815-8750	HEATER,BLOCK	1	SN:23535--26184
9	6150-21-1190	O-RING (K2)	1	SN:23535--26184
10	08053-01510	CLIP	1	SN:23535--26184
11	6210-21-1820	PLATE	1	SN:23535--26184
12	6210-61-6551	GASKET (K2)	1	SN:23535--26184
13	01010-81025	BOLT	2	SN:23535--26184
	6211-21-1800	NOZZLE ASS'Y,PISTON COOLING	6	SN:23535--26184
14	6211-21-1820	· NOZZLE	1	SN:23535--26184
15	02720-40104	· PLUG	1	SN:23535--26184
16	01437-01025	BOLT	6	SN:23535--26184
17	01641-21016	WASHER	6	SN:23535--26184
18	6211-22-2220	LINER,CYLINDER	6	SN:23535--26184
19	6210-21-2270	SEAL,CREVICE (K2)	6	SN:23535--26184
20	6210-21-2240	O-RING,CENTER (K2)	6	SN:23535--26184
21	6210-21-2230	O-RING,LOWER (K2)	6	SN:23535--26184
22	6210-21-1960	COVER	1	SN:23535--26184
23	6210-21-1971	GASKET (K2)	1	SN:23535--26184
24	01010-81025	BOLT	4	SN:23535--26184
25	07043-00415	PLUG	1	SN:23535--26184

Printed By : Dwi Iswanto (airafather6107170)

CYLINDER BLOCK (2/2) (WITH BLOCK HEATER)(#23535-26184)

Item	Part No.	Description	Qty	Options
26	287-35-11470	PLUG	1	SN:23535--26184

Printed By : Dwi Iswanto (airafather6107170)

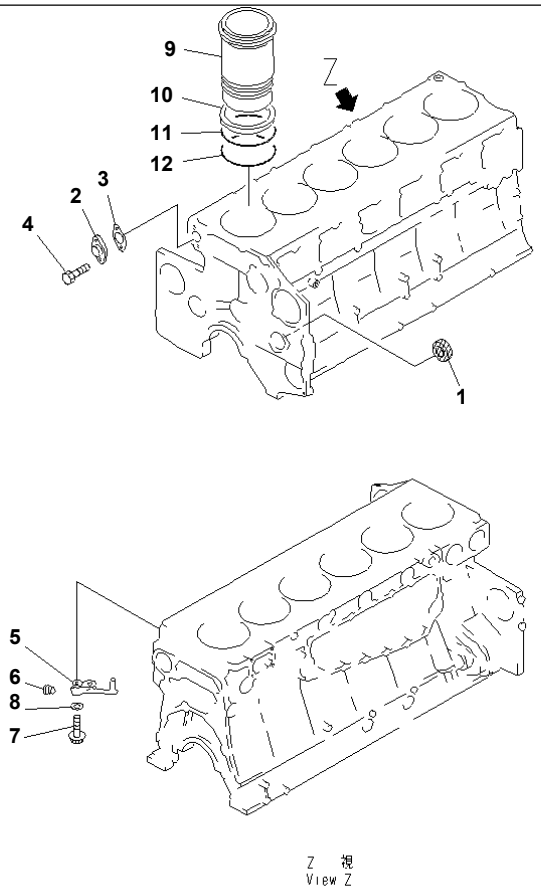

CYLINDER BLOCK (2/2)(#26185-27009)

Item	Part No.	Description	Qty	Options
1	6210-71-3281	SEAL,OIL (K2)	1	SN:26185--@
2	6210-21-1950	FLANGE	1	SN:26185--@
3	6696-61-9921	GASKET (K2)	1	SN:26185--@
4	01010-81225	BOLT	2	SN:26185--@
	6211-21-1800	NOZZLE ASS'Y,PISTON COOLING	6	SN:26185--@
5	6211-21-1820	· NOZZLE	1	SN:26185--@
6	02720-40104	· PLUG	1	SN:26185--@
7	01437-01025	BOLT	6	SN:26185--@
8	01641-21016	WASHER	6	SN:26185--@
9	6211-22-2220	LINER,CYLINDER	6	SN:26185--@
10	6210-21-2270	SEAL,CREVICE (K2)	6	SN:26185--@
11	6210-21-2240	O-RING,CENTER (K2)	6	SN:26185--@
12	6210-21-2230	O-RING,LOWER (K2)	6	SN:26185--@

Printed By : Dwi Iswanto (airafather6107170)

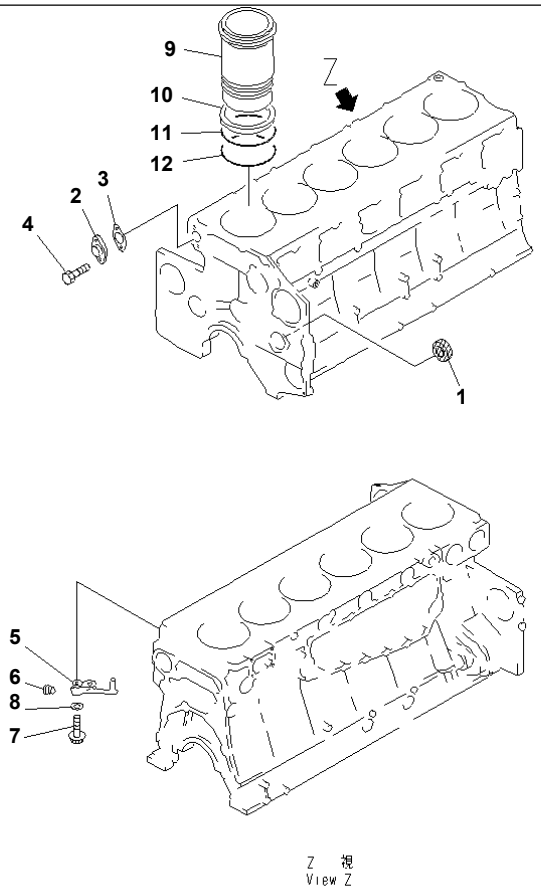

PJD5079

S6D140E-2B S/N 23227-UP

CYLINDER BLOCK (2/2)(#27010-)

Item	Part No.	Description	Qty	Options
1	6210-71-3281	SEAL,OIL (K2)	1	SN:26185--
2	6210-21-1950	FLANGE	1	SN:26185--
3	6696-61-9921	GASKET (K2)	1	SN:26185--
4	01010-81225	BOLT	2	SN:26185--
	6211-21-1800	NOZZLE ASS'Y,PISTON COOLING	6	SN:26185--
5	6211-21-1820	· NOZZLE	1	SN:26185--
6	02720-40104	· PLUG	1	SN:26185--
7	01437-01025	BOLT	6	SN:26185--
8	01641-21016	WASHER	6	SN:26185--
9	6211-22-2220	LINER,CYLINDER	6	SN:26185--
10	6210-21-2270	SEAL,CREVICE (K2)	6	SN:26185--
11	6210-21-2240	O-RING,CENTER (K2)	6	SN:26185--
12	6210-21-2230	O-RING,LOWER (K2)	6	SN:26185--

Printed By : Dwi Iswanto (airafather6107170)

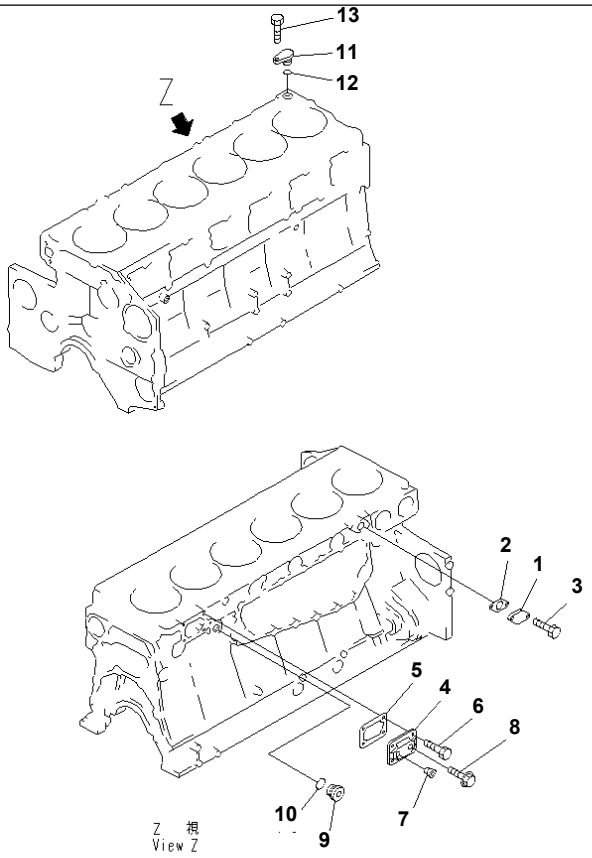

S6D140E-2B S/N 23227-UP

CYLINDER BLOCK MOUNTING(#26185-)

Item	Part No.	Description	Qty	Options
1	6210-21-1820	PLATE	1	SN:26185--
2	6210-61-6551	GASKET (K2)	1	SN:26185--
3	01010-81025	BOLT	2	SN:26185--
4	6210-21-1960	COVER	1	SN:26185--
5	6210-21-1971	GASKET (K2)	1	SN:26185--
6	01010-81025	BOLT	4	SN:26185--
7	07043-00415	PLUG	1	SN:26185--
8	287-35-11470	PLUG	1	SN:26185--
9	6150-21-1180	PLUG	1	SN:26185--
10	6150-21-1190	O-RING (K2)	1	SN:26185--
11	6210-21-1940	COVER	1	SN:26185--
12	07000-03025	O-RING (K2)	1	SN:26185--
13	01010-81020	BOLT	1	SN:26185--

Printed By : Dwi Iswanto (airafather6107170)

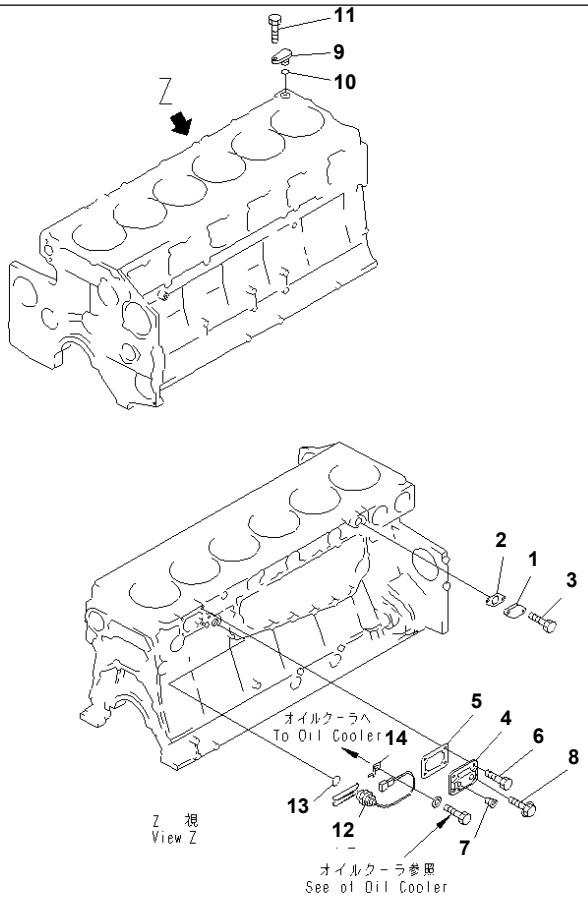

S6D140E-2B S/N 23227-UP

CYLINDER BLOCK MOUNTING (WITH BLOCK HEATER)(#26185-)

Item	Part No.	Description	Qty	Options
1	6210-21-1820	PLATE	1	SN:26185--
2	6210-61-6551	GASKET (K2)	1	SN:26185--
3	01010-81025	BOLT	2	SN:26185--
4	6210-21-1960	COVER	1	SN:26185--
5	6210-21-1971	GASKET (K2)	1	SN:26185--
6	01010-81025	BOLT	4	SN:26185--
7	07043-00415	PLUG	1	SN:26185--
8	287-35-11470	PLUG	1	SN:26185--
9	6210-21-1940	COVER	1	SN:26185--
10	07000-03025	O-RING (K2)	1	SN:26185--
11	01010-81020	BOLT	1	SN:26185--
12	600-815-8750	HEATER,BLOCK	1	SN:26185--
13	6150-21-1190	O-RING (K2)	1	SN:26185--
14	08053-01510	CLIP	1	SN:26185--

Printed By : Dwi Iswanto (airafather6107170)

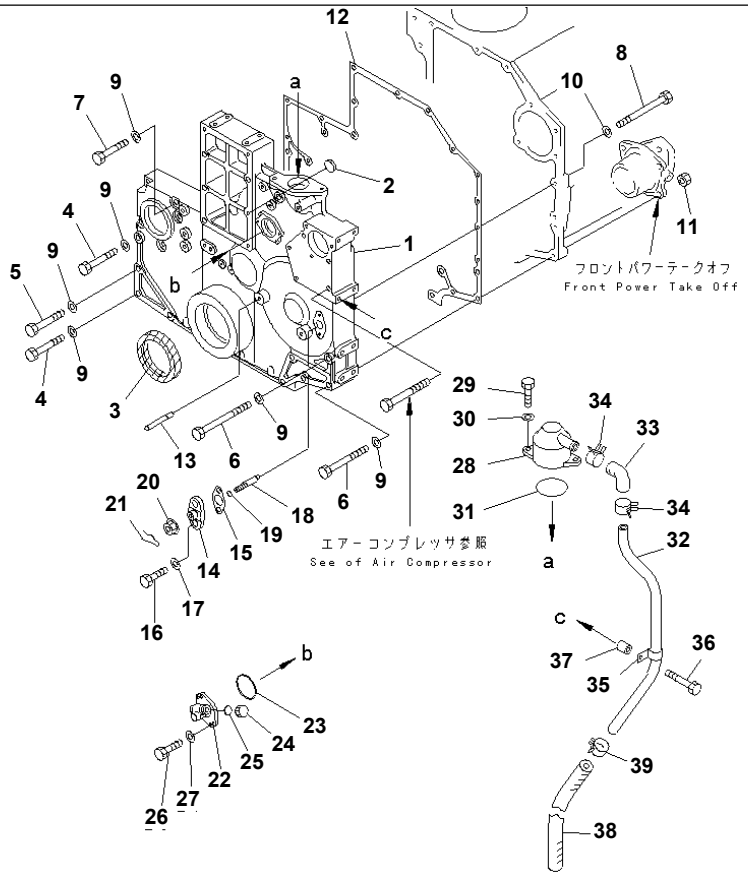

S6D140E-2B S/N 23227-UP
FRONT COVER(#23535-26118)

Item	Part No.	Description	Qty	Options
1	6210-22-3210	COVER	1	SN:23535--26118
2	07046-11816	PLUG	7	SN:23535--26118
3	6711-21-3521	SEAL¤ FRONT	1	SN:23535--26118
	6711-29-3521	SEAL¤ FRONT,WITH SLEEVE (REPAIR PART)	1	SN:23535--26118
4	01010-81290	BOLT	6	SN:23535--26118
5	01011-81200	BOLT	2	SN:23535--26118
6	6210-21-3190	BOLT	3	SN:23535--26118
7	01010-81275	BOLT	1	SN:23535--26118
8	01011-81045	BOLT	2	SN:23535--26118
9	01640-21223	WASHER	12	SN:23535--26118
10	01640-21016	WASHER	2	SN:23535--26118
11	01580-11210	NUT	3	SN:23535--26118
12	6210-21-3251	GASKET (K2)	1	SN:23535--26118
13	6150-22-3360	POINTER	1	SN:23535--26118
14	6210-72-3241	FLANGE	1	SN:23535--26118
15	6151-51-8721	GASKET	1	SN:23535--26118
16	01010-80830	BOLT	2	SN:23535--26118
17	01643-31032	WASHER	2	SN:23535--26118
18	6210-72-3231	PIN	1	SN:23535--26118
19	07000-E1007	O-RING	1	SN:23535--26118
20	01584-00806	NUT	1	SN:23535--26118
21	04052-11038	PIN	1	SN:23535--26118
22	6210-81-4111	BOX ASS'Y	1	SN:23535--26118
23	07000-03050	O-RING (K2)	1	SN:23535--26118
24	6136-81-5291	CAP	1	SN:23535--26118
25	6130-82-5270	GASKET	1	SN:23535--26118
26	01010-80616	BOLT	2	SN:23535--26118

Printed By : Dwi Iswanto (airafather6107170)

FRONT COVER(#23535-26118)

Item	Part No.	Description	Qty	Options
27	01640-20610	WASHER	2	SN:23535--26118
28	6210-21-8711	BREATHER	1	SN:23535--26118
29	01010-81020	BOLT	2	SN:23535--26118
30	01640-21016	WASHER	2	SN:23535--26118
31	07000-62060	O-RING (K2)	1	SN:23535--26118
32	6210-21-8730	TUBE	1	SN:23535--26118
33	6130-61-6611	HOSE	1	SN:23535--26118
34	07285-00260	CLIP	2	SN:23535--26118
35	112-946-4170	CLIP	1	SN:23535--26118
36	01010-81050	BOLT	1	SN:23535--26118
37	6144-11-5630	SPACER	1	SN:23535--26118
38	07287-01910	HOSE	1	SN:23535--26118
39	07285-00220	CLIP	1	SN:23535--26118

Printed By : Dwi Iswanto (airafather6107170)

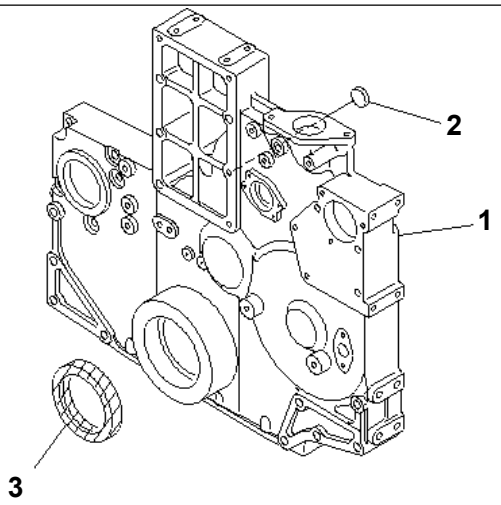

PJD5088

S6D140E-2B S/N 23227-UP

FRONT COVER(#26119-)

Item	Part No.	Description	Qty	Options
1	6210-22-3210	COVER	1	SN:26119--
2	07046-11816	PLUG	7	SN:26119--
3	6711-21-3521	SEAL¤ FRONT	1	SN:26119--

Ref. A2040-A4G4 Page 030143

Printed By : Dwi Iswanto (airafather6107170)

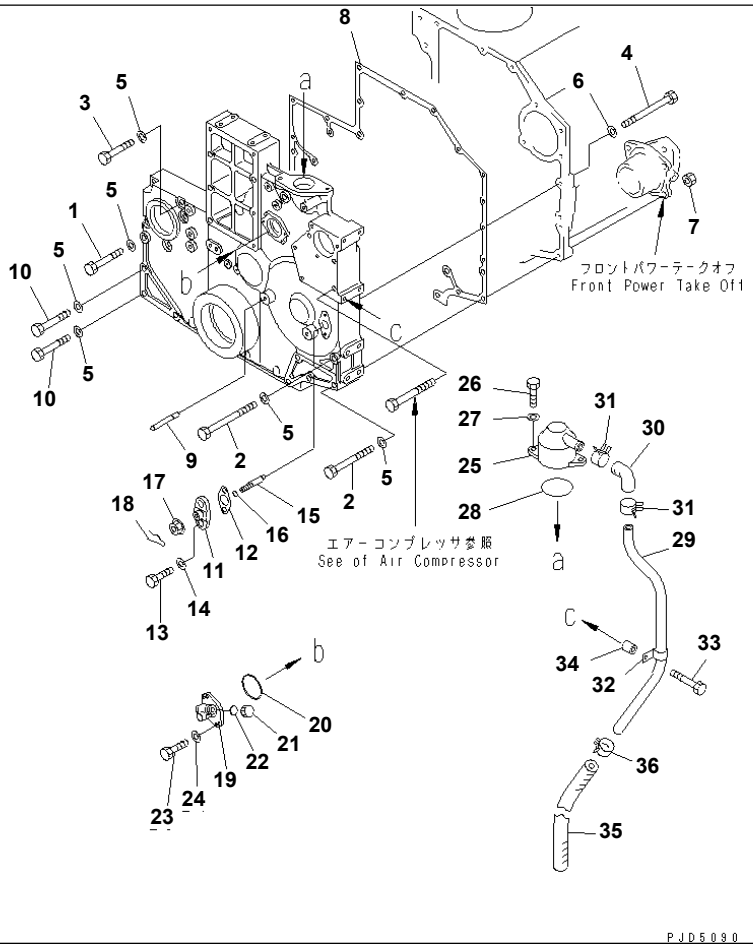

S6D140E-2B S/N 23227-UP

FRONT COVER MOUNTING(#26119-)

Item	Part No.	Description	Qty	Options
1	01010-81290	BOLT	5	SN:26119--
2	6210-21-3190	BOLT	3	SN:26119--
3	01010-81280	BOLT	1	SN:26119--
4	01011-81045	BOLT	2	SN:26119--
5	01640-21223	WASHER	12	SN:26119--
6	01640-21016	WASHER	2	SN:26119--
7	01580-11210	NUT	3	SN:26119--
8	6210-21-3251	GASKET (K2)	1	SN:26119--
9	6150-22-3360	POINTER	1	SN:26119--
10	01011-81200	BOLT	3	SN:26119--
11	6210-72-3241	FLANGE	1	SN:26119--
12	6151-51-8721	GASKET	1	SN:26119--
13	01010-80830	BOLT	2	SN:26119--
14	01643-31032	WASHER	2	SN:26119--
15	6210-72-3231	PIN	1	SN:26119--
16	07000-E1007	O-RING	1	SN:26119--
17	01584-00806	NUT	1	SN:26119--
18	04052-11038	PIN	1	SN:26119--
19	6210-81-4111	BOX ASS'Y	1	SN:26119--
20	07000-03050	O-RING (K2)	1	SN:26119--
21	6136-81-5291	CAP	1	SN:26119--
22	6130-82-5270	GASKET	1	SN:26119--
23	01010-80616	BOLT	2	SN:26119--
24	01640-20610	WASHER	2	SN:26119--
25	6210-21-8711	BREATHER	1	SN:26119--
26	01010-81020	BOLT	2	SN:26119--
27	01640-21016	WASHER	2	SN:26119--

Printed By : Dwi Iswanto (airafather6107170)

FRONT COVER MOUNTING(#26119-)

Item	Part No.	Description	Qty	Options
28	07000-62060	O-RING (K2)	1	SN:26119--
29	6210-21-8730	TUBE	1	SN:26119--
30	6130-61-6611	HOSE	1	SN:26119--
31	07285-00260	CLIP	2	SN:26119--
32	112-946-4170	CLIP	1	SN:26119--
33	01010-81050	BOLT	1	SN:26119--
34	6144-11-5630	SPACER	1	SN:26119--
35	07287-01910	HOSE	1	SN:26119--
36	07285-00220	CLIP	1	SN:26119--

Printed By : Dwi Iswanto (airafather6107170)

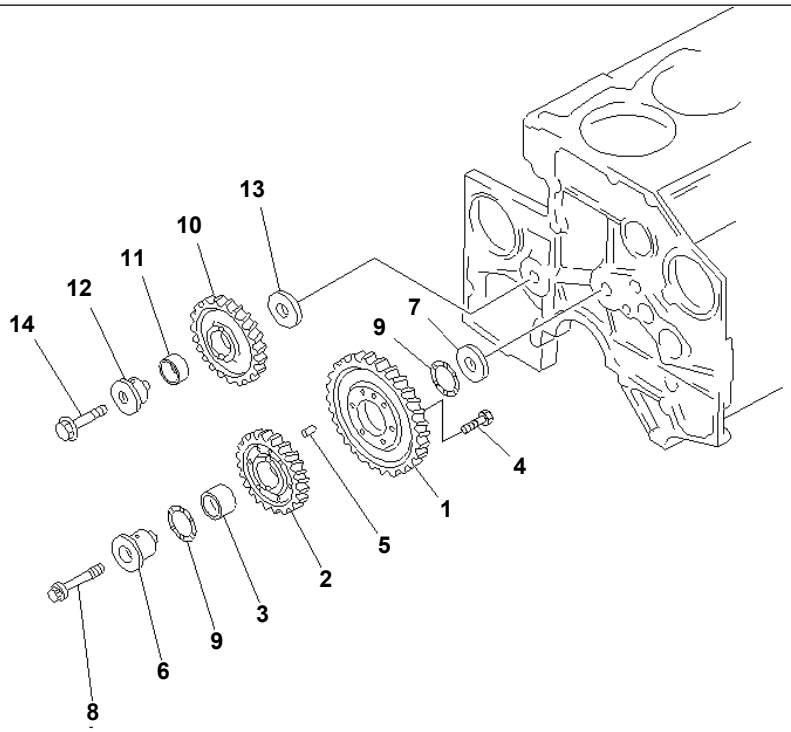

PE38105

S6D140E-2B S/N 23227-UP

IDLER GEAR(#23227-26697)

Item	Part No.	Description	Qty	Options
1	6210-31-6311	GEAR,IDLER	1	SN:23227--26697
	6212-31-6200	IDLER GEAR ASS'Y	1	SN:23227--26697
2	☆	· GEAR	1	SN:23227--26697
3	6212-31-6130	· BUSHING	1	SN:23227--26697
4	01010-80830	BOLT	6	SN:23227--26697
5	6127-21-1260	PIN,DOWEL	1	SN:23227--26697
6	6210-21-2414	SHAFT	1	SN:23227--26697
7	6210-21-2422	PLATE,THRUST	1	SN:23227--26697
8	6162-23-2443	BOLT	1	SN:23227--26697
9	6212-31-6140	BEARING	2	SN:23227--26697
	6212-31-6100	IDLER GEAR ASS'Y	1	SN:23227--26697
10	☆	· GEAR	1	SN:23227--26697
11	6212-31-6120	· BUSHING	1	SN:23227--26697
12	6212-21-2511	SHAFT	1	SN:23227--26697
13	6210-21-2422	PLATE,THRUST	1	SN:23227--26697
14	6212-21-2450	BOLT	1	SN:23227--26697

Printed By : Dwi Iswanto (airafather6107170)

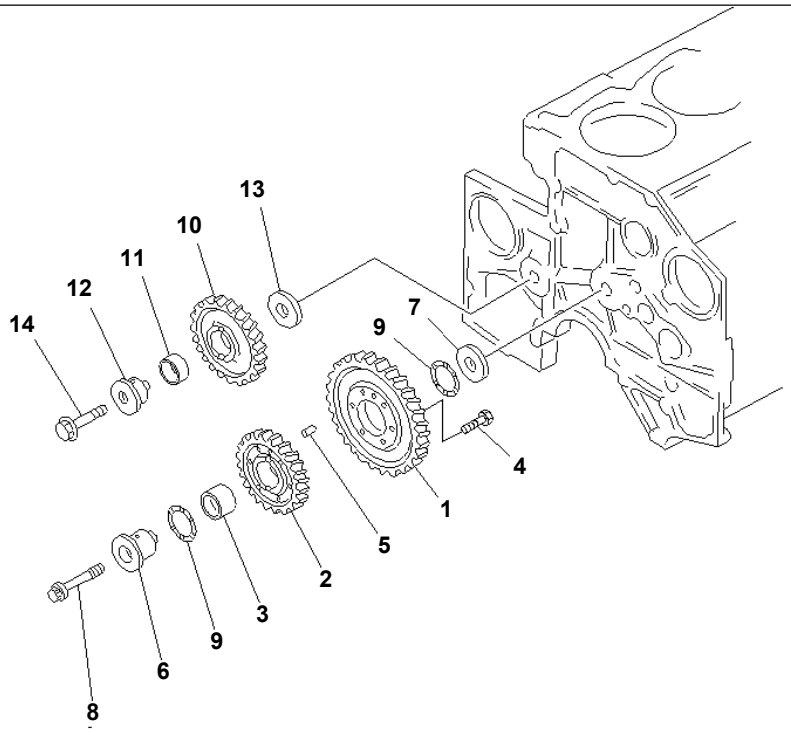

PE38105

S6D140E-2B S/N 23227-UP

IDLER GEAR(#26698-)

Item	Part No.	Description	Qty	Options
1	6210-31-6311	GEAR,IDLER	1	SN:26698--
	6212-31-6200	IDLER GEAR ASS'Y	1	SN:26698--
2	☆	· GEAR	1	SN:26698--
3	6212-31-6130	· BUSHING	1	SN:26698--
4	01010-80830	BOLT	6	SN:26698--
5	6127-21-1260	PIN,DOWEL	1	SN:26698--
6	6210-22-2410	SHAFT	1	SN:26698--
7	6210-22-2420	PLATE,THRUST	1	SN:26698--
8	6162-33-5322	BOLT	1	SN:26698--
9	6212-31-6140	BEARING	2	SN:26698--
	6212-31-6100	IDLER GEAR ASS'Y	1	SN:26698--
10	☆	· GEAR	1	SN:26698--
11	6212-31-6120	· BUSHING	1	SN:26698--
12	6212-21-2511	SHAFT	1	SN:26698--
13	6210-21-2422	PLATE,THRUST	1	SN:26698--
14	6212-21-2450	BOLT	1	SN:26698--

Ref. A2050-A4A3 Page 030155

Printed By : Dwi Iswanto (airafather6107170)

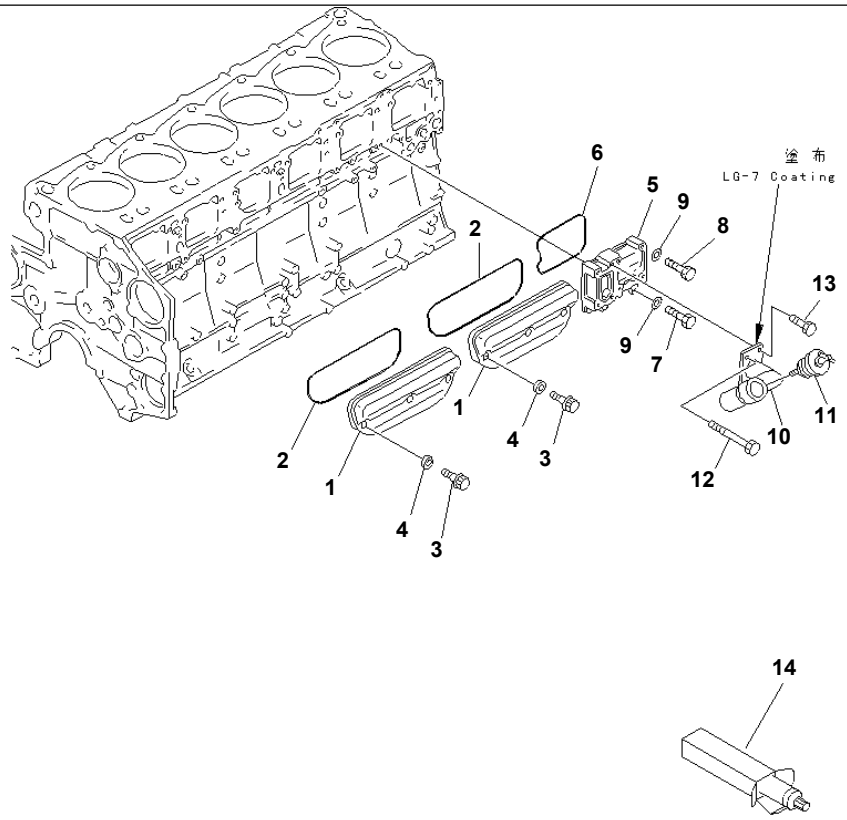

PE38812

S6D140E-2B S/N 23227-UP

CAMFOLLOWER COVER(#23535-)

Item	Part No.	Description	Qty	Options
1	6210-21-6410	COVER	2	SN:23535--
2	6210-21-6860	O-RING (K2)	2	SN:23535--
3	6210-21-6471	BOLT	6	SN:23535--
4	6150-21-6391	PACKING (K2)	6	SN:23535--
5	6210-21-6440	COVER	1	SN:23535--
6	6210-21-6452	O-RING (K2)	1	SN:23535--
7	01010-81030	BOLT	2	SN:23535--
8	01010-81065	BOLT	1	SN:23535--
9	01640-21016	WASHER	3	SN:23535--
10	6210-21-6570	FILLER,OIL	1	SN:23535--
11	07025-00200	CAP	1	SN:23535--
12	01010-81070	BOLT	1	SN:23535--
13	01010-81030	BOLT	3	SN:23535--
14	09920-00150	LIQUID GASKET,LG-7¤ 150G	AR	SN:23535--

Printed By : Dwi Iswanto (airafather6107170)

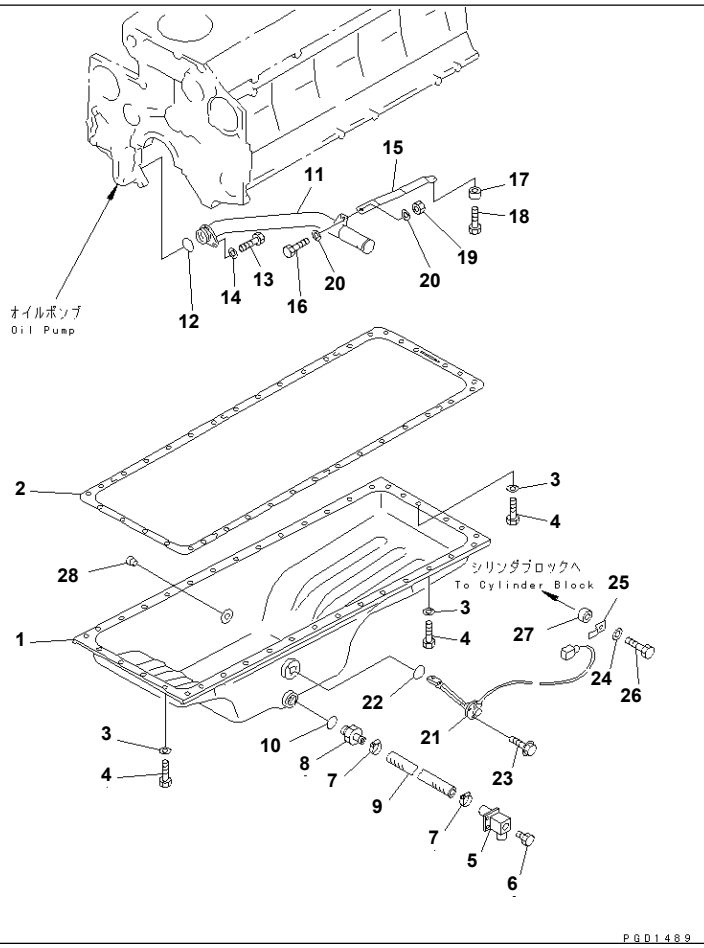

Ref. A2110-A4A1 **Page 030170**

S6D140E-2B S/N 23227-UP

OIL PAN AND SUCTION TUBE (WITHOUT OIL PAN HEATER)(#23535-)

Item	Part No.	Description	Qty	Options
1	6211-21-5240	PAN,OIL	1	SN:23535--
2	6210-21-5820	GASKET (K2)	1	SN:23535--
3	01640-21016	WASHER	38	SN:23535--
4	01010-81025	BOLT	38	SN:23535--
	6211-51-6500	HOSE ASS'Y	1	SN:23535--
5	425-01-12121	· TUBE	1	SN:23535--
6	424-01-11110	· PLUG	1	SN:23535--
7	07281-00359	· CLAMP	2	SN:23535--
8	235-01-31310	· NIPPLE	1	SN:23535--
9	07260-22071	· HOSE	1	SN:23535--
10	07002-23634	O-RING (K2)	1	SN:23535--
11	6210-51-6311	PIPE,OIL SUCTION	1	SN:23535--
12	07000-63040	O-RING (K2)	1	SN:23535--
13	01010-81025	BOLT	1	SN:23535--
14	01643-31032	WASHER	1	SN:23535--
15	6210-51-6322	BRACKET	1	SN:23535--
16	01010-81025	BOLT	1	SN:23535--
17	6131-12-5920	SPACER	1	SN:23535--
18	01010-81030	BOLT	1	SN:23535--
19	01580-01008	NUT	1	SN:23535--
20	01643-31032	WASHER	2	SN:23535--
21	7861-91-4210	SENSOR,OIL LEVEL	1	SN:23535--
22	7861-91-4220	· O-RING	1	SN:23535--
23	01435-20612	BOLT	3	SN:23535--
24	01640-21016	WASHER	1	SN:23535--
25	08053-01510	CLIP	1	SN:23535--
26	01010-81030	BOLT	1	SN:23535--

Printed By : Dwi Iswanto (airafather6107170)

OIL PAN AND SUCTION TUBE (WITHOUT OIL PAN HEATER)(#23535-)

Item	Part No.	Description	Qty	Options
27	6131-12-5920	SPACER	1	SN:23535--
28	02720-41616	PLUG	1	SN:24018--
	□02720-21616	PLUG	1	SN:23535--24017

Printed By : Dwi Iswanto (airafather6107170)

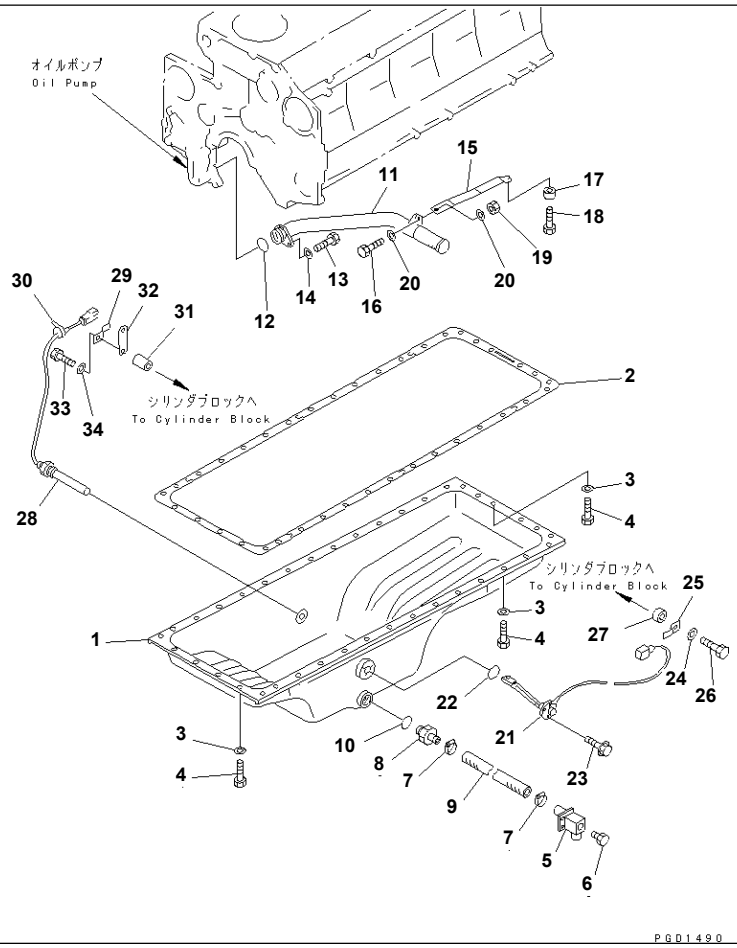

Ref. A2110-A4A2 Page 030180

S6D140E-2B S/N 23227-UP

OIL PAN AND SUCTION TUBE (WITH OIL PAN HEATER)(#23535-)

Item	Part No.	Description	Qty	Options
1	6211-21-5240	PAN,OIL	1	SN:23535--
2	6210-21-5820	GASKET (K2)	1	SN:23535--
3	01640-21016	WASHER	38	SN:23535--
4	01010-81025	BOLT	38	SN:23535--
	6211-51-6500	HOSE ASS'Y	1	SN:23535--
5	425-01-12121	· TUBE	1	SN:23535--
6	424-01-11110	· PLUG	1	SN:23535--
7	07281-00359	· CLAMP	2	SN:23535--
8	235-01-31310	· NIPPLE	1	SN:23535--
9	07260-22071	· HOSE	1	SN:23535--
10	07002-23634	O-RING (K2)	1	SN:23535--
11	6210-51-6311	PIPE,OIL SUCTION	1	SN:23535--
12	07000-63040	O-RING (K2)	1	SN:23535--
13	01010-81025	BOLT	1	SN:23535--
14	01643-31032	WASHER	1	SN:23535--
15	6210-51-6322	BRACKET	1	SN:23535--
16	01010-81025	BOLT	1	SN:23535--
17	6131-12-5920	SPACER	1	SN:23535--
18	01010-81030	BOLT	1	SN:23535--
19	01580-01008	NUT	1	SN:23535--
20	01643-31032	WASHER	2	SN:23535--
21	7861-91-4210	SENSOR,OIL LEVEL	1	SN:23535--
22	7861-91-4220	· O-RING	1	SN:23535--
23	01435-20612	BOLT	3	SN:23535--
24	01640-21016	WASHER	1	SN:23535--
25	08053-01510	CLIP	1	SN:23535--
26	01010-81030	BOLT	1	SN:23535--

Ref. A2110-A4A2 Page 030180

OIL PAN AND SUCTION TUBE (WITH OIL PAN HEATER)(#23535-)

Item	Part No.	Description	Qty	Options
27	6131-12-5920	SPACER	1	SN:23535--
28	600-815-8540	HEATER,OIL PAN	1	SN:23535--
29	08053-01510	CLIP	1	SN:23535--
30	08034-00519	BAND	1	SN:23535--
31	6144-11-5630	SPACER	1	SN:23535--
32	6301-11-4630	PLATE	1	SN:23535--
33	01010-81050	BOLT	1	SN:23535--
34	01640-21016	WASHER	1	SN:23535--

Printed By : Dwi Iswanto (airafather6107170)

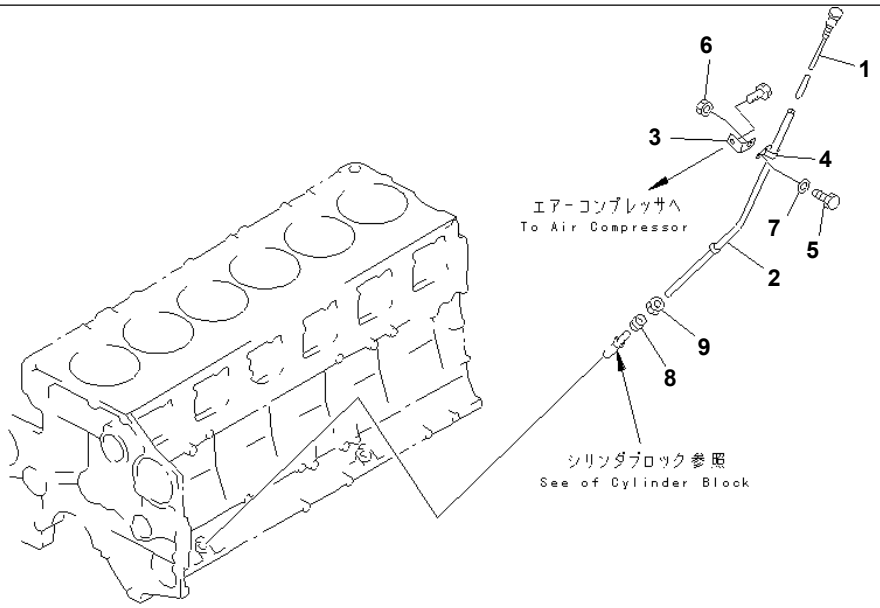

PE38815

Ref. A2110-B4A1 **Page 030190**

S6D140E-2B S/N 23227-UP
OIL LEVEL GAUGE (WITHOUT OIL PAN HEATER)(#23535-)

Item	Part No.	Description	Qty	Options
1	6210-21-5330	GAUGE,OIL	1	SN:23535--
2	6210-21-5420	GUIDE,GAUGE	1	SN:23535--
3	6211-21-5490	BRACKET	1	SN:23535--
4	6144-21-5650	CLIP	1	SN:23535--
5	01010-80816	BOLT	1	SN:23535--
6	01580-10806	NUT	1	SN:23535--
7	01640-20816	WASHER	1	SN:23535--
8	6150-21-5920	COLLAR	1	SN:23535--
9	6150-21-5930	NUT	1	SN:23535--

Printed By : Dwi Iswanto (airafather6107170)

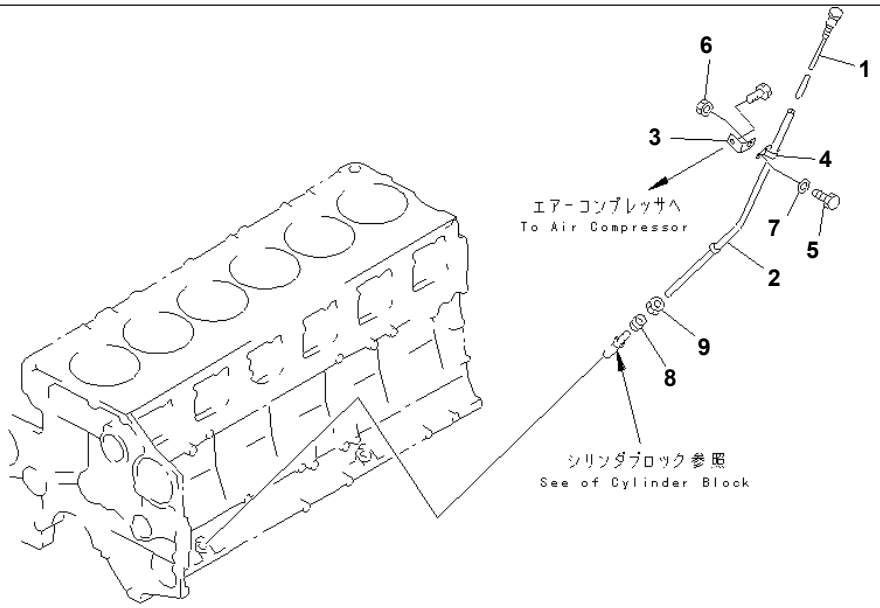

PE38815

Ref. A2110-B4A2 **Page 030200**

S6D140E-2B S/N 23227-UP

OIL LEVEL GAUGE (WITH OIL PAN HEATER)(#23535-)

Item	Part No.	Description	Qty	Options
1	6210-21-5330	GAUGE,OIL	1	SN:23535--
2	6210-21-5420	GUIDE,GAUGE	1	SN:23535--
3	6211-21-5490	BRACKET	1	SN:23535--
4	6144-21-5650	CLIP	1	SN:23535--
5	01010-80816	BOLT	1	SN:23535--
6	01580-10806	NUT	1	SN:23535--
7	01640-20816	WASHER	1	SN:23535--
8	6150-21-5920	COLLAR	1	SN:23535--
9	6150-21-5930	NUT	1	SN:23535--

Ref. A2110-B4A2 **Page 030200**

Printed By : Dwi Iswanto (airafather6107170)

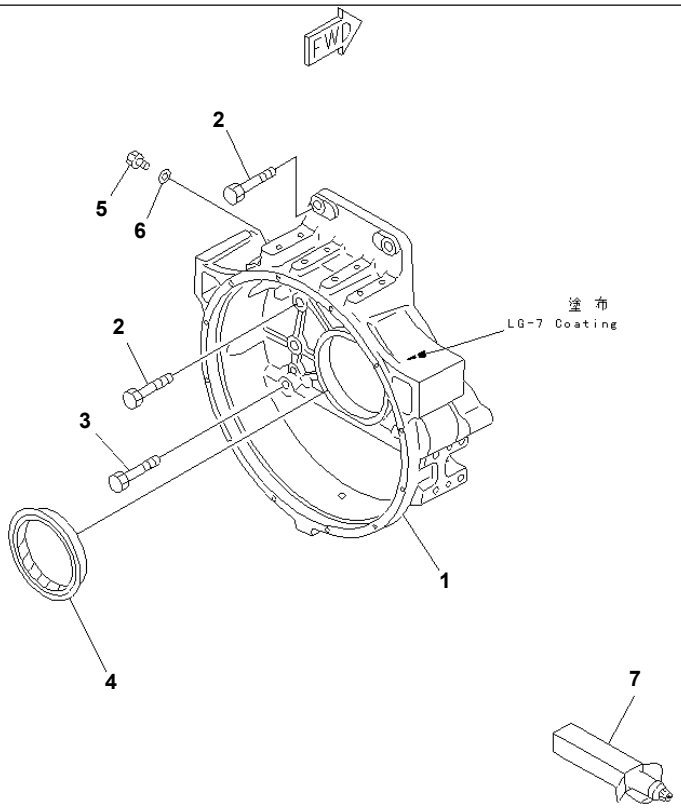

PE38816

Ref. A2210-A4A1 **Page 030210**

S6D140E-2B S/N 23227-UP
FLYWHEEL HOUSING(#23535-)

Item	Part No.	Description	Qty	Options
1	6210-21-4750	HOUSING,FLYWHEEL	1	SN:23535--
2	01010-31645	BOLT	8	SN:23535--
3	01010-31660	BOLT	2	SN:23535--
4	6151-21-4160	SEAL¤ REAR	1	SN:23535--
	6151-29-4160	SEAL¤ REAR,(SERVICE PARTS)	1	SN:23535--
5	6114-11-8910	PLUG	1	SN:23535--
6	07005-02216	GASKET (K2)	1	SN:23535--
7	(09920-00150)	LIQUID GASKET,LG-7¤ 150G	AR	SN:23535--

Printed By : Dwi Iswanto (airafather6107170)

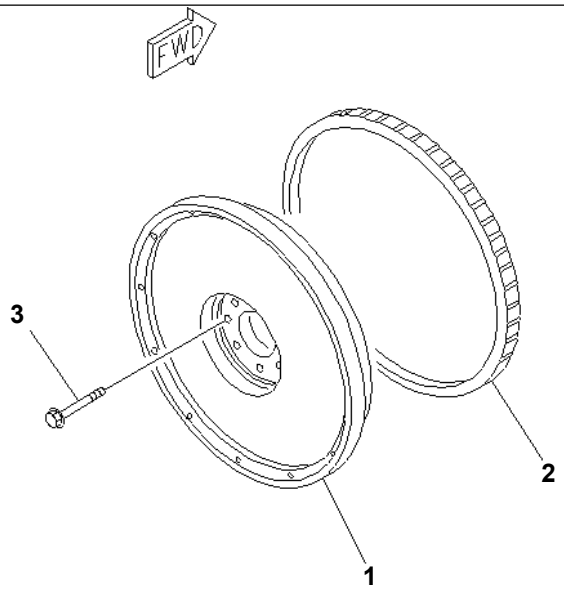

PE38817

Ref. A2230-A4A3 **Page 030220**

S6D140E-2B S/N 23227-UP
FLYWHEEL(#23535-)

Item	Part No.	Description	Qty	Options
	6210-31-1700	FLYWHEEL ASS'Y	1	SN:23535--
1	☆	· FLYWHEEL	1	SN:23535--
2	6150-31-1351	· GEAR,RING	1	SN:23535--
3	6210-31-1350	BOLT	6	SN:23535--

Printed By : Dwi Iswanto (airafather6107170)

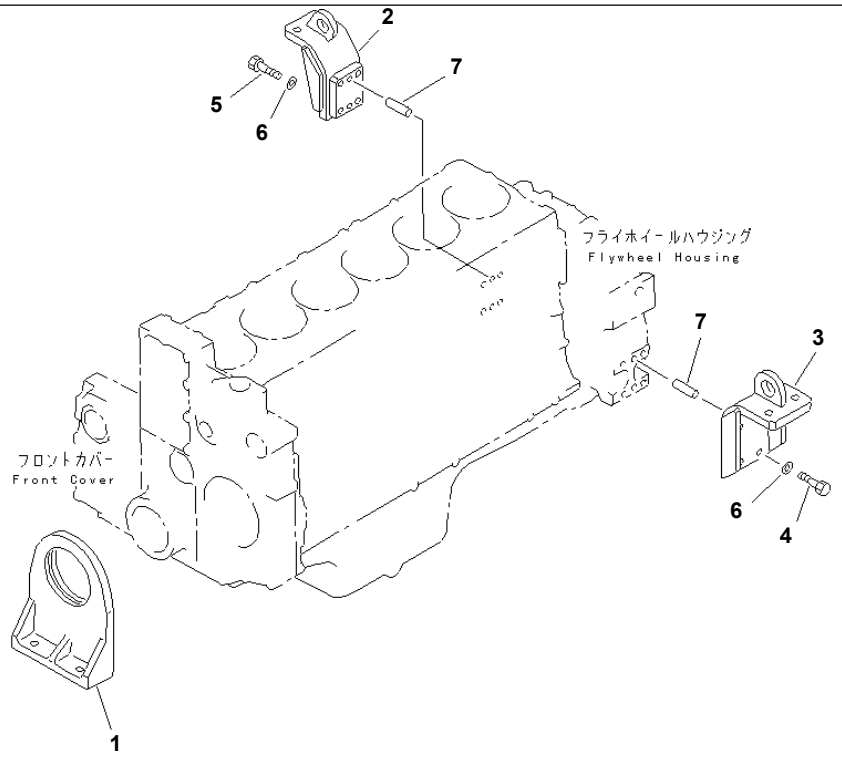

PE38818

S6D140E-2B S/N 23227-UP

ENGINE MOUNTING(#23535-)

Item	Part No.	Description	Qty	Options
1	6210-21-3760	SUPPORT,FRONT	1	SN:23535--
2	235-01-31120	BRACKET,REAR¤ R.H.	1	SN:23535--
3	235-01-31130	BRACKET,REAR¤ L.H.	1	SN:23535--
4	01010-51650	BOLT	4	SN:23535--
5	01010-51680	BOLT	4	SN:23535--
6	01643-31645	WASHER	8	SN:23535--
7	04020-01434	PIN,DOWEL	4	SN:23535--

Ref. A2250-A4A1 Page 030230

Printed By : Dwi Iswanto (airafather6107170)

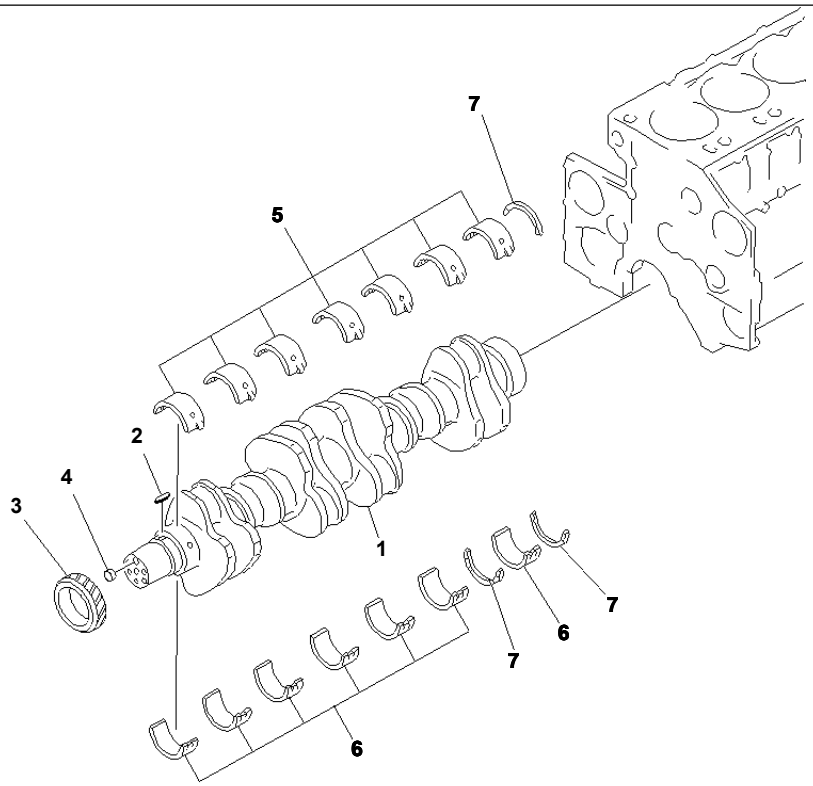

PE38053

S6D140E-2B S/N 23227-UP

CRANKSHAFT

Item	Part No.	Description	Qty	Options
	6211-31-1010	CRANKSHAFT ASS'Y	1	SN:23227--
1	☆	· CRANKSHAFT	1	SN:23227--
2	6150-31-1130	· KEY	1	SN:23227--
3	6210-31-1120	· GEAR	1	SN:23227--
4	6211-31-1420	· PIN	1	SN:23227--
STANDARD				
	6210-21-8000	METAL ASS'Y	1	SN:23227--
	6210-21-8010	· MAIN METAL ASS'Y	7	SN:23227--
5	☆	· · METAL,UPPER	1	SN:23227--
6	☆	· · METAL,LOWER	1	SN:23227--
7	6210-21-8050	· THRUST METAL ASS'Y	1	SN:23227--
	☆	· · METAL	3	SN:23227--
UNDERSIZE 0.25MM				
	6210-29-8010	MAIN METAL ASS'Y	7	SN:23227--
5	☆	· METAL,UPPER	1	SN:23227--
6	☆	· METAL,LOWER	1	SN:23227--
UNDERSIZE 0.50MM				
	6210-28-8010	MAIN METAL ASS'Y	7	SN:23227--
5	☆	· METAL,UPPER	1	SN:23227--
6	☆	· METAL,LOWER	1	SN:23227--
UNDERSIZE 0.75MM				
	6210-27-8010	MAIN METAL ASS'Y	7	SN:23227--
5	☆	· METAL,UPPER	1	SN:23227--
6	☆	· METAL,LOWER	1	SN:23227--
UNDERSIZE 1.00MM				
	6210-26-8010	MAIN METAL ASS'Y	7	SN:23227--
5	☆	· METAL,UPPER	1	SN:23227--

Printed By : Dwi Iswanto (airafather6107170)

CRANKSHAFT

Item	Part No.	Description	Qty	Options
6	☆	· METAL,LOWER	1	SN:23227--
OVERSIZE 0.25MM				
7	6210-29-8050	THRUST METAL ASS'Y	1	SN:23227--
	☆	· METAL	3	SN:23227--
OVERSIZE 0.50MM				
7	6210-28-8050	THRUST METAL ASS'Y	1	SN:23227--
	☆	· METAL	3	SN:23227--
OVERSIZE 0.75MM				
7	6210-27-8050	THRUST METAL ASS'Y	1	SN:23227--
	☆	· METAL	3	SN:23227--
OVERSIZE 1.00MM				
7	6210-26-8050	THRUST METAL ASS'Y	1	SN:23227--
	☆	· METAL	3	SN:23227--

Printed By : Dwi Iswanto (airafather6107170)

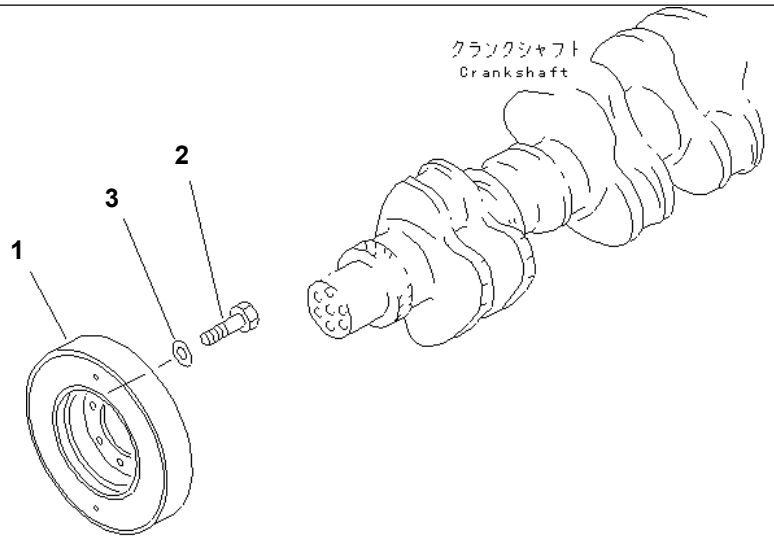

PE38113

S6D140E-2B S/N 23227-UP

DAMPER

Item	Part No.	Description	Qty	Options
1	6211-32-8300	DAMPER ASS'Y	1	SN:24186--
	◆6211-31-8300	DAMPER ASS'Y	1	SN:23227--24185
2	01010-81230	BOLT	6	SN:23227--
3	01643-31232	WASHER	6	SN:23227--

Ref. A2330-A4A5 Page 030250

Printed By : Dwi Iswanto (airafather6107170)

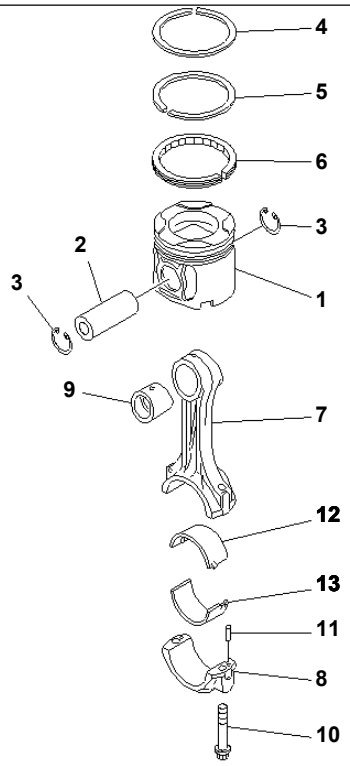

PE34893

Ref. A2350-A4B2 **Page 030260**

S6D140E-2B S/N 23227-UP
PISTON

Item	Part No.	Description	Qty	Options
1	6211-32-2130	PISTON	6	SN:25263--
	□6211-32-2110	PISTON	6	SN:23227--25262
2	6211-31-2410	PIN,PISTON	6	SN:23227--
3	04065-05220	RING,SNAP	12	SN:23227--
	6211-31-2033	PISTON RING ASS'Y	6	SN:23227--
4	☆	· RING,TOP	1	SN:23227--
5	☆	· RING,SECOND	1	SN:23227--
6	☆	· RING,OIL	1	SN:23227--
	6211-31-3100	CONNECTING ROD ASS'Y	6	SN:23227--
7	☆	· ROD,CONNECTING	1	SN:23227--
8	☆	· CAP	1	SN:23227--
9	6211-31-3130	· BUSHING	1	SN:23227--
10	6210-31-3310	· BOLT	2	SN:23227--
11	02400-10413	· PIN,DOWEL	2	SN:23227--
STANDARD				
	6210-32-3040	METAL ASS'Y	6	SN:23227--
12	☆	· METAL,UPPER	1	SN:23227--
13	☆	· METAL,LOWER	1	SN:23227--
UNDERSIZE 0.25MM				
	6210-39-3040	METAL ASS'Y	6	SN:23227--
12	☆	· METAL,UPPER	1	SN:23227--
13	☆	· METAL,LOWER	1	SN:23227--
UNDERSIZE 0.50MM				
	6210-38-3040	METAL ASS'Y	6	SN:23227--
12	☆	· METAL,UPPER	1	SN:23227--
13	☆	· METAL,LOWER	1	SN:23227--
UNDERSIZE 0.75MM				

Printed By : Dwi Iswanto (airafather6107170)

PISTON

Item	Part No.	Description	Qty	Options
	6210-37-3040	METAL ASS'Y	6	SN:23227--
12	☆	· METAL,UPPER	1	SN:23227--
13	☆	· METAL,LOWER	1	SN:23227--
UNDERSIZE 1.00MM				
	6210-36-3040	METAL ASS'Y	6	SN:23227--
12	☆	· METAL,UPPER	1	SN:23227--
13	☆	· METAL,LOWER	1	SN:23227--

Printed By : Dwi Iswanto (airafather6107170)

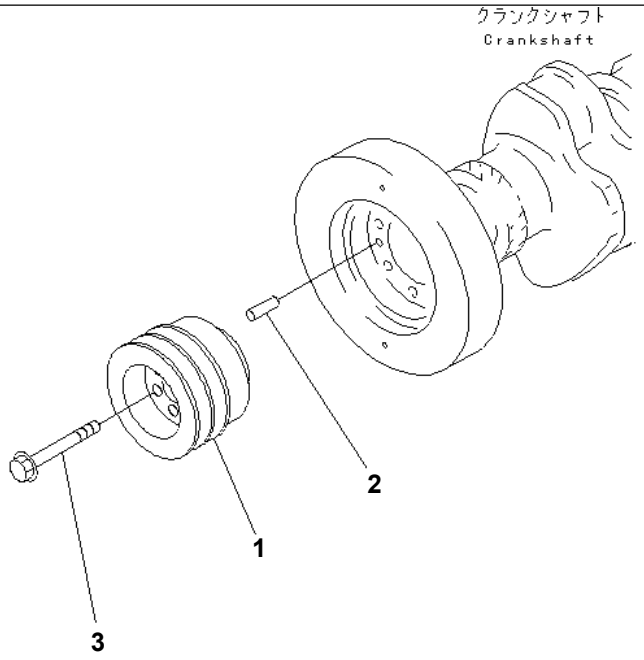

PGD1346

S6D140E-2B S/N 23227-UP

CRANK PULLEY (NON HARDENING)

Item	Part No.	Description	Qty	Options
1	6211-32-1440	PULLEY¤NON HARDENING	1	SN:23227--
2	04020-01024	PIN,DOWEL	1	SN:23227--
3	6210-81-8720	BOLT	6	SN:23227--

Printed By : Dwi Iswanto (airafather6107170)

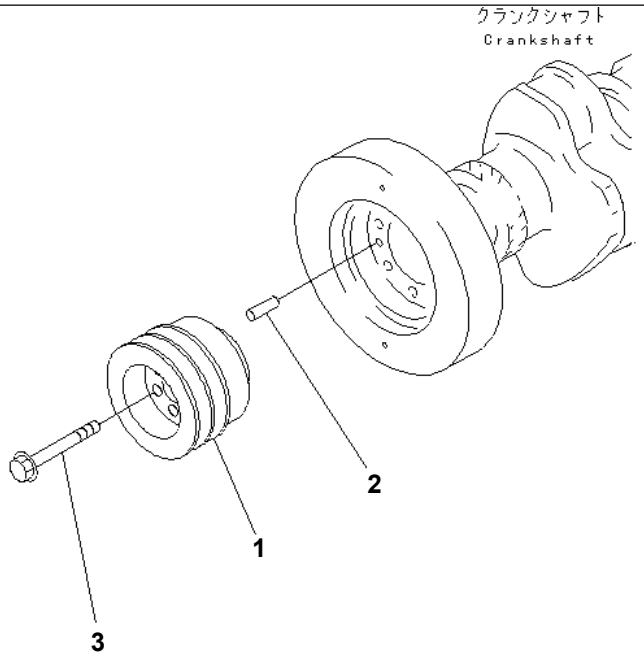

PGD1346

S6D140E-2B S/N 23227-UP

CRANK PULLEY (HARDENING)

Item	Part No.	Description	Qty	Options
1	6211-32-1410	PULLEY¤ HARDENING	1	SN:23227--
2	04020-01024	PIN,DOWEL	1	SN:23227--
3	6210-81-8720	BOLT	6	SN:23227--

Printed By : Dwi Iswanto (airafather6107170)

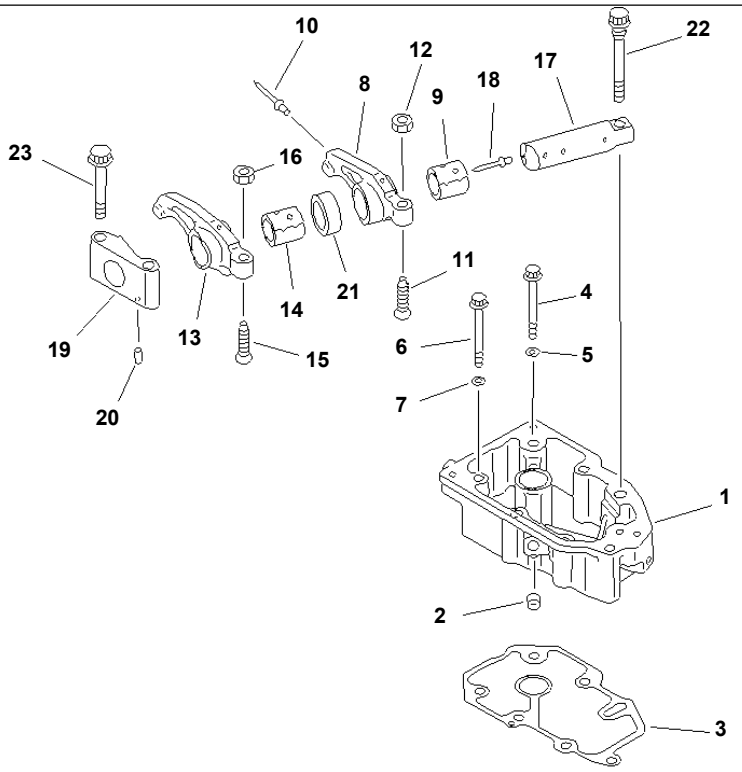

PE39836

S6D140E-2B S/N 23227-UP

ROCKER ARM(#23227-25091)

Item	Part No.	Description	Qty	Options
	6210-11-7101	HOUSING ASS'Y	6	SN:23227--@
1	☆	· HOUSING,ROCKER ARM	1	SN:23227--@
2	07046-41008	· PLUG,EXPANSION	3	SN:23227--@
3	6210-11-7830	GASKET (K1)	6	SN:23227--@
4	01437-01280	BOLT	6	SN:23227--@
5	01643-51232	WASHER	6	SN:23227--@
6	01437-11080	BOLT	16	SN:23227--@
7	01643-51032	WASHER	16	SN:23227--@
	6210-41-5041	ROCKER ARM ASS'Y	6	SN:23227--@
	6210-41-5401	· ROCKER ARM ASS'Y	1	SN:23227--@
8	☆	· · ARM,INTAKE	1	SN:23227--@
9	6210-41-5421	· · BUSHING	1	SN:23227--@
10	6162-43-5340	· · RIVET	1	SN:23227--@
11	6150-41-5540	· SCREW	1	SN:23227--@
12	01582-01008	· NUT	1	SN:23227--@
	6210-41-5051	ROCKER ARM ASS'Y	6	SN:23227--@
	6210-41-5501	· ROCKER ARM ASS'Y	1	SN:23227--@
13	☆	· · ARM,EXHAUST	1	SN:23227--@
14	6210-41-5520	· · BUSHING	1	SN:23227--@
15	6150-41-5540	· SCREW	1	SN:23227--@
16	01582-01008	· NUT	1	SN:23227--@
	6210-41-5303	ROCKER ARM SHAFT A.	6	SN:23227--@
17	☆	· SHAFT	1	SN:23227--@
18	6162-43-5340	· RIVET	1	SN:23227--@
19	6210-41-5530	BRACKET	6	SN:23227--@
20	04020-00514	PIN	6	SN:23227--@
21	6210-41-5440	COLLAR	6	SN:23227--@

Ref. A2410-A4A1A Page 030290

Printed By : Dwi Iswanto (airafather6107170)

S6D140E-2B S/N 23227-UP

ROCKER ARM(#23227-25091)

Item	Part No.	Description	Qty	Options
22	6210-81-8310	BOLT	6	SN:23227--@
23	01438-01220	BOLT	12	SN:23227--@

Printed By : Dwi Iswanto (airafather6107170)

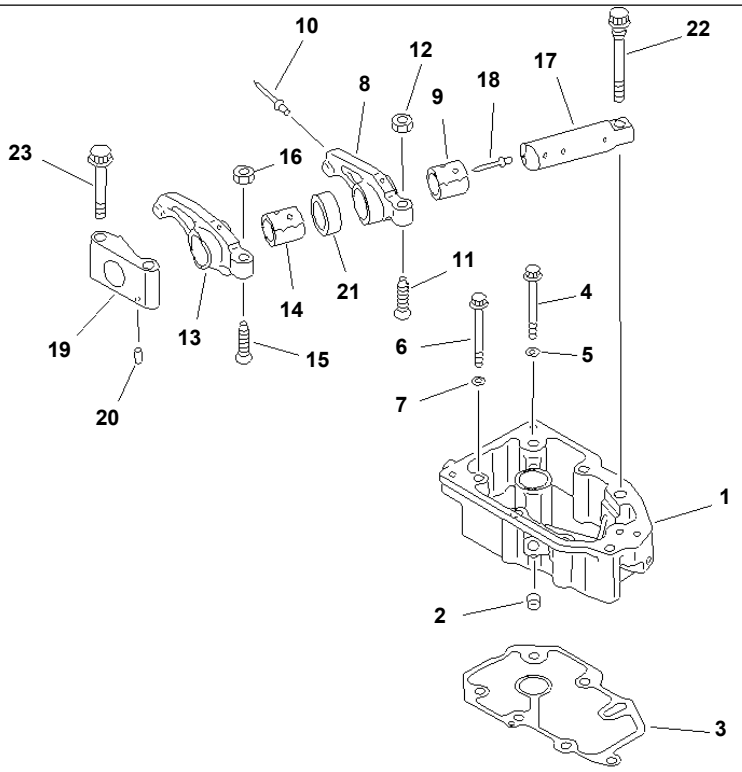

PE39836

S6D140E-2B S/N 23227-UP

ROCKER ARM(#25092-26118)

Item	Part No.	Description	Qty	Options
	6210-11-7101	HOUSING ASS'Y	6	SN:23227--26118
1	☆	· HOUSING,ROCKER ARM	1	SN:23227--26118
2	07046-41008	· PLUG,EXPANSION	3	SN:23227--26118
3	6210-11-7830	GASKET (K1)	6	SN:23227--26118
4	01437-01280	BOLT	6	SN:23227--26118
5	01643-51232	WASHER	6	SN:23227--26118
6	01437-11080	BOLT	16	SN:23227--26118
7	01643-51032	WASHER	16	SN:23227--26118
	6210-41-5041	ROCKER ARM ASS'Y	6	SN:23227--26118
	6210-41-5401	· ROCKER ARM ASS'Y	1	SN:23227--26118
8	☆	· · ARM,INTAKE	1	SN:23227--26118
9	6210-41-5421	· · BUSHING	1	SN:23227--26118
10	6162-43-5340	· · RIVET	1	SN:23227--26118
11	6150-41-5540	· SCREW	1	SN:23227--26118
12	01582-01008	· NUT	1	SN:23227--26118
	6210-41-5051	ROCKER ARM ASS'Y	6	SN:23227--26118
	6210-41-5501	· ROCKER ARM ASS'Y	1	SN:23227--26118
13	☆	· · ARM,EXHAUST	1	SN:23227--26118
14	6210-41-5520	· · BUSHING	1	SN:23227--26118
15	6150-41-5540	· SCREW	1	SN:23227--26118
16	01582-01008	· NUT	1	SN:23227--26118
	6210-41-5303	ROCKER ARM SHAFT A.	6	SN:23227--26118
17	☆	· SHAFT	1	SN:23227--26118
18	6162-43-5340	· RIVET	1	SN:23227--26118
19	6210-41-5530	BRACKET	6	SN:23227--26118
20	04020-00514	PIN	6	SN:23227--26118
21	6210-41-5440	COLLAR	6	SN:23227--26118

Ref. A2410-A4A1B Page 030300

Printed By : Dwi Iswanto (airafather6107170)

S6D140E-2B S/N 23227-UP

ROCKER ARM(#25092-26118)

Item	Part No.	Description	Qty	Options
22	6210-81-8310	BOLT	6	SN:23227--26118
23	01438-01220	BOLT	12	SN:23227--26118

Printed By : Dwi Iswanto (airafather6107170)

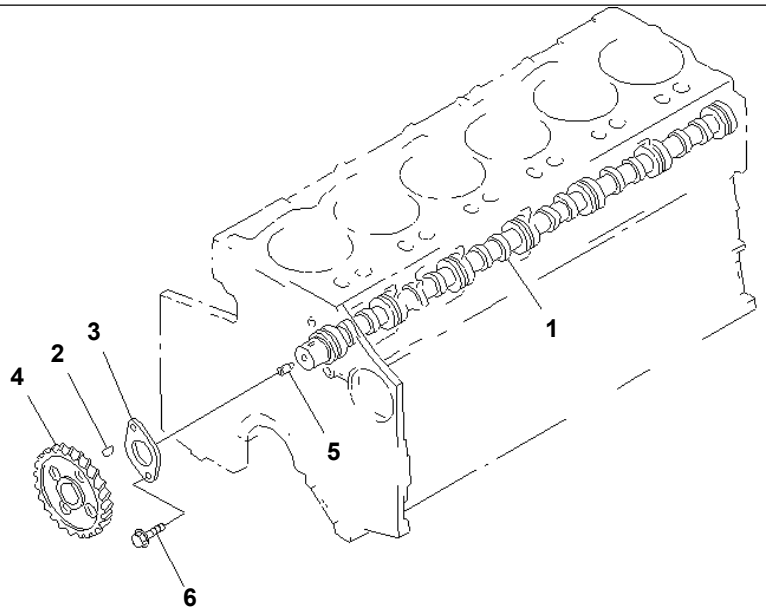

PJD5092

S6D140E-2B S/N 23227-UP

CAMSHAFT(#26119-)

Item	Part No.	Description	Qty	Options
	6210-41-1012	CAMSHAFT ASS'Y	1	SN:26119--
1	☆	· CAMSHAFT	1	SN:26119--
2	04010-00725	· KEY	1	SN:26119--
3	6210-41-1131	· PLATE,THRUST	1	SN:26119--
4	6210-41-1120	· GEAR	1	SN:26119--
5	6210-81-3510	SHAFT	1	SN:26119--
6	01437-01220	BOLT	2	SN:26119--

Ref. A2410-A4A6 Page 030305

Printed By : Dwi Iswanto (airafather6107170)

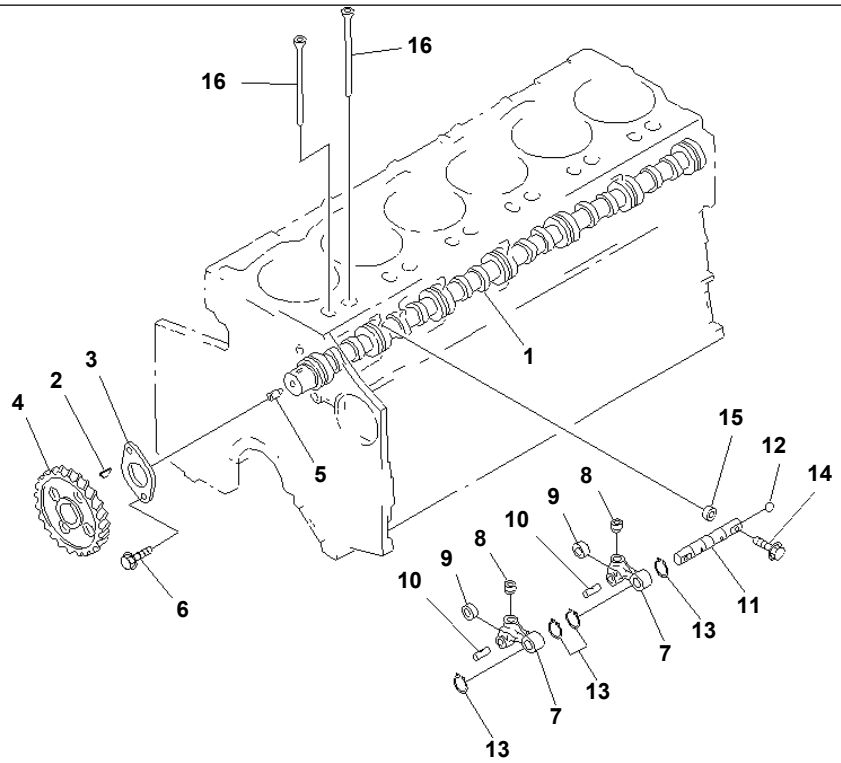

PE38058

S6D140E-2B S/N 23227-UP

CAMSHAFT AND CAMFOLLOWER(#23227-25091)

Item	Part No.	Description	Qty	Options
	6210-41-1011	CAMSHAFT ASS'Y	1	SN:23227--@
1	☆	· CAMSHAFT	1	SN:23227--@
2	04010-00725	· KEY	1	SN:23227--@
3	6210-41-1130	· PLATE,THRUST	1	SN:23227--@
4	6210-41-1120	· GEAR	1	SN:23227--@
5	6210-81-3510	SHAFT	1	SN:23227--@
6	01437-01220	BOLT	2	SN:23227--@
	6210-41-2010	CAMFOLLOWER ASS'Y	6	SN:23227--25091
	6210-41-2300	· LEVER ASS'Y	2	SN:23227--25091
7	☆	· · LEVER	1	SN:23227--25091
8	☆	· · SOCKET	1	SN:23227--25091
9	☆	· · ROLLER,CAM	1	SN:23227--25091
10	☆	· · PIN	1	SN:23227--25091
	6210-41-2400	· SHAFT ASS'Y	1	SN:23227--25091
11	☆	· · SHAFT	1	SN:23227--25091
12	6150-81-8420	· · BALL	1	SN:23227--25091
13	04064-02212	· RING,SNAP	4	SN:23227--25091
14	6210-41-2450	BOLT	12	SN:23227--@
15	6150-41-2430	PIN,DOWEL	12	SN:23227--@
16	6210-41-3120	ROD,PUSH	12	SN:23227--@

Ref. A2410-B4A1A Page 030310

Printed By : Dwi Iswanto (airafather6107170)

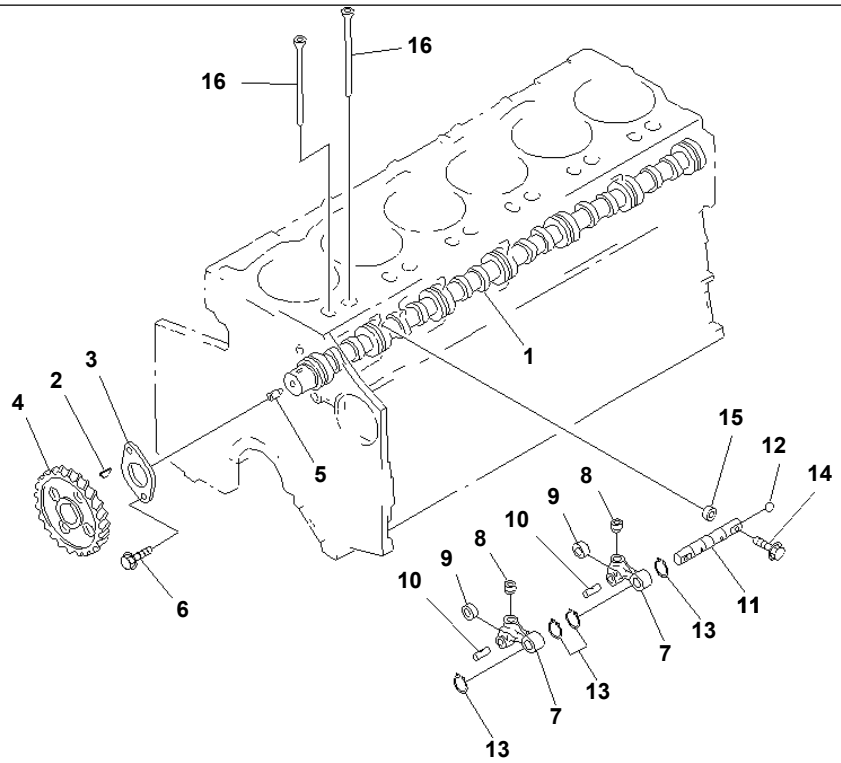

PE38058

CAMSHAFT AND CAMFOLLOWER(#25092-26118)

Item	Part No.	Description	Qty	Options
	6210-41-1011	CAMSHAFT ASS'Y	1	SN:23227--26118
1	☆	· CAMSHAFT	1	SN:23227--26118
2	04010-00725	· KEY	1	SN:23227--26118
3	6210-41-1130	· PLATE,THRUST	1	SN:23227--26118
4	6210-41-1120	· GEAR	1	SN:23227--26118
5	6210-81-3510	SHAFT	1	SN:23227--26118
6	01437-01220	BOLT	2	SN:23227--26118
	6210-41-2010	CAMFOLLOWER ASS'Y	6	SN:25439--26118
	□6210-42-2010	CAMFOLLOWER ASS'Y	6	SN:25092--25438
	6210-41-2300	· LEVER ASS'Y	2	SN:25439--26118
	6210-42-2300	· LEVER ASS'Y	2	SN:25092--25438
7	☆	· · LEVER	1	SN:25439--26118
	☆	· · LEVER	1	SN:25092--25438
8	☆	· · SOCKET	1	SN:25439--26118
	☆	· · SOCKET	1	SN:25092--25438
9	☆	· · ROLLER,CAM	1	SN:25439--26118
	☆	· · ROLLER,CAM	1	SN:25092--25438
10	☆	· · PIN	1	SN:25439--26118
	☆	· · PIN	1	SN:25092--25438
11	6210-41-2400	· SHAFT ASS'Y	1	SN:25439--26118
	6210-42-2400	· SHAFT ASS'Y	1	SN:25092--25438
11	☆	· · SHAFT	1	SN:25439--26118
	☆	· · SHAFT	1	SN:25092--25438
12	6150-81-8420	· · BALL	1	SN:25439--26118
	6210-42-2720	· · BALL	1	SN:25092--25438
13	04064-02212	· RING,SNAP	4	SN:25439--26118
	□6210-42-2730	· RING,SNAP	4	SN:25092--25438

Printed By : Dwi Iswanto (airafather6107170)

CAMSHAFT AND CAMFOLLOWER(#25092-26118)

Item	Part No.	Description	Qty	Options
14	6210-41-2450	BOLT	12	SN:23227--26118
15	6150-41-2430	PIN,DOWEL	12	SN:23227--26118
16	6210-41-3120	ROD,PUSH	12	SN:23227--26118

Printed By : Dwi Iswanto (airafather6107170)

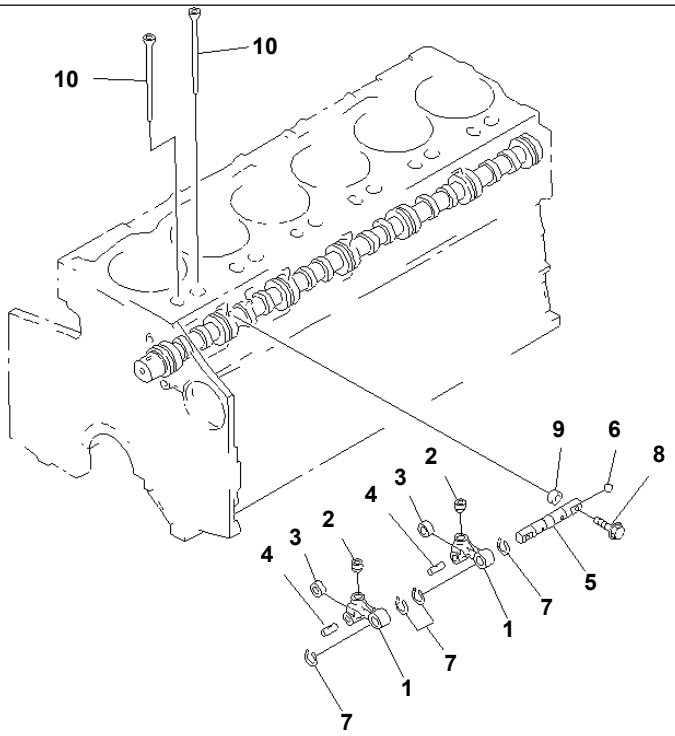

PJD5093

S6D140E-2B S/N 23227-UP

CAMFOLLOWER(#26119-)

Item	Part No.	Description	Qty	Options
	6210-41-2010	CAMFOLLOWER ASS'Y	6	SN:26119--
	6210-41-2300	· LEVER ASS'Y	2	SN:26119--
1	☆	· · LEVER	1	SN:26119--
2	☆	· · SOCKET	1	SN:26119--
3	☆	· · ROLLER,CAM	1	SN:26119--
4	☆	· · PIN	1	SN:26119--
	6210-41-2400	· SHAFT ASS'Y	1	SN:26119--
5	☆	· · SHAFT	1	SN:26119--
6	6150-81-8420	· · BALL	1	SN:26119--
7	04064-02212	· RING,SNAP	4	SN:26119--
8	6210-41-2450	BOLT	12	SN:26119--
9	6150-41-2430	PIN	12	SN:26119--
10	6210-41-3120	ROD,PUSH	12	SN:26119--

Ref. A2411-A4A4 Page 030323

Printed By : Dwi Iswanto (airafather6107170)

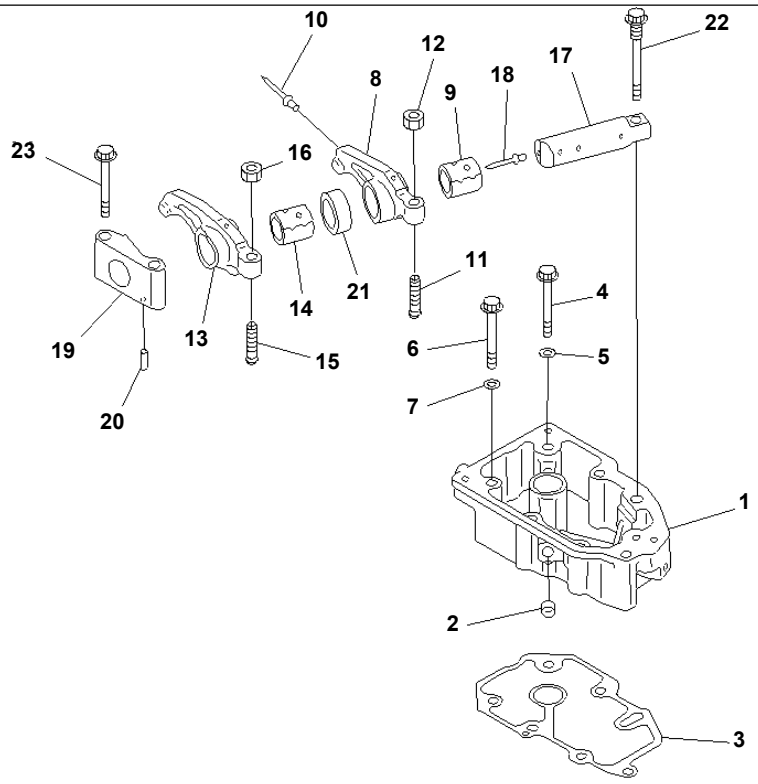

PDD2727

S6D140E-2B S/N 23227-UP

ROCKER ARM AND HOUSING(#26119-)

Item	Part No.	Description	Qty	Options
	6210-11-7101	HOUSING ASS'Y	6	SN:26119--
1	☆	· HOUSING,ROCKER ARM	1	SN:26119--
2	07046-41008	· PLUG,EXPANSION	3	SN:26119--
3	6210-11-7830	GASKET (K1)	6	SN:26119--
4	01437-01280	BOLT	6	SN:26119--
5	01643-51232	WASHER	6	SN:26119--
6	01437-11080	BOLT	16	SN:26119--
7	01643-51032	WASHER	16	SN:26119--
	6210-41-5041	ROCKER ARM ASS'Y	6	SN:26119--
	6210-41-5401	· ROCKER ARM ASS'Y	1	SN:26119--
8	☆	· · ARM,INTAKE	1	SN:26119--
9	6210-41-5421	· · BUSHING	1	SN:26119--
10	6162-43-5340	· · RIVET	1	SN:26119--
11	6150-41-5540	· SCREW	1	SN:26119--
12	01582-01008	· NUT	1	SN:26119--
	6210-41-5051	ROCKER ARM ASS'Y	6	SN:26119--
	6210-41-5501	· ROCKER ARM ASS'Y	1	SN:26119--
13	☆	· · ARM,EXHAUST	1	SN:26119--
14	6210-41-5520	· · BUSHING	1	SN:26119--
15	6150-41-5540	· SCREW	1	SN:26119--
16	01582-01008	· NUT	1	SN:26119--
	6210-41-5303	ROCKER ARM SHAFT A.	6	SN:26119--
17	☆	· SHAFT	1	SN:26119--
18	6162-43-5340	· RIVET	1	SN:26119--
19	6210-41-5530	BRACKET	6	SN:26119--
20	04020-00514	PIN	6	SN:26119--
21	6210-41-5440	COLLAR	6	SN:26119--

Printed By : Dwi Iswanto (airafather6107170)

ROCKER ARM AND HOUSING(#26119-)

Item	Part No.	Description	Qty	Options
22	6210-81-8310	BOLT	6	SN:26119--
23	01438-01220	BOLT	12	SN:26119--

Printed By : Dwi Iswanto (airafather6107170)

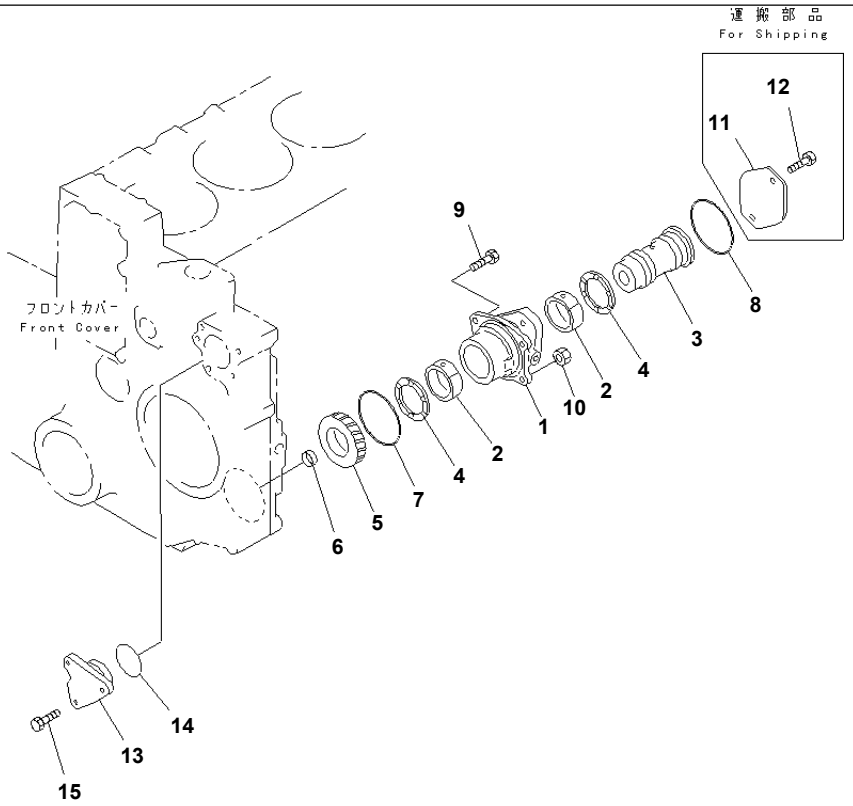

PGD1491

S6D140E-2B S/N 23227-UP
FRONT POWER TAKE OFF(#23535-)

Item	Part No.	Description	Qty	Options
	6210-81-4900	HOUSING ASS'Y	1	SN:23535--
1	6210-81-4910	· HOUSING	1	SN:23535--
2	6210-81-4840	· BUSHING	2	SN:23535--
3	6210-81-4920	· SHAFT	1	SN:23535--
4	6210-81-4850	· BEARING	2	SN:23535--
5	6210-81-4830	· GEAR	1	SN:23535--
6	07046-42516	· PLUG	1	SN:23535--
7	07000-02100	O-RING	1	SN:23535--
8	07000-02105	O-RING	1	SN:23535--
9	01010-81235	BOLT	1	SN:23535--
10	01580-11210	NUT	3	SN:23535--
11	6130-22-4490	COVER,(FOR SHIPPING)	1	SN:23535--
12	01010-81020	BOLT,(FOR SHIPPING)	2	SN:23535--
13	6210-21-1880	COVER	1	SN:23535--
14	07000-02060	O-RING (K2)	1	SN:23535--
15	01010-81020	BOLT	3	SN:23535--

Printed By : Dwi Iswanto (airafather6107170)

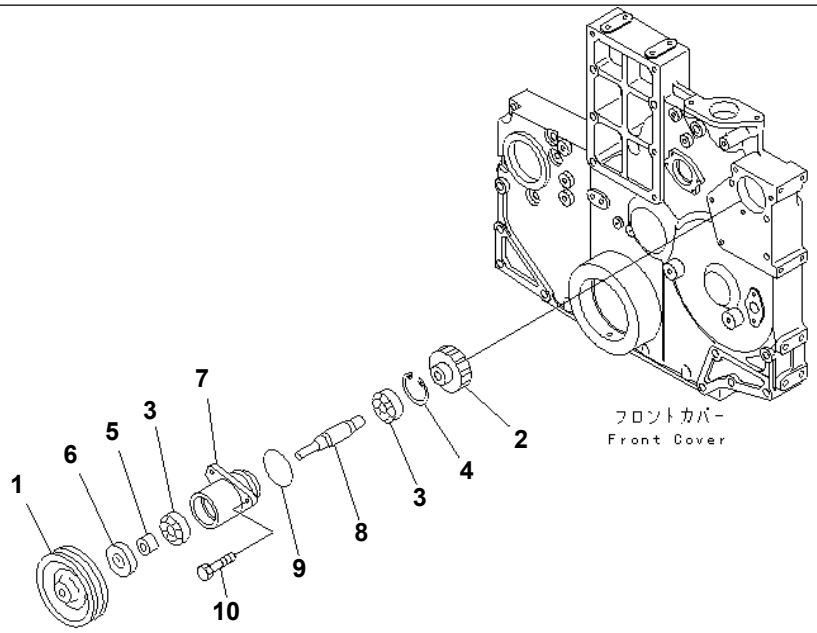

PED0657

S6D140E-2B S/N 23227-UP

ACCESSORY PULLEY (WITH AIR CONDITIONER)(#23535-)

Item	Part No.	Description	Qty	Options
	6210-21-3403	POWER TAKE OFF ASS'Y	1	SN:23535--
1	6210-21-3460	· PULLEY,NON HARDENING	1	SN:23535--
2	6210-21-3440	· GEAR	1	SN:23535--
3	06030-06204	· BEARING,BALL	2	SN:23535--
4	04065-04718	· RING,SNAP	1	SN:23535--
5	6210-21-3451	· SLEEVE	1	SN:23535--
6	07012-50028	· SEAL,OIL	1	SN:23535--
7	6210-21-3413	· HOUSING	1	SN:23535--
8	6210-21-3421	· SHAFT	1	SN:23535--
9	07000-02060	O-RING (K2)	1	SN:23535--
10	01010-81030	BOLT	3	SN:23535--

Printed By : Dwi Iswanto (airafather6107170)

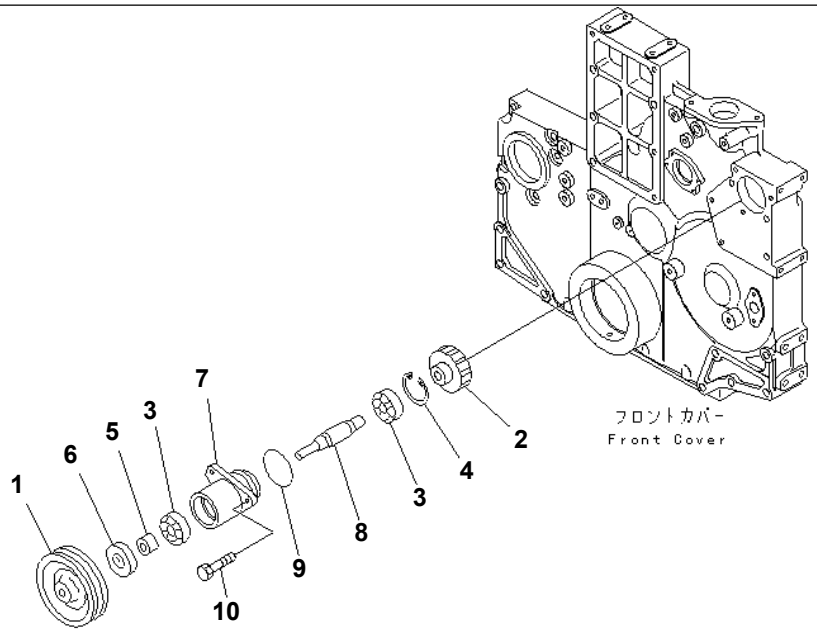

PED0657

S6D140E-2B S/N 23227-UP

ACCESSORY PULLEY (HARDENING PULLEY) (WITH AIR CONDITIONER)(#23535-)

Item	Part No.	Description	Qty	Options
	6211-21-3403	POWER TAKE OFF ASS'Y	1	SN:23535--
1	6211-21-3430	· PULLEY¤ HARDENING	1	SN:23535--
2	6210-21-3440	· GEAR	1	SN:23535--
3	06030-06204	· BEARING,BALL	2	SN:23535--
4	04065-04718	· RING,SNAP	1	SN:23535--
5	6210-21-3451	· SLEEVE	1	SN:23535--
6	07012-50028	· SEAL,OIL	1	SN:23535--
7	6210-21-3413	· HOUSING	1	SN:23535--
8	6210-21-3421	· SHAFT	1	SN:23535--
9	07000-02060	O-RING (K2)	1	SN:23535--
10	01010-81030	BOLT	3	SN:23535--

Printed By : Dwi Iswanto (airafather6107170)

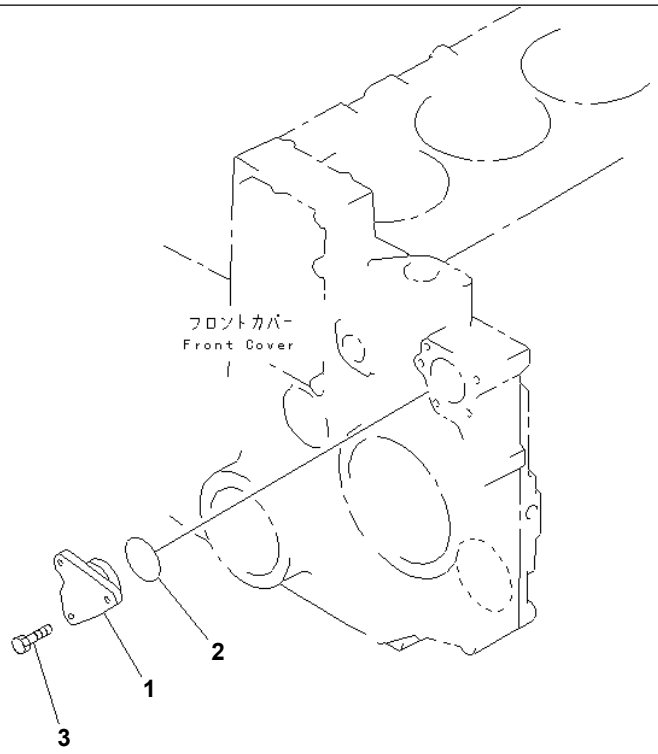

PE34500

Ref. A2670-A4A3 **Page 030360**

S6D140E-2B S/N 23227-UP
ACCESSORY PULLEY (WITHOUT PULLEY)(#23535-)

Item	Part No.	Description	Qty	Options
1	6210-21-1880	COVER	1	SN:23535--
2	07000-02060	O-RING (K2)	1	SN:23535--
3	01010-81020	BOLT	3	SN:23535--

Printed By : Dwi Iswanto (airafather6107170)

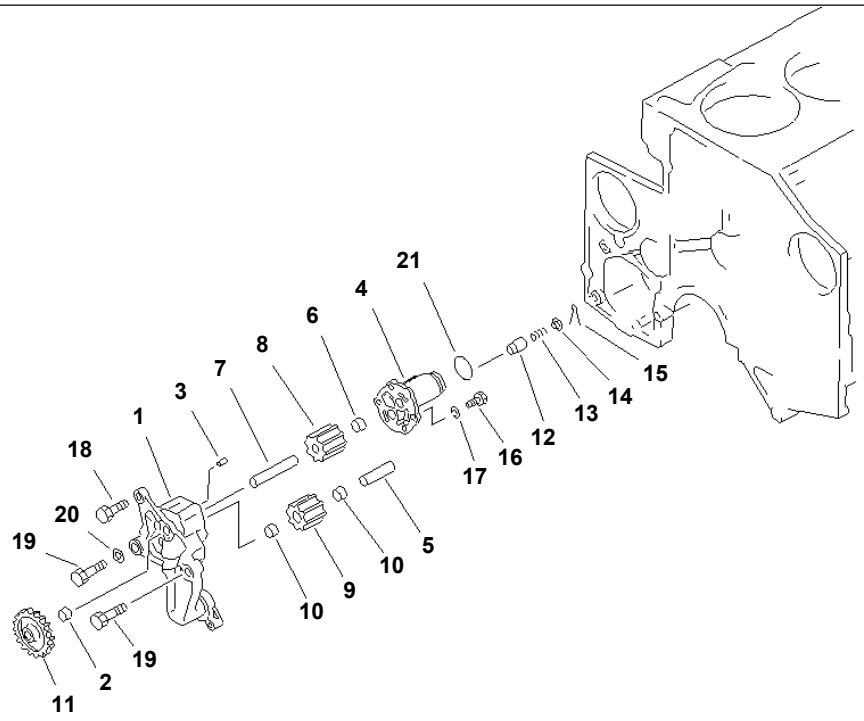

PE38060

S6D140E-2B S/N 23227-UP

OIL PUMP

Item	Part No.	Description	Qty	Options
	6211-51-1000	OIL PUMP ASS'Y	1	SN:23227--
	6211-51-1200	· BODY ASS'Y	1	SN:23227--
1	☆	· · BODY	1	SN:23227--
2	6136-52-1330	· · BUSHING	1	SN:23227--
3	6136-52-1620	· · PIN	1	SN:23227--
	6211-51-1100	· COVER ASS'Y	1	SN:23227--
4	☆	· · COVER	1	SN:23227--
5	6210-51-1320	· · SHAFT,DRIVEN	1	SN:23227--
6	6136-52-1330	· · BUSHING	1	SN:23227--
	6211-51-1300	· DRIVE SHAFT ASS'Y	1	SN:23227--
7	6210-51-1310	· · SHAFT	1	SN:23227--
8	☆	· · GEAR,DRIVE	1	SN:23227--
	6211-51-1250	· DRIVEN GEAR ASS'Y	1	SN:23227--
9	☆	· · GEAR	1	SN:23227--
10	6136-52-1330	· · BUSHING	2	SN:23227--
11	6210-51-1510	· GEAR,PUMP DRIVE	1	SN:23227--
12	6136-52-1640	· VALVE	1	SN:23227--
13	6136-52-1650	· SPRING	1	SN:23227--
14	6150-51-1650	· RETAINER	1	SN:23227--
15	04050-14035	· PIN,COTTER	1	SN:23227--
16	01010-80825	· BOLT	4	SN:23227--
17	01602-00825	· WASHER,SPRING	4	SN:23227--
18	01010-81230	BOLT	1	SN:23227--
19	01010-81240	BOLT	2	SN:23227--
20	01643-31232	WASHER	1	SN:23227--
21	07000-63038	O-RING (K2)	1	SN:23227--

Printed By : Dwi Iswanto (airafather6107170)

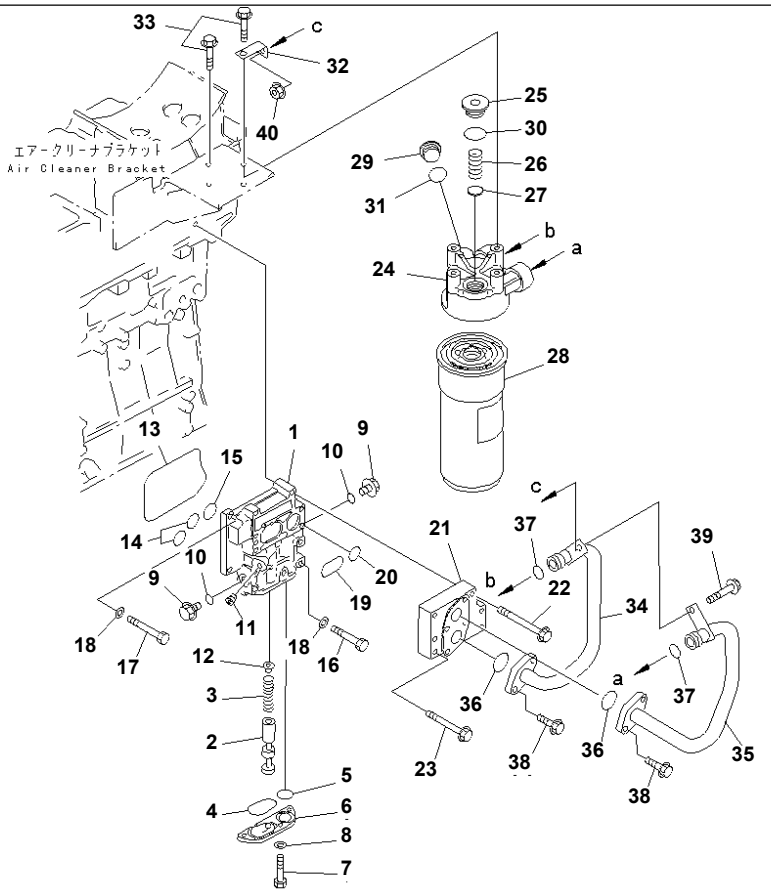

Ref. A3110-A4A1 **Page 030380**

S6D140E-2B S/N 23227-UP

LUBRICATING OIL FILTER AND ADAPTER(#23535-)

Item	Part No.	Description	Qty	Options
	6211-51-5500	ADAPTER ASS'Y,OIL	1	SN:23535--
1	☆	· BODY	1	SN:23535--
2	6210-51-5550	· VALVE	1	SN:23535--
3	6210-51-5560	· SPRING	1	SN:23535--
4	6210-51-5580	· O-RING	1	SN:23535--
5	07000-63032	· O-RING	1	SN:23535--
6	6211-51-5520	· COVER	1	SN:23535--
7	01010-80816	· BOLT	3	SN:23535--
8	01640-20816	· WASHER	3	SN:23535--
9	6210-51-5570	· PLUG	2	SN:23535--
10	07000-62018	· O-RING	2	SN:23535--
11	07043-00211	· PLUG	1	SN:23535--
12	6210-51-5590	· SEAT	1	SN:23535--
13	6210-21-6462	O-RING (K2)	1	SN:23535--
14	07000-63028	O-RING (K2)	2	SN:23535--
15	07000-63032	O-RING (K2)	1	SN:23535--
16	01010-81060	BOLT	5	SN:23535--
17	01010-81030	BOLT	2	SN:23535--
18	01640-21016	WASHER	7	SN:23535--
19	07000-63048	O-RING (K2)	1	SN:23535--
20	07000-63032	O-RING (K2)	1	SN:23535--
21	6212-51-6110	ADAPTER,OIL	1	SN:23535--
22	01435-01095	BOLT	2	SN:23535--
23	01435-01050	BOLT	4	SN:23535--
	6212-51-5301	OIL FILTER ASS'Y	1	SN:23535--
24	6212-51-5311	· HEAD	1	SN:23535--
25	600-211-1150	· PLUG	1	SN:23535--

Printed By : Dwi Iswanto (airafather6107170)

LUBRICATING OIL FILTER AND ADAPTER(#23535-)

Item	Part No.	Description	Qty	Options
26	6151-51-5320	· SPRING	1	SN:23535--
27	6150-51-4920	· DISC	1	SN:23535--
28	600-211-1231	· CARTRIDGE	1	SN:23535--
29	600-211-1130	· PLUG	1	SN:23535--
30	07000-73035	· O-RING	1	SN:23535--
31	600-211-1140	· O-RING	1	SN:23535--
32	6136-71-5730	BRACKET	1	SN:23535--
33	01435-01030	BOLT	4	SN:23535--
34	6212-51-6150	TUBE,OIL	1	SN:23535--
35	6212-51-6160	TUBE,OIL	1	SN:23535--
36	07000-63032	O-RING	2	SN:23535--
37	07000-63025	O-RING (K2)	2	SN:23535--
38	01435-01030	BOLT	4	SN:23535--
39	01435-01020	BOLT	1	SN:23535--
40	01584-01008	NUT	1	SN:23535--

Printed By : Dwi Iswanto (airafather6107170)

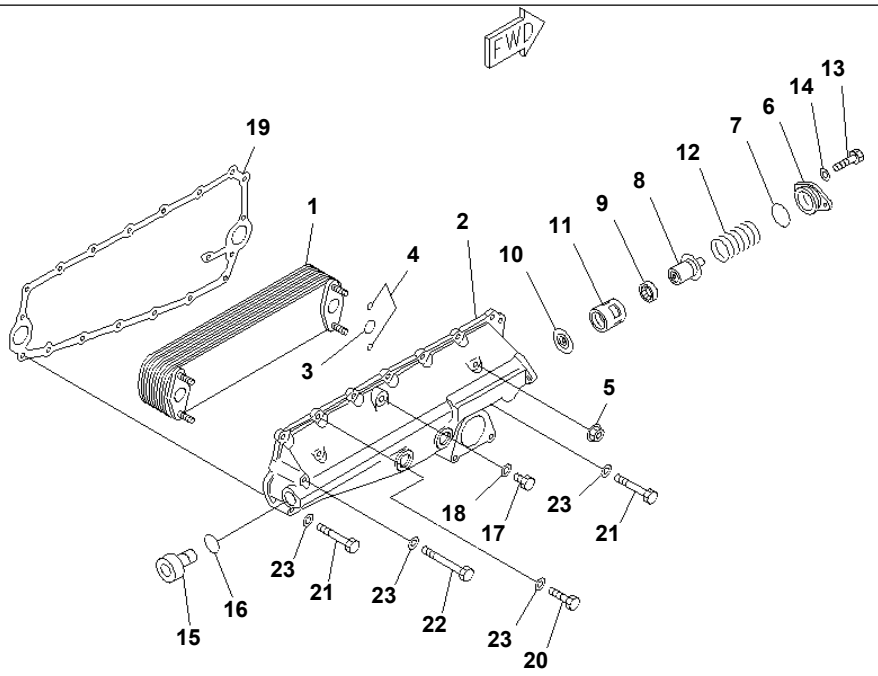

PGD1349

S6D140E-2B S/N 23227-UP

OIL COOLER

Item	Part No.	Description	Qty	Options
1	6211-61-2111	ELEMENT	1	SN:23227--
2	6211-61-2123	COVER	1	SN:23227--
3	6210-61-2520	O-RING (K2)	2	SN:23227--
4	6150-61-2520	O-RING (K2)	4	SN:23227--
5	6150-61-2580	NUT	4	SN:23227--
6	6210-61-2130	COVER	1	SN:23227--
7	07000-63042	O-RING (K2)	1	SN:23227--
8	6212-65-2610	THERMOSTAT	1	SN:23227--
9	6150-61-2540	SEAL,OIL (K2)	1	SN:23227--
10	6150-61-2151	PLATE	1	SN:23227--
11	6150-61-2141	CASE	1	SN:23227--
12	6210-61-2160	SPRING	1	SN:23227--
13	01010-80820	BOLT	2	SN:23227--
14	01640-20816	WASHER	2	SN:23227--
15	07040-13016	PLUG	1	SN:23227--
16	6210-61-2550	O-RING (K2)	1	SN:23227--
17	07040-11409	PLUG,(FOR SHIPPING)	1	SN:23227--
18	07005-01412	GASKET,(FOR SHIPPING) (K2)	1	SN:23227--
19	6210-61-2811	GASKET (K2)	1	SN:23227--
20	01010-81030	BOLT	13	SN:23227--
21	01010-81060	BOLT	2	SN:23227--
22	01010-81090	BOLT	1	SN:23227--
23	01640-21016	WASHER	16	SN:23227--

Ref. A3310-A4A1 Page 030390

Printed By : Dwi Iswanto (airafather6107170)

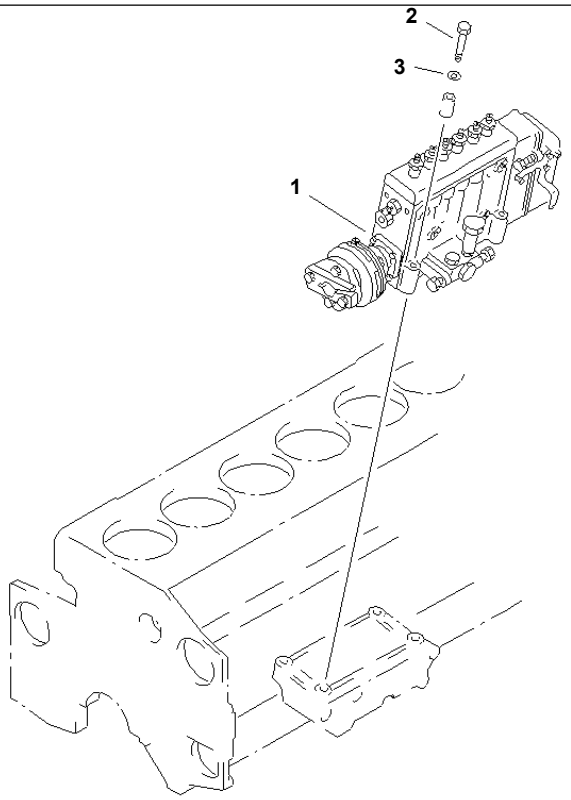

PE38826

S6D140E-2B S/N 23227-UP

FUEL INJECTION PUMP MOUNTING(#23535-)

Item	Part No.	Description	Qty	Options
1	(6211-72-1470)	INJECTION PUMP A.,(SEE FIG.A4010-B4G3)	1	SN:23535--
2	01437-01090	BOLT	4	SN:23535--
3	01640-21016	WASHER	4	SN:23535--

Printed By : Dwi Iswanto (airafather6107170)

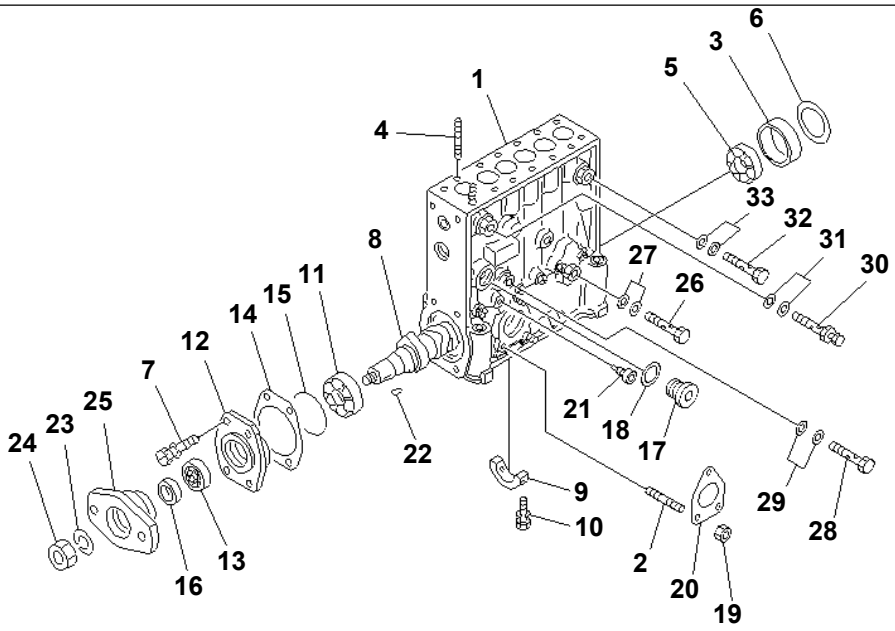

PJ3Q274

S6D140E-2B S/N 23227-UP

FUEL INJECTION PUMP (PUMP) (1/2) (INNER PARTS)(#23535-)

Item	Part No.	Description	Qty	Options
	6211-72-1470	INJECTION PUMP A.	1	SN:23535--
THIS ASSEMBLY CONSISTS OF ALL PARTS SHOWN IN FIGS.A4010-B4G3 TO A4010-G4G3.				
THE ZEXEL PART NUMBER IS THAT DK IS REMOVED FROM KOMATSU PART NUMBER LISTED BELOW.				
	DK106067-1150	· PUMP ASS'Y	1	SN:23535--
THIS ASSEMBLY CONSISTS OF ALL PARTS SHOWN IN FIGS.A4010-B4G3 AND A4010-C4G3.				
1	DK134063-2820	· · HOUSING	1	SN:23535--
2	DK029040-6020	· · · STUD	3	SN:23535--
3	DK134311-0000	· · · RING	1	SN:23535--
4	DK134138-0000	· · · STUD	12	SN:23535--
5	DK016650-2230	· · BEARING	1	SN:23535--
6	DK134303-0400	· · SHIM¤ 0.60MM	AR	SN:23535--
	DK134303-0000	· · SHIM¤ 1.20MM	AR	SN:23535--
	DK134303-0100	· · SHIM¤ 1.50MM	AR	SN:23535--
	DK134303-0200	· · SHIM¤ 1.80MM	AR	SN:23535--
	DK134303-0300	· · SHIM¤ 2.00MM	AR	SN:23535--
7	DK029010-6810	· · BOLT	4	SN:23535--
8	DK134371-7300	· · CAMSHAFT	1	SN:23535--
9	DK134306-0600	· · BEARING,CENTER	1	SN:23535--
10	DK020106-2040	· · BOLT	2	SN:23535--
11	DK016650-2230	· · BEARING	1	SN:23535--
12	DK134316-1700	· · COVER	1	SN:23535--
13	DK139629-0000	· · SEAL,OIL	1	SN:23535--
14	DK134314-0000	· · SHIM¤ 0.10MM	AR	SN:23535--
	DK134314-0100	· · SHIM¤ 0.12MM	AR	SN:23535--
	DK134314-0200	· · SHIM¤ 0.14MM	AR	SN:23535--
	DK134314-0300	· · SHIM¤ 0.16MM	AR	SN:23535--
	DK134314-0400	· · SHIM¤ 0.18MM	AR	SN:23535--

Printed By : Dwi Iswanto (airafather6107170)

FUEL INJECTION PUMP (PUMP) (1/2) (INNER PARTS)(#23535-)

Item	Part No.	Description	Qty	Options
	DK134314-0500	· · SHIM¤ 0.30MM	AR	SN:23535--
	DK134314-0600	· · SHIM¤ 0.50MM	AR	SN:23535--
15	DK029635-5010	· · O-RING	1	SN:23535--
16	DK134563-0900	· · SLEEVE	1	SN:23535--
17	DK134045-0100	· · PLUG	1	SN:23535--
18	DK026524-2940	· · GASKET	1	SN:23535--
19	DK139206-0400	· · NUT	3	SN:23535--
20	DK131041-0800	· · GASKET	1	SN:23535--
21	DK134047-0000	· · PLUG	6	SN:23535--
22	DK025805-1910	· · KEY	1	SN:23535--
23	DK023641-8410	· · WASHER,SPRING	1	SN:23535--
24	DK013121-8020	· · NUT	1	SN:23535--
25	DK156639-3100	· · COUPLING	1	SN:23535--
26	DK134430-3520	· · BOLT,EYE	1	SN:23535--
27	DK029341-4130	· · GASKET	2	SN:23535--
28	DK029731-0120	· · BOLT,EYE	1	SN:23535--
29	DK029341-0110	· · GASKET	2	SN:23535--
30	DK131424-3420	· · VALVE,OVER FLOW	1	SN:23535--
31	DK029341-4130	· · GASKET	2	SN:23535--
32	DK029731-4680	· · BOLT,EYE	1	SN:23535--
33	DK029341-4130	· · GASKET	2	SN:23535--

Printed By : Dwi Iswanto (airafather6107170)

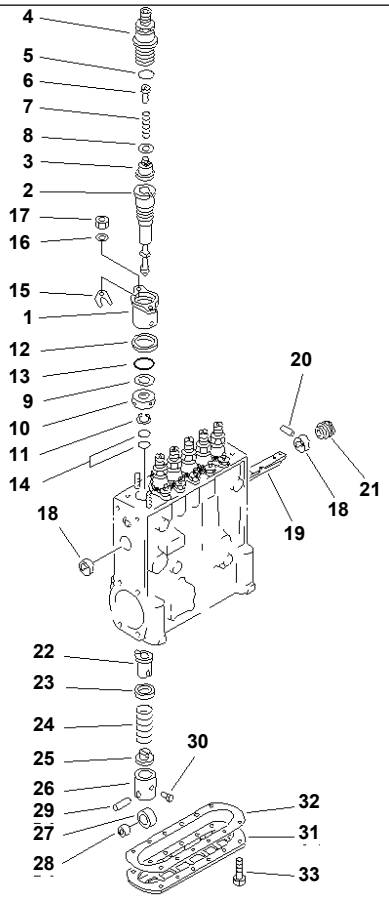

FUEL INJECTION PUMP (PUMP) (2/2) (INNER PARTS)(#23535-)

Item	Part No.	Description	Qty	Options
	(6211-72-1470)	INJECTION PUMP A.	1	SN:23535--
THIS ASSEMBLY CONSISTS OF ALL PARTS SHOWN IN FIGS.A4010-B4G3 TO A4010-G4G3.				
THE ZEXEL PART NUMBER IS THAT DK IS REMOVED FROM KOMATSU PART NUMBER LISTED BELOW.				
	(DK106067-1150)	· PUMP ASS'Y	1	SN:23535--
THIS ASSEMBLY CONSISTS OF ALL PARTS SHOWN IN FIGS.A4010-B4G3 AND A4010-C4G3.				
	DK134165-1720	· · PLUNGER BLOCK A.	6	SN:23535--
1	DK134131-1020	· · · FLANGE	1	SN:23535--
2	DK134153-6420	· · · PLUNGER ASS'Y	1	SN:23535--
3	DK134110-8920	· · · VALVE,DELIVERY	1	SN:23535--
4	DK134116-4720	· · · HOLDER	1	SN:23535--
5	DK029632-2070	· · · O-RING	1	SN:23535--
6	DK134117-0500	· · · STOPPER	AR	SN:23535--
	DK134117-2200	· · · STOPPER	AR	SN:23535--
	DK134117-2300	· · · STOPPER	AR	SN:23535--
7	DK134112-3400	· · · SPRING	1	SN:23535--
8	DK134115-0100	· · · GASKET	1	SN:23535--
9	DK029302-0140	· · · WASHER	1	SN:23535--
10	DK134135-0200	· · · DEFLECTOR	1	SN:23535--
11	DK029602-0010	· · · RING,SNAP	1	SN:23535--
12	DK134137-0100	· · · RING	1	SN:23535--
13	DK029632-9030	· · · O-RING	1	SN:23535--
14	DK029631-5020	· · · O-RING	2	SN:23535--
15	DK139400-0900	· · SHIM¤ 0.500MM	AR	SN:23535--
	DK139400-1000	· · SHIM¤ 0.525MM	AR	SN:23535--
	DK139400-1100	· · SHIM¤ 0.550MM	AR	SN:23535--
	DK139400-1200	· · SHIM¤ 0.575MM	AR	SN:23535--
	DK139400-1300	· · SHIM¤ 0.600MM	AR	SN:23535--

Printed By : Dwi Iswanto (airafather6107170)

FUEL INJECTION PUMP (PUMP) (2/2) (INNER PARTS)(#23535-)

Item	Part No.	Description	Qty	Options
	DK139400-1400	· · SHIM¤ 0.625MM	AR	SN:23535--
	DK139400-1500	· · SHIM¤ 0.650MM	AR	SN:23535--
	DK139400-1600	· · SHIM¤ 0.675MM	AR	SN:23535--
	DK139400-1700	· · SHIM¤ 0.700MM	AR	SN:23535--
	DK139400-1800	· · SHIM¤ 0.725MM	AR	SN:23535--
	DK139400-1900	· · SHIM¤ 0.750MM	AR	SN:23535--
	DK139400-2000	· · SHIM¤ 0.775MM	AR	SN:23535--
	DK139400-2100	· · SHIM¤ 0.800MM	AR	SN:23535--
	DK139400-2200	· · SHIM¤ 0.825MM	AR	SN:23535--
	DK139400-2300	· · SHIM¤ 0.850MM	AR	SN:23535--
	DK139400-2400	· · SHIM¤ 0.875MM	AR	SN:23535--
	DK139400-2500	· · SHIM¤ 0.900MM	AR	SN:23535--
	DK139400-2600	· · SHIM¤ 0.925MM	AR	SN:23535--
	DK139400-2700	· · SHIM¤ 0.950MM	AR	SN:23535--
	DK139400-2800	· · SHIM¤ 0.975MM	AR	SN:23535--
	DK139400-2900	· · SHIM¤ 1.000MM	AR	SN:23535--
	DK139400-3000	· · SHIM¤ 1.025MM	AR	SN:23535--
	DK139400-3100	· · SHIM¤ 1.050MM	AR	SN:23535--
	DK139400-3200	· · SHIM¤ 1.075MM	AR	SN:23535--
	DK139400-3300	· · SHIM¤ 1.100MM	AR	SN:23535--
	DK139400-3400	· · SHIM¤ 1.125MM	AR	SN:23535--
	DK139400-3500	· · SHIM¤ 1.150MM	AR	SN:23535--
	DK139400-3600	· · SHIM¤ 1.175MM	AR	SN:23535--
	DK139400-3700	· · SHIM¤ 1.200MM	AR	SN:23535--
	DK139400-3800	· · SHIM¤ 1.225MM	AR	SN:23535--
	DK139400-3900	· · SHIM¤ 1.250MM	AR	SN:23535--
	DK139400-4000	· · SHIM¤ 1.275MM	AR	SN:23535--
	DK139400-4100	· · SHIM¤ 1.300MM	AR	SN:23535--
	DK139400-4200	· · SHIM¤ 1.325MM	AR	SN:23535--
	DK139400-4300	· · SHIM¤ 1.350MM	AR	SN:23535--
	DK139400-4400	· · SHIM¤ 1.375MM	AR	SN:23535--
	DK139400-4500	· · SHIM¤ 1.400MM	AR	SN:23535--
	DK139400-4600	· · SHIM¤ 1.425MM	AR	SN:23535--
	DK139400-4700	· · SHIM¤ 1.450MM	AR	SN:23535--
	DK139400-4800	· · SHIM¤ 1.475MM	AR	SN:23535--
	DK139400-4900	· · SHIM¤ 1.500MM	AR	SN:23535--
	DK139400-5000	· · SHIM¤ 1.525MM	AR	SN:23535--
	DK139400-5100	· · SHIM¤ 1.550MM	AR	SN:23535--
	DK139400-5200	· · SHIM¤ 1.575MM	AR	SN:23535--
	DK139400-5300	· · SHIM¤ 1.600MM	AR	SN:23535--
	DK139400-5400	· · SHIM¤ 1.625MM	AR	SN:23535--
	DK139400-5500	· · SHIM¤ 1.650MM	AR	SN:23535--
	DK139400-5600	· · SHIM¤ 1.675MM	AR	SN:23535--
	DK139400-5700	· · SHIM¤ 1.700MM	AR	SN:23535--
	DK139400-5800	· · SHIM¤ 1.725MM	AR	SN:23535--
	DK139400-5900	· · SHIM¤ 1.750MM	AR	SN:23535--
	DK139400-6000	· · SHIM¤ 1.775MM	AR	SN:23535--
	DK139400-6100	· · SHIM¤ 1.800MM	AR	SN:23535--
	DK139400-6200	· · SHIM¤ 1.825MM	AR	SN:23535--
	DK139400-6300	· · SHIM¤ 1.850MM	AR	SN:23535--
	DK139400-6400	· · SHIM¤ 1.875MM	AR	SN:23535--
	DK139400-6500	· · SHIM¤ 1.900MM	AR	SN:23535--
	DK139400-6600	· · SHIM¤ 1.925MM	AR	SN:23535--
	DK139400-6700	· · SHIM¤ 1.950MM	AR	SN:23535--
	DK139400-6800	· · SHIM¤ 1.975MM	AR	SN:23535--
16	DK134132-0300	· · WASHER	12	SN:23535--
17	DK013021-0040	· · NUT	12	SN:23535--
18	DK134001-0000	· · BUSHING	2	SN:23535--
19	DK134256-0000	· · RACK,CONTROL	1	SN:23535--
20	DK024030-2030	· · PIN	1	SN:23535--
21	DK134222-0000	· · BUSHING	1	SN:23535--
22	DK134241-0320	· · SLEEVE,CONTROL	6	SN:23535--

Printed By : Dwi Iswanto (airafather6107170)

FUEL INJECTION PUMP (PUMP) (2/2) (INNER PARTS)(#23535-)

Item	Part No.	Description	Qty	Options
23	DK134216-0000	· · SEAT,SPRING	6	SN:23535--
24	DK134215-0700	· · SPRING	6	SN:23535--
25	DK134217-0500	· · SEAT,SPRING	6	SN:23535--
26	DK134200-0420	· · TAPPET ASS'Y	6	SN:23535--
27	DK134204-0100	· · · ROLLER	1	SN:23535--
28	DK134205-0000	· · · BUSHING	1	SN:23535--
29	DK134203-0000	· · · PIN	1	SN:23535--
30	DK131206-0500	· · · GUIDE	1	SN:23535--
31	DK134043-0800	· · COVER	1	SN:23535--
32	DK134042-1400	· · GASKET	1	SN:23535--
33	DK012206-1640	· · SCREW	12	SN:23535--

Printed By : Dwi Iswanto (airafather6107170)

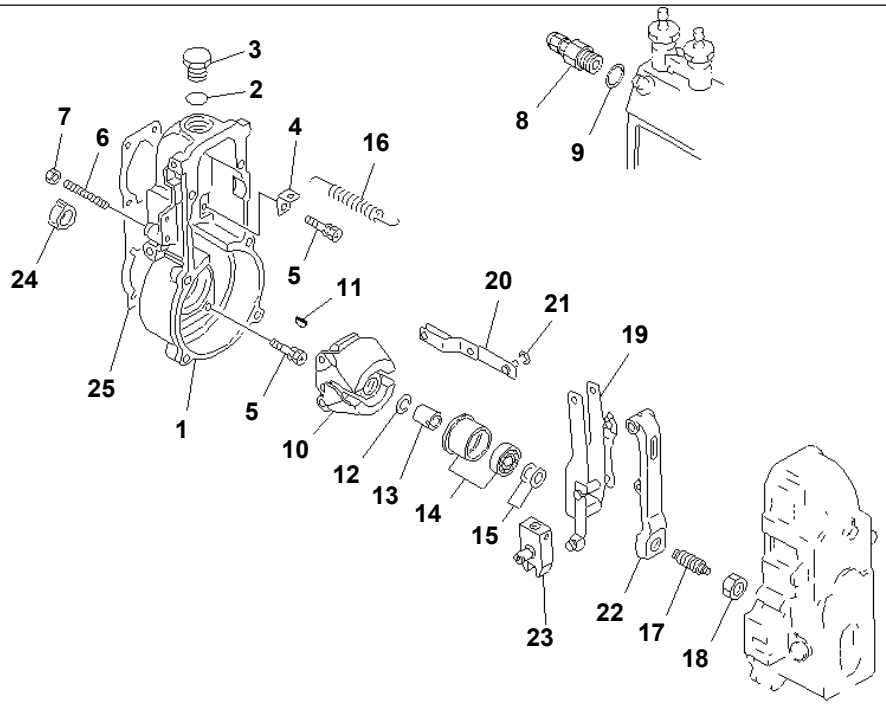

PJ3Q279

S6D140E-2B S/N 23227-UP

FUEL INJECTION PUMP (GOVERNOR) (1/2) (INNER PARTS)(#23535-)

Item	Part No.	Description	Qty	Options
	(6211-72-1470)	INJECTION PUMP A.	1	SN:23535--
THIS ASSEMBLY CONSISTS OF ALL PARTS SHOWN IN FIGS.A4010-B4G3 TO A4010-G4G3.				
THE ZEXEL PART NUMBER IS THAT DK IS REMOVED FROM KOMATSU PART NUMBER LISTED BELOW.				
	DK105407-6411	· GOVERNOR ASS'Y	1	SN:23535--
THIS ASSEMBLY CONSISTS OF ALL PARTS SHOWN IN FIGS.A4010-D4G3 AND A4010-E4G3.				
1	DK154000-5720	· · HOUSING	1	SN:23535--
2	DK029632-5070	· · O-RING	1	SN:23535--
3	DK154007-2900	· · PLUG	1	SN:23535--
4	DK154350-6000	· · PLATE	1	SN:23535--
5	DK020106-2040	· · BOLT	8	SN:23535--
6	DK154010-0100	· · SCREW	1	SN:23535--
7	DK154011-0100	· · NUT,LOCK	1	SN:23535--
8	DK153021-2220	· · LIMITER	1	SN:23535--
9	DK026524-3040	· · GASKET	1	SN:23535--
10	DK154101-0020	· · FLYWEIGHT ASS'Y	1	SN:23535--
11	DK025803-1310	· · KEY¤ 13MM,WOODRUFF	1	SN:23535--
	DK025803-1610	· · KEY¤ 16MM,WOODRUFF	1	SN:23535--
12	DK029321-2020	· · WASHER,SPRING	1	SN:23535--
13	DK029231-2030	· · NUT	1	SN:23535--
14	DK154123-2320	· · SLEEVE	1	SN:23535--
15	DK029311-0010	· · SHIM¤ 0.20MM	AR	SN:23535--
	DK029311-0180	· · SHIM¤ 0.30MM	AR	SN:23535--
	DK029311-0190	· · SHIM¤ 0.40MM	AR	SN:23535--
	DK139410-0000	· · SHIM¤ 0.50MM	AR	SN:23535--
	DK029311-0210	· · SHIM¤ 1.00MM	AR	SN:23535--
	DK139410-0100	· · SHIM¤ 1.50MM	AR	SN:23535--
	DK139410-3000	· · SHIM¤ 2.00MM	AR	SN:23535--

Printed By : Dwi Iswanto (airafather6107170)

FUEL INJECTION PUMP (GOVERNOR) (1/2) (INNER PARTS)(#23535-)

Item	Part No.	Description	Qty	Options
	DK139410-3100	· · SHIM¤ 3.00MM	AR	SN:23535--
	DK139410-3200	· · SHIM¤ 4.00MM	AR	SN:23535--
16	DK154154-0500	· · SPRING	1	SN:23535--
17	DK154177-0420	· · CAPSULE,SPRING	1	SN:23535--
18	DK029201-6010	· · NUT	1	SN:23535--
19	DK154210-2720	· · GUIDE LEVER ASS'Y	1	SN:23535--
20	DK154230-2920	· · LINK	1	SN:23535--
21	DK016010-0540	· · RING,SNAP	1	SN:23535--
22	DK154236-4100	· · LEVER,TENSION	1	SN:23535--
23	DK154326-5020	· · LEVER ASS'Y	1	SN:23535--
24	DK155412-5200	· · IMPELLER	1	SN:23535--
25	DK154371-5600	· · GASKET	1	SN:23535--

Printed By : Dwi Iswanto (airafather6107170)

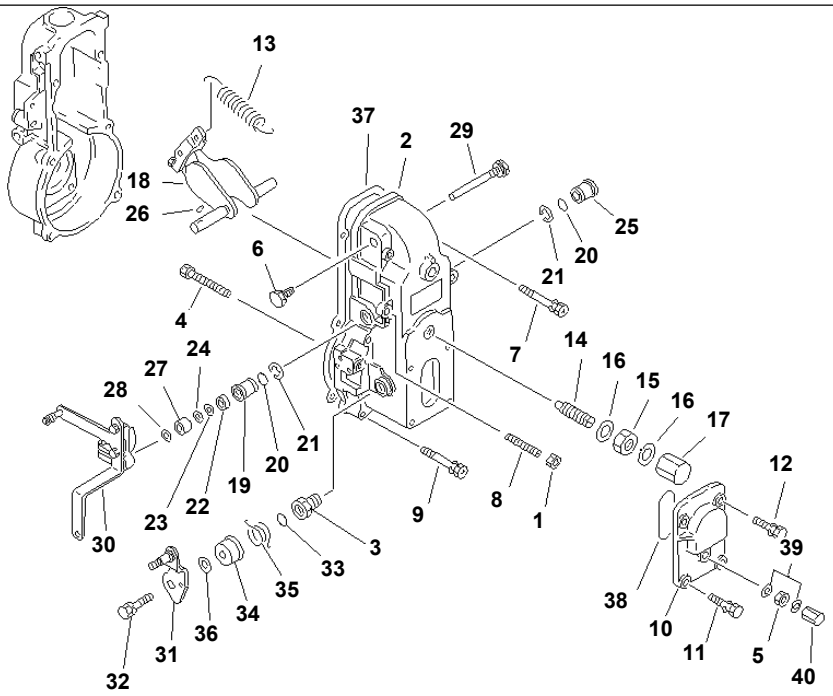

PE3P708

S6D140E-2B S/N 23227-UP

FUEL INJECTION PUMP (GOVERNOR) (2/2) (INNER PARTS)(#23535-)

Item	Part No.	Description	Qty	Options
	(6211-72-1470)	INJECTION PUMP A.	1	SN:23535--
THIS ASSEMBLY CONSISTS OF ALL PARTS SHOWN IN FIGS.A4010-B4G3 TO A4010-G4G3.				
THE ZEXEL PART NUMBER IS THAT DK IS REMOVED FROM KOMATSU PART NUMBER LISTED BELOW.				
	(DK105407-6411)	· GOVERNOR ASS'Y	1	SN:23535--
THIS ASSEMBLY CONSISTS OF ALL PARTS SHOWN IN FIGS.A4010-D4G3 AND A4010-E4G3.				
1	DK154011-0100	· · NUT,LOCK	1	SN:23535--
2	DK154500-8120	· · COVER	1	SN:23535--
3	DK154321-0400	· · · BUSHING	1	SN:23535--
4	DK154031-4300	· · SCREW	1	SN:23535--
5	DK139208-0400	· · NUT	1	SN:23535--
6	DK154036-0300	· · PLUG	1	SN:23535--
7	DK020106-5040	· · BOLT	2	SN:23535--
8	DK154010-0200	· · SCREW	1	SN:23535--
9	DK020106-3840	· · BOLT	4	SN:23535--
10	DK154063-7300	· · COVER	1	SN:23535--
11	DK029020-6210	· · BOLT	2	SN:23535--
12	DK020006-1640	· · BOLT	2	SN:23535--
13	DK154150-2900	· · SPRING,GOVERNOR	1	SN:23535--
14	DK154158-0820	· · CAPSULE,SPRING	1	SN:23535--
15	DK154011-1700	· · NUT	1	SN:23535--
16	DK026512-1540	· · GASKET	2	SN:23535--
17	DK154159-1200	· · NUT,CAP	1	SN:23535--
18	DK154200-7020	· · LEVER ASS'Y,SWIVEL	1	SN:23535--
19	DK154204-3000	· · BUSHING	1	SN:23535--
20	DK139718-0200	· · O-RING	2	SN:23535--
21	DK016010-1640	· · RING,SNAP	2	SN:23535--
22	DK139611-0300	· · SEAL,OIL	1	SN:23535--

Printed By : Dwi Iswanto (airafather6107170)

FUEL INJECTION PUMP (GOVERNOR) (2/2) (INNER PARTS)(#23535-)

Item	Part No.	Description	Qty	Options
23	DK139411-0000	· · SHIM¤ 0.40MM	1	SN:23535--
24	DK029311-1070	· · SHIM¤ 0.50MM	AR	SN:23535--
25	DK154204-3100	· · BUSHING	1	SN:23535--
26	DK025803-1310	· · KEY¤ 13MM,WOODRUFF	1	SN:23535--
27	DK154206-2800	· · COLLAR	1	SN:23535--
28	DK154206-0200	· · WASHER¤ 1.0MM	AR	SN:23535--
29	DK154237-1100	· · PIN	1	SN:23535--
30	DK154396-1720	· · LEVER	1	SN:23535--
31	DK154367-0420	· · LEVER	1	SN:23535--
32	DK020006-1640	· · BOLT	1	SN:23535--
33	DK139710-0500	· · O-RING	1	SN:23535--
34	DK154322-0100	· · CAP	1	SN:23535--
35	DK154327-7600	· · SPRING	1	SN:23535--
36	DK029311-0520	· · SHIM¤ 0.2MM	AR	SN:23535--
	DK029311-0530	· · SHIM¤ 0.25MM	AR	SN:23535--
	DK029311-0540	· · SHIM¤ 0.3MM	AR	SN:23535--
	DK029311-0550	· · SHIM¤ 0.35MM	AR	SN:23535--
	DK029311-0560	· · SHIM¤ 0.4MM	AR	SN:23535--
	DK029311-0570	· · SHIM¤ 0.5MM	AR	SN:23535--
37	DK154390-0300	· · GASKET	1	SN:23535--
38	DK029635-2020	· · O-RING	1	SN:23535--
39	DK026508-1140	· · GASKET	2	SN:23535--
40	DK154035-2000	· · NUT,CAP	1	SN:23535--

Printed By : Dwi Iswanto (airafather6107170)

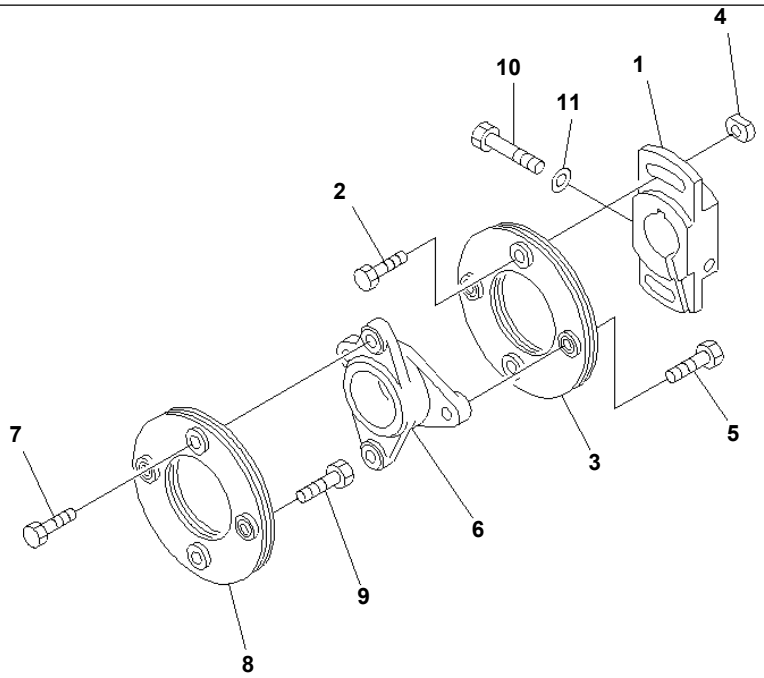

PE3P108

S6D140E-2B S/N 23227-UP

FUEL INJECTION PUMP (COUPLING) (INNER PARTS)(#23535-)

Item	Part No.	Description	Qty	Options
	(6211-72-1470)	INJECTION PUMP A.	1	SN:23535--
THIS ASSEMBLY CONSISTS OF ALL PARTS SHOWN IN FIGS.A4010-B4G3 TO A4010-G4G3. THE ZEXEL PART NUMBER IS THAT DK IS REMOVED FROM KOMATSU PART NUMBER LISTED BELOW.				
	DK105664-0340	· COUPLING ASS'Y	1	SN:23535--
1	DK156631-1700	· · COUPLING	1	SN:23535--
2	DK156633-5100	· · BOLT	2	SN:23535--
3	DK156605-4320	· · PLATE	1	SN:23535--
4	DK156617-2400	· · NUT	2	SN:23535--
5	DK156633-4900	· · BOLT	2	SN:23535--
6	DK156609-5600	· · COUPLING,CROSS	1	SN:23535--
7	DK156633-4900	· · BOLT	2	SN:23535--
8	DK156605-4320	· · PLATE	1	SN:23535--
9	DK156633-4900	· · BOLT	2	SN:23535--
10	DK156633-5200	· · BOLT	1	SN:23535--
11	DK156615-2600	· · WASHER	1	SN:23535--

Printed By : Dwi Iswanto (airafather6107170)

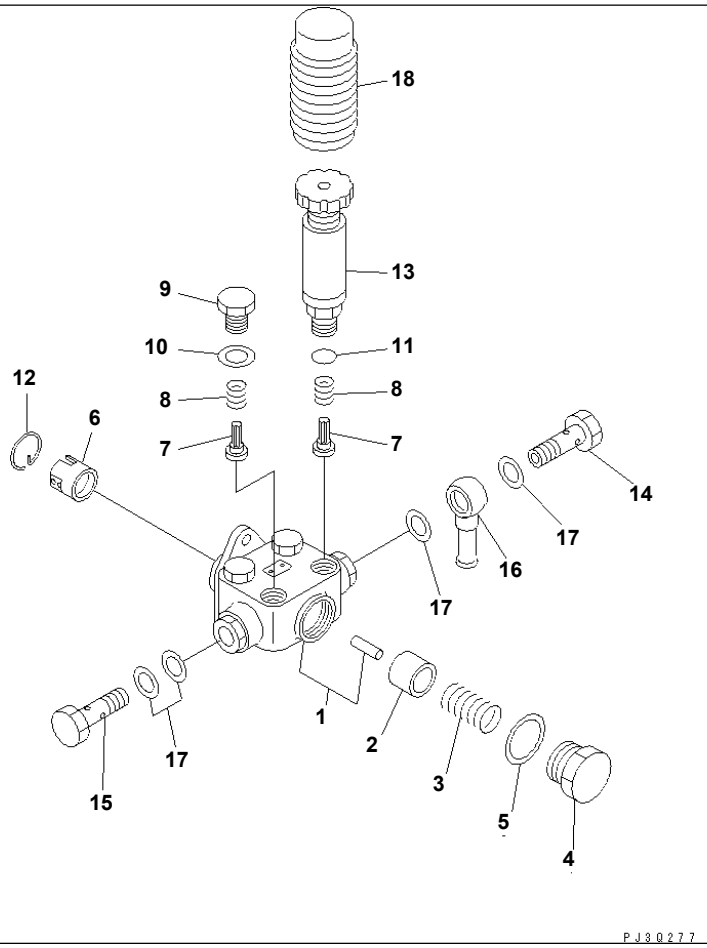

S6D140E-2B S/N 23227-UP

FUEL INJECTION PUMP (FEED PUMP) (INNER PARTS)(#23535-)

Item	Part No.	Description	Qty	Options
	(6211-72-1470)	INJECTION PUMP A.	1	SN:23535--
THIS ASSEMBLY CONSISTS OF ALL PARTS SHOWN IN FIGS.A4010-B4G3 TO A4010-G4G3. THE ZEXEL PART NUMBER IS THAT DK IS REMOVED FROM KOMATSU PART NUMBER LISTED BELOW.				
	DK105237-5070	· FEED PUMP ASS'Y	1	SN:23535--
1	DK152004-3820	· · HOUSING	1	SN:23535--
2	DK152100-1120	· · PISTON	1	SN:23535--
3	DK152102-1600	· · SPRING	1	SN:23535--
4	DK152105-1500	· · PLUG	1	SN:23535--
5	DK029332-6030	· · GASKET	1	SN:23535--
6	DK152111-4320	· · TAPPET	1	SN:23535--
7	DK152115-0500	· · VALVE	4	SN:23535--
8	DK152116-0200	· · SPRING	4	SN:23535--
9	DK152117-0400	· · PLUG	3	SN:23535--
10	DK029331-6030	· · GASKET	3	SN:23535--
11	DK029631-6060	· · O-RING	1	SN:23535--
12	DK152121-0400	· · RING,SNAP	1	SN:23535--
13	DK152200-5420	· · PUMP,PRIMING	1	SN:23535--
14	DK152300-5920	· · BOLT,EYE	1	SN:23535--
15	DK029731-4680	· · BOLT,EYE	1	SN:23535--
16	DK029711-4310	· · EYE	1	SN:23535--
17	DK029341-4130	· · GASKET	4	SN:23535--
18	DK152320-0100	· · COVER	1	SN:23535--

Printed By : Dwi Iswanto (airafather6107170)

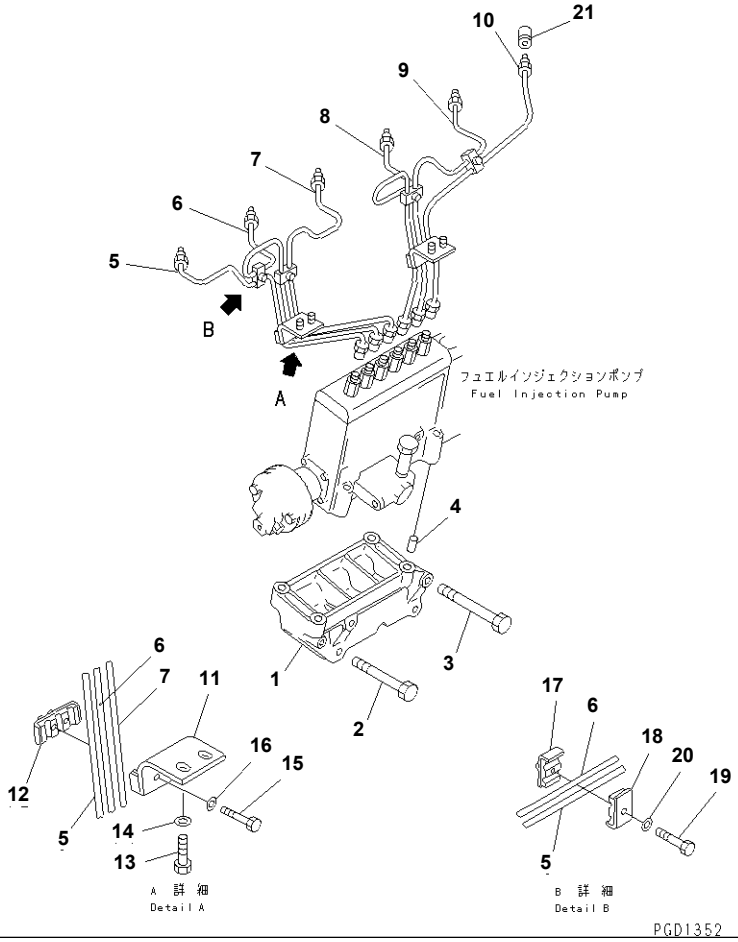

Ref. A4030-A4C6 **Page 030470**

S6D140E-2B S/N 23227-UP
FUEL INJECTION PUMP PIPING

Item	Part No.	Description	Qty	Options
1	6211-21-6110	BRACKET	1	SN:23227--
2	01010-81250	BOLT	2	SN:23227--
3	01010-81280	BOLT	2	SN:23227--
4	6150-41-2430	PIN,DOWEL	2	SN:23227--
5	6211-72-5110	TUBE,INJECTION¤ NO.1	1	SN:23227--
6	6211-72-5120	TUBE,INJECTION¤ NO.2	1	SN:23227--
7	6211-72-5130	TUBE,INJECTION¤ NO.3	1	SN:23227--
8	6211-72-5140	TUBE,INJECTION¤ NO.4	1	SN:23227--
9	6211-72-5150	TUBE,INJECTION¤ NO.5	1	SN:23227--
10	6211-72-5160	TUBE,INJECTION¤ NO.6	1	SN:23227--
11	6210-71-5511	CLAMP	2	SN:24132--
	□6210-71-5510	CLAMP	2	SN:23227--24131
12	6210-71-5520	CLAMP	2	SN:23227--
13	01010-80820	BOLT	4	SN:23227--
14	01640-20816	WASHER	4	SN:23227--
15	01010-80635	BOLT	4	SN:23227--
16	01640-20610	WASHER	4	SN:23227--
17	6162-73-5510	CLAMP¤ WITH THREAD	4	SN:23227--
18	6162-73-5520	CLAMP	4	SN:23227--
19	01010-80625	BOLT	4	SN:23227--
20	01640-20610	WASHER	4	SN:23227--
21	6215-71-9790	COVER	6	SN:23227--

Printed By : Dwi Iswanto (airafather6107170)

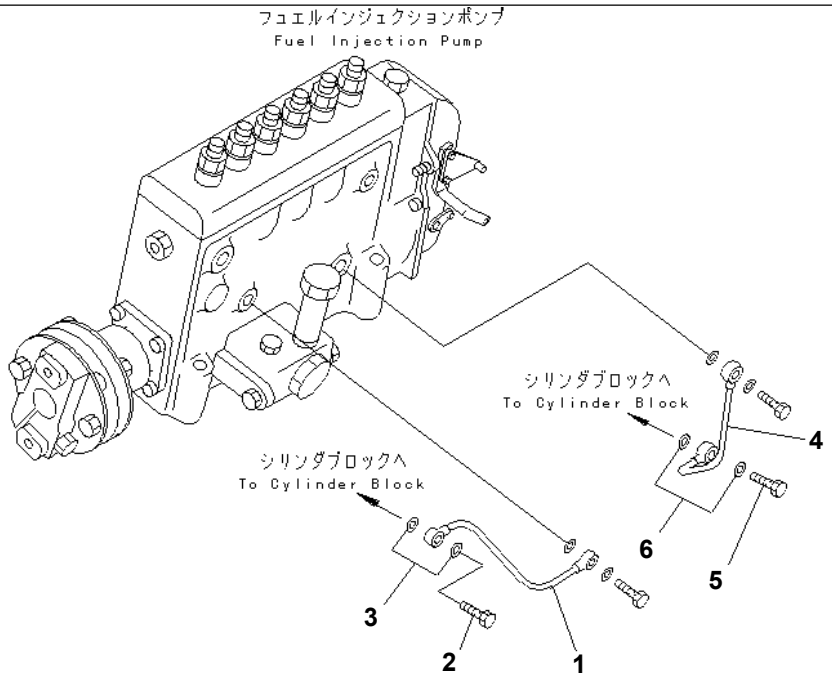

PGD1353

S6D140E-2B S/N 23227-UP

FUEL INJECTION PUMP LUBRICATOR

Item	Part No.	Description	Qty	Options
1	6211-72-5640	TUBE	1	SN:23227--
2	07206-30710	BOLT,JOINT	1	SN:23227--
3	07005-01012	GASKET (K2)	2	SN:23227--
4	6211-71-5710	TUBE,DRAIN	1	SN:23227--
5	07206-31014	BOLT,JOINT	1	SN:23227--
6	07005-01412	GASKET (K2)	2	SN:23227--

Ref. A4060-A4B6 Page 030480

Printed By : Dwi Iswanto (airafather6107170)

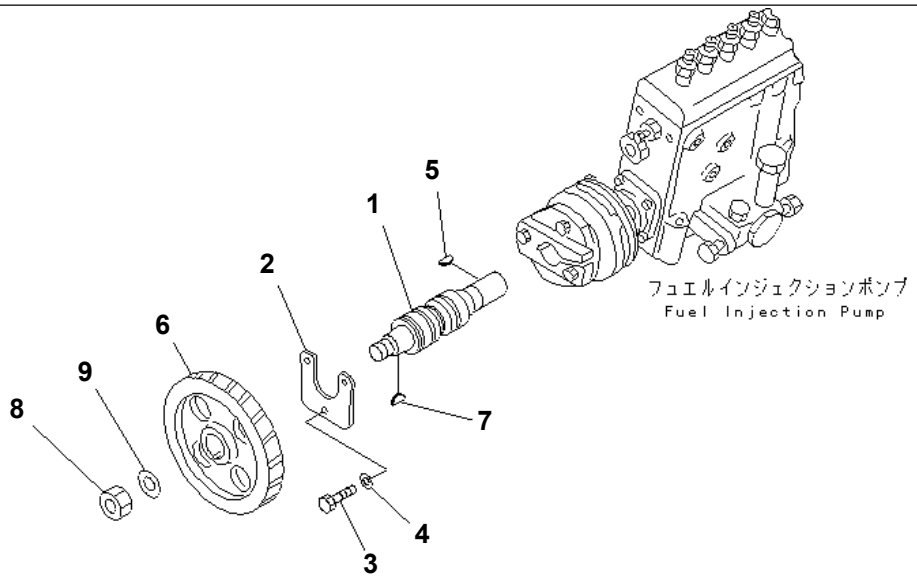

PED0663

S6D140E-2B S/N 23227-UP

FUEL INJECTION PUMP DRIVE

Item	Part No.	Description	Qty	Options
1	6212-72-3170	SHAFT	1	SN:23227--
2	6212-71-3190	PLATE,THRUST	1	SN:23227--
3	01010-80816	BOLT	3	SN:23227--
4	01640-00816	WASHER	3	SN:23227--
5	6150-71-3160	KEY	1	SN:23227--
6	6210-72-3220	GEAR	1	SN:23227--
7	6150-71-3160	KEY	1	SN:23227--
8	01582-02419	NUT	1	SN:23227--
9	01643-32460	WASHER	1	SN:23227--

Printed By : Dwi Iswanto (airafather6107170)

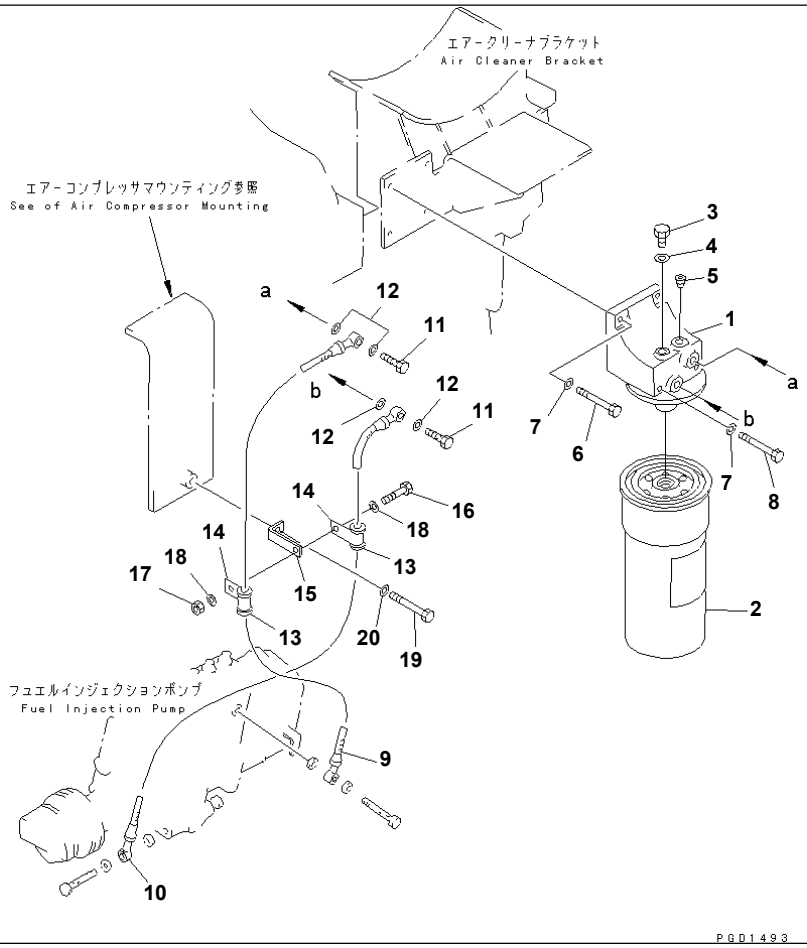

Ref. A4110-A4A2 **Page 030500**

S6D140E-2B S/N 23227-UP
FUEL FILTER(#23535-)

Item	Part No.	Description	Qty	Options
	6210-71-6202	FUEL FILTER ASS'Y	1	SN:23535--
1	6210-71-6210	· HEAD	1	SN:23535--
2	600-311-7132	· CARTRIDGE	1	SN:23535--
3	6110-73-6231	· PLUG	1	SN:23535--
4	07005-00812	· GASKET	1	SN:23535--
5	07043-70108	· PLUG	1	SN:23535--
6	01010-81030	BOLT	2	SN:23535--
7	01640-21016	WASHER	4	SN:23535--
8	01011-81010	BOLT	2	SN:23535--
9	07271-01460	HOSE	1	SN:23535--
10	07271-11485	HOSE	1	SN:23535--
11	07206-31014	BOLT,JOINT	2	SN:23535--
12	07005-01412	GASKET (K2)	4	SN:23535--
13	07095-20318	CUSHION	2	SN:23535--
14	04434-52511	CLIP	2	SN:23535--
15	6210-81-5561	BRACKET	1	SN:23535--
16	01010-81025	BOLT	1	SN:23535--
17	01580-11008	NUT	1	SN:23535--
18	01643-31032	WASHER	2	SN:23535--
19	01010-81020	BOLT	1	SN:23535--
20	01640-21016	WASHER	1	SN:23535--

Printed By : Dwi Iswanto (airafather6107170)

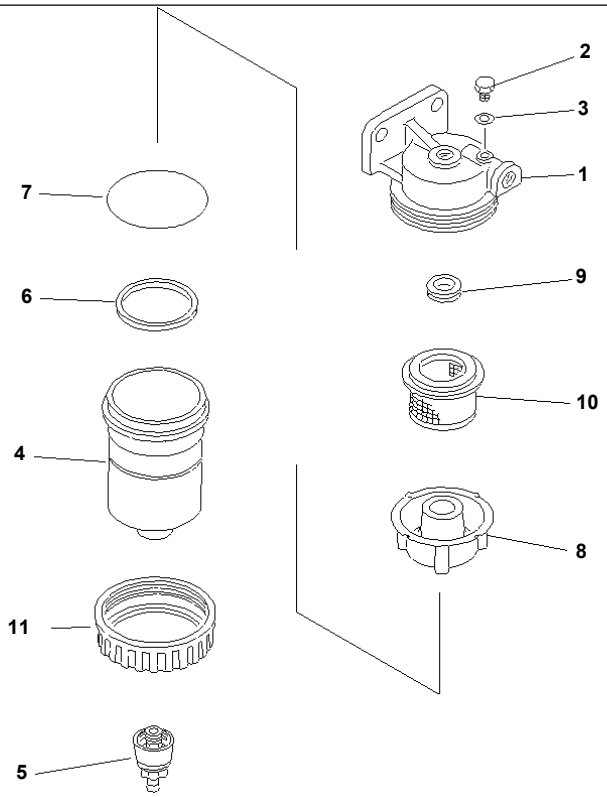

PE30742

S6D140E-2B S/N 23227-UP

WATER SEPARATOR(#23535-)

Item	Part No.	Description	Qty	Options
	600-311-9731	WATER SEPARATOR A.	1	SN:23535--
1	600-311-9911	· COVER	1	SN:23535--
2	6110-73-6231	· PLUG,AIR	1	SN:23535--
3	07005-00812	· GASKET	1	SN:23535--
4	600-311-9920	· CASE	1	SN:23535--
5	600-311-9760	· PLUG,DRAIN	1	SN:23535--
6	600-311-9950	· RING	1	SN:23535--
7	600-311-9890	· O-RING	1	SN:23535--
8	600-311-9941	· BAFFLE	1	SN:23535--
9	600-311-9961	· GASKET	1	SN:23535--
10	600-311-9971	· SCREEN	1	SN:23535--
11	600-311-9931	· NUT	1	SN:23535--

Printed By : Dwi Iswanto (airafather6107170)

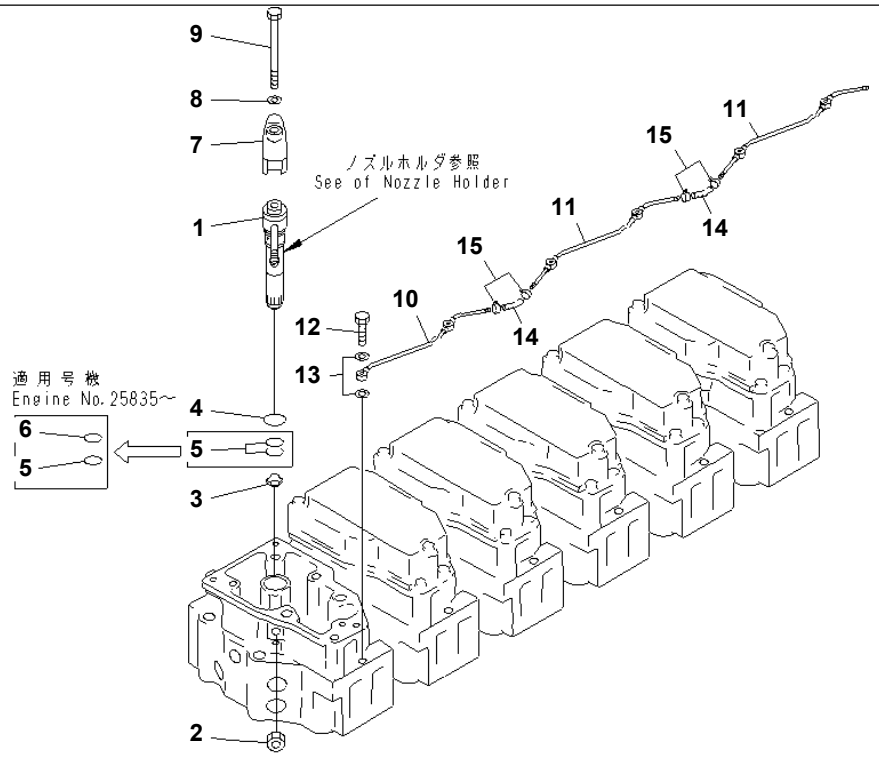

PJD5094

S6D140E-2B S/N 23227-UP
INJECTION NOZZLE

Item	Part No.	Description	Qty	Options
1	(6211-12-3100)	NOZZLE HOLDER ASS'Y,(SEE FIG.A4210-B4D4)	6	SN:23227--
2	6211-71-9770	NUT	6	SN:23227--
3	6210-71-1160	GASKET (K1)	6	SN:23227--
4	6210-11-7710	O-RING (K1)	6	SN:23227--
5	07000-22021	O-RING (K1)	6	SN:25835--
	07000-22021	O-RING (K1)	12	SN:23227--25834
6	6210-11-7720	O-RING	6	SN:25835--
7	6210-71-1150	HOLDER	6	SN:23227--
8	6210-71-1140	WASHER	6	SN:23227--
9	01011-81020	BOLT	6	SN:23227--
10	6211-71-5411	TUBE	1	SN:23227--
11	6211-71-5421	TUBE	2	SN:23227--
12	07206-20508	BOLT,JOINT	6	SN:23227--
13	07005-00812	GASKET (K1)	12	SN:23227--
14	07270-20409	TUBE	2	SN:23227--
15	07285-00085	CLIP	4	SN:23227--

Printed By : Dwi Iswanto (airafather6107170)

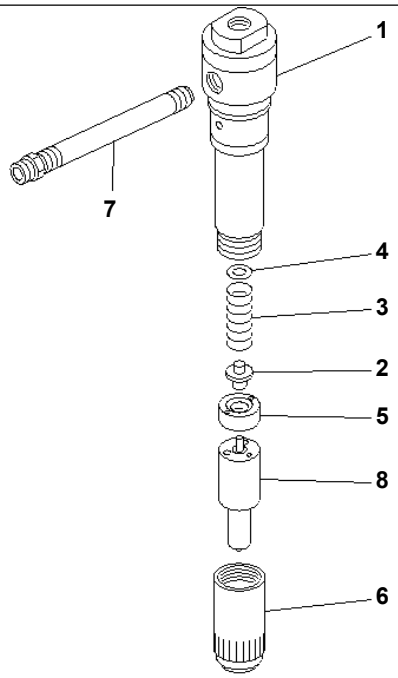

PGD1360

NOZZLE HOLDER (INNER PARTS)

Item	Part No.	Description	Qty	Options
	6211-12-3100	NOZZLE HOLDER ASS'Y	6	SN:23227--
1	6211-12-3210	· HOLDER ASS'Y	1	SN:23227--
THE ZEXEL PART NUMBER IS THAT DK IS REMOVED FROM KOMATSU PART NUMBER LISTED BELOW.				
2	DK150550-5900	· · ROD,PUSH	1	SN:23227--
3	DK150562-6200	· · SPRING	1	SN:23227--
4	DK150530-4000	· · SHIM¤ 0.500MM	AR	SN:23227--
	DK150530-4100	· · SHIM¤ 0.525MM	AR	SN:23227--
	DK150530-4200	· · SHIM¤ 0.550MM	AR	SN:23227--
	DK150530-4300	· · SHIM¤ 0.575MM	AR	SN:23227--
	DK150530-4400	· · SHIM¤ 0.600MM	AR	SN:23227--
	DK150530-4500	· · SHIM¤ 0.625MM	AR	SN:23227--
	DK150530-4600	· · SHIM¤ 0.650MM	AR	SN:23227--
	DK150530-4700	· · SHIM¤ 0.675MM	AR	SN:23227--
	DK150530-4800	· · SHIM¤ 0.700MM	AR	SN:23227--
	DK150530-4900	· · SHIM¤ 0.725MM	AR	SN:23227--
	DK150530-5000	· · SHIM¤ 0.750MM	AR	SN:23227--
	DK150530-5100	· · SHIM¤ 0.775MM	AR	SN:23227--
	DK150530-5200	· · SHIM¤ 0.800MM	AR	SN:23227--
	DK150530-5300	· · SHIM¤ 0.825MM	AR	SN:23227--
	DK150530-5400	· · SHIM¤ 0.850MM	AR	SN:23227--
	DK150530-5500	· · SHIM¤ 0.875MM	AR	SN:23227--
	DK150530-5600	· · SHIM¤ 0.900MM	AR	SN:23227--
	DK150530-5700	· · SHIM¤ 0.925MM	AR	SN:23227--
	DK150530-5800	· · SHIM¤ 0.950MM	AR	SN:23227--
	DK150530-5900	· · SHIM¤ 0.975MM	AR	SN:23227--
	DK150530-6000	· · SHIM¤ 1.000MM	AR	SN:23227--
	DK150530-6100	· · SHIM¤ 1.025MM	AR	SN:23227--

Printed By : Dwi Iswanto (airafather6107170)

NOZZLE HOLDER (INNER PARTS)

Item	Part No.	Description	Qty	Options
	DK150530-6200	· · SHIM¤ 1.050MM	AR	SN:23227--
	DK150530-6300	· · SHIM¤ 1.075MM	AR	SN:23227--
	DK150530-6400	· · SHIM¤ 1.100MM	AR	SN:23227--
	DK150530-6500	· · SHIM¤ 1.125MM	AR	SN:23227--
	DK150530-6600	· · SHIM¤ 1.150MM	AR	SN:23227--
	DK150530-6700	· · SHIM¤ 1.175MM	AR	SN:23227--
	DK150530-6800	· · SHIM¤ 1.200MM	AR	SN:23227--
	DK150530-6900	· · SHIM¤ 1.225MM	AR	SN:23227--
	DK150530-7000	· · SHIM¤ 1.250MM	AR	SN:23227--
	DK150530-7100	· · SHIM¤ 1.275MM	AR	SN:23227--
	DK150530-7200	· · SHIM¤ 1.300MM	AR	SN:23227--
	DK150530-7300	· · SHIM¤ 1.325MM	AR	SN:23227--
	DK150530-7400	· · SHIM¤ 1.350MM	AR	SN:23227--
	DK150530-7500	· · SHIM¤ 1.375MM	AR	SN:23227--
	DK150530-7600	· · SHIM¤ 1.400MM	AR	SN:23227--
	DK150530-7700	· · SHIM¤ 1.425MM	AR	SN:23227--
	DK150530-7800	· · SHIM¤ 1.450MM	AR	SN:23227--
	DK150530-7900	· · SHIM¤ 1.475MM	AR	SN:23227--
	DK150530-8000	· · SHIM¤ 1.500MM	AR	SN:23227--
	DK150530-8100	· · SHIM¤ 1.525MM	AR	SN:23227--
	DK150530-8200	· · SHIM¤ 1.550MM	AR	SN:23227--
	DK150530-8300	· · SHIM¤ 1.575MM	AR	SN:23227--
	DK150530-8400	· · SHIM¤ 1.600MM	AR	SN:23227--
	DK150530-8500	· · SHIM¤ 1.625MM	AR	SN:23227--
	DK150530-8600	· · SHIM¤ 1.650MM	AR	SN:23227--
	DK150530-8700	· · SHIM¤ 1.675MM	AR	SN:23227--
	DK150530-8800	· · SHIM¤ 1.700MM	AR	SN:23227--
	DK150530-8900	· · SHIM¤ 1.725MM	AR	SN:23227--
	DK150530-9000	· · SHIM¤ 1.750MM	AR	SN:23227--
	DK150530-9100	· · SHIM¤ 1.775MM	AR	SN:23227--
	DK150530-9200	· · SHIM¤ 1.800MM	AR	SN:23227--
	DK150530-9300	· · SHIM¤ 1.825MM	AR	SN:23227--
	DK150530-9400	· · SHIM¤ 1.850MM	AR	SN:23227--
	DK150530-9500	· · SHIM¤ 1.875MM	AR	SN:23227--
	DK150530-9600	· · SHIM¤ 1.900MM	AR	SN:23227--
	DK150530-9700	· · SHIM¤ 1.925MM	AR	SN:23227--
	DK150530-9800	· · SHIM¤ 1.950MM	AR	SN:23227--
	DK150530-9900	· · SHIM¤ 1.975MM	AR	SN:23227--
5	DK150524-4300	· · SPACER	1	SN:23227--
6	DK150651-0000	· · NUT	1	SN:23227--
7	6211-11-3131	· · CONNECTOR	1	SN:23227--
8	6211-12-3120	· NOZZLE	1	SN:23227--

Printed By : Dwi Iswanto (airafather6107170)

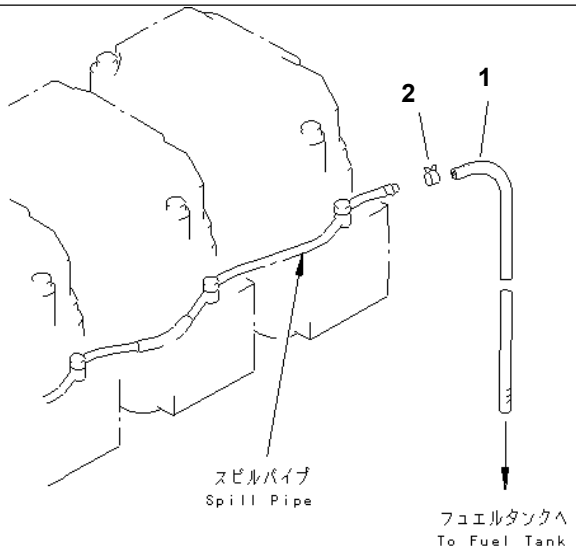

PE38832

Ref. A4230-A4C6 **Page 030540**

S6D140E-2B S/N 23227-UP
FUEL RETURN(#23535-)

Item	Part No.	Description	Qty	Options
1	07270-40412	TUBE,SPILL	1	SN:23535--
2	07285-00085	CLIP	1	SN:23535--

Printed By : Dwi Iswanto (airafather6107170)

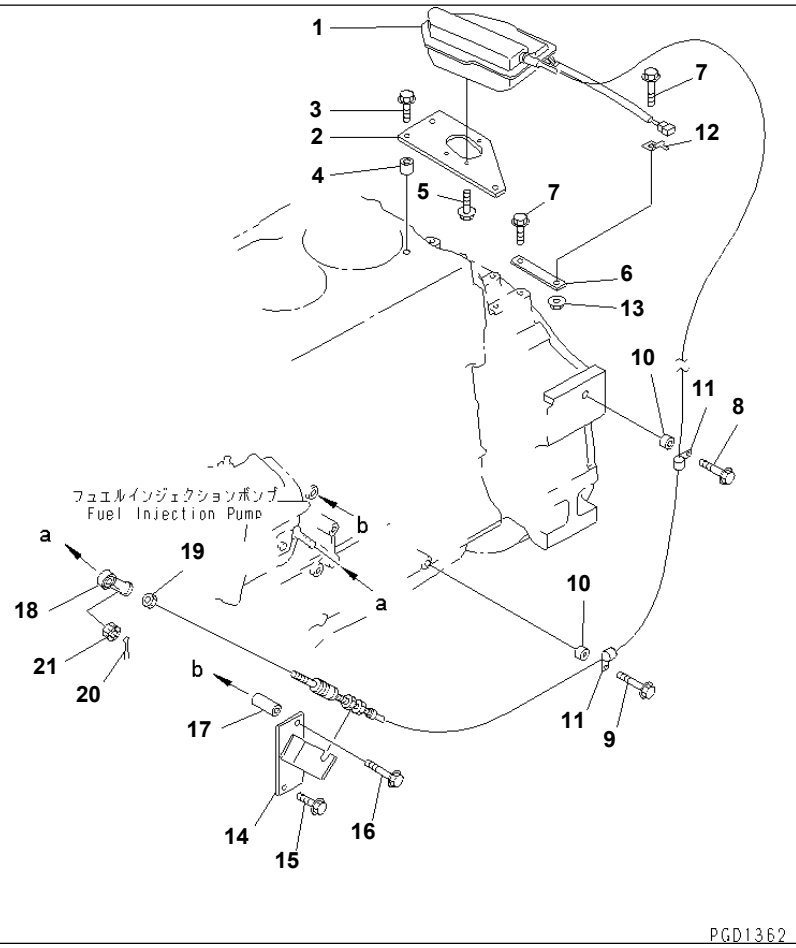

S6D140E-2B S/N 23227-UP
ENGINE STOP MOTOR

Item	Part No.	Description	Qty	Options
1	600-815-7660	MOTOR ASS'Y,ENGINE STOP	1	SN:23227--
2	6211-71-8550	BRACKET	1	SN:23227--
3	01435-01030	BOLT	3	SN:23227--
4	6131-12-5920	SPACER	3	SN:23227--
5	01010-80616	BOLT	3	SN:23227--
6	6212-11-5830	PLATE	1	SN:23227--
7	01435-01020	BOLT	2	SN:23227--
8	01435-01025	BOLT	1	SN:23227--
9	01435-01025	BOLT	1	SN:24186--
	□01435-01030	BOLT	1	SN:23227--24185
10	6131-12-5920	SPACER	2	SN:23227--
11	04434-50610	CLIP	2	SN:23580--
	□600-050-2160	CLAMP	2	SN:23227--23579
12	08053-00910	CLIP	1	SN:23227--
13	01584-01008	NUT	1	SN:23227--
14	6211-71-8540	BRACKET	1	SN:23227--
15	01435-01020	BOLT	1	SN:23227--
16	01435-01065	BOLT	1	SN:23227--
17	6152-21-6590	SPACER	1	SN:23227--
18	04250-40639	END,ROD	1	SN:23227--
19	01580-10605	NUT	1	SN:23227--
20	04050-11212	PIN,COTTER	1	SN:23227--
21	01590-10607	NUT	1	SN:23227--

Printed By : Dwi Iswanto (airafather6107170)

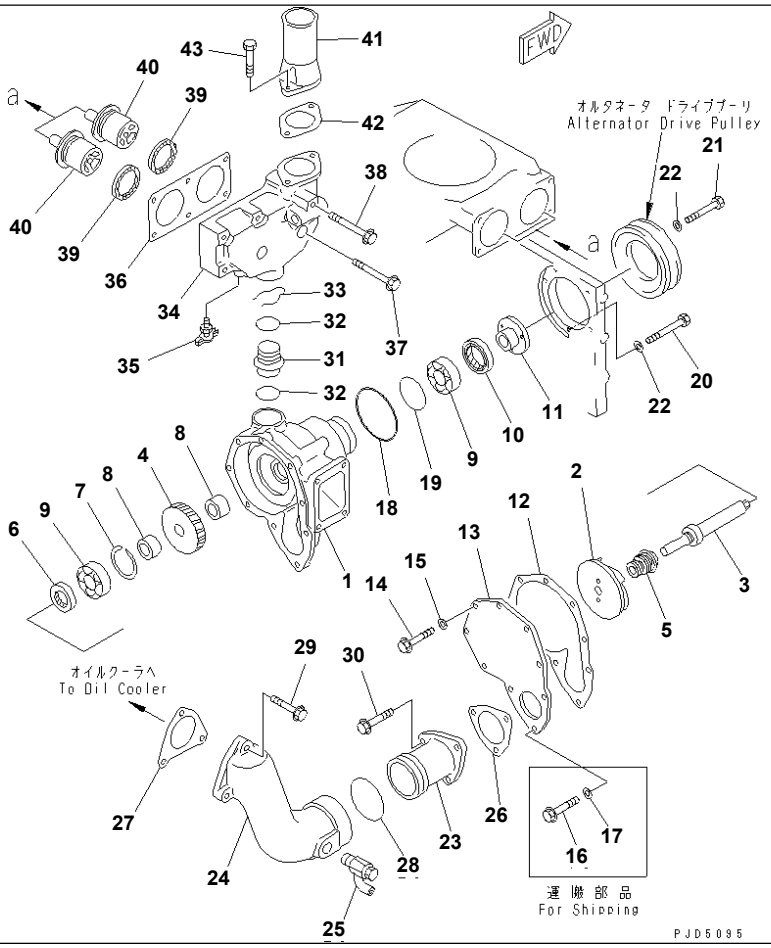

Ref. A5010-A4A4A **Page 030560**

S6D140E-2B S/N 23227-UP
WATER PUMP(#23535-25739)

Item	Part No.	Description	Qty	Options
	6211-62-1400	WATER PUMP ASS'Y	1	SN:24720--25739
	◆6211-61-1401	WATER PUMP ASS'Y	1	SN:23535--24719
1	☆	· BODY	1	SN:24720--@
	☆	· BODY	1	SN:23535--24719
2	6211-61-1420	· IMPELLER	1	SN:23535--@
3	6211-61-1310	· SHAFT	1	SN:23535--@
4	6210-61-1410	· GEAR	1	SN:23535--@
5	6211-61-1521	· SEAL¤ WATER (K6)	1	SN:23535--25739
6	6210-61-1510	· SEAL,OIL (K6)	1	SN:23535--@
7	04065-06220	· RING,SNAP	1	SN:23535--@
8	6210-61-1360	· SPACER	2	SN:23535--@
9	06030-06305	· BEARING,BALL	2	SN:23535--@
10	6210-61-1520	· SEAL,OIL (K6)	1	SN:23535--@
11	6210-61-1350	· FLANGE	1	SN:23535--@
12	6211-61-1170	· GASKET (K6)	1	SN:23535--@
13	6211-61-1150	· COVER	1	SN:23535--@
14	01010-80820	· BOLT	6	SN:23535--@
15	01641-00812	· WASHER	6	SN:23535--@
16	01010-31020	· BOLT,(FOR SHIPPING)	3	SN:23535--@
17	01641-01016	· WASHER,(FOR SHIPPING)	3	SN:23535--@
18	07000-72115	O-RING	1	SN:25244--@
	□07000-02115	O-RING	1	SN:23535--25243
19	07000-72070	O-RING	1	SN:25244--@
	□07000-02070	O-RING	1	SN:23535--25243
20	01010-81095	BOLT	3	SN:23535--@
21	01010-81080	BOLT	1	SN:25244--@
22	01640-21016	WASHER	4	SN:25244--@

Printed By : Dwi Iswanto (airafather6107170)

S6D140E-2B S/N 23227-UP

WATER PUMP(#23535-25739)

Item	Part No.	Description	Qty	Options
	01640-21016	WASHER	3	SN:23535--25243
23	6210-61-6310	TUBE	1	SN:23535--@
24	6210-61-6620	ELBOW	1	SN:23535--@
25	07730-50004	VALVE	1	SN:23535--@
26	6210-61-6331	GASKET (K6)	1	SN:23535--@
27	6210-61-6341	GASKET (K6)	1	SN:23535--@
28	6166-11-6290	O-RING (K6)	1	SN:23535--@
29	01437-11080	BOLT	3	SN:23535--@
30	01437-11030	BOLT	3	SN:23535--@
31	6210-61-6511	TUBE	1	SN:23535--@
32	02893-05037	O-RING (K6)	2	SN:23535--@
33	6210-61-6520	SPRING	1	SN:23535--@
34	6210-61-6410	HOUSING,THERMOSTAT	1	SN:23535--@
35	07062-00000	VALVE	1	SN:23535--@
36	6210-61-6421	GASKET (K2)	1	SN:23535--@
37	01437-01065	BOLT	5	SN:23535--@
38	01438-11010	BOLT	1	SN:23535--@
39	6162-13-6440	SEAL,OIL (K2)	2	SN:23535--@
40	600-421-6630	THERMOSTAT	2	SN:23535--@
41	6210-61-6260	CONNECTOR	1	SN:23535--@
42	6210-61-6441	GASKET (K2)	1	SN:23535--@
43	01010-81025	BOLT	2	SN:23535--@

Printed By : Dwi Iswanto (airafather6107170)

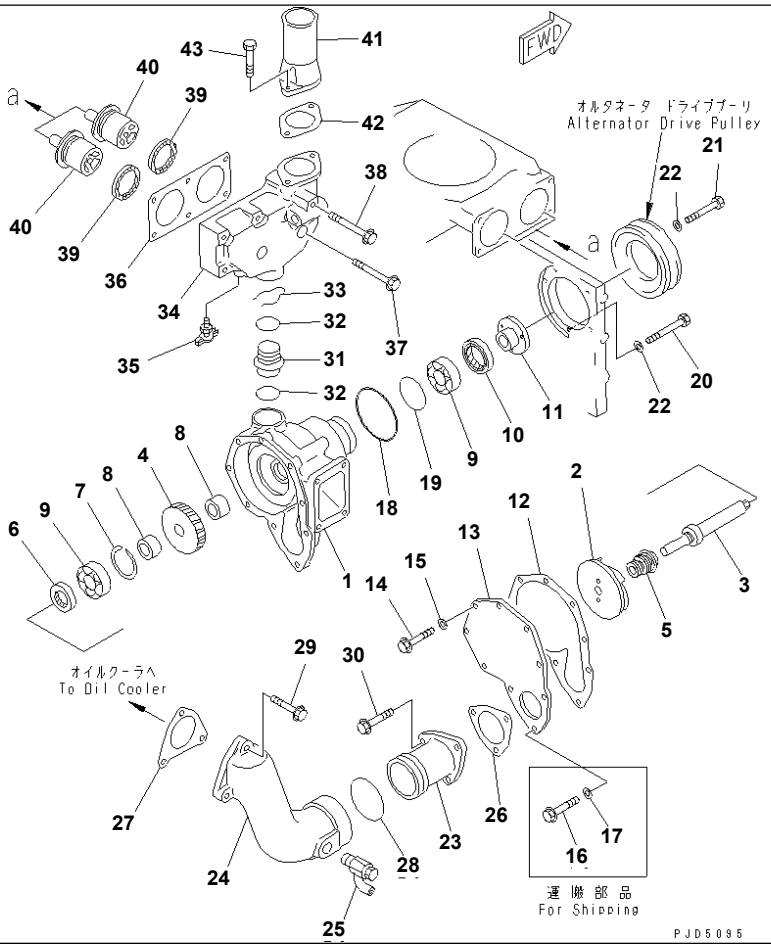

Ref. A5010-A4A4B **Page 030565**

S6D140E-2B S/N 23227-UP
WATER PUMP(#25740-)

Item	Part No.	Description	Qty	Options
	6211-62-1401	WATER PUMP ASS'Y	1	SN:25740--
1	☆	· BODY	1	SN:24720--
2	6211-61-1420	· IMPELLER	1	SN:23535--
3	6211-61-1310	· SHAFT	1	SN:23535--
4	6210-61-1410	· GEAR	1	SN:23535--
5	6211-61-1530	· SEAL¤ WATER (K6)	1	SN:25740--
6	6210-61-1510	· SEAL,OIL (K6)	1	SN:23535--
7	04065-06220	· RING,SNAP	1	SN:23535--
8	6210-61-1360	· SPACER	2	SN:23535--
9	06030-06305	· BEARING,BALL	2	SN:23535--
10	6210-61-1520	· SEAL,OIL (K6)	1	SN:23535--
11	6210-61-1350	· FLANGE	1	SN:23535--
12	6211-61-1170	· GASKET (K6)	1	SN:23535--
13	6211-61-1150	· COVER	1	SN:23535--
14	01010-80820	· BOLT	6	SN:23535--
15	01641-00812	· WASHER	6	SN:23535--
16	01010-31020	· BOLT,(FOR SHIPPING)	3	SN:23535--
17	01641-01016	· WASHER,(FOR SHIPPING)	3	SN:23535--
18	07000-72115	O-RING	1	SN:25244--
19	07000-72070	O-RING	1	SN:25244--
20	01010-81095	BOLT	3	SN:23535--
21	01010-81080	BOLT	1	SN:25244--
22	01640-21016	WASHER	4	SN:25244--
23	6210-61-6310	TUBE	1	SN:23535--
24	6210-61-6620	ELBOW	1	SN:23535--
25	07730-50004	VALVE	1	SN:23535--
26	6210-61-6331	GASKET (K6)	1	SN:23535--

Printed By : Dwi Iswanto (airafather6107170)

S6D140E-2B S/N 23227-UP
WATER PUMP(#25740-)

Item	Part No.	Description	Qty	Options
27	6210-61-6341	GASKET (K6)	1	SN:23535--
28	6166-11-6290	O-RING (K6)	1	SN:23535--
29	01437-11080	BOLT	3	SN:23535--
30	01437-11030	BOLT	3	SN:23535--
31	6210-61-6511	TUBE	1	SN:23535--
32	02893-05037	O-RING (K6)	2	SN:23535--
33	6210-61-6520	SPRING	1	SN:23535--
34	6210-61-6410	HOUSING,THERMOSTAT	1	SN:23535--
35	07062-00000	VALVE	1	SN:23535--
36	6210-61-6421	GASKET (K2)	1	SN:23535--
37	01437-01065	BOLT	5	SN:23535--
38	01438-11010	BOLT	1	SN:23535--
39	6162-13-6440	SEAL,OIL (K2)	2	SN:23535--
40	600-421-6630	THERMOSTAT	2	SN:23535--
41	6210-61-6260	CONNECTOR	1	SN:23535--
42	6210-61-6441	GASKET (K2)	1	SN:23535--
43	01010-81025	BOLT	2	SN:23535--

Printed By : Dwi Iswanto (airafather6107170)

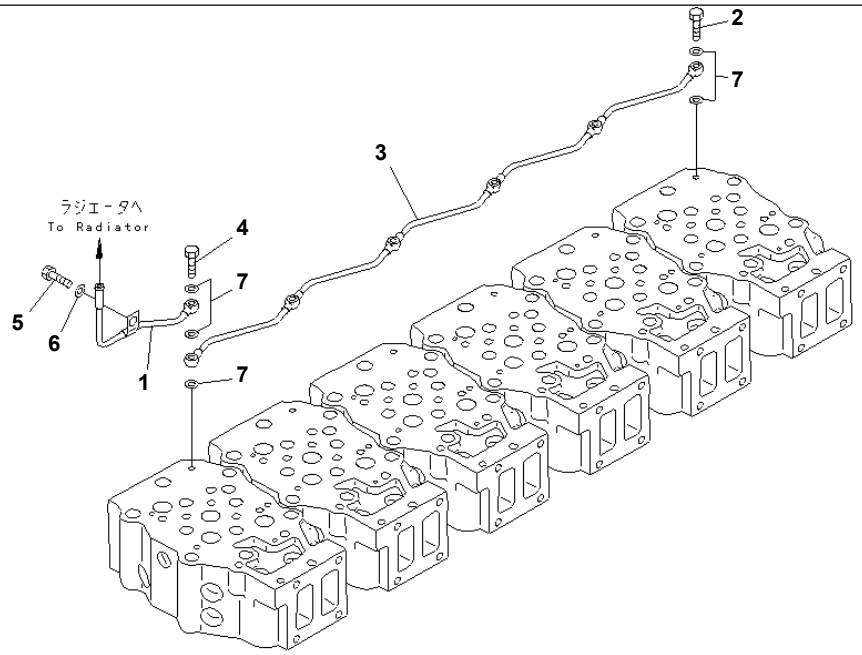

PGD1365

S6D140E-2B S/N 23227-UP

AIR VENT(#23535-25739)

Item	Part No.	Description	Qty	Options
1	6210-11-6611	TUBE	1	SN:23535--@
2	07206-30710	BOLT,JOINT	5	SN:23535--@
3	6210-11-6521	TUBE	1	SN:23535--@
4	6215-11-6560	BOLT,JOINT	1	SN:23535--@
5	01050-31020	BOLT	1	SN:23535--@
6	01640-21016	WASHER	1	SN:23535--@
7	07003-01015	GASKET (K1)	13	SN:23535--@

Printed By : Dwi Iswanto (airafather6107170)

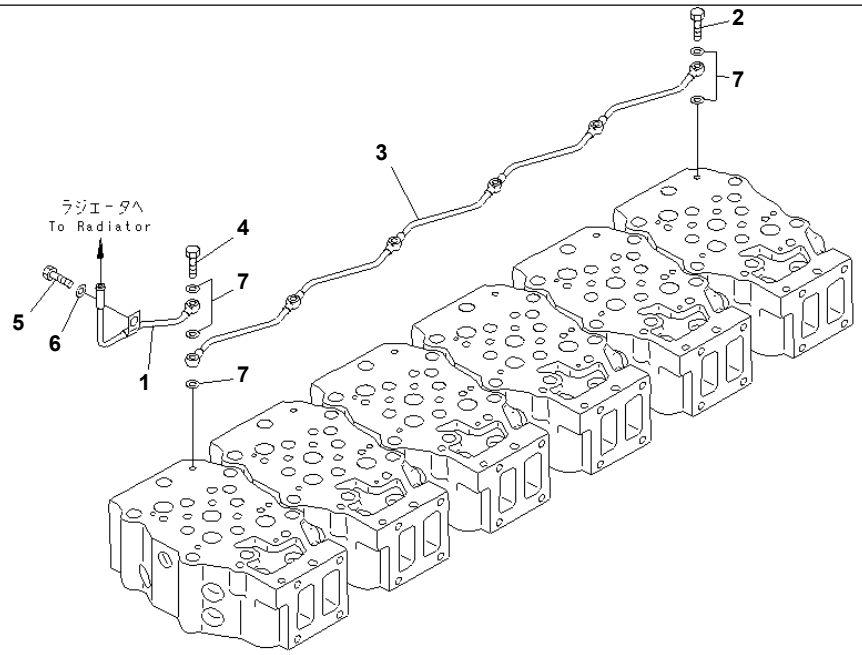

PGD1365

S6D140E-2B S/N 23227-UP
AIR VENT(#25740-)

Item	Part No.	Description	Qty	Options
1	6210-11-6611	TUBE	1	SN:23535--
2	07206-30710	BOLT,JOINT	5	SN:23535--
3	6210-11-6521	TUBE	1	SN:23535--
4	6215-11-6560	BOLT,JOINT	1	SN:23535--
5	01050-31020	BOLT	1	SN:23535--
6	01640-21016	WASHER	1	SN:23535--
7	07003-01015	GASKET (K1)	13	SN:23535--

Printed By : Dwi Iswanto (airafather6107170)

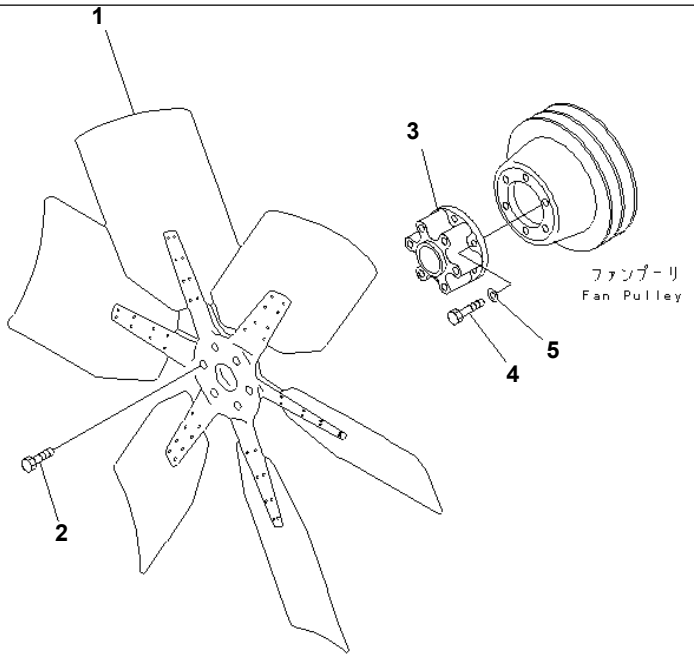

PGD1495

Ref. A5030-A4B4 **Page 030580**

S6D140E-2B S/N 23227-UP
COOLING FAN(#23535-)

Item	Part No.	Description	Qty	Options
1	600-633-0851	FAN	1	SN:23535--
2	01010-81030	BOLT	6	SN:23535--
3	6151-61-3840	SPACER	1	SN:23535--
4	01010-81055	BOLT	6	SN:23535--
5	01643-31032	WASHER	6	SN:23535--

Printed By : Dwi Iswanto (airafather6107170)

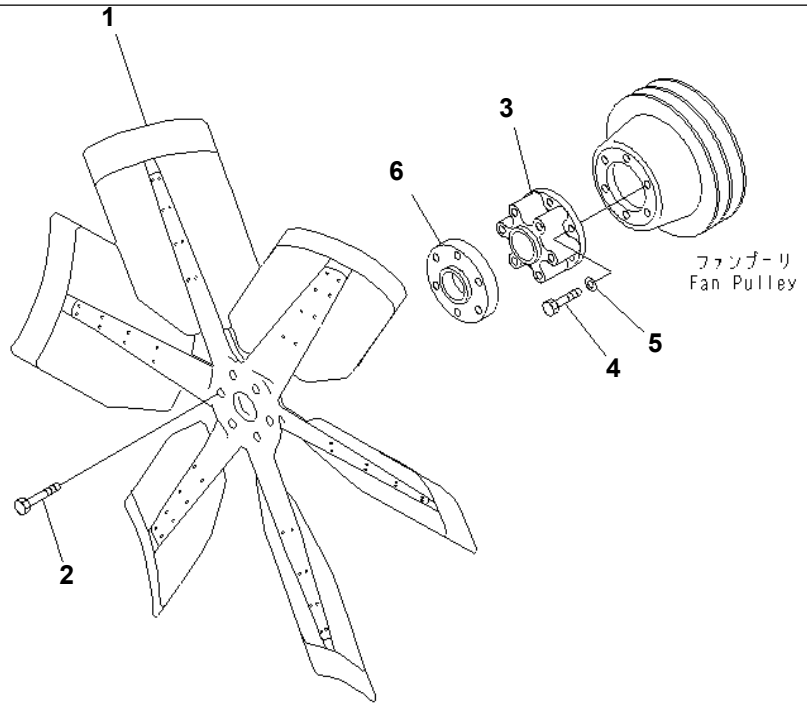

PJD5098

S6D140E-2B S/N 23227-UP

COOLING FAN (SUCTION FAN)(#25035-)

Item	Part No.	Description	Qty	Options
1	600-635-0850	FAN	1	SN:25035--
2	01010-81050	BOLT	6	SN:25035--
3	6151-61-3840	SPACER	1	SN:25035--
4	01010-81055	BOLT	6	SN:25035--
5	01643-31032	WASHER	6	SN:25035--
6	6211-62-3111	SPACER	1	SN:25035--

Printed By : Dwi Iswanto (airafather6107170)

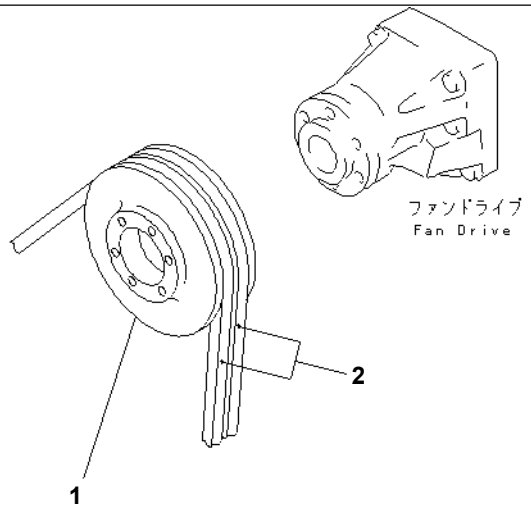

PGD1496

S6D140E-2B S/N 23227-UP

FAN PULLEY (HARDENING PULLEY)(#23535-)

Item	Part No.	Description	Qty	Options
1	6211-62-3150	PULLEY¤ HARDENING	1	SN:23535--
2	04121-22570	V-BELT SET	1	SN:23535--

Printed By : Dwi Iswanto (airafather6107170)

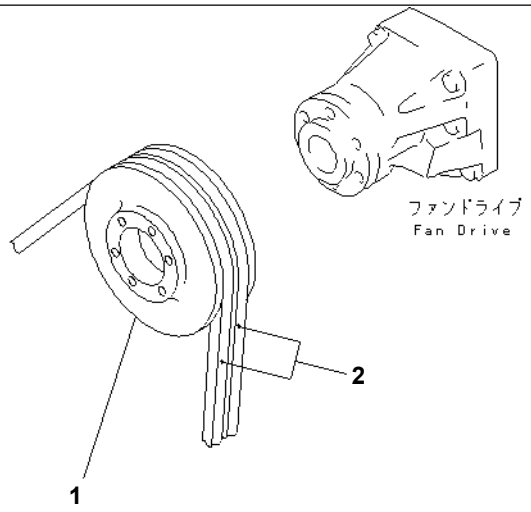

PGD1496

Ref. A5050-A4C5 **Page 030600**

S6D140E-2B S/N 23227-UP
FAN PULLEY (NON HARDENING PULLEY)(#23535-)

Item	Part No.	Description	Qty	Options
1	6211-62-3120	PULLEY	1	SN:23535--
2	04121-22570	V-BELT SET	1	SN:23535--

Ref. A5050-A4C5 **Page 030600**

Printed By : Dwi Iswanto (airafather6107170)

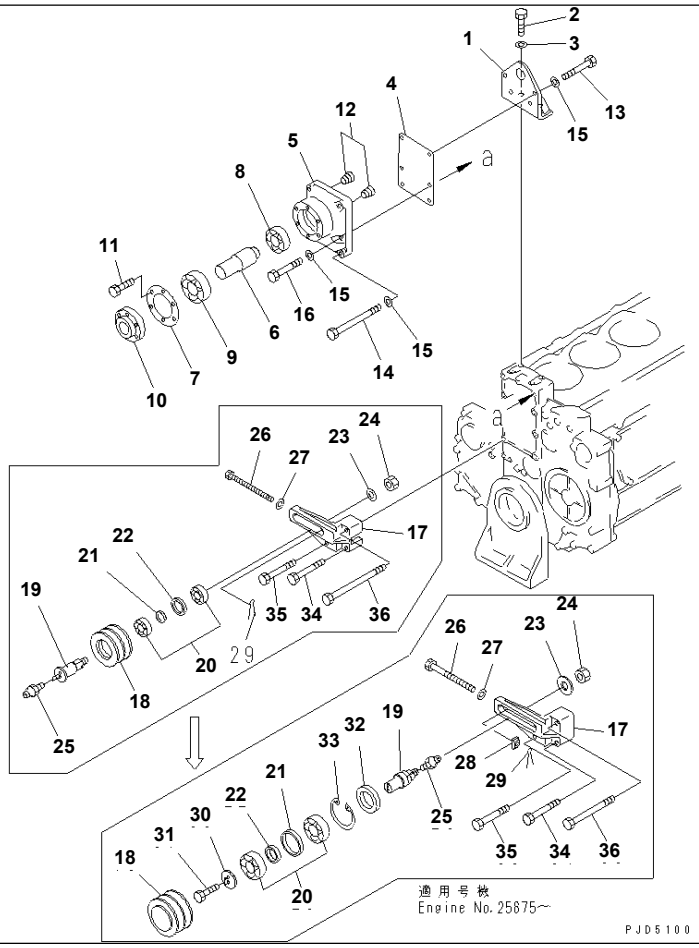

Ref. A5060-A4C3 **Page 030610**

S6D140E-2B S/N 23227-UP
FAN DRIVE (WITH HARDENING PULLEY)(#23535-)

Item	Part No.	Description	Qty	Options
1	6211-61-3260	BRACKET	1	SN:23535--
2	01010-81030	BOLT	2	SN:23535--
3	01643-31032	WASHER	2	SN:23535--
4	6211-62-3260	PLATE	1	SN:23535--
	6211-61-3300	FAN DRIVE ASS'Y	1	SN:23535--
5	6211-61-3250	· HOUSING	1	SN:23535--
6	6211-61-3330	· SHAFT	1	SN:23535--
7	6211-61-3240	· PLATE	1	SN:23535--
8	06037-06208	· BEARING,BALL	1	SN:23535--
9	06037-06309	· BEARING,BALL	1	SN:23535--
10	6211-61-3320	· BOSS	1	SN:23535--
11	01010-80812	· BOLT	6	SN:23535--
12	07043-50108	· PLUG	2	SN:23535--
13	01010-81235	BOLT	2	SN:23535--
14	01011-81210	BOLT	2	SN:23535--
15	01643-31232	WASHER	6	SN:23535--
16	01010-81240	BOLT	2	SN:23535--
	6211-62-4800	TENSION PULLEY ASS'Y,(WITH HARDENING PULLEY)	1	SN:25875--
	6211-62-3900	TENSION PULLEY ASS'Y,(WITH HARDENING PULLEY)	1	SN:23535--25874
17	6211-62-4710	· BRACKET	1	SN:25875--
	6211-62-3820	· BRACKET	1	SN:23535--25874
18	6211-61-4710	· PULLEY¤ HARDENING	1	SN:25875--
	6211-61-3810	· PULLEY¤ HARDENING	1	SN:23535--25874
19	6211-62-4730	· SHAFT	1	SN:25875--
	6211-62-3830	· SHAFT	1	SN:23535--25874
20	6212-61-3720	· BEARING,BALL	2	SN:25875--
	06037-06007	· BEARING,BALL	2	SN:23535--25874

Printed By : Dwi Iswanto (airafather6107170)

S6D140E-2B S/N 23227-UP

FAN DRIVE (WITH HARDENING PULLEY)(#23535-)

Item	Part No.	Description	Qty	Options
21	6211-61-4780	· SPACER	1	SN:25875--
	6211-61-3881	· SPACER	1	SN:23535--25874
22	6211-61-4780	· SPACER	1	SN:25875--
	6211-61-3970	· SPACER	1	SN:23535--25874
23	6211-61-3890	· PLATE	1	SN:23535--
24	01583-02012	· NUT	1	SN:25875--
	01582-02016	· NUT	1	SN:23535--25874
25	07020-00000	· FITTING	1	SN:25875--
	07043-70108	· PLUG	2	SN:23535--25874
26	6211-61-3840	· BOLT,ADJUSTING	1	SN:23535--
27	6211-61-3850	· WASHER	1	SN:25875--
	01643-30823	· WASHER	1	SN:23535--25874
28	6211-61-3860	· NUT	1	SN:25875--
29	04050-12015	· PIN,COTTER	1	SN:23535--
30	6211-61-4760	· PLATE	1	SN:25875--
31	01010-80820	· BOLT	2	SN:25875--
32	07011-00045	· SEAL	1	SN:25875--
33	04065-06525	· RING,SNAP	1	SN:25875--
34	01010-81260	BOLT	1	SN:25875--
	01010-81275	BOLT	1	SN:23535--25874
35	01010-81290	BOLT	1	SN:25875--
	01011-81200	BOLT	1	SN:23535--25874
36	01011-81230	BOLT	1	SN:25875--
	01011-81245	BOLT	1	SN:23535--25874

Printed By : Dwi Iswanto (airafather6107170)

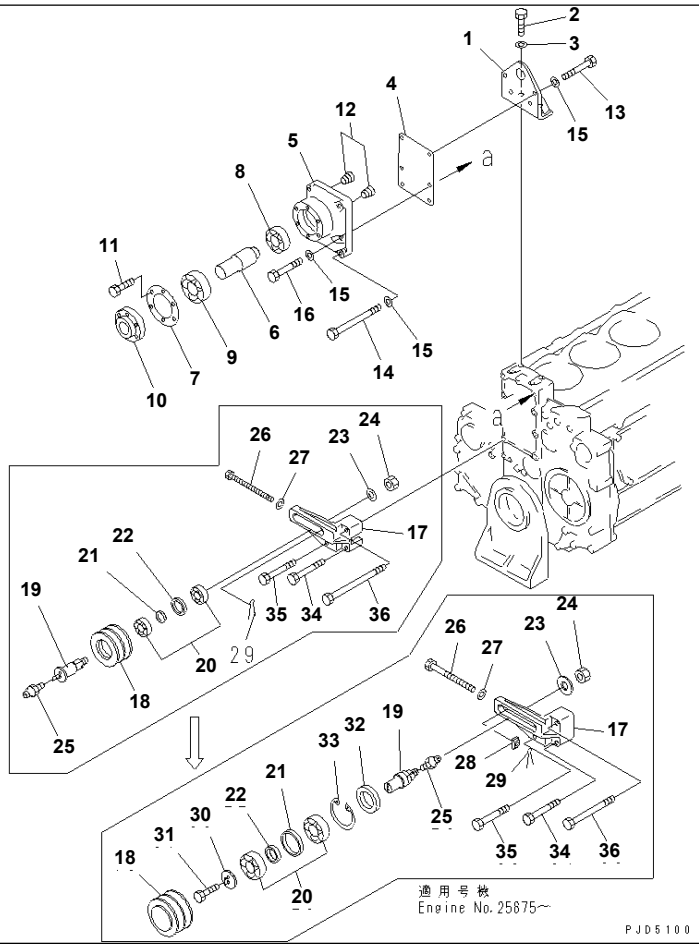

Ref. A5060-A4C4 **Page 030620**

S6D140E-2B S/N 23227-UP
FAN DRIVE (WITH NON HARDENING PULLEY)(#23535-)

Item	Part No.	Description	Qty	Options
1	6211-61-3260	BRACKET	1	SN:23535--
2	01010-81030	BOLT	2	SN:23535--
3	01643-31032	WASHER	2	SN:23535--
4	6211-62-3260	PLATE	1	SN:23535--
	6211-61-3300	FAN DRIVE ASS'Y	1	SN:23535--
5	6211-61-3250	· HOUSING	1	SN:23535--
6	6211-61-3330	· SHAFT	1	SN:23535--
7	6211-61-3240	· PLATE	1	SN:23535--
8	06037-06208	· BEARING,BALL	1	SN:23535--
9	06037-06309	· BEARING,BALL	1	SN:23535--
10	6211-61-3320	· BOSS	1	SN:23535--
11	01010-80812	· BOLT	6	SN:23535--
12	07043-50108	· PLUG	2	SN:23535--
13	01010-81235	BOLT	2	SN:23535--
14	01011-81210	BOLT	2	SN:23535--
15	01643-31232	WASHER	6	SN:23535--
16	01010-81240	BOLT	2	SN:23535--
	6211-62-4700	TENSION PULLEY ASS'Y,(WITH NON HARDENING PULLEY)	1	SN:25875--
	6211-62-3800	TENSION PULLEY ASS'Y,(WITH NON HARDENING PULLEY)	1	SN:23535--25874
17	6211-62-4710	· BRACKET	1	SN:25875--
	6211-62-3820	· BRACKET	1	SN:23535--25874
18	6211-62-4720	· PULLEY,NON HARDENING	1	SN:25875--
	6211-61-3910	· PULLEY,NON HARDENING	1	SN:23535--25874
19	6211-62-4730	· SHAFT	1	SN:25875--
	6211-62-3830	· SHAFT	1	SN:23535--25874
20	6212-61-3720	· BEARING,BALL	2	SN:25875--
	06037-06007	· BEARING,BALL	2	SN:23535--25874

Ref. A5060-A4C4 **Page 030620**

FAN DRIVE (WITH NON HARDENING PULLEY)(#23535-)

Item	Part No.	Description	Qty	Options
21	6211-61-4770	· SPACER	1	SN:25875--
	6211-61-3881	· SPACER	1	SN:23535--25874
22	6211-61-4780	· SPACER	1	SN:25875--
	6211-61-3970	· SPACER	1	SN:23535--25874
23	6211-61-3890	· PLATE	1	SN:23535--
24	01583-02012	· NUT	1	SN:25875--
	01582-02016	· NUT	1	SN:23535--25874
25	07020-00000	· FITTING	1	SN:25875--
	07043-70108	· PLUG	2	SN:23535--25874
26	6211-61-3840	· BOLT,ADJUSTING	1	SN:23535--
27	6211-61-3850	· WASHER	1	SN:25875--
	01643-30823	· WASHER	1	SN:23535--25874
28	6211-61-3860	· NUT	1	SN:25875--
29	04050-12015	· PIN,COTTER	1	SN:23535--
30	6211-61-4760	· PLATE	1	SN:25875--
31	01010-80820	· BOLT	2	SN:25875--
32	07011-00045	· SEAL	1	SN:25875--
33	04065-06525	· RING,SNAP	1	SN:25875--
34	01010-81260	BOLT	1	SN:25875--
	01010-81275	BOLT	1	SN:23535--25874
35	01010-81290	BOLT	1	SN:25875--
	01011-81200	BOLT	1	SN:23535--25874
36	01011-81230	BOLT	1	SN:25875--
	01011-81245	BOLT	1	SN:23535--25874

Printed By : Dwi Iswanto (airafather6107170)

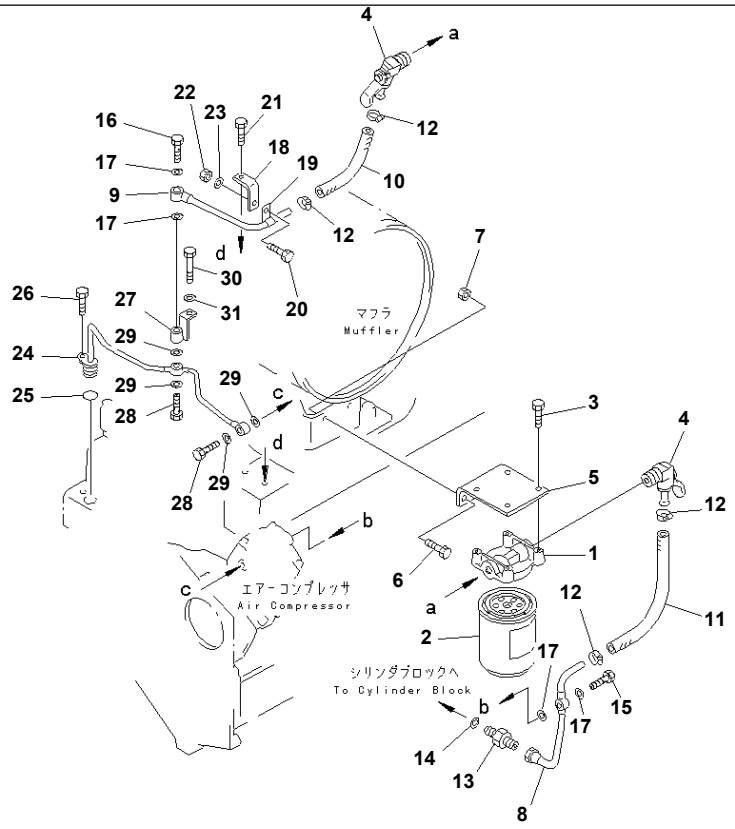

PGD1498

S6D140E-2B S/N 23227-UP

CORROSION RESISTOR(#23535-)

Item	Part No.	Description	Qty	Options
	6150-61-8172	RESISTOR ASS'Y,CORROSION	1	SN:23535--
1	6150-61-8211	· HEAD	1	SN:23535--
2	600-411-1151	· CARTRIDGE	1	SN:23535--
3	02010-70625	BOLT	4	SN:24088--
	□02010-20625	BOLT	4	SN:23535--24087
4	6150-61-8411	VALVE	2	SN:23535--
5	6211-61-8110	BRACKET	1	SN:23535--
6	01010-81025	BOLT	2	SN:23535--
7	01580-11008	NUT	2	SN:23535--
8	6211-61-8521	TUBE	1	SN:23535--
9	6211-61-8530	TUBE	1	SN:23535--
10	07260-20918	HOSE	1	SN:25574--
	□07260-20920	HOSE	1	SN:23535--25573
11	07260-20928	HOSE	1	SN:23535--
12	07281-00197	CLAMP	4	SN:23535--
13	205-62-55280	NIPPLE	1	SN:23535--
14	07005-01412	GASKET (K8)	1	SN:23535--
15	07206-31014	BOLT,JOINT	1	SN:23535--
16	07206-31014	BOLT,JOINT	1	SN:23535--
17	07005-01412	GASKET (K2)	2	SN:23535--
	07005-01412	GASKET (K8)	2	SN:23535--
18	6114-51-7890	PLATE	1	SN:23535--
19	600-050-2220	CLAMP	1	SN:23535--
20	01010-81016	BOLT	1	SN:23535--
21	01010-81025	BOLT	1	SN:23535--
22	01580-01008	NUT	1	SN:23535--
23	01643-51032	WASHER	1	SN:23535--

Ref. A5210-A4A1 Page 030630

Printed By : Dwi Iswanto (airafather6107170)

S6D140E-2B S/N 23227-UP

CORROSION RESISTOR(#23535-)

Item	Part No.	Description	Qty	Options
24	6210-81-5370	TUBE,WATER	1	SN:23535--
25	07000-03025	O-RING (K8)	1	SN:23535--
26	01010-81025	BOLT	1	SN:23535--
27	6210-81-5190	BRACKET	1	SN:23535--
28	07206-31014	BOLT,JOINT	2	SN:23535--
29	07005-01412	GASKET (K8)	4	SN:23535--
30	01437-01090	BOLT	1	SN:23535--
31	01643-51032	WASHER	1	SN:23535--

Printed By : Dwi Iswanto (airafather6107170)

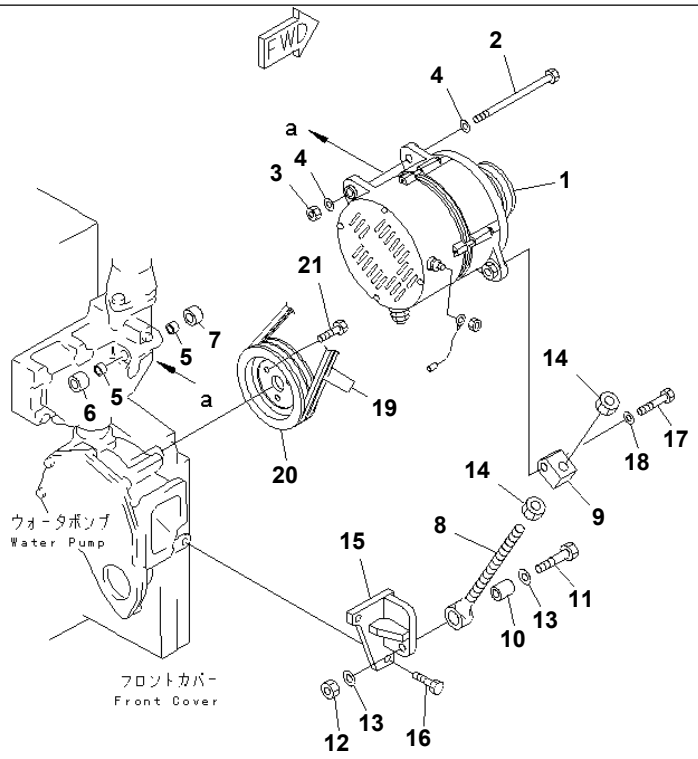

PGD1373

S6D140E-2B S/N 23227-UP

ALTERNATOR MOUNTING (50A) (WITH NON HARDENING PULLEY)(#23535-)

Item	Part No.	Description	Qty	Options
1	(600-821-9770)	ALTERNATOR A. (50A),(SEE FIG.A6010-B4F1)	1	SN:23535--
2	6711-21-6390	BOLT	1	SN:23535--
3	02215-10811	NUT	1	SN:23535--
4	01640-21323	WASHER	2	SN:23535--
5	6210-61-6530	PIN	2	SN:23535--
6	6144-85-6550	SPACER	1	SN:23535--
7	6210-81-6750	SPACER	1	SN:23535--
8	6150-82-8610	ROD,ADJUST	1	SN:23535--
9	6150-82-8690	PLATE	1	SN:23535--
10	6215-81-6150	PIN	1	SN:23535--
11	01010-81260	BOLT	1	SN:23535--
12	01580-11210	NUT	1	SN:23535--
13	01643-31232	WASHER	2	SN:23535--
14	01580-11411	NUT	2	SN:23535--
15	6210-82-6570	BRACKET	1	SN:23535--
16	01010-81025	BOLT	2	SN:23535--
17	01050-51255	BOLT	1	SN:23535--
18	01643-31232	WASHER	1	SN:23535--
19	6212-85-6840	V-BELT SET	1	SN:23535--
20	6210-82-6850	PULLEY¤NON HARDENING	1	SN:23535--
21	01010-80820	BOLT	3	SN:23535--

Printed By : Dwi Iswanto (airafather6107170)

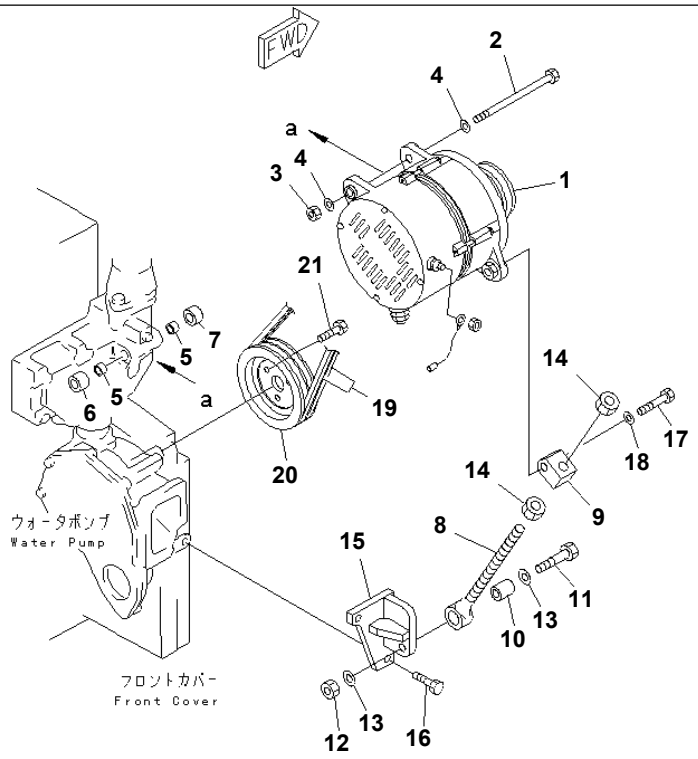

P G D 1 3 7 3

Ref. A6010-A4F2 **Page 030650**

S6D140E-2B S/N 23227-UP
ALTERNATOR MOUNTING (50A) (WITH HARDENING PULLEY)(#23535-)

Item	Part No.	Description	Qty	Options
1	(600-825-6410)	ALTERNATOR A. (50A),(SEE FIG.A6010-B4F2)	1	SN:23535--
2	6711-21-6390	BOLT	1	SN:23535--
3	02215-10811	NUT	1	SN:23535--
4	01640-21323	WASHER	2	SN:23535--
5	6210-61-6530	PIN	2	SN:23535--
6	6144-85-6550	SPACER	1	SN:23535--
7	6210-81-6750	SPACER	1	SN:23535--
8	6150-82-8610	ROD,ADJUST	1	SN:23535--
9	6150-82-8690	PLATE	1	SN:23535--
10	6215-81-6150	PIN	1	SN:23535--
11	01010-81260	BOLT	1	SN:23535--
12	01580-11210	NUT	1	SN:23535--
13	01643-31232	WASHER	2	SN:23535--
14	01580-11411	NUT	2	SN:23535--
15	6210-82-6570	BRACKET	1	SN:23535--
16	01010-81025	BOLT	2	SN:23535--
17	01050-51255	BOLT	1	SN:23535--
18	01643-31232	WASHER	1	SN:23535--
19	6212-85-6840	V-BELT SET	1	SN:23535--
20	6210-82-6840	PULLEY¤ HARDENING	1	SN:23535--
21	01010-80820	BOLT	3	SN:23535--

Printed By : Dwi Iswanto (airafather6107170)

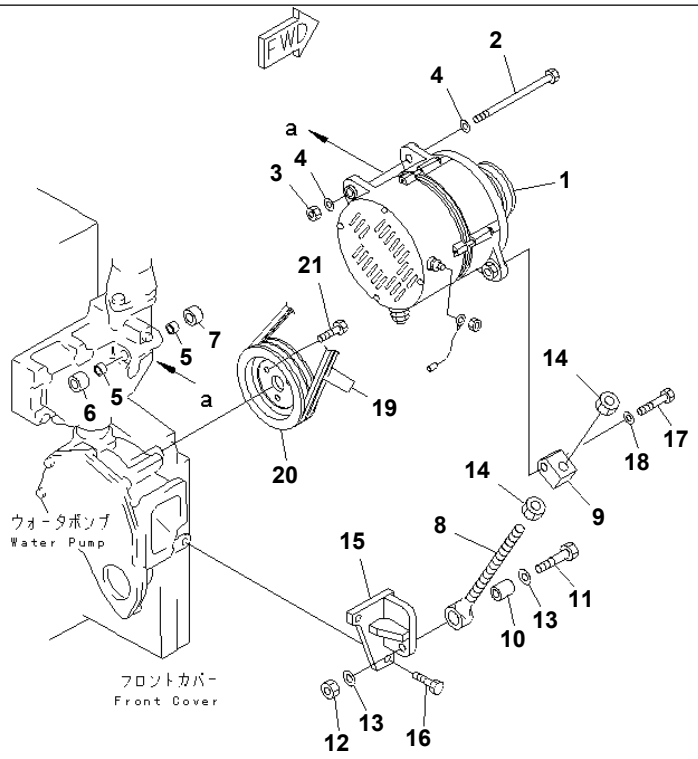

PGD1373

S6D140E-2B S/N 23227-UP

ALTERNATOR MOUNTING (75A) (WITH NON HARDENING PULLEY)(#23535-)

Item	Part No.	Description	Qty	Options
1	(600-825-7110)	ALTERNATOR A. (75A),(SEE FIG.A6010-B4F3)	1	SN:23535--
2	6711-21-6390	BOLT	1	SN:23535--
3	02215-10811	NUT	1	SN:23535--
4	01640-21323	WASHER	2	SN:23535--
5	6210-61-6530	PIN	2	SN:23535--
6	6144-85-6550	SPACER	1	SN:23535--
7	6210-81-6750	SPACER	1	SN:23535--
8	6150-82-8610	ROD,ADJUST	1	SN:23535--
9	6150-82-8690	PLATE	1	SN:23535--
10	6215-81-6150	PIN	1	SN:23535--
11	01010-81260	BOLT	1	SN:23535--
12	01580-11210	NUT	1	SN:23535--
13	01643-31232	WASHER	2	SN:23535--
14	01580-11411	NUT	2	SN:23535--
15	6210-82-6570	BRACKET	1	SN:23535--
16	01010-81025	BOLT	2	SN:23535--
17	01050-51255	BOLT	1	SN:23535--
18	01643-31232	WASHER	1	SN:23535--
19	6212-85-6840	V-BELT SET	1	SN:23535--
20	6210-82-6850	PULLEY¤NON HARDENING	1	SN:23535--
21	01010-80820	BOLT	3	SN:23535--

Printed By : Dwi Iswanto (airafather6107170)

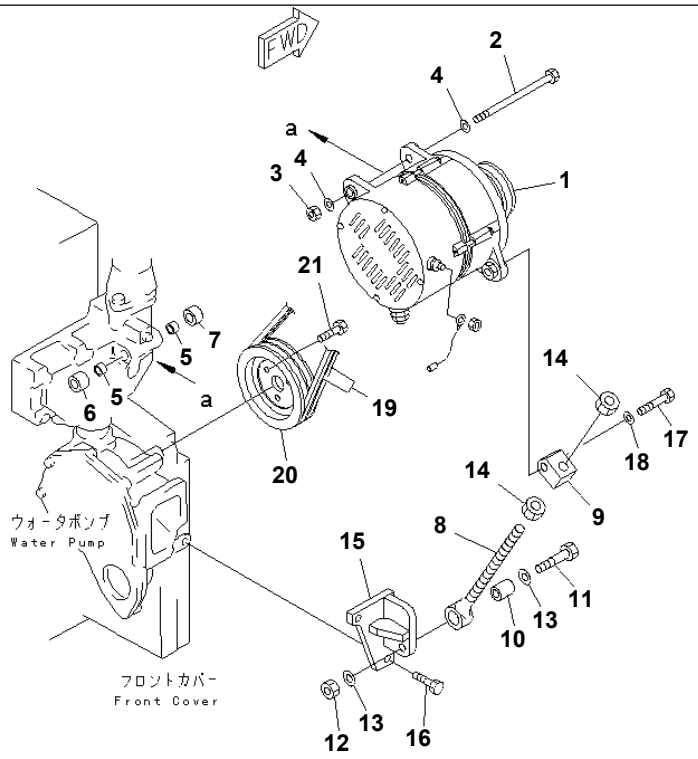

P G D 1 3 7 3

Ref. A6010-A4F6 **Page 030670**

S6D140E-2B S/N 23227-UP
ALTERNATOR MOUNTING (75A) (WITH HARDENING PULLEY)(#24911-)

Item	Part No.	Description	Qty	Options
1	(600-825-7210)	ALTERNATOR A. (75A),(SEE FIG.A6010-B4F6)	1	SN:24911--
2	6711-21-6390	BOLT	1	SN:24911--
3	02215-10811	NUT	1	SN:24911--
4	01640-21323	WASHER	2	SN:24911--
5	6210-61-6530	PIN	2	SN:24911--
6	6144-85-6550	SPACER	1	SN:24911--
7	6210-81-6750	SPACER	1	SN:24911--
8	6150-82-8610	ROD,ADJUST	1	SN:24911--
9	6150-82-8690	PLATE	1	SN:24911--
10	6215-81-6150	PIN	1	SN:24911--
11	01010-81260	BOLT	1	SN:24911--
12	01580-11210	NUT	1	SN:24911--
13	01643-31232	WASHER	2	SN:24911--
14	01580-11411	NUT	2	SN:24911--
15	6210-82-6570	BRACKET	1	SN:24911--
16	01010-81025	BOLT	2	SN:24911--
17	01050-51255	BOLT	1	SN:24911--
18	01643-31232	WASHER	1	SN:24911--
19	6212-85-6840	V-BELT SET	1	SN:24911--
20	6210-82-6840	PULLEY¤ HARDENING	1	SN:24911--
21	01010-80820	BOLT	3	SN:24911--

Printed By : Dwi Iswanto (airafather6107170)

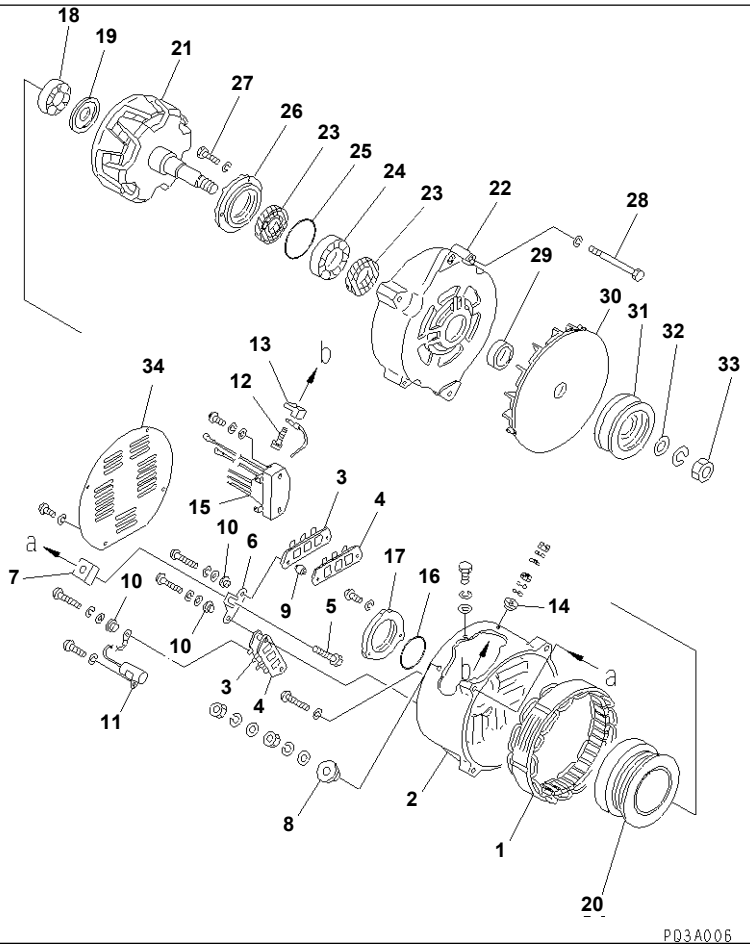

Ref. A6010-B4F1 **Page 030680**

S6D140E-2B S/N 23227-UP
ALTERNATOR (50A) (WITH NON HARDENING PULLEY) (INNER PARTS)(#23535-)

Item	Part No.	Description	Qty	Options
	600-821-9770	ALTERNATOR A. (50A)	1	SN:23535--
THE SAWAFUJI DENKI PART NUMBER IS THAT SD IS REMOVED FROM KOMATSU PART NUMBER LISTED BELOW.				
1	SD1211-35010X0	· STATOR ASS'Y	1	SN:23535--
	SD1230-18802X0	· REAR BRACKET ASS'Y	1	SN:23535--
2	SD2240-19500X0	· · BRACKET,REAR	1	SN:23535--
3	SD1235-06400X0	· · HEAT SINK ASS'Y(+)	2	SN:23535--
4	SD1235-06410X0	· · HEAT SINK ASS'Y(-)	2	SN:23535--
5	SD5010-26400X0	· · BOLT	1	SN:23535--
6	SD3220-38800X0	· · SUPPORT	1	SN:23535--
7	SD4215-04000X0	· · INSULATOR	1	SN:23535--
8	SD4041-07500X0	· · BUSHING	1	SN:23535--
9	SD4215-03900X0	· · INSULATOR	4	SN:23535--
10	SD4041-00900X0	· · BUSHING	4	SN:23535--
11	SD6060-11920X0	· · CONDENSER	1	SN:23535--
12	SD8140-0503010	· · BOLT	1	SN:23535--
13	SD4215-01300X0	· · INSULATOR	1	SN:23535--
14	SD4041-05700X0	· · BUSHING	1	SN:23535--
15	SD1510-02910X0	· · REGULATOR ASS'Y	1	SN:23535--
16	SD4142-01000X0	· O-RING	1	SN:23535--
17	SD2202-01401X0	· COVER	1	SN:23535--
18	SD6206-00730X0	· BEARING,BALL	1	SN:23535--
19	SD3409-00300X0	· COVER	1	SN:23535--
20	SD1251-00700X0	· COIL ASS'Y	1	SN:23535--
21	SD1221-15100X0	· ROTOR ASS'Y	1	SN:23535--
	SD1240-07200X0	· FRONT BRACKET ASS'Y	1	SN:23535--

Printed By : Dwi Iswanto (airafather6107170)

S6D140E-2B S/N 23227-UP

ALTERNATOR (50A) (WITH NON HARDENING PULLEY) (INNER PARTS)(#23535-)

Item	Part No.	Description	Qty	Options
22	SD2242-08600X0	· · BRACKET,FRONT	1	SN:23535--
23	SD6410-02000X0	· · SEAL,OIL	2	SN:23535--
24	SD6206-00320X0	· · BEARING,BALL	1	SN:23535--
25	SD4142-00900X0	· · O-RING	1	SN:23535--
26	SD2202-02200X0	· · COVER	1	SN:23535--
27	SD5010-21500X0	· · BOLT	3	SN:23535--
28	SD5010-04750X0	· BOLT	4	SN:23535--
29	SD3600-17300X0	· COLLAR	1	SN:23535--
30	SD1982-03200X0	· FAN ASS'Y	1	SN:23535--
31	SD2080-28900X0	· PULLEY	1	SN:23535--
32	SD3000-07800X0	· WASHER	1	SN:23535--
33	SD8264-1830010	· NUT	1	SN:23535--
34	SD3002-04600X0	· COVER	1	SN:23535--

Printed By : Dwi Iswanto (airafather6107170)

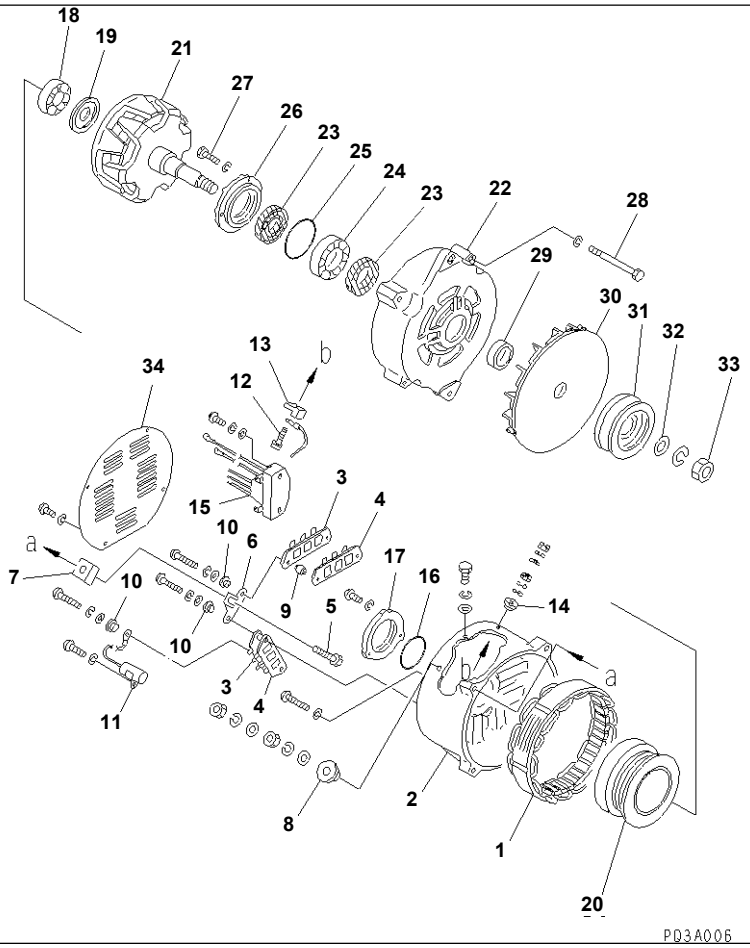

Ref. A6010-B4F2 **Page 030690**

S6D140E-2B S/N 23227-UP

ALTERNATOR (50A) (WITH HARDENING PULLEY) (INNER PARTS)(#23535-)

Item	Part No.	Description	Qty	Options
	600-825-6410	ALTERNATOR A. (50A)	1	SN:23535--
THE SAWAFUJI DENKI PART NUMBER IS THAT SD IS REMOVED FROM KOMATSU PART NUMBER LISTED BELOW.				
1	SD1211-35010X0	· STATOR ASS'Y	1	SN:23535--
	SD1230-18802X0	· REAR BRACKET ASS'Y	1	SN:23535--
2	SD2240-19500X0	· · BRACKET,REAR	1	SN:23535--
3	SD1235-06400X0	· · HEAT SINK ASS'Y(+)	2	SN:23535--
4	SD1235-06410X0	· · HEAT SINK ASS'Y(-)	2	SN:23535--
5	SD5010-26400X0	· · BOLT	1	SN:23535--
6	SD3220-38800X0	· · SUPPORT	1	SN:23535--
7	SD4215-04000X0	· · INSULATOR	1	SN:23535--
8	SD4041-07500X0	· · BUSHING	1	SN:23535--
9	SD4215-03900X0	· · INSULATOR	4	SN:23535--
10	SD4041-00900X0	· · BUSHING	4	SN:23535--
11	SD6060-11920X0	· · CONDENSER	1	SN:23535--
12	SD8140-0503010	· · BOLT	1	SN:23535--
13	SD4215-01300X0	· · INSULATOR	1	SN:23535--
14	SD4041-05700X0	· · BUSHING	1	SN:23535--
15	SD1510-02910X0	· · REGULATOR ASS'Y	1	SN:23535--
16	SD4142-01000X0	· O-RING	1	SN:23535--
17	SD2202-01401X0	· COVER	1	SN:23535--
18	SD6206-00730X0	· BEARING,BALL	1	SN:23535--
19	SD3409-00300X0	· COVER	1	SN:23535--
20	SD1251-00700X0	· COIL ASS'Y	1	SN:23535--
21	SD1221-15100X0	· ROTOR ASS'Y	1	SN:23535--
	SD1240-07200X0	· FRONT BRACKET ASS'Y	1	SN:23535--
22	SD2242-08600X0	· · BRACKET,FRONT	1	SN:23535--

Printed By : Dwi Iswanto (airafather6107170)

ALTERNATOR (50A) (WITH HARDENING PULLEY) (INNER PARTS)(#23535-)

Item	Part No.	Description	Qty	Options
23	SD6410-02000X0	· · SEAL,OIL	2	SN:23535--
24	SD6206-00320X0	· · BEARING,BALL	1	SN:23535--
25	SD4142-00900X0	· · O-RING	1	SN:23535--
26	SD2202-02200X0	· · COVER	1	SN:23535--
27	SD5010-21500X0	· · BOLT	3	SN:23535--
28	SD5010-04750X0	· BOLT	4	SN:23535--
29	SD3600-17300X0	· COLLAR	1	SN:23535--
30	SD1982-03200X0	· FAN ASS'Y	1	SN:23535--
31	SD2080-29000X0	· PULLEY¤ HARDENING	1	SN:23535--
32	SD3000-07800X0	· WASHER	1	SN:23535--
33	SD8264-1830010	· NUT	1	SN:23535--
34	SD3002-04600X0	· COVER	1	SN:23535--

Printed By : Dwi Iswanto (airafather6107170)

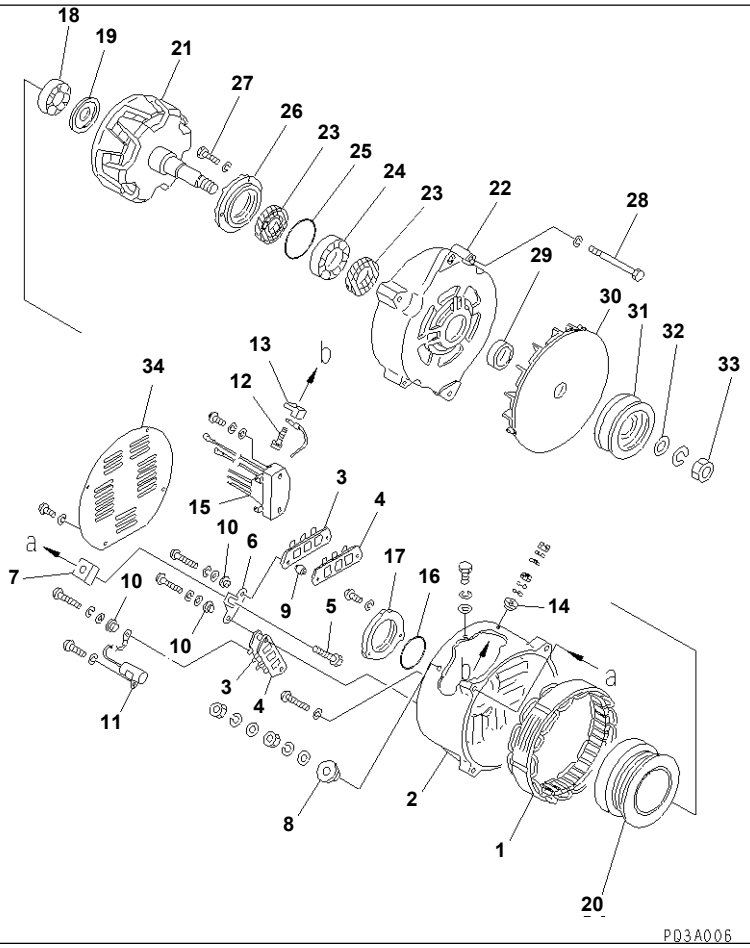

Ref. A6010-B4F3 **Page 030700**

S6D140E-2B S/N 23227-UP
ALTERNATOR (75A) (WITH NON HARDENING PULLEY) (INNER PARTS)(#23535-)

Item	Part No.	Description	Qty	Options
	600-825-7110	ALTERNATOR A. (75A)	1	SN:23535--
THE SAWAFUJI DENKI PART NUMBER IS THAT SD IS REMOVED FROM KOMATSU PART NUMBER LISTED BELOW.				
1	SD1211-40300X0	· STATOR ASS'Y	1	SN:23535--
	SD1230-18802X0	· REAR BRACKET ASS'Y	1	SN:23535--
2	SD2240-19500X0	· · BRACKET,REAR	1	SN:23535--
3	SD1235-06400X0	· · HEAT SINK ASS'Y(+)	2	SN:23535--
4	SD1235-06410X0	· · HEAT SINK ASS'Y(-)	2	SN:23535--
5	SD5010-26400X0	· · BOLT	1	SN:23535--
6	SD3220-38800X0	· · SUPPORT	1	SN:23535--
7	SD4215-04000X0	· · INSULATOR	1	SN:23535--
8	SD4041-07500X0	· · BUSHING	1	SN:23535--
9	SD4215-03900X0	· · INSULATOR	4	SN:23535--
10	SD4041-00900X0	· · BUSHING	4	SN:23535--
11	SD6060-11920X0	· · CONDENSER	1	SN:23535--
12	SD8140-0503010	· · BOLT	1	SN:23535--
13	SD4215-01300X0	· · INSULATOR	1	SN:23535--
14	SD4041-05700X0	· · BUSHING	1	SN:23535--
15	SD1510-02910X0	· · REGULATOR ASS'Y	1	SN:23535--
16	SD4142-01000X0	· O-RING	1	SN:23535--
17	SD2202-01401X0	· COVER	1	SN:23535--
18	SD6206-00730X0	· BEARING,BALL	1	SN:23535--
19	SD3409-00300X0	· COVER	1	SN:23535--
20	SD1251-00700X0	· COIL ASS'Y	1	SN:23535--
21	SD1221-15100X0	· ROTOR ASS'Y	1	SN:23535--
	SD1240-07200X0	· FRONT BRACKET ASS'Y	1	SN:23535--

Printed By : Dwi Iswanto (airafather6107170)

S6D140E-2B S/N 23227-UP

ALTERNATOR (75A) (WITH NON HARDENING PULLEY) (INNER PARTS)(#23535-)

Item	Part No.	Description	Qty	Options
22	SD2242-08600X0	· · BRACKET,FRONT	1	SN:23535--
23	SD6410-02000X0	· · SEAL,OIL	2	SN:23535--
24	SD6206-00320X0	· · BEARING,BALL	1	SN:23535--
25	SD4142-00900X0	· · O-RING	1	SN:23535--
26	SD2202-02200X0	· · COVER	1	SN:23535--
27	SD5010-21500X0	· · BOLT	3	SN:23535--
28	SD5010-04750X0	· BOLT	4	SN:23535--
29	SD3600-17300X0	· COLLAR	1	SN:23535--
30	SD1982-03200X0	· FAN ASS'Y	1	SN:23535--
31	SD2080-28900X0	· PULLEY,NON HARDENING	1	SN:23535--
32	SD3000-07800X0	· WASHER	1	SN:23535--
33	SD8264-1830010	· NUT	1	SN:23535--
34	SD3002-04600X0	· COVER	1	SN:23535--

Printed By : Dwi Iswanto (airafather6107170)

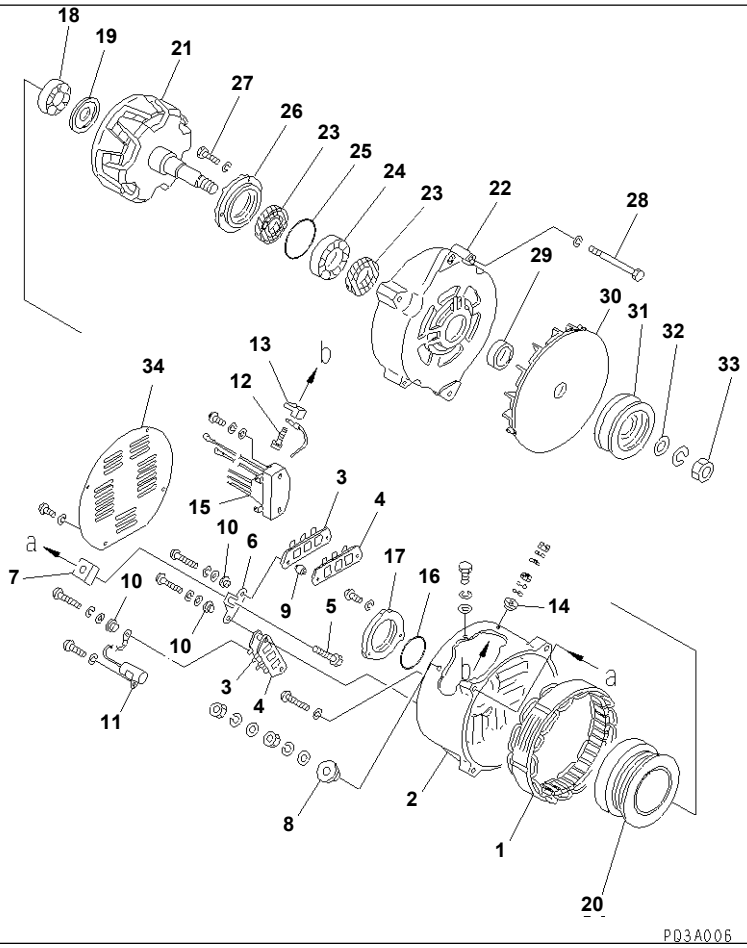

Ref. A6010-B4F6 **Page 030710**

S6D140E-2B S/N 23227-UP

ALTERNATOR (75A) (WITH HARDENING PULLEY) (INNER PARTS)(#24911-)

Item	Part No.	Description	Qty	Options
	600-825-7210	ALTERNATOR A. (75A)	1	SN:24911--
THE SAWAFUJI DENKI PART NUMBER IS THAT SD IS REMOVED FROM KOMATSU PART NUMBER LISTED BELOW.				
1	SD1211-40300X0	· STATOR ASS'Y	1	SN:24911--
	SD1230-18802X0	· REAR BRACKET ASS'Y	1	SN:24911--
2	SD2240-19500X0	· · BRACKET,REAR	1	SN:24911--
3	SD1235-06400X0	· · HEAT SINK ASS'Y(+)	2	SN:24911--
4	SD1235-06410X0	· · HEAT SINK ASS'Y(-)	2	SN:24911--
5	SD5010-26400X0	· · BOLT	1	SN:24911--
6	SD3220-38800X0	· · SUPPORT	1	SN:24911--
7	SD4215-04000X0	· · INSULATOR	1	SN:24911--
8	SD4041-07500X0	· · BUSHING	1	SN:24911--
9	SD4215-03900X0	· · INSULATOR	4	SN:24911--
10	SD4041-00900X0	· · BUSHING	4	SN:24911--
11	SD6060-11920X0	· · CONDENSER	1	SN:24911--
12	SD8140-0503010	· · BOLT	1	SN:24911--
13	SD4215-01300X0	· · INSULATOR	1	SN:24911--
14	SD4041-05700X0	· · BUSHING	1	SN:24911--
15	SD1510-02910X0	· · REGULATOR ASS'Y	1	SN:24911--
16	SD4142-01000X0	· O-RING	1	SN:24911--
17	SD2202-01401X0	· COVER	1	SN:24911--
18	SD6206-00730X0	· BEARING,BALL	1	SN:24911--
19	SD3409-00300X0	· COVER	1	SN:24911--
20	SD1251-00700X0	· COIL ASS'Y	1	SN:24911--
21	SD1221-15100X0	· ROTOR ASS'Y	1	SN:24911--
	SD1240-07200X0	· FRONT BRACKET ASS'Y	1	SN:24911--
22	SD2242-08600X0	· · BRACKET,FRONT	1	SN:24911--

Printed By : Dwi Iswanto (airafather6107170)

ALTERNATOR (75A) (WITH HARDENING PULLEY) (INNER PARTS)(#24911-)

Item	Part No.	Description	Qty	Options
23	SD6410-02000X0	· · SEAL,OIL	2	SN:24911--
24	SD6206-00320X0	· · BEARING,BALL	1	SN:24911--
25	SD4142-00900X0	· · O-RING	1	SN:24911--
26	SD2202-02200X0	· · COVER	1	SN:24911--
27	SD5010-21500X0	· · BOLT	3	SN:24911--
28	SD5010-04750X0	· BOLT	4	SN:24911--
29	SD3600-17300X0	· COLLAR	1	SN:24911--
30	SD1982-03200X0	· FAN ASS'Y	1	SN:24911--
31	SD2080-29000X0	· PULLEY¤ HARDENING,NON HARDENING	1	SN:24911--
32	SD3000-07800X0	· WASHER	1	SN:24911--
33	SD8264-1830010	· NUT	1	SN:24911--
34	SD3002-04600X0	· COVER	1	SN:24911--

Printed By : Dwi Iswanto (airafather6107170)

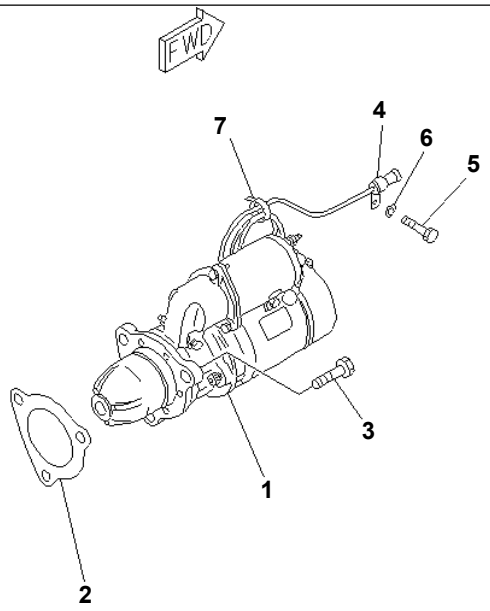

PE38801

Ref. A6210-A4A1 **Page 030720**

S6D140E-2B S/N 23227-UP
STARTING MOTOR MOUNTING (11KW)(#23535-)

Item	Part No.	Description	Qty	Options
1	(600-813-4222)	STARTING MOTOR ASS'Y,(11KW)¤(SEE FIG.A6210-B4A1)	1	SN:23535--
2	6221-81-6810	GASKET (K2)	1	SN:23535--
3	01010-51640	BOLT	3	SN:23535--
4	08052-11711	CLIP	1	SN:23535--
5	01010-81016	BOLT	1	SN:23535--
6	01640-21016	WASHER	1	SN:23535--
7	08034-00519	BAND	1	SN:23535--

Printed By : Dwi Iswanto (airafather6107170)

補給部品
Service Parts

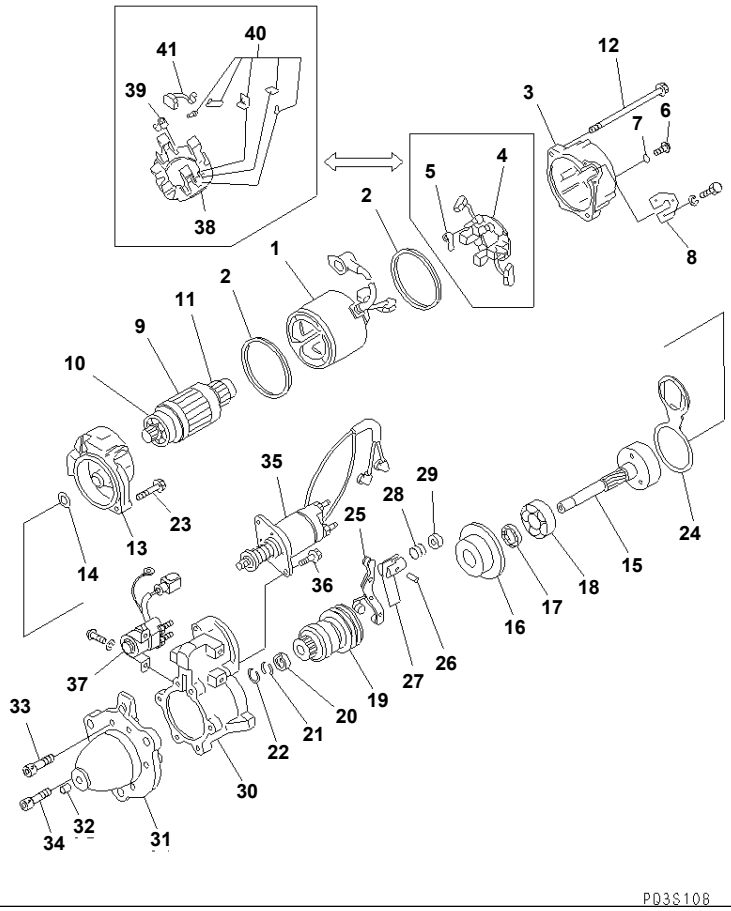

Ref. A6210-B4A1 **Page 030730**

S6D140E-2B S/N 23227-UP
STARTING MOTOR (11KW) (INNER PARTS)(#23535-)

Item	Part No.	Description	Qty	Options
	600-813-4222	STARTING MOTOR ASS'Y,(11KW)	1	SN:23535--
THE SAWAFUJI DENKI PART NUMBER IS THAT SD IS REMOVED FROM KOMATSU PART NUMBER LISTED BELOW.				
1	SD1310-10030X0	· YOKE ASS'Y	1	SN:23535--
2	SD4141-26410X0	· PACKING	2	SN:23535--
3	SD2240-24013X0	· BRACKET,REAR	1	SN:23535--
4	SD1331-04300X0	· BRUSH HOLDER ASS'Y	1	SN:23535--
5	SD5250-02800X0	· · SPRING,BRUSH	4	SN:23535--
6	SD5000-10500X0	· SCREW	2	SN:23535--
7	SD6414-02940X0	· O-RING	2	SN:23535--
8	SD3040-12100X0	· PLATE	1	SN:23535--
9	SD1320-07830X0	· ARMATURE ASS'Y	1	SN:23535--
10	SD6206-01110X0	· · BEARING,BALL	1	SN:23535--
11	SD6206-01120X0	· · BEARING,BALL	1	SN:23535--
12	SD8167-0719060	· BOLT	2	SN:23535--
13	SD2245-00830X0	· CASE,GEAR	1	SN:23535--
14	SD5031-05700X0	· SHIM	1	SN:23535--
15	SD2441-03200X0	· SHAFT	1	SN:23535--
16	SD2244-06902X0	· HOLDER,CENTER	1	SN:23535--
17	SD6410-01000X0	· SEAL,OIL	1	SN:23535--
18	SD6206-01710X0	· BEARING,BALL	1	SN:23535--
19	SD1361-04800X0	· PINION CLUTCH ASS'Y	1	SN:23535--
20	SD3661-02000X0	· STOPPER,PINION	1	SN:23535--
21	SD5221-01200X0	· HOOK	2	SN:23535--
22	SD5058-04200X0	· RING,RETAINING	1	SN:23535--
23	SD5010-27430X0	· BOLT	1	SN:23535--
24	SD4141-26311X0	· PACKING	1	SN:23535--

Printed By : Dwi Iswanto (airafather6107170)

STARTING MOTOR (11KW) (INNER PARTS)(#23535-)

Item	Part No.	Description	Qty	Options
25	SD1372-04200X0	· LEVER ASS'Y	1	SN:23535--
26	SD3600-17800X0	· ROD	1	SN:23535--
27	SD4223-05200X0	· HOLDER,LEVER	2	SN:23535--
28	SD5201-10100X0	· COIL,SPRING	1	SN:23535--
29	SD2407-02101X0	· COLLAR	1	SN:23535--
30	SD2244-06821X0	· BRACKET,CENTER	1	SN:23535--
31	SD2046-14100X9	· CASE ASS'Y,PINION	1	SN:23535--
32	SD2620-10500X9	· · METAL	1	SN:23535--
33	SD5010-26200X0	· BOLT	5	SN:23535--
34	SD5010-26220X0	· BOLT	1	SN:23535--
35	SD1350-10932X9	· SWITCH ASS'Y,ENGAGE	1	SN:23535--
36	SD5010-27300X0	· BOLT	2	SN:23535--
37	SD1599-0010040	· RELAY,SAFETY	1	SN:23535--
38	SD1331-04300X9	BRUSH HOLDER ASS'Y,(SERVICE PARTS)	1	SN:23535--
39	SD5250-02800X0	· SPRING,BRUSH	4	SN:23535--
40	SD2660-07400X6	· BRUSH,(FOR 1ST SERVICE ONLY)	1	SN:23535--
41	SD2660-07400X7	· · BRUSH,(FROM 2ND SERVICE)	4	SN:23535--

Printed By : Dwi Iswanto (airafather6107170)

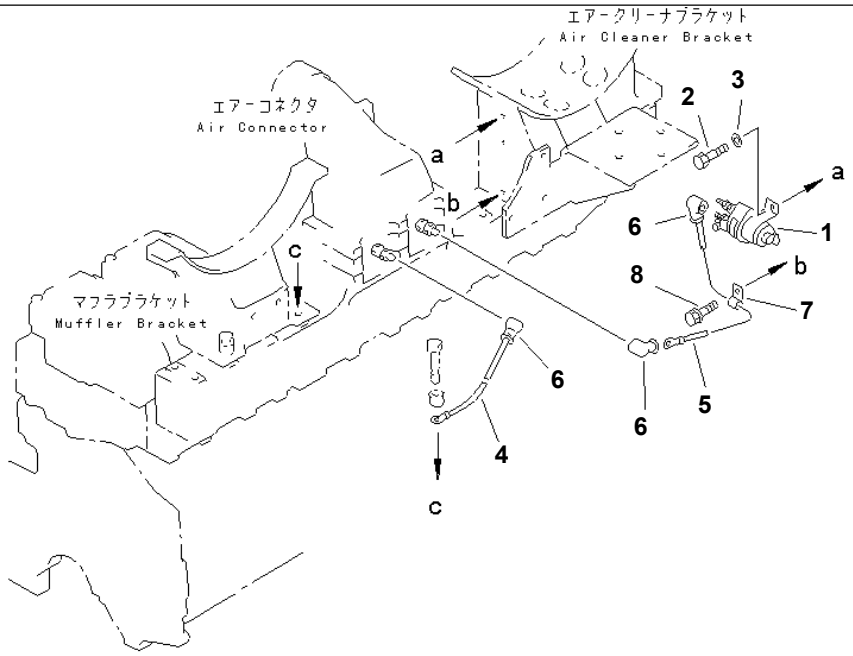

PE38840

Ref. A6810-A4B3 **Page 030740**

S6D140E-2B S/N 23227-UP
HEATER SWITCH WIRING(#23535-)

Item	Part No.	Description	Qty	Options
1	600-815-2170	SWITCH,HEATER	1	SN:23535--
2	01010-80610	BOLT	2	SN:23535--
3	01640-20610	WASHER	2	SN:23535--
4	6211-81-4230	WIRE¤ 220MM	1	SN:23535--
5	6151-81-4490	WIRE¤ 160MM	1	SN:24603--
	□6211-81-4260	WIRE	1	SN:23535--24602
6	08038-00519	CAP	3	SN:23535--
7	08036-00814	CLIP	1	SN:23535--
8	01435-01014	BOLT	1	SN:23535--

Ref. A6810-A4B3 **Page 030740**

Printed By : Dwi Iswanto (airafather6107170)

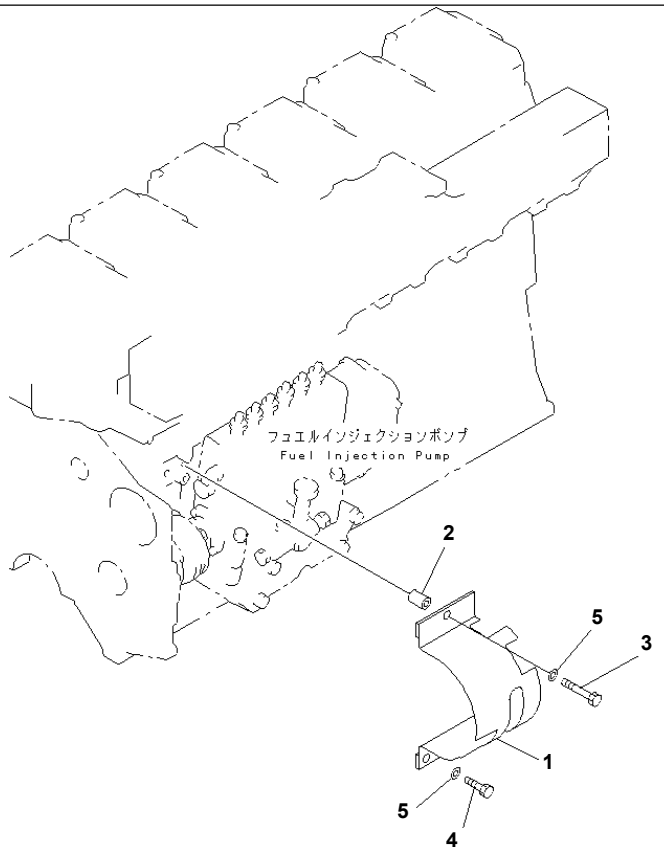

PGD1499

Ref. A6910-A4B6 **Page 030750**

S6D140E-2B S/N 23227-UP
INJECTION PUMP SAFETY GUARD(#23535-)

Item	Part No.	Description	Qty	Options
1	6210-71-3990	COVER	1	SN:23535--
2	6144-11-5630	SPACER,SAFETY	1	SN:23535--
3	01010-81055	BOLT	1	SN:23535--
4	01010-81025	BOLT	2	SN:23535--
5	01643-31032	WASHER	3	SN:23535--

Printed By : Dwi Iswanto (airafather6107170)

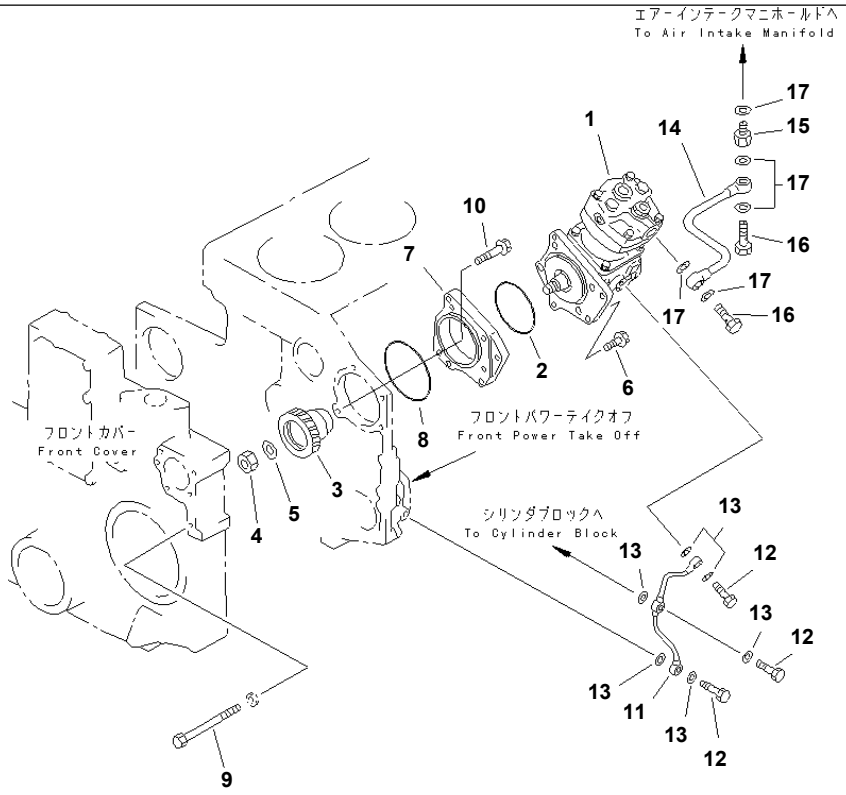

PE38842

Ref. A7010-A4C5 **Page 030760**

S6D140E-2B S/N 23227-UP
AIR COMPRESSOR MOUNTING (1/2)(#23535-)

Item	Part No.	Description	Qty	Options
1	(6210-81-3113)	AIR COMPRESSOR ASS'Y,(SEE FIG.A7010-C4C5)	1	SN:23535--
2	6210-81-3150	O-RING (K8)	1	SN:23535--
3	6210-81-5110	GEAR	1	SN:23535--
4	01583-02012	NUT	1	SN:23535--
5	01643-32060	WASHER	1	SN:23535--
6	01437-01030	BOLT	4	SN:23535--
7	6210-81-5120	SPACER	1	SN:23535--
8	6210-81-5240	O-RING (K8)	1	SN:23535--
9	01011-81000	BOLT	3	SN:23535--
10	6210-81-8350	BOLT	1	SN:23535--
11	6210-81-5380	TUBE,OIL	1	SN:23535--
12	07206-30710	BOLT,JOINT	3	SN:23535--
13	07005-01012	GASKET (K8)	6	SN:23535--
14	6210-81-5310	TUBE,AIR	1	SN:23535--
15	6212-81-5390	NIPPLE	1	SN:23535--
16	6137-81-3140	BOLT,JOINT	2	SN:23535--
17	6164-91-6220	GASKET (K8)	5	SN:23535--

Printed By : Dwi Iswanto (airafather6107170)

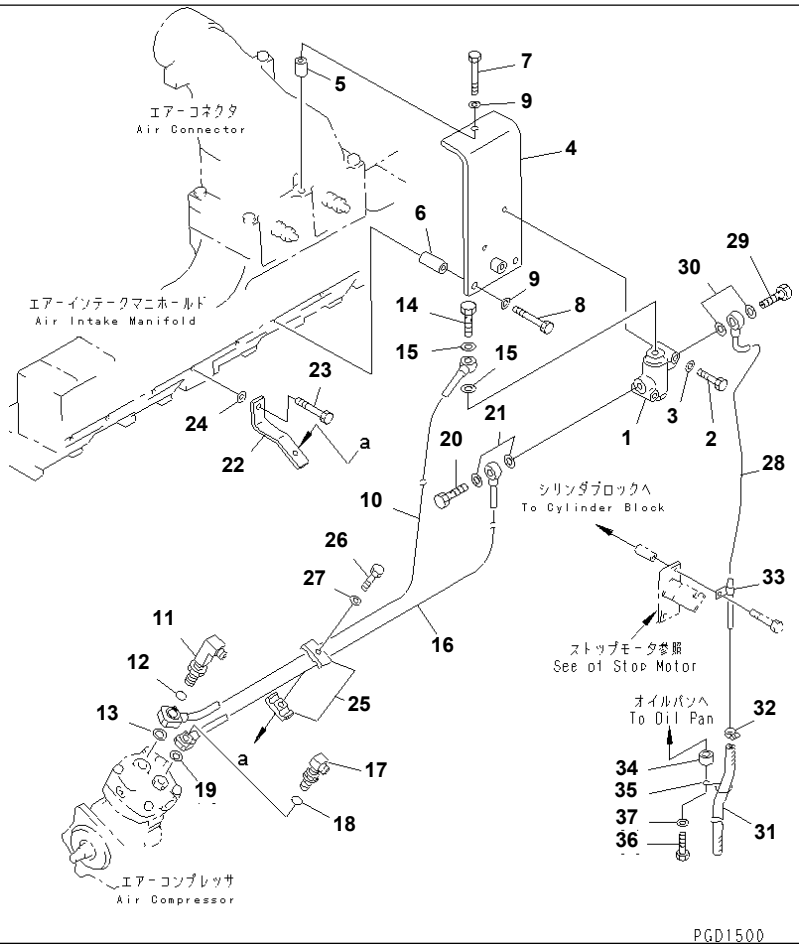

Ref. A7010-B4C5 **Page 030770**

S6D140E-2B S/N 23227-UP

AIR COMPRESSOR RELIF VALVE (2/2)(#23535-)

Item	Part No.	Description	Qty	Options
1	6162-83-6911	UNLOADER VALVE A.	1	SN:23535--
2	01010-81055	BOLT	2	SN:23535--
3	01640-21016	WASHER	2	SN:23535--
4	6210-82-5410	BRACKET	1	SN:23535--
5	6166-11-5391	SPACER	1	SN:23535--
6	6134-11-5120	SPACER	2	SN:23535--
7	01011-81015	BOLT	1	SN:23535--
8	01011-81090	BOLT	2	SN:23535--
9	01640-21016	WASHER	3	SN:23535--
10	6210-81-5510	TUBE	1	SN:23535--
11	6210-82-5570	ELBOW	1	SN:24018--
	□6210-81-5570	ELBOW	1	SN:23535--24017
12	07002-32434	O-RING	1	SN:23535--
13	6164-91-6220	GASKET	1	SN:23535--
14	07206-31014	BOLT,JOINT	1	SN:23535--
15	07003-01419	GASKET	2	SN:23535--
16	6210-81-5520	TUBE	1	SN:23535--
17	6210-82-5580	ELBOW	1	SN:24018--
	□6210-81-5580	ELBOW	1	SN:23535--24017
18	07002-31423	O-RING	1	SN:23535--
19	07003-01419	GASKET	1	SN:23535--
20	07206-31014	BOLT,JOINT	1	SN:23535--
21	07003-01419	GASKET	2	SN:23535--
22	6210-81-5550	PLATE	1	SN:23535--
23	01011-81040	BOLT	1	SN:23535--
24	01640-21016	WASHER	1	SN:23535--
25	6166-71-7850	CLAMP	2	SN:23535--

Printed By : Dwi Iswanto (airafather6107170)

AIR COMPRESSOR RELIF VALVE (2/2)(#23535-)

Item	Part No.	Description	Qty	Options
26	01010-80835	BOLT	1	SN:23535--
27	01640-20816	WASHER	1	SN:23535--
28	6210-81-5532	TUBE	1	SN:23535--
29	07206-31014	BOLT,JOINT	1	SN:23535--
30	07003-01419	GASKET	2	SN:23535--
31	07260-20990	HOSE	1	SN:23535--
32	07285-00155	CLIP	1	SN:23535--
33	04434-51010	CLIP	1	SN:23535--
34	6131-12-5920	SPACER	1	SN:23535--
35	6130-22-5290	CLIP	1	SN:23535--
36	01010-81045	BOLT	1	SN:23535--
37	01643-31032	WASHER	1	SN:23535--

Printed By : Dwi Iswanto (airafather6107170)

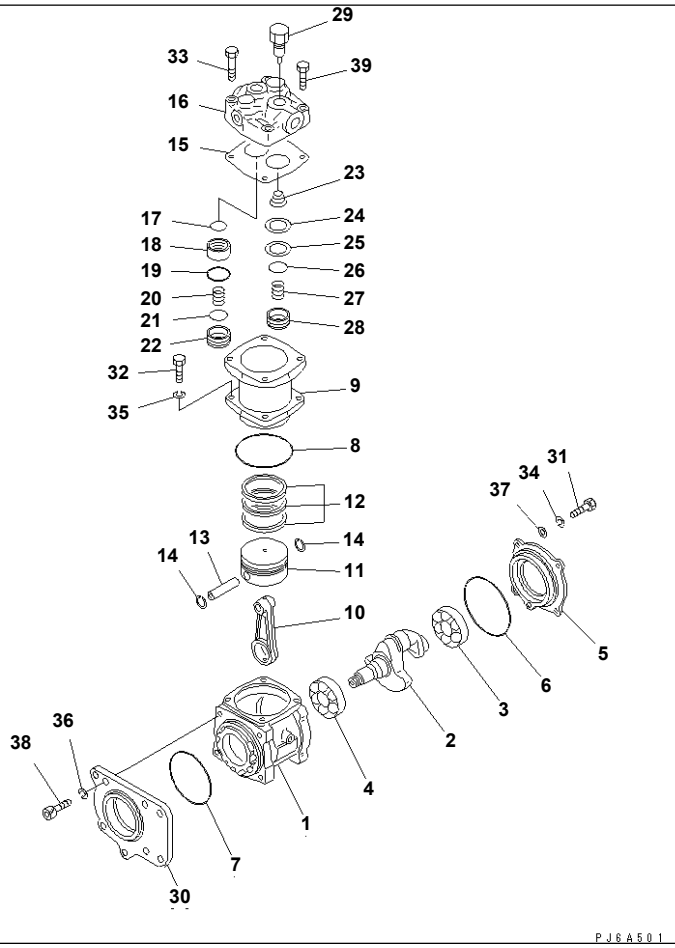

S6D140E-2B S/N 23227-UP

AIR COMPRESSOR (INNER PARTS)(#23535-)

Item	Part No.	Description	Qty	Options
	6210-81-3113	AIR COMPRESSOR ASS'Y	1	SN:23535--
THE ZEXEL PART NUMBER IS THAT DK IS REMOVED FROM KOMATSU PART NUMBER LISTED BELOW.				
1	DK487000-6500	· CASE,CRANK	1	SN:23535--
2	DK487653-0300	· CRANKSHAFT	1	SN:23535--
3	DK035620-6000	· BEARING	1	SN:23535--
4	DK036202-0700	· BEARING	1	SN:23535--
5	DK487003-7301	· COVER	1	SN:23535--
6	DK487061-4300	· O-RING (K8)	1	SN:23535--
7	DK487061-4500	· O-RING (K8)	1	SN:23535--
8	DK487061-3700	· O-RING (K8)	1	SN:23535--
9	DK487001-3200	· CYLINDER	1	SN:23535--
10	DK487013-2100	· CONNECTING ROD A.	1	SN:23535--
11	DK487009-2000	· PISTON	1	SN:23535--
12	DK487010-4720	· RING KIT,PISTON	1	SN:23535--
13	DK487012-0100	· PIN,PISTON	1	SN:23535--
14	DK016110-1610	· RING,SNAP	2	SN:23535--
15	DK487020-2200	· GASKET (K8)	1	SN:23535--
	DK487018-5222	· CYLINDER HEAD ASS'Y	1	SN:23535--
	DK487018-5321	· · CYLINDER HEAD A.	1	SN:23535--
16	DK487018-5300	· · · HEAD,CYLINDER	1	SN:23535--
17	DK487061-4000	· · · O-RING (K8)	1	SN:23535--
18	DK487042-1100	· · · GUIDE,SPRING	1	SN:23535--
19	DK487061-4100	· · · O-RING (K8)	1	SN:23535--
20	DK487031-2000	· · · SPRING,DELIVERY VALVE	1	SN:23535--
21	DK487026-1700	· · · VALVE,PLATE	1	SN:23535--
22	DK487030-2200	· · · SEAT,DELIVERY VALVE	1	SN:23535--
23	DK487024-1300	· · · SPRING,UNLOADER VALVE	1	SN:23535--

Ref. A7010-C4C5 Page 030780

AIR COMPRESSOR (INNER PARTS)(#23535-)

Item	Part No.	Description	Qty	Options
24	DK487039-0300	· · · GASKET (K8)	1	SN:23535--
25	DK487025-1000	· · · SEAT,INTAKE VALVE	1	SN:23535--
26	DK487026-2800	· · · VALVE,PLATE	1	SN:23535--
27	DK487027-1200	· · · SPRING,INTAKE VALVE	1	SN:23535--
28	DK487028-2700	· · · GUIDE,INTAKE VALVE	1	SN:23535--
29	DK487021-5020	· · UNLOADER VALVE A.	1	SN:23535--
30	DK487073-0900	· FLANGE	1	SN:23535--
31	DK156603-4400	· BOLT	4	SN:23535--
32	DK010110-2570	· BOLT	4	SN:23535--
33	DK487088-0000	· BOLT	2	SN:23535--
34	DK014110-8440	· WASHER,SPRING	4	SN:23535--
35	DK014111-0440	· WASHER,SPRING	4	SN:23535--
36	DK487351-0800	· WASHER,SPRING	4	SN:23535--
37	DK014020-8140	· WASHER	4	SN:23535--
38	DK487017-1600	· BOLT	4	SN:23535--
39	DK487088-0100	· BOLT	2	SN:23535--

Printed By : Dwi Iswanto (airafather6107170)

KIT 詳細については次のページを参照して下さい。
See subsequent pages for details.

K-1 6211-K1-9800 シリンダ ヘッド ガスケット キット
CYLINDER HEAD GASKET KIT

上記ガスケットキット以外に、不足分として同時に単品要求しなければならない部品があります。
品番については、明細を参照して下さい。

In addition to the above gasket kit, there are other parts not included in the kit that must be ordered as individual parts.
For details of the part numbers, see the parts list.

PFY0265

S6D140E-2B S/N 23227-UP

CYLINDER HEAD GASKET KIT

Item	Part No.	Description	Qty	Options
1	6211-K1-9800	GASKET KIT,CYLINDER HEAD	1	SN:23227--
	07000-63025	· O-RING	6	SN:23227--
	6212-41-4540	· SEAL	24	SN:23227--
	6210-17-1813	· GASKET	6	SN:23227--
	6210-11-8820	· GASKET	6	SN:23227--
	6210-11-4811	· GASKET	6	SN:23227--
	6211-11-4821	· GASKET	2	SN:23227--
	02895-67075	· O-RING	4	SN:23227--
	6127-81-4823	· GASKET	1	SN:23227--
	02895-67081	· O-RING	2	SN:23227--
	6210-11-5881	· GASKET	6	SN:23227--
	6212-15-5831	· GASKET	1	SN:23227--
	07005-01412	· GASKET	2	SN:23227--
	6151-51-8161	· GASKET	1	SN:23227--
	6151-51-8151	· GASKET	1	SN:23227--
	6211-11-5890	· GASKET	1	SN:23227--
	6162-13-5611	· GASKET	2	SN:23227--
	6210-11-7830	· GASKET	6	SN:23227--
	6210-71-1160	· GASKET	6	SN:23227--
	07000-22021	· O-RING	6	SN:25835--
	07000-22021	· O-RING	12	SN:23227--25834
	6210-11-7710	· O-RING	6	SN:23227--
	07005-00812	· GASKET	15	SN:23227--
	07003-01015	· GASKET	15	SN:23227--
	07005-01412	· GASKET	10	SN:23227--
THE FOLLOWING PARTS ARE NOT USED FOR THIS MODEL.				
	07000-22021	· O-RING	6	SN:25835--

Ref. A8111-A4A9 Page 030790

Printed By : Dwi Iswanto (airafather6107170)

S6D140E-2B S/N 23227-UP

CYLINDER HEAD GASKET KIT

Item	Part No.	Description	Qty	Options
	08034-00414	· BAND	3	SN:23227--
	07005-01012	· GASKET	6	SN:23227--
	07005-01212	· GASKET	2	SN:23227--
THE FOLLOWING PARTS ARE THE PARTS NOT INCLUDED IN THE GASKET KIT.				
	6210-11-7720	O-RING	6	SN:25835--

Printed By : Dwi Iswanto (airafather6107170)

KIT 詳細については次のページを参照して下さい。
See subsequent pages for details.

K-2 6211-K2-9800 シリンダ ブロック ガスケット キット
CYLINDER BLOCK GASKET KIT

上記ガスケットキット以外に、不足分として同時に単品要求しなければならない部品があります。
品番については、明細を参照して下さい。

In addition to the above gasket kit, there are other parts not included in the kit that must be ordered as individual parts.
For details of the part numbers, see the parts list.

PFY0266

S6D140E-2B S/N 23227-UP

CYLINDER BLOCK GASKET KIT(#23535-)

Item	Part No.	Description	Qty	Options
2	6211-K2-9800	GASKET KIT,CYLINDER BLOCK	1	SN:23535--
	07005-01412	· GASKET	3	SN:23535--
	07005-01012	· GASKET	2	SN:23535--
	07002-32034	· O-RING	1	SN:23535--
	6150-21-1190	· O-RING	1	SN:23535--
	6210-71-3281	· SEAL	1	SN:23535--
	6696-61-9921	· GASKET	1	SN:23535--
	07000-03025	· O-RING	1	SN:23535--
	6210-61-6551	· GASKET	1	SN:23535--
	6210-21-2270	· SEAL	6	SN:23535--
	6210-21-2240	· O-RING	6	SN:23535--
	6210-21-2230	· O-RING	6	SN:23535--
	6210-21-1971	· GASKET	1	SN:23535--
	6210-21-3251	· GASKET	1	SN:23535--
	07000-03050	· O-RING	1	SN:23535--
	07000-62060	· O-RING	1	SN:23535--
	6210-21-6860	· O-RING	2	SN:23535--
	6150-21-6391	· PACKING	6	SN:23535--
	6210-21-6452	· O-RING	1	SN:23535--
	6210-21-5820	· GASKET	1	SN:23535--
	07002-23634	· O-RING	1	SN:23535--
	07000-63040	· O-RING	1	SN:23535--
	07005-02216	· GASKET	1	SN:23535--
	07000-02060	· O-RING	1	SN:23535--
	07000-63038	· O-RING	1	SN:23535--
	6210-21-6462	· O-RING	1	SN:23535--
	07000-63028	· O-RING	2	SN:23535--

Printed By : Dwi Iswanto (airafather6107170)

S6D140E-2B S/N 23227-UP

CYLINDER BLOCK GASKET KIT(#23535-)

Item	Part No.	Description	Qty	Options
	07000-63032	· O-RING	1	SN:23535--
	07000-63048	· O-RING	1	SN:23535--
	07000-63032	· O-RING	1	SN:23535--
	6210-61-2520	· O-RING	2	SN:23535--
	6150-61-2520	· O-RING	4	SN:23535--
	07000-63042	· O-RING	1	SN:23535--
	6150-61-2540	· SEAL	1	SN:23535--
	6210-61-2550	· O-RING	1	SN:23535--
	07005-01412	· GASKET	1	SN:23535--
	6210-61-2811	· GASKET	1	SN:23535--
	07005-01412	· GASKET	2	SN:23535--
	07005-01412	· GASKET	4	SN:23535--
	6210-61-6421	· GASKET	1	SN:23535--
	6162-13-6440	· SEAL	2	SN:23535--
	6210-61-6441	· GASKET	1	SN:23535--
	07005-01412	· GASKET	2	SN:23535--
	6221-81-6810	· GASKET	1	SN:23535--
THE FOLLOWING PARTS ARE NOT USED FOR THIS MODEL.				
	6130-82-5270	· GASKET	1	SN:23535--
	01653-21012	· WASHER	2	SN:23535--
	6151-51-8151	· GASKET	1	SN:23535--
	07012-00025	· SEAL	1	SN:23535--
	6210-21-6860	· O-RING	2	SN:23535--
	08034-00414	· BAND	3	SN:23535--
	6136-21-5870	· GASKET	1	SN:23535--
	08034-00519	· BAND	4	SN:23535--
	6162-53-5430	· PACKING	1	SN:23535--
	07002-23634	· O-RING	1	SN:23535--
	6210-21-6462	· O-RING	2	SN:23535--
	07000-63028	· O-RING	1	SN:23535--
	07012-00028	· SEAL	1	SN:23535--
	6210-51-5580	· O-RING	1	SN:23535--
	07005-00812	· GASKET	1	SN:23535--
THE FOLLOWING PARTS ARE THE PARTS NOT INCLUDED IN THE GASKET KIT.				
	6711-21-3521	SEAL¤ FRONT	1	SN:23535--
	6711-29-3521	SEAL¤ FRONT,WITH SLEEVE (REPAIR PART)	1	SN:23535--
	6151-21-4160	SEAL¤ REAR	1	SN:23535--
	6151-29-4160	SEAL¤ REAR,(SERVICE PARTS)	1	SN:23535--
	07000-63032	O-RING	2	SN:23535--
	07005-01012	GASKET	2	SN:25035--
	6151-51-8721	GASKET	1	SN:23535--
	07000-E1007	O-RING	1	SN:23535--
	07000-02100	O-RING	1	SN:23535--
	07011-00045	SEAL	1	SN:25875--

Printed By : Dwi Iswanto (airafather6107170)

KIT 詳細については次のページを参照して下さい。
See subsequent pages for details.

K-8 6212-K8-9900 エアー コンプレッサ ガスケット キット
AIR COMPRESSOR GASKET KIT

上記ガスケットキット以外に、不足分として同時に単品要求しなければならない部品があります。
品番については、明細を参照して下さい。

In addition to the above gasket kit,there are other parts not included in the kit that must be ordered as individual parts.
For details of the part numbers,see the parts list.

S6D140E-2B S/N 23227-UP

AIR COMPRESSOR GASKET KIT(#23535-)

Item	Part No.	Description	Qty	Options
8	6212-K8-9900	GASKET KIT,AIR COMPRESSOR	1	SN:23535--
	6210-81-3150	· O-RING	1	SN:23535--
	6210-81-5240	· O-RING	1	SN:23535--
	07005-01012	· GASKET	6	SN:23535--
	6164-91-6220	· GASKET	5	SN:23535--
	DK487061-4300	· O-RING	1	SN:23535--
	DK487061-4500	· O-RING	1	SN:23535--
	DK487061-3700	· O-RING	1	SN:23535--
	DK487020-2200	· GASKET	1	SN:23535--
	DK487061-4000	· O-RING	1	SN:23535--
	DK487061-4100	· O-RING	1	SN:23535--
	DK487039-0300	· GASKET	1	SN:23535--
THE FOLLOWING PARTS ARE NOT USED FOR THIS MODEL.				
	07005-01012	· GASKET	2	SN:23535--
	07004-02840	· GASKET	1	SN:23535--
	07004-01525	· GASKET	1	SN:23535--
	07005-02416	· GASKET	5	SN:23535--
	07005-01412	· GASKET	12	SN:23535--
THE FOLLOWING PARTS ARE THE PARTS NOT INCLUDED IN THE GASKET KIT.				
	07002-32434	O-RING	2	SN:23535--
	6164-91-6220	GASKET	1	SN:23535--
	07003-01419	GASKET	7	SN:23535--
	07002-31423	O-RING	1	SN:23535--

Ref. A8115-H4A6 Page 030810

Printed By : Dwi Iswanto (airafather6107170)

KIT 詳細については次のページを参照して下さい。
See subsequent pages for details.

K-6 6212-K6-9901 ウォータ ポンプ ガスケット キット
WATER PUMP GASKET KIT

S6D140E-2B S/N 23227-UP
WATER PUMP GASKET KIT(#23535-)

Item	Part No.	Description	Qty	Options
6	6212-K6-9901	GASKET KIT,WATER PUMP	1	SN:23535--
	6211-61-1530	· SEAL¤ WATER	1	SN:25740--
	□6211-61-1521	· SEAL¤ WATER	1	SN:23535--25739
	6210-61-1510	· SEAL	1	SN:23535--
	6210-61-1520	· SEAL	2	SN:23535--
	6211-61-1170	· GASKET	1	SN:23535--
	6210-61-6331	· GASKET	1	SN:23535--
	6210-61-6341	· GASKET	1	SN:23535--
	6166-11-6290	· O-RING	1	SN:23535--
	02893-05037	· O-RING	2	SN:23535--
THE FOLLOWING PARTS ARE NOT USED FOR THIS MODEL.				
	07000-02145	· O-RING	1	SN:23535--
	6934-61-6210	· O-RING	1	SN:23535--
	07000-02055	· O-RING	2	SN:23535--
	6210-61-6371	· GASKET	1	SN:23535--
	6210-61-6421	· GASKET	1	SN:23535--
	07000-03022	· O-RING	1	SN:23535--
	6210-61-6441	· GASKET	1	SN:23535--
	07000-03025	· O-RING	1	SN:23535--
	07000-03032	· O-RING	1	SN:23535--
	07000-05065	· O-RING	1	SN:23535--
	6210-61-6231	· GASKET	1	SN:23535--
	6212-61-6821	· GASKET	1	SN:23535--
	07000-02115	· O-RING	1	SN:23535--
	07000-02070	· O-RING	1	SN:23535--
	6210-61-6551	· GASKET	1	SN:23535--
THE FOLLOWING PARTS ARE THE PARTS NOT INCLUDED IN THE GASKET KIT.				

Printed By : Dwi Iswanto (airafather6107170)

S6D140E-2B S/N 23227-UP

WATER PUMP GASKET KIT(#23535-)

Item	Part No.	Description	Qty	Options
	07000-G5065	O-RING	1	SN:23535--
	07000-G3032	O-RING	1	SN:23535--
	07000-72115	O-RING	1	SN:23535--
	07000-72070	O-RING	1	SN:23535--

Printed By : Dwi Iswanto (airafather6107170)

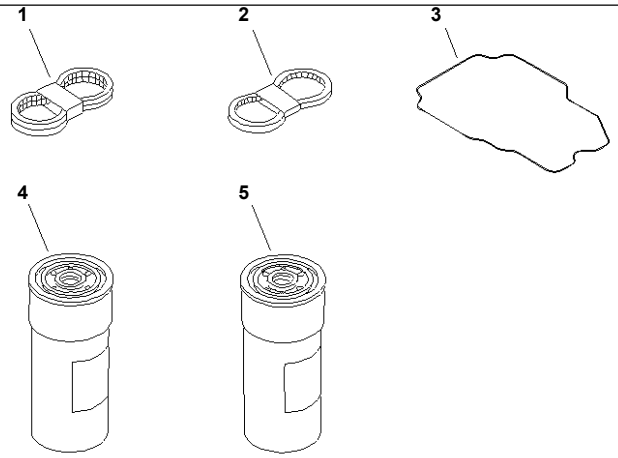

PE31717

Ref. A9020-A4A1A **Page 030830**

S6D140E-2B S/N 23227-UP
SPARE PARTS(#23535-)

Item	Part No.	Description	Qty	Options
1	04121-22570	V-BELT SET,FAN DRIVE	1	SN:23535--
2	600-736-9580	V-BELT,ALTERNATOR DRIVE	1	SN:23535--
3	6210-11-8820	GASKET,HEAD COVER	6	SN:23535--
4	600-211-1231	CARTRIDGE,OIL FILTER	1	SN:23535--
5	600-311-7132	CARTRIDGE,FUEL FILTER	1	SN:23535--

Printed By : Dwi Iswanto (airafather6107170)

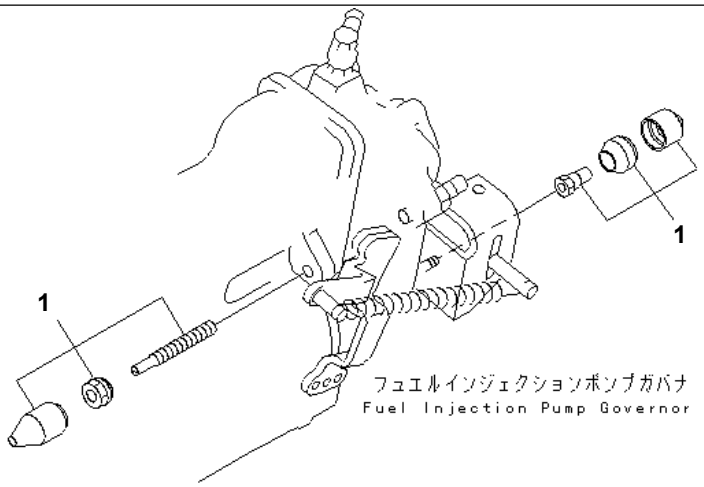

PQD3232

Ref. A9420-A3A3 **Page 030840**

S6D140E-2B S/N 23227-UP

TAMPER PROOF KIT (FOR REGULATION OF EPA)(#23257-)

Item	Part No.	Description	Qty	Options
1	6151-72-9110	TAMPER PROOF KIT	1	SN:23257--

Printed By : Dwi Iswanto (airafather6107170)

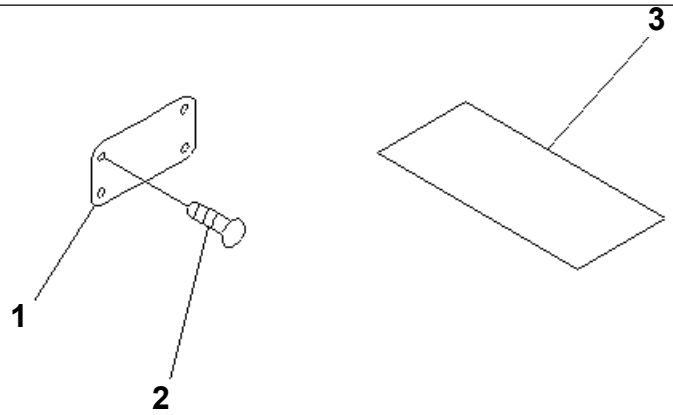

PGD0673

S6D140E-2B S/N 23227-UP

NAME PLATE AND CAUTION PLATE (FOR REGULATION OF EPA)(#23535-)

Item	Part No.	Description	Qty	Options
1	6150-82-2112	PLATE¤ NAME	1	SN:27133--
	□6150-82-2111	PLATE¤ NAME	1	SN:23535--27132
2	04418-02550	SCREW	4	SN:23535--
3	09637-30163	PLATE¤ INSTRUCTION	1	SN:23535--

Printed By : Dwi Iswanto (airafather6107170)

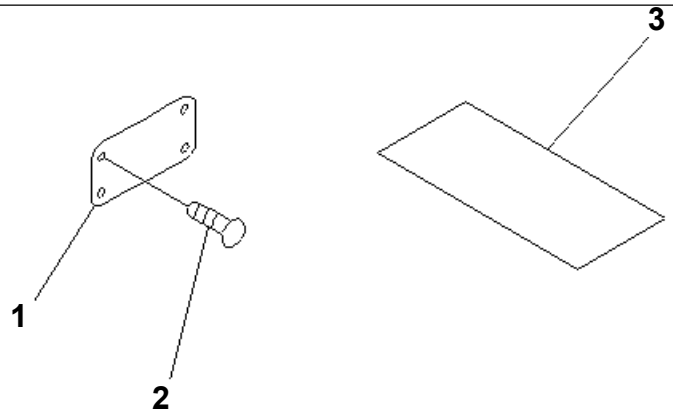

PGD0673

S6D140E-2B S/N 23227-UP

NAME PLATE AND CAUTION PLATE (ENGLISH)(#23535-)

Item	Part No.	Description	Qty	Options
1	09605-01440	PLATE¤ NAME	1	SN:23535--
2	04418-02550	SCREW	4	SN:23535--
3	09637-30163	PLATE¤ INSTRUCTION	1	SN:23535--

Printed By : Dwi Iswanto (airafather6107170)

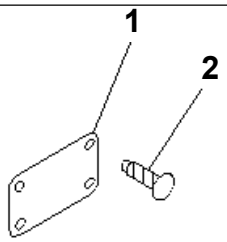

PJ6A127

PLATE (FOR REGULATION OF EPA)(#27478-)

Item	Part No.	Description	Qty	Options
1	6150-82-2112	PLATE¤ NAME	1	SN:27478--
2	04418-02550	SCREW	4	SN:27478--

Printed By : Dwi Iswanto (airafather6107170)

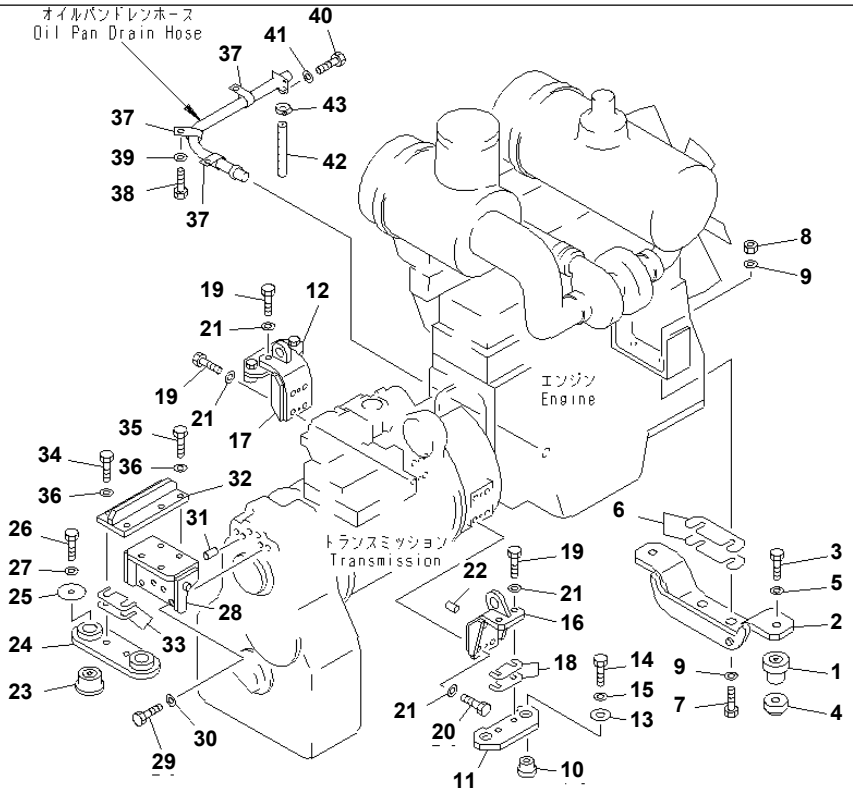

GD825A-2 S/N 11001-UP

ENGINE AND TRANSMISSION MOUNTING PARTS

Item	Part No.	Description	Qty	Options
1	235-01-11110	CUSHION	2	SN:11001--
2	235-01-31110	PLATE	1	SN:11001--
3	01011-52045	BOLT	2	SN:11001--
4	235-01-11120	PLATE	2	SN:11001--
5	01643-32060	WASHER	2	SN:11001--
6	235-01-00011	SHIM ASS'Y	1	SN:11001--
	☆	· SHIM¤ 0.2MM	3	SN:11001--
	☆	· SHIM¤ 0.5MM	1	SN:11001--
	☆	· SHIM¤ 1.0MM	5	SN:11001--
7	01010-51875	BOLT	2	SN:11001--
8	01580-11815	NUT	2	SN:11001--
9	01643-31845	WASHER	4	SN:11001--
10	234-01-41120	CUSHION	4	SN:11001--
11	235-01-11290	PLATE,L.H.	1	SN:11001--
12	235-01-11230	PLATE,R.H.	1	SN:11001--
13	235-01-11220	PLATE	4	SN:11001--
14	01010-51890	BOLT	4	SN:11001--
15	01643-31845	WASHER	4	SN:11001--
16	235-01-31120	BRACKET,L.H.	1	SN:11001--
17	235-01-31130	BRACKET,R.H.	1	SN:11001--
18	235-01-00020	SHIM ASS'Y	1	SN:11001--
	☆	· SHIM¤ 0.2MM	6	SN:11001--
	☆	· SHIM¤ 0.5MM	2	SN:11001--
	☆	· SHIM¤ 1.0MM	6	SN:11001--
19	01010-51650	BOLT	8	SN:11001--
20	01010-51675	BOLT	4	SN:11001--
21	01643-31645	WASHER	12	SN:11001--

Printed By : Dwi Iswanto (airafather6107170)

ENGINE AND TRANSMISSION MOUNTING PARTS

Item	Part No.	Description	Qty	Options
22	04020-01434	PIN,DOWEL	4	SN:11001--
23	235-01-11110	CUSHION	2	SN:11001--
24	235-01-31230	PLATE	1	SN:11001--
25	235-01-11330	PLATE	2	SN:11001--
26	01011-52025	BOLT	2	SN:11001--
27	01643-32060	WASHER	2	SN:11001--
28	235-01-31210	BRACKET	1	SN:11001--
29	01010-52465	BOLT	4	SN:11001--
30	01643-32460	WASHER	4	SN:11001--
31	04020-01638	PIN,DOWEL	2	SN:11001--
32	235-01-31220	BRACKET	1	SN:11001--
33	235-01-00140	SHIM ASS'Y	1	SN:11001--
	☆	· SHIM¤ 0.2MM	5	SN:11001--
	☆	· SHIM¤ 0.5MM	5	SN:11001--
	☆	· SHIM¤ 1.0MM	5	SN:11001--
	235-01-31270	SHIM¤ 4.5MM	2	SN:12069--
34	01010-52065	BOLT	2	SN:11001--
35	01010-52060	BOLT	4	SN:11002--
	01010-52065	BOLT	4	SN:11001--11001
36	01643-32060	WASHER	6	SN:11001--
37	04434-53211	CLIP	3	SN:11006--
	04434-53211	CLIP	1	SN:11001--11005
38	01010-51016	BOLT	2	SN:11006--
	01010-51016	BOLT	1	SN:11001--11005
39	01643-31032	WASHER	2	SN:11006--
	01643-31032	WASHER	1	SN:11001--11005
40	01010-51025	BOLT	2	SN:11001--
41	01643-31032	WASHER	2	SN:11001--
42	07260-22040	HOSE	1	SN:11006--
	07260-22020	HOSE	1	SN:11001--11005
43	07281-00359	CLAMP	1	SN:11001--

Printed By : Dwi Iswanto (airafather6107170)

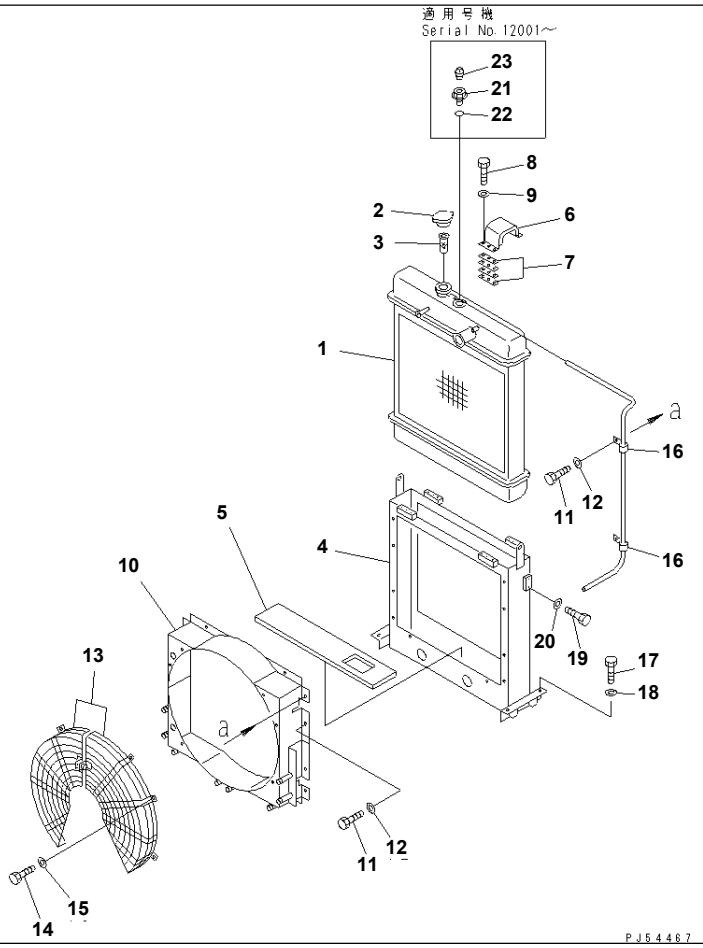

GD825A-2 S/N 11001-UP

RADIATOR AND MOUNTING PARTS

Item	Part No.	Description	Qty	Options
	235-03-11104	RADIATOR ASS'Y	1	SN:12099--
	□235-03-11103	RADIATOR ASS'Y	1	SN:12001--12098
	235-03-11102	RADIATOR ASS'Y	1	SN:11001--12000
1	235-03-11114	· CORE,(WITH OIL COOLER)	1	SN:12099--
	□235-03-11113	· CORE,(WITH OIL COOLER)	1	SN:12001--12098
	235-03-11112	· CORE,(WITH OIL COOLER)	1	SN:11001--12000
2	561-03-61510	· CAP	1	SN:11001--
3	230-03-11470	· STRAINER	1	SN:11001--
4	235-03-11124	· FRAME	1	SN:12099--
	□235-03-11123	· FRAME	1	SN:12001--12098
	235-03-11122	· FRAME	1	SN:11001--12000
5	235-03-11160	· SEAT,RUBBER	1	SN:11001--
6	235-03-11150	· CLAMP ASS'Y	2	SN:11001--
7	235-03-00010	· SHIM ASS'Y	1	SN:11001--
	☆	· · SHIM¤ 0.6MM	26	SN:11001--
8	01010-50820	· BOLT	12	SN:11001--
9	01643-30823	· WASHER	12	SN:11001--
10	235-03-11132	· SHROUD	1	SN:12099--
	235-03-11131	· SHROUD	1	SN:12001--12098
	235-03-11130	· SHROUD	1	SN:11001--12000
11	01010-51016	· BOLT	12	SN:11001--
12	01643-31032	· WASHER	12	SN:11001--
13	235-03-11143	· WIRE NET	1	SN:12001--
	235-03-11142	· WIRE NET	1	SN:11001--12000
14	01010-50816	· BOLT	7	SN:11001--
15	01643-30823	· WASHER	7	SN:11001--
16	232-03-11210	· CLIP	2	SN:11001--

Printed By : Dwi Iswanto (airafather6107170)

RADIATOR AND MOUNTING PARTS

Item	Part No.	Description	Qty	Options
17	01010-51645	BOLT	4	SN:11001--
18	01643-31645	WASHER	4	SN:11001--
19	01010-51270	BOLT	4	SN:11001--
20	01643-31232	WASHER	4	SN:11001--
21	07041-13633	PLUG	1	SN:12001--
22	07002-13634	O-RING	1	SN:12095--
	□07002-33634	O-RING	1	SN:12001--12094
23	07042-00108	PLUG	1	SN:12001--

Printed By : Dwi Iswanto (airafather6107170)

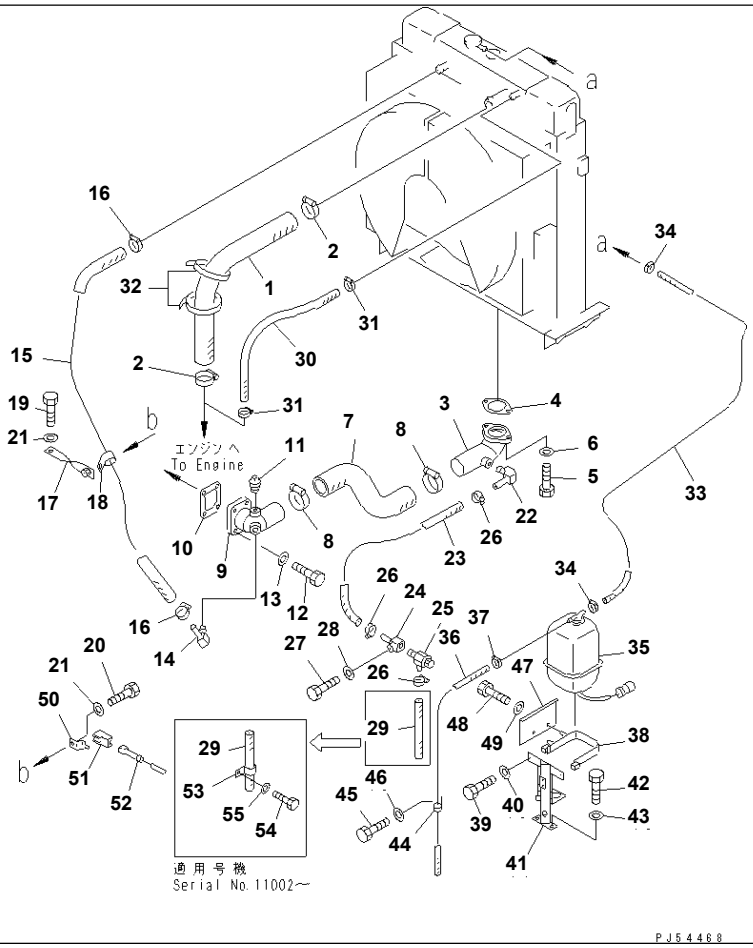

GD825A-2 S/N 11001-UP

RADIATOR PIPING(#11001-12000)

Item	Part No.	Description	Qty	Options
1	235-03-11311	HOSE	1	SN:11001--@
2	07289-00070	CLAMP	2	SN:11031--@
	07281-00809	CLAMP	2	SN:11001--11030
3	235-03-11420	TUBE	1	SN:11001--@
4	235-03-11431	GASKET	1	SN:11001--@
5	01010-51230	BOLT	2	SN:11001--@
6	01643-31232	WASHER	2	SN:11001--@
7	235-03-11440	HOSE	1	SN:11001--@
8	07289-00080	CLAMP	2	SN:11031--@
	07281-00909	CLAMP	2	SN:11001--11030
9	235-03-11411	CONNECTOR	1	SN:11001--@
10	235-03-11361	GASKET	1	SN:11001--@
11	07042-20415	PLUG	2	SN:11001--@
	07042-20415	PLUG,(WITH AIR CONDITIONER)	1	SN:11001--@
12	01010-51030	BOLT	4	SN:11001--@
13	01643-31032	WASHER	4	SN:11001--@
14	235-03-11380	ELBOW	1	SN:11001--@
15	07261-22014	HOSE	1	SN:11001--@
16	07281-00359	CLAMP	2	SN:11001--@
17	235-03-11350	BRACKET	1	SN:11001--@
18	238-60-26190	CLIP	1	SN:11001--@
19	01010-51030	BOLT	1	SN:11001--@
20	01010-51025	BOLT	1	SN:11001--@
21	01643-31032	WASHER	2	SN:11001--@
22	232-43-54460	ELBOW	1	SN:11001--@
23	07260-21470	HOSE	1	SN:11028--@
	07260-21480	HOSE	1	SN:11001--11027

Printed By : Dwi Iswanto (airafather6107170)

RADIATOR PIPING(#11001-12000)

Item	Part No.	Description	Qty	Options
24	232-03-56110	NIPPLE	1	SN:11001--@
25	07730-50004	VALVE	1	SN:11001--@
26	07281-00259	CLAMP	3	SN:11001--@
27	01010-51035	BOLT	1	SN:11001--@
28	01643-31032	WASHER	1	SN:11001--@
29	07260-21450	HOSE	1	SN:11002--@
	07260-21422	HOSE	1	SN:11001--11001
30	07260-20983	HOSE	1	SN:11001--@
31	07281-00197	CLAMP	2	SN:11001--@
32	08034-00834	BAND	2	SN:11001--@
33	23B-03-14350	HOSE	1	SN:11001--@
34	07281-00167	CLAMP	2	SN:11001--@
35	23F-03-12310	TANK	1	SN:11002--@
	20Y-06-15240	TANK ASS'Y	1	SN:11001--11001
36	07270-00895	TUBE	1	SN:11001--@
37	07281-00137	CLAMP	1	SN:11001--@
38	235-03-31230	BAND	1	SN:11001--@
39	01010-50820	BOLT	2	SN:11001--@
40	01643-30823	WASHER	2	SN:11001--@
41	235-03-31250	BRACKET	1	SN:11001--@
42	01010-51225	BOLT	2	SN:11001--@
43	01643-31232	WASHER	2	SN:11001--@
44	04434-51810	CLIP	1	SN:11001--@
45	01010-51016	BOLT	1	SN:11001--@
46	01643-31032	WASHER	1	SN:11001--@
47	235-03-31270	COVER	1	SN:11001--12000
48	01010-50820	BOLT	2	SN:11001--@
49	01643-30823	WASHER	2	SN:11001--@
50	08053-01512	CLIP	1	SN:11001--@
51	6215-11-8190	CONNECTOR	1	SN:11001--@
52	(6215-11-8170)	SENSOR	1	SN:11001--@
53	04434-52511	CLIP	1	SN:11002--@
54	01010-51016	BOLT	1	SN:11002--@
55	01643-31032	WASHER	1	SN:11002--@

Printed By : Dwi Iswanto (airafather6107170)

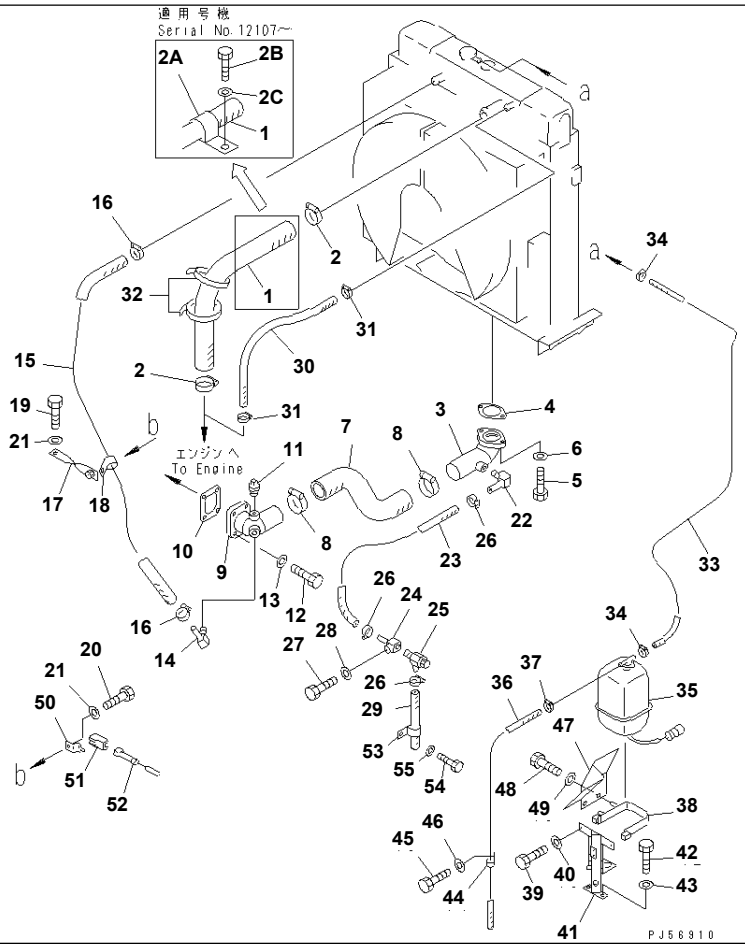

GD825A-2 S/N 11001-UP

RADIATOR PIPING(#12001-)

Item	Part No.	Description	Qty	Options
1	235-03-11311	HOSE	1	SN:11001--
2	07289-00070	CLAMP	2	SN:11031--
2A	207-62-33690	CLIP	1	SN:12107--
2B	01010-81016	BOLT	1	SN:12107--
2C	01643-31023	WASHER	1	SN:12107--
3	235-03-11422	TUBE	1	SN:.--
	□235-03-11421	TUBE	1	SN:12081--.
	□235-03-11420	TUBE	1	SN:11001--12080
4	235-03-11431	GASKET	1	SN:11001--
5	01010-81230	BOLT	2	SN:.--
	□01010-51230	BOLT	2	SN:11001--.
6	01643-31232	WASHER	2	SN:11001--
7	235-03-11441	HOSE	1	SN:12107--
	235-03-11440	HOSE	1	SN:11001--12106
8	07289-00080	CLAMP	2	SN:11031--
9	235-03-11412	CONNECTOR	1	SN:12081--
	□235-03-11411	CONNECTOR	1	SN:11001--12080
10	235-03-11361	GASKET	1	SN:11001--
11	07042-20415	PLUG	2	SN:11001--
	07042-20415	PLUG,(WITH AIR CONDITIONER)	1	SN:11001--
12	01010-81030	BOLT	1	SN:.--
	□01010-51030	BOLT	4	SN:11001--.
13	01643-31032	WASHER	4	SN:11001--
14	235-03-11381	ELBOW	1	SN:12081--
	□235-03-11380	ELBOW	1	SN:11001--12080
15	07261-22015	HOSE	1	SN:12102--
	07261-22014	HOSE	1	SN:11001--12101

Printed By : Dwi Iswanto (airafather6107170)

RADIATOR PIPING(#12001-)

Item	Part No.	Description	Qty	Options
	273-60-24450	TUBE	1	SN:12095--
16	07289-00035	CLAMP	2	SN:12081--
	☐07281-00359	CLAMP	2	SN:11001--12080
17	235-03-11350	BRACKET	1	SN:11001--
18	08036-03014	CLIP	1	SN:12095--
	☐238-60-26190	CLIP	1	SN:11001--12094
19	01010-51030	BOLT	1	SN:11001--
20	01010-81025	BOLT	1	SN:.--
	☐01010-51025	BOLT	1	SN:11001--.
21	01643-31032	WASHER	2	SN:11001--
22	232-43-54461	ELBOW	1	SN:12008--
	☐232-43-54460	ELBOW	1	SN:11001--12007
23	07260-21470	HOSE	1	SN:11028--
	273-60-14650	TUBE	1	SN:12095--
24	232-03-56111	NIPPLE	1	SN:12008--
	☐232-03-56110	NIPPLE	1	SN:11001--12007
25	07730-50004	VALVE	1	SN:11001--
26	07281-02523	CLAMP	3	SN:12008--
	07281-00259	CLAMP	3	SN:11001--12007
27	01010-81035	BOLT	1	SN:.--
	☐01010-51035	BOLT	1	SN:11001--.
28	01643-31032	WASHER	1	SN:11001--
29	07260-21450	HOSE	1	SN:11002--
30	07260-20983	HOSE	1	SN:11001--
31	07281-00197	CLAMP	2	SN:11001--
32	08034-00834	BAND	4	SN:12095--
	08034-00834	BAND	2	SN:11001--12094
33	23B-03-14350	HOSE	1	SN:11001--
34	07281-00167	CLAMP	2	SN:11001--
35	23F-03-12310	TANK	1	SN:11002--
36	07270-00880	TUBE	1	SN:12095--
	☐07270-00895	TUBE	1	SN:11001--12094
37	07281-00137	CLAMP	1	SN:11001--
38	235-03-31230	BAND	1	SN:11001--
39	01010-80820	BOLT	2	SN:.--
	☐01010-50820	BOLT	2	SN:11001--.
40	01643-30823	WASHER	2	SN:11001--
41	235-03-31250	BRACKET	1	SN:11001--
42	01010-81225	BOLT	2	SN:.--
	☐01010-51225	BOLT	2	SN:11001--.
43	01643-31232	WASHER	2	SN:11001--
44	08036-01414	CLIP	1	SN:12095--
	☐04434-51810	CLIP	1	SN:11001--12094
45	01010-81016	BOLT	1	SN:.--
	☐01010-51016	BOLT	1	SN:11001--.
46	01643-31032	WASHER	1	SN:11001--
47	235-03-31271	COVER	1	SN:12001--
48	01010-80820	BOLT	1	SN:.--
	☐01010-50820	BOLT	2	SN:11001--.
49	01643-30823	WASHER	2	SN:11001--
50	08053-01512	CLIP	1	SN:11001--
51	6215-11-8190	CONNECTOR	1	SN:11001--
52	(6215-11-8170)	SENSOR	1	SN:11001--
53	04434-52511	CLIP	1	SN:11002--
54	01010-81016	BOLT	1	SN:.--
	☐01010-51016	BOLT	1	SN:11002--.
55	01643-31032	WASHER	1	SN:11002--

Printed By : Dwi Iswanto (airafather6107170)

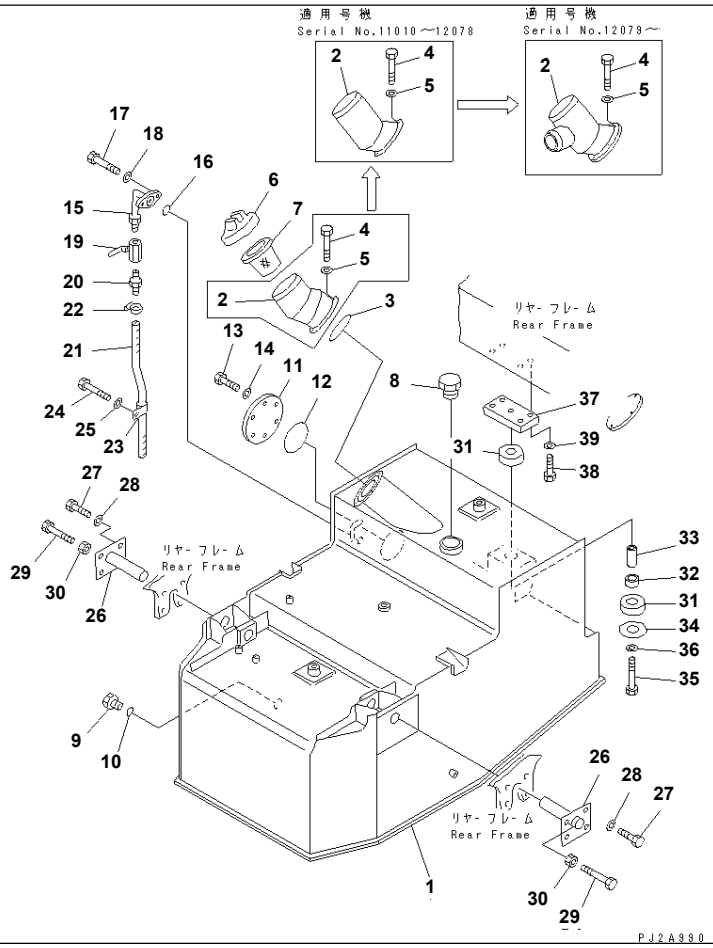

GD825A-2 S/N 11001-UP
FUEL TANK

Item	Part No.	Description	Qty	Options
1	235-04-31111	TANK	1	SN:11001--
2	235-04-31181	TUBE	1	SN:12079--
	235-04-31180	TUBE	1	SN:12013--12078
	235-04-31171	TUBE	1	SN:11010--12012
	235-04-31170	TUBE	1	SN:11001--11009
3	07000-12120	O-RING	1	SN:11001--
4	01010-50830	BOLT	4	SN:11001--
5	01643-30823	WASHER	4	SN:11001--
6	20Y-04-11160	CAP	1	SN:11001--
7	238-04-12130	STRAINER	1	SN:11001--
8	235-04-31310	PLUG	1	SN:11010--
	195-04-14130	PLUG	1	SN:11001--11009
9	07044-12412	PLUG	1	SN:11001--
10	07002-02434	O-RING	1	SN:11001--
11	195-04-14120	PLATE	1	SN:11001--
12	07000-12115	O-RING	1	SN:11001--
13	01010-50820	BOLT	6	SN:11001--
14	01643-30823	WASHER	6	SN:11001--
15	235-04-31210	TUBE	1	SN:11001--
16	07000-13022	O-RING	1	SN:11001--
17	01010-51030	BOLT	2	SN:11001--
18	01643-31032	WASHER	2	SN:11001--
19	07700-40460	VALVE	1	SN:11001--
20	232-04-52340	NIPPLE	1	SN:11001--
21	07260-20932	HOSE	1	SN:11001--
22	07281-00197	CLAMP	1	SN:11001--
23	04434-51610	CLIP	1	SN:11001--

Printed By : Dwi Iswanto (airafather6107170)

FUEL TANK

Item	Part No.	Description	Qty	Options
24	01010-51016	BOLT	1	SN:11001--
25	01643-31032	WASHER	1	SN:11001--
26	235-04-31121	PLATE	2	SN:11001--
27	01010-51235	BOLT	6	SN:11001--
28	01643-31232	WASHER	6	SN:11001--
29	01016-51260	BOLT	2	SN:11001--
30	01580-11210	NUT	2	SN:11001--
31	23A-01-11210	CUSHION	2	SN:11001--
32	23B-01-11240	CUSHION	1	SN:11001--
33	23A-01-11250	SPACER	1	SN:11001--
34	23A-01-11260	PLATE	1	SN:11001--
35	01011-51615	BOLT	1	SN:11001--
36	01643-31645	WASHER	1	SN:11001--
37	235-04-31220	PLATE	1	SN:11001--
38	01010-51245	BOLT	4	SN:11001--
39	01643-31232	WASHER	4	SN:11001--

Printed By : Dwi Iswanto (airafather6107170)

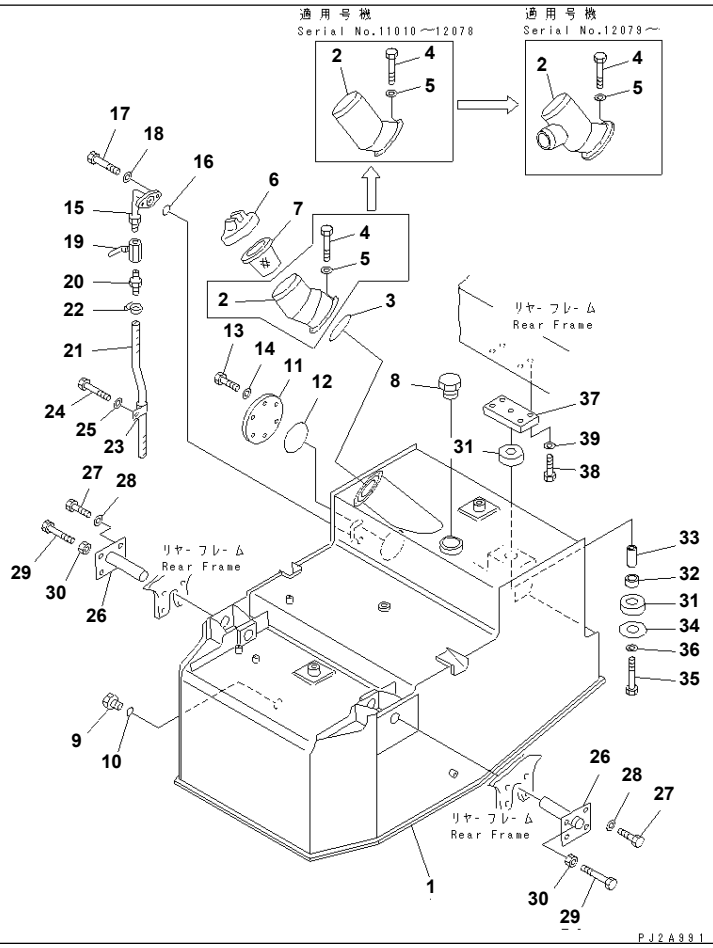

GD825A-2 S/N 11001-UP

FUEL TANK (WITH FAST FULL FILL CAP)

Item	Part No.	Description	Qty	Options
1	235-04-31111	TANK	1	SN:11001--
2	235-04-31181	TUBE	1	SN:12079--
	235-04-31180	TUBE	1	SN:12013--12078
	235-04-31171	TUBE	1	SN:11010--12012
	235-04-31170	TUBE	1	SN:11001--11009
3	07000-12120	O-RING	1	SN:11001--
4	01010-50830	BOLT	4	SN:11001--
5	01643-30823	WASHER	4	SN:11001--
6	423-04-11362	CAP	1	SN:11001--
	417-04-21230	· PACKING	1	SN:11001--
7	238-04-12130	STRAINER	1	SN:11001--
8	235-04-31310	PLUG	1	SN:11010--
	195-04-14130	PLUG	1	SN:11001--11009
9	07044-12412	PLUG	1	SN:11001--
10	07002-02434	O-RING	1	SN:11001--
11	195-04-14120	PLATE	1	SN:11001--
12	07000-12115	O-RING	1	SN:11001--
13	01010-50820	BOLT	6	SN:11001--
14	01643-30823	WASHER	6	SN:11001--
15	235-04-31210	TUBE	1	SN:11001--
16	07000-13022	O-RING	1	SN:11001--
17	01010-51030	BOLT	2	SN:11001--
18	01643-31032	WASHER	2	SN:11001--
19	07700-40460	VALVE	1	SN:11001--
20	232-04-52340	NIPPLE	1	SN:11001--
21	07260-20932	HOSE	1	SN:11001--
22	07281-00197	CLAMP	1	SN:11001--

Printed By : Dwi Iswanto (airafather6107170)

FUEL TANK (WITH FAST FULL FILL CAP)

Item	Part No.	Description	Qty	Options
23	04434-51610	CLIP	1	SN:11001--
24	01010-51016	BOLT	1	SN:11001--
25	01643-31032	WASHER	1	SN:11001--
26	235-04-31121	PLATE	2	SN:11001--
27	01010-51235	BOLT	6	SN:11001--
28	01643-31232	WASHER	6	SN:11001--
29	01016-51260	BOLT	2	SN:11001--
30	01580-11210	NUT	2	SN:11001--
31	23A-01-11210	CUSHION	2	SN:11001--
32	23B-01-11240	CUSHION	1	SN:11001--
33	23A-01-11250	SPACER	1	SN:11001--
34	23A-01-11260	PLATE	1	SN:11001--
35	01011-51615	BOLT	1	SN:11001--
36	01643-31645	WASHER	1	SN:11001--
37	235-04-31220	PLATE	1	SN:11001--
38	01010-51245	BOLT	4	SN:11001--
39	01643-31232	WASHER	4	SN:11001--

Printed By : Dwi Iswanto (airafather6107170)

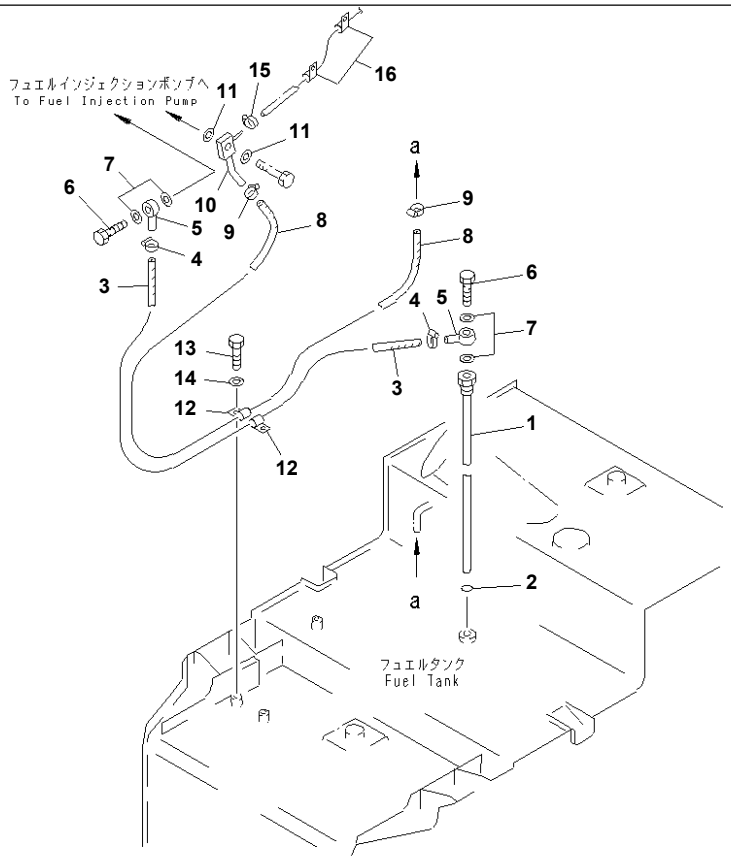

PS54470

Ref. 1311 **Page 030070**

GD825A-2 S/N 11001-UP
FUEL PIPING

Item	Part No.	Description	Qty	Options
1	235-04-31151	TUBE	1	SN:11001--
2	07002-02434	O-RING	1	SN:11001--
3	07261-20914	HOSE	1	SN:11001--
4	07281-00197	CLAMP	2	SN:11001--
5	238-04-12110	TUBE	2	SN:11001--
6	07206-31014	BOLT,JOINT	2	SN:11001--
7	07005-01412	GASKET	4	SN:11001--
8	07261-20914	HOSE	1	SN:11001--
9	07281-00197	CLAMP	2	SN:11001--
10	235-04-32190	TUBE	1	SN:11001--
11	07005-01412	GASKET	2	SN:11001--
12	04434-51610	CLIP	2	SN:11001--
13	01010-51016	BOLT	2	SN:11001--
14	01643-31032	WASHER	2	SN:11001--
15	07285-00080	CLIP	1	SN:11002--
16	04434-50810	CLIP	2	SN:11002--

Printed By : Dwi Iswanto (airafather6107170)

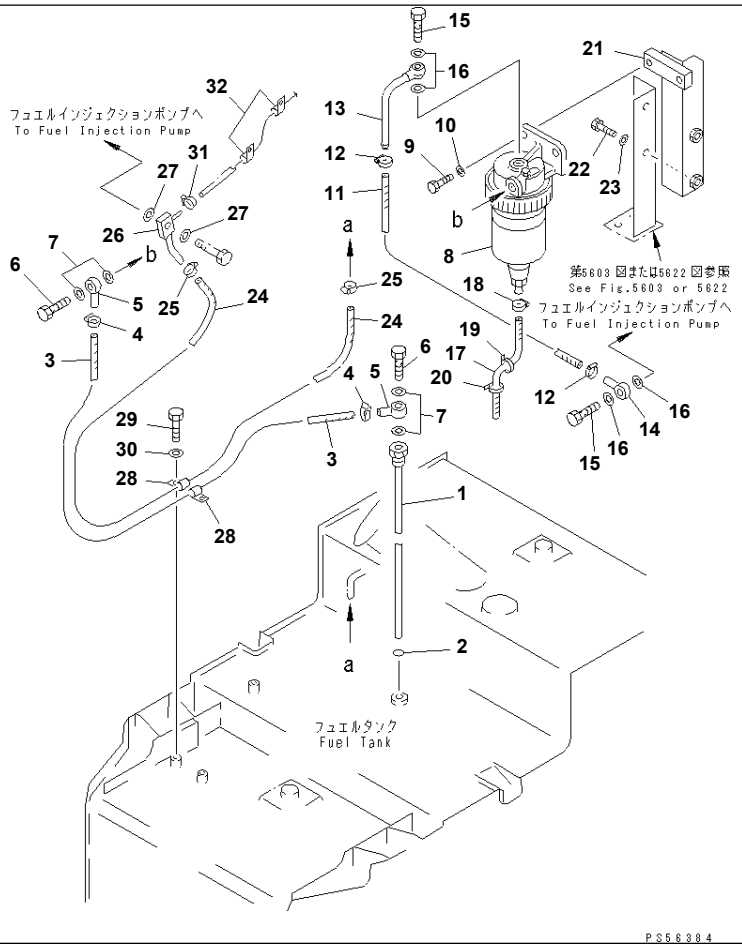

Ref. 1315 **Page 030080**

GD825A-2 S/N 11001-UP
FUEL PIPING (WITH WATER SEPARATOR)

Item	Part No.	Description	Qty	Options
1	235-04-31151	TUBE	1	SN:11001--
2	07002-02434	O-RING	1	SN:11001--
3	07261-20916	HOSE	1	SN:11001--
4	07281-00197	CLAMP	2	SN:11001--
5	238-04-12110	TUBE	2	SN:11001--
6	07206-31014	BOLT,JOINT	2	SN:11001--
7	07005-01412	GASKET	4	SN:11001--
8	(600-311-9731)	WATER SEPARATOR A.	1	SN:11001--
9	01010-51025	BOLT	2	SN:11001--
10	01643-31032	WASHER	2	SN:11001--
11	07260-20940	HOSE	1	SN:11001--
12	07281-00197	CLAMP	2	SN:11001--
13	235-04-31320	TUBE	1	SN:11001--
14	238-04-12110	TUBE	1	SN:11001--
15	07206-31014	BOLT,JOINT	2	SN:11001--
16	07005-01412	GASKET	4	SN:11001--
17	07260-20980	HOSE	1	SN:11001--
18	07281-00197	CLAMP	1	SN:11001--
19	08034-00519	BAND	1	SN:11001--
20	08034-00823	BAND	1	SN:11001--
21	235-04-31330	BRACKET	1	SN:11001--
22	01010-50820	BOLT	2	SN:11001--
23	01643-30823	WASHER	2	SN:11001--
24	07261-20914	HOSE	1	SN:11001--
25	07281-00197	CLAMP	2	SN:11001--
26	235-04-32190	TUBE	1	SN:11001--
27	07005-01412	GASKET	2	SN:11001--

Printed By : Dwi Iswanto (airafather6107170)

FUEL PIPING (WITH WATER SEPARATOR)

Item	Part No.	Description	Qty	Options
28	04434-51610	CLIP	2	SN:11001--
29	01010-51016	BOLT	2	SN:11001--
30	01643-31032	WASHER	2	SN:11001--
31	07285-00080	CLIP	1	SN:11002--
32	04434-50810	CLIP	2	SN:11002--

Printed By : Dwi Iswanto (airafather6107170)

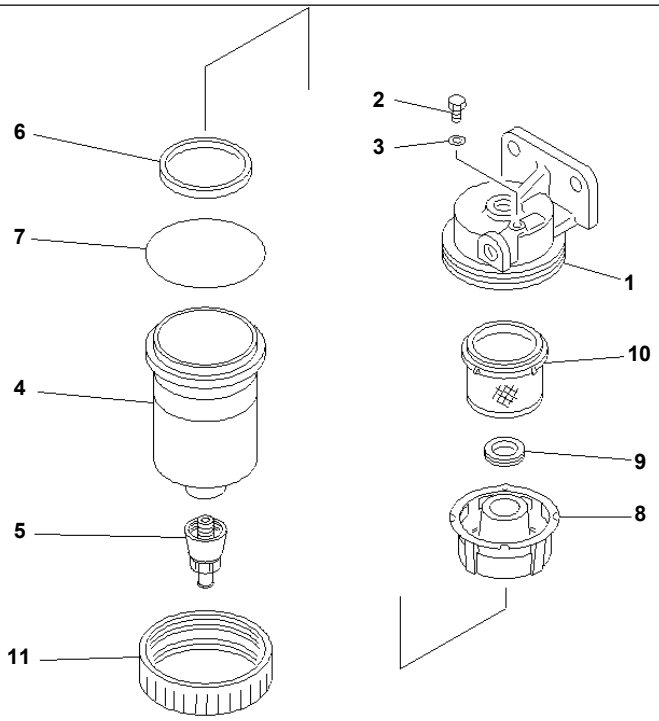

PS56385

GD825A-2 S/N 11001-UP

WATER SEPARATOR

Item	Part No.	Description	Qty	Options
	600-311-9731	WATER SEPARATOR A.	1	SN:11001--
1	600-311-9911	· COVER	1	SN:11001--
2	6110-73-6231	· PLUG	1	SN:11001--
3	07005-00812	· GASKET	1	SN:11001--
4	600-311-9920	· CASE	1	SN:11001--
5	600-311-9760	· PLUG	1	SN:11001--
6	600-311-9950	· RING	1	SN:11001--
7	600-311-9890	· O-RING	1	SN:11001--
8	600-311-9941	· BAFFLE,BAFFLE	1	SN:11001--
9	600-311-9961	· GASKET	1	SN:11001--
10	600-311-9971	· SCREEN	1	SN:11001--
11	600-311-9931	· NUT,RING	1	SN:11001--

Ref. 1351 Page 030090

Printed By : Dwi Iswanto (airafather6107170)

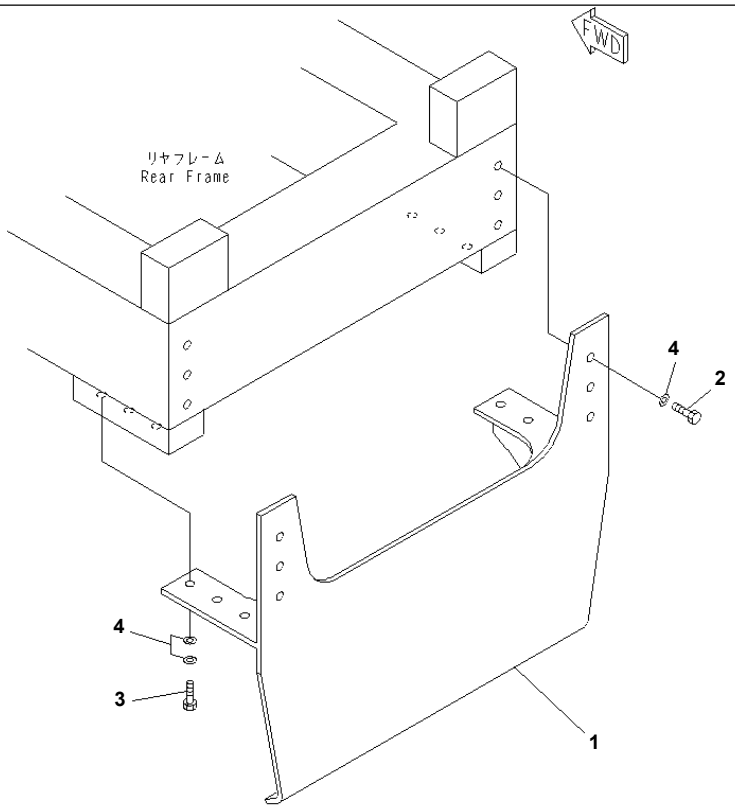

PC56911

Ref. 1381 **Page 030100**

GD825A-2 S/N 11001-UP
FUEL TANK GUARD(#11002-)

Item	Part No.	Description	Qty	Options
1	235-04-31160	GUARD	1	SN:11002--
2	01010-52460	BOLT	6	SN:11002--
3	01010-52450	BOLT	6	SN:11002--
4	01643-32460	WASHER	18	SN:11002--

Printed By : Dwi Iswanto (airafather6107170)

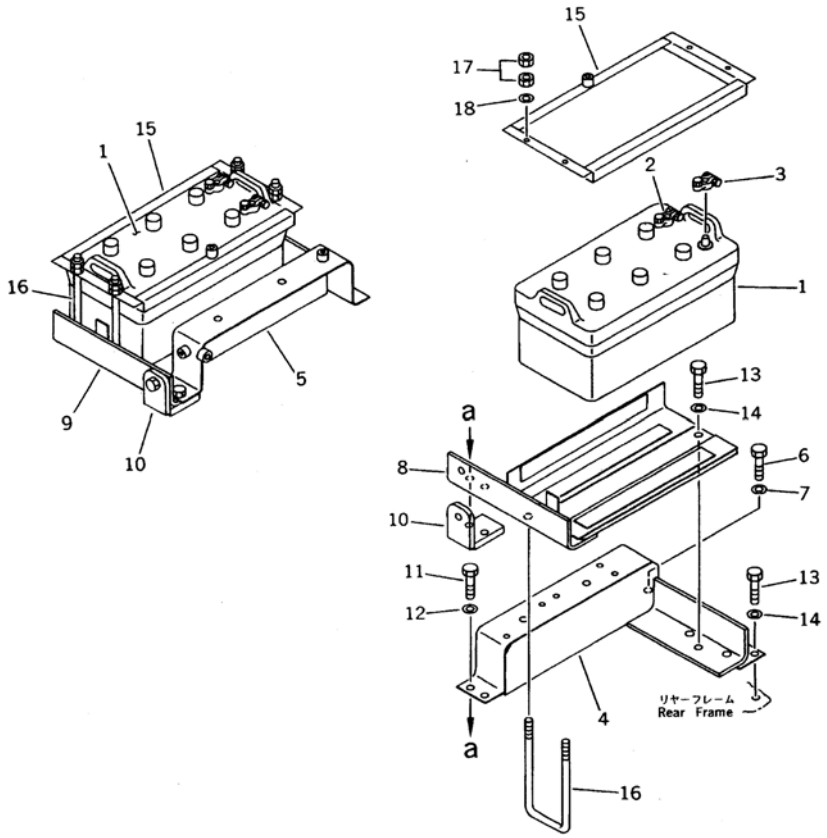

GD825A-2 S/N 11001-UP
BATTERY

Item	Part No.	Description	Qty	Options
1	08000-02220	BATTERY (190H52)	2	SN:11001--
	08000-02221	BATTERY,(C200 OR F300-20)	2	SN:11001--
2	08000-00000	TERMINAL¤ (+)	1	SN:11001--
3	08000-00001	TERMINAL¤ (-)	1	SN:11001--
4	235-06-35121	PLATE,L.H.	1	SN:11001--
5	235-06-35141	PLATE,R.H.	1	SN:11001--
6	01010-51635	BOLT	2	SN:11001--
7	01643-31645	WASHER	2	SN:11001--
8	235-06-35111	PLATE,L.H.	1	SN:11001--
9	235-06-35131	PLATE,R.H.	1	SN:11001--
10	235-06-15180	BRACKET (WELDED)	2	SN:11001--
11	01010-51235	BOLT	6	SN:11001--
12	01643-31232	WASHER	6	SN:11001--
13	01010-51225	BOLT	8	SN:11001--
14	01643-31232	WASHER	8	SN:11001--
15	23B-06-12410	HOLDER	2	SN:11001--
16	23A-06-12420	U-BOLT	4	SN:11001--
17	01580-11008	NUT	16	SN:11001--
18	01643-31032	WASHER	8	SN:11001--

Printed By : Dwi Iswanto (airafather6107170)

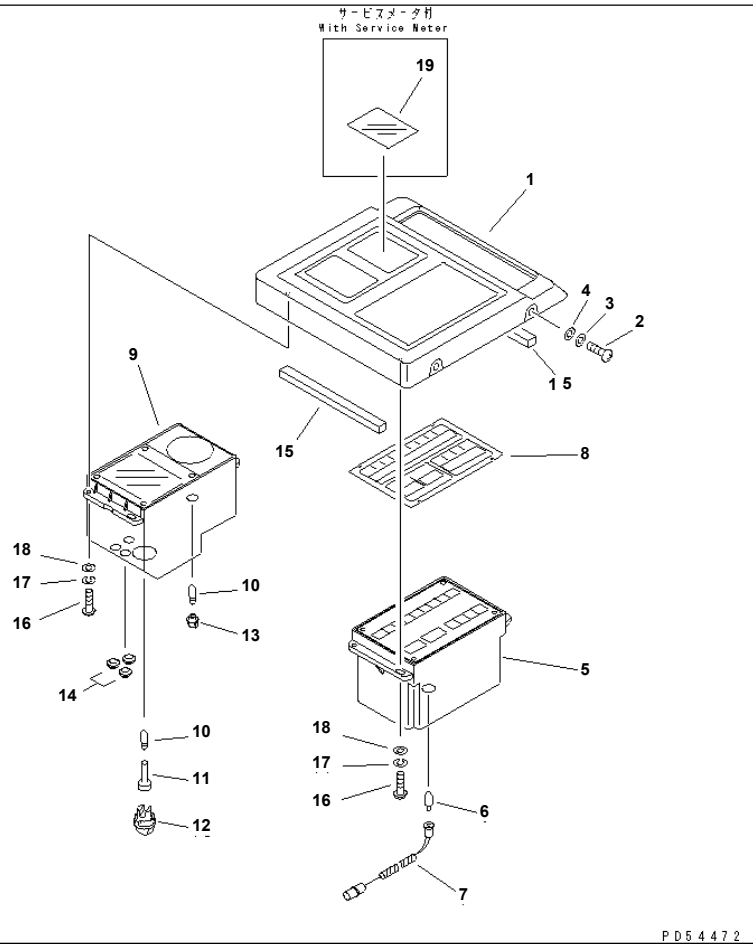

GD825A-2 S/N 11001-UP

MONITOR PANEL

Item	Part No.	Description	Qty	Options
1	235-06-35430	PANEL	1	SN:11001--
2	01220-40612	SCREW	4	SN:11001--
3	01643-30623	WASHER	4	SN:11001--
4	01640-20610	WASHER	4	SN:11001--
	7831-71-6000	MODULE ASS'Y	1	SN:11001--
5	☆	· MODULE	1	SN:11001--
6	08102-12403	· BULB¤ 3W	1	SN:11001--
7	7831-61-9110	· HOLDER	1	SN:11001--
8	7831-84-4111	PLATE	1	SN:12001--
	7831-84-4110	PLATE	1	SN:11001--12000
	7831-84-4211	PLATE,(WITH EMERGENCY STEERING)	1	SN:12001--
	7831-84-4210	PLATE,(WITH EMERGENCY STEERING)	1	SN:11001--12000
	7831-85-6000	SPEEDOMETER ASS'Y	1	SN:11001--
9	☆	· SPEEDOMETER	1	SN:11001--
10	7815-11-1010	· BULB¤ 1.4W	3	SN:11001--
11	7861-01-1320	· SOCKET	1	SN:11001--
12	7861-21-1170	· CAP	1	SN:11001--
13	7861-01-1820	· SOCKET	1	SN:11001--
14	7861-51-1630	· GROMMET	3	SN:11001--
15	23D-06-12510	SEAL	2	SN:11001--
16	23C-06-12410	SCREW	8	SN:11001--
17	01601-20410	WASHER,SPRING	8	SN:11001--
18	01641-20405	WASHER	8	SN:11001--
19	235-06-17180	PLATE,(WITH SERVICE METER)	1	SN:11001--

Printed By : Dwi Iswanto (airafather6107170)

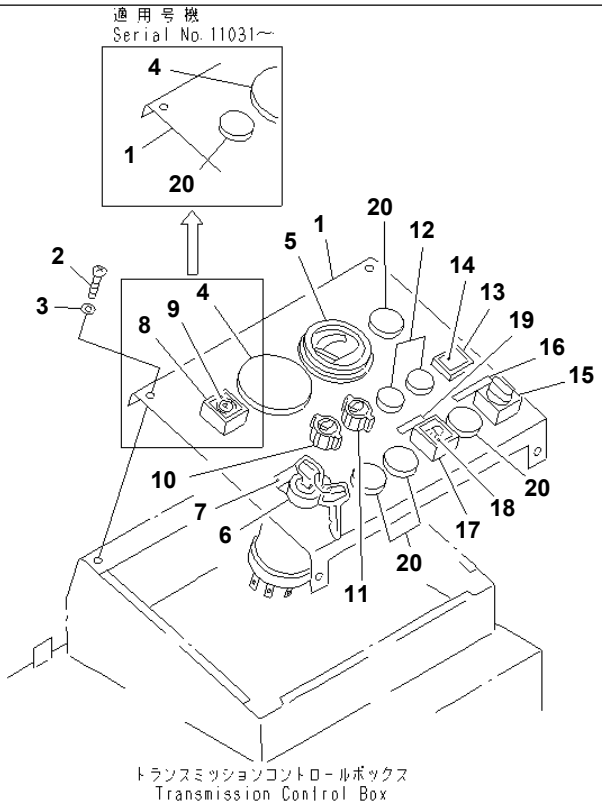

PJ54473

INSTRUMENT PANEL

Item	Part No.	Description	Qty	Options
1	235-06-35210	PANEL	1	SN:11001--
2	01220-40616	SCREW	4	SN:11001--
3	01642-20608	WASHER	4	SN:11001--
4	232-06-57190	CAP	1	SN:11001--
5	234-06-41381	GAUGE,AIR PRESSURE	1	SN:11001--
6	08086-20000	SWITCH,STARTING	1	SN:11001--
7	09683-0000A	PLATE¤ OPERATING	1	SN:12001--
	235-06-35380	PLATE¤ OPERATING	1	SN:11001--12000
8	235-806-1111	SWITCH,PARKING BRAKE	1	SN:11001--11030
	235-806-1160	· BULB	1	SN:11001--11030
9	235-06-35420	PLATE¤ MARK	1	SN:11001--11030
10	205-06-71690	SWITCH ASS'Y,WIPER¤ UPPER	1	SN:11001--
11	205-06-71690	SWITCH ASS'Y,WIPER¤ LOWER	1	SN:11001--
12	09415-01610	CAP	2	SN:11001--
13	235-06-31520	INDICATOR,BANK	1	SN:11001--
	08111-12430	· BULB¤ 3W	1	SN:11001--
14	235-06-35440	PLATE¤ MARK	1	SN:11001--
15	235-06-13290	SWITCH,BANK CONTROL	1	SN:11001--
16	235-06-35340	PLATE¤ MARK	1	SN:11001--
17	23F-06-11710	SWITCH,WORK LAMP¤ REAR	1	SN:11001--
	235-806-1160	· BULB	1	SN:11001--
18	235-06-35460	PLATE¤ MARK	1	SN:11001--
19	235-06-35360	PLATE¤ MARK	1	SN:12001--
	235-06-35350	PLATE¤ MARK	1	SN:11001--12000
20	09415-01610	CAP	5	SN:11031--
	09415-01610	CAP	4	SN:11001--11030

Printed By : Dwi Iswanto (airafather6107170)

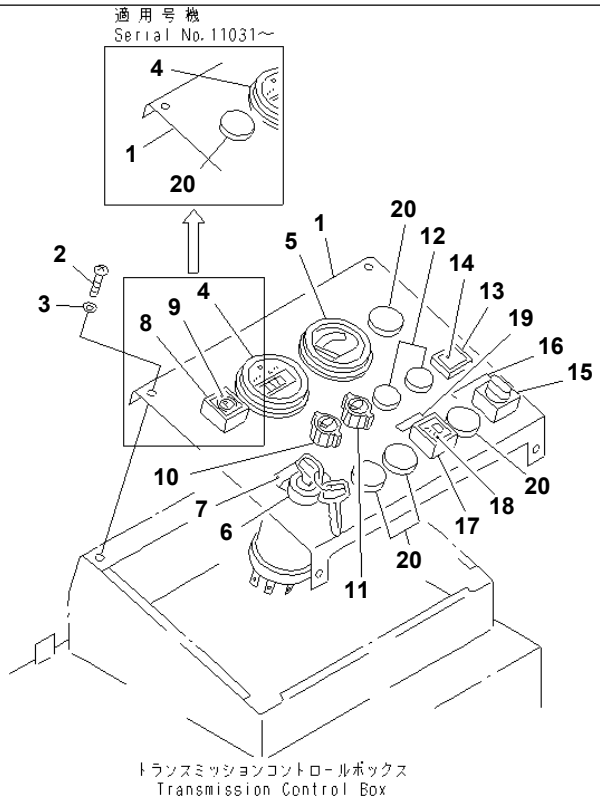

PJ56386

INSTRUMENT PANEL (WITH SERVICE METER)

Item	Part No.	Description	Qty	Options
1	235-06-35210	PANEL	1	SN:11001--
2	01220-40616	SCREW	4	SN:11001--
3	01642-20608	WASHER	4	SN:11001--
4	08687-22403	METER,SERVICE	1	SN:11001--
5	234-06-41381	GAUGE,AIR PRESSURE	1	SN:11001--
6	08086-20000	SWITCH,STARTING	1	SN:11001--
7	09683-0000A	PLATE¤ OPERATING	1	SN:12001--
	235-06-35380	PLATE¤ OPERATING	1	SN:11001--12000
8	235-806-1111	SWITCH,PARKING BRAKE	1	SN:11001--11030
	235-806-1160	· BULB	1	SN:11001--11030
9	235-06-35420	PLATE¤ MARK	1	SN:11001--11030
10	205-06-71690	SWITCH ASS'Y,WIPER¤ UPPER	1	SN:11001--
11	205-06-71690	SWITCH ASS'Y,WIPER¤ LOWER	1	SN:11001--
12	09415-01610	CAP	2	SN:11001--
13	235-06-31520	INDICATOR,BANK	1	SN:11001--
	08111-12430	· BULB¤ 3W	1	SN:11001--
14	235-06-35440	PLATE¤ MARK	1	SN:11001--
15	235-06-13290	SWITCH,BANK CONTROL	1	SN:11001--
16	235-06-35340	PLATE¤ MARK	1	SN:11001--
17	23F-06-11710	SWITCH,WORK LAMP¤ REAR	1	SN:11001--
	235-806-1160	· BULB	1	SN:11001--
18	235-06-35460	PLATE¤ MARK	1	SN:11001--
19	235-06-35360	PLATE¤ MARK	1	SN:12001--
	235-06-35350	PLATE¤ MARK	1	SN:11001--12000
20	09415-01610	CAP	5	SN:11031--
	09415-01610	CAP	4	SN:11001--11030

Printed By : Dwi Iswanto (airafather6107170)

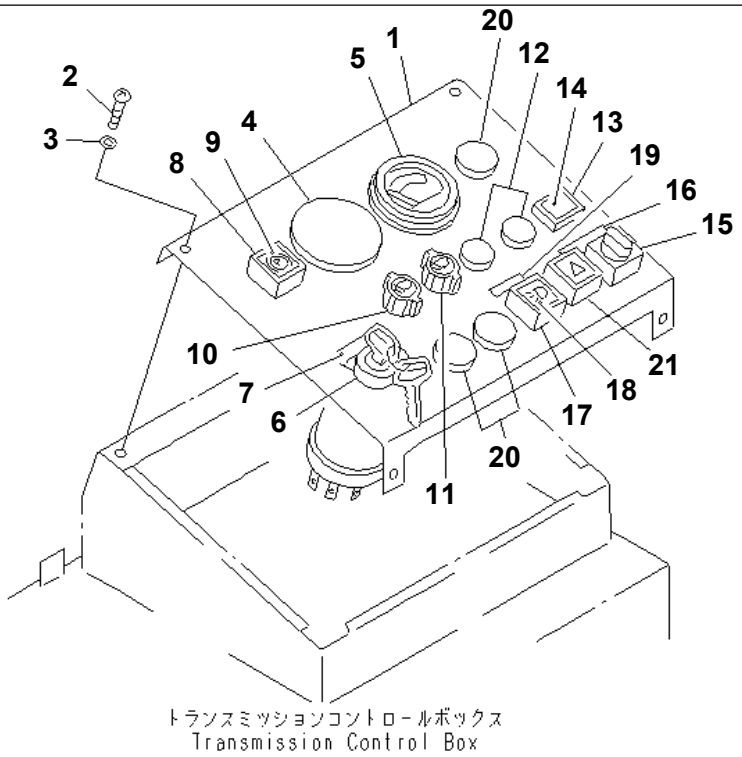

PJ56387

INSTRUMENT PANEL (WITH HAZARD SWITCH)(#11001-11030)

Item	Part No.	Description	Qty	Options
1	235-06-35210	PANEL	1	SN:11001--@
2	01220-40616	SCREW	4	SN:11001--@
3	01642-20608	WASHER	4	SN:11001--@
4	232-06-57190	CAP	1	SN:11001--@
5	234-06-41381	GAUGE,AIR PRESSURE	1	SN:11001--@
6	08086-20000	SWITCH,STARTING	1	SN:11001--@
7	235-06-35380	PLATE¤ OPERATING	1	SN:11001--@
8	235-806-1111	SWITCH,PARKING BRAKE	1	SN:11001--11030
	235-806-1160	· BULB	1	SN:11001--11030
9	235-06-35420	PLATE¤ MARK	1	SN:11001--11030
10	205-06-71690	SWITCH ASS'Y,WIPER¤ UPPER	1	SN:11001--@
11	205-06-71690	SWITCH ASS'Y,WIPER¤ LOWER	1	SN:11001--@
12	09415-01610	CAP	2	SN:11001--@
13	235-06-31520	INDICATOR,BANK	1	SN:11001--@
	08111-12430	· BULB¤ 3W	1	SN:11001--@
14	235-06-35440	PLATE¤ MARK	1	SN:11001--@
15	235-06-13290	SWITCH,BANK CONTROL	1	SN:11001--@
16	235-06-35340	PLATE¤ MARK	1	SN:11001--@
17	23F-06-11710	SWITCH,WORK LAMP¤ REAR	1	SN:11001--@
	235-806-1160	· BULB	1	SN:11001--@
18	235-06-35460	PLATE¤ MARK	1	SN:11001--@
19	235-06-35350	PLATE¤ MARK	1	SN:11001--@
20	09415-01610	CAP	3	SN:11001--11030
21	235-06-13370	SWITCH,HAZARD	1	SN:11001--@

Printed By : Dwi Iswanto (airafather6107170)

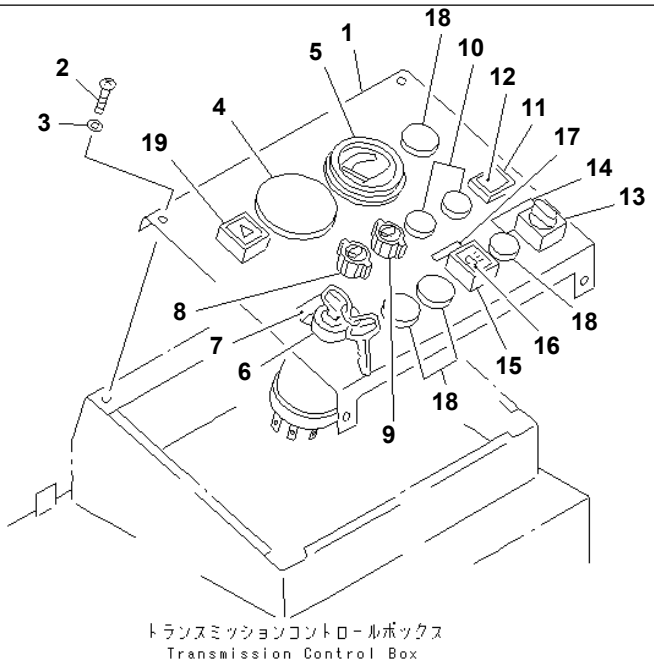

PS56912

INSTRUMENT PANEL (WITH HAZARD SWITCH)(#11031-)

Item	Part No.	Description	Qty	Options
1	235-06-35210	PANEL	1	SN:11001--
2	01220-40616	SCREW	4	SN:11001--
3	01642-20608	WASHER	4	SN:11001--
4	232-06-57190	CAP	1	SN:11001--
5	234-06-41381	GAUGE,AIR PRESSURE	1	SN:11001--
6	08086-20000	SWITCH,STARTING	1	SN:11001--
7	09683-0000A	PLATE¤ OPERATING	1	SN:12001--
	235-06-35380	PLATE¤ OPERATING	1	SN:11001--12000
8	205-06-71690	SWITCH ASS'Y,WIPER¤ UPPER	1	SN:11001--
9	205-06-71690	SWITCH ASS'Y,WIPER¤ LOWER	1	SN:11001--
10	09415-01610	CAP	2	SN:11001--
11	235-06-31520	INDICATOR,BANK	1	SN:11001--
	08111-12430	· BULB¤ 3W	1	SN:11001--
12	235-06-35440	PLATE¤ MARK	1	SN:11001--
13	235-06-13290	SWITCH,BANK CONTROL	1	SN:11001--
14	235-06-35340	PLATE¤ MARK	1	SN:11001--
15	23F-06-11710	SWITCH,WORK LAMP¤ REAR	1	SN:11001--
	235-806-1160	· BULB	1	SN:11001--
16	235-06-35460	PLATE¤ MARK	1	SN:11001--
17	235-06-35360	PLATE¤ MARK	1	SN:12001--
	235-06-35350	PLATE¤ MARK	1	SN:11001--12000
18	09415-01610	CAP	4	SN:11031--
19	235-06-13370	SWITCH,HAZARD	1	SN:11001--

Printed By : Dwi Iswanto (airafather6107170)

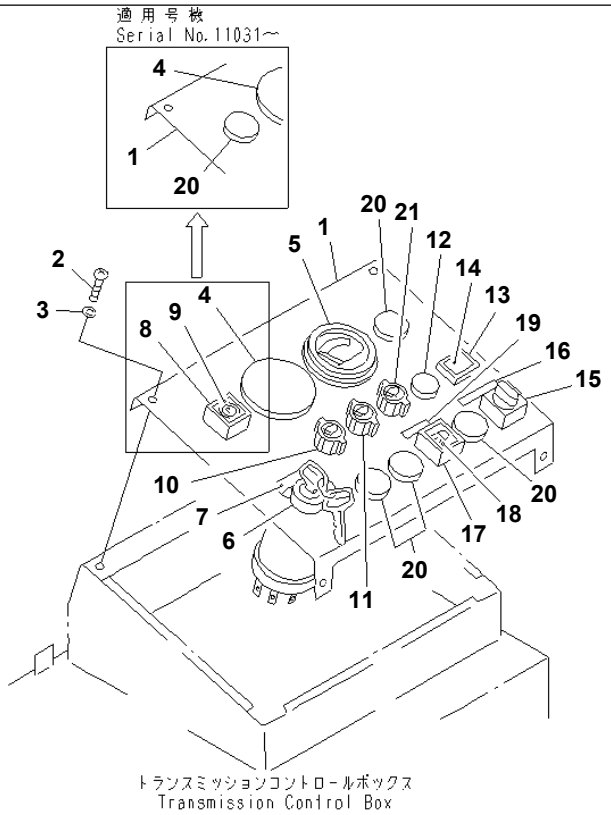

PJ56388

GD825A-2 S/N 11001-UP

INSTRUMENT PANEL (WITH DOOR WIPER)(#11009-)

Item	Part No.	Description	Qty	Options
1	235-06-35210	PANEL	1	SN:11009--
2	01220-40616	SCREW	4	SN:11009--
3	01642-20608	WASHER	4	SN:11009--
4	232-06-57190	CAP	1	SN:11009--
5	234-06-41381	GAUGE,AIR PRESSURE	1	SN:11009--
6	08086-20000	SWITCH,STARTING	1	SN:11009--
7	09683-0000A	PLATE¤ OPERATING	1	SN:12001--
	235-06-35380	PLATE¤ OPERATING	1	SN:11009--12000
8	235-806-1111	SWITCH,PARKING BRAKE	1	SN:11009--11030
	235-806-1160	· BULB	1	SN:11009--11030
9	235-06-35420	PLATE¤ MARK	1	SN:11009--11030
10	205-06-71690	SWITCH ASS'Y,WIPER¤ UPPER	1	SN:11009--
11	205-06-71690	SWITCH ASS'Y,WIPER¤ LOWER	1	SN:11009--
12	09415-01610	CAP	1	SN:11009--
13	235-06-31520	INDICATOR,BANK	1	SN:11009--
	08111-12430	· BULB¤ 3W	1	SN:11009--
14	235-06-35440	PLATE¤ MARK	1	SN:11009--
15	235-06-13290	SWITCH,BANK CONTROL	1	SN:11009--
16	235-06-35340	PLATE¤ MARK	1	SN:11009--
17	23F-06-11710	SWITCH,WORK LAMP¤ REAR	1	SN:11009--
	235-806-1160	· BULB	1	SN:11009--
18	235-06-35460	PLATE¤ MARK	1	SN:11009--
19	235-06-35360	PLATE¤ MARK	1	SN:12001--
	235-06-35350	PLATE¤ MARK	1	SN:11009--12000
20	09415-01610	CAP	5	SN:11031--
	09415-01610	CAP	4	SN:11009--11030
21	205-06-71341	SWITCH,WIPER¤ DOOR	1	SN:11009--

Printed By : Dwi Iswanto (airafather6107170)

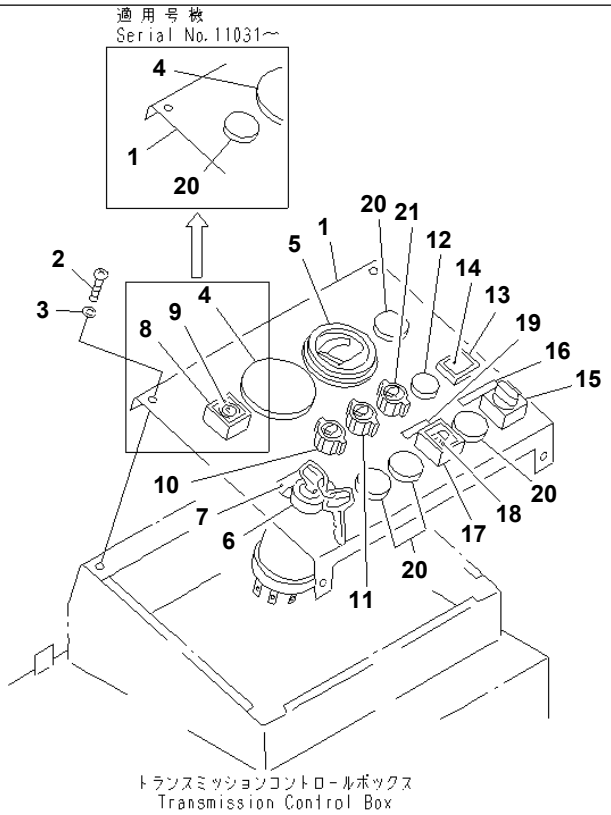

PJ56388

GD825A-2 S/N 11001-UP

INSTRUMENT PANEL (WITH REAR WIPER)

Item	Part No.	Description	Qty	Options
1	235-06-35210	PANEL	1	SN:11001--
2	01220-40616	SCREW	4	SN:11001--
3	01642-20608	WASHER	4	SN:11001--
4	232-06-57190	CAP	1	SN:11001--
5	234-06-41381	GAUGE,AIR PRESSURE	1	SN:11001--
6	08086-20000	SWITCH,STARTING	1	SN:11001--
7	09683-0000A	PLATE¤ OPERATING	1	SN:12001--
	235-06-35380	PLATE¤ OPERATING	1	SN:11001--12000
8	235-806-1111	SWITCH,PARKING BRAKE	1	SN:11001--11030
	235-806-1160	· BULB	1	SN:11001--11030
9	235-06-35420	PLATE¤ MARK	1	SN:11001--11030
10	205-06-71690	SWITCH ASS'Y,WIPER¤ UPPER	1	SN:11001--
11	205-06-71690	SWITCH ASS'Y,WIPER¤ LOWER	1	SN:11001--
12	09415-01610	CAP	1	SN:11001--
13	235-06-31520	INDICATOR,BANK	1	SN:11001--
	08111-12430	· BULB¤ 3W	1	SN:11001--
14	235-06-35440	PLATE¤ MARK	1	SN:11001--
15	235-06-13290	SWITCH,BANK CONTROL	1	SN:11001--
16	235-06-35340	PLATE¤ MARK	1	SN:11001--
17	23F-06-11710	SWITCH,WORK LAMP¤ REAR	1	SN:11001--
	235-806-1160	· BULB	1	SN:11001--
18	235-06-35460	PLATE¤ MARK	1	SN:11001--
19	235-06-35360	PLATE¤ MARK	1	SN:12001--
	235-06-35350	PLATE¤ MARK	1	SN:11001--12000
20	09415-01610	CAP	5	SN:11031--
	09415-01610	CAP	4	SN:11001--11030
21	205-06-71341	SWITCH,WIPER¤ REAR	1	SN:11001--

Printed By : Dwi Iswanto (airafather6107170)

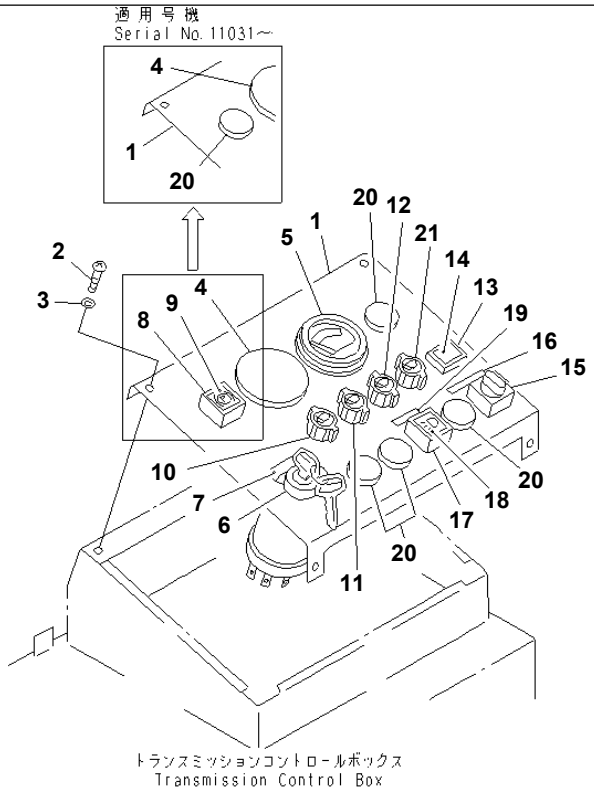

PJ56389

INSTRUMENT PANEL (WITH REAR WIPER AND DOOR WIPER)(#11009-)

Item	Part No.	Description	Qty	Options
1	235-06-35210	PANEL	1	SN:11009--
2	01220-40616	SCREW	4	SN:11009--
3	01642-20608	WASHER	4	SN:11009--
4	232-06-57190	CAP	1	SN:11009--
5	234-06-41381	GAUGE,AIR PRESSURE	1	SN:11009--
6	08086-20000	SWITCH,STARTING	1	SN:11009--
7	09683-0000A	PLATE¤ OPERATING	1	SN:12001--
	235-06-35380	PLATE¤ OPERATING	1	SN:11009--12000
8	235-806-1111	SWITCH,PARKING BRAKE	1	SN:11009--11030
	235-806-1160	· BULB	1	SN:11009--11030
9	235-06-35420	PLATE¤ MARK	1	SN:11009--11030
10	205-06-71690	SWITCH ASS'Y,WIPER¤ UPPER	1	SN:11009--
11	205-06-71690	SWITCH ASS'Y,WIPER¤ LOWER	1	SN:11009--
12	205-06-71341	SWITCH,WIPER¤ REAR	1	SN:11009--
13	235-06-31520	INDICATOR,BANK	1	SN:11009--
	08111-12430	· BULB¤ 3W	1	SN:11009--
14	235-06-35440	PLATE¤ MARK	1	SN:11009--
15	235-06-13290	SWITCH,BANK CONTROL	1	SN:11009--
16	235-06-35340	PLATE¤ MARK	1	SN:11009--
17	23F-06-11710	SWITCH,WORK LAMP¤ REAR	1	SN:11009--
	235-806-1160	· BULB	1	SN:11009--
18	235-06-35460	PLATE¤ MARK	1	SN:11009--
19	235-06-35360	PLATE¤ MARK	1	SN:12001--
	235-06-35350	PLATE¤ MARK	1	SN:11009--12000
20	09415-01610	CAP	5	SN:11031--
	09415-01610	CAP	4	SN:11009--11030
21	205-06-71341	SWITCH,WIPER¤ DOOR	1	SN:11009--

Printed By : Dwi Iswanto (airafather6107170)

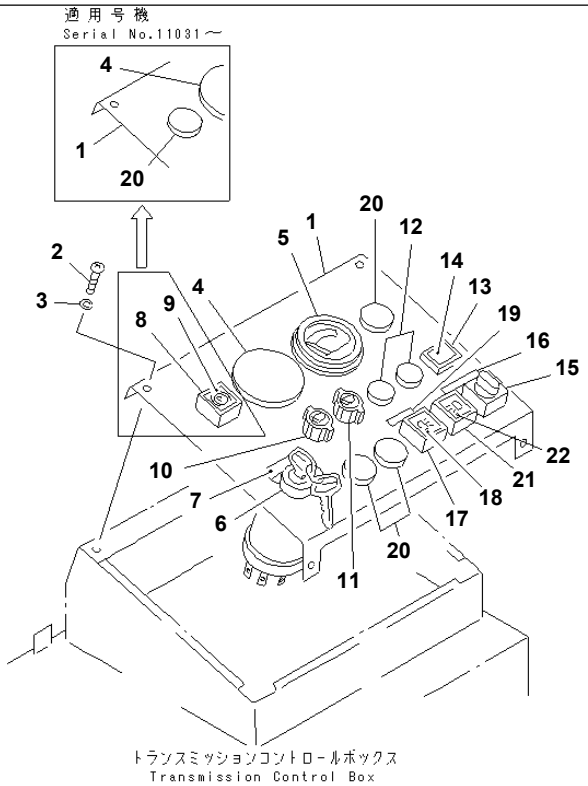

PS56913

GD825A-2 S/N 11001-UP

INSTRUMENT PANEL (WITH CAB TOP WORK LAMP)

Item	Part No.	Description	Qty	Options
1	235-06-35210	PANEL	1	SN:11001--
2	01220-40616	SCREW	4	SN:11001--
3	01642-20608	WASHER	4	SN:11001--
4	232-06-57190	CAP	1	SN:11001--
5	234-06-41381	GAUGE,AIR PRESSURE	1	SN:11001--
6	08086-20000	SWITCH,STARTING	1	SN:11001--
7	09683-0000A	PLATE¤ OPERATING	1	SN:12001--
	235-06-35380	PLATE¤ OPERATING	1	SN:11001--12000
8	235-806-1111	SWITCH,PARKING BRAKE	1	SN:11001--11030
	235-806-1160	· BULB	1	SN:11001--11030
9	235-06-35420	PLATE¤ MARK	1	SN:11001--11030
10	205-06-71690	SWITCH ASS'Y,WIPER¤ UPPER	1	SN:11001--
11	205-06-71690	SWITCH ASS'Y,WIPER¤ LOWER	1	SN:11001--
12	09415-01610	CAP	2	SN:11001--
13	235-06-31520	INDICATOR,BANK	1	SN:11001--
	08111-12430	· BULB¤ 3W	1	SN:11001--
14	235-06-35440	PLATE¤ MARK	1	SN:11001--
15	235-06-13290	SWITCH,BANK CONTROL	1	SN:11001--
16	235-06-35340	PLATE¤ MARK	1	SN:11001--
17	23F-06-11710	SWITCH,WORK LAMP¤ REAR	1	SN:11001--
	235-806-1160	· BULB	1	SN:11001--
18	235-06-35460	PLATE¤ MARK	1	SN:11001--
19	235-06-35360	PLATE¤ MARK	1	SN:12001--
	235-06-35350	PLATE¤ MARK	1	SN:11001--12000
20	09415-01610	CAP	4	SN:11031--
	09415-01610	CAP	3	SN:11001--11030
21	23F-06-11710	SWITCH,WORK LAMP¤ CAB	1	SN:11001--

Printed By : Dwi Iswanto (airafather6107170)

INSTRUMENT PANEL (WITH CAB TOP WORK LAMP)

Item	Part No.	Description	Qty	Options
	235-806-1160	· BULB	1	SN:11001--
22	235-06-35460	PLATE¤ MARK	1	SN:11001--

Printed By : Dwi Iswanto (airafather6107170)

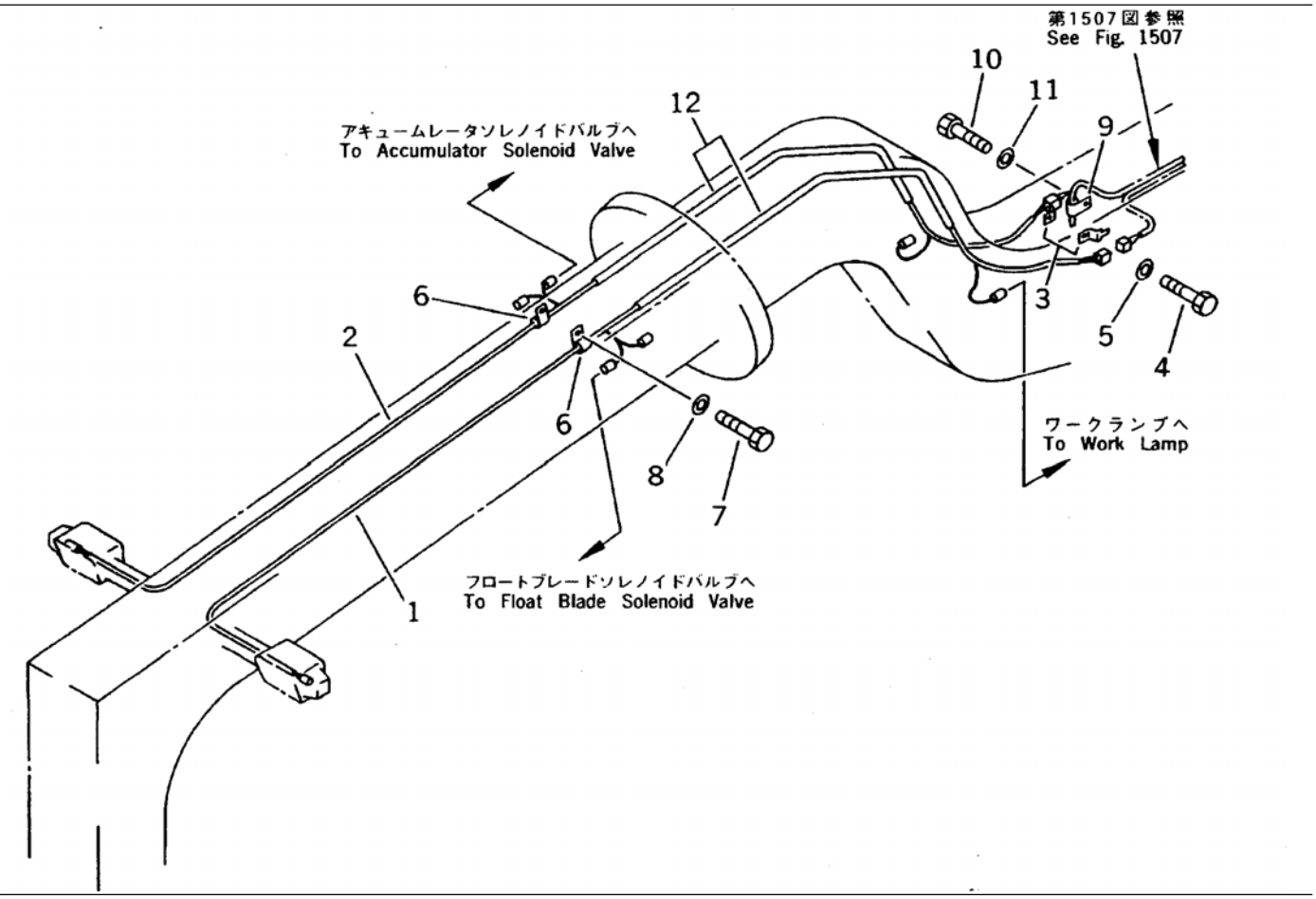

ELECTRICAL SYSTEM (FRONT LINE)(#11001-12000)

Item	Part No.	Description	Qty	Options
1	235-06-31121	WIRE ASS'Y,FRONT¤ L.H.	1	SN:11001--12000
2	235-06-31181	WIRE ASS'Y,FRONT¤ R.H.	1	SN:11001--12000
3	08053-00910	CLIP	2	SN:11001--@
4	01010-51016	BOLT	2	SN:11001--@
5	01643-31032	WASHER	2	SN:11001--@
6	08036-01014	CLIP	2	SN:11001--@
7	01010-51016	BOLT	2	SN:11001--@
8	01643-31032	WASHER	2	SN:11001--@
9	08036-01414	CLIP	1	SN:11001--@
10	01010-51016	BOLT	1	SN:11001--@
11	01643-31032	WASHER	1	SN:11001--@
12	235-06-35190	TUBE (WELDED)	2	SN:11001--@

Printed By : Dwi Iswanto (airafather6107170)

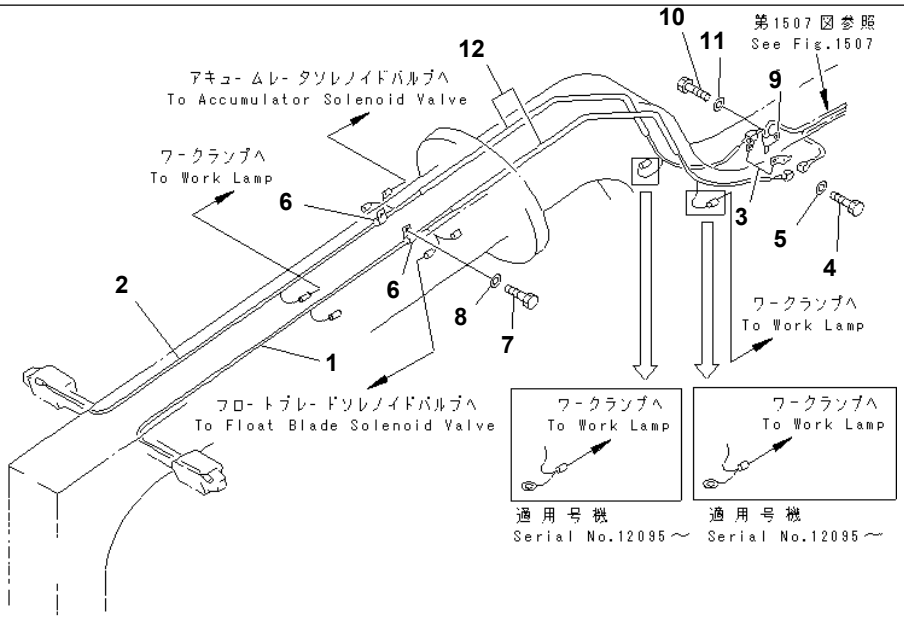

PJ2A700

GD825A-2 S/N 11001-UP

ELECTRICAL SYSTEM (FRONT LINE)(#12001-12101)

Item	Part No.	Description	Qty	Options
1	235-06-36490	WIRE ASS'Y,FRONT¤ L.H.	1	SN:12099--@
	235-06-31123	WIRE ASS'Y,FRONT¤ L.H.	1	SN:12095--12098
	235-06-31122	WIRE ASS'Y,FRONT¤ L.H.	1	SN:12001--12094
2	235-06-36480	WIRE ASS'Y,FRONT¤ R.H.	1	SN:12099--@
	235-06-31183	WIRE ASS'Y,FRONT¤ R.H.	1	SN:12095--12098
	235-06-31182	WIRE ASS'Y,FRONT¤ R.H.	1	SN:12001--12094
3	08053-00910	CLIP	2	SN:11001--12101
4	01010-51016	BOLT	2	SN:11001--12101
5	01643-31032	WASHER	2	SN:11001--@
6	08036-01014	CLIP	2	SN:11001--12101
7	01010-51016	BOLT	2	SN:11001--12101
8	01643-31032	WASHER	2	SN:11001--12101
9	08036-01414	CLIP	1	SN:11001--12101
10	01010-51016	BOLT	1	SN:11001--12101
11	01643-31032	WASHER	1	SN:11001--12101
12	235-06-35190	TUBE (WELDED)	2	SN:11001--@

Printed By : Dwi Iswanto (airafather6107170)

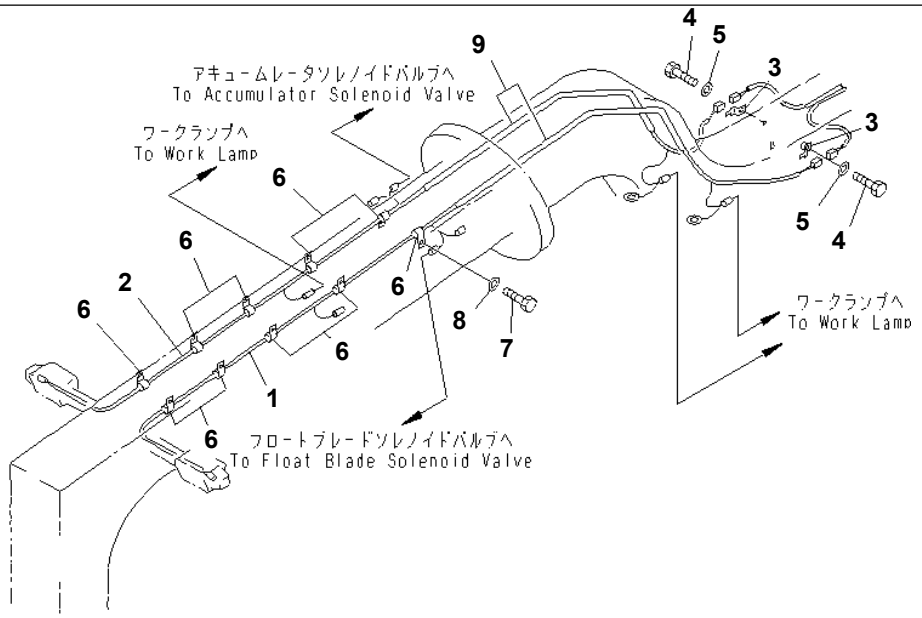

PJ2D447

GD825A-2 S/N 11001-UP

ELECTRICAL SYSTEM (FRONT LINE)(#12102-)

Item	Part No.	Description	Qty	Options
1	235-06-36490	WIRE ASS'Y,FRONT¤ L.H.	1	SN:12099--
2	235-06-36480	WIRE ASS'Y,FRONT¤ R.H.	1	SN:12099--
3	08193-31012	CLIP	2	SN:12102--
4	01010-81016	BOLT	2	SN:12102--
5	01643-31032	WASHER	2	SN:11001--
6	08036-01014	CLIP	10	SN:12102--
7	01010-81016	BOLT	10	SN:12102--
8	01643-31032	WASHER	10	SN:12102--
9	235-06-35190	TUBE (WELDED)	2	SN:11001--

Ref. 1501B Page 030230

Printed By : Dwi Iswanto (airafather6107170)

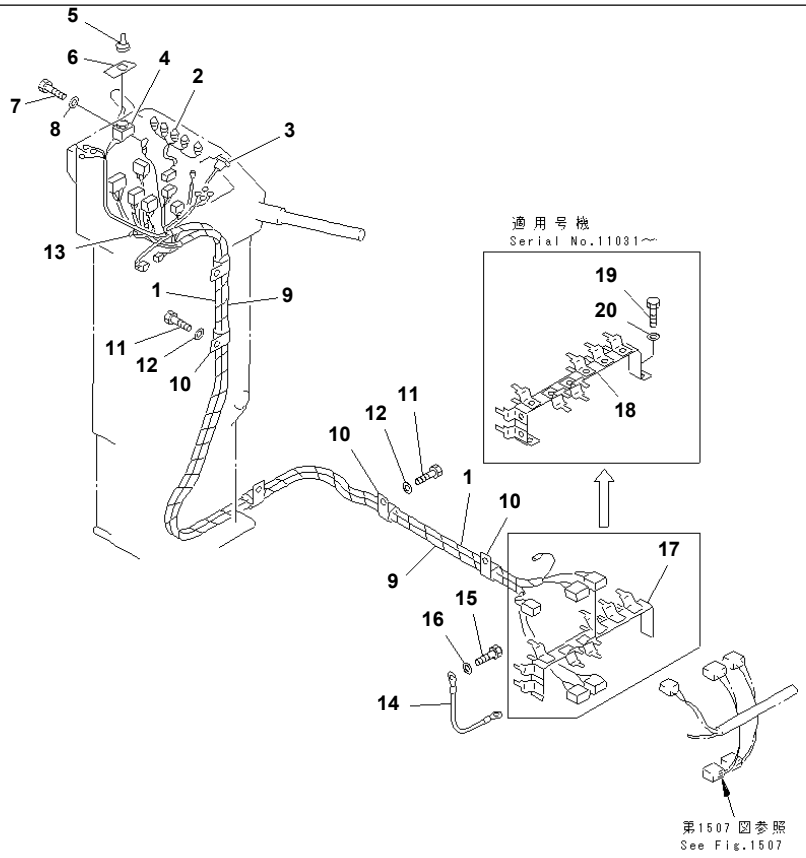

PS56915

GD825A-2 S/N 11001-UP

ELECTRICAL SYSTEM (MONITOR PANEL LINE)(#11001-12020)

Item	Part No.	Description	Qty	Options
1	235-06-31411	HARNESS	1	SN:11001--12020
2	235-06-13330	LAMP ASS'Y,PANEL	1	SN:11001--@
	08102-02403	· BULB¤ 3W	5	SN:11001--@
3	262-06-21610	LAMP ASS'Y,PARKING BRAKE	1	SN:11001--11030
	08111-12430	· BULB¤ 3W	1	SN:11001--11030
4	26A-06-11550	SWITCH,DIFFERENTIAL LOCK	1	SN:11001--@
5	235-06-31590	CAP	1	SN:11012--@
	203-06-41610	CAP	1	SN:11001--11011
6	235-06-35391	PLATE¤ MARK,ON-OFF	1	SN:12001--@
	235-06-35390	PLATE¤ MARK,ON-OFF	1	SN:11001--12000
7	01010-50812	BOLT	1	SN:11001--@
8	01643-30823	WASHER	1	SN:11001--@
9	235-06-31280	HARNESS	1	SN:11001--@
10	08036-03014	CLIP	5	SN:11001--@
11	01010-51016	BOLT	5	SN:11001--@
12	01643-31032	WASHER	5	SN:11001--@
13	08034-00414	BAND	5	SN:11001--@
14	238-06-11160	CABLE	1	SN:11001--@
15	01010-51016	BOLT	2	SN:11001--@
16	01643-31032	WASHER	2	SN:11001--@
17	235-06-35260	BRACKET (WELDED)	1	SN:11001--11030
18	235-06-35261	BRACKET	1	SN:11031--@
19	01010-81020	BOLT	2	SN:11031--@
20	01643-31032	WASHER	2	SN:11031--@

Printed By : Dwi Iswanto (airafather6107170)

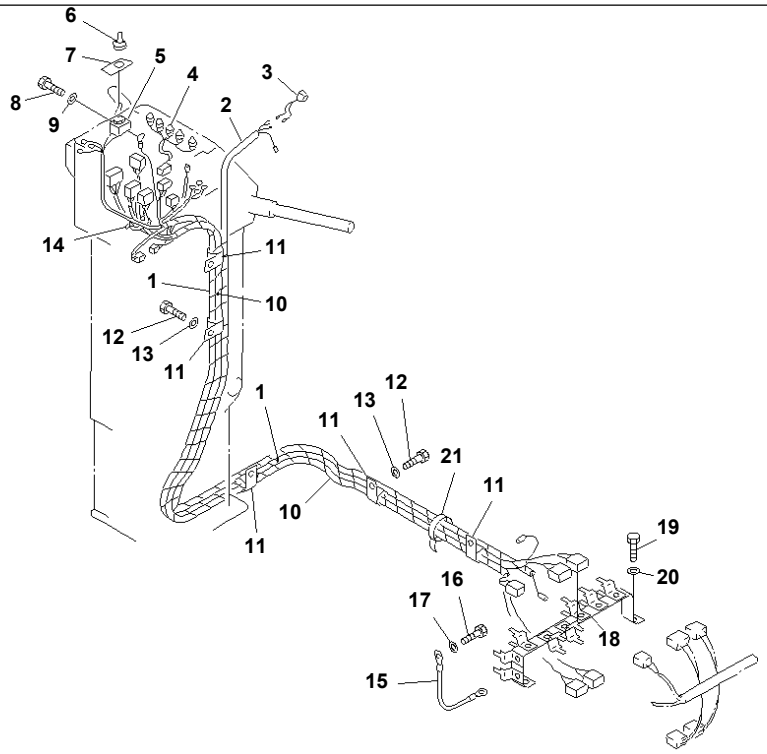

PJ2B767

GD825A-2 S/N 11001-UP

ELECTRICAL SYSTEM (MONITOR PANEL LINE)(#12021-.)

Item	Part No.	Description	Qty	Options
1	235-06-31412	HARNESS	1	SN:12021--@
2	235-06-31430	HARNESS	1	SN:12021--.
3	262-96-72650	LAMP,CAUTION	1	SN:12021--@
4	235-06-13330	LAMP ASS'Y,PANEL	1	SN:11001--@
	08102-02403	· BULB¤ 3W	5	SN:11001--@
5	26A-06-11550	SWITCH,DIFFERENTIAL LOCK	1	SN:11001--@
6	235-06-31590	CAP	1	SN:11012--@
7	235-06-35391	PLATE¤ MARK,ON-OFF	1	SN:12001--@
8	01010-50812	BOLT	1	SN:11001--@
9	01643-30823	WASHER	1	SN:11001--@
10	235-06-31280	HARNESS	1	SN:11001--@
11	08036-03014	CLIP	5	SN:11001--@
12	01010-51016	BOLT	5	SN:11001--@
13	01643-31032	WASHER	5	SN:11001--@
14	08034-00414	BAND	5	SN:11001--@
15	238-06-11160	CABLE	1	SN:11001--@
16	01010-51016	BOLT	2	SN:11001--@
17	01643-31032	WASHER	2	SN:11001--@
18	235-06-35261	BRACKET	1	SN:11031--@
19	01010-81020	BOLT	2	SN:11031--@
20	01643-31032	WASHER	2	SN:11031--@
21	08034-00519	BAND	4	SN:12021--@

Printed By : Dwi Iswanto (airafather6107170)

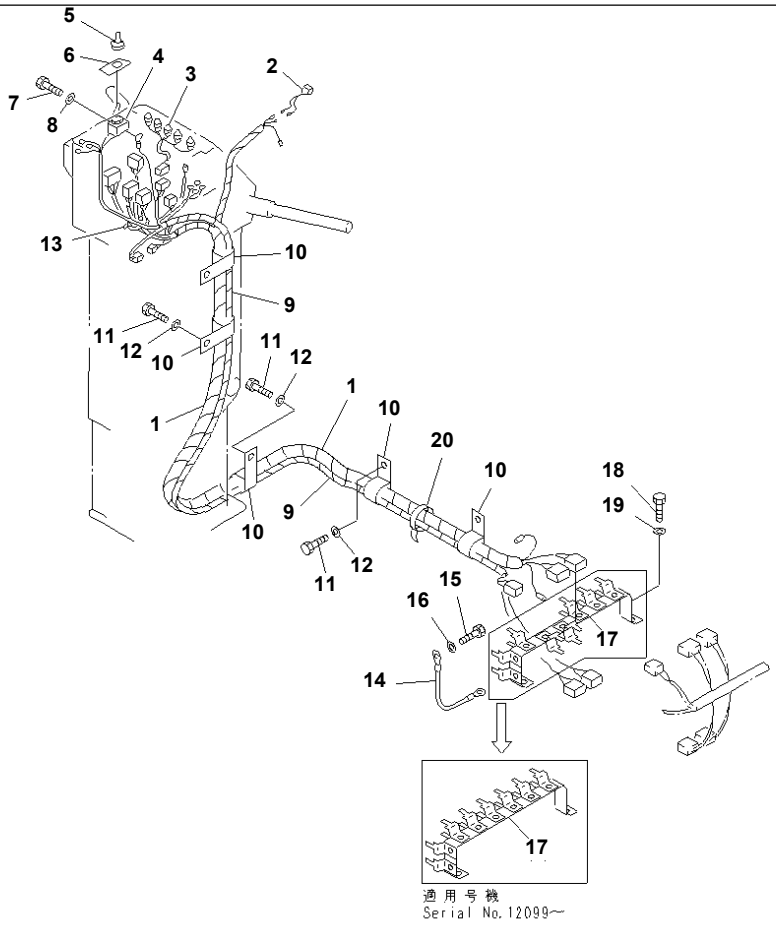

ELECTRICAL SYSTEM (MONITOR PANEL LINE)(#.-)

Item	Part No.	Description	Qty	Options
1	235-06-36410	HARNESS	1	SN:12099--
	235-06-31412	HARNESS	1	SN:12021--12098
2	262-96-72650	LAMP	1	SN:12021--
3	235-06-13330	LAMP ASS'Y,PANEL	1	SN:11001--
	08102-02403	· BULB¤ 3W	5	SN:11001--
4	26A-06-11550	SWITCH,DIFFERENTIAL LOCK	1	SN:11001--
5	235-06-31590	CAP	1	SN:11012--
6	235-06-35391	PLATE¤ MARK,ON-OFF	1	SN:12001--
7	01010-80812	BOLT	1	SN:11001--
8	01643-30823	WASHER	1	SN:11001--
9	235-06-36420	HARNESS	1	SN:12099--
	235-06-31280	HARNESS	1	SN:11001--12098
10	08036-03014	CLIP	5	SN:11001--
11	01010-81016	BOLT	5	SN:11001--
12	01643-31032	WASHER	5	SN:11001--
13	08034-00414	BAND	5	SN:11001--
14	238-06-11160	CABLE	1	SN:11001--
15	01010-81016	BOLT	2	SN:11001--
16	01643-31032	WASHER	2	SN:11001--
17	235-06-36550	BRACKET	1	SN:12099--
	235-06-35261	BRACKET	1	SN:11031--12098
18	01010-81020	BOLT	2	SN:11031--
19	01643-31032	WASHER	2	SN:11031--
20	08034-00519	BAND	4	SN:12021--

Printed By : Dwi Iswanto (airafather6107170)

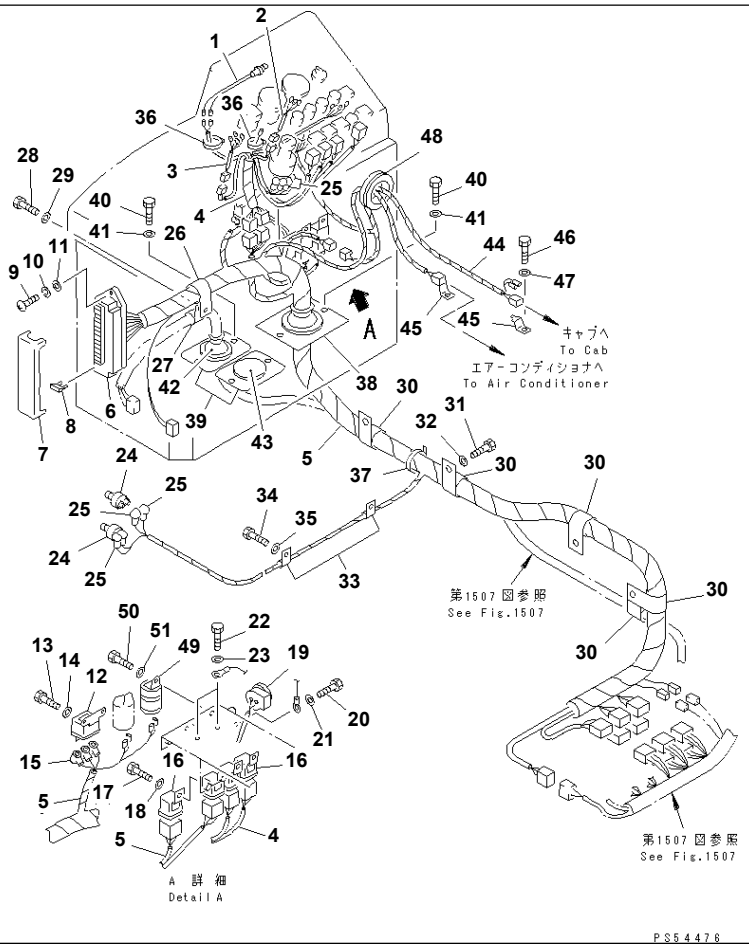

ELECTRICAL SYSTEM (INSTRUMENT PANEL LINE)(#11001-11013)

Item	Part No.	Description	Qty	Options
1	235-06-15370	LAMP,PANEL	1	SN:11001--@
	08111-12430	· BULB¤ 3W	1	SN:11001--@
2	235-06-31510	HARNESS	1	SN:11001--@
3	23F-06-11730	HARNESS	1	SN:11001--@
4	235-06-31481	HARNESS	1	SN:11001--@
5	235-06-31471	HARNESS	1	SN:11001--11013
6	283-06-16110	· BOX,FUSE	1	SN:11001--@
7	283-06-16120	· COVER	1	SN:11001--@
8	283-06-16190	· FUSE¤ 10A	12	SN:11001--@
	23B-06-12510	· FUSE¤ 15A	4	SN:11001--@
	23B-06-12520	· FUSE¤ 20A	3	SN:11001--@
9	01220-40620	SCREW	2	SN:11001--@
10	01601-20619	WASHER,SPRING	2	SN:11001--@
11	01641-20608	WASHER	2	SN:11001--@
12	08163-02400	RELAY,HORN	1	SN:11001--@
13	01010-50612	BOLT	2	SN:11001--@
14	01643-30623	WASHER	2	SN:11001--@
15	08038-00218	CAP	3	SN:11001--@
16	569-06-61960	RELAY	4	SN:11001--@
17	01010-50612	BOLT	4	SN:11001--@
18	01643-30623	WASHER	4	SN:11001--@
19	232-06-61620	BUZZER	1	SN:11001--@
20	01010-50812	BOLT	1	SN:11001--@
21	01643-30823	WASHER	1	SN:11001--@
22	01010-50612	BOLT	1	SN:11001--@
23	01643-30623	WASHER	1	SN:11001--@
24	281-06-14280	SWITCH,STOP LAMP	2	SN:11001--@

Printed By : Dwi Iswanto (airafather6107170)

ELECTRICAL SYSTEM (INSTRUMENT PANEL LINE)(#11001-11013)

Item	Part No.	Description	Qty	Options
25	08038-00218	CAP	8	SN:11001--@
26	08036-03014	CLIP	1	SN:11001--@
27	08036-01814	CLIP	1	SN:11001--@
28	01010-51016	BOLT	1	SN:11001--@
29	01643-31032	WASHER	1	SN:11001--@
30	232-807-1551	CLIP	6	SN:11001--11013
31	01010-51220	BOLT	6	SN:11001--11013
32	01643-31232	WASHER	6	SN:11001--11013
33	08036-01014	CLIP	2	SN:11001--11013
34	01010-51016	BOLT	2	SN:11001--11013
35	01643-31032	WASHER	2	SN:11001--11013
36	08034-00414	BAND	5	SN:11001--@
37	08034-00519	BAND	1	SN:11001--@
38	235-06-35150	PLATE	1	SN:11001--@
39	235-06-15161	PLATE	2	SN:11001--@
40	01010-50812	BOLT	6	SN:11001--@
41	01643-30823	WASHER	6	SN:11001--@
42	235-06-15390	GROMMET	1	SN:11001--@
43	09415-03614	CAP,(FOR EMERGENCY STEERING)	1	SN:11001--@
44	235-06-31540	HARNESS	1	SN:11001--@
45	08053-00910	CLIP	2	SN:11001--@
46	01010-51016	BOLT	2	SN:11001--@
47	01643-31032	WASHER	2	SN:11001--@
48	08037-05016	GROMMET	1	SN:11001--@
49	234-06-31940	FLASHER,HAZARD	1	SN:11001--@
50	01010-50610	BOLT	1	SN:11001--@
51	01643-30623	WASHER	1	SN:11001--@

Printed By : Dwi Iswanto (airafather6107170)

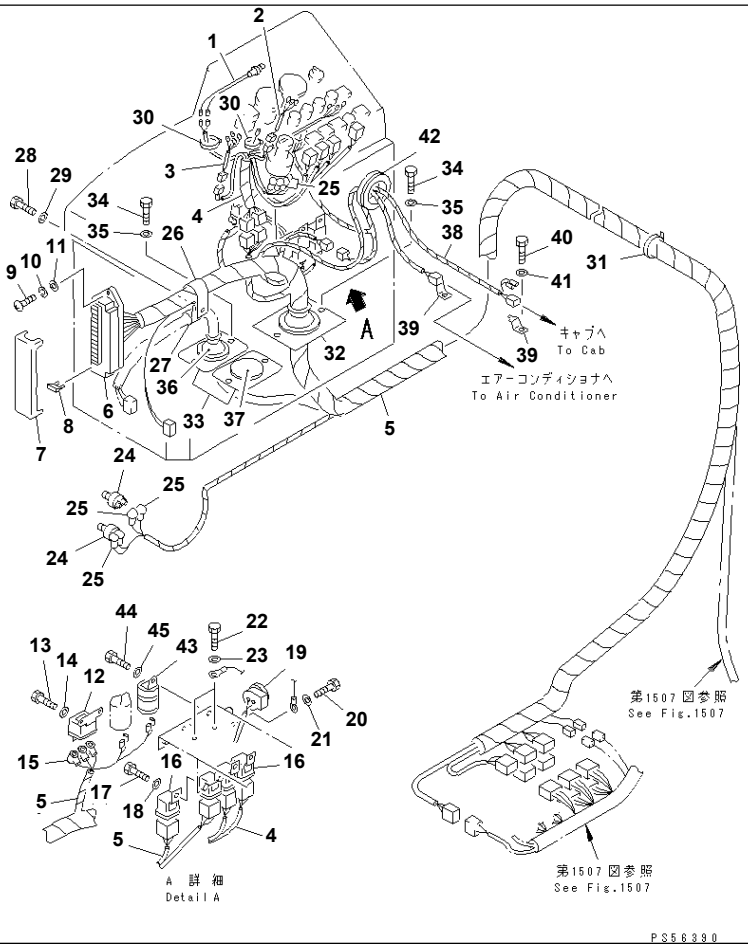

GD825A-2 S/N 11001-UP

ELECTRICAL SYSTEM (INSTRUMENT PANEL LINE)(#11014-11030)

Item	Part No.	Description	Qty	Options
1	235-06-15370	LAMP,PANEL	1	SN:11001--@
	08111-12430	· BULB¤ 3W	1	SN:11001--@
2	235-06-31510	HARNESS	1	SN:11001--@
3	23F-06-11730	HARNESS	1	SN:11001--@
4	235-06-31481	HARNESS	1	SN:11001--11030
5	235-06-31472	HARNESS	1	SN:11014--11030
6	283-06-16110	· BOX,FUSE	1	SN:11001--@
7	283-06-16120	· COVER	1	SN:11001--@
8	283-06-16190	· FUSE¤ 10A	12	SN:11001--@
	23B-06-12510	· FUSE¤ 15A	4	SN:11001--@
	23B-06-12520	· FUSE¤ 20A	3	SN:11001--@
9	01220-40620	SCREW	2	SN:11001--@
10	01601-20619	WASHER,SPRING	2	SN:11001--@
11	01641-20608	WASHER	2	SN:11001--@
12	08163-02400	RELAY,HORN	1	SN:11001--@
13	01010-50612	BOLT	2	SN:11001--@
14	01643-30623	WASHER	2	SN:11001--@
15	08038-00218	CAP	3	SN:11001--@
16	569-06-61960	RELAY	4	SN:11001--11030
17	01010-50612	BOLT	4	SN:11001--11030
18	01643-30623	WASHER	4	SN:11001--11030
19	232-06-61620	BUZZER	1	SN:11001--@
20	01010-50812	BOLT	1	SN:11001--@
21	01643-30823	WASHER	1	SN:11001--@
22	01010-50612	BOLT	1	SN:11001--@
23	01643-30623	WASHER	1	SN:11001--@
24	281-06-14280	SWITCH,STOP LAMP	2	SN:11001--@

Printed By : Dwi Iswanto (airafather6107170)

ELECTRICAL SYSTEM (INSTRUMENT PANEL LINE)(#11014-11030)

Item	Part No.	Description	Qty	Options
25	08038-00218	CAP	8	SN:11001--@
26	08036-03014	CLIP	1	SN:11001--@
27	08036-01814	CLIP	1	SN:11001--@
28	01010-51016	BOLT	1	SN:11001--@
29	01643-31032	WASHER	1	SN:11001--@
30	08034-00414	BAND	5	SN:11001--@
31	08034-00519	BAND	1	SN:11001--@
32	235-06-35150	PLATE	1	SN:11001--@
33	235-06-15161	PLATE	2	SN:11001--@
34	01010-50812	BOLT	6	SN:11001--@
35	01643-30823	WASHER	6	SN:11001--@
36	235-06-15390	GROMMET	1	SN:11001--@
37	09415-03614	CAP,(FOR EMERGENCY STEERING)	1	SN:11001--@
38	235-06-31540	HARNESS	1	SN:11001--@
39	08053-00910	CLIP	2	SN:11001--@
40	01010-51016	BOLT	2	SN:11001--@
41	01643-31032	WASHER	2	SN:11001--@
42	08037-05016	GROMMET	1	SN:11001--@
43	234-06-31940	FLASHER,HAZARD	1	SN:11001--@
44	01010-50610	BOLT	1	SN:11001--@
45	01643-30623	WASHER	1	SN:11001--@

Printed By : Dwi Iswanto (airafather6107170)

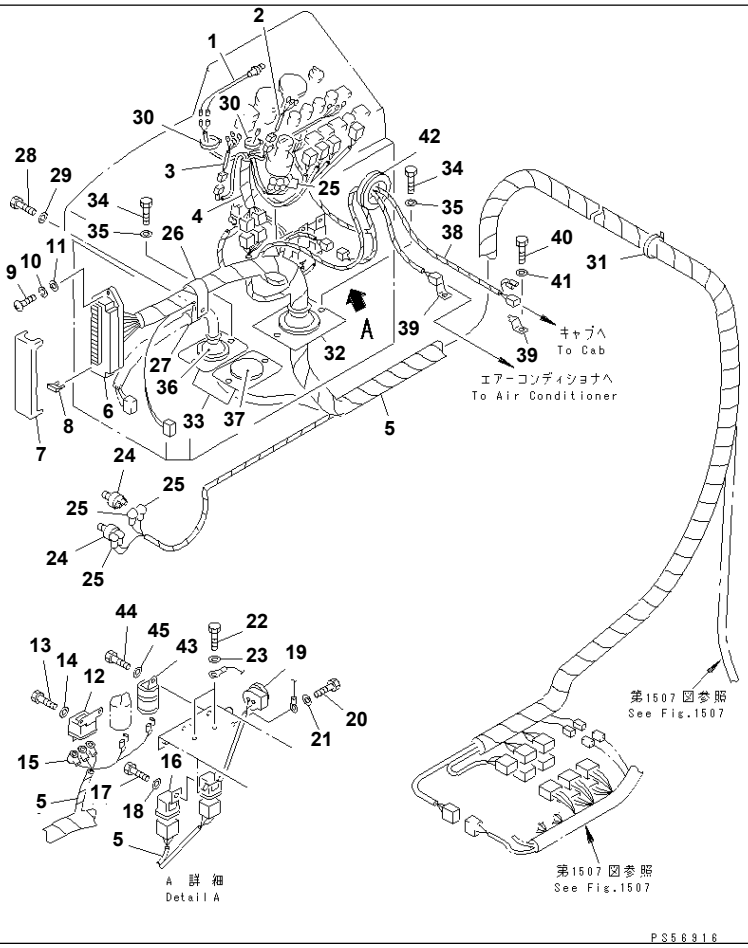

GD825A-2 S/N 11001-UP

ELECTRICAL SYSTEM (INSTRUMENT PANEL LINE)(#11031-12101)

Item	Part No.	Description	Qty	Options
1	235-06-15370	LAMP,PANEL	1	SN:11001--@
	08111-12430	· BULB¤ 3W	1	SN:11001--@
2	235-06-31510	HARNESS	1	SN:11001--@
3	23F-06-11730	HARNESS	1	SN:11001--@
4	235-06-31483	HARNESS	1	SN:12001--@
	235-06-31482	HARNESS	1	SN:11031--12000
5	235-06-36440	HARNESS	1	SN:12099--@
	235-06-31474	HARNESS	1	SN:12001--12098
	235-06-31473	HARNESS	1	SN:11031--12000
6	283-06-16110	· BOX,FUSE	1	SN:11001--@
7	283-06-16120	· COVER	1	SN:11001--@
8	08041-01000	· FUSE¤ 10A	11	SN:12001--@
	283-06-16190	· FUSE¤ 10A	12	SN:11001--12000
	08041-01500	· FUSE¤ 15A	4	SN:12001--@
	23B-06-12510	· FUSE¤ 15A	4	SN:11001--12000
	08041-02000	· FUSE¤ 20A	4	SN:12001--@
	23B-06-12520	· FUSE¤ 20A	3	SN:11001--12000
9	01220-40620	SCREW	2	SN:11001--@
10	01601-20619	WASHER,SPRING	2	SN:11001--@
11	01641-20608	WASHER	2	SN:11001--@
12	08163-02400	RELAY,HORN	1	SN:11001--@
13	01010-50612	BOLT	2	SN:11001--@
14	01643-30623	WASHER	2	SN:11001--@
15	08038-00218	CAP	3	SN:11001--@
16	569-06-61960	RELAY	2	SN:11031--@
17	01010-50612	BOLT	2	SN:11031--@
18	01643-30623	WASHER	2	SN:11031--@

Printed By : Dwi Iswanto (airafather6107170)

ELECTRICAL SYSTEM (INSTRUMENT PANEL LINE)(#11031-12101)

Item	Part No.	Description	Qty	Options
19	232-06-61620	BUZZER	1	SN:11001--@
20	01010-50812	BOLT	1	SN:11001--@
21	01643-30823	WASHER	1	SN:11001--@
22	01010-80612	BOLT	1	SN:.--@
	□01010-50612	BOLT	1	SN:11001--.
23	01643-30623	WASHER	1	SN:11001--@
24	281-06-14280	SWITCH,STOP LAMP	2	SN:11001--@
25	08038-00218	CAP	8	SN:11001--@
26	08036-03014	CLIP	1	SN:11001--12101
27	08036-01814	CLIP	1	SN:11001--12101
28	01010-81016	BOLT	1	SN:.--@
	□01010-51016	BOLT	1	SN:11001--.
29	01643-31032	WASHER	1	SN:11001--@
30	08034-00414	BAND	5	SN:11001--@
31	08034-00519	BAND	2	SN:12001--12101
	08034-00519	BAND	1	SN:11001--12000
32	235-06-35150	PLATE	1	SN:11001--@
33	235-06-15161	PLATE	2	SN:11001--@
34	01010-80812	BOLT	6	SN:.--@
	□01010-50812	BOLT	6	SN:11001--.
35	01643-30823	WASHER	6	SN:11001--@
36	235-06-15390	GROMMET	1	SN:11001--@
37	09415-03614	CAP,(FOR EMERGENCY STEERING)	1	SN:11001--@
38	235-06-31540	HARNESS	1	SN:11001--@
39	08053-00910	CLIP	2	SN:11001--@
40	01010-81016	BOLT	2	SN:.--@
	□01010-51016	BOLT	2	SN:11001--.
41	01643-31032	WASHER	2	SN:11001--@
42	08037-05016	GROMMET	1	SN:11001--@
43	234-06-31940	FLASHER,HAZARD	1	SN:11001--@
44	01010-50610	BOLT	1	SN:11001--@
45	01643-30623	WASHER	1	SN:11001--@

Printed By : Dwi Iswanto (airafather6107170)

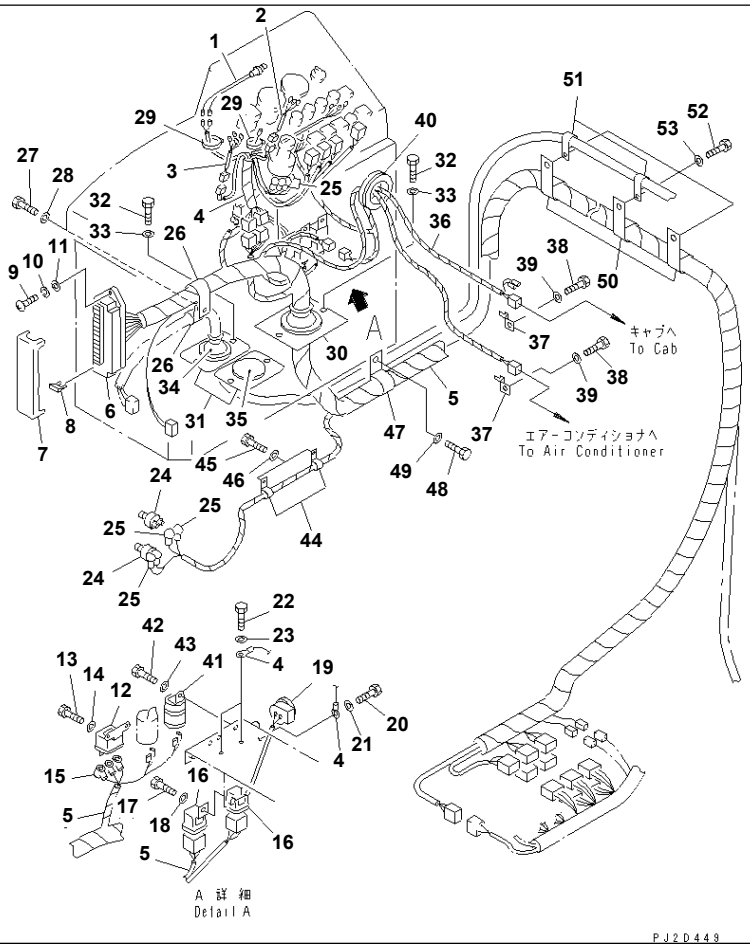

GD825A-2 S/N 11001-UP

ELECTRICAL SYSTEM (INSTRUMENT PANEL LINE)(#12102-)

Item	Part No.	Description	Qty	Options
1	235-06-15370	LAMP,PANEL	1	SN:11001--
	08111-12430	· BULB¤ 3W	1	SN:11001--
2	235-06-31510	HARNESS	1	SN:11001--
3	23F-06-11730	HARNESS	1	SN:11001--
4	235-06-31483	HARNESS	1	SN:12001--
5	235-06-36440	HARNESS	1	SN:12099--
6	283-06-16110	· BOX,FUSE	1	SN:11001--
7	283-06-16120	· COVER	1	SN:11001--
8	08041-01000	· FUSE¤ 10A	11	SN:12001--
	08041-01500	· FUSE¤ 15A	4	SN:12001--
	08041-02000	· FUSE¤ 20A	4	SN:12001--
9	01220-40620	SCREW	2	SN:11001--
10	01601-20619	WASHER,SPRING	2	SN:11001--
11	01641-20608	WASHER	2	SN:11001--
12	08163-02400	RELAY,HORN	1	SN:11001--
13	01010-50612	BOLT	2	SN:11001--
14	01643-30623	WASHER	2	SN:11001--
15	08038-00218	CAP	3	SN:11001--
16	569-06-61960	RELAY	2	SN:11031--
17	01010-50612	BOLT	2	SN:11031--
18	01643-30623	WASHER	2	SN:11031--
19	232-06-61620	BUZZER	1	SN:11001--
20	01010-50812	BOLT	1	SN:11001--
21	01643-30823	WASHER	1	SN:11001--
22	01010-80612	BOLT	1	SN:.--
23	01643-30623	WASHER	1	SN:11001--
24	281-06-14280	SWITCH,STOP LAMP	2	SN:11001--

Printed By : Dwi Iswanto (airafather6107170)

ELECTRICAL SYSTEM (INSTRUMENT PANEL LINE)(#12102-)

Item	Part No.	Description	Qty	Options
25	08038-00218	CAP	8	SN:11001--
26	04434-51410	CLIP	2	SN:12102--
27	01010-81016	BOLT	1	SN:.--
28	01643-31032	WASHER	1	SN:11001--
29	08034-00414	BAND	5	SN:11001--
30	235-06-35150	PLATE	1	SN:11001--
31	235-06-15161	PLATE	2	SN:11001--
32	01010-80812	BOLT	6	SN:.--
33	01643-30823	WASHER	6	SN:11001--
34	235-06-15390	GROMMET	1	SN:11001--
35	09415-03614	CAP,(FOR EMERGENCY STEERING)	1	SN:11001--
36	235-06-31540	HARNESS	1	SN:11001--
37	08053-00910	CLIP	2	SN:11001--
38	01010-81016	BOLT	2	SN:.--
39	01643-31032	WASHER	2	SN:11001--
40	08037-05016	GROMMET	1	SN:11001--
41	234-06-31940	FLASHER,HAZARD	1	SN:11001--
42	01010-50610	BOLT	1	SN:11001--
43	01643-30623	WASHER	1	SN:11001--
44	08036-01014	CLIP	2	SN:12102--
45	01010-81016	BOLT	2	SN:12102--
46	01643-31032	WASHER	2	SN:12102--
47	04434-52110	CLIP	1	SN:12102--
48	01010-81020	BOLT	1	SN:12102--
49	01643-31032	WASHER	1	SN:12102--
50	04434-52110	CLIP	3	SN:12102--
51	04434-51410	CLIP	2	SN:12102--
52	01010-81016	BOLT	3	SN:12102--
53	01643-31032	WASHER	3	SN:12102--

Printed By : Dwi Iswanto (airafather6107170)

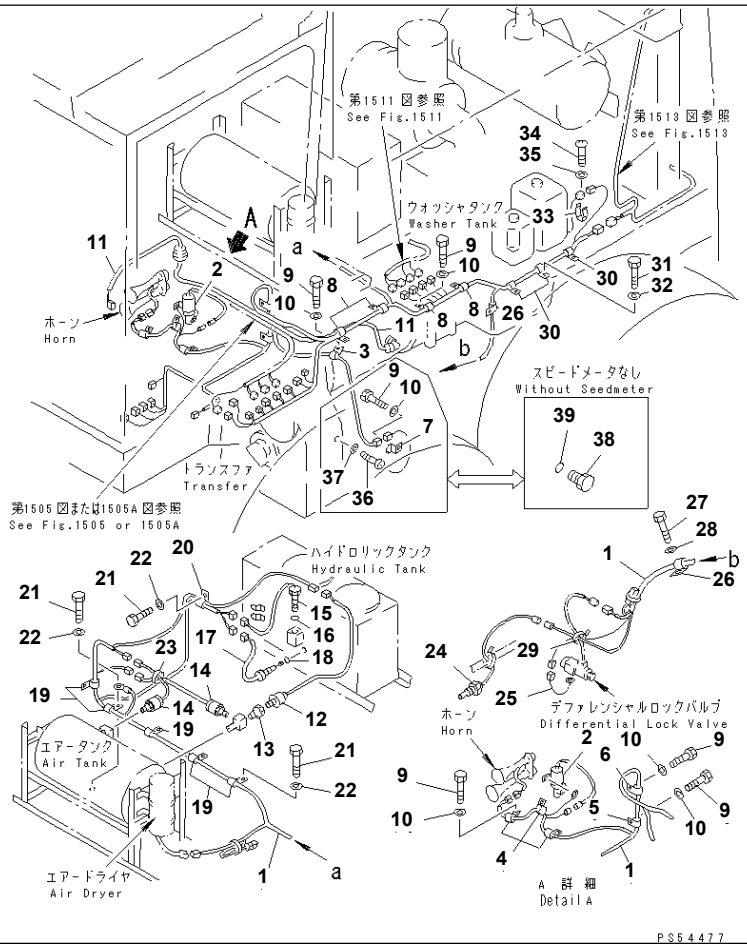

Ref. 1507 **Page 030310**

GD825A-2 S/N 11001-UP
ELECTRICAL SYSTEM (CENTER LINE)(#11001-12101)

Item	Part No.	Description	Qty	Options
1	235-06-36530	HARNESS	1	SN:12099--@
	235-06-31422	HARNESS	1	SN:12001--12098
	235-06-31421	HARNESS	1	SN:11001--12000
2	(425-06-11150)	VALVE	1	SN:11001--@
3	08036-00814	CLIP	2	SN:11001--12101
4	08036-01814	CLIP	3	SN:11001--12101
5	08036-01814	CLIP	1	SN:11001--12101
6	08036-02514	CLIP	1	SN:11001--12101
7	08053-01510	CLIP	1	SN:11001--@
8	08036-03014	CLIP	4	SN:11001--12101
9	01010-81016	BOLT	12	SN:.--12101
	□01010-51016	BOLT	12	SN:11001--.
10	01643-31032	WASHER	12	SN:11001--12101
11	235-06-31213	HARNESS	1	SN:11031--12020
	235-06-31212	HARNESS	1	SN:11014--11030
	235-06-31211	HARNESS	1	SN:11001--11013
12	232-06-52461	SENSOR,AIR GAUGE	1	SN:11001--@
13	07326-10201	ADAPTER	1	SN:11001--@
14	7861-92-1340	SENSOR,AIR PRESSURE	2	SN:11001--@
15	7861-92-4500	SENSOR,HYDRAULIC OIL LEVEL	1	SN:11001--@
16	07002-23634	O-RING	1	SN:11001--@
17	7861-92-3440	SWITCH,HYDRAULIC OIL TEMPERATURE	1	SN:11001--@
18	07002-23634	O-RING	1	SN:11001--@
19	08036-00814	CLIP	5	SN:11001--12101
20	08036-01014	CLIP	1	SN:11001--@
21	01010-81016	BOLT	6	SN:.--@
	□01010-51016	BOLT	6	SN:11001--.

Printed By : Dwi Iswanto (airafather6107170)

ELECTRICAL SYSTEM (CENTER LINE)(#11001-12101)

Item	Part No.	Description	Qty	Options
22	01643-31032	WASHER	6	SN:11001--12101
23	08034-00519	BAND	1	SN:11001--@
24	7861-92-3410	SENSOR,FINAL OIL TEMPERATURE	1	SN:11001--@
25	237-06-11470	WIRE	1	SN:11001--.
26	08036-00814	CLIP	2	SN:11001--12101
27	01010-81016	BOLT	2	SN:.--@
	□01010-51016	BOLT	2	SN:11001--.
28	01643-31032	WASHER	2	SN:11001--@
29	08034-00414	BAND	1	SN:11001--12101
30	08036-01814	CLIP	3	SN:11001--@
31	01010-81016	BOLT	3	SN:.--@
	□01010-51016	BOLT	3	SN:11001--.
32	01643-31032	WASHER	3	SN:11001--@
33	08052-01711	CLIP	1	SN:11001--.
34	01220-40608	SCREW	1	SN:11001--.
35	01641-20608	WASHER	1	SN:11001--.
36	7861-92-2330	SENSOR,SPEED	1	SN:11001--@
37	07005-02216	GASKET	1	SN:11001--@
38	424-15-13950	PLUG	1	SN:11001--@
39	07000-73025	O-RING	1	SN:11001--@

Printed By : Dwi Iswanto (airafather6107170)

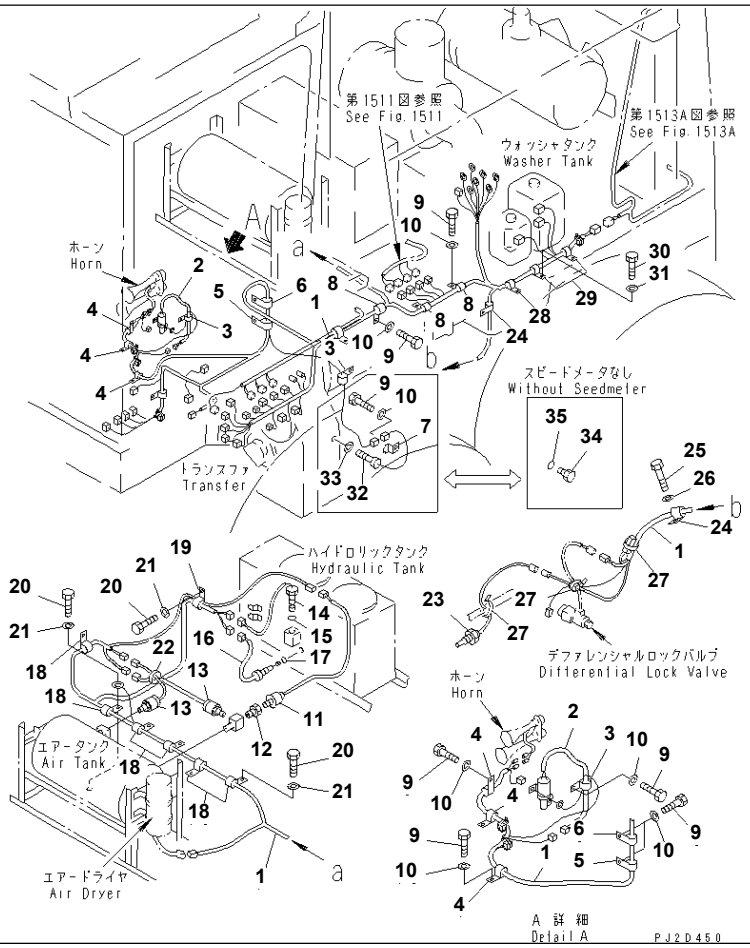

GD825A-2 S/N 11001-UP

ELECTRICAL SYSTEM (CENTER LINE)(#12102-)

Item	Part No.	Description	Qty	Options
1	235-06-36530	HARNESS	1	SN:12099--
2	(425-06-11150)	VALVE	1	SN:11001--
3	04434-50810	CLIP	2	SN:12102--
4	04434-50610	CLIP	3	SN:12102--
5	04434-50810	CLIP	1	SN:12102--
6	04434-51210	CLIP	1	SN:12102--
7	08053-01510	CLIP	1	SN:11001--
8	04434-52110	CLIP	3	SN:12102--
9	01010-81016	BOLT	11	SN:12102--
10	01643-31032	WASHER	11	SN:12102--
11	232-06-52461	SENSOR,AIR GAUGE	1	SN:11001--
12	07326-10201	ADAPTER	1	SN:11001--
13	7861-92-1340	SENSOR,AIR PRESSURE	2	SN:11001--
14	7861-92-4500	SENSOR,HYDRAULIC OIL LEVEL	1	SN:11001--
15	07002-23634	O-RING	1	SN:11001--
16	7861-92-3440	SWITCH,HYDRAULIC OIL TEMPERATURE	1	SN:11001--
17	07002-23634	O-RING	1	SN:11001--
18	08036-00814	CLIP	6	SN:12102--
19	08036-01014	CLIP	1	SN:11001--
20	01010-81016	BOLT	7	SN:12102--
21	01643-31032	WASHER	7	SN:12102--
22	08034-00519	BAND	1	SN:11001--
23	7861-92-3410	SENSOR,FINAL OIL TEMPERATURE	1	SN:11001--
24	04434-50610	CLIP	2	SN:12102--
25	01010-81016	BOLT	2	SN:.--
26	01643-31032	WASHER	2	SN:11001--
27	08034-00414	BAND	3	SN:12102--

Printed By : Dwi Iswanto (airafather6107170)

ELECTRICAL SYSTEM (CENTER LINE)(#12102-)

Item	Part No.	Description	Qty	Options
28	04434-51410	CLIP	1	SN:12102--
29	04434-50810	CLIP	2	SN:12102--
30	01010-81016	BOLT	3	SN:.--
31	01643-31032	WASHER	3	SN:11001--
32	7861-92-2330	SENSOR,SPEED	1	SN:11001--
33	07005-02216	GASKET	1	SN:11001--
34	424-15-13950	PLUG	1	SN:11001--
35	07000-73025	O-RING	1	SN:11001--

Printed By : Dwi Iswanto (airafather6107170)

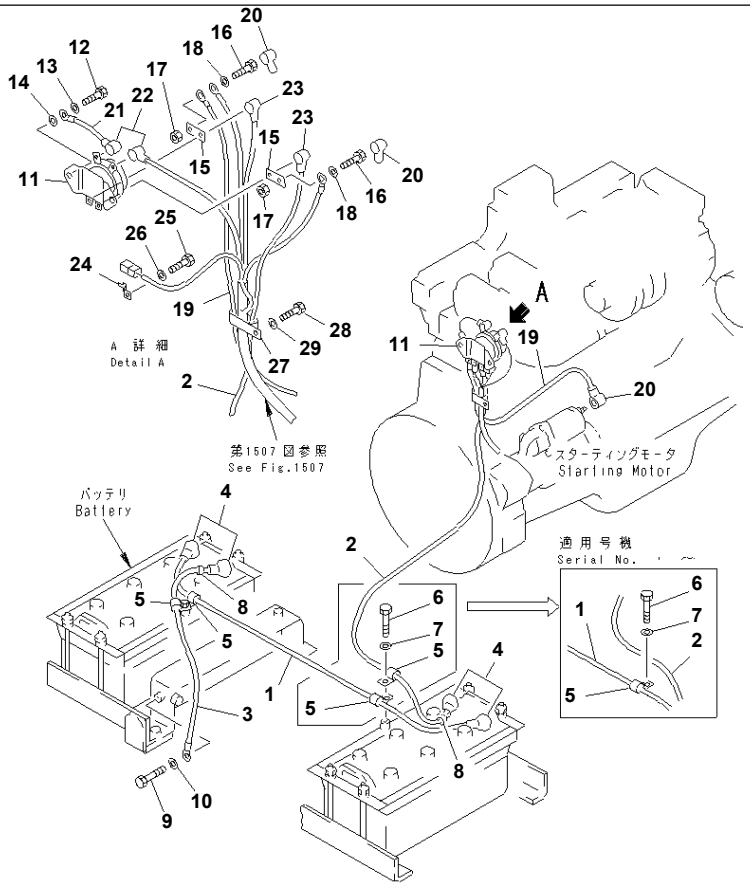

Ref. 1509 **Page 030330**

GD825A-2 S/N 11001-UP
ELECTRICAL SYSTEM (BATTERY LINE)(#11001-12101)

Item	Part No.	Description	Qty	Options
1	08028-64200	WIRE¤ 2000MM	1	SN:12001--@
	08028-14200	WIRE¤ 2000MM	1	SN:11001--12000
2	08028-64060	CABLE	1	SN:12001--@
	08028-14060	CABLE	1	SN:11001--12000
3	08028-14095	CABLE	1	SN:11001--@
4	232-06-11970	CAP	4	SN:11001--@
5	08036-01814	CLIP	3	SN:.--12101
	08036-01814	CLIP	4	SN:11001--.
6	01010-81016	BOLT	2	SN:..--12101
	□01010-51016	BOLT	2	SN:11001--..
7	01643-31032	WASHER	2	SN:11001--@
8	234-06-41320	BAND,MARK	2	SN:11001--@
9	01010-81016	BOLT	1	SN:..--@
	□01010-51016	BOLT	1	SN:11001--..
10	01643-31032	WASHER	1	SN:11001--12101
11	22W-06-13220	SWITCH,BATTERY RELAY	1	SN:11001--@
12	01010-80830	BOLT	2	SN:..--@
	□01010-50830	BOLT	2	SN:11001--..
13	01643-30823	WASHER	2	SN:11001--@
14	01641-20812	WASHER	2	SN:11001--@
15	234-06-32240	PLATE	2	SN:11001--@
16	01010-80820	BOLT	2	SN:..--@
	□01010-50820	BOLT	2	SN:11001--..
17	01580-10806	NUT	2	SN:11001--@
18	01643-30823	WASHER	2	SN:11001--@
19	08028-64075	WIRE¤ 750MM	1	SN:12001--@
	08028-14075	WIRE¤ 750MM	1	SN:11001--12000

Printed By : Dwi Iswanto (airafather6107170)

ELECTRICAL SYSTEM (BATTERY LINE)(#11001-12101)

Item	Part No.	Description	Qty	Options
20	232-06-11960	CAP	3	SN:11001--@
21	237-06-11510	WIRE	1	SN:11001--@
22	08038-00218	CAP	2	SN:11001--@
23	08038-02027	CAP	2	SN:11001--@
24	08053-01510	CLIP	1	SN:11001--@
25	01010-81020	BOLT	1	SN:..--@
	□01010-51020	BOLT	1	SN:11001--..
26	01643-31032	WASHER	1	SN:11001--@
27	04435-52210	CLIP	1	SN:11001--12101
28	01010-51025	BOLT	1	SN:..--@
	□01010-51025	BOLT	1	SN:11001--..
29	01643-31032	WASHER	1	SN:11001--@

Printed By : Dwi Iswanto (airafather6107170)

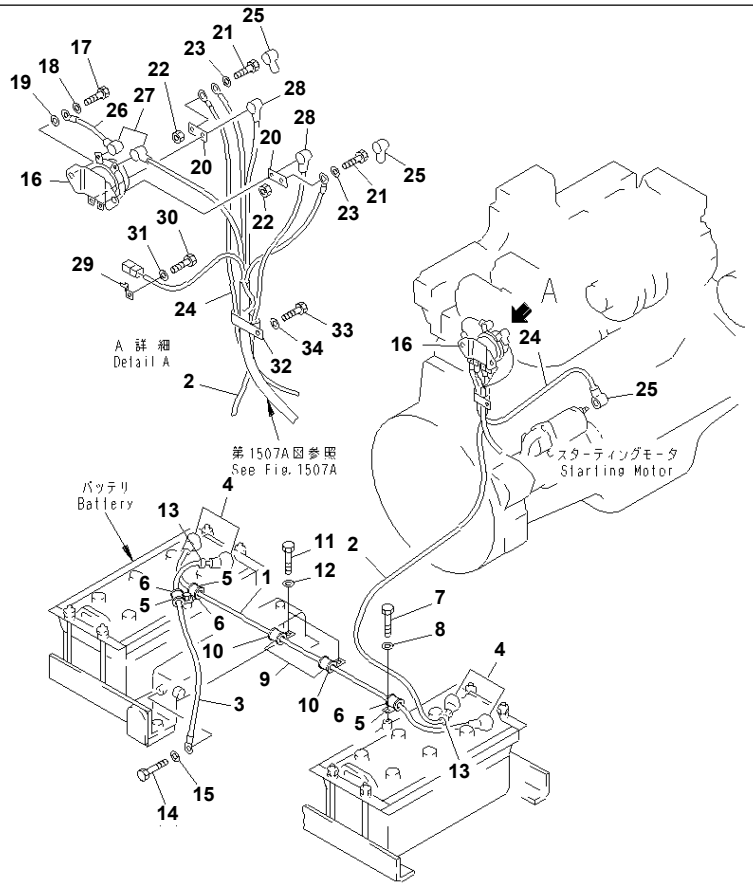

ELECTRICAL SYSTEM (BATTERY LINE)(#12102-)

Item	Part No.	Description	Qty	Options
1	08028-64200	WIRE¤ 2000MM	1	SN:12001--
2	08028-64060	CABLE	1	SN:12001--
3	08028-14095	CABLE	1	SN:11001--
4	232-06-11970	CAP	4	SN:11001--
5	04434-52212	CLIP	3	SN:12102--
6	07095-20314	CUSHION	3	SN:12102--
7	01010-81016	BOLT	2	SN:..--
8	01643-31032	WASHER	2	SN:11001--
9	04434-52210	CLIP	2	SN:12102--
10	07095-20314	CUSHION	2	SN:12102--
11	01010-81016	BOLT	2	SN:12102--
12	01643-31032	WASHER	2	SN:12102--
13	234-06-41320	BAND,MARK	2	SN:11001--
14	01010-81016	BOLT	1	SN:..--
15	01643-31032	WASHER	1	SN:11001--
16	22W-06-13220	SWITCH,BATTERY RELAY	1	SN:11001--
17	01010-80830	BOLT	2	SN:..--
18	01643-30823	WASHER	2	SN:11001--
19	01641-20812	WASHER	2	SN:11001--
20	234-06-32240	PLATE	2	SN:11001--
21	01010-80820	BOLT	2	SN:..--
22	01580-10806	NUT	2	SN:11001--
23	01643-30823	WASHER	2	SN:11001--
24	08028-64075	WIRE¤ 750MM	1	SN:12001--
25	232-06-11960	CAP	3	SN:11001--
26	237-06-11510	WIRE	1	SN:11001--
27	08038-00218	CAP	2	SN:11001--

Printed By : Dwi Iswanto (airafather6107170)

ELECTRICAL SYSTEM (BATTERY LINE)(#12102-)

Item	Part No.	Description	Qty	Options
28	08038-02027	CAP	2	SN:11001--
29	08053-01510	CLIP	1	SN:11001--
30	01010-81020	BOLT	1	SN:..--
31	01643-31032	WASHER	1	SN:11001--
32	04435-51910	CLIP	1	SN:12102--
33	01010-81025	BOLT	1	SN:..--
34	01643-31032	WASHER	1	SN:11001--

Printed By : Dwi Iswanto (airafather6107170)

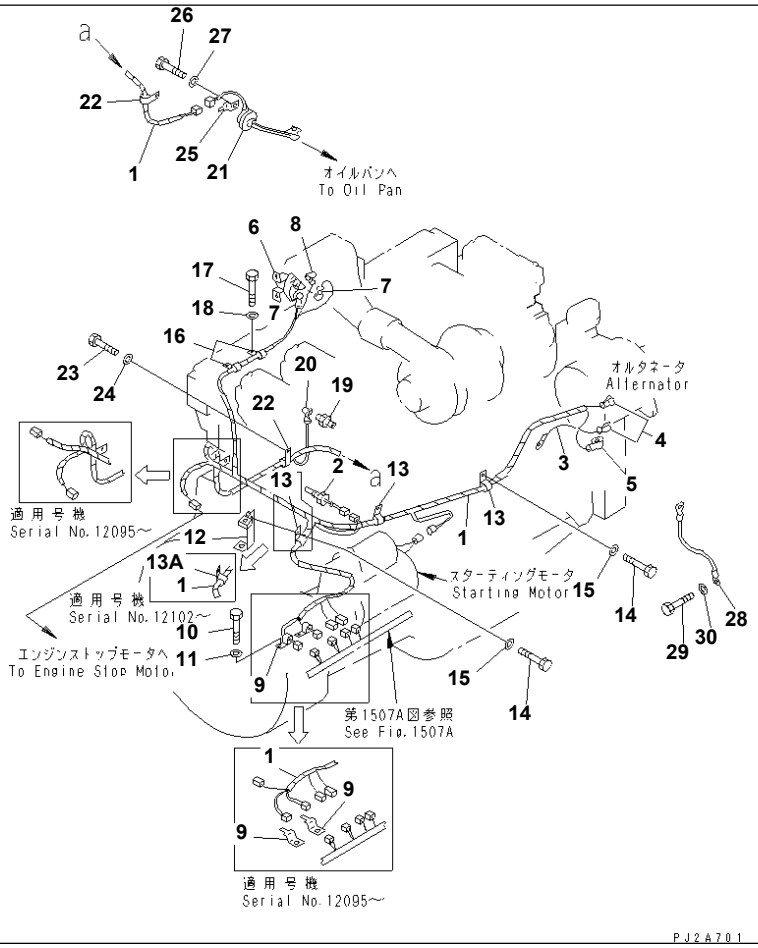

GD825A-2 S/N 11001-UP

ELECTRICAL SYSTEM (ENGINE LINE)

Item	Part No.	Description	Qty	Options
1	235-06-36540	HARNESS	1	SN:12099--
	235-06-31142	HARNESS	1	SN:12095--12098
	235-06-31141	HARNESS	1	SN:11001--12094
2	7861-92-3320	SENSOR,WATER TEMPERATURE	1	SN:11001--
3	235-06-11190	WIRE	1	SN:11001--
4	08038-00519	CAP	2	SN:11001--
5	08038-02027	CAP	1	SN:11001--
6	(600-815-2170)	SWITCH	1	SN:11001--
7	08038-02027	CAP	2	SN:11001--
8	08038-00218	CAP	1	SN:11001--
9	08193-21012	CLIP	2	SN:12095--
	08036-01814	CLIP	2	SN:11001--12094
10	01010-81016	BOLT	2	SN:.--
	□01010-51016	BOLT	2	SN:11001--.
11	01643-31032	WASHER	2	SN:11001--
12	235-06-31150	BRACKET	1	SN:11001--
13	08036-02514	CLIP	2	SN:12102--
	08036-02514	CLIP	3	SN:11001--12101
13A	04434-51010	CLIP	1	SN:12102--
14	01010-51016	BOLT	3	SN:11001--
15	01643-31032	WASHER	3	SN:11001--
16	08036-01814	CLIP	2	SN:11001--
17	01010-50812	BOLT	2	SN:11001--
18	01643-30823	WASHER	2	SN:11001--
19	08073-00505	SWITCH	1	SN:11001--
20	08038-00519	CAP	1	SN:11001--
21	7861-92-4210	SENSOR,ENGINE OIL LEVEL	1	SN:11001--

Printed By : Dwi Iswanto (airafather6107170)

ELECTRICAL SYSTEM (ENGINE LINE)

Item	Part No.	Description	Qty	Options
22	08036-01014	CLIP	3	SN:11001--
23	01010-51016	BOLT	3	SN:11001--
24	01643-31032	WASHER	3	SN:11001--
25	08053-01510	CLIP	2	SN:11001--12101
26	01010-51016	BOLT	2	SN:11001--12101
27	01643-31032	WASHER	2	SN:11001--12101
28	08028-14045	WIRE¤ 450MM	1	SN:11001--
29	01010-81016	BOLT	1	SN:.--
	□01010-51016	BOLT	1	SN:11001--.
30	01643-31032	WASHER	1	SN:11001--

Printed By : Dwi Iswanto (airafather6107170)

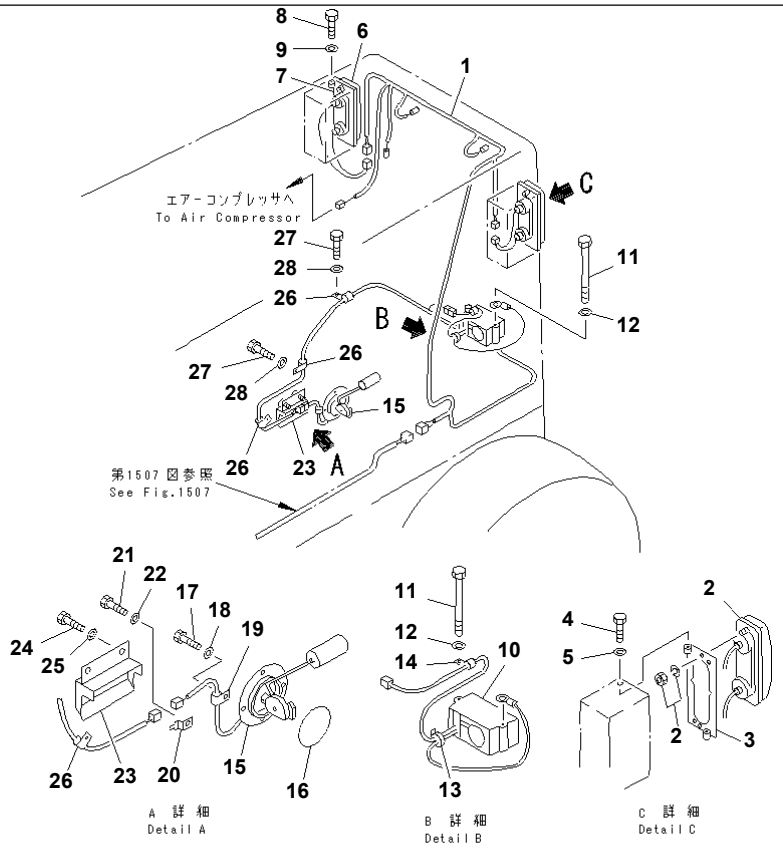

PS54480

GD825A-2 S/N 11001-UP

ELECTRICAL SYSTEM (REAR LINE)(#11001-12101)

Item	Part No.	Description	Qty	Options
1	235-06-36470	HARNESS	1	SN:12099--@
	235-06-31132	HARNESS	1	SN:11014--12098
	235-06-31131	HARNESS	1	SN:11001--11013
2	238-06-18330	COMBINATION LAMP,REAR¤ L.H.	1	SN:11001--@
	237-06-13360	· LENS	1	SN:11001--@
	08105-02420	· BULB¤ 25W	1	SN:11001--@
	08111-02430	· BULB¤ 3W	1	SN:11001--@
	08104-02420	· BULB¤ 25/10W	1	SN:11001--@
3	235-06-15230	PLATE,L.H.	1	SN:11001--@
4	01010-51016	BOLT	2	SN:11001--@
5	01643-31032	WASHER	2	SN:11001--@
6	238-06-18320	COMBINATION LAMP,REAR¤ R.H.	1	SN:11001--@
	237-06-13360	· LENS	1	SN:11001--@
	08105-02420	· BULB¤ 25W	1	SN:11001--@
	08111-02430	· BULB¤ 3W	1	SN:11001--@
	08104-02420	· BULB¤ 25/10W	1	SN:11001--@
7	235-06-15240	PLATE,R.H.	1	SN:11001--@
8	01010-51016	BOLT	2	SN:11001--@
9	01643-31032	WASHER	2	SN:11001--@
10	08164-00000	BUZZER,BACK	1	SN:11001--@
11	235-06-15150	BOLT	2	SN:11001--@
12	01643-30823	WASHER	2	SN:11001--@
13	08034-00310	BAND	1	SN:11001--@
14	08036-00814	CLIP	1	SN:11001--12101
15	7861-92-4800	SENSOR,FUEL LEVEL	1	SN:11001--@
16	07000-12085	O-RING	1	SN:11001--@
17	01010-81020	BOLT	4	SN:.--@

Printed By : Dwi Iswanto (airafather6107170)

ELECTRICAL SYSTEM (REAR LINE)(#11001-12101)

Item	Part No.	Description	Qty	Options
	☐01010-51020	BOLT	4	SN:11001--.
18	01643-31032	WASHER	4	SN:11001--@
19	08036-00814	CLIP	1	SN:11001--12101
20	08053-01510	CLIP	1	SN:11001--@
21	01010-81016	BOLT	1	SN:.--@
	☐01010-51016	BOLT	1	SN:11001--.
22	01643-31032	WASHER	1	SN:11001--@
23	235-06-35170	COVER	1	SN:11001--@
24	01010-81016	BOLT	2	SN:.--@
	☐01010-51016	BOLT	2	SN:11001--@
25	01643-31032	WASHER	2	SN:11001--@
26	08036-00814	CLIP	3	SN:11001--12101
27	01010-81016	BOLT	3	SN:.--@
	☐01010-51016	BOLT	3	SN:11001--.
28	01643-31032	WASHER	3	SN:11001--@

Printed By : Dwi Iswanto (airafather6107170)

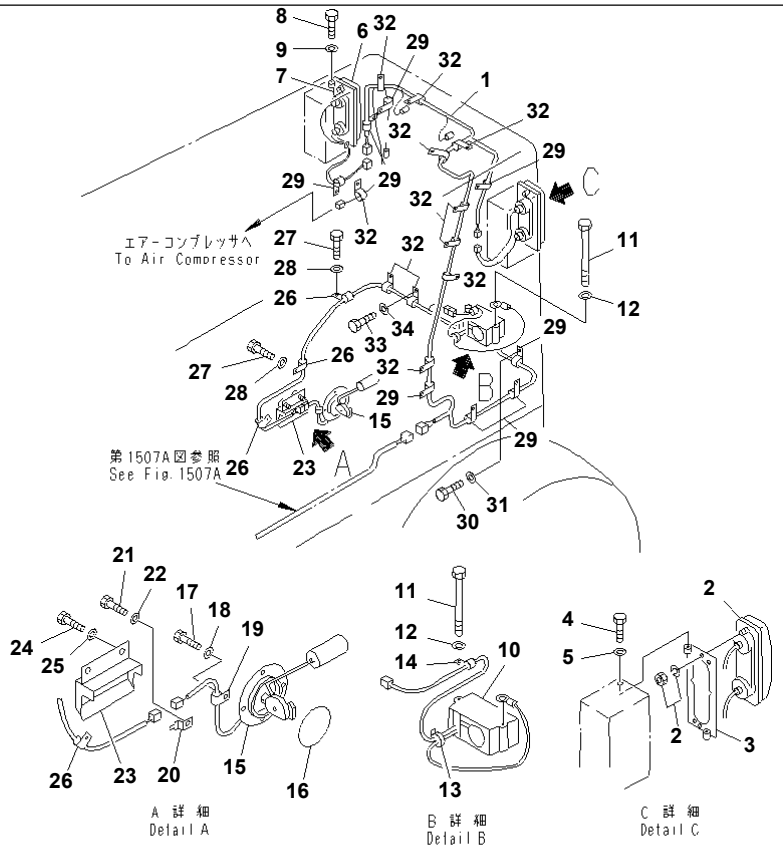

PJ2D452

ELECTRICAL SYSTEM (REAR LINE)(#12102-)

Item	Part No.	Description	Qty	Options
1	235-06-36470	HARNESS	1	SN:12099--
2	238-06-18330	COMBINATION LAMP,REAR¤ L.H.	1	SN:11001--
	237-06-13360	· LENS	1	SN:11001--
	08105-02420	· BULB¤ 25W	1	SN:11001--
	08111-02430	· BULB¤ 3W	1	SN:11001--
	08104-02420	· BULB¤ 25/10W	1	SN:11001--
3	235-06-15230	PLATE,L.H.	1	SN:11001--
4	01010-51016	BOLT	2	SN:11001--
5	01643-31032	WASHER	2	SN:11001--
6	238-06-18320	COMBINATION LAMP,REAR¤ R.H.	1	SN:11001--
	237-06-13360	· LENS	1	SN:11001--
	08105-02420	· BULB¤ 25W	1	SN:11001--
	08111-02430	· BULB¤ 3W	1	SN:11001--
	08104-02420	· BULB¤ 25/10W	1	SN:11001--
7	235-06-15240	PLATE,R.H.	1	SN:11001--
8	01010-51016	BOLT	2	SN:11001--
9	01643-31032	WASHER	2	SN:11001--
10	08164-00000	BUZZER,BACK	1	SN:11001--
11	235-06-15150	BOLT	2	SN:11001--
12	01643-30823	WASHER	2	SN:11001--
13	08034-00310	BAND	1	SN:11001--
14	04434-50810	CLIP	1	SN:12101--
15	7861-92-4800	SENSOR,FUEL LEVEL	1	SN:11001--
16	07000-12085	O-RING	1	SN:11001--
17	01010-81020	BOLT	4	SN:.--
18	01643-31032	WASHER	4	SN:11001--
19	04434-51010	CLIP	1	SN:12101--

Printed By : Dwi Iswanto (airafather6107170)

ELECTRICAL SYSTEM (REAR LINE)(#12102-)

Item	Part No.	Description	Qty	Options
20	08053-01510	CLIP	1	SN:11001--
21	01010-81016	BOLT	1	SN:.--
22	01643-31032	WASHER	1	SN:11001--
23	235-06-35170	COVER	1	SN:11001--
24	01010-81016	BOLT	2	SN:.--
25	01643-31032	WASHER	2	SN:11001--
26	04434-51010	CLIP	3	SN:12102--
27	01010-81016	BOLT	3	SN:.--
28	01643-31032	WASHER	3	SN:11001--
29	04434-50810	CLIP	11	SN:12102--
30	01010-81016	BOLT	11	SN:12102--
31	01643-31032	WASHER	11	SN:12102--
32	04434-51010	CLIP	14	SN:12102--
33	01010-81016	BOLT	14	SN:12102--
34	01643-31032	WASHER	14	SN:12102--

Printed By : Dwi Iswanto (airafather6107170)

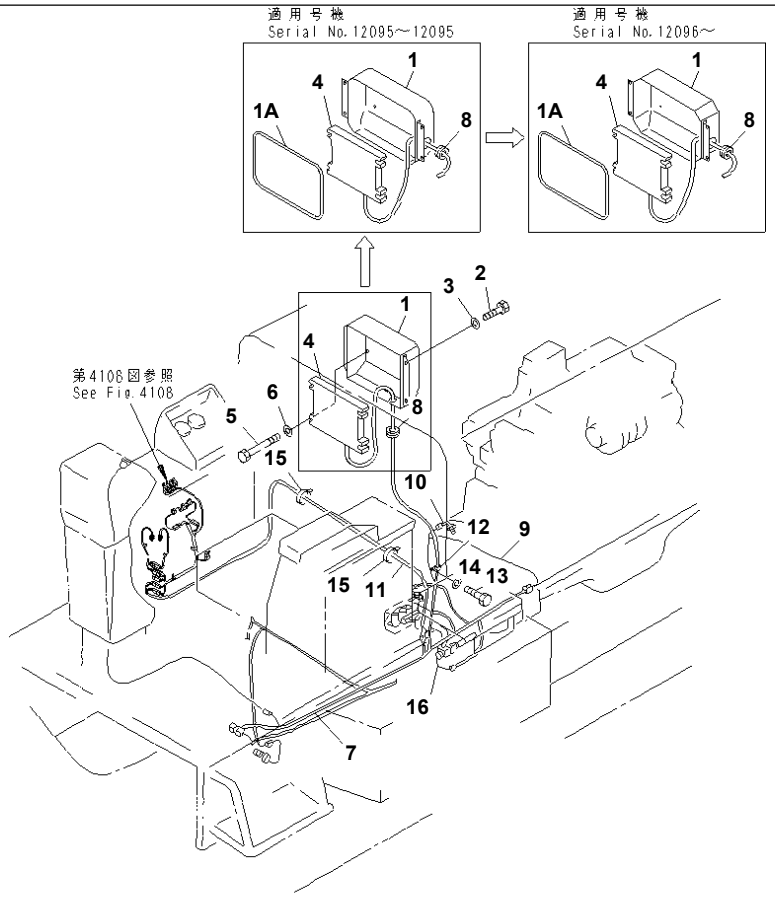

GD825A-2 S/N 11001-UP

ELECTRICAL SYSTEM (TRANSMISSION CONTROL LINE)(#12021-12101)

Item	Part No.	Description	Qty	Options
1	235-06-31552	COVER	1	SN:12096--@
	235-06-31551	COVER	1	SN:12095--12095
	235-06-31550	COVER	1	SN:12021--12094
1A	235-06-31570	SEAL	1	SN:12095--@
2	01010-81020	BOLT	4	SN:12021--@
3	01643-31032	WASHER	4	SN:12021--@
4	7821-23-8000	CONTROLLER	1	SN:12099--@
	7821-23-7000	CONTROLLER	1	SN:12021--12098
5	01010-80885	BOLT	4	SN:12021--@
6	01643-30823	WASHER	4	SN:12021--@
7	235-06-36460	WIRING HARNESS	1	SN:12099--@
	235-06-35651	WIRING HARNESS	1	SN:12095--12098
	235-06-35650	WIRING HARNESS	1	SN:12021--12094
8	08037-12536	GROMMET	1	SN:12021--@
9	235-06-35671	WIRING HARNESS	1	SN:12095--@
	235-06-35670	WIRING HARNESS	1	SN:12021--12094
10	7861-92-2310	SENSOR,ENGINE REVOLUTION	1	SN:12021--@
11	235-06-35661	HARNESS	1	SN:12095--@
	235-06-35660	HARNESS	1	SN:12021--12094
12	08036-02514	CLIP	1	SN:12021--12101
13	01010-81020	BOLT	1	SN:.--@
	□01010-51020	BOLT	1	SN:12021--.
14	01643-31032	WASHER	1	SN:12021--@
15	08034-00519	BAND	3	SN:12021--@
16	7861-92-3320	SENSOR,TRANSMISSION OIL TEMPERATURE	1	SN:12021--@

Printed By : Dwi Iswanto (airafather6107170)

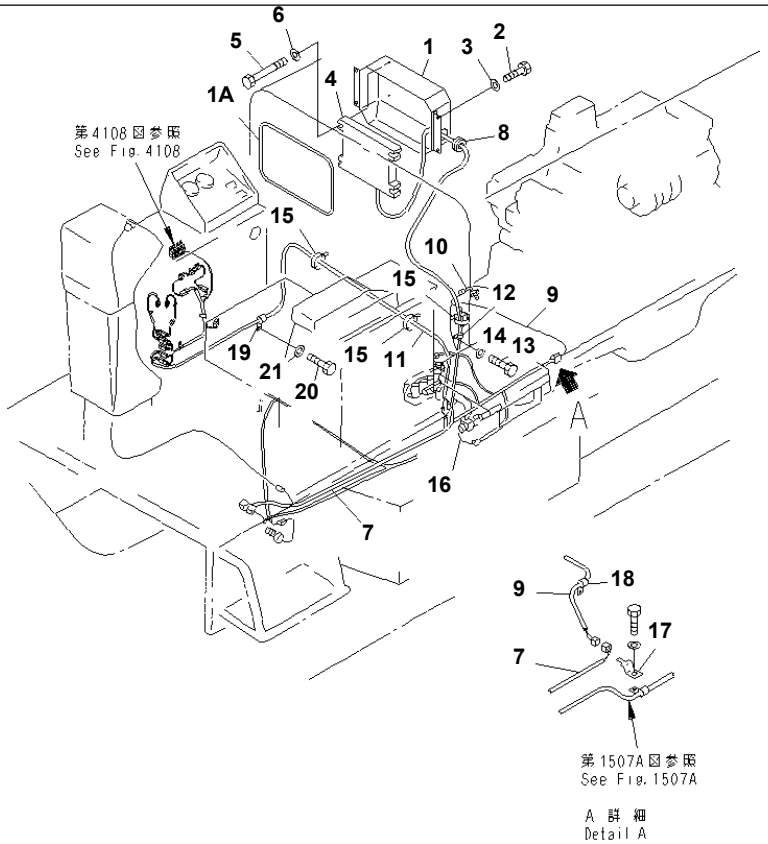

PJ2D453

GD825A-2 S/N 11001-UP

ELECTRICAL SYSTEM (TRANSMISSION CONTROL LINE)(#12102-)

Item	Part No.	Description	Qty	Options
1	235-06-31552	COVER	1	SN:12096--
1A	235-06-31570	SEAL	1	SN:12095--
2	01010-81020	BOLT	4	SN:12021--
3	01643-31032	WASHER	4	SN:12021--
4	7821-23-8001	CONTROLLER	1	SN:12105--
	7821-23-8000	CONTROLLER	1	SN:12099--12104
5	01010-80885	BOLT	4	SN:12021--
6	01643-30823	WASHER	4	SN:12021--
7	235-06-36460	WIRING HARNESS	1	SN:12099--
8	08037-12536	GROMMET	1	SN:12021--
9	235-06-35671	WIRING HARNESS	1	SN:12095--
10	7861-92-2310	SENSOR,ENGINE REVOLUTION	1	SN:12021--
11	235-06-35661	HARNESS	1	SN:12095--
12	04434-52110	CLIP	1	SN:12102--
13	01010-81020	BOLT	1	SN:.--
14	01643-31032	WASHER	1	SN:12021--
15	08034-00519	BAND	3	SN:12021--
16	7861-92-3320	SENSOR,TRANSMISSION OIL TEMPERATURE	1	SN:12021--
17	08193-21012	CLIP	1	SN:12102--
18	04434-51410	CLIP	1	SN:12102--
19	04434-51410	CLIP	1	SN:12102--
20	01010-81020	BOLT	1	SN:12102--
21	01643-31032	WASHER	1	SN:12102--

Printed By : Dwi Iswanto (airafather6107170)

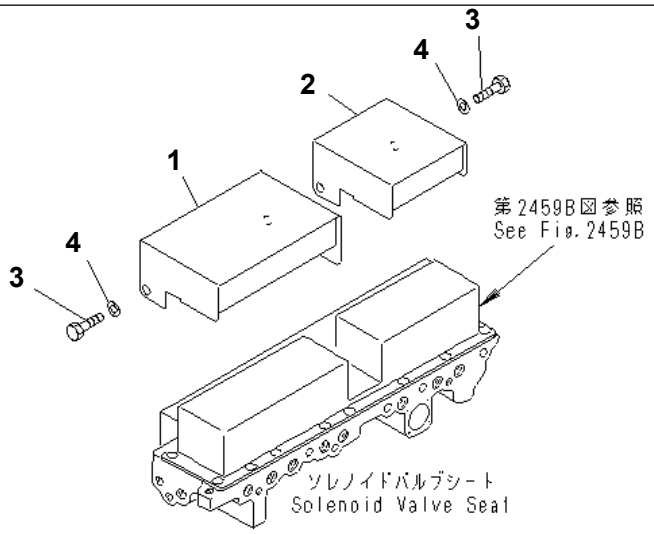

PR58162

TRANSMISSION SOLENOIDE VALVE COVER(#12021-)

Item	Part No.	Description	Qty	Options
1	235-06-35720	COVER	1	SN:12021--
2	235-06-35730	COVER	1	SN:12021--
3	01010-80812	BOLT	4	SN:12021--
4	01643-30823	WASHER	4	SN:12021--

Printed By : Dwi Iswanto (airafather6107170)

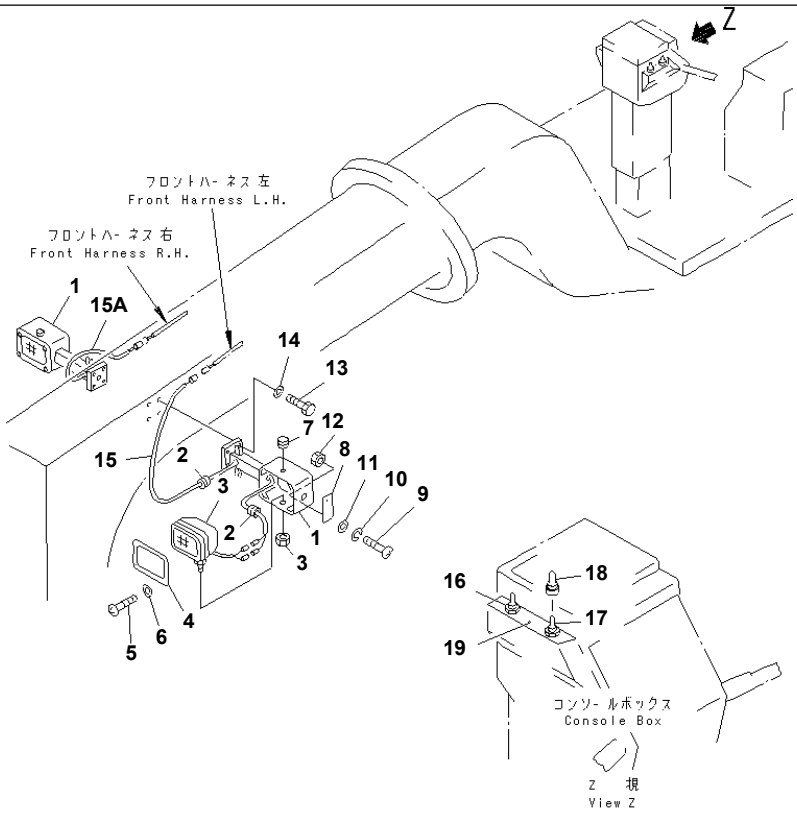

PJ2B768

GD825A-2 S/N 11001-UP

HEAD LAMP (FRONT FRAME MOUNTING TYPE)

Item	Part No.	Description	Qty	Options
1	235-06-35220	BRACKET	2	SN:11001--
2	08037-02512	GROMMET	4	SN:11001--
3	23B-06-22130	LAMP ASS'Y,HEAD	2	SN:11001--
	23B-06-22140	· BULB¤ 62/62W	1	SN:11001--
	23B-06-22150	· LENS	1	SN:11001--
4	235-06-35240	COVER	2	SN:11001--
5	01220-40612	SCREW	8	SN:11001--
6	01643-30623	WASHER	8	SN:11001--
7	09415-01008	CAP	2	SN:11001--
8	235-06-15330	PLATE	2	SN:11001--
9	01220-40512	SCREW	4	SN:11001--
10	01601-20513	WASHER,SPRING	4	SN:11001--
11	01641-20508	WASHER	4	SN:11001--12000
12	01580-10504	NUT	4	SN:11001--
13	01010-81020	BOLT	8	SN:.--
	□01010-51020	BOLT	8	SN:11001--.
14	01643-31032	WASHER	8	SN:11001--
15	235-06-36520	HARNESS,L.H.	1	SN:12099--
	235-06-31110	HARNESS	2	SN:11001--12098
15A	235-06-36510	HARNESS,R.H.	1	SN:12099--
16	23A-06-12660	SWITCH,HEAD LAMP DIMMER	1	SN:11001--
17	262-06-62350	SWITCH,HEAD LAMP	1	SN:11001--
18	235-06-31590	CAP	1	SN:11012--
	203-06-41610	CAP	1	SN:11001--11011
19	235-06-35411	PLATE¤ MARK,HEAD LAMP	1	SN:12001--
	235-06-35410	PLATE¤ MARK,HEAD LAMP	1	SN:11001--12000

Printed By : Dwi Iswanto (airafather6107170)

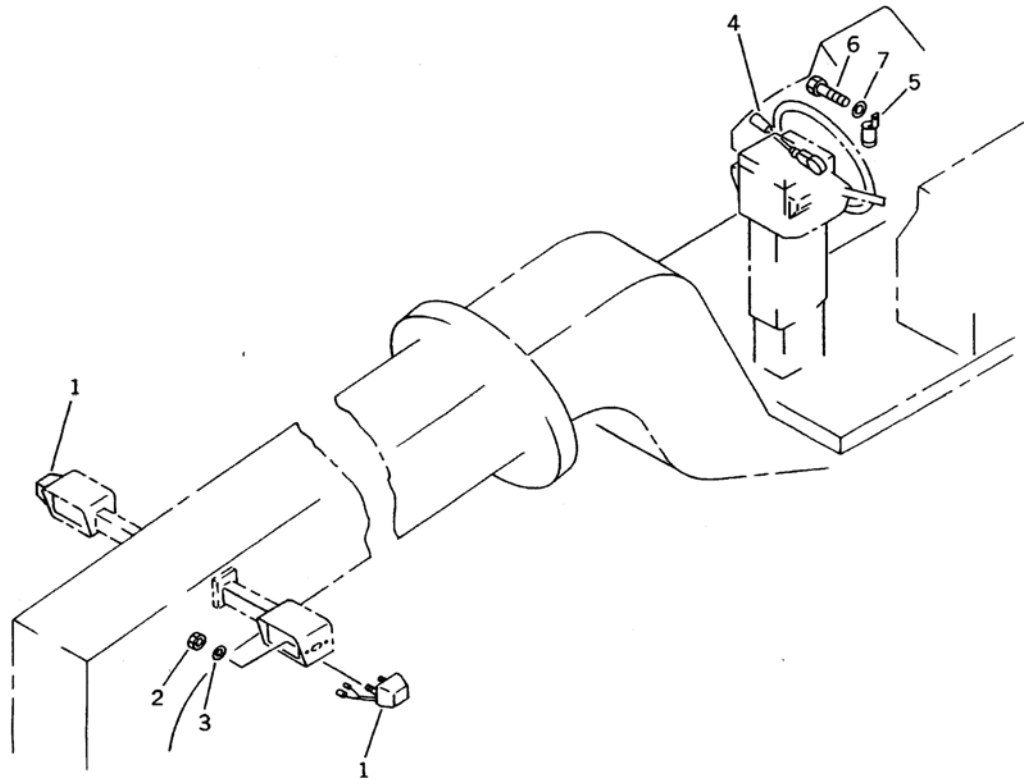

Ref. 1805 **Page 030420**

GD825A-2 S/N 11001-UP
TURNSIGNAL LAMP

Item	Part No.	Description	Qty	Options
1	235-06-13120	LAMP ASS'Y,COMBINATION	2	SN:11001--
	235-06-13310	· LENS	1	SN:11001--
	235-06-13320	· BULB¤ 20W	1	SN:11001--
2	01580-10504	NUT	4	SN:11001--
3	01601-20513	WASHER,SPRING	4	SN:11001--
4	23A-06-12650	SWITCH,TURN SIGNAL	1	SN:11001--
5	08077-22400	FLASHER	1	SN:11001--
6	01010-80612	BOLT	1	SN:.--
	□01010-50612	BOLT	1	SN:11001--.
7	01643-30623	WASHER	1	SN:11001--

Ref. 1805 **Page 030420**

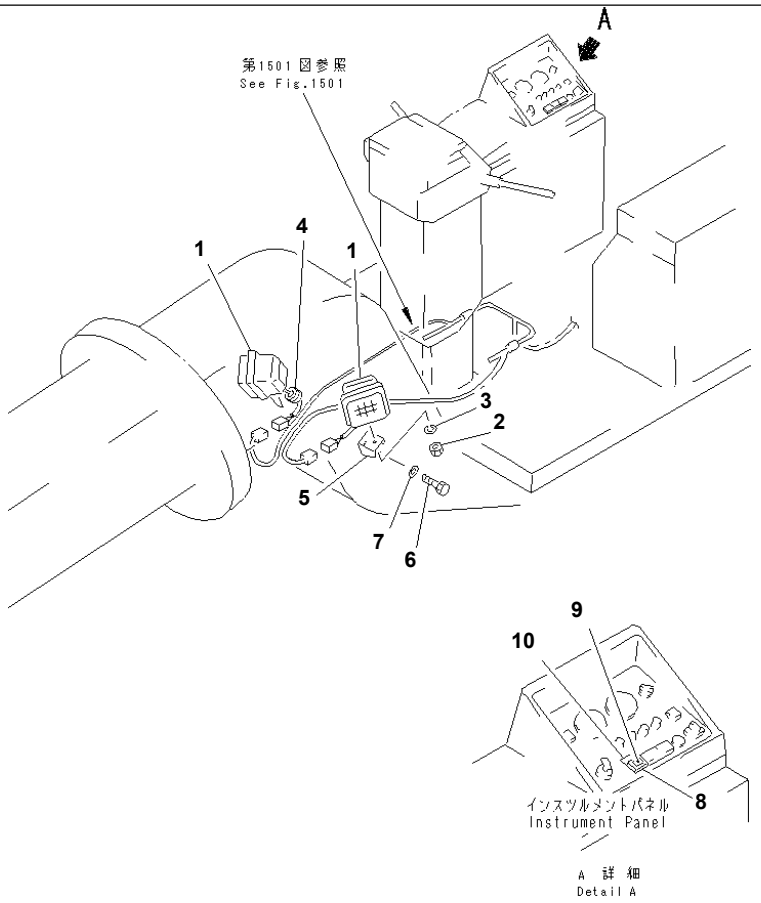

FRONT WORK LAMP(#11001-12000)

Item	Part No.	Description	Qty	Options
1	23D-06-13350	LAMP ASS'Y,WORK¤ FRONT	2	SN:11001--@
	22W-06-12170	· BULB¤ 24V	1	SN:11001--@
2	01582-11411	· NUT	1	SN:11001--@
3	01602-21442	· WASHER,SPRING	1	SN:11001--@
4	09415-01008	· CAP	1	SN:11001--@
5	235-06-15120	BRACKET	2	SN:11001--@
6	01010-51016	BOLT	2	SN:11001--@
7	01643-31032	WASHER	2	SN:11001--@
8	23F-06-11710	SWITCH,WORK LAMP¤ FRONT	1	SN:11001--@
	235-806-1160	· BULB	1	SN:11001--@
9	235-06-35450	PLATE¤ MARK	1	SN:11001--12000
10	235-06-35370	PLATE,WORK LAMP¤ FRONT	1	SN:11001--@

Printed By : Dwi Iswanto (airafather6107170)

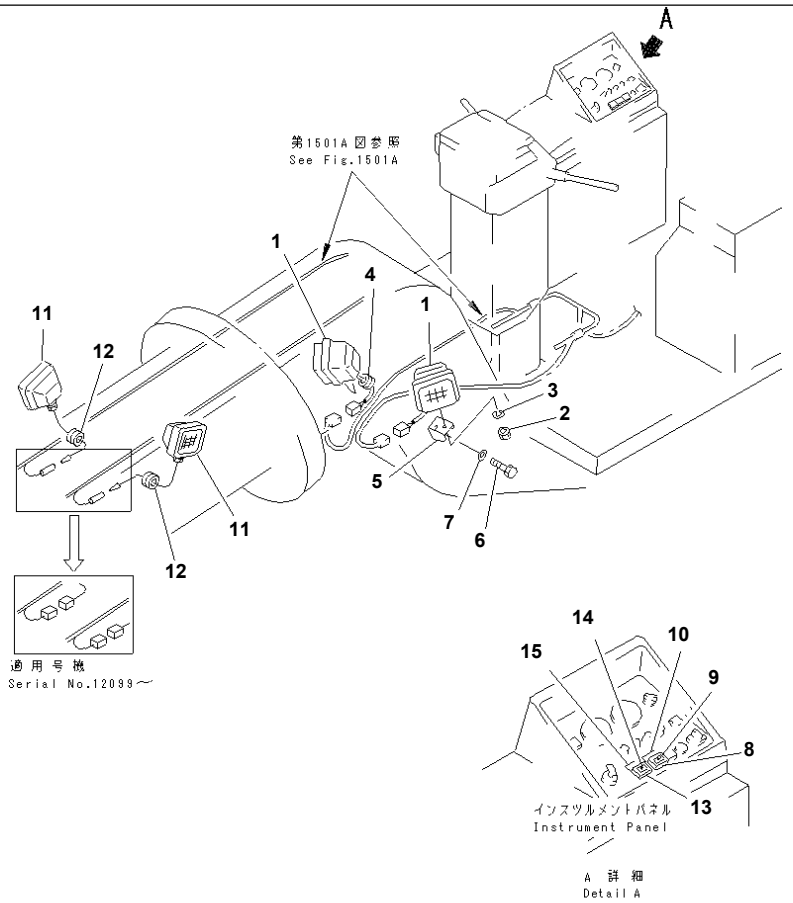

GD825A-2 S/N 11001-UP

FRONT WORK LAMP(#12001-)

Item	Part No.	Description	Qty	Options
1	421-06-23310	LAMP ASS'Y,WORK¤ FRONT	2	SN:12091--
	23D-06-13350	LAMP ASS'Y	2	SN:11001--12090
	421-06-23340	· LENS	1	SN:12091--
	421-06-23330	· BULB¤ 70W	1	SN:12091--
	01582-11411	· NUT	1	SN:12091--
	01602-21442	· WASHER	1	SN:12091--
	01643-31445	· WASHER	1	SN:12091--
	22W-06-12170	· BULB¤ 24V	1	SN:11001--12090
2	01582-11411	· NUT	1	SN:11001--12090
3	01602-21442	· WASHER,SPRING	1	SN:11001--12090
4	09415-01008	· CAP	1	SN:11001--12090
5	235-06-15120	BRACKET	2	SN:11001--
6	01010-81016	BOLT	2	SN:.--
	□01010-51016	BOLT	2	SN:11001--.
7	01643-31032	WASHER	2	SN:11001--
8	23F-06-11710	SWITCH,WORK LAMP¤ FRONT	1	SN:11001--
	235-806-1160	· BULB	1	SN:11001--
9	235-06-35451	PLATE¤ MARK	1	SN:12001--
10	235-06-35370	PLATE,WORK LAMP¤ FRONT	1	SN:11001--
11	421-06-23310	LAMP ASS'Y	2	SN:12099--
	421-06-23340	· LENS	1	SN:12099--
	421-06-23330	· BULB¤ 70W	1	SN:12099--
	01582-11411	· NUT	1	SN:12099--
	01602-21442	· WASHER	1	SN:12099--
	01643-31445	· WASHER	1	SN:12099--
	23B-06-22211	LAMP ASS'Y,WORK¤ FRONT	2	SN:12001--12098
	08119-02460	· BULB¤ 60W	1	SN:12001--12098

Printed By : Dwi Iswanto (airafather6107170)

GD825A-2 S/N 11001-UP

FRONT WORK LAMP(#12001-)

Item	Part No.	Description	Qty	Options
	23B-06-12241	· LENS	1	SN:12001--12098
12	08037-02512	GROMMET	2	SN:12102--
	08037-01008	GROMMET	2	SN:12001--12101
13	23F-06-11710	SWITCH,WORK LAMP¤ FRONT	1	SN:12001--
	235-806-1160	· BULB	1	SN:12001--
14	235-06-35451	PLATE¤ MARK	1	SN:12001--
15	235-06-35630	PLATE¤ MARK,WORK LAMP¤ FRONT	1	SN:12001--

Printed By : Dwi Iswanto (airafather6107170)

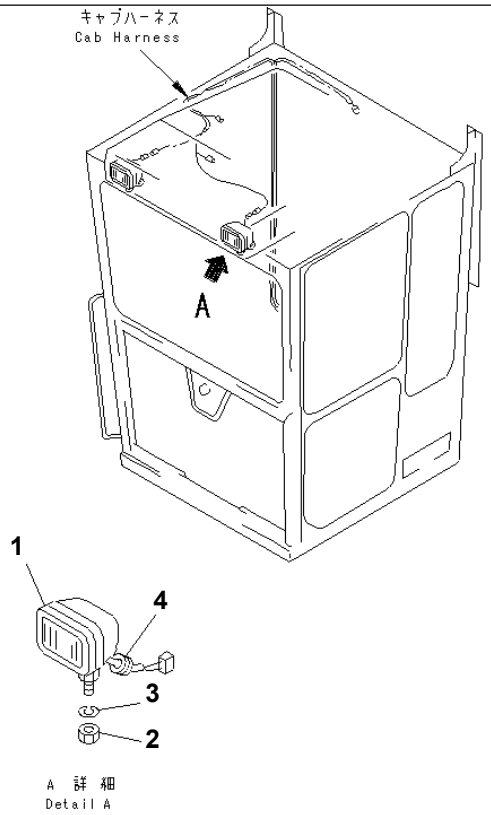

SP56391

GD825A-2 S/N 11001-UP

FRONT WORK LAMP (CAB TOP MOUNTING TYPE)

Item	Part No.	Description	Qty	Options
1	421-06-23310	LAMP ASS'Y,WORK	2	SN:12091--
	23D-06-13350	LAMP ASS'Y	2	SN:11001--12090
	421-06-23340	· LENS	1	SN:11091--
	421-06-23330	· BULB¤ 70W	1	SN:11091--
	01582-11411	· NUT	1	SN:11091--
	01602-21442	· WASHER	1	SN:11091--
	01643-31445	· WASHER	1	SN:11091--
	22W-06-12170	· BULB¤ 24V	1	SN:11001--12090
2	01582-11411	· NUT	1	SN:11001--12090
3	01602-21442	· WASHER,SPRING	1	SN:11001--12090
4	09415-01008	· CAP	1	SN:11001--12090

Printed By : Dwi Iswanto (airafather6107170)

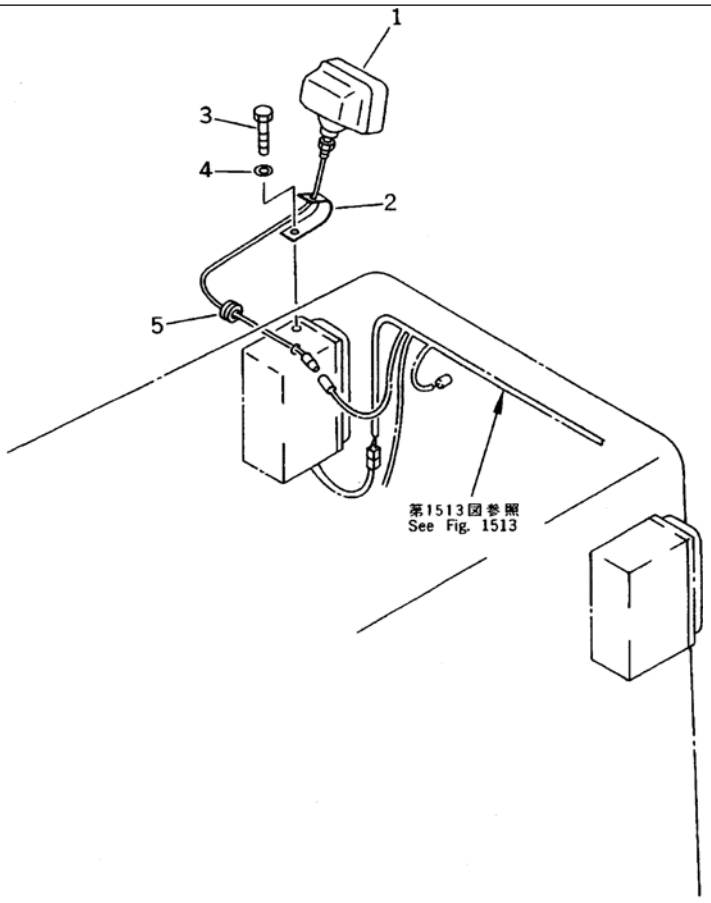

GD825A-2 S/N 11001-UP

BACK-UP LAMP

Item	Part No.	Description	Qty	Options
1	23B-06-22211	LAMP ASS'Y,BACK-UP	1	SN:11001--
	08119-02460	· BULB¤ 60W	1	SN:11001--
	23B-06-12241	· LENS	1	SN:11001--
2	235-06-35470	BRACKET	1	SN:11001--
3	01010-51025	BOLT	1	SN:11001--
4	01643-31032	WASHER	1	SN:11001--
5	08037-01008	GROMMET	1	SN:11001--

Printed By : Dwi Iswanto (airafather6107170)

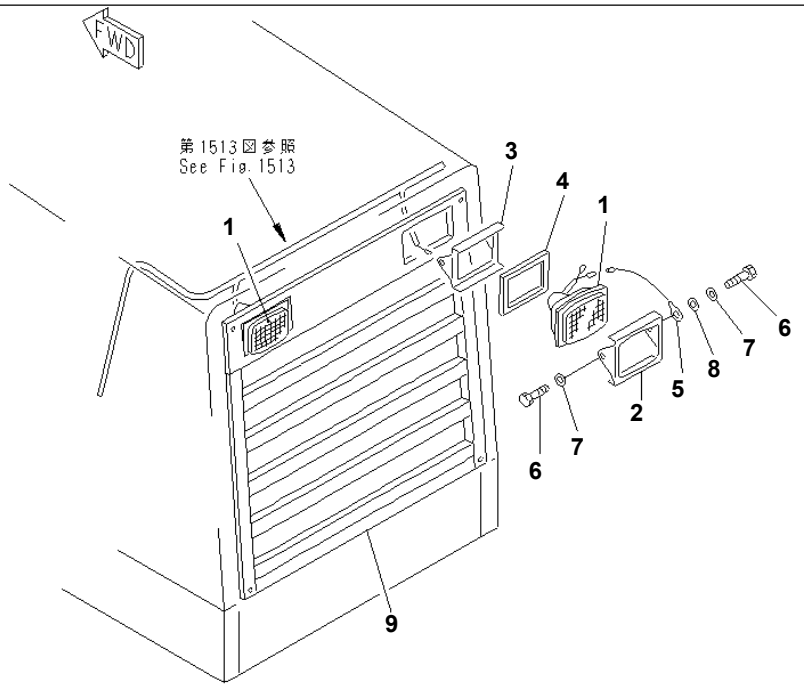

PJ54485

GD825A-2 S/N 11001-UP

REAR WORK LAMP

Item	Part No.	Description	Qty	Options
1	23B-06-11750	LAMP ASS'Y,WORK¤ REAR	2	SN:11001--
	120-Y79-5160	· BULB¤ 40W/45W	1	SN:11001--
2	232-957-9220	BRACKET	2	SN:11001--
3	232-957-9230	BRACKET	2	SN:11001--
4	120-Y79-5170	CUSHION	2	SN:11001--
5	235-06-11160	WIRE	2	SN:11001--
6	01010-51020	BOLT	4	SN:11001--
7	01643-31032	WASHER	4	SN:11001--
8	01640-21016	WASHER	2	SN:11001--
9	23B-06-12860	GRILL,MASK (MODIFIED PART)	1	SN:11001--

Ref. 1835 Page 030470

Printed By : Dwi Iswanto (airafather6107170)

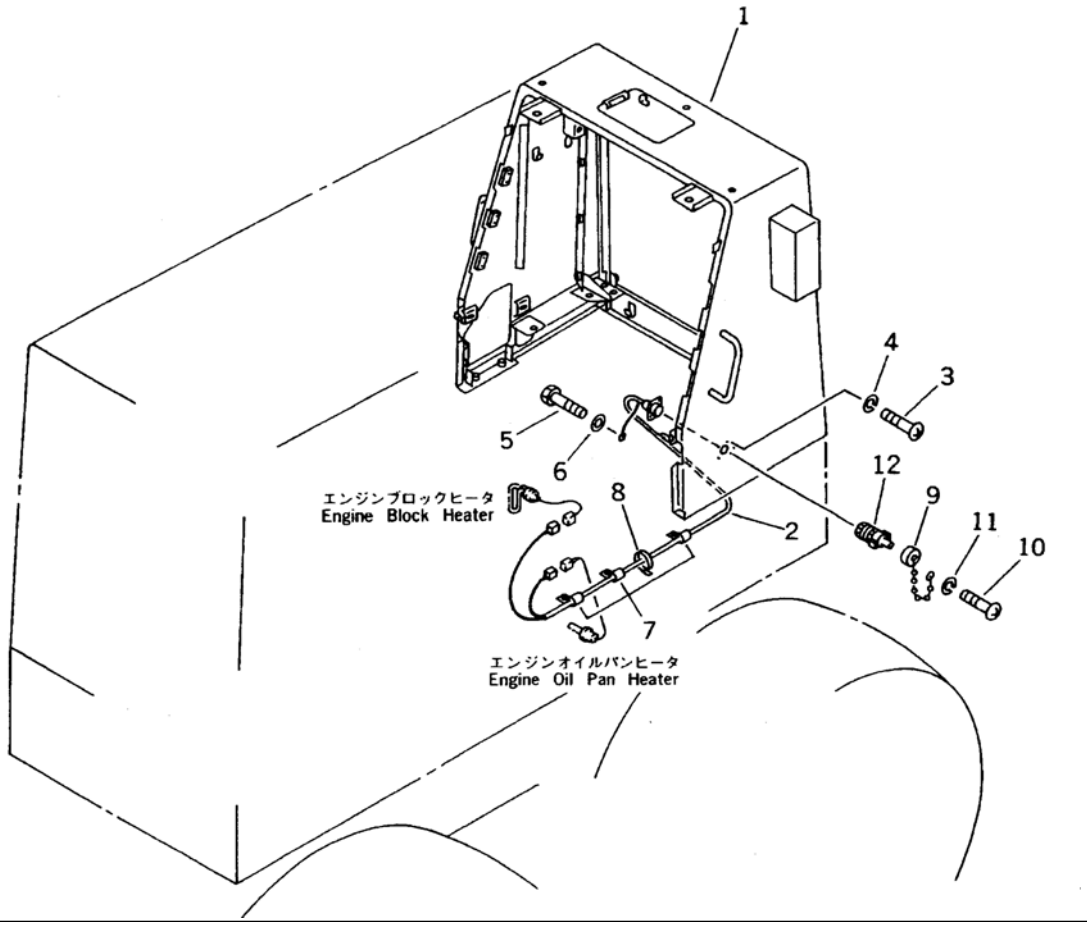

GD825A-2 S/N 11001-UP

OIL PAN HEATER WIRING (COLD TERRAIN (A) SPEC.)(#11001-12000)

Item	Part No.	Description	Qty	Options
1	235-54-31840	GRILL	1	SN:11001--12000
2	235-06-31610	WIRE ASS'Y	1	SN:11001--12000
3	01220-40310	SCREW	4	SN:.--12000
	01220-30310	SCREW	4	SN:11001--.
4	01641-20305	WASHER	4	SN:.--12000
	01601-00307	WASHER,SPRING	4	SN:11001--.
5	01010-50610	BOLT	1	SN:11001--12000
6	01643-30623	WASHER	1	SN:11001--12000
7	08036-01014	CLIP	5	SN:11001--12000
8	08034-00519	BAND	10	SN:11001--12000
9	175-06-39830	CAP	1	SN:11001--12000
10	01220-40310	SCREW	1	SN:.--12000
	01220-30310	SCREW	1	SN:11001--.
11	01601-00307	WASHER,SPRING	1	SN:11001--12000
12	175-06-37871	PLUG	1	SN:11001--12000

Printed By : Dwi Iswanto (airafather6107170)

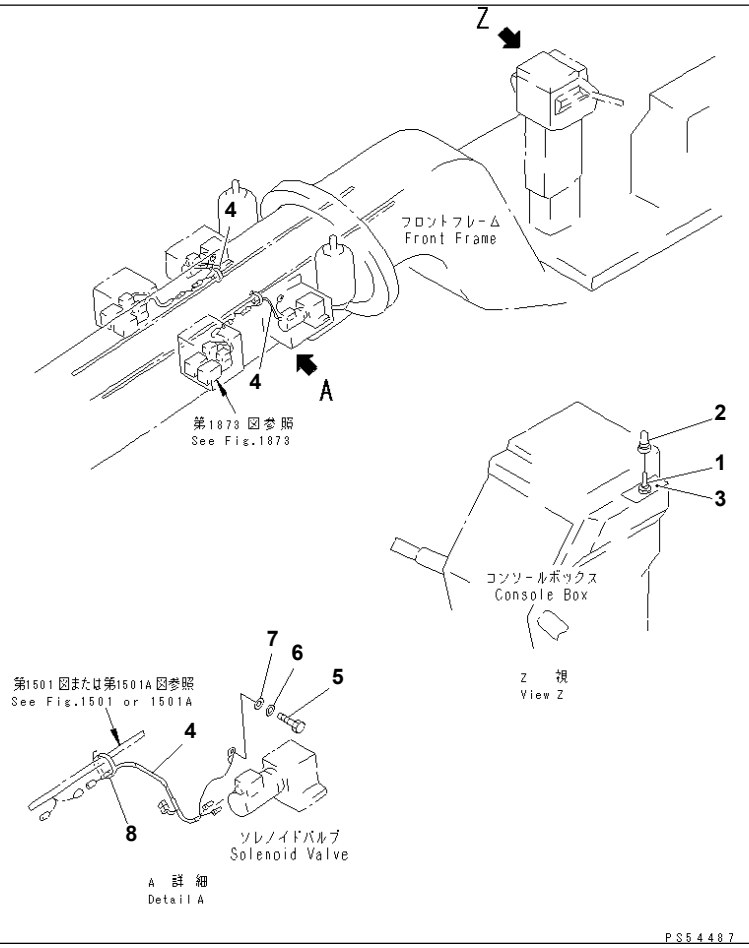

GD825A-2 S/N 11001-UP

BLADE ACCUMULATOR WIRING

Item	Part No.	Description	Qty	Options
1	262-06-62350	SWITCH,ACCUMULATOR	1	SN:11001--
2	235-06-31590	CAP	1	SN:.--
	203-06-41610	CAP	1	SN:11001--.
3	235-806-3320	PLATE,ON-OFF	1	SN:11001--
4	235-06-11260	WIRE ASS'Y	2	SN:11001--
5	01010-50812	BOLT	2	SN:11001--
6	01643-30823	WASHER	2	SN:11001--
7	01640-20816	WASHER	2	SN:11001--.
8	08034-00414	BAND	2	SN:11001--

Printed By : Dwi Iswanto (airafather6107170)

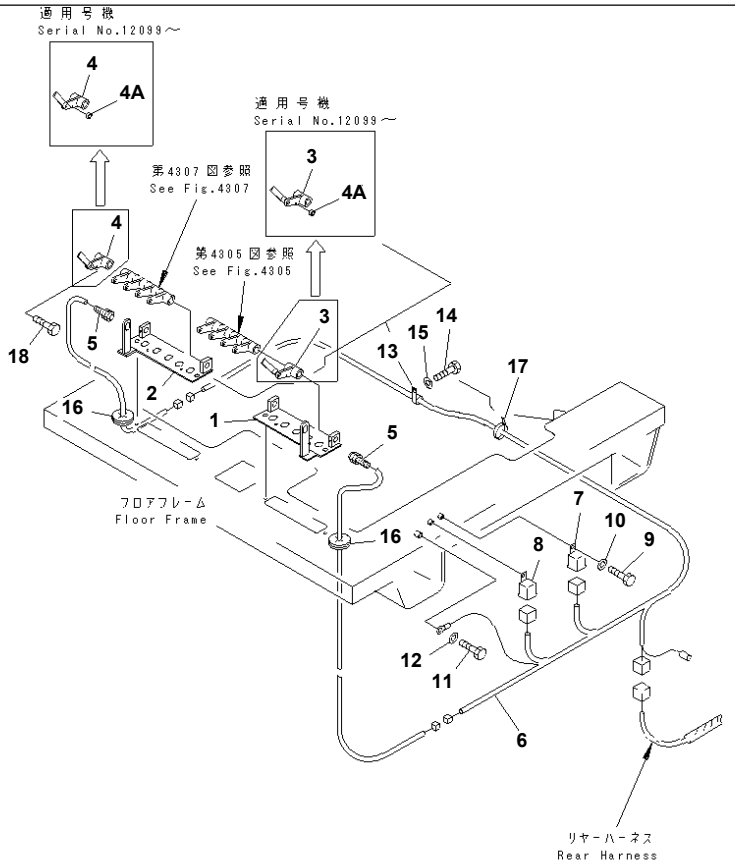

GD825A-2 S/N 11001-UP
FLOAT BLADE WIRING (1/2)

Item	Part No.	Description	Qty	Options
1	235-806-3150	BRACKET,L.H.	1	SN:11001--
2	235-806-3160	BRACKET,R.H.	1	SN:11001--
3	235-43-32320	LEVER,L.H.	1	SN:12099--
	■235-806-3411	LEVER,L.H.	1	SN:12095--12098
(235-43-32320{235-43-32340)}				
	□235-806-3410	LEVER,L.H.	1	SN:.--12095
	□235-806-3170	LEVER,L.H.	1	SN:11001--.
4	235-43-32330	LEVER,R.H.	1	SN:12099--
	■235-806-3421	LEVER,R.H.	1	SN:12095--12098
(235-43-32330{235-43-32340)}				
	□235-806-3420	LEVER,R.H.	1	SN:.--12095
	□235-806-3180	LEVER,R.H.	1	SN:11001--.
4A	235-43-32340	BUSHING	2	SN:12099--
5	262-06-51560	SENSOR	2	SN:11001--
6	235-806-3450	HARNESS	1	SN:12099--
	235-806-3310	HARNESS	1	SN:11001--12098
7	569-06-61960	RELAY,L.H.	1	SN:11001--
8	569-06-61960	RELAY,R.H.	1	SN:11001--
9	01010-50612	BOLT	2	SN:11001--
10	01643-30623	WASHER	2	SN:11001--
11	01010-51016	BOLT	1	SN:11001--
12	01643-31032	WASHER	1	SN:11001--
13	08036-00814	CLIP	1	SN:11001--
14	01010-51016	BOLT	1	SN:11001--
15	01643-31032	WASHER	1	SN:11001--
16	235-806-3190	CAP	2	SN:11001--
17	08034-00519	BAND	10	SN:11001--

Printed By : Dwi Iswanto (airafather6107170)

FLOAT BLADE WIRING (1/2)

Item	Part No.	Description	Qty	Options
18	235-806-1290	BOLT	2	SN:11001--

Printed By : Dwi Iswanto (airafather6107170)

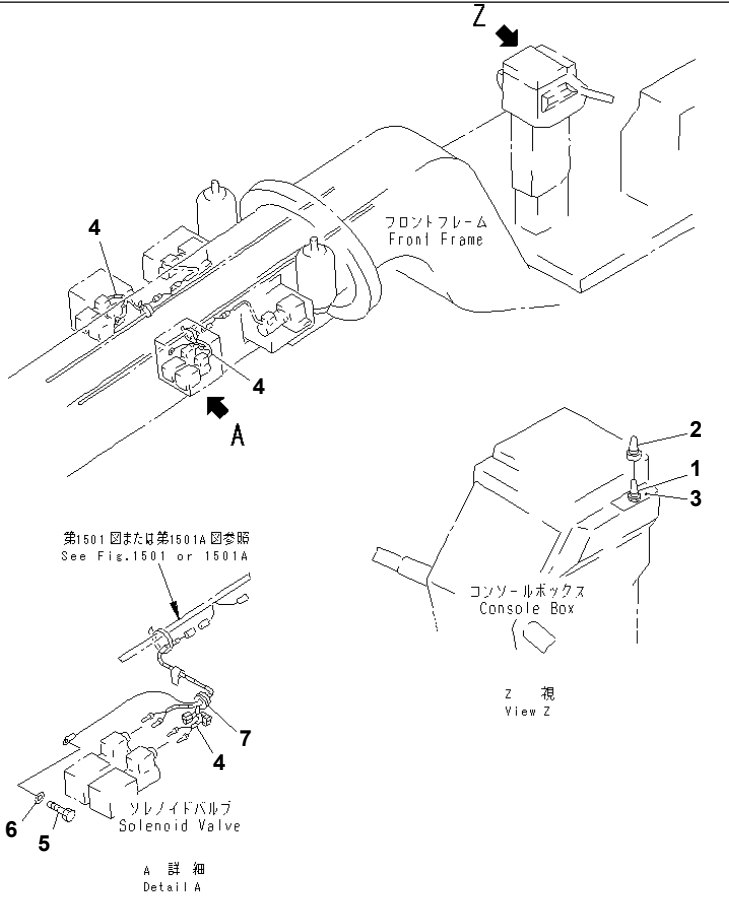

GD825A-2 S/N 11001-UP

FLOAT BLADE WIRING (2/2)

Item	Part No.	Description	Qty	Options
1	262-06-62350	SWITCH,FLOAT BLADE	1	SN:11001--
2	235-06-31590	CAP	1	SN:.--
	203-06-41610	CAP	1	SN:11001--.
3	235-806-3330	PLATE,ON-OFF	1	SN:11001--
	235-806-3340	PLATE,ON-OFF¤ (WITH ACCUMULATOR)	1	SN:11001--
4	235-806-1260	WIRE ASS'Y	2	SN:11001--
	22W-06-13590	· DIODE	1	SN:11001--
5	01010-50812	BOLT	2	SN:11001--
6	01643-30823	WASHER	2	SN:11001--
7	08037-01008	GROMMET	2	SN:11001--

Ref. 1873 **Page 030510**

Printed By : Dwi Iswanto (airafather6107170)

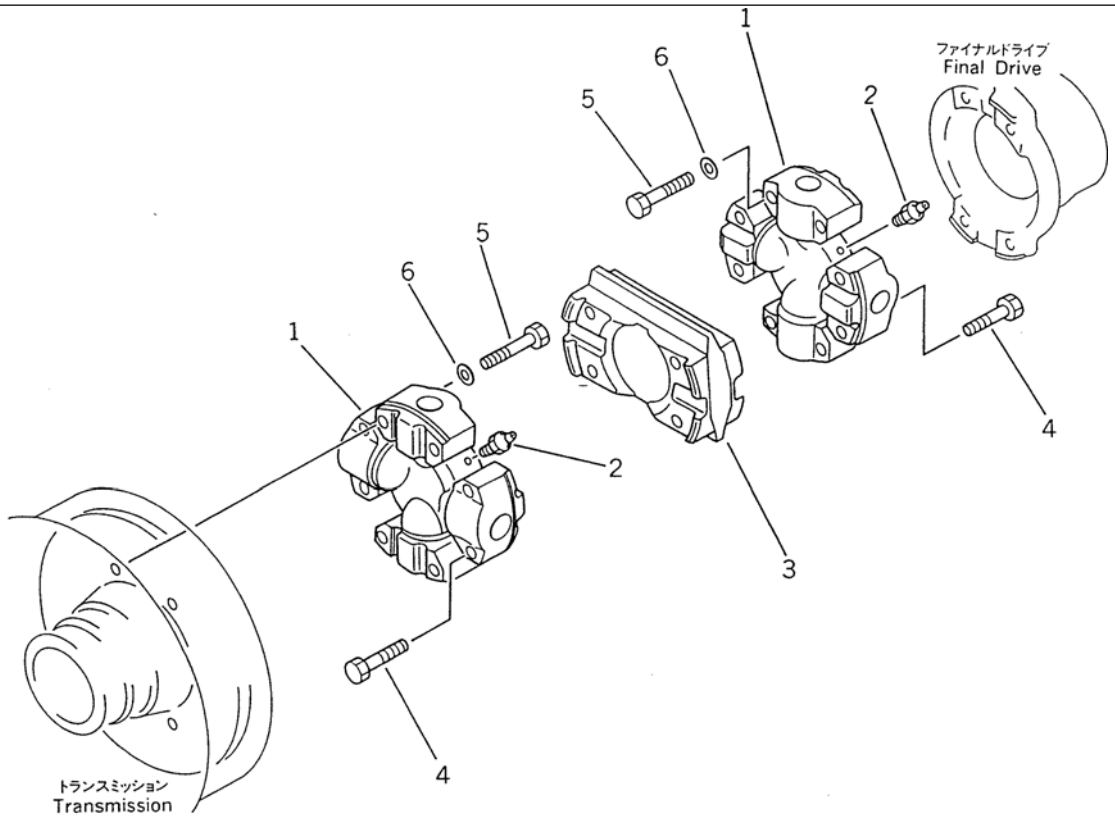

GD825A-2 S/N 11001-UP

DRIVE SHAFT

Item	Part No.	Description	Qty	Options
	235-20-11100	DRIVE SHAFT ASS'Y	1	SN:11001--
1	235-20-11110	· SPIDER BEARING A.	2	SN:11001--
2	235-20-11140	· · FITTING,GREASE	1	SN:11001--
3	235-20-11120	· PLATE,COUPLING	1	SN:11001--
4	235-20-11130	· BOLT	8	SN:11001--
5	01010-81260	BOLT	8	SN:11001--
6	01643-31232	WASHER	8	SN:11001--

Printed By : Dwi Iswanto (airafather6107170)

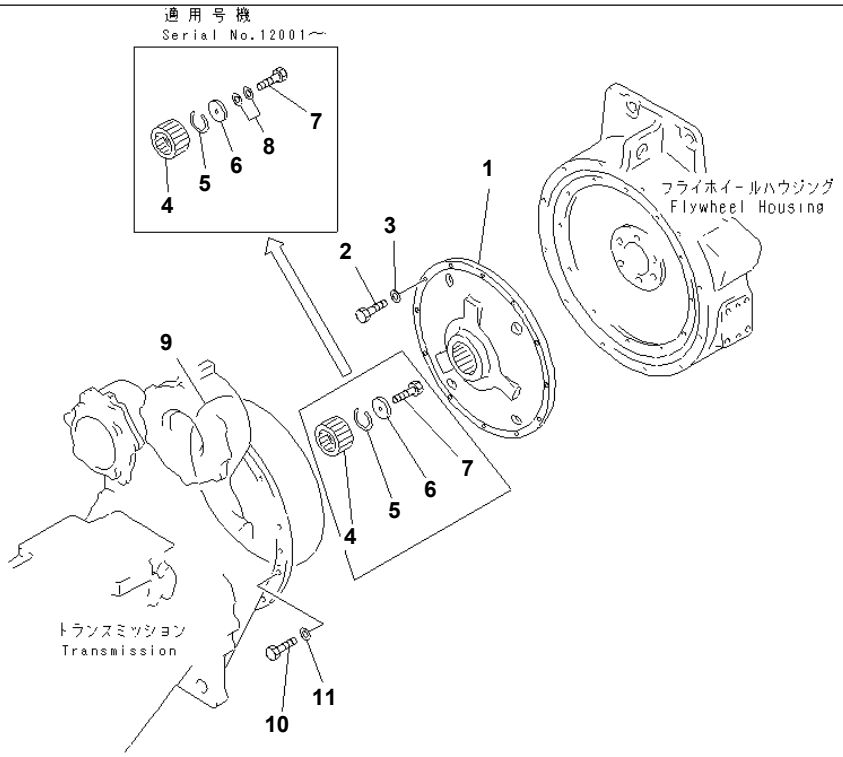

PS56918

Ref. 2051 **Page 060020**

GD825A-2 S/N 11001-UP
JOINT

Item	Part No.	Description	Qty	Options
1	235-12-12110	JOINT	1	SN:11001--
2	01010-51235	BOLT	12	SN:11001--
3	01643-31232	WASHER	12	SN:11001--
4	235-12-12120	COUPLING	1	SN:11001--
5	235-12-12130	RING,SNAP	1	SN:11001--
6	235-12-12141	HOLDER	1	SN:11001--
7	01010-51235	BOLT	1	SN:11001--
8	01643-31232	WASHER	2	SN:12001--
9	07000-15500	O-RING	1	SN:11001--
10	01010-51235	BOLT	12	SN:11001--
11	01643-31232	WASHER	12	SN:11001--

Printed By : Dwi Iswanto (airafather6107170)

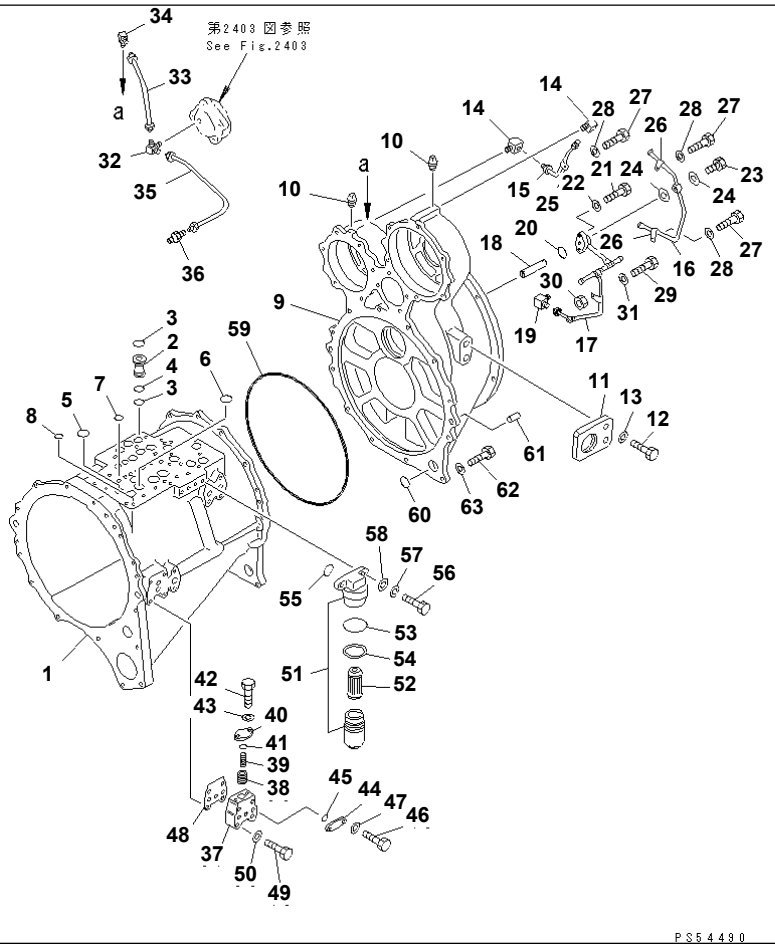

Ref. 2401 **Page 060030**

GD825A-2 S/N 11001-UP

TRANSMISSION (TRANSMISSION CASE) (1/2)(#11001-(1190))

Item	Part No.	Description	Qty	Options
SERIAL NO. IN ( ) INDICATES TRANSMISSION SERIAL NO.				
	235-15-00020	TRANSMISSION ASS'Y	1	SN:11001--(1190)
THIS ASSEMBLY CONSISTS OF ALL PARTS SHOWN IN FIGS.2401 TO 2459.				
1	235-15-11111	· CASE	1	SN:11001--(1190)
2	235-15-11310	· SLEEVE	6	SN:11001--(1190)
3	07000-72021	· O-RING	12	SN:11001--(1190)
4	07000-73022	· O-RING	6	SN:11001--(1190)
5	07000-73025	· O-RING	2	SN:11001--(1190)
6	07000-73028	· O-RING	9	SN:11001--(1190)
7	07000-72021	· O-RING	9	SN:11001--(1190)
8	07000-72014	· O-RING	7	SN:11001--(1190)
9	235-15-11812	· CASE	1	SN:11001--(1190)
10	07042-20108	· PLUG	4	SN:11001--(1190)
11	195-15-41710	· PLATE	2	SN:11001--(1190)
12	01010-62050	· BOLT	4	SN:11001--(1190)
13	01643-32060	· WASHER	4	SN:11001--(1190)
14	568-13-16560	· ELBOW	2	SN:11001--(1190)
15	235-15-11370	· TUBE	1	SN:11001--(1190)
16	235-15-11361	· TUBE	1	SN:11001--(1190)
17	235-15-11351	· TUBE	1	SN:11001--(1190)
18	235-15-11340	· TUBE	1	SN:11001--(1190)
19	22W-44-14580	· ELBOW	1	SN:11001--(1190)
20	07000-72015	· O-RING	1	SN:11001--(1190)
21	01010-50825	· BOLT	2	SN:11001--(1190)
22	01602-20825	· WASHER,SPRING	2	SN:11001--(1190)
23	07206-30812	· BOLT,JOINT	1	SN:11001--(1190)
24	07005-01212	· GASKET	2	SN:11001--(1190)

Printed By : Dwi Iswanto (airafather6107170)

TRANSMISSION (TRANSMISSION CASE) (1/2)(#11001-(1190))

Item	Part No.	Description	Qty	Options
25	04434-00608	· CLIP	1	SN:11001--(1190)
26	04434-00808	· CLIP	2	SN:11001--(1190)
27	01010-50816	· BOLT	3	SN:11001--(1190)
28	01643-30823	· WASHER	3	SN:11001--(1190)
29	01010-50840	· BOLT	1	SN:11001--(1190)
30	01580-10806	· NUT	1	SN:11001--(1190)
31	01643-30823	· WASHER	2	SN:11001--(1190)
32	235-15-11330	· TEE	1	SN:11001--(1190)
33	235-15-11381	· TUBE	1	SN:11001--(1190)
34	207-70-11740	· ELBOW	1	SN:11001--(1190)
35	235-15-11390	· TUBE	1	SN:11001--(1190)
36	207-70-11730	· NIPPLE	1	SN:11001--(1190)
	134-15-00160	· VALVE ASS'Y,LUBRICATING	1	SN:11001--(1190)
37	125-15-14112	· · BODY	1	SN:11001--(1190)
38	125-15-14142	· · PISTON	1	SN:11001--(1190)
39	125-15-14152	· · SPRING,(L=44)	1	SN:11001--(1190)
40	125-15-14131	· · COVER	1	SN:11001--(1190)
41	07000-73025	· · O-RING	1	SN:11001--(1190)
42	01010-50820	· · BOLT	2	SN:11001--(1190)
43	01643-30823	· · WASHER	2	SN:11001--(1190)
44	235-15-14170	· PLATE	1	SN:11001--(1190)
45	07000-72021	· O-RING	1	SN:11001--(1190)
46	01010-51025	· BOLT	2	SN:11001--(1190)
47	01643-31032	· WASHER	2	SN:11001--(1190)
48	135-15-34121	· GASKET	1	SN:(1144)--(1190)
	□135-15-34120	· GASKET	1	SN:11001--(1143)
49	01010-51055	· BOLT	4	SN:11001--(1190)
50	01643-31032	· WASHER	4	SN:11001--(1190)
51	426-15-16510	· FILTER ASS'Y	1	SN:11001--(1190)
52	209-38-12470	· · ELEMENT	1	SN:11001--(1190)
53	209-38-12480	· · O-RING	1	SN:11001--(1190)
54	209-38-12490	· · RING	1	SN:11001--(1190)
55	07000-72014	· O-RING	2	SN:11001--(1190)
56	01010-51035	· BOLT	2	SN:11001--(1190)
57	01602-21030	· WASHER,SPRING	2	SN:11001--(1190)
58	01641-21016	· WASHER	2	SN:11001--(1190)
59	07000-05445	· O-RING	1	SN:11001--(1190)
60	07000-73045	· O-RING	1	SN:11001--(1190)
61	04020-01638	· PIN,DOWEL	2	SN:11001--(1190)
62	01010-51235	· BOLT	12	SN:11001--(1190)
63	01643-31232	· WASHER	12	SN:11001--(1190)

Printed By : Dwi Iswanto (airafather6107170)

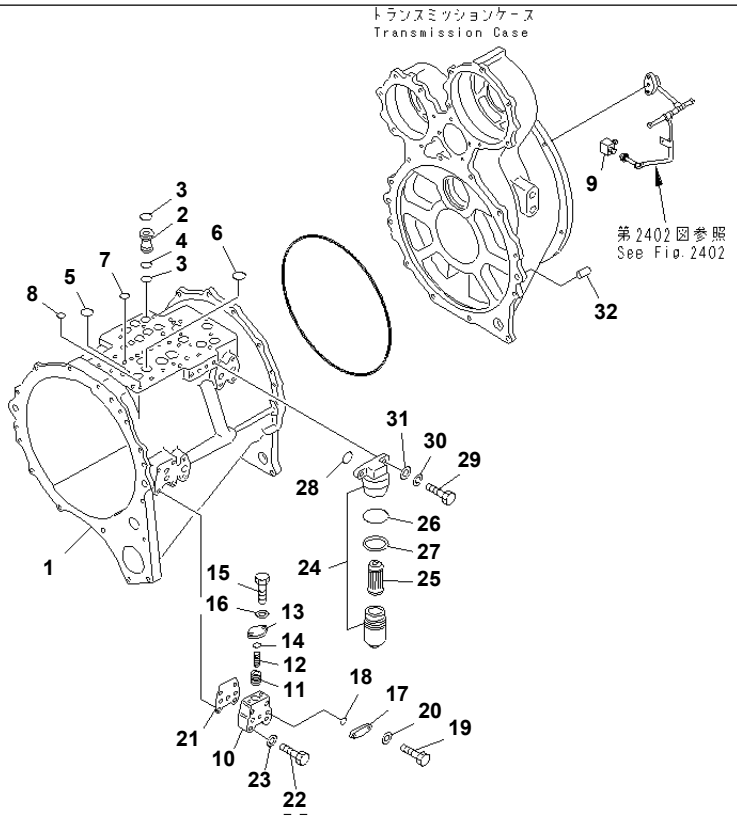

TRANSMISSION (TRANSMISSION CASE)(#(1191)-012098)

Item	Part No.	Description	Qty	Options
SERIAL NO. IN ( ) INDICATES TRANSMISSION SERIAL NO.				
	235-15-00021	TRANSMISSION ASS'Y	1	SN:(1251)--012098
	235-15-00020	TRANSMISSION ASS'Y	1	SN:(1191)--(1250)
THESE ASSEMBLIES CONSIST OF ALL PARTS SHOWN IN FIGS.2401A TO 2459B.				
	235-15-21011	· TRANSMISSION ASS'Y,(EXCEPT P.T.O.)	1	SN:(1251)--012098
	235-15-21010	· TRANSMISSION ASS'Y,(EXCEPT P.T.O.)	1	SN:(1191)--(1250)
THESE ASSEMBLIES CONSIST OF ALL PARTS SHOWN IN FIGS.2401A¤ 2405A TO 2459B.				
1	235-15-11111	· · CASE	1	SN:(1191)--012098
2	235-15-11310	· · SLEEVE	6	SN:(1191)--012098
3	07000-72021	· · O-RING	12	SN:(1191)--012098
4	07000-73022	· · O-RING	6	SN:(1191)--012098
5	07000-73025	· · O-RING	2	SN:(1191)--012098
6	07000-73028	· · O-RING	9	SN:(1191)--012098
7	07000-72021	· · O-RING	9	SN:(1191)--012098
8	07000-72014	· · O-RING	7	SN:(1191)--012098
9	22W-44-14580	· · ELBOW	1	SN:(1191)--012098
	134-15-00160	· · VALVE ASS'Y,LUBRICATING	1	SN:(1191)--012098
10	125-15-14112	· · · BODY	1	SN:(1191)--012098
11	125-15-14142	· · · PISTON	1	SN:(1191)--012098
12	125-15-14152	· · · SPRING,(L=44)	1	SN:(1191)--012098
13	125-15-14131	· · · COVER	1	SN:(1191)--012098
14	07000-73025	· · · O-RING	1	SN:(1191)--012098
15	01010-80820	· · · BOLT	2	SN:(1191)--012098
16	01643-30823	· · · WASHER	2	SN:(1191)--012098
17	235-15-14170	· · PLATE	1	SN:(1191)--012098
18	07000-72021	· · O-RING	1	SN:(1191)--012098
19	01010-81025	· · BOLT	2	SN:(1191)--012098

Printed By : Dwi Iswanto (airafather6107170)

TRANSMISSION (TRANSMISSION CASE)(#(1191)-012098)

Item	Part No.	Description	Qty	Options
20	01643-31032	· · WASHER	2	SN:(1191)--012098
21	135-15-34121	· · GASKET	1	SN:(1191)--012098
22	01010-81055	· · BOLT	4	SN:(1191)--012098
23	01643-31032	· · WASHER	4	SN:(1191)--012098
24	426-15-16510	· · FILTER ASS'Y	1	SN:(1191)--012098
25	209-38-12470	· · · ELEMENT	1	SN:(1191)--012098
26	209-38-12480	· · · O-RING	1	SN:(1191)--012098
27	209-38-12490	· · · RING	1	SN:(1191)--012098
28	07000-72014	· · O-RING	2	SN:(1191)--012098
29	01010-81035	· · BOLT	2	SN:(1191)--012098
30	01602-21030	· · WASHER,SPRING	2	SN:(1191)--012098
31	01641-21016	· · WASHER	2	SN:(1191)--012098
32	04020-01638	· · PIN,DOWEL	2	SN:(1191)--012098

Printed By : Dwi Iswanto (airafather6107170)

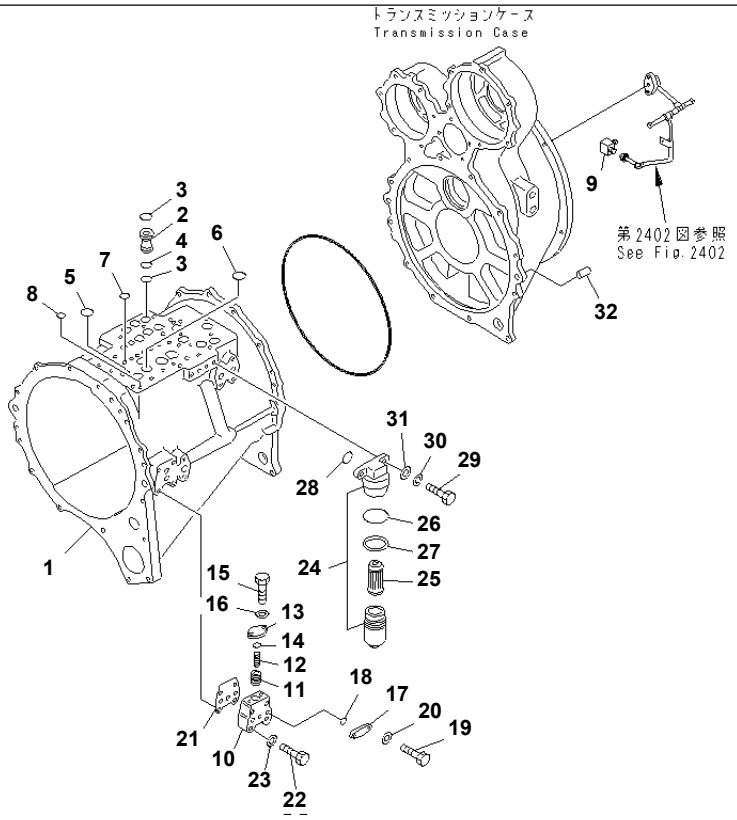

GD825A-2 S/N 11001-UP

TRANSMISSION (TRANSMISSION CASE)(#12099-)

Item	Part No.	Description	Qty	Options
	235-15-21013	TRANSMISSION ASS'Y,(EXCEPT P.T.O.)	1	SN:12099--
THIS ASSEMBLY CONSISTS OF ALL PARTS SHOWN IN FIGS.2401B¤ 2405B TO 2459C.				
1	235-15-11111	· CASE	1	SN:12099--
2	235-15-11310	· SLEEVE	6	SN:12099--
3	07000-72021	· O-RING	12	SN:12099--
4	07000-73022	· O-RING	6	SN:12099--
5	07000-73025	· O-RING	2	SN:12099--
6	07000-73028	· O-RING	9	SN:12099--
7	07000-72021	· O-RING	9	SN:12099--
8	07000-72014	· O-RING	7	SN:12099--
9	22W-44-14580	· ELBOW	1	SN:12099--
	134-15-00160	· VALVE ASS'Y,LUBRICATING	1	SN:12099--
10	125-15-14112	· · BODY	1	SN:12099--
11	125-15-14142	· · PISTON	1	SN:12099--
12	125-15-14152	· · SPRING,(L=44)	1	SN:12099--
13	125-15-14131	· · COVER	1	SN:12099--
14	07000-73025	· · O-RING	1	SN:12099--
15	01010-80820	· · BOLT	2	SN:12099--
16	01643-30823	· · WASHER	2	SN:12099--
17	235-15-14170	· PLATE	1	SN:12099--
18	07000-72021	· O-RING	1	SN:12099--
19	01010-81025	· BOLT	2	SN:12099--
20	01643-31032	· WASHER	2	SN:12099--
21	135-15-34121	· GASKET	1	SN:12099--
22	01010-81055	· BOLT	4	SN:12099--
23	01643-31032	· WASHER	4	SN:12099--
24	426-15-16510	· FILTER ASS'Y	1	SN:12099--

Printed By : Dwi Iswanto (airafather6107170)

TRANSMISSION (TRANSMISSION CASE)(#12099-)

Item	Part No.	Description	Qty	Options
25	209-38-12470	· · ELEMENT	1	SN:12099--
26	209-38-12480	· · O-RING	1	SN:12099--
27	209-38-12490	· · RING	1	SN:12099--
28	07000-72014	· O-RING	2	SN:12099--
29	01010-81035	· BOLT	2	SN:12099--
30	01602-21030	· WASHER,SPRING	2	SN:12099--
31	01641-21016	· WASHER	2	SN:12099--
32	04020-01638	· PIN,DOWEL	2	SN:12099--

Printed By : Dwi Iswanto (airafather6107170)

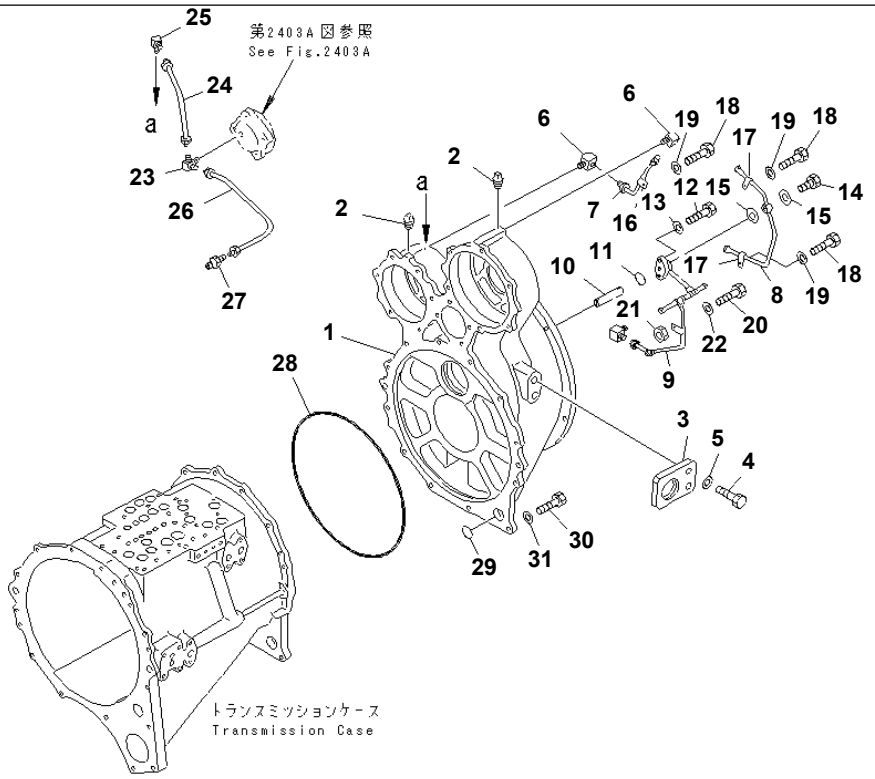

PS56955

GD825A-2 S/N 11001-UP

TRANSMISSION (P.T.O.) (1/3)(#(1191)-012064)

Item	Part No.	Description	Qty	Options
SERIAL NO. IN ( ) INDICATES TRANSMISSION SERIAL NO.				
	(235-15-00021)	TRANSMISSION ASS'Y	1	SN:(1251)--@
	(235-15-00020)	TRANSMISSION ASS'Y	1	SN:(1191)--(1250)
THESE ASSEMBLIES CONSIST OF ALL PARTS SHOWN IN FIGS.2401A TO 2459B.				
	235-15-19012	· P.T.O. ASS'Y	1	SN:12065--@
	□235-15-19011	· P.T.O. ASS'Y	1	SN:(1191)--012064
THIS ASSEMBLY CONSISTS OF ALL PARTS SHOWN IN FIGS.2402 TO 2404.				
1	235-15-11812	· · CASE	1	SN:(1191)--012064
2	07042-20108	· · PLUG	4	SN:(1191)--@
3	195-15-41710	· · PLATE	2	SN:(1191)--@
4	01010-62050	· · BOLT	4	SN:(1191)--@
5	01643-32060	· · WASHER	4	SN:(1191)--@
6	568-13-16560	· · ELBOW	2	SN:(1191)--@
7	235-15-11370	· · TUBE	1	SN:(1191)--@
8	235-15-11361	· · TUBE	1	SN:(1191)--@
9	235-15-11352	· · TUBE	1	SN:(1251)--012064
	235-15-11351	· · TUBE	1	SN:(1191)--(1250)
10	235-15-11340	· · TUBE	1	SN:(1191)--@
11	07000-72015	· · O-RING	1	SN:(1191)--@
12	01010-80825	· · BOLT	2	SN:(1191)--@
13	01602-20825	· · WASHER,SPRING	2	SN:(1191)--@
14	07206-30812	· · BOLT,JOINT	1	SN:(1191)--@
15	07005-01212	· · GASKET	2	SN:(1191)--@
16	04434-00608	· · CLIP	1	SN:(1191)--@
17	04434-00808	· · CLIP	2	SN:(1191)--@
18	01010-80816	· · BOLT	3	SN:(1191)--@
19	01643-30823	· · WASHER	3	SN:(1191)--@

Printed By : Dwi Iswanto (airafather6107170)

TRANSMISSION (P.T.O.) (1/3)(#(1191)-012064)

Item	Part No.	Description	Qty	Options
20	01010-80840	· · BOLT	1	SN:(1191)--@
21	01580-10806	· · NUT	1	SN:(1191)--@
22	01643-30823	· · WASHER	2	SN:(1191)--@
23	235-15-11330	· · TEE	1	SN:(1191)--@
24	235-15-11381	· · TUBE	1	SN:(1191)--@
25	207-70-11740	· · ELBOW	1	SN:(1191)--@
26	235-15-11390	· · TUBE	1	SN:(1191)--@
27	207-70-11730	· · NIPPLE	1	SN:(1191)--@
28	07000-05445	· · O-RING	1	SN:(1191)--@
29	07000-73045	· · O-RING	1	SN:(1191)--@
30	01010-81235	· · BOLT	12	SN:(1191)--@
31	01643-31232	· · WASHER	12	SN:(1191)--@

Printed By : Dwi Iswanto (airafather6107170)

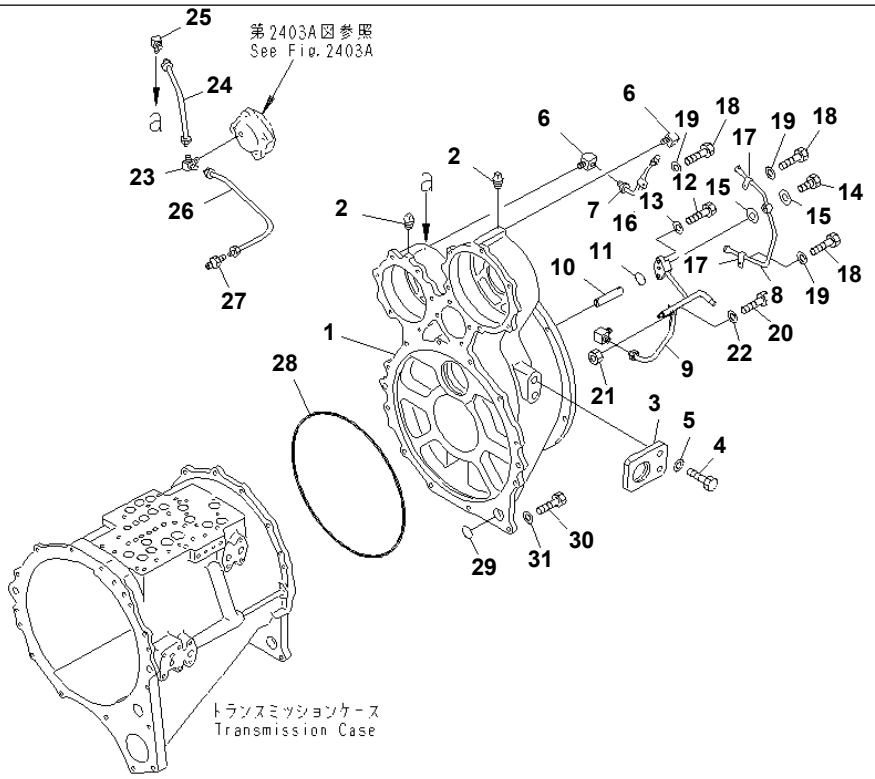

PJ0G669

TRANSMISSION (P.T.O.) (1/3)(#12065-012098)

Item	Part No.	Description	Qty	Options
SERIAL NO. IN ( ) INDICATES TRANSMISSION SERIAL NO.				
	(235-15-00021)	TRANSMISSION ASS'Y	1	SN:(1251)--012098
THESE ASSEMBLIES CONSIST OF ALL PARTS SHOWN IN FIGS.2401A TO 2459B.				
	235-15-19012	· P.T.O. ASS'Y	1	SN:12065--012098
THIS ASSEMBLY CONSISTS OF ALL PARTS SHOWN IN FIGS.2402 TO 2404.				
1	235-15-11813	· · CASE	1	SN:12065--012098
2	07042-20108	· · PLUG	4	SN:(1191)--012098
3	195-15-41710	· · PLATE	2	SN:(1191)--012098
4	01010-62050	· · BOLT	4	SN:(1191)--012098
5	01643-32060	· · WASHER	4	SN:(1191)--012098
6	568-13-16560	· · ELBOW	2	SN:(1191)--012098
7	235-15-11370	· · TUBE	1	SN:(1191)--012098
8	235-15-11361	· · TUBE	1	SN:(1191)--012098
9	235-15-11353	· · TUBE	1	SN:12065--012098
10	235-15-11340	· · TUBE	1	SN:(1191)--012098
11	07000-72015	· · O-RING	1	SN:(1191)--012098
12	01010-80825	· · BOLT	2	SN:(1191)--012098
13	01602-20825	· · WASHER,SPRING	2	SN:(1191)--012098
14	07206-30812	· · BOLT,JOINT	1	SN:(1191)--012098
15	07005-01212	· · GASKET	2	SN:(1191)--012098
16	04434-00608	· · CLIP	1	SN:(1191)--012098
17	04434-00808	· · CLIP	2	SN:(1191)--012098
18	01010-80816	· · BOLT	3	SN:(1191)--012098
19	01643-30823	· · WASHER	3	SN:(1191)--012098
20	01010-80840	· · BOLT	1	SN:(1191)--012098
21	01580-10806	· · NUT	1	SN:(1191)--012098
22	01643-30823	· · WASHER	2	SN:(1191)--012098

Printed By : Dwi Iswanto (airafather6107170)

TRANSMISSION (P.T.O.) (1/3)(#12065-012098)

Item	Part No.	Description	Qty	Options
23	235-15-11330	· · TEE	1	SN:(1191)--012098
24	235-15-11381	· · TUBE	1	SN:(1191)--012098
25	207-70-11740	· · ELBOW	1	SN:(1191)--012098
26	235-15-11390	· · TUBE	1	SN:(1191)--012098
27	207-70-11730	· · NIPPLE	1	SN:(1191)--012098
28	07000-05445	· · O-RING	1	SN:(1191)--012098
29	07000-73045	· · O-RING	1	SN:(1191)--012098
30	01010-81235	· · BOLT	12	SN:(1191)--012098
31	01643-31232	· · WASHER	12	SN:(1191)--012098

Printed By : Dwi Iswanto (airafather6107170)

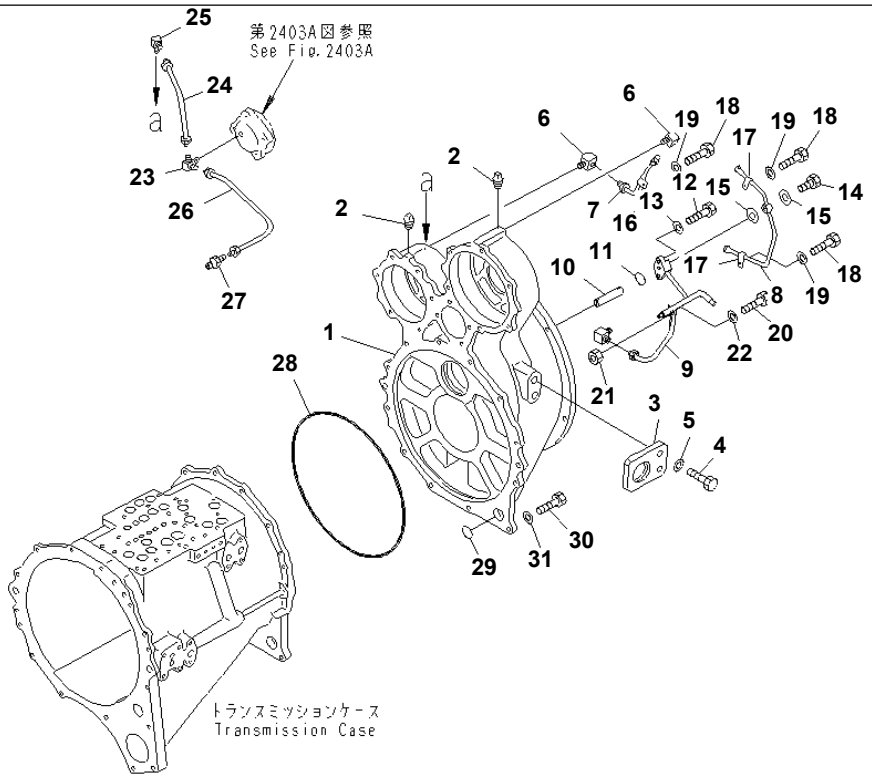

PJ0G669

TRANSMISSION (P.T.O.) (1/3)(#12099-12118)

Item	Part No.	Description	Qty	Options
	235-15-19012	P.T.O. ASS'Y	1	SN:12099--12118
THIS ASSEMBLY CONSISTS OF ALL PARTS SHOWN IN FIGS.2402 TO 2404.				
1	235-15-11813	· CASE	1	SN:12099--12118
2	07042-20108	· PLUG	4	SN:12099--12118
3	195-15-41710	· PLATE	2	SN:12099--12118
4	01010-62050	· BOLT	4	SN:12099--12118
5	01643-32060	· WASHER	4	SN:12099--12118
6	568-13-16560	· ELBOW	2	SN:12099--12118
7	235-15-11370	· TUBE	1	SN:12099--12118
8	235-15-11361	· TUBE	1	SN:12099--12118
9	235-15-11353	· TUBE	1	SN:12099--12118
10	235-15-11340	· TUBE	1	SN:12099--12118
11	07000-72015	· O-RING	1	SN:12099--12118
12	01010-80825	· BOLT	2	SN:12099--12118
13	01602-20825	· WASHER,SPRING	2	SN:12099--12118
14	07206-30812	· BOLT,JOINT	1	SN:12099--12118
15	07005-01212	· GASKET	2	SN:12099--12118
16	04434-00608	· CLIP	1	SN:12099--12118
17	04434-00808	· CLIP	2	SN:12099--12118
18	01010-80816	· BOLT	3	SN:12099--12118
19	01643-30823	· WASHER	3	SN:12099--12118
20	01010-80840	· BOLT	1	SN:12099--12118
21	01580-10806	· NUT	1	SN:12099--12118
22	01643-30823	· WASHER	2	SN:12099--12118
23	235-15-11330	· TEE	1	SN:12099--12118
24	235-15-11381	· TUBE	1	SN:12099--12118
25	207-70-11740	· ELBOW	1	SN:12099--12118

Printed By : Dwi Iswanto (airafather6107170)

TRANSMISSION (P.T.O.) (1/3)(#12099-12118)

Item	Part No.	Description	Qty	Options
26	235-15-11390	· TUBE	1	SN:12099--12118
27	207-70-11730	· NIPPLE	1	SN:12099--12118
28	07000-05445	· O-RING	1	SN:12099--12118
29	07000-73045	· O-RING	1	SN:12099--12118
30	01010-81235	· BOLT	12	SN:12099--12118
31	01643-31232	· WASHER	12	SN:12099--12118

Printed By : Dwi Iswanto (airafather6107170)

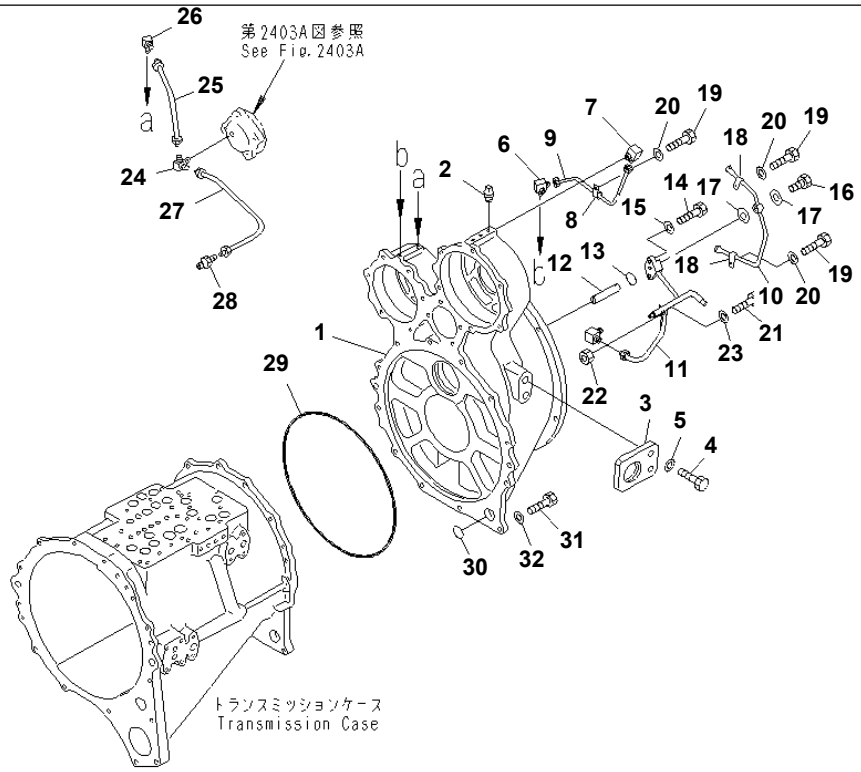

00006175

TRANSMISSION (P.T.O.) (1/3)(#12119-)

Item	Part No.	Description	Qty	Options
	235-15-19013	P.T.O. ASS'Y	1	SN:12119--
THIS ASSEMBLY CONSISTS OF ALL PARTS SHOWN IN FIGS.2402 TO 2404.				
1	235-15-11813	· CASE	1	SN:12119--
2	07042-20108	· PLUG	5	SN:12119--
3	195-15-41710	· PLATE	2	SN:12119--
4	01010-62050	· BOLT	4	SN:12119--
5	01643-32060	· WASHER	4	SN:12119--
6	235-15-11411	· TEE	1	SN:12119--
7	207-70-11740	· ELBOW	1	SN:12119--
8	04434-50808	· CLIP	1	SN:12119--
9	235-15-11371	· TUBE	1	SN:12119--
10	235-15-11361	· TUBE	1	SN:12119--
11	235-15-11353	· TUBE	1	SN:12119--
12	235-15-11340	· TUBE	1	SN:12119--
13	07000-72015	· O-RING	1	SN:12119--
14	01010-80825	· BOLT	2	SN:12119--
15	01602-20825	· WASHER,SPRING	2	SN:12119--
16	07206-30812	· BOLT,JOINT	1	SN:12119--
17	07005-01212	· GASKET	2	SN:12119--
18	04434-00808	· CLIP	2	SN:12119--
19	01010-80816	· BOLT	3	SN:12119--
20	01643-30823	· WASHER	3	SN:12119--
21	01010-80840	· BOLT	1	SN:12119--
22	01580-10806	· NUT	1	SN:12119--
23	01643-30823	· WASHER	2	SN:12119--
24	235-15-11330	· TEE	1	SN:12119--
25	235-15-11381	· TUBE	1	SN:12119--

Printed By : Dwi Iswanto (airafather6107170)

TRANSMISSION (P.T.O.) (1/3)(#12119-)

Item	Part No.	Description	Qty	Options
26	207-70-11740	· ELBOW	1	SN:12119--
27	235-15-11390	· TUBE	1	SN:12119--
28	207-70-11730	· NIPPLE	1	SN:12119--
29	07000-15445	· O-RING	1	SN:12119--
30	07000-73045	· O-RING	1	SN:12119--
31	01010-51235	· BOLT	12	SN:12119--
32	01643-31232	· WASHER	12	SN:12119--

Printed By : Dwi Iswanto (airafather6107170)

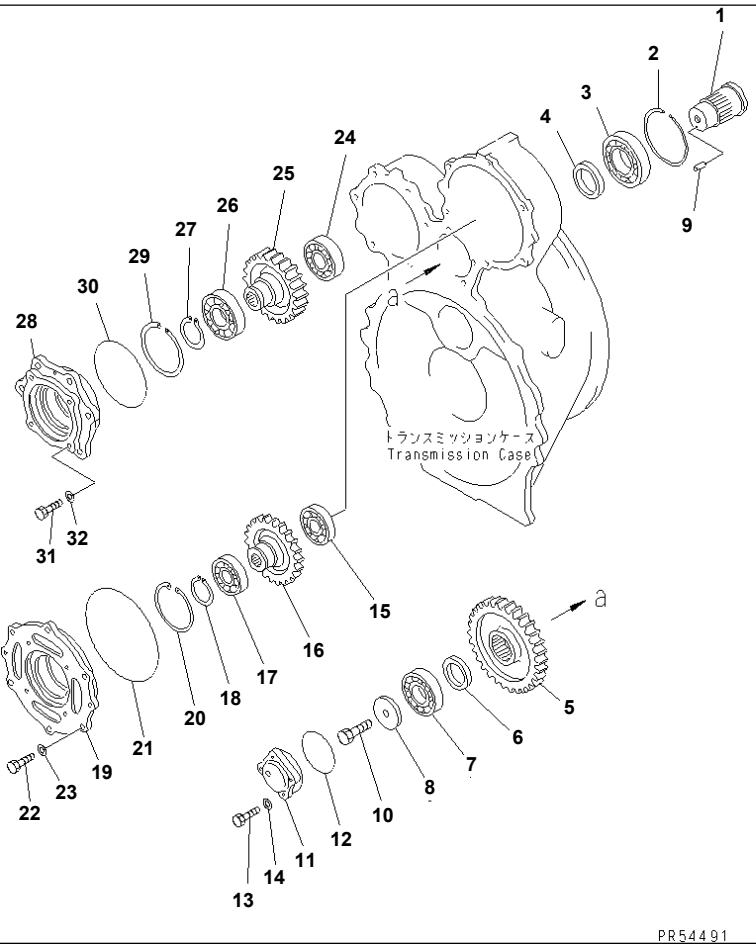

GD825A-2 S/N 11001-UP

TRANSMISSION (TRANSMISSION CASE) (2/2)(#11001-(1190))

Item	Part No.	Description	Qty	Options
SERIAL NO. IN ( ) INDICATES TRANSMISSION SERIAL NO.				
	(235-15-00020)	TRANSMISSION ASS'Y	1	SN:11001--(1190)
THIS ASSEMBLY CONSISTS OF ALL PARTS SHOWN IN FIGS.2401 TO 2459.				
1	235-15-12820	· SHAFT	1	SN:11001--(1190)
2	04071-00120	· RING,SNAP	1	SN:11001--(1190)
3	06040-06213	· BEARING	1	SN:11001--(1190)
4	235-15-12970	· SPACER	1	SN:11001--(1190)
5	235-15-12850	· GEAR	1	SN:11001--(1190)
6	234-15-22170	· SPACER	1	SN:11001--(1190)
7	06044-00211	· BEARING	1	SN:11001--(1190)
8	235-15-12980	· HOLDER	1	SN:11001--(1190)
9	04020-00616	· PIN,DOWEL	1	SN:11001--(1190)
10	01010-51235	· BOLT	1	SN:11001--(1190)
11	235-15-11850	· COVER	1	SN:11001--(1190)
12	07000-02095	· O-RING	1	SN:11001--(1190)
13	01010-51235	· BOLT	4	SN:11001--(1190)
14	01643-31232	· WASHER	4	SN:11001--(1190)
15	06044-00211	· BEARING	1	SN:11001--(1190)
16	235-15-12890	· GEAR	1	SN:11001--(1190)
17	06040-06211	· BEARING	1	SN:11001--(1190)
18	04064-05520	· RING,SNAP	1	SN:11001--(1190)
19	235-15-11840	· CAGE	1	SN:11001--(1190)
20	04065-01030	· RING,SNAP	1	SN:11001--(1190)
21	07000-05210	· O-RING	1	SN:11001--(1190)
22	01010-51235	· BOLT	6	SN:11001--(1190)
23	01643-31232	· WASHER	6	SN:11001--(1190)
24	06044-00211	· BEARING	1	SN:11001--(1190)

Printed By : Dwi Iswanto (airafather6107170)

TRANSMISSION (TRANSMISSION CASE) (2/2)(#11001-(1190))

Item	Part No.	Description	Qty	Options
25	235-15-12860	· GEAR	1	SN:11001--(1190)
26	06040-06212	· BEARING	1	SN:11001--(1190)
27	04064-06020	· RING,SNAP	1	SN:11001--(1190)
28	235-15-11831	· CAGE	1	SN:11001--(1190)
29	04071-00110	· RING,SNAP	1	SN:11001--(1190)
30	07000-05160	· O-RING	1	SN:11001--(1190)
31	01010-61645	· BOLT	6	SN:11001--(1190)
32	01643-31645	· WASHER	6	SN:11001--(1190)

Printed By : Dwi Iswanto (airafather6107170)

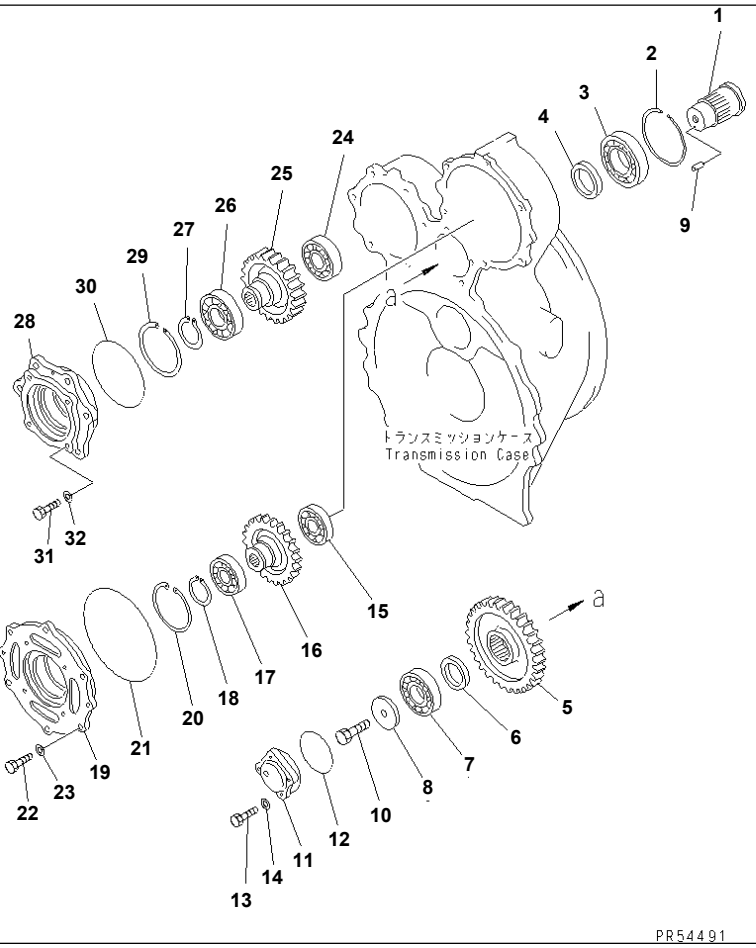

TRANSMISSION (P.T.O.) (2/3)(#(1191)-012098)

Item	Part No.	Description	Qty	Options
SERIAL NO. IN ( ) INDICATES TRANSMISSION SERIAL NO.				
	(235-15-00021)	TRANSMISSION ASS'Y	1	SN:(1251)--012098
	(235-15-00020)	TRANSMISSION ASS'Y	1	SN:(1191)--(1250)
THESE ASSEMBLIES CONSIST OF ALL PARTS SHOWN IN FIGS.2401A TO 2459B.				
	(235-15-19012)	· P.T.O. ASS'Y	1	SN:12065--012098
	(□235-15-19011)	· P.T.O. ASS'Y	1	SN:(1191)--012064
THIS ASSEMBLY CONSISTS OF ALL PARTS SHOWN IN FIGS.2402 TO 2404.				
1	235-15-12820	· · SHAFT	1	SN:(1191)--012098
2	04071-00120	· · RING,SNAP	1	SN:(1191)--012098
3	06040-06213	· · BEARING	1	SN:(1191)--012098
4	235-15-12970	· · SPACER	1	SN:(1191)--012098
5	235-15-12850	· · GEAR	1	SN:(1191)--012098
6	234-15-22170	· · SPACER	1	SN:(1191)--012098
7	06044-00211	· · BEARING	1	SN:(1191)--012098
8	235-15-12980	· · HOLDER	1	SN:(1191)--012098
9	04020-00616	· · PIN,DOWEL	1	SN:(1191)--012098
10	01010-81235	· · BOLT	1	SN:(1191)--012098
11	235-15-11850	· · COVER	1	SN:(1191)--012098
12	07000-02095	· · O-RING	1	SN:(1191)--012098
13	01010-81235	· · BOLT	4	SN:(1191)--012098
14	01643-31232	· · WASHER	4	SN:(1191)--012098
15	06044-00211	· · BEARING	1	SN:(1191)--012098
16	235-15-12890	· · GEAR	1	SN:(1191)--012098
17	06040-06211	· · BEARING	1	SN:(1191)--012098
18	04064-05520	· · RING,SNAP	1	SN:(1191)--012098
19	235-15-11840	· · CAGE	1	SN:(1191)--012098
20	04065-01030	· · RING,SNAP	1	SN:(1191)--012098

Printed By : Dwi Iswanto (airafather6107170)

TRANSMISSION (P.T.O.) (2/3)(#(1191)-012098)

Item	Part No.	Description	Qty	Options
21	07000-05210	· · O-RING	1	SN:(1191)--012098
22	01010-81235	· · BOLT	6	SN:(1191)--012098
23	01643-31232	· · WASHER	6	SN:(1191)--012098
24	06044-00211	· · BEARING	1	SN:(1191)--012098
25	235-15-12860	· · GEAR	1	SN:(1191)--012098
26	06040-06212	· · BEARING	1	SN:(1191)--012098
27	04064-06020	· · RING,SNAP	1	SN:(1191)--012098
28	235-15-11831	· · CAGE	1	SN:(1191)--012098
29	04071-00110	· · RING,SNAP	1	SN:(1191)--012098
30	07000-05160	· · O-RING	1	SN:(1191)--012098
31	01010-61645	· · BOLT	6	SN:(1191)--012098
32	01643-31645	· · WASHER	6	SN:(1191)--012098

Printed By : Dwi Iswanto (airafather6107170)

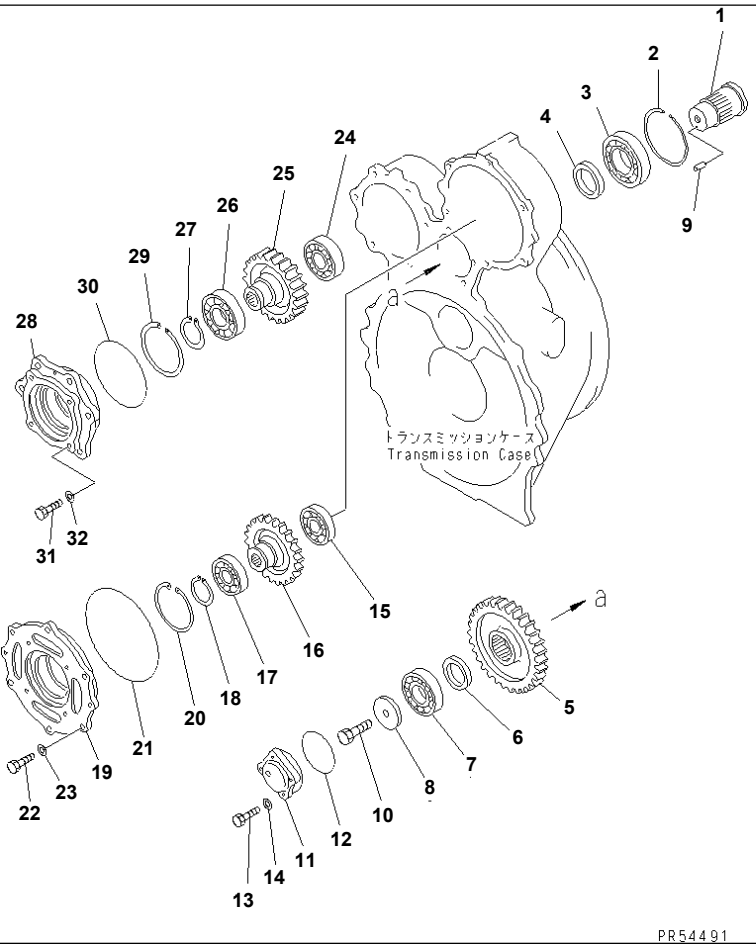

TRANSMISSION (P.T.O.) (2/3)(#12099-)

Item	Part No.	Description	Qty	Options
	(235-15-19013)	P.T.O. ASS'Y	1	SN:12118--
	(235-15-19012)	P.T.O. ASS'Y	1	SN:12099--12117
THIS ASSEMBLY CONSISTS OF ALL PARTS SHOWN IN FIGS.2402 TO 2404.				
1	235-15-12820	· SHAFT	1	SN:12099--
2	04071-00120	· RING,SNAP	1	SN:12099--
3	06040-06213	· BEARING	1	SN:12099--
4	235-15-12970	· SPACER	1	SN:12099--
5	235-15-12850	· GEAR	1	SN:12099--
6	234-15-22170	· SPACER	1	SN:12099--
7	06044-00211	· BEARING	1	SN:12099--
8	235-15-12980	· HOLDER	1	SN:12099--
9	04020-00616	· PIN,DOWEL	1	SN:12099--
10	01010-81235	· BOLT	1	SN:12099--
11	235-15-11850	· COVER	1	SN:12099--
12	07000-02095	· O-RING	1	SN:12099--
13	01010-81235	· BOLT	4	SN:12099--
14	01643-31232	· WASHER	4	SN:12099--
15	06044-00211	· BEARING	1	SN:12099--
16	235-15-12890	· GEAR	1	SN:12099--
17	06040-06211	· BEARING	1	SN:12099--
18	04064-05520	· RING,SNAP	1	SN:12099--
19	235-15-11841	· CAGE	1	SN:12118--
	235-15-11840	· CAGE	1	SN:12099--12117
20	04065-01030	· RING,SNAP	1	SN:12099--
21	07000-05210	· O-RING	1	SN:12099--
22	01010-81235	· BOLT	6	SN:12099--
23	01643-31232	· WASHER	6	SN:12099--

Printed By : Dwi Iswanto (airafather6107170)

TRANSMISSION (P.T.O.) (2/3)(#12099-)

Item	Part No.	Description	Qty	Options
24	06044-00211	· BEARING	1	SN:12099--
25	235-15-12860	· GEAR	1	SN:12099--
26	06040-06212	· BEARING	1	SN:12099--
27	04064-06020	· RING,SNAP	1	SN:12099--
28	235-15-11831	· CAGE	1	SN:12099--
29	04071-00110	· RING,SNAP	1	SN:12099--
30	07000-05160	· O-RING	1	SN:12099--
31	01010-61645	· BOLT	6	SN:12099--
32	01643-31645	· WASHER	6	SN:12099--

Printed By : Dwi Iswanto (airafather6107170)

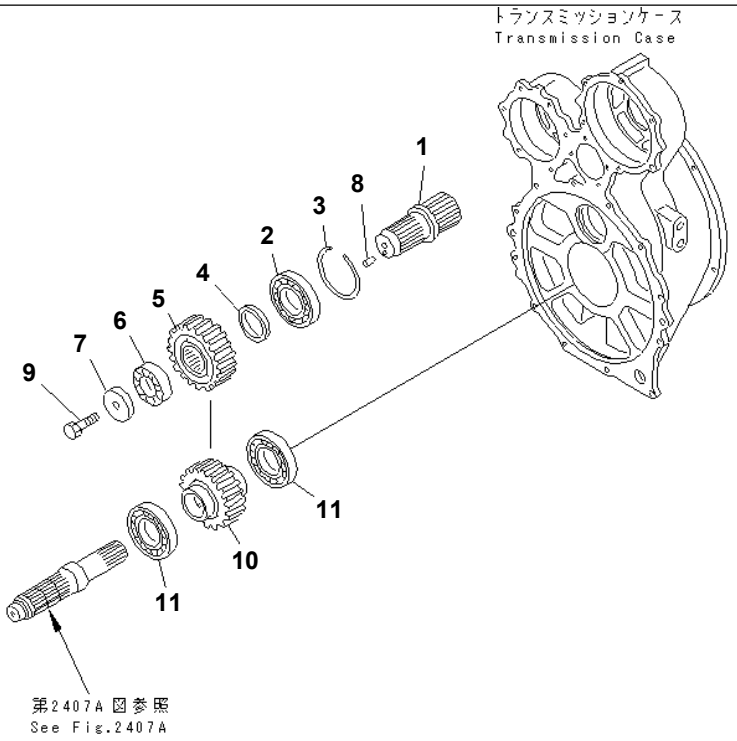

PS56956

TRANSMISSION (P.T.O.) (3/3)(#(1191)-012064)

Item	Part No.	Description	Qty	Options
SERIAL NO. IN ( ) INDICATES TRANSMISSION SERIAL NO.				
	(235-15-00021)	TRANSMISSION ASS'Y	1	SN:(1251)--012064
	(235-15-00020)	TRANSMISSION ASS'Y	1	SN:(1191)--(1250)
THESE ASSEMBLIES CONSIST OF ALL PARTS SHOWN IN FIGS.2401A TO 2459B.				
	(235-15-19012)	· P.T.O. ASS'Y	1	SN:012065--@
	(□235-15-19011)	· P.T.O. ASS'Y	1	SN:(1191)--012064
THIS ASSEMBLY CONSISTS OF ALL PARTS SHOWN IN FIGS.2402 TO 2404.				
1	235-15-12811	· · SHAFT	1	SN:(1191)--012064
2	06040-06214	· · BEARING	1	SN:(1191)--012064
3	04071-00125	· · RING,SNAP	1	SN:(1191)--012064
4	235-15-12961	· · SPACER	1	SN:(1191)--012064
5	235-15-12831	· · GEAR	1	SN:(1191)--@
6	06044-00211	· · BEARING	1	SN:(1191)--@
7	235-15-12980	· · HOLDER	1	SN:(1191)--@
8	04020-00616	· · PIN,DOWEL	1	SN:(1191)--@
9	01010-81235	· · BOLT	1	SN:(1191)--@
10	235-15-12841	· · GEAR	1	SN:(1191)--@
11	06044-00214	· · BEARING	2	SN:(1191)--@

Printed By : Dwi Iswanto (airafather6107170)

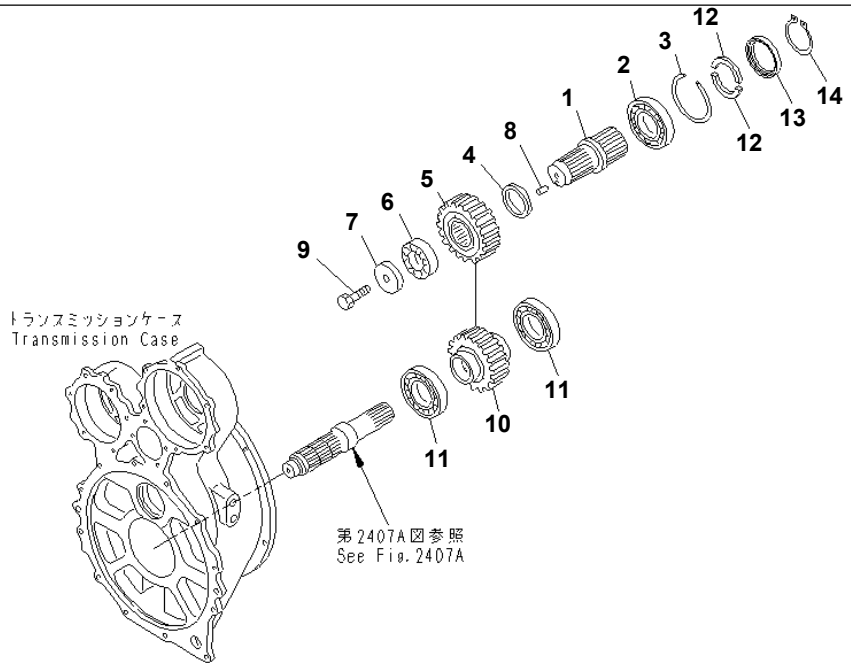

PJ0G670

GD825A-2 S/N 11001-UP

TRANSMISSION (P.T.O.) (3/3)(#12065-012098)

Item	Part No.	Description	Qty	Options
SERIAL NO. IN ( ) INDICATES TRANSMISSION SERIAL NO.				
	(235-15-00021)	TRANSMISSION ASS'Y	1	SN:(1251)--012098
THESE ASSEMBLIES CONSIST OF ALL PARTS SHOWN IN FIGS.2401A TO 2459B.				
	(235-15-19012)	· P.T.O. ASS'Y	1	SN:012065--012098
THIS ASSEMBLY CONSISTS OF ALL PARTS SHOWN IN FIGS.2402 TO 2404.				
1	235-15-12813	· · SHAFT	1	SN:012065--012098
2	235-15-29320	· · BEARING	1	SN:012065--012098
3	04071-00140	· · RING,SNAP	1	SN:012065--012098
4	235-15-12962	· · SPACER	1	SN:012065--012098
5	235-15-12831	· · GEAR	1	SN:(1191)--012098
6	06044-00211	· · BEARING	1	SN:(1191)--012098
7	235-15-12980	· · HOLDER	1	SN:(1191)--012098
8	04020-00616	· · PIN,DOWEL	1	SN:(1191)--012098
9	01010-81235	· · BOLT	1	SN:(1191)--012098
10	235-15-12841	· · GEAR	1	SN:(1191)--012098
11	06044-00214	· · BEARING	2	SN:(1191)--012098
12	567-15-42180	· · SPACER	2	SN:012065--012098
13	235-15-22141	· · SPACER	2	SN:012065--012098
14	04064-08025	· · RING	2	SN:012065--012098

Ref. 2404A Page 060130

Printed By : Dwi Iswanto (airafather6107170)

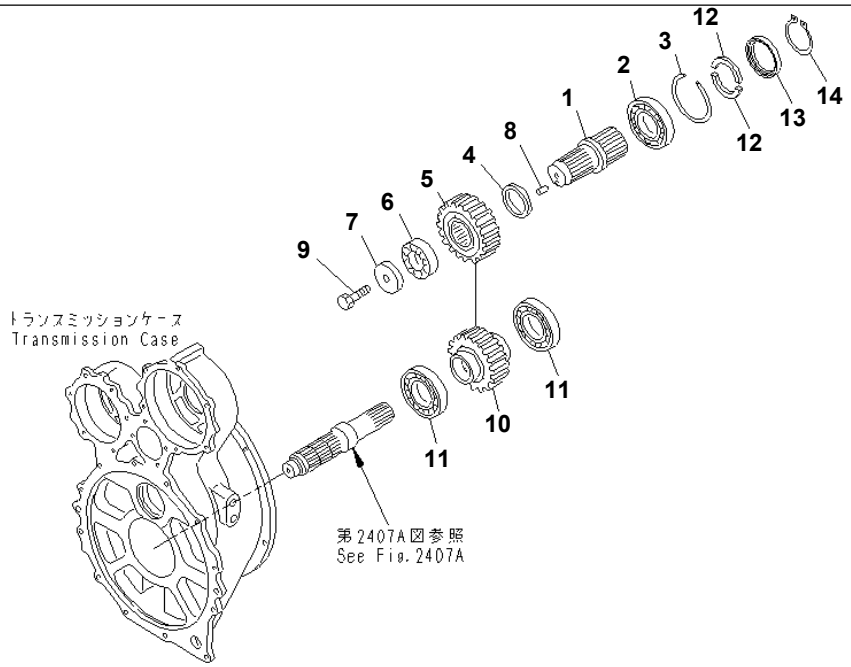

PJ0G670

TRANSMISSION (P.T.O.) (3/3)(#12099-)

Item	Part No.	Description	Qty	Options
	(235-15-19013)	P.T.O. ASS'Y	1	SN:12118--
	(235-15-19012)	P.T.O. ASS'Y	1	SN:12099--12117
THIS ASSEMBLY CONSISTS OF ALL PARTS SHOWN IN FIGS.2402 TO 2404.				
1	235-15-12813	· SHAFT	1	SN:12099--
2	235-15-29320	· BEARING	1	SN:12099--
3	04071-00140	· RING,SNAP	1	SN:12099--
4	235-15-12962	· SPACER	1	SN:12099--
5	235-15-12831	· GEAR	1	SN:12099--
6	06044-00211	· BEARING	1	SN:12099--
7	235-15-12980	· HOLDER	1	SN:12099--
8	04020-00616	· PIN,DOWEL	1	SN:12099--
9	01010-81235	· BOLT	1	SN:12099--
10	235-15-12841	· GEAR	1	SN:12099--
11	06044-00214	· BEARING	2	SN:12099--
12	567-15-42180	· SPACER	2	SN:12099--
13	235-15-22141	· SPACER	2	SN:12099--
14	04064-08025	· RING	2	SN:12099--

Printed By : Dwi Iswanto (airafather6107170)

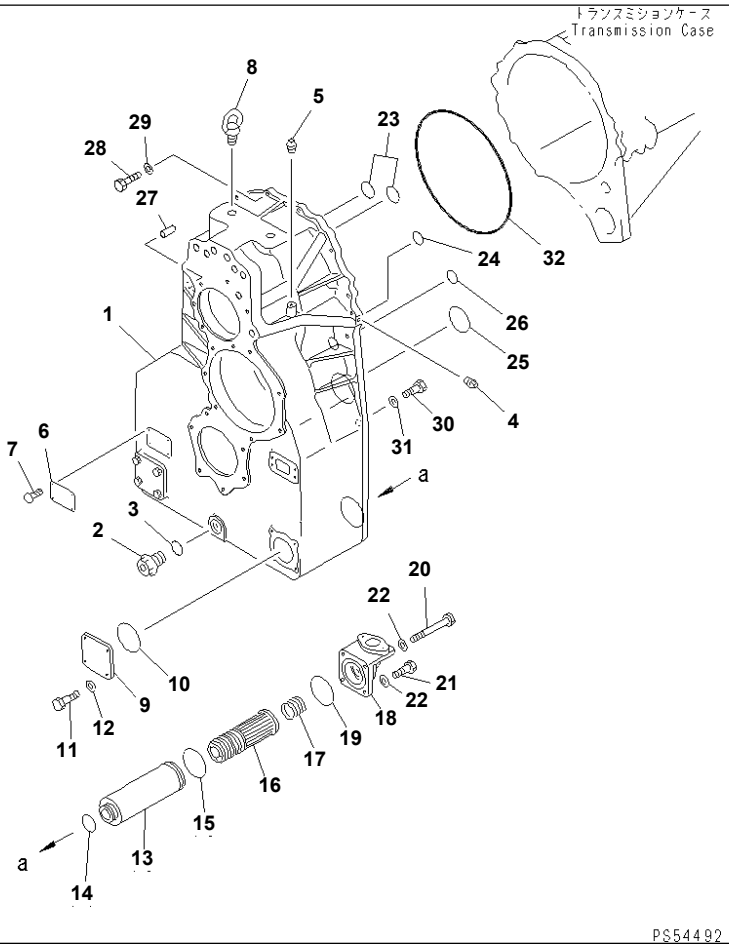

TRANSMISSION (TRANSFAR CASE)(#11001-(1190))

Item	Part No.	Description	Qty	Options
SERIAL NO. IN ( ) INDICATES TRANSMISSION SERIAL NO.				
	(235-15-00020)	TRANSMISSION ASS'Y	1	SN:11001--(1190)
THIS ASSEMBLY CONSISTS OF ALL PARTS SHOWN IN FIGS.2401 TO 2459.				
1	235-15-13111	· CASE	1	SN:11001--(1190)
2	07044-13620	· PLUG	1	SN:11001--(1190)
3	07002-03634	· O-RING	1	SN:11001--(1190)
4	07042-20415	· PLUG	1	SN:11001--(1190)
5	07042-20108	· PLUG	1	SN:11001--(1190)
6	09608-05080	· PLATE¤ NAME,(LIMITED SUPPLY)	1	SN:11001--(1190)
7	04418-13060	· SCREW	4	SN:11001--(1190)
8	04530-12438	· BOLT,EYE	2	SN:11001--(1190)
9	235-15-13180	· FLANGE	2	SN:11001--(1190)
10	07000-02090	· O-RING	2	SN:11001--(1190)
11	01010-51025	· BOLT	8	SN:11001--(1190)
12	01643-31032	· WASHER	8	SN:11001--(1190)
13	145-14-31660	· CASE	1	SN:11001--(1190)
14	07000-73045	· O-RING	1	SN:11001--(1190)
15	07000-02075	· O-RING	1	SN:11001--(1190)
16	145-14-31620	· MAGNET ASS'Y	1	SN:11001--(1190)
17	145-14-31650	· SPRING	1	SN:11001--(1190)
18	234-15-21710	· COVER	1	SN:11001--(1190)
19	07000-02090	· O-RING	1	SN:11001--(1190)
20	01011-51020	· BOLT	2	SN:11001--(1190)
21	01010-51030	· BOLT	2	SN:11001--(1190)
22	01643-31032	· WASHER	4	SN:11001--(1190)
23	07000-73025	· O-RING	2	SN:11001--(1190)
24	07000-73028	· O-RING	1	SN:11001--(1190)

Printed By : Dwi Iswanto (airafather6107170)

TRANSMISSION (TRANSFAR CASE)(#11001-(1190))

Item	Part No.	Description	Qty	Options
25	07000-02105	· O-RING	1	SN:11001--(1190)
26	07000-73045	· O-RING	1	SN:11001--(1190)
27	04020-01638	· PIN,DOWEL	3	SN:11001--(1190)
28	01010-51235	· BOLT	12	SN:11001--(1190)
29	01643-31232	· WASHER	12	SN:11001--(1190)
30	01010-51245	· BOLT	2	SN:11001--(1190)
31	01643-31232	· WASHER	2	SN:11001--(1190)
32	07000-05445	· O-RING	1	SN:11001--(1190)

Printed By : Dwi Iswanto (airafather6107170)

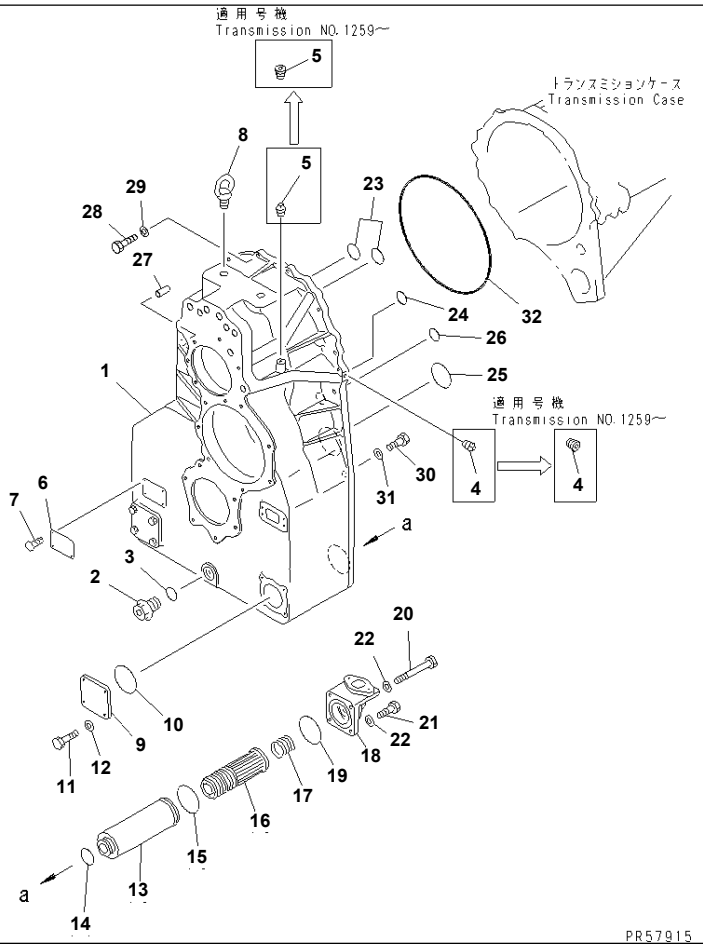

GD825A-2 S/N 11001-UP

TRANSMISSION (TRANSFAR CASE)(#(1191)-012098)

Item	Part No.	Description	Qty	Options
SERIAL NO. IN ( ) INDICATES TRANSMISSION SERIAL NO.				
	(235-15-00021)	TRANSMISSION ASS'Y	1	SN:(1251)--012098
	(235-15-00020)	TRANSMISSION ASS'Y	1	SN:(1191)--(1250)
THESE ASSEMBLIES CONSIST OF ALL PARTS SHOWN IN FIGS.2401A TO 2459B.				
	(235-15-21011)	· TRANSMISSION ASS'Y,(EXCEPT P.T.O.)	1	SN:(1251)--012098
	(235-15-21010)	· TRANSMISSION ASS'Y,(EXCEPT P.T.O.)	1	SN:(1191)--(1250)
THESE ASSEMBLIES CONSIST OF ALL PARTS SHOWN IN FIGS.2401A¤ 2405A TO 2459B.				
1	235-15-13111	· · CASE	1	SN:(1191)--012098
2	07044-13620	· · PLUG	1	SN:(1191)--012098
3	07002-03634	· · O-RING	1	SN:(1191)--012098
4	07043-70415	· · PLUG	1	SN:(1259)--012098
	07042-20415	· · PLUG	1	SN:(1191)--(1258)
5	07043-70108	· · PLUG	1	SN:(1259)--012098
	07042-20108	· · PLUG	1	SN:(1191)--(1258)
6	09608-05080	· · PLATE¤ NAME,(LIMITED SUPPLY)	1	SN:(1191)--012098
7	04418-13060	· · SCREW	4	SN:(1191)--012098
8	04530-12438	· · BOLT,EYE	2	SN:(1191)--012098
9	235-15-13180	· · FLANGE	2	SN:(1191)--012098
10	07000-02090	· · O-RING	2	SN:(1191)--012098
11	01010-81025	· · BOLT	8	SN:(1191)--012098
12	01643-31032	· · WASHER	8	SN:(1191)--012098
13	145-14-31660	· · CASE	1	SN:(1191)--012098
14	07000-73045	· · O-RING	1	SN:(1191)--012098
15	07000-02075	· · O-RING	1	SN:(1191)--012098
16	145-14-31620	· · MAGNET ASS'Y	1	SN:(1191)--012098
17	145-14-31650	· · SPRING	1	SN:(1191)--012098
18	234-15-21710	· · COVER	1	SN:(1191)--012098

Ref. 2405A Page 060160

Printed By : Dwi Iswanto (airafather6107170)

TRANSMISSION (TRANSFAR CASE)(#(1191)-012098)

Item	Part No.	Description	Qty	Options
19	07000-02090	· · O-RING	1	SN:(1191)--012098
20	01011-81020	· · BOLT	2	SN:(1191)--012098
21	01010-81030	· · BOLT	2	SN:(1191)--012098
22	01643-31032	· · WASHER	4	SN:(1191)--012098
23	07000-73025	· · O-RING	2	SN:(1191)--012098
24	07000-73028	· · O-RING	1	SN:(1191)--012098
25	07000-02105	· · O-RING	1	SN:(1191)--012098
26	07000-73045	· · O-RING	1	SN:(1191)--012098
27	04020-01638	· · PIN,DOWEL	3	SN:(1191)--012098
28	01010-81235	· · BOLT	12	SN:(1191)--012098
29	01643-31232	· · WASHER	12	SN:(1191)--012098
30	01010-81245	· · BOLT	2	SN:(1191)--012098
31	01643-31232	· · WASHER	2	SN:(1191)--012098
32	07000-05445	· · O-RING	1	SN:(1191)--012098

Printed By : Dwi Iswanto (airafather6107170)

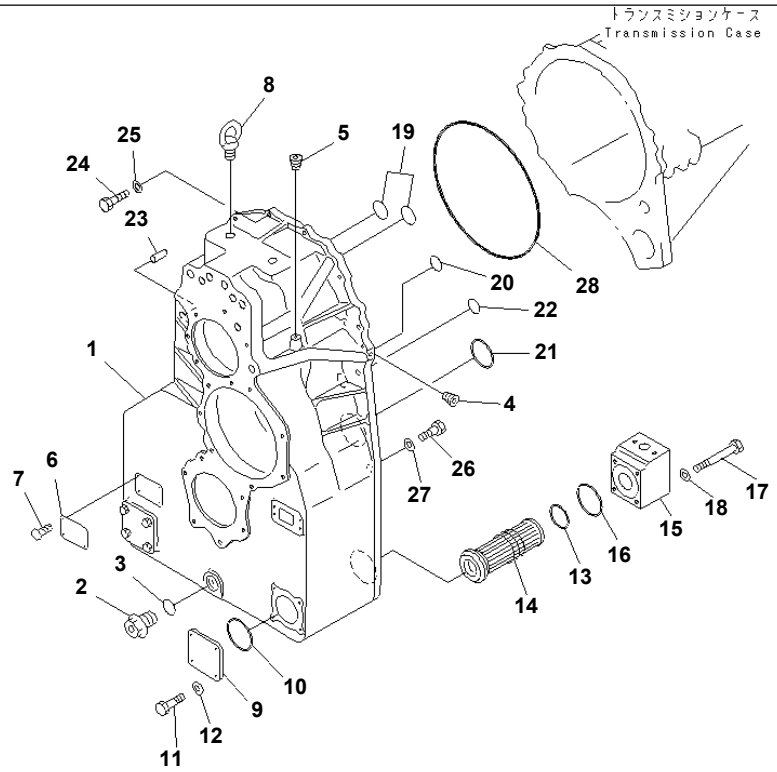

PJ0C411

GD825A-2 S/N 11001-UP

TRANSMISSION (TRANSFAR CASE)(#12099-)

Item	Part No.	Description	Qty	Options
	(235-15-21013)	TRANSMISSION ASS'Y,(EXCEPT P.T.O.)	1	SN:12099--
THIS ASSEMBLY CONSISTS OF ALL PARTS SHOWN IN FIGS.2401B¤ 2405B TO 2459C.				
1	235-15-13112	· CASE	1	SN:12099--
2	07044-13620	· PLUG	1	SN:12099--
3	07002-03634	· O-RING	1	SN:12099--
4	07043-70415	· PLUG	1	SN:12099--
5	07043-70108	· PLUG	1	SN:12099--
6	09608-05080	· PLATE¤ NAME,(LIMITED SUPPLY)	1	SN:12099--
7	04418-13060	· SCREW	4	SN:12099--
8	04530-12438	· BOLT,EYE	2	SN:12099--
9	235-15-13180	· FLANGE	2	SN:12099--
10	07000-02090	· O-RING	2	SN:12099--
11	01010-81025	· BOLT	8	SN:12099--
12	01643-31032	· WASHER	8	SN:12099--
13	07000-05085	· O-RING	1	SN:12099--
14	714-07-14521	· STRAINER ASS'Y	1	SN:12099--
15	235-15-21710	· BLOCK	1	SN:12099--
16	07000-72105	· O-RING	1	SN:12099--
17	01011-81020	· BOLT	4	SN:12099--
18	01643-31032	· WASHER	4	SN:12099--
19	07000-73025	· O-RING	2	SN:12099--
20	07000-73028	· O-RING	1	SN:12099--
21	07000-02105	· O-RING	1	SN:12099--
22	07000-73045	· O-RING	1	SN:12099--
23	04020-01638	· PIN,DOWEL	3	SN:12099--
24	01010-81235	· BOLT	12	SN:12099--
25	01643-31232	· WASHER	12	SN:12099--

Printed By : Dwi Iswanto (airafather6107170)

TRANSMISSION (TRANSFAR CASE)(#12099-)

Item	Part No.	Description	Qty	Options
26	01010-81245	· BOLT	2	SN:12099--
27	01643-31232	· WASHER	2	SN:12099--
28	07000-05445	· O-RING	1	SN:12099--

Printed By : Dwi Iswanto (airafather6107170)

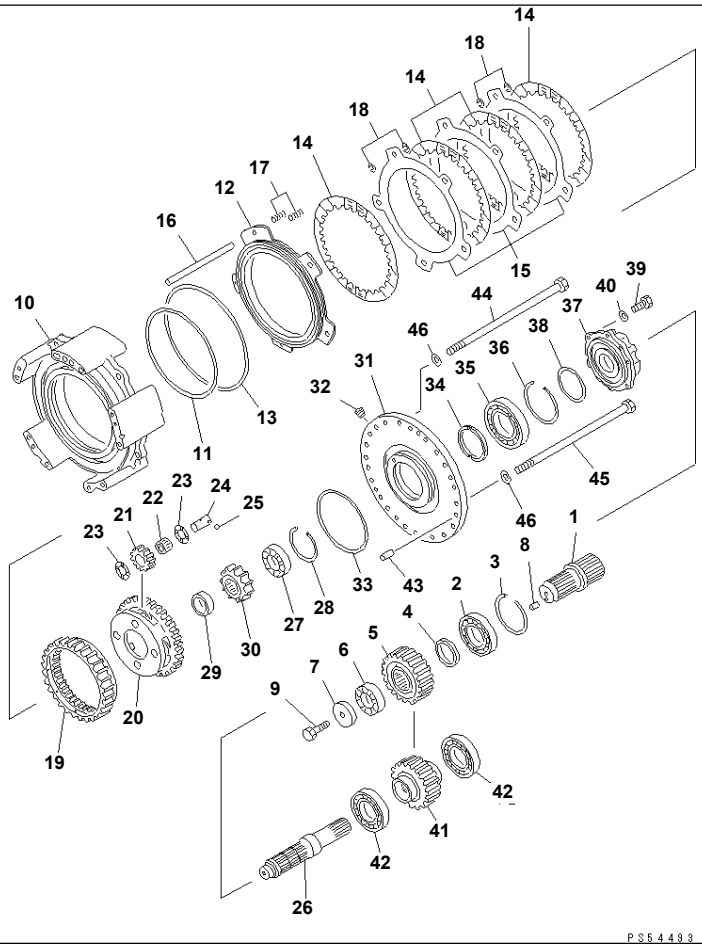

Ref. 2407 **Page 060180**

GD825A-2 S/N 11001-UP
TRANSMISSION (REVERSE CLUTCH)(#11001-(1190))

Item	Part No.	Description	Qty	Options
SERIAL NO. IN ( ) INDICATES TRANSMISSION SERIAL NO.				
	(235-15-00020)	TRANSMISSION ASS'Y	1	SN:11001--(1190)
THIS ASSEMBLY CONSISTS OF ALL PARTS SHOWN IN FIGS.2401 TO 2459.				
1	235-15-12811	· SHAFT	1	SN:11001--(1190)
2	06040-06214	· BEARING	1	SN:11001--(1190)
3	04071-00125	· RING,SNAP	1	SN:11001--(1190)
4	235-15-12961	· SPACER	1	SN:11001--(1190)
5	235-15-12831	· GEAR	1	SN:11001--(1190)
6	06044-00211	· BEARING	1	SN:11001--(1190)
7	235-15-12980	· HOLDER	1	SN:11001--(1190)
8	04020-00616	· PIN,DOWEL	1	SN:11001--(1190)
9	01010-51235	· BOLT	1	SN:11001--(1190)
10	234-15-21210	· HOUSING,REVERSE AND FORWARD	1	SN:11001--(1190)
11	232-15-19210	· RING,SEAL	1	SN:11001--(1190)
12	234-15-22780	· PISTON,REVERSE	1	SN:11001--(1190)
13	144-15-22881	· RING,SEAL	1	SN:11001--(1190)
14	424-15-12711	· DISC	4	SN:11001--(1190)
15	134-15-12720	· PLATE	3	SN:11001--(1190)
16	232-15-11270	· PIN,(D=15¤ L=255)	5	SN:11001--(1190)
17	125-15-12821	· SPRING¤ (L= 53.0)	10	SN:11001--(1190)
18	175-15-42880	· SPRING	20	SN:11001--(1190)
19	234-15-22660	· GEAR,RING	1	SN:11001--(1190)
20	235-15-12310	· CARRIER	1	SN:11001--(1190)
21	235-15-12410	· GEAR	4	SN:11001--(1190)
22	09232-02932	· BEARING	4	SN:11001--(1190)
23	09233-12920	· WASHER,THRUST	8	SN:11001--(1190)
24	232-15-12530	· SHAFT	4	SN:11001--(1190)

Printed By : Dwi Iswanto (airafather6107170)

TRANSMISSION (REVERSE CLUTCH)(#11001-(1190))

Item	Part No.	Description	Qty	Options
25	04260-00635	· BALL	4	SN:11001--(1190)
26	235-15-12111	· SHAFT	1	SN:11001--(1190)
27	06040-06210	· BEARING	1	SN:11001--(1190)
28	04077-00090	· RING,SNAP	1	SN:11001--(1190)
29	235-15-12150	· SPACER	1	SN:11001--(1190)
30	235-15-12211	· GEAR	1	SN:11001--(1190)
31	235-15-11220	· CAGE	1	SN:11001--(1190)
32	175-15-11230	· PLUG	1	SN:11001--(1190)
33	07018-12005	· RING,SEAL	1	SN:11001--(1190)
34	234-15-22560	· SPACER	1	SN:11001--(1190)
35	06000-06922	· BEARING	1	SN:11001--(1190)
36	04070-00110	· RING,SNAP	1	SN:11001--(1190)
37	235-15-11231	· CAGE	1	SN:11001--(1190)
38	07018-00954	· RING,SEAL	1	SN:11001--(1190)
39	01010-51235	· BOLT	6	SN:11001--(1190)
40	01643-31232	· WASHER	6	SN:11001--(1190)
41	235-15-12841	· GEAR	1	SN:11001--(1190)
42	06044-00214	· BEARING	2	SN:11001--(1190)
43	04020-01228	· PIN,DOWEL	2	SN:11001--(1190)
44	234-15-21250	· BOLT	8	SN:11001--(1190)
45	234-15-21260	· BOLT	1	SN:11001--(1190)
46	145-14-11570	· WASHER	9	SN:11001--(1190)

Printed By : Dwi Iswanto (airafather6107170)

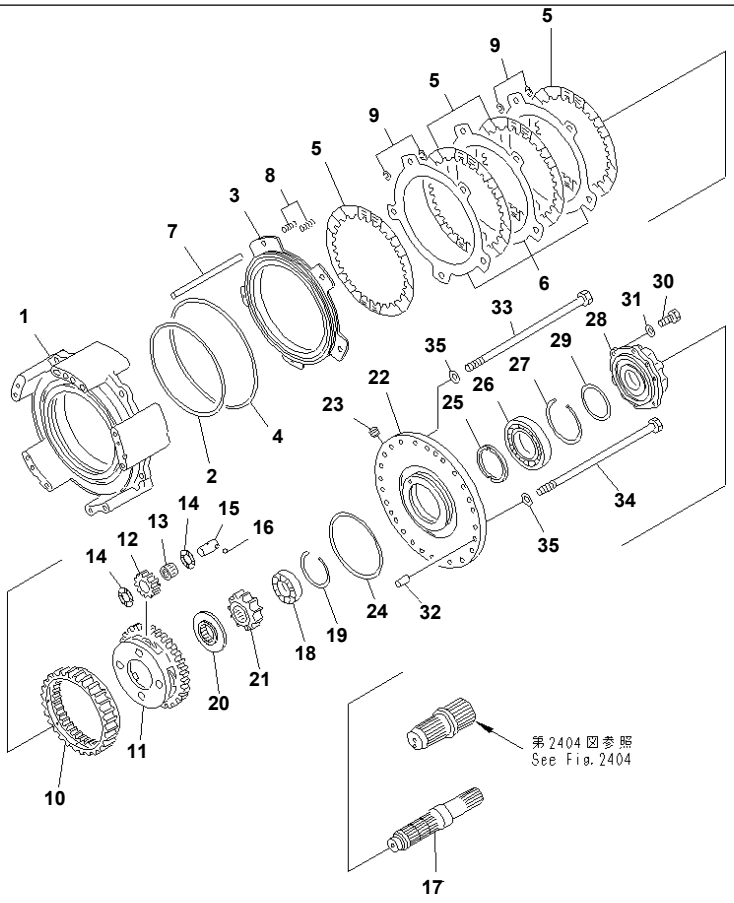

TRANSMISSION (REVERSE CLUTCH)(#(1191)-012098)

Item	Part No.	Description	Qty	Options
SERIAL NO. IN ( ) INDICATES TRANSMISSION SERIAL NO.				
	(235-15-00021)	TRANSMISSION ASS'Y	1	SN:(1251)--012098
	(235-15-00020)	TRANSMISSION ASS'Y	1	SN:(1191)--(1250)
THESE ASSEMBLIES CONSIST OF ALL PARTS SHOWN IN FIGS.2401A TO 2459B.				
	(235-15-21011)	· TRANSMISSION ASS'Y,(EXCEPT P.T.O.)	1	SN:(1251)--012098
	(235-15-21010)	· TRANSMISSION ASS'Y,(EXCEPT P.T.O.)	1	SN:(1191)--(1250)
THESE ASSEMBLIES CONSIST OF ALL PARTS SHOWN IN FIGS.2401A¤ 2405A TO 2459B.				
1	235-15-21210	· · HOUSING,REVERSE AND FORWARD	1	SN:(1191)--012098
2	232-15-19210	· · RING,SEAL	1	SN:(1191)--012098
3	234-15-22780	· · PISTON,REVERSE	1	SN:(1191)--012098
4	144-15-22881	· · RING,SEAL	1	SN:(1191)--012098
5	424-15-12711	· · DISC	4	SN:(1191)--012098
6	134-15-12720	· · PLATE	3	SN:(1191)--012098
7	232-15-11270	· · PIN,(D=15¤ L=255)	5	SN:(1191)--012098
8	125-15-12821	· · SPRING¤ (L= 53.0)	10	SN:(1191)--012098
9	175-15-42880	· · SPRING	20	SN:(1191)--012098
10	234-15-22660	· · GEAR,RING	1	SN:(1191)--012098
11	235-15-12310	· · CARRIER	1	SN:(1191)--012098
12	235-15-12410	· · GEAR	4	SN:(1191)--012098
13	09232-02932	· · BEARING	4	SN:(1191)--012098
14	09233-12920	· · WASHER,THRUST	8	SN:(1191)--012098
15	232-15-12530	· · SHAFT	4	SN:(1191)--012098
16	04260-00635	· · BALL	4	SN:(1191)--012098
17	235-15-12111	· · SHAFT	1	SN:(1191)--012098
18	06040-06210	· · BEARING	1	SN:(1191)--012098
19	04077-00090	· · RING,SNAP	1	SN:(1191)--012098
20	235-15-22150	· · SPACER	1	SN:(1191)--012098

Printed By : Dwi Iswanto (airafather6107170)

TRANSMISSION (REVERSE CLUTCH)(#(1191)-012098)

Item	Part No.	Description	Qty	Options
21	235-15-12211	· · GEAR	1	SN:(1191)--012098
22	235-15-11220	· · CAGE	1	SN:(1191)--012098
23	175-15-11230	· · PLUG	1	SN:(1191)--012098
24	07018-12005	· · RING,SEAL	1	SN:(1191)--012098
25	234-15-22560	· · SPACER	1	SN:(1191)--012098
26	06000-06922	· · BEARING	1	SN:(1191)--012098
27	04070-00110	· · RING,SNAP	1	SN:(1191)--012098
28	235-15-11231	· · CAGE	1	SN:(1191)--012098
29	07018-00954	· · RING,SEAL	1	SN:(1191)--012098
30	01010-81235	· · BOLT	6	SN:(1191)--012098
31	01643-31232	· · WASHER	6	SN:(1191)--012098
32	04020-01228	· · PIN,DOWEL	2	SN:(1191)--012098
33	234-15-21250	· · BOLT	8	SN:(1191)--012098
34	234-15-21260	· · BOLT	1	SN:(1191)--012098
35	145-14-11570	· · WASHER	9	SN:(1191)--012098

Printed By : Dwi Iswanto (airafather6107170)

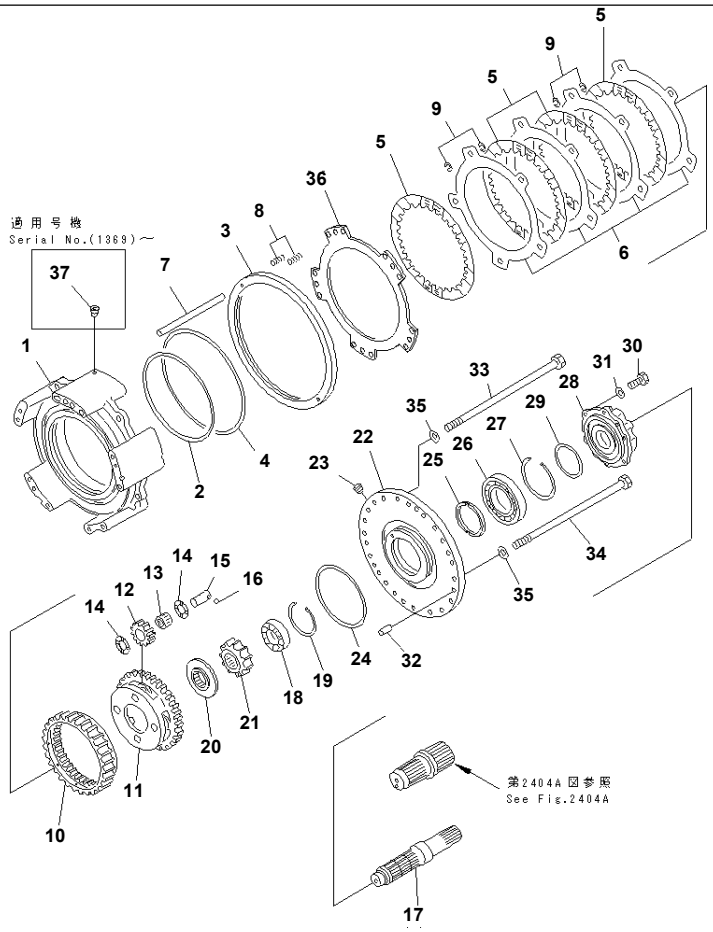

GD825A-2 S/N 11001-UP

TRANSMISSION (REVERSE CLUTCH)(#12099-)

Item	Part No.	Description	Qty	Options
	(235-15-21013)	TRANSMISSION ASS'Y,(EXCEPT P.T.O.)	1	SN:12099--
THIS ASSEMBLY CONSISTS OF ALL PARTS SHOWN IN FIGS.2401B¤ 2405B TO 2459C.				
1	235-15-21211	· HOUSING,REVERSE AND FORWARD	1	SN:12099--
2	232-15-19220	· RING,SEAL	1	SN:12099--
3	235-15-22731	· PISTON,REVERSE	1	SN:12099--
4	568-15-12850	· RING	1	SN:12099--
5	235-15-22710	· DISC	4	SN:12099--
6	235-15-22720	· PLATE	4	SN:12099--
7	234-15-12761	· PIN,(D=15¤ L=93)	5	SN:12099--
8	235-15-22910	· SPRING¤ (L= 53.0)	10	SN:12099--
9	175-15-42880	· SPRING	20	SN:12099--
10	235-15-22630	· GEAR,RING	1	SN:12099--
11	235-15-22310	· CARRIER	1	SN:12099--
12	235-15-12410	· GEAR	4	SN:12099--
13	09232-02932	· BEARING	4	SN:12099--
14	09233-12920	· WASHER,THRUST	8	SN:12099--
15	235-15-22510	· SHAFT	4	SN:12099--
16	04260-00635	· BALL	4	SN:12099--
17	235-15-12111	· SHAFT	1	SN:12099--
18	06040-06210	· BEARING	1	SN:12099--
19	04077-00090	· RING,SNAP	1	SN:12099--
20	235-15-22150	· SPACER	1	SN:12099--
21	235-15-12211	· GEAR	1	SN:12099--
22	235-15-21220	· CAGE	1	SN:12099--
23	175-15-11230	· PLUG	1	SN:12099--
24	07018-12005	· RING,SEAL	1	SN:12099--
25	234-15-22560	· SPACER	1	SN:12099--

Printed By : Dwi Iswanto (airafather6107170)

TRANSMISSION (REVERSE CLUTCH)(#12099-)

Item	Part No.	Description	Qty	Options
26	06000-06922	· BEARING	1	SN:12099--
27	04070-00110	· RING,SNAP	1	SN:12099--
28	235-15-11231	· CAGE	1	SN:12099--
29	07018-00954	· RING,SEAL	1	SN:12099--
30	01010-81235	· BOLT	6	SN:12099--
31	01643-31232	· WASHER	6	SN:12099--
32	04020-01228	· PIN,DOWEL	2	SN:12099--
33	234-15-21250	· BOLT	8	SN:12099--
34	234-15-21260	· BOLT	1	SN:12099--
35	145-14-11570	· WASHER	9	SN:12099--
36	562-15-22880	· PLATE	1	SN:12099--
37	07043-70108	· PLUG	1	SN:12099--

Printed By : Dwi Iswanto (airafather6107170)

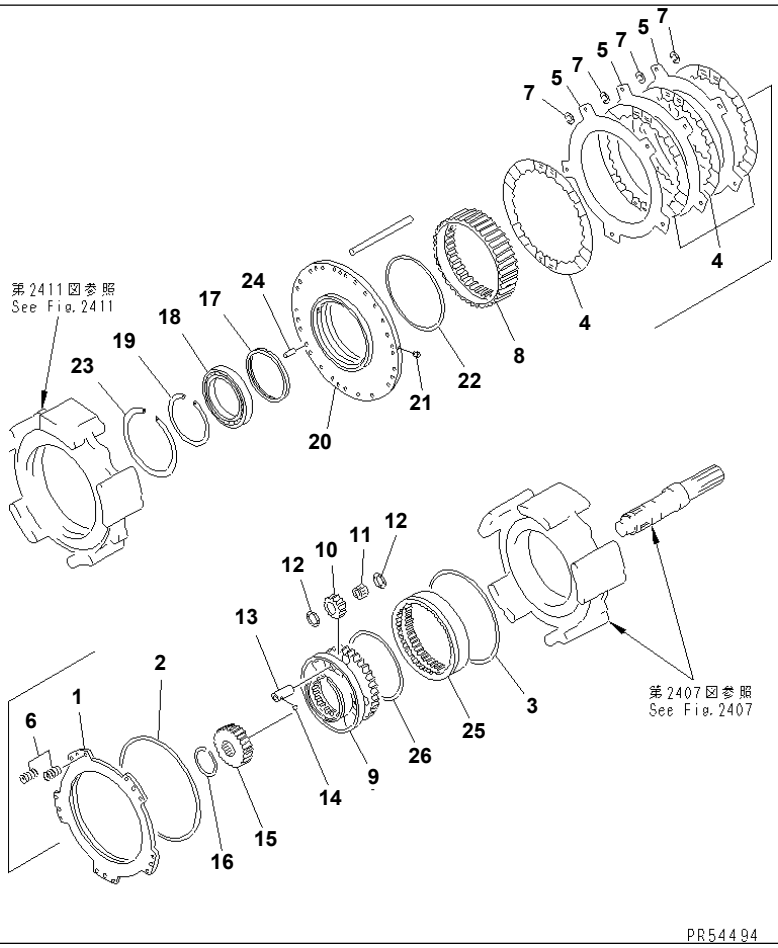

Ref. 2409 **Page 060210**

GD825A-2 S/N 11001-UP

TRANSMISSION (FORWARD CLUTCH)(#11001-(1190))

Item	Part No.	Description	Qty	Options
SERIAL NO. IN ( ) INDICATES TRANSMISSION SERIAL NO.				
	(235-15-00020)	TRANSMISSION ASS'Y	1	SN:11001--(1190)
THIS ASSEMBLY CONSISTS OF ALL PARTS SHOWN IN FIGS.2401 TO 2459.				
1	234-15-22761	· PISTON,FORWARD	1	SN:11001--(1190)
2	562-15-19220	· RING,SEAL	1	SN:11001--(1190)
3	569-15-12860	· RING,SEAL	1	SN:11001--(1190)
4	424-15-12711	· DISC	4	SN:11001--(1190)
5	134-15-12720	· PLATE	3	SN:11001--(1190)
6	125-15-12821	· SPRING¤ (L= 53.0)	10	SN:11001--(1190)
7	175-15-42880	· SPRING	20	SN:11001--(1190)
8	234-15-22650	· GEAR,RING	1	SN:11001--(1190)
9	235-15-22320	· CARRIER	1	SN:(1191)--@
	□234-15-22320	· CARRIER	1	SN:11001--(1190)
10	235-15-12420	· GEAR	4	SN:11001--(1190)
11	09232-02932	· BEARING	4	SN:11001--(1190)
12	09233-12920	· WASHER,THRUST	8	SN:11001--(1190)
13	232-15-12530	· SHAFT	4	SN:11001--(1190)
14	04260-00635	· BALL	4	SN:11001--(1190)
15	235-15-12220	· GEAR	1	SN:11001--(1190)
16	04064-05020	· RING,SNAP	1	SN:11001--(1190)
17	234-15-22570	· SPACER	1	SN:11001--(1190)
18	06000-06928	· BEARING	1	SN:11001--(1190)
19	04070-00140	· RING,SNAP	1	SN:11001--(1190)
	235-15-00220	· CAGE ASS'Y	1	SN:(1191)--@
	□234-15-00220	· CAGE ASS'Y	1	SN:11001--(1190)
20	☆	· · CAGE	1	SN:(1191)--@
	☆	· · CAGE	1	SN:11001--(1190)

Printed By : Dwi Iswanto (airafather6107170)

TRANSMISSION (FORWARD CLUTCH)(#11001-(1190))

Item	Part No.	Description	Qty	Options
21	234-15-12780	· · SCREW	2	SN:11001--(1190)
22	07018-12205	· RING,SEAL	1	SN:11001--(1190)
23	04071-00190	· RING,SNAP	1	SN:11001--(1190)
24	175-15-31210	· PIN,DOWEL	2	SN:11001--(1190)
25	235-15-22640	· GEAR,RING	1	SN:(1191)--@
	□232-15-12640	· GEAR,RING	1	SN:11001--(1190)
26	232-15-19530	· RING,SNAP	1	SN:11001--(1190)

Printed By : Dwi Iswanto (airafather6107170)

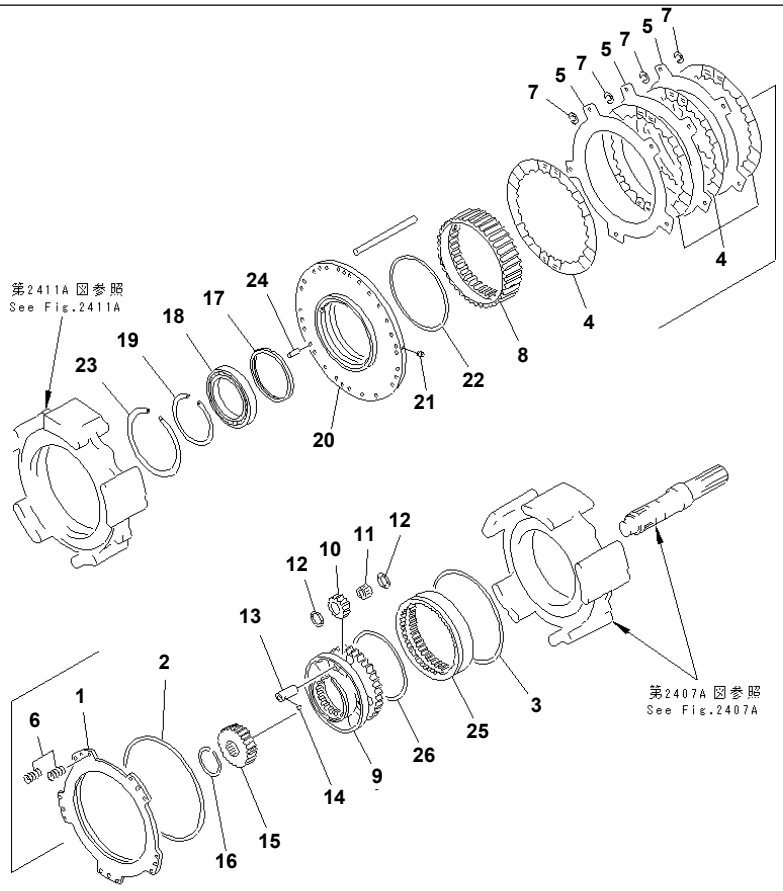

GD825A-2 S/N 11001-UP

TRANSMISSION (FORWARD CLUTCH)(#(1191)-012098)

Item	Part No.	Description	Qty	Options
SERIAL NO. IN ( ) INDICATES TRANSMISSION SERIAL NO.				
	(235-15-00021)	TRANSMISSION ASS'Y	1	SN:(1251)--012098
	(235-15-00020)	TRANSMISSION ASS'Y	1	SN:(1191)--(1250)
THESE ASSEMBLIES CONSIST OF ALL PARTS SHOWN IN FIGS.2401A TO 2459B.				
	(235-15-21011)	· TRANSMISSION ASS'Y,(EXCEPT P.T.O.)	1	SN:(1251)--012098
	(235-15-21010)	· TRANSMISSION ASS'Y,(EXCEPT P.T.O.)	1	SN:(1191)--(1250)
THESE ASSEMBLIES CONSIST OF ALL PARTS SHOWN IN FIGS.2401A¤ 2405A TO 2459B.				
1	234-15-22761	· · PISTON,FORWARD	1	SN:(1191)--012098
2	562-15-19220	· · RING,SEAL	1	SN:(1191)--012098
3	569-15-12860	· · RING,SEAL	1	SN:(1191)--012098
4	424-15-12711	· · DISC	4	SN:(1191)--012098
5	134-15-12720	· · PLATE	3	SN:(1191)--012098
6	125-15-12821	· · SPRING¤ (L= 53.0)	10	SN:(1191)--012098
7	175-15-42880	· · SPRING	20	SN:(1191)--012098
8	235-15-22650	· · GEAR,RING	1	SN:(1191)--012098
9	235-15-22320	· · CARRIER	1	SN:(1191)--012098
10	235-15-12420	· · GEAR	4	SN:(1191)--012098
11	09232-02932	· · BEARING	4	SN:(1191)--012098
12	09233-12920	· · WASHER,THRUST	8	SN:(1191)--012098
13	232-15-12530	· · SHAFT	4	SN:(1191)--012098
14	04260-00635	· · BALL	4	SN:(1191)--012098
15	235-15-12220	· · GEAR	1	SN:(1191)--012098
16	04064-05020	· · RING,SNAP	1	SN:(1191)--012098
17	234-15-22570	· · SPACER	1	SN:(1191)--012098
18	06000-06928	· · BEARING	1	SN:(1191)--012098
19	04070-00140	· · RING,SNAP	1	SN:(1191)--012098
	235-15-00220	· · CAGE ASS'Y	1	SN:(1191)--012098

Printed By : Dwi Iswanto (airafather6107170)

TRANSMISSION (FORWARD CLUTCH)(#(1191)-012098)

Item	Part No.	Description	Qty	Options
20	☆	· · · CAGE	1	SN:(1191)--012098
21	234-15-12780	· · · SCREW	2	SN:(1191)--012098
22	07018-12205	· · RING,SEAL	1	SN:(1191)--012098
23	04071-00190	· · RING,SNAP	1	SN:(1191)--012098
24	175-15-31210	· · PIN,DOWEL	2	SN:(1191)--012098
25	235-15-22640	· · GEAR,RING	1	SN:(1191)--012098
26	232-15-19530	· · RING,SNAP	1	SN:(1191)--012098

Printed By : Dwi Iswanto (airafather6107170)

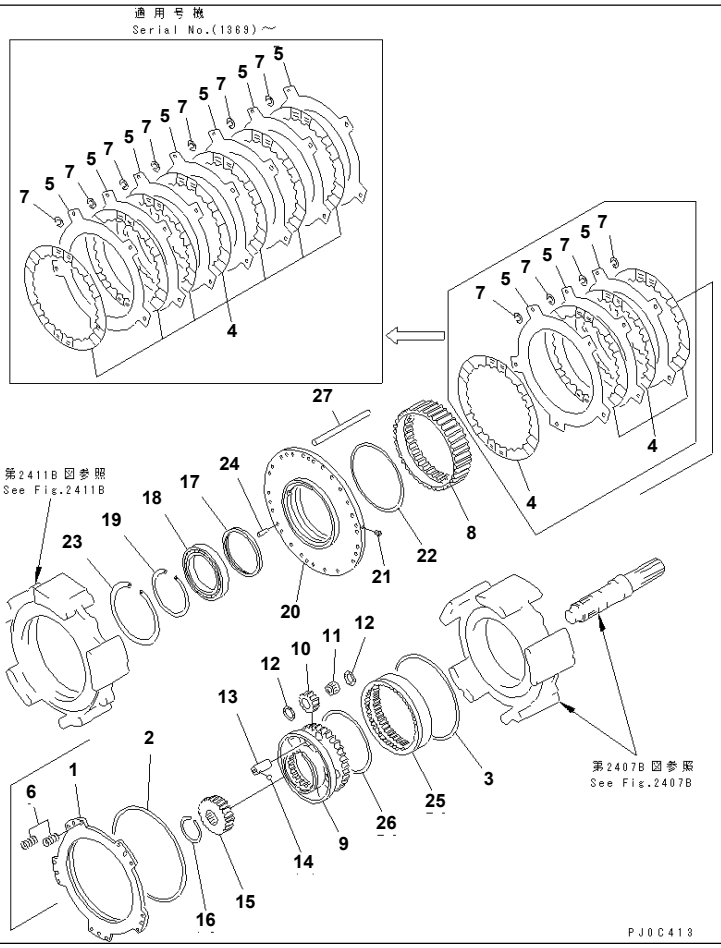

GD825A-2 S/N 11001-UP

TRANSMISSION (FORWARD CLUTCH)(#12099-)

Item	Part No.	Description	Qty	Options
	(235-15-21013)	TRANSMISSION ASS'Y,(EXCEPT P.T.O.)	1	SN:12099--
THIS ASSEMBLY CONSISTS OF ALL PARTS SHOWN IN FIGS.2401B¤ 2405B TO 2459C.				
1	235-15-22740	· PISTON,FORWARD	1	SN:12099--
2	232-15-19220	· RING	1	SN:12099--
3	569-15-12860	· RING,SEAL	1	SN:12099--
4	235-15-22710	· DISC	7	SN:12099--
5	235-15-22720	· PLATE	7	SN:12099--
6	235-15-22920	· SPRING¤ (L= 53.0)	10	SN:12099--
7	175-15-42880	· SPRING	35	SN:12099--
8	235-15-22651	· GEAR,RING	1	SN:12099--
9	235-15-22320	· CARRIER	1	SN:12099--
10	235-15-12420	· GEAR	4	SN:12099--
11	09232-02932	· BEARING	4	SN:12099--
12	09233-12920	· WASHER,THRUST	8	SN:12099--
13	232-15-12530	· SHAFT	4	SN:12099--
14	04260-00635	· BALL	4	SN:12099--
15	235-15-12220	· GEAR	1	SN:12099--
16	04064-05020	· RING,SNAP	1	SN:12099--
17	234-15-22570	· SPACER	1	SN:12099--
18	06000-06928	· BEARING	1	SN:12099--
19	04070-00140	· RING,SNAP	1	SN:12099--
	235-15-00221	· CAGE ASS'Y	1	SN:12099--
20	☆	· · CAGE	1	SN:12099--
21	234-15-12780	· · SCREW	3	SN:12099--
22	07018-12205	· RING,SEAL	1	SN:12099--
23	04071-00190	· RING,SNAP	1	SN:12099--
24	175-15-31210	· PIN,DOWEL	2	SN:12099--

Printed By : Dwi Iswanto (airafather6107170)

TRANSMISSION (FORWARD CLUTCH)(#12099-)

Item	Part No.	Description	Qty	Options
25	235-15-22641	· GEAR,RING	1	SN:12099--
26	232-15-19530	· RING,SNAP	1	SN:12099--
27	145-14-12760	· PIN	5	SN:12099--

Printed By : Dwi Iswanto (airafather6107170)

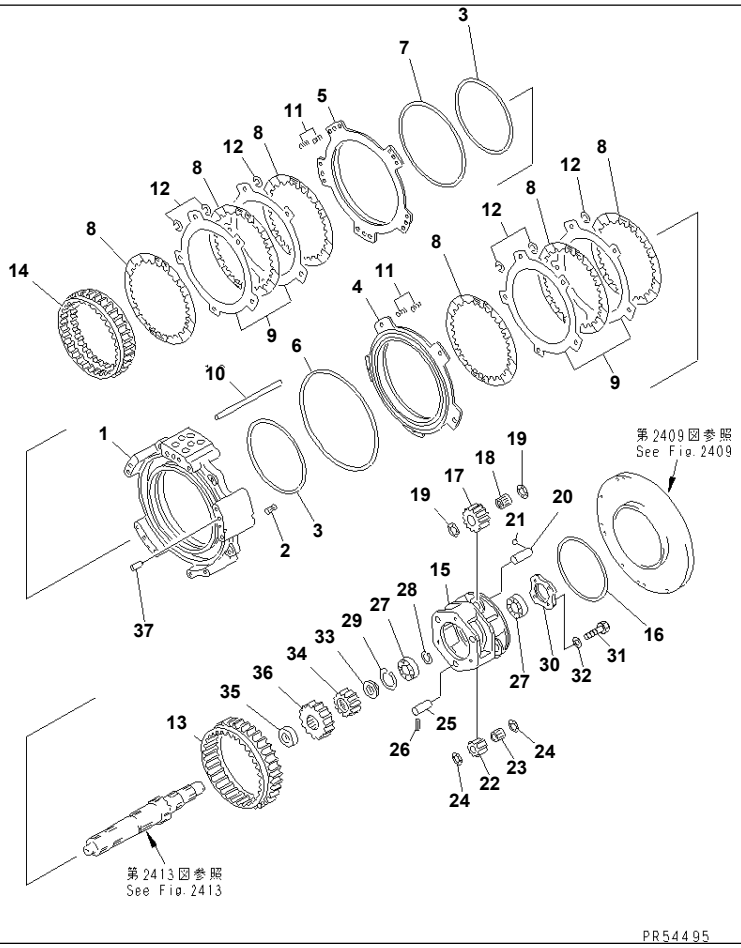

GD825A-2 S/N 11001-UP

TRANSMISSION (4TH AND 3RD CLUTCH)(#11001-(1190))

Item	Part No.	Description	Qty	Options
SERIAL NO. IN ( ) INDICATES TRANSMISSION SERIAL NO.				
	(235-15-00020)	TRANSMISSION ASS'Y	1	SN:11001--(1190)
THIS ASSEMBLY CONSISTS OF ALL PARTS SHOWN IN FIGS.2401 TO 2459.				
1	235-15-11180	· HOUSING,4TH AND 3RD CLUTCH	1	SN:11001--(1190)
2	569-15-41310	· SLEEVE	9	SN:11001--(1190)
3	569-15-12860	· RING,SEAL	2	SN:11001--(1190)
4	234-15-22730	· PISTON,4TH	1	SN:11001--(1190)
5	234-15-22750	· PISTON,3RD	1	SN:11001--(1190)
6	568-15-12850	· RING,SEAL	1	SN:11001--(1190)
7	144-15-22881	· RING,SEAL	1	SN:11001--(1190)
8	424-15-12711	· DISC	6	SN:11001--(1190)
9	134-15-12720	· PLATE	4	SN:11001--(1190)
10	234-15-12770	· PIN,(D=15¤ L=276)	5	SN:11001--(1190)
11	125-15-12860	· SPRING,(L=39.6)	20	SN:11001--(1190)
12	175-15-42880	· SPRING	30	SN:11001--(1190)
13	234-15-22640	· GEAR,RING	1	SN:11001--(1190)
14	234-15-22630	· GEAR,RING	1	SN:11001--(1190)
15	234-15-22330	· CARRIER	1	SN:11001--(1190)
16	07018-12205	· RING,SEAL	1	SN:11001--(1190)
17	235-15-12430	· GEAR	3	SN:11001--(1190)
18	41E-15-19310	· BEARING	3	SN:11001--(1190)
19	09233-13220	· WASHER,THRUST	6	SN:11001--(1190)
20	234-15-22510	· SHAFT	3	SN:11001--(1190)
21	04260-00635	· BALL	3	SN:11001--(1190)
22	235-15-12420	· GEAR	3	SN:11001--(1190)
23	09232-02932	· BEARING	3	SN:11001--(1190)
24	09233-12920	· WASHER,THRUST	6	SN:11001--(1190)

Printed By : Dwi Iswanto (airafather6107170)

TRANSMISSION (4TH AND 3RD CLUTCH)(#11001-(1190))

Item	Part No.	Description	Qty	Options
25	234-15-22520	· SHAFT	3	SN:11001--(1190)
26	04025-00424	· PIN,SPRING	3	SN:11001--(1190)
27	06000-06207	· BEARING	2	SN:11001--(1190)
28	04064-03515	· RING,SNAP	1	SN:11001--(1190)
29	04065-07225	· RING,SNAP	1	SN:11001--(1190)
30	234-15-22390	· HOLDER	1	SN:11001--(1190)
31	01010-51025	· BOLT	4	SN:11001--(1190)
32	01643-31032	· WASHER	4	SN:11001--(1190)
33	234-15-22150	· SPACER	1	SN:11001--(1190)
34	235-15-12230	· GEAR	1	SN:11001--(1190)
35	234-15-22160	· SPACER	1	SN:11001--(1190)
36	235-15-12240	· GEAR	1	SN:11001--(1190)
37	04020-01228	· PIN,DOWEL	2	SN:11001--(1190)

Printed By : Dwi Iswanto (airafather6107170)

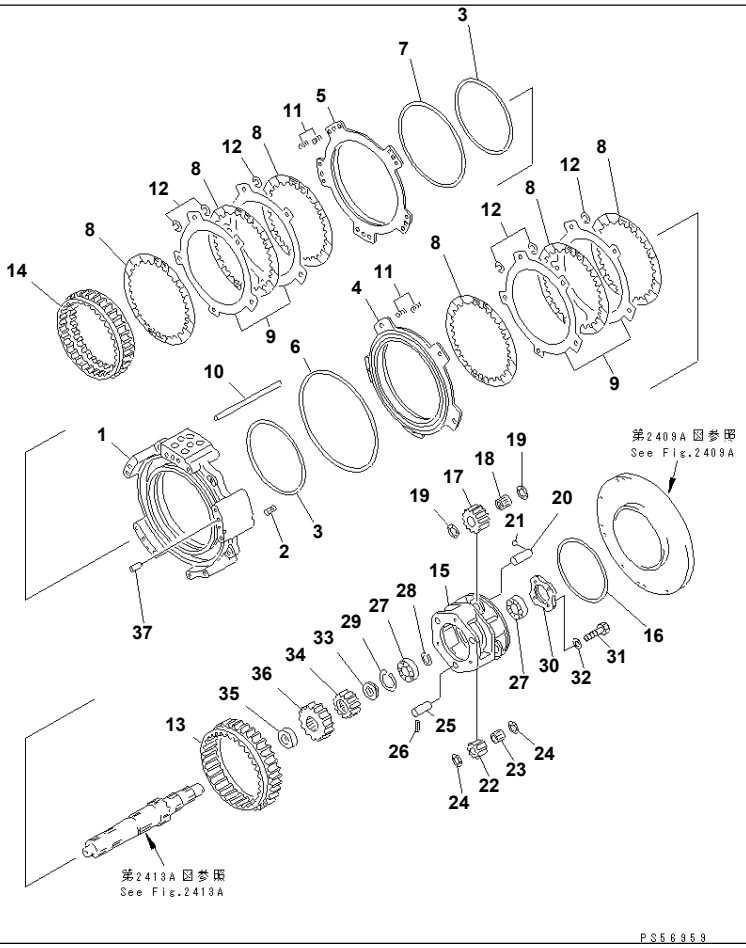

GD825A-2 S/N 11001-UP

TRANSMISSION (4TH AND 3RD CLUTCH)(#(1191)-012098)

Item	Part No.	Description	Qty	Options
SERIAL NO. IN ( ) INDICATES TRANSMISSION SERIAL NO.				
	(235-15-00021)	TRANSMISSION ASS'Y	1	SN:(1251)--012098
	(235-15-00020)	TRANSMISSION ASS'Y	1	SN:(1191)--(1250)
THESE ASSEMBLIES CONSIST OF ALL PARTS SHOWN IN FIGS.2401A TO 2459B.				
	(235-15-21011)	· TRANSMISSION ASS'Y,(EXCEPT P.T.O.)	1	SN:(1251)--012098
	(235-15-21010)	· TRANSMISSION ASS'Y,(EXCEPT P.T.O.)	1	SN:(1191)--(1250)
THESE ASSEMBLIES CONSIST OF ALL PARTS SHOWN IN FIGS.2401A¤ 2405A TO 2459B.				
1	235-15-11180	· · HOUSING,4TH AND 3RD CLUTCH	1	SN:(1191)--012098
2	569-15-41310	· · SLEEVE	9	SN:(1191)--012098
3	569-15-12860	· · RING,SEAL	2	SN:(1191)--012098
4	234-15-22730	· · PISTON,4TH	1	SN:(1191)--012098
5	234-15-22750	· · PISTON,3RD	1	SN:(1191)--012098
6	568-15-12850	· · RING,SEAL	1	SN:(1191)--012098
7	144-15-22881	· · RING,SEAL	1	SN:(1191)--012098
8	424-15-12711	· · DISC	6	SN:(1191)--012098
9	134-15-12720	· · PLATE	4	SN:(1191)--012098
10	234-15-12770	· · PIN,(D=15¤ L=276)	5	SN:(1191)--012098
11	125-15-12860	· · SPRING,(L=39.6)	20	SN:(1191)--012098
12	175-15-42880	· · SPRING	30	SN:(1191)--012098
13	234-15-22640	· · GEAR,RING	1	SN:(1191)--012098
14	234-15-22630	· · GEAR,RING	1	SN:(1191)--012098
15	234-15-22330	· · CARRIER	1	SN:(1191)--012098
16	07018-12205	· · RING,SEAL	1	SN:(1191)--012098
17	235-15-12430	· · GEAR	3	SN:(1191)--012098
18	41E-15-19310	· · BEARING	3	SN:(1191)--012098
19	09233-13220	· · WASHER,THRUST	6	SN:(1191)--012098
20	234-15-22510	· · SHAFT	3	SN:(1191)--012098

Printed By : Dwi Iswanto (airafather6107170)

TRANSMISSION (4TH AND 3RD CLUTCH)(#(1191)-012098)

Item	Part No.	Description	Qty	Options
21	04260-00635	· · BALL	3	SN:(1191)--012098
22	235-15-12420	· · GEAR	3	SN:(1191)--012098
23	09232-02932	· · BEARING	3	SN:(1191)--012098
24	09233-12920	· · WASHER,THRUST	6	SN:(1191)--012098
25	234-15-22520	· · SHAFT	3	SN:(1191)--012098
26	04025-00424	· · PIN,SPRING	3	SN:(1191)--012098
27	06000-06207	· · BEARING	2	SN:(1191)--012098
28	04064-03515	· · RING,SNAP	1	SN:(1191)--012098
29	04065-07225	· · RING,SNAP	1	SN:(1191)--012098
30	234-15-22390	· · HOLDER	1	SN:(1191)--012098
31	01010-81025	· · BOLT	4	SN:(1191)--012098
32	01643-31032	· · WASHER	4	SN:(1191)--012098
33	234-15-22150	· · SPACER	1	SN:(1191)--012098
34	235-15-12230	· · GEAR	1	SN:(1191)--012098
35	234-15-22160	· · SPACER	1	SN:(1191)--012098
36	235-15-12240	· · GEAR	1	SN:(1191)--012098
37	04020-01228	· · PIN,DOWEL	2	SN:(1191)--012098

Printed By : Dwi Iswanto (airafather6107170)

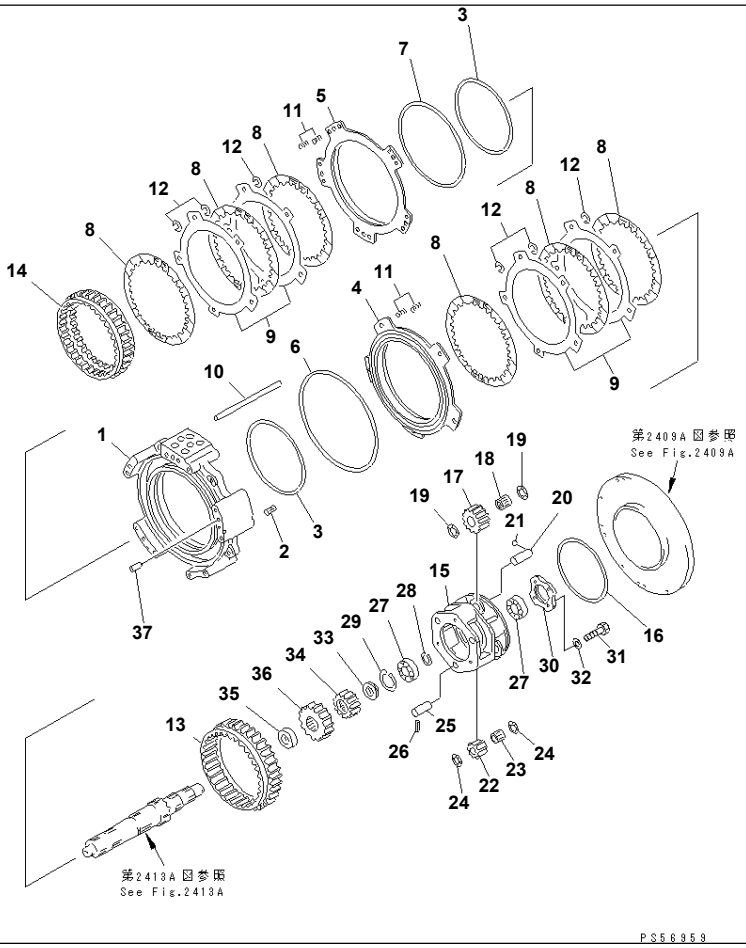

GD825A-2 S/N 11001-UP

TRANSMISSION (4TH AND 3RD CLUTCH)(#12099-)

Item	Part No.	Description	Qty	Options
	(235-15-21013)	TRANSMISSION ASS'Y	1	SN:12099--
THIS ASSEMBLY CONSISTS OF ALL PARTS SHOWN IN FIGS.2401B¤ 2405B TO 2459C.				
1	235-15-21180	· HOUSING,4TH AND 3RD CLUTCH	1	SN:12099--
2	569-15-41310	· SLEEVE	9	SN:12099--
3	569-15-12860	· RING,SEAL	2	SN:12099--
4	234-15-22730	· PISTON,4TH	1	SN:12099--
5	234-15-22750	· PISTON,3RD	1	SN:12099--
6	568-15-12850	· RING,SEAL	1	SN:12099--
7	144-15-22881	· RING,SEAL	1	SN:12099--
8	424-15-12711	· DISC	6	SN:12099--
9	134-15-12720	· PLATE	4	SN:12099--
10	234-15-12770	· PIN,(D=15¤ L=276)	5	SN:12099--
11	125-15-12860	· SPRING,(L=39.6)	20	SN:12099--
12	175-15-42880	· SPRING	30	SN:12099--
13	234-15-22640	· GEAR,RING	1	SN:12099--
14	234-15-22630	· GEAR,RING	1	SN:12099--
15	234-15-22330	· CARRIER	1	SN:12099--
16	07018-12205	· RING,SEAL	1	SN:12099--
17	235-15-12430	· GEAR	3	SN:12099--
18	41E-15-19310	· BEARING	3	SN:12099--
19	09233-13220	· WASHER,THRUST	6	SN:12099--
20	234-15-22510	· SHAFT	3	SN:12099--
21	04260-00635	· BALL	3	SN:12099--
22	235-15-12420	· GEAR	3	SN:12099--
23	09232-02932	· BEARING	3	SN:12099--
24	09233-12920	· WASHER,THRUST	6	SN:12099--
25	234-15-22520	· SHAFT	3	SN:12099--

Printed By : Dwi Iswanto (airafather6107170)

TRANSMISSION (4TH AND 3RD CLUTCH)(#12099-)

Item	Part No.	Description	Qty	Options
26	04025-00424	· PIN,SPRING	3	SN:12099--
27	06000-06207	· BEARING	2	SN:12099--
28	04064-03515	· RING,SNAP	1	SN:12099--
29	04065-07225	· RING,SNAP	1	SN:12099--
30	234-15-22390	· HOLDER	1	SN:12099--
31	01010-81025	· BOLT	4	SN:12099--
32	01643-31032	· WASHER	4	SN:12099--
33	234-15-22150	· SPACER	1	SN:12099--
34	235-15-12230	· GEAR	1	SN:12099--
35	234-15-22160	· SPACER	1	SN:12099--
36	235-15-12240	· GEAR	1	SN:12099--
37	04020-01228	· PIN,DOWEL	2	SN:12099--

Printed By : Dwi Iswanto (airafather6107170)

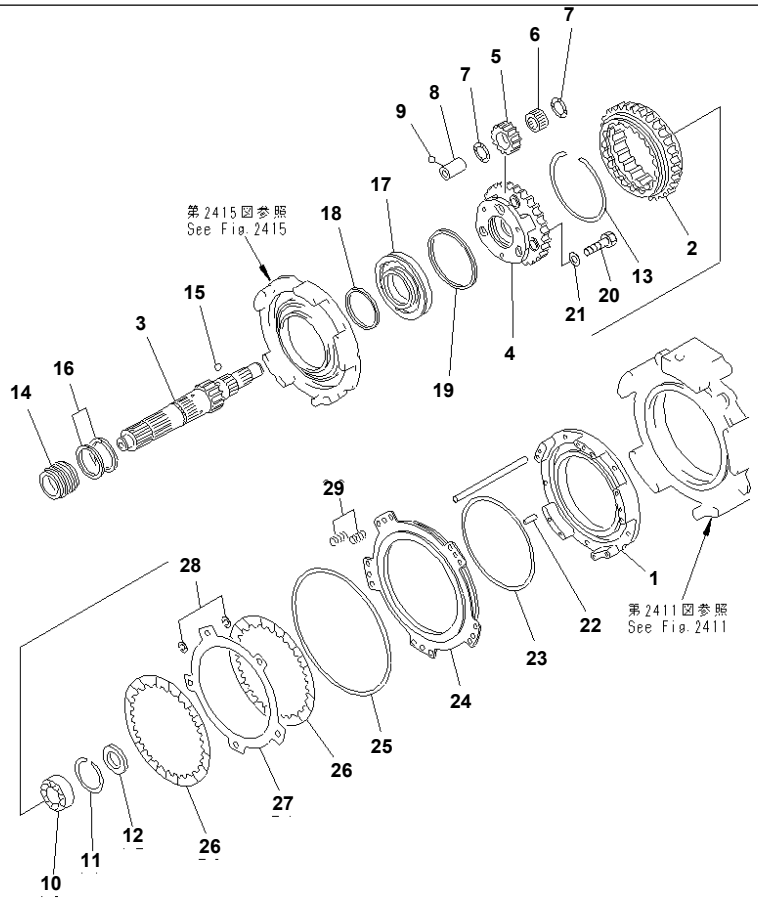

Ref. 2413 **Page 060270**

GD825A-2 S/N 11001-UP

TRANSMISSION (2ND CLUTCH)(#11001-(1190))

Item	Part No.	Description	Qty	Options
SERIAL NO. IN ( ) INDICATES TRANSMISSION SERIAL NO.				
	(235-15-00020)	TRANSMISSION ASS'Y	1	SN:11001--(1190)
THIS ASSEMBLY CONSISTS OF ALL PARTS SHOWN IN FIGS.2401 TO 2459.				
1	234-15-21170	· HOUSING,2ND	1	SN:11001--(1190)
2	232-15-12620	· GEAR,RING	1	SN:11001--(1190)
3	234-15-22120	· SHAFT	1	SN:11001--(1190)
4	234-15-22340	· CARRIER	1	SN:11001--(1190)
5	235-15-12440	· GEAR	3	SN:11001--(1190)
6	09232-03825	· BEARING	3	SN:11001--(1190)
7	09233-13820	· WASHER,THRUST	6	SN:11001--(1190)
8	234-15-22530	· SHAFT	3	SN:11001--(1190)
9	04260-00635	· BALL	3	SN:11001--(1190)
10	234-15-29310	· BEARING	1	SN:11001--(1190)
11	04077-00090	· RING,SNAP	1	SN:11001--(1190)
12	234-15-22170	· SPACER	1	SN:11001--(1190)
13	232-15-19540	· RING,SNAP	1	SN:11001--(1190)
14	234-15-22180	· COLLAR	1	SN:11001--(1190)
15	04260-00635	· BALL	1	SN:11001--(1190)
16	07018-20904	· RING,SEAL	2	SN:11001--(1190)
17	234-15-22370	· CAGE	1	SN:11001--(1190)
18	07018-01104	· RING,SEAL	1	SN:11001--(1190)
19	07018-11805	· RING,SEAL	1	SN:11001--(1190)
20	01010-81065	· BOLT	3	SN:11001--(1190)
21	01643-31032	· WASHER	3	SN:11001--(1190)
22	04020-01228	· PIN,DOWEL	2	SN:11001--(1190)
23	569-15-12860	· RING,SEAL	1	SN:11001--(1190)
24	234-15-22730	· PISTON,2ND	1	SN:11001--(1190)

Printed By : Dwi Iswanto (airafather6107170)

TRANSMISSION (2ND CLUTCH)(#11001-(1190))

Item	Part No.	Description	Qty	Options
25	568-15-12850	· RING,SEAL	1	SN:11001--(1190)
26	424-15-12711	· DISC	2	SN:11001--(1190)
27	134-15-12720	· PLATE	1	SN:11001--(1190)
28	175-15-42880	· SPRING	10	SN:11001--(1190)
29	125-15-12860	· SPRING,(L=39.6)	10	SN:11001--(1190)

Printed By : Dwi Iswanto (airafather6107170)

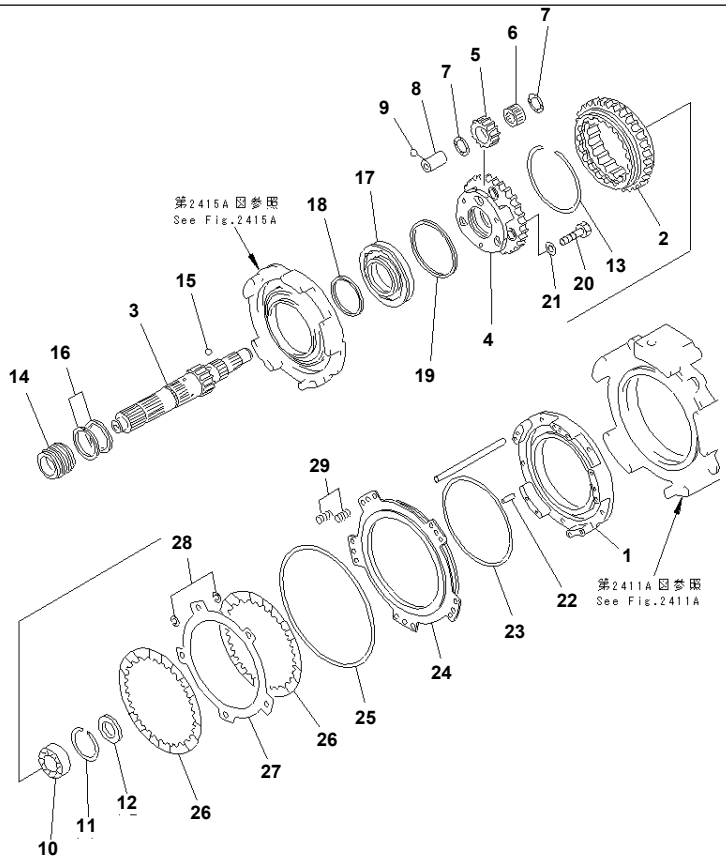

GD825A-2 S/N 11001-UP

TRANSMISSION (2ND CLUTCH)(#(1191)-012098)

Item	Part No.	Description	Qty	Options
SERIAL NO. IN ( ) INDICATES TRANSMISSION SERIAL NO.				
	(235-15-00021)	TRANSMISSION ASS'Y	1	SN:(1251)--012098
	(235-15-00020)	TRANSMISSION ASS'Y	1	SN:(1191)--(1250)
THESE ASSEMBLIES CONSIST OF ALL PARTS SHOWN IN FIGS.2401A TO 2459B.				
	(235-15-21011)	· TRANSMISSION ASS'Y,(EXCEPT P.T.O.)	1	SN:(1251)--012098
	(235-15-21010)	· TRANSMISSION ASS'Y,(EXCEPT P.T.O.)	1	SN:(1191)--(1250)
THESE ASSEMBLIES CONSIST OF ALL PARTS SHOWN IN FIGS.2401A¤ 2405A TO 2459B.				
1	234-15-21170	· · HOUSING,2ND	1	SN:(1191)--012098
2	232-15-12620	· · GEAR,RING	1	SN:(1191)--012098
3	234-15-22120	· · SHAFT	1	SN:(1191)--012098
4	234-15-22340	· · CARRIER	1	SN:(1191)--012098
5	235-15-12440	· · GEAR	3	SN:(1191)--012098
6	09232-03825	· · BEARING	3	SN:(1191)--012098
7	09233-13820	· · WASHER,THRUST	6	SN:(1191)--012098
8	234-15-22530	· · SHAFT	3	SN:(1191)--012098
9	04260-00635	· · BALL	3	SN:(1191)--012098
10	234-15-29310	· · BEARING	1	SN:(1191)--012098
11	04077-00090	· · RING,SNAP	1	SN:(1191)--012098
12	234-15-22170	· · SPACER	1	SN:(1191)--012098
13	232-15-19540	· · RING,SNAP	1	SN:(1191)--012098
14	234-15-22180	· · COLLAR	1	SN:(1191)--012098
15	04260-00635	· · BALL	1	SN:(1191)--012098
16	07018-20904	· · RING,SEAL	2	SN:(1191)--012098
17	234-15-22370	· · CAGE	1	SN:(1191)--012098
18	07018-01104	· · RING,SEAL	1	SN:(1191)--012098
19	07018-11805	· · RING,SEAL	1	SN:(1191)--012098
20	01010-81065	· · BOLT	3	SN:(1191)--012098

Printed By : Dwi Iswanto (airafather6107170)

TRANSMISSION (2ND CLUTCH)(#(1191)-012098)

Item	Part No.	Description	Qty	Options
21	01643-31032	· · WASHER	3	SN:(1191)--012098
22	04020-01228	· · PIN,DOWEL	2	SN:(1191)--012098
23	569-15-12860	· · RING,SEAL	1	SN:(1191)--012098
24	234-15-22730	· · PISTON,2ND	1	SN:(1191)--012098
25	568-15-12850	· · RING,SEAL	1	SN:(1191)--012098
26	424-15-12711	· · DISC	2	SN:(1191)--012098
27	134-15-12720	· · PLATE	1	SN:(1191)--012098
28	175-15-42880	· · SPRING	10	SN:(1191)--012098
29	125-15-12860	· · SPRING,(L=39.6)	10	SN:(1191)--012098

Printed By : Dwi Iswanto (airafather6107170)

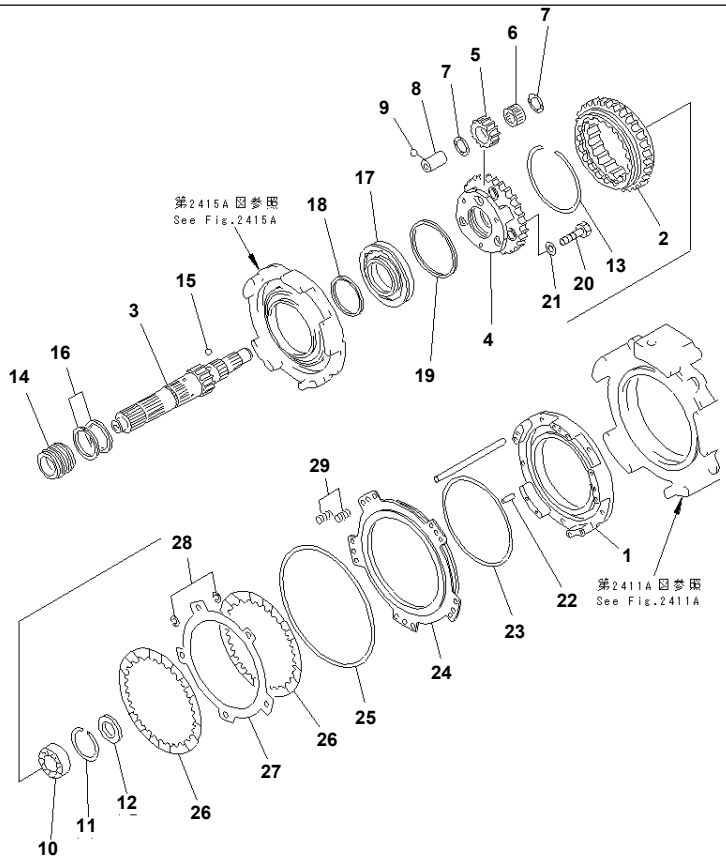

GD825A-2 S/N 11001-UP

TRANSMISSION (2ND CLUTCH)(#12099-)

Item	Part No.	Description	Qty	Options
	(235-15-21013)	TRANSMISSION ASS'Y	1	SN:12099--
THIS ASSEMBLY CONSISTS OF ALL PARTS SHOWN IN FIGS.2401B¤ 2405B TO 2459C.				
1	235-15-21170	· HOUSING,2ND	1	SN:12099--
2	232-15-12620	· GEAR,RING	1	SN:12099--
3	234-15-22120	· SHAFT	1	SN:12099--
4	234-15-22340	· CARRIER	1	SN:12099--
5	235-15-12440	· GEAR	3	SN:12099--
6	09232-03825	· BEARING	3	SN:12099--
7	09233-13820	· WASHER,THRUST	6	SN:12099--
8	234-15-22530	· SHAFT	3	SN:12099--
9	04260-00635	· BALL	3	SN:12099--
10	234-15-29310	· BEARING	1	SN:12099--
11	04077-00090	· RING,SNAP	1	SN:12099--
12	234-15-22170	· SPACER	1	SN:12099--
13	232-15-19540	· RING,SNAP	1	SN:12099--
14	234-15-22180	· COLLAR	1	SN:12099--
15	04260-00635	· BALL	1	SN:12099--
16	07018-20904	· RING,SEAL	2	SN:12099--
17	234-15-22370	· CAGE	1	SN:12099--
18	07018-01104	· RING,SEAL	1	SN:12099--
19	07018-11805	· RING,SEAL	1	SN:12099--
20	01010-81065	· BOLT	3	SN:12099--
21	01643-31032	· WASHER	3	SN:12099--
22	04020-01228	· PIN,DOWEL	2	SN:12099--
23	569-15-12860	· RING,SEAL	1	SN:12099--
24	234-15-22730	· PISTON,2ND	1	SN:12099--
25	568-15-12850	· RING,SEAL	1	SN:12099--

Printed By : Dwi Iswanto (airafather6107170)

TRANSMISSION (2ND CLUTCH)(#12099-)

Item	Part No.	Description	Qty	Options
26	424-15-12711	· DISC	2	SN:12099--
27	134-15-12720	· PLATE	1	SN:12099--
28	175-15-42880	· SPRING	10	SN:12099--
29	125-15-12860	· SPRING,(L=39.6)	10	SN:12099--

Printed By : Dwi Iswanto (airafather6107170)

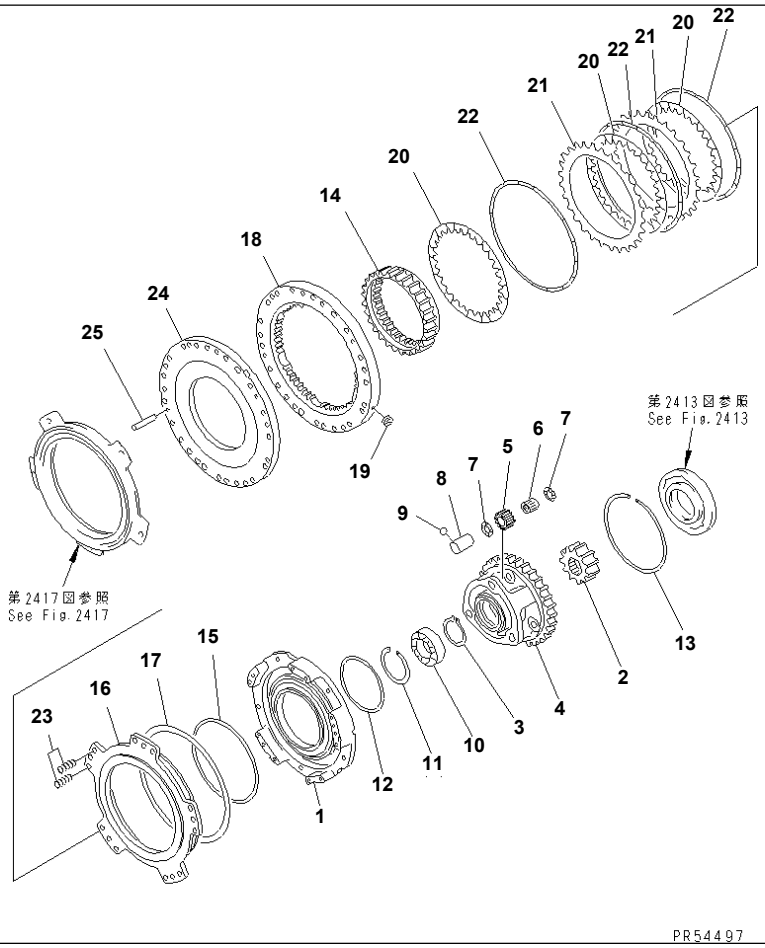

Ref. 2415 **Page 060300**

GD825A-2 S/N 11001-UP
TRANSMISSION (1ST CLUTCH)(#11001-(1190))

Item	Part No.	Description	Qty	Options
SERIAL NO. IN ( ) INDICATES TRANSMISSION SERIAL NO.				
	(235-15-00020)	TRANSMISSION ASS'Y	1	SN:11001--(1190)
THIS ASSEMBLY CONSISTS OF ALL PARTS SHOWN IN FIGS.2401 TO 2459.				
1	234-15-21160	· HOUSING,1ST	1	SN:11001--(1190)
2	235-15-12250	· GEAR	1	SN:11001--(1190)
3	04064-06525	· RING,SNAP	1	SN:11001--(1190)
4	234-15-22350	· CARRIER	1	SN:11001--(1190)
5	235-15-12450	· GEAR	3	SN:11001--(1190)
6	421-15-19411	· BEARING	3	SN:(1132)--(1190)
	□421-15-19410	· BEARING	3	SN:11001--(1131)
7	235-15-12590	· WASHER,THRUST	6	SN:11001--(1190)
8	234-15-22540	· SHAFT	3	SN:11001--(1190)
9	04260-00635	· BALL	3	SN:11001--(1190)
10	234-15-29310	· BEARING	1	SN:11001--(1190)
11	04077-00090	· RING,SNAP	1	SN:11001--(1190)
12	103-15-12220	· RING,SNAP	1	SN:11001--(1190)
13	232-15-19540	· RING,SNAP	1	SN:11001--(1190)
14	234-15-22620	· GEAR,RING	1	SN:11001--(1190)
15	562-15-19320	· RING,SEAL	1	SN:11001--(1190)
16	234-15-22740	· PISTON,1ST	1	SN:11001--(1190)
17	562-15-19220	· RING,SEAL	1	SN:11001--(1190)
	234-15-00210	· PLATE ASS'Y	1	SN:11001--(1190)
18	☆	· · PLATE	1	SN:11001--(1190)
19	234-15-12790	· · SCREW	4	SN:11001--(1190)
20	23S-15-12710	· DISC	3	SN:11001--(1190)
21	232-15-12720	· PLATE	2	SN:11001--(1190)
22	232-15-12960	· SPRING	3	SN:11001--(1190)

Printed By : Dwi Iswanto (airafather6107170)

TRANSMISSION (1ST CLUTCH)(#11001-(1190))

Item	Part No.	Description	Qty	Options
23	125-15-12860	· SPRING,(L=39.6)	10	SN:11001--(1190)
24	234-15-21140	· PLATE	1	SN:11001--(1190)
25	125-15-11250	· PIN,DOWEL	2	SN:11001--(1190)

Printed By : Dwi Iswanto (airafather6107170)

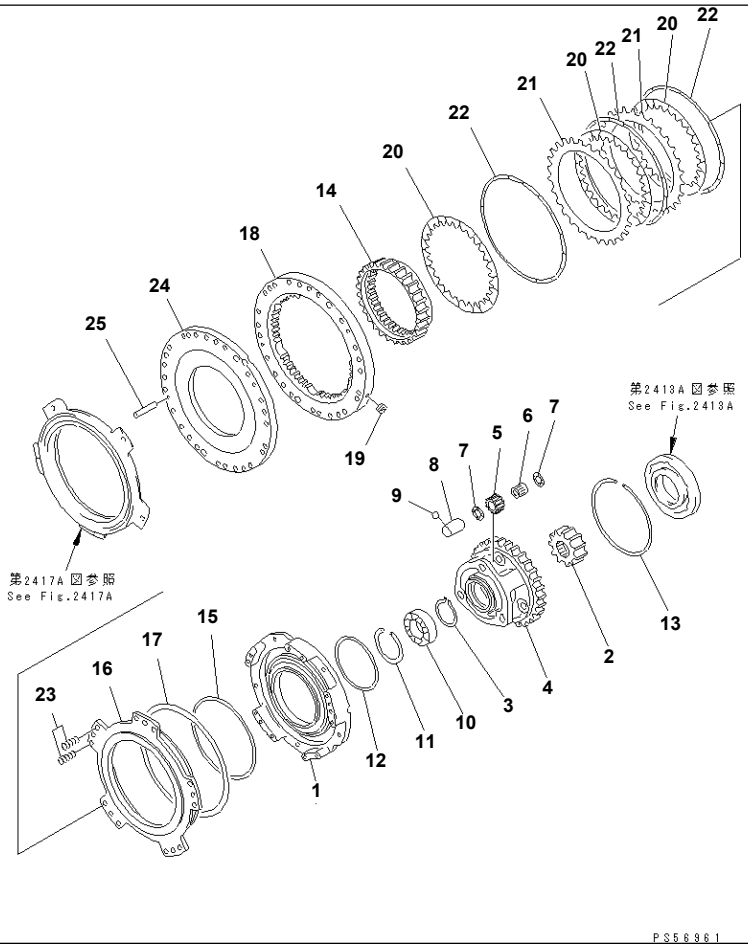

Ref. 2415A Page 060310

GD825A-2 S/N 11001-UP

TRANSMISSION (1ST CLUTCH)(#(1191)-012098)

Item	Part No.	Description	Qty	Options
SERIAL NO. IN ( ) INDICATES TRANSMISSION SERIAL NO.				
	(235-15-00021)	TRANSMISSION ASS'Y	1	SN:(1251)--012098
	(235-15-00020)	TRANSMISSION ASS'Y	1	SN:(1191)--(1250)
THESE ASSEMBLIES CONSIST OF ALL PARTS SHOWN IN FIGS.2401A TO 2459B.				
	(235-15-21011)	· TRANSMISSION ASS'Y,(EXCEPT P.T.O.)	1	SN:(1251)--012098
	(235-15-21010)	· TRANSMISSION ASS'Y,(EXCEPT P.T.O.)	1	SN:(1191)--(1250)
THESE ASSEMBLIES CONSIST OF ALL PARTS SHOWN IN FIGS.2401A¤ 2405A TO 2459B.				
1	234-15-21160	· · HOUSING,1ST	1	SN:(1191)--012098
2	235-15-12250	· · GEAR	1	SN:(1191)--012098
3	04064-06525	· · RING,SNAP	1	SN:(1191)--012098
4	234-15-22350	· · CARRIER	1	SN:(1191)--012098
5	235-15-12450	· · GEAR	3	SN:(1191)--012098
6	421-15-19411	· · BEARING	3	SN:(1191)--012098
7	235-15-12590	· · WASHER,THRUST	6	SN:(1191)--012098
8	234-15-22540	· · SHAFT	3	SN:(1191)--012098
9	04260-00635	· · BALL	3	SN:(1191)--012098
10	234-15-29310	· · BEARING	1	SN:(1191)--012098
11	04077-00090	· · RING,SNAP	1	SN:(1191)--012098
12	103-15-12220	· · RING,SNAP	1	SN:(1191)--012098
13	232-15-19540	· · RING,SNAP	1	SN:(1191)--012098
14	234-15-22620	· · GEAR,RING	1	SN:(1191)--012098
15	562-15-19320	· · RING,SEAL	1	SN:(1191)--012098
16	234-15-22740	· · PISTON,1ST	1	SN:(1191)--012098
17	562-15-19220	· · RING,SEAL	1	SN:(1191)--012098
	234-15-00210	· · PLATE ASS'Y	1	SN:(1191)--012098
18	☆	· · · PLATE	1	SN:(1191)--012098
19	234-15-12790	· · · SCREW	4	SN:(1191)--012098

Ref. 2415A Page 060310

TRANSMISSION (1ST CLUTCH)(#(1191)-012098)

Item	Part No.	Description	Qty	Options
20	23S-15-12710	· · DISC	3	SN:(1191)--012098
21	232-15-12720	· · PLATE	2	SN:(1191)--012098
22	232-15-12960	· · SPRING	3	SN:(1191)--012098
23	125-15-12860	· · SPRING,(L=39.6)	10	SN:(1191)--012098
24	234-15-21140	· · PLATE	1	SN:(1191)--012098
25	125-15-11250	· · PIN,DOWEL	2	SN:(1191)--012098

Printed By : Dwi Iswanto (airafather6107170)

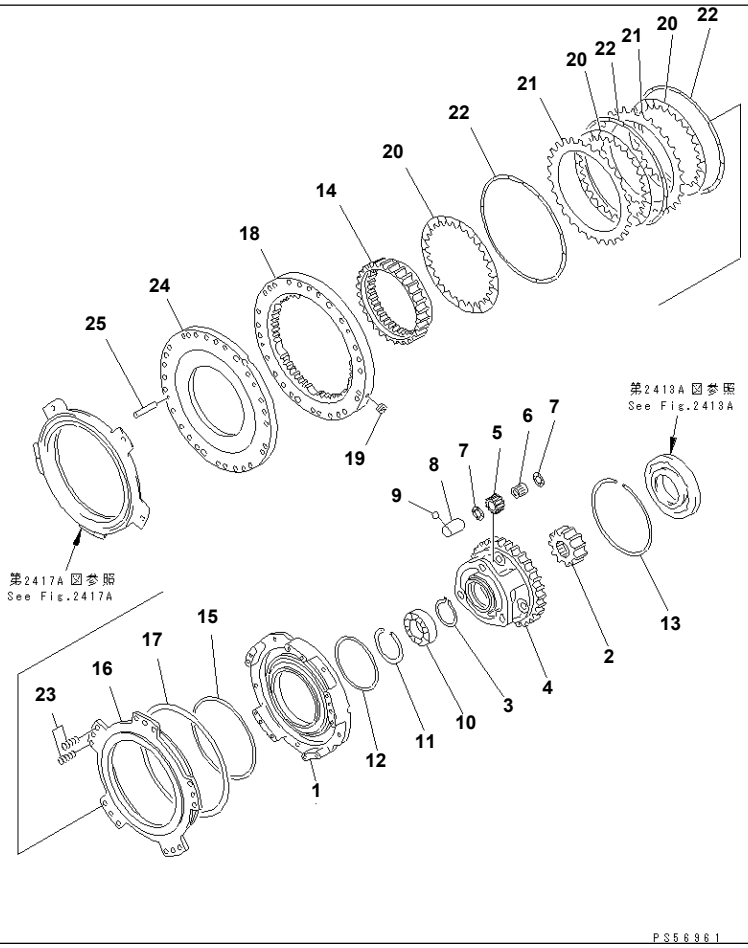

GD825A-2 S/N 11001-UP

TRANSMISSION (1ST CLUTCH)(#12099-)

Item	Part No.	Description	Qty	Options
SERIAL NO. IN ( ) INDICATES TRANSMISSION SERIAL NO.				
	(235-15-21013)	TRANSMISSION ASS'Y,(EXCEPT P.T.O.)	1	SN:12099--
THIS ASSEMBLY CONSISTS OF ALL PARTS SHOWN IN FIGS.2401B¤ 2405B TO 2459C.				
1	235-15-21160	· HOUSING,1ST	1	SN:12099--
2	235-15-12250	· GEAR	1	SN:12099--
3	04064-06525	· RING,SNAP	1	SN:12099--
4	234-15-22350	· CARRIER	1	SN:12099--
5	235-15-12450	· GEAR	3	SN:12099--
6	235-15-29410	· BEARING	3	SN:(1376)--
	421-15-19411	· BEARING	3	SN:12099--(1375)
7	421-15-12360	· WASHER,THRUST	6	SN:(1376)--
	□235-15-12590	· WASHER,THRUST	6	SN:12099--(1375)
8	235-15-22520	· SHAFT	3	SN:(1376)--
	234-15-22540	· SHAFT	3	SN:12099--(1375)
9	04260-00635	· BALL	3	SN:12099--
10	234-15-29310	· BEARING	1	SN:12099--
11	04077-00090	· RING,SNAP	1	SN:12099--
12	103-15-12220	· RING,SNAP	1	SN:12099--
13	232-15-19540	· RING,SNAP	1	SN:12099--
14	234-15-22620	· GEAR,RING	1	SN:12099--
15	562-15-19320	· RING,SEAL	1	SN:12099--
16	234-15-22740	· PISTON,1ST	1	SN:12099--
17	562-15-19220	· RING,SEAL	1	SN:12099--
	234-15-00211	· PLATE ASS'Y	1	SN:12099--
18	☆	· · PLATE	1	SN:12099--
19	234-15-12790	· · SCREW	5	SN:12099--
20	23S-15-12710	· DISC	3	SN:12099--

Printed By : Dwi Iswanto (airafather6107170)

TRANSMISSION (1ST CLUTCH)(#12099-)

Item	Part No.	Description	Qty	Options
21	232-15-12720	· PLATE	2	SN:12099--
22	232-15-12960	· SPRING	3	SN:12099--
23	125-15-12860	· SPRING,(L=39.6)	10	SN:12099--
24	234-15-21140	· PLATE	1	SN:12099--
25	125-15-11250	· PIN,DOWEL	2	SN:12099--

Printed By : Dwi Iswanto (airafather6107170)

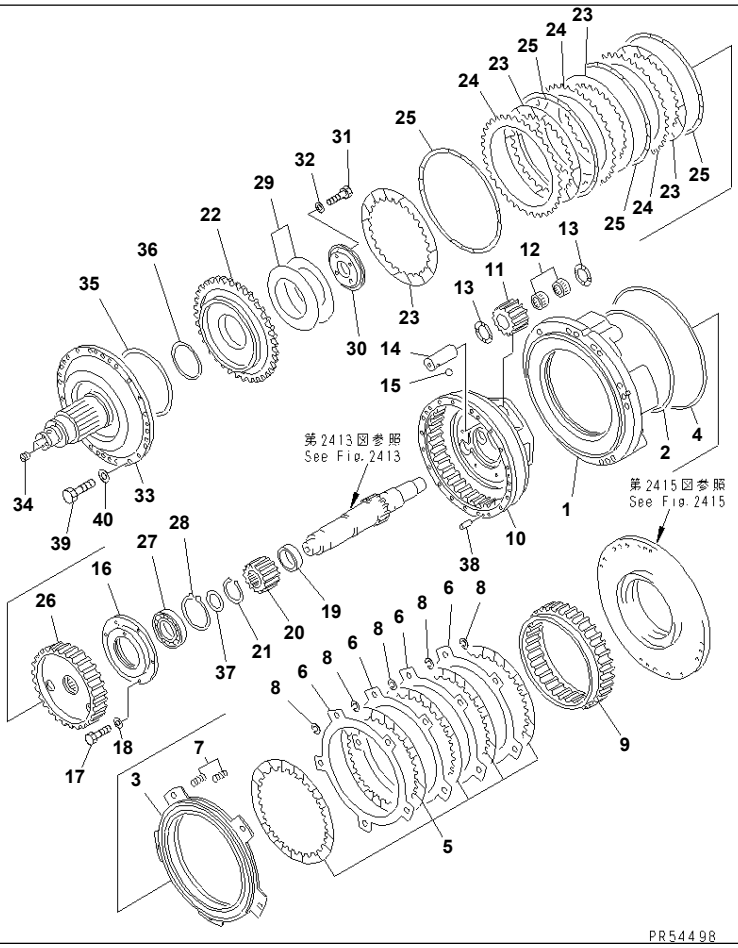

Ref. 2417 **Page 060330**

GD825A-2 S/N 11001-UP

TRANSMISSION (LOW AND HIGHT CLUTCH)(#11001-(1190))

Item	Part No.	Description	Qty	Options
SERIAL NO. IN ( ) INDICATES TRANSMISSION SERIAL NO.				
	(235-15-00020)	TRANSMISSION ASS'Y	1	SN:11001--(1190)
THIS ASSEMBLY CONSISTS OF ALL PARTS SHOWN IN FIGS.2401 TO 2459.				
1	235-15-11130	· HOUSING,LOW AND HIGHT	1	SN:11001--(1190)
2	569-15-12860	· RING,SEAL	1	SN:11001--(1190)
3	234-15-22730	· PISTON,LOW	1	SN:11001--(1190)
4	568-15-12850	· RING,SEAL	1	SN:11001--(1190)
5	424-15-12711	· DISC	5	SN:11001--(1190)
6	134-15-12720	· PLATE	4	SN:11001--(1190)
7	175-15-42781	· SPRING,(L=66)	10	SN:11001--(1190)
8	175-15-42880	· SPRING	25	SN:11001--(1190)
9	234-15-22610	· GEAR,RING	1	SN:11001--(1190)
10	234-15-22360	· CARRIER	1	SN:11001--(1190)
11	235-15-12460	· GEAR	3	SN:11001--(1190)
12	09232-03825	· BEARING	6	SN:11001--(1190)
13	09233-13820	· WASHER,THRUST	6	SN:11001--(1190)
14	234-15-22550	· SHAFT	3	SN:11001--(1190)
15	04260-00635	· BALL	3	SN:11001--(1190)
16	234-15-22380	· CAGE	1	SN:11001--(1190)
17	01010-51025	· BOLT	6	SN:11001--(1190)
18	01643-31032	· WASHER	6	SN:11001--(1190)
19	234-15-22190	· SPACER	1	SN:11001--(1190)
20	235-15-12260	· GEAR	1	SN:11001--(1190)
21	04064-05520	· RING,SNAP	1	SN:11001--(1190)
22	234-15-22770	· PISTON,HIGHT	1	SN:11001--(1190)
23	23S-15-12710	· DISC	4	SN:11001--(1190)
24	232-15-12720	· PLATE	3	SN:11001--(1190)

Printed By : Dwi Iswanto (airafather6107170)

TRANSMISSION (LOW AND HIGHT CLUTCH)(#11001-(1190))

Item	Part No.	Description	Qty	Options
25	232-15-12960	· SPRING	4	SN:11001--(1190)
26	234-15-22270	· GEAR	1	SN:11001--(1190)
27	06000-06015	· BEARING	1	SN:11001--(1190)
28	04064-07525	· RING,SNAP	1	SN:11001--(1190)
29	232-15-12940	· SPRING	2	SN:11001--(1190)
30	234-15-22810	· CAGE	1	SN:11001--(1190)
31	01010-51025	· BOLT	4	SN:11001--(1190)
32	01643-31032	· WASHER	4	SN:11001--(1190)
	234-15-00240	· SHAFT ASS'Y	1	SN:11001--(1190)
33	☆	· · SHAFT	1	SN:11001--(1190)
34	568-15-11380	· · PLUG	2	SN:11001--(1190)
35	234-15-29210	· RING,SEAL	1	SN:11001--(1190)
36	234-15-29220	· RING,SEAL	1	SN:11001--(1190)
37	07018-10352	· RING,SEAL	1	SN:11001--(1190)
38	04020-01228	· PIN,DOWEL	4	SN:11001--(1190)
39	01010-51230	· BOLT	20	SN:11001--(1190)
40	01643-31232	· WASHER	20	SN:11001--(1190)

Printed By : Dwi Iswanto (airafather6107170)

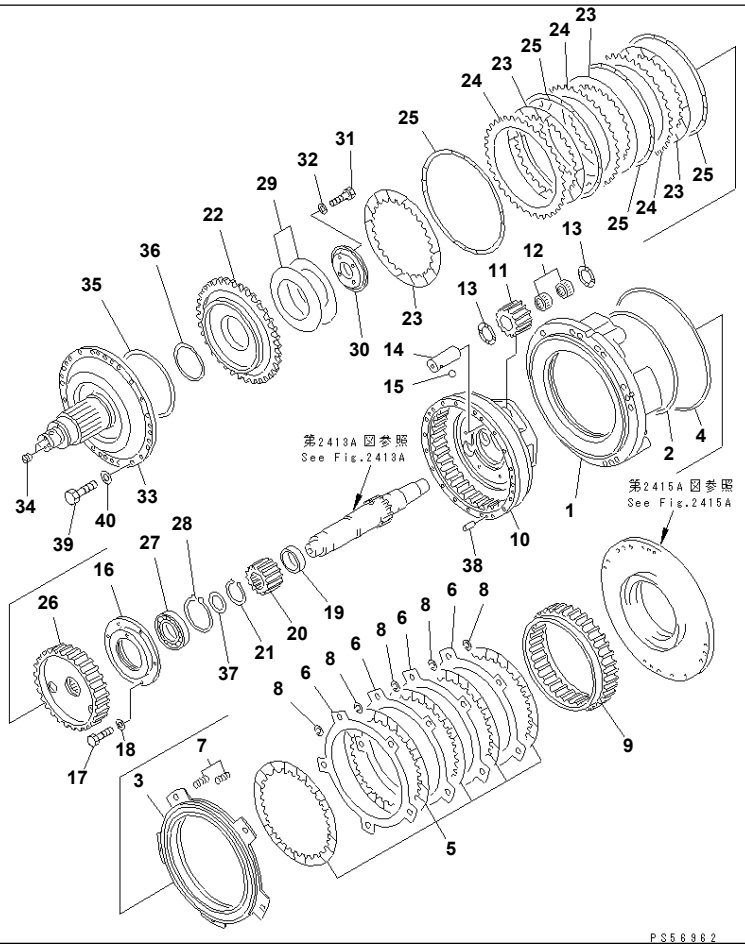

Ref. 2417A **Page 060340**

GD825A-2 S/N 11001-UP

TRANSMISSION (LOW AND HIGHT CLUTCH)(#(1191)-012098)

Item	Part No.	Description	Qty	Options
SERIAL NO. IN ( ) INDICATES TRANSMISSION SERIAL NO.				
	(235-15-00021)	TRANSMISSION ASS'Y	1	SN:(1251)--012098
	(235-15-00020)	TRANSMISSION ASS'Y	1	SN:(1191)--(1250)
THESE ASSEMBLIES CONSIST OF ALL PARTS SHOWN IN FIGS.2401A TO 2459B.				
	(235-15-21011)	· TRANSMISSION ASS'Y,(EXCEPT P.T.O.)	1	SN:(1251)--012098
	(235-15-21010)	· TRANSMISSION ASS'Y,(EXCEPT P.T.O.)	1	SN:(1191)--(1250)
THESE ASSEMBLIES CONSIST OF ALL PARTS SHOWN IN FIGS.2401A¤ 2405A TO 2459B.				
1	235-15-11130	· · HOUSING,LOW AND HIGHT	1	SN:(1191)--012098
2	569-15-12860	· · RING,SEAL	1	SN:(1191)--012098
3	234-15-22730	· · PISTON,LOW	1	SN:(1191)--012098
4	568-15-12850	· · RING,SEAL	1	SN:(1191)--012098
5	424-15-12711	· · DISC	5	SN:(1191)--012098
6	134-15-12720	· · PLATE	4	SN:(1191)--012098
7	175-15-42781	· · SPRING,(L=66)	10	SN:(1191)--012098
8	175-15-42880	· · SPRING	25	SN:(1191)--012098
9	234-15-22610	· · GEAR,RING	1	SN:(1191)--012098
10	234-15-22360	· · CARRIER	1	SN:(1191)--012098
11	235-15-12460	· · GEAR	3	SN:(1191)--012098
12	09232-03825	· · BEARING	6	SN:(1191)--012098
13	09233-13820	· · WASHER,THRUST	6	SN:(1191)--012098
14	234-15-22550	· · SHAFT	3	SN:(1191)--012098
15	04260-00635	· · BALL	3	SN:(1191)--012098
16	234-15-22380	· · CAGE	1	SN:(1191)--012098
17	01010-81025	· · BOLT	6	SN:(1191)--012098
18	01643-31032	· · WASHER	6	SN:(1191)--012098
19	234-15-22190	· · SPACER	1	SN:(1191)--012098
20	235-15-12260	· · GEAR	1	SN:(1191)--012098

Printed By : Dwi Iswanto (airafather6107170)

TRANSMISSION (LOW AND HIGHT CLUTCH)(#(1191)-012098)

Item	Part No.	Description	Qty	Options
21	04064-05520	· · RING,SNAP	1	SN:(1191)--012098
22	234-15-22770	· · PISTON,HIGHT	1	SN:(1191)--012098
23	23S-15-12710	· · DISC	4	SN:(1191)--012098
24	232-15-12720	· · PLATE	3	SN:(1191)--012098
25	232-15-12960	· · SPRING	4	SN:(1191)--012098
26	234-15-22270	· · GEAR	1	SN:(1191)--012098
27	06000-06015	· · BEARING	1	SN:(1191)--012098
28	04064-07525	· · RING,SNAP	1	SN:(1191)--012098
29	232-15-12940	· · SPRING	2	SN:(1191)--012098
30	234-15-22810	· · CAGE	1	SN:(1191)--012098
31	01010-81025	· · BOLT	4	SN:(1191)--012098
32	01643-31032	· · WASHER	4	SN:(1191)--012098
	234-15-00240	· · SHAFT ASS'Y	1	SN:(1191)--012098
33	☆	· · · SHAFT	1	SN:(1191)--012098
34	568-15-11380	· · · PLUG	2	SN:(1191)--012098
35	234-15-29210	· · RING,SEAL	1	SN:(1191)--012098
36	234-15-29220	· · RING,SEAL	1	SN:(1191)--012098
37	07018-10352	· · RING,SEAL	1	SN:(1191)--012098
38	04020-01228	· · PIN,DOWEL	4	SN:(1191)--012098
39	01010-81230	· · BOLT	20	SN:(1191)--012098
40	01643-31232	· · WASHER	20	SN:(1191)--012098

Printed By : Dwi Iswanto (airafather6107170)

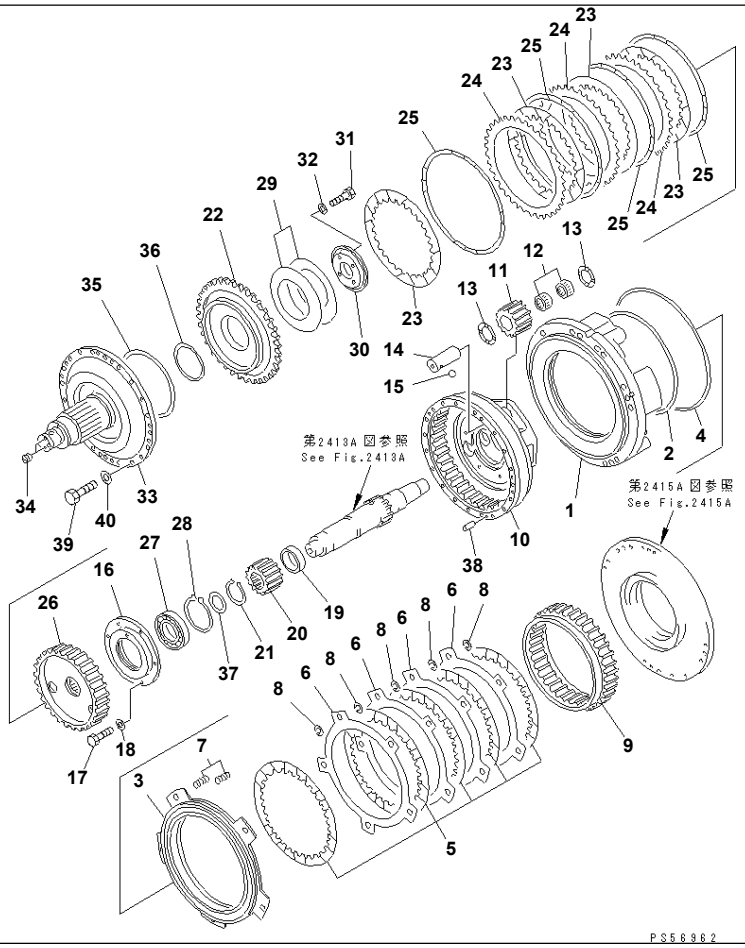

GD825A-2 S/N 11001-UP

TRANSMISSION (LOW AND HIGHT CLUTCH)(#12099-)

Item	Part No.	Description	Qty	Options
	(235-15-21013)	TRANSMISSION ASS'Y,(EXCEPT P.T.O.)	1	SN:12099--
THIS ASSEMBLY CONSISTS OF ALL PARTS SHOWN IN FIGS.2401B¤ 2405B TO 2459C.				
1	235-15-11130	· HOUSING,LOW AND HIGHT	1	SN:12099--
2	569-15-12860	· RING,SEAL	1	SN:12099--
3	234-15-22730	· PISTON,LOW	1	SN:12099--
4	568-15-12850	· RING,SEAL	1	SN:12099--
5	424-15-12711	· DISC	5	SN:12099--
6	134-15-12720	· PLATE	4	SN:12099--
7	175-15-42781	· SPRING,(L=66)	10	SN:12099--
8	175-15-42880	· SPRING	25	SN:12099--
9	234-15-22610	· GEAR,RING	1	SN:12099--
10	234-15-22360	· CARRIER	1	SN:12099--
11	235-15-12460	· GEAR	3	SN:12099--
12	09232-03825	· BEARING	6	SN:12099--
13	09233-13820	· WASHER,THRUST	6	SN:12099--
14	234-15-22550	· SHAFT	3	SN:12099--
15	04260-00635	· BALL	3	SN:12099--
16	234-15-22380	· CAGE	1	SN:12099--
17	01010-81025	· BOLT	6	SN:12099--
18	01643-31032	· WASHER	6	SN:12099--
19	234-15-22190	· SPACER	1	SN:12099--
20	235-15-12260	· GEAR	1	SN:12099--
21	04064-05520	· RING,SNAP	1	SN:12099--
22	234-15-22770	· PISTON,HIGHT	1	SN:12099--
23	23S-15-12710	· DISC	4	SN:12099--
24	232-15-12720	· PLATE	3	SN:12099--
25	232-15-12960	· SPRING	4	SN:12099--

Printed By : Dwi Iswanto (airafather6107170)

TRANSMISSION (LOW AND HIGHT CLUTCH)(#12099-)

Item	Part No.	Description	Qty	Options
26	234-15-22270	· GEAR	1	SN:12099--
27	06000-06015	· BEARING	1	SN:12099--
28	04064-07525	· RING,SNAP	1	SN:12099--
29	232-15-12940	· SPRING	2	SN:12099--
30	234-15-22810	· CAGE	1	SN:12099--
31	01010-81025	· BOLT	4	SN:12099--
32	01643-31032	· WASHER	4	SN:12099--
	234-15-00240	· SHAFT ASS'Y	1	SN:12099--
33	☆	· · SHAFT	1	SN:12099--
34	568-15-11380	· · PLUG	2	SN:12099--
35	234-15-29210	· RING,SEAL	1	SN:12099--
36	234-15-29220	· RING,SEAL	1	SN:12099--
37	07018-10352	· RING,SEAL	1	SN:12099--
38	04020-01228	· PIN,DOWEL	4	SN:12099--
39	01010-81230	· BOLT	20	SN:12099--
40	01643-31232	· WASHER	20	SN:12099--

Printed By : Dwi Iswanto (airafather6107170)

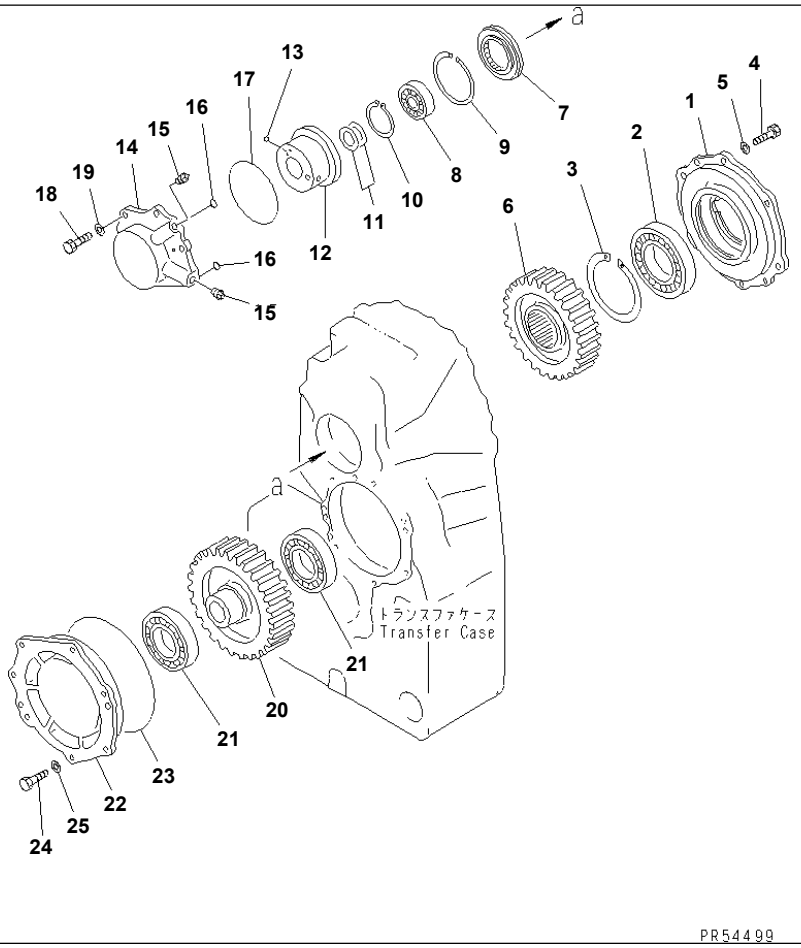

PR54499

GD825A-2 S/N 11001-UP

TRANSMISSION (OUTPUT SHAFT) (1/2)(#11001-(1190))

Item	Part No.	Description	Qty	Options
SERIAL NO. IN ( ) INDICATES TRANSMISSION SERIAL NO.				
	(235-15-00020)	TRANSMISSION ASS'Y	1	SN:11001--(1190)
THIS ASSEMBLY CONSISTS OF ALL PARTS SHOWN IN FIGS.2401 TO 2459.				
1	235-15-13290	· CAGE	1	SN:11001--(1190)
2	281-15-13931	· BEARING	1	SN:11001--(1190)
3	04071-00150	· RING,SNAP	1	SN:11001--(1190)
4	01010-51235	· BOLT	6	SN:11001--(1190)
5	01643-31232	· WASHER	6	SN:11001--(1190)
6	235-15-13210	· GEAR	1	SN:11001--(1190)
7	235-15-12140	· SPACER	1	SN:11001--(1190)
8	234-15-29330	· BEARING	1	SN:11001--(1190)
9	04077-00130	· RING,SNAP	1	SN:11001--(1190)
10	04064-07525	· RING,SNAP	1	SN:11001--(1190)
11	07018-20452	· RING,SEAL	2	SN:11001--(1190)
12	235-15-13250	· COLLAR	1	SN:11001--(1190)
13	04260-00635	· BALL	1	SN:11001--(1190)
	235-15-00120	· CAGE ASS'Y	1	SN:11001--(1190)
14	☆	· · CAGE	1	SN:11001--(1190)
15	07042-20415	· · PLUG	2	SN:11001--(1190)
16	07000-73025	· O-RING	2	SN:11001--(1190)
17	07000-05145	· O-RING	1	SN:11001--(1190)
18	01010-51235	· BOLT	6	SN:11001--(1190)
19	01643-31232	· WASHER	6	SN:11001--(1190)
20	235-15-13220	· GEAR	1	SN:11001--(1190)
21	234-15-29340	· BEARING	2	SN:11001--(1190)
22	235-15-13140	· CAGE	1	SN:11001--(1190)
23	07000-05240	· O-RING	1	SN:11001--(1190)

Printed By : Dwi Iswanto (airafather6107170)

TRANSMISSION (OUTPUT SHAFT) (1/2)(#11001-(1190))

Item	Part No.	Description	Qty	Options
24	01010-51235	· BOLT	7	SN:11001--(1190)
25	01643-31232	· WASHER	7	SN:11001--(1190)

Printed By : Dwi Iswanto (airafather6107170)

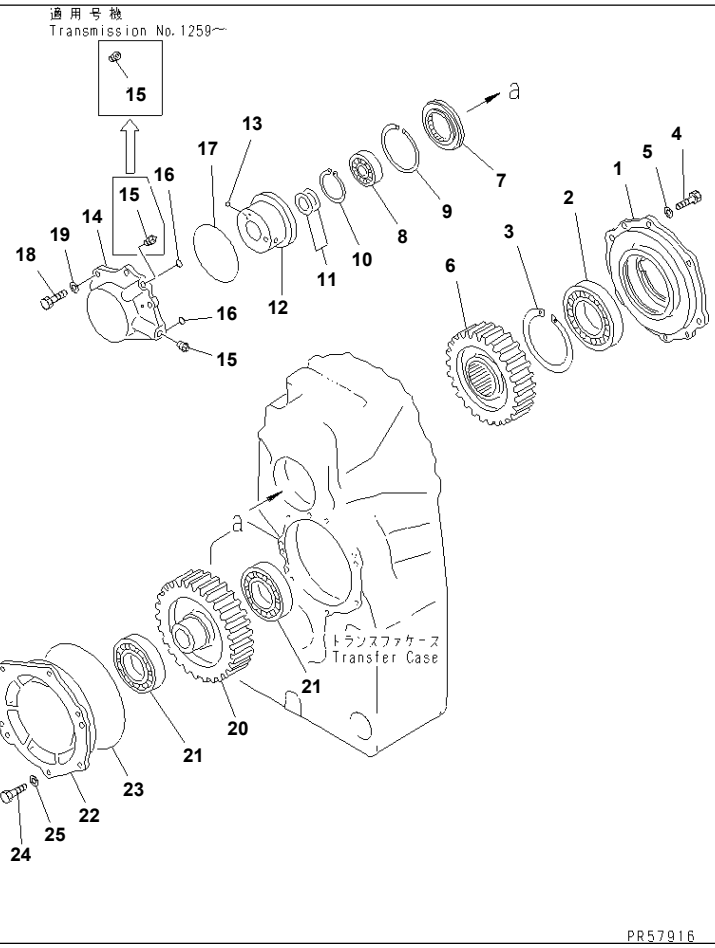

Ref. 2419A Page 060370

GD825A-2 S/N 11001-UP

TRANSMISSION (OUTPUT SHAFT) (1/2)(#(1191)-012098)

Item	Part No.	Description	Qty	Options
SERIAL NO. IN ( ) INDICATES TRANSMISSION SERIAL NO.				
	(235-15-00021)	TRANSMISSION ASS'Y	1	SN:(1251)--012098
	(235-15-00020)	TRANSMISSION ASS'Y	1	SN:(1191)--(1250)
THESE ASSEMBLIES CONSIST OF ALL PARTS SHOWN IN FIGS.2401A TO 2459B.				
	(235-15-21011)	· TRANSMISSION ASS'Y,(EXCEPT P.T.O.)	1	SN:(1251)--012098
	(235-15-21010)	· TRANSMISSION ASS'Y,(EXCEPT P.T.O.)	1	SN:(1191)--(1250)
THESE ASSEMBLIES CONSIST OF ALL PARTS SHOWN IN FIGS.2401A¤ 2405A TO 2459B.				
1	235-15-13290	· · CAGE	1	SN:(1191)--012098
2	281-15-13931	· · BEARING	1	SN:(1191)--012098
3	04071-00150	· · RING,SNAP	1	SN:(1191)--012098
4	01010-81235	· · BOLT	6	SN:(1191)--012098
5	01643-31232	· · WASHER	6	SN:(1191)--012098
6	235-15-13210	· · GEAR	1	SN:(1191)--012098
7	235-15-12140	· · SPACER	1	SN:(1191)--012098
8	234-15-29330	· · BEARING	1	SN:(1191)--012098
9	04077-00130	· · RING,SNAP	1	SN:(1191)--012098
10	04064-07525	· · RING,SNAP	1	SN:(1191)--012098
11	07018-20452	· · RING,SEAL	2	SN:(1191)--012098
12	235-15-13250	· · COLLAR	1	SN:(1191)--012098
13	04260-00635	· · BALL	1	SN:(1191)--012098
	235-15-00120	· · CAGE ASS'Y	1	SN:(1191)--012098
14	☆	· · · CAGE	1	SN:(1191)--012098
15	07043-70415	· · · PLUG	2	SN:(1259)--012098
	07042-20415	· · · PLUG	2	SN:(1191)--(1258)
16	07000-73025	· · O-RING	2	SN:(1191)--012098
17	07000-05145	· · O-RING	1	SN:(1191)--012098
18	01010-81235	· · BOLT	6	SN:(1191)--012098

Ref. 2419A Page 060370

TRANSMISSION (OUTPUT SHAFT) (1/2)(#(1191)-012098)

Item	Part No.	Description	Qty	Options
19	01643-31232	· · WASHER	6	SN:(1191)--012098
20	235-15-13220	· · GEAR	1	SN:(1191)--012098
21	234-15-29340	· · BEARING	2	SN:(1191)--012098
22	235-15-13140	· · CAGE	1	SN:(1191)--012098
23	07000-05240	· · O-RING	1	SN:(1191)--012098
24	01010-81235	· · BOLT	7	SN:(1191)--012098
25	01643-31232	· · WASHER	7	SN:(1191)--012098

Printed By : Dwi Iswanto (airafather6107170)

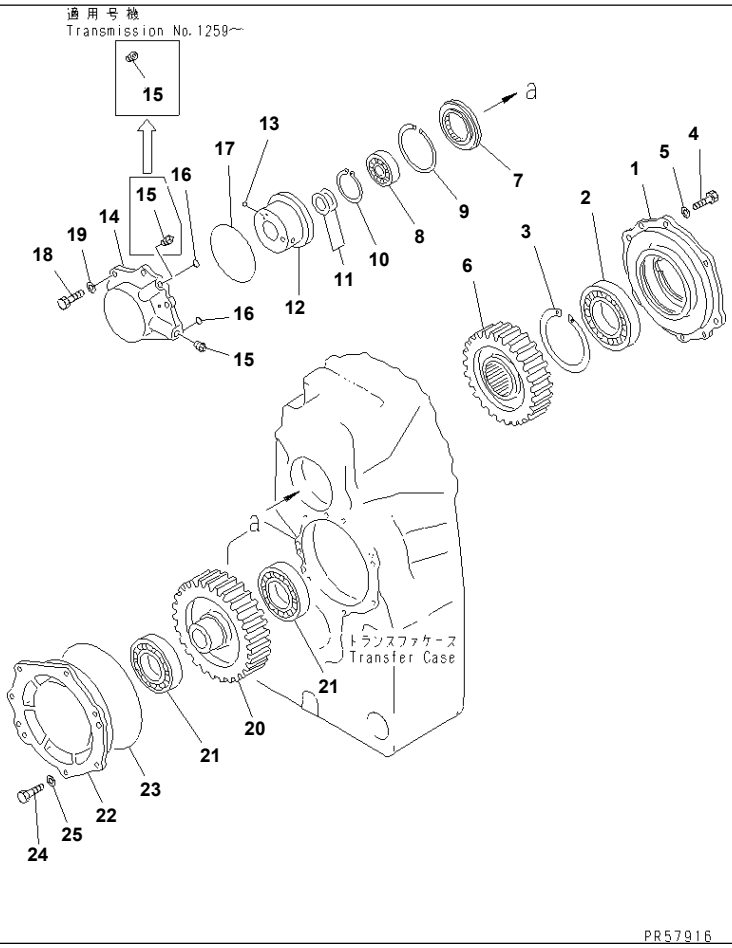

GD825A-2 S/N 11001-UP

TRANSMISSION (OUTPUT SHAFT) (1/2)(#12099-)

Item	Part No.	Description	Qty	Options
	(235-15-21013)	TRANSMISSION ASS'Y,(EXCEPT P.T.O.)	1	SN:12099--
THIS ASSEMBLY CONSISTS OF ALL PARTS SHOWN IN FIGS.2401B¤ 2405B TO 2459C.				
1	235-15-13290	· CAGE	1	SN:12099--
2	281-15-13931	· BEARING	1	SN:12099--
3	04071-00150	· RING,SNAP	1	SN:12099--
4	01010-81235	· BOLT	6	SN:12099--
5	01643-31232	· WASHER	6	SN:12099--
6	235-15-13210	· GEAR	1	SN:12099--
7	235-15-12140	· SPACER	1	SN:12099--
8	234-15-29330	· BEARING	1	SN:12099--
9	04077-00130	· RING,SNAP	1	SN:12099--
10	04064-07525	· RING,SNAP	1	SN:12099--
11	07018-20452	· RING,SEAL	2	SN:12099--
12	235-15-13250	· COLLAR	1	SN:12099--
13	04260-00635	· BALL	1	SN:12099--
	235-15-00120	· CAGE ASS'Y	1	SN:12099--
14	☆	· · CAGE	1	SN:12099--
15	07043-70415	· · PLUG	2	SN:12099--
16	07000-73025	· O-RING	2	SN:12099--
17	07000-05145	· O-RING	1	SN:12099--
18	01010-81235	· BOLT	6	SN:12099--
19	01643-31232	· WASHER	6	SN:12099--
20	235-15-13220	· GEAR	1	SN:12099--
21	234-15-29340	· BEARING	2	SN:12099--
22	235-15-13140	· CAGE	1	SN:12099--
23	07000-05240	· O-RING	1	SN:12099--
24	01010-81235	· BOLT	7	SN:12099--

Ref. 2419B Page 060380

Printed By : Dwi Iswanto (airafather6107170)

TRANSMISSION (OUTPUT SHAFT) (1/2)(#12099-)

Item	Part No.	Description	Qty	Options
25	01643-31232	· WASHER	7	SN:12099--

Printed By : Dwi Iswanto (airafather6107170)

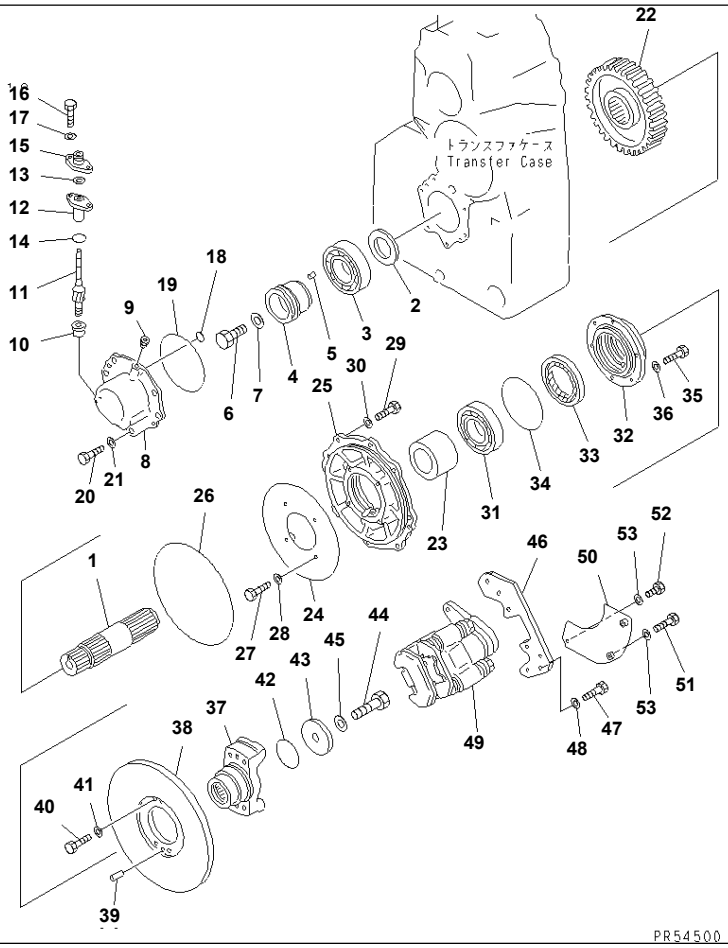

GD825A-2 S/N 11001-UP

TRANSMISSION (OUTPUT SHAFT) (2/2)(#11001-(1190))

Item	Part No.	Description	Qty	Options
SERIAL NO. IN ( ) INDICATES TRANSMISSION SERIAL NO.				
	(235-15-00020)	TRANSMISSION ASS'Y	1	SN:11001--(1190)
THIS ASSEMBLY CONSISTS OF ALL PARTS SHOWN IN FIGS.2401 TO 2459.				
1	235-15-13310	· SHAFT	1	SN:11001--(1190)
2	287-15-13360	· SPACER	1	SN:11001--(1190)
3	234-15-29340	· BEARING	1	SN:11001--(1190)
4	235-15-13410	· WORM	1	SN:11001--(1190)
5	04020-00820	· PIN,DOWEL	1	SN:11001--(1190)
6	01050-52465	· BOLT	1	SN:11001--(1190)
7	01643-32460	· WASHER	1	SN:11001--(1190)
8	235-15-13150	· COVER	1	SN:11001--(1190)
9	07043-00108	· PLUG	1	SN:11001--(1190)
10	281-15-13490	· BUSHING	1	SN:11001--(1190)
11	235-15-13420	· SHAFT	1	SN:11001--(1190)
12	281-15-13431	· BUSHING	1	SN:11001--(1190)
13	281-15-13820	· SEAL,OIL	1	SN:11001--(1190)
14	07000-73038	· O-RING	1	SN:11001--(1190)
15	281-15-13470	· FLANGE	1	SN:11001--(1190)
16	01010-50835	· BOLT	2	SN:11001--(1190)
17	01643-30823	· WASHER	2	SN:11001--(1190)
18	07000-71007	· O-RING	1	SN:11001--(1190)
19	07000-05155	· O-RING	1	SN:11001--(1190)
20	01010-51235	· BOLT	6	SN:11001--(1190)
21	01643-31232	· WASHER	6	SN:11001--(1190)
22	235-15-13230	· GEAR	1	SN:11001--(1190)
23	235-15-13260	· COLLAR	1	SN:11001--(1190)
24	235-15-13281	· PLATE	1	SN:11001--(1190)

Printed By : Dwi Iswanto (airafather6107170)

TRANSMISSION (OUTPUT SHAFT) (2/2)(#11001-(1190))

Item	Part No.	Description	Qty	Options
25	235-15-13160	· CAGE	1	SN:11001--(1190)
26	07000-05315	· O-RING	1	SN:11001--(1190)
27	01010-50850	· BOLT	4	SN:11001--(1190)
28	01643-30823	· WASHER	4	SN:11001--(1190)
29	01010-51235	· BOLT	8	SN:11001--(1190)
30	01643-31232	· WASHER	8	SN:11001--(1190)
31	234-15-29350	· BEARING	1	SN:11001--(1190)
32	235-15-13170	· COVER	1	SN:11001--(1190)
33	07012-10105	· SEAL,OIL	1	SN:11001--(1190)
34	07000-05165	· O-RING	1	SN:11001--(1190)
35	01010-51235	· BOLT	6	SN:11001--(1190)
36	01643-31232	· WASHER	6	SN:11001--(1190)
37	235-15-13270	· COUPLING	1	SN:11001--(1190)
38	235-15-13350	· PLATE	1	SN:11001--(1190)
39	04020-01638	· PIN,DOWEL	2	SN:11001--(1190)
40	01050-51640	· BOLT	4	SN:11001--(1190)
41	01643-31645	· WASHER	4	SN:11001--(1190)
42	07000-05075	· O-RING	1	SN:11001--(1190)
43	566-15-42160	· HOLDER	1	SN:11001--(1190)
44	01051-52400	· BOLT	1	SN:11001--(1190)
45	01643-32460	· WASHER	1	SN:11001--(1190)
46	235-15-13361	· BRACKET	1	SN:11001--(1190)
47	01010-61645	· BOLT	4	SN:11001--(1190)
48	01643-31645	· WASHER	4	SN:11001--(1190)
49	(235-15-13371)	· CALIPER ASS'Y	1	SN:(1144)--(1190)
	(□235-15-13370)	· CALIPER ASS'Y	1	SN:11001--(1143)
50	235-15-13390	· PLATE	1	SN:11001--(1190)
51	01010-51240	· BOLT	2	SN:11001--(1190)
52	01010-51220	· BOLT	1	SN:11001--(1190)
53	01643-31232	· WASHER	3	SN:11001--(1190)

Printed By : Dwi Iswanto (airafather6107170)

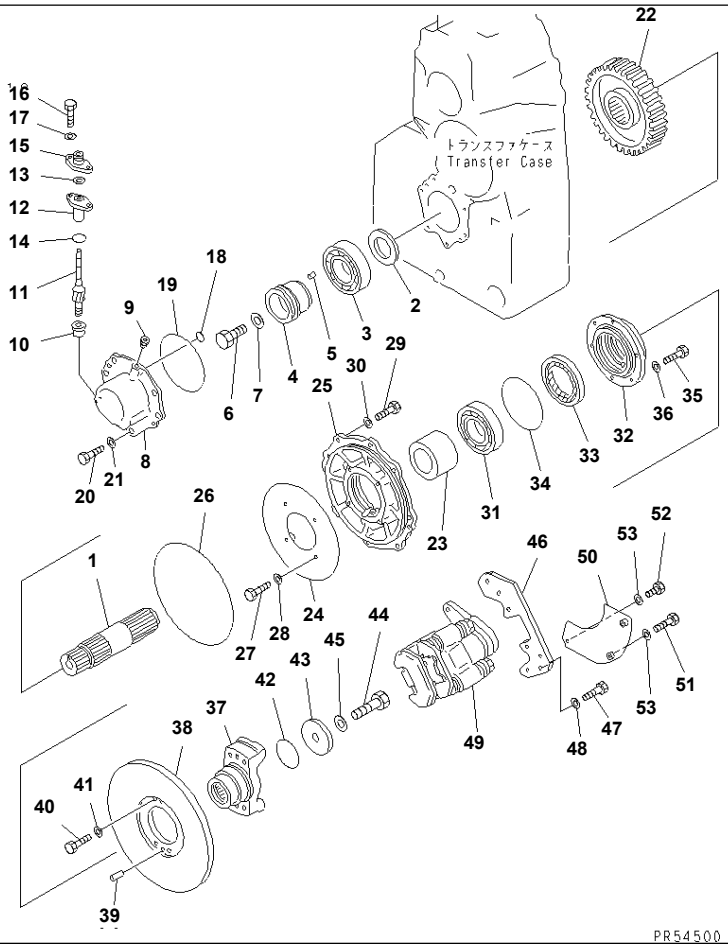

TRANSMISSION (OUTPUT SHAFT) (2/2)(#(1191)-012098)

Item	Part No.	Description	Qty	Options
SERIAL NO. IN ( ) INDICATES TRANSMISSION SERIAL NO.				
	(235-15-00021)	TRANSMISSION ASS'Y	1	SN:(1251)--012098
	(235-15-00020)	TRANSMISSION ASS'Y	1	SN:(1191)--(1250)
THESE ASSEMBLIES CONSIST OF ALL PARTS SHOWN IN FIGS.2401A TO 2459B.				
	(235-15-21011)	· TRANSMISSION ASS'Y,(EXCEPT P.T.O.)	1	SN:(1251)--012098
	(235-15-21010)	· TRANSMISSION ASS'Y,(EXCEPT P.T.O.)	1	SN:(1191)--(1250)
THESE ASSEMBLIES CONSIST OF ALL PARTS SHOWN IN FIGS.2401A¤ 2405A TO 2459B.				
1	235-15-13310	· · SHAFT	1	SN:(1191)--012098
2	287-15-13360	· · SPACER	1	SN:(1191)--012098
3	234-15-29340	· · BEARING	1	SN:(1191)--012098
4	235-15-13410	· · WORM	1	SN:(1191)--012098
5	04020-00820	· · PIN,DOWEL	1	SN:(1191)--012098
6	01050-52465	· · BOLT	1	SN:(1191)--012098
7	01643-32460	· · WASHER	1	SN:(1191)--012098
8	235-15-13150	· · COVER	1	SN:(1191)--012098
9	07043-00108	· · PLUG	1	SN:(1191)--012098
10	281-15-13490	· · BUSHING	1	SN:(1191)--012098
11	235-15-13420	· · SHAFT	1	SN:(1191)--012098
12	281-15-13431	· · BUSHING	1	SN:(1191)--012098
13	281-15-13820	· · SEAL,OIL	1	SN:(1191)--012098
14	07000-73038	· · O-RING	1	SN:(1191)--012098
15	281-15-13470	· · FLANGE	1	SN:(1191)--012098
16	01010-80835	· · BOLT	2	SN:(1191)--012098
17	01643-30823	· · WASHER	2	SN:(1191)--012098
18	07000-71007	· · O-RING	1	SN:(1191)--012098
19	07000-05155	· · O-RING	1	SN:(1191)--012098
20	01010-81235	· · BOLT	6	SN:(1191)--012098

Printed By : Dwi Iswanto (airafather6107170)

TRANSMISSION (OUTPUT SHAFT) (2/2)(#(1191)-012098)

Item	Part No.	Description	Qty	Options
21	01643-31232	· · WASHER	6	SN:(1191)--012098
22	235-15-13230	· · GEAR	1	SN:(1191)--012098
23	235-15-13260	· · COLLAR	1	SN:(1191)--012098
24	235-15-13281	· · PLATE	1	SN:(1191)--012098
25	235-15-13160	· · CAGE	1	SN:(1191)--012098
26	07000-05315	· · O-RING	1	SN:(1191)--012098
27	01010-80850	· · BOLT	4	SN:(1191)--012098
28	01643-30823	· · WASHER	4	SN:(1191)--012098
29	01010-81235	· · BOLT	8	SN:(1191)--012098
30	01643-31232	· · WASHER	8	SN:(1191)--012098
31	06040-06217	· · BEARING	1	SN:(1302)--012098
	◆234-15-29350	· · BEARING	1	SN:(1191)--(1301)
32	235-15-13170	· · COVER	1	SN:(1191)--012098
33	07012-10105	· · SEAL,OIL	1	SN:(1191)--012098
34	07000-05165	· · O-RING	1	SN:(1191)--012098
35	01010-81235	· · BOLT	6	SN:(1191)--012098
36	01643-31232	· · WASHER	6	SN:(1191)--012098
37	235-15-13270	· · COUPLING	1	SN:(1191)--012098
38	235-15-13350	· · PLATE	1	SN:(1191)--012098
39	04020-01638	· · PIN,DOWEL	2	SN:(1191)--012098
40	01050-51640	· · BOLT	4	SN:(1191)--012098
41	01643-31645	· · WASHER	4	SN:(1191)--012098
42	07000-05075	· · O-RING	1	SN:(1191)--012098
43	566-15-42160	· · HOLDER	1	SN:(1191)--012098
44	01051-52400	· · BOLT	1	SN:(1191)--012098
45	01643-32460	· · WASHER	1	SN:(1191)--012098
46	235-15-13361	· · BRACKET	1	SN:(1191)--012098
47	01010-61645	· · BOLT	4	SN:(1191)--012098
48	01643-31645	· · WASHER	4	SN:(1191)--012098
49	(235-15-13371)	· · CALIPER ASS'Y	1	SN:(1191)--012098
50	235-15-13390	· · PLATE	1	SN:(1191)--012098
51	01010-81240	· · BOLT	2	SN:(1191)--012098
52	01010-81220	· · BOLT	1	SN:(1191)--012098
53	01643-31232	· · WASHER	3	SN:(1191)--012098

Printed By : Dwi Iswanto (airafather6107170)

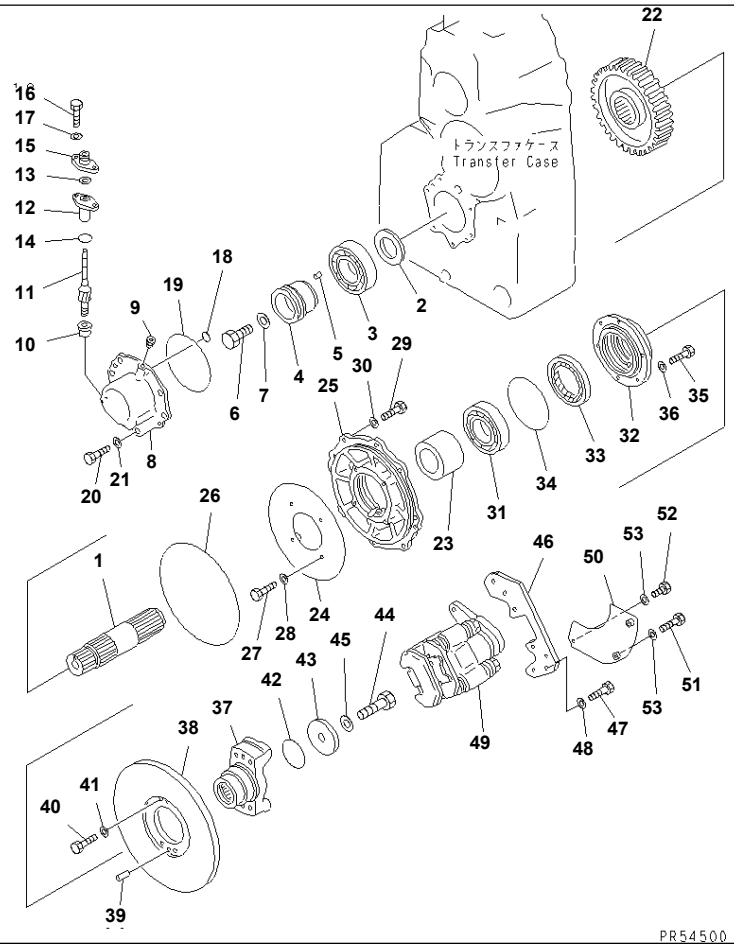

TRANSMISSION (OUTPUT SHAFT) (2/2)(#12099-)

Item	Part No.	Description	Qty	Options
	(235-15-21013)	TRANSMISSION ASS'Y,(EXCEPT P.T.O.)	1	SN:12099--
THIS ASSEMBLY CONSISTS OF ALL PARTS SHOWN IN FIGS.2401B¤ 2405B TO 2459C.				
1	235-15-13310	· SHAFT	1	SN:12099--
2	287-15-13360	· SPACER	1	SN:12099--
3	234-15-29340	· BEARING	1	SN:12099--
4	235-15-13410	· WORM	1	SN:12099--
5	04020-00820	· PIN,DOWEL	1	SN:12099--
6	01050-52465	· BOLT	1	SN:12099--
7	01643-32460	· WASHER	1	SN:12099--
8	235-15-13150	· COVER	1	SN:12099--
9	07043-00108	· PLUG	1	SN:12099--
10	281-15-13490	· BUSHING	1	SN:12099--
11	235-15-13420	· SHAFT	1	SN:12099--
12	281-15-13431	· BUSHING	1	SN:12099--
13	281-15-13820	· SEAL,OIL	1	SN:12099--
14	07000-73038	· O-RING	1	SN:12099--
15	281-15-13470	· FLANGE	1	SN:12099--
16	01010-80835	· BOLT	2	SN:12099--
17	01643-30823	· WASHER	2	SN:12099--
18	07000-71007	· O-RING	1	SN:12099--
19	07000-05155	· O-RING	1	SN:12099--
20	01010-81235	· BOLT	6	SN:12099--
21	01643-31232	· WASHER	6	SN:12099--
22	235-15-13230	· GEAR	1	SN:12099--
23	235-15-13260	· COLLAR	1	SN:12099--
24	235-15-13281	· PLATE	1	SN:12099--
25	235-15-13160	· CAGE	1	SN:12099--

Printed By : Dwi Iswanto (airafather6107170)

TRANSMISSION (OUTPUT SHAFT) (2/2)(#12099-)

Item	Part No.	Description	Qty	Options
26	07000-05315	· O-RING	1	SN:12099--
27	01010-80850	· BOLT	4	SN:12099--
28	01643-30823	· WASHER	4	SN:12099--
29	01010-81235	· BOLT	8	SN:12099--
30	01643-31232	· WASHER	8	SN:12099--
31	06040-06217	· BEARING	1	SN:12099--
32	235-15-13170	· COVER	1	SN:12099--
33	07012-10105	· SEAL,OIL	1	SN:12099--
34	07000-05165	· O-RING	1	SN:12099--
35	01010-81235	· BOLT	6	SN:12099--
36	01643-31232	· WASHER	6	SN:12099--
37	235-15-13270	· COUPLING	1	SN:12099--
38	235-15-13350	· PLATE	1	SN:12099--
39	04020-01638	· PIN,DOWEL	2	SN:12099--
40	01050-51640	· BOLT	4	SN:12099--
41	01643-31645	· WASHER	4	SN:12099--
42	07000-05075	· O-RING	1	SN:12099--
43	566-15-42160	· HOLDER	1	SN:12099--
44	01051-52400	· BOLT	1	SN:12099--
45	01643-32460	· WASHER	1	SN:12099--
46	235-15-13361	· BRACKET	1	SN:12099--
47	01010-61645	· BOLT	4	SN:12099--
48	01643-31645	· WASHER	4	SN:12099--
49	(235-15-13371)	· CALIPER ASS'Y	1	SN:12099--
50	235-15-13391	· PLATE	1	SN:12099--
51	01010-81240	· BOLT	2	SN:12099--
52	01010-81220	· BOLT	1	SN:12099--
53	01643-31232	· WASHER	3	SN:12099--

Printed By : Dwi Iswanto (airafather6107170)

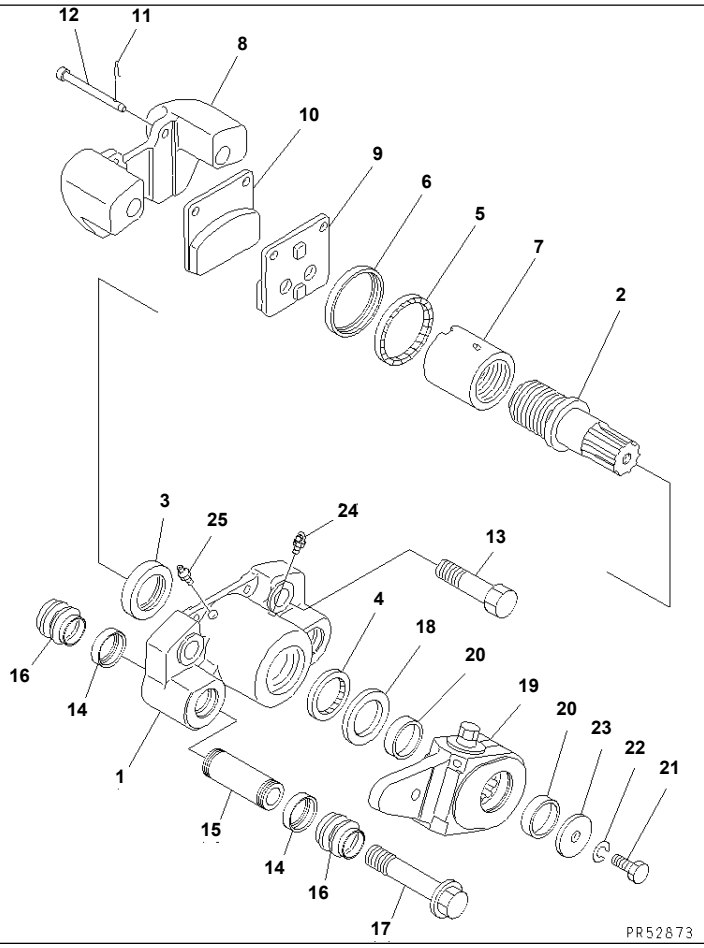

Ref. 2431 **Page 060420**

GD825A-2 S/N 11001-UP

TRANSMISSION (PARKING BRAKE)(#11001-(1190))

Item	Part No.	Description	Qty	Options
SERIAL NO. IN ( ) INDICATES TRANSMISSION SERIAL NO.				
	(235-15-00020)	TRANSMISSION ASS'Y	1	SN:11001--(1190)
THIS ASSEMBLY CONSISTS OF ALL PARTS SHOWN IN FIGS.2401 TO 2459.				
	235-15-13371	· CALIPER ASS'Y	1	SN:(1144)--(1190)
	□235-15-13370	· CALIPER ASS'Y	1	SN:11001--(1143)
1	☆	· · CALIPER,INNER	1	SN:11001--(1190)
2	421-43-15150	· · SHAFT	1	SN:11001--(1190)
3	421-43-15160	· · BEARING	1	SN:11001--(1190)
	421-43-05120	· · SEAL KIT	1	SN:11001--(1190)
4	☆	· · · SEAL,DUST	1	SN:11001--(1190)
5	☆	· · · SEAL,DUST	1	SN:11001--(1190)
6	421-43-15330	· · RETAINER	1	SN:11001--(1190)
7	421-43-15140	· · PISTON	1	SN:11001--(1190)
8	☆	· · CALIPER,OUTER	1	SN:11001--(1190)
	421-43-05210	· · BRAKE PAD KIT	1	SN:(1144)--(1190)
	□421-43-05110	· · BRAKE PAD KIT	1	SN:11001--(1143)
9	☆	· · · PAD	1	SN:(1144)--(1190)
	☆	· · · PAD	1	SN:11001--(1143)
10	☆	· · · PAD	1	SN:(1144)--(1190)
	☆	· · · PAD	1	SN:11001--(1143)
11	☆	· · · CLIP	2	SN:11001--(1190)
12	421-43-15310	· · PIN	2	SN:11001--(1190)
13	☆	· · BOLT	2	SN:11001--(1190)
14	421-43-15340	· · RETAINER	4	SN:11001--(1190)
15	421-43-15270	· · SLEEVE	2	SN:11001--(1190)
16	421-43-05130	· · BOOT KIT	1	SN:11001--(1190)
	☆	· · · BOOT	4	SN:11001--(1190)

Printed By : Dwi Iswanto (airafather6107170)

TRANSMISSION (PARKING BRAKE)(#11001-(1190))

Item	Part No.	Description	Qty	Options
17	421-43-15290	· · BOLT	2	SN:11001--(1190)
18	421-43-15210	· · WASHER	1	SN:11001--(1190)
19	235-15-13340	· · LEVER	1	SN:11001--(1190)
20	421-43-15230	· · COLLAR	2	SN:11001--(1190)
21	421-43-15260	· · BOLT	1	SN:11001--(1190)
22	421-43-15250	· · WASHER,SPRING	1	SN:11001--(1190)
23	421-43-15240	· · WASHER	1	SN:11001--(1190)
24	07020-00900	· · FITTING,GREASE	1	SN:11001--(1190)
25	07029-00000	· · VALVE	1	SN:11001--(1190)

Printed By : Dwi Iswanto (airafather6107170)

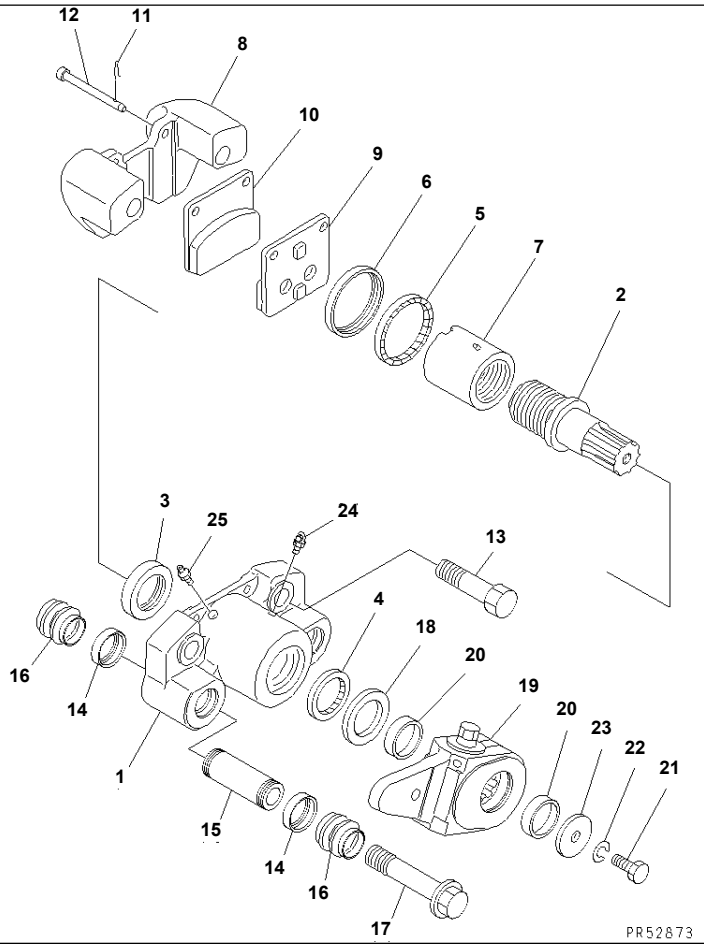

TRANSMISSION (PARKING BRAKE)(#(1191)-012098)

Item	Part No.	Description	Qty	Options
SERIAL NO. IN ( ) INDICATES TRANSMISSION SERIAL NO.				
	(235-15-00021)	TRANSMISSION ASS'Y	1	SN:(1251)--012098
	(235-15-00020)	TRANSMISSION ASS'Y	1	SN:(1191)--(1250)
THESE ASSEMBLIES CONSIST OF ALL PARTS SHOWN IN FIGS.2401A TO 2459B.				
	(235-15-21011)	· TRANSMISSION ASS'Y,(EXCEPT P.T.O.)	1	SN:(1251)--012098
	(235-15-21010)	· TRANSMISSION ASS'Y,(EXCEPT P.T.O.)	1	SN:(1191)--(1250)
THESE ASSEMBLIES CONSIST OF ALL PARTS SHOWN IN FIGS.2401A¤ 2405A TO 2459B.				
	235-15-13371	· · CALIPER ASS'Y	1	SN:(1191)--012098
1	☆	· · · CALIPER,INNER	1	SN:(1191)--012098
2	421-43-15150	· · · SHAFT	1	SN:(1191)--012098
3	421-43-15160	· · · BEARING	1	SN:(1191)--012098
	421-43-05120	· · · SEAL KIT	1	SN:(1191)--012098
4	☆	· · · · SEAL,DUST	1	SN:(1191)--012098
5	☆	· · · · SEAL,DUST	1	SN:(1191)--012098
6	421-43-15330	· · · RETAINER	1	SN:(1191)--012098
7	421-43-15140	· · · PISTON	1	SN:(1191)--012098
8	☆	· · · CALIPER,OUTER	1	SN:(1191)--012098
	421-43-05210	· · · BRAKE PAD KIT	1	SN:(1191)--012098
9	☆	· · · · PAD	1	SN:(1191)--012098
10	☆	· · · · PAD	1	SN:(1191)--012098
11	☆	· · · · CLIP	2	SN:(1191)--012098
12	421-43-15310	· · · PIN	2	SN:(1191)--012098
13	☆	· · · BOLT	2	SN:(1191)--012098
14	421-43-15340	· · · RETAINER	4	SN:(1191)--012098
15	421-43-15270	· · · SLEEVE	2	SN:(1191)--012098
16	421-43-05130	· · · BOOT KIT	1	SN:(1191)--012098
	☆	· · · · BOOT	4	SN:(1191)--012098

Printed By : Dwi Iswanto (airafather6107170)

TRANSMISSION (PARKING BRAKE)(#(1191)-012098)

Item	Part No.	Description	Qty	Options
17	421-43-15290	· · · BOLT	2	SN:(1191)--012098
18	421-43-15210	· · · WASHER	1	SN:(1191)--012098
19	235-15-13340	· · · LEVER	1	SN:(1191)--012098
20	421-43-15230	· · · COLLAR	2	SN:(1191)--012098
21	421-43-15260	· · · BOLT	1	SN:(1191)--012098
22	421-43-15250	· · · WASHER,SPRING	1	SN:(1191)--012098
23	421-43-15240	· · · WASHER	1	SN:(1191)--012098
24	07020-00900	· · · FITTING,GREASE	1	SN:(1191)--012098
25	07029-00000	· · · VALVE	1	SN:(1191)--012098

Printed By : Dwi Iswanto (airafather6107170)

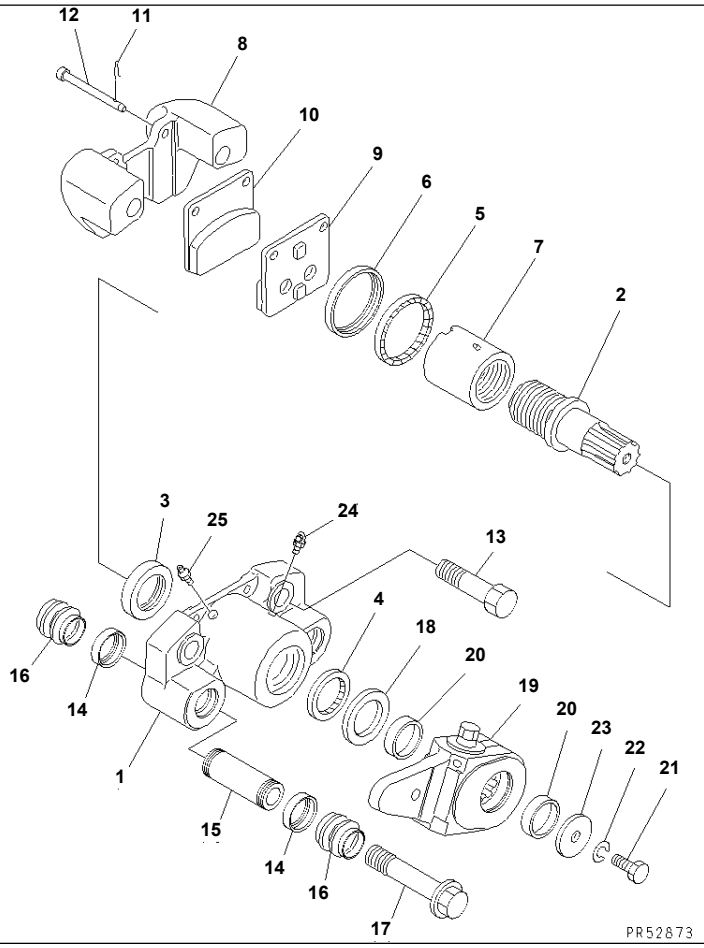

Ref. 2431B **Page 060440**

GD825A-2 S/N 11001-UP

TRANSMISSION (PARKING BRAKE)(#12099-)

Item	Part No.	Description	Qty	Options
	(235-15-21013)	TRANSMISSION ASS'Y,(EXCEPT P.T.O.)	1	SN:12099--
THIS ASSEMBLY CONSISTS OF ALL PARTS SHOWN IN FIGS.2401B¤ 2405B TO 2459C.				
	235-15-13371	· CALIPER ASS'Y	1	SN:12099--
1	☆	· · CALIPER,INNER	1	SN:12099--
2	421-43-15150	· · SHAFT	1	SN:12099--
3	421-43-15160	· · BEARING	1	SN:12099--
	421-43-05120	· · SEAL KIT	1	SN:12099--
4	☆	· · · SEAL,DUST	1	SN:12099--
5	☆	· · · SEAL,DUST	1	SN:12099--
6	421-43-15330	· · RETAINER	1	SN:12099--
7	421-43-15140	· · PISTON	1	SN:12099--
8	☆	· · CALIPER,OUTER	1	SN:12099--
	421-43-05210	· · BRAKE PAD KIT	1	SN:12099--
9	☆	· · · PAD	1	SN:12099--
10	☆	· · · PAD	1	SN:12099--
11	☆	· · · CLIP	2	SN:12099--
12	421-43-15310	· · PIN	2	SN:12099--
13	☆	· · BOLT	2	SN:12099--
14	421-43-15340	· · RETAINER	4	SN:12099--
15	421-43-15270	· · SLEEVE	2	SN:12099--
16	421-43-05130	· · BOOT KIT	1	SN:12099--
	☆	· · · BOOT	4	SN:12099--
17	421-43-15290	· · BOLT	2	SN:12099--
18	421-43-15210	· · WASHER	1	SN:12099--
19	235-15-13340	· · LEVER	1	SN:12099--
20	421-43-15230	· · COLLAR	2	SN:12099--
21	421-43-15260	· · BOLT	1	SN:12099--

Ref. 2431B **Page 060440**

Printed By : Dwi Iswanto (airafather6107170)

TRANSMISSION (PARKING BRAKE)(#12099-)

Item	Part No.	Description	Qty	Options
22	421-43-15250	· · WASHER,SPRING	1	SN:12099--
23	421-43-15240	· · WASHER	1	SN:12099--
24	07020-00900	· · FITTING,GREASE	1	SN:12099--
25	07029-00000	· · VALVE	1	SN:12099--

Printed By : Dwi Iswanto (airafather6107170)

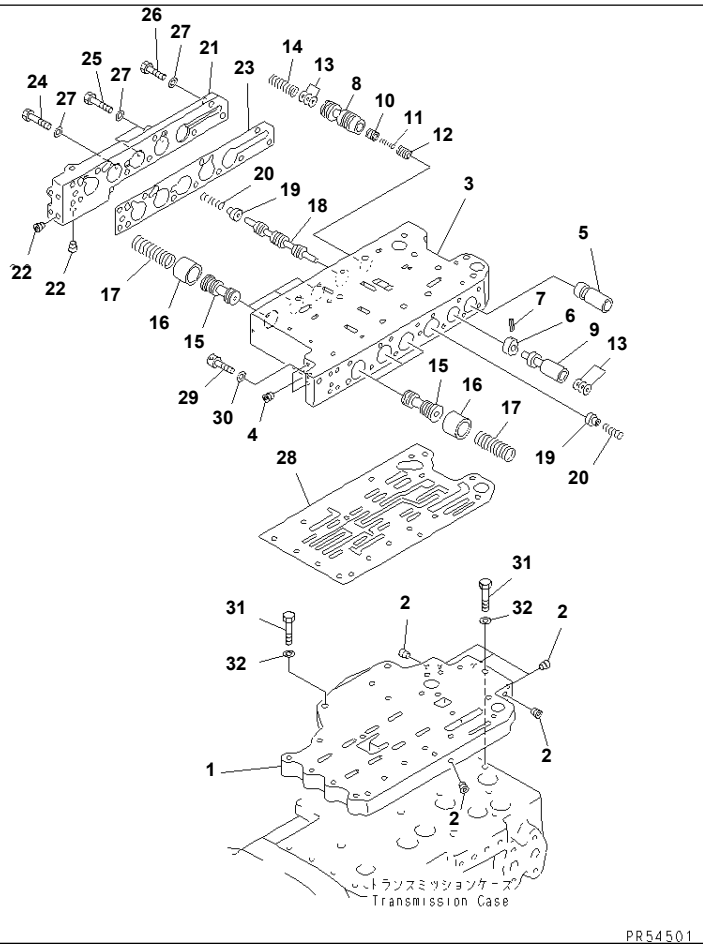

TRANSMISSION (CONTROL VALVE) (1/5)(#11001-(1190))

Item	Part No.	Description	Qty	Options
SERIAL NO. IN ( ) INDICATES TRANSMISSION SERIAL NO.				
	(235-15-00020)	TRANSMISSION ASS'Y	1	SN:11001--(1190)
THIS ASSEMBLY CONSISTS OF ALL PARTS SHOWN IN FIGS.2401 TO 2459.				
	235-15-00510	· CONTROL VALVE ASS'Y	1	SN:11001--(1190)
THIS ASSEMBLY CONSISTS OF ALL PARTS SHOWN IN FIGS.2451 TO 2459.				
1	235-15-15131	· · SEAT,VALVE	1	SN:11001--(1190)
2	07043-70211	· · PLUG	6	SN:11001--(1190)
3	235-15-15211	· · BODY,VALVE	1	SN:11001--(1190)
4	07043-70108	· · PLUG	4	SN:11001--(1190)
5	235-15-15381	· · SPACER	1	SN:11001--(1190)
6	235-15-15670	· · STOPPER	1	SN:11001--(1190)
7	04025-00640	· · PIN,SPRING	1	SN:11001--(1190)
8	424-15-15340	· · VALVE	1	SN:11001--(1190)
9	424-15-15391	· · VALVE	1	SN:11001--(1190)
10	104-15-25490	· · VALVE	1	SN:11001--(1190)
11	125-15-15290	· · SPRING,(L=26)	1	SN:11001--(1190)
12	104-15-25480	· · VALVE	1	SN:11001--(1190)
13	113-15-25260	· · SHIM¤ 0.5MM	6	SN:11001--(1190)
14	104-15-25290	· · SPRING¤ (L= 62.0)	1	SN:11001--(1190)
15	424-15-15321	· · VALVE	6	SN:11001--(1190)
16	424-15-15371	· · STOPPER	6	SN:11001--(1190)
17	568-15-15330	· · SPRING¤ (L= 78.0)	6	SN:11001--(1190)
18	235-15-15320	· · VALVE	1	SN:11001--(1190)
19	235-15-15370	· · COLLAR	2	SN:11001--(1190)
20	235-15-15330	· · SPRING¤ (L= 60.6)	2	SN:11001--(1190)
21	235-15-15950	· · COVER	1	SN:11001--(1190)
22	07043-70108	· · PLUG	8	SN:11001--(1190)

Printed By : Dwi Iswanto (airafather6107170)

TRANSMISSION (CONTROL VALVE) (1/5)(#11001-(1190))

Item	Part No.	Description	Qty	Options
23	235-15-15960	· · GASKET	1	SN:11001--(1190)
24	01010-50835	· · BOLT	4	SN:11001--(1190)
25	01016-50850	· · BOLT	2	SN:11001--(1190)
26	01010-50825	· · BOLT	4	SN:11001--(1190)
27	01643-50823	· · WASHER	10	SN:11001--(1190)
28	235-15-15992	· · GASKET	1	SN:11001--(1190)
29	01252-41035	· · BOLT	1	SN:11001--(1190)
30	01643-51032	· · WASHER	1	SN:11001--(1190)
31	01010-81045	· BOLT	4	SN:11001--(1190)
32	01643-31032	· WASHER	4	SN:11001--(1190)

Printed By : Dwi Iswanto (airafather6107170)

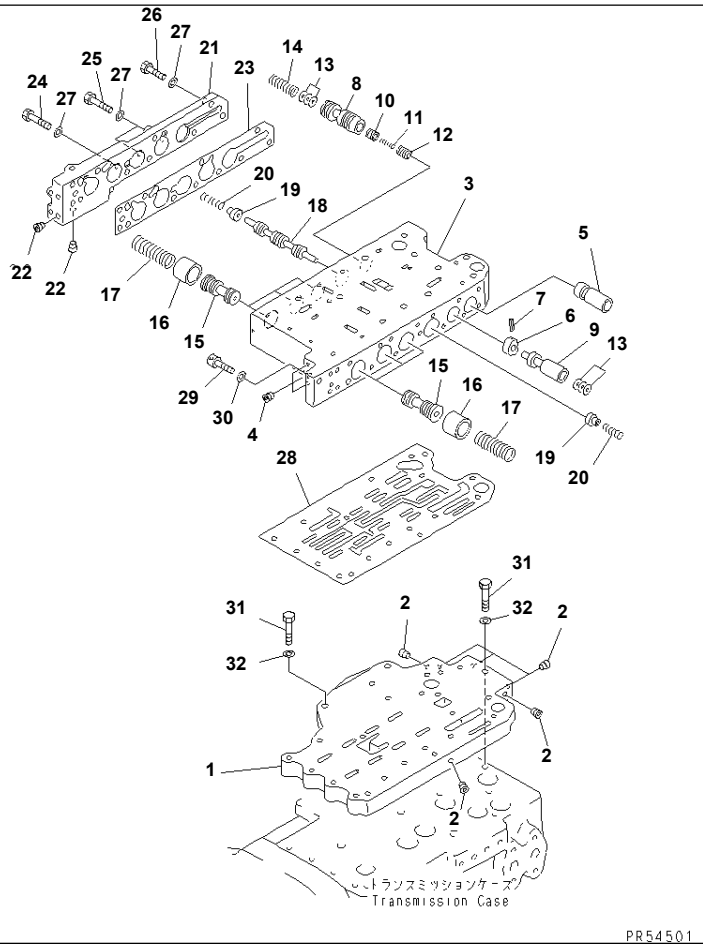

TRANSMISSION (CONTROL VALVE) (1/5)(#(1191)-012098)

Item	Part No.	Description	Qty	Options
SERIAL NO. IN ( ) INDICATES TRANSMISSION SERIAL NO.				
	(235-15-00021)	TRANSMISSION ASS'Y	1	SN:(1251)--012098
	(235-15-00020)	TRANSMISSION ASS'Y	1	SN:(1191)--(1250)
THESE ASSEMBLIES CONSIST OF ALL PARTS SHOWN IN FIGS.2401A TO 2459B.				
	(235-15-21011)	· TRANSMISSION ASS'Y,(EXCEPT P.T.O.)	1	SN:(1251)--012098
	(235-15-21010)	· TRANSMISSION ASS'Y,(EXCEPT P.T.O.)	1	SN:(1191)--(1250)
THESE ASSEMBLIES CONSIST OF ALL PARTS SHOWN IN FIGS.2401A¤ 2405A TO 2459B.				
	235-15-00511	· · CONTROL VALVE ASS'Y	1	SN:(1251)--012098
	235-15-00510	· · CONTROL VALVE ASS'Y	1	SN:(1191)--(1250)
THESE ASSEMBLIES CONSIST OF ALL PARTS SHOWN IN FIGS.2451A TO 2459B.				
1	235-15-15131	· · · SEAT,VALVE	1	SN:(1191)--012098
2	07043-70211	· · · PLUG	6	SN:(1191)--012098
3	235-15-15211	· · · BODY,VALVE	1	SN:(1191)--012098
4	07043-70108	· · · PLUG	4	SN:(1191)--012098
5	235-15-15381	· · · SPACER	1	SN:(1191)--012098
6	235-15-15670	· · · STOPPER	1	SN:(1191)--012098
7	04025-00640	· · · PIN,SPRING	1	SN:(1191)--012098
8	424-15-15340	· · · VALVE	1	SN:(1191)--012098
9	424-15-15391	· · · VALVE	1	SN:(1191)--012098
10	104-15-25490	· · · VALVE	1	SN:(1191)--012098
11	125-15-15290	· · · SPRING,(L=26)	1	SN:(1191)--012098
12	104-15-25480	· · · VALVE	1	SN:(1191)--012098
13	113-15-25260	· · · SHIM¤ 0.5MM	6	SN:(1191)--012098
14	104-15-25290	· · · SPRING¤ (L= 62.0)	1	SN:(1191)--012098
15	424-15-15321	· · · VALVE	6	SN:(1191)--012098
16	424-15-15371	· · · STOPPER	6	SN:(1191)--012098
17	568-15-15330	· · · SPRING¤ (L= 78.0)	6	SN:(1191)--012098

Printed By : Dwi Iswanto (airafather6107170)

TRANSMISSION (CONTROL VALVE) (1/5)(#(1191)-012098)

Item	Part No.	Description	Qty	Options
18	235-15-15320	· · · VALVE	1	SN:(1191)--012098
19	235-15-15370	· · · COLLAR	2	SN:(1191)--012098
20	235-15-15330	· · · SPRING¤ (L= 60.6)	2	SN:(1191)--012098
21	235-15-15950	· · · COVER	1	SN:(1191)--012098
22	07043-70108	· · · PLUG	8	SN:(1191)--012098
23	235-15-15960	· · · GASKET	1	SN:(1191)--012098
24	01010-80835	· · · BOLT	4	SN:(1191)--012098
25	01016-80850	· · · BOLT	2	SN:(1191)--012098
26	01010-80825	· · · BOLT	4	SN:(1191)--012098
27	01643-50823	· · · WASHER	10	SN:(1191)--012098
28	235-15-15992	· · · GASKET	1	SN:(1191)--012098
29	01252-41035	· · · BOLT	1	SN:(1191)--012098
30	01643-51032	· · · WASHER	1	SN:(1191)--012098
31	01010-81045	· · BOLT	4	SN:(1191)--012098
32	01643-31032	· · WASHER	4	SN:(1191)--012098

Printed By : Dwi Iswanto (airafather6107170)

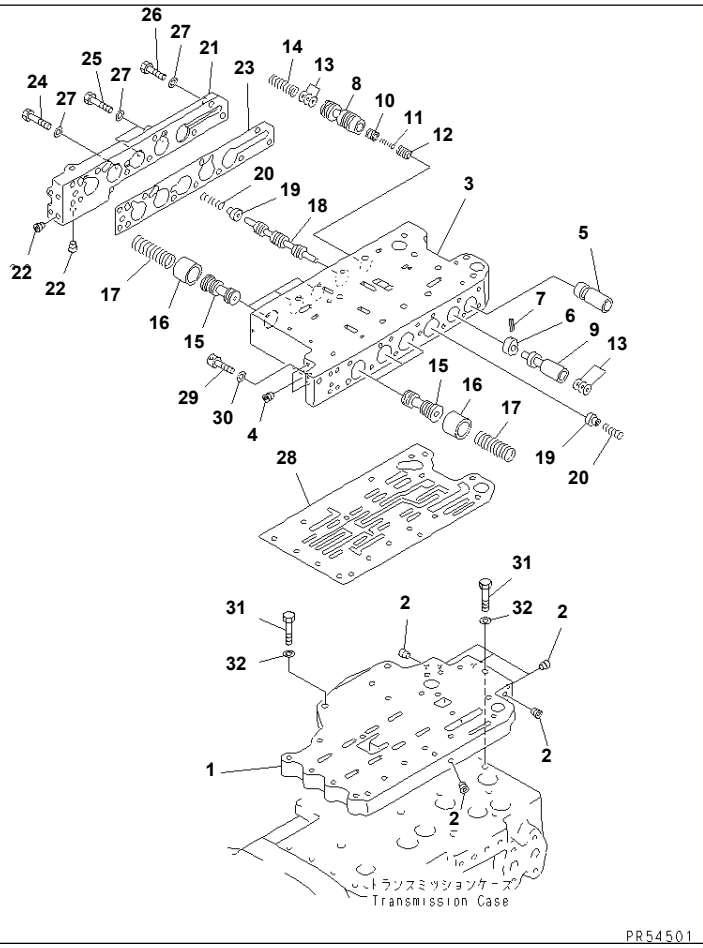

Ref. 2451B **Page 060470**

GD825A-2 S/N 11001-UP

TRANSMISSION (CONTROL VALVE) (1/5)(#12099-)

Item	Part No.	Description	Qty	Options
	(235-15-21013)	TRANSMISSION ASS'Y,(EXCEPT P.T.O.)	1	SN:12099--
THIS ASSEMBLY CONSISTS OF ALL PARTS SHOWN IN FIGS.2401B¤ 2405B TO 2459C.				
	235-15-25002	· CONTROL VALVE ASS'Y	1	SN:12099--
THIS ASSEMBLY CONSISTS OF ALL PARTS SHOWN IN FIGS.2451B TO 2459C.				
1	235-15-15131	· · SEAT,VALVE	1	SN:12099--
2	07043-70211	· · PLUG	6	SN:12099--
3	235-15-15211	· · BODY,VALVE	1	SN:12099--
4	07043-70108	· · PLUG	4	SN:12099--
5	235-15-15381	· · SPACER	1	SN:12099--
6	235-15-15670	· · STOPPER	1	SN:12099--
7	04025-00640	· · PIN,SPRING	1	SN:12099--
8	424-15-15340	· · VALVE	1	SN:12099--
9	424-15-15391	· · VALVE	1	SN:12099--
10	104-15-25490	· · VALVE	1	SN:12099--
11	125-15-15290	· · SPRING,(L=26)	1	SN:12099--
12	104-15-25480	· · VALVE	1	SN:12099--
13	113-15-25260	· · SHIM¤ 0.5MM	6	SN:12099--
14	104-15-25290	· · SPRING¤ (L= 62.0)	1	SN:12099--
15	424-15-15321	· · VALVE	6	SN:12099--
16	424-15-15371	· · STOPPER	6	SN:12099--
17	568-15-15330	· · SPRING¤ (L= 78.0)	6	SN:12099--
18	235-15-15320	· · VALVE	1	SN:12099--
19	235-15-15370	· · COLLAR	2	SN:12099--
20	235-15-15330	· · SPRING¤ (L= 60.6)	2	SN:12099--
21	235-15-15950	· · COVER	1	SN:12099--
22	07043-70108	· · PLUG	8	SN:12099--
23	235-15-15960	· · GASKET	1	SN:12099--

Printed By : Dwi Iswanto (airafather6107170)

TRANSMISSION (CONTROL VALVE) (1/5)(#12099-)

Item	Part No.	Description	Qty	Options
24	01010-80835	· · BOLT	4	SN:12099--
25	01016-80850	· · BOLT	2	SN:12099--
26	01010-80825	· · BOLT	4	SN:12099--
27	01643-50823	· · WASHER	10	SN:12099--
28	235-15-15992	· · GASKET	1	SN:12099--
29	01252-41035	· · BOLT	1	SN:12099--
30	01643-51032	· · WASHER	1	SN:12099--
31	01010-81045	· BOLT	4	SN:12099--
32	01643-31032	· WASHER	4	SN:12099--

Printed By : Dwi Iswanto (airafather6107170)

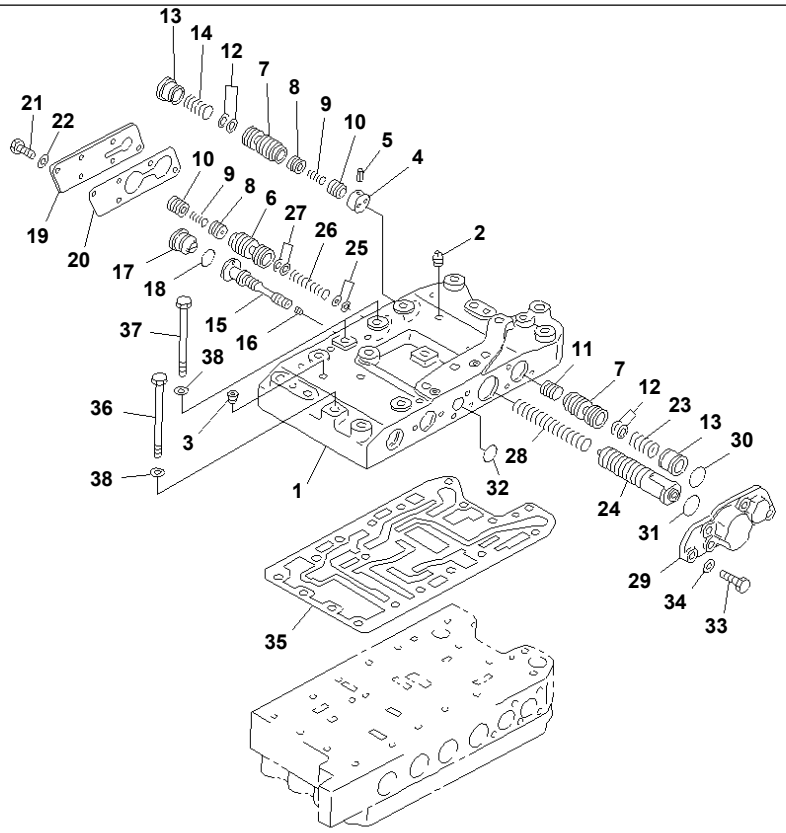

PJ54502

GD825A-2 S/N 11001-UP

TRANSMISSION (CONTROL VALVE) (2/5)(#11001-(1190))

Item	Part No.	Description	Qty	Options
SERIAL NO. IN ( ) INDICATES TRANSMISSION SERIAL NO.				
	(235-15-00020)	TRANSMISSION ASS'Y	1	SN:11001--(1190)
THIS ASSEMBLY CONSISTS OF ALL PARTS SHOWN IN FIGS.2401 TO 2459.				
	(235-15-00510)	· CONTROL VALVE ASS'Y	1	SN:11001--(1190)
THIS ASSEMBLY CONSISTS OF ALL PARTS SHOWN IN FIGS.2451 TO 2459.				
1	235-15-25110	· · BODY,VALVE	1	SN:11001--(1190)
2	07042-20108	· · PLUG	5	SN:11001--(1190)
3	07043-00108	· · PLUG	1	SN:11001--(1190)
4	424-15-15650	· · STOPPER	1	SN:11001--(1190)
5	04025-00640	· · PIN,SPRING	1	SN:11001--(1190)
6	424-15-15230	· · VALVE	1	SN:11001--(1190)
7	425-15-15220	· · VALVE	2	SN:11001--(1190)
8	104-15-25490	· · VALVE	2	SN:11001--(1190)
9	125-15-15290	· · SPRING,(L=26)	2	SN:11001--(1190)
10	104-15-25480	· · VALVE	2	SN:11001--(1190)
11	145-14-23720	· · PISTON	1	SN:11001--(1190)
12	113-15-25260	· · SHIM¤ 0.5MM	8	SN:11001--(1190)
13	424-15-15490	· · GUIDE	2	SN:11001--(1190)
14	104-15-25290	· · SPRING¤ (L= 62.0)	1	SN:11001--(1190)
15	424-15-15630	· · VALVE	1	SN:11001--(1190)
16	125-15-11230	· · PLUG	1	SN:11001--(1190)
17	424-15-15290	· · STOPPER	1	SN:11001--(1190)
18	07000-72021	· · O-RING	1	SN:11001--(1190)
19	424-15-15860	· · COVER	1	SN:11001--(1190)
20	424-15-15931	· · GASKET	1	SN:(1144)--(1190)
	□424-15-15930	· · GASKET	1	SN:11001--(1143)
21	01010-50820	· · BOLT	5	SN:11001--(1190)

Printed By : Dwi Iswanto (airafather6107170)

TRANSMISSION (CONTROL VALVE) (2/5)(#11001-(1190))

Item	Part No.	Description	Qty	Options
22	01643-50823	· · WASHER	5	SN:11001--(1190)
23	10E-10-12750	· · SPRING,(L=62)	1	SN:11001--(1190)
24	235-15-25560	· · VALVE	1	SN:11001--(1190)
25	424-15-16410	· · SHIM¤ 0.5MM	14	SN:11001--(1190)
26	423-15-16170	· · SPRING¤ (L=118.0)	1	SN:11001--(1190)
27	424-15-16420	· · SHIM¤ 0.5MM	4	SN:11001--(1190)
28	235-15-26160	· · SPRING,(L=145.7)	1	SN:11001--(1190)
29	235-15-25850	· · COVER	1	SN:11001--(1190)
30	07000-73030	· · O-RING	1	SN:11001--(1190)
31	07000-73035	· · O-RING	1	SN:11001--(1190)
32	07000-72015	· · O-RING	1	SN:11001--(1190)
33	01010-50825	· · BOLT	6	SN:11001--(1190)
34	01643-50823	· · WASHER	6	SN:11001--(1190)
35	235-15-15981	· · GASKET	1	SN:11001--(1190)
36	01011-51025	· · BOLT	2	SN:11001--(1190)
37	01010-51070	· · BOLT	2	SN:11001--(1190)
38	01643-31032	· · WASHER	4	SN:11001--(1190)

Printed By : Dwi Iswanto (airafather6107170)

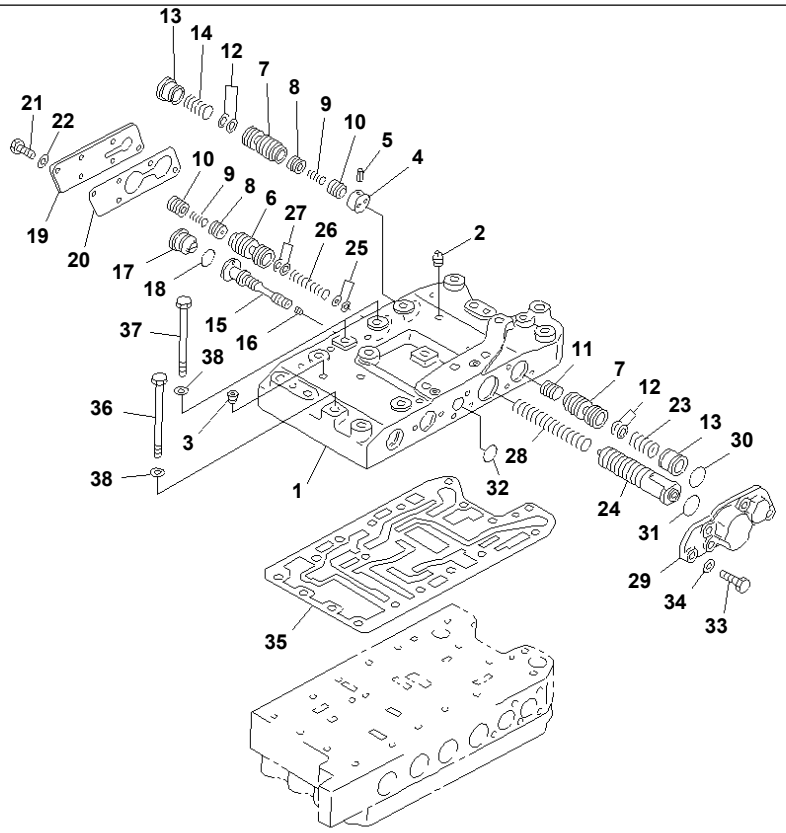

PJ54502

GD825A-2 S/N 11001-UP

TRANSMISSION (CONTROL VALVE) (2/5)(#11001-(1190))

Item	Part No.	Description	Qty	Options
SERIAL NO. IN ( ) INDICATES TRANSMISSION SERIAL NO.				
	(235-15-00020)	TRANSMISSION ASS'Y	1	SN:11001--(1190)
THIS ASSEMBLY CONSISTS OF ALL PARTS SHOWN IN FIGS.2401 TO 2459.				
	(235-15-00510)	· CONTROL VALVE ASS'Y	1	SN:11001--(1190)
THIS ASSEMBLY CONSISTS OF ALL PARTS SHOWN IN FIGS.2451 TO 2459.				
1	235-15-25110	· · BODY,VALVE	1	SN:11001--(1190)
2	07042-20108	· · PLUG	5	SN:11001--(1190)
3	07043-00108	· · PLUG	1	SN:11001--(1190)
4	424-15-15650	· · STOPPER	1	SN:11001--(1190)
5	04025-00640	· · PIN,SPRING	1	SN:11001--(1190)
6	424-15-15230	· · VALVE	1	SN:11001--(1190)
7	425-15-15220	· · VALVE	2	SN:11001--(1190)
8	104-15-25490	· · VALVE	2	SN:11001--(1190)
9	125-15-15290	· · SPRING,(L=26)	2	SN:11001--(1190)
10	104-15-25480	· · VALVE	2	SN:11001--(1190)
11	145-14-23720	· · PISTON	1	SN:11001--(1190)
12	113-15-25260	· · SHIM¤ 0.5MM	8	SN:11001--(1190)
13	424-15-15490	· · GUIDE	2	SN:11001--(1190)
14	104-15-25290	· · SPRING¤ (L= 62.0)	1	SN:11001--(1190)
15	424-15-15630	· · VALVE	1	SN:11001--(1190)
16	125-15-11230	· · PLUG	1	SN:11001--(1190)
17	424-15-15290	· · STOPPER	1	SN:11001--(1190)
18	07000-72021	· · O-RING	1	SN:11001--(1190)
19	424-15-15860	· · COVER	1	SN:11001--(1190)
20	424-15-15931	· · GASKET	1	SN:(1144)--(1190)
	□424-15-15930	· · GASKET	1	SN:11001--(1143)
21	01010-50820	· · BOLT	5	SN:11001--(1190)

Printed By : Dwi Iswanto (airafather6107170)

TRANSMISSION (CONTROL VALVE) (2/5)(#11001-(1190))

Item	Part No.	Description	Qty	Options
22	01643-50823	· · WASHER	5	SN:11001--(1190)
23	10E-10-12750	· · SPRING,(L=62)	1	SN:11001--(1190)
24	235-15-25560	· · VALVE	1	SN:11001--(1190)
25	424-15-16410	· · SHIM¤ 0.5MM	14	SN:11001--(1190)
26	423-15-16170	· · SPRING¤ (L=118.0)	1	SN:11001--(1190)
27	424-15-16420	· · SHIM¤ 0.5MM	4	SN:11001--(1190)
28	235-15-26160	· · SPRING,(L=145.7)	1	SN:11001--(1190)
29	235-15-25850	· · COVER	1	SN:11001--(1190)
30	07000-73030	· · O-RING	1	SN:11001--(1190)
31	07000-73035	· · O-RING	1	SN:11001--(1190)
32	07000-72015	· · O-RING	1	SN:11001--(1190)
33	01010-50825	· · BOLT	6	SN:11001--(1190)
34	01643-50823	· · WASHER	6	SN:11001--(1190)
35	235-15-15981	· · GASKET	1	SN:11001--(1190)
36	01011-51025	· · BOLT	2	SN:11001--(1190)
37	01010-51070	· · BOLT	2	SN:11001--(1190)
38	01643-31032	· · WASHER	4	SN:11001--(1190)

Printed By : Dwi Iswanto (airafather6107170)

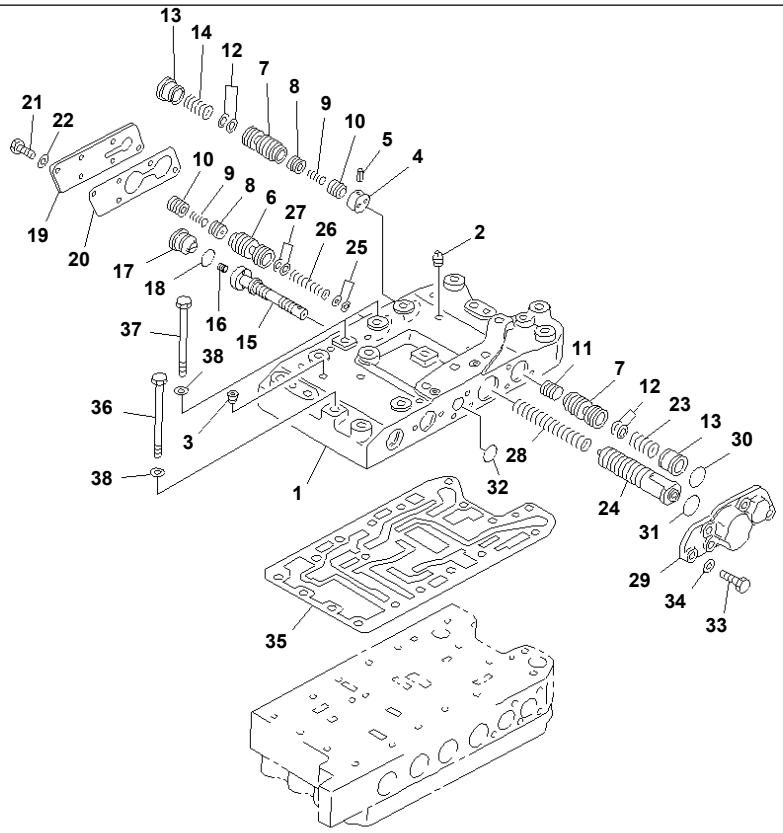

GD825A-2 S/N 11001-UP

TRANSMISSION (CONTROL VALVE) (2/5)(#(1191)-012098)

Item	Part No.	Description	Qty	Options
SERIAL NO. IN ( ) INDICATES TRANSMISSION SERIAL NO.				
	(235-15-00021)	TRANSMISSION ASS'Y	1	SN:(1251)--012098
	(235-15-00020)	TRANSMISSION ASS'Y	1	SN:(1191)--(1250)
THESE ASSEMBLIES CONSIST OF ALL PARTS SHOWN IN FIGS.2401A TO 2459B.				
	(235-15-21011)	· TRANSMISSION ASS'Y,(EXCEPT P.T.O.)	1	SN:(1251)--012098
	(235-15-21010)	· TRANSMISSION ASS'Y,(EXCEPT P.T.O.)	1	SN:(1191)--(1250)
THESE ASSEMBLIES CONSIST OF ALL PARTS SHOWN IN FIGS.2401A¤ 2405A TO 2459B.				
	(235-15-00511)	· · CONTROL VALVE ASS'Y	1	SN:(1251)--012098
	(235-15-00510)	· · CONTROL VALVE ASS'Y	1	SN:(1191)--(1250)
THESE ASSEMBLIES CONSIST OF ALL PARTS SHOWN IN FIGS.2451A TO 2459B.				
1	235-15-25110	· · · BODY,VALVE	1	SN:(1191)--012098
2	07042-80108	· · · PLUG	5	SN:(1302)--012098
	07042-20108	· · · PLUG	5	SN:(1191)--(1301)
3	07043-00108	· · · PLUG	1	SN:(1191)--012098
4	424-15-15650	· · · STOPPER	1	SN:(1191)--012098
5	04025-00640	· · · PIN,SPRING	1	SN:(1191)--012098
6	424-15-15230	· · · VALVE	1	SN:(1191)--012098
7	425-15-15220	· · · VALVE	2	SN:(1191)--012098
8	104-15-25490	· · · VALVE	2	SN:(1191)--012098
9	125-15-15290	· · · SPRING,(L=26)	2	SN:(1191)--012098
10	104-15-25480	· · · VALVE	2	SN:(1191)--012098
11	145-14-23720	· · · PISTON	1	SN:(1191)--012098
12	113-15-25260	· · · SHIM¤ 0.5MM	8	SN:(1191)--012098
13	424-15-15490	· · · GUIDE	2	SN:(1191)--012098
14	104-15-25290	· · · SPRING¤ (L= 62.0)	1	SN:(1191)--012098
	235-15-25640	· · · VALVE ASS'Y	1	SN:(1191)--012098
15	☆	· · · · VALVE	1	SN:(1191)--012098

Printed By : Dwi Iswanto (airafather6107170)

TRANSMISSION (CONTROL VALVE) (2/5)(#(1191)-012098)

Item	Part No.	Description	Qty	Options
16	☆	· · · · PLUG	1	SN:(1191)--012098
17	235-15-25290	· · · STOPPER	1	SN:(1191)--012098
18	07000-72021	· · · O-RING	1	SN:(1191)--012098
19	424-15-15860	· · · COVER	1	SN:(1191)--012098
20	424-15-15931	· · · GASKET	1	SN:(1191)--012098
21	01010-80820	· · · BOLT	5	SN:(1191)--012098
22	01643-50823	· · · WASHER	5	SN:(1191)--012098
23	10E-10-12750	· · · SPRING,(L=62)	1	SN:(1191)--012098
24	235-15-25560	· · · VALVE	1	SN:(1191)--(1368)
25	424-15-16410	· · · SHIM¤ 0.5MM	2	SN:(1223)--012098
	424-15-16410	· · · SHIM¤ 0.5MM	14	SN:(1191)--(1222)
26	423-15-16170	· · · SPRING¤ (L=118.0)	1	SN:(1191)--012098
27	113-15-25260	· · · SHIM¤ 0.5MM	8	SN:(1223)--012098
	424-15-16420	· · · SHIM¤ 0.5MM	4	SN:(1191)--(1222)
28	235-15-26160	· · · SPRING,(L=145.7)	1	SN:(1191)--012098
29	235-15-25850	· · · COVER	1	SN:(1191)--012098
30	07000-73030	· · · O-RING	1	SN:(1191)--012098
31	07000-73035	· · · O-RING	1	SN:(1191)--012098
32	07000-72015	· · · O-RING	1	SN:(1191)--012098
33	01010-80825	· · · BOLT	6	SN:(1191)--012098
34	01643-50823	· · · WASHER	6	SN:(1191)--012098
35	235-15-15981	· · · GASKET	1	SN:(1191)--012098
36	01011-81025	· · · BOLT	2	SN:(1191)--012098
37	01010-81070	· · · BOLT	2	SN:(1191)--012098
38	01643-31032	· · · WASHER	4	SN:(1191)--012098

Printed By : Dwi Iswanto (airafather6107170)

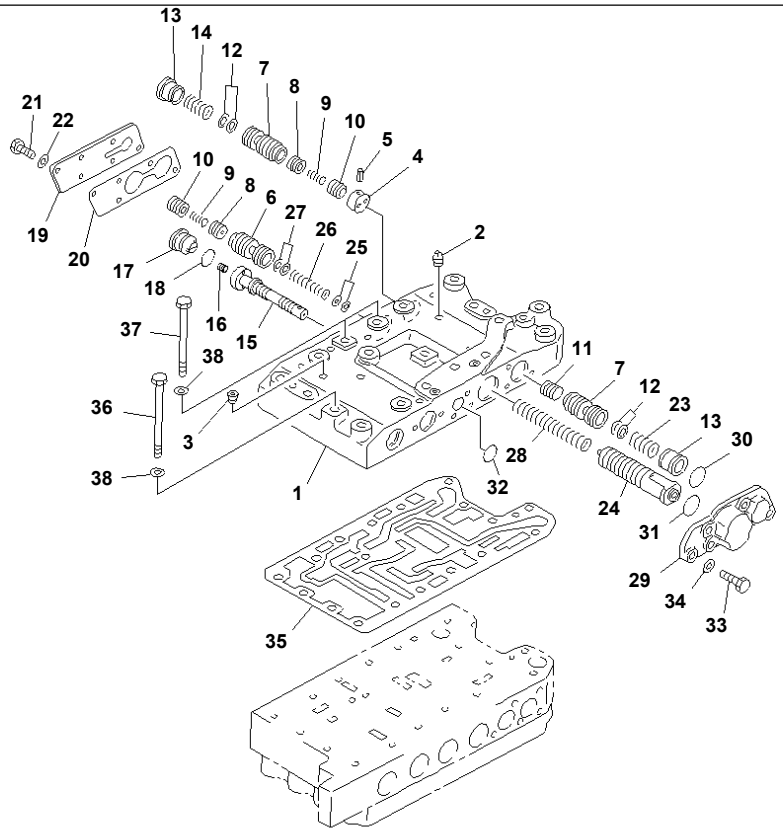

PS56963

GD825A-2 S/N 11001-UP

TRANSMISSION (CONTROL VALVE) (2/5)(#12099-)

Item	Part No.	Description	Qty	Options
	(235-15-21013)	TRANSMISSION ASS'Y,(EXCEPT P.T.O.)	1	SN:12099--
THIS ASSEMBLY CONSISTS OF ALL PARTS SHOWN IN FIGS.2401B¤ 2405B TO 2459C.				
	(235-15-25002)	· CONTROL VALVE ASS'Y	1	SN:12099--
THIS ASSEMBLY CONSISTS OF ALL PARTS SHOWN IN FIGS.2451B TO 2459C.				
1	235-15-25110	· · BODY,VALVE	1	SN:12099--
2	07042-80108	· · PLUG	5	SN:12099--
3	07043-00108	· · PLUG	1	SN:12099--
4	424-15-15650	· · STOPPER	1	SN:12099--
5	04025-00640	· · PIN,SPRING	1	SN:12099--
6	424-15-15230	· · VALVE	1	SN:12099--
7	425-15-15220	· · VALVE	2	SN:12099--
8	104-15-25490	· · VALVE	2	SN:12099--
9	125-15-15290	· · SPRING,(L=26)	2	SN:12099--
10	104-15-25480	· · VALVE	2	SN:12099--
11	145-14-23720	· · PISTON	1	SN:12099--
12	113-15-25260	· · SHIM¤ 0.5MM	8	SN:12099--
13	424-15-15490	· · GUIDE	2	SN:12099--
14	104-15-25290	· · SPRING¤ (L= 62.0)	1	SN:12099--
	235-15-25640	· · VALVE ASS'Y	1	SN:12099--
15	☆	· · · VALVE	1	SN:12099--
16	☆	· · · PLUG	1	SN:12099--
17	235-15-25290	· · STOPPER	1	SN:12099--
18	07000-72021	· · O-RING	1	SN:12099--
19	424-15-15860	· · COVER	1	SN:12099--
20	424-15-15931	· · GASKET	1	SN:12099--
21	01010-80820	· · BOLT	5	SN:12099--
22	01643-50823	· · WASHER	5	SN:12099--

Printed By : Dwi Iswanto (airafather6107170)

TRANSMISSION (CONTROL VALVE) (2/5)(#12099-)

Item	Part No.	Description	Qty	Options
23	10E-10-12750	· · SPRING,(L=62)	1	SN:12099--
24	235-15-25561	· · VALVE	1	SN:12099--
25	424-15-16410	· · SHIM¤ 0.5MM	2	SN:12099--
26	423-15-16170	· · SPRING¤ (L=118.0)	1	SN:12099--
27	113-15-25260	· · SHIM¤ 0.5MM	8	SN:12099--
28	235-15-26160	· · SPRING,(L=145.7)	1	SN:12099--
29	235-15-25850	· · COVER	1	SN:12099--
30	07000-73030	· · O-RING	1	SN:12099--
31	07000-73035	· · O-RING	1	SN:12099--
32	07000-72015	· · O-RING	1	SN:12099--
33	01010-80825	· · BOLT	6	SN:12099--
34	01643-50823	· · WASHER	6	SN:12099--
35	235-15-15981	· · GASKET	1	SN:12099--
36	01011-81025	· · BOLT	2	SN:12099--
37	01010-81070	· · BOLT	2	SN:12099--
38	01643-31032	· · WASHER	4	SN:12099--

Printed By : Dwi Iswanto (airafather6107170)

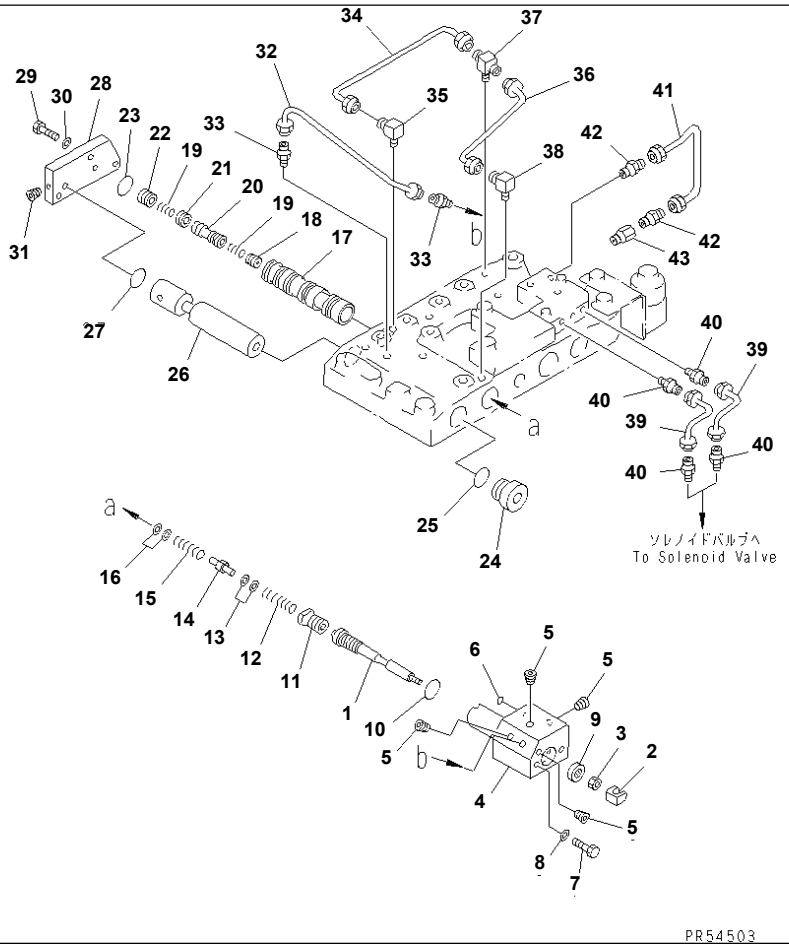

TRANSMISSION (CONTROL VALVE) (3/5)(#11001-(1190))

Item	Part No.	Description	Qty	Options
SERIAL NO. IN ( ) INDICATES TRANSMISSION SERIAL NO.				
	(235-15-00020)	TRANSMISSION ASS'Y	1	SN:11001--(1190)
THIS ASSEMBLY CONSISTS OF ALL PARTS SHOWN IN FIGS.2401 TO 2459.				
	(235-15-00510)	· CONTROL VALVE ASS'Y	1	SN:11001--(1190)
THIS ASSEMBLY CONSISTS OF ALL PARTS SHOWN IN FIGS.2451 TO 2459.				
1	235-15-25160	· · SPOOL	1	SN:11001--(1190)
2	235-15-15710	· · YOKE	1	SN:11001--(1190)
3	01580-10806	· · NUT	1	SN:11001--(1190)
4	235-15-25230	· · COVER	1	SN:11001--(1190)
5	07043-70108	· · PLUG	4	SN:11001--(1190)
6	07000-01009	· · O-RING	1	SN:11001--(1190)
7	01010-50875	· · BOLT	2	SN:11001--(1190)
8	01643-50823	· · WASHER	2	SN:11001--(1190)
9	235-15-19120	· · SEAL,OIL	1	SN:11001--(1190)
10	07000-72021	· · O-RING	1	SN:11001--(1190)
11	235-15-15171	· · STOPPER	1	SN:11001--(1190)
12	235-15-16192	· · SPRING,(L=24.5)	1	SN:11001--(1190)
13	103-15-35270	· · SHIM¤ 0.5MM	2	SN:11001--(1190)
14	235-15-25180	· · STOPPER	1	SN:11001--(1190)
15	235-15-16181	· · SPRING,(L=31.3)	1	SN:11001--(1190)
16	104-15-36480	· · SHIM¤ 0.5MM	2	SN:11001--(1190)
17	235-15-25420	· · VALVE	1	SN:11001--(1190)
18	103-15-15460	· · VALVE	1	SN:11001--(1190)
19	125-15-15290	· · SPRING,(L=26)	2	SN:11001--(1190)
20	235-15-25480	· · SLEEVE	1	SN:11001--(1190)
21	104-15-25490	· · VALVE	1	SN:11001--(1190)
22	104-15-25480	· · VALVE	1	SN:11001--(1190)

Printed By : Dwi Iswanto (airafather6107170)

TRANSMISSION (CONTROL VALVE) (3/5)(#11001-(1190))

Item	Part No.	Description	Qty	Options
23	07000-73030	· · O-RING	1	SN:11001--(1190)
24	07040-13016	· · PLUG	1	SN:11001--(1190)
25	07002-03034	· · O-RING	1	SN:11001--(1190)
26	235-15-15720	· · SPACER	1	SN:11001--(1190)
27	07000-73030	· · O-RING	1	SN:11001--(1190)
28	235-15-15880	· · COVER	1	SN:11001--(1190)
29	01010-50830	· · BOLT	3	SN:11001--(1190)
30	01643-50823	· · WASHER	3	SN:11001--(1190)
31	07043-70108	· · PLUG	1	SN:11001--(1190)
32	235-15-26310	· · TUBE	1	SN:11001--(1190)
33	07213-50710	· · CONNECTOR	2	SN:11001--(1190)
34	235-15-16320	· · TUBE	1	SN:11001--(1190)
35	176-43-41350	· · ELBOW	1	SN:11001--(1190)
36	235-15-16330	· · TUBE	1	SN:11001--(1190)
37	235-15-16360	· · TEE	1	SN:11001--(1190)
38	176-43-41350	· · ELBOW	1	SN:11001--(1190)
39	235-15-16350	· · TUBE	2	SN:11001--(1190)
40	07213-50710	· · CONNECTOR	4	SN:11001--(1190)
41	235-15-16340	· · TUBE	1	SN:11001--(1190)
42	07213-50710	· · CONNECTOR	2	SN:11001--(1190)
43	207-68-11170	· · NIPPLE	1	SN:11001--(1190)

Printed By : Dwi Iswanto (airafather6107170)

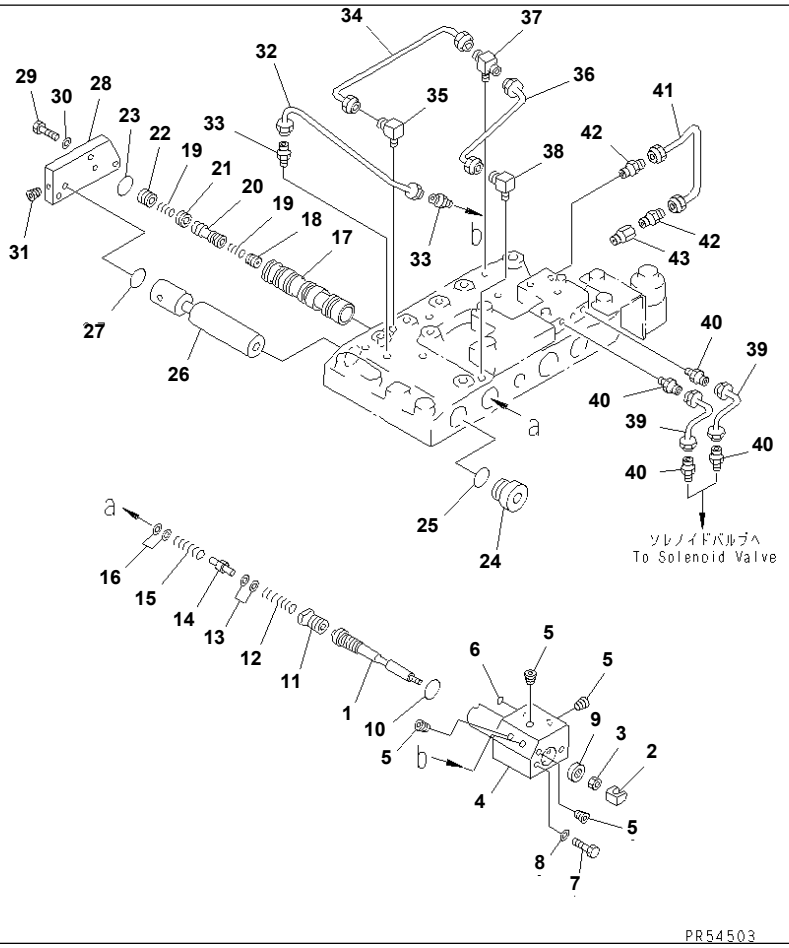

GD825A-2 S/N 11001-UP

TRANSMISSION (CONTROL VALVE) (3/5)(#(1191)-012098)

Item	Part No.	Description	Qty	Options
SERIAL NO. IN ( ) INDICATES TRANSMISSION SERIAL NO.				
	(235-15-00021)	TRANSMISSION ASS'Y	1	SN:(1251)--012098
	(235-15-00020)	TRANSMISSION ASS'Y	1	SN:(1191)--(1250)
THESE ASSEMBLIES CONSIST OF ALL PARTS SHOWN IN FIGS.2401A TO 2459B.				
	(235-15-21011)	· TRANSMISSION ASS'Y,(EXCEPT P.T.O.)	1	SN:(1251)--012098
	(235-15-21010)	· TRANSMISSION ASS'Y,(EXCEPT P.T.O.)	1	SN:(1191)--(1250)
THESE ASSEMBLIES CONSIST OF ALL PARTS SHOWN IN FIGS.2401A¤ 2405A TO 2459B.				
	(235-15-00511)	· · CONTROL VALVE ASS'Y	1	SN:(1251)--012098
	(235-15-00510)	· · CONTROL VALVE ASS'Y	1	SN:(1191)--(1250)
THESE ASSEMBLIES CONSIST OF ALL PARTS SHOWN IN FIGS.2451A TO 2459B.				
1	235-15-25160	· · · SPOOL	1	SN:(1191)--012098
2	235-15-15711	· · · YOKE	1	SN:(1302)--012098
	□235-15-15710	· · · YOKE	1	SN:(1191)--(1301)
3	01580-10806	· · · NUT	1	SN:(1191)--012098
4	235-15-25230	· · · COVER	1	SN:(1191)--012098
5	07043-70108	· · · PLUG	4	SN:(1191)--012098
6	07000-01009	· · · O-RING	1	SN:(1191)--012098
7	01010-50875	· · · BOLT	2	SN:(1191)--012098
8	01643-50823	· · · WASHER	2	SN:(1191)--012098
9	235-15-19120	· · · SEAL,OIL	1	SN:(1191)--012098
10	07000-72021	· · · O-RING	1	SN:(1191)--012098
11	235-15-15171	· · · STOPPER	1	SN:(1191)--012098
12	235-15-16192	· · · SPRING,(L=24.5)	1	SN:(1191)--012098
13	103-15-35270	· · · SHIM¤ 0.5MM	2	SN:(1191)--012098
14	235-15-25180	· · · STOPPER	1	SN:(1191)--012098
15	235-15-16181	· · · SPRING,(L=31.3)	1	SN:(1191)--012098
16	104-15-36480	· · · SHIM¤ 0.5MM	2	SN:(1191)--012098

Printed By : Dwi Iswanto (airafather6107170)

TRANSMISSION (CONTROL VALVE) (3/5)(#(1191)-012098)

Item	Part No.	Description	Qty	Options
17	235-15-25421	· · · VALVE	1	SN:(1213)--012098
	□235-15-25420	· · · VALVE	1	SN:(1191)--(1212)
18	103-15-15460	· · · VALVE	1	SN:(1191)--012098
19	125-15-15290	· · · SPRING,(L=26)	2	SN:(1191)--012098
20	235-15-25480	· · · SLEEVE	1	SN:(1191)--012098
21	104-15-25490	· · · VALVE	1	SN:(1191)--012098
22	104-15-25480	· · · VALVE	1	SN:(1191)--012098
23	07000-73030	· · · O-RING	1	SN:(1191)--012098
24	07040-13016	· · · PLUG	1	SN:(1191)--012098
25	07002-03034	· · · O-RING	1	SN:(1191)--012098
26	235-15-15720	· · · SPACER	1	SN:(1191)--012098
27	07000-73030	· · · O-RING	1	SN:(1191)--012098
28	235-15-15880	· · · COVER	1	SN:(1191)--012098
29	01010-80830	· · · BOLT	3	SN:(1191)--012098
30	01643-50823	· · · WASHER	3	SN:(1191)--012098
31	07043-70108	· · · PLUG	1	SN:(1191)--012098
32	235-15-26310	· · · TUBE	1	SN:(1191)--012098
33	07213-50710	· · · CONNECTOR	2	SN:(1191)--012098
34	235-15-16320	· · · TUBE	1	SN:(1191)--012098
35	176-43-41350	· · · ELBOW	1	SN:(1191)--012098
36	235-15-16330	· · · TUBE	1	SN:(1191)--012098
37	235-15-16360	· · · TEE	1	SN:(1191)--012098
38	176-43-41350	· · · ELBOW	1	SN:(1191)--012098
39	235-15-16350	· · · TUBE	2	SN:(1191)--012098
40	07213-50710	· · · CONNECTOR	4	SN:(1191)--012098
41	235-15-16340	· · · TUBE	1	SN:(1191)--012098
42	07213-50710	· · · CONNECTOR	2	SN:(1191)--012098
43	207-68-11170	· · · NIPPLE	1	SN:(1191)--012098

Printed By : Dwi Iswanto (airafather6107170)

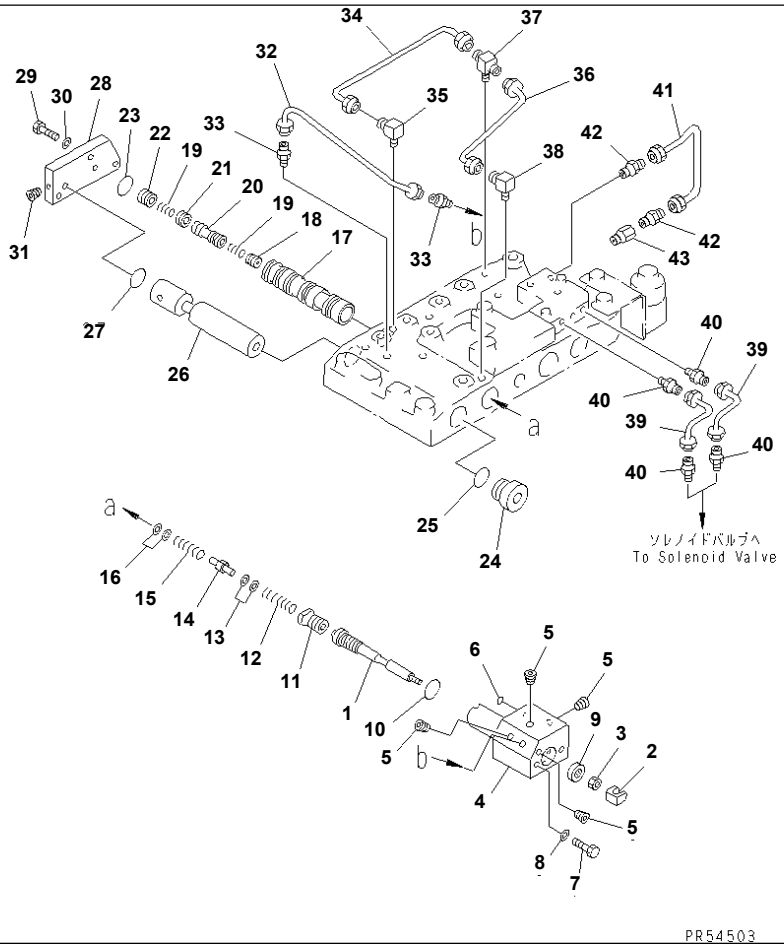

TRANSMISSION (CONTROL VALVE) (3/5)(#12099-)

Item	Part No.	Description	Qty	Options
	(235-15-21013)	TRANSMISSION ASS'Y,(EXCEPT P.T.O.)	1	SN:12099--
THIS ASSEMBLY CONSISTS OF ALL PARTS SHOWN IN FIGS.2401B¤ 2405B TO 2459C.				
	(235-15-25002)	· CONTROL VALVE ASS'Y	1	SN:12099--
THIS ASSEMBLY CONSISTS OF ALL PARTS SHOWN IN FIGS.2451B TO 2459C.				
1	235-15-25160	· · SPOOL	1	SN:12099--
2	235-15-15711	· · YOKE	1	SN:12099--
3	01580-10806	· · NUT	1	SN:12099--
4	235-15-25230	· · COVER	1	SN:12099--
5	07043-70108	· · PLUG	4	SN:12099--
6	07000-01009	· · O-RING	1	SN:12099--
7	01010-50875	· · BOLT	2	SN:12099--
8	01643-50823	· · WASHER	2	SN:12099--
9	235-15-19120	· · SEAL,OIL	1	SN:12099--
10	07000-72021	· · O-RING	1	SN:12099--
11	235-15-25170	· · STOPPER	1	SN:12099--
12	235-15-26190	· · SPRING,(L=24.5)	1	SN:12099--
13	103-15-35270	· · SHIM¤ 0.5MM	4	SN:12099--
14	235-15-25181	· · STOPPER	1	SN:12099--
15	235-15-26180	· · SPRING,(L=31.3)	1	SN:12099--
16	104-15-36480	· · SHIM¤ 0.5MM	2	SN:12099--
17	235-15-25421	· · VALVE	1	SN:12099--
18	103-15-15460	· · VALVE	1	SN:12099--
19	125-15-15290	· · SPRING,(L=26)	2	SN:12099--
20	235-15-25480	· · SLEEVE	1	SN:12099--
21	104-15-25490	· · VALVE	1	SN:12099--
22	104-15-25480	· · VALVE	1	SN:12099--
23	07000-73030	· · O-RING	1	SN:12099--

Printed By : Dwi Iswanto (airafather6107170)

TRANSMISSION (CONTROL VALVE) (3/5)(#12099-)

Item	Part No.	Description	Qty	Options
24	07040-13016	· · PLUG	1	SN:12099--
25	07002-03034	· · O-RING	1	SN:12099--
26	235-15-15720	· · SPACER	1	SN:12099--
27	07000-73030	· · O-RING	1	SN:12099--
28	235-15-15880	· · COVER	1	SN:12099--
29	01010-80830	· · BOLT	3	SN:12099--
30	01643-50823	· · WASHER	3	SN:12099--
31	07043-70108	· · PLUG	1	SN:12099--
32	235-15-26310	· · TUBE	1	SN:12099--
33	07213-50710	· · CONNECTOR	2	SN:12099--
34	235-15-16320	· · TUBE	1	SN:12099--
35	176-43-41350	· · ELBOW	1	SN:12099--
36	235-15-16330	· · TUBE	1	SN:12099--
37	235-15-16360	· · TEE	1	SN:12099--
38	176-43-41350	· · ELBOW	1	SN:12099--
39	235-15-16350	· · TUBE	2	SN:12099--
40	07213-50710	· · CONNECTOR	4	SN:12099--
41	235-15-16340	· · TUBE	1	SN:12099--
42	07213-50710	· · CONNECTOR	2	SN:12099--
43	207-68-11170	· · NIPPLE	1	SN:12099--

Printed By : Dwi Iswanto (airafather6107170)

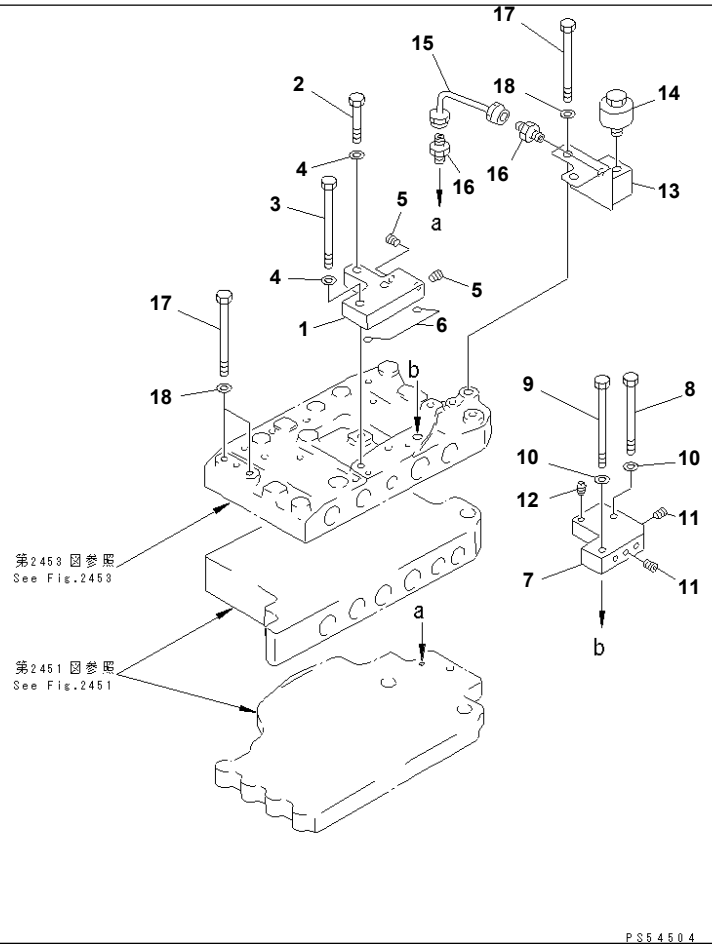

GD825A-2 S/N 11001-UP

TRANSMISSION (CONTROL VALVE) (4/5)(#11001-(1190))

Item	Part No.	Description	Qty	Options
SERIAL NO. IN ( ) INDICATES TRANSMISSION SERIAL NO.				
	(235-15-00020)	TRANSMISSION ASS'Y	1	SN:11001--(1190)
THIS ASSEMBLY CONSISTS OF ALL PARTS SHOWN IN FIGS.2401 TO 2459.				
	(235-15-00510)	· CONTROL VALVE ASS'Y	1	SN:11001--(1190)
THIS ASSEMBLY CONSISTS OF ALL PARTS SHOWN IN FIGS.2451 TO 2459.				
1	235-15-25860	· · PLATE	1	SN:11001--(1190)
2	01010-51040	· · BOLT	1	SN:11001--(1190)
3	01011-51075	· · BOLT	2	SN:11001--(1190)
4	01643-31032	· · WASHER	3	SN:11001--(1190)
5	07043-70108	· · PLUG	2	SN:11001--(1190)
6	07000-01009	· · O-RING	2	SN:11001--(1190)
7	235-15-15890	· · PLATE	1	SN:11001--(1190)
8	01010-51090	· · BOLT	1	SN:11001--(1190)
9	01011-51075	· · BOLT	1	SN:11001--(1190)
10	01643-31032	· · WASHER	2	SN:11001--(1190)
11	07043-70108	· · PLUG	2	SN:11001--(1190)
12	07042-20108	· · PLUG	1	SN:11001--(1190)
13	235-15-25870	· · BLOCK	1	SN:11001--(1190)
14	07030-00252	· · BREATHER	1	SN:11001--(1190)
15	235-15-26370	· · TUBE	1	SN:11001--(1190)
16	07213-50813	· · CONNECTOR	2	SN:11001--(1190)
17	01011-81055	· BOLT	10	SN:11001--(1190)
18	01643-31032	· WASHER	10	SN:11001--(1190)

Printed By : Dwi Iswanto (airafather6107170)

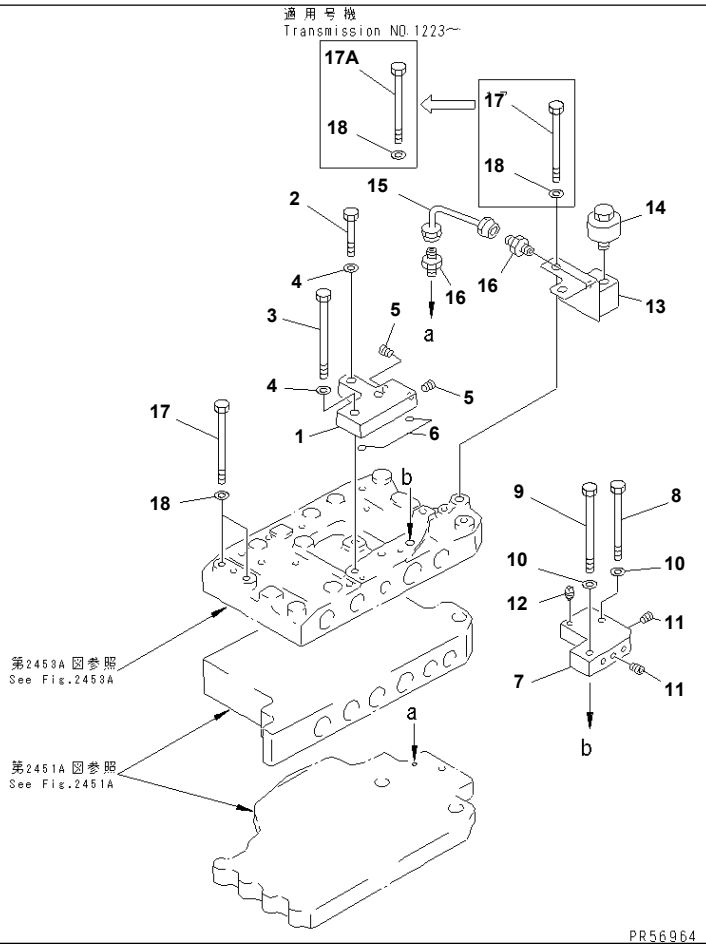

TRANSMISSION (CONTROL VALVE) (4/5)(#(1191)-012098)

Item	Part No.	Description	Qty	Options
SERIAL NO. IN ( ) INDICATES TRANSMISSION SERIAL NO.				
	(235-15-00021)	TRANSMISSION ASS'Y	1	SN:(1251)--012098
	(235-15-00020)	TRANSMISSION ASS'Y	1	SN:(1191)--(1250)
THESE ASSEMBLIES CONSIST OF ALL PARTS SHOWN IN FIGS.2401A TO 2459B.				
	(235-15-21011)	· TRANSMISSION ASS'Y,(EXCEPT P.T.O.)	1	SN:(1251)--012098
	(235-15-21010)	· TRANSMISSION ASS'Y,(EXCEPT P.T.O.)	1	SN:(1191)--(1250)
THESE ASSEMBLIES CONSIST OF ALL PARTS SHOWN IN FIGS.2401A¤ 2405A TO 2459B.				
	(235-15-00511)	· · CONTROL VALVE ASS'Y	1	SN:(1251)--012098
	(235-15-00510)	· · CONTROL VALVE ASS'Y	1	SN:(1191)--(1250)
THESE ASSEMBLIES CONSIST OF ALL PARTS SHOWN IN FIGS.2451A TO 2459B.				
1	235-15-25860	· · · PLATE	1	SN:(1191)--012098
2	01010-81040	· · · BOLT	1	SN:(1191)--012098
3	01011-81075	· · · BOLT	2	SN:(1191)--012098
4	01643-31032	· · · WASHER	3	SN:(1191)--012098
5	07043-70108	· · · PLUG	2	SN:(1191)--012098
6	07000-01009	· · · O-RING	2	SN:(1191)--012098
7	235-15-15890	· · · PLATE	1	SN:(1191)--012098
8	01010-81090	· · · BOLT	1	SN:(1191)--012098
9	01011-81075	· · · BOLT	1	SN:(1191)--012098
10	01643-31032	· · · WASHER	2	SN:(1191)--012098
11	07043-70108	· · · PLUG	2	SN:(1191)--012098
12	07042-80108	· · · PLUG	1	SN:(1302)--012098
	07042-20108	· · · PLUG	1	SN:(1191)--(1301)
13	235-15-25871	· · · BLOCK	1	SN:(1220)--012098
	235-15-25870	· · · BLOCK	1	SN:(1191)--(1219)
14	07030-00252	· · · BREATHER	1	SN:(1191)--012098
15	235-15-26370	· · · TUBE	1	SN:(1191)--012098

Printed By : Dwi Iswanto (airafather6107170)

TRANSMISSION (CONTROL VALVE) (4/5)(#(1191)-012098)

Item	Part No.	Description	Qty	Options
16	07213-50813	· · · CONNECTOR	2	SN:(1191)--012098
17	01011-81055	· · BOLT	8	SN:(1223)--012098
	01011-81055	· · BOLT	10	SN:(1191)--(1222)
17A	01011-81060	· · BOLT	2	SN:(1223)--012098
18	01643-31032	· · WASHER	10	SN:(1191)--012098

Printed By : Dwi Iswanto (airafather6107170)

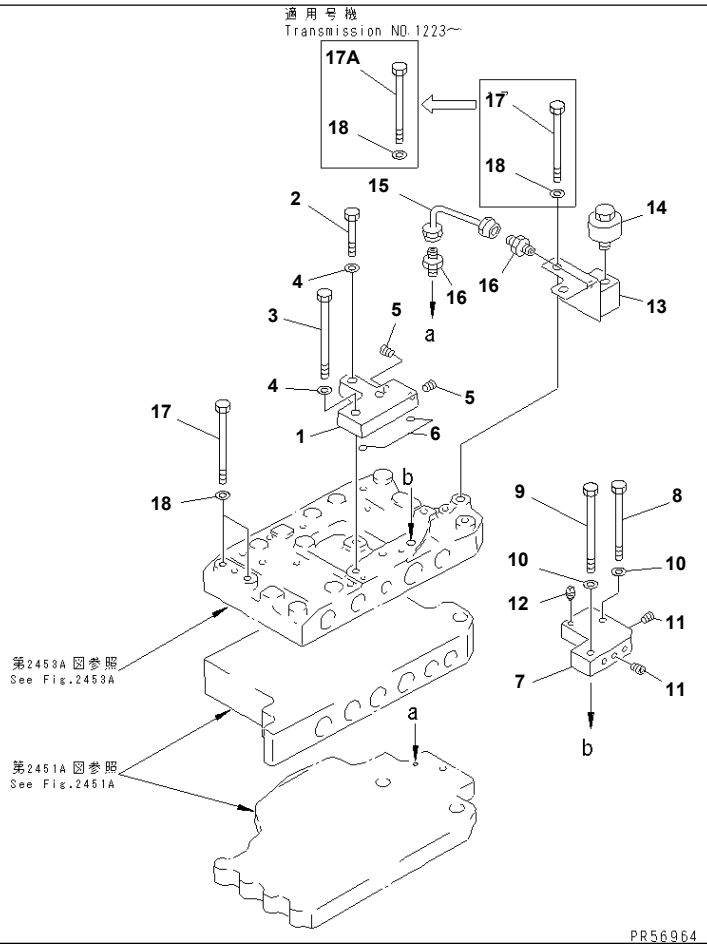

TRANSMISSION (CONTROL VALVE) (4/5)(#12099-)

Item	Part No.	Description	Qty	Options
	(235-15-21013)	TRANSMISSION ASS'Y,(EXCEPT P.T.O.)	1	SN:12099--
THIS ASSEMBLY CONSISTS OF ALL PARTS SHOWN IN FIGS.2401B¤ 2405B TO 2459C.				
	(235-15-25002)	· CONTROL VALVE ASS'Y	1	SN:12099--
THIS ASSEMBLY CONSISTS OF ALL PARTS SHOWN IN FIGS.2451B TO 2459C.				
1	235-15-25860	· · PLATE	1	SN:12099--
2	01010-81040	· · BOLT	1	SN:12099--
3	01011-81075	· · BOLT	2	SN:12099--
4	01643-31032	· · WASHER	3	SN:12099--
5	07043-70108	· · PLUG	2	SN:12099--
6	07000-01009	· · O-RING	2	SN:12099--
7	235-15-15890	· · PLATE	1	SN:12099--
8	01010-81090	· · BOLT	1	SN:12099--
9	01011-81075	· · BOLT	1	SN:12099--
10	01643-31032	· · WASHER	2	SN:12099--
11	07043-70108	· · PLUG	2	SN:12099--
12	07042-80108	· · PLUG	1	SN:12099--
13	235-15-25871	· · BLOCK	1	SN:12099--
14	07030-00252	· · BREATHER	1	SN:12099--
15	235-15-26370	· · TUBE	1	SN:12099--
16	07213-50813	· · CONNECTOR	2	SN:12099--
17	01011-81055	· BOLT	8	SN:12099--
17A	01011-81060	· BOLT	2	SN:12099--
18	01643-31032	· WASHER	10	SN:12099--

Printed By : Dwi Iswanto (airafather6107170)

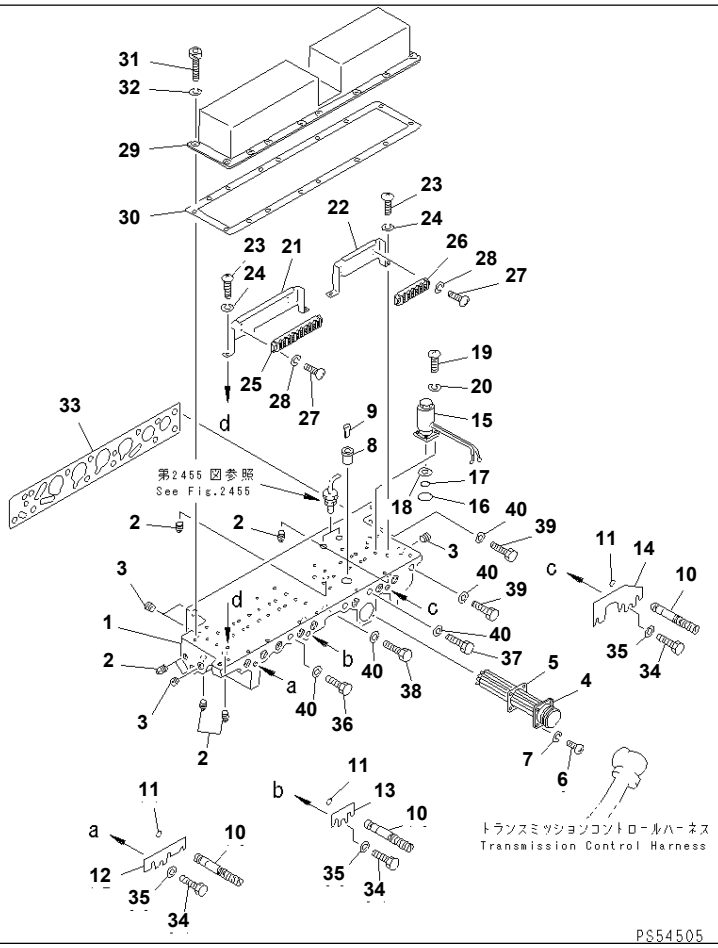

Ref. 2459 **Page 060570**

GD825A-2 S/N 11001-UP

TRANSMISSION (CONTROL VALVE) (5/5)(#11001-(1190))

Item	Part No.	Description	Qty	Options
SERIAL NO. IN ( ) INDICATES TRANSMISSION SERIAL NO.				
	(235-15-00020)	TRANSMISSION ASS'Y	1	SN:11001--(1190)
THIS ASSEMBLY CONSISTS OF ALL PARTS SHOWN IN FIGS.2401 TO 2459.				
	(235-15-00510)	· CONTROL VALVE ASS'Y	1	SN:11001--(1190)
THIS ASSEMBLY CONSISTS OF ALL PARTS SHOWN IN FIGS.2451 TO 2459.				
	235-15-00701	· · SOLENOID VALVE A.	1	SN:11001--(1190)
1	235-15-17112	· · · SEAT,SOLENOID	1	SN:11001--(1190)
2	07042-20108	· · · PLUG	6	SN:11001--(1190)
3	07043-50211	· · · PLUG	4	SN:11001--(1190)
4	235-15-17220	· · · WIRE ASS'Y	1	SN:11001--(1190)
5	568-15-15880	· · · GASKET	1	SN:11001--(1190)
6	01220-40310	· · · SCREW	4	SN:11001--(1190)
7	01601-20307	· · · WASHER,SPRING	4	SN:11001--(1190)
8	568-15-15960	· · · BUSHING	1	SN:11001--(1190)
9	568-15-15970	· · · PAD	1	SN:11001--(1190)
10	235-15-17310	· · · SPOOL	8	SN:11001--(1190)
11	07000-71007	· · · O-RING	8	SN:11001--(1190)
12	235-15-17340	· · · PLATE	1	SN:11001--(1190)
13	235-15-17350	· · · PLATE	1	SN:11001--(1190)
14	235-15-17360	· · · PLATE	1	SN:11001--(1190)
15	561-15-47210	· · · VALVE,SOLENOID	8	SN:11001--(1190)
16	568-15-17260	· · · · O-RING	1	SN:11001--(1190)
17	07000-31006	· · · · O-RING	1	SN:11001--(1190)
18	561-15-47230	· · · · SCREEN	1	SN:11001--(1190)
19	01220-40416	· · · SCREW	32	SN:11001--(1190)
20	01601-20410	· · · WASHER,SPRING	32	SN:11001--(1190)
21	235-15-17150	· · · STAND	1	SN:11001--(1190)

Ref. 2459 **Page 060570**

Printed By : Dwi Iswanto (airafather6107170)

TRANSMISSION (CONTROL VALVE) (5/5)(#11001-(1190))

Item	Part No.	Description	Qty	Options
22	235-15-17160	· · · STAND	1	SN:11001--(1190)
23	01220-40412	· · · SCREW	5	SN:11001--(1190)
24	01601-20410	· · · WASHER,SPRING	5	SN:11001--(1190)
25	235-15-17250	· · · TERMINAL	1	SN:11001--(1190)
26	235-15-17260	· · · TERMINAL	1	SN:11001--(1190)
27	01220-40310	· · · SCREW	8	SN:11001--(1190)
28	01601-20307	· · · WASHER,SPRING	8	SN:11001--(1190)
29	235-15-17130	· · · COVER	1	SN:11001--(1190)
30	235-15-17140	· · · GASKET	1	SN:11001--(1190)
31	01252-40616	· · · BOLT	16	SN:11001--(1190)
32	01602-20619	· · · WASHER,SPRING	16	SN:11001--(1190)
33	235-15-17121	· · · GASKET	1	SN:11001--(1190)
34	01010-50816	· · · BOLT	3	SN:11001--(1190)
35	01643-30823	· · · WASHER	3	SN:11001--(1190)
36	01011-51075	· · BOLT	3	SN:11001--(1190)
37	01011-51080	· · BOLT	2	SN:11001--(1190)
38	01011-51025	· · BOLT	3	SN:11001--(1190)
39	01010-51040	· · BOLT	2	SN:11001--(1190)
40	01643-31032	· · WASHER	10	SN:11001--(1190)

Printed By : Dwi Iswanto (airafather6107170)

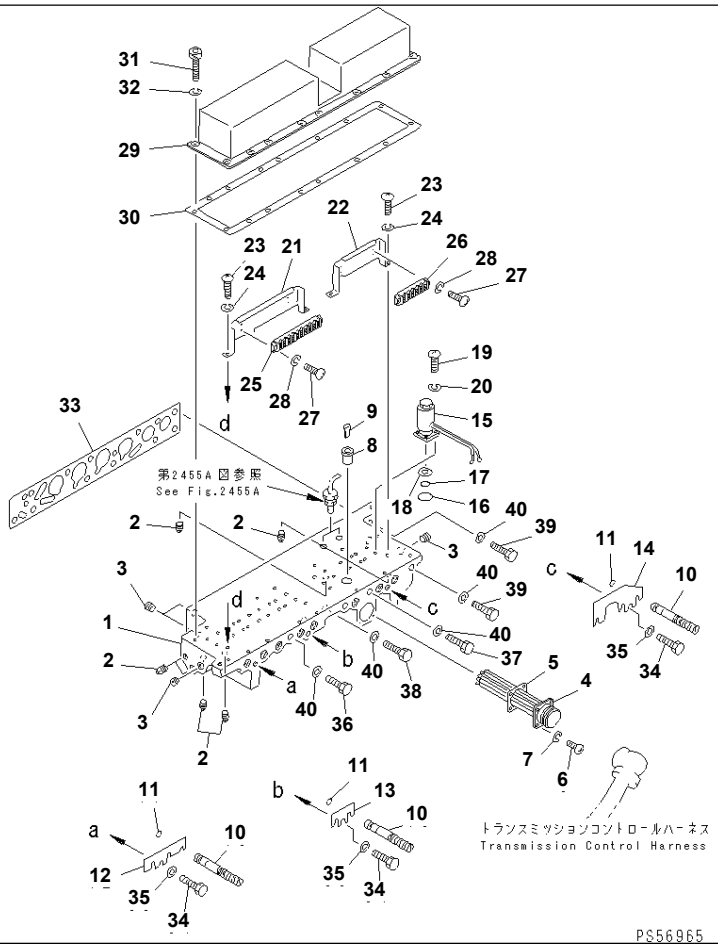

Ref. 2459A **Page 060580**

GD825A-2 S/N 11001-UP

TRANSMISSION (CONTROL VALVE) (5/5)(#(1191)-(1250))

Item	Part No.	Description	Qty	Options
SERIAL NO. IN ( ) INDICATES TRANSMISSION SERIAL NO.				
	(235-15-00020)	TRANSMISSION ASS'Y	1	SN:(1191)--(1250)
THIS ASSEMBLY CONSISTS OF ALL PARTS SHOWN IN FIGS.2401A TO 2459A.				
	(235-15-21010)	· TRANSMISSION ASS'Y,(EXCEPT P.T.O.)	1	SN:(1191)--(1250)
THIS ASSEMBLY CONSISTS OF ALL PARTS SHOWN IN FIGS.2401A¤ 2405A TO 2459A.				
	(235-15-00510)	· · CONTROL VALVE ASS'Y	1	SN:(1191)--(1250)
THIS ASSEMBLY CONSISTS OF ALL PARTS SHOWN IN FIGS.2451A TO 2459A.				
	235-15-00701	· · · SOLENOID VALVE A.	1	SN:(1191)--(1250)
1	235-15-17112	· · · · SEAT,SOLENOID	1	SN:(1191)--(1250)
2	07042-20108	· · · · PLUG	6	SN:(1191)--(1250)
3	07043-70211	· · · · PLUG	4	SN:(1191)--@
4	235-15-17220	· · · · WIRE ASS'Y	1	SN:(1191)--(1250)
5	568-15-15880	· · · · GASKET	1	SN:(1191)--(1250)
6	01220-40310	· · · · SCREW	4	SN:(1191)--(1250)
7	01601-20307	· · · · WASHER,SPRING	4	SN:(1191)--(1250)
8	568-15-15960	· · · · BUSHING	1	SN:(1191)--(1250)
9	568-15-15970	· · · · PAD	1	SN:(1191)--(1250)
10	235-15-17310	· · · · SPOOL	8	SN:(1191)--@
11	07000-71007	· · · · O-RING	8	SN:(1191)--@
12	235-15-17340	· · · · PLATE	1	SN:(1191)--@
13	235-15-17350	· · · · PLATE	1	SN:(1191)--@
14	235-15-17360	· · · · PLATE	1	SN:(1191)--@
15	561-15-47210	· · · · VALVE,SOLENOID	8	SN:(1191)--(1250)
16	568-15-17260	· · · · · O-RING	1	SN:(1191)--(1250)
17	07000-31006	· · · · · O-RING	1	SN:(1191)--(1250)
18	561-15-47230	· · · · · SCREEN	1	SN:(1191)--(1250)
19	01220-40416	· · · · SCREW	32	SN:(1191)--@

Ref. 2459A **Page 060580**

TRANSMISSION (CONTROL VALVE) (5/5)(#(1191)-(1250))

Item	Part No.	Description	Qty	Options
20	01601-20410	· · · · WASHER,SPRING	32	SN:(1191)--@
21	235-15-17150	· · · · STAND	1	SN:(1191)--(1250)
22	235-15-17160	· · · · STAND	1	SN:(1191)--(1250)
23	01220-40412	· · · · SCREW	5	SN:(1191)--(1250)
24	01601-20410	· · · · WASHER,SPRING	5	SN:(1191)--(1250)
25	235-15-17250	· · · · TERMINAL	1	SN:(1191)--(1250)
26	235-15-17260	· · · · TERMINAL	1	SN:(1191)--(1250)
27	01220-40310	· · · · SCREW	8	SN:(1191)--(1250)
28	01601-20307	· · · · WASHER,SPRING	8	SN:(1191)--(1250)
29	235-15-17130	· · · · COVER	1	SN:(1191)--(1250)
30	235-15-17140	· · · · GASKET	1	SN:(1191)--(1250)
31	01252-40616	· · · · BOLT	16	SN:(1191)--(1250)
32	01602-20619	· · · · WASHER,SPRING	16	SN:(1191)--(1250)
33	235-15-17121	· · · · GASKET	1	SN:(1191)--@
34	01010-80816	· · · · BOLT	3	SN:(1191)--@
35	01643-30823	· · · · WASHER	3	SN:(1191)--@
36	01011-81075	· · · BOLT	3	SN:(1191)--@
37	01011-81080	· · · BOLT	2	SN:(1191)--@
38	01011-81025	· · · BOLT	3	SN:(1191)--@
39	01010-81040	· · · BOLT	2	SN:(1191)--@
40	01643-31032	· · · WASHER	10	SN:(1191)--@

Printed By : Dwi Iswanto (airafather6107170)

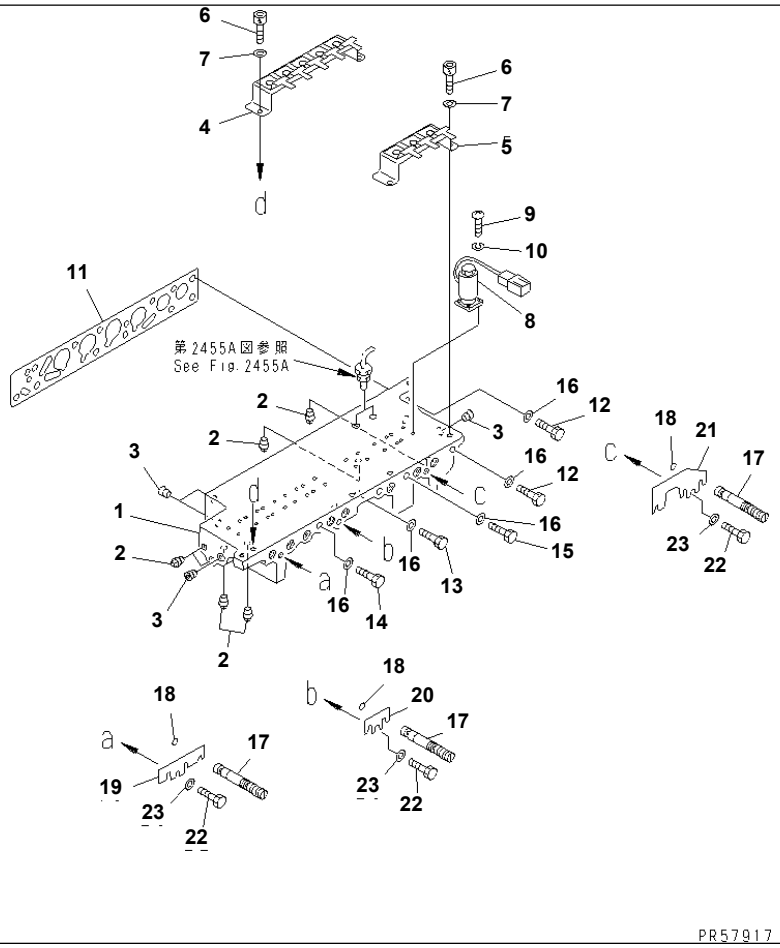

GD825A-2 S/N 11001-UP

TRANSMISSION (CONTROL VALVE) (5/5)(#(1251)-012098)

Item	Part No.	Description	Qty	Options
SERIAL NO. IN ( ) INDICATES TRANSMISSION SERIAL NO.				
	(235-15-00021)	TRANSMISSION ASS'Y	1	SN:(1251)--012098
THIS ASSEMBLY CONSISTS OF ALL PARTS SHOWN IN FIGS.2401A TO 2459B.				
	(235-15-21011)	· TRANSMISSION ASS'Y,(EXCEPT PTO)	1	SN:(1251)--012098
THIS ASSEMBLY CONSISTS OF ALL PARTS SHOWN IN FIGS.2401A¤ 2405A TO 2459B.				
	(235-15-00511)	· · CONTROL VALVE ASS'Y	1	SN:(1251)--012098
THIS ASSEMBLY CONSISTS OF ALL PARTS SHOWN IN FIGS.2451A TO 2459B.				
	235-15-00702	· · · SOLENOID VALVE A.	1	SN:(1251)--012098
1	235-15-17113	· · · · SEAT,SOLENOID	1	SN:(1251)--012098
2	07043-70108	· · · · PLUG	6	SN:(1251)--012098
3	07043-70211	· · · · PLUG	4	SN:(1191)--012098
4	235-15-17440	· · · · COVER	1	SN:(1251)--012098
5	235-15-17460	· · · · COVER	1	SN:(1251)--012098
6	01252-70612	· · · · BOLT	4	SN:(1251)--012098
7	01643-30623	· · · · WASHER	4	SN:(1251)--012098
8	17A-15-17271	· · · · SOLENOID VALVE	8	SN:(1251)--012098
9	01220-40416	· · · · SCREW	32	SN:(1191)--012098
10	01601-20410	· · · · WASHER	32	SN:(1191)--012098
11	235-15-17121	· · · GASKET	1	SN:(1191)--012098
12	01010-81040	· · · BOLT	2	SN:(1191)--012098
13	01010-81025	· · · BOLT	3	SN:(1191)--012098
14	01011-81075	· · · BOLT	3	SN:(1191)--012098
15	01011-81080	· · · BOLT	2	SN:(1191)--012098
16	01643-31032	· · · WASHER	10	SN:(1191)--012098
17	235-15-17310	· · · SPOOL	8	SN:(1191)--012098
18	07000-71007	· · · O-RING	8	SN:(1191)--012098
19	235-15-17340	· · · PLATE	1	SN:(1191)--012098

Printed By : Dwi Iswanto (airafather6107170)

TRANSMISSION (CONTROL VALVE) (5/5)(#(1251)-012098)

Item	Part No.	Description	Qty	Options
20	235-15-17350	· · · PLATE	1	SN:(1191)--012098
21	235-15-17360	· · · PLATE	1	SN:(1191)--012098
22	01010-80816	· · · BOLT	3	SN:(1191)--012098
23	01643-30823	· · · WASHER	3	SN:(1191)--012098

Printed By : Dwi Iswanto (airafather6107170)

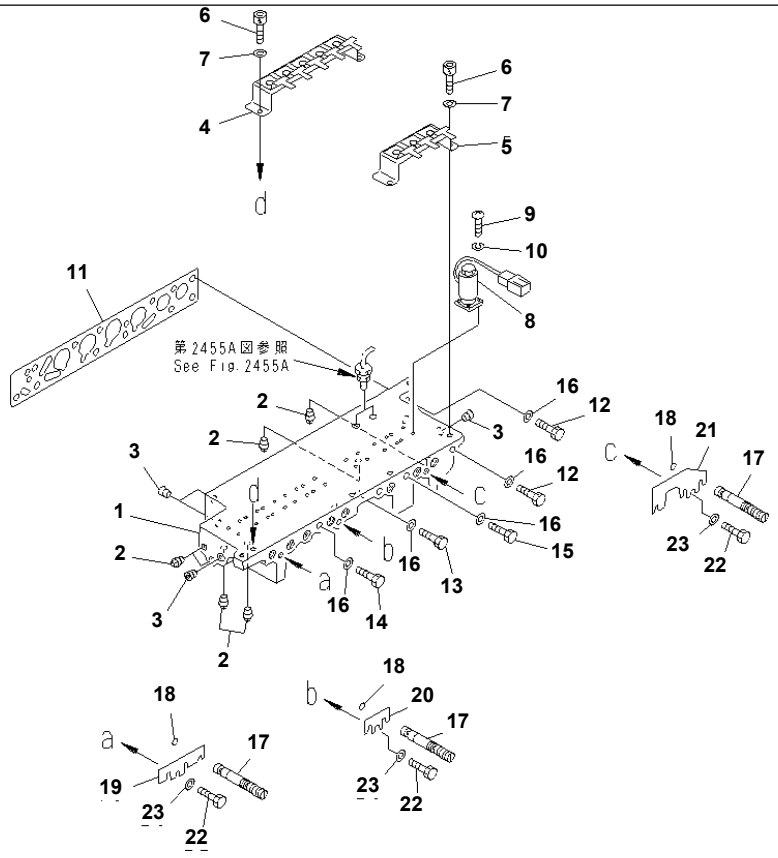

TRANSMISSION (CONTROL VALVE) (5/5)(#12099-)

Item	Part No.	Description	Qty	Options
	(235-15-21013)	TRANSMISSION ASS'Y,(EXCEPT P.T.O.)	1	SN:12099--
THIS ASSEMBLY CONSISTS OF ALL PARTS SHOWN IN FIGS.2401B¤ 2405B TO 2459C.				
	(235-15-25002)	· CONTROL VALVE ASS'Y	1	SN:12099--
THIS ASSEMBLY CONSISTS OF ALL PARTS SHOWN IN FIGS.2451B TO 2459C.				
	235-15-00702	· · SOLENOID VALVE A.	1	SN:12099--
1	235-15-17113	· · · SEAT,SOLENOID	1	SN:12099--
2	07043-70108	· · · PLUG	6	SN:12099--
3	07043-70211	· · · PLUG	4	SN:12099--
4	235-15-17440	· · · COVER	1	SN:12099--
5	235-15-17460	· · · COVER	1	SN:12099--
6	01252-70612	· · · BOLT	4	SN:12099--
7	01643-30623	· · · WASHER	4	SN:12099--
8	17A-15-17271	· · · SOLENOID VALVE	8	SN:12099--
9	01220-40416	· · · SCREW	32	SN:12099--
10	01601-20410	· · · WASHER	32	SN:12099--
11	235-15-17121	· · GASKET	1	SN:12099--
12	01010-81040	· · BOLT	2	SN:12099--
13	01010-81025	· · BOLT	3	SN:12099--
14	01011-81075	· · BOLT	3	SN:12099--
15	01011-81080	· · BOLT	2	SN:12099--
16	01643-31032	· · WASHER	10	SN:12099--
17	235-15-17310	· · SPOOL	8	SN:12099--
18	07000-71007	· · O-RING	8	SN:12099--
19	235-15-17340	· · PLATE	1	SN:12099--
20	235-15-17350	· · PLATE	1	SN:12099--
21	235-15-17360	· · PLATE	1	SN:12099--
22	01010-80816	· · BOLT	3	SN:12099--

Printed By : Dwi Iswanto (airafather6107170)

TRANSMISSION (CONTROL VALVE) (5/5)(#12099-)

Item	Part No.	Description	Qty	Options
23	01643-30823	· · WASHER	3	SN:12099--

Printed By : Dwi Iswanto (airafather6107170)

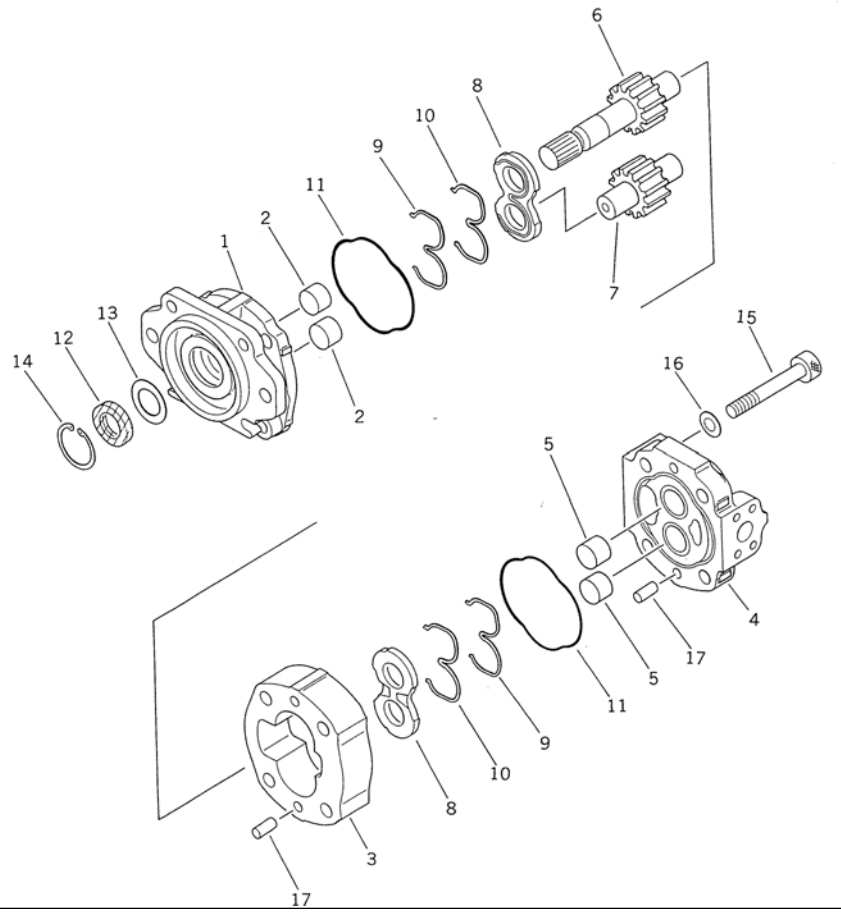

Ref. 2501 **Page 060610**

GD825A-2 S/N 11001-UP
TRANSMISSION PUMP(#11001-12098)

Item	Part No.	Description	Qty	Options
	705-12-36011	PUMP ASS'Y (SAR63)	1	SN:11001--12098
1	(★705-17-03021)	· BRACKET ASS'Y	1	SN:11001--12098
2	(★705-17-03352)	· · BUSHING,PLANE	2	SN:11001--12098
3	(★705-17-36010)	· CASE,GEAR	1	SN:11001--12098
4	(★705-17-03120)	· COVER ASS'Y	1	SN:11001--12098
5	(★705-17-03352)	· · BUSHING,PLANE	2	SN:11001--12098
6	(★705-17-36411)	· GEAR,DRIVE	1	SN:11001--12098
7	(★705-17-36511)	· GEAR,DRIVEN	1	SN:11001--12098
8	705-17-03610	· PLATE,SIDE	2	SN:11001--12098
9	705-17-03443	· RING,BACK-UP	2	SN:11001--12098
10	705-17-03473	· SEAL,RING	2	SN:11001--12098
11	705-17-03381	· O-RING	2	SN:11001--12098
12	705-17-03811	· SEAL,OIL	1	SN:11001--12098
13	705-17-03870	· PLATE	1	SN:11001--12098
14	04065-05220	· RING,SNAP	1	SN:11001--12098
15	705-17-03750	· BOLT	4	SN:11001--12098
16	01643-51645	· WASHER	4	SN:11001--12098
17	04020-01228	· PIN,DOWEL	4	SN:11001--12098

Printed By : Dwi Iswanto (airafather6107170)

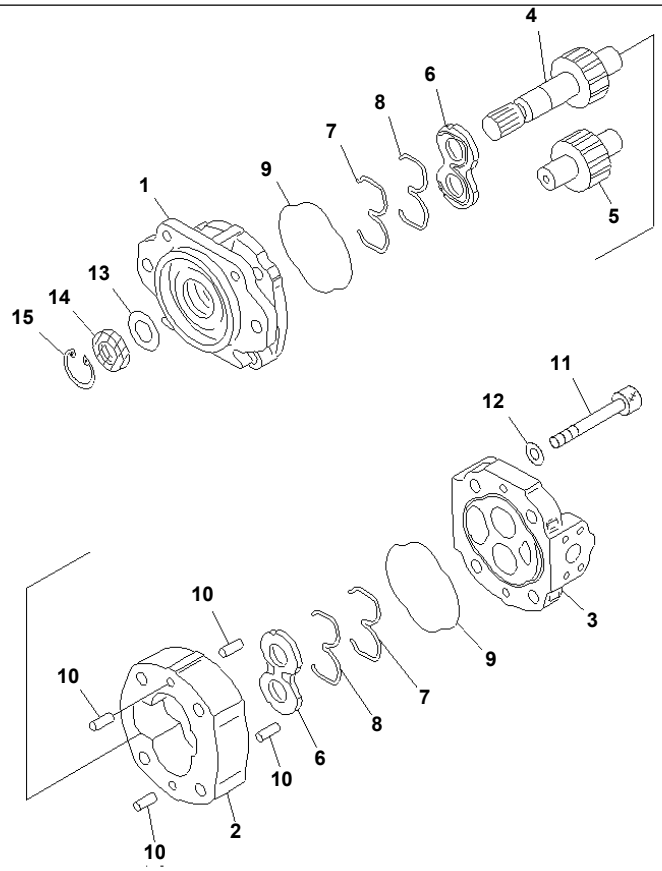

PN45059

GD825A-2 S/N 11001-UP

TRANSMISSION PUMP(#12099-)

Item	Part No.	Description	Qty	Options
	705-22-38160	PUMP ASS'Y,(SAR(3)-80)	1	SN:12107--
	705-12-38011	PUMP ASS'Y,(SAR(3)-80)	1	SN:12099--12106
1	(★705-17-03022)	· BRACKET ASS'Y	1	SN:12107--
	(★705-18-03410)	· BRACKET ASS'Y	1	SN:12099--12106
	(★705-17-03352)	· · BUSHING,PLANE	2	SN:12099--
2	(★705-17-38010)	· CASE,GEAR	1	SN:12099--
3	(★705-17-03121)	· COVER ASS'Y	1	SN:12099--
	(★705-17-03352)	· · BUSHING,PLANE	2	SN:12099--
4	(★705-17-38411)	· GEAR,DRIVE	1	SN:12099--
5	(★705-17-38511)	· GEAR,DRIVEN	1	SN:12099--
6	705-17-03610	· PLATE,SIDE	2	SN:12099--
7	705-17-03443	· RING,BACK-UP	2	SN:12099--
8	705-17-03473	· SEAL,RING	2	SN:12099--
9	705-17-03381	· O-RING	2	SN:12099--
10	04020-01228	· PIN,DOWEL	4	SN:12099--
11	01253-61625	· BOLT	4	SN:12099--
12	01643-51645	· WASHER	4	SN:12099--
13	705-17-03870	· PLATE	1	SN:12099--
14	705-17-03811	· SEAL,OIL	1	SN:12099--
15	04065-05220	· RING,SNAP	1	SN:12099--

Printed By : Dwi Iswanto (airafather6107170)

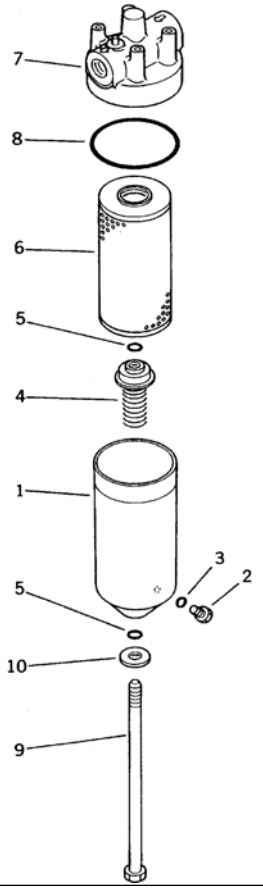

GD825A-2 S/N 11001-UP

TRANSMISSION FILTER

Item	Part No.	Description	Qty	Options
	424-16-11101	OIL FILTER ASS'Y	1	SN:11001--
1	424-16-11161	· CASE	1	SN:11001--
2	07040-11209	· PLUG	1	SN:11001--
3	07002-01223	· O-RING	1	SN:11001--
4	424-16-11191	· SPRING	1	SN:11001--
5	424-16-11630	· O-RING	2	SN:11001--
6	424-16-11140	· ELEMENT	1	SN:11001--
7	424-16-11640	· COVER,HEAD	1	SN:11001--
8	424-16-11130	· O-RING	1	SN:11001--
9	424-16-11171	· BOLT,CENTER	1	SN:11001--
10	424-16-11621	· WASHER	1	SN:11001--

Printed By : Dwi Iswanto (airafather6107170)

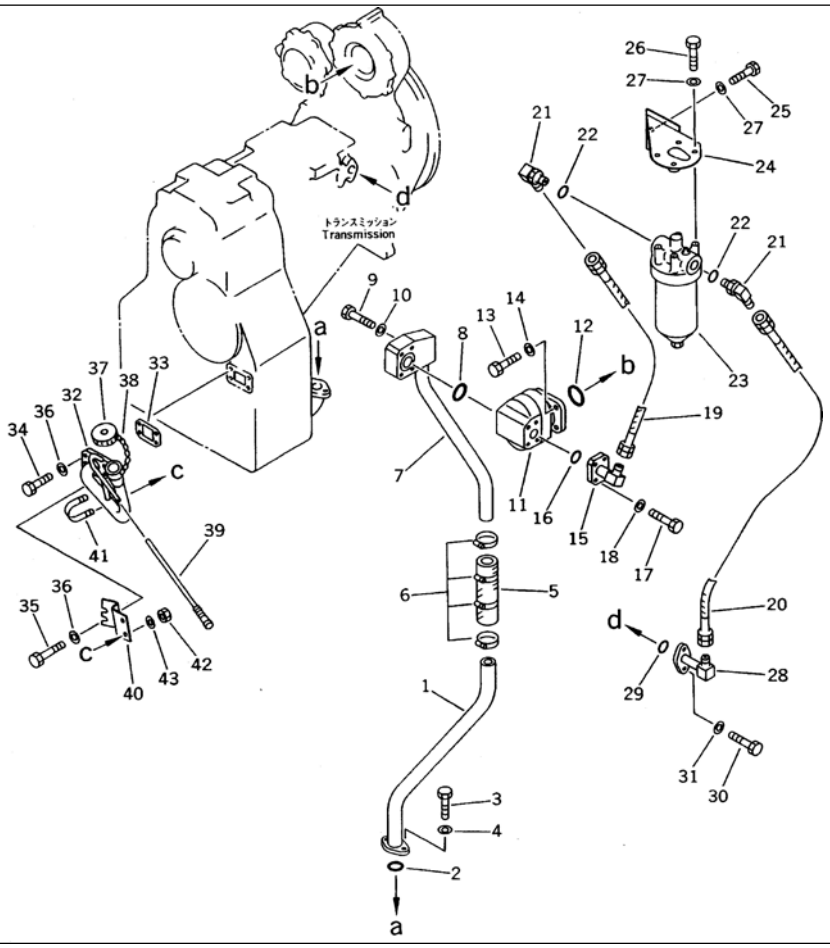

Ref. 2551 **Page 060640**

GD825A-2 S/N 11001-UP
TRANSMISSION PIPING

Item	Part No.	Description	Qty	Options
1	235-16-12111	TUBE	1	SN:12099--
	235-16-12110	TUBE	1	SN:11001--12098
2	07000-12055	O-RING	1	SN:12099--
	07000-13045	O-RING	1	SN:11001--12098
3	01010-51035	BOLT	2	SN:11001--
4	01643-31032	WASHER	2	SN:11001--
5	07260-24718	HOSE	1	SN:12099--
	07260-24118	HOSE	1	SN:11001--12098
6	07281-00709	CLAMP	4	SN:12099--
	07281-00609	CLAMP	4	SN:11001--12098
7	235-16-12122	TUBE	1	SN:12099--
	235-16-12120	TUBE	1	SN:11001--12098
8	07000-12060	O-RING	1	SN:11001--
9	01010-81285	BOLT	4	SN:12099--
	01010-51280	BOLT	4	SN:11001--12098
10	01643-31232	WASHER	4	SN:11001--
11	(705-12-38011)	PUMP ASS'Y,(SAR(3)-80)	1	SN:12099--
	(705-12-36011)	PUMP ASS'Y (SAR63)	1	SN:11001--12098
12	07000-12130	O-RING	1	SN:11001--
13	01010-51235	BOLT	4	SN:11001--
14	01643-31232	WASHER	4	SN:11001--
15	235-16-31110	ELBOW	1	SN:11001--
16	07000-13032	O-RING	1	SN:11001--
17	01010-51035	BOLT	4	SN:11001--
18	01643-31032	WASHER	4	SN:11001--
19	07102-21005	HOSE	1	SN:12001--
	07102-21006	HOSE	1	SN:11001--12000

Printed By : Dwi Iswanto (airafather6107170)

TRANSMISSION PIPING

Item	Part No.	Description	Qty	Options
20	07102-21009	HOSE	1	SN:11001--
21	07235-11034	ELBOW	2	SN:11001--
22	07002-13334	O-RING	2	SN:11001--
23	(424-16-11101)	OIL FILTER ASS'Y	1	SN:11001--
24	235-16-31131	BRACKET	1	SN:11001--
25	01010-51020	BOLT	4	SN:11001--
26	01010-51035	BOLT	4	SN:12001--
	01010-51030	BOLT	4	SN:11001--12000
27	01643-31032	WASHER	8	SN:11001--
28	235-16-31230	TUBE	1	SN:11001--
29	07000-13028	O-RING	1	SN:11001--
30	01010-51035	BOLT	2	SN:11001--
31	01643-31032	WASHER	2	SN:11001--
32	235-16-31310	TUBE	1	SN:11001--
33	235-16-12331	GASKET	1	SN:11001--
34	01010-51240	BOLT	2	SN:11001--
35	01010-51250	BOLT	2	SN:11001--
36	01643-31232	WASHER	4	SN:11001--
37	6136-21-7120	CAP ASS'Y	1	SN:11001--
38	6136-21-7190	CHAIN	1	SN:11001--
39	235-16-31340	GAUGE	1	SN:11001--
40	235-16-31330	STAY	1	SN:11001--
41	07283-23442	CLIP	1	SN:11001--
42	01599-01011	NUT	2	SN:11001--
43	01643-31032	WASHER	2	SN:11001--

Printed By : Dwi Iswanto (airafather6107170)

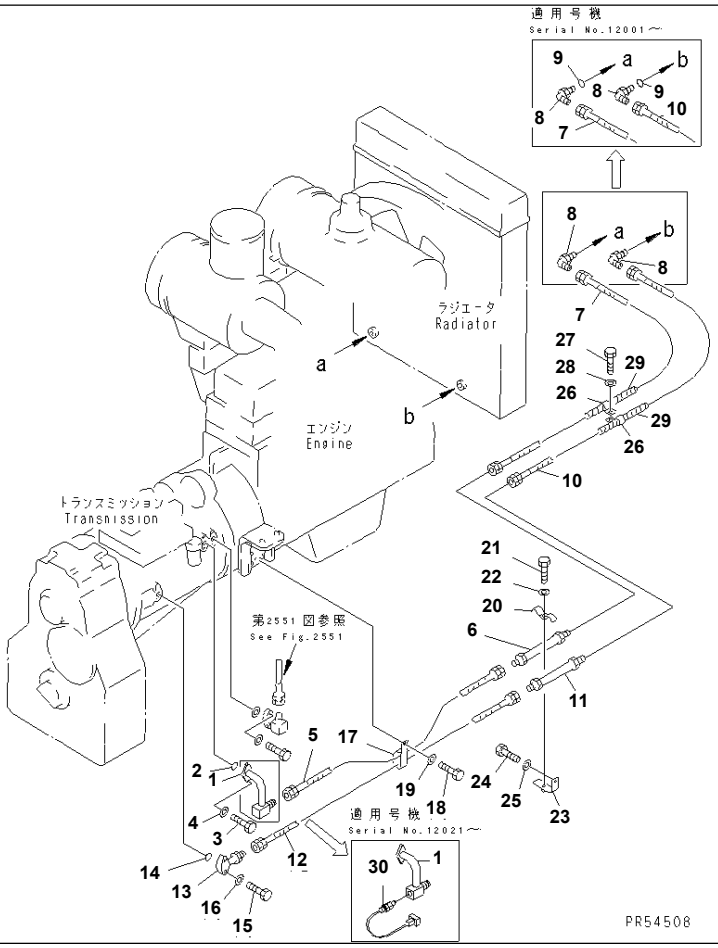

Ref. 2553 **Page 060650**

GD825A-2 S/N 11001-UP
TRANSMISSION OIL COOLER PIPING

Item	Part No.	Description	Qty	Options
1	235-16-31241	TUBE	1	SN:12021--
	235-16-31240	TUBE	1	SN:11001--12020
2	07000-13028	O-RING	1	SN:11001--
3	01010-51035	BOLT	2	SN:11001--
4	01643-31032	WASHER	2	SN:11001--
5	07102-21009	HOSE	1	SN:11001--
6	235-16-31250	TUBE	1	SN:11001--
7	07102-21014	HOSE	1	SN:12001--
	07102-21015	HOSE	1	SN:11001--12000
8	07235-11034	ELBOW	2	SN:11001--
9	07000-13334	O-RING	2	SN:12001--
10	07102-21011	HOSE	1	SN:12001--
	07102-21012	HOSE	1	SN:11001--12000
11	235-16-31250	TUBE	1	SN:11001--
12	07102-21011	HOSE	1	SN:11001--
13	235-16-31190	TUBE	1	SN:12001--
	235-16-12190	ELBOW	1	SN:11001--12000
14	07000-13028	O-RING	1	SN:11001--
15	01010-51065	BOLT	2	SN:11001--
16	01643-31032	WASHER	2	SN:11001--
17	235-16-31160	CLIP	1	SN:11001--
18	01010-51020	BOLT	1	SN:11001--
19	01643-31032	WASHER	1	SN:11001--
20	233-60-34130	CLIP	1	SN:11001--
21	01010-51065	BOLT	1	SN:11001--
22	01643-31032	WASHER	1	SN:11001--
23	235-16-31180	PLATE	1	SN:11001--

Printed By : Dwi Iswanto (airafather6107170)

TRANSMISSION OIL COOLER PIPING

Item	Part No.	Description	Qty	Options
24	01010-51016	BOLT	1	SN:11001--
25	01643-31032	WASHER	1	SN:11001--
26	04434-53411	CLIP	2	SN:11001--
27	01010-51020	BOLT	1	SN:11001--
28	01643-31032	WASHER	1	SN:11001--
29	273-60-24450	TUBE,SPIRAL	4	SN:12001--
	273-60-24450	TUBE,SPIRAL	2	SN:11001--12000
30	(7861-92-3320)	SENSOR,TRANSMISSION OIL TEMPERATURE	1	SN:12021--

Printed By : Dwi Iswanto (airafather6107170)

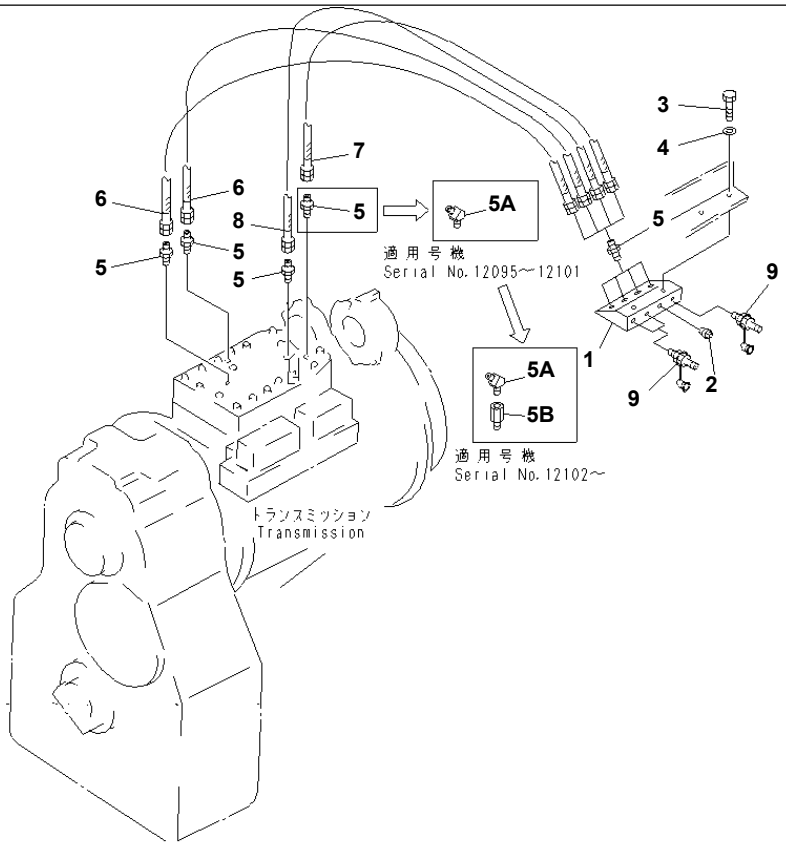

PJ2A703

GD825A-2 S/N 11001-UP

TRANSMISSION OIL PRESSURE CHECK PIPING

Item	Part No.	Description	Qty	Options
1	235-16-13111	JOINT	1	SN:11001--
2	07042-20108	PLUG	1	SN:11001--
3	01010-81020	BOLT	2	SN:.--
	□01010-51020	BOLT	2	SN:11001--.
4	01643-31032	WASHER	2	SN:11001--
5	235-16-13210	CONNECTOR	7	SN:12095--
	235-16-13210	CONNECTOR	8	SN:11001--12094
5A	201-62-41910	ELBOW	1	SN:12095--
5B	203-70-56570	NIPPLE	1	SN:12102--
6	235-16-13180	HOSE	2	SN:11001--
7	235-16-13170	HOSE	1	SN:11001--
8	235-16-13170	HOSE	1	SN:12001--
	235-16-13190	HOSE	1	SN:11001--12000
9	799-101-5160	NIPPLE	3	SN:11001--

Printed By : Dwi Iswanto (airafather6107170)

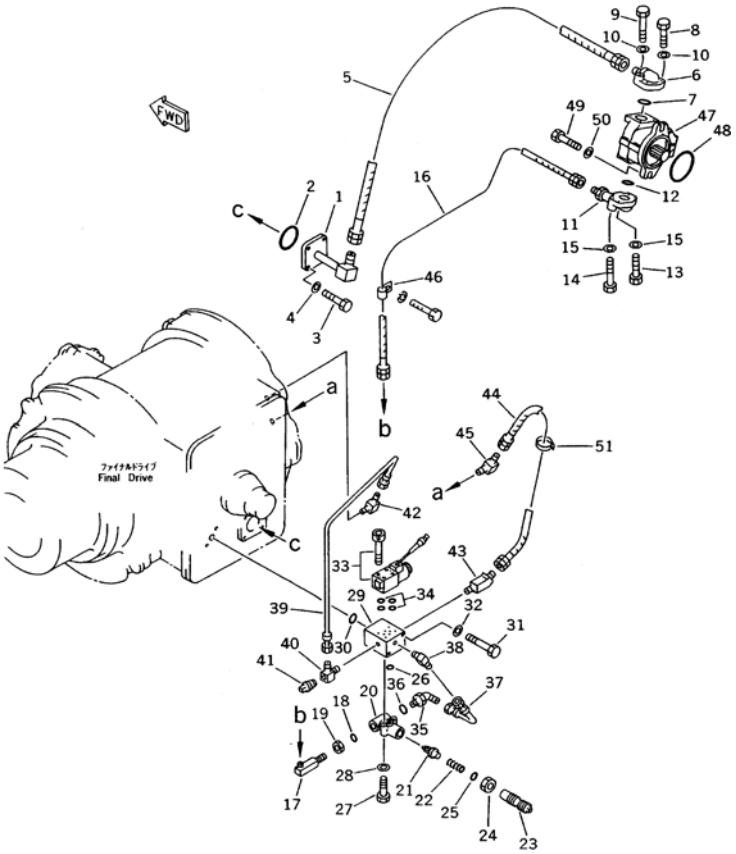

Ref. 2581 **Page 060670**

GD825A-2 S/N 11001-UP
DIFFERENTIAL PIPING

Item	Part No.	Description	Qty	Options
1	235-22-31410	TUBE	1	SN:11001--
2	07000-12070	O-RING	1	SN:11001--
3	01010-51060	BOLT	4	SN:11001--
4	01643-31032	WASHER	4	SN:11001--
5	07102-20610	HOSE	1	SN:11001--
6	235-22-31420	TUBE	1	SN:11001--
7	07000-13035	O-RING	1	SN:11001--
8	01010-51050	BOLT	2	SN:11001--
9	01010-51060	BOLT	2	SN:11001--
10	01643-31032	WASHER	4	SN:11001--
11	235-22-12330	TUBE	1	SN:11001--
12	07000-13030	O-RING	1	SN:11001--
13	01010-50840	BOLT	2	SN:11001--
14	01010-50850	BOLT	2	SN:11001--
15	01643-30823	WASHER	4	SN:11001--
16	07102-20314	HOSE	1	SN:11001--
17	235-22-12350	ELBOW	1	SN:11001--
18	07002-12434	O-RING	1	SN:11001--
19	07239-12410	NUT	1	SN:11001--
	235-22-12600	RELIEF VALVE ASS'Y	1	SN:11001--
20	235-22-12620	· BODY	1	SN:11001--
21	235-22-12640	· VALVE	1	SN:11001--
22	232-14-37461	· SPRING	1	SN:11001--
23	235-22-12630	· SCREW	1	SN:11001--
24	01583-12414	· NUT	1	SN:11001--
25	07002-12434	· O-RING	1	SN:11001--
26	07000-12018	· O-RING	1	SN:11001--

Ref. 2581 **Page 060670**

DIFFERENTIAL PIPING

Item	Part No.	Description	Qty	Options
27	01010-51055	BOLT	2	SN:11001--
28	01643-31032	WASHER	2	SN:11001--
29	235-22-12390	BLOCK	1	SN:11001--
30	07000-12015	O-RING	1	SN:11001--
31	01011-51025	BOLT	2	SN:11001--
32	01643-31032	WASHER	2	SN:11001--
33	235-22-12500	SOLENOID VALVE ASS'Y	1	SN:11001--
	01252-40545	· BOLT	4	SN:11001--
34	235-22-12510	· O-RING	4	SN:11001--
35	236-60-24450	ELBOW	1	SN:11001--
36	07002-12434	O-RING	1	SN:11001--
37	235-22-12380	TUBE	1	SN:11001--
38	234-943-6270	ELBOW	1	SN:11001--
39	235-22-12411	TUBE	1	SN:11001--
40	235-22-12151	ELBOW	1	SN:11001--
41	07042-30108	PLUG	1	SN:11001--
42	234-943-6270	ELBOW	1	SN:11001--
43	235-22-12420	ELBOW	1	SN:11001--
44	07102-20307	HOSE	1	SN:11001--
45	234-943-6270	ELBOW	1	SN:11001--
46	235-22-12440	CLIP	1	SN:11001--
47	(705-61-22010)	PUMP ASS'Y (LAL12)	1	SN:11001--
48	07000-12085	O-RING	1	SN:11001--
49	01010-51030	BOLT	2	SN:11001--
50	01643-31032	WASHER	2	SN:11001--
51	08034-00519	BAND	1	SN:11001--

Printed By : Dwi Iswanto (airafather6107170)

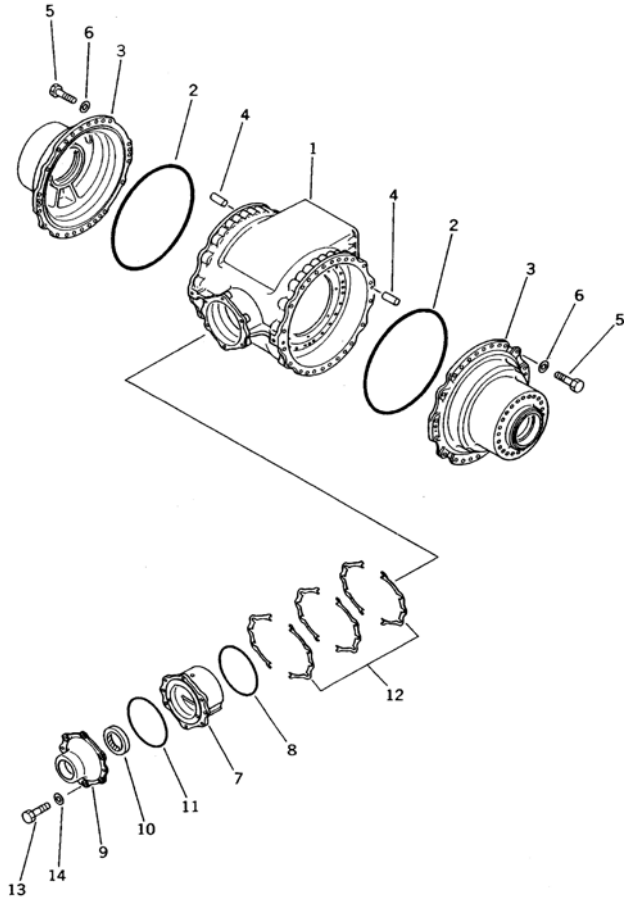

GD825A-2 S/N 11001-UP

FINAL DRIVE CASE (1/2)

Item	Part No.	Description	Qty	Options
	235-22-00132	FINAL DRIVE ASS'Y	1	SN:11099--
	□235-22-00131	FINAL DRIVE ASS'Y	1	SN:11031--11098
	□235-22-00130	FINAL DRIVE ASS'Y	1	SN:11001--11030
THESE ASSEMBLIES CONSIST OF ALL PARTS SHOWN IN FIGS.2601 TO 2607.				
1	235-22-51110	· CASE,CENTER	1	SN:11001--
2	235-22-11120	· O-RING	2	SN:11001--
3	235-22-11130	· CASE,SIDE	2	SN:11001--
4	04020-01638	· PIN,DOWEL	4	SN:11001--
5	01010-52075	· BOLT	48	SN:11001--
6	01643-32060	· WASHER	48	SN:11001--
7	235-22-11281	· CAGE	1	SN:11099--
	□235-22-11280	· RETAINER	1	SN:11001--11098
8	07000-15250	· O-RING	1	SN:11001--
9	235-22-11310	· COVER	1	SN:11001--
10	07012-50115	· SEAL,OIL	1	SN:11099--
	07012-00115	· SEAL,OIL	1	SN:11001--11098
11	07000-15260	· O-RING	1	SN:11001--
12	235-22-00020	· SHIM ASS'Y	1	SN:11001--
	☆	· · SHIM¤ 0.1MM	8	SN:11001--
	☆	· · SHIM¤ 0.2MM	16	SN:11001--
	☆	· · SHIM¤ 0.5MM	8	SN:11001--
13	01010-51665	· BOLT	6	SN:11001--
14	01643-31645	· WASHER	6	SN:11001--

Printed By : Dwi Iswanto (airafather6107170)

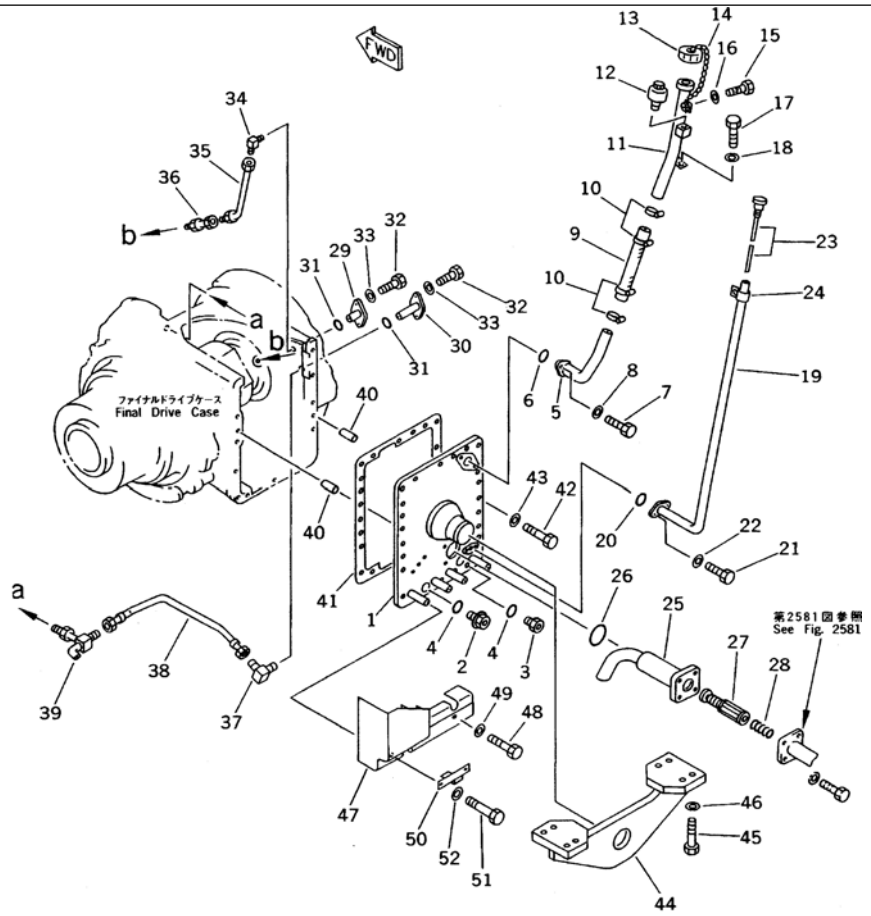

GD825A-2 S/N 11001-UP

FINAL DRIVE CASE (2/2)

Item	Part No.	Description	Qty	Options
	(235-22-00132)	FINAL DRIVE ASS'Y	1	SN:11099--
	(□235-22-00131)	FINAL DRIVE ASS'Y	1	SN:11031--11098
	(□235-22-00130)	FINAL DRIVE ASS'Y	1	SN:11001--11030
THESE ASSEMBLIES CONSIST OF ALL PARTS SHOWN IN FIGS.2601 TO 2607.				
1	235-22-31210	· COVER	1	SN:11001--
2	07044-12412	· PLUG	1	SN:11001--
3	23B-22-21250	· PLUG	1	SN:11001--
4	07002-12434	· O-RING	2	SN:11001--
5	235-22-12240	· TUBE	1	SN:11001--
6	07000-13045	· O-RING	1	SN:11001--
7	01010-51235	· BOLT	2	SN:11001--
8	01643-31232	· WASHER	2	SN:11001--
9	07260-24125	· HOSE	1	SN:11001--
10	07281-00609	· CLAMP	4	SN:11001--
11	235-22-31310	· TUBE	1	SN:11001--
12	07030-10252	· BREATHER	1	SN:11001--
13	6136-21-7120	· CAP ASS'Y	1	SN:11001--
14	6136-21-7190	· CHAIN	1	SN:11001--
15	01010-51020	· BOLT	1	SN:11001--
16	01643-31032	· WASHER	1	SN:11001--
17	01010-51020	· BOLT	2	SN:11001--
18	01643-31032	· WASHER	2	SN:11001--
19	235-22-31360	· TUBE	1	SN:11001--
20	07000-13022	· O-RING	1	SN:11001--
21	01010-51030	· BOLT	2	SN:11001--
22	01643-31032	· WASHER	2	SN:11001--
23	235-22-31350	· GAUGE	1	SN:11001--

Printed By : Dwi Iswanto (airafather6107170)

FINAL DRIVE CASE (2/2)

Item	Part No.	Description	Qty	Options
24	04434-51210	· CLIP	1	SN:11001--
25	235-22-12280	· CASE	1	SN:11001--
26	07000-12070	· O-RING	1	SN:11001--
27	125-15-11722	· MAGNET ASS'Y	1	SN:11001--
28	125-15-11790	· SPRING	1	SN:11001--
29	235-22-13350	· FLANGE	1	SN:11001--
30	235-22-12230	· FLANGE	1	SN:11001--
31	07000-13035	· O-RING	2	SN:11001--
32	01010-51035	· BOLT	4	SN:11001--
33	01643-31032	· WASHER	4	SN:11001--
34	234-943-6660	· ELBOW	1	SN:11001--
35	235-22-12120	· TUBE	1	SN:11001--
36	235-22-12110	· TUBE	1	SN:11001--
37	233-40-33190	· ELBOW	1	SN:11001--
38	235-22-12940	· TUBE	1	SN:11001--
39	235-22-51410	· TUBE	1	SN:11001--
40	04020-01638	· PIN,DOWEL	2	SN:11001--
41	235-22-31222	· GASKET	1	SN:11031--
	235-22-31221	· GASKET	1	SN:11001--11030
42	01010-51645	· BOLT	22	SN:11001--
43	01643-31645	· WASHER	22	SN:11001--
44	235-22-31240	· HANGER	1	SN:11001--
45	01010-52470	· BOLT	8	SN:11001--
46	01643-32460	· WASHER	8	SN:11001--
47	235-22-31231	· COVER	1	SN:11001--
48	01010-51025	· BOLT	2	SN:11001--
49	01643-31032	· WASHER	2	SN:11001--
50	235-22-31250	· PLATE	1	SN:11001--
51	01010-51030	· BOLT	2	SN:11001--
52	01643-31032	· WASHER	2	SN:11001--

Printed By : Dwi Iswanto (airafather6107170)

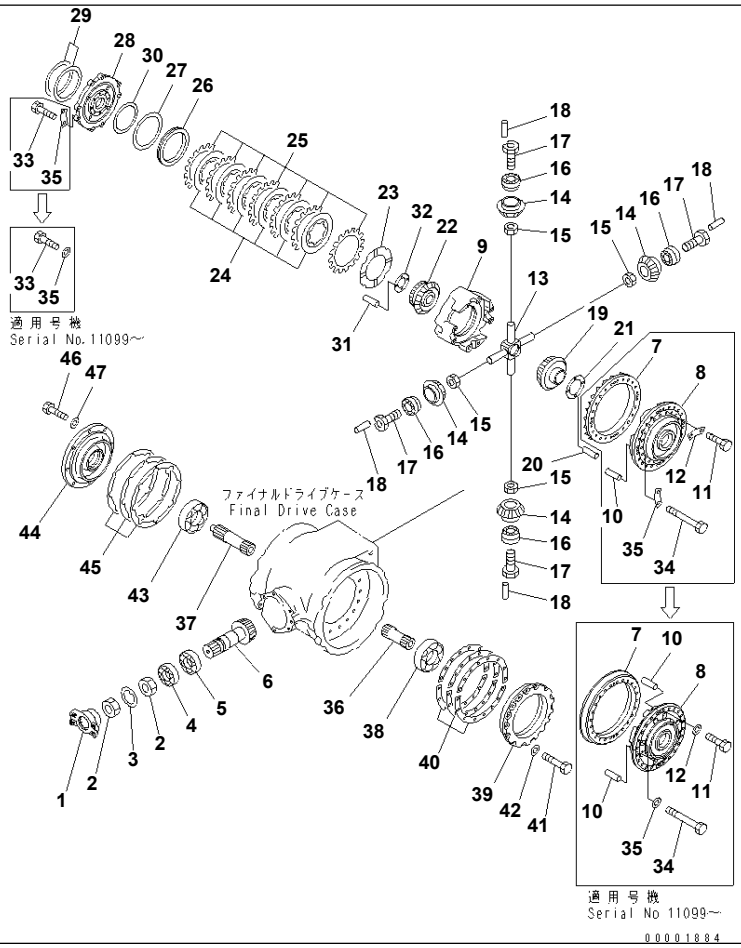

FINAL DRIVE GEAR (1/2)

Item	Part No.	Description	Qty	Options
	(235-22-00132)	FINAL DRIVE ASS'Y	1	SN:11099--
	(□235-22-00131)	FINAL DRIVE ASS'Y	1	SN:11031--11098
	(□235-22-00130)	FINAL DRIVE ASS'Y	1	SN:11001--11030
THESE ASSEMBLIES CONSIST OF ALL PARTS SHOWN IN FIGS.2601 TO 2607.				
1	235-22-11360	· COUPLING	1	SN:11001--
2	235-22-11340	· NUT	2	SN:11001--
3	235-22-11350	· LOCK	1	SN:11001--
4	235-22-11330	· BEARING	1	SN:11001--
5	235-22-11320	· BEARING	1	SN:11001--
	235-22-55300	· BEVEL GEAR ASS'Y	1	SN:11099--
	□235-22-00050	· BEVEL GEAR ASS'Y	1	SN:11001--11098
6	☆	· · PINION	1	SN:11099--
	☆	· · PINION	1	SN:11001--11098
7	☆	· · GEAR	1	SN:11099--
	☆	· · GEAR	1	SN:11001--11098
	235-22-55100	· CASE ASS'Y	1	SN:11099--
	□235-22-00070	· CASE ASS'Y	1	SN:11001--11098
8	☆	· · CASE,DIFFERENTIAL	1	SN:11099--
	☆	· · CASE,DIFFERENTIAL	1	SN:11001--11098
9	☆	· · CASE,DIFFERENTIAL	1	SN:11099--
	☆	· · CASE,DIFFERENTIAL	1	SN:11001--11098
10	04020-01842	· PIN,DOWEL	2	SN:11099--
	04020-01842	· PIN,DOWEL	4	SN:11001--11098
11	01010-51640	· BOLT	24	SN:11099--
	01010-51640	· BOLT	16	SN:11001--11098
12	01643-31645	· WASHER	24	SN:11099--
	235-22-11420	· LOCK	8	SN:11001--11098

Printed By : Dwi Iswanto (airafather6107170)

FINAL DRIVE GEAR (1/2)

Item	Part No.	Description	Qty	Options
13	569-22-21410	· SHAFT	1	SN:11001--
14	235-22-51310	· PINION	4	SN:11001--
15	569-22-21950	· NUT	4	SN:11001--
16	569-22-21850	· BEARING	4	SN:11001--
17	569-22-21440	· SLEEVE	4	SN:11001--
18	565-22-11991	· PIN	4	SN:11001--
19	235-22-51320	· GEAR	1	SN:11001--
20	565-99-81190	· PIN	4	SN:11001--
21	235-22-11430	· WASHER	1	SN:11001--
22	235-22-51330	· GEAR	1	SN:11001--
23	235-22-11540	· PLATE	1	SN:11001--
24	235-22-11560	· DISC	6	SN:11001--
25	235-22-11550	· PLATE	7	SN:11001--
26	235-22-11570	· PISTON	1	SN:11001--
27	235-22-11580	· RING,SEAL	1	SN:11001--
28	235-22-13131	· CASE,DIFFERENTIAL	1	SN:11099--
	235-22-13130	· CASE,DIFFERENTIAL	1	SN:11001--11098
29	235-22-11930	· RING,SEAL	2	SN:11001--
30	235-22-11590	· RING,SEAL	1	SN:11001--
31	565-99-81190	· PIN	4	SN:11001--
32	235-22-11520	· WASHER	1	SN:11001--
33	01010-51650	· BOLT	8	SN:11001--
34	01011-51615	· BOLT	8	SN:11001--
35	01643-31645	· WASHER	16	SN:11099--
	235-22-11620	· LOCK	8	SN:11001--11098
36	235-22-51340	· SHAFT,L.H.	1	SN:11001--
37	235-22-51350	· SHAFT,R.H.	1	SN:11001--
38	235-22-51170	· BEARING,L.H.	1	SN:11001--
39	235-22-51141	· CAGE	1	SN:11099--
	235-22-51140	· CAGE,L.H.	1	SN:11001--11098
40	235-22-00080	· SHIM ASS'Y	1	SN:11001--
	☆	· · SHIM¤ 0.1MM	8	SN:11001--
	☆	· · SHIM¤ 0.2MM	8	SN:11001--
	☆	· · SHIM¤ 0.5MM	10	SN:11001--
41	01010-51230	· BOLT	16	SN:11001--
42	01643-31232	· WASHER	16	SN:11001--
43	234-23-12520	· BEARING,R.H.	1	SN:11001--
44	235-22-51150	· CAGE,R.H.	1	SN:11001--
45	235-22-00090	· SHIM ASS'Y	1	SN:11001--
	☆	· · SHIM¤ 0.1MM	8	SN:11001--
	☆	· · SHIM¤ 0.2MM	8	SN:11001--
	☆	· · SHIM¤ 0.5MM	10	SN:11001--
46	01010-51230	· BOLT	8	SN:11001--
47	01643-31232	· WASHER	8	SN:11001--

Printed By : Dwi Iswanto (airafather6107170)

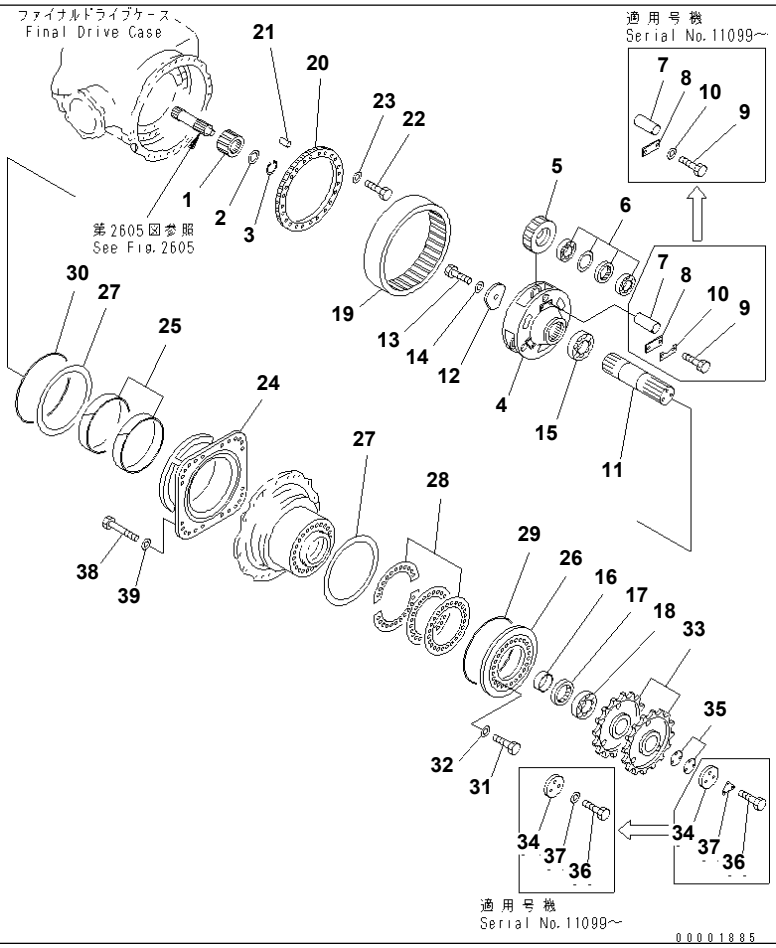

GD825A-2 S/N 11001-UP

FINAL DRIVE GEAR (2/2)

Item	Part No.	Description	Qty	Options
	(235-22-00132)	FINAL DRIVE ASS'Y	1	SN:11099--
	(□235-22-00131)	FINAL DRIVE ASS'Y	1	SN:11031--11098
	(□235-22-00130)	FINAL DRIVE ASS'Y	1	SN:11001--11030
THESE ASSEMBLIES CONSIST OF ALL PARTS SHOWN IN FIGS.2601 TO 2607.				
1	235-22-11750	· GEAR,SUN	2	SN:11001--
2	235-22-11760	· SPACER	2	SN:11001--
3	04065-08025	· RING,SNAP	2	SN:11001--
4	235-22-11820	· CARRIER	2	SN:11001--
5	235-22-11770	· PLANET,PINION	6	SN:11001--
6	235-22-11780	· BEARING	6	SN:11001--
7	235-22-11790	· SHAFT	6	SN:11001--
8	235-22-11870	· PLATE,LOCK	6	SN:11001--
9	01010-61230	· BOLT	12	SN:11099--
	01010-51225	· BOLT	12	SN:11001--11098
10	01643-51645	· WASHER	12	SN:11099--
	235-22-11810	· LOCK	6	SN:11001--11098
11	235-22-11851	· SHAFT	2	SN:11099--
	235-22-11850	· SHAFT	2	SN:11001--11098
12	235-22-11830	· HOLDER	2	SN:11001--
13	235-22-11840	· BOLT	2	SN:11001--
14	01643-32460	· WASHER	2	SN:11001--
15	234-23-12520	· BEARING	2	SN:11001--
16	235-22-11860	· SPACER	2	SN:11001--
17	07012-50130	· SEAL,OIL	2	SN:11099--
	07012-00130	· SEAL,OIL	2	SN:11001--11098
18	234-23-12520	· BEARING	2	SN:11001--
19	235-22-11290	· GEAR,RING	2	SN:11001--

Printed By : Dwi Iswanto (airafather6107170)

FINAL DRIVE GEAR (2/2)

Item	Part No.	Description	Qty	Options
20	235-22-51160	· GEAR	2	SN:11001--
21	04020-01638	· PIN,DOWEL	8	SN:11001--
22	01010-51650	· BOLT	48	SN:11001--
23	01643-31645	· WASHER	48	SN:11001--
24	235-22-11210	· FLANGE	2	SN:11001--
25	235-22-11140	· BUSHING	4	SN:11001--
26	235-22-11190	· PLATE	2	SN:11001--
27	235-22-11150	· WASHER	4	SN:11001--
28	235-22-00011	· SHIM ASS'Y	1	SN:11001--
	☆	· · SHIM,0.1MM	32	SN:11001--
	☆	· · SHIM,0.2MM	8	SN:11001--
	☆	· · SHIM,0.5MM	8	SN:11001--
29	07000-15485	· O-RING	2	SN:11001--
30	235-22-11250	· O-RING	2	SN:11001--
31	01010-52080	· BOLT	48	SN:11001--
32	01643-32060	· WASHER	48	SN:11001--
33	235-22-11880	· SPROCKET	4	SN:11001--
34	235-22-11890	· HOLDER	2	SN:11001--
35	235-25-00030	· SHIM ASS'Y	1	SN:11001--
	☆	· · SHIM¤ 0.1MM	8	SN:11001--
	☆	· · SHIM¤ 0.2MM	16	SN:11001--
	☆	· · SHIM¤ 0.5MM	8	SN:11001--
36	01010-61660	· BOLT	6	SN:11099--
	01010-51655	· BOLT	6	SN:11001--11098
37	01643-31645	· WASHER	6	SN:11099--
	235-25-11440	· LOCK	2	SN:11001--11098
38	01010-52065	· BOLT	48	SN:11001--
39	01643-32060	· WASHER	48	SN:11001--

Printed By : Dwi Iswanto (airafather6107170)

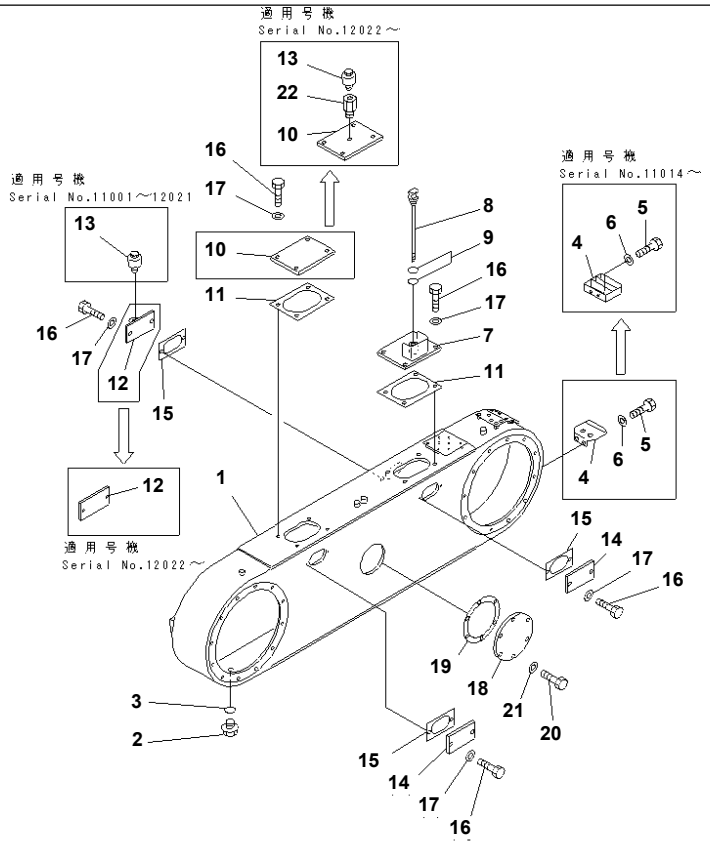

GD825A-2 S/N 11001-UP
TANDEM DRIVE CASE

Item	Part No.	Description	Qty	Options
	235-25-00151	TANDEM DRIVE ASS'Y,L.H.	1	SN:11014--
	235-25-00150	TANDEM DRIVE ASS'Y,L.H.	1	SN:11001--11013
	235-25-00161	TANDEM DRIVE ASS'Y,R.H.	1	SN:11014--
	235-25-00160	TANDEM DRIVE ASS'Y,R.H.	1	SN:11001--11013
THESE ASSEMBLIES CONSIST OF ALL PARTS SHOWN IN FIGS.2651 AND 2653.				
1	235-25-11551	· CASE,L.H.	1	SN:11001--
	235-25-11570	· CASE,R.H.	1	SN:11001--
2	07044-12412	· PLUG	1	SN:11001--
3	07002-12434	· O-RING	1	SN:11001--
4	235-25-31150	· STEP	1	SN:11014--
	235-25-11560	· STEP	1	SN:11001--11013
5	01010-51225	· BOLT	2	SN:11001--
6	01643-31232	· WASHER	2	SN:11001--
7	235-25-31130	· COVER	1	SN:11001--
8	235-25-11510	· GAUGE	1	SN:11001--
9	07002-12434	· O-RING	2	SN:11001--
10	235-25-31160	· COVER	1	SN:12022--
	235-25-31120	· COVER	1	SN:11001--12021
11	235-25-11141	· GASKET	2	SN:11001--
12	234-25-31150	· COVER	1	SN:11022--
	234-25-31160	· COVER	1	SN:11001--12021
13	07030-00252	· BREATHER	1	SN:11022--
	07030-10252	· BREATHER	1	SN:11001--12021
14	234-25-31150	· COVER	3	SN:11001--
15	235-25-11160	· GASKET	4	SN:11001--
16	01010-51230	· BOLT	16	SN:11001--
17	01643-31232	· WASHER	16	SN:11001--

Printed By : Dwi Iswanto (airafather6107170)

TANDEM DRIVE CASE

Item	Part No.	Description	Qty	Options
18	235-25-11180	· COVER	1	SN:11001--
19	235-25-11191	· GASKET	1	SN:11001--
20	01010-51235	· BOLT	6	SN:11001--
21	01643-31232	· WASHER	6	SN:11001--
22	170-21-11190	· NIPPLE	2	SN:12022--

Printed By : Dwi Iswanto (airafather6107170)

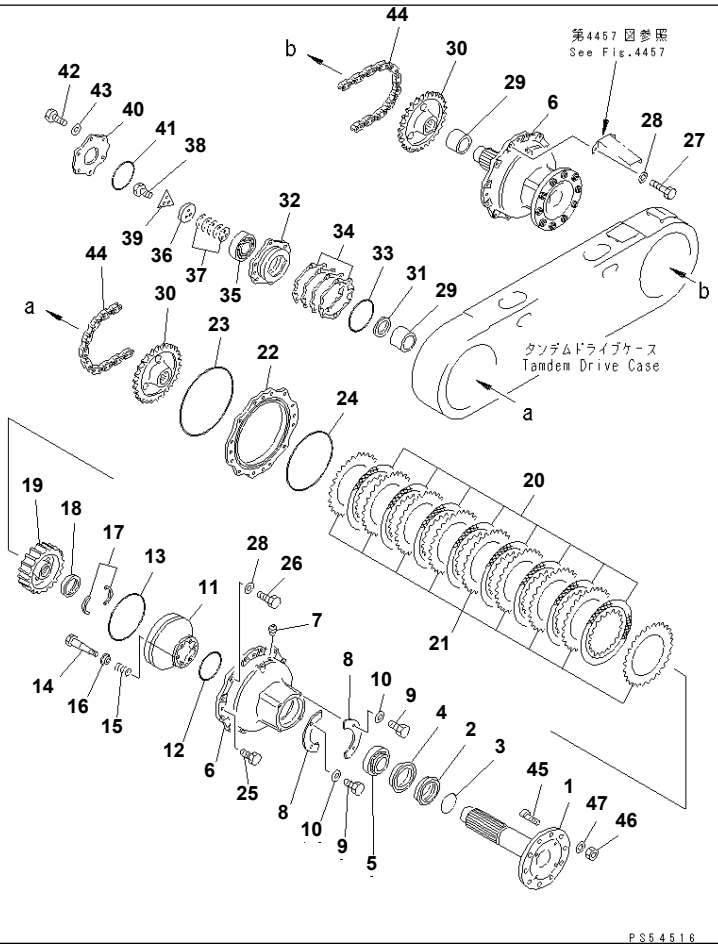

GD825A-2 S/N 11001-UP

TANDEM DRIVE GEAR AND CHAIN

Item	Part No.	Description	Qty	Options
	(235-25-00151)	TANDEM DRIVE ASS'Y,L.H.	1	SN:11014--
	(235-25-00150)	TANDEM DRIVE ASS'Y,L.H.	1	SN:11001--11013
	(235-25-00161)	TANDEM DRIVE ASS'Y,R.H.	1	SN:11014--
	(235-25-00160)	TANDEM DRIVE ASS'Y,R.H.	1	SN:11001--11013
THESE ASSEMBLIES CONSIST OF ALL PARTS SHOWN IN FIGS.2651 AND 2653.				
1	235-25-11270	· SHAFT	2	SN:11001--
2	235-25-11290	· SPACER	2	SN:11001--
3	07000-12120	· O-RING	2	SN:11001--
4	235-25-11310	· SEAL	2	SN:11001--
5	235-25-11530	· BEARING	2	SN:11001--
6	235-25-11220	· CAGE	2	SN:11001--
7	07042-20312	· PLUG	4	SN:11001--
8	235-25-11230	· PLATE	4	SN:11001--
9	01010-51020	· BOLT	8	SN:11001--
10	01643-31032	· WASHER	8	SN:11001--
11	235-25-11240	· PISTON	2	SN:11001--
12	235-25-11250	· O-RING	2	SN:11001--
13	232-25-51170	· O-RING	2	SN:11001--
14	235-25-11260	· BOLT	12	SN:11001--
15	232-25-51641	· SPRING	12	SN:11001--
16	235-25-11610	· WASHER	12	SN:11001--
17	235-25-11340	· COLLAR	4	SN:11001--
18	235-25-11320	· SPACER	2	SN:11001--
19	235-25-11330	· GEAR	2	SN:11001--
20	235-25-11360	· DISC	16	SN:11001--
21	232-25-51430	· PLATE	18	SN:11001--
22	235-25-11210	· SUPPORT	2	SN:11001--

Printed By : Dwi Iswanto (airafather6107170)

TANDEM DRIVE GEAR AND CHAIN

Item	Part No.	Description	Qty	Options
23	07000-15470	· O-RING	2	SN:11001--
24	07000-15460	· O-RING	2	SN:11001--
25	01010-52035	· BOLT	8	SN:11001--
26	01010-52075	· BOLT	20	SN:11001--
27	01010-52080	· BOLT	4	SN:11001--
28	01643-32060	· WASHER	24	SN:11001--
29	235-25-11370	· SPACER	2	SN:11001--
30	235-25-11350	· SPROCKET	2	SN:11001--
31	235-25-11380	· SPACER	2	SN:11001--
32	235-25-11480	· CAGE	2	SN:11001--
33	07000-15220	· O-RING	2	SN:11001--
34	235-25-00021	· SHIM ASS'Y	2	SN:11001--
	☆	· · SHIM¤ 0.1MM	16	SN:11001--
	☆	· · SHIM¤ 0.2MM	8	SN:11001--
	☆	· · SHIM¤ 0.5MM	8	SN:11001--
35	235-25-11540	· BEARING	2	SN:11001--
36	235-25-11430	· HOLDER	2	SN:11001--
37	235-25-00010	· SHIM ASS'Y	2	SN:11001--
	☆	· · SHIM¤ 0.1MM	8	SN:11001--
	☆	· · SHIM¤ 0.2MM	6	SN:11001--
	☆	· · SHIM¤ 0.5MM	3	SN:11001--
38	01010-51635	· BOLT	6	SN:11001--
39	235-25-11440	· LOCK	2	SN:11001--
40	235-25-11490	· COVER	2	SN:11001--
41	07000-15195	· O-RING	2	SN:11001--
42	01010-52075	· BOLT	12	SN:11001--
43	01643-32060	· WASHER	12	SN:11001--
44	235-25-11700	· CHAIN ASS'Y	2	SN:11001--
	☆	· · PIN LINK ASS'Y	24	SN:11001--
	☆	· · ROLLER LINK ASS'Y	25	SN:11001--
	235-25-11730	· · JOINT LINK ASS'Y	1	SN:11001--
	235-25-11740	· · PIN	2	SN:11001--
45	235-25-11280	· BOLT	20	SN:11001--
46	01582-13326	· NUT	20	SN:11001--
47	01643-33380	· WASHER	20	SN:11001--

Printed By : Dwi Iswanto (airafather6107170)

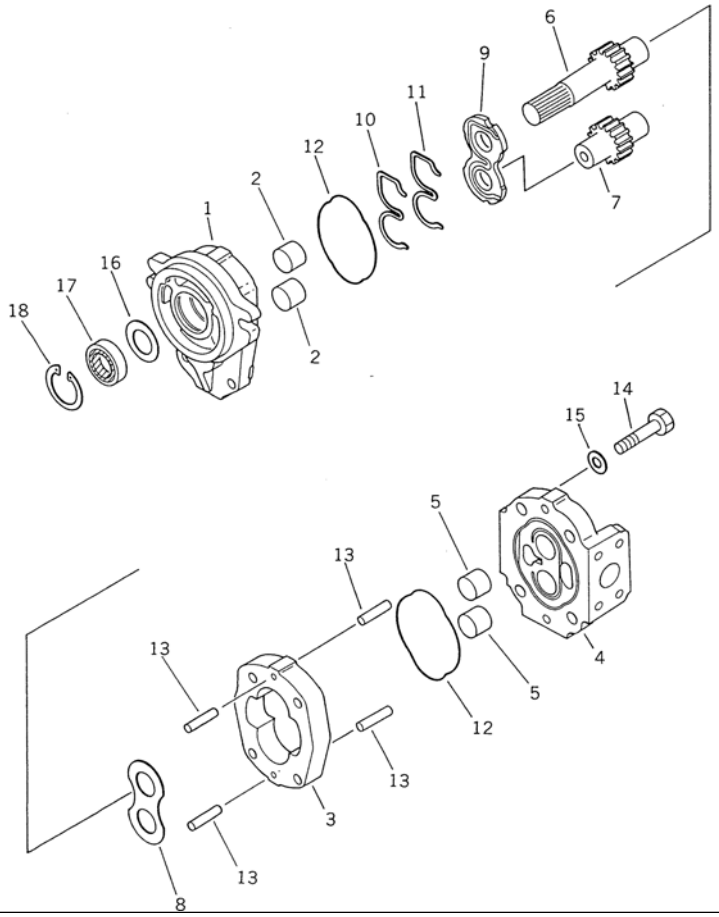

Ref. 2701 **Page 060740**

GD825A-2 S/N 11001-UP
FINAL DRIVE PUMP

Item	Part No.	Description	Qty	Options
	705-61-22010	PUMP ASS'Y (LAL12)	1	SN:11001--
1	(★705-67-01010)	· BRACKET ASS'Y	1	SN:11001--
2	(★705-67-01350)	· · BUSHING,PLANE	2	SN:11001--
3	(★705-67-22010)	· CASE,GEAR	1	SN:11001--
4	(★705-67-01120)	· COVER ASS'Y	1	SN:11001--
5	(★705-67-01350)	· · BUSHING,PLANE	2	SN:11001--
6	(★705-67-22410)	· GEAR,DRIVE	1	SN:11001--
7	(★705-67-22510)	· GEAR,DRIVEN	1	SN:11001--
8	705-67-01620	· PLATE,SIDE	1	SN:11001--
9	705-67-01610	· PLATE,SIDE	1	SN:11001--
10	705-67-01440	· RING,BACK-UP	1	SN:11001--
11	705-17-01470	· SEAL	1	SN:11001--
12	705-17-01381	· O-RING	2	SN:11001--
13	04020-00820	· PIN,DOWEL	4	SN:11001--
14	01252-61060	· BOLT	4	SN:11001--
15	01643-51032	· WASHER	4	SN:11001--
16	705-17-01870	· PLATE	1	SN:11001--
17	704-17-01810	· SEAL,OIL	1	SN:11001--
18	04065-03515	· RING,SNAP	1	SN:11001--

Ref. 2701 **Page 060740**

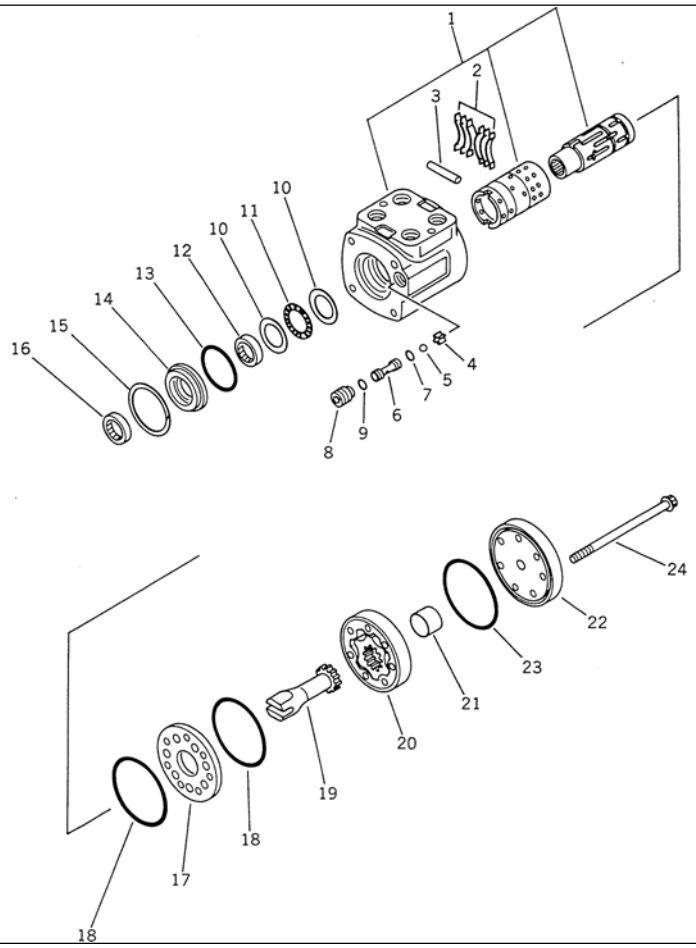

GD825A-2 S/N 11001-UP

STEERING VALVE

Item	Part No.	Description	Qty	Options
	235-40-14101	STEERING VALVE ASS'Y	1	SN:11009--
	235-40-14100	STEERING VALVE ASS'Y	1	SN:11001--11008
1	235-40-14370	· CONTROL ASS'Y	1	SN:11009--
	235-40-14170	· CONTROL ASS'Y	1	SN:11001--11008
2	235-40-14180	· · SPRING	6	SN:11001--
3	235-40-14190	· · PIN	1	SN:11001--
4	235-40-14260	· RETAINER	1	SN:11001--
5	235-40-14250	· BALL	1	SN:11001--
6	235-40-14230	· SEAT	1	SN:11001--
7	☆	· O-RING (K1)	1	SN:11001--
8	235-40-14210	· SCREW	1	SN:11001--
9	☆	· O-RING (K1)	1	SN:11001--
	235-40-14390	· BEARING ASS'Y	1	SN:11001--
10	☆	· · RACE	2	SN:11001--
11	☆	· · NEEDLE	1	SN:11001--
12	☆	· SEAL,OIL (K1)	1	SN:11001--
13	☆	· O-RING (K1)	1	SN:11001--
14	235-40-14350	· BUSHING	1	SN:11001--
15	235-40-14340	· RING	1	SN:11001--
16	☆	· SEAL,DUST (K1)	1	SN:11001--
17	235-40-14150	· PLATE,SPACER	1	SN:11001--
18	☆	· O-RING (K1)	2	SN:11001--
19	235-40-14160	· SHAFT,DRIVE	1	SN:11001--
20	235-40-14130	· DRIVE	1	SN:11001--
21	235-40-14140	· SPACER	1	SN:11001--
22	235-40-14120	· CAP,END	1	SN:11001--
23	☆	· O-RING (K1)	1	SN:11001--

Printed By : Dwi Iswanto (airafather6107170)

STEERING VALVE

Item	Part No.	Description	Qty	Options
24	235-40-14110	· SCREW	7	SN:11001--

Printed By : Dwi Iswanto (airafather6107170)

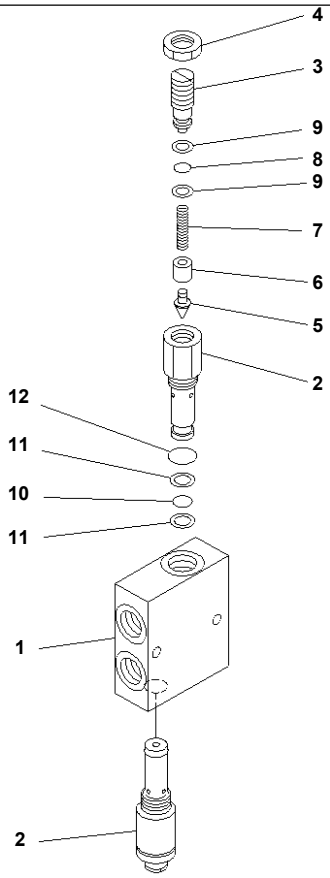

PJ59047

GD825A-2 S/N 11001-UP

STEERING PILOT CHECK VALVE

Item	Part No.	Description	Qty	Options
	232-40-57700	VALVE ASS'Y,DOUBLE RELIEF	1	SN:11001--
1	232-40-57710	· BODY	1	SN:11001--
	232-40-57800	· RELIEF VALVE ASS'Y	2	SN:11001--
2	232-40-57810	· · SLEEVE	1	SN:11001--
3	232-40-57820	· · BOLT	1	SN:11001--
4	232-40-57830	· · NUT	1	SN:11001--
5	135-60-12152	· · VALVE	1	SN:11001--
6	232-60-56150	· · COLLAR	1	SN:11001--
7	232-60-16240	· · SPRING	1	SN:11001--
8	07000-12012	· · O-RING	1	SN:11001--
9	07001-02012	· · RING,BACK-UP	2	SN:11001--
10	07000-12016	· · O-RING	1	SN:11001--
11	07001-02016	· · RING,BACK-UP	2	SN:11001--
12	07002-12434	· · O-RING	1	SN:11001--

Printed By : Dwi Iswanto (airafather6107170)

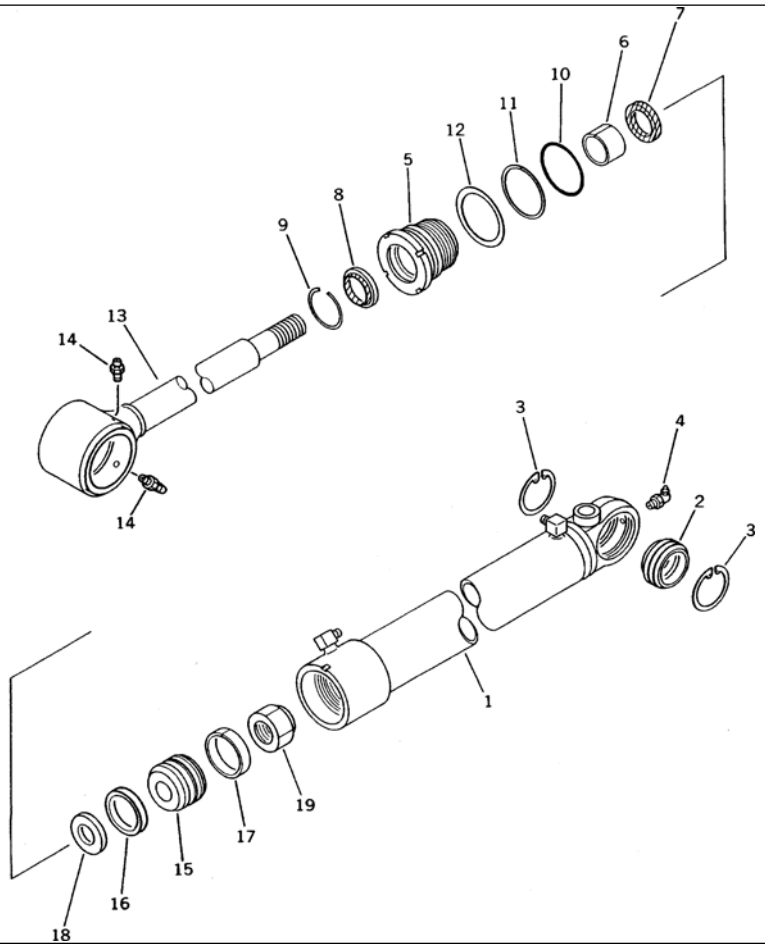

GD825A-2 S/N 11001-UP

STEERING CYLINDER

Item	Part No.	Description	Qty	Options
	707-00-07E30	CYLINDER ASS'Y,L.H.	1	SN:12103--
	235-63-76400	CYLINDER ASS'Y,L.H.	1	SN:11001--12102
	707-00-07E40	CYLINDER ASS'Y,R.H.	1	SN:12103--
	235-63-76500	CYLINDER ASS'Y,R.H.	1	SN:11001--12102
1	235-63-76440	· CYLINDER,L.H.	1	SN:11001--
	235-63-76540	· CYLINDER,R.H.	1	SN:11001--
2	707-76-35010	· BUSHING	1	SN:11001--
3	04065-05520	· RING,SNAP	2	SN:11001--
4	07020-00900	· FITTING,GREASE	1	SN:11001--
5	707-29-60290	· HEAD,CYLINDER	1	SN:11001--
6	07177-04025	· BUSHING	1	SN:11001--
7	707-51-40210	· PACKING,ROD (KIT)	1	SN:11001--
8	198-63-75190	· SEAL,DUST (KIT)	1	SN:11001--
9	07179-12052	· RING,SNAP	1	SN:11001--
10	07000-12065	· O-RING (KIT)	1	SN:11001--
11	07001-02065	· RING,BACK-UP (KIT)	1	SN:11001--
12	707-45-60010	· RING,LOCK	1	SN:11001--
13	235-63-76122	· ROD,PISTON	1	SN:11001--
14	07020-00000	· FITTING,GREASE	2	SN:11001--
15	707-36-60281	· PISTON	1	SN:11001--
16	707-44-60180	· RING,PISTON (KIT)	1	SN:11001--
17	07155-00615	· RING,WEAR (KIT)	1	SN:11001--
18	707-40-60280	· RETAINER,PISTON	1	SN:11001--
19	07165-13033	· NUT,NYLON	1	SN:11001--
SERVICE KIT				
K	707-98-14030	SERVICE KIT,STEERING CYLINDER	2	SN:11001--

Printed By : Dwi Iswanto (airafather6107170)

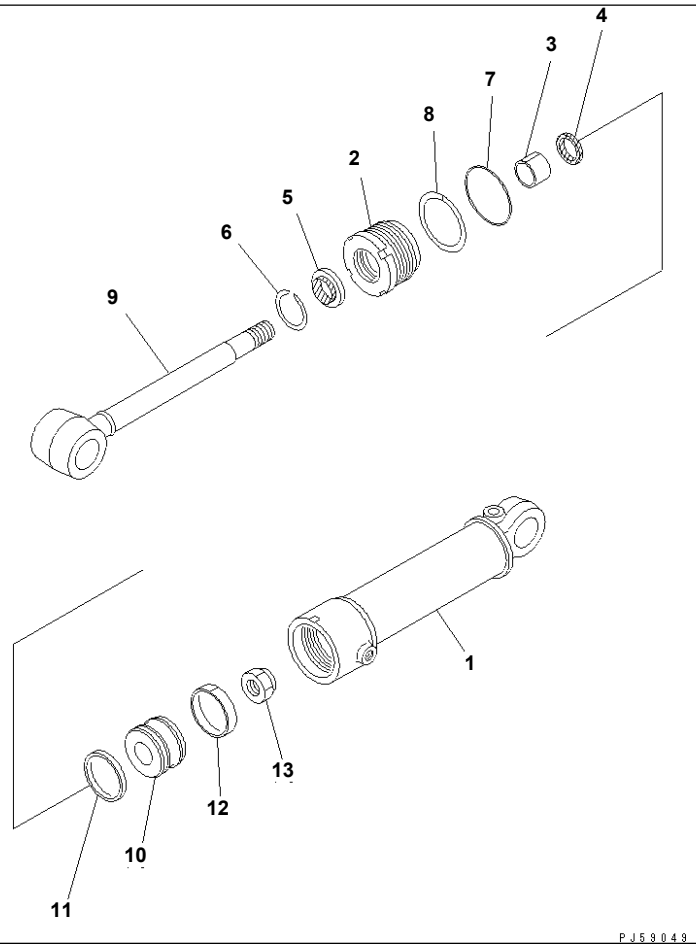

Ref. 2723 **Page 060780**

GD825A-2 S/N 11001-UP
LEANING CYLINDER(#11001-12102)

Item	Part No.	Description	Qty	Options
	235-63-53101	CYLINDER ASS'Y	1	SN:12051--@
	235-63-53100	CYLINDER ASS'Y	1	SN:11001--12050
1	235-63-53141	· CYLINDER	1	SN:12051--@
	235-63-53140	· CYLINDER	1	SN:11001--12050
2	707-29-90191	· HEAD,CYLINDER	1	SN:12051--@
	707-29-90190	· HEAD,CYLINDER	1	SN:11001--12050
3	07177-05030	· BUSHING	1	SN:12051--@
	07177-04530	· BUSHING	1	SN:11001--12050
4	707-51-50211	· PACKING,ROD (KIT)	1	SN:12051--@
	707-51-45210	· PACKING,ROD (KIT)	1	SN:11001--12050
5	176-63-92240	· SEAL,DUST (KIT)	1	SN:12051--@
	112-63-15370	· SEAL,DUST (KIT)	1	SN:11001--12050
6	07179-12062	· RING,SNAP	1	SN:12051--@
	07179-00064	· RING,SNAP	1	SN:11001--12050
7	07000-12095	· O-RING (KIT)	1	SN:11001--@
8	07001-02095	· RING,BACK-UP (KIT)	1	SN:11001--@
9	235-63-53121	· ROD,PISTON	1	SN:12051--@
	235-63-53120	· ROD,PISTON	1	SN:11001--12050
10	707-36-90240	· PISTON	1	SN:12051--@
	707-36-90140	· PISTON	1	SN:11001--12050
11	707-44-90180	· RING,PISTON (KIT)	1	SN:11001--@
12	07155-00912	· RING,WEAR (KIT)	1	SN:12051--@
	07155-00925	· RING,WEAR (KIT)	1	SN:11001--12050
13	07165-13941	· NUT,NYLON	1	SN:12051--@
	07165-13336	· NUT,NYLON	1	SN:11001--12050
SERVICE KIT				
K	707-98-25570	SERVICE KIT,LEANING CYLINDER	1	SN:12051--@

Printed By : Dwi Iswanto (airafather6107170)

LEANING CYLINDER(#11001-12102)

Item	Part No.	Description	Qty	Options
	707-98-24500	SERVICE KIT,LEANING CYLINDER	1	SN:11001--12050

Printed By : Dwi Iswanto (airafather6107170)

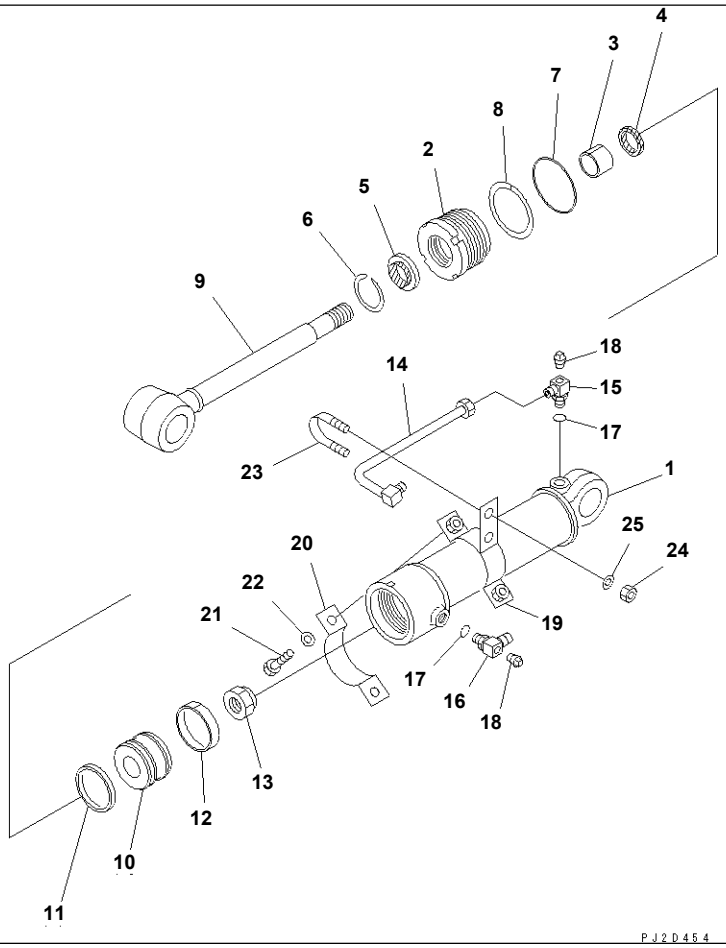

Ref. 2723A **Page 060790**

GD825A-2 S/N 11001-UP

LEANING CYLINDER(#12103-)

Item	Part No.	Description	Qty	Options
G1	(⊙707-00-X7E10)	CYLINDER GROUP	1	SN:12103--
==========				
	235-63-53101	CYLINDER ASS'Y	1	SN:12051--
1	235-63-53141	· CYLINDER	1	SN:12051--
2	707-29-90191	· HEAD,CYLINDER	1	SN:12051--
3	07177-05030	· BUSHING	1	SN:12051--
4	707-51-50211	· PACKING,ROD (KIT)	1	SN:12051--
5	176-63-92240	· SEAL,DUST (KIT)	1	SN:12051--
6	07179-12062	· RING,SNAP	1	SN:12051--
7	07000-12095	· O-RING (KIT)	1	SN:11001--
8	07001-02095	· RING,BACK-UP (KIT)	1	SN:11001--
9	235-63-53121	· ROD,PISTON	1	SN:12051--
10	707-36-90240	· PISTON	1	SN:12051--
11	707-44-90180	· RING,PISTON (KIT)	1	SN:11001--
12	07155-00912	· RING,WEAR (KIT)	1	SN:12051--
13	07165-13941	· NUT,NYLON	1	SN:12051--
14	235-60-13780	TUBE	1	SN:12103--
15	07235-50422	ELBOW	1	SN:12103--
16	07235-50315	ELBOW	1	SN:12103--
17	07002-12034	O-RING	2	SN:12103--
18	07042-20108	PLUG	2	SN:12103--
19	235-60-14340	CLIP	1	SN:12103--
20	232-63-63290	BAND	1	SN:12103--
21	01010-50830	BOLT	2	SN:12103--
22	01643-30823	WASHER	2	SN:12103--
23	07283-21529	CLIP	1	SN:12103--
24	01598-00809	NUT	2	SN:12103--

Ref. 2723A **Page 060790**

LEANING CYLINDER(#12103-)

Item	Part No.	Description	Qty	Options
25	01643-30823	WASHER	2	SN:12103--
==========				
SERVICE KIT				
K	707-98-25570	SERVICE KIT,LEANING CYLINDER	1	SN:12051--

Printed By : Dwi Iswanto (airafather6107170)

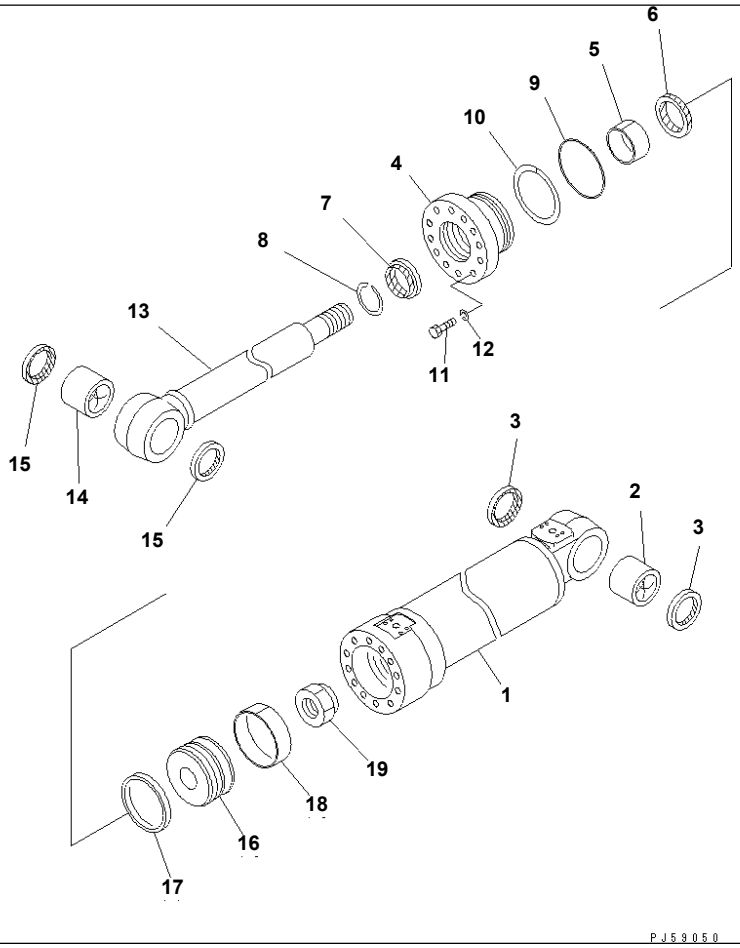

Ref. 2725 **Page 060800**

GD825A-2 S/N 11001-UP
ARTICULATE CYLINDER(#11001-12102)

Item	Part No.	Description	Qty	Options
	235-63-63000	CYLINDER ASS'Y	2	SN:11001--@
1	235-63-63140	· CYLINDER	1	SN:11001--@
2	707-76-65140	· BUSHING	1	SN:11001--@
3	07145-00065	· SEAL,DUST (KIT)	2	SN:11001--@
4	707-27-12040	· HEAD,CYLINDER	1	SN:11001--@
5	07177-06530	· BUSHING	1	SN:11001--@
6	705-51-65211	· PACKING,ROD (KIT)	1	SN:11001--@
7	144-63-92170	· SEAL,DUST (KIT)	1	SN:11001--@
8	07179-12079	· RING,SNAP	1	SN:11001--@
9	07000-12115	· O-RING (KIT)	1	SN:11001--@
10	07146-02116	· RING,BACK-UP (KIT)	1	SN:11001--@
11	01010-81660	· BOLT	12	SN:11001--@
12	01602-21648	· WASHER,SPRING	12	SN:11001--@
13	235-63-63120	· ROD,PISTON	1	SN:11001--@
14	707-76-65140	· BUSHING	1	SN:11001--@
15	07145-00065	· SEAL,DUST (KIT)	2	SN:11001--@
16	707-36-12110	· PISTON	1	SN:11001--@
17	707-44-12180	· RING,PISTON (KIT)	1	SN:11001--@
18	07155-01230	· RING,WEAR (KIT)	1	SN:11001--@
19	07165-14850	· NUT,NYLON	1	SN:11001--@
SERVICE KIT				
K	707-98-41110	SERVICE KIT,ARTICULATE CYLINDER	2	SN:11001--@

Printed By : Dwi Iswanto (airafather6107170)

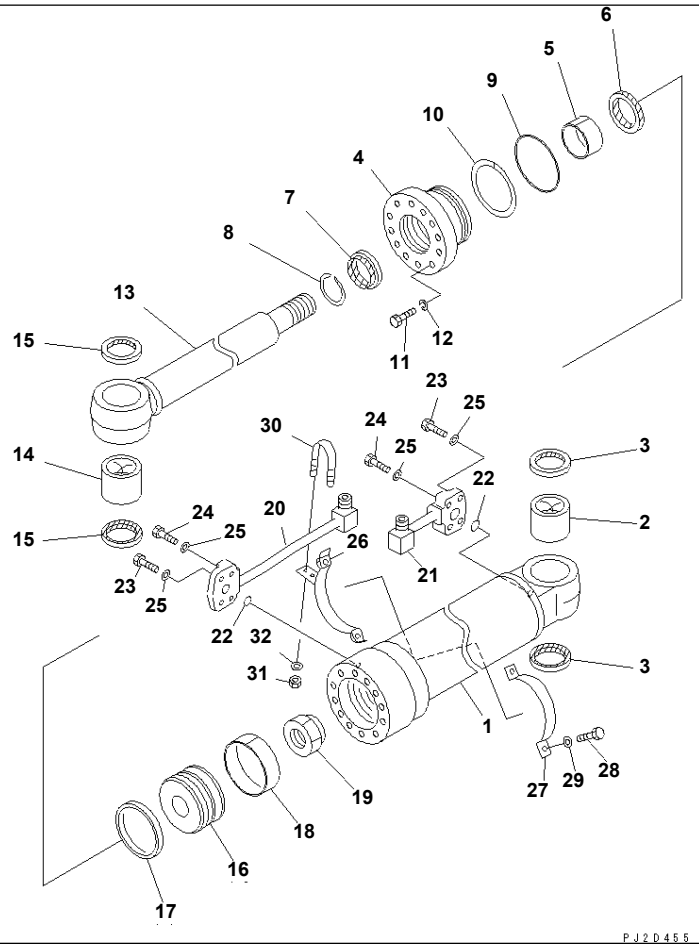

GD825A-2 S/N 11001-UP

ARTICULATE CYLINDER(#12103-)

Item	Part No.	Description	Qty	Options
G1	(⊙707-01-X7480)	CYLINDER GROUP,L.H.	1	SN:12103--
	(⊙707-01-X7490)	CYLINDER GROUP,R.H.	1	SN:12103--
==========				
	235-63-63000	CYLINDER ASS'Y	1	SN:11001--
1	235-63-63140	· CYLINDER	1	SN:11001--
2	707-76-65140	· BUSHING	1	SN:11001--
3	07145-00065	· SEAL,DUST (KIT)	2	SN:11001--
4	707-27-12040	· HEAD,CYLINDER	1	SN:11001--
5	07177-06530	· BUSHING	1	SN:11001--
6	705-51-65211	· PACKING,ROD (KIT)	1	SN:11001--
7	144-63-92170	· SEAL,DUST (KIT)	1	SN:11001--
8	07179-12079	· RING,SNAP	1	SN:11001--
9	07000-12115	· O-RING (KIT)	1	SN:11001--
10	07146-02116	· RING,BACK-UP (KIT)	1	SN:11001--
11	01010-81660	· BOLT	12	SN:11001--
12	01602-21648	· WASHER,SPRING	12	SN:11001--
13	235-63-63120	· ROD,PISTON	1	SN:11001--
14	707-76-65140	· BUSHING	1	SN:11001--
15	07145-00065	· SEAL,DUST (KIT)	2	SN:11001--
16	707-36-12110	· PISTON	1	SN:11001--
17	707-44-12180	· RING,PISTON (KIT)	1	SN:11001--
18	07155-01230	· RING,WEAR (KIT)	1	SN:11001--
19	07165-14850	· NUT,NYLON	1	SN:11001--
20	235-60-14660	TUBE,L.H.	1	SN:12103--
	235-60-14650	TUBE,R.H.	1	SN:12103--
21	235-60-17760	TUBE,L.H.	1	SN:12103--
	235-60-17770	TUBE,R.H.	1	SN:12103--

Printed By : Dwi Iswanto (airafather6107170)

ARTICULATE CYLINDER(#12103-)

Item	Part No.	Description	Qty	Options
22	07000-13030	O-RING	2	SN:12103--
23	01010-50835	BOLT	4	SN:12103--
24	01010-50845	BOLT	4	SN:12103--
25	01643-30823	WASHER	8	SN:12103--
26	235-60-13871	BAND	1	SN:12103--
27	235-60-14261	BAND	1	SN:12103--
28	01010-50830	BOLT	2	SN:12103--
29	01643-30823	WASHER	2	SN:12103--
30	07283-21529	CLIP	1	SN:12103--
31	01598-00809	NUT	2	SN:12103--
32	01643-30823	WASHER	2	SN:12103--
==========				
SERVICE KIT				
K	707-98-41110	SERVICE KIT,ARTICULATE CYLINDER	2	SN:11001--

Printed By : Dwi Iswanto (airafather6107170)

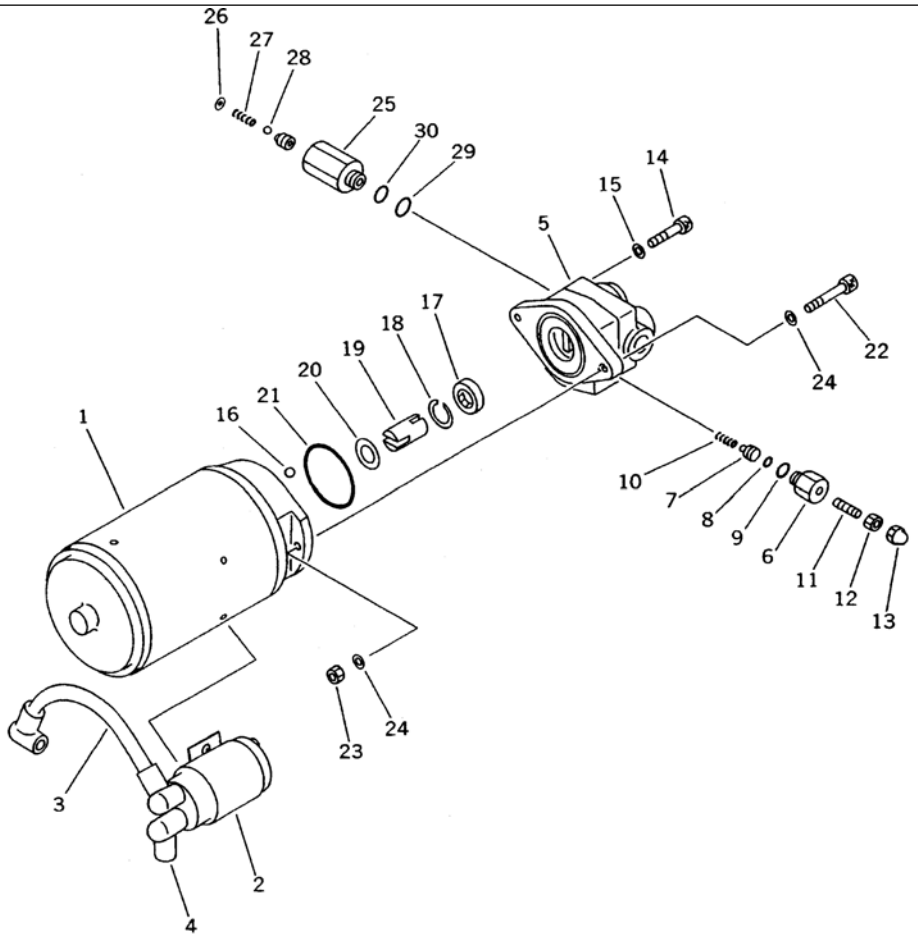

GD825A-2 S/N 11001-UP

EMERGENCY STEERING PUMP

Item	Part No.	Description	Qty	Options
	235-40-32100	PUMP ASS'Y	1	SN:11001--
	235-40-32110	· MOTOR ASS'Y	1	SN:11001--
1	☆	· · MOTOR	1	SN:11001--
2	☆	· · CONTACT	1	SN:11001--
3	235-40-32140	· WIRE	1	SN:11001--
4	235-40-32150	· CAP	3	SN:11001--
5	235-40-32280	· PUMP ASS'Y	1	SN:11001--
6	235-40-32340	· · PLUG	1	SN:11001--
7	235-40-32350	· · GUIDE	1	SN:11001--
8	235-40-32260	· · O-RING	1	SN:11001--
9	235-40-32270	· · O-RING	1	SN:11001--
10	235-40-32360	· · SPRING	1	SN:11001--
11	235-40-32370	· · BOLT	1	SN:11001--
12	235-40-32380	· · NUT	1	SN:11001--
13	235-40-32390	· · NUT	1	SN:11001--
14	235-40-32290	· · BOLT	4	SN:11001--
15	235-40-32310	· · WASHER	4	SN:11001--
16	235-40-32410	· · BALL,STEEL	2	SN:11001--
17	235-40-32320	· · SEAL,OIL	1	SN:11001--
18	235-40-32330	· · RING,SNAP	1	SN:11001--
19	235-40-32420	· COUPLING	1	SN:11001--
20	235-40-32430	· WASHER	1	SN:11001--
21	235-40-32190	· O-RING	1	SN:11001--
22	235-40-32160	· BOLT	2	SN:11001--
23	235-40-32180	· NUT	2	SN:11001--
24	235-40-32170	· WASHER	4	SN:11001--
	235-40-32210	· VALVE ASS'Y,CHECK	1	SN:11001--

Printed By : Dwi Iswanto (airafather6107170)

EMERGENCY STEERING PUMP

Item	Part No.	Description	Qty	Options
25	235-40-32220	· · BODY	1	SN:11001--
26	235-40-32230	· · RING,RETAINER	1	SN:11001--
27	235-40-32240	· · SPRING	1	SN:11001--
28	235-40-32250	· · BALL,STEEL	1	SN:11001--
29	235-40-32260	· · O-RING	1	SN:11001--
30	235-40-32270	· · O-RING	1	SN:11001--

Printed By : Dwi Iswanto (airafather6107170)

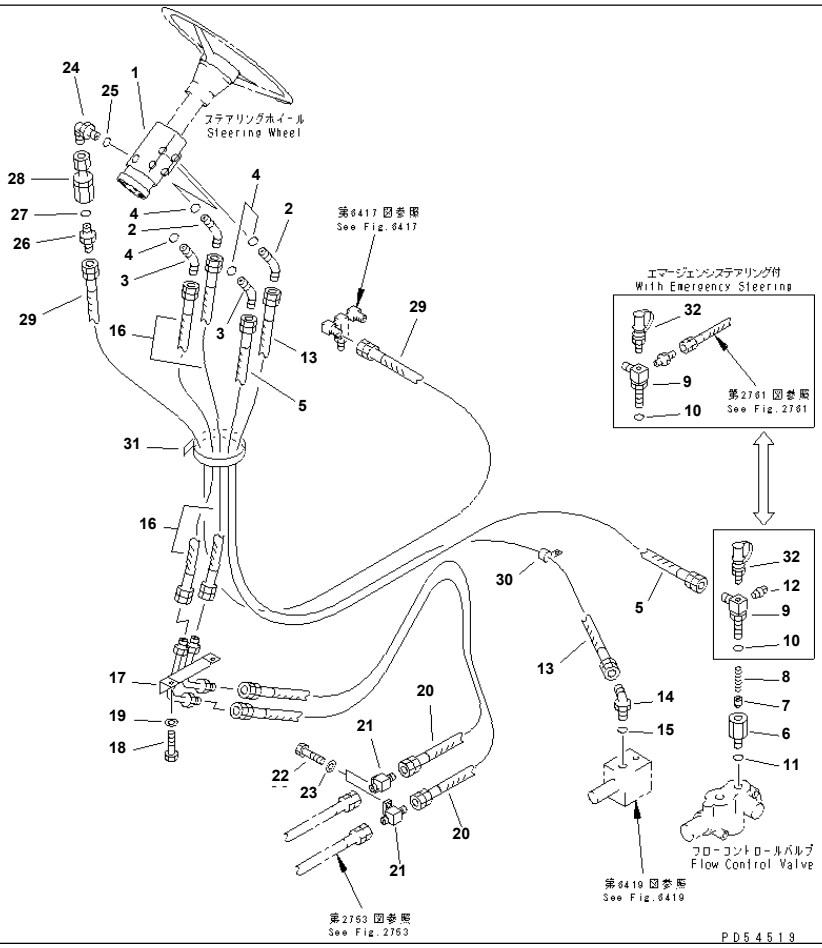

Ref. 2751 **Page 060830**

GD825A-2 S/N 11001-UP
STEERING PIPING (1/2)

Item	Part No.	Description	Qty	Options
1	(235-40-14101)	STEERING VALVE ASS'Y	1	SN:11009--
	(235-40-14100)	STEERING VALVE ASS'Y	1	SN:11001--11008
2	238-40-41320	ELBOW	2	SN:11001--
3	234-40-41310	ELBOW	2	SN:11001--
4	237-40-13160	O-RING	4	SN:11001--
5	07121-40423	HOSE	1	SN:11001--
	235-60-36201	VALVE ASS'Y,PILOT CHECK	1	SN:11010--
	235-60-36200	VALVE ASS'Y,PILOT CHECK	1	SN:11001--11009
6	☆	· BODY	1	SN:11010--
	☆	· BODY	1	SN:11001--11009
7	☆	· VALVE	1	SN:11001--
8	234-60-16350	· SPRING	1	SN:11001--
9	235-60-35250	· ELBOW	1	SN:11001--
10	07002-12034	· O-RING	1	SN:11001--
11	234-40-33270	O-RING	1	SN:11009--
	234-40-33290	O-RING	1	SN:11001--11008
12	07042-20312	PLUG	1	SN:11001--
13	07103-50418	HOSE	1	SN:11001--
14	07235-10422	ELBOW	1	SN:11001--
15	07002-12034	O-RING	1	SN:11001--
16	235-40-13180	HOSE	2	SN:11001--
17	235-40-33121	JOINT	1	SN:12023--
	235-40-33120	JOINT	1	SN:11001--12022
18	01010-50812	BOLT	2	SN:11001--
19	01643-30823	WASHER	2	SN:11001--
20	07121-40315	HOSE	2	SN:12096--
	□07121-40314	HOSE	2	SN:12023--12095

Printed By : Dwi Iswanto (airafather6107170)

STEERING PIPING (1/2)

Item	Part No.	Description	Qty	Options
	07121-40315	HOSE	2	SN:11001--12022
21	235-60-33630	NIPPLE	2	SN:11001--
22	01010-51040	BOLT	2	SN:11001--
23	01643-31032	WASHER	2	SN:11001--
24	235-40-13440	ELBOW	1	SN:11001--
25	235-60-15510	O-RING	1	SN:11001--
26	235-60-36320	FILTER	1	SN:11001--
27	235-60-15490	O-RING	1	SN:11001--
28	235-40-33100	VALVE ASS'Y	1	SN:11001--
29	07121-40221	HOSE	1	SN:11001--
30	04434-52711	CLIP	1	SN:11001--
31	08034-00536	BAND	1	SN:11001--
32	799-101-5160	NIPPLE	1	SN:11001--

Printed By : Dwi Iswanto (airafather6107170)

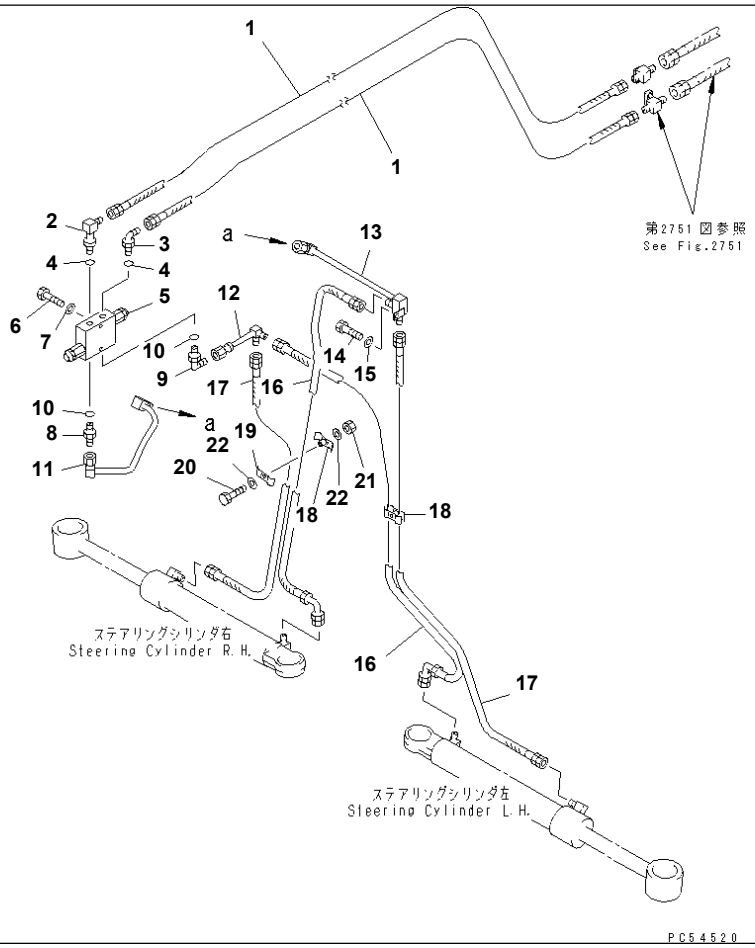

GD825A-2 S/N 11001-UP
STEERING PIPING (2/2)

Item	Part No.	Description	Qty	Options
1	07121-00362	HOSE	2	SN:11001--
2	238-60-14251	ELBOW	1	SN:11001--
3	07235-10315	ELBOW	1	SN:11001--
4	07002-12034	O-RING	2	SN:11001--
5	(232-40-57700)	VALVE ASS'Y,DOUBLE RELIEF	1	SN:11001--
6	01010-50855	BOLT	2	SN:11001--
7	01643-30823	WASHER	2	SN:11001--
8	07230-10422	UNION	1	SN:11001--
9	07235-10422	ELBOW	1	SN:11001--
10	07002-12034	O-RING	2	SN:11001--
11	235-40-33220	TUBE	1	SN:11001--
12	235-40-33210	TUBE	1	SN:11001--
13	235-40-33190	TUBE	1	SN:11001--
14	01010-51025	BOLT	1	SN:11001--
15	01643-31032	WASHER	1	SN:11001--
16	235-40-33230	HOSE	2	SN:11001--
17	235-40-33240	HOSE	2	SN:11001--
18	236-60-24920	CLIP	2	SN:11001--
19	236-60-24930	CLIP	2	SN:11001--
20	01010-50835	BOLT	2	SN:11001--
21	01580-10806	NUT	2	SN:11001--
22	01643-30823	WASHER	4	SN:11001--

Printed By : Dwi Iswanto (airafather6107170)

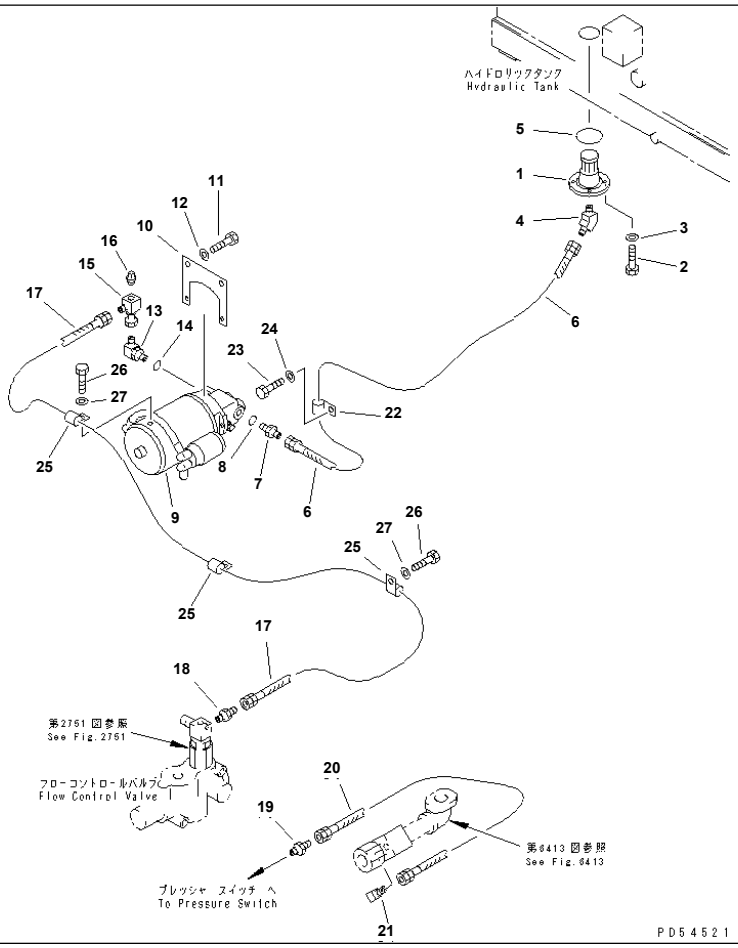

Ref. 2761 **Page 060850**

GD825A-2 S/N 11001-UP
EMERGENCY STEERING PIPING

Item	Part No.	Description	Qty	Options
1	235-832-2110	STRAINER	1	SN:11001--
2	01010-50618	BOLT	4	SN:11001--
3	01643-30623	WASHER	4	SN:11001--
4	566-35-42470	ELBOW	1	SN:11001--
5	235-832-2120	O-RING	1	SN:11001--
6	07103-50511	HOSE	1	SN:11001--
7	235-60-15410	NIPPLE	1	SN:11001--
8	237-60-22240	O-RING	1	SN:11001--
9	(235-40-32100)	PUMP ASS'Y,EMERGENCY	1	SN:11001--
10	235-832-2140	PLATE	1	SN:11001--
11	01010-51025	BOLT	2	SN:11001--
12	01643-31032	WASHER	2	SN:11001--
13	23D-43-13330	NIPPLE	1	SN:11001--
14	235-60-15490	O-RING	1	SN:11001--
15	262-814-1810	ELBOW	1	SN:11001--
16	07042-20108	PLUG	1	SN:11001--
17	07121-40323	HOSE	1	SN:11001--
18	07238-10315	CONNECTOR	1	SN:11001--
19	07238-10210	CONNECTOR	1	SN:11001--
20	07121-00204	HOSE	1	SN:11001--
21	234-60-22140	ELBOW	1	SN:11001--
22	04434-52711	CLIP	1	SN:11001--
23	01010-51016	BOLT	1	SN:11001--
24	01643-31032	WASHER	1	SN:11001--
25	04434-52210	CLIP	3	SN:11001--
26	01010-51016	BOLT	3	SN:11001--
27	01643-31032	WASHER	3	SN:11001--

Printed By : Dwi Iswanto (airafather6107170)

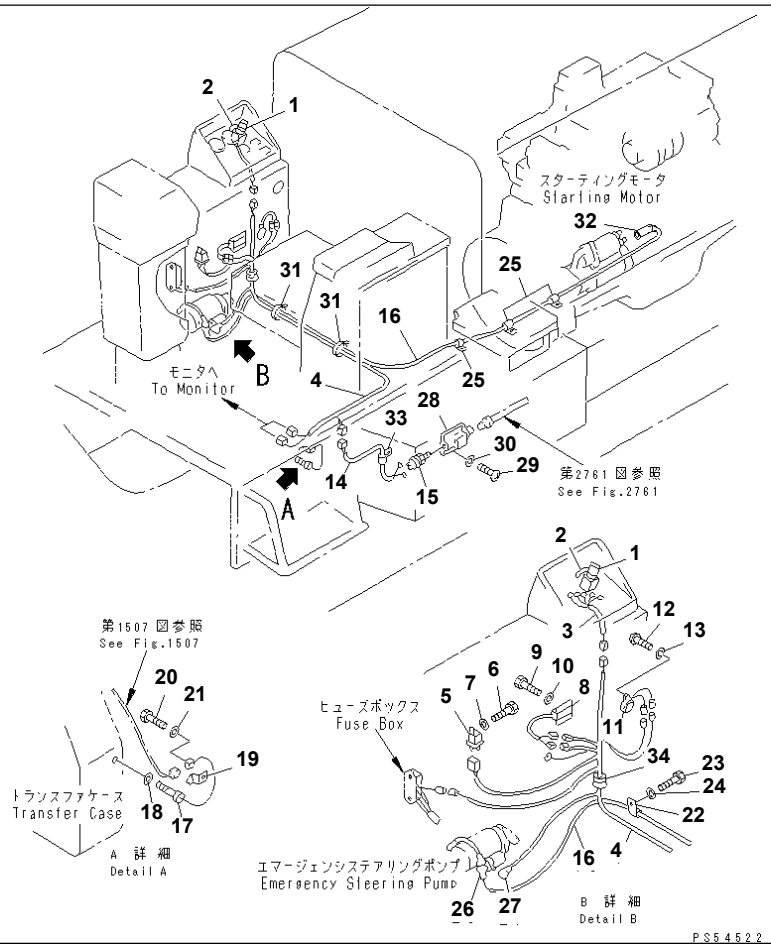

GD825A-2 S/N 11001-UP

EMERGENCY STEERING WIRING

Item	Part No.	Description	Qty	Options
1	235-806-3270	SWITCH,EMERGENCY STEERING	1	SN:11001--
2	235-806-3290	PLATE¤ MARK,SELECT	1	SN:11001--
3	235-806-3280	HARNESS	1	SN:11001--
4	235-806-3460	HARNESS	1	SN:12099--
	235-806-3231	HARNESS	1	SN:11001--12098
5	569-06-61960	RELAY	1	SN:11001--
6	01010-50612	BOLT	1	SN:11001--
7	01643-30623	WASHER	1	SN:11001--
8	235-806-1410	CONTROLLER,EMERGENCY STEERING	1	SN:11001--
9	01010-50612	BOLT	2	SN:11001--
10	01643-30623	WASHER	2	SN:11001--
11	263-806-1140	BUZZER	1	SN:11001--
12	01220-40520	SCREW	1	SN:11001--
13	01601-20513	WASHER,SPRING	1	SN:11001--
14	235-806-3260	CABLE	1	SN:11001--
15	235-806-1470	CONNECTOR ASS'Y	1	SN:11001--
16	235-806-3470	HARNESS	1	SN:12099--
	□235-806-3210	CABLE	1	SN:11001--12098
17	(7861-92-2330)	SENSOR,SPEED	1	SN:11001--
18	(07005-02216)	GASKET	1	SN:11001--
19	08053-01510	CLIP	1	SN:11001--
20	01010-51016	BOLT	1	SN:11001--
21	01643-31032	WASHER	1	SN:11001--
22	08036-01014	CLIP	1	SN:11001--
23	01010-51016	BOLT	1	SN:11001--
24	01643-31032	WASHER	1	SN:11001--
25	08036-03014	CLIP	7	SN:11001--

Printed By : Dwi Iswanto (airafather6107170)

EMERGENCY STEERING WIRING

Item	Part No.	Description	Qty	Options
26	08038-00218	CAP	1	SN:11001--
27	08038-02027	CAP	1	SN:11001--
28	235-832-1500	SWITCH,PRESSURE	1	SN:11001--
29	01220-40425	SCREW	4	SN:11001--
30	01641-20405	WASHER	4	SN:11001--
31	08034-00519	BAND	2	SN:11001--
32	08038-06031	CAP	1	SN:11001--
33	08036-00814	CLIP	1	SN:11001--
34	235-06-15390	GROMMET	1	SN:11001--

Printed By : Dwi Iswanto (airafather6107170)

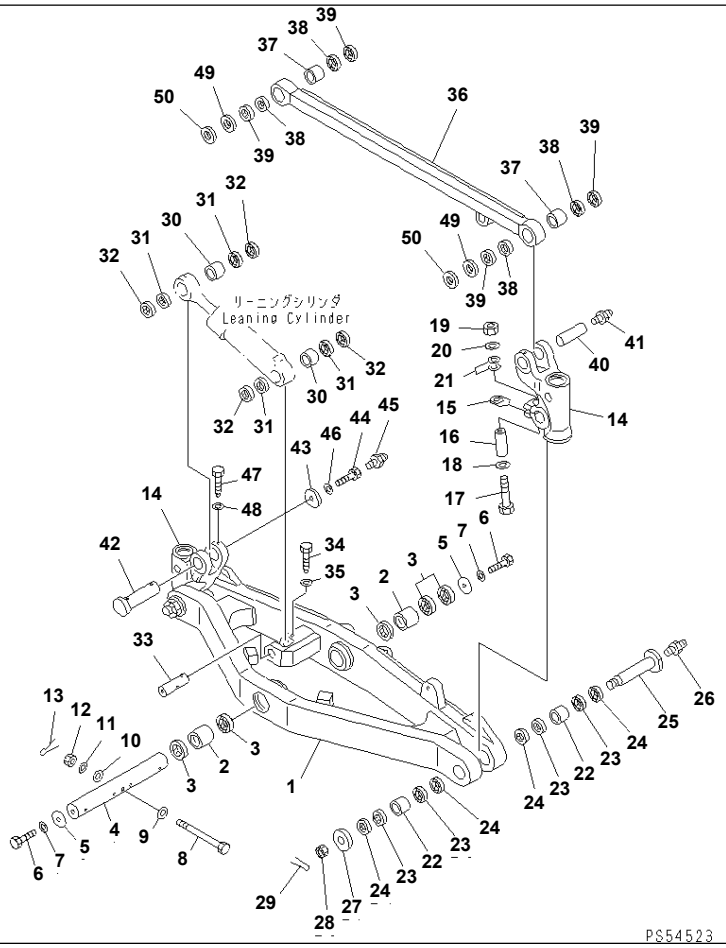

Ref. 2801 **Page 060870**

GD825A-2 S/N 11001-UP
FRONT AXLE (1/3)(#11001-11027)

Item	Part No.	Description	Qty	Options
1	235-27-31110	AXLE,FRONT	1	SN:11001--@
2	235-27-11970	BUSHING	2	SN:11001--@
3	07145-00070	SEAL,DUST	5	SN:11001--@
4	235-27-31120	SHAFT	1	SN:11001--@
5	235-27-31130	COVER	2	SN:11001--@
6	01010-51635	BOLT	2	SN:11001--@
7	01643-31645	WASHER	2	SN:11001--@
8	235-27-11360	BOLT	1	SN:11001--@
9	07005-01212	GASKET	1	SN:11001--@
10	07005-01612	GASKET	1	SN:11001--@
11	01643-31232	WASHER	1	SN:11001--@
12	01592-31215	NUT	1	SN:11014--@
	01592-11215	NUT	1	SN:11001--11013
13	04050-13022	PIN,COTTER	1	SN:11014--@
	04050-14025	PIN,COTTER	1	SN:11001--11013
14	235-27-31310	BRACKET	2	SN:11001--@
15	235-27-31320	LOCK	2	SN:11001--@
16	235-27-31380	COLLAR	2	SN:11001--11027
17	01011-51815	BOLT	2	SN:11001--11027
18	154-01-12620	SPACER	2	SN:11001--11027
19	01580-11815	NUT	2	SN:11001--11027
20	235-27-31340	WASHER	2	SN:11001--11027
21	235-27-00010	SHIM ASS'Y	1	SN:11001--11027
	☆	· SHIM¤ 0.1MM	8	SN:11001--11027
	☆	· SHIM¤ 0.5MM	4	SN:11001--11027
	☆	· SHIM¤ 1.0MM	2	SN:11001--11027
22	235-27-11531	BUSHING	4	SN:11001--@

Printed By : Dwi Iswanto (airafather6107170)

FRONT AXLE (1/3)(#11001-11027)

Item	Part No.	Description	Qty	Options
23	234-27-31730	SEAL,OIL	8	SN:11001--@
24	07145-00060	SEAL,DUST	8	SN:11001--@
25	235-27-31330	PIN	2	SN:11001--@
26	07020-00000	FITTING,GREASE	2	SN:11001--@
27	235-27-11640	HOLDER	2	SN:11001--@
28	01593-34829	NUT	2	SN:11014--@
	01593-14829	NUT	2	SN:11001--11013
29	04050-18075	PIN,COTTER	2	SN:11001--@
30	235-27-11581	BUSHING	2	SN:11001--@
31	234-27-31740	SEAL,OIL	4	SN:11001--@
32	07145-00055	SEAL,DUST	4	SN:11001--@
33	235-27-11310	PIN	1	SN:11001--@
34	235-27-11660	BOLT	1	SN:11001--@
35	01643-31645	WASHER	1	SN:11001--@
36	235-27-11121	ROD,LEANING	1	SN:11001--@
37	235-27-11940	BUSHING	2	SN:11001--@
38	234-27-31740	SEAL,DUST	4	SN:11001--@
39	07145-00055	SEAL,DUST	4	SN:11001--@
40	235-27-11310	PIN	1	SN:11001--@
41	07020-00000	FITTING,GREASE	1	SN:11001--@
42	235-27-11330	PIN	1	SN:11001--@
43	235-27-11340	HOLDER	1	SN:11001--@
44	235-27-11320	BOLT	1	SN:11001--@
45	07020-00000	FITTING,GREASE	1	SN:11001--@
46	01643-32460	WASHER	1	SN:11001--@
47	235-27-11660	BOLT	2	SN:11001--@
48	01643-31645	WASHER	2	SN:11001--@
49	235-27-12170	COLLAR	2	SN:11001--@
50	235-27-12180	COLLAR	2	SN:11001--@

Printed By : Dwi Iswanto (airafather6107170)

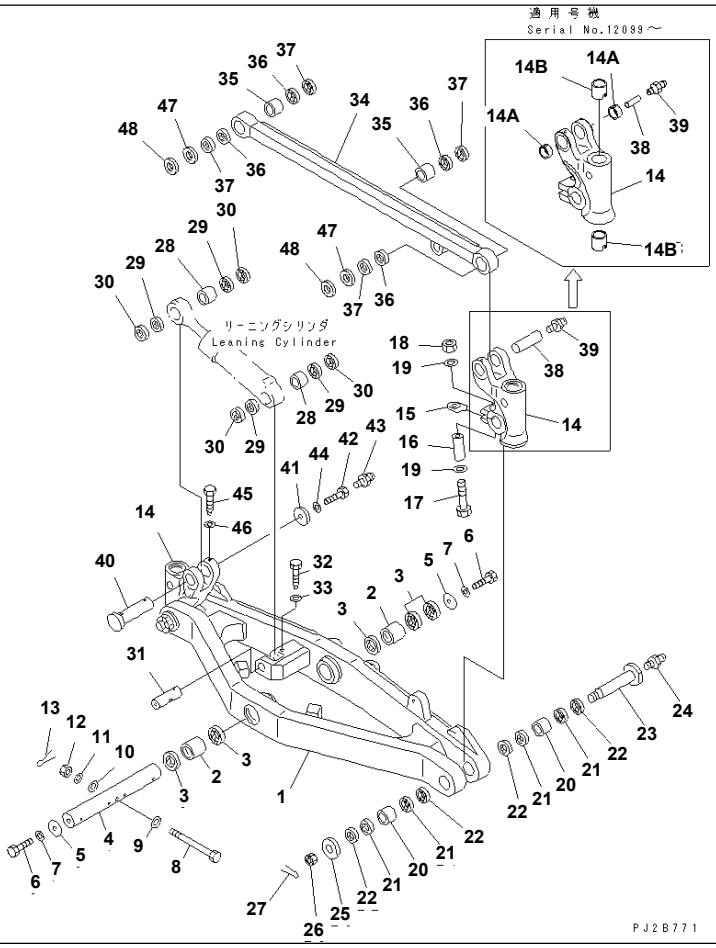

GD825A-2 S/N 11001-UP

FRONT AXLE (1/3)(#11028-)

Item	Part No.	Description	Qty	Options
1	235-27-31112	AXLE,FRONT	1	SN:12029--
	235-27-31111	AXLE,FRONT	1	SN:12022--12028
	235-27-31110	AXLE,FRONT	1	SN:11001--12021
2	235-27-11970	BUSHING	2	SN:11001--
3	07145-00070	SEAL,DUST	5	SN:11001--
4	235-27-31120	SHAFT	1	SN:11001--
5	235-27-31130	COVER	2	SN:11001--
6	01010-51635	BOLT	2	SN:11001--
7	01643-31645	WASHER	2	SN:11001--
8	235-27-11360	BOLT	1	SN:11001--
9	07005-01212	GASKET	1	SN:11001--
10	07005-01612	GASKET	1	SN:11001--
11	01643-31232	WASHER	1	SN:11001--
12	01592-31215	NUT	1	SN:11014--
13	04050-13022	PIN,COTTER	1	SN:11014--
14	235-27-31311	BRACKET	2	SN:12099--
	■235-27-31310	BRACKET	2	SN:11001--12098
(235-27-31311{235-27-11911¤} 235-27-11921{235-27-11661)}				
14A	235-27-11921	BUSHING	4	SN:12099--
14B	235-27-11911	BUSHING	4	SN:12099--
15	235-27-31320	LOCK	2	SN:11001--
16	235-27-31390	COLLAR	2	SN:11028--
17	01011-52220	BOLT	2	SN:11028--
18	01580-12218	NUT	2	SN:11028--
19	01643-32260	WASHER	4	SN:11028--
20	235-27-11531	BUSHING	4	SN:11001--

Printed By : Dwi Iswanto (airafather6107170)

FRONT AXLE (1/3)(#11028-)

Item	Part No.	Description	Qty	Options
21	234-27-31730	SEAL,OIL	8	SN:11001--
22	07145-00060	SEAL,DUST	8	SN:11001--
23	235-27-31330	PIN	2	SN:11001--
24	07020-00000	FITTING,GREASE	2	SN:11001--
25	235-27-11640	HOLDER	2	SN:11001--
26	01593-34829	NUT	2	SN:11014--
27	04050-18075	PIN,COTTER	2	SN:11001--
28	235-27-11581	BUSHING	2	SN:11001--
29	234-27-31740	SEAL,OIL	4	SN:11001--
30	07145-00055	SEAL,DUST	4	SN:11001--
31	235-27-11310	PIN	1	SN:11001--
32	235-27-11660	BOLT	1	SN:11001--
33	01643-31645	WASHER	1	SN:11001--
34	235-27-11121	ROD,LEANING	1	SN:11001--
35	235-27-11940	BUSHING	2	SN:11001--
36	234-27-31740	SEAL,DUST	4	SN:11001--
37	07145-00055	SEAL,DUST	4	SN:11001--
38	235-27-11310	PIN	1	SN:11001--
39	07020-00000	FITTING,GREASE	1	SN:11001--
40	235-27-11330	PIN	1	SN:11001--
41	235-27-11340	HOLDER	1	SN:11001--
42	235-27-11320	BOLT	1	SN:11001--
43	07020-00000	FITTING,GREASE	1	SN:11001--
44	01643-32460	WASHER	1	SN:11001--
45	235-27-11661	BOLT	2	SN:12099--
	235-27-11660	BOLT	2	SN:11001--12098
46	01643-31645	WASHER	2	SN:11001--
47	235-27-12170	COLLAR	4	SN:11001--
48	235-27-12180	COLLAR	2	SN:11001--

Printed By : Dwi Iswanto (airafather6107170)

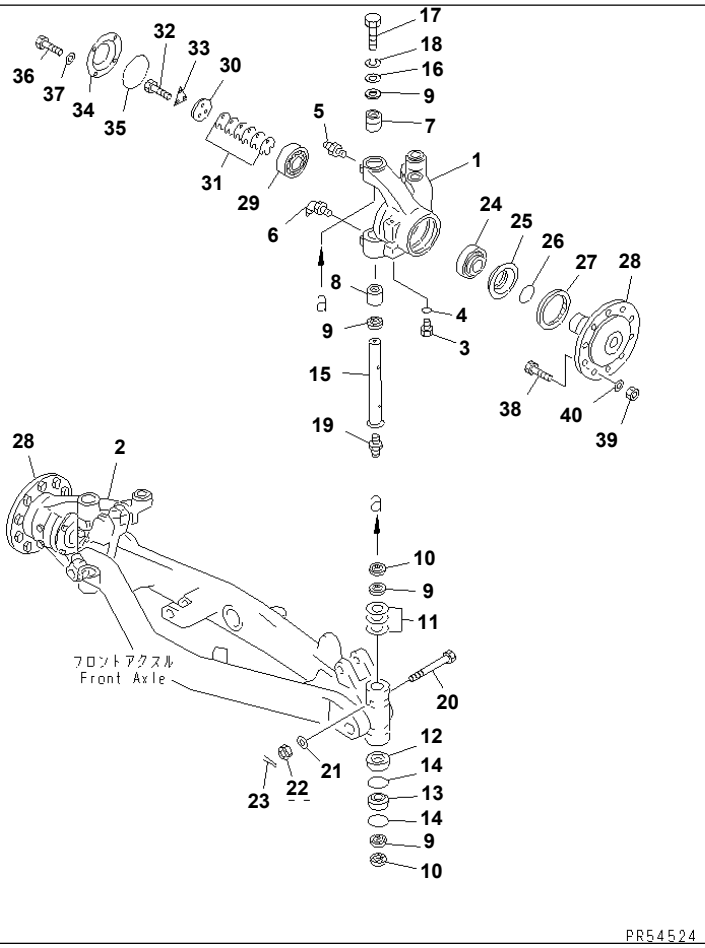

GD825A-2 S/N 11001-UP
FRONT AXLE (2/3)

Item	Part No.	Description	Qty	Options
1	235-27-41210	HOUSING,L.H.	1	SN:12051--
	235-27-31210	HOUSING,L.H.	1	SN:11001--12050
2	235-27-41220	HOUSING,R.H.	1	SN:12051--
	235-27-31220	HOUSING,R.H.	1	SN:11001--12050
3	07040-11812	PLUG	4	SN:11001--
4	07002-11823	O-RING	4	SN:11001--
5	07020-00000	FITTING,GREASE	2	SN:11001--
6	07020-00675	FITTING,GREASE	2	SN:11001--
7	235-27-11950	BUSHING	2	SN:11001--
8	235-27-11950	BUSHING	2	SN:11001--
9	234-27-31730	SEAL	8	SN:11001--
10	07145-00060	SEAL,DUST	4	SN:11001--
11	235-27-31270	SPACER,4.5MM	2	SN:11001--
	235-27-11260	SPACER,5.5MM	2	SN:11001--
	235-27-31260	SPACER,6.5MM	2	SN:11001--
12	235-27-31240	COVER	2	SN:11001--
13	235-27-11280	BEARING	2	SN:11001--
14	07000-15100	O-RING	4	SN:11001--
15	235-27-31230	PIN,KING	2	SN:11001--
16	235-27-31250	COVER	2	SN:11001--
17	01010-51225	BOLT	2	SN:11001--
18	01643-31232	WASHER	2	SN:11001--
19	07020-00000	FITTING,GREASE	2	SN:11001--
20	235-27-11290	BOLT	2	SN:11001--
21	01643-31032	WASHER	2	SN:11001--
22	01593-31008	NUT	2	SN:11014--
	01593-11008	NUT	2	SN:11001--11013

Printed By : Dwi Iswanto (airafather6107170)

FRONT AXLE (2/3)

Item	Part No.	Description	Qty	Options
23	04050-12015	PIN,COTTER	2	SN:12095--
	◆04050-12018	PIN,COTTER	2	SN:11001--12094
24	235-27-11190	BEARING	2	SN:11001--
25	235-27-11170	SPACER	2	SN:11001--
26	07000-12100	O-RING	2	SN:11001--
27	235-25-11310	SEAL,OIL	2	SN:11001--
28	235-27-11130	SHAFT	2	SN:11001--
29	235-25-11540	BEARING	2	SN:11001--
30	235-25-11430	HOLDER	2	SN:11001--
31	235-25-00040	SHIM ASS'Y	2	SN:11001--
	☆	· SHIM¤ 0.1MM	8	SN:11001--
	☆	· SHIM¤ 0.2MM	6	SN:11001--
	☆	· SHIM¤ 0.5MM	2	SN:11001--
32	01010-51640	BOLT	6	SN:11001--
33	235-25-11440	LOCK	2	SN:11001--
34	235-27-11180	CAP	2	SN:11001--
35	235-27-11210	O-RING	2	SN:11001--
36	01010-51225	BOLT	8	SN:11001--
37	01643-31232	WASHER	8	SN:11001--
38	235-25-11280	BOLT	20	SN:11001--
39	01582-13326	NUT	20	SN:11001--
40	01643-33380	WASHER	20	SN:11001--

Printed By : Dwi Iswanto (airafather6107170)

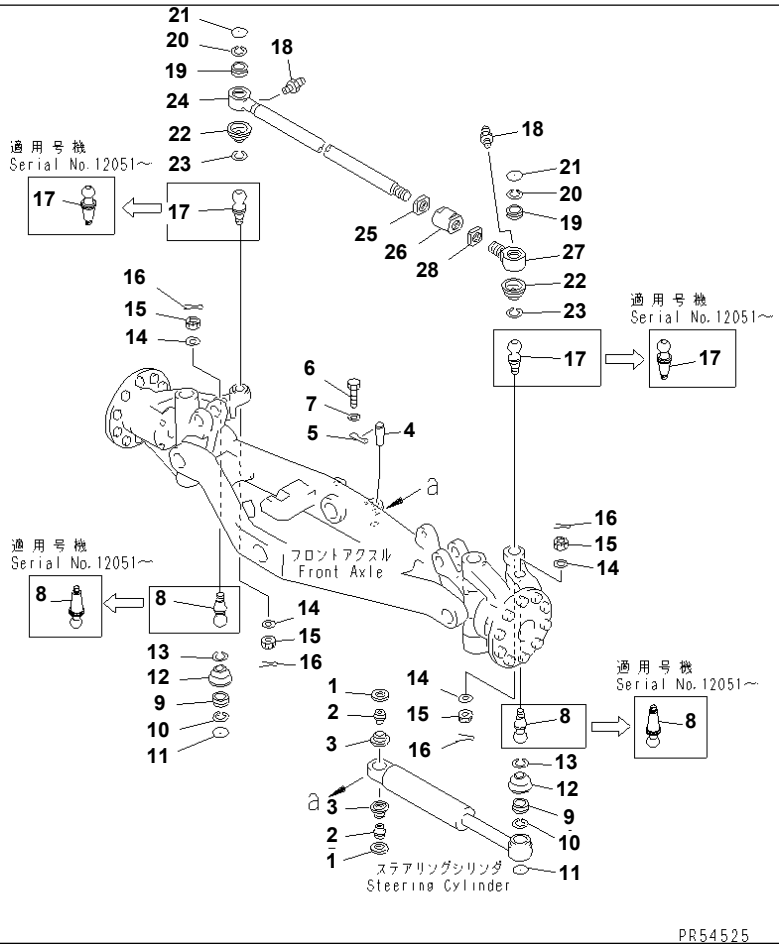

GD825A-2 S/N 11001-UP

FRONT AXLE (3/3)

Item	Part No.	Description	Qty	Options
1	235-27-11770	PLATE	4	SN:11001--
2	235-27-11760	SPACER	4	SN:11001--
3	235-27-11750	BOOT	4	SN:11001--
4	235-27-11620	PIN	2	SN:11001--
5	04082-00110	LOCK	2	SN:11001--
6	01010-51025	BOLT	4	SN:12095--
	◆01010-51020	BOLT	4	SN:11001--12094
7	01643-31032	WASHER	4	SN:11001--
8	235-27-12252	STUD,BALL	2	SN:12095--
	◆235-27-12243	STUD,BALL	2	SN:12051--12094
	235-27-12242	STUD,BALL	2	SN:11001--12050
9	235-27-11802	BUSHING ASS'Y	2	SN:11001--
10	04065-07025	RING,SNAP	2	SN:11001--
11	23B-27-11660	PLUG	2	SN:11001--
12	235-27-31280	BOOT	2	SN:11001--
13	23B-27-11920	RING,SNAP	2	SN:11001--
14	235-27-12260	HOLDER	4	SN:11001--
15	01593-33018	NUT	4	SN:11014--
	01593-13018	NUT	4	SN:11001--11013
16	04050-16045	PIN,COTTER	4	SN:11001--
17	235-27-12222	STUD,BALL	2	SN:12095--
	◆235-27-12213	STUD,BALL	2	SN:12051--12094
	235-27-12212	STUD,BALL	2	SN:11001--12050
18	07020-00000	FITTING,GREASE	2	SN:11001--
19	235-27-11802	BUSHING ASS'Y	2	SN:11001--
20	04065-07025	RING,SNAP	2	SN:11001--
21	23B-27-11660	PLUG	2	SN:11001--

Printed By : Dwi Iswanto (airafather6107170)

FRONT AXLE (3/3)

Item	Part No.	Description	Qty	Options
22	235-27-31280	BOOT	2	SN:11001--
23	23B-27-11920	RING,SNAP	2	SN:11001--
24	235-27-11431	ROD,TIE	1	SN:11001--
25	235-27-11481	NUT,L.H. THREAD	1	SN:11001--
26	235-27-11461	JOINT	1	SN:11001--
27	235-27-11421	ROD,END	1	SN:11001--
28	01580-14234	NUT	1	SN:11001--

Printed By : Dwi Iswanto (airafather6107170)

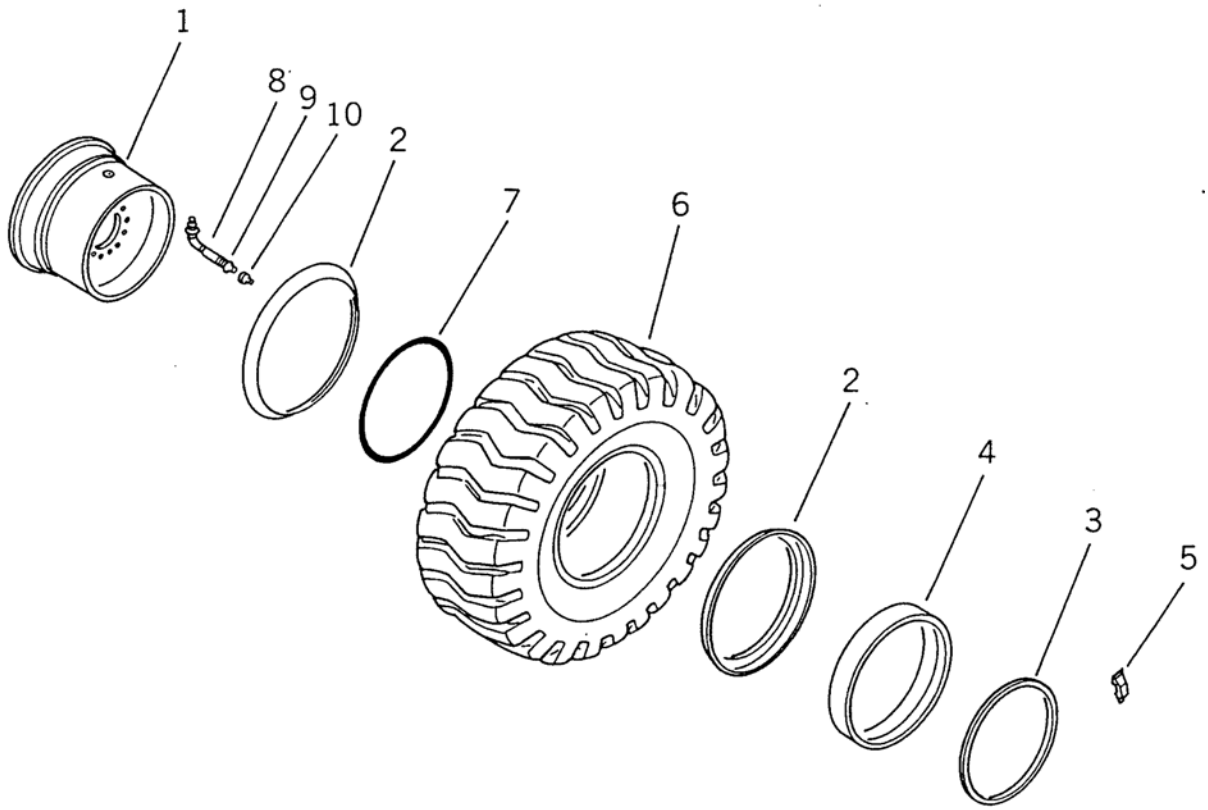

WHEEL AND TUBELESS TIRE (18.0-25-12PR)

Item	Part No.	Description	Qty	Options
ROCK TYPE 18.0-25-12PR				
	235-30-00080	WHEEL AND TIRE ASS'Y	6	SN:11001--
	235-30-11200	· WHEEL ASS'Y	1	SN:11001--
1	235-30-11210	· · RIM,WHEEL	1	SN:11001--
2	235-30-11230	· · RING,SIDE	2	SN:11001--
3	235-30-11240	· · RING,LOCK	1	SN:11001--
4	235-30-11220	· · BAND	1	SN:11001--
5	235-30-11250	· · DRIVER	1	SN:11001--
	235-30-12100	· TIRE ASS'Y	1	SN:11001--
6	235-30-12110	· · TIRE	1	SN:11001--
7	235-30-12170	· · O-RING	1	SN:11001--
8	235-30-12140	· · VALVE	1	SN:11001--
9	235-30-12150	· · CORE,VALVE	1	SN:11001--
10	235-30-12160	· · CAP,VALVE	1	SN:11001--

Printed By : Dwi Iswanto (airafather6107170)

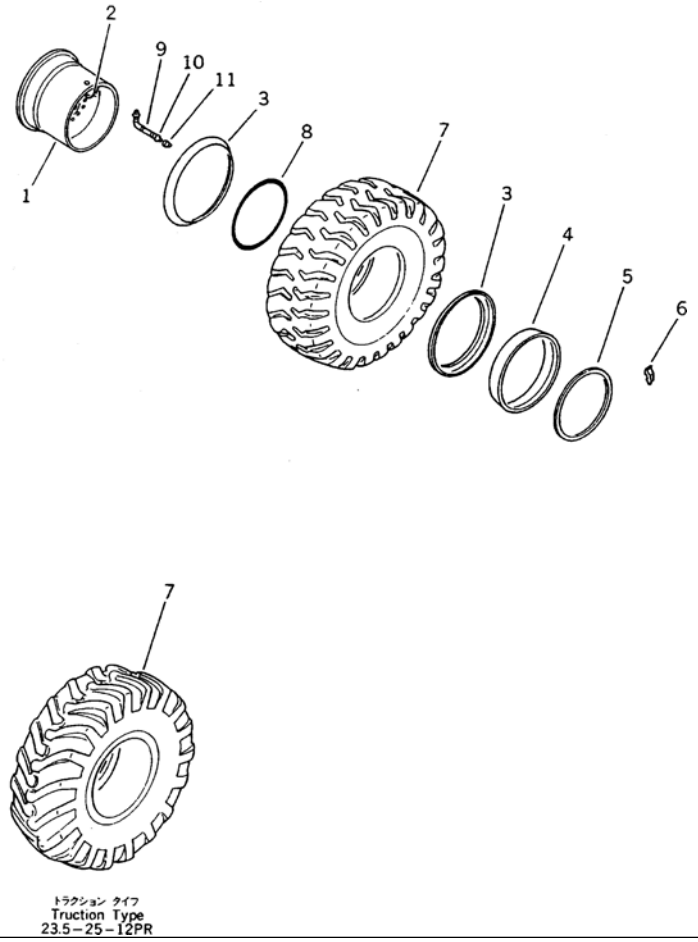

WHEEL AND TUBELESS TIRE (23.5-25-12PR)

Item	Part No.	Description	Qty	Options
ROCK TYPE				
23.5-25-12PR				
	235-30-00010	WHEEL AND TIRE ASS'Y	6	SN:11001--
	235-30-11600	· WHEEL ASS'Y	1	SN:11001--
1	235-30-11610	· · RIM,WHEEL	1	SN:11001--
2	235-30-11660	· · GUARD,VALVE (WELDED)	1	SN:11001--
3	235-30-11230	· · RING,SIDE	2	SN:11001--
4	235-30-11220	· · BAND	1	SN:11001--
5	235-30-11240	· · RING,LOCK	1	SN:11001--
6	235-30-11250	· · DRIVER	1	SN:11001--
	235-30-12501	· TIRE ASS'Y	1	SN:.--
	235-30-12500	· TIRE ASS'Y	1	SN:11001--.
7	235-30-12511	· · TIRE	1	SN:.--
	235-30-12510	· · TIRE	1	SN:11001--.
8	235-30-12170	· · O-RING	1	SN:11001--
9	235-30-12140	· · VALVE	1	SN:11001--
10	235-30-12150	· · CORE,VALVE	1	SN:11001--
11	235-30-12160	· · CAP,VALVE	1	SN:11001--
TRACTION TYPE				
23.5-25-12PR				
	235-30-00031	WHEEL AND TIRE ASS'Y,FRONT L.H. AND REAR R.H.	3	SN:.--
	235-30-00030	WHEEL AND TIRE ASS'Y,FRONT L.H. AND REAR R.H.	3	SN:11001--.
	235-30-00021	WHEEL AND TIRE ASS'Y,FRONT R.H. AND REAR L.H.	3	SN:.--
	235-30-00020	WHEEL AND TIRE ASS'Y,FRONT R.H. AND REAR L.H.	3	SN:11001--.
	235-30-11600	· WHEEL ASS'Y	1	SN:11001--
1	235-30-11610	· · RIM,WHEEL	1	SN:11001--
2	235-30-11660	· · GUARD,VALVE (WELDED)	1	SN:11001--

Printed By : Dwi Iswanto (airafather6107170)

WHEEL AND TUBELESS TIRE (23.5-25-12PR)

Item	Part No.	Description	Qty	Options
3	235-30-11230	· · RING,SIDE	2	SN:11001--
4	235-30-11220	· · BAND	1	SN:11001--
5	235-30-11240	· · RING,LOCK	1	SN:11001--
6	235-30-11250	· · DRIVER	1	SN:11001--
	235-30-13500	· TIRE ASS'Y,(YOKOHAMA)	1	SN:.--
	235-30-12900	· TIRE ASS'Y,(BRIDGESTONE)	1	SN:11001--.
7	235-30-13510	· · TIRE	1	SN:.--
	235-30-12910	· · TIRE	1	SN:11001--.
8	235-30-12170	· · O-RING	1	SN:11001--
9	235-30-12140	· · VALVE	1	SN:11001--
10	235-30-12150	· · CORE,VALVE	1	SN:11001--
11	235-30-12160	· · CAP,VALVE	1	SN:11001--

Printed By : Dwi Iswanto (airafather6107170)

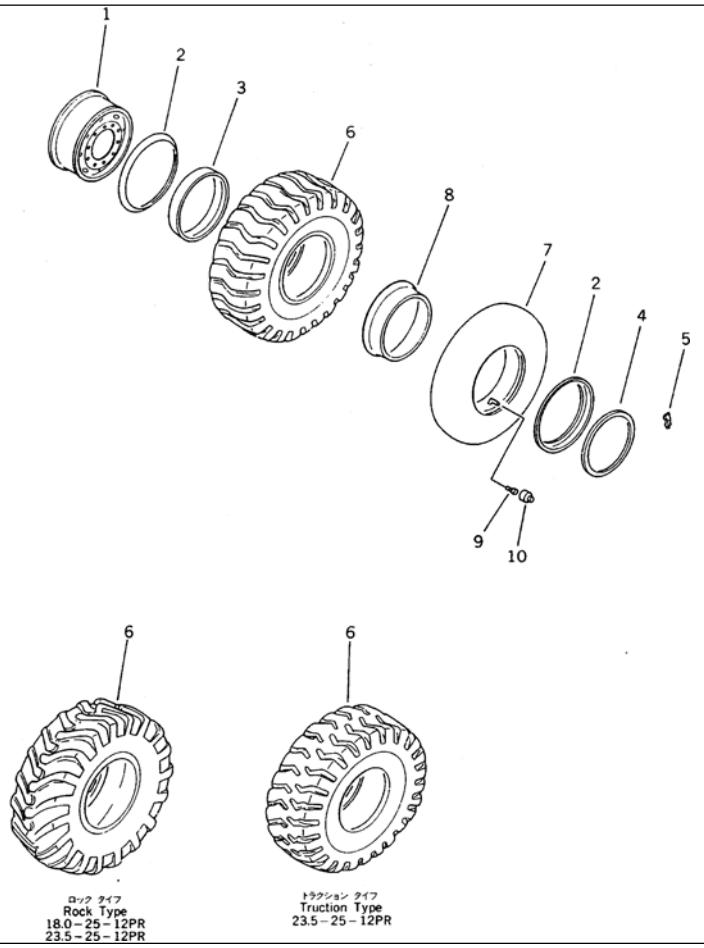

WHEEL AND TUBED TIRE(#11001-12000)

Item	Part No.	Description	Qty	Options
ROCK TYPE				
23.5-25-12PR				
	235-30-00060	WHEEL AND TIRE ASS'Y	6	SN:11001--12000
	235-30-11800	· WHEEL ASS'Y	1	SN:11001--12000
1	235-30-11810	· · RIM,WHEEL	1	SN:11001--12000
2	235-30-11230	· · RING,SIDE	2	SN:11001--12000
3	235-30-11220	· · BAND	1	SN:11001--12000
4	235-30-11240	· · RING,LOCK	1	SN:11001--12000
5	235-30-11250	· · DRIVER	1	SN:11001--12000
	235-30-12701	· TIRE ASS'Y	1	SN:.--12000
	235-30-12700	· TIRE ASS'Y	1	SN:11001--.
6	235-30-12711	· · TIRE	1	SN:.--12000
	235-30-12710	· · TIRE	1	SN:11001--.
7	235-30-12720	· · TUBE	1	SN:11001--12000
8	235-30-12730	· · FLAP	1	SN:11001--12000
9	235-30-12350	· · CORE,VALVE	1	SN:11001--12000
10	235-30-12360	· · CAP,VALVE	1	SN:11001--12000
ROCK TYPE				
18.0-25-12PR				
	235-30-00070	WHEEL AND TIRE ASS'Y	6	SN:11001--12000
	235-30-11400	· WHEEL ASS'Y	1	SN:11001--12000
1	235-30-11410	· · RIM,WHEEL	1	SN:11001--12000
2	235-30-11230	· · RING,SIDE	2	SN:11001--12000
3	235-30-11220	· · BAND	1	SN:11001--12000
4	235-30-11240	· · RING,LOCK	1	SN:11001--12000
5	235-30-11250	· · DRIVER	1	SN:11001--12000
	235-30-12300	· TIRE ASS'Y	1	SN:11001--12000

Printed By : Dwi Iswanto (airafather6107170)

WHEEL AND TUBED TIRE(#11001-12000)

Item	Part No.	Description	Qty	Options
6	235-30-12310	· · TIRE	1	SN:11001--12000
7	235-30-12320	· · TUBE	1	SN:11001--12000
8	235-30-12330	· · FLAP	1	SN:11001--12000
9	235-30-12350	· · CORE,VALVE	1	SN:11001--12000
10	235-30-12360	· · CAP,VALVE	1	SN:11001--12000
TRACTION TYPE				
23.5-25-12PR				
	235-30-00050	WHEEL AND TIRE ASS'Y,FRONT L.H. AND REAR R.H.	3	SN:11001--12000
	235-30-00040	WHEEL AND TIRE ASS'Y,FRONT R.H. AND REAR L.H.	3	SN:11001--12000
	235-30-11800	· WHEEL ASS'Y	1	SN:11001--12000
1	235-30-11810	· · RIM,WHEEL	1	SN:11001--12000
2	235-30-11230	· · RING,SIDE	2	SN:11001--12000
3	235-30-11220	· · BAND	1	SN:11001--12000
4	235-30-11240	· · RING,LOCK	1	SN:11001--12000
5	235-30-11250	· · DRIVER	1	SN:11001--12000
	235-30-13200	· TIRE ASS'Y	1	SN:11001--12000
6	235-30-13210	· · TIRE	1	SN:11001--12000
7	235-30-13220	· · TUBE	1	SN:11001--12000
8	235-30-13230	· · FLAP	1	SN:11001--12000
9	235-30-12350	· · CORE,VALVE	1	SN:11001--12000
10	235-30-12360	· · CAP,VALVE	1	SN:11001--12000

Printed By : Dwi Iswanto (airafather6107170)

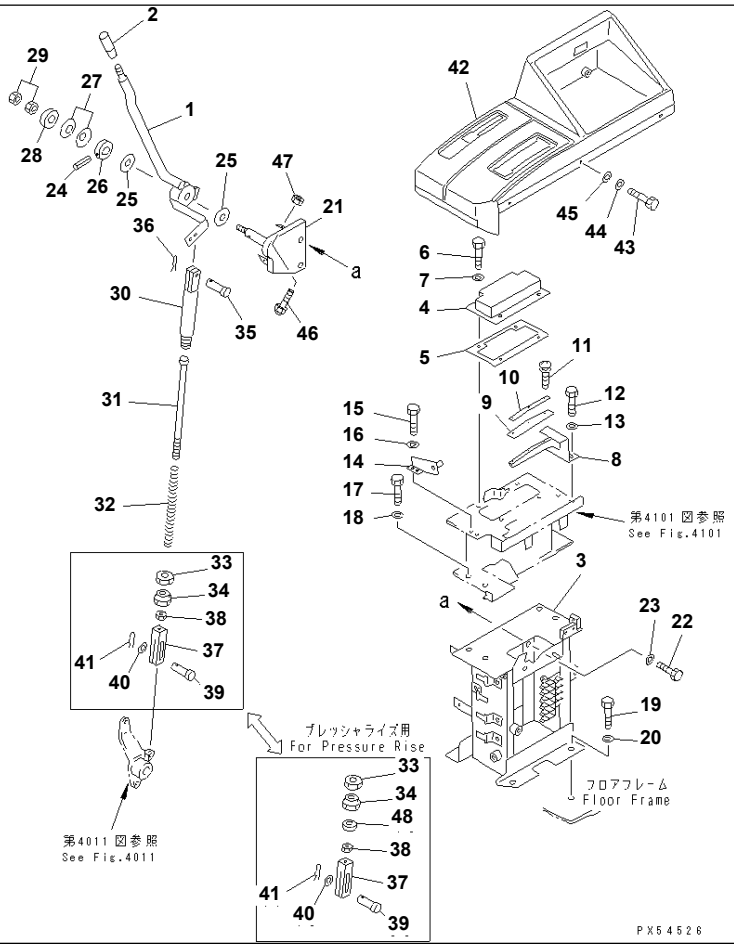

Ref. 4001 **Page 120010**

GD825A-2 S/N 11001-UP
FUEL CONTROL LEVER(#11001-11030)

Item	Part No.	Description	Qty	Options
1	235-43-32120	LEVER	1	SN:11001--@
2	238-43-12310	KNOB	1	SN:11001--@
	(235-45-31200)	CONTROLLER ASS'Y,TRANSMISSION	1	SN:11001--11030
	(☒235-45-13901)	CONTROLLER ASS'Y,TRANSMISSION	1	SN:(11001--11013)
THESE ASSEMBLIES CONSIST OF ALL PARTS SHOWN IN FIGS.4001 AND 4101 TO 4105.				
3	235-45-31110	· BRACKET	1	SN:11001--@
4	235-45-33160	· COVER	1	SN:11001--@
5	235-45-33170	· PACKING	1	SN:11001--@
6	01010-50625	· BOLT	4	SN:11001--@
7	01643-30623	· WASHER	4	SN:11001--@
8	235-45-31140	· GUIDE	1	SN:11001--@
9	235-45-31170	· PLATE	1	SN:11001--@
10	235-45-31180	· PLATE	1	SN:11001--@
11	01023-10310	· SCREW	3	SN:11001--@
12	01010-50820	· BOLT	2	SN:11001--@
13	01643-30823	· WASHER	2	SN:11001--@
14	235-45-33260	· STOPPER	1	SN:11001--@
15	01010-50616	· BOLT	2	SN:11001--@
16	01643-30623	· WASHER	2	SN:11001--@
17	01010-51225	· BOLT	4	SN:11001--@
18	01643-31232	· WASHER	4	SN:11001--@
19	01010-51225	BOLT	4	SN:11001--@
20	01643-31232	WASHER	4	SN:11001--@
21	235-43-32110	BRACKET	1	SN:11001--@
22	01010-51225	BOLT	2	SN:11001--@
23	01643-31232	WASHER	2	SN:11001--@
24	04025-00416	PIN,SPRING	1	SN:11001--@

Ref. 4001 **Page 120010**

FUEL CONTROL LEVER(#11001-11030)

Item	Part No.	Description	Qty	Options
25	144-43-51220	FACING	2	SN:11009--@
	10E-43-11160	FACING	2	SN:11001--11008
26	273-43-12120	DISC	1	SN:11001--@
27	101-854-9355	SPRING	2	SN:11001--@
28	273-43-12120	DISC	1	SN:11001--@
29	01583-11207	NUT	2	SN:11001--@
30	235-43-12241	PIPE	1	SN:11001--@
31	235-43-12251	ROD	1	SN:11001--@
32	235-43-12271	SPRING	1	SN:11001--@
33	01583-12012	NUT	1	SN:11001--@
34	232-43-22121	NUT	1	SN:11001--@
35	04205-10822	PIN	1	SN:11001--@
36	04052-10833	PIN,SNAP	1	SN:11001--@
37	235-43-12260	YOKE	1	SN:11001--@
38	01580-10806	NUT	1	SN:11001--@
39	04205-10825	PIN	1	SN:11001--@
40	01641-20812	WASHER	1	SN:11001--@
41	04052-10833	PIN,SNAP	1	SN:11001--@
42	235-45-31310	COVER,CONSOLE	1	SN:11001--11030
43	01010-50625	BOLT	5	SN:11001--@
44	01643-30623	WASHER	5	SN:11001--@
45	01640-20610	WASHER	5	SN:11001--@
46	232-45-11610	BOLT	2	SN:11001--@
47	01580-10806	NUT	2	SN:11001--@
48	235-54-32440	COVER,(FOR PRESSURE RISE)	1	SN:11014--@

Printed By : Dwi Iswanto (airafather6107170)

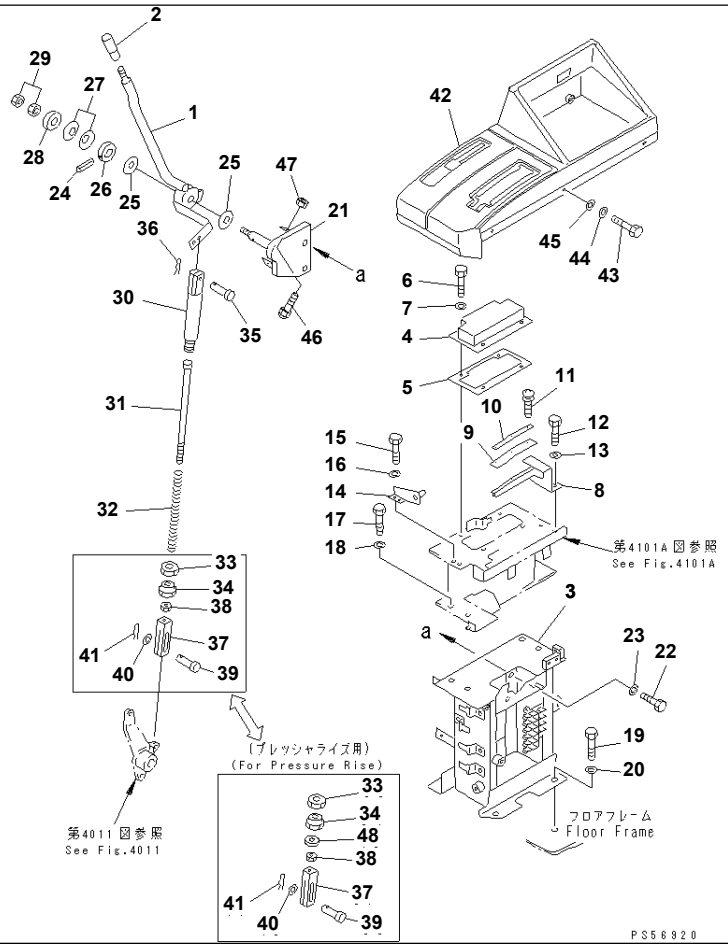

GD825A-2 S/N 11001-UP

FUEL CONTROL LEVER(#11031-12020)

Item	Part No.	Description	Qty	Options
1	235-43-32120	LEVER	1	SN:11001--@
2	238-43-12310	KNOB	1	SN:11001--@
3	(235-45-31101)	CONTROLLER ASS'Y,TRANSMISSION	1	SN:11031--12020
THIS ASSEMBLY CONSIST OF ALL PARTS SHOWN IN FIGS.4001A AND 4101A¤ 4105A.				
3	235-45-31110	· BRACKET	1	SN:11001--12020
4	235-45-33160	· COVER	1	SN:11001--12020
5	235-45-33170	· PACKING	1	SN:11001--12020
6	01010-50625	· BOLT	4	SN:11001--12020
7	01643-30623	· WASHER	4	SN:11001--12020
8	235-45-31140	· GUIDE	1	SN:11001--@
9	235-45-31170	· PLATE	1	SN:11001--@
10	235-45-31180	· PLATE	1	SN:11001--@
11	01023-10310	· SCREW	3	SN:11001--@
12	01010-50820	· BOLT	2	SN:11001--@
13	01643-30823	· WASHER	2	SN:11001--@
14	235-45-33260	· STOPPER	1	SN:11001--@
15	01010-50616	· BOLT	2	SN:11001--@
16	01643-30623	· WASHER	2	SN:11001--@
17	01010-51225	· BOLT	4	SN:11001--12020
18	01643-31232	· WASHER	4	SN:11001--12020
19	01010-51225	BOLT	4	SN:11001--@
20	01643-31232	WASHER	4	SN:11001--@
21	235-43-32110	BRACKET	1	SN:11001--@
22	01010-51225	BOLT	2	SN:11001--@
23	01643-31232	WASHER	2	SN:11001--@
24	04025-00416	PIN,SPRING	1	SN:11001--@
25	144-43-51220	FACING	2	SN:11009--@

Printed By : Dwi Iswanto (airafather6107170)

FUEL CONTROL LEVER(#11031-12020)

Item	Part No.	Description	Qty	Options
26	273-43-12120	DISC	1	SN:11001--@
27	101-854-9355	SPRING	2	SN:11001--@
28	273-43-12120	DISC	1	SN:11001--@
29	01583-11207	NUT	2	SN:11001--@
30	235-43-12241	PIPE	1	SN:11001--@
31	235-43-12251	ROD	1	SN:11001--@
32	235-43-12271	SPRING	1	SN:11001--@
33	01583-12012	NUT	1	SN:11001--@
34	232-43-22121	NUT	1	SN:11001--@
35	04205-10822	PIN	1	SN:11001--@
36	04052-10833	PIN,SNAP	1	SN:11001--@
37	235-43-12260	YOKE	1	SN:11001--@
38	01580-10806	NUT	1	SN:11001--@
39	04205-10825	PIN	1	SN:11001--@
40	01641-20812	WASHER	1	SN:11001--@
41	04052-10833	PIN,SNAP	1	SN:11001--@
42	235-45-31311	COVER,CONSOLE	1	SN:11031--@
43	01010-50625	BOLT	5	SN:11001--@
44	01643-30623	WASHER	5	SN:11001--@
45	01640-20610	WASHER	5	SN:11001--@
46	232-45-11610	BOLT	2	SN:11001--@
47	01580-10806	NUT	2	SN:11001--@
48	235-54-32440	COVER,(FOR PRESSURE RISE)	1	SN:11014--@

Printed By : Dwi Iswanto (airafather6107170)

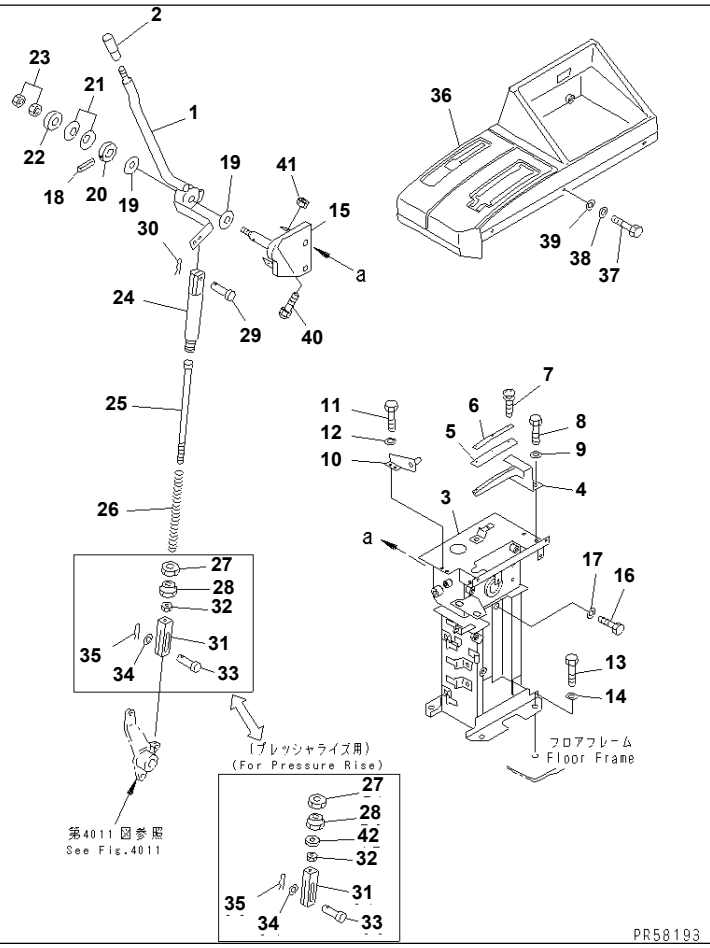

GD825A-2 S/N 11001-UP

FUEL CONTROL LEVER(#12021-12094)

Item	Part No.	Description	Qty	Options
1	235-43-32120	LEVER	1	SN:11001--@
2	238-43-12310	KNOB	1	SN:11001--@
	(235-45-31102)	CONTROLLER ASS'Y,TRANSMISSION	1	SN:12021--12094
THIS ASSEMBLY CONSIST OF ALL PARTS SHOWN IN FIGS.4001B AND 4107¤ 4108.				
3	235-45-34140	· CASE	1	SN:12021--12094
4	235-45-31140	· GUIDE	1	SN:11001--@
5	235-45-31170	· PLATE	1	SN:11001--@
6	235-45-31180	· PLATE	1	SN:11001--@
7	01023-10310	· SCREW	3	SN:11001--@
8	01010-50820	· BOLT	2	SN:11001--@
9	01643-30823	· WASHER	2	SN:11001--@
10	235-45-33260	· STOPPER	1	SN:11001--@
11	01010-50616	· BOLT	2	SN:11001--@
12	01643-30623	· WASHER	2	SN:11001--@
13	01010-51225	BOLT	4	SN:11001--12094
14	01643-31232	WASHER	4	SN:11001--12094
15	235-43-32110	BRACKET	1	SN:11001--@
16	01010-51225	BOLT	2	SN:11001--@
17	01643-31232	WASHER	2	SN:11001--@
18	04025-00416	PIN,SPRING	1	SN:11001--@
19	144-43-51220	FACING	2	SN:11009--@
20	273-43-12120	DISC	1	SN:11001--@
21	101-854-9355	SPRING	2	SN:11001--@
22	273-43-12120	DISC	1	SN:11001--@
23	01583-11207	NUT	2	SN:11001--@
24	235-43-12241	PIPE	1	SN:11001--@
25	235-43-12251	ROD	1	SN:11001--@

Printed By : Dwi Iswanto (airafather6107170)

FUEL CONTROL LEVER(#12021-12094)

Item	Part No.	Description	Qty	Options
26	235-43-12271	SPRING	1	SN:11001--@
27	01583-12012	NUT	1	SN:11001--@
28	232-43-22121	NUT	1	SN:11001--@
29	04205-10822	PIN	1	SN:11001--@
30	04052-10833	PIN,SNAP	1	SN:11001--@
31	235-43-12260	YOKE	1	SN:11001--@
32	01580-10806	NUT	1	SN:11001--@
33	04205-10825	PIN	1	SN:11001--@
34	01641-20812	WASHER	1	SN:11001--@
35	04052-10833	PIN,SNAP	1	SN:11001--@
36	235-45-31311	COVER,CONSOLE	1	SN:11031--@
37	01010-50625	BOLT	5	SN:11001--@
38	01643-30623	WASHER	5	SN:11001--@
39	01640-20610	WASHER	5	SN:11001--@
40	232-45-11610	BOLT	2	SN:11001--@
41	01580-10806	NUT	2	SN:11001--@
42	235-54-32440	COVER,(FOR PRESSURE RISE)	1	SN:11014--@

Printed By : Dwi Iswanto (airafather6107170)

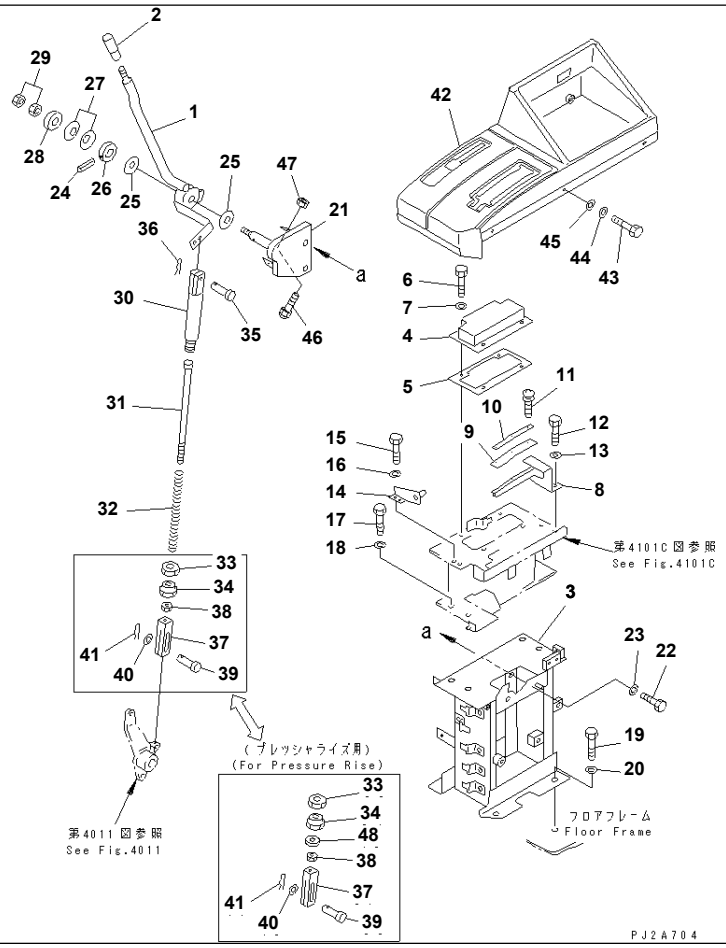

GD825A-2 S/N 11001-UP

FUEL CONTROL LEVER(#12095-)

Item	Part No.	Description	Qty	Options
1	235-43-32120	LEVER	1	SN:11001--
2	238-43-12310	KNOB	1	SN:11001--
3	(235-45-31103)	CONTROLLER ASS'Y,TRANSMISSION	1	SN:12095--
THIS ASSEMBLY CONSIST OF ALL PARTS SHOWN IN FIGS.4001C AND 4101C¤ 4105C.				
3	235-45-31111	· BRACKET	1	SN:12095--
4	235-45-33160	· COVER	1	SN:12095--
5	235-45-33170	· PACKING	1	SN:12095--
6	01010-50625	· BOLT	4	SN:12095--
7	01643-30623	· WASHER	4	SN:12095--
8	235-45-31140	· GUIDE	1	SN:11001--
9	235-45-31170	· PLATE	1	SN:11001--
10	235-45-31180	· PLATE	1	SN:11001--
11	01023-10310	· SCREW	3	SN:11001--
12	01010-50820	· BOLT	2	SN:11001--
13	01643-30823	· WASHER	2	SN:11001--
14	235-45-33260	· STOPPER	1	SN:11001--
15	01010-50616	· BOLT	2	SN:11001--
16	01643-30623	· WASHER	2	SN:11001--
17	01010-51225	· BOLT	4	SN:12095--
18	01643-31232	· WASHER	4	SN:12095--
19	01010-51225	BOLT	4	SN:11001--
20	01643-31232	WASHER	4	SN:11001--
21	235-43-32110	BRACKET	1	SN:11001--
22	01010-51225	BOLT	2	SN:11001--
23	01643-31232	WASHER	2	SN:11001--
24	04025-00416	PIN,SPRING	1	SN:11001--
25	144-43-51220	FACING	2	SN:11009--

Printed By : Dwi Iswanto (airafather6107170)

FUEL CONTROL LEVER(#12095-)

Item	Part No.	Description	Qty	Options
26	273-43-12120	DISC	1	SN:11001--
27	101-854-9355	SPRING	2	SN:11001--
28	273-43-12120	DISC	1	SN:11001--
29	01583-11207	NUT	2	SN:11001--
30	235-43-12241	PIPE	1	SN:11001--
31	235-43-12251	ROD	1	SN:11001--
32	235-43-12271	SPRING	1	SN:11001--
33	01583-12012	NUT	1	SN:11001--
34	232-43-22121	NUT	1	SN:11001--
35	04205-10822	PIN	1	SN:11001--
36	04052-10833	PIN,SNAP	1	SN:11001--
37	235-43-12260	YOKE	1	SN:11001--
38	01580-10806	NUT	1	SN:11001--
39	04205-10825	PIN	1	SN:11001--
40	01641-20812	WASHER	1	SN:11001--
41	04052-10833	PIN,SNAP	1	SN:11001--
42	235-45-31311	COVER,CONSOLE	1	SN:11031--
43	01010-50625	BOLT	5	SN:11001--
44	01643-30623	WASHER	5	SN:11001--
45	01640-20610	WASHER	5	SN:11001--
46	232-45-11610	BOLT	2	SN:11001--
47	01580-10806	NUT	2	SN:11001--
48	235-54-32440	COVER,(FOR PRESSURE RISE)	1	SN:11014--

Printed By : Dwi Iswanto (airafather6107170)

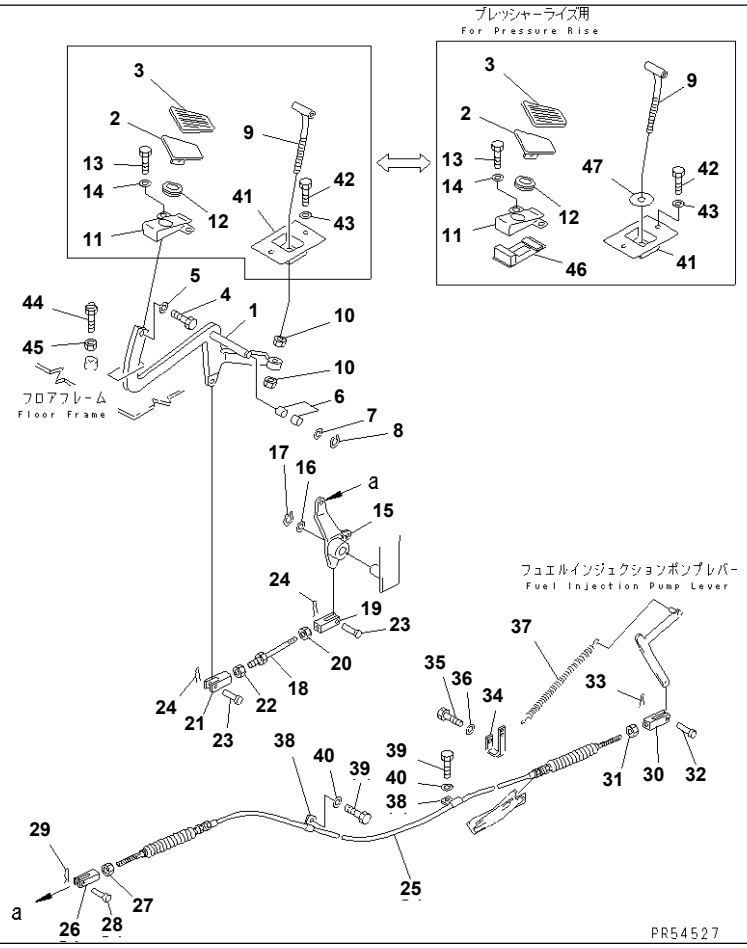

Ref. 4011 **Page 120050**

GD825A-2 S/N 11001-UP
ACCELERATOR PEDAL

Item	Part No.	Description	Qty	Options
1	235-43-31410	LEVER	1	SN:11001--
2	235-43-12110	PEDAL	1	SN:11001--
3	235-43-12180	COVER	1	SN:11001--
4	01010-51225	BOLT	1	SN:11001--
5	01643-31232	WASHER	1	SN:11001--
6	232-43-52320	BUSHING	2	SN:11001--
7	01640-21626	WASHER	1	SN:11001--
8	04064-01610	RING,SNAP	1	SN:11001--
9	235-43-31420	PEDAL	1	SN:11001--
10	01580-11210	NUT	2	SN:11001--
11	235-54-31280	COVER	1	SN:11001--
12	235-957-2170	GROMMET	1	SN:11001--
13	01010-50816	BOLT	2	SN:11001--
14	01643-30823	WASHER	2	SN:11001--
15	235-43-31130	LEVER	1	SN:11001--
16	01640-21626	WASHER	1	SN:11001--
17	04064-01610	RING,SNAP	1	SN:11001--
18	04248-30814	ROD	1	SN:11001--
19	04221-20844	YOKE,L.H. THREAD	1	SN:11001--
20	01508-40805	NUT,L.H. THREAD	1	SN:11001--
21	04211-20844	YOKE	1	SN:11001--
22	01580-10806	NUT	1	SN:11001--
23	04205-10822	PIN	2	SN:11001--
24	04052-10833	PIN,SNAP	2	SN:11001--
25	235-43-12160	CABLE	1	SN:11001--
26	232-43-12550	YOKE	1	SN:11001--
27	01580-10605	NUT	1	SN:11001--

Ref. 4011 **Page 120050**

ACCELERATOR PEDAL

Item	Part No.	Description	Qty	Options
28	04205-10822	PIN	1	SN:11001--
29	04052-10833	PIN,SNAP	1	SN:11001--
30	04211-20634	YOKE	1	SN:11001--
31	01580-10605	NUT	1	SN:11001--
32	04205-10618	PIN	1	SN:11001--
33	04050-11612	PIN,COTTER	1	SN:11001--
34	235-43-12281	PLATE	1	SN:12022--
	235-43-12280	BRACKET	1	SN:11001--12021
35	01010-51230	BOLT	1	SN:11001--
36	01643-31232	WASHER	1	SN:11001--
37	232-43-12360	SPRING	1	SN:11001--
38	08036-21414	CLIP	2	SN:11001--
39	01010-51220	BOLT	2	SN:11001--
40	01643-31232	WASHER	2	SN:11001--
41	235-54-31510	COVER	1	SN:11001--
42	01010-50825	BOLT	2	SN:11001--
43	01643-30823	WASHER	2	SN:11001--
44	232-43-52430	BUMPER	1	SN:11001--
45	01580-11210	NUT	1	SN:11001--
46	235-54-32410	COVER,(FOR PRESSURE RISE)	1	SN:11014--
47	235-54-32450	COVER,(FOR PRESSURE RISE)	1	SN:11014--

Printed By : Dwi Iswanto (airafather6107170)

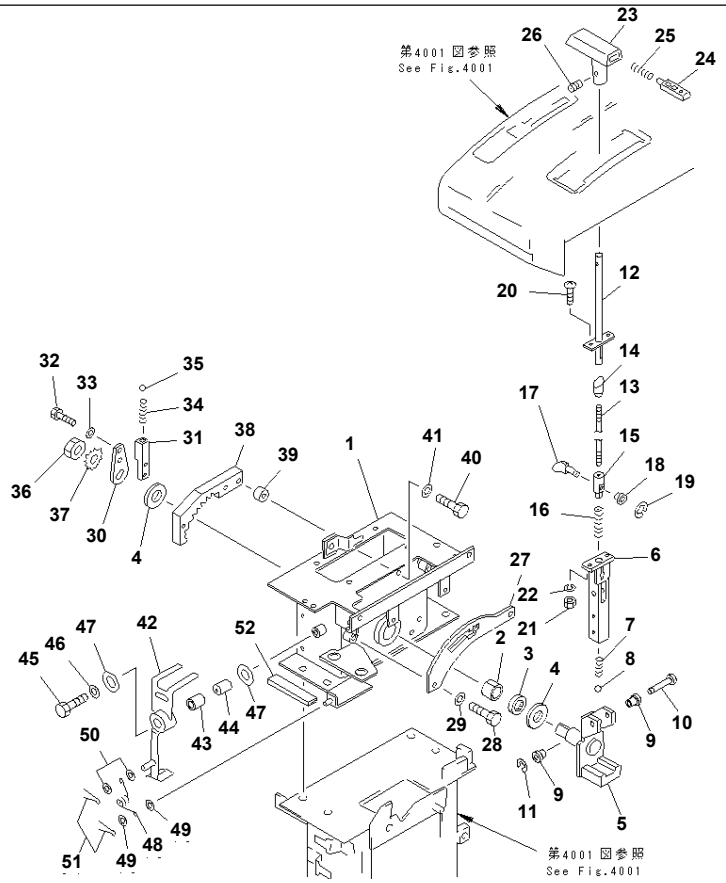

Ref. 4101 **Page 120060**

GD825A-2 S/N 11001-UP
TRANSMISSION CONTROL LEVER (BODY AND SHIFT LEVER)(#11001-11030)

Item	Part No.	Description	Qty	Options
	235-45-31200	CONTROLLER ASS'Y,TRANSMISSION		SN:11001--11030
	(☒235-45-13901)	CONTROLLER ASS'Y,TRANSMISSION		SN:(11001--11013)
THESE ASSEMBLIES CONSIST OF ALL PARTS SHOWN IN FIGS.4001 AND 4101 TO 4105.				
1	235-45-33111	· BODY ASS'Y	1	SN:11014--11030
	235-45-33110	· BODY ASS'Y	1	SN:11001--11013
2	235-45-33550	· BUSHING	1	SN:11014--@
	235-45-13140	· BUSHING	1	SN:11001--11013
3	235-45-13150	· SEAL,OIL	1	SN:11001--@
4	235-45-13380	· WASHER,THRUST	2	SN:11001--@
5	235-45-33311	· FRAME ASS'Y	1	SN:11014--11030
	235-45-33310	· FRAME ASS'Y	1	SN:11001--11013
6	235-45-13240	· STAY	1	SN:11001--@
7	235-45-13291	· SPRING	1	SN:11001--@
8	04260-00793	· BALL	1	SN:11001--@
9	235-45-33510	· BUSHING	2	SN:11001--@
10	235-45-13320	· PIN	1	SN:11001--@
11	235-45-13530	· RING,SNAP	1	SN:11001--@
12	235-45-33531	· LEVER	1	SN:11014--@
	235-45-33530	· LEVER	1	SN:11001--11013
13	235-45-33540	· ROD,SHIFT	1	SN:11001--@
14	235-45-13580	· SLEEVE	1	SN:11001--@
15	235-45-13540	· ROD,END	1	SN:11001--@
16	235-45-13460	· SPRING	1	SN:11001--@
17	235-45-13261	· CAM	1	SN:11001--@
18	235-45-13470	· COLLAR	1	SN:11001--@
19	235-45-13520	· RING,SNAP	1	SN:11001--@

Printed By : Dwi Iswanto (airafather6107170)

TRANSMISSION CONTROL LEVER (BODY AND SHIFT LEVER)(#11001-11030)

Item	Part No.	Description	Qty	Options
20	01220-40516	· SCREW	2	SN:11001--@
21	01580-10504	· NUT	2	SN:11001--@
22	01601-20513	· WASHER,SPRING	2	SN:11001--@
23	235-45-13551	· KNOB,SELECT	1	SN:11001--@
24	235-45-13561	· KNOB,PUSH	1	SN:11001--@
25	235-45-13571	· SPRING	1	SN:11001--@
26	235-45-13590	· SCREW	1	SN:11001--@
27	235-45-33390	· GUIDE	1	SN:11001--11030
28	01010-50820	· BOLT	2	SN:11001--@
29	01643-30823	· WASHER	2	SN:11001--@
30	235-45-13350	· ROD	1	SN:11001--@
31	235-45-13361	· HOLDER	1	SN:11001--@
32	01010-50616	· BOLT	2	SN:11001--@
33	01643-30623	· WASHER	2	SN:11001--@
34	235-45-13370	· SPRING	1	SN:11001--@
35	04260-00793	· BALL	1	SN:11001--@
36	01583-11610	· NUT	1	SN:11001--@
37	235-45-13510	· WASHER	1	SN:11001--@
38	235-45-33330	· BLOCK,DETENT	1	SN:11001--@
39	235-45-13490	· SPACER	2	SN:11001--@
40	01010-50830	· BOLT	2	SN:11001--@
41	01643-30823	· WASHER	2	SN:11001--@
42	235-45-33210	· LEVER	1	SN:11001--11030
43	235-45-33230	· BUSHING	1	SN:11001--@
44	235-45-33240	· COLLAR	1	SN:11001--@
45	01090-50840	· BOLT	1	SN:11001--@
46	175-61-23220	· WASHER	1	SN:11001--@
47	235-45-33250	· WASHER	2	SN:11001--@
48	233-54-22520	· SPRING	1	SN:11001--@
49	01643-30623	· WASHER	2	SN:11001--@
50	01640-20610	· WASHER	2	SN:11001--@
51	04050-11610	· PIN,COTTER	2	SN:11001--@
52	23A-54-25420	· SEAL	1	SN:11001--@

Printed By : Dwi Iswanto (airafather6107170)

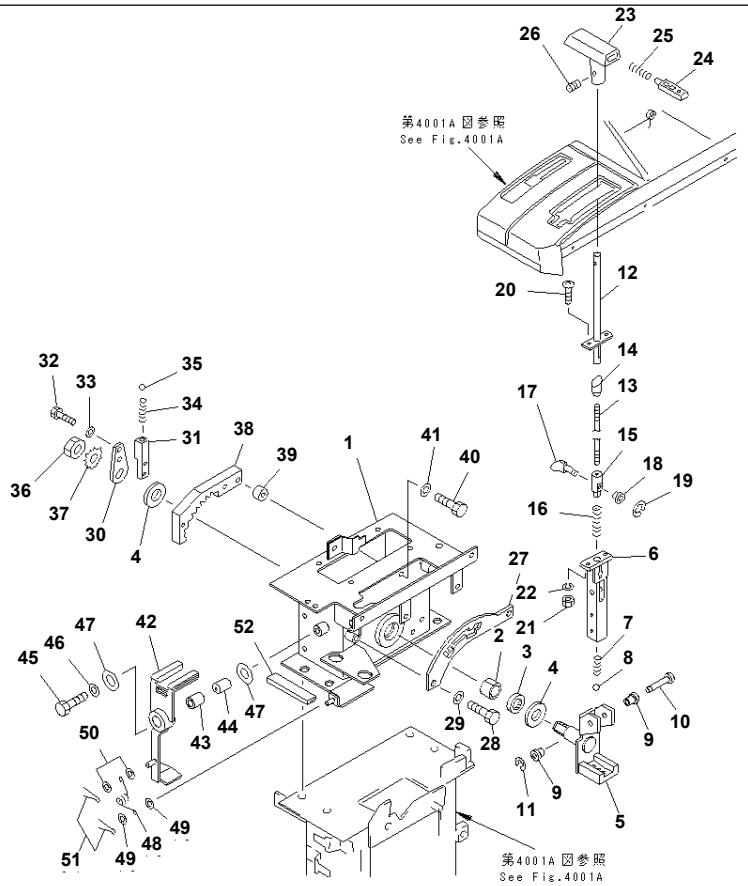

Ref. 4101A **Page 120070**

GD825A-2 S/N 11001-UP
TRANSMISSION CONTROL LEVER (BODY AND SHIFT LEVER)(#11031-12020)

Item	Part No.	Description	Qty	Options
	235-45-31101	CONTROLLER ASS'Y	1	SN:11031--12020
THIS ASSEMBLY CONSIST OF ALL PARTS SHOWN IN FIGS.4001A AND 4101A¤ 4105A.				
1	235-45-33112	· BODY ASS'Y	1	SN:11031--12020
2	235-45-33550	· BUSHING	1	SN:11014--12020
3	235-45-13150	· SEAL,OIL	1	SN:11001--@
4	235-45-13380	· WASHER,THRUST	2	SN:11001--@
5	235-45-33312	· FRAME ASS'Y	1	SN:11031--12020
6	235-45-13240	· STAY	1	SN:11001--@
7	235-45-13291	· SPRING	1	SN:11001--@
8	04260-00793	· BALL	1	SN:11001--@
9	235-45-33510	· BUSHING	2	SN:11001--@
10	235-45-13320	· PIN	1	SN:11001--@
11	235-45-13530	· RING,SNAP	1	SN:11001--@
12	235-45-33531	· LEVER	1	SN:11014--@
13	235-45-33540	· ROD,SHIFT	1	SN:11001--@
14	235-45-13580	· SLEEVE	1	SN:11001--@
15	235-45-13540	· ROD,END	1	SN:11001--@
16	235-45-13460	· SPRING	1	SN:11001--@
17	235-45-13261	· CAM	1	SN:11001--@
18	235-45-13470	· COLLAR	1	SN:11001--@
19	235-45-13520	· RING,SNAP	1	SN:11001--@
20	01220-40516	· SCREW	2	SN:11001--@
21	01580-10504	· NUT	2	SN:11001--@
22	01601-20513	· WASHER,SPRING	2	SN:11001--@
23	235-45-13551	· KNOB,SELECT	1	SN:11001--@
24	235-45-13561	· KNOB,PUSH	1	SN:11001--@

Printed By : Dwi Iswanto (airafather6107170)

GD825A-2 S/N 11001-UP

TRANSMISSION CONTROL LEVER (BODY AND SHIFT LEVER)(#11031-12020)

Item	Part No.	Description	Qty	Options
25	235-45-13571	· SPRING	1	SN:11001--@
26	235-45-13590	· SCREW	1	SN:11001--@
27	235-45-33320	· GUIDE	1	SN:11031--12020
28	01010-50820	· BOLT	2	SN:11001--@
29	01643-30823	· WASHER	2	SN:11001--@
30	235-45-13350	· ROD	1	SN:11001--12020
31	235-45-13361	· HOLDER	1	SN:11001--@
32	01010-50616	· BOLT	2	SN:11001--@
33	01643-30623	· WASHER	2	SN:11001--@
34	235-45-13370	· SPRING	1	SN:11001--@
35	04260-00793	· BALL	1	SN:11001--@
36	01583-11610	· NUT	1	SN:11001--@
37	235-45-13510	· WASHER	1	SN:11001--@
38	235-45-33330	· BLOCK,DETENT	1	SN:11001--@
39	235-45-13490	· SPACER	2	SN:11001--@
40	01010-50830	· BOLT	2	SN:11001--@
41	01643-30823	· WASHER	2	SN:11001--@
42	235-45-33211	· LEVER	1	SN:11031--@
43	235-45-33230	· BUSHING	1	SN:11001--@
44	235-45-33240	· COLLAR	1	SN:11001--@
45	01090-50840	· BOLT	1	SN:11001--@
46	175-61-23220	· WASHER	1	SN:11001--@
47	235-45-33250	· WASHER	2	SN:11001--@
48	233-54-22520	· SPRING	1	SN:11001--@
49	01643-30623	· WASHER	2	SN:11001--@
50	01640-20610	· WASHER	2	SN:11001--@
51	04050-11610	· PIN,COTTER	2	SN:11001--@
52	23A-54-25420	· SEAL	1	SN:11001--@

Printed By : Dwi Iswanto (airafather6107170)

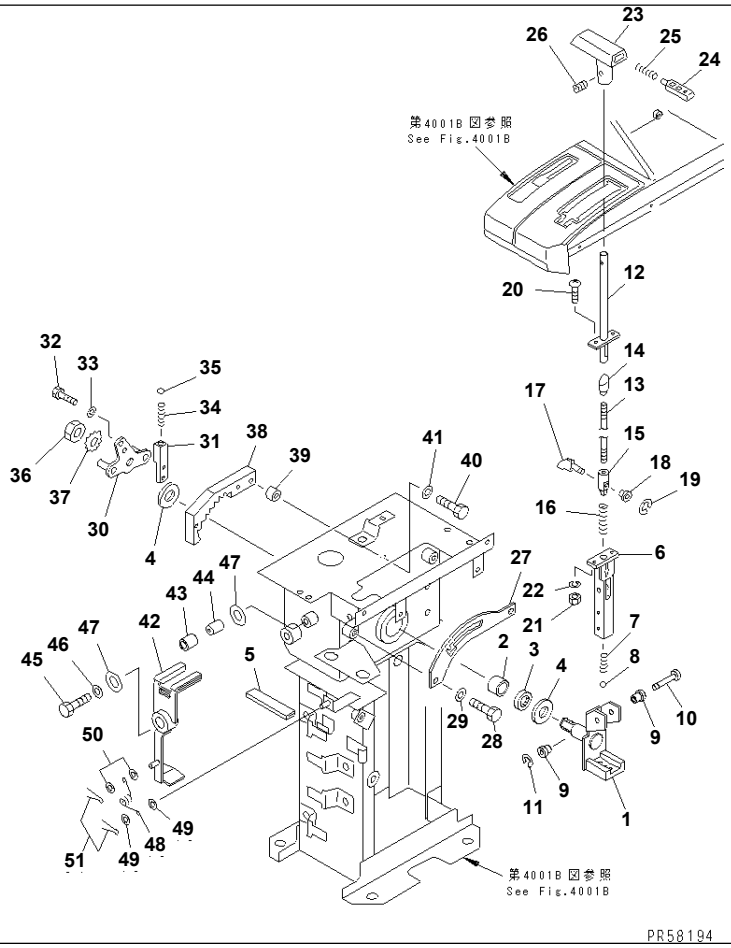

Ref. 4101B **Page 120080**

GD825A-2 S/N 11001-UP
TRANSMISSION CONTROL LEVER (BODY AND SHIFT LEVER)(#12021-12094)

Item	Part No.	Description	Qty	Options
	235-45-31102	CONTROLLER ASS'Y,TRANSMISSION		SN:12021--12094
THIS ASSEMBLY CONSIST OF ALL PARTS SHOWN IN FIGS.4001B AND 4107¤ 4108.				
1	235-45-34130	· FRAME ASS'Y	1	SN:12021--12094
2	235-45-33551	· BUSHING	1	SN:12021--12094
3	235-45-13150	· SEAL,OIL	1	SN:11001--@
4	235-45-13380	· WASHER,THRUST	2	SN:11001--@
5	23A-54-25420	· SEAL	1	SN:11001--@
6	235-45-13240	· STAY	1	SN:11001--@
7	235-45-13291	· SPRING	1	SN:11001--@
8	04260-00793	· BALL	1	SN:11001--@
9	235-45-33510	· BUSHING	2	SN:11001--@
10	235-45-13320	· PIN	1	SN:11001--@
11	235-45-13530	· RING,SNAP	1	SN:11001--@
12	235-45-33531	· LEVER	1	SN:11014--@
13	235-45-33540	· ROD,SHIFT	1	SN:11001--@
14	235-45-13580	· SLEEVE	1	SN:11001--@
15	235-45-13540	· ROD,END	1	SN:11001--@
16	235-45-13460	· SPRING	1	SN:11001--@
17	235-45-13261	· CAM	1	SN:11001--@
18	235-45-13470	· COLLAR	1	SN:11001--@
19	235-45-13520	· RING,SNAP	1	SN:11001--@
20	01220-40516	· SCREW	2	SN:11001--@
21	01580-10504	· NUT	2	SN:11001--@
22	01601-20513	· WASHER,SPRING	2	SN:11001--@
23	235-45-13551	· KNOB,SELECT	1	SN:11001--@
24	235-45-13561	· KNOB,PUSH	1	SN:11001--@

Printed By : Dwi Iswanto (airafather6107170)

TRANSMISSION CONTROL LEVER (BODY AND SHIFT LEVER)(#12021-12094)

Item	Part No.	Description	Qty	Options
25	235-45-13571	· SPRING	1	SN:11001--@
26	235-45-13590	· SCREW	1	SN:11001--@
27	235-45-34110	· GUIDE	1	SN:12021--12094
28	01010-50820	· BOLT	2	SN:11001--@
29	01643-30823	· WASHER	2	SN:11001--@
30	235-45-34120	· ROD,ACTION	1	SN:12021--12094
31	235-45-13361	· HOLDER	1	SN:11001--@
32	01010-50616	· BOLT	2	SN:11001--@
33	01643-30623	· WASHER	2	SN:11001--@
34	235-45-13370	· SPRING	1	SN:11001--@
35	04260-00793	· BALL	1	SN:11001--@
36	01583-11610	· NUT	1	SN:11001--@
37	235-45-13510	· WASHER	1	SN:11001--@
38	235-45-33330	· BLOCK,DETENT	1	SN:11001--@
39	235-45-13490	· SPACER	2	SN:11001--@
40	01010-50830	· BOLT	2	SN:11001--@
41	01643-30823	· WASHER	2	SN:11001--@
42	235-45-33211	· LEVER	1	SN:11031--@
43	235-45-33230	· BUSHING	1	SN:11001--@
44	235-45-33240	· COLLAR	1	SN:11001--@
45	01090-50840	· BOLT	1	SN:11001--@
46	175-61-23220	· WASHER	1	SN:11001--@
47	235-45-33250	· WASHER	2	SN:11001--@
48	233-54-22520	· SPRING	1	SN:11001--@
49	01643-30623	· WASHER	2	SN:11001--@
50	01640-20610	· WASHER	2	SN:11001--@
51	04050-11610	· PIN,COTTER	2	SN:11001--@

Printed By : Dwi Iswanto (airafather6107170)

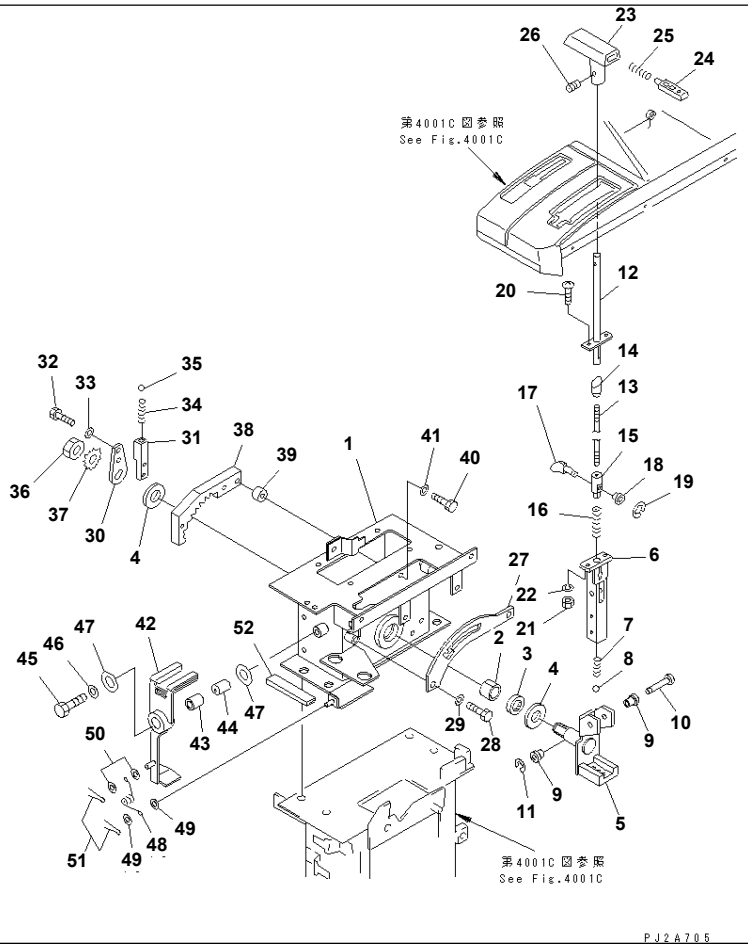

GD825A-2 S/N 11001-UP

TRANSMISSION CONTROL LEVER (BODY AND SHIFT LEVER)(#12095-)

Item	Part No.	Description	Qty	Options
	235-45-31103	CONTROLLER ASS'Y	1	SN:12095--
THIS ASSEMBLY CONSIST OF ALL PARTS SHOWN IN FIGS.4001C AND 4101C¤ 4105C.				
1	235-45-33113	· BODY ASS'Y	1	SN:12095--
2	235-45-33550	· BUSHING	1	SN:12095--
3	235-45-13150	· SEAL,OIL	1	SN:11001--
4	235-45-13380	· WASHER,THRUST	2	SN:11001--
5	235-45-33312	· FRAME ASS'Y	1	SN:12095--
6	235-45-13240	· STAY	1	SN:11001--
7	235-45-13291	· SPRING	1	SN:11001--
8	04260-00793	· BALL	1	SN:11001--
9	235-45-33510	· BUSHING	2	SN:11001--
10	235-45-13320	· PIN	1	SN:11001--
11	235-45-13530	· RING,SNAP	1	SN:11001--
12	235-45-33531	· LEVER	1	SN:11014--
13	235-45-33540	· ROD,SHIFT	1	SN:11001--
14	235-45-13580	· SLEEVE	1	SN:11001--
15	235-45-13540	· ROD,END	1	SN:11001--
16	235-45-13460	· SPRING	1	SN:11001--
17	235-45-13261	· CAM	1	SN:11001--
18	235-45-13470	· COLLAR	1	SN:11001--
19	235-45-13520	· RING,SNAP	1	SN:11001--
20	01220-40516	· SCREW	2	SN:11001--
21	01580-10504	· NUT	2	SN:11001--
22	01601-20513	· WASHER,SPRING	2	SN:11001--
23	235-45-13551	· KNOB,SELECT	1	SN:11001--
24	235-45-13561	· KNOB,PUSH	1	SN:11001--
25	235-45-13571	· SPRING	1	SN:11001--

Printed By : Dwi Iswanto (airafather6107170)

TRANSMISSION CONTROL LEVER (BODY AND SHIFT LEVER)(#12095-)

Item	Part No.	Description	Qty	Options
26	235-45-13590	· SCREW	1	SN:11001--
27	235-45-34240	· GUIDE	1	SN:12095--
28	01010-50820	· BOLT	2	SN:11001--
29	01643-30823	· WASHER	2	SN:11001--
30	235-45-13350	· ROD	1	SN:12095--
31	235-45-13361	· HOLDER	1	SN:11001--
32	01010-50616	· BOLT	2	SN:11001--
33	01643-30623	· WASHER	2	SN:11001--
34	235-45-13370	· SPRING	1	SN:11001--
35	04260-00793	· BALL	1	SN:11001--
36	01583-11610	· NUT	1	SN:11001--
37	235-45-13510	· WASHER	1	SN:11001--
38	235-45-33330	· BLOCK,DETENT	1	SN:11001--
39	235-45-13490	· SPACER	2	SN:11001--
40	01010-50830	· BOLT	2	SN:11001--
41	01643-30823	· WASHER	2	SN:11001--
42	235-45-33211	· LEVER	1	SN:11031--
43	235-45-33230	· BUSHING	1	SN:11001--
44	235-45-33240	· COLLAR	1	SN:11001--
45	01090-50840	· BOLT	1	SN:11001--
46	175-61-23220	· WASHER	1	SN:11001--
47	235-45-33250	· WASHER	2	SN:11001--
48	233-54-22520	· SPRING	1	SN:11001--
49	01643-30623	· WASHER	2	SN:11001--
50	01640-20610	· WASHER	2	SN:11001--
51	04050-11610	· PIN,COTTER	2	SN:11001--
52	23A-54-25420	· SEAL	1	SN:11001--

Printed By : Dwi Iswanto (airafather6107170)

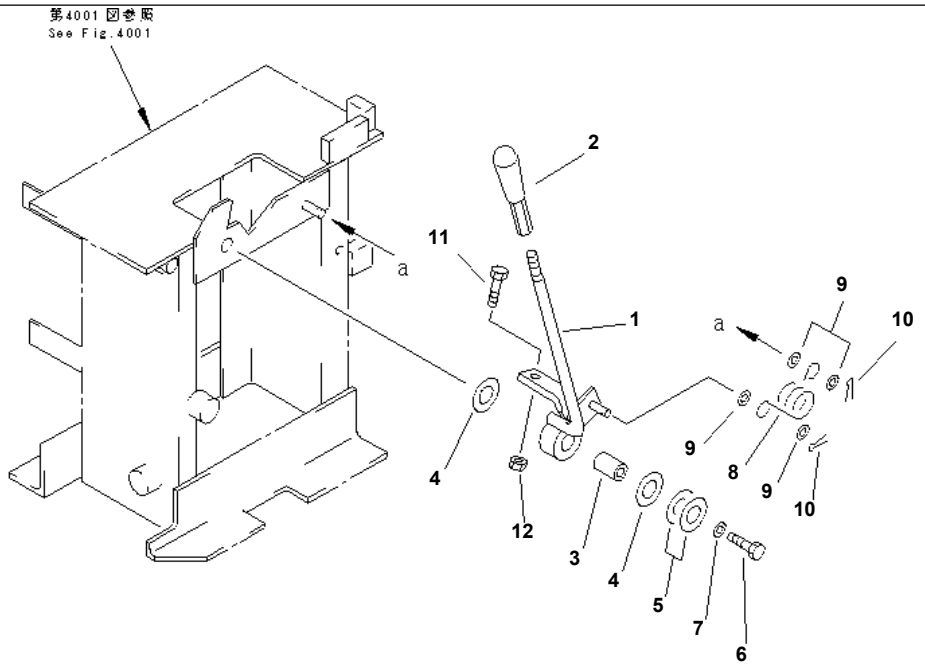

PD54529

GD825A-2 S/N 11001-UP

TRANSMISSION CONTROL LEVER (SHIFT LOCK LEVER)(#11001-11030)

Item	Part No.	Description	Qty	Options
	(235-45-31200)	CONTROLLER ASS'Y,TRANSMISSION	1	SN:11001--11030
	(☒235-45-13901)	CONTROLLER ASS'Y,TRANSMISSION	1	SN:(11001--11013)
THESE ASSEMBLIES CONSIST OF ALL PARTS SHOWN IN FIGS.4001 AND 4101 TO 4105.				
1	235-45-31240	· LEVER	1	SN:11001--@
2	09305-00800	· KNOB	1	SN:11001--@
3	235-45-33240	· COLLAR	1	SN:11001--@
4	235-45-33250	· WASHER	2	SN:11001--@
5	235-45-00010	· SHIM ASS'Y	1	SN:11001--@
	☆	· · SHIM¤ 0.2MM	5	SN:11001--@
6	01090-50840	· BOLT	1	SN:11001--@
7	175-61-23220	· WASHER	1	SN:11001--@
8	233-54-22520	· SPRING	1	SN:11001--@
9	01643-30623	· WASHER	4	SN:11001--@
10	04050-11610	· PIN,COTTER	2	SN:11001--@
11	01010-50835	· BOLT	1	SN:11001--@
12	01580-10806	· NUT	1	SN:11001--@

Printed By : Dwi Iswanto (airafather6107170)

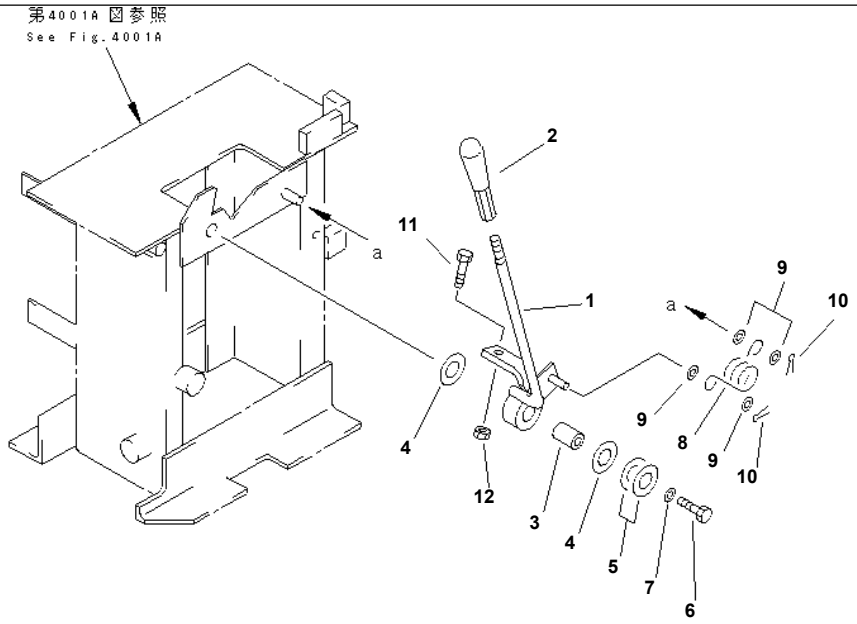

PC56922

TRANSMISSION CONTROL LEVER (SHIFT LOCK LEVER)(#11031-12020)

Item	Part No.	Description	Qty	Options
1	235-45-31240	LEVER	1	SN:11001--12020
2	09305-00800	KNOB	1	SN:11001--12020
3	235-45-33240	COLLAR	1	SN:11001--12020
4	235-45-33250	WASHER	2	SN:11001--12020
5	235-45-00010	SHIM ASS'Y	1	SN:11001--12020
	☆	· SHIM¤ 0.2MM	5	SN:11001--12020
6	01090-50840	BOLT	1	SN:11001--12020
7	175-61-23220	WASHER	1	SN:11001--12020
8	233-54-22520	SPRING	1	SN:11001--12020
9	01643-30623	WASHER	4	SN:11001--12020
10	04050-11610	PIN,COTTER	2	SN:11001--12020
11	01010-50835	BOLT	1	SN:11001--12020
12	01580-10806	NUT	1	SN:11001--12020

Printed By : Dwi Iswanto (airafather6107170)

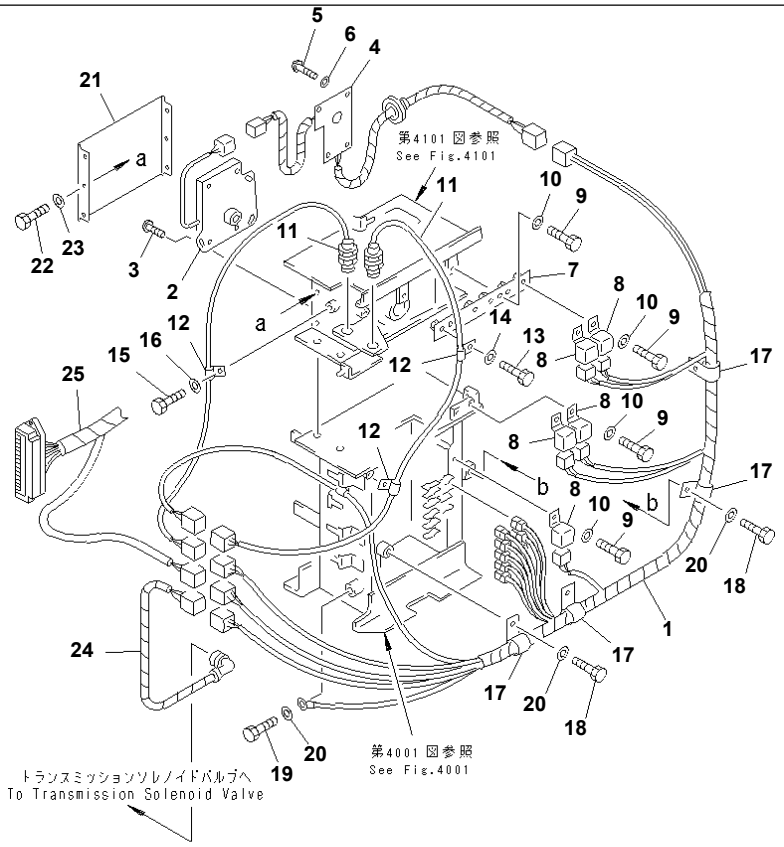

GD825A-2 S/N 11001-UP

TRANSMISSION CONTROL LEVER (ELECTRICAL SYSTEM)(#11001-11030)

Item	Part No.	Description	Qty	Options
	(235-45-31200)	CONTROLLER ASS'Y,TRANSMISSION	1	SN:11001--11030
	(☒235-45-13901)	CONTROLLER ASS'Y,TRANSMISSION	1	SN:(11001--11013)
THESE ASSEMBLIES CONSIST OF ALL PARTS SHOWN IN FIGS.4001 AND 4101 TO 4105.				
1	235-45-33450	· HARNESS	1	SN:11001--11030
2	235-45-13811	· SWITCH ASS'Y	1	SN:11014--@
	235-45-13810	· SWITCH ASS'Y	1	SN:11001--11013
3	01023-10612	· SCREW	3	SN:11001--@
4	235-45-33440	· HARNESS	1	SN:11001--11030
5	01220-40410	· SCREW	5	SN:11001--@
6	01642-20405	· WASHER	5	SN:11001--@
7	235-45-33180	· BRACKET	1	SN:11001--@
8	569-06-61960	· RELAY	5	SN:11001--11030
9	01010-50612	· BOLT	7	SN:11001--11030
10	01643-30623	· WASHER	7	SN:11001--11030
11	235-45-33410	· SENSOR	2	SN:11001--@
12	08036-10810	· CLIP	3	SN:11001--@
13	01010-50612	· BOLT	2	SN:11001--@
14	01643-30623	· WASHER	2	SN:11001--@
15	01010-50814	· BOLT	1	SN:11001--@
16	01643-30823	· WASHER	1	SN:11001--@
17	08036-02514	· CLIP	4	SN:11001--@
18	01010-51018	· BOLT	4	SN:11001--@
19	01010-51016	· BOLT	1	SN:11001--@
20	01643-31032	· WASHER	5	SN:11001--@
21	235-45-33190	· COVER	1	SN:11001--@
22	01010-50614	· BOLT	6	SN:11001--@
23	01643-30623	· WASHER	6	SN:11001--@

Printed By : Dwi Iswanto (airafather6107170)

TRANSMISSION CONTROL LEVER (ELECTRICAL SYSTEM)(#11001-11030)

Item	Part No.	Description	Qty	Options
24	(235-06-31212)	HARNESS	1	SN:11014--11030
	(235-06-31211)	HARNESS	1	SN:11001--11013
25	(235-06-31472)	HARNESS	1	SN:11014--11030
	(235-06-31471)	HARNESS	1	SN:11001--11013

Printed By : Dwi Iswanto (airafather6107170)

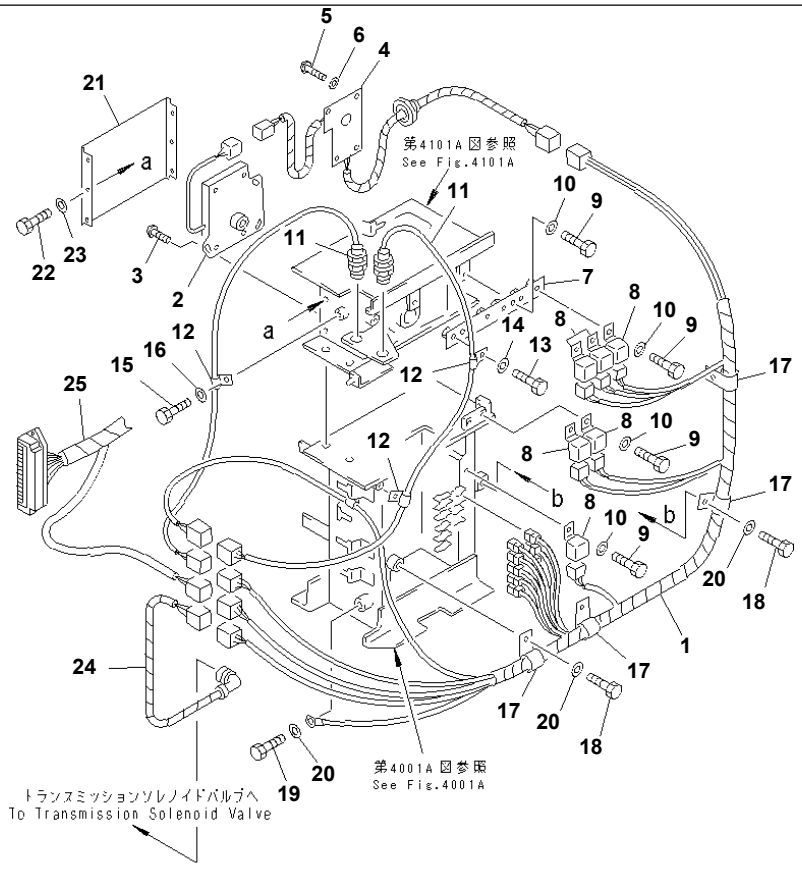

TRANSMISSION CONTROL LEVER (ELECTRICAL SYSTEM)(#11031-12020)

Item	Part No.	Description	Qty	Options
	(235-45-31101)	CONTROLLER ASS'Y,TRANSMISSION	1	SN:11031--12020
THIS ASSEMBLY CONSIST OF ALL PARTS SHOWN IN FIGS.4001A AND 4101A¤ 4105A.				
1	235-45-33451	· HARNESS	1	SN:11031--12020
2	235-45-13811	· SWITCH ASS'Y	1	SN:11014--12020
3	01023-10612	· SCREW	3	SN:11001--12020
4	235-45-33441	· HARNESS	1	SN:11031--12020
5	01220-40410	· SCREW	5	SN:11001--12020
6	01642-20405	· WASHER	5	SN:11001--12020
7	235-45-33180	· BRACKET	1	SN:11001--12020
8	569-06-61960	· RELAY	6	SN:11031--12020
9	01010-50612	· BOLT	8	SN:11031--12020
10	01643-30623	· WASHER	8	SN:11031--12020
11	235-45-33410	· SENSOR	2	SN:11001--12020
12	08036-10810	· CLIP	3	SN:11001--12020
13	01010-50612	· BOLT	2	SN:11001--12020
14	01643-30623	· WASHER	2	SN:11001--12020
15	01010-50814	· BOLT	1	SN:11001--12020
16	01643-30823	· WASHER	1	SN:11001--12020
17	08036-02514	· CLIP	4	SN:11001--12020
18	01010-51018	· BOLT	4	SN:11001--12020
19	01010-51016	· BOLT	1	SN:11001--12020
20	01643-31032	· WASHER	5	SN:11001--12020
21	235-45-33190	· COVER	1	SN:11001--12020
22	01010-50614	· BOLT	6	SN:11001--12020
23	01643-30623	· WASHER	6	SN:11001--12020
24	(235-06-31213)	HARNESS	1	SN:11031--12020
25	(235-06-31473)	HARNESS	1	SN:11031--12020

Printed By : Dwi Iswanto (airafather6107170)

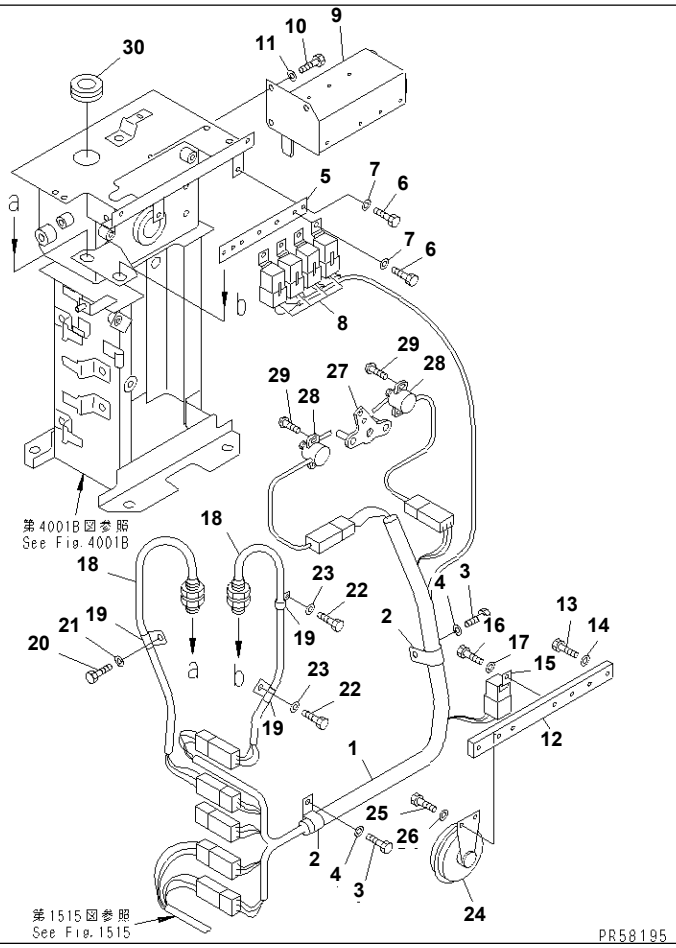

Ref. 4105B **Page 120140**

GD825A-2 S/N 11001-UP

TRANSMISSION CONTROL LEVER (ELECTRICAL SYSTEM)(#12021-12094)

Item	Part No.	Description	Qty	Options
	(235-45-31102)	CONTROLLER ASS'Y	1	SN:12021--12094
THIS ASSEMBLY CONSIST OF ALL PARTS SHOWN IN FIGS.4001B AND 4107¤ 4108.				
1	235-06-35680	· WIRING HARNESS	1	SN:12021--12094
2	08036-02514	· CLIP	2	SN:12021--12094
3	01010-51018	· BOLT	2	SN:12021--12094
4	01643-31032	· WASHER	2	SN:12021--12094
5	235-45-34160	· BRACKET	1	SN:12021--12094
6	01010-50612	· BOLT	7	SN:12021--12094
7	01643-30623	· WASHER	7	SN:12021--12094
8	569-06-61960	· RELAY	4	SN:12021--12094
9	235-06-35640	· BRACKET	1	SN:12021--12094
10	01010-50814	· BOLT	3	SN:12021--12094
11	01643-30823	· WASHER	3	SN:12021--12094
12	235-45-34230	· SEAT	1	SN:12021--12094
13	01010-50820	· BOLT	2	SN:12021--12094
14	01643-30823	· WASHER	2	SN:12021--12094
15	569-06-61960	· RELAY	1	SN:12021--12094
16	01010-50612	· BOLT	1	SN:12021--12094
17	01643-30623	· WASHER	1	SN:12021--12094
18	235-45-33410	· SENSOR,SHIFT POTENTIO	2	SN:12021--12094
19	08036-10810	· CLIP	3	SN:12021--12094
20	01010-50814	· BOLT	1	SN:12021--12094
21	01643-30823	· WASHER	1	SN:12021--12094
22	01010-50612	· BOLT	2	SN:12021--12094
23	01643-30623	· WASHER	2	SN:12021--12094
24	08160-62430	· HORN	1	SN:12021--12094
25	01010-50812	· BOLT	2	SN:12021--12094

Ref. 4105B **Page 120140**

TRANSMISSION CONTROL LEVER (ELECTRICAL SYSTEM)(#12021-12094)

Item	Part No.	Description	Qty	Options
26	01643-30823	· WASHER	2	SN:12021--12094
27	(235-45-34120)	· ROD,ACTION	1	SN:12021--12094
28	23G-06-13140	· SENSOR,POTENTIO	2	SN:12021--12094
29	01023-10412	· SCREW	4	SN:12021--12094
30	08037-03614	· GROMMET	1	SN:12021--12094

Printed By : Dwi Iswanto (airafather6107170)

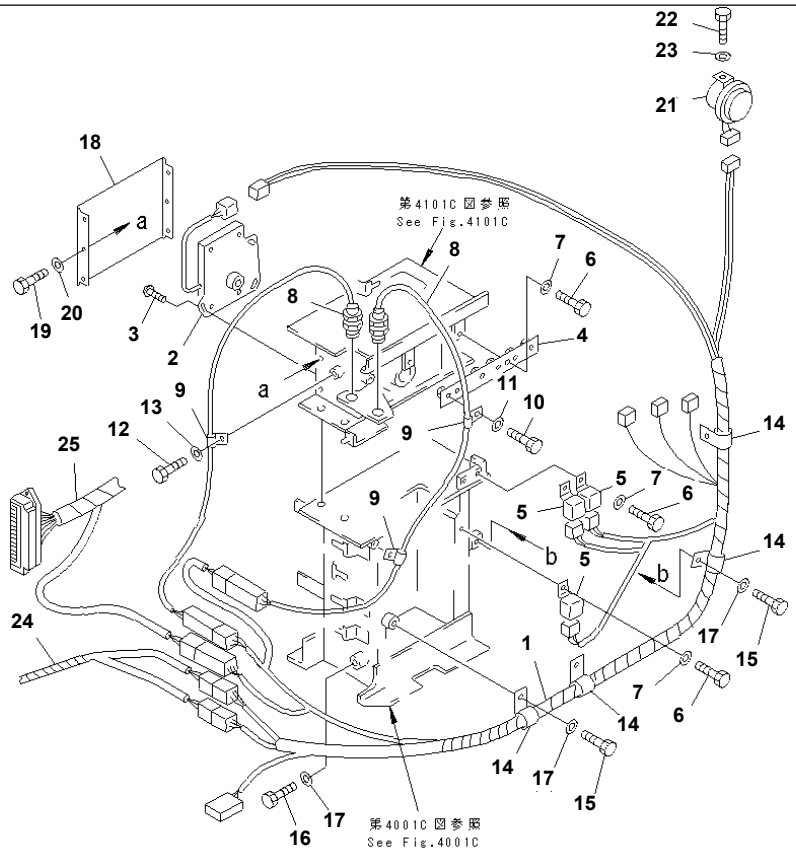

GD825A-2 S/N 11001-UP

TRANSMISSION CONTROL LEVER (ELECTRICAL SYSTEM)(#12095-)

Item	Part No.	Description	Qty	Options
	(235-45-31103)	CONTROLLER ASS'Y,TRANSMISSION	1	SN:12095--
THIS ASSEMBLY CONSIST OF ALL PARTS SHOWN IN FIGS.4001C AND 4101C¤ 4105C.				
1	235-06-36450	· HARNESS	1	SN:12099--
	235-06-35681	· HARNESS	1	SN:12095--12098
2	235-45-13811	· SWITCH ASS'Y	1	SN:12095--
3	01023-10612	· SCREW	3	SN:12095--
4	235-45-34230	· SEAT	1	SN:12099--
	□235-45-33180	· BRACKET	1	SN:12095--12098
5	569-06-61960	· RELAY	3	SN:12095--
6	01010-50612	· BOLT	9	SN:12095--
7	01643-30623	· WASHER	9	SN:12095--
8	235-45-33410	· SENSOR	2	SN:12095--
9	08036-10810	· CLIP	3	SN:12095--
10	01010-50612	· BOLT	2	SN:12095--
11	01643-30623	· WASHER	2	SN:12095--
12	01010-50814	· BOLT	1	SN:12095--
13	01643-30823	· WASHER	1	SN:12095--
14	08036-02514	· CLIP	4	SN:12095--
15	01010-51018	· BOLT	4	SN:12095--
16	01010-51016	· BOLT	1	SN:12095--
17	01643-31032	· WASHER	5	SN:12095--
18	235-45-33190	· COVER	1	SN:12095--
19	01010-50614	· BOLT	6	SN:12095--
20	01643-30623	· WASHER	6	SN:12095--
21	203-06-56230	· BUZZER ASS'Y	1	SN:12095--
22	01010-80612	· BOLT	1	SN:12095--
23	01643-30623	· WASHER	1	SN:12095--

Printed By : Dwi Iswanto (airafather6107170)

TRANSMISSION CONTROL LEVER (ELECTRICAL SYSTEM)(#12095-)

Item	Part No.	Description	Qty	Options
24	(235-06-35661)	HARNESS	1	SN:12095--
25	(235-06-36430)	HARNESS	1	SN:12099--
	(235-06-31474)	HARNESS	1	SN:12095--12098

Printed By : Dwi Iswanto (airafather6107170)

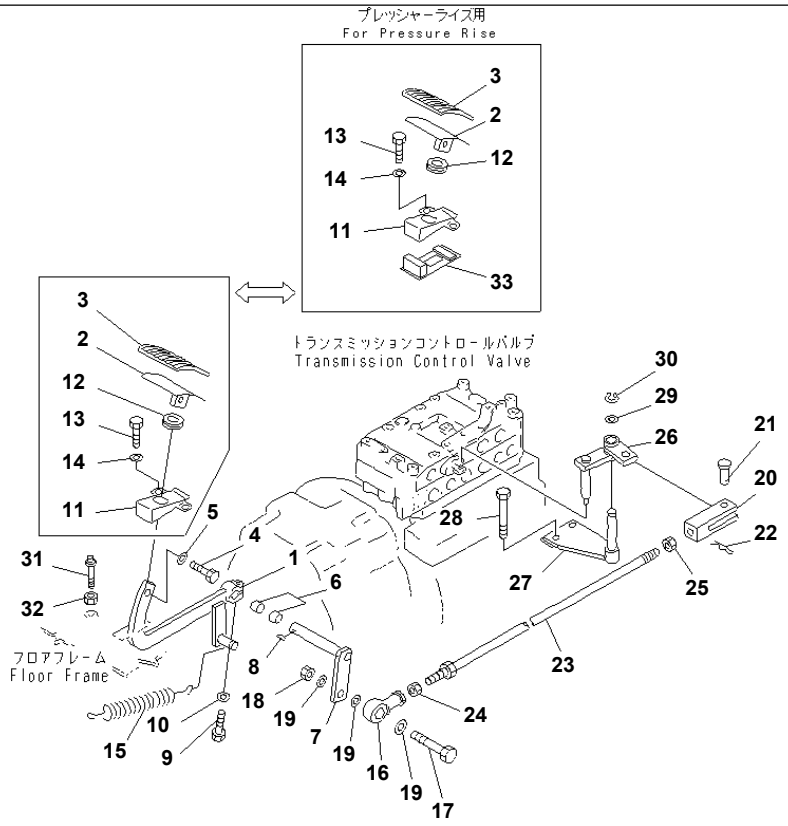

Ref. 4111 **Page 120160**

GD825A-2 S/N 11001-UP

INCHING PEDAL(#11001-12020)

Item	Part No.	Description	Qty	Options
1	235-45-12120	LEVER	1	SN:11001--@
2	235-45-12110	PEDAL	1	SN:11001--@
3	235-45-12170	COVER	1	SN:11001--@
4	01010-51225	BOLT	1	SN:11001--@
5	01643-31232	WASHER	1	SN:11001--@
6	232-43-52320	BUSHING	2	SN:11001--@
7	235-45-12130	LEVER	1	SN:11001--@
8	04010-00519	KEY	1	SN:11001--@
9	01010-50830	BOLT	1	SN:11001--@
10	01643-30823	WASHER	1	SN:11001--@
11	235-54-31280	COVER	1	SN:11001--@
12	235-957-2170	GROMMET	1	SN:11001--@
13	01010-50816	BOLT	2	SN:11001--@
14	01643-30823	WASHER	2	SN:11001--@
15	232-43-13162	SPRING	1	SN:11001--@
16	04250-41683	END,ROD	1	SN:11001--@
17	01010-51665	BOLT	1	SN:11001--@
18	01580-11613	NUT	1	SN:11001--@
19	01643-31645	WASHER	3	SN:11001--@
20	04221-21688	YOKE,L.H. THREAD	1	SN:11001--@
21	04205-11642	PIN	1	SN:11001--@
22	04052-01664	PIN,SNAP	1	SN:11001--@
23	04248-31692	ROD	1	SN:11001--@
24	01582-11613	NUT	1	SN:11001--@
25	01508-41610	NUT,L.H. THREAD	1	SN:11001--@
26	235-45-32110	LEVER	1	SN:11001--12020
27	235-45-32120	BRACKET	1	SN:11001--12020

Ref. 4111 **Page 120160**

INCHING PEDAL(#11001-12020)

Item	Part No.	Description	Qty	Options
28	01011-51090	BOLT	2	SN:11001--@
29	01640-21626	WASHER	1	SN:11001--@
30	04064-01610	RING,SNAP	1	SN:11001--@
31	232-43-52430	BUMPER	1	SN:11001--@
32	01580-11210	NUT	1	SN:11001--@
33	235-54-32420	COVER,(FOR PRESSURE RISE)	1	SN:11014--@

Printed By : Dwi Iswanto (airafather6107170)

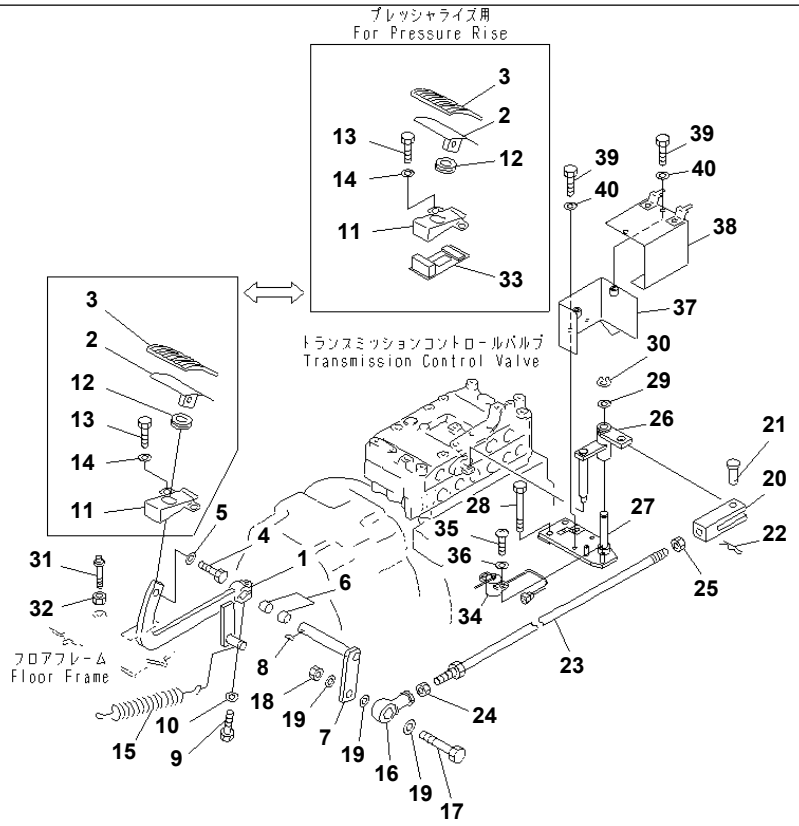

Ref. 4111A Page 120170

GD825A-2 S/N 11001-UP

INCHING PEDAL(#12021-)

Item	Part No.	Description	Qty	Options
1	235-45-12120	LEVER	1	SN:11001--
2	235-45-12110	PEDAL	1	SN:11001--
3	235-45-12170	COVER	1	SN:11001--
4	01010-51225	BOLT	1	SN:11001--
5	01643-31232	WASHER	1	SN:11001--
6	232-43-52320	BUSHING	2	SN:11001--
7	235-45-12130	LEVER	1	SN:11001--
8	04010-00519	KEY	1	SN:11001--
9	01010-50830	BOLT	1	SN:11001--
10	01643-30823	WASHER	1	SN:11001--
11	235-54-31280	COVER	1	SN:11001--
12	235-957-2170	GROMMET	1	SN:11001--
13	01010-50816	BOLT	2	SN:11001--
14	01643-30823	WASHER	2	SN:11001--
15	232-43-13162	SPRING	1	SN:11001--
16	04250-41683	END,ROD	1	SN:11001--
17	01010-51665	BOLT	1	SN:11001--
18	01580-11613	NUT	1	SN:11001--
19	01643-31645	WASHER	3	SN:11001--
20	04221-21688	YOKE,L.H. THREAD	1	SN:11001--
21	04205-11642	PIN	1	SN:11001--
22	04052-01664	PIN,SNAP	1	SN:11001--
23	04248-31692	ROD	1	SN:11001--
24	01582-11613	NUT	1	SN:11001--
25	01508-41610	NUT,L.H. THREAD	1	SN:11001--
26	235-45-32112	LEVER	1	SN:12095--
	□235-45-32111	LEVER	1	SN:12021--12094

Printed By : Dwi Iswanto (airafather6107170)

INCHING PEDAL(#12021-)

Item	Part No.	Description	Qty	Options
27	235-45-32122	BRACKET	1	SN:12087--
	□235-45-32121	BRACKET	1	SN:12021--12086
28	01010-81090	BOLT	2	SN:.--
	□01011-51090	BOLT	2	SN:11001--.
	01010-81055	BOLT	1	SN:.--
	□01010-51055	BOLT	1	SN:12087--.
	01643-31032	WASHER	1	SN:12087--
29	01640-21626	WASHER	1	SN:11001--
30	04064-01610	RING,SNAP	1	SN:11001--
31	232-43-52430	BUMPER	1	SN:11001--
32	01580-11210	NUT	1	SN:11001--
33	235-54-32420	COVER,(FOR PRESSURE RISE)	1	SN:11014--
34	23G-06-13140	SENSOR,POTENTIO	1	SN:12021--
35	01220-40412	SCREW	2	SN:12021--
36	01641-20405	WASHER	2	SN:12021--
37	235-45-34210	COVER	1	SN:12021--
38	235-45-34220	COVER	1	SN:12021--
39	01010-80812	BOLT	4	SN:.--
	□01010-50812	BOLT	4	SN:12021--.
40	01643-30823	WASHER	4	SN:12021--

Printed By : Dwi Iswanto (airafather6107170)

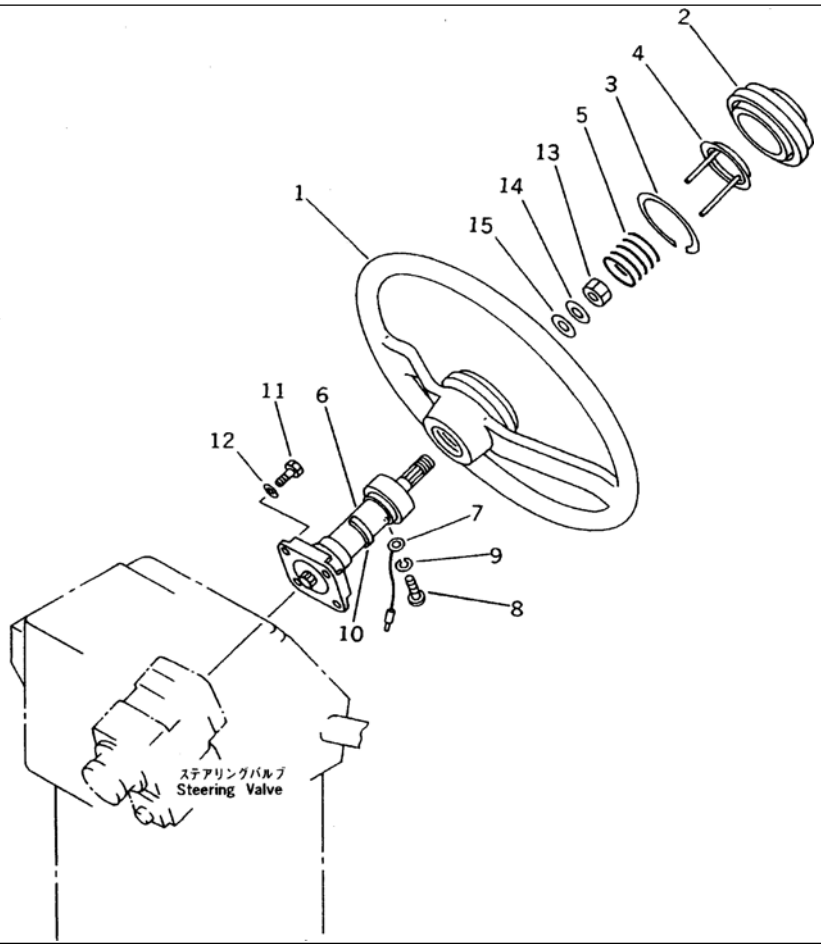

Ref. 4201 **Page 120180**

GD825A-2 S/N 11001-UP
STEERING WHEEL

Item	Part No.	Description	Qty	Options
	234-40-31201	WHEEL ASS'Y,STEERING	1	SN:11001--
1	234-40-31210	· WHEEL,STEERING	1	SN:11001--
2	235-40-11230	· CAP,HORN	1	SN:11001--
3	235-40-11240	· SPRING,LOCK	1	SN:11001--
4	234-40-31231	· NEEDLE,CONTACT	1	SN:11001--
5	235-40-11220	· SPRING,HORN	1	SN:11001--
6	23D-40-11100	SHAFT ASS'Y	1	SN:11001--
7	23D-40-11130	· WIRE ASS'Y	1	SN:11001--
8	23D-40-11120	· SCREW	1	SN:11001--
9	01601-20307	· WASHER,SPRING	1	SN:11001--
10	23D-40-11110	SEAT	1	SN:11001--
11	02010-70638	BOLT	4	SN:11001--
12	01643-31032	WASHER	4	SN:11001--
13	01582-11411	NUT	1	SN:11001--
14	01643-31445	WASHER	1	SN:11001--
15	01640-21426	WASHER	1	SN:11001--

Printed By : Dwi Iswanto (airafather6107170)

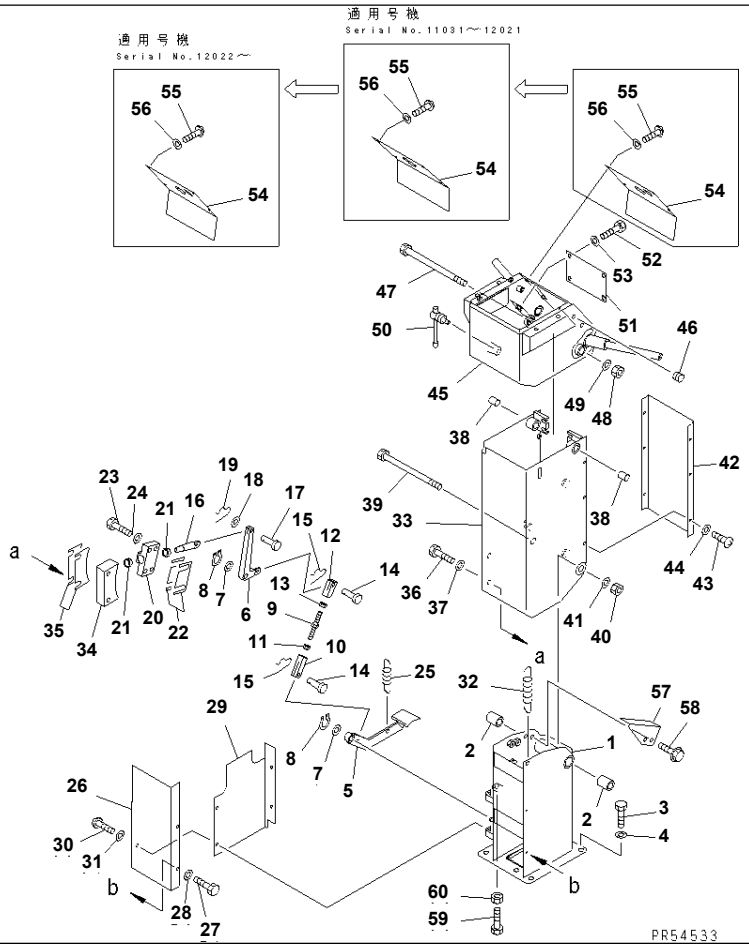

Ref. 4301 **Page 120190**

GD825A-2 S/N 11001-UP
CONSOLE BOX

Item	Part No.	Description	Qty	Options
1	235-43-31210	BRACKET	1	SN:11001--
2	235-43-28610	· BUSHING	2	SN:11001--
3	01010-51230	BOLT	4	SN:11001--
4	01643-31232	WASHER	4	SN:11001--
5	235-43-31250	PEDAL	1	SN:11001--
6	235-43-31260	LEVER	1	SN:11001--
7	01643-31232	WASHER	2	SN:11001--
8	04064-01210	RING,SNAP	2	SN:11001--
9	235-43-31390	ROD	1	SN:11001--
10	04211-20844	YOKE	1	SN:11001--
11	01580-10806	NUT	1	SN:11001--
12	04220-20832	YOKE,L.H. THREAD	1	SN:11001--
13	01508-40805	NUT,L.H. THREAD	1	SN:11001--
14	04205-10822	PIN	2	SN:11001--
15	04052-10833	PIN,SNAP	2	SN:11001--
16	235-43-31270	PIN	1	SN:11001--
17	04205-10628	PIN	1	SN:11001--
18	01643-30623	WASHER	2	SN:11001--
19	04052-10633	PIN,SNAP	1	SN:11001--
20	235-43-31280	BRACKET	1	SN:11001--
21	235-43-31290	BUSHING	2	SN:11001--
22	235-43-00110	SHIM ASS'Y	1	SN:11001--
	☆	· SHIM¤ 0.1MM	5	SN:11001--
	☆	· SHIM¤ 0.5MM	2	SN:11001--
	☆	· SHIM¤ 1.0MM	3	SN:11001--
23	01010-51040	BOLT	4	SN:11001--
24	01643-31032	WASHER	4	SN:11001--

Printed By : Dwi Iswanto (airafather6107170)

CONSOLE BOX

Item	Part No.	Description	Qty	Options
25	234-835-2230	SPRING	1	SN:11001--
26	235-43-31510	COVER	1	SN:11001--
27	01010-50616	BOLT	2	SN:11001--
28	01643-30623	WASHER	2	SN:11001--
29	235-43-31520	COVER	1	SN:11001--
30	01220-40616	SCREW	4	SN:11001--
31	01643-30623	WASHER	4	SN:11001--
32	230-43-13120	SPRING	1	SN:11001--
33	235-43-31230	BOX	1	SN:11001--
34	235-43-31240	LOCK	1	SN:11001--
35	235-43-00120	SHIM ASS'Y	1	SN:11001--
	☆	· SHIM¤ 0.2MM	10	SN:11001--
36	01010-51225	BOLT	2	SN:11001--
37	01643-31232	WASHER	2	SN:11001--
38	234-885-1610	BUSHING	2	SN:11001--
39	238-43-38160	SHAFT	1	SN:11001--
40	233-43-27860	NUT	1	SN:11001--
41	01643-31845	WASHER	1	SN:11001--
42	23D-43-21610	COVER	1	SN:11001--
43	01220-40616	SCREW	6	SN:11001--
44	01643-30623	WASHER	6	SN:11001--
45	235-43-31120	BOX	1	SN:11001--
46	09415-00706	CAP	2	SN:11001--
47	235-43-31630	SHAFT	1	SN:11010--
	238-43-38170	SHAFT	1	SN:11001--11009
48	235-43-27860	NUT	1	SN:11001--
49	01643-31845	WASHER	1	SN:11001--
50	238-43-38230	HANDLE	1	SN:11001--
51	23D-43-18550	PLATE	1	SN:11001--
52	01010-51025	BOLT	4	SN:11001--
53	01643-31032	WASHER	4	SN:11001--
54	235-43-31140	COVER	1	SN:12022--
	235-43-31141	COVER	1	SN:11031--12021
	235-43-31140	COVER	1	SN:11001--11030
55	01010-50812	BOLT	4	SN:12022--
	01220-40616	SCREW	4	SN:11001--12021
56	01643-30823	WASHER	4	SN:12022--
	01643-30623	WASHER	4	SN:11001--12021
57	235-43-31370	BRACKET	1	SN:11001--
58	01439-01025	BOLT	2	SN:11001--
59	01010-51025	BOLT	1	SN:11001--
60	01580-11008	NUT	1	SN:11001--

Printed By : Dwi Iswanto (airafather6107170)

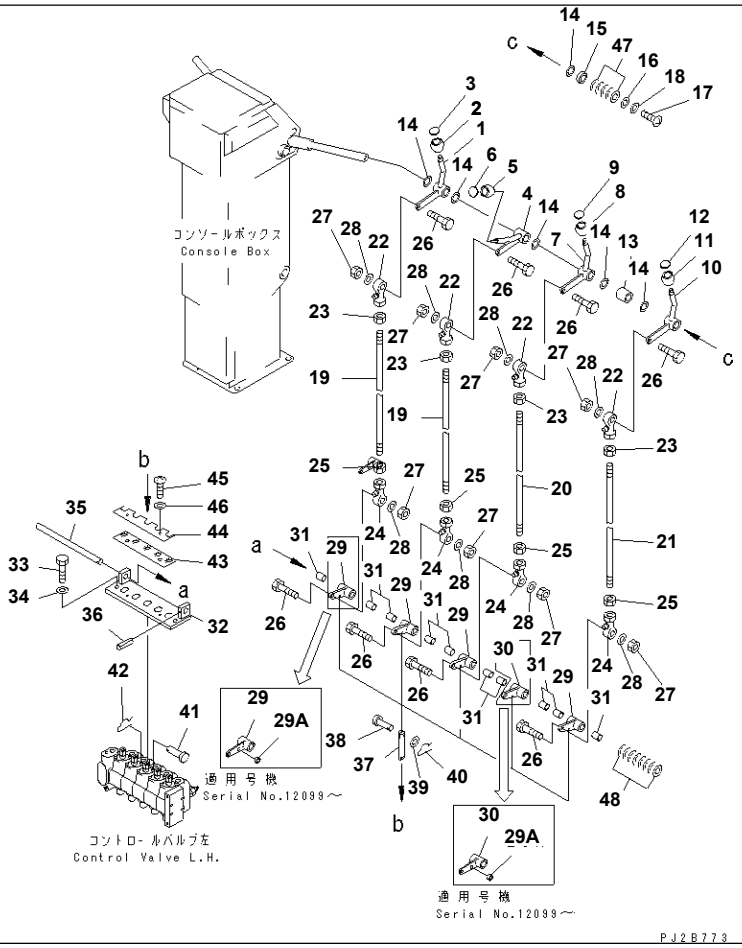

Ref. 4305 **Page 120200**

GD825A-2 S/N 11001-UP

HYDRAULIC CONTROL LEVER (L.H.)

Item	Part No.	Description	Qty	Options
1	235-43-28140	LEVER,CIRCLE REVERSE	1	SN:11001--
2	234-43-00321	KNOB ASS'Y,CIRCLE REVERSE	1	SN:12001--
	234-43-00320	KNOB ASS'Y,CIRCLE REVERSE	1	SN:11001--12000
2	237-43-17480	· KNOB	1	SN:11001--
3	234-53-32321	· PLATE¤ OPERATING	1	SN:12001--
	234-53-32320	· PLATE¤ OPERATING	1	SN:11001--12000
4	235-43-28151	LEVER,POWER TILT	1	SN:12023--
	235-43-28150	LEVER,POWER TILT	1	SN:11001--12022
	232-735-0050	KNOB ASS'Y,POWER TILT	1	SN:11001--
5	237-43-17480	· KNOB	1	SN:11001--
6	232-735-1340	· PLATE¤ OPERATING	1	SN:11001--
7	235-43-28140	LEVER,BLADE SIDE SHIFT	1	SN:11001--
	237-43-00061	KNOB ASS'Y,BLADE SIDE SHIFT	1	SN:12001--
	237-43-00060	KNOB ASS'Y,BLADE SIDE SHIFT	1	SN:11001--12000
8	237-43-17480	· KNOB	1	SN:11001--
9	237-54-13231	· PLATE¤ OPERATING	1	SN:12001--
	237-54-13230	· PLATE¤ OPERATING	1	SN:11001--12000
10	235-43-28140	LEVER,BLADE LIFT	1	SN:11001--
	237-43-00081	KNOB ASS'Y,BLADE LIFT	1	SN:12001--
	237-43-00080	KNOB ASS'Y,BLADE LIFT	1	SN:11001--12000
11	237-43-17480	· KNOB	1	SN:11001--
12	237-54-13211	· PLATE¤ OPERATING	1	SN:12001--
	237-54-13210	· PLATE¤ OPERATING	1	SN:11001--12000
13	237-43-17440	COLLAR	1	SN:11001--
14	237-43-17420	WASHER	6	SN:11001--
15	23D-43-18540	COLLAR	1	SN:11001--
16	23A-43-18190	WASHER	1	SN:11001--

Ref. 4305 **Page 120200**

HYDRAULIC CONTROL LEVER (L.H.)

Item	Part No.	Description	Qty	Options
17	01220-40816	SCREW	1	SN:11001--
18	01643-30823	WASHER	1	SN:11001--
19	235-43-31620	ROD	2	SN:11001--
20	235-43-31640	ROD	1	SN:12023--
	23D-43-18510	ROD	1	SN:11001--12022
21	235-43-31150	ROD	1	SN:11001--
22	04250-40847	END	4	SN:11001--
23	01580-10806	NUT	4	SN:11001--
24	04250-60847	END,L.H. THREAD	4	SN:11001--
25	01508-20805	NUT,L.H. THREAD	4	SN:11001--
26	235-43-18380	BOLT	8	SN:11001--
27	01580-10806	NUT	8	SN:11001--
28	01643-30823	WASHER	8	SN:11001--
29	235-43-32310	LEVER	4	SN:12099--
	■235-43-32221	LEVER	4	SN:12095--12098
(235-43-32310{235-43-32340)}				
	□235-43-32220	LEVER	4	SN:12001--12094
	235-43-28380	LEVER	4	SN:11001--11999
29A	235-43-32340	BUSHING	5	SN:12099--
30	235-43-32310	LEVER	1	SN:12099--
	■235-43-32221	LEVER	1	SN:12095--12098
(235-43-32310{235-43-32340)}				
	□235-43-32220	LEVER	1	SN:12001--12094
	235-43-28390	LEVER	1	SN:11001--11999
31	234-43-38440	BUSHING	10	SN:11001--
32	235-43-28281	BRACKET,L.H.	1	SN:11001--
33	01010-50816	BOLT	2	SN:11001--
34	01643-30823	WASHER	2	SN:11001--
35	235-43-28370	SHAFT	1	SN:11001--
36	04025-00532	PIN,SPRING	1	SN:11001--
37	235-43-32211	YOKE	5	SN:12102--
	235-43-32210	YOKE	5	SN:12023--12101
	235-43-18560	YOKE	5	SN:11001--12022
38	04205-10618	PIN	5	SN:11001--
39	01641-20608	WASHER	5	SN:11001--
40	233-43-27750	PIN,SNAP	5	SN:11001--
41	235-43-18440	PIN	5	SN:11001--
42	233-43-27750	PIN,SNAP	5	SN:11001--
43	235-43-31160	COVER,L.H.	1	SN:11001--
44	235-43-31170	PLATE	1	SN:11001--
45	01220-40610	SCREW	2	SN:11001--
46	01643-30623	WASHER	2	SN:11001--
47	232-43-00370	SHIM ASS'Y	1	SN:11001--
	☆	· SHIM¤ 0.2MM	5	SN:11001--
	☆	· SHIM¤ 0.5MM	4	SN:11001--
48	235-43-00130	SHIM ASS'Y	1	SN:11001--
	☆	· SHIM¤ 0.5MM	8	SN:11001--

Printed By : Dwi Iswanto (airafather6107170)

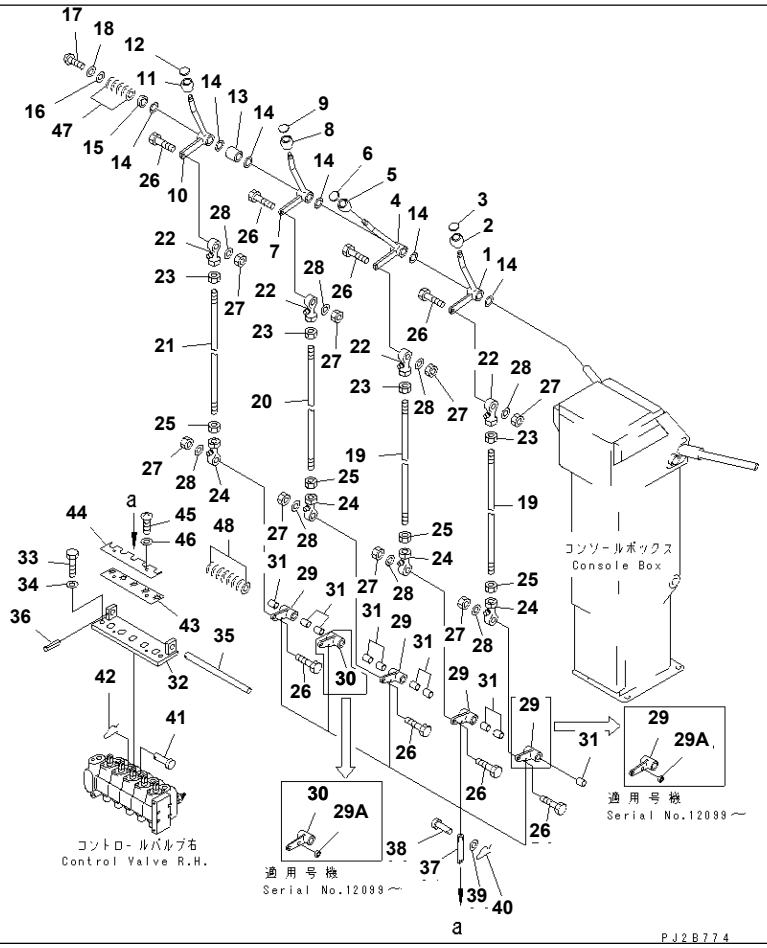

Ref. 4307 **Page 120210**

GD825A-2 S/N 11001-UP
HYDRAULIC CONTROL LEVER (R.H.)

Item	Part No.	Description	Qty	Options
1	235-43-28160	LEVER,DRAWBAR SIDE SHIFT	1	SN:11001--
	232-43-00123	KNOB ASS'Y,DRAWBAR SIDE SHIFT	1	SN:12001--
	232-43-00122	KNOB ASS'Y,DRAWBAR SIDE SHIFT	1	SN:11001--12000
2	237-43-17480	· KNOB	1	SN:11001--
3	232-43-18281	· PLATE¤ OPERATING	1	SN:12001--
	232-43-18280	· PLATE¤ OPERATING	1	SN:11001--12000
4	235-43-28170	LEVER,ARTICULATE	1	SN:11001--
	234-43-00310	KNOB ASS'Y,ARTICULATE	1	SN:11001--
5	237-43-17490	· KNOB	1	SN:11001--
6	234-53-32330	· PLATE¤ OPERATING	1	SN:11001--
7	235-43-28160	LEVER,LEANING	1	SN:11001--
	237-43-00121	KNOB ASS'Y,LEANING	1	SN:12001--
	237-43-00120	KNOB ASS'Y,LEANING	1	SN:11001--12000
8	237-43-17490	· KNOB	1	SN:11001--
9	237-54-13221	· PLATE¤ OPERATING	1	SN:12001--
	237-54-13220	· PLATE¤ OPERATING	1	SN:11001--12000
10	235-43-28160	LEVER,BLADE LIFT	1	SN:11001--
	237-43-00081	KNOB ASS'Y,BLADE LIFT	1	SN:12001--
	237-43-00080	KNOB ASS'Y,BLADE LIFT	1	SN:11001--12000
11	237-43-17480	· KNOB	1	SN:11001--
12	237-54-13211	· PLATE¤ OPERATING	1	SN:12001--
	237-54-13210	· PLATE¤ OPERATING	1	SN:11001--12000
13	237-43-17440	COLLAR	1	SN:11001--
14	237-43-17420	WASHER	6	SN:11001--
15	23D-43-18540	COLLAR	1	SN:11001--
16	23A-43-18190	WASHER	1	SN:11001--
17	01220-40816	SCREW	1	SN:11001--

Printed By : Dwi Iswanto (airafather6107170)

HYDRAULIC CONTROL LEVER (R.H.)

Item	Part No.	Description	Qty	Options
18	01643-30823	WASHER	1	SN:11001--
19	235-43-31620	ROD	2	SN:11001--
20	23D-43-18510	ROD	1	SN:11001--
21	235-43-31150	ROD	1	SN:11001--
22	04250-40847	END	4	SN:11001--
23	01580-10806	NUT	4	SN:11001--
24	04250-60847	END,L.H. THREAD	4	SN:11001--
25	01508-20805	NUT,L.H. THREAD	4	SN:11001--
26	235-43-18380	BOLT	8	SN:11001--
27	01580-10806	NUT	8	SN:11001--
28	01643-30823	WASHER	8	SN:11001--
29	235-43-32310	LEVER	4	SN:12099--
	■235-43-32221	LEVER	4	SN:12095--12098
(235-43-32310{235-43-32340)}				
	□235-43-32220	LEVER	4	SN:12001--12094
	235-43-28380	LEVER	4	SN:11001--11999
29A	235-43-32340	BUSHING	5	SN:12099--
30	235-43-32310	LEVER	1	SN:12099--
	■235-43-32221	LEVER	1	SN:12095--12098
(235-43-32310{235-43-32340)}				
	□235-43-32220	LEVER	1	SN:12001--12094
30	235-43-28390	LEVER	1	SN:11001--11999
31	234-43-38440	BUSHING	10	SN:11001--
32	235-43-28291	BRACKET,R.H.	1	SN:11001--
33	01010-50816	BOLT	2	SN:11001--
34	01643-30823	WASHER	2	SN:11001--
35	235-43-28370	SHAFT	1	SN:11001--
36	04025-00532	PIN,SPRING	1	SN:11001--
37	235-43-32211	YOKE	1	SN:12102--
	□235-43-32210	YOKE	1	SN:12023--12101
	235-43-18560	YOKE	5	SN:11001--12022
38	04205-10618	PIN	5	SN:11001--
39	01641-20608	WASHER	5	SN:11001--
40	233-43-27750	PIN,SNAP	5	SN:11001--
41	235-43-18440	PIN	5	SN:11001--
42	233-43-27750	PIN,SNAP	5	SN:11001--
43	235-43-31160	COVER,R.H.	1	SN:11001--
44	235-43-31170	PLATE	1	SN:11001--
45	01220-40610	SCREW	2	SN:11001--
46	01643-30623	WASHER	2	SN:11001--
47	232-43-00370	SHIM ASS'Y	1	SN:11001--
	☆	· SHIM¤ 0.2MM	5	SN:11001--
	☆	· SHIM¤ 0.5MM	4	SN:11001--
48	235-43-00130	SHIM ASS'Y	1	SN:11001--
	☆	· SHIM¤ 0.5MM	8	SN:11001--

Printed By : Dwi Iswanto (airafather6107170)

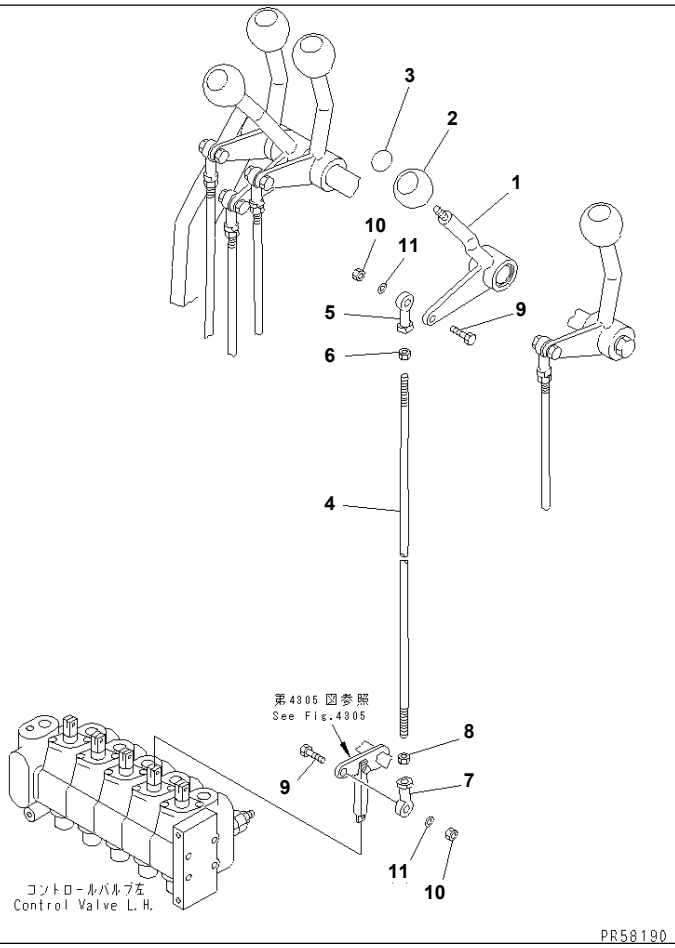

Ref. 4311 **Page 120220**

GD825A-2 S/N 11001-UP
RIPPER CONTROL LEVER

Item	Part No.	Description	Qty	Options
1	235-43-28150	LEVER,RIPPER	1	SN:11001--
2	237-43-17480	KNOB	1	SN:11001--
3	232-785-1411	PLATE¤ OPERATING,RIPPER	1	SN:12001--
	232-785-1410	PLATE¤ OPERATING,RIPPER	1	SN:11001--12000
4	23D-43-18510	ROD	1	SN:11001--
5	04250-40847	END,ROD	1	SN:11001--
6	01580-10806	NUT	1	SN:11001--
7	04250-60847	END,ROD¤ L.H. THREAD	1	SN:11001--
8	01508-20805	NUT,L.H. THREAD	1	SN:11001--
9	235-43-18380	BOLT	2	SN:11001--
10	01580-10806	NUT	2	SN:11001--
11	01643-30823	WASHER	2	SN:11001--

Ref. 4311 **Page 120220**

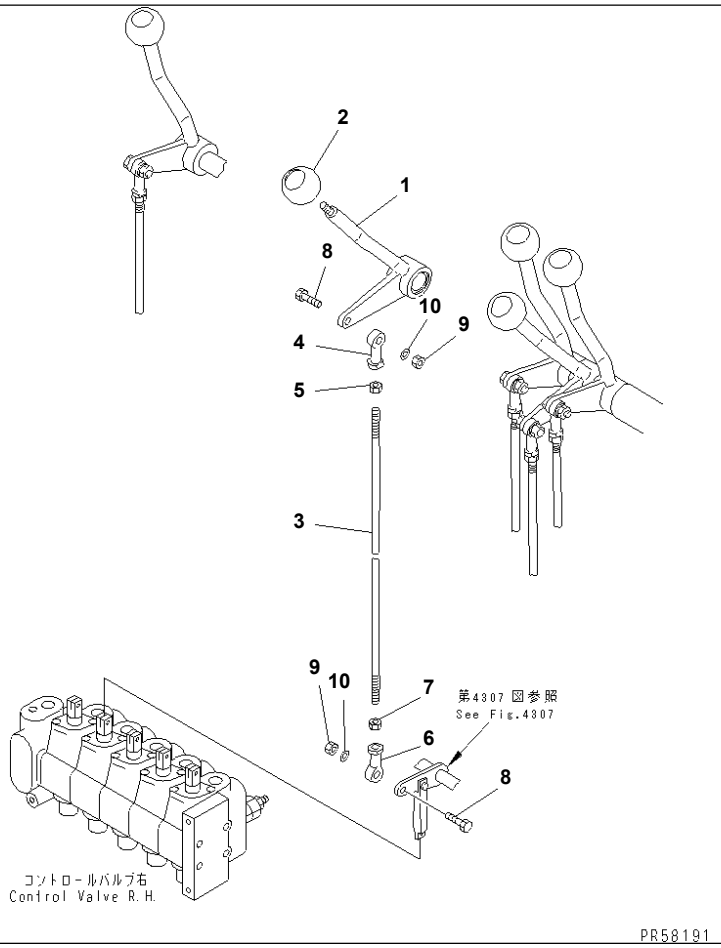

Ref. 4321 **Page 120230**

GD825A-2 S/N 11001-UP

OPTIONAL WORK EQUIPMENT CONTROL LEVER

Item	Part No.	Description	Qty	Options
1	235-43-28170	LEVER	1	SN:11001--
2	237-43-17480	KNOB	1	SN:11001--
3	23D-43-18510	ROD	1	SN:11001--
4	04250-40847	END,ROD	1	SN:11001--
5	01580-10806	NUT	1	SN:11001--
6	04250-60847	END,ROD¤ L.H. THREAD	1	SN:11001--
7	01508-20805	NUT,L.H. THREAD	1	SN:11001--
8	235-43-18380	BOLT	2	SN:11001--
9	01580-10806	NUT	2	SN:11001--
10	01643-30823	WASHER	2	SN:11001--

Ref. 4321 **Page 120230**

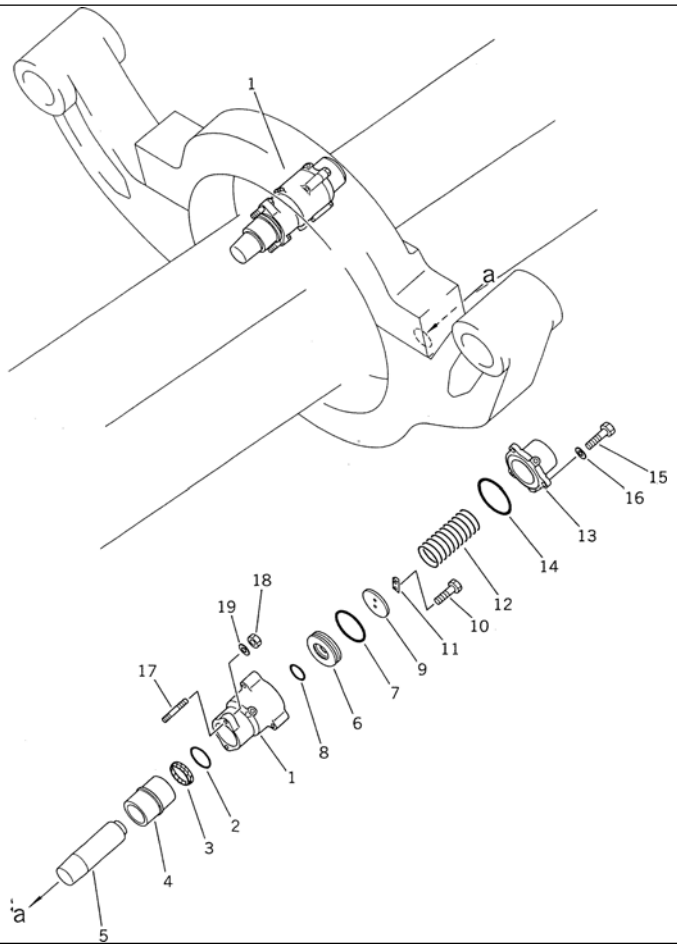

Ref. 4351 **Page 120240**

GD825A-2 S/N 11001-UP
BANK PIN

Item	Part No.	Description	Qty	Options
	235-43-00011	BANK PIN ASS'Y	2	SN:12051--
	235-43-00010	BANK PIN ASS'Y	2	SN:11001--12050
1	235-43-41110	· BODY	1	SN:12051--
	235-43-19110	· BODY	1	SN:11001--12050
2	07000-15075	· O-RING	1	SN:11001--
3	235-43-19120	· SEAL	1	SN:11001--
4	235-43-19211	· BUSHING	1	SN:12051--
	235-43-19210	· BUSHING	1	SN:11001--12050
5	235-43-19130	· ROD	1	SN:11001--
6	235-43-19140	· PISTON	1	SN:11001--
7	235-43-19170	· O-RING	1	SN:11001--
8	07000-13050	· O-RING	1	SN:11001--
9	235-43-19150	· WASHER	1	SN:11001--
10	01010-81025	· BOLT	2	SN:11001--
11	235-43-19160	· LOCK	1	SN:11001--
12	235-43-19180	· SPRING	1	SN:11001--
13	235-43-19190	· COVER	1	SN:11001--
14	07000-12125	· O-RING	1	SN:11001--
15	01016-51470	· BOLT	3	SN:11001--
16	238-22-11760	· WASHER	3	SN:11001--
17	01124-51645	· STUD	2	SN:11001--
18	01580-11613	· NUT	2	SN:11001--
19	01643-51645	· WASHER	2	SN:11001--

Printed By : Dwi Iswanto (airafather6107170)

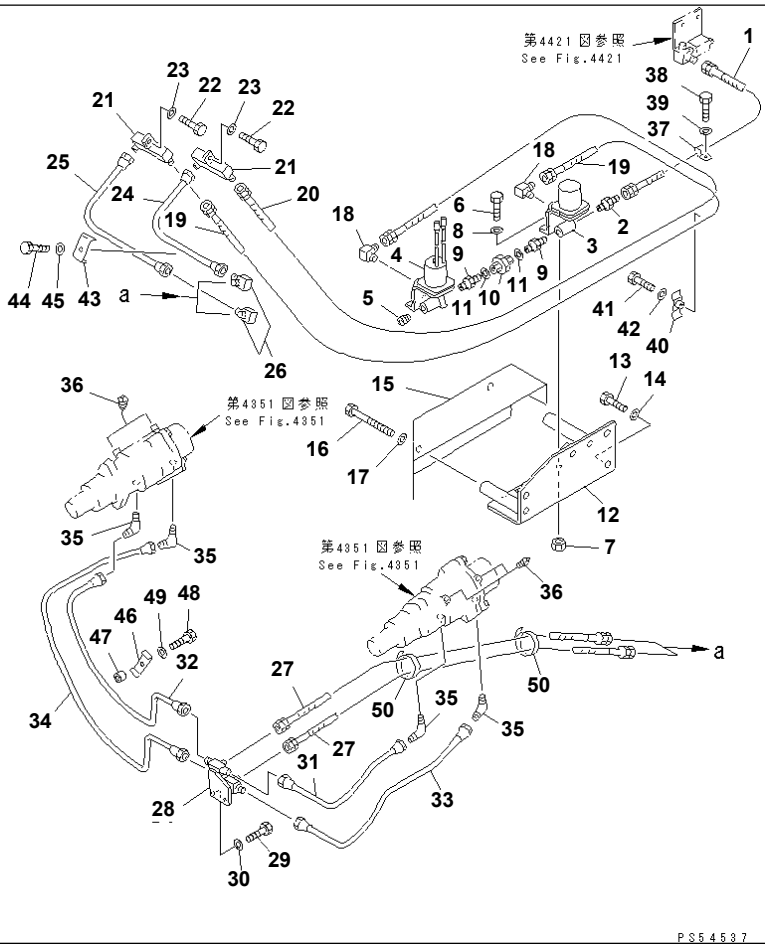

Ref. 4353 **Page 120250**

GD825A-2 S/N 11001-UP
BANK CUTTING CONTROL PIPING

Item	Part No.	Description	Qty	Options
1	07103-50209	HOSE	1	SN:11001--
2	07238-00210	CONNECTOR	1	SN:11001--
3	235-44-11930	VALVE	1	SN:11001--
4	235-44-11920	VALVE	1	SN:11001--
5	07043-70211	PLUG	1	SN:11001--
6	01010-50620	BOLT	4	SN:11001--
7	01580-10605	NUT	4	SN:11001--
8	01643-30623	WASHER	4	SN:11001--
9	07325-00200	NIPPLE	2	SN:11001--
10	07321-00200	UNION	1	SN:11001--
11	07322-00200	GASKET	2	SN:11001--
12	235-44-31430	BRACKET	1	SN:11001--
13	01010-51210	BOLT	3	SN:11001--
14	01643-31232	WASHER	3	SN:11001--
15	235-44-31440	COVER	1	SN:11001--
16	01010-51220	BOLT	2	SN:11001--
17	01643-31232	WASHER	2	SN:11001--
18	234-60-22140	ELBOW	2	SN:11001--
19	07102-20219	HOSE	1	SN:11001--
20	07102-20218	HOSE	1	SN:11001--
21	235-44-31490	ELBOW	2	SN:11001--
22	01010-50816	BOLT	2	SN:11001--
23	01643-30823	WASHER	2	SN:11001--
24	235-44-31460	TUBE	1	SN:11001--
25	235-44-31450	TUBE	1	SN:11001--
26	232-44-55140	ELBOW	2	SN:11001--
27	07113-00208	HOSE	2	SN:11001--

Printed By : Dwi Iswanto (airafather6107170)

BANK CUTTING CONTROL PIPING

Item	Part No.	Description	Qty	Options
28	235-44-12330	JOINT	1	SN:11001--
29	01010-50820	BOLT	2	SN:11001--
30	01643-30823	WASHER	2	SN:11001--
31	235-44-12340	TUBE	1	SN:11001--
32	235-44-12370	TUBE	1	SN:11001--
33	235-44-12350	TUBE	1	SN:11001--
34	235-44-12360	TUBE	1	SN:11001--
35	07217-61013	ELBOW	4	SN:11001--
36	07042-20211	PLUG	4	SN:11001--
37	04434-51910	CLIP	1	SN:11001--
38	01010-51018	BOLT	1	SN:11001--
39	01643-31032	WASHER	1	SN:11001--
40	237-60-23350	CLIP	1	SN:11001--
41	01010-50830	BOLT	1	SN:11001--
42	01643-30823	WASHER	1	SN:11001--
43	235-44-31470	CLIP	1	SN:11001--
44	01010-50816	BOLT	1	SN:11001--
45	01643-30823	WASHER	1	SN:11001--
46	235-44-11590	CLIP	1	SN:11001--
47	235-44-12390	COLLAR	1	SN:11001--
48	01010-50830	BOLT	1	SN:11001--
49	01643-30823	WASHER	1	SN:11001--
50	08034-00414	BAND	2	SN:11001--

Printed By : Dwi Iswanto (airafather6107170)

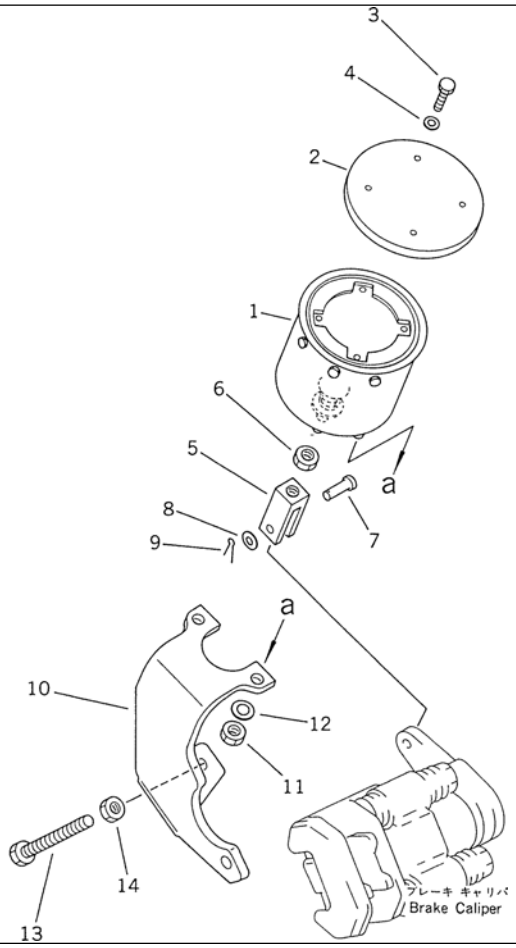

Ref. 4401 **Page 120260**

GD825A-2 S/N 11001-UP
PRAKING BRAKE CYLINDER

Item	Part No.	Description	Qty	Options
	235-44-00011	SPRING CYLINDER A.	1	SN:11001--
1	235-44-19100	· CYLINDER,SPRING	1	SN:11001--
2	235-44-19110	· COVER	1	SN:11001--
3	01010-50625	· BOLT	4	SN:11001--
4	01642-20608	· WASHER	4	SN:11001--
5	235-44-19120	YOKE	1	SN:11001--
6	01583-11610	NUT	1	SN:11001--
7	04205-11245	PIN	1	SN:11001--
8	01641-21223	WASHER	1	SN:11001--
9	04050-13022	PIN,COTTER	1	SN:11001--
10	235-32-11110	BRACKET	1	SN:11001--
11	01582-11613	NUT	2	SN:11001--
12	01643-31645	WASHER	2	SN:11001--
13	01017-51600	BOLT	1	SN:11001--
14	01580-11613	NUT	1	SN:11001--

Ref. 4401 **Page 120260**

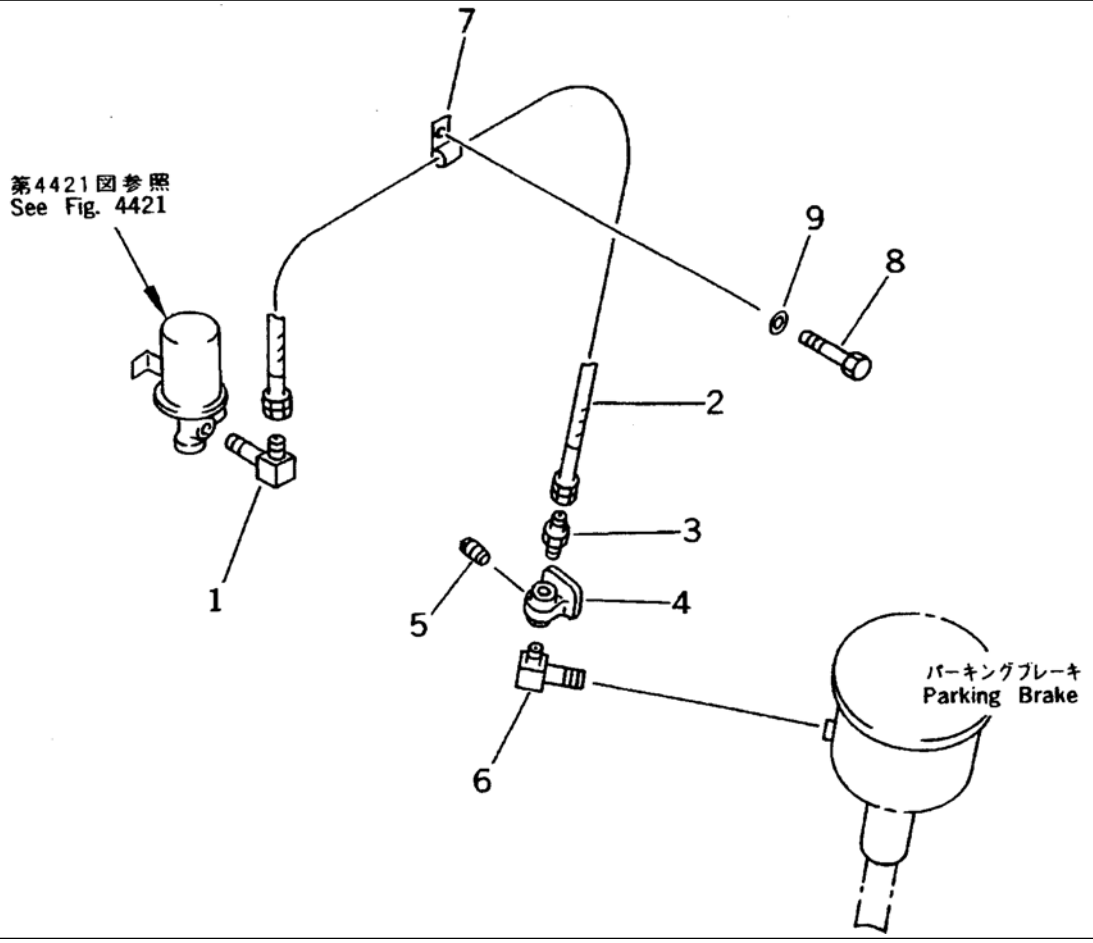

GD825A-2 S/N 11001-UP

PARKING BRAKE PIPING

Item	Part No.	Description	Qty	Options
1	234-943-8320	ELBOW	1	SN:11001--
2	07102-20310	HOSE	1	SN:11001--
3	236-60-24441	NIPPLE	1	SN:11001--
4	411-44-11600	VALVE ASS'Y,PRESSURE	1	SN:11001--
5	07042-20211	PLUG	1	SN:11001--
6	235-44-31520	ELBOW	1	SN:11001--
7	04434-51810	CLIP	1	SN:11001--
8	01010-51018	BOLT	1	SN:11001--
9	01643-31032	WASHER	1	SN:11001--

Printed By : Dwi Iswanto (airafather6107170)

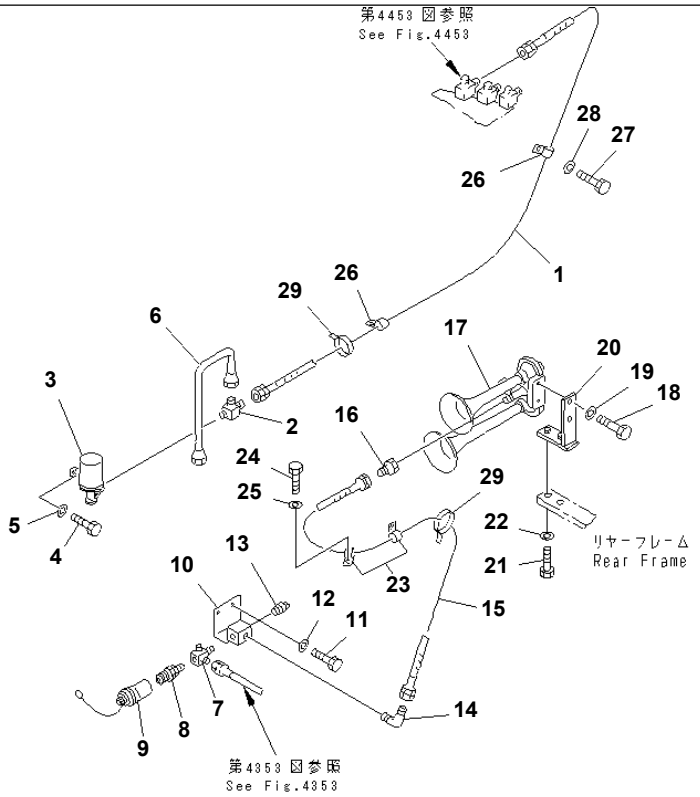

PS54539

GD825A-2 S/N 11001-UP

AIR HORN PIPING

Item	Part No.	Description	Qty	Options
1	07102-20417	HOSE	1	SN:11001--
2	235-44-31530	TEE	1	SN:11001--
3	425-06-11150	VALVE	1	SN:11001--
4	01010-50816	BOLT	2	SN:11001--
5	01643-30823	WASHER	2	SN:11001--
6	235-44-31541	TUBE	1	SN:12001--
	235-44-31540	TUBE	1	SN:11001--12000
7	235-44-31550	JOINT	1	SN:11001--
8	07880-10500	SOCKET	1	SN:11001--
9	234-44-32150	CAP ASS'Y	1	SN:11001--
10	235-44-31560	CONNECTOR	1	SN:11001--
11	01010-50816	BOLT	2	SN:11001--
12	01643-30823	WASHER	2	SN:11001--
13	07042-20211	PLUG	1	SN:11001--
14	234-60-22140	ELBOW	1	SN:11001--
15	07102-20208	HOSE	1	SN:11006--
	07102-20206	HOSE	1	SN:11001--11005
16	23B-44-11960	NIPPLE	1	SN:11001--
17	23B-44-11610	HORN,AIR	1	SN:11001--
18	01010-50816	BOLT	2	SN:11001--
19	01643-30823	WASHER	2	SN:11001--
20	235-44-31630	BRACKET	1	SN:11001--
21	01010-51025	BOLT	2	SN:11001--
22	01643-31032	WASHER	2	SN:11001--
23	04434-51810	CLIP	2	SN:11001--
24	01010-51016	BOLT	2	SN:11001--
25	01643-31032	WASHER	2	SN:11001--

Printed By : Dwi Iswanto (airafather6107170)

AIR HORN PIPING

Item	Part No.	Description	Qty	Options
26	04434-52110	CLIP	2	SN:11001--
27	01010-51018	BOLT	2	SN:11001--
28	01643-31032	WASHER	2	SN:11001--
29	08034-00519	BAND	2	SN:11006--

Printed By : Dwi Iswanto (airafather6107170)

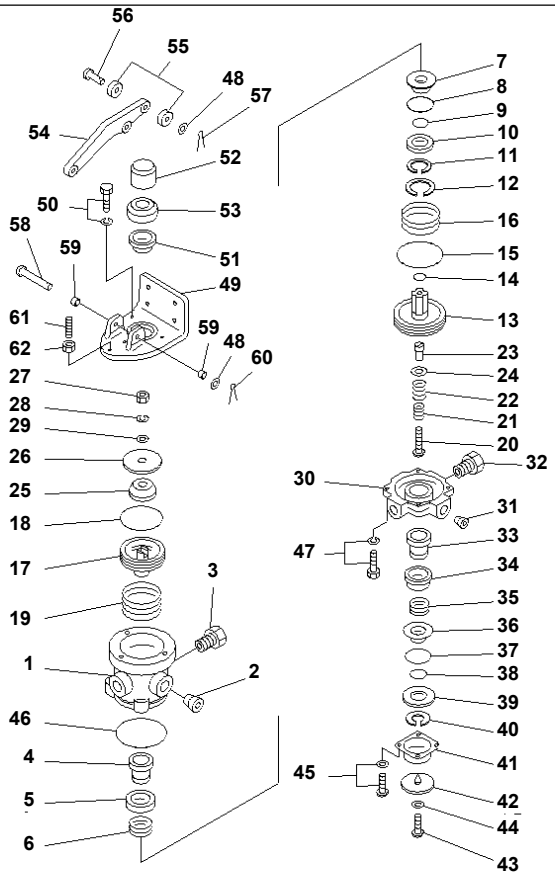

PJ50950

Ref. 4431 **Page 120290**

GD825A-2 S/N 11001-UP
BRAKE VALVE

Item	Part No.	Description	Qty	Options
	235-44-11690	VALVE ASS'Y,DUAL BRAKE	1	SN:11001--
1	☆	· BODY,UPPER	1	SN:11001--
2	☆	· PLUG,PIPE	1	SN:11001--
3	☆	· BUSHING	1	SN:11001--
4	☆	· VALVE,UPPER (K2)	1	SN:11001--
5	☆	· RETAINER	1	SN:11001--
6	☆	· SPRING (K3)	1	SN:11001--
7	☆	· RETAINER	1	SN:11001--
8	☆	· O-RING (K2)	1	SN:11001--
9	☆	· O-RING (K2)	1	SN:11001--
10	☆	· WASHER	1	SN:11001--
11	☆	· RING,SNAP (K2)	1	SN:11001--
12	☆	· RING,SNAP (K2)	1	SN:11001--
13	235-44-13150	· PISTON,RELAY	1	SN:11001--
14	☆	· O-RING (K2)	1	SN:11001--
15	☆	· O-RING (K2)	1	SN:11001--
16	☆	· SPRING (K3)	1	SN:11001--
17	235-44-13250	· PISTON,UPPER	1	SN:11001--
18	☆	· O-RING (K2)	1	SN:11001--
19	☆	· SPRING (K3)	1	SN:11001--
20	☆	· STEM	1	SN:11001--
21	☆	· SPRING,INNER (K3)	1	SN:11001--
22	☆	· SPRING,OUTER (K3)	1	SN:11001--
23	☆	· SLEEVE	1	SN:11001--
24	☆	· WASHER	1	SN:11001--
25	☆	· RUBBER (K2)	1	SN:11001--
26	☆	· SEAT	1	SN:11001--

Printed By : Dwi Iswanto (airafather6107170)

BRAKE VALVE

Item	Part No.	Description	Qty	Options
27	☆	· NUT	1	SN:11001--
28	☆	· WASHER,SPRING	1	SN:11001--
29	☆	· WASHER	1	SN:11001--
30	☆	· BODY,LOWER	1	SN:11001--
31	☆	· PLUG,PIPE	1	SN:11001--
32	☆	· BUSHING	1	SN:11001--
33	☆	· VALVE,LOWER (K2)	1	SN:11001--
34	☆	· RETAINER	1	SN:11001--
35	☆	· SPRING (K3)	1	SN:11001--
36	☆	· RETAINER	1	SN:11001--
37	☆	· O-RING (K3)	1	SN:11001--
38	☆	· O-RING (K3)	1	SN:11001--
39	☆	· WASHER	1	SN:11001--
40	☆	· RING,SPRING (K2)	1	SN:11001--
41	☆	· COVER,EXHAUST (K2)	1	SN:11001--
42	☆	· CHECK,EXHAUST (K2)	1	SN:11001--
43	☆	· SCREW (K2)	1	SN:11001--
44	☆	· WASHER (K2)	1	SN:11001--
45	☆	· SCREW AND WASHER	4	SN:11001--
46	☆	· O-RING (K2)	1	SN:11001--
47	☆	· BOLT AND WASHER	4	SN:11001--
48	☆	· WASHER	2	SN:11001--
	☆	· PLATE ASS'Y	1	SN:11001--
49	☆	· · PLATE	1	SN:11001--
50	☆	· · BOLT AND WASHER	3	SN:11001--
51	☆	· · BUSHING	1	SN:11001--
52	235-44-13550	· · PLUNGER	1	SN:11001--
53	☆	· · BOOT,PLUNGER	1	SN:11001--
54	235-44-13570	· · LEVER	1	SN:11001--
55	☆	· · ROLLER	2	SN:11001--
56	☆	· · PIN	1	SN:11001--
57	☆	· · PIN,COTTER	1	SN:11001--
58	☆	· · PIN	1	SN:11001--
59	☆	· · BUSHING	2	SN:11001--
60	☆	· · PIN,COTTER	1	SN:11001--
61	☆	· · SCREW	1	SN:11001--
62	☆	· · NUT	1	SN:11001--

Printed By : Dwi Iswanto (airafather6107170)

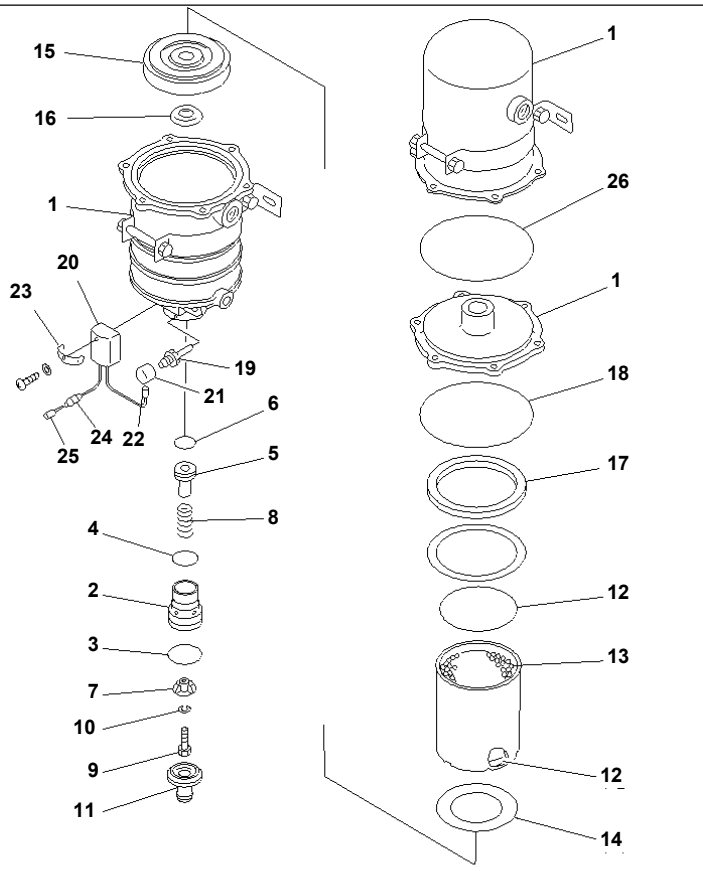

Ref. 4433 **Page 120300**

GD825A-2 S/N 11001-UP

AIR DRYER(#11001-.)

Item	Part No.	Description	Qty	Options
1	235-44-11770	AIR DRYER ASS'Y,(DR-3U)	1	SN:11001--.
	235-44-13700	· VALVE BODY ASS'Y	1	SN:11001--.
2	☆	· · BODY,VALVE	1	SN:11001--.
3	☆	· · O-RING (K4)	1	SN:11001--@
4	☆	· · O-RING (K4)	1	SN:11001--@
5	☆	· · PISTON	1	SN:11001--.
6	☆	· · O-RING	1	SN:11001--@
7	☆	· · VALVE ASS'Y (K4)	1	SN:11001--@
8	☆	· · SPRING,VALVE (K4)	1	SN:11001--@
9	☆	· · BOLT	1	SN:11001--@
10	☆	· · WASHER,SPRING	1	SN:11001--@
11	☆	· · COVER,EXHAUST	1	SN:11001--@
12	☆	· FILTER (K4)	2	SN:11001--@
13	☆	· DESICCANT (K4)	1	SN:11001--.
14	☆	· GASKET,FILTER (K4)	1	SN:11001--@
15	☆	· FILTER,OIL (K4)	1	SN:11001--@
16	☆	· RING,GASKET (K4)	1	SN:11001--@
17	☆	· RING,SEAL (K4)	1	SN:11001--@
18	☆	· O-RING (K4)	1	SN:11001--@
19	235-44-13770	· HEATER	1	SN:11001--.
20	235-44-13900	· THERMOSTAT ASS'Y	1	SN:11001--.
21	☆	· · BOOT,HEATER	1	SN:11001--.
22	☆	· · TERMINAL	1	SN:11001--@
23	☆	· · CLAMP	1	SN:11001--@
24	☆	· · CAP	1	SN:11001--.
25	☆	· · TERMINAL	1	SN:11001--.
26	☆	· O-RING (K4)	1	SN:11001--@

Ref. 4433 **Page 120300**

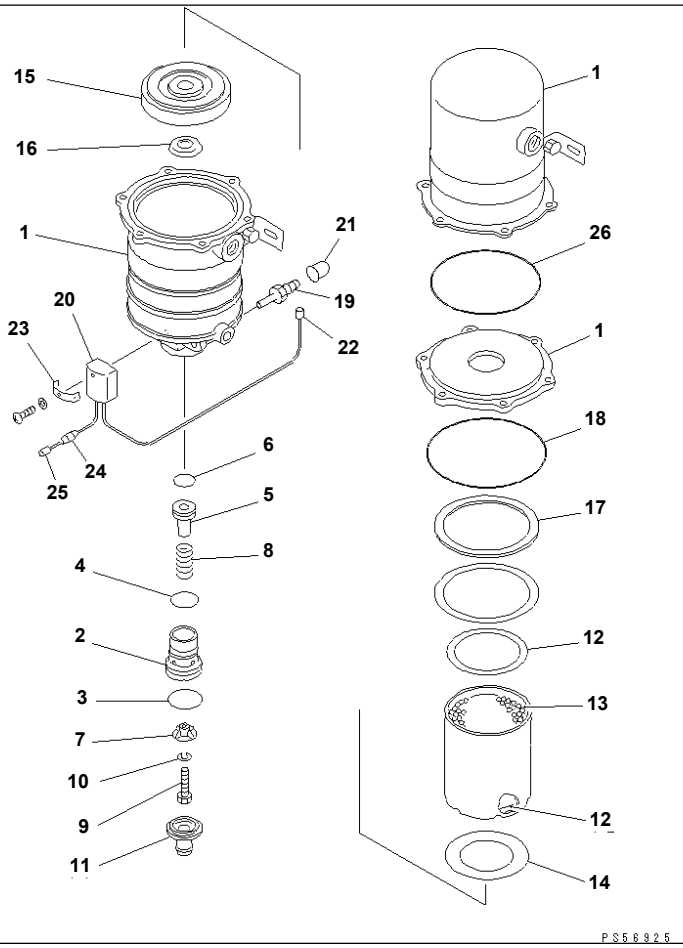

Ref. 4433A **Page 120310**

GD825A-2 S/N 11001-UP

AIR DRYER(#.-)

Item	Part No.	Description	Qty	Options
1	235-44-11771	AIR DRYER ASS'Y,(DR-31)	1	SN:.--
	235-44-13701	· VALVE BODY ASS'Y	1	SN:.--
2	☆	· · BODY,VALVE	1	SN:.--
3	☆	· · O-RING (K4)	1	SN:11001--
4	☆	· · O-RING (K4)	1	SN:11001--
5	☆	· · PISTON	1	SN:.--
6	☆	· · O-RING	1	SN:11001--
7	☆	· · VALVE ASS'Y (K4)	1	SN:11001--
8	☆	· · SPRING,VALVE (K4)	1	SN:11001--
9	☆	· · BOLT	1	SN:11001--
10	☆	· · WASHER,SPRING	1	SN:11001--
11	☆	· · COVER,EXHAUST	1	SN:11001--
12	☆	· FILTER (K4)	2	SN:11001--
13	☆	· DESICCANT (K4)	1	SN:.--
14	☆	· GASKET,FILTER (K4)	1	SN:11001--
15	☆	· FILTER,OIL (K4)	1	SN:11001--
16	☆	· RING,GASKET (K4)	1	SN:11001--
17	☆	· RING,SEAL (K4)	1	SN:11001--
18	☆	· O-RING (K4)	1	SN:11001--
19	235-44-13771	· HEATER	1	SN:.--
20	235-44-13901	· THERMOSTAT ASS'Y	1	SN:.--
21	☆	· · BOOT,HEATER	1	SN:.--
22	☆	· · TERMINAL	1	SN:11001--
23	☆	· · CLAMP	1	SN:11001--
24	☆	· · CAP	1	SN:.--
25	☆	· · TERMINAL	1	SN:.--
26	☆	· O-RING (K4)	1	SN:11001--

Ref. 4433A **Page 120310**

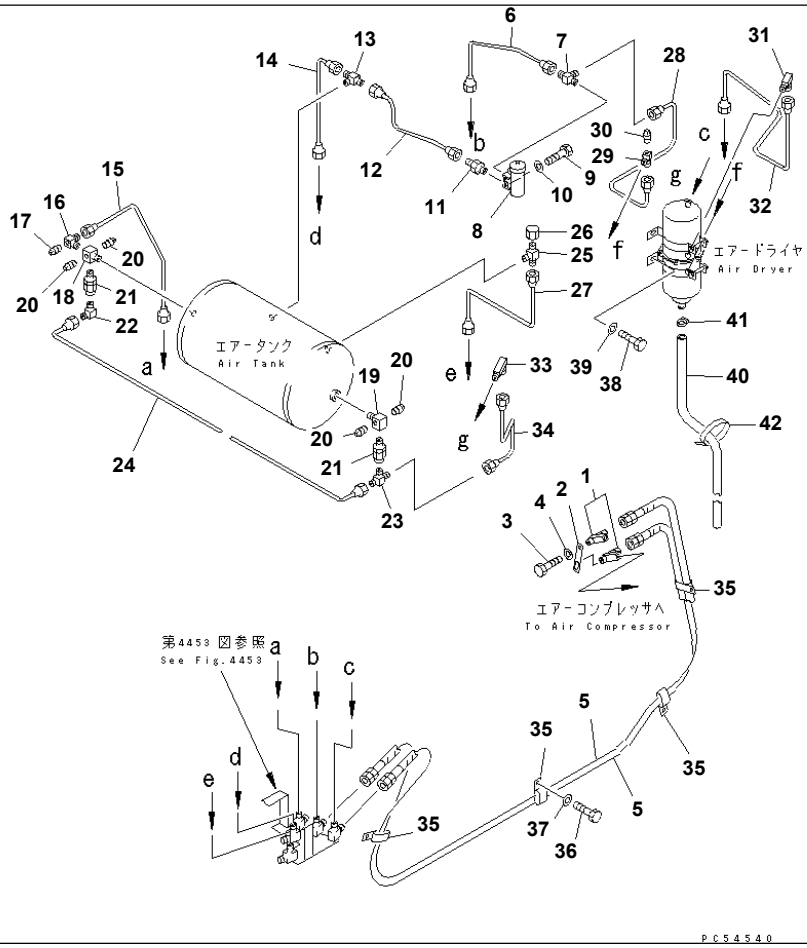

Ref. 4451 **Page 120320**

GD825A-2 S/N 11001-UP
AIR PIPING (1/4) (WITH AIR DRYER)(#11001-12000)

Item	Part No.	Description	Qty	Options
1	235-44-12731	ELBOW	2	SN:11001--12000
2	235-44-12540	PLATE	1	SN:11001--12000
3	01010-51020	BOLT	2	SN:11001--12000
4	01643-31032	WASHER	2	SN:11001--12000
5	07102-20427	HOSE	2	SN:11001--12000
6	235-44-31171	TUBE	1	SN:11001--@
7	238-44-11530	TEE	1	SN:11001--@
8	235-44-11680	GOVERNOR,AIR	1	SN:11001--@
9	01010-50870	BOLT	2	SN:11001--@
10	01643-30823	WASHER	2	SN:11001--@
11	232-44-52320	NIPPLE	1	SN:11001--@
12	235-44-31191	TUBE	1	SN:11001--@
13	235-44-12520	TEE	1	SN:11001--@
14	235-44-31211	TUBE	1	SN:11001--@
15	235-44-31231	TUBE	1	SN:11001--@
16	234-44-41220	ELBOW	1	SN:11001--@
17	07042-20108	PLUG	1	SN:11001--@
18	235-44-31390	ELBOW	1	SN:11001--@
19	232-44-54720	ELBOW	1	SN:11001--@
20	07042-20211	PLUG	4	SN:11001--@
21	234-44-11242	VALVE ASS'Y,CHECK	2	SN:11001--@
22	232-44-52270	ELBOW	1	SN:11001--@
23	238-44-11460	TEE	1	SN:11001--@
24	234-44-31540	TUBE	1	SN:11001--@
25	235-44-12530	TEE	1	SN:11001--@
26	232-44-52380	CAP	1	SN:11001--@
27	235-44-31221	TUBE	1	SN:11001--@

Printed By : Dwi Iswanto (airafather6107170)

AIR PIPING (1/4) (WITH AIR DRYER)(#11001-12000)

Item	Part No.	Description	Qty	Options
28	235-44-31131	TUBE	1	SN:11001--@
29	234-44-41220	ELBOW	1	SN:11001--@
30	07042-20108	PLUG	1	SN:11001--@
31	235-44-31180	ELBOW	1	SN:11001--@
32	235-44-31121	TUBE	1	SN:11001--@
33	235-44-31150	ELBOW	1	SN:11001--@
34	235-44-31140	TUBE	1	SN:11001--@
35	232-60-61280	CLIP	4	SN:11001--@
36	01010-51016	BOLT	4	SN:11001--@
37	01643-31032	WASHER	4	SN:11001--@
38	01010-51014	BOLT	4	SN:11001--@
39	01643-31032	WASHER	4	SN:11001--@
40	278-80-12530	HOSE	1	SN:11001--@
41	07281-00229	CLAMP	1	SN:11001--@
42	08034-00519	BAND	1	SN:11001--@

Printed By : Dwi Iswanto (airafather6107170)

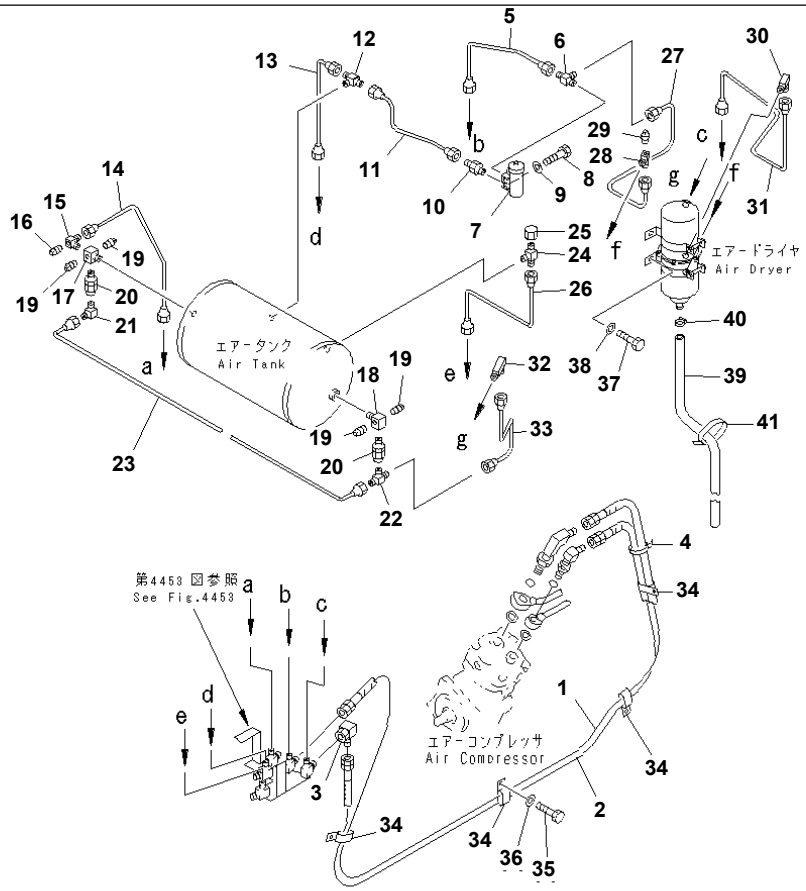

Ref. 4451A Page 120330

GD825A-2 S/N 11001-UP

AIR PIPING (1/4) (WITH AIR DRYER)(#12001-12084)

Item	Part No.	Description	Qty	Options
1	07102-20427	HOSE	1	SN:12001--12084
2	07102-20227	HOSE	1	SN:12001--@
3	235-44-31740	ELBOW	1	SN:12001--@
4	08034-00519	BAND	1	SN:12001--@
5	235-44-31171	TUBE	1	SN:11001--@
6	238-44-11530	TEE	1	SN:11001--@
7	235-44-11680	GOVERNOR,AIR	1	SN:11001--@
8	01010-50870	BOLT	2	SN:11001--@
9	01643-30823	WASHER	2	SN:11001--@
10	232-44-52320	NIPPLE	1	SN:11001--@
11	235-44-31191	TUBE	1	SN:11001--@
12	235-44-12520	TEE	1	SN:11001--@
13	235-44-31211	TUBE	1	SN:11001--@
14	235-44-31231	TUBE	1	SN:11001--@
15	234-44-41220	ELBOW	1	SN:11001--@
16	07042-20108	PLUG	1	SN:11001--@
17	235-44-31390	ELBOW	1	SN:11001--@
18	232-44-54720	ELBOW	1	SN:11001--@
19	07042-20211	PLUG	4	SN:11001--@
20	234-44-11242	VALVE ASS'Y,CHECK	2	SN:11001--@
21	232-44-52270	ELBOW	1	SN:11001--@
22	238-44-11460	TEE	1	SN:11001--@
23	234-44-31540	TUBE	1	SN:11001--@
24	235-44-12530	TEE	1	SN:11001--@
25	232-44-52380	CAP	1	SN:11001--@
26	235-44-31221	TUBE	1	SN:11001--@
27	235-44-31131	TUBE	1	SN:11001--@

Ref. 4451A Page 120330

Printed By : Dwi Iswanto (airafather6107170)

AIR PIPING (1/4) (WITH AIR DRYER)(#12001-12084)

Item	Part No.	Description	Qty	Options
28	234-44-41220	ELBOW	1	SN:11001--@
29	07042-20108	PLUG	1	SN:11001--@
30	235-44-31180	ELBOW	1	SN:11001--@
31	235-44-31121	TUBE	1	SN:11001--@
32	235-44-31150	ELBOW	1	SN:11001--@
33	235-44-31140	TUBE	1	SN:11001--@
34	232-60-61280	CLIP	4	SN:11001--@
35	01010-51016	BOLT	4	SN:11001--@
36	01643-31032	WASHER	4	SN:11001--@
37	01010-51014	BOLT	4	SN:11001--@
38	01643-31032	WASHER	4	SN:11001--@
39	278-80-12530	HOSE	1	SN:11001--@
40	07281-00229	CLAMP	1	SN:11001--@
41	08034-00519	BAND	1	SN:11001--@

Printed By : Dwi Iswanto (airafather6107170)

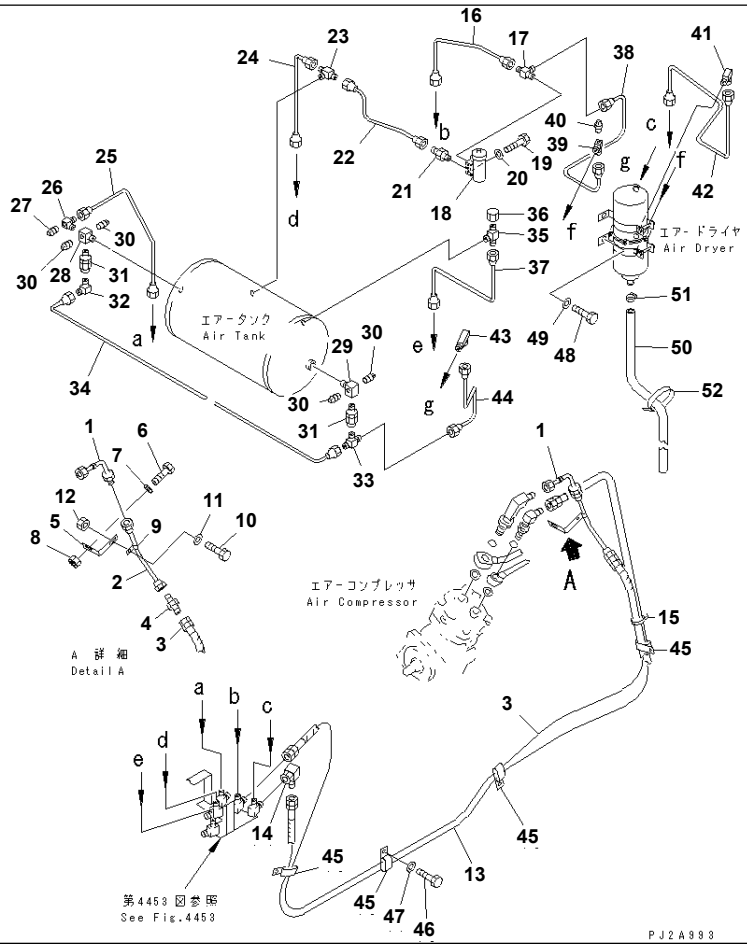

AIR PIPING (1/4) (WITH AIR DRYER)(#12085-)

Item	Part No.	Description	Qty	Options
1	235-44-32120	TUBE	1	SN:12085--
2	235-44-32140	TUBE	1	SN:12085--
3	07102-20423	HOSE	1	SN:12085--
4	235-44-32150	JOINT	1	SN:12085--
5	235-44-32160	BRACKET	1	SN:12085--
6	01010-80822	BOLT	1	SN:12085--
7	01643-30823	WASHER	1	SN:12085--
8	01580-10806	NUT	1	SN:12085--
9	04434-51008	CLIP	1	SN:12085--
10	01010-80816	BOLT	1	SN:12085--
11	01643-30823	WASHER	1	SN:12085--
12	01580-10816	NUT	1	SN:12085--
13	07102-20227	HOSE	1	SN:11001--
14	235-44-31740	ELBOW	1	SN:11001--
15	08034-00519	BAND	1	SN:11001--
16	235-44-31171	TUBE	1	SN:11001--
17	238-44-11530	TEE	1	SN:11001--
18	235-44-11680	GOVERNOR,AIR	1	SN:11001--
19	01010-50870	BOLT	2	SN:11001--
20	01643-30823	WASHER	2	SN:11001--
21	232-44-52320	NIPPLE	1	SN:11001--
22	235-44-31191	TUBE	1	SN:11001--
23	235-44-12520	TEE	1	SN:11001--
24	235-44-31211	TUBE	1	SN:11001--
25	235-44-31231	TUBE	1	SN:11001--
26	234-44-41220	ELBOW	1	SN:11001--
27	07042-20108	PLUG	1	SN:11001--

Printed By : Dwi Iswanto (airafather6107170)

AIR PIPING (1/4) (WITH AIR DRYER)(#12085-)

Item	Part No.	Description	Qty	Options
28	235-44-31390	ELBOW	1	SN:11001--
29	232-44-54720	ELBOW	1	SN:11001--
30	07042-20211	PLUG	4	SN:11001--
31	234-44-11242	VALVE ASS'Y,CHECK	2	SN:11001--
32	232-44-52270	ELBOW	1	SN:11001--
33	238-44-11460	TEE	1	SN:11001--
34	234-44-31540	TUBE	1	SN:11001--
35	235-44-12530	TEE	1	SN:11001--
36	232-44-52380	CAP	1	SN:11001--
37	235-44-31221	TUBE	1	SN:11001--
38	235-44-31131	TUBE	1	SN:11001--
39	234-44-41220	ELBOW	1	SN:11001--
40	07042-20108	PLUG	1	SN:11001--
41	235-44-31180	ELBOW	1	SN:11001--
42	235-44-31121	TUBE	1	SN:11001--
43	235-44-31150	ELBOW	1	SN:11001--
44	235-44-31140	TUBE	1	SN:11001--
45	232-60-61280	CLIP	4	SN:11001--
46	01010-51016	BOLT	4	SN:11001--
47	01643-31032	WASHER	4	SN:11001--
48	01010-51014	BOLT	4	SN:11001--
49	01643-31032	WASHER	4	SN:11001--
50	278-80-12530	HOSE	1	SN:11001--
51	07281-00229	CLAMP	1	SN:11001--
52	08034-00519	BAND	1	SN:11001--

Printed By : Dwi Iswanto (airafather6107170)

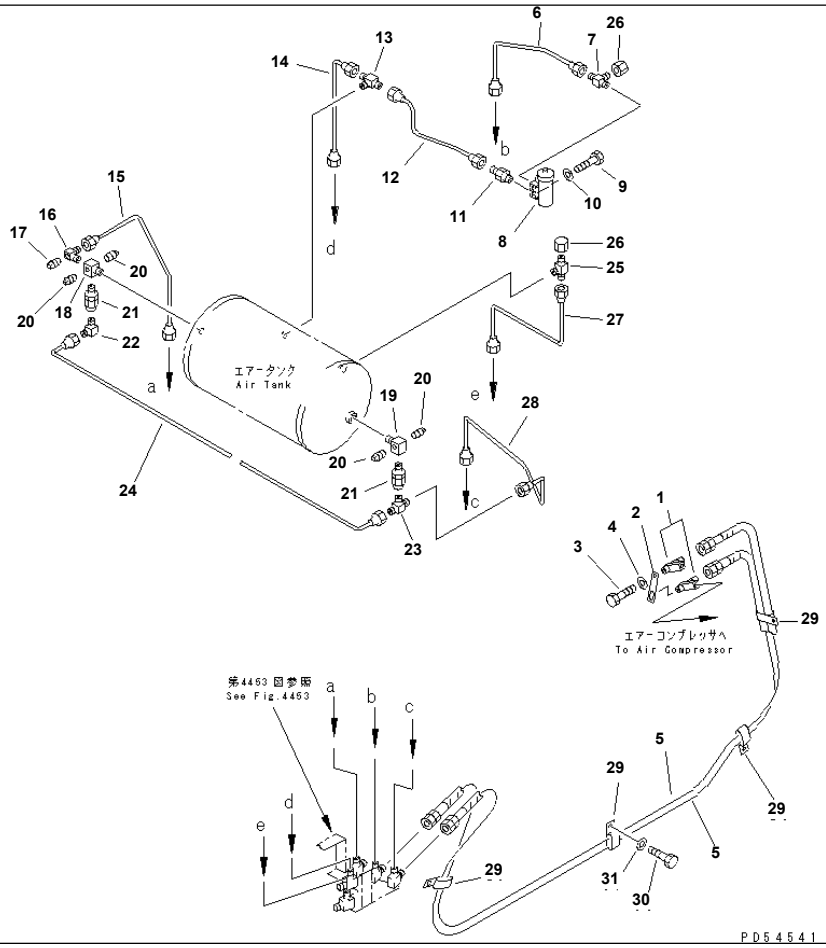

Ref. 4453 **Page 120350**

GD825A-2 S/N 11001-UP
AIR PIPING (1/4) (WITHOUT AIR DRYER)(#11001-12000)

Item	Part No.	Description	Qty	Options
1	235-44-12731	ELBOW	2	SN:11001--12000
2	235-44-12540	PLATE	1	SN:11001--12000
3	01010-51020	BOLT	2	SN:11001--12000
4	01643-31032	WASHER	2	SN:11001--12000
5	07102-20427	HOSE	2	SN:11001--12000
6	235-44-31171	TUBE	1	SN:11001--@
7	238-44-11530	TEE	1	SN:11001--@
8	235-44-11680	GOVERNOR,AIR	1	SN:11001--@
9	01010-50870	BOLT	2	SN:11001--@
10	01643-30823	WASHER	2	SN:11001--@
11	232-44-52320	NIPPLE	1	SN:11001--@
12	235-44-31191	TUBE	1	SN:11001--@
13	235-44-12520	TEE	1	SN:11001--@
14	235-44-31211	TUBE	1	SN:11001--@
15	235-44-31231	TUBE	1	SN:11001--@
16	234-44-41220	ELBOW	1	SN:11001--@
17	07042-20108	PLUG	1	SN:11001--@
18	235-44-31390	ELBOW	1	SN:11001--@
19	232-44-54720	ELBOW	1	SN:11001--@
20	07042-20211	PLUG	4	SN:11001--@
21	234-44-11242	VALVE ASS'Y,CHECK	2	SN:11001--@
22	232-44-52270	ELBOW	1	SN:11001--@
23	238-44-11460	TEE	1	SN:11001--@
24	234-44-31540	TUBE	1	SN:11001--@
25	235-44-12530	TEE	1	SN:11001--@
26	232-44-52380	CAP	2	SN:11001--@
27	235-44-31221	TUBE	1	SN:11001--@

Ref. 4453 **Page 120350**

AIR PIPING (1/4) (WITHOUT AIR DRYER)(#11001-12000)

Item	Part No.	Description	Qty	Options
28	235-44-31380	TUBE	1	SN:11001--@
29	232-60-61280	CLIP	4	SN:11001--@
30	01010-51016	BOLT	4	SN:11001--@
31	01643-31032	WASHER	4	SN:11001--@

Printed By : Dwi Iswanto (airafather6107170)

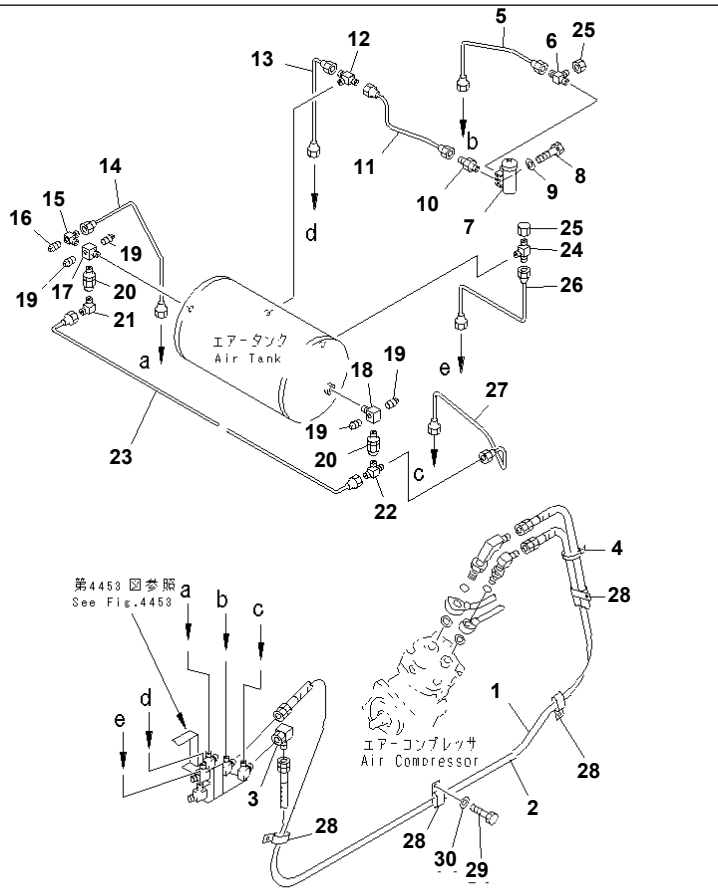

Ref. 4453A **Page 120360**

GD825A-2 S/N 11001-UP
AIR PIPING (1/4) (WITHOUT AIR DRYER)(#12001-12084)

Item	Part No.	Description	Qty	Options
1	07102-20427	HOSE	1	SN:12001--12084
2	07102-20227	HOSE	1	SN:12001--@
3	235-44-31740	ELBOW	1	SN:12001--@
4	08034-00519	BAND	1	SN:12001--@
5	235-44-31171	TUBE	1	SN:11001--@
6	238-44-11530	TEE	1	SN:11001--@
7	235-44-11680	GOVERNOR,AIR	1	SN:11001--@
8	01010-50870	BOLT	2	SN:11001--@
9	01643-30823	WASHER	2	SN:11001--@
10	232-44-52320	NIPPLE	1	SN:11001--@
11	235-44-31191	TUBE	1	SN:11001--@
12	235-44-12520	TEE	1	SN:11001--@
13	235-44-31211	TUBE	1	SN:11001--@
14	235-44-31231	TUBE	1	SN:11001--@
15	234-44-41220	ELBOW	1	SN:11001--@
16	07042-20108	PLUG	1	SN:11001--@
17	235-44-31390	ELBOW	1	SN:11001--@
18	232-44-54720	ELBOW	1	SN:11001--@
19	07042-20211	PLUG	4	SN:11001--@
20	234-44-11242	VALVE ASS'Y,CHECK	2	SN:11001--@
21	232-44-52270	ELBOW	1	SN:11001--@
22	238-44-11460	TEE	1	SN:11001--@
23	234-44-31540	TUBE	1	SN:11001--@
24	235-44-12530	TEE	1	SN:11001--@
25	232-44-52380	CAP	2	SN:11001--@
26	235-44-31221	TUBE	1	SN:11001--@
27	235-44-31380	TUBE	1	SN:11001--@

Printed By : Dwi Iswanto (airafather6107170)

AIR PIPING (1/4) (WITHOUT AIR DRYER)(#12001-12084)

Item	Part No.	Description	Qty	Options
28	232-60-61280	CLIP	4	SN:11001--@
29	01010-51016	BOLT	4	SN:11001--@
30	01643-31032	WASHER	4	SN:11001--@

Printed By : Dwi Iswanto (airafather6107170)

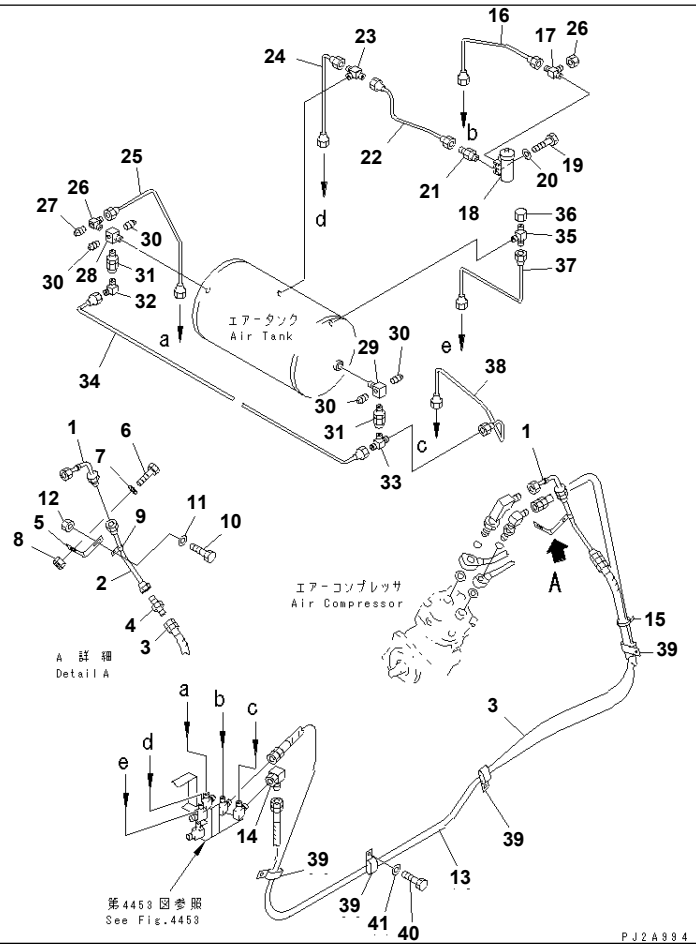

Ref. 4453B **Page 120370**

GD825A-2 S/N 11001-UP

AIR PIPING (1/4) (WITHOUT AIR DRYER)(#12085-12104)

Item	Part No.	Description	Qty	Options
1	235-44-32120	TUBE	1	SN:12085--12104
2	235-44-32140	TUBE	1	SN:12085--12104
3	07102-20423	HOSE	1	SN:12085--12104
4	235-44-32150	JOINT	1	SN:12085--12104
5	235-44-32160	BRACKET	1	SN:12085--12104
6	01010-80822	BOLT	1	SN:12085--12104
7	01643-30823	WASHER	1	SN:12085--12104
8	01580-10806	NUT	1	SN:12085--12104
9	04434-51008	CLIP	1	SN:12085--12104
10	01010-80816	BOLT	1	SN:12085--12104
11	01643-30823	WASHER	1	SN:12085--12104
12	01580-10816	NUT	1	SN:12085--12104
13	07102-20227	HOSE	1	SN:11001--12104
14	235-44-31740	ELBOW	1	SN:11001--12104
15	08034-00519	BAND	1	SN:11001--12104
16	235-44-31171	TUBE	1	SN:11001--12104
17	238-44-11530	TEE	1	SN:11001--12104
18	235-44-11680	GOVERNOR,AIR	1	SN:11001--12104
19	01010-50870	BOLT	2	SN:11001--12104
20	01643-30823	WASHER	2	SN:11001--12104
21	232-44-52320	NIPPLE	1	SN:11001--12104
22	235-44-31191	TUBE	1	SN:11001--12104
23	235-44-12520	TEE	1	SN:11001--12104
24	235-44-31211	TUBE	1	SN:11001--12104
25	235-44-31231	TUBE	1	SN:11001--12104
26	234-44-41220	ELBOW	1	SN:11001--12104
27	07042-20108	PLUG	1	SN:11001--12104

Ref. 4453B **Page 120370**

AIR PIPING (1/4) (WITHOUT AIR DRYER)(#12085-12104)

Item	Part No.	Description	Qty	Options
28	235-44-31390	ELBOW	1	SN:11001--12104
29	232-44-54720	ELBOW	1	SN:11001--12104
30	07042-20211	PLUG	4	SN:11001--12104
31	234-44-11242	VALVE ASS'Y,CHECK	2	SN:11001--12104
32	232-44-52270	ELBOW	1	SN:11001--12104
33	238-44-11460	TEE	1	SN:11001--12104
34	234-44-31540	TUBE	1	SN:11001--12104
35	235-44-12530	TEE	1	SN:11001--12104
36	232-44-52380	CAP	2	SN:11001--12104
37	235-44-31221	TUBE	1	SN:11001--12104
38	235-44-31380	TUBE	1	SN:11001--12104
39	232-60-61280	CLIP	4	SN:11001--12104
40	01010-51016	BOLT	4	SN:11001--12104
41	01643-31032	WASHER	4	SN:11001--12104

Printed By : Dwi Iswanto (airafather6107170)

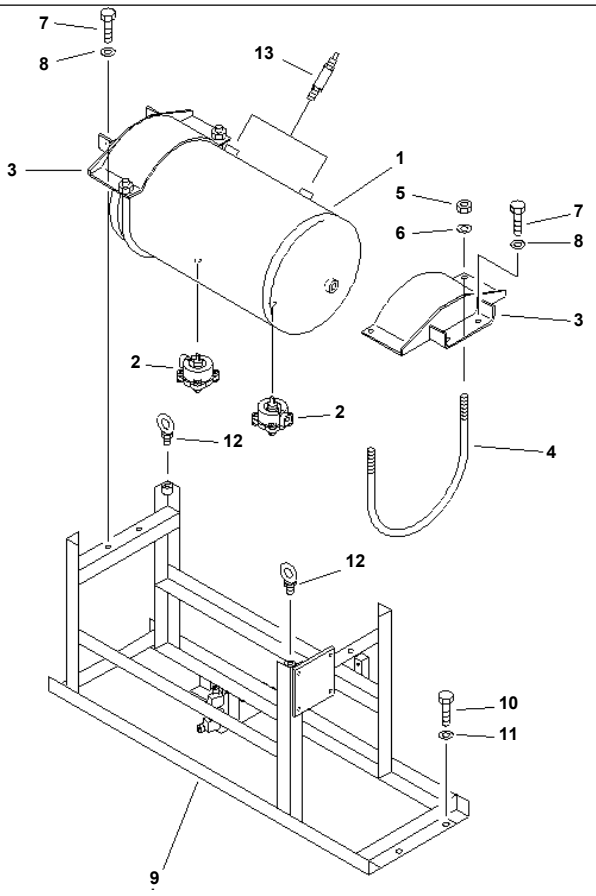

GD825A-2 S/N 11001-UP
AIR PIPING (2/4)

Item	Part No.	Description	Qty	Options
1	234-44-11114	TANK,AIR	1	SN:11001--
2	232-44-53510	VALVE,AUTO DRAIN	2	SN:11001--
3	235-44-11110	SUPPORT	2	SN:11001--
4	232-44-54810	U-BOLT	2	SN:11001--
5	01580-11008	NUT	4	SN:11001--
6	01643-31032	WASHER	4	SN:11001--
7	01010-51025	BOLT	4	SN:11001--
8	01643-31032	WASHER	4	SN:11001--
9	235-44-31112	BRACKET	1	SN:12004--
	235-44-31111	BRACKET	1	SN:11001--12003
10	01010-51225	BOLT	4	SN:11001--
11	01643-31232	WASHER	4	SN:11001--
12	04530-11222	BOLT,EYE	2	SN:11001--
13	232-44-52620	VALVE ASS'Y,SAFETY	2	SN:11001--

Printed By : Dwi Iswanto (airafather6107170)

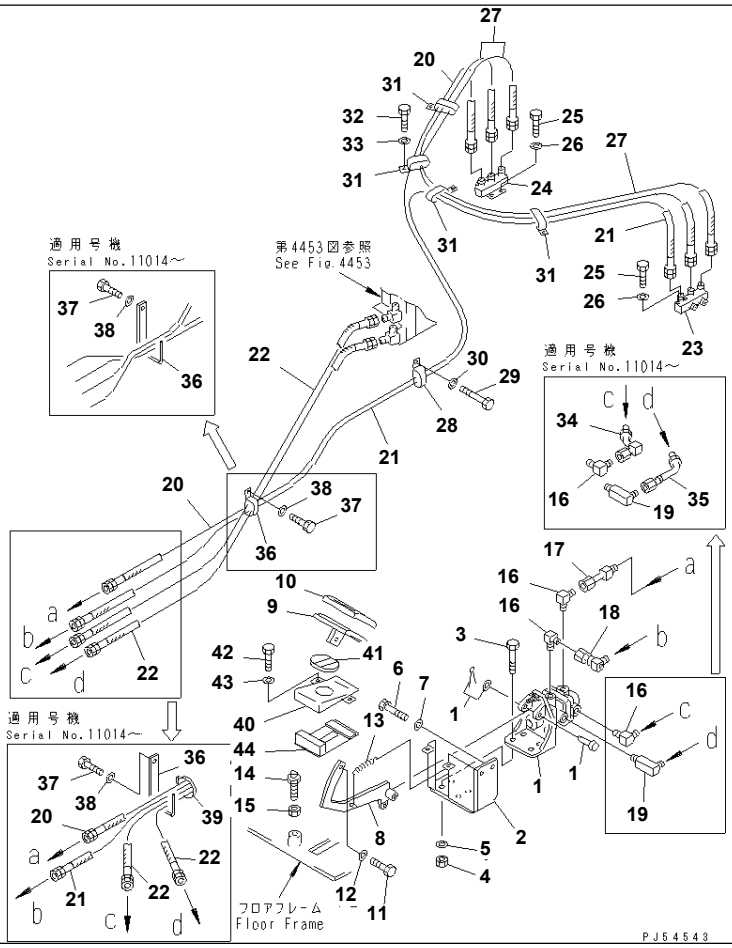

Ref. 4461 **Page 120390**

GD825A-2 S/N 11001-UP
AIR PIPING (3/4)

Item	Part No.	Description	Qty	Options
1	(235-44-11690)	VALVE ASS'Y,DUAL BRAKE	1	SN:11001--
2	235-43-31110	BRACKET	1	SN:11001--
3	01010-51030	BOLT	4	SN:11001--
4	01580-11008	NUT	4	SN:11001--
5	01643-31032	WASHER	4	SN:11001--
6	01010-51235	BOLT	2	SN:11001--
7	01643-31232	WASHER	2	SN:11001--
8	235-43-13121	LEVER	1	SN:11001--
9	235-45-12110	PEDAL	1	SN:11001--
10	235-45-12170	COVER	1	SN:11001--
11	01010-51225	BOLT	1	SN:11001--
12	01643-31232	WASHER	1	SN:11001--
13	144-15-25710	SPRING	1	SN:11001--
14	232-43-52430	BUMPER	1	SN:11001--
15	01580-11210	NUT	1	SN:11001--
16	232-44-52450	ELBOW	3	SN:11001--
17	235-44-31361	JOINT	1	SN:11001--
18	235-44-31351	ELBOW	1	SN:11001--
19	232-44-52510	ELBOW	1	SN:11001--
20	07102-20321	HOSE	1	SN:11001--
21	07102-20327	HOSE	1	SN:11001--
22	07102-20411	HOSE	2	SN:11014--
	235-44-31640	HOSE	2	SN:11001--11013
23	235-44-31311	JOINT,L.H.	1	SN:11001--
24	235-44-31291	JOINT,R.H.	1	SN:11001--
25	01010-51020	BOLT	4	SN:11001--
26	01643-31032	WASHER	4	SN:11001--

Ref. 4461 **Page 120390**

AIR PIPING (3/4)

Item	Part No.	Description	Qty	Options
27	07102-20320	HOSE	2	SN:11001--
28	234-01-11220	CLIP	1	SN:11001--
29	01010-51016	BOLT	1	SN:11001--
30	01643-31032	WASHER	1	SN:11001--
31	235-44-31650	CLIP	4	SN:11001--
32	01010-51016	BOLT	4	SN:11001--
33	01643-31032	WASHER	4	SN:11001--
34	235-44-31720	TUBE	1	SN:11014--
35	235-44-31710	TUBE	1	SN:11014--
36	235-44-31730	BRACKET	2	SN:11014--
	234-01-11220	CLIP	1	SN:11001--11013
37	01010-51020	BOLT	2	SN:11014--
	01010-51010	BOLT	1	SN:11001--11013
38	01643-31032	WASHER	2	SN:11014--
	01643-31032	WASHER	1	SN:11001--11013
39	08034-00536	BAND	2	SN:11014--
40	235-54-31280	COVER	1	SN:11001--
41	235-957-2170	GROMMET	1	SN:11001--
42	01010-50816	BOLT	2	SN:11001--
43	01643-30823	WASHER	2	SN:11001--
44	235-54-32430	COVER,(FOR PRESSURE RISE)	1	SN:11014--

Printed By : Dwi Iswanto (airafather6107170)

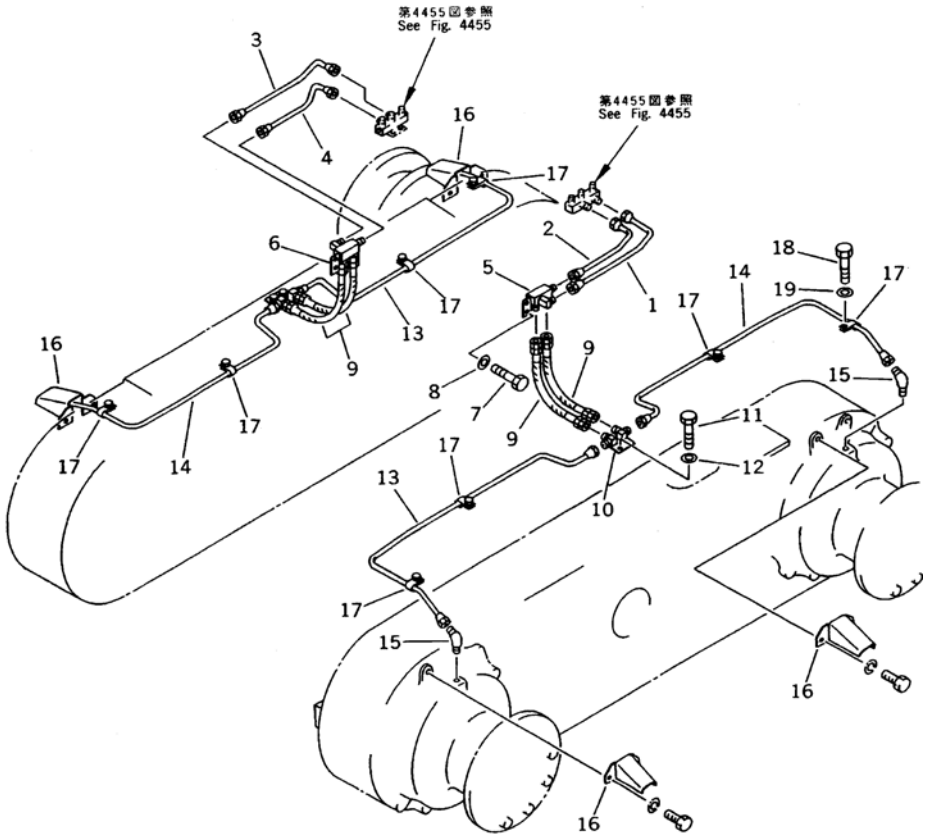

Ref. 4465 **Page 120400**

GD825A-2 S/N 11001-UP
AIR PIPING (4/4)

Item	Part No.	Description	Qty	Options
1	235-44-31281	TUBE	1	SN:11001--
2	235-44-31271	TUBE	1	SN:11001--
3	235-44-31261	TUBE	1	SN:11001--
4	235-44-31251	TUBE	1	SN:11001--
5	235-44-11510	JOINT	1	SN:11001--
6	235-44-12410	JOINT	1	SN:11001--
7	01010-51220	BOLT	4	SN:11001--
8	01643-31232	WASHER	4	SN:11001--
9	07103-50404	HOSE	4	SN:11028--
	07102-20404	HOSE	4	SN:11001--11027
10	232-44-54970	JOINT	2	SN:11001--
11	01010-51220	BOLT	4	SN:11001--
12	01643-31232	WASHER	4	SN:11001--
13	235-44-31610	TUBE	2	SN:11001--
14	235-44-31620	TUBE	2	SN:11001--
15	235-44-11570	ELBOW	4	SN:11001--
16	235-44-11580	PROTECTOR	4	SN:11001--
17	232-44-54680	CLIP	8	SN:11001--
18	01010-51220	BOLT	8	SN:11001--
19	01643-31232	WASHER	8	SN:11001--

Printed By : Dwi Iswanto (airafather6107170)

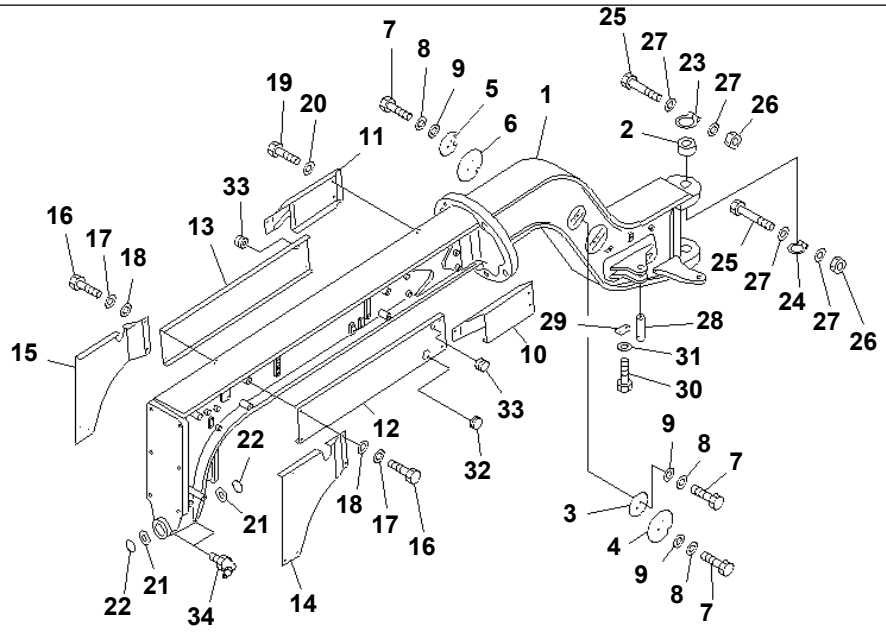

PJ54545

GD825A-2 S/N 11001-UP
FRONT FRAME(#11001-12000)

Item	Part No.	Description	Qty	Options
1	235-46-31100	FRAME,FRONT	1	SN:11001--@
2	235-46-11420	BUSHING	2	SN:11001--@
3	235-46-31160	PLATE,L.H.	1	SN:11001--@
4	235-46-31180	PLATE,L.H.	1	SN:11001--@
5	235-46-31160	PLATE,R.H.	1	SN:11001--@
6	235-46-31170	PLATE,R.H.	1	SN:11001--@
7	01010-51220	BOLT	8	SN:11001--@
8	232-43-58360	WASHER	8	SN:11001--@
9	01640-21223	WASHER	8	SN:11001--@
10	235-60-14710	COVER,L.H.	1	SN:11001--@
11	235-60-14720	COVER,R.H.	1	SN:11001--@
12	235-46-11680	COVER,L.H.	1	SN:11001--12000
13	235-46-11560	PLATE,R.H.	1	SN:11001--12000
14	235-46-11580	COVER,L.H.	1	SN:11001--@
15	235-46-11570	COVER,R.H.	1	SN:11001--@
16	01010-51220	BOLT	14	SN:11001--@
17	01643-31232	WASHER	14	SN:11001--@
18	01640-21223	WASHER	14	SN:11001--@
19	01010-51020	BOLT	4	SN:11001--@
20	01643-31032	WASHER	4	SN:11001--@
21	235-46-11480	SPACER	2	SN:11001--@
22	07000-15125	O-RING	2	SN:11001--@
23	235-46-11470	O-RING	2	SN:11001--@
24	236-46-13610	O-RING	2	SN:11001--@
25	235-46-11710	BOLT	4	SN:11001--@
26	01598-00608	NUT	4	SN:11001--@
27	01640-20610	WASHER	8	SN:11001--@

Printed By : Dwi Iswanto (airafather6107170)

FRONT FRAME(#11001-12000)

Item	Part No.	Description	Qty	Options
28	235-46-11340	PIN	2	SN:11001--@
29	04082-00306	LOCK	2	SN:11001--@
30	01010-51225	BOLT	4	SN:11001--@
31	01643-31232	WASHER	4	SN:11001--@
32	23B-06-12540	CAP	1	SN:11001--@
33	09415-01610	CAP	2	SN:11001--@
34	07020-00675	FITTING,GREASE	2	SN:11001--@

Printed By : Dwi Iswanto (airafather6107170)

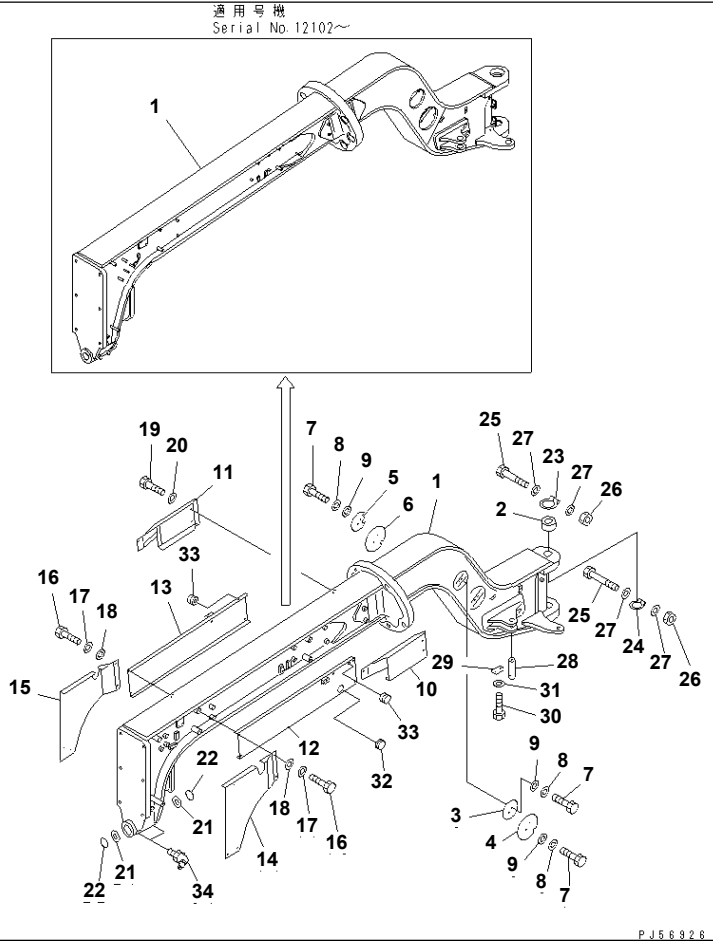

GD825A-2 S/N 11001-UP

FRONT FRAME(#12001-)

Item	Part No.	Description	Qty	Options
1	235-46-31102	FRAME,FRONT	1	SN:12102--
	235-46-31101	FRAME,FRONT	1	SN:12051--12101
	235-46-31100	FRAME,FRONT	1	SN:11001--12050
2	235-46-11420	BUSHING	2	SN:11001--
3	235-46-31160	PLATE,L.H.	1	SN:11001--
4	235-46-31180	PLATE,L.H.	1	SN:11001--
5	235-46-31160	PLATE,R.H.	1	SN:11001--
6	235-46-31170	PLATE,R.H.	1	SN:11001--
7	01010-81220	BOLT	8	SN:.--
	□01010-51220	BOLT	8	SN:11001--.
8	232-43-58360	WASHER	8	SN:11001--
9	01640-21223	WASHER	8	SN:11001--
10	235-60-14710	COVER,L.H.	1	SN:11001--
11	235-60-14720	COVER,R.H.	1	SN:11001--
12	235-46-11682	COVER,L.H.	1	SN:12099--
	□235-46-11681	COVER,L.H.	1	SN:12001--12098
13	235-46-11562	COVER,R.H.	1	SN:12099--
	□235-46-11561	PLATE,R.H.	1	SN:12001--12098
14	235-46-11580	COVER,L.H.	1	SN:11001--
15	235-46-11571	COVER,R.H.	1	SN:12051--
	235-46-11570	COVER,R.H.	1	SN:11001--12050
16	01010-81220	BOLT	14	SN:.--
	□01010-51220	BOLT	14	SN:11001--.
17	01643-31232	WASHER	14	SN:11001--
18	01640-21223	WASHER	14	SN:11001--
19	01010-51020	BOLT	4	SN:11001--
20	01643-31032	WASHER	4	SN:11001--

Ref. 5001A Page 150020

Printed By : Dwi Iswanto (airafather6107170)

FRONT FRAME(#12001-)

Item	Part No.	Description	Qty	Options
21	235-46-11480	SPACER	2	SN:11001--
22	07000-F5125	O-RING	2	SN:.--
	□07000-15125	O-RING	2	SN:11001--.
23	235-46-11470	O-RING	2	SN:11001--
24	236-46-13610	O-RING	2	SN:11001--
25	235-46-11710	BOLT	4	SN:11001--
26	01598-00608	NUT	4	SN:11001--
27	01640-20610	WASHER	8	SN:11001--
28	235-46-11340	PIN	2	SN:11001--
29	04082-00306	LOCK	2	SN:11001--
30	01010-51225	BOLT	4	SN:11001--
31	01643-31232	WASHER	4	SN:11001--
32	23B-06-12540	CAP	1	SN:11001--
33	09415-01610	CAP	2	SN:11001--
34	07020-00675	FITTING,GREASE	2	SN:11001--

Printed By : Dwi Iswanto (airafather6107170)

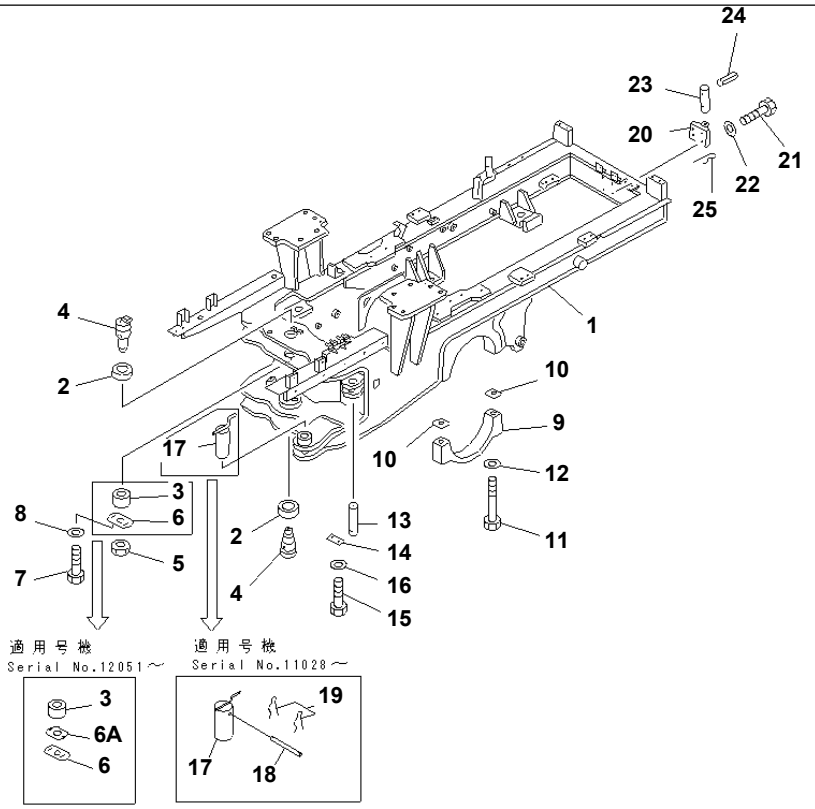

PR56392

GD825A-2 S/N 11001-UP
REAR FRAME

Item	Part No.	Description	Qty	Options
1	235-46-32100	FRAME,REAR	1	SN:11001--
2	235-46-11430	BUSHING	2	SN:11001--
3	235-46-11440	BUSHING	2	SN:11001--
4	235-46-11410	PIN	2	SN:11001--
5	235-46-11450	NUT	2	SN:11001--
6	235-46-11460	PLATE	2	SN:11001--
6A	235-46-11950	PLATE	2	SN:12051--
7	01010-81635	BOLT	4	SN:12051--
	01010-51630	BOLT	4	SN:11001--12050
8	01643-31645	WASHER	4	SN:11001--
9	235-46-12150	CAP	2	SN:11001--
10	235-46-00010	SHIM ASS'Y	1	SN:11001--
	☆	· SHIM¤ 0.1MM	4	SN:11001--
	☆	· SHIM¤ 0.2MM	4	SN:11001--
11	235-46-12160	BOLT	4	SN:11001--
12	01643-33690	WASHER	4	SN:11001--
13	235-46-11340	PIN	2	SN:11001--
14	04082-00306	LOCK	2	SN:11001--
15	01010-51225	BOLT	4	SN:11001--
16	01643-31232	WASHER	4	SN:11001--
17	235-46-32271	PIN	1	SN:11028--
	235-46-32270	PIN	1	SN:11001--11027
18	234-54-31171	PIN	1	SN:11028--
19	04052-01038	PIN,SNAP	2	SN:11028--
20	238-46-11810	DRAWBAR	1	SN:11001--
21	01010-52065	BOLT	4	SN:11001--
22	01643-32060	WASHER	4	SN:11001--

Printed By : Dwi Iswanto (airafather6107170)

REAR FRAME

Item	Part No.	Description	Qty	Options
23	232-46-11711	PIN	1	SN:11001--
24	04025-01065	PIN,SPRING	1	SN:11001--
25	232-46-11920	PIN,SNAP	1	SN:11001--

Printed By : Dwi Iswanto (airafather6107170)

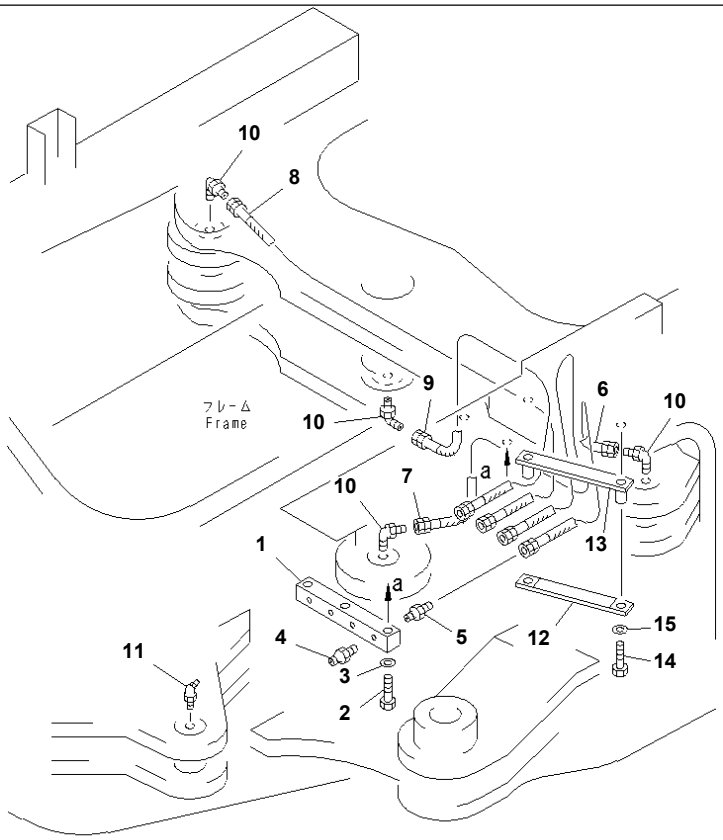

PC56393

Ref. 5051 **Page 150040**

GD825A-2 S/N 11001-UP
ARTICULATE LUBRICATION PIPING

Item	Part No.	Description	Qty	Options
1	235-46-31230	BLOCK	1	SN:11001--
2	01010-51050	BOLT	2	SN:11006--
	01010-51080	BOLT	2	SN:11001--11005
3	01643-31032	WASHER	2	SN:11001--
4	07020-00000	FITTING,GREASE	4	SN:11001--
5	232-860-5560	NIPPLE	4	SN:11001--
6	07082-40206	HOSE	1	SN:11001--
7	07082-40212	HOSE	1	SN:11001--
8	07082-40213	HOSE	1	SN:11001--
9	07082-40209	HOSE	1	SN:11001--
10	234-60-22672	ELBOW	4	SN:11001--
11	07020-00675	FITTING,GREASE	2	SN:11001--
12	235-46-31260	BRACKET	1	SN:11001--
13	235-46-31250	BRACKET	1	SN:11001--
14	01010-51050	BOLT	2	SN:11001--
15	01643-31032	WASHER	2	SN:11001--

Printed By : Dwi Iswanto (airafather6107170)

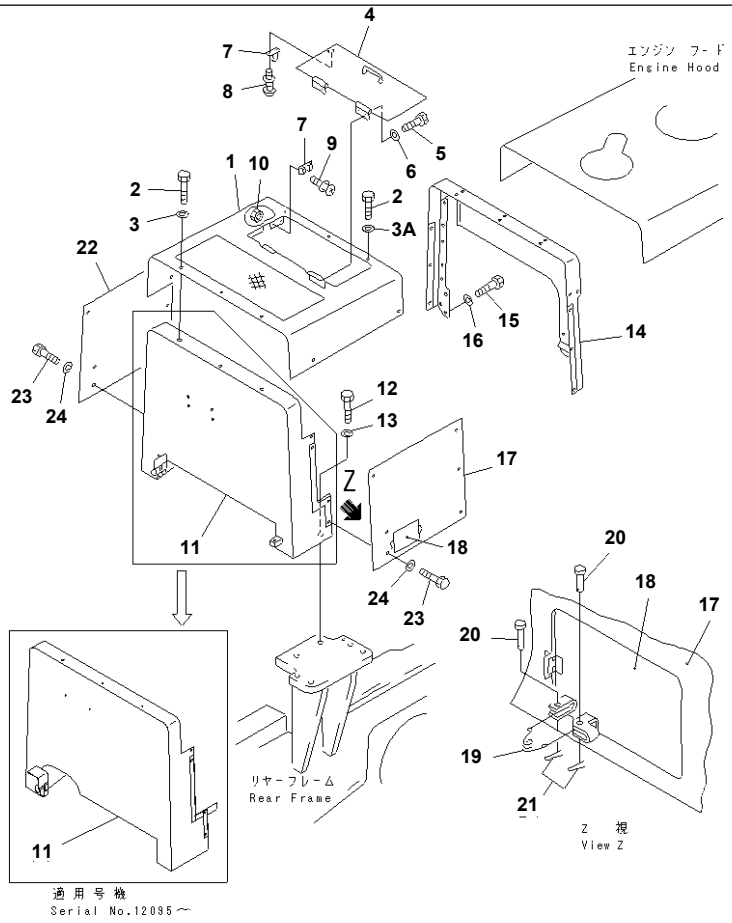

Ref. 5101 **Page 150050**

GD825A-2 S/N 11001-UP
HYDRAULIC AND AIR TANK COVER

Item	Part No.	Description	Qty	Options
1	235-54-31411	HOOD	1	SN:11001--
2	01010-51225	BOLT	6	SN:11001--
3	232-43-58360	WASHER	3	SN:12095--
	232-43-58360	WASHER	6	SN:11001--12094
3A	01643-31232	WASHER	3	SN:12095--
4	235-54-31451	COVER	1	SN:11001--
5	01010-51225	BOLT	4	SN:11001--
6	01643-31232	WASHER	4	SN:11001--
7	235-54-31470	CATCHER,BALL	2	SN:11001--
8	01236-40408	SCREW	4	SN:11001--
9	01236-40412	SCREW	4	SN:11001--
10	01580-10403	NUT	4	SN:11001--
11	235-54-31422	COVER,FRONT	1	SN:12095--
	235-06-35710	COVER,FRONT	1	SN:12021--12094
	235-54-31420	COVER,FRONT	1	SN:11001--12020
12	01010-51225	BOLT	4	SN:11001--
13	232-43-58360	WASHER	4	SN:11001--
14	235-54-31350	COVER,REAR	1	SN:11001--
15	01010-51235	BOLT	4	SN:11001--
16	01643-31232	WASHER	4	SN:11001--
17	235-54-31431	COVER,L.H.	1	SN:11001--
18	235-54-31460	· COVER (WELDED)	1	SN:11001--
19	233-54-22520	SPRING	1	SN:11001--
20	04205-10616	PIN	2	SN:11001--
21	04050-11610	PIN,COTTER	2	SN:11001--
22	235-54-31440	COVER,R.H.	1	SN:11001--
23	01010-51225	BOLT	12	SN:11001--

Printed By : Dwi Iswanto (airafather6107170)

HYDRAULIC AND AIR TANK COVER

Item	Part No.	Description	Qty	Options
24	232-43-58360	WASHER	12	SN:11001--

Printed By : Dwi Iswanto (airafather6107170)

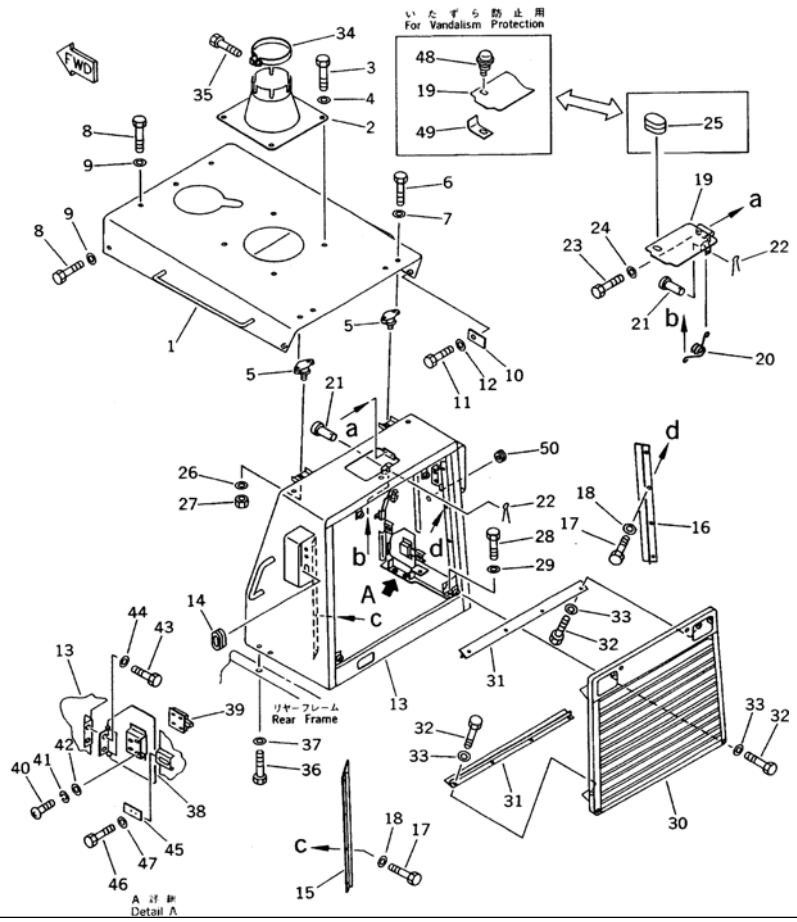

GD825A-2 S/N 11001-UP

ENGINE HOOD AND RADIATOR GRILLE(#11001-12000)

Item	Part No.	Description	Qty	Options
1	235-54-31310	HOOD	1	SN:11001--12000
2	235-54-21131	SUPPORT	1	SN:11001--12000
3	01010-51230	BOLT	4	SN:11001--@
4	232-43-58360	WASHER	4	SN:11001--@
5	235-54-31340	CUSHION	2	SN:11001--@
6	01010-51020	BOLT	4	SN:11001--@
7	01643-51032	WASHER	4	SN:11001--@
8	01010-51225	BOLT	5	SN:11001--@
9	232-43-58360	WASHER	5	SN:11001--@
10	235-54-21890	PLATE	2	SN:11001--@
11	01010-51225	BOLT	2	SN:11001--@
12	01643-31232	WASHER	2	SN:11001--@
13	235-54-31320	GRILLE	1	SN:11001--12000
14	08037-03614	GROMMET	2	SN:11001--@
15	235-54-21830	PLATE	1	SN:11001--@
16	235-54-21330	PLATE	1	SN:11001--@
17	01010-51225	BOLT	8	SN:11001--@
18	01643-31232	WASHER	8	SN:11001--@
19	235-54-21610	COVER	1	SN:11001--@
20	233-54-22520	SPRING	1	SN:11001--@
21	04205-10616	PIN	2	SN:11001--@
22	04050-11610	PIN,COTTER	2	SN:11001--@
23	01010-51225	BOLT	2	SN:11001--@
24	01643-31232	WASHER	2	SN:11001--@
25	09415-01610	CAP	1	SN:11001--@
26	01643-31232	WASHER	2	SN:11001--@
27	01580-11210	NUT	2	SN:11001--@

Printed By : Dwi Iswanto (airafather6107170)

ENGINE HOOD AND RADIATOR GRILLE(#11001-12000)

Item	Part No.	Description	Qty	Options
28	01010-51630	BOLT	6	SN:11001--@
29	01643-31645	WASHER	6	SN:11001--@
30	235-54-31330	COVER	1	SN:11001--@
31	235-54-21340	PLATE	2	SN:11001--@
32	01010-51225	BOLT	12	SN:11001--@
33	01643-31232	WASHER	12	SN:11001--@
34	235-01-11430	BAND	1	SN:11001--@
35	01010-51035	BOLT	1	SN:11001--@
36	01010-51240	BOLT	4	SN:11001--@
37	01643-31232	WASHER	4	SN:11001--@
38	235-54-31670	COVER	1	SN:11001--@
39	234-54-32631	CATCH	1	SN:11001--@
40	01220-40512	SCREW	4	SN:11001--@
41	01601-20513	WASHER,SPRING	4	SN:11001--@
42	01642-20508	WASHER	4	SN:11001--@
43	01010-51225	BOLT	2	SN:11001--@
44	01643-31232	WASHER	2	SN:11001--@
45	235-54-21771	PLATE	1	SN:11001--@
46	01010-51235	BOLT	2	SN:11001--@
47	01643-31232	WASHER	2	SN:11001--@
48	232-855-1870	LOCK	1	SN:11001--@
49	235-54-21640	STOPPER	1	SN:11001--@
50	09415-01008	CAP	1	SN:11001--@

Printed By : Dwi Iswanto (airafather6107170)

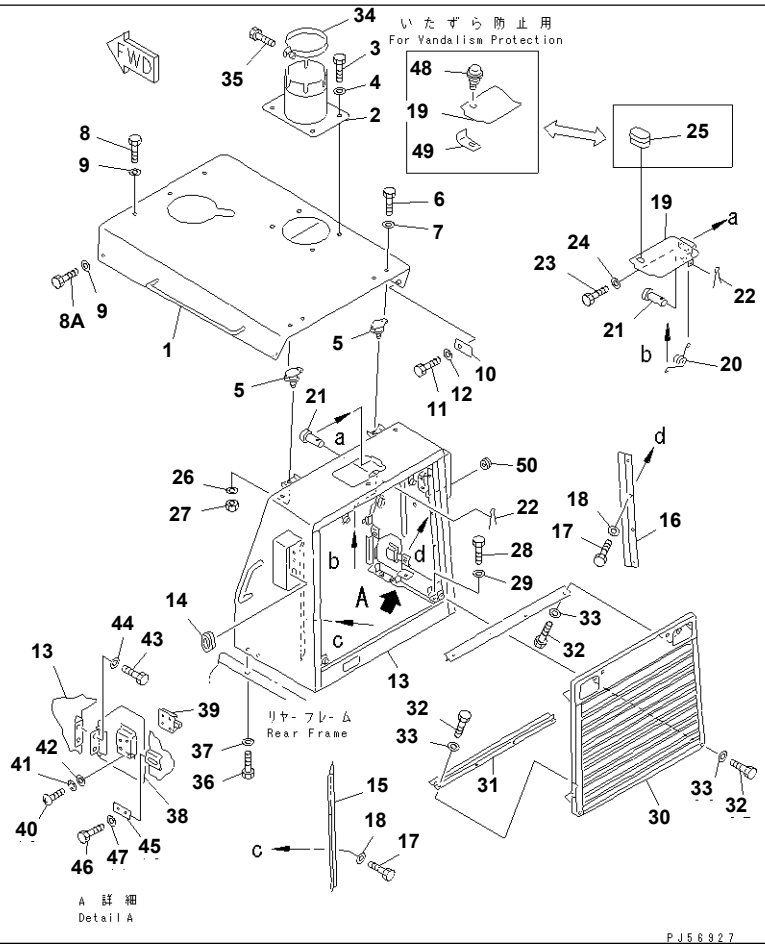

Ref. 5111A **Page 150070**

GD825A-2 S/N 11001-UP

ENGINE HOOD AND RADIATOR GRILLE(#12001-.)

Item	Part No.	Description	Qty	Options
1	235-54-31311	HOOD	1	SN:12001--.
2	235-54-21132	SUPPORT	1	SN:12001--@
3	01010-51230	BOLT	4	SN:11001--@
4	232-43-58360	WASHER	4	SN:11001--@
5	235-54-31340	CUSHION	2	SN:11001--@
6	01010-51020	BOLT	4	SN:11001--@
7	234-54-13252	WASHER	4	SN:12095--@
	□01643-51032	WASHER	4	SN:11001--12094
8	01010-51225	BOLT	3	SN:12095--@
	01010-51225	BOLT	5	SN:11001--12094
8A	01010-51220	BOLT	2	SN:12095--@
9	232-43-58360	WASHER	5	SN:11001--@
10	235-54-21890	PLATE	2	SN:11001--@
11	01010-51225	BOLT	2	SN:11001--@
12	01643-31232	WASHER	2	SN:11001--@
13	235-54-31321	GRILLE	1	SN:12001--.
14	08037-03614	GROMMET	2	SN:11001--@
15	235-54-21830	PLATE	1	SN:11001--@
16	235-54-21330	PLATE	1	SN:11001--@
17	01010-51225	BOLT	8	SN:11001--@
18	01643-31232	WASHER	8	SN:11001--@
19	235-54-21610	COVER	1	SN:11001--.
20	233-54-22520	SPRING	1	SN:11001--@
21	04205-10616	PIN	2	SN:11001--@
22	04050-11610	PIN,COTTER	2	SN:11001--@
23	01010-51225	BOLT	2	SN:11001--@
24	01643-31232	WASHER	2	SN:11001--@

Ref. 5111A **Page 150070**

ENGINE HOOD AND RADIATOR GRILLE(#12001-.)

Item	Part No.	Description	Qty	Options
25	09415-01610	CAP	1	SN:11001--@
26	01643-31232	WASHER	2	SN:11001--@
27	01580-11210	NUT	2	SN:11001--@
28	01010-51630	BOLT	6	SN:11001--@
29	01643-31645	WASHER	6	SN:11001--@
30	235-54-31330	COVER	1	SN:11001--.
31	235-54-21340	PLATE	2	SN:11001--@
32	01010-51225	BOLT	12	SN:11001--@
33	01643-31232	WASHER	12	SN:11001--@
34	235-01-11430	BAND	1	SN:11001--@
35	01010-51035	BOLT	1	SN:11001--@
36	01010-51240	BOLT	4	SN:11001--@
37	01643-31232	WASHER	4	SN:11001--@
38	235-54-31670	COVER	1	SN:11001--@
39	234-54-32631	CATCH	1	SN:11001--@
40	01220-40512	SCREW	4	SN:11001--@
41	01601-20513	WASHER,SPRING	4	SN:11001--@
42	01642-20508	WASHER	4	SN:11001--@
43	01010-51225	BOLT	2	SN:11001--@
44	01643-31232	WASHER	2	SN:11001--@
45	235-54-21771	PLATE	1	SN:11001--@
46	01010-51235	BOLT	2	SN:11001--@
47	01643-31232	WASHER	2	SN:11001--@
48	232-855-1870	LOCK	1	SN:11001--@
49	235-54-21640	STOPPER	1	SN:11001--@
50	09415-01008	CAP	1	SN:11001--@

Printed By : Dwi Iswanto (airafather6107170)

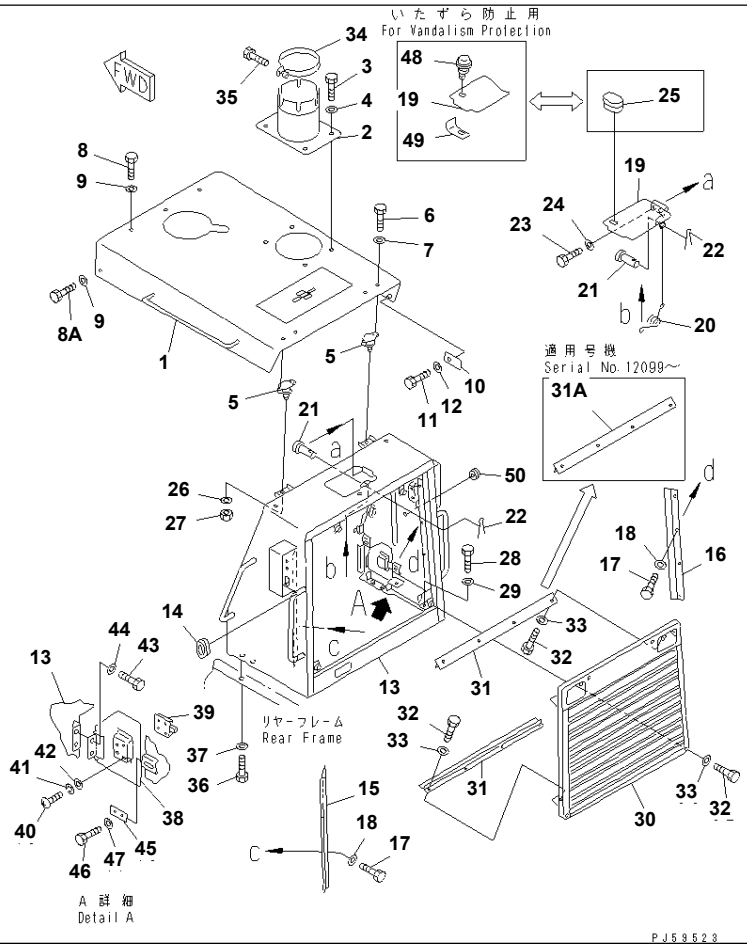

GD825A-2 S/N 11001-UP

ENGINE HOOD AND RADIATOR GRILLE(#.-)

Item	Part No.	Description	Qty	Options
1	235-54-31312	HOOD	1	SN:.--
2	235-54-21132	SUPPORT	1	SN:12001--
3	01010-51230	BOLT	4	SN:11001--
4	232-43-58360	WASHER	4	SN:11001--
5	235-54-31340	CUSHION	2	SN:11001--
6	01010-51020	BOLT	4	SN:11001--
7	234-54-13252	WASHER	4	SN:12095--
8	01010-51225	BOLT	3	SN:12095--
8A	01010-51220	BOLT	2	SN:12095--
9	232-43-58360	WASHER	5	SN:11001--
10	235-54-21890	PLATE	2	SN:11001--
11	01010-51225	BOLT	2	SN:11001--
12	01643-31232	WASHER	2	SN:11001--
13	235-54-31323	GRILLE	1	SN:12099--
	235-54-31322	GRILLE	1	SN:.--12098
	235-5431480	GRILLE,(WITH RIPPER)	1	SN:12099--
14	08037-03614	GROMMET	2	SN:11001--
15	235-54-21830	PLATE	1	SN:11001--
16	235-54-21330	PLATE	1	SN:11001--
17	01010-51225	BOLT	8	SN:11001--
18	01643-31232	WASHER	8	SN:11001--
19	235-54-21611	COVER	1	SN:.--
20	233-54-22520	SPRING	1	SN:11001--
21	04205-10616	PIN	2	SN:11001--
22	04050-11610	PIN,COTTER	2	SN:11001--
23	01010-51225	BOLT	2	SN:11001--
24	01643-31232	WASHER	2	SN:11001--

Printed By : Dwi Iswanto (airafather6107170)

ENGINE HOOD AND RADIATOR GRILLE(#.-)

Item	Part No.	Description	Qty	Options
25	09415-01610	CAP	1	SN:11001--
26	01643-31232	WASHER	2	SN:11001--
27	01580-11210	NUT	2	SN:11001--
28	01010-51630	BOLT	6	SN:11001--
29	01643-31645	WASHER	6	SN:11001--
30	235-54-31331	COVER	1	SN:.--
31	235-54-21340	PLATE	1	SN:12099--
	235-54-21340	PLATE	2	SN:11001--12098
31A	235-54-33640	PLATE	1	SN:12099--
32	01010-51225	BOLT	12	SN:11001--
33	01643-31232	WASHER	12	SN:11001--
34	235-01-11430	BAND	1	SN:11001--
35	01010-51035	BOLT	1	SN:11001--
36	01010-51240	BOLT	4	SN:11001--
37	01643-31232	WASHER	4	SN:11001--
38	235-54-31670	COVER	1	SN:11001--
39	234-54-32631	CATCH	1	SN:11001--
40	01220-40512	SCREW	4	SN:11001--
41	01601-20513	WASHER,SPRING	4	SN:11001--
42	01642-20508	WASHER	4	SN:11001--
43	01010-51225	BOLT	2	SN:11001--
44	01643-31232	WASHER	2	SN:11001--
45	235-54-21771	PLATE	1	SN:11001--
46	01010-81235	BOLT	2	SN:.--
	□01010-51235	BOLT	2	SN:11001--.
47	01643-31232	WASHER	2	SN:11001--
48	232-855-1870	LOCK	1	SN:11001--
49	235-54-21640	STOPPER	1	SN:11001--
50	09415-01008	CAP	1	SN:11001--

Printed By : Dwi Iswanto (airafather6107170)

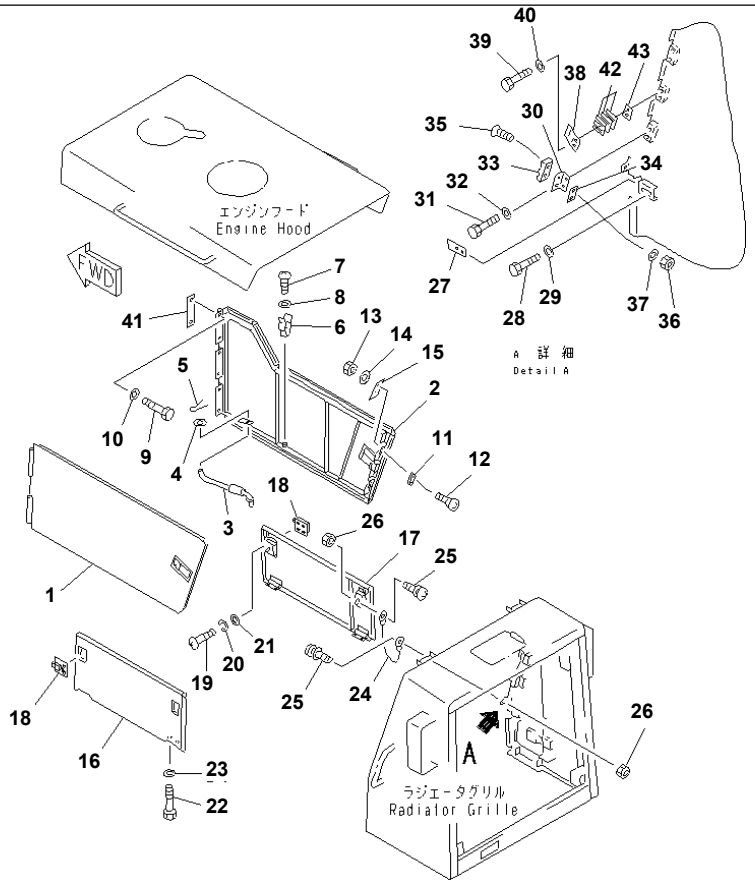

GD825A-2 S/N 11001-UP
ENGINE SIDE PANEL

Item	Part No.	Description	Qty	Options
1	235-54-31711	PANEL,SIDE¤ L.H.	1	SN:12001--
	235-54-31790	· HINGE (WELDED)	2	SN:12001--
	421-54-11363	· LOCK ASS'Y	1	SN:12001--
	235-54-31710	PANEL,SIDE¤ L.H.	1	SN:11001--12000
2	235-54-31721	PANEL,SIDE¤ R.H.	1	SN:12001--
	235-54-31790	· HINGE (WELDED)	3	SN:12001--
	421-54-11363	· LOCK ASS'Y	1	SN:12001--
	235-54-31720	PANEL,SIDE¤ R.H.	1	SN:11001--12000
3	235-54-21760	BAR	2	SN:11001--
4	01643-31032	WASHER	2	SN:11001--
5	04050-13018	PIN,COTTER	2	SN:11001--
6	283-06-17130	CLIP	2	SN:11001--
7	01220-40610	SCREW	2	SN:11001--
8	01641-20608	WASHER	2	SN:11001--
9	01010-51225	BOLT	10	SN:11001--
10	01643-31232	WASHER	10	SN:11001--
11	566-54-14420	STOPPER	4	SN:11001--
12	01225-40820	SCREW	8	SN:11001--
13	01580-00806	NUT	8	SN:11001--
14	566-54-13570	WASHER	8	SN:11001--
15	203-54-52610	PLATE	4	SN:11001--
16	235-54-31730	PLATE,LOWER¤ L.H.	1	SN:11001--
17	235-54-31740	PLATE,LOWER¤ R.H.	1	SN:11001--
18	234-54-32631	CATCH	4	SN:11001--
19	01220-40512	SCREW	16	SN:11006--
	01220-50512	SCREW	16	SN:11001--11005
20	01601-20513	WASHER,SPRING	16	SN:11001--

Printed By : Dwi Iswanto (airafather6107170)

ENGINE SIDE PANEL

Item	Part No.	Description	Qty	Options
21	01642-20508	WASHER	16	SN:11001--
22	01010-51225	BOLT	8	SN:11001--
23	01643-31232	WASHER	8	SN:11001--
24	235-54-31750	ROPE,WIRE	4	SN:11001--
25	01023-10510	SCREW	8	SN:11001--
26	01580-10504	NUT	8	SN:11001--
27	235-54-21771	PLATE	2	SN:11001--
28	01010-51014	BOLT	4	SN:11001--
29	01643-31032	WASHER	4	SN:11001--
30	235-54-31930	BRACKET	4	SN:11006--
	23F-54-15340	BRACKET	4	SN:11001--11005
31	01010-51020	BOLT	8	SN:11001--
32	01643-31032	WASHER	8	SN:11001--
33	566-54-13410	STRIKER	4	SN:11001--
34	203-54-56790	PLATE	4	SN:11001--
35	01225-40820	SCREW	8	SN:11001--
36	01580-00806	NUT	8	SN:11001--
37	566-54-13570	WASHER	8	SN:11001--
38	235-54-31941	PLATE	2	SN:12001--
	235-54-31940	PLATE	2	SN:11006--12000
	23F-54-15350	PLATE	2	SN:11001--11005
39	01010-81025	BOLT	4	SN:12001--
	01010-51020	BOLT	4	SN:11001--12000
40	01643-31032	WASHER	4	SN:11001--
41	235-54-00010	SHIM ASS'Y	1	SN:11006--
	☆	· SHIM	8	SN:11006--
42	235-54-00020	SHIM ASS'Y	1	SN:11019--
	☆	· SHIM¤ 1.0MM	8	SN:11019--
43	235-54-31970	PLATE	2	SN:12001--

Printed By : Dwi Iswanto (airafather6107170)

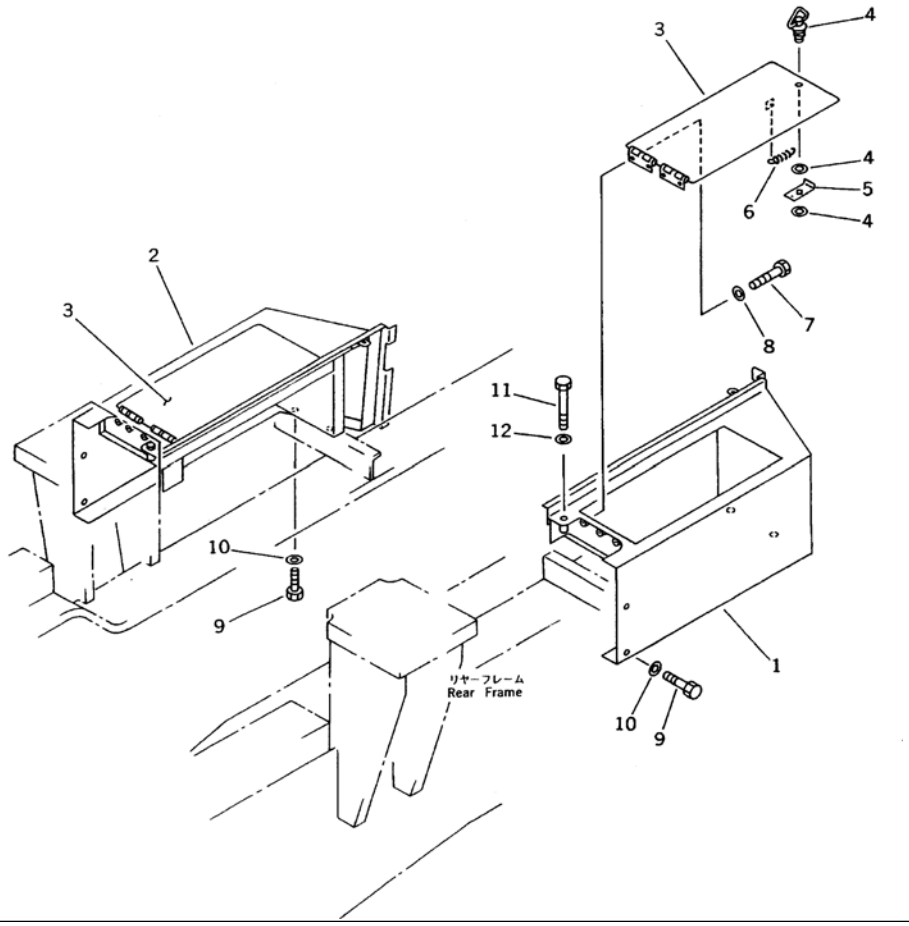

Ref. 5141 **Page 150100**

GD825A-2 S/N 11001-UP
BATTERY COVER

Item	Part No.	Description	Qty	Options
1	235-54-31520	COVER,BATTERY¤ L.H.	1	SN:11001--
2	235-54-31530	COVER,BATTERY¤ R.H.	1	SN:11001--
3	235-54-31540	COVER	2	SN:11001--
4	235-54-21790	HANDLE	2	SN:11001--
5	235-54-21810	PLATE	2	SN:11001--
6	236-54-22460	SPRING	2	SN:11001--
7	01010-51225	BOLT	8	SN:11001--
8	01643-31232	WASHER	8	SN:11001--
9	01010-51225	BOLT	8	SN:11001--
10	01643-31232	WASHER	8	SN:11001--
11	01010-51260	BOLT	2	SN:12095--
	□01010-51265	BOLT	2	SN:11001--12094
12	01643-31232	WASHER	2	SN:12095--
	□232-43-58360	WASHER	2	SN:11001--12094

Printed By : Dwi Iswanto (airafather6107170)

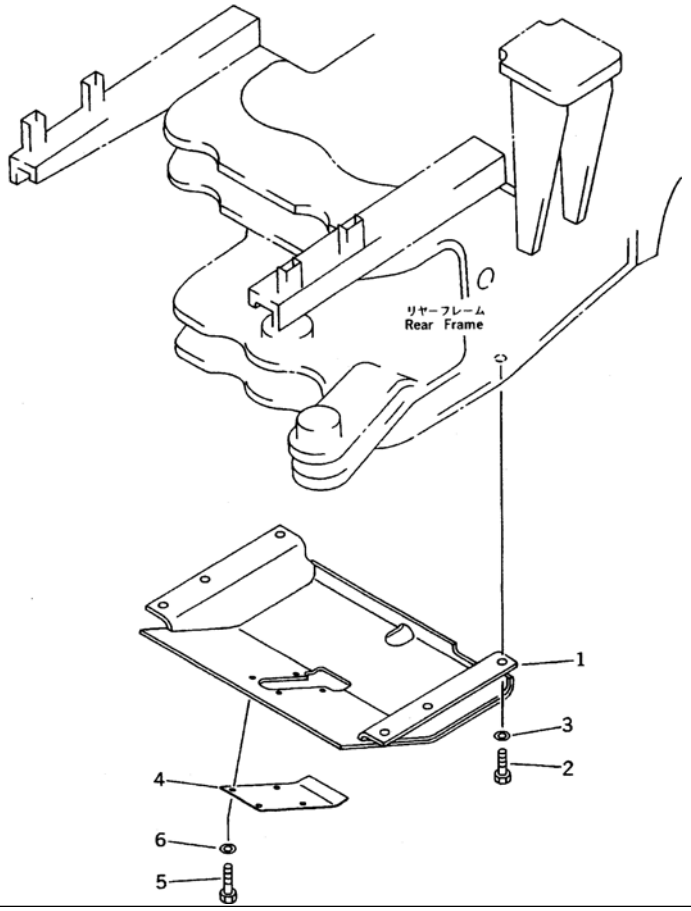

Ref. 5151 **Page 150110**

GD825A-2 S/N 11001-UP
TRANSMISSION UNDER GUARD

Item	Part No.	Description	Qty	Options
1	235-915-3110	GUARD	1	SN:11001--
2	01010-52450	BOLT	6	SN:11001--
3	01643-32460	WASHER	6	SN:11001--
4	235-915-3130	PLATE	1	SN:11001--
5	01010-51030	BOLT	4	SN:11001--
6	234-54-13252	WASHER	4	SN:11001--

Printed By : Dwi Iswanto (airafather6107170)

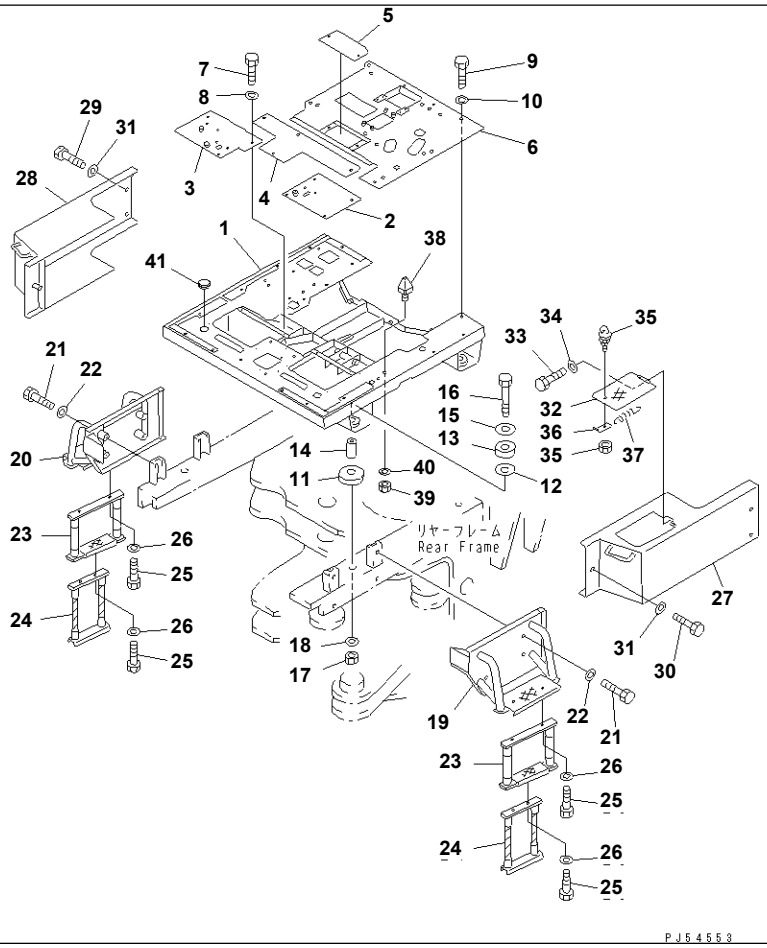

Ref. 5201 **Page 150120**

GD825A-2 S/N 11001-UP
OPERATOR'S COMPARTMENT (1/2) (FLOOR FRAME AND WIRE STEP)(#11001-11013)

Item	Part No.	Description	Qty	Options
1	235-54-31110	FRAME,FLOOR	1	SN:11001--11013
	235-957-3651	FRAME,FLOOR (WITHOUT CAB)	1	SN:11001--@
2	235-54-31270	COVER	1	SN:11001--@
3	235-54-31150	COVER	1	SN:11001--@
4	235-54-31160	COVER	1	SN:11001--11013
5	235-54-31260	COVER	1	SN:11001--11013
6	235-54-31120	COVER	1	SN:11001--11013
7	01010-50816	BOLT	14	SN:11001--11013
8	01643-30823	WASHER	14	SN:11001--11013
9	01010-51225	BOLT	6	SN:11001--@
10	01643-31232	WASHER	6	SN:11001--@
11	565-54-12810	CUSHION	4	SN:11001--@
12	23B-01-11240	CUSHION	4	SN:11001--@
13	565-54-12820	CUSHION	4	SN:11001--@
14	23A-01-11250	SPACER	4	SN:11001--@
15	234-54-11480	PLATE	4	SN:11001--@
16	01011-51605	BOLT	4	SN:11001--@
17	01580-11613	NUT	4	SN:11001--@
18	01643-31645	WASHER	4	SN:11001--@
19	235-54-31810	COVER,L.H.	1	SN:11001--@
20	235-54-31820	COVER,R.H.	1	SN:11001--@
21	01010-51255	BOLT	8	SN:11001--@
22	01643-31232	WASHER	8	SN:11001--@
23	235-54-11980	STEP,WIRE	2	SN:11001--11013
24	233-54-21311	STEP,WIRE	2	SN:11001--11013
25	01010-51025	BOLT	8	SN:11001--11013

Printed By : Dwi Iswanto (airafather6107170)

OPERATOR'S COMPARTMENT (1/2) (FLOOR FRAME AND WIRE STEP)(#11001-11013)

Item	Part No.	Description	Qty	Options
26	01643-31032	WASHER	8	SN:11001--11013
27	235-54-31760	COVER,L.H.	1	SN:11001--11013
28	235-54-31770	COVER,R.H.	1	SN:11001--@
29	01010-51225	BOLT	4	SN:11001--@
30	01010-51255	BOLT	2	SN:11001--@
31	01643-31232	WASHER	6	SN:11001--@
32	235-54-31780	COVER	1	SN:11001--11013
33	01010-51220	BOLT	2	SN:11001--@
34	01643-31232	WASHER	2	SN:11001--@
35	235-54-21790	HANDLE	1	SN:11001--@
36	235-54-21810	PLATE	1	SN:11001--@
37	236-54-22460	SPRING	1	SN:11001--@
38	235-54-31680	BAR	1	SN:11001--@
39	01580-11210	NUT	1	SN:11001--@
40	01643-31232	WASHER	1	SN:11001--@
41	09415-03614	CAP	2	SN:11001--@

Printed By : Dwi Iswanto (airafather6107170)

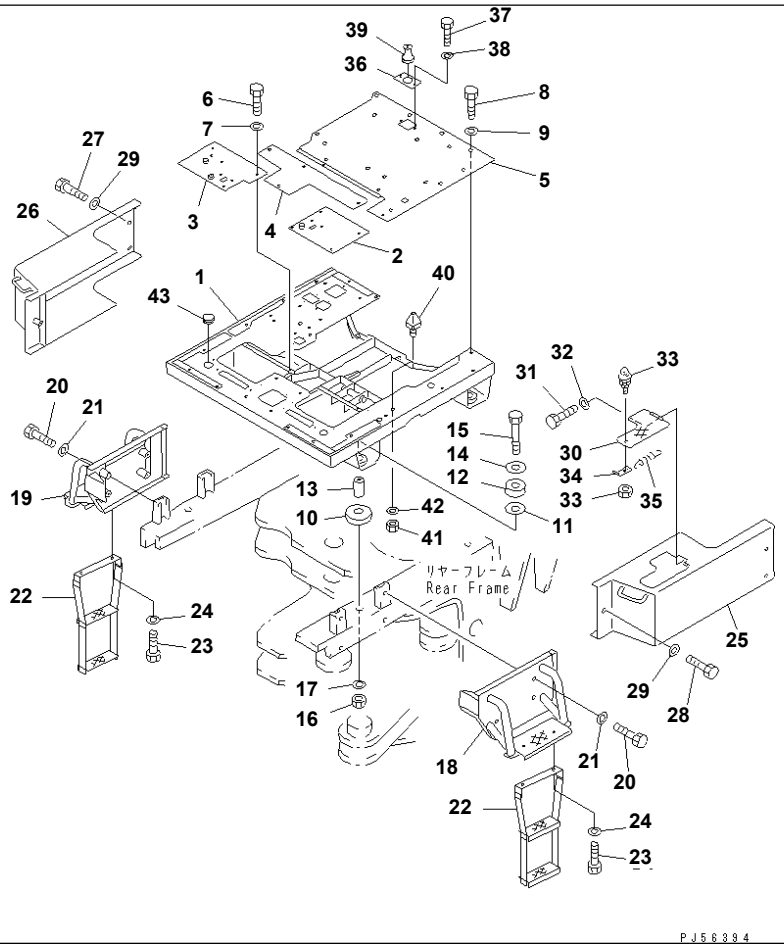

GD825A-2 S/N 11001-UP

OPERATOR'S COMPARTMENT (1/2) (FLOOR FRAME AND WIRE STEP)(#11014-)

Item	Part No.	Description	Qty	Options
1	235-54-31112	FRAME,FLOOR	1	SN:12023--
	235-54-31111	FRAME,FLOOR	1	SN:11014--12022
	235-957-3651	FRAME,FLOOR (WITHOUT CAB)	1	SN:11001--
2	235-54-31270	COVER	1	SN:11001--
3	235-54-31150	COVER	1	SN:11001--
4	235-54-31161	COVER	1	SN:11014--
5	235-54-31121	COVER	1	SN:11014--
6	01010-50816	BOLT	12	SN:11014--
7	01643-30823	WASHER	12	SN:11014--
8	01010-51225	BOLT	6	SN:11001--
9	01643-31232	WASHER	6	SN:11001--
10	565-54-12810	CUSHION	4	SN:11001--
11	23B-01-11240	CUSHION	4	SN:11001--
12	565-54-12820	CUSHION	4	SN:11001--
13	23A-01-11250	SPACER	4	SN:11001--
14	234-54-11480	PLATE	4	SN:11001--
15	01011-51605	BOLT	4	SN:11001--
16	01580-11613	NUT	4	SN:11001--
17	01643-31645	WASHER	4	SN:11001--
18	235-54-31810	COVER,L.H.	1	SN:11001--
19	235-54-31820	COVER,R.H.	1	SN:11001--
20	01010-51260	BOLT	8	SN:12095--
	□01010-51255	BOLT	8	SN:11001--12094
21	01643-31232	WASHER	8	SN:11001--
22	235-54-32100	STEP,WIRE	2	SN:11014--
23	01010-51025	BOLT	4	SN:11014--

Printed By : Dwi Iswanto (airafather6107170)

OPERATOR'S COMPARTMENT (1/2) (FLOOR FRAME AND WIRE STEP)(#11014-)

Item	Part No.	Description	Qty	Options
24	01643-31032	WASHER	4	SN:11014--
25	235-54-31761	COVER,L.H.	1	SN:11014--
26	235-54-31770	COVER,R.H.	1	SN:11001--
27	01010-51225	BOLT	4	SN:11001--
28	01010-51255	BOLT	2	SN:11001--
29	232-43-58360	WASHER	6	SN:12095--
	□01643-31232	WASHER	6	SN:11001--12094
30	235-54-31781	COVER	1	SN:11014--
31	01010-51220	BOLT	2	SN:11001--
32	01643-31232	WASHER	2	SN:11001--
33	235-54-21790	HANDLE	1	SN:11001--
34	235-54-21810	PLATE	1	SN:11001--
35	236-54-22460	SPRING	1	SN:11001--
36	235-54-32210	PLATE	1	SN:11014--
37	01010-50612	BOLT	2	SN:11014--
38	01643-30623	WASHER	2	SN:11014--
39	08037-11025	GROMMET	1	SN:11014--
40	235-54-31680	BAR	1	SN:11001--
41	01580-11210	NUT	1	SN:11001--
42	01643-31232	WASHER	1	SN:11001--
43	09415-03614	CAP	2	SN:11001--

Printed By : Dwi Iswanto (airafather6107170)

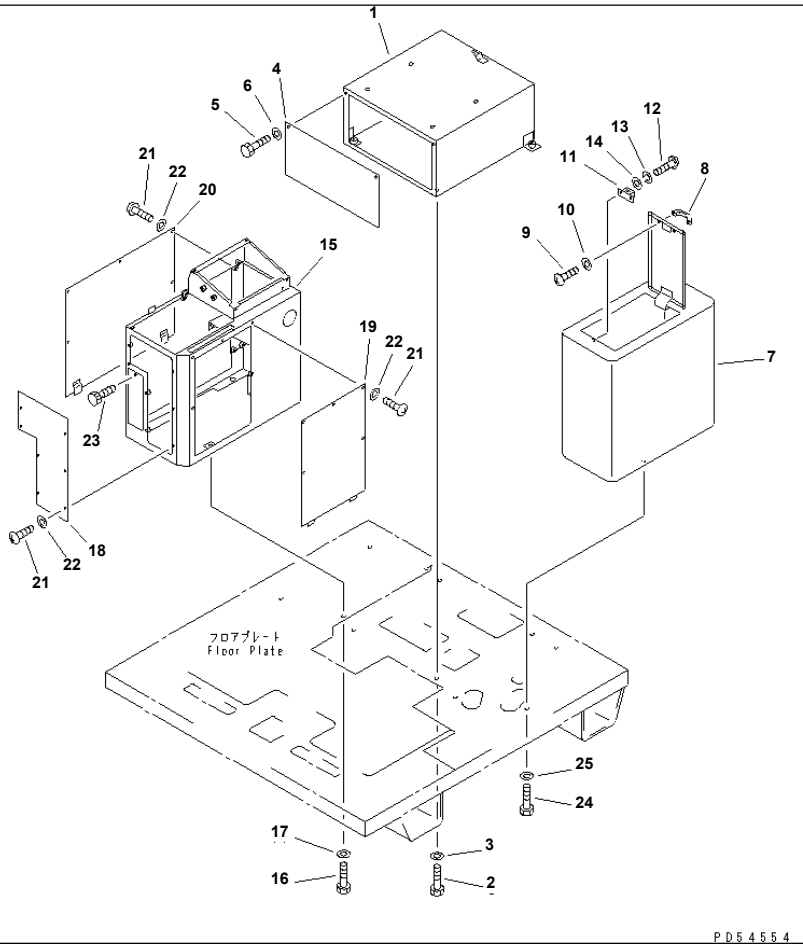

GD825A-2 S/N 11001-UP

OPERATOR'S COMPARTMENT (2/2) (SEAT BRACKET AND CONTROL BOX)(#11001-11013)

Item	Part No.	Description	Qty	Options
1	235-54-31560	BRACKET	1	SN:11001--11013
2	01010-51220	BOLT	4	SN:11001--11013
3	01643-31232	WASHER	4	SN:11001--@
4	235-54-31590	COVER	1	SN:11001--11013
5	01010-50816	BOLT	2	SN:11001--11013
6	01643-30823	WASHER	2	SN:11001--11013
7	235-54-31570	BOX	1	SN:11001--@
8	235-54-11390	HANDLE	1	SN:11001--@
9	01220-40408	SCREW	2	SN:11001--@
10	01601-20410	WASHER,SPRING	2	SN:11001--@
11	09452-14503	CATCHER	1	SN:11001--@
12	01220-40308	SCREW	2	SN:11001--@
13	01601-20307	WASHER,SPRING	2	SN:11001--@
14	01641-20305	WASHER	2	SN:11001--@
15	235-54-31170	BOX,R.H.	1	SN:11001--@
16	01010-51225	BOLT	4	SN:11001--@
17	01643-31232	WASHER	4	SN:11001--@
18	235-54-31180	PLATE	1	SN:11001--@
19	235-54-31190	PLATE	1	SN:11001--@
20	235-54-31220	COVER	1	SN:11001--@
21	01220-40612	SCREW	17	SN:11001--@
22	01643-30623	WASHER	17	SN:11001--@
23	235-54-11540	KNOB	1	SN:11001--@
24	01010-51220	BOLT	3	SN:11001--@
25	01643-31232	WASHER	3	SN:11001--@

Printed By : Dwi Iswanto (airafather6107170)

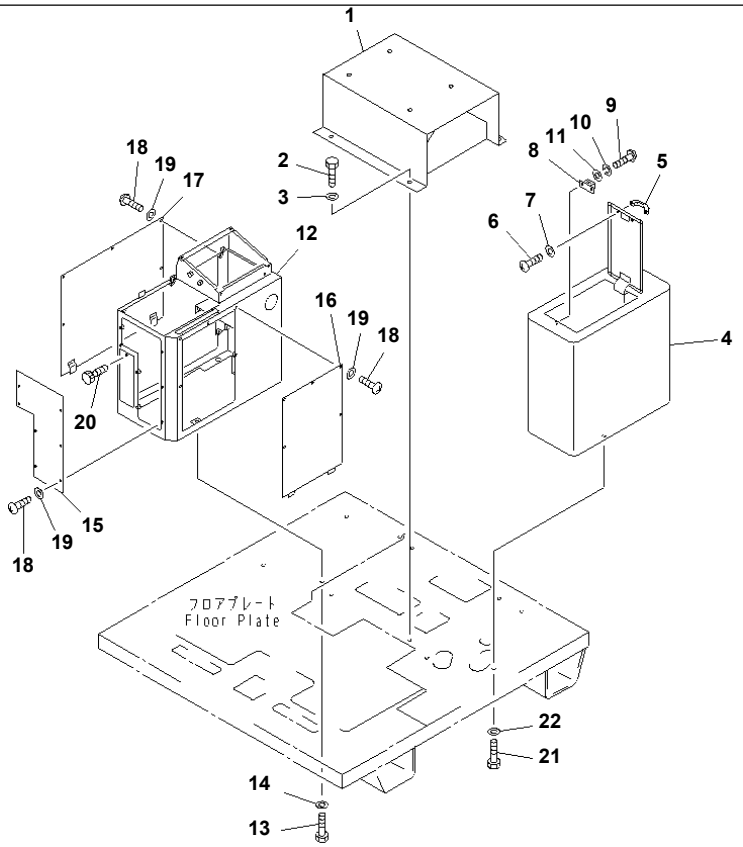

PC56395

GD825A-2 S/N 11001-UP

OPERATOR'S COMPARTMENT (2/2) (SEAT BRACKET AND CONTROL BOX)(#11014-12020)

Item	Part No.	Description	Qty	Options
1	235-54-31561	BRACKET	1	SN:11014--@
2	01010-51225	BOLT	4	SN:11014--@
3	01643-31232	WASHER	4	SN:11001--@
4	235-54-31570	BOX	1	SN:11001--@
5	235-54-11390	HANDLE	1	SN:11001--@
6	01220-40408	SCREW	2	SN:11001--@
7	01601-20410	WASHER,SPRING	2	SN:11001--@
8	09452-14503	CATCHER	1	SN:11001--@
9	01220-40308	SCREW	2	SN:11001--@
10	01601-20307	WASHER,SPRING	2	SN:11001--@
11	01641-20305	WASHER	2	SN:11001--@
12	235-54-31170	BOX,R.H.	1	SN:11001--12021
13	01010-51225	BOLT	4	SN:11001--@
14	01643-31232	WASHER	4	SN:11001--@
15	235-54-31180	PLATE	1	SN:11001--12021
16	235-54-31190	PLATE	1	SN:11001--12021
17	235-54-31220	COVER	1	SN:11001--@
18	01220-40612	SCREW	17	SN:11001--@
19	01643-30623	WASHER	17	SN:11001--@
20	235-54-11540	KNOB	1	SN:11001--@
21	01010-51220	BOLT	3	SN:11001--@
22	01643-31232	WASHER	3	SN:11001--@

Ref. 5203A Page 150150

Printed By : Dwi Iswanto (airafather6107170)

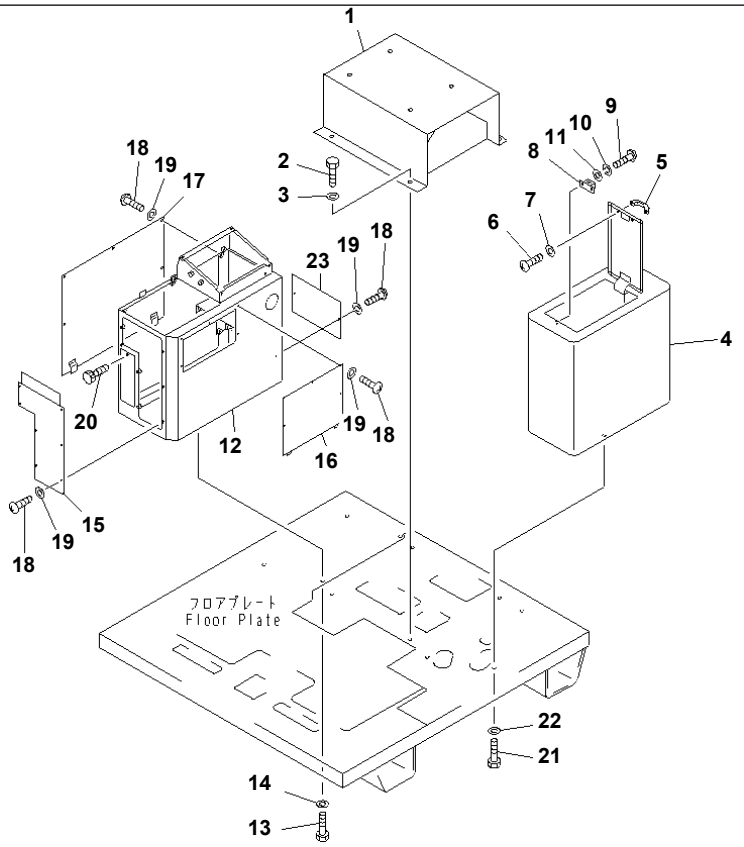

PR58185

GD825A-2 S/N 11001-UP

OPERATOR'S COMPARTMENT (2/2) (SEAT BRACKET AND CONTROL BOX)(#12021-12094)

Item	Part No.	Description	Qty	Options
1	235-54-31561	BRACKET	1	SN:11014--@
2	01010-51225	BOLT	4	SN:11014--@
3	01643-31232	WASHER	4	SN:11001--@
4	235-54-31570	BOX	1	SN:11001--@
5	235-54-11390	HANDLE	1	SN:11001--@
6	01220-40408	SCREW	2	SN:11001--@
7	01601-20410	WASHER,SPRING	2	SN:11001--@
8	09452-14503	CATCHER	1	SN:11001--@
9	01220-40308	SCREW	2	SN:11001--@
10	01601-20307	WASHER,SPRING	2	SN:11001--@
11	01641-20305	WASHER	2	SN:11001--@
12	235-54-32710	BOX,R.H.	1	SN:12021--12094
13	01010-51225	BOLT	4	SN:11001--@
14	01643-31232	WASHER	4	SN:11001--@
15	235-54-32740	PLATE	1	SN:12021--12094
16	235-54-32720	PLATE	1	SN:12021--12094
17	235-54-31220	COVER	1	SN:11001--@
18	01220-40612	SCREW	17	SN:11001--@
19	01643-30623	WASHER	17	SN:11001--@
20	235-54-11540	KNOB	1	SN:11001--@
21	01010-51220	BOLT	3	SN:11001--@
22	01643-31232	WASHER	3	SN:11001--@
23	235-54-32730	PLATE	1	SN:12021--@

Printed By : Dwi Iswanto (airafather6107170)

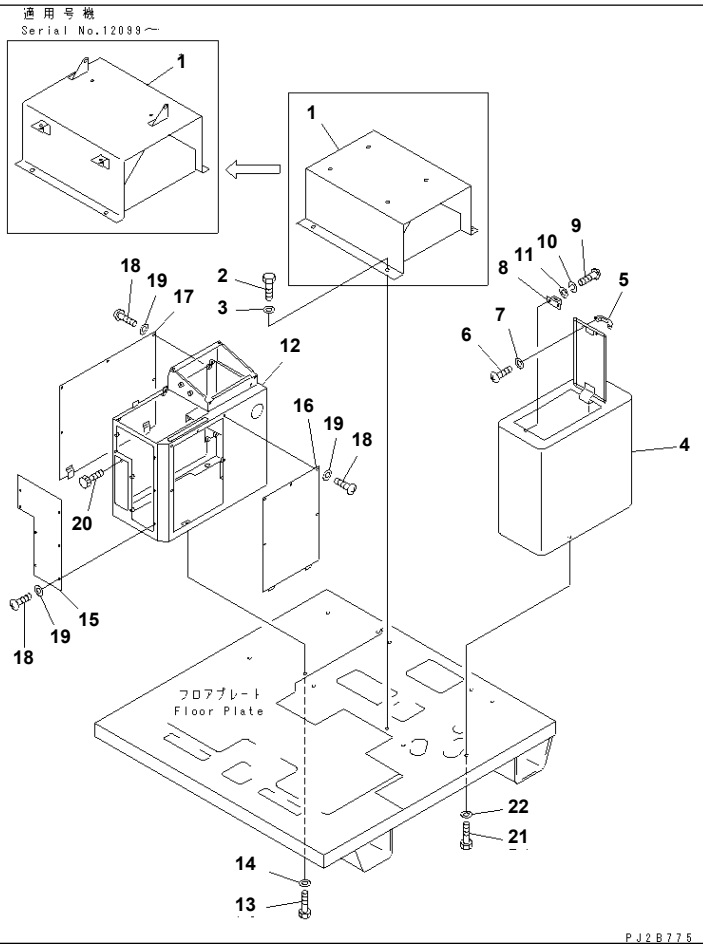

GD825A-2 S/N 11001-UP

OPERATOR'S COMPARTMENT (2/2) (SEAT BRACKET AND CONTROL BOX)(#12095-)

Item	Part No.	Description	Qty	Options
1	235-54-31580	BRACKET	1	SN:12099--
	235-54-31561	BRACKET	1	SN:11014--12098
2	01010-51225	BOLT	4	SN:11014--
3	01643-31232	WASHER	4	SN:11001--
4	235-54-31570	BOX	1	SN:11001--
5	235-54-11390	HANDLE	1	SN:11001--
6	01220-40408	SCREW	2	SN:11001--
7	01601-20410	WASHER,SPRING	2	SN:11001--
8	09452-14503	CATCHER	1	SN:11001--
9	01220-40308	SCREW	2	SN:11001--
10	01601-20307	WASHER,SPRING	2	SN:11001--
11	01641-20305	WASHER	2	SN:11001--
12	235-54-31170	BOX,R.H.	1	SN:12095--
13	01010-51225	BOLT	4	SN:11001--
14	01643-31232	WASHER	4	SN:11001--
15	235-54-31180	PLATE	1	SN:12095--
16	235-54-31190	PLATE	1	SN:12095--
17	235-54-31220	COVER	1	SN:11001--
18	01220-40612	SCREW	17	SN:11001--
19	01643-30623	WASHER	17	SN:11001--
20	235-54-11540	KNOB	1	SN:11001--
21	01010-51220	BOLT	3	SN:11001--
22	01643-31232	WASHER	3	SN:11001--

Printed By : Dwi Iswanto (airafather6107170)

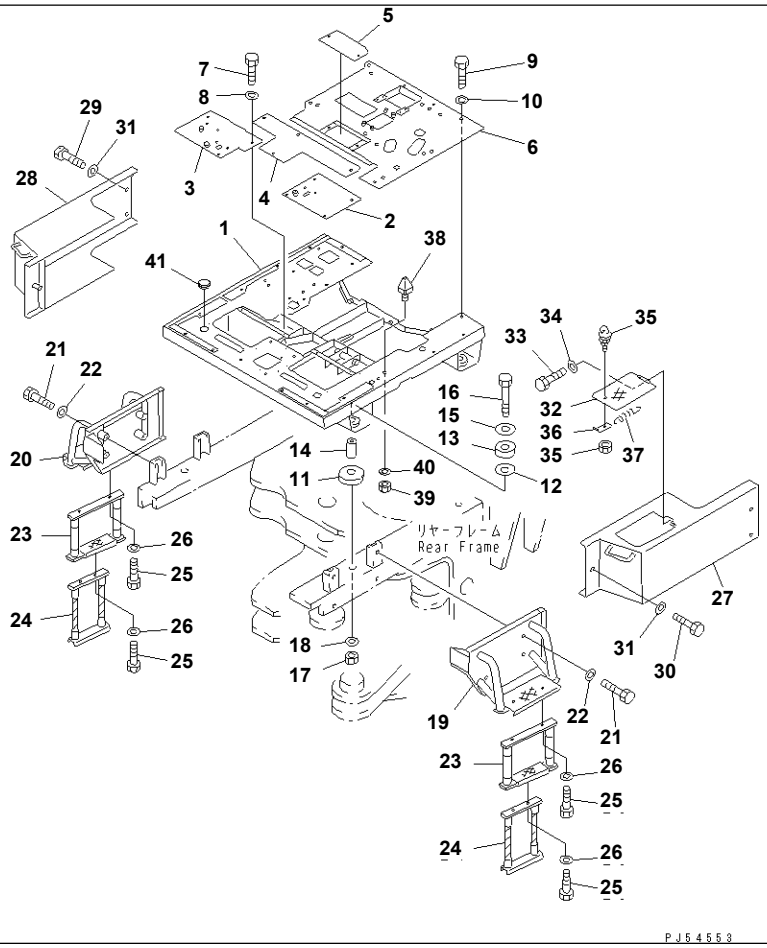

GD825A-2 S/N 11001-UP

OPERATOR'S COMPARTMENT (1/2) (FLOOR FRAME AND WIRE STEP) (WITH AIR CONDITIONER)(#11001-11013)

Item	Part No.	Description	Qty	Options
1	235-54-31110	FRAME,FLOOR	1	SN:11001--11013
2	235-54-31270	COVER	1	SN:11001--@
3	235-54-31150	COVER	1	SN:11001--@
4	235-54-31160	COVER	1	SN:11001--11013
5	235-54-31260	COVER	1	SN:11001--11013
6	235-54-31120	COVER	1	SN:11001--11013
7	01010-50816	BOLT	14	SN:11001--@
8	01643-30823	WASHER	14	SN:11001--@
9	01010-51225	BOLT	6	SN:11001--@
10	01643-31232	WASHER	6	SN:11001--@
11	565-54-12810	CUSHION	4	SN:11001--@
12	23B-01-11240	CUSHION	4	SN:11001--@
13	565-54-12820	CUSHION	4	SN:11001--@
14	23A-01-11250	SPACER	4	SN:11001--@
15	234-54-11480	PLATE	4	SN:11001--@
16	01011-51605	BOLT	4	SN:11001--@
17	01580-11613	NUT	4	SN:11001--@
18	01643-31645	WASHER	4	SN:11001--@
19	235-54-31810	COVER,L.H.	1	SN:11001--@
20	235-54-31820	COVER,R.H.	1	SN:11001--@
21	01010-51255	BOLT	8	SN:11001--@
22	01643-31232	WASHER	8	SN:11001--@
23	235-54-11980	STEP,WIRE	2	SN:11001--11013
24	233-54-21311	STEP,WIRE	2	SN:11001--11013
25	01010-51025	BOLT	8	SN:11001--11013
26	01643-31032	WASHER	8	SN:11001--11013

Printed By : Dwi Iswanto (airafather6107170)

OPERATOR'S COMPARTMENT (1/2) (FLOOR FRAME AND WIRE STEP) (WITH AIR CONDITIONER)(#11001-11013)

Item	Part No.	Description	Qty	Options
27	235-54-31760	COVER,L.H.	1	SN:11001--11013
28	235-54-31770	COVER,R.H.	1	SN:11001--@
29	01010-51225	BOLT	4	SN:11001--@
30	01010-51255	BOLT	2	SN:11001--@
31	01643-31232	WASHER	6	SN:11001--@
32	235-54-31780	COVER	1	SN:11001--11013
33	01010-51220	BOLT	2	SN:11001--@
34	01643-31232	WASHER	2	SN:11001--@
35	235-54-21790	HANDLE	1	SN:11001--@
36	235-54-21810	PLATE	1	SN:11001--@
37	236-54-22460	SPRING	1	SN:11001--@
38	235-54-31680	BAR	1	SN:11001--@
39	01580-11210	NUT	1	SN:11001--@
40	01643-31232	WASHER	1	SN:11001--@
41	09415-03614	CAP	2	SN:11001--@

Printed By : Dwi Iswanto (airafather6107170)

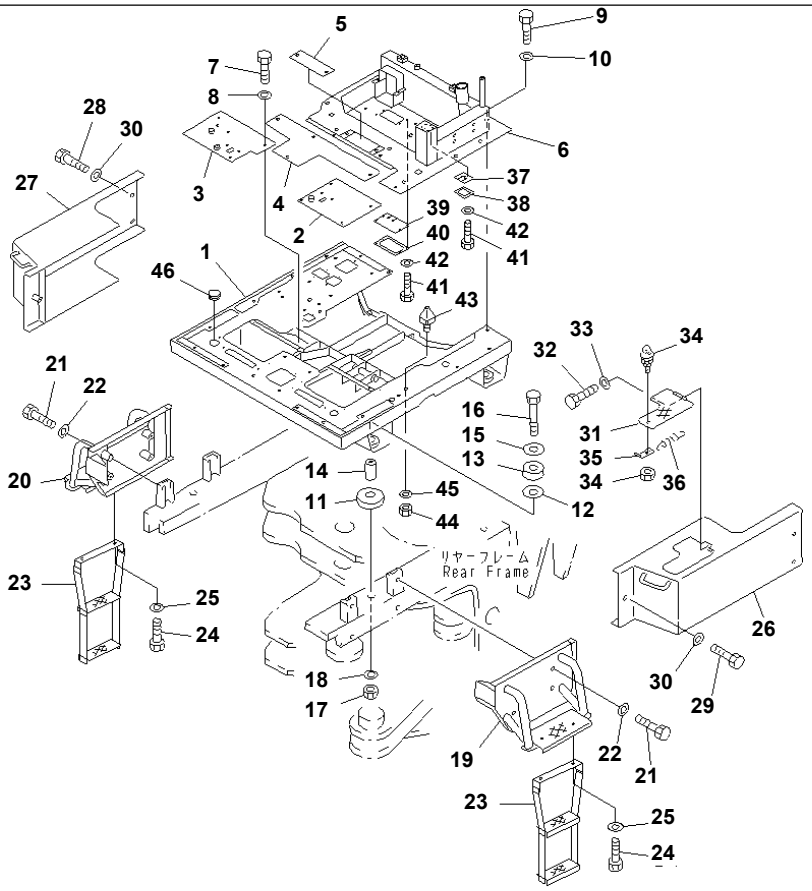

GD825A-2 S/N 11001-UP

OPERATOR'S COMPARTMENT (1/2) (FLOOR FRAME AND WIRE STEP) (WITH AIR CONDITIONER)(#11014-)

Item	Part No.	Description	Qty	Options
1	235-54-31112	FRAME,FLOOR	1	SN:12023--
	235-54-31111	FRAME,FLOOR	1	SN:11014--12022
2	235-54-31270	COVER	1	SN:11001--
3	235-54-31150	COVER	1	SN:11001--
4	235-54-31161	COVER	1	SN:11014--
5	235-54-31261	COVER	1	SN:11014--
6	235-809-4540	COVER	1	SN:11014--
7	01010-50816	BOLT	14	SN:11001--
8	01643-30823	WASHER	14	SN:11001--
9	01010-51225	BOLT	6	SN:11001--
10	01643-31232	WASHER	6	SN:11001--
11	565-54-12810	CUSHION	4	SN:11001--
12	23B-01-11240	CUSHION	4	SN:11001--
13	565-54-12820	CUSHION	4	SN:11001--
14	23A-01-11250	SPACER	4	SN:11001--
15	234-54-11480	PLATE	4	SN:11001--
16	01011-51605	BOLT	4	SN:11001--
17	01580-11613	NUT	4	SN:11001--
18	01643-31645	WASHER	4	SN:11001--
19	235-54-31810	COVER,L.H.	1	SN:11001--
20	235-54-31820	COVER,R.H.	1	SN:11001--
21	01010-51255	BOLT	8	SN:11001--
22	01643-31232	WASHER	8	SN:11001--
23	235-54-32100	STEP,WIRE	2	SN:11014--
24	01010-51025	BOLT	4	SN:11014--
25	01643-31032	WASHER	4	SN:11014--

Printed By : Dwi Iswanto (airafather6107170)

OPERATOR'S COMPARTMENT (1/2) (FLOOR FRAME AND WIRE STEP) (WITH AIR CONDITIONER)(#11014-)

Item	Part No.	Description	Qty	Options
26	235-54-31761	COVER,L.H.	1	SN:11014--
27	235-54-31770	COVER,R.H.	1	SN:11001--
28	01010-51225	BOLT	4	SN:11001--
29	01010-51255	BOLT	2	SN:11014--
30	01643-31232	WASHER	6	SN:11001--
31	235-54-31781	COVER	1	SN:11014--
32	01010-51220	BOLT	2	SN:11001--
33	01643-31232	WASHER	2	SN:11001--
34	235-54-21790	HANDLE	1	SN:11001--
35	235-54-21810	PLATE	1	SN:11001--
36	236-54-22460	SPRING	1	SN:11001--
37	235-809-4740	PLATE	1	SN:11014--
38	235-809-4730	PLATE	1	SN:11014--
39	235-809-4720	PLATE	1	SN:11014--
40	235-809-4710	PLATE	1	SN:11014--
41	01010-51020	BOLT	6	SN:11014--
42	01643-31032	WASHER	6	SN:11014--
43	235-54-31680	BAR	1	SN:11001--
44	01580-11210	NUT	1	SN:11001--
45	01643-31232	WASHER	1	SN:11001--
46	09415-03614	CAP	2	SN:11001--

Printed By : Dwi Iswanto (airafather6107170)

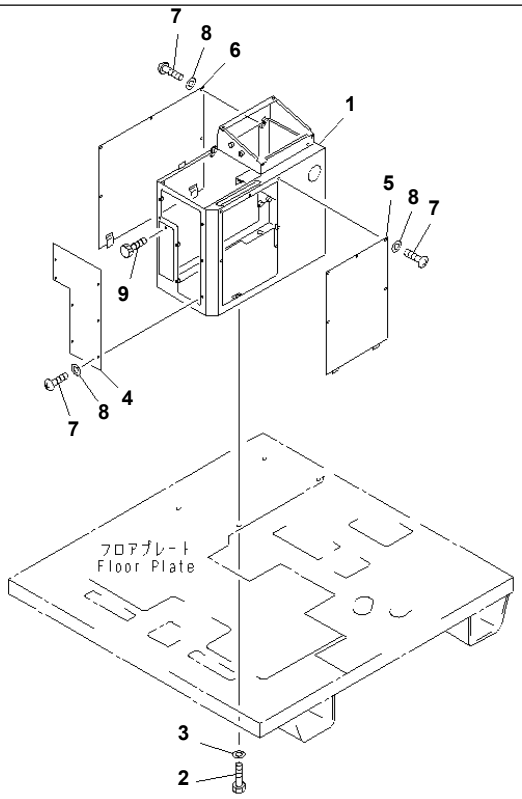

PC56397

GD825A-2 S/N 11001-UP

OPERATOR'S COMPARTMENT (2/2) (SEAT BRACKET AND CONTROL BOX) (WITH AIR CONDITIONER)

Item	Part No.	Description	Qty	Options
1	235-54-31170	BOX,R.H.	1	SN:11001--
2	01010-51225	BOLT	4	SN:11001--
3	01643-31232	WASHER	4	SN:11001--
4	235-54-31180	PLATE	1	SN:11001--
5	235-54-31190	PLATE	1	SN:11001--
6	235-54-31220	COVER	1	SN:11001--
7	01220-40612	SCREW	17	SN:11001--
8	01643-30623	WASHER	17	SN:11001--
9	235-54-11540	KNOB	1	SN:11001--

Printed By : Dwi Iswanto (airafather6107170)

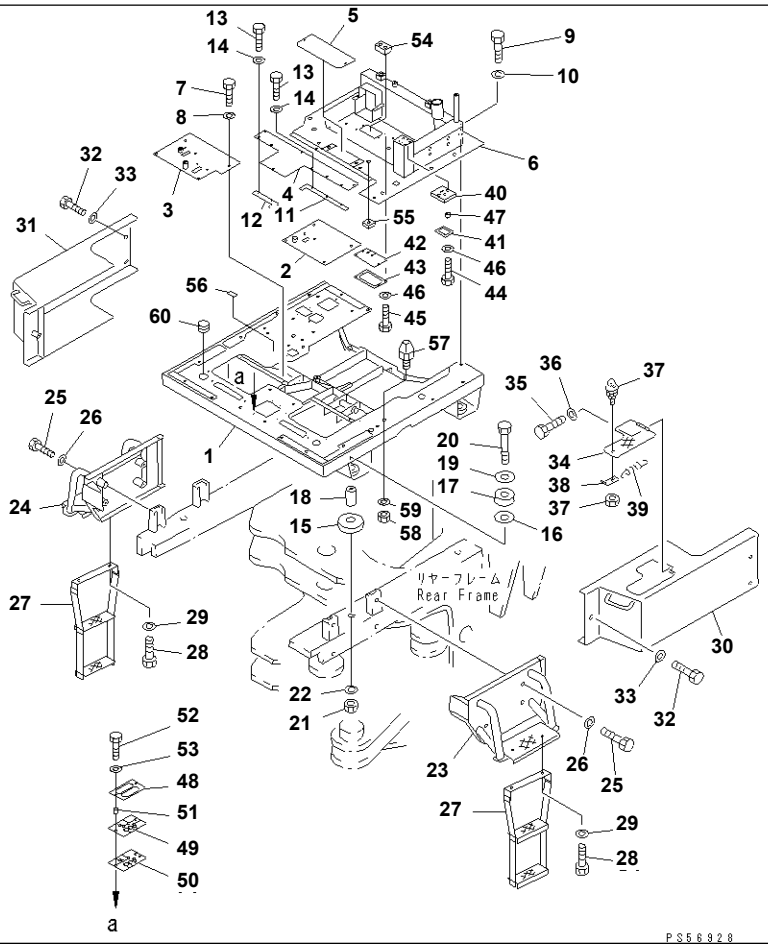

GD825A-2 S/N 11001-UP

OPERATOR'S COMPARTMENT (1/2) (FLOOR FRAME AND WIRE STEP) (FOR PRESSURE RISE)(#11014-)

Item	Part No.	Description	Qty	Options
1	235-54-32640	FRAME,FLOOR	1	SN:11014--
2	235-54-32650	COVER	1	SN:11014--
3	235-54-32590	COVER	1	SN:11014--
4	235-54-32610	COVER	1	SN:11014--
5	235-54-32620	COVER	1	SN:11014--
6	235-809-4540	COVER	1	SN:11014--
7	01010-50816	BOLT	14	SN:11014--
8	01643-30823	WASHER	14	SN:11014--
9	01010-51225	BOLT	6	SN:11014--
10	01643-31232	WASHER	6	SN:11001--
11	235-54-32520	COVER	1	SN:11014--
12	235-54-32510	COVER	1	SN:11014--
13	01010-50620	BOLT	5	SN:11014--
14	01643-30623	WASHER	5	SN:11014--
15	565-54-12810	CUSHION	4	SN:11014--
16	23B-01-11240	CUSHION	4	SN:11014--
17	565-54-12820	CUSHION	4	SN:11014--
18	23A-01-11250	SPACER	4	SN:11014--
19	234-54-11480	PLATE	4	SN:11014--
20	01011-51605	BOLT	4	SN:11014--
21	01580-11613	NUT	4	SN:11014--
22	01643-31645	WASHER	4	SN:11014--
23	235-54-31810	COVER,L.H.	1	SN:11014--
24	235-54-31820	COVER,R.H.	1	SN:11014--
25	01010-51255	BOLT	8	SN:11014--
26	01643-31232	WASHER	8	SN:11014--

Printed By : Dwi Iswanto (airafather6107170)

OPERATOR'S COMPARTMENT (1/2) (FLOOR FRAME AND WIRE STEP) (FOR PRESSURE RISE)(#11014-)

Item	Part No.	Description	Qty	Options
27	235-54-32100	STEP,WIRE	2	SN:11014--
28	01010-51025	BOLT	4	SN:11014--
29	01643-31032	WASHER	4	SN:11014--
30	235-54-31761	COVER,L.H.	1	SN:11014--
31	235-54-31770	COVER,R.H.	1	SN:11014--
32	01010-51255	BOLT	6	SN:11014--
33	01643-31232	WASHER	6	SN:11014--
34	235-54-31781	COVER	1	SN:11014--
35	01010-51220	BOLT	2	SN:11014--
36	01643-31232	WASHER	2	SN:11014--
37	235-54-21790	HANDLE	1	SN:11014--
38	235-54-21810	PLATE	1	SN:11014--
39	236-54-22460	SPRING	1	SN:11014--
40	235-54-32560	PLATE	1	SN:11014--
41	235-809-4730	PLATE	1	SN:11014--
42	235-809-4720	PLATE	1	SN:11014--
43	235-809-4710	PLATE	1	SN:11014--
44	01010-51035	BOLT	2	SN:11014--
45	01010-51020	BOLT	4	SN:11014--
46	01643-31032	WASHER	6	SN:11014--
47	235-54-32570	COLLAR	2	SN:11014--
48	235-54-32460	PLATE	1	SN:11014--
49	235-54-32470	PLATE	1	SN:11014--
50	235-54-32480	PLATE	1	SN:11014--
51	235-54-32490	COLLAR	2	SN:11014--
52	01010-80830	BOLT	2	SN:11014--
53	01643-30823	WASHER	2	SN:11014--
54	235-54-32550	PLATE	1	SN:11014--
55	235-54-32580	PLATE	2	SN:11014--
56	235-54-32530	PLATE	1	SN:11014--
57	235-54-31680	BAR	1	SN:11014--
58	01580-11210	NUT	1	SN:11014--
59	01643-31232	WASHER	1	SN:11014--
60	09415-03614	CAP	2	SN:11014--

Printed By : Dwi Iswanto (airafather6107170)

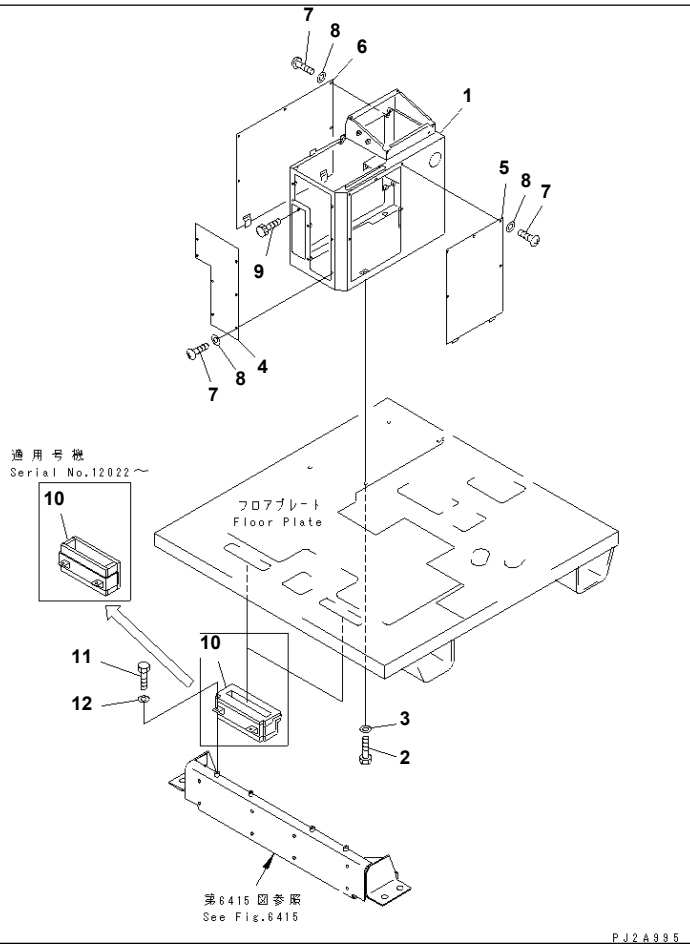

Ref. 5223 **Page 150220**

GD825A-2 S/N 11001-UP

OPERATOR'S COMPARTMENT (2/2) (SEAT BRACKET AND CONTROL BOX) (FOR PRESSURE RISE)(#11014-)

Item	Part No.	Description	Qty	Options
1	235-54-31170	BOX,R.H.	1	SN:11014--
2	01010-51225	BOLT	4	SN:11014--
3	01643-31232	WASHER	4	SN:11014--
4	235-54-31180	PLATE	1	SN:11014--
5	235-54-31190	PLATE	1	SN:11014--
6	235-54-31220	COVER	1	SN:11014--
7	01220-40612	SCREW	17	SN:11014--
8	01643-30623	WASHER	17	SN:11014--
9	235-54-11540	KNOB	1	SN:11014--
10	235-54-32541	COVER	2	SN:12022--
	235-54-32540	COVER	2	SN:11014--12021
11	01010-80816	BOLT	4	SN:11014--
12	01643-30823	WASHER	4	SN:11014--

Printed By : Dwi Iswanto (airafather6107170)

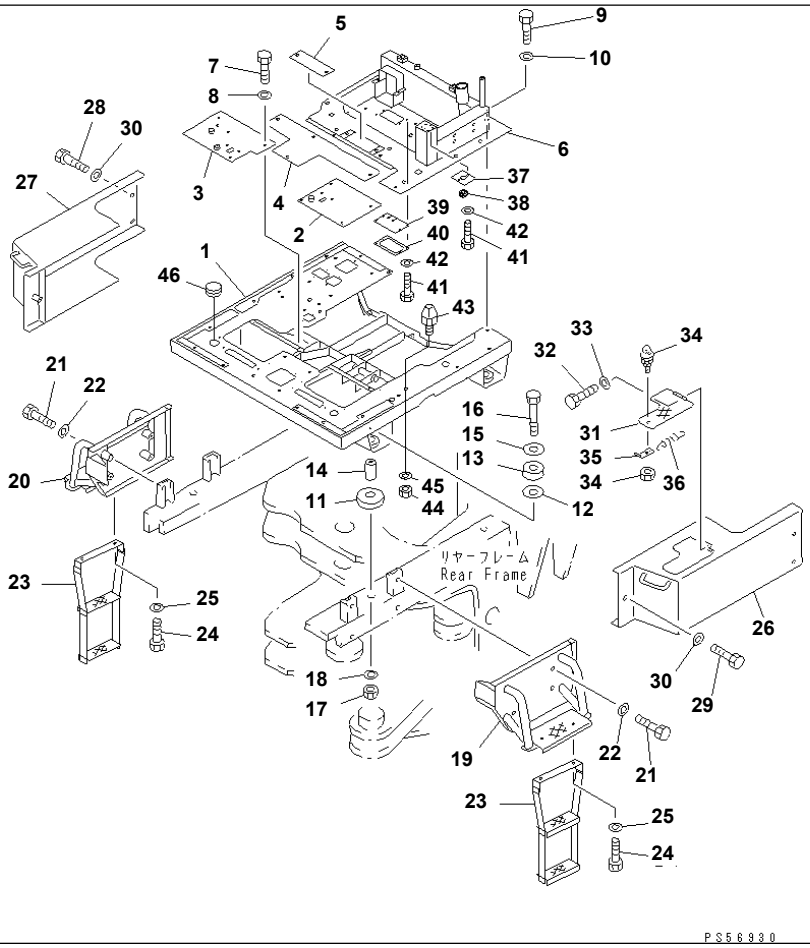

GD825A-2 S/N 11001-UP

OPERATOR'S COMPARTMENT (1/2) (FLOOR FRAME AND WIRE STEP) (WITH CAR HEATER)(#11014-)

Item	Part No.	Description	Qty	Options
1	235-54-31112	FRAME,FLOOR	1	SN:12023--
	235-54-31111	FRAME,FLOOR	1	SN:11014--12022
2	235-54-31270	COVER	1	SN:11014--
3	235-54-31150	COVER	1	SN:11014--
4	235-54-31161	COVER	1	SN:11014--
5	235-54-31261	COVER	1	SN:11014--
6	235-809-4540	COVER	1	SN:11014--
7	01010-50816	BOLT	14	SN:11014--
8	01643-30823	WASHER	14	SN:11014--
9	01010-51225	BOLT	6	SN:11014--
10	01643-31232	WASHER	6	SN:11014--
11	565-54-12810	CUSHION	4	SN:11014--
12	23B-01-11240	CUSHION	4	SN:11014--
13	565-54-12820	CUSHION	4	SN:11014--
14	23A-01-11250	SPACER	4	SN:11014--
15	234-54-11480	PLATE	4	SN:11014--
16	01011-51605	BOLT	4	SN:11014--
17	01580-11613	NUT	4	SN:11014--
18	01643-31645	WASHER	4	SN:11014--
19	235-54-31810	COVER,L.H.	1	SN:11014--
20	235-54-31820	COVER,R.H.	1	SN:11014--
21	01010-51255	BOLT	8	SN:11014--
22	01643-31232	WASHER	8	SN:11014--
23	235-54-32100	STEP,WIRE	2	SN:11014--
24	01010-51025	BOLT	4	SN:11014--
25	01643-31032	WASHER	4	SN:11014--

Printed By : Dwi Iswanto (airafather6107170)

OPERATOR'S COMPARTMENT (1/2) (FLOOR FRAME AND WIRE STEP) (WITH CAR HEATER)(#11014-)

Item	Part No.	Description	Qty	Options
26	235-54-31761	COVER,L.H.	1	SN:11014--
27	235-54-31770	COVER,R.H.	1	SN:11014--
28	01010-51225	BOLT	4	SN:11014--
29	01010-51255	BOLT	2	SN:11014--
30	01643-31232	WASHER	6	SN:11014--
31	235-54-31781	COVER	1	SN:11014--
32	01010-51220	BOLT	2	SN:11014--
33	01643-31232	WASHER	2	SN:11014--
34	235-54-21790	HANDLE	1	SN:11014--
35	235-54-21810	PLATE	1	SN:11014--
36	236-54-22460	SPRING	1	SN:11014--
37	235-807-3150	PLATE	1	SN:11014--
38	08037-11425	GROMMET	1	SN:11014--
39	235-809-4720	PLATE	1	SN:11014--
40	235-809-4710	PLATE	1	SN:11014--
41	01010-51020	BOLT	6	SN:11014--
42	01643-31032	WASHER	6	SN:11014--
43	235-54-31680	BAR	1	SN:11014--
44	01580-11210	NUT	1	SN:11014--
45	01643-31232	WASHER	1	SN:11014--
46	09415-03614	CAP	2	SN:11014--

Printed By : Dwi Iswanto (airafather6107170)

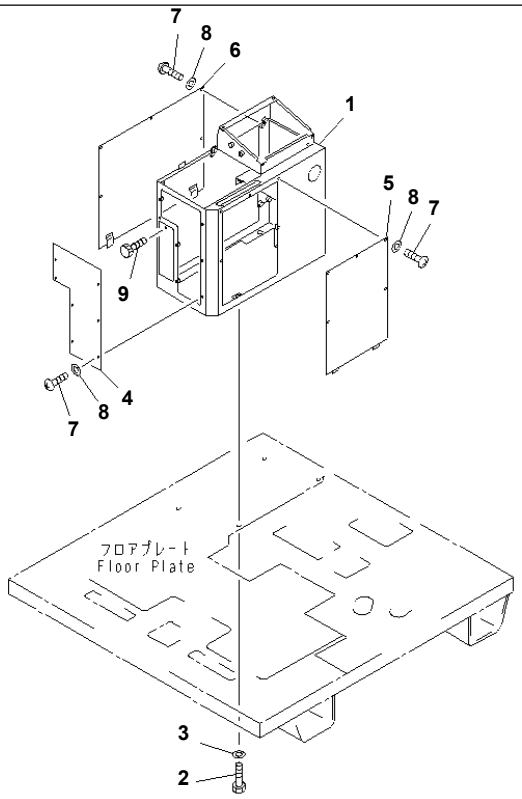

PC56397

GD825A-2 S/N 11001-UP

OPERATOR'S COMPARTMENT (2/2) (SEAT BRACKET AND CONTROL BOX) (WITH CAR HEATER)(#11014-)

Item	Part No.	Description	Qty	Options
1	235-54-31170	BOX,R.H.	1	SN:11014--
2	01010-51225	BOLT	4	SN:11014--
3	01643-31232	WASHER	4	SN:11014--
4	235-54-31180	PLATE	1	SN:11014--
5	235-54-31190	PLATE	1	SN:11014--
6	235-54-31220	COVER	1	SN:11014--
7	01220-40612	SCREW	17	SN:11014--
8	01643-30623	WASHER	17	SN:11014--
9	235-54-11540	KNOB	1	SN:11014--

Printed By : Dwi Iswanto (airafather6107170)

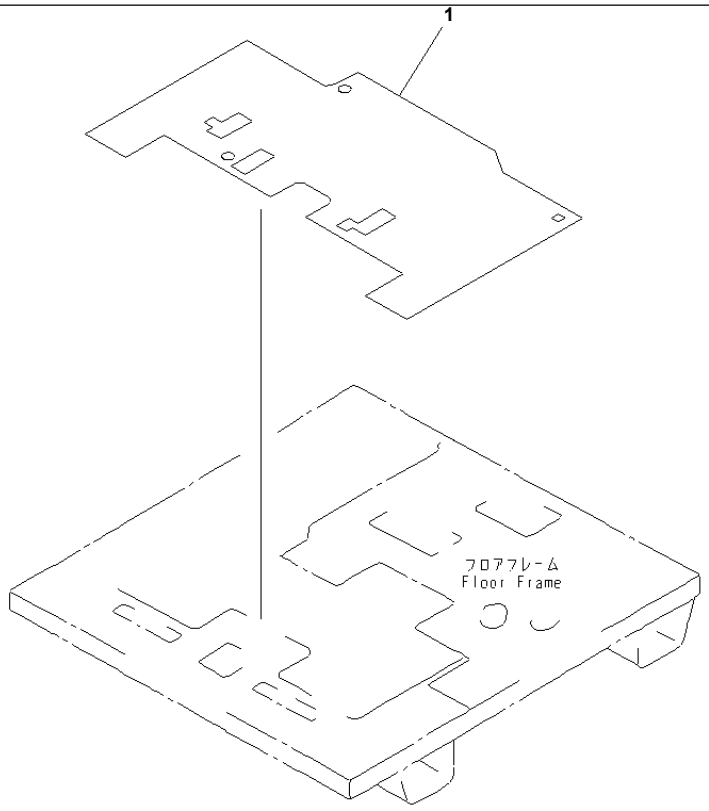

PS56398

GD825A-2 S/N 11001-UP

FLOOR MAT(#11001-12000)

Item	Part No.	Description	Qty	Options
1	235-54-31130	MAT,FLOOR	1	SN:11001--12000

Printed By : Dwi Iswanto (airafather6107170)

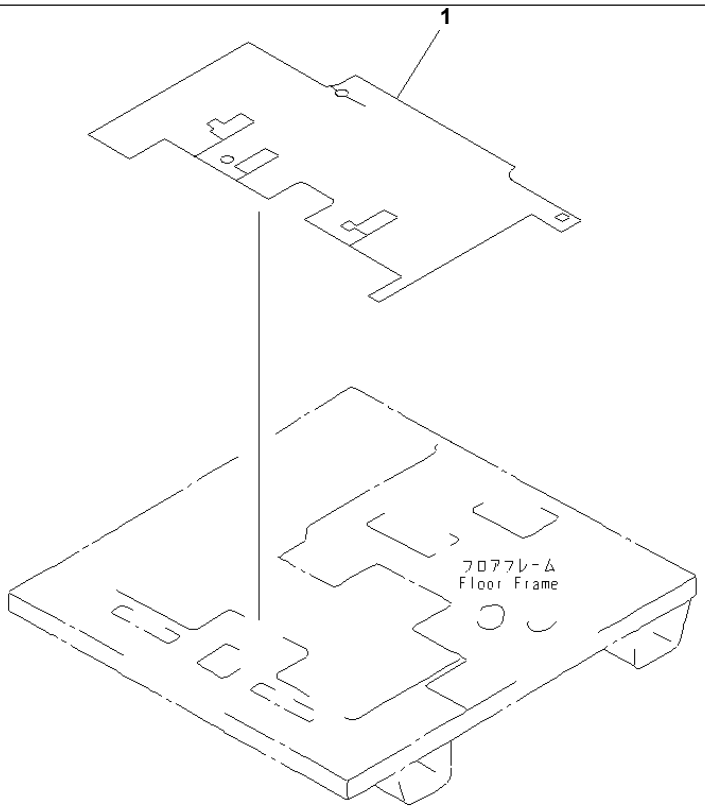

PR56931

GD825A-2 S/N 11001-UP

FLOOR MAT(#12001-)

Item	Part No.	Description	Qty	Options
1	235-54-31132	MAT,FLOOR	1	SN:12023--
	235-54-31131	MAT,FLOOR	1	SN:12001--12022

Printed By : Dwi Iswanto (airafather6107170)

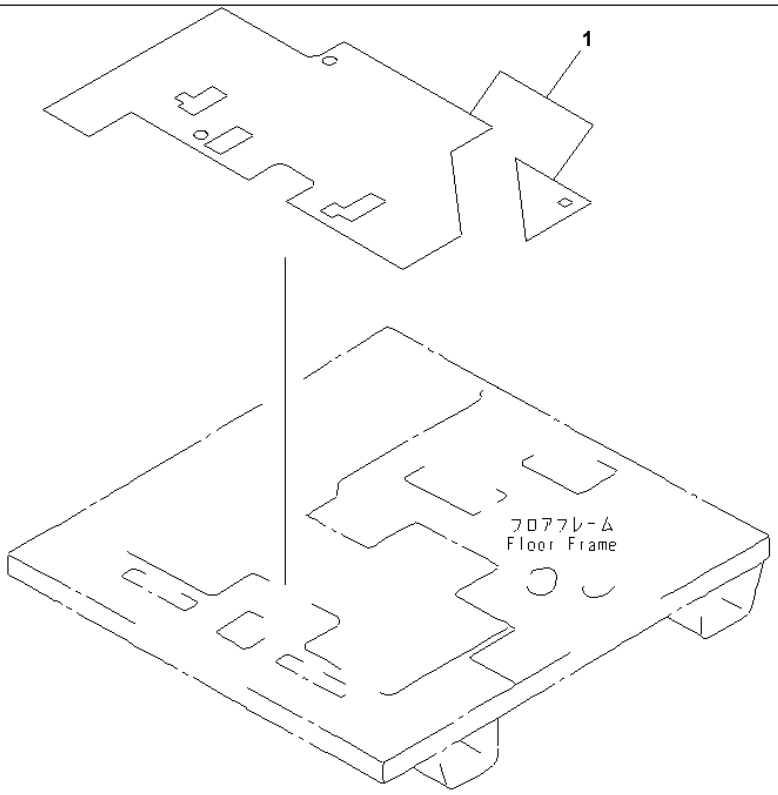

PS56399

Ref. 5273 **Page 150270**

GD825A-2 S/N 11001-UP
FLOOR MAT (WITH AIR CONDITIONER)(#11001-11013)

Item	Part No.	Description	Qty	Options
1	235-809-3960	MAT,FLOOR	1	SN:11001--11013

Printed By : Dwi Iswanto (airafather6107170)

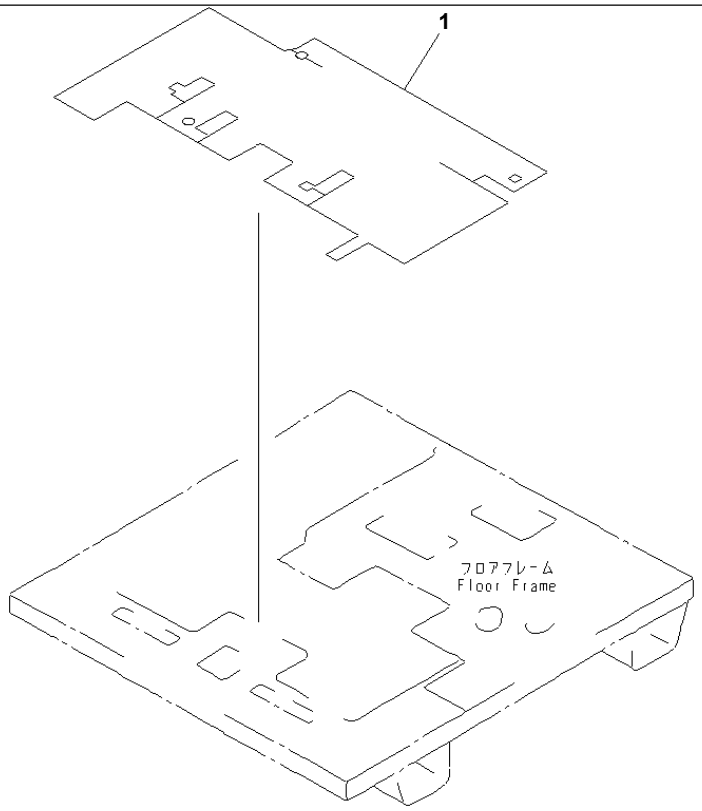

PR56400

GD825A-2 S/N 11001-UP

FLOOR MAT (WITH AIR CONDITIONER)(#11014-)

Item	Part No.	Description	Qty	Options
1	235-809-4781	MAT,FLOOR	1	SN:12023--
	235-809-4780	MAT,FLOOR	1	SN:11014--12022

Printed By : Dwi Iswanto (airafather6107170)

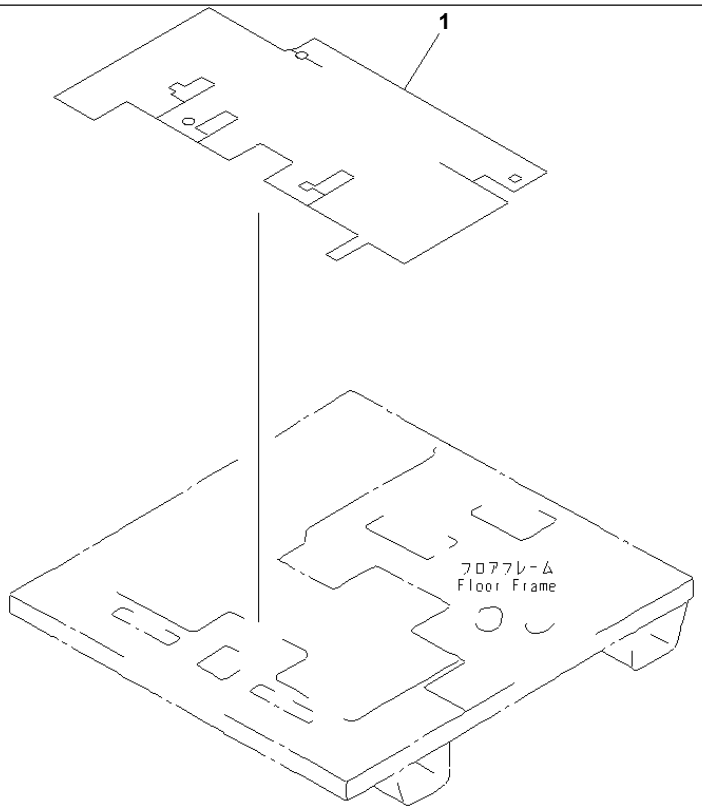

PR56400

GD825A-2 S/N 11001-UP

FLOOR MAT (WITH CAR HEATER)(#11014-)

Item	Part No.	Description	Qty	Options
1	235-809-4781	MAT,FLOOR	1	SN:12023--
	235-809-4780	MAT,FLOOR	1	SN:11014--12022

Printed By : Dwi Iswanto (airafather6107170)

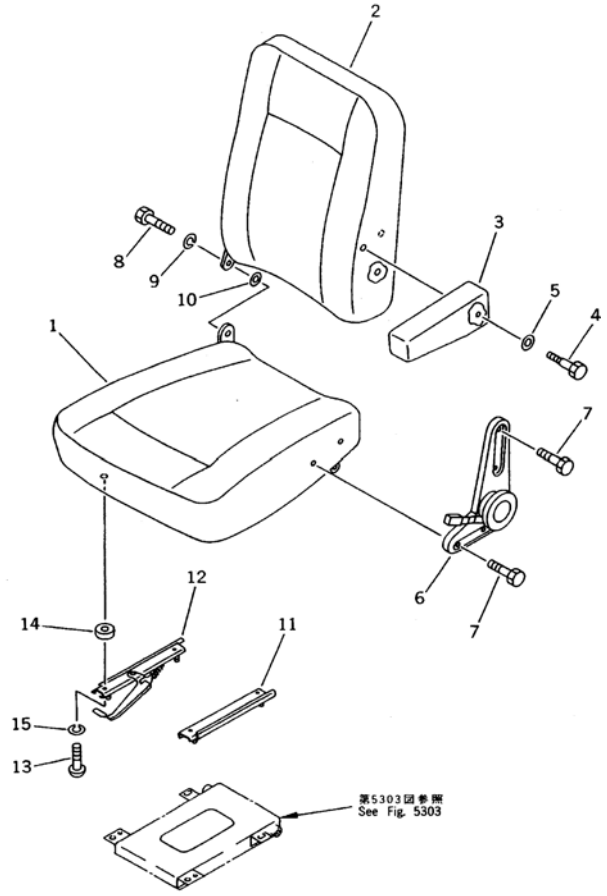

Ref. 5301 **Page 150300**

GD825A-2 S/N 11001-UP

OPERATOR'S SEAT (1/2) (VYNIL LEATHER TYPE)(#11001-11009)

Item	Part No.	Description	Qty	Options
	235-57-31200	OPERATOR'S SEAT A.	1	SN:11001--11009
1	278-57-11230	· CUSHION,SEAT	1	SN:11001--11009
2	235-57-31210	· CUSHION,BACK	1	SN:11001--11009
3	278-57-11260	· ARM REST,L.H.	1	SN:11001--11009
4	278-57-11330	· BOLT	1	SN:11001--@
5	278-57-11320	· WASHER	1	SN:11001--@
6	278-57-11390	· ADJUSTER,RECLINING	1	SN:11001--@
7	278-57-11270	· BOLT	4	SN:11001--@
8	278-57-11280	· BOLT	1	SN:11001--@
9	278-57-11290	· WASHER	1	SN:11001--@
10	278-57-11310	· WASHER	1	SN:11001--@
11	278-57-11360	· SLIDE ASS'Y,L.H.	1	SN:11001--@
12	278-57-11350	· SLIDE ASS'Y,R.H.	1	SN:11001--@
13	278-57-11380	· SCREW	4	SN:11001--@
14	278-57-11340	· SPACER	4	SN:11001--@
15	278-57-11370	· WASHER	4	SN:11001--@

Printed By : Dwi Iswanto (airafather6107170)

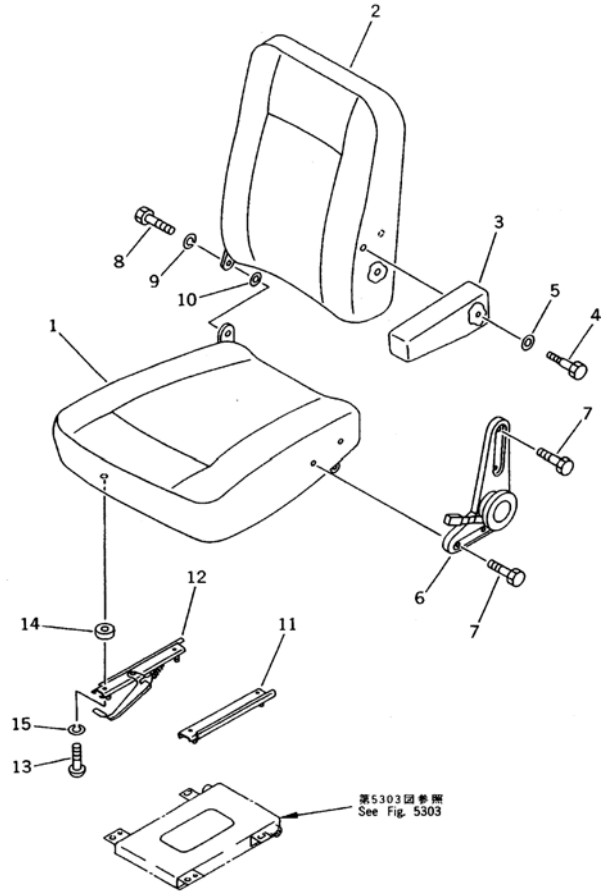

Ref. 5301A **Page 150310**

GD825A-2 S/N 11001-UP

OPERATOR'S SEAT (1/2) (FABRIC TYPE)(#11010-12098)

Item	Part No.	Description	Qty	Options
	235-57-31300	OPERATOR'S SEAT A.	1	SN:11010--12098
1	☆	· CUSHION,SEAT	1	SN:11010--12098
2	☆	· CUSHION,BACK	1	SN:11010--12098
3	☆	· ARM REST,L.H.	1	SN:11010--12098
4	278-57-11330	· BOLT	1	SN:11001--12098
5	278-57-11320	· WASHER	1	SN:11001--12098
6	278-57-11390	· ADJUSTER,RECLINING	1	SN:11001--12098
7	278-57-11270	· BOLT	4	SN:11001--12098
8	278-57-11280	· BOLT	1	SN:11001--12098
9	278-57-11290	· WASHER	1	SN:11001--12098
10	278-57-11310	· WASHER	1	SN:11001--12098
11	278-57-11360	· SLIDE ASS'Y,L.H.	1	SN:11001--12098
12	278-57-11350	· SLIDE ASS'Y,R.H.	1	SN:11001--12098
13	278-57-11380	· SCREW	4	SN:11001--12098
14	278-57-11340	· SPACER	4	SN:11001--12098
15	278-57-11370	· WASHER	4	SN:11001--12098

Ref. 5301A **Page 150310**

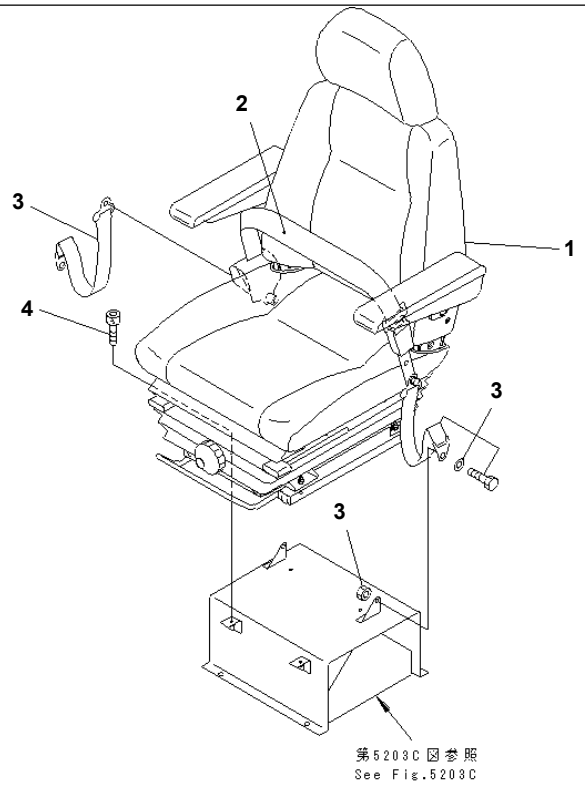

PJ2B778

GD825A-2 S/N 11001-UP

OPERATOR'S SEAT (FABRIC TYPE¤WITH SUSPENSION COVER)(#12099-)

Item	Part No.	Description	Qty	Options
1	23B-57-31301	SEAT ASS'Y,OPERATOR'S	1	SN:12099--
2	09409-70000	BELT¤ LAP	1	SN:12099--
3	09409-20000	BELT¤ TETHER	2	SN:12099--
	09409-00001	· BOLT	2	SN:12099--
	09409-00002	· WASHER	2	SN:12099--
	09409-00003	· NUT	2	SN:12099--
4	01252-60820	BOLT	4	SN:12099--

Printed By : Dwi Iswanto (airafather6107170)

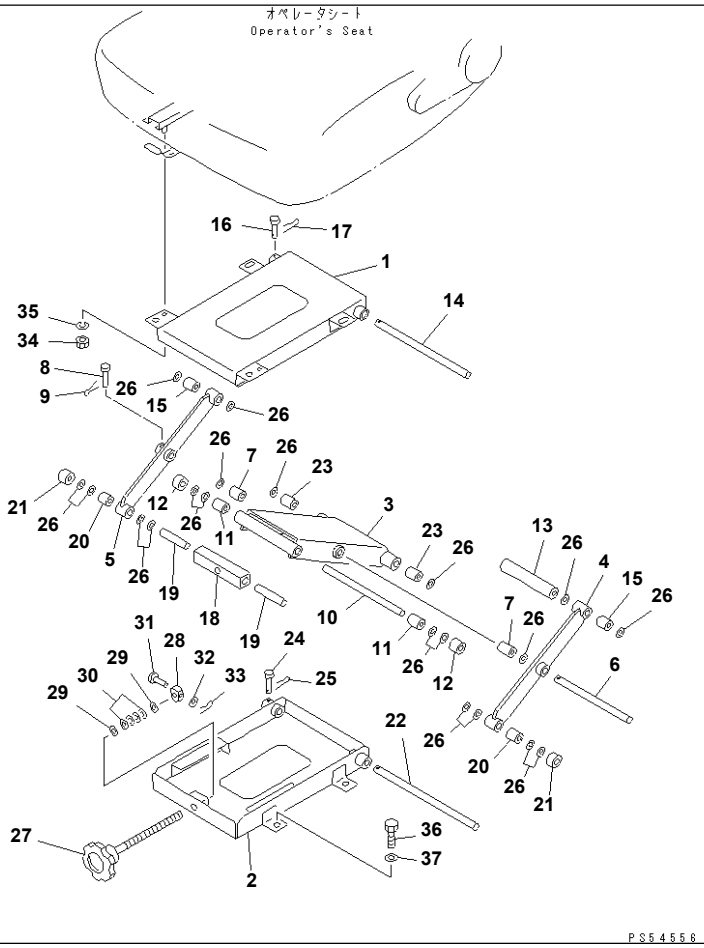

OPERATOR'S SEAT (2/2)(#11001-12098)

Item	Part No.	Description	Qty	Options
	235-57-31100	STAND ASS'Y	1	SN:11001--12098
1	235-57-31110	· BRACKET	1	SN:11001--12098
2	23E-57-11130	· BRACKET	1	SN:11001--12098
3	205-57-72520	· LINK	1	SN:11001--12098
4	205-57-72530	· LINK	1	SN:11001--12098
5	205-57-72540	· LINK	1	SN:11001--12098
6	205-57-63170	· PIN	1	SN:11001--12098
7	203-57-21280	· BUSHING	2	SN:11001--12098
8	207-57-11240	· PIN	1	SN:11001--12098
9	04050-11610	· PIN,COTTER	1	SN:11001--12098
10	205-57-63190	· PIN	1	SN:11001--12098
11	203-57-21280	· BUSHING	2	SN:11001--12098
12	203-57-21310	· ROLLER	2	SN:11001--12098
13	205-57-72560	· COLLAR	1	SN:11001--12098
14	205-57-63180	· PIN	1	SN:11001--12098
15	203-57-21280	· BUSHING	2	SN:11001--12098
16	207-57-11240	· PIN	1	SN:11001--12098
17	04050-11610	· PIN,COTTER	1	SN:11001--12098
18	205-57-72570	· BAR	1	SN:11001--12098
19	207-57-11220	· PIN	2	SN:11001--12098
20	203-57-21280	· BUSHING	2	SN:11001--12098
21	203-57-21310	· ROLLER	2	SN:11001--12098
22	205-57-63160	· PIN	1	SN:11001--12098
23	203-57-21280	· BUSHING	2	SN:11001--12098
24	207-57-11240	· PIN	1	SN:11001--12098
25	04050-11610	· PIN,COTTER	1	SN:11001--12098
26	203-57-21320	· SHIM¤ 0.5MM	20	SN:11001--12098

Printed By : Dwi Iswanto (airafather6107170)

OPERATOR'S SEAT (2/2)(#11001-12098)

Item	Part No.	Description	Qty	Options
27	23E-57-11150	· KNOB	1	SN:11001--12098
28	23E-57-11160	· NUT	1	SN:11001--12098
29	01643-31445	· WASHER	2	SN:11001--12098
30	23E-57-11120	· SPRING	4	SN:11001--12098
31	205-57-63250	· PIN	1	SN:11001--12098
32	01641-20608	· WASHER	1	SN:11001--12098
33	04050-11610	· PIN,COTTER	1	SN:11001--12098
34	01580-10806	NUT	4	SN:11001--12098
35	01643-30823	WASHER	4	SN:11001--12098
36	01010-51230	BOLT	4	SN:11001--12098
37	01643-31232	WASHER	4	SN:11001--12098

Printed By : Dwi Iswanto (airafather6107170)

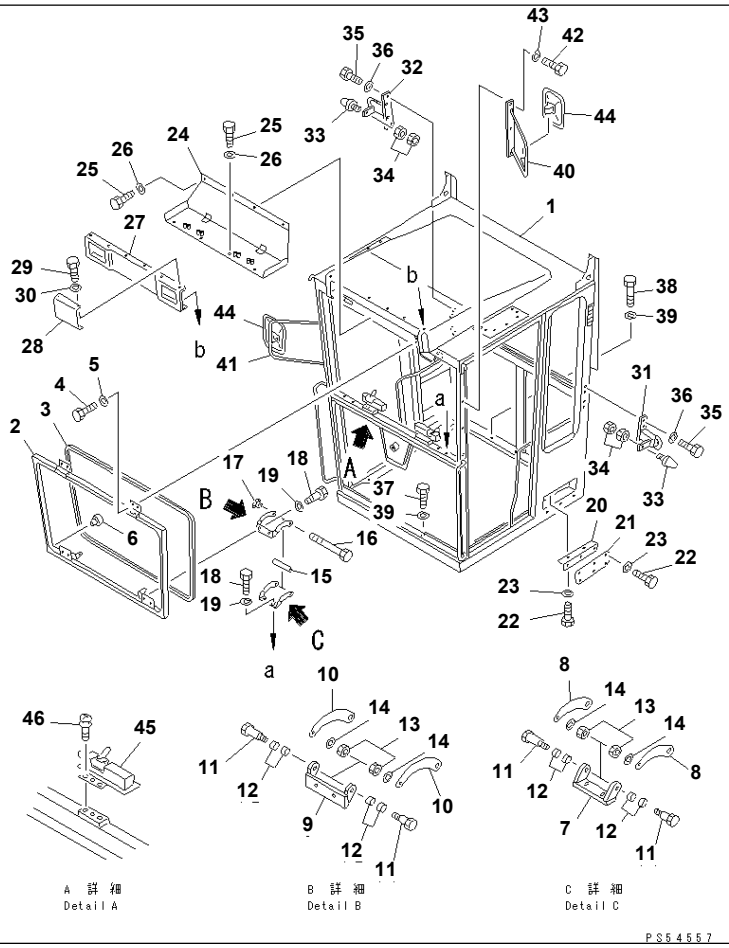

Ref. 5401 **Page 150340**

GD825A-2 S/N 11001-UP

OPERATOR'S CAB (1/8) (CAB)(#11001-11008)

Item	Part No.	Description	Qty	Options
	(235-957-0210)	ROPS CAB ASS'Y,(FULL)	1	SN:11001--11008
	(235-957-0230)	ROPS CAB ASS'Y,(LOW)	1	SN:11001--11008
THESE ASSEMBLIES CONSIST OF ALL PARTS SHOWN IN FIGS.5401 TO 5415 AND 5511.				
	235-957-0220	· STEEL CAB ASS'Y,(FULL)	1	SN:11001--11008
	235-957-0240	· STEEL CAB ASS'Y,(LOW)	1	SN:11001--11008
THESE ASSEMBLIES CONSIST OF ALL PARTS SHOWN IN FIGS.5401 TO 5413.				
1	235-950-3601	· · CAB ASS'Y,(FULL)	1	SN:11001--11008
	235-950-1601	· · CAB ASS'Y,(LOW)	1	SN:11001--11008
2	235-950-3591	· · BRACKET,(FULL)	1	SN:11001--@
	235-950-1761	· · BRACKET,(LOW)	1	SN:11001--@
3	23B-951-3270	· · SEAL,(FULL)	1	SN:11001--@
	23B-951-3260	· · SEAL,(LOW)	1	SN:11001--@
4	01010-51016	· · BOLT	4	SN:11001--@
5	01643-31032	· · WASHER	4	SN:11001--@
6	235-950-4690	· · CUSHION	2	SN:11001--@
	235-950-0210	· · LINK ASS'Y,L.H.	1	SN:11001--@
	235-950-0220	· · LINK ASS'Y,R.H.	1	SN:11001--@
7	235-950-4650	· · · PLATE	1	SN:11001--@
8	235-950-4640	· · · PLATE,L.H.	1	SN:11001--@
	235-950-4630	· · · PLATE,R.H.	1	SN:11001--@
9	235-950-4670	· · · PLATE	1	SN:11001--@
10	235-950-4660	· · · PLATE	2	SN:11001--@
11	235-950-4680	· · · BOLT	4	SN:11001--@
12	07177-00808	· · · BUSHING	8	SN:11001--@
13	01598-00608	· · · NUT	4	SN:11001--@
14	01643-30623	· · · WASHER	4	SN:11001--@
15	235-950-4930	· · · COLLAR	1	SN:11001--@

Printed By : Dwi Iswanto (airafather6107170)

OPERATOR'S CAB (1/8) (CAB)(#11001-11008)

Item	Part No.	Description	Qty	Options
16	01011-31055	· · · BOLT	1	SN:11001--@
17	235-950-2291	· · · KNOB	1	SN:11001--@
18	01010-50816	· · · BOLT	4	SN:11001--@
19	01643-30823	· · · WASHER	4	SN:11001--@
20	235-950-2540	· · BRACKET	2	SN:11001--11008
21	235-950-2550	· · COVER	2	SN:11001--11008
22	01010-50816	· · BOLT	16	SN:11001--@
23	01643-30823	· · WASHER	16	SN:11001--@
24	23B-950-5281	· · COVER	1	SN:11001--@
25	01010-50820	· · BOLT	8	SN:11001--@
26	01643-30823	· · WASHER	8	SN:11001--@
27	235-950-1310	· · COVER	1	SN:11001--@
28	235-950-1780	· · COVER,(WITHOUT CAB TOP LAMP)	2	SN:11001--@
29	01010-50816	· · BOLT	10	SN:11001--@
30	01643-30823	· · WASHER	10	SN:11001--@
31	23B-950-1490	· · CATCH,L.H.	1	SN:11001--@
32	23B-950-1510	· · CATCH,R.H.	1	SN:11001--@
33	235-950-1370	· · CUSHION	2	SN:11001--@
34	01580-11008	· · NUT	4	SN:11001--@
35	01010-51030	· · BOLT	8	SN:11001--@
36	01643-31032	· · WASHER	8	SN:11001--@
37	01010-51225	· · BOLT	12	SN:11001--@
38	01010-51255	· · BOLT	3	SN:11001--@
39	01643-31232	· · WASHER	15	SN:11001--@
40	235-950-1320	· · BRACKET,L.H.	1	SN:11001--@
41	235-950-1330	· · BRACKET,R.H.	1	SN:11001--@
42	01010-51025	· · BOLT	6	SN:11001--@
43	01643-31032	· · WASHER	6	SN:11001--@
44	235-950-1790	· · MIRROR	2	SN:11001--@
45	20U-54-24611	· · LATCH,L.H.	1	SN:11001--@
	20U-54-24621	· · LATCH,R.H.	1	SN:11001--@
46	01023-10510	· · SCREW	6	SN:11001--@

Printed By : Dwi Iswanto (airafather6107170)

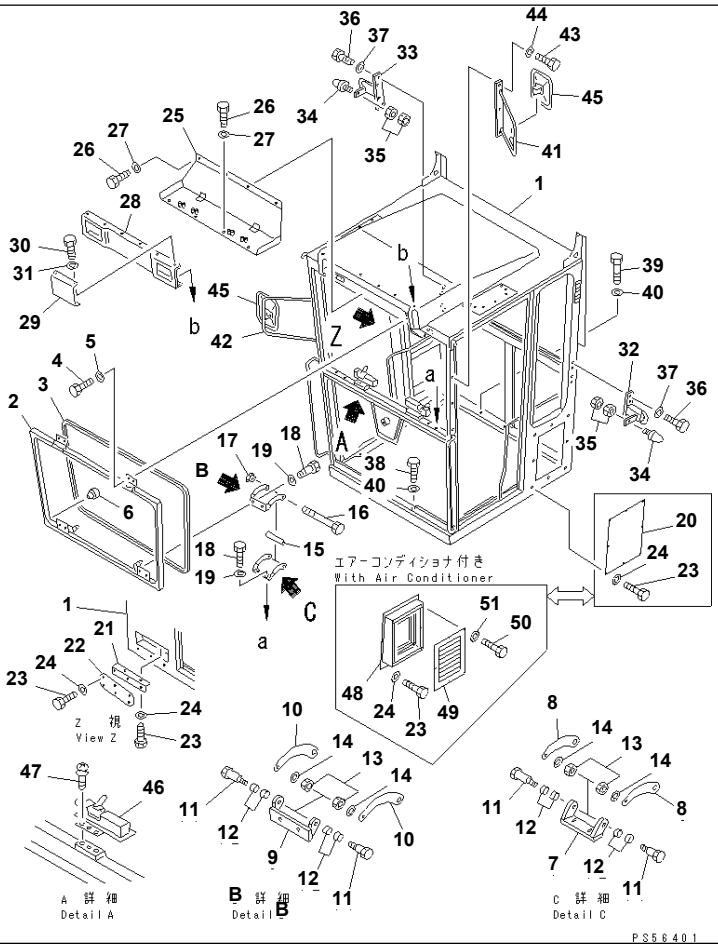

GD825A-2 S/N 11001-UP

OPERATOR'S CAB (1/8) (CAB)(#11009-.)

Item	Part No.	Description	Qty	Options
	(235-957-0211)	ROPS CAB ASS'Y,(FULL)	1	SN:11009--.
	(235-957-0231)	ROPS CAB ASS'Y,(LOW)	1	SN:11009--.
THESE ASSEMBLIES CONSIST OF ALL PARTS SHOWN IN FIGS.5401A TO 5415A AND 5511.				
	235-957-0221	· STEEL CAB ASS'Y,(FULL)	1	SN:11009--.
	235-957-0241	· STEEL CAB ASS'Y,(LOW)	1	SN:11009--.
THESE ASSEMBLIES CONSIST OF ALL PARTS SHOWN IN FIGS.5401A TO 5413.				
1	235-950-3602	· · CAB ASS'Y,(FULL)	1	SN:11009--.
	235-950-1602	· · CAB ASS'Y,(LOW)	1	SN:11009--.
2	235-950-3591	· · BRACKET,(FULL)	1	SN:11001--.
	235-950-1761	· · BRACKET,(LOW)	1	SN:11001--.
3	23B-951-3270	· · SEAL,(FULL)	1	SN:11001--.
	23B-951-3260	· · SEAL,(LOW)	1	SN:11001--.
4	01010-51016	· · BOLT	4	SN:11001--.
5	01643-31032	· · WASHER	4	SN:11001--.
6	235-950-4690	· · CUSHION	2	SN:11001--.
	235-950-0210	· · LINK ASS'Y,L.H.	1	SN:11001--.
	235-950-0220	· · LINK ASS'Y,R.H.	1	SN:11001--.
7	235-950-4650	· · · PLATE	1	SN:11001--.
8	235-950-4640	· · · PLATE,L.H.	1	SN:11001--.
	235-950-4630	· · · PLATE,R.H.	1	SN:11001--.
9	235-950-4670	· · · PLATE	1	SN:11001--.
10	235-950-4660	· · · PLATE	2	SN:11001--.
11	235-950-4680	· · · BOLT	4	SN:11001--.
12	07177-00808	· · · BUSHING	8	SN:11001--.
13	01598-00608	· · · NUT	4	SN:11001--.
14	01643-30623	· · · WASHER	4	SN:11001--.
15	235-950-4930	· · · COLLAR	1	SN:11001--.

Printed By : Dwi Iswanto (airafather6107170)

OPERATOR'S CAB (1/8) (CAB)(#11009-.)

Item	Part No.	Description	Qty	Options
16	01011-31055	· · · BOLT	1	SN:11001--.
17	235-950-2291	· · · KNOB	1	SN:11001--.
18	01010-50816	· · · BOLT	4	SN:11001--.
19	01643-30823	· · · WASHER	4	SN:11001--.
20	235-950-5640	· · COVER	1	SN:11009--@
21	235-950-2540	· · BRACKET	1	SN:11009--@
22	235-950-2550	· · COVER	1	SN:11009--@
23	01010-50816	· · BOLT	16	SN:11001--@
24	01643-30823	· · WASHER	16	SN:11001--@
25	23B-950-5281	· · COVER	1	SN:11001--.
26	01010-50820	· · BOLT	8	SN:11001--@
27	01643-30823	· · WASHER	8	SN:11001--@
28	235-950-1310	· · COVER	1	SN:11001--@
29	235-950-1780	· · COVER,(WITHOUT CAB TOP LAMP)	2	SN:11001--@
30	01010-50816	· · BOLT	10	SN:11001--@
31	01643-30823	· · WASHER	10	SN:11001--@
32	23B-950-1490	· · CATCH,L.H.	1	SN:11001--@
33	23B-950-1510	· · CATCH,R.H.	1	SN:11001--@
34	235-950-1370	· · CUSHION	2	SN:11001--@
35	01580-11008	· · NUT	4	SN:11001--@
36	01010-51030	· · BOLT	8	SN:11001--@
37	01643-31032	· · WASHER	8	SN:11001--@
38	01010-51225	· · BOLT	12	SN:11001--@
39	01010-51255	· · BOLT	3	SN:11001--@
40	01643-31232	· · WASHER	15	SN:11001--@
41	235-950-1320	· · BRACKET,L.H.	1	SN:11001--.
42	235-950-1330	· · BRACKET,R.H.	1	SN:11001--.
43	01010-51025	· · BOLT	6	SN:11001--.
44	01643-31032	· · WASHER	6	SN:11001--.
45	235-950-1790	· · MIRROR	2	SN:11001--.
46	20U-54-24611	· · LATCH,L.H.	1	SN:11001--.
	20U-54-24621	· · LATCH,R.H.	1	SN:11001--.
47	01023-10510	· · SCREW	6	SN:11001--.
WITH AIR CONDITIONER				
48	235-809-4680	COVER	1	SN:11014--@
49	235-809-4670	COVER	1	SN:11014--@
50	01010-50816	BOLT	8	SN:11014--@
51	01643-30823	WASHER	8	SN:11014--@

Printed By : Dwi Iswanto (airafather6107170)

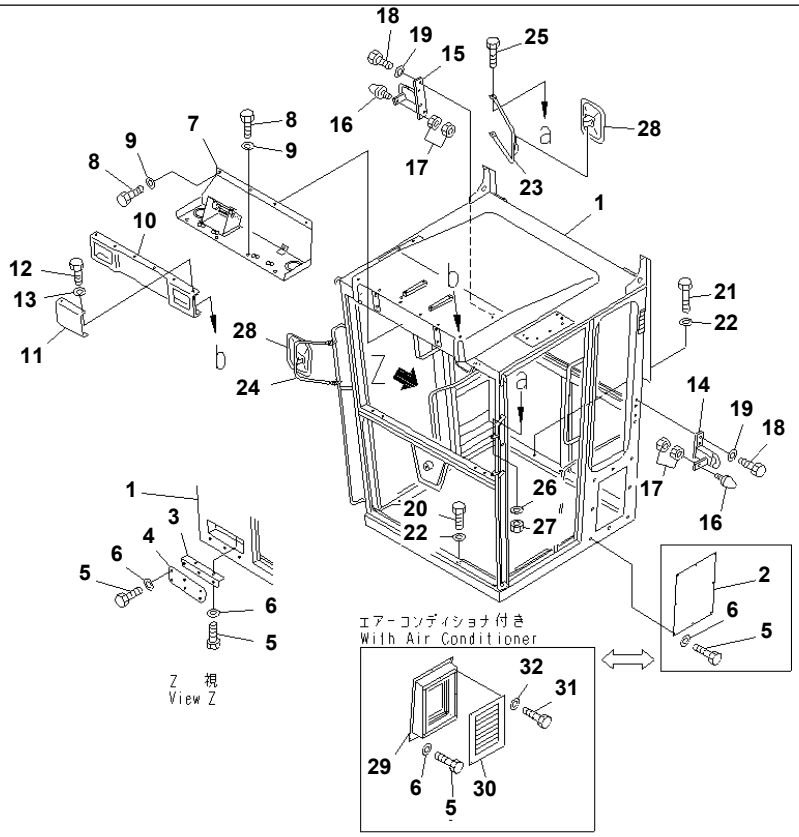

00003635

GD825A-2 S/N 11001-UP

OPERATOR'S CAB (1/8) (CAB)(#.-)

Item	Part No.	Description	Qty	Options
	(235-957-0212)	ROPS CAB ASS'Y,(FULL)	1	SN:.--
	(235-957-0232)	ROPS CAB ASS'Y,(LOW)	1	SN:.--
THESE ASSEMBLIES CONSIST OF ALL PARTS SHOWN IN FIGS.5401B TO 5415A AND 5511.				
	235-957-0222	· STEEL CAB ASS'Y,(FULL)	1	SN:.--
	235-957-0242	· STEEL CAB ASS'Y,(LOW)	1	SN:.--
THESE ASSEMBLIES CONSIST OF ALL PARTS SHOWN IN FIGS.5401B TO 5413.				
1	235-950-3603	· · CAB ASS'Y,(FULL)	1	SN:.--
	235-950-1603	· · CAB ASS'Y,(LOW)	1	SN:.--
2	235-950-5640	· · COVER	1	SN:11009--
3	235-950-2540	· · BRACKET	1	SN:11009--
4	235-950-2550	· · COVER	1	SN:11009--
5	01010-50816	· · BOLT	16	SN:11001--
6	01643-30823	· · WASHER	16	SN:11001--
7	23B-950-5282	· · COVER	1	SN:.--
8	01010-50820	· · BOLT	8	SN:11001--
9	01643-30823	· · WASHER	8	SN:11001--
10	235-950-1310	· · COVER	1	SN:11001--
11	235-950-1780	· · COVER,(WITHOUT CAB TOP LAMP)	2	SN:11001--
12	01010-50816	· · BOLT	10	SN:11001--
13	01643-30823	· · WASHER	10	SN:11001--
14	23B-950-1490	· · CATCH,L.H.	1	SN:11001--
15	23B-950-1510	· · CATCH,R.H.	1	SN:11001--
16	235-950-1370	· · CUSHION	2	SN:11001--
17	01580-11008	· · NUT	4	SN:11001--
18	01010-51030	· · BOLT	8	SN:11001--
19	01643-31032	· · WASHER	8	SN:11001--
20	01010-51225	· · BOLT	12	SN:11001--

Printed By : Dwi Iswanto (airafather6107170)

OPERATOR'S CAB (1/8) (CAB)(#.-)

Item	Part No.	Description	Qty	Options
21	01010-51255	· · BOLT	3	SN:11001--
22	01643-31232	· · WASHER	15	SN:11001--
23	235-950-1321	· · BRACKET,L.H.	1	SN:.--
24	235-950-1331	· · BRACKET,R.H.	1	SN:.--
25	01010-81225	· · BOLT	4	SN:.--
26	01643-31232	· · WASHER	4	SN:.--
27	01580-11210	· · NUT	4	SN:.--
28	235-950-1790	· · MIRROR	2	SN:11001--
WITH AIR CONDITIONER				
29	235-809-4680	COVER	1	SN:11014--
30	235-809-4670	COVER	1	SN:11014--
31	01010-50816	BOLT	8	SN:11014--
32	01643-30823	WASHER	8	SN:11014--

Printed By : Dwi Iswanto (airafather6107170)

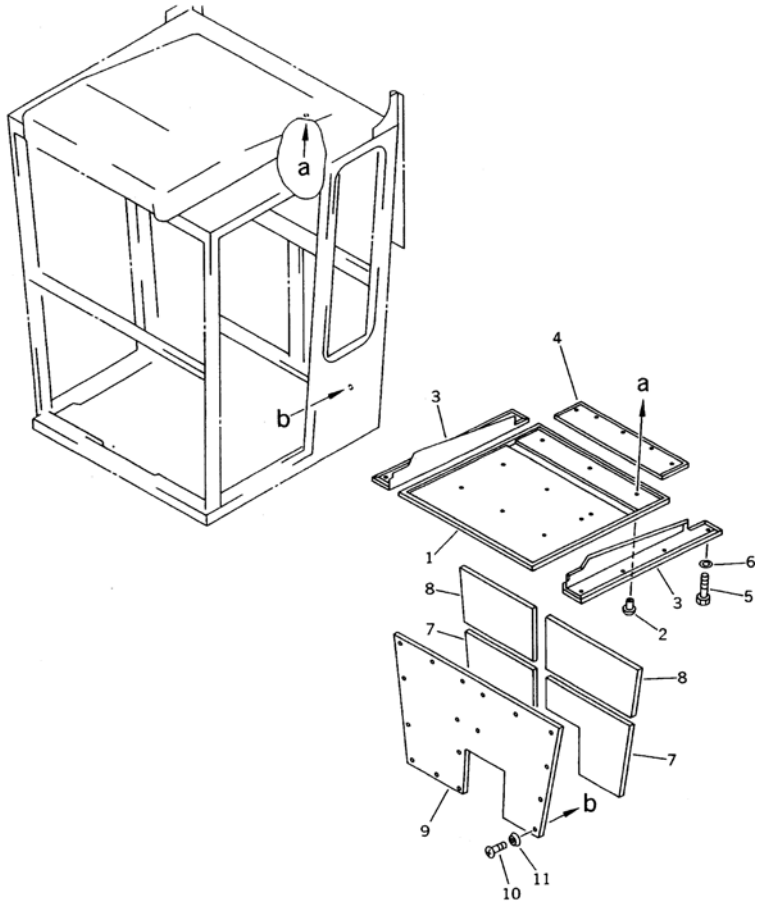

Ref. 5403 **Page 150370**

GD825A-2 S/N 11001-UP

OPERATOR'S CAB (2/8) (INSIDE PANEL)

Item	Part No.	Description	Qty	Options
	(235-957-0212)	ROPS CAB ASS'Y,(FULL)	1	SN:.--
	(235-957-0211)	ROPS CAB ASS'Y,(FULL)	1	SN:11009--.
	(□235-957-0210)	ROPS CAB ASS'Y,(FULL)	1	SN:11001--11008
	(235-957-0232)	ROPS CAB ASS'Y,(LOW)	1	SN:.--
	(235-957-0231)	ROPS CAB ASS'Y,(LOW)	1	SN:11009--.
	(□235-957-0230)	ROPS CAB ASS'Y,(LOW)	1	SN:11001--11008
THESE ASSEMBLIES CONSIST OF ALL PARTS SHOWN IN FIGS.5401 TO 5415A AND 5511.				
	(235-957-0222)	· STEEL CAB ASS'Y,(FULL)	1	SN:.--
	(235-957-0221)	· STEEL CAB ASS'Y,(FULL)	1	SN:11009--.
	(□235-957-0220)	· STEEL CAB ASS'Y,(FULL)	1	SN:11001--11008
	(235-957-0242)	· STEEL CAB ASS'Y,(LOW)	1	SN:.--
	(235-957-0241)	· STEEL CAB ASS'Y,(LOW)	1	SN:11009--.
	(□235-957-0240)	· STEEL CAB ASS'Y,(LOW)	1	SN:11001--11008
THESE ASSEMBLIES CONSIST OF ALL PARTS SHOWN IN FIGS.5401 TO 5413.				
1	23B-950-5250	· · PANEL	1	SN:11001--
2	09416-10000	· · BUTTON	6	SN:11001--
3	23B-950-5260	· · PANEL,L.H.	1	SN:11001--
	23B-950-5270	· · PANEL,R.H.	1	SN:11001--
4	23B-950-5190	· · PANEL	1	SN:11001--
5	01220-40820	· · SCREW	13	SN:11001--
6	23B-950-5350	· · WASHER	13	SN:11001--
7	23B-950-5230	· · PLATE	2	SN:11001--
8	23B-950-5240	· · PLATE	2	SN:11001--
9	235-950-2380	· · PLATE,(FULL)	1	SN:11001--
	235-950-2180	· · PLATE,(LOW)	1	SN:11001--
10	01382-04116	· · SCREW	16	SN:11001--
11	273-955-2420	· · GROMMET	16	SN:11001--

Printed By : Dwi Iswanto (airafather6107170)

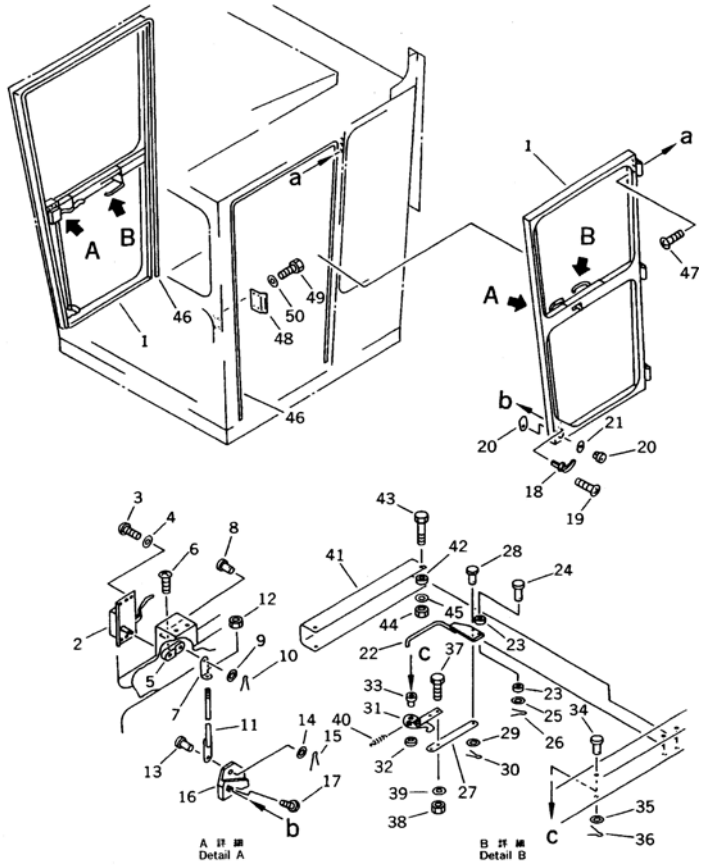

Ref. 5405 **Page 150380**

GD825A-2 S/N 11001-UP
OPERATOR'S CAB (3/8) (DOOR)(#11001-11008)

Item	Part No.	Description	Qty	Options
	(235-957-0210)	ROPS CAB ASS'Y,(FULL)	1	SN:11001--11008
	(235-957-0230)	ROPS CAB ASS'Y,(LOW)	1	SN:11001--11008
THESE ASSEMBLIES CONSIST OF ALL PARTS SHOWN IN FIGS.5401 TO 5415 AND 5511.				
	(235-957-0220)	· STEEL CAB ASS'Y,(FULL)	1	SN:11001--11008
	(235-957-0240)	· STEEL CAB ASS'Y,(LOW)	1	SN:11001--11008
THESE ASSEMBLIES CONSIST OF ALL PARTS SHOWN IN FIGS.5401 TO 5413.				
1	23B-950-5320	· · DOOR,L.H. (FULL)	1	SN:11001--11008
	23B-950-5120	· · DOOR,L.H. (LOW)	1	SN:11001--11008
	235-950-3620	· · DOOR,R.H. (FULL)	1	SN:11001--11008
	235-950-1420	· · DOOR,R.H. (LOW)	1	SN:11001--11008
2	232-957-6470	· · LOCK,L.H.	1	SN:11001--@
	232-957-6480	· · LOCK,R.H.	1	SN:11001--@
3	01220-40616	· · SCREW	12	SN:11001--@
4	01643-30623	· · WASHER	12	SN:11001--@
5	235-950-1680	· · LEVER	2	SN:11001--@
6	01220-40420	· · SCREW	2	SN:11001--@
7	235-950-1561	· · PLATE	2	SN:11001--@
8	04205-10618	· · PIN	2	SN:11001--@
9	01641-20608	· · WASHER	2	SN:11001--@
10	04050-11610	· · PIN,COTTER	2	SN:11001--@
11	235-950-1551	· · ROD	2	SN:11001--@
12	01580-10605	· · NUT	2	SN:11001--@
13	04205-10618	· · PIN	2	SN:11001--@
14	01641-20608	· · WASHER	2	SN:11001--@
15	04050-11610	· · PIN,COTTER	2	SN:11001--@
16	235-950-1571	· · LEVER,L.H.	1	SN:11001--@
	235-950-1581	· · LEVER,R.H.	1	SN:11001--@

Printed By : Dwi Iswanto (airafather6107170)

OPERATOR'S CAB (3/8) (DOOR)(#11001-11008)

Item	Part No.	Description	Qty	Options
17	01220-40412	· · SCREW	2	SN:11001--@
18	235-950-1690	· · HANDLE	2	SN:11001--@
19	01225-40412	· · SCREW	4	SN:11001--@
20	23B-950-5130	· · LOCK	1	SN:11001--@
21	23B-950-5140	· · SPACER	1	SN:11001--@
22	235-950-1660	· · HANDLE,L.H.	1	SN:11001--@
	235-950-1670	· · HANDLE,R.H.	1	SN:11001--@
23	235-950-1540	· · SPACER	4	SN:11001--@
24	235-950-1510	· · PIN	2	SN:11001--@
25	01641-20608	· · WASHER	2	SN:11001--@
26	04050-11612	· · PIN,COTTER	2	SN:11001--@
27	235-950-1490	· · PLATE	2	SN:11001--@
28	04205-10616	· · PIN	2	SN:11001--@
29	01641-20608	· · WASHER	2	SN:11001--@
30	04050-11612	· · PIN,COTTER	2	SN:11001--@
31	232-957-6240	· · LOCK,L.H.	1	SN:11001--@
	232-957-6250	· · LOCK,R.H.	1	SN:11001--@
32	232-957-6540	· · COLLAR	2	SN:11001--@
33	232-957-6260	· · SPACER	2	SN:11001--@
34	04205-11045	· · PIN	2	SN:11001--@
35	01641-21016	· · WASHER	2	SN:11001--@
36	04050-13020	· · PIN,COTTER	2	SN:11001--@
37	01010-50616	· · BOLT	4	SN:11001--@
38	01580-10605	· · NUT	4	SN:11001--@
39	01643-30623	· · WASHER	4	SN:11001--@
40	232-957-6310	· · SPRING	2	SN:11001--@
41	235-950-1460	· · COVER,L.H.	1	SN:11001--@
	235-950-1470	· · COVER,R.H.	1	SN:11001--@
42	235-950-1520	· · SPACER	4	SN:11001--@
43	235-950-1530	· · BOLT	4	SN:11001--@
44	01580-10605	· · NUT	4	SN:11001--@
45	01641-20608	· · WASHER	4	SN:11001--@
46	09412-00040	· · SEAL	2	SN:11001--@
47	01220-40812	· · SCREW	18	SN:11001--@
48	234-957-4250	· · HOOK	2	SN:11001--@
49	01010-51020	· · BOLT	4	SN:11001--@
50	01643-31032	· · WASHER	4	SN:11001--@

Printed By : Dwi Iswanto (airafather6107170)

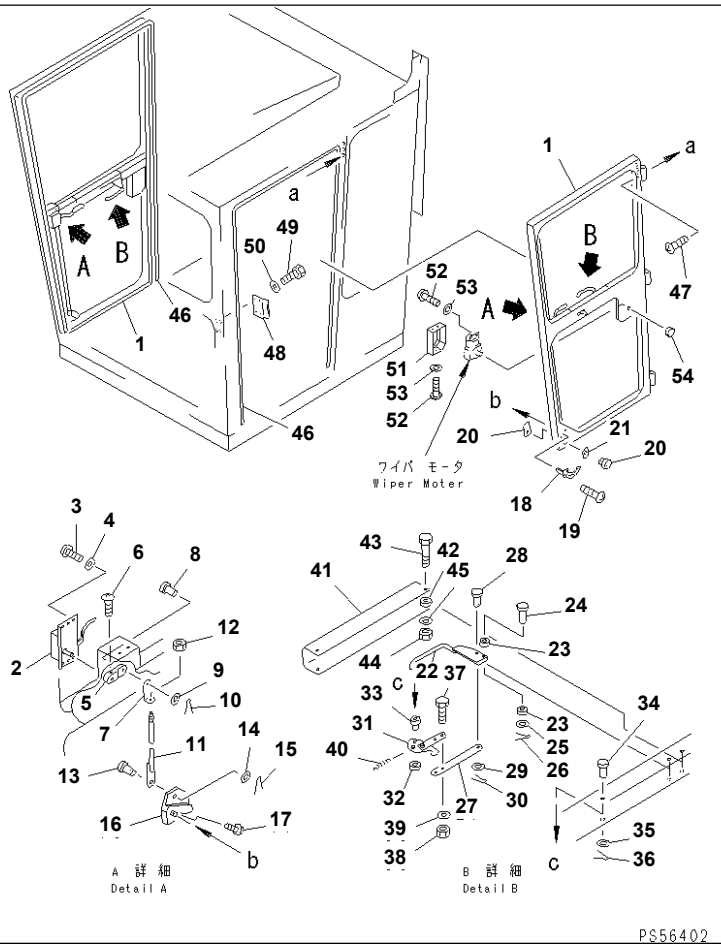

GD825A-2 S/N 11001-UP

OPERATOR'S CAB (3/8) (DOOR)(#11009-.)

Item	Part No.	Description	Qty	Options
	(235-957-0211)	ROPS CAB ASS'Y,(FULL)	1	SN:11009--.
	(235-957-0231)	ROPS CAB ASS'Y,(LOW)	1	SN:11009--.
THESE ASSEMBLIES CONSIST OF ALL PARTS SHOWN IN FIGS.5401A TO 5415A AND 5511.				
	(235-957-0221)	· STEEL CAB ASS'Y,(FULL)	1	SN:11009--.
	(235-957-0241)	· STEEL CAB ASS'Y,(LOW)	1	SN:11009--.
THESE ASSEMBLIES CONSIST OF ALL PARTS SHOWN IN FIGS.5401A TO 5413.				
1	235-950-5620	· · DOOR,L.H. (FULL)	1	SN:11009--.
	235-950-5630	· · DOOR,L.H. (LOW)	1	SN:11009--.
	235-950-3621	· · DOOR,R.H. (FULL)	1	SN:11009--.
	235-950-1421	· · DOOR,R.H. (LOW)	1	SN:11009--.
2	232-957-6470	· · LOCK,L.H.	1	SN:11001--@
	232-957-6480	· · LOCK,R.H.	1	SN:11001--@
3	01220-40616	· · SCREW	12	SN:11001--@
4	01643-30623	· · WASHER	12	SN:11001--@
5	235-950-1680	· · LEVER	2	SN:11001--@
6	01220-40420	· · SCREW	2	SN:11001--@
7	235-950-1561	· · PLATE	2	SN:11001--@
8	04205-10618	· · PIN	2	SN:11001--@
9	01641-20608	· · WASHER	2	SN:11001--@
10	04050-11610	· · PIN,COTTER	2	SN:11001--@
11	235-950-1551	· · ROD	2	SN:11001--@
12	01580-10605	· · NUT	2	SN:11001--@
13	04205-10618	· · PIN	2	SN:11001--@
14	01641-20608	· · WASHER	2	SN:11001--@
15	04050-11610	· · PIN,COTTER	2	SN:11001--@
16	235-950-1571	· · LEVER,L.H.	1	SN:11001--@
	235-950-1581	· · LEVER,R.H.	1	SN:11001--@

Printed By : Dwi Iswanto (airafather6107170)

OPERATOR'S CAB (3/8) (DOOR)(#11009-.)

Item	Part No.	Description	Qty	Options
17	01220-40412	· · SCREW	2	SN:11001--@
18	235-950-1690	· · HANDLE	2	SN:11001--@
19	01225-40412	· · SCREW	4	SN:11001--@
20	23B-950-5130	· · LOCK	1	SN:11001--@
21	23B-950-5140	· · SPACER	1	SN:11001--@
22	235-950-1660	· · HANDLE,L.H.	1	SN:11001--@
	235-950-1670	· · HANDLE,R.H.	1	SN:11001--@
23	235-950-1540	· · SPACER	4	SN:11001--@
24	235-950-1510	· · PIN	2	SN:11001--@
25	01641-20608	· · WASHER	2	SN:11001--@
26	04050-11612	· · PIN,COTTER	2	SN:11001--@
27	235-950-1490	· · PLATE	2	SN:11001--@
28	04205-10616	· · PIN	2	SN:11001--@
29	01641-20608	· · WASHER	2	SN:11001--@
30	04050-11612	· · PIN,COTTER	2	SN:11001--@
31	232-957-6240	· · LOCK,L.H.	1	SN:11001--@
	232-957-6250	· · LOCK,R.H.	1	SN:11001--@
32	232-957-6540	· · COLLAR	2	SN:11001--@
33	232-957-6260	· · SPACER	2	SN:11001--@
34	04205-11045	· · PIN	2	SN:11001--@
35	01641-21016	· · WASHER	2	SN:11001--@
36	04050-13020	· · PIN,COTTER	2	SN:11001--@
37	01010-50616	· · BOLT	4	SN:11001--@
38	01580-10605	· · NUT	4	SN:11001--@
39	01643-30623	· · WASHER	4	SN:11001--@
40	232-957-6310	· · SPRING	2	SN:11001--@
41	235-950-1460	· · COVER,L.H.	1	SN:11001--@
	235-950-1470	· · COVER,R.H.	1	SN:11001--@
42	235-950-1520	· · SPACER	4	SN:11001--@
43	235-950-1530	· · BOLT	4	SN:11001--@
44	01580-10605	· · NUT	4	SN:11001--@
45	01641-20608	· · WASHER	4	SN:11001--@
46	09412-00040	· · SEAL	2	SN:11001--@
47	01220-40812	· · SCREW	18	SN:11001--@
48	234-957-4250	· · HOOK	2	SN:11001--@
49	01010-51020	· · BOLT	4	SN:11001--@
50	01643-31032	· · WASHER	4	SN:11001--@
51	235-950-5550	· · COVER,L.H.	1	SN:11009--.
	235-950-5560	· · COVER,R.H.	1	SN:11009--.
52	01220-40512	· · SCREW	13	SN:11009--.
53	01641-20508	· · WASHER	13	SN:11009--.
54	09415-01610	· · CAP	2	SN:11009--@

Printed By : Dwi Iswanto (airafather6107170)

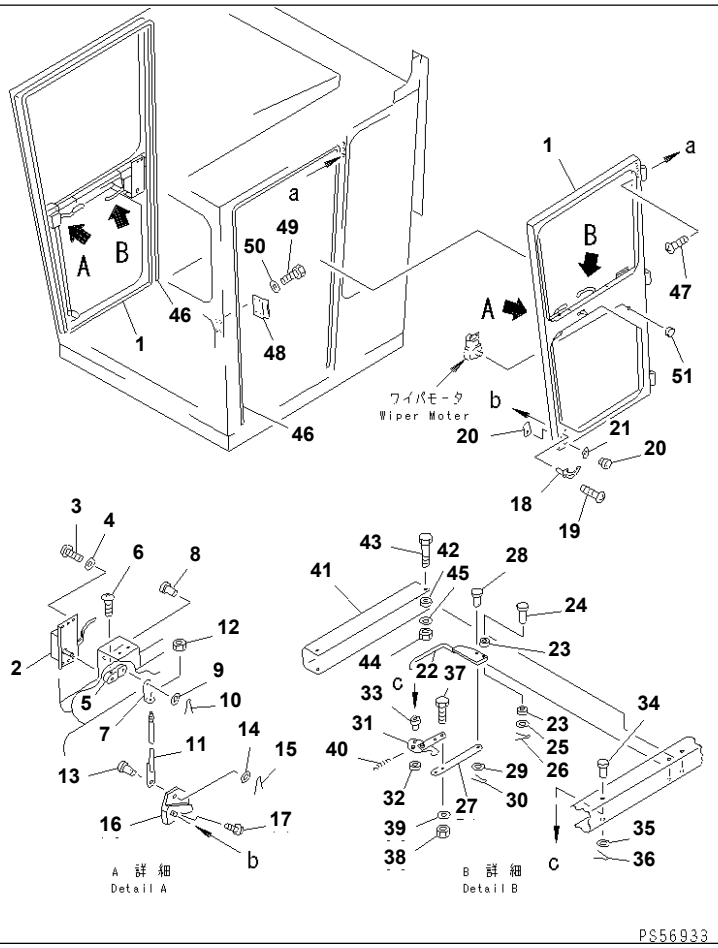

GD825A-2 S/N 11001-UP

OPERATOR'S CAB (3/8) (DOOR)(#.-)

Item	Part No.	Description	Qty	Options
	(235-957-0212)	ROPS CAB ASS'Y,(FULL)	1	SN:.--
	(235-957-0232)	ROPS CAB ASS'Y,(LOW)	1	SN:.--
THESE ASSEMBLIES CONSIST OF ALL PARTS SHOWN IN FIGS.5401B TO 5415A AND 5511.				
	(235-957-0222)	· STEEL CAB ASS'Y,(FULL)	1	SN:.--
	(235-957-0242)	· STEEL CAB ASS'Y,(LOW)	1	SN:.--
THESE ASSEMBLIES CONSIST OF ALL PARTS SHOWN IN FIGS.5401B TO 5413.				
1	235-950-5621	· · DOOR,L.H. (FULL)	1	SN:.--
	235-950-5631	· · DOOR,L.H. (LOW)	1	SN:.--
	235-950-3622	· · DOOR,R.H. (FULL)	1	SN:.--
	235-950-1422	· · DOOR,R.H. (LOW)	1	SN:.--
2	232-957-6470	· · LOCK,L.H.	1	SN:11001--
	232-957-6480	· · LOCK,R.H.	1	SN:11001--
3	01220-40616	· · SCREW	12	SN:11001--
4	01643-30623	· · WASHER	12	SN:11001--
5	235-950-1680	· · LEVER	2	SN:11001--
6	01220-40420	· · SCREW	2	SN:11001--
7	235-950-1561	· · PLATE	2	SN:11001--
8	04205-10618	· · PIN	2	SN:11001--
9	01641-20608	· · WASHER	2	SN:11001--
10	04050-11610	· · PIN,COTTER	2	SN:11001--
11	235-950-1551	· · ROD	2	SN:11001--
12	01580-10605	· · NUT	2	SN:11001--
13	04205-10618	· · PIN	2	SN:11001--
14	01641-20608	· · WASHER	2	SN:11001--
15	04050-11610	· · PIN,COTTER	2	SN:11001--
16	235-950-1571	· · LEVER,L.H.	1	SN:11001--
	235-950-1581	· · LEVER,R.H.	1	SN:11001--

Printed By : Dwi Iswanto (airafather6107170)

OPERATOR'S CAB (3/8) (DOOR)(#.-)

Item	Part No.	Description	Qty	Options
17	01220-40412	· · SCREW	2	SN:11001--
18	235-950-1690	· · HANDLE	2	SN:11001--
19	01225-40412	· · SCREW	4	SN:11001--
20	23B-950-5130	· · LOCK	1	SN:11001--
21	23B-950-5140	· · SPACER	1	SN:11001--
22	235-950-1660	· · HANDLE,L.H.	1	SN:11001--
	235-950-1670	· · HANDLE,R.H.	1	SN:11001--
23	235-950-1540	· · SPACER	4	SN:11001--
24	235-950-1510	· · PIN	2	SN:11001--
25	01641-20608	· · WASHER	2	SN:11001--
26	04050-11612	· · PIN,COTTER	2	SN:11001--
27	235-950-1490	· · PLATE	2	SN:11001--
28	04205-10616	· · PIN	2	SN:11001--
29	01641-20608	· · WASHER	2	SN:11001--
30	04050-11612	· · PIN,COTTER	2	SN:11001--
31	232-957-6240	· · LOCK,L.H.	1	SN:11001--
	232-957-6250	· · LOCK,R.H.	1	SN:11001--
32	232-957-6540	· · COLLAR	2	SN:11001--
33	232-957-6260	· · SPACER	2	SN:11001--
34	04205-11045	· · PIN	2	SN:11001--
35	01641-21016	· · WASHER	2	SN:11001--
36	04050-13020	· · PIN,COTTER	2	SN:11001--
37	01010-50616	· · BOLT	4	SN:11001--
38	01580-10605	· · NUT	4	SN:11001--
39	01643-30623	· · WASHER	4	SN:11001--
40	232-957-6310	· · SPRING	2	SN:11001--
41	235-950-1460	· · COVER,L.H.	1	SN:11001--
	235-950-1470	· · COVER,R.H.	1	SN:11001--
42	235-950-1520	· · SPACER	4	SN:11001--
43	235-950-1530	· · BOLT	4	SN:11001--
44	01580-10605	· · NUT	4	SN:11001--
45	01641-20608	· · WASHER	4	SN:11001--
46	09412-00040	· · SEAL	2	SN:11001--
47	01220-40812	· · SCREW	18	SN:11001--
48	234-957-4250	· · HOOK	2	SN:11001--
49	01010-51020	· · BOLT	4	SN:11001--
50	01643-31032	· · WASHER	4	SN:11001--
51	09415-01610	· · CAP	2	SN:11009--

Printed By : Dwi Iswanto (airafather6107170)

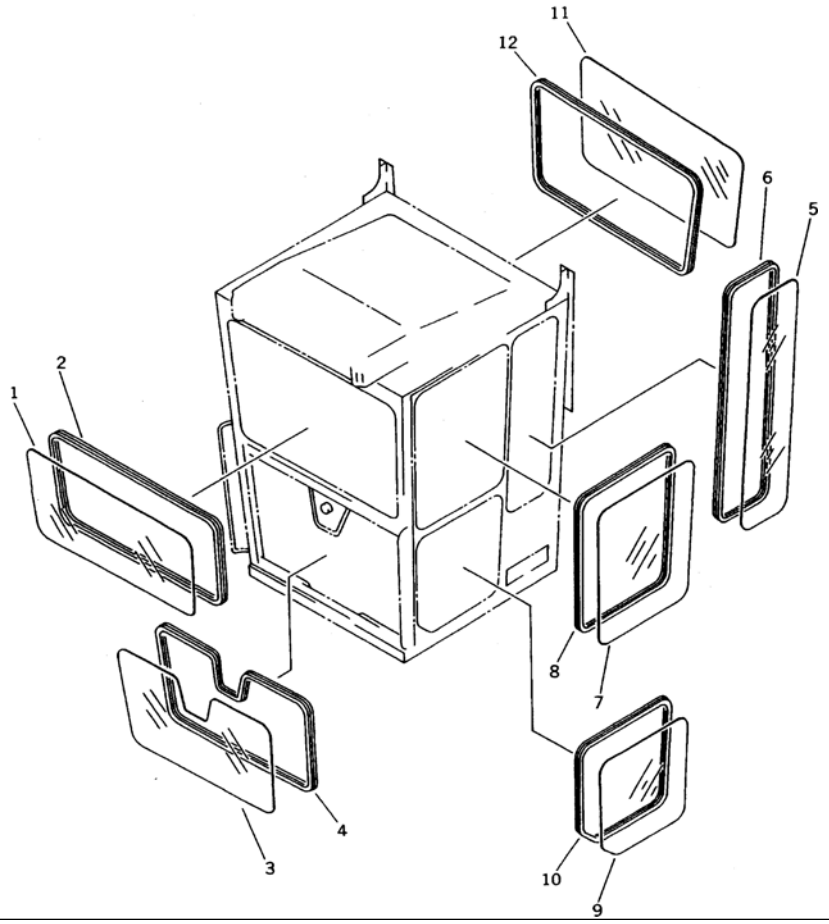

OPERATOR'S CAB (4/8) (GLASS)(#11001-11008)

Item	Part No.	Description	Qty	Options
	(235-957-0210)	ROPS CAB ASS'Y,(FULL)	1	SN:11001--11008
	(235-957-0230)	ROPS CAB ASS'Y,(LOW)	1	SN:11001--11008
THESE ASSEMBLIES CONSIST OF ALL PARTS SHOWN IN FIGS.5401 TO 5415 AND 5511.				
	(235-957-0220)	· STEEL CAB ASS'Y,(FULL)	1	SN:11001--11008
	(235-957-0240)	· STEEL CAB ASS'Y,(LOW)	1	SN:11001--11008
THESE ASSEMBLIES CONSIST OF ALL PARTS SHOWN IN FIGS.5401 TO 5413.				
1	235-950-3710	· · GLASS,(FULL)	1	SN:11001--@
	235-950-1640	· · GLASS,(LOW)	1	SN:11001--@
2	09410-40450	· · STRIP,WEATHER (FULL)	1	SN:11001--@
	09410-40431	· · STRIP,WEATHER (LOW)	1	SN:11001--@
3	23B-950-5330	· · GLASS,(FULL)	1	SN:11001--@
	23C-950-1130	· · GLASS,(LOW)	1	SN:11001--@
4	09410-40415	· · STRIP,WEATHER	1	SN:11001--@
5	235-950-3741	· · GLASS,(FULL)	2	SN:11001--11008
	235-950-1621	· · GLASS,(LOW)	2	SN:11001--11008
6	09410-40388	· · STRIP,WEATHER (FULL)	2	SN:11001--@
	09410-40368	· · STRIP,WEATHER (LOW)	2	SN:11001--@
7	235-950-3750	· · GLASS,(FULL)	2	SN:11001--@
	235-950-1590	· · GLASS,(LOW)	2	SN:11001--@
8	09410-40328	· · STRIP,WEATHER (FULL)	2	SN:11001--@
	09410-40306	· · STRIP,WEATHER (LOW)	2	SN:11001--@
9	235-950-3760	· · GLASS,(FULL)	2	SN:11001--11008
	235-950-1610	· · GLASS,(LOW)	2	SN:11001--11008
10	09410-40294	· · STRIP,WEATHER (FULL)	2	SN:11001--@
	09410-40308	· · STRIP,WEATHER (LOW)	2	SN:11001--@
11	235-950-3730	· · GLASS,(FULL)	1	SN:11001--@
	235-950-1630	· · GLASS,(LOW)	1	SN:11001--@

Printed By : Dwi Iswanto (airafather6107170)

OPERATOR'S CAB (4/8) (GLASS)(#11001-11008)

Item	Part No.	Description	Qty	Options
12	09410-40412	· · STRIP,WEATHER (FULL)	1	SN:11001--@
	09410-40402	· · STRIP,WEATHER (LOW)	1	SN:11001--@

Printed By : Dwi Iswanto (airafather6107170)

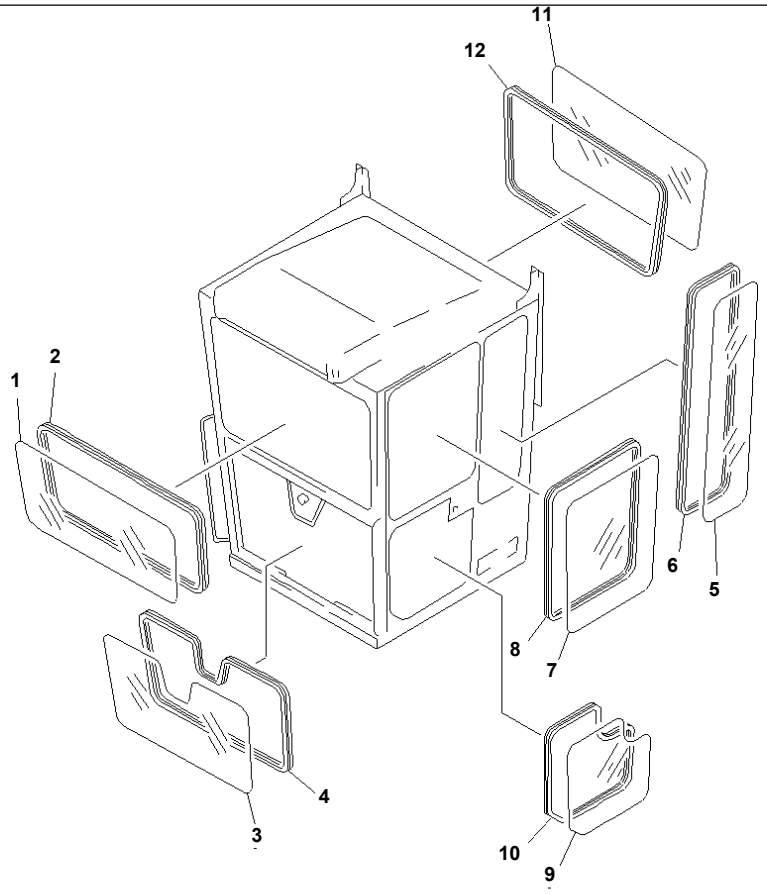

OPERATOR'S CAB (4/8) (GLASS)(#11009-.)

Item	Part No.	Description	Qty	Options
	(235-957-0211)	ROPS CAB ASS'Y,(FULL)	1	SN:11009--.
	(235-957-0231)	ROPS CAB ASS'Y,(LOW)	1	SN:11009--.
THESE ASSEMBLIES CONSIST OF ALL PARTS SHOWN IN FIGS.5401A TO 5415A AND 5511.				
	(235-957-0221)	· STEEL CAB ASS'Y,(FULL)	1	SN:11009--.
	(235-957-0241)	· STEEL CAB ASS'Y,(LOW)	1	SN:11009--.
THESE ASSEMBLIES CONSIST OF ALL PARTS SHOWN IN FIGS.5401A TO 5413.				
1	235-950-3710	· · GLASS,(FULL)	1	SN:11001--@
	235-950-1640	· · GLASS,(LOW)	1	SN:11001--@
2	09410-40450	· · STRIP,WEATHER (FULL)	1	SN:11001--@
	09410-40431	· · STRIP,WEATHER (LOW)	1	SN:11001--@
3	23B-950-5330	· · GLASS,(FULL)	1	SN:11001--@
	23C-950-1130	· · GLASS,(LOW)	1	SN:11001--@
4	09410-40415	· · STRIP,WEATHER	1	SN:11001--@
5	235-950-3742	· · GLASS,(FULL)	2	SN:11009--@
	235-950-1622	· · GLASS,(LOW)	2	SN:11009--@
6	09410-40388	· · STRIP,WEATHER (FULL)	2	SN:11001--@
	09410-40368	· · STRIP,WEATHER (LOW)	2	SN:11001--@
7	235-950-3750	· · GLASS,(FULL)	2	SN:11001--@
	235-950-1590	· · GLASS,(LOW)	2	SN:11001--@
8	09410-40328	· · STRIP,WEATHER (FULL)	2	SN:11001--@
	09410-40306	· · STRIP,WEATHER (LOW)	2	SN:11001--@
9	235-950-5610	· · GLASS,(FULL)	2	SN:11009--.
	235-950-5510	· · GLASS,(LOW)	2	SN:11009--.
10	09410-40294	· · STRIP,WEATHER (FULL)	2	SN:11001--@
	09410-40308	· · STRIP,WEATHER (LOW)	2	SN:11001--@
11	235-950-3730	· · GLASS,(FULL)	1	SN:11001--@
	235-950-1630	· · GLASS,(LOW)	1	SN:11001--@

Printed By : Dwi Iswanto (airafather6107170)

OPERATOR'S CAB (4/8) (GLASS)(#11009-.)

Item	Part No.	Description	Qty	Options
12	09410-40412	· · STRIP,WEATHER (FULL)	1	SN:11001--@
	09410-40402	· · STRIP,WEATHER (LOW)	1	SN:11001--@

Printed By : Dwi Iswanto (airafather6107170)

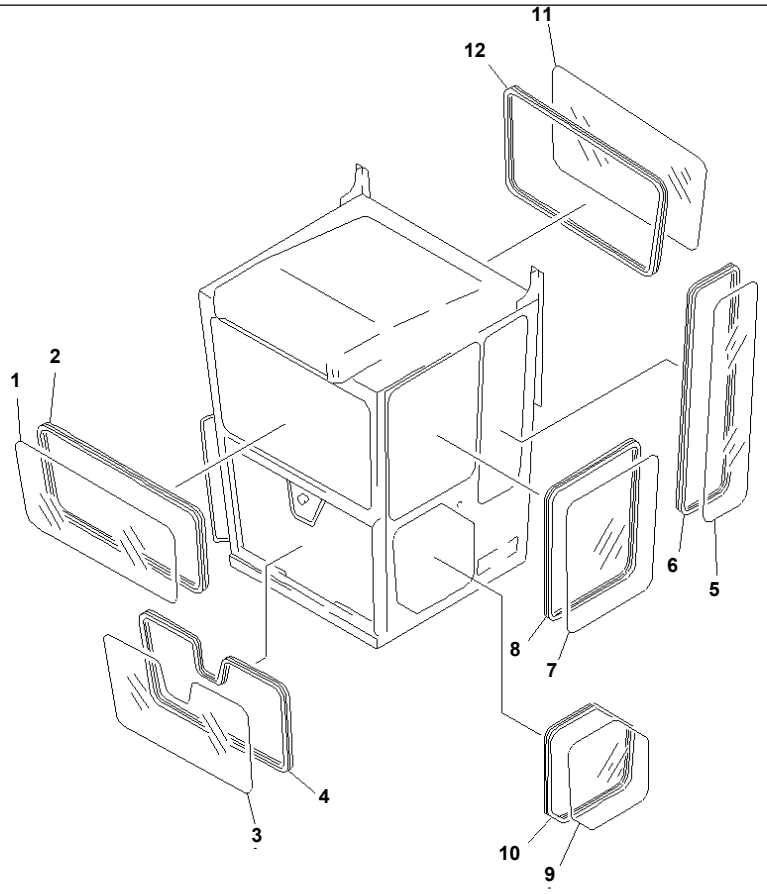

OPERATOR'S CAB (4/8) (GLASS)(#.-)

Item	Part No.	Description	Qty	Options
	(235-957-0212)	ROPS CAB ASS'Y,(FULL)	1	SN:.--
	(235-957-0232)	ROPS CAB ASS'Y,(LOW)	1	SN:.--
THESE ASSEMBLIES CONSIST OF ALL PARTS SHOWN IN FIGS.5401B TO 5415A AND 5511.				
	(235-957-0222)	· STEEL CAB ASS'Y,(FULL)	1	SN:.--
	(235-957-0242)	· STEEL CAB ASS'Y,(LOW)	1	SN:.--
THESE ASSEMBLIES CONSIST OF ALL PARTS SHOWN IN FIGS.5401B TO 5413.				
1	235-950-3710	· · GLASS,(FULL)	1	SN:11001--
	235-950-1640	· · GLASS,(LOW)	1	SN:11001--
2	09410-40450	· · STRIP,WEATHER (FULL)	1	SN:11001--
	09410-40431	· · STRIP,WEATHER (LOW)	1	SN:11001--
3	23B-950-5330	· · GLASS,(FULL)	1	SN:11001--
	23C-950-1130	· · GLASS,(LOW)	1	SN:11001--
4	09410-40415	· · STRIP,WEATHER	1	SN:11001--
5	235-950-3742	· · GLASS,(FULL)	2	SN:11009--
	235-950-1622	· · GLASS,(LOW)	2	SN:11009--
6	09410-40388	· · STRIP,WEATHER (FULL)	2	SN:11001--
	09410-40368	· · STRIP,WEATHER (LOW)	2	SN:11001--
7	235-950-3750	· · GLASS,(FULL)	2	SN:11001--
	235-950-1590	· · GLASS,(LOW)	2	SN:11001--
8	09410-40328	· · STRIP,WEATHER (FULL)	2	SN:11001--
	09410-40306	· · STRIP,WEATHER (LOW)	2	SN:11001--
9	235-950-5611	· · GLASS,(FULL)	2	SN:.--
	235-950-5511	· · GLASS,(LOW)	2	SN:.--
10	09410-40294	· · STRIP,WEATHER (FULL)	2	SN:11001--
	09410-40308	· · STRIP,WEATHER (LOW)	2	SN:11001--
11	235-950-3730	· · GLASS,(FULL)	1	SN:11001--
	235-950-1630	· · GLASS,(LOW)	1	SN:11001--

Printed By : Dwi Iswanto (airafather6107170)

OPERATOR'S CAB (4/8) (GLASS)(#.-)

Item	Part No.	Description	Qty	Options
12	09410-40412	· · STRIP,WEATHER (FULL)	1	SN:11001--
	09410-40402	· · STRIP,WEATHER (LOW)	1	SN:11001--

Printed By : Dwi Iswanto (airafather6107170)

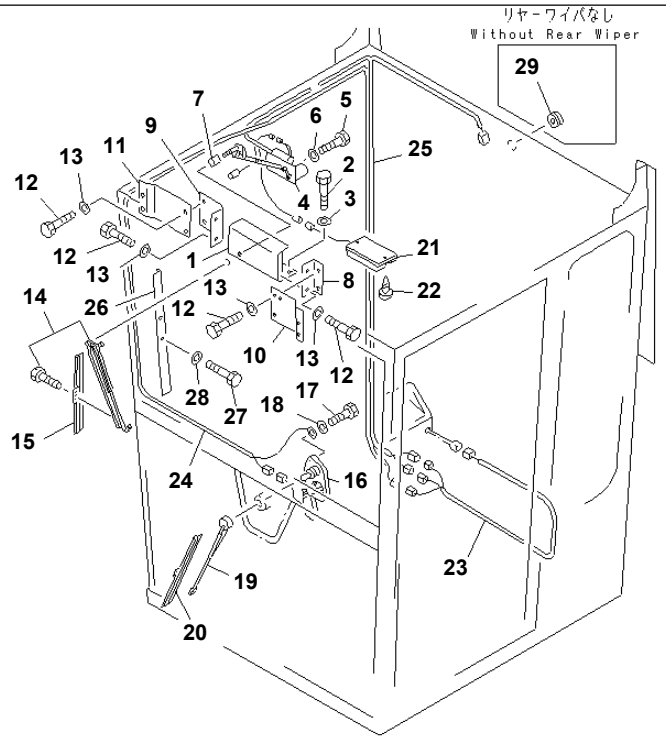

PS54561

OPERATOR'S CAB (5/8) (ELECTRICAL SYSTEM)

Item	Part No.	Description	Qty	Options
	(235-957-0212)	ROPS CAB ASS'Y,(FULL)	1	SN:.--
	(235-957-0211)	ROPS CAB ASS'Y,(FULL)	1	SN:11009--.
	(□235-957-0210)	ROPS CAB ASS'Y,(FULL)	1	SN:11001--11008
	(235-957-0232)	ROPS CAB ASS'Y,(LOW)	1	SN:.--
	(235-957-0231)	ROPS CAB ASS'Y,(LOW)	1	SN:11009--.
	(□235-957-0230)	ROPS CAB ASS'Y,(LOW)	1	SN:11001--11008
THESE ASSEMBLIES CONSIST OF ALL PARTS SHOWN IN FIGS.5401 TO 5415 AND 5511.				
	(235-957-0222)	· STEEL CAB ASS'Y,(FULL)	1	SN:.--
	(235-957-0221)	· STEEL CAB ASS'Y,(FULL)	1	SN:11009--.
	(□235-957-0220)	· STEEL CAB ASS'Y,(FULL)	1	SN:11001--11008
	(235-957-0242)	· STEEL CAB ASS'Y,(LOW)	1	SN:.--
	(235-957-0241)	· STEEL CAB ASS'Y,(LOW)	1	SN:11009--.
	(□235-957-0240)	· STEEL CAB ASS'Y,(LOW)	1	SN:11001--11008
THESE ASSEMBLIES CONSIST OF ALL PARTS SHOWN IN FIGS.5401 TO 5413.				
1	235-950-2710	· · BRACKET	1	SN:11001--
2	01010-51020	· · BOLT	3	SN:11001--
3	01643-31032	· · WASHER	3	SN:11001--
4	130-911-3270	· · MOTOR,WIPER	1	SN:11001--
5	01010-50616	· · BOLT	2	SN:11001--
6	01643-30623	· · WASHER	2	SN:11001--
7	235-950-2720	· · SPACER	1	SN:11001--
8	235-950-2750	· · PLATE,L.H.	1	SN:11001--
9	235-950-2740	· · PLATE,R.H.	1	SN:11001--
10	235-950-2760	· · PLATE,L.H.	1	SN:11001--
11	235-950-2730	· · PLATE,R.H.	1	SN:11001--
12	01010-50816	· · BOLT	12	SN:11001--
13	01643-30823	· · WASHER	12	SN:11001--

Printed By : Dwi Iswanto (airafather6107170)

OPERATOR'S CAB (5/8) (ELECTRICAL SYSTEM)

Item	Part No.	Description	Qty	Options
14	235-950-2780	· · ARM,WIPER (FULL)	1	SN:11001--
	08184-10550	· · ARM,WIPER (LOW)	1	SN:11001--
15	205-06-62570	· · BLADE,WIPER	1	SN:11001--
16	23B-951-2610	· · MOTOR,WIPER	1	SN:11001--
17	01010-50816	· · BOLT	3	SN:11001--
18	01643-30823	· · WASHER	3	SN:11001--
19	08184-30400	· · ARM,WIPER	1	SN:11001--
20	08185-00300	· · BLADE,WIPER	1	SN:11001--
21	08141-02400	· · LAMP,ROOM	1	SN:11001--
	08116-02410	· · · BULB¤ 10W	1	SN:11001--
22	01370-00410	· · SCREW	2	SN:11001--
23	235-950-5320	· · WIRE ASS'Y	1	SN:11001--
24	235-950-5310	· · WIRE ASS'Y	1	SN:11001--
25	235-950-1811	· · WIRE ASS'Y	1	SN:12091--
	235-950-1810	· · WIRE ASS'Y	1	SN:11001--12090
26	235-950-5350	· · BRACKET,(FULL)	1	SN:11001--
	235-950-5340	· · BRACKET,(LOW)	1	SN:11001--
27	01010-50830	· · BOLT	2	SN:11001--
28	01643-30823	· · WASHER	2	SN:11001--
29	09415-01008	· · CAP	1	SN:11001--

Printed By : Dwi Iswanto (airafather6107170)

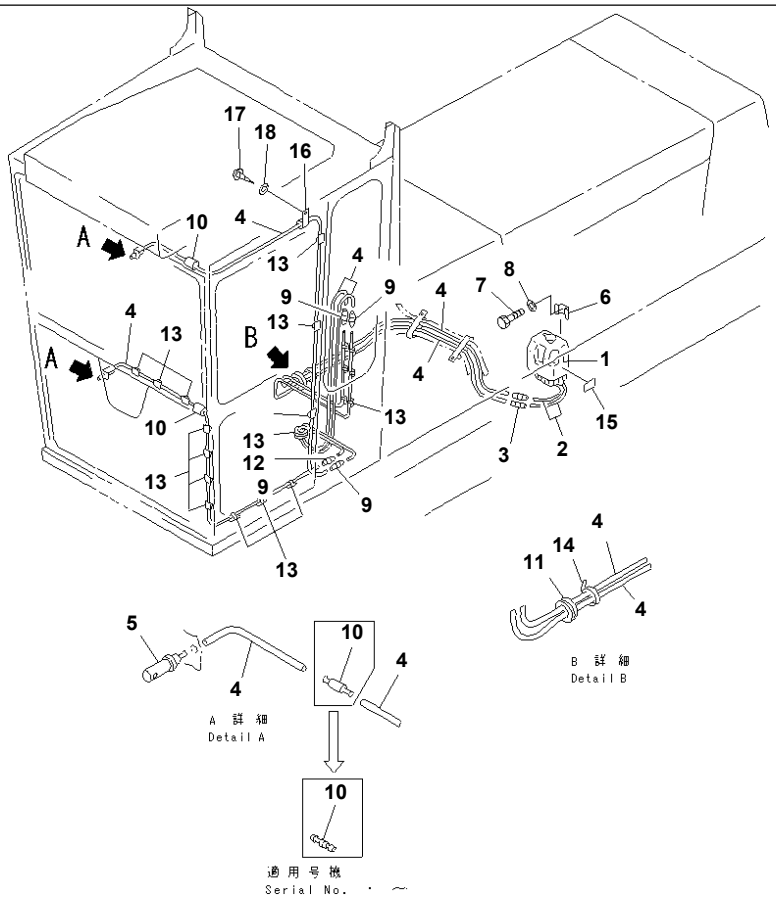

OPERATOR'S CAB (6/8) (WINDOW WASHER TANK)

Item	Part No.	Description	Qty	Options
	(235-957-0212)	ROPS CAB ASS'Y,(FULL)	1	SN:.--
	(235-957-0211)	ROPS CAB ASS'Y,(FULL)	1	SN:11009--.
	(□235-957-0210)	ROPS CAB ASS'Y,(FULL)	1	SN:11001--11008
	(235-957-0232)	ROPS CAB ASS'Y,(LOW)	1	SN:.--
	(235-957-0231)	ROPS CAB ASS'Y,(LOW)	1	SN:11009--.
	(□235-957-0230)	ROPS CAB ASS'Y,(LOW)	1	SN:11001--11008
THESE ASSEMBLIES CONSIST OF ALL PARTS SHOWN IN FIGS.5401 TO 5415A AND 5511.				
	(235-957-0222)	・ STEEL CAB ASS'Y,(FULL)	1	SN:.--
	(235-957-0221)	・ STEEL CAB ASS'Y,(FULL)	1	SN:11009--.
	(□235-957-0220)	・ STEEL CAB ASS'Y,(FULL)	1	SN:11001--11008
	(235-957-0242)	・ STEEL CAB ASS'Y,(LOW)	1	SN:.--
	(235-957-0241)	・ STEEL CAB ASS'Y,(LOW)	1	SN:11009--.
	(□235-957-0240)	・ STEEL CAB ASS'Y,(LOW)	1	SN:11001--11008
THESE ASSEMBLIES CONSIST OF ALL PARTS SHOWN IN FIGS.5401 TO 5413.				
	23B-950-2810	・・ TANK ASS'Y,WINDOW WASHER	1	SN:11001--
1	23B-950-2820	・・・ BODY	1	SN:11001--
2	232-856-5140	・・・ HOSE	2	SN:11001--
3	232-856-5160	・・・ CONNECTOR	2	SN:11001--
4	232-856-5260	・・・ HOSE¤ 10M	2	SN:11001--
5	232-856-5170	・・・ NOZZLE	2	SN:11001--
6	232-856-5130	・・・ BRACKET	1	SN:11001--
7	01010-50612	・・ BOLT	2	SN:11001--
8	01643-30623	・・ WASHER	2	SN:11001--
9	232-856-5160	・・ CONNECTOR	4	SN:11001--
10	120-Y79-5760	・・ VALVE,CHECK	2	SN:..--
	◆23F-950-1490	・・ VALVE,CHECK	2	SN:11001--..
11	08037-01008	・・ GROMMET	2	SN:11001--

Printed By : Dwi Iswanto (airafather6107170)

OPERATOR'S CAB (6/8) (WINDOW WASHER TANK)

Item	Part No.	Description	Qty	Options
12	08037-02512	· · GROMMET	1	SN:11001--
13	08051-00801	· · CLIP	30	SN:11001--
14	08034-00414	· · BAND	1	SN:11001--
15	09699-13000	· · PLATE¤ CAUTION,WINDOW WASHER	1	SN:11001--
16	22W-54-18840	· · CLIP	1	SN:11001--
17	01370-00408	· · SCREW	1	SN:11001--
18	01641-10405	· · WASHER	1	SN:11001--

Printed By : Dwi Iswanto (airafather6107170)

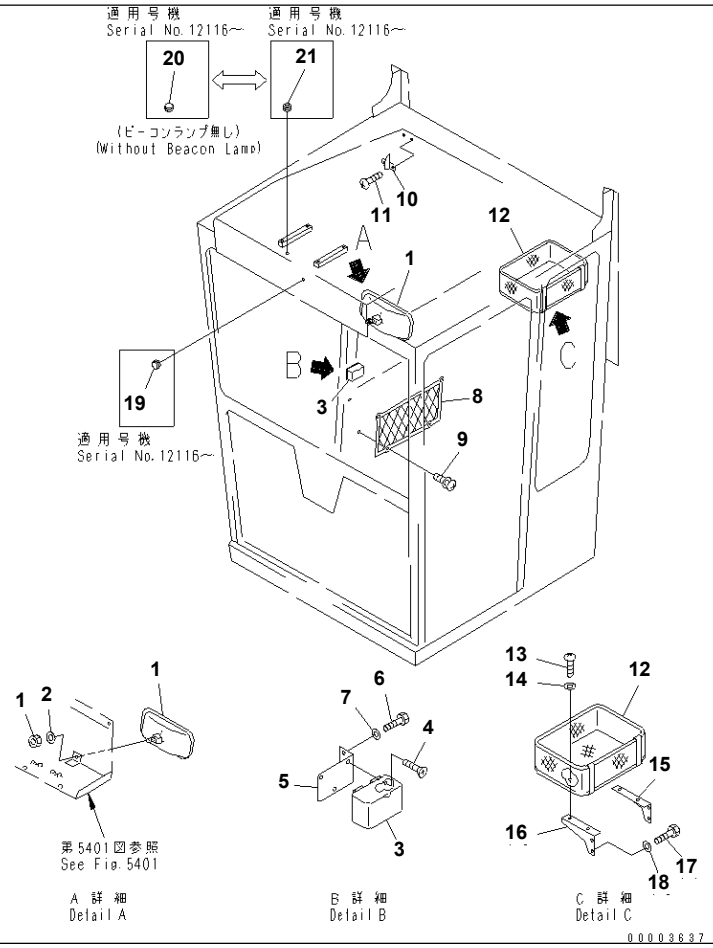

OPERATOR'S CAB (7/8) (ACCESSORY PARTS)

Item	Part No.	Description	Qty	Options
	(235-957-0212)	ROPS CAB ASS'Y,(FULL)	1	SN:.--
	(235-957-0211)	ROPS CAB ASS'Y,(FULL)	1	SN:11009--.
	(□235-957-0210)	ROPS CAB ASS'Y,(FULL)	1	SN:11001--11008
	(235-957-0232)	ROPS CAB ASS'Y,(LOW)	1	SN:.--
	(235-957-0231)	ROPS CAB ASS'Y,(LOW)	1	SN:11009--.
	(□235-957-0230)	ROPS CAB ASS'Y,(LOW)	1	SN:11001--11008
THESE ASSEMBLIES CONSIST OF ALL PARTS SHOWN IN FIGS.5401 TO 5415A AND 5511.				
	(235-957-0222)	・ STEEL CAB ASS'Y,(FULL)	1	SN:.--
	(235-957-0221)	・ STEEL CAB ASS'Y,(FULL)	1	SN:11009--.
	(□235-957-0220)	・ STEEL CAB ASS'Y,(FULL)	1	SN:11001--11008
	(235-957-0242)	・ STEEL CAB ASS'Y,(LOW)	1	SN:.--
	(235-957-0241)	・ STEEL CAB ASS'Y,(LOW)	1	SN:11009--.
	(□235-957-0240)	・ STEEL CAB ASS'Y,(LOW)	1	SN:11001--11008
THESE ASSEMBLIES CONSIST OF ALL PARTS SHOWN IN FIGS.5401 TO 5413.				
1	232-957-6210	・・ MIRROR,ROOM	1	SN:11001--
2	01643-31032	・・ WASHER	1	SN:11001--
3	232-855-1542	・・ ASHTRAY	1	SN:11001--
4	01224-40406	・・ SCREW	3	SN:11001--
5	23B-950-2571	・・ BRACKET	1	SN:11001--
6	01010-50610	・・ BOLT	2	SN:11001--
7	01643-30623	・・ WASHER	2	SN:11001--
8	205-54-66530	・・ POCKET	1	SN:11001--
9	01023-10514	・・ SCREW	4	SN:11001--
10	205-54-51250	・・ HANGER	1	SN:11001--
11	01236-40410	・・ SCREW	2	SN:11001--
12	23B-950-2930	・・ SHELF	1	SN:11001--
13	01220-40612	・・ SCREW	4	SN:11001--

Printed By : Dwi Iswanto (airafather6107170)

OPERATOR'S CAB (7/8) (ACCESSORY PARTS)

Item	Part No.	Description	Qty	Options
14	01642-20608	· · WASHER	4	SN:11001--
15	23B-950-2910	· · BRACKET	1	SN:11001--
16	23B-950-2920	· · BRACKET	1	SN:11001--
17	01010-51016	· · BOLT	4	SN:11001--
18	01643-31032	· · WASHER	4	SN:11001--
19	09415-00506	· · CAP	1	SN:12116--
20	09415-01008	· · CAP	1	SN:12116--
21	08037-01008	· · GROMMET	1	SN:12116--

Printed By : Dwi Iswanto (airafather6107170)

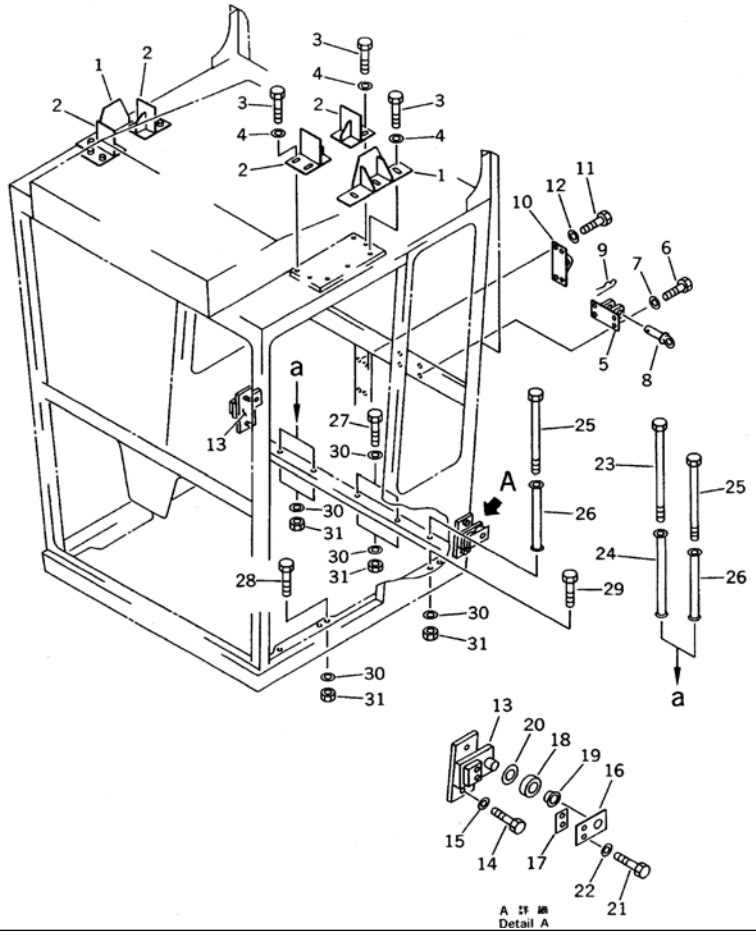

GD825A-2 S/N 11001-UP

OPERATOR'S CAB (8/8) (LIFTING PARTS)(#11001-11008)

Item	Part No.	Description	Qty	Options
	(235-957-0210)	ROPS CAB ASS'Y,(FULL)	1	SN:11001--11008
	(235-957-0230)	ROPS CAB ASS'Y,(LOW)	1	SN:11001--11008
THESE ASSEMBLIES CONSIST OF ALL PARTS SHOWN IN FIGS.5401 TO 5415 AND 5511.				
1	235-950-5260	· BRACKET	2	SN:11001--11008
2	235-950-5250	· BRACKET	4	SN:11001--11008
3	01010-51025	· BOLT	14	SN:11001--@
4	234-54-13252	· WASHER	14	SN:11001--@
5	235-957-3430	· BRACKET	2	SN:11001--@
6	01010-51055	· BOLT	8	SN:11001--@
7	01643-31032	· WASHER	8	SN:11001--@
8	235-957-3450	· PIN,LINCH	2	SN:11001--@
9	234-971-8180	· PIN,SNAP	2	SN:11001--@
10	235-957-3130	· HOOK	1	SN:11001--@
11	01010-51025	· BOLT	4	SN:11001--@
12	01643-31032	· WASHER	4	SN:11001--@
13	235-950-5150	· BRACKET,L.H.	1	SN:11001--@
	235-950-3440	· BRACKET,R.H.	1	SN:11001--@
14	01010-51225	· BOLT	4	SN:11001--@
15	01643-31232	· WASHER	4	SN:11001--@
16	235-950-5160	· PLATE	2	SN:11001--@
17	235-950-0100	· SHIM ASS'Y	1	SN:11001--@
	☆	· · SHIM¤ 1.0MM	4	SN:11001--@
18	235-950-5180	· PLATE	2	SN:11001--@
19	235-950-5220	· BUSHING	2	SN:11001--@
20	235-950-5230	· SEAT	2	SN:11001--@
21	01010-51235	· BOLT	4	SN:11001--@
22	01643-31232	· WASHER	4	SN:11001--@

Printed By : Dwi Iswanto (airafather6107170)

OPERATOR'S CAB (8/8) (LIFTING PARTS)(#11001-11008)

Item	Part No.	Description	Qty	Options
23	235-957-3470	· BOLT	1	SN:11001--@
24	235-957-3490	· TUBE	1	SN:11001--@
25	235-957-3460	· BOLT	2	SN:11001--@
26	235-957-3480	· TUBE	2	SN:11001--@
27	01010-51255	· BOLT	2	SN:11001--11008
28	01010-51230	· BOLT	9	SN:11001--@
29	01010-51260	· BOLT	4	SN:11001--@
30	01643-31232	· WASHER	18	SN:11001--11008
31	01580-01210	· NUT	18	SN:11001--11008

Printed By : Dwi Iswanto (airafather6107170)

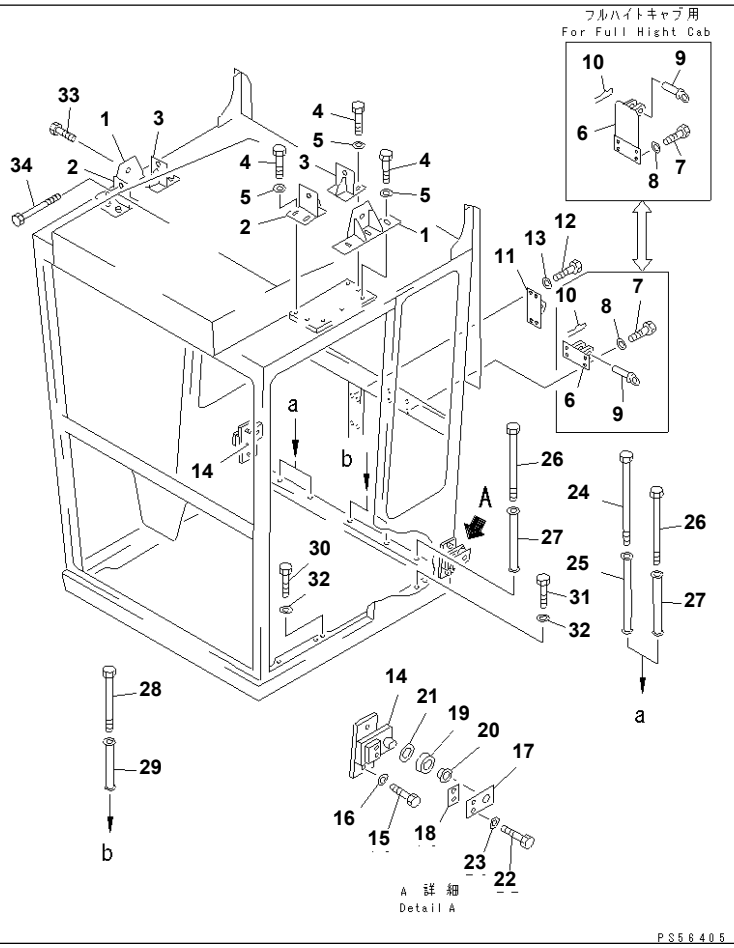

GD825A-2 S/N 11001-UP

OPERATOR'S CAB (8/8) (LIFTING PARTS)(#11009-)

Item	Part No.	Description	Qty	Options
	(235-957-0212)	ROPS CAB ASS'Y,(FULL)	1	SN:.--
	(235-957-0211)	ROPS CAB ASS'Y,(FULL)	1	SN:11009--.
	(235-957-0232)	ROPS CAB ASS'Y,(LOW)	1	SN:.--
	(235-957-0231)	ROPS CAB ASS'Y,(LOW)	1	SN:11009--.
THESE ASSEMBLIES CONSIST OF ALL PARTS SHOWN IN FIGS.5401A TO 5415A AND 5511.				
1	235-950-5261	· BRACKET	2	SN:11009--
2	235-950-5251	· BRACKET	2	SN:11009--
3	235-950-5430	· BRACKET	2	SN:11009--
4	01010-51025	· BOLT	14	SN:11001--
5	234-54-13252	· WASHER	14	SN:11001--
6	235-957-3550	· BRACKET,(FULL)	2	SN:11009--
	235-957-3430	· BRACKET,(LOW)	2	SN:11001--
7	01010-51055	· BOLT	8	SN:11001--
8	01643-31032	· WASHER	8	SN:11001--
9	235-957-3450	· PIN,LINCH	2	SN:11001--
10	234-971-8180	· PIN,SNAP	2	SN:11001--
11	235-957-3130	· HOOK	1	SN:11001--
12	01010-51025	· BOLT	4	SN:11001--
13	01643-31032	· WASHER	4	SN:11001--
14	235-950-5150	· BRACKET,L.H.	1	SN:11001--
	235-950-3440	· BRACKET,R.H.	1	SN:11001--
15	01010-51225	· BOLT	4	SN:11001--
16	01643-31232	· WASHER	4	SN:11001--
17	235-950-5160	· PLATE	2	SN:11001--
18	235-950-0100	· SHIM ASS'Y	1	SN:11001--
	☆	· · SHIM¤ 1.0MM	4	SN:11001--
19	235-950-5180	· PLATE	2	SN:11001--

Printed By : Dwi Iswanto (airafather6107170)

OPERATOR'S CAB (8/8) (LIFTING PARTS)(#11009-)

Item	Part No.	Description	Qty	Options
20	235-950-5220	· BUSHING	2	SN:11001--
21	235-950-5230	· SEAT	2	SN:11001--
22	01010-51235	· BOLT	4	SN:11001--
23	01643-31232	· WASHER	4	SN:11001--
24	235-957-3470	· BOLT	1	SN:11001--
25	235-957-3490	· TUBE	1	SN:11001--
26	235-957-3460	· BOLT	2	SN:11001--
27	235-957-3480	· TUBE	2	SN:11001--
28	235-957-3530	· BOLT	2	SN:11009--
29	235-957-3540	· TUBE	2	SN:11009--
30	01010-51230	· BOLT	9	SN:11001--
31	01010-51260	· BOLT	4	SN:11001--
32	01643-31232	· WASHER	13	SN:11001--
33	01010-51075	BOLT,(FOR ADJUSTING)	1	SN:11009--
34	235-950-5440	BOLT,(FOR ADJUSTING)	1	SN:11009--

Printed By : Dwi Iswanto (airafather6107170)

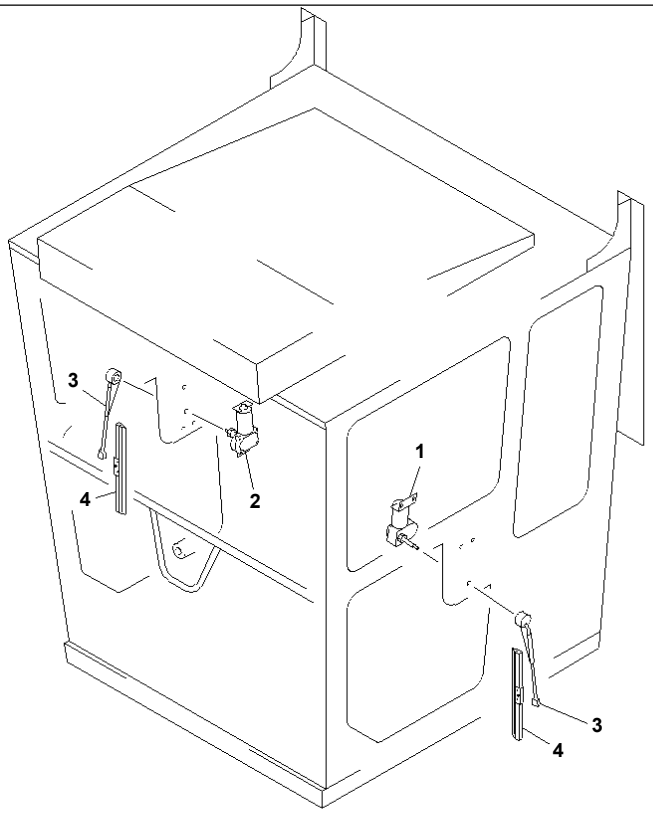

PC56406

GD825A-2 S/N 11001-UP

DOOR WIPER(#11009-)

Item	Part No.	Description	Qty	Options
1	08180-12480	WIPER MOTOR ASS'Y,WIPER¤ L.H.	1	SN:11009--
2	26C-95-11820	MOTOR,WIPER¤ R.H.	1	SN:11009--
3	08184-30400	ARM	2	SN:11009--
4	08185-00350	BLADE	2	SN:11009--

Printed By : Dwi Iswanto (airafather6107170)

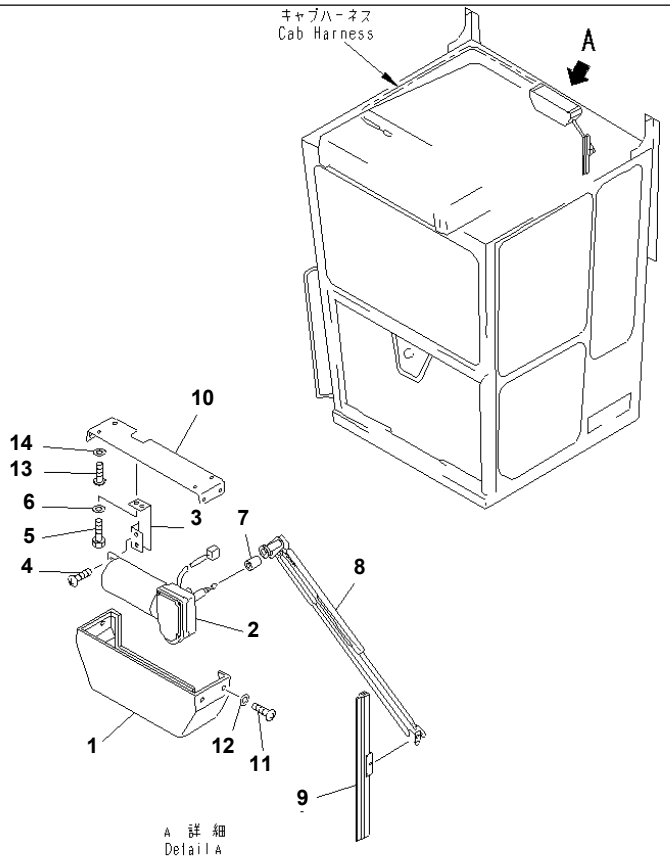

PS5457.1

GD825A-2 S/N 11001-UP
REAR WIPER

Item	Part No.	Description	Qty	Options
1	235-950-1750	BOX	1	SN:11001--
2	08180-12411	WIPER MOTOR ASS'Y,WIPER	1	SN:11001--
3	235-950-1871	BRACKET	1	SN:11001--
4	01224-40516	SCREW	2	SN:11001--
5	01010-50616	BOLT	2	SN:11001--
6	01643-30623	WASHER	2	SN:11001--
7	235-950-1851	SPACER	1	SN:11001--
8	20S-06-13470	ARM,WIPER (FULL)	1	SN:11001--
	20S-06-13420	ARM,WIPER (LOW)	1	SN:11001--
9	08185-00350	BLADE,WIPER	1	SN:11001--
10	235-950-2170	BRACKET	1	SN:11001--
11	01220-40616	SCREW	4	SN:11001--
12	01643-30623	WASHER	4	SN:11001--
13	01220-40816	SCREW	4	SN:11001--
14	01643-30823	WASHER	4	SN:11001--

Printed By : Dwi Iswanto (airafather6107170)

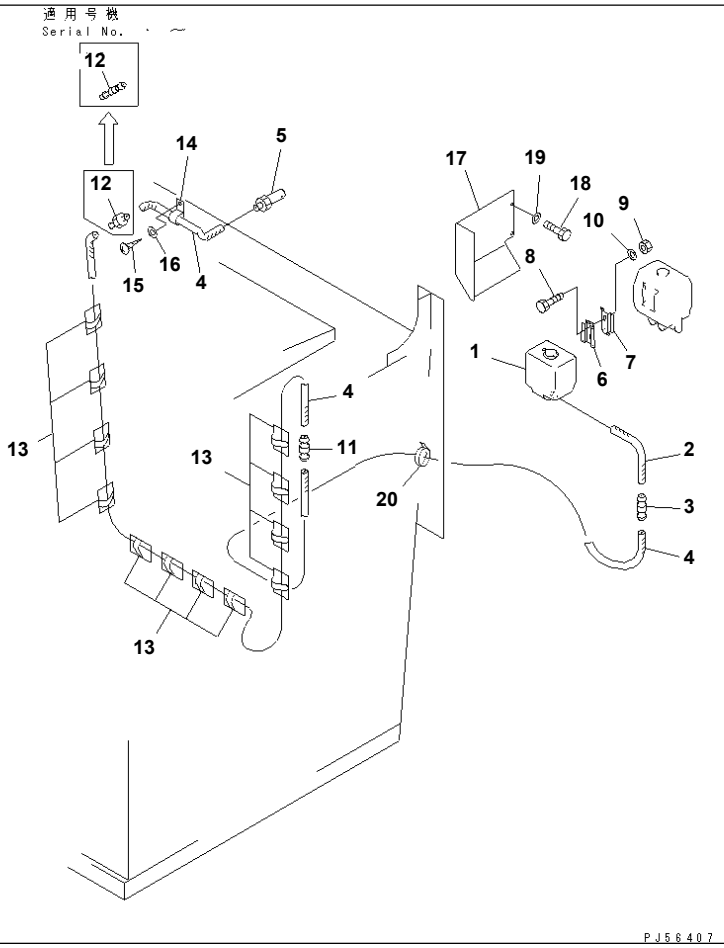

Ref. 5453 **Page 150510**

GD825A-2 S/N 11001-UP

ADDITIONAL WASHER PIPING (FOR REAR WIPER)

Item	Part No.	Description	Qty	Options
	232-950-5700	TANK ASS'Y,WINDOW WASHER	1	SN:11001--
1	232-856-5120	· TANK ASS'Y	1	SN:11001--
2	232-856-5140	· HOSE	1	SN:11001--
3	232-856-5160	· CONNECTOR	1	SN:11001--
4	232-856-5260	· HOSE¤ 10M	1	SN:11001--
5	232-856-5170	· NOZZLE	1	SN:11001--
6	232-856-5130	· BRACKET	1	SN:11001--
7	232-856-5130	BRACKET	1	SN:11001--
8	01010-50612	BOLT	2	SN:11001--
9	01580-10605	NUT	2	SN:11001--
10	01643-30623	WASHER	2	SN:11001--
11	232-856-5160	CONNECTOR	1	SN:11001--
12	120-Y79-5760	VALVE,CHECK	1	SN:.--
	◆23F-950-1490	VALVE,CHECK	1	SN:11001--.
13	08051-00801	CLIP	15	SN:11001--
14	22W-54-18840	CLIP	1	SN:11001--
15	01370-00408	SCREW	1	SN:11001--
16	01641-20405	WASHER	1	SN:11001--
17	235-950-5380	COVER	1	SN:11001--
18	01010-50816	BOLT	2	SN:11001--
19	01643-30823	WASHER	2	SN:11001--
20	08034-00414	BAND	2	SN:11001--

Printed By : Dwi Iswanto (airafather6107170)

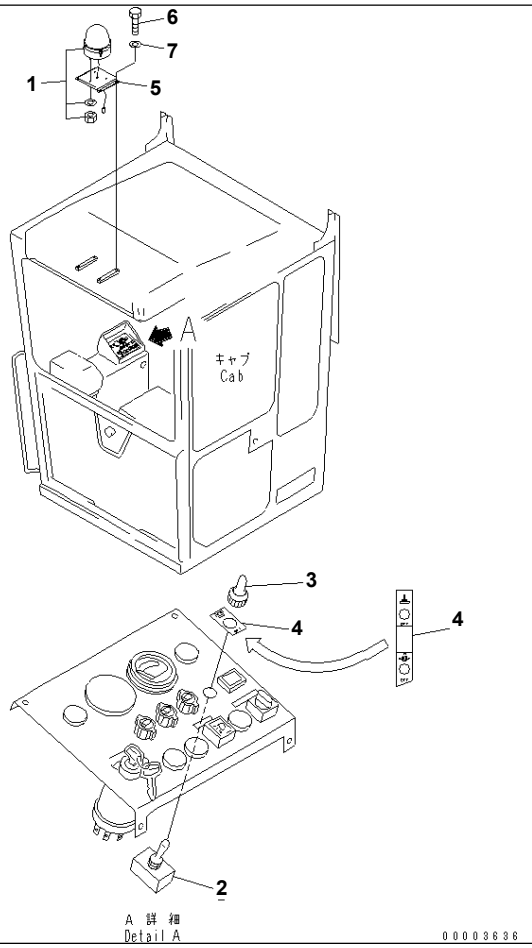

Ref. 5461 **Page 150515**

GD825A-2 S/N 11001-UP
BEACOM LAMP(#12116-)

Item	Part No.	Description	Qty	Options
1	08154-72400	LAMP ASS'Y	1	SN:12116--
2	26A-06-11550	SWITCH	1	SN:12116--
3	235-06-31590	CAP	1	SN:12116--
4	235-06-35810	PLATE	1	SN:12116--
5	232-957-9510	BRACKET	1	SN:12116--
6	01010-81020	BOLT	4	SN:12116--
7	01643-31032	WASHER	4	SN:12116--

Printed By : Dwi Iswanto (airafather6107170)

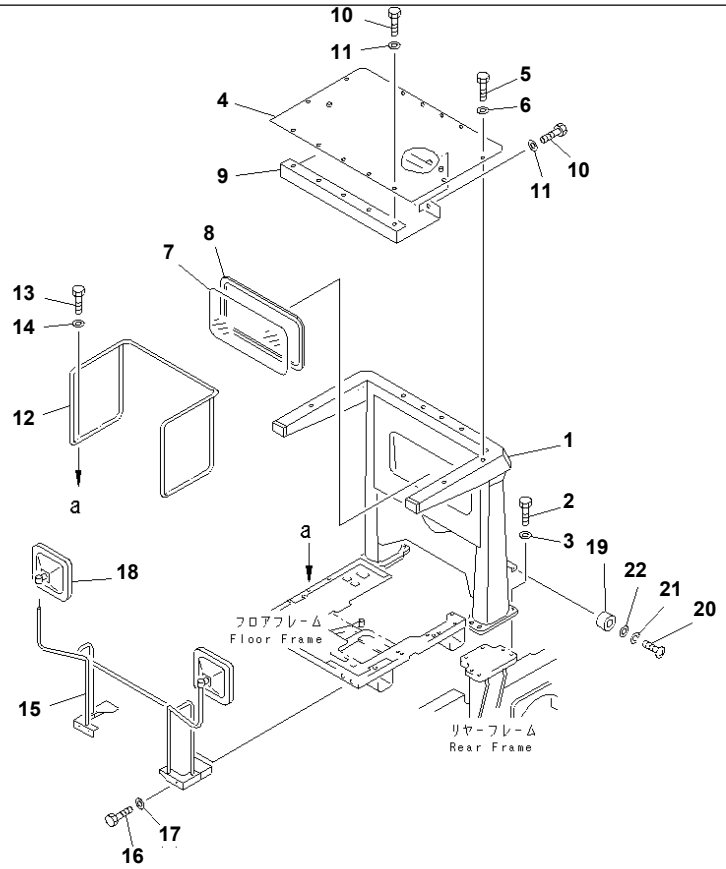

ROPS CANOPY (WITHOUT CAB)(#11001-12000)

Item	Part No.	Description	Qty	Options
1	235-957-3680	COLUMN,(FULL)	1	SN:11001--12000
	235-957-3620	COLUMN,(LOW)	1	SN:11001--12000
2	01010-53080	BOLT	8	SN:11001--12000
3	01643-33080	WASHER	8	SN:11001--12000
4	235-957-3630	PLATE	1	SN:11001--12000
5	01010-51635	BOLT	8	SN:11001--12000
6	01643-31645	WASHER	8	SN:11001--12000
7	235-957-1540	GLASS	1	SN:11001--12000
8	09410-40350	STRIP,WEATHER	1	SN:11001--12000
9	235-957-3640	COVER	1	SN:11001--12000
10	01010-51016	BOLT	10	SN:11001--12000
11	01643-31032	WASHER	10	SN:11001--12000
12	23A-54-11310	GUARD,REAR	1	SN:11001--12000
13	01010-51265	BOLT	4	SN:11001--12000
14	01643-31232	WASHER	4	SN:11001--12000
15	235-957-3660	BRACKET	1	SN:11001--12000
16	01010-51230	BOLT	8	SN:11001--12000
17	01643-31232	WASHER	8	SN:11001--12000
18	08174-33023	MIRROR	2	SN:11001--12000
19	234-54-32710	STOPPER	2	SN:11001--12000
20	01220-40520	SCREW	2	SN:11001--12000
21	01601-20513	WASHER,SPRING	2	SN:11001--12000
22	01641-20508	WASHER	2	SN:11001--12000

Printed By : Dwi Iswanto (airafather6107170)

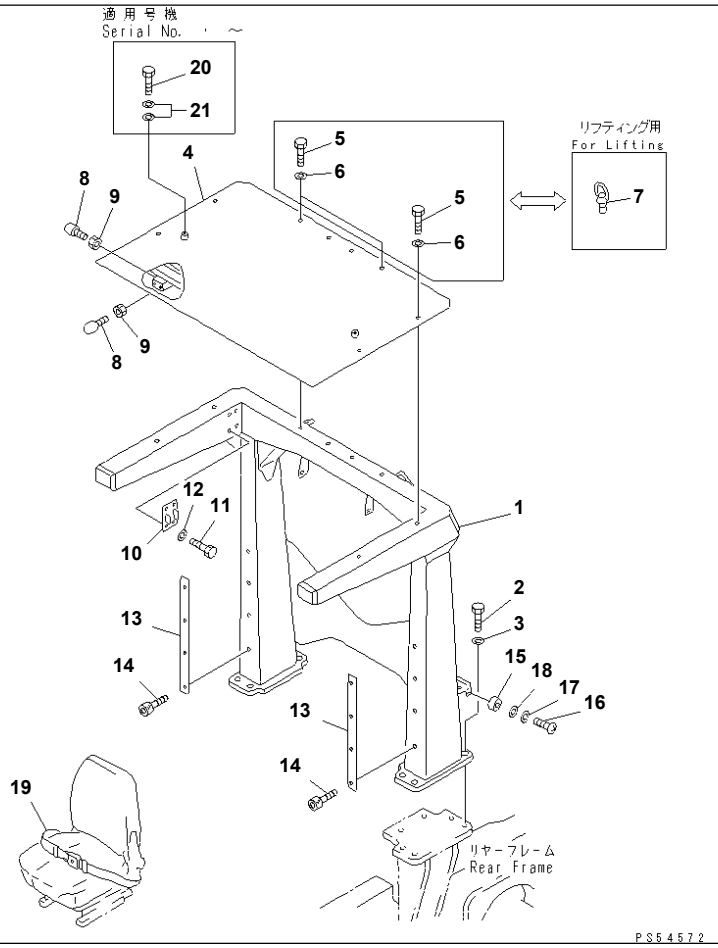

GD825A-2 S/N 11001-UP

ROPS CANOPY (WITH CAB)

Item	Part No.	Description	Qty	Options
	235-957-0212	ROPS CAB ASS'Y,(FULL)	1	SN:.--
	235-957-0211	ROPS CAB ASS'Y,(FULL)	1	SN:11009--.
	□235-957-0210	ROPS CAB ASS'Y,(FULL)	1	SN:11001--11008
	235-957-0232	ROPS CAB ASS'Y,(LOW)	1	SN:.--
	235-957-0231	ROPS CAB ASS'Y,(LOW)	1	SN:11009--.
	□235-957-0230	ROPS CAB ASS'Y,(LOW)	1	SN:11001--11008
THESE ASSEMBLIES CONSIST OF ALL PARTS SHOWN IN FIGS.5401 TO 5415A AND 5511.				
1	235-957-3410	· COLUMN,(FULL)	1	SN:11001--
	235-957-3310	· COLUMN,(LOW)	1	SN:11001--
2	01010-53080	· BOLT	8	SN:11001--
3	01643-33080	· WASHER	8	SN:11001--
4	235-957-3121	· PLATE	1	SN:11001--
5	01010-51625	· BOLT	8	SN:11001--
6	01643-31645	· WASHER	8	SN:11001--
7	04530-11628	· BOLT,EYE	6	SN:11001--
8	21K-54-11310	· STOPPER	12	SN:11001--
9	01580-11210	· NUT	12	SN:11001--
10	235-957-3420	· BRACKET	2	SN:11001--
11	01010-51025	· BOLT	6	SN:11009--
	01010-51025	· BOLT	8	SN:11001--11008
12	01643-31032	· WASHER	6	SN:11009--
	01643-31032	· WASHER	8	SN:11001--11008
13	235-950-5210	· PLATE	2	SN:11001--
14	01252-41025	· BOLT	8	SN:11001--
15	234-54-32710	· STOPPER	2	SN:11001--
16	01220-40520	· SCREW	2	SN:11001--
17	01601-20513	· WASHER,SPRING	2	SN:11001--

Printed By : Dwi Iswanto (airafather6107170)

ROPS CANOPY (WITH CAB)

Item	Part No.	Description	Qty	Options
18	01641-20508	· WASHER	2	SN:11001--
19	09409-10001	· BELT¤ LAP	1	SN:11001--
20	01010-51220	· BOLT	2	SN:.--
21	01643-31232	· WASHER	4	SN:.--

Printed By : Dwi Iswanto (airafather6107170)

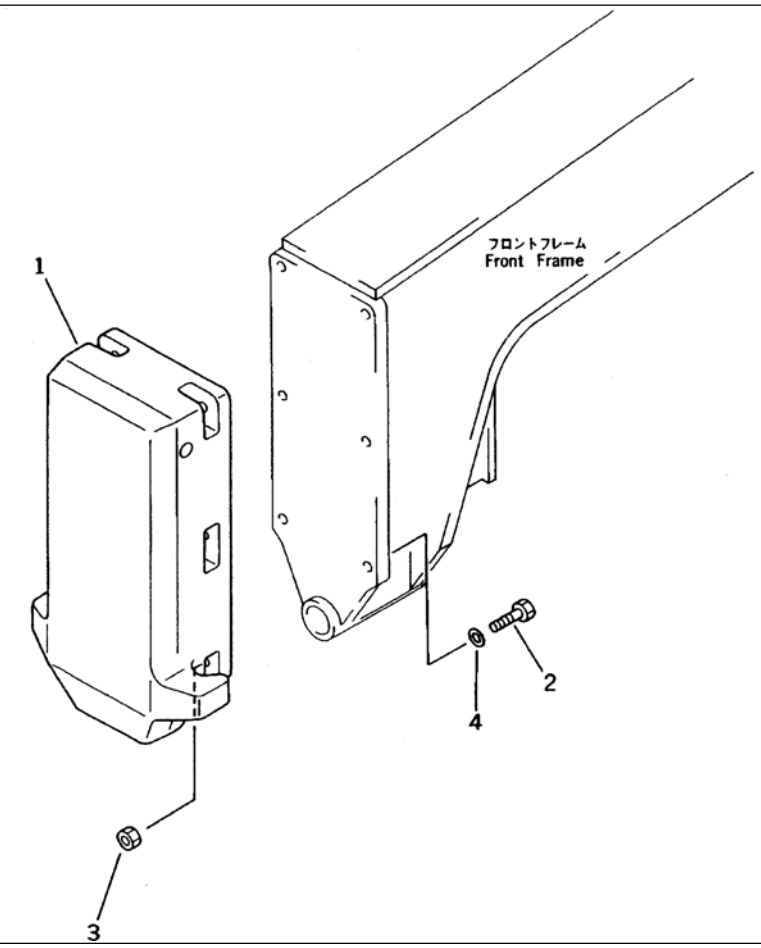

Ref. 5551 **Page 150540**

GD825A-2 S/N 11001-UP
FRONT WEIGHT

Item	Part No.	Description	Qty	Options
1	235-846-1111	WEIGHT	1	SN:11001--
2	01011-52430	BOLT	4	SN:11001--
3	01580-12419	NUT	4	SN:11001--
4	01643-32460	WASHER	4	SN:11001--

Ref. 5551 **Page 150540**

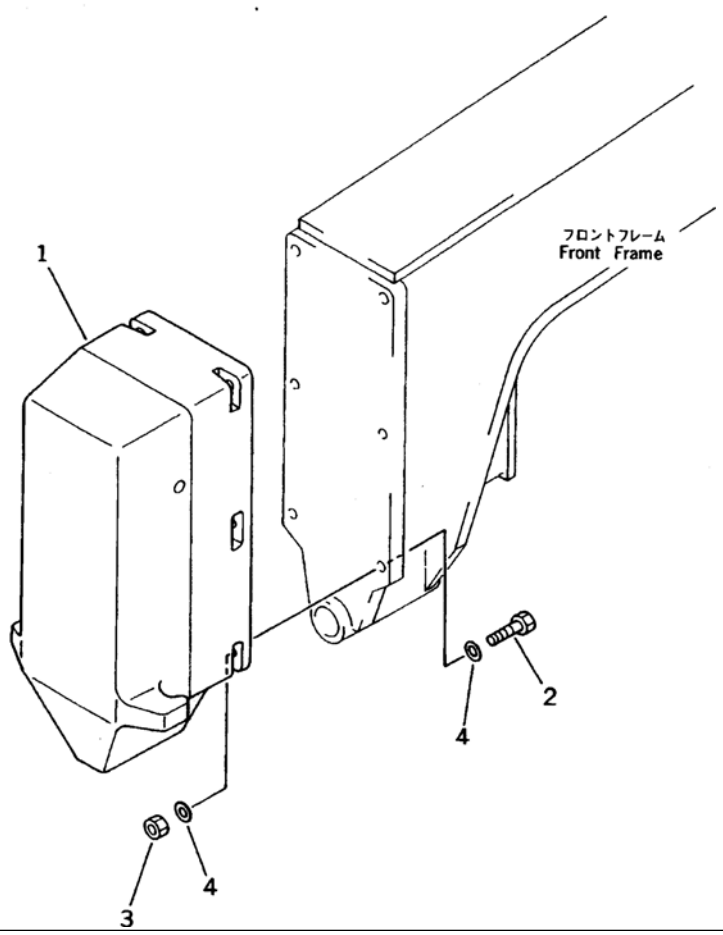

Ref. 5555 **Page 150550**

GD825A-2 S/N 11001-UP
FRONT WEIGHT (FOR REAR RIPPER)(#11001-12000)

Item	Part No.	Description	Qty	Options
1	235-930-1111	PLATE,PUSH	1	SN:11001--12000
2	01011-52435	BOLT	6	SN:11001--12000
3	01580-12419	NUT	6	SN:11001--12000
4	01643-32460	WASHER	12	SN:11001--12000

Printed By : Dwi Iswanto (airafather6107170)

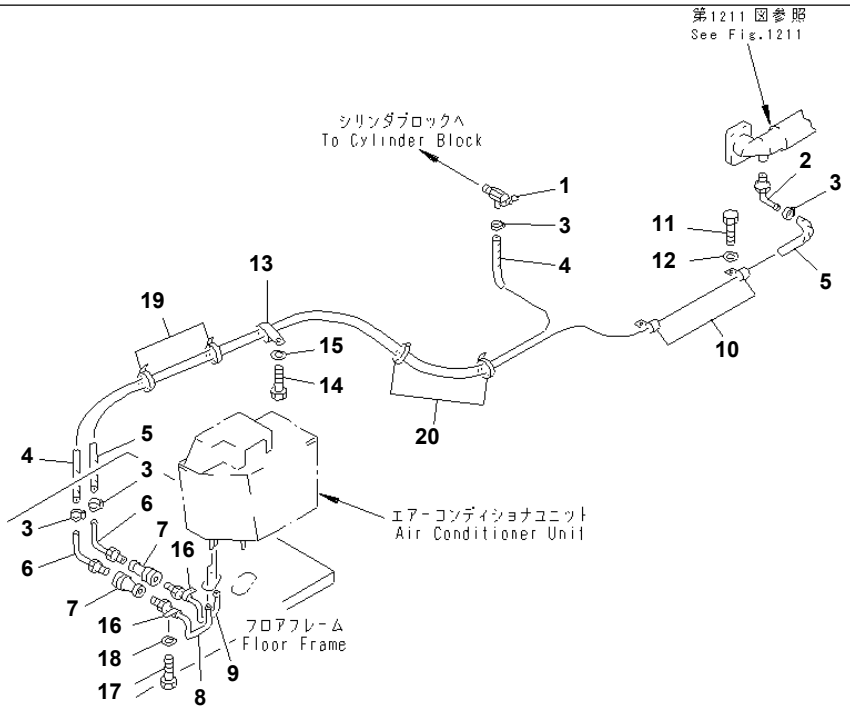

PS54566

GD825A-2 S/N 11001-UP

AIR CONDITIONER (1/7) (HEATER PIPING)(#11001-11013)

Item	Part No.	Description	Qty	Options
1	09482-20000	VALVE	1	SN:11001--11013
2	23B-807-1150	JOINT	1	SN:11001--11013
3	07281-00229	CLAMP	4	SN:11001--11013
4	09483-00423	HOSE	1	SN:11001--11013
5	09483-00433	HOSE	1	SN:11001--11013
6	235-809-3680	JOINT	2	SN:11001--11013
7	235-809-3580	COUPLER	2	SN:11001--11013
8	235-809-3690	TUBE	1	SN:11001--11013
9	235-809-3660	TUBE	1	SN:11001--11013
10	04434-52512	CLIP	2	SN:11001--11013
11	01010-51020	BOLT	2	SN:11001--11013
12	01643-31032	WASHER	2	SN:11001--11013
13	232-817-1140	CLIP	1	SN:11001--11013
14	01010-51016	BOLT	1	SN:11001--11013
15	01643-31032	WASHER	1	SN:11001--11013
16	04434-51410	CLIP	2	SN:11001--11013
17	01010-51025	BOLT	2	SN:11001--11013
18	01643-31032	WASHER	2	SN:11001--11013
19	08034-00519	BAND	15	SN:11001--11013
20	08034-00823	BAND	15	SN:11001--11013

Printed By : Dwi Iswanto (airafather6107170)

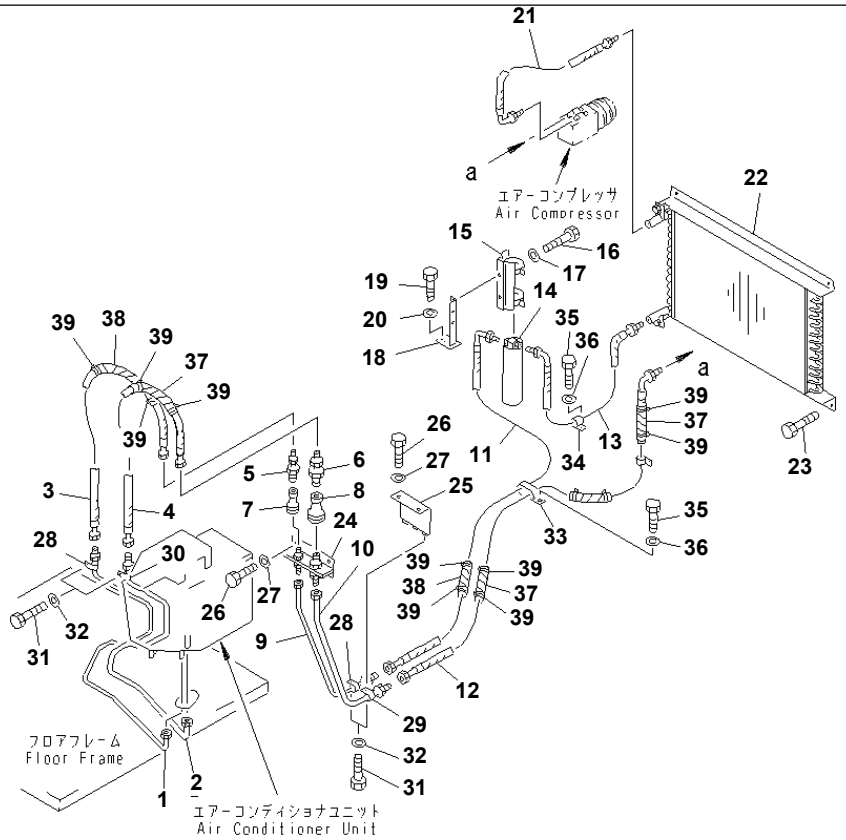

PS54567

GD825A-2 S/N 11001-UP

AIR CONDITIONER (2/7) (COOLER PIPING)(#11001-11013)

Item	Part No.	Description	Qty	Options
1	235-809-3720	TUBE	1	SN:11001--11013
2	235-809-3710	TUBE	1	SN:11001--11013
3	09488-50410	HOSE	1	SN:11001--11013
4	09488-50710	HOSE	1	SN:11001--11013
5	235-809-3760	JOINT	1	SN:11001--11013
6	235-809-3750	JOINT	1	SN:11001--11013
7	235-809-3590	COUPLER	1	SN:11001--11013
8	235-809-3580	COUPLER	1	SN:11001--11013
9	235-809-3740	TUBE	1	SN:11001--11013
10	235-809-3730	TUBE	1	SN:11001--11013
11	09488-70421	HOSE	1	SN:11001--11013
12	09488-70729	HOSE	1	SN:11001--11013
13	09488-70411	HOSE	1	SN:11001--11013
14	423-T43-1410	TANK	1	SN:11001--11013
15	423-T43-1420	HOLDER	1	SN:11001--11013
16	01010-50816	BOLT	2	SN:11001--11013
17	01643-30823	WASHER	2	SN:11001--11013
18	235-809-3560	BRACKET	1	SN:11001--11013
19	01010-51016	BOLT	2	SN:11001--11013
20	01643-31032	WASHER	2	SN:11001--11013
21	09488-70607	HOSE	1	SN:11001--11013
22	235-809-3280	CONDENSOR	1	SN:11001--11013
23	01010-51020	BOLT	4	SN:11001--11013
24	235-809-3610	BRACKET	1	SN:11001--11013
25	235-809-3570	BRACKET	1	SN:11001--11013
26	01010-51020	BOLT	4	SN:11001--11013
27	01643-31032	WASHER	4	SN:11001--11013

Printed By : Dwi Iswanto (airafather6107170)

AIR CONDITIONER (2/7) (COOLER PIPING)(#11001-11013)

Item	Part No.	Description	Qty	Options
28	04434-50810	CLIP	3	SN:11001--11013
29	04434-51410	CLIP	2	SN:11001--11013
30	233-60-14941	CLIP	1	SN:11001--11013
31	01010-51016	BOLT	6	SN:11001--11013
32	01643-31032	WASHER	6	SN:11001--11013
33	232-817-1140	CLIP	1	SN:11001--11013
34	04434-51910	CLIP	1	SN:11001--11013
35	01010-51020	BOLT	2	SN:11001--11013
36	01643-31032	WASHER	2	SN:11001--11013
37	273-60-14520	TUBE,SPIRAL	3	SN:11001--11013
38	238-60-41370	TUBE,SPIRAL	3	SN:11001--11013
39	08034-00414	BAND	12	SN:11001--11013

Printed By : Dwi Iswanto (airafather6107170)

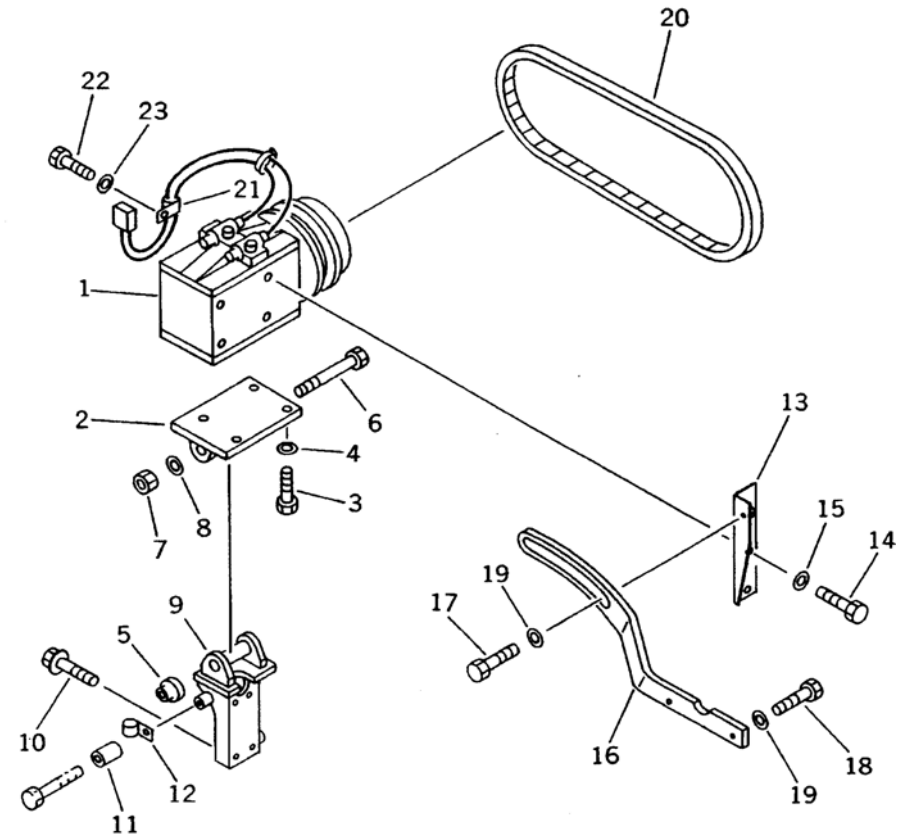

Ref. 5605 **Page 150580**

GD825A-2 S/N 11001-UP

AIR CONDITIONER (3/7) (AIR COMPRESSOR AND MOUNTING PARTS)(#11001-11013)

Item	Part No.	Description	Qty	Options
1	195-Z11-5300	COMPRESSOR ASS'Y	1	SN:11001--11013
	195-Z11-6330	· COMPRESSOR	1	SN:11001--11013
	195-Z11-6340	· MAGNET CLUTCH A.	1	SN:11001--11013
2	235-809-3470	BRACKET	1	SN:11001--11013
3	01010-50835	BOLT	4	SN:11001--11013
4	01643-30823	WASHER	4	SN:11001--11013
5	419-07-11760	COLLAR	1	SN:11001--11013
6	01011-51260	BOLT	1	SN:11001--11013
7	01580-11210	NUT	1	SN:11001--11013
8	01643-31232	WASHER	1	SN:11001--11013
9	235-809-3460	BRACKET	1	SN:11001--11013
10	01435-01025	BOLT	4	SN:11001--11013
11	6210-11-582A	SPACER	1	SN:11001--11013
12	112-946-4170	CLIP	1	SN:11001--11013
13	235-809-3480	PLATE	1	SN:11001--11013
14	01010-50820	BOLT	2	SN:11001--11013
15	01643-30823	WASHER	2	SN:11001--11013
16	235-809-3490	PLATE	1	SN:11001--11013
17	01010-51230	BOLT	1	SN:11001--11013
18	01010-51235	BOLT	2	SN:11001--11013
19	01643-31232	WASHER	3	SN:11001--11013
20	04120-21752	V-BELT	1	SN:11001--11013
21	08036-10810	CLIP	1	SN:11001--11013
22	01010-50816	BOLT	1	SN:11001--11013
23	01643-30823	WASHER	1	SN:11001--11013

Printed By : Dwi Iswanto (airafather6107170)

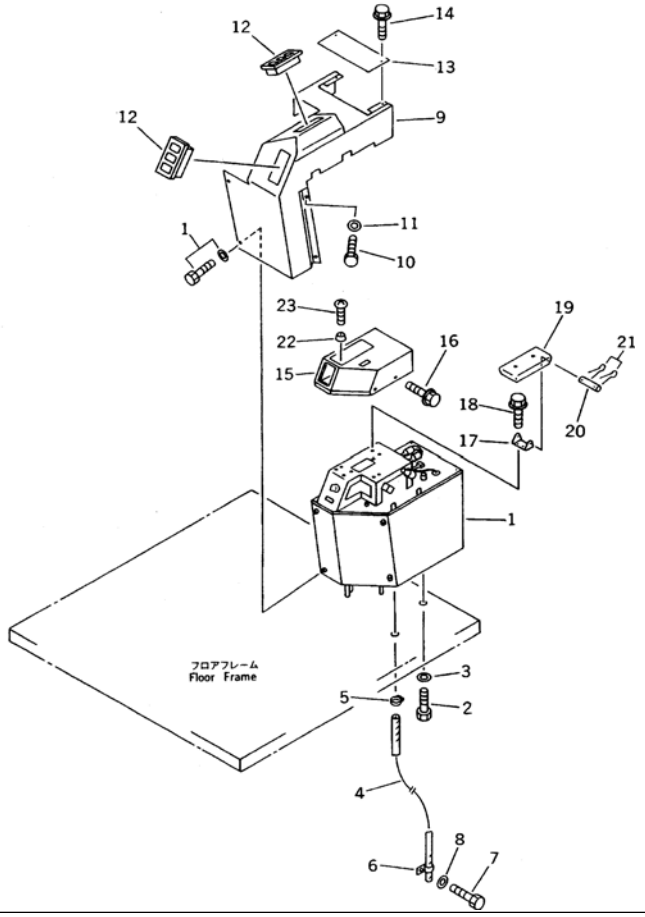

AIR CONDITIONER (4/7) (COOLING UNIT AND COVER)(#11001-11013)

Item	Part No.	Description	Qty	Options
1	235-809-3310	COOLING UNIT	1	SN:11001--11013
	423-T43-1111	· AIR CONDITIONER A.	1	SN:11001--11013
2	01010-51225	BOLT	3	SN:11001--11013
3	01643-31232	WASHER	3	SN:11001--11013
4	07260-21410	HOSE	1	SN:11001--11013
5	07281-00259	CLAMP	1	SN:11001--11013
6	04434-52210	CLIP	1	SN:11001--11013
7	01010-51016	BOLT	1	SN:11001--11013
8	01643-31032	WASHER	1	SN:11001--11013
9	235-809-3440	COVER	1	SN:11001--11013
10	01010-50812	BOLT	2	SN:11001--11013
11	01643-30823	WASHER	2	SN:11001--11013
12	421-07-12512	GRILLE ASS'Y	2	SN:11001--11013
13	235-809-3450	PLATE	1	SN:11001--11013
14	01439-00814	BOLT	2	SN:11001--11013
15	425-54-12671	COVER	1	SN:11001--11013
16	01435-00612	BOLT	2	SN:11001--11013
17	425-54-12520	PLATE	1	SN:11001--11013
18	01435-01020	BOLT	2	SN:11001--11013
19	425-54-12510	BRACKET	1	SN:11001--11013
20	425-54-12530	SHAFT	1	SN:11001--11013
21	04050-13018	PIN,COTTER	2	SN:11001--11013
22	425-54-12590	STOPPER	2	SN:11001--11013
23	01220-30420	SCREW	2	SN:11001--11013

Printed By : Dwi Iswanto (airafather6107170)

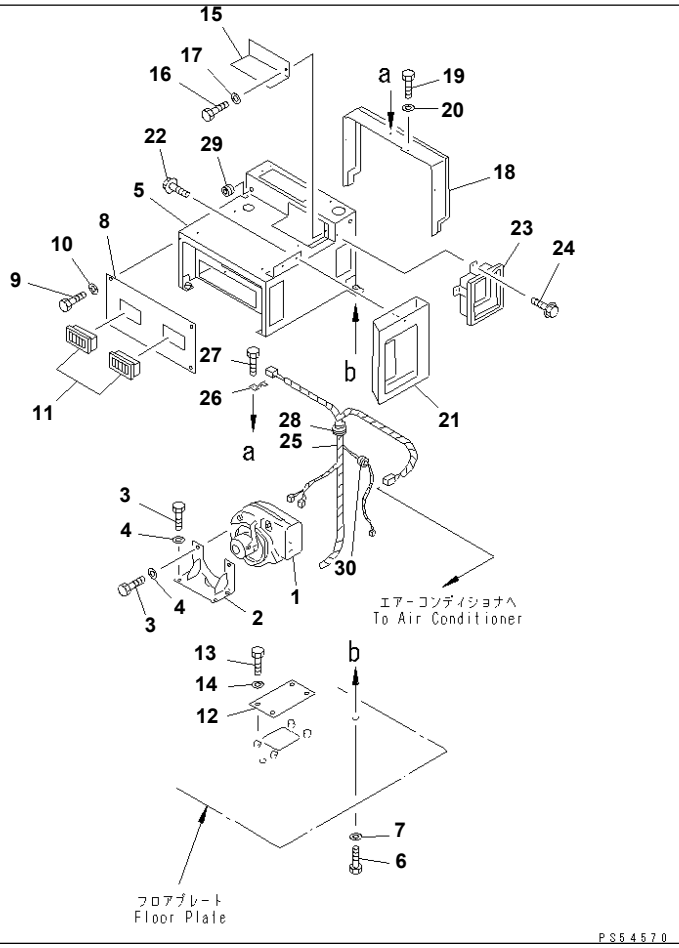

GD825A-2 S/N 11001-UP

AIR CONDITIONER (5/7) (BLOWER AND COVER)(#11001-11013)

Item	Part No.	Description	Qty	Options
1	(425-963-1160)	BLOWER ASS'Y	1	SN:11001--11013
2	425-963-1210	BRACKET	1	SN:11001--11013
3	01010-50812	BOLT	4	SN:11001--11013
4	01643-30823	WASHER	4	SN:11001--11013
5	235-809-3110	BRACKET	1	SN:11001--11013
6	01010-51225	BOLT	4	SN:11001--11013
7	01643-31232	WASHER	4	SN:11001--11013
8	235-809-3210	COVER	1	SN:11001--11013
9	01010-50816	BOLT	2	SN:11001--11013
10	01643-30823	WASHER	2	SN:11001--11013
11	142-979-3221	GRILLE ASS'Y	2	SN:11001--11013
12	235-809-3250	COVER	1	SN:11001--11013
13	01010-51220	BOLT	4	SN:11001--11013
14	01643-31232	WASHER	4	SN:11001--11013
15	235-809-3430	PLATE	1	SN:11001--11013
16	01010-50612	BOLT	1	SN:11001--11013
17	01643-30623	WASHER	1	SN:11001--11013
18	235-809-3150	COVER	1	SN:11001--11013
19	01010-50612	BOLT	3	SN:11001--11013
20	01643-30623	WASHER	3	SN:11001--11013
21	235-809-3130	DUCT	1	SN:11001--11013
22	01435-00816	BOLT	2	SN:11001--11013
23	235-809-3140	DUCT	1	SN:11001--11013
24	01435-00820	BOLT	2	SN:11001--11013
25	235-809-3411	HARNESS	1	SN:11001--11013
26	08053-01510	CLIP	1	SN:11001--11013
27	01010-51016	BOLT	1	SN:11001--11013

Printed By : Dwi Iswanto (airafather6107170)

AIR CONDITIONER (5/7) (BLOWER AND COVER)(#11001-11013)

Item	Part No.	Description	Qty	Options
28	235-06-15390	GROMMET	1	SN:11001--11013
29	08037-01008	GROMMET	3	SN:11001--11013
30	08037-02512	GROMMET	1	SN:11001--11013

Printed By : Dwi Iswanto (airafather6107170)

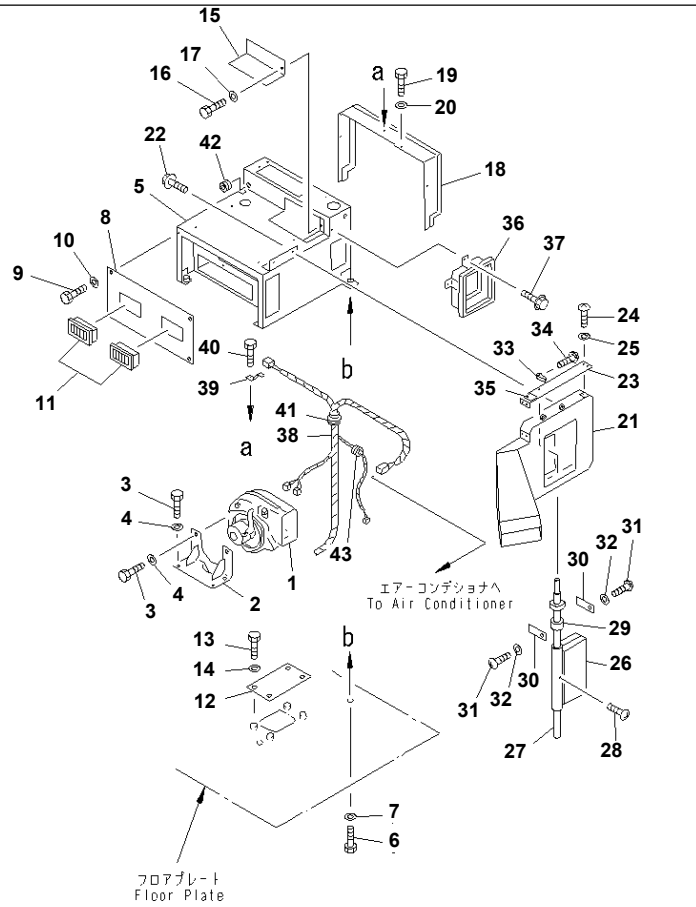

GD825A-2 S/N 11001-UP

AIR CONDITIONER (5/7) (BLOWER AND COVER) (WITH FRONT DEFROSTER)(#11001-11013)

Item	Part No.	Description	Qty	Options
1	(425-963-1160)	BLOWER ASS'Y	1	SN:11001--11013
2	425-963-1210	BRACKET	1	SN:11001--11013
3	01010-50812	BOLT	4	SN:11001--11013
4	01643-30823	WASHER	4	SN:11001--11013
5	235-809-3110	BRACKET	1	SN:11001--11013
6	01010-51225	BOLT	4	SN:11001--11013
7	01643-31232	WASHER	4	SN:11001--11013
8	235-809-3210	COVER	1	SN:11001--11013
9	01010-50816	BOLT	2	SN:11001--11013
10	01643-30823	WASHER	2	SN:11001--11013
11	142-979-3221	GRILLE ASS'Y	2	SN:11001--11013
12	235-809-3250	COVER	1	SN:11001--11013
13	01010-51220	BOLT	4	SN:11001--11013
14	01643-31232	WASHER	4	SN:11001--11013
15	235-809-3430	PLATE	1	SN:11001--11013
16	01010-50612	BOLT	1	SN:11001--11013
17	01643-30623	WASHER	1	SN:11001--11013
18	235-809-3150	COVER	1	SN:11001--11013
19	01010-50612	BOLT	3	SN:11001--11013
20	01643-30623	WASHER	3	SN:11001--11013
21	235-809-3910	DUCT	1	SN:11001--11013
22	01435-00816	BOLT	2	SN:11001--11013
23	235-809-3980	COVER	1	SN:11001--11013
24	01220-40610	SCREW	4	SN:11001--11013
25	01641-20608	WASHER	4	SN:11001--11013
26	235-809-4190	BAFFLE	1	SN:11001--11013

Printed By : Dwi Iswanto (airafather6107170)

AIR CONDITIONER (5/7) (BLOWER AND COVER) (WITH FRONT DEFROSTER)(#11001-11013)

Item	Part No.	Description	Qty	Options
27	235-809-4210	SHAFT	1	SN:11001--11013
28	01220-40310	SCREW	1	SN:11001--11013
29	235-809-3990	COLLAR	1	SN:11001--11013
30	23B-950-2240	SPRING	2	SN:11001--11013
31	01220-40508	SCREW	2	SN:11001--11013
32	01641-20508	WASHER	2	SN:11001--11013
33	23B-950-2230	KNOB	1	SN:11001--11013
34	01220-40306	SCREW	1	SN:11001--11013
35	235-809-4170	PLATE¤ MARK	1	SN:11001--11013
36	235-809-3140	DUCT	1	SN:11001--11013
37	01435-00820	BOLT	2	SN:11001--11013
38	235-809-3411	HARNESS	1	SN:11001--11013
39	08053-01510	CLIP	1	SN:11001--11013
40	01010-51016	BOLT	1	SN:11001--11013
41	235-06-15390	GROMMET	1	SN:11001--11013
42	08037-01008	GROMMET	3	SN:11001--11013
43	08037-02512	GROMMET	1	SN:11001--11013

Printed By : Dwi Iswanto (airafather6107170)

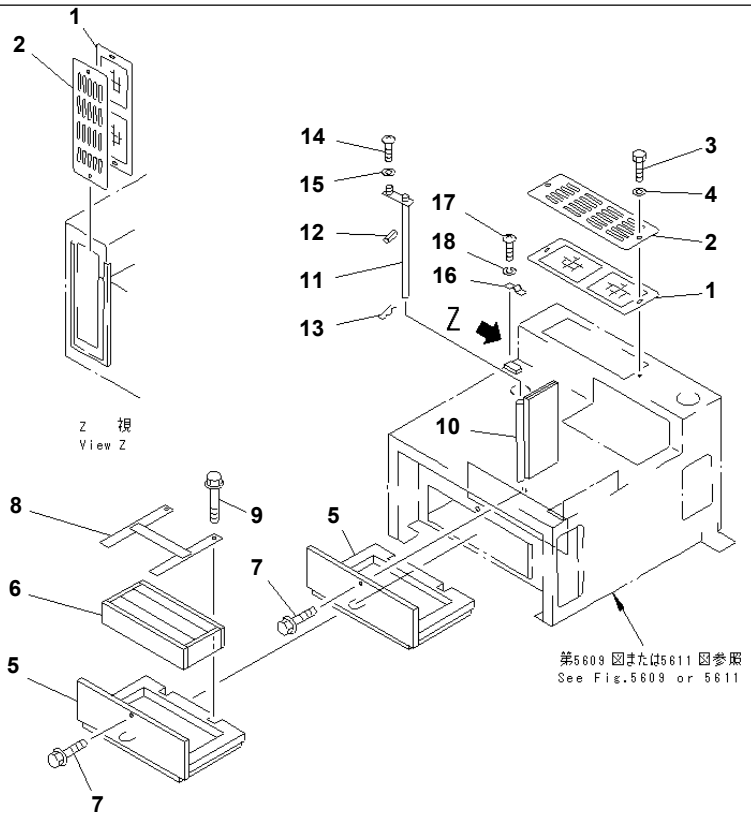

PS54562

Ref. 5613 **Page 150620**

GD825A-2 S/N 11001-UP

AIR CONDITIONER (6/7) (FILTER AND BUFFLE)(#11001-11013)

Item	Part No.	Description	Qty	Options
1	423-T43-1430	FILTER	2	SN:11001--11013
2	235-809-3240	PLATE	2	SN:11001--11013
3	01010-50620	BOLT	2	SN:11001--11013
4	01643-30623	WASHER	2	SN:11001--11013
5	235-809-3180	CASE	2	SN:11001--11013
6	421-07-12312	FILTER	1	SN:11001--11013
7	01435-00616	BOLT	2	SN:11001--11013
8	235-809-3190	PLATE	1	SN:11001--11013
9	01435-00665	BOLT	2	SN:11001--11013
10	235-809-3170	BUFFLE	1	SN:11001--11013
11	235-809-3160	SHAFT	1	SN:11001--11013
12	04025-00316	PIN,SPRING	1	SN:11001--11013
13	04052-01038	PIN,SNAP	1	SN:11001--11013
14	01220-40312	SCREW	1	SN:11001--11013
15	01641-01016	WASHER	1	SN:11001--11013
16	232-809-7790	CLAMP	1	SN:11001--11013
17	01220-40408	SCREW	2	SN:11001--11013
18	01601-20410	WASHER,SPRING	2	SN:11001--11013

Printed By : Dwi Iswanto (airafather6107170)

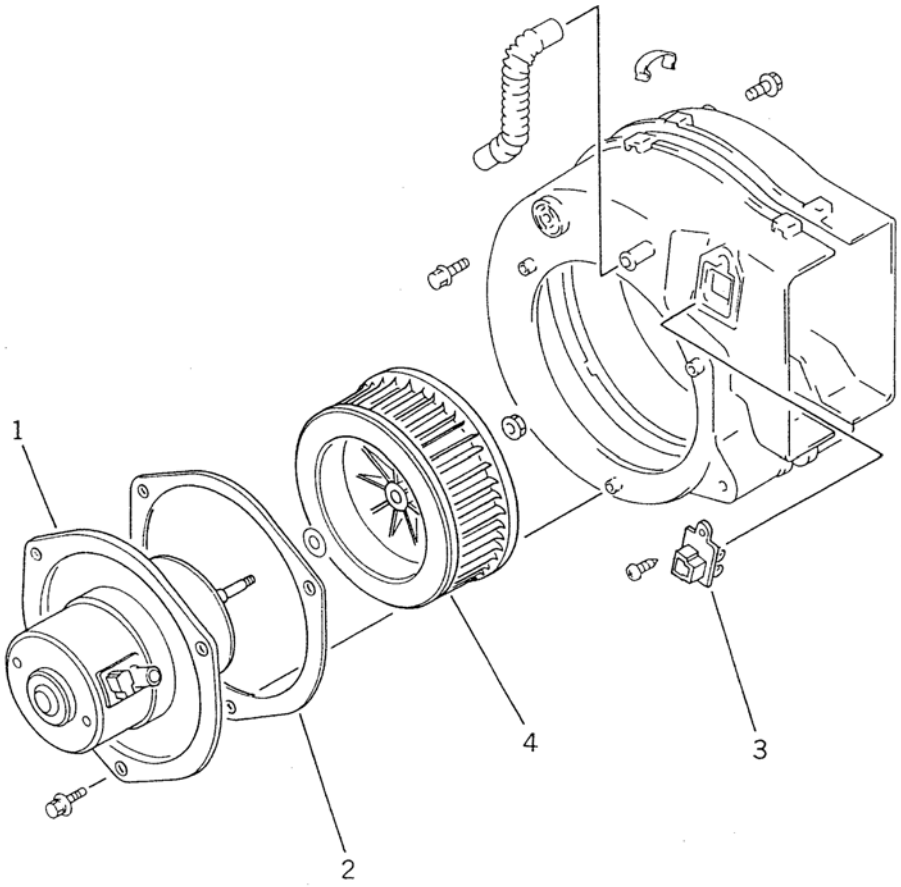

Ref. 5615 **Page 150630**

GD825A-2 S/N 11001-UP

AIR CONDITIONER (7/7) (BLOWER)(#11001-11013)

Item	Part No.	Description	Qty	Options
	425-963-1160	BLOWER ASS'Y	1	SN:11001--11013
1	425-963-2410	· MOTOR ASS'Y	1	SN:11001--11013
2	425-963-2420	· PACKING	1	SN:11001--11013
3	425-963-2430	· RESISTOR,BLOWER	1	SN:11001--11013
4	425-963-2440	· FAN,BLOWER	1	SN:11001--11013

Printed By : Dwi Iswanto (airafather6107170)

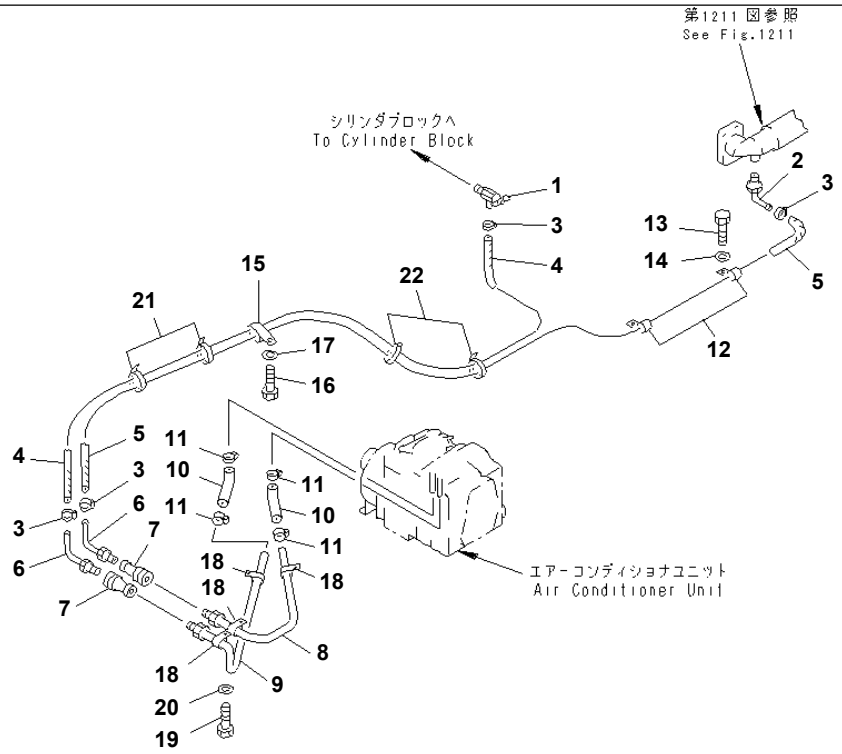

PS56410

GD825A-2 S/N 11001-UP

AIR CONDITIONER (1/7) (HEATER PIPING)(#11014-)

Item	Part No.	Description	Qty	Options
1	09482-20000	VALVE	1	SN:11014--
2	23B-807-1150	JOINT	1	SN:11014--
3	07280-02323	CLAMP	4	SN:.--
	07281-00229	CLAMP	4	SN:11014--.
4	09483-00423	HOSE	1	SN:11014--
5	09483-00433	HOSE	1	SN:11014--
6	235-809-3680	JOINT	2	SN:11014--
7	235-809-3580	COUPLER	2	SN:11014--
8	235-809-4430	TUBE	1	SN:11014--
9	235-809-4440	TUBE	1	SN:11014--
10	235-809-4450	HOSE	2	SN:11014--
11	07281-00259	CLAMP	4	SN:11014--
12	04434-52512	CLIP	2	SN:11014--
13	01010-51020	BOLT	2	SN:11014--
14	01643-31032	WASHER	2	SN:11014--
15	232-817-1140	CLIP	1	SN:11014--
16	01010-51016	BOLT	1	SN:11014--
17	01643-31032	WASHER	1	SN:11014--
18	04434-51610	CLIP	4	SN:11014--
19	01010-51016	BOLT	4	SN:11014--
20	01643-31032	WASHER	4	SN:11014--
21	08034-00519	BAND	15	SN:11014--
22	08034-00823	BAND	15	SN:11014--

Printed By : Dwi Iswanto (airafather6107170)

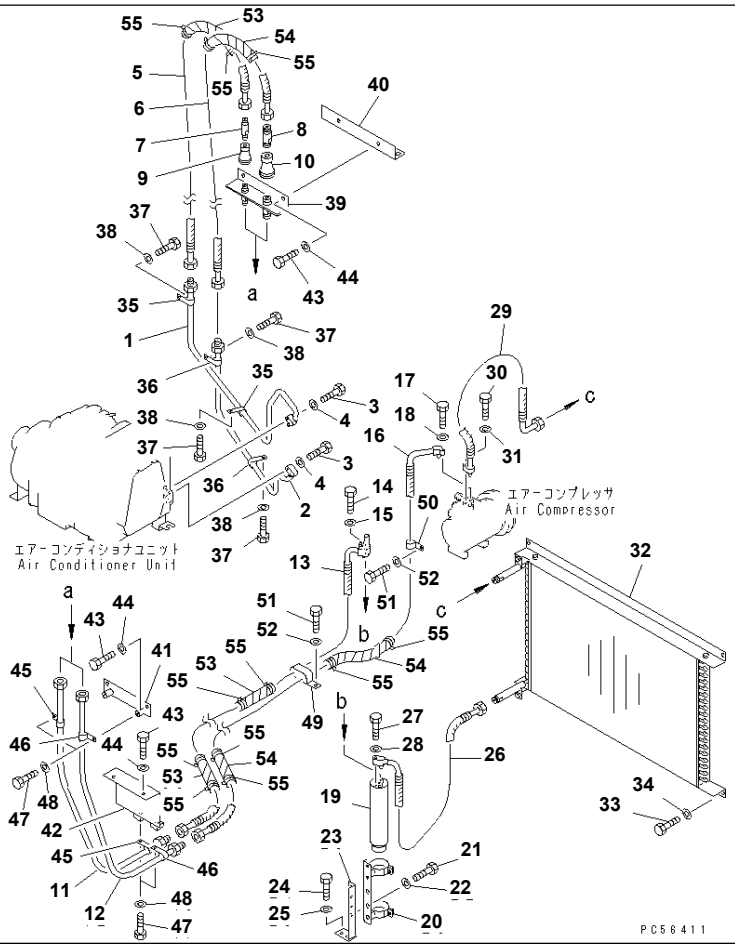

Ref. 5622 **Page 150650**

GD825A-2 S/N 11001-UP
AIR CONDITIONER (2/7) (COOLER PIPING)(#11014-)

Item	Part No.	Description	Qty	Options
1	235-809-4370	TUBE	1	SN:11014--
	23D-809-2820	· O-RING	1	SN:11014--
2	235-809-4380	TUBE	1	SN:11014--
	23D-809-2840	· O-RING	1	SN:11014--
3	01010-50630	BOLT	2	SN:11014--
4	01643-30623	WASHER	2	SN:11014--
5	235-809-4360	HOSE	1	SN:11014--
	23D-809-2820	· O-RING	2	SN:11014--
6	235-809-4390	HOSE	1	SN:11014--
	23D-809-2840	· O-RING	2	SN:11014--
7	235-809-4460	JOINT	1	SN:11014--
8	235-809-4470	JOINT	1	SN:11014--
9	235-809-3590	COUPLER	1	SN:11014--
10	235-809-3580	COUPLER	1	SN:11014--
11	235-809-4350	TUBE	1	SN:11014--
12	235-809-4410	TUBE	1	SN:11014--
13	235-809-4340	HOSE	1	SN:11014--
	23D-809-2820	· O-RING	2	SN:11014--
	23D-809-2710	· SWITCH,PRESSURE	1	SN:11014--
14	01010-50625	BOLT	1	SN:11014--
15	01643-30623	WASHER	1	SN:11014--
16	235-809-4420	HOSE	1	SN:11014--
	23D-809-2840	· O-RING	2	SN:11014--
17	01010-50630	BOLT	1	SN:11014--
18	01643-30623	WASHER	1	SN:11014--
19	20Y-979-3120	TANK	1	SN:11014--
20	234-809-6190	HOLDER	1	SN:11014--

Printed By : Dwi Iswanto (airafather6107170)

AIR CONDITIONER (2/7) (COOLER PIPING)(#11014-)

Item	Part No.	Description	Qty	Options
21	01010-50816	BOLT	2	SN:11014--
22	01643-30823	WASHER	2	SN:11014--
23	235-809-3560	BRACKET	1	SN:11014--
24	01010-51016	BOLT	2	SN:11014--
25	01643-31032	WASHER	2	SN:11014--
26	235-809-4330	HOSE	1	SN:11014--
	23D-809-2820	· O-RING	2	SN:11014--
27	01010-50625	BOLT	1	SN:11014--
28	01643-30623	WASHER	1	SN:11014--
29	235-809-4320	HOSE	1	SN:11014--
	23D-809-2830	· O-RING	2	SN:11014--
30	01010-50630	BOLT	1	SN:11014--
31	01643-30623	WASHER	1	SN:11014--
32	235-809-3290	CONDENSOR	1	SN:11014--
33	01010-51020	BOLT	4	SN:11014--
34	01643-31032	WASHER	4	SN:11014--
35	233-60-14941	CLIP	2	SN:11014--
36	04434-50810	CLIP	2	SN:11014--
37	01010-51016	BOLT	4	SN:11014--
38	01643-31032	WASHER	4	SN:11014--
39	235-809-4480	BRACKET	1	SN:11014--
40	235-809-3840	BRACKET	1	SN:11014--
41	235-809-3850	BRACKET	1	SN:11014--
42	235-809-3570	BRACKET	1	SN:11014--
43	01010-51020	BOLT	6	SN:11014--
44	01643-31032	WASHER	6	SN:11014--
45	04434-50810	CLIP	2	SN:11014--
46	04434-51410	CLIP	2	SN:11014--
47	01010-51016	BOLT	4	SN:11014--
48	01643-31032	WASHER	4	SN:11014--
49	232-817-1140	CLIP	1	SN:11014--
50	04434-51610	CLIP	1	SN:11014--
51	01010-51020	BOLT	2	SN:11014--
52	01643-31032	WASHER	2	SN:11014--
53	238-60-41370	TUBE,SPIRAL	6	SN:11014--
54	273-60-14520	TUBE,SPIRAL	4	SN:11014--
55	08034-00414	BAND	20	SN:11014--

Printed By : Dwi Iswanto (airafather6107170)

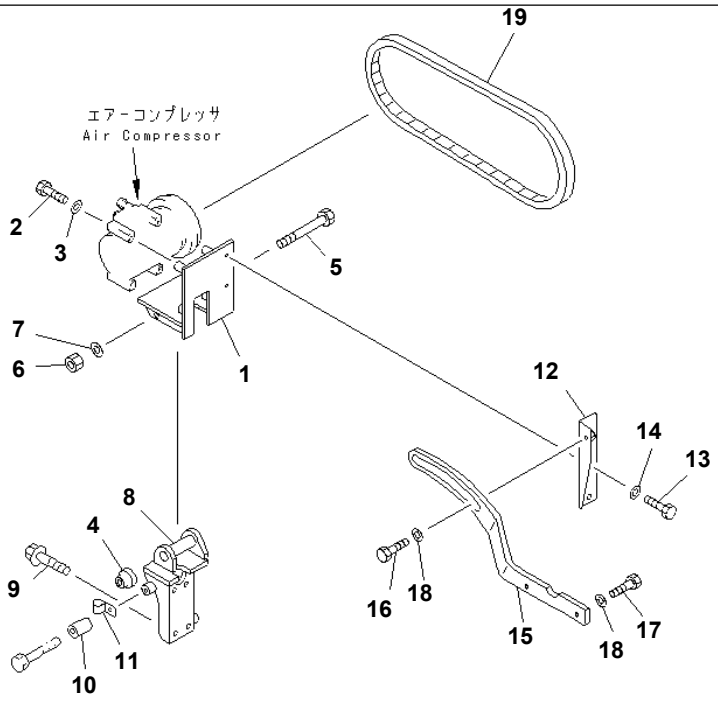

PS56412

GD825A-2 S/N 11001-UP

AIR CONDITIONER (3/7) (AIR COMPRESSOR MOUNTING PARTS)(#11014-)

Item	Part No.	Description	Qty	Options
1	235-809-4511	BRACKET	1	SN:12001--
	235-809-4510	BRACKET	1	SN:11014--12000
2	01010-50885	BOLT	4	SN:11014--
3	01643-30823	WASHER	4	SN:11014--
4	419-07-11760	COLLAR	1	SN:11014--
5	01011-51260	BOLT	1	SN:11014--
6	01580-11210	NUT	1	SN:11014--
7	01643-31232	WASHER	1	SN:11014--
8	235-809-3462	BRACKET	1	SN:12001--
	235-809-3461	BRACKET	1	SN:11014--12000
9	01435-01025	BOLT	4	SN:11014--
10	6210-11-5820	SPACER	1	SN:11014--
11	112-946-4170	CLIP	1	SN:11014--
12	235-809-4521	PLATE	1	SN:12001--
	235-809-4520	PLATE	1	SN:11014--12000
13	01010-50820	BOLT	2	SN:11014--
14	01643-30823	WASHER	2	SN:11014--
15	235-809-4531	PLATE	1	SN:12001--
	235-809-4530	PLATE	1	SN:11014--12000
16	01010-51230	BOLT	1	SN:11014--
17	01010-51235	BOLT	2	SN:11014--
18	01643-31232	WASHER	3	SN:11014--
19	04120-21735	V-BELT	1	SN:12001--
	04120-21752	V-BELT	1	SN:11014--12000

Printed By : Dwi Iswanto (airafather6107170)

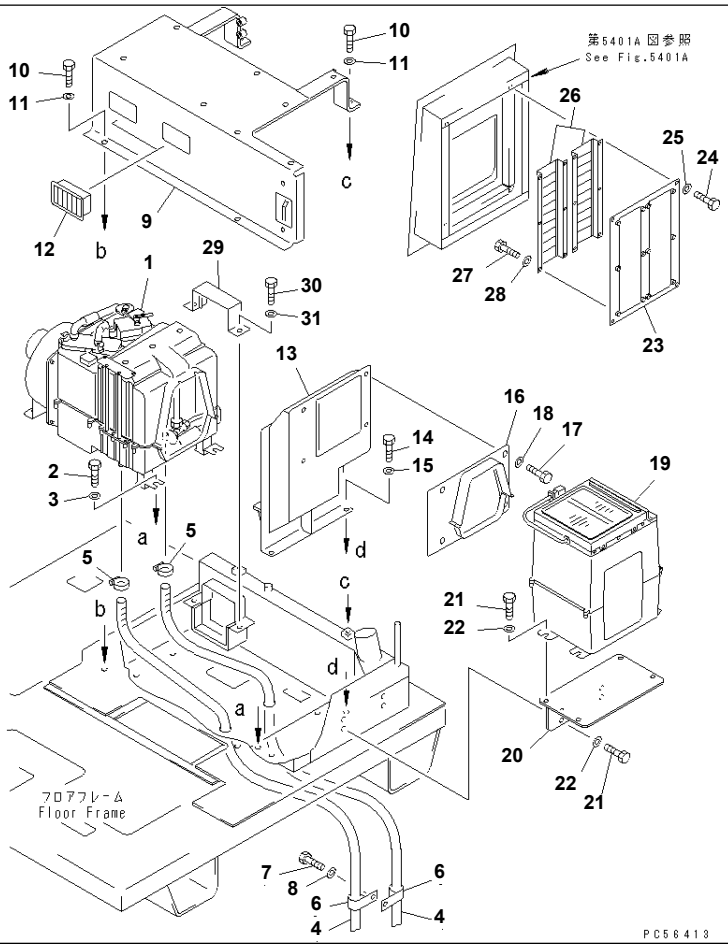

GD825A-2 S/N 11001-UP

AIR CONDITIONER (4/7) (AIR CONDITIONER UNIT AND DAMPER)(#11014-12098)

Item	Part No.	Description	Qty	Options
1	235-809-0030	AIR CONDITIONER UNIT,(MODIFIED PART)	1	SN:11014--@
	421-07-21510	· AIR CONDITIONER UNIT	1	SN:11014--@
2	01010-51025	BOLT	5	SN:11014--@
3	01643-31032	WASHER	5	SN:11014--@
4	07261-21410	HOSE,DRAIN	2	SN:11014--@
5	07281-00259	CLAMP	2	SN:11014--@
6	04434-52210	CLIP	2	SN:11014--@
7	01010-51016	BOLT	1	SN:11014--@
8	01643-31032	WASHER	1	SN:11014--12098
9	235-809-4550	BRACKET	1	SN:11014--@
10	01010-51225	BOLT	4	SN:11014--@
11	01643-31232	WASHER	4	SN:11014--@
12	142-979-3221	GRILLE ASS'Y	2	SN:11014--@
13	235-809-4570	DUCT	1	SN:11014--@
14	01010-51025	BOLT	2	SN:11014--@
15	01643-31032	WASHER	2	SN:11014--@
16	235-809-4580	JOINT	1	SN:11014--@
17	01010-51020	BOLT	4	SN:11014--@
18	01643-31032	WASHER	4	SN:11014--@
19	235-809-0040	DAMPER ASS'Y,(MODIFIED PART)	1	SN:11014--@
	421-07-21110	· DAMPER ASS'Y	1	SN:11014--@
20	235-809-4590	BRACKET	1	SN:11014--@
21	01010-51020	BOLT	8	SN:11014--@
22	01643-31032	WASHER	8	SN:11014--@
23	235-809-4660	PLATE	1	SN:11014--@
24	01010-50816	BOLT	4	SN:11014--@

Printed By : Dwi Iswanto (airafather6107170)

AIR CONDITIONER (4/7) (AIR CONDITIONER UNIT AND DAMPER)(#11014-12098)

Item	Part No.	Description	Qty	Options
25	01643-30823	WASHER	4	SN:11014--@
26	23B-950-2170	FILTER	2	SN:11014--@
27	01010-50612	BOLT	12	SN:11014--@
28	01643-30623	WASHER	12	SN:11014--@
29	235-809-4560	PLATE	1	SN:11014--@
30	01010-51020	BOLT	2	SN:11014--@
31	01643-31032	WASHER	2	SN:11014--@

Printed By : Dwi Iswanto (airafather6107170)

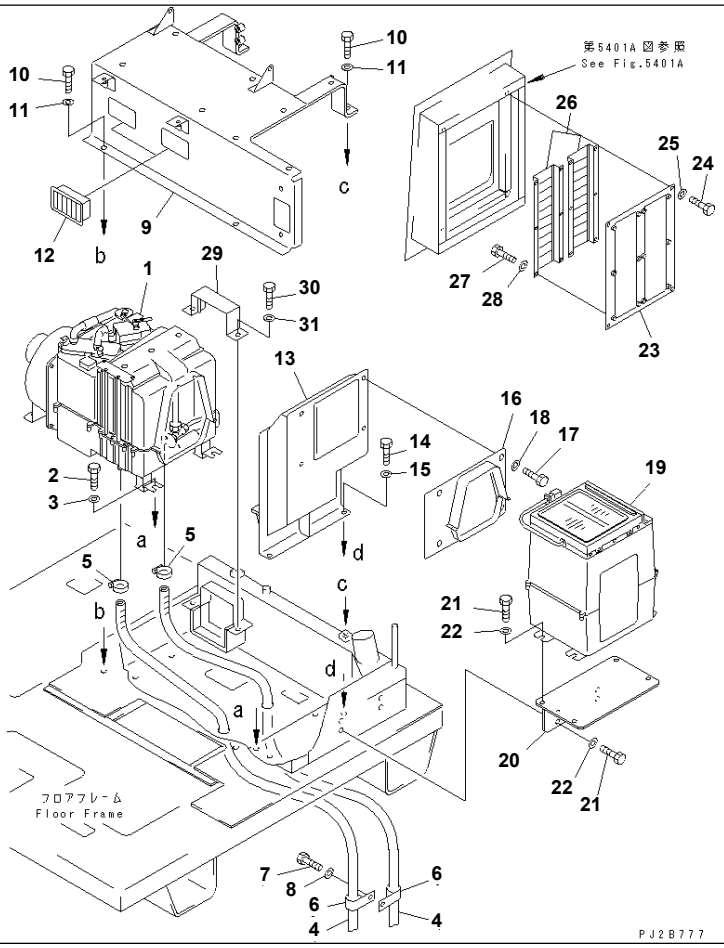

GD825A-2 S/N 11001-UP

AIR CONDITIONER (4/7) (AIR CONDITIONER UNIT AND DAMPER)(#12099-)

Item	Part No.	Description	Qty	Options
1	235-809-0030	AIR CONDITIONER UNIT,(MODIFIED PART)	1	SN:11014--
	421-07-21510	· AIR CONDITIONER UNIT	1	SN:11014--
2	01010-51025	BOLT	5	SN:11014--
3	01643-31032	WASHER	5	SN:11014--
4	07261-21410	HOSE,DRAIN	2	SN:11014--
5	07281-00259	CLAMP	2	SN:11014--
6	04434-52210	CLIP	2	SN:11014--
7	01010-51016	BOLT	1	SN:11014--
8	01643-31032	WASHER	1	SN:11014--
9	235-809-5110	BRACKET	1	SN:12099--
10	01010-51225	BOLT	4	SN:11014--
11	01643-31232	WASHER	4	SN:11014--
12	142-979-3221	GRILLE ASS'Y	2	SN:11014--
13	235-809-4570	DUCT	1	SN:11014--
14	01010-51025	BOLT	2	SN:11014--
15	01643-31032	WASHER	2	SN:11014--
16	235-809-4580	JOINT	1	SN:11014--
17	01010-51020	BOLT	4	SN:11014--
18	01643-31032	WASHER	4	SN:11014--
19	235-809-0040	DAMPER ASS'Y,(MODIFIED PART)	1	SN:11014--
	421-07-21110	· DAMPER ASS'Y	1	SN:11014--
20	235-809-4590	BRACKET	1	SN:11014--
21	01010-51020	BOLT	8	SN:11014--
22	01643-31032	WASHER	8	SN:11014--
23	235-809-4660	PLATE	1	SN:11014--
24	01010-50816	BOLT	4	SN:11014--
25	01643-30823	WASHER	4	SN:11014--

Printed By : Dwi Iswanto (airafather6107170)

AIR CONDITIONER (4/7) (AIR CONDITIONER UNIT AND DAMPER)(#12099-)

Item	Part No.	Description	Qty	Options
26	23B-950-2170	FILTER	2	SN:11014--
27	01010-50612	BOLT	12	SN:11014--
28	01643-30623	WASHER	12	SN:11014--
29	235-809-4560	PLATE	1	SN:11014--
30	01010-51020	BOLT	2	SN:11014--
31	01643-31032	WASHER	2	SN:11014--

Printed By : Dwi Iswanto (airafather6107170)

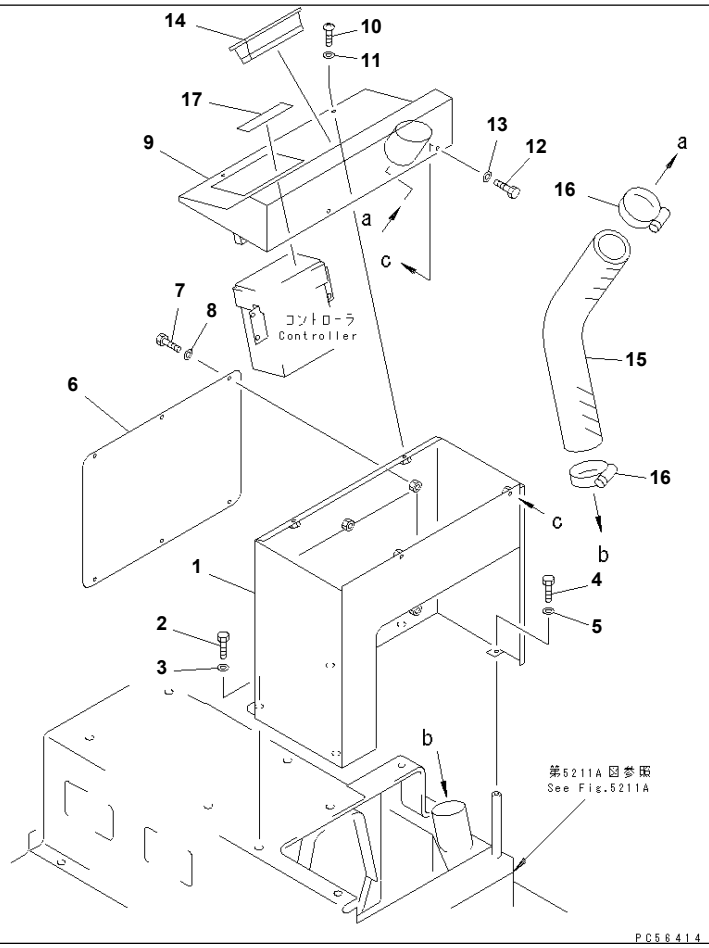

Ref. 5625 **Page 150690**

GD825A-2 S/N 11001-UP

AIR CONDITIONER (5/7) (L.H. BOX)(#11014-)

Item	Part No.	Description	Qty	Options
1	235-809-4610	BOX	1	SN:11014--
2	01010-51220	BOLT	4	SN:11014--
3	01643-31232	WASHER	4	SN:11014--
4	01010-50612	BOLT	1	SN:11014--
5	01643-30623	WASHER	1	SN:11014--
6	235-809-4620	PLATE	1	SN:11014--
7	01010-50612	BOLT	6	SN:11014--
8	01643-30623	WASHER	6	SN:11014--
9	235-809-4630	COVER	1	SN:11014--
10	01220-40612	SCREW	2	SN:11014--
11	01640-20610	WASHER	2	SN:11014--
12	01010-50612	BOLT	2	SN:11014--
13	01643-30623	WASHER	2	SN:11014--
14	421-07-12512	GRILLE ASS'Y	1	SN:11014--
15	09485-06505	HOSE	1	SN:11014--
16	07281-00709	CLAMP	2	SN:11014--
17	235-809-4690	PLATE	1	SN:11014--

Ref. 5625 **Page 150690**

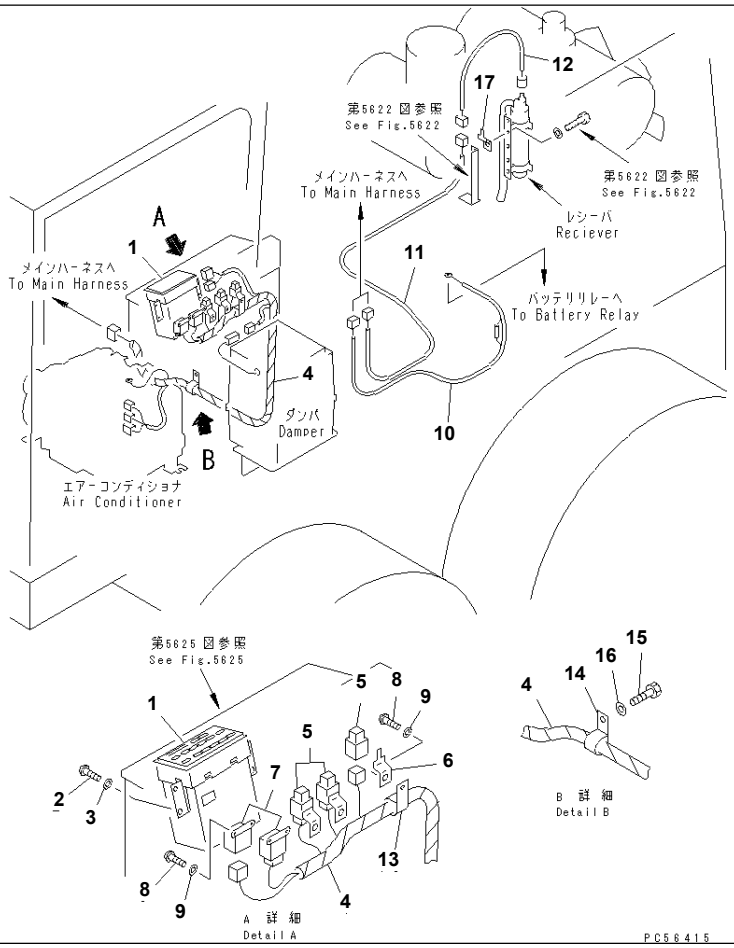

GD825A-2 S/N 11001-UP

AIR CONDITIONER (6/7) (ELECTRICAL SYSTEM)(#11014-)

Item	Part No.	Description	Qty	Options
1	421-07-21150	CONTROLLER	1	SN:11014--
2	01220-40612	SCREW	4	SN:11014--
3	01640-20610	WASHER	4	SN:11014--
4	235-809-4750	HARNESS	1	SN:11014--
5	425-963-1920	RELAY	3	SN:11014--
6	421-07-21180	BRACKET	3	SN:11014--
7	421-07-21260	RELAY	2	SN:11014--
8	01220-40610	SCREW	7	SN:11014--
9	01643-30623	WASHER	7	SN:11014--
10	235-809-4770	CABLE	1	SN:11014--
	234-06-11760	· FUSE BOX	1	SN:11014--
	08040-00500	· FUSE¤ 5A	1	SN:11014--
11	235-809-4760	HARNESS	1	SN:11014--
12	421-07-21820	WIRING HARNESS	1	SN:11014--
13	08036-11210	CLIP	1	SN:11014--
14	08036-01814	CLIP	1	SN:11014--
15	01010-51016	BOLT	1	SN:11014--
16	01643-31032	WASHER	1	SN:11014--
17	08053-00910	CLIP	1	SN:11014--

Printed By : Dwi Iswanto (airafather6107170)

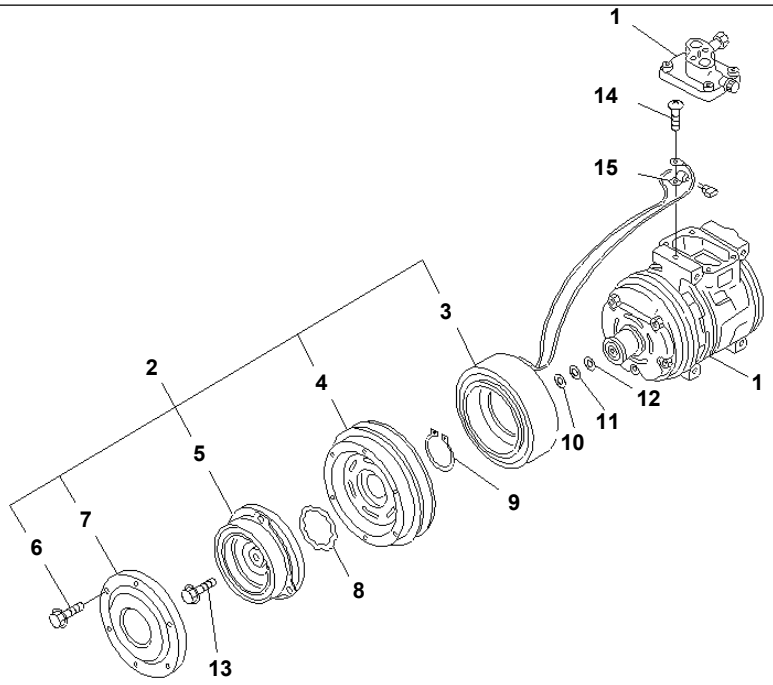

PNB1861

GD825A-2 S/N 11001-UP

AIR CONDITIONER (7/7) (AIR COMPRESSOR)(#11014-)

Item	Part No.	Description	Qty	Options
	20Y-979-3110	AIR COMPRESSOR ASS'Y	1	SN:11014--
1	ND447200-0240	· COMPRESSOR ASS'Y	1	SN:11014--
2	ND447300-1440	· CLUTCH ASS'Y	1	SN:11014--
3	ND047310-7240	· · STATOR	1	SN:11014--
4	ND047350-7130	· · ROTOR	1	SN:11014--
5	ND447410-0010	· · HUB	1	SN:11014--
	ND447410-0020	· · HUB	1	SN:11014--
6	ND949047-2950	· · BOLT	6	SN:11014--
7	ND047372-0660	· · COVER	1	SN:11014--
8	ND949070-0831	· RING¤ SNAP	1	SN:11014--
9	ND949070-0640	· RING¤ SNAP	1	SN:11014--
10	ND949013-7480	· WASHER¤ 0.1MM	1	SN:11014--
11	ND949013-7500	· WASHER¤ 0.3MM	1	SN:11014--
12	ND949013-7510	· WASHER¤ 0.5MM	1	SN:11014--
13	ND949048-0430	· BOLT	1	SN:11014--
14	ND91310-05081	· SCREW	1	SN:11014--
15	ND146691-4470	· CLAMP	1	SN:11014--

Printed By : Dwi Iswanto (airafather6107170)

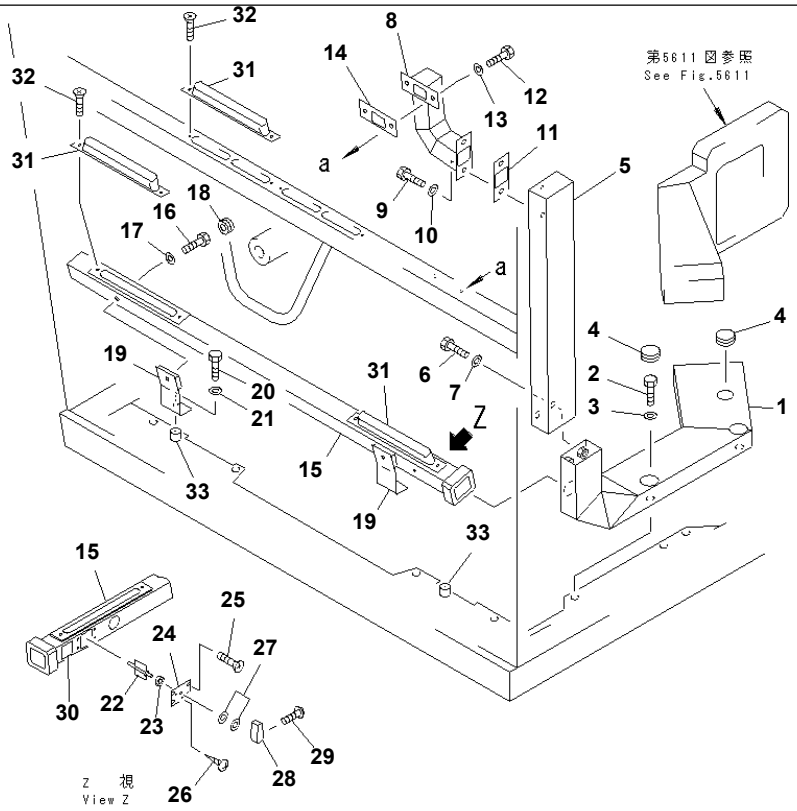

PC56416

GD825A-2 S/N 11001-UP

FRONT DEFROSTER(#11001-11013)

Item	Part No.	Description	Qty	Options
1	235-809-3920	DUCT	1	SN:11001--11013
2	(01010-51235)	BOLT	2	SN:11001--11013
3	(01643-31232)	WASHER	2	SN:11001--11013
4	09415-02512	CAP	3	SN:11001--11013
5	235-809-3950	DUCT	1	SN:11001--11013
6	01010-50816	BOLT	2	SN:11001--11013
7	01641-20812	WASHER	2	SN:11001--11013
8	235-809-3940	BRACKET	1	SN:11001--11013
9	01010-50816	BOLT	2	SN:11001--11013
10	01643-30823	WASHER	2	SN:11001--11013
11	235-809-4120	GASKET	1	SN:11001--11013
12	01010-50610	BOLT	2	SN:11001--11013
13	01643-30623	WASHER	2	SN:11001--11013
14	235-809-4110	GASKET	1	SN:11001--11013
15	235-809-3930	DUCT	1	SN:11001--11013
16	01010-50810	BOLT	2	SN:11001--11013
17	01643-30823	WASHER	2	SN:11001--11013
18	09415-02110	CAP	2	SN:11001--11013
19	235-809-4160	BRACKET	2	SN:11001--11013
20	01010-50816	BOLT	2	SN:11001--11013
21	01641-20812	WASHER	2	SN:11001--11013
22	235-809-4130	SHUTTER	1	SN:11001--11013
23	235-809-4150	RUBBER	1	SN:11001--11013
24	235-809-4140	PLATE	1	SN:11001--11013
25	01224-40306	SCREW	4	SN:11001--11013
26	01370-00406	SCREW	2	SN:11001--11013
27	01641-20608	WASHER	2	SN:11001--11013

Printed By : Dwi Iswanto (airafather6107170)

FRONT DEFROSTER(#11001-11013)

Item	Part No.	Description	Qty	Options
28	23B-950-2230	KNOB	1	SN:11001--11013
29	01220-40306	SCREW	1	SN:11001--11013
30	235-809-4180	PLATE¤ MARK	1	SN:11001--11013
31	09487-30220	NOZZLE	4	SN:11001--11013
32	01224-40412	SCREW	8	SN:11001--11013
33	01571-00814	SEAT (WELDED)	2	SN:11001--11013

Printed By : Dwi Iswanto (airafather6107170)

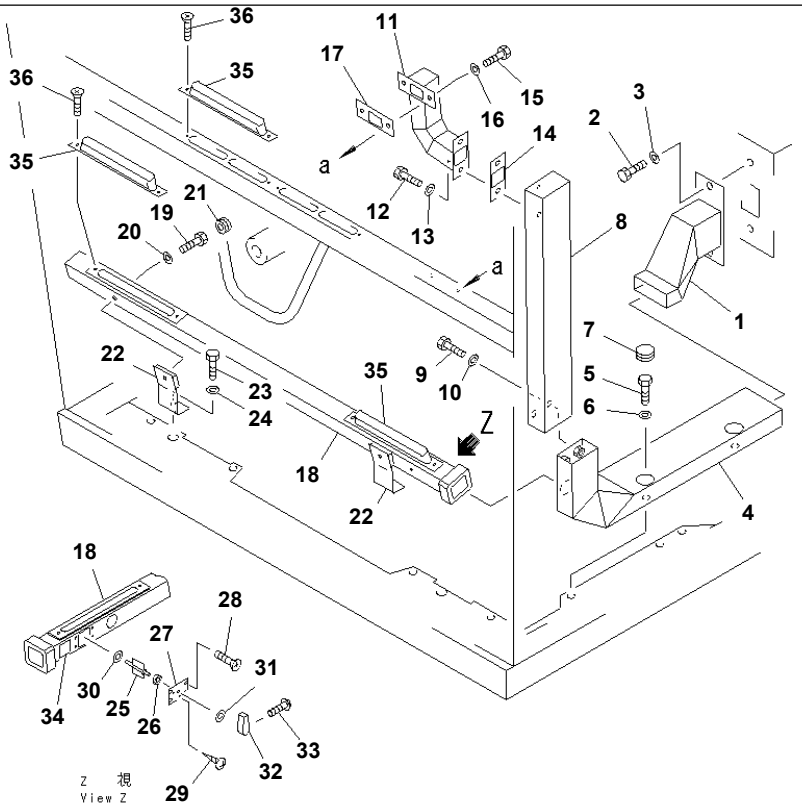

PC56417

FRONT DEFROSTER(#11014-.)

Item	Part No.	Description	Qty	Options
1	235-809-4220	DUCT	1	SN:11014--@
2	01010-51016	BOLT	2	SN:11014--@
3	01643-31032	WASHER	2	SN:11014--@
4	235-809-4230	DUCT	1	SN:11014--@
5	(01010-51230)	BOLT	2	SN:11014--@
6	(01643-31232)	WASHER	2	SN:11014--@
7	09415-02512	CAP	2	SN:11014--@
8	235-809-3950	DUCT	1	SN:11014--.
9	01010-50816	BOLT	2	SN:11014--@
10	01641-20812	WASHER	2	SN:11014--@
11	235-809-3940	BRACKET	1	SN:11014--.
12	01010-50816	BOLT	2	SN:11014--.
13	01643-30823	WASHER	2	SN:11014--.
14	235-809-4120	GASKET	1	SN:11014--.
15	01010-50610	BOLT	2	SN:11014--@
16	01643-30623	WASHER	2	SN:11014--@
17	235-809-4110	GASKET	1	SN:11014--@
18	235-809-3930	DUCT	1	SN:11014--@
19	01010-50810	BOLT	2	SN:11014--@
20	01643-30823	WASHER	2	SN:11014--@
21	09415-02110	CAP	2	SN:11014--@
22	235-809-4160	BRACKET	2	SN:11014--@
23	01010-50816	BOLT	2	SN:11014--@
24	01641-20812	WASHER	2	SN:11014--@
25	235-809-4130	SHUTTER	1	SN:11014--@
26	235-809-4150	RUBBER	1	SN:11014--@
27	235-809-4140	PLATE	1	SN:11014--@

Printed By : Dwi Iswanto (airafather6107170)

FRONT DEFROSTER(#11014-.)

Item	Part No.	Description	Qty	Options
28	01224-40306	SCREW	4	SN:11014--@
29	01370-00410	SCREW	2	SN:11014--@
30	01643-30623	WASHER	1	SN:11014--@
31	01641-20608	WASHER	1	SN:11014--@
32	23B-950-2230	KNOB	1	SN:11014--@
33	01220-40306	SCREW	1	SN:11014--@
34	235-809-4180	PLATE¤ MARK	1	SN:11014--@
35	09487-30220	NOZZLE	4	SN:11014--@
36	01224-40412	SCREW	8	SN:11014--@

Printed By : Dwi Iswanto (airafather6107170)

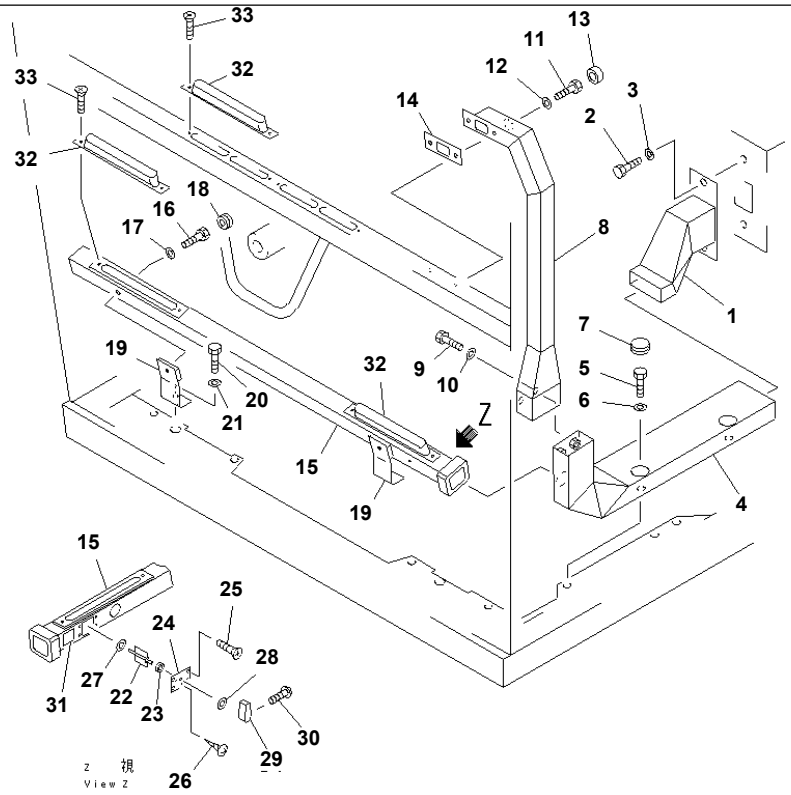

PC56935

GD825A-2 S/N 11001-UP

FRONT DEFROSTER(#.-)

Item	Part No.	Description	Qty	Options
1	235-809-4220	DUCT	1	SN:11014--
2	01010-51016	BOLT	2	SN:11014--
3	01643-31032	WASHER	2	SN:11014--
4	235-809-4230	DUCT	1	SN:11014--
5	(01010-51230)	BOLT	2	SN:11014--
6	(01643-31232)	WASHER	2	SN:11014--
7	09415-02512	CAP	2	SN:11014--
8	235-809-3951	DUCT	1	SN:.--
9	01010-50816	BOLT	2	SN:11014--
10	01641-20812	WASHER	2	SN:11014--
11	01010-50610	BOLT	2	SN:11014--
12	01643-30623	WASHER	2	SN:11014--
13	09415-02110	CAP	1	SN:.--
14	235-809-4110	GASKET	1	SN:11014--
15	235-809-3930	DUCT	1	SN:11014--
16	01010-50810	BOLT	2	SN:11014--
17	01643-30823	WASHER	2	SN:11014--
18	09415-02110	CAP	2	SN:11014--
19	235-809-4160	BRACKET	2	SN:11014--
20	01010-50816	BOLT	2	SN:11014--
21	01641-20812	WASHER	2	SN:11014--
22	235-809-4130	SHUTTER	1	SN:11014--
23	235-809-4150	RUBBER	1	SN:11014--
24	235-809-4140	PLATE	1	SN:11014--
25	01224-40306	SCREW	4	SN:11014--
26	01370-00410	SCREW	2	SN:11014--
27	01643-30623	WASHER	1	SN:11014--

Printed By : Dwi Iswanto (airafather6107170)

FRONT DEFROSTER(#.-)

Item	Part No.	Description	Qty	Options
28	01641-20608	WASHER	1	SN:11014--
29	23B-950-2230	KNOB	1	SN:11014--
30	01220-40306	SCREW	1	SN:11014--
31	235-809-4180	PLATE¤ MARK	1	SN:11014--
32	09487-30220	NOZZLE	4	SN:11014--
33	01224-40412	SCREW	8	SN:11014--

Printed By : Dwi Iswanto (airafather6107170)

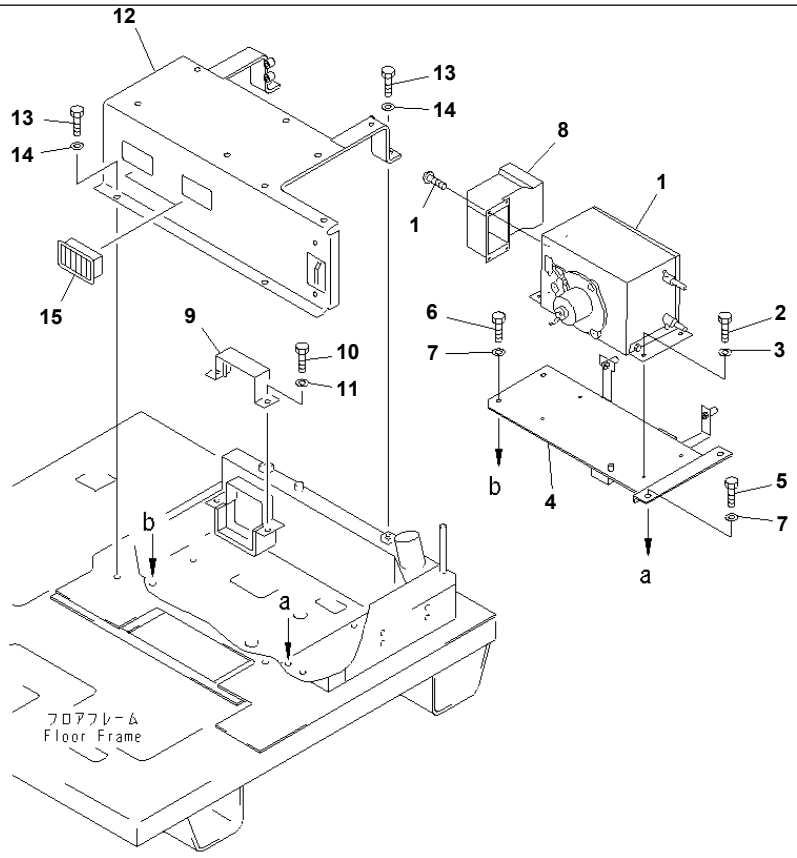

PC56936

Ref. 5701 **Page 150750**

GD825A-2 S/N 11001-UP

CAR HEATER (1/4) (CAR HEATER UNIT)(#11014-)

Item	Part No.	Description	Qty	Options
1	235-807-0010	HEATER UNIT,(MODIFIED PARTS)	1	SN:11014--
	232-817-1610	· HEATER ASS'Y	1	SN:11014--
	ND90930-04061	· · SCREW	4	SN:11014--
2	01010-51025	BOLT	4	SN:11014--
3	01643-31032	WASHER	4	SN:11014--
4	235-807-3110	BRACKET	1	SN:11014--
5	01010-51220	BOLT	2	SN:11014--
6	01010-51245	BOLT	2	SN:11014--
7	01643-31232	WASHER	4	SN:11014--
8	235-807-3140	DUCT	1	SN:11014--
9	235-809-4560	PLATE	1	SN:11014--
10	01010-51020	BOLT	2	SN:11014--
11	01643-31032	WASHER	2	SN:11014--
12	235-809-4550	BRACKET	1	SN:11014--
13	01010-51225	BOLT	4	SN:11014--
14	01643-31232	WASHER	4	SN:11014--
15	142-979-3221	GRILLE ASS'Y	2	SN:11014--

Printed By : Dwi Iswanto (airafather6107170)

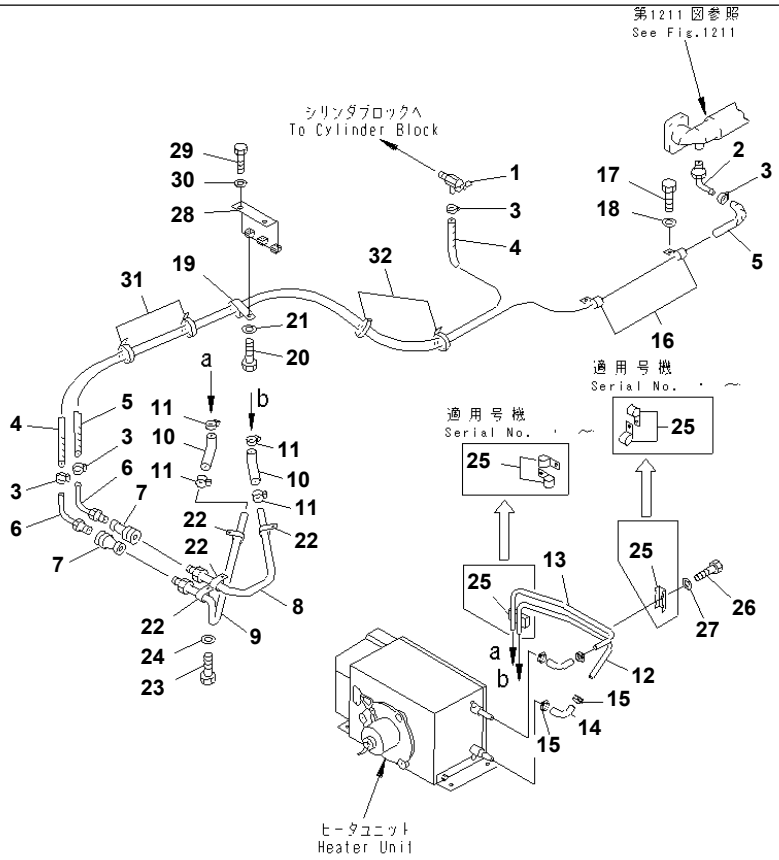

GD825A-2 S/N 11001-UP

CAR HEATER (2/4) (HEATER PIPING)(#11014-)

Item	Part No.	Description	Qty	Options
1	09482-20000	VALVE	1	SN:11014--
2	23B-807-1150	JOINT	1	SN:11014--
3	07280-02323	CLAMP	4	SN:.--
	07281-00229	CLAMP	4	SN:11014--.
4	09483-00423	HOSE	1	SN:11014--
5	09483-00433	HOSE	1	SN:11014--
6	235-809-3680	JOINT	2	SN:11014--
7	235-809-3580	COUPLER	2	SN:11014--
8	235-809-4430	TUBE	1	SN:11014--
9	235-809-4440	TUBE	1	SN:11014--
10	235-809-4450	HOSE	2	SN:11014--
11	07281-00259	CLAMP	4	SN:11014--
12	235-807-3120	TUBE	1	SN:11014--
13	235-807-3180	TUBE	1	SN:11014--
14	09483-20550	HOSE	2	SN:11014--
15	07280-02323	CLAMP	4	SN:.--
	07281-00259	CLAMP	4	SN:11014--.
16	04434-52512	CLIP	2	SN:11014--
17	01010-51020	BOLT	2	SN:11014--
18	01643-31032	WASHER	2	SN:11014--
19	232-817-1140	CLIP	1	SN:11014--
20	01010-51016	BOLT	1	SN:11014--
21	01643-31032	WASHER	1	SN:11014--
22	04434-51610	CLIP	4	SN:11014--
23	01010-51016	BOLT	4	SN:11014--
24	01643-31032	WASHER	4	SN:11014--
25	04434-51610	CLIP	4	SN:.--

Ref. 5703 Page 150760

Printed By : Dwi Iswanto (airafather6107170)

CAR HEATER (2/4) (HEATER PIPING)(#11014-)

Item	Part No.	Description	Qty	Options
	232-60-14932	CLIP	2	SN:11014--.
26	01010-51035	BOLT	2	SN:11014--
27	01643-31232	WASHER	2	SN:11014--
28	235-809-3570	BRACKET	1	SN:11014--
29	01010-51020	BOLT	2	SN:11014--
30	01643-31032	WASHER	2	SN:11014--
31	08034-00519	BAND	15	SN:11014--
32	08034-00823	BAND	15	SN:11014--

Printed By : Dwi Iswanto (airafather6107170)

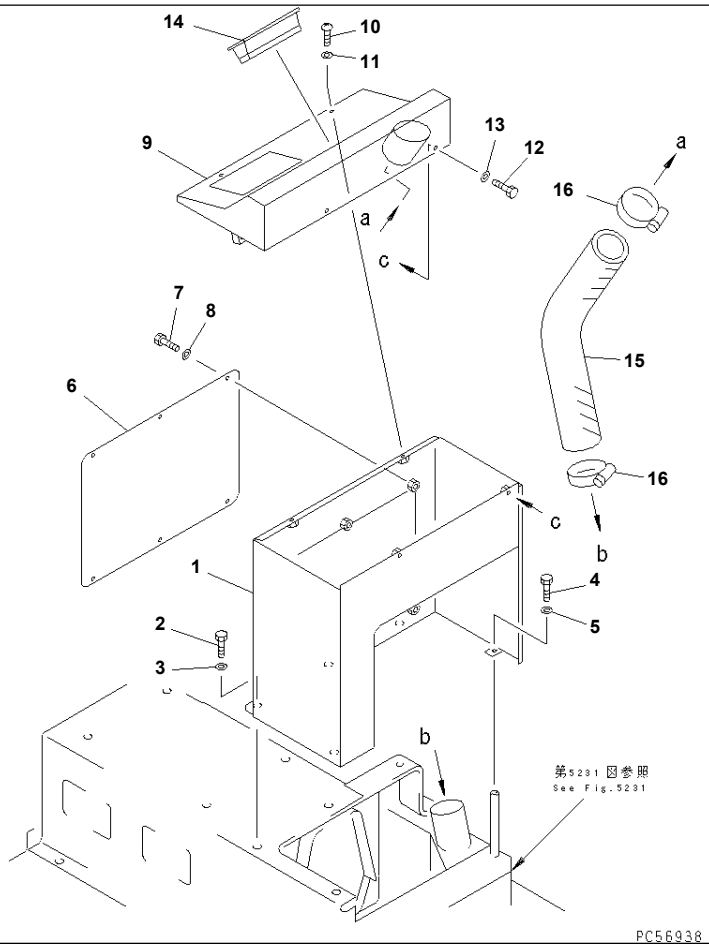

Ref. 5705 **Page 150770**

GD825A-2 S/N 11001-UP

CAR HEATER (3/4) (L.H. BOX)(#11014-)

Item	Part No.	Description	Qty	Options
1	235-809-4610	BOX	1	SN:11014--
2	01010-51220	BOLT	4	SN:11014--
3	01643-31232	WASHER	4	SN:11014--
4	01010-50612	BOLT	1	SN:11014--
5	01643-30623	WASHER	1	SN:11014--
6	235-809-4620	PLATE	1	SN:11014--
7	01010-50612	BOLT	6	SN:11014--
8	01643-30623	WASHER	6	SN:11014--
9	235-809-4630	COVER	1	SN:11014--
10	01220-40612	SCREW	2	SN:11014--
11	01640-20610	WASHER	2	SN:11014--
12	01010-50612	BOLT	2	SN:11014--
13	01643-30623	WASHER	2	SN:11014--
14	421-07-12512	GRILLE ASS'Y	1	SN:11014--
15	09485-06505	HOSE	1	SN:11014--
16	07281-00709	CLAMP	2	SN:11014--

Ref. 5705 **Page 150770**

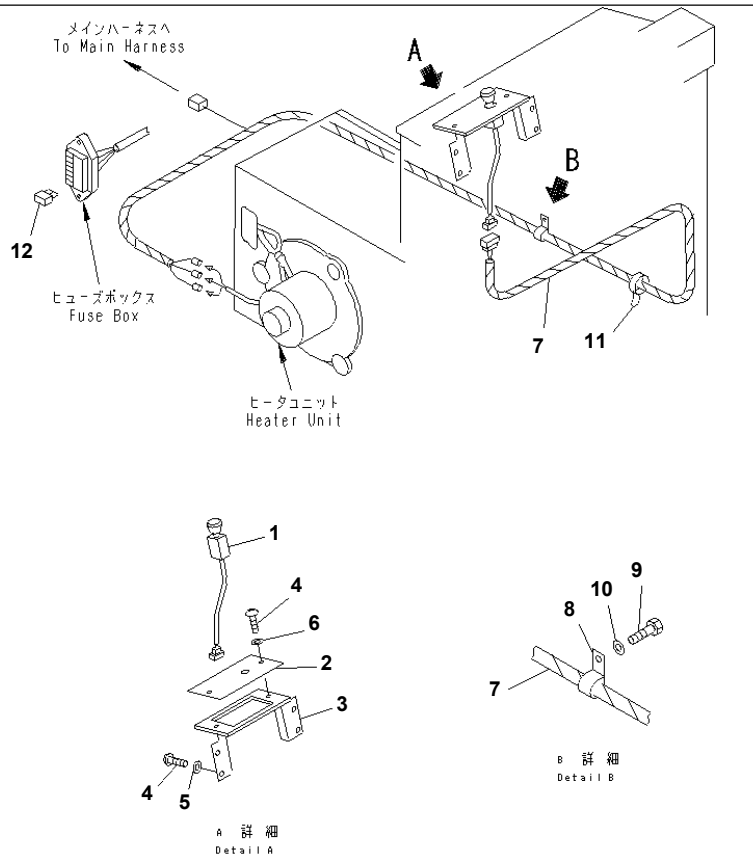

PC56939

CAR HEATER (4/4) (ELECTRICAL PARTS)(#11014-)

Item	Part No.	Description	Qty	Options
1	232-817-1620	SWITCH,HEATER	1	SN:11014--
2	235-807-3170	PLATE	1	SN:11014--
3	235-807-3130	BRACKET	1	SN:11014--
4	01220-40612	SCREW	6	SN:11014--
5	01640-20610	WASHER	4	SN:11014--
6	01641-20608	WASHER	2	SN:11014--
7	235-807-3160	HARNESS	1	SN:11014--
8	08036-01214	CLIP	1	SN:11014--
9	01010-51016	BOLT	1	SN:11014--
10	01643-31032	WASHER	1	SN:11014--
11	08034-00519	BAND	1	SN:11014--
12	08041-01000	FUSE¤ 10A	1	SN:11014--

Printed By : Dwi Iswanto (airafather6107170)

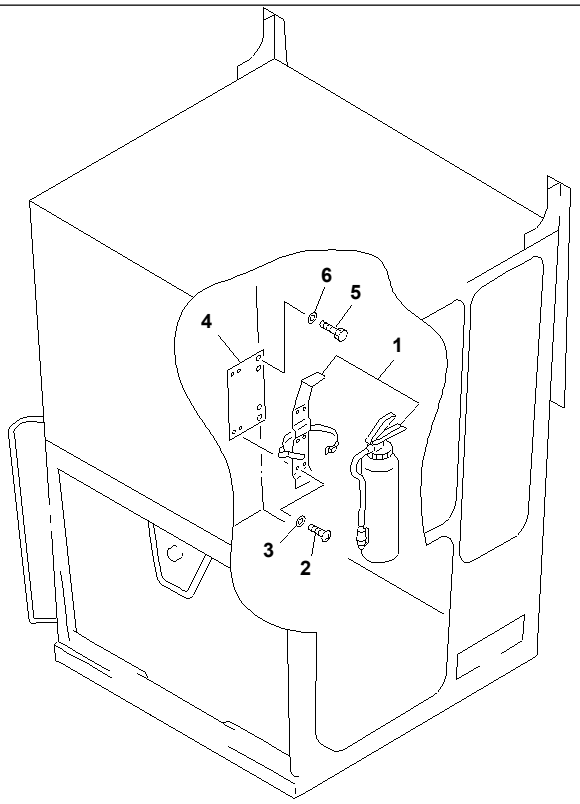

PS56418

GD825A-2 S/N 11001-UP
FIRE EXTINGUISHER

Item	Part No.	Description	Qty	Options
1	09495-40000	FIRE EXTINGUISHER	1	SN:11001--
2	01220-40512	SCREW	4	SN:11001--
3	01601-20513	WASHER,SPRING	4	SN:11001--
4	235-950-2940	PLATE	1	SN:11001--
5	01010-50816	BOLT	4	SN:11001--
6	01643-30823	WASHER	4	SN:11001--

Printed By : Dwi Iswanto (airafather6107170)

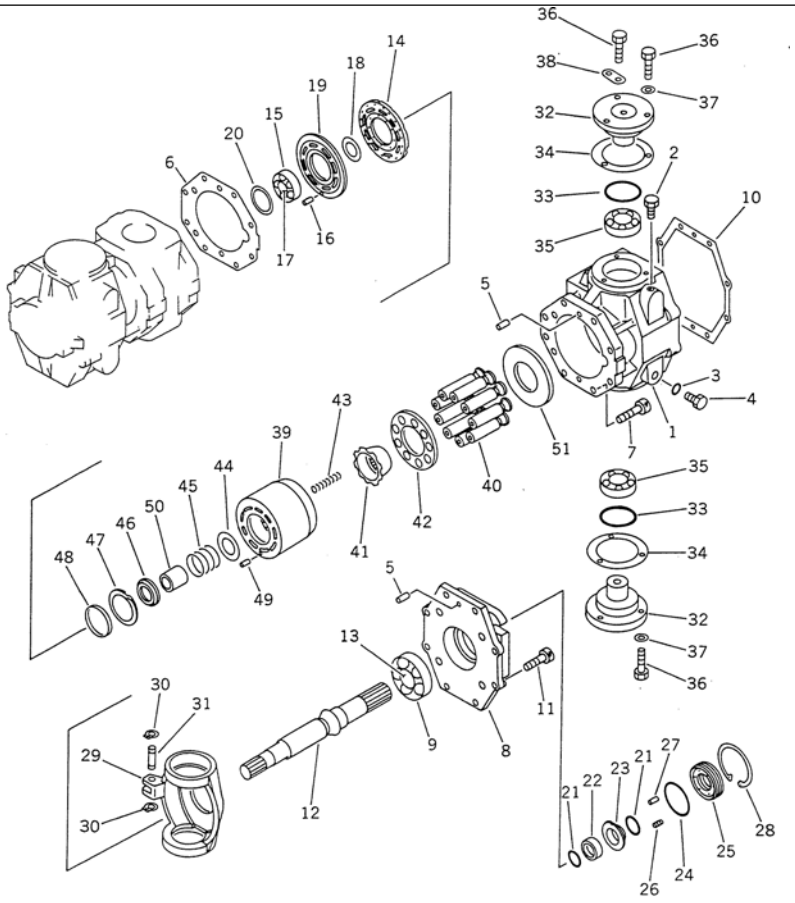

HYDRAULIC PUMP (1/3)

Item	Part No.	Description	Qty	Options
	235-60-11100	PUMP ASS'Y	1	SN:11001--
THIS ASSEMBLY CONSISTS OF ALL PARTS SHOWN IN FIGS.6001 TO 6005.				
1	235-60-18430	· HOUSING	1	SN:11001--
2	235-60-18220	· PLUG	1	SN:11001--
3	235-60-11180	· O-RING	1	SN:11001--
4	235-60-11190	· PLUG	1	SN:11001--
5	235-60-11130	· PIN,DOWEL	6	SN:11001--
6	235-60-18370	· GASKET	1	SN:11001--
7	235-60-18210	· BOLT	8	SN:11001--
	235-60-18450	· COVER ASS'Y,FRONT	1	SN:11001--
8	☆	· · COVER,FRONT	1	SN:11001--
9	☆	· · BEARING	1	SN:11001--
10	235-60-18440	· GASKET	1	SN:11001--
11	235-60-18160	· BOLT	8	SN:11001--
	235-60-18470	· SHAFT ASS'Y,FRONT	1	SN:11001--
12	☆	· · SHAFT	1	SN:11001--
13	☆	· · BEARING	1	SN:11001--
14	235-60-18310	· PLATE,BEARING	1	SN:11001--
15	235-60-18360	· BEARING	1	SN:11001--
16	235-60-18260	· PIN,DOWEL	1	SN:11001--
17	235-60-18390	· BEARING	1	SN:11001--
18	235-60-18410	· SPACER	1	SN:11001--
19	235-60-18380	· PLATE,VALVE	1	SN:11001--
20	235-60-18350	· SHIM	AR	SN:11001--
	235-60-18460	· SEAL ASS'Y	1	SN:11001--
21	☆	· · O-RING	2	SN:11001--
22	☆	· · SEAL	1	SN:11001--

Printed By : Dwi Iswanto (airafather6107170)

HYDRAULIC PUMP (1/3)

Item	Part No.	Description	Qty	Options
23	☆	· · SEAT,SPRING	1	SN:11001--
24	☆	· · O-RING	1	SN:11001--
25	☆	· · COVER	1	SN:11001--
26	☆	· · SEAL	1	SN:11001--
27	☆	· · PIN,DOWEL	1	SN:11001--
28	235-60-18230	· RING,SNAP	1	SN:11001--
	235-60-18240	· PLATE ASS'Y	1	SN:11001--
29	☆	· · PLATE	1	SN:11001--
30	☆	· · RING	2	SN:11001--
31	☆	· · PIN	1	SN:11001--
	235-60-11140	· TRUNNION ASS'Y	2	SN:11001--
32	☆	· · TRUNNION	1	SN:11001--
33	☆	· · O-RING	1	SN:11001--
34	☆	· · GASKET	1	SN:11001--
35	☆	· · BEARING	1	SN:11001--
36	235-60-11110	· BOLT	6	SN:11001--
37	235-60-11120	· WASHER	5	SN:11001--
38	235-60-18130	· BRACKET	1	SN:11001--
	235-60-18420	· BLOCK KIT,CYLINDER	1	SN:11001--
39	☆	· · BLOCK,CYLINDER	1	SN:11001--
40	☆	· · PISTON	1	SN:11001--
41	☆	· · GUIDE,RETAINER	1	SN:11001--
42	☆	· · RETAINER	1	SN:11001--
43	☆	· · SPRING	1	SN:11001--
44	☆	· · SEAT,SPRING	1	SN:11001--
45	☆	· · SPRING	1	SN:11001--
46	☆	· · SEAT,SPRING	1	SN:11001--
47	☆	· · RING	1	SN:11001--
48	☆	· · RING	1	SN:11001--
49	☆	· · PIN,DOWEL	1	SN:11001--
50	235-60-18290	· GUIDE,SPRING	1	SN:11001--
51	235-60-18250	· PLATE,THRUST	1	SN:11001--

Printed By : Dwi Iswanto (airafather6107170)

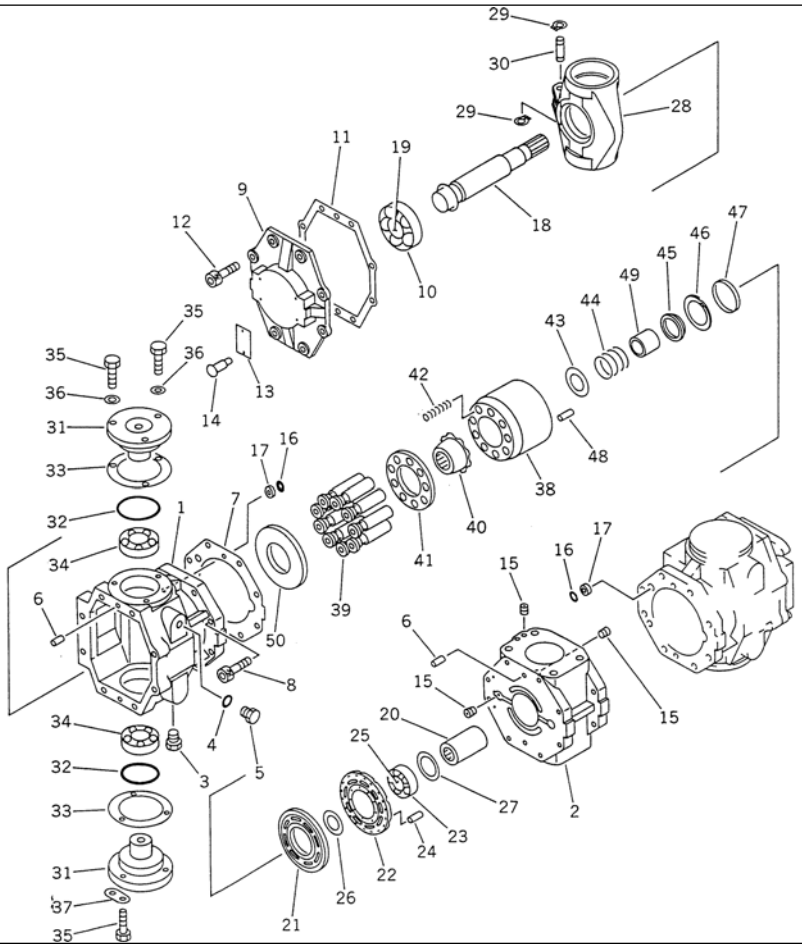

GD825A-2 S/N 11001-UP

HYDRAULIC PUMP (2/3)

Item	Part No.	Description	Qty	Options
	(235-60-11100)	PUMP ASS'Y	1	SN:11001--
THIS ASSEMBLY CONSISTS OF ALL PARTS SHOWN IN FIGS.6001 TO 6005.				
1	235-60-18430	· HOUSING	1	SN:11001--
2	235-60-18330	· CENTER	1	SN:11001--
3	235-60-18220	· PLUG	1	SN:11001--
4	235-60-11180	· O-RING	1	SN:11001--
5	235-60-11190	· PLUG	1	SN:11001--
6	235-60-11130	· PIN,DOWEL	6	SN:11001--
7	235-60-18370	· GASKET	1	SN:11001--
8	235-60-18210	· BOLT	8	SN:11001--
	235-60-18270	· COVER ASS'Y,REAR	1	SN:11001--
9	☆	· · COVER	1	SN:11001--
10	☆	· · BEARING	1	SN:11001--
11	235-60-18440	· GASKET	1	SN:11001--
12	235-60-18160	· BOLT	8	SN:11001--
13	235-60-18150	· PLATE	1	SN:11001--
14	235-60-18140	· PIN	2	SN:11001--
15	235-60-18170	· PLUG	4	SN:11001--
16	235-60-18180	· O-RING	2	SN:11001--
17	235-60-18190	· RING,BACK-UP	2	SN:11001--
	235-60-18280	· SHAFT ASS'Y,REAR	1	SN:11001--
18	☆	· · SHAFT	1	SN:11001--
19	☆	· · BEARING	1	SN:11001--
20	235-60-18340	· COUPLING	1	SN:11001--
21	235-60-18310	· PLATE,BEARING	1	SN:11001--
22	235-60-18320	· PLATE,VALVE	1	SN:11001--
23	235-60-18360	· BEARING	1	SN:11001--

Printed By : Dwi Iswanto (airafather6107170)

HYDRAULIC PUMP (2/3)

Item	Part No.	Description	Qty	Options
24	235-60-18260	· PIN,DOWEL	1	SN:11001--
25	235-60-18390	· BEARING	1	SN:11001--
26	235-60-18410	· SPACER	1	SN:11001--
27	235-60-18350	· SHIM	AR	SN:11001--
	235-60-18240	· PLATE ASS'Y	1	SN:11001--
28	☆	· · PLATE	1	SN:11001--
29	☆	· · RING	2	SN:11001--
30	☆	· · PIN	1	SN:11001--
	235-60-11140	· TRUNNION ASS'Y	2	SN:11001--
31	☆	· · TRUNNION	1	SN:11001--
32	☆	· · O-RING	1	SN:11001--
33	☆	· · GASKET	1	SN:11001--
34	☆	· · BEARING	1	SN:11001--
35	235-60-11110	· BOLT	6	SN:11001--
36	235-60-11120	· WASHER	5	SN:11001--
37	235-60-18130	· BRACKET	1	SN:11001--
	235-60-18420	· BLOCK KIT,CYLINDER	1	SN:11001--
38	☆	· · BLOCK,CYLINDER	1	SN:11001--
39	☆	· · PISTON	1	SN:11001--
40	☆	· · GUIDE,RETAINER	1	SN:11001--
41	☆	· · RETAINER	1	SN:11001--
42	☆	· · SPRING	1	SN:11001--
43	☆	· · SEAT,SPRING	1	SN:11001--
44	☆	· · SPRING	1	SN:11001--
45	☆	· · SEAT,SPRING	1	SN:11001--
46	☆	· · RING	1	SN:11001--
47	☆	· · RING	1	SN:11001--
48	☆	· · PIN,DOWEL	1	SN:11001--
49	235-60-18290	· GUIDE,SPRING	1	SN:11001--
50	235-60-18250	· PLATE,THRUST	1	SN:11001--

Printed By : Dwi Iswanto (airafather6107170)

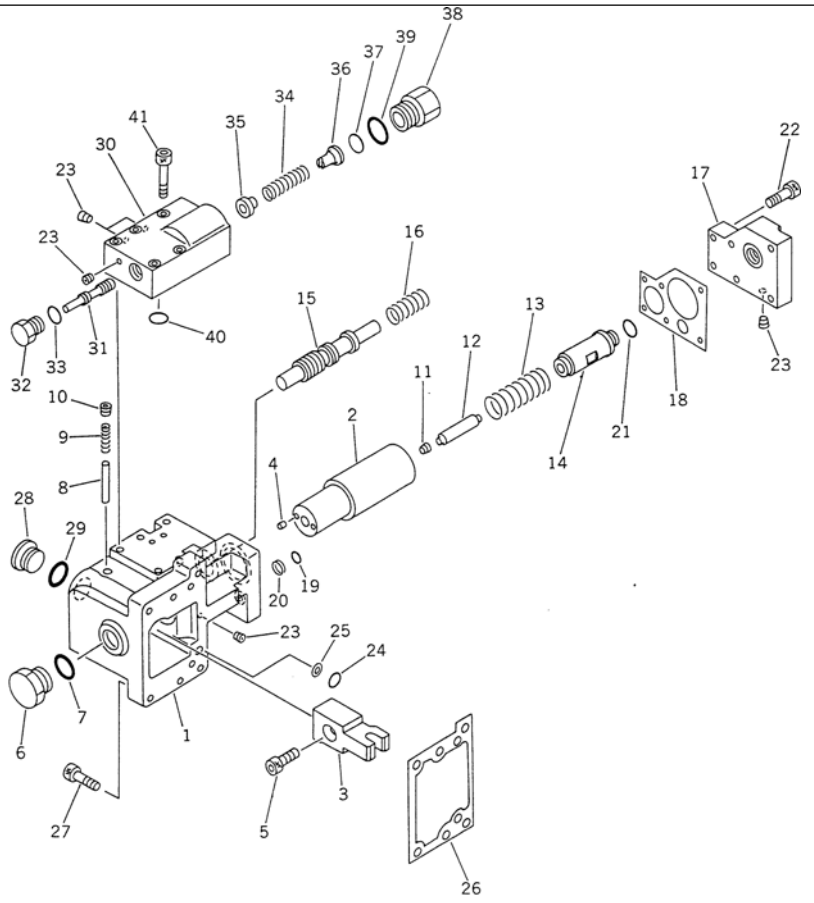

GD825A-2 S/N 11001-UP

HYDRAULIC PUMP (3/3)

Item	Part No.	Description	Qty	Options
	(235-60-11100)	PUMP ASS'Y	1	SN:11001--
THIS ASSEMBLY CONSISTS OF ALL PARTS SHOWN IN FIGS.6001 TO 6005.				
	235-60-11170	· VALVE ASS'Y,MAIN CONTROL	2	SN:11001--
1	☆	· · HOUSING	1	SN:11001--
2	☆	· · PISTON	1	SN:11001--
3	☆	· · LINK	1	SN:11001--
4	☆	· · PIN	2	SN:11001--
5	☆	· · BOLT	1	SN:11001--
6	☆	· · PLUG	1	SN:11001--
7	☆	· · O-RING	1	SN:11001--
8	☆	· · PIN	1	SN:11001--
9	☆	· · SPRING	1	SN:11001--
10	☆	· · PLUG	1	SN:11001--
11	☆	· · PLUG	1	SN:11001--
12	☆	· · PISTON	1	SN:11001--
13	☆	· · SPRING	1	SN:11001--
14	☆	· · SLEEVE	1	SN:11001--
15	☆	· · SPOOL	1	SN:11001--
16	☆	· · SPRING	1	SN:11001--
17	☆	· · COVER	1	SN:11001--
18	☆	· · GASKET	1	SN:11001--
19	☆	· · O-RING	1	SN:11001--
20	☆	· · RING,BACK-UP	1	SN:11001--
21	☆	· · O-RING	1	SN:11001--
22	☆	· · BOLT	6	SN:11001--
23	235-60-18170	· PLUG	14	SN:11001--
24	235-60-18180	· O-RING	2	SN:11001--

Printed By : Dwi Iswanto (airafather6107170)

HYDRAULIC PUMP (3/3)

Item	Part No.	Description	Qty	Options
25	235-60-18190	· RING,BACK-UP	2	SN:11001--
26	235-60-18120	· GASKET	2	SN:11001--
27	235-60-18110	· BOLT	12	SN:11001--
28	235-60-11190	· PLUG	1	SN:11001--
29	235-60-11180	· O-RING	1	SN:11001--
	235-60-11150	· VALVE ASS'Y	2	SN:11001--
30	☆	· · HOUSING	1	SN:11001--
31	☆	· · SPOOL	1	SN:11001--
32	☆	· · PLUG	1	SN:11001--
33	☆	· · O-RING	1	SN:11001--
34	☆	· · SPRING	1	SN:11001--
35	☆	· · SEAT,SPRING	1	SN:11001--
36	☆	· · SEAT,SPRING	1	SN:11001--
37	☆	· · SHIM	1	SN:11001--
38	☆	· · PLUG	1	SN:11001--
39	☆	· · O-RING	1	SN:11001--
40	☆	· · O-RING	1	SN:11001--
41	235-60-11160	· BOLT	10	SN:11001--

Printed By : Dwi Iswanto (airafather6107170)

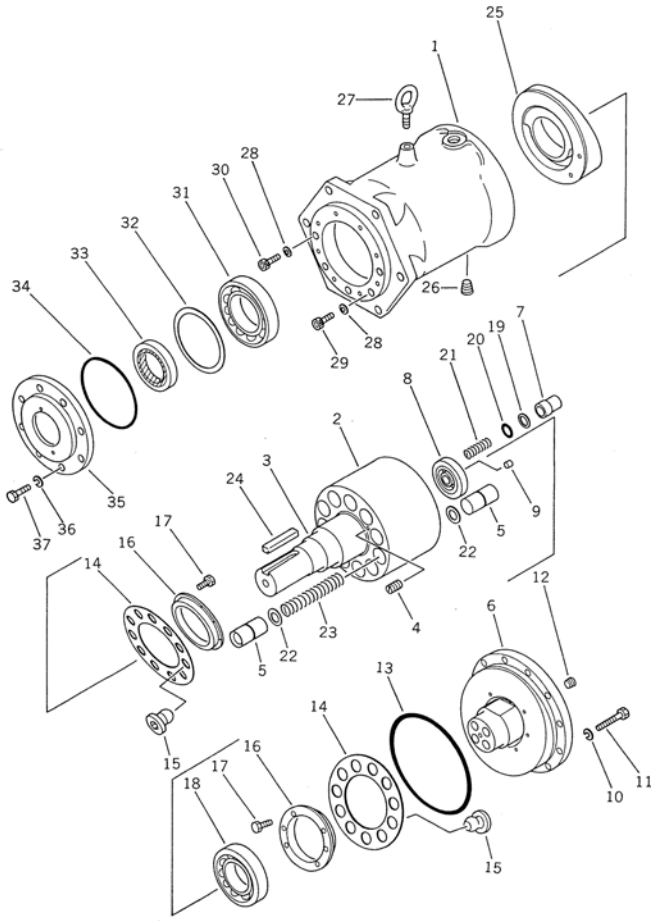

Ref. 6051 **Page 180040**

GD825A-2 S/N 11001-UP
HYDRAULIC MOTOR

Item	Part No.	Description	Qty	Options
	235-62-11100	MOTOR ASS'Y	1	SN:11001--
1	235-62-11110	· CASING	1	SN:11001--
	235-62-00010	· BLOCK ASS'Y,CYLINDER	1	SN:11001--
2	☆	· · BLOCK,CYLINDER	1	SN:11001--
3	☆	· · SHAFT	1	SN:11001--
4	☆	· · SCREW	3	SN:11001--
5	☆	· · PISTON	22	SN:11001--
	235-62-00020	· PLATE ASS'Y,RETAINER	1	SN:11001--
6	☆	· · PLATE,RETAINER	1	SN:11001--
7	☆	· · SLEEVE	4	SN:11001--
	235-62-00030	· PLATE ASS'Y,TIMING	1	SN:11001--
8	☆	· · PLATE,TIMING	1	SN:11001--
9	☆	· · PIN,TIMING PLATE	2	SN:11001--
10	235-62-11490	· WASHER,SPRING	12	SN:11001--
11	235-62-11390	· BOLT	12	SN:11001--
12	235-62-11470	· PLUG	1	SN:11001--
13	235-62-11310	· O-RING	1	SN:11001--
14	235-62-11220	· PLATE,RETAINER	2	SN:11001--
15	235-62-11190	· SLIPPER	22	SN:11001--
16	235-62-11160	· RING,RETAINER	2	SN:11001--
17	235-62-11440	· BOLT	12	SN:11001--
18	235-62-11380	· BEARING	1	SN:11001--
19	235-62-11340	· RING,BACK-UP	4	SN:11001--
20	235-62-11330	· O-RING	4	SN:11001--
21	235-62-11260	· SPRING,TIMING PLATE	4	SN:11001--
22	235-62-11280	· RING,PISTON	22	SN:11001--
23	235-62-11250	· SPRING	11	SN:11001--

Printed By : Dwi Iswanto (airafather6107170)

HYDRAULIC MOTOR

Item	Part No.	Description	Qty	Options
24	235-62-11290	· KEY	1	SN:11001--
25	235-62-11140	· PLATE	1	SN:11001--
26	235-62-11460	· PLUG	2	SN:11001--
27	235-62-11480	· BOLT,EYE	1	SN:11001--
28	235-62-11350	· WASHER,SEAL	5	SN:11001--
29	235-62-11420	· BOLT	3	SN:11001--
30	235-62-11430	· BOLT	2	SN:11001--
31	235-62-11370	· BEARING	1	SN:11001--
32	235-62-11270	· SHIM	1	SN:11001--
33	235-62-11360	· SEAL,OIL	1	SN:11001--
34	235-62-11320	· O-RING	1	SN:11001--
35	235-62-11150	· COVER	1	SN:11001--
36	235-62-11510	· WASHER,SPRING	8	SN:11001--
37	235-62-11410	· BOLT	8	SN:11001--

Printed By : Dwi Iswanto (airafather6107170)

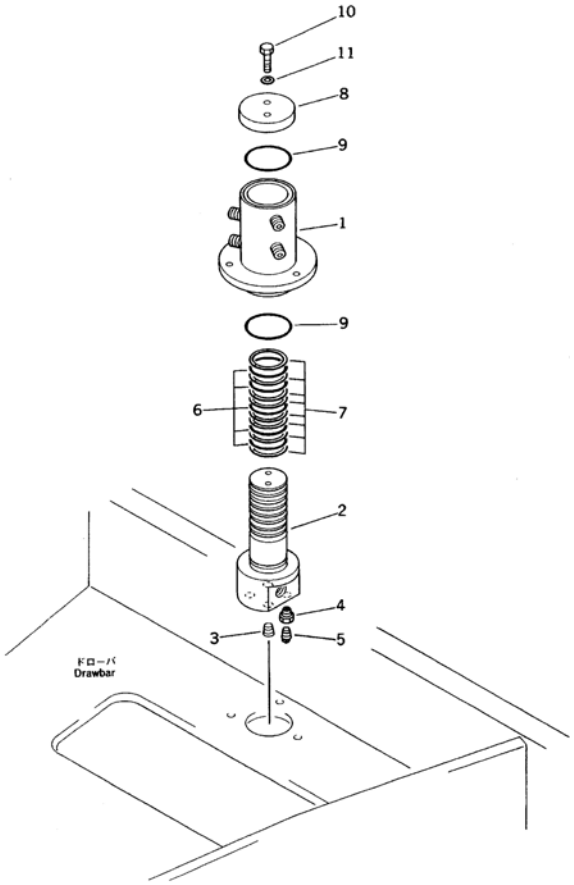

Ref. 6071 **Page 180050**

GD825A-2 S/N 11001-UP
SWIVEL JOINT

Item	Part No.	Description	Qty	Options
	235-60-14901	JOINT ASS'Y	1	SN:11001--
1	235-60-14910	· BODY	1	SN:11001--
2	235-60-14920	· FLANGE	1	SN:11001--
3	07043-00211	· PLUG	2	SN:11001--
4	235-60-14680	· NIPPLE	2	SN:11001--
5	07042-20108	· PLUG	2	SN:11001--
6	07000-13050	· O-RING	5	SN:11001--
7	07001-03050	· RING,BACK-UP	8	SN:11001--
8	232-60-54730	· PLATE	1	SN:11001--
9	07000-12065	· O-RING	2	SN:11001--
10	01010-51225	· BOLT	2	SN:11001--
11	01643-31232	· WASHER	2	SN:11001--

Printed By : Dwi Iswanto (airafather6107170)

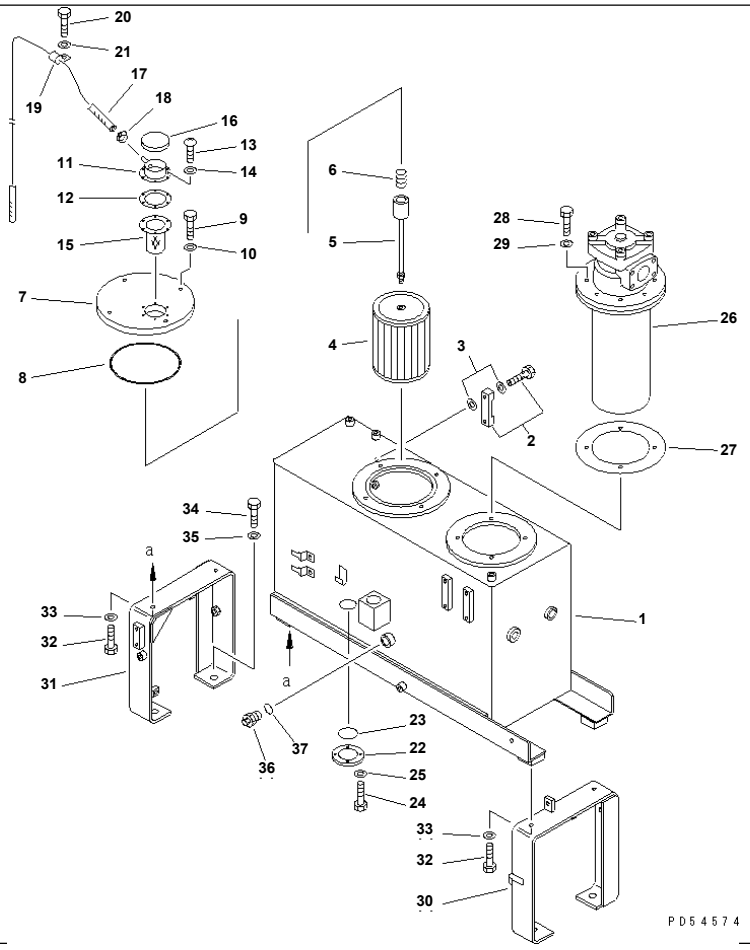

GD825A-2 S/N 11001-UP
HYDRAULIC TANK

Item	Part No.	Description	Qty	Options
1	235-60-32110	TANK	1	SN:11001--
2	23A-60-13500	GAUGE	1	SN:11001--
3	07005-01012	GASKET	4	SN:11001--
4	205-60-51450	STRAINER	1	SN:11001--
5	235-60-32120	SUPPORT	1	SN:11001--
6	12R-60-11230	SPRING	1	SN:11001--
7	20Y-60-11450	COVER	1	SN:11001--
8	07000-05180	O-RING	1	SN:11001--
9	01010-51035	BOLT	4	SN:11001--
10	01643-31032	WASHER	4	SN:11001--
11	201-60-12171	FILLER,NECK	1	SN:11001--
12	205-60-51460	GASKET	1	SN:11001--
13	01220-40516	SCREW	6	SN:11001--
14	01641-20508	WASHER	6	SN:11001--
15	205-60-51480	SCREEN	1	SN:11001--
16	201-60-12190	CAP ASS'Y	1	SN:11001--
17	07270-60817	TUBE	1	SN:11001--
18	07280-01110	CLAMP	1	SN:11001--
19	08036-01014	CLIP	3	SN:11001--
20	01010-51020	BOLT	3	SN:11001--
21	01643-31032	WASHER	3	SN:11001--
22	235-60-32140	FLANGE	1	SN:11001--
23	235-832-2120	O-RING	1	SN:11001--
24	01010-50618	BOLT	4	SN:11001--
25	01643-30623	WASHER	4	SN:11001--
26	(234-60-31300)	FILTER ASS'Y	1	SN:11001--
27	273-60-13250	GASKET	1	SN:11001--

Printed By : Dwi Iswanto (airafather6107170)

HYDRAULIC TANK

Item	Part No.	Description	Qty	Options
28	01010-51030	BOLT	4	SN:11001--
29	01643-31032	WASHER	4	SN:11001--
30	235-60-32210	BRACKET,L.H.	1	SN:11001--
31	235-60-32220	BRACKET,R.H.	1	SN:11001--
32	01010-51225	BOLT	4	SN:11001--
33	01643-31232	WASHER	4	SN:11001--
34	01010-51640	BOLT	4	SN:11001--
35	01643-31645	WASHER	4	SN:11001--
36	23B-22-21250	PLUG	1	SN:11001--
37	07002-12434	O-RING	1	SN:11001--

Printed By : Dwi Iswanto (airafather6107170)

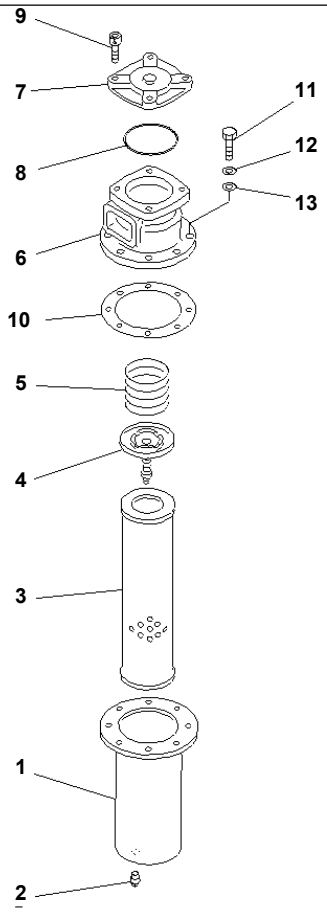

GD825A-2 S/N 11001-UP

HYDRAULIC OIL FILTER

Item	Part No.	Description	Qty	Options
	234-60-31300	FILTER ASS'Y	1	SN:11001--
1	234-60-31320	· CASE	1	SN:11001--
2	07042-20108	· PLUG	1	SN:11001--
3	234-60-31330	· ELEMENT	1	SN:11001--
4	234-60-31400	· VALVE ASS'Y	1	SN:11001--
5	234-60-31350	· SPRING	1	SN:11001--
6	234-60-31340	· HEAD	1	SN:11001--
7	234-60-31310	· COVER	1	SN:11001--
8	234-60-31360	· O-RING	1	SN:11001--
9	01252-31230	· BOLT	4	SN:11001--
10	234-60-31370	· PACKING	1	SN:11001--
11	01010-51020	· BOLT	4	SN:11001--
12	234-60-31380	· WASHER	4	SN:11001--
13	01640-21016	· WASHER	4	SN:11001--

Printed By : Dwi Iswanto (airafather6107170)

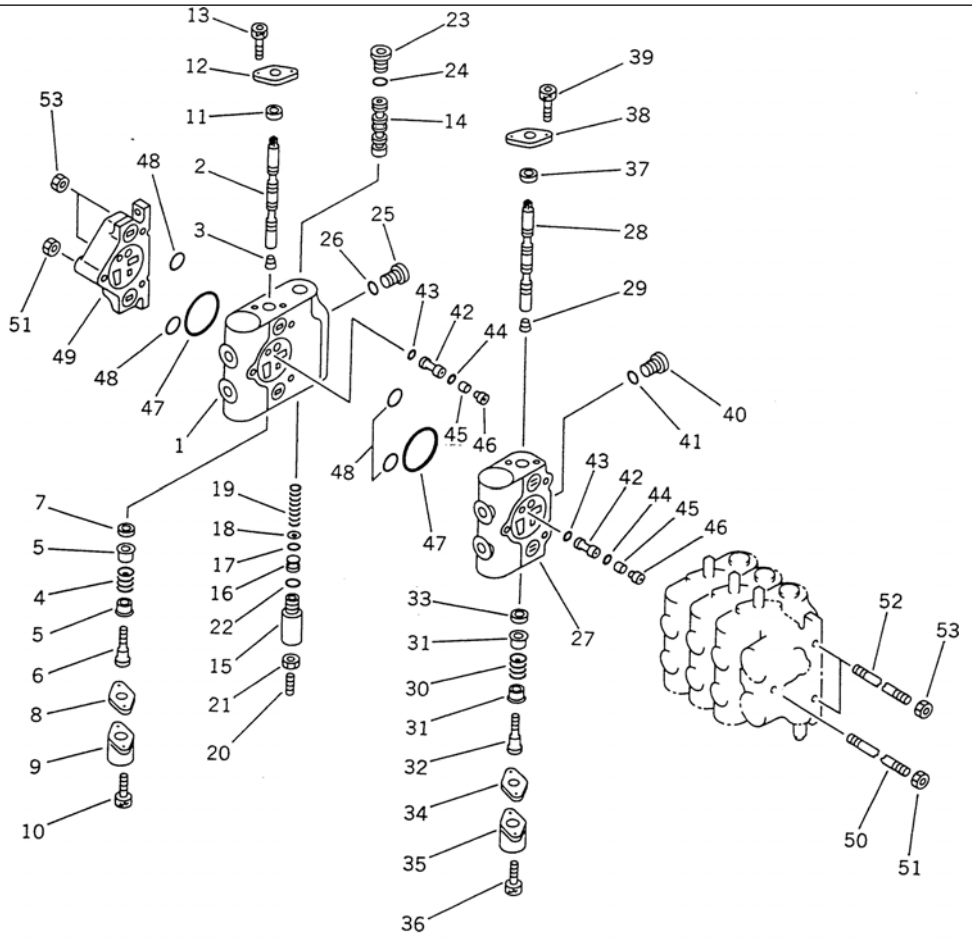

Ref. 6201 **Page 180080**

GD825A-2 S/N 11001-UP

HYDRAULIC CONTROL VALVE¤ L.H. (5-SPOOL) (1/2)(#11001-12022)

Item	Part No.	Description	Qty	Options
	235-60-11201	VALVE ASS'Y,HYD. CONTROL¤ L.H.	1	SN:11001--12022
THIS ASSEMBLY CONSISTS OF ALL PARTS SHOWN IN FIGS.6201 AND 6202.				
1	☆	· BODY,VALVE	1	SN:11001--12022
2	☆	· SPOOL,CIRCLE REVERSE	1	SN:11001--12022
3	235-60-11990	· PLUG	1	SN:11001--12022
4	235-60-11771	· SPRING	1	SN:11001--12022
5	235-60-11760	· COLLAR	2	SN:11001--12022
6	235-60-11780	· BOLT	1	SN:11001--12022
7	235-60-11820	· SEAL,OIL	1	SN:11001--12022
8	235-60-11740	· PLATE	1	SN:11001--12022
9	235-60-11750	· CAP,SPRING	1	SN:11001--12022
10	235-60-11810	· BOLT	2	SN:11001--12022
11	235-60-11820	· SEAL,OIL	1	SN:11001--12022
12	235-60-11740	· PLATE	1	SN:11001--12022
13	235-60-11790	· BOLT	2	SN:11001--12022
14	☆	· SPOOL	1	SN:11001--12022
15	235-60-12440	· CAP	1	SN:11001--12022
16	235-60-11870	· COLLAR	1	SN:11001--12022
17	235-60-11960	· O-RING	1	SN:11001--12022
18	235-60-11970	· RING,BACK-UP	1	SN:11001--12022
19	235-60-11840	· SPRING	1	SN:11001--12022
20	235-60-11880	· STUD	1	SN:11001--12022
21	235-60-11890	· NUT	1	SN:11001--12022
22	235-60-12310	· O-RING	1	SN:11001--12022
23	235-60-11860	· PLUG	1	SN:11001--12022
24	235-60-12310	· O-RING	1	SN:11001--12022
25	235-60-11730	· PLUG	1	SN:11001--12022

Printed By : Dwi Iswanto (airafather6107170)

HYDRAULIC CONTROL VALVE¤ L.H. (5-SPOOL) (1/2)(#11001-12022)

Item	Part No.	Description	Qty	Options
26	235-60-12310	· O-RING	1	SN:11001--12022
27	☆	· BLOCK,VALVE	1	SN:11001--12022
28	☆	· SPOOL,POWER TILT	1	SN:11001--12022
29	235-60-11990	· PLUG	1	SN:11001--12022
30	235-60-11771	· SPRING	1	SN:11001--12022
31	235-60-11760	· COLLAR	2	SN:11001--12022
32	235-60-11780	· BOLT	1	SN:11001--12022
33	235-60-11820	· SEAL,OIL	1	SN:11001--12022
34	235-60-11740	· PLATE	1	SN:11001--12022
35	235-60-11750	· CAP,SPRING	1	SN:11001--12022
36	235-60-11810	· BOLT	2	SN:11001--12022
37	235-60-11820	· SEAL,OIL	1	SN:11001--12022
38	235-60-11740	· PLATE	1	SN:11001--12022
39	235-60-11790	· BOLT	2	SN:11001--12022
40	235-60-11730	· PLUG	1	SN:11001--12022
41	235-60-12310	· O-RING	1	SN:11001--12022
	235-60-11900	· VALVE	2	SN:11001--12022
42	☆	· · BODY,VALVE	1	SN:11001--12022
43	235-60-11950	· · O-RING	1	SN:11001--12022
44	235-60-11940	· · O-RING	1	SN:11001--12022
45	☆	· · SPOOL	1	SN:11001--12022
46	☆	· · SEAT	1	SN:11001--12022
47	235-60-12360	· O-RING	2	SN:11001--12022
48	235-60-12350	· O-RING	4	SN:11001--12022
49	☆	· COVER,END	1	SN:11001--12022
50	235-60-11250	· STUD	1	SN:11001--12022
51	235-60-11260	· NUT	2	SN:11001--12022
52	235-60-11280	· STUD	2	SN:11001--12022
53	235-60-11270	· NUT	4	SN:11001--12022

Printed By : Dwi Iswanto (airafather6107170)

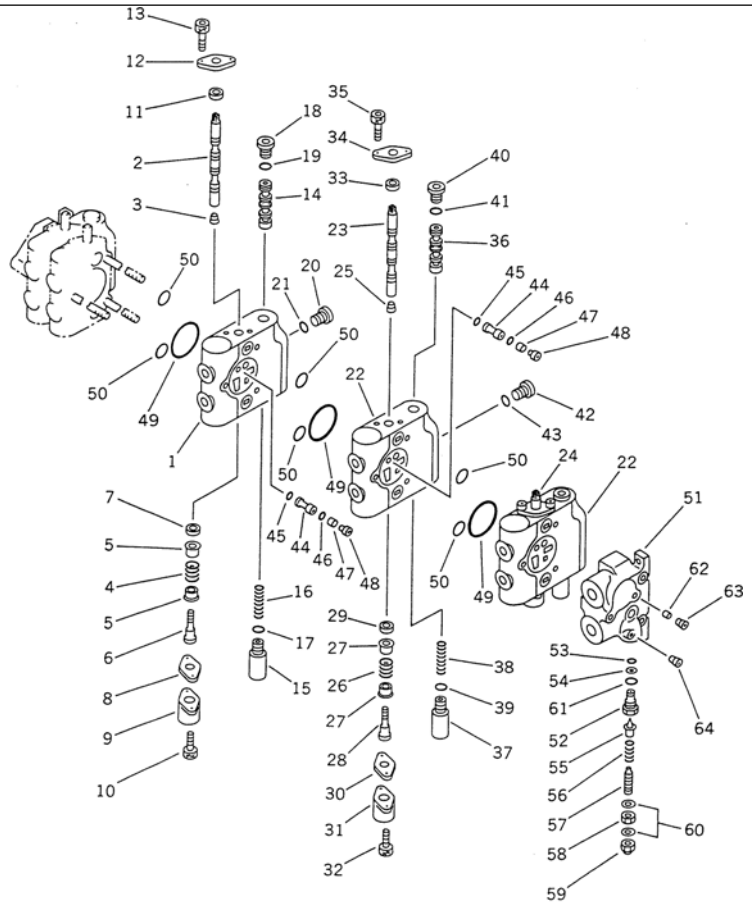

HYDRAULIC CONTROL VALVE¤ L.H. (5-SPOOL) (2/2)(#11001-12022)

Item	Part No.	Description	Qty	Options
	(235-60-11201)	VALVE ASS'Y,HYD. CONTROL¤ L.H.	1	SN:11001--12022
THIS ASSEMBLY CONSISTS OF ALL PARTS SHOWN IN FIGS.6201 AND 6202.				
1	☆	· BODY,VALVE	1	SN:11001--12022
2	☆	· SPOOL,BLADE SIDE SHIFT	1	SN:11001--12022
3	235-60-11990	· PLUG	1	SN:11001--12022
4	235-60-11771	· SPRING	1	SN:11001--12022
5	235-60-11760	· COLLAR	2	SN:11001--12022
6	235-60-11780	· BOLT	1	SN:11001--12022
7	235-60-11820	· SEAL,OIL	1	SN:11001--12022
8	235-60-11740	· PLATE	1	SN:11001--12022
9	235-60-11750	· CAP,SPRING	1	SN:11001--12022
10	235-60-11810	· BOLT	2	SN:11001--12022
11	235-60-11820	· SEAL,OIL	1	SN:11001--12022
12	235-60-11740	· PLATE	1	SN:11001--12022
13	235-60-11790	· BOLT	2	SN:11001--12022
14	☆	· SPOOL	1	SN:11001--12022
15	235-60-11850	· CAP	1	SN:11001--12022
16	235-60-11840	· SPRING	1	SN:11001--12022
17	235-60-12310	· O-RING	1	SN:11001--12022
18	235-60-11860	· PLUG	1	SN:11001--12022
19	235-60-12310	· O-RING	1	SN:11001--12022
20	235-60-11730	· PLUG	1	SN:11001--12022
21	235-60-12310	· O-RING	1	SN:11001--12022
22	☆	· BODY,VALVE	2	SN:11001--12022
23	☆	· SPOOL	1	SN:11001--12022
24	☆	· SPOOL,BLADE LIFT	1	SN:11001--12022
25	235-60-11990	· PLUG	2	SN:11001--12022

Printed By : Dwi Iswanto (airafather6107170)

HYDRAULIC CONTROL VALVE¤ L.H. (5-SPOOL) (2/2)(#11001-12022)

Item	Part No.	Description	Qty	Options
26	235-60-11771	· SPRING	2	SN:11001--12022
27	235-60-11760	· COLLAR	4	SN:11001--12022
28	235-60-11780	· BOLT	2	SN:11001--12022
29	235-60-11820	· SEAL,OIL	2	SN:11001--12022
30	235-60-11740	· PLATE	2	SN:11001--12022
31	235-60-11750	· CAP,SPRING	2	SN:11001--12022
32	235-60-11810	· BOLT	4	SN:11001--12022
33	235-60-11820	· SEAL,OIL	2	SN:11001--12022
34	235-60-11740	· PLATE	2	SN:11001--12022
35	235-60-11790	· BOLT	4	SN:11001--12022
36	☆	· SPOOL	2	SN:11001--12022
37	235-60-11850	· CAP	2	SN:11001--12022
38	235-60-11840	· SPRING	2	SN:11001--12022
39	235-60-12310	· O-RING	2	SN:11001--12022
40	235-60-11860	· PLUG	2	SN:11001--12022
41	235-60-12310	· O-RING	2	SN:11001--12022
42	235-60-11730	· PLUG	2	SN:11001--12022
43	235-60-12310	· O-RING	2	SN:11001--12022
	235-60-11900	· VALVE	3	SN:11001--12022
44	☆	· · BODY,VALVE	1	SN:11001--12022
45	235-60-11950	· · O-RING	1	SN:11001--12022
46	235-60-11940	· · O-RING	1	SN:11001--12022
47	☆	· · SPOOL	1	SN:11001--12022
48	☆	· · SEAT	1	SN:11001--12022
49	235-60-12360	· O-RING	3	SN:11001--12022
50	235-60-12350	· O-RING	6	SN:11001--12022
51	☆	· COVER,VALVE	1	SN:11001--12022
	235-60-11600	· VALVE ASS'Y,PILOT CHECK	1	SN:11001--12022
52	235-60-11610	· · BODY,VALVE	1	SN:11001--12022
53	235-60-11670	· · O-RING	1	SN:11001--12022
54	235-60-11690	· · RING,BACK-UP	1	SN:11001--12022
55	☆	· · VALVE	1	SN:11001--12022
56	☆	· · SPRING	1	SN:11001--12022
57	☆	· · STUD	1	SN:11001--12022
58	☆	· · NUT	1	SN:11001--12022
59	☆	· · NUT	1	SN:11001--12022
60	235-60-11710	· · WASHER,SEAL	2	SN:11001--12022
61	235-60-11680	· · O-RING	1	SN:11001--12022
62	235-60-11580	· ORIFICE	1	SN:11001--12022
63	235-60-11590	· PLUG	1	SN:11001--12022
64	235-60-12370	· PLUG	1	SN:11001--12022

Printed By : Dwi Iswanto (airafather6107170)

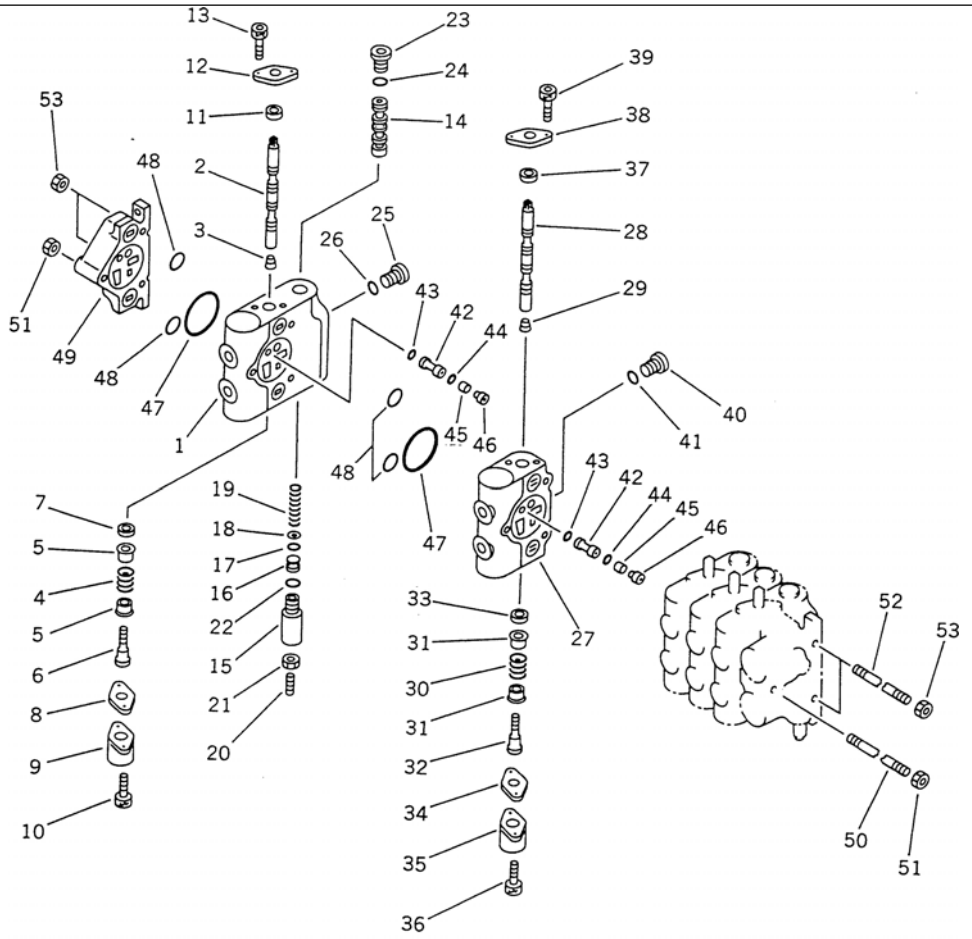

HYDRAULIC CONTROL VALVE¤ R.H. (5-SPOOL) (1/2)(#11001-12022)

Item	Part No.	Description	Qty	Options
	235-60-11301	VALVE ASS'Y,HYD. CONTOL¤ R.H.	1	SN:11001--12022
THIS ASSEMBLY CONSISTS OF ALL PARTS SHOWN IN FIGS.6205 AND 6206.				
1	☆	· BODY,VALVE	1	SN:11001--12022
2	☆	· SPOOL,BLADE LIFT	1	SN:11001--12022
3	235-60-11990	· PLUG	1	SN:11001--12022
4	235-60-11771	· SPRING	1	SN:11001--12022
5	235-60-11760	· COLLAR	2	SN:11001--12022
6	235-60-11780	· BOLT	1	SN:11001--12022
7	235-60-11820	· SEAL,OIL	1	SN:11001--12022
8	235-60-11740	· PLATE	1	SN:11001--12022
9	235-60-11750	· CAP,SPRING	1	SN:11001--12022
10	235-60-11810	· BOLT	2	SN:11001--12022
11	235-60-11820	· SEAL,OIL	1	SN:11001--12022
12	235-60-11740	· PLATE	1	SN:11001--12022
13	235-60-11790	· BOLT	2	SN:11001--12022
14	☆	· SPOOL	1	SN:11001--12022
15	235-60-12440	· CAP	1	SN:11001--12022
16	235-60-11870	· COLLAR	1	SN:11001--12022
17	235-60-11960	· O-RING	1	SN:11001--12022
18	235-60-11970	· RING,BACK-UP	1	SN:11001--12022
19	235-60-11840	· SPRING	1	SN:11001--12022
20	235-60-11880	· STUD	1	SN:11001--12022
21	235-60-11890	· NUT	1	SN:11001--12022
22	235-60-12310	· O-RING	1	SN:11001--12022
23	235-60-11860	· PLUG	1	SN:11001--12022
24	235-60-12310	· O-RING	1	SN:11001--12022
25	235-60-11730	· PLUG	1	SN:11001--12022

Printed By : Dwi Iswanto (airafather6107170)

HYDRAULIC CONTROL VALVE¤ R.H. (5-SPOOL) (1/2)(#11001-12022)

Item	Part No.	Description	Qty	Options
26	235-60-12310	· O-RING	1	SN:11001--12022
27	☆	· BLOCK,VALVE	1	SN:11001--12022
28	☆	· SPOOL,RIPPER	1	SN:11001--12022
29	235-60-11990	· PLUG	1	SN:11001--12022
30	235-60-11771	· SPRING	1	SN:11001--12022
31	235-60-11760	· COLLAR	2	SN:11001--12022
32	235-60-11780	· BOLT	1	SN:11001--12022
33	235-60-11820	· SEAL,OIL	1	SN:11001--12022
34	235-60-11740	· PLATE	1	SN:11001--12022
35	235-60-11750	· CAP,SPRING	1	SN:11001--12022
36	235-60-11810	· BOLT	2	SN:11001--12022
37	235-60-11820	· SEAL,OIL	1	SN:11001--12022
38	235-60-11740	· PLATE	1	SN:11001--12022
39	235-60-11790	· BOLT	2	SN:11001--12022
40	235-60-11730	· PLUG	1	SN:11001--12022
41	235-60-12310	· O-RING	1	SN:11001--12022
	235-60-11900	· VALVE	2	SN:11001--12022
42	☆	· · BODY,VALVE	1	SN:11001--12022
43	235-60-11950	· · O-RING	1	SN:11001--12022
44	235-60-11940	· · O-RING	1	SN:11001--12022
45	☆	· · SPOOL	1	SN:11001--12022
46	☆	· · SEAT	1	SN:11001--12022
47	235-60-12360	· O-RING	2	SN:11001--12022
48	235-60-12350	· O-RING	4	SN:11001--12022
49	☆	· COVER,END	1	SN:11001--12022
50	235-60-11250	· STUD	1	SN:11001--12022
51	235-60-11260	· NUT	2	SN:11001--12022
52	235-60-11280	· STUD	2	SN:11001--12022
53	235-60-11270	· NUT	4	SN:11001--12022

Printed By : Dwi Iswanto (airafather6107170)

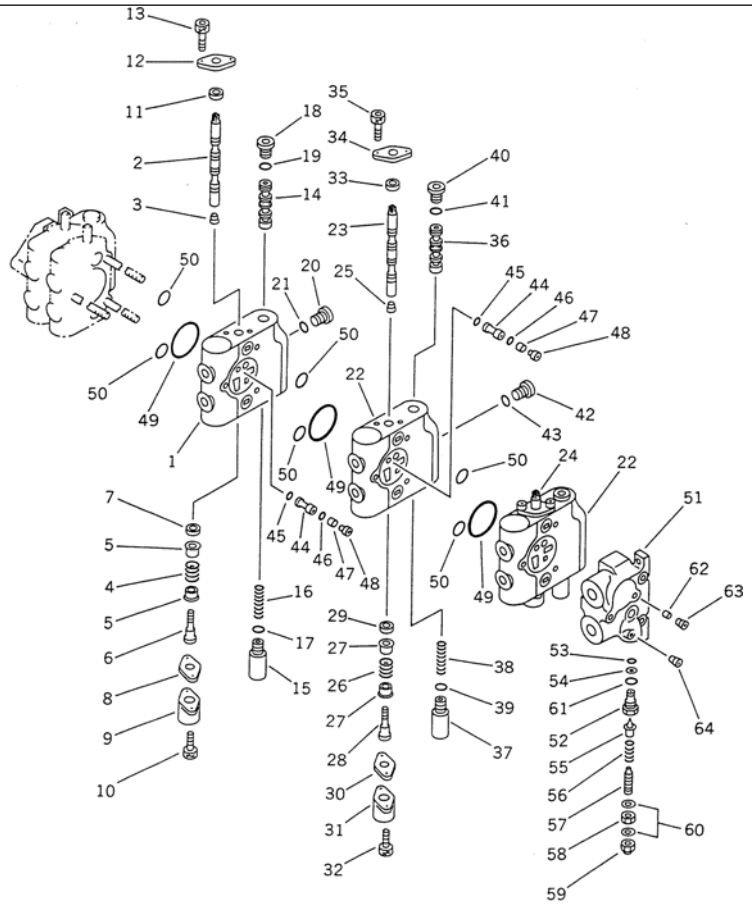

Ref. 6206 Page 180110

GD825A-2 S/N 11001-UP

HYDRAULIC CONTROL VALVE¤ R.H. (5-SPOOL) (2/2)(#11001-12022)

Item	Part No.	Description	Qty	Options
	(235-60-11301)	VALVE ASS'Y,HYD. CONTROL¤ R.H.	1	SN:11001--12022
THIS ASSEMBLY CONSISTS OF ALL PARTS SHOWN IN FIGS.6205 AND 6206.				
1	☆	· BODY,VALVE	1	SN:11001--12022
2	☆	· SPOOL,LEANING	1	SN:11001--12022
3	235-60-11990	· PLUG	1	SN:11001--12022
4	235-60-11771	· SPRING	1	SN:11001--12022
5	235-60-11760	· COLLAR	2	SN:11001--12022
6	235-60-11780	· BOLT	1	SN:11001--12022
7	235-60-11820	· SEAL,OIL	1	SN:11001--12022
8	235-60-11740	· PLATE	1	SN:11001--12022
9	235-60-11750	· CAP,SPRING	1	SN:11001--12022
10	235-60-11810	· BOLT	2	SN:11001--12022
11	235-60-11820	· SEAL,OIL	1	SN:11001--12022
12	235-60-11740	· PLATE	1	SN:11001--12022
13	235-60-11790	· BOLT	2	SN:11001--12022
14	☆	· SPOOL	1	SN:11001--12022
15	235-60-11850	· CAP	1	SN:11001--12022
16	235-60-11840	· SPRING	1	SN:11001--12022
17	235-60-12310	· O-RING	1	SN:11001--12022
18	235-60-11860	· PLUG	1	SN:11001--12022
19	235-60-12310	· O-RING	1	SN:11001--12022
20	235-60-11730	· PLUG	1	SN:11001--12022
21	235-60-12310	· O-RING	1	SN:11001--12022
22	☆	· BODY,VALVE	2	SN:11001--12022
23	☆	· SPOOL,ARTICULATE	1	SN:11001--12022
24	☆	· SPOOL,DRAWBAR SIDE SHIFT	1	SN:11001--12022
25	235-60-11990	· PLUG	2	SN:11001--12022

Printed By : Dwi Iswanto (airafather6107170)

HYDRAULIC CONTROL VALVE¤ R.H. (5-SPOOL) (2/2)(#11001-12022)

Item	Part No.	Description	Qty	Options
26	235-60-11771	· SPRING	2	SN:11001--12022
27	235-60-11760	· COLLAR	4	SN:11001--12022
28	235-60-11780	· BOLT	2	SN:11001--12022
29	235-60-11820	· SEAL,OIL	2	SN:11001--12022
30	235-60-11740	· PLATE	2	SN:11001--12022
31	235-60-11750	· CAP,SPRING	2	SN:11001--12022
32	235-60-11810	· BOLT	4	SN:11001--12022
33	235-60-11820	· SEAL,OIL	2	SN:11001--12022
34	235-60-11740	· PLATE	2	SN:11001--12022
35	235-60-11790	· BOLT	4	SN:11001--12022
36	☆	· SPOOL	2	SN:11001--12022
37	235-60-11850	· CAP	2	SN:11001--12022
38	235-60-11840	· SPRING	2	SN:11001--12022
39	235-60-12310	· O-RING	2	SN:11001--12022
40	235-60-11860	· PLUG	2	SN:11001--12022
41	235-60-12310	· O-RING	2	SN:11001--12022
42	235-60-11730	· PLUG	2	SN:11001--12022
43	235-60-12310	· O-RING	2	SN:11001--12022
	235-60-11900	· VALVE	3	SN:11001--12022
44	☆	· · BODY,VALVE	1	SN:11001--12022
45	235-60-11950	· · O-RING	1	SN:11001--12022
46	235-60-11940	· · O-RING	1	SN:11001--12022
47	☆	· · SPOOL	1	SN:11001--12022
48	☆	· · SEAT	1	SN:11001--12022
49	235-60-12360	· O-RING	3	SN:11001--12022
50	235-60-12350	· O-RING	6	SN:11001--12022
51	☆	· COVER,VALVE	1	SN:11001--12022
	235-60-11600	· VALVE ASS'Y,PILOT CHECK	1	SN:11001--12022
52	235-60-11610	· · BODY,VALVE	1	SN:11001--12022
53	235-60-11670	· · O-RING	1	SN:11001--12022
54	235-60-11690	· · RING,BACK-UP	1	SN:11001--12022
55	☆	· · VALVE	1	SN:11001--12022
56	☆	· · SPRING	1	SN:11001--12022
57	☆	· · STUD	1	SN:11001--12022
58	☆	· · NUT	1	SN:11001--12022
59	☆	· · NUT	1	SN:11001--12022
60	235-60-11710	· · WASHER,SEAL	2	SN:11001--12022
61	235-60-11680	· · O-RING	1	SN:11001--12022
62	235-60-11580	· ORIFICE	1	SN:11001--12022
63	235-60-11590	· PLUG	1	SN:11001--12022
64	235-60-12370	· PLUG	1	SN:11001--12022

Printed By : Dwi Iswanto (airafather6107170)

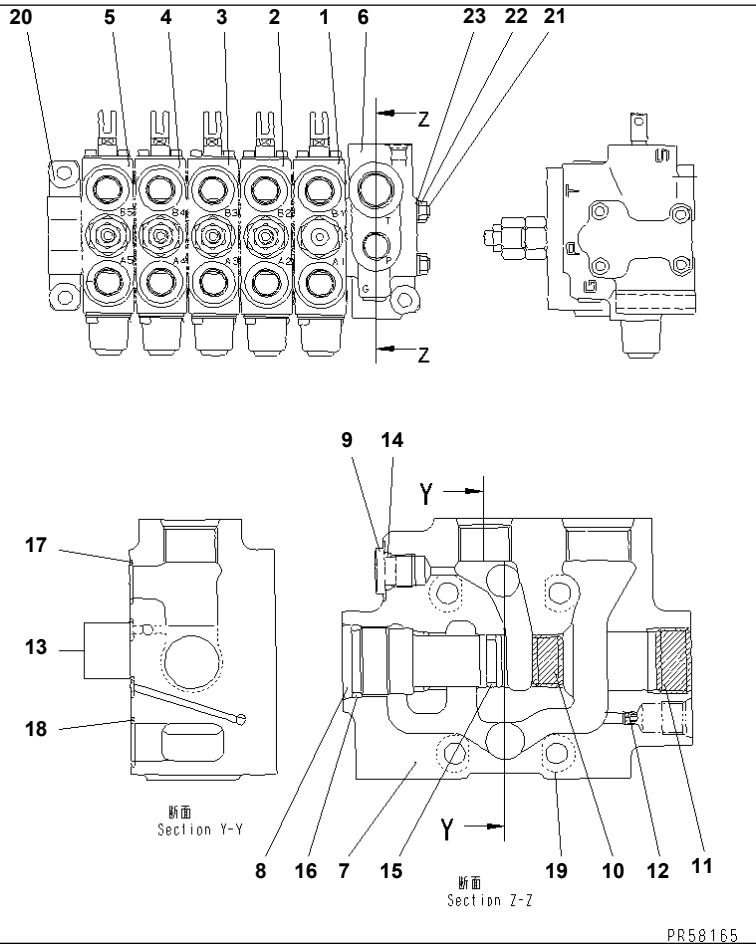

HYDRAULIC CONTROL VALVE¤ L.H. (5-SPOOL) (1/4)(#12023-)

Item	Part No.	Description	Qty	Options
	235-60-35300	VALVE ASS'Y,HYD. CONTROL¤ L.H.	1	SN:12023--
THIS ASSEMBLY CONSISTS OF ALL PARTS SHOWN IN FIGS.6211 TO 6214.				
THE UCHIDA YUATSU PART NUMBER IS THAT UC IS REMOVED FROM KOMATSU PART NUMBER LISTED BELOW.				
1	(UC4100548009)	· BODY ASS'Y,CIRCLE	1	SN:12023--
2	(UC4100548019)	· BODY ASS'Y,POWER TILT	1	SN:12023--
3	(UC4100547969)	· BODY ASS'Y,BLADE SIDE SHIFT	1	SN:12023--
4	(UC4100548028)	· BODY ASS'Y,RIPPER	1	SN:12023--
5	(UC4100548037)	· BODY ASS'Y,FREE DRIFT	1	SN:12023--
THESE ASSEMBLIES CONSIST OF ALL PARTS SHOWN IN FIGS.6212 TO 6214.				
6	UC4100463541	· COVER ASS'Y	1	SN:12023--
7	UC1100236728	· · COVER	1	SN:12023--
8	UC1801478216	· · PLUG	1	SN:12023--
9	UC1198273603	· · PLUG	1	SN:12023--
10	UC1301895001	· · PLUG	1	SN:12023--
11	UC1301896004	· · PLUG	1	SN:12023--
12	UC1100111876	· · ORIFICE	1	SN:12023--
13	UC1301148002	· · O-RING	3	SN:12023--
14	UC1301169009	· · O-RING	1	SN:12023--
15	UC1300149004	· · O-RING	1	SN:12023--
16	UC1300170008	· · O-RING	1	SN:12023--
17	UC1179043407	· · RING	1	SN:12023--
18	UC1179043508	· · RING	1	SN:12023--
19	UC1178286401	· · SHIM	4	SN:12023--
20	UC1100184773	· COVER	1	SN:12023--
21	UC1163500002	· BOLT,STUD	4	SN:12023--
22	UC1301996003	· NUT	4	SN:12023--

Printed By : Dwi Iswanto (airafather6107170)

HYDRAULIC CONTROL VALVE¤ L.H. (5-SPOOL) (1/4)(#12023-)

Item	Part No.	Description	Qty	Options
23	UC1302060004	· WASHER	4	SN:12023--

Printed By : Dwi Iswanto (airafather6107170)

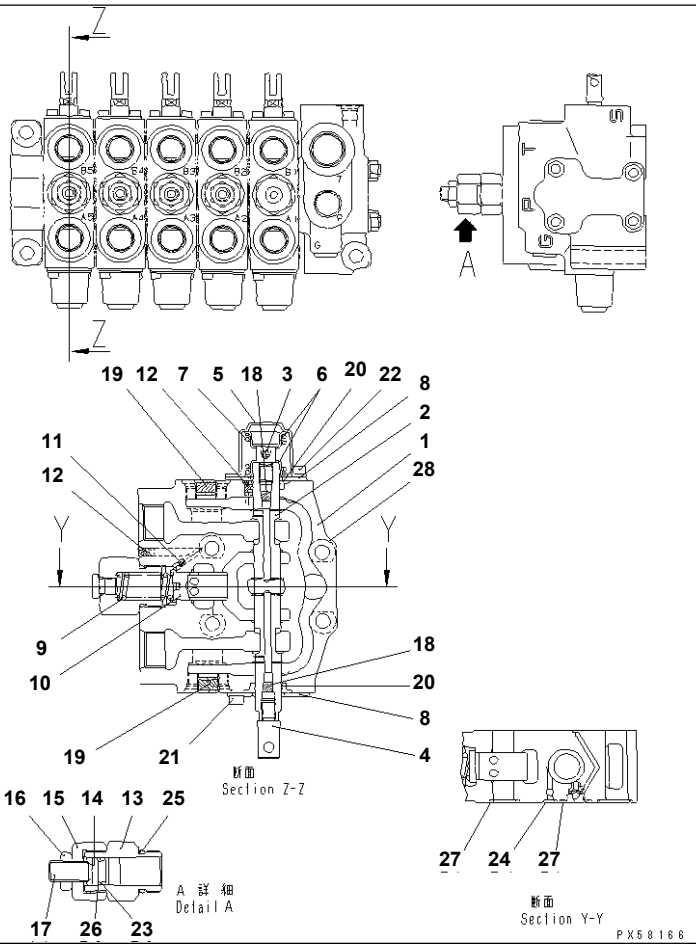

HYDRAULIC CONTROL VALVE¤ L.H. (5-SPOOL) (2/4) (CIRCLE)(#12023-)

Item	Part No.	Description	Qty	Options
	(235-60-35300)	VALVE ASS'Y,HYD. CONTROL¤ L.H.	1	SN:12023--
THIS ASSEMBLY CONSISTS OF ALL PARTS SHOWN IN FIGS.6211 TO 6214. THE UCHIDA YUATSU PART NUMBER IS THAT UC IS REMOVED FROM KOMATSU PART NUMBER LISTED BELOW.				
	UC4100548037	· BODY ASS'Y,FREE DRIFT	1	SN:12023--
1	UC1100226914	· · BODY,VALVE	1	SN:12023--
2	UC1100547459	· · SPOOL,FREE DRIFT	1	SN:12023--
3	UC1163532009	· · END,SPOOL	1	SN:12023--
4	UC1100233297	· · END,SPOOL	1	SN:12023--
5	UC1163529003	· · COVER	1	SN:12023--
6	UC1163533002	· · SPRING	2	SN:12023--
7	UC1100546593	· · SPRING	1	SN:12023--
8	UC1163528009	· · PLATE	2	SN:12023--
9	UC1100208934	· · SPRING	1	SN:12023--
10	UC1100208237	· · PLUNGER	1	SN:12023--
11	UC1198253902	· · ORIFICE	1	SN:12023--
12	UC1701538687	· · PLUG	2	SN:12023--
13	UC1100229959	· · GUIDE	1	SN:12023--
14	UC1198219205	· · RETAINER	1	SN:12023--
15	UC1198026609	· · GUIDE	1	SN:12023--
16	UC1303027347	· · NUT	1	SN:12023--
17	UC1302098072	· · SCREW	1	SN:12023--
18	UC1800087029	· · PLUG	2	SN:12023--
19	UC1301893005	· · PLUG	2	SN:12023--
20	UC1100028765	· · PACKING	2	SN:12023--
21	UC1301513002	· · BOLT	2	SN:12023--
22	UC1301514005	· · BOLT	2	SN:12023--

Printed By : Dwi Iswanto (airafather6107170)

HYDRAULIC CONTROL VALVE¤ L.H. (5-SPOOL) (2/4) (CIRCLE)(#12023-)

Item	Part No.	Description	Qty	Options
23	UC1301174001	· · O-RING	1	SN:12023--
24	UC1301148002	· · O-RING	1	SN:12023--
25	UC1301196001	· · O-RING	1	SN:12023--
26	UC1303006919	· · RING,BACK-UP	1	SN:12023--
27	UC1179043407	· · RING	2	SN:12023--
28	UC1178286401	· · SHIM	4	SN:12023--

Printed By : Dwi Iswanto (airafather6107170)

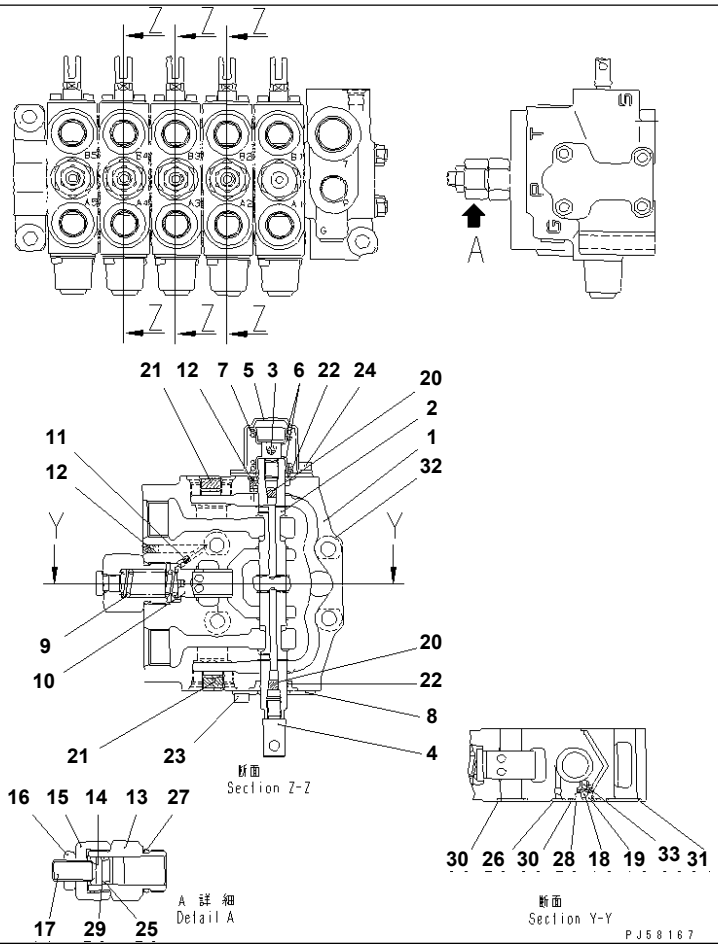

GD825A-2 S/N 11001-UP

HYDRAULIC CONTROL VALVE¤ L.H. (5-SPOOL) (3/4) (POWER TILT¤BLADE SIDE SHIFT AND RIPPER)(#12023-)

Item	Part No.	Description	Qty	Options
	(235-60-35300)	VALVE ASS'Y,HYD. CONTROL¤ L.H.	1	SN:12023--
THIS ASSEMBLY CONSISTS OF ALL PARTS SHOWN IN FIGS.6211 TO 6214. THE UCHIDA YUATSU PART NUMBER IS THAT UC IS REMOVED FROM KOMATSU PART NUMBER LISTED BELOW.				
	UC4100548019	· BODY ASS'Y,POWER TILT	1	SN:12023--
	UC4100547969	· BODY ASS'Y,BLADE SIDE SHIFT	1	SN:12023--
	UC4100548028	· BODY ASS'Y,RIPPER	1	SN:12023--
1	UC1100226914	· · BODY,VALVE	1	SN:12023--
2	UC1100547486	· · SPOOL,POWER TILT	1	SN:12023--
	UC1100547459	· · SPOOL,BLADE SIDE SHIFT	1	SN:12023--
	UC1100547495	· · SPOOL,RIPPER	1	SN:12023--
3	UC1163532009	· · END,SPOOL	1	SN:12023--
4	UC1100233297	· · END,SPOOL	1	SN:12023--
5	UC1163529003	· · COVER	1	SN:12023--
6	UC1163533002	· · SPRING	2	SN:12023--
7	UC1100546593	· · SPRING	1	SN:12023--
8	UC1163528009	· · PLATE	2	SN:12023--
9	UC1100208934	· · SPRING	1	SN:12023--
10	UC1100208237	· · PLUNGER	1	SN:12023--
11	UC1198253902	· · ORIFICE	1	SN:12023--
12	UC1701538687	· · PLUG	2	SN:12023--
13	UC1100229959	· · GUIDE	1	SN:12023--
14	UC1198219205	· · RETAINER	1	SN:12023--
15	UC1198026609	· · GUIDE	1	SN:12023--
16	UC1303027347	· · NUT	1	SN:12023--
17	UC1302098072	· · SCREW	1	SN:12023--

Printed By : Dwi Iswanto (airafather6107170)

HYDRAULIC CONTROL VALVE¤ L.H. (5-SPOOL) (3/4) (POWER TILT¤BLADE SIDE SHIFT AND RIPPER)(#12023-)

Item	Part No.	Description	Qty	Options
18	UC1303021165	· · BALL,STEEL	1	SN:12023--
19	UC1100303929	· · RETAINER	1	SN:12023--
20	UC1800087029	· · PLUG	2	SN:12023--
21	UC1301893005	· · PLUG	2	SN:12023--
22	UC1100028765	· · PACKING	2	SN:12023--
23	UC1301513002	· BOLT	2	SN:12023--
24	UC1301514005	· BOLT	2	SN:12023--
25	UC1301174001	· O-RING	1	SN:12023--
26	UC1301148002	· O-RING	1	SN:12023--
27	UC1301196001	· O-RING	1	SN:12023--
28	UC1303028496	· O-RING	1	SN:12023--
29	UC1303006919	· RING,BACK-UP	1	SN:12023--
30	UC1179043407	· RING	2	SN:12023--
31	UC1179043508	· RING	1	SN:12023--
32	UC1178286401	· SHIM	4	SN:12023--
33	UC1100303919	· SEAT	1	SN:12023--

Printed By : Dwi Iswanto (airafather6107170)

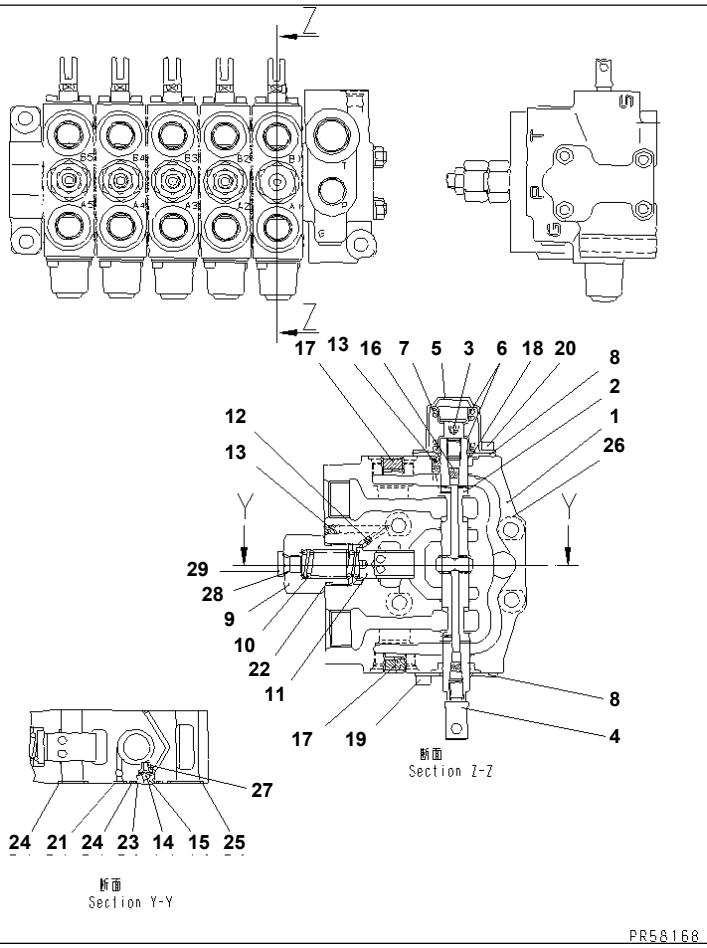

GD825A-2 S/N 11001-UP

HYDRAULIC CONTROL VALVE¤ L.H. (5-SPOOL) (4/4) (FREE DRIFT)(#12023-)

Item	Part No.	Description	Qty	Options
	(235-60-35300)	VALVE ASS'Y,HYD. CONTROL¤ L.H.	1	SN:12023--
THIS ASSEMBLY CONSISTS OF ALL PARTS SHOWN IN FIGS.6211 TO 6214. THE UCHIDA YUATSU PART NUMBER IS THAT UC IS REMOVED FROM KOMATSU PART NUMBER LISTED BELOW.				
	UC4100548009	· BODY ASS'Y,CIRCLE	1	SN:12023--
1	UC1100226914	· · BODY,VALVE	1	SN:12023--
2	UC1100237739	· · SPOOL,CIRCLE	1	SN:12023--
3	UC1163532009	· · END,SPOOL	1	SN:12023--
4	UC1100233297	· · END,SPOOL	1	SN:12023--
5	UC1163529003	· · COVER	2	SN:12023--
6	UC1163533002	· · SPRING	1	SN:12023--
7	UC1100546593	· · SPRING	1	SN:12023--
8	UC1163528009	· · PLATE	2	SN:12023--
9	UC1100208228	· · PLUG	1	SN:12023--
10	UC1100548067	· · SPRING	1	SN:12023--
11	UC1100208237	· · PLUNGER	1	SN:12023--
12	UC1198253902	· · ORIFICE	1	SN:12023--
13	UC1701538687	· · PLUG	2	SN:12023--
14	UC1303021165	· · BALL,STEEL	1	SN:12023--
15	UC1100303929	· · RETAINER	1	SN:12023--
16	UC1800087029	· · PLUG	2	SN:12023--
17	UC1301893005	· · PLUG	2	SN:12023--
18	UC1100028765	· · PACKING	2	SN:12023--
19	UC1301513002	· · BOLT	2	SN:12023--
20	UC1301514005	· · BOLT	2	SN:12023--
21	UC1301148002	· · O-RING	1	SN:12023--
22	UC1301196001	· · O-RING	1	SN:12023--

Printed By : Dwi Iswanto (airafather6107170)

HYDRAULIC CONTROL VALVE¤ L.H. (5-SPOOL) (4/4) (FREE DRIFT)(#12023-)

Item	Part No.	Description	Qty	Options
23	UC1303028496	· · O-RING	1	SN:12023--
24	UC1179043407	· · RING	2	SN:12023--
25	UC1179043508	· · RING	1	SN:12023--
26	UC1178286401	· · SHIM	4	SN:12023--
27	UC1100303919	· · SEAT,VALVE	1	SN:12023--
28	UC1198273502	· · PLUG	1	SN:12023--
29	UC1301157006	· · O-RING	1	SN:12023--

Printed By : Dwi Iswanto (airafather6107170)

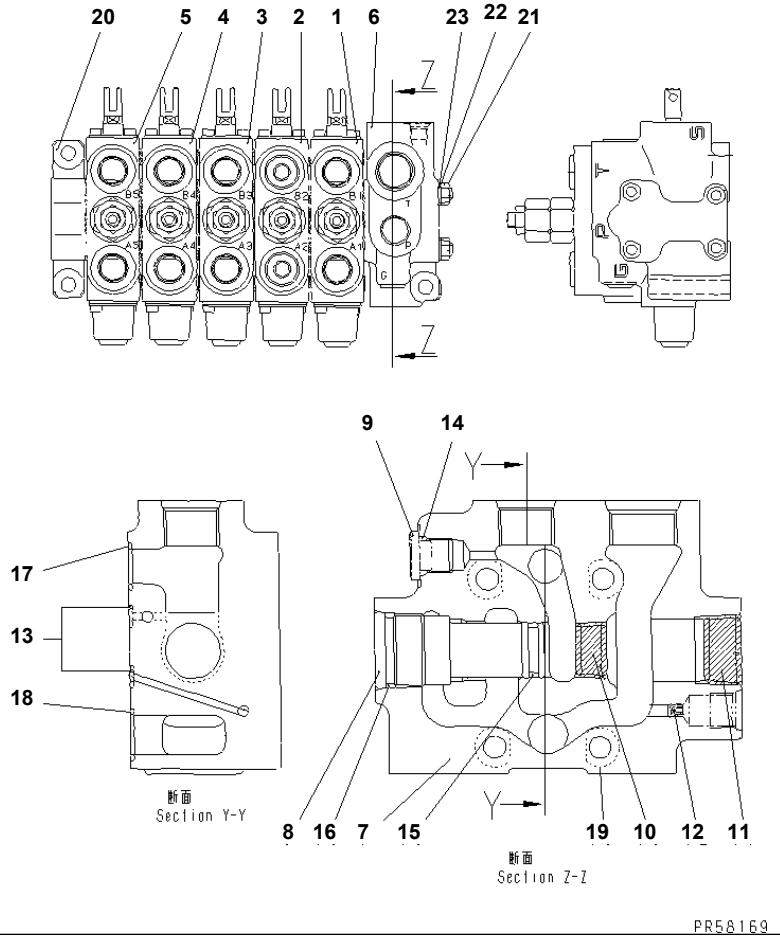

HYDRAULIC CONTROL VALVE¤ R.H. (5-SPOOL) (1/3)(#12023-)

Item	Part No.	Description	Qty	Options
	235-60-35400	VALVE ASS'Y,HYD. CONTROL¤ R.H.	1	SN:12023--
THIS ASSEMBLY CONSISTS OF ALL PARTS SHOWN IN FIGS.6215 TO 6217. THE UCHIDA YUATSU PART NUMBER IS THAT UC IS REMOVED FROM KOMATSU PART NUMBER LISTED BELOW.				
1	(UC4100547969)	· BODY ASS'Y,FREE DRIFT	1	SN:12023--
2	(UC4100547969)	· BODY ASS'Y,SCARIFIER	1	SN:12023--
3	(UC4100547979)	· BODY ASS'Y,LEANING	1	SN:12023--
4	(UC4100547988)	· BODY ASS'Y,ARTICULATE	1	SN:12023--
5	(UC4100547997)	· BODY ASS'Y,DRAWBAR SIDE SHIFT	1	SN:12023--
THESE ASSEMBLIES CONSIST OF ALL PARTS SHOWN IN FIGS.6216 AND 6217.				
6	UC4100463541	· COVER ASS'Y	1	SN:12023--
7	UC1100236728	· · COVER	1	SN:12023--
8	UC1801478216	· · PLUG	1	SN:12023--
9	UC1198273603	· · PLUG	1	SN:12023--
10	UC1301895001	· · PLUG	1	SN:12023--
11	UC1301896004	· · PLUG	1	SN:12023--
12	UC1100111876	· · ORIFICE	1	SN:12023--
13	UC1301148002	· · O-RING	3	SN:12023--
14	UC1301169009	· · O-RING	1	SN:12023--
15	UC1300149004	· · O-RING	1	SN:12023--
16	UC1300170008	· · O-RING	1	SN:12023--
17	UC1179043407	· · RING	1	SN:12023--
18	UC1179043508	· · RING	1	SN:12023--
19	UC1178286401	· · SHIM	4	SN:12023--
20	UC1100184773	· COVER	1	SN:12023--
21	UC1163500002	· BOLT,STUD	4	SN:12023--
22	UC1301996003	· NUT	4	SN:12023--

Printed By : Dwi Iswanto (airafather6107170)

HYDRAULIC CONTROL VALVE¤ R.H. (5-SPOOL) (1/3)(#12023-)

Item	Part No.	Description	Qty	Options
23	UC1302060004	· WASHER	4	SN:12023--

Printed By : Dwi Iswanto (airafather6107170)

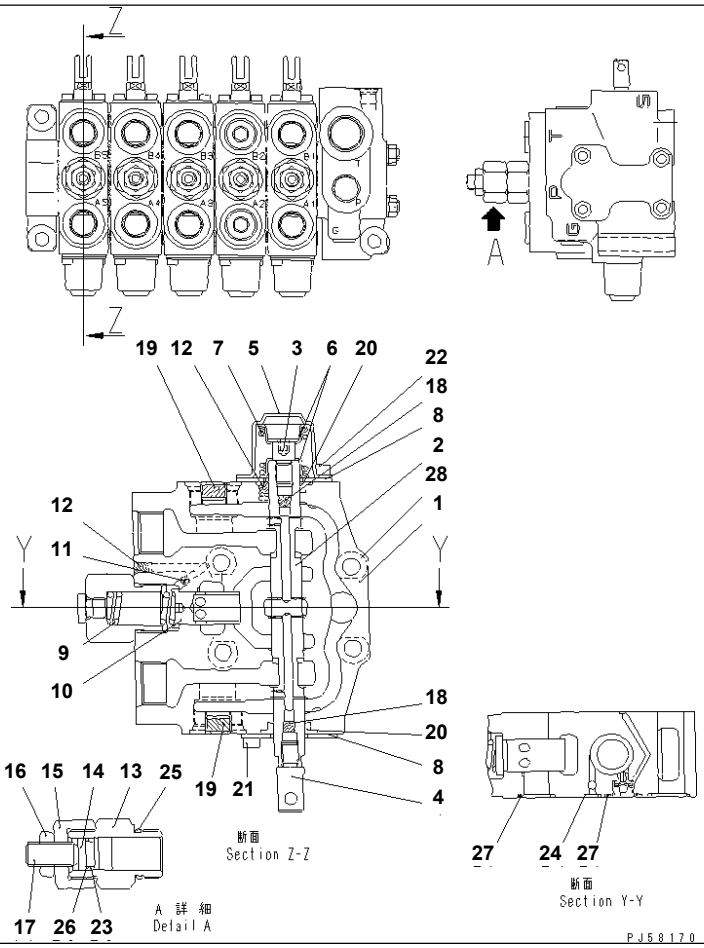

HYDRAULIC CONTROL VALVE¤ R.H. (5-SPOOL) (2/3) (DRAWBAR SIDE SHIFT)(#12023-)

Item	Part No.	Description	Qty	Options
	(235-60-35400)	VALVE ASS'Y,HYD. CONTROL¤ R.H.	1	SN:12023--
THIS ASSEMBLY CONSISTS OF ALL PARTS SHOWN IN FIGS.6215 TO 6217. THE UCHIDA YUATSU PART NUMBER IS THAT UC IS REMOVED FROM KOMATSU PART NUMBER LISTED BELOW.				
	UC4100547997	· BODY ASS'Y,DRAWBAR SIDE SHIFT	1	SN:12023--
1	UC1100226914	· · BODY,VALVE	1	SN:12023--
2	UC1100547477	· · SPOOL,DRAWBAR SIDE SHIFT	1	SN:12023--
3	UC1163532009	· · END,SPOOL	1	SN:12023--
4	UC1100233297	· · END,SPOOL	1	SN:12023--
5	UC1163529003	· · COVER	1	SN:12023--
6	UC1163533002	· · SPRING	2	SN:12023--
7	UC1100546593	· · SPRING	1	SN:12023--
8	UC1163528009	· · PLATE	2	SN:12023--
9	UC1100208934	· · SPRING	1	SN:12023--
10	UC1100208237	· · PLUNGER	1	SN:12023--
11	UC1198253902	· · ORIFICE	1	SN:12023--
12	UC1701538687	· · PLUG	2	SN:12023--
13	UC1100229959	· · GUIDE	1	SN:12023--
14	UC1198219205	· · RETAINER	1	SN:12023--
15	UC1198026609	· · GUIDE	1	SN:12023--
16	UC1303027347	· · NUT	1	SN:12023--
17	UC1302098072	· · SCREW	1	SN:12023--
18	UC1800087029	· · PLUG	2	SN:12023--
19	UC1301893005	· · PLUG	2	SN:12023--
20	UC1100028765	· · PACKING	2	SN:12023--
21	UC1301513002	· · BOLT	2	SN:12023--

Printed By : Dwi Iswanto (airafather6107170)

HYDRAULIC CONTROL VALVE¤ R.H. (5-SPOOL) (2/3) (DRAWBAR SIDE SHIFT)(#12023-)

Item	Part No.	Description	Qty	Options
22	UC1301514005	· · BOLT	2	SN:12023--
23	UC1301174001	· · O-RING	1	SN:12023--
24	UC1301148002	· · O-RING	1	SN:12023--
25	UC1301196001	· · O-RING	1	SN:12023--
26	UC1303006919	· · RING,BACK-UP	1	SN:12023--
27	UC1179043407	· · RING	2	SN:12023--
28	UC1178286401	· · SHIM	4	SN:12023--

Printed By : Dwi Iswanto (airafather6107170)

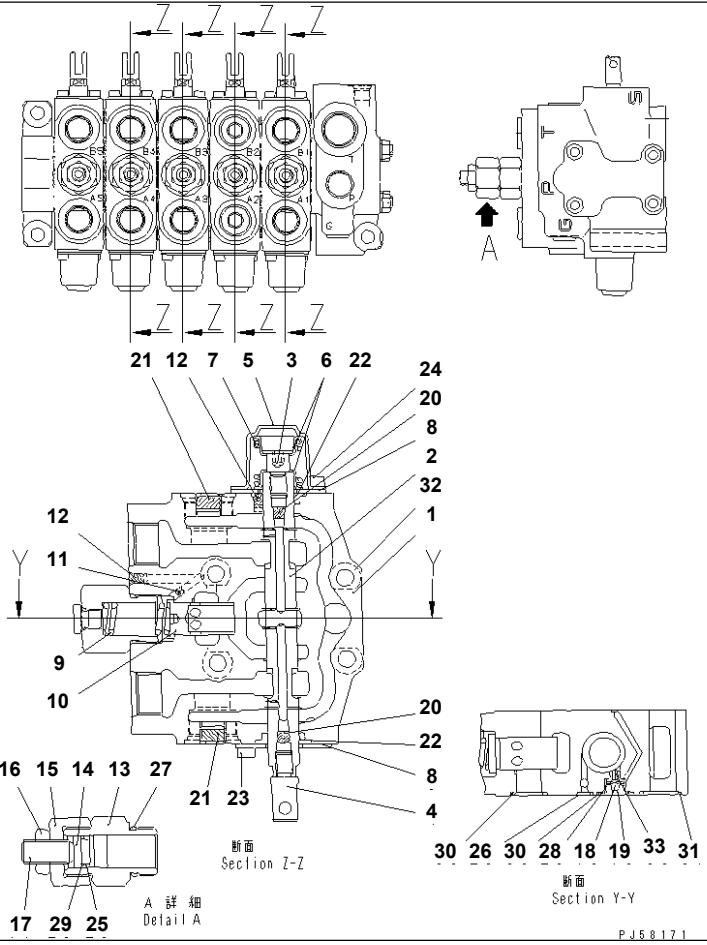

HYDRAULIC CONTROL VALVE¤ R.H. (5-SPOOL) (3/3) (FREE DRIFT¤SCARIFIER¤LEANING AND ARTICULATE)(#12023-)

Item	Part No.	Description	Qty	Options
	(235-60-35400)	VALVE ASS'Y,HYD. CONTROL¤ R.H.	1	SN:12023--
THIS ASSEMBLY CONSISTS OF ALL PARTS SHOWN IN FIGS.6215 TO 6217. THE UCHIDA YUATSU PART NUMBER IS THAT UC IS REMOVED FROM KOMATSU PART NUMBER LISTED BELOW.				
	UC4100547969	· BODY ASS'Y,FREE DRIFT	1	SN:12023--
	UC4100547969	· BODY ASS'Y,SCARIFIER	1	SN:12023--
	UC4100547979	· BODY ASS'Y,LEANING	1	SN:12023--
	UC4100547988	· BODY ASS'Y,ARTICULATE	1	SN:12023--
1	UC1100226914	· · BODY,VALVE	1	SN:12023--
2	UC1100547459	· · SPOOL,FREE DRIFT	1	SN:12023--
	UC1100547459	· · SPOOL,SCARIFIER	1	SN:12023--
	UC1100547468	· · SPOOL,LEANING	1	SN:12023--
	UC1100237739	· · SPOOL,ARTICULATE	1	SN:12023--
3	UC1163532009	· · END,SPOOL	1	SN:12023--
4	UC1100233297	· · END,SPOOL	1	SN:12023--
5	UC1163529003	· · COVER	1	SN:12023--
6	UC1163533002	· · SPRING	2	SN:12023--
7	UC1100546593	· · SPRING	4	SN:12023--
8	UC1163528009	· · PLATE	8	SN:12023--
9	UC1100208934	· · SPRING	4	SN:12023--
10	UC1100208237	· · PLUNGER	4	SN:12023--
11	UC1198253902	· · ORIFICE	4	SN:12023--
12	UC1701538687	· · PLUG	8	SN:12023--
13	UC1100229959	· · GUIDE	4	SN:12023--
14	UC1198219205	· · RETAINER	4	SN:12023--
15	UC1198026609	· · GUIDE	4	SN:12023--

Printed By : Dwi Iswanto (airafather6107170)

HYDRAULIC CONTROL VALVE¤ R.H. (5-SPOOL) (3/3) (FREE DRIFT¤SCARIFIER¤LEANING AND ARTICULATE)(#12023-)

Item	Part No.	Description	Qty	Options
16	UC1303027347	· · NUT	4	SN:12023--
17	UC1302098072	· · SCREW	4	SN:12023--
18	UC1303021165	· · BALL,STEEL	4	SN:12023--
19	UC1100303929	· · RETAINER	4	SN:12023--
20	UC1800087029	· · PLUG	8	SN:12023--
21	UC1301893005	· · PLUG	8	SN:12023--
22	UC1100028765	· · PACKING	8	SN:12023--
23	UC1301513002	· · BOLT	8	SN:12023--
24	UC1301514005	· · BOLT	8	SN:12023--
25	UC1301174001	· · O-RING	4	SN:12023--
26	UC1301148002	· · O-RING	4	SN:12023--
27	UC1301196001	· · O-RING	4	SN:12023--
28	UC1303028496	· · O-RING	4	SN:12023--
29	UC1303006919	· · RING,BACK-UP	4	SN:12023--
30	UC1179043407	· · RING	8	SN:12023--
31	UC1179043508	· · RING	8	SN:12023--
32	UC1178286401	· · SHIM	16	SN:12023--
33	UC1100303919	· · SEAT	4	SN:12023--

Printed By : Dwi Iswanto (airafather6107170)

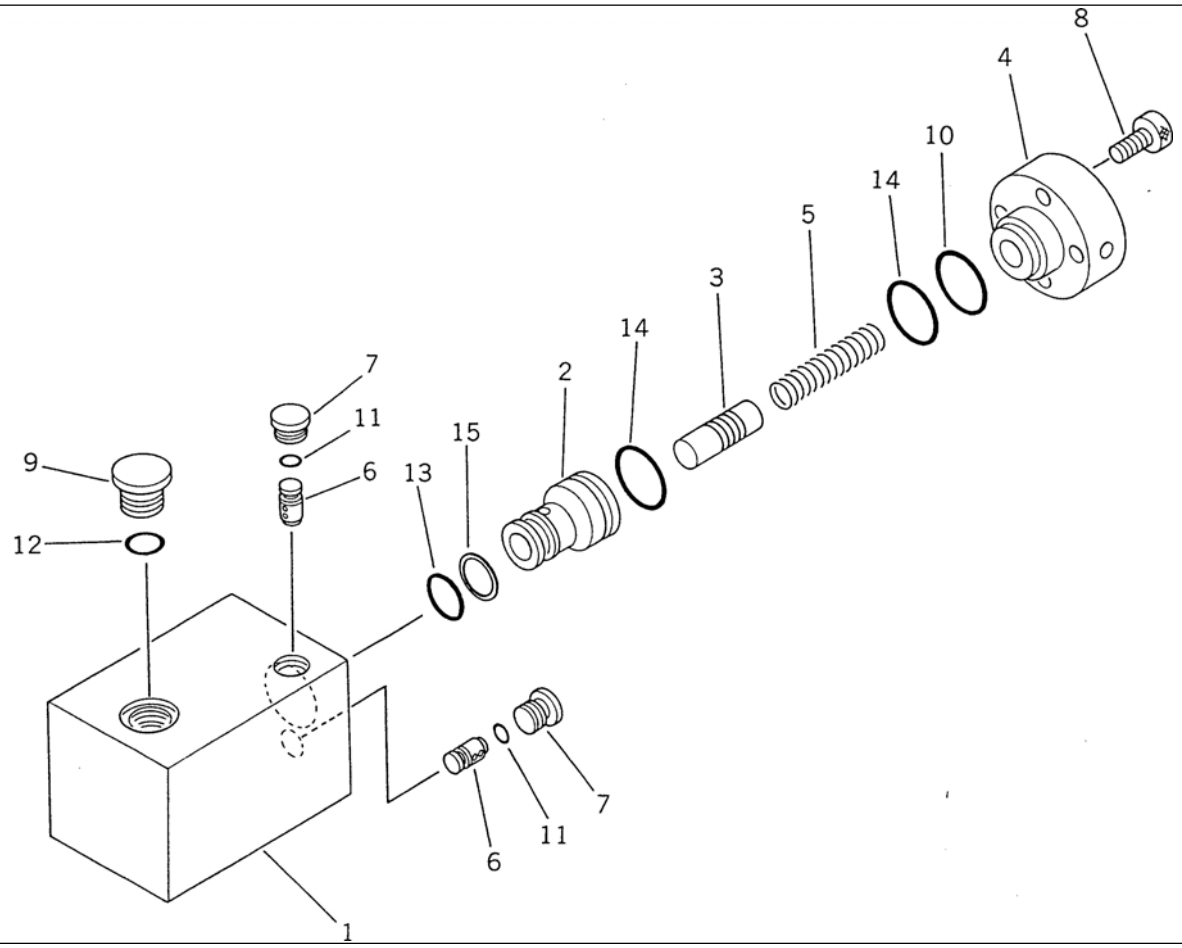

GD825A-2 S/N 11001-UP

MAIN RELIEF VALVE

Item	Part No.	Description	Qty	Options
	235-60-11400	VALVE ASS'Y,MAIN RELIEF	1	SN:11001--
1	☆	· BODY	1	SN:11001--
2	☆	· VALVE	1	SN:11001--
3	☆	· SPOOL	1	SN:11001--
4	235-60-11440	· COVER	1	SN:11001--
5	235-60-11450	· SPRING,SPOOL	1	SN:11001--
6	☆	· VALVE	2	SN:11001--
7	235-60-11470	· PLUG	2	SN:11001--
8	235-60-11480	· BOLT	4	SN:11001--
9	235-60-11490	· PLUG	1	SN:11001--
10	235-60-11510	· O-RING	1	SN:11001--
11	235-60-11520	· O-RING	2	SN:11001--
12	235-60-11530	· O-RING	1	SN:11001--
13	235-60-11540	· O-RING	1	SN:11001--
14	235-60-11550	· O-RING	2	SN:11001--
15	235-60-11560	· RING,BACK-UP	1	SN:11001--

Printed By : Dwi Iswanto (airafather6107170)

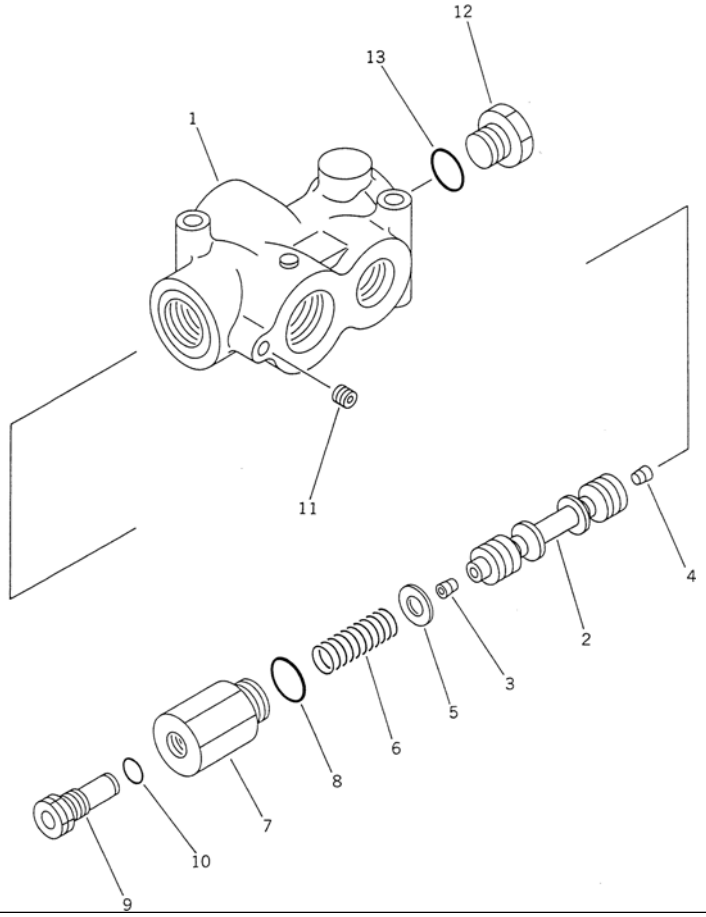

Ref. 6235 **Page 180200**

GD825A-2 S/N 11001-UP
FLOW CONTROL VALVE

Item	Part No.	Description	Qty	Options
	235-40-12202	VALVE ASS'Y,FLOW CONTROL	1	SN:11009--
	235-40-12201	VALVE ASS'Y,FLOW CONTROL	1	SN:11001--11008
1	235-40-13660	· HOUSING	1	SN:11009--
	235-40-13510	· HOUSING	1	SN:11001--11008
2	235-40-13520	· SPOOL	1	SN:11001--
3	235-40-13670	· PLUG	1	SN:11009--
	235-40-13570	· PLUG	1	SN:11001--11008
4	235-40-13610	· PLUG	1	SN:11001--
5	235-40-13550	· WASHER	1	SN:11001--
6	235-40-13530	· SPRING	1	SN:11001--
7	235-40-13620	· CASE	1	SN:11001--
8	☆	· O-RING (K5)	1	SN:11001--
	235-40-13650	· RELIEF VALVE ASS'Y	1	SN:11009--
	235-40-13500	· RELIEF VALVE ASS'Y	1	SN:11001--11008
9	☆	· · VALVE	1	SN:11001--
10	☆	· · O-RING (K5)	1	SN:11001--
11	235-40-13680	· ORIFICE	1	SN:11009--
	235-40-13560	· ORIFICE	1	SN:11001--11008
12	235-40-13580	· PLUG	1	SN:11001--
13	☆	· O-RING (K5)	1	SN:11001--

Printed By : Dwi Iswanto (airafather6107170)

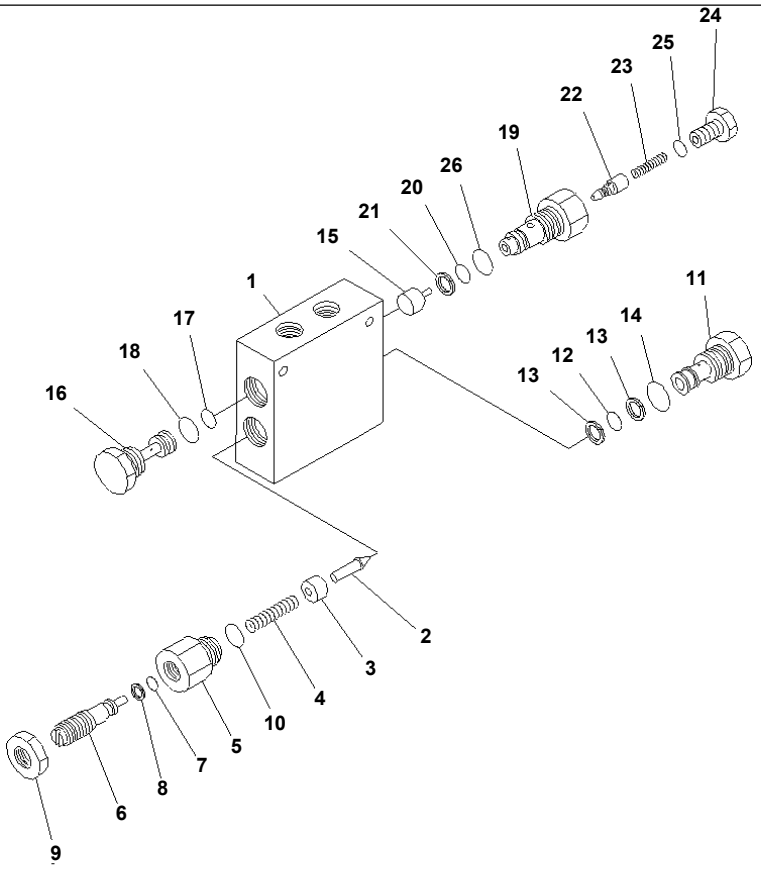

PV59105

GD825A-2 S/N 11001-UP

PILOT CHECK VALVE (FOR BLADE LIFT¤ L.H.)

Item	Part No.	Description	Qty	Options
	235-61-13400	VALVE ASS'Y,PILOT CHECK	1	SN:11001--
1	235-61-13210	· BODY	1	SN:11001--
2	☆	· VALVE	1	SN:11001--
3	235-61-13250	· COLLAR	1	SN:11001--
4	235-61-11620	· SPRING	1	SN:11001--
5	235-61-13230	· SLEEVE	1	SN:11001--
6	235-61-13220	· BOLT	1	SN:11001--
7	07000-12010	· O-RING	1	SN:11001--
8	07001-02010	· RING,BACK-UP	1	SN:11001--
9	235-61-13270	· NUT	1	SN:11001--
10	07002-12434	· O-RING	1	SN:11001--
11	☆	· PLUG	1	SN:11001--
12	07000-12014	· O-RING	1	SN:11001--
13	07001-02014	· RING,BACK-UP	2	SN:11001--
14	07002-12434	· O-RING	1	SN:11001--
15	235-61-11220	· PISTON	1	SN:11001--
16	235-61-11210	· PLUG	1	SN:11001--
17	07000-12014	· O-RING	1	SN:11001--
18	07002-12434	· O-RING	1	SN:11001--
	235-61-11400	· VALVE ASS'Y	1	SN:11001--
19	☆	· · SLEEVE	1	SN:11001--
20	07000-12014	· · O-RING	1	SN:11001--
21	07001-02014	· · RING,BACK-UP	1	SN:11001--
22	☆	· · VALVE	1	SN:11001--
23	235-61-11150	· · SPRING	1	SN:11001--
24	235-61-11140	· · PLUG	1	SN:11001--
25	07002-12434	· · O-RING	1	SN:11001--

Printed By : Dwi Iswanto (airafather6107170)

PILOT CHECK VALVE (FOR BLADE LIFT¤ L.H.)

Item	Part No.	Description	Qty	Options
26	07002-11423	· · O-RING	1	SN:11001--

Printed By : Dwi Iswanto (airafather6107170)

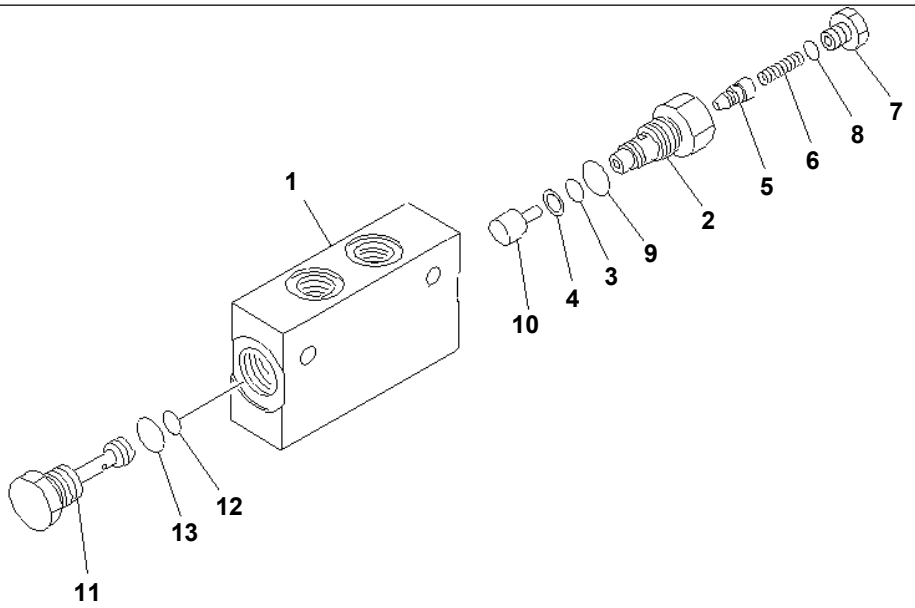

PV59106

GD825A-2 S/N 11001-UP

PILOT CHECK VALVE (FOR BLADE LIFT¤ R.H.)

Item	Part No.	Description	Qty	Options
	235-61-12300	VALVE ASS'Y,PILOT CHECK	1	SN:11001--
1	235-61-11110	· BODY	1	SN:11001--
	235-61-11400	· VALVE ASS'Y	1	SN:11001--
2	☆	· · SLEEVE	1	SN:11001--
3	07000-12014	· · O-RING	1	SN:11001--
4	07001-02014	· · RING,BACK-UP	1	SN:11001--
5	235-61-11160	· · VALVE	1	SN:11001--
6	235-61-11150	· · SPRING	1	SN:11001--
7	235-61-11140	· · PLUG	1	SN:11001--
8	07002-11423	· · O-RING	1	SN:11001--
9	07002-12434	· · O-RING	1	SN:11001--
10	235-61-11220	· PISTON	1	SN:11001--
11	235-61-11210	· PLUG	1	SN:11001--
12	07000-12014	· O-RING	1	SN:11001--
13	07002-12434	· O-RING	1	SN:11001--

Printed By : Dwi Iswanto (airafather6107170)

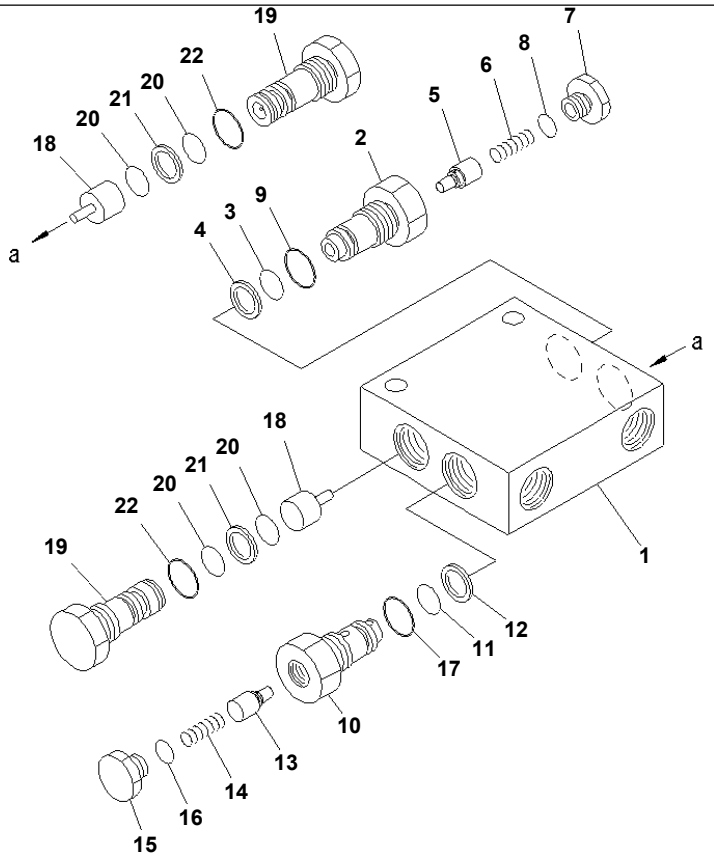

PN50149

GD825A-2 S/N 11001-UP

PILOT CHECK VALVE (FOR ARTICULATE)

Item	Part No.	Description	Qty	Options
	235-61-16100	VALVE ASS'Y,PILOT CHECK	1	SN:11001--
1	235-61-13710	· BODY	1	SN:11001--
	235-61-11500	· VALVE ASS'Y	1	SN:11001--
2	☆	· · SLEEVE	1	SN:11001--
3	07000-12014	· · O-RING	1	SN:11001--
4	07001-02014	· · RING,BACK-UP	1	SN:11001--
5	☆	· · VALVE	1	SN:11001--
6	235-61-11150	· · SPRING	1	SN:11001--
7	235-61-11140	· · PLUG	1	SN:11001--
8	07002-11423	· · O-RING	1	SN:11001--
9	07002-12434	· · O-RING	1	SN:11001--
	235-61-11500	· VALVE ASS'Y	1	SN:11001--
10	☆	· · SLEEVE	1	SN:11001--
11	07000-12014	· · O-RING	1	SN:11001--
12	07001-02014	· · RING,BACK-UP	1	SN:11001--
13	☆	· · VALVE	1	SN:11001--
14	235-61-11150	· · SPRING	1	SN:11001--
15	235-61-11140	· · PLUG	1	SN:11001--
16	07002-11423	· · O-RING	1	SN:11001--
17	07002-12434	· · O-RING	1	SN:11001--
18	☆	· PISTON	2	SN:11001--
19	☆	· PLUG	2	SN:11001--
20	07000-12014	· O-RING	4	SN:11001--
21	07001-02014	· RING,BACK-UP	2	SN:11001--
22	07002-12434	· O-RING	2	SN:11001--

Printed By : Dwi Iswanto (airafather6107170)

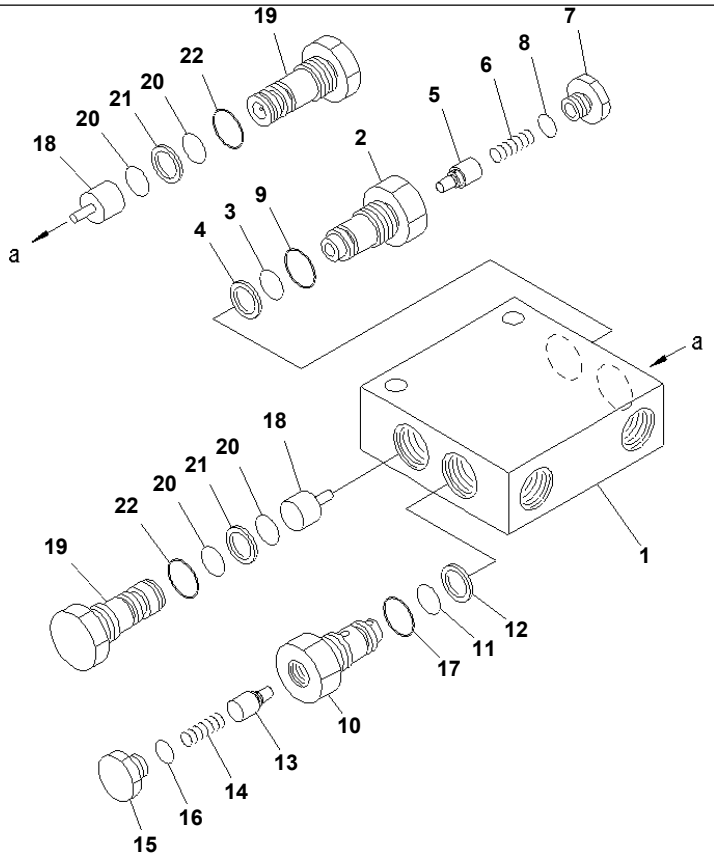

PN50149

GD825A-2 S/N 11001-UP

PILOT CHECK VALVE (FOR DRAWBAR SIDE SHIFT AND LEANING)

Item	Part No.	Description	Qty	Options
	235-61-16200	VALVE ASS'Y,PILOT CHECK	2	SN:11001--
1	235-61-13710	· BODY	1	SN:11001--
	235-61-12200	· VALVE ASS'Y	1	SN:11001--
2	☆	· · SLEEVE	1	SN:11001--
3	07000-12014	· · O-RING	1	SN:11001--
4	07001-02014	· · RING,BACK-UP	1	SN:11001--
5	☆	· · VALVE	1	SN:11001--
6	235-61-11150	· · SPRING	1	SN:11001--
7	235-61-11140	· · PLUG	1	SN:11001--
8	07002-11423	· · O-RING	1	SN:11001--
9	07002-12434	· · O-RING	1	SN:11001--
	235-61-11400	· VALVE ASS'Y	1	SN:11001--
10	☆	· · SLEEVE	1	SN:11001--
11	07000-12014	· · O-RING	1	SN:11001--
12	07001-02014	· · RING,BACK-UP	1	SN:11001--
13	☆	· · VALVE	1	SN:11001--
14	235-61-11150	· · SPRING	1	SN:11001--
15	235-61-11140	· · PLUG	1	SN:11001--
16	07002-11423	· · O-RING	1	SN:11001--
17	07002-12434	· · O-RING	1	SN:11001--
18	☆	· PISTON	2	SN:11001--
19	☆	· PLUG	2	SN:11001--
20	07000-12014	· O-RING	4	SN:11001--
21	07001-02014	· RING,BACK-UP	2	SN:11001--
22	07002-12434	· O-RING	2	SN:11001--

Printed By : Dwi Iswanto (airafather6107170)

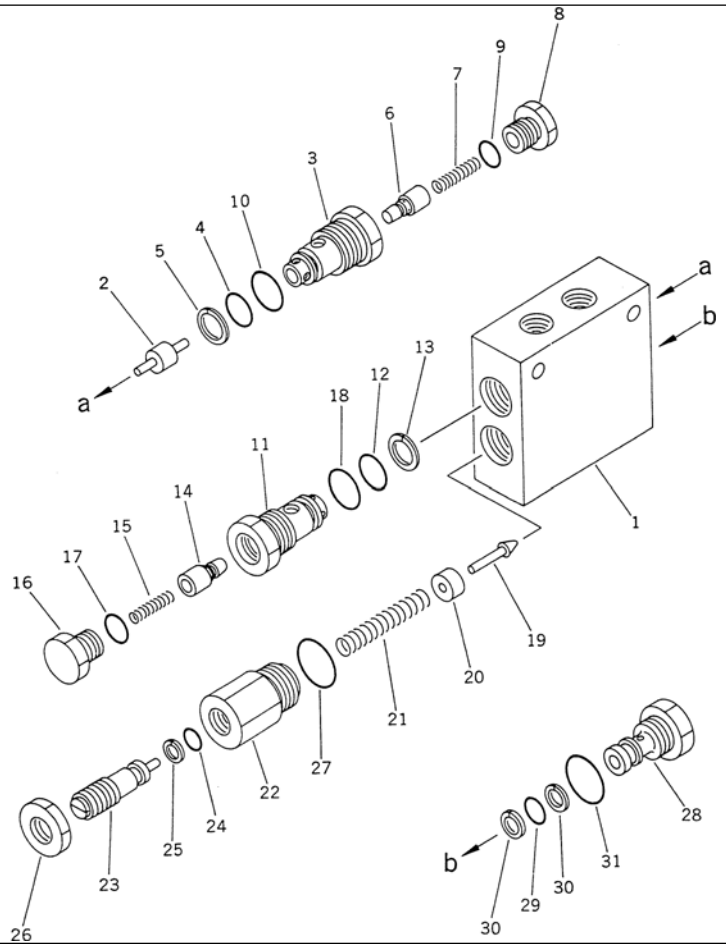

Ref. 6249 **Page 180250**

GD825A-2 S/N 11001-UP
PILOT CHECK VALVE (FOR POWER TILT)

Item	Part No.	Description	Qty	Options
	235-61-13900	VALVE ASS'Y,PILOT CHECK	1	SN:11001--
1	☆	· BODY	1	SN:11001--
2	235-61-11120	· PISTON	1	SN:11001--
	235-61-11400	· VALVE ASS'Y	1	SN:11001--
3	☆	· · SLEEVE	1	SN:11001--
4	07000-12014	· · O-RING	1	SN:11001--
5	07001-02014	· · RING,BACK-UP	1	SN:11001--
6	☆	· · VALVE	1	SN:11001--
7	235-61-11150	· · SPRING	1	SN:11001--
8	235-61-11140	· · PLUG	1	SN:11001--
9	07002-11423	· · O-RING	1	SN:11001--
10	07002-12434	· · O-RING	1	SN:11001--
	235-61-11500	· VALVE ASS'Y	1	SN:11001--
11	☆	· · SLEEVE	1	SN:11001--
12	07000-12014	· · O-RING	1	SN:11001--
13	07001-02014	· · RING,BACK-UP	1	SN:11001--
14	☆	· · VALVE	1	SN:11001--
15	235-61-11150	· · SPRING	1	SN:11001--
16	235-61-11140	· · PLUG	1	SN:11001--
17	07002-11423	· · O-RING	1	SN:11001--
18	07002-12434	· · O-RING	1	SN:11001--
19	235-61-13240	· VALVE	1	SN:11001--
20	235-61-13250	· COLLAR	1	SN:11001--
21	235-61-11620	· SPRING	1	SN:11001--
22	235-61-13230	· SLEEVE	1	SN:11001--
23	235-61-13220	· BOLT	1	SN:11001--
24	07000-12010	· O-RING	1	SN:11001--

Printed By : Dwi Iswanto (airafather6107170)

PILOT CHECK VALVE (FOR POWER TILT)

Item	Part No.	Description	Qty	Options
25	07001-02010	· RING,BACK-UP	1	SN:11001--
26	235-61-13270	· NUT	1	SN:11001--
27	07002-12434	· O-RING	1	SN:11001--
28	235-61-13260	· PLUG	1	SN:11001--
29	07000-12014	· O-RING	1	SN:11001--
30	07001-02014	· RING,BACK-UP	2	SN:11001--
31	07002-12434	· O-RING	1	SN:11001--

Printed By : Dwi Iswanto (airafather6107170)

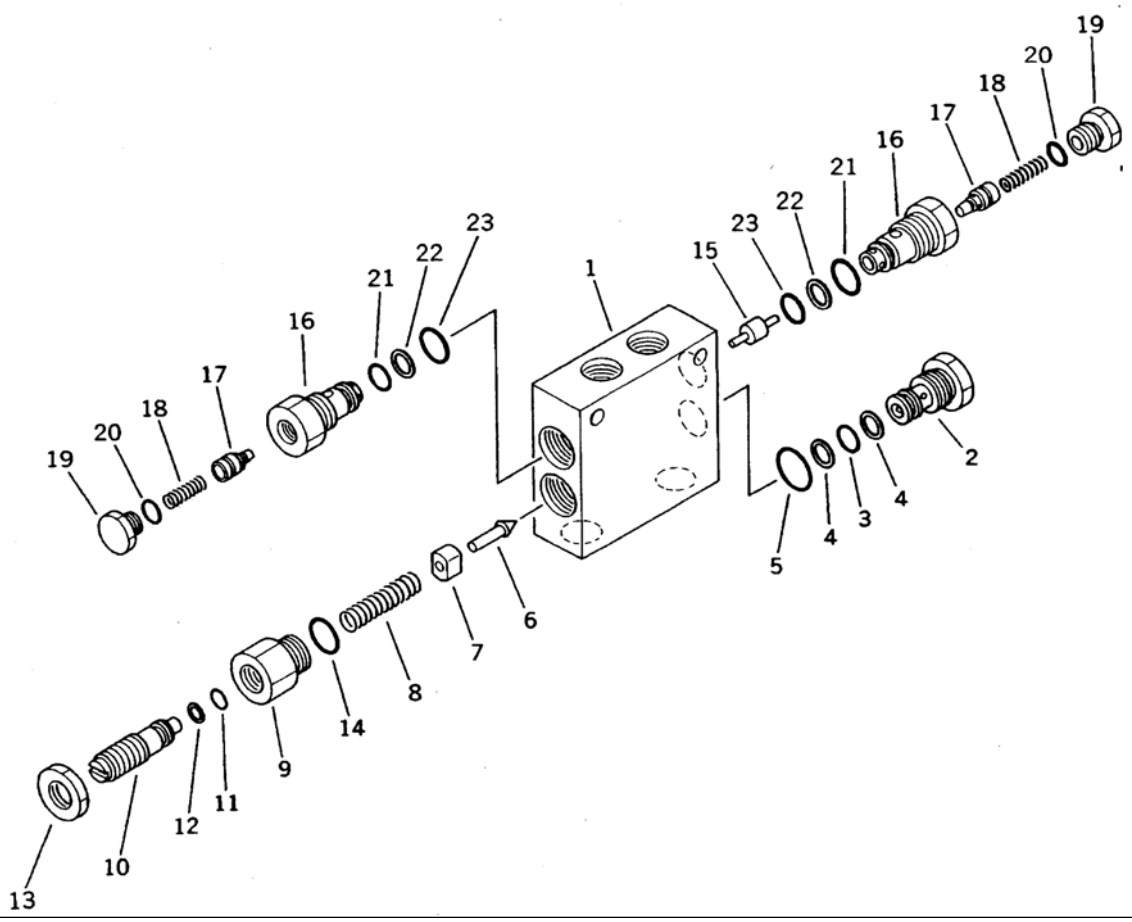

GD825A-2 S/N 11001-UP

PILOT CHECK VALVE (FOR RIPPER)

Item	Part No.	Description	Qty	Options
	235-61-13500	VALVE ASS'Y,PILOT CHECK	1	SN:11001--
1	235-61-13210	· BODY	1	SN:11001--
2	☆	· PLUG	1	SN:11001--
3	07000-12014	· O-RING	1	SN:11001--
4	07001-02014	· RING,BACK-UP	2	SN:11001--
5	07002-12434	· O-RING	1	SN:11001--
6	☆	· VALVE	1	SN:11001--
7	235-61-13250	· COLLAR	1	SN:11001--
8	235-61-11620	· SPRING	1	SN:11001--
9	235-61-13230	· SLEEVE	1	SN:11001--
10	235-61-13220	· BOLT	1	SN:11001--
11	07000-12010	· O-RING	1	SN:11001--
12	07001-02010	· RING,BACK-UP	1	SN:11001--
13	235-61-13270	· NUT	1	SN:11001--
14	07002-12434	· O-RING	1	SN:11001--
15	235-61-11120	· PISTON	1	SN:11001--
	235-61-12200	· VALVE ASS'Y	2	SN:11001--
16	☆	· · SLEEVE	1	SN:11001--
17	☆	· · VALVE	1	SN:11001--
18	235-61-11150	· · SPRING	1	SN:11001--
19	235-61-11140	· · PLUG	1	SN:11001--
20	07002-11423	· · O-RING	1	SN:11001--
21	07000-12014	· · O-RING	1	SN:11001--
22	07001-02014	· · RING,BACK-UP	1	SN:11001--
23	07002-12434	· · O-RING	1	SN:11001--

Printed By : Dwi Iswanto (airafather6107170)

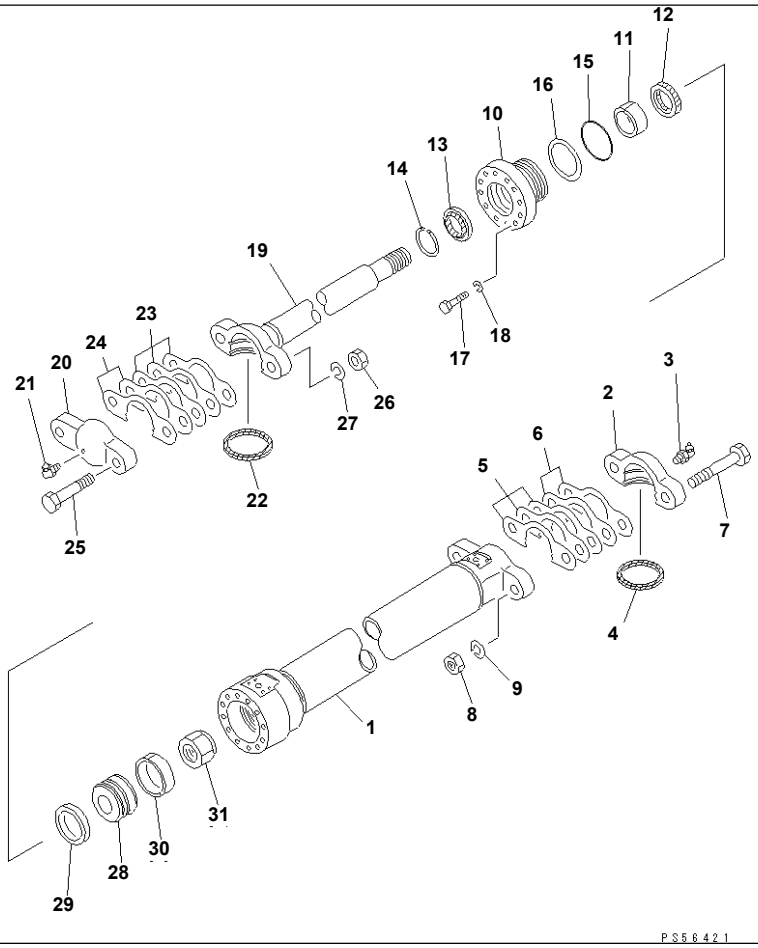

Ref. 6301 **Page 180270**

GD825A-2 S/N 11001-UP
DRAWBAR SIDE SHIFT CYLINDER(#11001-12102)

Item	Part No.	Description	Qty	Options
	235-63-22002	CYLINDER ASS'Y	1	SN:12051--@
	235-63-22001	CYLINDER ASS'Y	1	SN:12013--12050
	235-63-22000	CYLINDER ASS'Y	1	SN:11001--12012
1	235-63-22240	· CYLINDER	1	SN:12051--@
	235-63-22141	· CYLINDER	1	SN:12013--12050
	235-63-22140	· CYLINDER	1	SN:11001--12012
2	707-66-65120	· CAP	1	SN:12051--@
	707-66-65080	· CAP	1	SN:12013--12050
	07138-01100	· CAP	1	SN:11001--12012
3	07020-00900	· FITTING,GREASE	1	SN:11001--@
4	707-56-12550	· SEAL,DUST (KIT)	1	SN:12051--@
	07141-01100	· SEAL,DUST (KIT)	1	SN:11001--12050
5	707-88-32170	· SHIM¤ 0.2MM	3	SN:12051--@
	07139-01102	· SHIM¤ 0.2MM	3	SN:11001--12050
6	707-88-32180	· SHIM¤ 0.5MM	2	SN:12051--@
	07139-01105	· SHIM¤ 0.5MM	2	SN:11001--12050
7	01011-82710	· BOLT	2	SN:11001--@
8	01580-12722	· NUT	2	SN:11001--@
9	01602-22783	· WASHER,SPRING	2	SN:11001--@
10	707-27-10040	· HEAD,CYLINDER	1	SN:11001--@
11	07177-06030	· BUSHING	1	SN:11001--@
12	707-51-60211	· PACKING,ROD (KIT)	1	SN:11001--@
13	141-63-93270	· SEAL,DUST (KIT)	1	SN:11001--@
14	07179-12074	· RING,SNAP	1	SN:11001--@
15	07000-12095	· O-RING (KIT)	1	SN:11001--@
16	07146-02096	· RING,BACK-UP (KIT)	1	SN:11001--@
17	01010-81455	· BOLT	12	SN:11001--@

Printed By : Dwi Iswanto (airafather6107170)

DRAWBAR SIDE SHIFT CYLINDER(#11001-12102)

Item	Part No.	Description	Qty	Options
18	01643-31445	· WASHER	12	SN:12013--@
	01602-21442	· WASHER,SPRING	12	SN:11001--12012
19	235-63-22220	· ROD,PISTON	1	SN:12051--@
	235-63-22121	· ROD,PISTON	1	SN:12013--12050
	235-63-22120	· ROD,PISTON	1	SN:11001--12012
20	707-66-65120	· CAP	1	SN:12051--@
	07138-01100	· CAP	1	SN:11001--12050
21	07020-00900	· FITTING,GREASE	1	SN:11001--@
22	707-56-12550	· SEAL,DUST (KIT)	1	SN:12051--@
	07141-00110	· SEAL,DUST (KIT)	1	SN:11001--12050
23	707-88-32170	· SHIM¤ 0.2MM	3	SN:12051--@
	07139-01102	· SHIM¤ 0.2MM	3	SN:11001--12050
24	707-88-32180	· SHIM¤ 0.5MM	2	SN:12051--@
	07139-01105	· SHIM¤ 0.5MM	2	SN:11001--12050
25	01011-82710	· BOLT	2	SN:11001--@
26	01580-12722	· NUT	2	SN:11001--@
27	01602-22783	· WASHER,SPRING	2	SN:11001--@
28	707-36-10280	· PISTON	1	SN:11001--@
29	707-44-10180	· RING,PISTON (KIT)	1	SN:11001--@
30	07155-01025	· RING,WEAR (KIT)	1	SN:11001--@
31	07165-14547	· NUT,NYLON	1	SN:11001--@
SERVICE KIT				
K	707-98-35280	SERVICE KIT,DRAWBAR SIDE SHIFT CYLINDER	1	SN:12051--@
	707-98-35110	SERVICE KIT,DRAWBAR SIDE SHIFT CYLINDER	1	SN:11001--12050

Printed By : Dwi Iswanto (airafather6107170)

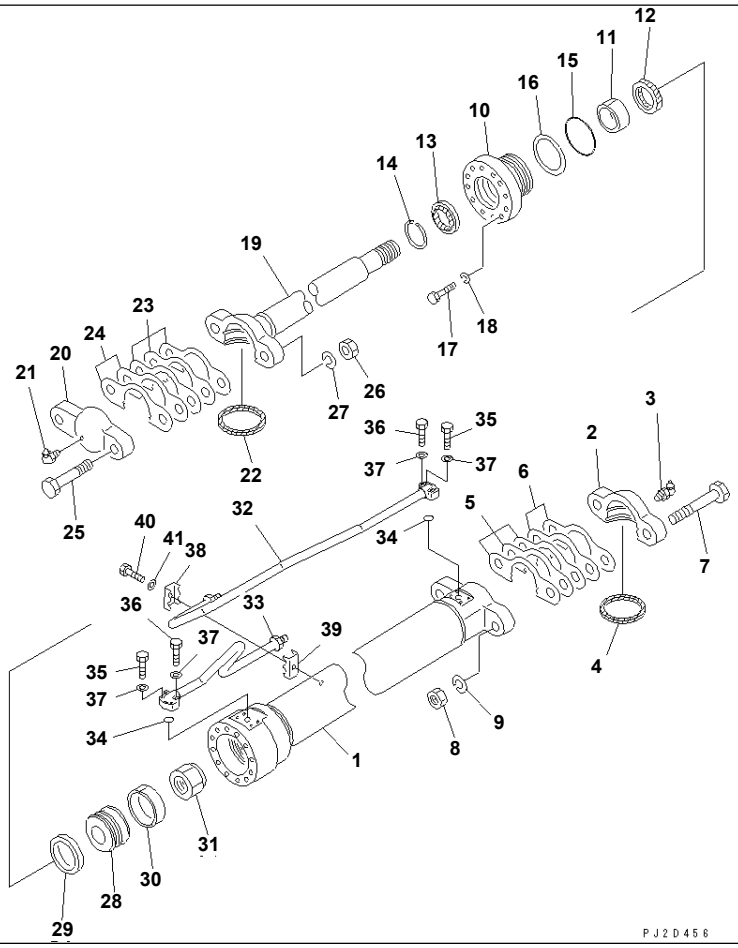

DRAWBAR SIDE SHIFT CYLINDER(#12103-)

Item	Part No.	Description	Qty	Options
G1	(⊙707-04-XZ030)	CYLINDER GROUP	1	SN:12103--
==========				
	235-63-22002	CYLINDER ASS'Y	1	SN:12051--
1	235-63-22240	· CYLINDER	1	SN:12051--
2	707-66-65120	· CAP	1	SN:12051--
3	07020-00900	· FITTING,GREASE	1	SN:11001--
4	707-56-12550	· SEAL,DUST (KIT)	1	SN:12051--
5	707-88-32170	· SHIM¤ 0.2MM	3	SN:12051--
6	707-88-32180	· SHIM¤ 0.5MM	2	SN:12051--
7	01011-82710	· BOLT	2	SN:11001--
8	01580-12722	· NUT	2	SN:11001--
9	01602-22783	· WASHER,SPRING	2	SN:11001--
10	707-27-10040	· HEAD,CYLINDER	1	SN:11001--
11	07177-06030	· BUSHING	1	SN:11001--
12	707-51-60211	· PACKING,ROD (KIT)	1	SN:11001--
13	141-63-93270	· SEAL,DUST (KIT)	1	SN:11001--
14	07179-12074	· RING,SNAP	1	SN:11001--
15	07000-12095	· O-RING (KIT)	1	SN:11001--
16	07146-02096	· RING,BACK-UP (KIT)	1	SN:11001--
17	01010-81455	· BOLT	12	SN:11001--
18	01643-31445	· WASHER	12	SN:12013--
19	235-63-22220	· ROD,PISTON	1	SN:12051--
20	707-66-65120	· CAP	1	SN:12051--
21	07020-00900	· FITTING,GREASE	1	SN:11001--
22	707-56-12550	· SEAL,DUST (KIT)	1	SN:12051--
23	707-88-32170	· SHIM¤ 0.2MM	3	SN:12051--
24	707-88-32180	· SHIM¤ 0.5MM	2	SN:12051--

Printed By : Dwi Iswanto (airafather6107170)

DRAWBAR SIDE SHIFT CYLINDER(#12103-)

Item	Part No.	Description	Qty	Options
25	01011-82710	· BOLT	2	SN:11001--
26	01580-12722	· NUT	2	SN:11001--
27	01602-22783	· WASHER,SPRING	2	SN:11001--
28	707-36-10280	· PISTON	1	SN:11001--
29	707-44-10180	· RING,PISTON (KIT)	1	SN:11001--
30	07155-01025	· RING,WEAR (KIT)	1	SN:11001--
31	07165-14547	· NUT,NYLON	1	SN:11001--
32	235-60-14311	TUBE	1	SN:12103--
33	235-60-14291	TUBE	1	SN:12103--
34	07000-13025	O-RING	2	SN:12103--
35	01010-80830	BOLT	4	SN:12103--
36	01010-80840	BOLT	4	SN:12103--
37	01643-30823	WASHER	8	SN:12103--
38	232-60-54830	CLIP	1	SN:12103--
39	235-60-34310	CLAMP	1	SN:12103--
40	01010-81055	BOLT	1	SN:12103--
41	01643-31032	WASHER	1	SN:12103--
==========				
SERVICE KIT				
K	707-98-35280	SERVICE KIT,DRAWBAR SIDE SHIFT CYLINDER	1	SN:12051--

Printed By : Dwi Iswanto (airafather6107170)

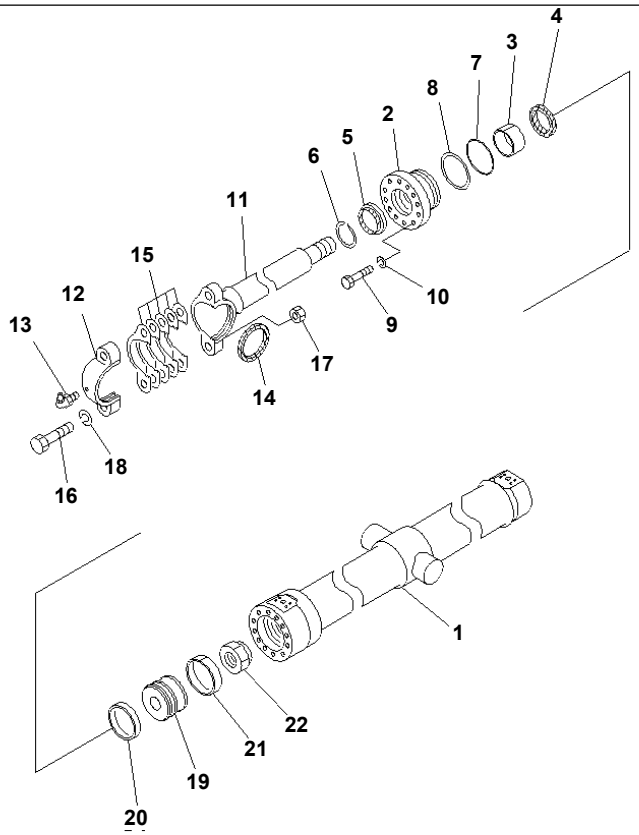

PJ59110

BLADE LIFT CYLINDER(#11001-12102)

Item	Part No.	Description	Qty	Options
	235-63-16102	CYLINDER ASS'Y	2	SN:12051--@
	235-63-16100	CYLINDER ASS'Y	2	SN:11001--12050
1	235-63-16140	· CYLINDER	1	SN:11001--@
2	707-27-10170	· HEAD,CYLINDER	1	SN:11001--@
3	07177-06530	· BUSHING	1	SN:11001--@
4	707-51-65211	· PACKING,ROD (KIT)	1	SN:11001--@
5	144-63-92170	· SEAL,DUST (KIT)	1	SN:11001--@
6	07179-12079	· RING,SNAP	1	SN:11001--@
7	07000-12095	· O-RING (KIT)	1	SN:11001--@
8	07146-02096	· RING,BACK-UP (KIT)	1	SN:11001--@
9	01010-81455	· BOLT	12	SN:11001--@
10	01643-31445	· WASHER	12	SN:12051--@
	01602-21442	· WASHER,SPRING	12	SN:11001--12050
11	235-63-16220	· ROD,PISTON	1	SN:12051--@
	235-63-16120	· ROD,PISTON	1	SN:11001--12050
12	707-66-65120	· CAP	1	SN:12051--@
	07138-01100	· CAP	1	SN:11001--12050
13	07020-00900	· FITTING,GREASE	1	SN:11001--@
14	707-56-12550	· SEAL,DUST	1	SN:12051--@
	07141-00110	· SEAL,DUST	1	SN:11001--12050
15	707-88-32170	· SHIM¤ 0.2MM	3	SN:12051--@
	07139-01102	· SHIM¤ 0.2MM	3	SN:11001--@
	707-88-32180	· SHIM¤ 0.5MM	2	SN:12051--@
	07139-01105	· SHIM¤ 0.5MM	2	SN:11001--12050
16	01011-82710	· BOLT	2	SN:11001--@
17	01580-12722	· NUT	2	SN:11001--@
18	01602-22783	· WASHER,SPRING	2	SN:11001--@

Printed By : Dwi Iswanto (airafather6107170)

BLADE LIFT CYLINDER(#11001-12102)

Item	Part No.	Description	Qty	Options
19	707-36-10260	· PISTON	1	SN:11001--@
20	707-44-10180	· RING,PISTON (KIT)	1	SN:11001--@
21	07155-01025	· RING,WEAR (KIT)	1	SN:11001--@
22	07165-14547	· NUT,NYLON	1	SN:11001--@
SERVICE KIT				
K	707-98-36230	SERVICE KIT,BLADE LIFT CYLINDER	2	SN:11001--@

Printed By : Dwi Iswanto (airafather6107170)

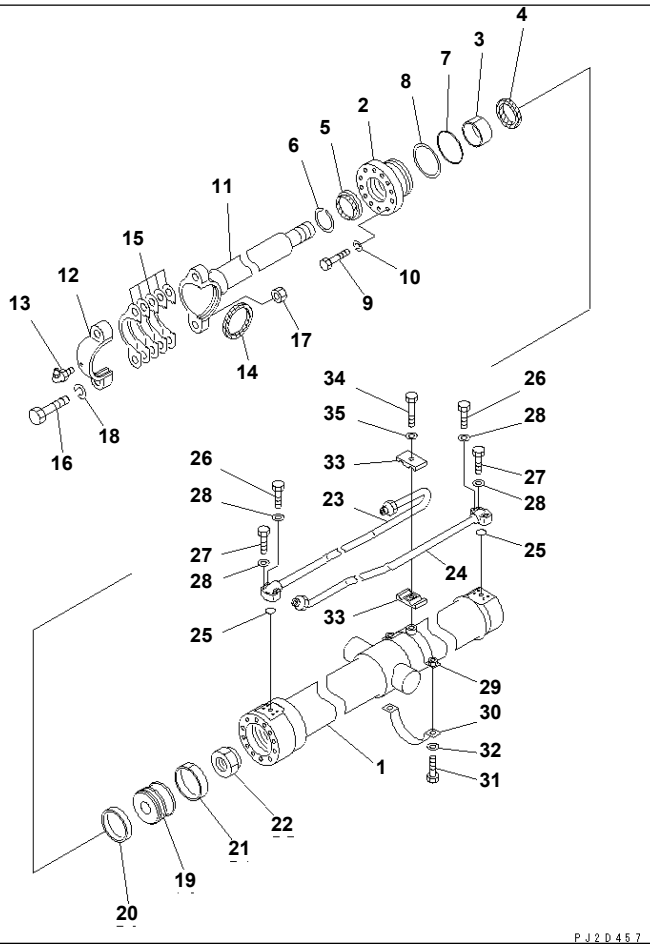

GD825A-2 S/N 11001-UP

BLADE LIFT CYLINDER(#12103-)

Item	Part No.	Description	Qty	Options
G1	(⊙707-03-X7280)	CYLINDER GROUP,L.H.	1	SN:12103--
	(⊙707-03-X7290)	CYLINDER GROUP,R.H.	1	SN:12103--
==========				
	235-63-16102	CYLINDER ASS'Y	1	SN:12051--
1	235-63-16140	· CYLINDER	1	SN:11001--
2	707-27-10170	· HEAD,CYLINDER	1	SN:11001--
3	07177-06530	· BUSHING	1	SN:11001--
4	707-51-65211	· PACKING,ROD (KIT)	1	SN:11001--
5	144-63-92170	· SEAL,DUST (KIT)	1	SN:11001--
6	07179-12079	· RING,SNAP	1	SN:11001--
7	07000-12095	· O-RING (KIT)	1	SN:11001--
8	07146-02096	· RING,BACK-UP (KIT)	1	SN:11001--
9	01010-81455	· BOLT	12	SN:11001--
10	01643-31445	· WASHER	12	SN:12051--
11	235-63-16220	· ROD,PISTON	1	SN:12051--
12	707-66-65120	· CAP	1	SN:12051--
13	07020-00900	· FITTING,GREASE	1	SN:11001--
14	707-56-12550	· SEAL,DUST	1	SN:12051--
15	707-88-32170	· SHIM¤ 0.2MM	3	SN:12051--
	07139-01102	· SHIM¤ 0.2MM	3	SN:11001--
	707-88-32180	· SHIM¤ 0.5MM	2	SN:12051--
16	01011-82710	· BOLT	2	SN:11001--
17	01580-12722	· NUT	2	SN:11001--
18	01602-22783	· WASHER,SPRING	2	SN:11001--
19	707-36-10260	· PISTON	1	SN:11001--
20	707-44-10180	· RING,PISTON (KIT)	1	SN:11001--
21	07155-01025	· RING,WEAR (KIT)	1	SN:11001--

Printed By : Dwi Iswanto (airafather6107170)

BLADE LIFT CYLINDER(#12103-)

Item	Part No.	Description	Qty	Options
22	07165-14547	· NUT,NYLON	1	SN:11001--
23	235-60-14640	TUBE,L.H.	1	SN:12103--
	235-60-14620	TUBE,R.H.	1	SN:12103--
24	235-60-14630	TUBE,L.H.	1	SN:12103--
	235-60-14610	TUBE,R.H.	1	SN:12103--
25	07000-13025	O-RING	2	SN:12103--
26	01010-50830	BOLT	4	SN:12103--
27	01010-50840	BOLT	4	SN:12103--
28	01643-30823	WASHER	8	SN:12103--
29	235-60-13831	BAND	1	SN:12103--
30	235-60-17790	BAND	1	SN:12103--
31	01010-50830	BOLT	2	SN:12103--
32	01643-30823	WASHER	2	SN:12103--
33	232-60-54830	CLIP	2	SN:12103--
34	01010-51050	BOLT	1	SN:12103--
35	01643-31032	WASHER	1	SN:12103--
==========				
SERVICE KIT				
K	707-98-36230	SERVICE KIT,BLADE LIFT CYLINDER	2	SN:11001--

Printed By : Dwi Iswanto (airafather6107170)

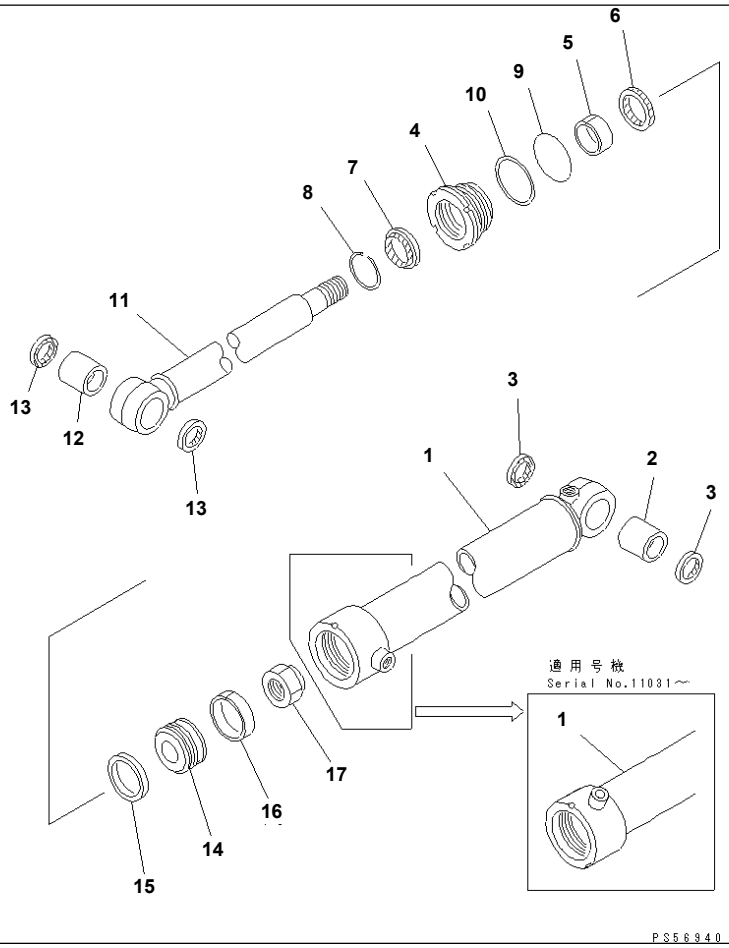

Ref. 6305 **Page 180310**

GD825A-2 S/N 11001-UP
BLADE SIDE SHIFT CYLINDER(#11001-12050)

Item	Part No.	Description	Qty	Options
	235-63-42001	CYLINDER ASS'Y	1	SN:11031--12050
	235-63-42000	CYLINDER ASS'Y	1	SN:11001--11030
1	235-63-42141	· CYLINDER	1	SN:11031--12050
	235-63-42140	· CYLINDER	1	SN:11001--11030
2	07143-10506	· BUSHING	1	SN:11001--@
3	07145-00055	· SEAL,DUST (KIT)	2	SN:11001--@
4	707-29-10490	· HEAD,CYLINDER	1	SN:11001--12050
5	07177-06530	· BUSHING	1	SN:11001--12050
6	707-51-65211	· PACKING,ROD (KIT)	1	SN:11001--@
7	144-63-92170	· SEAL,DUST (KIT)	1	SN:11001--@
8	07179-12079	· RING,SNAP	1	SN:11001--@
9	07000-12015	· O-RING (KIT)	1	SN:11001--12050
10	101-63-81230	· RING,BACK-UP (KIT)	1	SN:11001--12050
11	235-63-42120	· ROD,PISTON	1	SN:11001--@
12	07143-10506	· BUSHING	1	SN:11001--@
13	07145-00055	· SEAL,DUST (KIT)	2	SN:11001--@
14	707-36-10280	· PISTON	1	SN:11001--@
15	707-44-10180	· RING,PISTON (KIT)	1	SN:11001--@
16	07155-01025	· RING,WEAR (KIT)	1	SN:11001--@
17	07165-14547	· NUT,NYLON	1	SN:11001--@
SERVICE KIT				
K	707-98-36140	SERVICE KIT,BLADE SIDE SHIFT CYLINDER	1	SN:11001--12050

Printed By : Dwi Iswanto (airafather6107170)

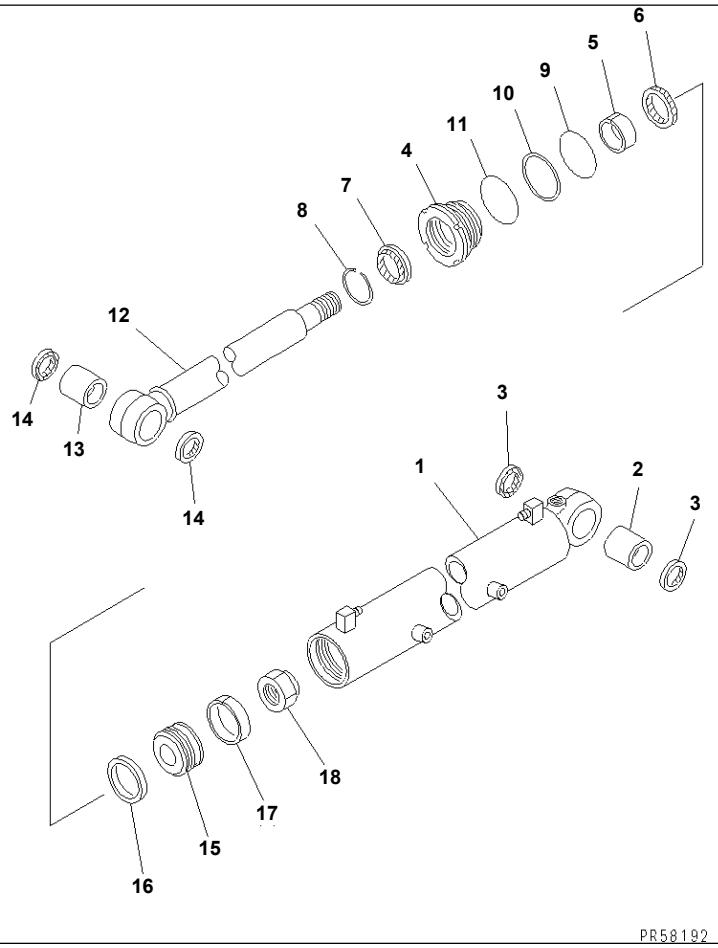

GD825A-2 S/N 11001-UP

BLADE SIDE SHIFT CYLINDER(#12051-)

Item	Part No.	Description	Qty	Options
	707-00-07E50	CYLINDER ASS'Y	1	SN:12103--
	□235-63-42002	CYLINDER ASS'Y	1	SN:12051--12102
1	235-63-42240	· CYLINDER	1	SN:12051--
2	07143-10506	· BUSHING	1	SN:11001--
3	07145-00055	· SEAL,DUST (KIT)	2	SN:11001--
4	707-29-10860	· HEAD,CYLINDER	1	SN:12051--
5	707-52-10660	· BUSHING	1	SN:12051--
6	707-51-65211	· PACKING,ROD (KIT)	1	SN:11001--
7	144-63-92170	· SEAL,DUST (KIT)	1	SN:11001--
8	07179-12079	· RING,SNAP	1	SN:11001--
9	07000-12095	· O-RING (KIT)	1	SN:12051--
10	07146-02096	· RING,BACK-UP (KIT)	1	SN:12051--
11	07000-02100	· O-RING	1	SN:12051--
12	235-63-42120	· ROD,PISTON	1	SN:11001--
13	07143-10506	· BUSHING	1	SN:11001--
14	07145-00055	· SEAL,DUST (KIT)	2	SN:11001--
15	707-36-10280	· PISTON	1	SN:11001--
16	707-44-10180	· RING,PISTON (KIT)	1	SN:11001--
17	07155-01025	· RING,WEAR (KIT)	1	SN:11001--
18	07165-14547	· NUT,NYLON	1	SN:11001--
SERVICE KIT				
K	707-98-36280	SERVICE KIT,BLADE SIDE SHIFT CYLINDER	1	SN:12051--

Printed By : Dwi Iswanto (airafather6107170)

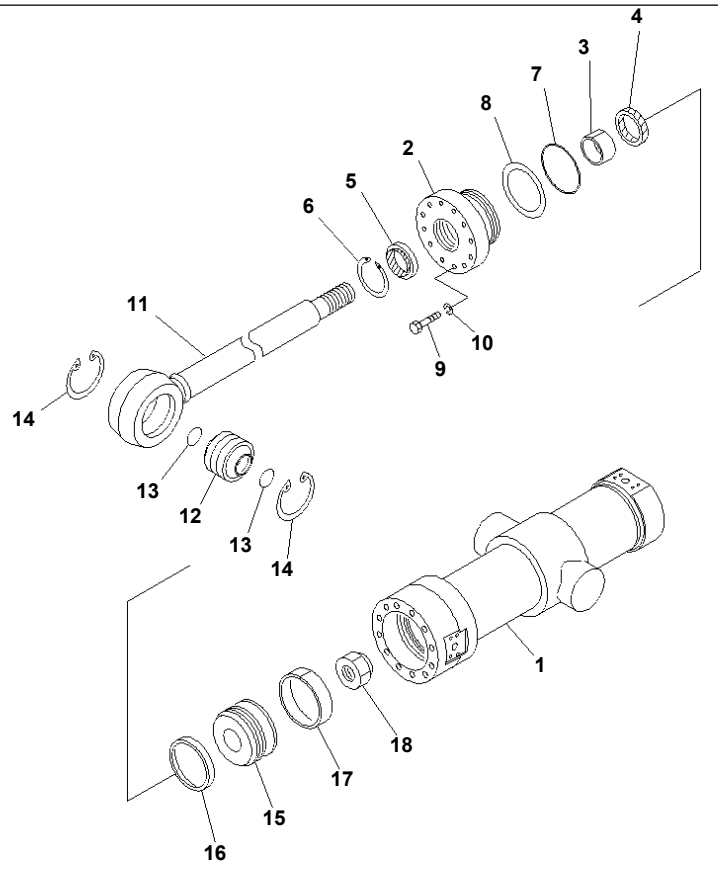

PJ59112

GD825A-2 S/N 11001-UP

POWER TILT CYLINDER(#11001-12102)

Item	Part No.	Description	Qty	Options
	235-63-28000	CYLINDER ASS'Y	1	SN:11001--@
1	235-63-28140	· CYLINDER	1	SN:11001--@
2	707-27-12040	· HEAD,CYLINDER	1	SN:11001--@
3	07177-06530	· BUSHING	1	SN:11001--@
4	707-51-65211	· PACKING,ROD (KIT)	1	SN:11001--@
5	144-63-92170	· SEAL,DUST (KIT)	1	SN:11001--@
6	07179-12079	· RING,SNAP	1	SN:11001--@
7	07000-22115	· O-RING (KIT)	1	SN:11001--@
8	07146-02116	· RING,BACK-UP (KIT)	1	SN:11001--@
9	01010-81660	· BOLT	12	SN:11001--@
10	01602-21648	· WASHER,SPRING	12	SN:11001--@
11	235-63-28120	· ROD,PISTON	1	SN:11001--@
12	07137-05008	· BUSHING	1	SN:11001--@
13	07000-03050	· O-RING	2	SN:11001--@
14	04065-01104	· RING,SNAP	2	SN:11001--@
15	707-36-12110	· PISTON	1	SN:11001--@
16	707-44-12180	· RING,PISTON (KIT)	1	SN:11001--@
17	07155-01230	· RING,WEAR (KIT)	1	SN:11001--@
18	07165-14850	· NUT,NYLON	1	SN:11001--@
SERVICE KIT				
K	707-98-42100	SERVICE KIT,POWER TILT CYLINDER	1	SN:11001--@

Ref. 6307 Page 180330

Printed By : Dwi Iswanto (airafather6107170)

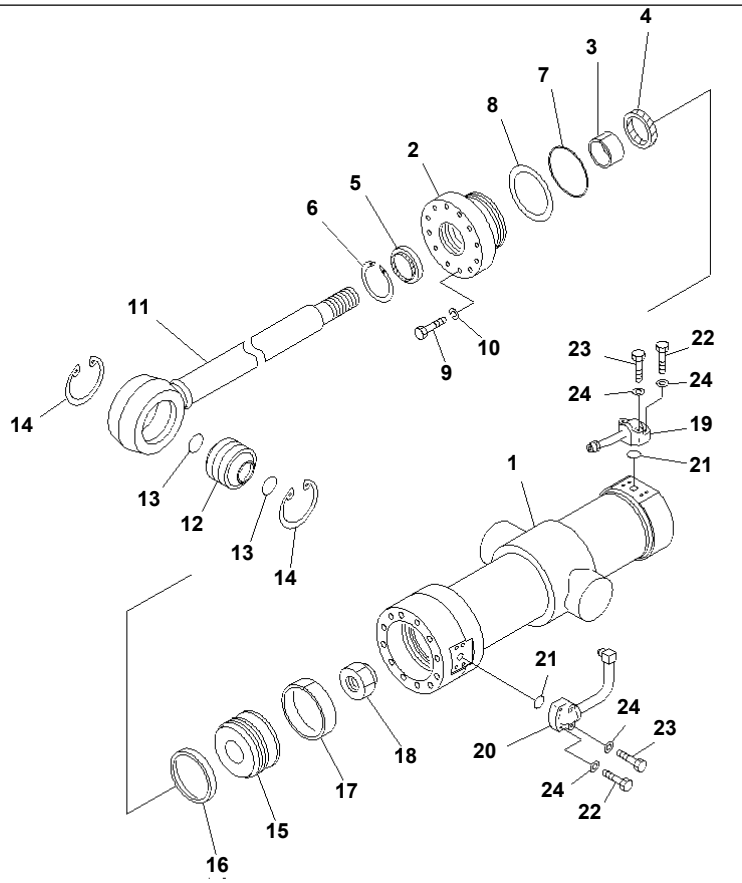

GD825A-2 S/N 11001-UP

POWER TILT CYLINDER(#12103-)

Item	Part No.	Description	Qty	Options
G1	(⊙707-03-X7310)	CYLINDER GROUP	1	SN:12103--
==========				
	235-63-28000	CYLINDER ASS'Y	1	SN:11001--
1	235-63-28140	· CYLINDER	1	SN:11001--
2	707-27-12040	· HEAD,CYLINDER	1	SN:11001--
3	07177-06530	· BUSHING	1	SN:11001--
4	707-51-65211	· PACKING,ROD (KIT)	1	SN:11001--
5	144-63-92170	· SEAL,DUST (KIT)	1	SN:11001--
6	07179-12079	· RING,SNAP	1	SN:11001--
7	07000-22115	· O-RING (KIT)	1	SN:11001--
8	07146-02116	· RING,BACK-UP (KIT)	1	SN:11001--
9	01010-81660	· BOLT	12	SN:11001--
10	01602-21648	· WASHER,SPRING	12	SN:11001--
11	235-63-28120	· ROD,PISTON	1	SN:11001--
12	07137-05008	· BUSHING	1	SN:11001--
13	07000-03050	· O-RING	2	SN:11001--
14	04065-01104	· RING,SNAP	2	SN:11001--
15	707-36-12110	· PISTON	1	SN:11001--
16	707-44-12180	· RING,PISTON (KIT)	1	SN:11001--
17	07155-01230	· RING,WEAR (KIT)	1	SN:11001--
18	07165-14850	· NUT,NYLON	1	SN:11001--
19	235-60-17741	TUBE	1	SN:12103--
20	235-60-14273	TUBE	1	SN:12103--
21	07000-13030	O-RING	2	SN:12103--
22	01010-80835	BOLT	4	SN:12103--
23	01010-80845	BOLT	4	SN:12103--
24	01643-30823	WASHER	8	SN:12103--

Printed By : Dwi Iswanto (airafather6107170)

POWER TILT CYLINDER(#12103-)

Item	Part No.	Description	Qty	Options
==========				
SERVICE KIT				
K	707-98-42100	SERVICE KIT,POWER TILT CYLINDER	1	SN:11001--

Printed By : Dwi Iswanto (airafather6107170)

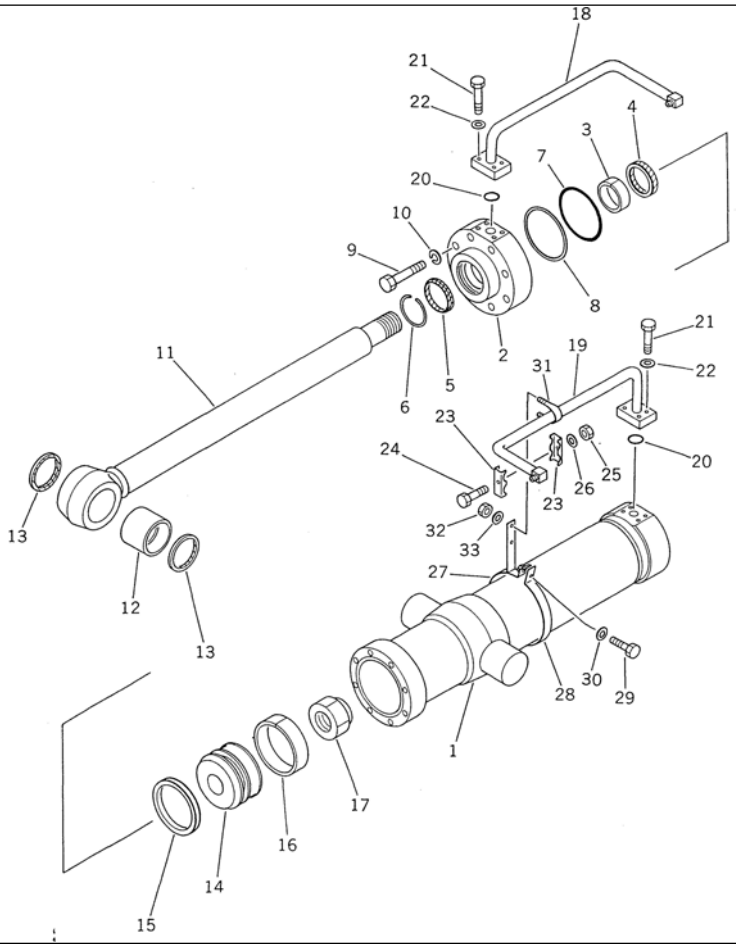

Ref. 6309 **Page 180350**

GD825A-2 S/N 11001-UP
RIPPER CYLINDER(#11001-12102)

Item	Part No.	Description	Qty	Options
	235-63-25200	CYLINDER ASS'Y	1	SN:11001--@
1	235-63-25240	· CYLINDER	1	SN:11001--@
2	707-27-14010	· HEAD,CYLINDER	1	SN:11001--@
3	07177-07030	· BUSHING	1	SN:11001--@
4	707-51-70211	· PACKING,ROD (KIT)	1	SN:11001--@
5	144-63-95170	· SEAL,DUST (KIT)	1	SN:11001--@
6	07179-12084	· RING,SNAP	1	SN:11001--@
7	07000-12135	· O-RING (KIT)	1	SN:11001--@
8	07146-02136	· RING,BACK-UP (KIT)	1	SN:11001--@
9	01010-51890	· BOLT	8	SN:11001--@
10	01602-21854	· WASHER,SPRING	8	SN:11001--@
11	235-63-25220	· ROD,PISTON	1	SN:11001--@
12	07143-10707	· BUSHING	1	SN:11001--@
13	07145-00075	· SEAL,DUST (KIT)	2	SN:11001--@
14	707-36-14180	· PISTON	1	SN:11001--@
15	707-44-14180	· RING,PISTON (KIT)	1	SN:11001--@
16	07155-01435	· RING,WEAR (KIT)	1	SN:11001--@
17	07165-15252	· NUT,NYLON	1	SN:11001--@
18	235-60-17182	TUBE	1	SN:11001--@
19	235-60-17192	TUBE	1	SN:11001--@
20	07000-13032	O-RING	2	SN:11001--@
21	01010-51035	BOLT	8	SN:11001--@
22	01643-31032	WASHER	8	SN:11001--@
23	232-60-54820	CLIP	2	SN:11001--@
24	01010-51055	BOLT	1	SN:11001--@
25	01580-11008	NUT	1	SN:11001--@
26	01643-31032	WASHER	1	SN:11001--@

Ref. 6309 **Page 180350**

RIPPER CYLINDER(#11001-12102)

Item	Part No.	Description	Qty	Options
27	235-60-17231	BAND	1	SN:11001--@
28	235-60-17221	BAND	1	SN:11001--@
29	01010-51030	BOLT	2	SN:11001--@
30	01643-31032	WASHER	2	SN:11001--@
31	07283-22236	CLIP	1	SN:11001--@
32	01599-01011	NUT	2	SN:11001--@
33	01643-31032	WASHER	2	SN:11001--@
SERVICE KIT				
K	707-98-52100	SERVICE KIT,RIPPER CYLINDER	1	SN:11001--@

Printed By : Dwi Iswanto (airafather6107170)

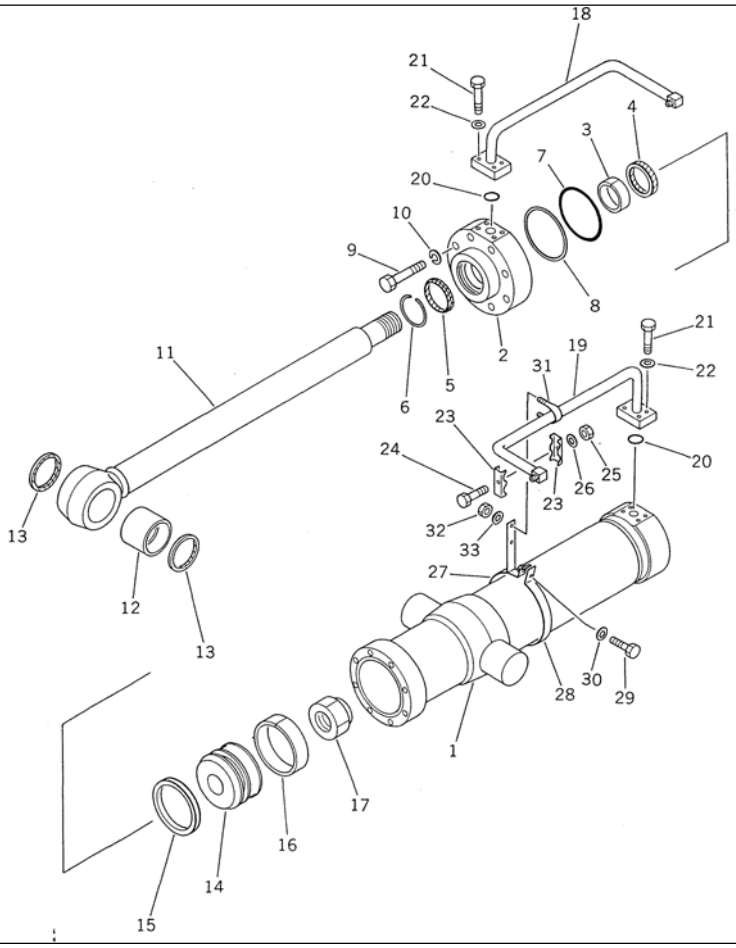

GD825A-2 S/N 11001-UP

RIPPER CYLINDER(#12103-)

Item	Part No.	Description	Qty	Options
G1	(⊙707-03-X7300)	CYLINDER GROUP	1	SN:12103--
==========				
	235-63-25200	CYLINDER ASS'Y	1	SN:11001--
1	235-63-25240	· CYLINDER	1	SN:11001--
2	707-27-14010	· HEAD,CYLINDER	1	SN:11001--
3	07177-07030	· BUSHING	1	SN:11001--
4	707-51-70211	· PACKING,ROD (KIT)	1	SN:11001--
5	144-63-95170	· SEAL,DUST (KIT)	1	SN:11001--
6	07179-12084	· RING,SNAP	1	SN:11001--
7	07000-12135	· O-RING (KIT)	1	SN:11001--
8	07146-02136	· RING,BACK-UP (KIT)	1	SN:11001--
9	01010-51890	· BOLT	8	SN:11001--
10	01602-21854	· WASHER,SPRING	8	SN:11001--
11	235-63-25220	· ROD,PISTON	1	SN:11001--
12	07143-10707	· BUSHING	1	SN:11001--
13	07145-00075	· SEAL,DUST (KIT)	2	SN:11001--
14	707-36-14180	· PISTON	1	SN:11001--
15	707-44-14180	· RING,PISTON (KIT)	1	SN:11001--
16	07155-01435	· RING,WEAR (KIT)	1	SN:11001--
17	07165-15252	· NUT,NYLON	1	SN:11001--
18	235-60-17182	TUBE	1	SN:11001--
19	235-60-17192	TUBE	1	SN:11001--
20	07000-13032	O-RING	2	SN:11001--
21	01010-51035	BOLT	8	SN:11001--
22	01643-31032	WASHER	8	SN:11001--
23	232-60-54820	CLIP	2	SN:11001--
24	01010-51055	BOLT	1	SN:11001--

Printed By : Dwi Iswanto (airafather6107170)

RIPPER CYLINDER(#12103-)

Item	Part No.	Description	Qty	Options
25	01580-11008	NUT	1	SN:11001--
26	01643-31032	WASHER	1	SN:11001--
27	235-60-17231	BAND	1	SN:11001--
28	235-60-17221	BAND	1	SN:11001--
29	01010-51030	BOLT	2	SN:11001--
30	01643-31032	WASHER	2	SN:11001--
31	07283-22236	CLIP	1	SN:11001--
32	01599-01011	NUT	2	SN:11001--
33	01643-31032	WASHER	2	SN:11001--
==========				
SERVICE KIT				
K	707-98-52100	SERVICE KIT,RIPPER CYLINDER	1	SN:11001--

Printed By : Dwi Iswanto (airafather6107170)

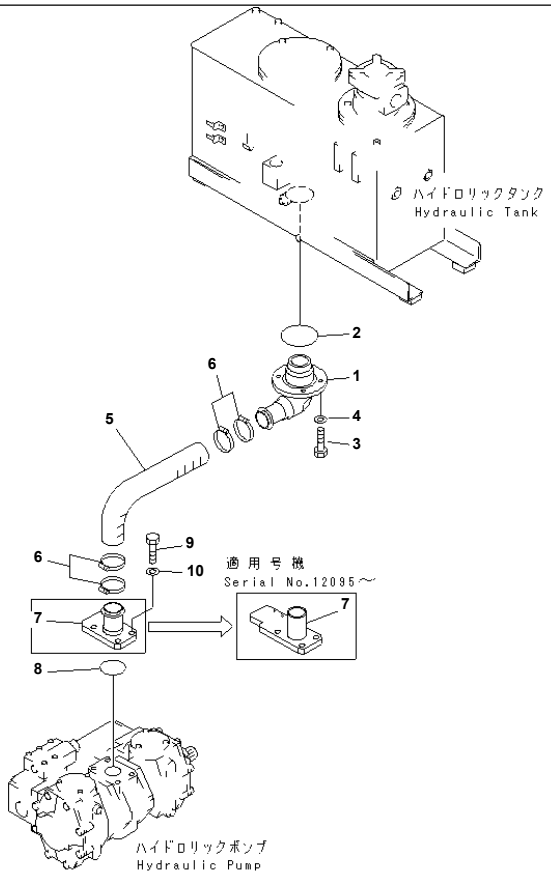

PJ2A708

GD825A-2 S/N 11001-UP

HYDRAULIC PIPING (TANK TO PUMP)

Item	Part No.	Description	Qty	Options
1	235-60-32130	FLANGE	1	SN:11001--
2	07000-12100	O-RING	1	SN:11009--
	07000-02100	O-RING	1	SN:11001--11008
3	01010-51235	BOLT	4	SN:11001--
4	01643-31232	WASHER	4	SN:11001--
5	235-60-36110	HOSE	1	SN:11001--
6	07281-00909	CLAMP	4	SN:11001--
7	235-60-36121	FLANGE	1	SN:12095--
	235-60-36120	FLANGE	1	SN:11001--12094
8	07000-12075	O-RING	1	SN:11001--
9	01010-51640	BOLT	4	SN:11001--
10	01643-31645	WASHER	4	SN:11001--

Printed By : Dwi Iswanto (airafather6107170)

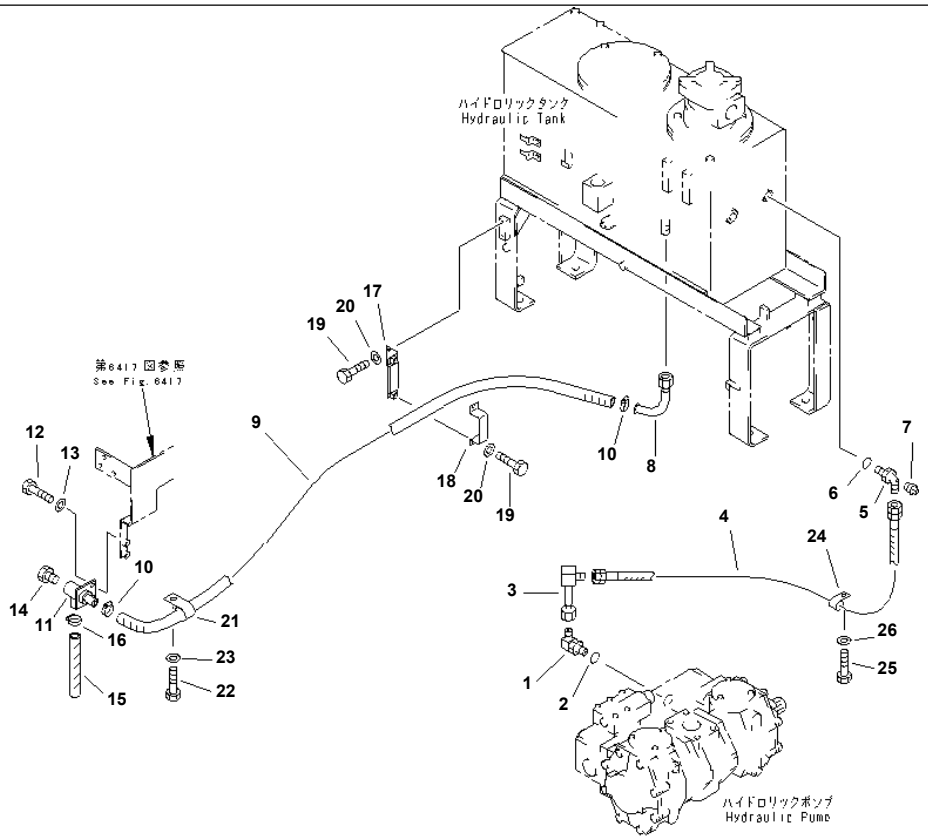

GD825A-2 S/N 11001-UP

HYDRAULIC PIPING (PUMP TO TANK)

Item	Part No.	Description	Qty	Options
1	232-40-58310	ELBOW	1	SN:11001--
2	238-40-16140	O-RING	1	SN:11001--
3	235-60-16470	ELBOW	1	SN:11001--
4	07102-20612	HOSE	1	SN:11001--
5	07235-50628	ELBOW	1	SN:11001--
6	07002-12434	O-RING	1	SN:11001--
7	07042-20108	PLUG	1	SN:11001--
8	235-60-36510	TUBE	1	SN:11001--
9	07261-22020	HOSE	1	SN:11001--
10	07281-00359	CLAMP	2	SN:11001--
11	425-01-12121	TUBE	1	SN:11001--
12	01010-51025	BOLT	2	SN:11001--
13	01643-31032	WASHER	2	SN:11001--
14	424-01-11110	PLUG	1	SN:11001--
15	07260-22020	HOSE	1	SN:11001--
16	07281-00359	CLAMP	1	SN:11001--
17	235-60-35240	PLATE	1	SN:11001--
18	234-60-33430	CLIP	1	SN:11001--
19	01010-50816	BOLT	4	SN:11001--
20	01643-30823	WASHER	4	SN:11001--
21	08036-03014	CLIP	1	SN:11001--
22	01010-51018	BOLT	1	SN:11001--
23	01643-31032	WASHER	1	SN:11001--
24	04434-52711	CLIP	1	SN:11001--
25	01010-51020	BOLT	1	SN:11001--
26	01643-31032	WASHER	1	SN:11001--

Printed By : Dwi Iswanto (airafather6107170)

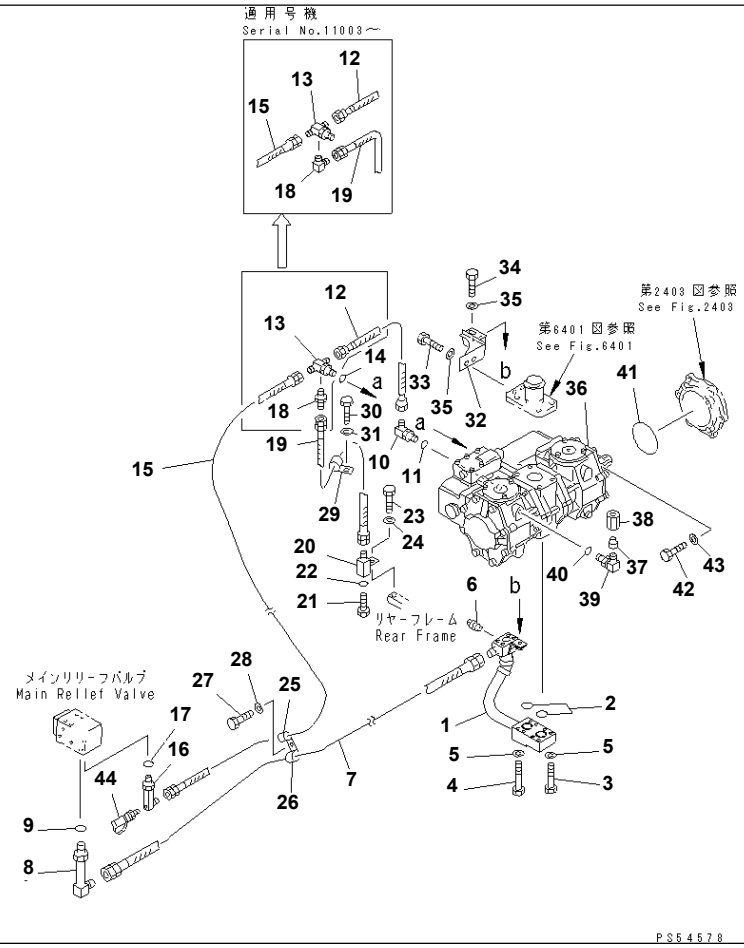

Ref. 6411 **Page 180390**

GD825A-2 S/N 11001-UP
HYDRAULIC PIPING (PUMP TO MAIN RELIEF VALVE)(#11001-12022)

Item	Part No.	Description	Qty	Options
1	235-60-36130	TUBE	1	SN:11001--@
2	07000-13035	O-RING	2	SN:11001--@
3	01010-51055	BOLT	4	SN:11001--@
4	01010-51065	BOLT	4	SN:11001--@
5	01643-31032	WASHER	8	SN:11001--@
6	07042-20108	PLUG	1	SN:11001--@
7	07121-40411	HOSE	1	SN:11001--@
8	233-60-24580	ELBOW	1	SN:11001--@
9	237-60-22240	O-RING	1	SN:11001--@
10	235-60-36310	ELBOW	1	SN:11001--@
11	235-60-15490	O-RING	1	SN:11001--@
12	235-60-16460	TUBE	1	SN:11001--@
13	235-60-36290	TEE	1	SN:11001--@
14	235-60-15490	O-RING	1	SN:11001--@
15	07121-40210	HOSE	1	SN:11001--@
16	235-60-36280	ELBOW	1	SN:11001--@
17	235-60-15490	O-RING	1	SN:11001--@
18	234-60-22672	ELBOW	1	SN:11003--@
	232-860-5560	NIPPLE	1	SN:11001--11002
19	07121-40204	HOSE	1	SN:11001--@
20	235-60-35180	NIPPLE	1	SN:11001--@
21	07060-11230	BOLT	1	SN:11001--@
22	07002-01223	O-RING	1	SN:11001--@
23	01010-51025	BOLT	1	SN:11001--@
24	01643-31032	WASHER	1	SN:11001--@
25	04434-51810	CLIP	1	SN:11001--@
26	04434-52711	CLIP	1	SN:11001--@

Printed By : Dwi Iswanto (airafather6107170)

HYDRAULIC PIPING (PUMP TO MAIN RELIEF VALVE)(#11001-12022)

Item	Part No.	Description	Qty	Options
27	01010-51020	BOLT	1	SN:11001--@
28	01643-31032	WASHER	1	SN:11001--@
29	04434-51910	CLIP	1	SN:11001--11002
30	01010-51016	BOLT	1	SN:11001--11002
31	01643-31032	WASHER	1	SN:11001--11002
32	235-60-36140	BRACKET	1	SN:11001--@
33	01010-51020	BOLT	2	SN:11001--@
34	01010-51025	BOLT	1	SN:11001--@
35	01643-31032	WASHER	3	SN:11001--@
36	(235-60-11100)	PUMP ASS'Y	1	SN:11001--@
37	07222-00616	PLUG	1	SN:11001--@
38	07221-20628	NUT	1	SN:11001--@
39	232-40-58310	ELBOW	1	SN:11001--@
40	238-40-16140	O-RING	1	SN:11001--@
41	07000-12130	O-RING	1	SN:11001--@
42	01010-51440	BOLT	4	SN:11001--@
43	01643-31445	WASHER	4	SN:11001--@
44	799-101-5160	NIPPLE	1	SN:11001--@

Printed By : Dwi Iswanto (airafather6107170)

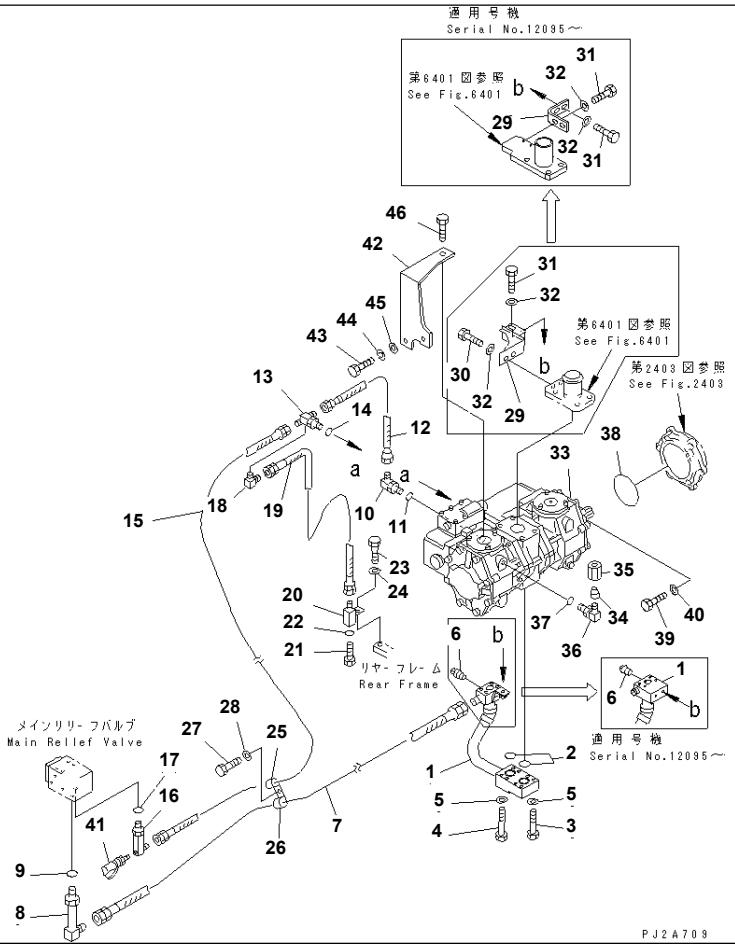

HYDRAULIC PIPING (PUMP TO MAIN RELIEF VALVE)(#12023-)

Item	Part No.	Description	Qty	Options
1	235-60-36131	TUBE	1	SN:12095--
	235-60-36130	TUBE	1	SN:11001--12094
2	07000-13035	O-RING	2	SN:11001--
3	01010-51055	BOLT	4	SN:11001--
4	01010-51065	BOLT	4	SN:11001--
5	01643-31032	WASHER	8	SN:11001--
6	07042-20108	PLUG	1	SN:11001--
7	07121-40411	HOSE	1	SN:11001--
8	233-60-24580	ELBOW	1	SN:11001--
9	237-60-22240	O-RING	1	SN:11001--
10	235-60-36310	ELBOW	1	SN:11001--
11	235-60-15490	O-RING	1	SN:11001--
12	235-60-16460	TUBE	1	SN:11001--
13	235-60-36290	TEE	1	SN:11001--
14	235-60-15490	O-RING	1	SN:11001--
15	07121-40210	HOSE	1	SN:11001--
16	235-60-36280	ELBOW	1	SN:11001--
17	235-60-15490	O-RING	1	SN:11001--
18	234-60-22672	ELBOW	1	SN:11003--
19	07121-40204	HOSE	1	SN:11001--
20	235-60-35180	NIPPLE	1	SN:11001--
21	07060-11230	BOLT	1	SN:11001--
22	07002-01223	O-RING	1	SN:11001--
23	01010-51025	BOLT	1	SN:11001--
24	01643-31032	WASHER	1	SN:11001--
25	04434-51810	CLIP	1	SN:11001--
26	04434-52711	CLIP	1	SN:11001--

Printed By : Dwi Iswanto (airafather6107170)

HYDRAULIC PIPING (PUMP TO MAIN RELIEF VALVE)(#12023-)

Item	Part No.	Description	Qty	Options
27	01010-51020	BOLT	1	SN:11001--
28	01643-31032	WASHER	1	SN:11001--
29	235-60-36210	BRACKET	1	SN:12095--
	235-60-36140	BRACKET	1	SN:11001--12094
30	01010-51020	BOLT	2	SN:11001--12094
31	01010-51025	BOLT	4	SN:12095--
	01010-51025	BOLT	1	SN:11001--12094
32	234-54-13252	WASHER	4	SN:12095--
	01643-31032	WASHER	3	SN:11001--12094
33	(235-60-11100)	PUMP ASS'Y	1	SN:11001--
34	07222-00616	PLUG	1	SN:11001--
35	07221-20628	NUT	1	SN:11001--
36	232-40-58310	ELBOW	1	SN:11001--
37	238-40-16140	O-RING	1	SN:11001--
38	07000-12130	O-RING	1	SN:11001--
39	01010-51440	BOLT	4	SN:11001--
40	01643-31445	WASHER	4	SN:11001--
41	799-101-5160	NIPPLE	1	SN:11001--
42	235-16-12410	BRACKET	1	SN:12023--
43	01010-81225	BOLT	2	SN:12023--
44	01643-31445	WASHER	2	SN:12023--
45	124-54-26540	WASHER	2	SN:12023--
46	02010-70844	BOLT	1	SN:12023--

Printed By : Dwi Iswanto (airafather6107170)

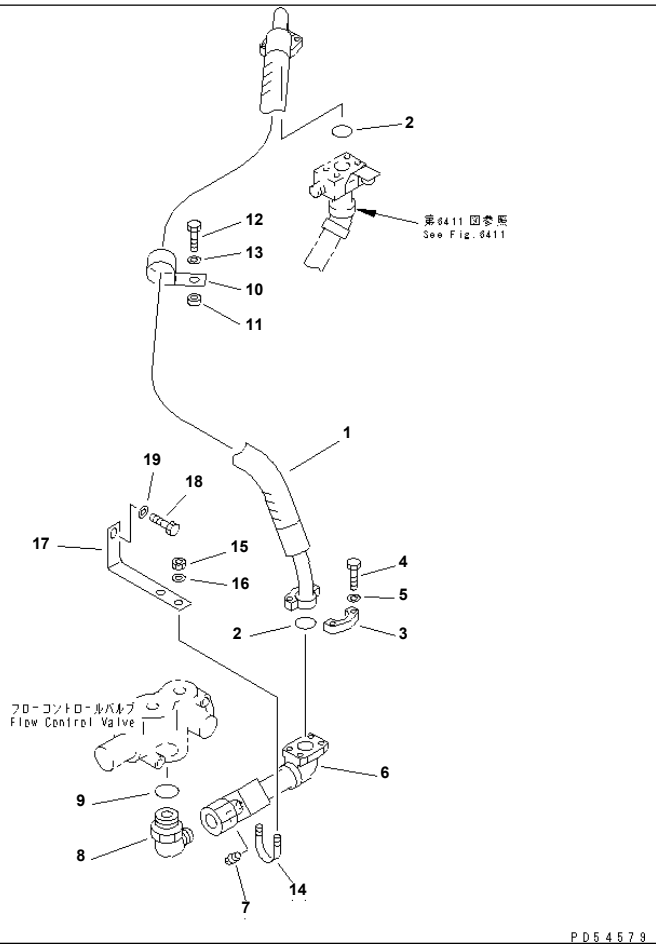

HYDRAULIC PIPING (PUMP TO FLOW CONTROL VALVE)

Item	Part No.	Description	Qty	Options
1	235-60-35230	HOSE	1	SN:11001--
2	07000-13032	O-RING	2	SN:11001--
3	07371-31049	FLANGE	4	SN:11001--
4	07372-21035	BOLT	8	SN:11001--
5	01643-31032	WASHER	8	SN:11001--
6	235-60-36150	TUBE	1	SN:11001--
7	07042-20211	PLUG	1	SN:11001--
8	235-60-36170	ELBOW	1	SN:11001--
9	235-60-16590	O-RING	1	SN:11001--
10	235-60-36520	CLIP	1	SN:11001--
11	238-43-12260	SPACER	1	SN:11001--
12	02010-70844	BOLT	1	SN:11001--
13	01643-31445	WASHER	1	SN:11001--
14	07283-23442	CLIP	1	SN:11001--
15	01598-01011	NUT	2	SN:11001--
16	01643-31032	WASHER	2	SN:11001--
17	235-60-36160	BRACKET	1	SN:11001--
18	01010-51235	BOLT	1	SN:11001--
19	01643-31232	WASHER	1	SN:11001--

Printed By : Dwi Iswanto (airafather6107170)

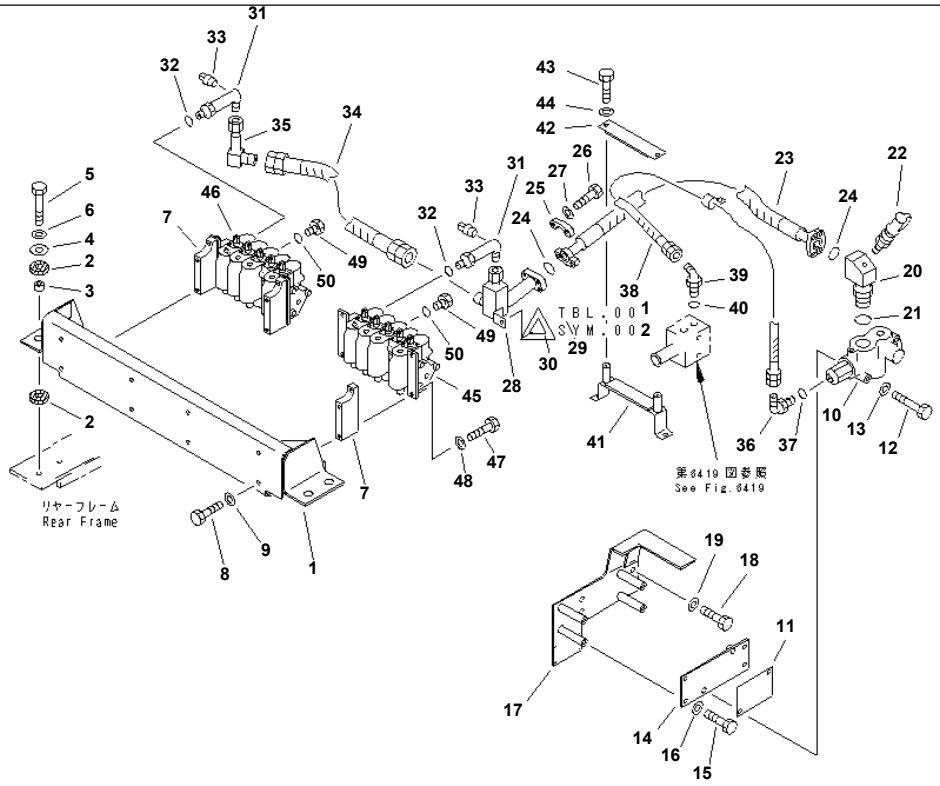

PD54580

GD825A-2 S/N 11001-UP

HYDRAULIC PIPING (FLOW CONTROL VALVE TO CONTROL VALVE)(#11001-12022)

Item	Part No.	Description	Qty	Options
1	235-60-35120	BRACKET	1	SN:11001--@
2	235-60-15760	CUSHION	8	SN:11001--@
3	235-60-35260	COLLAR	4	SN:11001--@
4	235-60-15790	WASHER	4	SN:11001--@
5	01010-51255	BOLT	4	SN:11001--@
6	01643-31232	WASHER	4	SN:11001--@
7	235-60-35131	PLATE	4	SN:11001--@
8	01010-51025	BOLT	8	SN:11001--@
9	01643-31032	WASHER	8	SN:11001--@
10	(235-40-12202)	VALVE ASS'Y,FLOW CONTROL	1	SN:11009--@
	(235-40-12201)	VALVE ASS'Y,FLOW CONTROL	1	SN:11001--11008
11	235-60-36260	SEAT	1	SN:11001--@
12	01011-51200	BOLT	2	SN:11001--@
13	01643-31232	WASHER	2	SN:11001--@
14	235-60-36240	PLATE	1	SN:11001--@
15	01010-51020	BOLT	4	SN:11001--@
16	01643-31032	WASHER	4	SN:11001--@
17	235-60-36250	BRACKET	1	SN:11001--@
18	01010-51230	BOLT	3	SN:11001--@
19	01643-31232	WASHER	3	SN:11001--@
20	235-60-36180	ELBOW	1	SN:11001--@
21	235-60-16590	O-RING	1	SN:11001--@
22	799-101-5160	NIPPLE	1	SN:11001--@
23	07127-41010	HOSE	1	SN:11001--12022
24	07000-13032	O-RING	2	SN:11001--@
25	07371-31049	FLANGE	4	SN:11001--@

Printed By : Dwi Iswanto (airafather6107170)

HYDRAULIC PIPING (FLOW CONTROL VALVE TO CONTROL VALVE)(#11001-12022)

Item	Part No.	Description	Qty	Options
26	07372-21035	BOLT	8	SN:11001--@
27	01643-51032	WASHER	8	SN:11001--@
28	235-60-36410	JOINT	1	SN:11001--12022
29	01010-51025	BOLT	1	SN:11001--12022
30	01643-31032	WASHER	1	SN:11001--12022
31	233-60-34280	ELBOW	2	SN:11001--12022
32	237-60-22240	O-RING	2	SN:11001--@
33	07042-20108	PLUG	2	SN:11001--12022
34	07121-00604	HOSE	1	SN:11001--12022
35	235-60-36420	JOINT	1	SN:11001--12022
36	235-60-16680	ELBOW	1	SN:11001--@
37	235-60-15510	O-RING	1	SN:11001--@
38	07103-50212	HOSE	1	SN:11001--@
39	07235-10210	ELBOW	1	SN:11001--@
40	07002-11423	O-RING	1	SN:11001--@
41	235-60-33650	BRACKET	1	SN:11001--@
42	235-60-33660	PLATE	1	SN:11001--@
43	01010-51020	BOLT	4	SN:11001--@
44	01643-31032	WASHER	4	SN:11001--@
45	(235-60-11201)	VALVE ASS'Y,L.H.	1	SN:11001--12022
46	(235-60-11301)	VALVE ASS'Y,R.H.	1	SN:11001--12022
47	01010-51030	BOLT	6	SN:11001--12022
48	01643-31032	WASHER	6	SN:11001--12022
49	235-60-33130	PLUG	2	SN:11001--12022
50	237-60-22240	O-RING	2	SN:11001--12022

Printed By : Dwi Iswanto (airafather6107170)

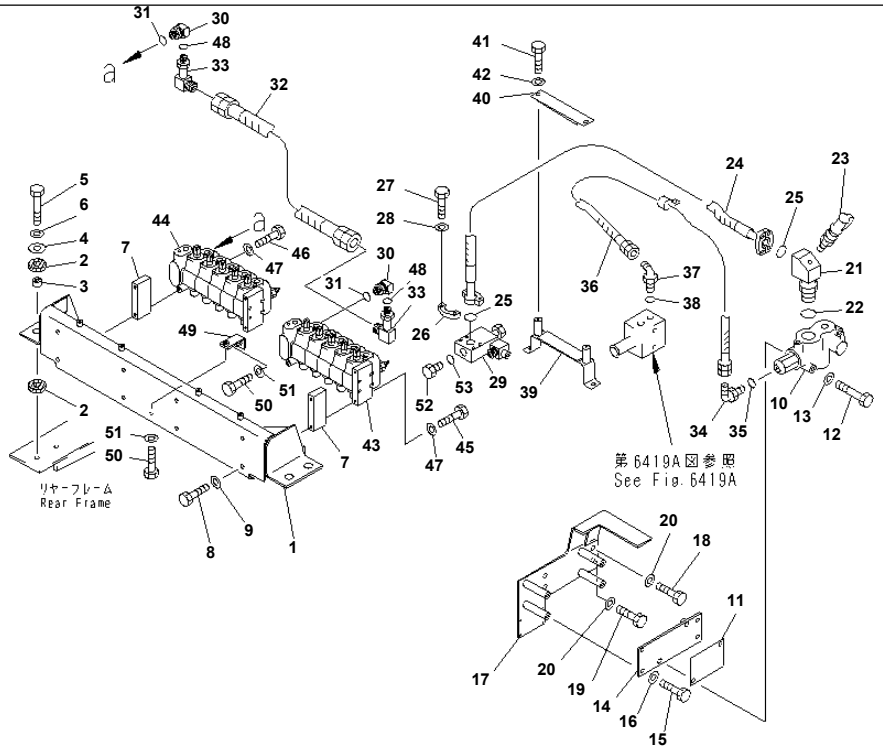

PR58173

GD825A-2 S/N 11001-UP

HYDRAULIC PIPING (FLOW CONTROL VALVE TO CONTROL VALVE)(#12023-)

Item	Part No.	Description	Qty	Options
1	235-60-35310	BRACKET	1	SN:12023--
2	235-60-15760	CUSHION	8	SN:11001--
3	235-60-35260	COLLAR	4	SN:11001--
4	235-60-15790	WASHER	8	SN:12095--
	235-60-15790	WASHER	4	SN:11001--12094
5	01010-51255	BOLT	4	SN:11001--
6	01643-31232	WASHER	4	SN:11001--
7	235-60-35320	PLATE	4	SN:12023--
8	01010-51025	BOLT	8	SN:11001--
9	01643-31032	WASHER	8	SN:11001--
10	(235-40-12202)	VALVE ASS'Y,FLOW CONTROL	1	SN:11009--
11	235-60-36260	SEAT	1	SN:11001--
12	01011-51200	BOLT	2	SN:11001--
13	01643-31232	WASHER	2	SN:11001--
14	235-60-36240	PLATE	1	SN:11001--
15	01010-51020	BOLT	4	SN:11001--
16	01643-31032	WASHER	4	SN:11001--
17	235-60-36250	BRACKET	1	SN:11001--
18	01010-51230	BOLT	3	SN:11001--
19	01010-51235	BOLT	1	SN:11001--
20	01643-31232	WASHER	4	SN:11001--
21	235-60-36180	ELBOW	1	SN:11001--
22	235-60-16590	O-RING	1	SN:11001--
23	799-101-5160	NIPPLE	1	SN:11001--
24	07126-41013	HOSE	1	SN:12023--
	273-60-24450	TUBE	1	SN:12095--

Printed By : Dwi Iswanto (airafather6107170)

HYDRAULIC PIPING (FLOW CONTROL VALVE TO CONTROL VALVE)(#12023-)

Item	Part No.	Description	Qty	Options
25	07000-13032	O-RING	2	SN:11001--
26	07371-31049	FLANGE	4	SN:11001--
27	07372-21035	BOLT	8	SN:11001--
28	01643-51032	WASHER	8	SN:11001--
29	235-60-35340	BLOCK	1	SN:12023--
30	235-60-36570	ELBOW	2	SN:12023--
31	237-60-22240	O-RING	2	SN:11001--
32	07121-40603	HOSE	1	SN:12023--
33	235-60-35360	JOINT	1	SN:12023--
34	235-60-16680	ELBOW	1	SN:11001--
35	235-60-15510	O-RING	1	SN:11001--
36	07103-50212	HOSE	1	SN:11001--
37	07235-10210	ELBOW	1	SN:11001--
38	07002-11423	O-RING	1	SN:11001--
39	235-60-33650	BRACKET	1	SN:11001--
40	235-60-33660	PLATE	1	SN:11001--
41	01010-51020	BOLT	4	SN:11001--
42	01643-31032	WASHER	4	SN:11001--
43	(235-60-35300)	VALVE ASS'Y,L.H.	1	SN:11001--
44	(235-60-35400)	VALVE ASS'Y,R.H.	1	SN:11001--
45	01010-81030	BOLT	4	SN:12023--
46	01010-81080	BOLT	2	SN:12023--
47	01643-31032	WASHER	6	SN:12023--
48	07002-12034	O-RING	2	SN:12023--
49	235-60-35430	BRACKET	1	SN:12023--
50	01010-81020	BOLT	2	SN:12023--
51	01643-31032	WASHER	2	SN:12023--
52	07040-12412	PLUG	1	SN:12023--
53	07002-12434	O-RING	1	SN:12023--

Printed By : Dwi Iswanto (airafather6107170)

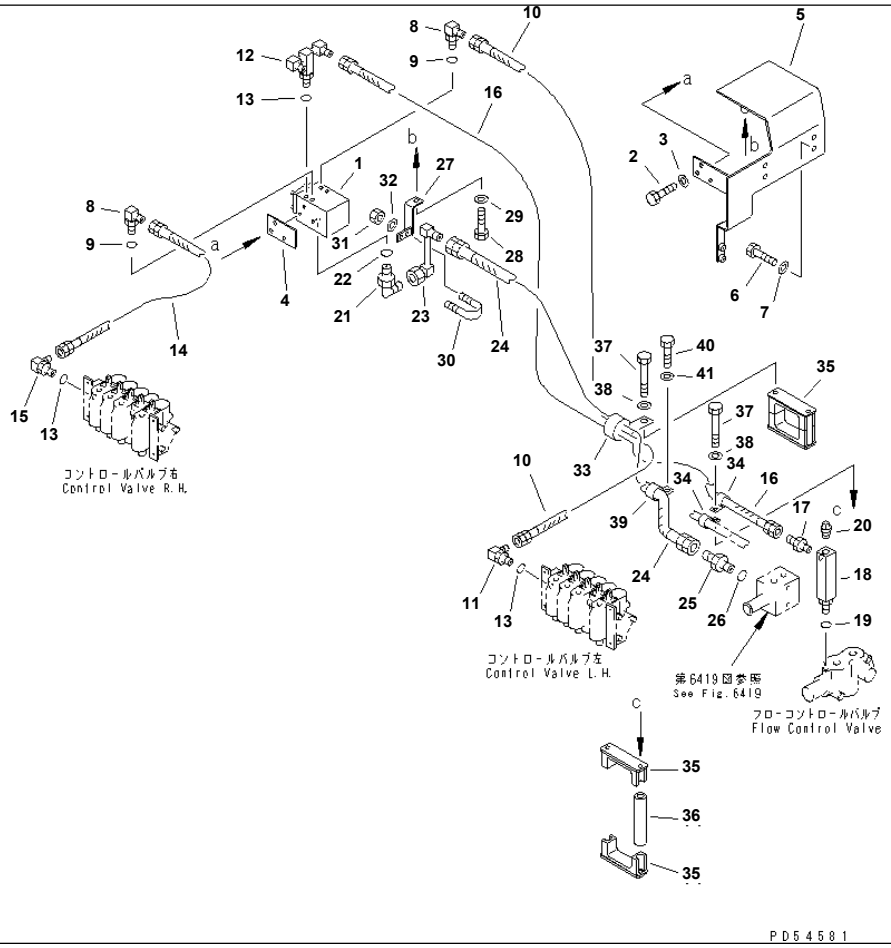

Ref. 6417 **Page 180440**

GD825A-2 S/N 11001-UP
HYDRAULIC PIPING (MAIN RELIEF VALVE TO CONTROL VALVE)(#11001-12022)

Item	Part No.	Description	Qty	Options
1	(235-60-11400)	VALVE ASS'Y,MAIN RELIEF	1	SN:11001--@
2	01010-51025	BOLT	3	SN:11001--@
3	01643-31032	WASHER	3	SN:11001--@
4	235-60-36370	PLATE	1	SN:11001--@
5	235-60-36360	BRACKET	1	SN:11001--@
6	01010-51230	BOLT	4	SN:11001--@
7	01643-31232	WASHER	4	SN:11001--@
8	235-60-36310	ELBOW	2	SN:11001--@
9	235-60-15490	O-RING	2	SN:11001--@
10	07121-40213	HOSE	1	SN:11001--12022
11	235-60-36310	ELBOW	1	SN:11001--@
12	235-60-36330	TEE	1	SN:11001--@
13	235-60-15490	O-RING	3	SN:11001--@
14	07121-40208	HOSE	1	SN:11001--12022
15	235-60-36310	ELBOW	1	SN:11001--@
16	07121-40215	HOSE	1	SN:11001--@
17	232-860-5560	NIPPLE	1	SN:11001--@
18	235-60-36380	ELBOW	1	SN:11001--@
19	235-60-15510	O-RING	1	SN:11001--@
20	07042-20108	PLUG	1	SN:11001--@
21	23A-60-16430	ELBOW	1	SN:11001--@
22	237-60-22240	O-RING	1	SN:11001--@
23	235-60-36340	TUBE	1	SN:11001--@
24	07103-50412	HOSE	1	SN:11001--@
25	07230-10422	UNION	1	SN:11001--@
26	07002-12034	O-RING	1	SN:11001--@

Printed By : Dwi Iswanto (airafather6107170)

HYDRAULIC PIPING (MAIN RELIEF VALVE TO CONTROL VALVE)(#11001-12022)

Item	Part No.	Description	Qty	Options
27	235-60-36350	BRACKET	1	SN:11001--@
28	01010-51020	BOLT	1	SN:11001--@
29	01643-31032	WASHER	1	SN:11001--@
30	07283-21529	CLIP	1	SN:11001--@
31	01598-00809	NUT	2	SN:11001--@
32	01643-30823	WASHER	2	SN:11001--@
33	235-60-36471	CLIP	1	SN:11001--@
34	04434-51910	CLIP	2	SN:11001--@
35	235-60-33410	BRACKET	4	SN:11001--@
36	235-60-33430	SPACER	4	SN:11001--@
37	01011-51040	BOLT	4	SN:11001--@
38	01643-31032	WASHER	4	SN:11001--@
39	04434-52711	CLIP	1	SN:11001--@
40	01010-51016	BOLT	1	SN:11001--@
41	01643-31032	WASHER	1	SN:11001--@

Printed By : Dwi Iswanto (airafather6107170)

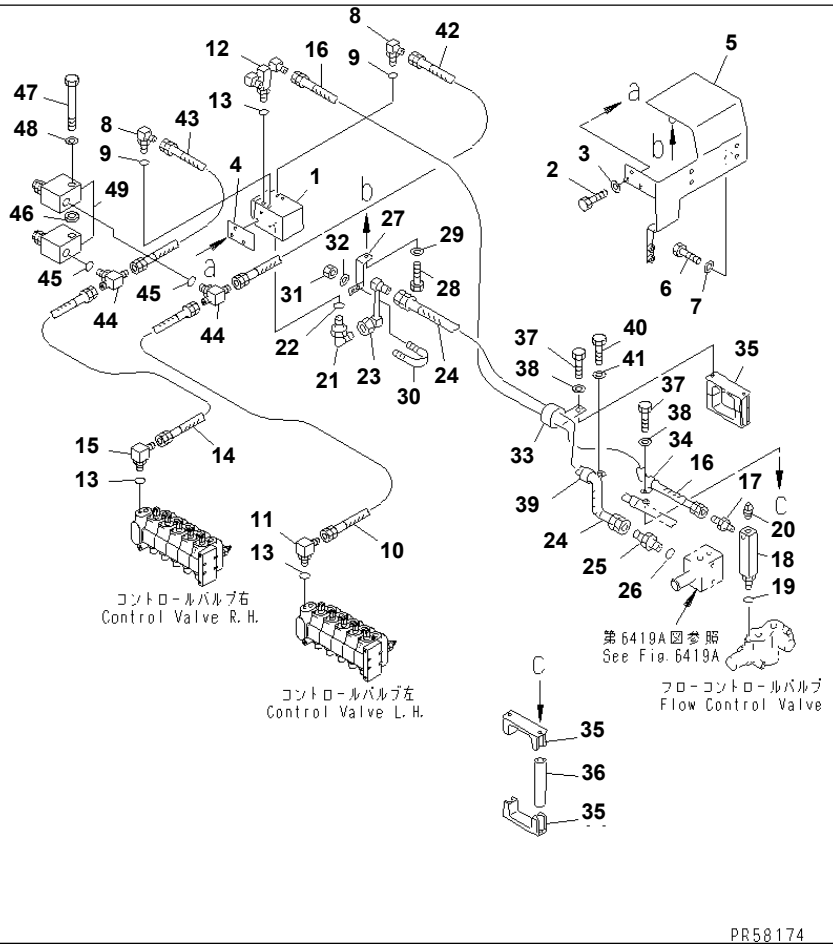

GD825A-2 S/N 11001-UP

HYDRAULIC PIPING (MAIN RELIEF VALVE TO CONTROL VALVE)(#12023-)

Item	Part No.	Description	Qty	Options
1	(235-60-11400)	VALVE ASS'Y,MAIN RELIEF	1	SN:11001--
2	01010-51025	BOLT	3	SN:11001--
3	01643-31032	WASHER	3	SN:11001--
4	235-60-36370	PLATE	1	SN:11001--
5	235-60-36360	BRACKET	1	SN:11001--
6	01010-51230	BOLT	4	SN:11001--
7	01643-31232	WASHER	4	SN:11001--
8	235-60-36310	ELBOW	2	SN:11001--
9	235-60-15490	O-RING	2	SN:11001--
10	07121-40209	HOSE	1	SN:12023--
11	235-60-36310	ELBOW	1	SN:11001--
12	235-60-36330	TEE	1	SN:11001--
13	235-60-15490	O-RING	3	SN:11001--
14	07121-40205	HOSE	1	SN:12023--
15	235-60-36310	ELBOW	1	SN:11001--
16	07121-40215	HOSE	1	SN:11001--
	235-60-17120	TUBE	1	SN:12095--
17	232-860-5560	NIPPLE	1	SN:11001--
18	235-60-36380	ELBOW	1	SN:11001--
19	235-60-15510	O-RING	1	SN:11001--
20	07042-20108	PLUG	1	SN:11001--
21	23A-60-16430	ELBOW	1	SN:11001--
22	237-60-22240	O-RING	1	SN:11001--
23	235-60-36340	TUBE	1	SN:11001--
24	07103-50412	HOSE	1	SN:11001--
25	07230-10422	UNION	1	SN:11001--
26	07002-12034	O-RING	1	SN:11001--

Printed By : Dwi Iswanto (airafather6107170)

HYDRAULIC PIPING (MAIN RELIEF VALVE TO CONTROL VALVE)(#12023-)

Item	Part No.	Description	Qty	Options
27	235-60-36350	BRACKET	1	SN:11001--
28	01010-51020	BOLT	1	SN:11001--
29	01643-31032	WASHER	1	SN:11001--
30	07283-21529	CLIP	1	SN:11001--
31	01598-00809	NUT	2	SN:11001--
32	01643-30823	WASHER	2	SN:11001--
33	235-60-36471	CLIP	1	SN:11001--
34	08036-01814	CLIP	2	SN:12095--
	□04434-51910	CLIP	2	SN:11001--12094
35	235-60-33410	BRACKET	4	SN:11001--
36	235-60-33430	SPACER	4	SN:11001--
37	01011-51040	BOLT	4	SN:11001--
38	01643-31032	WASHER	4	SN:11001--
39	08036-02514	CLIP	1	SN:12095--
	□04434-52711	CLIP	1	SN:11001--12094
40	01010-51016	BOLT	1	SN:11001--
41	01643-31032	WASHER	1	SN:11001--
42	07121-40205	HOSE	1	SN:12023--
	273-60-14650	TUBE	1	SN:12095--
43	07121-40204	HOSE	1	SN:12023--
44	235-60-36290	TEE	2	SN:12023--
45	235-60-15490	O-RING	2	SN:12023--
46	235-60-35380	PLATE	1	SN:12023--
47	10E-60-25120	BOLT	1	SN:12023--
48	01643-30823	WASHER	1	SN:12023--
49	235-60-35390	BLOCK,VALVE	2	SN:12023--

Printed By : Dwi Iswanto (airafather6107170)

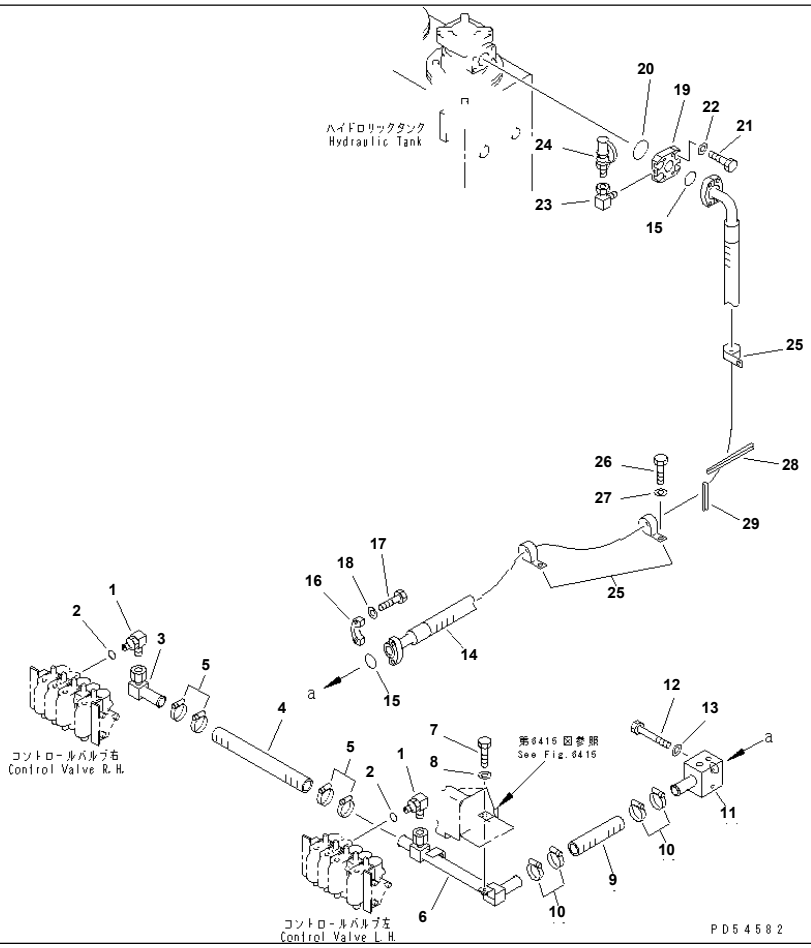

Ref. 6419 **Page 180460**

GD825A-2 S/N 11001-UP
HYDRAULIC PIPING (CONTROL VALVE DRAIN LINE)(#11001-12022)

Item	Part No.	Description	Qty	Options
1	232-40-58310	ELBOW	2	SN:11001--12022
2	238-40-16140	O-RING	2	SN:11001--@
3	235-60-36430	JOINT	1	SN:11001--12022
4	07260-03240	HOSE	1	SN:11001--12022
5	07281-00549	CLAMP	4	SN:11001--@
6	235-60-36440	TUBE	1	SN:11001--12022
7	01010-51025	BOLT	1	SN:11001--12022
8	01643-31032	WASHER	1	SN:11001--@
9	07260-03220	HOSE	1	SN:11001--12022
10	07281-00549	CLAMP	4	SN:11001--@
11	235-60-36460	BLOCK	1	SN:11001--@
12	01010-51095	BOLT	2	SN:11001--@
13	01643-31032	WASHER	2	SN:11001--@
14	07298-41424	HOSE	1	SN:11001--@
15	07000-13048	O-RING	2	SN:11001--@
16	07371-31465	FLANGE	4	SN:11001--@
17	07372-21240	BOLT	8	SN:11001--@
18	01643-51232	WASHER	8	SN:11001--@
19	235-60-36480	FLANGE	1	SN:11001--@
20	07000-12060	O-RING	1	SN:11001--@
21	01010-51225	BOLT	4	SN:11001--@
22	01643-31232	WASHER	4	SN:11001--@
23	234-975-9370	ELBOW	1	SN:11001--@
24	799-101-5160	NIPPLE	1	SN:11001--@
25	235-60-36471	CLIP	3	SN:11001--@
26	01010-51020	BOLT	3	SN:11001--@
27	01643-31032	WASHER	3	SN:11001--@

Printed By : Dwi Iswanto (airafather6107170)

HYDRAULIC PIPING (CONTROL VALVE DRAIN LINE)(#11001-12022)

Item	Part No.	Description	Qty	Options
28	235-60-36530	RUBBER	1	SN:11001--@
29	235-60-36540	RUBBER	1	SN:11001--@

Printed By : Dwi Iswanto (airafather6107170)

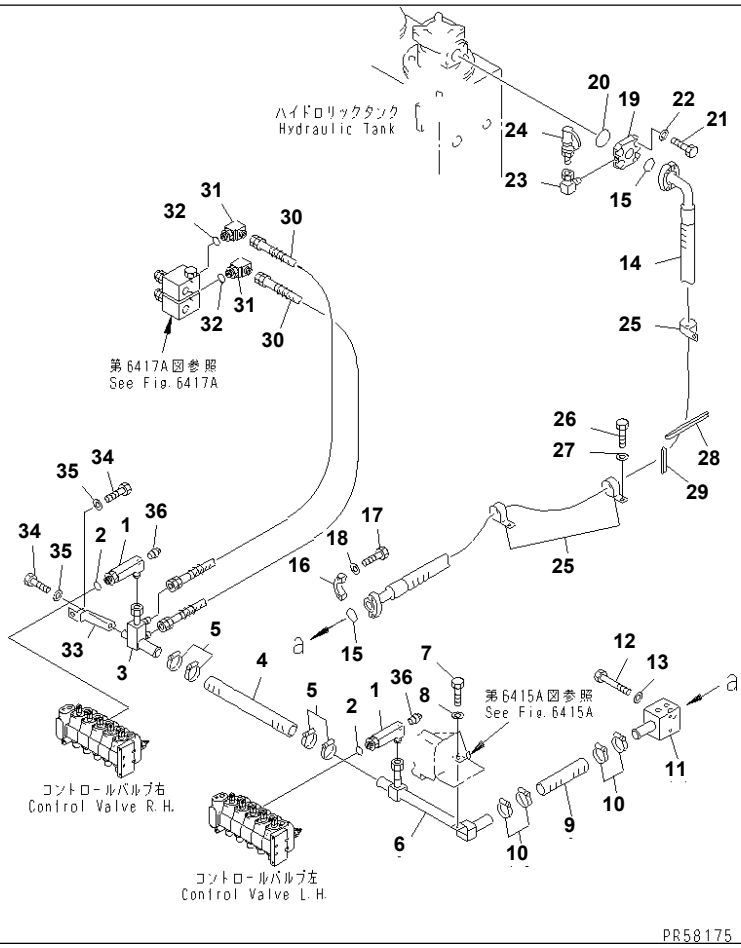

Ref. 6419A **Page 180470**

GD825A-2 S/N 11001-UP

HYDRAULIC PIPING (CONTROL VALVE DRAIN LINE)(#12023-)

Item	Part No.	Description	Qty	Options
1	235-60-36610	ELBOW	2	SN:12023--
2	238-40-16140	O-RING	2	SN:11001--
3	235-60-36630	BLOCK	1	SN:12023--
4	07260-03245	HOSE	1	SN:12023--
5	07281-00549	CLAMP	4	SN:11001--
6	235-60-36620	TUBE	1	SN:12023--
7	01010-81025	BOLT	1	SN:11001--
8	01643-31032	WASHER	1	SN:11001--
9	07260-03216	HOSE	1	SN:12023--
10	07281-00489	CLAMP	4	SN:12095--
	□07281-00549	CLAMP	4	SN:11001--
11	235-60-36460	BLOCK	1	SN:11001--
12	01010-51095	BOLT	2	SN:11001--
13	01643-31032	WASHER	2	SN:11001--
14	07298-41424	HOSE	1	SN:11001--
15	07000-13048	O-RING	2	SN:11001--
16	07371-31465	FLANGE	4	SN:11001--
17	07372-21240	BOLT	8	SN:11001--
18	01643-51232	WASHER	8	SN:11001--
19	235-60-36480	FLANGE	1	SN:11001--
20	07000-12060	O-RING	1	SN:11001--
21	01010-51225	BOLT	4	SN:11001--
22	01643-31232	WASHER	4	SN:11001--
23	234-975-9370	ELBOW	1	SN:11001--
24	799-101-5160	NIPPLE	1	SN:11001--
25	235-60-36471	CLIP	3	SN:11001--
26	01010-51020	BOLT	3	SN:11001--

Ref. 6419A **Page 180470**

HYDRAULIC PIPING (CONTROL VALVE DRAIN LINE)(#12023-)

Item	Part No.	Description	Qty	Options
27	01643-31032	WASHER	3	SN:11001--
28	235-60-36530	RUBBER	1	SN:11001--
29	235-60-36540	RUBBER	1	SN:11001--
30	07103-50205	HOSE	2	SN:12023--
31	235-60-15380	ELBOW	2	SN:12023--
32	235-60-15490	O-RING	2	SN:12023--
33	235-60-35330	BRACKET	1	SN:12023--
34	01010-81020	BOLT	2	SN:12023--
35	01643-31032	WASHER	2	SN:12023--
36	07042-20108	PLUG	2	SN:12023--

Printed By : Dwi Iswanto (airafather6107170)

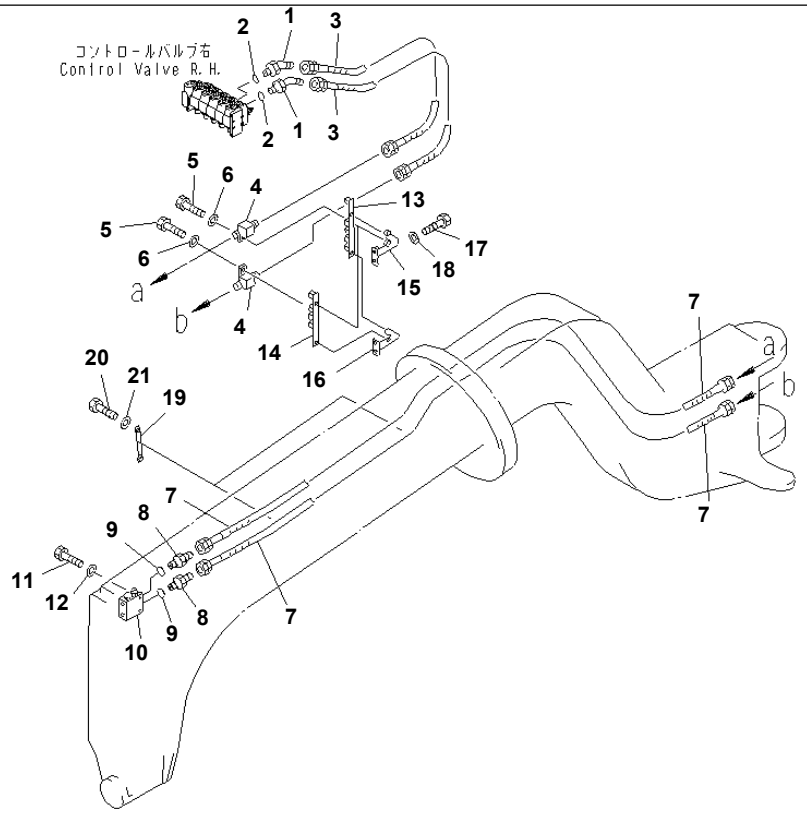

GD825A-2 S/N 11001-UP

HYDRAULIC PIPING (LEANING CYLINDER LINE) (1/2)

Item	Part No.	Description	Qty	Options
1	235-60-35420	ELBOW	2	SN:12023--
	235-60-33120	ELBOW	2	SN:11001--12022
2	237-60-22240	O-RING	2	SN:11001--
3	07121-40313	HOSE	2	SN:11001--
4	235-60-33630	NIPPLE	2	SN:11001--
5	01010-51030	BOLT	2	SN:11001--
6	01643-31032	WASHER	2	SN:11001--
7	07121-00362	HOSE	2	SN:11001--
8	07230-10315	UNION	2	SN:11001--
9	07002-12034	O-RING	2	SN:11001--
10	(235-61-16200)	VALVE ASS'Y,PILOT CHECK	1	SN:11001--
11	01010-50855	BOLT	2	SN:11001--
12	01643-30823	WASHER	2	SN:11001--
13	235-60-33470	BRACKET	1	SN:11001--
14	235-60-33460	BRACKET	1	SN:11001--
15	235-60-33620	BRACKET,UPPER	1	SN:11001--
16	235-60-33610	BRACKET,LOWER	1	SN:11001--
17	01010-51230	BOLT	8	SN:11001--
18	01643-31232	WASHER	8	SN:11001--
19	235-60-33241	PLATE	2	SN:11001--
20	01010-51025	BOLT	4	SN:11001--
21	01643-31032	WASHER	4	SN:11001--

Printed By : Dwi Iswanto (airafather6107170)

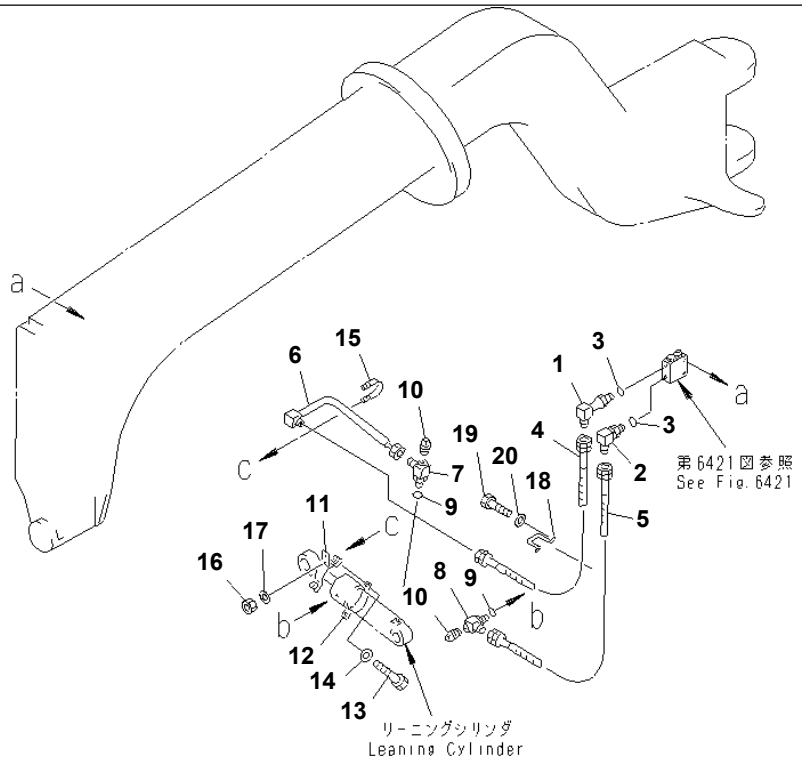

PR58176

GD825A-2 S/N 11001-UP

HYDRAULIC PIPING (LEANING CYLINDER LINE) (2/2)(#11001-12050)

Item	Part No.	Description	Qty	Options
1	238-60-14251	ELBOW	1	SN:11001--12050
2	07235-10315	ELBOW	1	SN:11001--12050
3	07002-12034	O-RING	2	SN:11001--@
4	07121-40313	HOSE	1	SN:11006--12050
	07121-00312	HOSE	1	SN:11001--11005
5	07121-40313	HOSE	1	SN:11006--12050
	07121-00314	HOSE	1	SN:11001--11005
6	235-60-13780	TUBE	1	SN:11001--@
7	07235-50422	ELBOW	1	SN:11001--@
8	07235-50315	ELBOW	1	SN:11001--@
9	07002-12034	O-RING	2	SN:11001--@
10	07042-20108	PLUG	2	SN:11001--@
11	235-60-14340	CLIP	1	SN:11001--@
12	232-63-63290	BAND	1	SN:11001--@
13	01010-50830	BOLT	2	SN:11001--@
14	01643-30823	WASHER	2	SN:11001--@
15	07283-21529	CLIP	1	SN:11001--@
16	01598-00809	NUT	2	SN:11001--@
17	01643-30823	WASHER	2	SN:11001--@
18	235-40-13370	CLIP	1	SN:11001--12050
19	01010-50816	BOLT	2	SN:11001--@
20	01643-30823	WASHER	2	SN:11001--@

Printed By : Dwi Iswanto (airafather6107170)

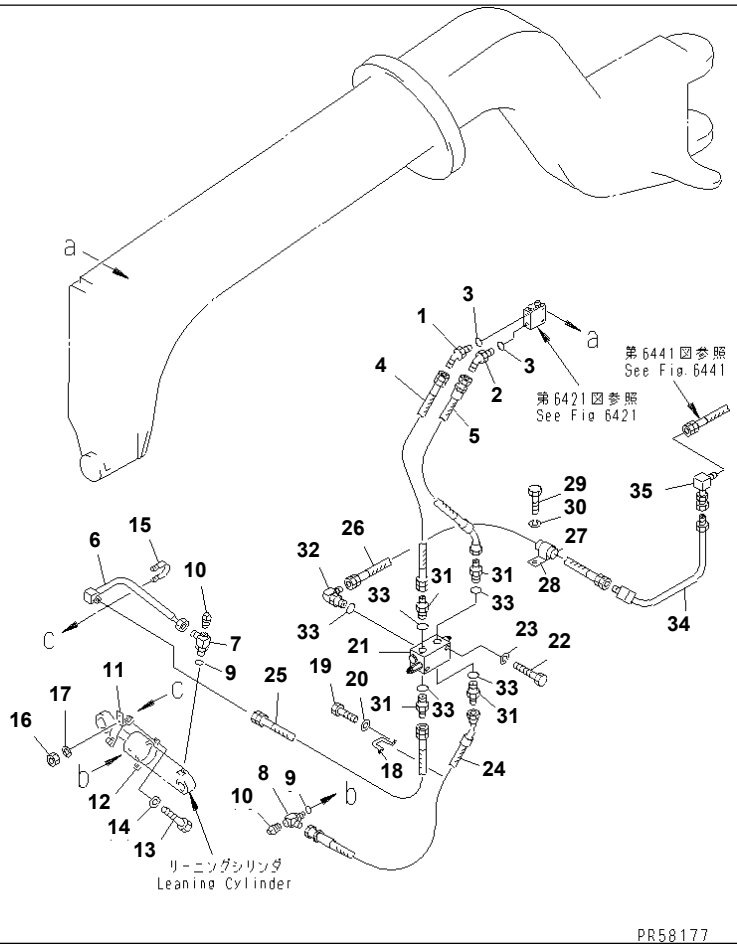

Ref. 6422A **Page 180500**

GD825A-2 S/N 11001-UP

HYDRAULIC PIPING (LEANING CYLINDER LINE) (2/2)(#12051-12102)

Item	Part No.	Description	Qty	Options
1	07236-10315	ELBOW	1	SN:12051--@
2	07236-10315	ELBOW	1	SN:12051--@
3	07002-12034	O-RING	2	SN:11001--@
4	07121-40304	HOSE	1	SN:12051--@
5	235-60-33730	HOSE	1	SN:12051--@
6	235-60-13780	TUBE	1	SN:11001--12102
7	07235-50422	ELBOW	1	SN:11001--12102
8	07235-50315	ELBOW	1	SN:11001--12102
9	07002-12034	O-RING	2	SN:11001--12102
10	07042-20108	PLUG	2	SN:11001--12102
11	235-60-14340	CLIP	1	SN:11001--12102
12	232-63-63290	BAND	1	SN:11001--12102
13	01010-50830	BOLT	2	SN:11001--12102
14	01643-30823	WASHER	2	SN:11001--12102
15	07283-21529	CLIP	1	SN:11001--12102
16	01598-00809	NUT	2	SN:11001--12102
17	01643-30823	WASHER	2	SN:11001--12102
18	235-60-33720	CLIP	1	SN:12051--@
19	01010-50816	BOLT	2	SN:11001--@
20	01643-30823	WASHER	2	SN:11001--@
21	235-61-31100	VALVE,RELIEF	1	SN:12051--@
22	01010-80890	BOLT	2	SN:12051--@
23	01643-30823	WASHER	2	SN:12051--@
24	235-60-33740	HOSE	1	SN:12051--@
25	07121-40307	HOSE	1	SN:12051--@
26	07103-50308	HOSE	1	SN:12051--@
27	07095-20420	CUSHION	1	SN:12051--@

Printed By : Dwi Iswanto (airafather6107170)

HYDRAULIC PIPING (LEANING CYLINDER LINE) (2/2)(#12051-12102)

Item	Part No.	Description	Qty	Options
28	04434-52711	CLIP	1	SN:12051--@
29	01010-81016	BOLT	1	SN:12051--@
30	01643-31032	WASHER	1	SN:12051--@
31	237-60-23120	NIPPLE	4	SN:12051--@
32	237-60-24110	ELBOW	1	SN:12051--@
33	07000-12018	O-RING	5	SN:12051--@
34	235-60-33280	TUBE	1	SN:12051--@
35	23E-60-14710	TUBE	1	SN:12051--@

Printed By : Dwi Iswanto (airafather6107170)

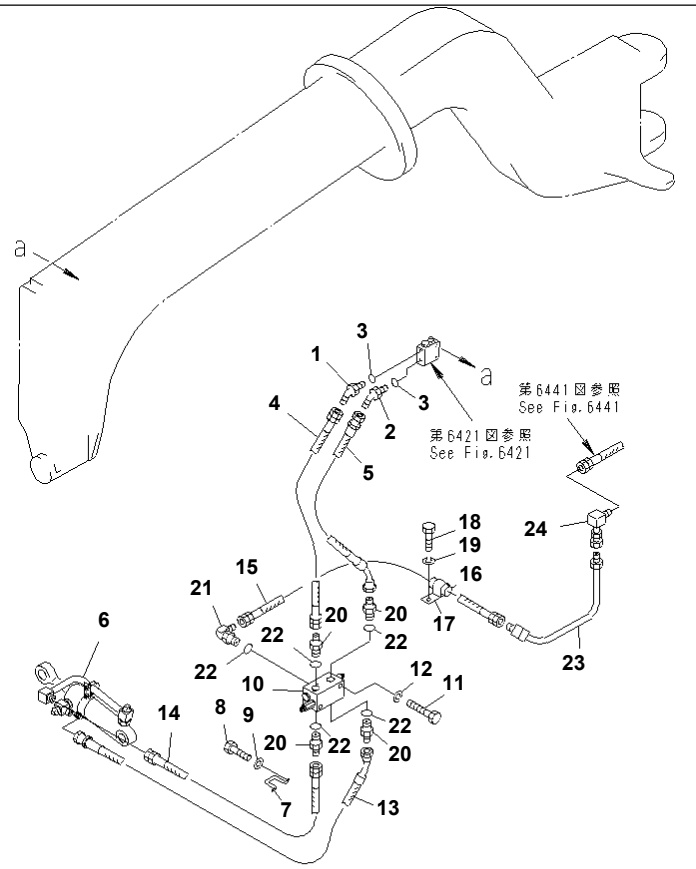

HYDRAULIC PIPING (LEANING CYLINDER LINE) (2/2)(#12103-)

Item	Part No.	Description	Qty	Options
1	07236-10315	ELBOW	1	SN:12051--
2	07236-10315	ELBOW	1	SN:12051--
3	07002-12034	O-RING	2	SN:11001--
4	07121-40304	HOSE	1	SN:12051--
5	235-60-33730	HOSE	1	SN:12051--
6	(707-00-X7E10)	CYLINDER GROUP	1	SN:12103--
7	235-60-33720	CLIP	1	SN:12051--
8	01010-50816	BOLT	2	SN:11001--
9	01643-30823	WASHER	2	SN:11001--
10	235-61-31100	VALVE,RELIEF	1	SN:12051--
11	01010-80890	BOLT	2	SN:12051--
12	01643-30823	WASHER	2	SN:12051--
13	235-60-33740	HOSE	1	SN:12051--
14	07121-40307	HOSE	1	SN:12051--
15	07103-50308	HOSE	1	SN:12051--
16	07095-20420	CUSHION	1	SN:12051--
17	04434-52711	CLIP	1	SN:12051--
18	01010-81016	BOLT	1	SN:12051--
19	01643-31032	WASHER	1	SN:12051--
20	237-60-23120	NIPPLE	4	SN:12051--
21	237-60-24110	ELBOW	1	SN:12051--
22	07000-12018	O-RING	5	SN:12051--
23	235-60-33280	TUBE	1	SN:12051--
24	23E-60-14710	TUBE	1	SN:12051--

Printed By : Dwi Iswanto (airafather6107170)

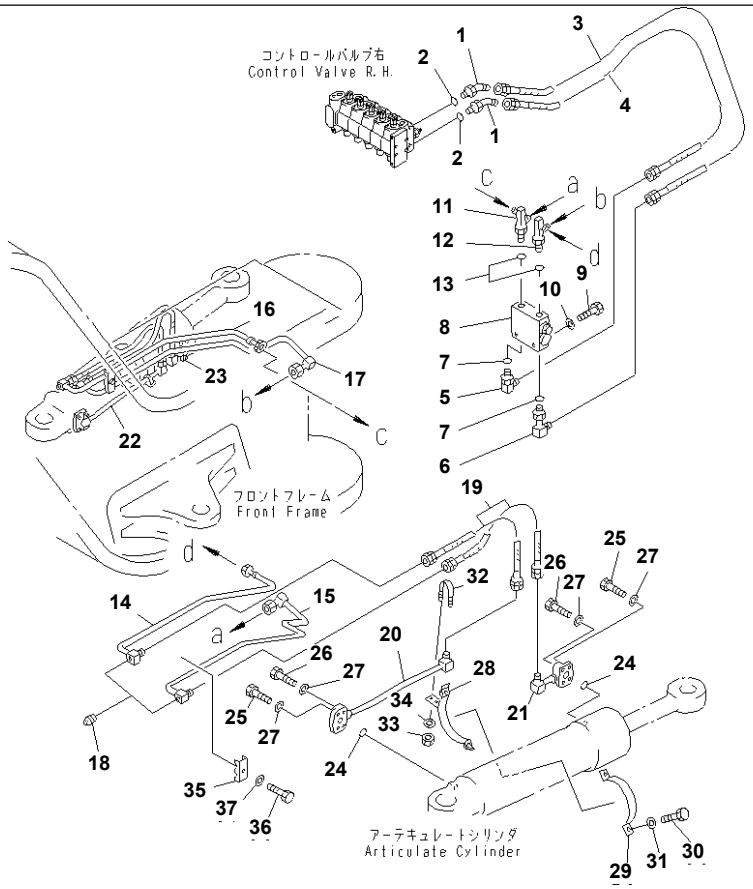

Ref. 6423 Page 180520

GD825A-2 S/N 11001-UP

HYDRAULIC PIPING (ARTICULATE CYLINDER LINE)(#11001-12102)

Item	Part No.	Description	Qty	Options
1	235-60-35420	ELBOW	2	SN:12023--@
	235-60-33120	ELBOW	2	SN:11001--12022
2	237-60-22240	O-RING	2	SN:11001--@
3	07121-40314	HOSE	1	SN:11001--@
4	07121-40315	HOSE	1	SN:11001--@
5	07235-10315	ELBOW	1	SN:11001--@
6	238-60-14251	ELBOW	1	SN:11001--@
7	07002-12034	O-RING	2	SN:11001--@
8	(235-61-16100)	VALVE ASS'Y,PILOT CHECK	1	SN:11001--@
9	01010-50855	BOLT	2	SN:11001--@
10	01643-30823	WASHER	2	SN:11001--@
11	235-60-13690	ELBOW	1	SN:11001--@
12	235-60-13680	ELBOW	1	SN:11001--@
13	07002-12034	O-RING	2	SN:11001--@
14	235-60-35150	TUBE	1	SN:11001--@
15	235-60-35160	TUBE	1	SN:11001--@
16	235-60-35140	TUBE	1	SN:11001--@
17	235-60-35170	TUBE	1	SN:11001--@
18	07042-20108	PLUG	4	SN:11001--@
19	07121-00305	HOSE	4	SN:11001--@
20	235-60-14660	TUBE	1	SN:11001--12102
21	235-60-17760	TUBE	1	SN:11001--12102
22	235-60-14650	TUBE	1	SN:11001--12102
23	235-60-17770	TUBE	1	SN:11001--12102
24	07000-13030	O-RING	4	SN:11001--12102
25	01010-50835	BOLT	8	SN:11001--12102
26	01010-50845	BOLT	8	SN:11001--12102

Ref. 6423 Page 180520

HYDRAULIC PIPING (ARTICULATE CYLINDER LINE)(#11001-12102)

Item	Part No.	Description	Qty	Options
27	01643-30823	WASHER	16	SN:11001--12102
28	235-60-13871	BAND	2	SN:11001--12102
29	235-60-14261	BAND	2	SN:11001--12102
30	01010-50830	BOLT	4	SN:11001--12102
31	01643-30823	WASHER	4	SN:11001--12102
32	07283-21529	CLIP	2	SN:11001--12102
33	01598-00809	NUT	4	SN:11001--12102
34	01643-30823	WASHER	4	SN:11001--12102
35	234-60-33240	CLIP	2	SN:11001--@
36	01010-51035	BOLT	2	SN:11001--@
37	01643-31032	WASHER	2	SN:11001--@

Printed By : Dwi Iswanto (airafather6107170)

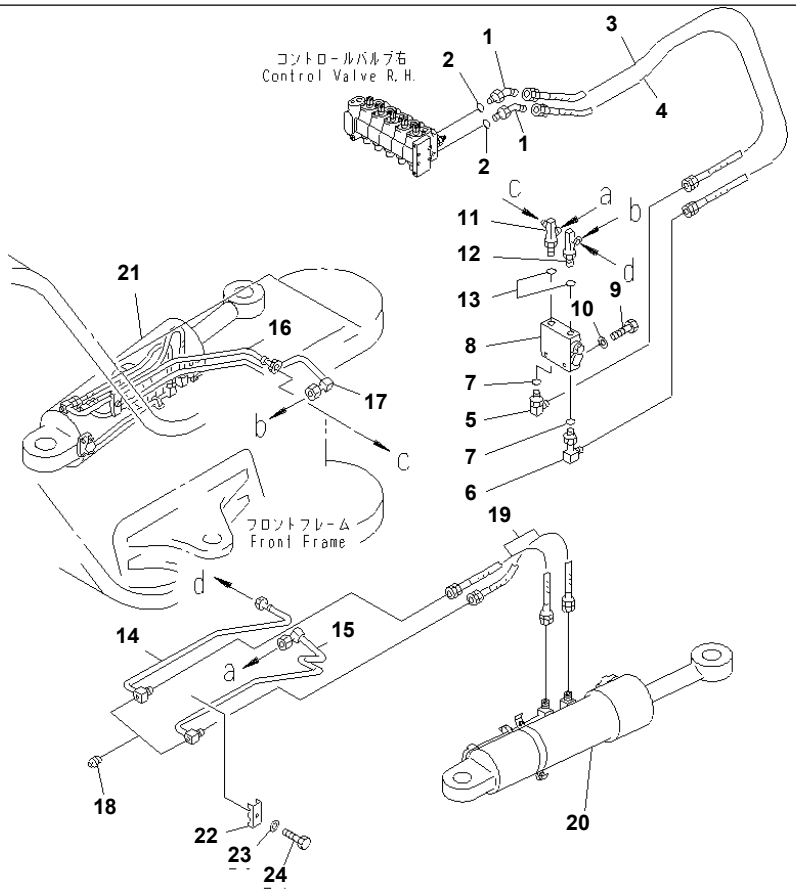

Ref. 6423A **Page 180530**

GD825A-2 S/N 11001-UP
HYDRAULIC PIPING (ARTICULATE CYLINDER LINE)(#12103-)

Item	Part No.	Description	Qty	Options
1	235-60-35420	ELBOW	2	SN:12023--
2	237-60-22240	O-RING	2	SN:11001--
3	07121-40314	HOSE	1	SN:11001--
4	07121-40315	HOSE	1	SN:11001--
5	07235-10315	ELBOW	1	SN:11001--
6	238-60-14251	ELBOW	1	SN:11001--
7	07002-12034	O-RING	2	SN:11001--
8	(235-61-16100)	VALVE ASS'Y,PILOT CHECK	1	SN:11001--
9	01010-50855	BOLT	2	SN:11001--
10	01643-30823	WASHER	2	SN:11001--
11	235-60-13690	ELBOW	1	SN:11001--
12	235-60-13680	ELBOW	1	SN:11001--
13	07002-12034	O-RING	2	SN:11001--
14	235-60-35150	TUBE	1	SN:11001--
15	235-60-35160	TUBE	1	SN:11001--
16	235-60-35140	TUBE	1	SN:11001--
17	235-60-35170	TUBE	1	SN:11001--
18	07042-20108	PLUG	4	SN:11001--
19	07121-00305	HOSE	4	SN:11001--
20	(707-01-X7480)	CYLINDER GROUP,ARTICULATE¤ L.H.	1	SN:12103--
21	(707-01-X7490)	CYLINDER GROUP,ARTICULATE¤ R.H.	1	SN:12103--
22	234-60-33240	CLIP	2	SN:11001--
23	01010-51035	BOLT	2	SN:11001--
24	01643-31032	WASHER	2	SN:11001--

Printed By : Dwi Iswanto (airafather6107170)

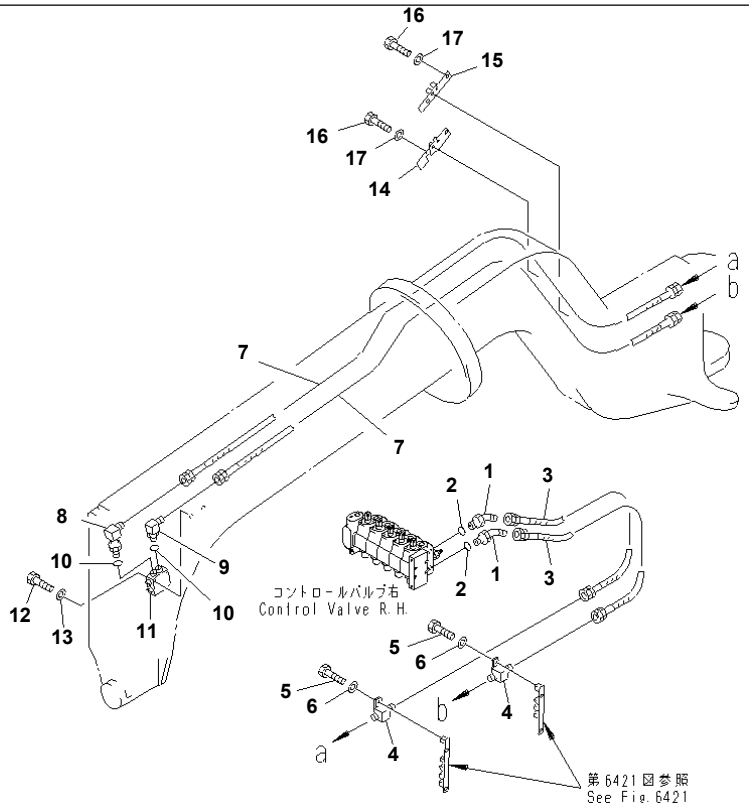

PR54585

GD825A-2 S/N 11001-UP

HYDRAULIC PIPING (DRAWBAR SIDE SHIFT CYLINDER LINE) (1/2)

Item	Part No.	Description	Qty	Options
1	235-60-35420	ELBOW	2	SN:12023--
	235-60-33120	ELBOW	2	SN:11001--12022
2	237-60-22240	O-RING	2	SN:11001--
3	07121-40312	HOSE	2	SN:11001--
4	235-60-33630	NIPPLE	2	SN:11001--
5	01010-51030	BOLT	2	SN:11001--
6	01643-31032	WASHER	2	SN:11001--
7	07121-00360	HOSE	2	SN:11001--
8	238-60-14251	ELBOW	1	SN:11001--
9	07235-10315	ELBOW	1	SN:11001--
10	07002-12034	O-RING	2	SN:11001--
11	(235-61-16200)	VALVE ASS'Y,PILOT CHECK	1	SN:11001--
12	01010-50855	BOLT	2	SN:11001--
13	01643-30823	WASHER	2	SN:11001--
14	235-60-33550	BRACKET	1	SN:11001--
15	235-60-33560	BRACKET	1	SN:11001--
16	01010-51025	BOLT	4	SN:11001--
17	01643-31032	WASHER	4	SN:11001--

Printed By : Dwi Iswanto (airafather6107170)

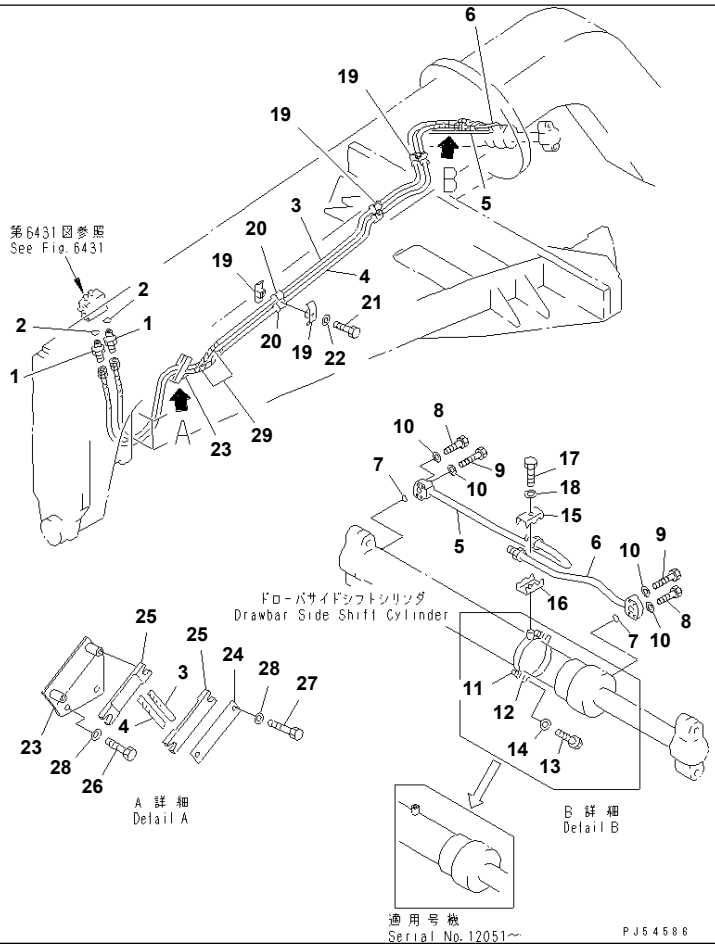

GD825A-2 S/N 11001-UP

HYDRAULIC PIPING (DRAWBAR SIDE SHIFT CYLINDER LINE) (2/2)(#11001-12102)

Item	Part No.	Description	Qty	Options
1	07230-10315	UNION	2	SN:11001--@
2	07002-12034	O-RING	2	SN:11001--@
3	07121-40345	HOSE	1	SN:11001--@
4	07121-40346	HOSE	1	SN:11001--@
5	235-60-14311	TUBE	1	SN:11001--12102
6	235-60-14291	TUBE	1	SN:11001--12102
7	07000-13025	O-RING	2	SN:11001--12102
8	01010-80830	BOLT	4	SN:11001--12102
9	01010-80840	BOLT	4	SN:11001--12102
10	01643-30823	WASHER	8	SN:11001--12102
11	235-60-14321	BAND	1	SN:11001--12050
12	235-60-17790	BAND	1	SN:11001--12050
13	01010-50830	BOLT	2	SN:11001--12050
14	01643-30823	WASHER	2	SN:11001--12050
15	232-60-54830	CLIP	1	SN:11001--12102
16	235-60-34310	CLAMP	1	SN:12051--12102
	232-60-54830	CLIP	1	SN:11001--12050
17	01010-81055	BOLT	1	SN:12051--12102
	01010-51045	BOLT	1	SN:11001--12050
18	01643-31032	WASHER	1	SN:11001--12102
19	07094-20417	CLAMP	6	SN:11001--@
20	07095-00420	CUSHION	6	SN:11001--@
21	01010-81260	BOLT	3	SN:12051--@
	01010-51265	BOLT	3	SN:11001--12050
22	01643-31232	WASHER	3	SN:11001--@
23	235-60-34120	PLATE	1	SN:11001--@

Printed By : Dwi Iswanto (airafather6107170)

HYDRAULIC PIPING (DRAWBAR SIDE SHIFT CYLINDER LINE) (2/2)(#11001-12102)

Item	Part No.	Description	Qty	Options
24	235-60-34150	PLATE	1	SN:11001--@
25	235-60-34140	CLAMP	2	SN:11001--@
26	01010-51020	BOLT	2	SN:11001--@
27	01010-51030	BOLT	2	SN:11001--@
28	01643-31032	WASHER	4	SN:11001--@
29	238-60-41370	TUBE,SPIRAL	2	SN:11001--@

Printed By : Dwi Iswanto (airafather6107170)

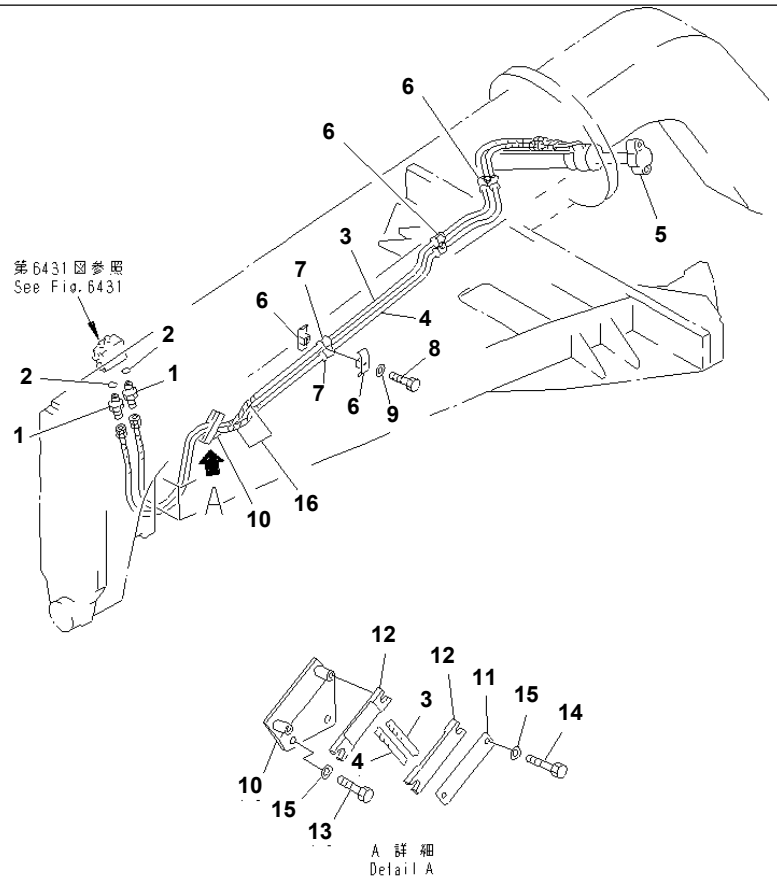

PJ2D481

GD825A-2 S/N 11001-UP

HYDRAULIC PIPING (DRAWBAR SIDE SHIFT CYLINDER LINE) (2/2)(#12103-)

Item	Part No.	Description	Qty	Options
1	07230-10315	UNION	2	SN:11001--
2	07002-12034	O-RING	2	SN:11001--
3	07121-40345	HOSE	1	SN:11001--
4	07121-40346	HOSE	1	SN:11001--
5	(707-04-XZ030)	CYLINDER GROUP,DRAWBAR SIDE SHIFT	1	SN:12103--
6	07094-30417	CLAMP	6	SN:12107--
	07094-20417	CLAMP	6	SN:11001--12106
7	07095-00420	CUSHION	6	SN:11001--
8	01010-81260	BOLT	3	SN:12051--
9	01643-31232	WASHER	3	SN:11001--
10	235-60-34120	PLATE	1	SN:11001--
11	235-60-34150	PLATE	1	SN:11001--
12	235-60-34140	CLAMP	2	SN:11001--
13	01010-51020	BOLT	2	SN:11001--
14	01010-51030	BOLT	2	SN:11001--
15	01643-31032	WASHER	4	SN:11001--
16	238-60-41370	TUBE,SPIRAL	2	SN:11001--

Printed By : Dwi Iswanto (airafather6107170)

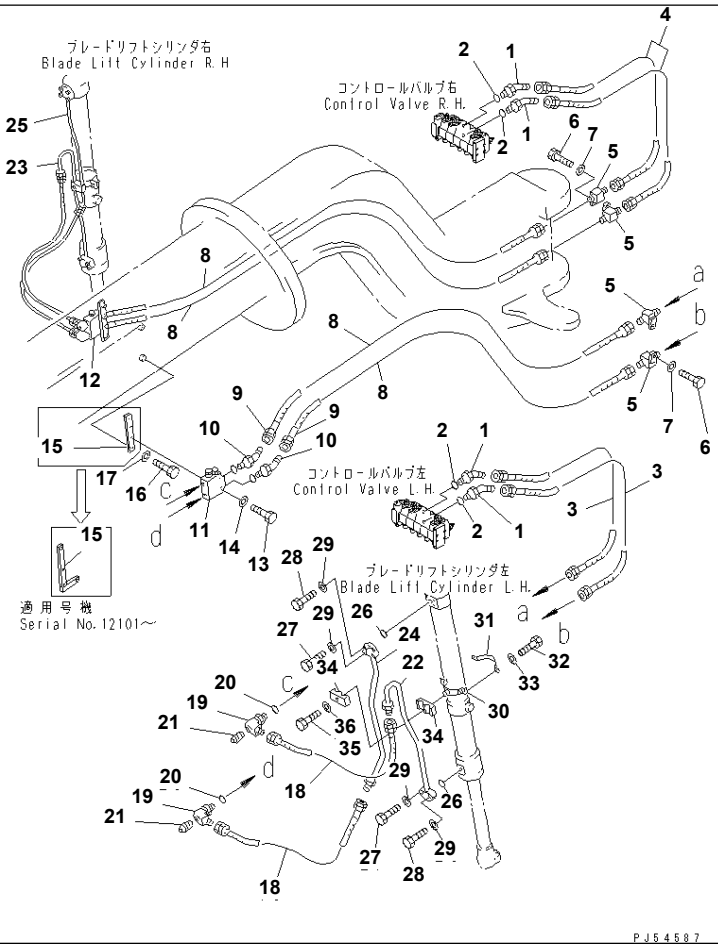

GD825A-2 S/N 11001-UP

HYDRAULIC PIPING (BLADE LIFT CYLINDER LINE)(#11001-12102)

Item	Part No.	Description	Qty	Options
1	235-60-35420	ELBOW	4	SN:12023--@
	235-60-33120	ELBOW	4	SN:11001--12022
2	237-60-22240	O-RING	4	SN:11001--@
3	07121-40315	HOSE	2	SN:11001--@
4	07121-40314	HOSE	2	SN:11001--@
5	235-60-33630	NIPPLE	4	SN:11001--@
6	01010-51030	BOLT	4	SN:11001--@
7	01643-31032	WASHER	4	SN:11001--@
8	07121-00336	HOSE	4	SN:11001--@
9	233-60-24461	ELBOW	4	SN:11001--@
10	07002-12034	O-RING	4	SN:11001--@
11	(235-61-13400)	VALVE ASS'Y,PILOT CHECK¤ L.H.	1	SN:11001--@
12	(235-61-12300)	VALVE ASS'Y,PILOT CHECK¤ R.H.	1	SN:11001--@
13	01010-50855	BOLT	4	SN:11001--@
14	01643-30823	WASHER	4	SN:11001--@
15	235-60-14730	BRACKET	2	SN:12101--@
	235-60-13840	SEAT	2	SN:11001--12100
16	01010-51035	BOLT	4	SN:11001--@
17	01643-31032	WASHER	4	SN:11001--@
18	07121-00311	HOSE	4	SN:11001--@
19	07235-50315	ELBOW	4	SN:11001--@
20	07002-12034	O-RING	4	SN:11001--@
21	07042-20108	PLUG	4	SN:11001--@
22	235-60-14640	TUBE	1	SN:11001--12102
23	235-60-14620	TUBE	1	SN:11001--12102
24	235-60-14630	TUBE	1	SN:11001--12102
25	235-60-14610	TUBE	1	SN:11001--12102

Printed By : Dwi Iswanto (airafather6107170)

HYDRAULIC PIPING (BLADE LIFT CYLINDER LINE)(#11001-12102)

Item	Part No.	Description	Qty	Options
26	07000-13025	O-RING	4	SN:11001--12102
27	01010-50830	BOLT	8	SN:11001--12102
28	01010-50840	BOLT	8	SN:11001--12102
29	01643-30823	WASHER	16	SN:11001--12102
30	235-60-13831	BAND	2	SN:11001--12102
31	235-60-17790	BAND	2	SN:11001--12102
32	01010-50830	BOLT	4	SN:11001--12102
33	01643-30823	WASHER	4	SN:11001--12102
34	232-60-54830	CLIP	4	SN:11001--12102
35	01010-51050	BOLT	2	SN:11001--12102
36	01643-31032	WASHER	2	SN:11001--12102

Printed By : Dwi Iswanto (airafather6107170)

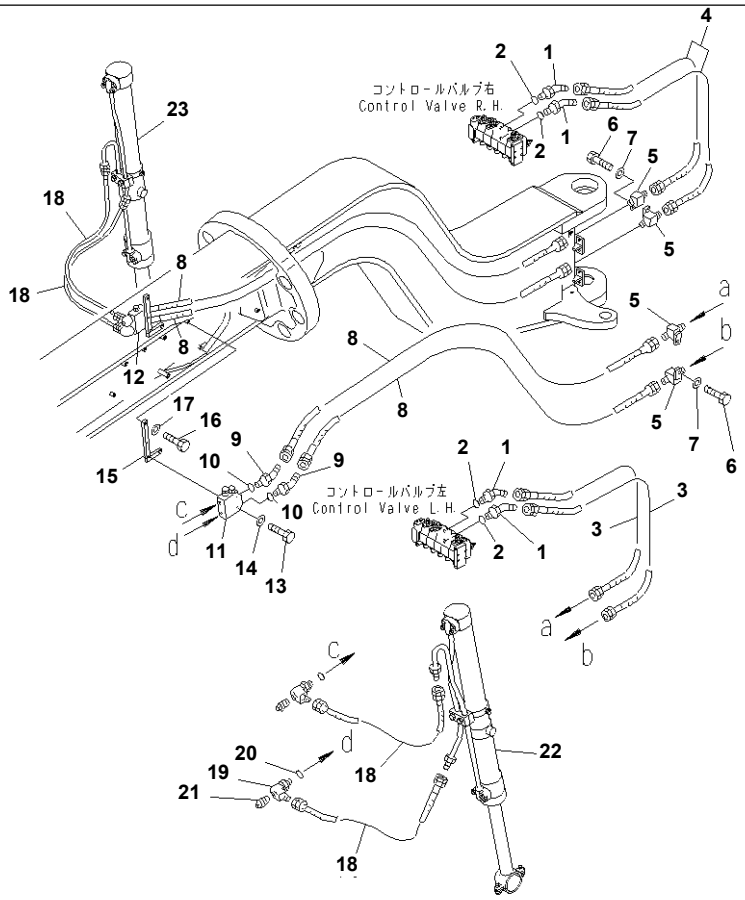

Ref. 6435A **Page 180580**

GD825A-2 S/N 11001-UP
HYDRAULIC PIPING (BLADE LIFT CYLINDER LINE)(#12103-)

Item	Part No.	Description	Qty	Options
1	235-60-35420	ELBOW	4	SN:12023--
2	237-60-22240	O-RING	4	SN:11001--
3	07121-40315	HOSE	2	SN:11001--
4	07121-40314	HOSE	2	SN:11001--
5	235-60-33630	NIPPLE	4	SN:11001--
6	01010-51030	BOLT	4	SN:11001--
7	01643-31032	WASHER	4	SN:11001--
8	07121-00336	HOSE	4	SN:11001--
9	233-60-24461	ELBOW	4	SN:11001--
10	07002-12034	O-RING	4	SN:11001--
11	(235-61-13400)	VALVE ASS'Y,PILOT CHECK¤ L.H.	1	SN:11001--
12	(235-61-12300)	VALVE ASS'Y,PILOT CHECK¤ R.H.	1	SN:11001--
13	01010-50855	BOLT	4	SN:11001--
14	01643-30823	WASHER	4	SN:11001--
15	235-60-14730	BRACKET	2	SN:12101--
	235-60-13840	SEAT	2	SN:11001--12100
16	01010-51035	BOLT	4	SN:11001--
17	01643-31032	WASHER	4	SN:11001--
18	07121-00311	HOSE	4	SN:11001--
19	07235-50315	ELBOW	4	SN:11001--
20	07002-12034	O-RING	4	SN:11001--
21	07042-20108	PLUG	4	SN:11001--
22	(707-03-X7280)	CYLINDER GROUP,BLADE LIFT¤ L.H.	1	SN:12103--
23	(707-03-X7290)	CYLINDER GROUP,BLADE LIFT¤ R.H.	1	SN:12103--

Printed By : Dwi Iswanto (airafather6107170)

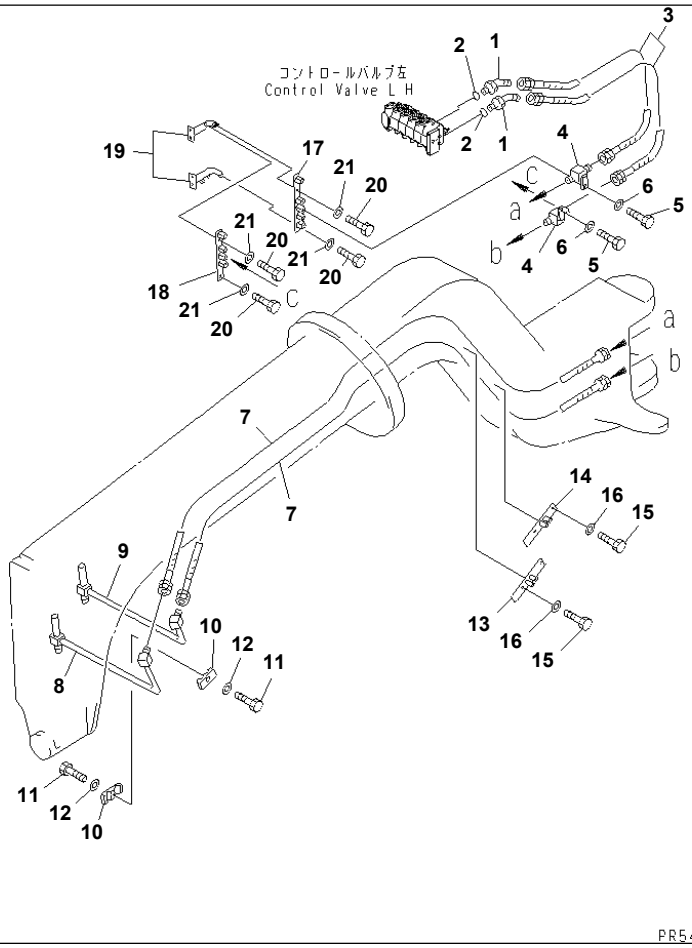

GD825A-2 S/N 11001-UP

HYDRAULIC PIPING (BLADE SIDE SHIFT CYLINDER LINE) (1/2)

Item	Part No.	Description	Qty	Options
1	235-60-35420	ELBOW	2	SN:12023--
	235-60-33120	ELBOW	2	SN:11001--12022
2	237-60-22240	O-RING	2	SN:11001--
3	07121-40314	HOSE	2	SN:11001--
4	235-60-33630	NIPPLE	2	SN:11001--
5	01010-51030	BOLT	2	SN:11001--
6	01643-31032	WASHER	2	SN:11001--
7	07121-00358	HOSE	2	SN:11001--
8	235-60-33290	TUBE	1	SN:11001--
9	235-60-33310	TUBE	1	SN:11001--
10	232-60-54820	CLIP	2	SN:11001--
11	01010-51030	BOLT	2	SN:11001--
12	01643-31032	WASHER	2	SN:11001--
13	235-60-33520	BRACKET	1	SN:11001--
14	235-60-33530	BRACKET	1	SN:11001--
15	01010-51025	BOLT	4	SN:11001--
16	01643-31032	WASHER	4	SN:11001--
17	235-60-33470	BRACKET	1	SN:11001--
18	235-60-33460	BRACKET	1	SN:11001--
19	235-60-33610	BRACKET,UPPER	1	SN:11001--
	235-60-33620	BRACKET,LOWER	1	SN:11001--
20	01010-51230	BOLT	8	SN:11001--
21	01643-31232	WASHER	8	SN:11001--

Printed By : Dwi Iswanto (airafather6107170)

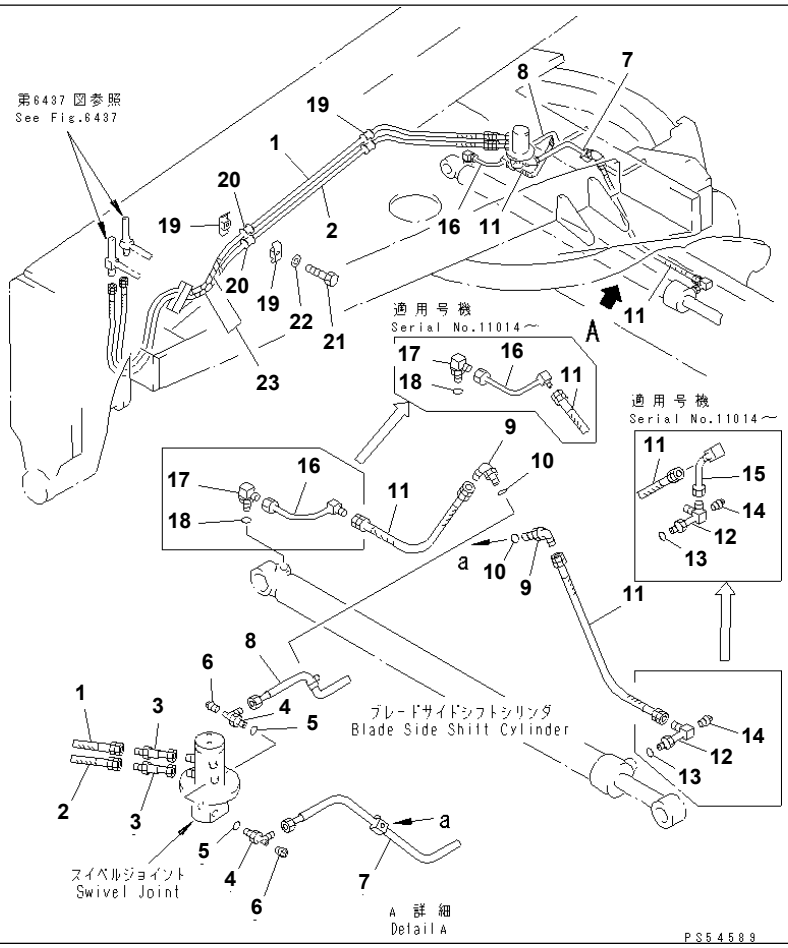

GD825A-2 S/N 11001-UP

HYDRAULIC PIPING (BLADE SIDE SHIFT CYLINDER LINE) (2/2)(#11001-11030)

Item	Part No.	Description	Qty	Options
1	07121-40335	HOSE	1	SN:11001--@
2	07121-40336	HOSE	1	SN:11001--@
3	263-78-15550	NIPPLE	2	SN:11001--@
4	07235-50422	ELBOW	2	SN:11001--@
5	07002-12034	O-RING	2	SN:11001--@
6	07042-20108	PLUG	2	SN:11001--@
7	235-60-34190	TUBE	1	SN:11001--@
8	235-60-34180	TUBE	1	SN:11001--@
9	07235-10315	ELBOW	2	SN:11001--@
10	07002-12034	O-RING	2	SN:11001--@
11	07121-40309	HOSE	2	SN:11001--11030
12	238-60-14210	ELBOW	1	SN:11014--11030
	235-60-34210	ELBOW	1	SN:11001--11013
13	07002-12034	O-RING	1	SN:11001--@
14	07043-50108	PLUG	1	SN:11001--11030
15	235-60-34230	TUBE	1	SN:11014--11030
16	235-60-34221	TUBE	1	SN:11014--11030
	235-60-34220	TUBE	1	SN:11001--11013
17	232-60-14281	ELBOW	1	SN:11001--11030
18	07002-12034	O-RING	1	SN:11001--@
19	07094-20417	CLAMP	4	SN:11001--@
20	07095-00420	CUSHION	4	SN:11001--@
21	01010-51260	BOLT	2	SN:11001--@
22	01643-31232	WASHER	2	SN:11001--@
23	238-60-41370	TUBE,SPIRAL	2	SN:11001--@

Printed By : Dwi Iswanto (airafather6107170)

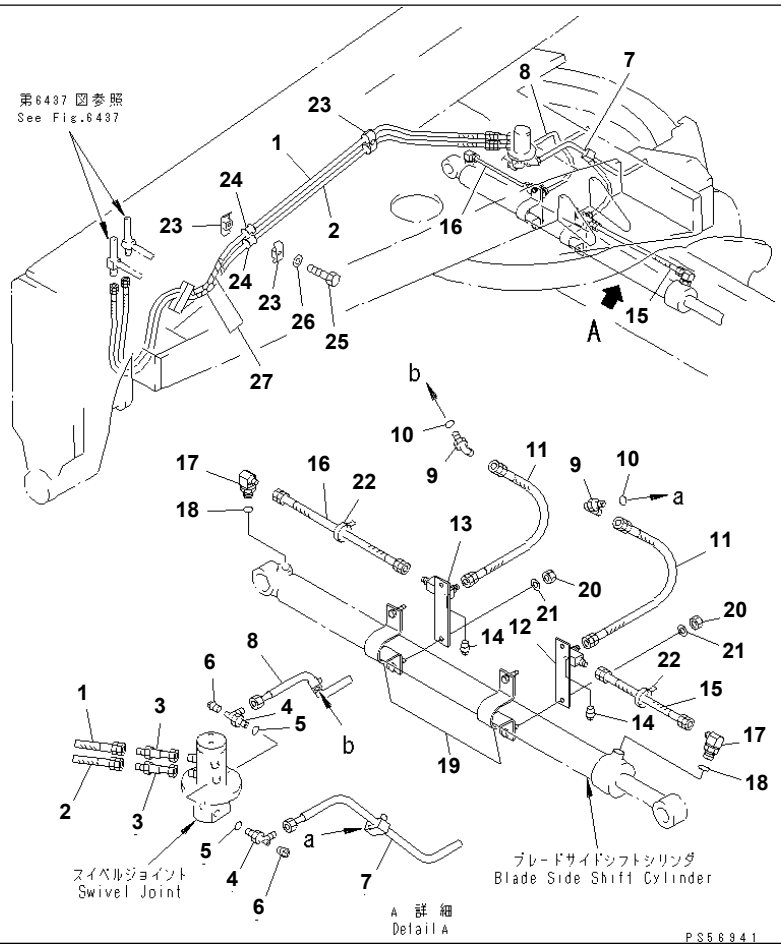

GD825A-2 S/N 11001-UP

HYDRAULIC PIPING (BLADE SIDE SHIFT CYLINDER LINE) (2/2)(#11031-12050)

Item	Part No.	Description	Qty	Options
1	07121-40335	HOSE	1	SN:11001--@
2	07121-40336	HOSE	1	SN:11001--@
3	263-78-15550	NIPPLE	2	SN:11001--@
4	07235-50422	ELBOW	2	SN:11001--@
5	07002-12034	O-RING	2	SN:11001--@
6	07042-20108	PLUG	2	SN:11001--@
7	235-60-34180	TUBE	1	SN:11001--12050
8	235-60-34190	TUBE	1	SN:11001--12050
9	07235-50315	ELBOW	2	SN:11001--@
10	07002-12034	O-RING	2	SN:11001--@
11	07121-40307	HOSE	2	SN:11031--12050
12	235-60-34240	JOINT	1	SN:11031--12050
13	235-60-34250	JOINT	1	SN:11031--12050
14	07042-20108	PLUG	2	SN:11031--12050
15	07121-40306	HOSE	1	SN:11031--12050
16	07121-40307	HOSE	1	SN:11031--12050
17	236-60-24450	ELBOW	2	SN:11031--12050
18	07002-12034	O-RING	2	SN:11001--12050
19	235-70-31211	CLIP	2	SN:11031--12050
20	01580-11008	NUT	4	SN:11031--12050
21	01643-31032	WASHER	4	SN:11031--@
22	08034-00876	BAND	2	SN:11031--@
23	07094-20417	CLAMP	4	SN:11001--@
24	07095-00420	CUSHION	4	SN:11001--@
25	01010-51260	BOLT	2	SN:11001--@
26	01643-31232	WASHER	2	SN:11001--@

Printed By : Dwi Iswanto (airafather6107170)

HYDRAULIC PIPING (BLADE SIDE SHIFT CYLINDER LINE) (2/2)(#11031-12050)

Item	Part No.	Description	Qty	Options
27	238-60-41370	TUBE,SPIRAL	2	SN:11001--@

Printed By : Dwi Iswanto (airafather6107170)

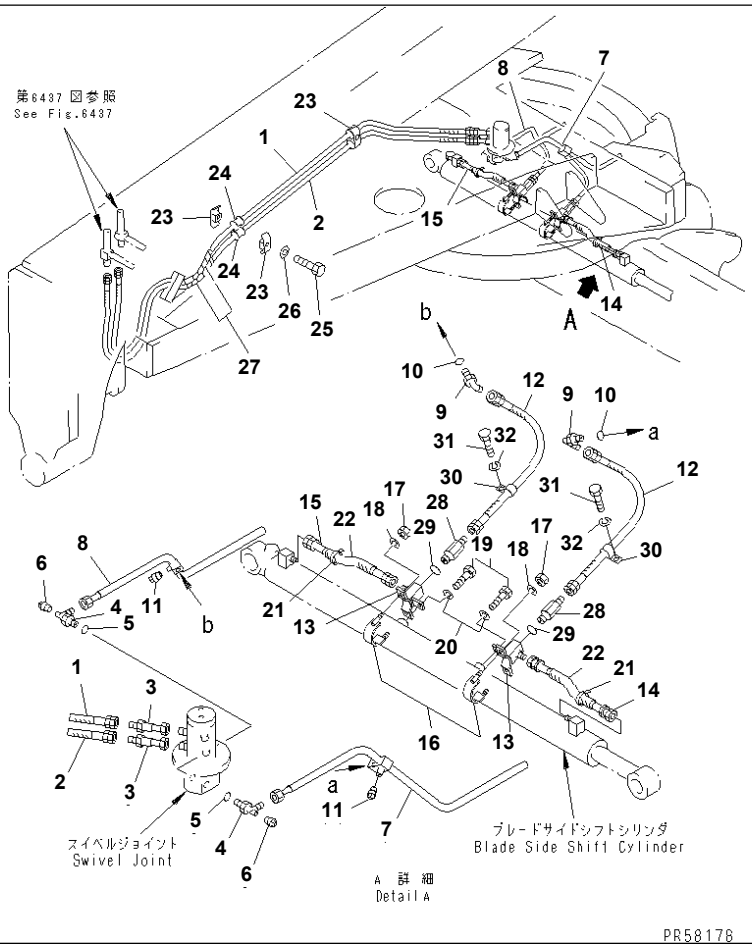

Ref. 6439B **Page 180620**

GD825A-2 S/N 11001-UP
HYDRAULIC PIPING (BLADE SIDE SHIFT CYLINDER LINE) (2/2)(#12051-)

Item	Part No.	Description	Qty	Options
1	07121-40335	HOSE	1	SN:11001--
2	07121-40336	HOSE	1	SN:11001--
3	263-78-15550	NIPPLE	2	SN:11001--
4	07235-50422	ELBOW	2	SN:11001--
5	07002-12034	O-RING	2	SN:11001--
6	07042-20108	PLUG	2	SN:11001--
7	235-60-34370	TUBE,L.H.	1	SN:12051--
8	235-60-34380	TUBE,R.H.	1	SN:12051--
9	07235-50315	ELBOW	2	SN:11001--
10	07002-12034	O-RING	2	SN:11001--
11	07042-20108	PLUG	2	SN:12051--
12	07121-40309	HOSE	2	SN:12051--
13	235-60-34430	JOINT	2	SN:12051--
14	235-60-34450	HOSE	1	SN:12051--
15	07121-40305	HOSE	1	SN:12051--
16	235-70-34440	CLIP	2	SN:12051--
17	01596-01009	NUT	4	SN:12051--
18	01643-31032	WASHER	4	SN:11031--
19	01010-81020	BOLT	2	SN:12051--
20	01643-31032	WASHER	2	SN:12051--
21	08034-00876	BAND	2	SN:11031--
22	238-60-41370	TUBE	2	SN:12051--
23	07094-30417	CLAMP	4	SN:12107--
	□07094-20417	CLAMP	4	SN:11001--12106
24	07095-00420	CUSHION	4	SN:11001--
25	01010-81260	BOLT	2	SN:.--
	□01010-51260	BOLT	2	SN:11001--.

Printed By : Dwi Iswanto (airafather6107170)

HYDRAULIC PIPING (BLADE SIDE SHIFT CYLINDER LINE) (2/2)(#12051-)

Item	Part No.	Description	Qty	Options
26	01643-31232	WASHER	2	SN:11001--
27	238-60-41370	TUBE,SPIRAL	2	SN:11001--
28	235-60-34350	UNION	2	SN:12051--
29	07002-12034	O-RING	2	SN:12051--
30	04434-52210	CLIP	2	SN:12051--
31	01010-81016	BOLT	2	SN:12051--
32	01643-31032	WASHER	2	SN:12051--

Printed By : Dwi Iswanto (airafather6107170)

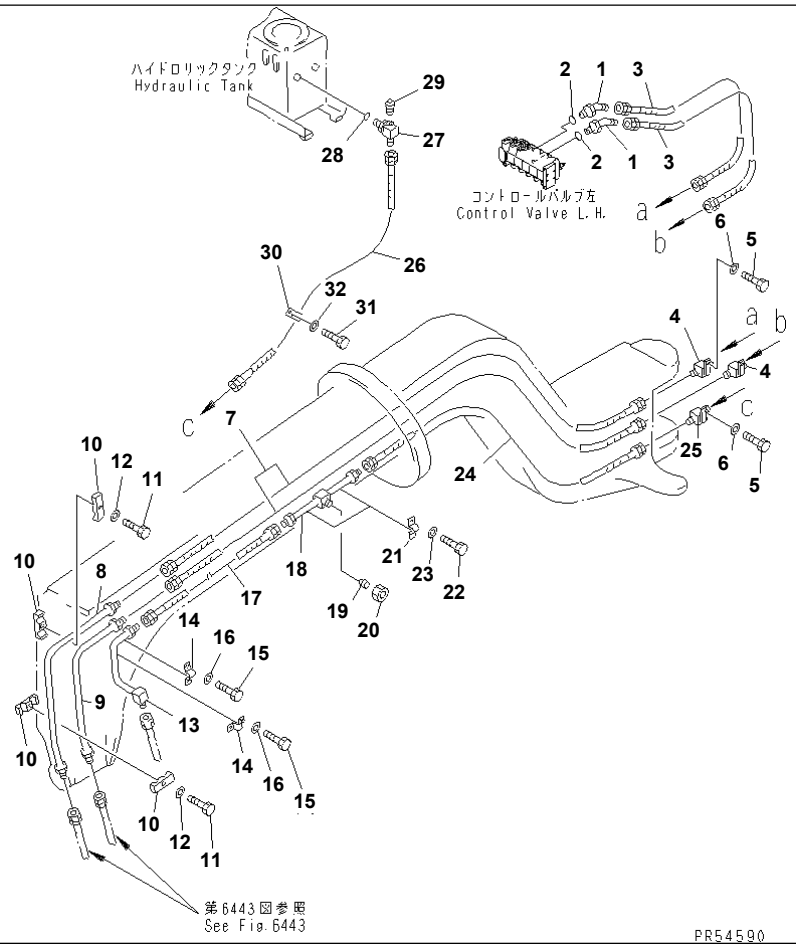

Ref. 6441 **Page 180630**

GD825A-2 S/N 11001-UP

HYDRAULIC PIPING (CIRCLE REVOLUTION MOTOR LINE) (1/2)

Item	Part No.	Description	Qty	Options
1	235-60-35410	ELBOW	2	SN:12023--
	235-60-33110	ELBOW	2	SN:11001--12022
2	237-60-22240	O-RING	2	SN:11001--
3	07121-40412	HOSE	2	SN:11001--
4	235-60-33640	NIPPLE	2	SN:11001--
5	01010-51030	BOLT	3	SN:11001--
6	01643-31032	WASHER	3	SN:11001--
7	07121-00460	HOSE	2	SN:11001--
8	235-60-33260	TUBE	1	SN:11001--
9	235-60-33270	TUBE	1	SN:11001--
10	232-60-54820	CLIP	4	SN:11001--
11	01010-51055	BOLT	2	SN:11001--
12	01643-31032	WASHER	2	SN:11001--
13	(235-60-33281)	TUBE	1	SN:12051--
	235-60-33280	TUBE	1	SN:11001--12050
14	07282-01568	CLAMP	2	SN:11001--
15	01010-50816	BOLT	4	SN:11001--
16	01643-30823	WASHER	4	SN:11001--
17	07121-00316	HOSE	1	SN:11006--
	07121-00317	HOSE	1	SN:11001--11005
18	235-60-33250	TUBE	1	SN:11001--
19	07222-00414	PLUG,(WITHOUT FLOAT BLADE)	1	SN:11001--
20	07221-20422	NUT,(WITHOUT FLOAT BLADE)	1	SN:11001--
21	07282-01568	CLAMP	2	SN:11001--
22	01010-50816	BOLT	4	SN:11001--
23	01643-30823	WASHER	4	SN:11001--
24	07102-20439	HOSE	1	SN:11001--

Ref. 6441 **Page 180630**

HYDRAULIC PIPING (CIRCLE REVOLUTION MOTOR LINE) (1/2)

Item	Part No.	Description	Qty	Options
25	235-60-33490	NIPPLE	1	SN:11001--
26	07103-50420	HOSE	1	SN:11008--
	07103-50419	HOSE	1	SN:11001--11007
27	07235-50422	ELBOW	1	SN:11001--
28	07002-12034	O-RING	1	SN:11001--
29	07042-20108	PLUG	1	SN:11001--
30	04434-52711	CLIP	1	SN:11001--
31	01010-51016	BOLT	1	SN:11001--
32	01643-31032	WASHER	1	SN:11001--

Printed By : Dwi Iswanto (airafather6107170)

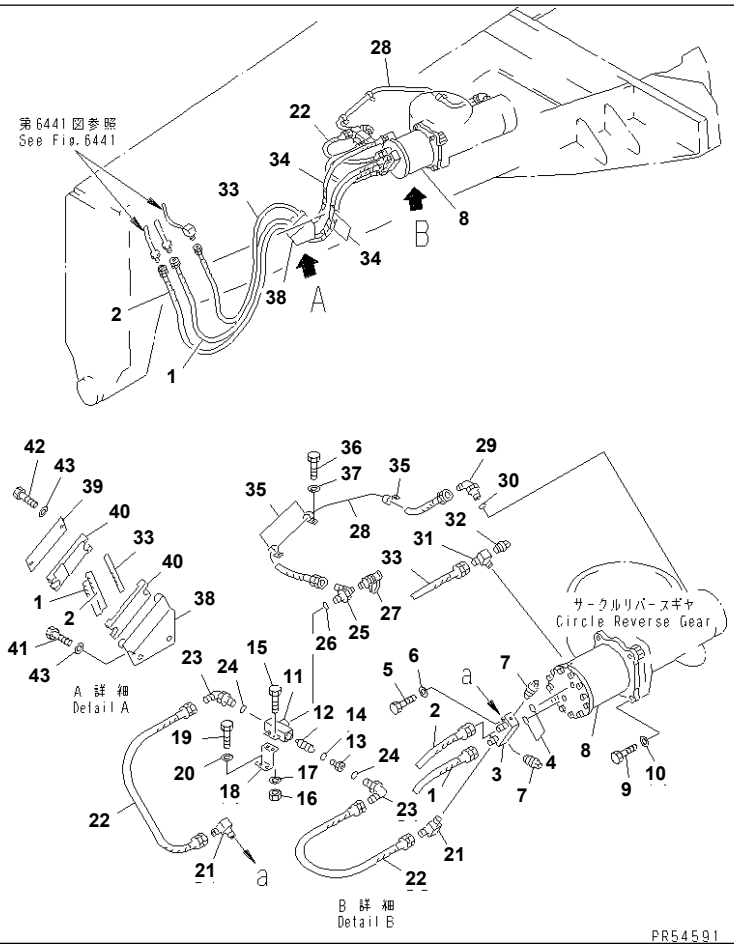

Ref. 6443 Page 180640

GD825A-2 S/N 11001-UP

HYDRAULIC PIPING (CIRCLE REVOLUTION MOTOR LINE) (2/2)(#11001-12050)

Item	Part No.	Description	Qty	Options
1	07121-40420	HOSE	1	SN:11001--12050
2	07121-40421	HOSE	1	SN:11001--12050
3	235-60-14460	FLANGE	1	SN:11001--12050
4	07000-13038	O-RING	2	SN:11001--12050
5	01010-51245	BOLT	8	SN:11001--12050
6	01643-51232	WASHER	8	SN:11001--12050
7	07042-20108	PLUG	2	SN:11001--12050
8	(235-62-11100)	MOTOR ASS'Y	1	SN:11001--12050
9	01010-51240	BOLT	6	SN:11001--12050
10	01643-31232	WASHER	6	SN:11001--12050
	235-61-12100	VALVE ASS'Y,SHUTTLE	1	SN:11001--12050
11	235-61-12110	· BODY	1	SN:11001--12050
12	☆	· PISTON	1	SN:11001--12050
13	235-61-12130	· SLEEVE	1	SN:11001--12050
14	07002-12434	· O-RING	1	SN:11001--12050
15	01010-50820	BOLT	2	SN:11001--12050
16	01580-10806	NUT	2	SN:11001--12050
17	01643-30823	WASHER	2	SN:11001--12050
18	235-60-14480	PLATE	1	SN:11001--12050
19	01010-51016	BOLT	2	SN:11001--12050
20	01643-31032	WASHER	2	SN:11001--12050
21	234-60-22672	ELBOW	2	SN:11001--12050
22	07121-00204	HOSE	2	SN:11001--12050
23	07235-10210	ELBOW	2	SN:11001--12050
24	07002-11423	O-RING	2	SN:11001--12050
25	07235-50210	ELBOW	1	SN:11001--12050

Ref. 6443 Page 180640

HYDRAULIC PIPING (CIRCLE REVOLUTION MOTOR LINE) (2/2)(#11001-12050)

Item	Part No.	Description	Qty	Options
26	07002-11423	O-RING	1	SN:11001--12050
27	799-101-5160	NIPPLE	1	SN:11001--12050
28	07121-00213	HOSE	1	SN:11001--12050
29	07235-10210	ELBOW	1	SN:11001--12050
30	07002-11423	O-RING	1	SN:11001--12050
31	235-60-14190	ELBOW	1	SN:11001--12050
32	07042-20108	PLUG	1	SN:11001--12050
33	07103-50321	HOSE	1	SN:11001--12050
34	238-60-41370	TUBE,SPIRAL	3	SN:11001--12050
35	04434-51410	CLIP	3	SN:11001--12050
36	01010-51016	BOLT	3	SN:11001--12050
37	01643-31032	WASHER	3	SN:11001--12050
38	235-60-34110	PLATE	1	SN:11001--12050
39	235-60-34150	PLATE	1	SN:11001--12050
40	235-60-34130	CLAMP	2	SN:11001--12050
41	01010-51020	BOLT	2	SN:11001--12050
42	01010-51030	BOLT	2	SN:11001--12050
43	01643-31032	WASHER	4	SN:11001--12050

Printed By : Dwi Iswanto (airafather6107170)

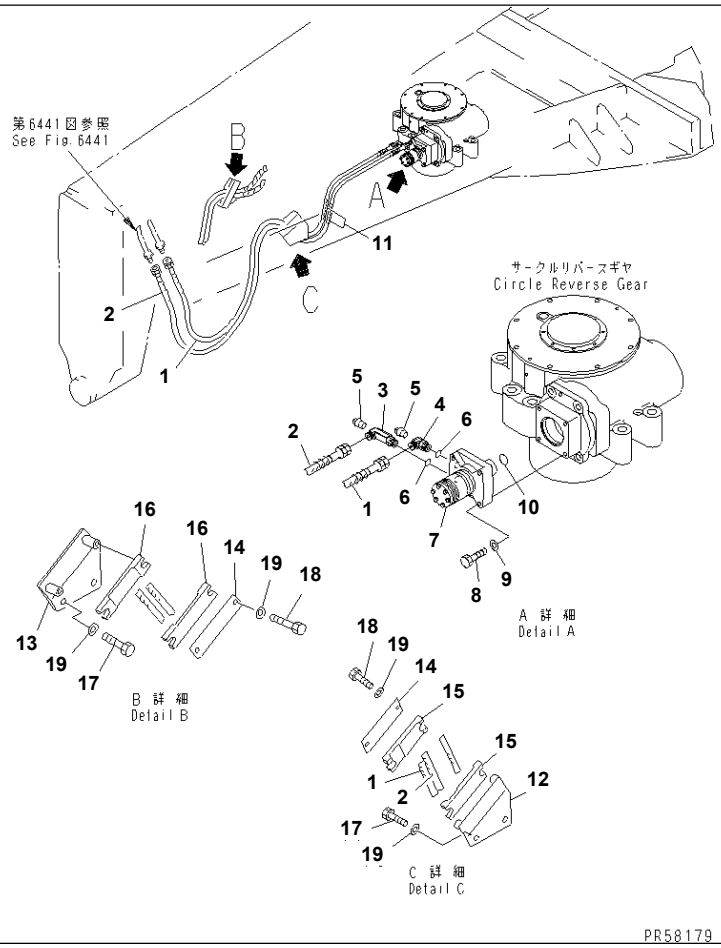

GD825A-2 S/N 11001-UP

HYDRAULIC PIPING (CIRCLE REVOLUTION MOTOR LINE) (2/2)(#12051-)

Item	Part No.	Description	Qty	Options
1	07121-40423	HOSE	1	SN:12051--
2	07121-40424	HOSE	1	SN:12051--
3	263-60-13250	TUBE	1	SN:12051--
4	235-60-34320	HOSE	1	SN:12051--
5	07042-20108	PLUG	2	SN:12051--
6	237-60-24190	O-RING	2	SN:12051--
7	(235-62-11700)	MOTOR ASS'Y	1	SN:12051--
8	07372-21260	BOLT	4	SN:12051--
9	01643-51232	WASHER	4	SN:12051--
10	01643-31645	WASHER	1	SN:12051--
11	238-60-41370	TUBE	2	SN:12051--
12	235-60-34110	PLATE,L.H.	1	SN:12051--
13	235-60-34120	PLATE,R.H.	1	SN:12051--
14	235-60-34150	PLATE	1	SN:12051--
15	235-60-34130	CLAMP,L.H.	2	SN:12051--
16	235-60-34140	CLAMP,R.H.	2	SN:12051--
17	01010-81020	BOLT	4	SN:12051--
18	01010-81030	BOLT	4	SN:12051--
19	01643-31032	WASHER	8	SN:12051--

Printed By : Dwi Iswanto (airafather6107170)

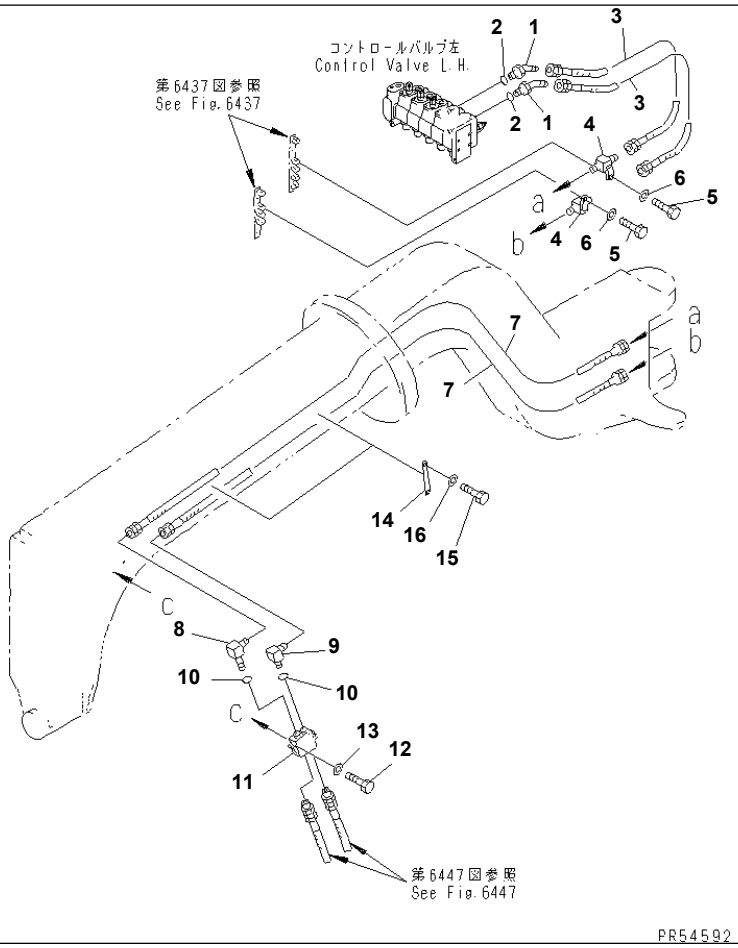

GD825A-2 S/N 11001-UP

HYDRAULIC PIPING (POWER TILT CYLINDER LINE) (1/2)

Item	Part No.	Description	Qty	Options
1	235-60-35420	ELBOW	2	SN:12023--
	235-60-33120	ELBOW	2	SN:11001--12022
2	237-60-22240	O-RING	2	SN:11001--
3	07121-40313	HOSE	2	SN:11001--
4	235-60-33630	NIPPLE	2	SN:11001--
5	01010-51030	BOLT	2	SN:11001--
6	01643-31032	WASHER	2	SN:11001--
7	07121-00360	HOSE	2	SN:11001--
8	238-60-14251	ELBOW	1	SN:11001--
9	07235-10315	ELBOW	1	SN:11001--
10	07002-12034	O-RING	2	SN:11001--
11	(235-61-13900)	VALVE ASS'Y,PILOT CHECK	1	SN:11001--
12	01010-50855	BOLT	2	SN:11001--
13	01643-30823	WASHER	2	SN:11001--
14	235-60-33241	PLATE	2	SN:11001--
15	01010-51025	BOLT	4	SN:11001--
16	01643-31032	WASHER	4	SN:11001--

Printed By : Dwi Iswanto (airafather6107170)

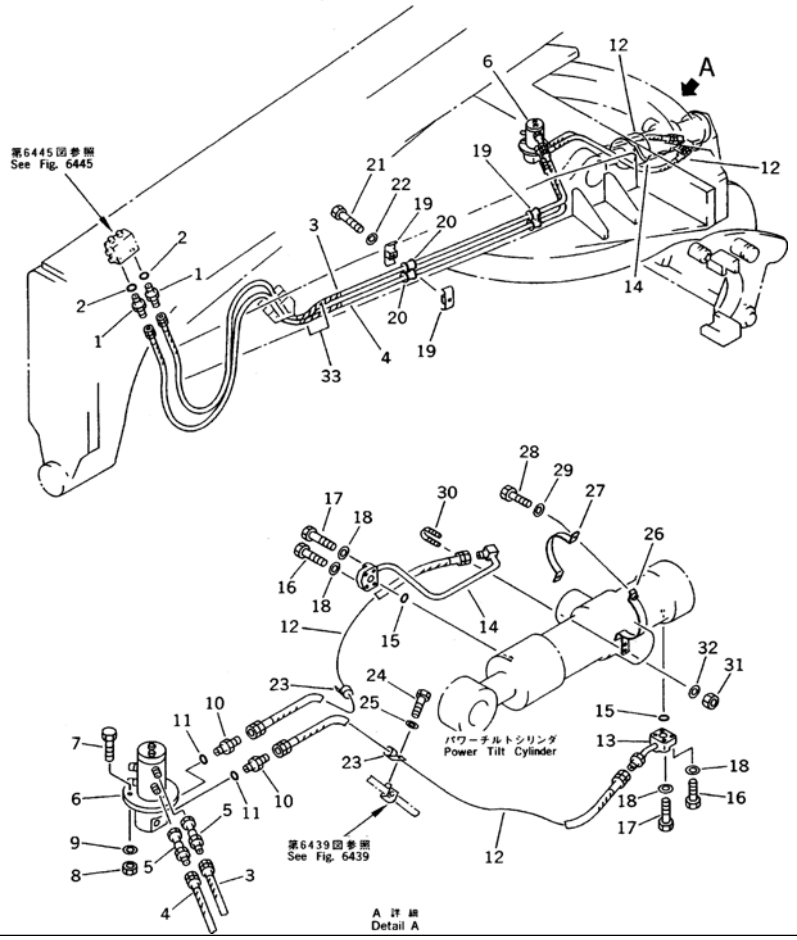

Ref. 6447 **Page 180670**

GD825A-2 S/N 11001-UP

HYDRAULIC PIPING (POWER TILT CYLINDER LINE) (2/2)(#11001-11030)

Item	Part No.	Description	Qty	Options
1	07230-10315	UNION	2	SN:11001--@
2	07002-12034	O-RING	2	SN:11001--@
3	07121-40334	HOSE	1	SN:11001--@
4	07121-40335	HOSE	1	SN:11001--@
5	263-78-15550	NIPPLE	2	SN:11001--@
6	(235-60-14901)	JOINT ASS'Y,SWIVEL	1	SN:11001--@
7	01010-51250	BOLT	3	SN:11001--@
8	01580-11210	NUT	3	SN:11001--@
9	01643-31232	WASHER	3	SN:11001--@
10	237-60-14110	NIPPLE	2	SN:11001--@
11	07002-12034	O-RING	2	SN:11001--@
12	07121-40313	HOSE	2	SN:11001--11030
13	235-60-17740	TUBE	1	SN:11001--11030
14	235-60-14271	TUBE	1	SN:11001--11030
15	07000-13030	O-RING	2	SN:11001--@
16	01010-50835	BOLT	4	SN:11001--11030
17	01010-50845	BOLT	4	SN:11001--11030
18	01643-30823	WASHER	8	SN:11001--@
19	07094-20417	CLAMP	4	SN:11001--@
20	07095-00420	CUSHION	4	SN:11001--@
21	01010-51265	BOLT	2	SN:11001--@
22	01643-31232	WASHER	2	SN:11001--@
23	04434-52210	CLIP	2	SN:11001--11030
24	01010-51016	BOLT	2	SN:11001--11030
25	01643-31032	WASHER	2	SN:11001--11030
26	235-60-14251	BAND	1	SN:11001--11030
27	235-60-14261	BAND	1	SN:11001--11030

Printed By : Dwi Iswanto (airafather6107170)

HYDRAULIC PIPING (POWER TILT CYLINDER LINE) (2/2)(#11001-11030)

Item	Part No.	Description	Qty	Options
28	01010-50830	BOLT	2	SN:11001--11030
29	01643-30823	WASHER	2	SN:11001--11030
30	07283-21529	CLIP	1	SN:11001--11030
31	01598-00809	NUT	2	SN:11001--11030
32	01643-30823	WASHER	2	SN:11001--11030
33	238-60-41370	TUBE,SPIRAL	2	SN:11001--@

Printed By : Dwi Iswanto (airafather6107170)

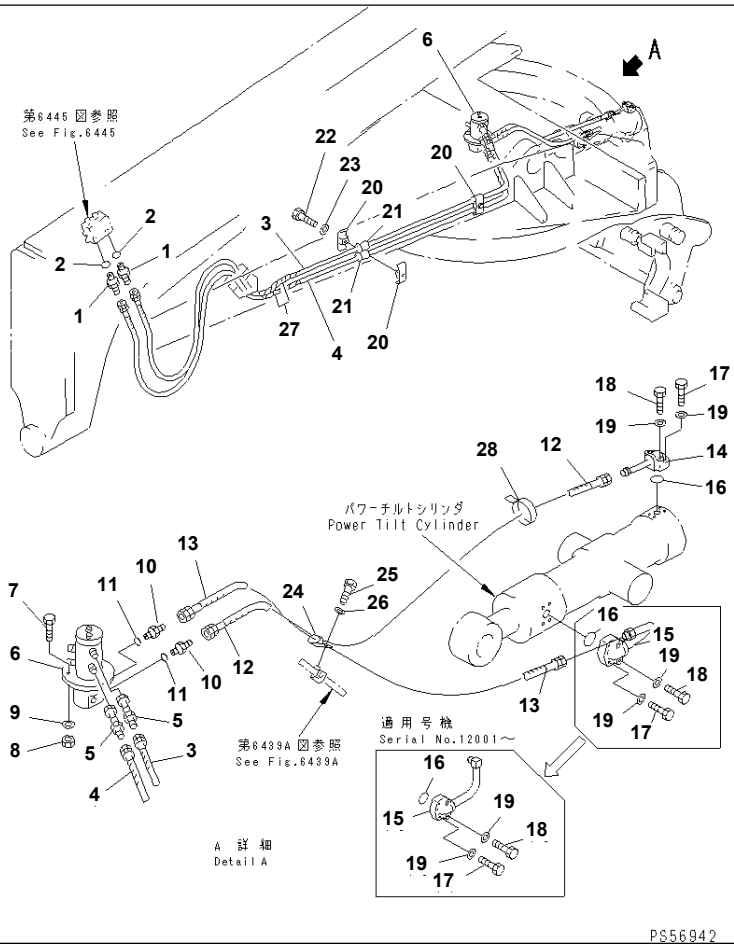

Ref. 6447A **Page 180680**

GD825A-2 S/N 11001-UP
HYDRAULIC PIPING (POWER TILT CYLINDER LINE) (2/2)(#11031-12102)

Item	Part No.	Description	Qty	Options
1	07230-10315	UNION	2	SN:11001--@
2	07002-12034	O-RING	2	SN:11001--@
3	07121-40334	HOSE	1	SN:11001--@
4	07121-40335	HOSE	1	SN:11001--@
5	263-78-15550	NIPPLE	2	SN:11001--@
6	(235-60-14901)	JOINT ASS'Y,SWIVEL	1	SN:11001--@
7	01010-51250	BOLT	3	SN:11001--@
8	01580-11210	NUT	3	SN:11001--@
9	01643-31232	WASHER	3	SN:11001--@
10	237-60-14110	NIPPLE	2	SN:11001--@
11	07002-12034	O-RING	2	SN:11001--@
12	07121-40312	HOSE	1	SN:11031--@
13	07121-40310	HOSE	1	SN:12001--@
	07121-40307	HOSE	1	SN:11031--12000
14	235-60-17741	TUBE	1	SN:11031--12102
15	235-60-14273	TUBE	1	SN:12001--12102
	235-60-14272	TUBE	1	SN:11031--12000
16	07000-13030	O-RING	2	SN:11001--12102
17	01010-80835	BOLT	4	SN:11031--12102
18	01010-80845	BOLT	4	SN:11031--12102
19	01643-30823	WASHER	8	SN:11001--12102
20	07094-20417	CLAMP	4	SN:11001--@
21	07095-00420	CUSHION	4	SN:11001--@
22	01010-51265	BOLT	2	SN:11001--@
23	01643-31232	WASHER	2	SN:11001--@
24	04434-52210	CLIP	1	SN:11031--@
25	01010-51016	BOLT	1	SN:11031--@

Printed By : Dwi Iswanto (airafather6107170)

HYDRAULIC PIPING (POWER TILT CYLINDER LINE) (2/2)(#11031-12102)

Item	Part No.	Description	Qty	Options
26	01643-31032	WASHER	1	SN:11031--@
27	238-60-41370	TUBE,SPIRAL	2	SN:11001--@
28	08034-00876	BAND	1	SN:11031--12102

Printed By : Dwi Iswanto (airafather6107170)

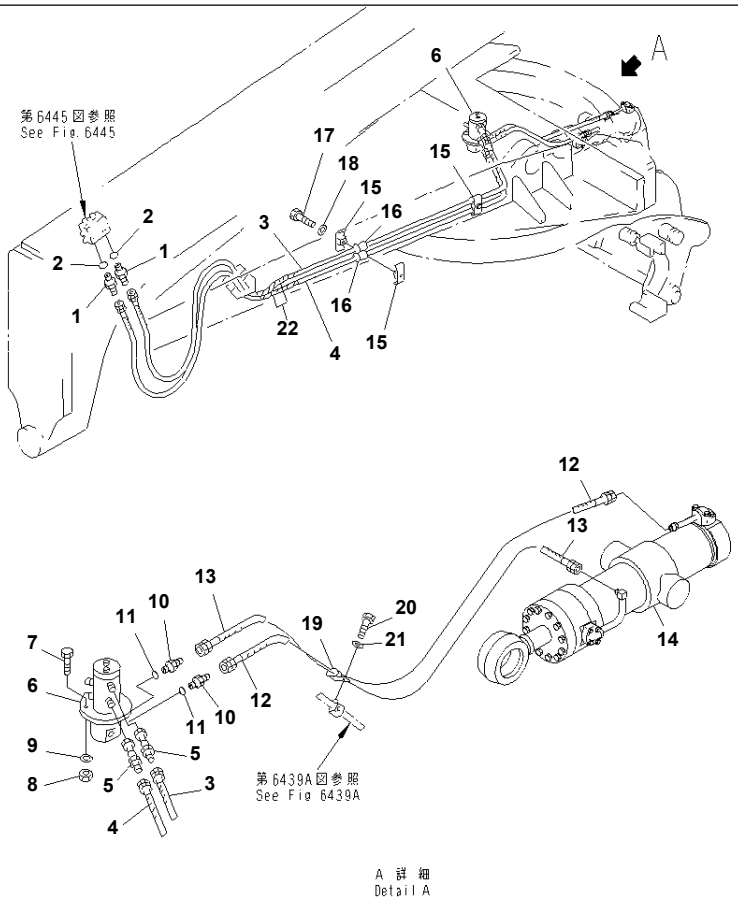

HYDRAULIC PIPING (POWER TILT CYLINDER LINE) (2/2)(#12103-)

Item	Part No.	Description	Qty	Options
1	07230-10315	UNION	2	SN:11001--
2	07002-12034	O-RING	2	SN:11001--
3	07121-40334	HOSE	1	SN:11001--
4	07121-40335	HOSE	1	SN:11001--
5	263-78-15550	NIPPLE	2	SN:11001--
6	(235-60-14901)	JOINT ASS'Y,SWIVEL	1	SN:11001--
7	01010-51250	BOLT	3	SN:11001--
8	01580-11210	NUT	3	SN:11001--
9	01643-31232	WASHER	3	SN:11001--
10	237-60-14110	NIPPLE	2	SN:11001--
11	07002-12034	O-RING	2	SN:11001--
12	07121-40312	HOSE	1	SN:11031--
13	07121-40310	HOSE	1	SN:12001--
14	(707-03-X7310)	CYLINDER GROUP,POWER TILT	1	SN:12103--
15	07094-20417	CLAMP	4	SN:11001--
16	07095-00420	CUSHION	4	SN:11001--
17	01010-51265	BOLT	2	SN:11001--
18	01643-31232	WASHER	2	SN:11001--
19	04434-52210	CLIP	1	SN:11031--
20	01010-51016	BOLT	1	SN:11031--
21	01643-31032	WASHER	1	SN:11031--
22	238-60-41370	TUBE,SPIRAL	2	SN:11001--

Printed By : Dwi Iswanto (airafather6107170)

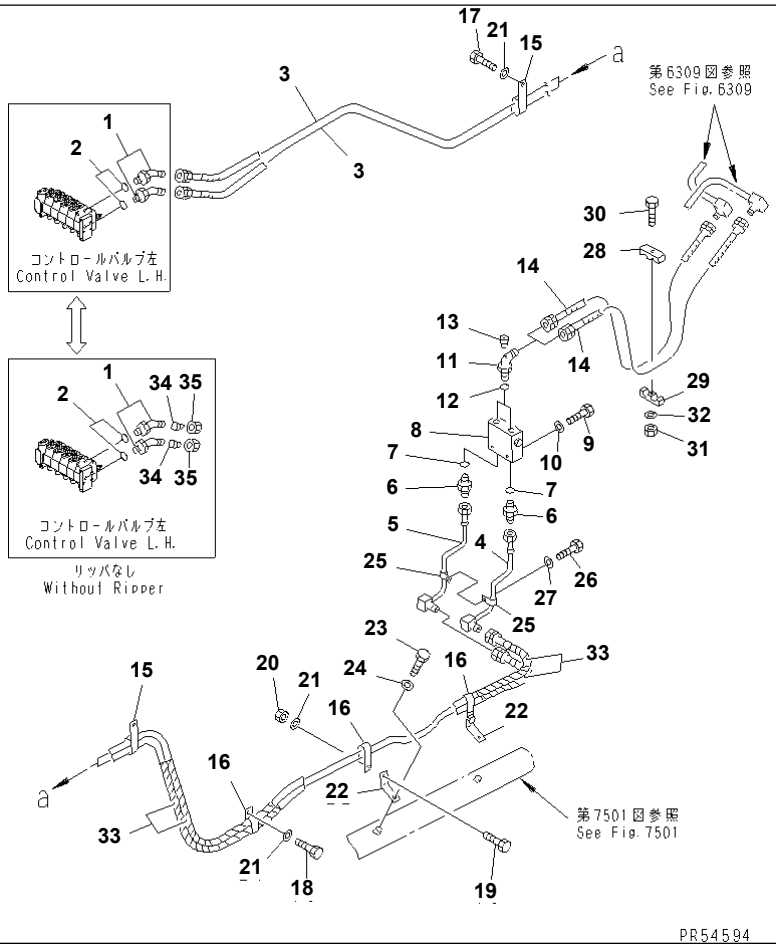

Ref. 6461 **Page 180700**

GD825A-2 S/N 11001-UP

HYDRAULIC PIPING (RIPPER CYLINDER LINE)

Item	Part No.	Description	Qty	Options
1	235-60-35410	ELBOW	2	SN:12023--
	235-60-33110	ELBOW	2	SN:11001--12022
2	237-60-22240	O-RING	2	SN:11001--
3	07121-40442	HOSE	2	SN:12105--
	□07121-40446	HOSE	2	SN:11001--12104
4	235-60-37120	TUBE	1	SN:11001--
5	235-60-37130	TUBE	1	SN:11001--
6	07230-10422	UNION	2	SN:11001--
7	07002-12034	O-RING	2	SN:11001--
8	(235-61-13500)	VALVE ASS'Y,PILOT CHECK	1	SN:11001--
9	01010-80855	BOLT	2	SN:..--
	□01010-50855	BOLT	2	SN:11001--..
10	01643-30823	WASHER	2	SN:11001--
11	07235-50315	ELBOW	2	SN:11001--
12	07002-12034	O-RING	2	SN:11001--
13	07043-50108	PLUG	2	SN:11001--
14	07121-00310	HOSE	2	SN:11001--
15	235-60-37140	CLAMP	3	SN:.--
	235-60-37140	CLAMP	2	SN:11001--.
16	235-60-37150	CLAMP	4	SN:.--
	235-60-37150	CLAMP	3	SN:11001--.
17	01010-81016	BOLT	3	SN:..--
	□01010-51016	BOLT	3	SN:.--..
	01010-51016	BOLT	2	SN:11001--.
18	01010-81020	BOLT	2	SN:..--
	□01010-51020	BOLT	2	SN:.--..
	01010-51020	BOLT	1	SN:11001--.

Printed By : Dwi Iswanto (airafather6107170)

HYDRAULIC PIPING (RIPPER CYLINDER LINE)

Item	Part No.	Description	Qty	Options
19	01010-81025	BOLT	3	SN:..--
	□01010-51025	BOLT	3	SN:.--..
	01010-51025	BOLT	2	SN:11001--.
20	01580-11008	NUT	3	SN:.--
	01580-11008	NUT	2	SN:11001--.
21	01643-31032	WASHER	8	SN:.--
	01643-31032	WASHER	5	SN:11001--.
22	235-60-37110	PLATE	3	SN:.--
	235-60-37110	PLATE	2	SN:11001--.
23	01010-81020	BOLT	3	SN:..--
	01010-51020	BOLT	3	SN:.--..
	01010-51020	BOLT	2	SN:11001--.
24	01643-31032	WASHER	3	SN:.--
	01643-31032	WASHER	2	SN:11001--.
25	04434-51510	CLIP	2	SN:11001--
26	01010-81020	BOLT	1	SN:..--
	□01010-51020	BOLT	1	SN:11001--..
27	01643-31032	WASHER	1	SN:11001--
28	236-60-24920	CLIP	1	SN:11001--
29	236-60-24930	CLIP	1	SN:11001--
30	01010-80835	BOLT	1	SN:..--
	□01010-50835	BOLT	1	SN:11001--..
31	01580-10806	NUT	1	SN:11001--
32	01643-30823	WASHER	2	SN:11001--
33	235-60-17120	TUBE,SPIRAL	4	SN:11001--
34	07222-00414	PLUG	2	SN:11001--
35	07221-20422	NUT	2	SN:11001--

Printed By : Dwi Iswanto (airafather6107170)

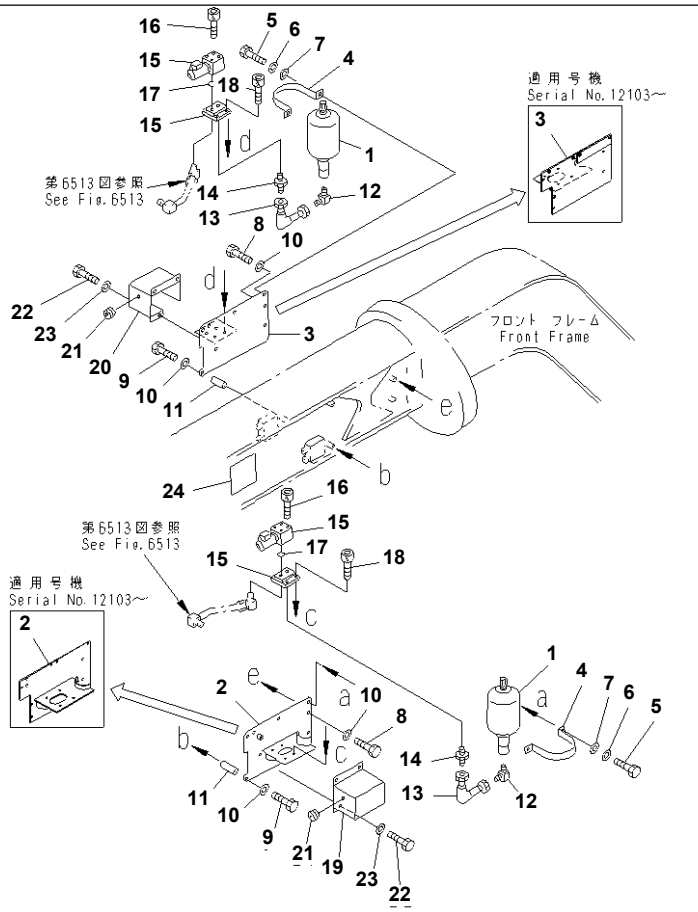

Ref. 6511 **Page 180710**

GD825A-2 S/N 11001-UP
BLADE ACCUMULATOR PIPING (1/2)

Item	Part No.	Description	Qty	Options
1	235-833-1201	ACCUMULATOR	2	SN:.--
	□235-833-1200	ACCUMULATOR	2	SN:11001--.
2	235-833-3142	BRACKET,L.H.	1	SN:12103--
	235-833-3141	BRACKET,L.H.	1	SN:11001--12102
3	235-833-3152	BRACKET,R.H.	1	SN:12103--
	235-833-3151	BRACKET,R.H.	1	SN:11001--12102
4	235-833-3160	CLIP	2	SN:11001--
5	01010-81030	BOLT	4	SN:.--
	□01010-51030	BOLT	4	SN:11001--.
6	01640-21016	WASHER	4	SN:.--
	01641-21016	WASHER	4	SN:11001--.
7	01643-31032	WASHER	4	SN:11001--
8	01010-81020	BOLT	4	SN:.--
	□01010-51020	BOLT	4	SN:11001--.
9	01011-51000	BOLT	4	SN:11001--
10	01643-31032	WASHER	8	SN:11001--
11	235-833-3220	COLLAR	4	SN:11001--
12	234-977-5980	ELBOW	2	SN:11001--
13	235-833-3230	TUBE	2	SN:11001--
14	234-833-2190	NIPPLE	2	SN:11001--
15	235-833-2111	VALVE ASS'Y,SOLENOID	2	SN:11001--
16	01252-40875	· BOLT	4	SN:11001--
17	07000-12016	· O-RING	2	SN:11001--
18	01252-41040	BOLT	8	SN:11001--
19	235-833-3181	COVER,L.H.	1	SN:11001--
20	235-833-3191	COVER,R.H.	1	SN:11001--
21	08037-01008	GROMMET	2	SN:11001--

Printed By : Dwi Iswanto (airafather6107170)

BLADE ACCUMULATOR PIPING (1/2)

Item	Part No.	Description	Qty	Options
22	01010-51020	BOLT	6	SN:11001--
23	01643-31032	WASHER	6	SN:11001--
24	235-53-31340	PLATE¤ SAFETY,(JAPANESE)	2	SN:11001--
	235-53-31130	PLATE¤ SAFETY,(ENGLISH)	2	SN:.--
	09659-23000	PLATE¤ SAFETY,(ENGLISH)	1	SN:11001--.
	235-53-31640	PLATE¤ SAFETY,(CHINESE)	2	SN:11001--
	235-53-32140	PLATE¤ SAFETY,(SPANISH)	2	SN:11001--
	235-53-32540	PLATE¤ SAFETY,(FRENCH)	2	SN:11001--

Printed By : Dwi Iswanto (airafather6107170)

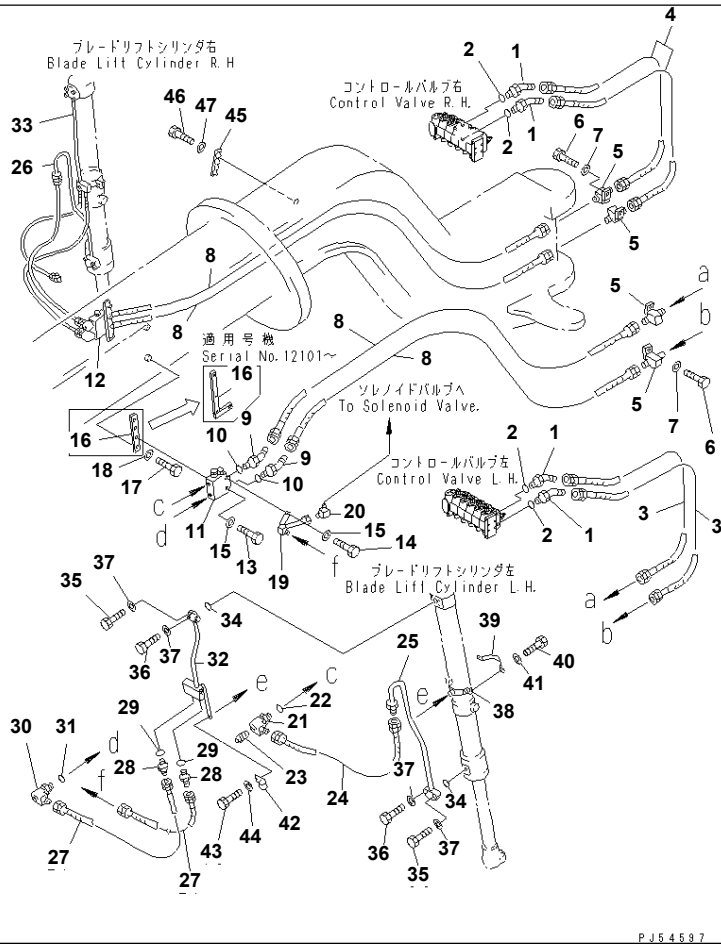

Ref. 6513 **Page 180720**

GD825A-2 S/N 11001-UP
BLADE ACCUMULATOR PIPING (2/2)

Item	Part No.	Description	Qty	Options
1	235-60-35420	ELBOW	4	SN:12023--
	235-60-33120	ELBOW	4	SN:11001--12022
2	237-60-22240	O-RING	4	SN:11001--
3	07121-40315	HOSE	2	SN:11001--
4	07121-40314	HOSE	2	SN:11001--
5	235-60-33630	NIPPLE	4	SN:11001--
6	01010-51030	BOLT	4	SN:11001--
7	01643-31032	WASHER	4	SN:11001--
8	07121-00336	HOSE	4	SN:11001--
9	233-60-24461	ELBOW	4	SN:11001--
10	07002-12034	O-RING	4	SN:11001--
11	(235-61-13400)	VALVE ASS'Y,L.H.	1	SN:11001--
12	(235-61-12300)	VALVE ASS'Y,R.H.	1	SN:11001--
13	01010-50855	BOLT	2	SN:11001--
14	01010-50860	BOLT,L.H.	1	SN:11001--
	01010-50865	BOLT,R.H.	1	SN:11001--
15	01643-30823	WASHER	4	SN:11001--
16	235-60-14730	BRACKET	2	SN:12101--
	235-60-13840	SEAT	2	SN:11001--12100
17	01010-81035	BOLT	4	SN:.--
	□01010-51035	BOLT	4	SN:11001--.
18	01643-31032	WASHER	4	SN:11001--
19	235-833-3310	TUBE,L.H.	1	SN:11001--
	235-833-3320	TUBE,R.H.	1	SN:11001--
20	235-16-12210	ELBOW	2	SN:11001--
21	07235-50315	ELBOW	2	SN:11001--
22	07002-12034	O-RING	2	SN:11001--

Ref. 6513 **Page 180720**

BLADE ACCUMULATOR PIPING (2/2)

Item	Part No.	Description	Qty	Options
23	07042-20108	PLUG	2	SN:11001--
24	07121-00311	HOSE	2	SN:11001--
25	235-60-14640	TUBE	1	SN:11001--
26	235-60-14620	TUBE	1	SN:11001--
27	07121-00613	HOSE	4	SN:11001--
28	07230-10628	UNION	4	SN:11001--
29	07002-12434	O-RING	4	SN:11001--
30	232-60-66270	ELBOW	2	SN:11001--
31	07002-12034	O-RING	2	SN:11001--
32	235-833-3260	TUBE,L.H.	1	SN:11001--
33	235-833-3270	TUBE,R.H.	1	SN:11001--
34	07000-13025	O-RING	4	SN:11001--
35	01010-50830	BOLT	8	SN:11001--
36	01010-50840	BOLT	8	SN:11001--
37	01643-30823	WASHER	16	SN:11001--
38	235-60-13831	BAND	2	SN:11001--
39	235-60-17790	BAND	2	SN:11001--
40	01010-50830	BOLT	4	SN:11001--
41	01643-30823	WASHER	4	SN:11001--
42	232-60-63160	CLIP	2	SN:11001--
43	01010-51050	BOLT	2	SN:11001--
44	01643-31032	WASHER	2	SN:11001--
45	235-60-33520	BRACKET	1	SN:11001--
46	01010-81025	BOLT	2	SN:.--
	□01010-51025	BOLT	2	SN:11001--.
47	01643-31032	WASHER	2	SN:11001--

Printed By : Dwi Iswanto (airafather6107170)

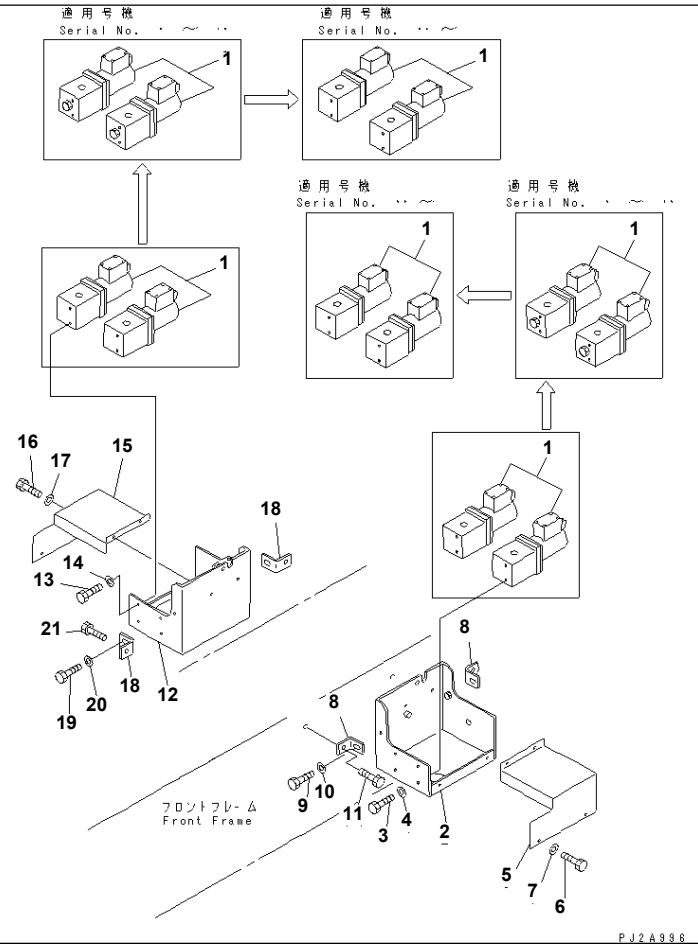

Ref. 6521 **Page 180730**

GD825A-2 S/N 11001-UP
FLOAT BLADE PIPING (1/2)

Item	Part No.	Description	Qty	Options
1	235-834-1202	VALVE ASS'Y,SOLENOID	4	SN:..--
	235-834-1201	VALVE ASS'Y	4	SN:.--..
	235-834-1200	VALVE ASS'Y,SOLENOID	4	SN:11001--.
2	235-834-2311	BRACKET,L.H.	1	SN:.--
	235-834-2310	BRACKET,L.H.	1	SN:11001--.
3	01010-50835	BOLT	4	SN:.--
	01010-50820	BOLT	4	SN:11001--.
4	01643-30823	WASHER	4	SN:11001--
5	235-834-2330	COVER,L.H.	1	SN:11001--
6	01010-50612	BOLT	4	SN:11001--
7	01643-30623	WASHER	4	SN:11001--
8	235-834-2350	BRACKET	2	SN:11001--
9	01010-51030	BOLT	2	SN:11001--
10	01643-31032	WASHER	2	SN:11001--
11	01010-51230	BOLT	2	SN:11001--
12	235-834-2321	BRACKET,R.H.	1	SN:.--
	235-834-2320	BRACKET,R.H.	1	SN:11001--.
13	01010-50835	BOLT	4	SN:.--
	01010-50820	BOLT	4	SN:11001--.
14	01643-30823	WASHER	4	SN:11001--
15	235-834-2340	COVER,R.H.	1	SN:11001--
16	01010-50612	BOLT	4	SN:11001--
17	01643-30623	WASHER	4	SN:11001--
18	235-834-2350	BRACKET	2	SN:11001--
19	01010-51030	BOLT	2	SN:11001--
20	01643-31032	WASHER	2	SN:11001--
21	01010-51230	BOLT	2	SN:11001--

Ref. 6521 **Page 180730**

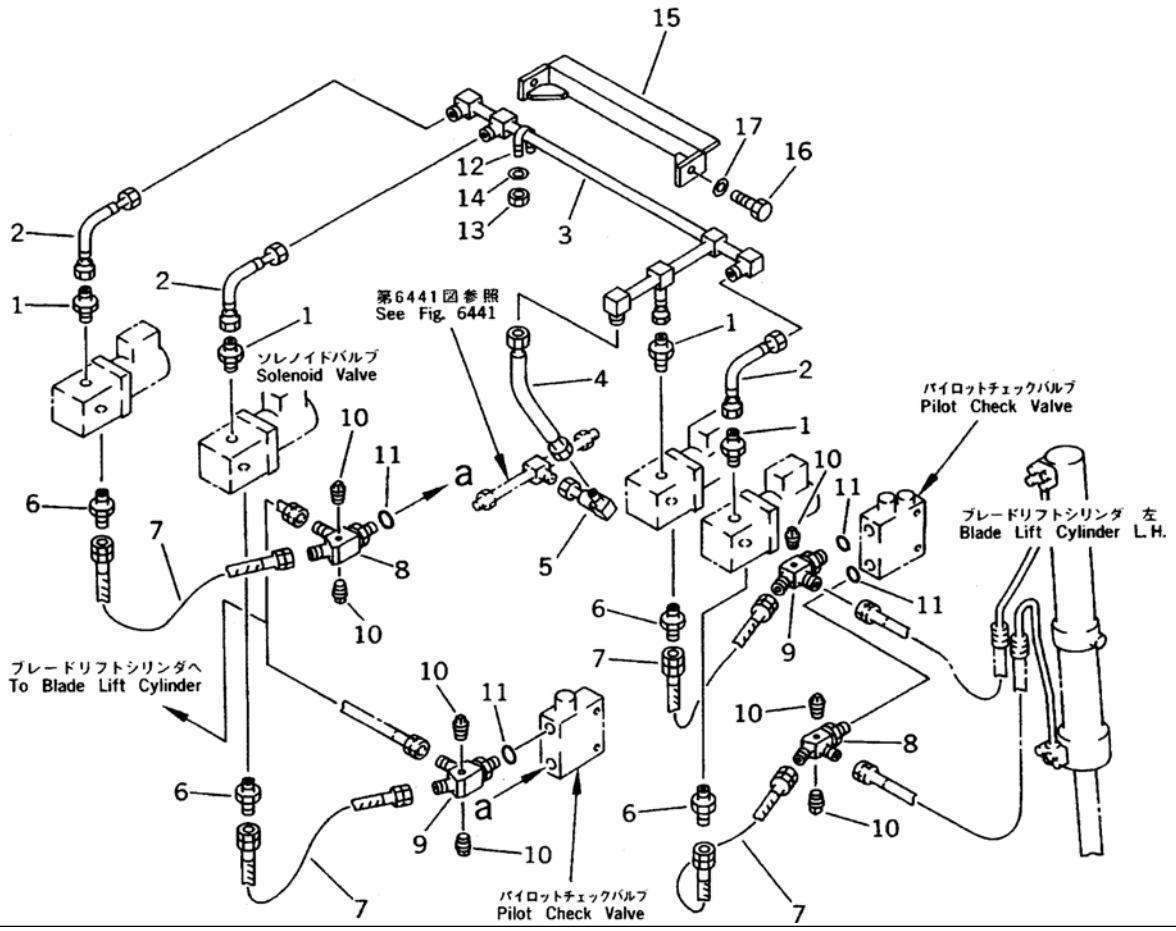

Ref. 6523 **Page 180740**

GD825A-2 S/N 11001-UP

FLOAT BLADE PIPING (2/2)

Item	Part No.	Description	Qty	Options
1	237-60-18140	NIPPLE	4	SN:11001--
2	235-834-2170	TUBE	3	SN:11001--
3	235-834-2160	TUBE	1	SN:11001--
4	07103-50403	HOSE	1	SN:.--
	235-834-3120	TUBE	1	SN:11001--.
5	235-834-3110	TUBE	1	SN:11001--
6	237-60-18140	NIPPLE	4	SN:11001--
7	07121-00304	HOSE	4	SN:11001--
8	235-834-2110	TEE	2	SN:11001--
9	235-834-2110	TEE	2	SN:11001--
	235-834-2190	TEE,(WITH ACCUMULATOR)	2	SN:11001--
10	07042-20108	PLUG	8	SN:11001--
11	07002-12034	O-RING	4	SN:11001--
12	07283-22236	CLIP	1	SN:11001--
13	01599-01011	NUT	2	SN:11001--
14	01643-31032	WASHER	2	SN:11001--
15	235-834-2360	BRACKET	1	SN:11001--
16	01010-51025	BOLT	2	SN:11001--
17	01643-31032	WASHER	2	SN:11001--

Printed By : Dwi Iswanto (airafather6107170)

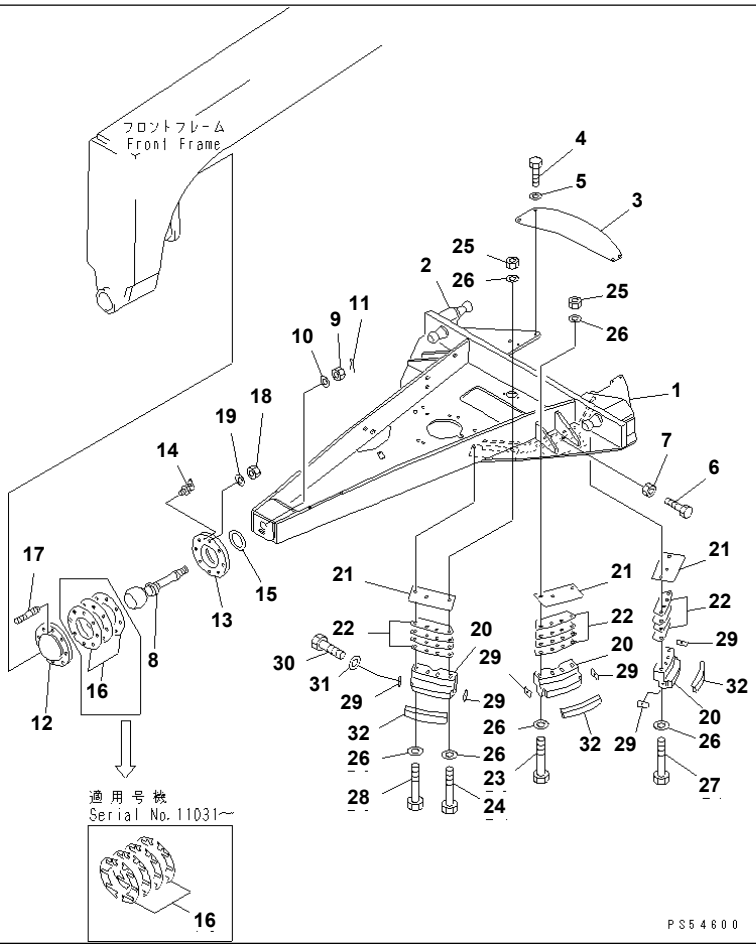

GD825A-2 S/N 11001-UP

DRAWBAR(#11001-12050)

Item	Part No.	Description	Qty	Options
1	235-70-31111	DRAWBAR	1	SN:12001--12050
	235-70-31110	DRAWBAR	1	SN:11001--12000
2	235-70-11130	· STUD (WELDED)	3	SN:11001--12050
3	235-70-11330	PLATE	1	SN:11001--12050
4	01010-81230	BOLT	4	SN:11001--@
5	01643-31232	WASHER	4	SN:11001--@
6	01016-52480	BOLT	12	SN:11001--@
7	01580-12419	NUT	12	SN:11001--@
8	235-70-11120	STUD	1	SN:11001--12050
9	01590-15254	NUT	1	SN:11001--12050
10	235-70-11210	WASHER	1	SN:11001--12050
11	04050-18090	PIN,COTTER	1	SN:11001--12050
12	235-70-11161	RETAINER	1	SN:12010--@
	235-70-11160	RETAINER	1	SN:11001--12009
13	235-70-11171	FLANGE	1	SN:12010--@
	235-70-11170	FLANGE	1	SN:11001--12009
14	07020-00675	FITTING,GREASE	1	SN:11001--@
15	235-70-11190	SEAL,DUST	1	SN:11001--@
16	235-70-00131	SHIM ASS'Y	1	SN:11031--@
	235-70-00130	SHIM ASS'Y	1	SN:11001--11030
	☆	· SHIM¤ 0.2MM	30	SN:11031--@
	☆	· SHIM¤ 0.2MM	15	SN:11001--11030
17	01124-82485	STUD	8	SN:11001--@
18	01580-12419	NUT	8	SN:11001--@
19	01643-32460	WASHER	8	SN:11001--@
20	235-70-31131	GUIDE	6	SN:11014--@
	235-70-31130	GUIDE	6	SN:11001--11013

Printed By : Dwi Iswanto (airafather6107170)

DRAWBAR(#11001-12050)

Item	Part No.	Description	Qty	Options
21	235-70-31150	PLATE	6	SN:11001--12050
22	235-70-00171	SHIM ASS'Y	6	SN:11001--@
	☆	· SHIM¤ 0.5MM	4	SN:11001--
	☆	· SHIM¤ 1.0MM	9	SN:11001--@
23	01011-52475	BOLT	12	SN:11014--@
	01011-52470	BOLT	12	SN:11001--11013
24	235-70-11471	BOLT	2	SN:11014--12050
	235-70-11470	BOLT	2	SN:11001--11013
25	01580-12419	NUT	14	SN:11001--12050
26	01643-32460	WASHER	32	SN:11001--12050
27	01011-82455	BOLT	2	SN:11014--@
	01011-52450	BOLT	2	SN:11001--11013
28	235-70-11471	BOLT	2	SN:11014--12050
	235-70-11470	BOLT	2	SN:11001--11013
29	235-70-11440	PLATE	12	SN:11001--12009
30	01010-51230	BOLT	12	SN:11001--12009
31	01643-31232	WASHER	12	SN:11001--12009
32	235-70-11430	SPACER	6	SN:11001--12050

Printed By : Dwi Iswanto (airafather6107170)

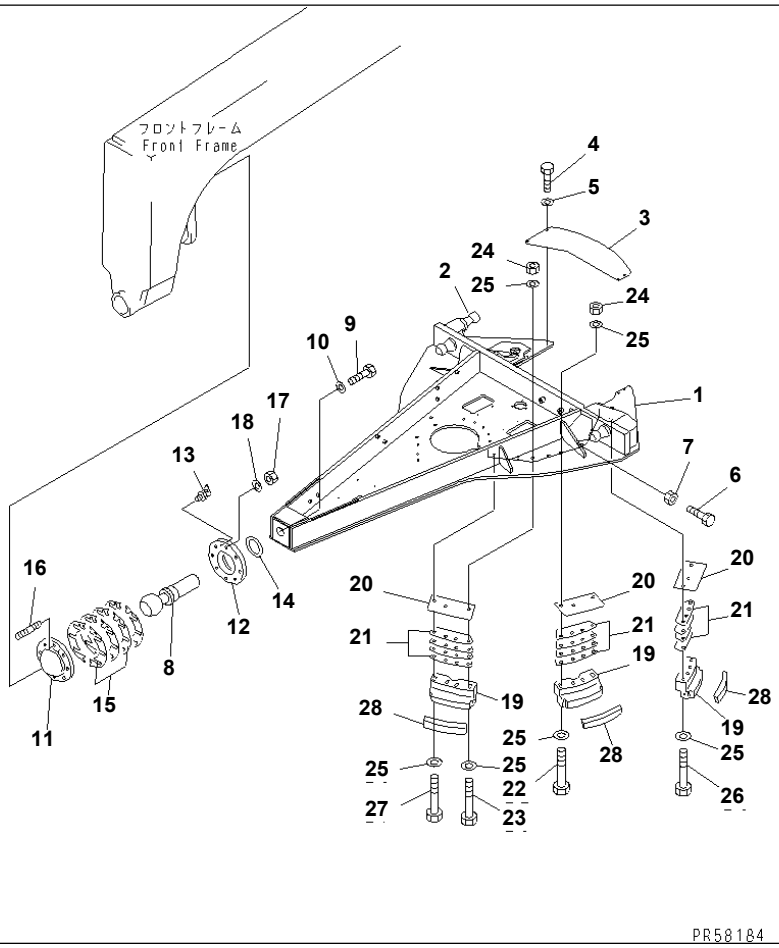

GD825A-2 S/N 11001-UP
DRAWBAR(#12051-)

Item	Part No.	Description	Qty	Options
1	235-70-41110	DRAWBAR	1	SN:12051--
2	235-70-41130	· STUD (WELDED)	2	SN:12091--
	235-70-41130	· STUD (WELDED)	3	SN:12051--12090
3	235-70-41180	PLATE	1	SN:12051--
4	01010-81230	BOLT	4	SN:11001--
5	01643-31232	WASHER	4	SN:11001--
6	01016-52480	BOLT	12	SN:11001--
7	01580-12419	NUT	12	SN:11001--
8	235-70-41120	STUD	1	SN:12051--
9	01437-12075	BOLT	6	SN:12051--
10	235-70-41210	WASHER	6	SN:12051--
11	235-70-11161	RETAINER	1	SN:12010--
12	235-70-11171	FLANGE	1	SN:12010--
13	07020-00675	FITTING,GREASE	1	SN:11001--
14	235-70-11190	SEAL,DUST	1	SN:11001--
15	235-70-00131	SHIM ASS'Y	1	SN:11031--
	☆	· SHIM¤ 0.2MM	30	SN:11031--
16	01124-82485	STUD	8	SN:11001--
17	01580-12419	NUT	8	SN:11001--
18	01643-32460	WASHER	8	SN:11001--
19	235-70-31131	GUIDE	6	SN:11014--
20	235-70-41190	PLATE	6	SN:12051--
21	235-70-00171	SHIM ASS'Y	6	SN:11001--
	☆	· SHIM¤ 0.5MM	4	SN:11001--
	☆	· SHIM¤ 1.0MM	9	SN:11001--
22	01011-82475	BOLT	12	SN:11014--
23	01011-82475	BOLT	2	SN:12051--

Printed By : Dwi Iswanto (airafather6107170)

DRAWBAR(#12051-)

Item	Part No.	Description	Qty	Options
24	01580-12419	NUT	16	SN:11001--
25	01643-32460	WASHER	36	SN:11001--
26	01011-82455	BOLT	2	SN:11014--
27	01011-82475	BOLT	2	SN:12051--
28	235-70-11431	SPACER	6	SN:12051--

Printed By : Dwi Iswanto (airafather6107170)

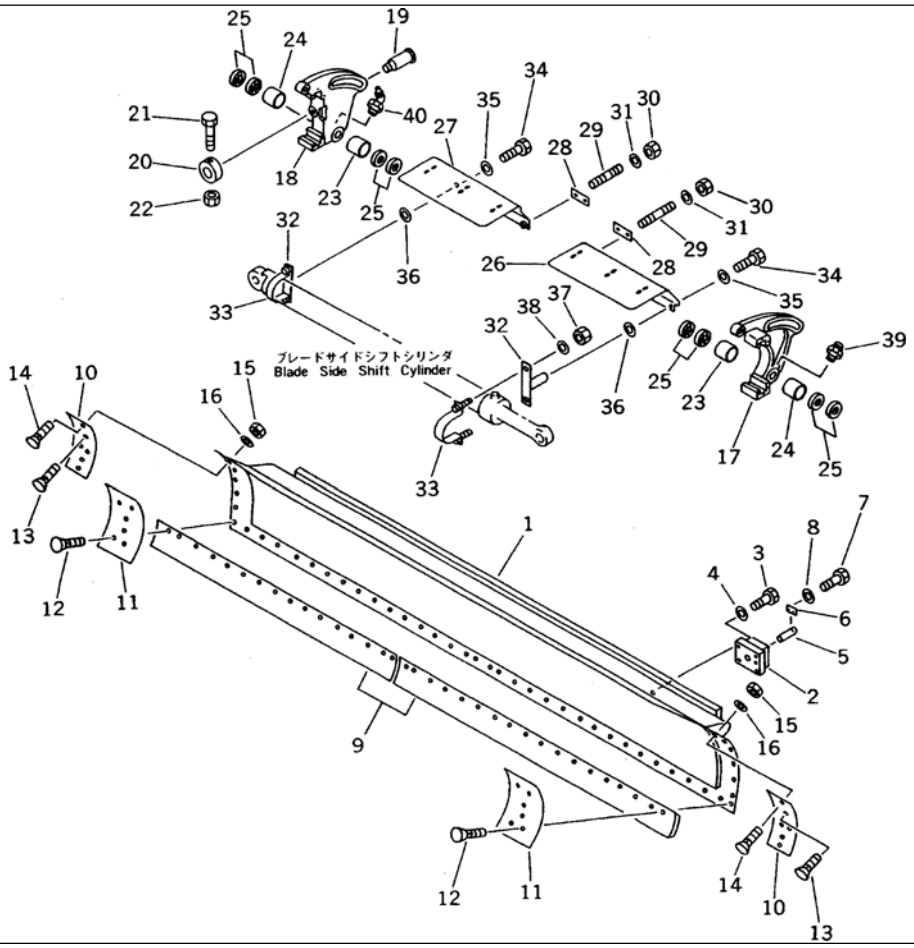

GD825A-2 S/N 11001-UP

BLADE(#11001-11027)

Item	Part No.	Description	Qty	Options
1	235-70-12110	BLADE	1	SN:11001--11027
	235-70-12120	· RAIL (WELDED)	2	SN:11001--11027
2	235-70-11280	BRACKET	1	SN:11001--@
3	01010-52075	BOLT	5	SN:11001--@
4	01643-32060	WASHER	5	SN:11001--@
5	235-70-11290	PIN	1	SN:11001--@
6	04082-00212	LOCK	1	SN:11001--@
7	01010-51225	BOLT	2	SN:11001--@
8	01643-31232	WASHER	2	SN:11001--@
9	235-70-12140	EDGE	2	SN:11001--@
10	234-70-32230	EDGE,SIDE	2	SN:11001--@
11	234-70-32240	BIT,END	2	SN:11001--@
12	234-70-32260	BOLT	32	SN:11001--11027
13	234-70-32270	BOLT	10	SN:11001--11027
14	234-70-32280	BOLT	2	SN:11001--@
15	234-70-32290	NUT	44	SN:11001--@
16	01643-32060	WASHER	44	SN:11001--@
17	235-70-13262	ADJUSTER,L.H.	1	SN:11001--@
18	235-70-13272	ADJUSTER,R.H.	1	SN:11001--@
19	235-70-12161	SHAFT	1	SN:11001--@
20	235-70-12350	COLLAR	1	SN:11001--@
21	01011-51410	BOLT	1	SN:11001--@
22	01598-01415	NUT	1	SN:11001--@
23	235-70-13430	BUSHING	2	SN:11001--@
24	235-70-13440	BUSHING	2	SN:11001--@
25	235-70-13450	SEAL	8	SN:11001--@
26	235-70-13331	COVER,L.H.	1	SN:11001--@

Printed By : Dwi Iswanto (airafather6107170)

BLADE(#11001-11027)

Item	Part No.	Description	Qty	Options
27	235-70-13341	COVER,R.H.	1	SN:11001--@
28	235-70-13350	PLATE	2	SN:11001--@
29	01124-51230	STUD	4	SN:11001--@
30	01598-01214	NUT	4	SN:11001--@
31	232-43-58360	WASHER	4	SN:11001--@
32	235-70-31221	CLIP	2	SN:11001--@
33	235-70-31211	CLIP	2	SN:11001--@
34	01010-51230	BOLT	2	SN:11001--@
35	01643-31232	WASHER	2	SN:11001--@
36	232-43-58360	WASHER	2	SN:11001--@
37	01598-01011	NUT	4	SN:11001--@
38	01643-31032	WASHER	4	SN:11001--@
39	07020-00000	FITTING,GREASE	1	SN:11001--@
40	07020-00675	FITTING,GREASE	1	SN:11001--@

Printed By : Dwi Iswanto (airafather6107170)

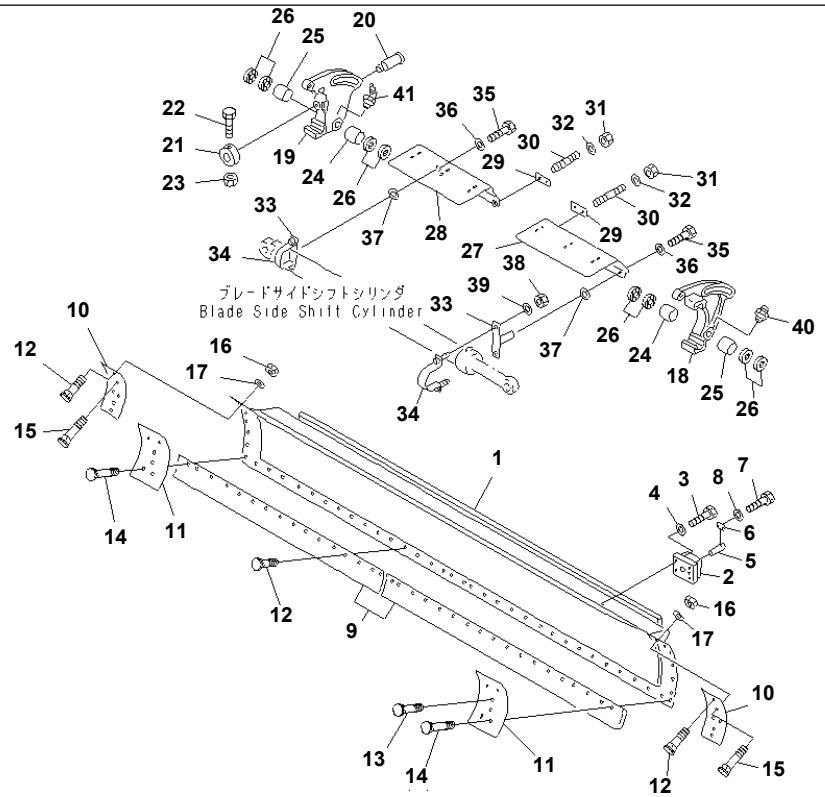

GD825A-2 S/N 11001-UP

BLADE(#11028-12000)

Item	Part No.	Description	Qty	Options
1	235-70-12111	BLADE	1	SN:11028--12000
	235-70-12121	· RAIL (WELDED)	2	SN:11028--@
2	235-70-11280	BRACKET	1	SN:11001--@
3	01010-52075	BOLT	5	SN:11001--@
4	01643-32060	WASHER	5	SN:11001--@
5	235-70-11290	PIN	1	SN:11001--@
6	04082-00212	LOCK	1	SN:11001--@
7	01010-51225	BOLT	2	SN:11001--@
8	01643-31232	WASHER	2	SN:11001--@
9	235-70-12140	EDGE	2	SN:11001--12000
10	234-70-32230	EDGE,SIDE	2	SN:11001--@
11	234-70-32240	BIT,END	2	SN:11001--12000
12	234-70-32260	BOLT	26	SN:11028--12000
13	234-70-32270	BOLT	4	SN:11028--12000
14	235-70-12330	BOLT	6	SN:11028--12000
15	234-70-32280	BOLT	2	SN:11001--12000
16	234-70-32290	NUT	44	SN:11001--@
17	01643-32060	WASHER	44	SN:11001--@
18	235-70-13262	ADJUSTER,L.H.	1	SN:11001--@
19	235-70-13272	ADJUSTER,R.H.	1	SN:11001--@
20	235-70-12161	SHAFT	1	SN:11001--@
21	235-70-12350	COLLAR	1	SN:11001--@
22	01011-51410	BOLT	1	SN:11001--@
23	01598-01415	NUT	1	SN:11001--@
24	235-70-13430	BUSHING	2	SN:11001--@
25	235-70-13440	BUSHING	2	SN:11001--@
26	235-70-13450	SEAL	8	SN:11001--@

Printed By : Dwi Iswanto (airafather6107170)

BLADE(#11028-12000)

Item	Part No.	Description	Qty	Options
27	235-70-13332	COVER,L.H.	1	SN:11031--@
	235-70-13331	COVER,L.H.	1	SN:11001--11030
28	235-70-13342	COVER,R.H.	1	SN:11031--@
	235-70-13341	COVER,R.H.	1	SN:11001--11030
29	235-70-13350	PLATE	2	SN:11001--@
30	01124-51230	STUD	4	SN:11001--@
31	01598-01214	NUT	4	SN:11001--@
32	232-43-58360	WASHER	4	SN:11001--@
33	235-70-31221	CLIP	2	SN:11001--@
34	235-70-31211	CLIP	2	SN:11001--@
35	01010-51230	BOLT	2	SN:11001--@
36	01643-31232	WASHER	2	SN:11001--@
37	232-43-58360	WASHER	2	SN:11001--@
38	01598-01011	NUT	4	SN:11001--@
39	01643-31032	WASHER	4	SN:11001--@
40	07020-00000	FITTING,GREASE	1	SN:11001--@
41	07020-00675	FITTING,GREASE	1	SN:11001--@

Printed By : Dwi Iswanto (airafather6107170)

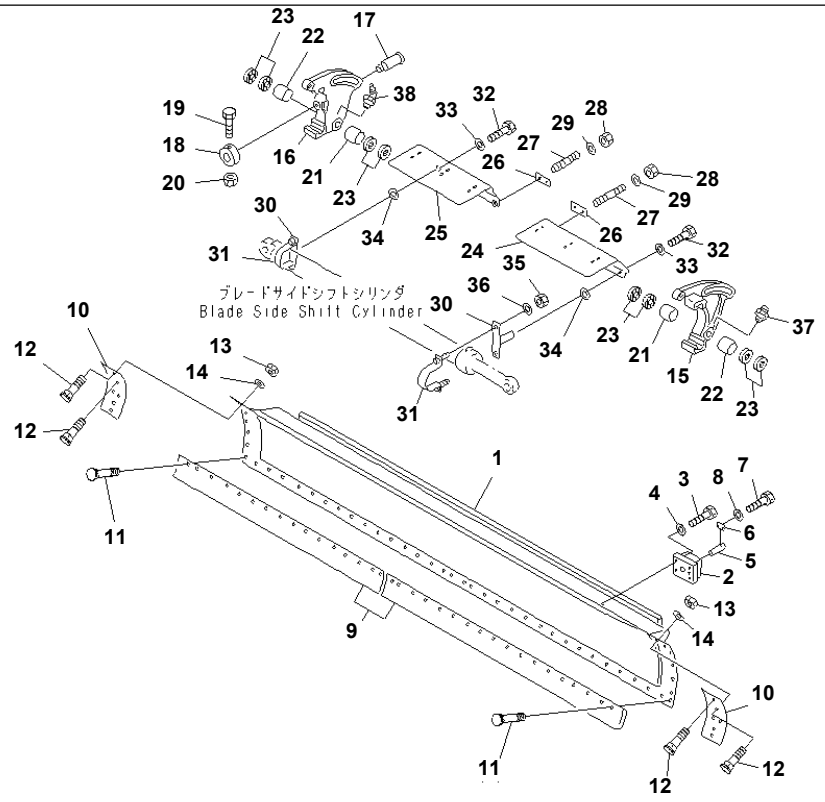

GD825A-2 S/N 11001-UP
BLADE(#12001-12050)

Item	Part No.	Description	Qty	Options
1	235-70-12112	BLADE	1	SN:12001--12050
	235-70-12121	· RAIL (WELDED)	2	SN:11028--12050
2	235-70-11280	BRACKET	1	SN:11001--12050
3	01010-52075	BOLT	5	SN:11001--12050
4	01643-32060	WASHER	5	SN:11001--12050
5	235-70-11290	PIN	1	SN:11001--12050
6	04082-00212	LOCK	1	SN:11001--12050
7	01010-51225	BOLT	2	SN:11001--12050
8	01643-31232	WASHER	2	SN:11001--12050
9	235-70-12320	EDGE	2	SN:11001--12050
10	234-70-32230	EDGE,SIDE	2	SN:11001--12050
11	234-70-32270	BOLT	36	SN:12001--12050
12	234-70-32260	BOLT	8	SN:12001--12050
13	234-70-32290	NUT	44	SN:11001--12050
14	01643-32060	WASHER	44	SN:11001--12050
15	235-70-13262	ADJUSTER,L.H.	1	SN:11001--12050
16	235-70-13272	ADJUSTER,R.H.	1	SN:11001--12050
17	235-70-12161	SHAFT	1	SN:11001--12050
18	235-70-12350	COLLAR	1	SN:11001--12050
19	01011-51410	BOLT	1	SN:11001--12050
20	01598-01415	NUT	1	SN:11001--12050
21	235-70-13430	BUSHING	2	SN:11001--12050
22	235-70-13440	BUSHING	2	SN:11001--12050
23	235-70-13450	SEAL	8	SN:11001--12050
24	235-70-13332	COVER,L.H.	1	SN:11031--12050
25	235-70-13342	COVER,R.H.	1	SN:11031--12050
26	235-70-13350	PLATE	2	SN:11001--12050

Printed By : Dwi Iswanto (airafather6107170)

BLADE(#12001-12050)

Item	Part No.	Description	Qty	Options
27	01124-51230	STUD	4	SN:11001--12050
28	01598-01214	NUT	4	SN:11001--12050
29	232-43-58360	WASHER	4	SN:11001--12050
30	235-70-31221	CLIP	2	SN:11001--12050
31	235-70-31211	CLIP	2	SN:11001--12050
32	01010-51230	BOLT	2	SN:11001--12050
33	01643-31232	WASHER	2	SN:11001--12050
34	232-43-58360	WASHER	2	SN:11001--12050
35	01598-01011	NUT	4	SN:11001--12050
36	01643-31032	WASHER	4	SN:11001--12050
37	07020-00000	FITTING,GREASE	1	SN:11001--12050
38	07020-00675	FITTING,GREASE	1	SN:11001--12050

Printed By : Dwi Iswanto (airafather6107170)

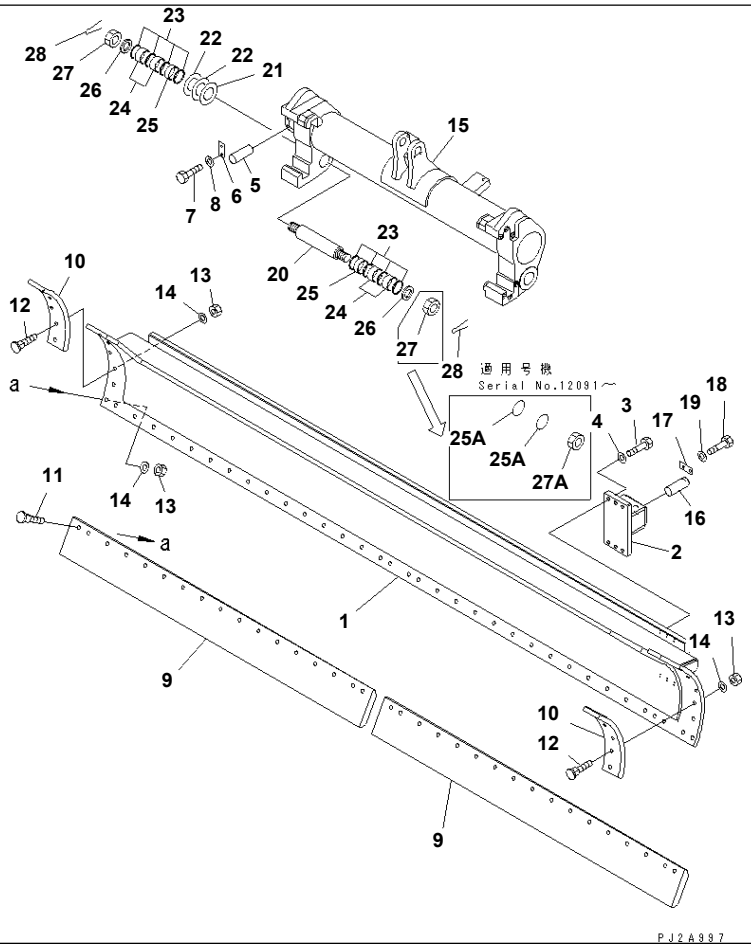

GD825A-2 S/N 11001-UP

BLADE(#12051-)

Item	Part No.	Description	Qty	Options
1	235-70-42111	BLADE	1	SN:12096--
	□235-70-42110	BLADE	1	SN:12051--12095
	235-70-42120	· RAIL (WELDED)	1	SN:12051--
	235-70-42130	· RAIL (WELDED)	1	SN:12051--
2	235-70-42180	BRACKET	1	SN:12051--
3	01010-82060	BOLT	6	SN:12051--
4	01643-32060	WASHER	6	SN:12051--
5	235-70-42190	PIN	1	SN:12051--
6	04082-00212	LOCK	1	SN:12051--
7	01010-81225	BOLT	2	SN:12051--
8	01643-31232	WASHER	2	SN:12051--
9	235-70-12320	EDGE	2	SN:12051--
10	234-70-32230	EDGE	2	SN:12051--
11	234-70-32270	BOLT	36	SN:12051--
12	234-70-32260	BOLT	8	SN:12051--
13	234-70-32290	NUT	44	SN:12051--
14	01643-32060	WASHER	44	SN:12051--
15	235-70-43250	BRACKET	1	SN:12051--
16	235-70-42190	PIN	1	SN:12051--
17	04082-00212	LOCK	1	SN:12051--
18	01010-81225	BOLT	2	SN:12051--
19	01643-31232	WASHER	2	SN:12051--
20	235-70-43141	SHAFT	2	SN:12091--
	235-70-43140	SHAFT	2	SN:12051--12090
21	235-70-43151	WASHER	6	SN:12091--
	235-70-43150	WASHER	10	SN:12051--12090
22	235-70-43161	SHIM	10	SN:12091--

Printed By : Dwi Iswanto (airafather6107170)

BLADE(#12051-)

Item	Part No.	Description	Qty	Options
	235-70-00290	SHIM ASS'Y	1	SN:12051--12090
	235-70-43181	SHIM	10	SN:12091--
	☆	· SHIM	10	SN:12051--12090
	☆	· SHIM	10	SN:12051--12090
23	417-09-11120	SEAL	16	SN:12099--
	□417-09-11110	SEAL	16	SN:12091--12098
	235-70-13450	SEAL	16	SN:12051--12090
24	235-70-43310	BUSHING	5	SN:12091--
	235-70-13430	BUSHING	8	SN:12051--12090
25	235-70-43320	BUSHING	4	SN:12091--
	235-70-13440	BUSHING	4	SN:12051--12090
25A	235-70-43340	SHIM¤ 0.5MM	2	SN:12091--
	235-70-43350	SHIM¤ 0.1MM	2	SN:12091--
26	235-70-43360	WASHER	4	SN:12091--
	235-70-13220	WASHER	4	SN:12051--12090
27	01590-34548	NUT	2	SN:12091--
	01590-35254	NUT	4	SN:12051--12090
27A	235-70-31411	PIN	2	SN:12091--
28	04050-18080	PIN,COTTER	4	SN:12091--
	04050-18090	PIN,COTTER	4	SN:12051--12090

Printed By : Dwi Iswanto (airafather6107170)

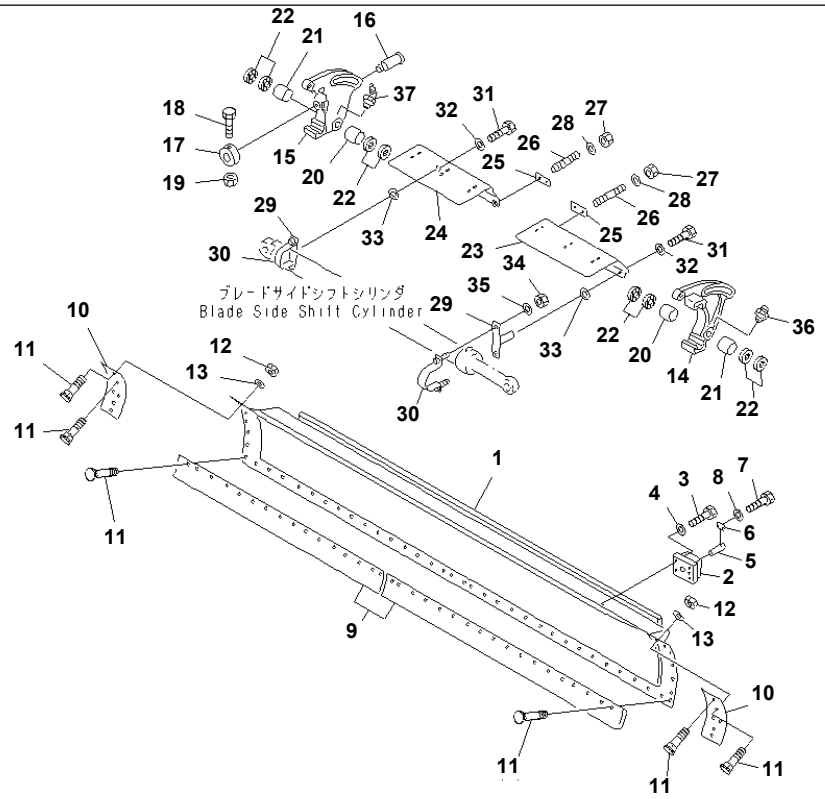

PS56945

BLADE (WITH WIDE EDGE)(#11001-11027)

Item	Part No.	Description	Qty	Options
1	235-70-12110	BLADE	1	SN:11001--11027
	235-70-12120	· RAIL (WELDED)	2	SN:11001--11027
2	235-70-11280	BRACKET	1	SN:11001--@
3	01010-52075	BOLT	5	SN:11001--@
4	01643-32060	WASHER	5	SN:11001--@
5	235-70-11290	PIN	1	SN:11001--@
6	04082-00212	LOCK	1	SN:11001--@
7	01010-51225	BOLT	2	SN:11001--@
8	01643-31232	WASHER	2	SN:11001--@
9	235-70-12320	EDGE	2	SN:11001--@
10	234-70-32230	EDGE,SIDE	2	SN:11001--@
11	234-70-32260	BOLT	44	SN:11001--11027
12	234-70-32290	NUT	44	SN:11001--@
13	01643-32060	WASHER	44	SN:11001--@
14	235-70-13262	ADJUSTER,L.H.	1	SN:11001--@
15	235-70-13272	ADJUSTER,R.H.	1	SN:11001--@
16	235-70-12161	SHAFT	1	SN:11001--@
17	235-70-12350	COLLAR	1	SN:11001--@
18	01011-51410	BOLT	1	SN:11001--@
19	01598-01415	NUT	1	SN:11001--@
20	235-70-13430	BUSHING	2	SN:11001--@
21	235-70-13440	BUSHING	2	SN:11001--@
22	235-70-13450	SEAL	8	SN:11001--@
23	235-70-13331	COVER,L.H.	1	SN:11001--@
24	235-70-13341	COVER,R.H.	1	SN:11001--@
25	235-70-13350	PLATE	2	SN:11001--@
26	01124-51230	STUD	4	SN:11001--@

Printed By : Dwi Iswanto (airafather6107170)

BLADE (WITH WIDE EDGE)(#11001-11027)

Item	Part No.	Description	Qty	Options
27	01598-01214	NUT	4	SN:11001--@
28	232-43-58360	WASHER	4	SN:11001--@
29	235-70-31221	CLIP	2	SN:11001--@
30	235-70-31211	CLIP	2	SN:11001--@
31	01010-51230	BOLT	2	SN:11001--@
32	01643-31232	WASHER	2	SN:11001--@
33	232-43-58360	WASHER	2	SN:11001--@
34	01598-01011	NUT	4	SN:11001--@
35	01643-31032	WASHER	4	SN:11001--@
36	07020-00000	FITTING,GREASE	1	SN:11001--@
37	07020-00675	FITTING,GREASE	1	SN:11001--@

Printed By : Dwi Iswanto (airafather6107170)

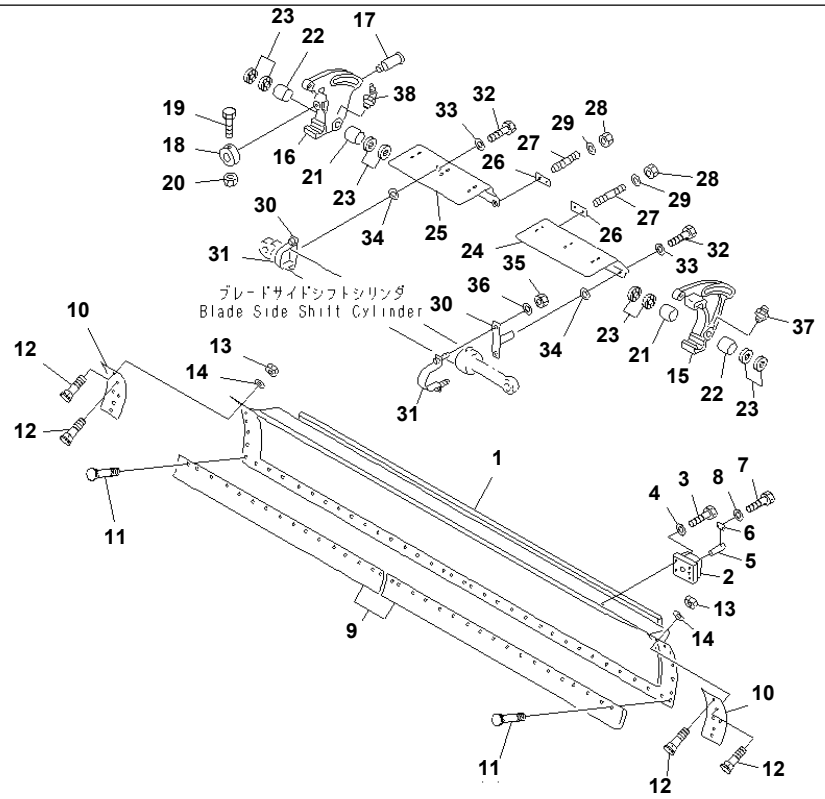

PS56944

BLADE (WITH WIDE EDGE)(#11028-12000)

Item	Part No.	Description	Qty	Options
1	235-70-12111	BLADE	1	SN:11028--12000
	235-70-12121	· RAIL (WELDED)	2	SN:11028--12000
2	235-70-11280	BRACKET	1	SN:11001--12000
3	01010-52075	BOLT	5	SN:11001--12000
4	01643-32060	WASHER	5	SN:11001--12000
5	235-70-11290	PIN	1	SN:11001--12000
6	04082-00212	LOCK	1	SN:11001--12000
7	01010-51225	BOLT	2	SN:11001--12000
8	01643-31232	WASHER	2	SN:11001--12000
9	235-70-12320	EDGE	2	SN:11001--12000
10	234-70-32230	EDGE,SIDE	2	SN:11001--12000
11	234-70-32270	BOLT	6	SN:11028--12000
12	234-70-32260	BOLT	38	SN:11028--12000
13	234-70-32290	NUT	44	SN:11001--12000
14	01643-32060	WASHER	44	SN:11001--12000
15	235-70-13262	ADJUSTER,L.H.	1	SN:11001--12000
16	235-70-13272	ADJUSTER,R.H.	1	SN:11001--12000
17	235-70-12161	SHAFT	1	SN:11001--12000
18	235-70-12350	COLLAR	1	SN:11001--12000
19	01011-51410	BOLT	1	SN:11001--12000
20	01598-01415	NUT	1	SN:11001--12000
21	235-70-13430	BUSHING	2	SN:11001--12000
22	235-70-13440	BUSHING	2	SN:11001--12000
23	235-70-13450	SEAL	8	SN:11001--12000
24	235-70-13332	COVER,L.H.	1	SN:11031--12000
	235-70-13331	COVER,L.H.	1	SN:11001--11030
25	235-70-13342	COVER,R.H.	1	SN:11031--12000

Printed By : Dwi Iswanto (airafather6107170)

BLADE (WITH WIDE EDGE)(#11028-12000)

Item	Part No.	Description	Qty	Options
	235-70-13341	COVER,R.H.	1	SN:11001--11030
26	235-70-13350	PLATE	2	SN:11001--12000
27	01124-51230	STUD	4	SN:11001--12000
28	01598-01214	NUT	4	SN:11001--12000
29	232-43-58360	WASHER	4	SN:11001--12000
30	235-70-31221	CLIP	2	SN:11001--12000
31	235-70-31211	CLIP	2	SN:11001--12000
32	01010-51230	BOLT	2	SN:11001--12000
33	01643-31232	WASHER	2	SN:11001--12000
34	232-43-58360	WASHER	2	SN:11001--12000
35	01598-01011	NUT	4	SN:11001--12000
36	01643-31032	WASHER	4	SN:11001--12000
37	07020-00000	FITTING,GREASE	1	SN:11001--12000
38	07020-00675	FITTING,GREASE	1	SN:11001--12000

Printed By : Dwi Iswanto (airafather6107170)

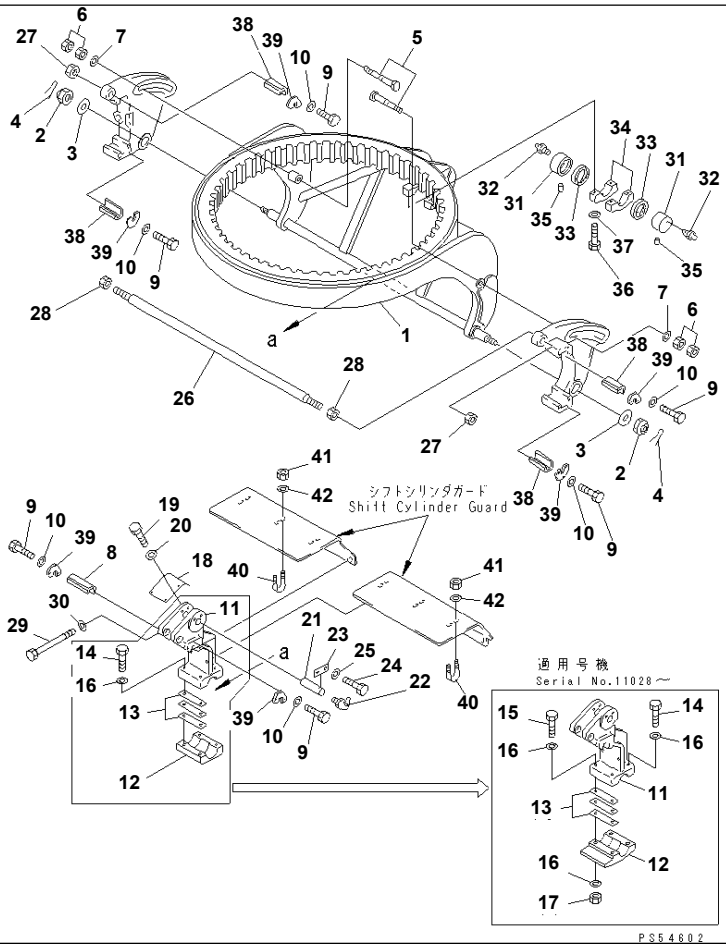

Ref. 7013 **Page 210090**

GD825A-2 S/N 11001-UP

CIRCLE SUPPORT(#11001-12050)

Item	Part No.	Description	Qty	Options
1	235-70-13112	SUPPORT	1	SN:11001--12050
2	01590-15254	NUT	2	SN:11001--12050
3	235-70-13220	WASHER	2	SN:11001--12050
4	04050-18090	PIN,COTTER	2	SN:11001--12050
5	235-70-13250	BOLT	2	SN:11001--12050
6	01580-13024	NUT	4	SN:11001--12050
7	235-70-13460	WASHER	2	SN:11001--12050
8	235-70-13320	GUIDE	1	SN:11001--12050
9	01010-51235	BOLT	30	SN:11001--12050
10	01643-31232	WASHER	30	SN:11001--12050
	235-70-00021	BRACKET ASS'Y	1	SN:11028--12050
	□235-70-00020	BRACKET ASS'Y	1	SN:11001--11027
11	☆	· BRACKET	1	SN:11028--12050
	☆	· BRACKET	1	SN:11001--11027
12	☆	· BRACKET	1	SN:11028--12050
	☆	· BRACKET	1	SN:11001--11027
13	235-70-00231	· SHIM ASS'Y	1	SN:11028--12050
	235-70-00230	· SHIM ASS'Y	1	SN:11001--11027
	☆	· · SHIM¤ 0.5MM	7	SN:11028--12050
	☆	· · SHIM¤ 0.5MM	7	SN:11001--11027
14	01011-52200	· BOLT	2	SN:11028--12050
	01010-51690	· BOLT	4	SN:11001--11027
15	196-01-11180	· BOLT	2	SN:11028--12050
16	01643-32260	· WASHER	6	SN:11028--12050
	01643-31645	· WASHER	4	SN:11001--11027
17	01580-12218	· NUT	2	SN:11028--12050
18	235-70-13370	COVER	1	SN:11001--12050

Ref. 7013 **Page 210090**

CIRCLE SUPPORT(#11001-12050)

Item	Part No.	Description	Qty	Options
19	01010-51016	BOLT	6	SN:11001--12050
20	01643-31032	WASHER	6	SN:11001--12050
21	235-70-13360	PIN	1	SN:11001--12050
22	07020-00675	FITTING,GREASE	1	SN:11001--12050
23	04082-00212	LOCK	1	SN:11001--12050
24	01010-51225	BOLT	2	SN:11001--12050
25	01643-31232	WASHER	2	SN:11001--12050
26	235-70-13242	ROD	1	SN:.--12050
	235-70-13241	ROD	1	SN:11001--.
27	235-70-31410	NUT	2	SN:11001--12050
28	01580-15242	NUT	2	SN:11001--12050
29	01011-51405	BOLT	2	SN:11001--12050
30	01643-31445	WASHER	2	SN:11001--12050
31	235-70-13291	BUSHING	2	SN:11001--12050
32	07020-00000	FITTING,GREASE	2	SN:11001--12050
33	07145-00085	SEAL,OIL	2	SN:11001--12050
34	235-70-13280	CAP	2	SN:11001--12050
35	144-70-15251	PIN	2	SN:11001--12050
36	01010-52090	BOLT	4	SN:11001--12050
37	01643-32060	WASHER	4	SN:11001--12050
38	235-70-12210	GUIDE	4	SN:11001--12050
39	235-70-12220	PLATE	10	SN:11001--12050
40	07283-26155	CLIP	6	SN:11001--12050
41	01599-01011	NUT	12	SN:11001--12050
42	234-54-13252	WASHER	12	SN:11001--12050

Printed By : Dwi Iswanto (airafather6107170)

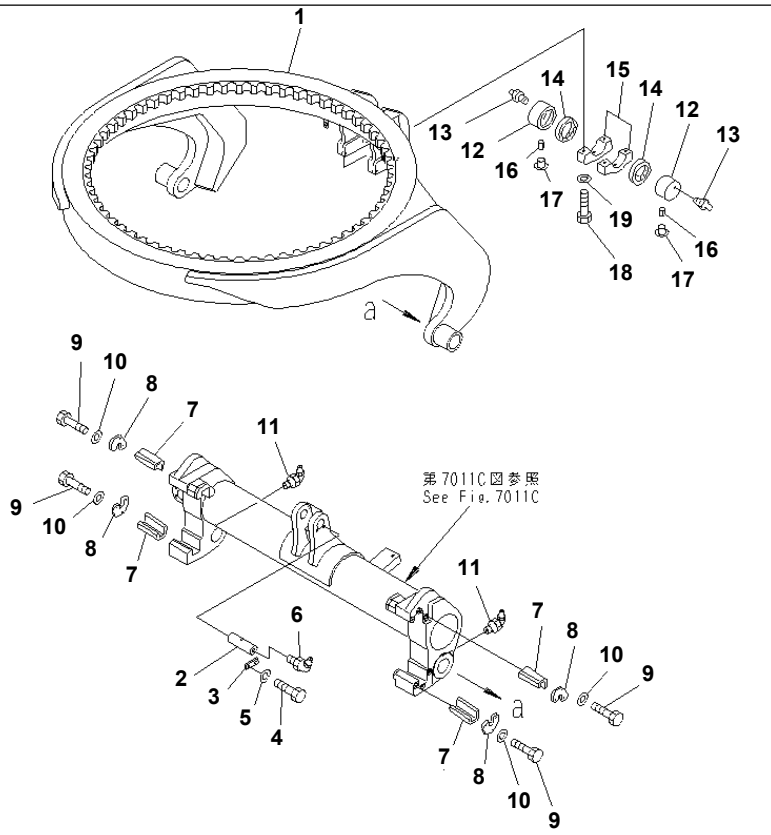

PR58181

GD825A-2 S/N 11001-UP

CIRCLE SUPPORT(#12051-)

Item	Part No.	Description	Qty	Options
1	235-70-43111	SUPPORT	1	SN:12091--
	235-70-43110	SUPPORT	1	SN:12051--12090
2	235-70-43190	PIN	1	SN:12051--
3	04082-00212	LOCK	1	SN:12051--
4	01010-81225	BOLT	2	SN:12051--
5	01643-31232	WASHER	2	SN:12051--
6	07020-00675	FITTING,GREASE	1	SN:12051--
7	235-70-42210	GUIDE	4	SN:12051--
8	235-70-12220	PLATE	4	SN:12051--
9	01010-81240	BOLT	12	SN:12051--
10	01643-31232	WASHER	12	SN:12051--
11	07020-00900	FITTING,GREASE	2	SN:12051--
12	235-70-13291	BUSHING	2	SN:12051--
13	07020-00000	FITTING,GREASE	2	SN:12051--
14	07145-00085	SEAL	2	SN:12051--
15	235-70-13280	CAP	2	SN:12051--
16	144-70-15251	PIN	2	SN:12051--
17	07048-01010	PLUG	2	SN:12051--
18	01010-82090	BOLT	4	SN:12051--
19	01643-32060	WASHER	4	SN:12051--

Printed By : Dwi Iswanto (airafather6107170)

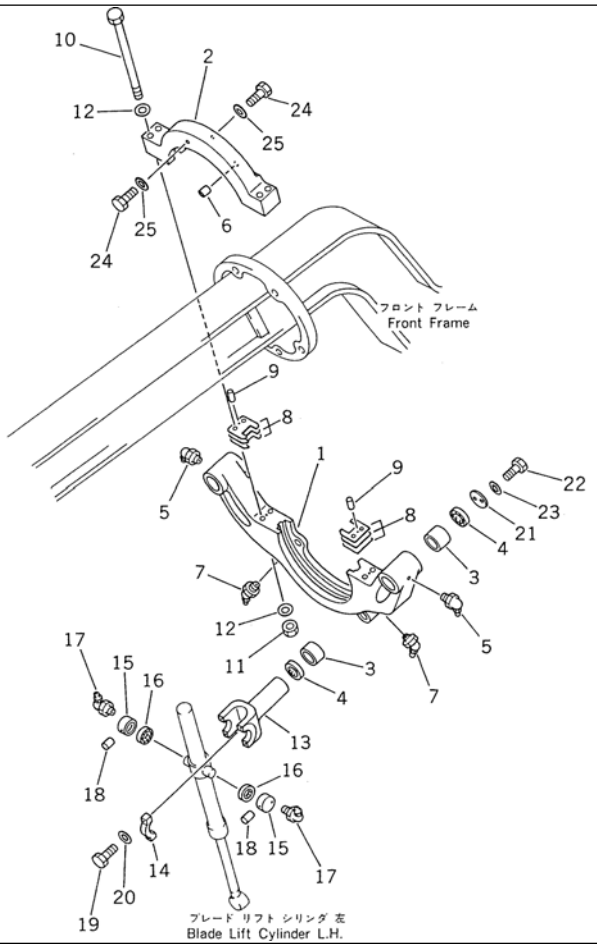

Ref. 7021 **Page 210110**

GD825A-2 S/N 11001-UP
BLADE LIFTER

Item	Part No.	Description	Qty	Options
	235-70-00013	BRACKET ASS'Y	1	SN:12051--
	235-70-00012	BRACKET ASS'Y	1	SN:11001--12050
1	☆	· BRACKET	1	SN:12051--
	☆	· BRACKET	1	SN:11001--12050
	235-70-14131	· · STUD,BALL (WELDED)	1	SN:12051--
	235-70-14130	· · STUD,BALL (WELDED)	1	SN:11001--12050
2	☆	· BRACKET	1	SN:11001--
3	07143-11107	BUSHING	4	SN:11001--
4	07145-00110	SEAL,DUST	4	SN:11001--
5	07020-00675	FITTING,GREASE	2	SN:11001--
6	235-70-14230	BUSHING	6	SN:11001--
7	07020-00675	FITTING,GREASE	2	SN:11001--
8	235-70-00110	SHIM ASS'Y	2	SN:11001--
	☆	· SHIM¤ 0.5MM	6	SN:11001--
9	04020-01842	PIN,DOWEL	2	SN:11001--
10	235-70-14220	BOLT	4	SN:11001--
11	01580-12419	NUT	4	SN:11001--
12	01643-32460	WASHER	8	SN:11001--
	235-70-00120	YOKE ASS'Y	2	SN:11001--
13	☆	· YOKE	1	SN:11001--
14	☆	· CAP	2	SN:11001--
15	234-70-33341	BUSHING	4	SN:11001--
16	07145-00075	SEAL	4	SN:11001--
17	07020-00900	FITTING,GREASE	4	SN:11001--
18	144-70-15251	PIN	4	SN:11001--
19	01010-51680	BOLT	8	SN:11001--
20	01643-31645	WASHER	8	SN:11001--

Printed By : Dwi Iswanto (airafather6107170)

BLADE LIFTER

Item	Part No.	Description	Qty	Options
21	235-70-14190	HOLDER	2	SN:11001--
22	01010-82055	BOLT	4	SN:11001--
23	01643-32060	WASHER	4	SN:11001--
24	01010-81220	BOLT	2	SN:11001--
25	01643-31232	WASHER	2	SN:11001--
26	07048-01010	PLUG	4	SN:12039--

Printed By : Dwi Iswanto (airafather6107170)

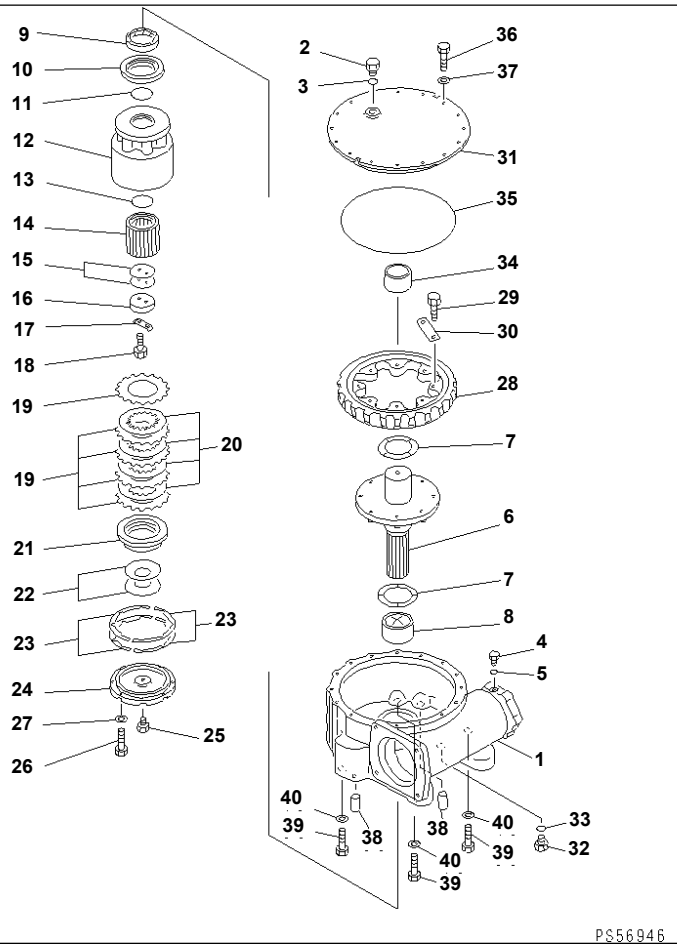

CIRCLE REVERSE GEAR (1/2)(#11001-11030)

Item	Part No.	Description	Qty	Options
	235-70-00212	GEAR ASS'Y,CIRCLE REVERSE	1	SN:11014--11030
	235-70-00211	GEAR ASS'Y,CIRCLE REVERSE	1	SN:11001--11013
THESE ASSEMBLIES CONSIST OF ALL PARTS SHOWN IN FIGS.7031 AND 7033.				
1	235-70-15112	· CASE	1	SN:11001--11030
2	07040-13016	· PLUG	1	SN:11001--@
3	07002-13034	· O-RING	1	SN:11001--@
4	07040-11409	· PLUG	2	SN:11001--@
5	07002-11423	· O-RING	2	SN:11001--@
6	235-70-15760	· SHAFT	1	SN:11001--@
7	235-70-15150	· WASHER	2	SN:11001--@
8	235-70-15250	· BUSHING	1	SN:11001--@
9	07012-00090	· SEAL,OIL	1	SN:11001--@
10	235-70-15740	· COLLAR	1	SN:11001--@
11	07000-05075	· O-RING	1	SN:11001--@
12	235-70-15732	· GEAR	1	SN:11014--@
	235-70-15731	· GEAR	1	SN:11001--11013
13	07000-05075	· O-RING	1	SN:11001--@
14	235-70-15770	· COUPLING	1	SN:11001--@
15	235-70-00180	· SHIM ASS'Y	1	SN:11001--@
	☆	· · SHIM¤ 0.2MM	5	SN:11001--@
	☆	· · SHIM¤ 0.5MM	2	SN:11001--@
	☆	· · SHIM¤ 1.0MM	4	SN:11001--@
16	235-70-15850	· HOLDER	1	SN:11001--@
17	04081-05512	· LOCK	1	SN:11001--@
18	01010-51255	· BOLT	2	SN:11001--@
19	419-15-12310	· PLATE	19	SN:11001--@
20	235-70-15920	· DISC	18	SN:11001--@

Printed By : Dwi Iswanto (airafather6107170)

CIRCLE REVERSE GEAR (1/2)(#11001-11030)

Item	Part No.	Description	Qty	Options
21	235-70-15780	· END,PLATE	1	SN:11001--@
22	235-70-15790	· SPRING	2	SN:11001--@
23	235-70-00190	· SHIM ASS'Y	1	SN:11001--@
	☆	· · SHIM¤ 0.2MM	10	SN:11001--@
	☆	· · SHIM¤ 0.5MM	6	SN:11001--@
	☆	· · SHIM¤ 1.0MM	14	SN:11001--@
24	235-70-15810	· COVER	1	SN:11001--@
25	07040-11409	· PLUG	1	SN:11001--@
26	01010-50825	· BOLT	8	SN:11001--@
27	01643-30823	· WASHER	8	SN:11001--@
28	235-70-15140	· WORM WHEEL	1	SN:11001--@
29	01090-51665	· BOLT	8	SN:11001--@
30	235-70-15170	· LOCK	4	SN:11001--@
31	235-70-15121	· COVER	1	SN:11001--@
32	07040-13016	· PLUG	1	SN:11001--@
33	07002-13034	· O-RING	1	SN:11001--@
34	235-70-15240	· BUSHING	1	SN:11001--@
35	07000-15385	· O-RING	1	SN:11001--@
36	01010-51230	· BOLT	16	SN:11001--@
37	01643-31232	· WASHER	16	SN:11001--@
38	235-70-15340	· PIN	2	SN:11001--11030
39	01010-52465	· BOLT	4	SN:11001--11030
40	01643-32460	· WASHER	4	SN:11001--11030

Printed By : Dwi Iswanto (airafather6107170)

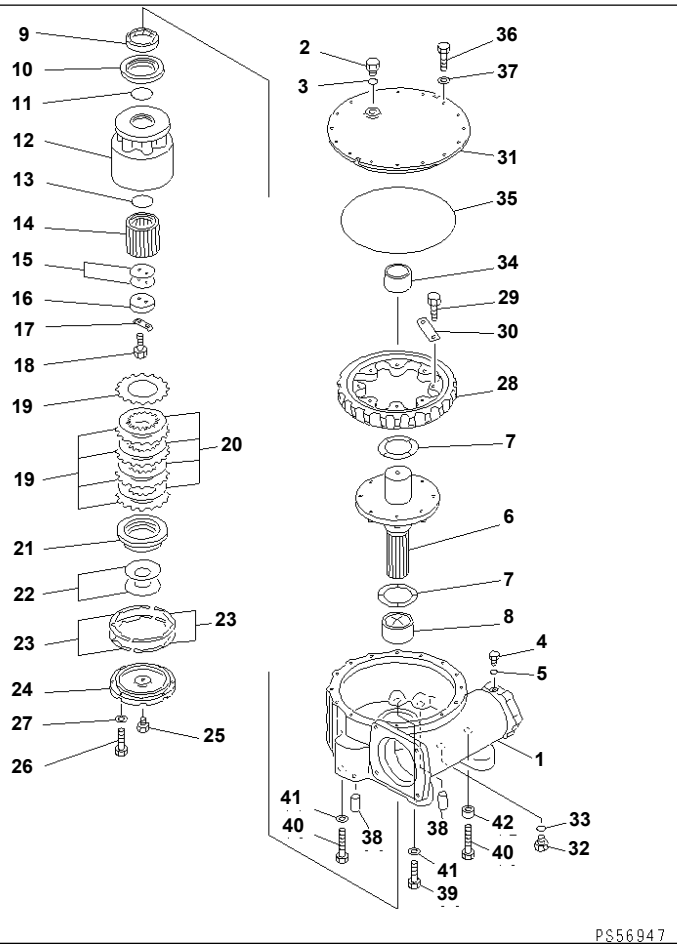

CIRCLE REVERSE GEAR (1/2)(#11031-12050)

Item	Part No.	Description	Qty	Options
	235-70-00214	GEAR ASS'Y,CIRCLE REVERSE	1	SN:12033--12050
	235-70-00213	GEAR ASS'Y		SN:11031--12032
THIS ASSEMBLY CONSISTS OF ALL PARTS SHOWN IN FIGS.7031A AND 7033.				
1	235-70-15114	· CASE	1	SN:12033--12050
	235-70-15113	· CASE	1	SN:11031--12032
2	07040-13016	· PLUG	1	SN:11001--12050
3	07002-13034	· O-RING	1	SN:11001--12050
4	07040-11409	· PLUG	2	SN:11001--12050
5	07002-11423	· O-RING	2	SN:11001--12050
6	235-70-15760	· SHAFT	1	SN:11001--12050
7	235-70-15150	· WASHER	1	SN:12033--12050
	235-70-45250	· WASHER	1	SN:12033--12050
	235-70-15150	· WASHER	2	SN:11001--12032
8	235-70-15250	· BUSHING	1	SN:11001--12050
9	07012-00090	· SEAL,OIL	1	SN:11001--12050
10	235-70-15740	· COLLAR	1	SN:11001--12050
11	07000-05075	· O-RING	1	SN:11001--12050
12	235-70-15732	· GEAR	1	SN:11014--12050
13	07000-05075	· O-RING	1	SN:11001--12050
14	235-70-15770	· COUPLING	1	SN:11001--12050
15	235-70-00180	· SHIM ASS'Y	1	SN:11001--12050
	☆	· · SHIM¤ 0.2MM	5	SN:11001--12050
	☆	· · SHIM¤ 0.5MM	2	SN:11001--12050
	☆	· · SHIM¤ 1.0MM	4	SN:11001--12050
16	235-70-15850	· HOLDER	1	SN:11001--12050
17	04081-05512	· LOCK	1	SN:11001--12050
18	01010-51255	· BOLT	2	SN:11001--12050

Printed By : Dwi Iswanto (airafather6107170)

CIRCLE REVERSE GEAR (1/2)(#11031-12050)

Item	Part No.	Description	Qty	Options
19	419-15-12310	· PLATE	19	SN:11001--12050
20	235-70-15920	· DISC	18	SN:11001--12050
21	235-70-15780	· END,PLATE	1	SN:11001--12050
22	235-70-15790	· SPRING	2	SN:11001--12050
23	235-70-00190	· SHIM ASS'Y	1	SN:11001--12050
	☆	· · SHIM¤ 0.2MM	10	SN:11001--12050
	☆	· · SHIM¤ 0.5MM	6	SN:11001--12050
	☆	· · SHIM¤ 1.0MM	14	SN:11001--12050
24	235-70-15810	· COVER	1	SN:11001--12050
25	07040-11409	· PLUG	1	SN:11001--12050
26	01010-50825	· BOLT	8	SN:11001--12050
27	01643-30823	· WASHER	8	SN:11001--12050
28	235-70-15140	· WORM WHEEL	1	SN:11001--12050
29	01090-51665	· BOLT	8	SN:11001--12050
30	235-70-15170	· LOCK	4	SN:11001--12050
31	235-70-15121	· COVER	1	SN:11001--12050
32	07040-13016	· PLUG	1	SN:11001--12050
33	07002-13034	· O-RING	1	SN:11001--12050
34	235-70-15240	· BUSHING	1	SN:11001--12050
35	07000-15385	· O-RING	1	SN:11001--12050
36	01010-51230	· BOLT	16	SN:11001--12050
37	01643-31232	· WASHER	16	SN:11001--12050
38	235-70-15341	· PIN	2	SN:11031--12050
39	01010-52780	· BOLT	1	SN:11031--12050
40	01011-52720	· BOLT	3	SN:11031--12050
41	01643-32780	· WASHER	2	SN:11031--12050
42	235-70-31180	· SEAT	2	SN:11031--12050

Printed By : Dwi Iswanto (airafather6107170)

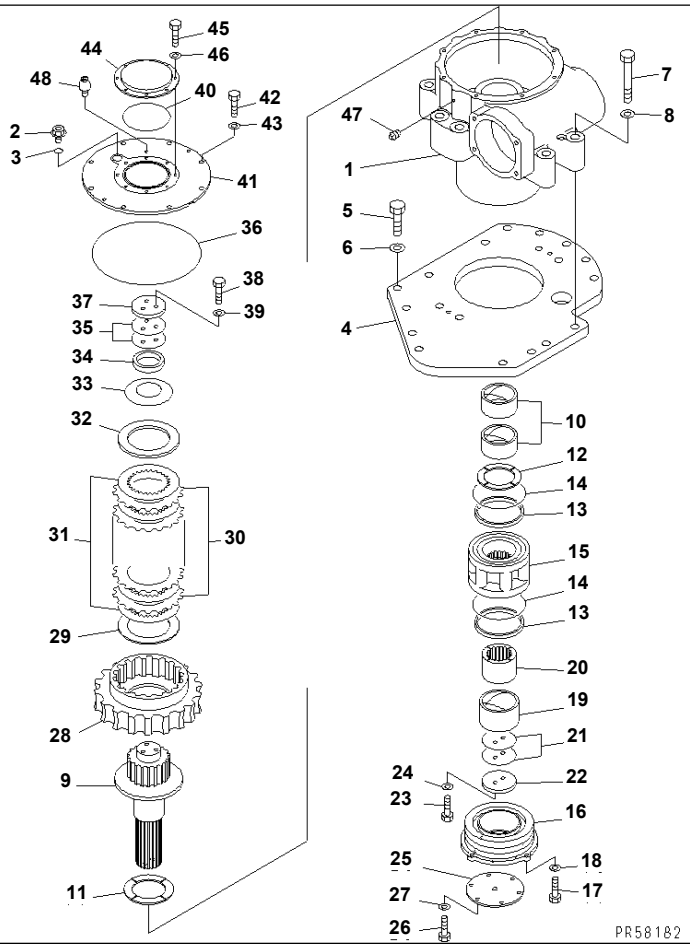

Ref. 7031B **Page 210140**

GD825A-2 S/N 11001-UP

CIRCLE REVERSE GEAR (1/2)(#12051-)

Item	Part No.	Description	Qty	Options
	235-70-00310	GEAR ASS'Y,CIRCLE REVERSE	1	SN:12051--
THIS ASSEMBLY CONSISTS OF ALL PARTS SHOWN IN FIGS.7031B AND 7033A.				
1	235-70-45110	· CASE	1	SN:12051--
2	07041-13012	· PLUG	2	SN:12051--
3	07002-13034	· O-RING	2	SN:12051--
4	235-70-45190	· PLATE	1	SN:12051--
5	01010-82060	· BOLT	11	SN:12051--
6	01643-32060	· WASHER	11	SN:12051--
7	01011-82440	· BOLT	8	SN:12051--
8	01643-32460	· WASHER	8	SN:12051--
9	235-70-45170	· SHAFT	1	SN:12051--
10	235-70-45240	· BUSHING	2	SN:12051--
11	235-70-45250	· WASHER	1	SN:12051--
12	235-70-45370	· WASHER	1	SN:12051--
	198-30-00072	· FLOATING SEAL ASS'Y	2	SN:12051--
13	☆	· · RING	2	SN:12051--
14	☆	· · O-RING	2	SN:12051--
15	235-70-45161	· GEAR	1	SN:12099--
	□235-70-45160	· GEAR	1	SN:12051--12098
16	235-70-45180	· HOUSING	1	SN:12051--
17	01010-81035	· BOLT	4	SN:12051--
18	01643-31032	· WASHER	4	SN:12051--
19	235-70-45220	· BUSHING	1	SN:12051--
20	235-70-45230	· COLLAR	1	SN:12051--
21	235-70-00260	· SHIM ASS'Y	1	SN:12051--
	☆	· · SHIM¤ 1.0MM	4	SN:12051--
	☆	· · SHIM¤ 0.5MM	4	SN:12051--

Printed By : Dwi Iswanto (airafather6107170)

CIRCLE REVERSE GEAR (1/2)(#12051-)

Item	Part No.	Description	Qty	Options
	☆	· · SHIM¤ 0.2MM	5	SN:12051--
22	235-70-15850	· HOLDER	1	SN:12051--
23	04081-05512	· LOCK	1	SN:12051--
24	01010-81235	· BOLT	2	SN:12051--
25	235-70-45210	· COVER	1	SN:12051--
26	01010-81025	· BOLT	6	SN:12051--
27	01643-31032	· WASHER	6	SN:12051--
28	235-70-00320	· GEAR ASS'Y,WORM	1	SN:12051--
	☆	· · WHEEL,WORM	1	SN:12051--
	☆	· · WORM,(SEE FIG. 7033A)	1	SN:12051--
29	235-70-45260	· SPACER	1	SN:12051--
30	714-07-12680	· PLATE,SEPARATE	10	SN:12051--
31	235-70-45430	· DISC	11	SN:12051--
32	235-70-45270	· SPACER	1	SN:12051--
33	235-70-45360	· SPRING	1	SN:12051--
34	235-70-45290	· SPACER	1	SN:12051--
35	235-70-00270	· SHIM ASS'Y	1	SN:12051--
	☆	· · SHIM¤ 0.5MM	10	SN:12051--
	☆	· · SHIM¤ 0.2MM	10	SN:12051--
36	07000-15310	· O-RING	1	SN:12051--
37	235-70-45320	· HOLDER	1	SN:12051--
38	01010-81235	· BOLT	3	SN:12051--
39	01643-31232	· WASHER	3	SN:12051--
40	07000-12135	· O-RING	1	SN:12051--
41	235-70-45120	· COVER	1	SN:12051--
42	01010-81235	· BOLT	8	SN:12051--
43	01643-31232	· WASHER	8	SN:12051--
44	235-70-45350	· COVER	1	SN:12051--
45	01010-80820	· BOLT	8	SN:12051--
46	01643-30823	· WASHER	8	SN:12051--
47	07042-30108	· PLUG	1	SN:12051--
48	07030-01030	· BREATHER	1	SN:12051--

Printed By : Dwi Iswanto (airafather6107170)

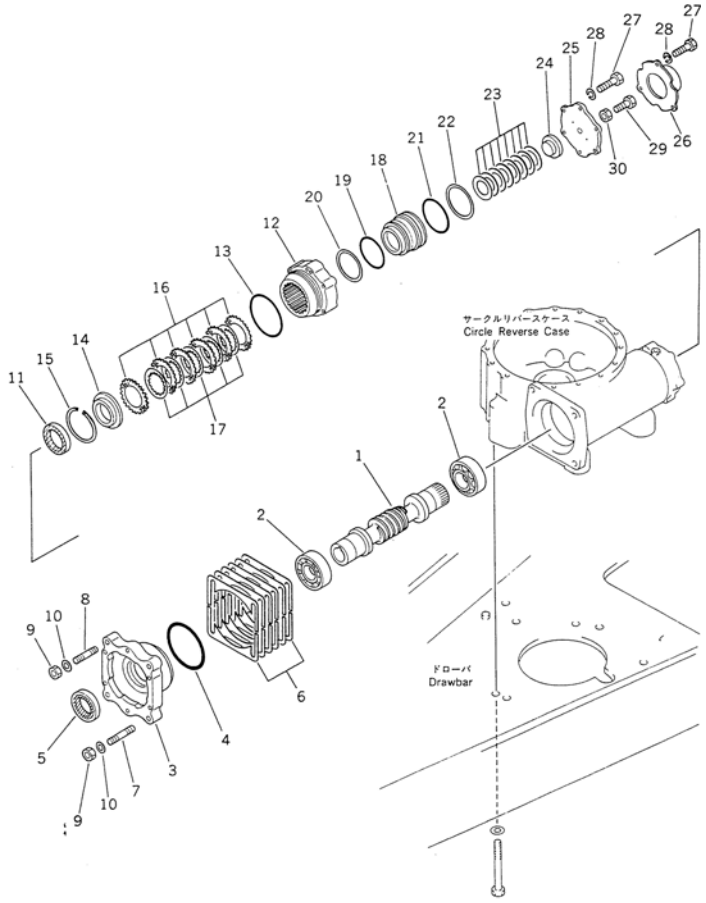

GD825A-2 S/N 11001-UP

CIRCLE REVERSE GEAR (2/2)(#11001-12050)

Item	Part No.	Description	Qty	Options
	(235-70-00213)	GEAR ASS'Y,CIRCLE REVERSE	1	SN:11031--12050
	(235-70-00212)	GEAR ASS'Y,CIRCLE REVERSE	1	SN:11014--11030
	(235-70-00211)	GEAR ASS'Y,CIRCLE REVERSE	1	SN:11001--11013
THESE ASSEMBLIES CONSIST OF ALL PARTS SHOWN IN FIGS.7031 AND 7033.				
1	235-70-15160	· WORM	1	SN:11001--12050
2	06002-33215	· BEARING	2	SN:11001--12050
3	235-70-15190	· HOUSING	1	SN:11001--12050
4	07000-15150	· O-RING	1	SN:11001--12050
5	07011-00075	· SEAL,OIL	1	SN:11001--12050
6	235-70-00140	· SHIM ASS'Y	1	SN:11001--12050
	☆	· · SHIM¤ 0.1MM	8	SN:11001--12050
	☆	· · SHIM¤ 0.2MM	12	SN:11001--12050
	☆	· · SHIM¤ 1.0MM	4	SN:11001--12050
7	01140-51665	· STUD	3	SN:11001--12050
8	01140-51655	· STUD	1	SN:11001--12050
9	01582-11613	· NUT	4	SN:11001--12050
10	01643-31645	· WASHER	4	SN:11001--12050
11	07011-00075	· SEAL,OIL	1	SN:11001--12050
12	235-70-15261	· HOUSING	1	SN:11001--12050
13	07000-15140	· O-RING	1	SN:11001--12050
14	7720-30-2620	· PLATE	1	SN:11001--12050
15	235-70-15350	· RING,SNAP	1	SN:11001--12050
16	7720-30-2590	· DISC	6	SN:11001--12050
17	7720-30-2610	· DISC	5	SN:11001--12050
18	235-70-15281	· PISTON	1	SN:11001--12050
19	07000-15105	· O-RING	1	SN:11001--12050
20	07001-05105	· RING,BACK-UP	1	SN:11001--12050

Printed By : Dwi Iswanto (airafather6107170)

CIRCLE REVERSE GEAR (2/2)(#11001-12050)

Item	Part No.	Description	Qty	Options
21	07000-15125	· O-RING	1	SN:11001--12050
22	07001-05125	· RING,BACK-UP	1	SN:11001--12050
23	235-70-15320	· SPRING	8	SN:11001--12050
24	235-70-15311	· PLATE	1	SN:11001--12050
25	235-70-15270	· COVER	1	SN:11001--12050
26	235-70-15330	· COVER	1	SN:11001--12050
27	01010-51280	· BOLT	6	SN:11001--12050
28	01643-31232	· WASHER	6	SN:11001--12050
29	235-70-15291	· BOLT	1	SN:11001--12050
30	01583-12414	· NUT	1	SN:11001--12050

Printed By : Dwi Iswanto (airafather6107170)

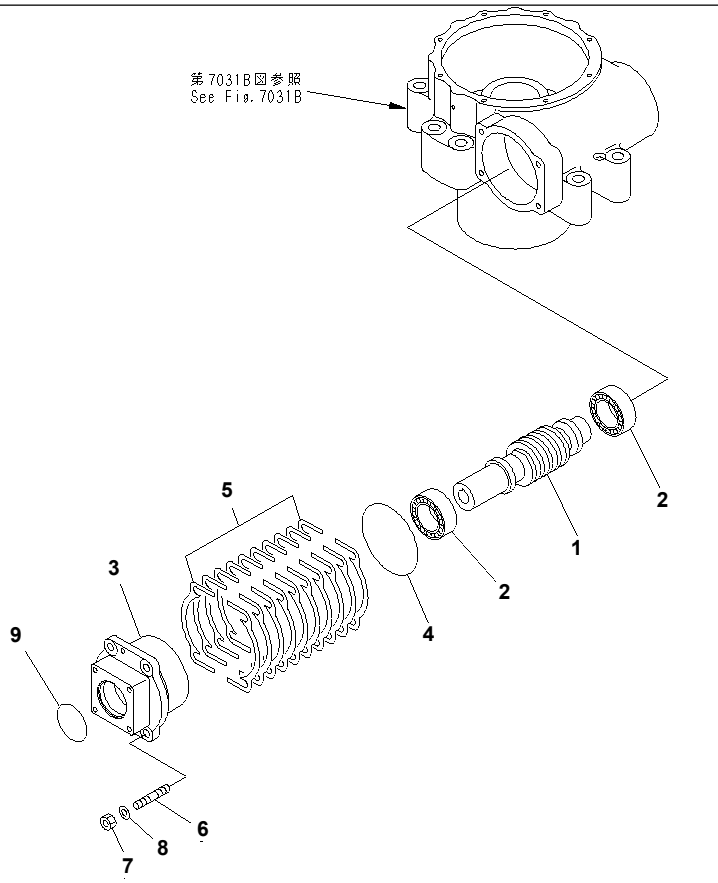

CIRCLE REVERSE GEAR (2/2)(#12051-)

Item	Part No.	Description	Qty	Options
	(235-70-00310)	GEAR ASS'Y,CIRCLE REVERSE	1	SN:12051--
THIS ASSEMBLY CONSISTS OF ALL PARTS SHOWN IN FIGS.7031B AND 7033A.				
	(235-70-00320)	· GEAR ASS'Y,WORM	1	SN:12051--
1	☆	· · WORM	1	SN:12051--
	☆	· · WHEEL,(SEE FIG. 7031B)	1	SN:12051--
2	06302-30313	· BEARING	2	SN:12051--
3	235-70-45150	· HOUSING	1	SN:12051--
4	07000-15160	· O-RING	1	SN:12051--
5	235-70-00280	· SHIM ASS'Y	1	SN:12051--
	☆	· · SHIM	10	SN:12051--
	☆	· · SHIM	10	SN:12051--
6	01144-51645	· STUD	4	SN:12051--
7	01580-11613	· NUT	4	SN:12051--
8	01643-31645	· WASHER	4	SN:12051--
9	07000-12085	· O-RING	1	SN:12051--

Printed By : Dwi Iswanto (airafather6107170)

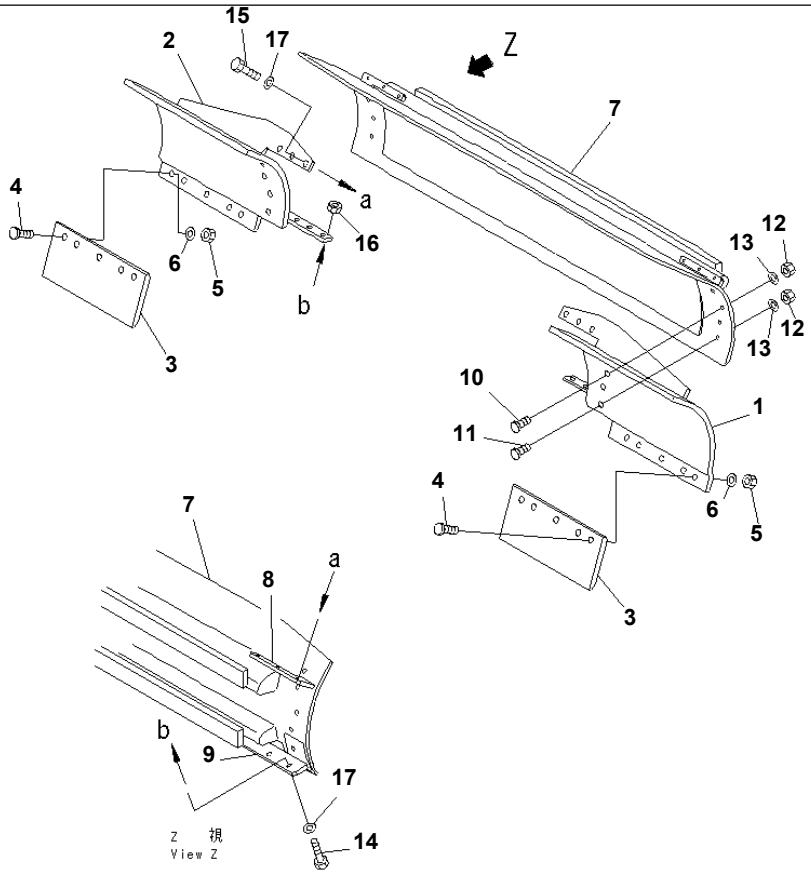

Ref. 7111 **Page 210170**

GD825A-2 S/N 11001-UP
EXTENSION BLADE(#12001-)

Item	Part No.	Description	Qty	Options
1	235-755-1121	BLADE,EXTENTION¤ L.H.	1	SN:12001--
2	235-755-1131	BLADE,EXTENTION¤ R.H.	1	SN:12001--
3	235-70-12390	EDGE	2	SN:12001--
4	234-70-32260	BOLT	10	SN:12001--
5	234-70-32290	NUT	10	SN:12001--
6	01643-32060	WASHER	10	SN:12001--
	235-755-0010	BLADE ASS'Y	1	SN:12001--
7	235-70-12112	· BLADE	1	SN:12001--
8	235-755-1141	· PLATE (WELDED)	2	SN:12001--
9	235-755-1151	· PLATE (WELDED)	2	SN:12001--
10	235-70-12230	BOLT	8	SN:12001--
11	235-70-12340	BOLT	2	SN:12001--
12	234-70-32290	NUT	10	SN:12001--
13	01643-32060	WASHER	10	SN:12001--
14	01010-51670	BOLT	6	SN:12001--
15	01010-51650	BOLT	6	SN:12001--
16	01580-11613	NUT	6	SN:12001--
17	01643-31645	WASHER	12	SN:12001--

Printed By : Dwi Iswanto (airafather6107170)

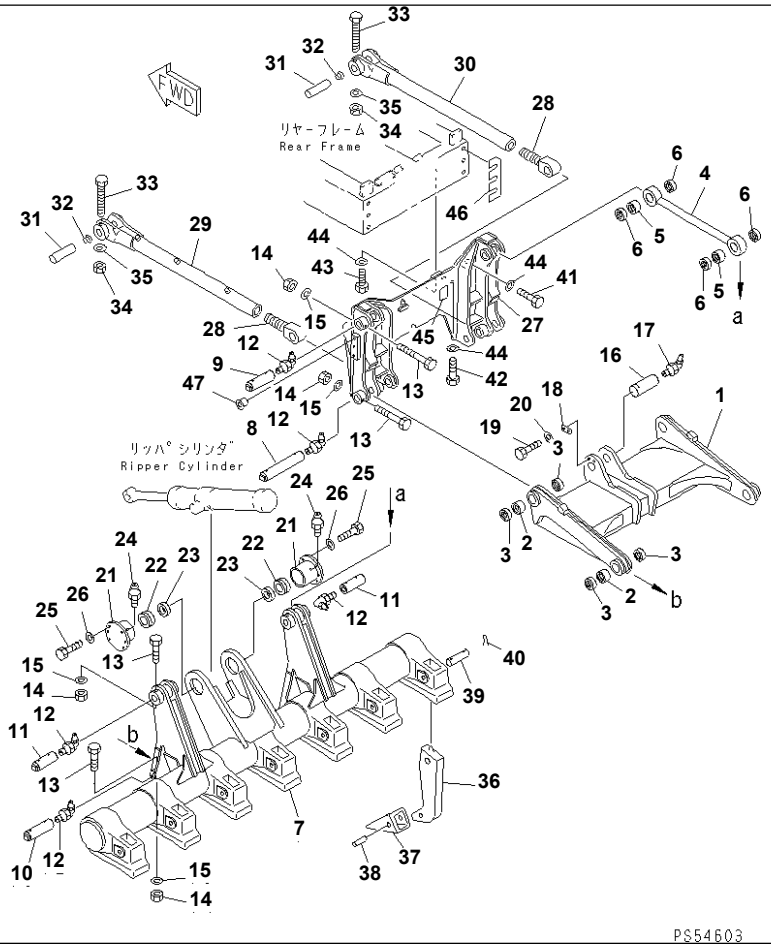

GD825A-2 S/N 11001-UP

REAR MOUNT RIPPER

Item	Part No.	Description	Qty	Options
1	235-785-1161	LINK	1	SN:11001--
2	07143-10606	BUSHING	4	SN:11001--
3	07145-00060	SEAL,DUST	8	SN:11001--
4	235-785-1170	ROD	2	SN:11001--
5	234-785-1620	BUSHING	4	SN:11001--
6	07145-00060	SEAL,DUST	8	SN:11001--
7	235-785-1111	BRACKET	1	SN:11001--
8	235-785-1210	PIN	2	SN:11001--
9	235-785-1270	PIN	2	SN:11001--
10	235-785-1220	PIN	2	SN:11001--
11	235-785-1230	PIN	2	SN:11001--
12	07020-00900	FITTING,GREASE	8	SN:11001--
13	01011-51025	BOLT	8	SN:11001--
14	01580-11008	NUT	8	SN:11001--
15	01643-31032	WASHER	8	SN:11001--
16	235-785-1290	PIN	1	SN:11001--
17	07020-00900	FITTING,GREASE	1	SN:11001--
18	04082-00514	LOCK	1	SN:11001--
19	01010-51435	BOLT	2	SN:11001--
20	01643-31445	WASHER	2	SN:11001--
21	234-785-1711	SUPPORT	2	SN:.--
	234-785-1710	SUPPORT	2	SN:11001--.
22	234-785-1610	BUSHING	2	SN:11001--
23	07145-00090	SEAL,DUST	2	SN:11001--
24	07020-00000	FITTING,GREASE	2	SN:11001--
25	01010-51245	BOLT	8	SN:11001--
26	01643-31232	WASHER	8	SN:11001--

Printed By : Dwi Iswanto (airafather6107170)

REAR MOUNT RIPPER

Item	Part No.	Description	Qty	Options
27	235-785-1150	BRACKET	1	SN:11001--
28	234-785-1261	BOLT,EYE	2	SN:11001--
29	235-785-5110	ROD,L.H.	1	SN:11001--
30	235-785-1180	ROD,R.H.	1	SN:11001--
31	235-785-1190	PIN	2	SN:11001--
32	07048-01210	PLUG	2	SN:11001--
33	01011-51025	BOLT	2	SN:11001--
34	01580-11008	NUT	2	SN:11001--
35	01643-31032	WASHER	2	SN:11001--
36	235-785-1250	SHANK	3	SN:11001--
37	235-785-1310	POINT	3	SN:.--
	235-785-1260	POINT	3	SN:11001--.
38	09244-02516	PIN	3	SN:11001--
39	235-785-1240	PIN	3	SN:11001--
40	04050-10070	PIN,COTTER	6	SN:11001--
41	01010-52465	BOLT	6	SN:11001--
42	01010-52455	BOLT	4	SN:.--
	01010-52470	BOLT	4	SN:11001--.
43	01010-52455	BOLT	2	SN:11001--
44	01643-32460	WASHER	12	SN:11001--
45	235-53-31440	PLATE¤ CAUTION,SHANK	1	SN:11001--
46	235-785-0020	SHIM ASS'Y	1	SN:11001--
	☆	· SHIM¤ 0.5MM	2	SN:11001--
47	07048-02516	PLUG	6	SN:11001--

Printed By : Dwi Iswanto (airafather6107170)

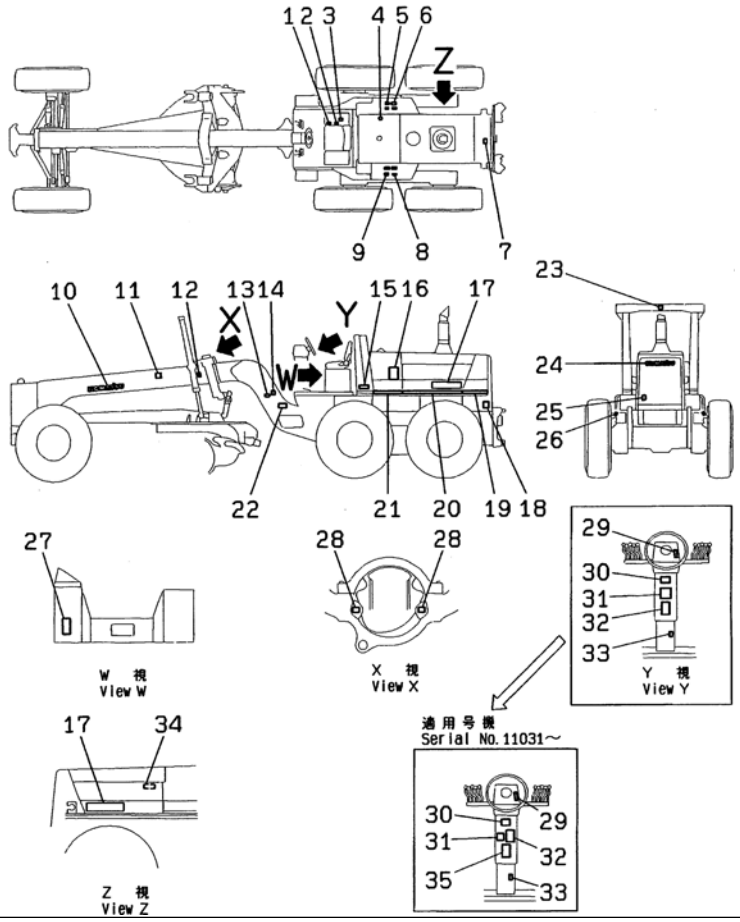

MARKS AND PLATES (ENGLISH) (TEXTUAL PLATES)(#11001-12000)

Item	Part No.	Description	Qty	Options
1	235-45-31270	PLATE¤ INSTRUCTION,SHIFT LOCK¤ FREE	1	SN:11001--@
2	235-45-31260	PLATE¤ INSTRUCTION,SHIFT LOCK	1	SN:11001--@
3	09683-0000A	PLATE¤ OPERATING,STARTER	1	SN:11031--@
	09683-30150	PLATE¤ OPERATING,STARTER	1	SN:11001--11030
4	14X-98-11521	PLATE¤ CAUTION,HYDRAULIC TANK CAP	1	SN:11001--@
5	235-53-31140	PLATE¤ INSTRUCTION,BATTERY CABLE	2	SN:11001--@
6	235-53-31210	PLATE¤ INSTRUCTION,BATTERY	2	SN:11001--@
7	14X-98-11531	PLATE¤ SAFETY,RADIATOR CAP	1	SN:11001--@
8	235-53-31220	PLATE¤ INSTRUCTION,BATTERY	2	SN:11001--@
9	09664-30068	PLATE¤ INSTRUCTION,BATTERY (FOR USA¤ PUERTO RICO)	2	SN:11001--@
10	09690-B0710	PLATE¤ MARK,KOMATSU	2	SN:11001--@
11	235-53-31130	PLATE¤ SAFETY,ACCUMULATOR	2	SN:11001--@
12	09960-01084	PLATE¤ MARK,HANDLING	2	SN:11001--12000
13	235-53-31170	PLATE¤ CAUTION,ARTICULATE LOCK	2	SN:11001--@
14	235-53-31190	PLATE¤ SAFETY,KEEP OUT	2	SN:11001--@
15	09620-30200	PLATE¤ NAME,ROPS(EXCEPT U.S.A. AND CANADA)	1	SN:11001--@
	09620-30201	PLATE¤ NAME,ROPS (FOR U.S.A. AND CANADA)	1	SN:11001--@
16	235-53-31110	OIL CHART	1	SN:11001--12000
17	235-53-11631	MARK,GD825A	2	SN:11001--12000
18	23E-53-11650	PLATE¤ MARK,LIFTING	1	SN:11001--@
19	235-53-11540	STRIPE	2	SN:11001--12000
20	235-53-11530	STRIPE	2	SN:11001--12000
21	235-53-11520	STRIPE	2	SN:11001--12000
22	09602-01635	PLATE¤ NAME,(LIMITED SUPPLY)	1	SN:11001--@
	04418-03060	SCREW	4	SN:11001--@
23	235-53-31180	PLATE¤ CAUTION,CAB LIFT	1	SN:11001--@
24	09690-C0450	PLATE¤ MARK,KOMATSU	1	SN:11001--@

Printed By : Dwi Iswanto (airafather6107170)

MARKS AND PLATES (ENGLISH) (TEXTUAL PLATES)(#11001-12000)

Item	Part No.	Description	Qty	Options
25	234-53-32340	TAG	1	SN:11001--@
26	09960-01084	PLATE¤ MARK,HANDLING	2	SN:11001--12000
27	235-53-31120	PLATE¤ CAUTION,FUSE	1	SN:11001--@
28	235-53-31160	PLATE¤ CAUTION,AIR CYLINDER	2	SN:11001--@
29	23A-53-11550	PLATE¤ OPERATING,TURN SIGNAL	1	SN:11001--@
30	235-53-31150	PLATE¤ SAFETY,BANK PIN	1	SN:11001--@
31	14X-98-11580	PLATE¤ SAFETY,BEFORE OPERATING	1	SN:11001--@
32	235-53-31230	PLATE¤ SAFETY	1	SN:11001--@
33	234-53-32310	PLATE¤ SAFETY,ACCEL. AND DECEL. PEDAL	1	SN:11001--@
34	09637-30161	PLATE¤ INSTRUCTION,AIR CLEANER	1	SN:11001--12000
35	235-53-31250	PLATE¤ SAFETY	1	SN:11031--@

Printed By : Dwi Iswanto (airafather6107170)

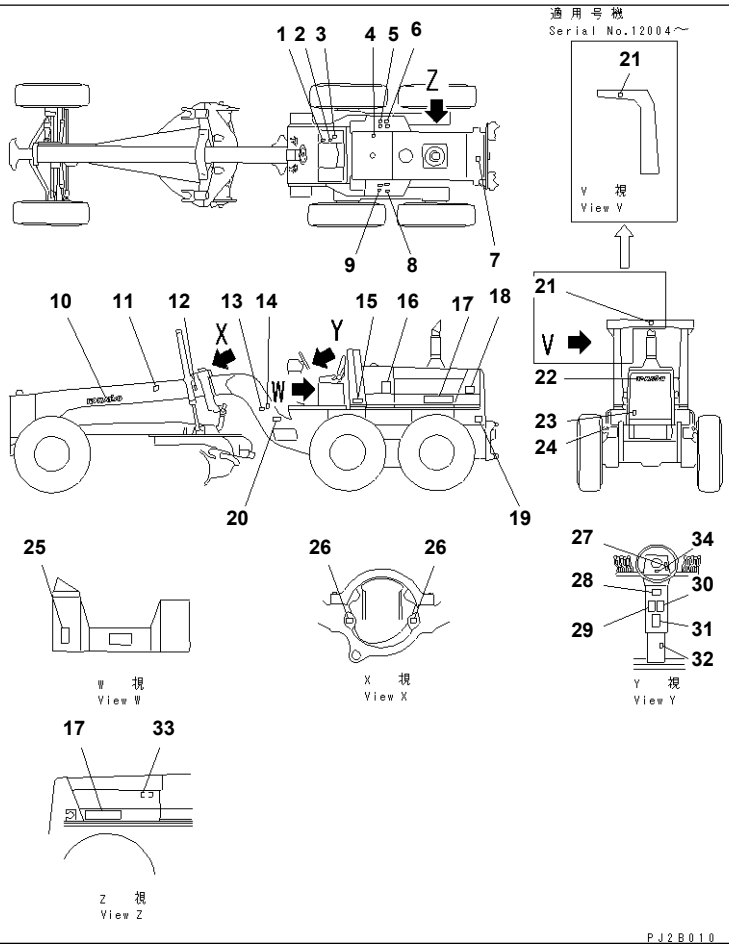

MARKS AND PLATES (ENGLISH) (TEXTUAL PLATES)(#12001-)

Item	Part No.	Description	Qty	Options
1	235-45-31270	PLATE¤ INSTRUCTION,SHIFT LOCK¤ FREE	1	SN:11001--
2	235-45-31260	PLATE¤ INSTRUCTION,SHIFT LOCK	1	SN:11001--
3	09683-0000A	PLATE¤ OPERATING,STARTER	1	SN:11031--
4	14X-98-11521	PLATE¤ CAUTION,HYDRAULIC TANK CAP	1	SN:11001--
5	235-53-31140	PLATE¤ INSTRUCTION,BATTERY CABLE	2	SN:11001--
6	235-53-31210	PLATE¤ INSTRUCTION,BATTERY	2	SN:11001--
7	14X-98-11531	PLATE¤ SAFETY,RADIATOR CAP	1	SN:11001--
8	235-53-31220	PLATE¤ INSTRUCTION,BATTERY	2	SN:11001--
9	09664-30068	PLATE¤ INSTRUCTION,BATTERY (FOR USA¤ PUERTO RICO)	2	SN:11001--
10	09690-B0710	PLATE¤ MARK,KOMATSU	2	SN:11001--
11	235-53-31130	PLATE¤ SAFETY,ACCUMULATOR	2	SN:11001--
12	09960-01001	PLATE¤ MARK,HANDLING	2	SN:12001--
13	235-53-31170	PLATE¤ CAUTION,ARTICULATE LOCK	2	SN:11001--
14	235-53-31190	PLATE¤ SAFETY,KEEP OUT	2	SN:11001--
15	09620-30200	PLATE¤ NAME,ROPS(EXCEPT U.S.A. AND CANADA)	1	SN:11001--
	09620-30201	PLATE¤ NAME,ROPS (FOR U.S.A. AND CANADA)	1	SN:11001--
16	235-53-31111	OIL CHART	1	SN:12001--
17	235-53-11632	MARK,GD825A	2	SN:12001--
18	235-53-31240	PLATE¤ CAUTION	2	SN:12001--
19	23E-53-11650	PLATE¤ MARK,LIFTING	1	SN:11001--
20	09602-01635	PLATE¤ NAME,(LIMITED SUPPLY)	1	SN:11001--
	04418-03060	SCREW	4	SN:11001--
21	235-53-31180	PLATE¤ CAUTION	2	SN:12004--
	235-53-31180	PLATE¤ CAUTION,CAB LIFT	1	SN:11001--12003
22	09690-C0450	PLATE¤ MARK,KOMATSU	1	SN:11001--
23	234-53-32340	TAG	1	SN:11001--
24	09960-01001	PLATE¤ MARK,HANDLING	2	SN:12001--

Printed By : Dwi Iswanto (airafather6107170)

MARKS AND PLATES (ENGLISH) (TEXTUAL PLATES)(#12001-)

Item	Part No.	Description	Qty	Options
25	235-53-31120	PLATE¤ CAUTION,FUSE	1	SN:11001--
26	235-53-31160	PLATE¤ CAUTION,AIR CYLINDER	2	SN:11001--
27	23A-53-11550	PLATE¤ OPERATING,TURN SIGNAL	1	SN:11001--
28	235-53-31150	PLATE¤ SAFETY,BANK PIN	1	SN:11001--
29	14X-98-11580	PLATE¤ SAFETY,BEFORE OPERATING	1	SN:11001--
30	235-53-31230	PLATE¤ SAFETY	1	SN:11001--
31	235-53-31250	PLATE¤ SAFETY	1	SN:11031--
32	234-53-32310	PLATE¤ SAFETY,ACCEL. AND DECEL. PEDAL	1	SN:11001--
33	09637-30163	PLATE¤ INSTRUCTION,AIR CLEANER	1	SN:12001--
34	235-53-31290	PLATE¤ CAUTION	1	SN:.--

Printed By : Dwi Iswanto (airafather6107170)

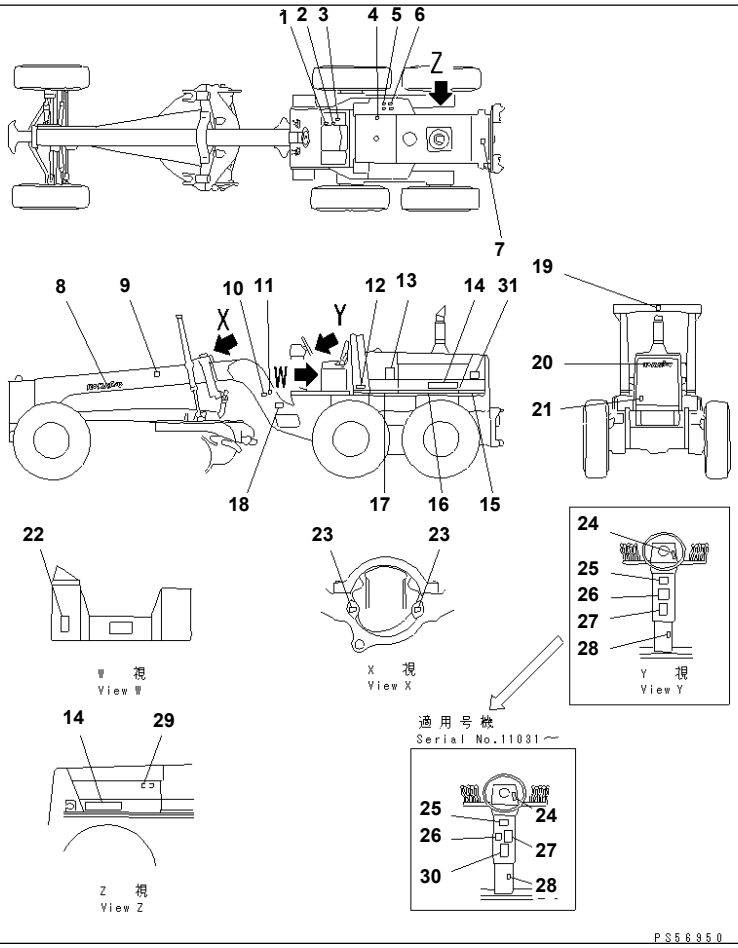

Ref. 9804 **Page 240030**

GD825A-2 S/N 11001-UP

MARKS AND PLATES (SPANISH)(#11001-12000)

Item	Part No.	Description	Qty	Options
1	235-45-31270	PLATE¤ INSTRUCTION,SHIFT LOCK¤ FREE	1	SN:11001--12000
2	235-45-31260	PLATE¤ INSTRUCTION,SHIFT LOCK	1	SN:11001--12000
3	09683-0000A	PLATE¤ OPERATING,STARTER	1	SN:11031--12000
	09683-11150	PLATE¤ OPERATING,STARTER	1	SN:11001--11030
4	235-53-32330	PLATE¤ CAUTION,HYDRAULIC TANK CAP	1	SN:11001--12000
5	235-53-32150	PLATE¤ INSTRUCTION,BATTERY CABLE	2	SN:11001--12000
6	235-53-32160	PLATE¤ INSTRUCTION,BATTERY	2	SN:11001--12000
7	235-53-32320	PLATE,RADIATOR CAP	1	SN:11001--12000
8	09690-B0710	PLATE¤ MARK,KOMATSU	2	SN:11001--12000
9	235-53-32140	PLATE¤ SAFETY,ACCUMULATOR	2	SN:11001--12000
10	235-53-32190	PLATE¤ CAUTION,ARTICULATE LOCK	2	SN:11001--12000
11	235-53-32130	PLATE¤ SAFETY,KEEP OUT	2	SN:11001--12000
12	09620-10200	PLATE¤ NAME,ROPS	1	SN:11001--12000
13	235-53-32110	OIL CHART	1	SN:11001--12000
14	235-53-11631	MARK,GD825A	2	SN:11001--12000
15	235-53-11540	STRIPE	2	SN:11001--12000
16	235-53-11530	STRIPE	2	SN:11001--12000
17	235-53-11520	STRIPE	2	SN:11001--12000
18	09602-11635	PLATE¤ NAME,(LIMITED SUPPLY)	1	SN:11001--12000
	04418-03060	SCREW	4	SN:11001--12000
19	235-53-32220	PLATE¤ CAUTION,CAB LIFT	1	SN:11001--12000
20	09690-C0450	PLATE¤ MARK,KOMATSU	1	SN:11001--12000
21	235-53-32270	TAG	1	SN:11001--12000
22	235-53-32230	PLATE¤ CAUTION,FUSE	1	SN:11001--12000
23	235-53-32180	PLATE¤ CAUTION,AIR CYLINDER	2	SN:11001--12000
24	23A-53-11550	PLATE¤ OPERATING,TURN SIGNAL	1	SN:11001--12000
25	235-53-32170	PLATE¤ SAFETY,BANK PIN	1	SN:11001--12000

Printed By : Dwi Iswanto (airafather6107170)

MARKS AND PLATES (SPANISH)(#11001-12000)

Item	Part No.	Description	Qty	Options
26	235-53-32310	PLATE¤ SAFETY,BEFORE OPERATING	1	SN:11001--12000
27	235-53-32120	PLATE¤ SAFETY	1	SN:11001--12000
28	235-53-32250	PLATE¤ SAFETY,ACCEL. AND DECEL. PEDAL	1	SN:11001--12000
29	09637-70161	PLATE¤ INSTRUCTION,AIR CLEANER	1	SN:11001--12000
30	235-53-32370	PLATE¤ SAFETY	1	SN:11031--12000
31	235-53-32360	PLATE¤ CAUTION	2	SN:11031--12000

Printed By : Dwi Iswanto (airafather6107170)

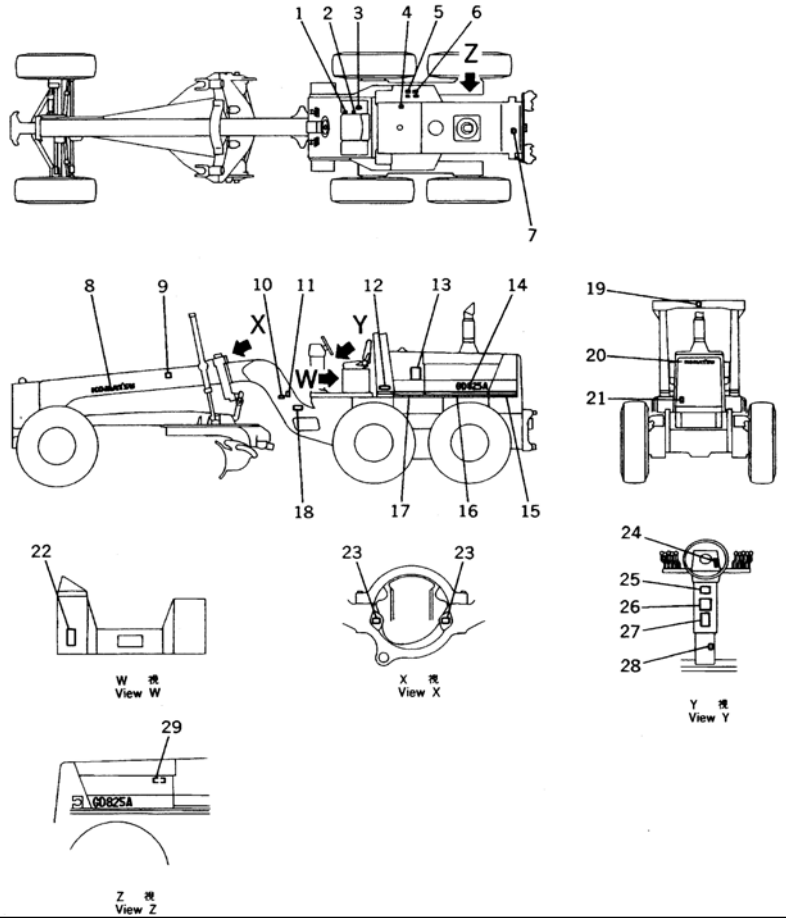

MARKS AND PLATES (CHINESE)(#11001-12000)

Item	Part No.	Description	Qty	Options
1	235-45-31270	PLATE¤ INSTRUCTION,SHIFT LOCK¤ FREE	1	SN:11001--12000
2	235-45-31260	PLATE¤ INSTRUCTION,SHIFT LOCK	1	SN:11001--12000
3	09683-0000A	PLATE¤ OPERATING,STARTER	1	SN:.--12000
	09683-90150	PLATE¤ OPERATING,STARTER	1	SN:11001--.
4	235-53-31830	PLATE¤ CAUTION,HYDRAULIC TANK CAP	1	SN:11001--12000
5	235-53-31650	PLATE¤ INSTRUCTION,BATTERY CABLE	2	SN:11001--12000
6	235-53-31660	PLATE¤ INSTRUCTION,BATTERY	2	SN:11001--12000
7	235-53-31820	PLATE¤ SAFETY,RADIATOR CAP	1	SN:11001--12000
8	09690-B0710	PLATE¤ MARK,KOMATSU	2	SN:11001--12000
9	235-53-31640	PLATE¤ SAFETY,ACCUMULATOR	2	SN:11001--12000
10	235-53-31690	PLATE¤ CAUTION,ARTICULATE LOCK	2	SN:11001--12000
11	235-53-31630	PLATE¤ SAFETY,KEEP OUT	2	SN:11001--12000
12	09620-90200	PLATE¤ NAME,ROPS	1	SN:11001--12000
13	235-53-31610	OIL CHART	1	SN:11001--12000
14	235-53-11631	MARK,GD825A	2	SN:11001--12000
15	235-53-11540	STRIPE	2	SN:11001--12000
16	235-53-11530	STRIPE	2	SN:11001--12000
17	235-53-11520	STRIPE	2	SN:11001--12000
18	09602-91635	PLATE¤ NAME,(LIMITED SUPPLY)	1	SN:11001--12000
	04418-03060	SCREW	4	SN:11001--12000
19	235-53-31720	PLATE¤ CAUTION,CAB LIFT	1	SN:11001--12000
20	09690-C0450	PLATE¤ MARK,KOMATSU	1	SN:11001--12000
21	234-53-46120	TAG	1	SN:11001--12000
22	235-53-31730	PLATE¤ CAUTION,FUSE	1	SN:11001--12000
23	235-53-31680	PLATE¤ CAUTION,AIR CYLINDER	2	SN:11001--12000
24	23A-53-11550	PLATE¤ OPERATING,TURN SIGNAL	1	SN:11001--12000
25	235-53-31670	PLATE¤ SAFETY,BANK PIN	1	SN:11001--12000

Printed By : Dwi Iswanto (airafather6107170)

MARKS AND PLATES (CHINESE)(#11001-12000)

Item	Part No.	Description	Qty	Options
26	235-53-31810	PLATE¤ SAFETY,BEFORE OPERATING	1	SN:11001--12000
27	235-53-31620	PLATE¤ SAFETY	1	SN:11001--12000
28	235-53-31750	PLATE¤ SAFETY,ACCEL. AND DECEL. PEDAL	1	SN:11001--12000
29	09637-90261	PLATE¤ INSTRUCTION,AIR CLEANER	1	SN:11001--12000

Printed By : Dwi Iswanto (airafather6107170)

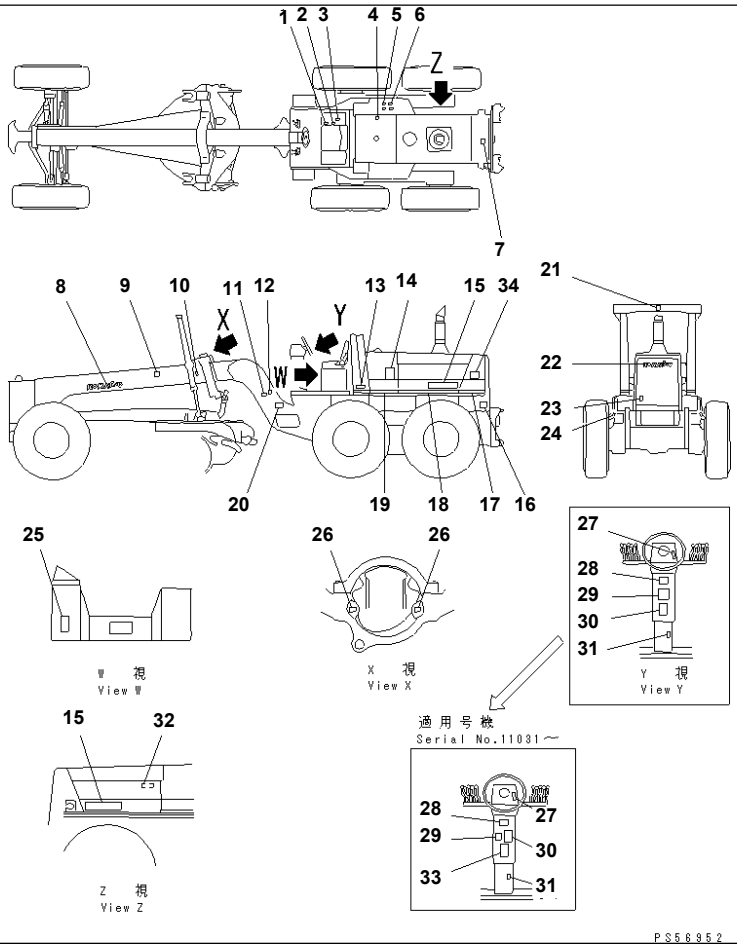

MARKS AND PLATES (RUSSIAN)(#11001-12000)

Item	Part No.	Description	Qty	Options
1	235-45-31270	PLATE¤ INSTRUCTION,SHIFT LOCK¤ FREE	1	SN:11001--@
2	235-45-31260	PLATE¤ INSTRUCTION,SHIFT LOCK	1	SN:11001--@
3	09683-0000A	PLATE¤ OPERATING,STARTER	1	SN:11001--@
4	235-53-32780	PLATE¤ CAUTION,HYDRAULIC TANK CAP	1	SN:11001--@
5	235-53-32860	PLATE¤ INSTRUCTION,BATTERY CABLE	2	SN:11001--@
6	235-53-32870	PLATE¤ INSTRUCTION,BATTERY	2	SN:11001--@
7	235-53-32720	PLATE¤ SAFETY,RADIATOR CAP	1	SN:11001--@
8	09690-B0710	PLATE¤ MARK,KOMATSU	2	SN:11001--@
9	235-53-32840	PLATE¤ SAFETY,ACCUMULATOR	2	SN:11001--@
10	09960-01001	PLATE¤ MARK,HANDLING	2	SN:11001--@
11	235-53-32760	PLATE¤ CAUTION,ARTICULATE LOCK	2	SN:11001--@
12	235-53-32750	PLATE¤ SAFETY,KEEP OUT	2	SN:11001--@
13	09620-40200	PLATE¤ NAME,ROPS(EXCEPT U.S.A. AND CANADA)	1	SN:11001--@
14	235-53-32770	OIL CHART	1	SN:11001--@
15	235-53-11631	MARK,GD825A	2	SN:11001--12000
16	23E-53-11650	PLATE¤ MARK,LIFTING	1	SN:11001--@
17	235-53-11540	STRIPE	2	SN:11001--12000
18	235-53-11530	STRIPE	2	SN:11001--12000
19	235-53-11520	STRIPE	2	SN:11001--12000
20	09602-41635	PLATE¤ NAME,(LIMITED SUPPLY)	1	SN:11001--@
	04418-03060	SCREW	4	SN:11001--@
21	235-53-32830	PLATE¤ CAUTION,CAB LIFT	1	SN:11001--@
22	09690-C0450	PLATE¤ MARK,KOMATSU	1	SN:11001--@
23	23A-53-26110	TAG	1	SN:11001--@
24	09960-01001	PLATE¤ MARK,HANDLING	2	SN:11001--@
25	235-53-32730	PLATE¤ CAUTION,FUSE	1	SN:11001--@
26	235-53-32820	PLATE¤ CAUTION,AIR CYLINDER	2	SN:11001--@

Printed By : Dwi Iswanto (airafather6107170)

MARKS AND PLATES (RUSSIAN)(#11001-12000)

Item	Part No.	Description	Qty	Options
27	23A-53-11550	PLATE¤ OPERATING,TURN SIGNAL	1	SN:11001--@
28	235-53-32810	PLATE¤ SAFETY,BANK PIN	1	SN:11001--@
29	235-53-32710	PLATE¤ SAFETY,BEFORE OPERATING	1	SN:11001--@
30	235-53-32790	PLATE¤ SAFETY	1	SN:11001--@
31	235-53-32850	PLATE¤ SAFETY,ACCEL. AND DECEL. PEDAL	1	SN:11001--@
32	09637-40161	PLATE¤ INSTRUCTION,AIR CLEANER	1	SN:11001--12000
33	235-53-32930	PLATE¤ SAFETY	1	SN:11031--@
34	235-53-32920	PLATE¤ CAUTION	2	SN:11031--@

Printed By : Dwi Iswanto (airafather6107170)

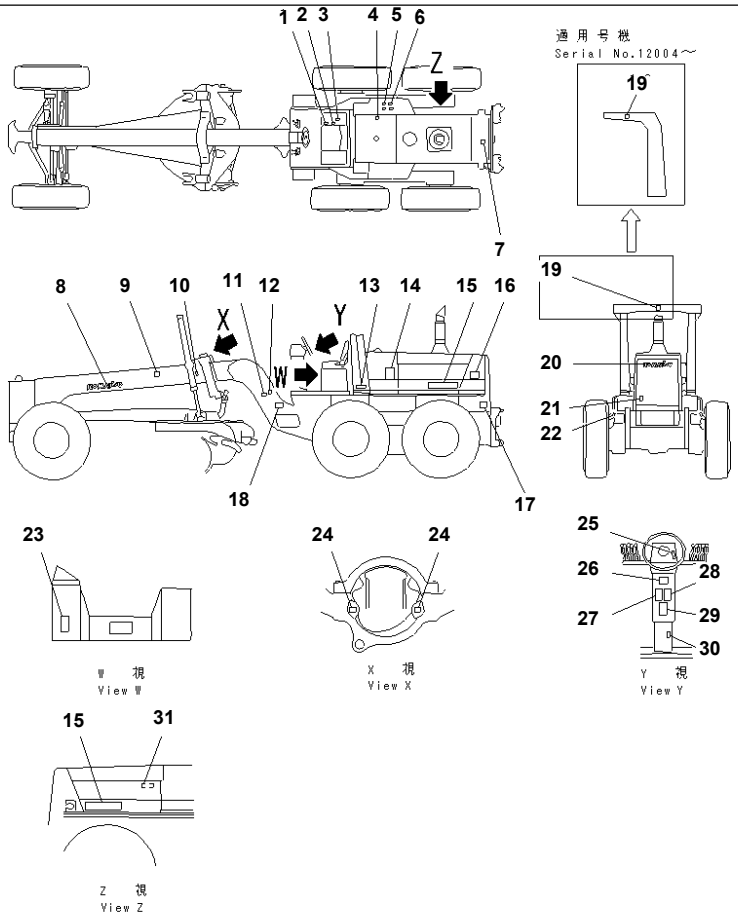

MARKS AND PLATES (RUSSIAN)(#12001-)

Item	Part No.	Description	Qty	Options
1	235-45-31270	PLATE¤ INSTRUCTION,SHIFT LOCK¤ FREE	1	SN:11001--
2	235-45-31260	PLATE¤ INSTRUCTION,SHIFT LOCK	1	SN:11001--
3	09683-0000A	PLATE¤ OPERATING,STARTER	1	SN:11001--
4	235-53-32780	PLATE¤ CAUTION,HYDRAULIC TANK CAP	1	SN:11001--
5	235-53-32860	PLATE¤ INSTRUCTION,BATTERY CABLE	2	SN:11001--
6	235-53-32870	PLATE¤ INSTRUCTION,BATTERY	2	SN:11001--
7	235-53-32720	PLATE¤ SAFETY,RADIATOR CAP	1	SN:11001--
8	09690-B0710	PLATE¤ MARK,KOMATSU	2	SN:11001--
9	235-53-32840	PLATE¤ SAFETY,ACCUMULATOR	2	SN:11001--
10	09960-01001	PLATE¤ MARK,HANDLING	2	SN:11001--
11	235-53-32760	PLATE¤ CAUTION,ARTICULATE LOCK	2	SN:11001--
12	235-53-32750	PLATE¤ SAFETY,KEEP OUT	2	SN:11001--
13	09620-40200	PLATE¤ NAME,ROPS(EXCEPT U.S.A. AND CANADA)	1	SN:11001--
14	235-53-32770	OIL CHART	1	SN:11001--
15	235-53-11632	MARK,GD825A	2	SN:12001--
16	235-53-32920	PLATE¤ CAUTION	2	SN:11031--
17	23E-53-11650	PLATE¤ MARK,LIFTING	1	SN:11001--
18	09602-41635	PLATE¤ NAME,(LIMITED SUPPLY)	1	SN:11001--
	04418-03060	SCREW	4	SN:11001--
19	235-53-32830	PLATE¤ CAUTION	2	SN:12004--
	235-53-32830	PLATE¤ CAUTION,CAB LIFT	1	SN:11001--12003
20	09690-C0450	PLATE¤ MARK,KOMATSU	1	SN:11001--
21	23A-53-26110	TAG	1	SN:11001--
22	09960-01001	PLATE¤ MARK,HANDLING	2	SN:11001--
23	235-53-32730	PLATE¤ CAUTION,FUSE	1	SN:11001--
24	235-53-32820	PLATE¤ CAUTION,AIR CYLINDER	2	SN:11001--
25	23A-53-11550	PLATE¤ OPERATING,TURN SIGNAL	1	SN:11001--

Printed By : Dwi Iswanto (airafather6107170)

MARKS AND PLATES (RUSSIAN)(#12001-)

Item	Part No.	Description	Qty	Options
26	235-53-32810	PLATE¤ SAFETY,BANK PIN	1	SN:11001--
27	235-53-32850	PLATE¤ SAFETY,BEFORE OPERATING	1	SN:11001--
28	235-53-32790	PLATE¤ SAFETY	1	SN:11001--
29	235-53-32930	PLATE¤ SAFETY	1	SN:11031--
30	235-53-32850	PLATE¤ SAFETY,ACCEL. AND DECEL. PEDAL	1	SN:11001--
31	09637-40163	PLATE¤ INSTRUCTION,AIR CLEANER	1	SN:12001--

Printed By : Dwi Iswanto (airafather6107170)

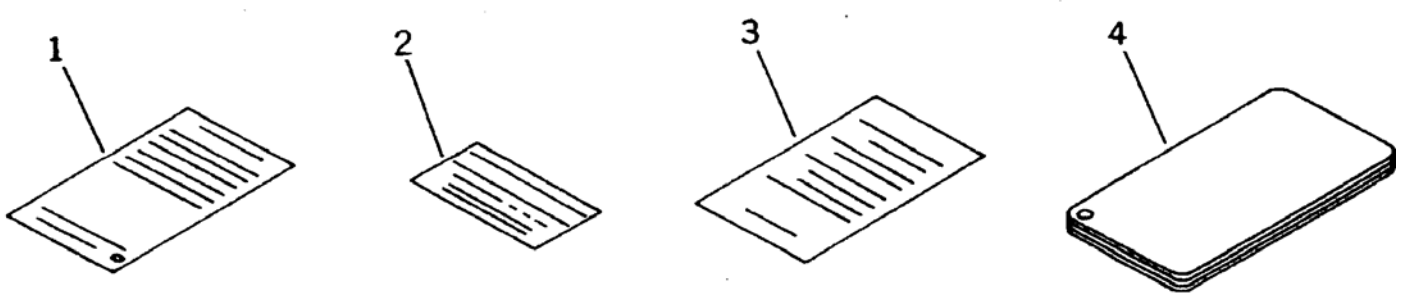

GD825A-2 S/N 11001-UP

TABLES (ENGLISH)

Item	Part No.	Description	Qty	Options
1	232-53-62852	TABLE	1	SN:11001--
2	09963-03000	TAG,DO NOT OPERATE	1	SN:11001--
3	235-53-12631	PLATE¤ CAUTION,BEFORE OPERATING	1	SN:11001--
4	09069-00280	CASE	3	SN:11001--

Printed By : Dwi Iswanto (airafather6107170)

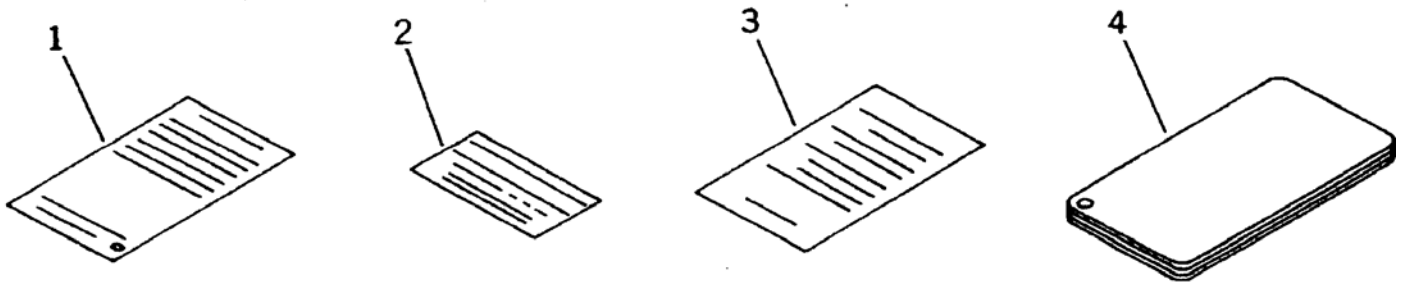

GD825A-2 S/N 11001-UP

TABLES (SPANISH)

Item	Part No.	Description	Qty	Options
1	235-53-32350	TABLE	1	SN:11001--
2	09963-01000	TAG,DO NOT OPERATE	1	SN:11001--
3	235-53-32340	PLATE¤ CAUTION,BEFORE OPERATING	1	SN:11001--
4	09069-00280	CASE	3	SN:11001--

Printed By : Dwi Iswanto (airafather6107170)

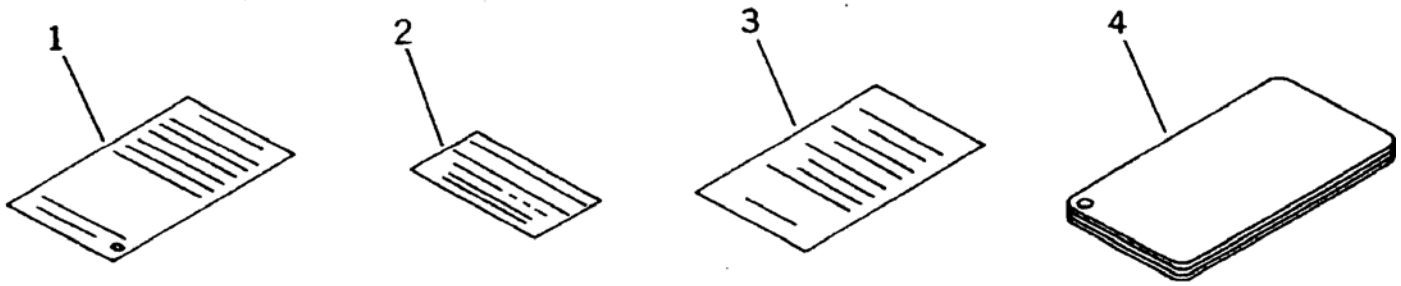

GD825A-2 S/N 11001-UP

TABLES (CHINESE)

Item	Part No.	Description	Qty	Options
1	235-53-17171	TABLE	1	SN:11001--
2	09963-09000	TAG,DO NOT OPERATE	1	SN:11001--
3	235-53-31840	PLATE¤ CAUTION,BEFORE OPERATING	1	SN:11001--
4	09069-00280	CASE	3	SN:11001--

Printed By : Dwi Iswanto (airafather6107170)

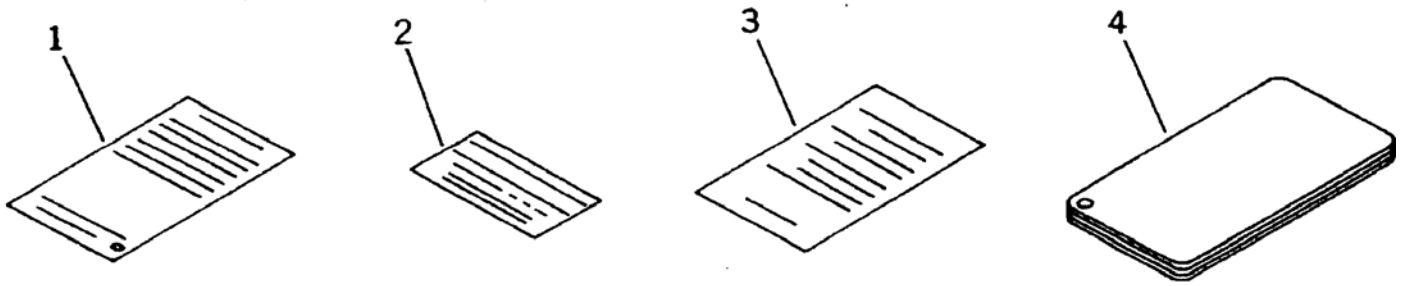

GD825A-2 S/N 11001-UP

TABLES (RUSSIAN)

Item	Part No.	Description	Qty	Options
1	235-53-32890	TABLE	1	SN:11001--
2	09963-04000	TAG,DO NOT OPERATE	1	SN:11001--
3	235-53-32910	PLATE¤ CAUTION,BEFORE OPERATING	1	SN:11001--
4	09069-00280	CASE	3	SN:11001--

Printed By : Dwi Iswanto (airafather6107170)

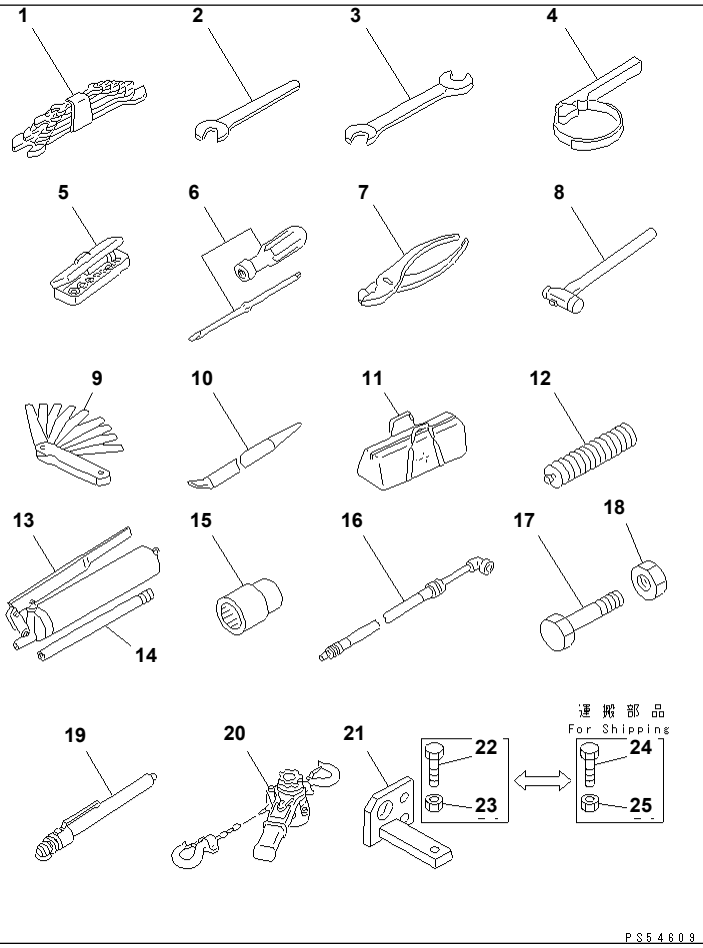

GD825A-2 S/N 11001-UP
TOOL

Item	Part No.	Description	Qty	Options
1	09000-30005	WRENCH SET	1	SN:11001--
2	09001-07500	WRENCH¤ 75	1	SN:11001--
3	09002-03641	WRENCH¤ 36X41	1	SN:11001--
	09002-04650	WRENCH¤ 46X50	1	SN:11001--
4	09019-08035	WRENCH,FILTER	1	SN:11001--
5	09020-10282	SOCKET WRENCH SET	1	SN:11001--
6	09033-00190	DRIVER,SCREW	1	SN:11001--
7	09036-00150	PLIERS	1	SN:11001--
8	09039-00150	HAMMER	1	SN:11001--
9	09054-00009	GAUGE,THICKNESS	1	SN:11001--
10	09055-10390	BAR	1	SN:11001--
11	09056-05513	BAG,TOOL	1	SN:11001--
12	07950-90403	CARTRIDGE,GREASE	1	SN:11001--
	07952-80002	GREASE PUMP ASS'Y	1	SN:11001--
13	07950-10450	· PUMP,GREASE	1	SN:11001--
14	07951-21045	· NOZZLE	1	SN:11001--
15	235-98-11220	WRENCH,SOCKET	1	SN:11001--
16	235-98-11210	HOSE,TIRE INFLATION	1	SN:11001--
17	01011-83040	BOLT,LEANING LOCK	1	SN:11001--
18	01580-13024	NUT,LEANING LOCK	1	SN:11001--
19	09289-10000	GAUGE,TIRE	1	SN:11001--
20	235-98-31120	LEVER	1	SN:11001--
21	235-16-31410	BRACKET,L.H.	1	SN:11001--
	235-16-31420	BRACKET,R.H.	1	SN:11001--
22	01017-52000	BOLT	2	SN:11001--
23	01580-12016	NUT	2	SN:11001--
24	01010-52050	BOLT	2	SN:11001--

Printed By : Dwi Iswanto (airafather6107170)

Item	Part No.	Description	Qty	Options
25	01643-32060	WASHER	2	SN:11001--

Printed By : Dwi Iswanto (airafather6107170)

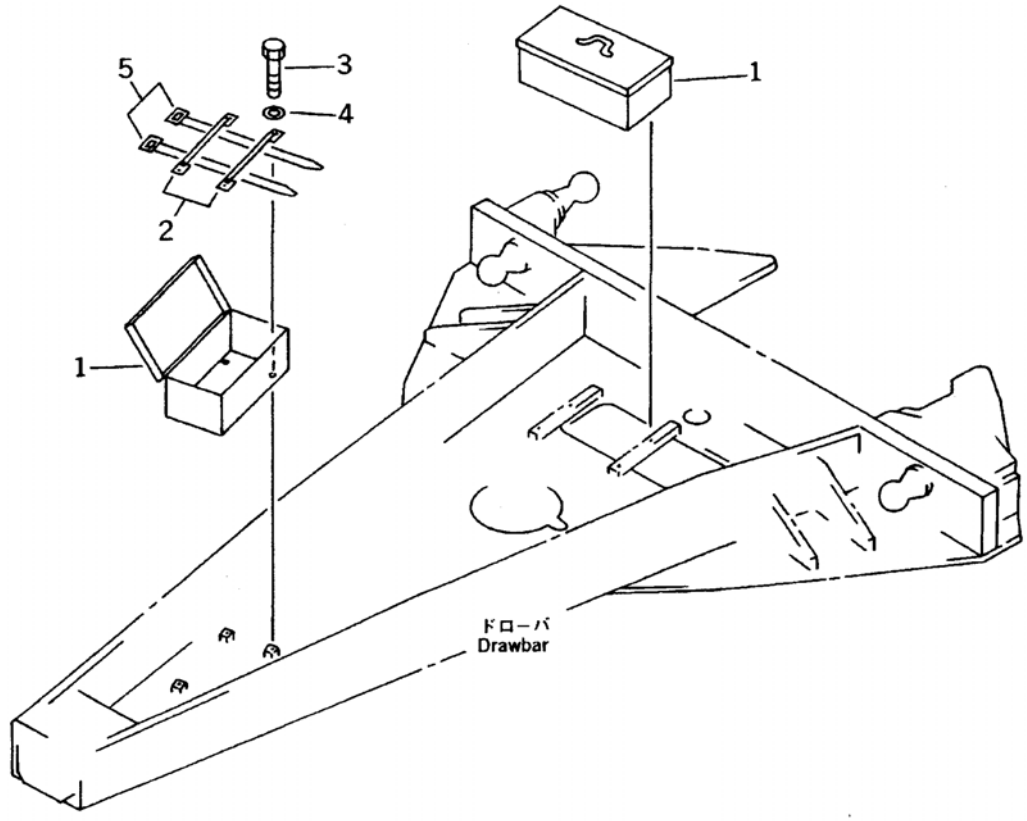

Ref. 9993 **Page 240120**

GD825A-2 S/N 11001-UP
TOOL BOX

Item	Part No.	Description	Qty	Options
1	235-98-31110	BOX,TOOL	2	SN:11001--
2	235-98-31130	PLATE	4	SN:11001--
3	01010-51016	BOLT	8	SN:11001--
4	01643-31032	WASHER	8	SN:11001--
5	278-956-1240	BAND	4	SN:11001--

Printed By : Dwi Iswanto (airafather6107170)

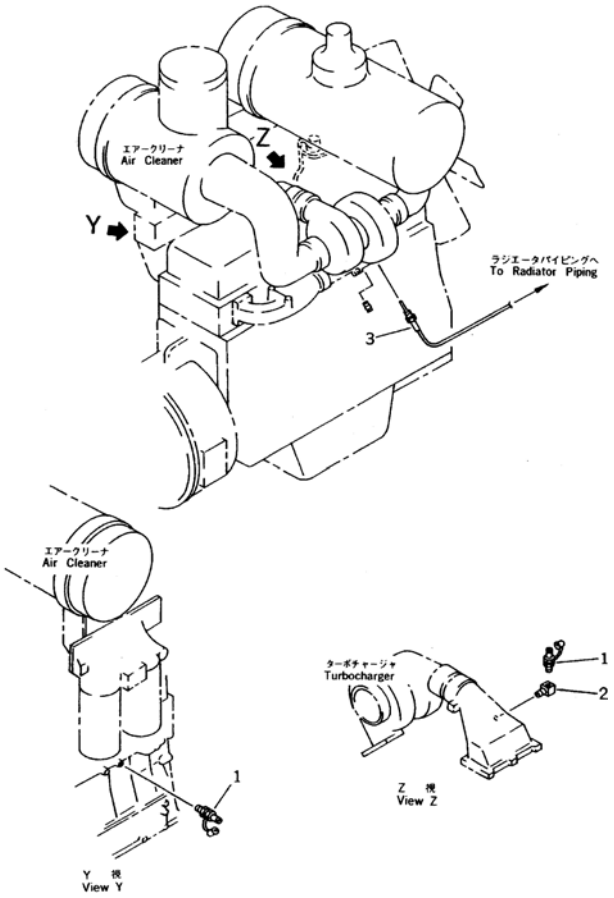

GD825A-2 S/N 11001-UP

PRE MAINTENANCE PARTS (FOR ENGINE)

Item	Part No.	Description	Qty	Options
1	799-101-5160	NIPPLE	2	SN:11001--
2	07323-20100	ELBOW	1	SN:11001--
3	6215-11-8170	SENSOR	1	SN:11001--

Printed By : Dwi Iswanto (airafather6107170)

キット　詳細については次のページを参照して下さい。
KIT　See subsequent pages for detail.

1K-1	235-40-05110	ステアリング バルブ サービス キット STEERING VALVE SERVICE KIT
1K-2	235-44-12910	ブレーキ バルブ サービス キット BRAKE VALVE SERVICE KIT
1K-3	235-44-12920	ブレーキ バルブ サービス キット BRAKE VALVE SERVICE KIT
1K-4	235-44-11780	エアー ドライヤ サービス キット AIR DRYER SERVICE KIT
1K-5	235-40-05020	フロワ コントロール バルブ サービス キット FLOW CONTROL VALVE SERVICE KIT

PCX0064

GD825A-2 S/N 11001-UP

SERVICE KIT

Item	Part No.	Description	Qty	Options
1	235-40-05110	SERVICE KIT,STEERING VALVE	1	SN:11001--
	☆	· O-RING	1	SN:11001--
	☆	· O-RING	1	SN:11001--
	☆	· O-RING	3	SN:11001--
	☆	· O-RING	1	SN:11001--
	☆	· SEAL	1	SN:11001--
	☆	· SEAL	1	SN:11001--
2	235-44-12910	SERVICE KIT,BRAKE VALVE	1	SN:11001--
	☆	· VALVE,UPPER	1	SN:11001--
	☆	· O-RING	1	SN:11001--
	☆	· O-RING	1	SN:11001--
	☆	· RING,SNAP	1	SN:11001--
	☆	· RING,SNAP	1	SN:11001--
	☆	· O-RING	1	SN:11001--
	☆	· O-RING	1	SN:11001--
	☆	· O-RING	1	SN:11001--
	☆	· RUBBER	1	SN:11001--
	☆	· VALVE,LOWER	1	SN:11001--
	☆	· RING,SPRING	1	SN:11001--
	☆	· COVER,EXHAUST	1	SN:11001--
	☆	· CHECK,EXHAUST	1	SN:11001--
	☆	· SCREW	1	SN:11001--
	☆	· WASHER	1	SN:11001--
	☆	· O-RING	1	SN:11001--
3	235-44-12920	SERVICE KIT,BRAKE VALVE	1	SN:11001--
	☆	· SPRING	1	SN:11001--
	☆	· SPRING	1	SN:11001--

Printed By : Dwi Iswanto (airafather6107170)

SERVICE KIT

Item	Part No.	Description	Qty	Options
	☆	· SPRING	1	SN:11001--
	☆	· SPRING	1	SN:11001--
	☆	· SPRING	1	SN:11001--
	☆	· SPRING	1	SN:11001--
	☆	· O-RING	1	SN:11001--
	☆	· O-RING	1	SN:11001--
4	235-44-11781	SERVICE KIT,AIR DRYER	1	SN:.--
	235-44-11780	SERVICE KIT,AIR DRYER	1	SN:11001--.
	☆	· O-RING,VALVE BODY	1	SN:11001--
	☆	· O-RING,PISTON	1	SN:11001--
	☆	· VALVE ASS'Y	1	SN:11001--
	☆	· SPRING,VALVE	1	SN:11001--
	☆	· FILTER,DESICCANT	2	SN:11001--
	☆	· DESICCANT	1	SN:.--
	☆	· DESICCANT	1	SN:11001--.
	☆	· GASKET,FILTER	1	SN:11001--
	☆	· FILTER,OIL	1	SN:11001--
	☆	· RING,GASKET	1	SN:11001--
	☆	· RING,SEAL¤ COVER	1	SN:11001--
	☆	· O-RING,BODY	1	SN:11001--
	☆	· O-RING,COVER	1	SN:11001--
5	235-40-05020	SERVICE KIT,FLOW CONTROL VALVE	1	SN:11001--
	☆	· O-RING	1	SN:11001--
	☆	· O-RING	1	SN:11001--
	☆	· O-RING	1	SN:11001--

Printed By : Dwi Iswanto (airafather6107170)