RUTHZIL TRATOR COMERCIAL DE PEÇAS LTDA 11 97083-6812 ROLANDO CITRANGULO

부품 매뉴얼
PARTS MANUAL

GEX 40/45/50

SERIAL NUMBER : GEX450 - XXXX - 9868 KF

부품 청구시 항상 장비의 SERIAL NO. 도 함께 알려 주십시오.

ALWAYS GIVE TRUCK SERIAL NUMBER WHEN ORDERING PARTS.

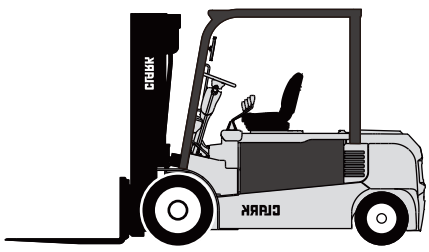

Part No. 8106245
Jan. 2013

CLARK
THE FORKLIFT

(본사) 경기도 부천시 오정구 오정동 202-1
(Head office) 202-1 Ojung-Dong, Ojung-Gu, Bucheon-city, Kyunggi-do, Korea
(공장) 경남 창원시 웅남동 40-1
(Factory) 40-1 Ungnam-dong, Changwon-city, Kyungnam, Korea

02-189 ACCELERATOR LINKAGE
악셀레이터 링케이지

13-064 BACK-UP ALARM INSTALLATION
백-업 알람 조립그룹

13-066 ELECTRICAL COMPONENTS (SBR)
*

13-162 STROBE LIGHT MOUNTING
경광등 어셈블리

13-182 STROBE LIGHT
경광등

13-194 WORK LIGHT
작업등

13-346 HEAD LAMP INSTALLATION
헤드램프 조립그룹

13-347 TURN SIGNAL LAMP INSTALLATION
*

13-348 REAR WORK LIGHT INSTALLATION
후방등 조립그룹

13-349 COMBINATION LAMP INSTALLATION
컴비네이션 램프 조립그룹

13-352 FORK LEVELING SYSTEM
포크 레벨링 시스템

14-359 ELECTRICAL COMPONENTS
전기장치 구성품

14-437 ELECTRICAL WIRING
전기장치 와이어링

15-078 ELECTRICAL COMPONENTS (ELH)
*

15-079 ELECTRICAL WIRING (ELH)
*

15-080 CABLE INSTALLATION
케이블 조립그룹

15-081 ELECTRICAL COMPONENTS (EE)
전기장치 구성품 (EE)

15-082 CABLE INSTALLATION
케이블 조립그룹

15-083 CABLE INSTALLATION (EE)
케이블 조립그룹 (EE)

16-192 PUMP MOTOR ASSEMBLY
펌프 모터

16-193 DRIVE MOTOR ASSEMBLY
드라이브 모터

16-196 TRACTION & PUMP MOTORS MOUNTING
*

17-030 LINE CONTACTOR ASSEMBLY
*

19-018 CONTROLLER MOUNTING
컨트롤러 마운팅

20-275 DRIVE AXLE MOUNTING
드라이브 액슬 어셈블리

20-276 DRIVE AXLE ASSEMBLY
드라이브 액슬

22-013 DRIVE WHEEL & TIRE MOUNTING
드라이브휠 & 타이어 마운팅

22-014 STEER WHEEL & TIRE MOUNTING
스티어휠 & 타이어 마운팅

22-024 DRIVE WHEEL & TIRE (SOLID TYPE)
*

22-025 STEER WHEEL & TIRE (SOLID TYPE)
*

22-050 DRIVE WHEEL & TIRE MOUNTING
드라이브휠 & 타이어 마운팅

23-235 BRAKE MASTER CYLINDER
브레이크 마스터 실린더

23-416 BRAKE MASTER CYLINDER
브레이크 마스터 실린더

23-549 BRAKE SYSTEM
브레이크 시스템

23-550 BRAKE LINES
브레이크 라인

23-552 PARKING BRAKE SYSTEM
주차 브레이크 시스템

25-145 STEERING UNIT
스티어링 유니트

25-278 STEERING COLUMN ASSEMBLY
스티어 컬럼 어셈블리

25-291 STEERING COLUMN SHAFT ASSEMBLY
스티어링 컬럼 보조 어셈블리

25-292 STEERING WHEEL & COLUMN MOUNTING
스티어 컬럼 & 핸들 마운팅

25-353 STEERING COLUMN ASSEMBLY
스티어 컬럼 어셈블리

25-372 STEERING GEAR MOUNTING
스티어링 기어 어셈블리

26-000 STEER AXLE ASSEMBLY
스티어링 액슬 어셈블리

26-003 HYDRAULIC STEERING LINES
스티어링 라인

26-004 STEER AXLE MOUNTING
스티어링 액슬 마운팅

26-266 STEER CYLINDER
스티어링 실린더

27-000 PRIORITY VALVE ASSEMBLY
메인 벨브 어셈블리

29-139 HYDRAULIC PUMP MOUNTING
유압 펌프 마운팅

29-198 HYDRAULIC TANK & COMPONENTS MOUNTING
유압탱크 & 구성품 마운팅

29-296 HYDRAULIC PUMP ASSEMBLY
유압 펌프 어셈블리

30-609 HYDRAULIC VALVE MOUNTING
유압 밸브 마운팅

30-610 HYDRAULIC VALVE MOUNTING
유압 밸브 마운팅

30-611 HYDRAULIC VALVE MOUNTING (3SPOOL)
유압벨브 마운팅 (3스풀)

30-612 HYDRAULIC VALVE MOUNTING (4SPOOL)
유압벨브 마운팅 (4스풀)

30-613 HYDRAULIC CONTROL VALVE
유압 컨트롤 밸브

31-357 HYDRAULIC SUPPLY LINES
유압 공급 라인

31-358 HYDRAULIC LIFT & TILT LINES
유압 리프트 & 틸트 라인

31-359 HYDRAULIC RETURN LINES
유압 라인 - 리턴

32-167 TILT AMOUNT GROUP
틸트 어마운트 그룹

32-174 TILT CYLINDER MOUNTING
틸트 실린더 어셈블리

32-175 TILT CYLINDER
틸트 실린더

33-049 SOLENOID VALVE
솔레노이드 밸브

33-056 CLAMP LEVER LOCK SYSTEM
*

34-119 UPRIGHT MOUNTING
업라이트 마운팅

34-189 CARRIAGE ASSEMBLY
캐리지 어셈블리

34-190 LOAD BACK REST MOUNTING
*

37-009 SEAT ASSEMBLY
시트 어셈블리

37-076 BACK MIRROR
백미러

37-128 OVERHEAD GUARD MOUNTING
오버헤드가드 마운팅

37-129 SHEET METAL & HOOD MOUNTING
시트메탈 & 후드 마운팅

37-130 ARMREST MOUNTING (ELH)
*

37-131 ARMREST MOUNTING (ELH)
*

37-133 SEAT BELT MOUTING
*

38-236 MODEL DECALS & COUNTERWEIGHT MOUNTING
모델 데칼 & 카운터웨이트 마운팅

38-240 BATTERY STOPPER MOUNTING
*

39-661 SEAT ASSEMBLY
시트 어셈블리

39-829 SEAT MOUNTING
시트 어셈블리

39-834 SEAT ASSEMBLY (SUSPENSION)
시트 어셈블리

40-287 DECALS
데칼

47-000 SEAT WING KIT
시트윙 키트

50-234 ATTACHMENT HOSE ADAPTATION (UPRIGHT)
작업장치 호스 적용 (업라이트)

50-263 ATTACHMENT HOSE ADAPTATION (UPRIGHT)
작업장치 호스 적용 (업라이트)

50-264 ATTACHMENT HOSE ADAPTATION (UPRIGHT)
작업장치 호스 적용 (업라이트)

50-272 ATTACHMENT HOSE ADAPTATION (UPRIGHT)
작업장치 호스 적용 (업라이트)

50-273 ATTACHMENT HOSE ADAPTATION (UPRIGHT)
작업장치 호스 적용 (업라이트)

50-277 ATTACHMENT HOSE ADAPTATION (UPRIGHT)
작업장치 호스 적용 (업라이트)

50-286 ATTACHMENT HOSE & CABLE ADAPTATION (UPRIGHT)
*

50-287 ATTACHMENT HOSE & CABLE ADAPTATION (UPRIGHT)
*

50-288 ATTACHMENT HOSE & CABLE ADAPTATION (UPRIGHT)
*

50-298 ATTACHMENT HOSE & CABLE ADAPTATION (UPRIGHT)
*

50-299 ATTACHMENT HOSE & CABLE ADAPTATION (UPRIGHT)
*

50-374 ATTACHMENT HOSE & CABLE ADAPTATION (UPRIGHT)
*

50-375 HIGH TERMINATION FOR DEVICE HOSE ADAPTATION
*

50-775 ATTACHMENT HOSE & CABLE SETTINGS (UPRIGHT)
*

50-798 QUICK DISCONNECT FOR DEVICE HOSE ADAPTATION
퀵 차단 (호스 어댑션 장치용)

50-807 SOLENOID VALVE FOR DEVICE HOSE ADAPTATION
*

50-822 AUXILIARY VALVE LINES
보조 밸브 라인

53-134 SIDE SHIFT ASSEMBLY
*

53-146 F/P SIDESHIFT CYLINDER
포크포지셔너 사이드쉬프트실린더

53-198 SIDESHIFT CYLINDER
사이드 쉬프트 실린더

53-212 FORK POSITIONER (SHIFTING)
포크 포지셔너 (쉬프트 타입)

66-058 FORK
포크

66-148 PRIMARY CYLINDER ASSEMBLY
*

66-269 SECONDARY CYLINDER ASSEMBLY
2차 실린더 어셈블리

66-271 SECONDARY CYLINDER ASSEMBLY
2차 실린더 어셈블리

66-273 STANDARD UPRIGHT
표준 업라이트

66-274 TRIPLE STAGE UPRIGHT
3단 업라이트

66-275 HI-LO UPRIGHT
하이로 업라이트

66-999 EXTENTION FORK
익스텐션 포크

75-012 SEAT OPERATED BRAKE SWITCH
시트 조작 브레이크 스위치

75-013 SEAT OPERATED BRAKE
시트 조작 브레이크

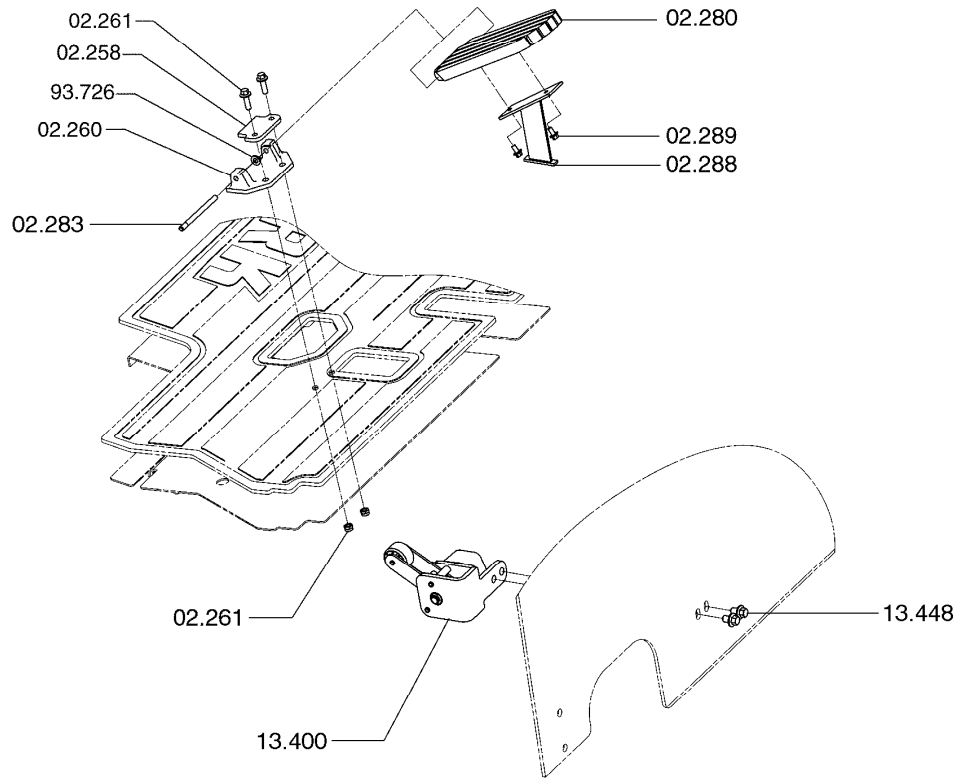

ACCELERATOR LINKAGE **02-189**

02.258 STOP, ACCELERATOR PEDAL
스톱

02.260 BRACKET, ACCELERATOR LINKAGE MOUNTING
브라켓

02.261 FASTENER, ACCELERATOR LINKAGE MOUNTING BRACKET
패스너

02.280 PEDAL, ACCELERATOR
페달

02.283 PIN, ACCELERATOR PEDAL TO BRACKET PIVOT
핀

02.288 BRACKET, ACCELERATOR PEDAL ATTACHING
브라켓

02.289 FASTENER, ACCELERATOR PEDAL BRACKET ATTACHING
패스너

13.400 CONTROL ASSEMBLY, ACCELERATING
컨트롤

13.448 FASTENER, ACCELERATING CONTROL ASSEMBLY
패스너

93.726 WASHER, ACCELERATOR PEDAL PIVOT RETAINER
와셔

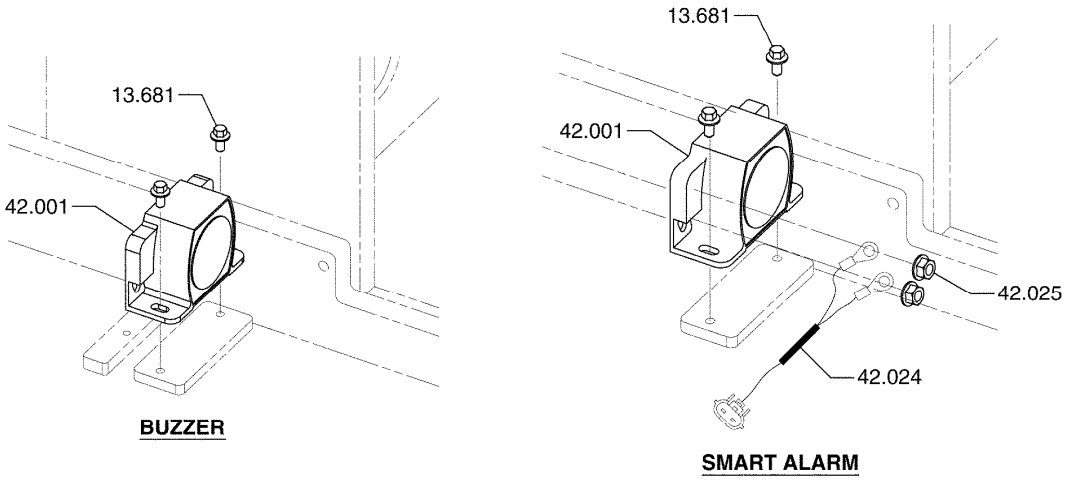

BACK-UP ALARM INSTALLATION **13-064**

13.681 FASTENER, WARNING DEVICE
패스너

42.001 WARNING DEVICE, AUDIBLE (AIR OPER)
경보장치

42.024 HARNESS, TRAVEL ALARM
하네스

42.025 FASTENER, TRAVEL ALARM
패스너

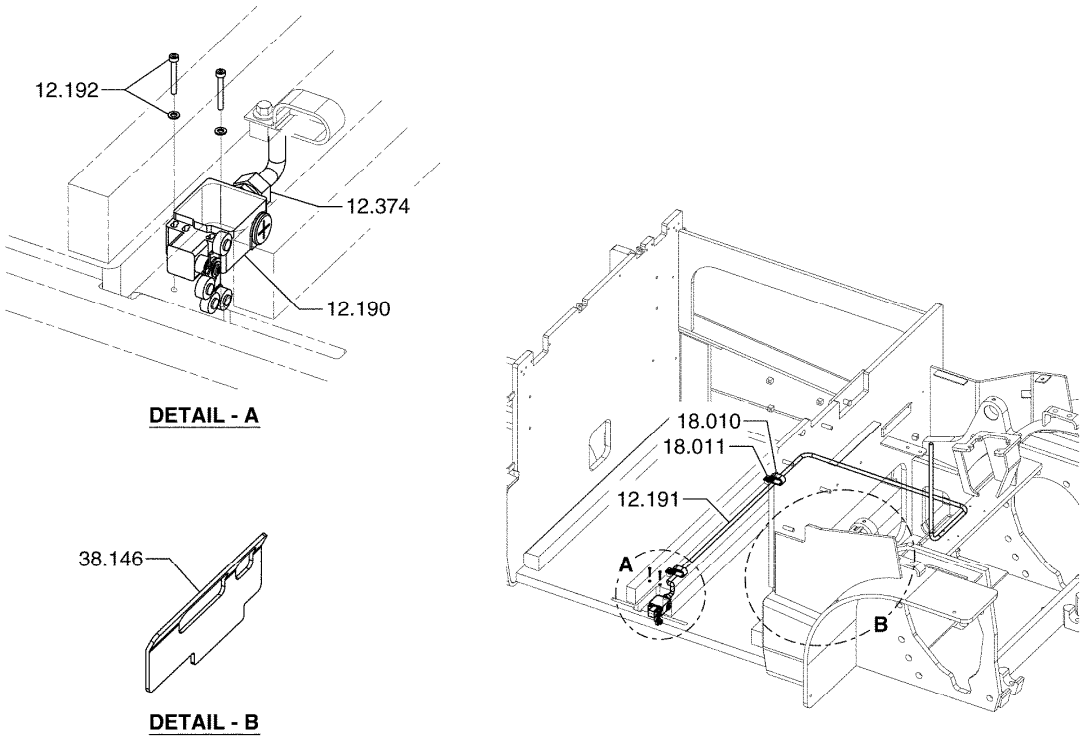

12.190 SWITCH, BATTERY RETAINER INTERLOCK
스위치

12.191 HARNESS, BATTERY RETAINER INTERLOCK SWITCH
하네스

12.192 FASTENER,BATTERY RETAINER INTERLOCK SWITCH
패스너

12.374 FITTING, BATTERY RETAINER INTERLOCK SWITCH HARNESS
피팅

18.010 CLIP, HARNESS
클립

18.011 FASTENER, HARNESS CLIP
패스너

38.146 PLATE, BATTERY STOP
플레이트

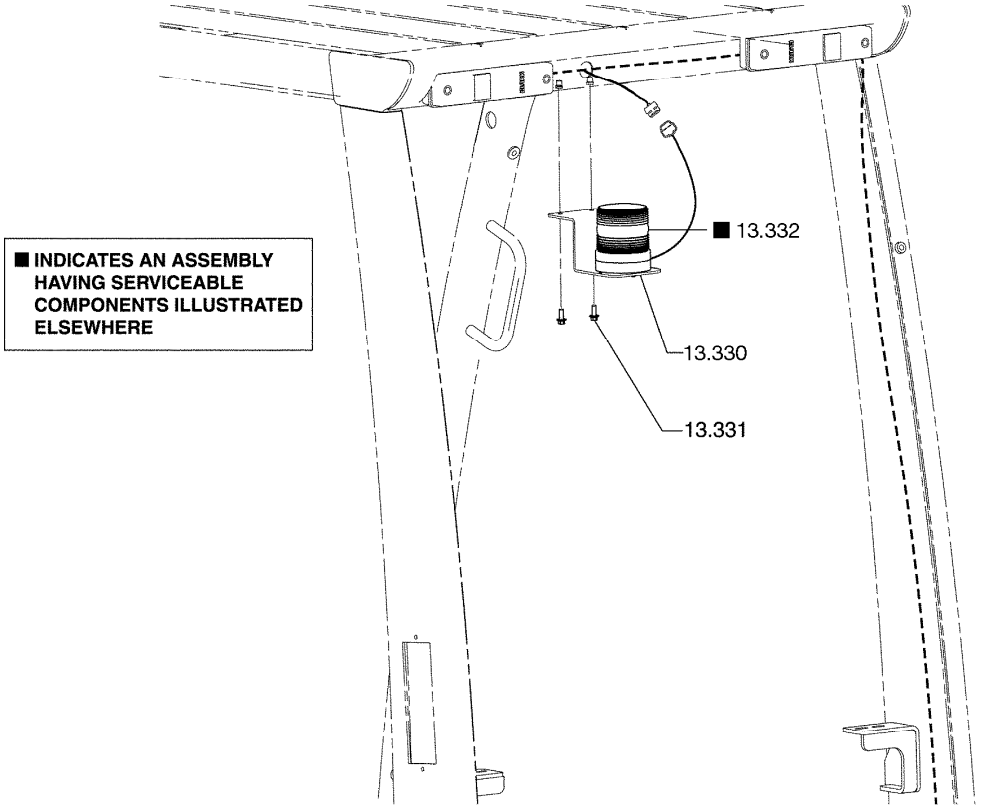

STROBE LIGHT MOUNTING **13-162**

13.330 BRACKET, WARNING LIGHT
브라켓

13.331 FASTENER, WARNING LIGHT BRACKET
패스너

13.332 ASSEMBLY, WARNING LIGHT
경고등

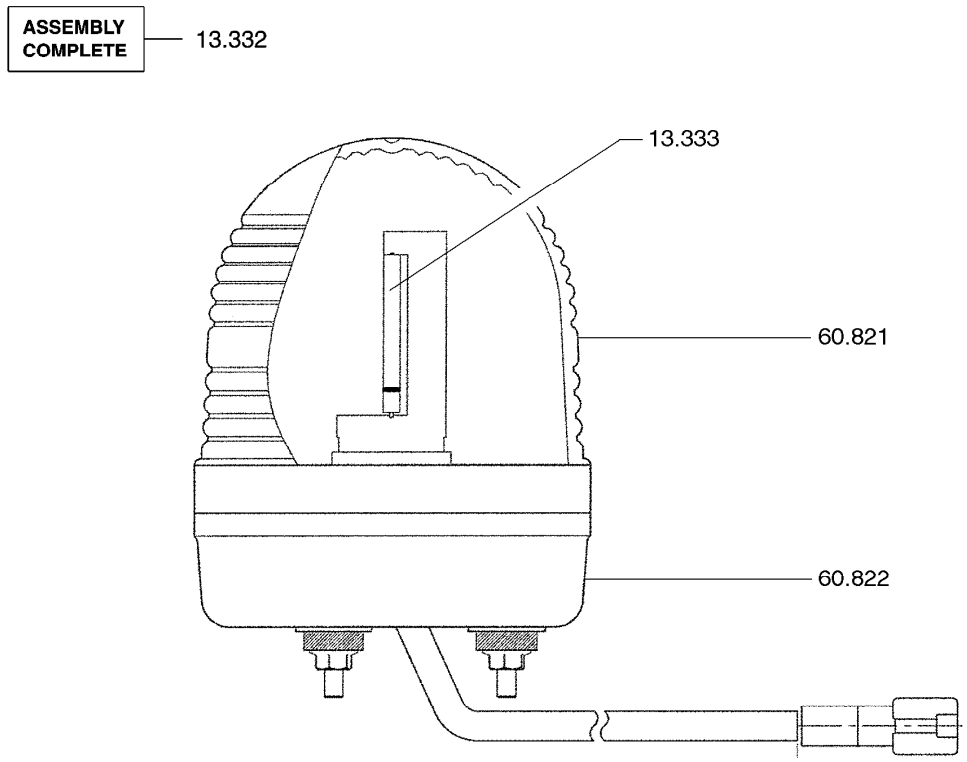

STROBE LIGHT **13-182**

13.332 ASSEMBLY, WARNING LIGHT
경고등

13.333 BULB, WARNING LIGHT
전구

60.821 GLOBE, STROBE LIGHT
글로브

60.822 BASE, STROBE LIGHT
베이스

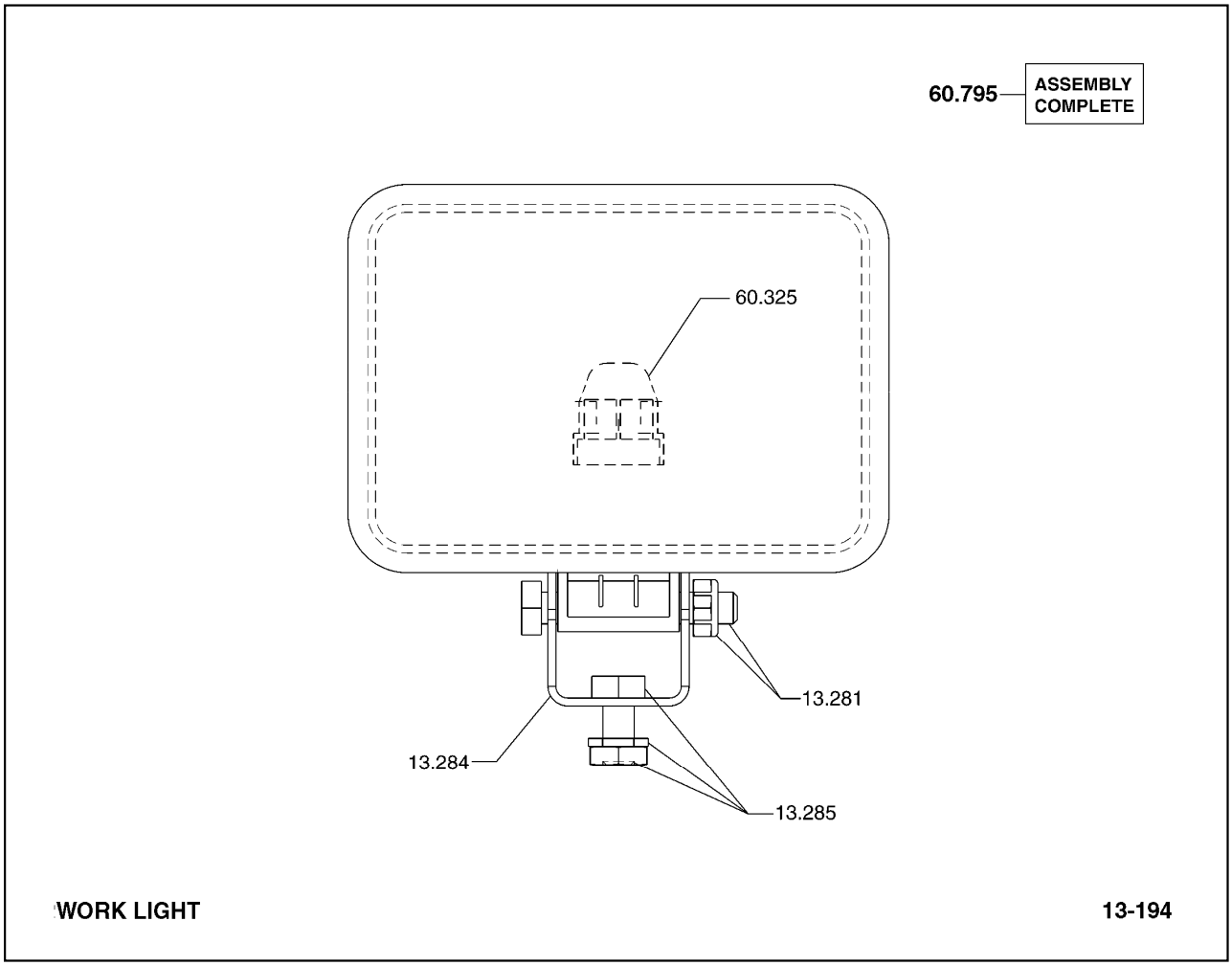

13.281 FASTENER, ADJ HEADLAMP SWIVEL
패스너

13.284 BRACKET, ADJUSTABLE HEADLAMP
브라켓

13.285 FASTENER, ADJUSTABLE HEADLAMP BRACKET
패스너

60.325 BULB, HEADLAMP
전구

60.795 LIGHT, REAR WORK
라이트

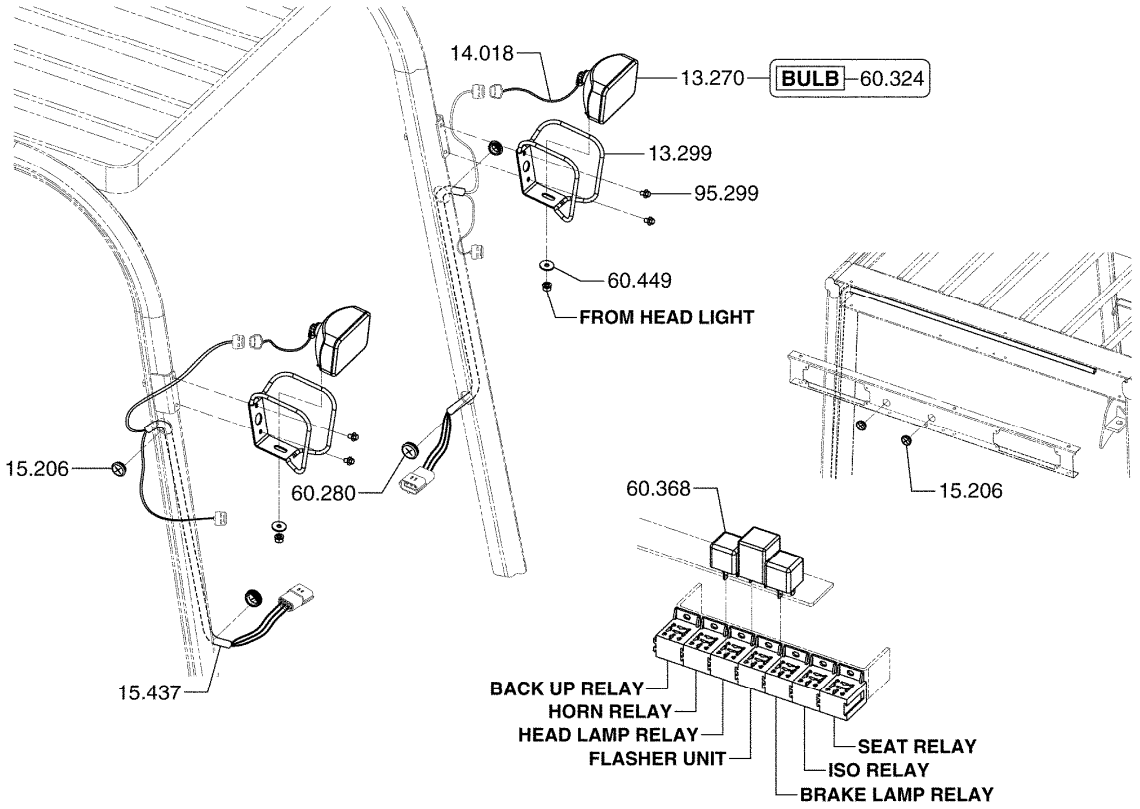

HEAD LAMP INSTALLATION **13-346**

13.270	HEADLAMP, ADJUSTABLE 헤드램프
13.299	GUARD, HEADLIGHT 가드
14.018	WIRE, HEADLIGHT 와이어
15.206	GROMMET, HEADLAMP CONDUCTOR 그로멧
15.437	HARNESS, HEADLAMP WIRING 하네스
60.280	GROMMET, HEADLAMP CONDUCTOR 그로멧
60.324	BULB, HEADLAMP 전구
60.368	RELAY, HEADLIGHTS 릴레이
60.449	SPACER, HEAD LAMP BRACKET MOUNTING 스페이서

95.299 FASTENER, HEADLAMP GUARD
패스너

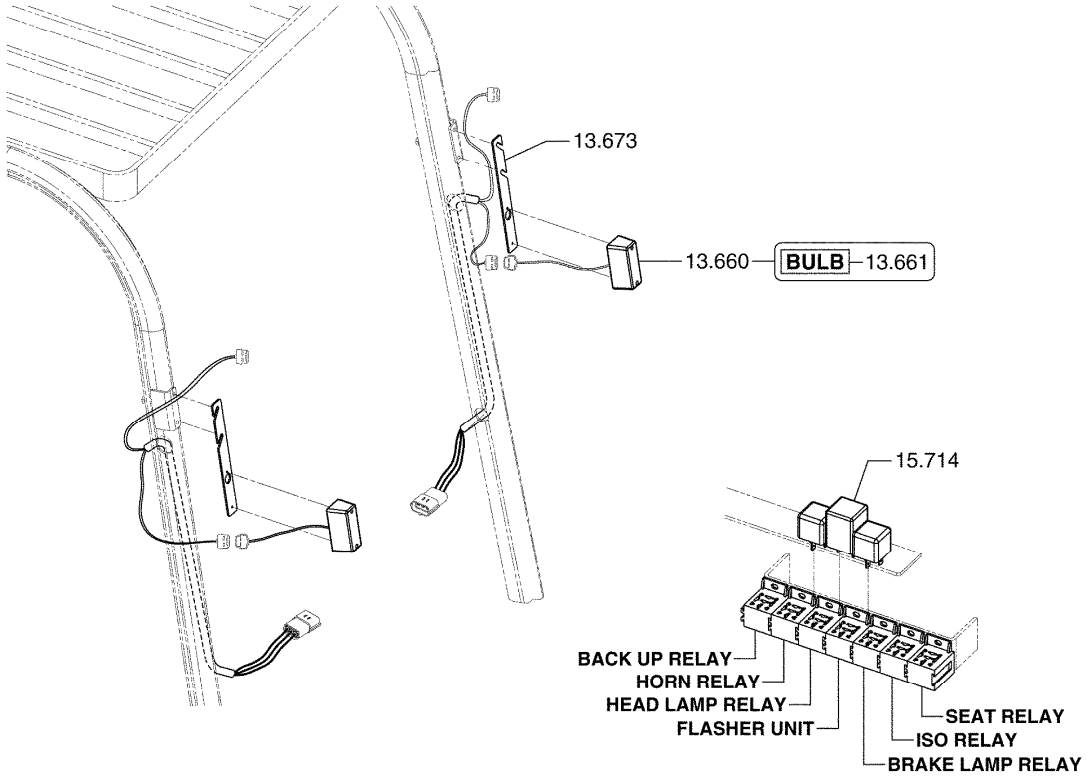

TURN SIGNAL LAMP INSTALLATION **13-347**

13.660 LIGHT, TURN SIGNAL
라이트

13.661 BULB, TURN SIGNAL LIGHT
전구

13.673 BRACKET, TURN LIGHT
브라켓

15.714 FLASHER, UNIT
플래셔

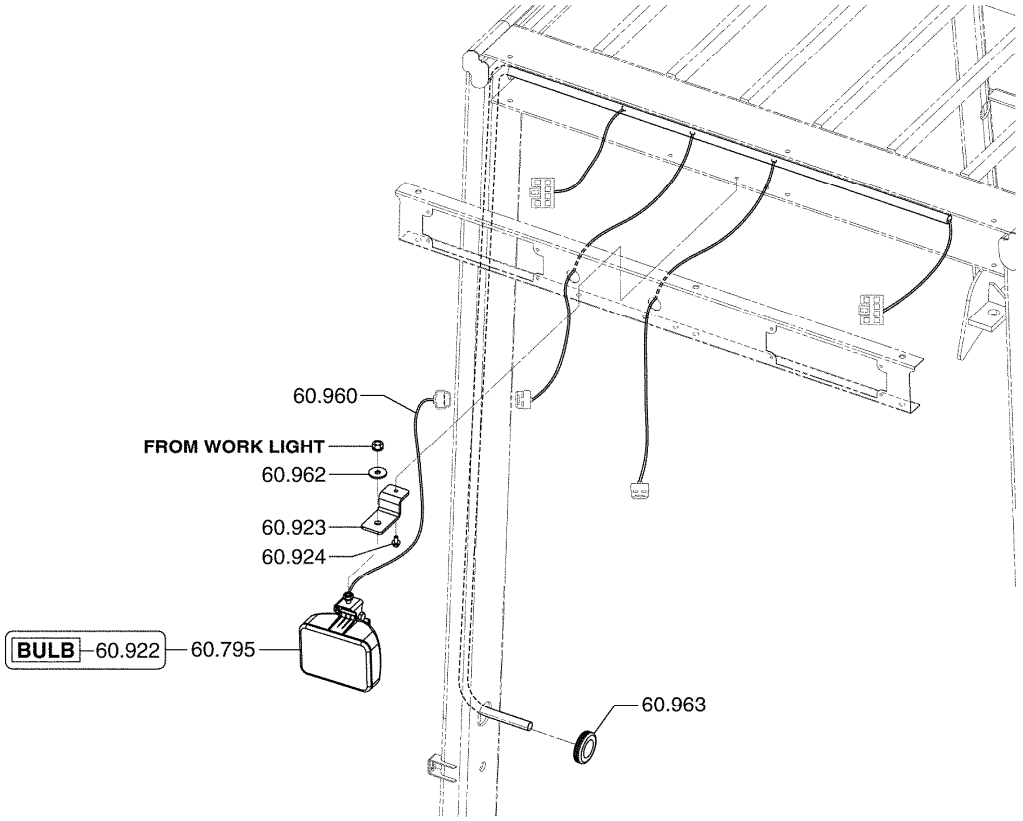

REAR WORK LIGHT INSTALLATION **13-348**

60.795 LIGHT, REAR WORK
라이트

60.922 BULB, REAR WORK LAMP
전구

60.923 BRACKET, REAR WORK LAMP MOUNTING
브라켓

60.924 FASTENER, REAR WORK LAMP MOUNTING
패스너

60.960 HARNESS, REAR WORK LAMP EXTENSION
*

60.962 SPACER, REAR WORK LAMP MOUNTING
*

60.963 GROMMET, REAR ACCESSORY WIRING
*

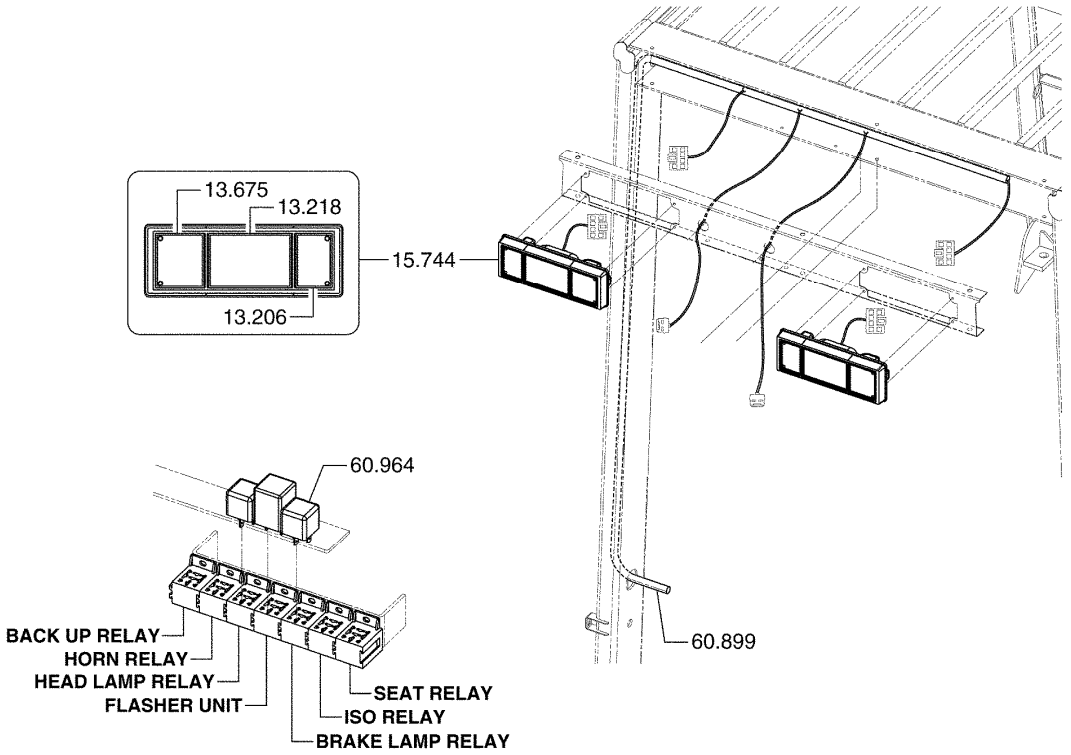

COMBINATION LAMP INSTALLATION **13-349**

13.206 BULB, BACK-UP LAMP
전구

13.218 BULB, STOP & TAIL LAMP
전구

13.675 BULB, TURN LIGHT
전구

15.744 LAMP ASSEMBLY, COMBINATION STOP & TAIL
램프

60.899 WIRING HARNESS, REAR ACCESSORY
욱J潔紂電謬

60.964 RELAY, FOOT BRAKE
*

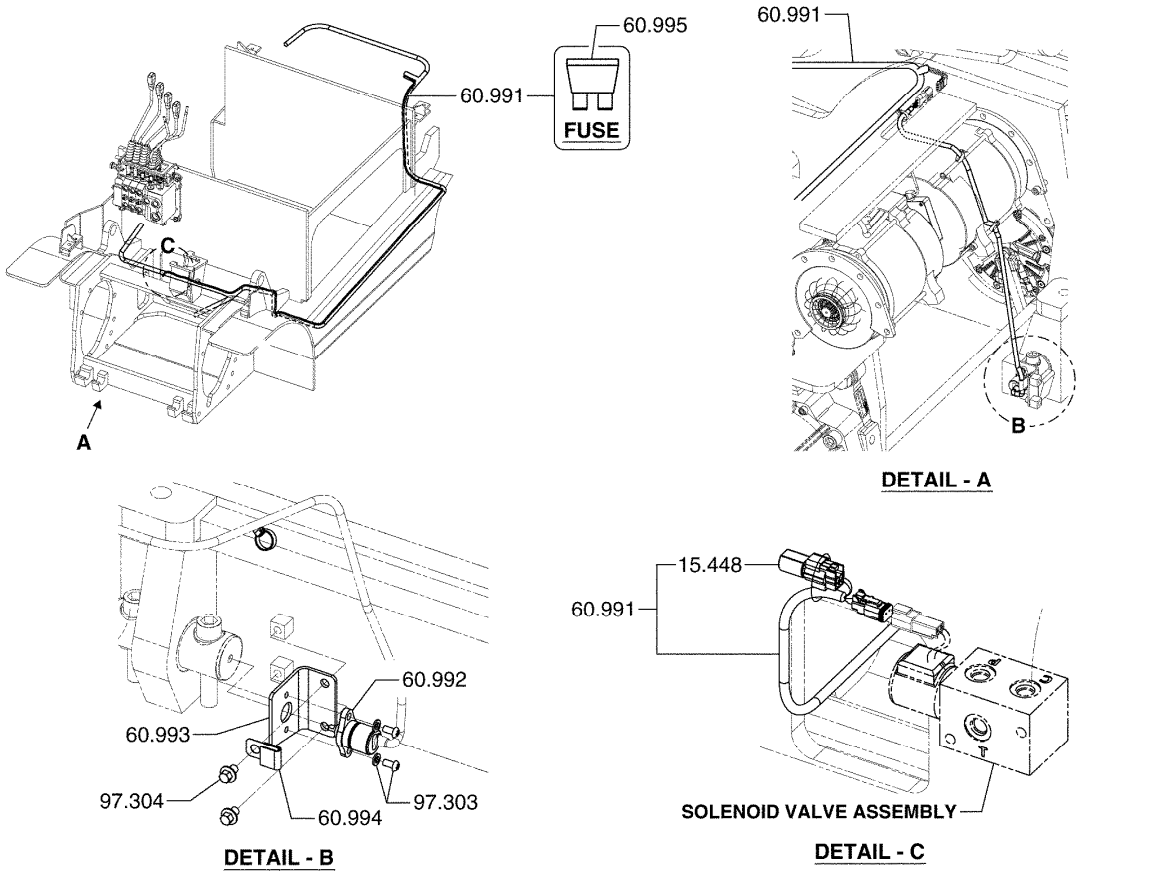

15.448 DIODE, HARNESS
다이오드

60.991 WIRE HARNESS, FORK LEVELING
*

60.992 SENSOR, FORK LEVELING
*

60.993 BRACKET, FORK LEVELING SENSOR
*

60.994 CLAMP, FORK LEVELING SENSOR WIRE HARNESS
*

60.995 FUSE, FORK LEVELING WIRE HARNESS
*

97.303 FASTENER, FORK LEVELING SENSOR MOUNTING
*

97.304 FASTENER, FORK LEVELING SENSOR BRACKET
*

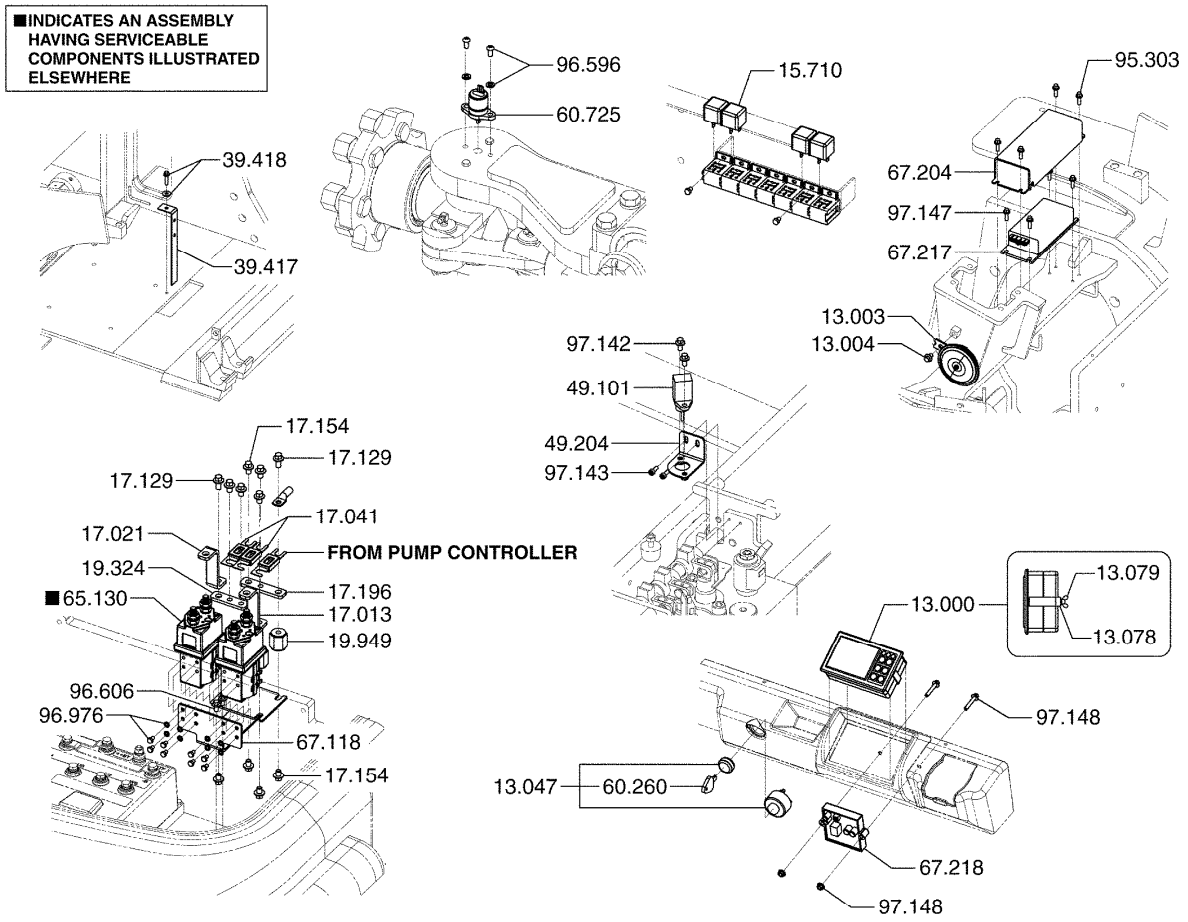

13.000	PANEL, INSTRUMENT CLUSTER 판넬	39.417	GROUND STRAP, ELECTRIC TRUCK 접지케이블
13.003	HORN 혼	39.418	FASTENER, ELECTRIC TRUCK GROUND STRAP 패스너
13.004	FASTENER, HORN MOUNTING BRACKET 패스너	49.101	SENSOR, LEVER POSITION 센서
13.047	SWITCH, CIRCUIT LOCKING 스위치	49.204	BRACKET, LEVER POSITION SENSOR 브라켓
13.078	CLAMP, INSTRUMENT CLUSTER TO INST PANEL 클램프	60.260	KEY, CIRCUIT LOCKING SWITCH 키
13.079	FASTENER, INSTRUMENT CLUSTER TO INST PANEL 패스너	60.725	POTENTIOMETER, STEERING INTERLOCK 포텐션메터
15.710	RELAY, ELECTRICAL 릴레이	65.130	CONTACTOR ASSEMBLY, LINE 컨택터
17.013	BUS, 2A CONTACTOR 버스	67.118	BRACKET, LINE CONTACTOR MOUNTING 브라켓
17.021	BUS, 1A CONTACTOR 버스	67.204	COVER, DC CONVERTER 커버
17.041	FUSE, POWER 퓨즈	67.217	CONVERTER, DC-DC FOR ACCESSORY 컨버터
17.129	FASTENER, 1A CONTACTOR BUS 패스너	67.218	CONVERTER, DC-DC FOR INSTRUMENT PANEL 컨버터
17.154	FASTENER, FUSE TERMINAL ANGLE BUS 패스너	95.303	FASTENER, DC-DC CONVERTER GUARD 패스너
17.196	BUS, MAIN FUSE CONNECTING 버스	96.596	FASTENER, STEERING INTERLOCK POTENTIOMETER 패스너
19.324	BUS, MAIN FUSE FUSED TERMINAL 버스	96.606	FASTENER, LINE CONTACTOR MOUNTING BRACKET 패스너
19.949	INSULATOR, CONTACTOR PANEL FUSE HOLDER 절연체	96.976	FASTENER, CONTACTOR MOUNTING 패스너

97.142 FASTENER, LEVER POSITION SENSOR
패스너

97.143 FASTENER, LEVER POSITION SENSOR BRACKET
패스너

97.147 FASTENER, DC-DC CONVERTER FOR ACCESSORY
패스너

97.148 FASTENER, DC-DC CONVERTER FOR INSTRUMENT PANEL
패스너

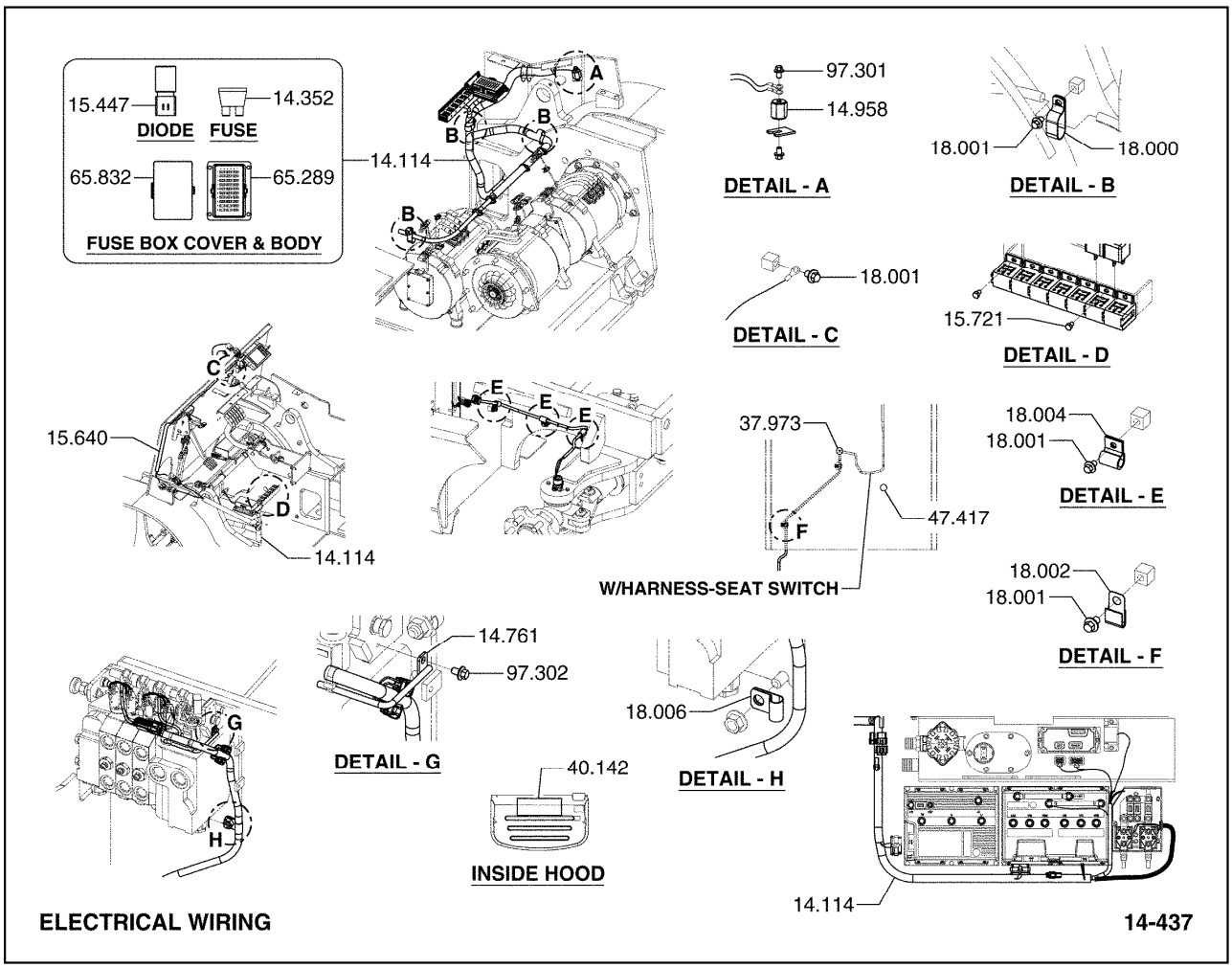

14.114 HARNESS, MACHINE WIRING
하네스

14.352 FUSE, CONTROL CIRCUIT
퓨즈

14.761 BAR, WIRING HARNESS POSITION
*

14.958 INSULATOR, WIRING HARNESS GROUND
*

15.447 DIODE, HARNESS
다이오드

15.640 WIRING HARNESS, MACHINE COWL
와이어하네스

15.721 FASTENER, RELAY BRACKET
패스너

18.000 CLIP, WIRING HARNESS
클립

18.001 FASTENER, WIRING HARNESS CLIP
패스너

18.002	CLIP, WIRING HARNESS 클립
18.004	CLIP, WIRING HARNESS 클립
18.006	CLIP, WIRING HARNESS 클립
37.973	GROMMET, SEAT WIRING HARNESS 그로멧
40.142	DECAL, ELECTRICAL CIRCUIT DIAGRAM 데칼
47.417	CAP, SEAT WIRING HARNESS HOLE *
65.289	BODY, FUSE BOX *
65.832	COVER, FUSE BOX 커버
97.301	FASTENER, WIRING HARNESS GROUND INSULATOR *
97.302	FASTENER, WIRING HARNESS POSITION BAR *

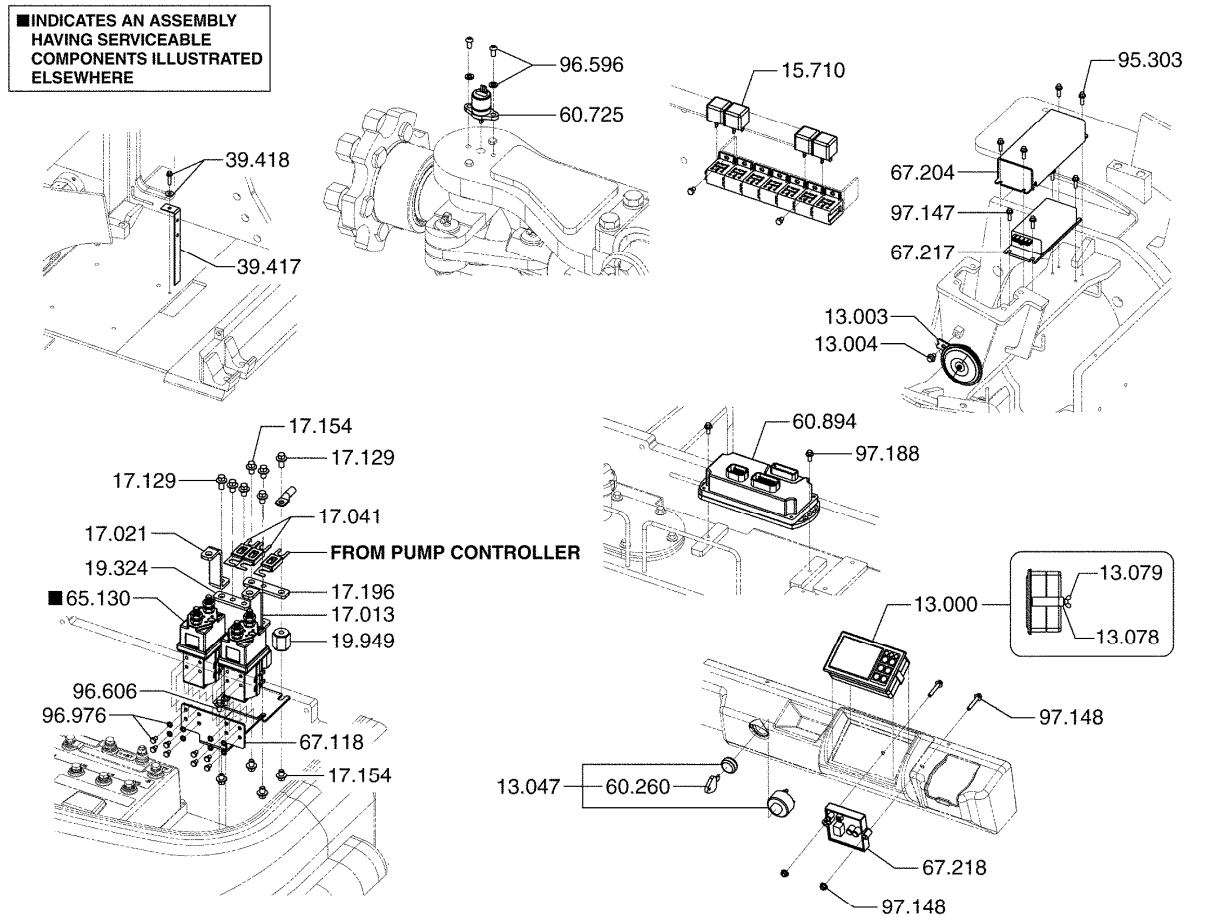

13.000	PANEL, INSTRUMENT CLUSTER 판넬	39.417	GROUND STRAP, ELECTRIC TRUCK 접지케이블
13.003	HORN 혼	39.418	FASTENER, ELECTRIC TRUCK GROUND STRAP 패스너
13.004	FASTENER, HORN MOUNTING BRACKET 패스너	60.260	KEY, CIRCUIT LOCKING SWITCH 키
13.047	SWITCH, CIRCUIT LOCKING 스위치	60.725	POTENTIOMETER, STEERING INTERLOCK 포텐션메터
13.078	CLAMP, INSTRUMENT CLUSTER TO INST PANEL 클램프	60.894	CONTROLLER, ELECTRONIC HYDRAULIC 컨트롤러
13.079	FASTENER, INSTRUMENT CLUSTER TO INST PANEL 패스너	65.130	CONTACTOR ASSEMBLY, LINE 컨택터
15.710	RELAY, ELECTRICAL 릴레이	67.118	BRACKET, LINE CONTACTOR MOUNTING 브라켓
17.013	BUS, 2A CONTACTOR 버스	67.204	COVER, DC CONVERTER 커버
17.021	BUS, 1A CONTACTOR 버스	67.217	CONVERTER, DC-DC FOR ACCESSORY 컨버터
17.041	FUSE, POWER 퓨즈	67.218	CONVERTER, DC-DC FOR INSTRUMENT PANEL 컨버터
17.129	FASTENER, 1A CONTACTOR BUS 패스너	95.303	FASTENER, DC-DC CONVERTER GUARD 패스너
17.154	FASTENER, FUSE TERMINAL ANGLE BUS 패스너	96.596	FASTENER, STEERING INTERLOCK POTENTIOMETER 패스너
17.196	BUS, MAIN FUSE CONNECTING 버스	96.606	FASTENER, LINE CONTACTOR MOUNTING BRACKET 패스너
19.324	BUS, MAIN FUSE FUSED TERMINAL 버스	96.976	FASTENER, CONTACTOR MOUNTING 패스너
19.949	INSULATOR, CONTACTOR PANEL FUSE HOLDER 절연체	97.147	FASTENER, DC-DC CONVERTER FOR ACCESSORY 패스너

97.148 FASTENER, DC-DC CONVERTER FOR INSTRUMENT PANEL
패스너

97.188 FASTENER, ELECTRONIC HYDRAULIC CONTROLLER
*

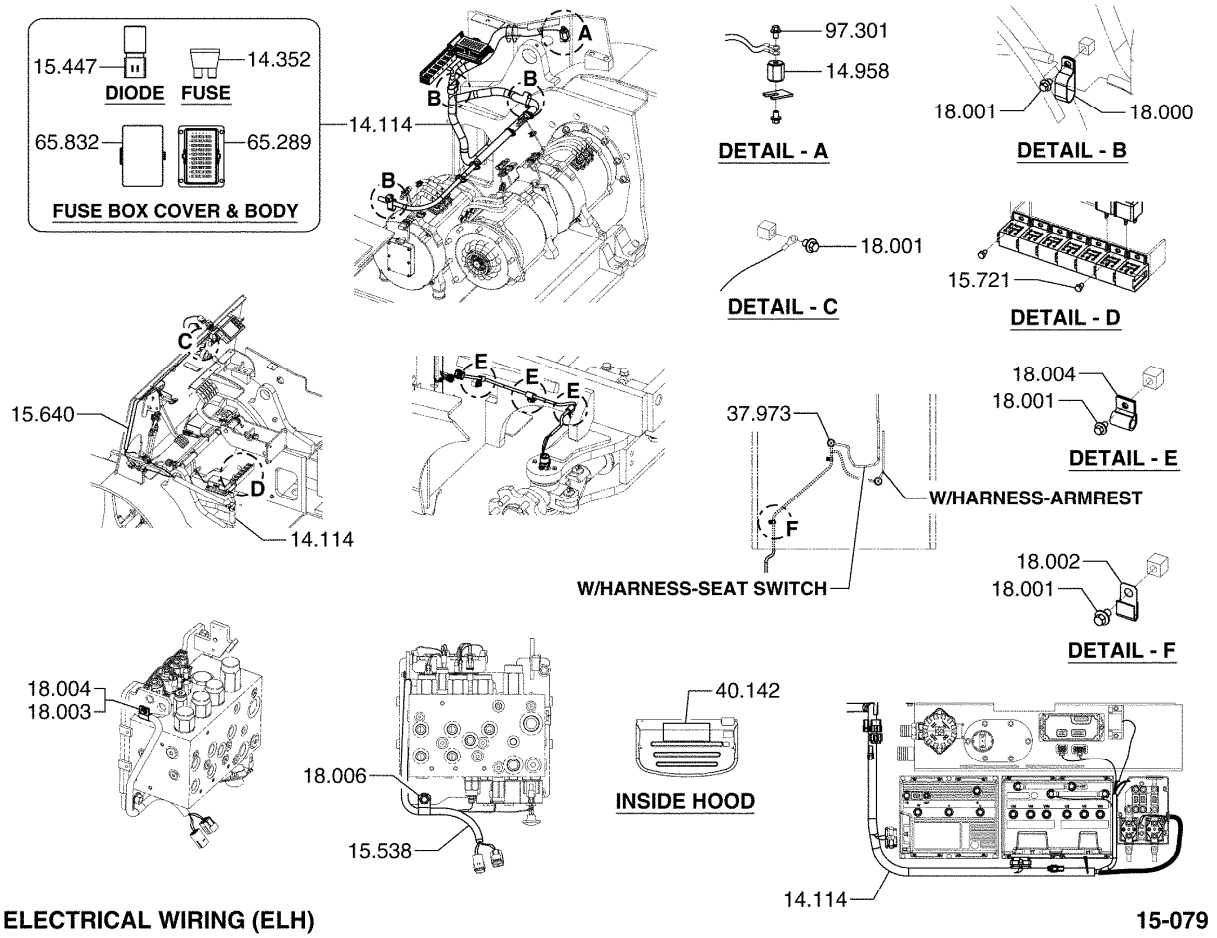

14.114	HARNESS, MACHINE WIRING 하네스
14.352	FUSE, CONTROL CIRCUIT 퓨즈
14.958	INSULATOR, WIRING HARNESS GROUND *
15.447	DIODE, HARNESS 다이오드
15.538	HARNESS, VALVE SWITCH WIRING CONNECTOR 하네스
15.640	WIRING HARNESS, MACHINE COWL 와이어하네스
15.721	FASTENER, RELAY BRACKET 패스너
18.000	CLIP, WIRING HARNESS 클립
18.001	FASTENER, WIRING HARNESS CLIP 패스너

18.002	CLIP, WIRING HARNESS 클립
18.003	FASTENER, WIRING HARNESS CLIP 패스너
18.004	CLIP, WIRING HARNESS 클립
18.006	CLIP, WIRING HARNESS 클립
37.973	GROMMET, SEAT WIRING HARNESS 그로멧
40.142	DECAL, ELECTRICAL CIRCUIT DIAGRAM 데칼
65.289	BODY, FUSE BOX *
65.832	COVER, FUSE BOX 커버
97.301	FASTENER, WIRING HARNESS GROUND INSULATOR *

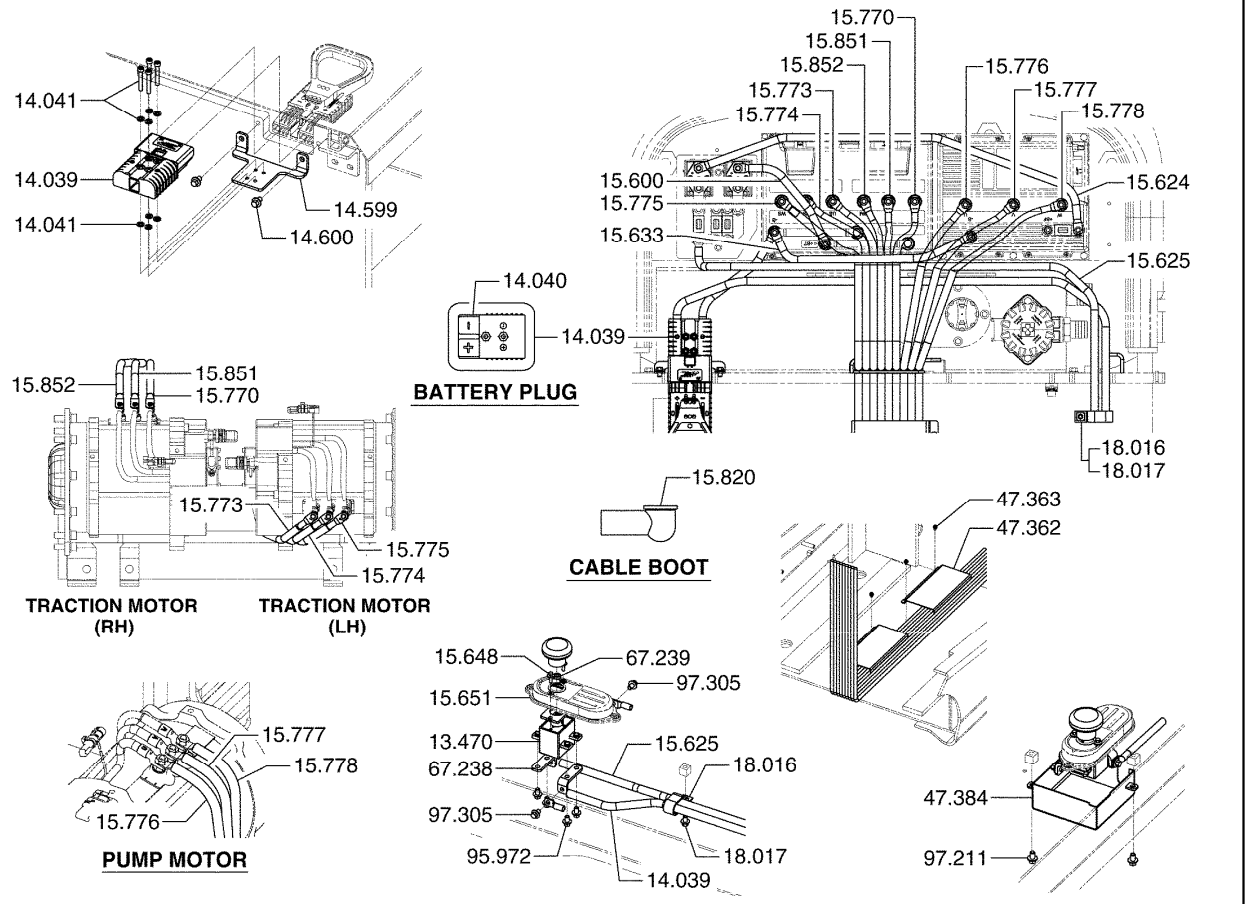

13.470	SWITCH, DISCONNECT 스위치	15.775	CABLE, DRIVE MOTOR (TMWL TO TCWL) 케이블
14.039	RECEPTACLE & LEAD ASSEMBLY, BATTERY 리셉터클과리드	15.776	CABLE, PUMP MOTOR (PMU TO PCU) 케이블
14.040	RECEPTACLE, BATTERY 리셉터클	15.777	CABLE, PUMP MOTOR (PMV TO PCV) 케이블
14.041	FASTENER, BATTERY RECEPTACLE 패스너	15.778	CABLE, PUMP MOTOR (PMW TO PCW) 케이블
14.599	BRACKET, BATTERY RECEPTACLE MOUNTING 브라켓	15.820	BOOT, CABLE 부트
14.600	FASTENER, BATTERY RECEPTACLE MOUNTING BRACKET 패스너	15.851	CABLE, DRIVE MOTOR (TMVR TO TCVR) *
15.600	CABLE, CONTACTOR 케이블	15.852	CABLE, DRIVE MOTOR (TMWR TO TCWR) *
15.624	CABLE, CONTACTOR L- 케이블	18.016	CLIP, CABLE 클립
15.625	CABLE, CONTACTOR L+ 케이블	18.017	FASTENER, CABLE CLIP 패스너
15.633	CABLE, CONTACTOR B-T TO CONTACTOR B-P 케이블	47.362	COVER, CABLE PROTECTION *
15.648	FASTENER, DISCONNECT SWITCH MOUNTING BRACKET 패스너	47.363	FASTENER, CABLE PROTECTION COVER *
15.651	BRACKET, DISCONNECT SWITCH MOUNTING 브라켓	47.384	COVER, DISCONNECT SWITCH *
15.770	CABLE, DRIVE MOTOR (TMUR TO TCUR) 케이블	67.238	BUS, BATTERY DISCONNECT SWITCH *
15.773	CABLE, DRIVE MOTOR (TMUL TO TCUL) 케이블	67.239	BUSHING, BATTERY DISCONNECT SWITCH *
15.774	CABLE, DRIVE MOTOR (TMVL TO TCVL) 케이블	95.972	FASTENER, BATTERY DISCONNECT SWITCH 패스너

97.211 FASTENER, DISCONNECT SWITCH COVER
*

97.305 FASTENER, BATTERY DISCONNECTOR SWITCH BUS
*

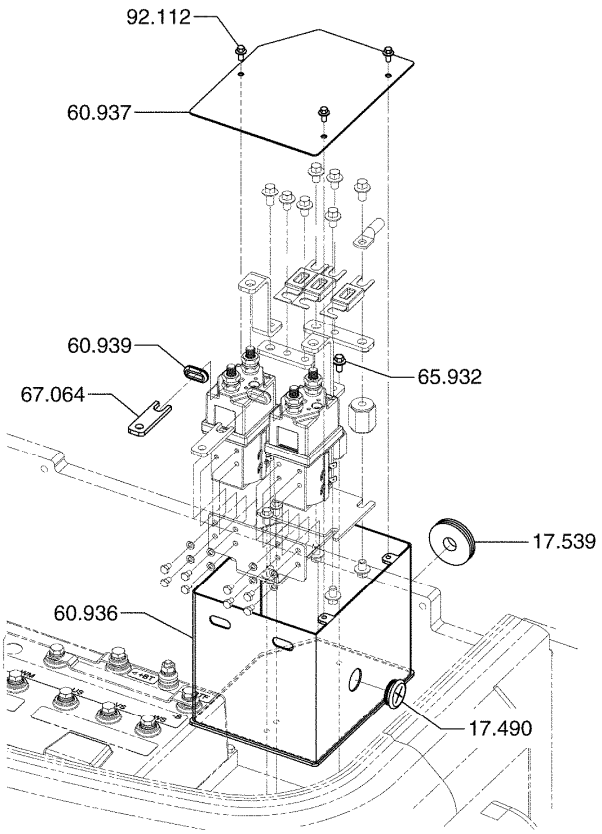

ELECTRICAL COMPONENTS (EE) **15-081**

17.490 GROMMET, CONTACTOR PANEL BOX LEADS
그로멧

17.539 GROMMET, CONTACTOR BOX
그로멧

60.936 BRACKET, CONTACTOR COVERING BODY
브라켓

60.937 BRACKET, CONTACTOR COVERING
브라켓

60.939 GROMMET, CONTACTOR CONNECTING CONDUCTOR
그로멧

65.932 FASTENER, LINE CONTACTOR
패스너

67.064 CONDUCTOR, LINE CONTACTOR
컨덕터

92.112 FASTENER, CONTACTOR BOX
패스너

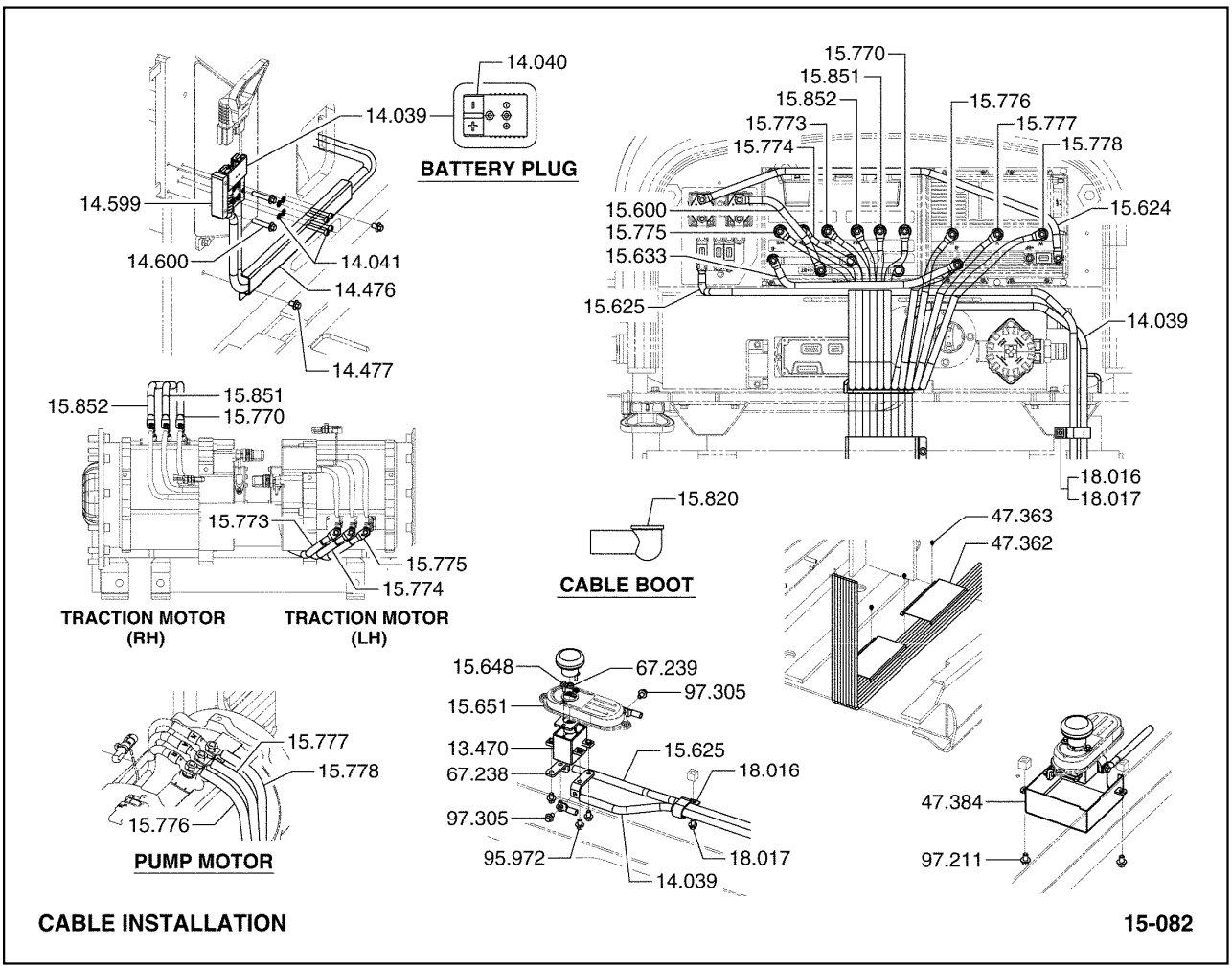

13.470	SWITCH, DISCONNECT 스위치
14.039	RECEPTACLE & LEAD ASSEMBLY, BATTERY 리셉터클과리드
14.040	RECEPTACLE, BATTERY 리셉터클
14.041	FASTENER, BATTERY RECEPTACLE 패스너
14.476	SHIELD, BATTERY CABLE 쉴드
14.477	FASTENER, BATTERY CABLE SHIELD 패스너
14.599	BRACKET, BATTERY RECEPTACLE MOUNTING 브라켓
14.600	FASTENER, BATTERY RECEPTACLE MOUNTING BRACKET 패스너
15.600	CABLE, CONTACTOR 케이블
15.624	CABLE, CONTACTOR L- 케이블
15.625	CABLE, CONTACTOR L+ 케이블
15.633	CABLE, CONTACTOR B-T TO CONTACTOR B-P 케이블
15.648	FASTENER, DISCONNECT SWITCH MOUNTING BRACKET 패스너
15.651	BRACKET, DISCONNECT SWITCH MOUNTING 브라켓
15.770	CABLE, DRIVE MOTOR (TMUR TO TCUR) 케이블
15.773	CABLE, DRIVE MOTOR (TMUL TO TCUL) 케이블
15.774	CABLE, DRIVE MOTOR (TMVL TO TCVL) 케이블
15.775	CABLE, DRIVE MOTOR (TMWL TO TCWL) 케이블
15.776	CABLE, PUMP MOTOR (PMU TO PCU) 케이블
15.777	CABLE, PUMP MOTOR (PMV TO PCV) 케이블
15.778	CABLE, PUMP MOTOR (PMW TO PCW) 케이블
15.820	BOOT, CABLE 부트
15.851	CABLE, DRIVE MOTOR (TMVR TO TCVR) *
15.852	CABLE, DRIVE MOTOR (TMWR TO TCWR) *
18.016	CLIP, CABLE 클립
18.017	FASTENER, CABLE CLIP 패스너
47.362	COVER, CABLE PROTECTION *
47.363	FASTENER, CABLE PROTECTION COVER *
47.384	COVER, DISCONNECT SWITCH *
67.238	BUS, BATTERY DISCONNECT SWITCH *

67.239 BUSHING, BATTERY DISCONNECT SWITCH
*

95.972 FASTENER, BATTERY DISCONNECT SWITCH
패스너

97.211 FASTENER, DISCONNECT SWITCH COVER
*

97.305 FASTENER, BATTERY DISCONNECTOR SWITCH BUS
*

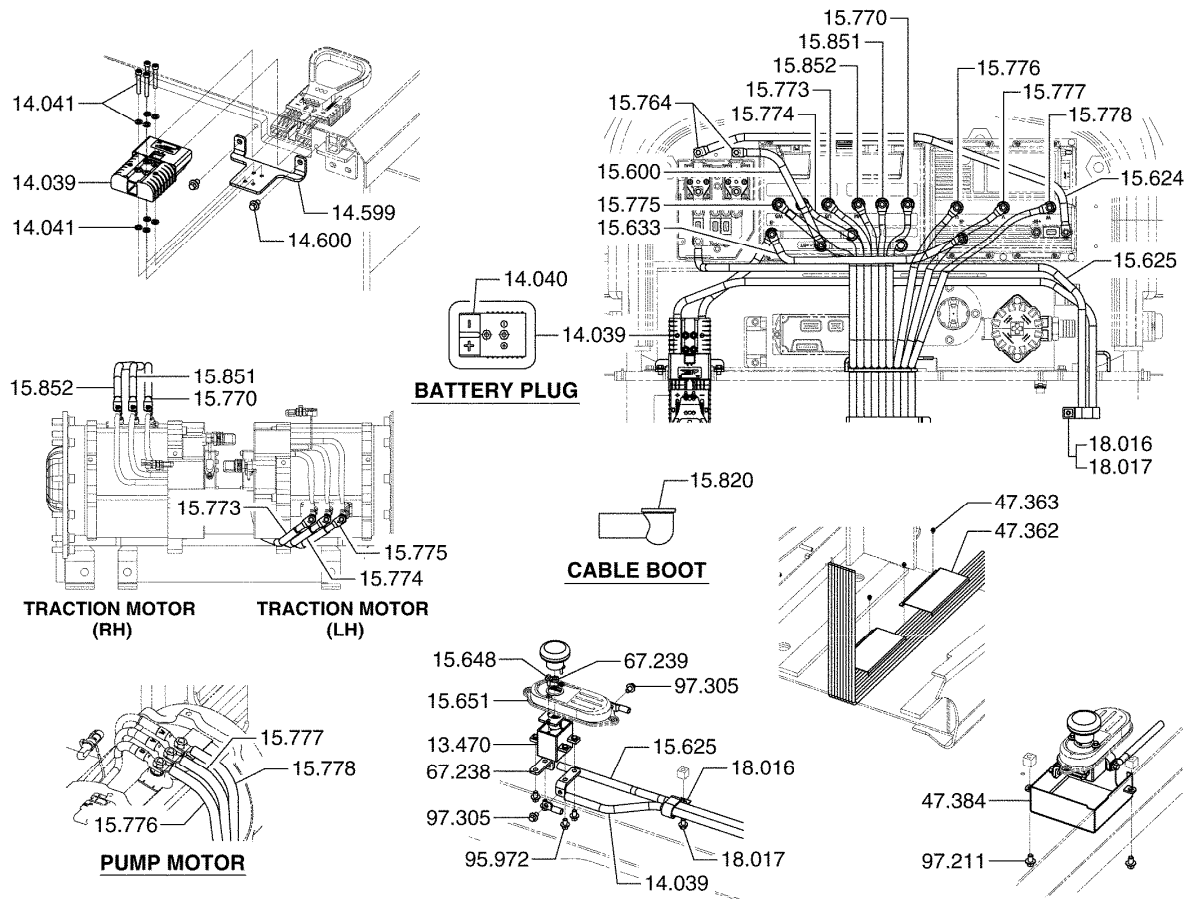

13.470	SWITCH, DISCONNECT 스위치	15.774	CABLE, DRIVE MOTOR (TMVL TO TCVL) 케이블
14.039	RECEPTACLE & LEAD ASSEMBLY, BATTERY 리셉터클과리드	15.775	CABLE, DRIVE MOTOR (TMWL TO TCWL) 케이블
14.040	RECEPTACLE, BATTERY 리셉터클	15.776	CABLE, PUMP MOTOR (PMU TO PCU) 케이블
14.041	FASTENER, BATTERY RECEPTACLE 패스너	15.777	CABLE, PUMP MOTOR (PMV TO PCV) 케이블
14.599	BRACKET, BATTERY RECEPTACLE MOUNTING 브라켓	15.778	CABLE, PUMP MOTOR (PMW TO PCW) 케이블
14.600	FASTENER, BATTERY RECEPTACLE MOUNTING BRACKET 패스너	15.820	BOOT, CABLE 부트
15.600	CABLE, CONTACTOR 케이블	15.851	CABLE, DRIVE MOTOR (TMVR TO TCVR) *
15.624	CABLE, CONTACTOR L- 케이블	15.852	CABLE, DRIVE MOTOR (TMWR TO TCWR) *
15.625	CABLE, CONTACTOR L+ 케이블	18.016	CLIP, CABLE 클립
15.633	CABLE, CONTACTOR B-T TO CONTACTOR B-P 케이블	18.017	FASTENER, CABLE CLIP 패스너
15.648	FASTENER, DISCONNECT SWITCH MOUNTING BRACKET 패스너	47.362	COVER, CABLE PROTECTION *
15.651	BRACKET, DISCONNECT SWITCH MOUNTING 브라켓	47.363	FASTENER, CABLE PROTECTION COVER *
15.764	FASTENER, CABLE MOUNTING 패스너	47.384	COVER, DISCONNECT SWITCH *
15.770	CABLE, DRIVE MOTOR (TMUR TO TCUR) 케이블	67.238	BUS, BATTERY DISCONNECT SWITCH *
15.773	CABLE, DRIVE MOTOR (TMUL TO TCUL) 케이블	67.239	BUSHING, BATTERY DISCONNECT SWITCH *

95.972 FASTENER, BATTERY DISCONNECT SWITCH
패스너

97.211 FASTENER, DISCONNECT SWITCH COVER
*

97.305 FASTENER, BATTERY DISCONNECTOR SWITCH BUS
*

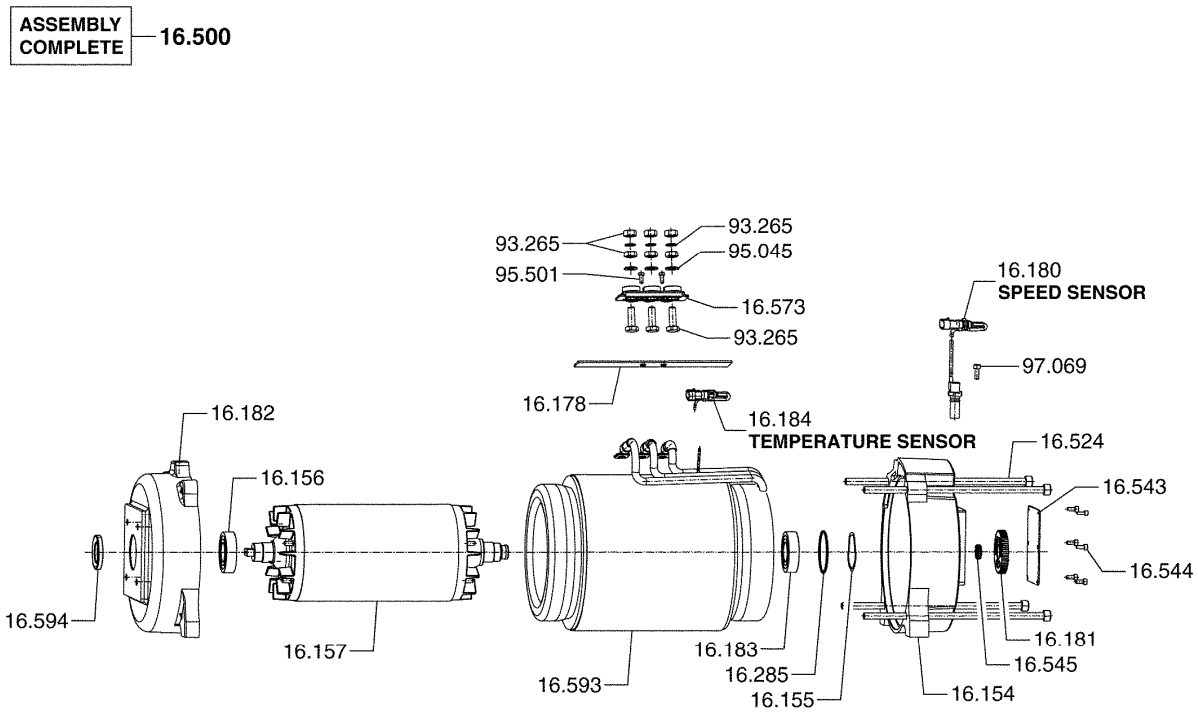

PUMP MOTOR ASSEMBLY **16-192**

16.154 COVER, PUMP MOTOR ROTOR END
커버

16.155 WASHER, PUMP MOTOR ROTOR BEARING
와셔

16.156 RING, PUMP MOTOR ROTOR BEARING
링

16.157 ROTOR, PUMP MOTOR
로터

16.178 BASE, PUMP MOTOR TERMINAL
베이스

16.180 SENSOR KIT, PUMP MOTOR ROTOR
센서

16.181 PLATE, PUMP MOTOR ROTOR SENSOR TARGET
플레이트

16.182 COVER, PUMP MOTOR DRIVE END
커버

16.183 BEARING, PUMP MOTOR ROTOR END
베어링

16.184 SENSOR KIT, PUMP MOTOR TEMPERATURE
센서키트

16.285 SEAL, PUMP MOTOR ROTOR BEARING
실리콘

16.500 MOTOR ASSEMBLY, PUMP
모터

16.524 FASTENER, PUMP MOTOR MOUNTING
패스너

16.543 COVER, PUMP MOTOR COMMUTATOR END BEARING
커버

16.544 FASTENER, COMMUTATOR END BEARING COVER
패스너

16.545 RETAINER, PUMP MOTOR COMMUTATOR END BEARING
리테이너

16.573 TERMINAL BLOCK, HYDRAULIC PUMP MOTOR
터미널블록

16.593 STATOR ASSY, HYDRAULIC-PUMP MOTOR
스테이터

16.594 RETAINER, HYDRAULIC PUMP MOTOR DRIVE END FRAME
리테이너

93.265 FASTENER, HYDRAULIC PUMP MOTOR TERMINAL
패스너

95.045 WASHER, HYDRAULIC PUMP MOTOR TERMINAL FASTENER
와셔

95.501 FASTENER, PUMP MOTOR TERMINAL BLOCK CONNECTOR
패스너

97.069 FASTENER, PUMP MOTOR SPEED SENSOR
패스너

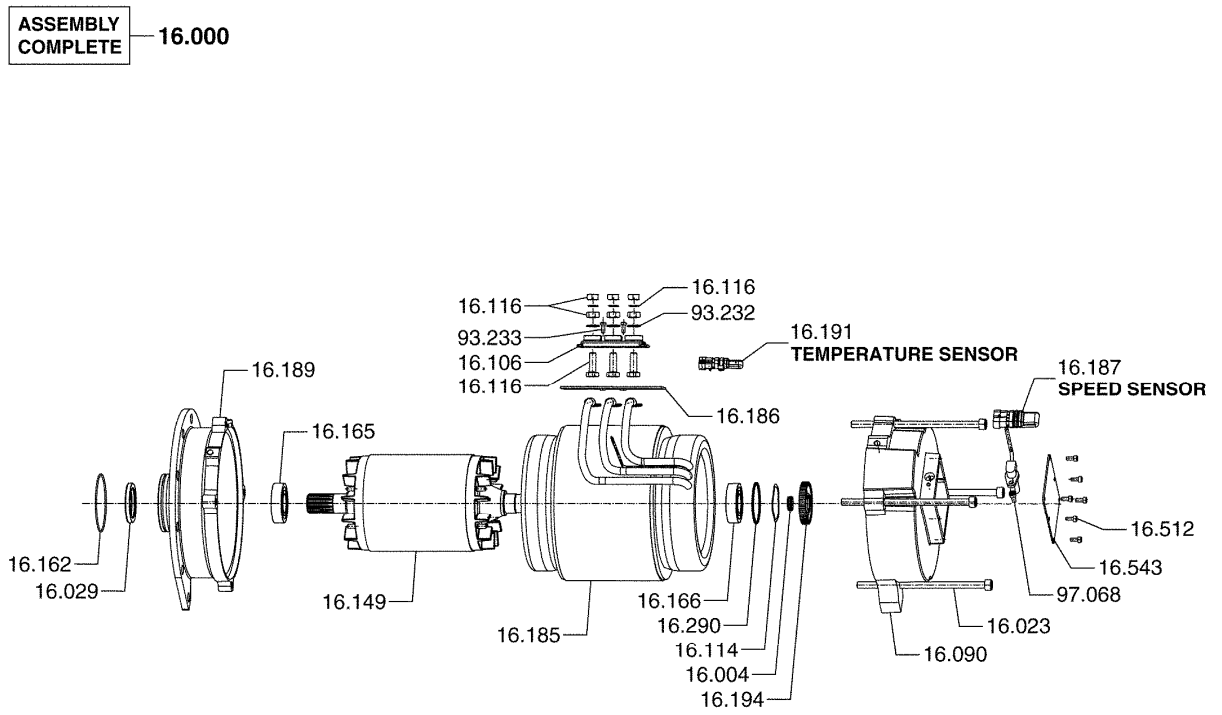

16.000 MOTOR ASSEMBLY, DRIVE
모터

16.004 RETAINER, DRIVE MOTOR COMMUTATOR END BEARING
리테이너

16.023 FASTENER, DRIVE MOTOR DRIVE END FRAME
패스너

16.029 SEAL, DRIVE MOTOR ARMATURE SHAFT DRIVE END
시일

16.090 COVER, DRIVE MOTOR COMMUTATOR END
커버

16.106 TERMINAL BLOCK, DRIVE MOTOR
터미널블록

16.114 WASHER, DRIVE MOTOR DRIVE END THRUST
와셔

16.116 FASTENER, DRIVE MOTOR TERMINAL
패스너

16.149 ROTOR, DRIVE MOTOR
로터

16.162 SEAL, DRIVE MOTOR DRIVE END
시일

16.165 BEARING, DRIVE MOTOR DRIVE END
베어링

16.166 BEARING, DRIVE MOTOR NON DRIVE END
베어링

16.185 STATOR ASSY, DRIVE MOTOR
스테이터

16.186 BASE, DRIVE MOTOR TERMINAL
베이스

16.187 SENSOR KIT, DRIVE MOTOR ROTOR
센서키트

16.189 COVER, DRIVE MOTOR DRIVE END
커버

16.191 SENSOR KIT, DRIVE MOTOR TEMPERATURE
센서키트

16.194 PLATE, DRIVE MOTOR ROTOR SENSOR TARGET
플레이트

16.290 SEAL, DRIVE MOTOR ROTOR BEARING
*

16.512 FASTENER, PUMP MOTOR COMMUTATOR END FRAME
패스너

16.543 COVER, PUMP MOTOR COMMUTATOR END BEARING
커버

93.232 WASHER, DRIVE MOTOR TERMINAL BLOCK FASTENER
와셔

93.233 FASTENER, DRIVE MOTOR TERMINAL
패스너

97.068 FASTENER, DRIVE MOTOR SPEED SENSOR
패스너

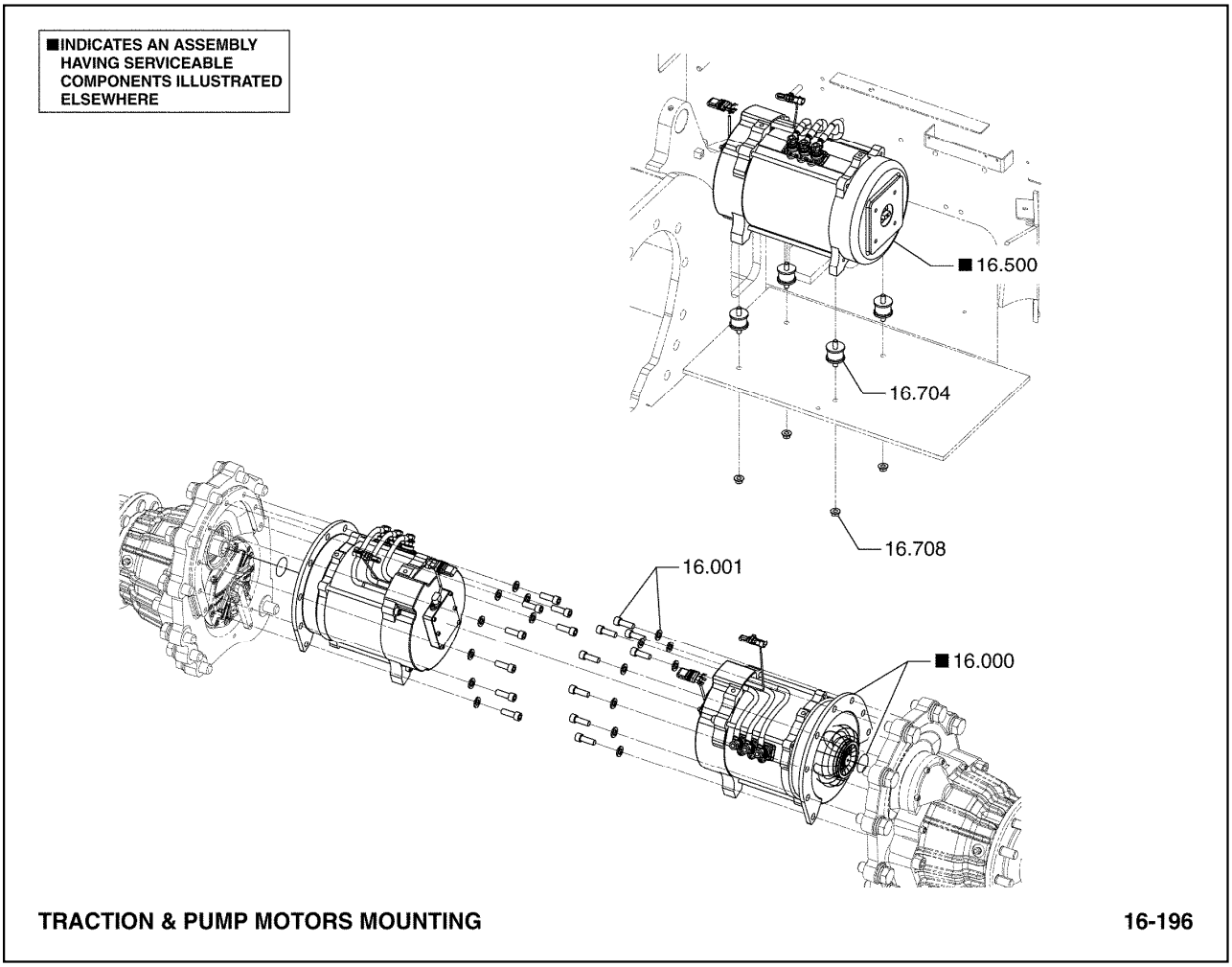

16.000 MOTOR ASSEMBLY, DRIVE
모터

16.001 FASTENER, DRIVE MOTOR
패스너

16.500 MOTOR ASSEMBLY, PUMP
모터

16.704 DAMPENER, PUMP MOTOR VIBRATION
댐프너

16.708 FASTENER, PUMP MOTOR VIBRATION DAMPENER
패스너

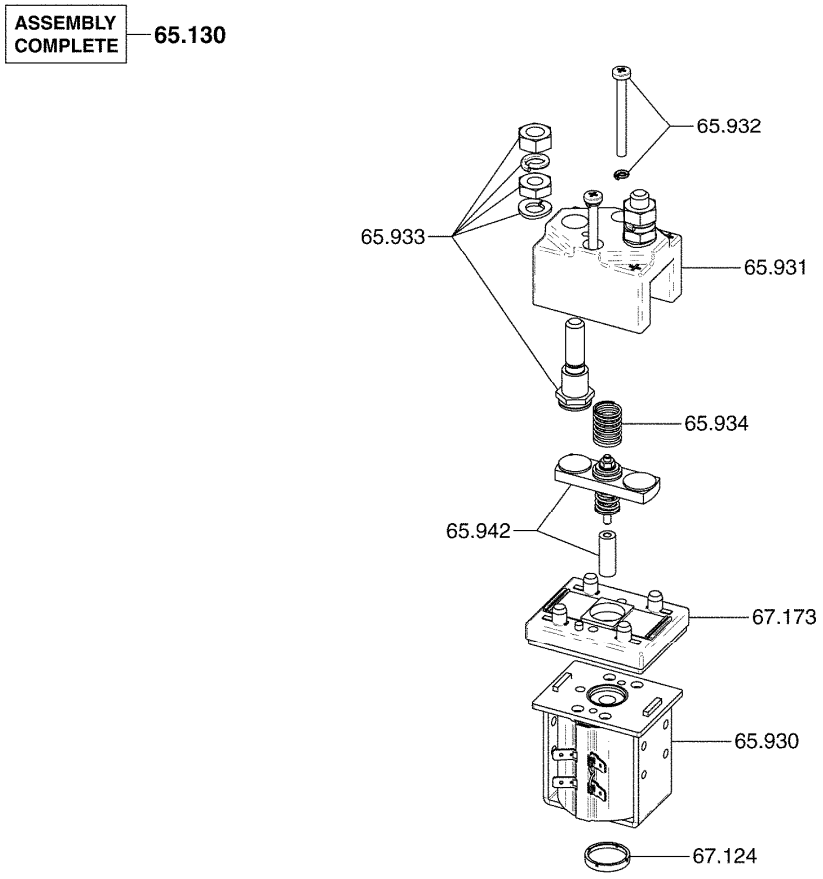

LINE CONTACTOR ASSEMBLY **17-030**

65.130 CONTACTOR ASSEMBLY, LINE
컨택터

65.930 ASSEMBLED COIL & MAGNET FRAME, LINE CONTACTOR
코일과마그넷

65.931 TOP COVER, LINE CONTACTOR
탑커버

65.932 FASTENER, LINE CONTACTOR
패스너

65.933 CONTACT KIT, LINE CONTACTOR
컨택트킷

65.934 RETURN SPRING, LINE CONTACTOR
리턴스프링

65.942 CONTACT SET, LINE CONTACTOR
컨택트셋

67.124 END CAP, LINE CONTACTOR
엔드캡

67.173 BASE,LINE CONTACTOR
베이스

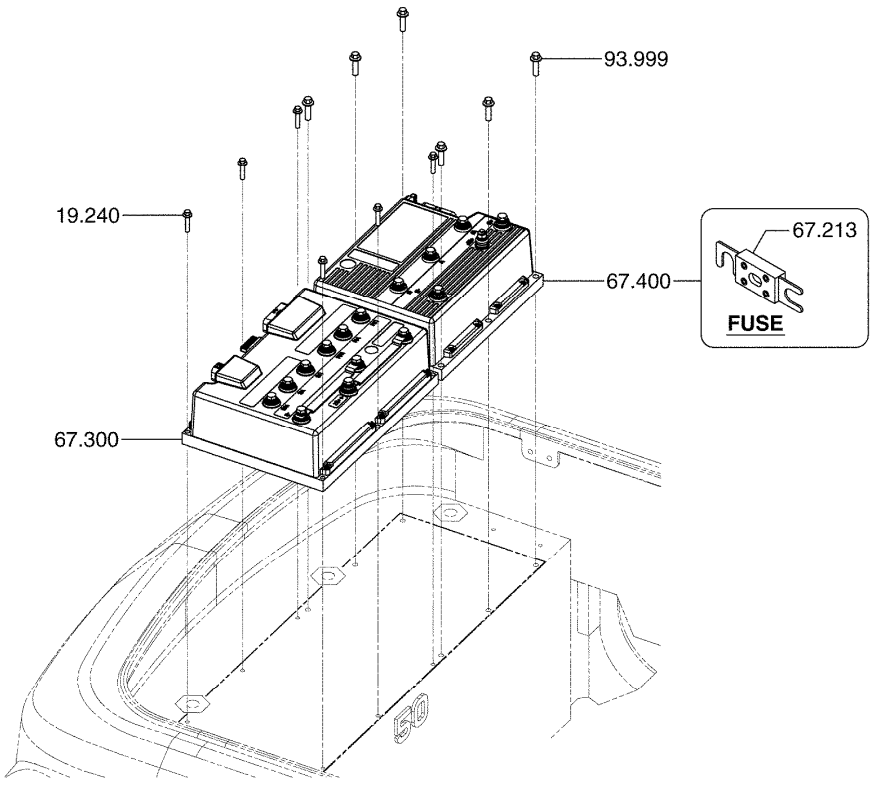

CONTROLLER MOUNTING **19-018**

19.240	FASTENER, CONTROL PANEL MOUNTING 패스너
67.213	FUSE, PUMP CONTROLLER 퓨즈
67.300	CONTROLLER, TRACTION 컨트롤러
67.400	CONTROLLER, PUMP 컨트롤러
93.999	FASTENER, CONTROL PANEL MOUNTING 패스너

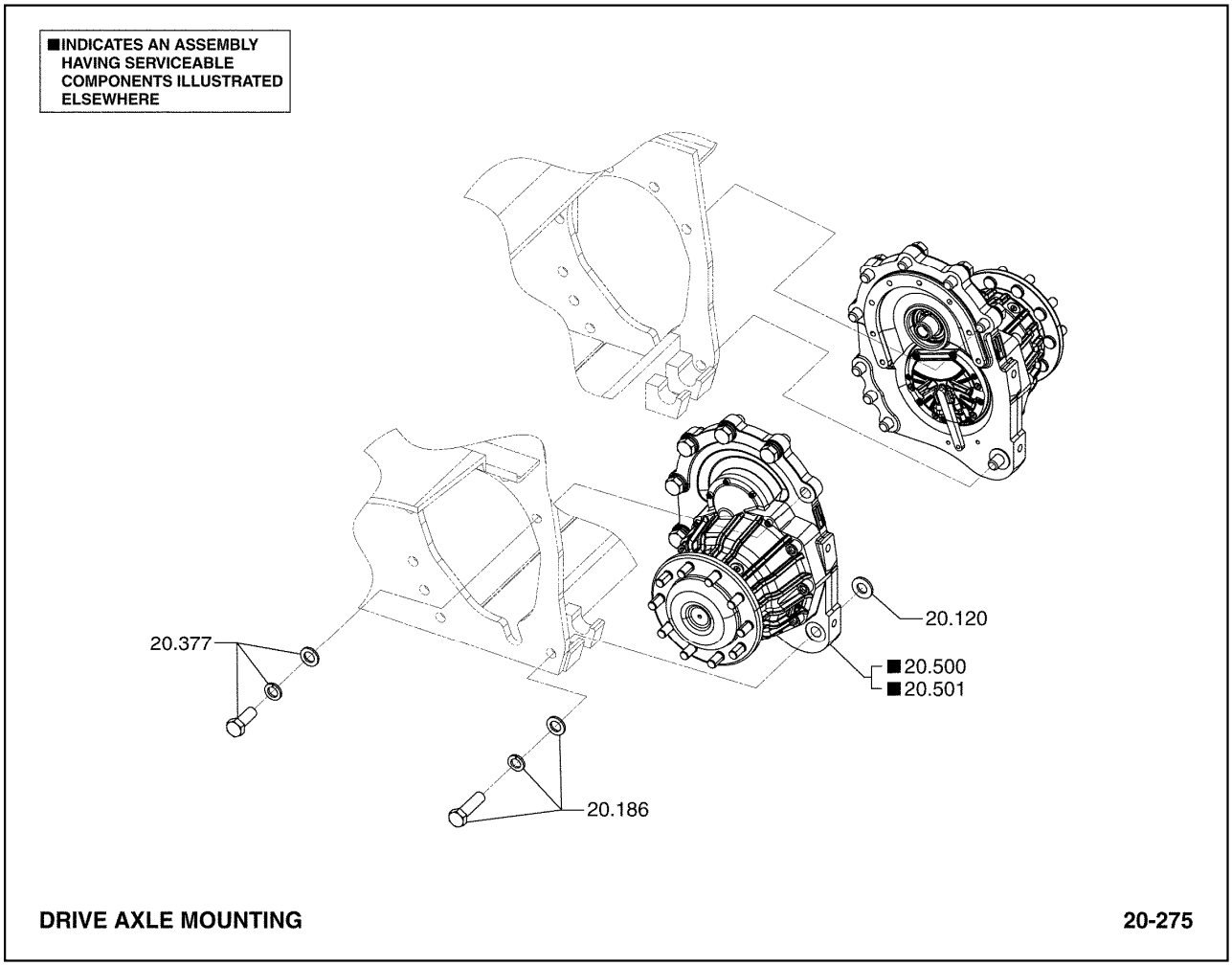

20.120 SPACER, DRIVE AXLE MOUNTING
스페이서

20.186 KIT,DRIVE GEAR
킷

20.377 FASTENER, DRIVE AXLE TO FRAME
패스너

20.500 AXLE END ASSEMBLY, DRIVE RH
액슬엔드

20.501 AXLE END ASSEMBLY, DRIVE LH
액슬엔드

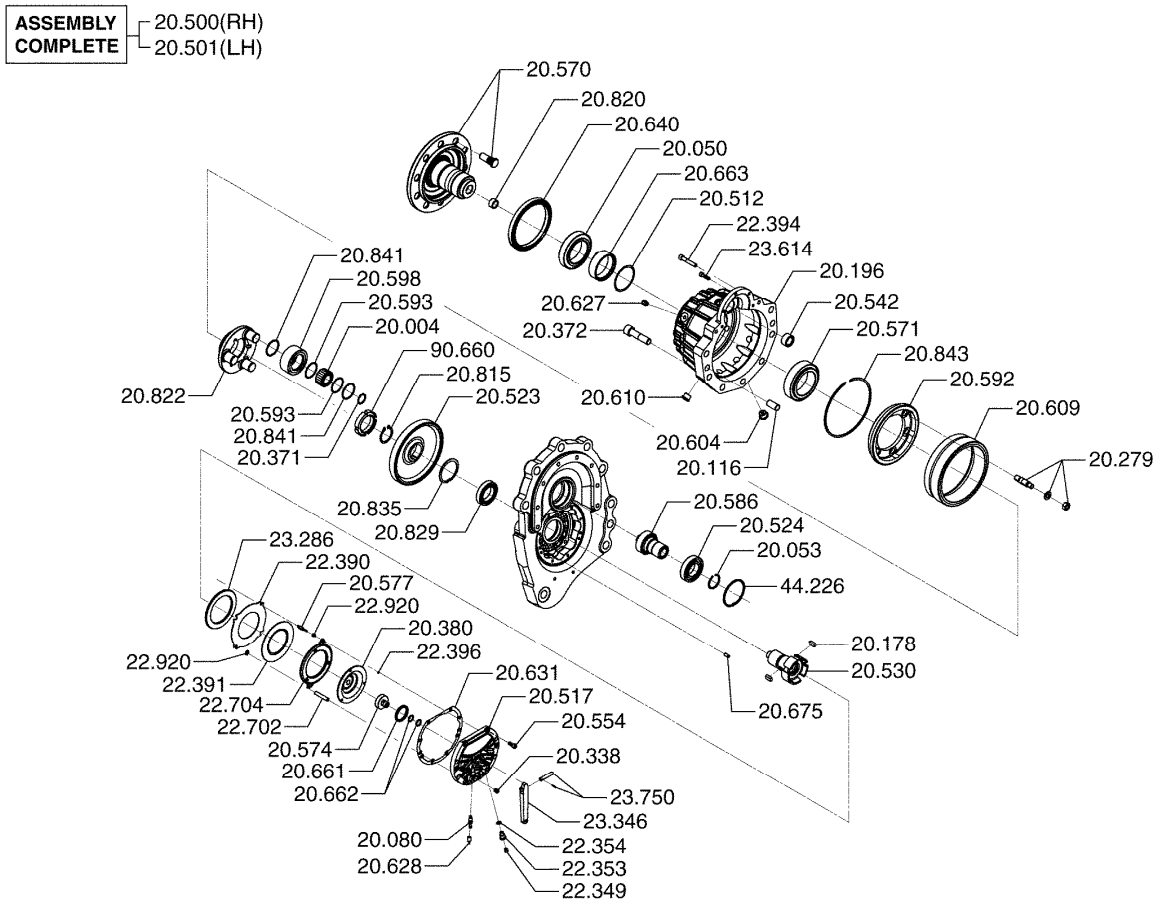

DRIVE AXLE ASSEMBLY **20-276**

20.004	BEARING, DRIVE HOUSING SPINDLE 베어링	20.517	COVER, DRIVE AXLE PLANET 커버
20.050	BEARING, DRIVE HOUSING SPINDLE 베어링	20.523	GEAR, DRIVE AXLE OUTPUT 기어
20.053	RETAINER, DRIVE UNIT PINION BEARING 리테이너	20.524	BEARING, DRIVE AXLE INTERMEDIATE GEAR SHAFT 베어링
20.080	BREATHER, DRIVE UNIT 브리더	20.530	SHAFT, DRIVE AXLE INPUT GEAR 샤프트
20.116	PIN, DRIVE AXLE HOUSING & DIFF ALIGNMENT 핀	20.542	BEARING, DRIVE AXLE SHAFT 베어링
20.178	KEY, INPUT SHAFT 키	20.554	FASTENER, DRIVE AXLE HUB CAP 패스너
20.196	HOUSING ASSEMBLY,DRIVE AXLE 하우징	20.570	FASTENER, DRIVE WHEEL MOUNTING 패스너
20.279	FASTENER, DIFFERENTIAL CASE TO RING GEAR 패스너	20.571	CONE, DRIVE AXLE HUB OUTER BEARING 콘
20.338	PLUG, DRIVE UNIT HOUSING CAP 플러그	20.574	SHAFT, DRIVE AXLE PLANET PINION 샤프트
20.371	FASTENER, DRIVE AXLE PLANET 패스너	20.577	FASTENER, DRIVE AXLE PLANET 패스너
20.372	FASTENER, AXLE HOUSING 패스너	20.586	SHAFT, DRIVE AXLE 샤프트
20.380	PLATE, HOUSING COVER 플레이트	20.592	PLANET, DRIVE AXLE 플래닛
20.500	AXLE END ASSEMBLY, DRIVE RH 액슬엔드	20.593	WASHER, PLANET PINION GEAR THRUST 와셔
20.501	AXLE END ASSEMBLY, DRIVE LH 액슬엔드	20.598	GEAR, DRIVE AXLE PLANET PINION 기어
20.512	SHIM, DRIVE AXLE HUB BEARING 심	20.604	PLUG, DRIVE AXLE HUB DRAIN 플러그

20.609 HUB, DRIVE AXLE INTERNAL GEAR
허브

20.610 PLUG, DRIVE AXLE HUB FILLER
플러그

20.627 VENT, DIFFERENTIAL & AXLE
벤트

20.628 ADAPTOR, DRIVE AXLE BREATHER VENT
어댑톼

20.631 SEAL, DRIVE AXLE PLANET CARRIER
시일

20.640 SEAL, RING GEAR SHAFT BEARING HOUSING
시일

20.661 SEAL, DRIVE AXLE RING GEAR SHAFT BEARING CAP
시일

20.662 SEAL, DRIVE AXLE RING GEAR SHAFT BEARING CAP
시일

20.663 SPACER, DRIVE AXLE HUB BEARING
스페이서

20.675 DOWEL PIN, DRIVE AXLE END HOUSING
다월핀

20.815 RETAINER, DRIVE AXLE HOUSING CARRIER BEARING
리테이너

20.820 BEARING, DRIVE AXLE PINION SHAFT
베어링

20.822 CARRIER, DRIVE AXLE HOUSING
캐리어

20.829 BEARING, DRIVE AXLE RING GEAR
베어링

20.835 RETAINER, DRIVE AXLE RING GEAR
리테이너

20.841 LOCATOR, DRIVE AXLE PLANET
로케이터

20.843 LOCATOR, DRIVE AXLE OUTPUT GEAR BEARING
로케이터

22.349 PLUG, SERVICE BRAKE HOUSING
플러그

22.353 FITTING, SERVICE BRAKE INLET PORT
피팅

22.354 SEAL, SERVICE BRAKE INLET PORT FITTING
시일

22.390 DISC, BRAKE - INNER
디스크

22.391 DISC, BRAKE - OUTER
디스크

22.394 FASTENER, BRAKE DISC HUB
패스너

22.396 RETAINER, BRAKE DISC
리테이너

22.702 DOWEL PIN, BRAKE DISC PISTON SLEEVE
다월핀

22.704 PLATE, DRIVE AXLE END HOUSING
플레이트

22.920 SPRING, BRAKE DISC PISTON PLATE FASTENER
스프링

23.286 PLATE, BRAKE BACKING
플레이트

23.346 ARM, PARKING BRAKE
암

23.614 FASTENER, DRIVE WHEEL BRK DRUM TO HUB (RH)
패스너

23.750 PIN, BRAKE ACTUATING LEVER PIVOT
핀

44.226 RING, DRIVE SHAFT BEARING
링

90.660 NUT, DRIVE AXLE PLANET FASTENER
너트

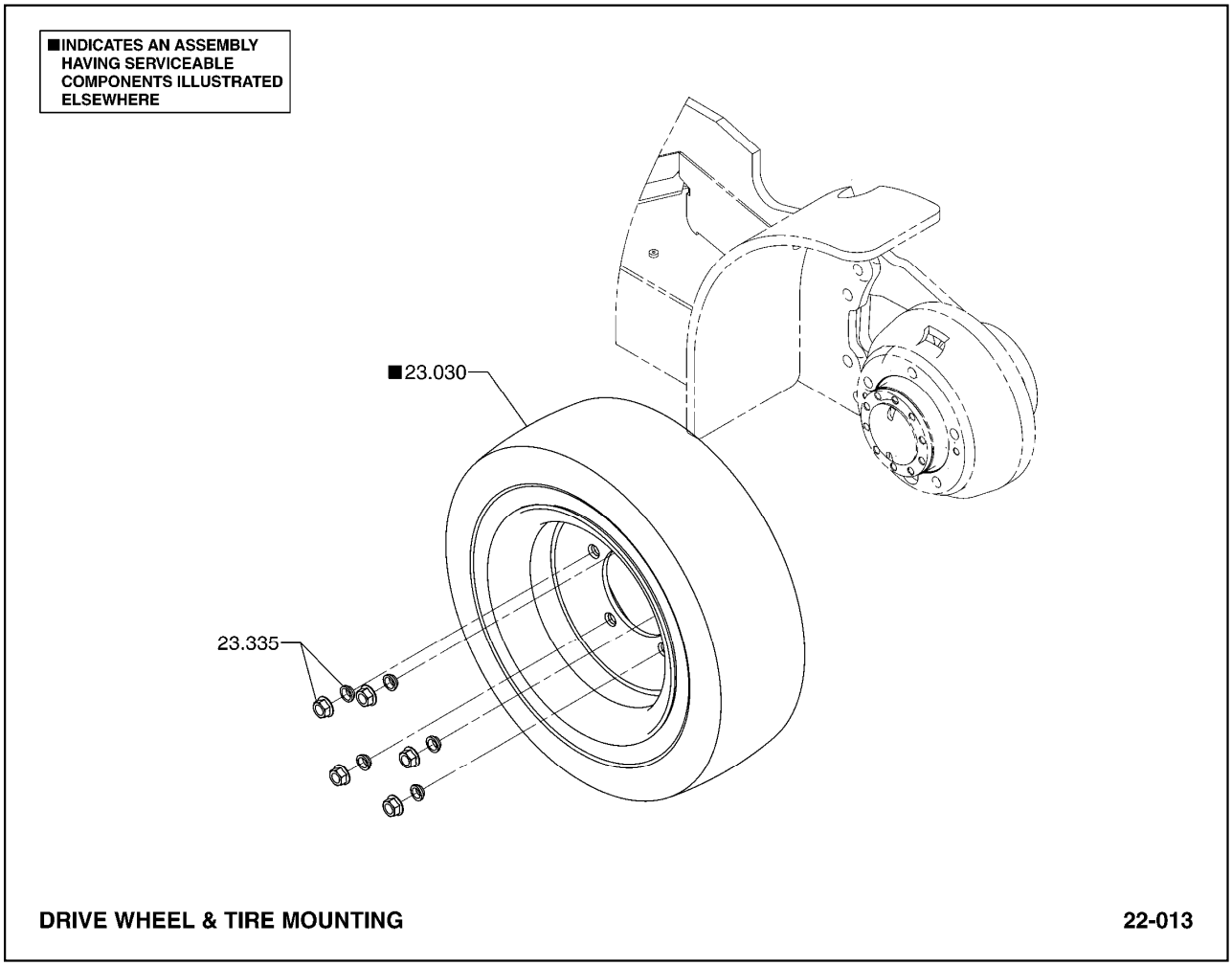

23.030 DRIVE WHEEL AND TIRE ASSEMBLY
드라이브휠타이어

23.335 FASTENER, DRIVE WHEEL
패스너

■INDICATES AN ASSEMBLY HAVING SERVICEABLE COMPONENTS ILLUSTRATED ELSEWHERE

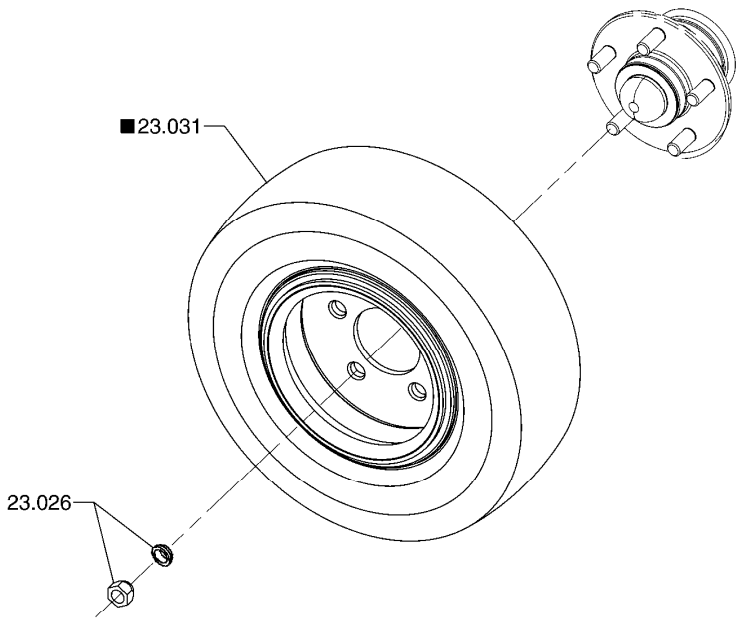

STEER WHEEL & TIRE MOUNTING **22-014**

23.026 FASTENER, STEER WHEEL
패스너

23.031 STEER WHEEL AND TIRE ASSEMBLY
휠

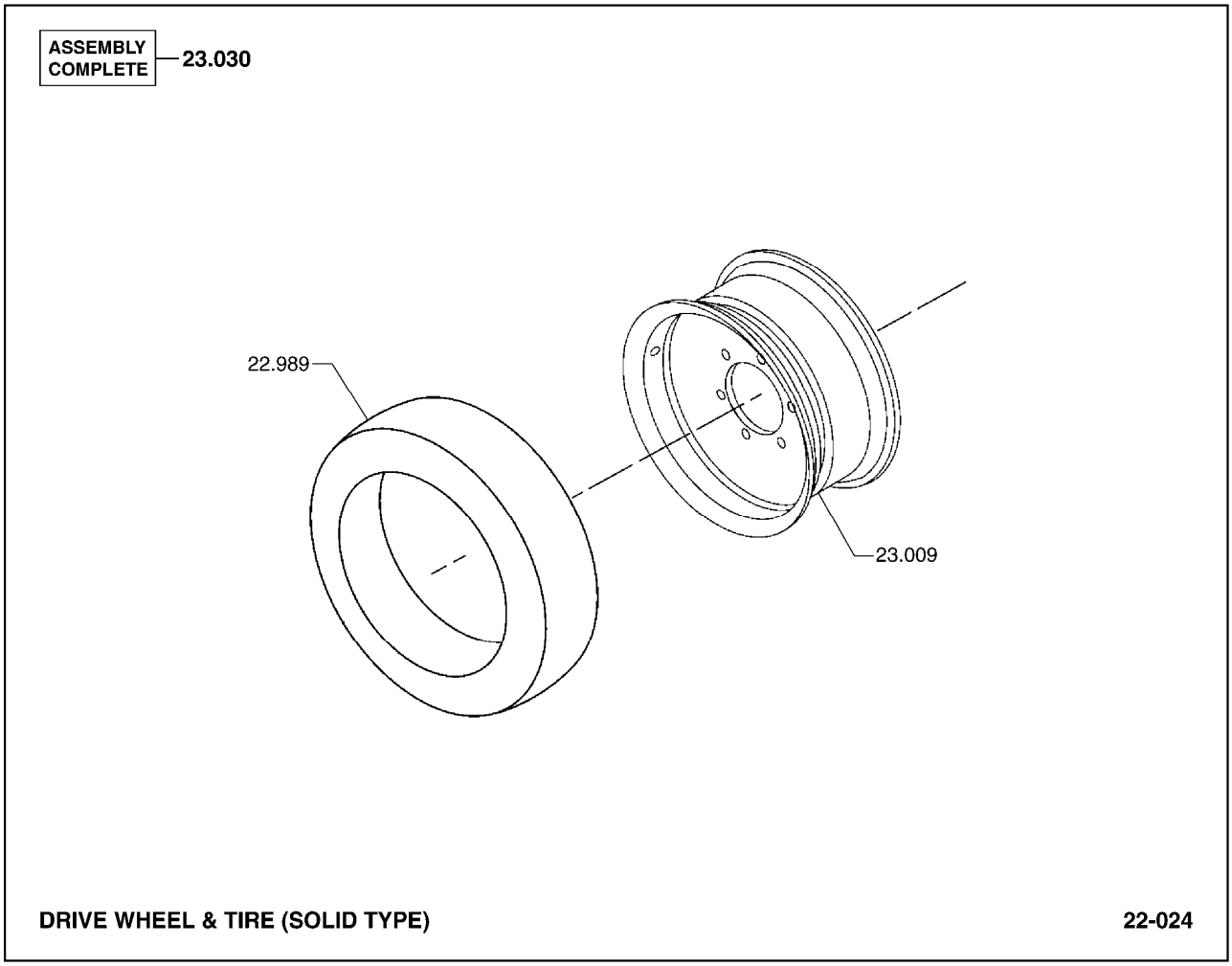

22.989	TIRE ASSEMBLY, DRIVE *
23.009	RIM ASSEMBLY, DRIVE WHEEL 림
23.030	DRIVE WHEEL AND TIRE ASSEMBLY 드라이브휠타이어

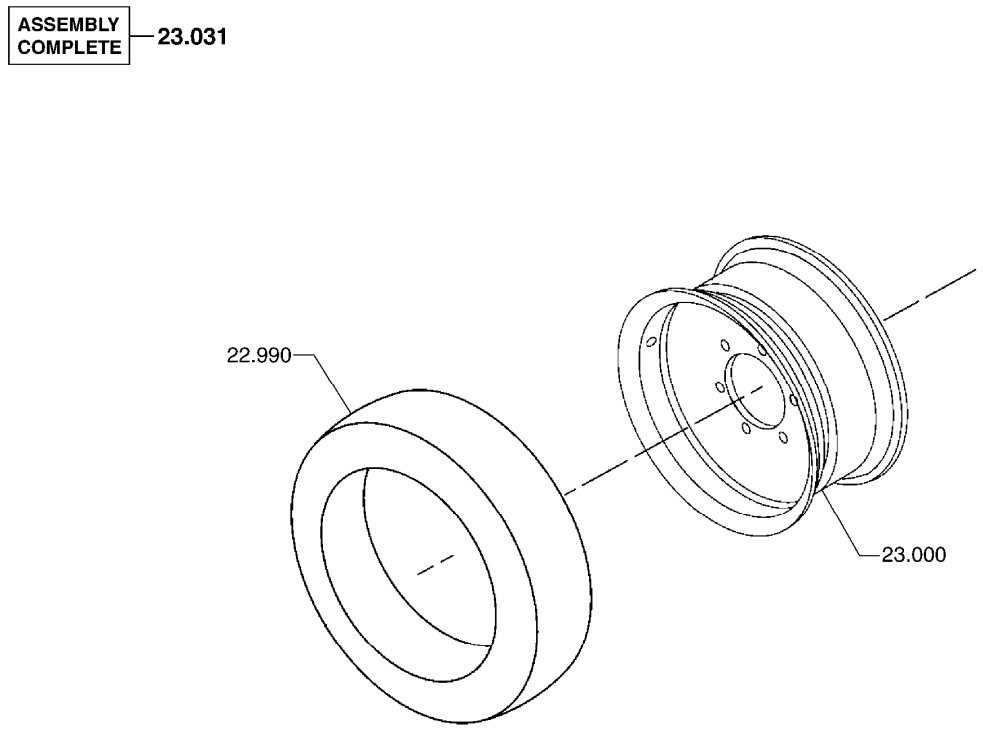

STEER WHEEL & TIRE (SOLID TYPE) **22-025**

22.990	TIRE ASSEMBLY, STEER *
23.000	RIM ASSEMBLY, STEER WHEEL 림
23.031	STEER WHEEL AND TIRE ASSEMBLY 휠

■INDICATES AN ASSEMBLY HAVING SERVICEABLE COMPONENTS ILLUSTRATED ELSEWHERE

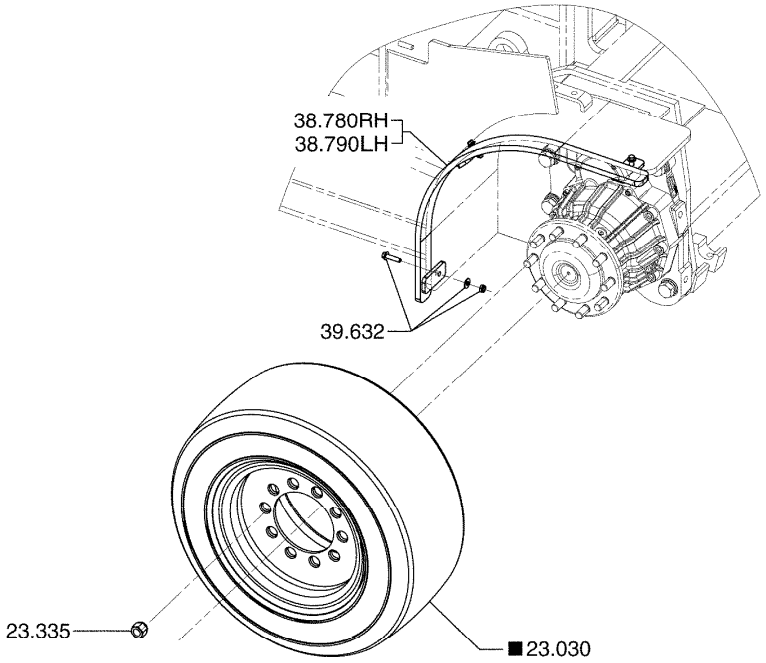

DRIVE WHEEL & TIRE MOUNTING **22-050**

23.030 DRIVE WHEEL AND TIRE ASSEMBLY
드라이브휠타이어

23.335 FASTENER, DRIVE WHEEL
패스너

38.780 FENDER, RIGHT HAND FRONT
펜더

38.790 FENDER, LEFT HAND FRONT
펜더

39.632 FASTENER, FENDER SUPPORT
패스너

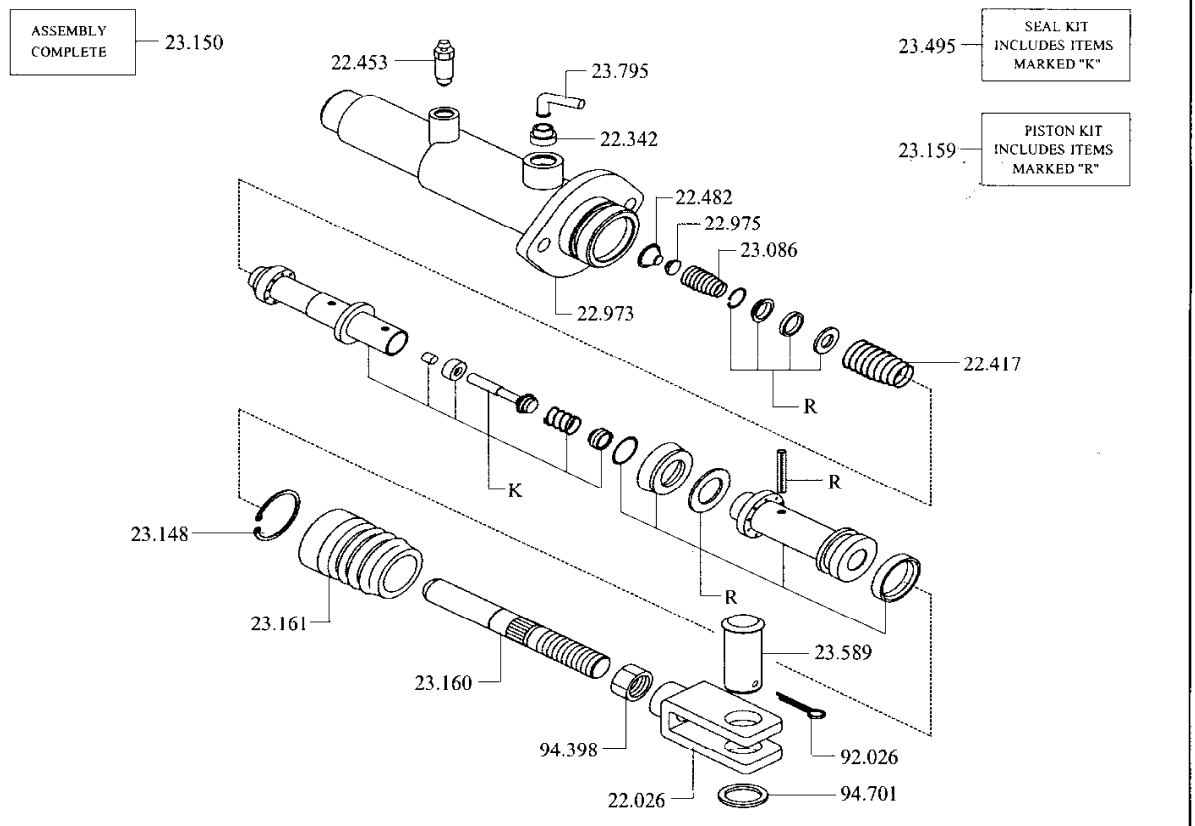

22.026 ROD END, BRAKE PEDAL LINKAGE
로드엔드

22.342 SEAL, BRAKE MASTER CYLINDER INLET FITTING
시일

22.417 SPRING, MASTER CYLINDER PISTON RETURN
스프링

22.453 BLEEDER, MASTER CYLINDER RELIEF VALVE LINE
블리더

22.482 CUP, MASTER CYLINDER PISTON RETURN SPRING
컵

22.973 HOUSING, BRAKE MASTER CYLINDER
하우징

22.975 STOP-SPRING, BRAKE MASTER CYLINDER
스톱

23.086 SPRING, MASTER CYL CHECK VALVE
스프링

23.148 CLAMP, MASTER CYLINDER BOOT (SMALL)
클램프

23.150	CYLINDER ASSEMBLY, BRAKE MASTER COMPLETE 실린더
23.159	REPAIR KIT, MASTER CYLINDER 리페어킷
23.160	ROD, PUSH 로드
23.161	BOOT, MASTER CYLINDER 부트
23.495	SEAL KIT, MASTER CYLINDER 시일킷
23.589	RETAINER, BRAKE ACTUATING LEVER 리테이너
23.795	FITTING, BRAKE MASTER CYLINDER INLET 피팅
92.026	RETAINER, BRAKE MASTER CYLINDER ACTUATING ROD PIN 리테이너
94.398	NUT, BRAKE MASTER CYLINDER ACTUATING ROD FASTENER 너트
94.701	WASHER, BRAKE MASTER CYLINDER ACTUATING ROD PIN 와셔

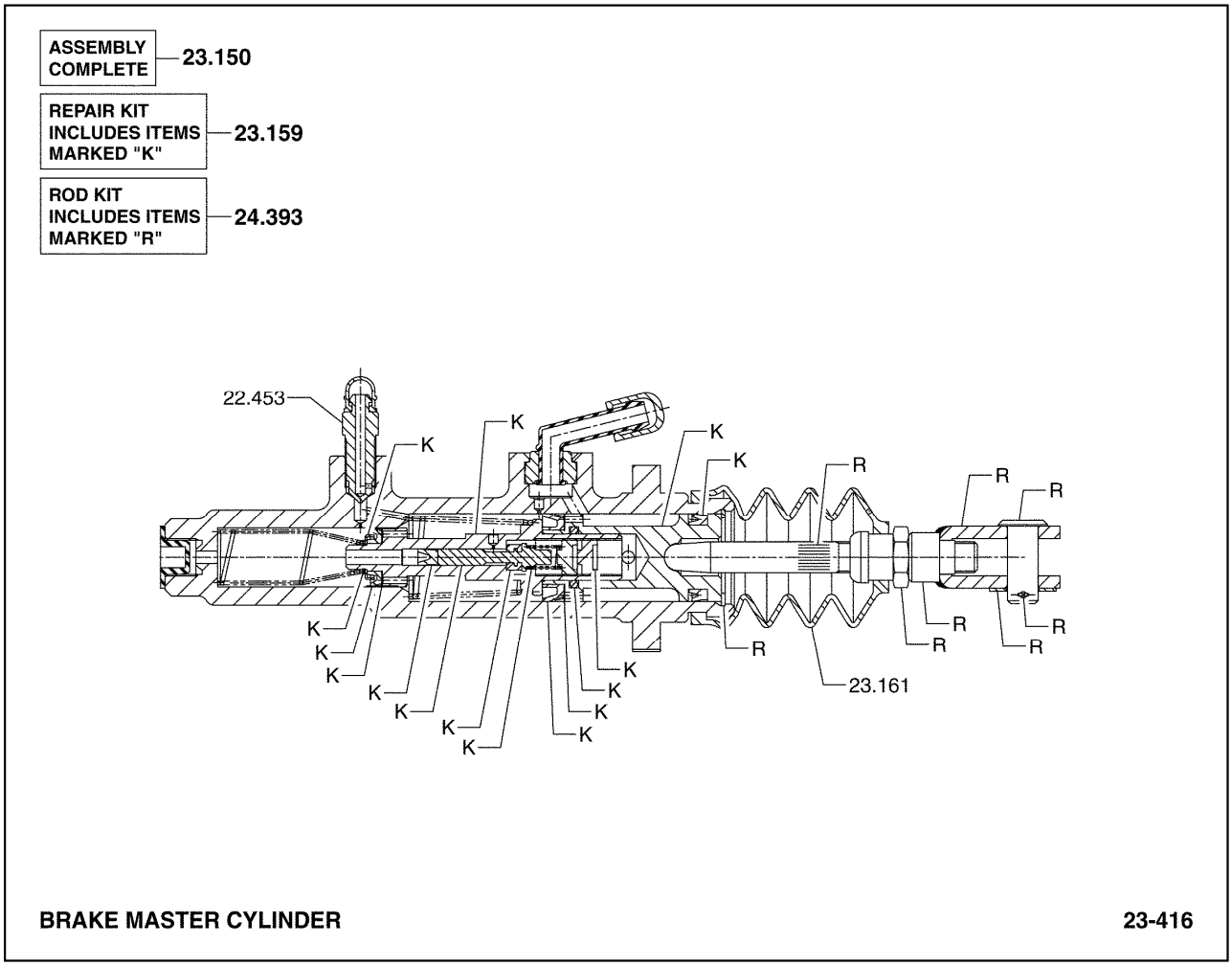

22.453 BLEEDER, MASTER CYLINDER RELIEF VALVE LINE
블리더

23.150 CYLINDER ASSEMBLY, BRAKE MASTER COMPLETE
실린더

23.159 REPAIR KIT, MASTER CYLINDER
리페어킷

23.161 BOOT, MASTER CYLINDER
부트

24.393 ROD KIT, BRAKE MASTER CYLINDER
*

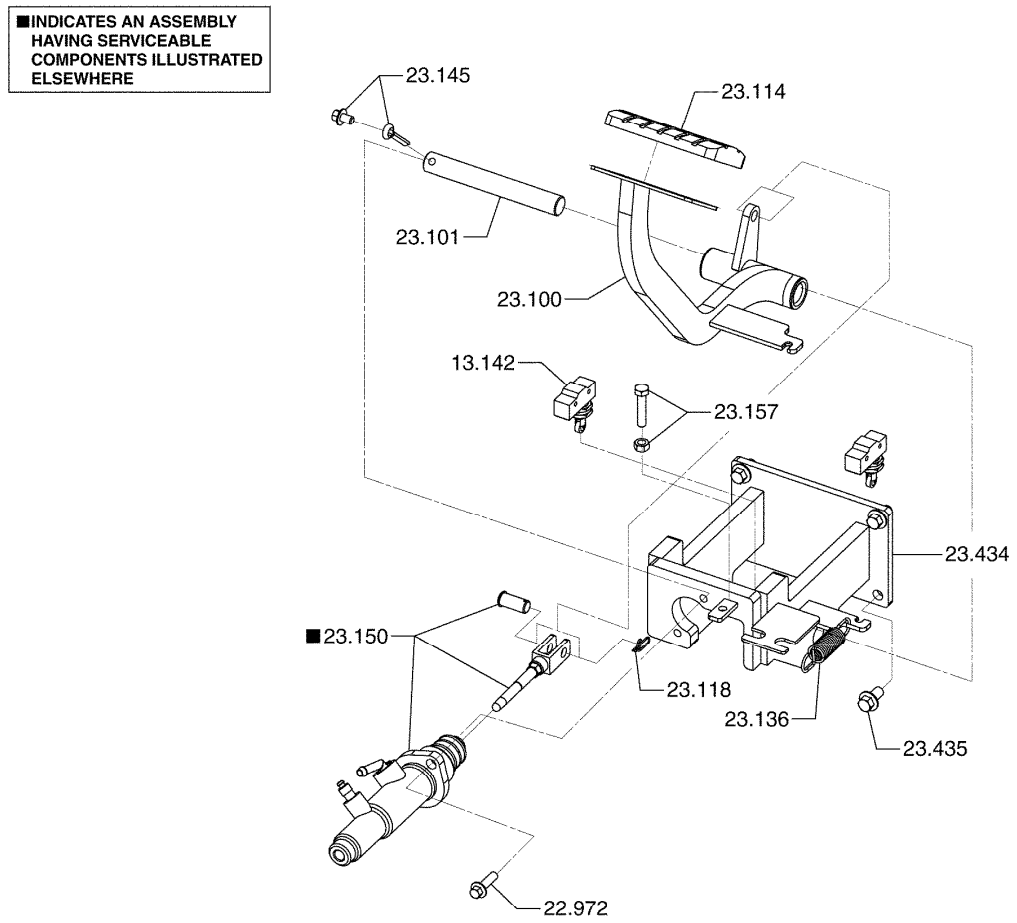

13.142 SWITCH, BRAKE INTERLOCK
스위치

22.972 FASTENER, BRAKE MASTER CYLINDER MOUNTING
패스너

23.100 PEDAL, BRAKE
페달

23.101 SHAFT, BRAKE PEDAL
샤프트

23.114 PAD & FASTENER, BRAKE PEDAL
패드와패스너

23.118 FASTENER, BRAKE PEDAL TO MASTER CYL PUSH ROD
패스너

23.136 SPRING, BRAKE PEDAL RETURN
스프링

23.145 FASTENER, BRAKE PEDAL SHAFT
패스너

23.150 CYLINDER ASSEMBLY, BRAKE MASTER COMPLETE
실린더

23.157 FASTENER, BRAKE MASTER CYLINDER ATTACHING
패스너

23.434 BRACKET, BRAKE PEDAL PIVOT
브라켓

23.435 FASTENER, BRAKE PEDAL PIVOT BRACKET
패스너

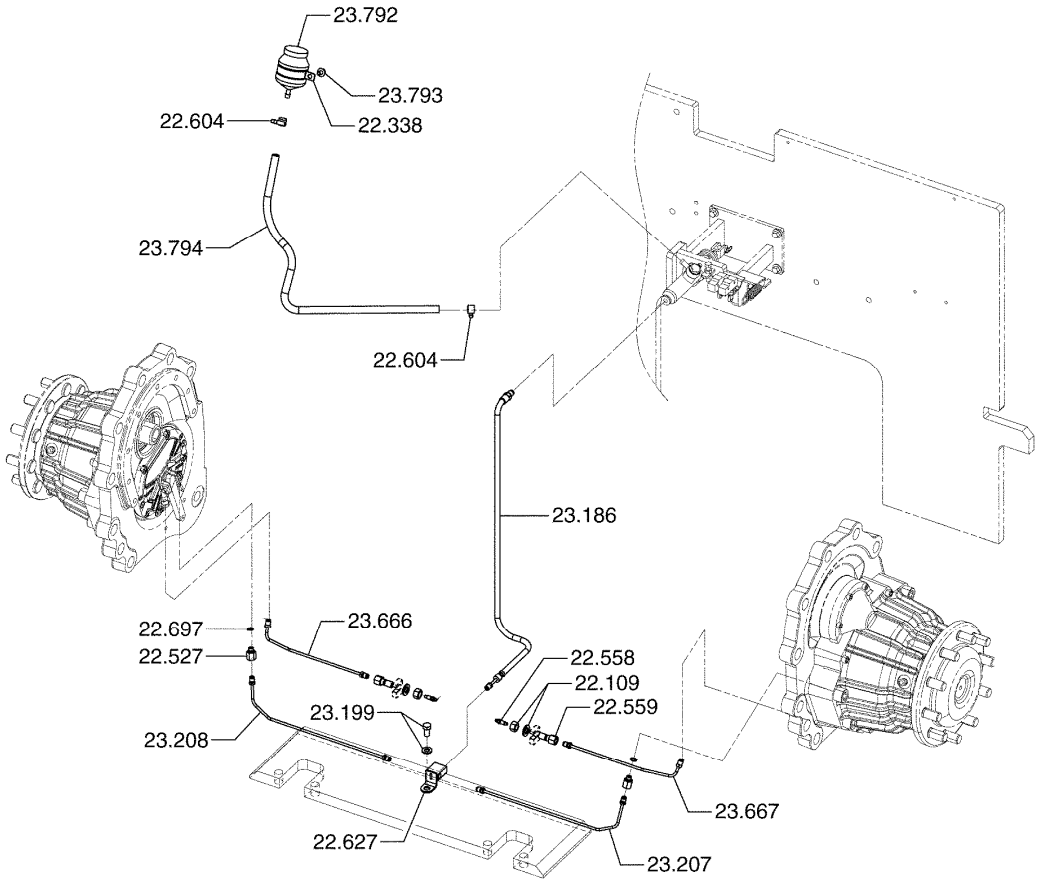

BRAKE LINES **23-550**

22.109 FASTENER, BRAKE CYLINDER BLEEDER LINE
패스너

22.338 CLAMP, BRAKE FLUID RESERVOIR
클룻프

22.527 ADAPTER, BRAKE LINES
어댑터

22.558 BLEEDER, BRAKE LINES
블리더

22.559 FITTING, BRAKE LINES BLEEDER
피팅

22.604 CLAMP, BRAKE FLUID RESERVOIR LINE
클램프

22.627 TEE, BRAKE LINE
티

22.697 SEAL, BRAKE LINE FITTING
시일

23.186 LINE, BRAKE MASTER CYLINDER OUTLET
라인

23.199 FASTENER, BRAKE LINE TEE
패스너

23.207 LINE, LH DRIVE WHEEL BRAKE CYLINDER TO TEE
라인

23.208 LINE, RH DRIVE WHEEL BRAKE CYLINDER TO TEE
라인

23.666 LINE, BRAKE CYLINDER BLEEDER (RH)
라인

23.667 LINE, BRAKE CYLINDER BLEEDER (LH)
라인

23.792 RESERVOIR, BRAKE FLUID
리저버

23.793 FASTENER, BRAKE FLUID RESERVOIR
패스너

23.794 LINE, BRAKE MASTER CYLINDER INLET
라인

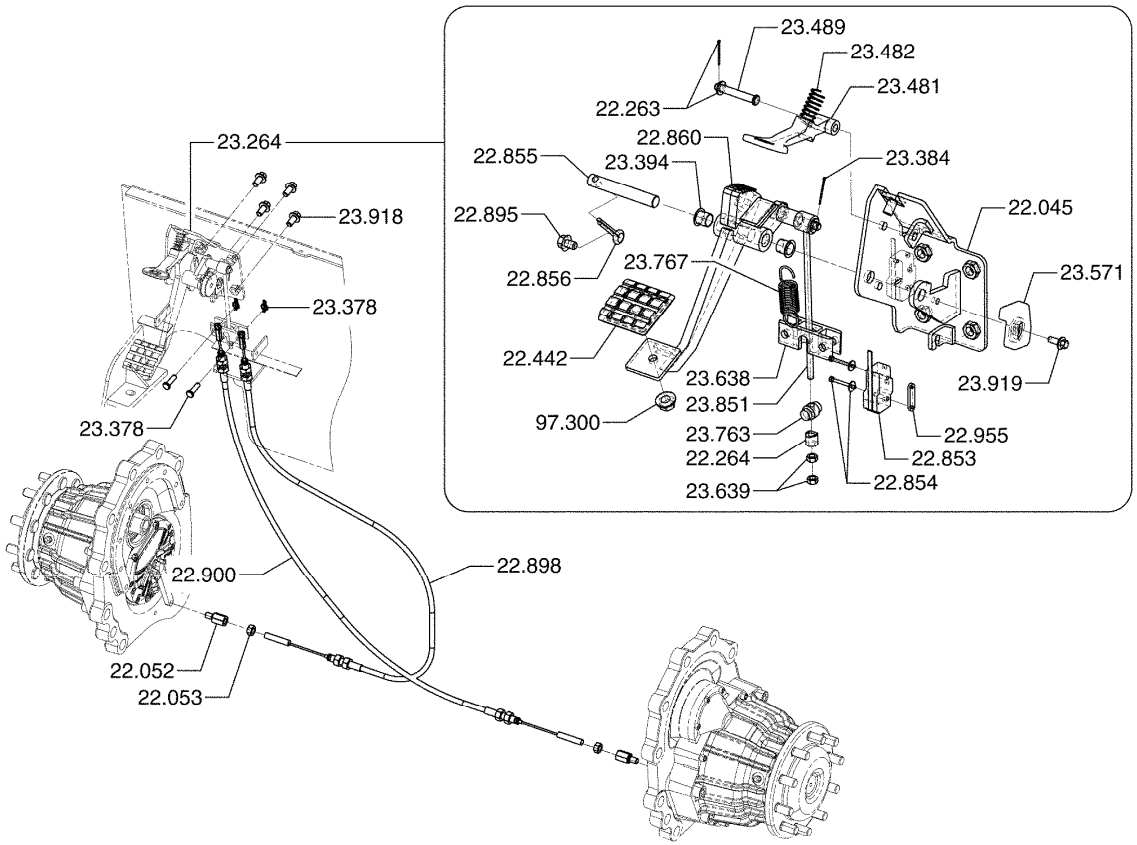

PARKING BRAKE SYSTEM **23-552**

22.045	BRACKET, PARKING BRAKE PEDAL PIVOT MTG 브라켓
22.052	GUIDE, PARKING BRAKE DRAW ROD 가이드
22.053	FASTENER, PARKING BRK DRAW ROD GUIDE 패스너
22.263	RETAINER, PARKING BRAKE RELEASE LEVER PIVOT 리테이너
22.264	ADJUSTOR, PARKING BRAKE 어드져스터
22.442	PAD, PARKING BRAKE PEDAL 패드
22.853	SWITCH, PARKING BRAKE PEDAL ACTUATING 스위치
22.854	FASTENER, PARKING BRAKE PEDAL ACTUATING 패스너
22.855	PIVOT, PARKING BRAKE PEDAL 피봇
22.856	RETAINER, PARKING BRAKE PEDAL PIVOT 리테이너
22.860	PEDAL, PARKING BRAKE 페달
22.895	FASTENER, PARKING BRAKE PEDAL PIVOT RETAINER 패스너
22.898	CABLE, PARKING BRAKE DRAW - LH 케이블
22.900	CABLE, PARKING BRAKE DRAW - RH 케이블
22.955	PLATE, PARKING BRAKE PEDAL ACTUATING SWITCH 플레이트
23.264	BRAKE ASSEMBLY, PARKING 브레이크
23.378	FASTENER, PARKING BRAKE DRAW ROD CLEVIS 패스너
23.384	FASTENER, PARKING BRAKE LINK 패스너
23.394	BEARING, PARKING BRAKE LEVER PIVOT BRACKET 베어링
23.481	LEVER, PARKING BRAKE RELEASE 레버
23.482	SPRING, PARKING BRAKE RELEASE LEVER 스프링
23.489	PIVOT, PARKING BRAKE RELEASE LEVER 피봇
23.571	BUMPER, PARKING BRAKE LEVER 범퍼
23.638	ANCHOR, PARKING BRAKE CABLE 앵커
23.639	FASTENER, PARKING BRAKE CABLE ANCHOR 패스너
23.763	PIVOT, PARKING BRAKE OPERATING LEVER 피봇
23.767	SPRING, PARKING BRAKE DRAW 스프링
23.851	LINK, PARKING BRAKE 링크
23.918	FASTENER, PARKING BRAKE PEDAL PIVOT BRACKET 패스너
23.919	FASTENER, PARKING BRAKE PIVOT BRACKET 패스너

97.300 FASTENER, PARKING BRAKE PEDAL PAD
*

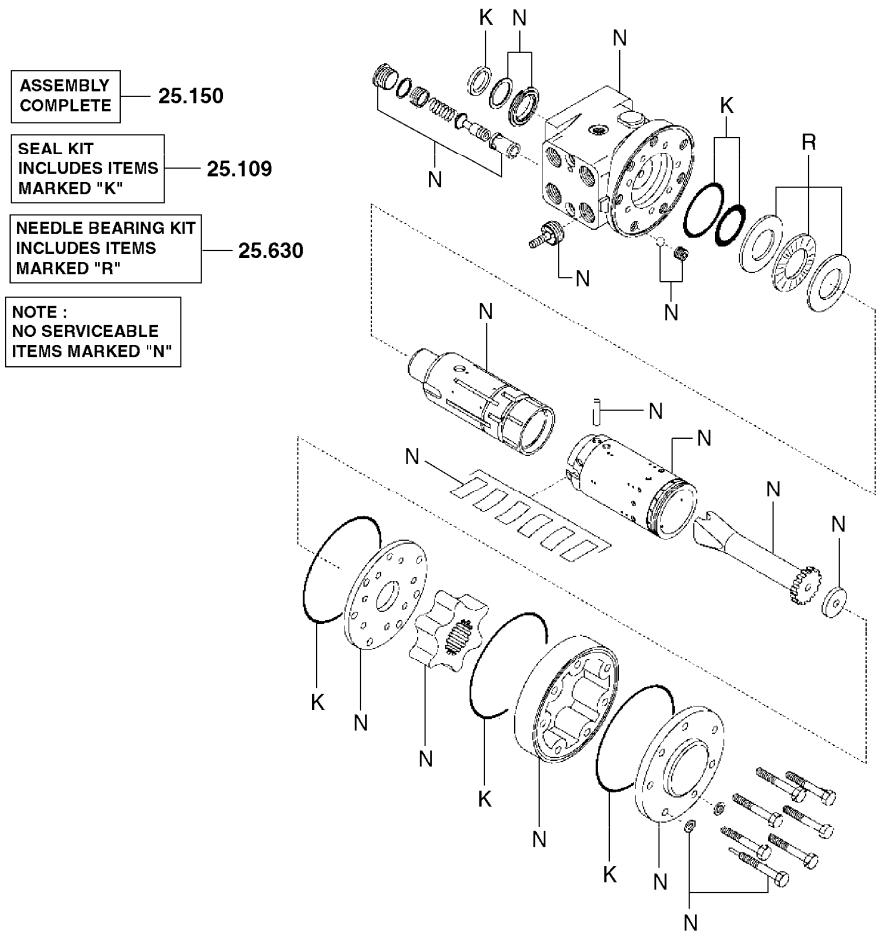

25.109 KIT, STEER GEAR SEAL
킷

25.150 GEAR BOX ASSEMBLY, STEERING
기어박스

25.630 REPAIR KIT, STEERING COLUMN
리페어킷

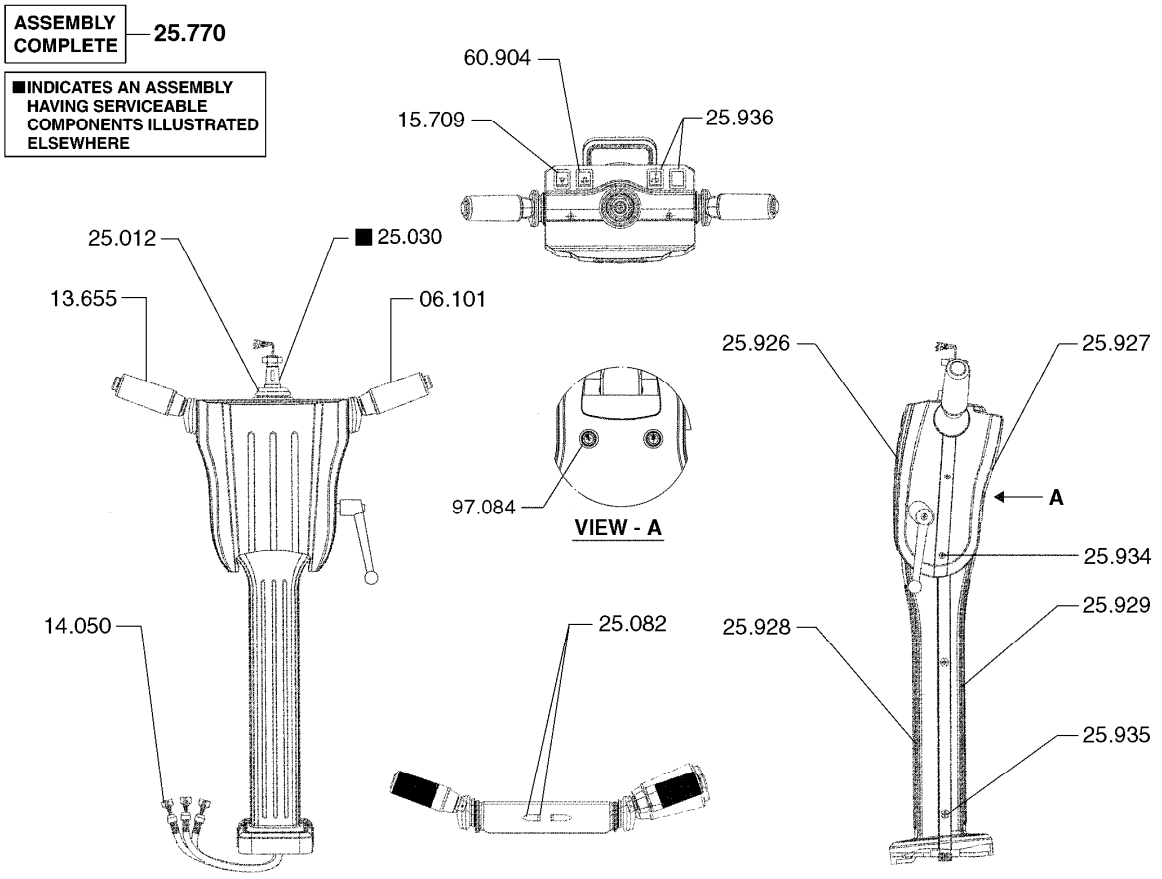

06.101	LEVER ASSEMBLY, FORWARD & REVERSE 레버
13.655	SWITCH, TURN INDICATOR 스위치
14.050	HARNESS, CONTROL CIRCUIT WIRING 하네스
15.709	SWITCH, EMERGENCY 스위치
25.012	CUSHION, STEERING COLUMN 쿠션
25.030	SHAFT ASSEMBLY, STEERING COLUMN 샤프트
25.082	FASTENER, LEVER MOUNTING BRACKET 패스너
25.770	SHAFT & COLUMN ASSY, POWER STEERING (TILT) 샤프트와컬럼
25.926	COVER, STEER COLUMN FRONT UPPER 커버

25.927	COVER, STEER COLUMN REAR UPPER 커버
25.928	COVER, STEER COLUMN FRONT LOWER 커버
25.929	COVER, STEER COLUMN REAR LOWER 커버
25.934	FASTENER, STEER COLUMN COVER 패스너
25.935	FASTENER, STEER COLUMN COVER 패스너
25.936	PLUG, STEER COLUMN SWITCH 플러그
60.904	SWITCH, STROBE LIGHT 스J穎
97.084	FASTENER, STEER COLUMN COVER 패스너

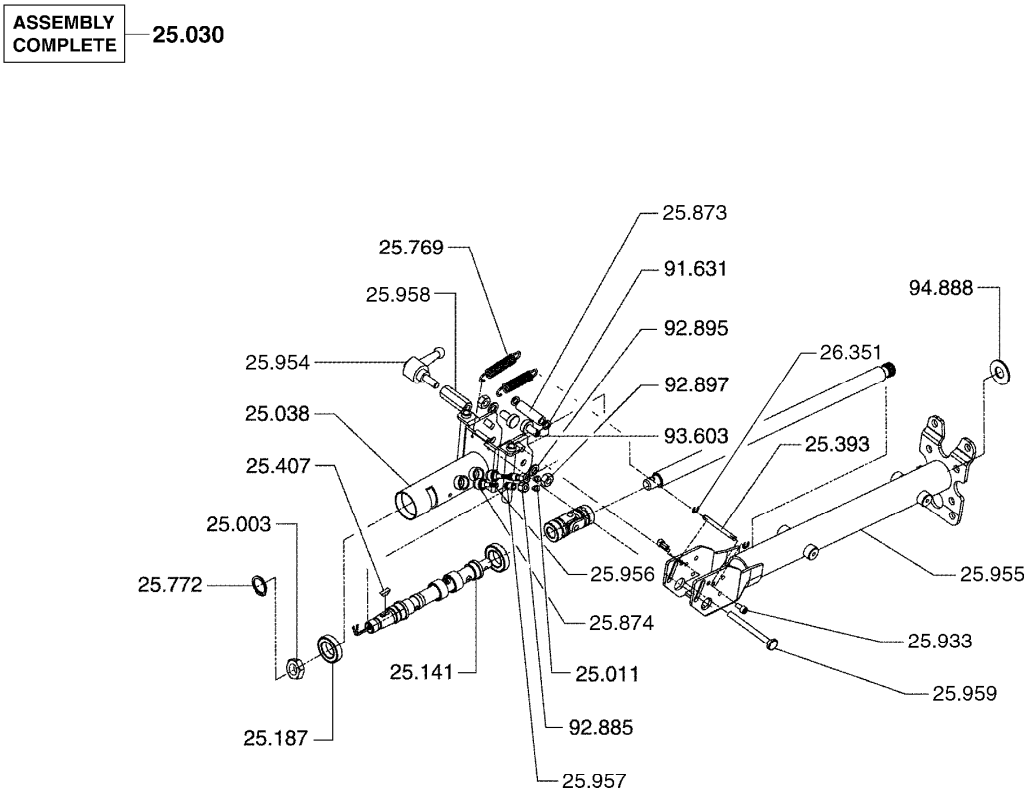

STEERING COLUMN SHAFT ASSEMBLY **25-291**

25.003	NUT, HANDWHEEL 너트
25.011	FASTENER, STEERING COLUMN 패스너
25.030	SHAFT ASSEMBLY, STEERING COLUMN 샤프트
25.038	HOUSING ASSEMBLY-CUP & BUSHING, STEERING 하우징
25.141	SHAFT, STEERING GEAR 샤프트
25.187	BEARING, STEER SHAFT 베어링
25.393	PIN, STEERING LINK (STEERING ARM) 핀
25.407	KEY, STEER COLUMN SHAFT COUPLING 키
25.769	SPRING, STEERING COLUMN TILTING (LOWER) 스프링

25.772	RETAINER, STEERING COLUMN SHAFT 리테이너
25.873	BUSHING, STEER COLUMN AXIAL 부싱
25.874	BUSHING, STEER COLUMN TELESCOPING 부싱
25.933	FASTENER, STEERING COLUMN 패스너
25.954	ARM, TILT STEERING COLUMN ADJUSTOR *
25.955	SUPPORT, STEERING COLUMN SHAFT *
25.956	BRUSH, STEERING COLUMN SHAFT *
25.957	BRUSH HOLDER, STEERING COLUMN SHAFT *
25.958	PIVOT, TILT STEERING COLUMN ADJUSTOR ARM *
25.959	PIN, TILT STEERING COLUMN ADJUSTOR ARM *
26.351	WASHER, STEERING ARM PIN 와셔
91.631	WASHER, STEERING COLUMN UPPER BRACKET FASTENER 와셔
92.885	NUT, STEERING COLUMN UPPER BRACKET FASTENER 너트
92.895	WASHER, STEERING COLUMN SUPPORT FASTENER 와셔
92.897	NUT, STEERING COLUMN SUPPORT FASTENER 너트
93.603	FASTENER, STEERING COLUMN TILTING SPRING BALL STUD 패스너
94.888	RETAINER, STEERING COLUMN ADJUSTOR 리테이너

■ INDICATES AN ASSEMBLY HAVING SERVICEABLE COMPONENTS ILLUSTRATED ELSEWHERE

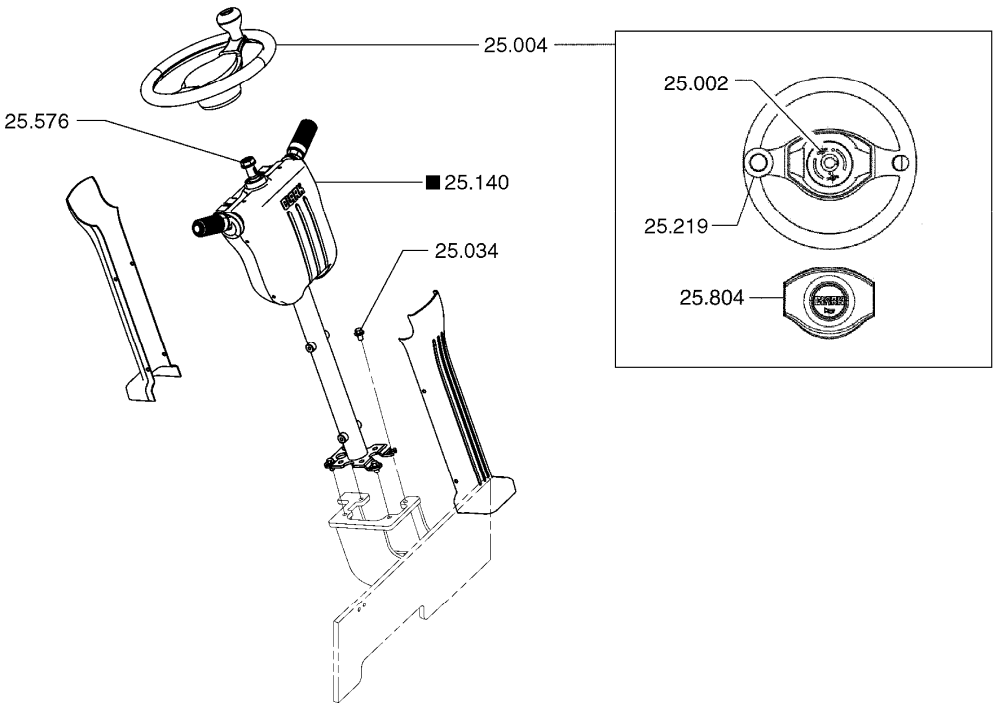

STEERING WHEEL & COLUMN MOUNTING **25-292**

25.002	HORN BUTTON KIT 혼버튼킷
25.004	HAND WHEEL, STEERING GEAR 핸드휠
25.219	KNOB, STEERING HAND WHEEL SPINNER 노브
25.576	SPACER, STEERING HAND WHEEL 스페이서
25.770	SHAFT & COLUMN ASSY, POWER STEERING (TILT) 샤프트와컬럼
25.785	FASTENER, TILT STEERING SHAFT & COLUMN ASSEMBLY 패스너
25.804	COVER, HANDLE CONTROL ASSEMBLY 커버

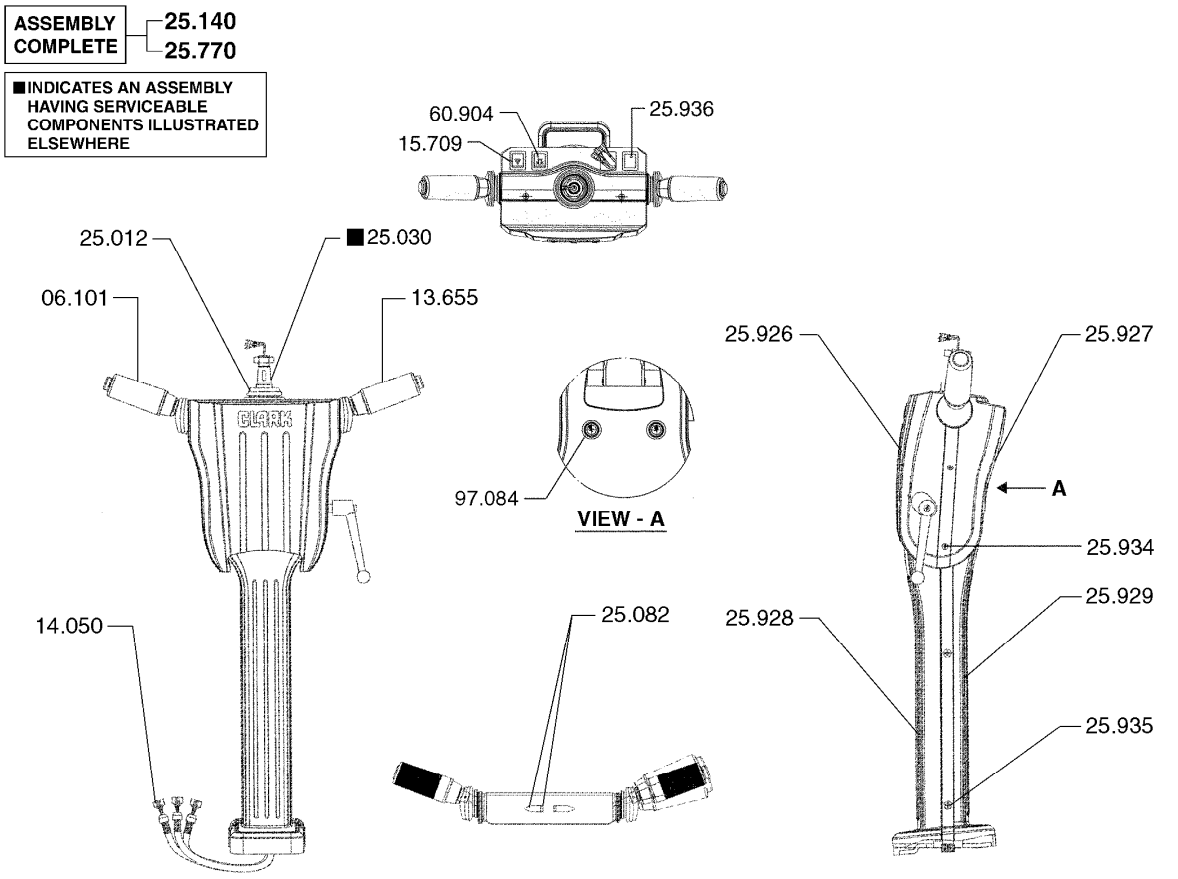

06.101	LEVER ASSEMBLY, FORWARD & REVERSE 레버
13.655	SWITCH, TURN INDICATOR 스위치
14.050	HARNESS, CONTROL CIRCUIT WIRING 하네스
15.709	SWITCH, EMERGENCY 스위치
25.012	CUSHION, STEERING COLUMN 쿠션
25.030	SHAFT ASSEMBLY, STEERING COLUMN 샤프트
25.082	FASTENER, LEVER MOUNTING BRACKET 패스너
25.770	SHAFT & COLUMN ASSY, POWER STEERING (TILT) 샤프트와컬럼
25.926	COVER, STEER COLUMN FRONT UPPER 커버

25.927	COVER, STEER COLUMN REAR UPPER 커버
25.928	COVER, STEER COLUMN FRONT LOWER 커버
25.929	COVER, STEER COLUMN REAR LOWER 커버
25.934	FASTENER, STEER COLUMN COVER 패스너
25.935	FASTENER, STEER COLUMN COVER 패스너
25.936	PLUG, STEER COLUMN SWITCH 플러그
60.904	SWITCH, STROBE LIGHT 스J穎
97.084	FASTENER, STEER COLUMN COVER 패스너

■INDICATES AN ASSEMBLY HAVING SERVICEABLE COMPONENTS ILLUSTRATED ELSEWHERE

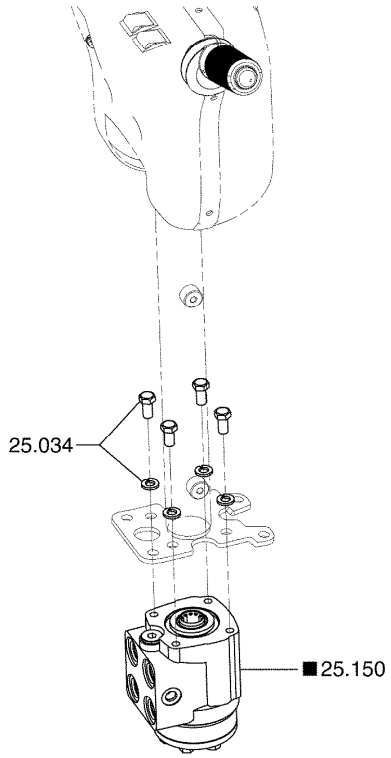

STEERING GEAR MOUNTING **25-372**

25.034 FASTENER, STEERING GEAR ATTACHING
패스너

25.150 GEAR BOX ASSEMBLY, STEERING
기어박스

ASSEMBLY COMPLETE — 26.100

■INDICATES AN ASSEMBLY HAVING SERVICEABLE COMPONENTS ILLUSTRATED ELSEWHERE

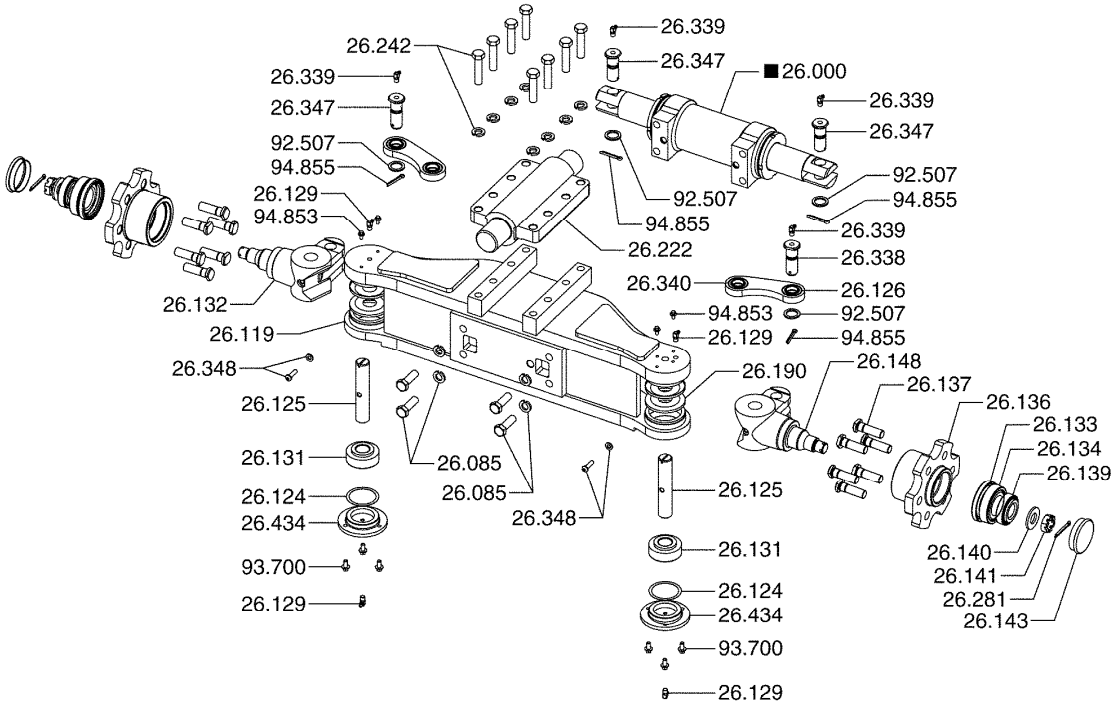

STEER AXLE ASSEMBLY **26-000**

26.000	CYLINDER ASSEMBLY, STEERING 실린더	26.140	WASHER, STEER WHEEL HUB BEARING THRUST 와셔
26.085	FASTENER, STEERING CYLINDER MOUNTING BRKT 패스너	26.141	FASTENER, STEER WHEEL HUB 패스너
26.100	AXLE ASSEMBLY, STEERING 스티어액슬	26.143	CAP, STEER WHEEL HUB 캡
26.119	AXLE, STEER 액슬	26.148	KNUCKLE, STEER AXLE (LH) 너트
26.124	SHIM, STEER AXLE KNUCKLE 심	26.190	SEAL, STEER AXLE KNUCKLE OIL 시일
26.125	PIN, STEER AXLE KNUCKLE 핀	26.222	SHAFT, STEER AXLE 샤프트
26.126	ARM, RH STEERING 암	26.242	FASTENER, STEER AXLE SHAFT 패스너
26.129	FITTING - LUB, STEER AXLE KNUCKLE 피팅	26.281	RETAINER, STEER AXLE HUB BRG KNUCKLE NUT 리테이너
26.131	BEARING, STEER AXLE KNUCKLE PIN LOWER 베어링	26.338	PIN, STEERING ARM 핀
26.132	KNUCKLE, STEER AXLE (RH) 너트	26.339	LUB-FITTING, STEERING ARM 윤활피팅
26.133	SEAL, STEER WHEEL HUB 시일	26.340	BEARING, STEERING ARM PIN 베어링
26.134	CONE, STEER WHEEL HUB BEARING (INNER) 콘	26.347	PIN, STEER ARM 핀
26.136	HUB & CUP, STEER WHEEL 허브와컵	26.348	LOCATOR, STEER CYLINDER 로케이터
26.137	FASTENER, STEER WHEEL 패스너	26.434	COVER, STEER AXLE KNUCKLE PIVOT (BOTTOM) *
26.139	CONE, STEER WHEEL HUB BEARING (OUTER) 콘	92.507	WASHER, STEERING ARM FASTENER 와셔

93.700 FASTENER, STEER AXLE KNUCKLE PIN COVER
패스너

94.853 FASTENER, STEER AXLE KNUCKLE PIN
패스너

94.855 RETAINER, STEERING ARM PIN
리테이너

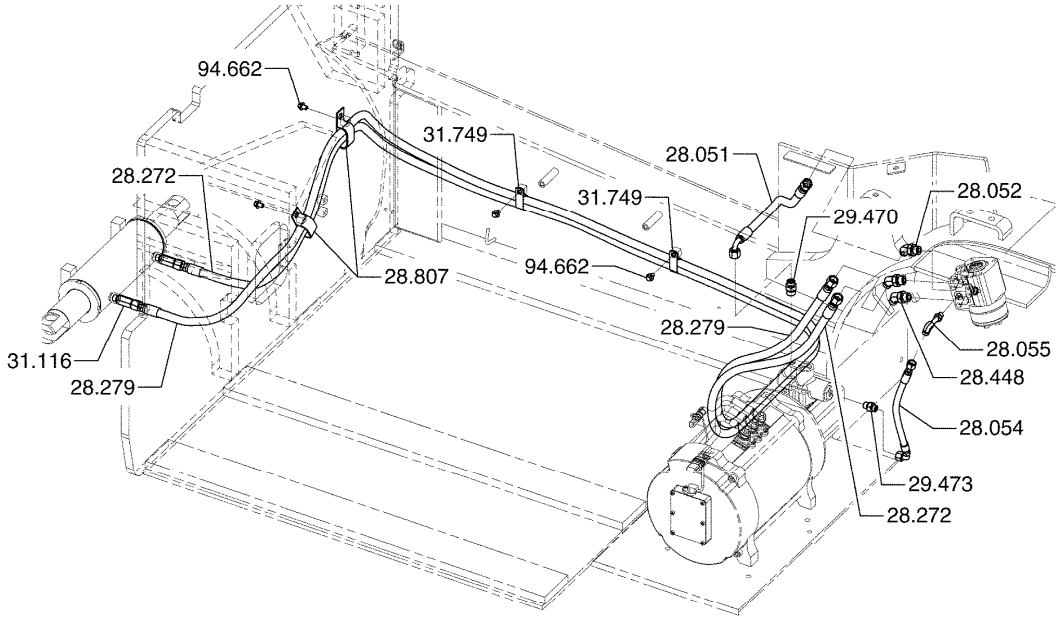

HYDRAULIC STEERING LINES **26-003**

28.051	LINE, STEERING GEAR 라인
28.052	FITTING, STEERING GEAR 피팅
28.054	LINE, STEERING GEAR 라인
28.055	FITTING, STEERING GEAR 피팅
28.272	LINE, STEER CYLINDER INLET 라인
28.279	LINE, STEER CYLINDER INLET 라인
28.448	FITTING, STEER CYLINDER LINE 피팅
28.807	CLAMP, POWER STEERING LINES 클램프
29.470	FITTING, PRIORITY VALVE 피팅

29.473	FITTING, PRIORITY VALVE 피팅
31.116	FITTING, STEER CYLINDER PORT 피팅
31.749	CLAMP, POWER STEERING LINES 클램프
94.662	FASTENER, POWER STEERING LINES CLAMP 패스너

■INDICATES AN ASSEMBLY HAVING SERVICEABLE COMPONENTS ILLUSTRATED ELSEWHERE

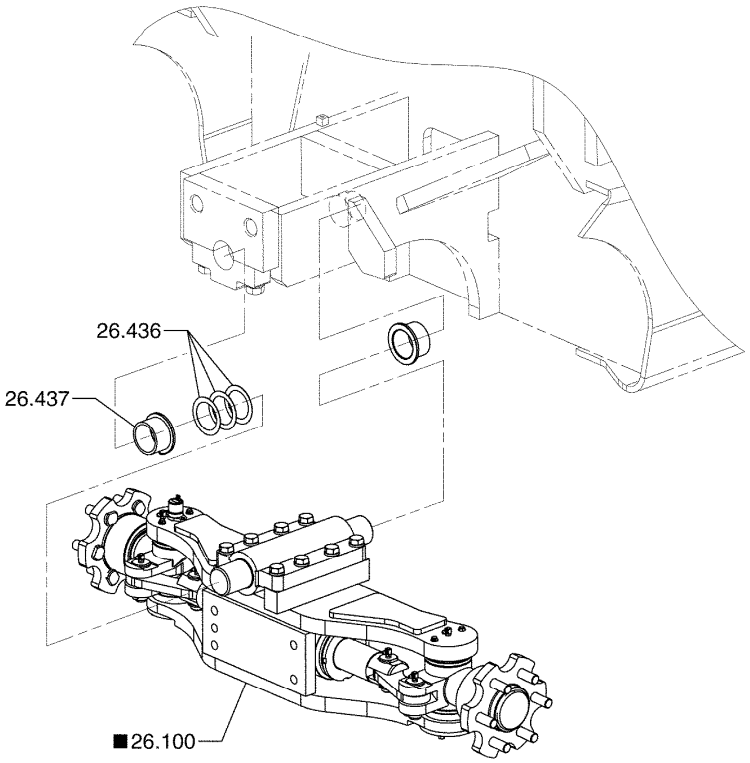

STEER AXLE MOUNTING **26-004**

26.100	AXLE ASSEMBLY, STEERING 스티어액슬
26.436	SHIM, STEER AXLE SHAFT *
26.437	BUSHING, STEER AXLE SHAFT *

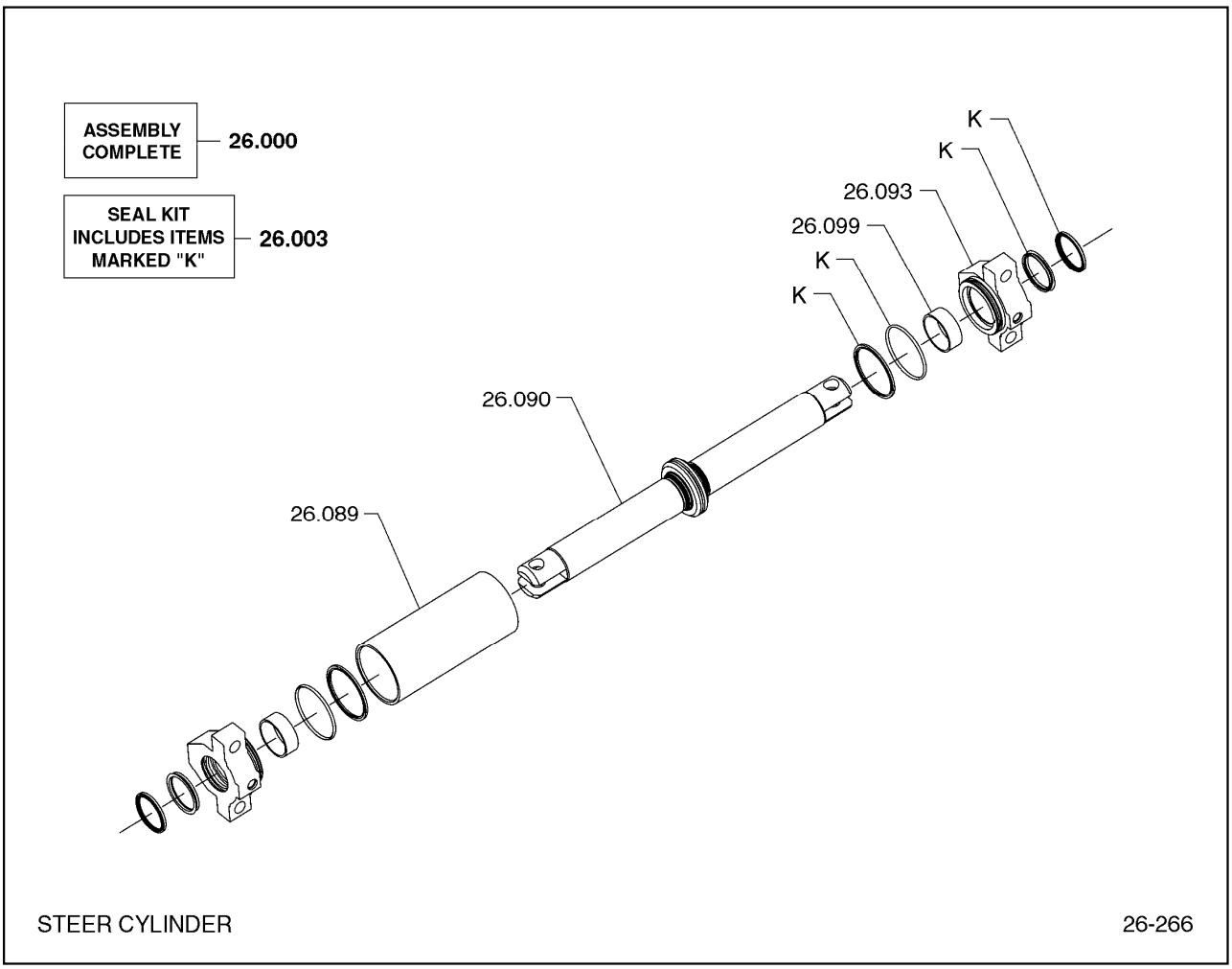

26.000	CYLINDER ASSEMBLY, STEERING 실린더
26.003	SEAL KIT, PISTON ROD 시일킷
26.089	BARREL, STEERING CYLINDER 배럴
26.090	STEER CYLINDER PISTON 룽드욱피스톤
26.093	GLAND, STEERING CYLINDER 그랜드
26.099	BUSHING, STEERING CYLINDER GLAND 부싱

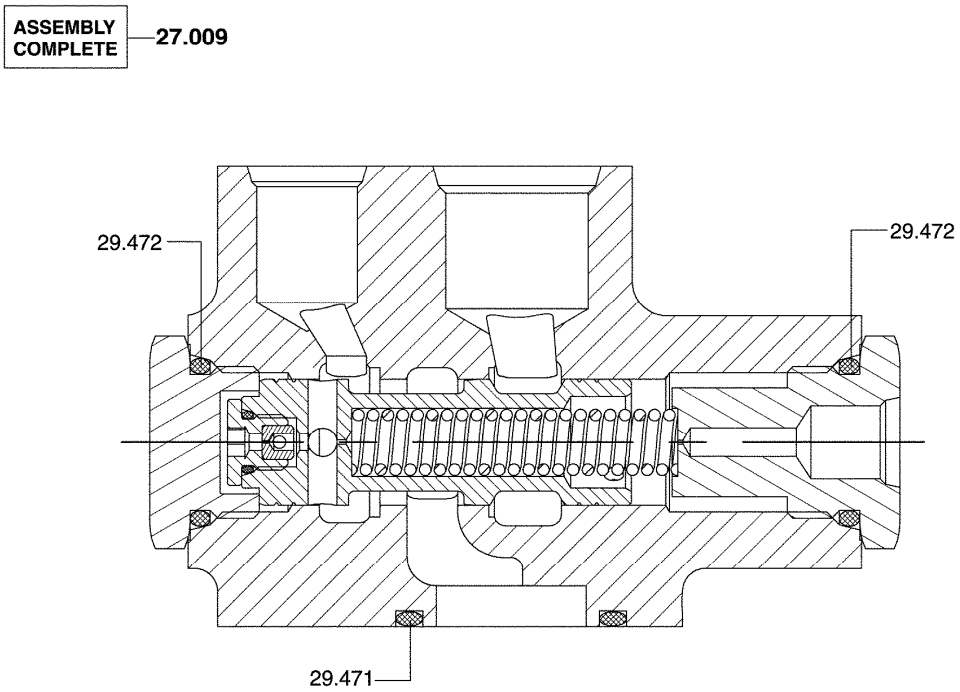

PRIORITY VALVE ASSEMBLY **27-000**

27.009 VALVE ASSEMBLY, HYDRAULIC PRIORITY
벨브

29.471 SEAL, PRIORITY VALVE FITTING
시일

29.472 SEAL, PRIORITY VALVE FITTING
시일

■INDICATES AN ASSEMBLY HAVING SERVICEABLE COMPONENTS ILLUSTRATED ELSEWHERE

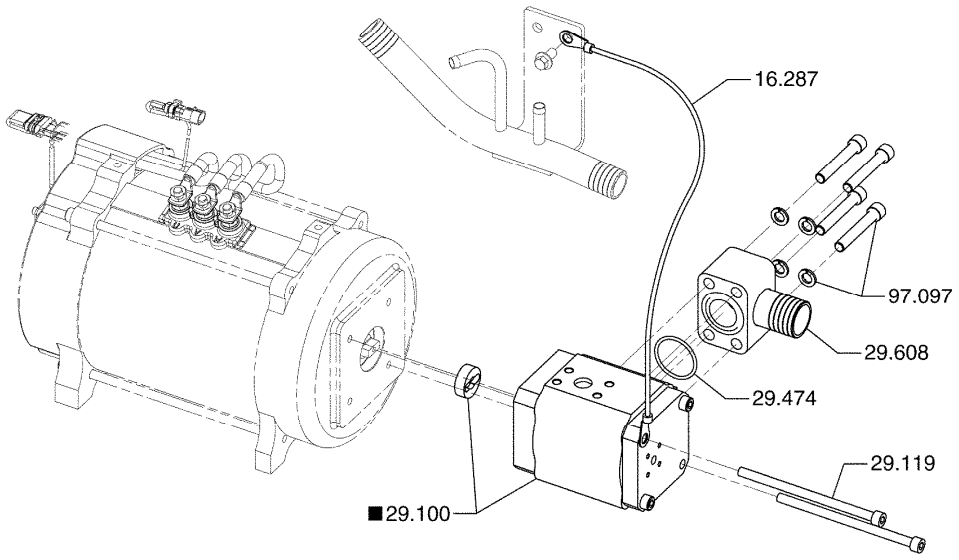

HYDRAULIC PUMP MOUNTING **29-139**

16.287	WIRE, LEAD GROUND FROM MOTOR *
29.100	PUMP ASSEMBLY, HYDRAULIC 펌프
29.119	FASTENER, PUMP HOUSING 패스너
29.474	SEAL, PUMP INLET FITTING 시일
29.608	MANIFOLD, HYDRAULIC PUMP INLET SUCTION 매니폴드
97.097	FASTENER, HYDRAULIC PUMP INLET SUCTION MANIFOLD 패스너

NOTE :
NON SERVICEABLE
ITEMS MARKED "N"

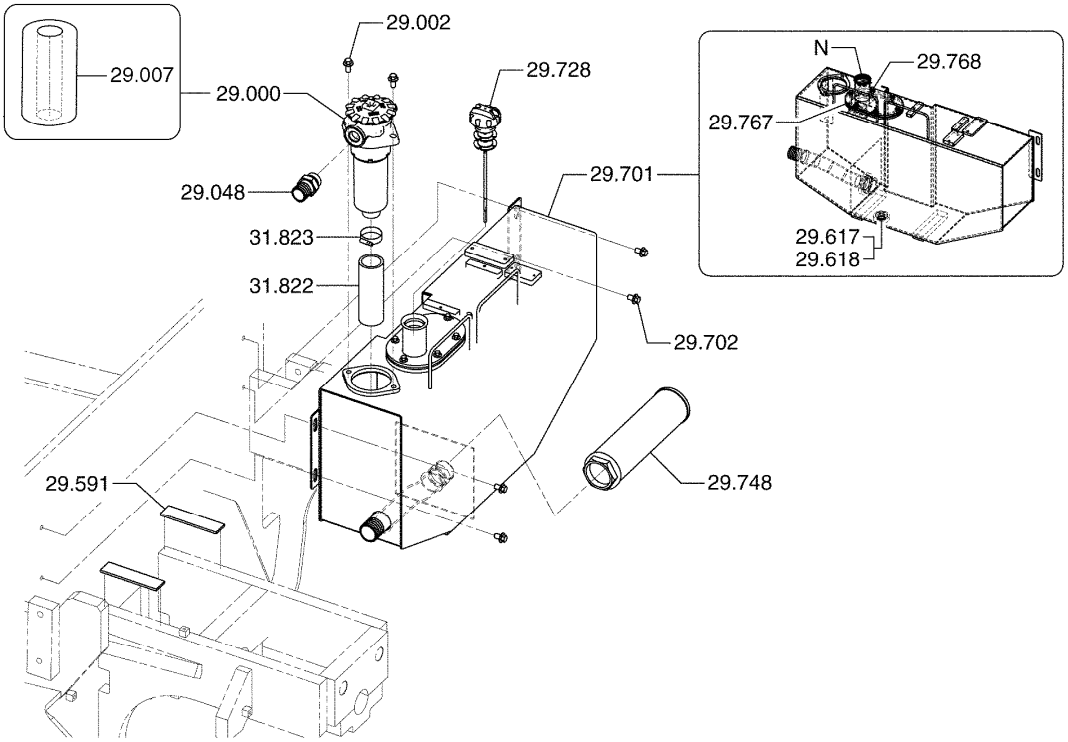

HYDRAULIC TANK & COMPONENTS MOUNTING **29-198**

29.000 FILTER, HYDRAULIC OIL
필터

29.002 FASTENER, HYDRAULIC OIL FILTER
패스너

29.007 CARTRIDGE, HYDRAULIC OIL FILTER
카트리지

29.048 PIPE, HYDRAULIC FILTER
파이프

29.591 RUBBER, SUMP TANK MOUNTING
러버

29.617 PLUG, SUMP TANK DRAIN
*

29.618 SEAL, SUMP TANK DRAIN PLUG
*

29.701 TANK, SUMP
탱크

29.702 FASTENER, SUMP TANK
패스너

29.728	CAP, HYDRAULIC SUMP FILLER 캡
29.748	STRAINER, HYDRAULIC 스트레이너
29.767	SEAL, SUMP TANK COVER 시일
29.768	FASTENER, SUMP TANK COVER 패스너
31.822	LINE, FILTER OUTLET TO SUMP 라인
31.823	CLAMP, FILTER OUTLET LINE 클램프

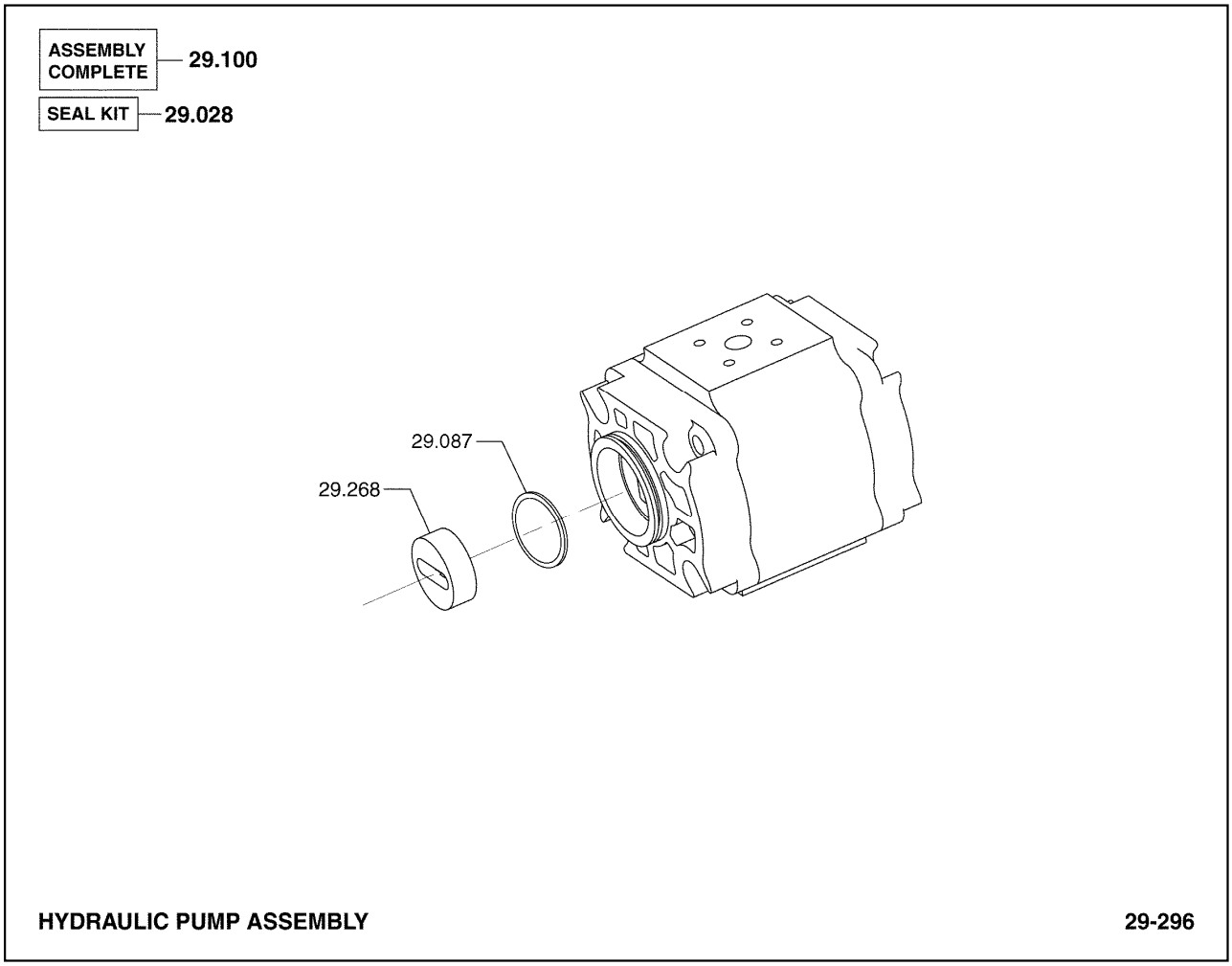

29.028	SEAL KIT, HYDRAULIC UNIT PUMP 시일킷
29.087	SEAL, HYDRAULIC PUMP HOUSING 시일
29.100	PUMP ASSEMBLY, HYDRAULIC 펌프
29.268	COUPLING, MAIN HYDRAULIC PUMP 커플링

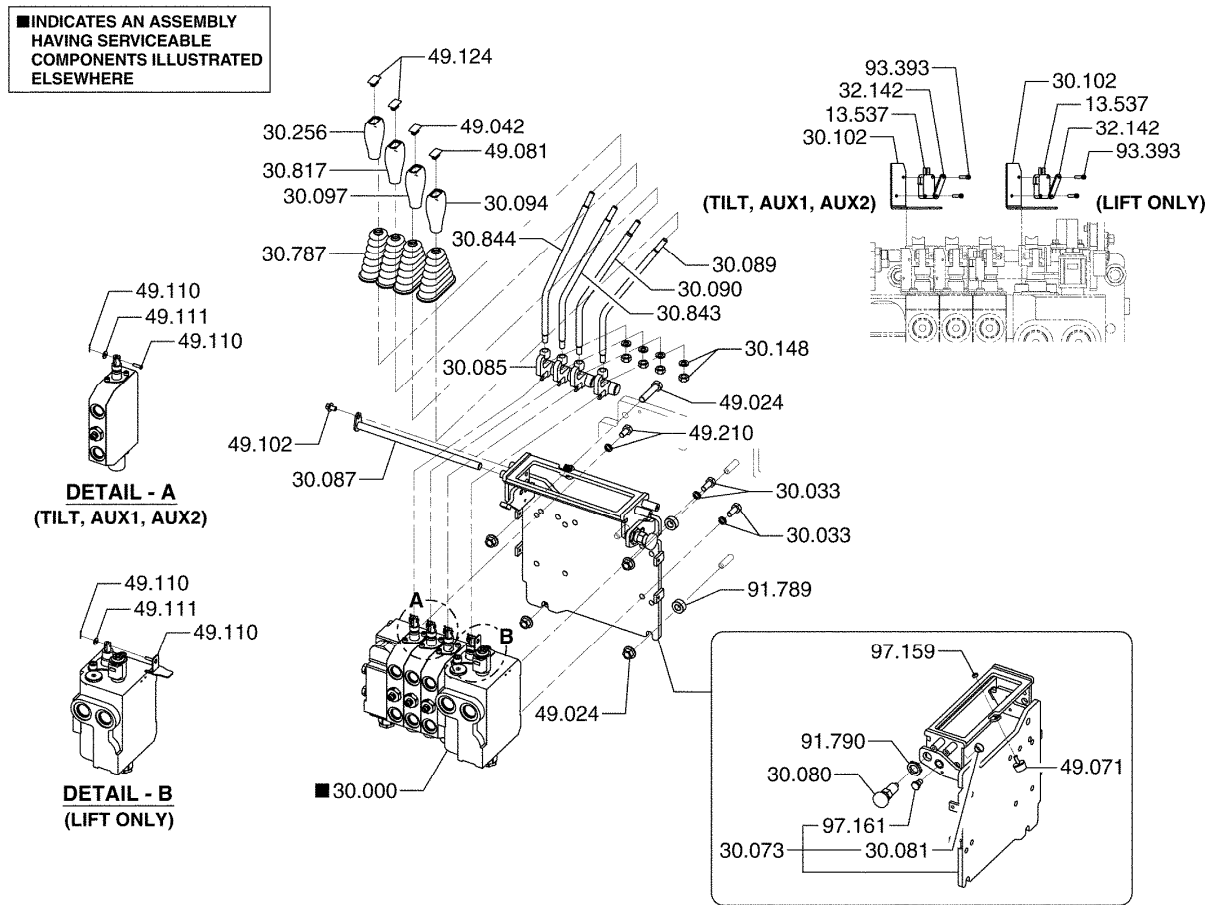

13.537	SWITCH, CONTROL VALVE PUMP OPERATING 스위치	30.787	BOOT, VALVE CONTROL LEVER 부트
30.000	VALVE ASSEMBLY, HYDRAULIC 벨브	30.817	KNOB, AUXILIARY VALVE CONTROL LEVER 노브
30.033	FASTENER, HYDRAULIC VALVE MOUNTING 패스너	30.843	LEVER, AUXILIARY VALVE CONTROL (1ST AUX) 레버
30.073	BRACKET, HYDRAULIC VALVE MOUNTING 브라켓	30.844	LEVER, AUXILIARY VALVE CONTROL (2ND AUX) 레버
30.080	PLUNGER, HYDRAULIC VALVE MOUNTING BRACKET *	32.142	PLATE, SWITCH MOUNTING BRACKET 플레이트
30.081	BEARING, HYDRAULIC VALVE BRACKET HINGE PIVOT *	49.024	FASTENER, HYDRAULIC VALVE MOUNTING BRACKET 패스너
30.085	LINK, CONTROL VALVE SPOOL 링크	49.042	CAP, TILT CONTROL LEVER 캡
30.087	PIN, VALVE CONTROL LEVER PIVOT 핀	49.071	DAMPENER, HYDRAULIC VALVE BRACKET 댐프너
30.089	LEVER, LIFT CONTROL 레버	49.081	CAP, LIFT CONTROL LEVER 캡
30.090	LEVER, TILT CONTROL 레버	49.102	FASTENER, VALVE CONTROL LEVER PIVOT RETAINER 패스너
30.094	KNOB, LIFT CONTROL LEVER 노브	49.110	PIN, VALVE SPOOL CLEVIS ROD 핀
30.097	KNOB, TILT CONTROL LEVER 노브	49.111	RETAINER, VALVE SPOOL CLEVIS ROD PIN 리테이너
30.102	BRACKET, HYDRAULIC VALVE SWITCH 브라켓	49.124	CAP, AUXILIARY CONTROL LEVER 캡
30.148	FASTENER, CONTROL LINKAGE BRACKET 패스너	49.210	FASTENER, HYDRAULIC VALVE MOUNTING *
30.256	KNOB, AUXILIARY VALVE CONTROL LEVER 노브	91.789	SPACER, HYDRAULIC VALVE MOUNTING FASTENER 스페이서

91.790	NUT, HYDRAULIC VALVE MOUNTING BRACKET FASTENER 너트
93.393	FASTENER, HYDRAULIC VALVE SWITCH BRACKET 패스너
97.159	FASTENER, HYDRAULIC VALVE BRACKET DAMPENER *
97.161	FASTENER, HYDRAULIC VALVE BRACKET HINGE PIVOT *

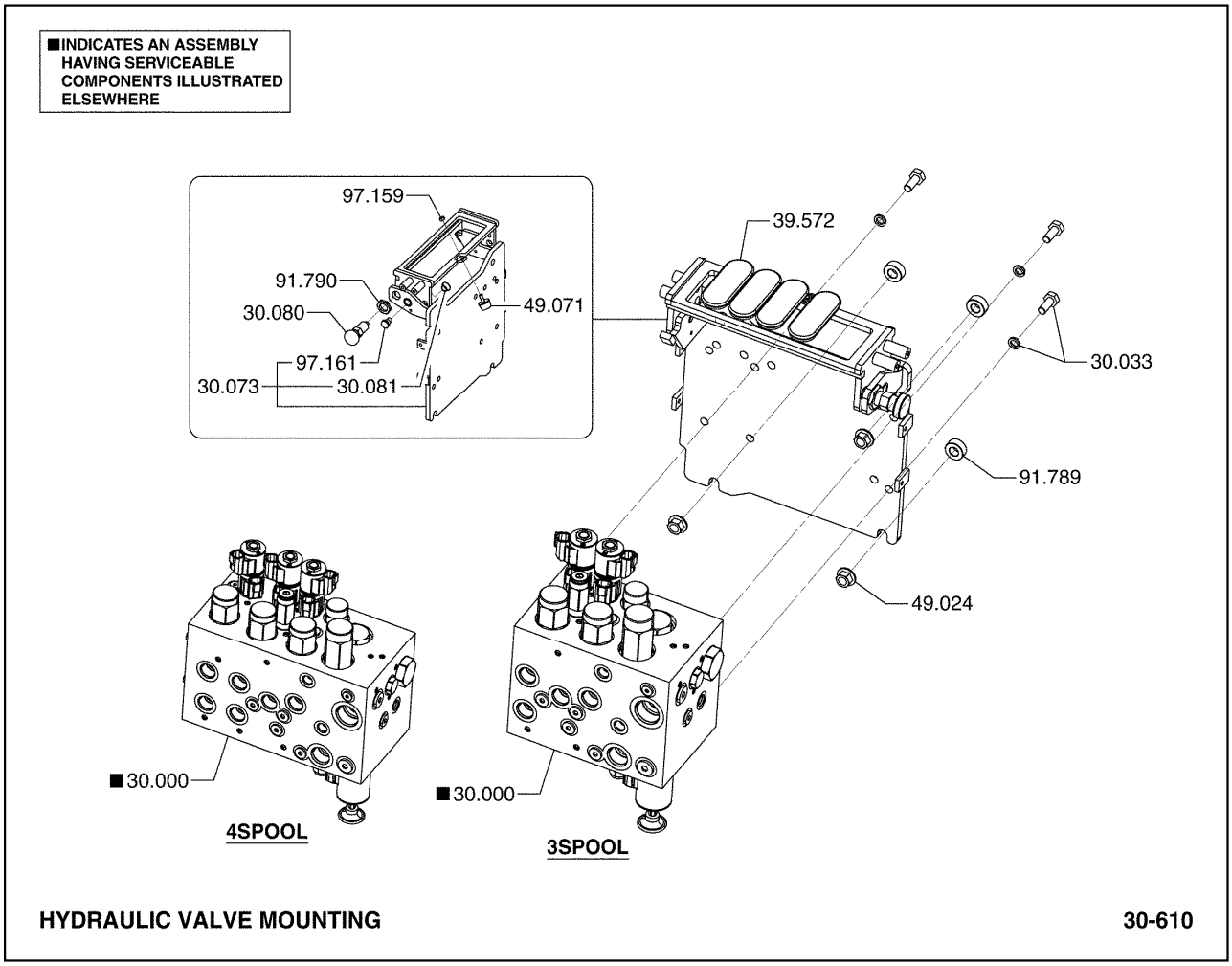

30.000 VALVE ASSEMBLY, HYDRAULIC
벨브

30.033 FASTENER, HYDRAULIC VALVE MOUNTING
패스너

30.073 BRACKET, HYDRAULIC VALVE MOUNTING
브라켓

30.080 PLUNGER, HYDRAULIC VALVE MOUNTING BRACKET
*

30.081 BEARING, HYDRAULIC VALVE BRACKET HINGE PIVOT
*

39.572 COVER, AUXILIARY VALVE LEVER HOLE
커버

49.024 FASTENER, HYDRAULIC VALVE MOUNTING BRACKET
패스너

49.071 DAMPENER, HYDRAULIC VALVE BRACKET
댐프너

91.789 SPACER, HYDRAULIC VALVE MOUNTING FASTENER
스페이서

91.790	NUT, HYDRAULIC VALVE MOUNTING BRACKET FASTENER 너트
97.159	FASTENER, HYDRAULIC VALVE BRACKET DAMPENER *
97.161	FASTENER, HYDRAULIC VALVE BRACKET HINGE PIVOT *

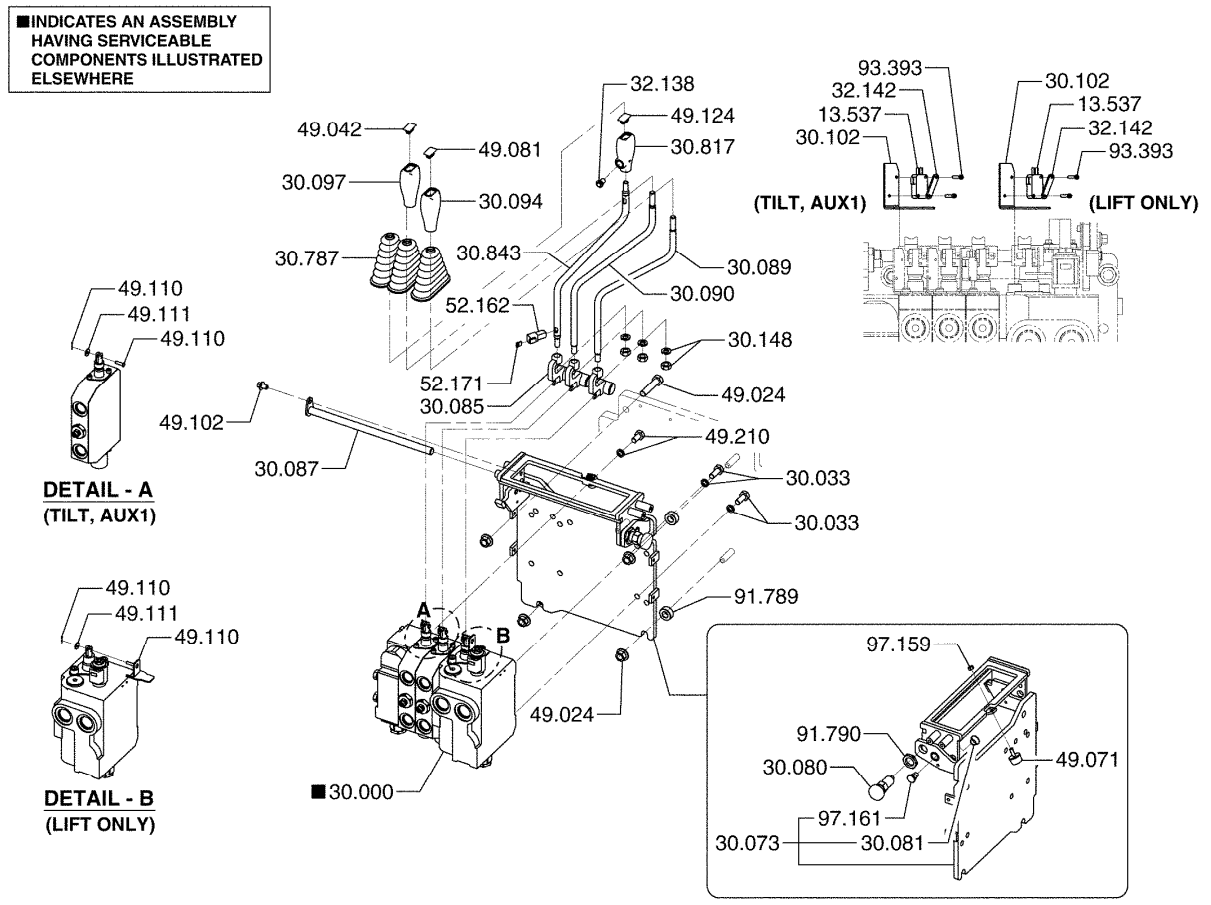

HYDRAULIC VALVE MOUNTING (3SP00L) **30-611**

13.537	SWITCH, CONTROL VALVE PUMP OPERATING 스위치
30.000	VALVE ASSEMBLY, HYDRAULIC 벨브
30.033	FASTENER, HYDRAULIC VALVE MOUNTING 패스너
30.073	BRACKET, HYDRAULIC VALVE MOUNTING 브라켓
30.080	PLUNGER, HYDRAULIC VALVE MOUNTING BRACKET *
30.081	BEARING, HYDRAULIC VALVE BRACKET HINGE PIVOT *
30.085	LINK, CONTROL VALVE SPOOL 링크
30.087	PIN, VALVE CONTROL LEVER PIVOT 핀
30.089	LEVER, LIFT CONTROL 레버
30.090	LEVER, TILT CONTROL 레버
30.094	KNOB, LIFT CONTROL LEVER 노브
30.097	KNOB, TILT CONTROL LEVER 노브
30.102	BRACKET, HYDRAULIC VALVE SWITCH 브라켓
30.148	FASTENER, CONTROL LINKAGE BRACKET 패스너
30.787	BOOT, VALVE CONTROL LEVER 부트
30.817	KNOB, AUXILIARY VALVE CONTROL LEVER 노브
30.843	LEVER, AUXILIARY VALVE CONTROL (1ST AUX) 레버
32.138	SWITCH, PUSH BUTTON 스위치
32.142	PLATE, SWITCH MOUNTING BRACKET 플레이트
49.024	FASTENER, HYDRAULIC VALVE MOUNTING BRACKET 패스너
49.042	CAP, TILT CONTROL LEVER 캡
49.071	DAMPENER, HYDRAULIC VALVE BRACKET 댐프너
49.081	CAP, LIFT CONTROL LEVER 캡
49.102	FASTENER, VALVE CONTROL LEVER PIVOT RETAINER 패스너
49.110	PIN, VALVE SPOOL CLEVIS ROD 핀
49.111	RETAINER, VALVE SPOOL CLEVIS ROD PIN 리테이너
49.124	CAP, AUXILIARY CONTROL LEVER 캡
49.210	FASTENER, HYDRAULIC VALVE MOUNTING *
52.162	CONNECTOR, AUXILIARY VALVE LEVER WIRE 커넥터
52.171	LOCK, AUXILIARY VALVE LEVER WIRE *

91.789	SPACER, HYDRAULIC VALVE MOUNTING FASTENER 스페이서
91.790	NUT, HYDRAULIC VALVE MOUNTING BRACKET FASTENER 너트
93.393	FASTENER, HYDRAULIC VALVE SWITCH BRACKET 패스너
97.159	FASTENER, HYDRAULIC VALVE BRACKET DAMPENER *
97.161	FASTENER, HYDRAULIC VALVE BRACKET HINGE PIVOT *

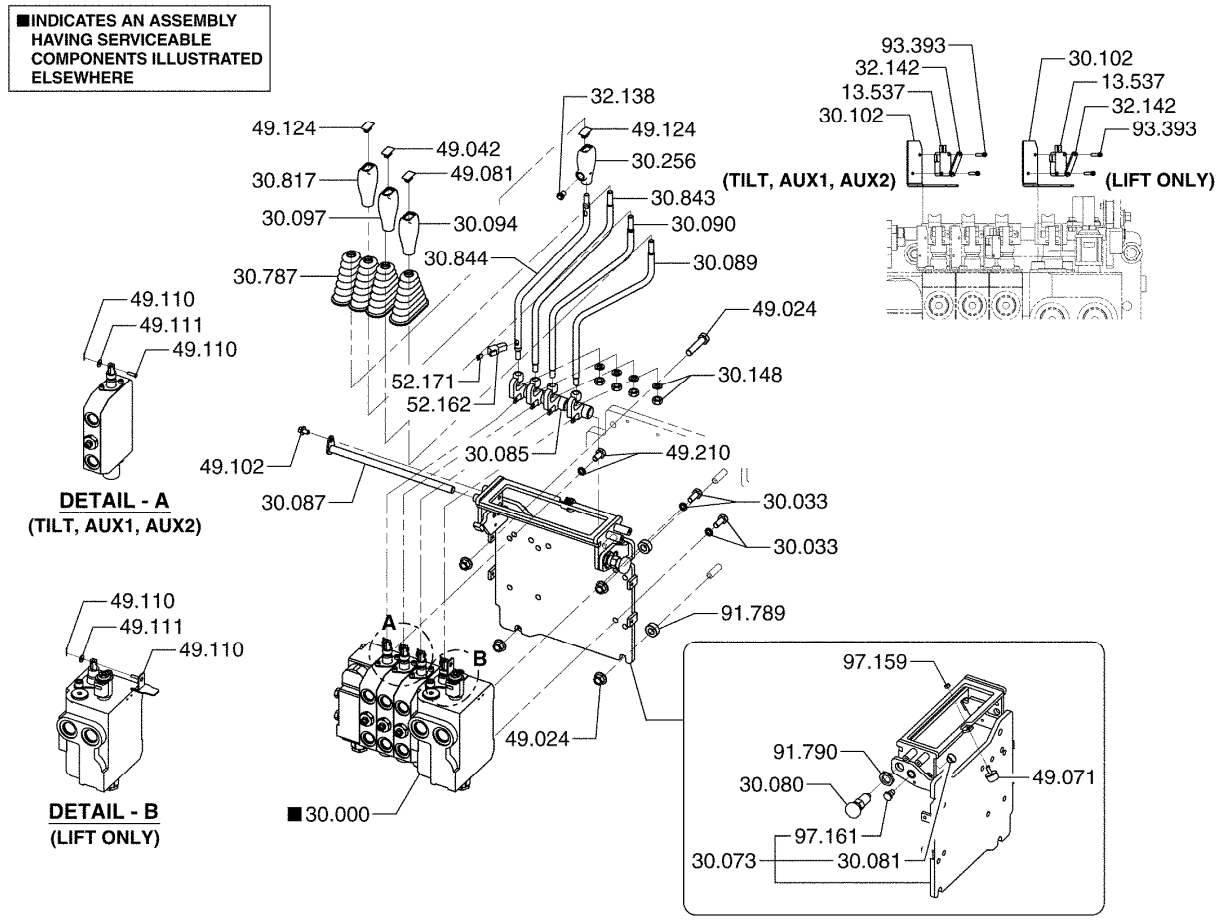

13.537	SWITCH, CONTROL VALVE PUMP OPERATING 스위치	30.787	BOOT, VALVE CONTROL LEVER 부트
30.000	VALVE ASSEMBLY, HYDRAULIC 벨브	30.817	KNOB, AUXILIARY VALVE CONTROL LEVER 노브
30.033	FASTENER, HYDRAULIC VALVE MOUNTING 패스너	30.843	LEVER, AUXILIARY VALVE CONTROL (1ST AUX) 레버
30.073	BRACKET, HYDRAULIC VALVE MOUNTING 브라켓	30.844	LEVER, AUXILIARY VALVE CONTROL (2ND AUX) 레버
30.080	PLUNGER, HYDRAULIC VALVE MOUNTING BRACKET *	32.138	SWITCH, PUSH BUTTON 스위치
30.081	BEARING, HYDRAULIC VALVE BRACKET HINGE PIVOT *	32.142	PLATE, SWITCH MOUNTING BRACKET 플레이트
30.085	LINK, CONTROL VALVE SPOOL 링크	49.024	FASTENER, HYDRAULIC VALVE MOUNTING BRACKET 패스너
30.087	PIN, VALVE CONTROL LEVER PIVOT 핀	49.042	CAP, TILT CONTROL LEVER 캡
30.089	LEVER, LIFT CONTROL 레버	49.071	DAMPENER, HYDRAULIC VALVE BRACKET 댐프너
30.090	LEVER, TILT CONTROL 레버	49.081	CAP, LIFT CONTROL LEVER 캡
30.094	KNOB, LIFT CONTROL LEVER 노브	49.102	FASTENER, VALVE CONTROL LEVER PIVOT RETAINER 패스너
30.097	KNOB, TILT CONTROL LEVER 노브	49.110	PIN, VALVE SPOOL CLEVIS ROD 핀
30.102	BRACKET, HYDRAULIC VALVE SWITCH 브라켓	49.111	RETAINER, VALVE SPOOL CLEVIS ROD PIN 리테이너
30.148	FASTENER, CONTROL LINKAGE BRACKET 패스너	49.124	CAP, AUXILIARY CONTROL LEVER 캡
30.256	KNOB, AUXILIARY VALVE CONTROL LEVER 노브	49.210	FASTENER, HYDRAULIC VALVE MOUNTING *

52.162	CONNECTOR, AUXILIARY VALVE LEVER WIRE 커넥터
52.171	LOCK, AUXILIARY VALVE LEVER WIRE *
91.789	SPACER, HYDRAULIC VALVE MOUNTING FASTENER 스페이서
91.790	NUT, HYDRAULIC VALVE MOUNTING BRACKET FASTENER 너트
93.393	FASTENER, HYDRAULIC VALVE SWITCH BRACKET 패스너
97.159	FASTENER, HYDRAULIC VALVE BRACKET DAMPENER *
97.161	FASTENER, HYDRAULIC VALVE BRACKET HINGE PIVOT *

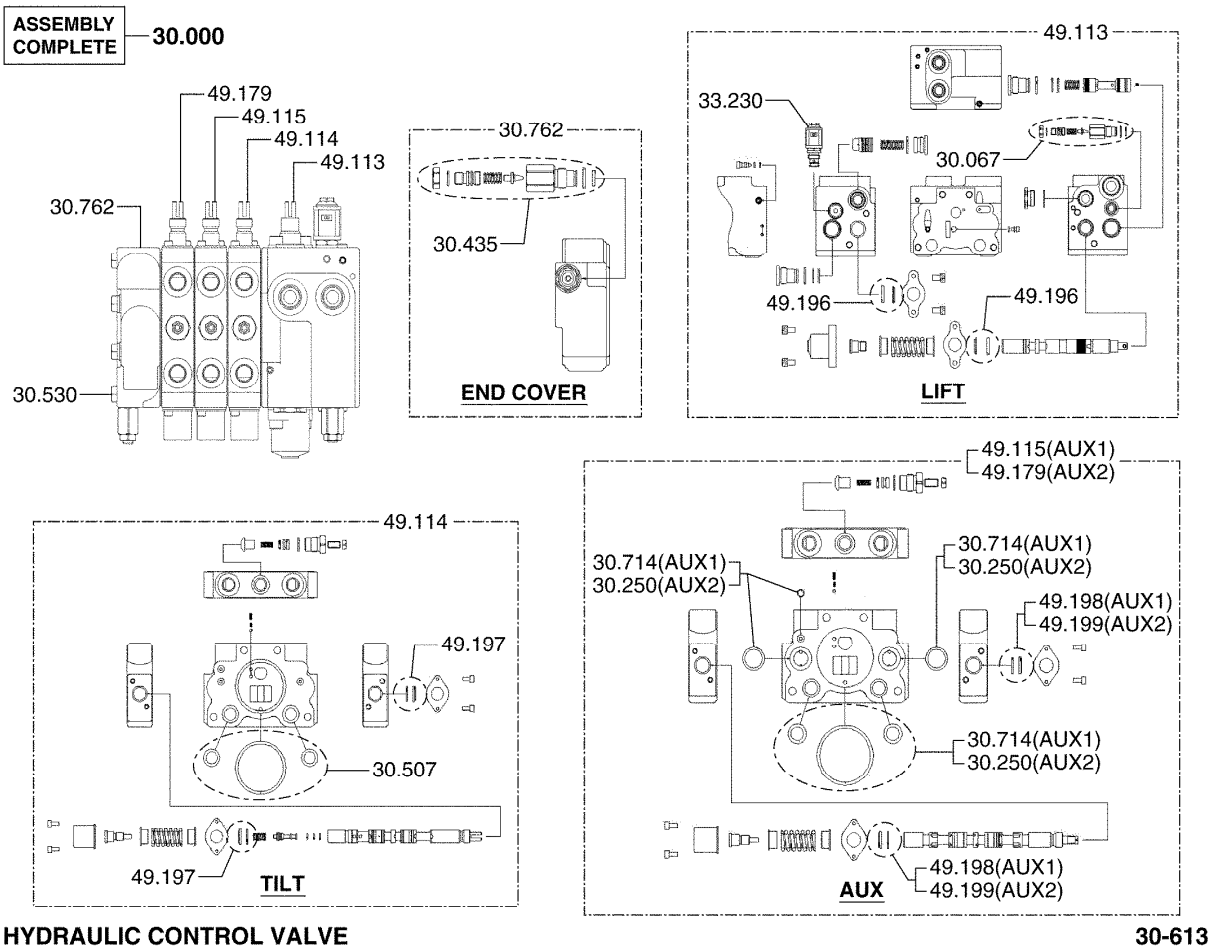

30.000 VALVE ASSEMBLY, HYDRAULIC
벨브

30.067 RELIEF VALVE KIT, VALVE INLET SECTION
릴리프밸브

30.250 SEAL KIT, HYDRAULIC VALVE SECTION (AUX)
시일킷

30.435 RELIEF VALVE ASSEMBLY, AUXILIARY VALVE
릴리프밸브

30.507 SEAL KIT, HYDRAULIC VALVE (TILT)
시일킷

30.530 FASTENER, VALVE THRU
패스너

30.714 SEAL KIT, HYDRAULIC VALVE SECTION (AUX)
시일킷

30.762 END COVER, HYDRAULIC VALVE
엔드커버

33.230 VALVE ASSEMBLY, LIFT SOLENOID
벨브

49.113	LIFT SECTION, HYDRAULIC VALVE 리프트섹션
49.114	TILT SECTION, HYDRAULIC VALVE 틸트섹션
49.115	AUX SECTION, HYDRAULIC VALVE 보조섹션
49.179	AUX SECTION, HYDRAULIC VALVE 보조섹션
49.196	SPOOL SEAL KIT, LIFT SECTION 스풀실킷
49.197	SPOOL SEAL KIT, TILT SECTION 스풀실킷
49.198	SPOOL SEAL KIT, AUX SECTION 스풀실킷
49.199	SPOOL SEAL KIT, AUX SECTION 스풀실킷

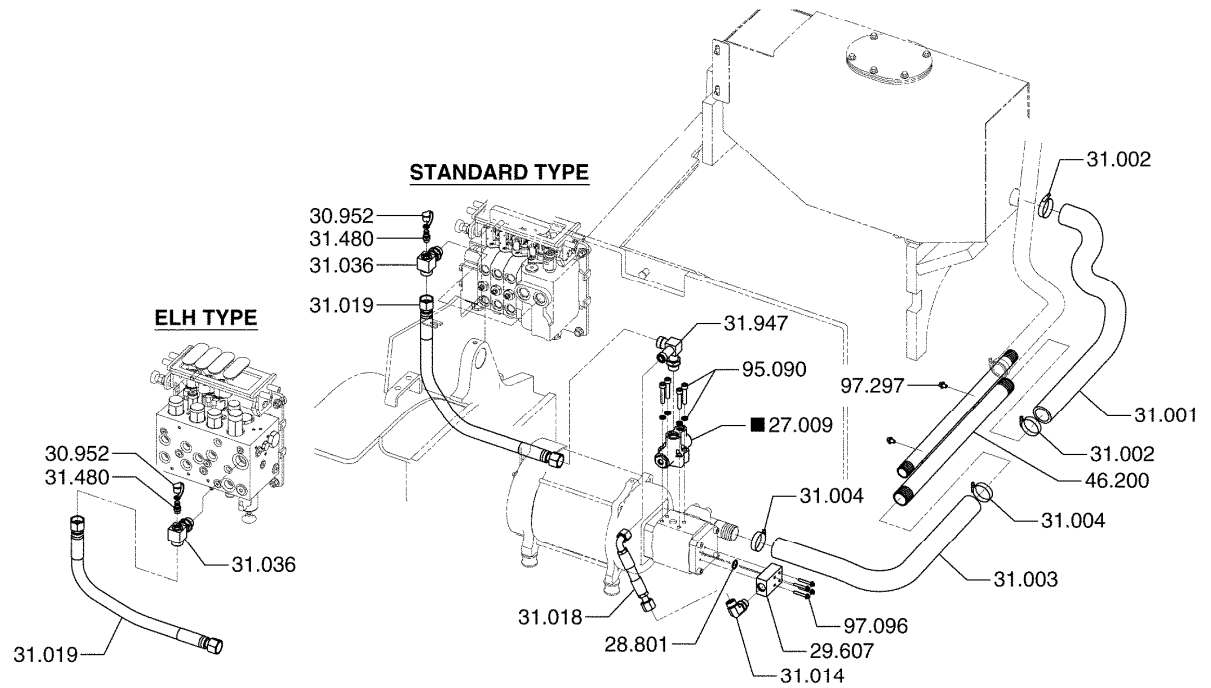

27.009 VALVE ASSEMBLY, HYDRAULIC PRIORITY
벨브

28.801 SEAL, HYD PUMP OUTLET PORT FITTING
시일

29.607 MANIFOLD, HYDRAULIC PUMP OUTLET LINE
매니폴드

30.952 DUST CAP, PRESSURE GAUGE PORT FITTING
더스트캡

31.001 LINE, SUMP OUTLET
라인

31.002 CLAMP, SUMP OUTLET LINE
클램프

31.003 LINE, PUMP INLET
라인

31.004 CLAMP, PUMP INLET LINE
클램프

31.014 FITTING, PUMP OUTLET
피팅

31.018	LINE, PUMP OUTLET 라인
31.019	LINE, VALVE INLET 라인
31.036	FITTING, MAIN VALVE INLET PORT 피팅
31.480	PLUG, PRESSURE GAUGE PORT 플러그
31.947	FITTING, PRIORITY VALVE 피팅
46.200	PIPE ASSEMBLY, HYDRAULIC LINES *
95.090	FASTENER, HYDRAULIC PRIORITY VALVE 패스너
97.096	FASTENER, HYDRAULIC PUMP OUTLET LINE MANIFOLD 패스너
97.297	FASTENER, HYDRAULIC LINES PIPE *

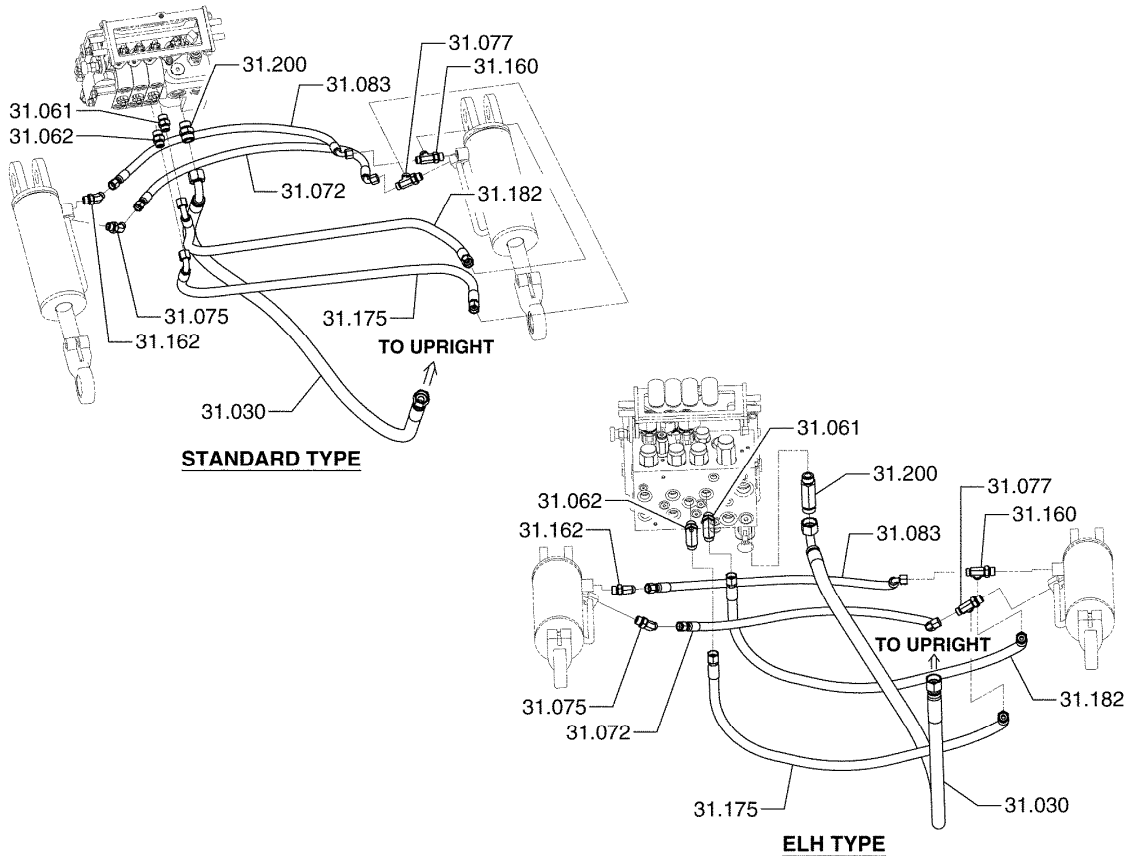

HYDRAULIC LIFT & TILT LINES **31-358**

31.030 LINE, VALVE TO LIFT CYLINDER
라인

31.061 FITTING, VALVE TILT PORT "A"
피팅

31.062 FITTING, VALVE TILT PORT "B"
피팅

31.072 LINE, RH TILT CYLINDER ROD PORT
라인

31.075 FITTING, RH TILT CYLINDER ROD PORT
피팅

31.077 FITTING, LH TILT CYLINDER ROD PORT
피팅

31.083 LINE, RH TILT CYLINDER ANCHOR PORT
라인

31.160 FITTING, LH TILT CYLINDER ANCHOR PORT
피팅

31.162 FITTING, RH TILT CYLINDER ANCHOR PORT
피팅

31.175 LINE, VALVE TILT PORT "B"
라인

31.182 LINE, VALVE TILT PORT "A"
라인

31.200 FITTING, MAIN VALVE LIFT PORT
피팅

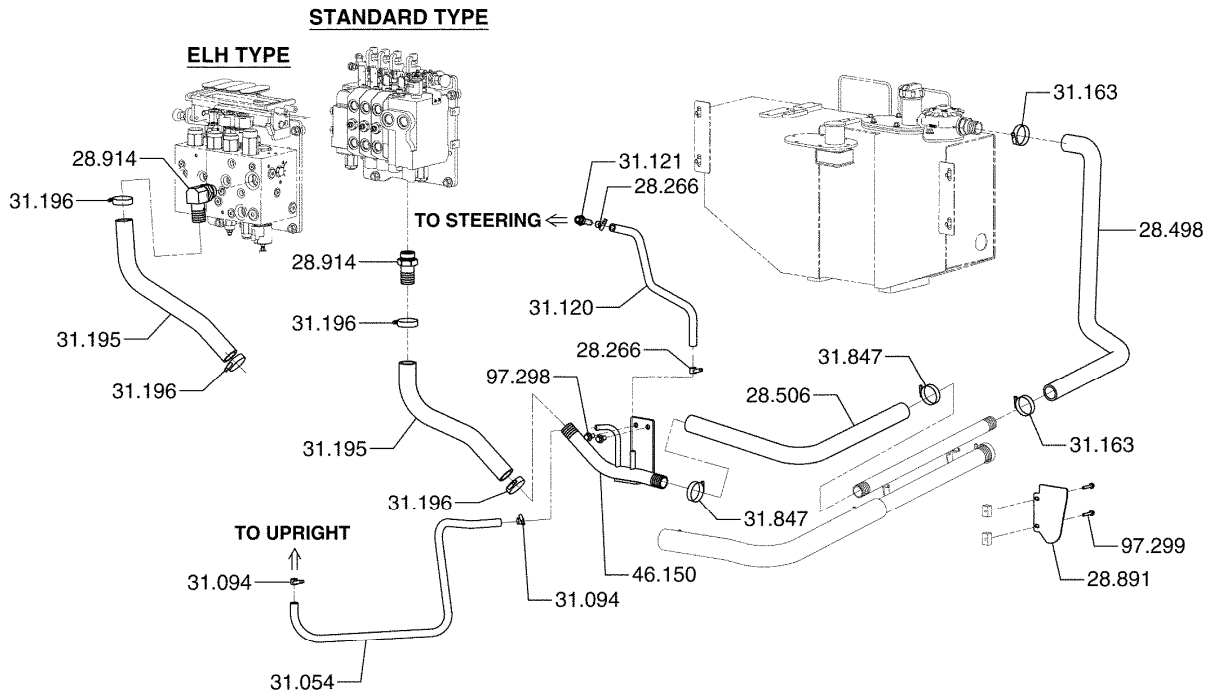

HYDRAULIC RETURN LINES **31-359**

28.266	CLAMP, POWER STEERING SUMP RETURN LINE 클램프
28.498	LINE, SUMP RETURN 라인
28.506	LINE, SUMP RETURN 라인
28.891	FASTENER, PUMP TO MAIN VALVE LINE CLAMP 패스너
28.914	FITTING, VALVE SUMP RETURN PORT 피팅
31.054	LINE, LIFT CYLINDER VENT TO SUMP 라인
31.094	CLAMP, LIFT CYLINDER VENT TO SUMP LINE *
31.120	LINE, SUMP RETURN (POWER STEERING) 라인
31.121	FITTING, POWER STEERING SUMP RETURN 피팅

31.163	CLAMP, SUMP RETURN LINE 클램프
31.195	LINE, MAIN VALVE TO SUMP RETURN 라인
31.196	CLAMP, MAIN VALVE TO SUMP LINE 클램프
31.847	CLAMP, SUMP RETURN LINE 클램프
46.150	PIPE ASSEMBLY, SUMP RETURN LINE *
97.298	FASTENER, SUMP RETURN LINE PIPE *
97.299	FASTENER, HYDRAULIC SUMP COVER *

■ INDICATES AN ASSEMBLY HAVING SERVICEABLE COMPONENTS ILLUSTRATED ELSEWHERE

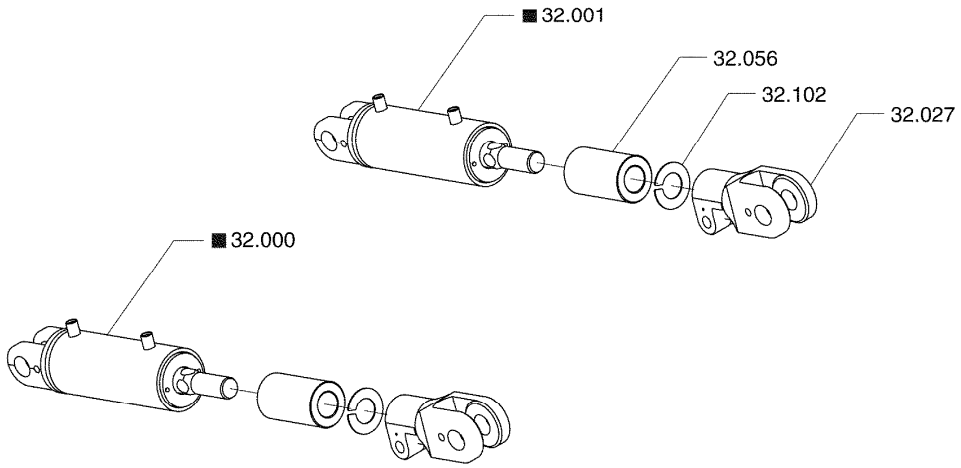

TILT AMOUNT GP **32-167**

32.000	CYLINDER ASSEMBLY, TILT 실린더
32.001	TILT CYLINDER ASSEMBLY (LH) 틸트실린더
32.027	END, RH TILT CYLINDER ROD 엔드
32.056	SPACER, TILT CYLINDER ROD END 스페이서
32.102	SHIM, TILT CYLINDER STROKE ADJUSTING 심

■INDICATES AN ASSEMBLY HAVING SERVICEABLE COMPONENTS ILLUSTRATED ELSEWHERE

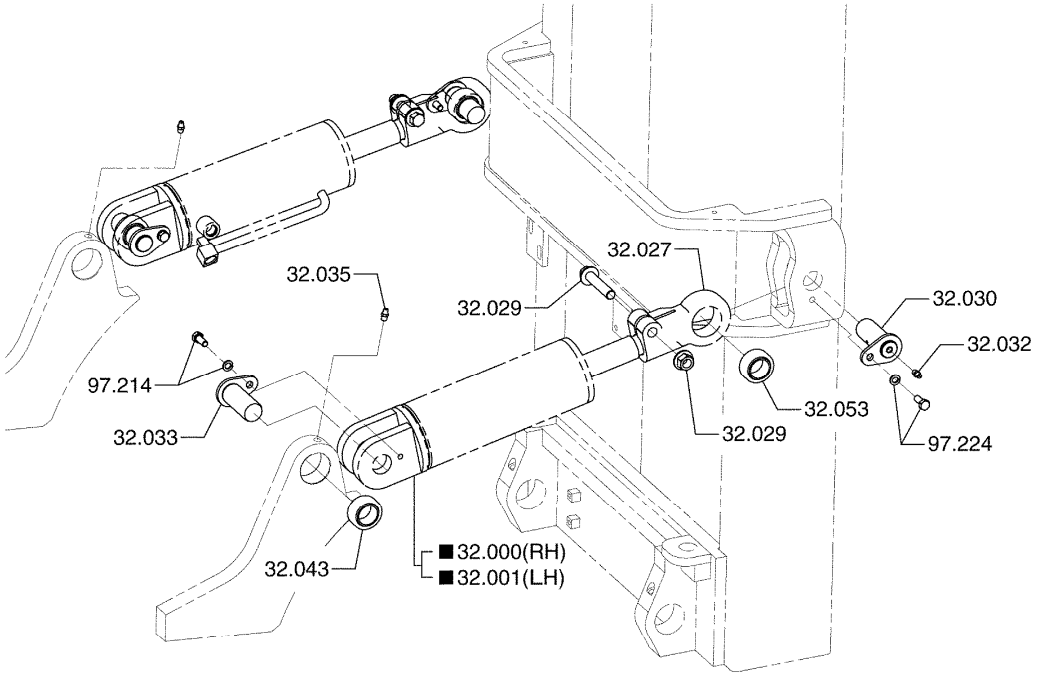

TILT CYLINDER MOUNTING **32-174**

32.000	CYLINDER ASSEMBLY, TILT 실린더
32.001	TILT CYLINDER ASSEMBLY (LH) 틸트실린더
32.027	END, RH TILT CYLINDER ROD 엔드
32.029	FASTENER, TILT CYLINDER ROD END 패스너
32.030	PIN, TILT CYLINDER TO UPRIGHT 핀
32.032	FITTING, TILT CYLINDER TO UPRIGHT PIN LUB 피팅
32.033	PIN, TILT CYLINDER REAR MOUNTING RH 핀
32.035	FITTING, TILT CYLINDER TO FRAME PIN LUB 피팅
32.043	BEARING, TILT CYLINDER FRAME MOUNTING 베어링

32.053	BEARING, TILT CYLINDER ROD END 베어링
97.214	FASTENER, TILT CYLINDER TO FRAME PIN *
97.224	FASTENER, TILT CYLINDER TO UPRIGHT PIN *

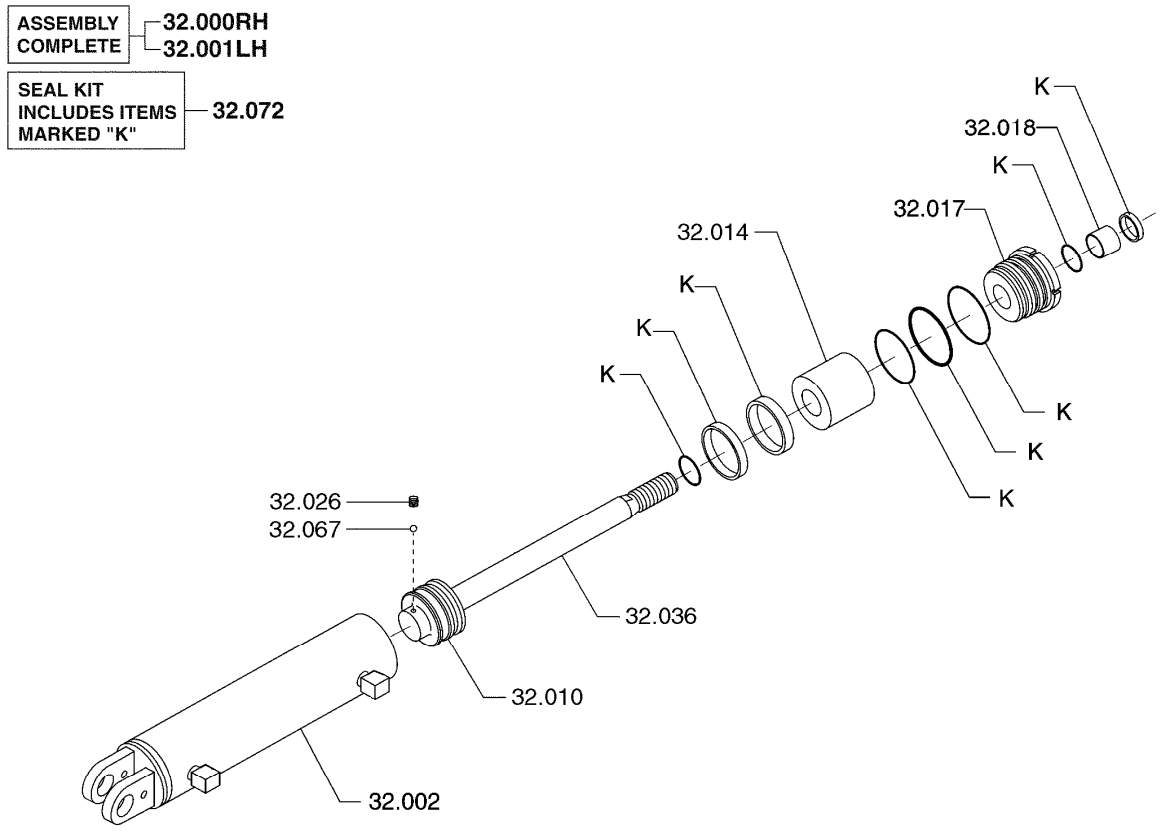

TILT CYLINDER ASSEMBLY **32-175**

32.000 CYLINDER ASSEMBLY, TILT
실린더

32.001 TILT CYLINDER ASSEMBLY (LH)
틸트실린더

32.002 CYLINDER ASSEMBLY, WELDED
실린더

32.010 PISTON, TILT CYLINDER
피스톤

32.014 SPACER, TILT CYLINDER PISTON
스페이서

32.017 GLAND, TILT CYLINDER
그랜드

32.018 BUSHING, TILT CYLINDER GLAND
부싱

32.026 SETSCREW, TILT CYLINDER GLAND NUT PLUG
셋스크류

32.036 ROD & PISTON ASSEMBLY, TILT CYLINDER
로드와피스톤

32.067 FASTENER, TILT CYL PISTON PAD COVER TO PISTON ROD
패스너

32.072 PACKING KIT, TILT CYLINDER
패킹킷

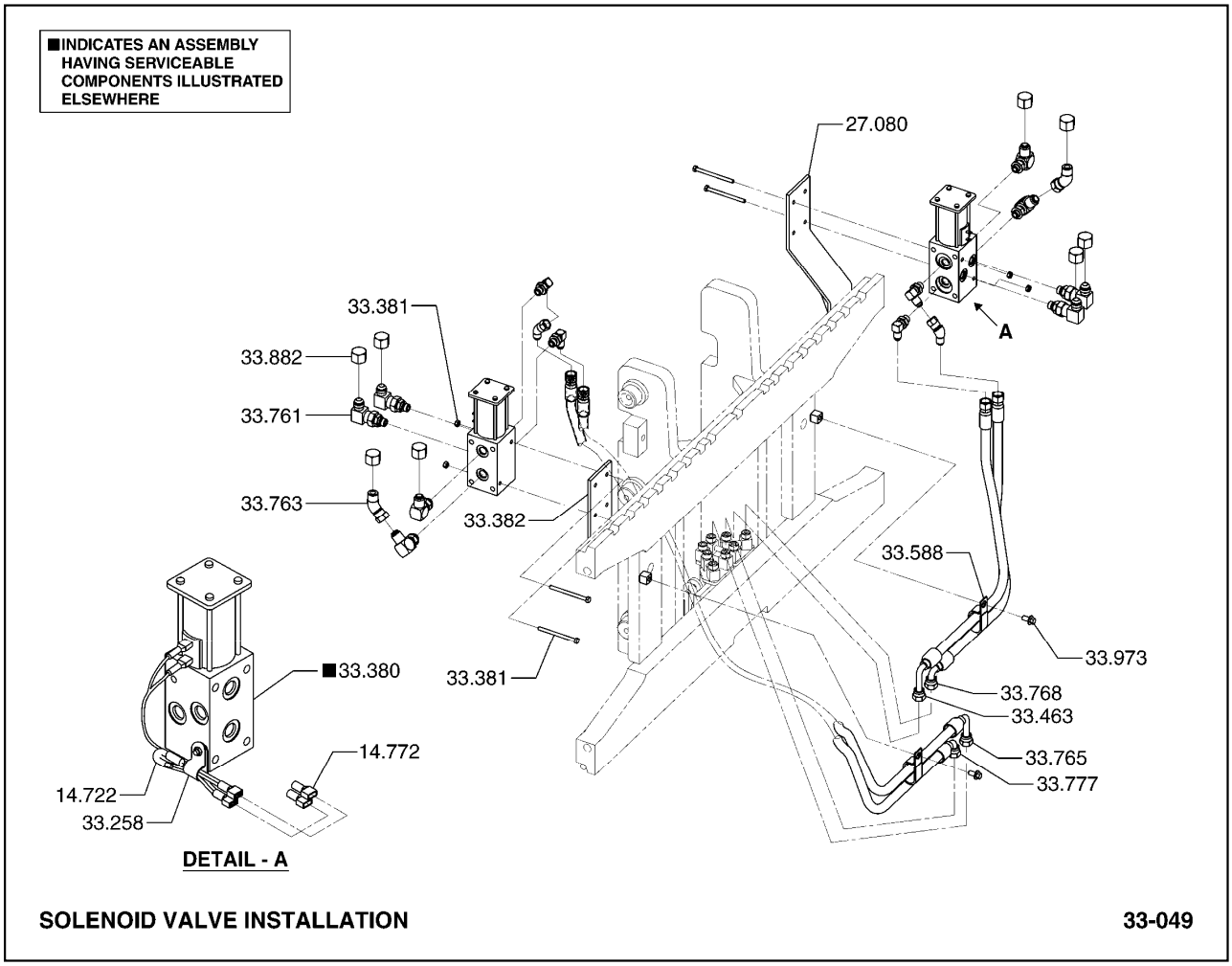

13.994 BODY, TILT SOLENOID VALVE SWITCH ACTUATOR
바디

27.048 CARTRIDGE, SOLENOID VALVE - DEVICE
카트리지

33.330 VALVE ASSEMBLY, CLAMP SOLENOID
벨브

33.333 COIL, CLAMP VALVE SOLENOID
코일

33.387 SEAL KIT, DEVICE SELECTOR VALVE
시일킷

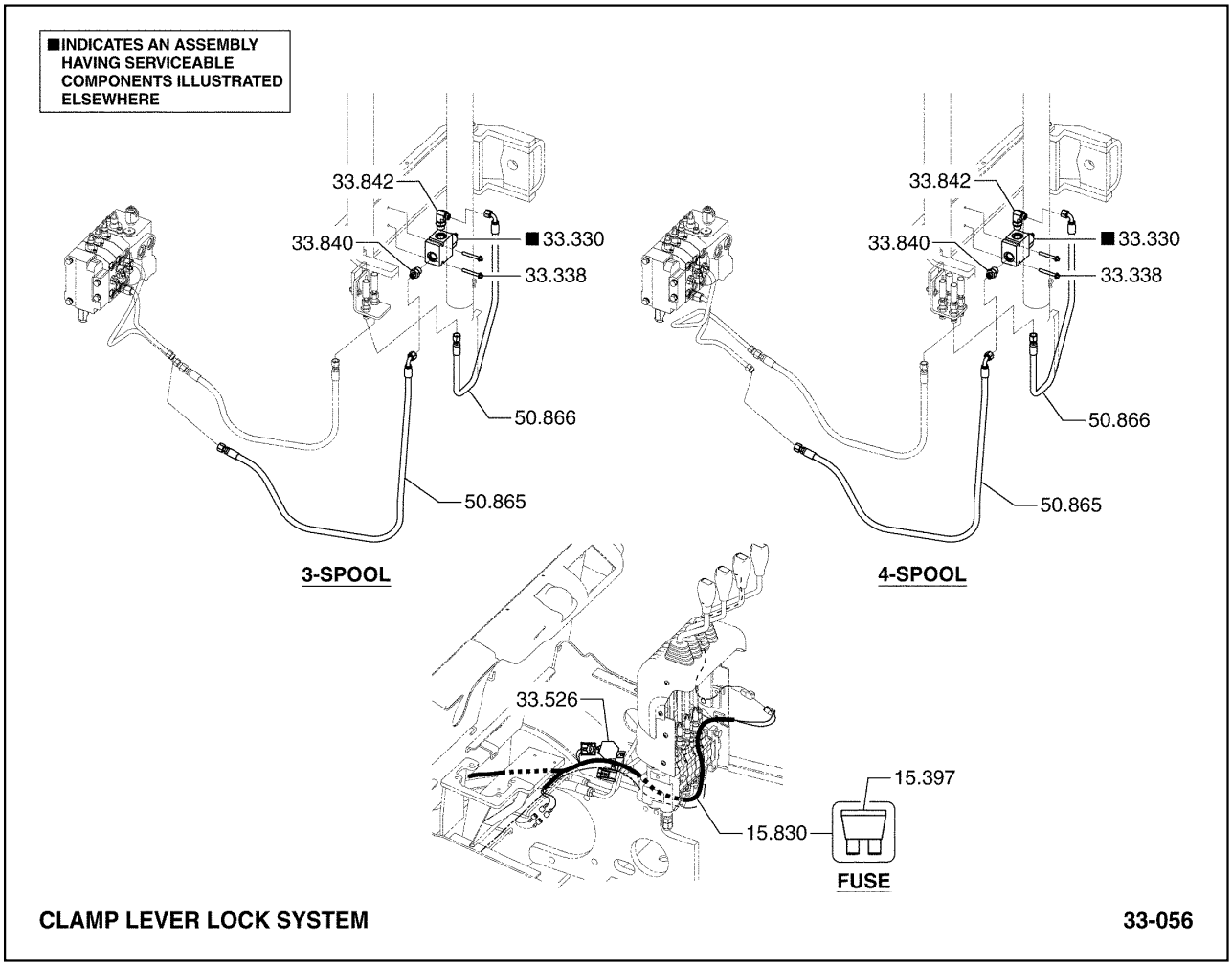

15.397 FUSE, SOLENOID VALVE
퓨즈

15.830 WIRING HARNESS, CLAMP SOLENOID VALVE
*

33.330 VALVE ASSEMBLY, CLAMP SOLENOID
벨브

33.338 FASTENER, CLAMP SOLENOID VALVE
패스너

33.526 RELAY, CLAMP SOLENOID VALVE
*

33.840 FITTING, CLAMP SOLENOID VALVE INLET PORT
피팅

33.842 FITTING, CLAMP SOLENOID VALVE OUTLET PORT
피팅

50.865 LINE, AUXILIARY VALVE B PORT
라인

50.866 LINE, AUXILIARY VALVE A PORT
라인

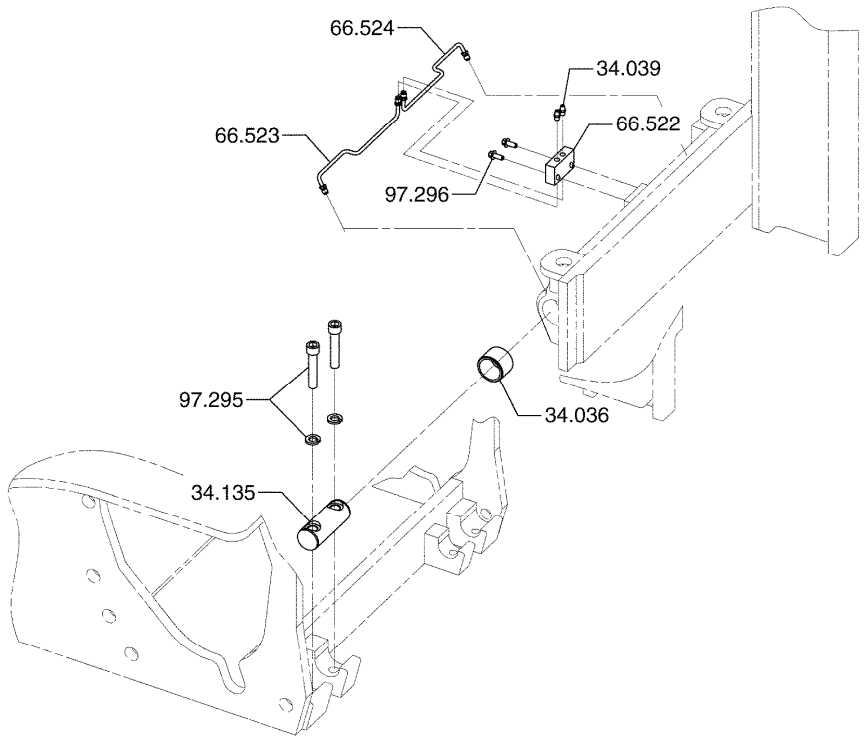

UPRIGHT MOUNTING **34-119**

34.036 BUSHING, UPRIGHT TRUNNION
부싱

34.039 FITTING-LUB, UPRIGHT TRUNNION
피팅

34.135 SHAFT, UPRIGHT TRUNNION
*

66.522 BLOCK, UPRIGHT TRUNNION LUB LINE JUNCTION
*

66.523 LINE, UPRIGHT TRUNNION LUBRICATION RH
*

66.524 LINE, UPRIGHT TRUNNION LUBRICATION LH
*

97.295 FASTENER, UPRIGHT TRUNNION SHAFT
*

97.296 FASTENER, UPRIGHT TRUNNION LUB LINE JUNCTION BLOCK
*

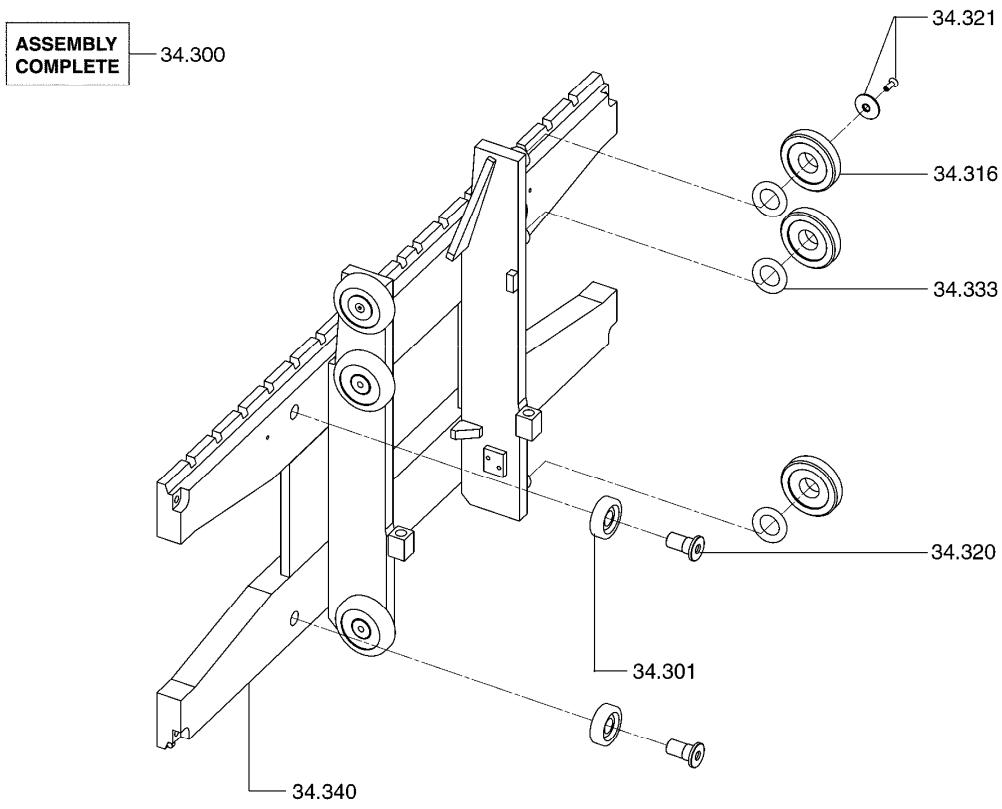

CARRIAGE ASSEMBLY **34-189**

34.300 ASSEMBLY, FORK BARS & CARRIAGE
캐리지

34.301 ROLLER, CARRIAGE OUTER THRUST
롤러

34.316 ROLLER, CARRIAGE
롤러

34.320 SHAFT, CARRIAGE OUTER THRUST ROLLER
샤프트

34.321 FASTENER, CARRIAGE ROLLER SHAFT
패스너

34.333 SHIM, CARRIAGE ROLLER
심

34.340 CARRIAGE WELDED ASSEMBLY
캐리지용접물

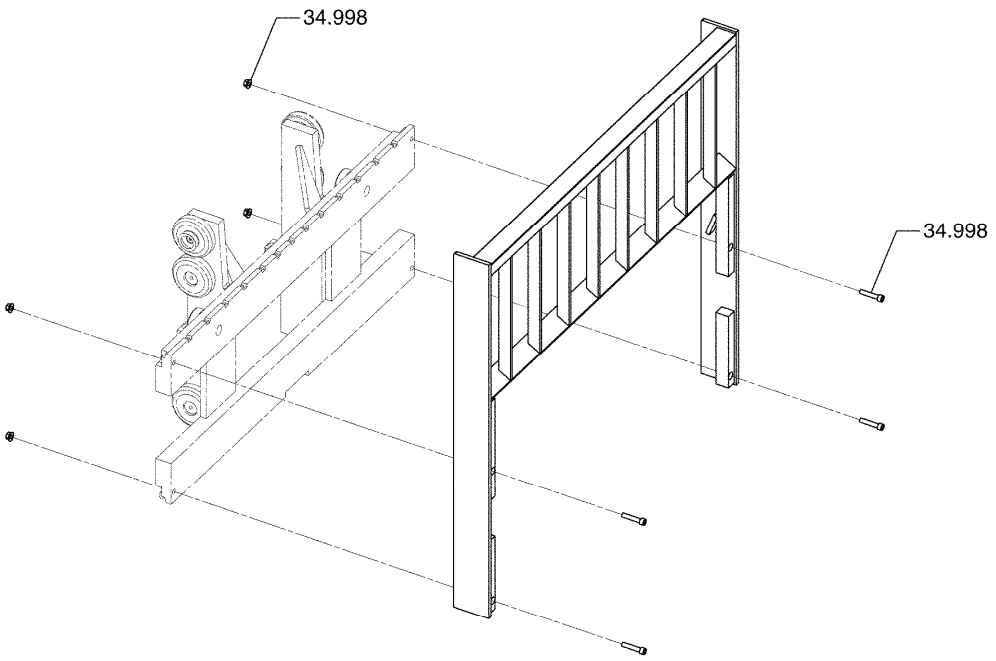

LOAD BACK REST MOUNTING **34-190**

34.998 FASTENER, LOAD SAFETY BACK REST
패스너

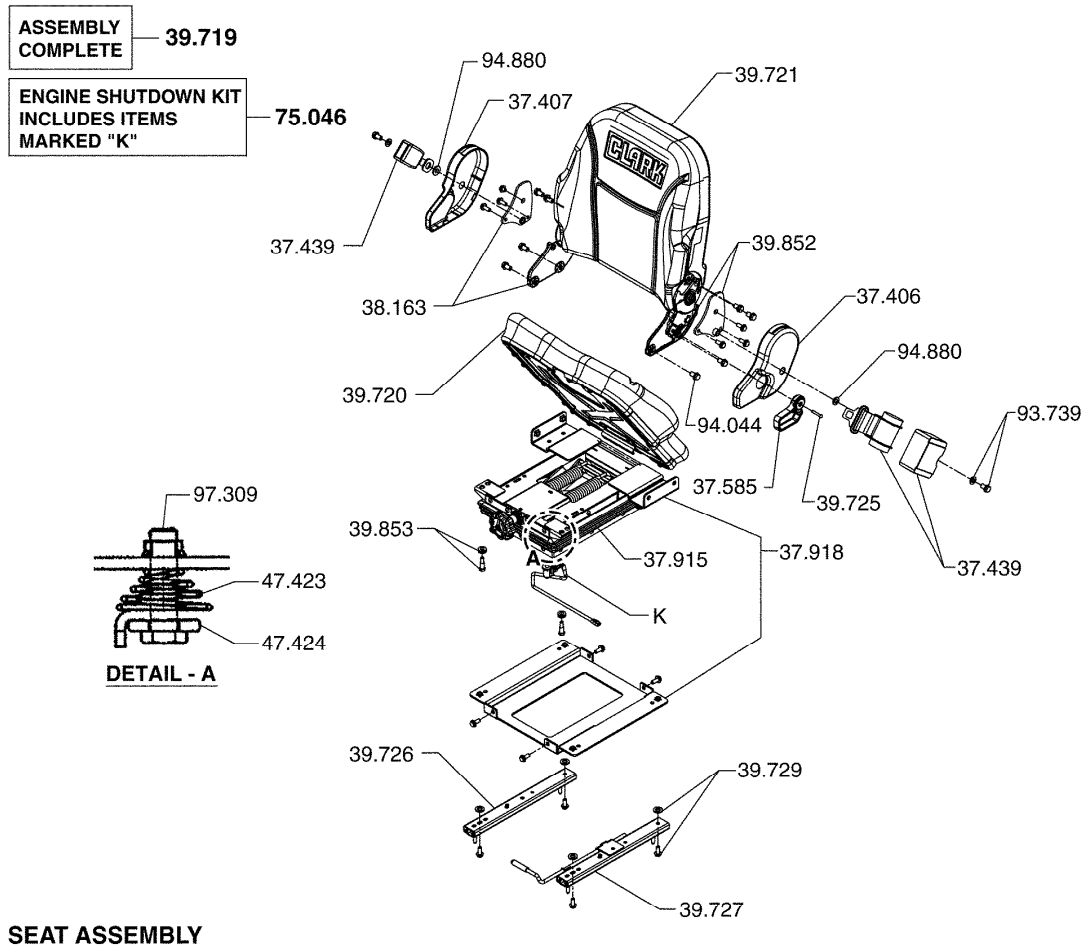

37.406 BRACKET, SEAT BACK REST COVER LH
브라켓

37.407 BRACKET, SEAT BACK REST COVER RH
브라켓

37.439 SAFETY BELT, SEAT
세이프티벨트

37.585 KNOB, SEAT BACK REST CUSHION ADJUSTOR
노브

37.915 SUSPENSION COVER, SEAT SUSPENSION
서스펜션

37.918 SUSPENSION ASSEMBLY, SEAT
서스펜션

38.163 BRACKET, SEAT SUPPORT RH
브라켓

39.719 SEAT ASSEMBLY
시트

39.720 CUSHION, SEAT
쿠션

39.721	CUSHION, SEAT BACK REST 쿠션
39.725	FASTENER, SEAT BACK REST CLIP TO FRAME 패스너
39.726	ADJUSTOR, SEAT 어드져스터
39.727	ADJUSTOR, SEAT WITH LATCH 어드져스터
39.729	FASTENER, ADJUSTOR TO SEAT SUPPORT 패스너
39.852	BRACKET, SEAT SUPPORT LH 브라켓
39.853	FASTENER, SEAT SUPPORT BRACKET 패스너
47.423	SPRING, SEAT SWITCH *
47.424	GROMMET, SEAT SWITCH SPRING *
75.046	KIT, SEAT ACTUATED ENGINE SHUTDOWN 킷
93.739	FASTENER, SAFETY BELT ASSEMBLY 패스너
94.044	FASTENER, SEAT CUSHION MOUNTING PLATE 패스너
94.880	FASTENER, SEAT SUPPORT CATCH BRACKET 패스너
97.309	FASTENER, SEAT SWITCH SPRING *

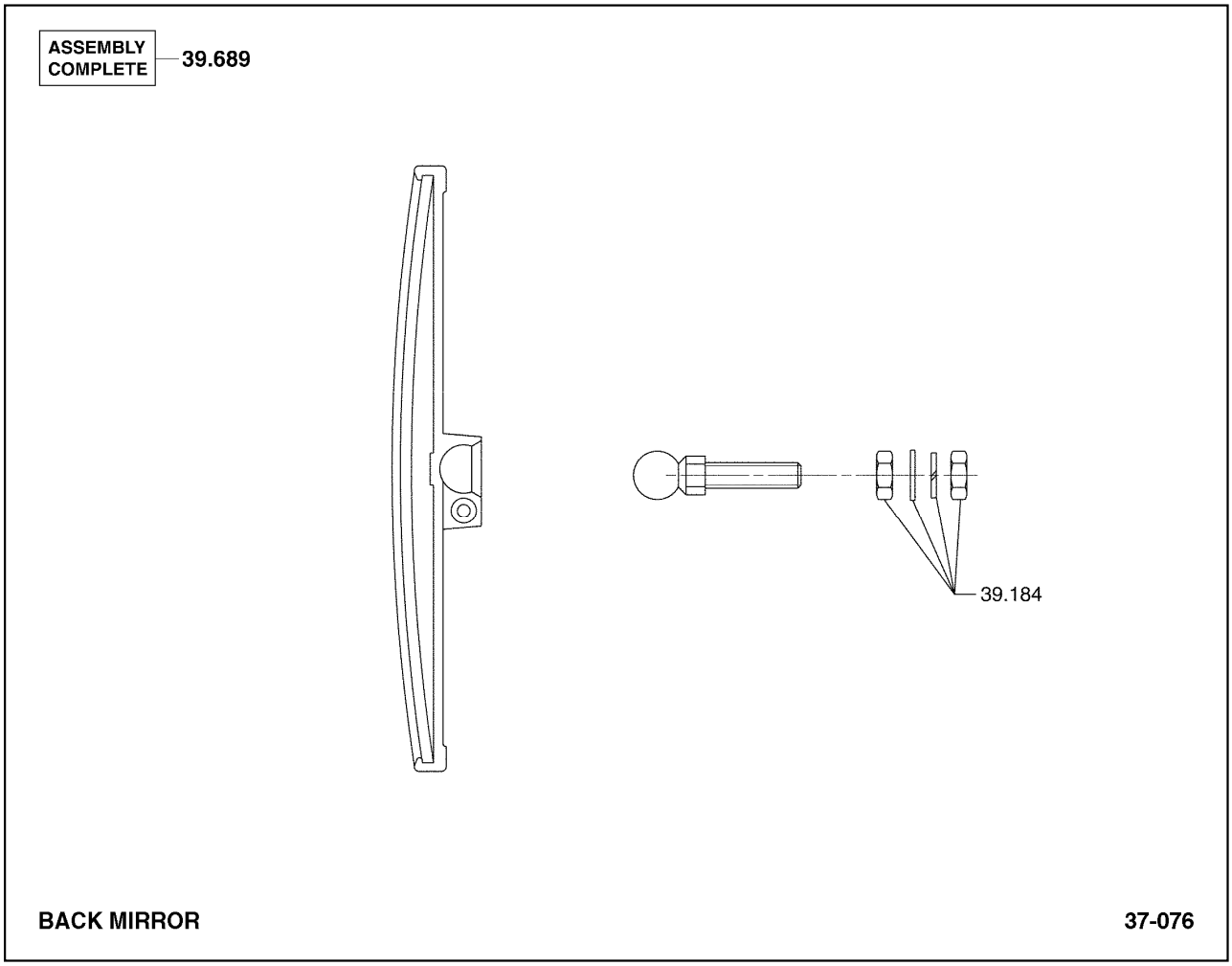

39.184 FASTENER, REAR VIEW MIRROR
패스너

39.689 MIRROR, REAR VIEW
미러

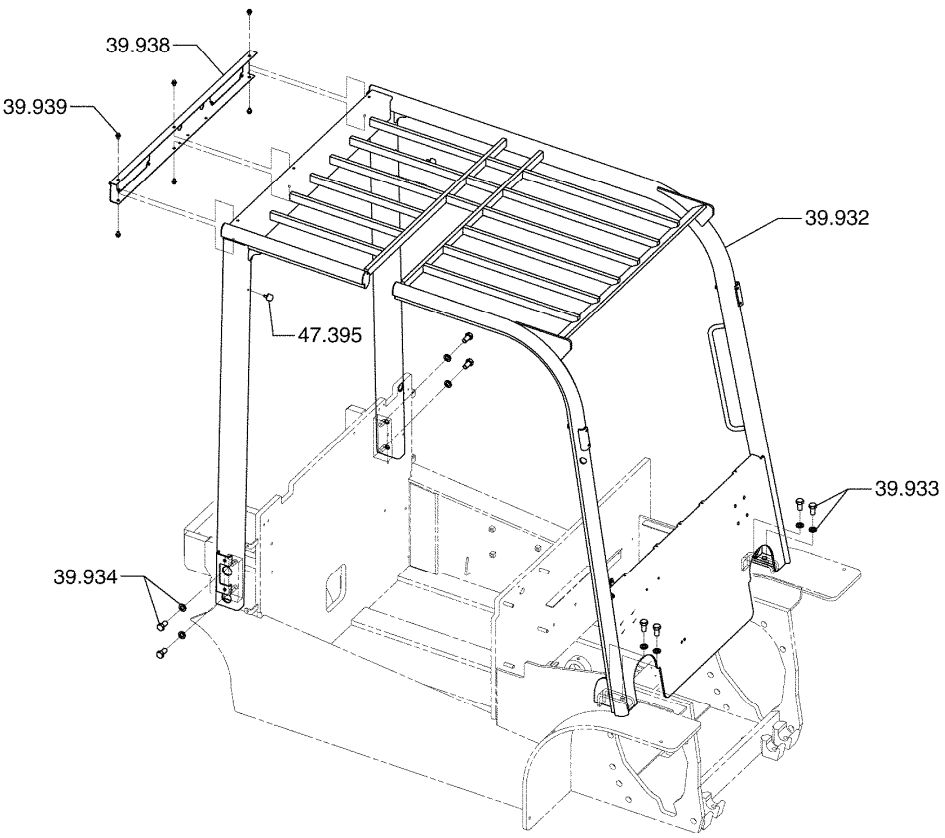

OVERHEAD GUARD MOUNTING **37-128**

39.932 GUARD, OVERHEAD
가드

39.933 FASTENER, OVERHEAD GUARD
패스너

39.934 FASTENER, OVERHEAD GUARD
패스너

39.938 BRACKET, OVERHEAD GUARD REAR SUPPORT
브라켓

39.939 FASTENER, OVERHEAD GUARD REAR SUPPORT BRACKET
패스너

47.395 BUMPER, FRAME COVERING HOOD SUPPORT
*

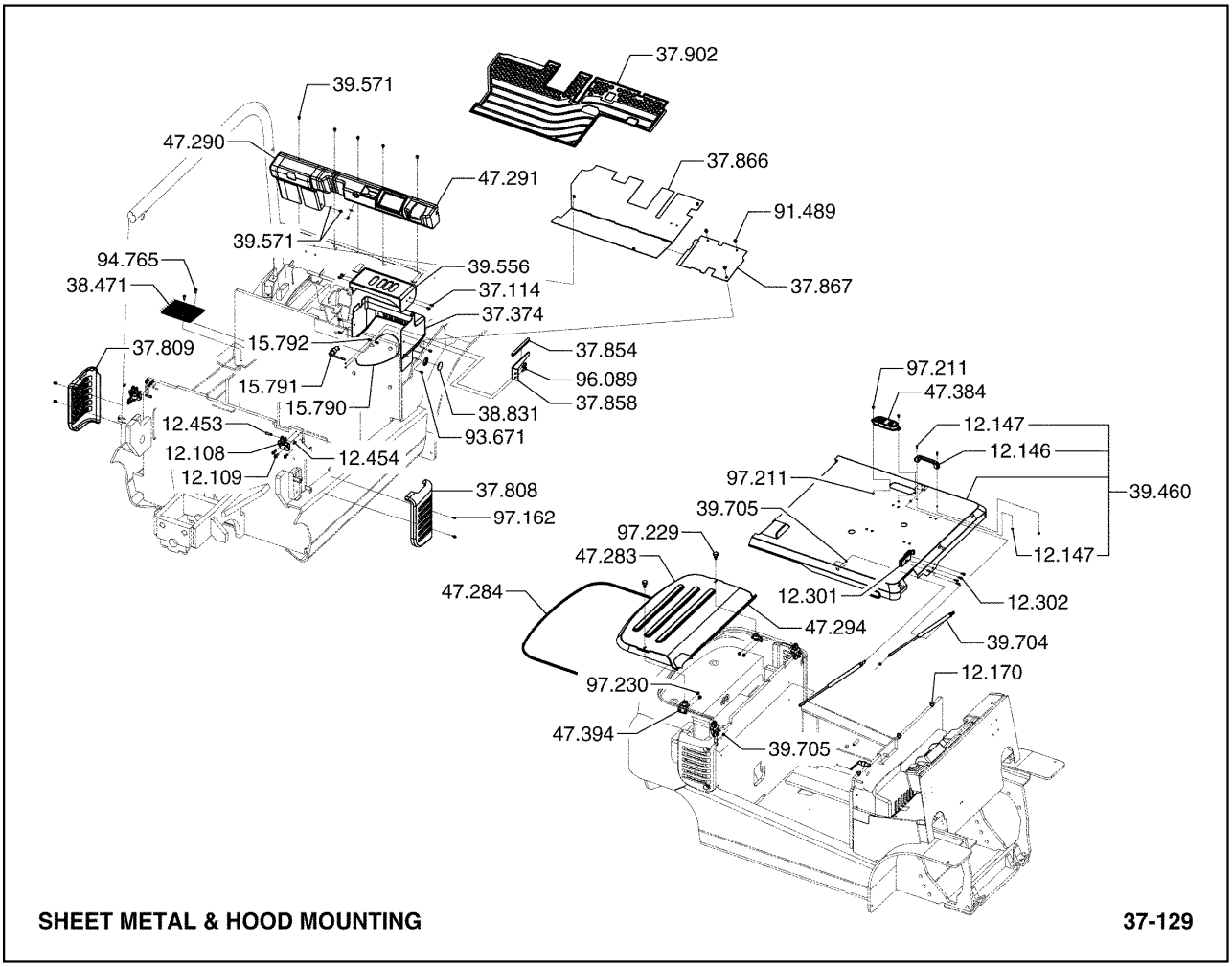

12.108	HINGE, BATTERY COVER 힌지	37.809	COVER, REAR LH 커버
12.109	FASTENER, BATTERY COVER HINGE 패스너	37.854	SEAL, FLOOR PLATE 시일
12.146	HANDLE, BATTERY COVER 핸들	37.858	SUPPORT, FLOOR PLATE 서포트
12.147	FASTENER, BATTERY COVER HANDLE 패스너	37.866	PLATE, FLOOR-LH 플레이트
12.170	BUMPER, BATTERY COVER 범퍼	37.867	PLATE, FLOOR-RH 플레이트
12.301	LATCH, BATTERY COVER 래치	37.902	MAT, FLOORPLATE 매트
12.302	FASTENER, BATTERY COVER LATCH 패스너	38.471	PAD, LH STEP NON-SKID 패드
12.453	PIVOT, BATTERY COVER HINGE *	38.831	PLUG, FRAME CLOSURE 플러그
12.454	RETAINER, BATTERY COVER HINGE *	39.460	COVER ASSEMBLY, BATTERY 커버
15.790	WIRE, BATTERY STOPPER 와이어	39.556	COVER, VALVE LINKAGE ACCESS 커버
15.791	HOLDER, BATTERY 홀더	39.571	FASTENER, DASH COVER 패스너
15.792	SLEEVE, BATTERY STOOPER WIRE 슬리브	39.704	SPRING, HOOD PROP (OUTER) 스프링
37.114	FASTENER, VALVE LINKAGE ACCESS COVER 패스너	39.705	FASTENER, HOOD PROP 패스너
37.374	COVER, HYDRAULIC VALVE 커버	47.283	COVER, FRAME REAR 커버
37.808	COVER, REAR RH 커버	47.284	WEATHERSTRIP, FRAME REAR COVER 웨더스트립

47.290 COVER ASSEMBLY, DASH LH
커버

47.291 COVER ASSEMBLY, DASH RH
커버

47.294 WEATHERSTRIP, REAR HOOD
웨더스트립

47.384 COVER, DISCONNECT SWITCH
*

47.394 BRACKET, FRAME REAR COVER MOUNTING
*

91.489 FASTENER, FLOOR PLATE
패스너

93.671 FASTENER, HYDRAULIC VALVE COVER
패스너

94.765 FASTENER, PAD NON-SKID
패스너

96.089 FASTENER, FLOOR PLATE SUPPORT
패스너

97.162 FASTENER, SIDE COVER TO FRAME
*

97.211 FASTENER, DISCONNECT SWITCH COVER
*

97.229 FASTENER, FRAME REAR COVER
*

97.230 FASTENER, FRAME REAR COVER MOUNTING
*

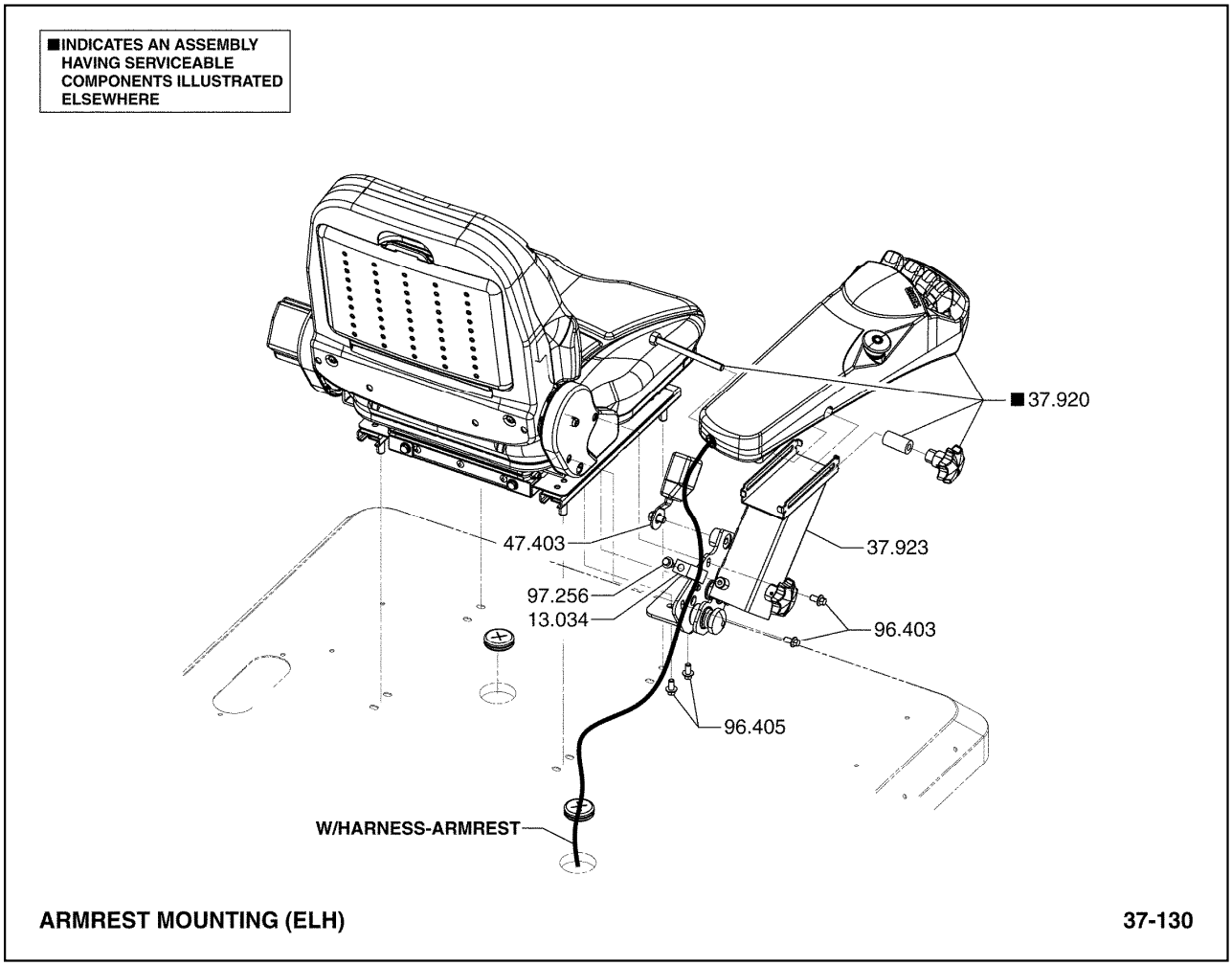

13.034	CLIP, VALVE SWITCH WIRING HARNESS *
37.920	ARMREST RH, SEAT 암레스트
37.923	BRACKET, SEAT ARMREST RIGHT HAND 브라켓
47.403	BUCKLE, SEAT SAFETY BELT *
96.403	FASTENER, SEAT ARMREST BRACKET 패스너
96.405	FASTENER, SEAT ARMREST BRACKET 패스너
97.256	FASTENER, VALVE SWITCH WIRING HARNESS CLIP *

■INDICATES AN ASSEMBLY HAVING SERVICEABLE COMPONENTS ILLUSTRATED ELSEWHERE

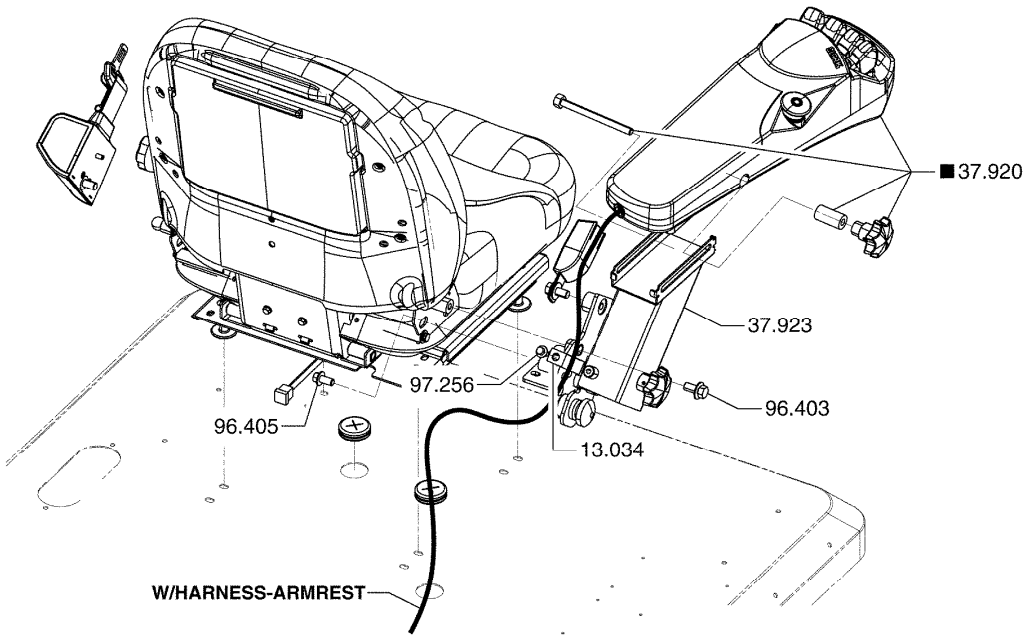

ARMREST MOUNTING (ELH) **37-131**

13.034	CLIP, VALVE SWITCH WIRING HARNESS *
37.920	ARMREST RH, SEAT 암레스트
37.923	BRACKET, SEAT ARMREST RIGHT HAND 브라켓
96.403	FASTENER, SEAT ARMREST BRACKET 패스너
96.405	FASTENER, SEAT ARMREST BRACKET 패스너
97.256	FASTENER, VALVE SWITCH WIRING HARNESS CLIP *

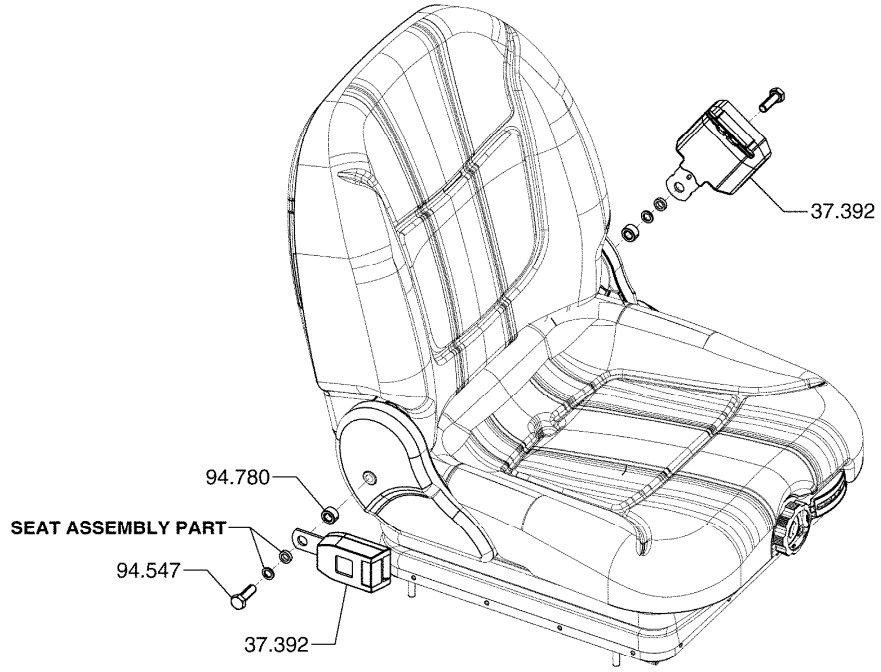

SEAT BELT MOUNTING **37-133**

37.392 SAFETY BELT ASSEMBLY
세이프티벨트

94.547 FASTENER, SEAT SAFETY BELT MOUNTING BRACKET
패스너

94.780 BUSHING, SEAT SAFETY BELT FASTENER
부싱

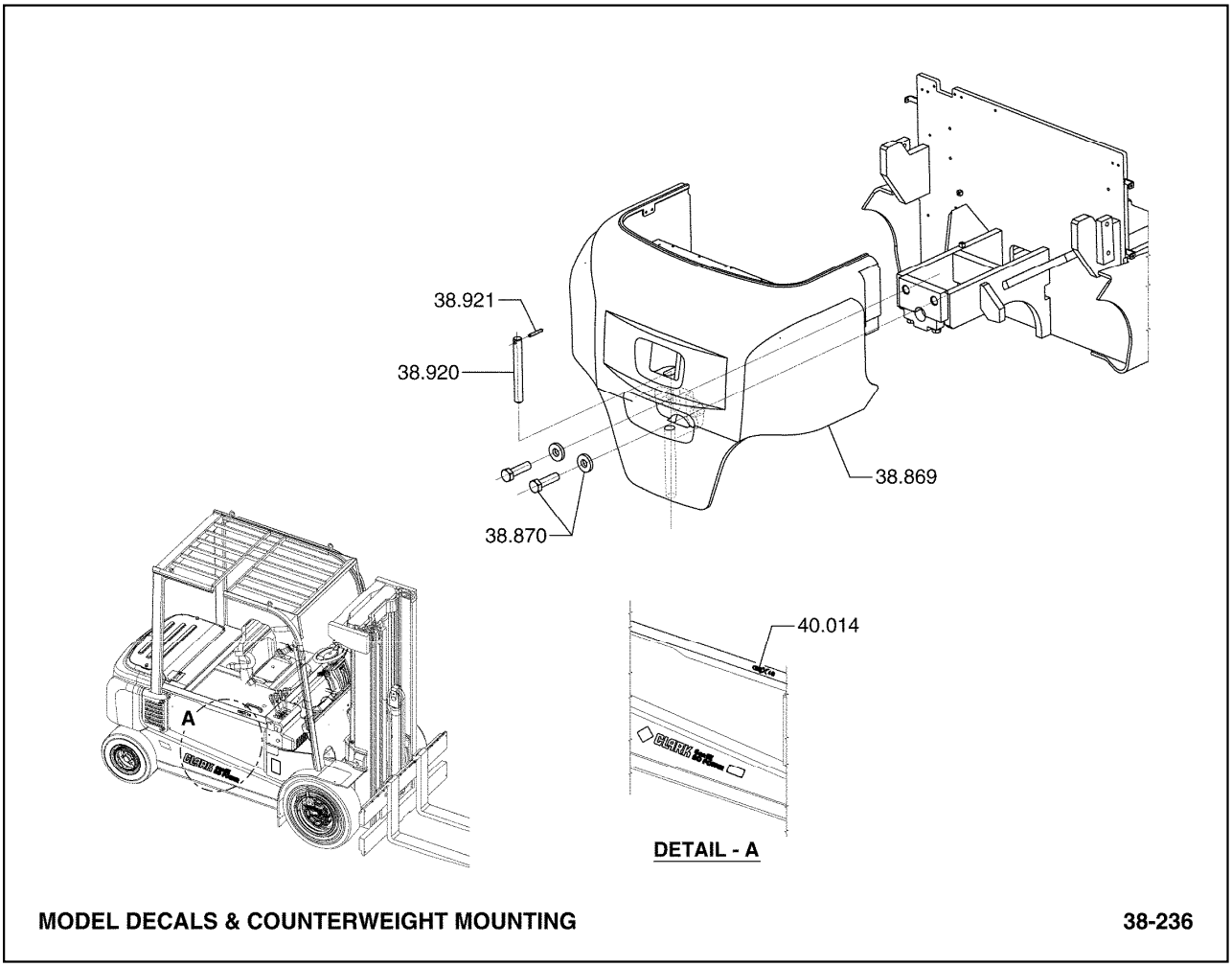

38.869	COUNTERWEIGHT 카운터웨이트
38.870	FASTENER, COUNTERWEIGHT (LOWER) 패스너
38.920	PIN, COUPLER 핀
38.921	PIN, COUPLER PIN CROSS 핀
40.014	DECAL, MODEL NAME 데칼

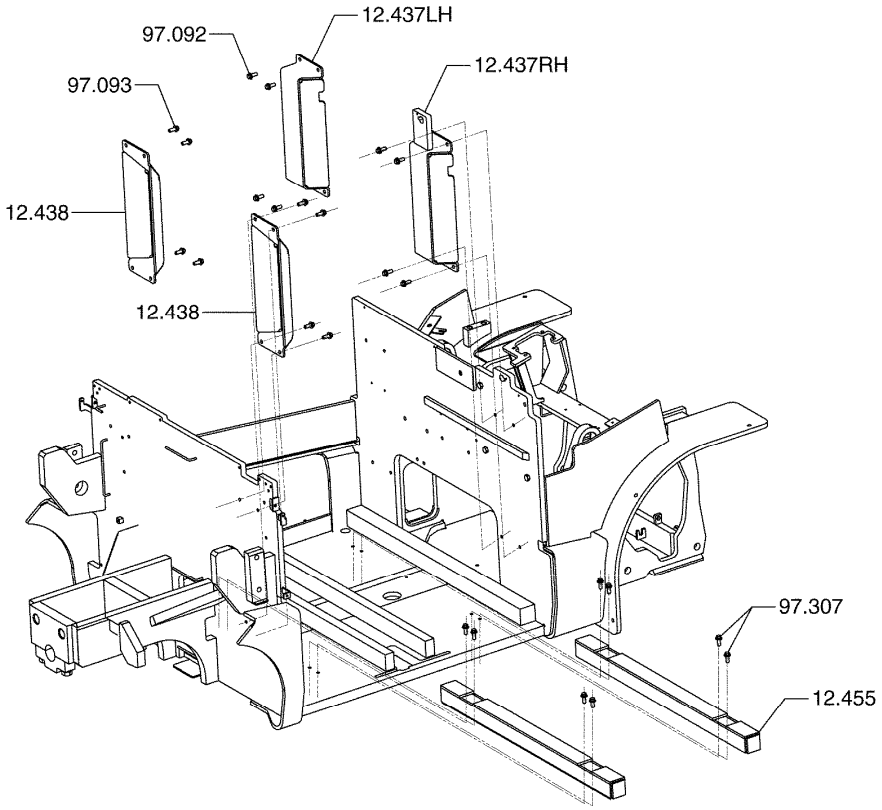

BATTERY STOPPER MOUNTING **38-240**

12.437	SPACER, BATTERY STOP 스페이서
12.438	SPACER, BATTERY STOP 스페이서
12.455	SPACER, BATTERY STOP BOTTOM *
97.092	FASTENER, BATTERY STOP SPACER 패스너
97.307	FASTENER, BATTERY STOP BOTTOM SPACER *

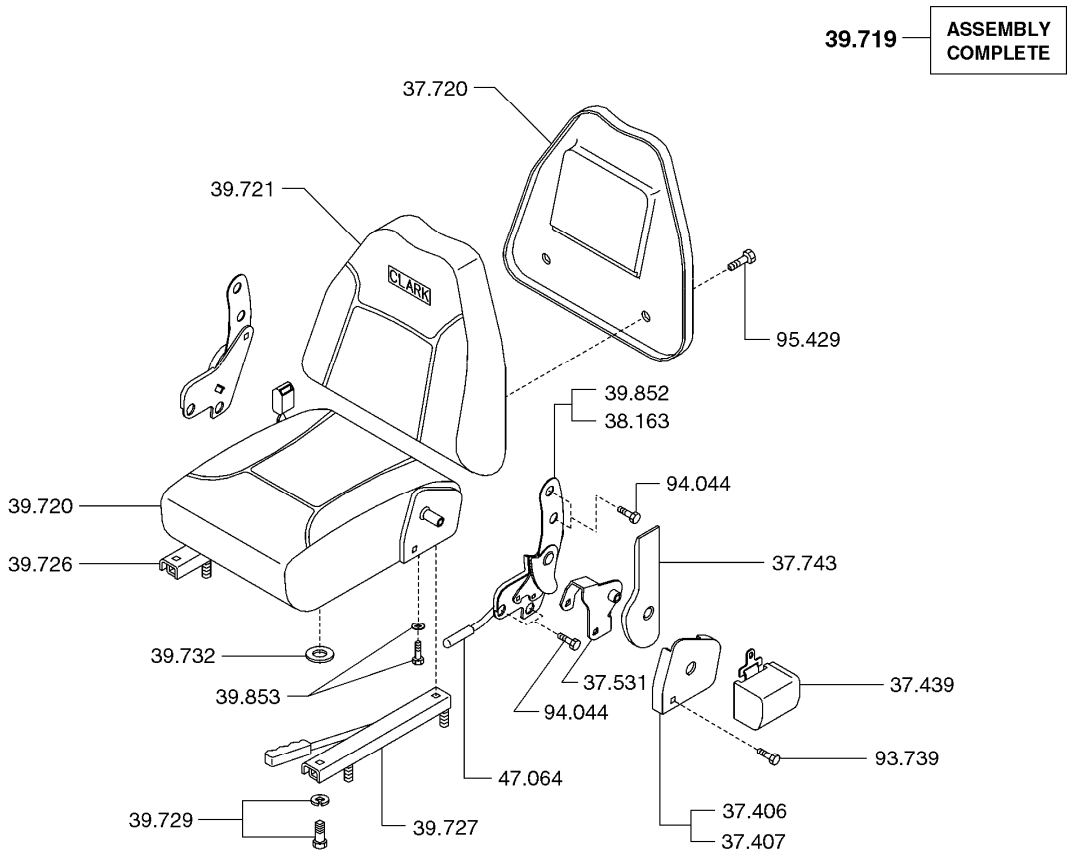

SEAT ASSEMBLY **39-661**

37.406 BRACKET, SEAT BACK REST COVER LH
브라켓

37.407 BRACKET, SEAT BACK REST COVER RH
브라켓

37.439 SAFETY BELT, SEAT
세이프티벨트

37.531 BRACKET, SEAT SAFETY BELT MOUNTING
브라켓

37.720 COVER, OPERATOR SEAT LATERAL RESTRAINT
커버

37.743 COVER, SEAT SUPPORT LATCH
커버

38.163 BRACKET, SEAT SUPPORT RH
브라켓

39.719 SEAT ASSEMBLY
시트

39.720 CUSHION, SEAT
쿠션

39.721	CUSHION, SEAT BACK REST 쿠션
39.726	ADJUSTOR, SEAT 어드져스터
39.727	ADJUSTOR, SEAT WITH LATCH 어드져스터
39.729	FASTENER, ADJUSTOR TO SEAT SUPPORT 패스너
39.732	SPACER, SEAT FRAME TO ADJUSTOR 스페이서
39.852	BRACKET, SEAT SUPPORT LH 브라켓
39.853	FASTENER, SEAT SUPPORT BRACKET 패스너
47.064	KNOB, SEAT ASSEMBLY WEIGHT ADJUSTER 노브
93.739	FASTENER, SAFETY BELT ASSEMBLY 패스너
94.044	FASTENER, SEAT CUSHION MOUNTING PLATE 패스너
95.429	FASTENER, SEAT LATERAL RESTRAINT COVER 패스너

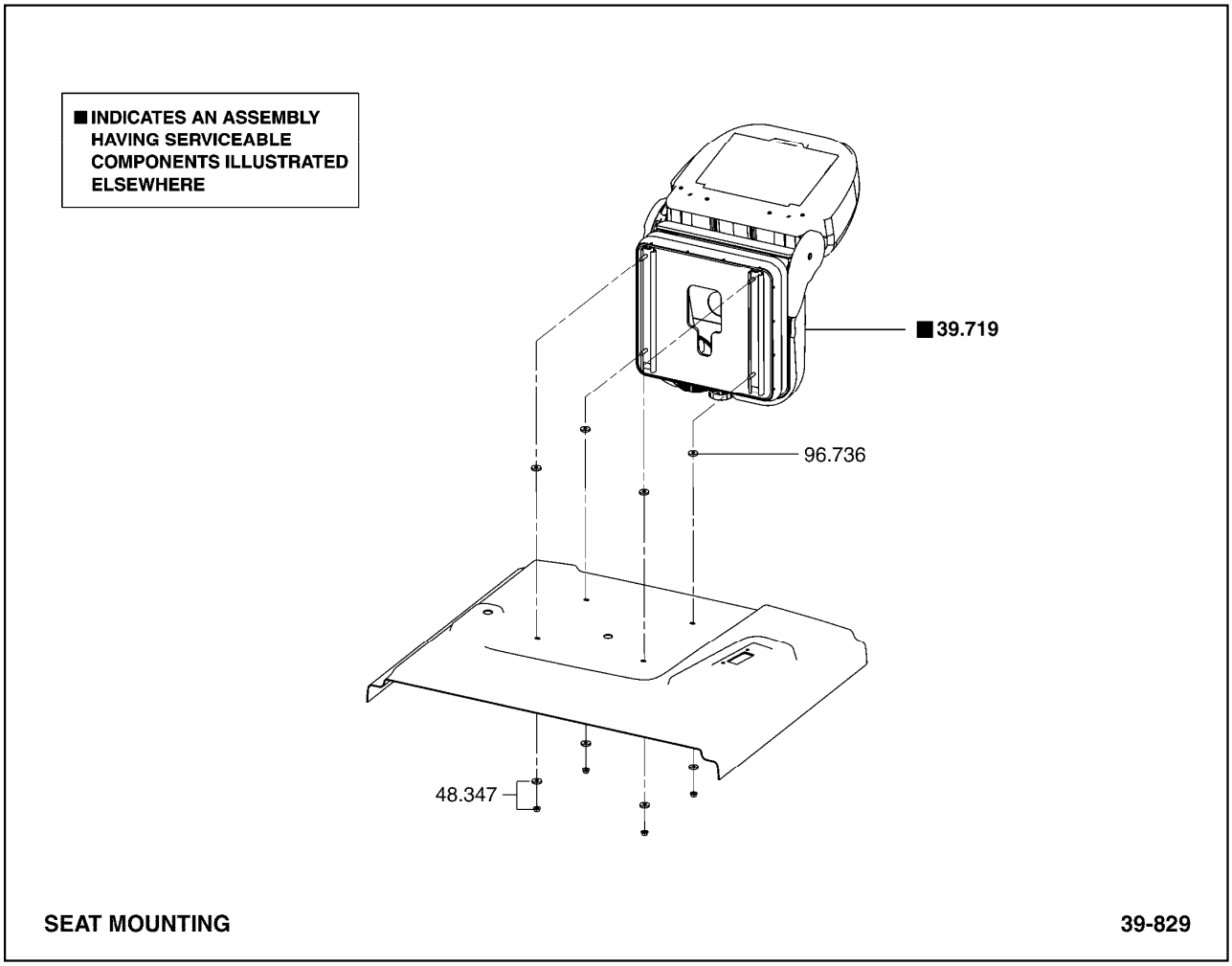

39.719	SEAT ASSEMBLY 시트
48.347	FASTENER, SEAT ASSEMBLY 패스너
96.736	WASHER, SEAT ASSEMBLY FASTENER 와셔

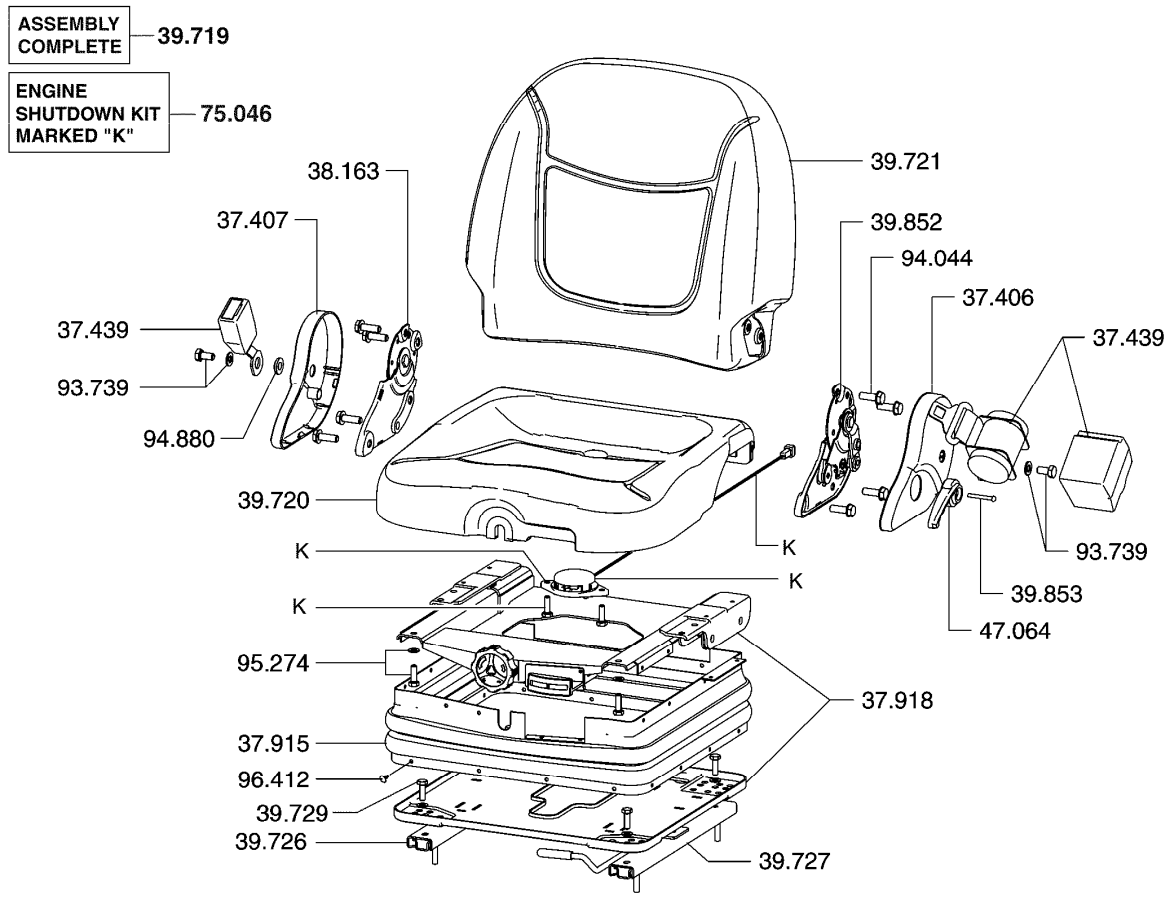

37.406 BRACKET, SEAT BACK REST COVER LH
브라켓

37.407 BRACKET, SEAT BACK REST COVER RH
브라켓

37.439 SAFETY BELT, SEAT
세이프티벨트

37.915 SUSPENSION COVER, SEAT SUSPENSION
서스펜션

37.918 SUSPENSION ASSEMBLY, SEAT
서스펜션

38.163 BRACKET, SEAT SUPPORT RH
브라켓

39.719 SEAT ASSEMBLY
시트

39.720 CUSHION, SEAT
쿠션

39.721 CUSHION, SEAT BACK REST
쿠션

39.726	ADJUSTOR, SEAT 어드져스터
39.727	ADJUSTOR, SEAT WITH LATCH 어드져스터
39.729	FASTENER, ADJUSTOR TO SEAT SUPPORT 패스너
39.852	BRACKET, SEAT SUPPORT LH 브라켓
39.853	FASTENER, SEAT SUPPORT BRACKET 패스너
47.064	KNOB, SEAT ASSEMBLY WEIGHT ADJUSTER 노브
75.046	KIT, SEAT ACTUATED ENGINE SHUTDOWN 킷
93.739	FASTENER, SAFETY BELT ASSEMBLY 패스너
94.044	FASTENER, SEAT CUSHION MOUNTING PLATE 패스너
94.880	FASTENER, SEAT SUPPORT CATCH BRACKET 패스너
95.274	FASTENER, SEAT CUSHION SUSPENSION SUPPORT 패스너
96.412	FASTENER, SEAT SUSPENSION BACK SIDE COVER 패스너

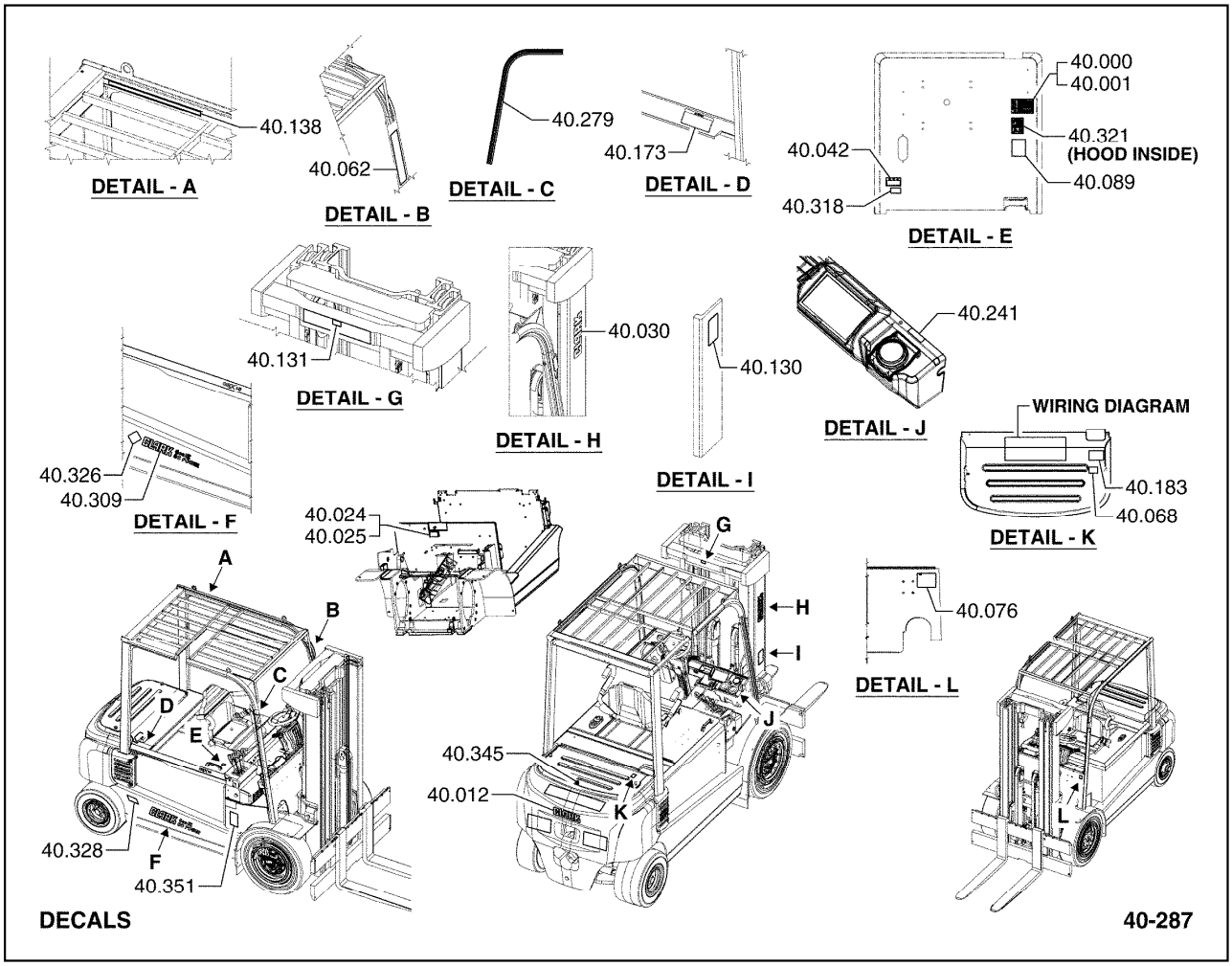

40.000 PLATE, CAPACITY & SERIAL NUMBER
플레이트

40.001 FASTENER, CAPACITY & SERIAL PLATE
패스너

40.012 DECAL, CLARK LOGO-SMALL
데칼

40.024 PLATE, UNDERWRITERS LABEL
플레이트

40.025 FASTENER, UNDERWRITERS LABEL PLATE
패스너

40.030 DECAL, CLARK VERTICAL
데칼

40.042 DECAL, POLARITY
데칼

40.062 DECAL, DRIVERS CAUTION
플레J鉗

40.068 DECAL, HYD-SYSTEM OIL
데칼

40.076	DECAL, ELECTRIC TRUCK CAUTION 데칼
40.089	PLATE, SAFETY INSTRUCTION 플레이트
40.130	LEGEND, SAFETY 범례
40.131	LEGEND, SAFETY 범례
40.138	DECAL, SAFETY 데칼
40.173	DECAL, IMPORTANT 데칼
40.183	DECAL, BATTERY DISCONNECT WARNING 데칼
40.241	DECAL, BRAKE OIL SPEC 데칼
40.279	DECAL, STARTING PROCEDURE 데칼
40.309	DECAL, AC LOGO 데칼
40.318	DECAL, BATTERY LOCATION 데칼
40.321	DECAL, DISTILLED WATER 데칼
40.326	DECAL, EE MARKING 데칼
40.328	DECAL, WHEEL NUT WARNING 데칼
40.345	DECAL, VOLTAGE WARNING *
40.351	DECAL, HOOD OPEN OPERATING INSTRUCTIONS *

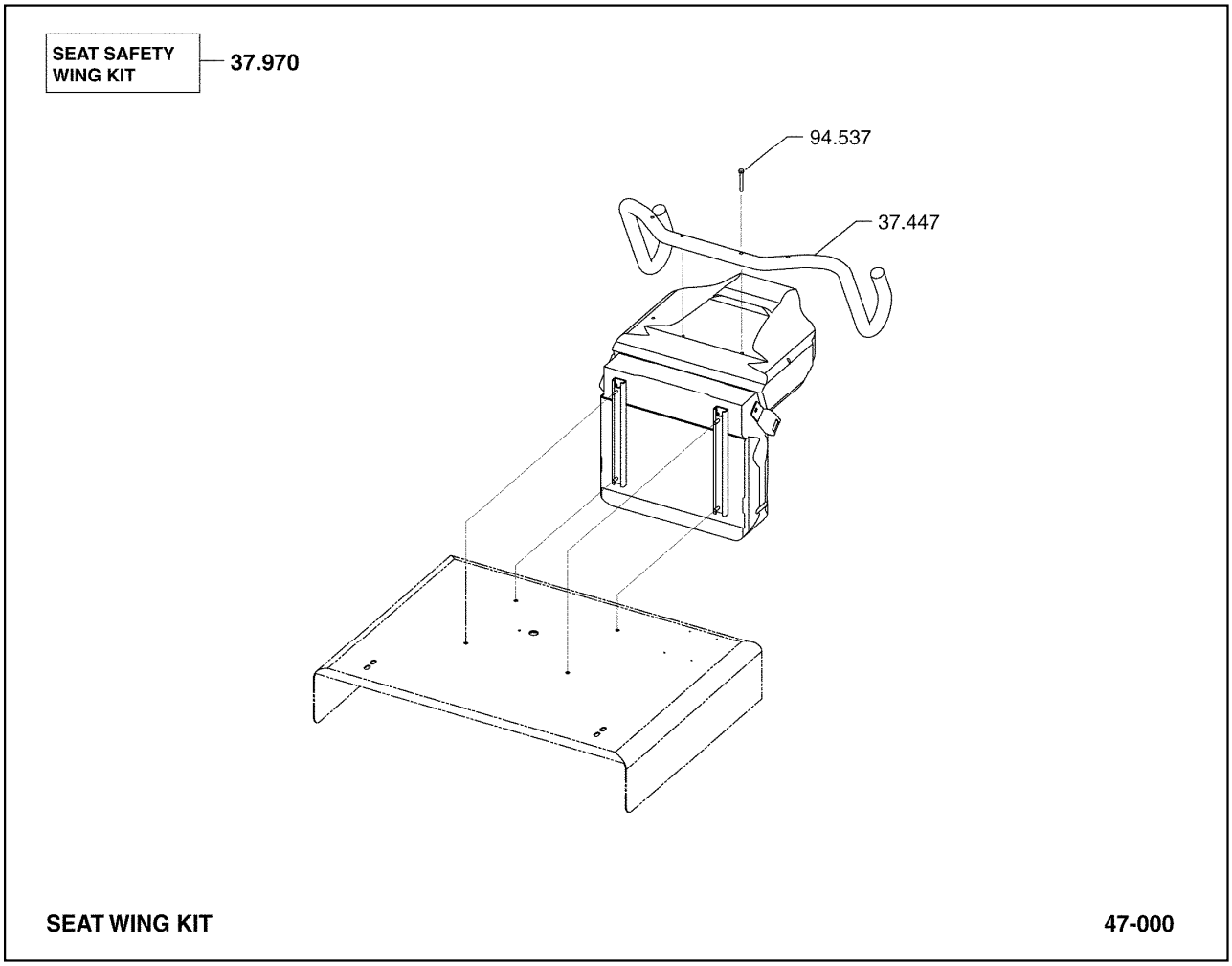

37.447 RESTRAINT, OPERATOR SEAT LATERAL
레스트레인트

37.970 KIT, SEAT SAFETY
킷

94.537 FASTENER, OPERATOR SEAT LATERAL RESTRAINT
패스너

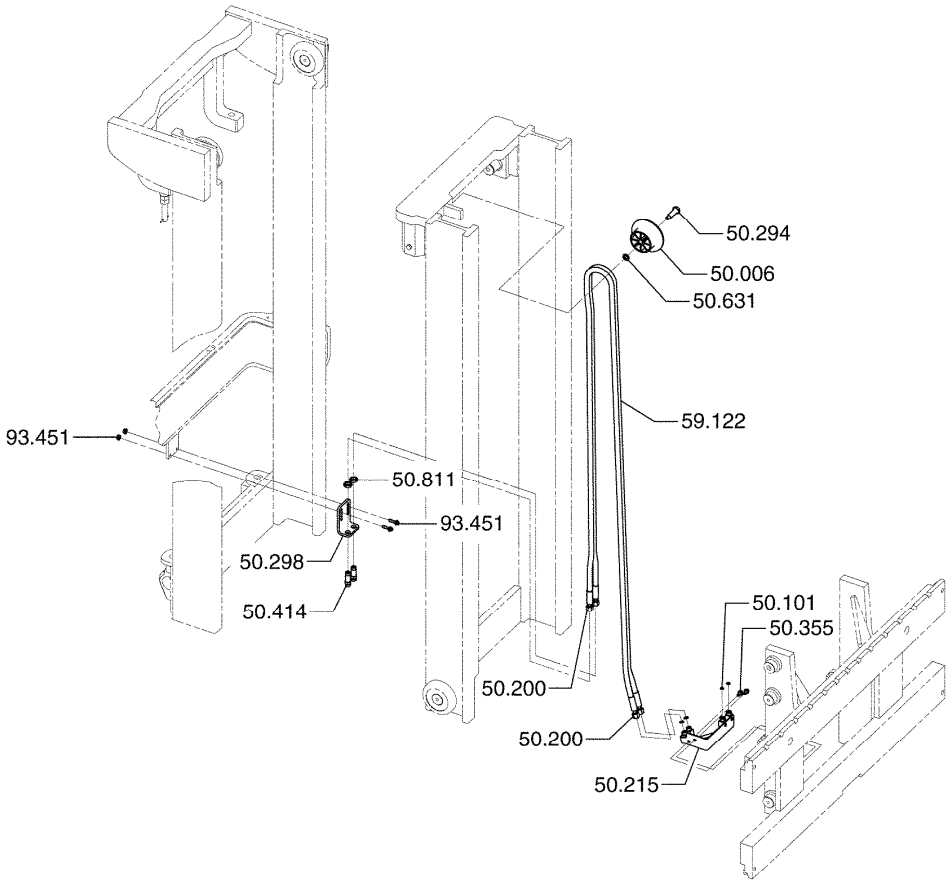

ATTACHMENT HOSE ADAPTATION (UPRIGHT) **50-234**

50.006	SHEAVE, DEVICE HOSE UPPER 쉬브
50.101	SEAL, DEVICE HOSE SWIVEL COUPLING 시일
50.200	COUPLING, DEVICE HOSE 커플링
50.215	TERMINAL BLOCK, DEVICE HOSE 터미널블록
50.294	PIVOT, DEVICE HOSE UPPER SHEAVE 피봇
50.298	BRACKET, DEVICE HOSE TERMINAL 브라켓
50.355	FASTENER, DEVICE HOSE TERMINAL BLOCK 패스너
50.414	FITTING, DEVICE HOSE CONNECTOR 피팅
50.631	SPACER, DEVICE HOSE SHEAVE 스페이서

50.811	NUT, DEVICE HOSE FITTING 너트
59.122	LINE, DEVICE HYDRAULIC (INNER RAIL) 라J
93.451	FASTENER, DEVICE HOSE TERMINAL BRACKET 패스너

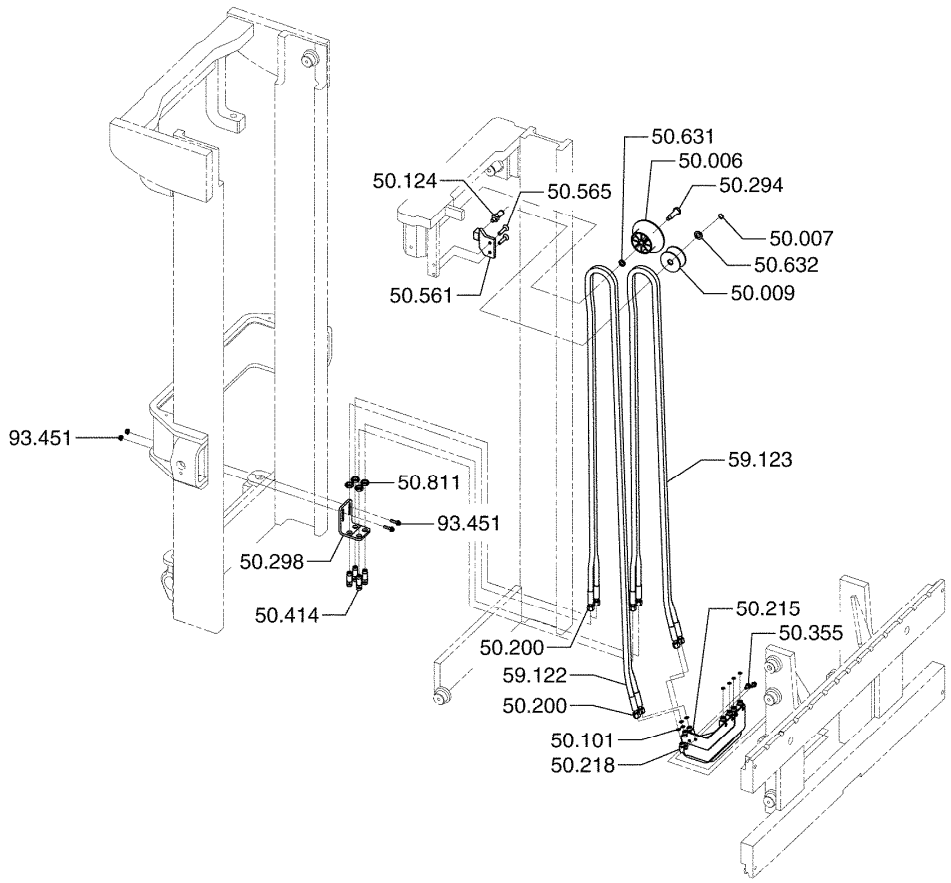

ATTACHMENT HOSE ADAPTATION (UPRIGHT) **50-263**

50.006 SHEAVE, DEVICE HOSE UPPER
쉬브

50.007 RETAINER, DEVICE HOSE SHEAVE
리테이너

50.009 SHEAVE, DEVICE HOSE LOWER
쉬브

50.101 SEAL, DEVICE HOSE SWIVEL COUPLING
시일

50.124 PIVOT, DEVICE HOSE LOWER RH SHEAVE
피봇

50.200 COUPLING, DEVICE HOSE
커플링

50.215 TERMINAL BLOCK, DEVICE HOSE
터미널블록

50.218 TERMINAL BLOCK, DEVICE LH HOSE
터미널블록

50.294 PIVOT, DEVICE HOSE UPPER SHEAVE
피봇

50.298	BRACKET, DEVICE HOSE TERMINAL 브라켓
50.355	FASTENER, DEVICE HOSE TERMINAL BLOCK 패스너
50.414	FITTING, DEVICE HOSE CONNECTOR 피팅
50.561	BRACKET, DEVICE HOSE LOWER SHEAVE 브라켓
50.565	FASTENER, DEVICE HOSE LOWER SHEAVE MTG BRACKET 패스너
50.631	SPACER, DEVICE HOSE SHEAVE 스페이서
50.632	SPACER, DEVICE HOSE SHEAVE 스페이서
50.811	NUT, DEVICE HOSE FITTING 너트
59.122	LINE, DEVICE HYDRAULIC (INNER RAIL) 라J
59.123	LINE, DEVICE HYDRAULIC (INNER RAIL) 라J
93.451	FASTENER, DEVICE HOSE TERMINAL BRACKET 패스너

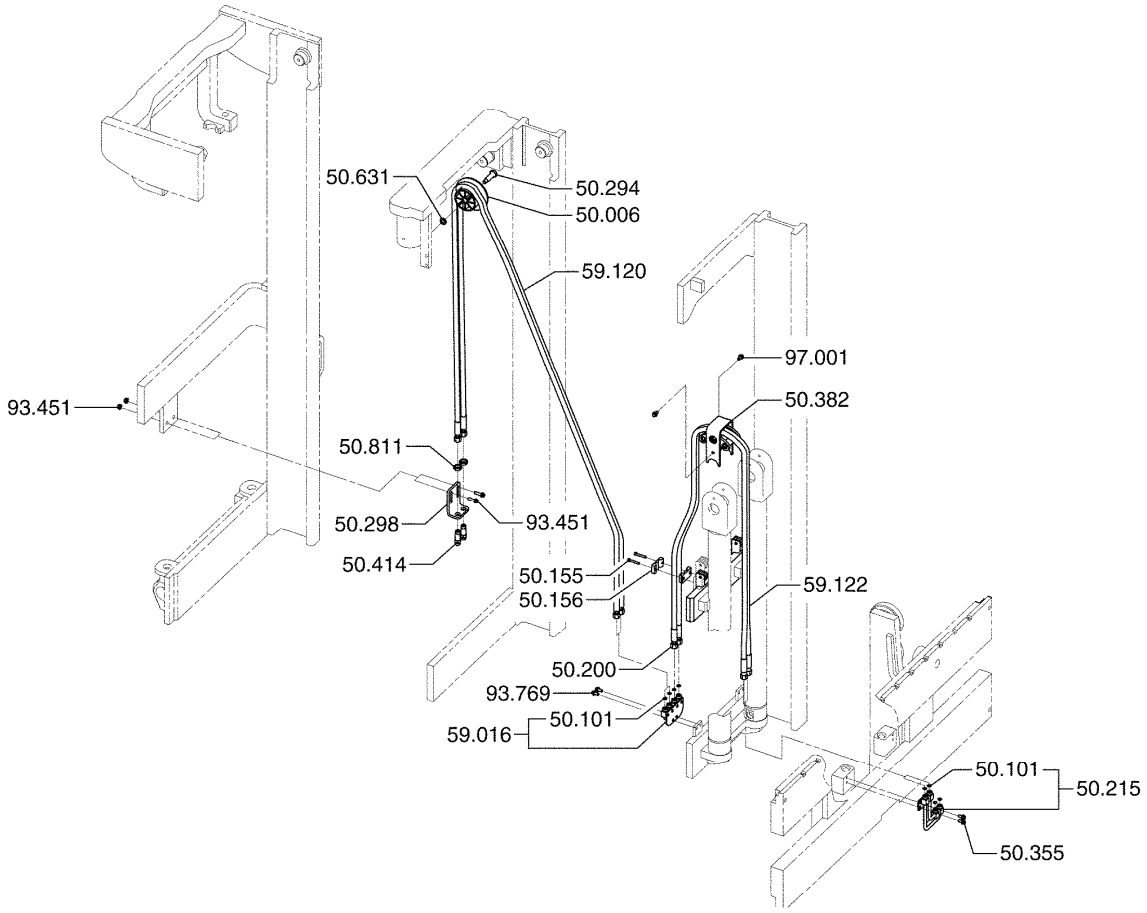

ATTACHMENT HOSE ADAPTATION (UPRIGHT) **50-264**

50.006 SHEAVE, DEVICE HOSE UPPER
쉬브

50.101 SEAL, DEVICE HOSE SWIVEL COUPLING
시일

50.155 FASTENER, DEVICE HOSE CLIP
패스너

50.156 CLIP, DEVICE HOSE
클립

50.200 COUPLING, DEVICE HOSE
커플링

50.215 TERMINAL BLOCK, DEVICE HOSE
터미널블록

50.294 PIVOT, DEVICE HOSE UPPER SHEAVE
피봇

50.298 BRACKET, DEVICE HOSE TERMINAL
브라켓

50.355 FASTENER, DEVICE HOSE TERMINAL BLOCK
패스너

50.382	ROLLER, DEVICE HOSE 롤러
50.414	FITTING, DEVICE HOSE CONNECTOR 피팅
50.631	SPACER, DEVICE HOSE SHEAVE 스페이서
50.811	NUT, DEVICE HOSE FITTING 너트
59.016	JUNCTION BLOCK, DEVICE HOSE 연결블록
59.120	LINE, DEVICE HYDRAULIC (INTERMEDIATE RAIL) 라J
59.122	LINE, DEVICE HYDRAULIC (INNER RAIL) 라J
93.451	FASTENER, DEVICE HOSE TERMINAL BRACKET 패스너
93.769	FASTENER, DEVICE LINE JUNCTION BLOCK 패스너
97.001	FASTENER, DEVICE HOSE ROLLER BRACKET 패스너

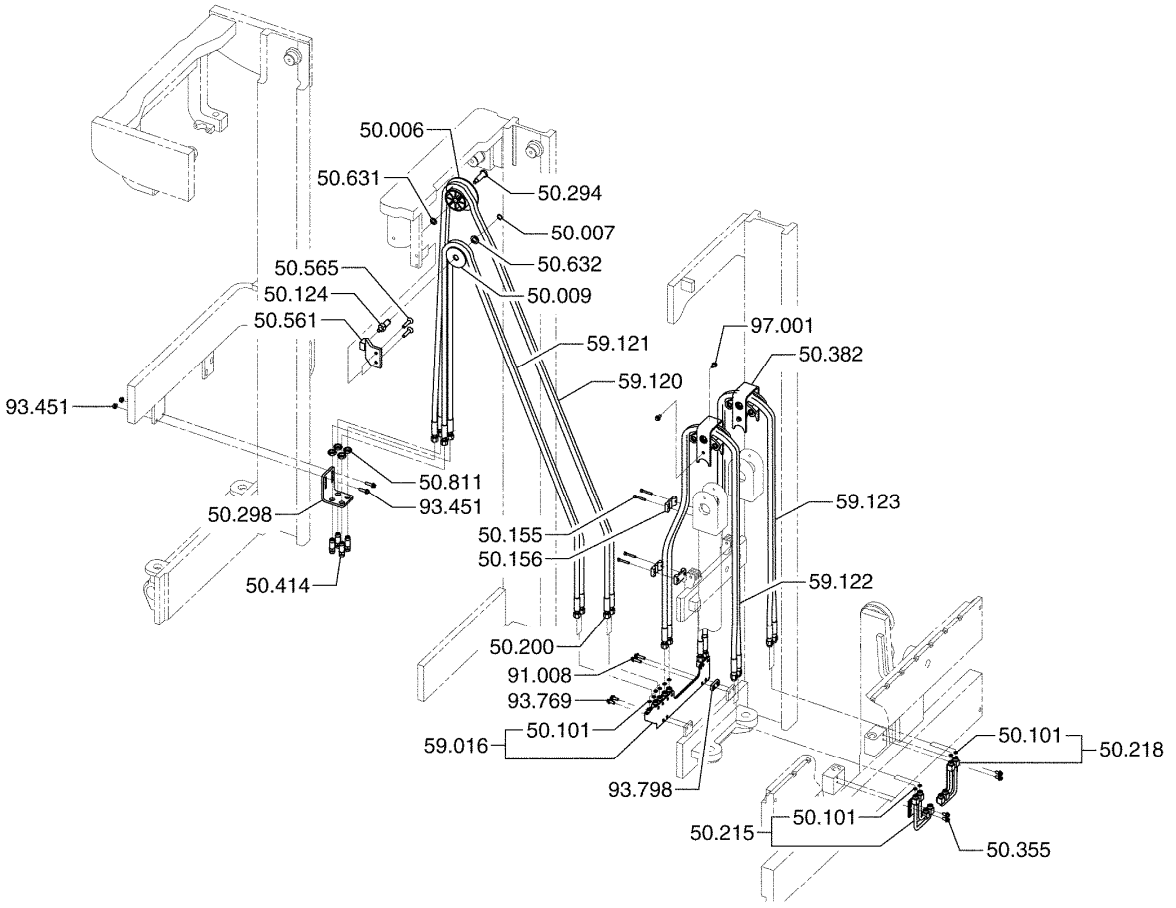

ATTACHMENT HOSE ADAPTATION (UPRIGHT) **50-272**

50.006	SHEAVE, DEVICE HOSE UPPER 쉬브	50.561	BRACKET, DEVICE HOSE LOWER SHEAVE 브라켓
50.007	RETAINER, DEVICE HOSE SHEAVE 리테이너	50.565	FASTENER, DEVICE HOSE LOWER SHEAVE MTG BRACKET 패스너
50.009	SHEAVE, DEVICE HOSE LOWER 쉬브	50.631	SPACER, DEVICE HOSE SHEAVE 스페이서
50.101	SEAL, DEVICE HOSE SWIVEL COUPLING 시일	50.632	SPACER, DEVICE HOSE SHEAVE 스페이서
50.124	PIVOT, DEVICE HOSE LOWER RH SHEAVE 피봇	50.811	NUT, DEVICE HOSE FITTING 너트
50.155	FASTENER, DEVICE HOSE CLIP 패스너	59.016	JUNCTION BLOCK, DEVICE HOSE 연결블록
50.156	CLIP, DEVICE HOSE 클립	59.120	LINE, DEVICE HYDRAULIC (INTERMEDIATE RAIL) 라J
50.200	COUPLING, DEVICE HOSE 커플링	59.121	LINE, DEVICE HYDRAULIC (INTERMEDIATE RAIL) 라J
50.215	TERMINAL BLOCK, DEVICE HOSE 터미널블록	59.122	LINE, DEVICE HYDRAULIC (INNER RAIL) 라J
50.218	TERMINAL BLOCK, DEVICE LH HOSE 터미널블록	59.123	LINE, DEVICE HYDRAULIC (INNER RAIL) 라J
50.294	PIVOT, DEVICE HOSE UPPER SHEAVE 피봇	91.008	FASTENER, DEVICE JUNCTION BLOCK 패스너
50.298	BRACKET, DEVICE HOSE TERMINAL 브라켓	93.451	FASTENER, DEVICE HOSE TERMINAL BRACKET 패스너
50.355	FASTENER, DEVICE HOSE TERMINAL BLOCK 패스너	93.769	FASTENER, DEVICE LINE JUNCTION BLOCK 패스너
50.382	ROLLER, DEVICE HOSE 롤러	93.798	SPACER, DEVICE HOSE JUNCTION BLOCK FASTENER 스페이서
50.414	FITTING, DEVICE HOSE CONNECTOR 피팅	97.001	FASTENER, DEVICE HOSE ROLLER BRACKET 패스너

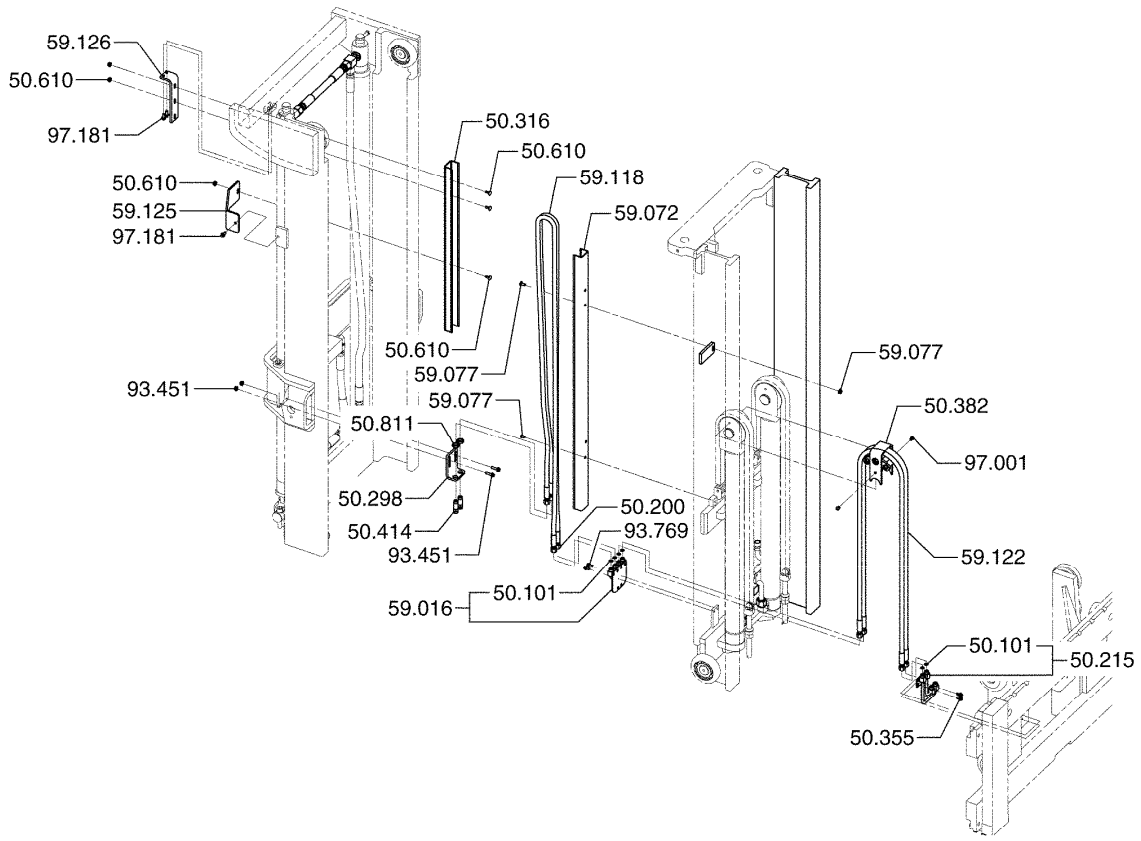

ATTACHMENT HOSE ADAPTATION (UPRIGHT) **50-273**

50.101	SEAL, DEVICE HOSE SWIVEL COUPLING 시일
50.200	COUPLING, DEVICE HOSE 커플링
50.215	TERMINAL BLOCK, DEVICE HOSE 터미널블록
50.298	BRACKET, DEVICE HOSE TERMINAL 브라켓
50.316	GUARD, DEVICE RH HOSE 가드
50.355	FASTENER, DEVICE HOSE TERMINAL BLOCK 패스너
50.382	ROLLER, DEVICE HOSE 롤러
50.414	FITTING, DEVICE HOSE CONNECTOR 피팅
50.610	FASTENER, DEVICE HOSE GUARD 패스너

50.811	NUT, DEVICE HOSE FITTING 너트
59.016	JUNCTION BLOCK, DEVICE HOSE 연결블록
59.072	GUARD, DEVICE HOSE 가드
59.077	FASTENER, DEVICE HOSE GUARD 패스너
59.118	LINE, DEVICE HYDRAULIC (OUTER RAIL) 라J
59.122	LINE, DEVICE HYDRAULIC (INNER RAIL) 라J
59.125	BRACKET, DEVICE HOSE GUARD MOUNTING *
59.126	BRACKET, DEVICE HOSE GUARD MOUNTING *
93.451	FASTENER, DEVICE HOSE TERMINAL BRACKET 패스너
97.001	FASTENER, DEVICE HOSE ROLLER BRACKET 패스너
97.181	FASTENER, DEVICE HOSE GUARD MOUNTING BRACKET *
97.769	FASTENER, DEVICE HOSE GUARD MOUNTING BRACKET *

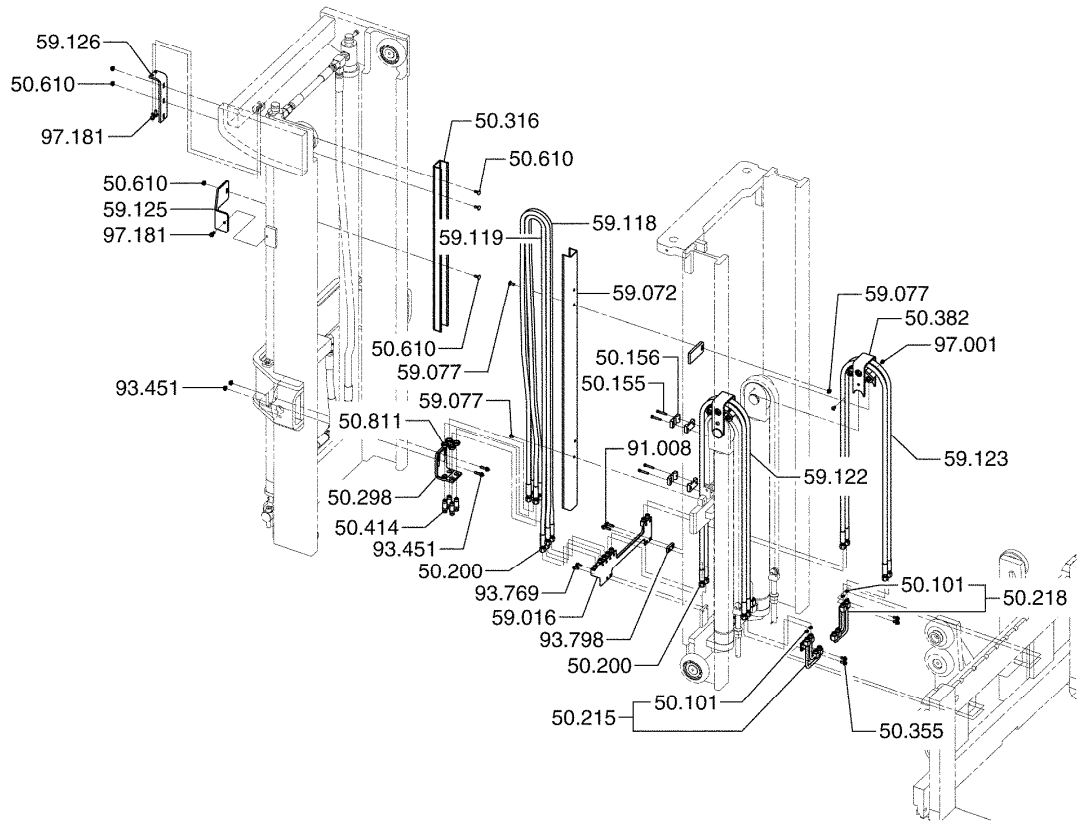

ATTACHMENT HOSE ADAPTATION (UPRIGHT) **50-277**

50.101 SEAL, DEVICE HOSE SWIVEL COUPLING
시일

50.155 FASTENER, DEVICE HOSE CLIP
패스너

50.156 CLIP, DEVICE HOSE
클립

50.200 COUPLING, DEVICE HOSE
커플링

50.215 TERMINAL BLOCK, DEVICE HOSE
터미널블록

50.218 TERMINAL BLOCK, DEVICE LH HOSE
터미널블록

50.298 BRACKET, DEVICE HOSE TERMINAL
브라켓

50.316 GUARD, DEVICE RH HOSE
가드

50.355 FASTENER, DEVICE HOSE TERMINAL BLOCK
패스너

50.382	ROLLER, DEVICE HOSE 롤러
50.414	FITTING, DEVICE HOSE CONNECTOR 피팅
50.610	FASTENER, DEVICE HOSE GUARD 패스너
50.811	NUT, DEVICE HOSE FITTING 너트
59.016	JUNCTION BLOCK, DEVICE HOSE 연결블록
59.072	GUARD, DEVICE HOSE 가드
59.077	FASTENER, DEVICE HOSE GUARD 패스너
59.118	LINE, DEVICE HYDRAULIC (OUTER RAIL) 라J
59.119	LINE, DEVICE HYDRAULIC (OUTER RAIL) 라J
59.122	LINE, DEVICE HYDRAULIC (INNER RAIL) 라J
59.123	LINE, DEVICE HYDRAULIC (INNER RAIL) 라J
59.125	BRACKET, DEVICE HOSE GUARD MOUNTING *
59.126	BRACKET, DEVICE HOSE GUARD MOUNTING *
91.008	FASTENER, DEVICE JUNCTION BLOCK 패스너
93.451	FASTENER, DEVICE HOSE TERMINAL BRACKET 패스너
93.769	FASTENER, DEVICE LINE JUNCTION BLOCK 패스너
93.798	SPACER, DEVICE HOSE JUNCTION BLOCK FASTENER 스페이서
97.001	FASTENER, DEVICE HOSE ROLLER BRACKET 패스너
97.181	FASTENER, DEVICE HOSE GUARD MOUNTING BRACKET *

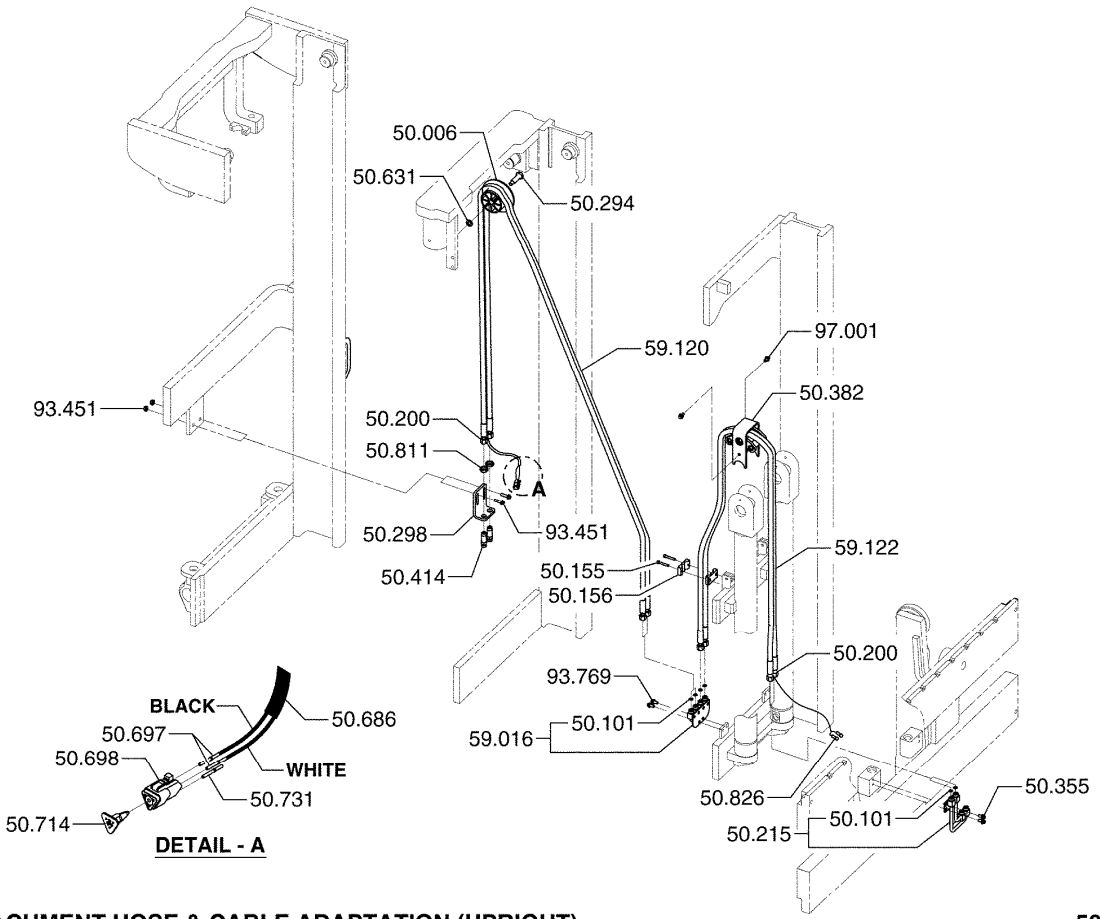

ATTACHMENT HOSE & CABLE ADAPTATION (UPRIGHT) **50-286**

50.006 SHEAVE, DEVICE HOSE UPPER
쉬브

50.101 SEAL, DEVICE HOSE SWIVEL COUPLING
시일

50.155 FASTENER, DEVICE HOSE CLIP
패스너

50.156 CLIP, DEVICE HOSE
클립

50.200 COUPLING, DEVICE HOSE
커플링

50.215 TERMINAL BLOCK, DEVICE HOSE
터미널블록

50.294 PIVOT, DEVICE HOSE UPPER SHEAVE
피봇

50.298 BRACKET, DEVICE HOSE TERMINAL
브라켓

50.355 FASTENER, DEVICE HOSE TERMINAL BLOCK
패스너

50.382	ROLLER, DEVICE HOSE 롤러
50.414	FITTING, DEVICE HOSE CONNECTOR 피팅
50.631	SPACER, DEVICE HOSE SHEAVE 스페이서
50.686	WIRE, DEVICE 와이어
50.697	CONNECTOR, DEVICE CABLE (PIN END) 커넥터
50.698	CONNECTOR, DEVICE CABLE (SOCKET END) 커넥터
50.714	LOCK, DEVICE CABLE CONNECTOR *
50.731	PLUG, DEVICE CABLE CONNECTOR *
50.811	NUT, DEVICE HOSE FITTING 너트
50.826	TERMINAL, DEVICE CABLE 터미널
59.016	JUNCTION BLOCK, DEVICE HOSE 연결블록
59.120	LINE, DEVICE HYDRAULIC (INTERMEDIATE RAIL) 라J
59.122	LINE, DEVICE HYDRAULIC (INNER RAIL) 라J
93.451	FASTENER, DEVICE HOSE TERMINAL BRACKET 패스너
93.769	FASTENER, DEVICE LINE JUNCTION BLOCK 패스너
97.001	FASTENER, DEVICE HOSE ROLLER BRACKET 패스너

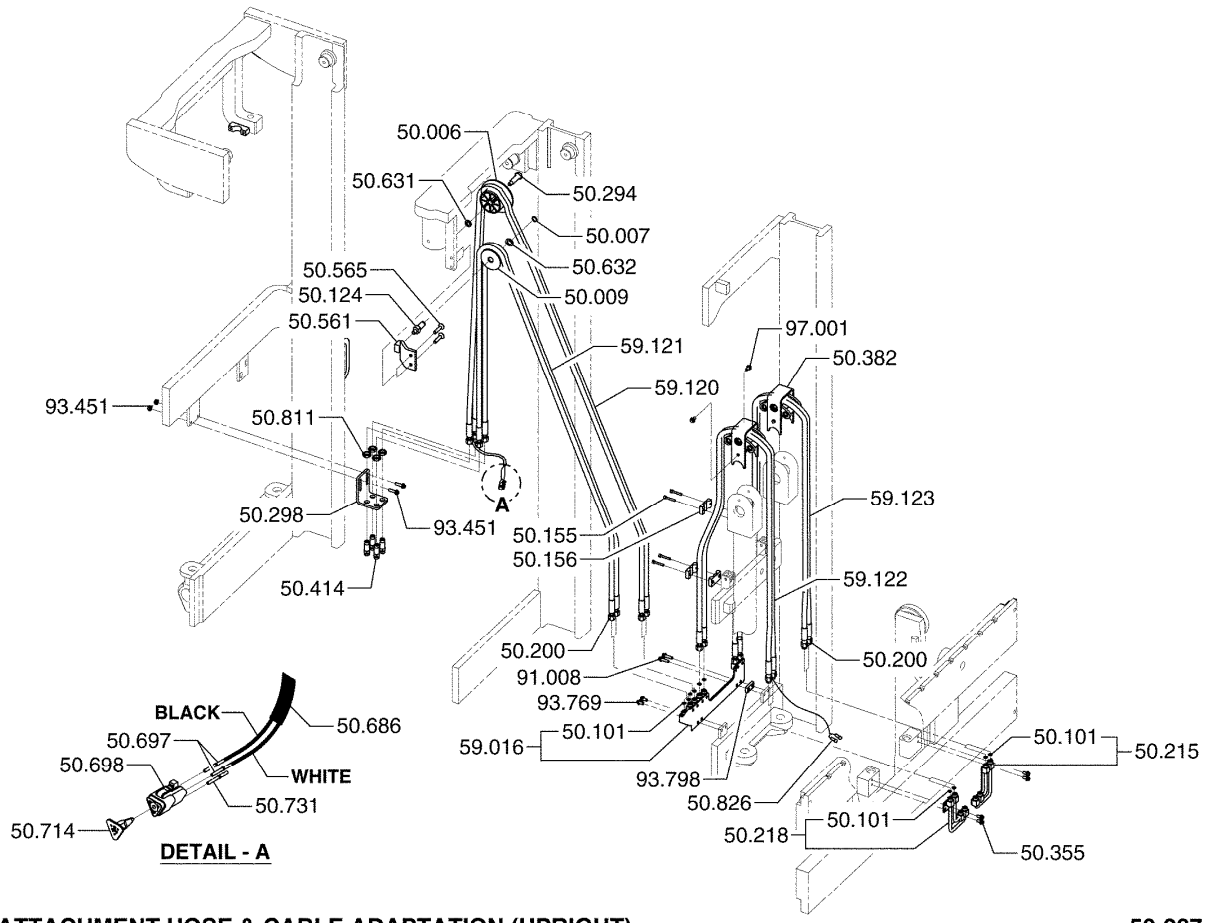

ATTACHMENT HOSE & CABLE ADAPTATION (UPRIGHT) **50-287**

50.006	SHEAVE, DEVICE HOSE UPPER 쉬브	50.561	BRACKET, DEVICE HOSE LOWER SHEAVE 브라켓
50.007	RETAINER, DEVICE HOSE SHEAVE 리테이너	50.565	FASTENER, DEVICE HOSE LOWER SHEAVE MTG BRACKET 패스너
50.009	SHEAVE, DEVICE HOSE LOWER 쉬브	50.631	SPACER, DEVICE HOSE SHEAVE 스페이서
50.101	SEAL, DEVICE HOSE SWIVEL COUPLING 시일	50.632	SPACER, DEVICE HOSE SHEAVE 스페이서
50.124	PIVOT, DEVICE HOSE LOWER RH SHEAVE 피봇	50.686	WIRE, DEVICE 와이어
50.155	FASTENER, DEVICE HOSE CLIP 패스너	50.697	CONNECTOR, DEVICE CABLE (PIN END) 커넥터
50.156	CLIP, DEVICE HOSE 클립	50.698	CONNECTOR, DEVICE CABLE (SOCKET END) 커넥터
50.200	COUPLING, DEVICE HOSE 커플링	50.714	LOCK, DEVICE CABLE CONNECTOR *
50.215	TERMINAL BLOCK, DEVICE HOSE 터미널블록	50.731	PLUG, DEVICE CABLE CONNECTOR *
50.218	TERMINAL BLOCK, DEVICE LH HOSE 터미널블록	50.811	NUT, DEVICE HOSE FITTING 너트
50.294	PIVOT, DEVICE HOSE UPPER SHEAVE 피봇	50.826	TERMINAL, DEVICE CABLE 터미널
50.298	BRACKET, DEVICE HOSE TERMINAL 브라켓	59.016	JUNCTION BLOCK, DEVICE HOSE 연결블록
50.355	FASTENER, DEVICE HOSE TERMINAL BLOCK 패스너	59.120	LINE, DEVICE HYDRAULIC (INTERMEDIATE RAIL) 라J
50.382	ROLLER, DEVICE HOSE 롤러	59.121	LINE, DEVICE HYDRAULIC (INTERMEDIATE RAIL) 라J
50.414	FITTING, DEVICE HOSE CONNECTOR 피팅	59.122	LINE, DEVICE HYDRAULIC (INNER RAIL) 라J

59.123 LINE, DEVICE HYDRAULIC (INNER RAIL)
라J

91.008 FASTENER, DEVICE JUNCTION BLOCK
패스너

93.451 FASTENER, DEVICE HOSE TERMINAL BRACKET
패스너

93.769 FASTENER, DEVICE LINE JUNCTION BLOCK
패스너

93.798 SPACER, DEVICE HOSE JUNCTION BLOCK FASTENER
스페이서

97.001 FASTENER, DEVICE HOSE ROLLER BRACKET
패스너

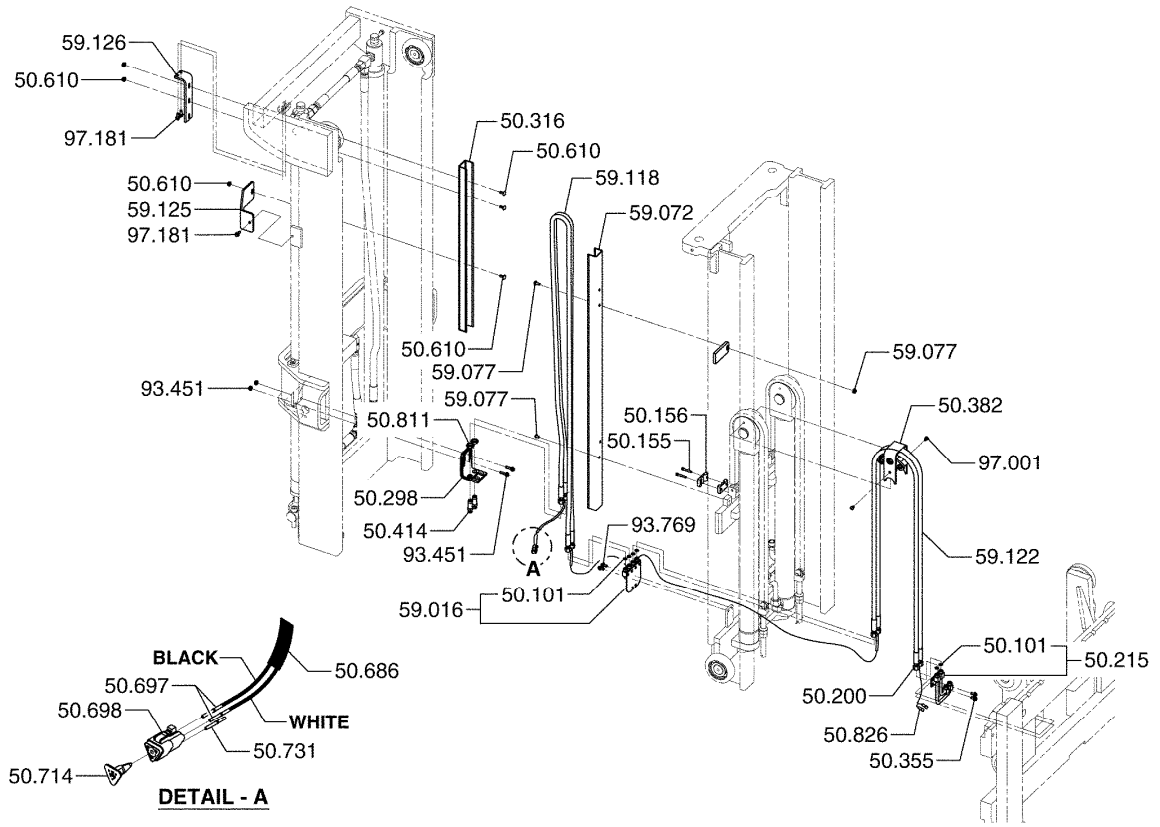

ATTACHMENT HOSE & CABLE ADAPTATION (UPRIGHT) **50-288**

50.101	SEAL, DEVICE HOSE SWIVEL COUPLING 시일	50.731	PLUG, DEVICE CABLE CONNECTOR *
50.155	FASTENER, DEVICE HOSE CLIP 패스너	50.811	NUT, DEVICE HOSE FITTING 너트
50.156	CLIP, DEVICE HOSE 클립	50.826	TERMINAL, DEVICE CABLE 터미널
50.200	COUPLING, DEVICE HOSE 커플링	59.016	JUNCTION BLOCK, DEVICE HOSE 연결블록
50.215	TERMINAL BLOCK, DEVICE HOSE 터미널블록	59.072	GUARD, DEVICE HOSE 가드
50.298	BRACKET, DEVICE HOSE TERMINAL 브라켓	59.077	FASTENER, DEVICE HOSE GUARD 패스너
50.316	GUARD, DEVICE RH HOSE 가드	59.118	LINE, DEVICE HYDRAULIC (OUTER RAIL) 라J
50.355	FASTENER, DEVICE HOSE TERMINAL BLOCK 패스너	59.122	LINE, DEVICE HYDRAULIC (INNER RAIL) 라J
50.382	ROLLER, DEVICE HOSE 롤러	59.125	BRACKET, DEVICE HOSE GUARD MOUNTING *
50.414	FITTING, DEVICE HOSE CONNECTOR 피팅	59.126	BRACKET, DEVICE HOSE GUARD MOUNTING *
50.610	FASTENER, DEVICE HOSE GUARD 패스너	93.451	FASTENER, DEVICE HOSE TERMINAL BRACKET 패스너
50.686	WIRE, DEVICE 와이어	93.769	FASTENER, DEVICE LINE JUNCTION BLOCK 패스너
50.697	CONNECTOR, DEVICE CABLE (PIN END) 커넥터	97.001	FASTENER, DEVICE HOSE ROLLER BRACKET 패스너
50.698	CONNECTOR, DEVICE CABLE (SOCKET END) 커넥터	97.181	FASTENER, DEVICE HOSE GUARD MOUNTING BRACKET *
50.714	LOCK, DEVICE CABLE CONNECTOR *		

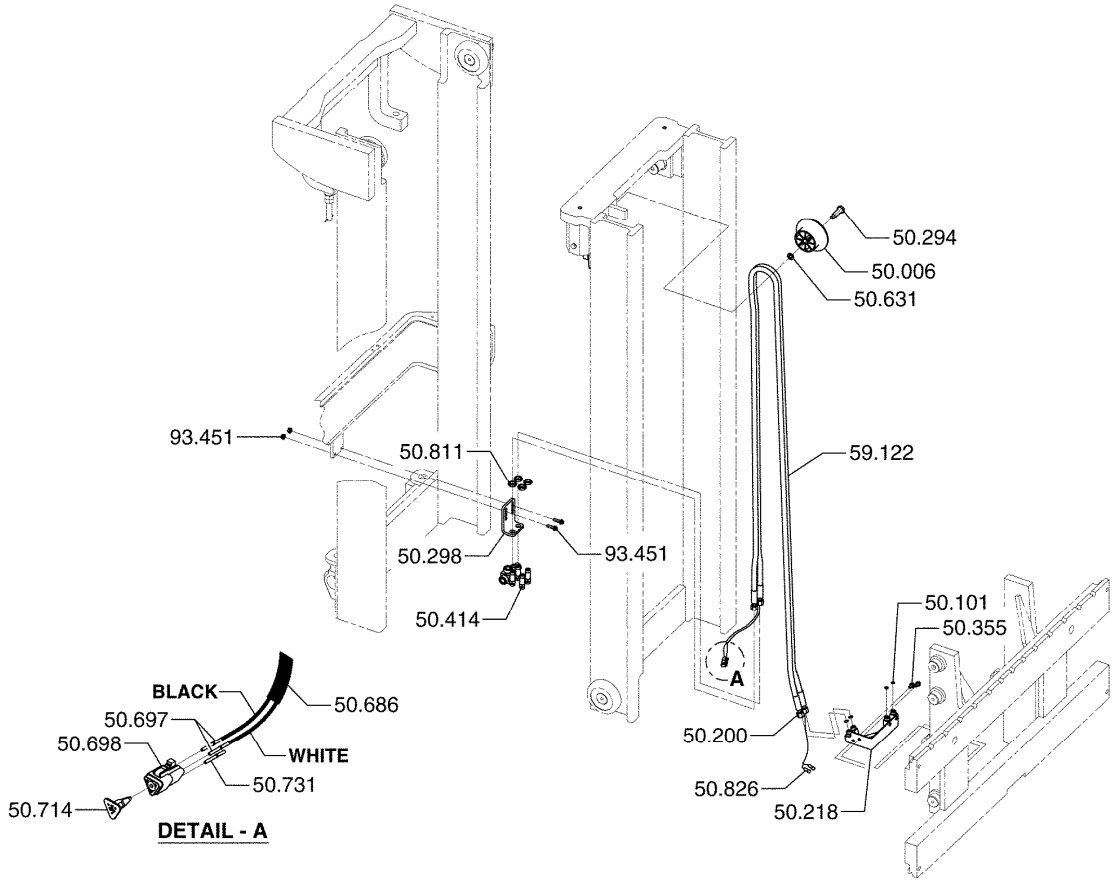

ATTACHMENT HOSE & CABLE ADAPTATION (UPRIGHT) **50-298**

50.006 SHEAVE, DEVICE HOSE UPPER
쉬브

50.101 SEAL, DEVICE HOSE SWIVEL COUPLING
시일

50.200 COUPLING, DEVICE HOSE
커플링

50.218 TERMINAL BLOCK, DEVICE LH HOSE
터미널블록

50.294 PIVOT, DEVICE HOSE UPPER SHEAVE
피봇

50.298 BRACKET, DEVICE HOSE TERMINAL
브라켓

50.355 FASTENER, DEVICE HOSE TERMINAL BLOCK
패스너

50.414 FITTING, DEVICE HOSE CONNECTOR
피팅

50.631 SPACER, DEVICE HOSE SHEAVE
스페이서

50.686	WIRE, DEVICE 와이어
50.697	CONNECTOR, DEVICE CABLE (PIN END) 커넥터
50.698	CONNECTOR, DEVICE CABLE (SOCKET END) 커넥터
50.714	LOCK, DEVICE CABLE CONNECTOR *
50.731	PLUG, DEVICE CABLE CONNECTOR *
50.811	NUT, DEVICE HOSE FITTING 너트
50.826	TERMINAL, DEVICE CABLE 터미널
59.122	LINE, DEVICE HYDRAULIC (INNER RAIL) 라J
93.451	FASTENER, DEVICE HOSE TERMINAL BRACKET 패스너

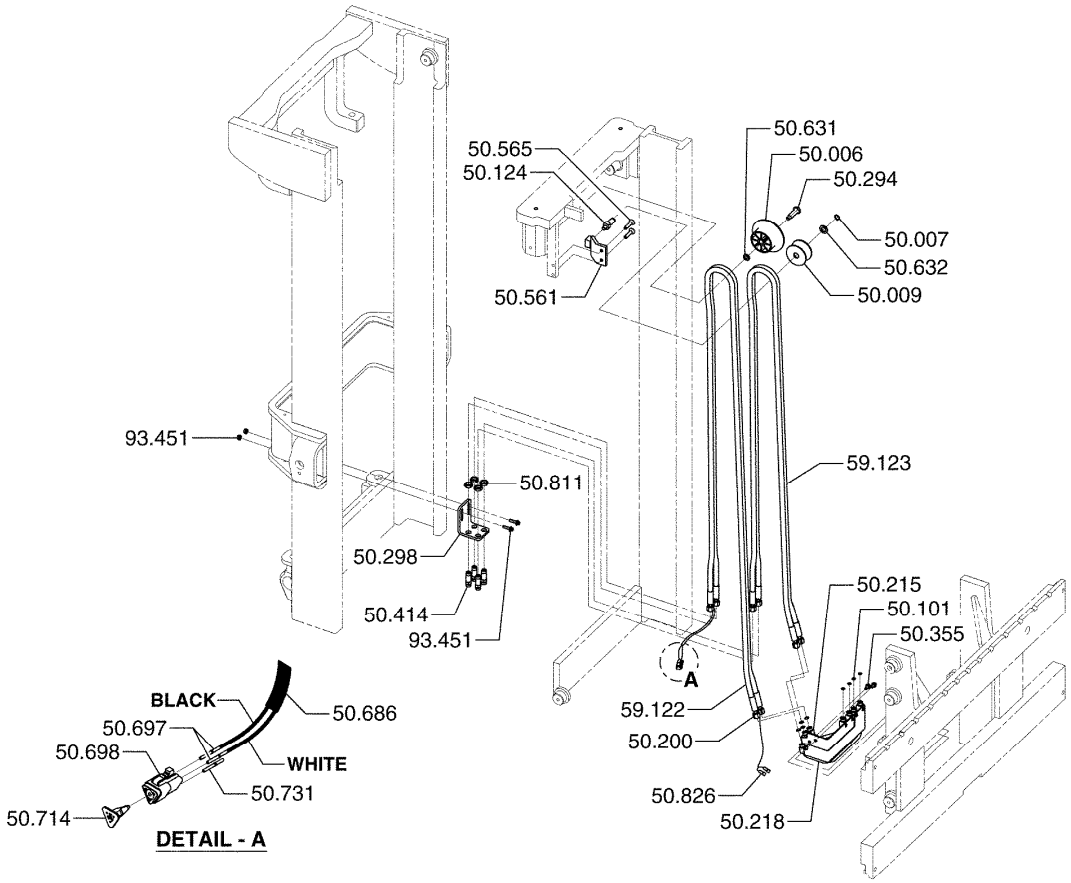

ATTACHMENT HOSE & CABLE ADAPTATION **50-299**

50.006 SHEAVE, DEVICE HOSE UPPER
쉬브

50.007 RETAINER, DEVICE HOSE SHEAVE
리테이너

50.009 SHEAVE, DEVICE HOSE LOWER
쉬브

50.101 SEAL, DEVICE HOSE SWIVEL COUPLING
시일

50.124 PIVOT, DEVICE HOSE LOWER RH SHEAVE
피봇

50.200 COUPLING, DEVICE HOSE
커플링

50.215 TERMINAL BLOCK, DEVICE HOSE
터미널블록

50.218 TERMINAL BLOCK, DEVICE LH HOSE
터미널블록

50.294 PIVOT, DEVICE HOSE UPPER SHEAVE
피봇

50.298	BRACKET, DEVICE HOSE TERMINAL 브라켓
50.355	FASTENER, DEVICE HOSE TERMINAL BLOCK 패스너
50.414	FITTING, DEVICE HOSE CONNECTOR 피팅
50.561	BRACKET, DEVICE HOSE LOWER SHEAVE 브라켓
50.565	FASTENER, DEVICE HOSE LOWER SHEAVE MTG BRACKET 패스너
50.631	SPACER, DEVICE HOSE SHEAVE 스페이서
50.632	SPACER, DEVICE HOSE SHEAVE 스페이서
50.686	WIRE, DEVICE 와이어
50.697	CONNECTOR, DEVICE CABLE (PIN END) 커넥터
50.698	CONNECTOR, DEVICE CABLE (SOCKET END) 커넥터
50.714	LOCK, DEVICE CABLE CONNECTOR *
50.731	PLUG, DEVICE CABLE CONNECTOR *
50.811	NUT, DEVICE HOSE FITTING 너트
50.826	TERMINAL, DEVICE CABLE 터미널
59.122	LINE, DEVICE HYDRAULIC (INNER RAIL) 라J
59.123	LINE, DEVICE HYDRAULIC (INNER RAIL) 라J
93.451	FASTENER, DEVICE HOSE TERMINAL BRACKET 패스너

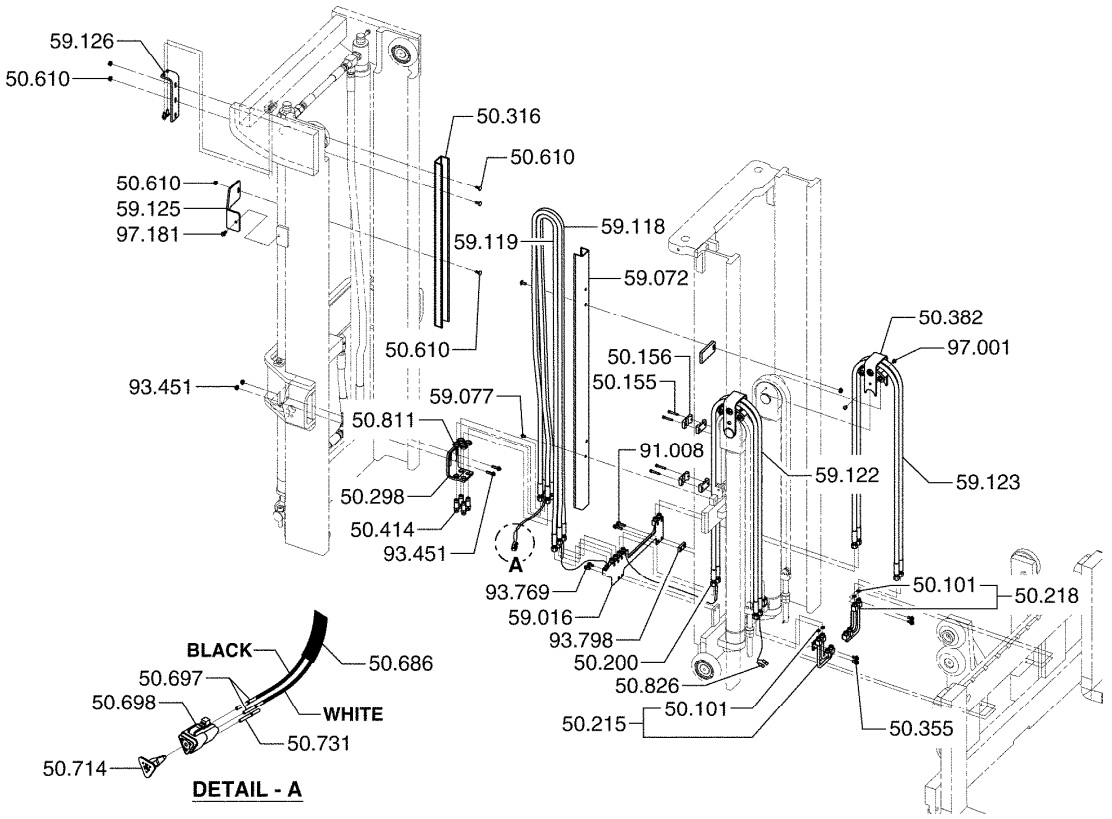

ATTACHMENT HOSE & CABLE ADAPTATION **50-374**

50.101	SEAL, DEVICE HOSE SWIVEL COUPLING 시일	50.714	LOCK, DEVICE CABLE CONNECTOR *
50.155	FASTENER, DEVICE HOSE CLIP 패스너	50.731	PLUG, DEVICE CABLE CONNECTOR *
50.156	CLIP, DEVICE HOSE 클립	50.811	NUT, DEVICE HOSE FITTING 너트
50.200	COUPLING, DEVICE HOSE 커플링	50.826	TERMINAL, DEVICE CABLE 터미널
50.215	TERMINAL BLOCK, DEVICE HOSE 터미널블록	59.016	JUNCTION BLOCK, DEVICE HOSE 연결블록
50.218	TERMINAL BLOCK, DEVICE LH HOSE 터미널블록	59.072	GUARD, DEVICE HOSE 가드
50.298	BRACKET, DEVICE HOSE TERMINAL 브라켓	59.077	FASTENER, DEVICE HOSE GUARD 패스너
50.316	GUARD, DEVICE RH HOSE 가드	59.118	LINE, DEVICE HYDRAULIC (OUTER RAIL) 라J
50.355	FASTENER, DEVICE HOSE TERMINAL BLOCK 패스너	59.119	LINE, DEVICE HYDRAULIC (OUTER RAIL) 라J
50.382	ROLLER, DEVICE HOSE 롤러	59.122	LINE, DEVICE HYDRAULIC (INNER RAIL) 라J
50.414	FITTING, DEVICE HOSE CONNECTOR 피팅	59.123	LINE, DEVICE HYDRAULIC (INNER RAIL) 라J
50.610	FASTENER, DEVICE HOSE GUARD 패스너	59.125	BRACKET, DEVICE HOSE GUARD MOUNTING *
50.686	WIRE, DEVICE 와이어	59.126	BRACKET, DEVICE HOSE GUARD MOUNTING *
50.697	CONNECTOR, DEVICE CABLE (PIN END) 커넥터	91.008	FASTENER, DEVICE JUNCTION BLOCK 패스너
50.698	CONNECTOR, DEVICE CABLE (SOCKET END) 커넥터	93.451	FASTENER, DEVICE HOSE TERMINAL BRACKET 패스너

93.769 FASTENER, DEVICE LINE JUNCTION BLOCK
패스너

93.798 SPACER, DEVICE HOSE JUNCTION BLOCK FASTENER
스페이서

97.001 FASTENER, DEVICE HOSE ROLLER BRACKET
패스너

97.181 FASTENER, DEVICE HOSE GUARD MOUNTING BRACKET
*

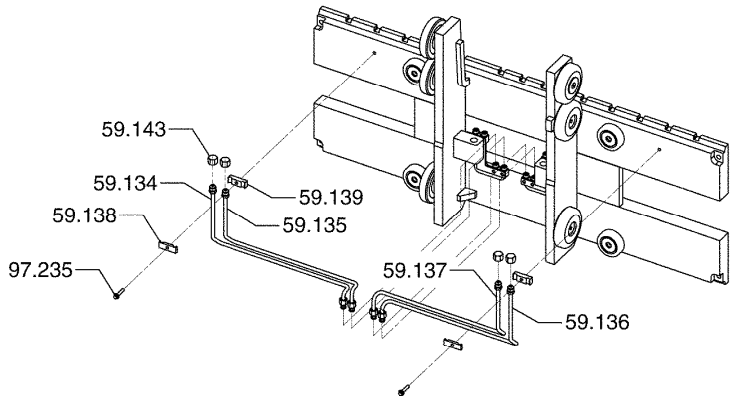

TRIPLE STAGE / HI - LO UPRIGHT

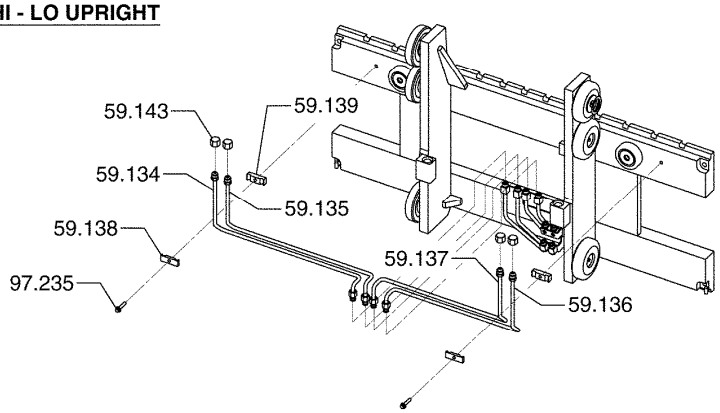

STANDARD UPRIGHT

HIGH TERMINATION FOR DEVICE HOSE ADAPTATION **50-375**

59.134 LINE, DEVICE LH LINE FOR HIGH TERMINATION
*

59.135 LINE, DEVICE LH LINE FOR HIGH TERMINATION
*

59.136 LINE, DEVICE RH LINE FOR HIGH TERMINATION
*

59.137 LINE, DEVICE RH LINE FOR HIGH TERMINATION
*

59.138 CLAMP, DEVICE LINE FOR HIGH TERMINATION
*

59.139 CLAMP, DEVICE LINE FOR HIGH TERMINATION
*

59.143 CAP, DEVICE LINE FITTING FOR HIGH TERMINATION
*

97.235 FASTENER, DEVICE LINE CLAMP FOR HIGH TERMINATION
*

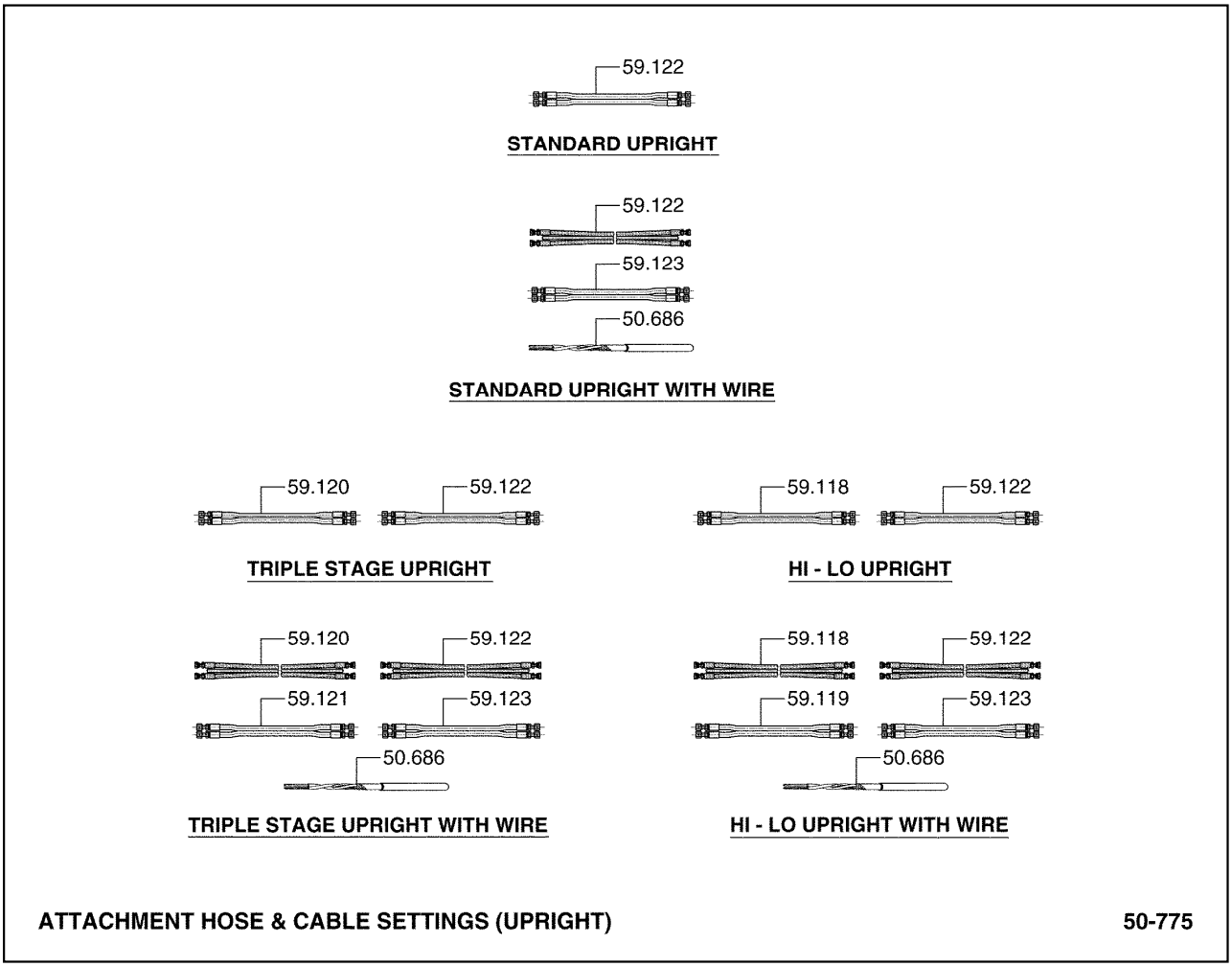

50.686 WIRE, DEVICE
와이어

59.118 LINE, DEVICE HYDRAULIC (OUTER RAIL)
라J

59.119 LINE, DEVICE HYDRAULIC (OUTER RAIL)
라J

59.120 LINE, DEVICE HYDRAULIC (INTERMEDIATE RAIL)
라J

59.121 LINE, DEVICE HYDRAULIC (INTERMEDIATE RAIL)
라J

59.122 LINE, DEVICE HYDRAULIC (INNER RAIL)
라J

59.123 LINE, DEVICE HYDRAULIC (INNER RAIL)
라J

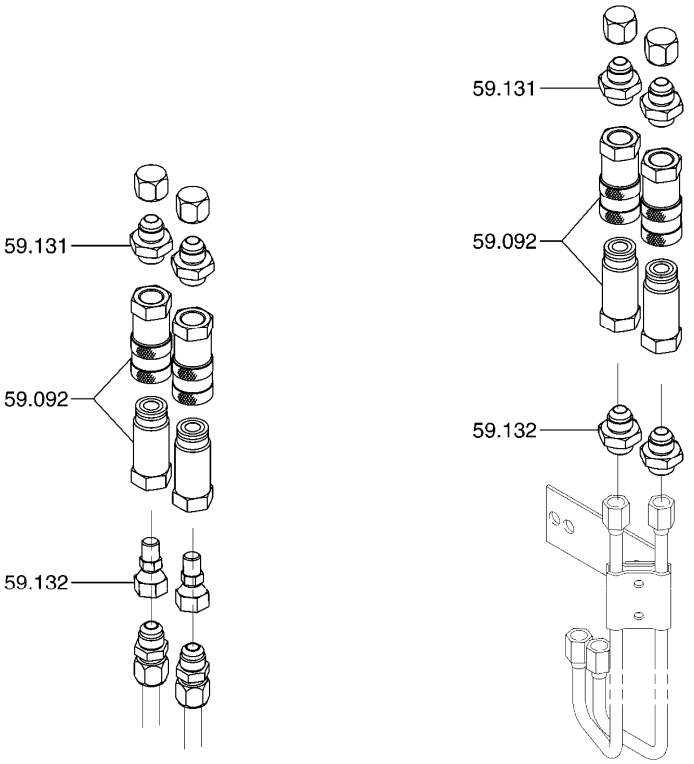

QUICK DISCONNECT FOR DEVICE HOSE ADAPTATION **50-798**

59.092 QUICK DISCONNECT, DEVICE HOSE
퀵디스커넥트

59.131 FITTING, DEVICE LINE QUICK DISCONNECT
*

59.132 FITTING, DEVICE LINE QUICK DISCONNECT
*

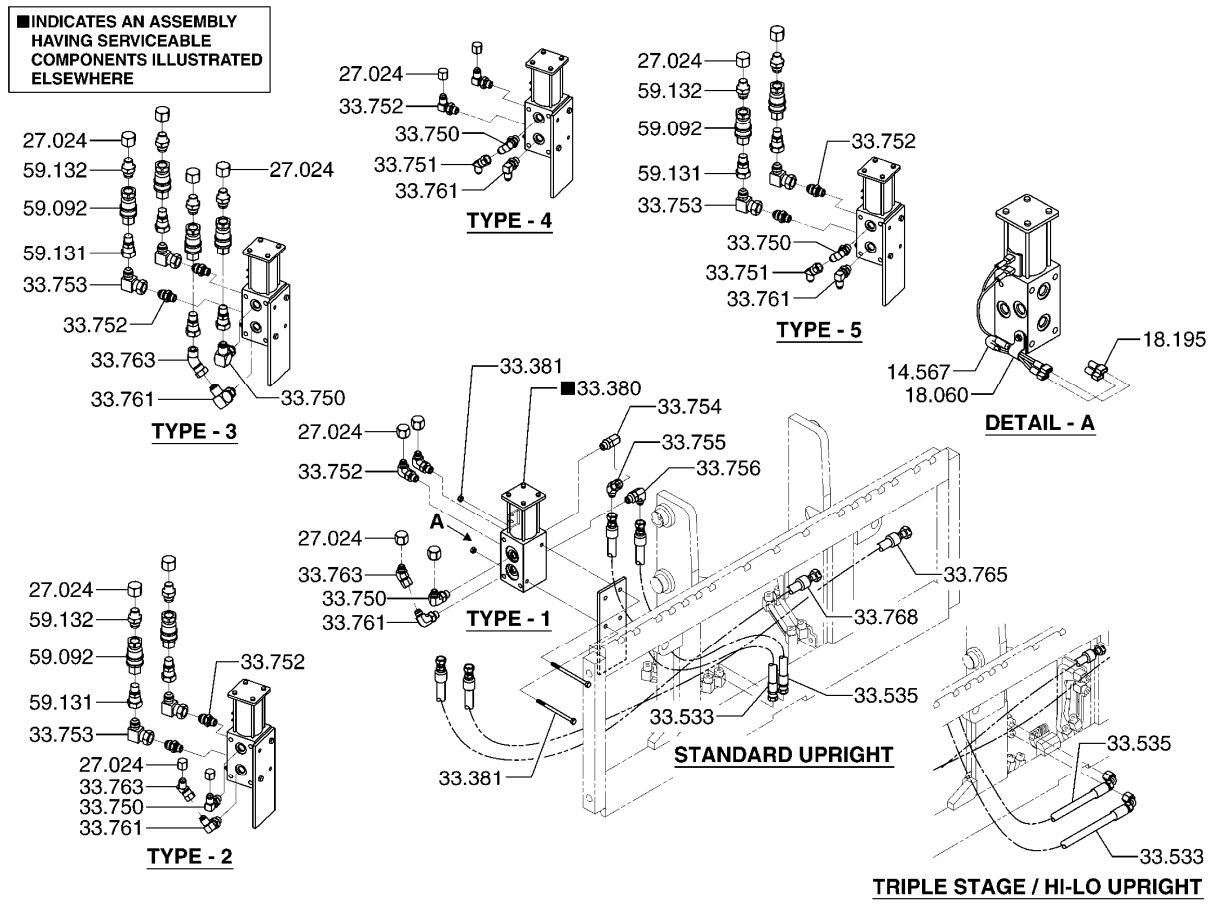

14.567 WIRE, DEVICE SELECTOR VALVE SWITCH FEED
와이어

18.060 CLAMP, DEVICE SELECTOR VALVE CABLE
클램프

18.195 TERMINAL, DEVICE SELECTOR VALVE SWITCH FEED WIRE
*

27.024 PLUG, DEVICE SELECTOR VALVE OPTIONAL OUTLET PORT
플러그

33.380 VALVE ASSEMBLY, DEVICE SELECTOR SOLENOID
벨브

33.381 FASTENER, DEVICE SELECTOR VALVE
패스너

33.533 LINE, DEVICE SELECTOR VALVE "P" PORT HYDRAULIC
*

33.535 LINE, DEVICE SELECTOR VALVE "R" PORT HYDRAULIC
*

33.750 FITTING, DEVICE SELECTOR VALVE C1 PORT
피팅

33.751	FITTING, DEVICE SELECTOR VALVE C1 PORT 피팅
33.752	FITTING, DEVICE SELECTOR VALVE C2 PORT 피팅
33.753	FITTING, DEVICE SELECTOR VALVE C2 PORT 피팅
33.754	FITTING, DEVICE SELECTOR VALVE "P" PORT 피팅
33.755	FITTING, DEVICE SELECTOR VALVE "P" PORT 피팅
33.756	FITTING, DEVICE SELECTOR VALVE "R" PORT 피팅
33.761	FITTING, DEVICE SELECTOR VALVE C4 PORT 피팅
33.763	FITTING, DEVICE SELECTOR VALVE C4 PORT 피팅
33.765	LINE, DEVICE SELECTOR VALVE C4 PORT HYDRAULIC 라인
33.768	LINE, DEVICE SELECTOR VALVE C1 PORT HYDRAULIC 라인
59.092	QUICK DISCONNECT, DEVICE HOSE 퀵디스커넥트
59.131	FITTING, DEVICE LINE QUICK DISCONNECT *
59.132	FITTING, DEVICE LINE QUICK DISCONNECT *

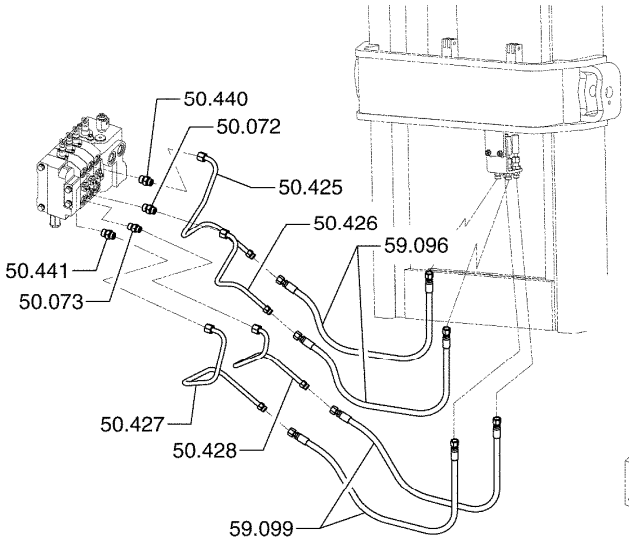

STANDARD VALVE TYPE

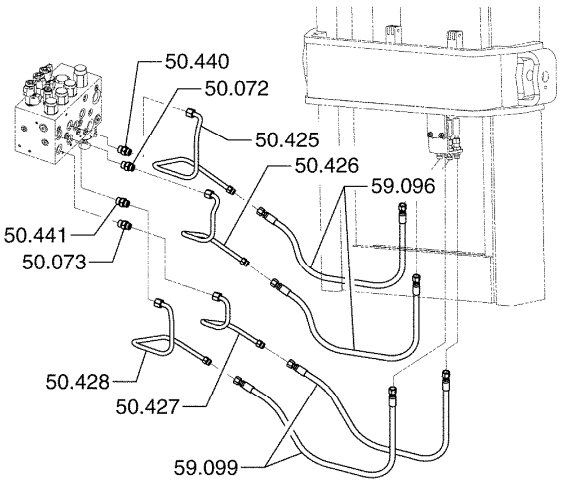

ELH VALVE TYPE

AUXILIARY VALVE LINES **50-822**

50.072 FITTING, 1ST AUXILIARY VALVE "B" PORT
피팅

50.073 FITTING, 2ND AUXILIARY VALVE "B" PORT
피팅

50.425 LINE, 1ST AUXILIARY VALVE "A" PORT
라인

50.426 LINE, 1ST AUXILIARY VALVE "B" PORT
라인

50.427 LINE, 2ND AUXILIARY VALVE "A" PORT
라인

50.428 LINE, 2ND AUXILIARY VALVE "B" PORT
라인

50.440 FITTING, 1ST AUXILIARY VALVE "A" PORT
피팅

50.441 FITTING, 2ND AUXILIARY VALVE "A" PORT
피팅

59.096 LINE, 1ST AUXILIARY FUNCTION
라인

59.099 LINE, 2ND AUXILIARY FUNCTION
라인

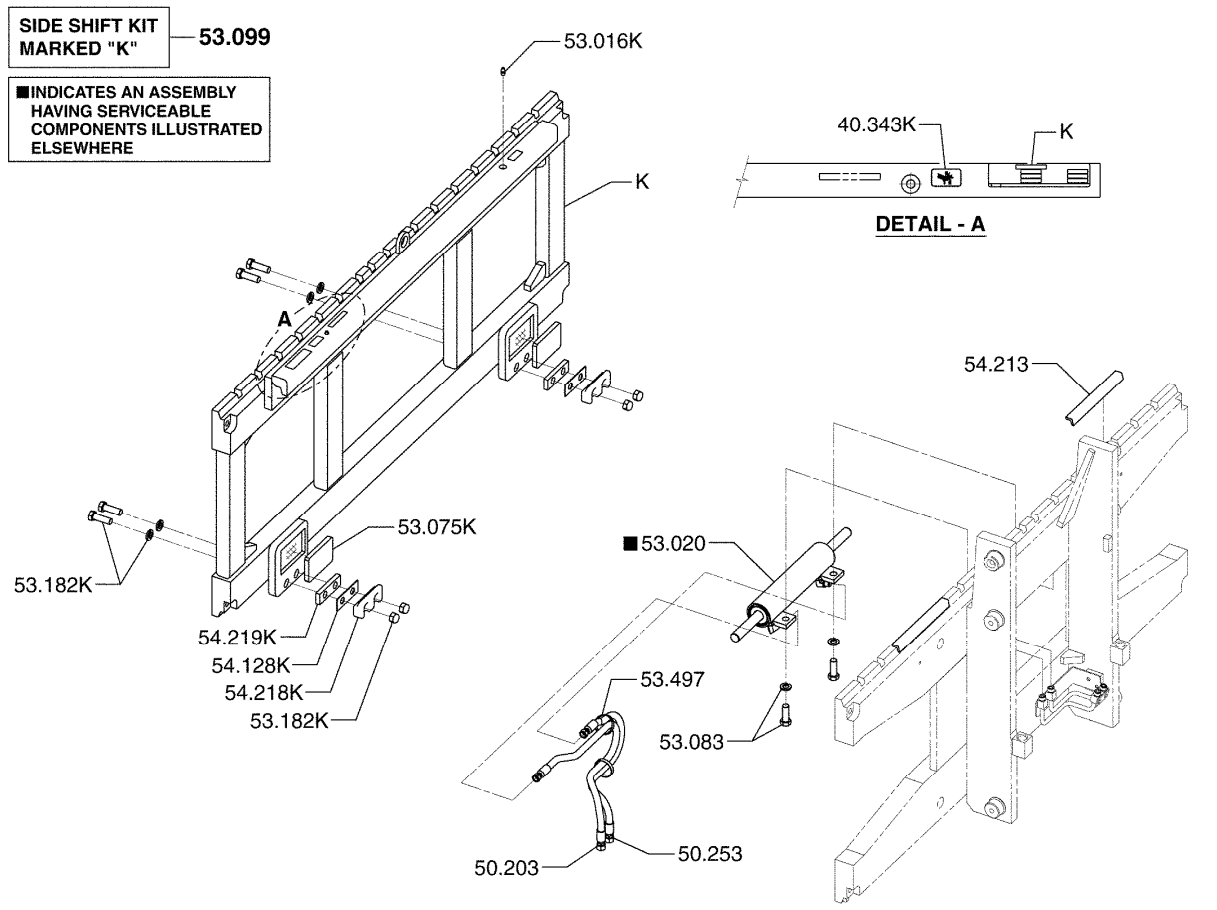

40.343	DECAL, ATTACHMENT SAFETY *
50.203	LINE, DEVICE HYDRAULIC (AT CARRIAGE) 라인
50.253	LINE, DEVICE HYDRAULIC (AT CARRIAGE) 라인
53.016	FITTING-LUB, SIDE SHIFTER MOVABLE FRAME SUPPORT SH 피팅
53.020	CYLINDER ASSEMBLY, SIDE SHIFTER 실린더
53.075	BEARING, SIDE SHIFTER (LOWER) 베어링
53.083	FASTENER, SIDE SHIFTER CYLINDER ANCHOR 패스너
53.099	SIDE SHIFTER, DEVICE 사이드쉬프트
53.182	FASTENER, SIDE SHIFTER HANGER 패스너

53.497 STRAP, DEVICE HOSE
스트랩

54.128 SPACER, SIDE SHIFTER MOVEABLE FRAME BEARING
스페이서

54.213 BEARING, SIDE SHIFTER (UPPER)
베어링

54.218 HOOK, SIDE SHIFTER HANGER
후크

54.219 SPACER, SIDE SHIFTING BASE PLATE HANGER
스페이서

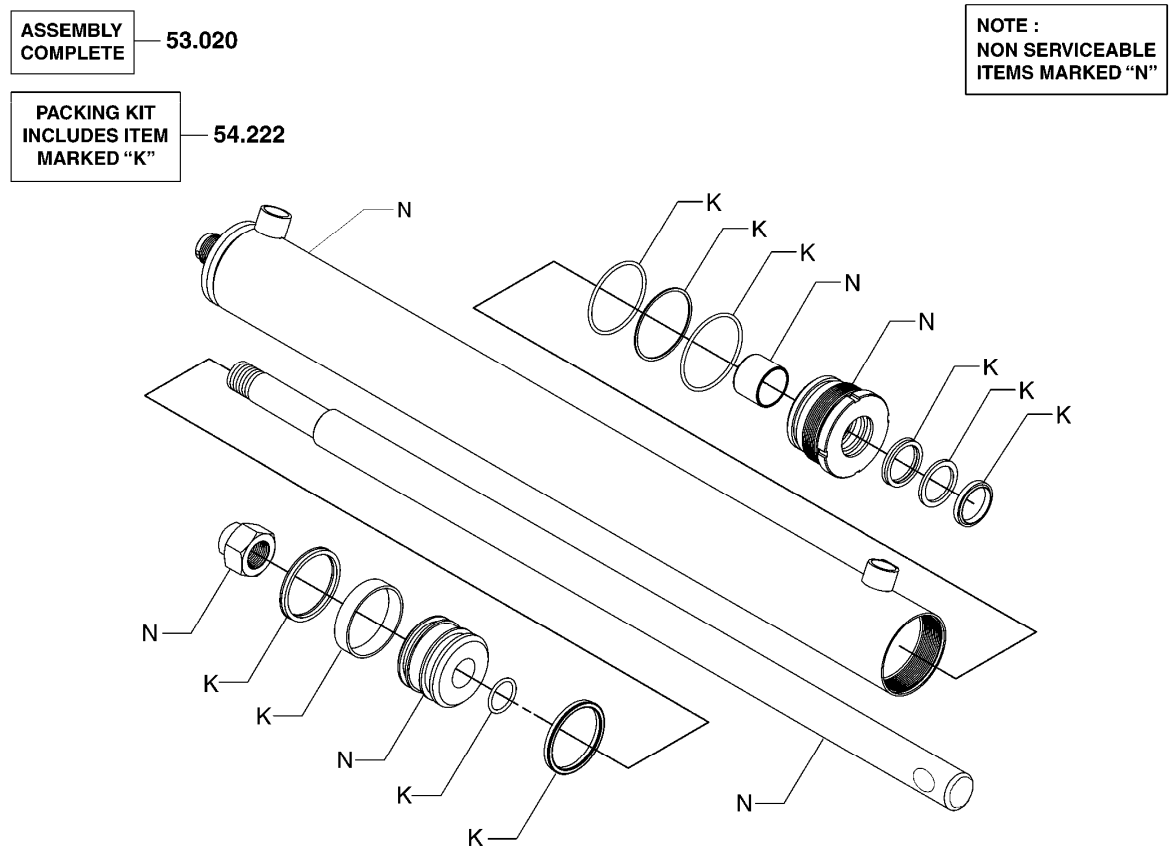

53.020 CYLINDER ASSEMBLY, SIDE SHIFTER
실린더

54.222 PACKING KIT, SIDE SHIFTER CYLINDER
패킹킷

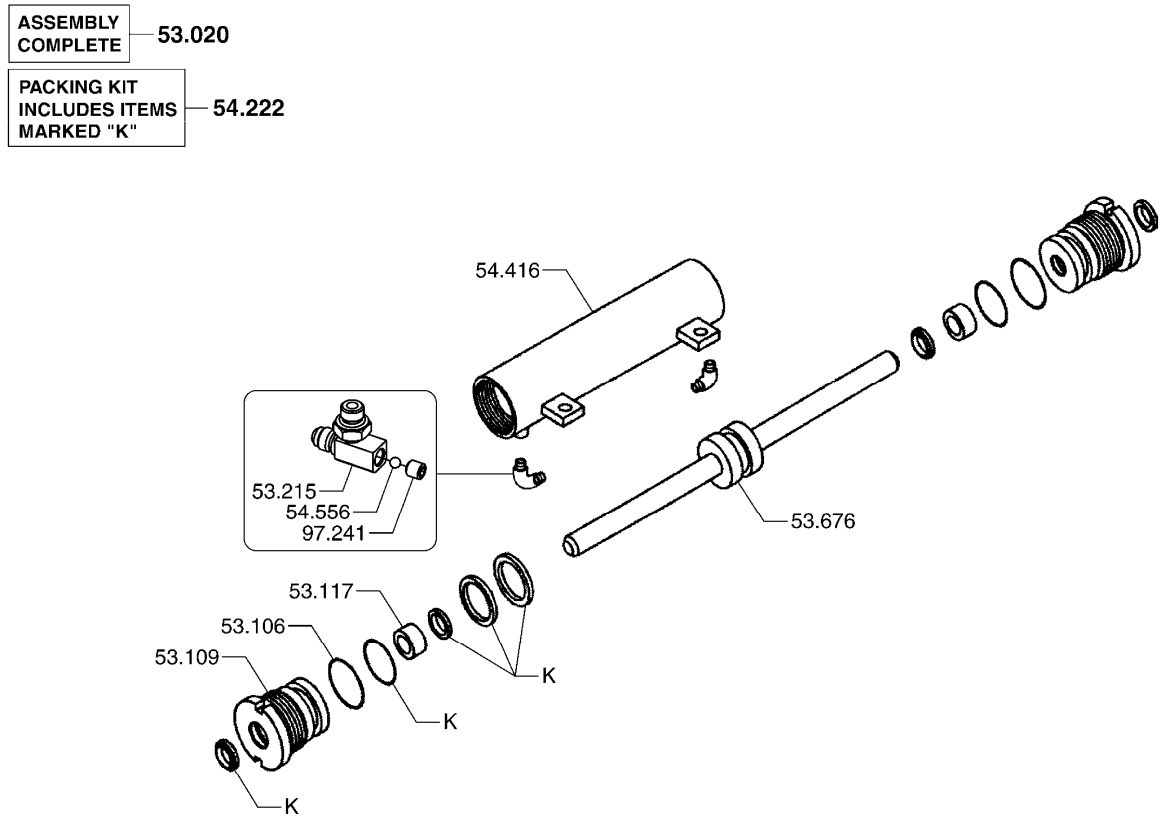

SIDESHIFT CYLINDER **53-198**

53.020	CYLINDER ASSEMBLY, SIDE SHIFTER 실린더
53.109	GLAND, SIDE SHIFTER CYLINDER 그랜드
53.110	RETAINER, SIDE SHIFTER CYLINDER GLAND 리테이너
53.117	BUSHING, SIDE SHIFTER CYLINDER GLAND 부싱
53.215	FITTING, SIDE SHIFTER CYLINDER ROD PORT 피팅
53.676	ROD, SIDE SHIFTER CYLINDER PISTON 로드
54.222	PACKING KIT, SIDE SHIFTER CYLINDER 패킹킷
54.416	BARREL, SIDE SHIFT CYLINDER 배럴
54.556	BALL, SIDE SHIFTER CYLINDER ROD PORT *

97.241 SET SCREW, SIDE SHIFTER CYLINDER ROD PORT
*

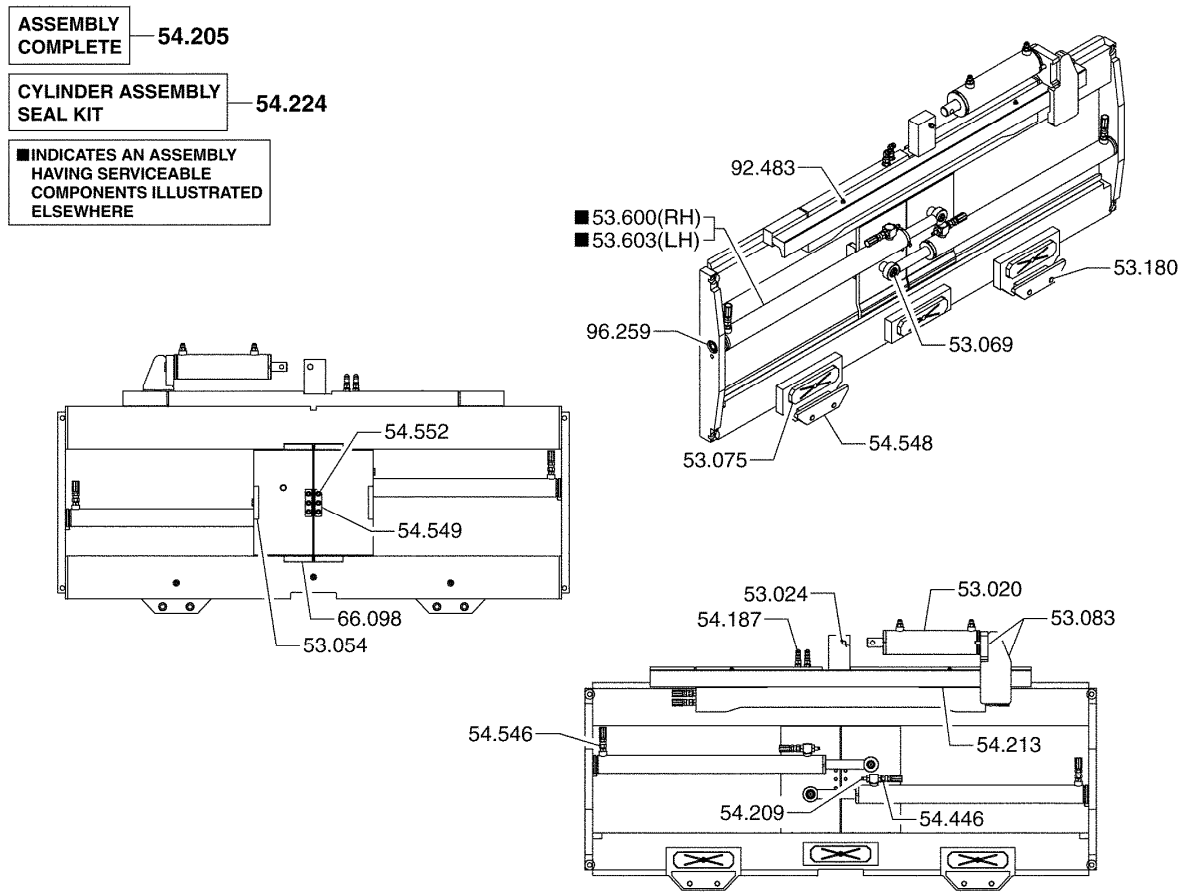

53.020 CYLINDER ASSEMBLY, SIDE SHIFTER
실린더

53.024 ANCHOR, SIDE SHIFTER CYLINDER BASE
앵커

53.054 GUIDE, FORK
가이드

53.069 FASTENER, FORK CYLINDER ROD END
패스너

53.075 BEARING, SIDE SHIFTER (LOWER)
베어링

53.083 FASTENER, SIDE SHIFTER CYLINDER ANCHOR
패스너

53.180 SPACER, SIDE SHIFTER BEARING
스페이서

53.600 CYLINDER ASSEMBLY, INBOARD RH FORK
실린더

53.603 CYLINDER ASSEMBLY, INBOARD LH FORK
실린더

54.187 FITTING, SIDE SHIFTER ANCHOR PORT LINE
피팅

54.205 ATTACHMENT, FORK POSITIONER
어태치먼트

54.209 PLUG, FORK CYLINDER FLOW DIVIDER
플러그

54.213 BEARING, SIDE SHIFTER (UPPER)
베어링

54.224 PACKING KIT, LH FORK CYLINDER
패킹킷

54.446 FITTING - LUB, FORK POSITIONER
피팅

54.546 FITTING - LUB, FORK POSITIONER
피팅

54.548 HOOK, FORK POSITIONER HANGER
후크

54.549 STOP, FORK POSITIONER CYLINDER
스톱

54.552 FASTENER, FORK POSITIONER CYLINDER STOP
패스너

66.098 BEARING, FORK HORIZONTAL THRUST ROLLER
베어링

92.483 NIPPLE, LUBRICATION
니플

96.259 FASTENER, FORK CYLINDER ANCHOR END PIN RETAINER
패스너

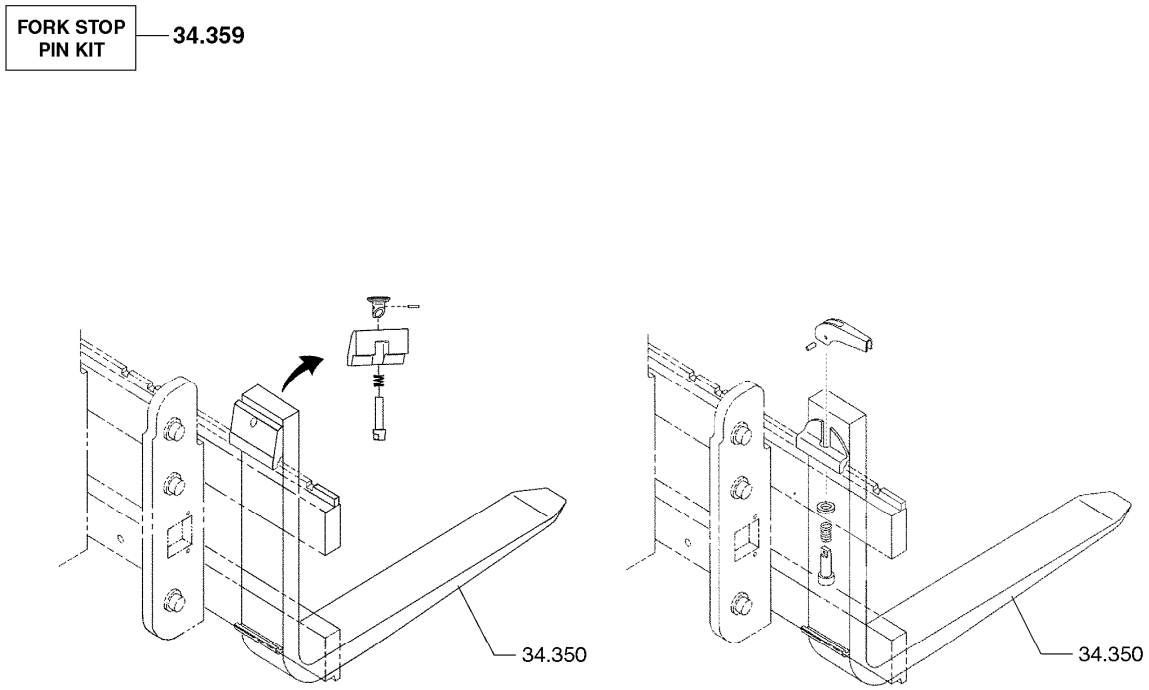

34.350 FORK ASSEMBLY
포크

34.359 KIT, FORK STOP PIN (CAPTIVE)
킷

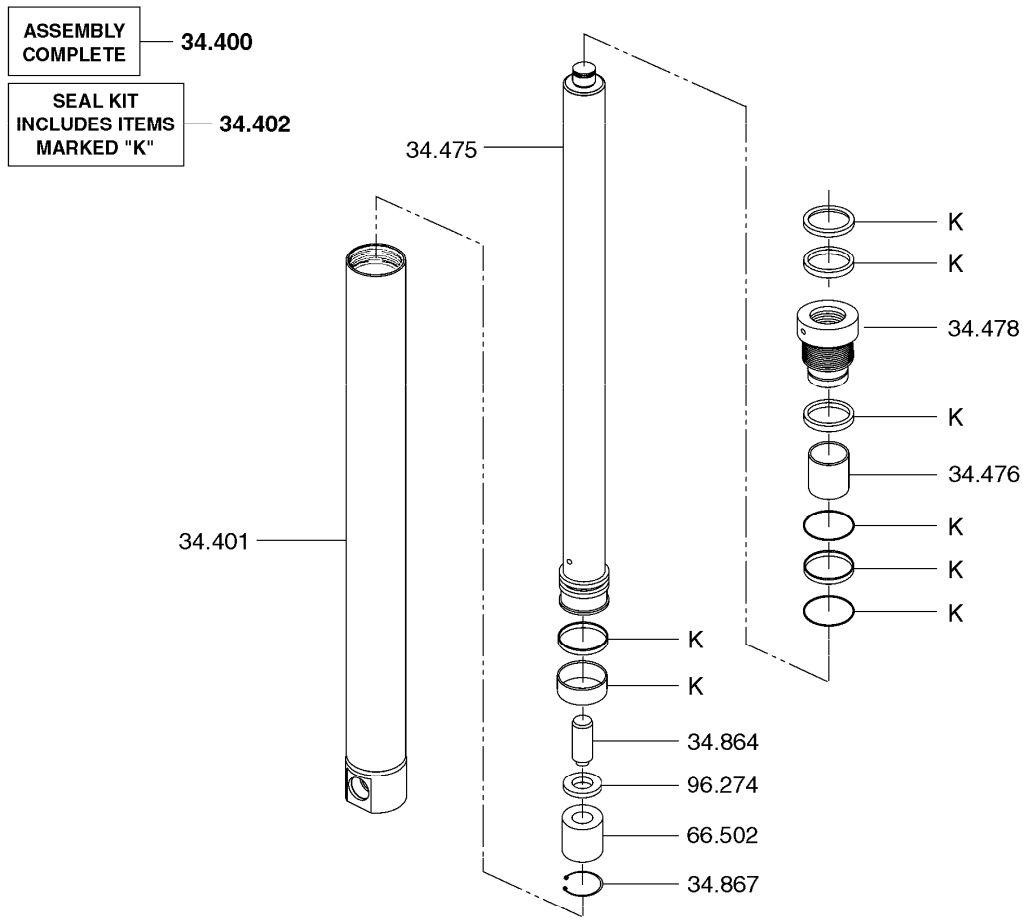

PRIMARY CYLINDER ASSEMBLY **66-148**

34.400 CYLINDER ASSEMBLY, LIFT
실린더

34.401 BARREL, LIFT CYLINDER
배럴

34.402 SEAL & PACKING KIT, LIFT CYLINDER
시일과팩킹킷

34.475 ROD, LIFT CYLINDER
로드

34.476 BEARING, LIFT CYLINDER ROD
베어링

34.478 GLAND, LIFT CYLINDER
그랜드

34.864 CHECK VALVE, LIFT CYLINDER
체크밸브

34.867 RETAINER, LIFT CYLINDER CHECK VALVE
리테이너

66.502 CUSHION, LIFT CYLINDER
쿠션

96.274 WASHER, LIFT CYLINDER CHECK VALVE
옥셔

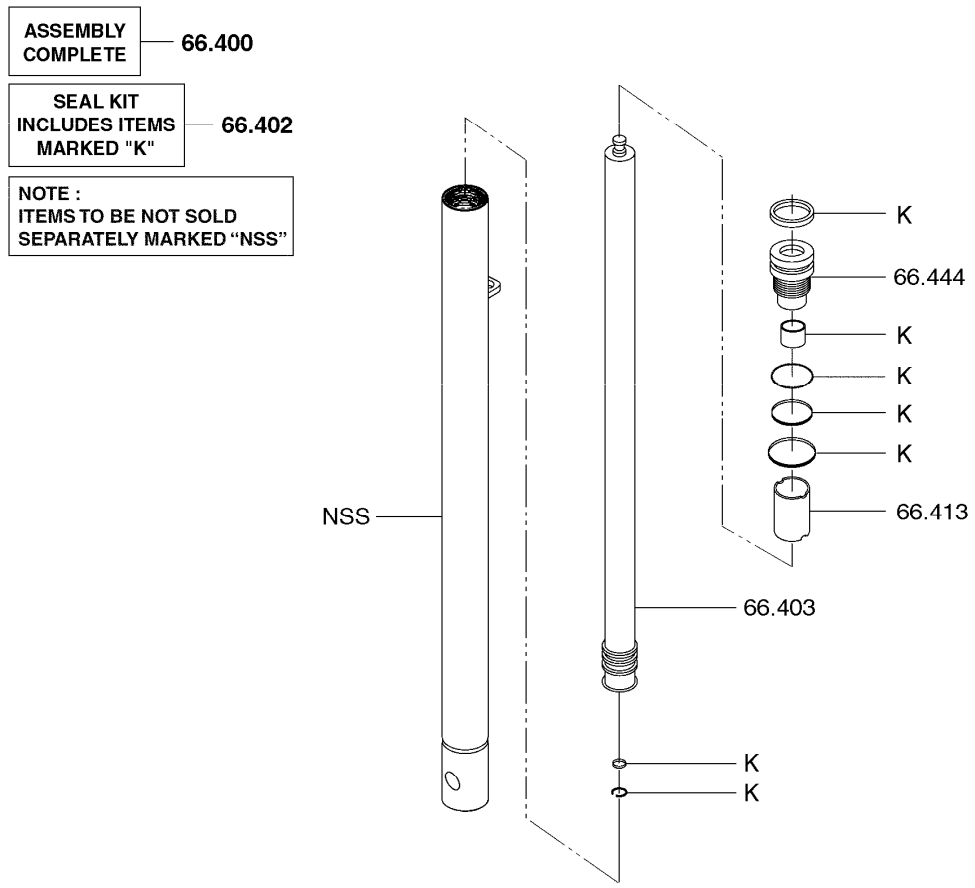

SECONDARY CYLINDER ASSEMBLY **66-269**

66.400 CYLINDER ASSEMBLY, FINAL LIFT
실린더

66.402 PACKING KIT, FINAL LIFT CYLINDER
패킹킷

66.403 PISTON ROD, FINAL LIFT CYLINDER
피스톤로드

66.413 SPACER, FINAL LIFT CYLINDER PISTON ROD
스페이서

66.444 GLAND, FINAL LIFT CYLINDER
그룹드

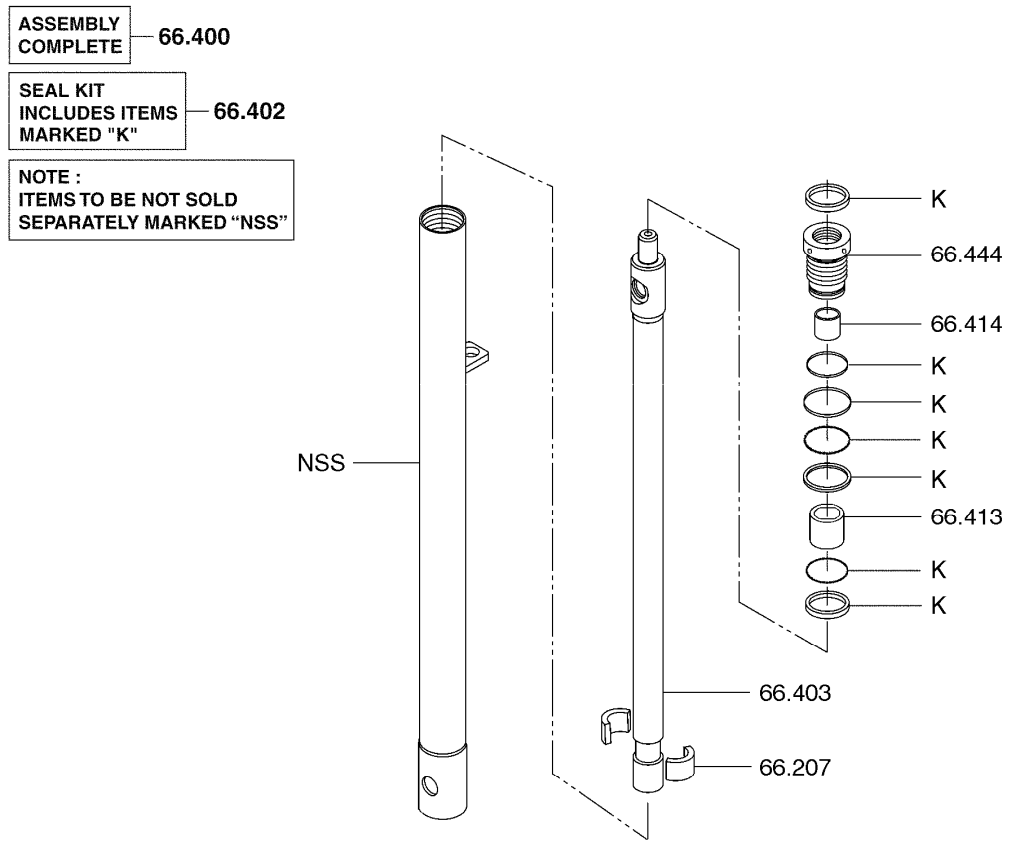

SECONDARY CYLINDER ASSEMBLY **66-271**

66.207 PISTON, FINAL LIFT CYLINDER
피스톤

66.400 CYLINDER ASSEMBLY, FINAL LIFT
실린더

66.402 PACKING KIT, FINAL LIFT CYLINDER
패킹킷

66.403 PISTON ROD, FINAL LIFT CYLINDER
피스톤로드

66.413 SPACER, FINAL LIFT CYLINDER PISTON ROD
스페이서

66.414 BEARING, FINAL LIFT CYLINDER GLAND CAP
베어링

66.444 GLAND, FINAL LIFT CYLINDER
그룔드

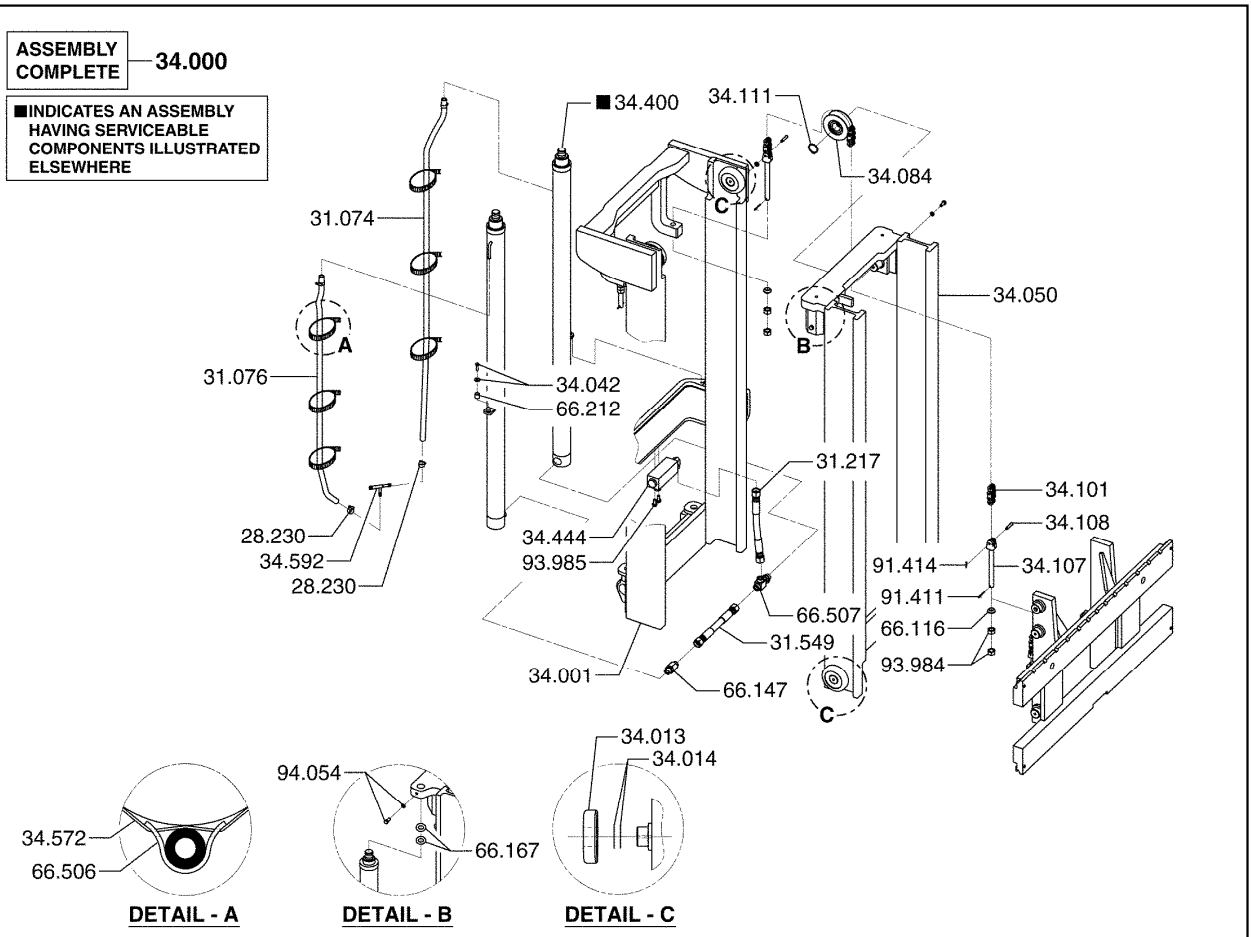

28.230	CLAMP, LIFT CYLINDER VENT LINE 클램프	34.111	FASTENER, CHAIN SHEAVE SHAFT (CARRIER) 패스너
31.074	LINE, LIFT CYLINDER VENT 라인	34.400	CYLINDER ASSEMBLY, LIFT 실린더
31.076	LINE, LIFT CYLINDER VENT 라인	34.444	VALVE ASSEMBLY, LIFT CYLINDER FLOW CONTROL 벨브
31.217	LINE, LIFT CYLINDER INLET FITTING 라인	34.572	STRAP, VENT LINE TO LIFT CYLINDER 스트랩
31.549	LINE, LIFT CYL FLOW CONTROL VALVE INLET 라인	34.592	FITTING, LIFT CYLINDER VENT LINE 피팅
34.000	UPRIGHT & LIFT CYL ASSEMBLY 업라이트와실린더	66.116	SPACER, LIFT CHAIN ANCHOR 스페이서
34.001	OUTER RAIL WELDER ASSEMBLY, UPRIGHT 아웃레일	66.147	VALVE, FINAL LIFT CYLINDER PORT FLOW CONTROL 밸브
34.013	ROLLER, UPRIGHT 롤러	66.167	SHIM, LIFT CYLINDER UPPER 심
34.014	SHIM, UPRIGHT ROLLER 심	66.212	SPACER, LIFT CYLINDER FASTENER 스페이서
34.042	FASTENER, LIFT CYLINDER (UPPER) 패스너	66.506	CLAMP, LIFT CYLINDER *
34.050	INNER RAIL WELDED ASSEMBLY, UPRIGHT 인너레일	66.507	TEE, LIFT CYLINDER LINE *
34.084	SHEAVE, LIFT CHAIN 쉬브	91.411	RETAINER, LIFT CHAIN TO ANCHOR FASTENER 리테이너
34.101	CHAIN, LIFT 체인	91.414	RETAINER, LIFT CHAIN TO ANCHOR FASTENER 리테이너
34.107	ANCHOR, LIFT CHAIN 앵커	93.984	FASTENER, LIFT CHAIN ANCHOR 패스너
34.108	FASTENER, LIFT CHAIN TO ANCHOR 패스너	93.985	FASTENER, LIFT CYLINDER FLOW CONTROL VALVE MANIF 패스너

94.054 FASTENER, LIFT CYLINDER (UPPER)
패스너

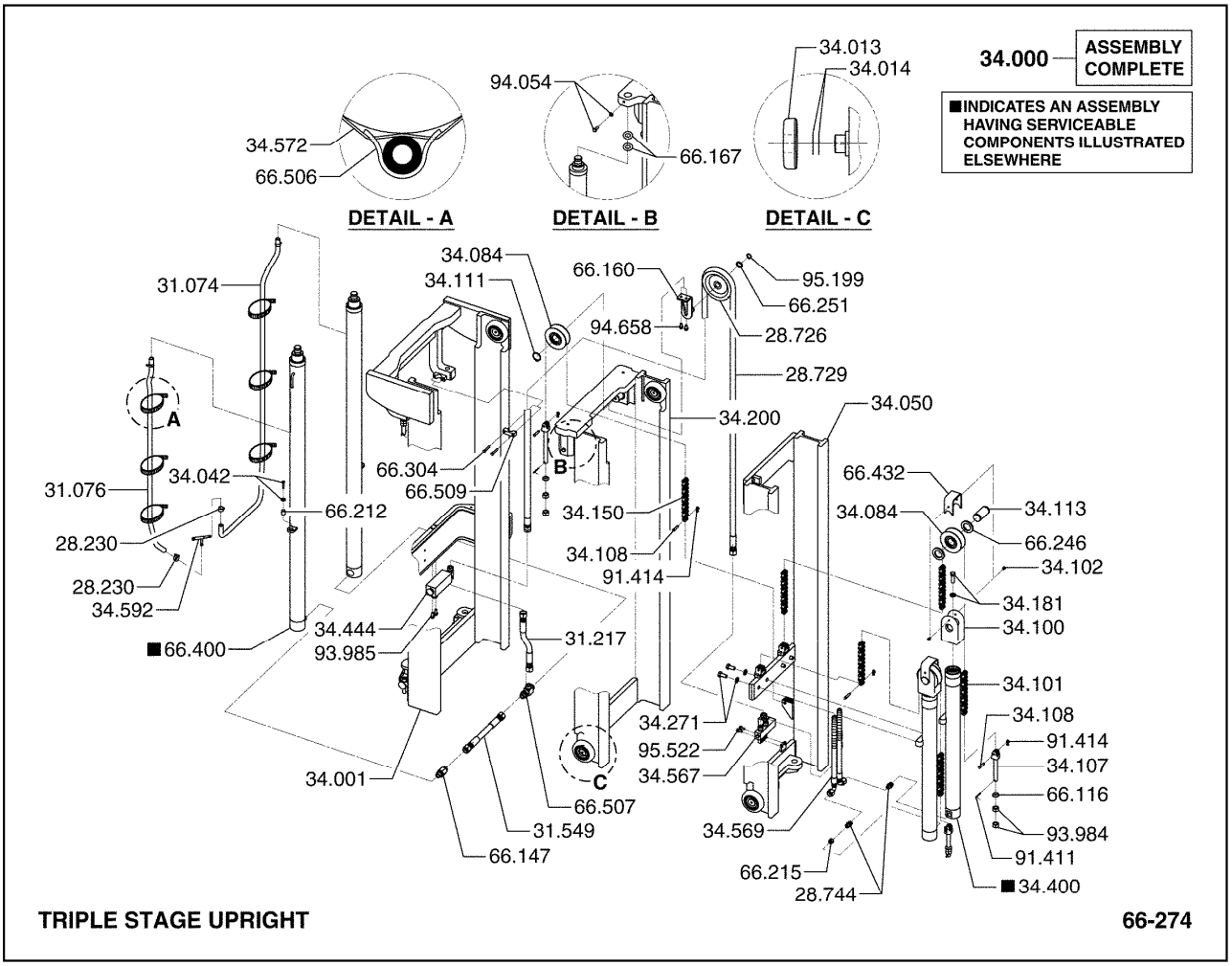

TRIPLE STAGE UPRIGHT **66-274**

28.230	CLAMP, LIFT CYLINDER VENT LINE 클램프
28.726	SHEAVE, LIFT CYLINDER HOSE 쉬브
28.729	LINE, LIFT CYLINDER 라인
28.744	FITTING, LIFT CYLINDER LINE 피팅
31.074	LINE, LIFT CYLINDER VENT 라인
31.076	LINE, LIFT CYLINDER VENT 라인
31.217	LINE, LIFT CYLINDER INLET FITTING 라인
31.549	LINE, LIFT CYL FLOW CONTROL VALVE INLET 라인
34.000	UPRIGHT & LIFT CYL ASSEMBLY 업라이트와실린더
34.001	OUTER RAIL WELDER ASSEMBLY, UPRIGHT 아웃레일
34.013	ROLLER, UPRIGHT 롤러
34.014	SHIM, UPRIGHT ROLLER 심
34.042	FASTENER, LIFT CYLINDER (UPPER) 패스너
34.050	INNER RAIL WELDED ASSEMBLY, UPRIGHT 인너레일
34.084	SHEAVE, LIFT CHAIN 쉬브
34.100	CARRIER, LIFT CYLINDER CHAIN SHEAVE 캐리어
34.101	CHAIN, LIFT 체인
34.102	FASTENER, SHEAVE CARRIER 패스너
34.107	ANCHOR, LIFT CHAIN 앵커
34.108	FASTENER, LIFT CHAIN TO ANCHOR 패스너
34.111	FASTENER, CHAIN SHEAVE SHAFT (CARRIER) 패스너
34.113	SHAFT, LIFT CHAIN SHEAVE (CARRIER) 샤프트
34.150	CHAIN, UPRIGHT RAIL LIFT 체인
34.181	FASTENER, LIFT CYLINDER PISTON ROD 패스너
34.200	INTERMEDIATE RAIL WELDED ASSEMBLY, UPRIGHT 인터레일
34.271	FASTENER, LIFT CYLINDER LOWER 패스너
34.400	CYLINDER ASSEMBLY, LIFT 실린더
34.444	VALVE ASSEMBLY, LIFT CYLINDER FLOW CONTROL 벨브
34.567	LINE, LIFT CYLINDER VENT 라인
34.569	LINE, LIFT CYLINDER VENT 라인

34.572 STRAP, VENT LINE TO LIFT CYLINDER
스트랩

34.592 FITTING, LIFT CYLINDER VENT LINE
피팅

66.116 SPACER, LIFT CHAIN ANCHOR
스페이서

66.147 VALVE, FINAL LIFT CYLINDER PORT FLOW CONTROL
밸브

66.160 BRACKET, LIFT CYLINDER HOSE SHEAVE
브라켓

66.167 SHIM, LIFT CYLINDER UPPER
심

66.212 SPACER, LIFT CYLINDER FASTENER
스페이서

66.215 VALVE, LIFT CYLINDER PORT FLOW CONTROL
밸브

66.246 SPACER, LIFT CHAIN SHEAVE
스페이서

66.251 SPACER, LIFT CYLINDER LINE SHEAVE
스페이서

66.304 FASTENER, LIFT CYLINDER LINE CLAMP
패스너

66.400 CYLINDER ASSEMBLY, FINAL LIFT
실린더

66.432 COVER, SHEAVE CARRIER
커버

66.506 CLAMP, LIFT CYLINDER
*

66.507 TEE, LIFT CYLINDER LINE
*

66.509 CLAMP, LIFT CYLINDER LINE
*

91.411 RETAINER, LIFT CHAIN TO ANCHOR FASTENER
리테이너

91.414 RETAINER, LIFT CHAIN TO ANCHOR FASTENER
리테이너

93.984 FASTENER, LIFT CHAIN ANCHOR
패스너

93.985 FASTENER, LIFT CYLINDER FLOW CONTROL VALVE MANIF
패스너

94.054 FASTENER, LIFT CYLINDER (UPPER)
패스너

94.658 FASTENER, LIFT CYLINDER HOSE SHEAVE BRACKET
패스너

95.199 FASTENER, LIFT LINE SHEAVE
패스너

95.522 FASTENER, LIFT CYLINDER LINE
패스너

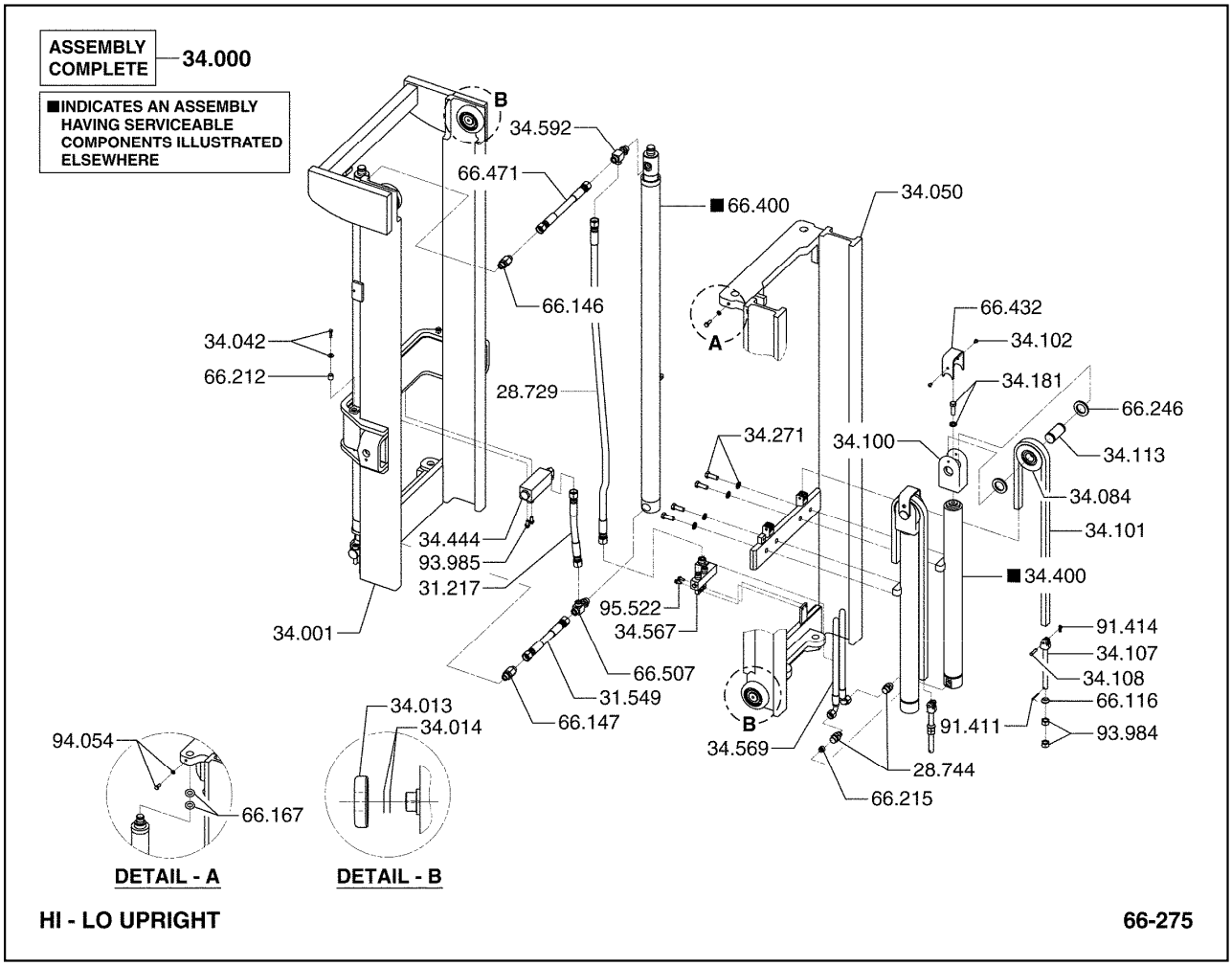

28.729	LINE, LIFT CYLINDER 라인	34.108	FASTENER, LIFT CHAIN TO ANCHOR 패스너
28.744	FITTING, LIFT CYLINDER LINE 피팅	34.113	SHAFT, LIFT CHAIN SHEAVE (CARRIER) 샤프트
31.217	LINE, LIFT CYLINDER INLET FITTING 라인	34.181	FASTENER, LIFT CYLINDER PISTON ROD 패스너
31.549	LINE, LIFT CYL FLOW CONTROL VALVE INLET 라인	34.271	FASTENER, LIFT CYLINDER LOWER 패스너
34.000	UPRIGHT & LIFT CYL ASSEMBLY 업라이트와실린더	34.400	CYLINDER ASSEMBLY, LIFT 실린더
34.001	OUTER RAIL WELDER ASSEMBLY, UPRIGHT 아웃레일	34.444	VALVE ASSEMBLY, LIFT CYLINDER FLOW CONTROL 벨브
34.013	ROLLER, UPRIGHT 롤러	34.567	LINE, LIFT CYLINDER VENT 라인
34.014	SHIM, UPRIGHT ROLLER 심	34.569	LINE, LIFT CYLINDER VENT 라인
34.042	FASTENER, LIFT CYLINDER (UPPER) 패스너	34.592	FITTING, LIFT CYLINDER VENT LINE 피팅
34.050	INNER RAIL WELDED ASSEMBLY, UPRIGHT 인너레일	66.116	SPACER, LIFT CHAIN ANCHOR 스페이서
34.084	SHEAVE, LIFT CHAIN 쉬브	66.146	VALVE, LIFT CYLINDER PORT FLOW CONTROL 밸브
34.100	CARRIER, LIFT CYLINDER CHAIN SHEAVE 캐리어	66.147	VALVE, FINAL LIFT CYLINDER PORT FLOW CONTROL 밸브
34.101	CHAIN, LIFT 체인	66.167	SHIM, LIFT CYLINDER UPPER 심
34.102	FASTENER, SHEAVE CARRIER 패스너	66.212	SPACER, LIFT CYLINDER FASTENER 스페이서
34.107	ANCHOR, LIFT CHAIN 앵커	66.215	VALVE, LIFT CYLINDER PORT FLOW CONTROL 밸브

66.246 SPACER, LIFT CHAIN SHEAVE
스페이서

66.400 CYLINDER ASSEMBLY, FINAL LIFT
실린더

66.432 COVER, SHEAVE CARRIER
커버

66.471 LINE, LIFT CYLINDER FEED
라인

66.507 TEE, LIFT CYLINDER LINE
*

91.411 RETAINER, LIFT CHAIN TO ANCHOR FASTENER
리테이너

91.414 RETAINER, LIFT CHAIN TO ANCHOR FASTENER
리테이너

93.984 FASTENER, LIFT CHAIN ANCHOR
패스너

93.985 FASTENER, LIFT CYLINDER FLOW CONTROL VALVE MANIF
패스너

94.054 FASTENER, LIFT CYLINDER (UPPER)
패스너

95.522 FASTENER, LIFT CYLINDER LINE
패스너

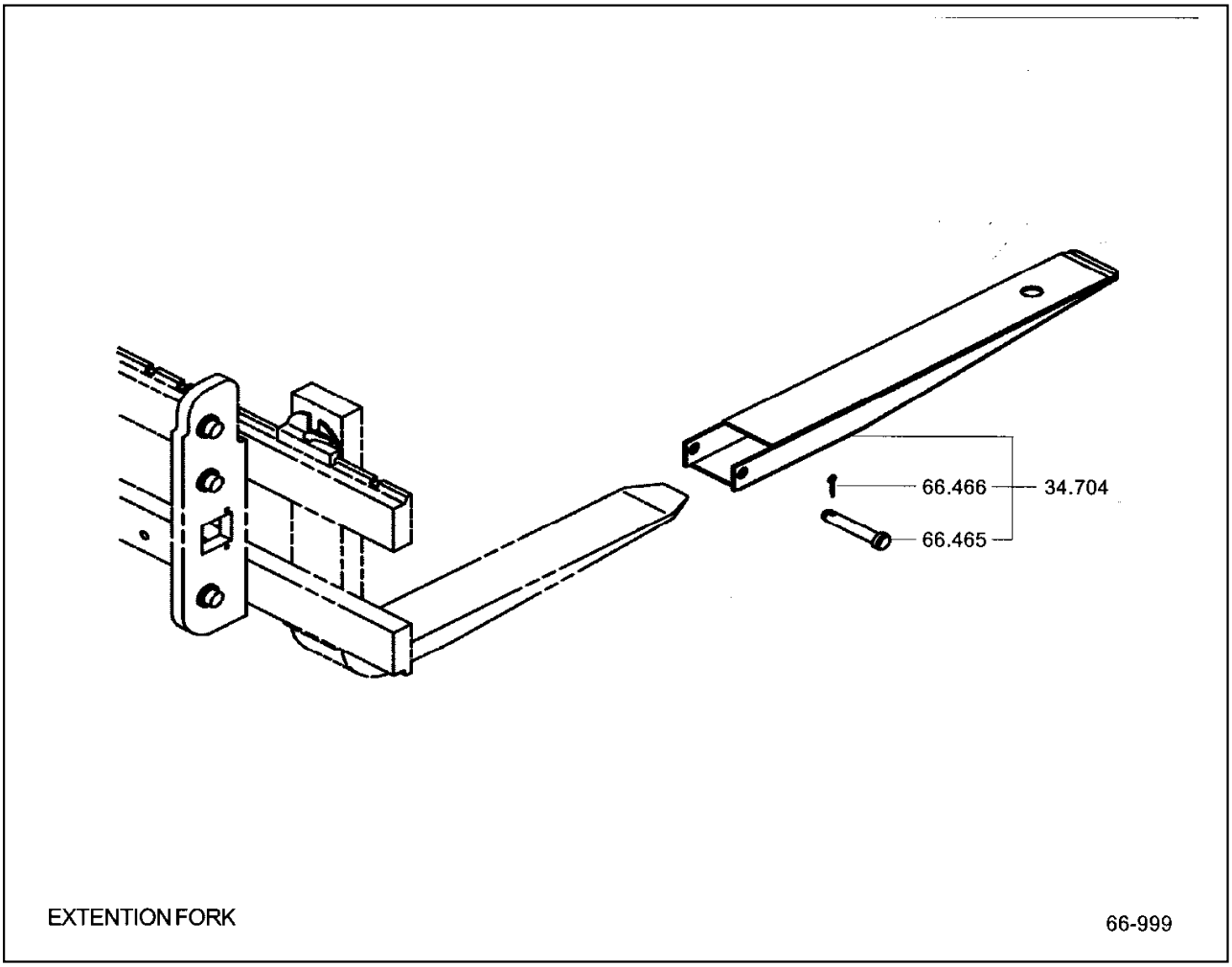

34.704 EXTENSION, FORK ASSEMBLY COMPLETE
익스텐션

66.465 PIN, EXTENTION FORK
핀

66.466 PIN, EXTENTION FORK
핀

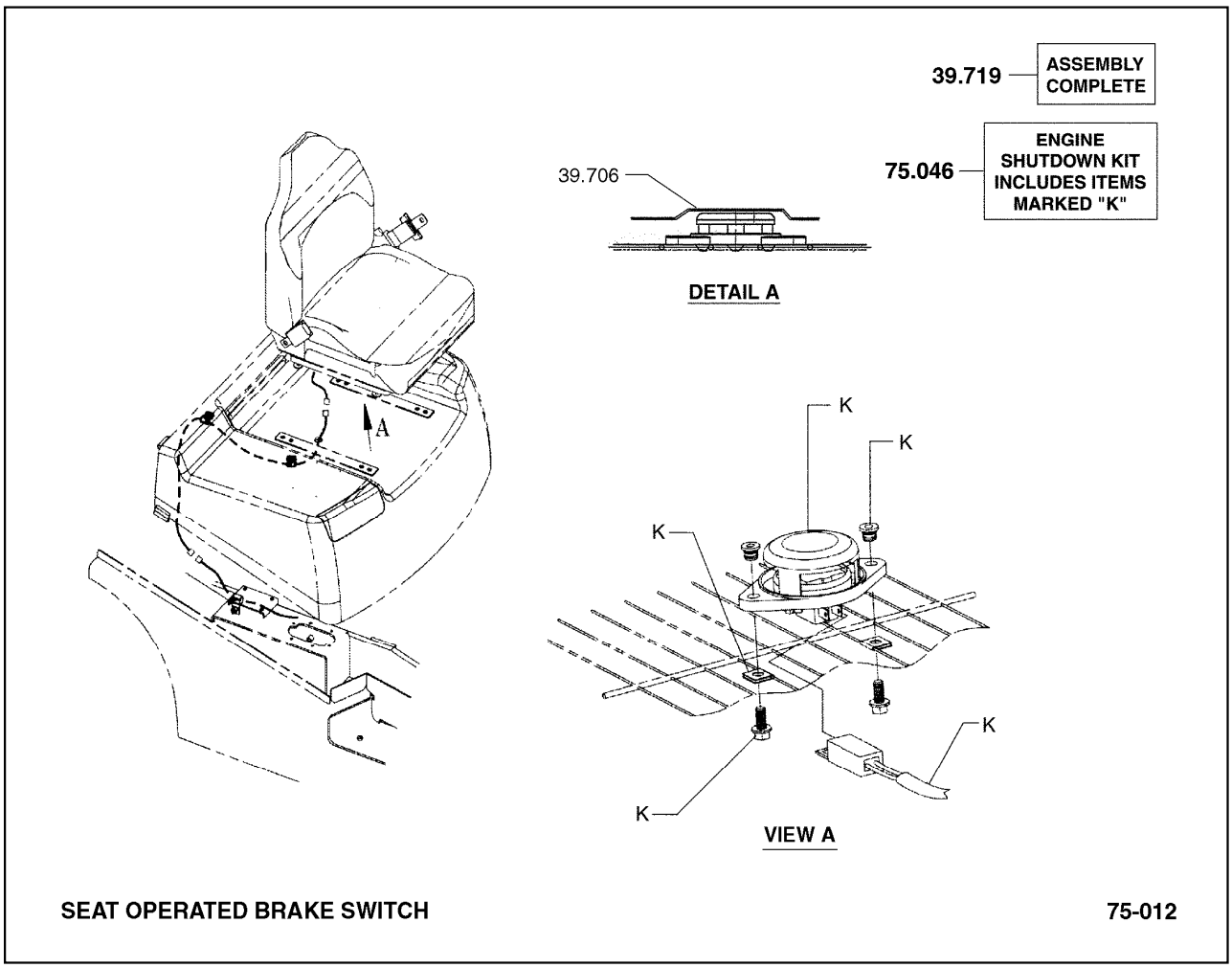

39.706 SUPPORT, SEAT
서포트

39.719 SEAT ASSEMBLY
시트

75.046 KIT, SEAT ACTUATED ENGINE SHUTDOWN
킷

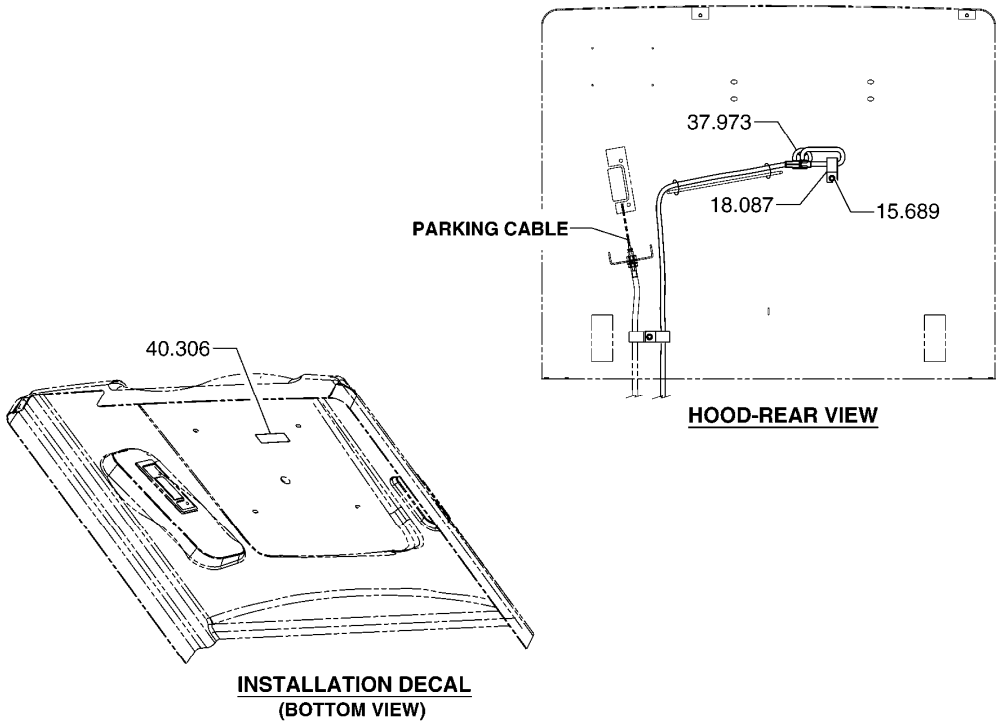

SEAT OPERATED BRAKE SWITCH INSTALLATION **75-013**

15.689 FASTENER, SEAT SWITCH HARNESS RETAINER
패스너

18.087 CLIP, SEAT SAFETY SWITCH WIRE
클립

37.973 GROMMET, SEAT WIRING HARNESS
그로멧

40.306 DECAL, SEAT SWITCH
데칼