RUTHZIL TRATOR COMERCIAL DE PEÇAS LTDA 11 97083-6812 ROLANDO CITRANGULO

PARTS MANUAL

GP080-120VX, GLP080-120VX, GDP080-120VX VERACITOR (G813)

AGOSTO 2008

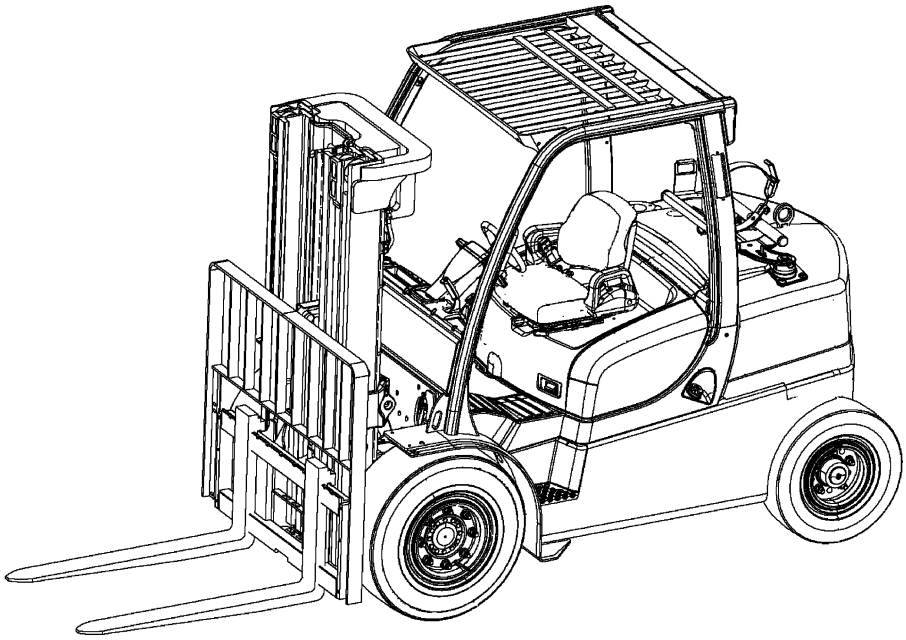

Yale Materials Handling Corporation
1400 Sullivan Drive
Caller No. 12011
Greenville, NC 27834-2011

524329168
©Yale Corp.
08/2008

MODEL NOMENCLATURE

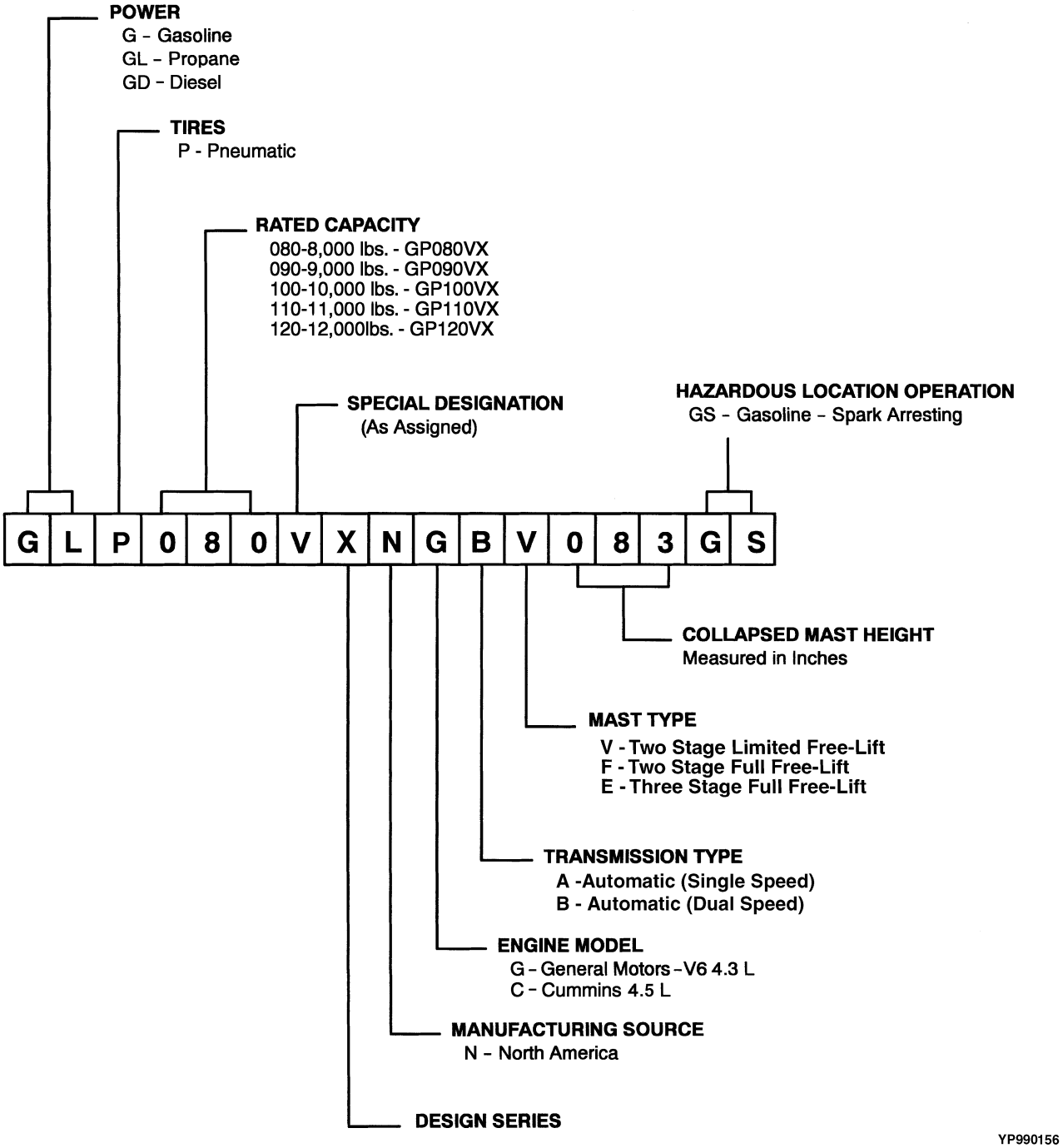

NOTE:

NOTE: This parts manual contains alternate pages for certain assemblies. The truck model code can be used to determine many of the assemblies on your lift truck (power, tire type, mast type). The complete truck model and serial number are stamped into the nameplate. See for further information.

Yale

SECTIONS

1	GENERAL TRUCK
2	ENGINE ASSEMBLY
3	EXHAUST SYSTEM
4	COOLING SYSTEM
5	FUEL SYSTEM
6	ELECTRICAL SYSTEM
7	TRANSMISSION
8	DRIVE AXLE
9	STEERING SYSTEM
10	BRAKE SYSTEM
11	HYDRAULIC SYSTEM
12	MAST-TWO STAGE LIMITED FREE-LIFT
13	MAST-THREE STAGE FULL FREE-LIFT
14	MAST-TWO STAGE FULL FREE-LIFT
15	ATTACHMENTS AND HEADER HOSE GROUP
16	OPTIONS
17	FIELD CONVERSION KITS

This Parts Manual is divided into 19 major sections which are listed above. Quick reference to these sections can be made by placing the right thumb on the tab of the desired section, bending the book back and thumbing the pages to the corresponding tab.

18 NUMERICAL INDEX

19 USER SUPPORT INFORMATION

This Parts Manual is divided into 19 major sections which are listed above. Quick reference to these sections can be made by placing the right thumb on the tab of the desired section, bending the book back and thumbing the pages to the corresponding tab.

TABLE OF CONTENTS

DESCRIPTION	PAGE
A	
ACCUMULATOR	16-8
AIR CLEANER	
CUMMINS QSB 3.3L DIESEL	5-4
GM 4.3L, GASOLINE AND LPG	5-2
AIR FILTER	5-7
AIR INTAKE MANIFOLD	
CUMMINS QSB 3.3L DIESEL	2-70
ASSEMBLED ENGINE	
GM 4.3L, GASOLINE AND LPG - SHEET 1 OF 3	2-4
GM 4.3L, GASOLINE AND LPG - SHEET 2 OF 3	2-8
GM 4.3L, GASOLINE AND LPG - SHEET 3 OF 3	2-10
AUDIBLE ALARM KITS	17-3
AUXILIARY HOSES	11-40
AUXILIARY TUBE EXTENSIONS	
THREE STAGE FULL FREE-LIFT	15-36
TWO STAGE FULL FREE-LIFT	15-34
TWO STAGE LIMITED FREE-LIFT	15-32
B	
BACK-UP ALARM	16-6
BATTERY CABLES	
CUMMINS QSB 3.3L DIESEL	6-22
GM 4.3L	6-14
BRAKE AND INCHING PEDAL CONVERSION	17-2
BRAKE ASSEMBLY	
GP/GLP/GDP100-120VX - DRY BRAKE	10-18
GP/GLP/GDP80-90VX - DRY BRAKE	10-16
BRAKE COOLING SYSTEM	
SINGLE AND DUAL PEDAL - WET BRAKE	10-24
BRAKE LINKAGE	
DUAL PEDAL - DRY BRAKE	10-6
DUAL PEDALS - WET BRAKE	10-12
SINGLE PEDAL - DRY BRAKE	10-2
SINGLE PEDAL - WET BRAKE	10-10
BRAKE MASTER CYLINDER ASSEMBLY	10-22
C	
CAB ASSEMBLY WITH STEEL DOORS	
COVERS, SEALS, SHIMS, AND FASTENERS	1-28
FAN	1-30
LEFT HAND DOOR COMPONENTS	1-36
RIGHT HAND DOOR COMPONENTS	1-32
RIGHT HAND DOOR HEATER COMPONENTS	1-34
SHEET 1 OF 3	1-20
SHEET 2 OF 3	1-22
SHEET 3 OF 3	1-24
WINDOWS	1-26

©2008 Yale Materials Handling Corporation

TABLE OF CONTENTS (continued)

DESCRIPTION	PAGE
CAMSHAFT	
CUMMINS QSB 3.3L DIESEL	2-32
CAMSHAFT AND OIL PAN	
GM 4.3L GASOLINE AND LPG	2-20
CARRIAGE	
THREE STAGE FULL FREE-LIFT	13-28
TWO STAGE FULL FREE-LIFT	14-18
TWO STAGE LIMITED FREE-LIFT	12-18
CARRIER ASSEMBLY	
DRY BRAKE	8-10
COIL ASSEMBLY	
GM 4.3L GASOLINE AND LPG	2-23
CONTROL LEVER LABELS	
MANUAL HYDRAULICS	1-58
CONTROL VALVE ASSEMBLY	7-30
ELECTRONIC CONTROL - THREE FUNCTION	11-24
ELECTRONIC CONTROL - FOUR FUNCTION	11-26
MANUAL CONTROL VALVE - THREE AND FOUR FUNCTION	11-16
COOLING	
CUMMINS QSB 3.3L	4-6
GM 4.3L WITH EXTERNAL OIL COOLER AND ELECTRONIC TRANSMISSION - OR WITH WET BRAKE	4-2
GM 4.3L WITH INTERNAL OIL COOLER - WITH BASIC TRANSMISSION AND DRY BRAKE	4-4
COUNTERWEIGHT	1-6
COWL ELECTRICAL	6-30
COWL MOUNT	1-18
CRANKCASE BREATHER	
CUMMINS QSB 3.3L DIESEL	2-62
CRANKSHAFT	
CUMMINS QSB 3.3L DIESEL	2-60
CYLINDER BLOCK	
CUMMINS QSB 3.3L DIESEL	2-42
GM 4.3L GASOLINE AND LPG	2-18
CYLINDER HEAD	
CUMMINS QSB 3.3L DIESEL	2-44
GM 4.3L GASOLINE AND LPG	2-16
D	
DIFFERENTIAL	
DRY BRAKE	8-8
WET BRAKE	8-16
DIRECTIONAL CONTROL KITS	17-2
DISTRIBUTOR ASSEMBLY	
GM 4.3L GASOLINE AND LPG	6-13
DRIVE AXLE AND ATTACHING PARTS	
DRY BRAKE	8-2
WET BRAKE	8-12
DRIVE AXLE ASSEMBLY	
DRY BRAKE	8-4

©2008 Yale Materials Handling Corporation

TABLE OF CONTENTS (continued)

DESCRIPTION	PAGE
DRIVE AXLE HOUSING AND HUB	
WET BRAKE	8-14
DRIVE TIRE AND WHEEL	
DUAL MOUNT	8-24
PNEUMATIC RADIAL	8-25
SINGLE MOUNT WITH STANDARD TREAD	8-22
SINGLE MOUNT WITH WIDE TREAD	8-23
DUAL MIRRORS	
WITH CAB	16-4
E	
E-HYDRAULIC CONTROL CONVERSION KITS	17-3
ELECTRICAL SYSTEM	
RIGHT HAND CHASSIS	6-4
ELECTRO HYDRAULIC POPPET VALVE	
THREE AND FOUR FUNCTION	11-32
ELECTRONIC CONTROL LEVERS	
MINI-LEVER MODULE (FOUR FUNCTION)	6-32
MINI-LEVER MODULES (THREE FUNCTION)	6-34
ELECTRONIC CONTROL MODULE AND SENSORS	
CUMMINS QSB 3.3L DIESEL	6-18
ELECTRONIC LEVER LABELS	
MINI LEVERS	1-56
ENGINE ELECTRICAL SYSTEM	
GM 4.3L GASOLINE AND LPG	6-8
ENGINE MOUNTING	
CUMMINS QSB 3.3L DIESEL	2-38
GM 4.3L, GASOLINE AND LPG	2-14
ENGINE SAFETY ELECTRICAL	
CUMMINS QSB 3.3L DIESEL	6-26
GM 4.3L (GS AND LPS)	6-10
EXAUST SYSTEM	
COUNTERWEIGHT EXHAUST - CUMMINS QSB 3.3L DIESEL	3-10
OVERHEAD EXHAUST - CUMMINS QSB 3.3L DIESEL	3-8
EXHAUST MANIFOLD	
CUMMINS QSB 3.3L DIESEL	2-72
EXHAUST SYSTEM	
GM 4.3L - WITH CATALYTIC CONVERTER	3-2
GM 4.3L - WITHOUT CATALYTIC CONVERTER	3-4
EXHAUST WRAPS	
CUMMINS QSB 3.3L DIESEL	3-12
GM 4.3L GASOLINE AND LPG	3-6
F	
FAN ASSEMBLY	
CUMMINS QSB 3.3L DIESEL	2-34
FAN MOUNT ASSEMBLY	
GM 4.3L GASOLINE AND LPG	2-12
FENDERS	1-14

©2008 Yale Materials Handling Corporation

TABLE OF CONTENTS (continued)

DESCRIPTION	PAGE
FIRE EXTINGUISHER	16-5
FLOOR PLATES AND COVERS	1-10
FLYWHEEL AND HOUSING	
CUMMINS QSB 3.3L DIESEL	2-30
GM 4.3L GASOLINE AND LPG	2-28
FOOT DIRECTIONAL CONTROL PEDAL	5-36
FORKS	
POLISHED FORK WITH FULL BOTTOM TAPER - CLASS III AND IV	1-62
STANDARD TAPER - CLASS III	1-60
STANDARD TAPER - CLASS IV	1-61
FORWARD CLUTCH	
SINGLE SPEED TRANSMISSION	7-16
FORWARD CLUTCH, HIGH	
DUAL SPEED TRANSMISSION	7-26
FORWARD CLUTCH, LOW	
DUAL SPEED TRANSMISSION	7-24
FREE-LIFT	
THREE STAGE FULL FREE-LIFT	13-20
FREE-LIFT CYLINDER	
THREE STAGE FULL FREE-LIFT	13-24
TWO STAGE FULL FREE-LIFT	14-14
FRONT GEAR HOUSING	
CUMMINS QSB 3.3L DIESEL	2-56
FUEL FILTER	
CUMMINS QSB 3.3L DIESEL	5-33
FUEL FILTER PLUMBING	
CUMMINS QSB 3.3L DIESEL	5-30
FUEL INJECTION PUMP	
CUMMINS QSB 3.3L DIESEL	5-24
FUEL INJECTOR AND INJECTOR PLUMBING	
CUMMINS QSB 3.3L DIESEL	5-26
FUEL PUMP PLUMBING	
CUMMINS QSB 3.3L DIESEL	5-28
FUEL SYSTEM	
CUMMINS QSB 3.3L DIESEL	5-22
GM 4.3L LPG	5-8
GM 4.3L, GASOLINE	5-10
FULL SUSPENSION SEAT	
WITH AND WITHOUT ELECTRONIC CONTROLS	1-48
FULL SUSPENSION SWIVEL SEAT	
WITH AND WITHOUT ELECTRONIC CONTROLS	1-50

G

GEAR PUMP	11-6
GM LPG REGULATOR DRAIN KIT	16-12

©2008 Yale Materials Handling Corporation

TABLE OF CONTENTS (continued)

DESCRIPTION	PAGE
H	
HAND LEVERS	
FOUR FUNCTION - WITH DETENTED LEVERS	11-12
FOUR FUNCTION - WITHOUT DETENTED LEVERS	11-14
THREE FUNCTION - WITH DETENTED LEVERS	11-8
THREE FUNCTION - WITHOUT DETENTED LEVERS	11-10
HEADER HOSE	
THREE STAGE FULL FREE-LIFT	15-10
TWO STAGE FULL FREE-LIFT	15-6
TWO STAGE LIMITED FREE-LIFT	15-2
HEADER HOSE CONVERSION KITS	
HEATER HOSE ARRANGEMENT	
CUMMINS QSB 3.3L DIESEL - WITH CAB	1-40
GM 4.3L GASOLINE - WITH CAB	1-38
GM 4.3L LPG - WITH CAB	1-42
HOOD ASSEMBLY	1-2
HYDRAULIC CONTROL CONVERSIONS	17-3
HYDRAULIC FILTER	11-4
HYDRAULIC SUPPLY AND RETURN	11-2
I	
IMPACT SENSOR	6-46
INNER MAST	
THREE STAGE FULL FREE-LIFT	13-10
TWO STAGE LIMITED FREE-LIFT	12-6
INNER MAST AND FREE-LIFT	
TWO STAGE FULL FREE-LIFT	14-6
INSTRUMENT CLUSTER	6-29
INTEGRAL SIDE-SHIFT ASSEMBLY	
GP/GLP/GDP080-090VX (48 IN. AND 60 IN.) - TWO STAGE LIMITED FREE-LIFT	15-14
GP/GLP/GDP080-090VX (48 IN. AND 60 IN.) - TWO AND THREE STAGE FULL FREE-LIFT	15-22
GP/GLP/GDP100-120VX (54 IN. AND 60 IN.) - TWO STAGE LIMITED FREE-LIFT	15-18
GP/GLP/GDP100-120VX (54 IN. AND 60 IN.) - TWO AND THREE STAGE FULL FREE-LIFT	15-28
INTEGRAL SIDE-SHIFT CARRIAGE	
GP/GLP/GDP080-090VX (48 IN. AND 60 IN.) - TWO STAGE LIMITED FREE-LIFT	15-16
GP/GLP/GDP100-120VX (54 IN. AND 60 IN.) - TWO STAGE LIMITED FREE-LIFT	15-20
GP/GLP/GDP100-120VX (54 IN. AND 60 IN.) - TWO AND THREE STAGE FULL FREE-LIFT	15-30
GP/GLP/GDP80-90VX (48 IN.) - TWO AND THREE STAGE FULL FREE-LIFT	15-24
GP/GLP/GDP80-90VX (60 IN.) - TWO AND THREE STAGE FULL FREE-LIFT	15-26
INTERMEDIATE MAST	
THREE STAGE FULL FREE-LIFT	13-6
L	
LABELS	
EXTERIOR	1-52
INTERIOR	1-54
LIFTING BRACKET	
CUMMINS QSB 3.3L DIESEL	2-37
LIFTING EYES	16-10

©2008 Yale Materials Handling Corporation

TABLE OF CONTENTS (continued)

DESCRIPTION	PAGE
LIGHT KITS	17-9
LOAD BACKREST EXTENSION	1-64
LOAD WEIGH ELECTRICAL	6-40
LPG TANK BRACKET	
SWING OUT	5-18
SWING OUT, DROP DOWN	5-20
M	
MAIN CYLINDER (GP/GLP/GDP080-090VX)	
TWO STAGE LIMITED FREE-LIFT	12-14
MAIN CYLINDER (GP/GLP/GDP100-120VX)	
TWO STAGE LIMITED FREE-LIFT	12-16
MAIN LIFT	
THREE STAGE FULL FREE-LIFT	13-12
TWO STAGE LIMITED FREE-LIFT	12-10
MAIN LIFT CYLINDER	
THREE STAGE FULL FREE-LIFT	13-16
TWO STAGE FULL FREE-LIFT	14-10
MAST ELECTRICAL	6-44
MIRROR	16-3
MISCELLANEOUS CONVERSION KITS	17-9
MUD GUARDS	1-16
N	
NON SUSPENSION SEAT	1-44
O	
OIL FILTER AND COOLER	
CUMMINS QSB 3.3L DIESEL	2-48
OIL LEVEL GAUGE	
CUMMINS QSB 3.3L DIESEL	2-52
OIL PAN	
CUMMINS QSB 3.3L DIESEL	2-50
OIL PUMP	
GM 4.3L GASOLINE AND LPG	2-26
OIL PUMP AND FRONT GEAR COVER	
CUMMINS QSB 3.3L DIESEL	2-46
OUTER MAST	
THREE STAGE FULL FREE-LIFT	13-2
TWO STAGE LIMITED FREE-LIFT	12-2
OUTER MAST AND MAIN LIFT	
TWO STAGE FULL FREE-LIFT	14-2
OVERHEAD GUARD	1-8
P	
PARK BRAKE ASSEMBLY	10-20
PISTON AND CONNECTING ROD	
CUMMINS QSB 3.3L DIESEL	2-54
POWER DISTRIBUTION MODULE	6-28
PRE-CLEANER	5-6

©2008 Yale Materials Handling Corporation

TABLE OF CONTENTS (continued)

DESCRIPTION	PAGE
R	
REGULATOR	
GM 4.3L LPG	5-14
REMOTE KEY SWITCH	6-6
RETURN TO SET TILT KITS	17-2
REVERSE CLUTCH	
DUAL SPEED TRANSMISSION	7-28
SINGLE SPEED TRANSMISSION	7-18
ROCKER ARM SHAFT	
CUMMINS QSB 3.3L DIESEL	2-36
S	
SEALED ALTERNATOR AND MOUNTING	
CUMMINS QSB 3.3L DIESEL	6-20
GM 4.3L, GASOLINE AND LPG	6-16
SEAT CONVERSION KITS	17-2
SEMI SUSPENSION SEAT	
WITH AND WITHOUT ELECTRONIC CONTROLS	1-46
STARTER AND MOUNT	
CUMMINS QSB 3.3L DIESEL	6-24
STARTER MOTOR	
CUMMINS QSB 3.3L DIESEL	6-21
STARTING AID	
CUMMINS QSB 3.3L DIESEL	2-64
STEER AXLE	9-10
STEER CONTROL UNIT	9-6
STEER CYLINDER	9-14
STEER TIRE AND WHEEL	9-16
STEERING COLUMN AND ATTACHING PARTS	9-2
STEERING COLUMN ASSEMBLY	9-4
STEERING LINES	9-8
STROBE LIGHT	
LED	16-2
T	
THERMOSTAT	
CUMMINS QSB 3.3L DIESEL	2-39
THROTTLE BODY ASSEMBLY	
GM 4.3L LPG	5-12
THROTTLE BODY ASSEMBLY AND FUEL RAIL	
GM 4.3L GASOLINE	5-16
THROTTLE PEDAL AND ATTACHING PARTS	5-34
TILT HOSES	11-42
TILT CYLINDER AND MAST INSTALLATION	11-46
TILT CYLINDERS	11-48
TORQUE CONVERTER	
CUMMINS QSB 3.3L DIESEL	7-3
GM 4.3L, GASOLINE AND LPG	7-4

©2008 Yale Materials Handling Corporation

TABLE OF CONTENTS (continued)

DESCRIPTION	PAGE
TRANSMISSION	
DUAL SPEED, TWO PIECE HOUSING - SHEET 1 0F 2	7-20
DUAL SPEED, TWO PIECE HOUSING - SHEET 2 0F 2	7-22
SINGLE SPEED - SHEET 1 0F 2	7-12
SINGLE SPEED - SHEET 2 0F 2	7-14
TRANSMISSION COOLING	
WITH EXTERNAL OIL COOLER - GM 4.3L AND CUMMINS QSB 3.3L	7-10
WITH INTERNAL OIL COOLER - CUMMINS QSB 3.3L DIESEL	7-6
WITH INTERNAL OIL COOLER - GM 4.3L GASOLINE AND LPG	7-8
TRANSMISSION ELECTRICAL SYSTEM	6-42
TRANSMISSION MOUNTING	7-2
TURBOCHARGER	
CUMMINS QSB 3.3L DIESEL	2-66
TURBOCHARGER PLUMBING	
CUMMINS QSB 3.3L DIESEL	2-68
V	
VALVE ASSEMBLY, AUXILIARY ONE AND TWO	
MANUAL CONTROL VALVE - THREE AND FOUR FUNCTION	11-20
VALVE ASSEMBLY, AUXILIARY ONE SECTION	
ELECTRONIC CONTROL VALVE - THREE AND FOUR FUNCTION	11-34
VALVE ASSEMBLY, AUXILIARY TWO SECTION	
ELECTRONIC CONTROL VALVE - FOUR FUNCTION	11-36
VALVE ASSEMBLY, LIFT AND LOWER	
ELECTRONIC CONTROL VALVE - THREE AND FOUR FUNCTION	11-28
VALVE ASSEMBLY, LIFT AND TILT	
MANUAL CONTROL VALVE - THREE AND FOUR FUNCTION	11-18
VALVE ASSEMBLY, OUTLET SECTION	
ELECTRONIC CONTROL VALVE - THREE AND FOUR FUNCTION	11-38
MANUAL CONTROL VALVE	11-22
VALVE ASSEMBLY, TILT SECTION	
ELECTRONIC CONTROL VALVE - THREE AND FOUR FUNCTION	11-30
VALVE COVER	
CUMMINS QSB 3.3L DIESEL	2-58
VALVE COVER AND INLET MANIFOLD	
GM 4.3L GASOLINE AND LPG	2-24
VENT LINE GROUP	11-44
VIBRATION DAMPER	
CUMMINS QSB 3.3L DIESEL	2-65
W	
WATER PUMP AND PULLEY	
CUMMINS QSB 3.3L DIESEL	2-40
WATER SEPARATOR	
CUMMINS QSB 3.3L DIESEL	5-32
WEATHER PROTECTION KITS	17-2
WET BRAKE ASSEMBLY	8-20
WHEEL CONVERSION KITS	17-2

©2008 Yale Materials Handling Corporation

TABLE OF CONTENTS (continued)

DESCRIPTION	PAGE
WIRE HARNESS	
ALTERNATOR - CUMMINS QSB 3.3L DIESEL	6-74
COWL WITH FORWARD/REVERSE LEVER	6-90
COWL WITH FORWARD/REVERSE LEVER - WITH HYDRAULIC PUMP SOLENOID	6-94
COWL WITH MONOTROL PEDAL	6-86
ELECTRONIC CONTROL VALVE - THREE FUNCTION	6-98
ELECTRONIC CONTROL VALVE - FOUR FUNCTION	6-100
ENGINE - CUMMINS QSB 3.3L DIESEL	6-64
ENGINE - GM 4.3L GASOLINE	6-66
ENGINE - GM 4.3L LPG	6-70
LEFT HAND CHASSIS - GM 4.3L, GASOLINE	6-60
LEFT HAND CHASSIS - GM 4.3L LPG	6-62
LIGHTS - WITH OVERHEAD GUARD	6-102
RIGHT HAND CHASSIS - GM 4.3L GASOLINE AND LPG	6-48
RIGHT HAND CHASSIS - CUMMINS QSB 3.3L	6-54
SEALED ALTERNATOR - GM 4.3L	6-76
SEALED ALTERNATOR - CUMMINS QSB 3.3L	6-78
TRANSMISSION - SINGLE SPEED	6-82
TRANSMISSION - DUAL SPEED	6-84
WORK, REAR DRIVE, AND BRAKE/TAIL LIGHTS	
WITH CAB	6-36
WITH OVERHEAD GUARD	6-38

©2008 Yale Materials Handling Corporation

ABBREVIATIONS QUICK REFERENCE SHEET

Listed below are abbreviations used in parts manuals to denote the following expressions:

TERM	DEFINITION
Amp	Amperes
AR	As Required
BDI	Battery Discharge Indicators
BWI	Brush Wear Indicator
CE	Communicator End
CRE	Corrosive Environment
D/B	Date Break
dbA	Decibel "A" Scale
DE	Drive End
ECH	Empty Container Handler
ECH-3	Empty Container Handler - 3 High Stacking
ECH-4	Empty Container Handler - 4 High Stacking
ECH-5	Empty Container Handler - 5 High Stacking
ECH-6	Empty Container Handler - 6 High Stacking
ECH-7	Empty Container Handler - 7 High Stacking
ECM	Electronic Control Module
ECN	Engineering Change Notice
EEPROM	Electrically Erasable Programmable Read Only Memory
EPA	US Environmental Protection Agency
EPROM	Electrically Programmable Read Only Memory

TERM	DEFINITION
FRE	Freezer Environment
in.	inches
LPG	Liquefied Petroleum Gas
MAP	Manifold Absolute Pressure
mm	millimeters
MSTS	Microprocessor Spark Timing System
NPT	National Pipe Threads
O/S	Oversize
PTO	Power Take Off
RPM	Revolutions per Minute
S/N	Serial Number
TMM	Truck Management Module
UL Type D	Diesel-Powered Safety Rating
UL Type DS	Diesel-Powered Safety Rating
UL Type E	Battery-Powered Safety Rating
UL Type EE	Battery-Powered Safety Rating
UL Type ES	Battery-Powered Safety Rating
UL Type G	Gasoline-Powered Safety Rating
UL Type GS	Gasoline-Powered Safety Rating
UL Type LP	Gas-Powered Safety Rating
UL Type LPS	LP Gas-Powered Safety Rating
U/S	Undersize
UL	Underwriters Laboratory
V	Volts

©2008 Yale Materials Handling Corporation

HOW TO USE THE ILLUSTRATED PARTS MANUAL

This parts manual describes and illustrates assemblies, subassemblies, and detail parts needed for service replacement.

The different constructions are indicated by keys and footnotes. The callouts correspond to descriptions found on the next page.

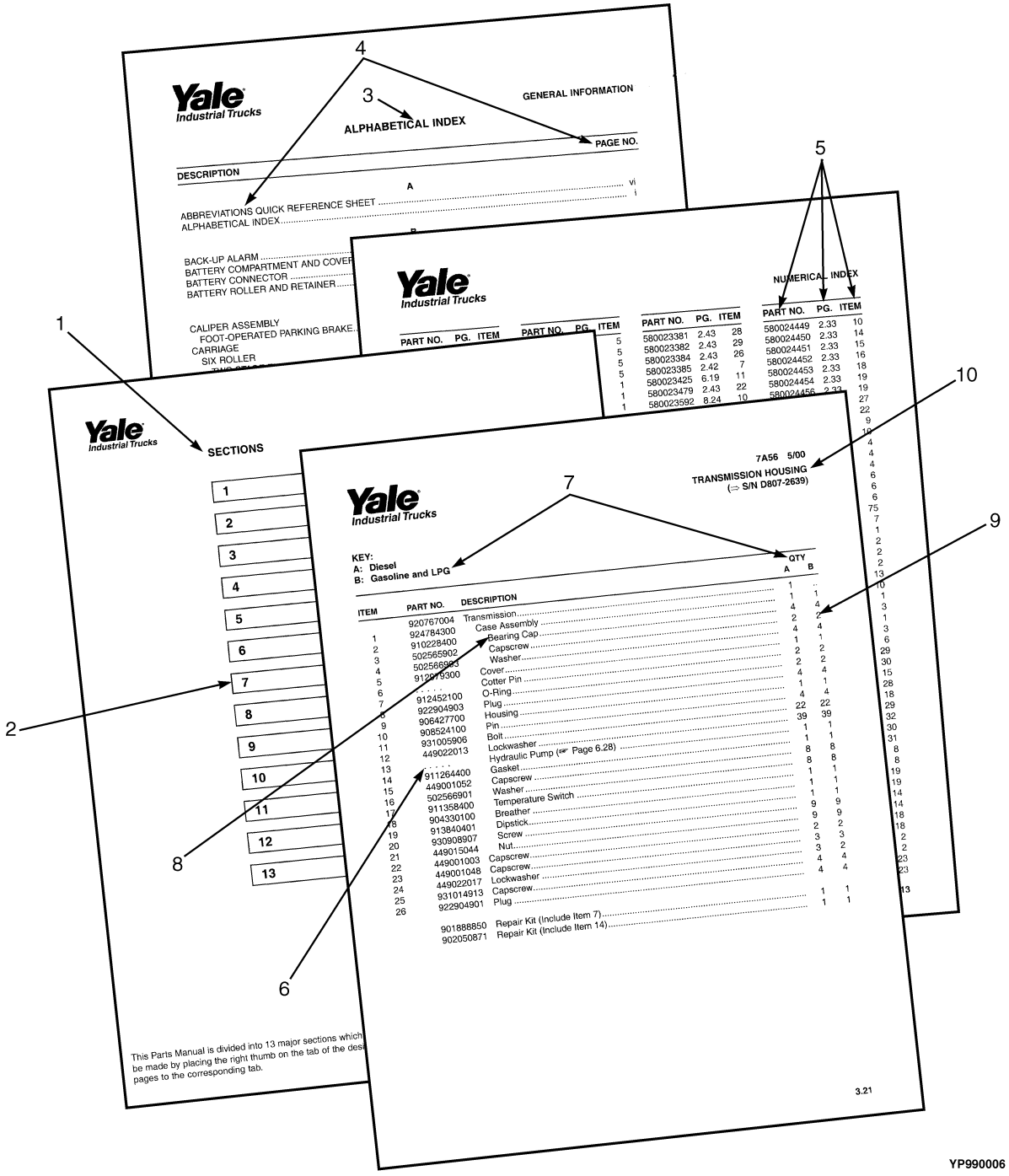

©2008 Yale Materials Handling Corporation

HOW TO FIND THE DESIRED PART NUMBER

WHEN THE PART NUMBER AND THE NEXT HIGHER ASSEMBLY IS NOT KNOWN:

1. Determine the function and application of the part required. Turn to the Sections Page. Choose the general area of reference most likely to include the part.

2. Turn to the section you chose. Use the Section Table of Contents to determine the assembly which would normally contain the part required. Then locate the part on the assembly breakdown page.

WHEN THE PART NUMBER IS NOT KNOWN AND THE NEXT HIGHER ASSEMBLY IS KNOWN:

3. Determine the assembly the required part is used on. Turn to the Table of Contents (Page i).

4. Locate the assembly the required part is used on and turn to the page indicated for that assembly. Then locate the part on the assembly breakdown page.

WHEN THE PART NUMBER IS KNOWN:

5. Use the Numerical Index (Page 18-1) to find the part number. Turn to the page listed and locate the part as indicated by the item number.

GENERAL:

The assembly breakdowns include part numbers, descriptions, quantities required, keys and footnotes to help in selecting correct parts.

6. Five periods in the PART NO. column (. . . . .) indicate that the part is either *Not Serviced Separately* or there is a reference to another figure. A figure reference is denoted by a pointing hand followed by a parts page number in the DESCRIPTION column (☞7A56)

7. Keys are used to show two or more similar assemblies, RH and LH assembly parts, etc. Select the appropriate key, "A", "B", "C", "D", or "E" and the corresponding quantity column to find the required parts. Two periods in the QTY column (..) indicate that the part is not used for that assembly.

8. Indented descriptions under the DESCRIPTION column are used to indicate assemblies and subparts of assemblies. In the example on the previous page, *BEARING CAP* (Item 2) is a subpart of the major assembly *CASE*.

9. Quantities shown are for one assembly. The quantities of the subpart *BEARING CAP* are indicated as two and two. This means two per *CASE* assembly.

10. Serial number breaks identify the most current parts information and are shown as follows:
    → **S/N A810N2639**
    Indicates last serial number affected.
    S/N A810N2640 →
    Indicates the first serial number affected.
    S/N A810N1553 ↔ S/N A810N3291
    Indicates a range of serial numbers affected.

    ECN numbers for pending serial numbers are shown to allow for the inclusion of the most current parts information and are identified as follows:
    → **S/N Pending Per ECN 63243**
    Indicates a pending serial number for last unit affected.
    S/N Pending Per ECN 63243 →
    Indicates a pending serial number for first unit affected.

    Date breaks are used to indicate when a change occurred but a subsequent serial number break was not recorded. This is an arbitrary date usually based on the ECN release and are identified as follows:
    → **D/B 3/00**
    Indicates that a change occurred sometime within that month for the item affected.
    D/B 3/00 →
    Indicates that a change occurred sometime within that month for the item affected.
    D/B 3/00 ↔ D/B 4/00
    Indicates a range of production dates of the item affected.

    Contact your local dealer for Yale lift trucks for serial number information for items with a ECN or a date break.

ORDERING PARTS:

When ordering replacement parts, give the unit serial number, part number, name of part and quantity required.

For any further information on parts, service, or ordering, consult your local dealer for Yale lift trucks.

©2008 Yale Materials Handling Corporation

IDENTIFICATION OF TRUCK SERIAL NUMBERS

X	OOO	X	OOOO	X
(1)	(2)	(3)	(4)	(5)

NOTE: Serial Number breakdown is only for trucks built after 1994.

(1) and (2) The first letter and three numbers indicate the truck unit code.

(3) The second letter indicates the plant of manufacture.

(4) The four or five digit number indicates the production sequence number of the truck.

(5) The final letter indicates the year of manufacture starting with "A" in 1957, 1980, and 2003. The letters "I", "O", and "Q" will not be used.

For pending serial numbers contact your local dealer for Yale lift trucks.

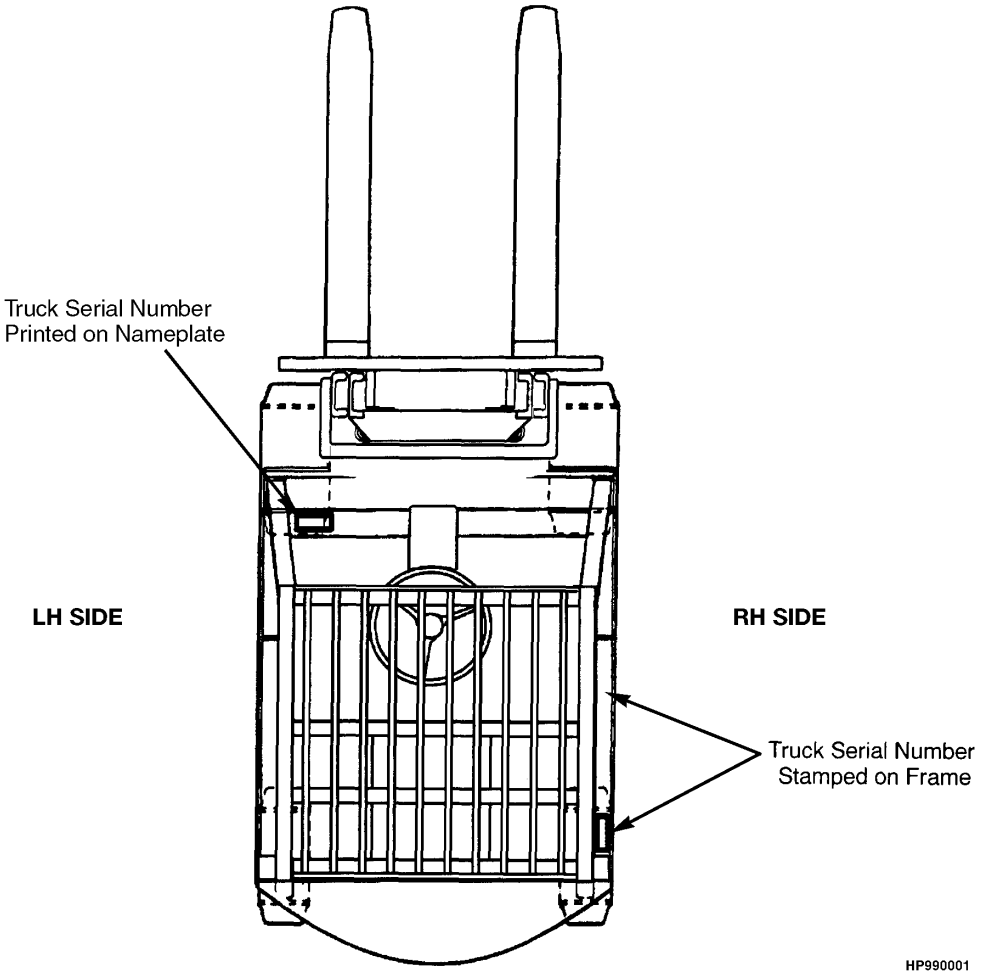

Parts referred to in this book as right or left hand parts are in accordance with the illustration above.

©2008 Yale Materials Handling Corporation

IDENTIFICATION OF MAST SERIAL NUMBERS

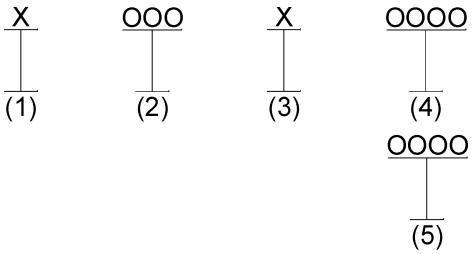

(1) and (2) The first letter and number indicates the mast unit code.

(3) The second letter indicates the plant of manufacture.

(4) The four or five digit number indicates the production sequence number of the mast.

(5) Carriage travel in millimeters stamped just below the serial number.

Mast Group identification consists of mast unit code (1) and (2) plus carriage travel (5).

For pending production sequence numbers contact your local dealer for Yale lift trucks.

LIFT EQUIPMENT IDENTIFICATION

1. Fork part number, capacity rating, plant code letter, and date of manufacture are stamped approximately six inches below the top of most forks.
2. The carriage group number is stamped on the right hand side of the top crossmember (pin type) or on the back of the right hand end of the bottom crossmember (hook type). A date code has two letters in line with or below the carriage group number.
3. The mast identification number has a unit code, a letter indicating the plant of manufacture, and a serial number. Underneath the production sequence number is a four digit number that indicates the carriage travel in millimeters.
4. Tilt and lift cylinder group numbers are stamped on the cylinder shell.

   Always refer to the group, serial, or part number when ordering service parts.

   Modification of masts and carriages by SPED (Special Products Engineering Department) are identified by a model prefix code beginning with the letter "S". contact your dealer for Yale lift trucks for information on these assemblies.

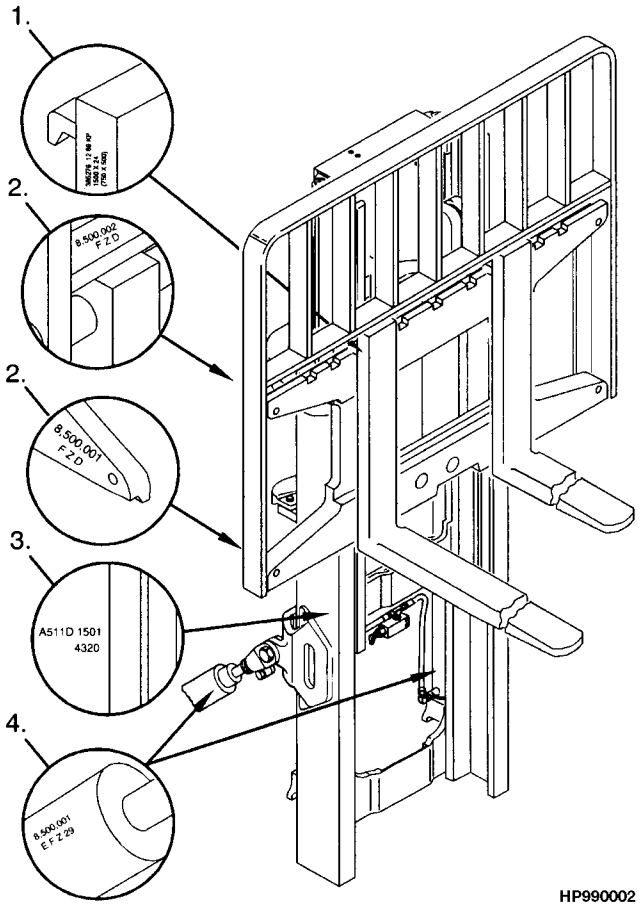

©2008 Yale Materials Handling Corporation

IDENTIFICATION OF ATTACHMENT AND SIDE-SHIFT CARRIAGE SERIAL NUMBERS

X OOO X OOOO

(1) (2) (3) (4)

(1) and (2) The first letter and three numbers indicate the attachment unit code.

(3) The second letter indicates the plant of manufacture.

(4) The four or five digit number indicates the production sequence number.

For pending production sequence numbers contact your local dealer for Yale lift trucks.

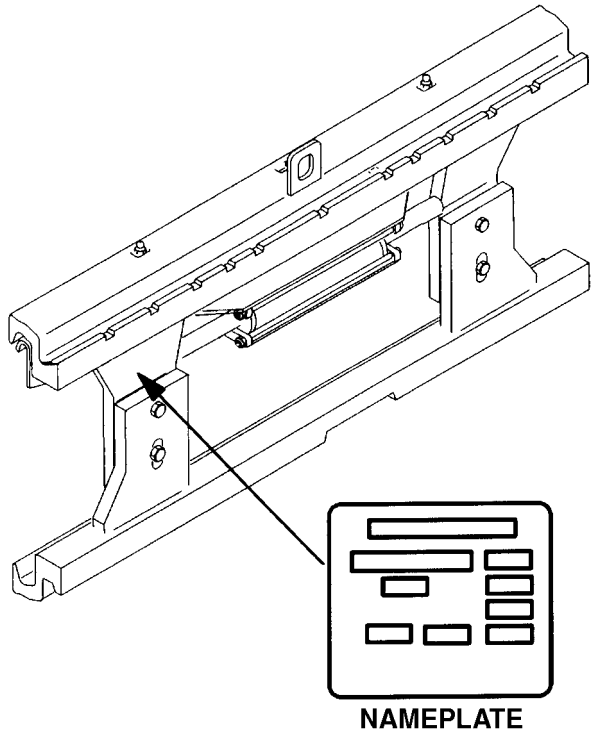

HP990003

Side-shift carriages and attachments have nameplates. Use the serial number found on the nameplate to identify the attachment.

Always refer to the group, serial, or part number when ordering service parts.

Modifications of attachments and side-shift carriages by SPED (Special Products Engineering Department) are identified by a model prefix code beginning with the letter "S". Contact your dealer for Yale lift trucks for information on these assemblies.

©2008 Yale Materials Handling Corporation

PUBLICATIONS

Every new lift truck is provided with an OPERATING MANUAL. This manual has information that the operator must know for inspection and operation of the lift truck.

SERVICE MAINTENANCE MANUALS, which provide service and overhaul procedures, and PARTS MANUALS with complete replacement part identification, are available at a nominal fee from your Yale dealer to assist users in effectively maintaining Yale lift trucks in a safe, useful condition. See the list below for information on ordering specific publications for this model lift truck.

PUBLICATION	YALE PART NUMBER
Operating Manual	524262271
Service Manual (Complete)	524329176
Parts Manual	524329168

©2008 Yale Materials Handling Corporation

MASTER PART SHEET CROSS-REFERENCE

NOTE: Throughout this manual are references to Part Sheet Numbers. These references are usually found after the description of a part or assembly. The Part Sheet Number is found on the upper left- or righthand corner of the parts pages.

EXAMPLE:

ITEM	PART NO.	DESCRIPTION	QTY
31	505965530	Steering Cylinder (☞6E67 [Figure 4-3])	1
32	504224261	Pin	4

Below is a numerical listing of Part Sheet Numbers found in this parts book and what page number they are on.

PART SHEET	PAGE
O19804	10-24
P19554	1-10
P19555	1-2
P19556	1-14
P19557	1-16
P19558	1-18
P19559	1-6
P19560	1-8
P19562	1-20
P19563	1-22
P19564	1-24
P19565	1-28
P19566	1-30
P19567	1-26
P19568	1-36
P19569	1-32
P19570	1-34
P19571	1-40
P19572	1-42
P19574	1-44
P19575	1-46
P19576	1-48
P19577	1-50
P19578	1-52
P19579	1-54
P19580	1-58
P19581	1-56
P19585	1-60
P19586	1-61
P19587	1-62
P19588	1-64
P19589	3-2
P19590	3-4
P19591	3-6
P19592	4-4
P19593	4-2
P19594	4-6
P19595	2-14
P19596	2-4
P19597	2-8
P19598	2-10
P19599	2-12
P19600	2-28
P19601	2-16
P19602	2-18
P19603	2-20
P19604	2-23
P19605	2-26
P19606	2-24
P19607	5-2
P19608	5-4
P19609	5-6
P19610	5-7
P19678	5-10
P19679	5-12
P19680	5-8
P19681	5-16
P19682	5-14
P19706	5-20
P19707	5-22
P19708	5-18
P19709	2-34
P19712	5-34
P19713	5-36
P19714	6-4
P19715	6-6
P19716	6-8
P19717	6-10
P19718	6-14
P19719	6-26
P19720	6-22
P19722	6-13
P19723	6-16
P19724	6-24
P19725	6-28
P19727	6-30
P19728	6-29
P19730	6-34
P19731	6-32
P19732	6-36
P19733	6-38
P19734	6-42
P19735	6-44
P19736	6-46
P19737	6-40
P19740	6-48
P19741	6-54
P19742	6-62
P19743	6-60
P19744	6-66
P19745	6-70
P19746	6-76
P19747	6-78
P19748	6-82
P19749	6-84
P19750	6-86
P19751	6-90
P19752	6-94
P19753	6-98
P19754	6-100
P19756	6-102
P19758	7-2
P19759	7-3
P19760	7-4
P19761	7-6
P19762	7-8
P19763	7-10
P19764	7-12

©2008 Yale Materials Handling Corporation

PART SHEET	PAGE
P19765	7-14
P19766	7-16
P19767	7-18
P19768	7-20
P19769	7-22
P19770	7-24
P19771	7-26
P19772	7-28
P19774	7-30
P19774	8-2
P19775	8-4
P19776	8-8
P19777	8-10
P19778	8-12
P19779	8-14
P19780	8-16
P19781	8-20
P19782	8-22
P19783	8-23
P19784	8-24
P19785	8-25
P19786	9-2
P19787	9-4
P19788	9-6
P19789	9-8
P19790	9-10
P19791	9-14
P19792	9-16
P19794	10-2
P19797	10-6
P19798	10-10
P19799	10-12
P19800	10-16
P19801	10-18
P19802	10-20
P19803	10-22
P19805	11-2
P19806	11-4
P19807	11-6
P19808	11-8
P19809	11-10
P19810	11-12
P19811	11-14
P19812	11-16
P19813	11-44
P19814	11-46
P19815	11-48
P19816	11-42
P19817	12-2
P19818	12-6
P19819	12-10
P19820	12-14
P19821	12-16
P19824	15-2
P19825	12-18
P19826	15-16
P19827	15-20
P19828	14-2
P19829	14-6
P19830	14-10
P19831	14-14
P19832	15-6
P19833	14-18
P19834	13-2
P19835	13-6
P19836	13-10
P19837	13-12
P19838	13-16
P19839	13-20
P19840	13-24
P19841	15-10
P19842	13-28
P19843	15-14
P19844	15-18
P19845	15-24
P19846	15-26
P19847	15-28
P19848	15-30
P19849	15-32
P19850	15-34
P19851	15-36
P19852	16-12
P19853	16-2
P19854	16-3
P19855	16-4
P19856	16-5
P19857	16-6
P19858	16-8
P19859	16-10
P19860	2-30
P19861	2-42
P19862	2-44
P19863	2-46
P19864	2-32
P19865	2-54
P19866	2-36
P19867	2-58
P19868	2-60
P19870	2-38
P19871	2-50
P19872	1-38
P19873	11-18
P19874	11-20
P19875	11-22
P19876	11-24
P19877	11-26
P19878	11-28
P19879	11-30
P19880	11-32
P19881	11-34
P19882	11-36
P19883	11-38
P19884	2-66
P19885	2-68
P19886	2-70
P19887	2-72
P19889	15-22
P19898	2-62
P19899	5-33
P19900	6-74
P19901	6-20
P19902	2-52
P19903	2-56
P19904	6-64
P19906	6-21
P19907	6-18
P19908	5-24
P19909	5-26
P19910	5-28
P19911	5-30
P19912	5-32
P19913	3-8
P19914	3-10
P19915	3-12
P19924	2-37
P19925	2-48
P19926	2-64
P19927	2-39
P19928	2-65
P19929	2-40
P19931	11-40

©2008 Yale Materials Handling Corporation

1 GENERAL TRUCK

SECTION 1
GENERAL TRUCK

DESCRIPTION	PAGE
CAB ASSEMBLY WITH STEEL DOORS	
COVERS, SEALS, SHIMS, AND FASTENERS	1-28
FAN	1-30
LEFT HAND DOOR COMPONENTS	1-36
RIGHT HAND DOOR COMPONENTS	1-32
RIGHT HAND DOOR HEATER COMPONENTS	1-34
SHEET 1 OF 3	1-20
SHEET 2 OF 3	1-22
SHEET 3 OF 3	1-24
WINDOWS	1-26
CONTROL LEVER LABELS	
MANUAL HYDRAULICS	1-58
COUNTERWEIGHT	1-6
COWL MOUNT	1-18
ELECTRONIC LEVER LABELS	
MINI LEVERS	1-56
FENDERS	1-14
FLOOR PLATES AND COVERS	1-10
FORKS	
POLISHED FORK WITH FULL BOTTOM TAPER - CLASS III AND IV	1-62
STANDARD TAPER - CLASS III	1-60
STANDARD TAPER - CLASS IV	1-61
FULL SUSPENSION SEAT	
WITH AND WITHOUT ELECTRONIC CONTROLS	1-48
FULL SUSPENSION SWIVEL SEAT	
WITH AND WITHOUT ELECTRONIC CONTROLS	1-50
HEATER HOSE ARRANGEMENT	
CUMMINS QSB 3.3L DIESEL - WITH CAB	1-40
GM 4.3L GASOLINE - WITH CAB	1-38
GM 4.3L LPG - WITH CAB	1-42
HOOD ASSEMBLY	1-2
LABELS	
EXTERIOR	1-52
INTERIOR	1-54
LOAD BACKREST EXTENSION	1-64
MUD GUARDS	1-16
NON SUSPENSION SEAT	1-44
OVERHEAD GUARD	1-8
SEMI SUSPENSION SEAT	
WITH AND WITHOUT ELECTRONIC CONTROLS	1-46

©2008 Yale Materials Handling Corporation

HOOD ASSEMBLY (FIGURE 1-1)

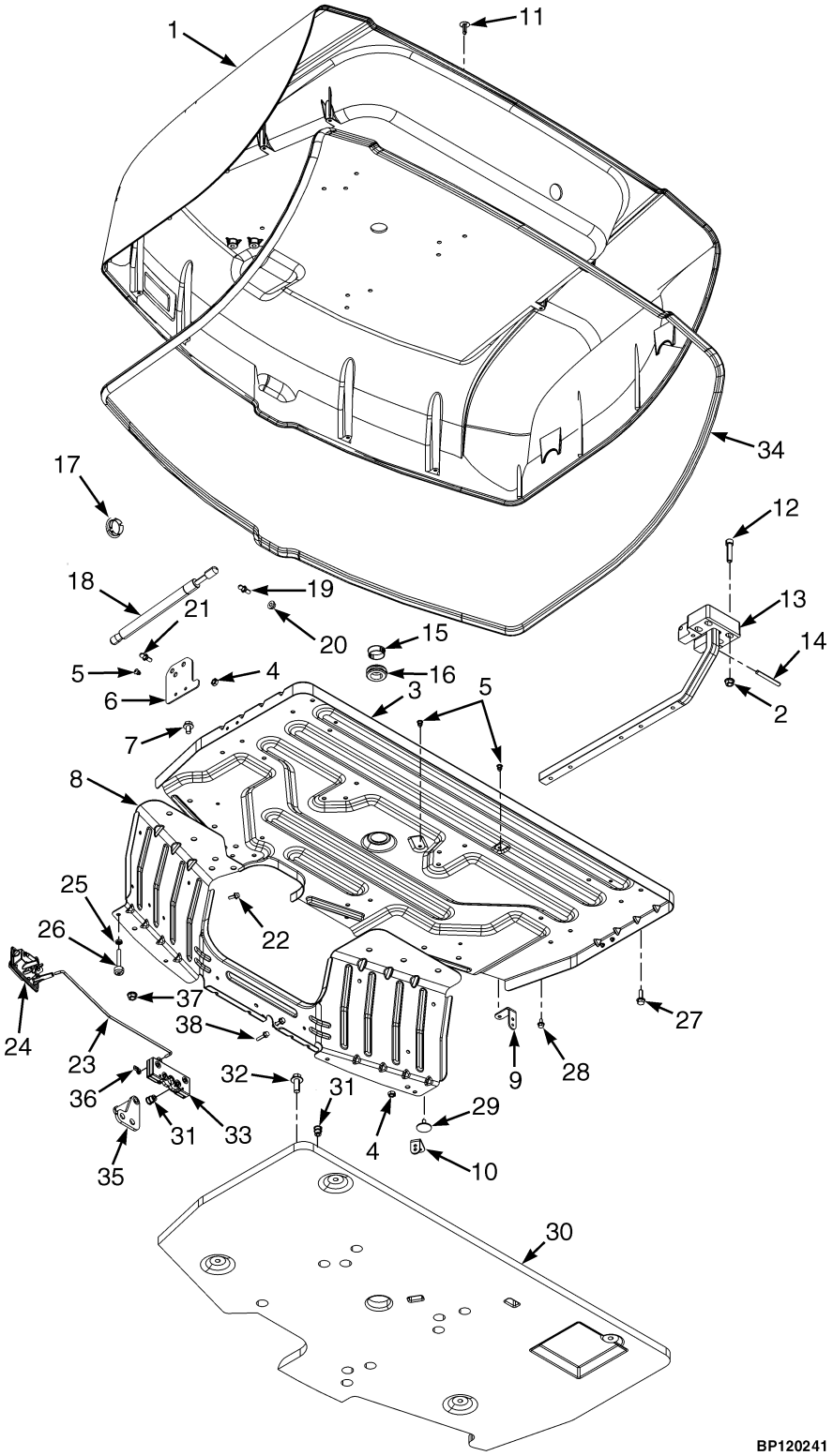

©2008 Yale Materials Handling Corporation

HOOD ASSEMBLY

ITEM	PART NO.	DESCRIPTION	QTY
1	524309072	Hood (Assembly)	1
1	524256876	Hood	1
1	524309075	Hood (Assembly) (Vented, With Liner, With Cab)	1
1	524256878	Hood (Vented)	1
1	524309074	Hood (Assembly) (Without Liner, With Overhead Guard)	1
1	524256876	Hood	1
1	524309076	Hood (Assembly) (Vented, Without Liner, With Overhead Guard)	1
1	524256878	Hood (Vented)	1
1	524309070	Hood (Assembly) (Low Noise With Damping and Liner, With Cab)	1
1	524256879	Hood (With Damping)	1
2	580027572	Nut	6
3	580090154	Hood Reinforcement	1
4	518805632	Nut	8
5	580065386	Capscrew	6
6	580069656	Bracket	2
7	580037179	Capscrew	6
8	580064906	Hood Reinforcement (Front)	1
9	580058135	Bracket	1
10	580064907	Bracket	1
11	580049758	Fastener	8
12	932202908	Capscrew	4
13	580064909	Hinge	2
14	580070675	Dowel	1
15	580058137	Plug	1
16	580051832	Grommet	1
17	524255979	Plug (Gold)	1
18	580072744	Gas Spring (With Overhead Guard)	2
18	580072744	Gas Spring (With Cab - RH)	1
18	580066569	Gas Spring (Locking) (With Cab - LH)	1
19	580064627	Ball Stud (With Cab)	1
20	580058190	Nut	4
21	580049915	Ball Stud (With Cab)	3
21	580049915	Ball Stud (With Overhead Guard)	4
22	580049011	Capscrew	2
23	580064914	Link (Link)	1
24	580064910	Handle	1
25	580004592	Nut	2
26	580058383	Bumper (Hood)	2
27	580030966	Capscrew	8
28	580039900	Capscrew	8
29	518793609	Fastener	4
30	580090153	Hood Liner	1
31	580044860	Insert	4
32	580056527	Capscrew	6
33	580064913	Latch	1
34	580064911	Seal	1
35	580073741	Striker Bolt (Striker)	1
36	580037719	Clip	2
37	580027572	Nut	4
38	580049840	Capscrew	4
ab	580074748	Hood Liner (Low Noise) (LH Panel)	1

©2008 Yale Materials Handling Corporation

HOOD ASSEMBLY

ITEM	PART NO.	DESCRIPTION	QTY
	ab 580074749	Hood Liner (Low Noise) (RH Panel)	1
	ab 580074750	Hood Liner (Low Noise) (Front Panel)	1

FOOTNOTES:

a Not Illustrated

b Used with Cab

©2008 Yale Materials Handling Corporation

NOTES

©2008 Yale Materials Handling Corporation

COUNTERWEIGHT (FIGURE 1-2)

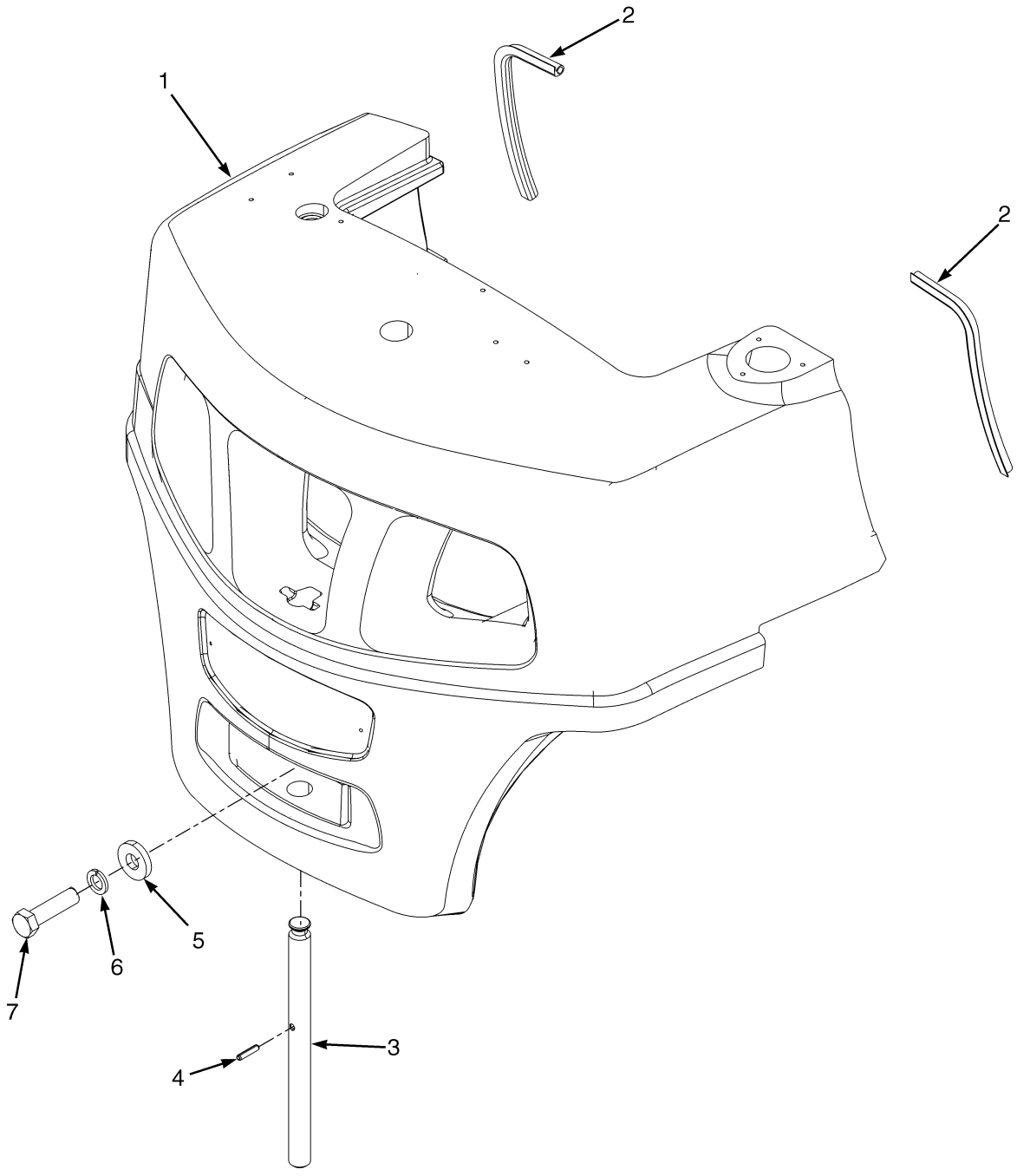

BP120215

©2008 Yale Materials Handling Corporation

COUNTERWEIGHT

ITEM	PART NO.	DESCRIPTION	QTY
1	524302330	Counterweight (GP/GLP/GDP80VX)	1
1	524302331	Counterweight (GP/GLP/GDP90VX)	1
1	524302332	Counterweight (GP/GLP/GDP100VX)	1
1	524302333	Counterweight (GP/GLP/GDP120VX)	1
1	524302335	Counterweight (GP/GDP/GDP110VX)	1
2	580063909	Seal	2
3	580084587	Tow Pin	1
4	954513908	Roll Pin	1
5	580053098	Washer	1
6	955400912	Washer	1
7	931011914	Capscrew	1

©2008 Yale Materials Handling Corporation

OVERHEAD GUARD (FIGURE 1-3)

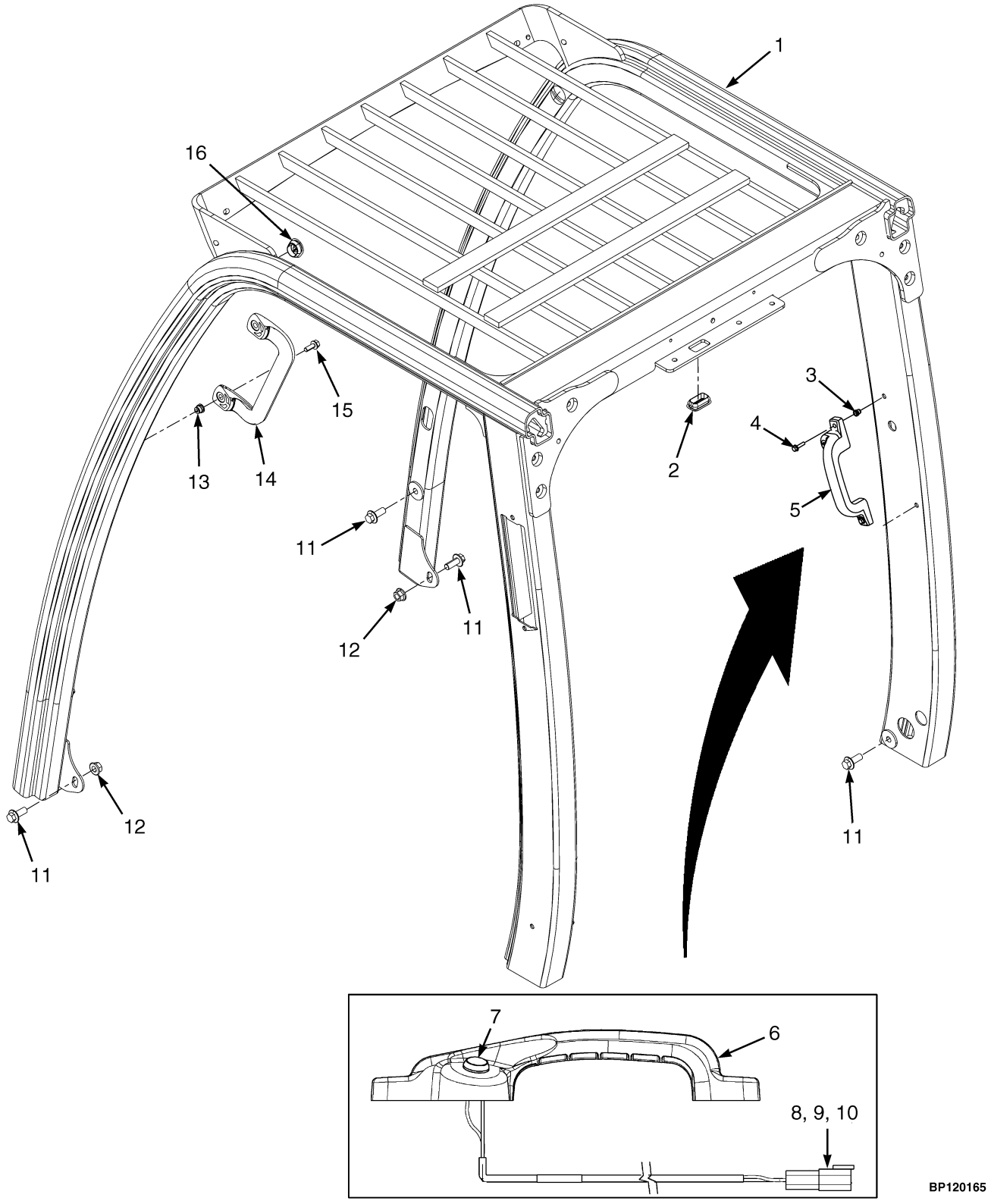

©2008 Yale Materials Handling Corporation

OVERHEAD GUARD

ITEM	PART NO.	DESCRIPTION	QTY
1	524240425	Overhead Guard (High)	1
1	524240431	Overhead Guard (Low)	1
2	524208883	Grommet	1
3	580041704	Insert	2
4	580058212	Capscrew	2
5	580051747	Handle	1
6	580050959	Handle	1
7	580058447	Push Button Switch	1
8	580022893	Connector	1
9	505968540	Connector	1
10	505968514	Terminal (Pin)	2
11	580051941	Capscrew	8
12	580056528	Nut (Shoulder)	2
13	580044861	Insert	4
14	580056526	Handle (Grab)	1
15	580056815	Capscrew	2
16	524201323	Grommet	2
	a 258979300	Plug	4
	a 524240692	Plug	1
	a 580036667	Grommet	1

FOOTNOTES:

a Not Illustrated

©2008 Yale Materials Handling Corporation

FLOOR PLATES AND COVERS (FIGURE 1-4)

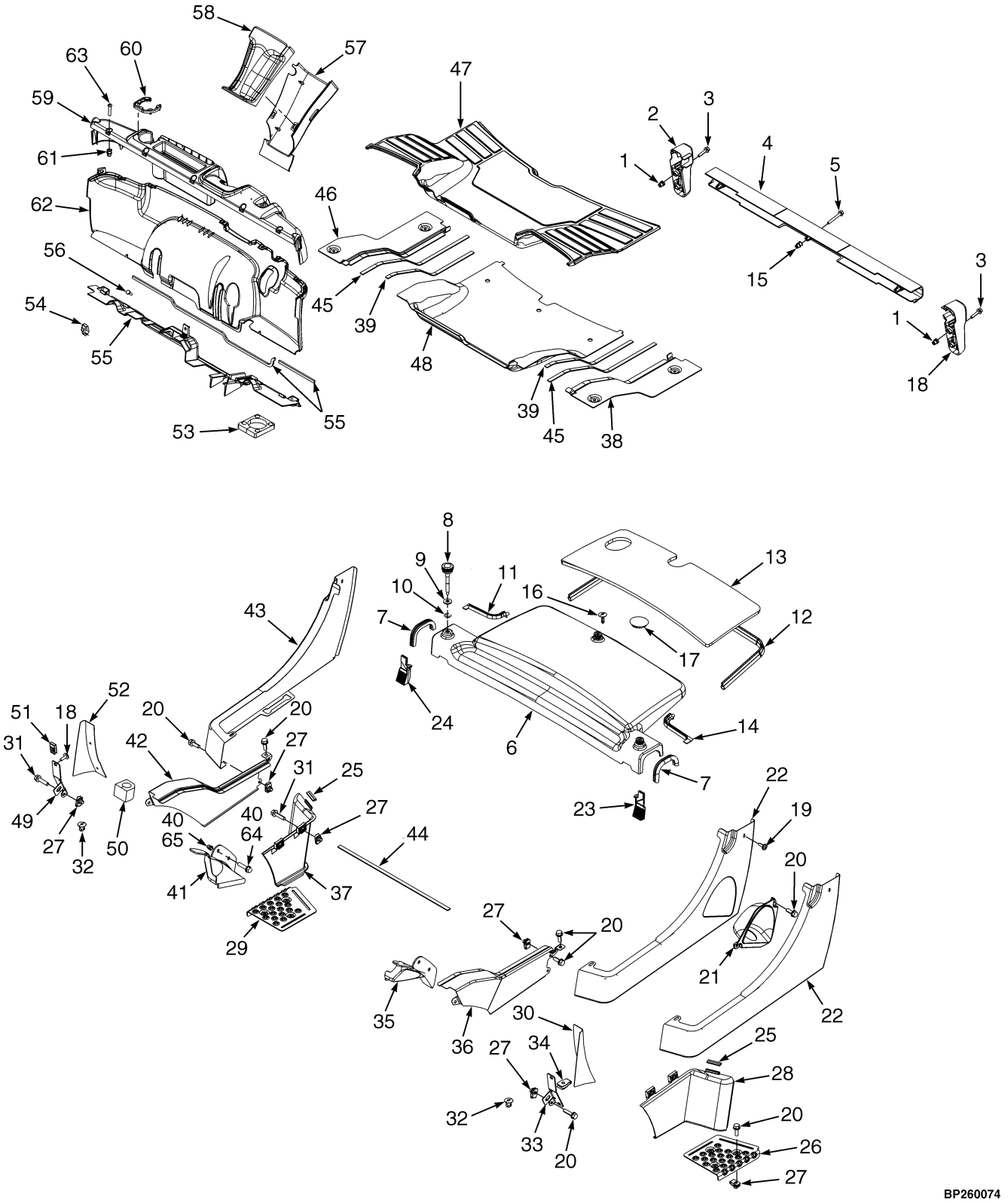

©2008 Yale Materials Handling Corporation

FLOOR PLATES AND COVERS

ITEM	PART NO.	DESCRIPTION	QTY
1	580041704	Insert	6
2	580037206	Tail Light Base (RH)	1
3	580058212	Capscrew	4
4	580048573	Cover	1
5	580041711	Capscrew	3
6	524318746	Cover	1
6	524231093	Cover	1
7	580063962	Trim Seal	2
8	580058734	Screw	3
9	504226242	Washer	3
10	507353800	Retaining Ring	3
11	580064084	Seal (RH)	1
12	580059335	Trim Seal	1
13	580068109	Sound Liner	1
14	580064083	Seal (LH)	1
15	580044859	Insert	3
16	580049758	Fastener	6
17	922365300	Cap	1
18	580037205	Tail Light Base (LH)	1
19	580056530	Screw	6
20	580056815	Capscrew	20
21	524149438	Shield	1
22	524228462	Panel (Rear LH) (LPG Only)	1
22	524228461	Panel (Rear LH) (Gasoline or Diesel Only)	1
23	580072818	Seal (LH)	1
24	580072819	Seal	1
25	580056224	Trim Seal	2
26	580049835	Plate (LH)	1
27	580026621	Nut	22
28	580087197	Step Panel (LH)	1
29	580049836	Plate (RH)	1
30	524214788	Cover (LH Fender)	1
31	580058269	Capscrew	6
32	580078280	Plug	4
33	580061696	Bracket (LH)	1
34	580012987	Nut	2
35	580071073	Flap (LH)	1
36	524239043	Panel (Front)	1
37	580087196	Step Panel (RH)	1
38	580058320	Floorplate (LH)	1
39	580058315	Seal (Rubber)	1
40	580056003	Washer	8
41	580071074	Flap (RH)	1
42	524239044	Panel (Front RH)	1
43	524228463	Panel (Rear RH)	1
44	580058798	Seal (Rubber)	1
45	580063913	Seal (Rubber)	2
46	580058321	Floorplate (RH)	1
47	580061291	Floormat	1
48	580058319	Floorplate (Center)	1
49	580061697	Bracket (RH)	1

©2008 Yale Materials Handling Corporation

FLOOR PLATES AND COVERS

ITEM	PART NO.	DESCRIPTION	QTY
50	580038033	Grommet	1
51	504225257	Nut	4
52	524214789	Cover (RH Fender)	1
53	580060870	Seal (Foam)	1
54	580046139	Clip	8
55	580052156	Cover Plate	1
55	580064147	Seal	1
56	909904403	Screw	2
57	580046138	Cover (Steering Column Lower)	1
58	580083020	Cover (Steering Column Upper)	1
59	580058909	Dash Panel (Manual Hydraulics)	1
59	580058910	Dash Panel (Electronic Hydraulics)	1
60	580052409	Cup Holder	1
61	580044859	Insert	5
62	580052292	Panel (Single Brake Pedal)	1
62	580059919	Panel (Dual Brake Pedal)	1
63	932728908	Capscrew	5
64	580055734	Capscrew	4
65	449015014	Nut	4

©2008 Yale Materials Handling Corporation

NOTES

©2008 Yale Materials Handling Corporation

FENDERS (FIGURE 1-5)

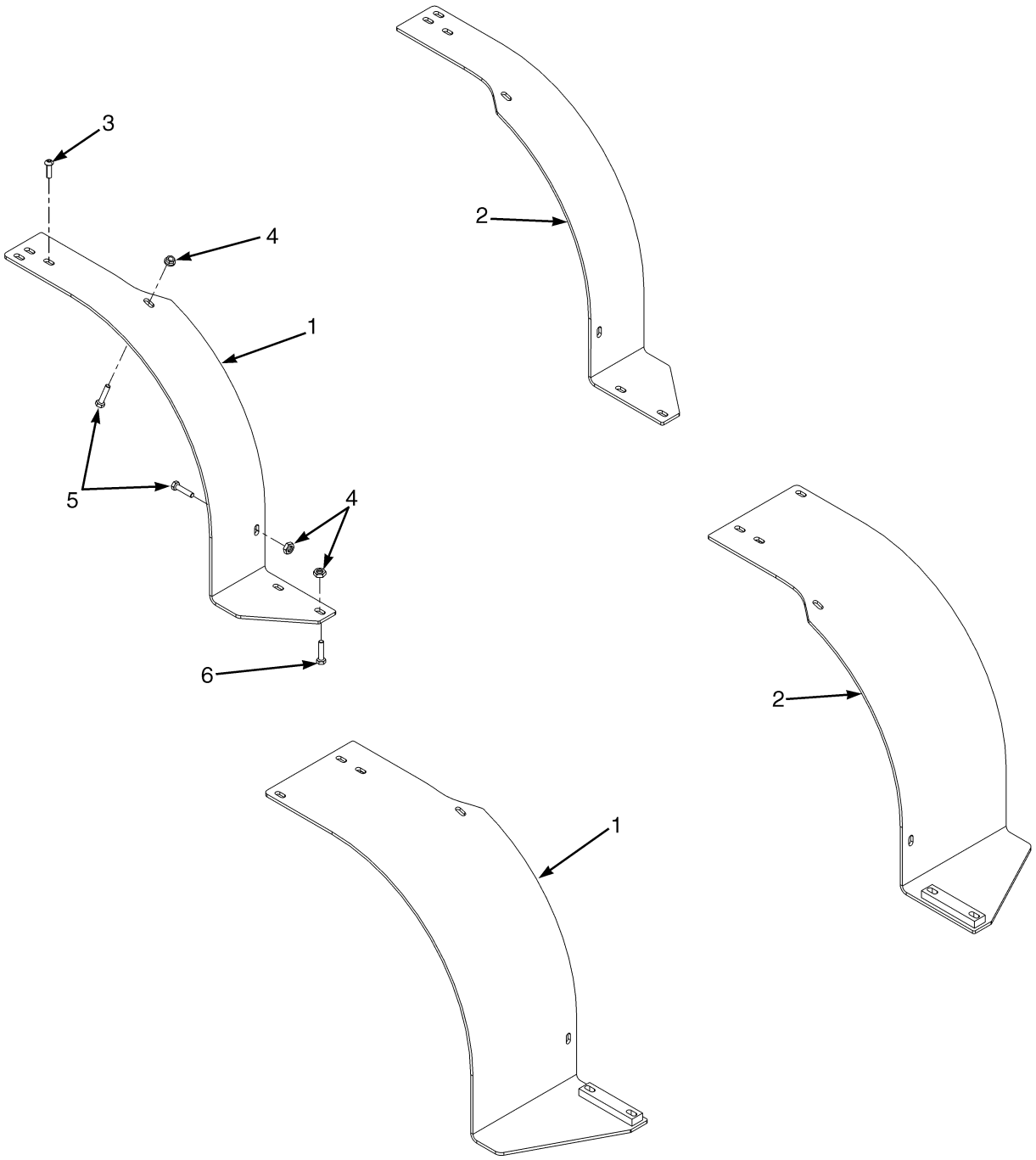

BP120229

©2008 Yale Materials Handling Corporation

FENDERS

KEY:
A: GP/GLP/GDP80-90VX
B: GP/GLP/GDP100-120VX

ITEM	PART NO.	DESCRIPTION	QTY A	QTY B
1	524220839	Fender (Wide Tread) (LH)	1	..
1	524220840	Fender (Wide Tread) (LH)	..	1
1	524220841	Fender (Dual Tread) (LH)	1	..
1	524220842	Fender (Dual Tread) (LH)	..	1
2	524220846	Fender (Wide Tread) (RH)	1	..
2	524220847	Fender (Wide Tread) (RH)	..	1
2	524220848	Fender (Dual Tread) (RH)	1	..
2	524220849	Fender (Dual Tread) (RH)	..	1
3	932731908	Capscrew	2	2
4	580058192	Nut	10	10
5	580066671	Capscrew	4	4
6	580066672	Capscrew	4	4

©2008 Yale Materials Handling Corporation

MUD GUARDS (FIGURE 1-6)

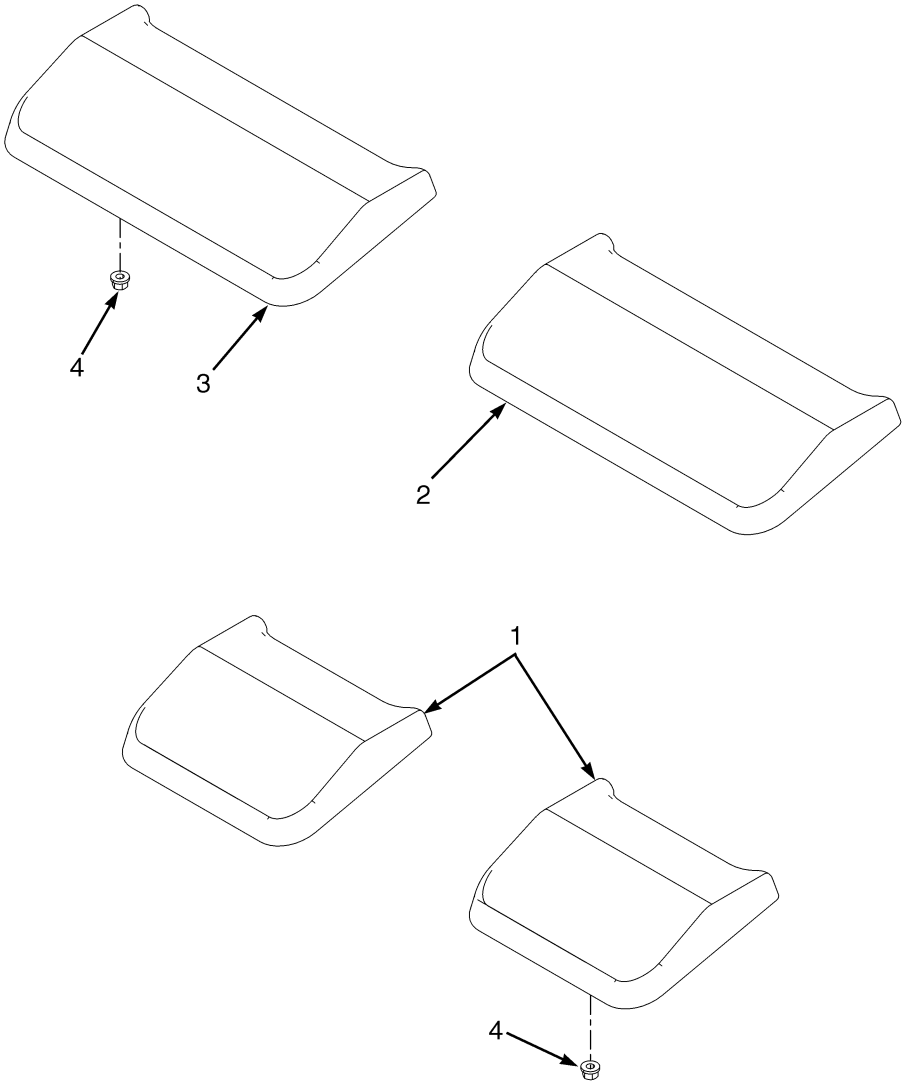

©2008 Yale Materials Handling Corporation

MUD GUARDS

KEY:
A: Standard Tread
B: Wide Tread
C: Dual Tread

ITEM	PART NO.	DESCRIPTION	QTY A	QTY B	QTY C
1	580053272	Mud Flap	2	..	..
2	**a** 580056793	Mud Flap (LH)	..	1	..
2	**b** 580056794	Mud Flap (LH)	..	1	..
2	**a** 580056795	Mud Flap (LH)	..	..	1
2	**b** 580056796	Mud Flap (LH)	..	..	1
3	**a** 580056797	Mud Flap (RH)	..	1	..
3	**b** 580056798	Mud Flap (RH)	..	1	..
3	**a** 580056799	Mud Flap (RH)	..	..	1
3	**b** 580056800	Mud Flap (RH)	..	..	1
4	**a** 580042963	Locknut	4	4	..
4	**b** 580042963	Locknut	..	6	6

FOOTNOTES:
a GP/GDP/GLP080-090VX
b GP/GDP/GLP100-120VX

©2008 Yale Materials Handling Corporation

COWL MOUNT (FIGURE 1-7)

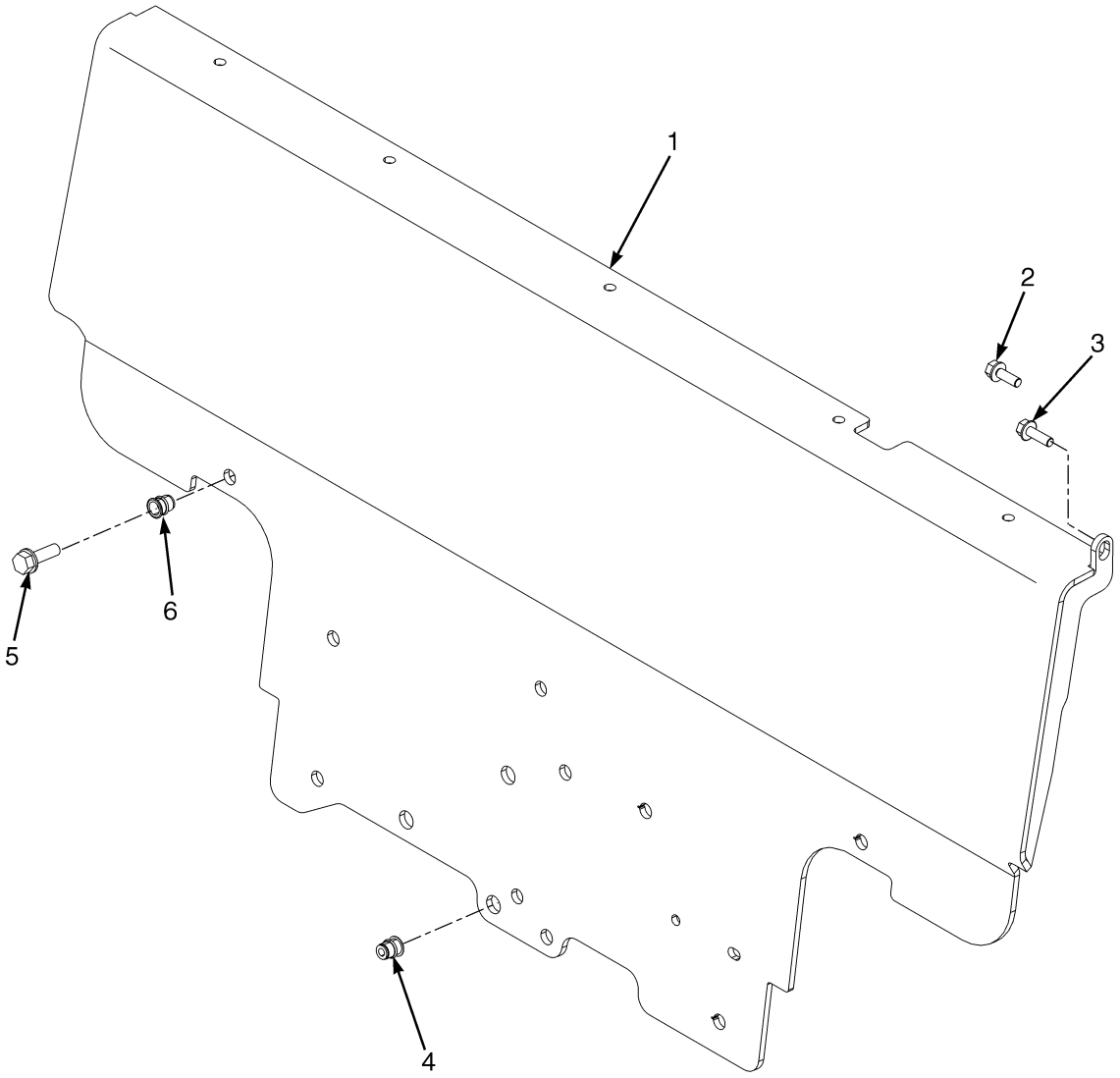

BP120212

©2008 Yale Materials Handling Corporation

COWL MOUNT

ITEM	PART NO.	DESCRIPTION	QTY
1	524316719	Cowl	1
2	580056815	Capscrew	2
3	580030966	Capscrew	2
4	580044860	Insert	2
5	580058270	Capscrew	7
6	580074879	Insert	7

©2008 Yale Materials Handling Corporation

CAB ASSEMBLY WITH STEEL DOORS (FIGURE 1-8)

SHEET 1 OF 3

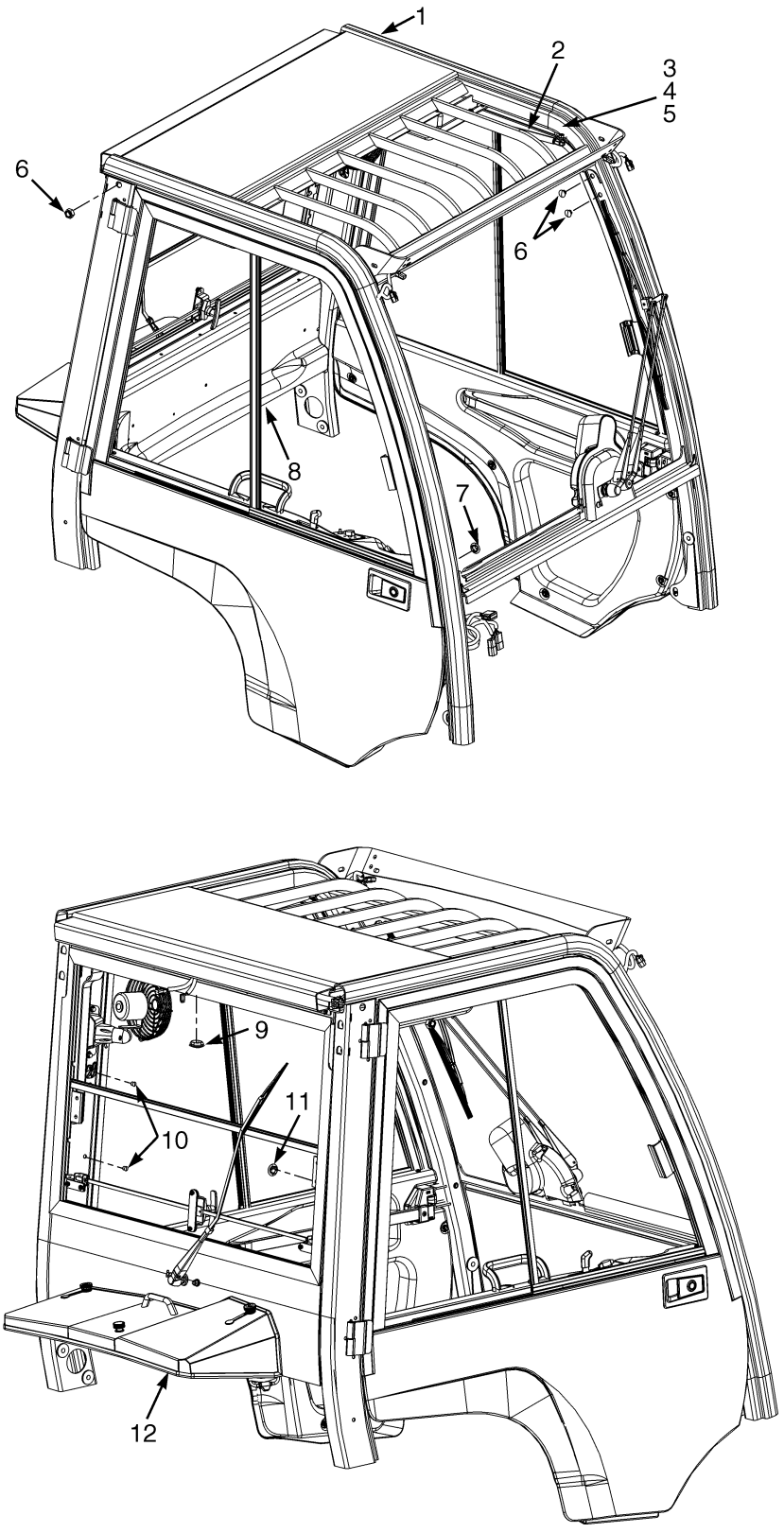

©2008 Yale Materials Handling Corporation

CAB ASSEMBLY WITH STEEL DOORS

SHEET 1 OF 3

ITEM	PART NO.	DESCRIPTION	QTY
1	524302424	Cab (With Steel Doors)	1
2	580092015	Gas Spring (LH)	1
2	580092016	Gas Spring (RH)	1
3	504229298	Nut	2
4	580016584	Washer	4
5	580014009	Ball Stud	2
6	580059493	Plug	4
7	580015529	Grommet	1
8	580083156	Cover (Inner Rear)	1
9	524201323	Grommet (Black)	1
10	580090886	Hole Plug (Yellow)	4
11	258979300	Plug	1
12	580072684	Cover (Counterweight)	1

©2008 Yale Materials Handling Corporation

CAB ASSEMBLY WITH STEEL DOORS (FIGURE 1-9)

SHEET 2 OF 3

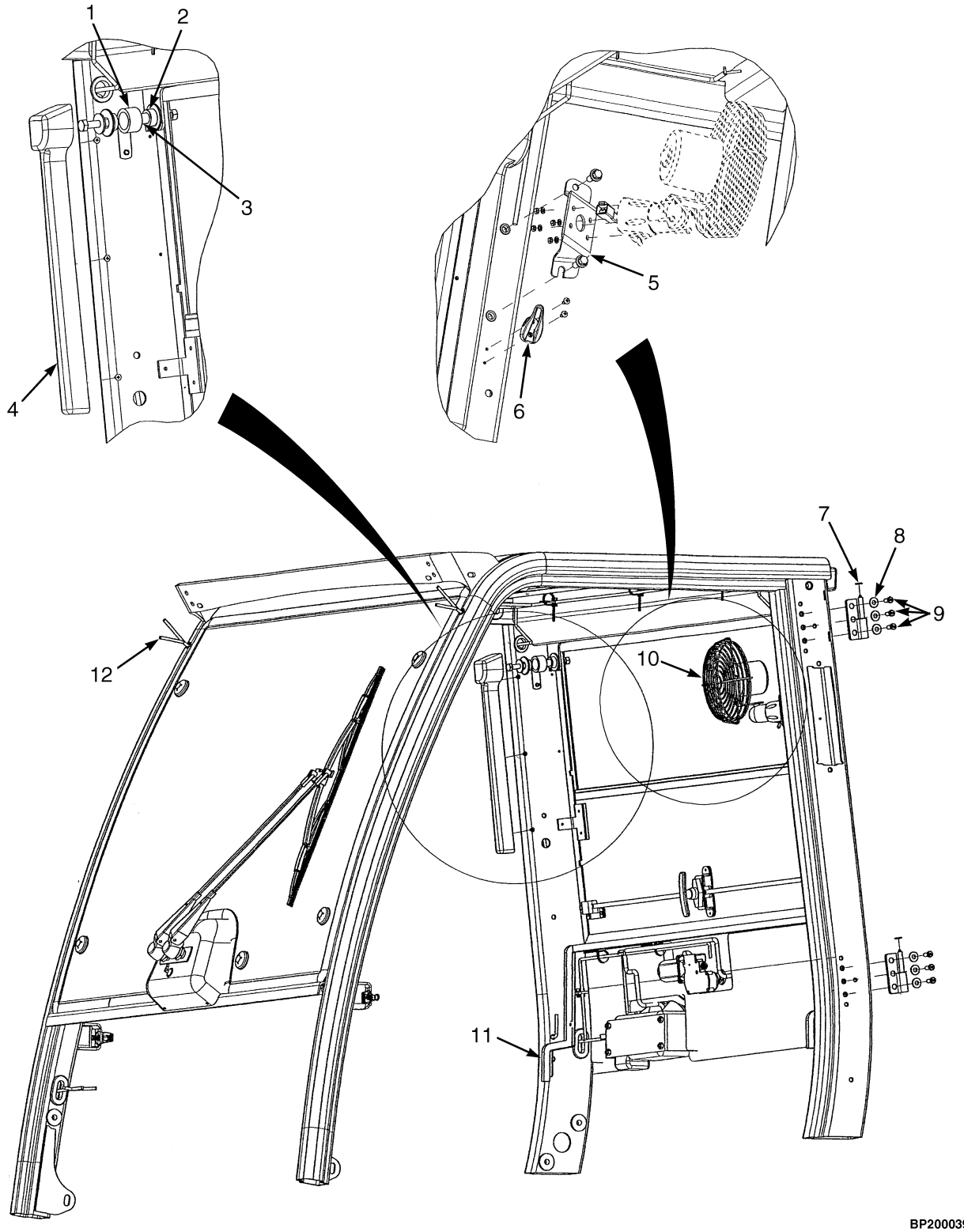

©2008 Yale Materials Handling Corporation

CAB ASSEMBLY WITH STEEL DOORS

SHEET 2 OF 3

ITEM	PART NO.	DESCRIPTION	QTY
	524302424	Cab (With Steel Doors)	1
1	580077075	Spring (Coil)	2
2	580077073	Bushing	4
3	580077074	Bushing	2
4	580077076	Cover (RH) (Coil Spring)	1
4	580077077	Cover (LH) (Coil Spring)	1
5	580077078	Bracket (Fan)	1
6	580077071	Coat Hook	1
7	580015760	Hinge (LH)	2
7	580015761	Hinge (RH)	2
8	520042832	Washer	12
9	580022964	Capscrew	12
10	580077079	Fan (Assembly) (☞P19566 [Page 1-30])	1
11	580077080	Seal	1
12	580077088	Wire Harness (Cab) (Lights)	1

©2008 Yale Materials Handling Corporation

CAB ASSEMBLY WITH STEEL DOORS (FIGURE 1-10)

SHEET 3 OF 3

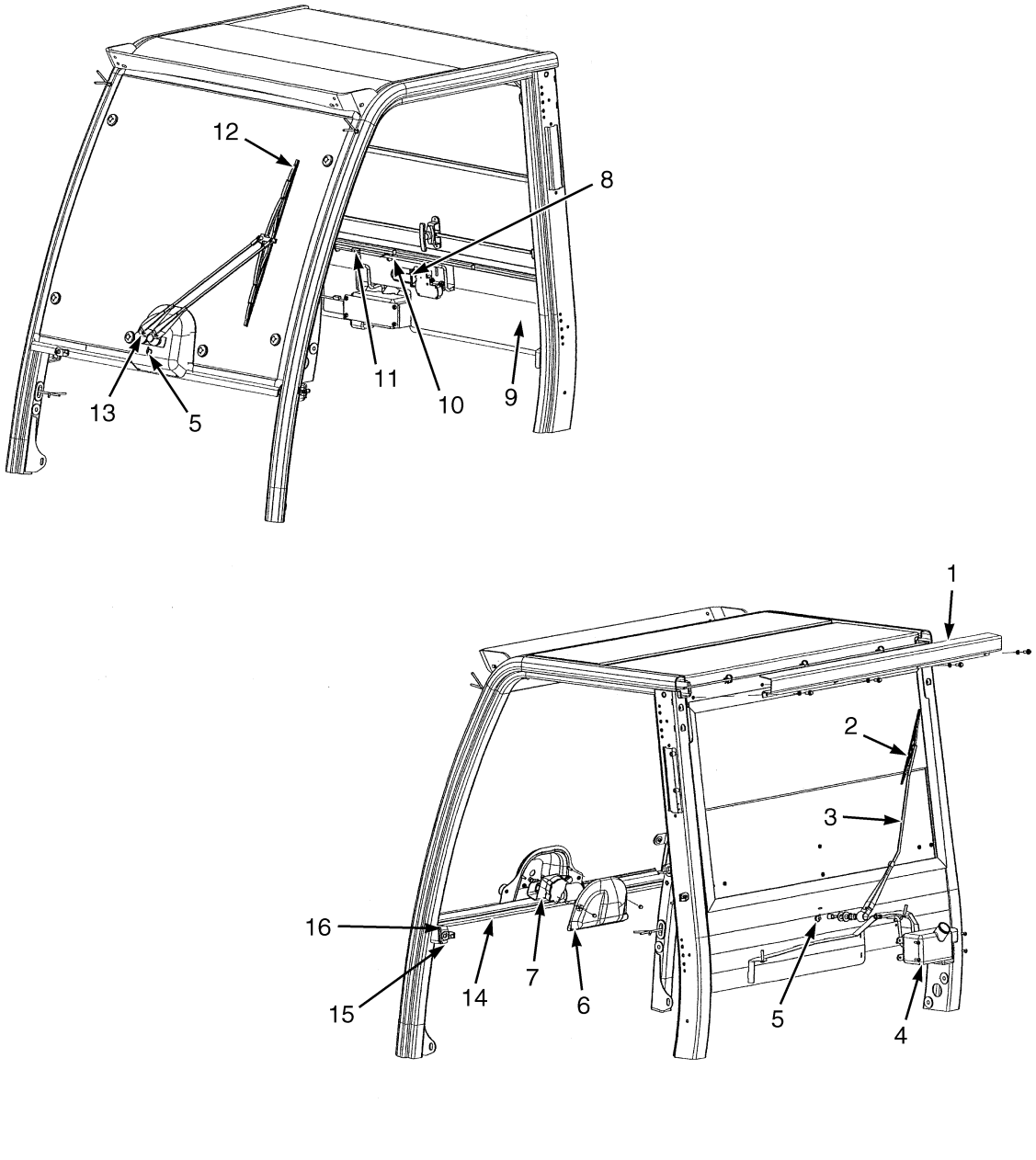

BP200040

©2008 Yale Materials Handling Corporation

CAB ASSEMBLY WITH STEEL DOORS

SHEET 3 OF 3

ITEM	PART NO.	DESCRIPTION	QTY
	524302424	Cab (With Steel Doors)	1
1	580077097	Cover	1
2	580077086	Wiper Blade (Rear)	1
3	580077085	Wiper Arm (Rear)	1
4	580077853	Reservoir (Washer Bottle with Pump)	1
5	580077072	Connector	2
6	580077069	Cover (Front Wiper)	1
7	580069797	Wiper Motor (Front)	1
8	580077084	Wiper Motor (Rear)	1
9	580077092	Liner (Rear Cover)	1
10	580077096	Hose	1
11	580077095	Connector	1
12	580077083	Wiper Blade (Front)	1
13	580069796	Wiper Arm (Front)	1
14	580077094	Trim (Front Window)	1
15	580080812	Bolt (Striker)	2
16	580088184	Striker (Guard)	2

©2008 Yale Materials Handling Corporation

CAB ASSEMBLY WITH STEEL DOORS (FIGURE 1-11)

WINDOWS

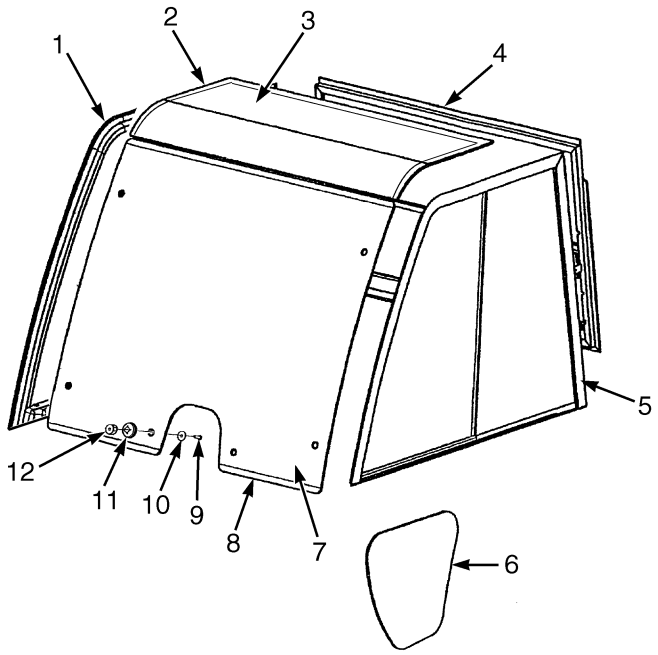

ITEM	PART NO.	DESCRIPTION	QTY
	524302424	Cab (With Steel Doors)	1
1	580077146	Sliding Window (RH Door)	1
2	580087148	Foam Lining (Skylight)	1
3	580077141	Window (Skylight)	1
4	580077143	Window (Rear, Sliding)	1
5	580077144	Sliding Window (LH Door)	1
6	580077145	Window (Lower Door)	1
7	580094090	Front Window	1
8	580077090	Seal (Front Window)	1
9	449007050	Screw (Front Window)	6
10	580014766	Washer (Front Window)	6
11	580077089	Cap (Front Window)	6
12	504574259	Nut (Front Window)	6

©2008 Yale Materials Handling Corporation

NOTES

©2008 Yale Materials Handling Corporation

CAB ASSEMBLY WITH STEEL DOORS (FIGURE 1-12)

COVERS, SEALS, SHIMS, AND FASTENERS

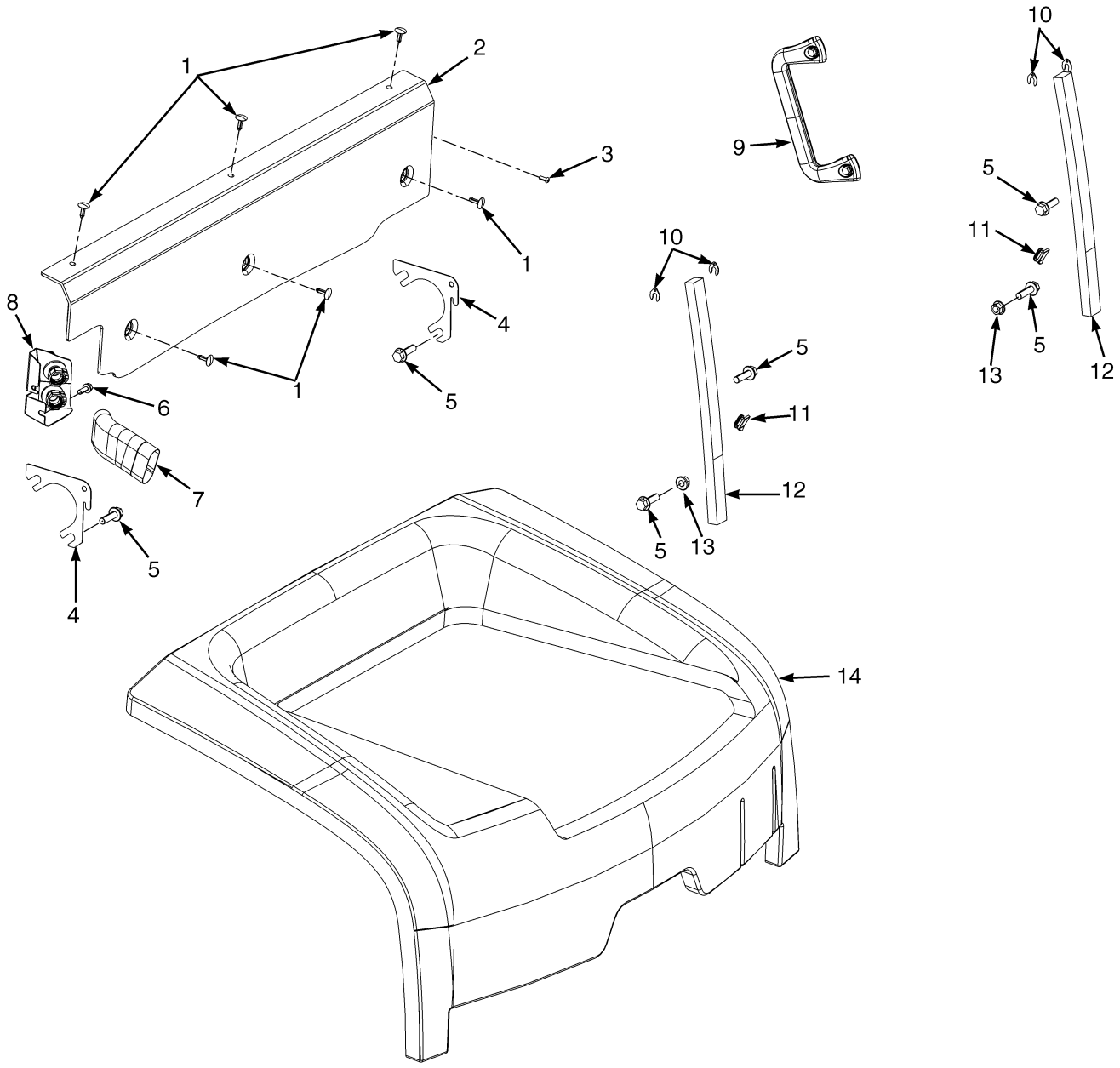

©2008 Yale Materials Handling Corporation

CAB ASSEMBLY WITH STEEL DOORS
COVERS, SEALS, SHIMS, AND FASTENERS

ITEM	PART NO.	DESCRIPTION	QTY
	524302424	Cab (With Steel Doors)	1
1	524260552	Fastener	6
2	580073407	Cover (Rear, Fabric)	1
3	580030975	Screw (Button Head)	3
4	580073550	Shim	2
5	580051941	Capscrew	8
6	580056815	Capscrew	4
7	580060257	Sleeve (Hose)	1
8	580083104	Bracket (Heater Hose) (Bulkhead)	1
9	580056526	Handle (Grab)	1
10	580073522	Shim	AR
11	580059127	Seal (Cowl)	2
12	580066768	Seal (Cowl)	2
13	580056528	Nut (Shoulder)	2
14	580074948	Blanket (Hood)	1

©2008 Yale Materials Handling Corporation

CAB ASSEMBLY WITH STEEL DOORS (FIGURE 1-13)

FAN

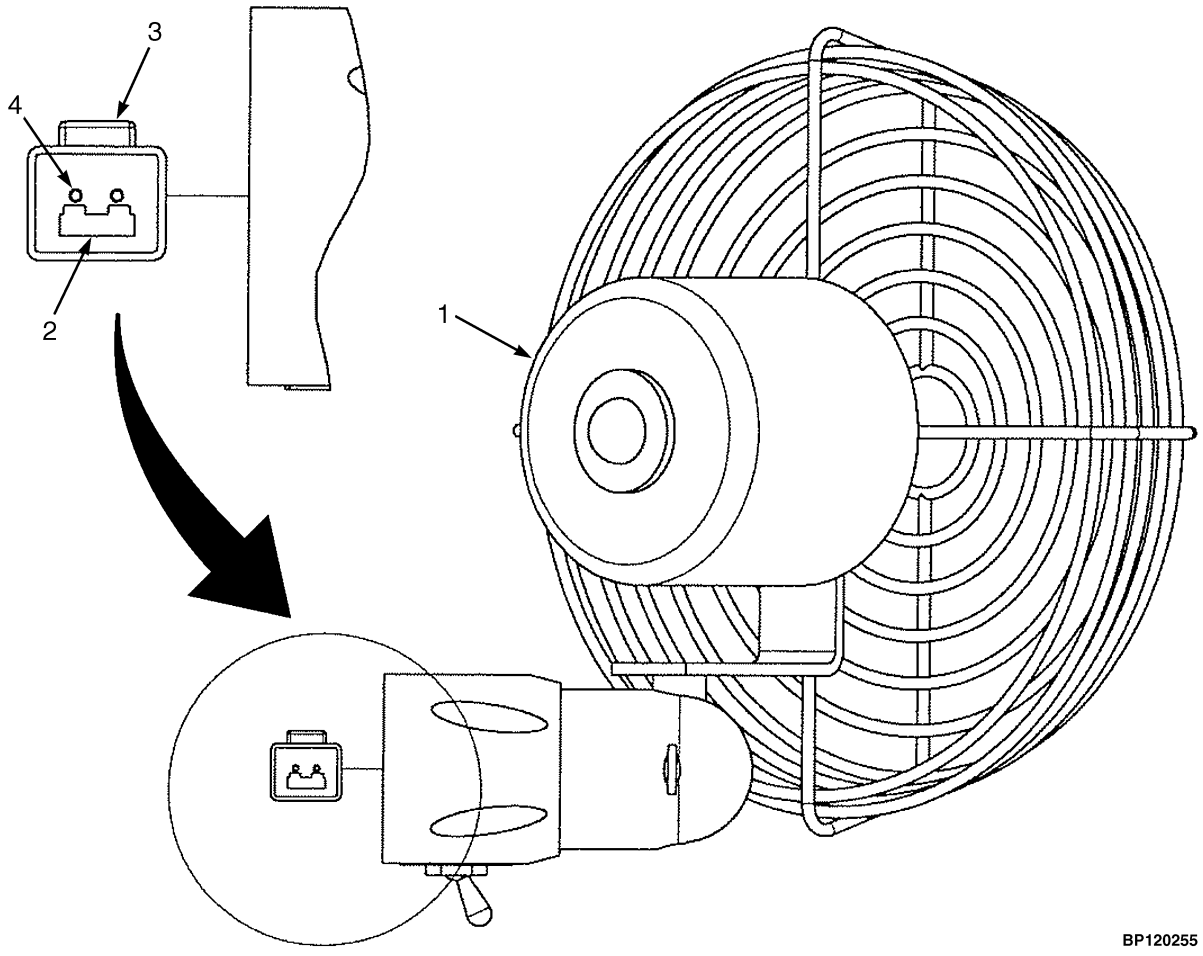

©2008 Yale Materials Handling Corporation

CAB ASSEMBLY WITH STEEL DOORS

FAN

ITEM	PART NO.	DESCRIPTION	QTY
	524302424	Cab (With Steel Doors)	1
	580077079	Fan (Assembly)	1
1	580077148	Fan	1
2	505968533	Connector	1
3	505968540	Connector	1
4	505968514	Terminal (Pin)	2

©2008 Yale Materials Handling Corporation

CAB ASSEMBLY WITH STEEL DOORS (FIGURE 1-14)
RIGHT HAND DOOR COMPONENTS

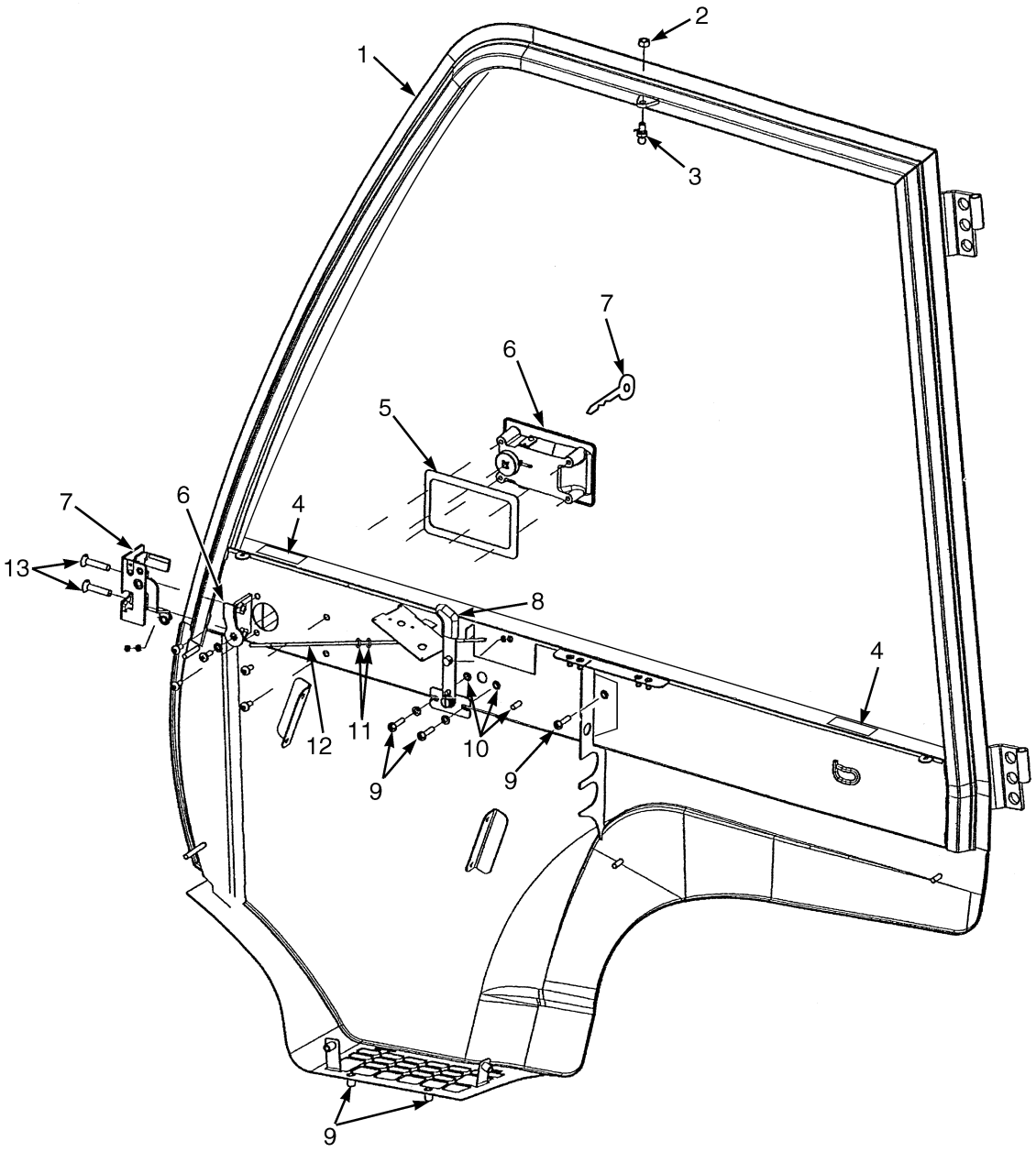

©2008 Yale Materials Handling Corporation

CAB ASSEMBLY WITH STEEL DOORS

RIGHT HAND DOOR COMPONENTS

ITEM	PART NO.	DESCRIPTION	QTY
	524302424	Cab (With Steel Doors)	1
1	580077119	Door (Assembly With Heater) (☞P19570 [Page 1-34])	1
2	504229298	Nut	1
3	580014009	Ball Stud	1
4	580015530	Block	2
5	580077100	Seal	1
6	580077099	Latch	1
7	580090494	Door Key (One Per Cab)	1
8	580077122	Handle	1
9	580021345	Screw	8
10	580015531	Insert	6
11	937100903	Nut	4
12	580077121	Linkage (Door Latch)	1
13	520037891	Capscrew	2

©2008 Yale Materials Handling Corporation

CAB ASSEMBLY WITH STEEL DOORS (FIGURE 1-15)

RIGHT HAND DOOR HEATER COMPONENTS

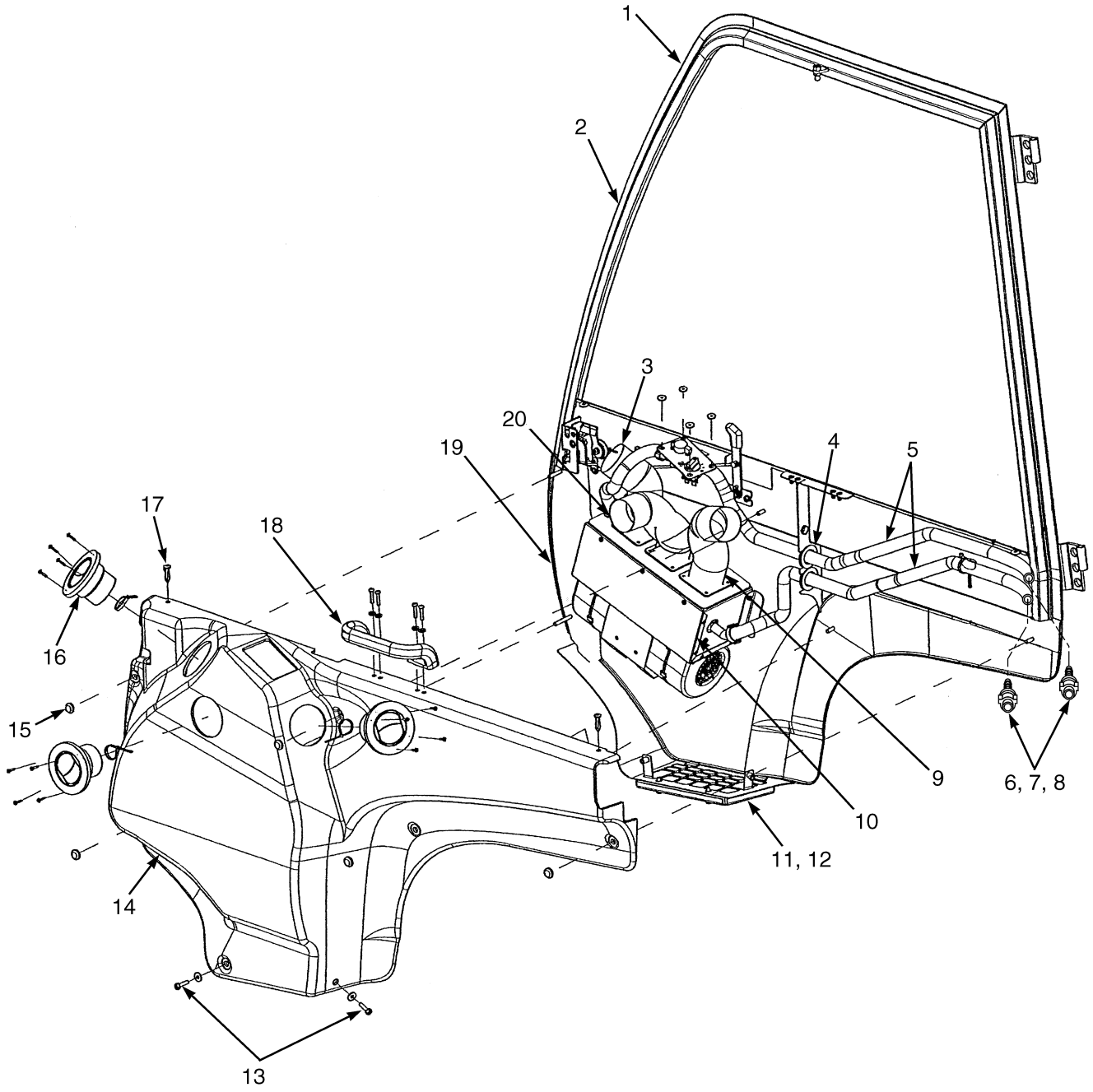

©2008 Yale Materials Handling Corporation

CAB ASSEMBLY WITH STEEL DOORS

RIGHT HAND DOOR HEATER COMPONENTS

ITEM	PART NO.	DESCRIPTION	QTY
	524302424	Cab (With Steel Doors)	1
1	580077119	Door (Assembly With Heater) (☞P19568 [Page 1-36])	1
2	580077135	Seal	1
3	580077129	Hose	1
4	580077126	Grommet	2
5	580077138	Hose	2
6	580077137	Clamp	6
7	580077134	Fitting (Quick Disconnect)	2
8	580085192	Quick Disconnect Fitting	2
9	580077822	Adapter	3
10	580077127	Heater	1
10	580089467	Knob	1
11	580077133	Filter	1
12	580077132	Cover	1
13	580021345	Screw	2
14	580077130	Liner	1
15	580077105	Retainer	5
16	580077131	Louver	3
17	580077104	Plug	2
18	580077136	Handle	1
19	580077139	Seal	1
20	580077128	Cover	1

©2008 Yale Materials Handling Corporation

CAB ASSEMBLY WITH STEEL DOORS (FIGURE 1-16)

LEFT HAND DOOR COMPONENTS

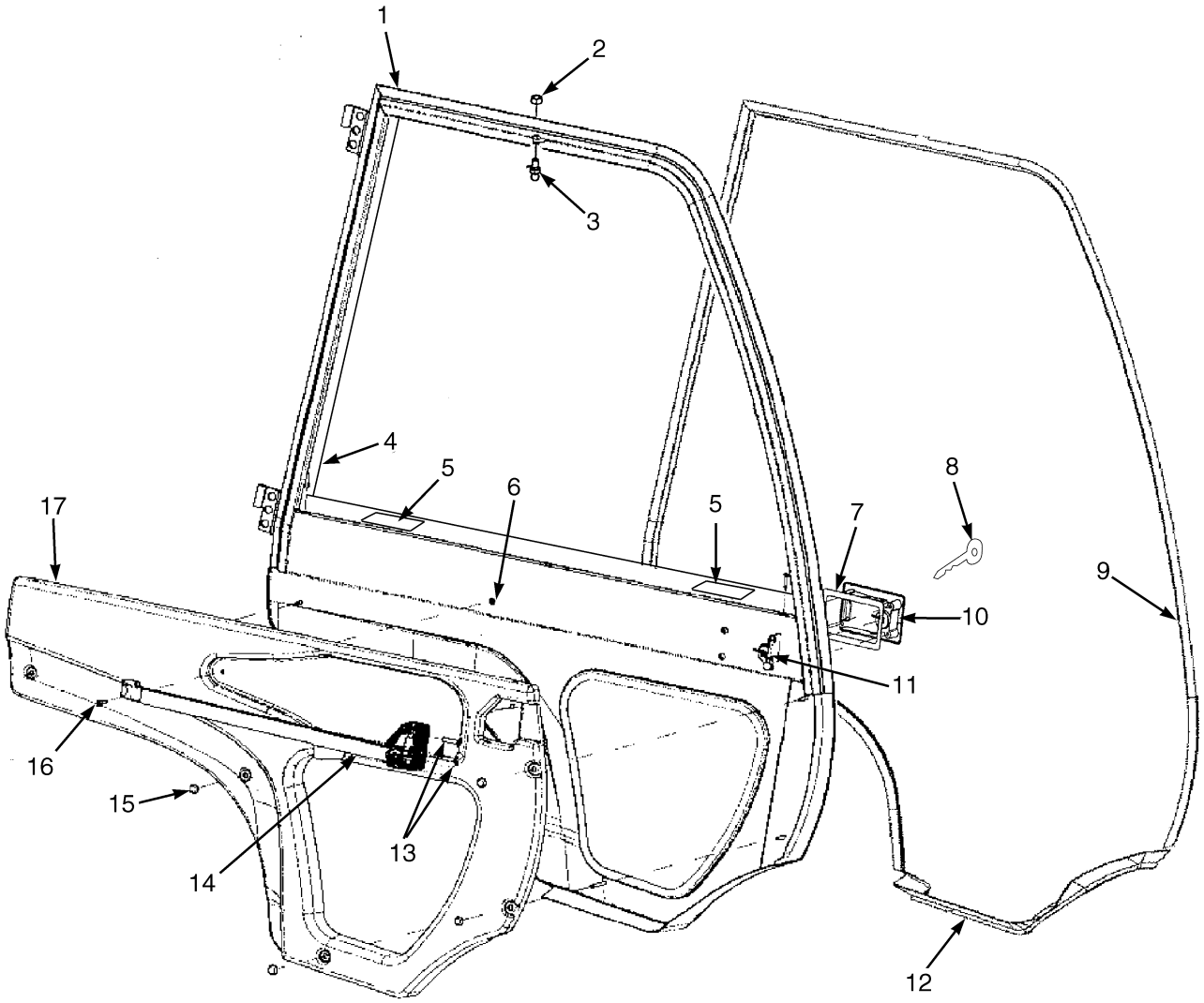

BP200043

©2008 Yale Materials Handling Corporation

CAB ASSEMBLY WITH STEEL DOORS

LEFT HAND DOOR COMPONENTS

ITEM	PART NO.	DESCRIPTION	QTY
	524302424	Cab (With Steel Doors)	1
1	580077098	Door (Left Hand)	1
2	504229298	Nut	1
3	580014009	Ball Stud	1
4	580077104	Plug	2
5	580015530	Block	2
6	580015531	Insert	1
7	580077100	Seal	1
8	580090494	Door Key (One Per Cab)	1
9	580077103	Seal (Upper LH)	1
10	580077099	Latch	1
11	580077101	Lever	1
12	580077106	Seal (Lower LH Door)	1
13	520037891	Capscrew	2
14	580014013	Door Handle (With Latch)	1
15	580077105	Retainer	5
16	580021345	Screw	1
17	580077102	Liner (LH Interior)	1

©2008 Yale Materials Handling Corporation

HEATER HOSE ARRANGEMENT (FIGURE 1-17)

GM 4.3L GASOLINE — WITH CAB

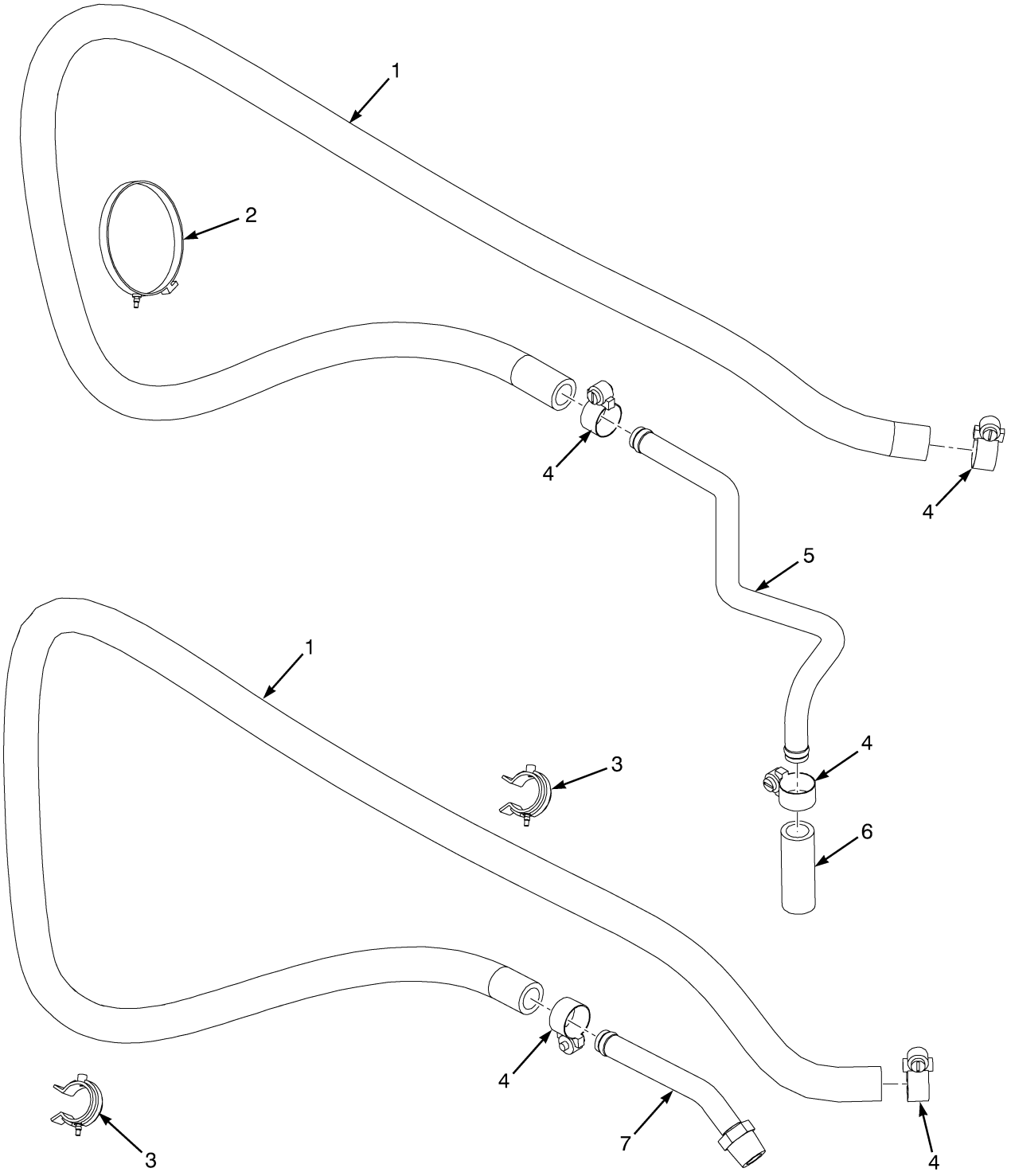

BP120505

©2008 Yale Materials Handling Corporation

HEATER HOSE ARRANGEMENT

GM 4.3L GASOLINE – WITH CAB

ITEM	PART NO.	DESCRIPTION	QTY
1	580052422	Hose	2
2	580041557	Clamp	1
3	580052680	Clamp	2
4	062159500	Clamp	5
5	580050923	Tube	1
6	580083872	Hose	1
7	580072091	Tube	1

©2008 Yale Materials Handling Corporation

HEATER HOSE ARRANGEMENT (FIGURE 1-18)
CUMMINS QSB 3.3L DIESEL — WITH CAB

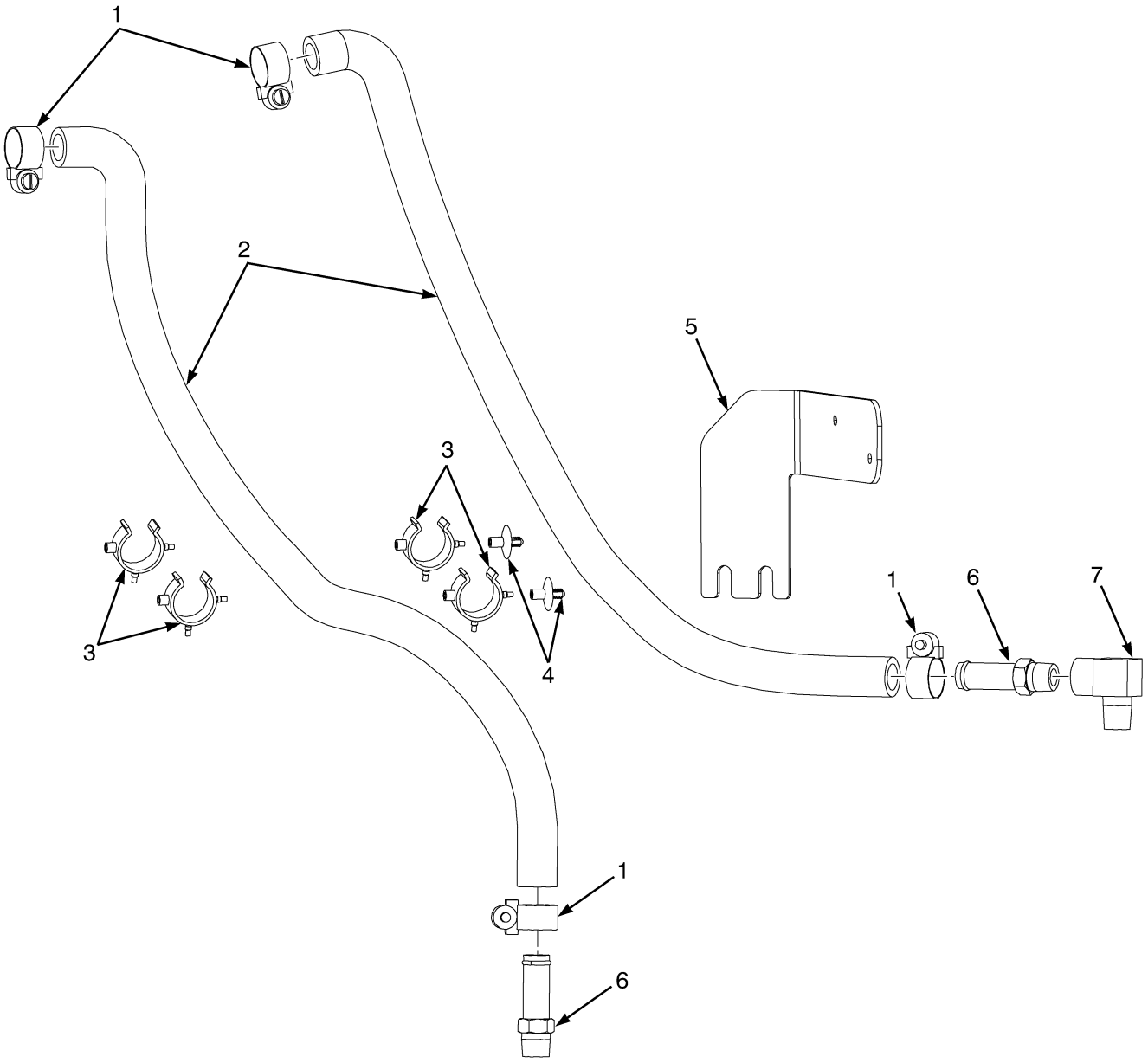

©2008 Yale Materials Handling Corporation

HEATER HOSE ARRANGEMENT

CUMMINS QSB 3.3L DIESEL – WITH CAB

ITEM	PART NO.	DESCRIPTION	QTY
1	062159500	Clamp	4
2	580092630	Hose	2
3	580066556	Clamp	4
4	580042842	Clamp	2
5	580092631	Bracket	1
6	502600903	Fitting	2
7	013393700	Fitting	1
	505970592	Sealant	AR

©2008 Yale Materials Handling Corporation

HEATER HOSE ARRANGEMENT (FIGURE 1-19)

GM 4.3L LPG — WITH CAB

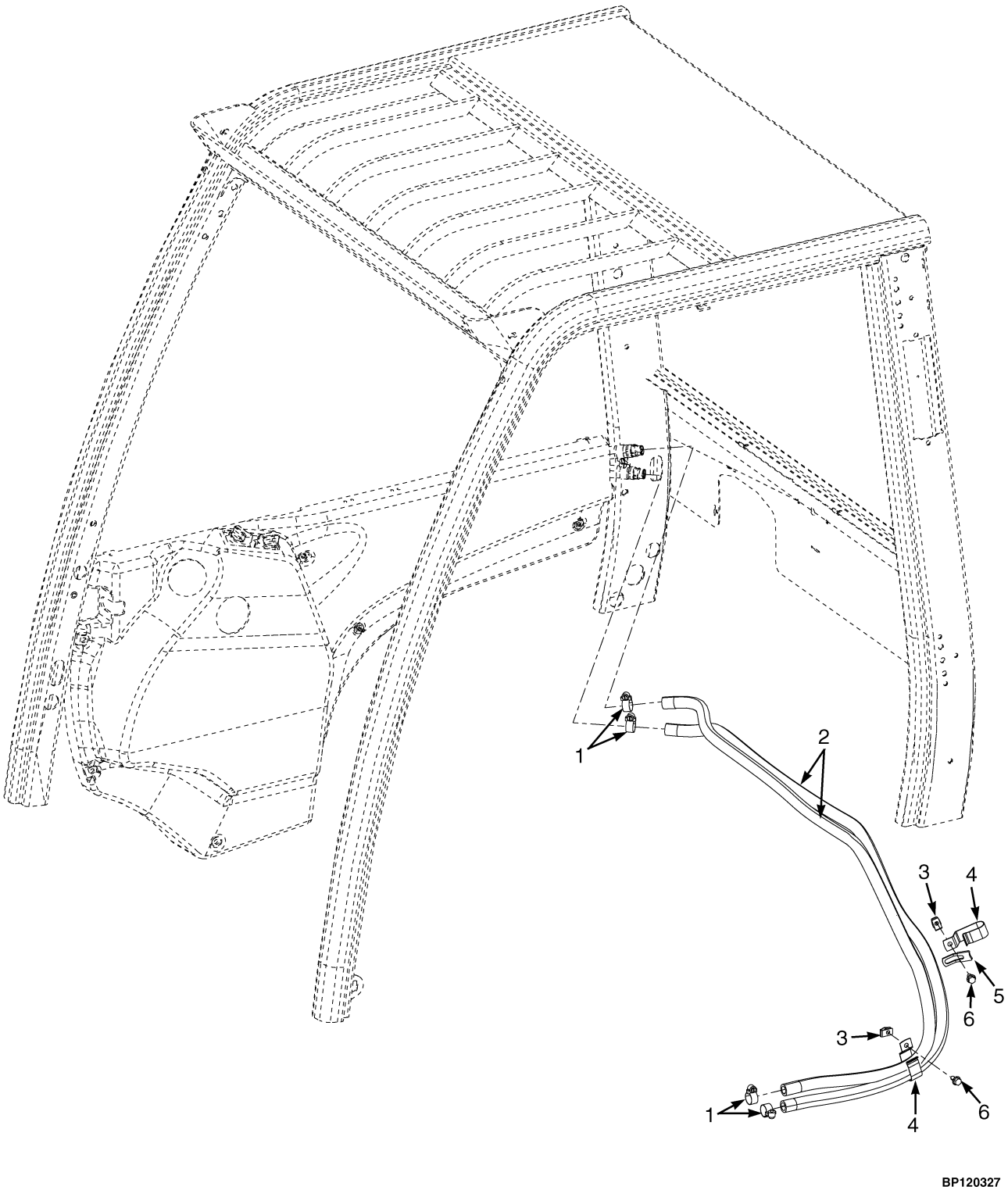

©2008 Yale Materials Handling Corporation

HEATER HOSE ARRANGEMENT

GM 4.3L LPG – WITH CAB

ITEM	PART NO.	DESCRIPTION	QTY
1	062159500	Clamp	4
2	580052422	Hose	2
3	580026621	Nut	2
4	580049814	Clip	2
5	520036879	Strap	1
6	580047714	Capscrew	2

©2008 Yale Materials Handling Corporation

NON SUSPENSION SEAT (FIGURE 1-20)

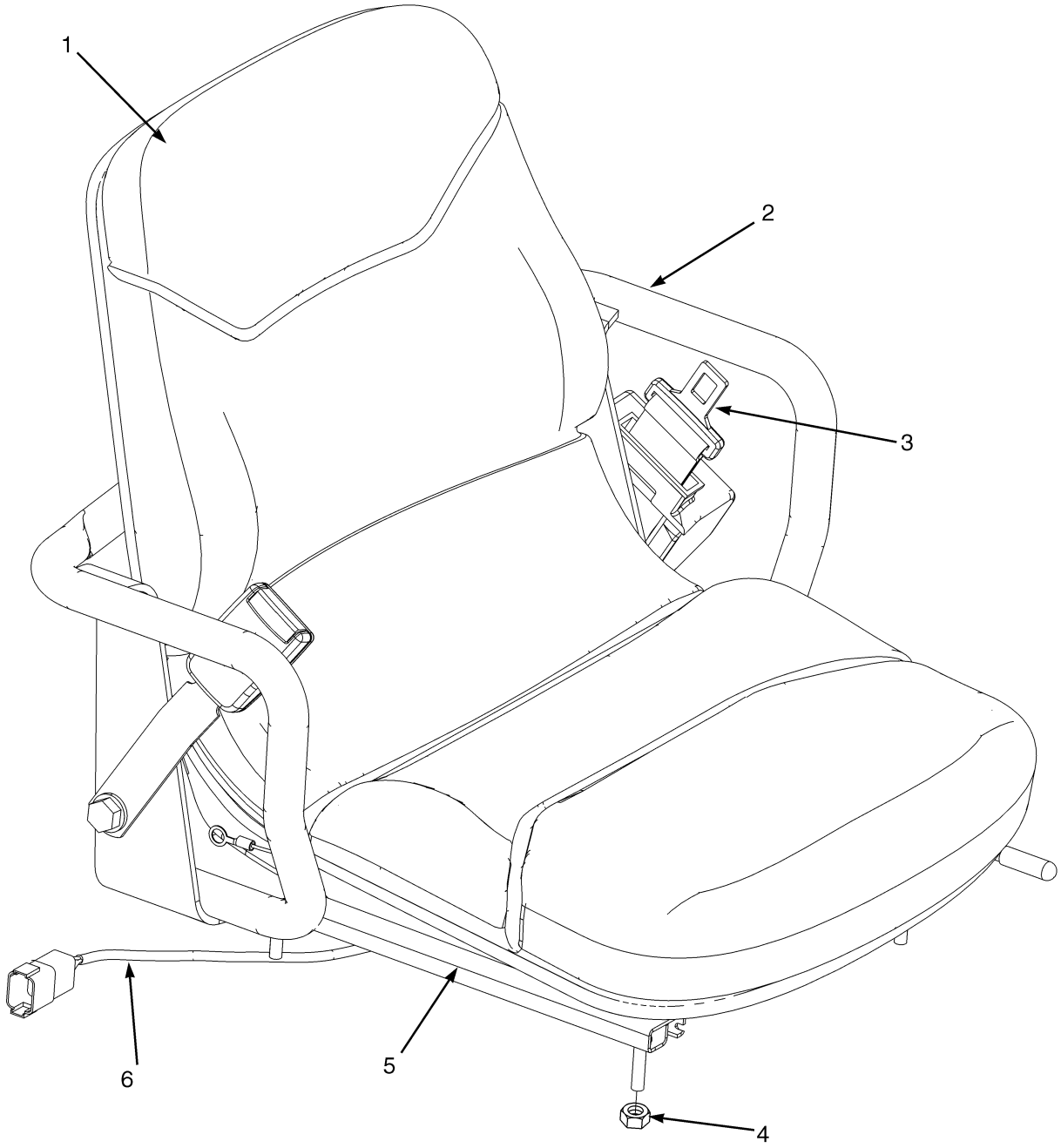

BP120126

©2008 Yale Materials Handling Corporation

NON SUSPENSION SEAT

ITEM	PART NO.	DESCRIPTION	QTY
	580086877	Seat-Non Suspension (Vinyl)	1
	580086881	Seat-Non Suspension (Cloth)	1
1	580049906	Kit-Seat Cushion (Vinyl)	1
1	580049895	Kit-Seat Cushion (Cloth)	1
1	**a** 580049891	Sensor (Operator Presence)	1
2	580049893	Hip Restraint (RH)	1
2	580049892	Hip Restraint (LH)	1
3	580062078	Kit-Seat Belt	1
4	449015098	Nut	4
4	**a** 580087659	Stud	4
5	580090679	Kit-Seat Rail	1
6	580059816	Wire Harness	1
	a 519996801	Information Case	1
	a 519996803	Cover (Information Case)	1

FOOTNOTES:

a Not Illustrated

©2008 Yale Materials Handling Corporation

SEMI SUSPENSION SEAT (FIGURE 1-21)
WITH AND WITHOUT ELECTRONIC CONTROLS

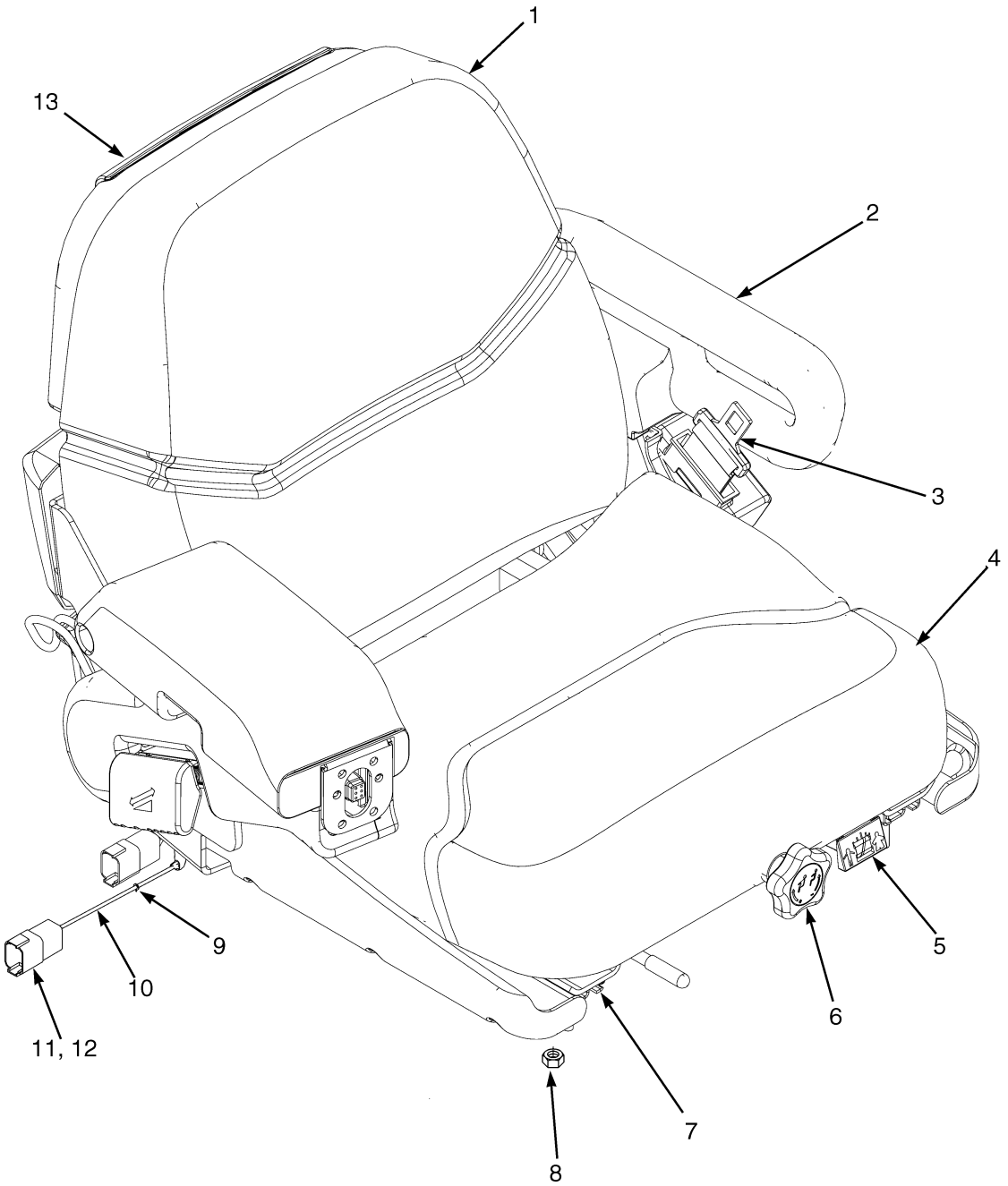

©2008 Yale Materials Handling Corporation

SEMI SUSPENSION SEAT
WITH AND WITHOUT ELECTRONIC CONTROLS

KEY:
A: With Hip Restraints
B: With Electronic Control Arm

ITEM	PART NO.	DESCRIPTION	QTY A	QTY B
	580086882	Seat-Semi Suspension (Vinyl)	1	..
	580086883	Seat-Semi Suspension (Cloth)	1	..
	580086884	Seat-Semi Suspension (Vinyl)	..	1
	b 580086885	Seat-Semi Suspension (Cloth)	..	1
1	580051572	Seat Cushion (Back Cushion) (Vinyl)	1	1
1	580051573	Seat Cushion (Back Cushion) (Cloth)	1	1
2	580049897	Hip Restraint (LH)	1	1
2	580049898	Hip Restraint (RH)	1	..
3	580062078	Kit-Seat Belt	1	1
4	580051574	Seat Cushion (Vinyl)	1	1
4	580051575	Seat Cushion (Cloth)	1	1
5	**b** 580018653	Guide	1	1
6	580049900	Knob	1	1
7	580090678	Kit-Seat Rail	1	1
8	449015098	Nut	4	4
8	**a** 580087659	Stud	4	4
9	580026810	Clip	1	1
10	580059816	Wire Harness	1	..
10	580080127	Wire Harness	..	1
11	580040850	Nut	1	1
12	518791646	Capscrew	1	1
13	520041852	Information Case	1	1
	a 520041836	Kit-Shock Absorber	1	1
	a 580049891	Sensor (Operator Presence)	1	1
	a 580078361	Foam	..	1
	a 580049887	Knob (Electronic Control Arm)	..	1

FOOTNOTES:
a Not Illustrated
b Not Used With 580086882

©2008 Yale Materials Handling Corporation

FULL SUSPENSION SEAT (FIGURE 1-22)
WITH AND WITHOUT ELECTRONIC CONTROLS

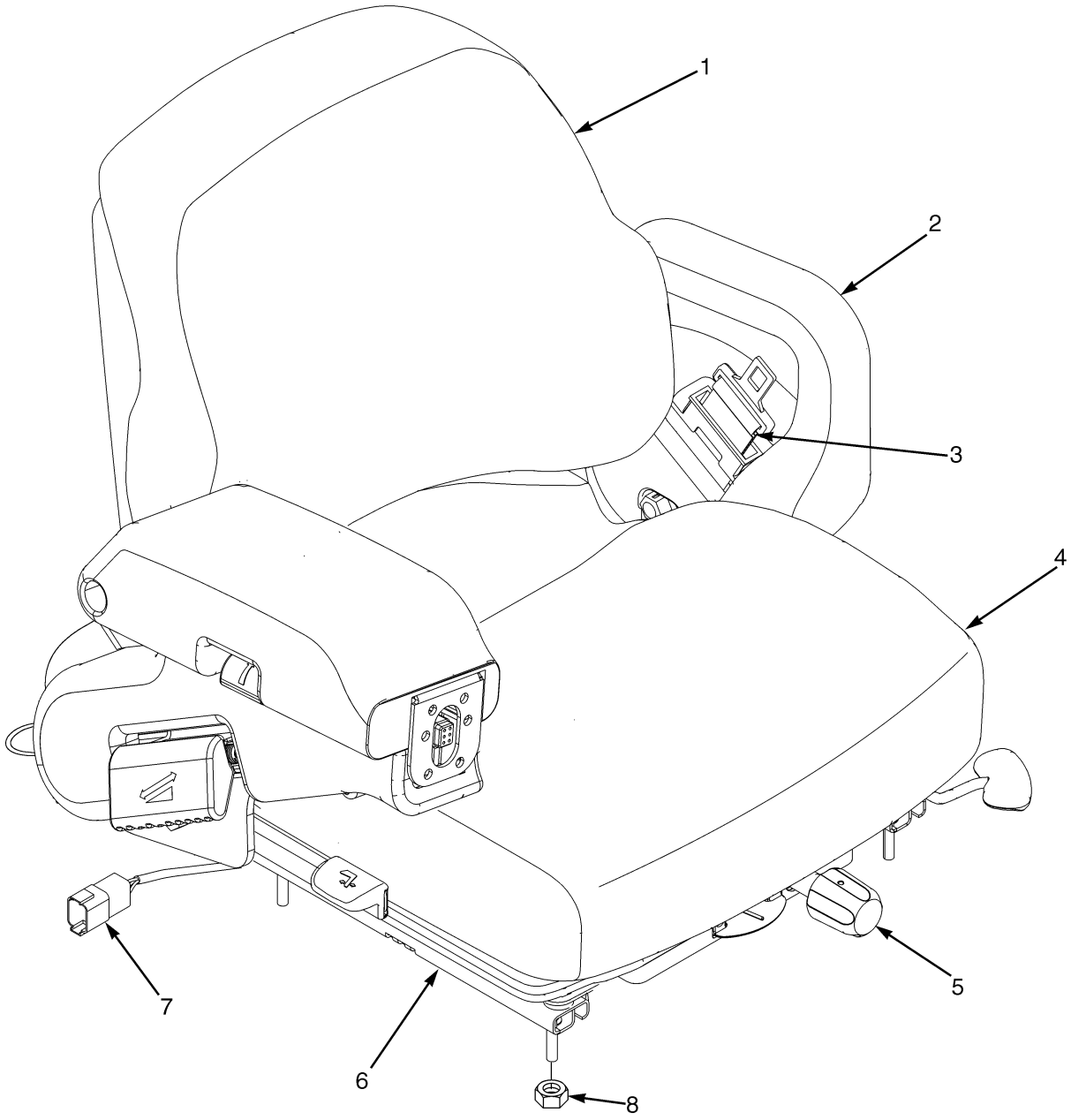

©2008 Yale Materials Handling Corporation

FULL SUSPENSION SEAT
WITH AND WITHOUT ELECTRONIC CONTROLS

KEY:
A: Full Suspension (Vinyl)
B: Full Suspension (Cloth)
C: Full Suspension (Vinyl with Electronic Control Arm)
D: Full Suspension (Cloth with Electronic Control Arm)

ITEM	PART NO.	DESCRIPTION	QTY A	B	C	D
	580060060	Seat-Full Suspension (Vinyl)	1	..	..	..
	580060061	Seat-Full Suspension (Cloth)	..	1	..	..
	580068489	Seat-Full Suspension (Vinyl)	..	..	1	..
	580068490	Seat-Full Suspension (Cloth)	..	..	..	1
1	580014462	Seat Cushion (Back Cushion, Vinyl) (Vinyl)	1	..	1	..
1	580014463	Seat Cushion (Back Cushion, Cloth) (Cloth)	..	1	..	1
2	580014467	Hip Restraint (LH)	1	1	1	1
2	580014466	Hip Restraint (RH)	1	1	..	..
3	580062078	Kit-Seat Belt	1	1	1	1
4	580049883	Seat Cushion (Vinyl)	1	..	1	..
4	580051805	Seat Cushion (Cloth)	..	1	..	1
	a 580049884	Sensor (Operator Presence)	1	1	1	1
5	580014473	Kit-Weight Adjuster	1	1	..	..
5	580057259	Knob	..	..	1	1
6	580014471	Kit-Seat Rail	1	1	1	1
7	580059816	Wire Harness	1	1	..	..
7	580080127	Wire Harness	..	..	1	1
8	518793684	Nut	4	4	4	4
	a 580026810	Clip	..	..	1	1
	a 580026812	Clip	..	..	1	1
	a 580040850	Nut	..	..	1	1
	a 518791646	Capscrew	..	..	1	1
	a 580018888	Kit-Gas Spring	1	1	..	..
	a 580049886	Cap (Electronic Control Arm)	..	..	1	1
	a 580049887	Knob (Electronic Control Arm)	..	..	1	1
	a 580014465	Information Case	1	1	1	1
	a 580013425	Kit-Spring	1	1	1	1
	a 580071505	Weight Adjust Rack	1	1	1	1
	a 580013421	Kit-Bumper	1	1	1	1
	a 580013419	Kit-Boot	1	1	1	1
	a 580013422	Kit-Shaft and Bearing	1	1	1	1
	a 580013420	Kit-Bearing	1	1	1	1
	a 580013423	Kit-Weight Adjuster	1	1	1	1
	a 580057259	Knob	1	1	1	1
	a 580065961	Handle	1	1	1	1

FOOTNOTES:
a Not Illustrated

©2008 Yale Materials Handling Corporation

FULL SUSPENSION SWIVEL SEAT (FIGURE 1-23)
WITH AND WITHOUT ELECTRONIC CONTROLS

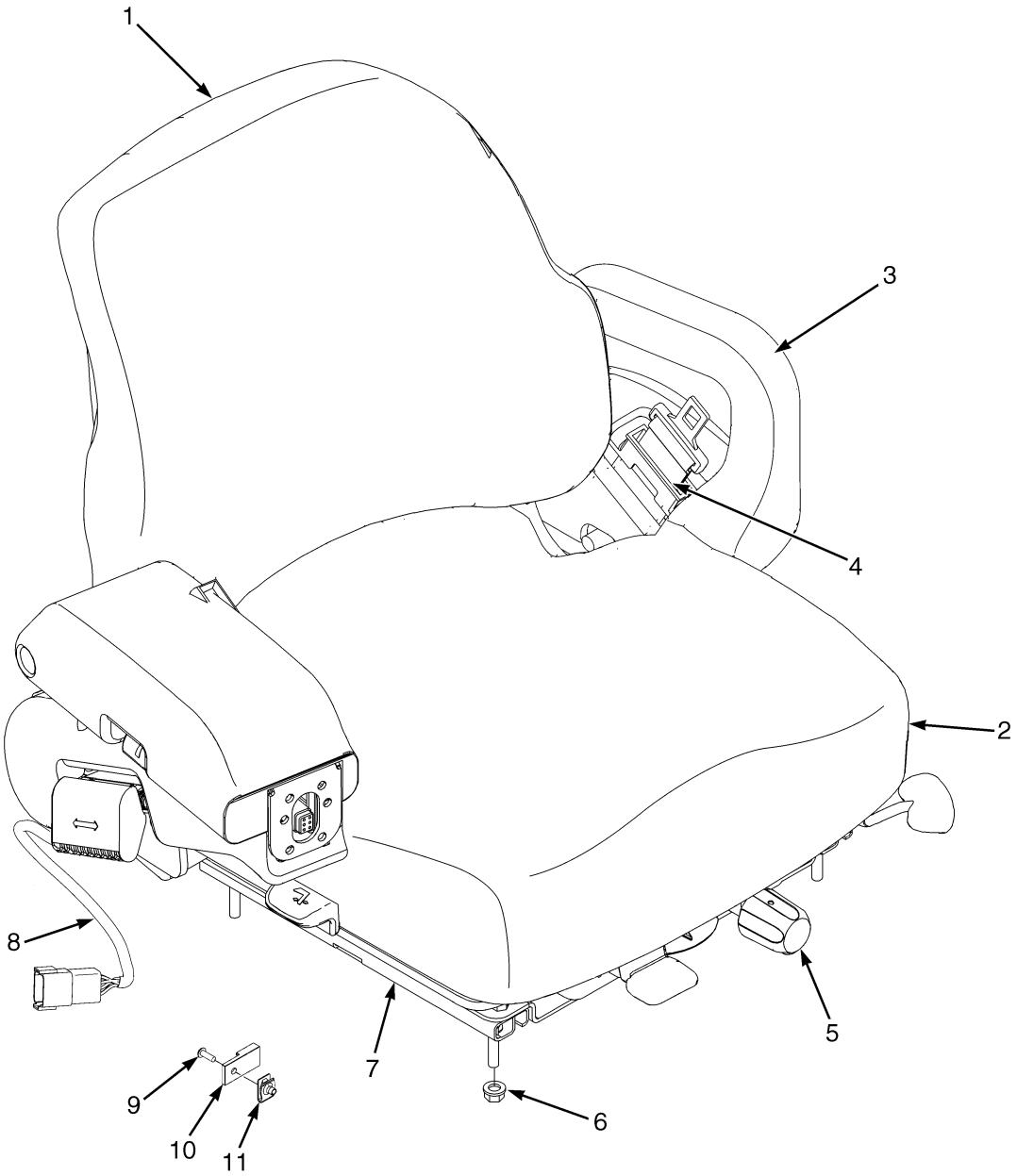

©2008 Yale Materials Handling Corporation

FULL SUSPENSION SWIVEL SEAT
WITH AND WITHOUT ELECTRONIC CONTROLS

KEY:
A: With Hip Restraints
B: With Electronic Controls

ITEM	PART NO.	DESCRIPTION	QTY A	QTY B
	580060074	Seat-Full Suspension (Vinyl)	1	..
	580060075	Seat-Full Suspension (Cloth)	1	..
	580068631	Seat-Full Suspension (Vinyl)	..	1
	580068633	Seat Assy (Cloth)	..	1
1	580014462	Seat Cushion (Back Cushion, Vinyl)	1	1
1	580014463	Seat Cushion (Back Cushion, Cloth)	1	1
2	580049883	Seat Cushion (Vinyl)	1	1
2	580051805	Seat Cushion (Cloth)	1	1
2	580049884	Sensor (Operator Presence)	1	1
3	580014467	Hip Restraint (LH)	1	1
3	580014466	Hip Restraint (RH)	1	..
4	580062078	Kit-Seat Belt	1	1
5	580014473	Kit-Weight Adjuster	1	..
6	518793684	Nut	4	4
7	580014471	Kit-Seat Rail	1	1
8	580059816	Wire Harness	1	..
8	580080127	Wire Harness	..	1
9	518791646	Capscrew	1	1
10	580026812	Clip	1	1
11	580040850	Nut	1	1
	a 580018888	Kit-Gas Spring	1	..
	a 580043895	Lever (Swivel Release)	1	1
	a 580049887	Knob (Electronic Control Arm)	..	1
	a 580078361	Foam	..	1
	a 580018888	Kit-Gas Spring	1	1
	a 580049884	Sensor (Operator Presence)	1	1
	a 580057259	Knob	1	1
	a 580013425	Kit-Spring	1	1
	a 580089324	Kit-Swivel Seat Full Susp	1	1
	a 580071505	Weight Adjust Rack	1	1
	a 580013419	Kit-Boot	1	1
	a 580013423	Kit-Weight Adjuster	1	1
	a 580014473	Kit-Weight Adjuster (Handle)	1	1
	a 580013422	Kit-Shaft and Bearing	1	1
	a 580013420	Kit-Bearing	1	1
	a 580013421	Kit-Bumper	1	1
	a 580065961	Handle	1	1
	a 580014465	Information Case	1	..

FOOTNOTES:
a Not Illustrated

©2008 Yale Materials Handling Corporation

LABELS (FIGURE 1-24)
EXTERIOR

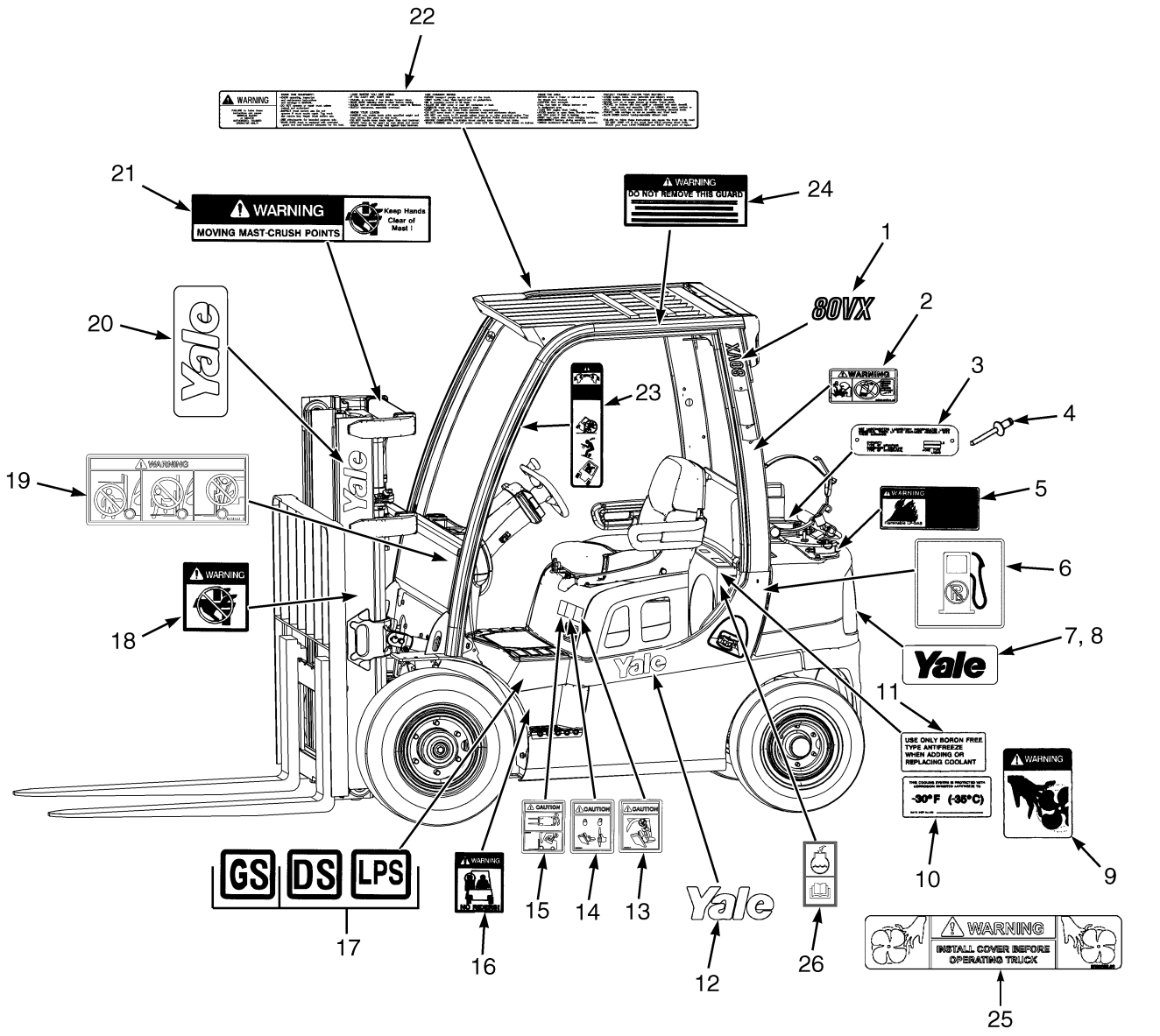

YP120208

©2008 Yale Materials Handling Corporation

LABELS
EXTERIOR

KEY:
A: Overhead Guard or Cab with PVC Doors
B: Cab with Steel Doors

ITEM	PART NO.	DESCRIPTION	QTY A	QTY B
1	**d** 524236525	Label (Veracitor 80VX) (RH)	1	2
1	524236522	Label (80VX) (LH)	1	..
1	**d** 524265464	Label (Veracitor 90VX) (RH)	1	2
1	524265461	Label (90VX) (LH)	1	..
1	**d** 524236526	Label (Veracitor 100VX) (RH)	1	2
1	524236523	Label (100VX) (LH)	1	..
1	**d** 524265465	Label (Veracitor 110VX) (RH)	1	2
1	524265462	Label (110VX) (LH)	1	..
1	**d** 524236527	Label (Veracitor120VX) (RH)	1	2
1	524236524	Label (120VX) (LH)	1	..
2	**b** 580001007	Label (Ether Warning)	1	1
3	580026934	Nameplate (LP Tank)	1	1
4	505976530	Rivet	2	2
5	505977565	Label (Flammable LP-Gas)	1	1
6	580056514	Label (Unleaded Fuel Only)	1	1
6	580056515	Label (Diesel Fuel Only)	1	1
7	524310789	Label (Yale Logo)	1	1
8	580056532	Fastener	2	2
9	505976556	Label (Fan Warning)	2	2
10	505976545	Label (Antifreeze)	1	1
11	518806645	Label (Boron-Free Anti-Freeze)	1	1
12	524208880	Label (Yale)	4	4
13	580057342	Label (Joystick Warning)	1	1
14	580058357	Label (Locking Gas Spring)	1	1
15	**e** 580058773	Label (Hood Opening)	1	1
15	**c** 580059788	Label (Swivel Seat)	1	1
16	504231248	Label (No Riders)	2	2
17	505977525	Label (Type GS)	2	2
17	505978586	Label (Type LPS)	2	2
17	505978570	Label (Type DS)	2	2
18	504231252	Label (Pinch Point)	2	2
19	580058821	Label (Mast Warning) (On Cowl)	2	2
20	524208881	Label (Yale)	2	2
21	504231215	Label (Mast Warning)	1	1
22	580055312	Label (Operator Warning)	1	1
23	504231296	Label (Operator Restraint)	2	2
24	**a**	Label (Overhead Guard)	1	1
25	505976566	Label (Fan Warning)	1	1
	505974597	Label (Lifting Eye) (Not Illustrated)	1	1

FOOTNOTES:
a Contact your local Yale dealer
b Diesel Only
c For Use With Swivel Seats Only
d Label applied to Door on Cabs with Steel Doors
e LPG Only

©2008 Yale Materials Handling Corporation

LABELS (FIGURE 1-25)
INTERIOR

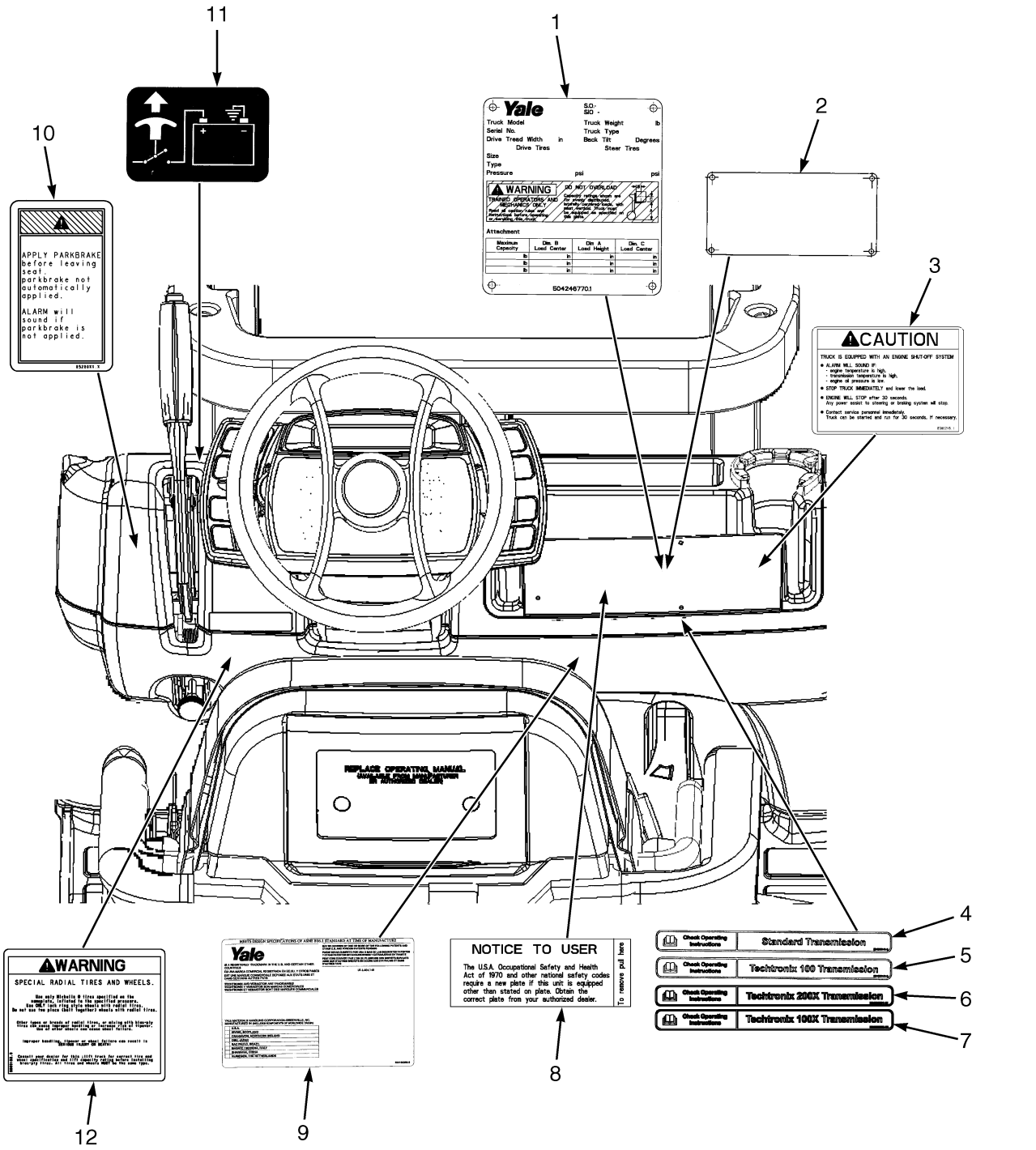

BP260057

©2008 Yale Materials Handling Corporation

LABELS
INTERIOR

ITEM	PART NO.	DESCRIPTION	QTY
1	**b**	Nameplate	1
1	505976530	Rivet	4
2	580008064	Nameplate (Plastic Plate)	1
3	520045130	Label (Drive Train Protection)	1
4	524232141	Label (Standard Transmission)	1
5	**a** 524232161	Label (Techtronix 100 Transmission)	1
6	**a** 524232201	Label (Techtronix 200X Transmission)	1
7	**a** 524265153	Label (Techtronix 100X Transmission)	1
8	504231265	Label (Nameplate Tag)	1
9	524162256	Label (Patents and Trademarks)	1
10	580056430	Label (Parking Brake Warning)	1
11	580008338	Label (Battery Switch) (Safety Trucks Only)	1
12	505977581	Label (Radial Tire Warning)	1

FOOTNOTES:

a Electronic Transmission

b Please Contact Your Local Yale Dealer

©2008 Yale Materials Handling Corporation

ELECTRONIC LEVER LABELS (FIGURE 1-26)

MINI LEVERS

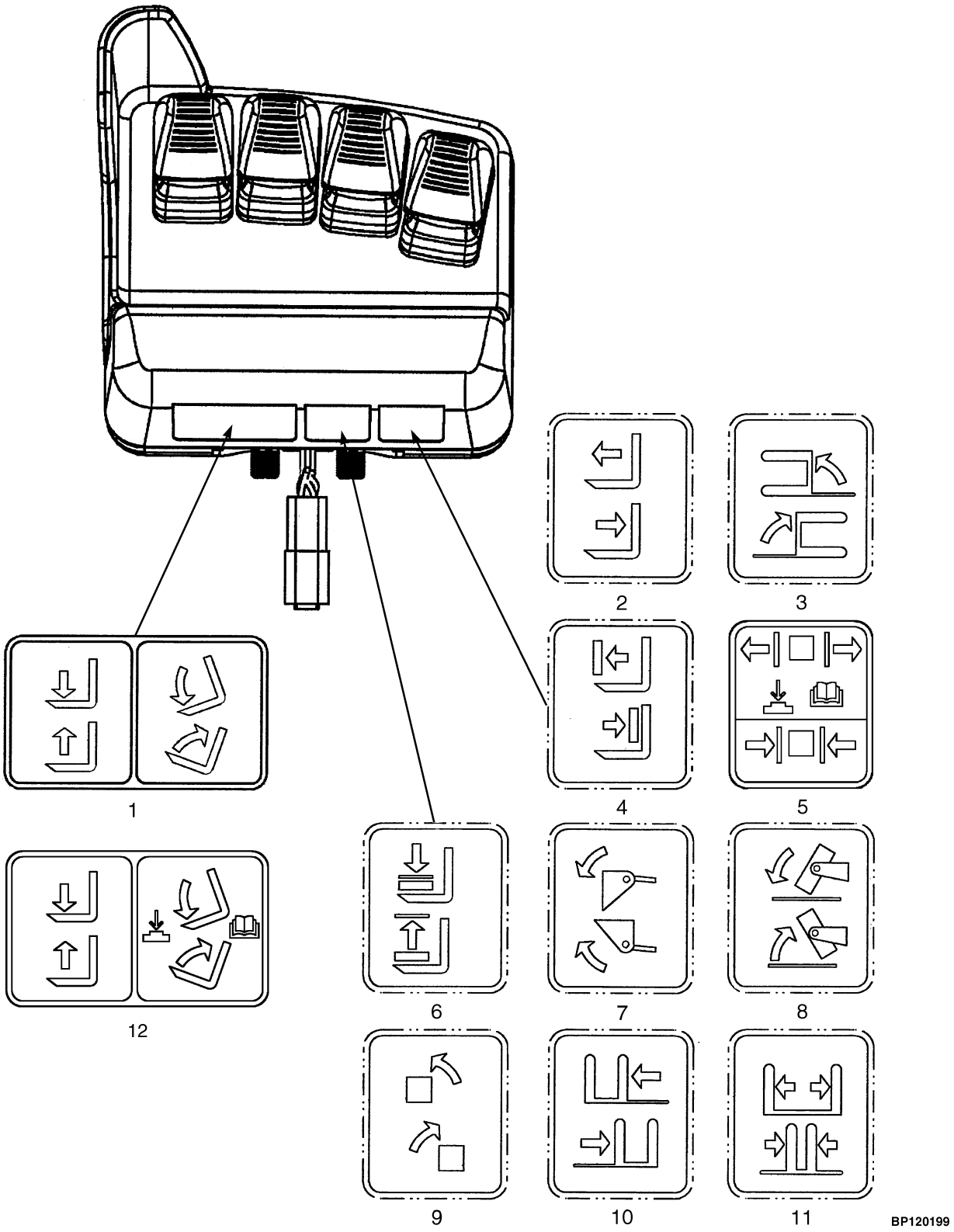

©2008 Yale Materials Handling Corporation

ELECTRONIC LEVER LABELS

MINI LEVERS

ITEM	PART NO.	DESCRIPTION	QTY
1	580058930	Label (Hoist and Tilt)	1
2	580055171	Label (Reach)	1
3	580055170	Label (Swing)	1
4	580055174	Label (Push/Pull)	1
5	580069759	Label (Clamp)	1
6	580055172	Label (Load Stabilizer)	1
7	580055173	Label (Scoop)	1
8	580055175	Label (Upender)	1
9	580055177	Label (Rotate)	1
10	580055178	Label (Side-Shift)	1
11	580055179	Label (Fork Spread)	1
12	580069753	Label (Hoist and Tilt with Return to Set Tilt)	1

©2008 Yale Materials Handling Corporation

CONTROL LEVER LABELS (FIGURE 1-27)

MANUAL HYDRAULICS

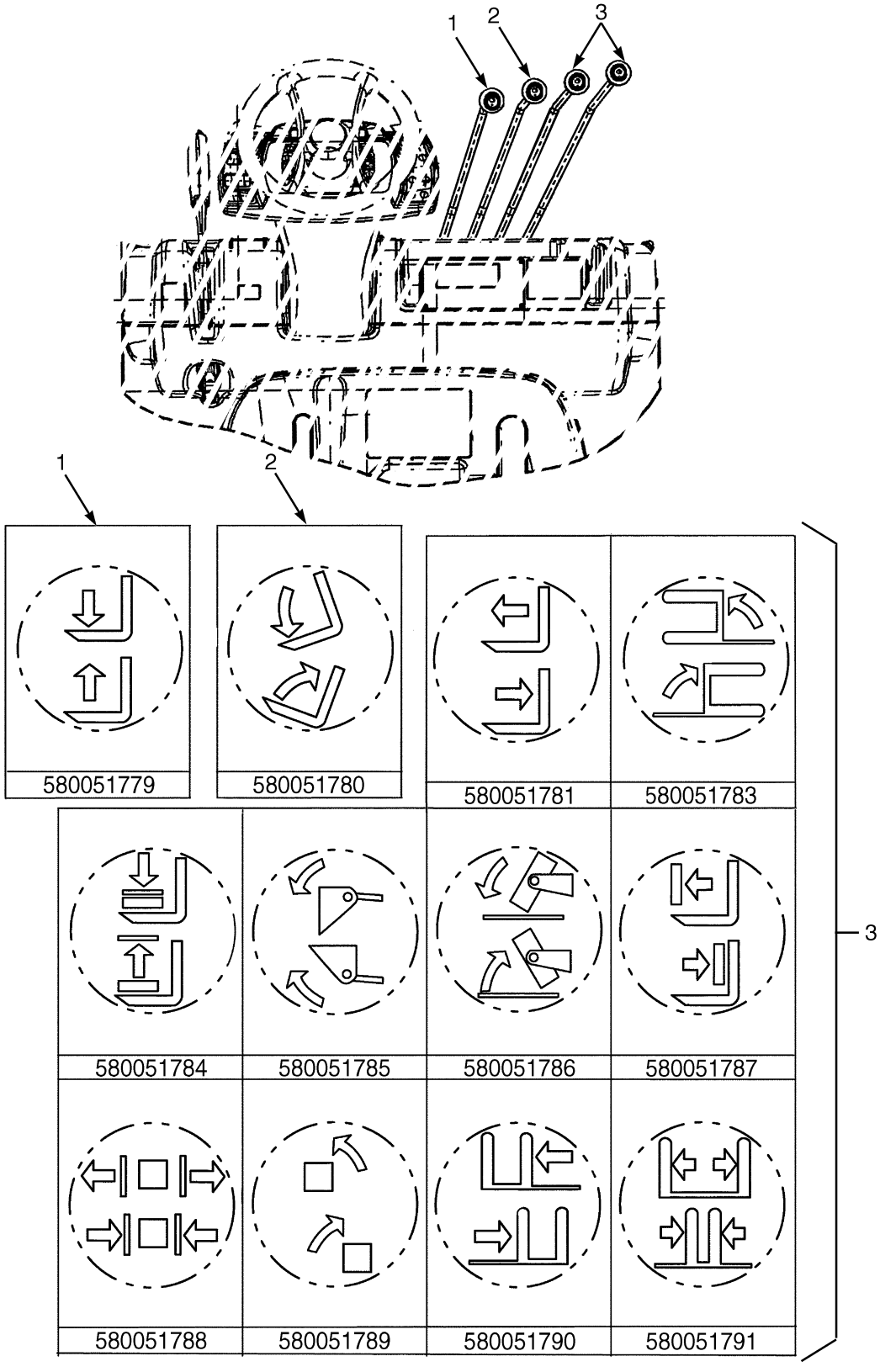

©2008 Yale Materials Handling Corporation

CONTROL LEVER LABELS
MANUAL HYDRAULICS

ITEM	PART NO.	DESCRIPTION	QTY
1	580051779	Lens (Lift)	1
2	580051780	Lens (Tilt)	1
3	580051781	Lens (Reach)	1
3	580051783	Lens (Swing)	1
3	580051784	Lens (Load Stabilizer)	1
3	580051785	Lens (Scoop)	1
3	580051786	Lens (Upender)	1
3	580051787	Lens (Push/Pull)	1
3	580051788	Lens (Clamp)	1
3	580051789	Lens (Rotate)	1
3	580051790	Lens (Side-Shift)	1
3	580051791	Lens (Fork Spread)	1
	a 580052203	Lens (Blank)	1

FOOTNOTES:
a Not Illustrated

©2008 Yale Materials Handling Corporation

FORKS (FIGURE 1-28)
STANDARD TAPER — CLASS III

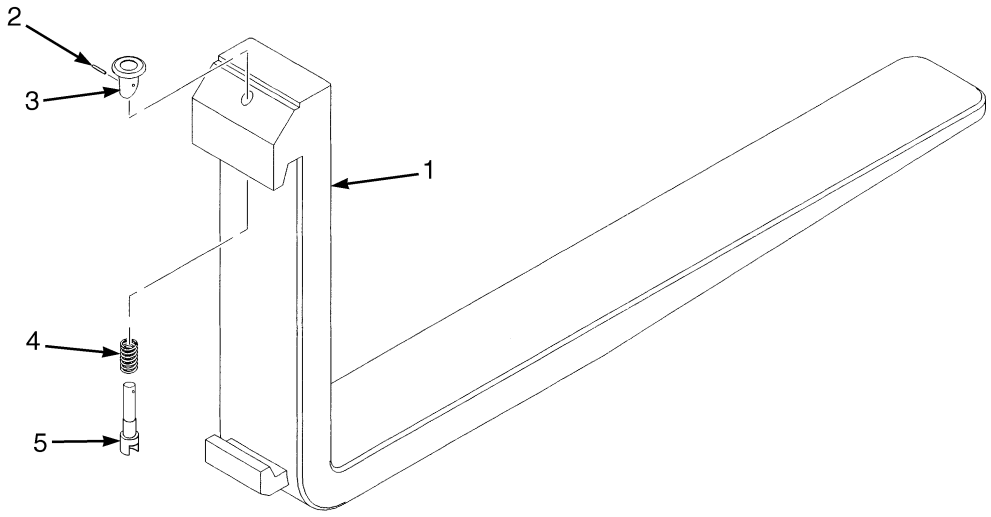

BP000187

KEY:
A: 125 mm x 50 mm (5 in. x 2 in.)
B: 150 mm x 50 mm (6 in x 2 in.)

ITEM	PART NO.	DESCRIPTION	QTY A	QTY B
1	518688602	Fork (42 in.)	2	..
1	518688603	Fork (48 in.)	2	..
1	518688604	Fork (54 in.)	2	..
1	518717602	Fork (42 in)	..	2
1	518717603	Fork (48 in)	..	2
1	518717604	Fork (54 in.)	..	2
1	518717605	Fork (60 in.)	..	2
1	518717607	Fork (72 in.)	..	2
2	580006844	Roll Pin	1	1
3	580006843	Latch	1	1
4	580006842	Spring	1	1
5	580006841	Fork (Pin)	1	1
	580006840	Kit-Latch (Class III And IV)	1	1

©2008 Yale Materials Handling Corporation

FORKS (FIGURE 1-29)
STANDARD TAPER — CLASS IV

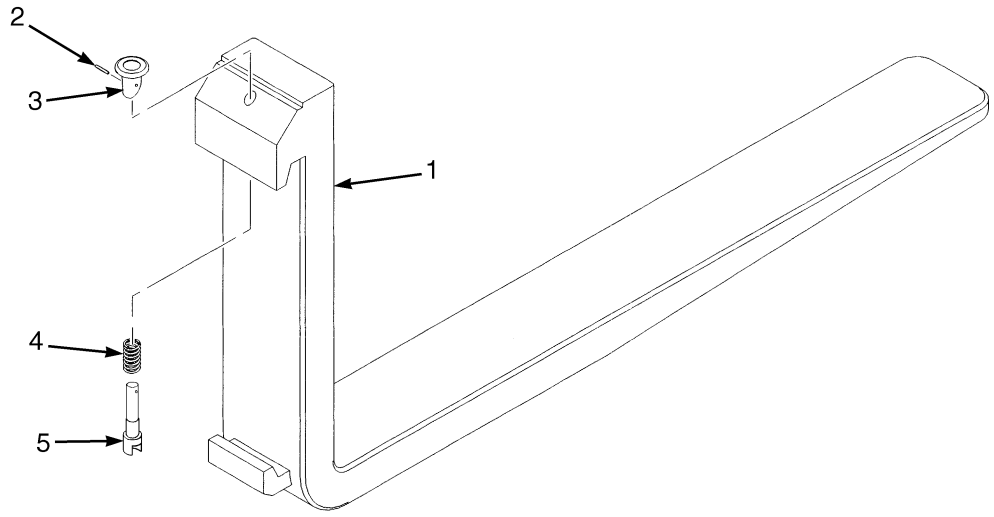

BP000187

KEY:
A: 125 mm x 50 mm (5 in x 2 in.)
B: 150 mm x 60 mm (6 in. x 2.4 in.)

ITEM	PART NO.	DESCRIPTION	QTY A	QTY B
1	518688602	Fork (42 in.)	2	..
1	518688603	Fork (48 in.)	2	..
1	518688604	Fork (54 in.)	2	..
1	518688605	Fork (60 in.)	2	..
1	505849502	Fork (42 in.)	..	2
1	505849503	Fork (48 in.)	..	2
1	505849504	Fork (54 in.)	..	2
1	505849505	Fork (60 in.)	..	2
1	505849507	Fork (72 in.)	..	2
2	580006844	Roll Pin	1	1
3	580006843	Latch	1	1
4	580006842	Spring	1	1
5	580006841	Fork (Pin)	1	1
	580006840	Kit-Latch (Class III And IV)	1	1

©2008 Yale Materials Handling Corporation

FORKS (FIGURE 1-30)

POLISHED FORK WITH FULL BOTTOM TAPER — CLASS III AND IV

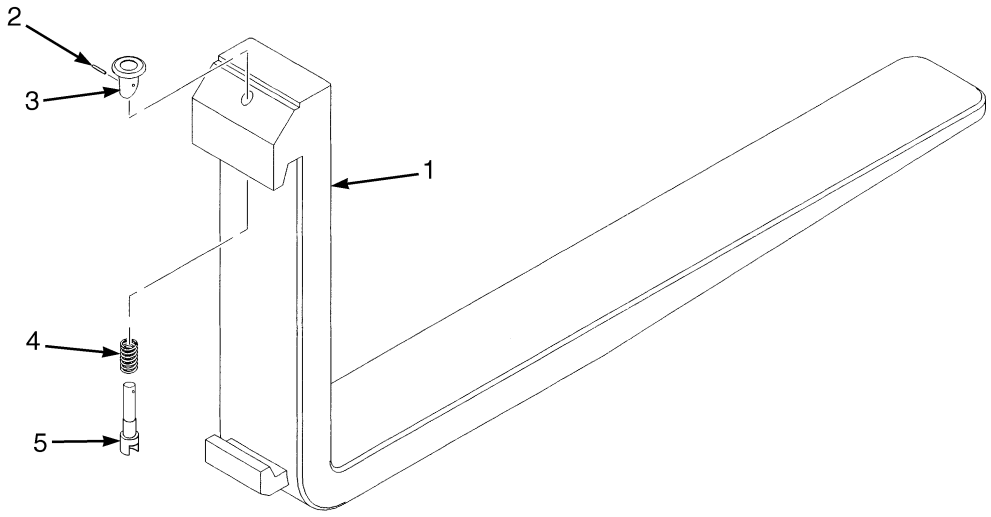

BP000187

KEY:
A: 200 x 40 Class III (8 in. x 1.6 in.)
B: 250 x 40 Class IV (10 in x 1.6 in.)

ITEM	PART NO.	DESCRIPTION	QTY A	QTY B
1	524139139	Fork (47.5 in.)	2	..
1	524139140	Fork (54 in.)	2	..
1	524139141	Fork (47.5 in.)	..	2
1	524139142	Fork (54 in.)	..	2
2	580006844	Roll Pin	1	1
3	580006843	Latch	1	1
4	580006842	Spring	1	1
5	580006841	Fork (Pin)	1	1
	580006840	Kit-Latch (Class III And IV)	1	1

©2008 Yale Materials Handling Corporation

NOTES

©2008 Yale Materials Handling Corporation

LOAD BACKREST EXTENSION (FIGURE 1-31)

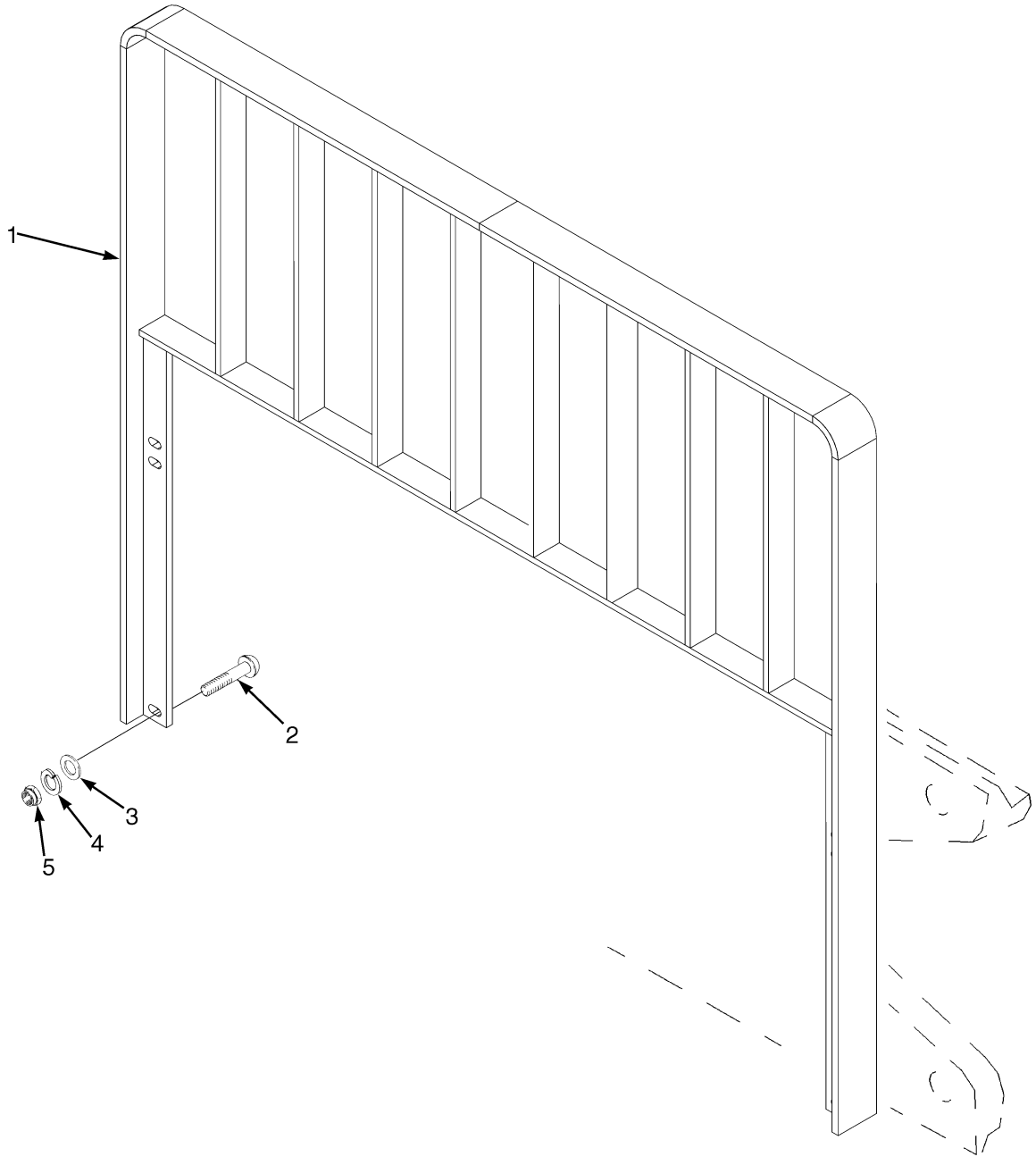

BP120217

©2008 Yale Materials Handling Corporation

LOAD BACKREST EXTENSION

ITEM	PART NO.	DESCRIPTION	QTY
1	**b** 504314701	Load Backrest (48 in.) Class III	1
1	**b** 504314703	Load Backrest (60 in.) Class III	1
1	**bd** 524139478	Load Backrest (48 in.) Class III	1
1	**bd** 524139480	Load Backrest (60 in.) Class III	1
1	**a** 504314705	Load Backrest (48 in.) Class IV	1
1	**a** 504314706	Load Backrest (54 in.) Class IV	1
1	**a** 504314707	Load Backrest (60 in.) Class IV	1
1	**ad** 524139001	Load Backrest (54 in.) Class IV	1
1	**ad** 524139002	Load Backrest (60 in.) Class IV	1
2	580013508	Capscrew (Side-Shift Carriage)	4
3	504233271	Washer	4
3	**c** 061278200	Washer	4
4	449022017	Lockwasher	4
5	580033885	Nut	4

FOOTNOTES:

a GP/GLP/GDP100-120VX
b GP/GLP/GDP80-90VX
c Optional
d Polished Fork with Full Bottom Taper

©2008 Yale Materials Handling Corporation

NOTES

©2008 Yale Materials Handling Corporation

2 ENGINE ASSEMBLY

SECTION 2
ENGINE ASSEMBLY

DESCRIPTION	PAGE
AIR INTAKE MANIFOLD	
CUMMINS QSB 3.3L DIESEL	2-70
ASSEMBLED ENGINE	
GM 4.3L, GASOLINE AND LPG - SHEET 1 OF 3	2-4
GM 4.3L, GASOLINE AND LPG - SHEET 2 OF 3	2-8
GM 4.3L, GASOLINE AND LPG - SHEET 3 OF 3	2-10
CAMSHAFT	
CUMMINS QSB 3.3L DIESEL	2-32
CAMSHAFT AND OIL PAN	
GM 4.3L GASOLINE AND LPG	2-20
COIL ASSEMBLY	
GM 4.3L GASOLINE AND LPG	2-23
CRANKCASE BREATHER	
CUMMINS QSB 3.3L DIESEL	2-62
CRANKSHAFT	
CUMMINS QSB 3.3L DIESEL	2-60
CYLINDER BLOCK	
CUMMINS QSB 3.3L DIESEL	2-42
GM 4.3L GASOLINE AND LPG	2-18
CYLINDER HEAD	
CUMMINS QSB 3.3L DIESEL	2-44
GM 4.3L GASOLINE AND LPG	2-16
ENGINE MOUNTING	
CUMMINS QSB 3.3L DIESEL	2-38
GM 4.3L, GASOLINE AND LPG	2-14
EXHAUST MANIFOLD	
CUMMINS QSB 3.3L DIESEL	2-72
FAN ASSEMBLY	
CUMMINS QSB 3.3L DIESEL	2-34
FAN MOUNT ASSEMBLY	
GM 4.3L GASOLINE AND LPG	2-12
FLYWHEEL AND HOUSING	
CUMMINS QSB 3.3L DIESEL	2-30
GM 4.3L GASOLINE AND LPG	2-28
FRONT GEAR HOUSING	
CUMMINS QSB 3.3L DIESEL	2-56
LIFTING BRACKET	
CUMMINS QSB 3.3L DIESEL	2-37
OIL FILTER AND COOLER	
CUMMINS QSB 3.3L DIESEL	2-48
OIL LEVEL GAUGE	
CUMMINS QSB 3.3L DIESEL	2-52
OIL PAN	
CUMMINS QSB 3.3L DIESEL	2-50
OIL PUMP	
GM 4.3L GASOLINE AND LPG	2-26
OIL PUMP AND FRONT GEAR COVER	
CUMMINS QSB 3.3L DIESEL	2-46

©2008 Yale Materials Handling Corporation

SECTION 2
ENGINE ASSEMBLY

DESCRIPTION	PAGE
PISTON AND CONNECTING ROD	
CUMMINS QSB 3.3L DIESEL	2-54
ROCKER ARM SHAFT	
CUMMINS QSB 3.3L DIESEL	2-36
STARTING AID	
CUMMINS QSB 3.3L DIESEL	2-64
THERMOSTAT	
CUMMINS QSB 3.3L DIESEL	2-39
TURBOCHARGER	
CUMMINS QSB 3.3L DIESEL	2-66
TURBOCHARGER PLUMBING	
CUMMINS QSB 3.3L DIESEL	2-68
VALVE COVER	
CUMMINS QSB 3.3L DIESEL	2-58
VALVE COVER AND INLET MANIFOLD	
GM 4.3L GASOLINE AND LPG	2-24
VIBRATION DAMPER	
CUMMINS QSB 3.3L DIESEL	2-65
WATER PUMP AND PULLEY	
CUMMINS QSB 3.3L DIESEL	2-40

©2008 Yale Materials Handling Corporation

NOTES

©2008 Yale Materials Handling Corporation

ASSEMBLED ENGINE (FIGURE 2-1)

GM 4.3L, GASOLINE AND LPG — SHEET 1 OF 3

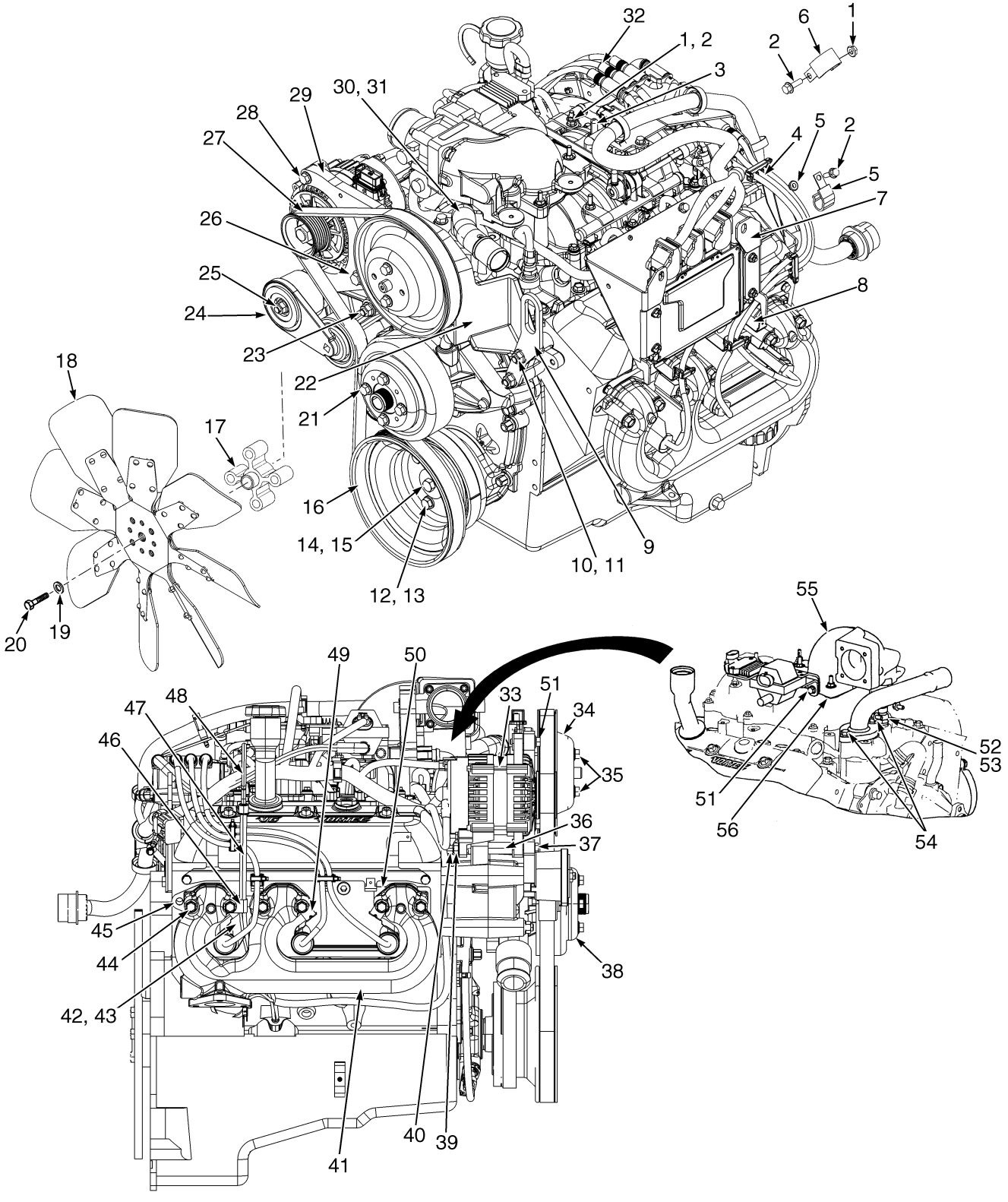

©2008 Yale Materials Handling Corporation

ASSEMBLED ENGINE

GM 4.3L, GASOLINE AND LPG – SHEET 1 OF 3

ITEM	PART NO.	DESCRIPTION	QTY
	580092555	Engine Assy-Gas	1
	580092554	Engine Assy-LPG	1
1	580047919	Nut	6
2	580039438	Capscrew	6
3	580052999	Cap (Vacuum Port)	1
4	. . . . .	Wire Harness Spark Plug LH	1
5	580072019	Clamp	2
6	580072018	Clamp	1
7	580075007	Bracket	1
8	580050409	Bracket	2
9	580043001	Bracket	1
10	580027572	Nut	5
11	580071204	Stud	2
12	449022013	Lockwasher	3
13	059079500	Capscrew	3
14	580008487	Washer	1
15	580000341	Capscrew	1
16	900011268	Pulley	1
17	580025194	Spacer	1
18	580079180	Fan	1
19	502566901	Washer	4
20	580063934	Capscrew	4
21	580047714	Capscrew	4
22	580075397	Fan Mount (☞P19599 [Page 2-12])	1
23	580070456	Stud	2
24	580073942	Belt Tensioner	1
25	580070455	Stud	1
26	580049387	Capscrew	1
27	580073538	V-Belt	1
28	580036662	Capscrew	1
29	580073539	Bracket (Alternator)	1
30	580049106	Thermostat Housing	1
31	580052711	Thermostat (By Pass Type 197 degree with seal)	1
32	. . . . .	Wire Harness Spark Plug RH	1
33	580039672	Alternator	1
34	580053099	Fan Pulley	1
35	580037180	Capscrew	2
36	580047182	Spacer	1
37	580004502	Capscrew	1
38	580042922	Pulley (Water Pump)	1
39	449021001	Washer	1
40	449015098	Nut	1
41	580075454	Manifold (Exhaust)	2
42	580085521	Exhaust Shield	2
43	580052062	Shield	1
44	900015229	Bolt	12
45	580041258	Gasket	2
46	900011247	Clamp	1
47	580085520	Dipstick Tube	1
48	580087447	Dipstick	1

©2008 Yale Materials Handling Corporation

ASSEMBLED ENGINE
GM 4.3L, GASOLINE AND LPG – SHEET 1 OF 3

ITEM	PART NO.	DESCRIPTION	QTY
49	900011253	Shield	2
50	580041257	Gasket	2
51	580039900	Capscrew	3
52	580049173	Sensor (Coolant Temperature)	1
53	505970592	Sealant	AR
54	580030966	Capscrew	2
55	580080122	Adapter (Gasoline)	1
55	580080121	Adapter (LPG)	1
55	580049105	Sleeve	2
56	580048863	Gasket	1
57	580049011	Capscrew	2
	a 580072047	Screw	4
	a 505971582	Clamp	2
	580072615	Kit-Ignition Cable (Spark Plug Wires and Coil Wire)	1

FOOTNOTES:
a Not Illustrated

©2008 Yale Materials Handling Corporation

NOTES

©2008 Yale Materials Handling Corporation

ASSEMBLED ENGINE (FIGURE 2-2)
GM 4.3L, GASOLINE AND LPG — SHEET 2 OF 3

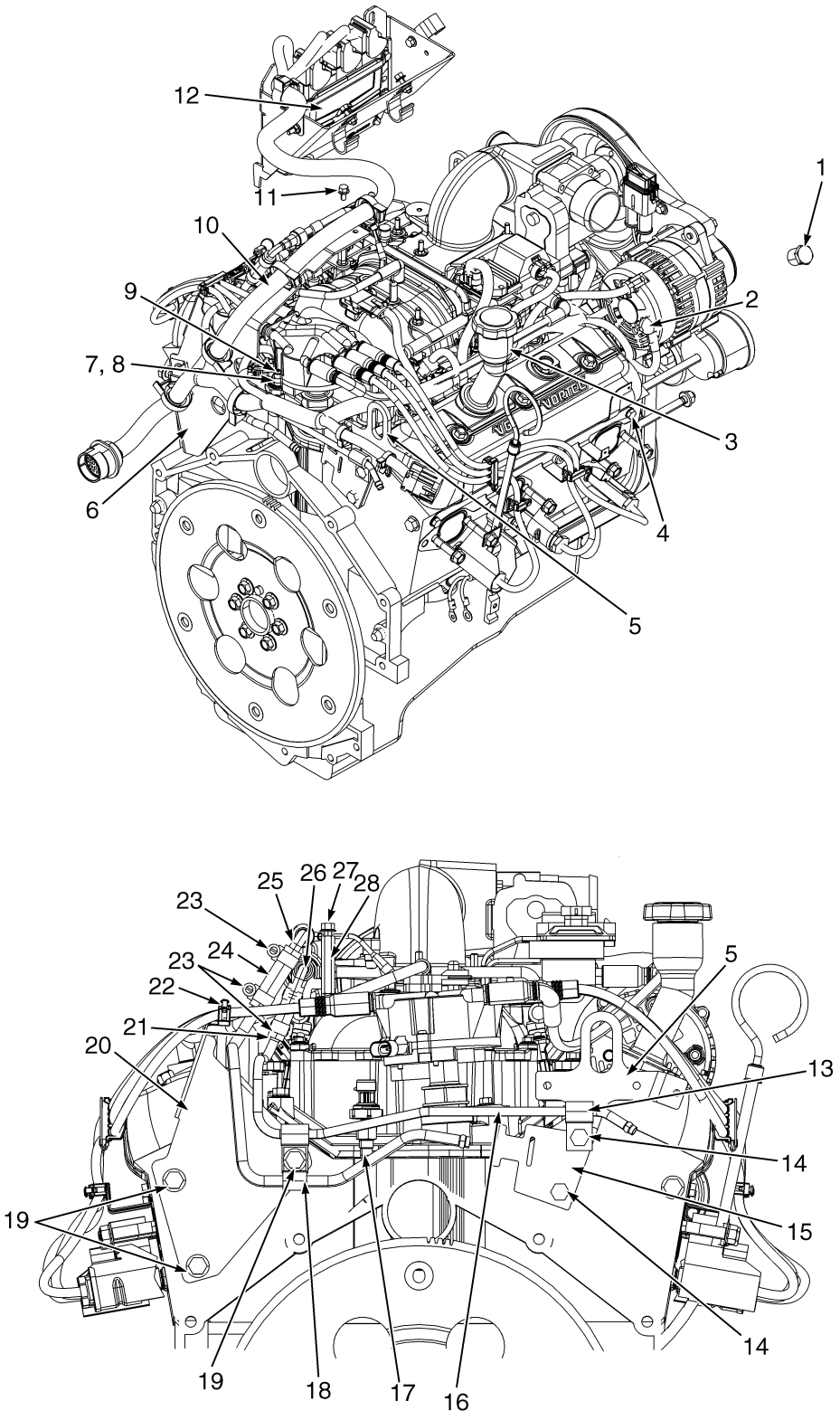

©2008 Yale Materials Handling Corporation

ASSEMBLED ENGINE

GM 4.3L, GASOLINE AND LPG – SHEET 2 OF 3

KEY:
A: Gasoline
B: LPG

ITEM	PART NO.	DESCRIPTION	QTY A	QTY B
	580092555	Engine Assy-Gas	1	..
	580092554	Engine Assy-LPG	..	1
1	501884908	Fitting	1	..
2	580047919	Nut	1	1
3	580046499	Filler Neck	1	1
4	580072090	Screw	4	4
5	580073352	Bracket	1	1
6	580073353	Bracket	1	1
7	580059320	Fitting	1	1
8	505970592	Sealant	AR	AR
9	580051890	Pressure Transducer (Engine Oil Pressure)	1	1
10	580077675	Wire Harness (Engine) (☞P19744 [Page 6-66])	1	..
10	580077676	Wire Harness (Engine) (☞P19745 [Page 6-70])	..	1
11	580039900	Capscrew	3	3
12	580086129	Engine Control Module	..	1
12	580086130	Engine Control Module	1	..
13	580007683	Clamp	2	..
14	580000338	Screw	2	2
15	580065523	Bracket	1	..
16	580065858	Tube	1	..
17	580046654	Tube	1	..
18	900003231	Clamp	1	..
19	580072047	Screw	2	2
20	580070000	Bracket	1	..
21	580042354	Hose	1	..
22	580050410	Retainer (Three Wire Clip)	1	..
23	511405800	Clamp (Worm Screw)	4	..
24	580046629	Hose	1	..
25	580043696	Elbow	1	..
26	580042867	Fitting	1	..
27	580039900	Capscrew	1	..
28	580065981	Adapter	1	1

©2008 Yale Materials Handling Corporation

ASSEMBLED ENGINE (FIGURE 2-3)
GM 4.3L, GASOLINE AND LPG — SHEET 3 OF 3

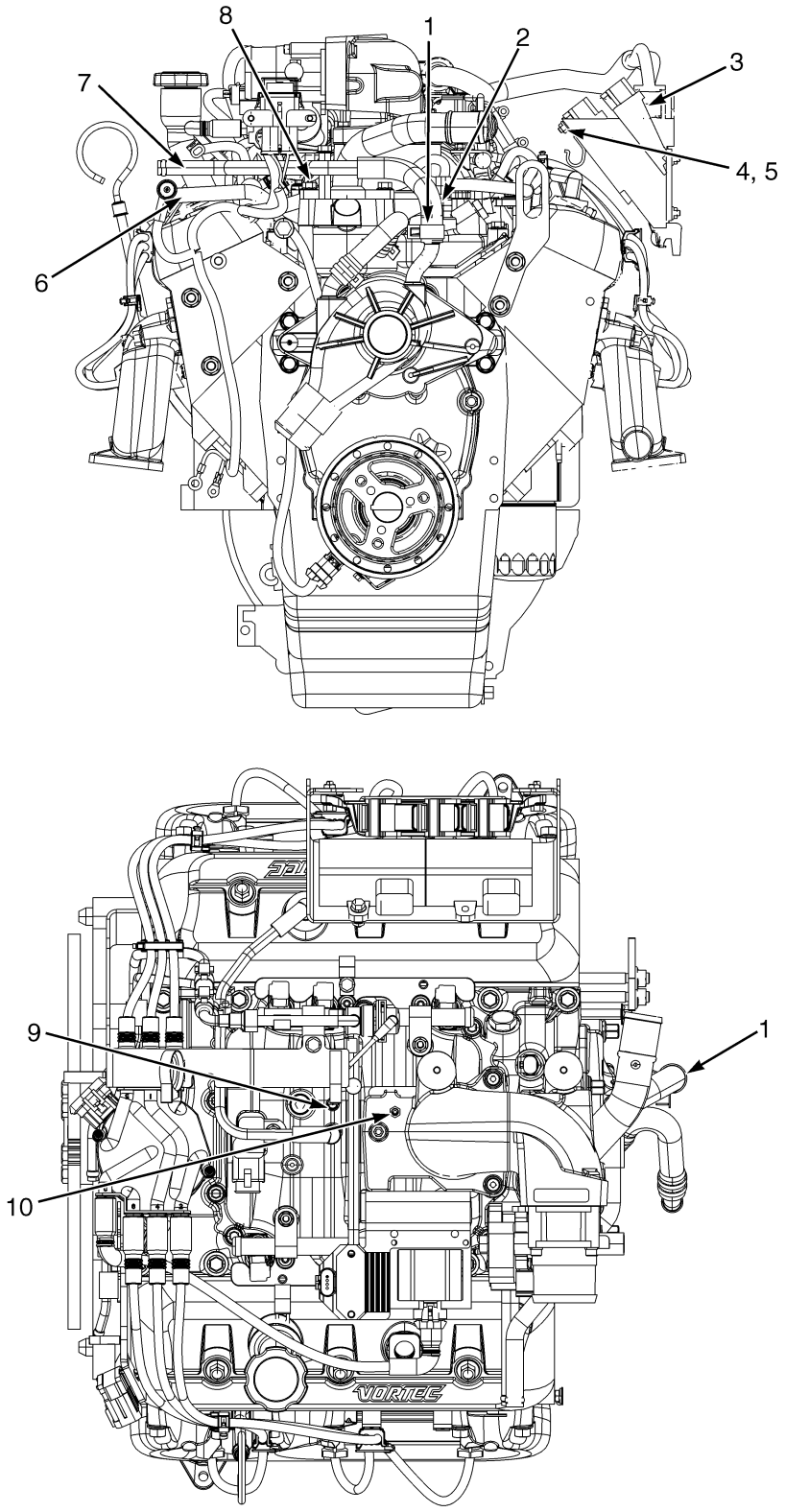

BP090273

©2008 Yale Materials Handling Corporation

ASSEMBLED ENGINE

GM 4.3L, GASOLINE AND LPG – SHEET 3 OF 3

ITEM	PART NO.	DESCRIPTION	QTY
	580092555	Engine Assy-Gas	1
	580092554	Engine Assy-LPG	1
1	580039890	Hose Clamp	2
1	**a** 580039890	Hose Clamp	1
2	**b** 580060284	Hose	1
3	580066710	Module (Injectior Driver)	2
4	580047919	Nut	2
5	580039438	Capscrew	2
6	**b** 580072091	Tube	1
7	**b** 580060283	Tube	1
8	**b** 580030969	Capscrew	1
9	**b** 580054232	Fitting	1
10	580060285	Cap	1
	c 580049011	Capscrew	3

FOOTNOTES:

a Gasoline Engine Only

b LPG Engine

c Not Illustrated

©2008 Yale Materials Handling Corporation

FAN MOUNT ASSEMBLY (FIGURE 2-4)

GM 4.3L GASOLINE AND LPG

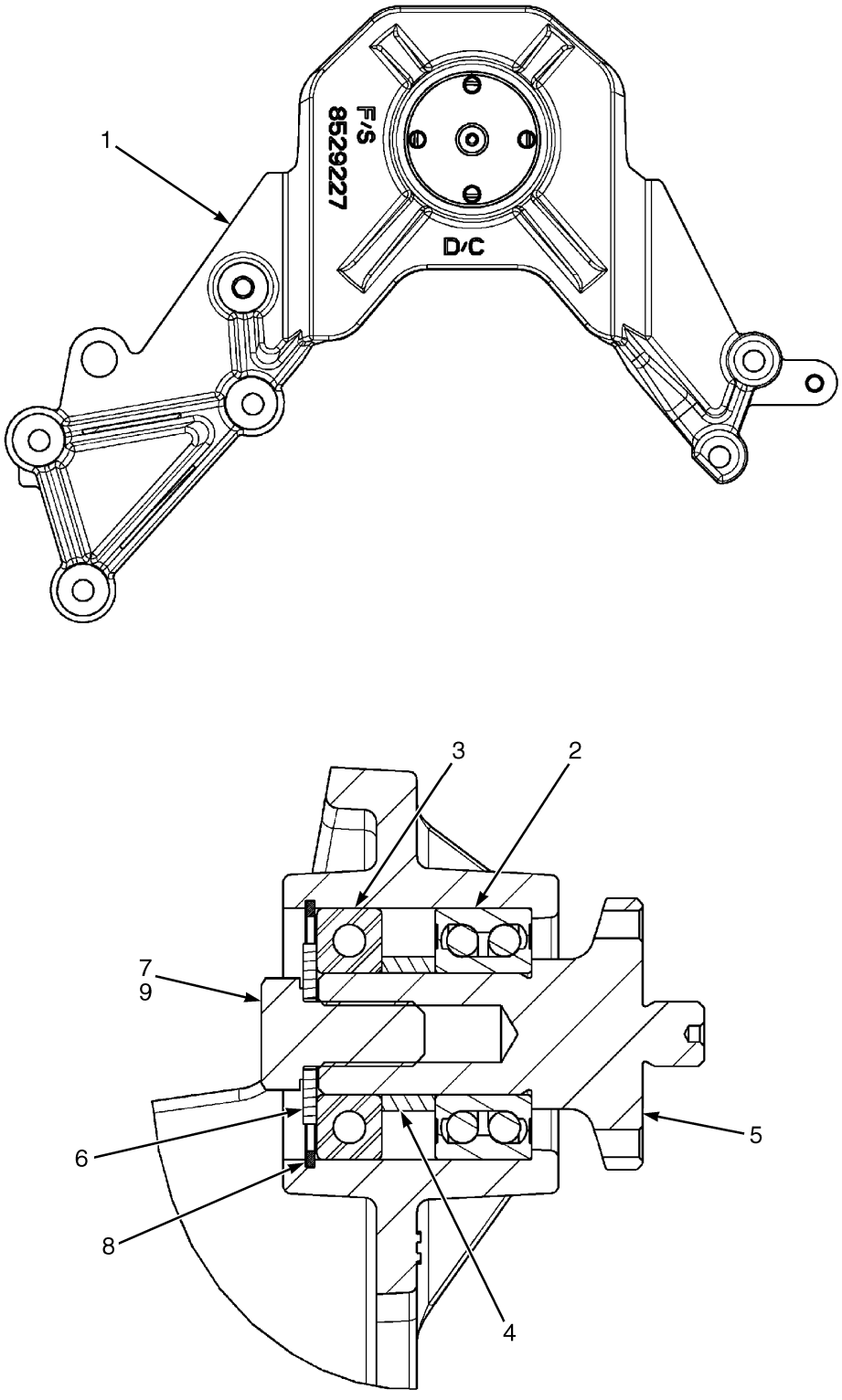

©2008 Yale Materials Handling Corporation

FAN MOUNT ASSEMBLY
GM 4.3L GASOLINE AND LPG

ITEM	PART NO.	DESCRIPTION	QTY
	580070454	Fan Mount	1
1	580067616	Bracket	1
2	580067641	Ball Bearing	1
3	520426863	Bearing	1
4	580067617	Spacer	1
5	580067615	Shaft	1
6	502398908	Washer	1
7	449001125	Capscrew	1
8	640046913	Snap Ring	1
9	501702901	Loctite	AR

©2008 Yale Materials Handling Corporation

ENGINE MOUNTING (FIGURE 2-5)

GM 4.3L, GASOLINE AND LPG

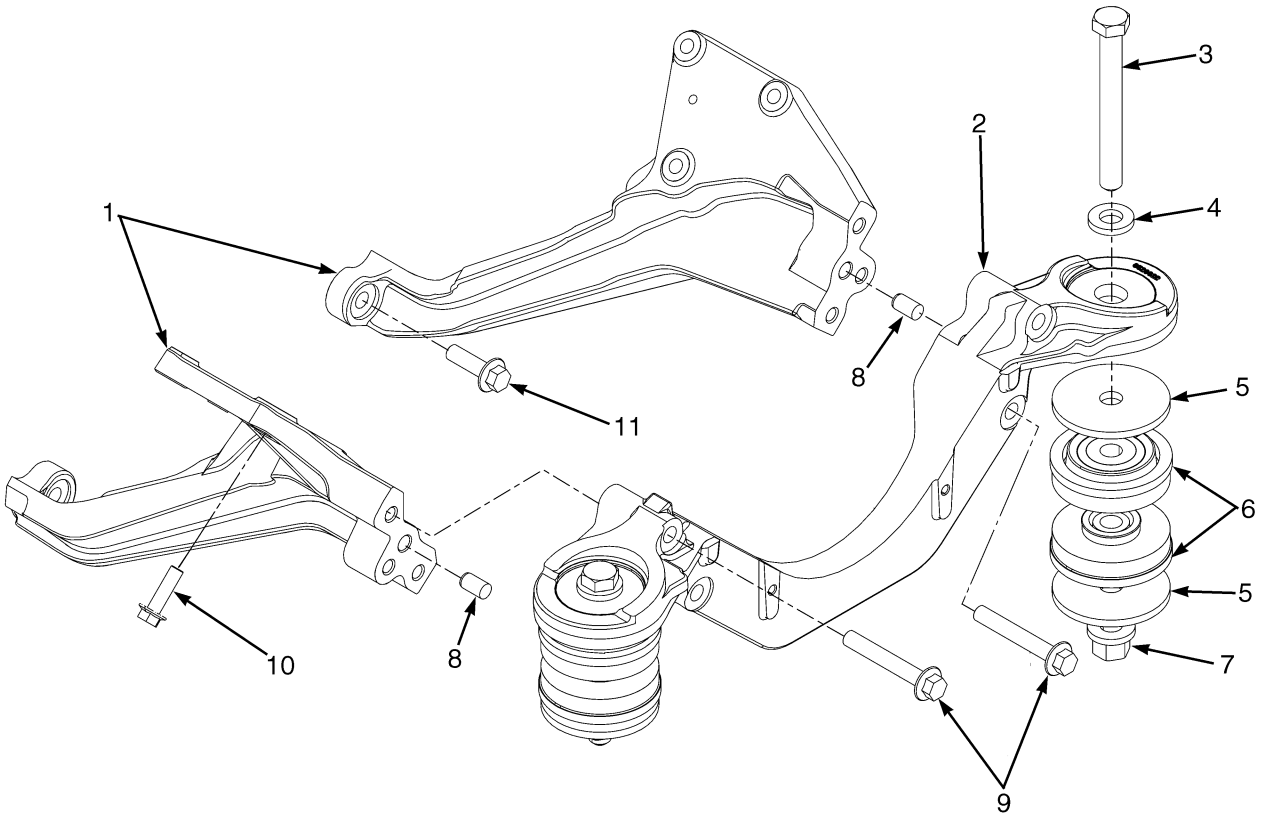

BP090206

©2008 Yale Materials Handling Corporation

ENGINE MOUNTING

GM 4.3L, GASOLINE AND LPG

ITEM	PART NO.	DESCRIPTION	QTY
	580092555	Engine Assy-Gas	1
	580092554	Engine Assy-LPG	1
1	580059353	Mount (LH)	1
1	580059355	Mount (RH)	1
2	580086924	Bracket (Cross Member)	1
3	931017919	Capscrew	2
4	580027945	Washer	2
5	580048458	Washer	4
6	580051383	Isolator	4
7	580051384	Nut (Flange)	2
8	580050042	Dowel	2
9	580059828	Capscrew	4
10	580063961	Capscrew	6
11	580051941	Capscrew	4

©2008 Yale Materials Handling Corporation

CYLINDER HEAD (FIGURE 2-6)
GM 4.3L GASOLINE AND LPG

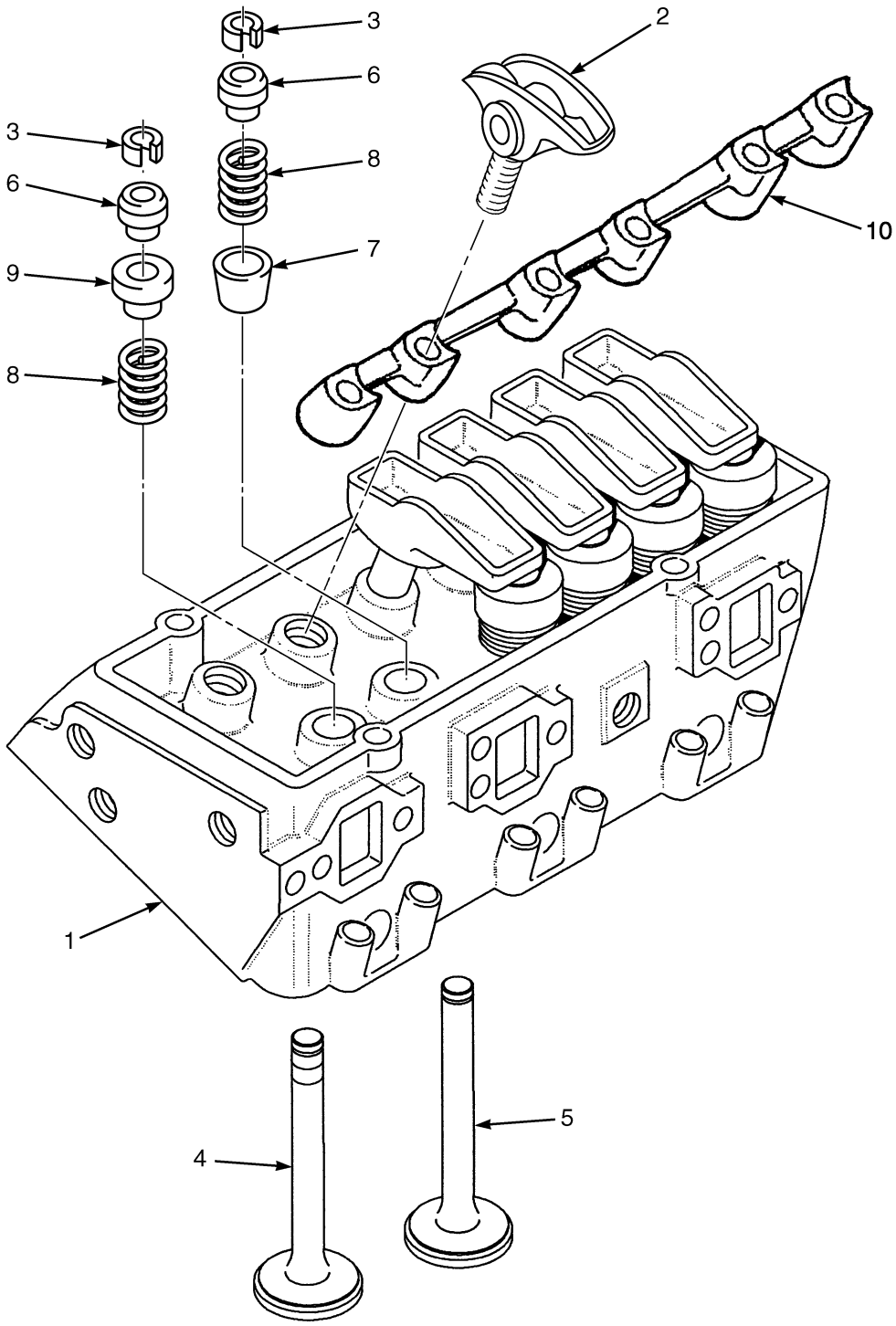

©2008 Yale Materials Handling Corporation

CYLINDER HEAD
GM 4.3L GASOLINE AND LPG

KEY:
A: Gasoline
B: LPG

ITEM	PART NO.	DESCRIPTION	QTY A	QTY B
	580092555	Engine Assy-Gas	1	..
	580092554	Engine Assy-LPG	..	1
1	580014838	Cylinder Head	2	..
1	580079540	Cylinder Head	..	2
2	520046863	Bolt	4	4
2	580079539	Rocker Arm	12	12
3	520046837	Valve Stop (Valve)	24	24
4	520046832	Exhaust Valve	6	..
4	580026863	Exhaust Valve	..	6
5	520046833	Inlet Valve	6	6
6	520053823	Cap	12	12
7	520046835	Seal (Black) (Intake)	12	12
8	520046836	Spring	12	..
8	580090276	Spring	..	12
9	580008775	Seal (Orange) (Exhaust)	12	12
10	580020930	Support (Rocker Arm)	2	2

©2008 Yale Materials Handling Corporation

CYLINDER BLOCK (FIGURE 2-7)

GM 4.3L GASOLINE AND LPG

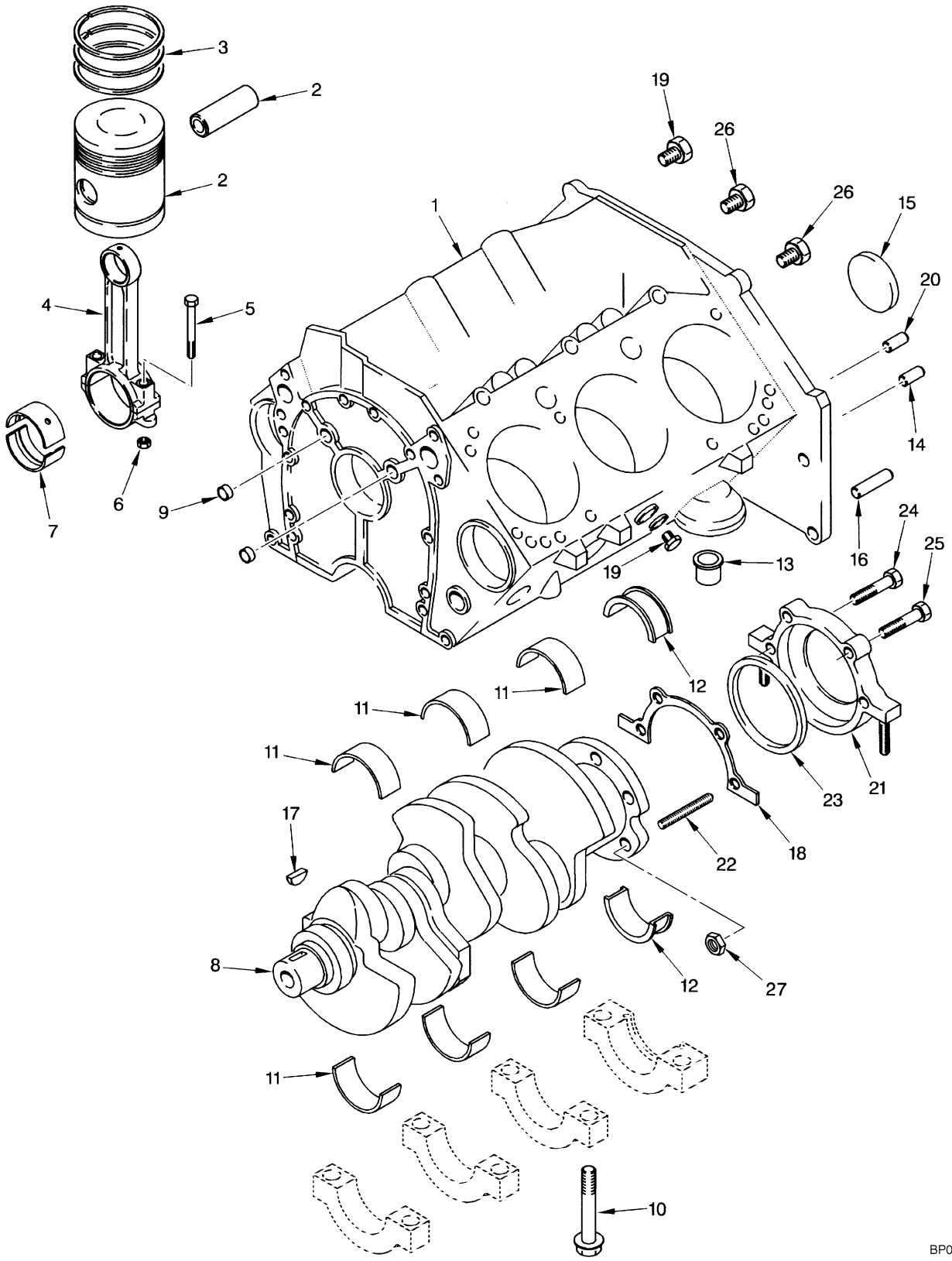

©2008 Yale Materials Handling Corporation

CYLINDER BLOCK
GM 4.3L GASOLINE AND LPG

ITEM	PART NO.	DESCRIPTION	QTY
	580092555	Engine Assy-Gas	1
	580092554	Engine Assy-LPG	1
1	. . . . .	Short Block Assembly	1
2	520047875	Kit-Piston (Standard)	6
2	520047876	Kit-Piston (0.020 O/S) (0,5 mm)	6
2	580071200	Kit-Piston (0.005 in O/S)	6
3	520047877	Kit-Piston Ring (Standard)	6
3	520047878	Kit-Piston Ring (0.020 O/S) (0,5 mm)	6
4	900005237	Piston Rod	6
5	580001744	Bolt	2
6	580015148	Nut	2
7	520047880	Piston Rod Bearing (Connecting Rod) (Standard)	1
8	580008777	Crankshaft	1
9	900005280	Plug	3
10	900005254	Bolt	10
11	580048804	Kit-Crankshaft Bearing (Standard)	3
11	580009266	Kit-Crankshaft Bearing (0.020 in. O/S) (Crankshaft)	3
12	520047888	Bearing Set (.010 in.O/S) (Crankshaft)	1
13	580032627	Valve	1
14	900005256	Pin	4
15	900005255	Plug	1
16	900005257	Pin	2
17	580000316	Key	1
18	580026803	Gasket	1
19	900005280	Plug	2
20	900005278	Pin	1
21	580008599	Retainer	1
22	580000309	Stud	2
23	580008600	Seal	1
24	900006219	Bolt	1
25	900006220	Bolt	1
26	900006251	Plug	4
27	580026931	Nut	1
	520043812	Plug (Not Illustrated)	8

©2008 Yale Materials Handling Corporation

CAMSHAFT AND OIL PAN (FIGURE 2-8)

GM 4.3L GASOLINE AND LPG

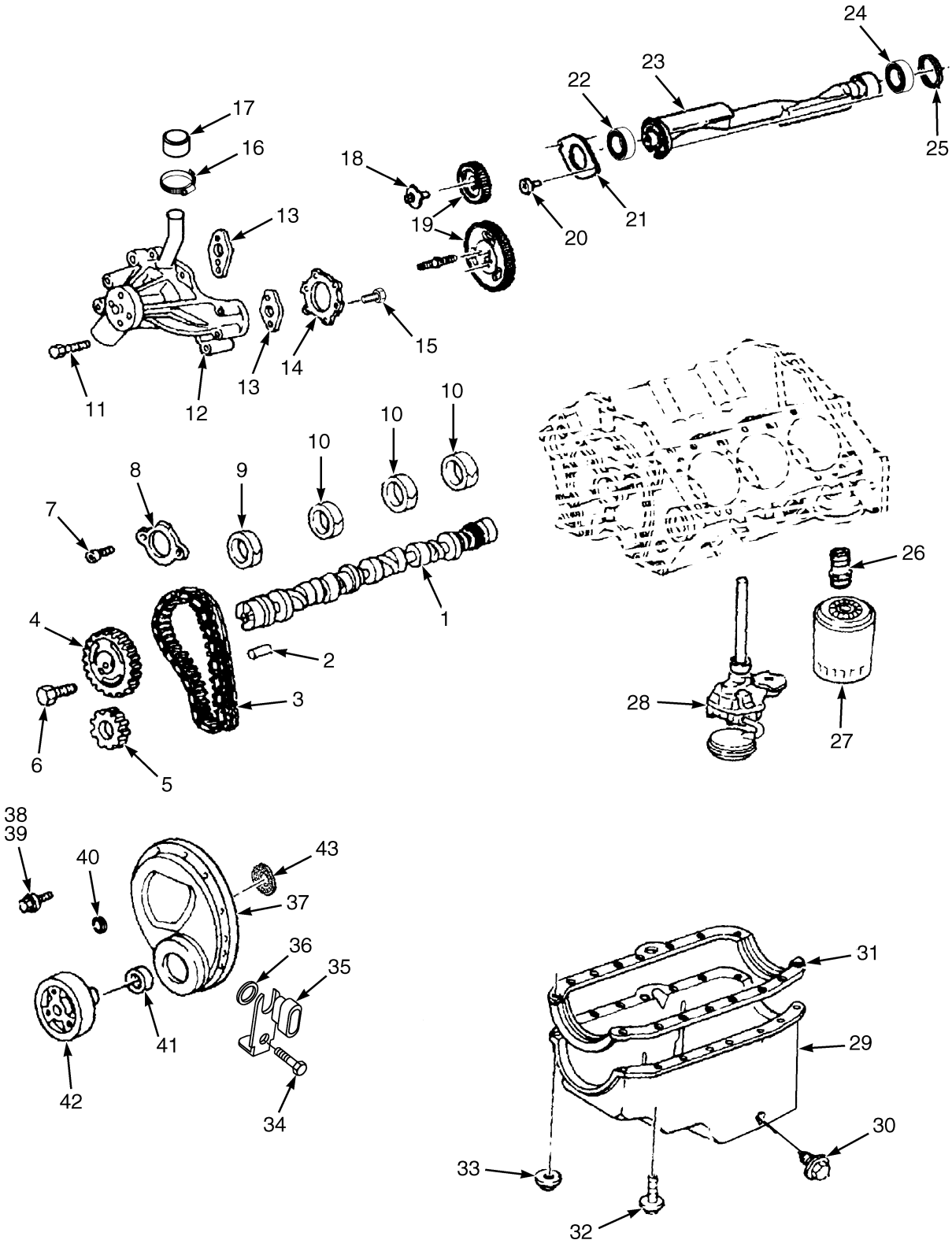

©2008 Yale Materials Handling Corporation

CAMSHAFT AND OIL PAN
GM 4.3L GASOLINE AND LPG

ITEM	PART NO.	DESCRIPTION	QTY
	580092555	Engine Assy-Gas	1
	580092554	Engine Assy-LPG	1
1	580071203	Camshaft	1
2	900005282	Pin	1
3	580088767	Kit-Repair Cable Chain	1
3	. . . . .	Timing Chain	1
4	. . . . .	Sprocket	1
5	. . . . .	Sprocket	1
6	900005286	Bolt	3
7	900005287	Bolt	2
8	900005288	Retainer	1
9	580001617	Bearing	2
10	580001619	Bearing	1
11	900015229	Bolt	4
12	580088774	Water Pump	1
13	580088773	Gasket	1
14	580008575	Gasket	1
15	520046840	Bolt	10
16	062159500	Clamp	1
17	900015240	Cap	1
18	900006233	Bolt	6
19	900006234	Kit-Gear (Balancer)	1
20	900006240	Bolt	2
21	520046852	Retainer	1
22	900006239	Bearing	1
23	900006236	Shaft	1
24	580000318	Bearing	1
25	900005255	Plug	2
26	900006211	Fitting	1
27	900006282	Oil Filter	1
28	520046841	Engine Oil Pump (☞P19605 [Page 2-26])	1
29	580088846	Oil Pan	1
30	580009275	Screw	1
30	580009276	Gasket	1
31	580088845	Gasket	1
32	520046851	Bolt	10
33	520042866	Nut	1
34	580032622	Bolt	1
35	580088847	Sensor (Camshaft Position)	1
36	580032621	O-Ring	1
37	580088831	Engine Cover (Front Cover)	1
37	580079953	Bracket	1
37	580079956	Engine Cover	1
38	520046844	Bolt	4
39	900006213	Bolt	2
40	520046854	Grommet	6
41	900006231	Seal	1
41	580001039	Seal	1
42	580071205	Damper	1
43	580032619	O-Ring (Crankshaft Position Sensor)	1

©2008 Yale Materials Handling Corporation

CAMSHAFT AND OIL PAN
GM 4.3L GASOLINE AND LPG

ITEM	PART NO.	DESCRIPTION	QTY
	900005294	Stud (not illustrated)	1
	580088832	Pin (not illustrated)	2
	580088833	Gasket (not illustrated)	1

©2008 Yale Materials Handling Corporation

COIL ASSEMBLY (FIGURE 2-9)
GM 4.3L GASOLINE AND LPG

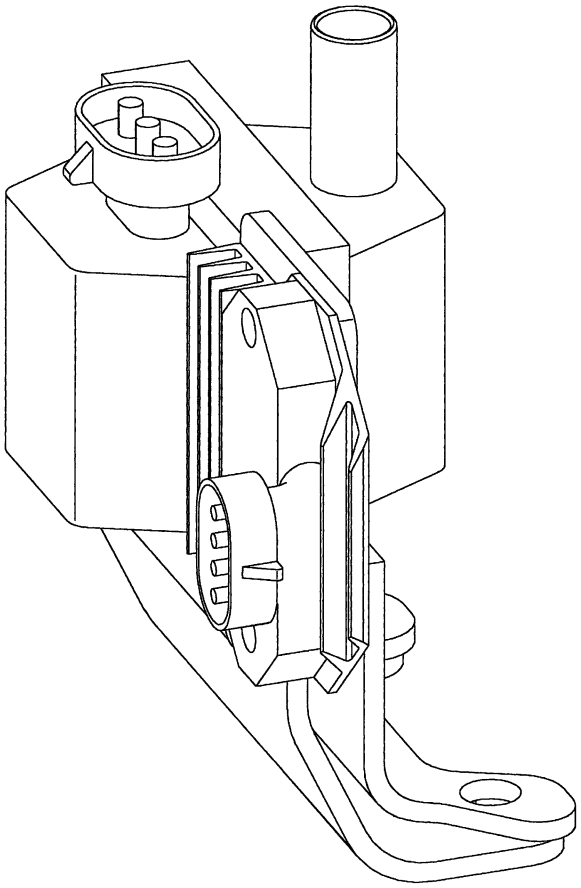

BP090140

ITEM	PART NO.	DESCRIPTION	QTY
	580052474	Ignition Coil	1
	580053965	Bracket	1
	900006264	Bolt	4
	580053966	Module	1
	580053967	Heatsink	1
	580053968	Screw	2
	580053969	Ignition Coil	1
	900006280	Nut	1
	580053970	Bracket	1

©2008 Yale Materials Handling Corporation

VALVE COVER AND INLET MANIFOLD (FIGURE 2-10)

GM 4.3L GASOLINE AND LPG

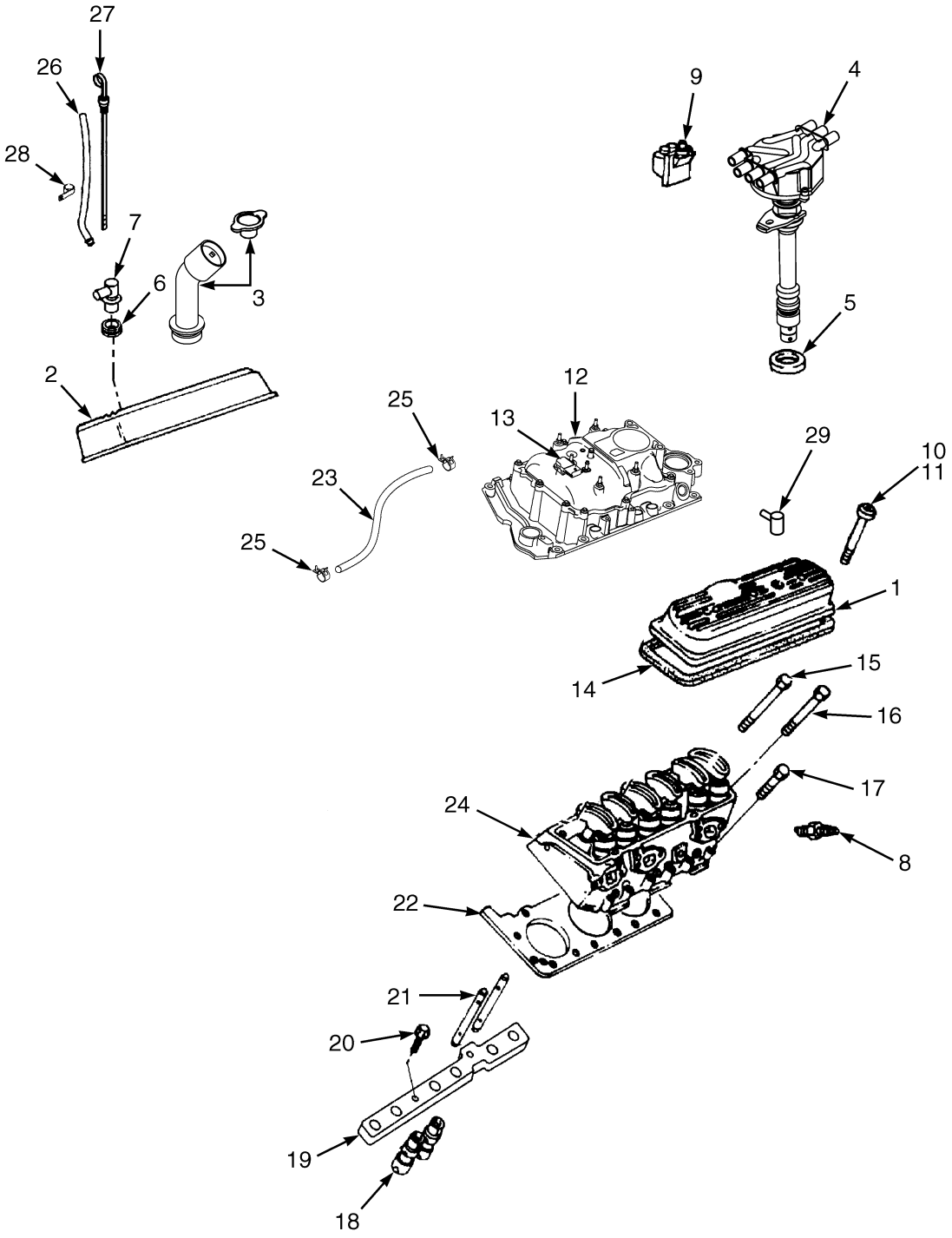

©2008 Yale Materials Handling Corporation

VALVE COVER AND INLET MANIFOLD
GM 4.3L GASOLINE AND LPG

ITEM	PART NO.	DESCRIPTION	QTY
	580092555	Engine Assy-Gas	1
	580092554	Engine Assy-LPG	1
1	524155833	Cover (LH)	1
2	520046856	Cover (RH)	1
3	580046499	Filler Neck	1
3	900006247	Cap	1
3	580088849	Cap	1
4	580048919	Distributor	1
5	900006248	Gasket	1
6	900006250	Grommet	3
7	900011248	Fitting	1
8	580075019	Spark Plug	6
9	580052474	Ignition Coil	1
10	520046857	Grommet	6
11	900006256	Bolt	6
12	580089120	Manifold Assy	1
12	580089116	Intake Manifold (Lower)	1
12	580089121	Intake Manifold (Upper)	1
13	580048879	Sensor (Temperature manifold absolute pressure)	1
14	900006257	Gasket	2
15	**a** 520042867	Bolt (Long)	10
16	**a** 900006272	Bolt (Medium)	4
17	**a** 900006259	Bolt (Short)	12
18	580014840	Valve Lifter	12
19	520046862	Guide	2
20	520046863	Bolt	2
21	520046864	Push Rod	12
22	520046865	Cylinder Head Gasket	1
23	580071308	Hose Assy	1
24	580014838	Cylinder Head (Gasoline)	1
24	580079540	Cylinder Head (LPG)	1
25	580014841	Clamp	2
26	580085520	Dipstick Tube	1
27	580087447	Dipstick	1
28	900011247	Clamp	1
29	580063369	Fitting (90 Degree)	1
	520046860	Kit-Gasket (Intake Manifold)	1

FOOTNOTES:

a Quanity is listed for both heads.

©2008 Yale Materials Handling Corporation

OIL PUMP (FIGURE 2-11)
GM 4.3L GASOLINE AND LPG

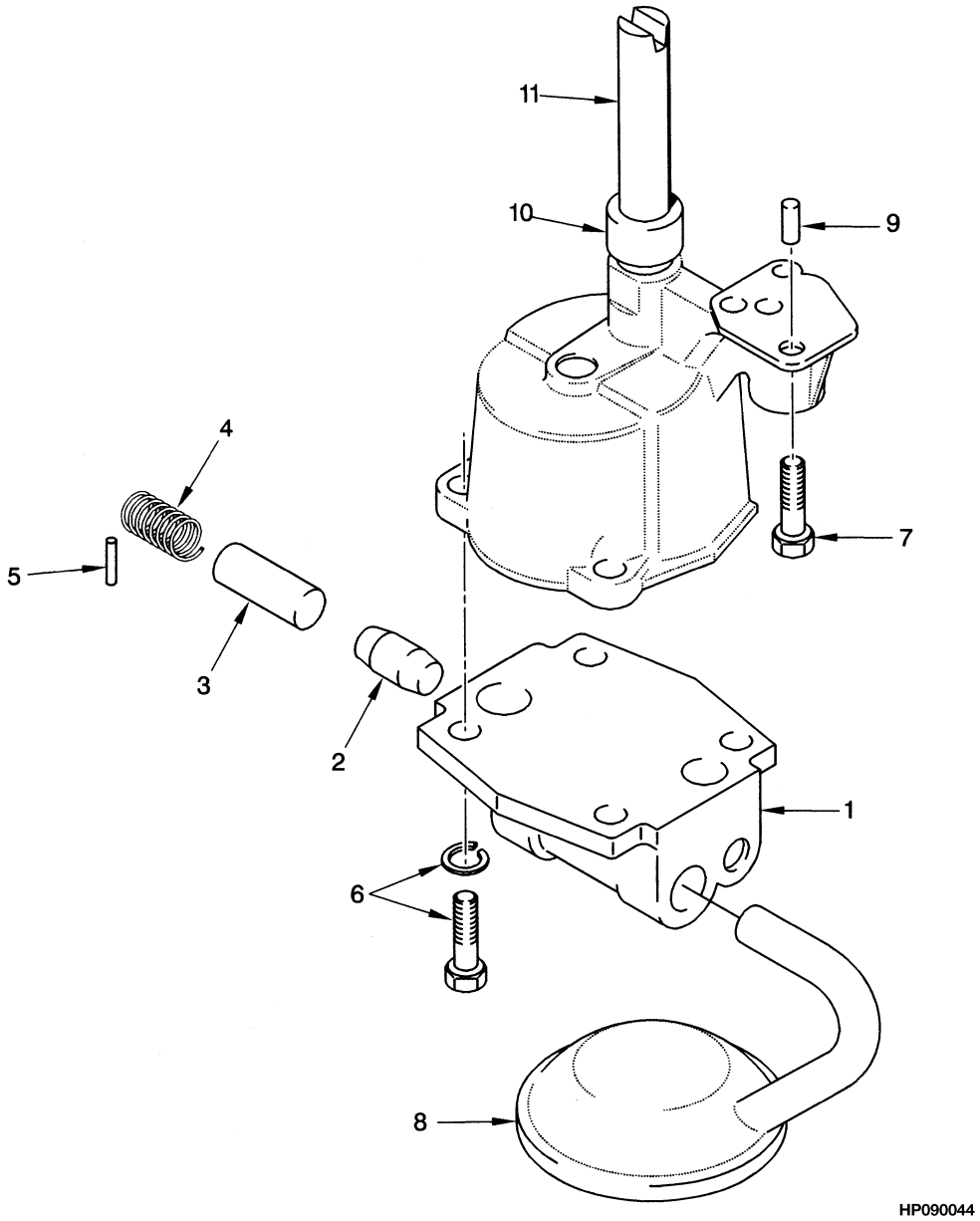

©2008 Yale Materials Handling Corporation

OIL PUMP

GM 4.3L GASOLINE AND LPG

ITEM	PART NO.	DESCRIPTION	QTY
	580092555	Engine Assy-Gas	1
	580092554	Engine Assy-LPG	1
1	900006204	Cover	1
2	900006205	Stop	1
3	900006206	Regulator Valve	1
4	900006207	Spring	1
5	520042869	Pin	1
6	900006208	Kit-Screw	2
7	900006209	Bolt	1
8	520046842	Screen	1
9	580000322	Pin	2
10	900006201	Retainer	1
11	900005297	Shaft	1

©2008 Yale Materials Handling Corporation

FLYWHEEL AND HOUSING (FIGURE 2-12)

GM 4.3L GASOLINE AND LPG

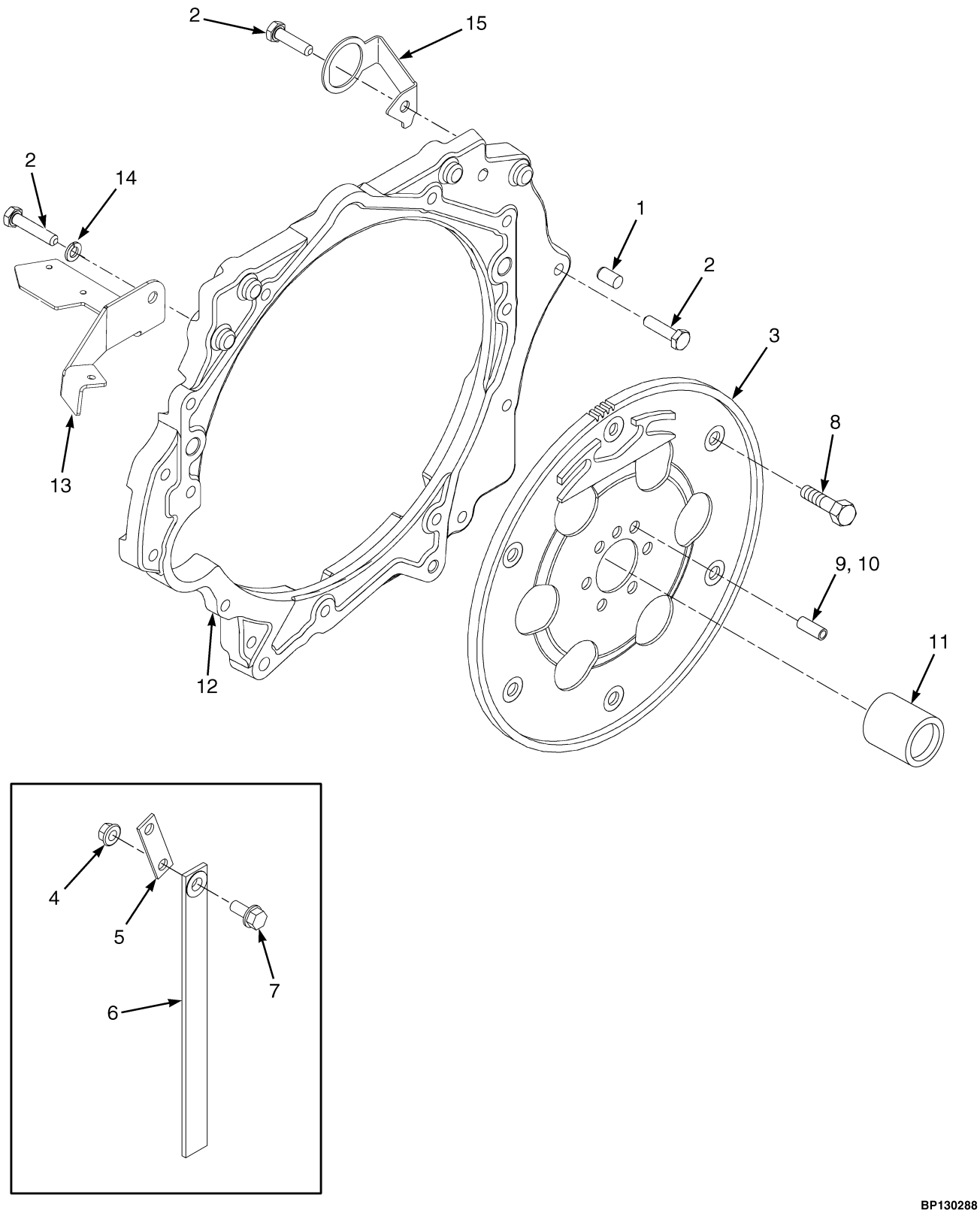

BP130288

©2008 Yale Materials Handling Corporation

FLYWHEEL AND HOUSING

GM 4.3L GASOLINE AND LPG

ITEM	PART NO.	DESCRIPTION	QTY
1	580050042	Dowel	2
2	449001040	Capscrew	18
3	580009125	Flywheel	1
4	580027572	Nut	1
5	580051610	Bracket	1
6	504232234	Static Strap	1
7	580058009	Capscrew	1
8	580002329	Bolt	6
9	580005048	Pin	AR
10	900005247	Pin	1
11	580071252	Bearing	1
12	580060778	Housing	1
13	580082844	Bracket (Tube Retention)	1
14	449022013	Lockwasher	19
15	580079916	Bracket (Electrical Connector)	1

©2008 Yale Materials Handling Corporation

FLYWHEEL AND HOUSING (FIGURE 2-13)

CUMMINS QSB 3.3L DIESEL

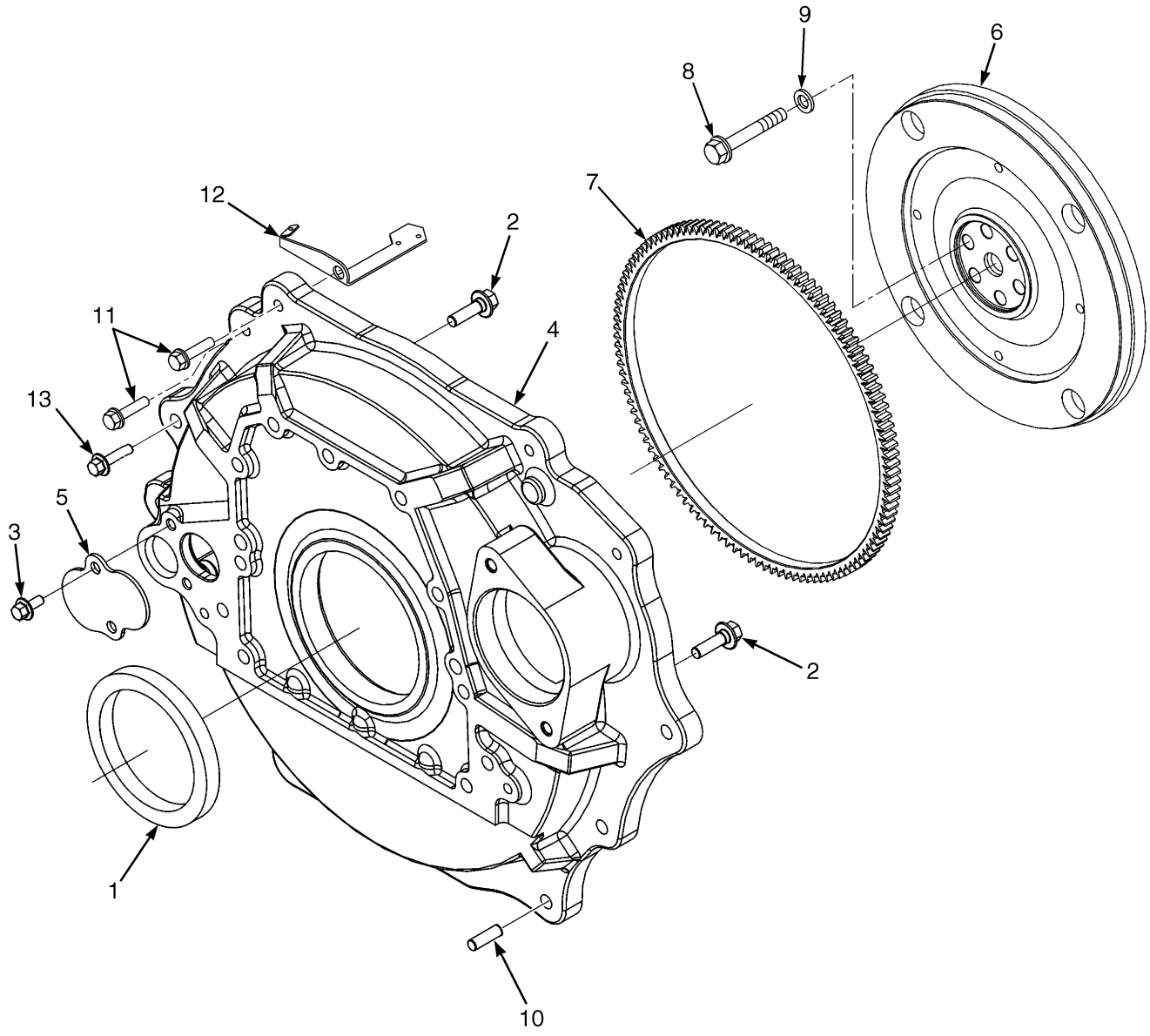

©2008 Yale Materials Handling Corporation

FLYWHEEL AND HOUSING

CUMMINS QSB 3.3L DIESEL

ITEM	PART NO.	DESCRIPTION	QTY
	580087913	Engine Assy-Diesel	1
1	580091034	Oil Seal	1
2	580044081	Capscrew	11
3	580031754	Capscrew	2
4	580092312	Flywheel Housing	1
5	580092311	Cover Plate	1
6	580092310	Flywheel	1
7	580079689	Ring Gear (Flywheel Ring)	1
8	580091054	Capscrew	6
9	580091065	Washer	6

©2008 Yale Materials Handling Corporation

CAMSHAFT (FIGURE 2-14)
CUMMINS QSB 3.3L DIESEL

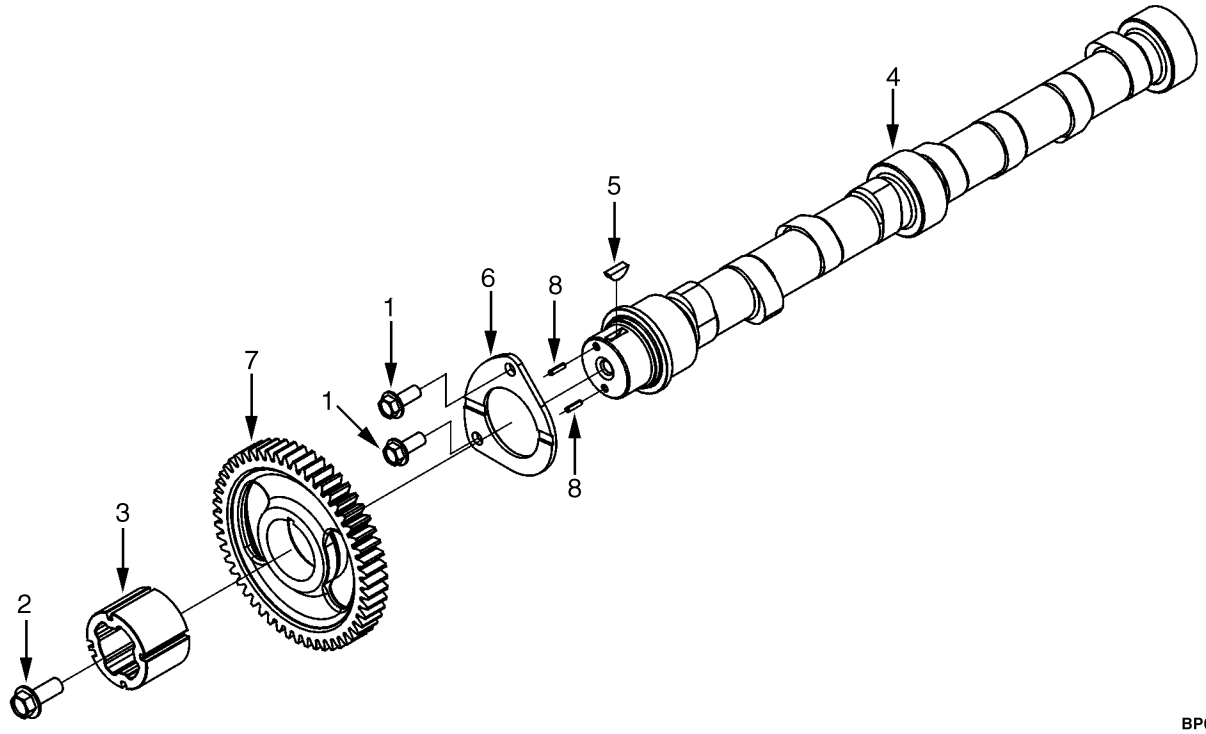

BP090393

ITEM	PART NO.	DESCRIPTION	QTY
	580087913	Engine Assy-Diesel	1
1	580091125	Capscrew	2
2	580091141	Capscrew	1
3	580091142	Adapter (Postion Sensor)	1
4	580091143	Camshaft	1
5	580091149	Key	1
6	580092833	Plate (Clamping)	1
7	580094500	Gear	1
8	580091150	Cotter Pin	2

©2008 Yale Materials Handling Corporation

NOTES

©2008 Yale Materials Handling Corporation

FAN ASSEMBLY (FIGURE 2-15)
CUMMINS QSB 3.3L DIESEL

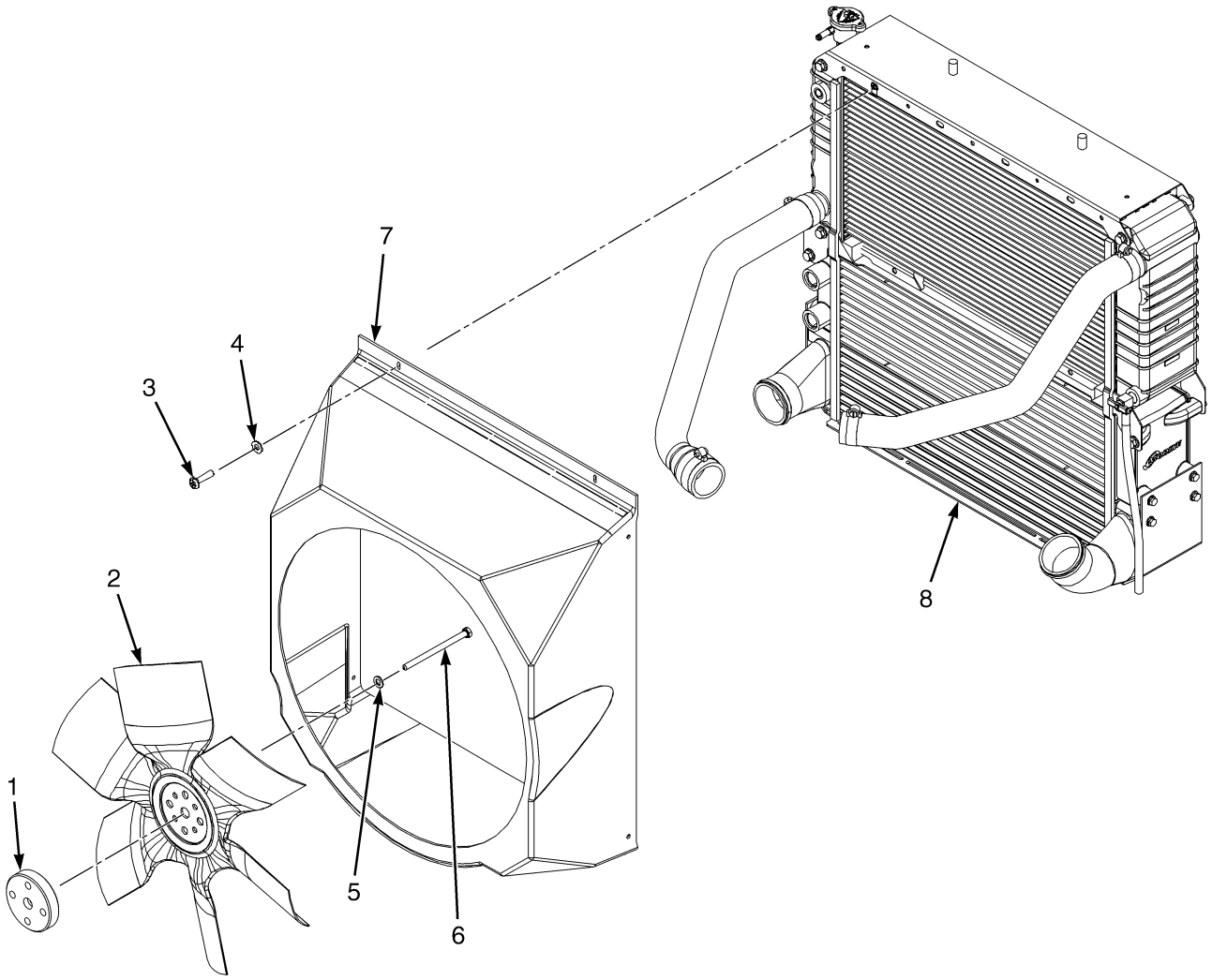

©2008 Yale Materials Handling Corporation

FAN ASSEMBLY
CUMMINS QSB 3.3L DIESEL

ITEM	PART NO.	DESCRIPTION	QTY
	580087913	Engine Assy-Diesel	1
1	580084651	Spacer (Fan)	1
2	580084515	Fan	1
3	449007005	Screw	2
4	940004903	Washer	2
5	502566901	Washer	4
6	580001756	Capscrew	4
7	580086538	Shroud	1
8	. . . . .	Cooling	1

©2008 Yale Materials Handling Corporation

ROCKER ARM SHAFT (FIGURE 2-16)

CUMMINS QSB 3.3L DIESEL

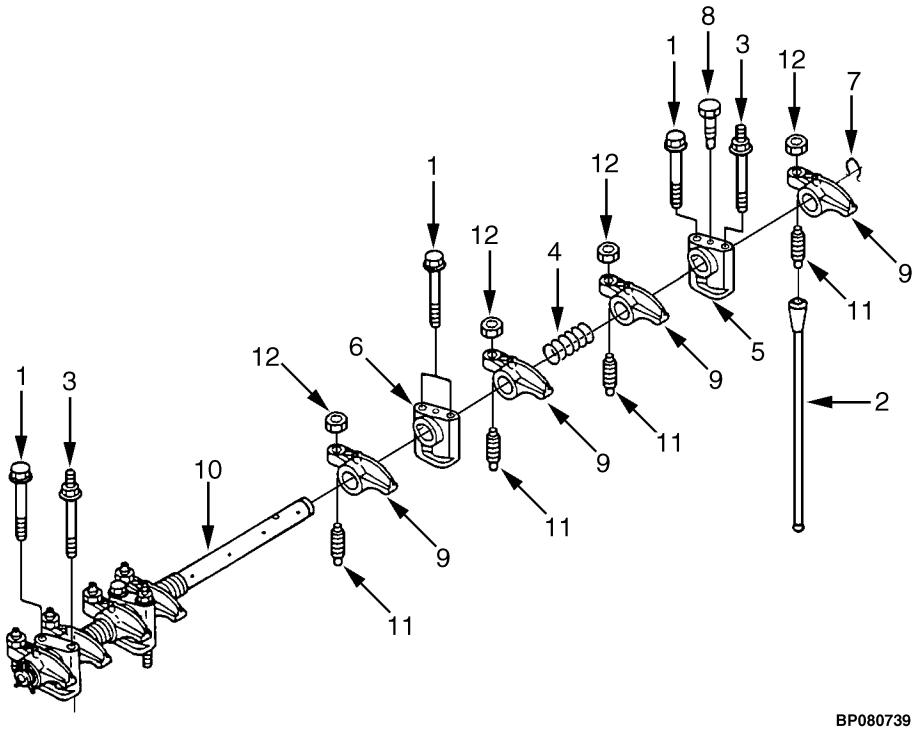

BP080739

ITEM	PART NO.	DESCRIPTION	QTY
	580087913	Engine Assy-Diesel	1
1	580091276	Capscrew	5
2	580091277	Push Rod	8
3	580091278	Capscrew	3
4	580091279	Spring	3
5	580091280	Support	1
6	580091281	Support	3
7	580091282	Clip	2
8	580091283	Capscrew	1
9	580091284	Lever	8
10	580091285	Shaft	1
11	580091287	Screw	8
12	580091288	Locknut	8

©2008 Yale Materials Handling Corporation

LIFTING BRACKET (FIGURE 2-17)
CUMMINS QSB 3.3L DIESEL

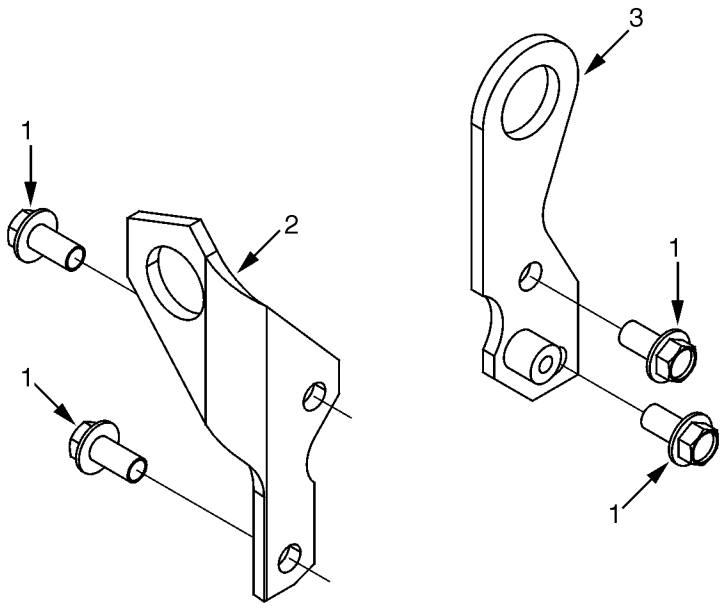

BP090402

ITEM	PART NO.	DESCRIPTION	QTY
	580087913	Engine Assy-Diesel	1
1	580091081	Capscrew	4
2	580091056	Bracket	1
3	580093502	Bracket	1

©2008 Yale Materials Handling Corporation

ENGINE MOUNTING (FIGURE 2-18)
CUMMINS QSB 3.3L DIESEL

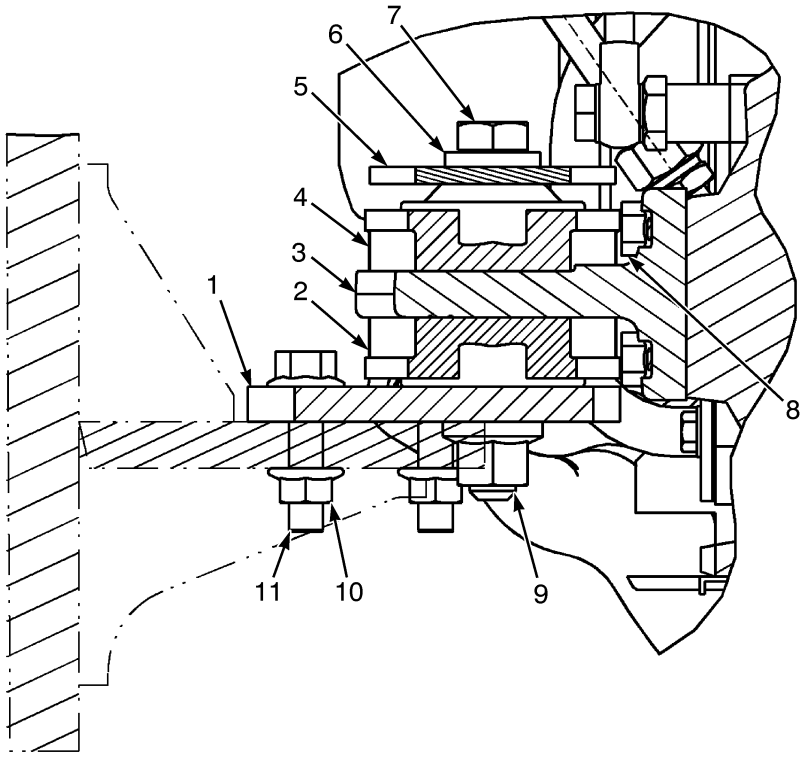

BP090391

ITEM	PART NO.	DESCRIPTION	QTY
1	580083690	Plate	2
2	580051383	Isolator	2
3	580083559	Motor Mount	2
4	580051383	Isolator	2
5	580048458	Washer	2
6	580027945	Washer	2
7	931017917	Capscrew	2
8	580083689	Bolt	8
9	580051384	Nut (Flange)	2
10	580056528	Nut (Shoulder)	6
11	580084304	Capscrew	6

©2008 Yale Materials Handling Corporation

THERMOSTAT (FIGURE 2-19)
CUMMINS QSB 3.3L DIESEL

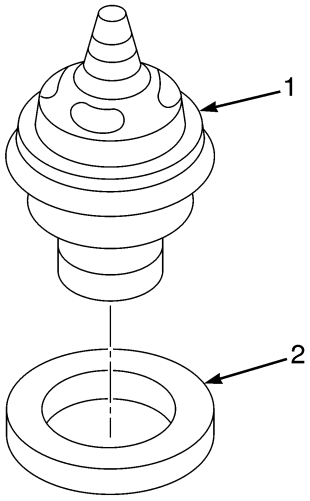

BP090406

ITEM	PART NO.	DESCRIPTION	QTY
	580087913	Engine Assy-Diesel	1
1	580090972	Kit-Thermostat	1
2	580090973	Gasket	1

©2008 Yale Materials Handling Corporation

WATER PUMP AND PULLEY (FIGURE 2-20)
CUMMINS QSB 3.3L DIESEL

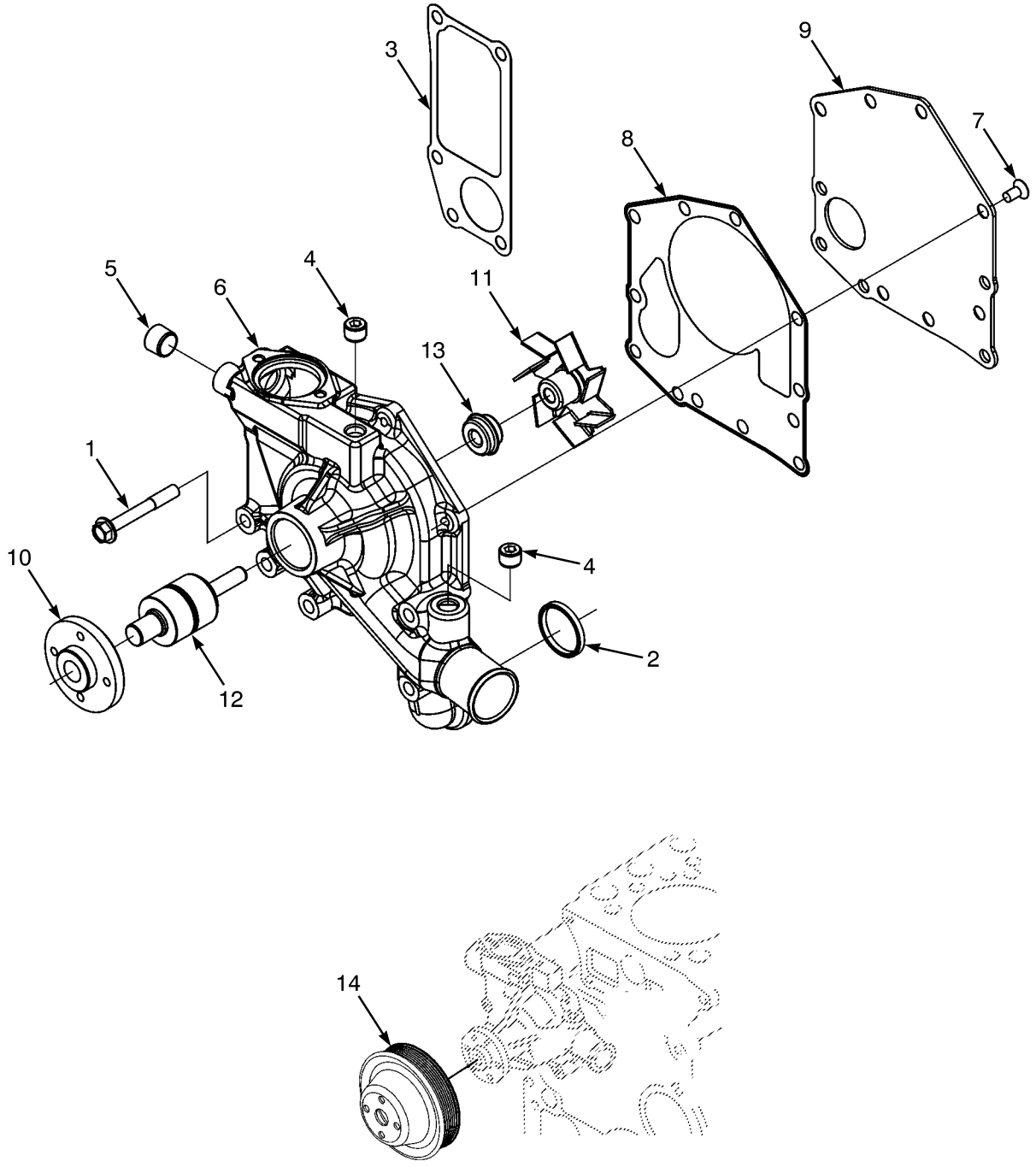

©2008 Yale Materials Handling Corporation

WATER PUMP AND PULLEY

CUMMINS QSB 3.3L DIESEL

ITEM	PART NO.	DESCRIPTION	QTY
	580087913	Engine Assy-Diesel	1
1	580091096	Capscrew	4
2	580091787	Seal	1
3	580091788	Gasket	1
4	580091789	Plug	2
5	580091790	Plug	1
6	580091791	Water Pump	1
6	580094156	Body	1
7	580091316	Capscrew	7
8	580094157	Gasket	1
9	580094158	Cover Plate	1
10	580091792	Boss	1
11	580091793	Impeller	1
12	580091314	Shaft	1
13	580091315	Seal	1
14	580090991	Water Pump Pulley	1
	580091317	V-Belt (Not illustrated)	1

©2008 Yale Materials Handling Corporation

CYLINDER BLOCK (FIGURE 2-21)

CUMMINS QSB 3.3L DIESEL

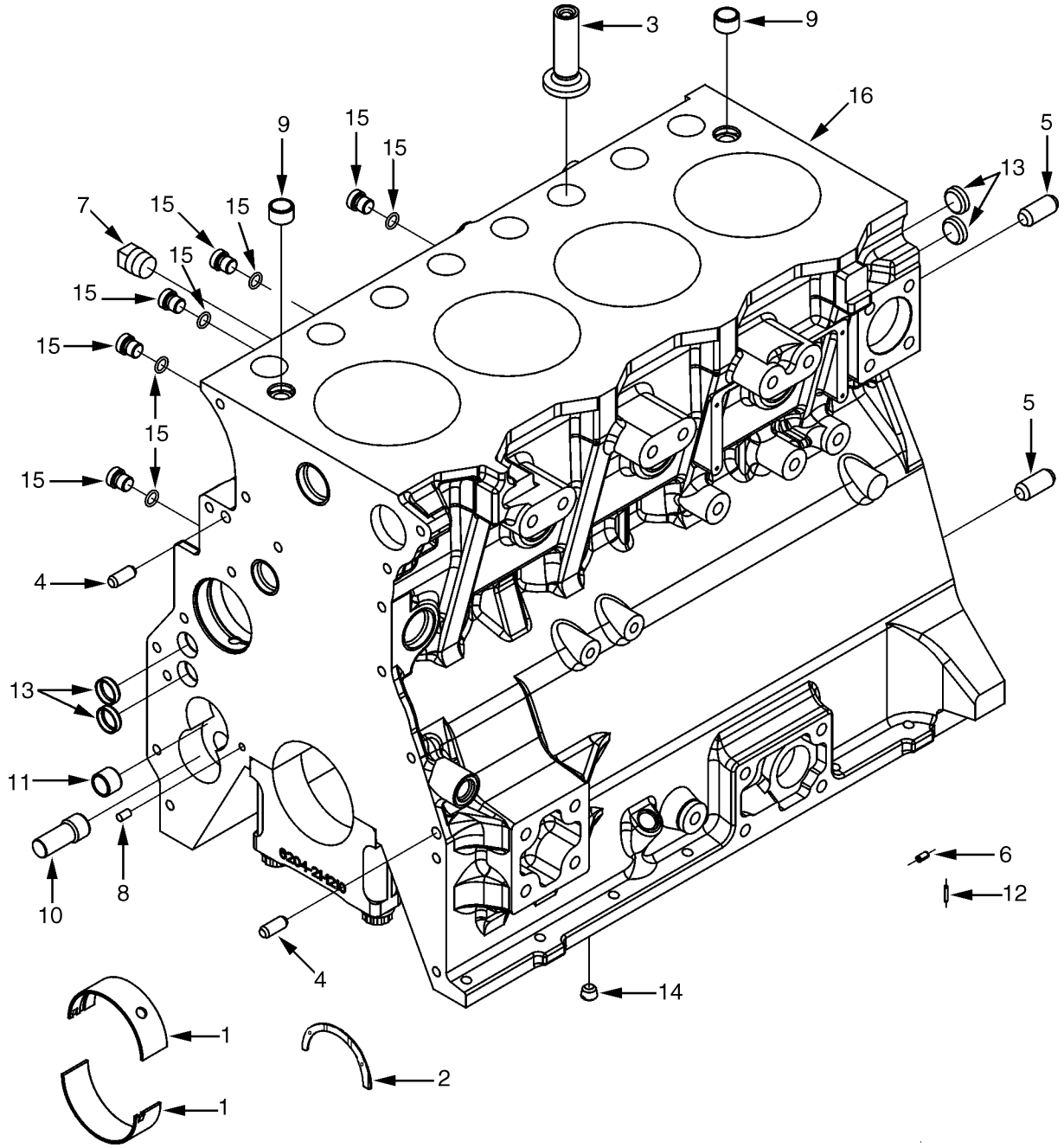

©2008 Yale Materials Handling Corporation

CYLINDER BLOCK
CUMMINS QSB 3.3L DIESEL

ITEM	PART NO.	DESCRIPTION	QTY
	580087913	Engine Assy-Diesel	1
1	580092075	Kit-Bearing	5
2	. . . . .	Thrust Bearing	3
3	580090927	Valve Tappet	8
4	580090929	Dowel Pin	2
5	580090930	Dowel Pin	2
6	580090941	Dowel Pin	6
7	580090942	Plug	1
8	580090943	Dowel	1
9	580090944	Dowel	2
10	. . . . .	Shaft (Lub Oil Pump)	1
11	. . . . .	Bushing	1
12	580090945	Dowel	4
13	580090946	Plug	4
14	580090947	Plug	1
15	580063044	Plug	5
15	580063092	O-Ring	1
16	. . . . .	Cylinder Block	1

©2008 Yale Materials Handling Corporation

CYLINDER HEAD (FIGURE 2-22)
CUMMINS QSB 3.3L DIESEL

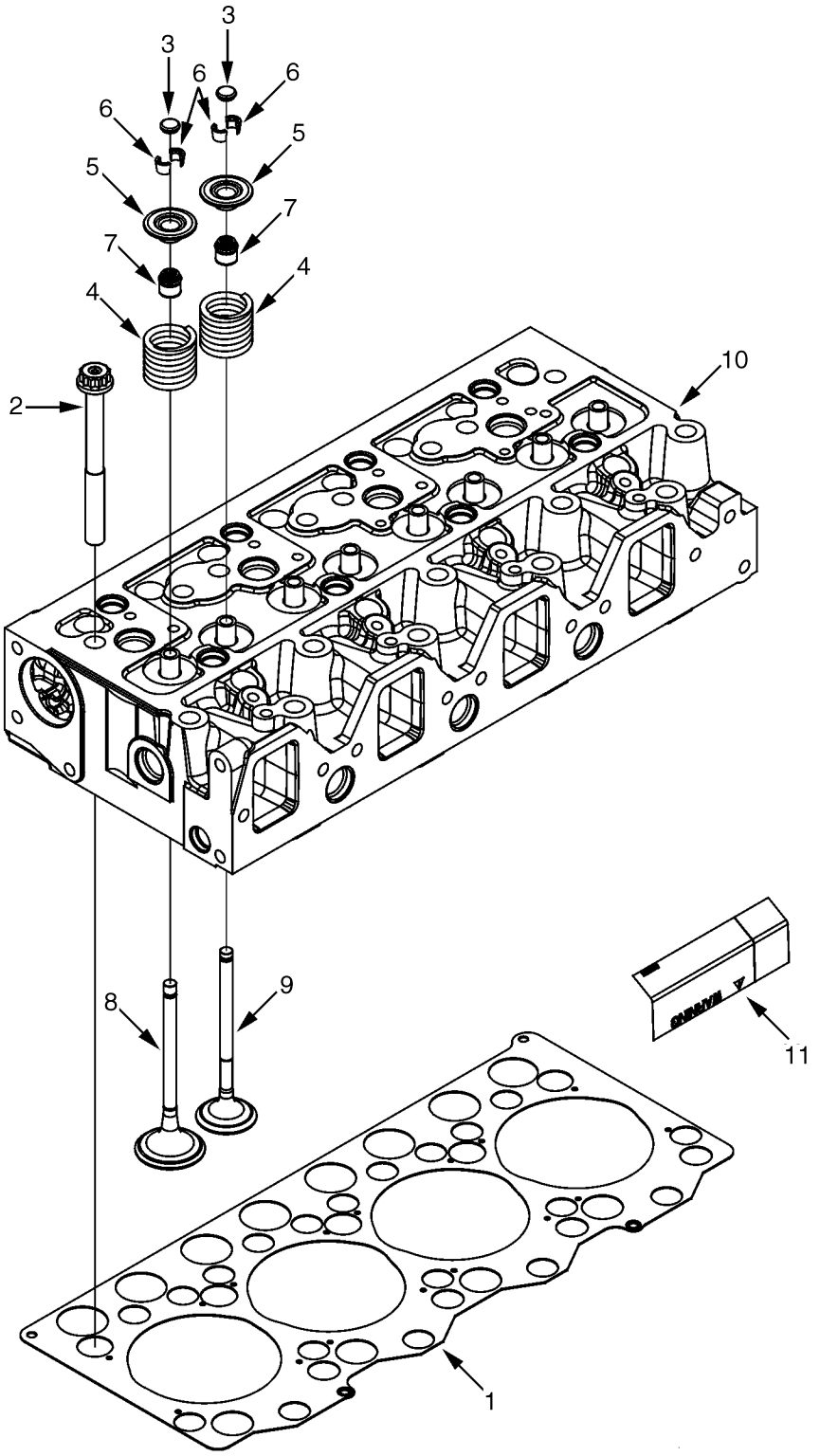

©2008 Yale Materials Handling Corporation

CYLINDER HEAD
CUMMINS QSB 3.3L DIESEL

ITEM	PART NO.	DESCRIPTION	QTY
	580087913	Engine Assy-Diesel	1
1	580091151	Cylinder Head Gasket	1
2	580091152	Capscrew	17
3	580091153	Cap	8
4	580091154	Spring	8
5	580091155	Retainer	8
6	580091156	Valve (Collet)	16
7	580091157	Seal (Valve Stem)	8
8	580091257	Inlet Valve	4
9	580091158	Exhaust Valve	4
10	. . . . .	Cylinder Head	1
11	. . . . .	Decal	1
12	580091163	Kit-Cylinder Head	1

©2008 Yale Materials Handling Corporation

OIL PUMP AND FRONT GEAR COVER (FIGURE 2-23)
CUMMINS QSB 3.3L DIESEL

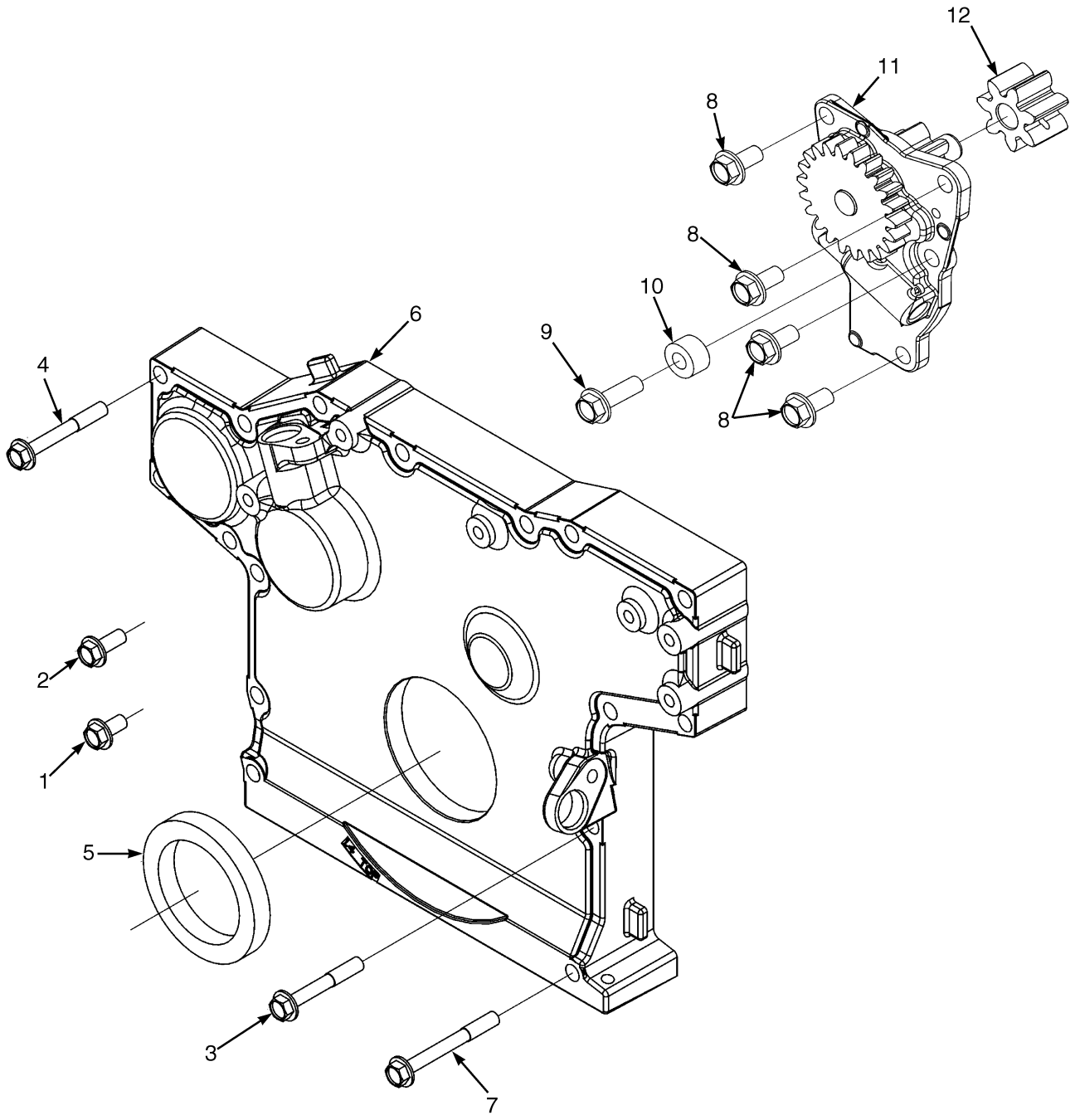

©2008 Yale Materials Handling Corporation

OIL PUMP AND FRONT GEAR COVER

CUMMINS QSB 3.3L DIESEL

ITEM	PART NO.	DESCRIPTION	QTY
	580087913	Engine Assy-Diesel	1
1	580091109	Capscrew	2
2	580091125	Capscrew	2
3	580091086	Capscrew	6
4	580091087	Capscrew	8
5	580091088	Oil Seal	1
6	580091089	Cover	1
7	580091090	Capscrew	2
8	580091109	Capscrew	4
9	580091110	Capscrew	1
10	580091112	Spacer	1
11	580091113	Oil Pump	1
12	580091111	Gear	1

©2008 Yale Materials Handling Corporation

OIL FILTER AND COOLER (FIGURE 2-24)

CUMMINS QSB 3.3L DIESEL

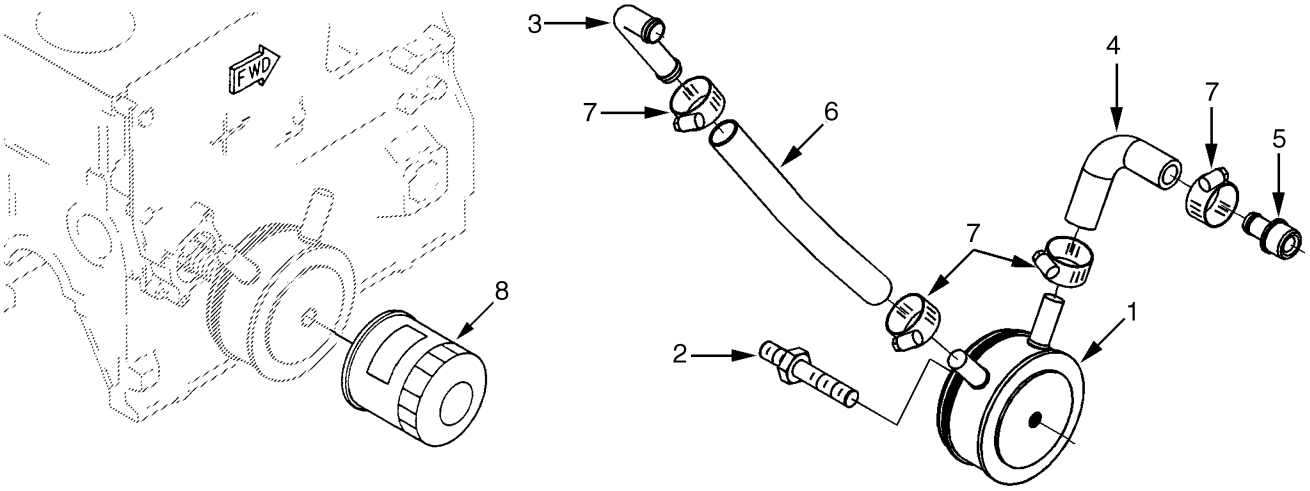

BP090403

ITEM	PART NO.	DESCRIPTION	QTY
	580087913	Engine Assy-Diesel	1
1	580091084	Hose Clamp	4
2	580091093	Coupling	1
3	580091097	Coupling	1
4	580091098	Hose	1
5	580091099	Hose	1
6	580091100	Oil Cooler	1
7	580091101	Coupling	1
8	580091102	Oil Filter	1

©2008 Yale Materials Handling Corporation

NOTES

©2008 Yale Materials Handling Corporation

OIL PAN (FIGURE 2-25)
CUMMINS QSB 3.3L DIESEL

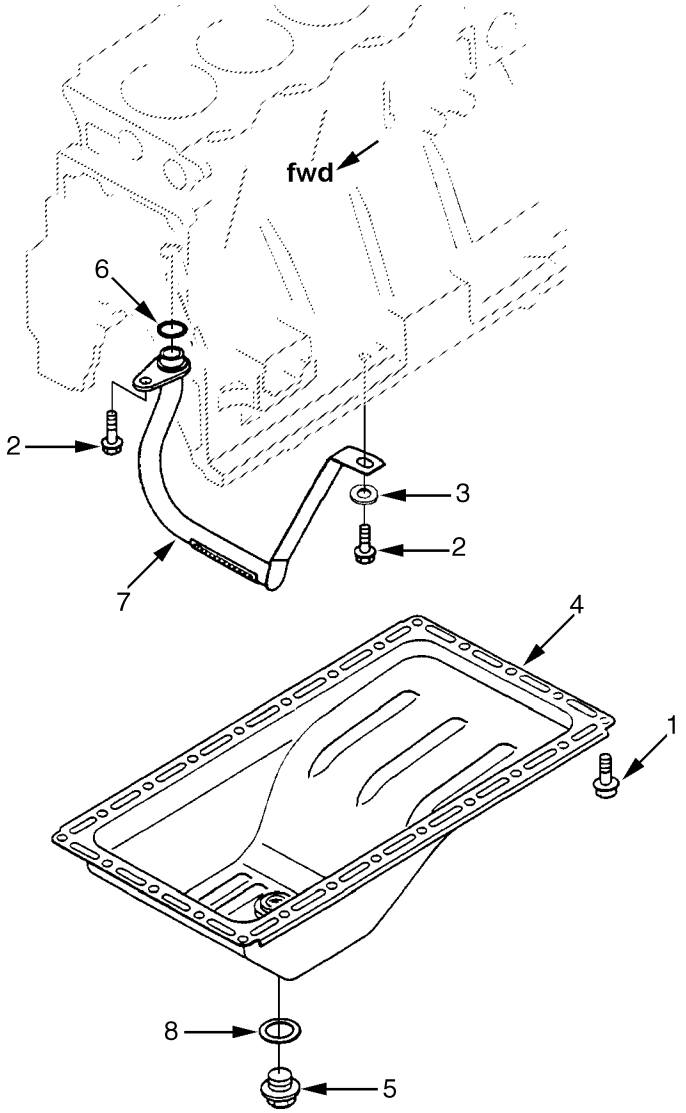

BP090395

©2008 Yale Materials Handling Corporation

OIL PAN

CUMMINS QSB 3.3L DIESEL

ITEM	PART NO.	DESCRIPTION	QTY
	580087913	Engine Assy-Diesel	1
1	580091116	Capscrew	24
2	580091109	Capscrew	2
3	580091118	Washer	1
4	580094607	Oil Pan	1
5	580091120	Plug	1
6	580091121	Seal	1
7	580091122	Tube	1
8	580091123	Washer	1

©2008 Yale Materials Handling Corporation

OIL LEVEL GAUGE (FIGURE 2-26)
CUMMINS QSB 3.3L DIESEL

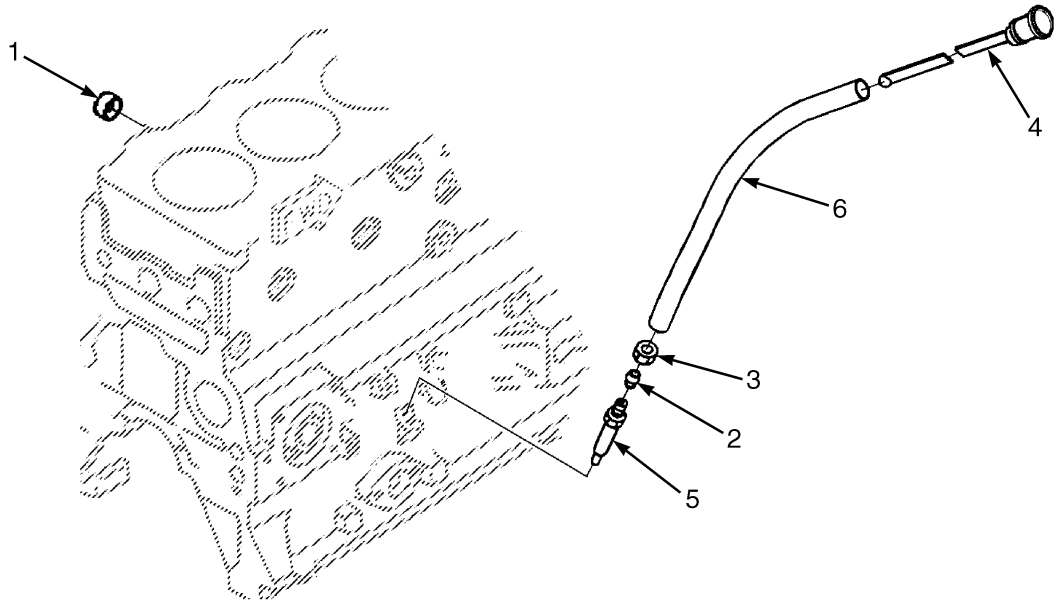

BP090409

ITEM	PART NO.	DESCRIPTION	QTY
	580087913	Engine Assy-Diesel	1
1	580091103	Plug	1
2	580091104	Collar	1
3	580091105	Nut	1
4	580091106	Dipstick	1
5	580091107	Dipstick Tube (Lower)	1
6	580091108	Dipstick Tube (Upper)	1

©2008 Yale Materials Handling Corporation

NOTES

©2008 Yale Materials Handling Corporation

PISTON AND CONNECTING ROD (FIGURE 2-27)

CUMMINS QSB 3.3L DIESEL

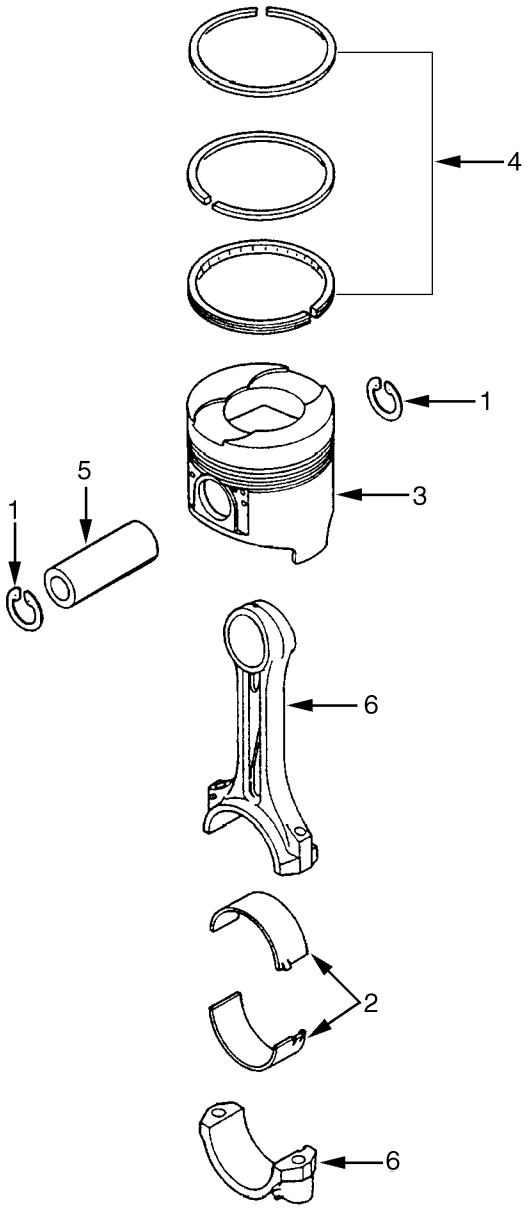

BP090228

©2008 Yale Materials Handling Corporation

PISTON AND CONNECTING ROD

CUMMINS QSB 3.3L DIESEL

ITEM	PART NO.	DESCRIPTION	QTY
	580087913	Engine Assy-Diesel	1
1	580091145	Retaining Ring	8
2	580091146	Bearing	8
3	. . . . .	Piston	4
4	580091148	Piston Ring	1
5	580091136	Pin	4
6	580091137	Piston Rod	4
7	580091147	Kit-Piston	4

©2008 Yale Materials Handling Corporation

FRONT GEAR HOUSING (FIGURE 2-28)
CUMMINS QSB 3.3L DIESEL

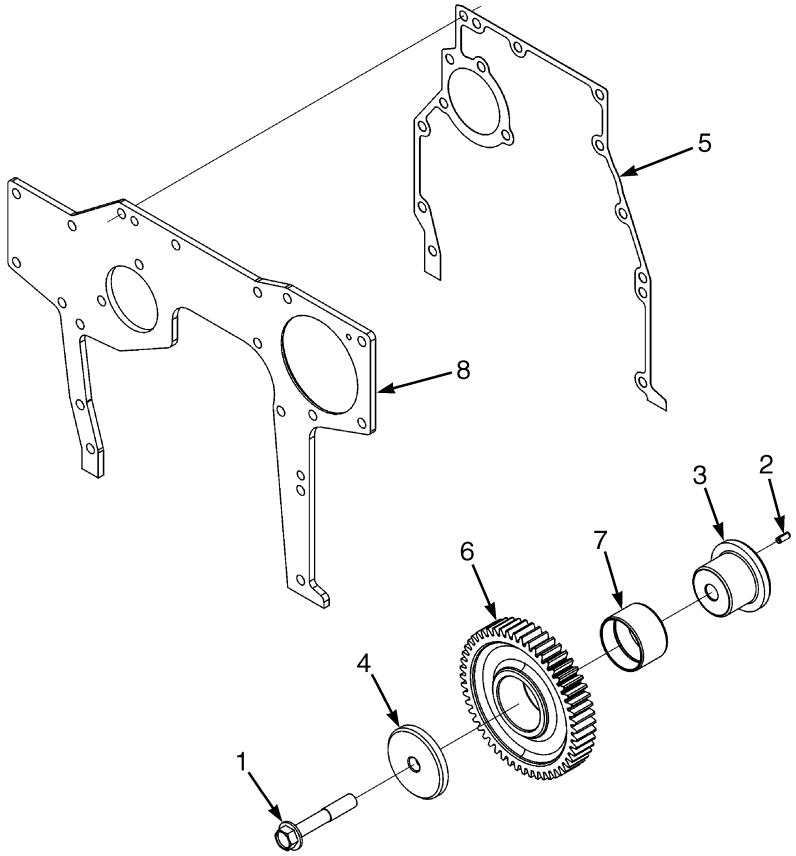

BP060410

ITEM	PART NO.	DESCRIPTION	QTY
	580087913	Engine Assy-Diesel	1
1	580090955	Capscrew	1
2	580090956	Cotter Pin	1
3	580090957	Shaft	1
4	580090958	Washer	1
5	580090959	Gasket (Gear Cover)	1
6	580090960	Idler Gear	1
7	. . . . .	Bushing	1
8	580090961	Cover Plate	1

©2008 Yale Materials Handling Corporation

NOTES

©2008 Yale Materials Handling Corporation

VALVE COVER (FIGURE 2-29)
CUMMINS QSB 3.3L DIESEL

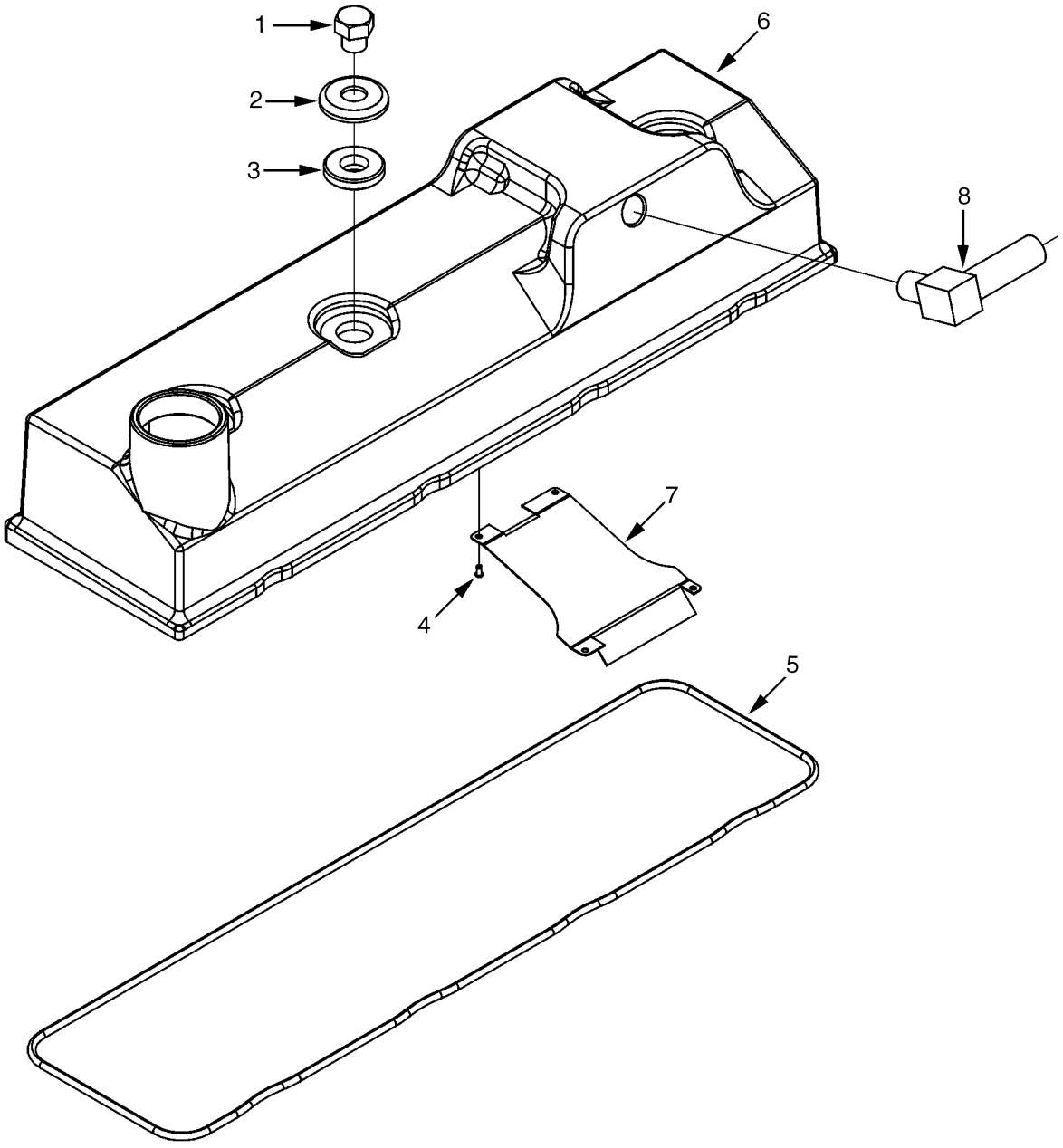

BP090389

©2008 Yale Materials Handling Corporation

VALVE COVER
CUMMINS QSB 3.3L DIESEL

ITEM	PART NO.	DESCRIPTION	QTY
	580087913	Engine Assy-Diesel	1
1	580091308	Locknut	3
2	580091309	Washer	3
3	580091310	Gasket	3
4	580091311	Cover	1
5	580091312	Rivet	4
6	580094501	Cover	1
7	580094502	Cover Plate	1
8	580094503	Tube (Breather)	1

©2008 Yale Materials Handling Corporation

CRANKSHAFT (FIGURE 2-30)
CUMMINS QSB 3.3L DIESEL

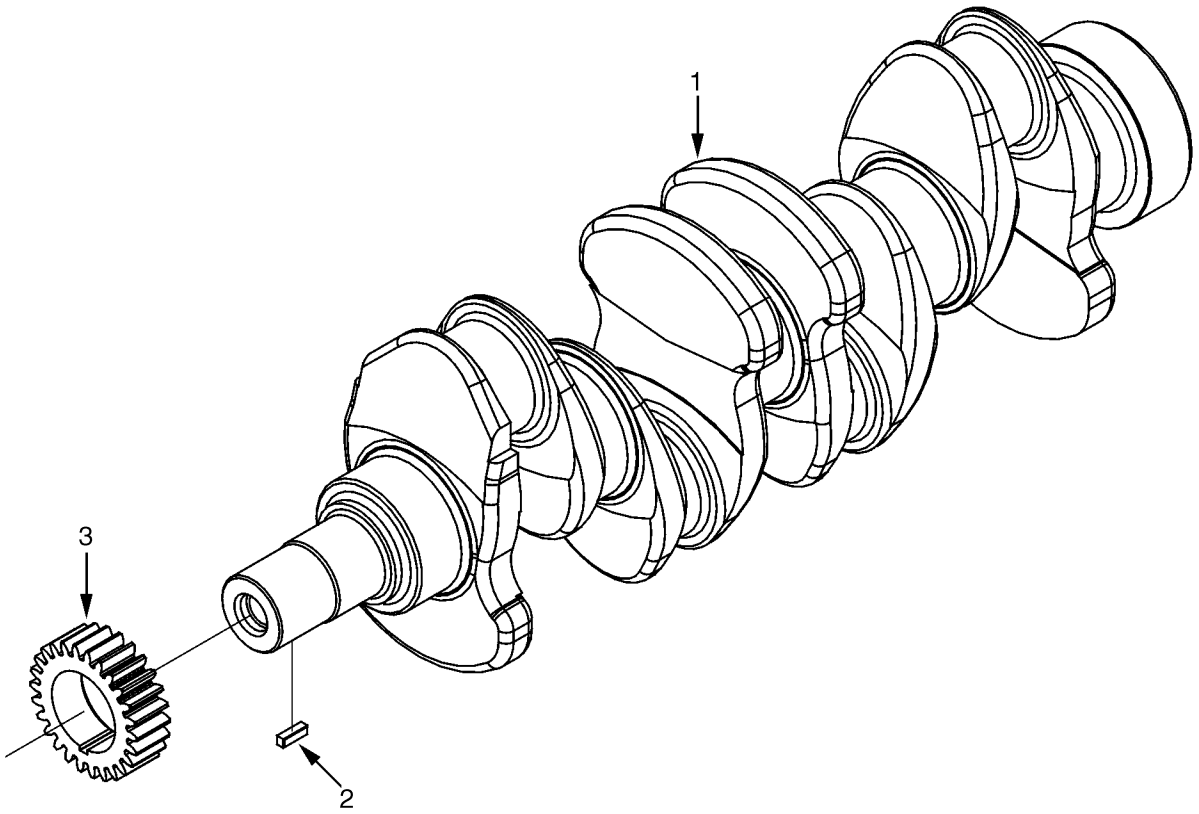

BP090178

©2008 Yale Materials Handling Corporation

CRANKSHAFT
CUMMINS QSB 3.3L DIESEL

ITEM	PART NO.	DESCRIPTION	QTY
	580087913	Engine Assy-Diesel	1
1	580090948	Crankshaft	1
2	580090949	Woodruff Key	1
3	. . . . .	Crankshaft Gear	1

©2008 Yale Materials Handling Corporation

CRANKCASE BREATHER (FIGURE 2-31)

CUMMINS QSB 3.3L DIESEL

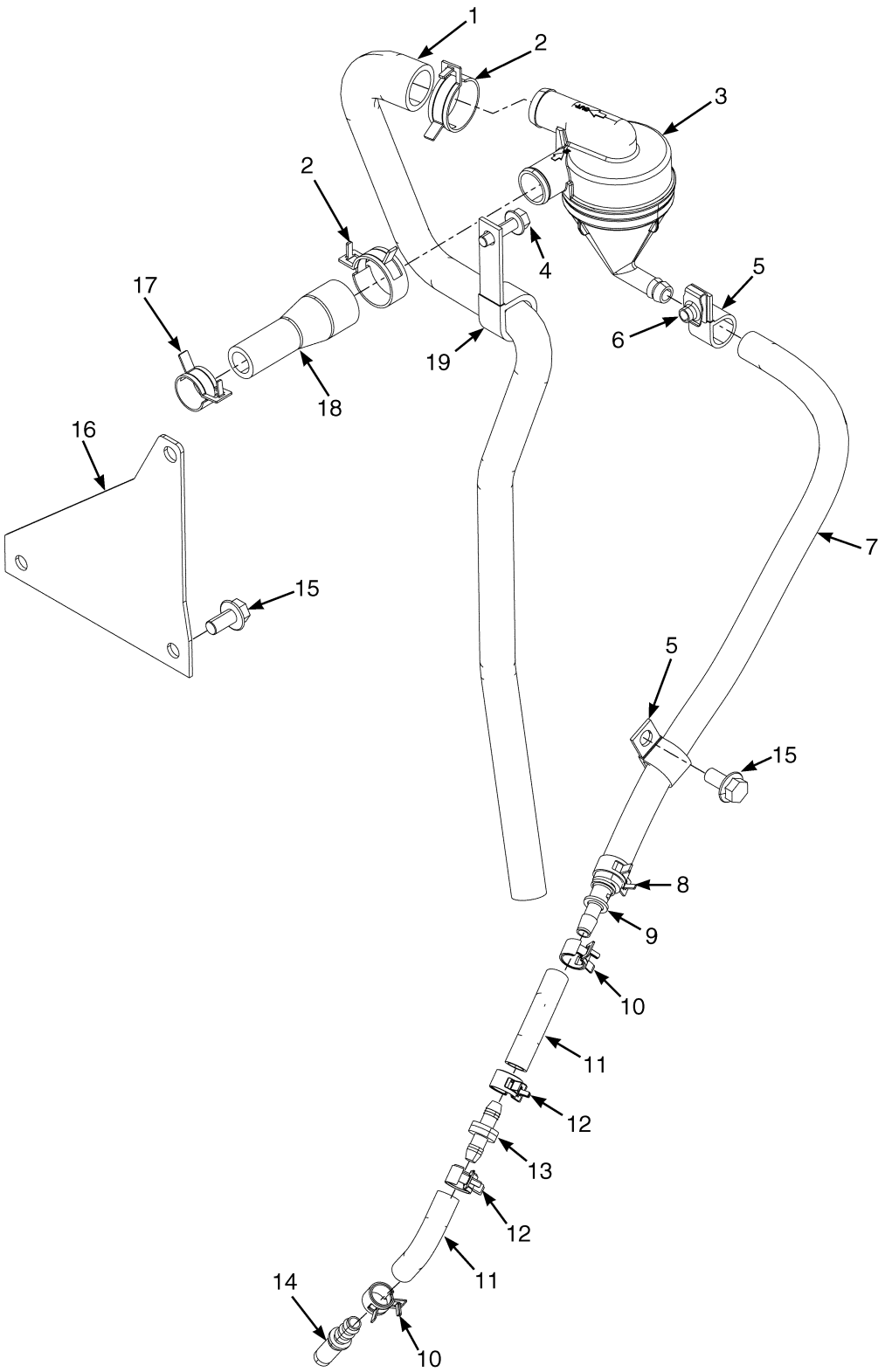

BP090398

©2008 Yale Materials Handling Corporation

CRANKCASE BREATHER
CUMMINS QSB 3.3L DIESEL

ITEM	PART NO.	DESCRIPTION	QTY
1	580087460	Hose	1
2	580036688	Hose Clamp	2
3	580087797	Separator	1
4	580049229	Capscrew	1
5	060023600	Clamp	2
6	580026621	Nut	1
7	580089441	Hose	1
8	580039911	Hose Clamp	1
9	580087794	Reducer	1
10	580039909	Hose Clamp	1
11	580015022	Hose	2
12	580052736	Hose Clamp	4
13	580087627	Check Valve	1
14	580089694	Fitting	1
15	580049010	Capscrew	3
16	580087459	Bracket	1
17	580039890	Hose Clamp	1
18	580087464	Hose	1
19	580009292	Clamp	1

©2008 Yale Materials Handling Corporation

STARTING AID (FIGURE 2-32)
CUMMINS QSB 3.3L DIESEL

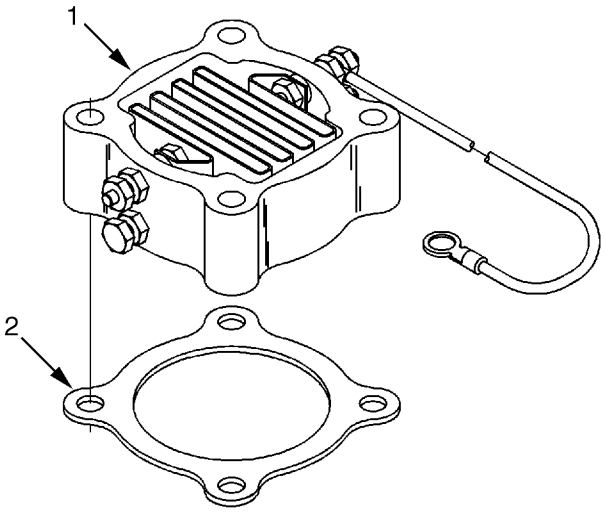

BP090404

ITEM	PART NO.	DESCRIPTION	QTY
	580087913	Engine Assy-Diesel	1
1	580090920	Heater	1
2	580090921	Gasket	1
2	**a** 580090967	Plug (Not Illustrated)	1

FOOTNOTES:
a When heater is not used

©2008 Yale Materials Handling Corporation

VIBRATION DAMPER (FIGURE 2-33)
CUMMINS QSB 3.3L DIESEL

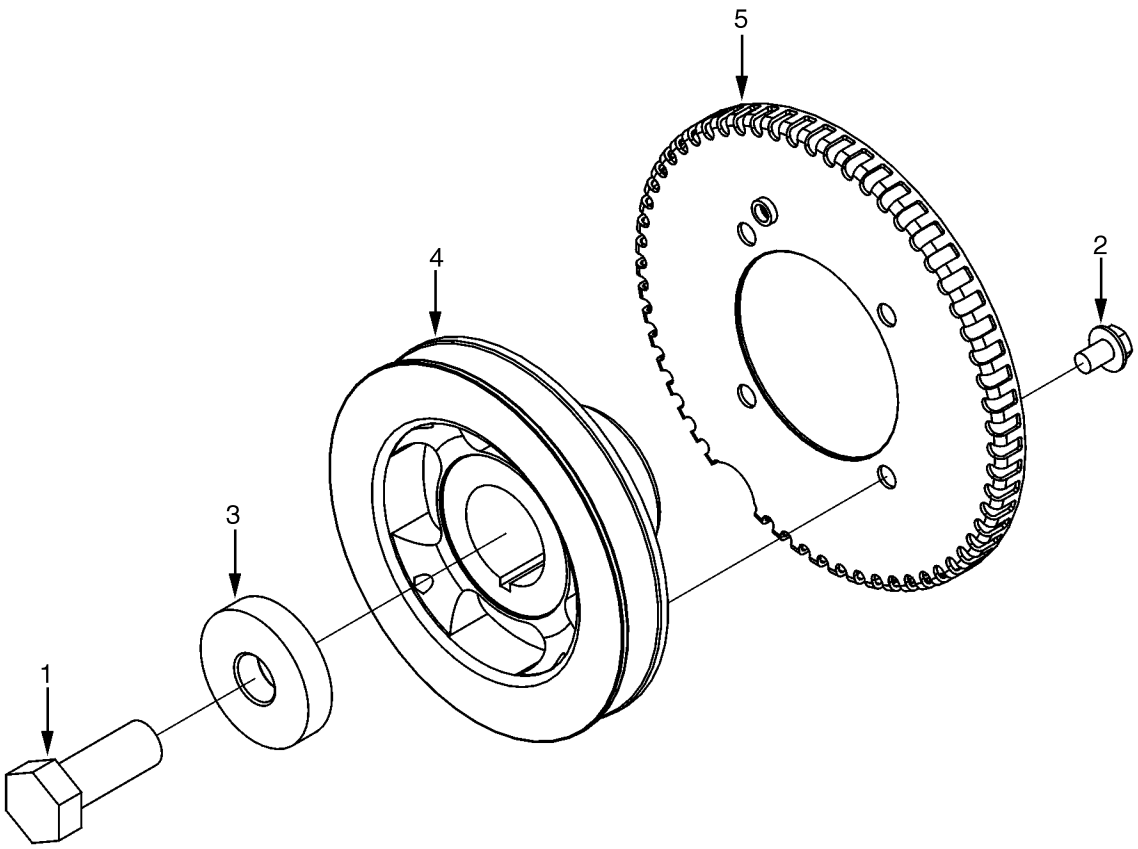

ITEM	PART NO.	DESCRIPTION	QTY
	580087913	Engine Assy-Diesel	1
1	580090968	Capscrew	1
2	580090954	Capscrew	4
3	580090969	Plate	1
4	580090970	Crankshaft Pulley	1
5	580090971	Ring (Speed Indicator)	1

©2008 Yale Materials Handling Corporation

TURBOCHARGER (FIGURE 2-34)
CUMMINS QSB 3.3L DIESEL

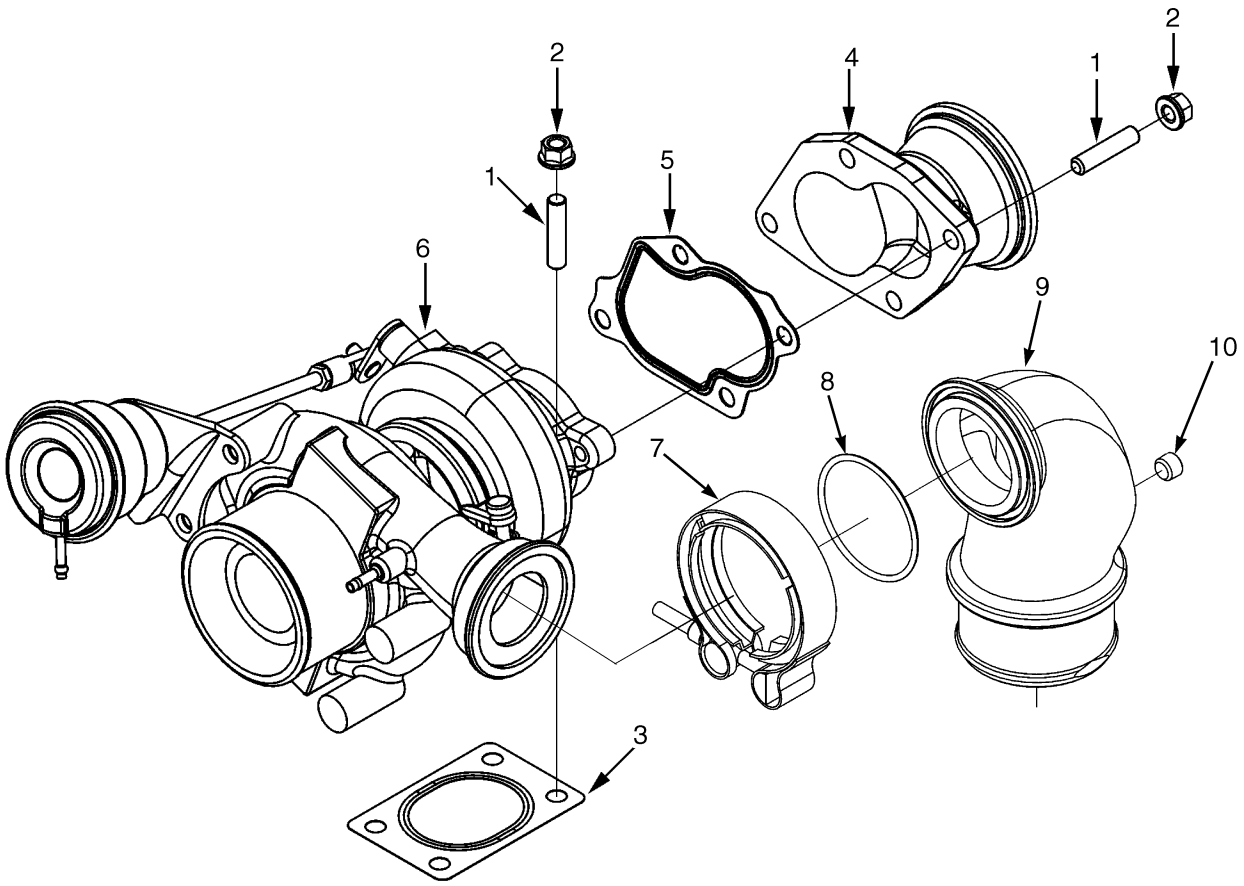

BP090396

©2008 Yale Materials Handling Corporation

TURBOCHARGER

CUMMINS QSB 3.3L DIESEL

ITEM	PART NO.	DESCRIPTION	QTY
	580087913	Engine Assy-Diesel	1
1	580091271	Stud	4
2	580091272	Nut	4
3	580091273	Gasket	1
4	580091274	Connector	1
5	580091275	Gasket	1
6	. . . . .	Turbocharger	1
7	580091064	Clamp	1
8	580091078	Seal	1
9	580091079	Pipe	1
10	580071226	Fitting	1
11	580091286	Kit-Repair Turbocharger	1

©2008 Yale Materials Handling Corporation

TURBOCHARGER PLUMBING (FIGURE 2-35)

CUMMINS QSB 3.3L DIESEL

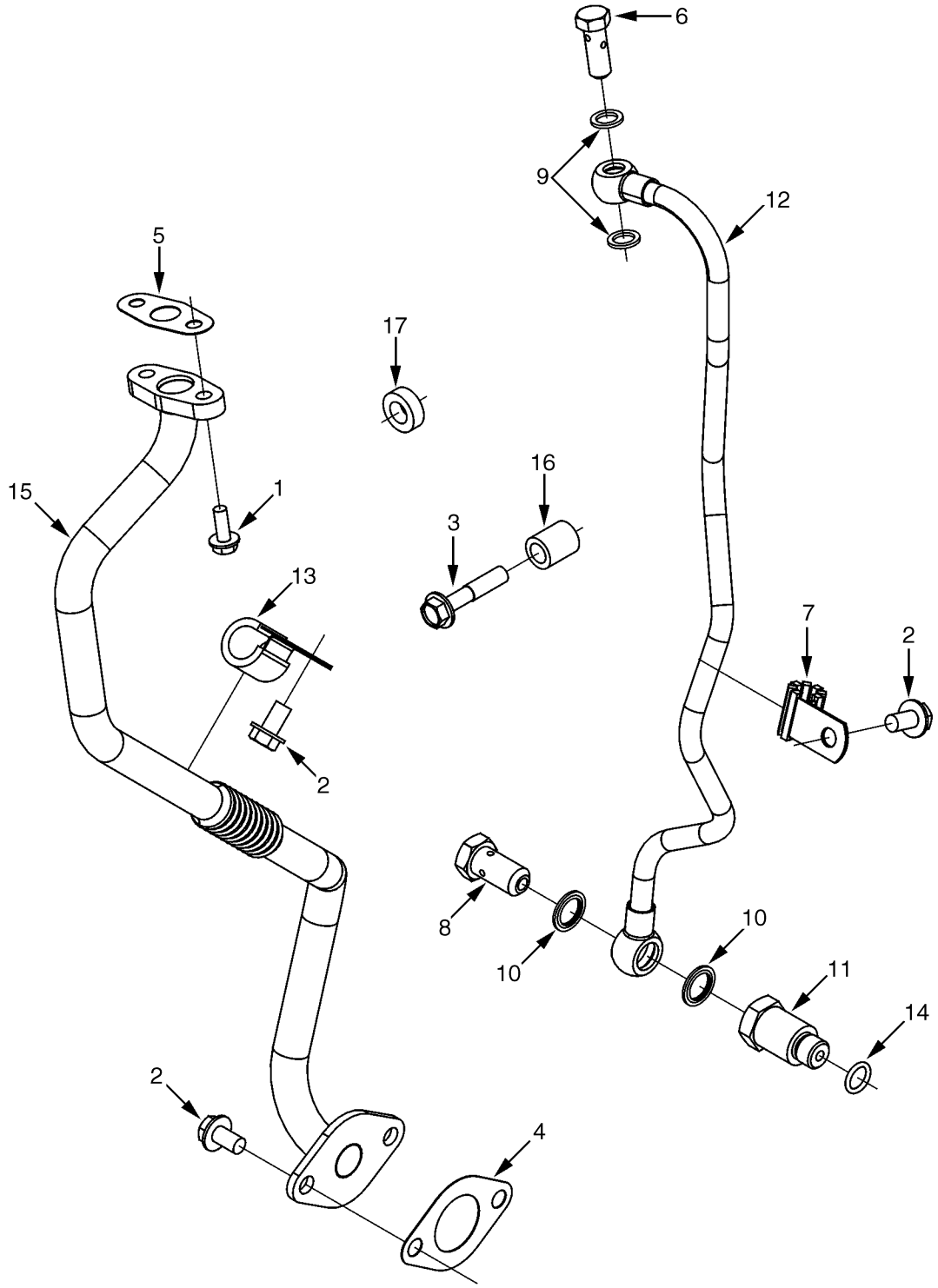

©2008 Yale Materials Handling Corporation

TURBOCHARGER PLUMBING
CUMMINS QSB 3.3L DIESEL

ITEM	PART NO.	DESCRIPTION	QTY
	580087913	Engine Assy-Diesel	1
1	580091294	Capscrew	2
2	580091116	Capscrew	2
3	580091160	Capscrew	2
4	580091296	Gasket (Oil Drain)	1
5	580091297	Gasket (Oil Drain)	1
6	580091298	Screw (Banjo Connector)	1
7	580091299	Clip	1
8	580088192	Screw (Banjo Connector)	1
9	580091300	Washer	2
10	580088190	Sealing Ring	2
11	580091301	Boot	1
12	580091302	Tube (Oil Supply)	1
13	580091303	Clip	1
14	580091304	Seal	1
15	580091305	Tube (Oil Drain)	1
16	580091306	Spacer	1
17	580091307	Spacer	1

©2008 Yale Materials Handling Corporation

AIR INTAKE MANIFOLD (FIGURE 2-36)

CUMMINS QSB 3.3L DIESEL

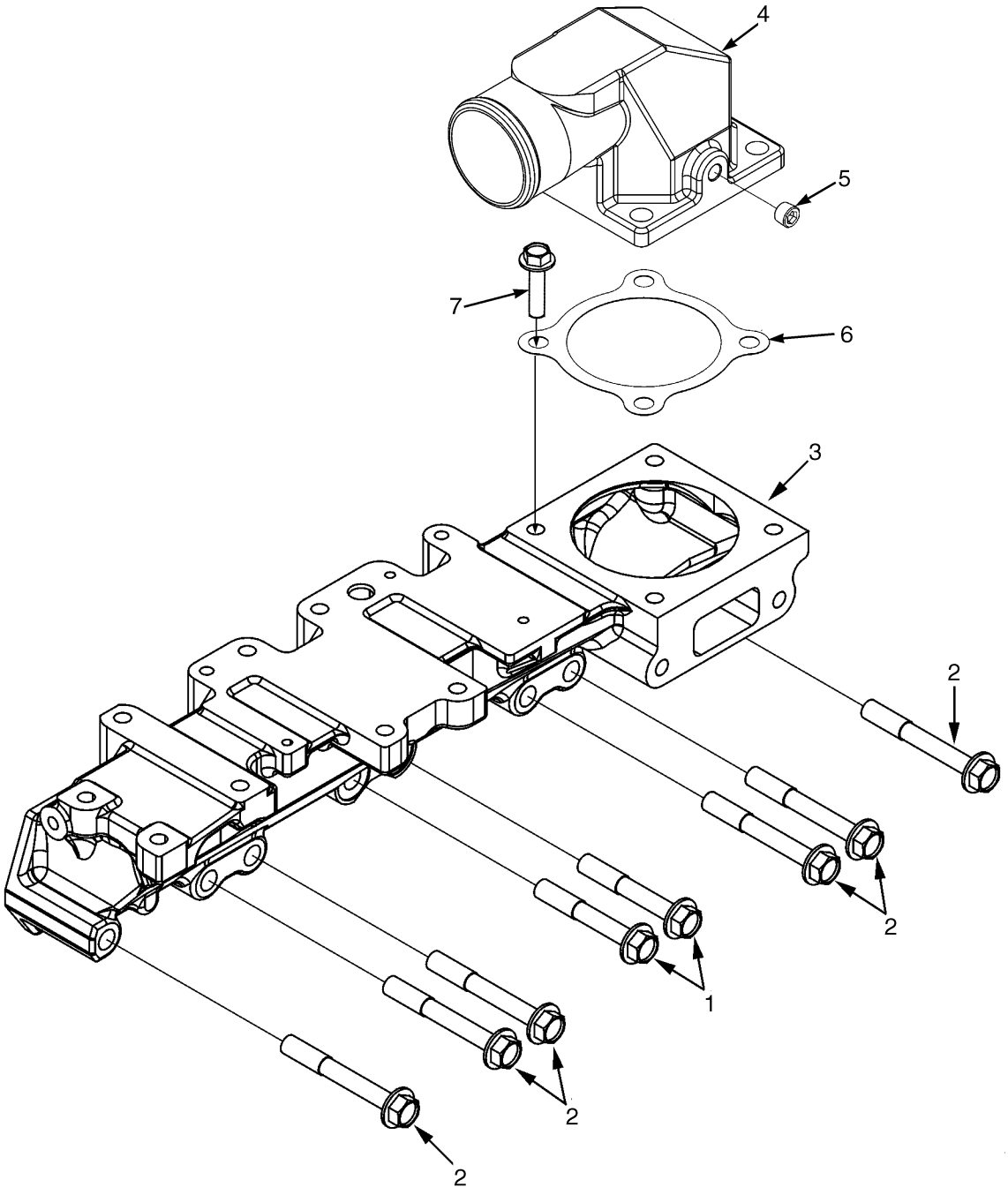

©2008 Yale Materials Handling Corporation

AIR INTAKE MANIFOLD
CUMMINS QSB 3.3L DIESEL

ITEM	PART NO.	DESCRIPTION	QTY
	580087913	Engine Assy-Diesel	1
1	580091095	Capscrew	2
2	580091096	Capscrew	6
3	580090989	Intake Manifold	1
4	580091094	Connector (Air Intake)	1
5	580071226	Fitting	1
6	580090921	Gasket	1
7	580091091	Capscrew	4

©2008 Yale Materials Handling Corporation

EXHAUST MANIFOLD (FIGURE 2-37)
CUMMINS QSB 3.3L DIESEL

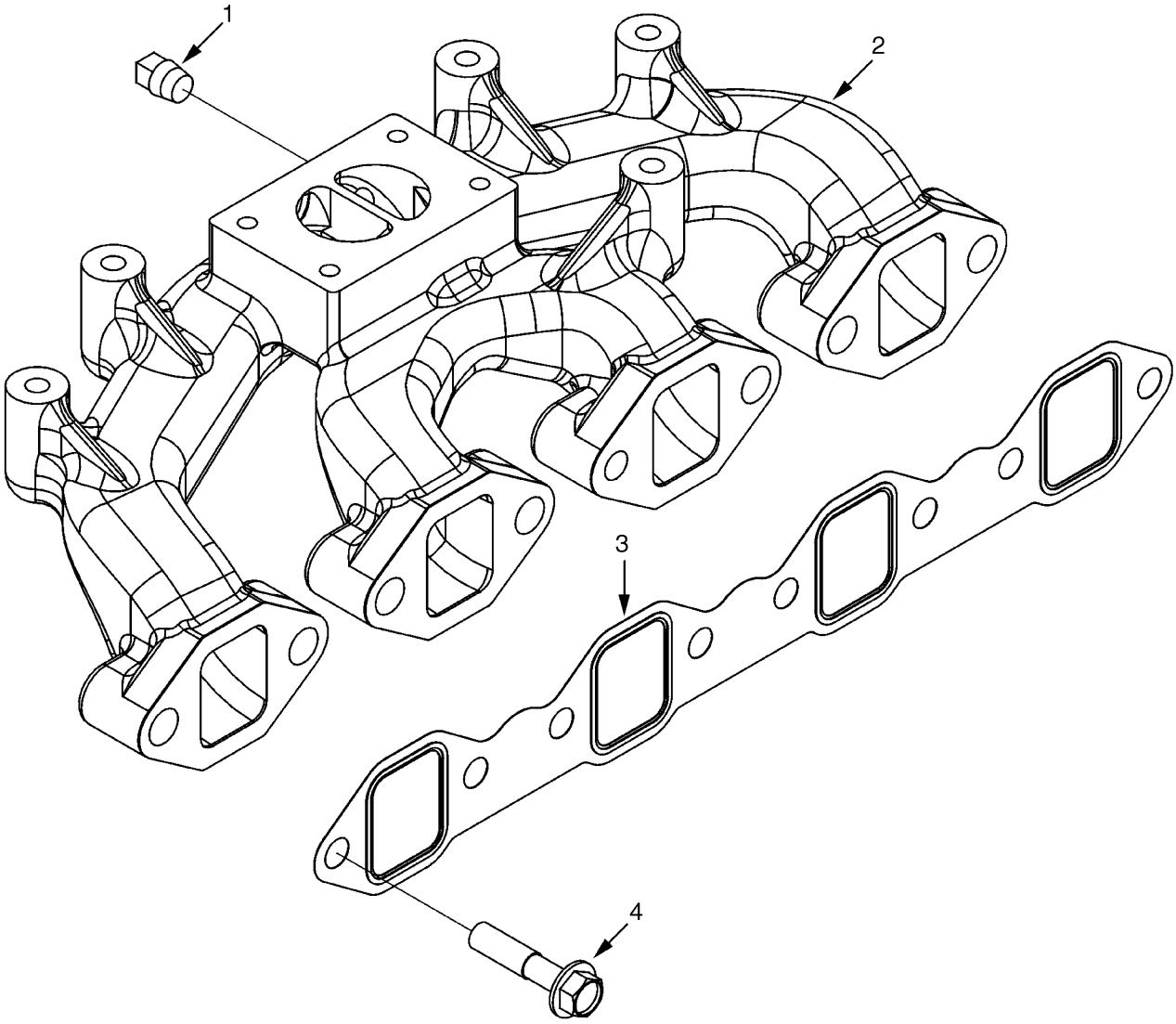

BP090259

©2008 Yale Materials Handling Corporation

EXHAUST MANIFOLD
CUMMINS QSB 3.3L DIESEL

ITEM	PART NO.	DESCRIPTION	QTY
	580087913	Engine Assy-Diesel	1
1	580091292	Plug	1
2	580091293	Exhaust Manifold	1
3	580091291	Gasket	1
4	580092020	Capscrew	7

©2008 Yale Materials Handling Corporation

NOTES

©2008 Yale Materials Handling Corporation

3 EXHAUST SYSTEM

SECTION 3
EXHAUST SYSTEM

DESCRIPTION	PAGE
EXAUST SYSTEM	
COUNTERWEIGHT EXHAUST - CUMMINS QSB 3.3L DIESEL	3-10
OVERHEAD EXHAUST - CUMMINS QSB 3.3L DIESEL	3-8
EXHAUST SYSTEM	
GM 4.3L - WITH CATALYTIC CONVERTER	3-2
GM 4.3L - WITHOUT CATALYTIC CONVERTER	3-4
EXHAUST WRAPS	
CUMMINS QSB 3.3L DIESEL	3-12
GM 4.3L GASOLINE AND LPG	3-6

©2008 Yale Materials Handling Corporation

EXHAUST SYSTEM (FIGURE 3-1)

GM 4.3L — WITH CATALYTIC CONVERTER

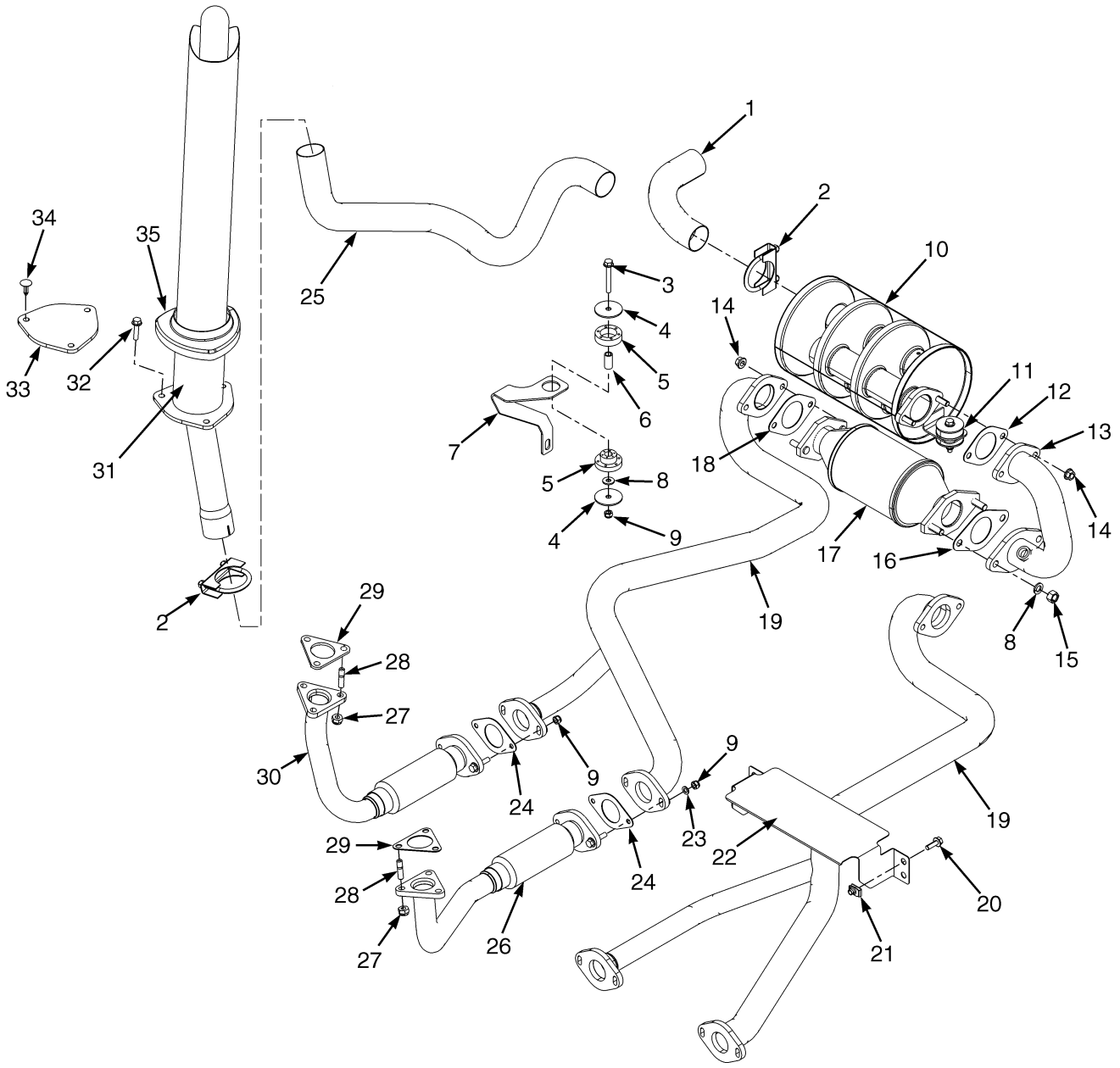

©2008 Yale Materials Handling Corporation

EXHAUST SYSTEM
GM 4.3L – WITH CATALYTIC CONVERTER

KEY:
A: Short Overhead Guard
B: Tall Overhead Guard or with Cab

ITEM	PART NO.	DESCRIPTION	QTY A	QTY B
1	**a** 580087666	Exhaust Pipe	1	1
2	580007621	Clamp	2	2
3	580030968	Capscrew	2	2
4	580037329	Washer	4	4
5	580037328	Mount	2	2
6	580077713	Spacer	2	2
7	580054721	Bracket	1	1
8	449022017	Lockwasher	2	2
9	580056381	Locknut	6	6
10	580063288	Muffler (Crimped)	1	1
10	580054021	Muffler (Welded) (Safety Truck Only)	1	1
11	580039566	Washer	1	1
12	580039610	Gasket	1	1
13	580089111	Exhaust Pipe	1	1
14	580027572	Nut	4	4
15	580020060	Nut	2	2
16	580054717	Gasket	1	1
17	580083309	Catalytic Converter (Gasoline Only)	1	1
18	580054719	Gasket	1	1
19	**c** 580074439	Exhaust Pipe	1	1
19	**b** 580074462	Exhaust Pipe	1	1
20	**b** 580030966	Capscrew	4	4
21	**b** 580026621	Nut	4	4
22	**b** 580057364	Exhaust Shield	1	1
23	504226242	Washer	6	6
24	580051847	Gasket	2	2
25	**c** 580055247	Exhaust Pipe	1	1
25	**b** 580055194	Exhaust Pipe	1	1
26	580075010	Exhaust Pipe	1	1
27	580054687	Locknut	6	6
28	580054724	Stud	6	6
29	580054716	Gasket	2	2
30	580088892	Exhaust Pipe	1	1
31	**d** 580078097	Tail Pipe	1	..
31	580078098	Tail Pipe	..	1
32	**d** 580030970	Capscrew	3	3
33	**a** 504240715	Cover	1	1
34	**a** 504240785	Fastener	3	3
35	**d** 916522400	Cover	1	1

FOOTNOTES:
a Counterweight Exhaust
b GP/GLP100-120VX
c GP/GLP80-90VX
d Overhead Exhaust

©2008 Yale Materials Handling Corporation

EXHAUST SYSTEM (FIGURE 3-2)
GM 4.3L — WITHOUT CATALYTIC CONVERTER

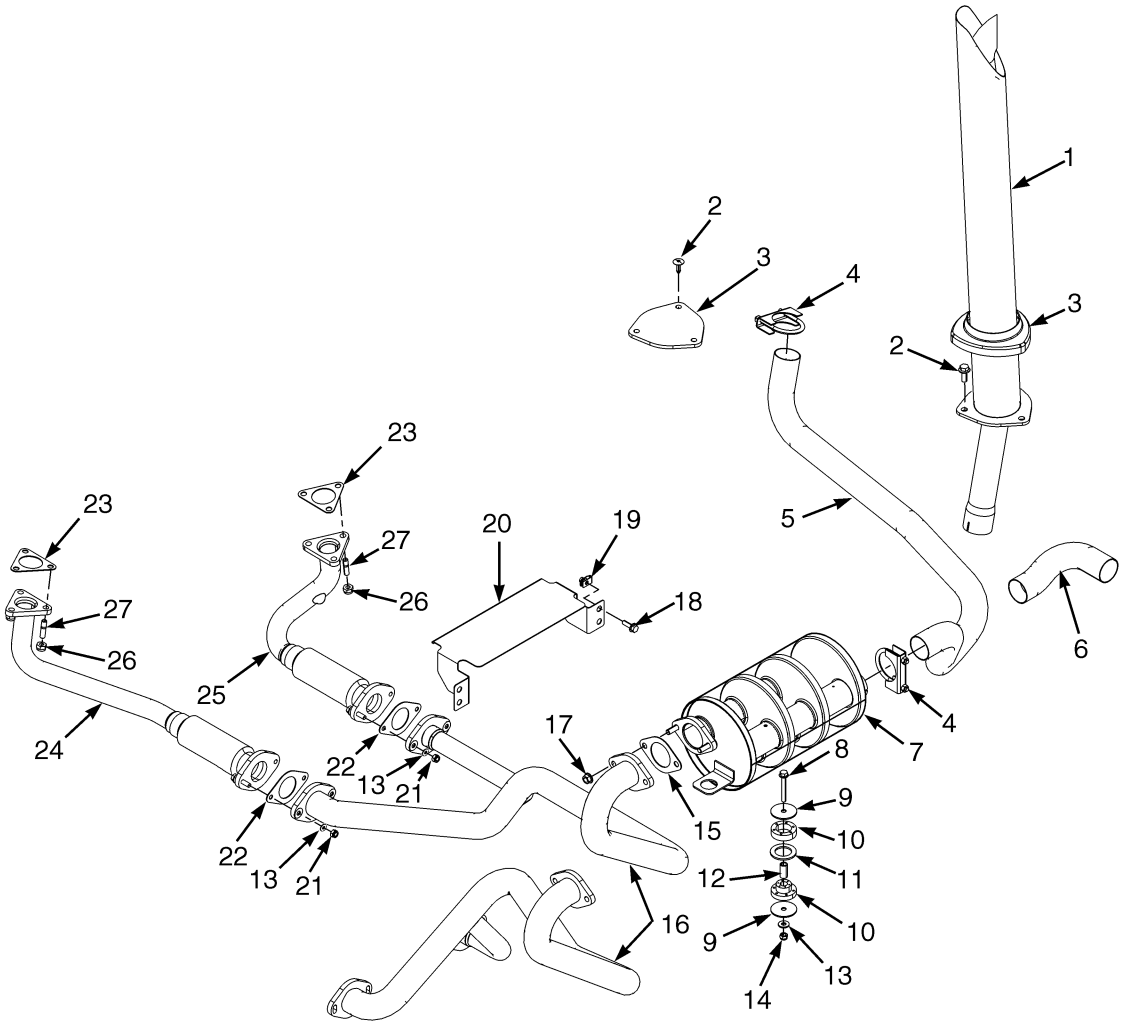

BP110040

©2008 Yale Materials Handling Corporation

EXHAUST SYSTEM
GM 4.3L – WITHOUT CATALYTIC CONVERTER

KEY:
A: Short Overhead Guard
B: Tall Overhead Guard or with Cab

ITEM	PART NO.	DESCRIPTION	QTY A	QTY B
1	580078097	Tail Pipe	1	..
1	580078098	Tail Pipe	..	1
2	**a** 504240785	Fastener	3	3
2	**d** 580030970	Capscrew	3	3
3	**a** 504240715	Cover	1	1
3	**d** 916522400	Cover	1	1
4	580007621	Clamp	2	2
5	**c** 580055247	Exhaust Pipe	1	1
5	**b** 580055194	Exhaust Pipe	1	1
6	**a** 580087666	Exhaust Pipe	1	1
7	580054021	Muffler (Welded) (Safety Truck Only)	1	1
7	580063288	Muffler	1	1
8	580030968	Capscrew	2	2
9	580037329	Washer	4	4
10	580037328	Mount	2	2
11	580039566	Washer	2	2
12	580077713	Spacer	2	2
13	504226242	Washer	6	6
14	580056381	Locknut	6	6
15	580039610	Gasket	1	1
16	**c** 580074461	Exhaust Pipe	1	1
16	**b** 580074463	Exhaust Pipe	1	1
17	580027572	Nut	2	2
18	**b** 580030966	Capscrew	4	4
19	**b** 580026621	Nut	4	4
20	**b** 580057364	Exhaust Shield	1	1
21	580056381	Locknut	6	6
22	580051847	Gasket	2	2
23	580054716	Gasket	2	2
24	580075010	Exhaust Pipe	1	1
25	580088892	Exhaust Pipe	1	1
26	580054687	Locknut	6	6
27	580054724	Stud	6	6

FOOTNOTES:
a Counterweight Exhaust
b GP/GLP100-120VX
c GP/GLP80-90VX
d Overhead Exhaust

©2008 Yale Materials Handling Corporation

EXHAUST WRAPS (FIGURE 3-3)
GM 4.3L GASOLINE AND LPG

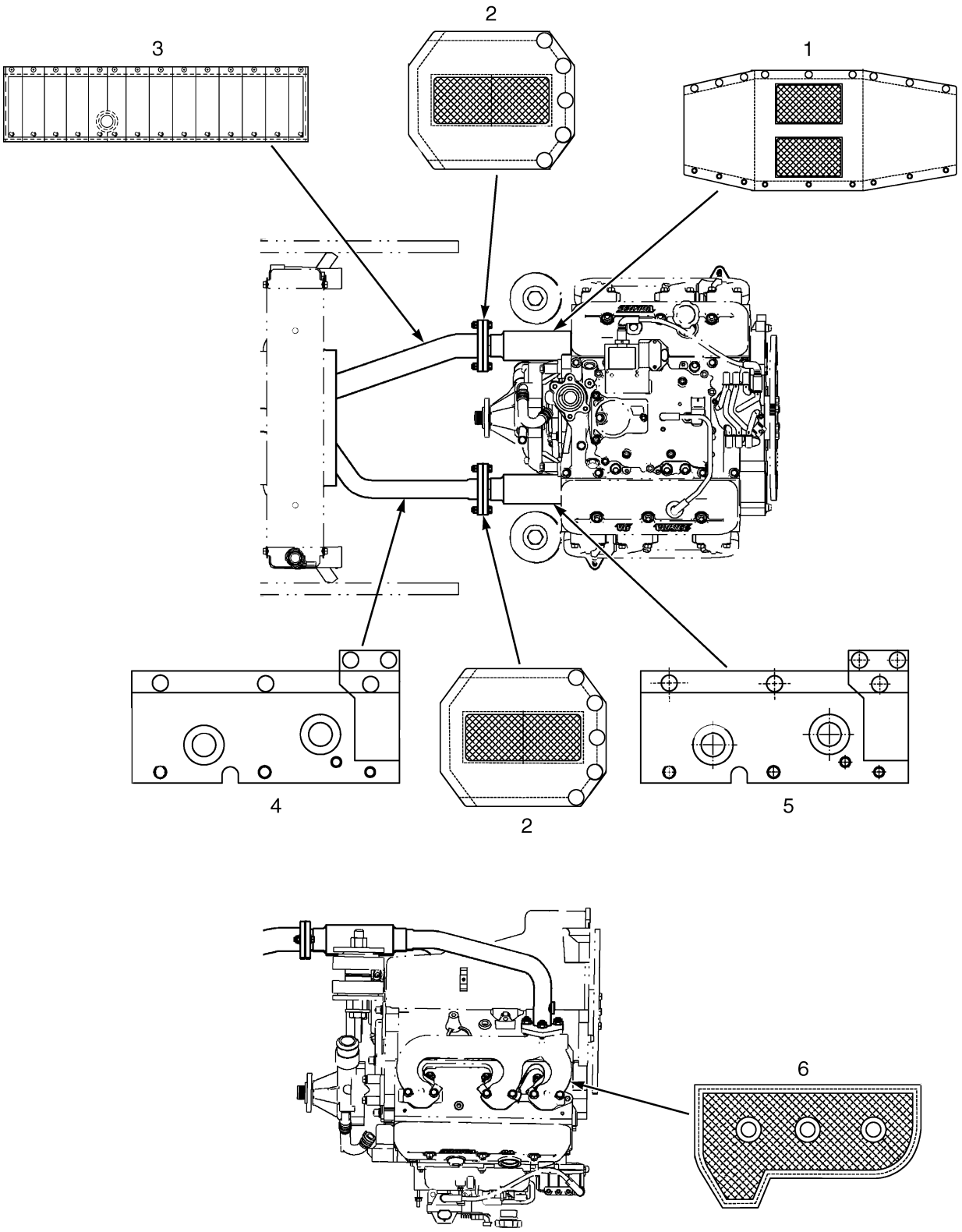

©2008 Yale Materials Handling Corporation

EXHAUST WRAPS
GM 4.3L GASOLINE AND LPG

ITEM	PART NO.	DESCRIPTION	QTY
1	580079850	Wrap (Flex)	1
2	580079852	Wrap (Joint)	2
3	**d** 580079858	Exhaust Wrap	1
3	**b** 580079857	Exhaust Wrap	1
4	**a** 580079854	Wrap (with Snaps)	1
4	**c** 580079856	Wrap (with Snaps)	1
5	580079851	Wrap (Flex)	1
6	580070814	Wrap (Manifold)	2
	e 580072976	Boot (Spark Plug)	6

FOOTNOTES:

a GP/GLP100-120VX
b GP/GLP100-120VX with Catalytic Converter
c GP/GLP80-90VX
d GP/GLP80-90VX with Catalytic Converter
e Not Illustrated

©2008 Yale Materials Handling Corporation

EXAUST SYSTEM (FIGURE 3-4)
OVERHEAD EXHAUST — CUMMINS QSB 3.3L DIESEL

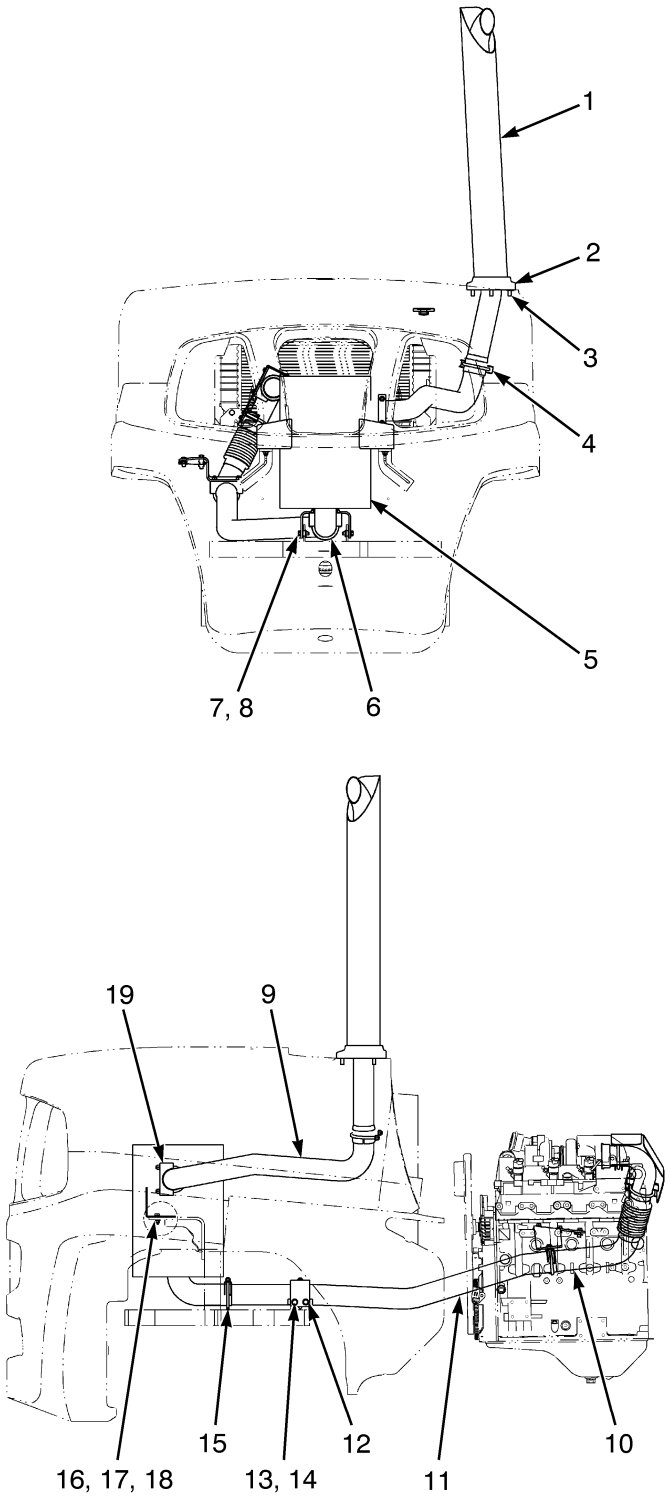

BP110037

©2008 Yale Materials Handling Corporation

EXAUST SYSTEM

OVERHEAD EXHAUST – CUMMINS QSB 3.3L DIESEL

KEY:
A: Short Wheel Base
B: Long Wheel Base

ITEM	PART NO.	DESCRIPTION	QTY A	QTY B
1	580083865	Overhead Exhaust	1	1
2	580084621	Cover	1	1
3	580030970	Capscrew	3	3
4	061977400	Clamp	1	1
5	580088001	Muffler	1	1
6	061977400	Clamp	1	1
7	580012987	Nut	4	4
8	580030966	Capscrew	4	4
9	580083866	Exhaust Pipe	1	..
9	580083868	Exhaust Pipe	..	1
10	580085229	Exhaust Pipe	1	1
11	580087144	Exhaust Pipe	1	..
11	580087145	Exhaust Pipe	..	1
12	580093311	Bracket	1	..
12	580093312	Bracket	..	1
13	580026621	Nut	2	2
14	580049231	Capscrew	2	2
15	061977400	Clamp	1	1
16	580030966	Capscrew	2	2
17	504226242	Washer	2	2
18	580056381	Locknut	2	2
19	061977400	Clamp	1	1

©2008 Yale Materials Handling Corporation

EXAUST SYSTEM (FIGURE 3-5)
COUNTERWEIGHT EXHAUST — CUMMINS QSB 3.3L DIESEL

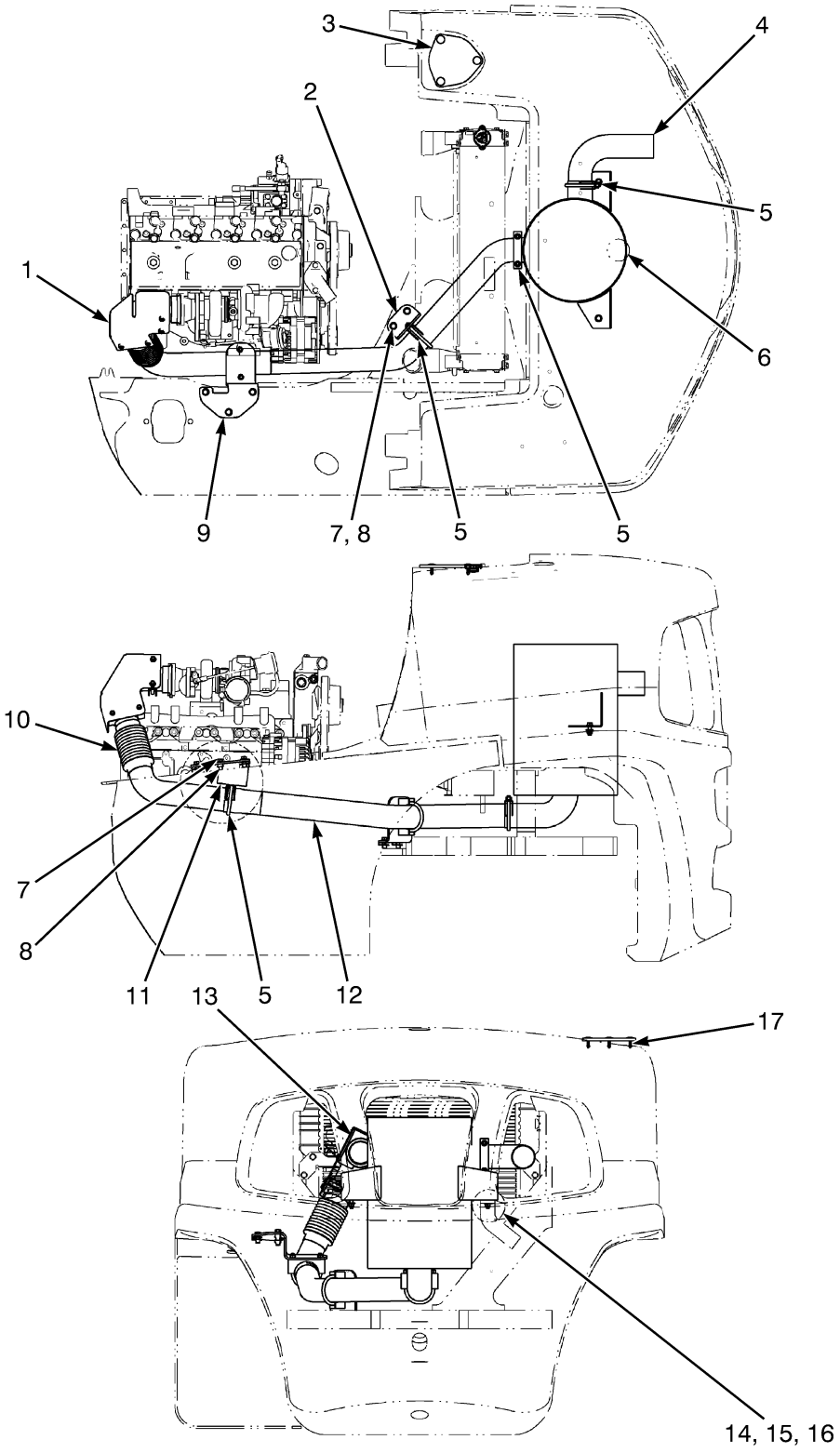

BP110052

©2008 Yale Materials Handling Corporation

EXAUST SYSTEM

COUNTERWEIGHT EXHAUST – CUMMINS QSB 3.3L DIESEL

ITEM	PART NO.	DESCRIPTION	QTY
1	580087974	Exhaust Shield	1
2	580093311	Bracket	1
3	504240715	Cover	1
4	580083869	Exhaust Pipe	1
5	061977400	Clamp	5
6	580088001	Muffler	1
7	580049231	Capscrew	5
8	580026621	Nut	5
9	580093313	Bracket	1
10	580085229	Exhaust Pipe	1
11	580093313	Bracket	1
12	580087144	Exhaust Pipe	1
13	580088580	Spacer	2
14	580030966	Capscrew	2
15	504226242	Washer	2
16	580056381	Locknut	2
17	580049758	Fastener	3

©2008 Yale Materials Handling Corporation

EXHAUST WRAPS (FIGURE 3-6)
CUMMINS QSB 3.3L DIESEL

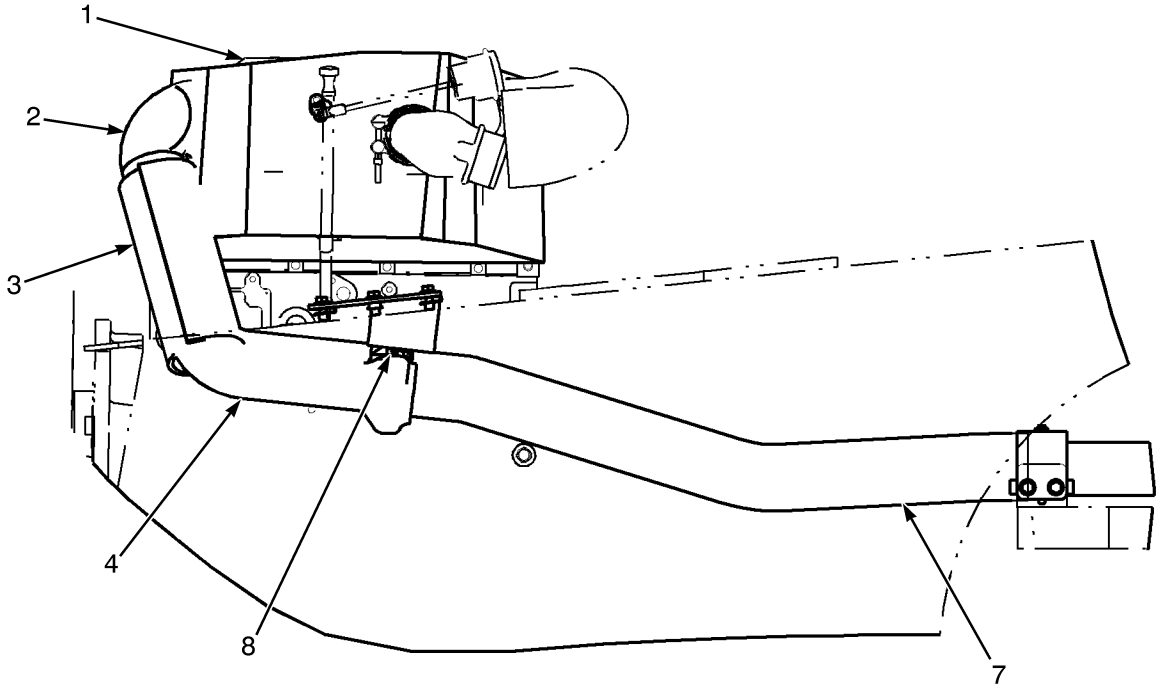

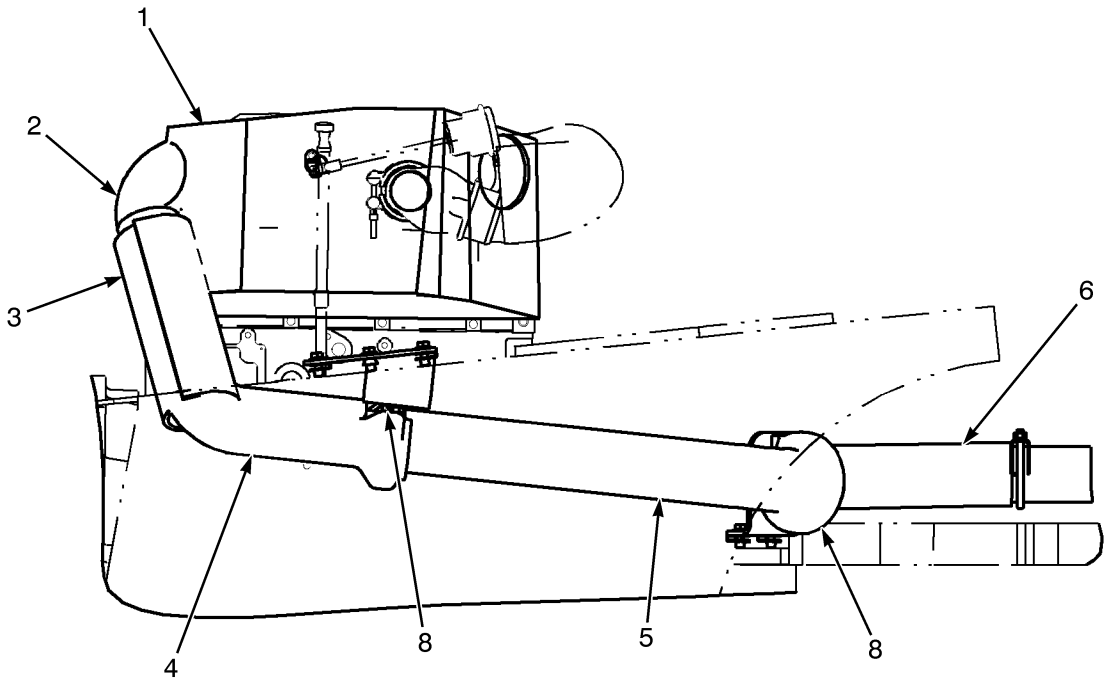

BP110000

©2008 Yale Materials Handling Corporation

EXHAUST WRAPS
CUMMINS QSB 3.3L DIESEL

KEY:
A: Short Wheel Base
B: Long Wheel Base

ITEM	PART NO.	DESCRIPTION	QTY A	QTY B
1	580089687	Exhaust Wrap (Turbo-Manifold)	1	1
2	580090014	Exhaust Wrap (Upper Header)	1	1
3	580089688	Flywheel Assembly (Bellows Pipe)	1	1
4	580090015	Exhaust Wrap (Lower Header)	1	1
5	580090016	Exhaust Wrap (Upper Tailpipe)	1	..
6	580090017	Exhaust Wrap (Lower Tailpipe)	1	..
7	580090018	Exhaust Wrap (Tailpipe)	..	1
8	061977400	Clamp	2	1

©2008 Yale Materials Handling Corporation

NOTES

©2008 Yale Materials Handling Corporation

4 COOLING SYSTEM

SECTION 4
COOLING SYSTEM

DESCRIPTION	PAGE
COOLING	
CUMMINS QSB 3.3L	4-6
GM 4.3L WITH EXTERNAL OIL COOLER AND ELECTRONIC TRANSMISSION - OR WITH WET BRAKE	4-2
GM 4.3L WITH INTERNAL OIL COOLER - WITH BASIC TRANSMISSION AND DRY BRAKE	4-4

©2008 Yale Materials Handling Corporation

COOLING (FIGURE 4-1)

GM 4.3L WITH EXTERNAL OIL COOLER AND ELECTRONIC TRANSMISSION — OR WITH WET BRAKE

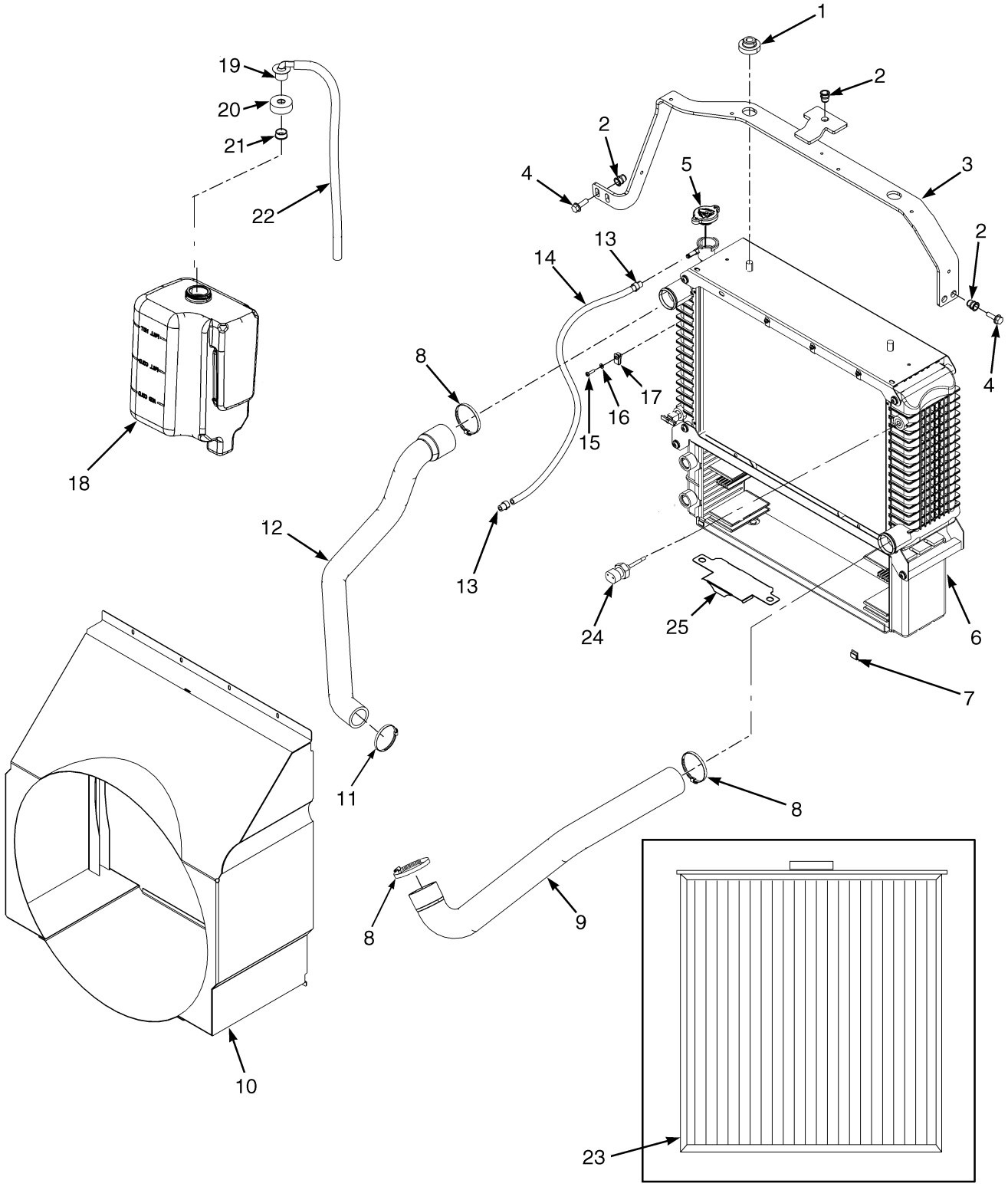

©2008 Yale Materials Handling Corporation

COOLING

GM 4.3L WITH EXTERNAL OIL COOLER AND ELECTRONIC TRANSMISSION – OR WITH WET BRAKE

ITEM	PART NO.	DESCRIPTION	QTY
1	580037325	Isolator	4
2	580044860	Insert	5
3	**b** 580063713	Bracket	1
3	**a** 580063714	Bracket	1
4	580030966	Capscrew	4
5	505972563	Radiator Cap	1
6	580046833	Radiator	1
6	580069988	Radiator	1
6	580069986	Oil Cooler	1
7	580046304	Clip	2
8	062159700	Clamp	4
9	**b** 580054740	Radiator Hose (Lower)	1
9	**a** 580054742	Radiator Hose (Lower)	1
10	**b** 580075147	Shroud	1
10	**a** 580072563	Shroud	1
11	502056903	Clamp	1
12	**b** 580054732	Radiator Hose (Upper)	1
12	**a** 580054734	Radiator Hose (Upper)	1
13	505966595	Clamp	2
14	**b** 580057231	Hose	1
14	**a** 580007059	Hose	1
15	449007005	Screw	4
16	940004903	Washer	4
17	580040177	Nut	4
18	580075506	Reservoir	1
19	900001230	Outlet (Reservoir)	1
19	580002885	Outlet	1
20	900001231	Cap	1
21	900003260	Bushing	1
22	580083733	Hose	1
23	580053914	Screen	1
24	580038312	Sensor (Low Coolant Level)	1
	c 501884906	Fitting (Without Coolant Sensor)	1
25	**c** 580086074	Exhaust Shield	1

FOOTNOTES:

a GP/GLP 100-120VX

b GP/GLP 80-90VX

c Not Illustrated

©2008 Yale Materials Handling Corporation

COOLING (FIGURE 4-2)

GM 4.3L WITH INTERNAL OIL COOLER — WITH BASIC TRANSMISSION AND DRY BRAKE

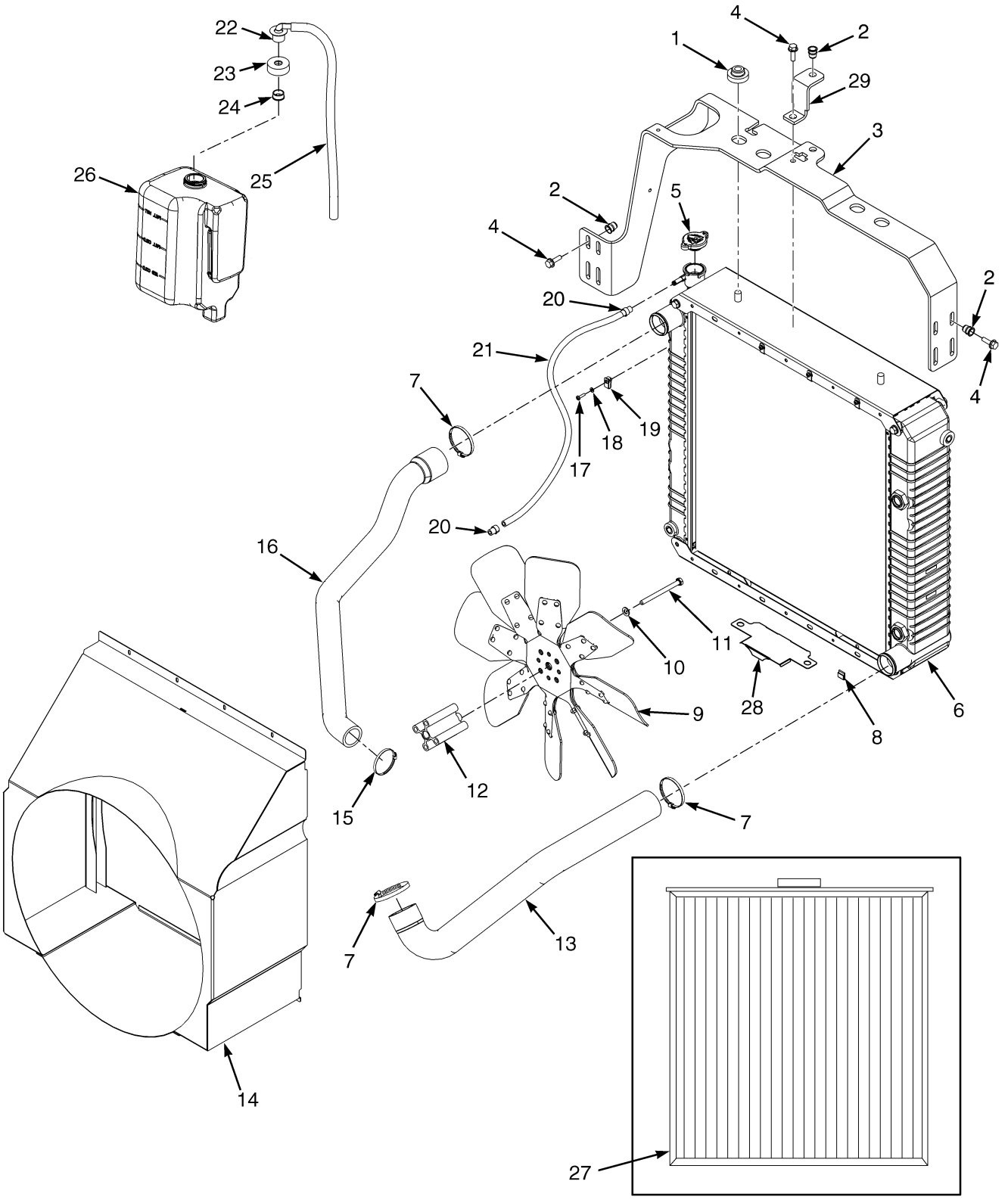

©2008 Yale Materials Handling Corporation

COOLING

GM 4.3L WITH INTERNAL OIL COOLER – WITH BASIC TRANSMISSION AND DRY BRAKE

ITEM	PART NO.	DESCRIPTION	QTY
1	580037325	Isolator	4
2	580044860	Insert	5
3	**b** 580092142	Bracket	1
3	**a** 580092142	Bracket	1
4	580030966	Capscrew	4
5	505972563	Radiator Cap	1
6	580046431	Radiator	1
7	062159700	Clamp	3
8	505972572	Clip	2
9	580079180	Fan	1
10	502566901	Washer	4
11	580063934	Capscrew	4
12	580025194	Spacer	1
13	**b** 580054736	Radiator Hose (Lower)	1
13	**a** 580054738	Radiator Hose (Lower)	1
14	**b** 580070721	Shroud	1
14	**a** 580072559	Shroud	1
15	502056903	Clamp	1
16	**b** 580054732	Radiator Hose (Upper)	1
16	**a** 580054734	Radiator Hose (Upper)	1
17	449007005	Screw	4
18	940004903	Washer	4
19	580040177	Nut	4
20	505966595	Clamp	2
21	**b** 580057231	Hose	1
22	580002885	Outlet	1
22	900001230	Outlet (Reservoir)	1
23	900001231	Cap	1
24	900003260	Bushing	1
25	580083733	Hose	1
26	580075506	Reservoir	1
27	580053914	Screen	1
28	580086074	Exhaust Shield	1
29	**a** 580092330	Bracket	1
	c 580038312	Sensor (Low Coolant Level)	1
	c 501884906	Fitting	1

FOOTNOTES:

a GLP/GP 100-120VX

b GLP/GP 80-90VX

c Not Illustrated

©2008 Yale Materials Handling Corporation

COOLING (FIGURE 4-3)
CUMMINS QSB 3.3L

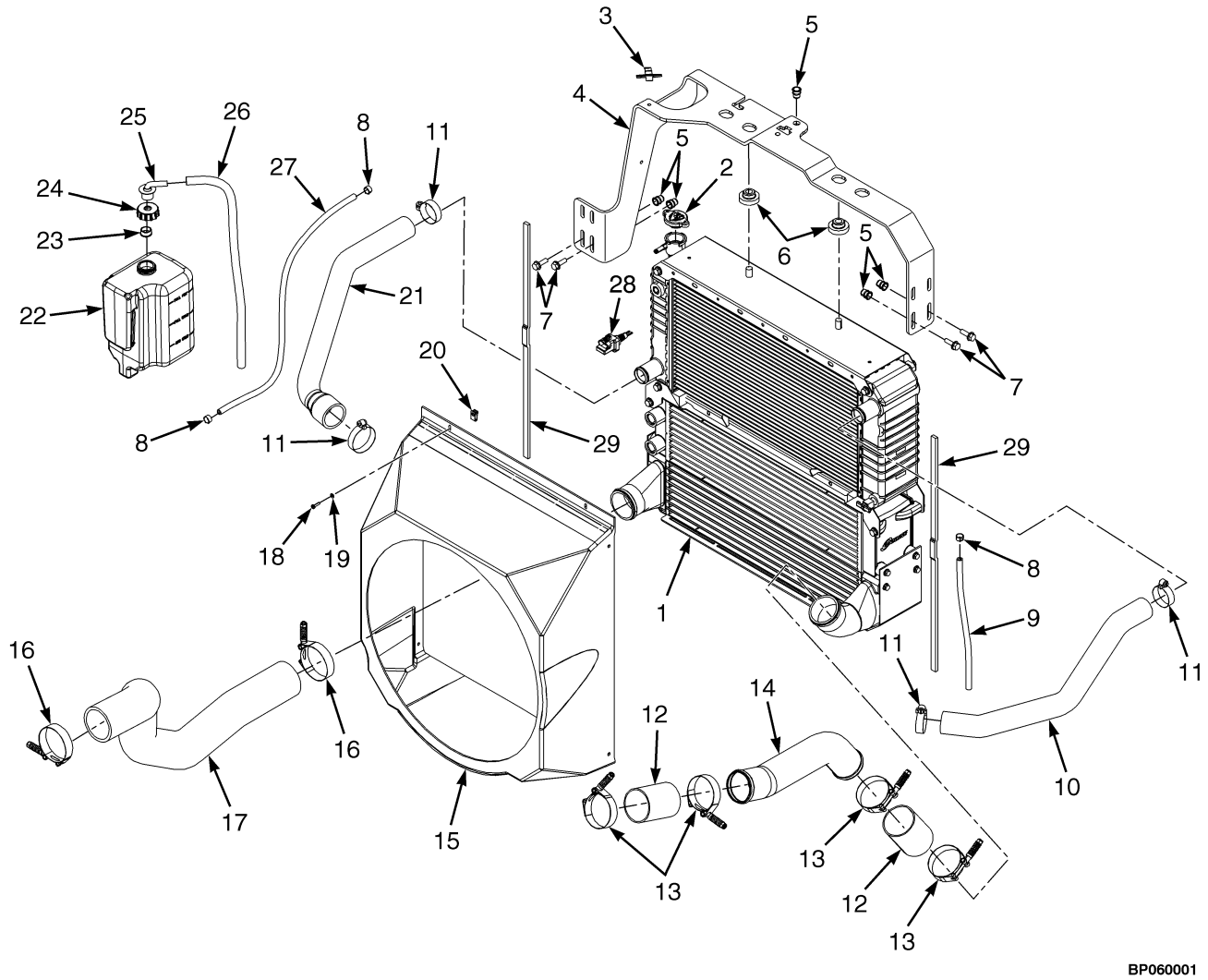

©2008 Yale Materials Handling Corporation

COOLING
CUMMINS QSB 3.3L

KEY:
A: GDP80-90VX
B: GDP100-120VX

ITEM	PART NO.	DESCRIPTION	QTY A	QTY B
1	580086159	Radiator	1	1
2	505972563	Radiator Cap	1	1
3	. . . . .	Harness Clip	1	1
4	580092142	Bracket	1	1
4	**a** 580092330	Bracket	..	1
5	580044860	Insert	5	6
6	580037325	Isolator	4	4
7	580030966	Capscrew	4	5
8	505966595	Clamp	3	3
9	505972513	Hose	1	1
10	580084459	Radiator Hose (Upper)	1	..
10	580084457	Radiator Hose (Upper)	..	1
11	062159700	Clamp	4	4
12	580088471	Hose	2	2
13	580084517	Clamp	4	4
14	580086627	Tube	1	..
14	580088343	Tube	..	1
15	580086538	Shroud	1	..
15	580087866	Shroud	..	1
16	580084518	Clamp	2	2
17	580084558	Hose	1	..
17	580088853	Hose	..	1
18	449007005	Screw	2	2
19	940004903	Washer	2	2
20	580040177	Nut	2	2
21	580084460	Radiator Hose (Lower)	1	..
21	580084458	Radiator Hose (Lower)	..	1
22	580075506	Reservoir	1	1
23	900003260	Bushing	1	1
24	900001231	Cap	1	1
25	580002885	Outlet	1	1
26	580083733	Hose	1	1
27	580057231	Hose	1	1
28	580090489	Sensor	1	1
28	**a** 501884906	Fitting (Without Coolant Sensor)	1	1
29	580087536	Seal	2	2

FOOTNOTES:
a Not Illustrated

©2008 Yale Materials Handling Corporation

NOTES

©2008 Yale Materials Handling Corporation

5 FUEL SYSTEM

SECTION 5
FUEL SYSTEM

DESCRIPTION	PAGE
AIR CLEANER	
CUMMINS QSB 3.3L DIESEL	5-4
GM 4.3L, GASOLINE AND LPG	5-2
AIR FILTER	5-7
FOOT DIRECTIONAL CONTROL PEDAL	5-36
FUEL FILTER	
CUMMINS QSB 3.3L DIESEL	5-33
FUEL FILTER PLUMBING	
CUMMINS QSB 3.3L DIESEL	5-30
FUEL INJECTION PUMP	
CUMMINS QSB 3.3L DIESEL	5-24
FUEL INJECTOR AND INJECTOR PLUMBING	
CUMMINS QSB 3.3L DIESEL	5-26
FUEL PUMP PLUMBING	
CUMMINS QSB 3.3L DIESEL	5-28
FUEL SYSTEM	
CUMMINS QSB 3.3L DIESEL	5-22
GM 4.3L LPG	5-8
GM 4.3L, GASOLINE	5-10
LPG TANK BRACKET	
SWING OUT	5-18
SWING OUT, DROP DOWN	5-20
PRE-CLEANER	5-6
REGULATOR	
GM 4.3L LPG	5-14
THROTTLE BODY ASSEMBLY	
GM 4.3L LPG	5-12
THROTTLE BODY ASSEMBLY AND FUEL RAIL	
GM 4.3L GASOLINE	5-16
THROTTLE PEDAL AND ATTACHING PARTS	5-34
WATER SEPARATOR	
CUMMINS QSB 3.3L DIESEL	5-32

©2008 Yale Materials Handling Corporation

AIR CLEANER (FIGURE 5-1)
GM 4.3L, GASOLINE AND LPG

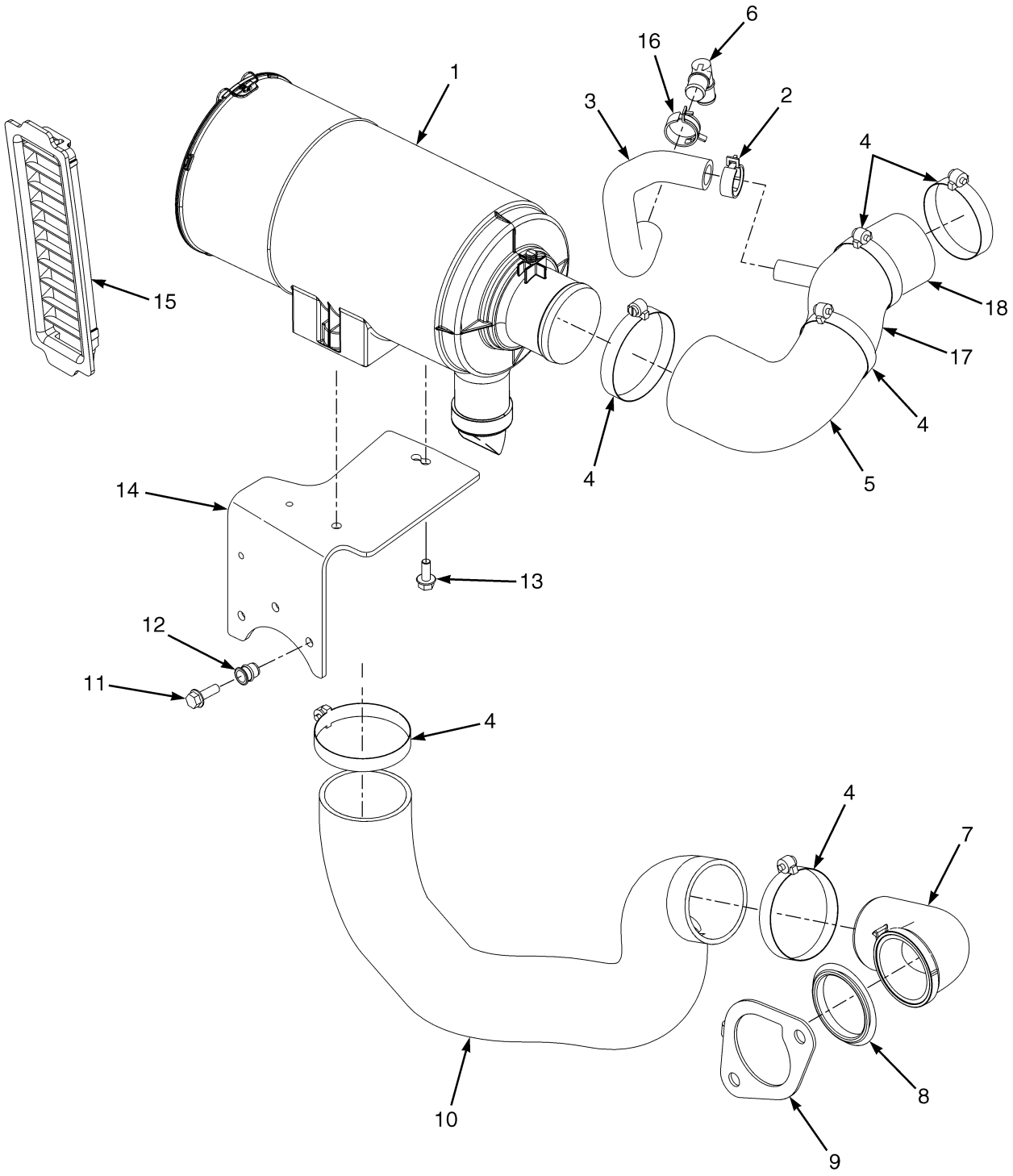

©2008 Yale Materials Handling Corporation

AIR CLEANER

GM 4.3L, GASOLINE AND LPG

ITEM	PART NO.	DESCRIPTION	QTY
1	580090152	Air Filter (☞P19610 [Page 5-7])	1
2	580007558	Clamp	1
3	580054461	Hose (PVC Vent)	1
4	504058787	Hose Clamp	6
5	580077670	Hose (Clean Air)	1
6	900011248	Fitting	1
7	580055561	Elbow	1
8	580042932	Grommet	1
9	580077901	Retainer	1
10	580060564	Hose (Dirty Air)	1
11	580030966	Capscrew	3
12	580044860	Insert	3
13	580047714	Capscrew	2
14	580084488	Bracket (Air Cleaner)	1
15	580048576	Grill	1
16	580039892	Hose Clamp	1
17	580083135	Coupler (PVC)	1
18	580077671	Hose (Clean Air)	1

©2008 Yale Materials Handling Corporation

AIR CLEANER (FIGURE 5-2)
CUMMINS QSB 3.3L DIESEL

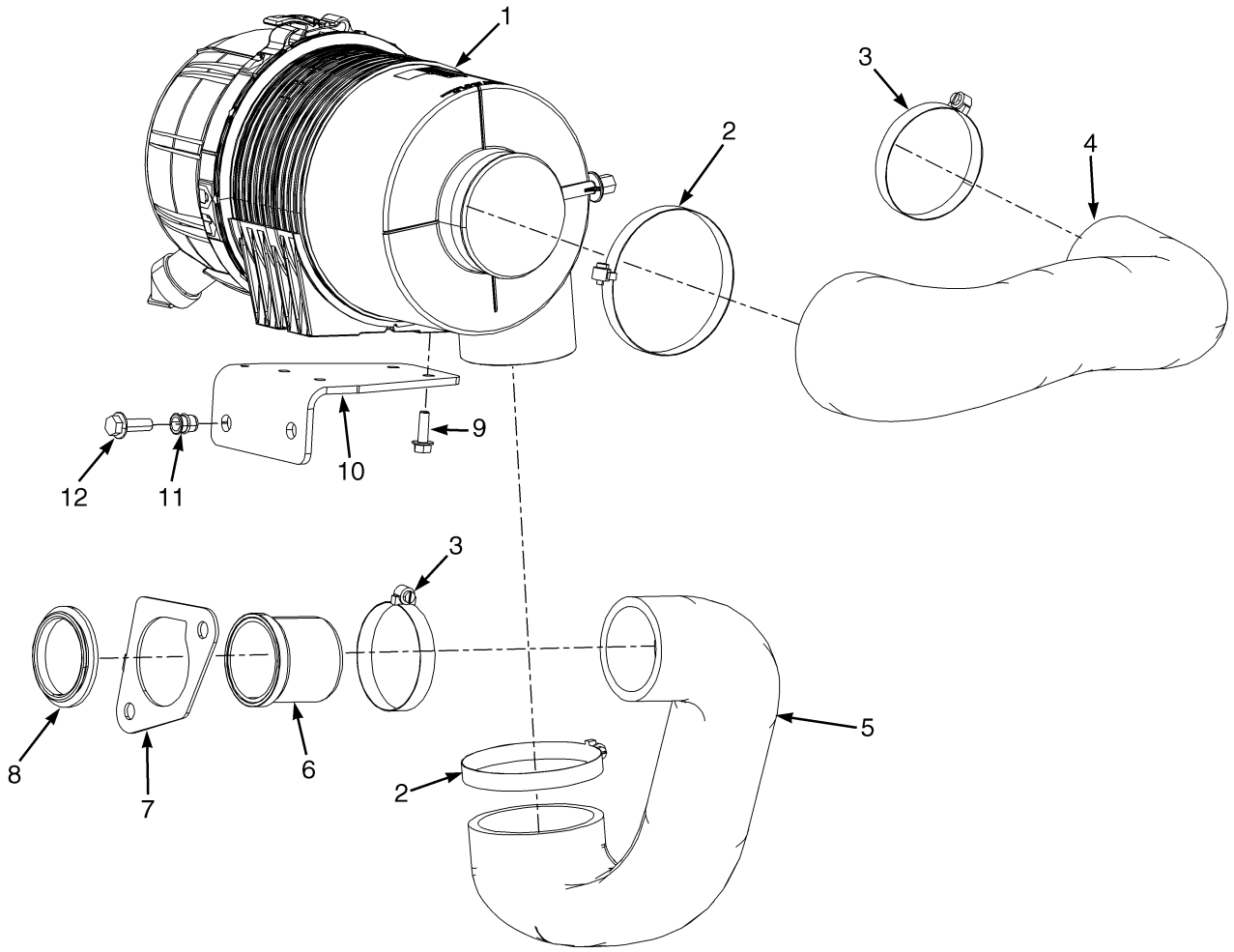

BP130053

©2008 Yale Materials Handling Corporation

AIR CLEANER
CUMMINS QSB 3.3L DIESEL

ITEM	PART NO.	DESCRIPTION	QTY
1	580083864	Air Filter	2
1	580088196	Filter Element	1
1	580090341	Kit-Cover	1
2	502056905	Clamp	2
3	504058787	Hose Clamp	2
4	580083875	Hose	1
5	580083874	Hose	1
6	580083873	Adapter	1
7	580077901	Retainer	1
8	580042932	Grommet	1
9	580030966	Capscrew	4
10	580091436	Bracket	1
11	580044862	Insert	2
12	580046451	Capscrew	2

©2008 Yale Materials Handling Corporation

PRE-CLEANER (FIGURE 5-3)

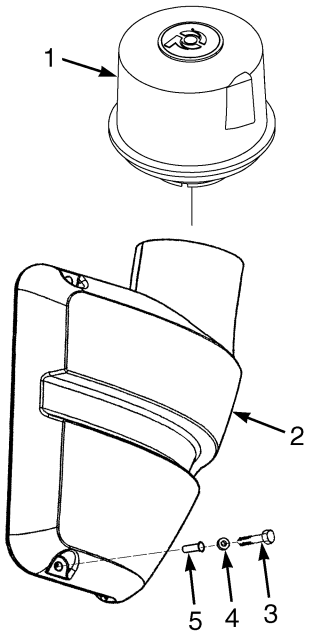

BP130092

ITEM	PART NO.	DESCRIPTION	QTY
1	580087533	Pre-Cleaner	1
2	580087619	Duct	1
3	932728908	Capscrew	2
4	580029990	Washer	2
5	580041704	Insert	2

©2008 Yale Materials Handling Corporation

AIR FILTER (FIGURE 5-4)

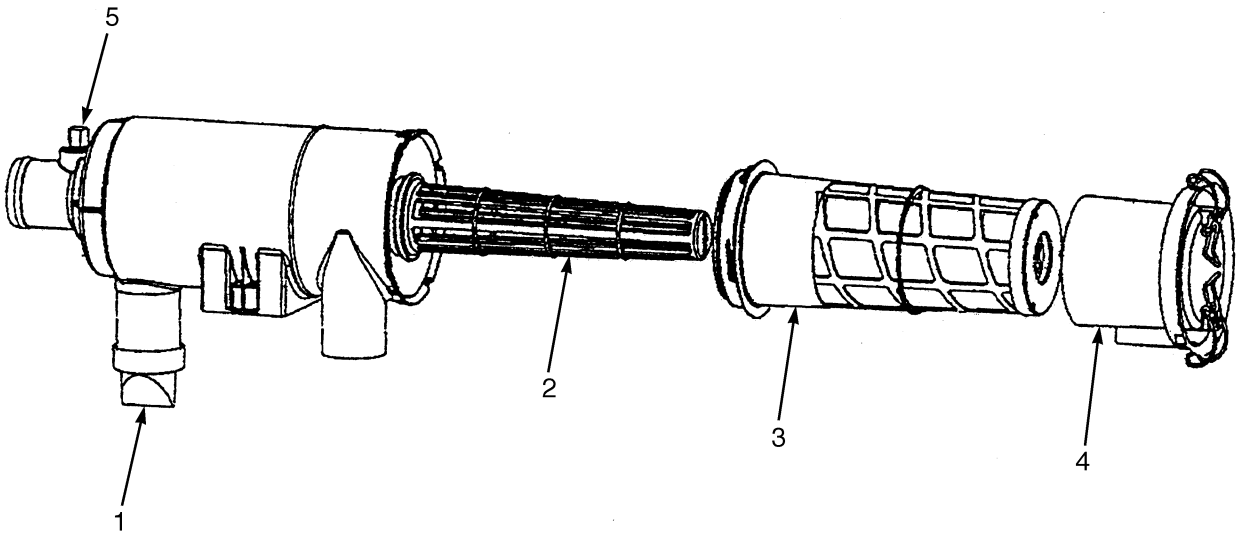

BP130113

ITEM	PART NO.	DESCRIPTION	QTY
	580090152	Air Filter	1
1	505967516	Valve	1
2	580069339	Filter (Inner Liner Assembly with Gasket)	1
3	580069337	Filter Element	1
4	580090150	Cover	1
5	580003427	Cap	1

©2008 Yale Materials Handling Corporation

FUEL SYSTEM (FIGURE 5-5)

GM 4.3L LPG

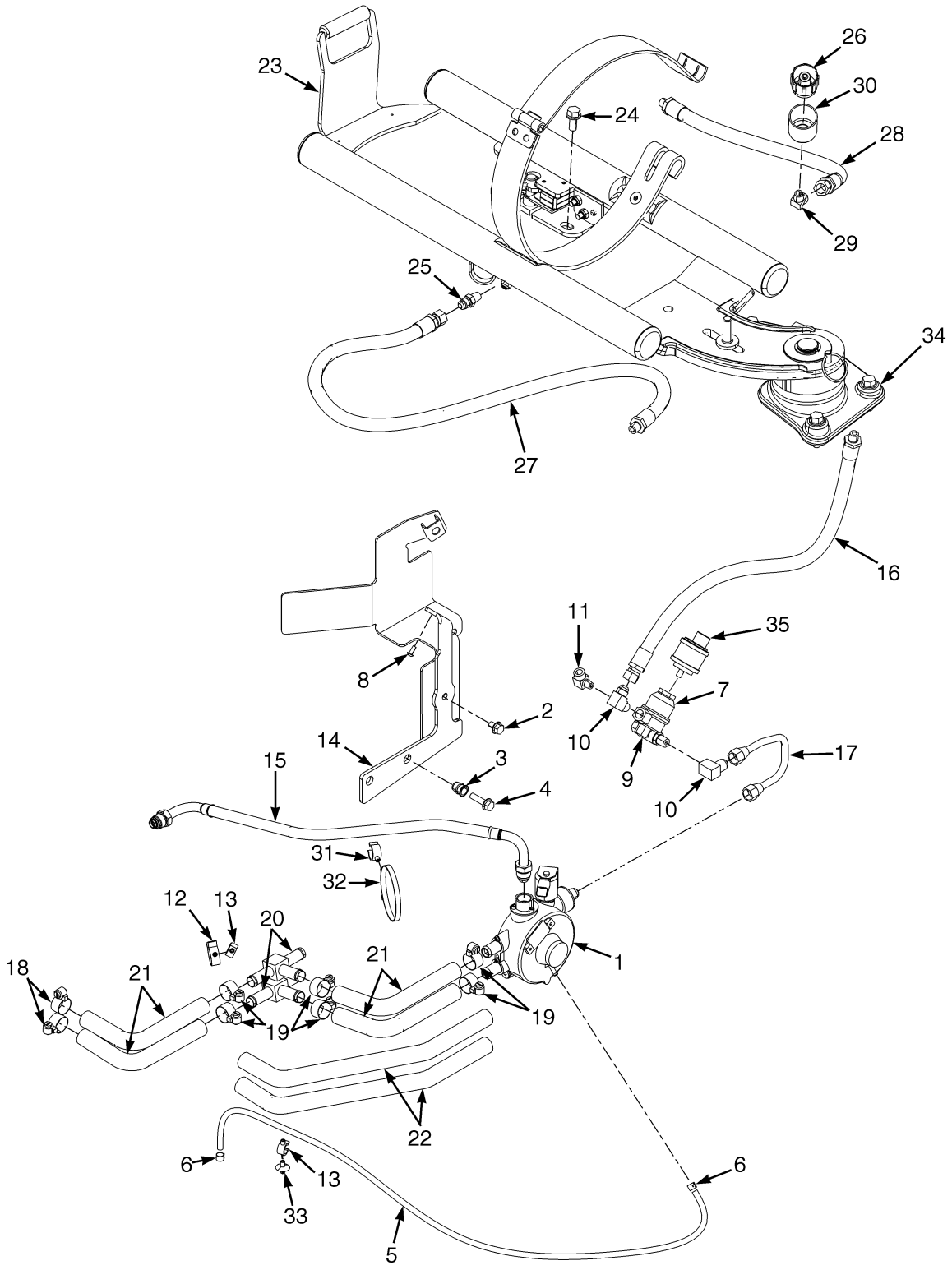

©2008 Yale Materials Handling Corporation

FUEL SYSTEM
GM 4.3L LPG

KEY:
A: With Overhead Guard
B: With Cab

ITEM	PART NO.	DESCRIPTION	QTY A	QTY B
1	580037181	Lpg Converter (LPG) (☞P19682 [Page 5-14])	1	1
2	580037180	Capscrew	1	1
3	580044860	Insert	2	2
4	580049229	Capscrew	2	2
5	580009778	Hose	1	1
6	505966507	Clamp	2	2
7	580090374	Fuel Filter (LPG)	1	1
7	580090387	Kit-Filter Element	1	1
8	580008220	Capscrew	2	2
9	019930000	Fitting	1	1
10	580017034	Fitting	1	1
11	056623800	Fitting	1	1
12	580042328	Clamp	1	1
13	580042330	Clamp (Swivel)	1	1
14	580060846	Bracket	1	1
15	580054499	Hose	1	1
15	580094100	Kit-O-Ring	1	1
16	580039599	Hose Assy	1	1
17	580052430	Tube	1	1
18	062159500	Clamp	..	8
19	062159500	Clamp	4	..
20	580052672	Fitting	..	2
21	580064049	Coolant Hose	..	4
22	580052434	Coolant Hose	2	..
23	580084379	Lpg Tank Bracket (Swing Out/Drop Down) (☞P19706 [Page 5-20])	1	1
23	580084377	Lpg Tank Bracket (Swing Out) (☞P19708 [Page 5-18])	1	1
24	580058009	Capscrew	4	4
25	909267300	Fitting	2	2
26	912514300	Fitting	1	1
27	580054169	Hose Assy	1	1
28	580059784	Hose Assy	1	1
29	500204901	Fitting (Swing Out)	1	1
30	580053000	Sleeve	1	1
31	580041557	Clamp	1	1
32	580041384	Clamp	1	1
33	580042842	Clamp	1	1
34	580059393	Capscrew	3	3
35	580037008	Pressure Switch (Low Pressure)	1	1
36	505970592	Sealant	AR	AR

©2008 Yale Materials Handling Corporation

FUEL SYSTEM (FIGURE 5-6)

GM 4.3L, GASOLINE

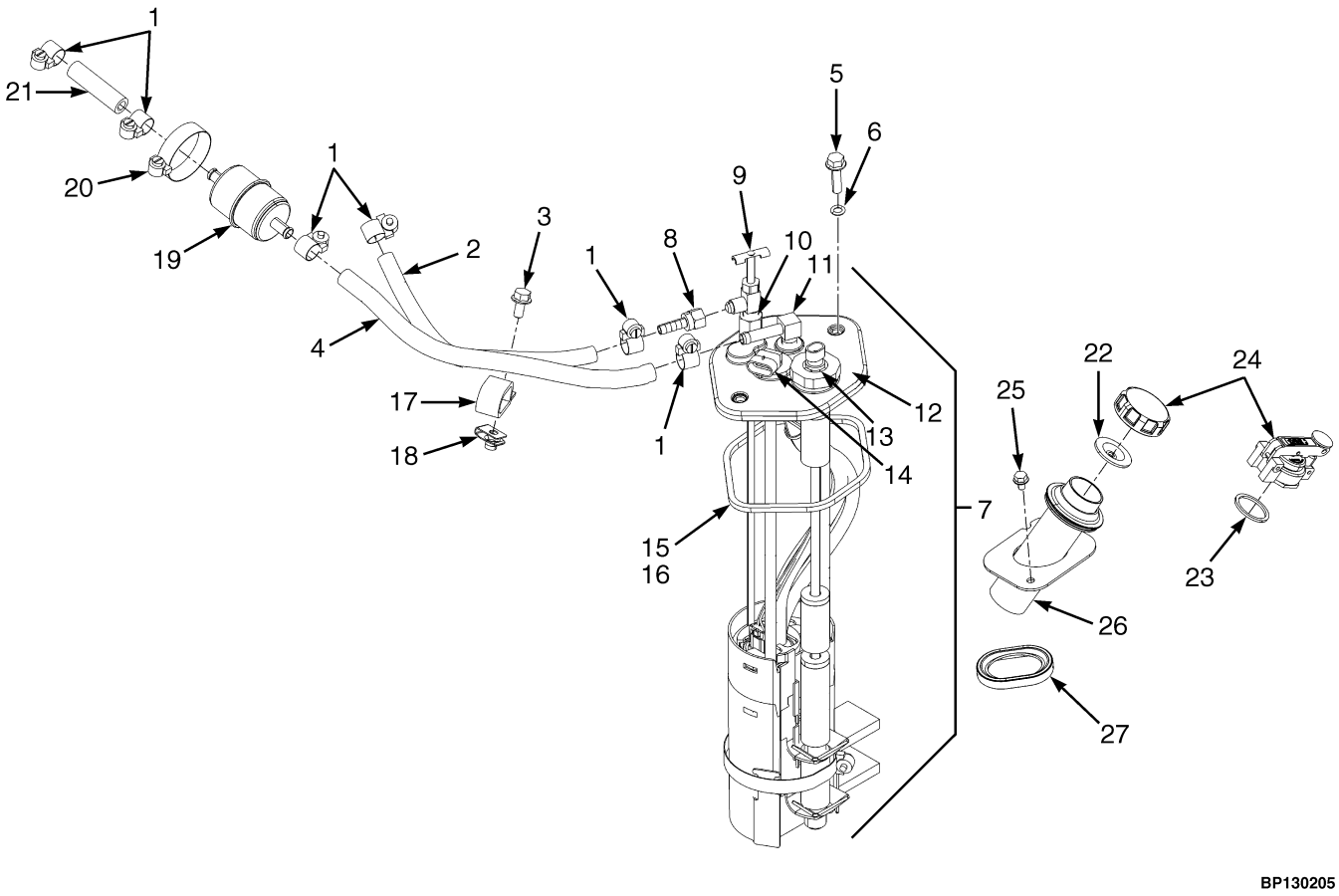

©2008 Yale Materials Handling Corporation

FUEL SYSTEM
GM 4.3L, GASOLINE

ITEM	PART NO.	DESCRIPTION	QTY
1	502056906	Clamp	10
2	580056489	Hose	1
3	580047714	Capscrew	1
4	580056486	Hose	2
5	580049229	Capscrew	2
6	514214804	O-Ring	2
7	580052978	Fuel Sender	1
8	580052527	Fitting	1
9	580016765	Drain Valve (Shut Off)	1
10	500017905	Fitting	1
11	056260300	Fitting	1
12	580046311	Cover	1
13	580066770	Fuel Sender	1
14	580032269	Connector	1
15	502058911	Adhesive	AR
16	580036870	Quad Ring	1
17	580005926	Clamp	1
18	580026621	Nut	1
19	580046832	Fuel Filter	1
20	062159700	Clamp	1
21	580046629	Hose	1
22	912207300	Gasket	1
23	911851100	Gasket (GS)	1
24	919891402	Fuel Cap	1
24	580054472	Fuel Cap (GS)	1
25	580037180	Capscrew	2
26	580050475	Pipe (Fill)	1
27	580037219	Seal	1
	580036738	Grommet (Not Illustrated)	1

©2008 Yale Materials Handling Corporation

THROTTLE BODY ASSEMBLY (FIGURE 5-7)

GM 4.3L LPG

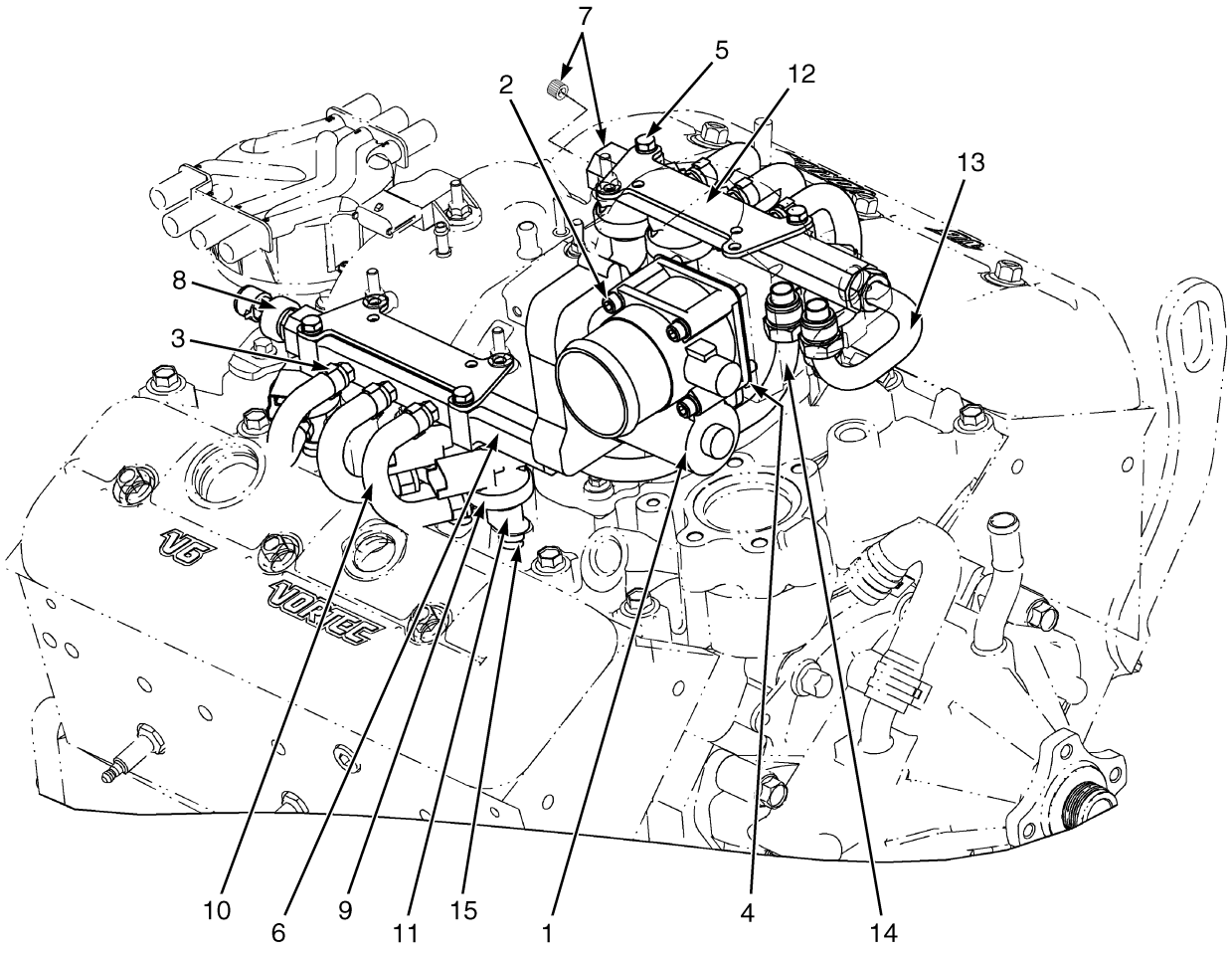

BP090275

©2008 Yale Materials Handling Corporation

THROTTLE BODY ASSEMBLY

GM 4.3L LPG

ITEM	PART NO.	DESCRIPTION	QTY
1	580048274	Throttle Body	1
2	580041711	Capscrew	4
3	580048293	Hose Clamp	12
4	580048278	Gasket (Throttle Body)	1
5	580049011	Capscrew	4
6	580072477	Fuel Rail (Right Hand)	1
6	580072478	Fuel Rail (Left Hand)	1
7	**c** 023080200	Fitting	1
8	**a** 580072480	Sensor (Fuel Pressure)	1
9	580048287	Injector (LPG)	6
10	580072481	Hose	6
11	580072482	Adapter	6
12	580072483	Bracket	2
13	580072484	Tube Assy (Right Hand)	1
14	580072485	Tube Assy (Left Hand)	1
15	580048292	O-Ring	6
	b 580072487	Bracket	2

FOOTNOTES:

a Left Rail Only

b Not Illustrated

c Right Rail Only

©2008 Yale Materials Handling Corporation

REGULATOR (FIGURE 5-8)
GM 4.3L LPG

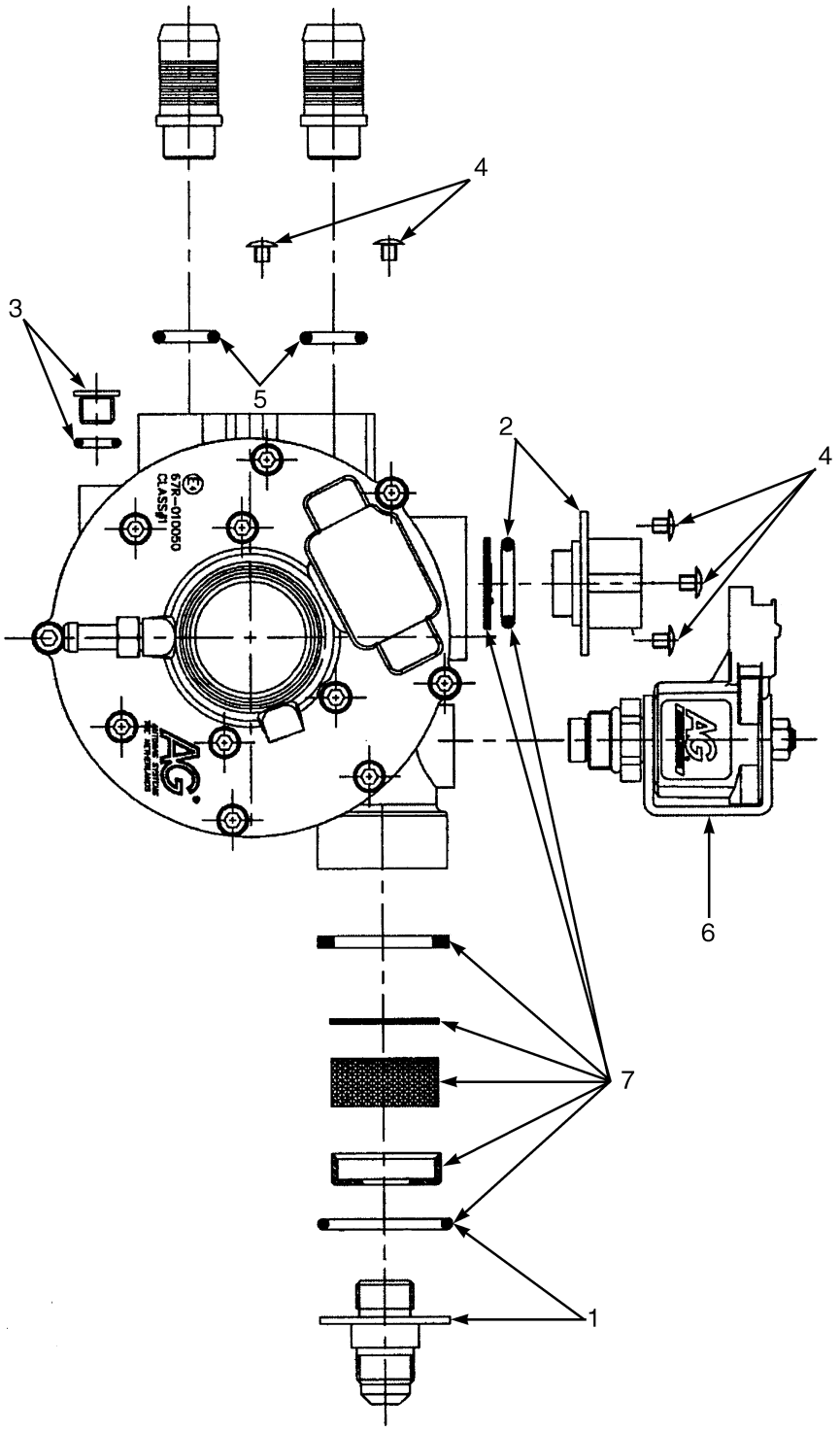

©2008 Yale Materials Handling Corporation

REGULATOR
GM 4.3L LPG

ITEM	PART NO.	DESCRIPTION	QTY
	580037181	Lpg Converter (LPG)	1
1	580055883	Fitting (Inlet Fitting With O-Ring)	1
2	580055884	Fitting (Outlet Fitting With O-Ring)	1
3	580055885	Drain Plug (With O-Ring)	1
4	580057860	Kit-Screw (With Connector Screw)	1
5	580057857	Kit-O-Ring (With Coolant Fitting O-Ring)	1
6	580057855	Lpg Lock-Off	1
7	580055882	Kit-Filter	1
7	. . . . .	O-Ring	1
7	. . . . .	Plastic Cap	1
7	. . . . .	Foam Filter	1
7	. . . . .	Paper Filter	1
7	. . . . .	Rubber Washer	1
7	. . . . .	Screen	1

©2008 Yale Materials Handling Corporation

THROTTLE BODY ASSEMBLY AND FUEL RAIL (FIGURE 5-9)
GM 4.3L GASOLINE

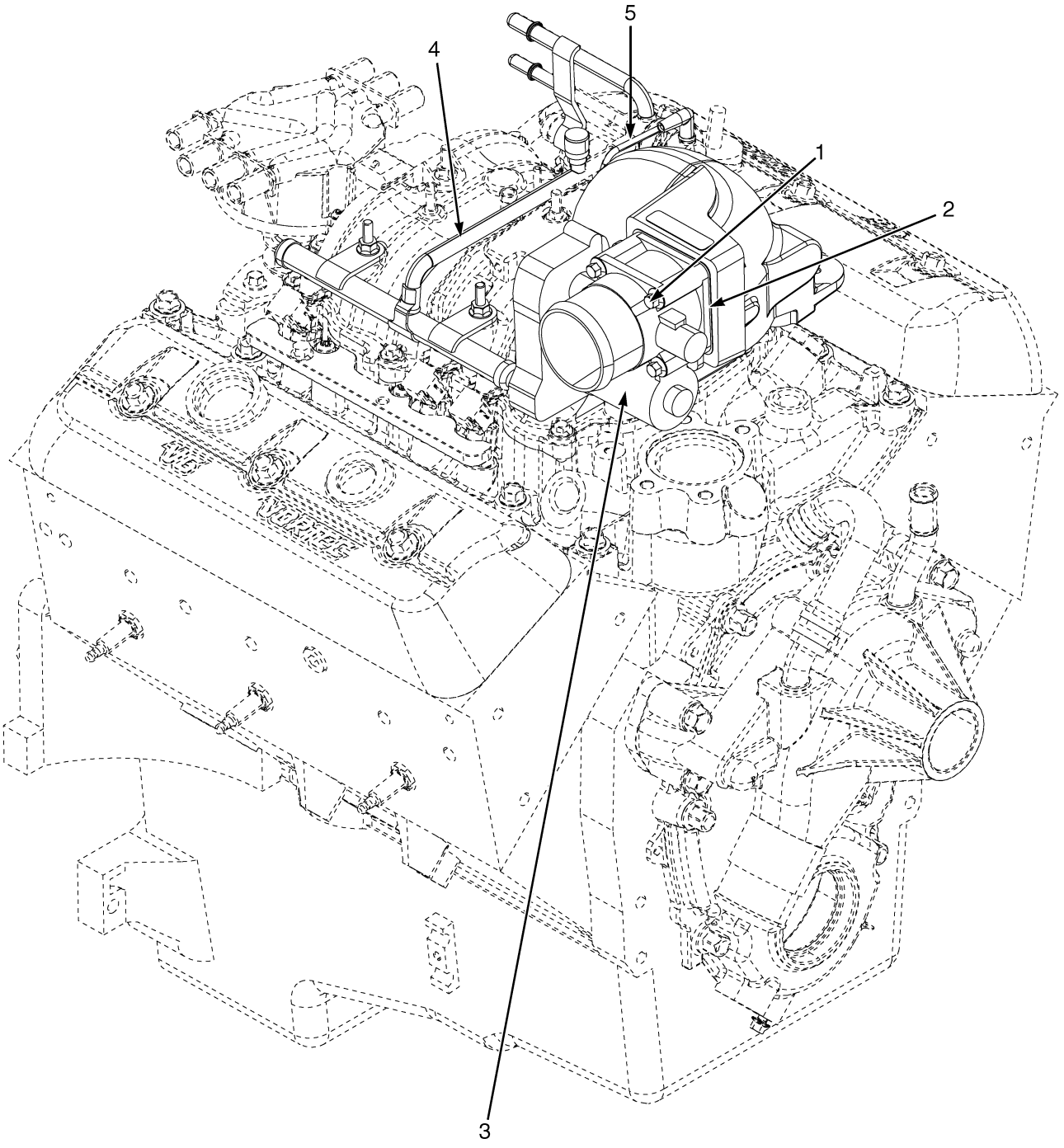

BP130267

©2008 Yale Materials Handling Corporation

THROTTLE BODY ASSEMBLY AND FUEL RAIL

GM 4.3L GASOLINE

ITEM	PART NO.	DESCRIPTION	QTY
1	580041711	Capscrew	4
2	580048278	Gasket (Throttle Body)	1
3	580048274	Throttle Body	1
4	580087847	Tube Assy	1
4	580048875	Injector	6
4	580087629	Retainer	6
4	580048869	Clip	1
4	580090506	Clip (Alternate Part)	1
4	580048873	Regulator	1
4	580089522	Fuel Rail	1
4	580089523	Pressure Valve	1
5	580046629	Hose	1

©2008 Yale Materials Handling Corporation

LPG TANK BRACKET (FIGURE 5-10)

SWING OUT

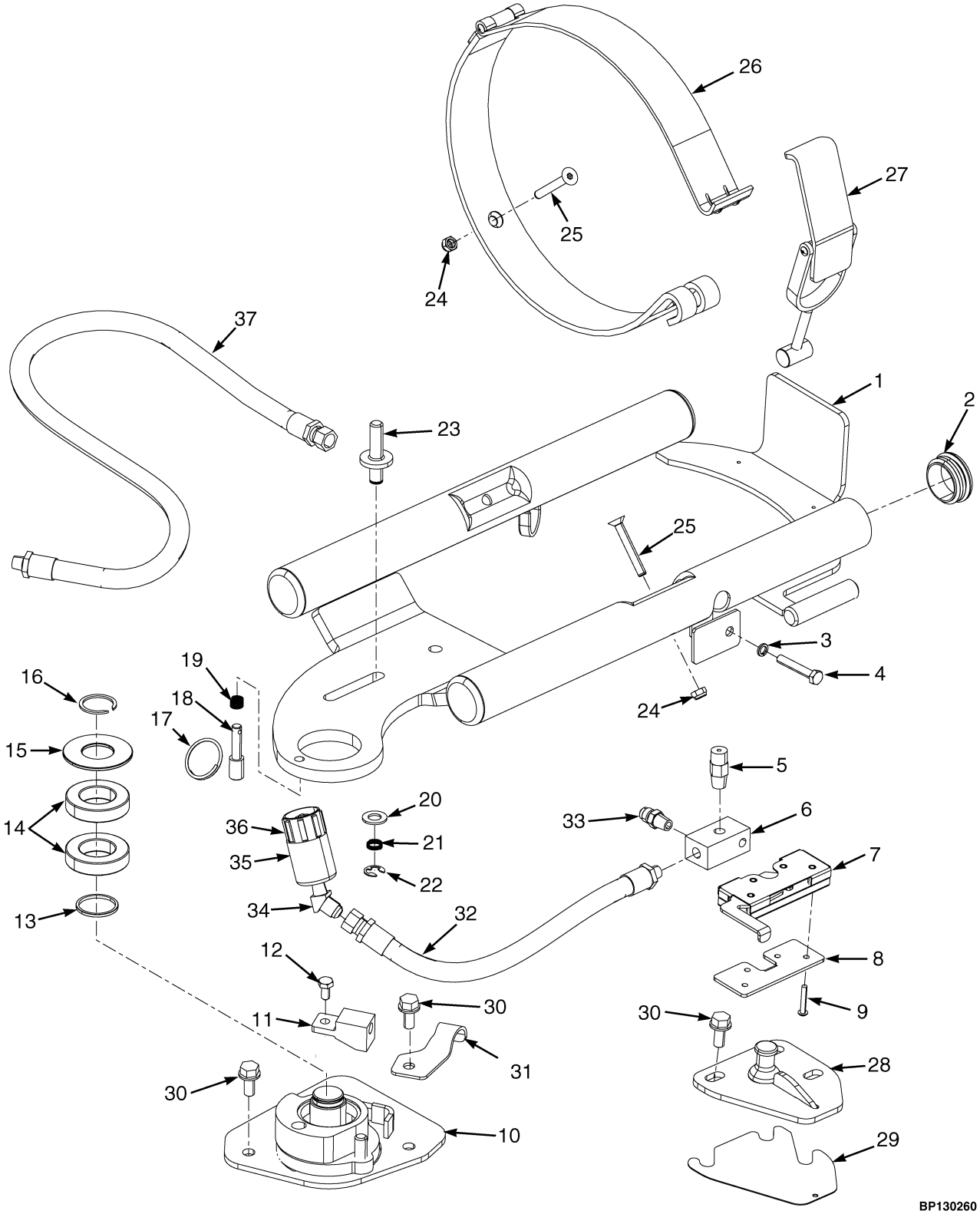

©2008 Yale Materials Handling Corporation

LPG TANK BRACKET
SWING OUT

ITEM	PART NO.	DESCRIPTION	QTY
	580084377	Lpg Tank Bracket	1
1	580084334	Lpg Tank Bracket	1
2	. . . . .	Plug	2
3	580056094	Washer	1
4	580055736	Capscrew	1
5	019299600	Relief Valve	1
6	580053493	Fitting	1
7	580080977	Latch	1
8	580077741	Plate	1
9	932727908	Capscrew	4
10	580074174	Bracket Wldmt	1
11	580038895	Fitting	1
12	580055732	Capscrew	1
13	580052691	Thrust Washer	1
14	502507901	Ball Bearing	2
15	580052689	Washer (Pivot)	1
16	580052259	Snap Ring	1
17	580053498	Ring	1
18	580072812	Pin	1
19	580041947	Spring	1
20	580055634	Washer	1
21	580038894	Spring	1
22	023338500	Retaining Ring	1
23	580038891	Pin (Alignment)	1
24	580055861	Nut	2
25	580055858	Capscrew	2
26	580068206	Strap	1
27	580069175	Latch	1
28	580085989	Pin	1
29	580080377	Shim	1
30	580058009	Capscrew	6
31	580081524	Bracket	1
32	580059784	Hose Assy	1
33	909267300	Fitting	1
34	500204901	Fitting	1
35	580053000	Sleeve	1
36	912514300	Fitting	1
37	580054169	Hose Assy	1

©2008 Yale Materials Handling Corporation

LPG TANK BRACKET (FIGURE 5-11)
SWING OUT, DROP DOWN

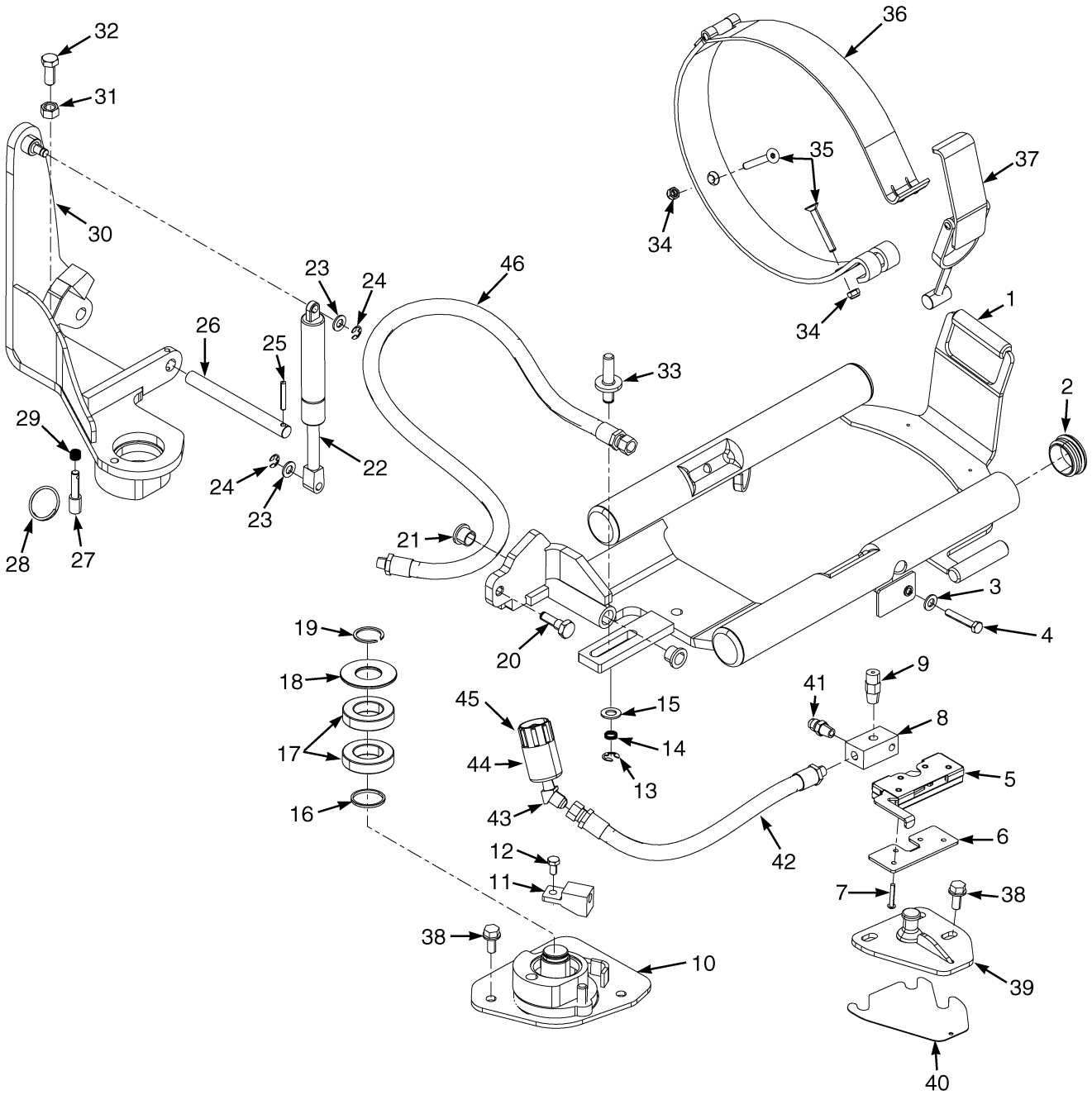

©2008 Yale Materials Handling Corporation

LPG TANK BRACKET
SWING OUT, DROP DOWN

ITEM	PART NO.	DESCRIPTION	QTY
	580084379	Lpg Tank Bracket (Swing Out/Drop Down)	1
1	580084351	Lpg Tank Bracket	1
2	580008703	Plug	4
3	580056094	Washer	1
4	580055736	Capscrew	1
5	580080977	Latch	1
6	580077741	Plate	1
7	932727908	Capscrew	4
8	580053493	Fitting	1
9	019299600	Relief Valve	1
10	580074174	Bracket Wldmt	1
11	580038895	Fitting	1
12	580055732	Capscrew	1
13	023338500	Retaining Ring	1
14	580055634	Washer	1
15	580038894	Spring	1
16	580052691	Thrust Washer	1
17	502507901	Ball Bearing	2
18	580052689	Washer (Pivot)	1
19	580052259	Snap Ring	1
20	580053495	Pin	1
21	580056063	Bushing	1
22	580051169	Gas Spring	1
23	580055632	Washer	1
24	580053496	E-Ring	1
25	449034001	Roll Pin	1
26	580056062	Shaft	1
27	580072812	Pin	1
28	580053498	Ring	1
29	580041947	Spring	1
30	580072459	Pivot	1
31	580056000	Nut	1
32	580058017	Capscrew	1
33	580038891	Pin (Alignment)	1
34	580055861	Nut	2
35	580055858	Capscrew	2
36	580068206	Strap	1
37	580069175	Latch	1
38	580058017	Capscrew	1
39	580085989	Pin	1
40	580080377	Shim	1
41	909267300	Fitting	1
42	580059784	Hose Assy	1
43	500204901	Fitting	1
44	580053000	Sleeve	1
45	912514300	Fitting	1
46	580054169	Hose Assy	1

©2008 Yale Materials Handling Corporation

FUEL SYSTEM (FIGURE 5-12)
CUMMINS QSB 3.3L DIESEL

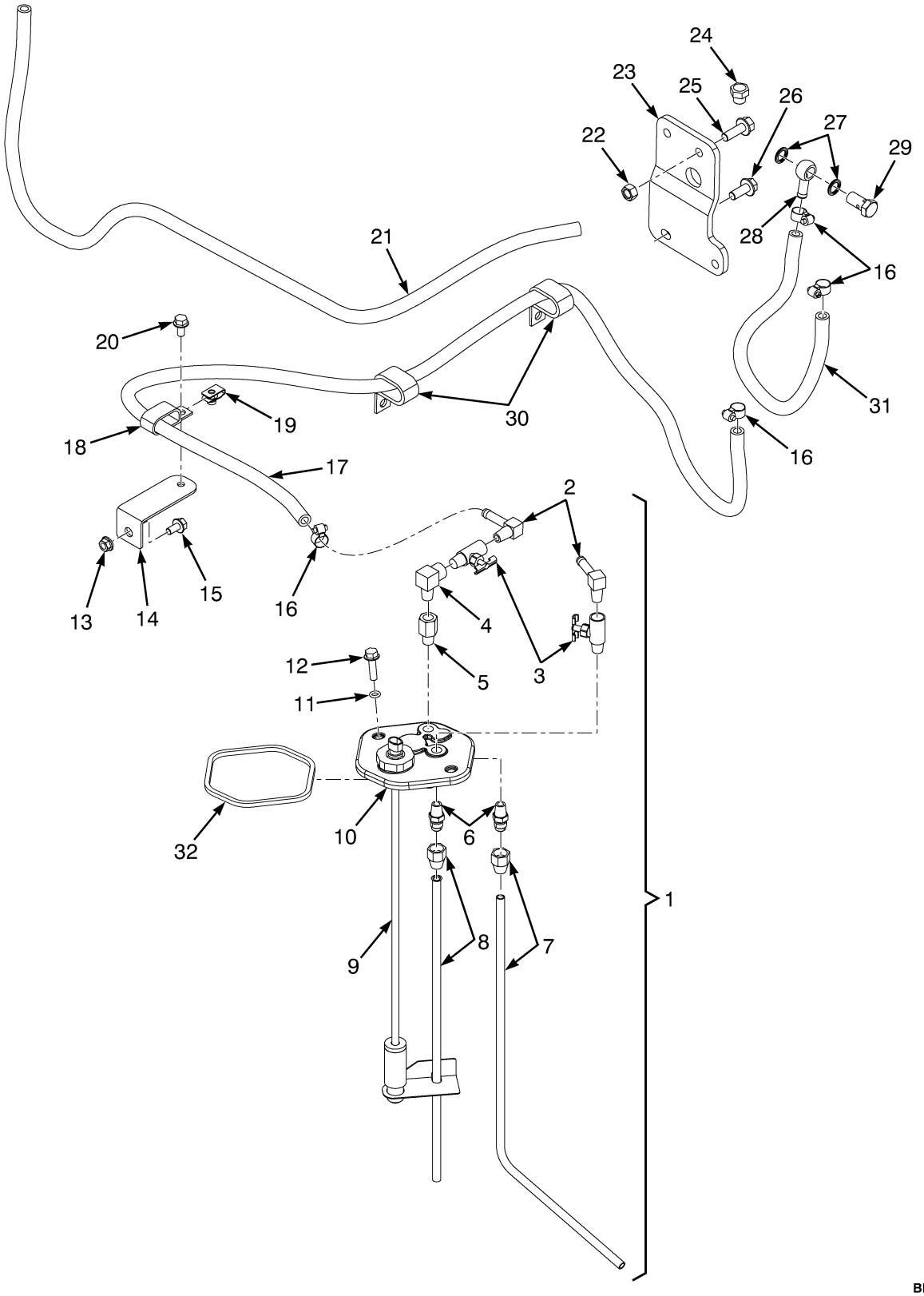

©2008 Yale Materials Handling Corporation

FUEL SYSTEM
CUMMINS QSB 3.3L DIESEL

ITEM	PART NO.	DESCRIPTION	QTY
1	580084601	Fuel Sender	1
2	056260300	Fitting	2
3	580007719	Drain Valve (Shut Off)	2
4	013392500	Fitting	1
5	505970580	Fitting	1
6	909267300	Fitting	2
7	580074023	Tube	1
8	580053107	Tube	1
9	580066770	Fuel Sender	1
10	580056992	Cover	1
11	514214804	O-Ring	2
12	580049229	Capscrew	2
13	580027573	Nut (Flange)	1
14	580088186	Bracket	1
15	580047714	Capscrew	1
16	511405800	Clamp (Worm Screw)	6
16	502056906	Clamp (Optional Part)	6
17	580093602	Hose	1
18	500412904	Clamp	2
19	580026621	Nut	3
20	580049231	Capscrew	3
21	580093603	Hose	1
22	501737903	Nut	2
23	580088186	Bracket	1
24	580088189	Plug	1
25	580083689	Bolt	2
26	580030970	Capscrew	1
27	580088190	Sealing Ring	4
28	580088191	Fitting	2
29	580088192	Screw	2
30	504240791	Clamp	2
31	580094382	Hose	1
32	580036870	Quad Ring	1
	a 580092169	Bracket	1
	a 580049389	Capscrew	1

FOOTNOTES:
a Not Illustrated

©2008 Yale Materials Handling Corporation

FUEL INJECTION PUMP (FIGURE 5-13)
CUMMINS QSB 3.3L DIESEL

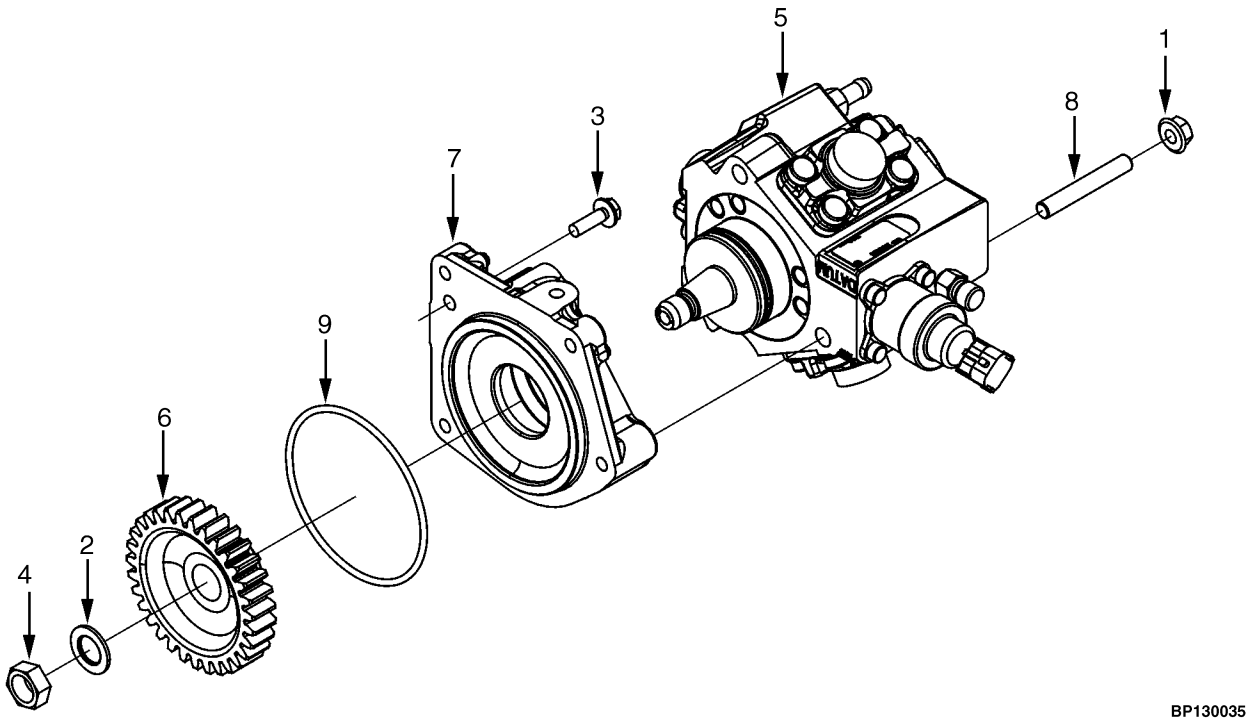

ITEM	PART NO.	DESCRIPTION	QTY
	580087913	Engine Assy-Diesel	1
1	580091064	Clamp	3
2	580091065	Washer	1
3	580091066	Capscrew	1
4	580091067	Nut	1
5	580091068	Fuel Pump	1
6	580091069	Gear	1
7	580091070	Support	1
8	580091071	Stud	3
9	580091072	Seal	1

©2008 Yale Materials Handling Corporation

NOTES

©2008 Yale Materials Handling Corporation

FUEL INJECTOR AND INJECTOR PLUMBING (FIGURE 5-14)

CUMMINS QSB 3.3L DIESEL

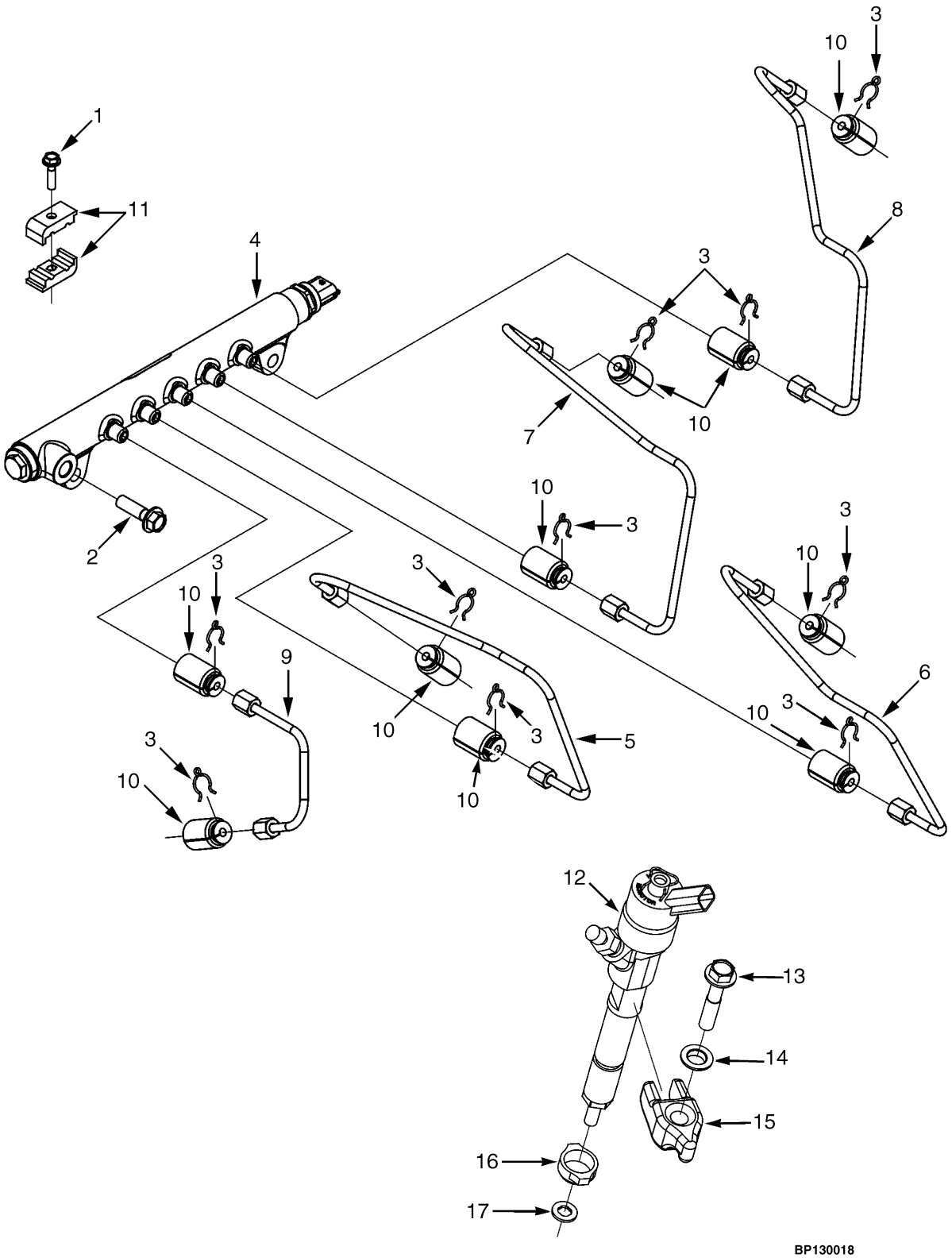

©2008 Yale Materials Handling Corporation

FUEL INJECTOR AND INJECTOR PLUMBING

CUMMINS QSB 3.3L DIESEL

ITEM	PART NO.	DESCRIPTION	QTY
	580087913	Engine Assy-Diesel	1
1	580091141	Capscrew	2
2	580091260	Capscrew	2
3	580091261	Clip	10
4	580091262	Manifold (Fuel Rail)	1
5	580091263	Tube (Injector Fuel Supply)	1
6	580091264	Tube (Injector Fuel Supply)	1
7	580091265	Tube (Injector Fuel Supply)	1
8	580091266	Tube (Injector Fuel Supply)	1
9	580091267	Tube (Injector Fuel Supply)	1
10	580091268	Cover	10
11	580091269	Clamp	4
12	. . . . .	Injector	4
13	580091160	Capscrew	4
14	580091161	Washer	4
15	580091259	Capscrew	4
16	580091258	Dust Seal	4
17	580091162	Gasket	4
18	580091164	Kit-Injector	4

©2008 Yale Materials Handling Corporation

FUEL PUMP PLUMBING (FIGURE 5-15)
CUMMINS QSB 3.3L DIESEL

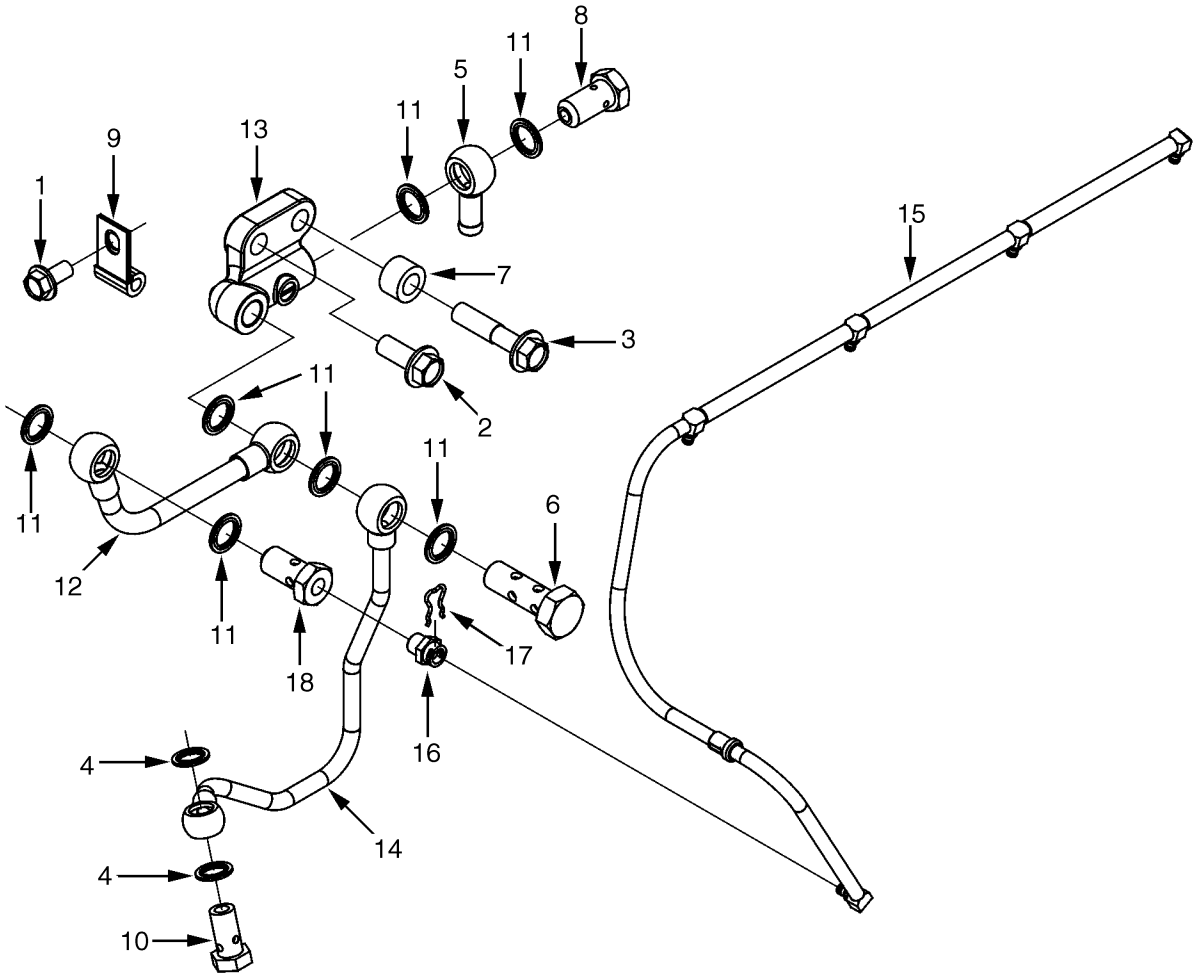

BP130020

©2008 Yale Materials Handling Corporation

FUEL PUMP PLUMBING
CUMMINS QSB 3.3L DIESEL

ITEM	PART NO.	DESCRIPTION	QTY
	580087913	Engine Assy-Diesel	1
1	580091109	Capscrew	1
2	580091031	Capscrew	1
3	580092020	Capscrew	1
4	580091080	Gasket	2
5	580088191	Fitting (Banjo Connector)	1
6	580091082	Screw (Banjo Connector)	1
7	580091083	Spacer	1
8	580088192	Screw (Banjo Connector)	1
9	580091040	Clip	1
10	580091041	Screw (Banjo Connector)	1
11	580088190	Sealing Ring	7
12	580091046	Tube (Fuel Supply)	1
13	580091047	Adapter (Fuel Connector)	1
14	580091048	Tube (Fuel Supply)	1
15	580091050	Hose	1
16	580091051	Connector (Banjo)	1
17	580091052	Roll Pin	1
18	580091053	Screw (Banjo Connector)	1

©2008 Yale Materials Handling Corporation

FUEL FILTER PLUMBING (FIGURE 5-16)
CUMMINS QSB 3.3L DIESEL

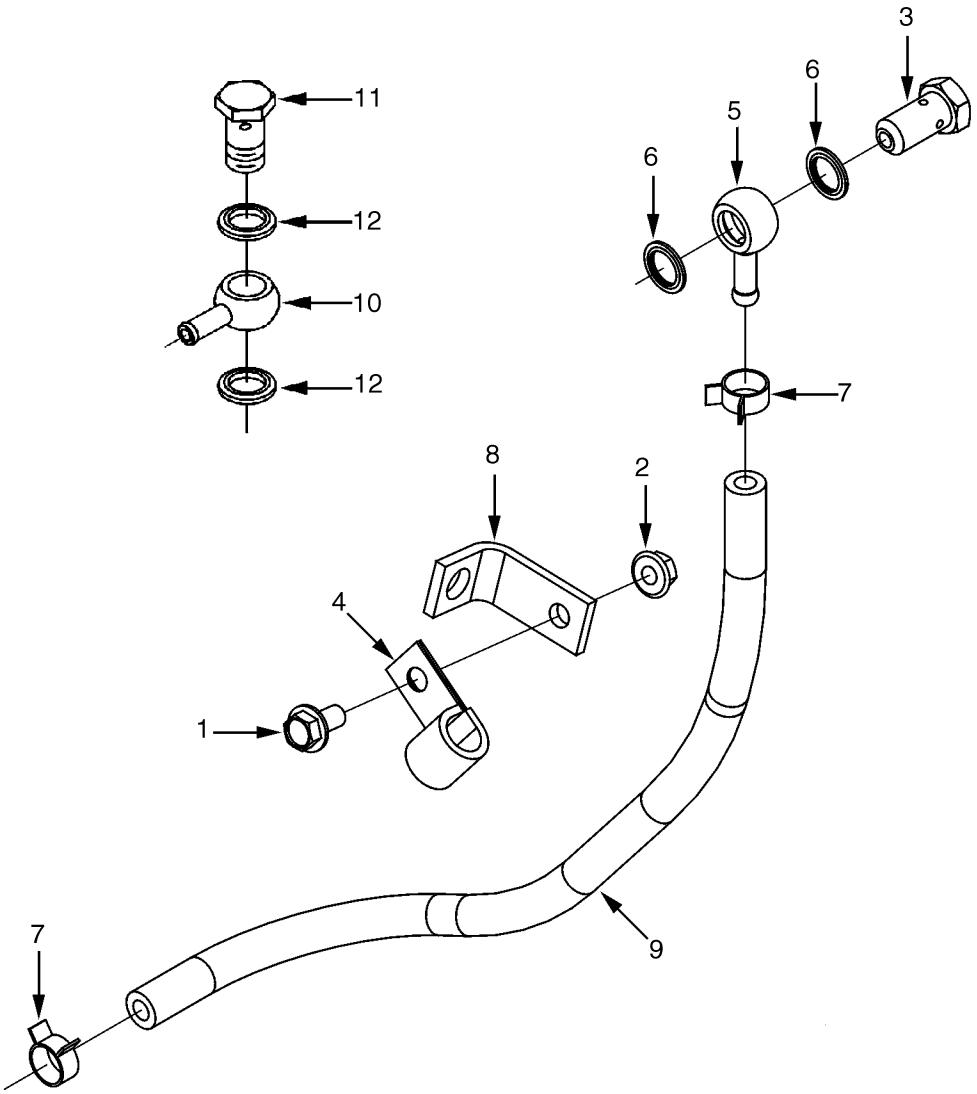

BP130042

©2008 Yale Materials Handling Corporation

FUEL FILTER PLUMBING
CUMMINS QSB 3.3L DIESEL

ITEM	PART NO.	DESCRIPTION	QTY
	580087913	Engine Assy-Diesel	1
1	**b** 580091109	Capscrew	1
2	**b** 580091025	Nut	1
3	**b** 580088192	Screw (Banjo Connector)	1
4	**b** 580091026	Clip	1
5	**b** 580091027	Coupling	1
6	**b** 580088190	Sealing Ring	2
7	**b** 580091028	Clip	2
8	**b** 580091029	Plate (Clamping)	1
9	**b** 580091030	Hose	1
10	**a** 580088191	Fitting (Banjo Connector)	1
11	**a** 580088192	Screw	1
12	**a** 580088190	Sealing Ring	1

FOOTNOTES:

a Fuel Inlet

b Mounting location: Fuel Pump Side Middle Mount

©2008 Yale Materials Handling Corporation

WATER SEPARATOR (FIGURE 5-17)
CUMMINS QSB 3.3L DIESEL

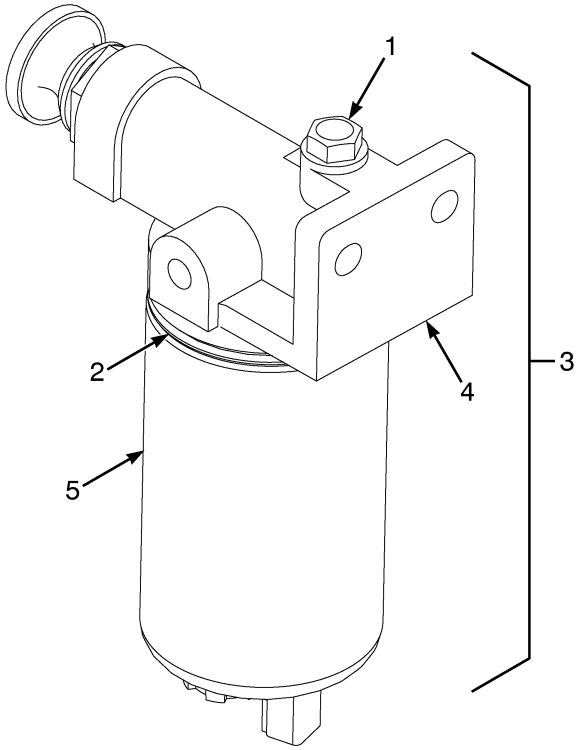

BP130138

ITEM	PART NO.	DESCRIPTION	QTY
	580087913	Engine Assy-Diesel	1
1	580091073	Plug	1
2	580091074	Seal	1
3	580091075	Fuel Filter	1
4	. . . . .	Filter Head	1
5	580091077	Cartridge	1

©2008 Yale Materials Handling Corporation

FUEL FILTER (FIGURE 5-18)
CUMMINS QSB 3.3L DIESEL

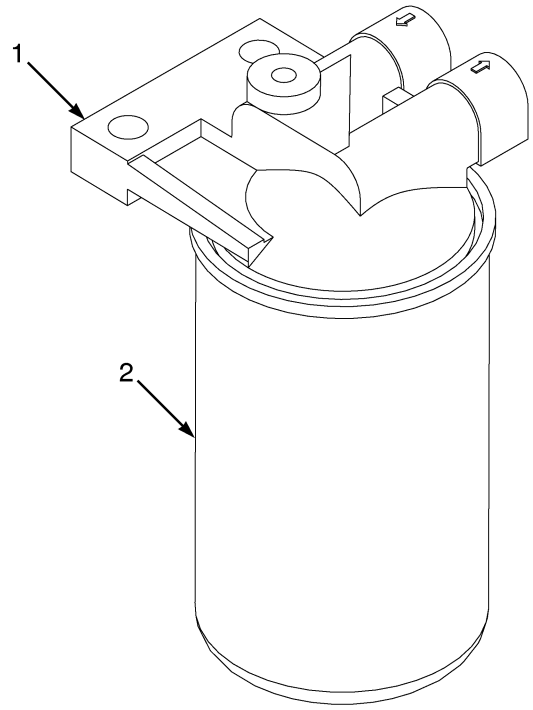

BP130147

ITEM	PART NO.	DESCRIPTION	QTY
	580087913	Engine Assy-Diesel	1
1	580091075	Fuel Filter	1
1	. . . . .	Fuel Filter head	1
2	580091077	Cartridge	1

©2008 Yale Materials Handling Corporation

THROTTLE PEDAL AND ATTACHING PARTS (FIGURE 5-19)

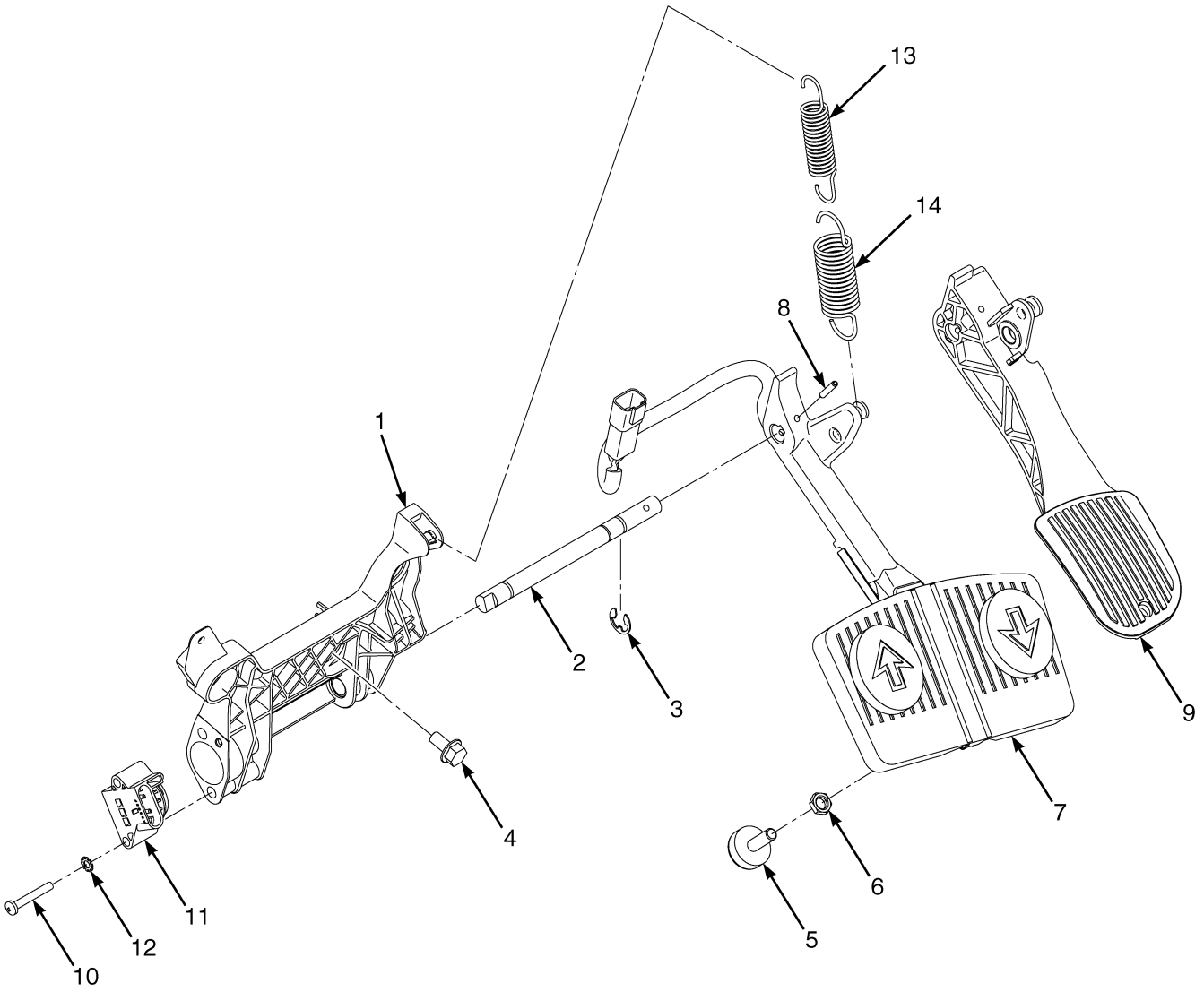

©2008 Yale Materials Handling Corporation

THROTTLE PEDAL AND ATTACHING PARTS

ITEM	PART NO.	DESCRIPTION	QTY
1	580080022	Throttle Plate	1
1	580080368	Bushing	1
2	580080021	Shaft	1
3	580038063	E-Ring	1
4	580047714	Capscrew	3
5	580037700	Screw (Stop)	1
6	580004592	Nut	1
7	524246118	Foot Directional Control Pedal (☞P19713 [Page 5-36])	1
8	449034011	Roll Pin	1
9	580052661	Pedal (Standard)	1
10	580056839	Capscrew	2
11	580043866	Sensor	1
12	940600906	Washer	2
13	580056460	Spring (Inner)	1
14	580056459	Spring (Outer)	1

©2008 Yale Materials Handling Corporation

FOOT DIRECTIONAL CONTROL PEDAL (FIGURE 5-20)

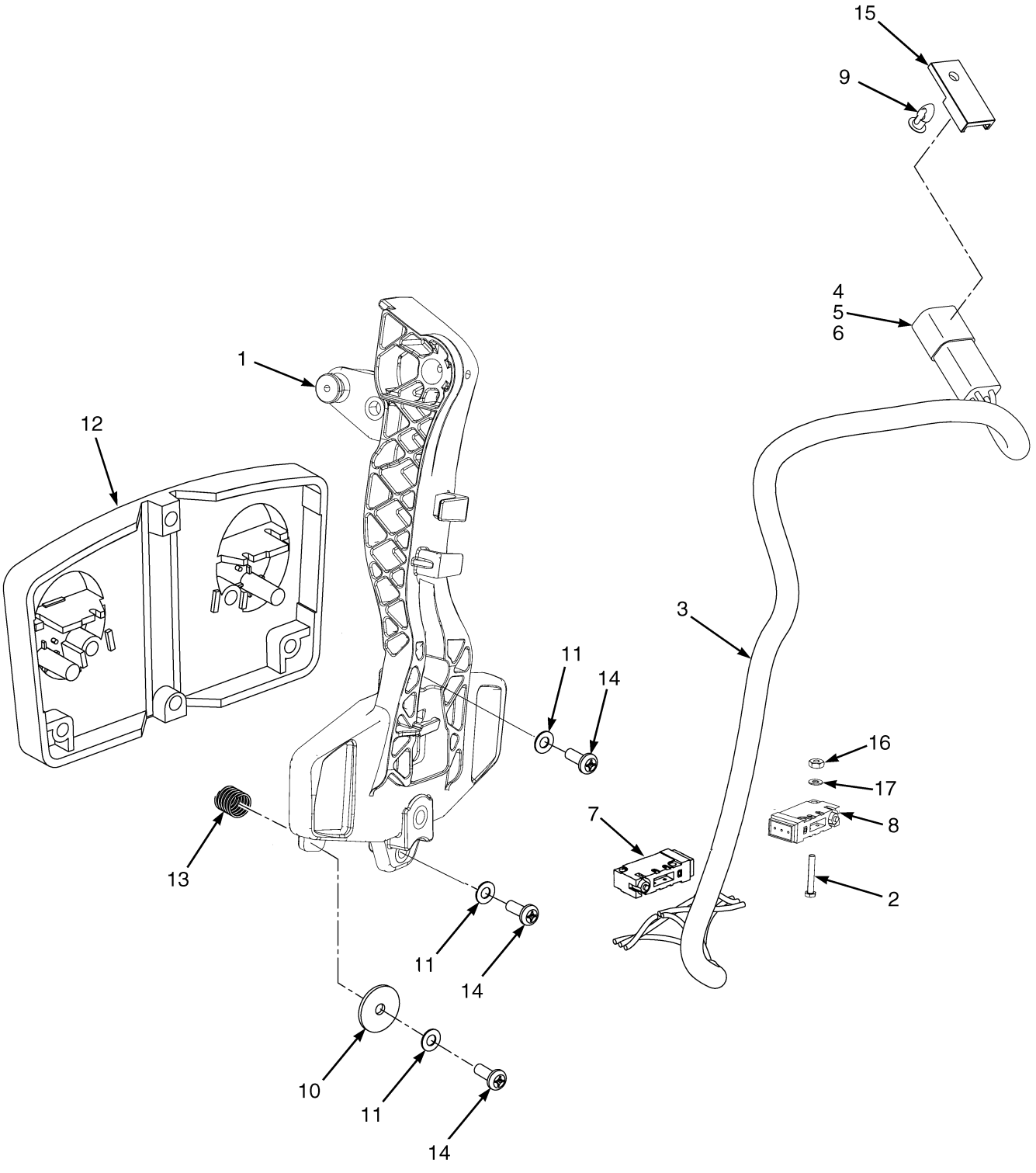

©2008 Yale Materials Handling Corporation

FOOT DIRECTIONAL CONTROL PEDAL

ITEM	PART NO.	DESCRIPTION	QTY
	524246118	Foot Directional Control Pedal	1
1	580057300	Pedal	1
2	504225201	Screw	4
3	580054683	Wire Harness	1
4	518806635	Connector	1
5	580020942	Connector (4 Way)	1
6	580038290	Terminal	4
7	. . . . .	Switch	1
8	. . . . .	Switch	1
9	580050676	Clip (Key Hole)	1
10	580010433	Washer	2
11	065619300	Lockwasher	4
12	580047527	Pad	1
13	580010432	Spring	2
14	502634904	Screw	4
15	580026812	Clip	1
16	032643500	Nut	4
17	500552902	Lockwasher	4
	501702901	Loctite	AR

©2008 Yale Materials Handling Corporation

NOTES

©2008 Yale Materials Handling Corporation

6 ELECTRICAL SYSTEM

SECTION 6
ELECTRICAL SYSTEM

DESCRIPTION	PAGE
BATTERY CABLES	
CUMMINS QSB 3.3L DIESEL	6-22
GM 4.3L	6-14
COWL ELECTRICAL	6-30
DISTRIBUTOR ASSEMBLY	
GM 4.3L GASOLINE AND LPG	6-13
ELECTRICAL SYSTEM	
RIGHT HAND CHASSIS	6-4
ELECTRONIC CONTROL LEVERS	
MINI-LEVER MODULE (FOUR FUNCTION)	6-32
MINI-LEVER MODULES (THREE FUNCTION)	6-34
ELECTRONIC CONTROL MODULE AND SENSORS	
CUMMINS QSB 3.3L DIESEL	6-18
ENGINE ELECTRICAL SYSTEM	
GM 4.3L GASOLINE AND LPG	6-8
ENGINE SAFETY ELECTRICAL	
CUMMINS QSB 3.3L DIESEL	6-26
GM 4.3L (GS AND LPS)	6-10
IMPACT SENSOR	6-46
INSTRUMENT CLUSTER	6-29
LOAD WEIGH ELECTRICAL	6-40
MAST ELECTRICAL	6-44
POWER DISTRIBUTION MODULE	6-28
REMOTE KEY SWITCH	6-6
SEALED ALTERNATOR AND MOUNTING	
CUMMINS QSB 3.3L DIESEL	6-20
GM 4.3L, GASOLINE AND LPG	6-16
STARTER AND MOUNT	
CUMMINS QSB 3.3L DIESEL	6-24
STARTER MOTOR	
CUMMINS QSB 3.3L DIESEL	6-21
TRANSMISSION ELECTRICAL SYSTEM	6-42
WIRE HARNESS	
ALTERNATOR - CUMMINS QSB 3.3L DIESEL	6-74
COWL WITH FORWARD/REVERSE LEVER	6-90
COWL WITH FORWARD/REVERSE LEVER - WITH HYDRAULIC PUMP SOLENOID	6-94
COWL WITH MONOTROL PEDAL	6-86
ELECTRONIC CONTROL VALVE - THREE FUNCTION	6-98
ELECTRONIC CONTROL VALVE - FOUR FUNCTION	6-100
ENGINE - CUMMINS QSB 3.3L DIESEL	6-64
ENGINE - GM 4.3L GASOLINE	6-66
ENGINE - GM 4.3L LPG	6-70
LEFT HAND CHASSIS - GM 4.3L, GASOLINE	6-60
LEFT HAND CHASSIS - GM 4.3L LPG	6-62
LIGHTS - WITH OVERHEAD GUARD	6-102
RIGHT HAND CHASSIS - GM 4.3L GASOLINE AND LPG	6-48
RIGHT HAND CHASSIS - CUMMINS QSB 3.3L	6-54
SEALED ALTERNATOR - GM 4.3L	6-76
SEALED ALTERNATOR - CUMMINS QSB 3.3L	6-78

©2008 Yale Materials Handling Corporation

SECTION 6
ELECTRICAL SYSTEM

DESCRIPTION	PAGE
TRANSMISSION - SINGLE SPEED	6-82
TRANSMISSION - DUAL SPEED	6-84
WORK, REAR DRIVE, AND BRAKE/TAIL LIGHTS	
WITH CAB	6-36
WITH OVERHEAD GUARD	6-38

©2008 Yale Materials Handling Corporation

NOTES

©2008 Yale Materials Handling Corporation

ELECTRICAL SYSTEM (FIGURE 6-1)
RIGHT HAND CHASSIS

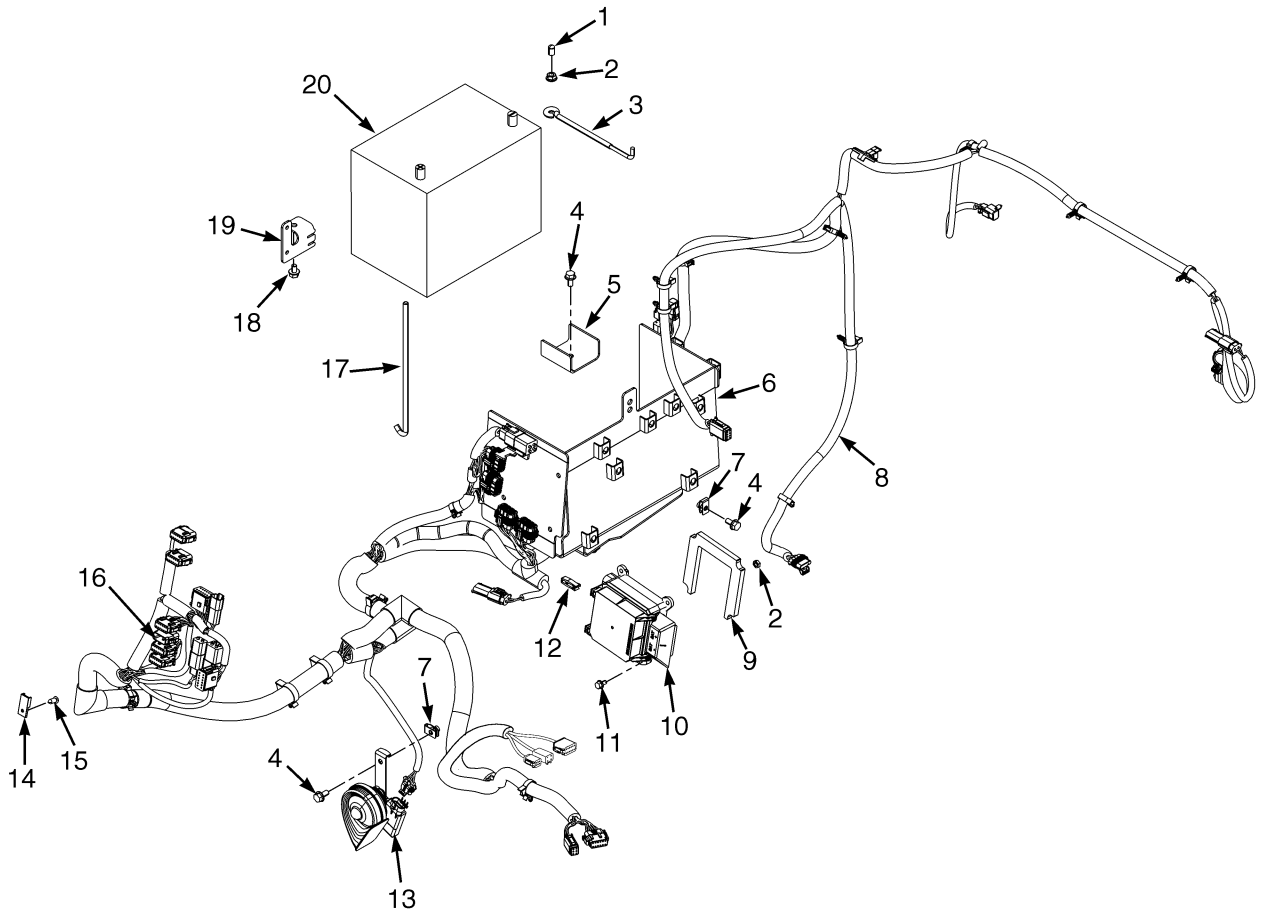

BP080484

©2008 Yale Materials Handling Corporation

ELECTRICAL SYSTEM
RIGHT HAND CHASSIS

KEY:
A: GM 4.3L
B: Cummins QSB 3.3L Diesel

ITEM	PART NO.	DESCRIPTION	QTY A	QTY B
1	580041768	Cap	1	1
2	580027573	Nut (Flange)	3	3
3	580074110	Link (Battery Hold Down)	1	1
4	580047714	Capscrew	7	4
5	580073755	Bracket	1	1
6	580077590	Battery Tray	1	1
7	580026621	Nut	7	4
8	580090227	Wire Harness (Gasoline and LPG) (☞P19741 [Page 6-54], ☞P19740 [Page 6-48])	1	..
8	580090786	Wire Harness (Diesel) (☞P19741 [Page 6-54])	..	1
9	580056730	Seal	1	1
10	580074261	Module (☞P19725 [Page 6-28])	1	1
11	580039900	Capscrew	4	..
11	580039438	Capscrew	..	3
12	580023854	Fuse Puller	1	1
13	580068957	Horn	1	1
14	580026812	Clip	4	4
15	580056613	Fastener	6	6
16	580060014	Connector	1	..
17	580046263	Link (Battery Hold Down)	1	1
18	580037180	Capscrew	1	1
19	580066219	Bracket	1	1
20	520052851	Start Battery Wet	1	..
20	580076313	Start Battery Wet (Optional)	1	..
20	580013937	Start Battery Wet	..	1
20	580076315	Start Battery Wet (Optional)	..	1

©2008 Yale Materials Handling Corporation

REMOTE KEY SWITCH (FIGURE 6-2)

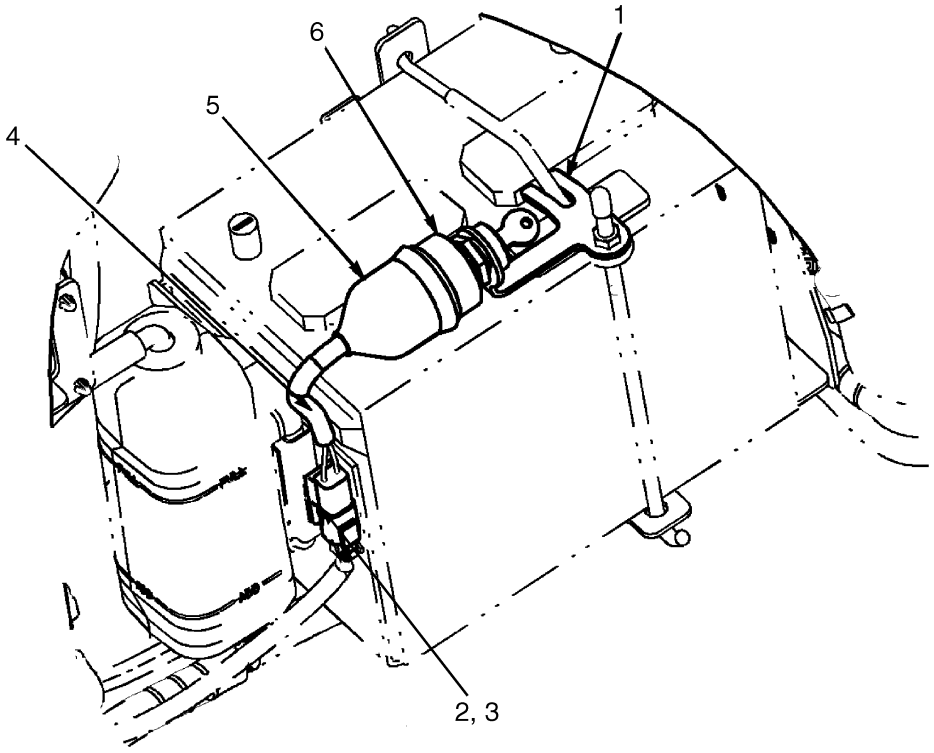

BP080556

ITEM	PART NO.	DESCRIPTION	QTY
1	580056487	Bracket	1
2	580026812	Clip	1
3	580056613	Fastener	1
4	580054477	Wire Harness (Remote Keyswitch)	1
4	580022893	Connector	1
4	505968540	Connector	1
4	505968514	Terminal (Pin)	2
4	580034540	Connector Body	2
5	520045009	Boot	1
6	580054478	Ignition Switch	1
6	500863106	Key Set	1

©2008 Yale Materials Handling Corporation

NOTES

©2008 Yale Materials Handling Corporation

ENGINE ELECTRICAL SYSTEM (FIGURE 6-3)

GM 4.3L GASOLINE AND LPG

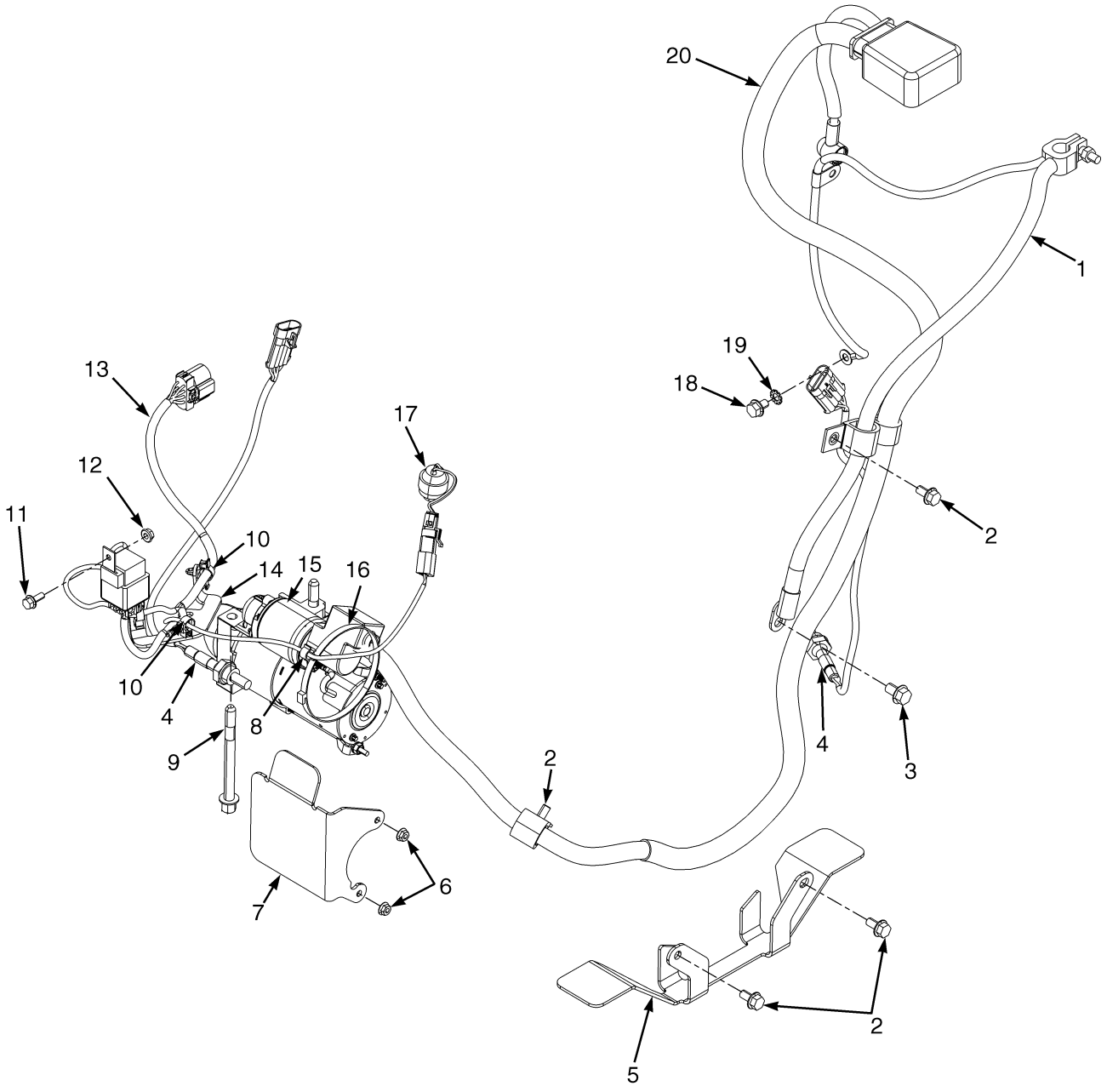

©2008 Yale Materials Handling Corporation

ENGINE ELECTRICAL SYSTEM
GM 4.3L GASOLINE AND LPG

KEY:
A: Gasoline
B: LPG

ITEM	PART NO.	DESCRIPTION	QTY A	QTY B
1	580077530	Battery Cable (Negative) (☞P19718 [Page 6-14])	1	1
2	580047714	Capscrew	4	4
3	580072047	Screw	1	1
4	580048273	Oxygen Sensor (With Wire Harness)	2	2
5	580072475	Bracket	1	1
6	580072127	Nut	2	2
7	580074788	Bracket	1	1
8	580049559	Clamp (Swivel)	1	2
9	580087935	Bolt	2	2
10	580025560	Clip	2	..
11	580049011	Capscrew	1	1
12	580047919	Nut	1	1
13	580064367	Wire Harness (LH Chassis) (☞P19743 [Page 6-60])	1	..
13	580064368	Wire Harness (LH Chassis) (☞P19742 [Page 6-62])	..	1
14	580032023	Bracket	1	1
15	580074751	Starter	1	1
16	580041557	Clamp	1	1
17	580037160	Sensor (Air Flow Restriction)	1	1
18	580037180	Capscrew	1	1
19	940600908	Washer	2	2
20	580077531	Battery Cable (Positive) (☞P19718 [Page 6-14])	1	1
	a 937100904	Nut	1	1
	a 580027573	Nut (Flange)	1	1

FOOTNOTES:
a Not Illustrated

©2008 Yale Materials Handling Corporation

ENGINE SAFETY ELECTRICAL (FIGURE 6-4)

GM 4.3L (GS AND LPS)

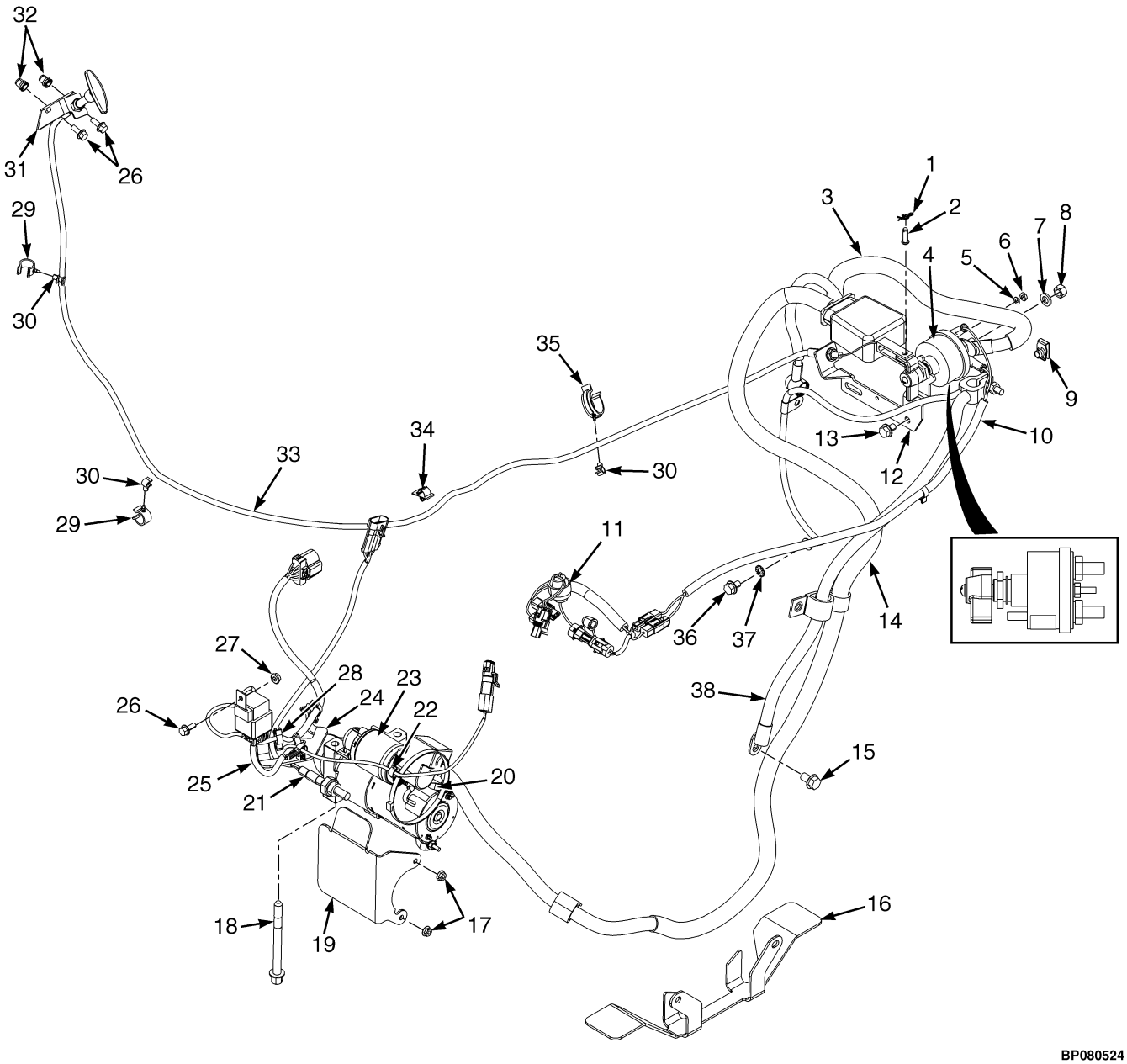

©2008 Yale Materials Handling Corporation

ENGINE SAFETY ELECTRICAL
GM 4.3L (GS AND LPS)

KEY:
A: Gasoline
B: LPS

ITEM	PART NO.	DESCRIPTION	QTY A	QTY B
1	580056840	Lockring	1	1
2	900011212	Pin	1	1
3	580052989	Battery Cable	1	1
3	580063616	Terminal	1	1
3	505976537	Boot	1	1
3	580040374	Boot	1	1
4	580054023	Switch	1	1
5	015035700	Lockwasher	2	2
6	014939300	Nut	2	2
7	015026400	Lockwasher	2	2
8	014996900	Nut	2	2
9	580039438	Capscrew	2	2
10	580078489	Wire Harness (Sealed Alternator) (☞P19723 [Page 6-16])	1	1
11	580037160	Sensor (Air Flow Restriction)	1	1
12	580076731	Bracket	1	1
12	580077305	Bracket	1	1
13	580047714	Capscrew	4	4
14	580077531	Battery Cable (Positive) (☞P19718 [Page 6-14])	1	1
15	580072047	Screw	1	1
16	580072475	Bracket	1	1
17	580072127	Nut	2	2
18	580087935	Bolt	2	2
19	580074788	Bracket	1	1
20	580041557	Clamp	1	1
21	580048273	Oxygen Sensor (With Wire Harness)	1	1
22	580049559	Clamp (Swivel)	1	2
23	580074751	Starter	1	1
24	580032023	Bracket	1	..
25	580064367	Wire Harness (LH Chassis) (☞P19743 [Page 6-60])	1	..
25	580064368	Wire Harness (LH Chassis) (☞P19742 [Page 6-62])	..	1
26	580049011	Capscrew	3	3
27	580047919	Nut	1	1
28	580025560	Clip	2	..
29	580042794	Clamp (Swivel)	2	2
30	580042331	Clamp (Swivel)	3	3
31	580052982	Bracket	1	1
32	580041704	Insert	2	2
33	580067028	Cable Assy	1	1
34	580052685	Clip	1	1
35	580049555	Clamp (Swivel)	1	1
36	580037180	Capscrew	1	1
37	940600908	Washer	1	1
38	580077530	Battery Cable (Negative) (☞P19718 [Page 6-14])	1	1
	a 580027573	Nut (Flange)	1	1
	a 449022016	Lockwasher	1	1

©2008 Yale Materials Handling Corporation

ENGINE SAFETY ELECTRICAL
GM 4.3L (GS AND LPS)

KEY:
A: Gasoline
B: LPS

ITEM	PART NO.	DESCRIPTION	QTY A	QTY B
	a 937100904	Nut	1	1

FOOTNOTES:
a Not Illustrated

©2008 Yale Materials Handling Corporation

DISTRIBUTOR ASSEMBLY (FIGURE 6-5)
GM 4.3L GASOLINE AND LPG

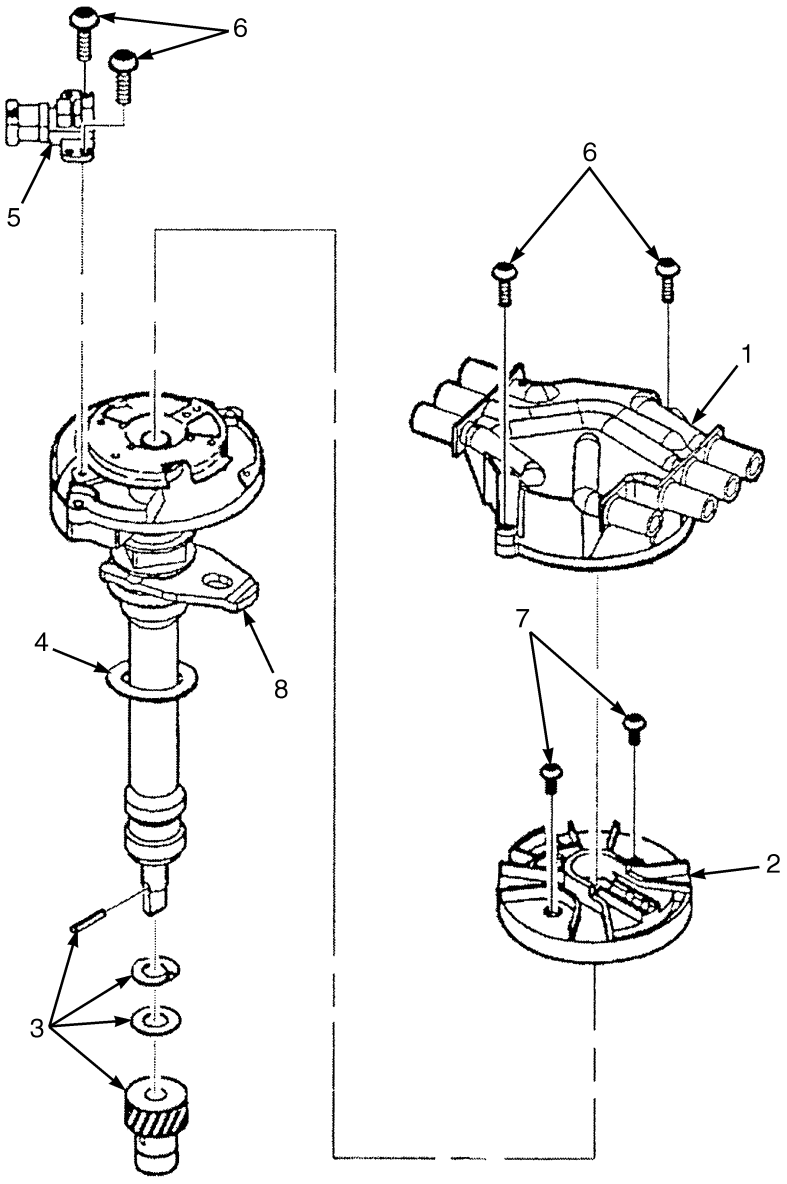

BP080184

ITEM	PART NO.	DESCRIPTION	QTY
	580048919	Distributor	1
1	580051808	Distributor Cap	1
2	580051809	Rotor	1
3	580048979	Kit-Gear	1
4	900006248	Gasket	1
5	580048980	Sensor (Cam)	1
6	580048981	Screw	4
7	580048982	Screw	2
8	580012858	Clamp	1

©2008 Yale Materials Handling Corporation

BATTERY CABLES (FIGURE 6-6)

GM 4.3L

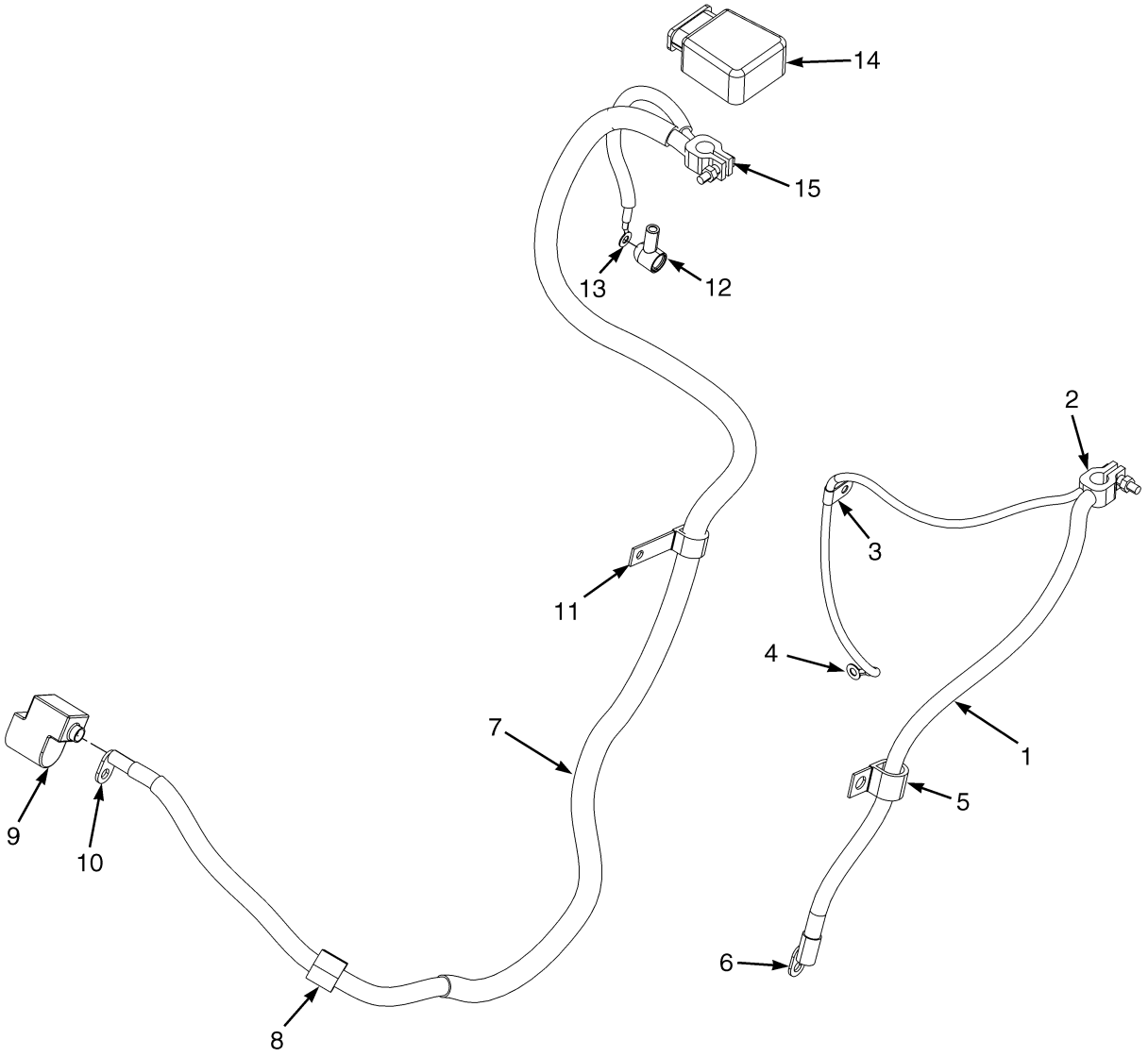

©2008 Yale Materials Handling Corporation

BATTERY CABLES

GM 4.3L

ITEM	PART NO.	DESCRIPTION	QTY
1	580077530	Battery Cable (Negative)	1
2	580063618	Terminal	1
3	580050293	E-Ring	1
4	580006553	E-Ring	1
5	580002460	Clamp	1
6	580063617	Terminal	1
7	580053960	Battery Cable (Positive)	1
7	580077531	Battery Cable (Positive) (GS/LPS)	1
8	580002460	Clamp	1
9	580059293	Boot	1
10	580078334	Terminal	1
11	580015673	Clamp	1
12	580052019	Boot	1
13	580006553	E-Ring	1
14	580040374	Boot	1
14	505976537	Boot (GS/LPG)	1
15	580063616	Terminal	1
15	580074877	Terminal (GS/LPG)	1

©2008 Yale Materials Handling Corporation

SEALED ALTERNATOR AND MOUNTING (FIGURE 6-7)

GM 4.3L, GASOLINE AND LPG

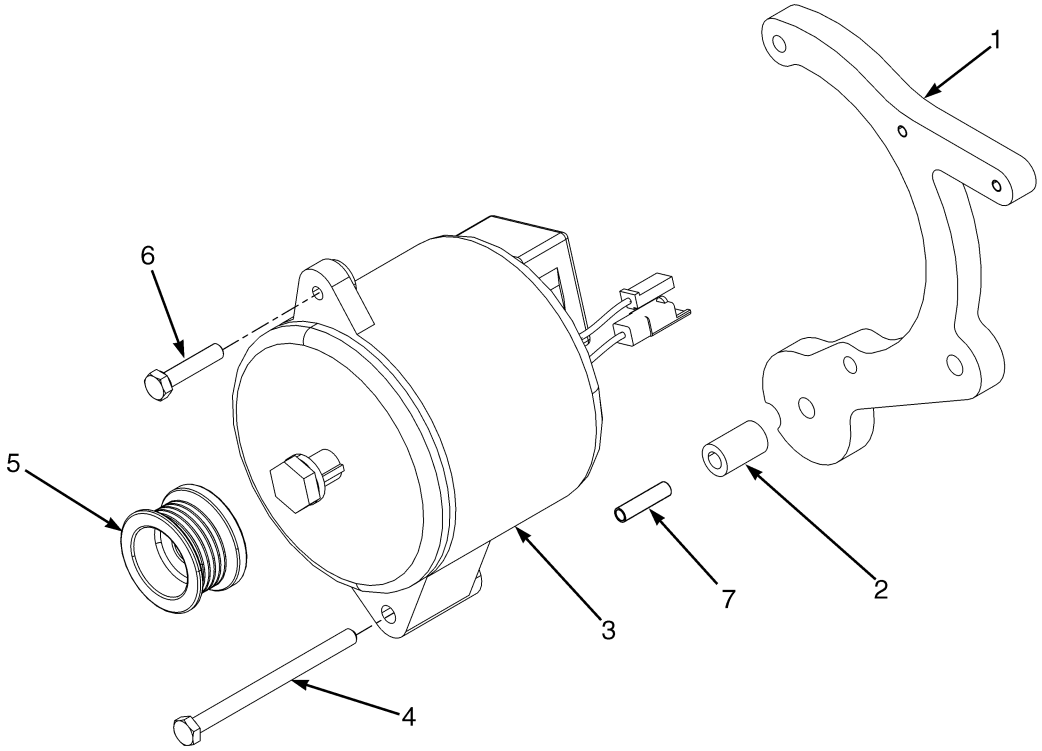

BP080487

ITEM	PART NO.	DESCRIPTION	QTY
1	580073556	Bracket	1
2	580047183	Spacer	1
3	900017264	Alternator (Sealed)	1
4	580004505	Capscrew	1
5	580039016	Pulley	1
6	062307300	Capscrew	1
7	580040737	Spacer	1

©2008 Yale Materials Handling Corporation

NOTES

©2008 Yale Materials Handling Corporation

ELECTRONIC CONTROL MODULE AND SENSORS (FIGURE 6-8)

CUMMINS QSB 3.3L DIESEL

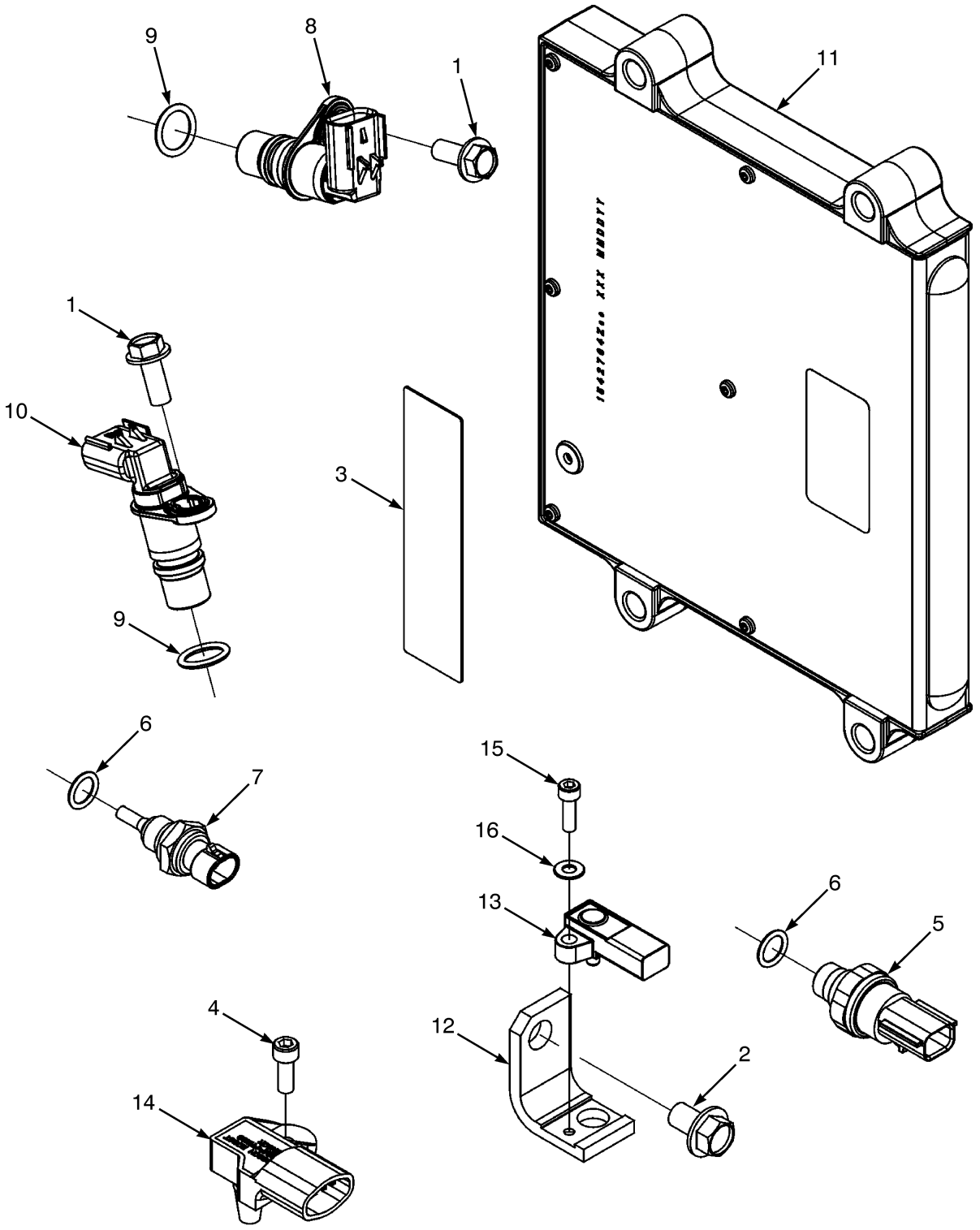

©2008 Yale Materials Handling Corporation

ELECTRONIC CONTROL MODULE AND SENSORS

CUMMINS QSB 3.3L DIESEL

ITEM	PART NO.	DESCRIPTION	QTY
	580087913	Engine Assy-Diesel	1
1	580091125	Capscrew	2
2	580091126	Capscrew	1
3	580063065	Data Plate	1
4	580091127	Capscrew	1
5	580058690	Sensor (Air Intake)	1
6	580086769	O-Ring	2
7	580082622	Temperature Sender (Temperature)	1
8	580092021	Throttle Position Sensor (Cam Position)	1
9	580094645	O-Ring	2
10	580092022	Throttle Position Sensor (Crank Position)	1
11	580091117	Electronic Control Module	1
12	580091124	Support	1
13	580091132	Sensor (Ambient Air Pressure)	1
14	580091133	Sensor (Intake ManifoldTemperature)	1
15	580091134	Capscrew	1
16	580091135	Washer	1

©2008 Yale Materials Handling Corporation

SEALED ALTERNATOR AND MOUNTING (FIGURE 6-9)
CUMMINS QSB 3.3L DIESEL

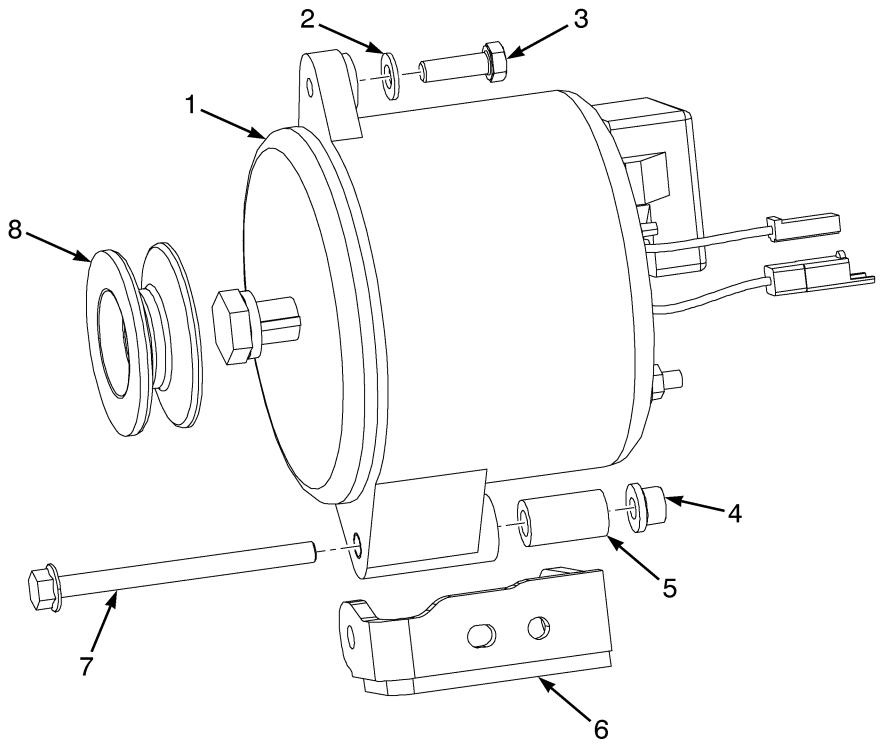

BP080748

ITEM	PART NO.	DESCRIPTION	QTY
1	900017264	Alternator (Sealed)	1
2	016103700	Washer	1
3	062143700	Capscrew	1
4	580042963	Locknut	1
5	580088013	Spacer	1
6	580087977	Bracket Wldmt	1
7	580068208	Bolt	1
	504232260	Thread Sealant	AR

©2008 Yale Materials Handling Corporation

STARTER MOTOR (FIGURE 6-10)
CUMMINS QSB 3.3L DIESEL

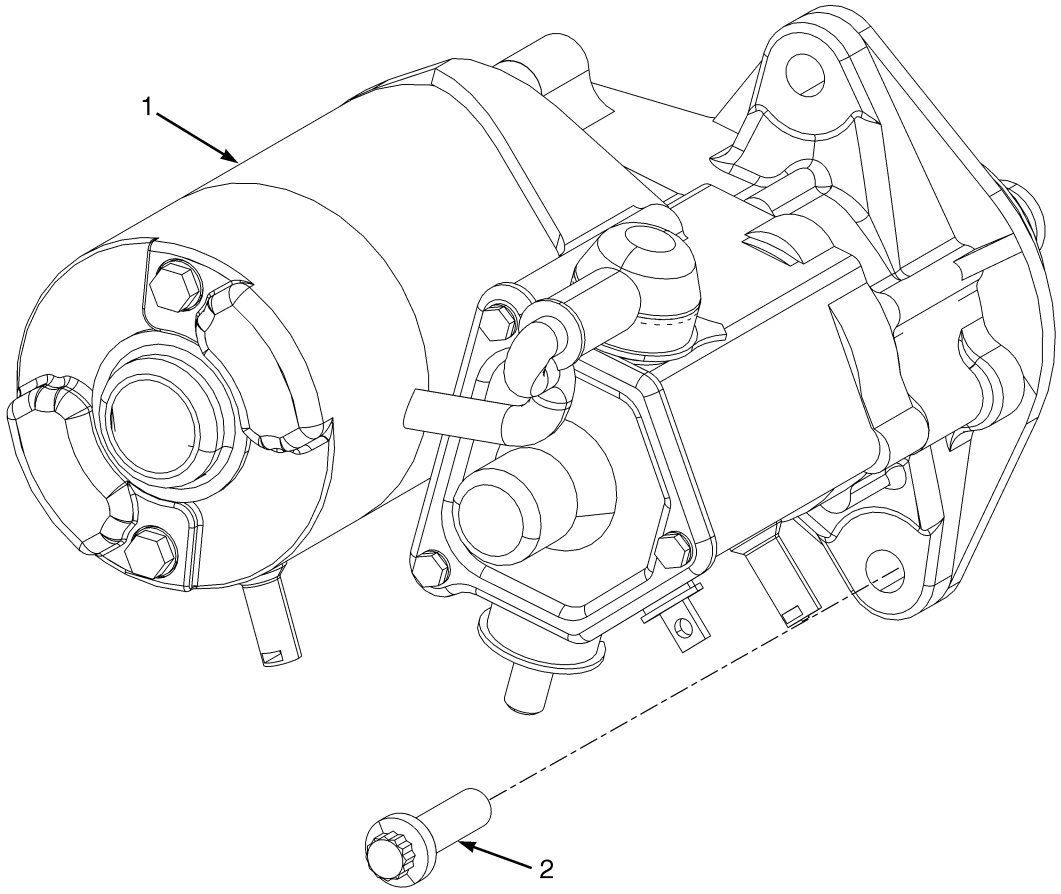

BP090305

ITEM	PART NO.	DESCRIPTION	QTY
	580087913	Engine Assy-Diesel	1
1	580091290	Motor (Starter)	1
2	580091289	Capscrew	3

©2008 Yale Materials Handling Corporation

BATTERY CABLES (FIGURE 6-11)
CUMMINS QSB 3.3L DIESEL

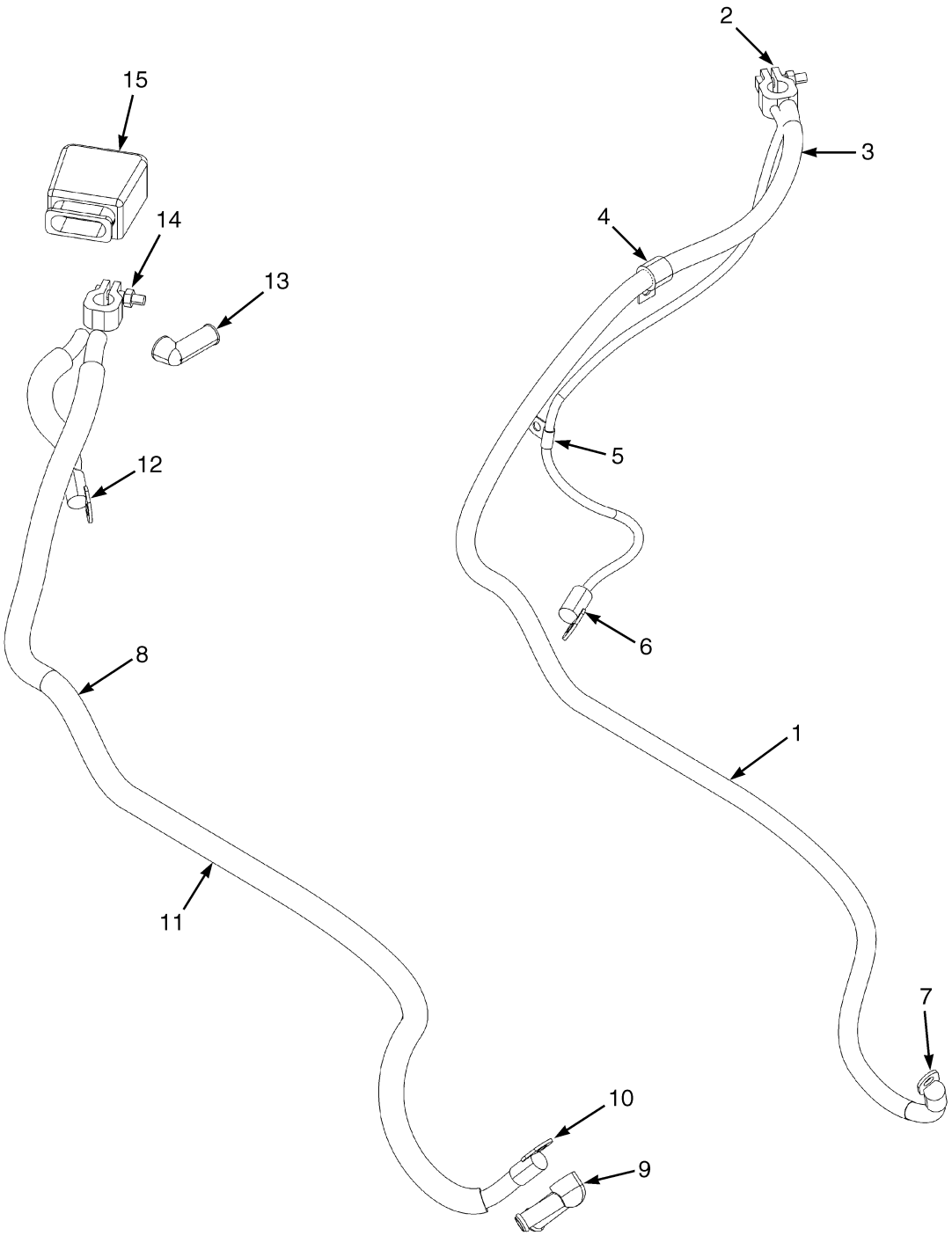

BP080500

©2008 Yale Materials Handling Corporation

BATTERY CABLES
CUMMINS QSB 3.3L DIESEL

KEY:
A: Positive
B: Negative

ITEM	PART NO.	DESCRIPTION	QTY A	QTY B
1	580084814	Battery Cable (Negative)	..	1
2	580063618	Terminal	..	1
3	580073520	Battery Cable	..	AR
4	505970529	Clamp	..	1
5	580050293	E-Ring	..	1
6	580006553	E-Ring	..	1
7	580063617	Terminal	..	1
8	580084813	Battery Cable (Positive)	1	..
8	**a** 580084815	Battery Cable (Positive)	1	..
9	580083152	Boot	1	..
10	580063617	Terminal	1	..
11	580073519	Battery Cable (Red)	AR	..
12	580075790	Terminal	1	..
13	580052019	Boot	1	..
13	**a** 505976537	Boot	1	..
14	580063616	Terminal	1	..
15	580040374	Boot	1	..

FOOTNOTES:
a Safety Truck Only

©2008 Yale Materials Handling Corporation

STARTER AND MOUNT (FIGURE 6-12)
CUMMINS QSB 3.3L DIESEL

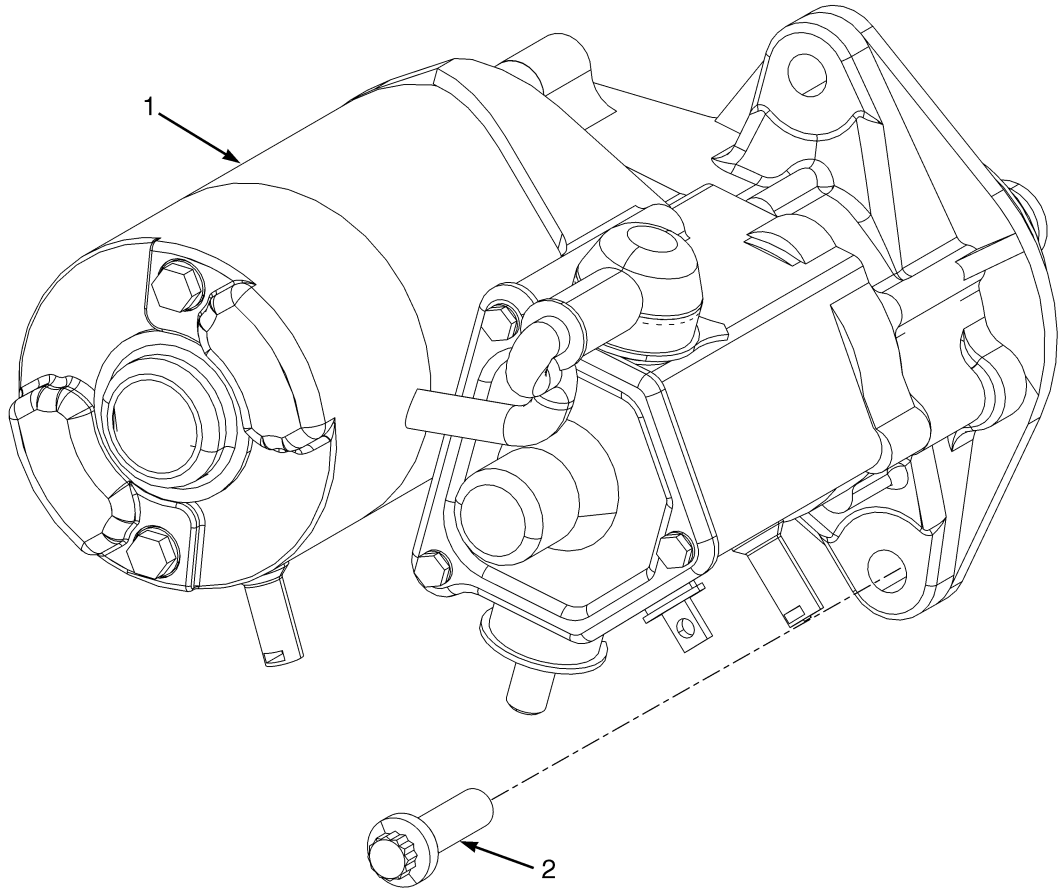

BP090305

ITEM	PART NO.	DESCRIPTION	QTY
	580087913	Engine Assy-Diesel	1
1	580091290	Motor (Starter)	1
2	580091289	Capscrew	3

©2008 Yale Materials Handling Corporation

NOTES

©2008 Yale Materials Handling Corporation

ENGINE SAFETY ELECTRICAL (FIGURE 6-13)

CUMMINS QSB 3.3L DIESEL

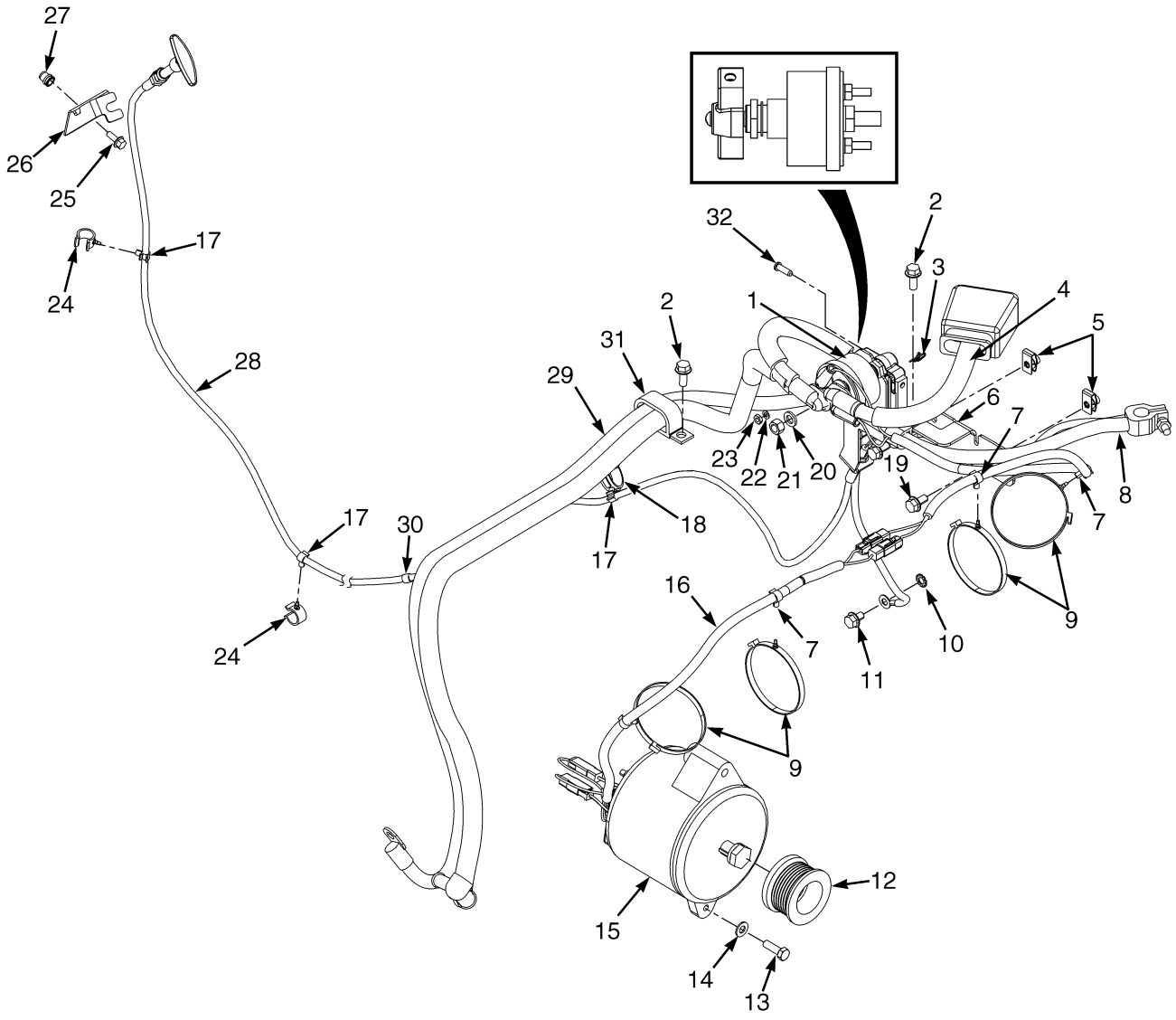

©2008 Yale Materials Handling Corporation

ENGINE SAFETY ELECTRICAL
CUMMINS QSB 3.3L DIESEL

ITEM	PART NO.	DESCRIPTION	QTY
1	580054023	Switch	1
2	580049231	Capscrew	2
3	580056840	Lockring	1
4	580087490	Cable (Disconnect Switch)	1
5	580051800	Nut	2
6	580084823	Bracket	1
7	580049559	Clamp (Swivel)	4
8	580084814	Battery Cable (Negative) (☞P19720 [Page 6-22])	1
9	580041557	Clamp	4
10	940600908	Washer	1
11	580037180	Capscrew	1
12	580087948	Pulley (Alternator)	1
13	062143700	Capscrew	1
14	016103700	Washer	1
15	900017264	Alternator (Sealed)	1
16	580086076	Wire Harness (Alternator) (☞P19747 [Page 6-78])	1
17	580042331	Clamp (Swivel)	3
18	580049555	Clamp (Swivel)	1
19	580039438	Capscrew	2
20	015026400	Lockwasher	2
21	014996900	Nut	2
22	015035700	Lockwasher	2
23	014939300	Nut	2
24	580042794	Clamp (Swivel)	2
25	580049011	Capscrew	2
26	580052982	Bracket	1
27	580041704	Insert	2
28	580087490	Cable (Disconnect Switch)	1
29	580084815	Battery Cable (Positive) (☞P19720 [Page 6-22])	1
30	580052685	Clip	1
31	900003207	Clamp	1
32	900011212	Pin	1

©2008 Yale Materials Handling Corporation

POWER DISTRIBUTION MODULE (FIGURE 6-14)

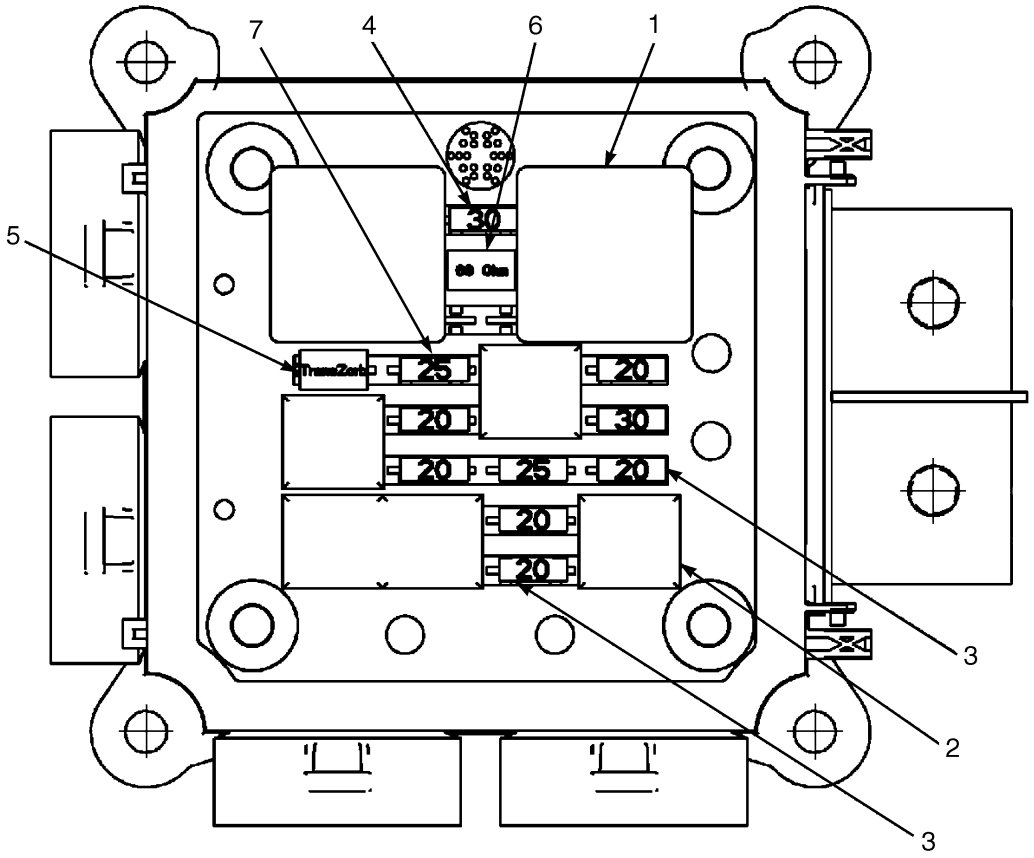

BP080485

ITEM	PART NO.	DESCRIPTION	QTY
	580074261	Module	1
1	580023052	Relay (30 Amp)	2
2	580036599	Relay (20 Amp)	5
3	580036575	Fuse (20 Amp)	6
4	580036576	Fuse (30 Amp)	2
5	580036751	Semiconductor	1
6	580036752	Resistor (68 Ohm, 5 Watt)	1
7	580043031	Fuse (25 Amp)	2
	a 580039900	Capscrew	4
	a 580027573	Nut (Flange)	2
	a 580023854	Fuse Puller	1
	a 580056730	Seal	1

FOOTNOTES:

a Not Illustrated

©2008 Yale Materials Handling Corporation

INSTRUMENT CLUSTER (FIGURE 6-15)

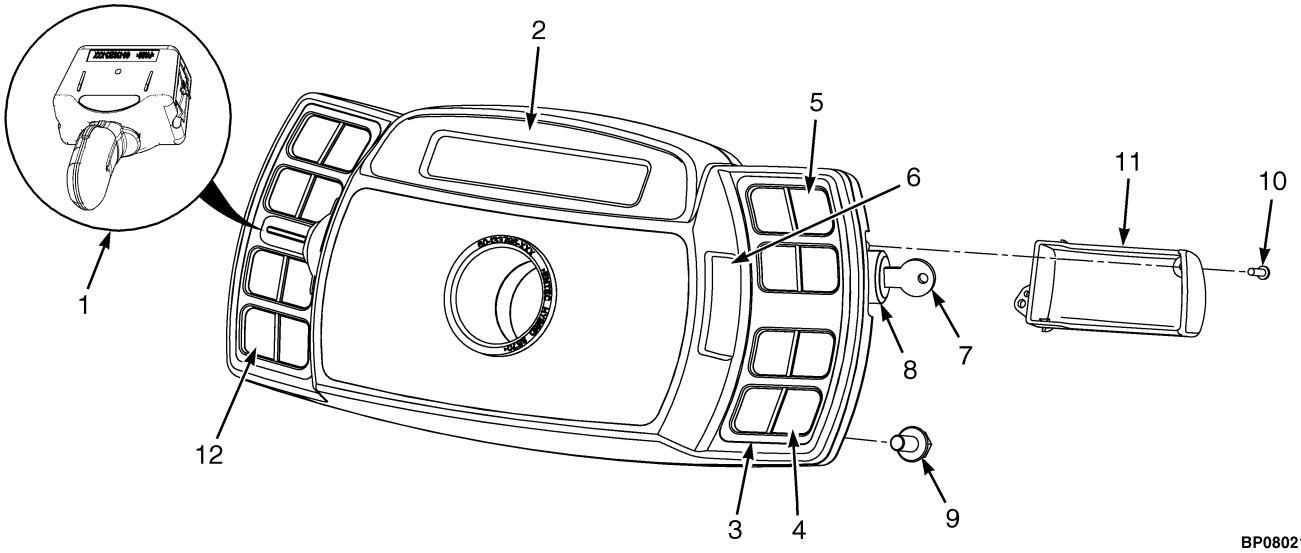

ITEM	PART NO.	DESCRIPTION	QTY
1	580087546	Lever (Detent Forward and Reverse)	1
2	580060625	Display (With Overhead Guard)	1
2	580060626	Display (With Cab)	1
3	580047049	Bezel (Display Cluster)	2
4	**a** 580047046	Label (RH Display)	1
5	580047048	Label (RH Display, All Options)	1
6	580039846	Cover (Display Lever)	1
7	580047691	Key Set	1
8	580037904	Ignition Switch (Without Keys)	1
9	580047714	Capscrew	4
10	580047200	Screw	5
11	580039847	Cover (Keyswitch)	1
12	580050933	Label (Blank) (LH Display with Overhead Guard)	1
12	580047047	Label (LH Display with Cab)	1
	580087547	Lever (Not Illustrated)	1

FOOTNOTES:

a Remove Panels From Overlay as Required For Truck Configuration.

©2008 Yale Materials Handling Corporation

COWL ELECTRICAL (FIGURE 6-16)

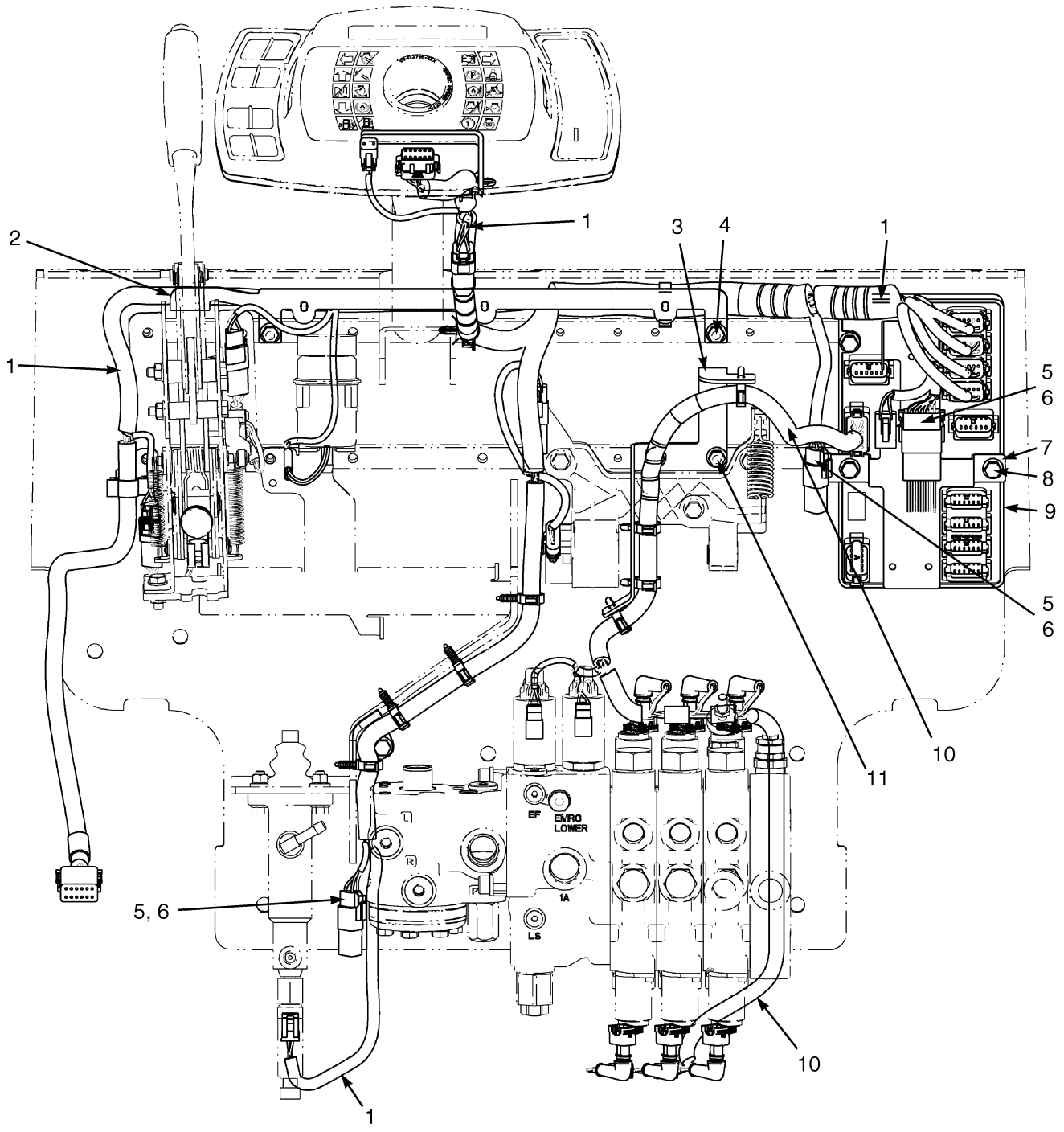

©2008 Yale Materials Handling Corporation

COWL ELECTRICAL

ITEM	PART NO.	DESCRIPTION	QTY
1	**cg** 580082486	Wire Harness	1
1	580082487	Wire Harness	1
1	**a** 580089451	Wire Harness (Manual)	1
1	**h** 580089452	Wire Harness (Manual)	1
2	580062311	Bracket	1
3	580038826	Bracket	1
4	580037180	Capscrew	2
5	580026812	Clip	3
6	580056613	Fastener	3
7	580056614	Bracket	1
8	580030968	Capscrew	3
9	**h** 580049608	Vehicle System Manager (VSM) -8525419	1
9	**f** 580049609	Vehicle System Manager (VSM) -8525420	1
9	**e** 580049610	Vehicle System Manager (VSM) -8525421	1
10	**b** 580038751	Wire Harness (Electronic Control Valve) (☞P19754 [Page 6-100])	1
10	**d** 580040090	Wire Harness (Electronic Control Valve) (☞P19753 [Page 6-98])	1
11	580037180	Capscrew	4

FOOTNOTES:

a Diesel
b Four Function
c Gasoline and LPG
d Three Function
e With Electronic Hydraulics and Cab
f With Electronic Hydraulics and Overhead Guard
g With Return to Set Tilt
h Without Electronic Hydraulics

©2008 Yale Materials Handling Corporation

ELECTRONIC CONTROL LEVERS (FIGURE 6-17)

MINI-LEVER MODULE (FOUR FUNCTION)

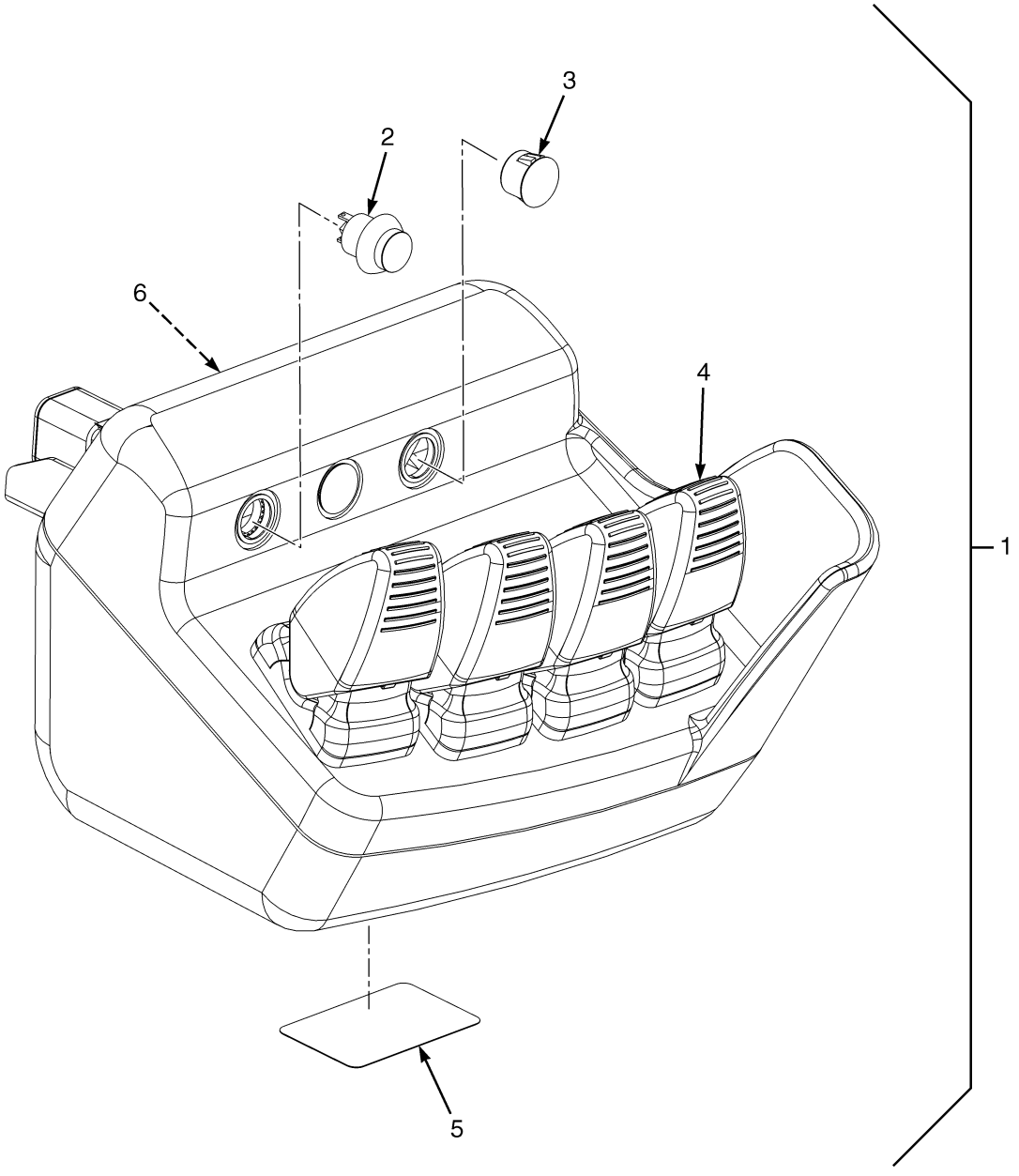

©2008 Yale Materials Handling Corporation

ELECTRONIC CONTROL LEVERS

MINI-LEVER MODULE (FOUR FUNCTION)

ITEM	PART NO.	DESCRIPTION	QTY
1	580089967	Mini-Lever (8544614)	1
	580090361	Kit-Mini-Lever (Non-Clamping)	4
	b 580061852	Kit-Plug (Interlock Switch Plug)	3
1	580089971	Mini-Lever (8544618) (With Clamping)	1
	580090361	Kit-Mini-Lever (Non-Clamping)	3
	580090362	Kit-Mini-Lever (Clamping)	1
	c 580061850	Kit-Switch (Interlock Switch)	1
	b 580061852	Kit-Plug (Interlock Switch Plug)	1
1	580089976	Mini-Lever (8544620) (With Return to Set Tilt)	1
	580090361	Kit-Mini-Lever (Non-Clamping)	3
	a 580090362	Kit-Mini-Lever (Clamping)	1
	c 580061850	Kit-Switch (Interlock Switch)	1
	b 580061852	Kit-Plug (Interlock Switch Plug)	2
1	580089978	Mini-Lever (8544622) (Clamping and Return to Set Tilt)	1
	580090361	Kit-Mini-Lever (Non-Clamping)	2
	c 580061850	Kit-Switch (Interlock Switch)	2
	b 580061852	Kit-Plug (Interlock Switch Plug)	1
	580090362	Kit-Mini-Lever (Clamping)	2
2	. . . . .	Momentary Switch	AR
3	. . . . .	Plug (Momentary Switch)	AR
4	. . . . .	Mini-Lever	AR
4	580081812	Handle (Mini-Lever)	1
5	. . . . .	Label	1
6	. . . . .	Control Labels (☞P19581 [Page 1-56])	1

FOOTNOTES:

a Kit Includes: 1 Interlock Mini-Lever (must be used in combination with a Momentary Interlock Switch), 1 Gasket, 4 Screws (parts are NSS)

b Kit Includes: 1 Momentary Switch Hole Plug, 1 Gasket (parts are NSS)

c Kit Includes: 1 Momentary Switch, 1 Lockwasher, 1 Gasket, 1 Nut (parts are NSS)

©2008 Yale Materials Handling Corporation

ELECTRONIC CONTROL LEVERS (FIGURE 6-18)
MINI-LEVER MODULES (THREE FUNCTION)

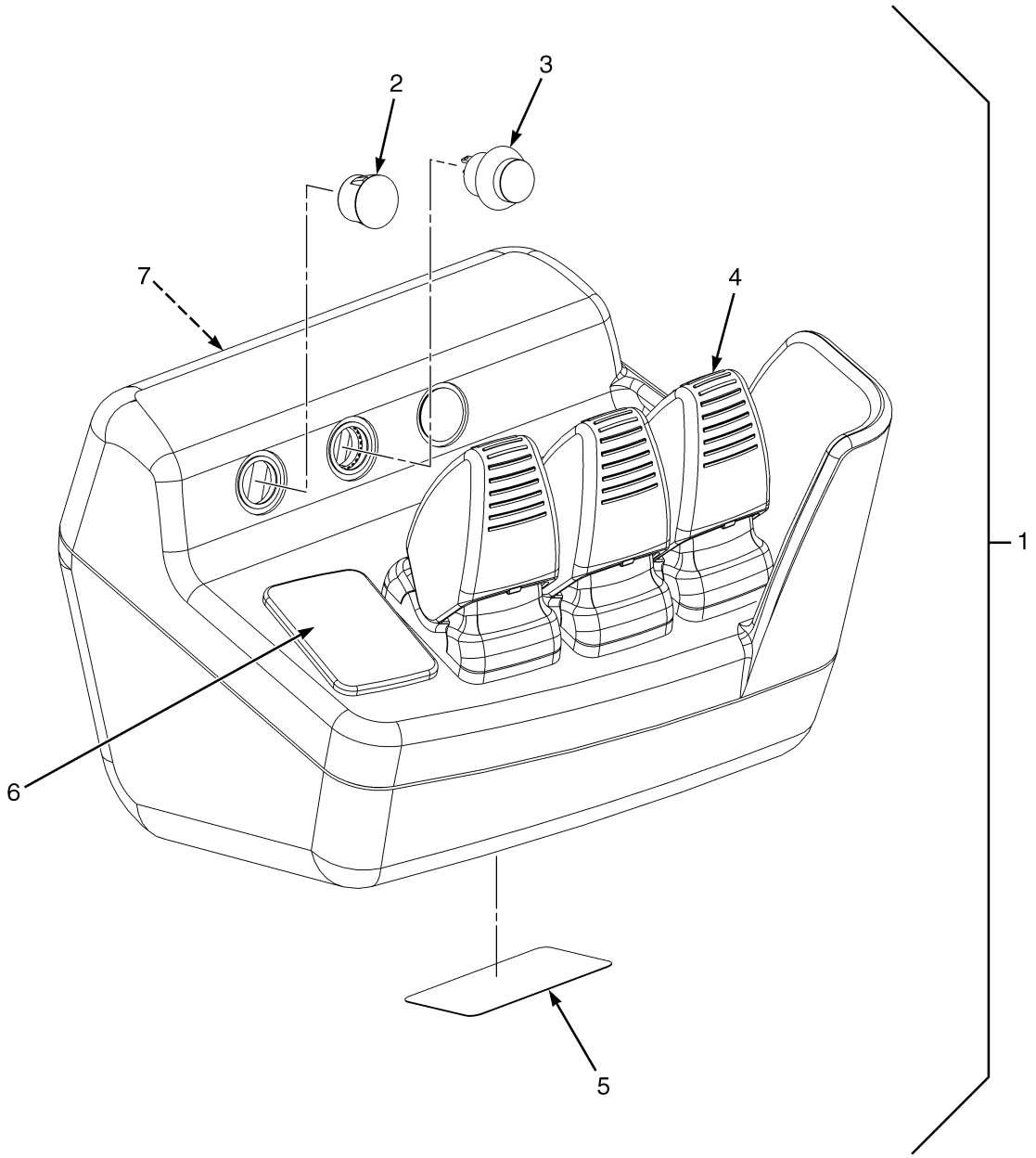

©2008 Yale Materials Handling Corporation

ELECTRONIC CONTROL LEVERS

MINI-LEVER MODULES (THREE FUNCTION)

ITEM	PART NO.	DESCRIPTION	QTY
1	580089966	Mini-Lever (8544613)	1
	580090361	Kit-Mini-Lever (Non-Clamping)	3
	b 580062910	Plug	1
	c 580061852	Kit-Plug (Interlock Switch Plug)	3
1	580089970	Mini-Lever (8544617) (With Clamping)	1
	a 580061852	Kit-Plug (Interlock Switch Plug)	1
	d 580061850	Kit-Switch (Interlock Switch)	1
	b 580062910	Plug	1
	c 580090361	Kit-Mini-Lever (Non-Clamping)	2
	580090362	Kit-Mini-Lever (Clamping)	1
1	580089972	Mini-Lever (8544619) (With Return To Set Tilt)	1
	a 580061852	Kit-Plug (Interlock Switch Plug)	2
	d 580061850	Kit-Switch (Interlock Switch)	1
	b 580062910	Plug	1
	c 580090361	Kit-Mini-Lever (Non-Clamping)	2
	580090362	Kit-Mini-Lever (Clamping)	1
1	580089977	Mini-Lever (8544621) (With Clamping and Return to set Tilt)	1
	d 580061850	Kit-Switch (Interlock Switch)	2
	b 580062910	Plug	2
	c 580061852	Kit-Plug (Interlock Switch Plug)	1
	580090361	Kit-Mini-Lever (Non-Clamping)	1
	580090362	Kit-Mini-Lever (Clamping)	2
2	. . . . .	Plug (Momentary Switch)	AR
3	. . . . .	Momentary Switch	AR
4	. . . . .	Mini-Lever	AR
4	580081812	Handle (Mini-Lever)	1
5	. . . . .	Label (Shows Production Part Number)	1
6	580062910	Plug (Mini-Lever)	1
7	. . . . .	Control Labels (☞P19581 [Page 1-56])	1

FOOTNOTES:

a Kit Includes: 1 Interlock Rocker (must be used in combination with a Momentary Interlock Switch), 1 Gasket, 4 Screws (parts are NSS)

b Kit Includes: 1 Mini-Lever Plug, 1 Gasket (parts are NSS)

c Kit Includes: 1 Momentary Interlock Switch Plug, 1 Gasket (parts are NSS)

d Kit Includes: 1 Momentary Switch, 1 Lockwasher, 1 Gasket, 1 Nut (parts are NSS)

©2008 Yale Materials Handling Corporation

WORK, REAR DRIVE, AND BRAKE/TAIL LIGHTS (FIGURE 6-19)
WITH CAB

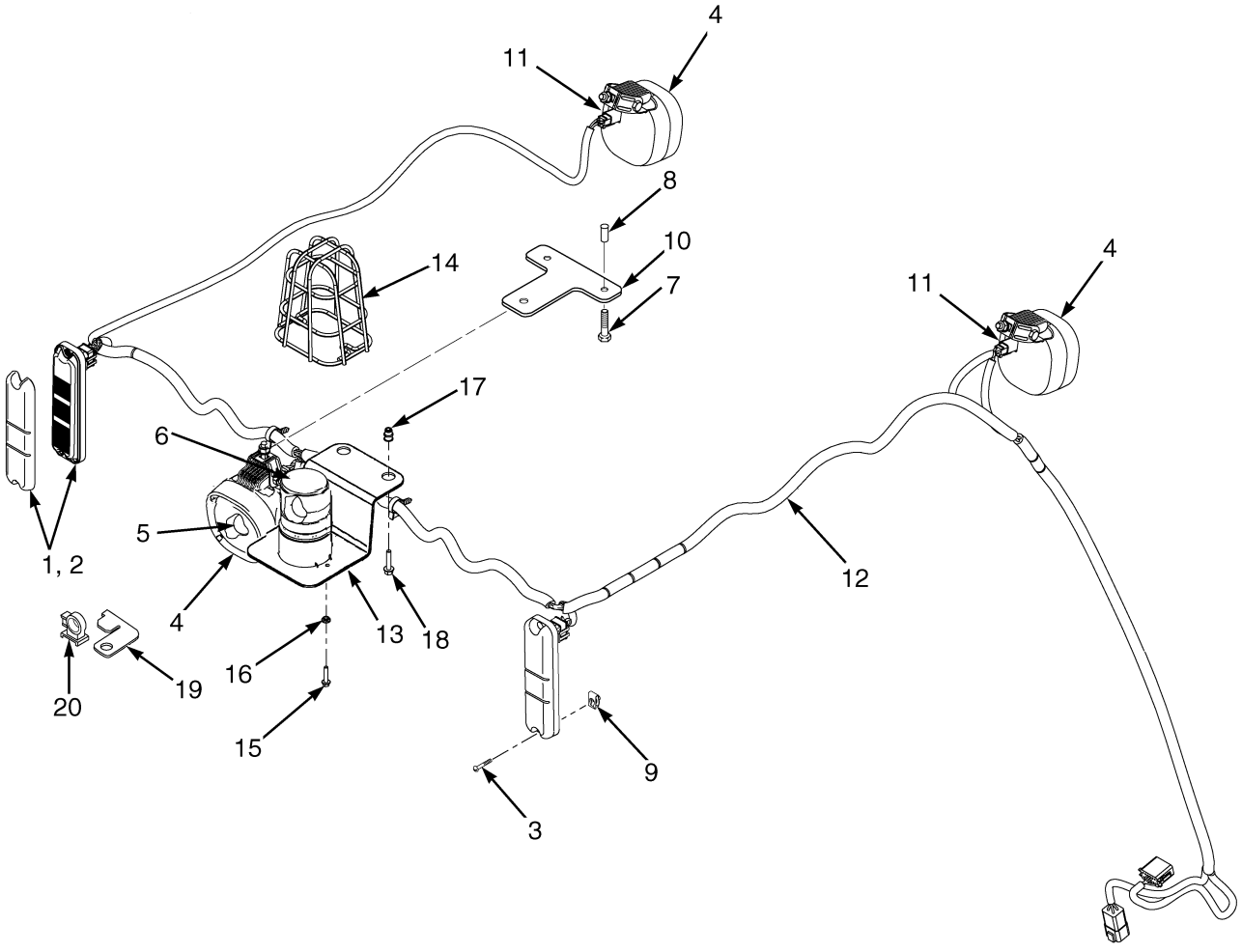

HP081649

©2008 Yale Materials Handling Corporation

WORK, REAR DRIVE, AND BRAKE/TAIL LIGHTS
WITH CAB

ITEM	PART NO.	DESCRIPTION	QTY
1	580037207	Brake/Backup Light (Stop,Turn,Tail, And Back-Up)	2
1	. . . . .	Tail Light Brackets	2
2	580037209	Reflector (Tail)	2
3	580051168	Screw	4
4	580082532	Work Light (Rear)	1
4	580082533	Work Light (RH Front)	1
4	580082534	Work Light (LH Front)	1
5	580082531	Bulb (Halogen)	1
6	580079615	Strobe Light	1
7	580058212	Capscrew	2
8	580041704	Insert	2
9	580040850	Nut	4
10	580048802	Bracket	1
11	580010571	Connector (End Cap)	2
12	580077088	Wire Harness (Cab)	1
13	580051159	Bracket Wldmt	1
14	504232297	Guard	1
15	580058314	Capscrew	2
16	580058188	Nut	2
17	580041704	Insert	2
18	580058212	Capscrew	2
19	580039278	Clip	1
20	580039251	Clip	1

©2008 Yale Materials Handling Corporation

WORK, REAR DRIVE, AND BRAKE/TAIL LIGHTS (FIGURE 6-20)
WITH OVERHEAD GUARD

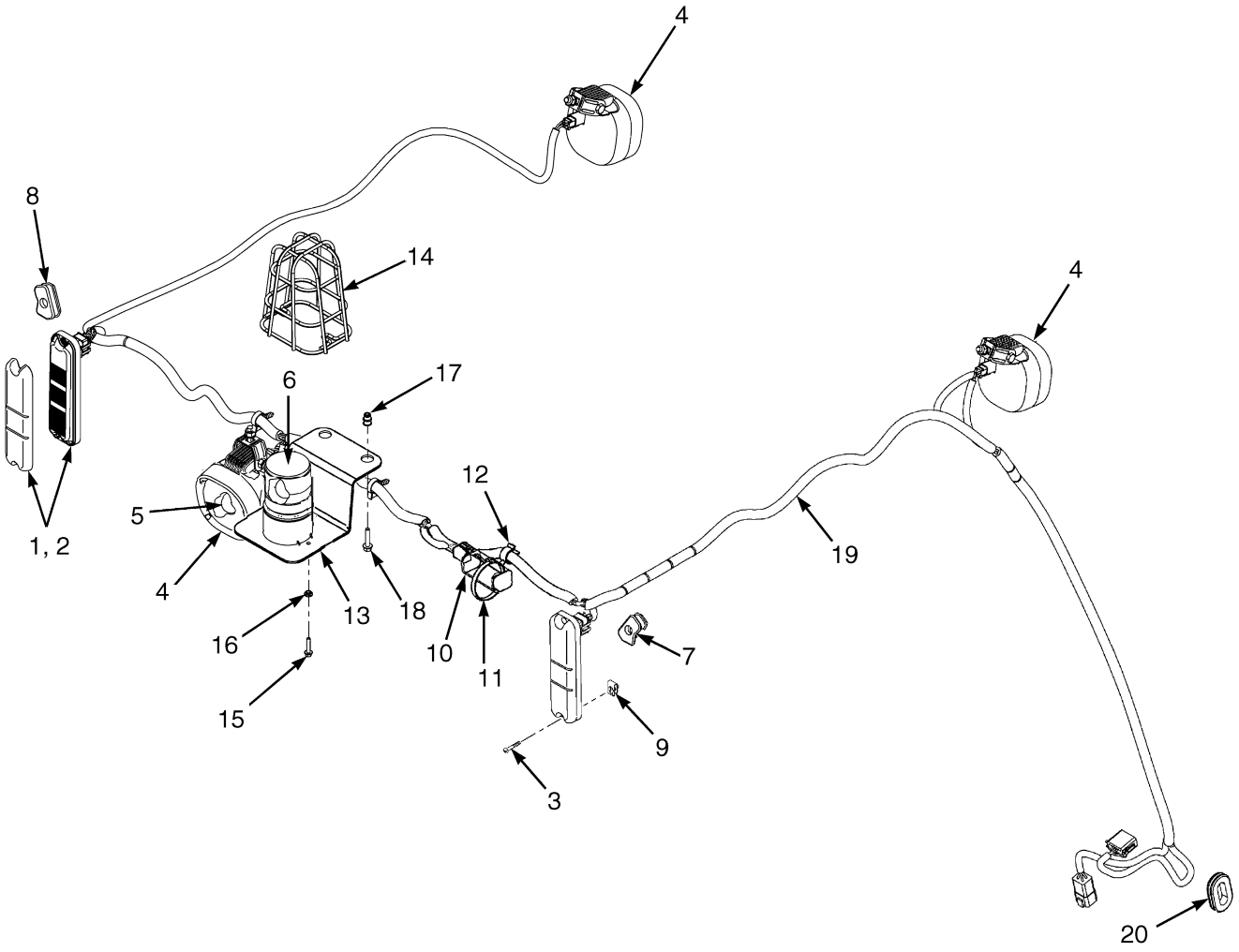

BP080495

©2008 Yale Materials Handling Corporation

WORK, REAR DRIVE, AND BRAKE/TAIL LIGHTS
WITH OVERHEAD GUARD

ITEM	PART NO.	DESCRIPTION	QTY
1	580037207	Brake/Backup Light (Stop,Turn,Tail, And Back-Up)	2
1	. . . . .	Tail Light Bracket	2
2	580037209	Reflector (Tail)	2
3	580051168	Screw	4
4	580082532	Work Light (Rear)	1
4	580082533	Work Light (RH Front)	1
4	580082534	Work Light (LH Front)	1
5	580082531	Bulb (Halogen)	1
6	580079615	Strobe Light	1
7	580049224	Grommet (RH Tail Light)	1
8	580049225	Grommet (LH Tail Light)	1
9	580040850	Nut	4
10	580079983	Wire Harness	1
11	580076302	Clamp	1
12	580064599	Clamp	1
13	580051159	Bracket Wldmt	1
14	504232297	Guard	1
15	580058314	Capscrew	2
16	580058188	Nut	2
17	580044859	Insert	2
18	580058212	Capscrew	2
19	580086521	Wire Harness (Lights)	1
20	580041360	Grommet	1

©2008 Yale Materials Handling Corporation

LOAD WEIGH ELECTRICAL (FIGURE 6-21)

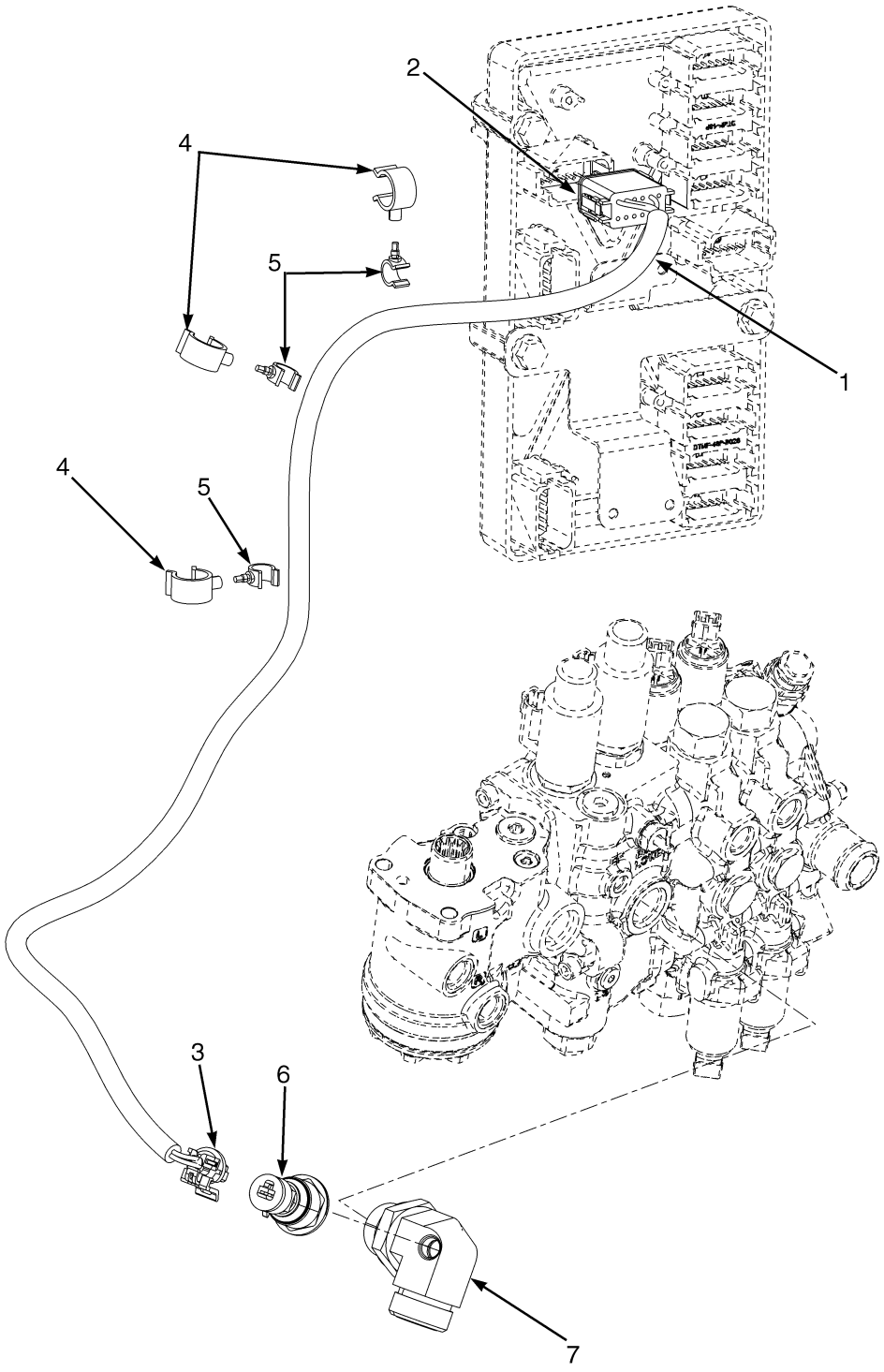

©2008 Yale Materials Handling Corporation

LOAD WEIGH ELECTRICAL

ITEM	PART NO.	DESCRIPTION	QTY
1	580064598	Wire Harness (Load Weigh)	1
2	580036942	Connector	1
2	580026813	Connector	1
2	505968568	Terminal (Socket)	3
2	580019119	Plug	9
3	580063697	Connector	1
3	580063751	Connector (Secondary Lock)	1
3	580044852	Terminal (Socket)	3
3	580044854	Seal	3
4	580064599	Clamp	3
5	580053484	Clamp	3
6	580064733	Sensor (Load Sensing)	1
7	580077359	Fitting	1

©2008 Yale Materials Handling Corporation

TRANSMISSION ELECTRICAL SYSTEM (FIGURE 6-22)

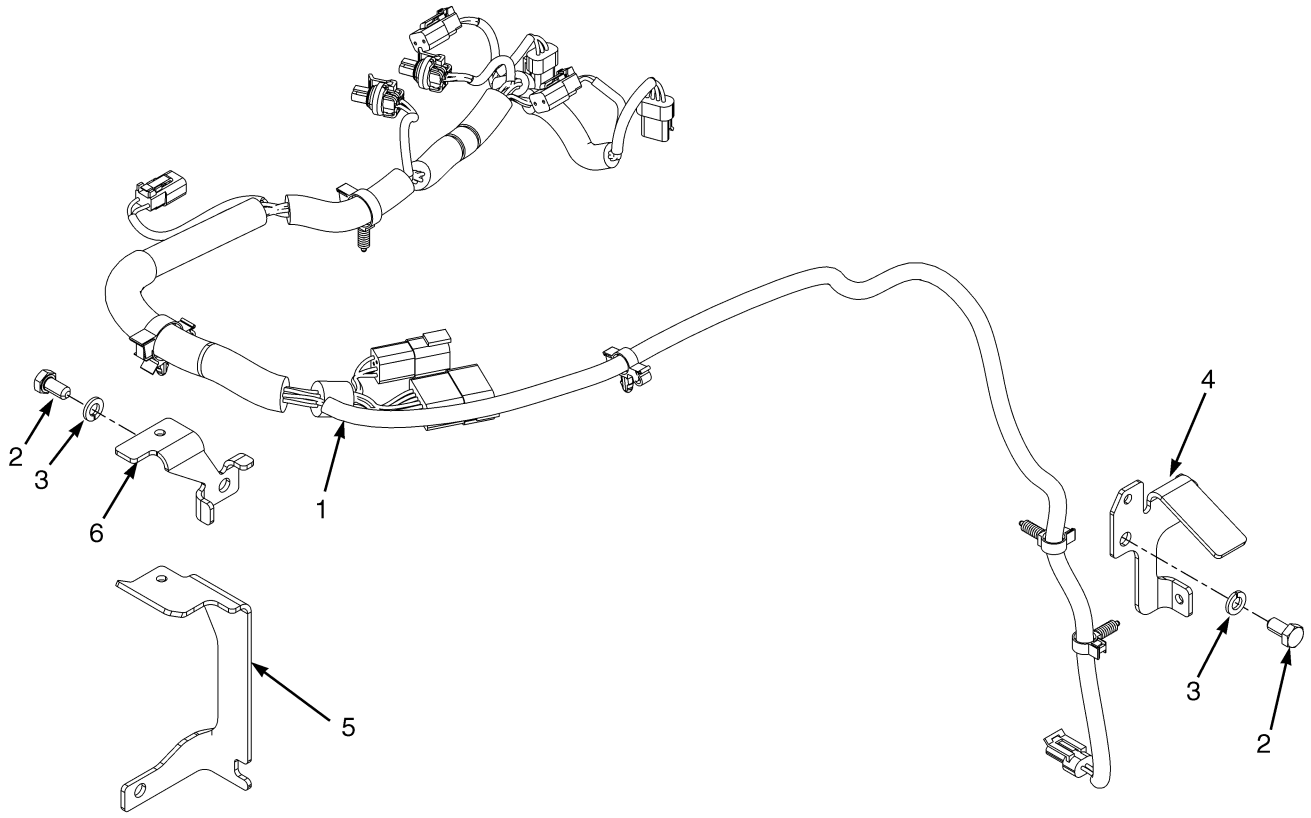

BP080514

©2008 Yale Materials Handling Corporation

TRANSMISSION ELECTRICAL SYSTEM

KEY:
A: Single Speed
B: Dual Speed

ITEM	PART NO.	DESCRIPTION	QTY A	QTY B
1	580069841	Wire Harness (Transmission) (Single Speed) (☞P19748 [Page 6-82])	1	..
1	580069840	Wire Harness (Transmission) (Dual Speed) (☞P19749 [Page 6-84])	..	1
2	449001415	Capscrew	2	2
3	449022016	Lockwasher	2	2
4	580066463	Bracket	1	1
5	580067818	Bracket	1	..
6	580066542	Bracket	..	1

©2008 Yale Materials Handling Corporation

MAST ELECTRICAL (FIGURE 6-23)

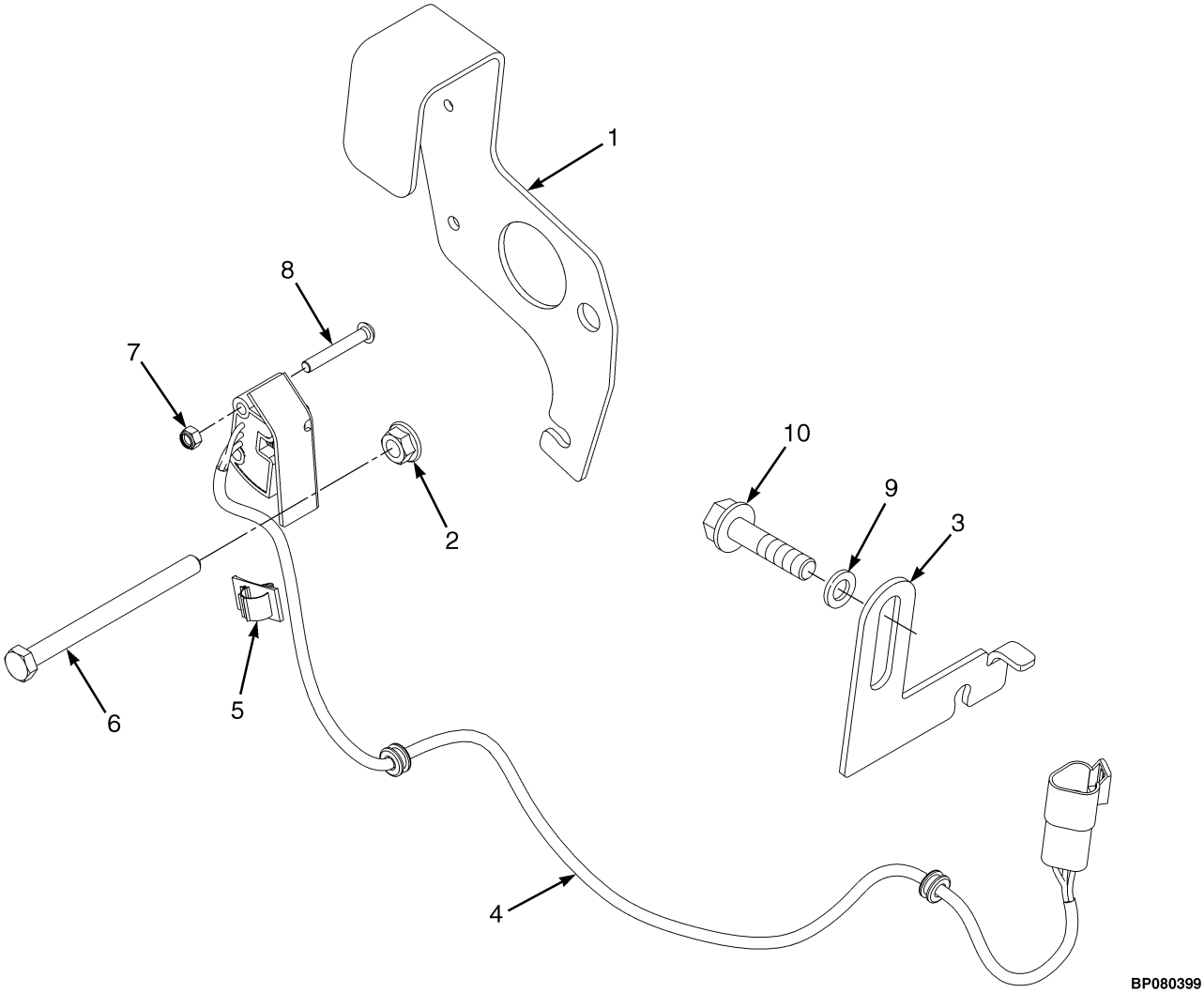

ITEM	PART NO.	DESCRIPTION	QTY
1	580070745	Bracket	1
2	580058190	Nut	1
3	580060837	Bracket	1
4	580060645	Sensor (Mast Position)	1
5	580052685	Clip	1
6	580072635	Capscrew	1
7	449015112	Locknut	2
8	580047034	Capscrew	2
9	580071048	Washer	1
10	580081830	Capscrew	1

©2008 Yale Materials Handling Corporation

NOTES

©2008 Yale Materials Handling Corporation

IMPACT SENSOR (FIGURE 6-24)

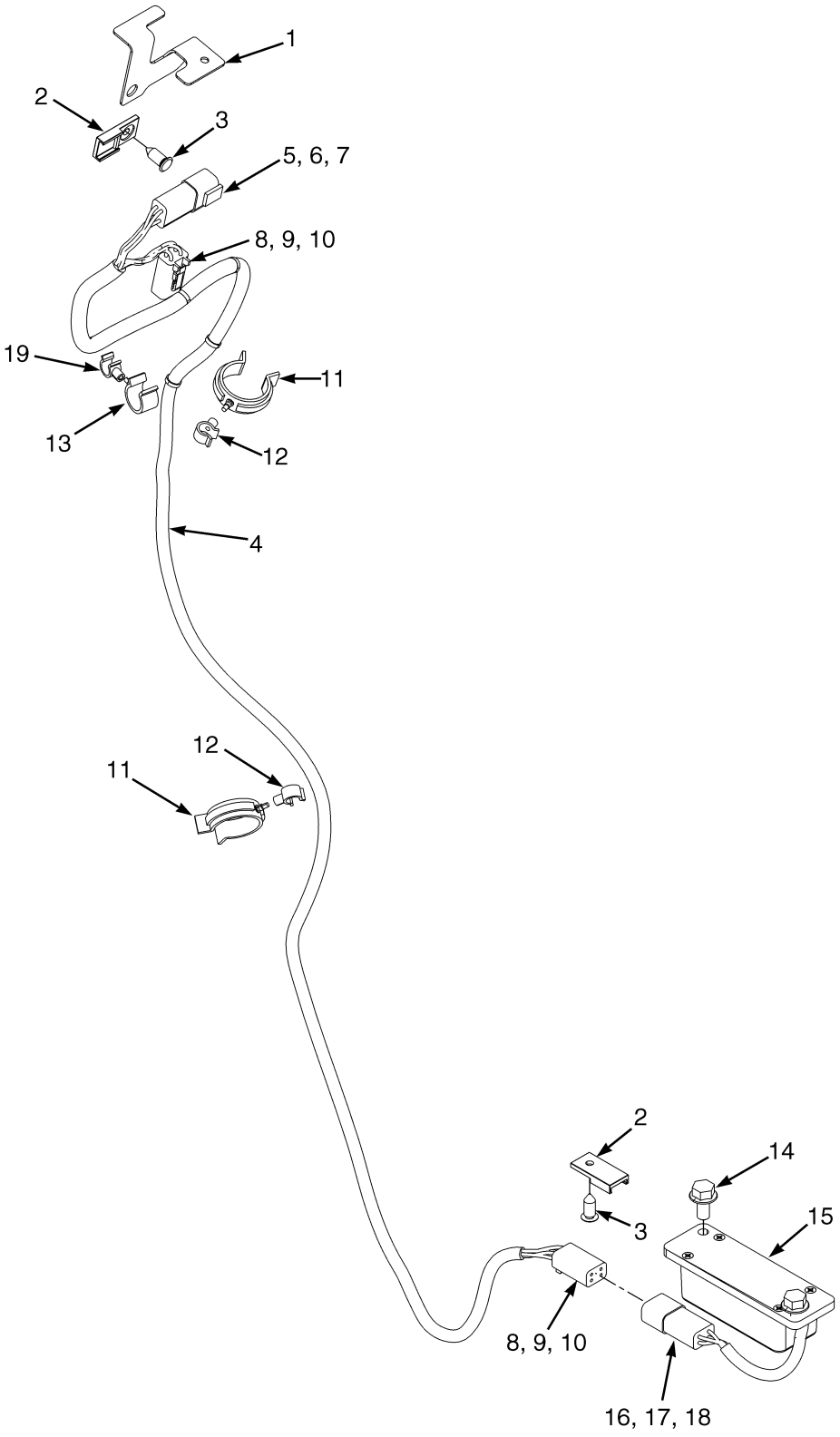

©2008 Yale Materials Handling Corporation

IMPACT SENSOR

ITEM	PART NO.	DESCRIPTION	QTY
1	580064567	Bracket	1
2	580026812	Clip	2
3	580056613	Fastener	2
4	580064565	Wire Harness (Impact Sensor)	1
5	580020942	Connector (4 Way)	1
6	518806635	Connector	1
7	505968514	Terminal (Pin)	4
8	580020943	Connector (4-Way)	2
9	580020944	Connector	2
10	505968568	Terminal (Socket)	8
11	580049555	Clamp (Swivel)	2
12	580042330	Clamp (Swivel)	2
13	580041371	Clamp (Swivel)	1
14	580047714	Capscrew	2
15	580064917	Sensor (Impact)	1
16	580020942	Connector (4 Way)	1
17	518806635	Connector	1
18	505972554	Terminal	4
19	580041369	Clamp (Swivel)	1

©2008 Yale Materials Handling Corporation

WIRE HARNESS (FIGURE 6-25)

RIGHT HAND CHASSIS — GM 4.3L GASOLINE AND LPG

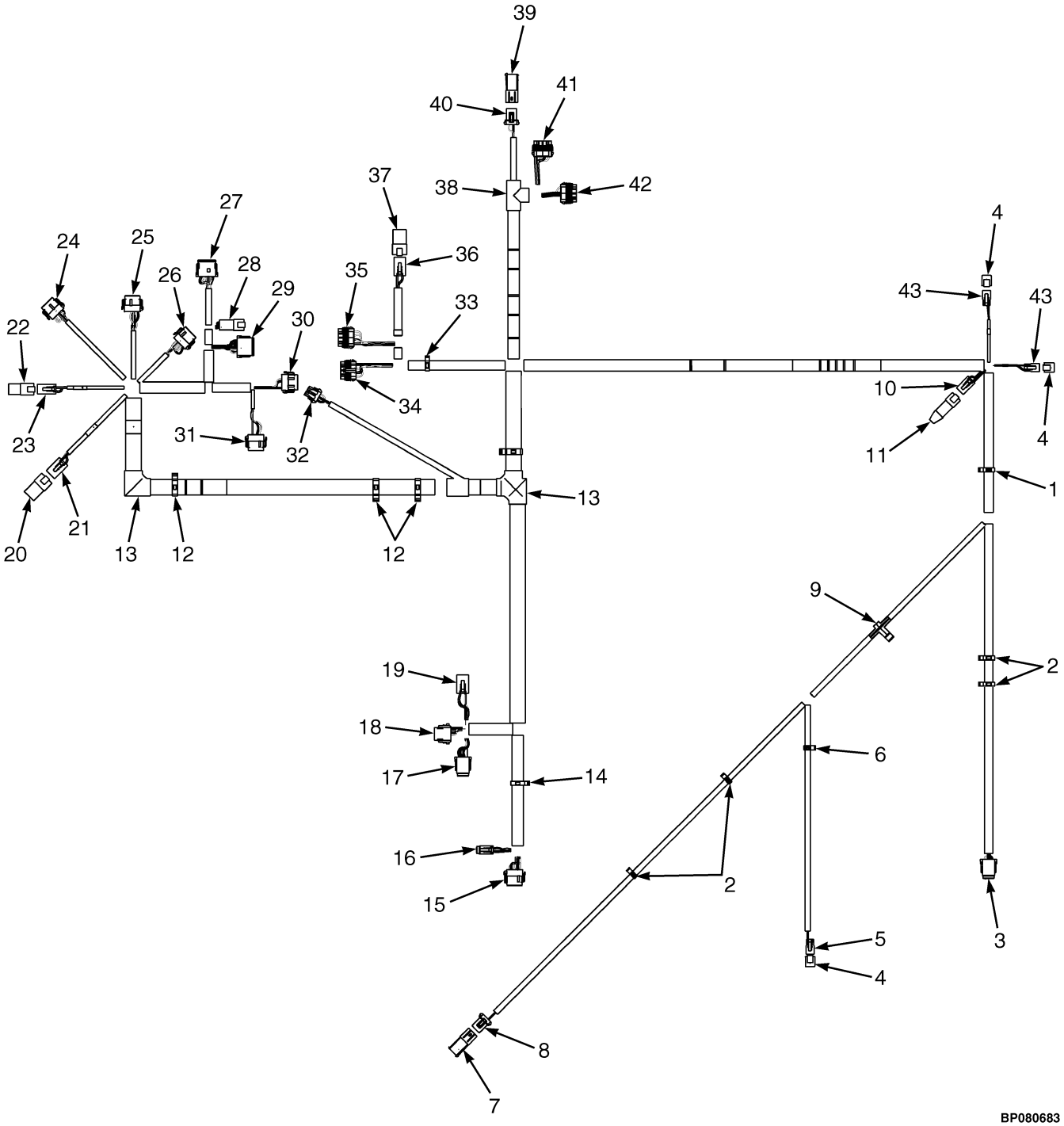

©2008 Yale Materials Handling Corporation

WIRE HARNESS

RIGHT HAND CHASSIS – GM 4.3L GASOLINE AND LPG

ITEM	PART NO.	DESCRIPTION	QTY
	580090227	Wire Harness	1
1	580030878	Clip	2
2	580025559	Clip	2
3	. . . . .	Connector Assembly (To Seat Harness)	1
3	580042221	Connector	1
3	580042222	Connector	1
3	580039513	Terminal	8
4	580071066	Connector (End Cap)	3
5	. . . . .	Connector Assembly (To Backup Alarm Harness)	1
5	580021087	Connector	1
5	580021088	Connector	1
5	505968568	Terminal (Socket)	2
6	580030876	Clip	3
7	. . . . .	Connector Assembly (End Cap)	1
7	520045068	Connector	1
7	520045069	Terminal	1
7	504288730	Seal	2
8	. . . . .	Connector Assembly (Coolant Level)	1
8	520045074	Plug	1
8	520045069	Terminal	1
8	504288733	Terminal	2
8	580023845	Seal	2
9	580058669	Clip	3
10	. . . . .	Connector Assembly (Bus Terminal Two)	1
10	580020943	Connector (4-Way)	1
10	580020944	Connector	1
10	505968568	Terminal (Socket)	4
11	580037670	Connector (With Resistor) (End Cap)	1
12	580039764	Clip	4
13	580049292	Conduit (Elbow)	3
14	580026808	Clip	1
15	. . . . .	Connector Assembly (To Transmission Harness)	1
15	580036981	Connector	1
15	580036986	Connector	1
15	580039513	Terminal	11
15	580019119	Plug	1
15	580034658	Terminal	7
16	. . . . .	Connector Assembly (To Transmission Harness)	1
16	580039499	Connector	1
16	580039500	Connector	1
16	580039513	Terminal	6
17	. . . . .	Connector Assembly (To Engine Harness)	1
17	580042221	Connector	1
17	580042222	Connector	1
17	580039513	Terminal	8
18	. . . . .	Connector Assembly (To Engine Harness)	1
18	580027206	Connector	1
18	580027207	Connector	1
18	505968568	Terminal (Socket)	7
18	580019119	Plug	1

©2008 Yale Materials Handling Corporation

WIRE HARNESS

RIGHT HAND CHASSIS – GM 4.3L GASOLINE AND LPG

ITEM	PART NO.	DESCRIPTION	QTY
19	. . . . .	Connector Assembly (To Engine Harness)	1
19	580040820	Connector	1
19	580040821	Connector	1
19	580050627	Terminal	4
20	. . . . .	Connector Assembly (End Cap)	1
20	580040822	Connector	1
20	505968566	Plug	1
21	. . . . .	Connector Assembly (To Lights/Cab Harness)	1
21	580040820	Connector	1
21	580040821	Connector	1
21	580050627	Terminal	4
22	. . . . .	Connector Assembly (End Cap)	1
22	580032038	Connector	1
22	505968566	Plug	2
23	. . . . .	Connector Assembly (Accessory One)	1
23	580043467	Connector	1
23	580043915	Connector	1
23	580050627	Terminal	4
24	. . . . .	Connector Assembly (Vehicle System Manager)	1
24	580036984	Connector	1
24	580039502	Connector	1
24	580039513	Terminal	8
24	580019119	Plug	4
25	. . . . .	Connector Assembly (Vehicle System Manager)	1
25	580036982	Connector	1
25	580039502	Connector	1
25	580039513	Terminal	7
25	580019119	Plug	5
26	. . . . .	Connector Assembly (Vehicle System Manager)	1
26	580036981	Connector	1
26	580039502	Connector	1
26	580039513	Terminal	9
26	580019119	Plug	3
27	. . . . .	Connector Assembly (Vehicle System Manager)	1
27	580036940	Connector	1
27	580026813	Connector	2
27	505968568	Terminal (Socket)	8
27	505968593	Terminal (Socket)	4
28	. . . . .	Connector Assembly (To Cowl Harness)	1
28	580020942	Connector (4 Way)	1
28	518806635	Connector	1
28	505968514	Terminal (Pin)	4
29	. . . . .	Connector Assembly (To Cowl Harness)	1
29	580022859	Connector (12-Way)	1
29	580026813	Connector	1
29	505968568	Terminal (Socket)	9
29	580019119	Plug	3
30	. . . . .	Connector Assembly (Vehicle System Manager)	1
30	580039499	Connector	1
30	580036986	Connector	1

©2008 Yale Materials Handling Corporation

WIRE HARNESS

RIGHT HAND CHASSIS – GM 4.3L GASOLINE AND LPG

ITEM	PART NO.	DESCRIPTION	QTY
30	580039513	Terminal	3
30	580019119	Plug	9
31	. . . . .	Connector Assembly (Vehicle System Manager)	1
31	580036981	Connector	1
31	580033537	Connector Lock	1
31	580039513	Terminal	3
31	580019119	Plug	9
32	. . . . .	Connector Assembly (To Horn)	1
32	580033515	Connector	1
32	518806635	Connector	1
32	520045805	Seal	2
32	520045804	Terminal	3
32	580026649	Wire Seal	1
33	580040120	Clip	1
34	. . . . .	Connector Assembly (Power Distribution Module)	1
34	580034505	Connector	1
34	580034509	Lock	1
34	505968505	Seal	5
34	504288730	Seal	1
34	504288733	Terminal	6
34	580034658	Terminal	1
34	580023845	Seal	2
35	. . . . .	Connector Assembly (Power Distribution Module)	1
35	580034504	Connector	1
35	580034509	Lock	1
35	505968505	Seal	7
35	504288730	Seal	1
35	504288733	Terminal	4
35	580034658	Terminal	3
36	. . . . .	Connector Assembly (Accessory Two)	1
36	580040820	Connector	1
36	580040821	Connector	1
36	505968566	Plug	1
36	580050627	Terminal	3
37	. . . . .	Connector Assembly (End Cap)	1
37	580040822	Connector	1
37	580033515	Connector	4
38	580039851	Conduit	1
39	. . . . .	Connector Assembly (End Cap)	1
39	520045068	Connector	1
39	520045069	Terminal	1
39	504288730	Seal	2
40	. . . . .	Connector Assembly (To Hydraulic Filter)	1
40	520045074	Plug	1
40	520045069	Terminal	1
40	504288733	Terminal	2
40	580023845	Seal	2
41	. . . . .	Connector Assembly (Power Distribution Module)	1
41	580034507	Connector	1
41	580034509	Lock	1

©2008 Yale Materials Handling Corporation

WIRE HARNESS

RIGHT HAND CHASSIS – GM 4.3L GASOLINE AND LPG

ITEM	PART NO.	DESCRIPTION	QTY
41	505968505	Seal	7
41	580050627	Terminal	1
41	580034658	Terminal	7
42	. . . . .	Connector Assembly (Power Distribution Module)	1
42	580034506	Connector	1
42	580034509	Lock	1
42	505968505	Seal	8
42	504288733	Terminal	5
42	580034658	Terminal	3
43	. . . . .	Connector Assembly (Key Switch/Alternate Horn Button)	2
43	580021087	Connector	1
43	580021088	Connector	1
43	505968568	Terminal (Socket)	2

©2008 Yale Materials Handling Corporation

NOTES

©2008 Yale Materials Handling Corporation

WIRE HARNESS (FIGURE 6-26)

RIGHT HAND CHASSIS — CUMMINS QSB 3.3L

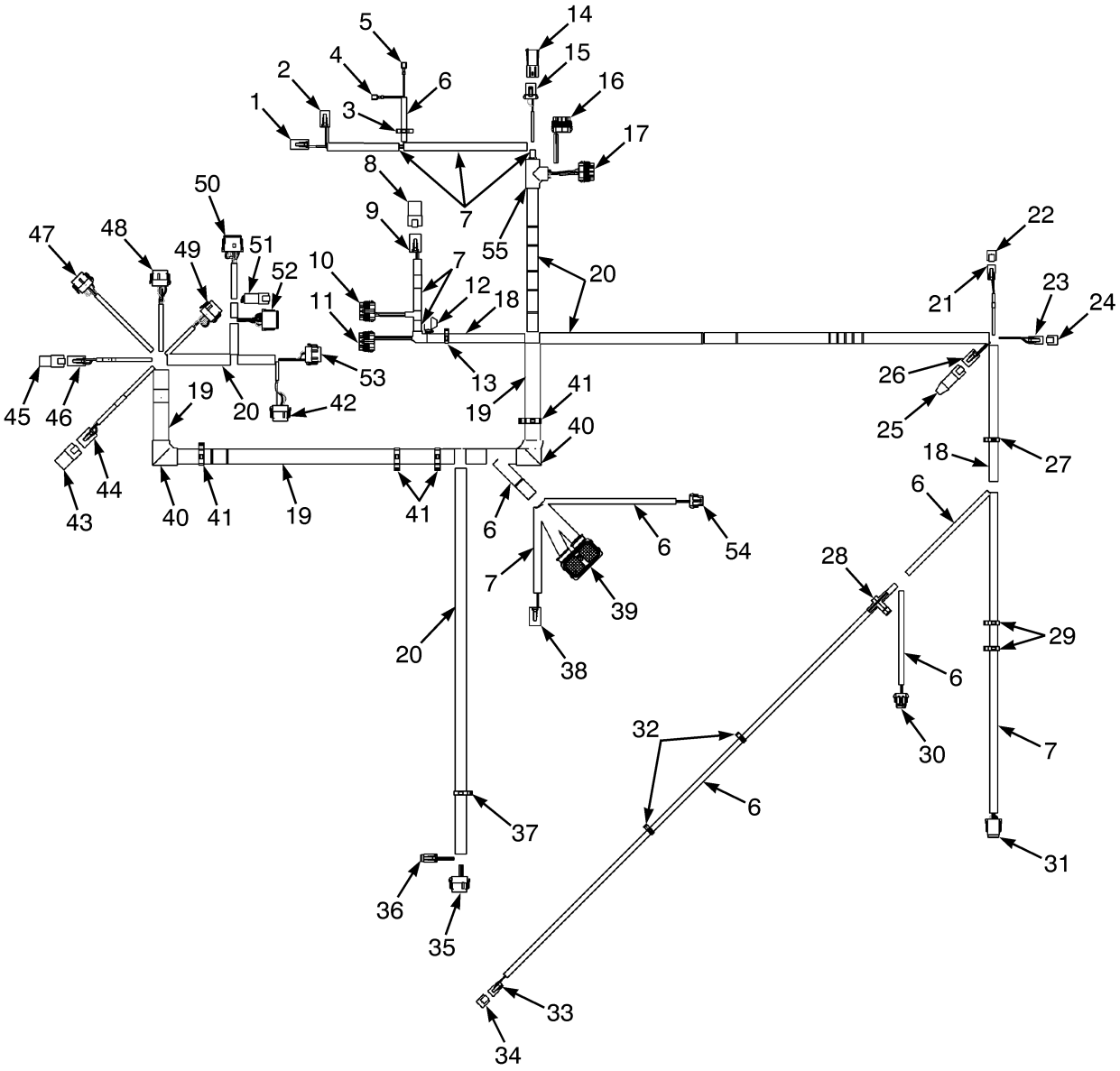

©2008 Yale Materials Handling Corporation

WIRE HARNESS

RIGHT HAND CHASSIS – CUMMINS QSB 3.3L

ITEM	PART NO.	DESCRIPTION	QTY
	580090786	Wire Harness	1
1	. . . . .	Connector Assembly (To Alternator Harness)	1
1	580043467	Connector	1
1	580043915	Connector	1
1	580050627	Terminal	2
2	. . . . .	Connector Assembly (To Alternator Harness)	1
2	580020943	Connector (4-Way)	1
2	580020944	Connector	1
2	505968568	Terminal (Socket)	4
3	580025560	Clip	1
4	. . . . .	Connector Assembly (Contactor Signal)	1
4	580027620	Connector Body	1
5	. . . . .	Connector Assembly (Contactor Ground)	1
5	580027620	Connector Body	1
6	580044908	Conduit	AR
7	520038855	Conduit	AR
8	. . . . .	Connector Assembly (Endcap))	1
8	580040822	Connector	1
8	505968566	Plug	4
9	. . . . .	Connector Assembly (Accessory Two)	1
9	580040820	Connector	1
9	580040821	Connector	1
9	505968566	Plug	1
9	580050627	Terminal	3
10	. . . . .	Connector Assembly (Power Distribution Module)	1
10	580034504	Connector	1
10	580034509	Lock	1
10	505968505	Seal	7
10	504288730	Seal	1
10	504288733	Terminal	4
10	580034658	Terminal	3
11	. . . . .	Connector Assembly (Power Distribution Module)	1
11	580034505	Connector	1
11	580034509	Lock	1
11	505968505	Seal	5
11	504288730	Seal	2
11	504288733	Terminal	5
11	580034658	Terminal	1
11	580023845	Seal	1
12	. . . . .	Connector Assembly (Ignition Fuse)	1
12	580063571	Fuse Holder	1
12	580025567	Fuse (5 Amp)	1
13	580040120	Clip	1
14	. . . . .	Connector Assembly (Endcap)	1
14	520045068	Connector	1
14	520045069	Terminal	1
14	504288730	Seal	2
15	. . . . .	Connector Assembly (Hydraulic Filter)	1
15	520045074	Plug	1
15	520045069	Terminal	1

©2008 Yale Materials Handling Corporation

WIRE HARNESS

RIGHT HAND CHASSIS – CUMMINS QSB 3.3L

ITEM	PART NO.	DESCRIPTION	QTY
15	504288733	Terminal	1
15	580023845	Seal	1
16	. . . . .	Connector Assembly (Power Distribution Module)	1
16	580034507	Connector	1
16	580034509	Lock	1
16	505968505	Seal	7
16	504288730	Seal	1
16	580034658	Terminal	7
17	. . . . .	Connection Assembly (Power Distribution Module)	1
17	580034506	Connector	1
17	580034509	Lock	1
17	504288733	Terminal	5
17	580034658	Terminal	3
17	505968505	Seal	7
17	580023845	Seal	1
18	910065119	Conduit	AR
19	580041641	Conduit	AR
20	520045672	Conduit	AR
21	. . . . .	Connector Assembly (Hood Switch/Keyswitch	1
21	580021087	Connector	1
21	580021088	Connector	1
21	505968568	Terminal (Socket)	2
22	. . . . .	Connector Assembly	1
22	580071066	Connector	1
23	. . . . .	Connector Assembly (Alternate Horn Button)	1
23	580021087	Connector	1
23	580021088	Connector	1
23	505968568	Terminal (Socket)	2
24	. . . . .	Connector Assembly (Endcap)	1
24	580071066	Connector	1
25	. . . . .	Connector Assembly (Endcap)	1
25	580037670	Connector (With Resistor)	1
26	. . . . .	Connector Assembly (Bus Terminal)	1
26	580020943	Connector (4-Way)	1
26	580020944	Connector	1
26	505968568	Terminal (Socket)	4
27	580030878	Clip	1
28	580058669	Clip	1
29	580025559	Clip	1
30	. . . . .	Connector Assembly (Coolant Level)	1
30	580033516	Connector	1
30	580033537	Connector Lock	1
30	520045804	Terminal	3
30	580026649	Wire Seal	3
31	. . . . .	Connector Assembly (To Seat Harness)	1
31	580042221	Connector	1
31	580042222	Connector	1
31	580039513	Terminal	8
32	580030876	Clip	2
33	. . . . .	Connector Assembly (Backup Alarm)	1

©2008 Yale Materials Handling Corporation

WIRE HARNESS

RIGHT HAND CHASSIS – CUMMINS QSB 3.3L

ITEM	PART NO.	DESCRIPTION	QTY
33	580021087	Connector	1
33	580021088	Connector	1
33	505968568	Terminal (Socket)	2
34	. . . . .	Connector Assembly (Endcap)	1
34	580071066	Connector	1
35	. . . . .	Connector Assembly (To Transmission Harness)	1
35	580036981	Connector	1
35	580036986	Connector	1
35	580039513	Terminal	11
35	580019119	Plug	1
36	. . . . .	Connector Assembly (To Transmission Harness)	1
36	580039499	Connector	1
36	580039500	Connector	1
36	580039513	Terminal	6
37	580026808	Clip	1
38	. . . . .	Connector Assembly (Engine Control Module)	1
38	580040820	Connector	1
38	580040821	Connector	1
38	505968566	Plug	2
38	580050627	Terminal	2
39	. . . . .	Connector Assembly (Engine Control Module)	1
39	580087837	Connector	1
39	580087838	Strain Relief	1
39	580019119	Plug	46
39	580039514	Terminal	14
40	580049292	Conduit (Elbow)	2
41	580039764	Clip	4
42	. . . . .	Connector Assembly (Vehicle System Manager)	1
42	580036981	Connector	1
42	580036986	Connector	1
42	580039513	Terminal	3
42	580019119	Plug	9
43	. . . . .	Connector Assembly (Endcap)	1
43	580040822	Connector	1
43	505968566	Plug	4
44	. . . . .	Connector Assembly (To Lights/Cab Harness)	1
44	580040820	Connector	1
44	580040821	Connector	1
44	580050627	Terminal	4
45	. . . . .	Connector Assembly (Endcap)	1
45	580032038	Connector	1
45	505968566	Plug	2
46	. . . . .	Connector Assembly (Accessory One)	1
46	580043467	Connector	1
46	580043915	Connector	1
46	580050627	Terminal	2
47	. . . . .	Connector Assembly (Vehicle System Manager)	1
47	580036984	Connector	1
47	580039502	Connector	1
47	580039513	Terminal	8

©2008 Yale Materials Handling Corporation

WIRE HARNESS

RIGHT HAND CHASSIS – CUMMINS QSB 3.3L

ITEM	PART NO.	DESCRIPTION	QTY
47	580019119	Plug	4
48	. . . . .	Connector Assembly (Vehicle System Manager)	1
48	580036982	Connector	1
48	580039502	Connector	1
48	580039513	Terminal	7
48	580019119	Plug	5
49	. . . . .	Connector Assembly (Vehicle System Manager)	1
49	580036981	Connector	1
49	580039502	Connector	1
49	580039513	Terminal	8
49	580019119	Plug	4
50	. . . . .	Connector Assembly (Vehicle System Manager)	1
50	580036940	Connector	1
50	580026813	Connector	1
50	505968568	Terminal (Socket)	8
50	505968593	Terminal (Socket)	4
51	. . . . .	Connector Assembly (To Cowl Harness)	1
51	580020942	Connector (4 Way)	1
51	518806635	Connector	1
51	505968514	Terminal (Pin)	4
52	. . . . .	Connector Assembly (To Cowl Harness)	1
52	580022859	Connector (12-Way)	1
52	580026813	Connector	1
52	505968568	Terminal (Socket)	9
52	580019119	Plug	3
53	. . . . .	Connector Assembly (Vehicle System Manager)	1
53	580036983	Connector	1
53	580036986	Connector	1
53	580039513	Terminal	3
53	580019119	Plug	3
54	. . . . .	Connector Assembly (Horn)	1
54	580033515	Connector	1
54	580033537	Connector Lock	1
54	520045805	Seal	2
54	520045804	Terminal	3
54	580026649	Wire Seal	1
55	580039851	Conduit	AR

©2008 Yale Materials Handling Corporation

NOTES

©2008 Yale Materials Handling Corporation

WIRE HARNESS (FIGURE 6-27)
LEFT HAND CHASSIS — GM 4.3L, GASOLINE

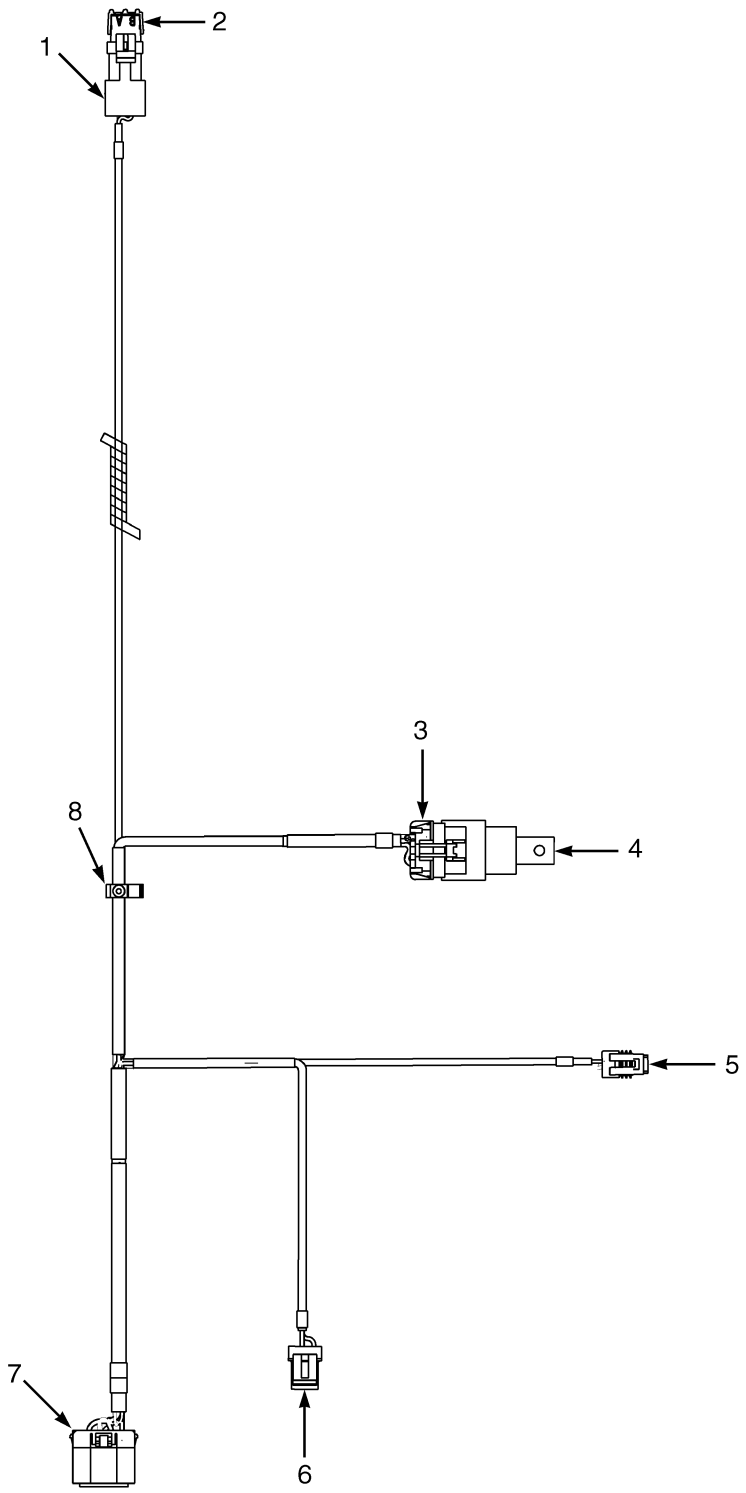

BP080469

©2008 Yale Materials Handling Corporation

WIRE HARNESS

LEFT HAND CHASSIS – GM 4.3L, GASOLINE

ITEM	PART NO.	DESCRIPTION	QTY
	580064367	Wire Harness (LH Chassis)	1
1	. . . . .	Connector Assembly (Air Restriction)	1
1	580012324	Connector	1
1	580023845	Seal	2
1	520038875	Terminal	2
2	. . . . .	End Cap (Air Restriction Cap)	1
2	580012323	Connector	1
2	504288730	Seal	3
3	. . . . .	Connector Assembly (Fuel Pump Relay)	1
3	580010545	Connector Body	1
3	505968505	Seal	4
3	580023878	Terminal	4
3	580025849	Sealant	AR
4	580010544	Relay (Fuel Pump)	1
4	580079973	Clip (Relay)	1
5	. . . . .	Connector Assembly (Fuel Level)	1
5	580025779	Connector	1
5	504288741	Terminal	2
6	. . . . .	Connector Assembly (Fuel Pump)	1
6	580033852	Connector	1
6	504288741	Terminal	2
7	. . . . .	Connector Assembly (To Engine Harness)	1
7	580036349	Connector	1
7	580023866	Terminal	3
7	580023865	Terminal	5
7	580070459	Seal	5
7	580023869	Wire Seal	3
7	580036358	Connector Lock	1
8	580030876	Clip	1

©2008 Yale Materials Handling Corporation

WIRE HARNESS (FIGURE 6-28)
LEFT HAND CHASSIS — GM 4.3L LPG

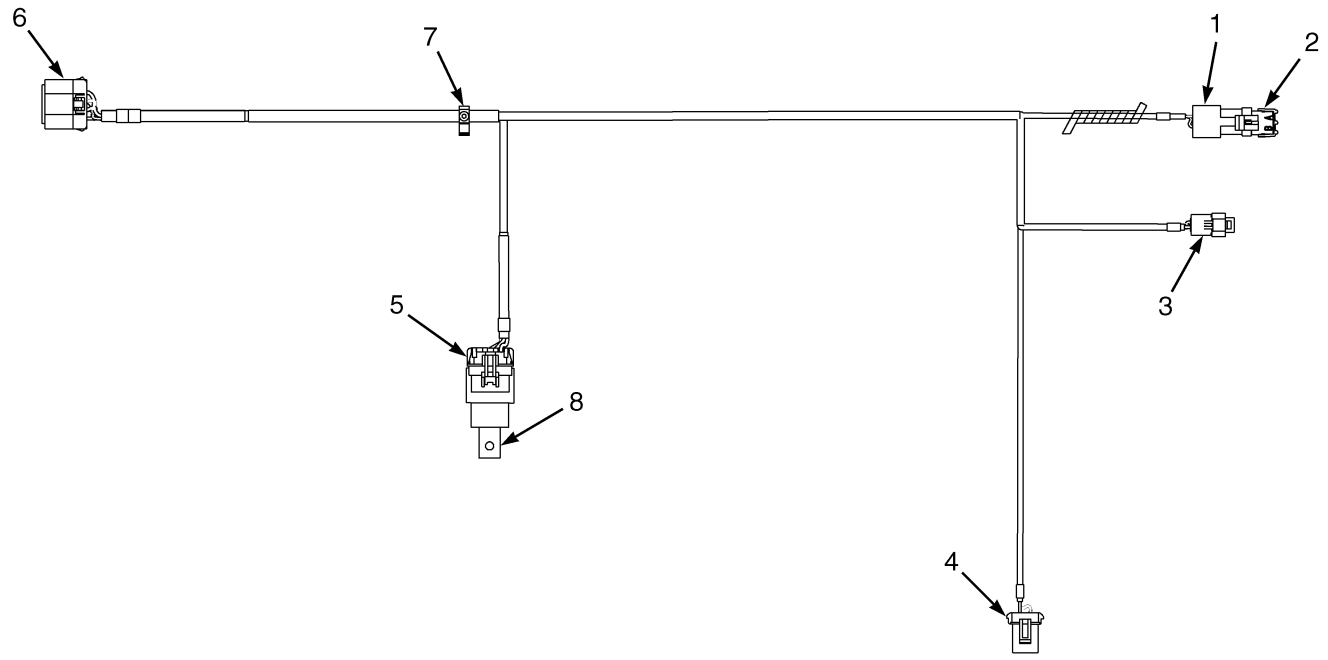

BP080436

ITEM	PART NO.	DESCRIPTION	QTY
	580064368	Wire Harness (LH Chassis)	1
1	. . . . .	Connector Assembly (Air Restriction)	1
1	580012324	Connector	1
1	520038875	Terminal	2
1	580023845	Seal	2
2	. . . . .	End Cap Assembly (Air Restriction Cap)	1
2	580012323	Connector	1
2	504288730	Seal	1
3	. . . . .	Connector Assembly (LPG Lockoff)	1
3	580068120	Connector	1
3	580051025	Terminal	2
4	. . . . .	Connector Assembly (Low LPG Switch)	1
4	580023845	Seal	2
4	520045074	Plug	1
4	520045069	Terminal	1
4	520045073	Terminal	2
5	. . . . .	Connector Assembly (Fuel Pump Relay)	1
5	580010545	Connector Body	1
5	504288730	Seal	1
5	505968505	Seal	4
5	580023878	Terminal	4
5	580025849	Sealant	AR
6	. . . . .	Connector Assembly (To Engine Wire Harness)	1
6	580036349	Connector	1
6	580023866	Terminal	3

©2008 Yale Materials Handling Corporation

ITEM	PART NO.	DESCRIPTION	QTY
6	580023865	Terminal	5
6	580070459	Seal	5
6	580023869	Wire Seal	3
6	580036358	Connector Lock	1
7	580030876	Clip	1
8	580010544	Relay (Fuel Pump)	1
8	580079973	Clip (Relay)	1

©2008 Yale Materials Handling Corporation

WIRE HARNESS (FIGURE 6-29)
ENGINE — CUMMINS QSB 3.3L DIESEL

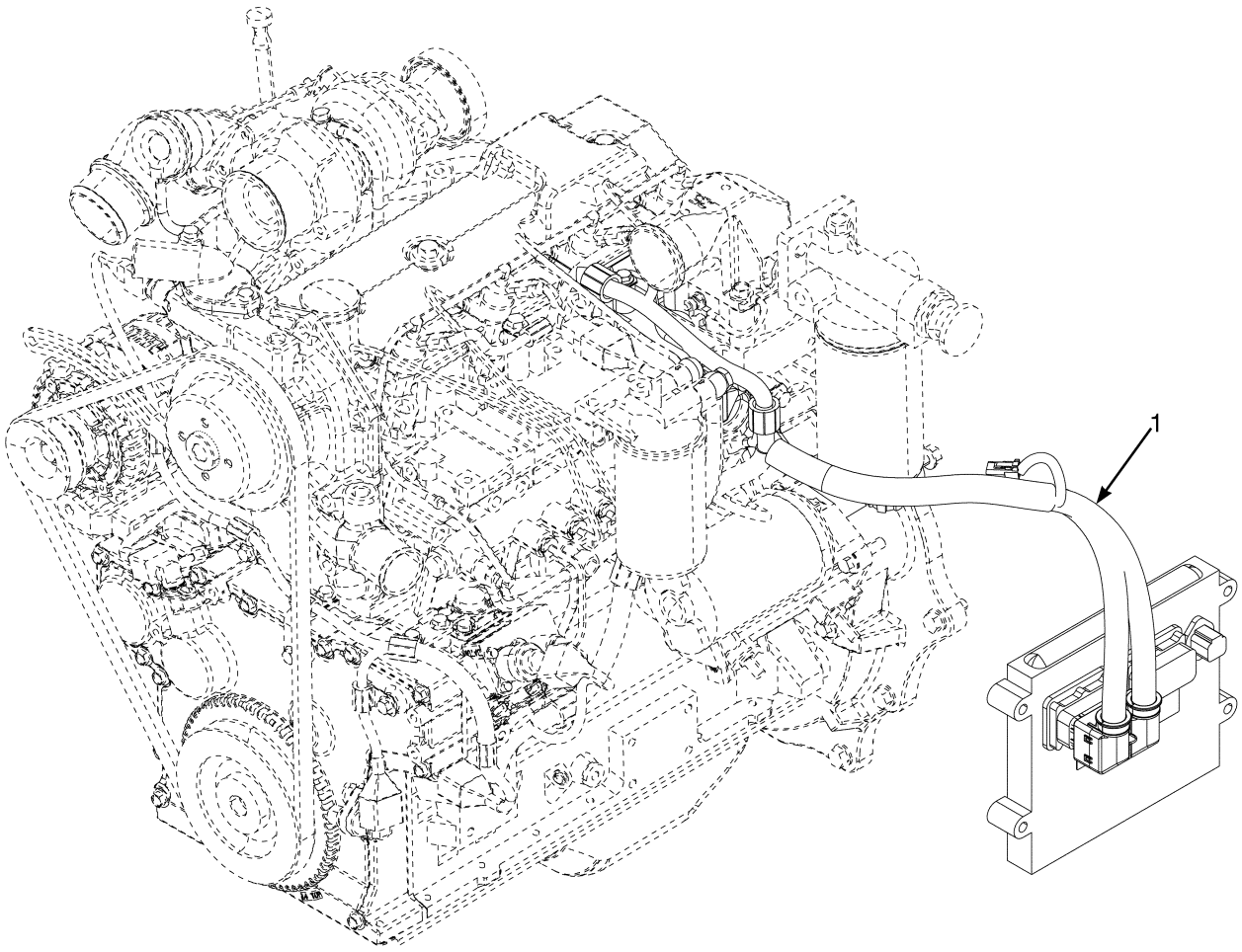

BP090411

©2008 Yale Materials Handling Corporation

ITEM	PART NO.	DESCRIPTION	QTY
1	580094469	Wire Harness (Engine)	1

©2008 Yale Materials Handling Corporation

WIRE HARNESS (FIGURE 6-30)
ENGINE — GM 4.3L GASOLINE

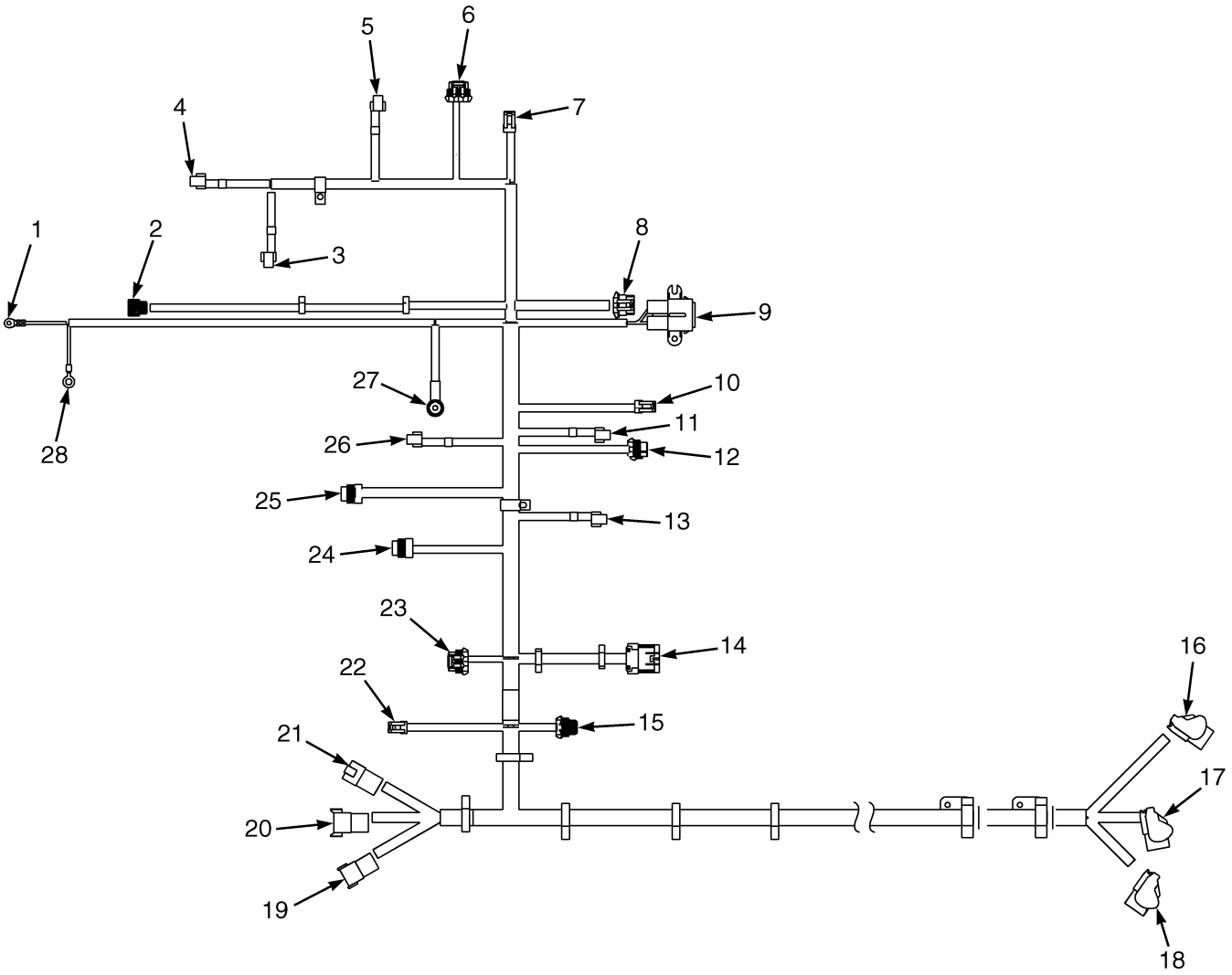

BP080685

©2008 Yale Materials Handling Corporation

WIRE HARNESS
ENGINE – GM 4.3L GASOLINE

ITEM	PART NO.	DESCRIPTION	QTY
	580077675	Wire Harness	1
1	. . . . .	Connector Assembly (Starter)	1
1	580042947	Ring Terminal	1
2	. . . . .	Connector Assembly (Crank Position)	1
2	580080198	Electrical Connector	1
2	580080199	Electrical Terminal	3
2	580080808	Seal	3
3	. . . . .	Connector Assembly (Injector 3)	1
4	. . . . .	Connector Assembly (Injector 5)	1
5	. . . . .	Connector Assembly (Injector 1)	1
6	. . . . .	Connector Assembly (Right Oxygen Sensor)	1
6	580022990	Connector Body	1
6	520045804	Terminal	4
6	580027611	Electrical Terminal	4
6	580022993	Connector	1
7	. . . . .	Connector Assembly (Temperature Sensor)	1
7	504288740	Connector	1
7	580000559	Terminal	2
8	. . . . .	Connector Assembly (Connector)	1
8	580064880	Connector	1
9	. . . . .	Connector Assembly (Connector)	1
9	580042698	Fuse Holder	1
9	580014386	Fuse (60 Amp)	1
9	580010739	Cover (With Seal)	1
9	580034616	Seal	2
9	580035200	Terminal	2
10	. . . . .	Connector Assembly (Alternator)	1
10	504288740	Connector	1
10	504288741	Terminal	2
11	. . . . .	Connector Assembly (Injector 2)	1
12	. . . . .	Connector Assembly (Coil)	1
12	580033519	Connector	1
12	580027611	Electrical Terminal	2
12	520045805	Seal	3
12	580000554	Seal	1
12	580033537	Connector Lock	1
13	. . . . .	Connector Assembly (Injector 6)	1
14	. . . . .	Connector Assembly (LH Chassis)	1
14	580036351	Connector	1
14	580027619	Clip	1
15	. . . . .	Connector Assembly (Cam Positioner Sensor)	1
15	580033516	Connector	1
15	580033537	Connector Lock	1
15	520045804	Terminal	3
15	580026649	Wire Seal	3
16	. . . . .	Connector Assembly (Connector)	1
17	. . . . .	Connector Assembly (Connector)	1
18	. . . . .	Connector Assembly (Connector)	1
19	. . . . .	Connector Assembly (Chassis Harness)	1
19	580042219	Connector	1

©2008 Yale Materials Handling Corporation

WIRE HARNESS
ENGINE – GM 4.3L GASOLINE

ITEM	PART NO.	DESCRIPTION	QTY
20	. . . . .	Connector Assembly (Chassis Harness)	1
20	505972593	Connector	1
21	. . . . .	Connector Assembly (Chassis Harness)	1
21	580040822	Connector	1
22	. . . . .	Connector Assembly (Oil Pressure)	1
22	504288749	Connector	1
22	580000559	Terminal	3
23	. . . . .	Connector Assembly (Left Oxygen Sensor)	1
23	580022990	Connector Body	1
23	520045804	Terminal	4
23	580027611	Electrical Terminal	4
23	580022993	Connector	1
24	. . . . .	Connector Assembly (Map Sensor)	1
24	580064923	Connector	1
24	580025558	Terminal	4
24	580049815	Seal	4
25	. . . . .	Connector Assembly (Ignition)	1
25	580059253	Connector	1
25	580000559	Terminal	1
25	580033537	Connector Lock	1
25	504288741	Terminal	3
26	. . . . .	Connector Assembly (Injector 4)	1
27	. . . . .	Connector Assembly (Alternator)	1
27	505968598	E-Ring	1
27	580052019	Boot	1
28	. . . . .	Connector Assembly (Battery)	1
28	520044861	E-Ring	1

©2008 Yale Materials Handling Corporation

NOTES

©2008 Yale Materials Handling Corporation

WIRE HARNESS (FIGURE 6-31)
ENGINE — GM 4.3L LPG

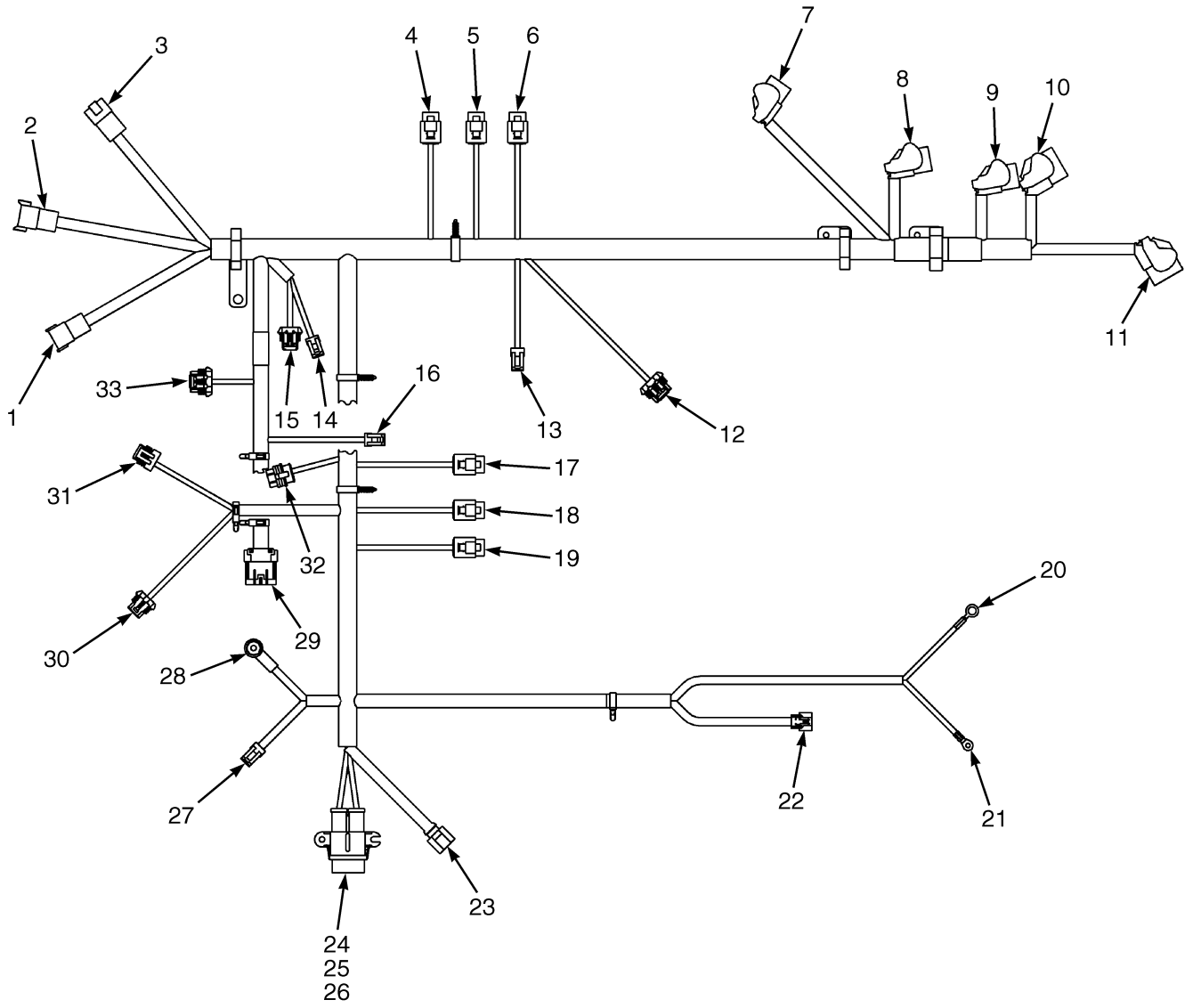

©2008 Yale Materials Handling Corporation

WIRE HARNESS
ENGINE – GM 4.3L LPG

ITEM	PART NO.	DESCRIPTION	QTY
	580077676	Wire Harness	1
1	. . . . .	Connector Assembly (Chassis Harness)	1
1	580042219	Connector	1
2	. . . . .	Connector Assembly (Chassis Harness)	1
2	505972593	Connector	1
3	. . . . .	Connector Assembly (Chassis Harness)	1
3	580040822	Connector	1
4	. . . . .	Connector Assembly (Injector 5)	1
4	580051025	Terminal	2
4	580064825	Connector	1
5	. . . . .	Connector Assembly (Injector 3)	1
5	580051025	Terminal	2
5	580064825	Connector	1
6	. . . . .	Connector Assembly (Injector 1)	1
6	580051025	Terminal	2
6	580064825	Connector	1
7	. . . . .	Connector Assembly (Connector)	1
8	. . . . .	Connector Assembly (Connector)	1
9	. . . . .	Connector Assembly (Connector)	1
10	. . . . .	Connector Assembly (Connector)	1
11	. . . . .	Connector Assembly (Connector)	1
12	. . . . .	Connector Assembly (RH Oxygen Sensor)	1
12	580022990	Connector Body	1
12	580027611	Electrical Terminal	4
12	520045804	Terminal	4
12	580022993	Connector	1
13	. . . . .	Connector Assembly (Connector)	1
13	504288740	Connector	1
13	580000559	Terminal	2
14	. . . . .	Connector Assembly (Oil Pressure)	1
14	504288749	Connector	1
14	580000559	Terminal	3
15	. . . . .	Connector Assembly (Cam Sensor)	1
15	580033516	Connector	1
15	580033537	Connector Lock	1
15	520045804	Terminal	3
15	580026649	Wire Seal	3
16	. . . . .	Connector Assembly (Fuel Pressure)	1
16	580028186	Connector	1
16	504288741	Terminal	3
17	. . . . .	Connector Assembly (Injector 6)	1
17	580051025	Terminal	2
17	580064825	Connector	1
18	. . . . .	Connector Assembly (Injector 4)	1
18	580051025	Terminal	2
18	580064825	Connector	1
19	. . . . .	Connector Assembly (Injector 2)	1
19	580051025	Terminal	2
19	580064825	Connector	1
20	. . . . .	Connector Assembly (Battery)	1

©2008 Yale Materials Handling Corporation

WIRE HARNESS
ENGINE – GM 4.3L LPG

ITEM	PART NO.	DESCRIPTION	QTY
20	520044861	E-Ring	1
21	. . . . .	Connector Assembly (Starter)	1
21	580042947	Ring Terminal	1
22	. . . . .	Connector Assembly (Crank Position Sensor)	1
22	580080198	Electrical Connector	1
22	580080199	Electrical Terminal	3
22	580080808	Seal	3
23	. . . . .	Connector Assembly (Connector)	1
23	580064880	Connector	1
24	. . . . .	Connector Assembly (Connector)	1
24	580042698	Fuse Holder	1
24	580014386	Fuse (60 Amp)	1
24	580035200	Terminal	2
25	. . . . .	Connector Assembly (Cover)	1
25	580010739	Cover (With Seal)	1
26	. . . . .	Connector Assembly (Connector)	1
26	580034616	Seal	1
27	. . . . .	Connector Assembly (Alternator)	1
27	504288741	Terminal	2
27	504288740	Connector	1
28	. . . . .	Connector Assembly (Alternator)	1
28	505968598	E-Ring	1
29	. . . . .	Connector Assembly (LH Chassis Harness)	1
29	580027619	Clip	1
29	580036351	Connector	1
30	. . . . .	Connector Assembly (Coil)	1
30	580033519	Connector	1
30	580027611	Electrical Terminal	2
30	580033537	Connector Lock	1
30	520045805	Seal	3
30	580000554	Seal	1
31	. . . . .	Connector Assembly (Ignition)	1
31	580059253	Connector	1
31	580000559	Terminal	1
31	504288741	Terminal	3
31	580033537	Connector Lock	1
32	. . . . .	Connector Assembly (Map Sensor)	1
32	580064923	Connector	1
32	580025558	Terminal	4
32	580049815	Seal	4
33	. . . . .	Connector Assembly (LH Oxygen Sensor)	1
33	580022993	Connector	1
33	520045804	Terminal	4
33	580027611	Electrical Terminal	4
33	580022990	Connector Body	1

©2008 Yale Materials Handling Corporation

NOTES

©2008 Yale Materials Handling Corporation

WIRE HARNESS (FIGURE 6-32)
ALTERNATOR — CUMMINS QSB 3.3L DIESEL

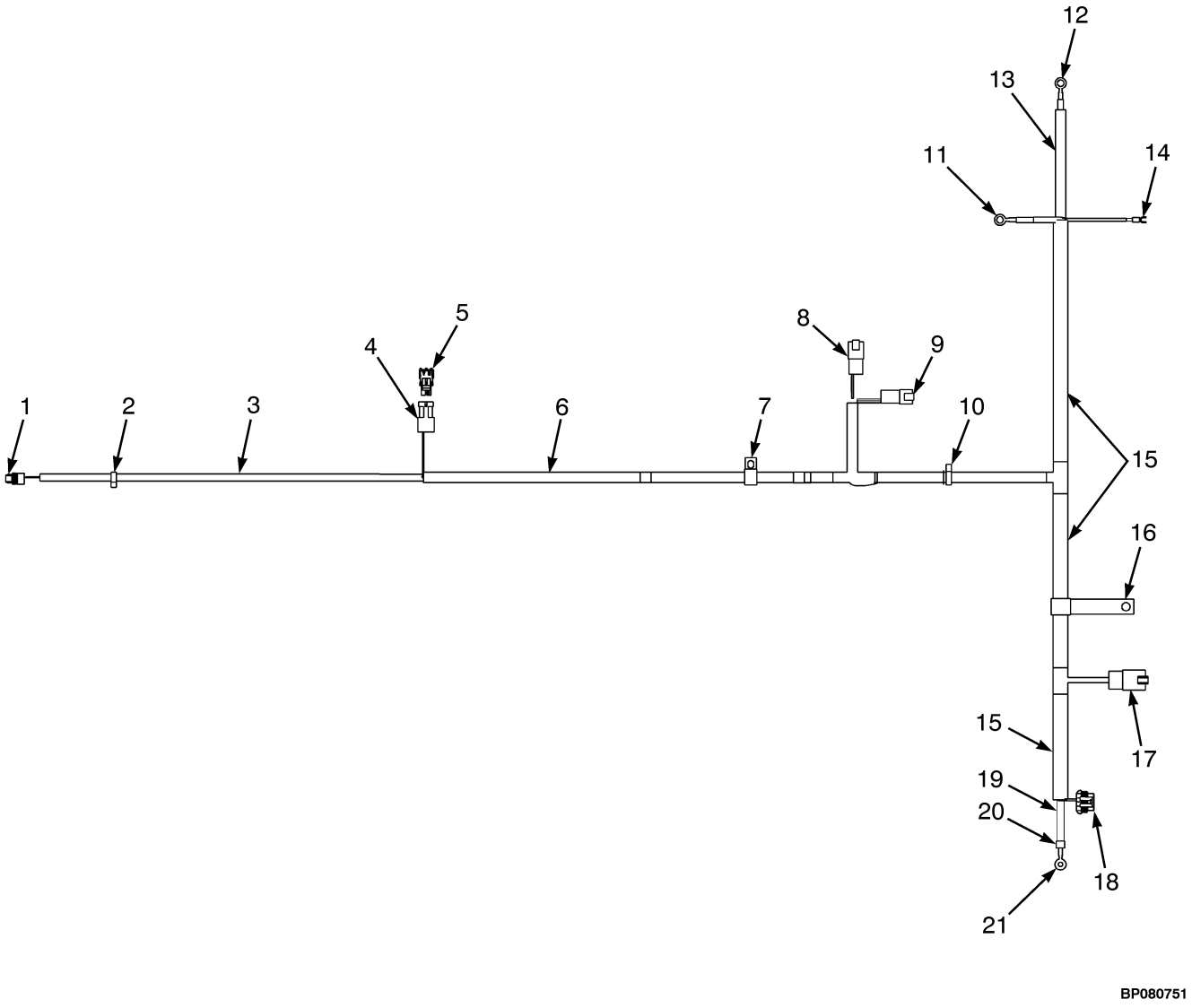

©2008 Yale Materials Handling Corporation

WIRE HARNESS

ALTERNATOR – CUMMINS QSB 3.3L DIESEL

ITEM	PART NO.	DESCRIPTION	QTY
	580086076	Wire Harness (Alternator)	1
1	. . . . .	Connector Assembly (Fuel Level)	1
1	580025779	Connector	1
1	504288741	Terminal	2
2	580030876	Clip	1
3	580044908	Conduit	AR
4	. . . . .	Connector Assembly (Air Restriction Sensor)	1
4	580012324	Connector	1
4	520038875	Terminal	2
4	580023845	Seal	2
5	. . . . .	Connector Assembly (Endcap)	1
5	580012323	Connector	1
5	504288730	Seal	2
6	520038855	Conduit	AR
7	520035824	Clamp	1
8	. . . . .	Connector Assembly (To Right Hand Chassis Harness)	1
8	580032038	Connector	1
8	580032039	Connector	1
8	150121835	Terminal	2
9	. . . . .	Connector Assembly (To Tight Hand Chassis Assembly)	1
9	580020942	Connector (4 Way)	1
9	518806635	Connector	1
9	505968514	Terminal (Pin)	4
10	580025559	Clip	1
11	. . . . .	Connector Assembly (Starter Positive Stud)	1
11	580006526	E-Ring	1
12	. . . . .	Connector Assembly (Starter Negitive Stud)	1
12	580006526	E-Ring	1
13	520038855	Conduit	AR
14	. . . . .	Connector Assembly (Sarter Solenoid)	1
14	580088535	E Ftg Spade Term #10	1
15	520045672	Conduit	AR
16	518793625	Clamp	1
17	. . . . .	Connector Assembly (Alternatoe Fuse)	1
17	580075791	Receptacle	1
17	580075792	Pin	1
18	. . . . .	Connector Assembly (Alternator)	1
18	580073617	Connector	1
18	580022993	Connector	1
18	520045804	Terminal	2
18	580027612	Plug	2
18	520045805	Seal	2
19	580088532	Sleeve	AR
20	580058268	Heat Shrink	AR
21	. . . . .	Connector Assembly (Alternator Ground)	1
21	580062216	E-Ring	1

©2008 Yale Materials Handling Corporation

WIRE HARNESS (FIGURE 6-33)
SEALED ALTERNATOR — GM 4.3L

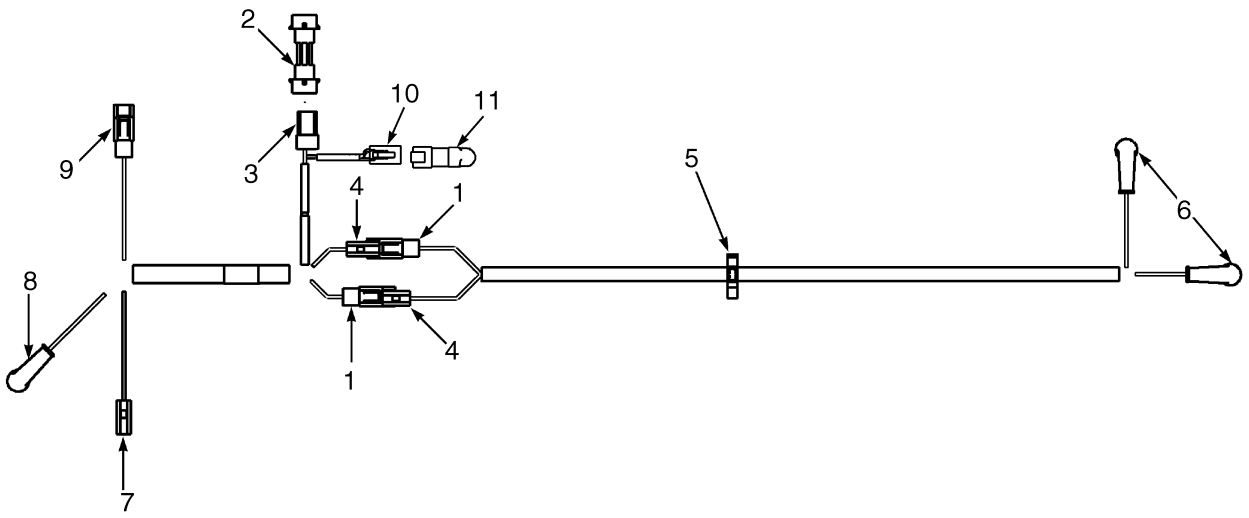

BP080577

ITEM	PART NO.	DESCRIPTION	QTY
	580078489	Wire Harness (Sealed Alternator)	1
1	. . . . .	Connector Assembly (To Disconnect Switch Link)	2
1	504450740	Connector Body	1
1	504450761	Terminal	1
2	580028441	Adapter (To Engine Harness)	1
3	. . . . .	Connector Assembly (To Engine Harness)	1
3	504288740	Connector	1
3	504288741	Terminal	2
4	. . . . .	Connector Assembly (To Disconnect Switch Link)	2
4	504450741	Connector Body	1
4	580049322	Terminal	1
5	580025560	Clip	1
6	. . . . .	Connector Assembly (To Disconnect Switch)	2
6	580056380	E-Ring	1
6	505970552	Boot	1
6	504231204	Heat Shrink	1
7	. . . . .	Connector Assembly (Alternator Excite)	1
7	504450741	Connector Body	1
7	580049322	Terminal	1
8	. . . . .	Connector Assembly (Alternator D+)	1
8	580056380	E-Ring	1
8	505970552	Boot	1
8	504231204	Heat Shrink	1
9	. . . . .	Connector Assembly (Alternator Field)	1
9	504450740	Connector Body	1
9	504450761	Terminal	1
10	. . . . .	Connector Assembly (Diode Pack)	1

©2008 Yale Materials Handling Corporation

ITEM	PART NO.	DESCRIPTION	QTY
10	580020943	Connector (4-Way)	1
10	580020944	Connector	1
10	505968593	Terminal (Socket)	4
11	580078403	Kit-Diode	1

©2008 Yale Materials Handling Corporation

WIRE HARNESS (FIGURE 6-34)
SEALED ALTERNATOR — CUMMINS QSB 3.3L

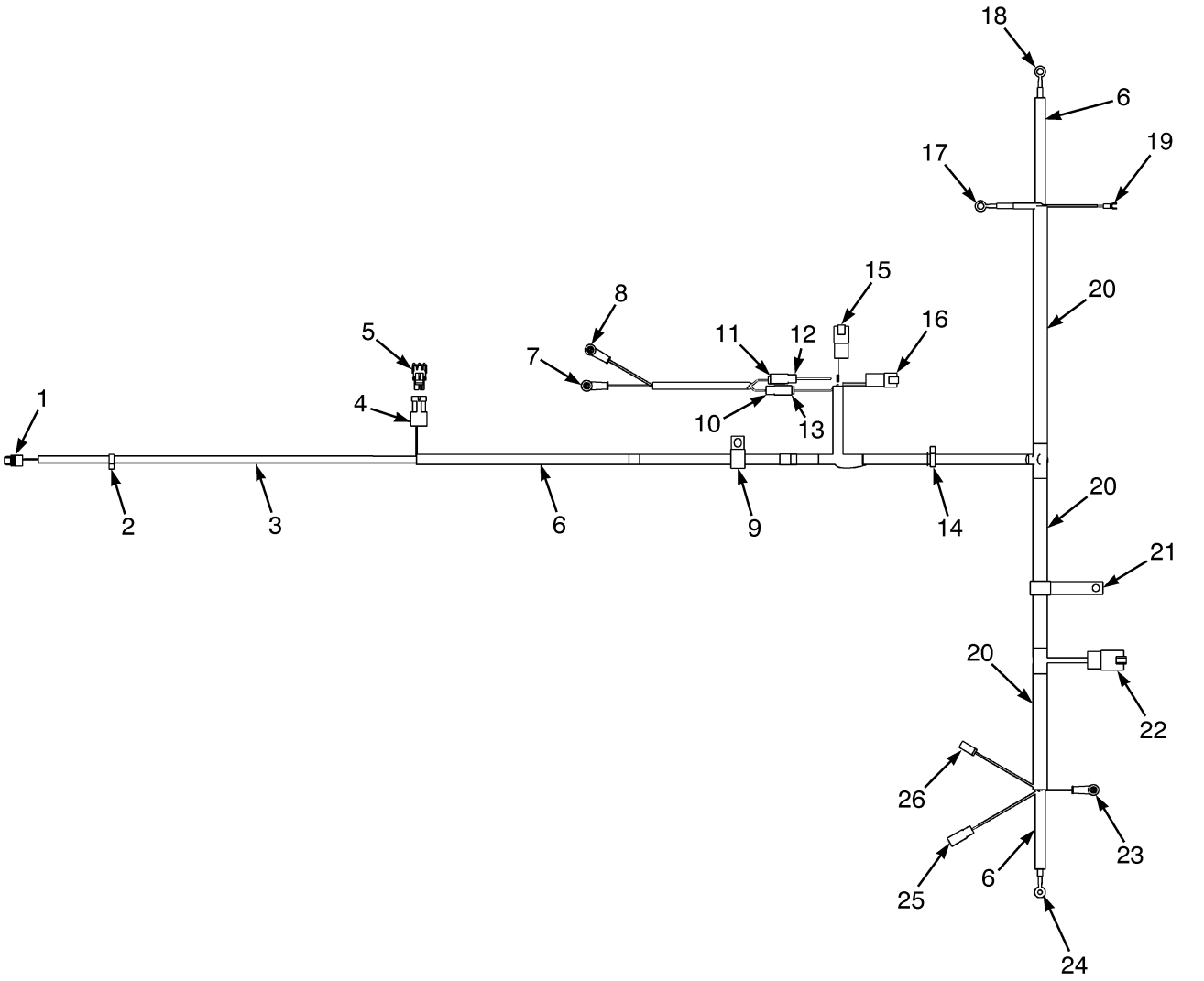

©2008 Yale Materials Handling Corporation

WIRE HARNESS
SEALED ALTERNATOR – CUMMINS QSB 3.3L

ITEM	PART NO.	DESCRIPTION	QTY
	580088369	Wire Harness	1
1	. . . . .	Connector Assembly (Fuel Level)	1
1	580025779	Connector	1
1	504288741	Terminal	2
2	580030876	Clip	1
3	580044908	Conduit	AR
4	. . . . .	Connector Assembly (Air Restriction Sensor)	1
4	580012324	Connector	1
4	520038875	Terminal	1
4	580023845	Seal	2
5	. . . . .	Connector Assembly (Endcap)	1
5	580012323	Connector	1
5	504288730	Seal	2
6	520038855	Conduit	AR
7	. . . . .	Connector Assembly (Disconnect Switch)	1
7	580056380	E-Ring	1
7	505970552	Boot	1
7	504231204	Heat Shrink	AR
8	. . . . .	Connector Assembly (Disconnect Switch)	1
8	580056380	E-Ring	1
8	505970552	Boot	1
8	504231204	Heat Shrink	AR
9	060023600	Clamp	1
10	. . . . .	Connector Assembly (Disconnect Switch Link)	1
10	504450740	Connector Body	1
10	504450761	Terminal	1
11	. . . . .	Connector Assembly (Disconnect Switch Link)	1
11	504450741	Connector Body	1
11	580049322	Terminal	1
12	. . . . .	Connector Assembly (Disconnect Switch Link)	1
12	504450740	Connector Body	1
12	504450761	Terminal	1
13	. . . . .	Connector Assembly (Disconnect Switch Link)	1
13	504450740	Connector Body	1
13	580049322	Terminal	1
14	580025559	Clip	1
15	. . . . .	Connector Assembly (To Right Hand Chassis Harness)	1
15	580032038	Connector	1
15	580032039	Connector	1
15	150121835	Terminal	2
16	. . . . .	Connector Assembly (To Right Hand Chassis Harness)	1
16	580020942	Connector (4 Way)	1
16	518806635	Connector	1
16	505968514	Terminal (Pin)	4
17	. . . . .	Connector Assembly (Starter Positive Stud)	1
17	580006526	E-Ring	1
18	. . . . .	Connector Assembly (Starter Negitive Stud)	1
18	580006526	E-Ring	1
19	. . . . .	Connector Assembly (Starter Solenoid)	1
19	580088535	E Ftg Spade Term #10	1

©2008 Yale Materials Handling Corporation

WIRE HARNESS

SEALED ALTERNATOR – CUMMINS QSB 3.3L

ITEM	PART NO.	DESCRIPTION	QTY
20	520045672	Conduit	AR
21	580050487	Clamp	1
22	. . . . .	Connector Assembly (Alternator Fuse)	1
22	580075791	Receptacle	1
22	580075792	Pin	1
23	. . . . .	Connector Assembly (Alternator D)	1
23	580056380	E-Ring	1
23	505970552	Boot	1
23	504231204	Heat Shrink	AR
24	. . . . .	Connector Assembly (Alternator Ground)	1
24	580062216	E-Ring	1
25	. . . . .	Connector Assembly (Alternator Field)	1
25	504450740	Connector Body	1
25	504450761	Terminal	1
26	. . . . .	Connector Assembly (Alternator Excite)	1
26	504450741	Connector Body	1
26	580049322	Terminal	1

©2008 Yale Materials Handling Corporation

NOTES

©2008 Yale Materials Handling Corporation

WIRE HARNESS (FIGURE 6-35)
TRANSMISSION — SINGLE SPEED

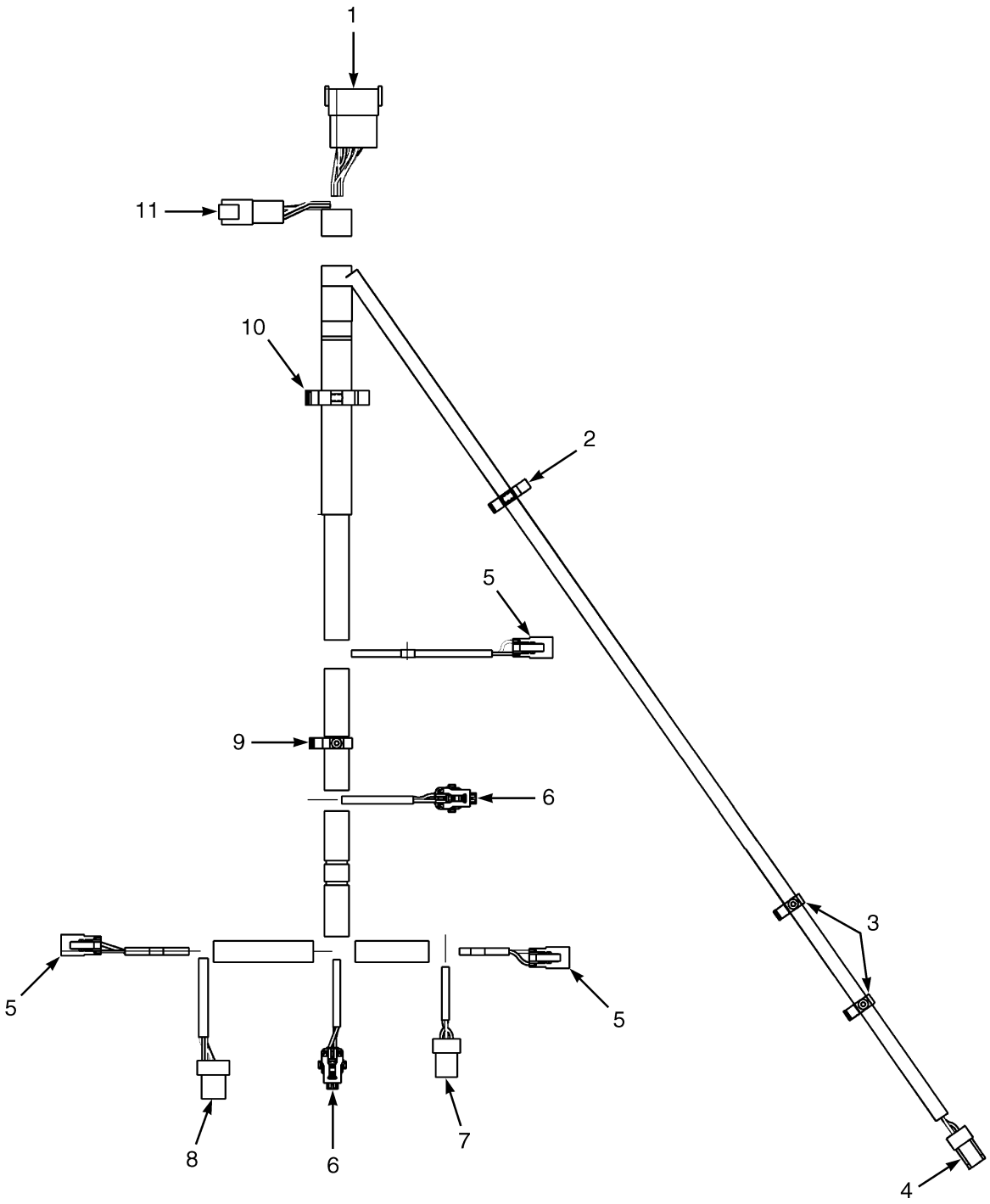

©2008 Yale Materials Handling Corporation

WIRE HARNESS
TRANSMISSION – SINGLE SPEED

ITEM	PART NO.	DESCRIPTION	QTY
	580069841	Wire Harness (Transmission)	1
1	. . . . .	Connector Assembly (To RH Chassis Harness)	1
1	580069704	Connector	1
1	580069705	Connector	1
1	580041195	Terminal	10
1	580019119	Plug	2
2	580025560	Clip	1
3	580030876	Clip	2
4	. . . . .	Connector Assembly (Temperature)	1
4	580023944	Connector	1
4	504288741	Terminal	2
5	. . . . .	Connector Assembly (Clutch Forward/Reverse 1)	1
5	580021087	Connector	1
5	580021088	Connector	1
5	505968568	Terminal (Socket)	2
6	. . . . .	Connector Assembly (Forward/Reverse 1 Pressure)	1
6	580063697	Connector	1
6	580063751	Connector (Secondary Lock)	1
6	580044852	Terminal (Socket)	3
6	580044854	Seal	3
7	. . . . .	Connector Assembly (Turbine Shaft RPM)	1
7	580043885	Connector	1
7	504288741	Terminal	3
8	. . . . .	Connector Assembly (Tail Shaft RPM)	1
8	580048895	Connector	1
8	504288741	Terminal	4
9	580030878	Clip	1
10	580025557	Clip	1
11	. . . . .	Connector Assembly (To RH Chassis Harness)	1
11	580039490	Connector	1
11	580039491	Connector	1
11	580041195	Terminal	4
11	580019119	Plug	2

©2008 Yale Materials Handling Corporation

WIRE HARNESS (FIGURE 6-36)
TRANSMISSION — DUAL SPEED

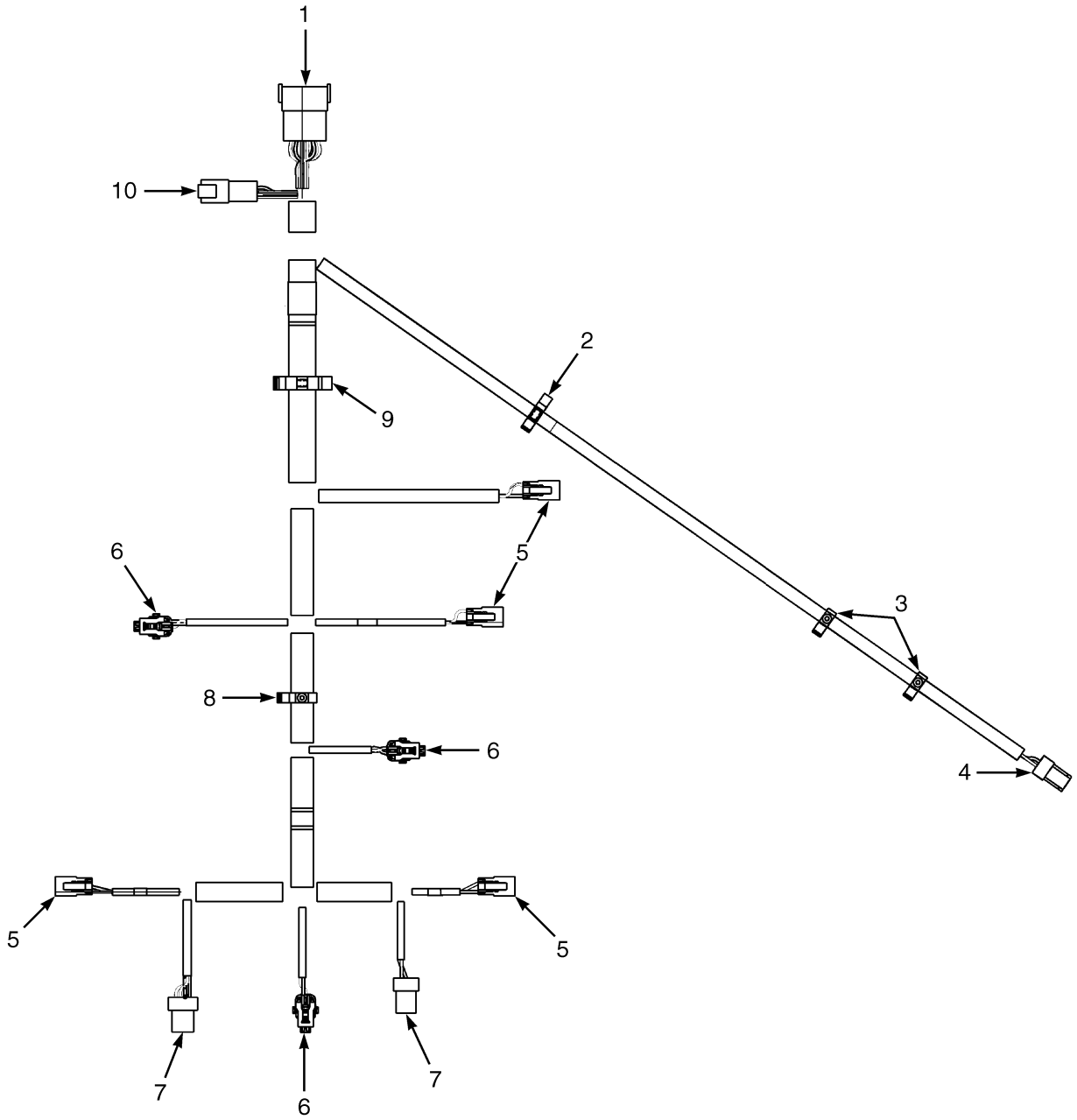

BP080479

©2008 Yale Materials Handling Corporation

WIRE HARNESS
TRANSMISSION – DUAL SPEED

ITEM	PART NO.	DESCRIPTION	QTY
	580069840	Wire Harness (Transmission)	1
1	. . . . .	Connector Assembly (To RH Chassis Harness)	1
1	580069704	Connector	1
1	580069705	Connector	1
1	580041195	Terminal	11
1	580019119	Plug	2
2	580025560	Clip	1
3	580030876	Clip	2
4	. . . . .	Connector Assembly (Temperature)	1
4	580023944	Connector	1
4	504288741	Terminal	2
5	. . . . .	Connector Assembly (Clutch Forward 1, and 2 Reverse 1)	4
5	580021087	Connector	1
5	580021088	Connector	1
5	505968568	Terminal (Socket)	2
6	. . . . .	Connector Assembly (Forward/Reverse 1 Pressure)	1
6	580063697	Connector	1
6	580063751	Connector (Secondary Lock)	1
6	580044852	Terminal (Socket)	3
6	580044854	Seal	3
7	. . . . .	Connector Assembly (Turbine/Tail Shaft RPM)	2
7	580043885	Connector	1
7	504288741	Terminal	3
8	580030878	Clip	1
9	580025557	Clip	1
10	. . . . .	Connector Assembly (To RH Chassis Harness)	1
10	580039490	Connector	1
10	580039491	Connector	1
10	580041195	Terminal	6

©2008 Yale Materials Handling Corporation

WIRE HARNESS (FIGURE 6-37)
COWL WITH MONOTROL PEDAL

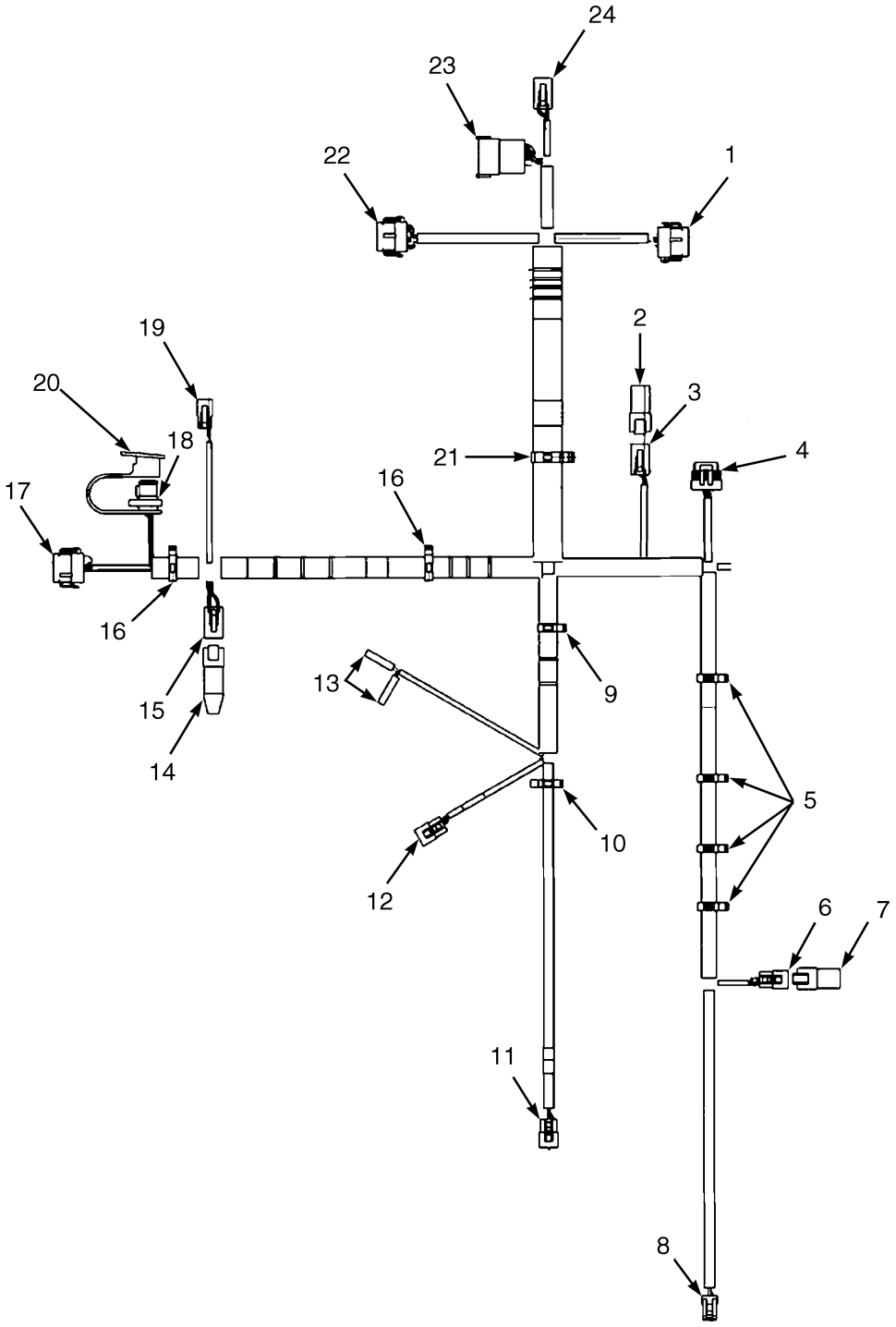

HP081702

©2008 Yale Materials Handling Corporation

WIRE HARNESS
COWL WITH MONOTROL PEDAL

ITEM	PART NO.	DESCRIPTION	QTY
	580082486	Wire Harness	1
1	. . . . .	Connector Assembly (Vehicle System Manager)	1
1	580036982	Connector	1
1	580036986	Connector	1
1	580039513	Terminal	10
1	580019119	Plug	2
2	580036910	Connector (End Cap)	1
2	. . . . .	Connector Assembly (Endcap)	1
3	. . . . .	Connector Assembly (To Monotrol Harness)	1
3	580020943	Connector (4-Way)	1
3	580020944	Connector	1
3	505968568	Terminal (Socket)	4
4	. . . . .	Connector Assembly (Accelerator Pedal Sensor)	1
4	580038661	Connector	1
4	580039158	Terminal	6
5	580030878	Clip	4
6	. . . . .	Connector Assembly (To Mast Harness)	1
6	580019139	Connector (3-Way)	1
6	580019140	Connector	1
6	505968568	Terminal (Socket)	3
7	. . . . .	Connector Assembly (Endcap)	1
7	580010571	Connector (End Cap)	1
8	. . . . .	Connector Assembly (Brake Pressure)	1
8	580063697	Connector	1
8	580063751	Connector (Secondary Lock)	1
8	580044852	Terminal (Socket)	3
8	580044854	Seal	3
9	580040120	Clip	1
10	580025560	Clip	1
11	. . . . .	Connector Assembly (Brake Pedal)	1
11	580019140	Connector	1
11	580019139	Connector (3-Way)	1
11	505968568	Terminal (Socket)	3
12	. . . . .	Connector Assembly (Park Brake)	1
12	580019140	Connector	1
12	580019139	Connector (3-Way)	1
12	505968568	Terminal (Socket)	3
13	. . . . .	Connector Assembly (Brake Fluid Sensor)	2
13	952408901	Sleeve	1
13	952405902	Terminal	1
14	580037670	Connector (With Resistor) (End Cap)	1
15	. . . . .	Connector Assembly (Bus Terminal 1)	1
15	580020943	Connector (4-Way)	1
15	580020944	Connector	1
15	505968568	Terminal (Socket)	4
16	580026808	Clip	2
17	. . . . .	Connector Assembly (Display)	1
17	580036981	Connector	1
17	580036986	Connector	1
17	580039513	Terminal	5

©2008 Yale Materials Handling Corporation

WIRE HARNESS
COWL WITH MONOTROL PEDAL

ITEM	PART NO.	DESCRIPTION	QTY
17	580019119	Plug	7
18	. . . . .	Connector Assembly (J1939 Diagnostic)	1
18	580051703	Connector	1
18	580039194	Connector	1
18	505968568	Terminal (Socket)	3
19	. . . . .	Connector Assembly (To Horn)	1
19	580021087	Connector	1
19	580025557	Clip	1
19	505968568	Terminal (Socket)	2
20	580051704	Dust Cap	1
21	580039764	Clip	1
22	. . . . .	Connector Assembly (Vehicle System Manager)	1
22	580036984	Connector	1
22	580036986	Connector	1
22	580039513	Terminal	7
22	580019119	Plug	5
23	. . . . .	Connector Assembly (Right Hand Chassis Harness)	1
23	580026816	Connector	1
23	505972589	Connector	1
23	505968514	Terminal (Pin)	9
23	580019119	Plug	3
24	. . . . .	Connector Assembly (Right Hand Chassis Harness)	1
24	580020943	Connector (4-Way)	1
24	505968568	Terminal (Socket)	4
24	580020944	Connector	1

©2008 Yale Materials Handling Corporation

NOTES

©2008 Yale Materials Handling Corporation

WIRE HARNESS (FIGURE 6-38)
COWL WITH FORWARD/REVERSE LEVER

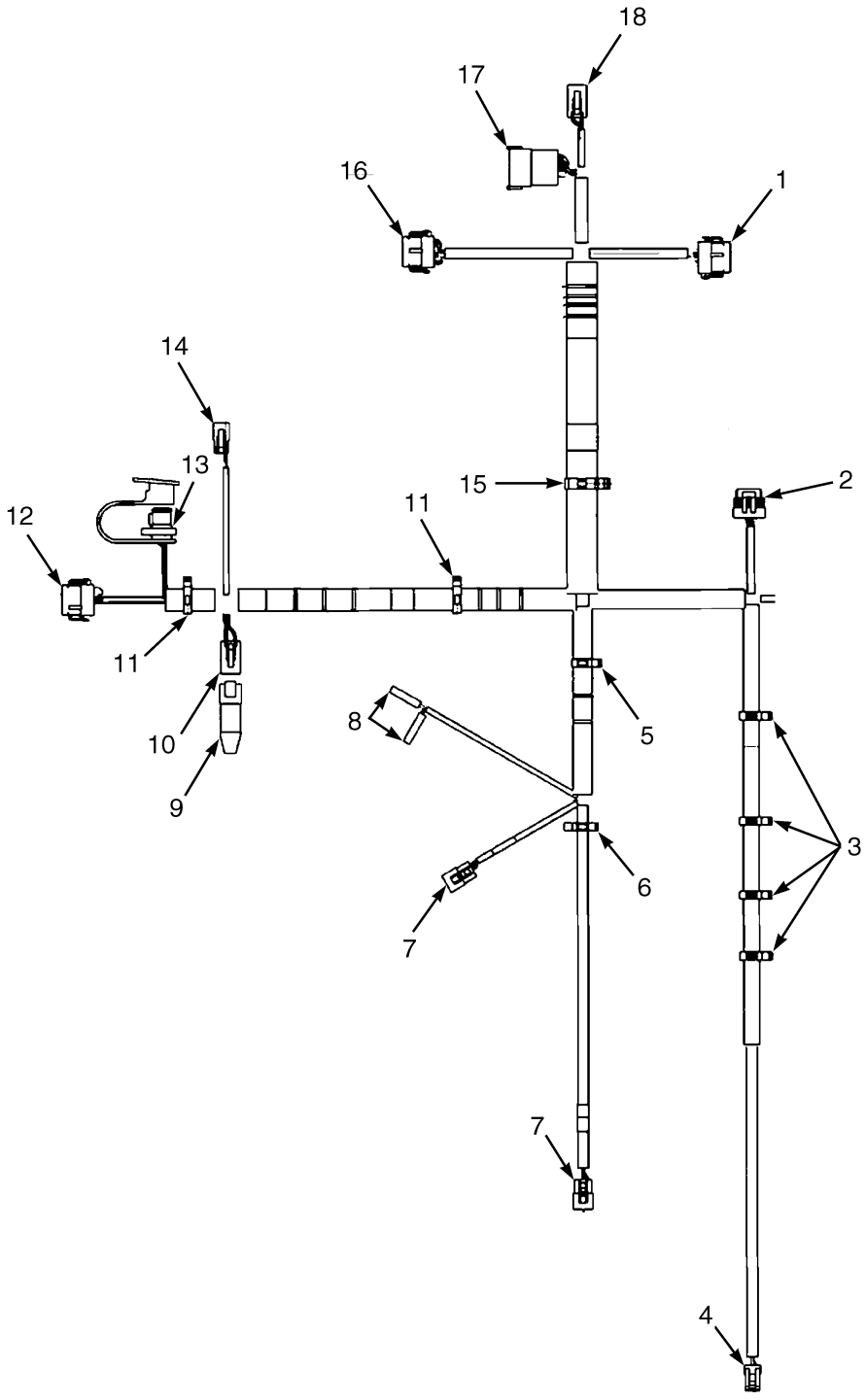

BP080443

©2008 Yale Materials Handling Corporation

WIRE HARNESS
COWL WITH FORWARD/REVERSE LEVER

ITEM	PART NO.	DESCRIPTION	QTY
	580082487	Wire Harness (Cowl)	1
1	. . . . .	Connector Assembly (Vehicle System Manager)	1
1	580036982	Connector	1
1	580039513	Terminal	6
1	580019119	Plug	6
1	580036986	Connector	1
2	. . . . .	Connector Assembly (Accelerator Pedal Sensor)	1
2	580038661	Connector	1
2	580039158	Terminal	6
3	580030876	Clip	4
4	. . . . .	Connector Assembly (Brake Pressure)	1
4	580063697	Connector	1
4	580063751	Connector (Secondary Lock)	1
4	580044852	Terminal (Socket)	3
4	580044854	Seal	3
5	580040120	Clip	1
6	580025560	Clip	1
7	. . . . .	Connector Assembly (Park Brake)	2
7	580019139	Connector (3-Way)	1
7	580019140	Connector	1
7	505968568	Terminal (Socket)	3
8	. . . . .	Connector Assembly (Brake Fluid)	2
8	952408901	Sleeve	1
8	952405902	Terminal	1
9	. . . . .	Connector Assembly (Endcap)	1
9	580037670	Connector (With Resistor)	1
10	. . . . .	Connector Assembly	1
10	580020943	Connector (4-Way)	1
10	580020944	Connector	1
10	505968568	Terminal (Socket)	4
11	580026808	Clip	2
12	. . . . .	Connector Assembly (Display)	1
12	580036981	Connector	1
12	580036986	Connector	1
12	580039513	Terminal	5
12	580019119	Plug	7
13	. . . . .	Connector Assembly (J1939 Diagnostic)	1
13	580051703	Connector	1
13	580039194	Connector	1
13	505968568	Terminal (Socket)	3
13	580051704	Dust Cap	1
14	. . . . .	Connector Assembly (Horn Button)	1
14	580021087	Connector	1
14	580025557	Clip	1
14	505968568	Terminal (Socket)	2
15	580039764	Clip	1
16	. . . . .	Connector Assembly (Vehicle System Manager)	1
16	580036984	Connector	1
16	580036986	Connector	1
16	580039513	Terminal	7

©2008 Yale Materials Handling Corporation

WIRE HARNESS
COWL WITH FORWARD/REVERSE LEVER

ITEM	PART NO.	DESCRIPTION	QTY
16	580019119	Plug	5
17	. . . . .	Connector Assembly (To Right Hand Chassis Harness)	1
17	580026816	Connector	1
17	505972589	Connector	1
17	505968514	Terminal (Pin)	6
17	580019119	Plug	6
18	. . . . .	Connector Assembly (To Right Hand Chassis Harness)	1
18	580020943	Connector (4-Way)	1
18	580020944	Connector	1
18	505968568	Terminal (Socket)	4

©2008 Yale Materials Handling Corporation

NOTES

©2008 Yale Materials Handling Corporation

WIRE HARNESS (FIGURE 6-39)

COWL WITH FORWARD/REVERSE LEVER — WITH HYDRAULIC PUMP SOLENOID

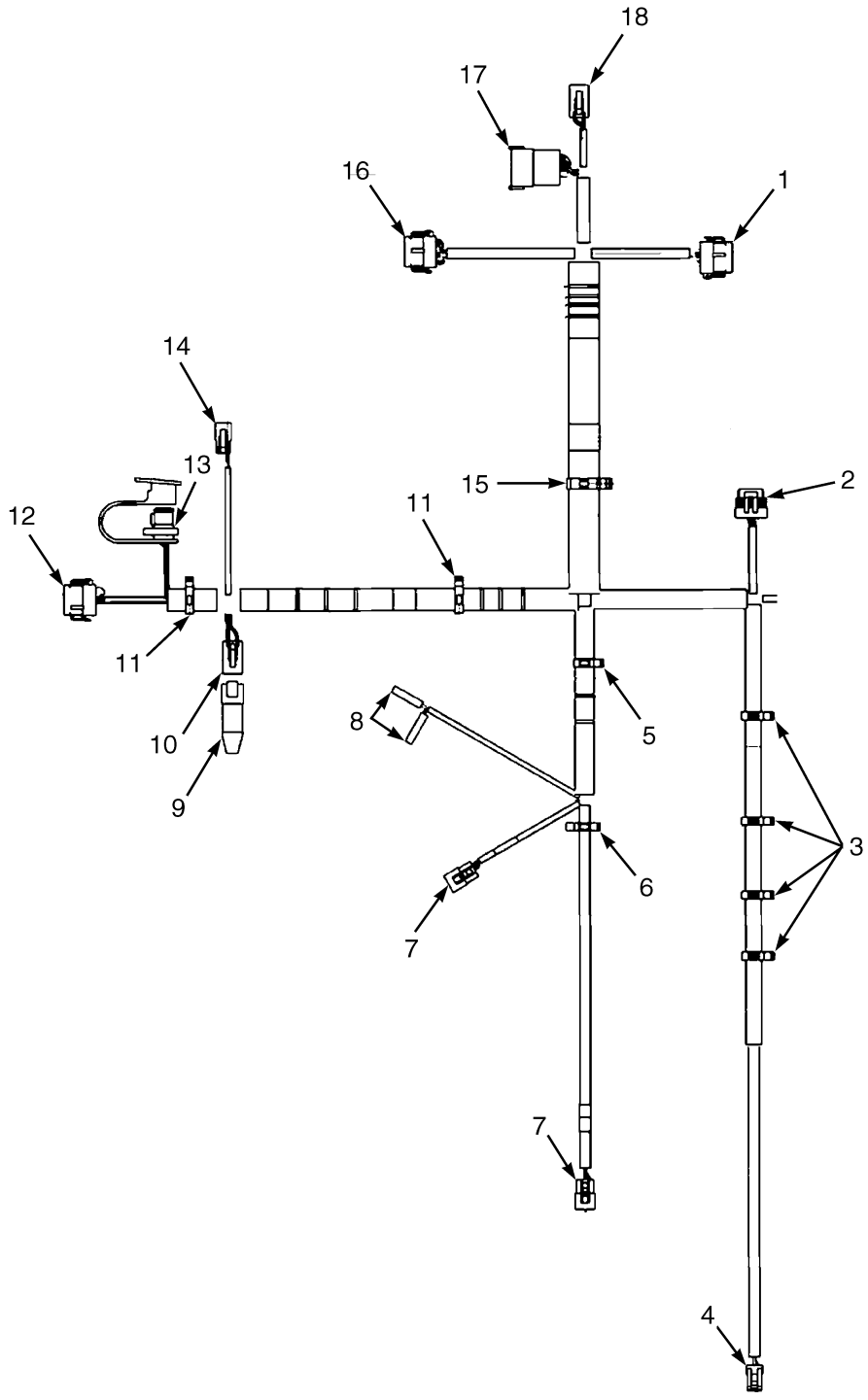

BP080443

©2008 Yale Materials Handling Corporation

WIRE HARNESS

COWL WITH FORWARD/REVERSE LEVER – WITH HYDRAULIC PUMP SOLENOID

ITEM	PART NO.	DESCRIPTION	QTY
	580082487	Wire Harness	1
1	. . . . .	Connector Assembly (Vehicle System Manager)	1
1	580036982	Connector	1
1	580036986	Connector	1
1	580039513	Terminal	7
1	580019119	Plug	5
2	. . . . .	Connector Assembly (Accelerator Pedal Sensor)	1
2	580038661	Connector	1
2	580039158	Terminal	6
3	580030876	Clip	4
4	. . . . .	Connector Assembly (Brake Pressure)	1
4	580063697	Connector	1
4	580063751	Connector (Secondary Lock)	1
4	580044852	Terminal (Socket)	3
4	580044854	Seal	3
5	580040120	Clip	1
6	580025560	Clip	1
7	. . . . .	Connector Assembly (Park Brake)	1
7	580019139	Connector (3-Way)	1
7	580019140	Connector	1
7	505968568	Terminal (Socket)	3
8	. . . . .	Connector Assembly (Brake Fluid)	2
8	952408901	Sleeve	1
8	952405902	Terminal	1
9	. . . . .	Connector Assembly (End Cap with Resistor)	1
9	580037670	Connector (With Resistor)	1
10	. . . . .	Connector Assembly (Connector)	1
10	580020943	Connector (4-Way)	1
10	580020944	Connector	1
10	505968568	Terminal (Socket)	1
11	580026808	Clip	1
12	. . . . .	Connector Assembly (Display)	1
12	580036981	Connector	1
12	580036986	Connector	1
12	580039513	Terminal	5
12	580019119	Plug	7
13	. . . . .	Connector Assembly (J1939 Diagnostic)	1
13	580051703	Connector	1
13	580039194	Connector	1
13	505968568	Terminal (Socket)	3
13	580051704	Dust Cap	1
14	. . . . .	Connector Assembly (Horn Button)	1
14	580021087	Connector	1
14	580021088	Connector	1
14	505968568	Terminal (Socket)	2
15	580039764	Clip	1
16	. . . . .	Connector Assembly Vehicle System Manager)	1
16	580036984	Connector	1
16	580036986	Connector	1
16	580039513	Terminal	7

©2008 Yale Materials Handling Corporation

WIRE HARNESS

COWL WITH FORWARD/REVERSE LEVER – WITH HYDRAULIC PUMP SOLENOID

ITEM	PART NO.	DESCRIPTION	QTY
16	580019119	Plug	5
17	. . . . .	Connector Assembly (To Right Hand Chassis Harness	1
17	580026816	Connector	1
17	505972589	Connector	1
17	505968514	Terminal (Pin)	7
17	580019119	Plug	5
18	. . . . .	Connector Assembly (To Right Hand Chassis Harness(	1
18	580020943	Connector (4-Way)	1
18	580020944	Connector	1
18	505968568	Terminal (Socket)	4

©2008 Yale Materials Handling Corporation

NOTES

©2008 Yale Materials Handling Corporation

WIRE HARNESS (FIGURE 6-40)
ELECTRONIC CONTROL VALVE — THREE FUNCTION

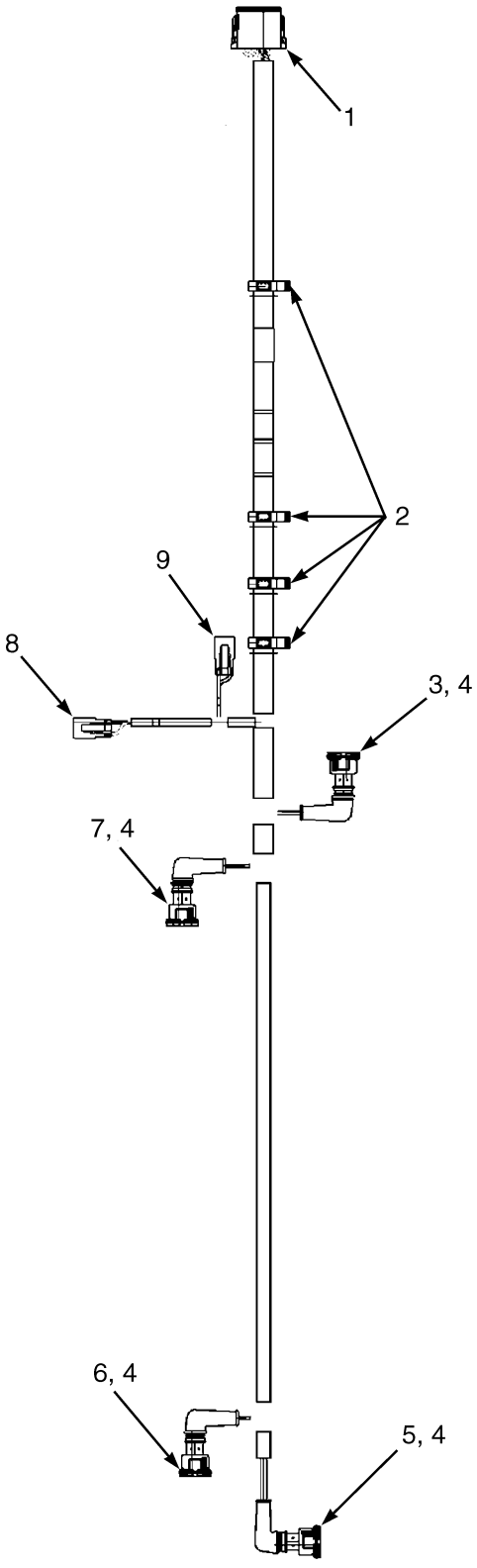

HP081569

©2008 Yale Materials Handling Corporation

WIRE HARNESS

ELECTRONIC CONTROL VALVE – THREE FUNCTION

ITEM	PART NO.	DESCRIPTION	QTY
	580040090	Wire Harness (Electronic Control Valve)	1
1	. . . . .	Connector Assembly (Vehicle System Manager)	1
1	580036941	Connector	1
1	505968568	Terminal (Socket)	9
1	505968566	Plug	3
1	580036941	Connector	1
1	580026813	Connector	1
2	580025559	Clip	4
3	. . . . .	Connector Assembly (2A Tilt)	1
3	580038186	Connector	1
3	580049815	Seal	2
3	580025558	Terminal	2
4	505970552	Boot	4
5	. . . . .	Connector Assembly (2B Tilt)	1
5	580038186	Connector	1
5	580049815	Seal	2
5	580025558	Terminal	2
6	. . . . .	Connector Assembly (3B Auxiliary 1)	1
6	580022866	Connector (2-Way)	1
6	580049815	Seal	2
6	580025558	Terminal	2
7	. . . . .	Connector Assembly (3A Auxiliary 1)	1
7	580022866	Connector (2-Way)	1
7	580049815	Seal	2
7	580025558	Terminal	2
8	. . . . .	Connector Assembly (Lift)	1
8	580021087	Connector	1
8	505968568	Terminal (Socket)	2
8	580021088	Connector	1
9	. . . . .	Connector Assembly (Lower)	1
9	580021087	Connector	1
9	505968568	Terminal (Socket)	2
9	580021088	Connector	1

©2008 Yale Materials Handling Corporation

WIRE HARNESS (FIGURE 6-41)
ELECTRONIC CONTROL VALVE — FOUR FUNCTION

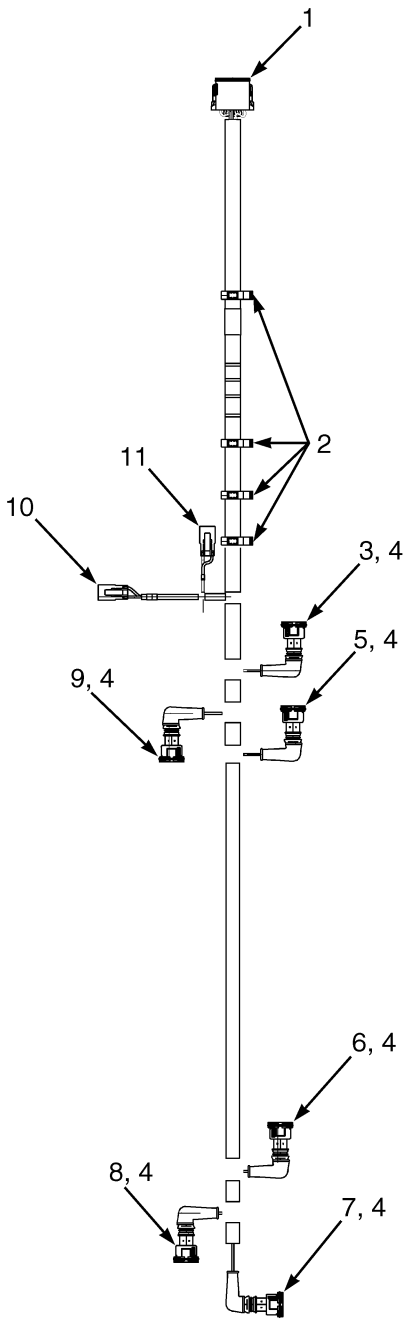

HP081568

©2008 Yale Materials Handling Corporation

WIRE HARNESS

ELECTRONIC CONTROL VALVE – FOUR FUNCTION

ITEM	PART NO.	DESCRIPTION	QTY
	580038751	Wire Harness (Electronic Control Valve)	1
1	. . . . .	Connector Assembly (Vehicle System Manager)	1
1	580036941	Connector	1
1	505968568	Terminal (Socket)	12
1	580026813	Connector	1
2	580025559	Clip	4
3	. . . . .	Connector Assembly (2A Tilt)	1
3	580038186	Connector	1
3	580049815	Seal	2
3	580025558	Terminal	2
4	505970552	Boot	6
5	580022878	Connector (4A Auxiliary 2)	1
5	580049815	Seal	2
5	580025558	Terminal	2
6	580022878	Connector (4B Auxiliary 2)	1
6	580049815	Seal	2
6	580025558	Terminal	2
7	. . . . .	Connector Assembly (2B Tilt)	1
7	580038186	Connector	1
7	580049815	Seal	2
7	580025558	Terminal	2
8	. . . . .	Connector Assembly (3B Auxiliary 1)	1
8	580022866	Connector (2-Way)	1
8	580049815	Seal	2
8	580025558	Terminal	2
9	. . . . .	Connector Assembly (3A Auxiliary 1)	1
9	580022866	Connector (2-Way)	1
9	580049815	Seal	2
9	580025558	Terminal	2
10	. . . . .	Connector Assembly (Lift)	1
10	580021087	Connector	1
10	505968568	Terminal (Socket)	2
10	580021088	Connector	1
11	. . . . .	Connector Assembly (Lower)	1
11	580021087	Connector	1
11	505968568	Terminal (Socket)	2
11	580021088	Connector	1

©2008 Yale Materials Handling Corporation

WIRE HARNESS (FIGURE 6-42)
LIGHTS — WITH OVERHEAD GUARD

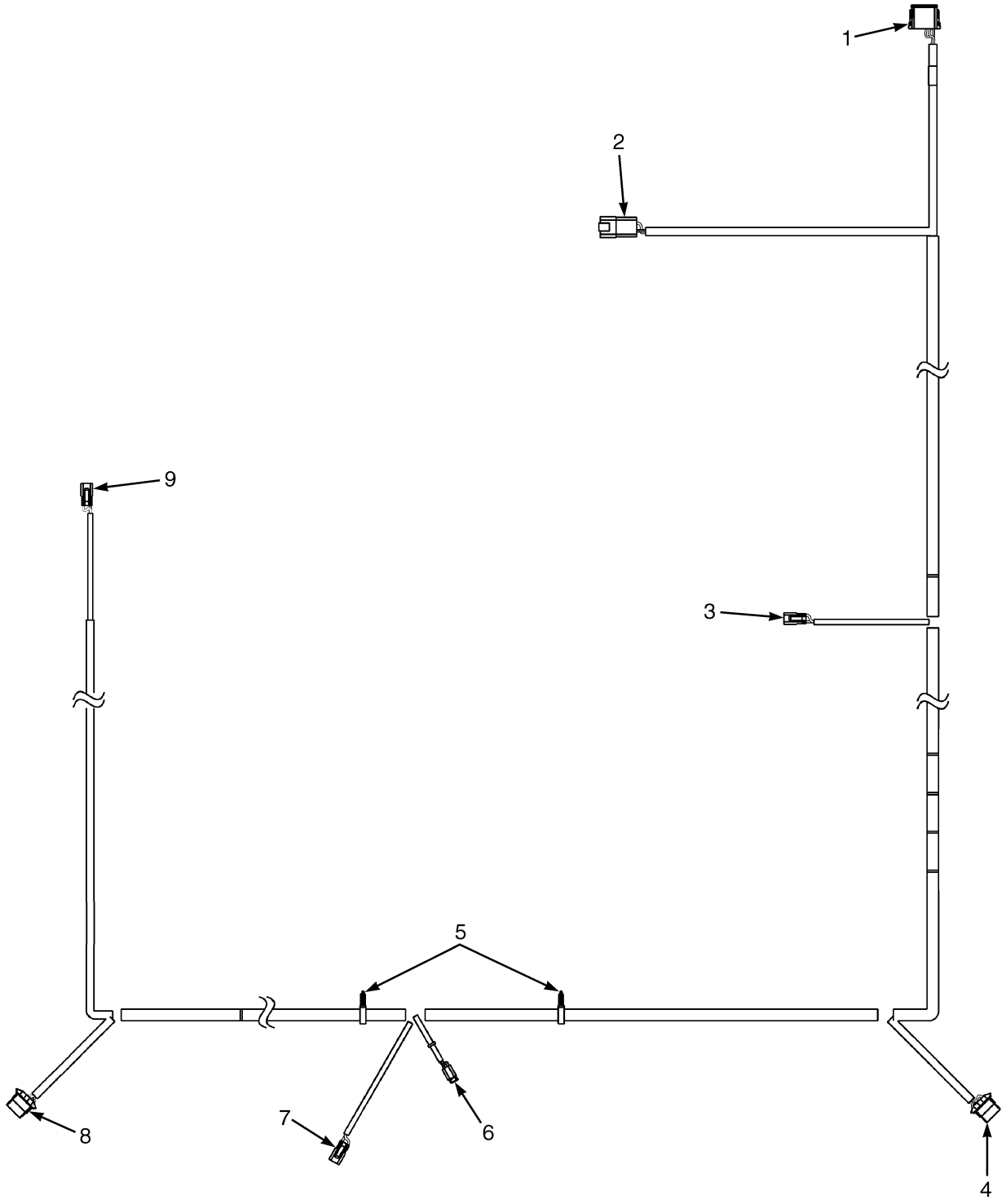

©2008 Yale Materials Handling Corporation

WIRE HARNESS
LIGHTS – WITH OVERHEAD GUARD

ITEM	PART NO.	DESCRIPTION	QTY
	580086521	Wire Harness (Lights)	1
1	. . . . .	Connector Assembly (Vehicle System Manager)	1
1	580036943	Connector	1
1	580019119	Plug	9
1	505968568	Terminal (Socket)	3
1	580026813	Connector	1
2	. . . . .	Connector Assembly (To Right Hand Classis Harness)	1
2	580040822	Connector	1
2	580019341	Terminal (Pin)	4
2	580040823	Connector	1
3	. . . . .	Connector Assembly (Right Hand Work Lights)	1
3	580021087	Connector	1
3	505968593	Terminal (Socket)	2
3	580021088	Connector	1
4	. . . . .	Connector Assembly (Right Hand Rear Signal Light)	1
4	580041462	Connector	1
4	520045804	Terminal	4
4	520045805	Seal	1
4	580027612	Plug	2
4	580045480	Connector	1
4	580026649	Wire Seal	3
5	580030878	Clip	2
6	. . . . .	Connector Assembly (Strobe Light)	1
6	580019245	Connector	1
6	580019246	Connector	1
6	580039513	Terminal	2
7	. . . . .	Connector Assembly (Rear Work Lights)	1
7	580021087	Connector	1
7	580021088	Connector	1
7	505968593	Terminal (Socket)	1
8	. . . . .	Connector Assembly (Left Hand Rear Signal Lights)	1
8	580041462	Connector	1
8	580045480	Connector	1
8	520045804	Terminal	4
8	520045805	Seal	1
8	580027612	Plug	2
8	580026649	Wire Seal	3
9	. . . . .	Connector Assembly (Left Hand Work Lights)	1
9	580021087	Connector	1
9	580021088	Connector	1
9	505968593	Terminal (Socket)	2

©2008 Yale Materials Handling Corporation

NOTES

©2008 Yale Materials Handling Corporation

7 TRANSMISSION

SECTION 7
TRANSMISSION

DESCRIPTION	PAGE
CONTROL VALVE ASSEMBLY	7-30
FORWARD CLUTCH	
SINGLE SPEED TRANSMISSION	7-16
FORWARD CLUTCH, HIGH	
DUAL SPEED TRANSMISSION	7-26
FORWARD CLUTCH, LOW	
DUAL SPEED TRANSMISSION	7-24
REVERSE CLUTCH	
DUAL SPEED TRANSMISSION	7-28
SINGLE SPEED TRANSMISSION	7-18
TORQUE CONVERTER	
CUMMINS QSB 3.3L DIESEL	7-3
GM 4.3L, GASOLINE AND LPG	7-4
TRANSMISSION	
DUAL SPEED, TWO PIECE HOUSING - SHEET 1 0F 2	7-20
DUAL SPEED, TWO PIECE HOUSING - SHEET 2 0F 2	7-22
SINGLE SPEED - SHEET 1 0F 2	7-12
SINGLE SPEED - SHEET 2 0F 2	7-14
TRANSMISSION COOLING	
WITH EXTERNAL OIL COOLER - GM 4.3L AND CUMMINS QSB 3.3L	7-10
WITH INTERNAL OIL COOLER - CUMMINS QSB 3.3L DIESEL	7-6
WITH INTERNAL OIL COOLER - GM 4.3L GASOLINE AND LPG	7-8
TRANSMISSION MOUNTING	7-2

©2008 Yale Materials Handling Corporation

TRANSMISSION MOUNTING (FIGURE 7-1)

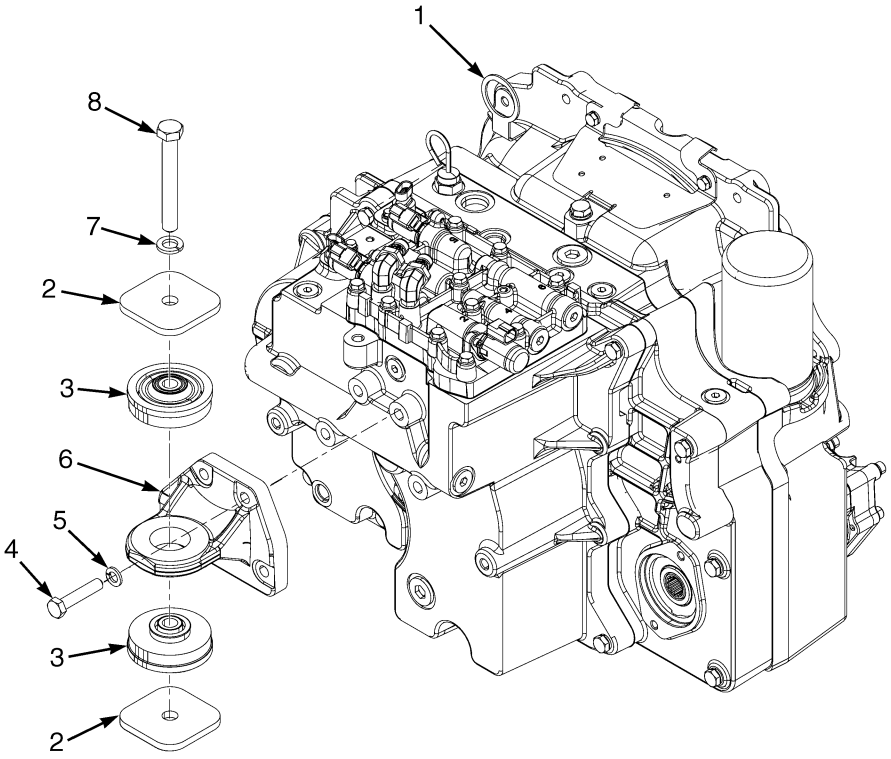

ITEM	PART NO.	DESCRIPTION	QTY
1	580079916	Bracket (Electrical Connector)	1
2	580051746	Washer	2
3	580051670	Isolator	2
4	449001048	Capscrew	4
5	449022017	Lockwasher	4
6	580052018	Bracket	1
7	449022041	Lockwasher	1
8	931017917	Capscrew	1

©2008 Yale Materials Handling Corporation

TORQUE CONVERTER (FIGURE 7-2)
CUMMINS QSB 3.3L DIESEL

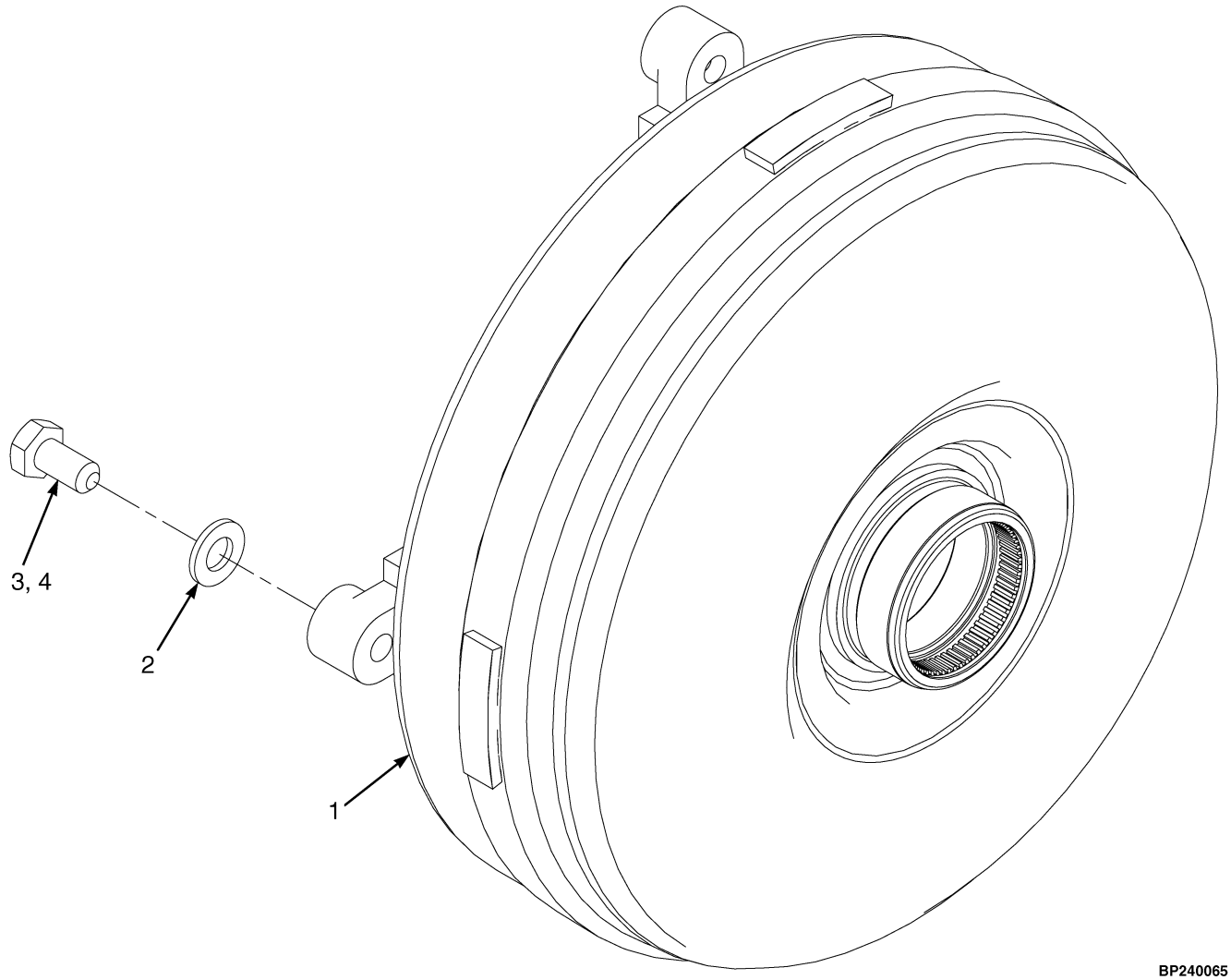

BP240065

ITEM	PART NO.	DESCRIPTION	QTY
1	580047058	Torque Converter	1
2	502566904	Washer	4
3	580042194	Capscrew	4
4	501702901	Loctite	AR

©2008 Yale Materials Handling Corporation

TORQUE CONVERTER (FIGURE 7-3)
GM 4.3L, GASOLINE AND LPG

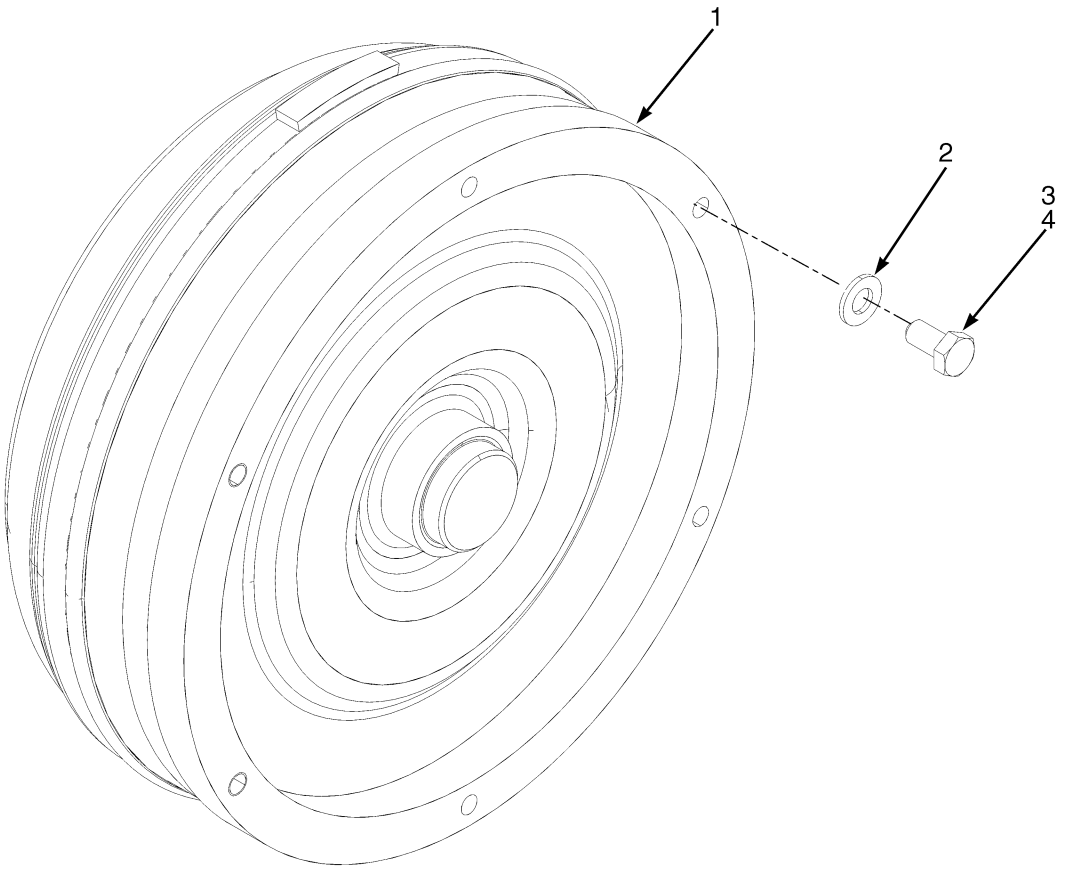

BP240064

ITEM	PART NO.	DESCRIPTION	QTY
1	580047056	Torque Converter (Without Extended Function Transmission)	1
1	580047057	Torque Converter (With Extended Function Transmission)	1
2	502566904	Washer	6
3	580042194	Capscrew	6
4	501702901	Loctite	AR

©2008 Yale Materials Handling Corporation

NOTES

©2008 Yale Materials Handling Corporation

TRANSMISSION COOLING (FIGURE 7-4)
WITH INTERNAL OIL COOLER — CUMMINS QSB 3.3L DIESEL

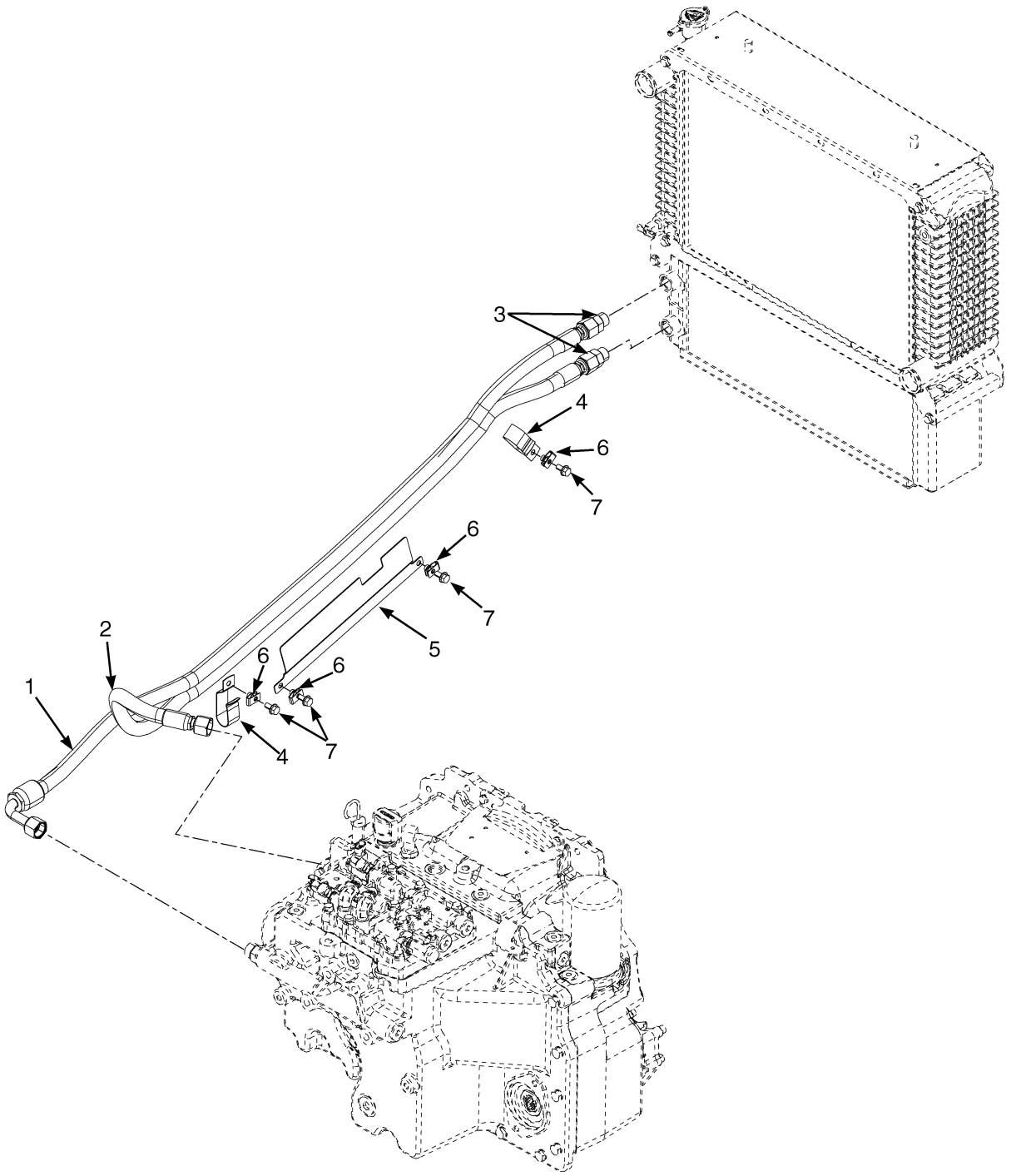

BP240119

©2008 Yale Materials Handling Corporation

TRANSMISSION COOLING

WITH INTERNAL OIL COOLER – CUMMINS QSB 3.3L DIESEL

ITEM	PART NO.	DESCRIPTION	QTY
1	580085259	Hose Assy	1
2	580085260	Hose Assy	1
3	580019817	Fitting	3
4	580049814	Clip	2
5	580064921	Shield	1
6	580026621	Nut	4
7	580047714	Capscrew	4

©2008 Yale Materials Handling Corporation

TRANSMISSION COOLING (FIGURE 7-5)

WITH INTERNAL OIL COOLER — GM 4.3L GASOLINE AND LPG

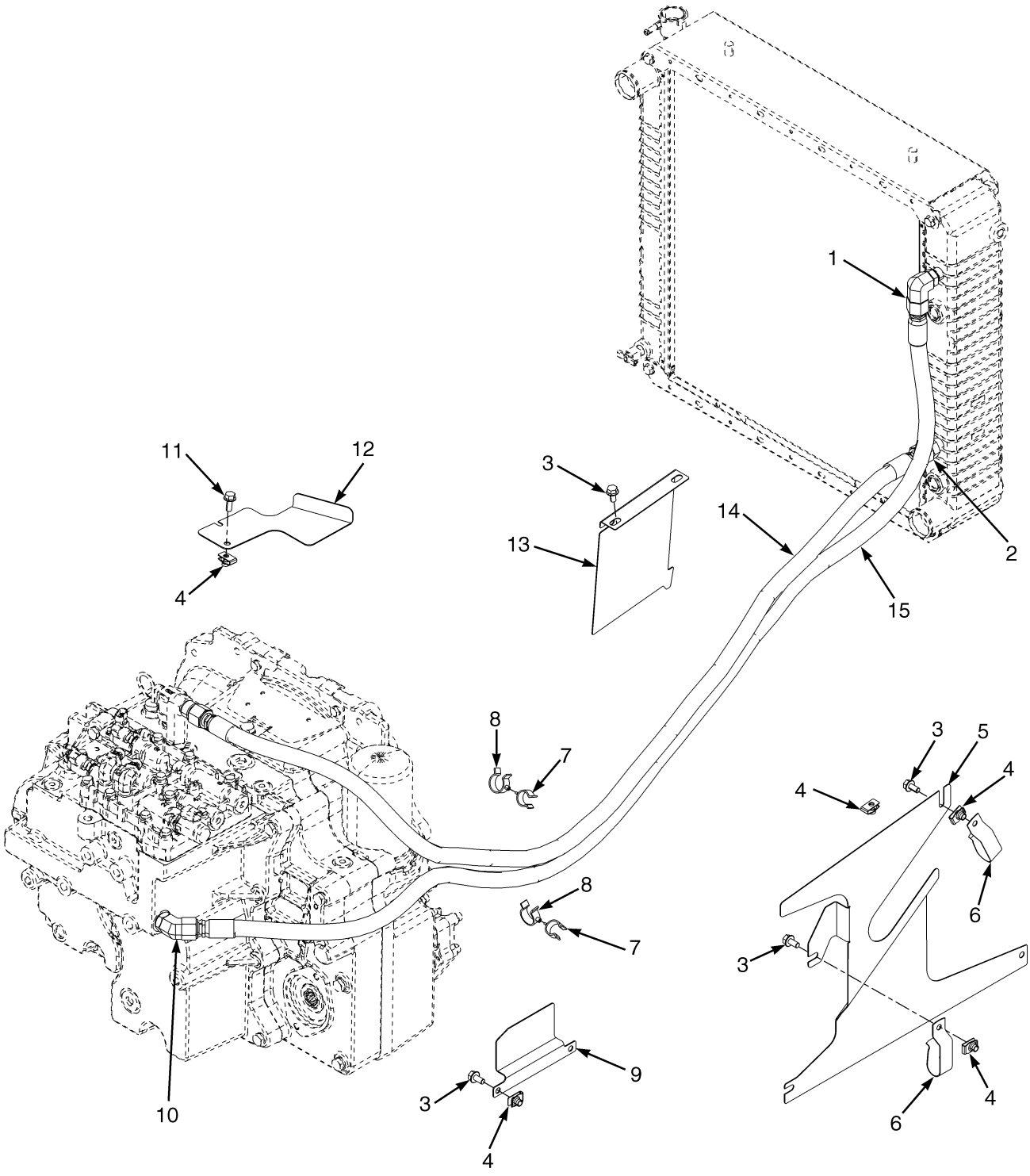

©2008 Yale Materials Handling Corporation

TRANSMISSION COOLING

WITH INTERNAL OIL COOLER – GM 4.3L GASOLINE AND LPG

ITEM	PART NO.	DESCRIPTION	QTY
1	580057932	Fitting	1
2	580055798	Fitting	1
3	580047714	Capscrew	6
4	580026621	Nut	7
5	580072662	Shield	1
6	580049814	Clip	2
7	580042567	Clamp	2
8	580042328	Clamp	2
9	580064920	Shield	1
10	580039353	Fitting	1
11	580049231	Capscrew	1
12	580061571	Drip Shield	1
13	580074143	Heat Shield	1
14	580073577	Hose Assy (Alternate Part)	1
14	580080134	Hose Assy	1
15	580064114	Hose Assy (Alternate Part)	1
15	580080129	Hose Assy	1

©2008 Yale Materials Handling Corporation

TRANSMISSION COOLING (FIGURE 7-6)

WITH EXTERNAL OIL COOLER — GM 4.3L AND CUMMINS QSB 3.3L

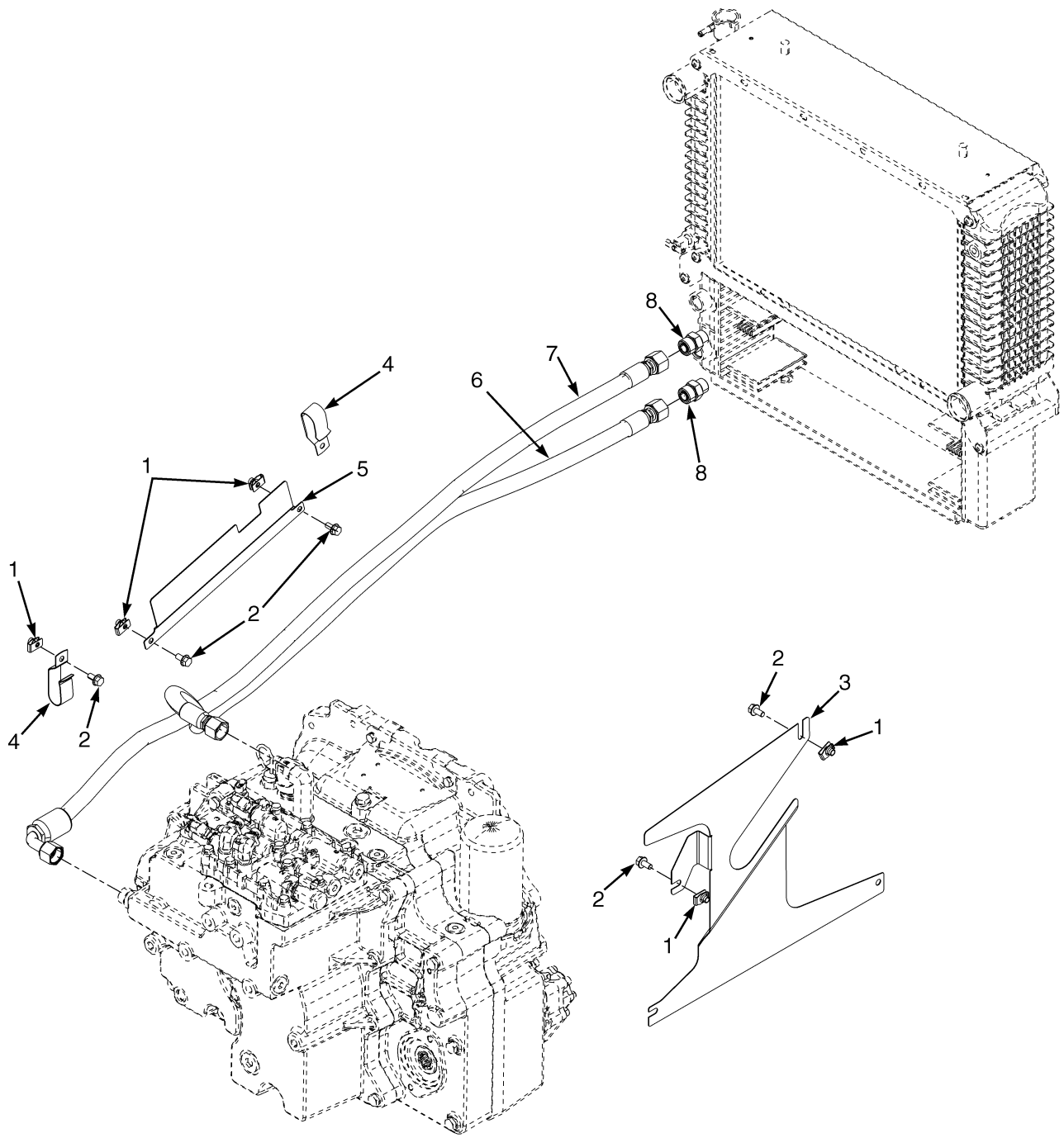

BP240081

©2008 Yale Materials Handling Corporation

TRANSMISSION COOLING

WITH EXTERNAL OIL COOLER – GM 4.3L AND CUMMINS QSB 3.3L

ITEM	PART NO.	DESCRIPTION	QTY
1	580026621	Nut	3
2	580047714	Capscrew	3
3	580072662	Shield	1
4	580049814	Clip	1
5	580064921	Shield	1
6	580064115	Hose Assy (Alternate Part)	1
6	580080130	Hose Assy	1
7	580077753	Hose Assy (Alternate Part)	1
7	580080137	Hose Assy	1
8	580019817	Fitting	3

©2008 Yale Materials Handling Corporation

TRANSMISSION (FIGURE 7-7)

SINGLE SPEED — SHEET 1 0F 2

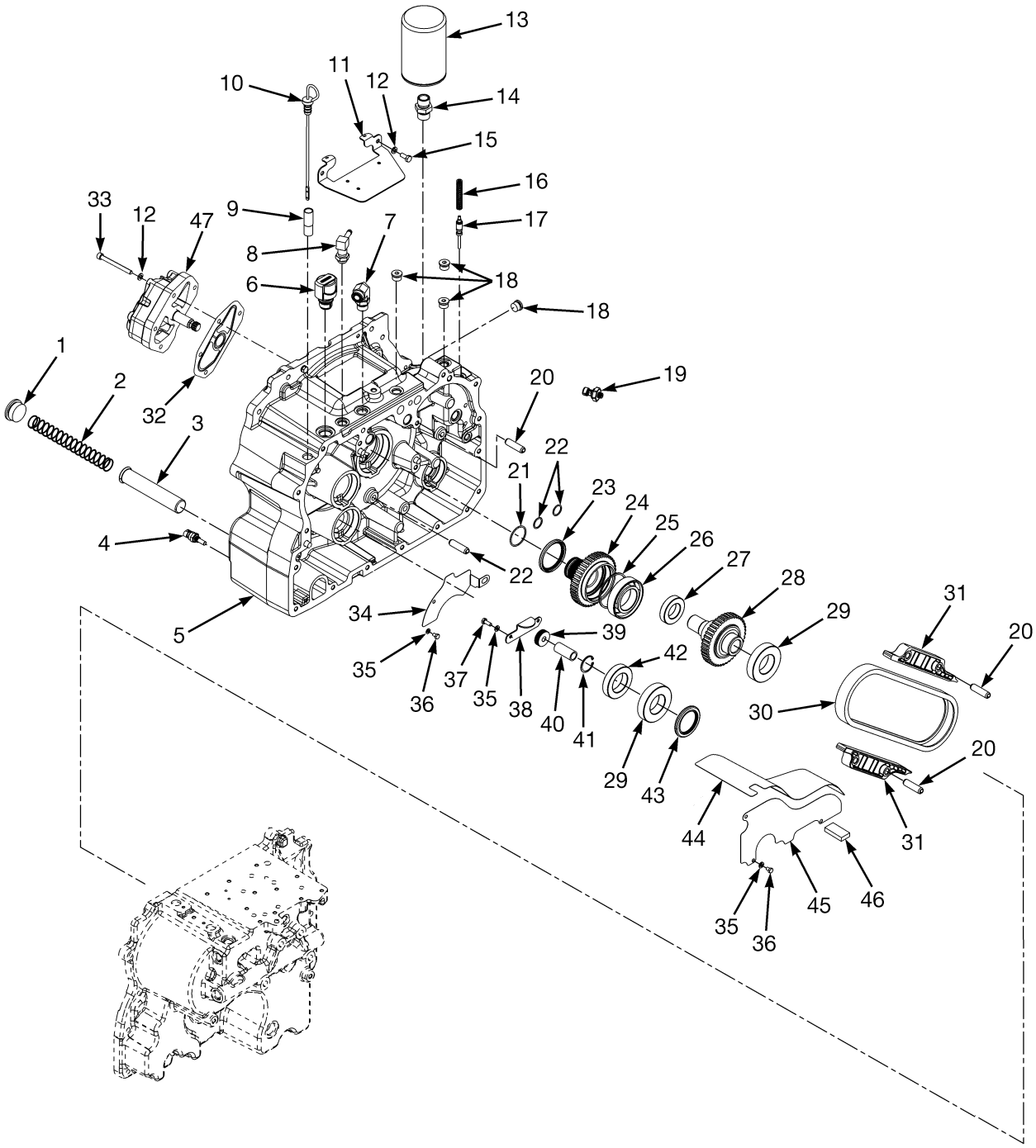

BP240131

©2008 Yale Materials Handling Corporation

TRANSMISSION
SINGLE SPEED – SHEET 1 0F 2

ITEM	PART NO.	DESCRIPTION	QTY
	580076344	Transmission Assy (Single Speed Dry Brake)	1
	580076345	Transmission Assy (Single Speed Wet Brake)	1
1	810646400	Fitting	1
2	580046280	Spring	1
3	580074890	Screen	1
4	580036023	Sensor (Coolant Temperature)	1
5	580075838	Converter Housing (Torque Converter)	1
6	580073345	Breather	1
7	580056465	Fitting	1
8	580074759	Fitting	1
9	580082181	Dipstick Tube	1
10	580070353	Dipstick	1
11	580074891	Cover (Converter Housing)	1
12	449022016	Lockwasher	6
13	580072982	Filter	1
14	580048738	Fitting	1
15	449001013	Capscrew	2
16	580066585	Spring	1
17	580066583	Spool	1
18	505967551	Fitting	4
19	580051796	Pressure Transducer	1
20	954514907	Roll Pin	4
21	580059631	O-Ring	1
22	580046769	O-Ring	2
23	580046273	Oil Seal (Torque Converter)	1
24	580045062	Sprocket	1
25	580045072	Sealing Ring	1
26	580045064	Bearing	1
27	500505908	Bearing	1
28	580060780	Sprocket	1
29	201928200	Ball Bearing	2
30	580035695	Chain (Drive Pump)	1
31	580074888	Snubber	2
32	580079527	Gasket	2
33	932201916	Capscrew	4
34	580074893	Shield (Upper)	1
35	449022018	Washer	6
36	449001160	Capscrew	4
37	449001412	Capscrew	2
38	580046277	Cover Plate	1
39	580047839	Nut	1
40	580074887	Spacer	1
41	064570600	Snap Ring	1
42	640088905	Bearing	1
43	580046274	Oil Seal	1
44	580074892	Baffle	1
45	580074894	Shield (Lower)	1
46	505967598	Magnet	1

©2008 Yale Materials Handling Corporation

TRANSMISSION (FIGURE 7-8)
SINGLE SPEED — SHEET 2 0F 2

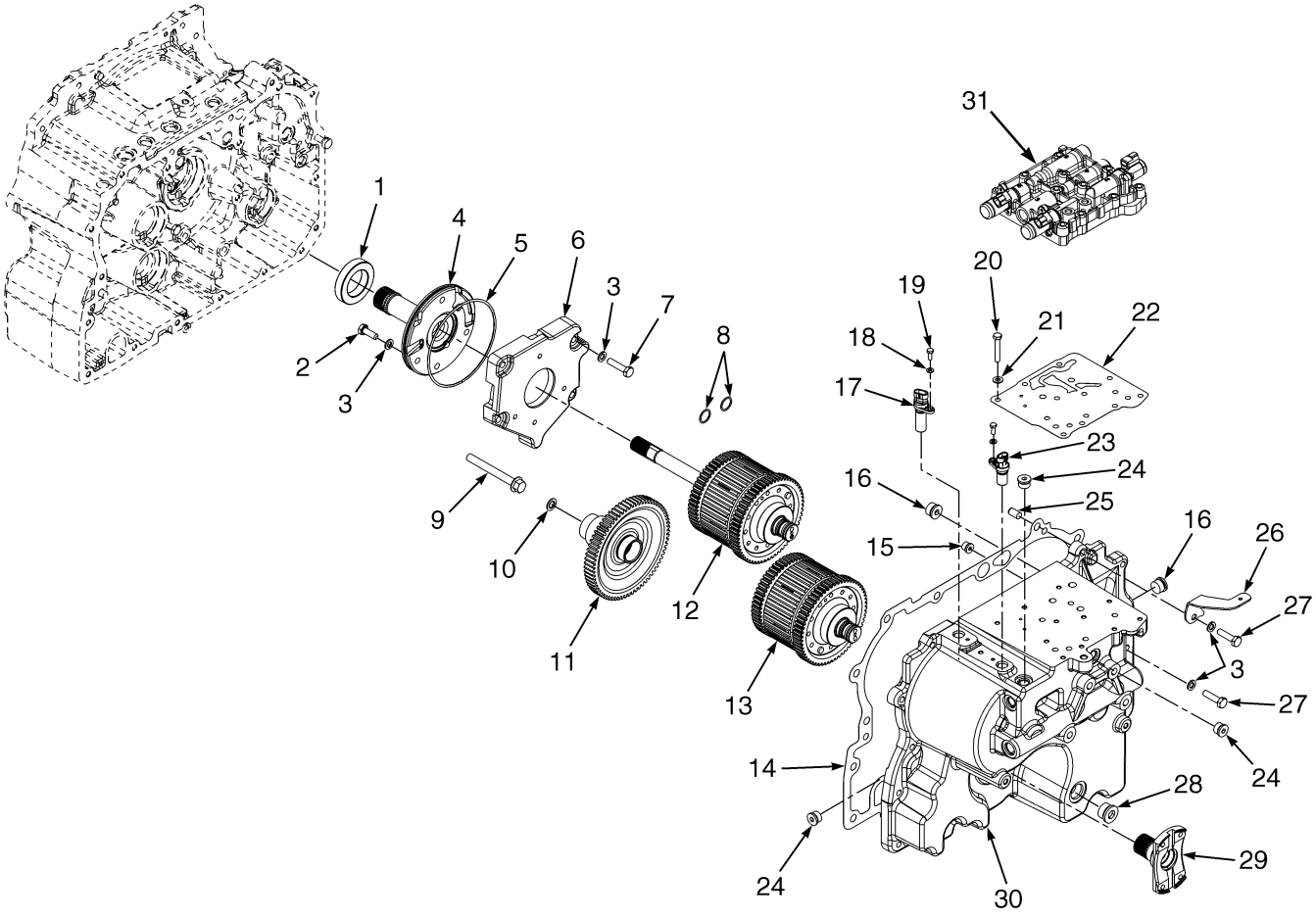

©2008 Yale Materials Handling Corporation

TRANSMISSION

SINGLE SPEED – SHEET 2 0F 2

ITEM	PART NO.	DESCRIPTION	QTY
	580076344	Transmission Assy (Single Speed Dry Brake)	1
	580076345	Transmission Assy (Single Speed Wet Brake)	1
1	640088904	Ball Bearing	1
2	449001302	Capscrew	4
3	449022013	Lockwasher	25
4	580047772	Stator	1
5	580056463	O-Ring	1
6	580075839	Carrier	1
7	449001010	Capscrew	4
8	580046769	O-Ring	2
9	580079982	Flange Head Capscrew	1
10	580011108	Seal	1
11	580075050	Gear (Output)	1
12	580076934	Clutch Pack	1
13	580076935	Clutch Pack	1
14	580074889	Gasket	1
15	315976070	Fitting	1
16	514454800	Fitting	2
17	580056272	Sensor	1
18	449022018	Washer	2
19	449001412	Capscrew	2
20	449001050	Capscrew	11
21	449021001	Washer	1
22	580055553	Gasket	1
23	580045059	Sensor (Speed)	1
24	505967551	Fitting	4
25	580050042	Dowel	4
26	580079000	Bracket	1
27	449001040	Capscrew	15
28	500390901	Fitting	1
29	580079608	Yoke	1
30	580075837	Transmission Housing	1

©2008 Yale Materials Handling Corporation

FORWARD CLUTCH (FIGURE 7-9)
SINGLE SPEED TRANSMISSION

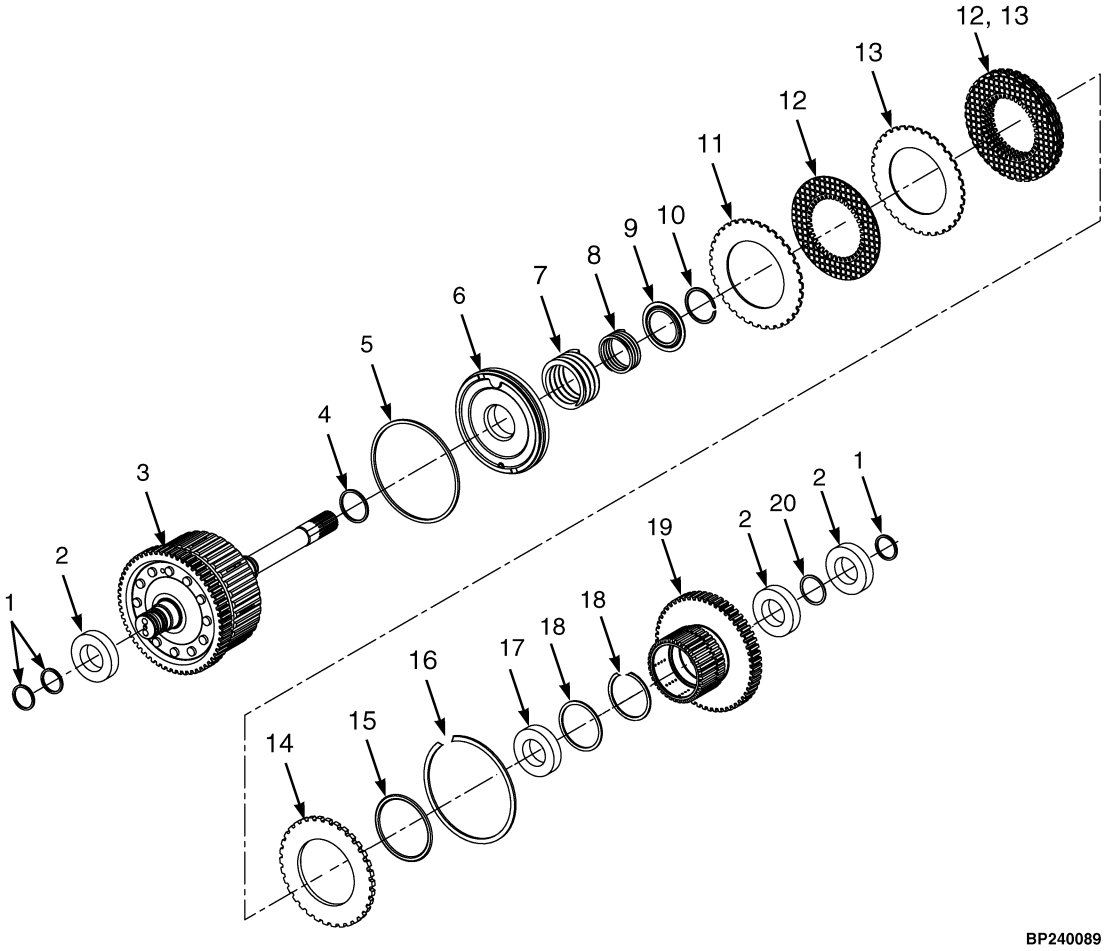

©2008 Yale Materials Handling Corporation

FORWARD CLUTCH
SINGLE SPEED TRANSMISSION

ITEM	PART NO.	DESCRIPTION	QTY
	580076934	Clutch Pack	1
1	. . . . .	Ring Seal	3
2	015125800	Ball Bearing	3
3	580078582	Shaft	1
4	. . . . .	Ring Seal	1
5	. . . . .	Ring Seal	1
6	524259220	Piston	1
7	580055204	Spring	1
8	580055193	Spring	1
9	580055195	Spring Guide	1
10	580055196	Snap Ring	1
11	. . . . .	Conical Plate	1
12	. . . . .	Friction Plate	8
13	. . . . .	Separator Plate	7
14	580040786	Pressure Plate (6.0 mm)	1
15	. . . . .	O-Ring	1
16	580040787	Snap Ring	1
17	580055216	Ball Bearing	1
18	580055203	Snap Ring	2
19	580078583	Clutch Gear	1
20	580055202	Snap Ring	1
	580078918	Repair Kit	1
	580053110	Kit-Clutch Pack Plates (Clutch Pack Plates)	1
	580060755	Kit-Clutch Pack Seals	1

©2008 Yale Materials Handling Corporation

REVERSE CLUTCH (FIGURE 7-10)
SINGLE SPEED TRANSMISSION

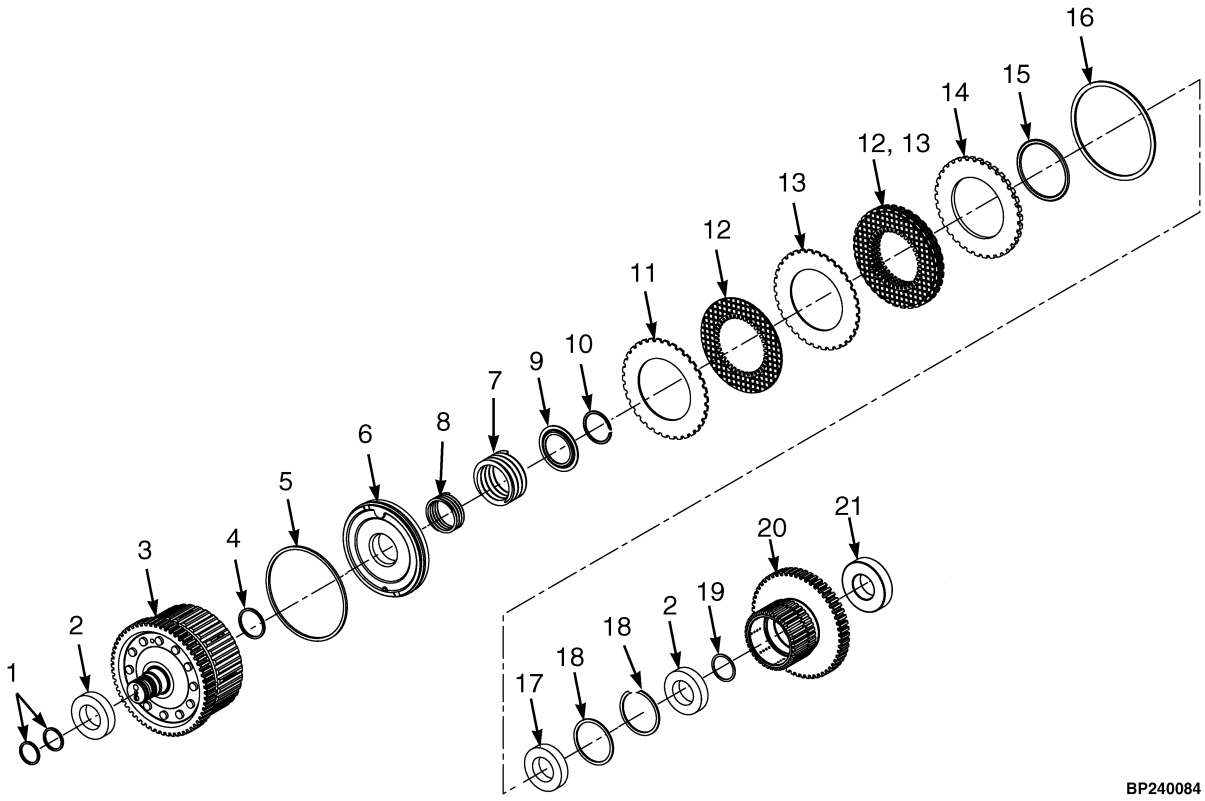

©2008 Yale Materials Handling Corporation

REVERSE CLUTCH
SINGLE SPEED TRANSMISSION

ITEM	PART NO.	DESCRIPTION	QTY
	580076935	Clutch Pack	1
1	. . . . .	Seal	2
2	015125800	Ball Bearing	3
3	580078584	Shaft	1
4	. . . . .	Seal	1
5	. . . . .	Seal	1
6	524259220	Piston	1
7	580055204	Spring	1
8	580055193	Spring	1
9	580055195	Spring Guide	1
10	580055196	Snap Ring	1
11	. . . . .	Conical Plate	1
12	. . . . .	Friction Plate	5
13	. . . . .	Separator Plate	4
14	580040786	Pressure Plate (6.0 mm)	1
15	. . . . .	O-Ring	1
16	580040787	Snap Ring	1
17	580055216	Ball Bearing	1
18	580055203	Snap Ring	1
19	580040796	Snap Ring	1
20	580078583	Clutch Gear	1
	580078918	Repair Kit	1
	580053110	Kit-Clutch Pack Plates (Clutch Pack Plates)	1
	580060755	Kit-Clutch Pack Seals	1

©2008 Yale Materials Handling Corporation

TRANSMISSION (FIGURE 7-11)

DUAL SPEED, TWO PIECE HOUSING — SHEET 1 0F 2

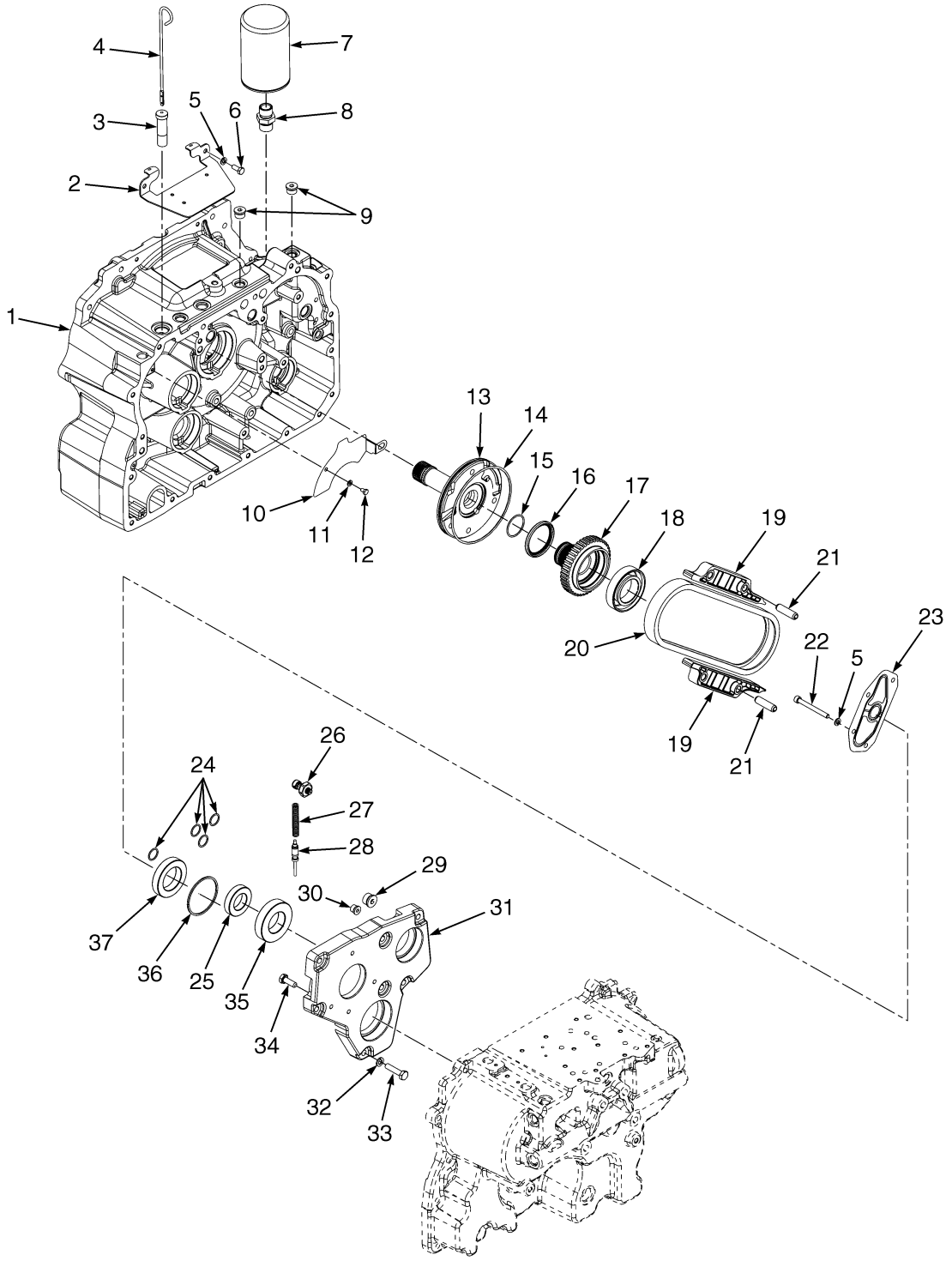

BP240129

©2008 Yale Materials Handling Corporation

TRANSMISSION

DUAL SPEED, TWO PIECE HOUSING – SHEET 1 0F 2

ITEM	PART NO.	DESCRIPTION	QTY
	580075203	Transmission Assy (Dual Speed Dry Brake)	1
	580075204	Transmission Assy (Dual Speed Wet Brake)	1
1	580075039	Converter Housing (Torque Converter)	1
2	580074891	Cover (Converter Housing)	1
3	580082181	Dipstick Tube	1
4	580070353	Dipstick	1
5	449022016	Lockwasher	6
6	449001013	Capscrew	2
7	580072982	Filter	1
8	580048738	Fitting	1
9	505967551	Fitting	4
10	580074893	Shield (Upper)	1
11	449022018	Washer	1
12	449001160	Capscrew	1
13	580047772	Stator	1
14	580056463	O-Ring	1
15	580059631	O-Ring	1
16	580046273	Oil Seal (Torque Converter)	1
17	580045062	Sprocket	1
18	580045064	Bearing	1
19	580074888	Snubber	2
20	580035695	Chain (Drive Pump)	1
21	954514907	Roll Pin	4
22	932201916	Capscrew	4
23	580079527	Gasket	1
24	580046769	O-Ring	4
25	500505908	Bearing	1
26	580051796	Pressure Transducer	2
27	580066585	Spring	1
28	580066583	Spool	1
29	514454800	Fitting	2
30	315976070	Fitting	1
31	580075035	Carrier	1
32	449022013	Lockwasher	7
33	449001010	Capscrew	7
34	449001302	Capscrew	4
35	201928200	Ball Bearing	1
36	580045072	Sealing Ring	1
37	640088904	Ball Bearing	1

©2008 Yale Materials Handling Corporation

TRANSMISSION (FIGURE 7-12)

DUAL SPEED, TWO PIECE HOUSING — SHEET 2 0F 2

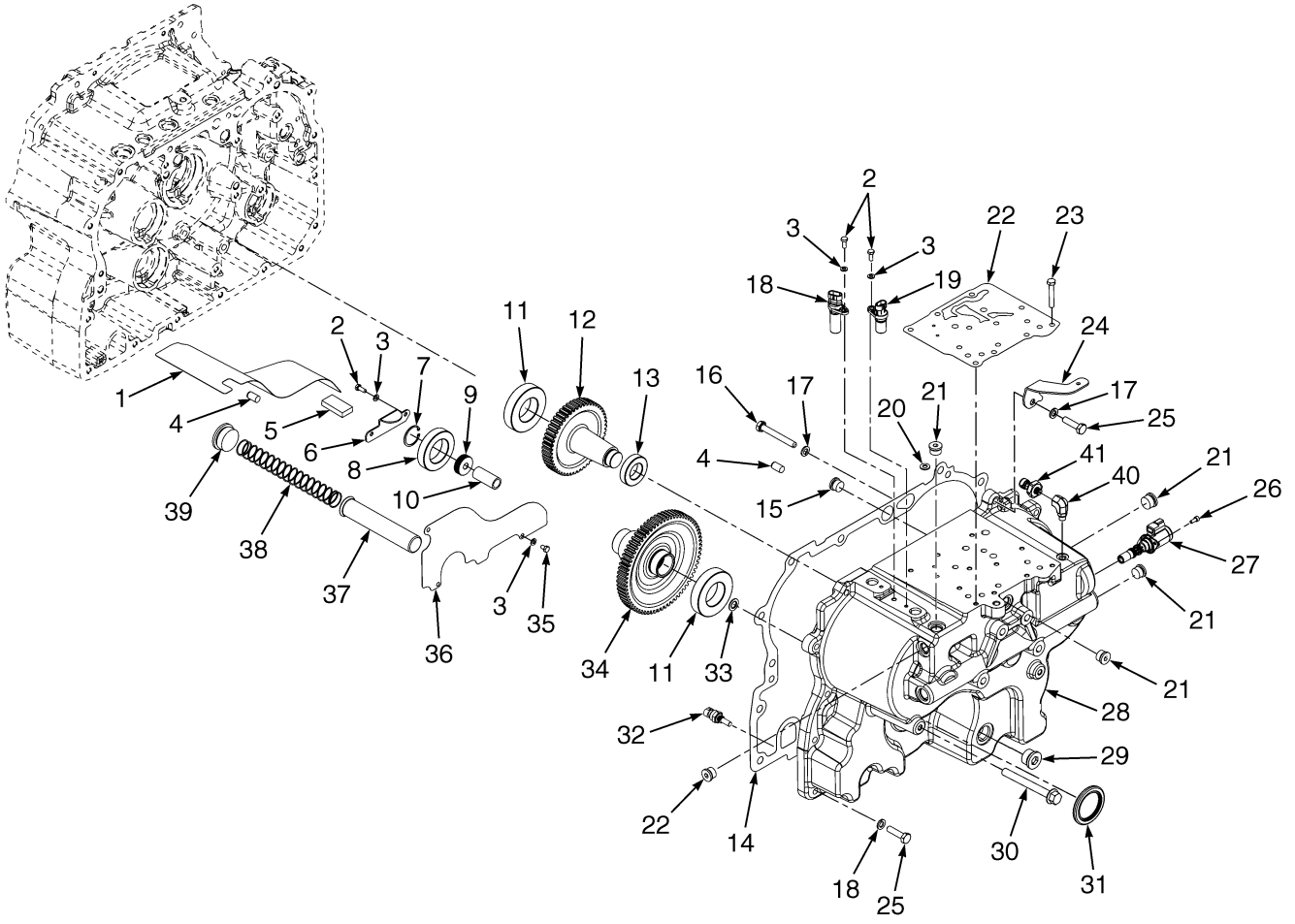

©2008 Yale Materials Handling Corporation

TRANSMISSION

DUAL SPEED, TWO PIECE HOUSING – SHEET 2 0F 2

ITEM	PART NO.	DESCRIPTION	QTY
	580075203	Transmission Assy (Dual Speed Dry Brake)	1
	580075204	Transmission Assy (Dual Speed Wet Brake)	1
1	580074892	Baffle	1
2	449001412	Capscrew	4
3	449022018	Washer	7
4	580050042	Dowel	4
5	505967598	Magnet	1
6	580046277	Cover Plate	1
7	064570600	Snap Ring	1
8	640088905	Bearing	1
9	580047839	Nut	1
10	580074887	Spacer	1
11	201928200	Ball Bearing	2
12	580057859	Gear (Idler)	1
13	950409907	Ball Bearing	1
14	580074889	Gasket	1
15	505967551	Fitting	4
16	449001078	Capscrew	2
17	449022013	Lockwasher	21
18	580056272	Sensor	1
19	580045059	Sensor (Speed)	1
20	449021001	Washer	11
21	505967551	Fitting	4
22	580055553	Gasket	1
23	449001050	Capscrew	11
24	580079000	Bracket	1
25	449001040	Capscrew	15
26	580009061	Screw	2
27	580082537	Solenoid Valve	1
28	580075037	Transmission Housing	1
29	500390901	Fitting	1
30	580079982	Flange Head Capscrew	1
31	580046274	Oil Seal	1
32	580036023	Sensor (Coolant Temperature)	1
33	580011108	Seal	1
34	580075050	Gear (Output)	1
35	449001160	Capscrew	3
36	580074894	Shield (Lower)	1
37	580074890	Screen	1
38	580046280	Spring	1
39	810646400	Fitting	1
40	580051796	Pressure Transducer	1
41	580043644	Fitting	1

©2008 Yale Materials Handling Corporation

FORWARD CLUTCH, LOW (FIGURE 7-13)
DUAL SPEED TRANSMISSION

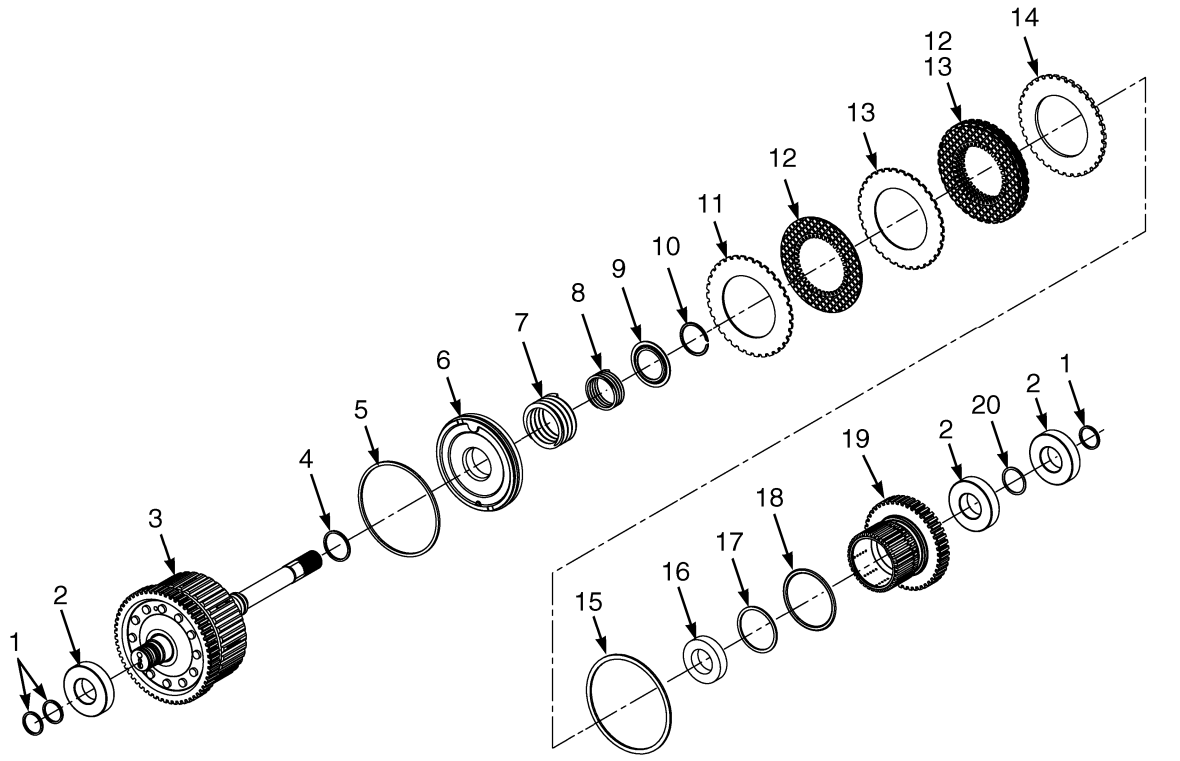

©2008 Yale Materials Handling Corporation

FORWARD CLUTCH, LOW
DUAL SPEED TRANSMISSION

ITEM	PART NO.	DESCRIPTION	QTY
	580076931	Clutch Pack (Input/Forward-Low)	1
1	. . . . .	Seal	3
2	015125800	Ball Bearing	3
3	580074546	Shaft	1
4	. . . . .	Seal	1
5	. . . . .	Seal	1
6	524259220	Piston	1
7	580055204	Spring	1
8	580055193	Spring	1
9	580055195	Spring Guide	1
10	580055196	Snap Ring	1
11	. . . . .	Conical Plate	1
12	. . . . .	Friction Plate	9
13	. . . . .	Separator Plate	8
14	580040786	Pressure Plate (6.0 mm)	1
15	580040787	Snap Ring	1
16	580055216	Ball Bearing	1
17	580055203	Snap Ring	1
18	. . . . .	Seal	1
19	580074547	Gear	1
20	580040796	Snap Ring	1
	580078892	Kit-Clutch Pack Plates/Seals	1
	580078974	Kit-Clutch Pack Plates	1
	580060755	Kit-Clutch Pack Seals	1

©2008 Yale Materials Handling Corporation

FORWARD CLUTCH, HIGH (FIGURE 7-14)
DUAL SPEED TRANSMISSION

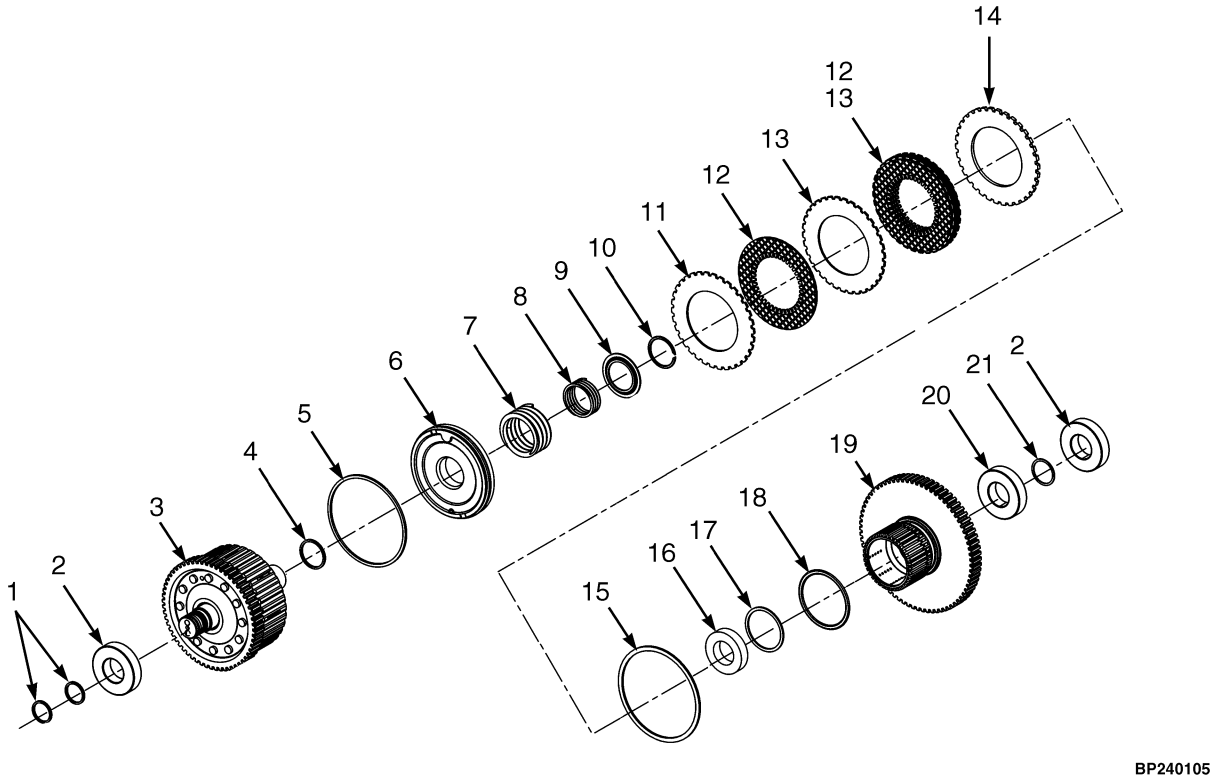

©2008 Yale Materials Handling Corporation

FORWARD CLUTCH, HIGH
DUAL SPEED TRANSMISSION

ITEM	PART NO.	DESCRIPTION	QTY
	580076932	Clutch Pack (Forward-High)	1
1	. . . . .	Seal	2
2	580078589	Ball Bearing	2
3	580074543	Shaft	1
4	. . . . .	Seal	1
5	. . . . .	Seal	1
6	524259220	Piston	1
7	580055204	Spring	1
8	580055193	Spring	1
9	580055195	Spring Guide	1
10	580055196	Snap Ring	1
11	. . . . .	Conical Plate	1
12	. . . . .	Friction Plate	9
13	. . . . .	Separator Plate	8
14	580040786	Pressure Plate (6.0 mm)	1
15	580040787	Snap Ring	1
16	580055216	Ball Bearing	1
17	580055203	Snap Ring	1
18	. . . . .	Seal	1
18	580055201	Spacer	1
19	580074545	Gear	1
20	015125800	Ball Bearing	1
21	580040796	Snap Ring	1
	580078892	Kit-Clutch Pack Plates/Seals	1
	580078974	Kit-Clutch Pack Plates	1
	580060755	Kit-Clutch Pack Seals	1

©2008 Yale Materials Handling Corporation

REVERSE CLUTCH (FIGURE 7-15)
DUAL SPEED TRANSMISSION

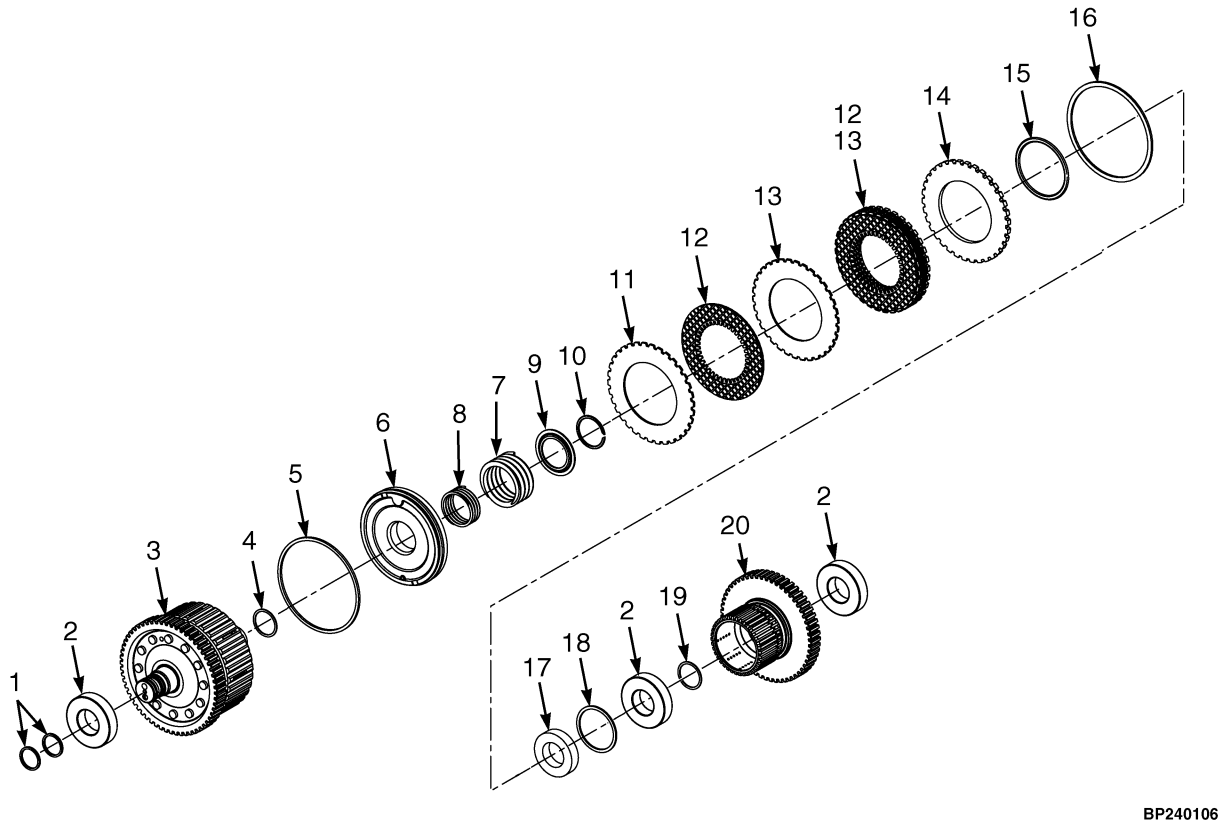

BP240106

©2008 Yale Materials Handling Corporation

REVERSE CLUTCH
DUAL SPEED TRANSMISSION

ITEM	PART NO.	DESCRIPTION	QTY
	580076933	Clutch Pack (Reverse)	1
1	. . . . .	Seal	3
2	015125800	Ball Bearing	3
3	580074543	Shaft	1
4	. . . . .	Seal	1
5	. . . . .	Seal	1
6	524259220	Piston	1
7	580055204	Spring	1
8	580055193	Spring	1
9	580055195	Spring Guide	1
10	580055196	Snap Ring	1
11	. . . . .	Conical Plate	1
12	. . . . .	Friction Plate	9
13	. . . . .	Separator Plate	8
14	580040786	Pressure Plate (6.0 mm)	1
15	. . . . .	Seal	1
16	580040787	Snap Ring	1
17	580055216	Ball Bearing	1
18	580055203	Snap Ring	1
19	580040796	Snap Ring	1
20	580074544	Gear	1
	580078892	Kit-Clutch Pack Plates/Seals	1
	580078974	Kit-Clutch Pack Plates	1
	580060755	Kit-Clutch Pack Seals	1

©2008 Yale Materials Handling Corporation

CONTROL VALVE ASSEMBLY (FIGURE 7-16)

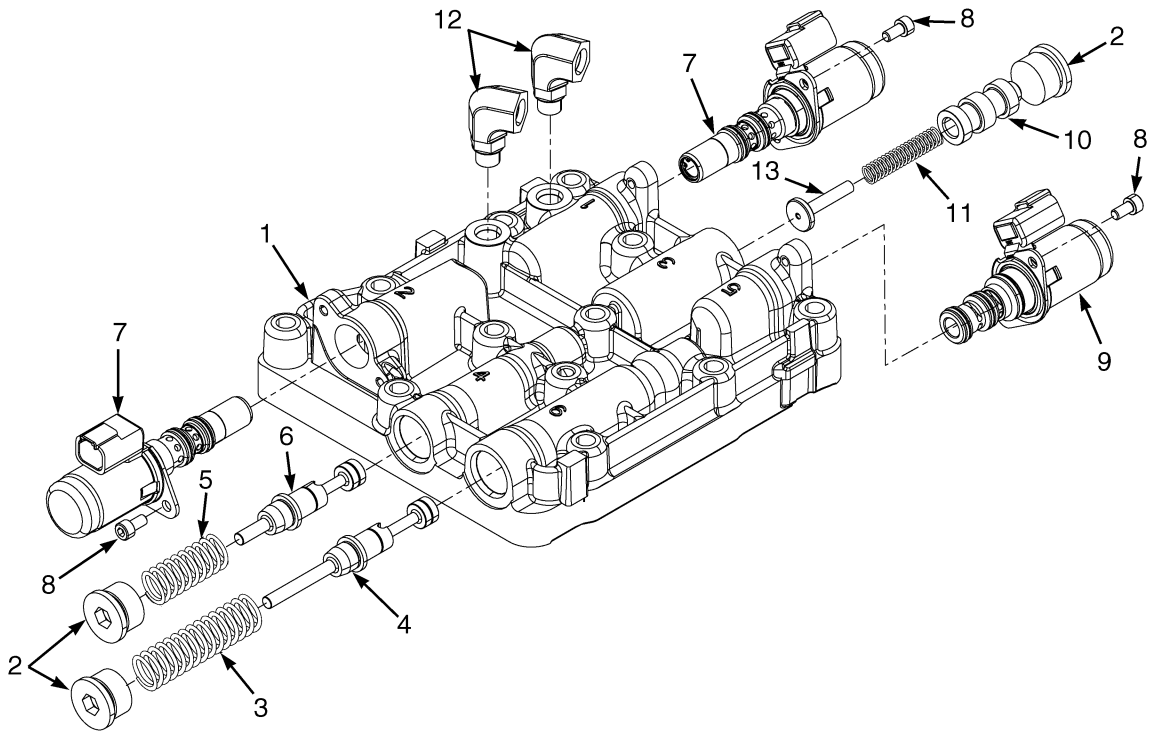

BP240127

ITEM	PART NO.	DESCRIPTION	QTY
	580084189	Valve (High Pressure)	1
	580084190	Valve (Low Pressure)	1
1	580067465	Body	1
2	514454800	Fitting	3
3	580056466	Spring	1
4	580066842	Spool (High Pressure)	1
4	580066841	Spool (Low Pressure)	1
5	580035731	Spring	1
6	580043203	Spool	1
7	580082537	Solenoid Valve	2
7	580078160	Kit-Seal	1
8	505975518	Capscrew	6
9	580037013	Solenoid	1
10	580059638	Spool (Cut-Off)	1
11	580059639	Return Spring (Return)	1
12	580043644	Fitting	2
13	580059637	Spool (Stop)	1

©2008 Yale Materials Handling Corporation

8 DRIVE AXLE

SECTION 8
DRIVE AXLE

DESCRIPTION	PAGE
CARRIER ASSEMBLY	
DRY BRAKE	8-10
DIFFERENTIAL	
DRY BRAKE	8-8
WET BRAKE	8-16
DRIVE AXLE AND ATTACHING PARTS	
DRY BRAKE	8-2
WET BRAKE	8-12
DRIVE AXLE ASSEMBLY	
DRY BRAKE	8-4
DRIVE AXLE HOUSING AND HUB	
WET BRAKE	8-14
DRIVE TIRE AND WHEEL	
DUAL MOUNT	8-24
PNEUMATIC RADIAL	8-25
SINGLE MOUNT WITH STANDARD TREAD	8-22
SINGLE MOUNT WITH WIDE TREAD	8-23
WET BRAKE ASSEMBLY	8-20

©2008 Yale Materials Handling Corporation

DRIVE AXLE AND ATTACHING PARTS (FIGURE 8-1)

DRY BRAKE

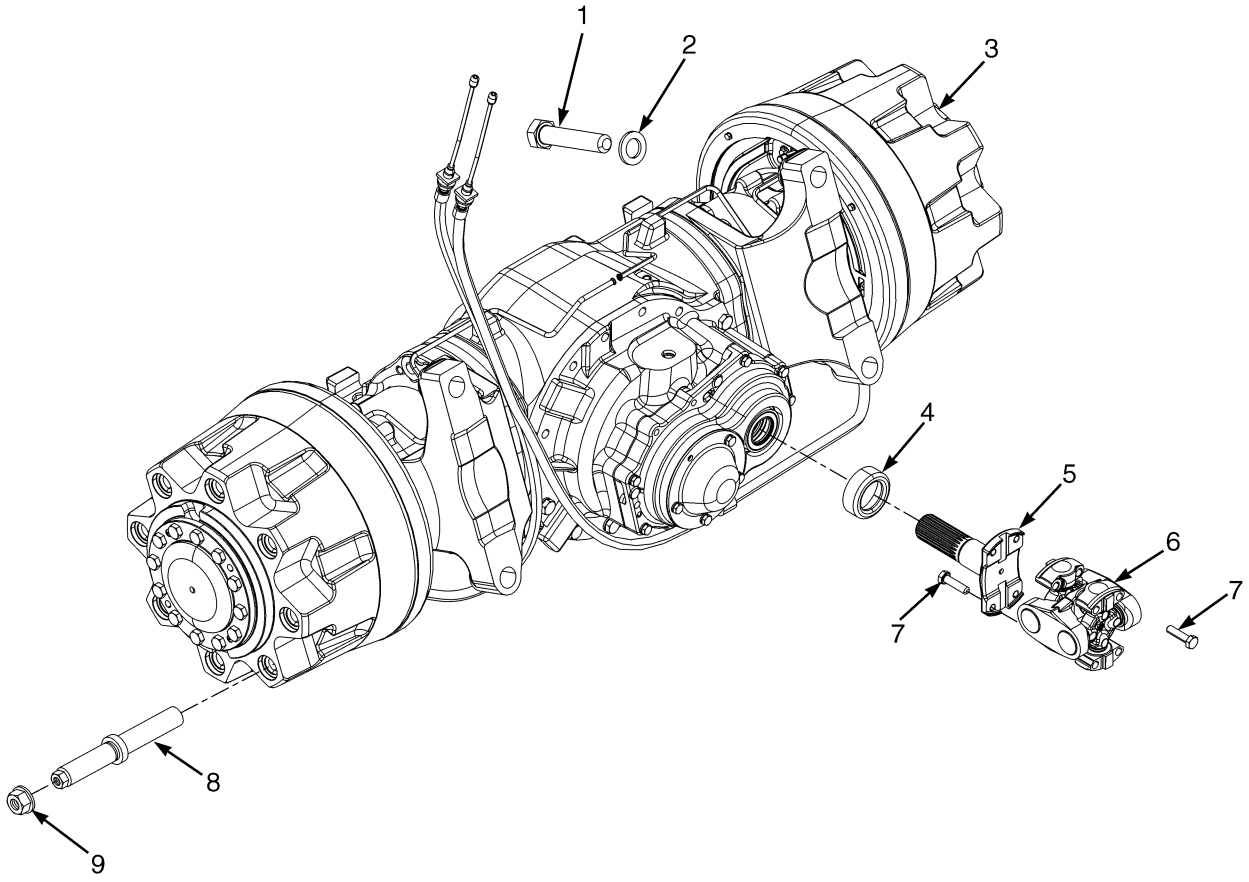

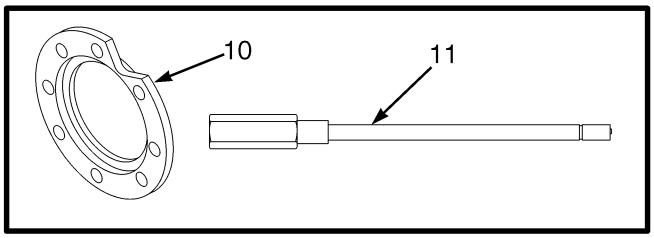

BP070038

©2008 Yale Materials Handling Corporation

DRIVE AXLE AND ATTACHING PARTS
DRY BRAKE

ITEM	PART NO.	DESCRIPTION	QTY
1	580056479	Capscrew	4
2	940102912	Washer	4
3	580066865	Drive Axle (.889 DB Ratio) (☞P19775 [Page 8-4])	..
3	580066867	Drive Axle (.789 DB Ratio) (☞P19775 [Page 8-4])	..
4	580044798	Dust Cover	1
5	580044565	Shaft	1
6	580060455	Universal Joint	1
7	505970570	Capscrew	8
8	580052679	Wheel Stud	16
9	580003941	Wheel Nut	16
10	580056147	Spacer	2
11	901466103	Extension	2

©2008 Yale Materials Handling Corporation

DRIVE AXLE ASSEMBLY (FIGURE 8-2)

DRY BRAKE

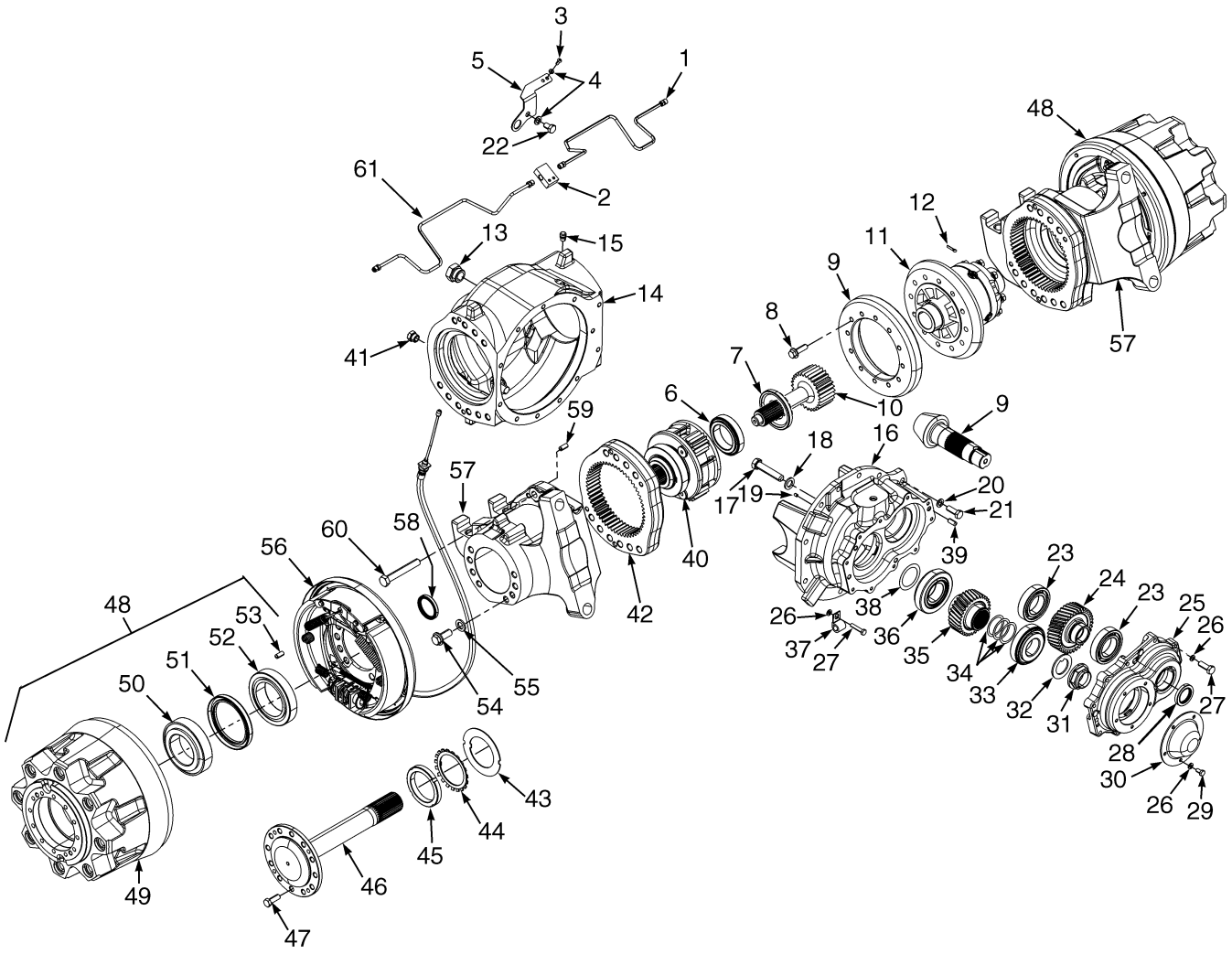

BP070047

©2008 Yale Materials Handling Corporation

DRIVE AXLE ASSEMBLY
DRY BRAKE

ITEM	PART NO.	DESCRIPTION	QTY
	580066867	Drive Axle (0.789 Gear Ratio)	1
	580066865	Drive Axle (0.889 Gear Ratio)	1
1	580072761	Tube Assy (Right Hand)	1
2	580065066	Manifold Assy	1
2	580062145	Manifold	1
3	580030975	Screw (Button Head)	2
4	449022018	Washer	2
5	. . . . .	Bracket	1
6	580067346	Bearing Set	2
6	505967544	Dowel	13
7	580079948	Retainer	2
8	909964401	Bolt	12
9	580043943	Gear and Pinion	1
10	580084828	Sun Gear	1
11	580048851	Differential (☞P19776 [Page 8-8])	1
12	015421000	Cotter Pin	2
13	057390000	Plug	1
13	052645700	O-Ring	1
14	580044742	Housing (Differential)	1
15	015630100	Breather	1
16	580044744	Support	1
17	502565902	Capscrew	4
18	502566903	Washer	4
19	504226268	Dowel	4
20	449022017	Lockwasher	12
21	449001058	Capscrew	11
22	449001024	Capscrew	1
23	580044998	Ball Bearing	2
24	580088347	Drive Gear (0.789 Gear Ratio)	1
24	580088348	Gear (0.889 Gear Ratio)	1
25	580044741	Transmission Housing	1
26	449022016	Lockwasher	15
27	449001028	Capscrew	10
28	580050296	Oil Seal	1
29	449001415	Capscrew	5
30	580032975	Cover	1
31	924234401	Nut	1
32	580037836	Washer	1
33	950513905	Bearing Set	1
34	580033876	Shim (0.004 in.)	AR
34	580033877	Shim (0.005 in.)	AR
34	580033878	Shim (0.007 in.)	AR
34	580033879	Shim (0.009 in.)	AR
34	580033880	Shim (0.19 in.)	AR
35	580088351	Gear (0.789 Gear Ratio)	1
35	580088352	Gear (0.889 Ratio)	1
36	906196100	Bearing Set	1
37	580002460	Clamp	2
38	580034310	Shim (0.30 mm)	AR
38	580034311	Shim (0.40 mm)	AR

©2008 Yale Materials Handling Corporation

DRIVE AXLE ASSEMBLY
DRY BRAKE

ITEM	PART NO.	DESCRIPTION	QTY
38	580034312	Shim (0.50 mm)	AR
38	580034313	Shim (1.00 mm)	AR
38	580052865	Shim (0.20 mm)	AR
38	580052864	Shim (0.25 mm)	AR
38	580052866	Shim (0.35 mm)	AR
38	580052867	Shim (0.45 mm)	AR
39	505967544	Dowel	7
40	580084829	Carrier	1
41	580034643	Drain Plug	1
42	580047884	Gear	2
43	580044800	Washer	2
44	909367300	Lockwasher	2
45	940800912	Nut	2
46	580046603	Axle Shaft	2
47	501725901	Capscrew	24
48	580069559	Wheel Hub	1
49	580069560	Hub	2
49	580069561	Hub	2
50	909932413	Bearing Set	1
51	909368300	Seal	1
52	909932414	Bearing Set	1
53	505967544	Dowel	2
54	580067686	Bolt (Serrated)	16
55	502566903	Washer	20
56	580092280	Brake Assy (Left Hand)	1
56	580092281	Brake Assy (Right Hand)	1
57	580065860	Hanger (Left Hand)	1
57	580065861	Hanger (Right Hand)	1
58	580065030	Seal	1
59	505967544	Dowel	2
60	931017916	Capscrew	20
61	580072762	Tube Assy (Left Hand) (LH)	1

©2008 Yale Materials Handling Corporation

NOTES

©2008 Yale Materials Handling Corporation

DIFFERENTIAL (FIGURE 8-3)

DRY BRAKE

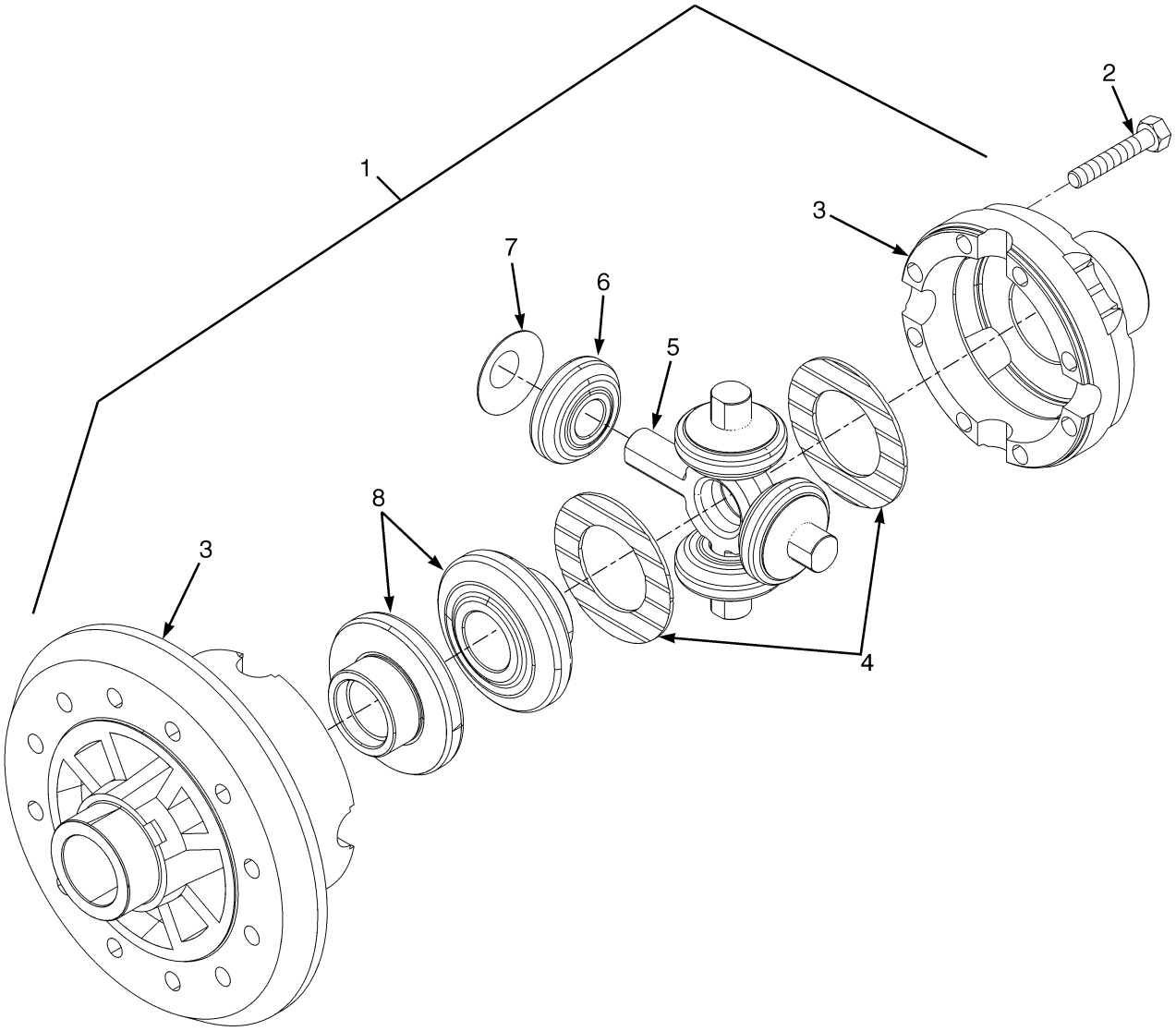

©2008 Yale Materials Handling Corporation

DIFFERENTIAL
DRY BRAKE

ITEM	PART NO.	DESCRIPTION	QTY
1	580048851	Differential	1
2	580051337	Bolt	8
3	. . . . .	Case Set	1
4	580060289	Washer (Side)	2
5	902254806	Spider	1
6	. . . . .	Gear (Pinion)	4
7	. . . . .	Washer (Pinion)	4
8	. . . . .	Gear (Side)	2
	580064595	Kit-Gear	1
	580051336	Washer	1

©2008 Yale Materials Handling Corporation

CARRIER ASSEMBLY (FIGURE 8-4)
DRY BRAKE

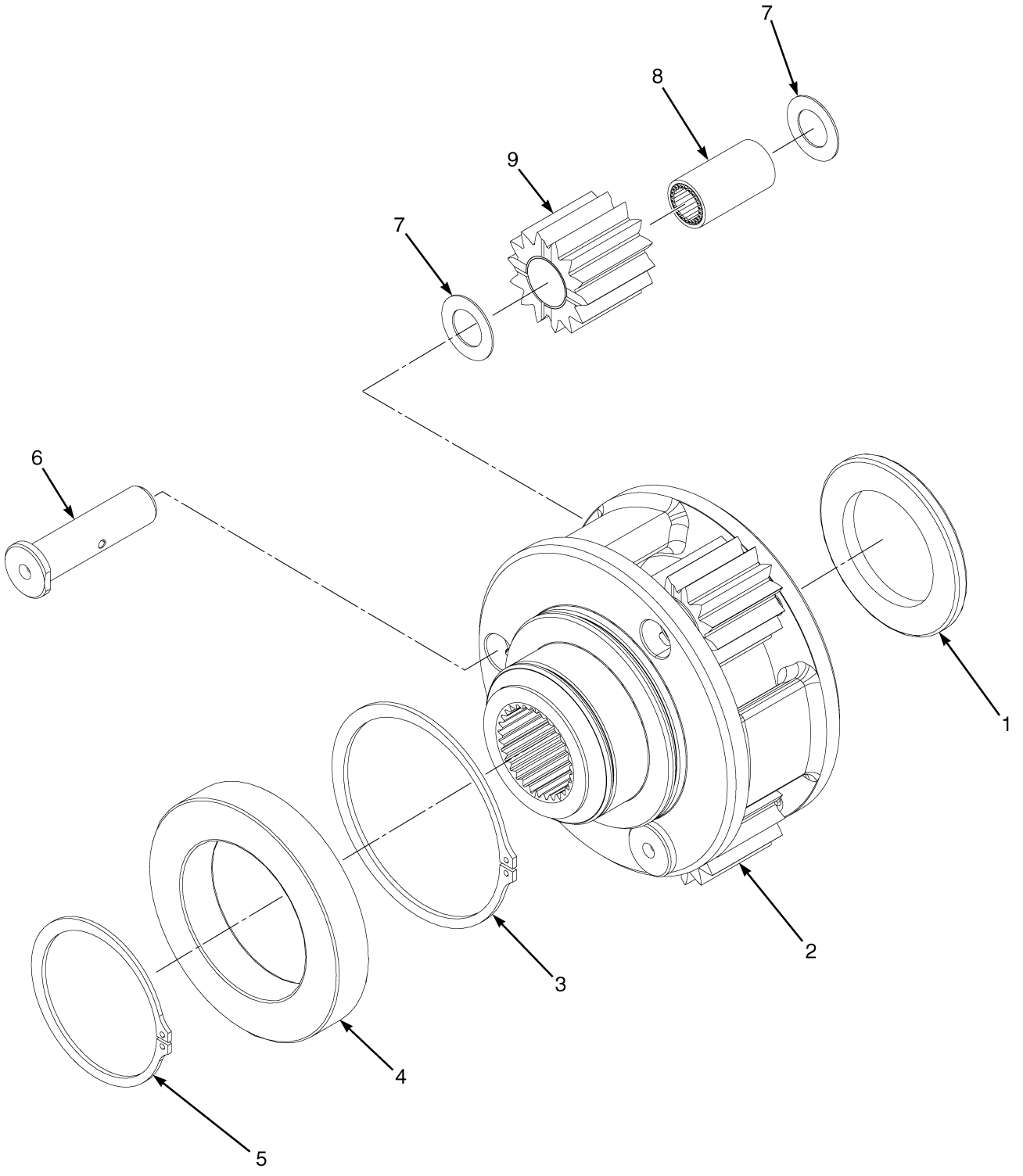

©2008 Yale Materials Handling Corporation

CARRIER ASSEMBLY
DRY BRAKE

ITEM	PART NO.	DESCRIPTION	QTY
	580084829	Carrier	1
1	580047890	Thrust Washer	1
2	580063625	Carrier	1
3	500186902	Retaining Ring	1
4	950409918	Ball Bearing	1
5	500186908	Snap Ring	1
6	580063624	Pin	3
7	580047889	Thrust Washer	6
8	580072683	Roller	3
9	580084827	Planetary Gear	1

©2008 Yale Materials Handling Corporation

DRIVE AXLE AND ATTACHING PARTS (FIGURE 8-5)

WET BRAKE

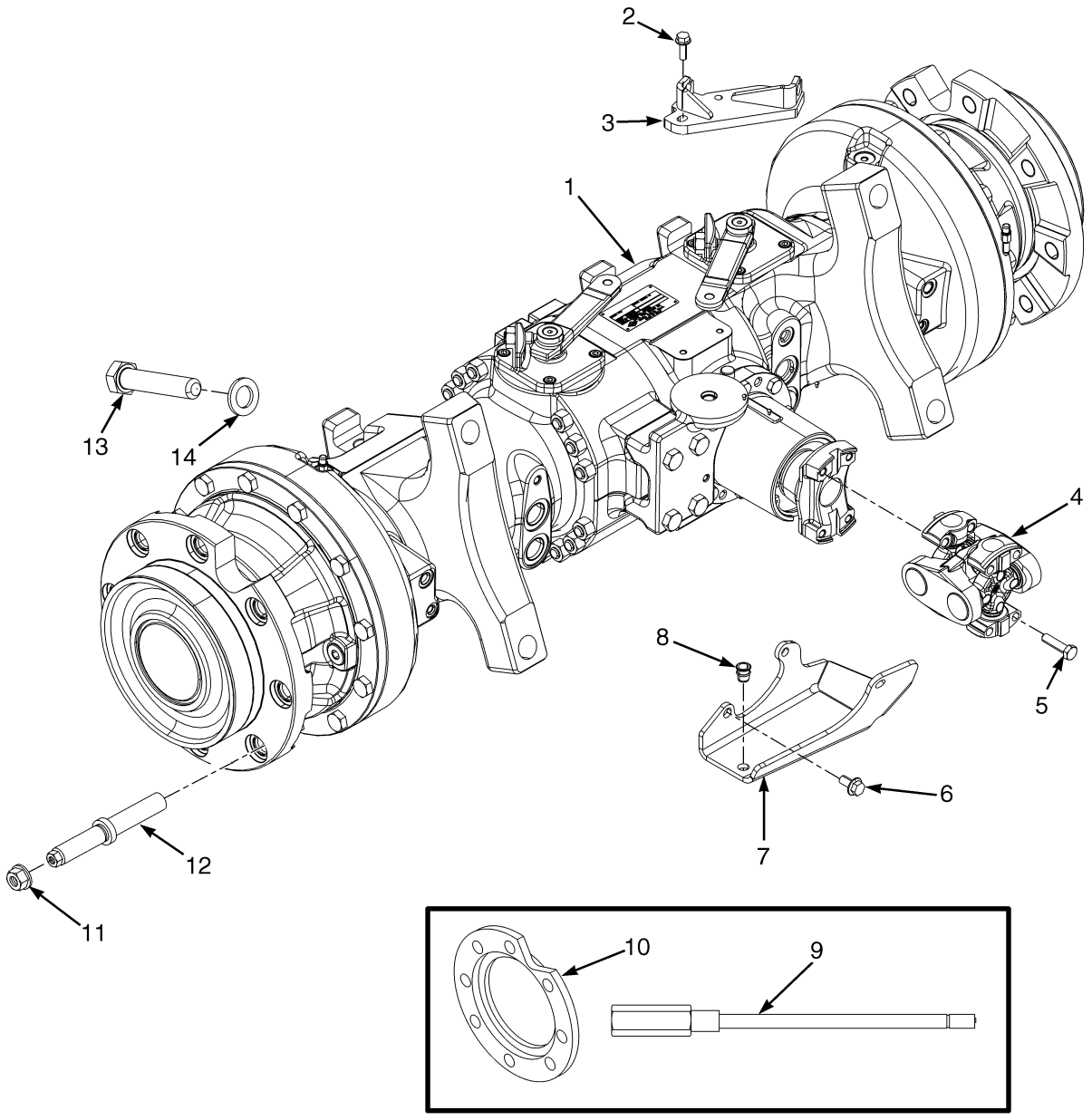

©2008 Yale Materials Handling Corporation

DRIVE AXLE AND ATTACHING PARTS
WET BRAKE

KEY:
A: H100-120FT
B: H80-90FT

ITEM	PART NO.	DESCRIPTION	QTY A	QTY B
1	580084764	Drive Axle (11.2 Overall Ratio)	1	..
1	580084760	Drive Axle (12.8 Overall Ratio)	..	1
1	580084762	Drive Axle (13.7 Overall Ratio)	..	1
1	580084763	Drive Axle (15.2 Overall Ratio)	1	..
2	580030966	Capscrew	2	2
3	580070999	Bracket	1	1
4	580060455	Universal Joint	1	1
5	505970570	Capscrew	8	8
6	580049010	Capscrew	2	2
7	580070999	Bracket	1	1
8	580044860	Insert	2	2
9	**a** 580002638	Extension (Dual Drive)	2	2
9	580074525	Extension (Single Drive)	..	2
9	**b** 901466103	Extension (Dual Drive)	2	2
10	580055645	Spacer	2	2
11	580003941	Wheel Nut	16	16
12	580056332	Wheel Stud (Dual Drive)	16	..
12	580056331	Wheel Stud (Dual Drive)	..	16
12	580052679	Wheel Stud (Single Drive)	..	16
13	580056479	Capscrew	4	4
14	940102912	Washer	4	4

FOOTNOTES:
a Bias Ply Tires
b Radial Tires

©2008 Yale Materials Handling Corporation

DRIVE AXLE HOUSING AND HUB (FIGURE 8-6)

WET BRAKE

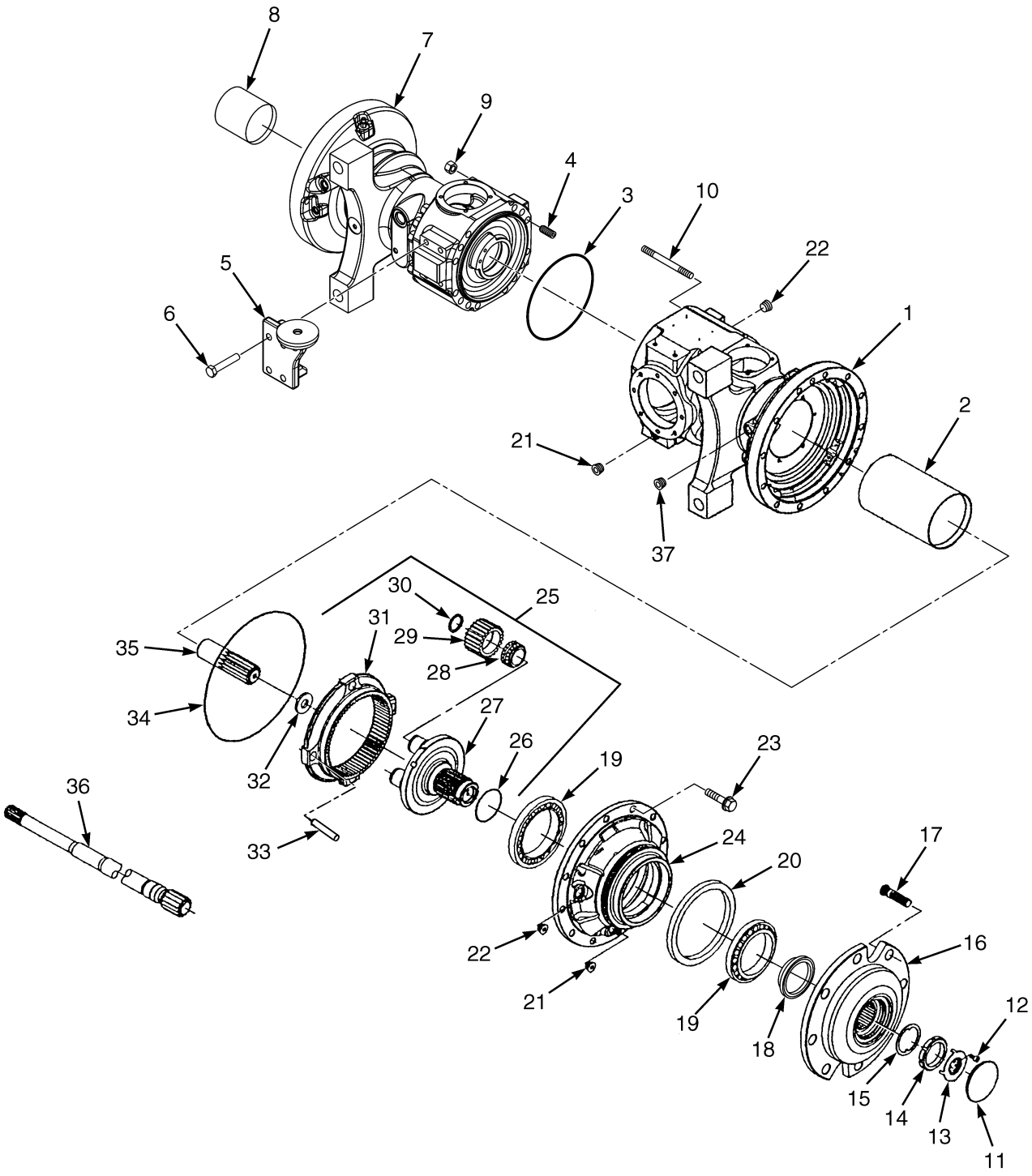

©2008 Yale Materials Handling Corporation

DRIVE AXLE HOUSING AND HUB
WET BRAKE

ITEM	PART NO.	DESCRIPTION	QTY
	580084764	Drive Axle (11.2 Overall Ratio)	1
	580084760	Drive Axle (12.8 Overall Ratio)	1
	580084762	Drive Axle (13.7 Overall Ratio)	1
	580084763	Drive Axle (15.2 Overall Ratio)	1
1	. . . . .	Axle Housing (RH)	1
1	**a** 580074995	Plug	1
1	**a** 580069949	O-Ring	1
1	**a** 580074996	Plug	1
2	580071573	Tube (Long)	1
3	580069932	O-Ring	1
4	580069936	Bolt	4
5	580071571	Support	1
6	580069944	Bolt	4
7	. . . . .	Axle Housing (LH)	1
8	580071572	Tube (Short)	1
9	580076340	Nut	14
10	580071566	Stud	14
11	580071567	Plug	2
12	580069931	Bolt	2
13	580071564	Cap	2
14	580071563	Nut	2
15	580071562	Washer	2
16	580071561	Wheel Hub	2
17	580052679	Wheel Stud	16
18	580071574	Washer (Hub Shaft)	2
19	580069924	Bearing	4
20	580071560	Ring	2
21	580069855	Drain Plug (Fluid Drain)	2
22	580069854	Plug (Fluid Check And Fill)	2
23	580069922	Bolt	24
24	580077526	Cover	2
25	580071568	Carrier	2
26	580090360	O-Ring	2
27	580071556	Carrier	2
28	580069919	Bearing	4
29	580069918	Gear	4
30	580069917	Retaining Ring	4
31	580069915	Ring Gear	1
32	580069914	Thrust Washer	1
33	580069916	Dowel	8
34	580069913	O-Ring	2
35	580071555	Pinion	2
36	580071569	Axle Shaft (Short) (Short)	1
36	580071570	Axle Shaft (Long) (Long)	1
37	580074998	Plug (Fluid Check And Fill)	2
37	**a** 580074999	Washer	12
37	**a** 580075000	Sealing Ring	6

FOOTNOTES:
a Not Illustrated

©2008 Yale Materials Handling Corporation

DIFFERENTIAL (FIGURE 8-7)
WET BRAKE

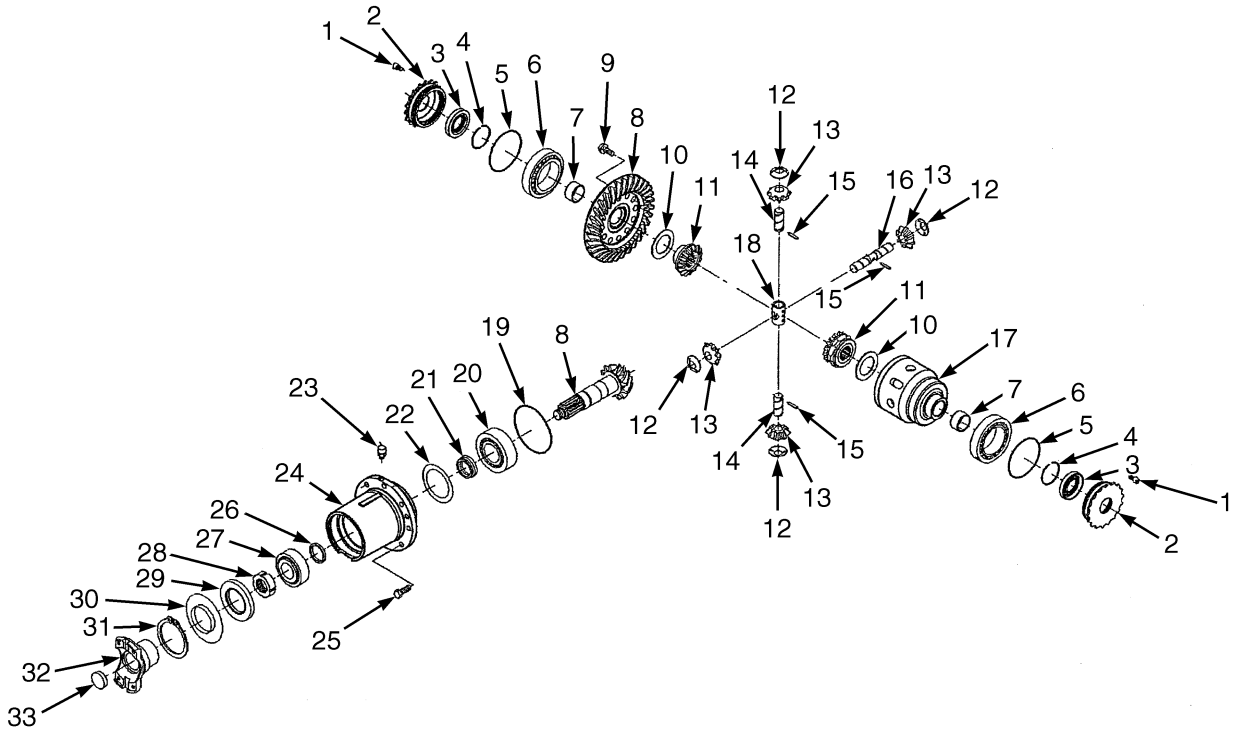

BP070043

©2008 Yale Materials Handling Corporation

DIFFERENTIAL
WET BRAKE

ITEM	PART NO.	DESCRIPTION	QTY
	580084764	Drive Axle (11.2 Overall Ratio)	1
	580084760	Drive Axle (12.8 Overall Ratio)	1
	580084762	Drive Axle (13.7 Overall Ratio)	1
	580084763	Drive Axle (15.2 Overall Ratio)	1
1	580069903	Bolt	2
2	580071552	Nut	2
3	580071553	Seal	2
4	580069900	Snap Ring	2
5	580069901	O-Ring	2
6	580069902	Bearing	2
7	580075003	Bushing	2
8	580069985	Bevel Gear (12.8 Overall Ratio)	1
8	580071604	Gear and Pinion (13.7 Overall Ratio)	1
8	580071674	Gear and Pinion (15.2 Overall Ratio)	1
8	580069885	Bevel Gear (11.2 Overall Ratio)	1
9	580069888	Bolt	12
10	580069890	Thrust Washer	2
11	580069891	Gear	2
12	580069897	Thrust Washer	4
13	580069896	Pinion	4
14	580069894	Pin	2
15	580069895	Dowel	3
16	580069893	Pin	1
17	580069889	Differential Carrier	1
18	580069892	Retainer	1
19	580069884	O-Ring	1
20	580069883	Bearing	1
21	580069882	Spacer	1
22	580071547	Shim	1
22	580071548	Shim	1
22	580071549	Shim	1
22	580075002	Shim	1
23	580071550	Plug	1
24	580069878	Cover	1
25	580071551	Bolt	8
26	580069863	Spacer (5.0 mm)	1
26	580069864	Spacer (5.1 mm)	1
26	580069865	Spacer (5.2 mm)	1
26	580069866	Spacer (5.3 mm)	1
26	580069867	Spacer (5.4 mm)	1
26	580069868	Spacer (5.5 mm)	1
26	580069869	Spacer (5.6 mm)	1
26	580069870	Spacer (5.7 mm)	1
26	580069871	Spacer (5.8 mm)	1
26	580069872	Spacer (5.9 mm)	1
26	580069873	Spacer (3.02 mm)	1
26	580069874	Spacer (3.04 mm)	1
26	580069875	Spacer (3.06 mm)	1
26	580069876	Spacer (3.08 mm)	1
26	580077524	Spacer (3.00 mm)	1

©2008 Yale Materials Handling Corporation

DIFFERENTIAL
WET BRAKE

ITEM	PART NO.	DESCRIPTION	QTY
27	580069862	Bearing	1
28	580069861	Nut	1
29	580069860	Seal	1
30	580069859	Cover Plate	1
31	580069858	Retaining Ring	1
32	580069857	Flange	1
33	580069856	Plug	1

©2008 Yale Materials Handling Corporation

NOTES

©2008 Yale Materials Handling Corporation

WET BRAKE ASSEMBLY (FIGURE 8-8)

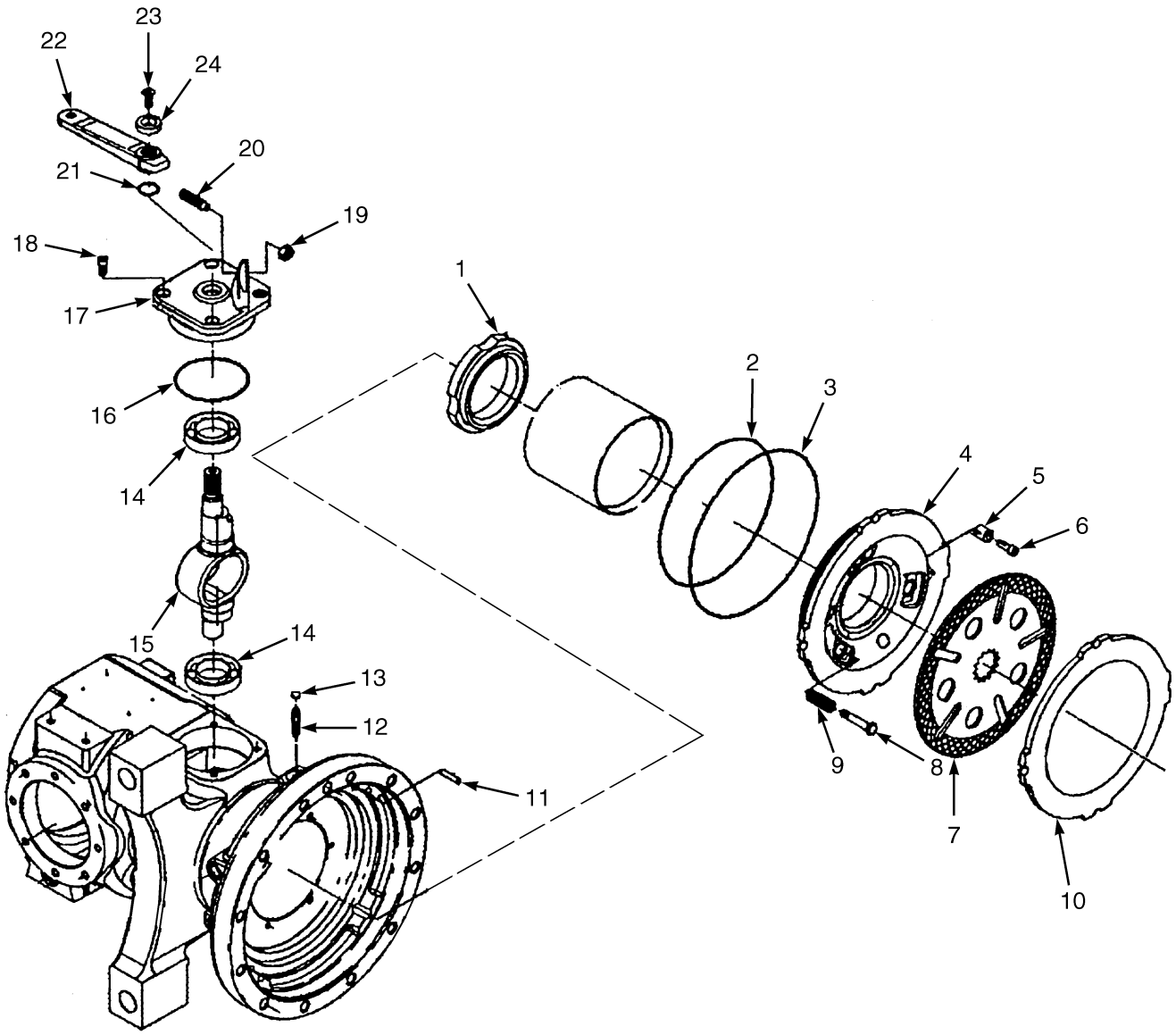

BP070032

©2008 Yale Materials Handling Corporation

WET BRAKE ASSEMBLY

ITEM	PART NO.	DESCRIPTION	QTY
	580084764	Drive Axle (11.2 Overall Ratio)	1
	580084760	Drive Axle (12.8 Overall Ratio)	1
	580084762	Drive Axle (13.7 Overall Ratio)	1
	580084763	Drive Axle (15.2 Overall Ratio)	1
1	580071576	Disk	2
2	580069958	Seal	2
3	580069959	Seal	2
4	580076341	Piston	2
5	580069961	Spring	6
6	580069962	Bolt	6
7	580071589	Brake Disk	4
8	580071579	Bolt	6
9	580071578	Spring	6
10	580076342	Disk (Intermediate)	4
11	580071575	Dowel	8
12	580069955	Stud (Bleeding)	2
13	580069954	Plug	2
14	580069952	Bearing	4
15	580069953	Lever (Brake)	2
16	580069951	O-Ring	2
17	580071588	Bushing (Reduction)	2
18	580069950	Bolt	8
19	580069967	Nut	2
20	580069966	Bolt (Left)	1
20	580077041	Bolt (Right)	1
21	580069949	O-Ring	2
22	580069948	Lever	2
23	580069947	Bolt	2
24	580069965	Spacer	2

©2008 Yale Materials Handling Corporation

DRIVE TIRE AND WHEEL (FIGURE 8-9)
SINGLE MOUNT WITH STANDARD TREAD

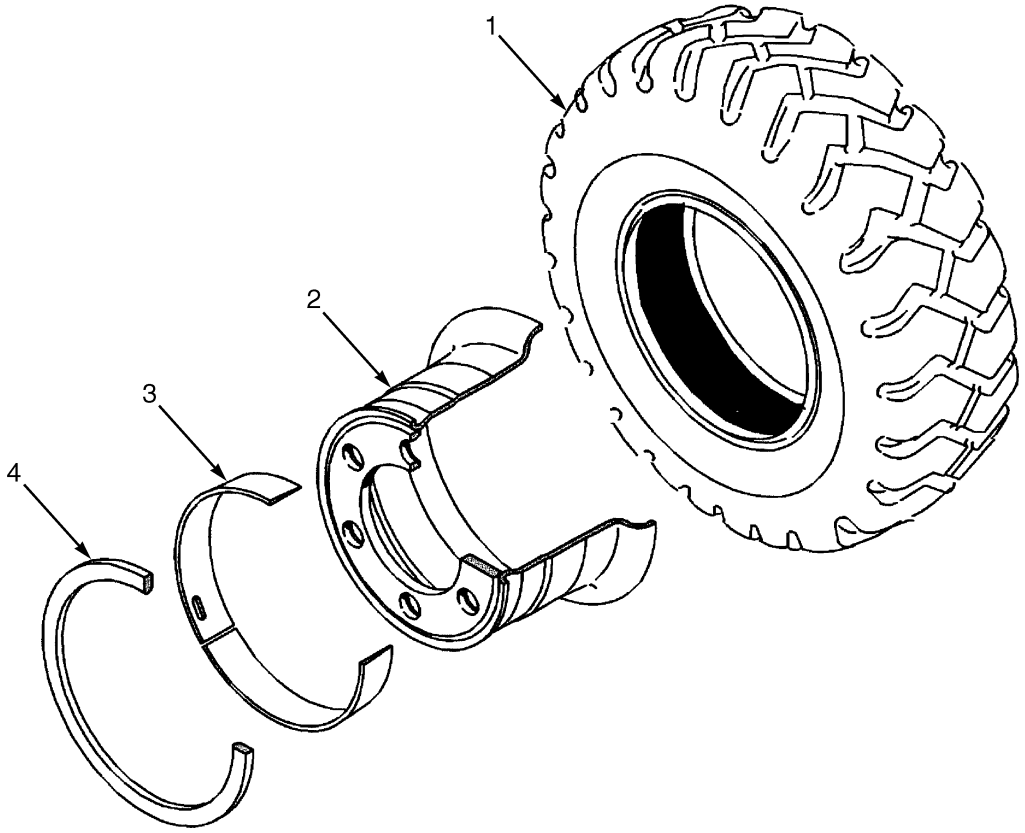

BP070041

KEY:
A: 250 x 15-20PR (H80-90FT)
B: 300 x 15-20PR (H100-120FT)

ITEM	PART NO.	DESCRIPTION	QTY A	QTY B
1	580050043	Tire (Trell)	2	..
1	580050044	Tire (Monarch)	2	..
1	580050047	Tire (Trell)	..	2
1	580050048	Tire (Monarch)	..	2
2	580067472	Wheel Assy	2	..
2	580067475	Wheel Assy	..	2
3	505971549	Wheel Side Ring	1	1
4	505971526	Wheel Lock Ring	1	1

©2008 Yale Materials Handling Corporation

DRIVE TIRE AND WHEEL (FIGURE 8-10)
SINGLE MOUNT WITH WIDE TREAD

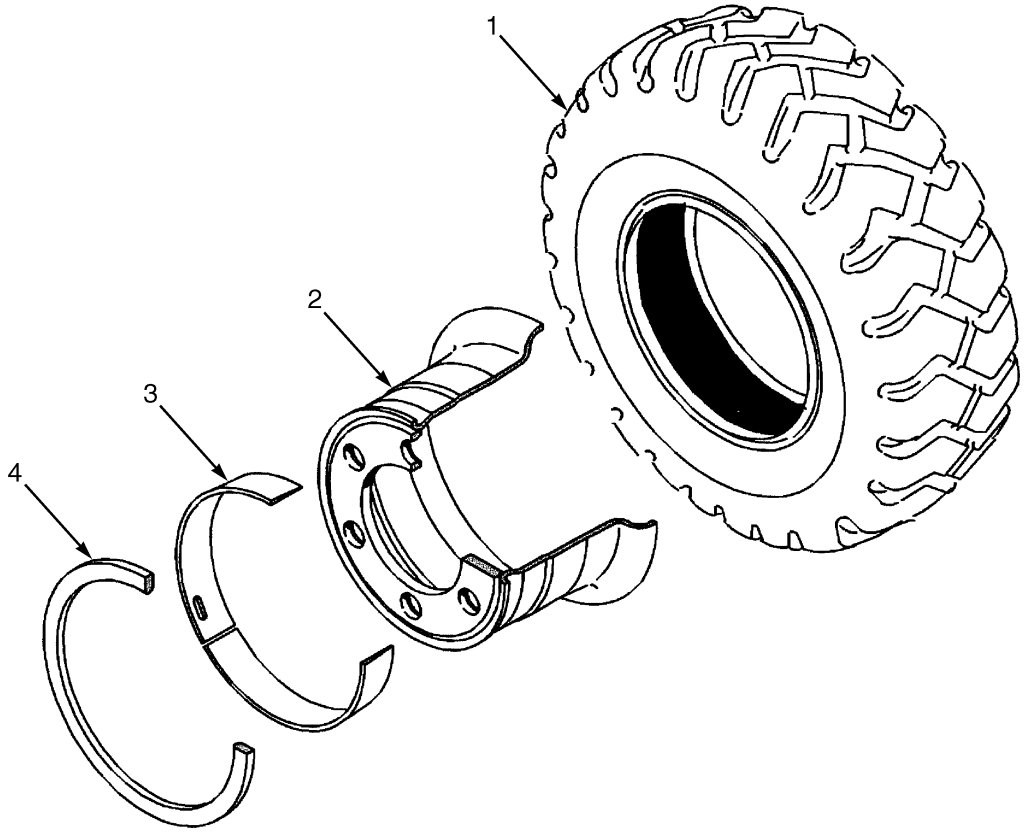

BP070041

KEY:
A: 250 x 15-20PR (H80-90FT)
B: 300 x 15-20PR (H100-120FT)

ITEM	PART NO.	DESCRIPTION	QTY A	QTY B
1	580050043	Tire (Trell)	2	..
1	580050044	Tire (Monarch)	2	..
1	580050047	Tire (Trell)	..	2
1	580050048	Tire (Monarch)	..	2
2	580067473	Wheel Assy	2	..
2	580067476	Wheel Assembly	..	2
3	505971549	Wheel Side Ring	1	1
4	505971526	Wheel Lock Ring	1	1

©2008 Yale Materials Handling Corporation

DRIVE TIRE AND WHEEL (FIGURE 8-11)
DUAL MOUNT

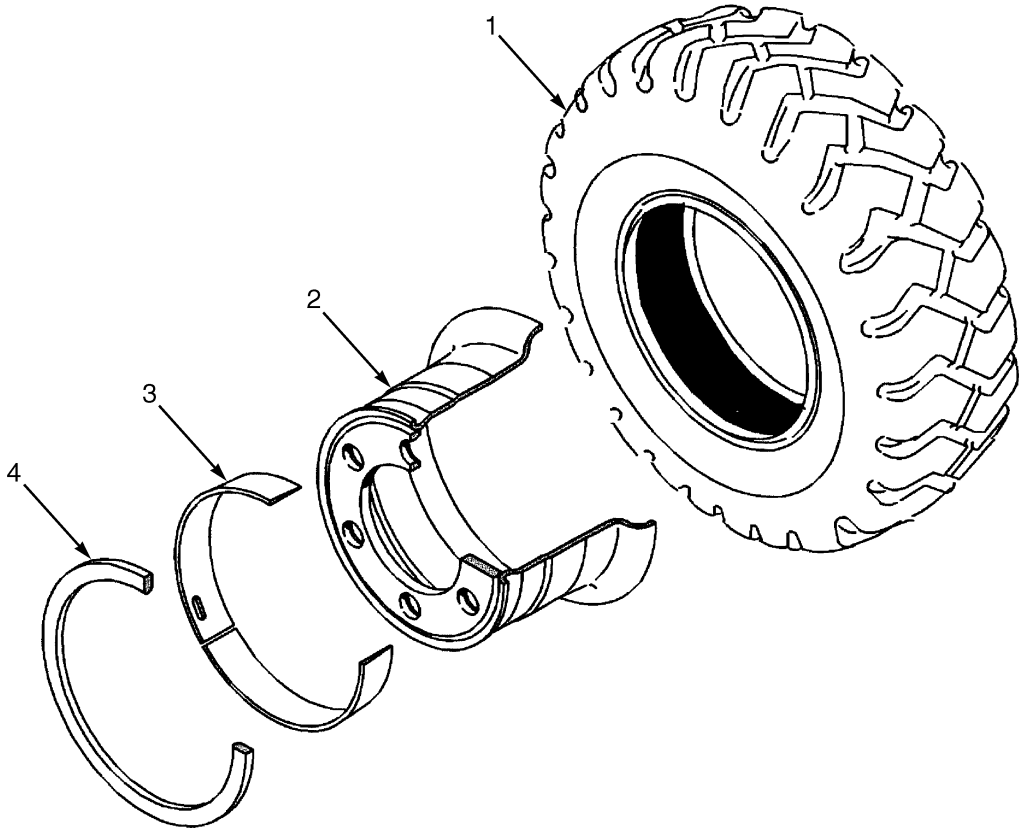

BP070041

KEY:
A: 7.00 x 15-14 PR (H80-90FT)
B: 8.25 x 15-14PR (H100-120FT)

ITEM	PART NO.	DESCRIPTION	QTY A	QTY B
1	580050045	Tire (Trell)	4	..
1	580050046	Tire (Monarch)	4	..
1	580050049	Tire (Trell)	..	4
1	580050050	Tire (Monarch)	..	4
2	580067474	Wheel Assy	4	..
2	580067477	Wheel Assy	..	4
3	505971549	Wheel Side Ring	1	1
4	505971526	Wheel Lock Ring	1	1

©2008 Yale Materials Handling Corporation

DRIVE TIRE AND WHEEL (FIGURE 8-12)
PNEUMATIC RADIAL

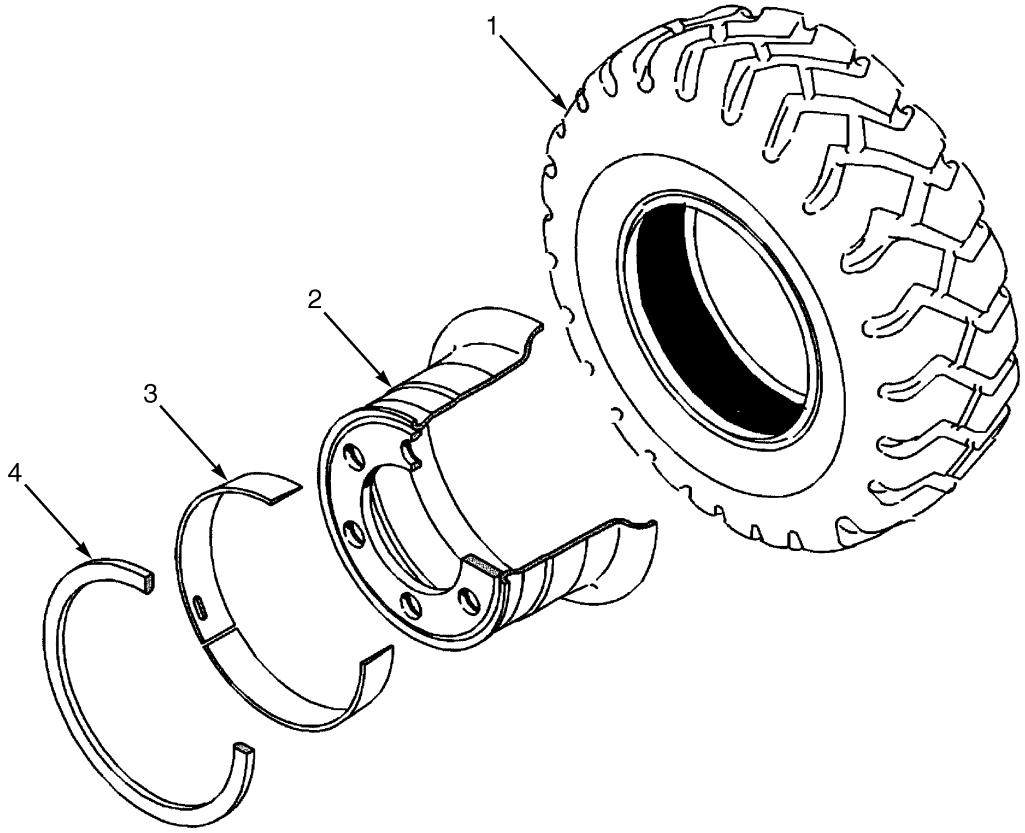

BP070041

KEY:
A: 250/70 R15 (H80-90FT) Single Mount
B: 7.00 R15 (H80-90FT) Dual Mount
C: 315/70 R15 (H100-120FT) Single Mount
D: 8.25 R15 (H100-120FT) Dual Mount

ITEM	PART NO.	DESCRIPTION	QTY A	B	C	D
1	580014955	Pneumatic Tire	2	..	..	..
1	580011097	Tubeless Bead Seal	1	..	..	..
1	580014188	Pneumatic Tire	1	..	..	..
1	580014987	Tubeless Bead Seal Valve	1	..	..	..
1	580014960	Pneumatic Tire	..	4	..	..
1	580011097	Tubeless Bead Seal	..	1	..	..
1	580034747	Pneumatic Tire	..	1	..	..
1	580014987	Tubeless Bead Seal Valve	..	1	..	..
1	580014956	Pneumatic Tire	..	..	2	..
1	580014866	Tire Flap	..	..	1	..
1	580014189	Pneumatic Tire	..	..	1	..
1	580014987	Tubeless Bead Seal Valve	..	..	1	..
1	580014962	Pneumatic Tire	..	..	..	4
1	580015806	Tire	..	..	..	1

©2008 Yale Materials Handling Corporation

KEY:
A: 250/70 R15 (H80-90FT) Single Mount
B: 7.00 R15 (H80-90FT) Dual Mount
C: 315/70 R15 (H100-120FT) Single Mount
D: 8.25 R15 (H100-120FT) Dual Mount

ITEM	PART NO.	DESCRIPTION	QTY A	QTY B	QTY C	QTY D
1	580014869	Tubeless Bead Seal	..	..	..	1
1	580014987	Tubeless Bead Seal Valve	..	..	..	1
2	580067472	Wheel Assy	2	..	..	..
2	580067473	Wheel Assy (Wide)	2	..	..	..
2	580067474	Wheel Assy	..	4	..	..
2	580067475	Wheel Assy	..	..	2	..
2	580067476	Wheel Assembly (Wide)	..	..	2	..
2	580067477	Wheel Assy	..	..	..	4
3	505971549	Wheel Side Ring	1	1	1	1
4	505971526	Wheel Lock Ring	1	1	1	1
	580074525	Extension	1	1	1	1

©2008 Yale Materials Handling Corporation

9 STEERING SYSTEM

SECTION 9
STEERING SYSTEM

DESCRIPTION	PAGE
STEER AXLE	9-10
STEER CONTROL UNIT	9-6
STEER CYLINDER	9-14
STEER TIRE AND WHEEL	9-16
STEERING COLUMN AND ATTACHING PARTS	9-2
STEERING COLUMN ASSEMBLY	9-4
STEERING LINES	9-8

©2008 Yale Materials Handling Corporation

STEERING COLUMN AND ATTACHING PARTS (FIGURE 9-1)

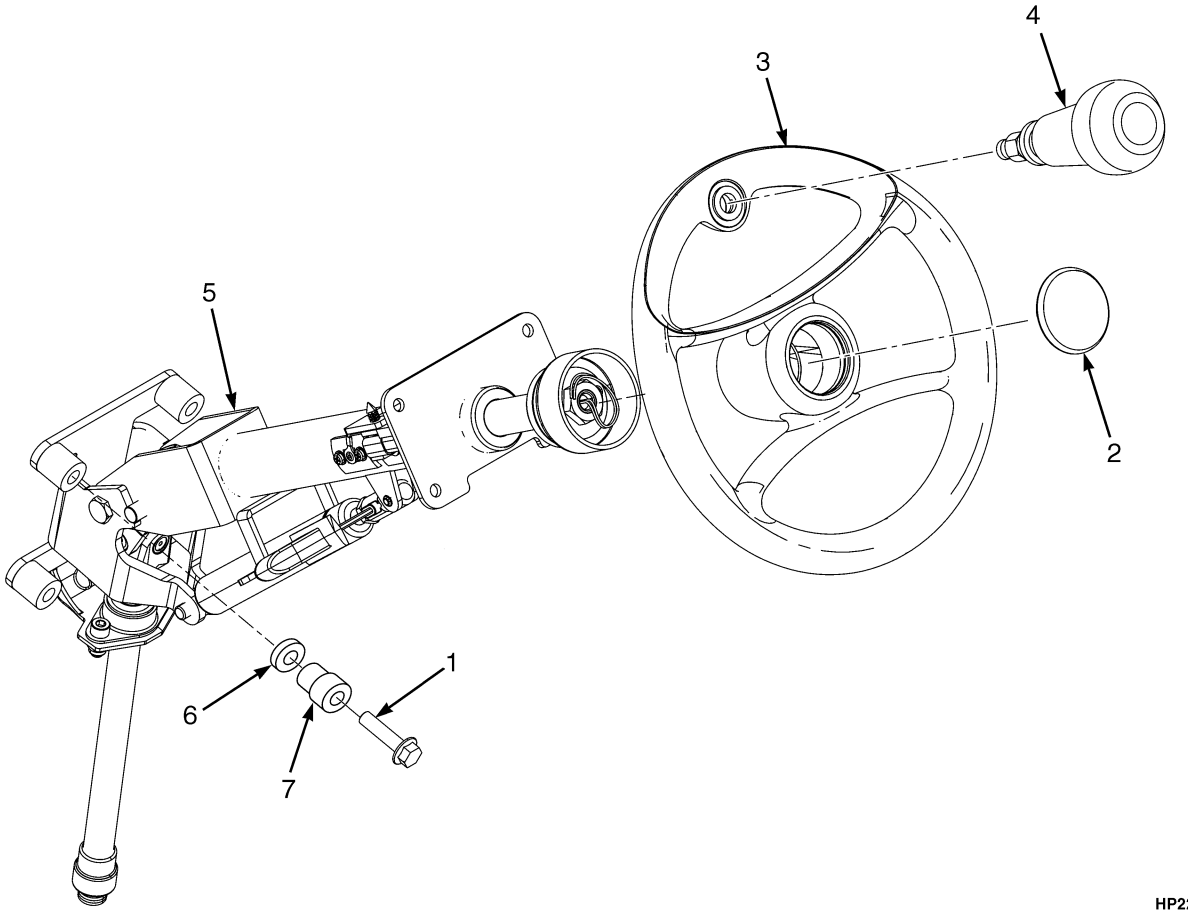

ITEM	PART NO.	DESCRIPTION	QTY
1	580032011	Capscrew	4
2	580065002	Horn Button	1
3	580046399	Steering Wheel (Without Spinner Knob)	1
3	580045338	Steering Wheel (With Spinner Knob)	1
4	580058078	Knob	1
5	580081787	Steering Column (Gasoline and LPG) (☞P19787 [Page 9-4])	1
5	**a** 580081786	Steering Column (Diesel) (☞P19787 [Page 9-4])	1
6	**a** 580064736	Isolator	8
7	**a** 580064805	Spacer	4

FOOTNOTES:

a For Vehicles With Diesel Engines Only

©2008 Yale Materials Handling Corporation

NOTES

©2008 Yale Materials Handling Corporation

STEERING COLUMN ASSEMBLY (FIGURE 9-2)

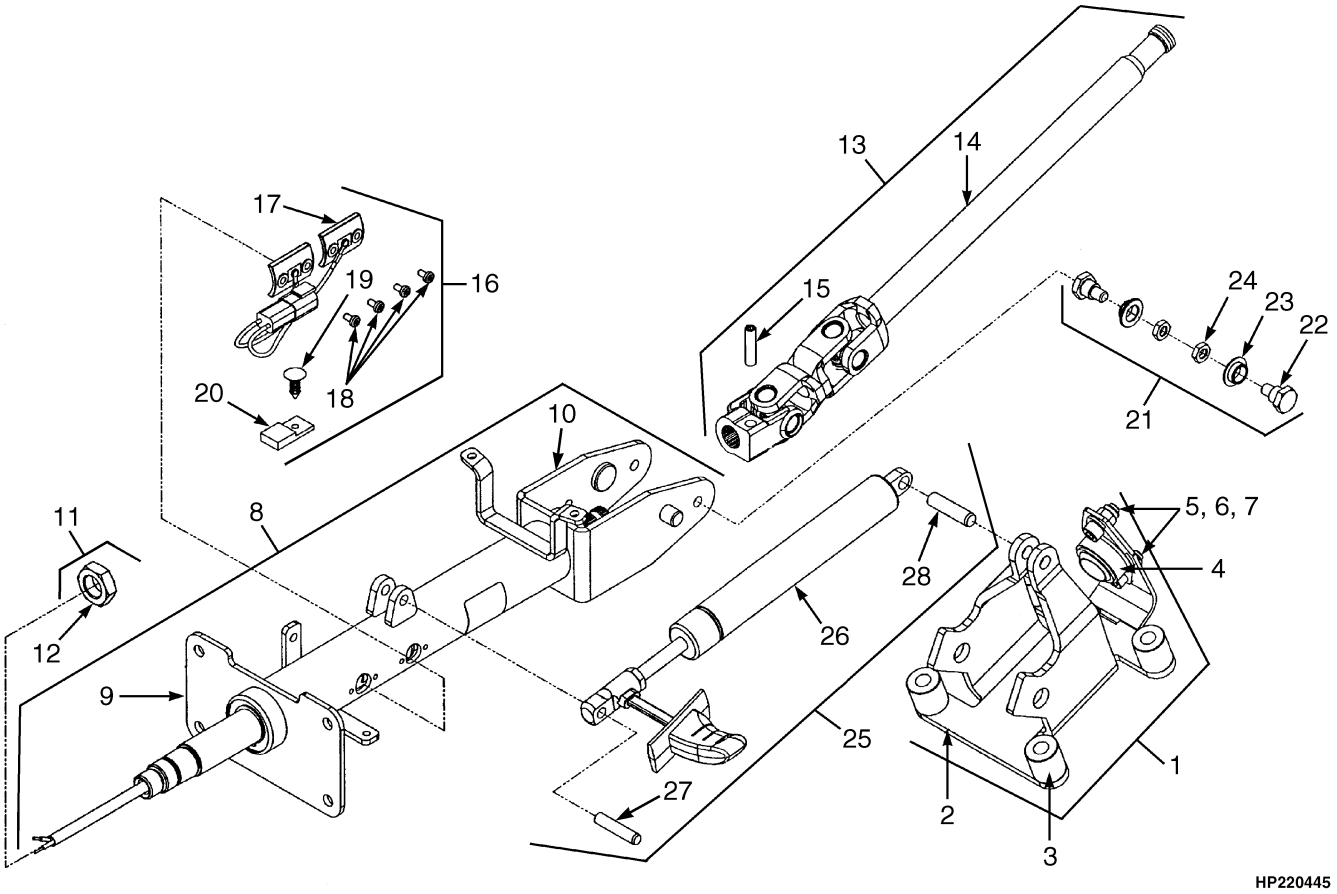

©2008 Yale Materials Handling Corporation

STEERING COLUMN ASSEMBLY

ITEM	PART NO.	DESCRIPTION	QTY
	580081787	Steering Column (Gasoline and LPG)	1
	580081786	Steering Column (Diesel)	1
1	580049808	Kit-Support	1
1	580078691	Kit-Support (Diesel)	1
2	. . . . .	Support	1
3	. . . . .	Spacer	4
4	. . . . .	Joint	1
5	. . . . .	Nut	2
6	. . . . .	Washer	2
7	. . . . .	Screw	2
8	580049809	Kit-Shaft (Upper)	1
8	580078690	Kit-Shaft (Upper)	1
9	. . . . .	Shaft Assembly (Upper)	1
10	. . . . .	Housing Assembly	1
11	580049810	Kit-Nut	1
12	. . . . .	Nut	2
13	580049811	Kit-Shaft (Lower)	1
14	. . . . .	Shaft Assembly (Lower)	1
15	. . . . .	Pin	1
16	580049812	Kit-Contact	1
17	. . . . .	Contact Assembly (Horn)	1
18	. . . . .	Screw	4
19	. . . . .	Fastener	1
20	. . . . .	Connector	1
21	580049806	Kit-Pivot (Lower)	1
22	. . . . .	Bolt (Pivot)	2
23	. . . . .	Bushing	2
24	. . . . .	Nut	2
25	580049807	Kit-Gas Spring	1
26	. . . . .	Gas Spring	1
27	. . . . .	Pin	1
28	. . . . .	Pin	1

©2008 Yale Materials Handling Corporation

STEER CONTROL UNIT (FIGURE 9-3)

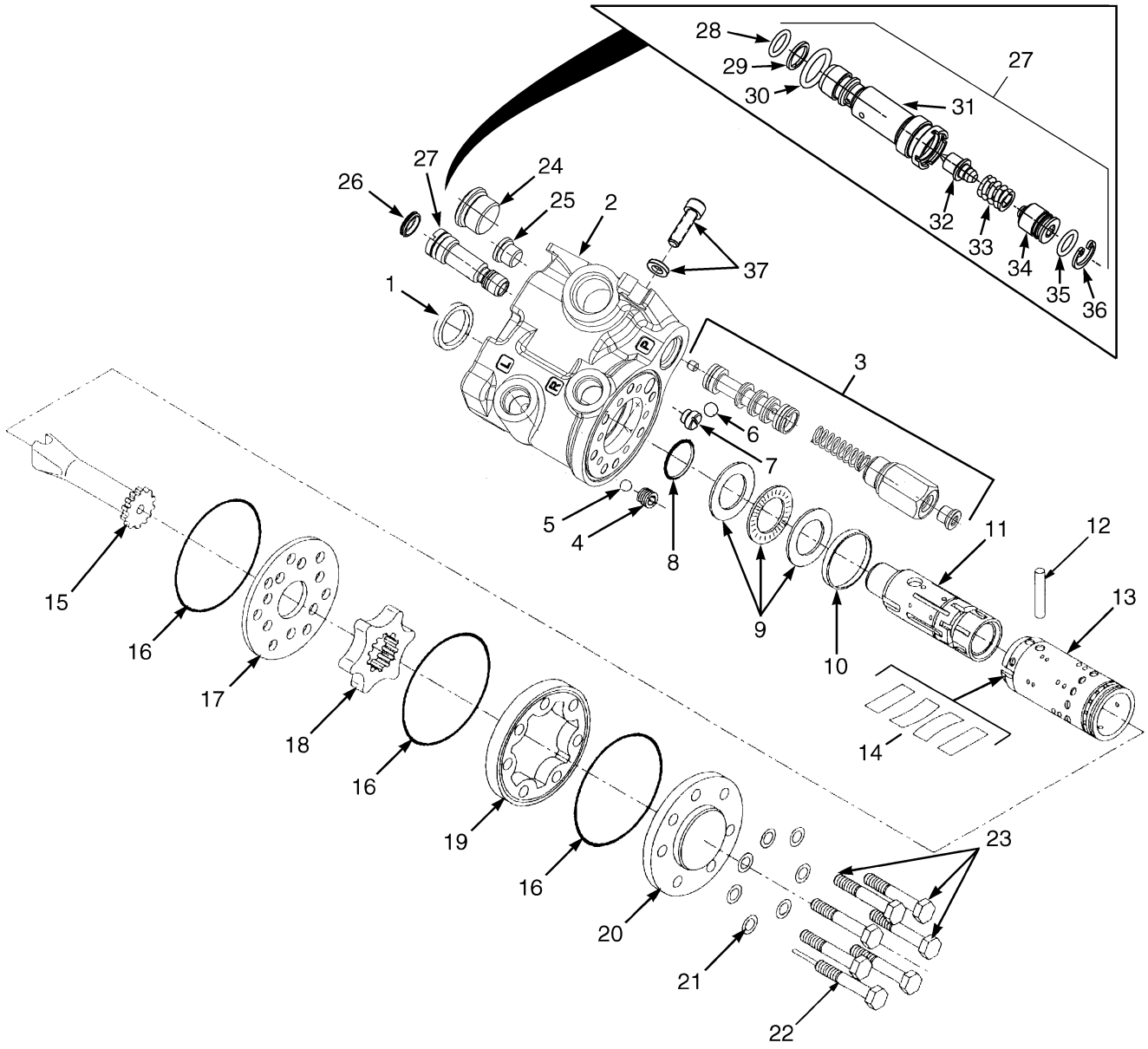

BP220056

©2008 Yale Materials Handling Corporation

STEER CONTROL UNIT

ITEM	PART NO.	DESCRIPTION	QTY
	580087257	Steering Control Unit	1
1	. . . . .	Dust Seal	1
2	. . . . .	Housing	1
3	. . . . .	Relief Valve	1
4	. . . . .	Bushing	1
5	. . . . .	Check Ball	1
6	. . . . .	Check Ball	1
7	. . . . .	Seat	1
8	. . . . .	O-Ring	1
9	. . . . .	Bearing Set	1
10	. . . . .	Ring	1
11	. . . . .	Spool	1
12	. . . . .	Pin	1
13	. . . . .	Sleeve	1
14	. . . . .	Spring Set	1
15	. . . . .	Shaft	1
16	. . . . .	O-Ring	3
17	. . . . .	Plate	1
18	. . . . .	Gear Set	1
19	. . . . .	Gear Ring	1
20	. . . . .	Cover	1
21	. . . . .	Washer	7
22	. . . . .	Special Screw	2
23	. . . . .	Capscrew	5
24	. . . . .	Priority Valve Plug	1
25	. . . . .	Diagnostic Plug (Supply Pressure)	1
26	. . . . .	Cap	1
27	. . . . .	System Relief Valve	1
28	. . . . .	O-Ring	1
29	. . . . .	Back-Up Ring	1
30	. . . . .	O-Ring	1
31	. . . . .	Cartridge	1
32	. . . . .	Seat	1
33	. . . . .	Spring	1
34	. . . . .	Plug	1
35	. . . . .	Anti-Tamper Ring	1
36	. . . . .	Snap Ring	1
37	580056021	Kit-Capscrew	1
	580054569	Kit-Seal	1

©2008 Yale Materials Handling Corporation

STEERING LINES (FIGURE 9-4)

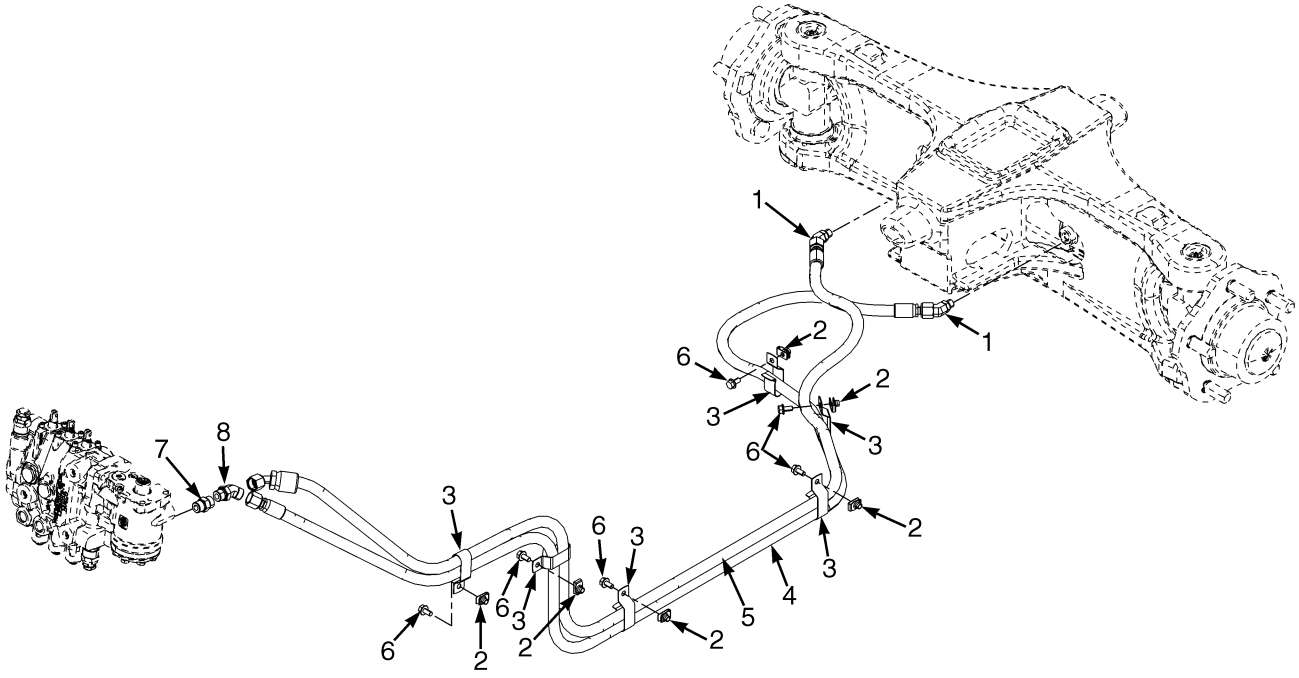

BP220088

©2008 Yale Materials Handling Corporation

STEERING LINES

ITEM	PART NO.	DESCRIPTION	QTY
1	580039351	Fitting	2
1	580063949	O-Ring	1
1	052645200	O-Ring	1
2	580026621	Nut	6
3	580045558	Clip	6
4	**b** 580088060	Hose Assy	1
4	**a** 580088708	Hose Assy	1
5	**b** 580088706	Hose Assy	1
5	**a** 580088707	Hose Assy	1
6	580047714	Capscrew	6
7	580020430	Fitting	1
7	580063949	O-Ring	1
7	052645300	O-Ring	2
8	580039350	Fitting	1
8	580063949	O-Ring	1
8	052645300	O-Ring	1

FOOTNOTES:

a GP/GLP/GDP100-120VX

b GP/GLP/GDP80-90VX

©2008 Yale Materials Handling Corporation

STEER AXLE (FIGURE 9-5)

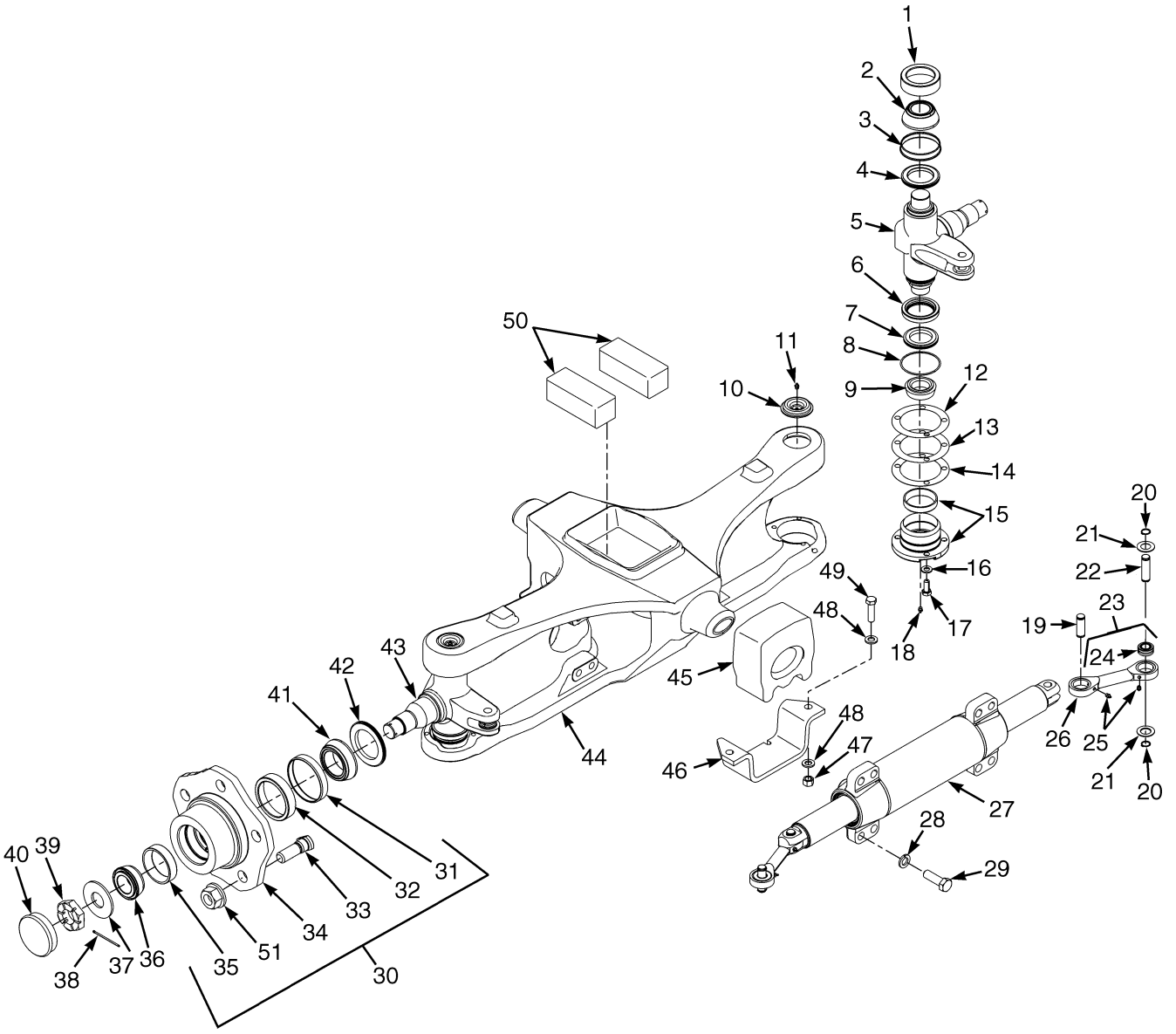

©2008 Yale Materials Handling Corporation

STEER AXLE

ITEM	PART NO.	DESCRIPTION	QTY
	580042227	Steer Axle Assembly	1
1	072387302	Bearing Cup	2
2	072387301	Bearing Cone	2
3	504224231	Wear Sleeve	2
4	504224298	Seal	2
5	580042229	Spindle (RH)	1
6	504224242	Seal	2
7	520045589	Seal	2
8	504225236	O-Ring	2
9	065001000	Bearing Cone	2
10	580001875	Dust Cap	2
11	504224266	Plug	1
12	580009744	Shim (0.005 in.)	2
13	580009745	Shim (0.007 in.)	2
14	580009746	Shim (0.020 in.)	4
15	580009734	Bearing Cap	2
15	065000900	Bearing Cup	1
15	580009733	Bearing Cap	1
16	502566904	Washer	6
17	931014904	Capscrew	6
18	015631500	Grease Fitting	4
19	580052360	Pin	2
20	015918200	Snap Ring	8
21	580008277	Seal	8
22	580052361	Pin	2
23	580052283	Tie Rod	2
24	580052264	Bushing	2
25	015631500	Grease Fitting	2
26	580009637	Tie Rod	1
27	580068690	Steering Cylinder (☞P19791 [Page 9-14])	1
28	311323023	Capscrew	8
29	449022041	Lockwasher	8
30	580075394	Hub	2
31	504224217	Wear Sleeve	1
32	053236500	Bearing Cup	1
33	580002014	Wheel Stud	5
34	580074133	Wheel Hub	1
35	580014161	Bearing Cup	1
36	580014163	Bearing Cone	2
37	580001878	Lockwasher	2
38	015418800	Cotter Pin	2
39	520044815	Nut	2
40	504227283	Cap	2
41	520049820	Bearing Cone	2
42	504224218	Seal	2
43	580042230	Spindle (LH)	1
44	580042228	Steering Axle (Frame)	1
45	580035563	Rubber Mount	2
46	580048175	Plate	2
47	909882405	Nut	4
48	449021010	Washer	8

©2008 Yale Materials Handling Corporation

STEER AXLE

ITEM	PART NO.	DESCRIPTION	QTY
49	502565903	Capscrew	4
50	520045594	Rubber Mount	2
51	580003941	Wheel Nut	10

©2008 Yale Materials Handling Corporation

NOTES

©2008 Yale Materials Handling Corporation

STEER CYLINDER (FIGURE 9-6)

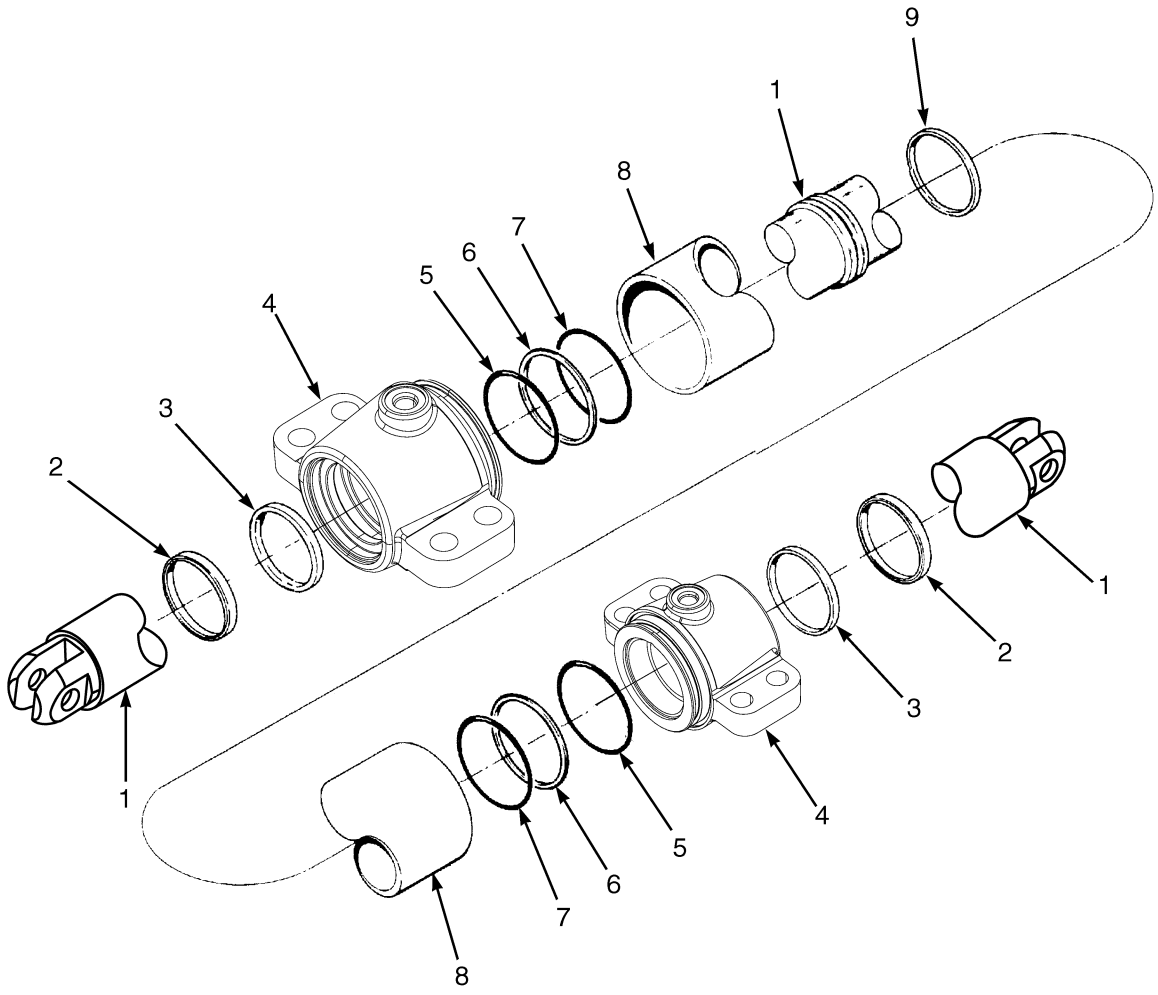

BP220087

©2008 Yale Materials Handling Corporation

STEER CYLINDER

ITEM	PART NO.	DESCRIPTION	QTY
	580068690	Steering Cylinder	1
1	580079937	Cylinder Rod	1
2	524214603	Rod Wiper	2
3	580052511	Rod Seal	2
4	580048315	End Cap	2
5	580074187	O-Ring	2
6	500167917	Back-Up Ring	2
7	580006367	O-Ring	2
8	580075342	Tube Wldmt-Cylinder	1
9	504305713	Seal	1
	580058187	Kit-Seal	1

©2008 Yale Materials Handling Corporation

STEER TIRE AND WHEEL (FIGURE 9-7)

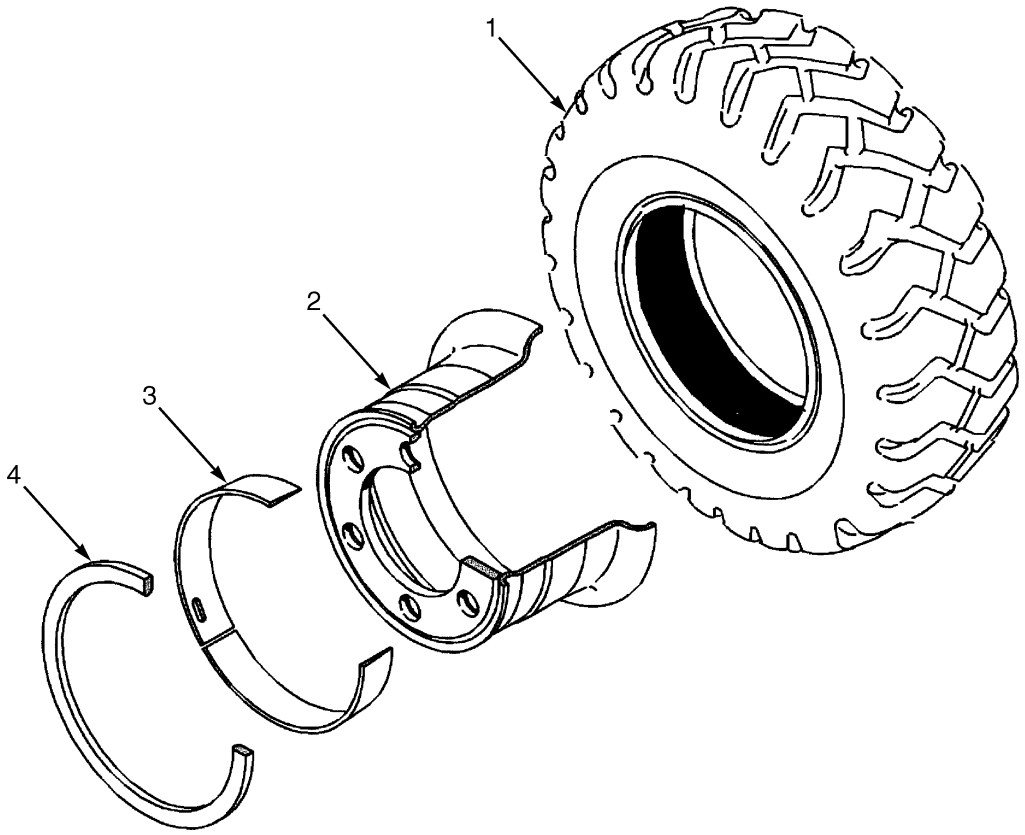

BP070041

KEY:
A: 7.00 x 12-14PR
B: 7.00 x 12 Solid Pneumatic
C: 7.00 R12 Radial

ITEM	PART NO.	DESCRIPTION	QTY A	QTY B	QTY C
1	580043308	Tire Flap (Trell)	2	..	..
1	580079611	Tire (Monarch)	..	2	..
1	580014954	Pneumatic Tire (Michelin XZM)	..	..	2
1	505973583	Pneumatic Tire	..	..	1
1	580014862	Tire Flap	..	..	1
1	580014987	Tubeless Bead Seal Valve	..	..	1
2	580067484	Rim	2	2	2
3	580073903	Ring	1	1	1
4	580073904	Lockring	1	1	1

©2008 Yale Materials Handling Corporation

10 BRAKE SYSTEM

SECTION 10
BRAKE SYSTEM

DESCRIPTION	PAGE
BRAKE ASSEMBLY	
GP/GLP/GDP100-120VX - DRY BRAKE	10-18
GP/GLP/GDP80-90VX - DRY BRAKE	10-16
BRAKE COOLING SYSTEM	
SINGLE AND DUAL PEDAL - WET BRAKE	10-24
BRAKE LINKAGE	
DUAL PEDAL - DRY BRAKE	10-6
DUAL PEDALS - WET BRAKE	10-12
SINGLE PEDAL - DRY BRAKE	10-2
SINGLE PEDAL - WET BRAKE	10-10
BRAKE MASTER CYLINDER ASSEMBLY	10-22
PARK BRAKE ASSEMBLY	10-20

©2008 Yale Materials Handling Corporation

BRAKE LINKAGE (FIGURE 10-1)

SINGLE PEDAL — DRY BRAKE

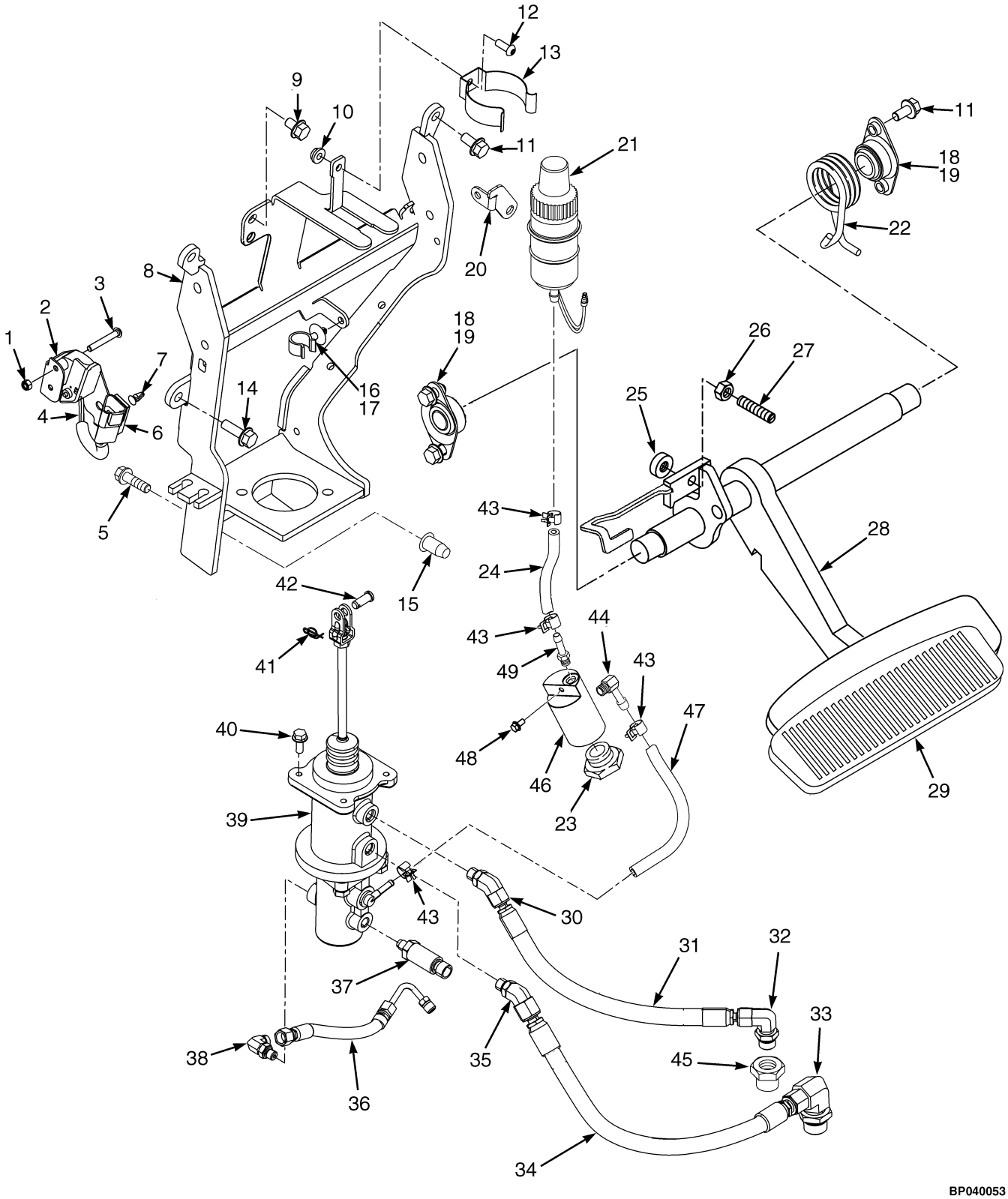

©2008 Yale Materials Handling Corporation

BRAKE LINKAGE
SINGLE PEDAL – DRY BRAKE

ITEM	PART NO.	DESCRIPTION	QTY
1	449015112	Locknut	2
2	580056625	Bracket (Inching Sensor)	1
3	580047034	Capscrew	2
4	580044785	Sensor (Brake Position)	1
5	580058269	Capscrew	2
6	580026812	Clip	1
7	580050676	Clip (Key Hole)	1
8	580070016	Bracket Wldmt	1
9	580037180	Capscrew	1
10	580047919	Nut	1
11	580047714	Capscrew	2
12	580030975	Screw (Button Head)	1
13	922627300	Holder	1
14	580030966	Capscrew	2
15	580044860	Insert	2
16	580042794	Clamp (Swivel)	2
17	580042842	Clamp	1
18	580057831	Bushing	2
19	501702902	Loctite	AR
20	580060576	Bracket	1
21	580076790	Reservoir	1
21	580080011	Diaphragm	1
21	580077299	Cap	1
22	580052279	Spring (RH)	1
23	810528500	Fitting	1
24	580076897	Hose (Upper Brake Feed)	1
25	580047742	Bumper	1
26	449015014	Nut	1
27	580040128	Bolt	1
28	580075101	Pedal (GP/GLP/GDP80VX)	1
28	580075099	Pedal (GP/GLP/GDP90-120VX)	1
29	580052931	Rubber Pad	1
30	580039347	Fitting	1
30	504155200	O-Ring	1
30	052645200	O-Ring	1
31	580074768	Hose Assy	1
32	580055804	Fitting	1
32	052645300	O-Ring	1
32	504155200	O-Ring	1
33	580071113	Fitting	1
33	580063949	O-Ring	1
33	052645500	O-Ring	1
34	580005640	Hose	1
35	580064915	Fitting	1
35	052645200	O-Ring	1
36	580056373	Hose Assy (Brake)	1
37	580059254	Transducer	1
38	580019860	Fitting	1
38	580039385	O-Ring	1
38	056363300	O-Ring	1

©2008 Yale Materials Handling Corporation

BRAKE LINKAGE
SINGLE PEDAL – DRY BRAKE

ITEM	PART NO.	DESCRIPTION	QTY
39	580080176	Master Cylinder (☞P19803 [Page 10-22])	1
40	580049231	Capscrew	2
41	580000868	Lockring	1
42	580056624	Pin (Rod End)	1
43	502056906	Clamp	4
43	**b** 511405800	Clamp (Worm Screw)	4
44	580077616	Fitting	1
44	056363300	O-Ring	1
45	580075851	Fitting	1
45	052645700	O-Ring	1
46	580076769	Cylinder Block	1
47	580000242	Hose	1
48	580049011	Capscrew	1
49	580077615	Fitting	1
49	056363300	O-Ring	1
	a 580077316	Label (Brake Fluid Warning)	1
	a 312850042	Strap Clamp	1

FOOTNOTES:

a Not Illustrated

b Optional

©2008 Yale Materials Handling Corporation

NOTES

©2008 Yale Materials Handling Corporation

BRAKE LINKAGE (FIGURE 10-2)
DUAL PEDAL — DRY BRAKE

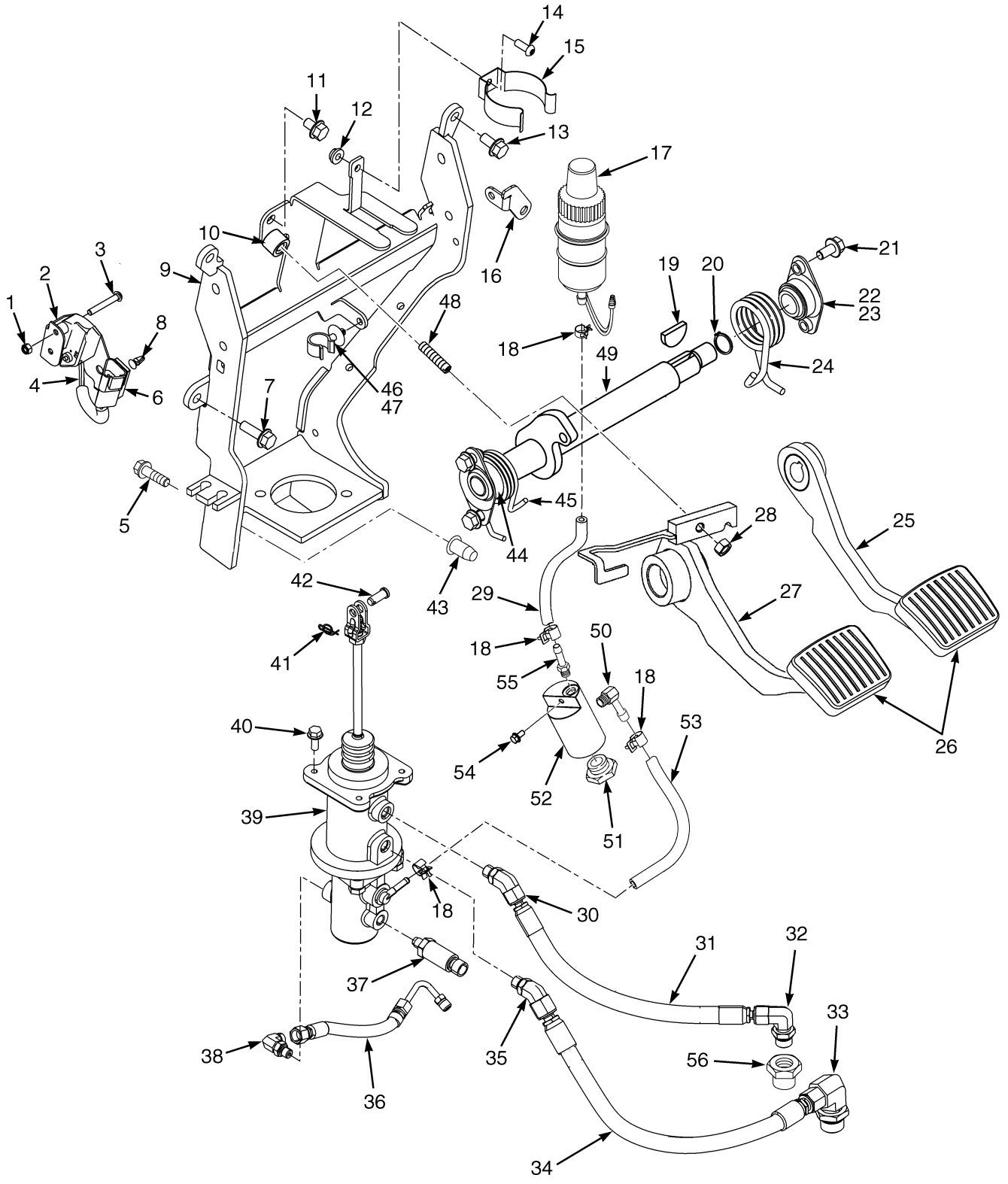

©2008 Yale Materials Handling Corporation

BRAKE LINKAGE
DUAL PEDAL – DRY BRAKE

ITEM	PART NO.	DESCRIPTION	QTY
1	449015112	Locknut	2
2	580056625	Bracket (Inching Sensor)	1
3	580047034	Capscrew	2
4	580044785	Sensor (Brake Position)	1
5	580058269	Capscrew	2
6	580026812	Clip (Connector)	1
7	580030966	Capscrew	2
8	580050676	Clip (Key Hole)	1
9	580070016	Bracket Wldmt	1
10	580047742	Bumper	1
11	580037180	Capscrew	1
12	580047919	Nut	1
13	580047714	Capscrew	6
14	580030975	Screw (Button Head)	1
15	922627300	Holder	1
16	580060576	Bracket	1
17	580076790	Reservoir	1
17	934404300	Tank	1
17	580080011	Diaphragm	1
17	580077299	Cap	1
18	502056906	Clamp	4
18	**b** 511405800	Clamp (Worm Screw)	4
19	014979500	Woodruff Key	1
20	015915100	Snap Ring	1
21	580055299	Hose Assy (Brake)	1
22	580057831	Bushing	2
23	501702902	Loctite	AR
24	580052280	Spring (RH)	1
25	580052353	Brake Pedal (RH)	1
26	580052933	Pad	2
27	580074515	Brake Pedal (LH)	1
28	449015014	Nut	1
29	580076897	Hose (Upper Brake Feed)	1
30	580039347	Fitting	1
30	504155200	O-Ring	1
30	052645200	O-Ring	1
31	580074768	Hose Assy	1
32	580055804	Fitting	1
32	052645300	O-Ring	1
32	504155200	O-Ring	1
33	580071113	Fitting	1
33	052645500	O-Ring	1
33	580063949	O-Ring	1
34	580005640	Hose	1
35	580064915	Fitting	1
35	052645200	O-Ring	1
36	580056373	Hose Assy	1
37	580059254	Transducer	1
38	580019860	Fitting	1
38	580039385	O-Ring	1

©2008 Yale Materials Handling Corporation

BRAKE LINKAGE
DUAL PEDAL – DRY BRAKE

ITEM	PART NO.	DESCRIPTION	QTY
38	056363300	O-Ring	1
39	580080176	Master Cylinder (☞P19803 [Page 10-22])	1
40	580049231	Capscrew	2
41	580000868	Lockring	1
42	580056624	Pin (Rod End)	1
43	580044860	Insert	2
44	520037811	Bushing	2
45	580052281	Spring (LH)	1
46	580042842	Clamp	1
47	580042794	Clamp (Swivel)	1
48	580040128	Bolt	1
49	580052351	Crank (GP/GLP/GDP90-120VX)	1
49	580055257	Crank (GP/GLP/GDP80VX)	1
50	580077616	Fitting	1
50	056363300	O-Ring	1
51	810528500	Fitting	1
51	052645700	O-Ring	1
52	580076769	Cylinder Block	1
53	580000242	Hose	1
54	580049011	Capscrew	1
55	580077615	Fitting	1
55	056363300	O-Ring	1
	a 580077316	Label (Brake Fluid Warning)	1
	a 312850042	Strap Clamp	1

FOOTNOTES:

a Not Illustrated

b Optional

©2008 Yale Materials Handling Corporation

NOTES

©2008 Yale Materials Handling Corporation

BRAKE LINKAGE (FIGURE 10-3)

SINGLE PEDAL — WET BRAKE

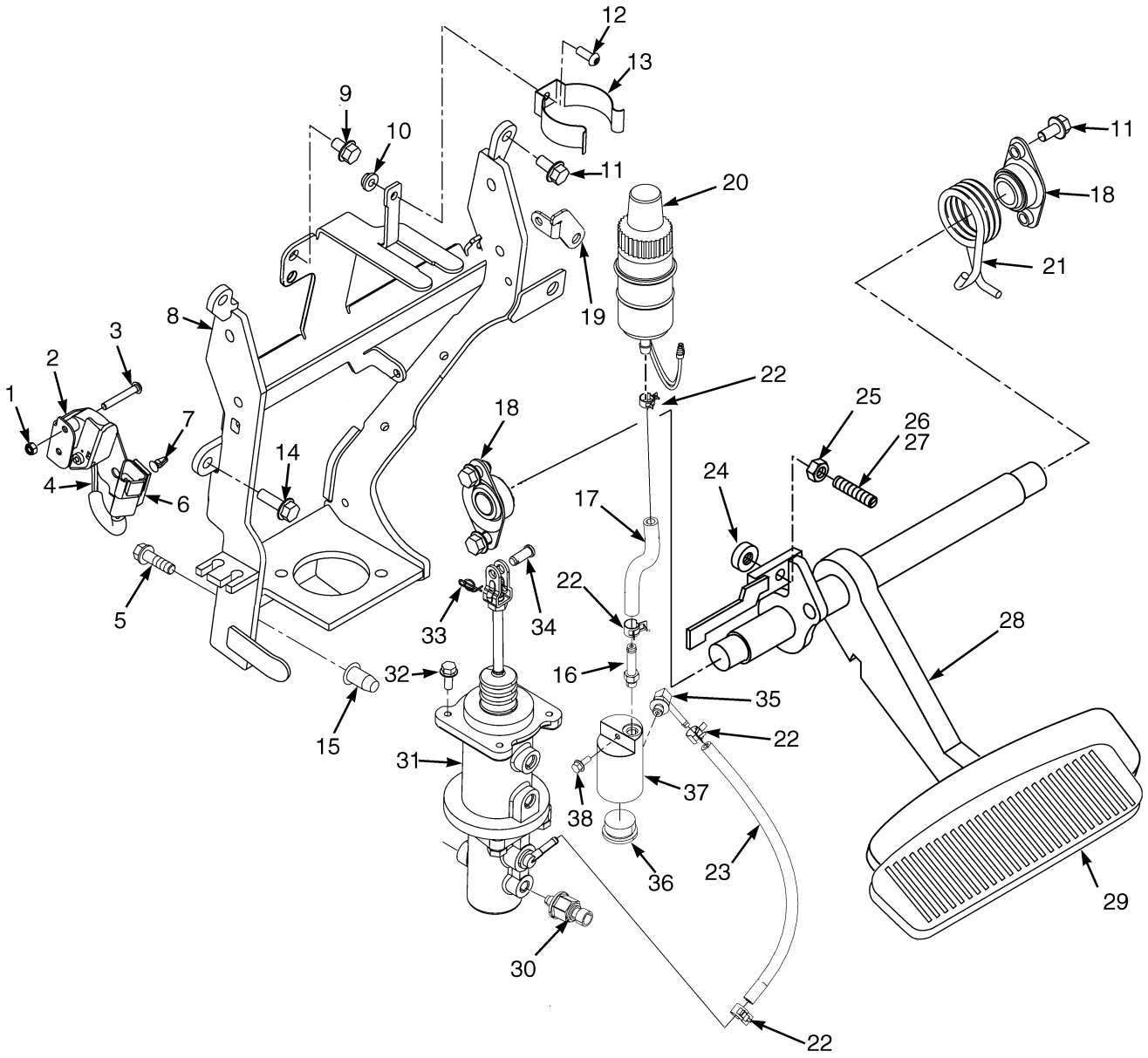

©2008 Yale Materials Handling Corporation

BRAKE LINKAGE
SINGLE PEDAL – WET BRAKE

ITEM	PART NO.	DESCRIPTION	QTY
1	449015112	Locknut	2
2	580056625	Bracket (Inching Sensor)	1
3	580047034	Capscrew	2
4	580044785	Sensor (Brake Position)	1
5	580058269	Capscrew	2
6	580026812	Clip	1
7	580050676	Clip (Key Hole)	1
8	580070016	Bracket Wldmt	1
9	580037180	Capscrew	1
10	580047919	Nut	1
11	580047714	Capscrew	6
12	580030975	Screw (Button Head)	1
13	922627300	Holder	1
14	580056815	Capscrew	2
15	580044860	Insert	2
16	580077615	Fitting	1
16	056363300	O-Ring	1
17	580076897	Hose	1
18	580057831	Bushing	2
19	580060576	Bracket	1
20	580076790	Reservoir	1
20	934404300	Tank	1
20	580080011	Diaphragm	1
20	580077299	Cap	1
21	580052279	Spring (RH)	1
22	502056906	Clamp	4
22	**a** 511405800	Clamp (Worm Screw)	4
23	580000242	Hose (Brake Feed)	1
24	580047742	Bumper	1
25	449015014	Nut	1
26	580040128	Bolt	1
27	501702902	Loctite	AR
28	580075100	Pedal	1
29	580052931	Rubber Pad	1
30	580059254	Transducer	1
31	580052701	Master Cylinder (☞P19803 [Page 10-22])	1
32	580049231	Capscrew	4
33	580000868	Lockring	1
34	580056624	Pin (Rod End)	1
35	580077616	Fitting	1
35	056363300	O-Ring	1
36	810528500	Fitting	1
36	052645700	O-Ring	1
37	580076769	Cylinder Block	1
38	580049011	Capscrew	1

FOOTNOTES:
a Optional

©2008 Yale Materials Handling Corporation

BRAKE LINKAGE (FIGURE 10-4)
DUAL PEDALS — WET BRAKE

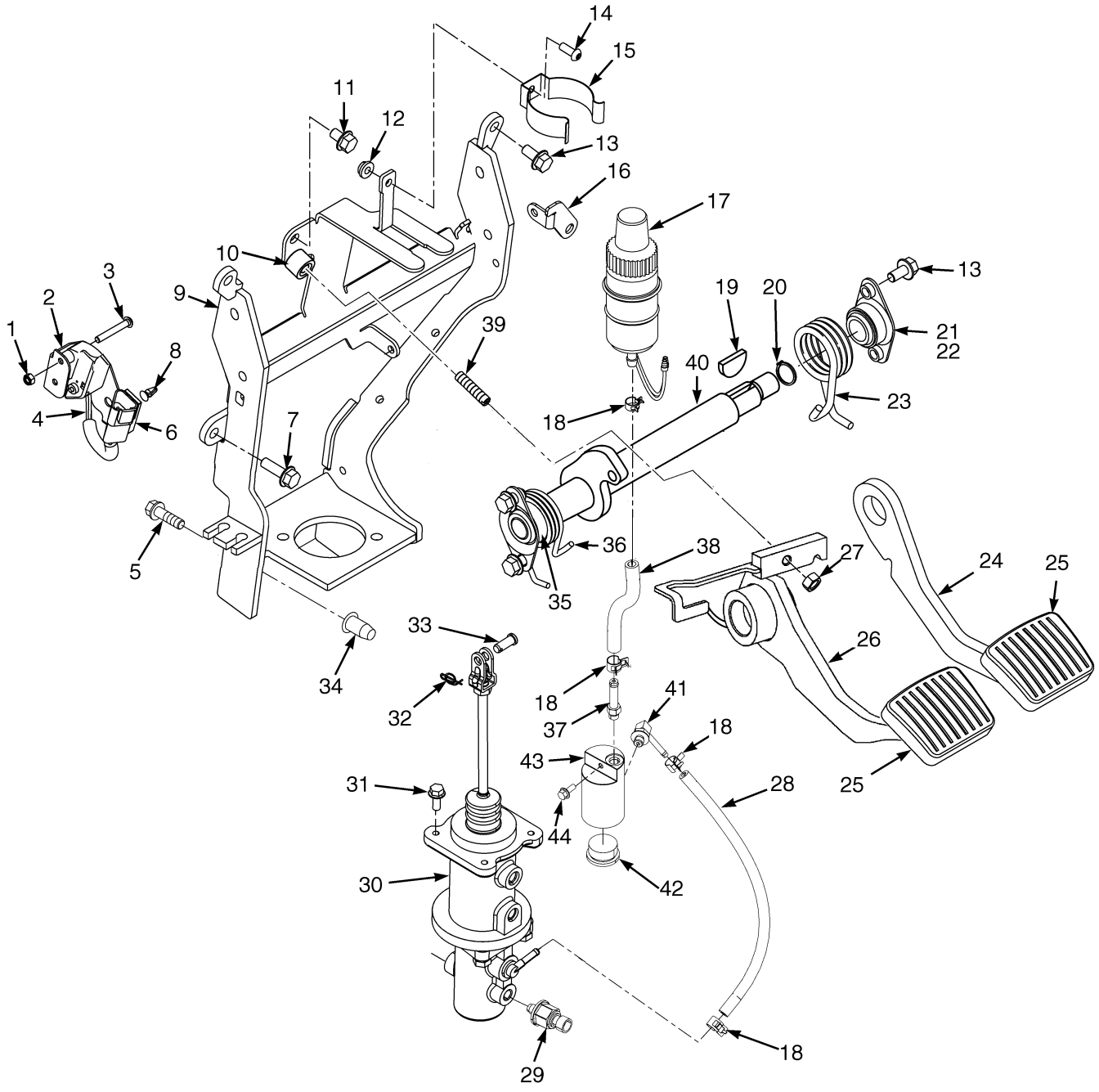

BP040083

©2008 Yale Materials Handling Corporation

BRAKE LINKAGE
DUAL PEDALS – WET BRAKE

ITEM	PART NO.	DESCRIPTION	QTY
1	449015112	Locknut	2
2	580056625	Bracket (Inching Sensor)	1
3	580047034	Capscrew	2
4	580044785	Sensor (Brake Position)	1
5	580058269	Capscrew	2
6	580026812	Clip (Connector)	1
7	580056815	Capscrew	2
8	580050676	Clip (Key Hole) (Key Hole)	1
9	580070016	Bracket Wldmt	1
10	580047742	Bumper	1
11	580037180	Capscrew	1
12	580047919	Nut	1
13	580047714	Capscrew	6
14	580030975	Screw (Button Head)	1
15	922627300	Holder	1
16	580060576	Bracket	1
17	580076790	Reservoir	1
17	934404300	Tank	1
17	580077298	Diaphragm	1
17	580080011	Diaphragm	1
17	580077299	Cap	1
18	502056906	Clamp	4
18	**a** 511405800	Clamp (Worm Screw)	4
19	014979500	Woodruff Key	1
20	015915100	Snap Ring	1
21	580057831	Bushing	2
22	501702902	Loctite	AR
23	580052280	Spring (RH)	1
24	580052353	Brake Pedal (RH)	1
25	580052933	Pad	2
26	580074515	Brake Pedal (LH)	1
27	449015014	Nut	1
28	580000242	Hose (Brake Feed)	1
29	580059254	Transducer	1
30	580052701	Master Cylinder (☞P19803 [Page 10-22])	1
31	580049231	Capscrew	4
32	580000868	Lockring	1
33	580056624	Pin (Rod End)	1
34	580044860	Insert	2
35	520037811	Bushing	2
36	580052281	Spring (LH)	1
37	580077615	Fitting	1
37	056363300	O-Ring	1
38	580076897	Hose	1
39	580040128	Bolt	1
40	580054153	Crank	1
41	580077616	Fitting	1
41	056363300	O-Ring	1
42	810528500	Fitting	1
42	052645700	O-Ring	1

©2008 Yale Materials Handling Corporation

BRAKE LINKAGE
DUAL PEDALS – WET BRAKE

ITEM	PART NO.	DESCRIPTION	QTY
43	580076769	Cylinder Block	1
44	580049011	Capscrew	1

FOOTNOTES:
a Optional

©2008 Yale Materials Handling Corporation

NOTES

©2008 Yale Materials Handling Corporation

BRAKE ASSEMBLY (FIGURE 10-5)
GP/GLP/GDP80-90VX — DRY BRAKE

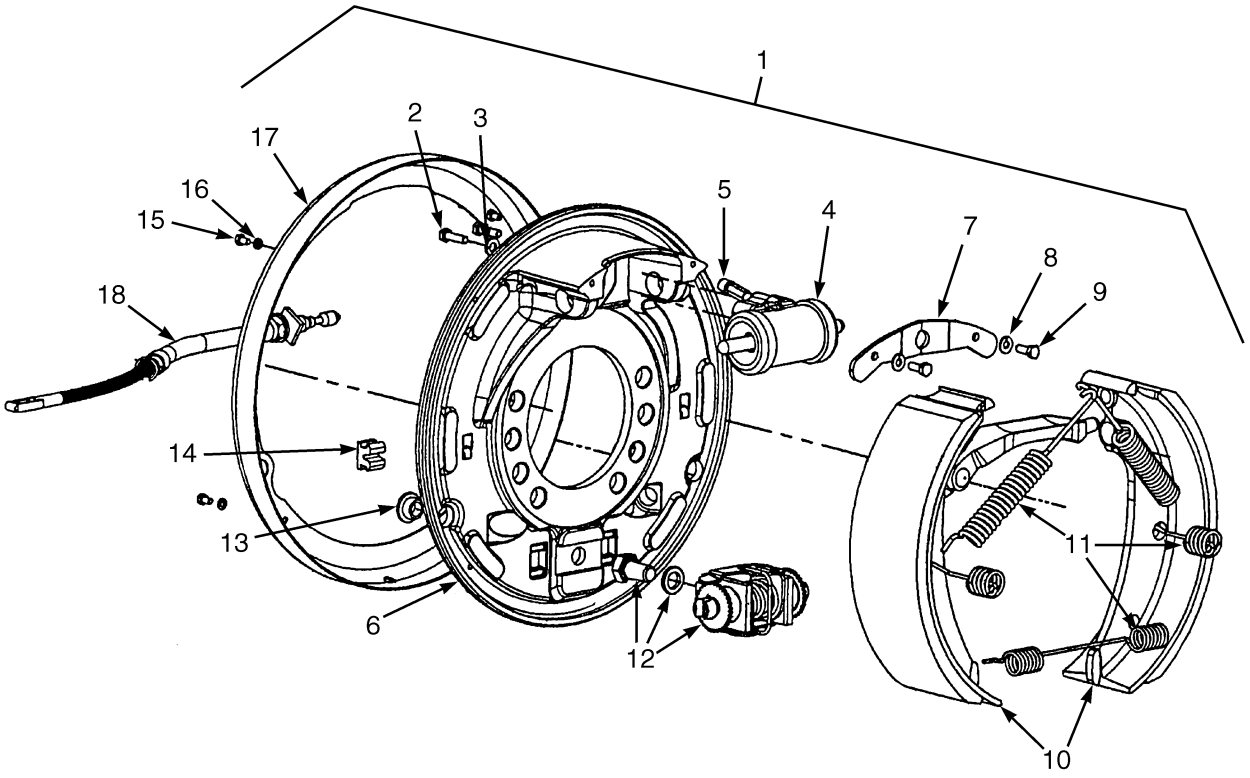

BP040072

©2008 Yale Materials Handling Corporation

BRAKE ASSEMBLY

GP/GLP/GDP80-90VX – DRY BRAKE

KEY:
A: Left Hand
B: Right Hand

ITEM	PART NO.	DESCRIPTION	QTY A	QTY B
	580092280	Brake Assy (Left Hand)	1	..
	580092281	Brake Assy (Right Hand)	..	1
1	580092284	Brake Assy (Left Hand) (Without Cable)	1	..
1	580092285	Brake Assy (Right Hand) (Without Cable)	..	1
2	580071341	Bolt	2	2
3	580071340	Spring Washer	2	2
4	580071321	Wheel Cylinder	1	1
5	. . . . .	Bleeder Valve	1	1
6	580071329	Backplate (LH)	1	..
6	580071330	Backplate (RH)	..	1
7	. . . . .	Retainer	1	1
8	. . . . .	Bolt	2	2
9	449022018	Washer	2	2
10	580092286	Kit-Brake Shoe	1	..
10	580092287	Kit-Brake Shoe	..	1
11	580090177	Kit-Spring	1	1
11	. . . . .	Spring	1	1
11	. . . . .	Tension Spring	1	1
11	. . . . .	Spring	1	1
12	580076326	Kit-Adjuster	1	1
12	. . . . .	Adjuster	1	1
12	. . . . .	Bolt	1	1
12	. . . . .	Washer	2	2
13	. . . . .	Hole Plug	2	2
14	. . . . .	Hole Plug	2	2
15	. . . . .	Bolt	2	2
16	. . . . .	Spring Washer	2	2
17	. . . . .	Dust Shield	1	1
18	580090162	Parking Brake Cable (LH)	1	..
18	580090163	Parking Brake Cable (RH)	..	1

©2008 Yale Materials Handling Corporation

BRAKE ASSEMBLY (FIGURE 10-6)

GP/GLP/GDP100-120VX — DRY BRAKE

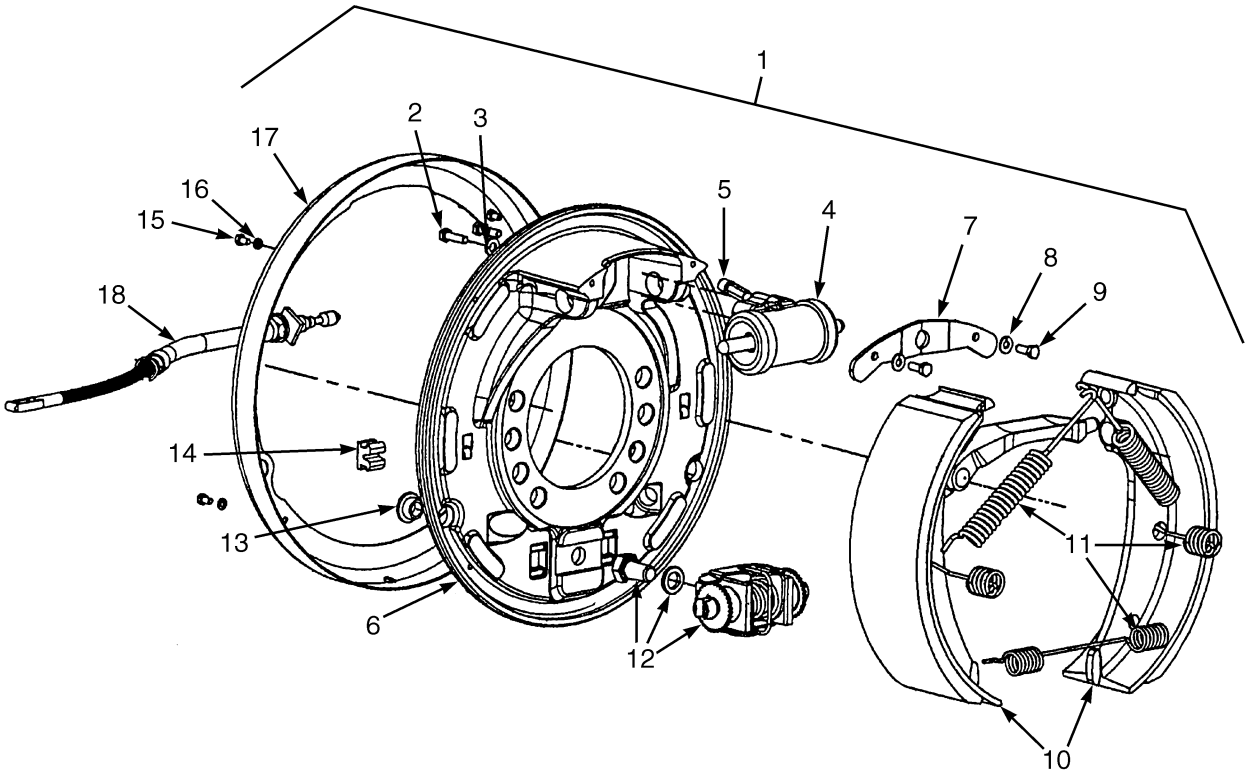

BP040072

©2008 Yale Materials Handling Corporation

BRAKE ASSEMBLY

GP/GLP/GDP100-120VX – DRY BRAKE

KEY:
A: Left Hand
B: Right Hand

ITEM	PART NO.	DESCRIPTION	QTY A	QTY B
	580090160	Brake Assembly (LH)	1	..
	580090161	Brake Assembly (RH)	..	1
1	580090166	Brake Assembly (LH, without cable)	1	..
1	580090167	Brake Assembly (RH, without cable)	..	1
2	580071341	Bolt	4	4
3	580071340	Spring Washer	4	4
4	580071322	Kit-Repair Wheel Cylinder	1	1
5	. . . . .	Bleeder Valve	1	1
6	580071333	Anchor Plate Assembly (LH)	1	..
6	580071334	Anchor Plate Assembly (RH)	..	1
7	. . . . .	Retainer	1	1
8	. . . . .	Bolt	2	2
9	449022018	Washer	2	2
10	580071320	Kit-Brake Shoe	..	1
10	580076325	Kit-Brake Shoe	..	1
10	580071319	Kit-Brake Shoe	1	..
10	580076324	Kit-Brake Shoe	1	..
11	580090168	Kit-Spring	1	1
12	580073246	Kit-Adjuster	1	1
12	580076329	Kit-Adjuster	1	1
12	. . . . .	Washer	2	2
12	. . . . .	Bolt	1	1
13	. . . . .	Hole Plug	2	2
14	. . . . .	Hole Plug	2	2
15	. . . . .	Bolt	2	2
16	. . . . .	Spring Washer	2	2
17	. . . . .	Dust Shield	1	1
18	580090162	Parking Brake Cable (LH)	1	..
18	580090163	Parking Brake Cable (RH)	..	1

©2008 Yale Materials Handling Corporation

PARK BRAKE ASSEMBLY (FIGURE 10-7)

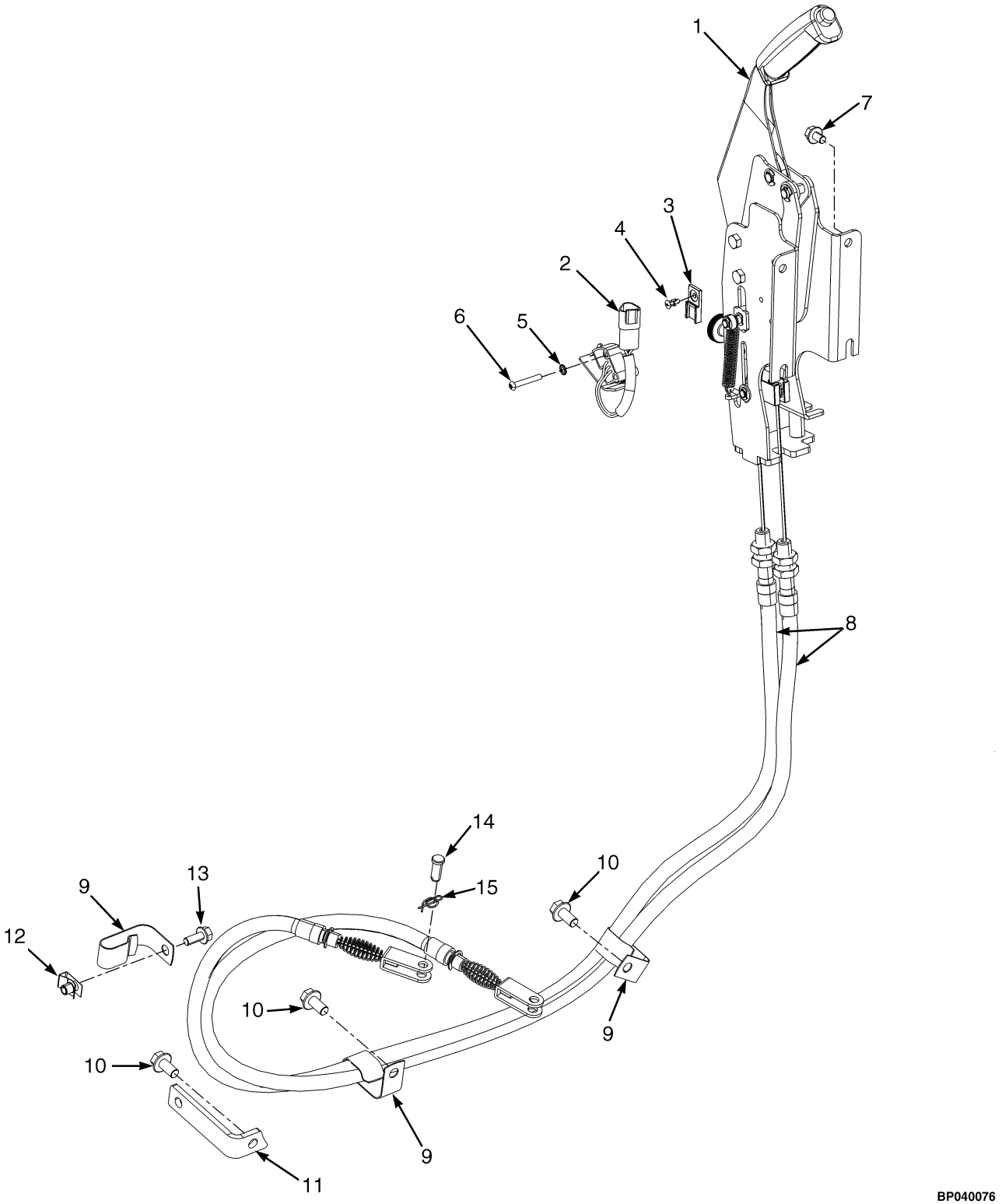

©2008 Yale Materials Handling Corporation

PARK BRAKE ASSEMBLY

KEY:
A: With Cab
B: With Overhead Guard

ITEM	PART NO.	DESCRIPTION	QTY A	QTY B
	580080972	Parking Brake	..	1
	580080971	Parking Brake	1	..
1	580081500	Parking Brake Lever	..	1
1	580081499	Parking Brake Lever	1	..
1	580084626	Grip	1	1
2	580044785	Sensor (Brake Position)	1	1
3	580026812	Clip	1	1
4	580050676	Clip (Key Hole)	1	1
5	940600906	Washer	2	2
6	580047034	Capscrew	2	2
7	580037180	Capscrew	4	4
8	**a** 580076523	Parking Brake Cable (LH)	1	1
8	**a** 580076524	Parking Brake Cable (RH)	1	1
9	**a** 501921905	Clamp	3	3
10	**a** 580049010	Capscrew	3	3
11	**a** 580073882	Bracket	1	1
12	**a** 312823020	Clamp	1	1
13	**a** 580049231	Capscrew	2	2
14	**a** 580056624	Pin (Rod End)	2	2
15	**a** 580063952	Lockring	2	2

FOOTNOTES:
a Used with Wet Brake System, for dry brakes see Dry Brake Assembly

©2008 Yale Materials Handling Corporation

BRAKE MASTER CYLINDER ASSEMBLY (FIGURE 10-8)

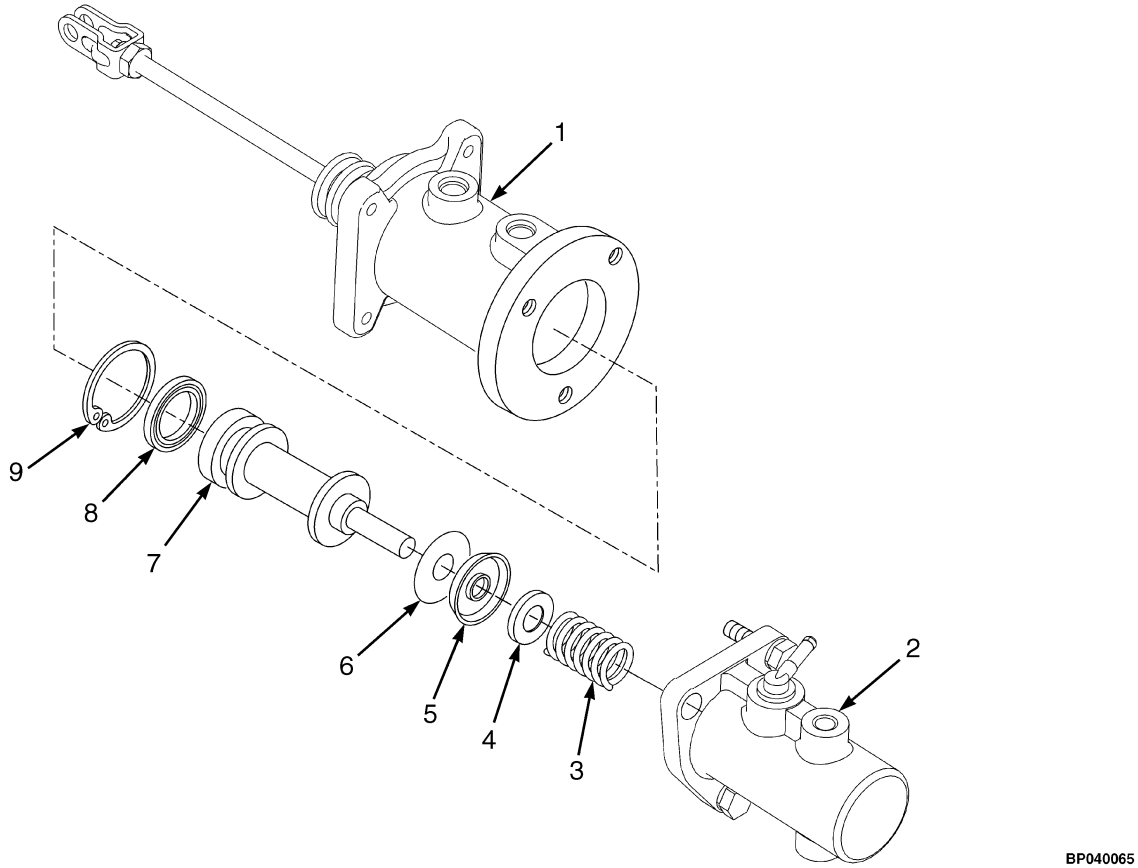

KEY:
A: 2096079
B: 1569527

ITEM	PART NO.	DESCRIPTION	QTY A	QTY B
	580080176	Master Cylinder (31.75 Bore)	1	..
	580052701	Master Cylinder (38.1 Bore)	..	1
1	. . . . .	Booster	..	..
1	580085536	Brake Booster	1	1
1	580091367	Kit-Repair Brake Booster	1	1
2	580085537	Master Cylinder	1	..
2	580085539	Master Cylinder	..	1
2	. . . . .	Housing	1	1
3	. . . . .	Spring	1	1
4	. . . . .	Retainer	1	1
5	. . . . .	Seal (Pressure)	1	1
6	. . . . .	Washer	1	1
7	. . . . .	Piston	1	1
8	. . . . .	Seal (Retaining)	1	1
9	. . . . .	Snap Ring	1	1
	580060996	Kit-Repair Minor-Master Cyl (31.75 Bore)	1	..
	a 580069323	Kit-Repair Major-Master Cyl (38.1 Bore)	..	1
	580069324	Kit-Repair Minor-Master Cyl (38.1 Bore)	..	1

©2008 Yale Materials Handling Corporation

FOOTNOTES:

a Includes Minor Repair Kit

©2008 Yale Materials Handling Corporation

BRAKE COOLING SYSTEM (FIGURE 10-9)

SINGLE AND DUAL PEDAL — WET BRAKE

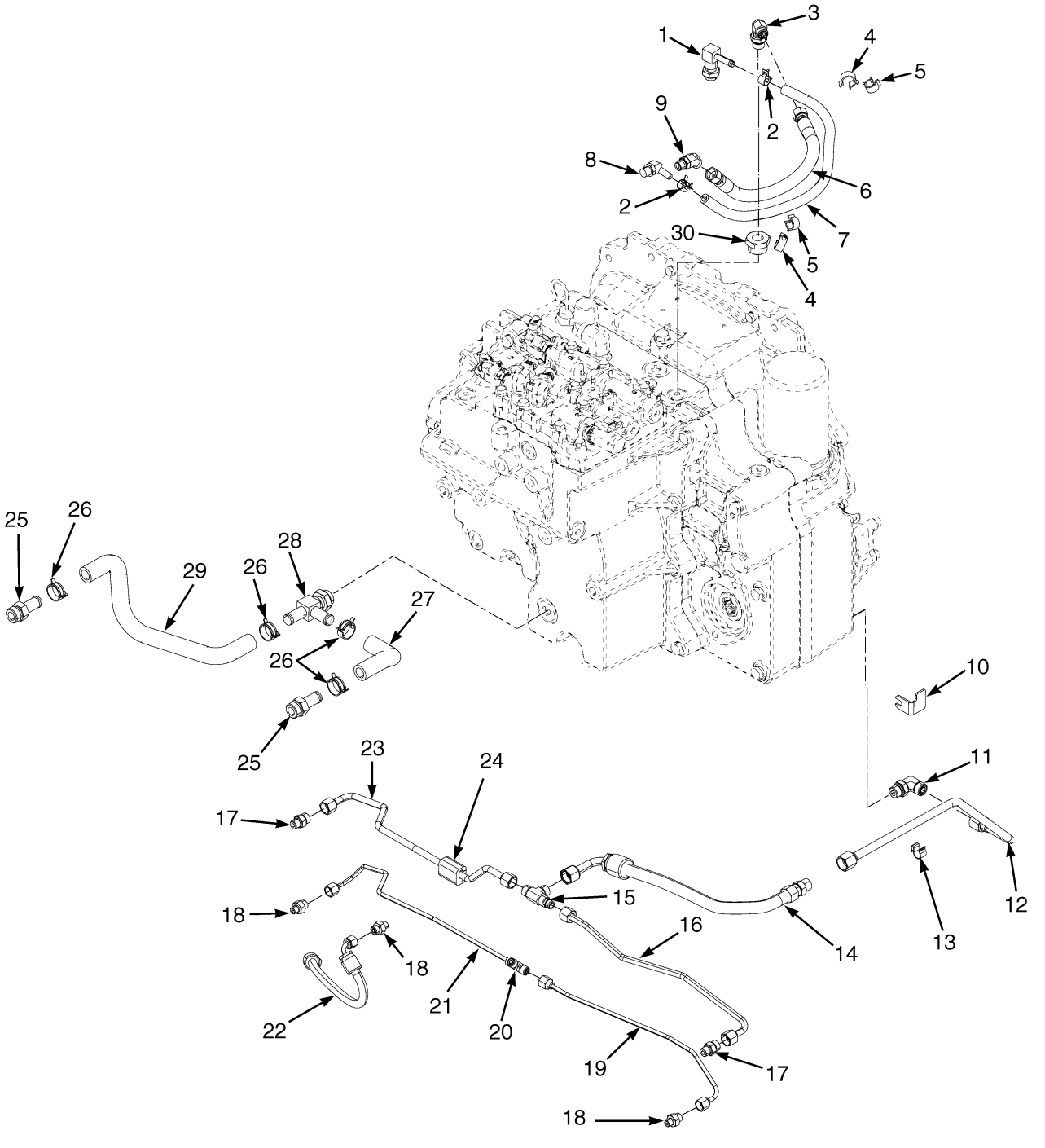

©2008 Yale Materials Handling Corporation

BRAKE COOLING SYSTEM
SINGLE AND DUAL PEDAL – WET BRAKE

ITEM	PART NO.	DESCRIPTION	QTY
1	580074759	Fitting	2
2	580052736	Hose Clamp	2
3	580055804	Fitting	2
3	052645300	O-Ring	1
3	504155200	O-Ring	1
4	580041369	Clamp (Swivel)	2
5	580042794	Clamp (Swivel)	2
6	580074768	Hose Assy (High Temperature)	1
7	580007707	Hose	1
7	580005640	Hose	1
8	580064915	Fitting	1
9	580039347	Fitting	1
9	052645200	O-Ring	1
9	504155200	O-Ring	1
10	580056657	Bracket	1
11	580020576	Fitting	1
12	580070009	Tube (Booster Supply)	1
13	580056638	Clip	1
14	580070010	Hose Assy (Booster Supply)	1
15	580039365	Fitting	1
15	504155200	O-Ring	3
16	580074710	Tube (Cooling Inlet)	1
17	580019808	Fitting	2
18	580019805	Fitting	3
19	580074862	Tube	1
20	580039364	Fitting	1
20	580039385	O-Ring	3
21	580075334	Tube	1
22	580055825	Hose Assy (Brake Actuation)	1
23	580074709	Tube (Cooling Inlet)	1
24	580075331	Block	1
25	057090400	Fitting	2
26	580039914	Hose Clamp	4
27	580073670	Hose (Left Hand Formed Axle Return)	1
28	580073781	Fitting	1
29	580073671	Hose (Right Hand Formed Axle Return)	1

©2008 Yale Materials Handling Corporation

NOTES

©2008 Yale Materials Handling Corporation

11 HYDRAULIC SYSTEM

SECTION 11
HYDRAULIC SYSTEM

DESCRIPTION	PAGE
AUXILIARY HOSES	11-40
CONTROL VALVE ASSEMBLY	
ELECTRONIC CONTROL - THREE FUNCTION	11-24
ELECTRONIC CONTROL - FOUR FUNCTION	11-26
MANUAL CONTROL VALVE - THREE AND FOUR FUNCTION	11-16
ELECTRO HYDRAULIC POPPET VALVE	
THREE AND FOUR FUNCTION	11-32
GEAR PUMP	11-6
HAND LEVERS	
FOUR FUNCTION - WITH DETENTED LEVERS	11-12
FOUR FUNCTION - WITHOUT DETENTED LEVERS	11-14
THREE FUNCTION - WITH DETENTED LEVERS	11-8
THREE FUNCTION - WITHOUT DETENTED LEVERS	11-10
HYDRAULIC FILTER	11-4
HYDRAULIC SUPPLY AND RETURN	11-2
TILT HOSES	11-42
TILT CYLINDER AND MAST INSTALLATION	11-46
TILT CYLINDERS	11-48
VALVE ASSEMBLY, AUXILIARY ONE AND TWO	
MANUAL CONTROL VALVE - THREE AND FOUR FUNCTION	11-20
VALVE ASSEMBLY, AUXILIARY ONE SECTION	
ELECTRONIC CONTROL VALVE - THREE AND FOUR FUNCTION	11-34
VALVE ASSEMBLY, AUXILIARY TWO SECTION	
ELECTRONIC CONTROL VALVE - FOUR FUNCTION	11-36
VALVE ASSEMBLY, LIFT AND LOWER	
ELECTRONIC CONTROL VALVE - THREE AND FOUR FUNCTION	11-28
VALVE ASSEMBLY, LIFT AND TILT	
MANUAL CONTROL VALVE - THREE AND FOUR FUNCTION	11-18
VALVE ASSEMBLY, OUTLET SECTION	
ELECTRONIC CONTROL VALVE - THREE AND FOUR FUNCTION	11-38
MANUAL CONTROL VALVE	11-22
VALVE ASSEMBLY, TILT SECTION	
ELECTRONIC CONTROL VALVE - THREE AND FOUR FUNCTION	11-30
VENT LINE GROUP	11-44

©2008 Yale Materials Handling Corporation

HYDRAULIC SUPPLY AND RETURN (FIGURE 11-1)

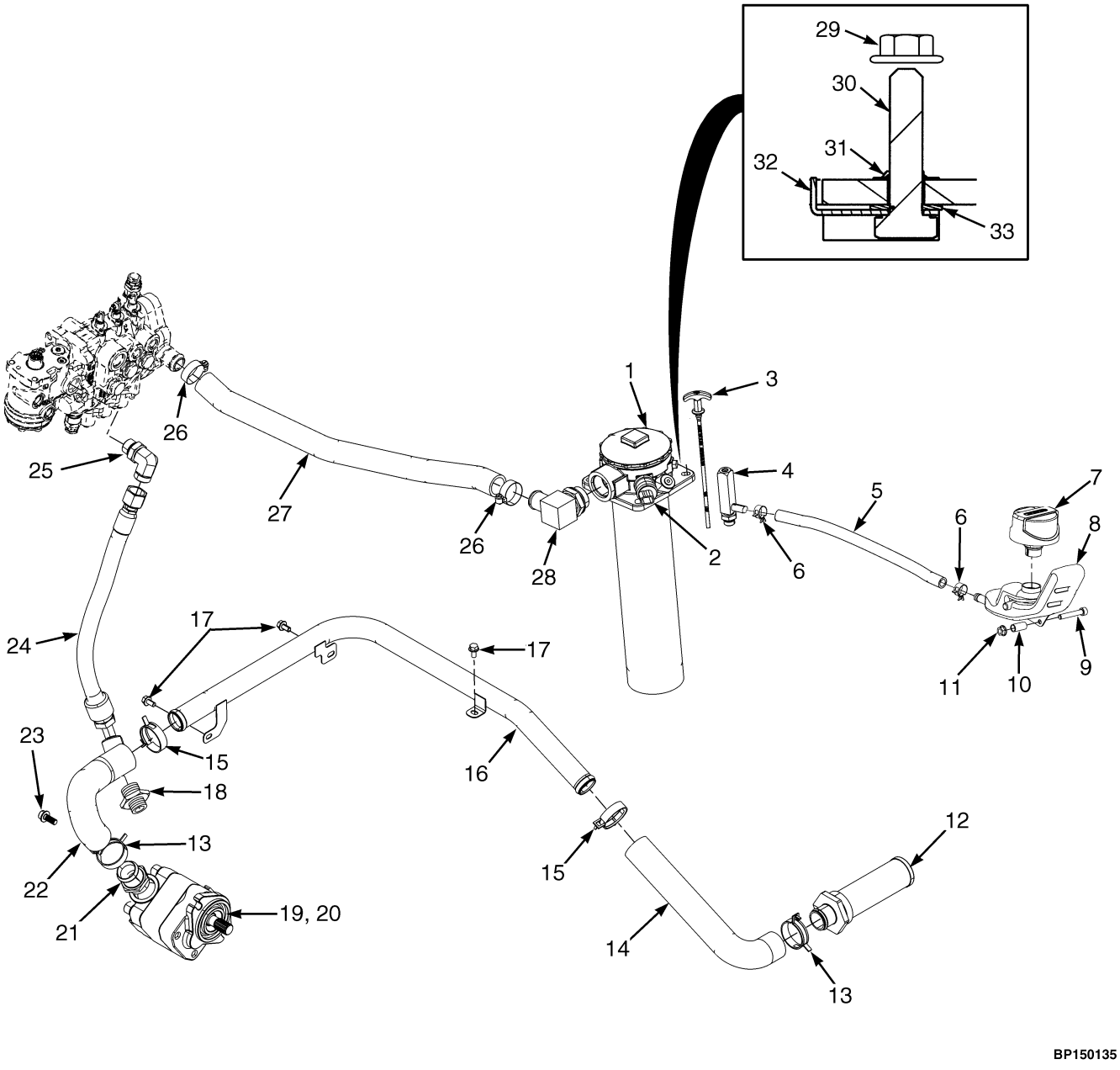

©2008 Yale Materials Handling Corporation

HYDRAULIC SUPPLY AND RETURN

ITEM	PART NO.	DESCRIPTION	QTY
1	580052148	Hydraulic Filter (☞P19806 [Page 11-4])	1
2	**e** 580049602	Pressure Switch	1
3	580067256	Dipstick	1
4	580072389	Fitting	1
4	052645300	O-Ring	1
5	580052115	Hose	1
6	580039912	Hose Clamp	2
7	580056337	Breather	1
8	580066272	Surge Tank	1
9	580026610	Capscrew	2
10	580068084	Spacer	1
11	580027573	Nut (Flange)	2
12	580071013	Strainer	1
13	580036691	Hose Clamp	4
14	580064821	Hose	1
15	580046107	Hose Clamp	2
16	580083010	Tube	1
17	580047714	Capscrew	3
18	580020431	Fitting	1
18	580061267	O-Ring	1
18	052645500	O-Ring	1
19	**c** 580066704	Gear Pump (41.3 cc)	1
19	**a** 580061830	Gear Pump (46.5cc)	1
19	**b** 580070656	Gear Pump (51.6 cc)	1
19	**c** 580089187	Gear Pump (32.5 cc) (☞P19807 [Page 11-6])	1
20	520042831	Adhesive	AR
21	580053784	Adapter	1
21	052645800	O-Ring	1
22	580064820	Hose	1
23	580050641	Capscrew	2
24	580072519	Hose Assy	1
25	580020577	Fitting	1
25	580061267	O-Ring	1
25	052645500	O-Ring	1
26	502056903	Clamp	2
27	580090239	Hose Assy	1
28	580066452	Fitting	1
29	580027573	Nut (Flange)	4
30	449001343	Capscrew	4
31	580074469	Seal	4
32	580090824	Retainer	4
33	580090823	Retainer	4
	d 580036666	Plug (With O-Ring)	1

FOOTNOTES:

a GDP80-90VX Diesel
b GP/GLP/GDP100-120VX
c GP/GLP80-90VX Gasoline and LPG
d Not Illustrated
e With Electronic Monitoring Package

©2008 Yale Materials Handling Corporation

HYDRAULIC FILTER (FIGURE 11-2)

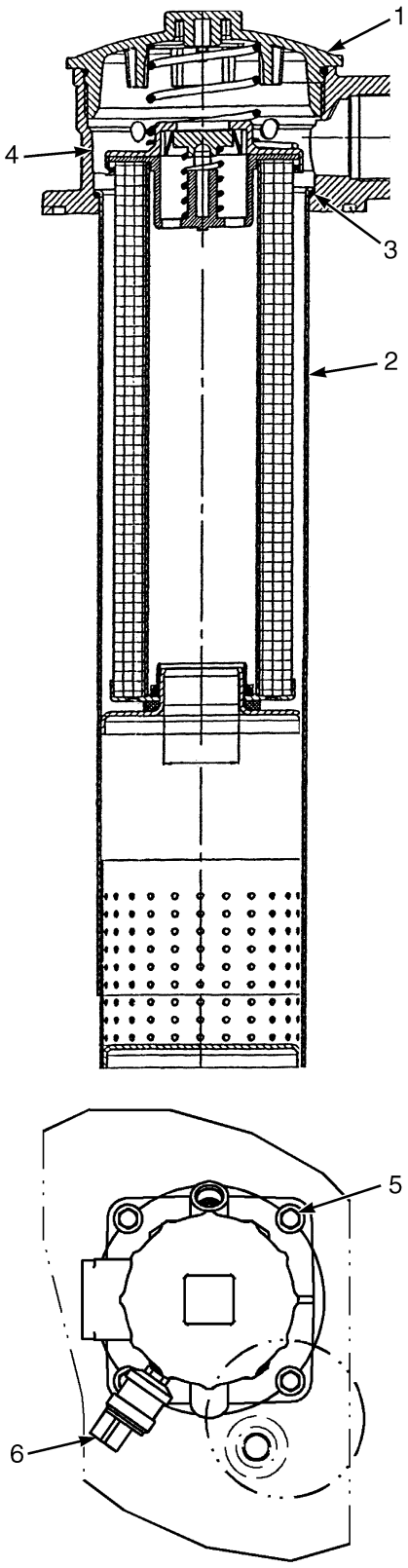

©2008 Yale Materials Handling Corporation

HYDRAULIC FILTER

ITEM	PART NO.	DESCRIPTION	QTY
	580052148	Hydraulic Filter	1
1	580067372	Cap Assembly	1
1	. . . . .	Lid	1
1	. . . . .	O-Ring	1
1	. . . . .	Spring	1
2	580070556	Hydraulic Filter	1
2	. . . . .	O-Ring	1
3	580070557	Bowl Assembly	1
3	. . . . .	Bowl	1
3	. . . . .	O-Ring	1
4	580071342	Head	1
4	. . . . .	Quad Ring	1
5	580027573	Nut (Flange)	4
6	**a** 580049602	Pressure Switch	1
	580070562	Kit-O-Ring	1

FOOTNOTES:

a With Electronic Monitoring Package

©2008 Yale Materials Handling Corporation

GEAR PUMP (FIGURE 11-3)

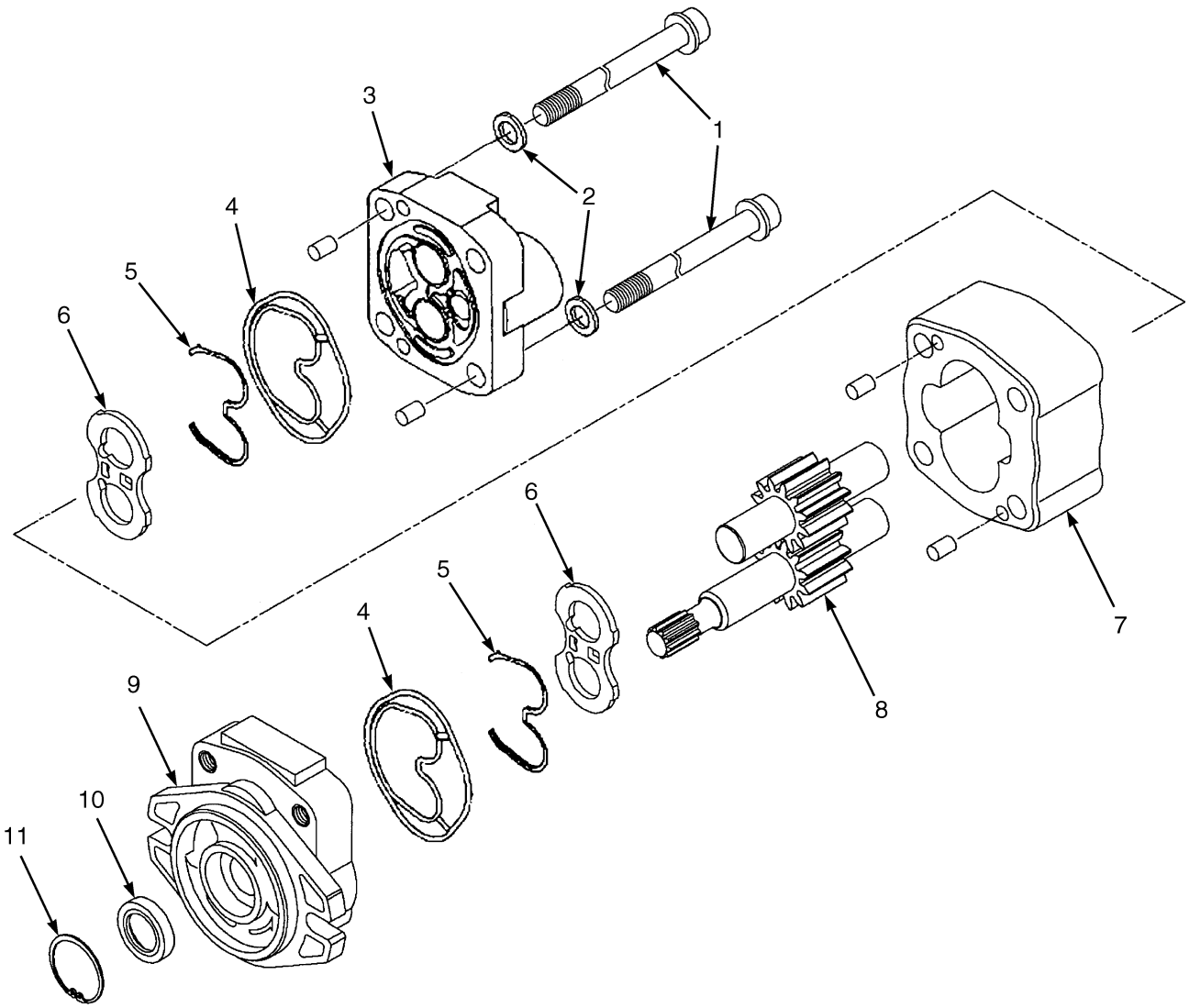

BP150147

©2008 Yale Materials Handling Corporation

GEAR PUMP

ITEM	PART NO.	DESCRIPTION	QTY
	d 580066704	Gear Pump (41.3 cc)	1
	ac 580070656	Gear Pump (51.6 cc)	1
	b 580061830	Gear Pump (46.5 cc)	1
	de 580089187	Gear Pump (32.5 cc)	1
1	**abce** 580070622	Bolt	4
1	**ac** 580073351	Bolt	4
1	**b** 524270429	Bolt	4
1	**de** 580092822	Bolt	4
2	580070623	Washer	4
3	580070615	Cover	1
4	580070618	Plate (Seal)	2
5	580070619	Back-Up Ring	2
6	580070617	Pressure Plate	2
7	. . . . .	Gear Plate	1
8	**d** 580070629	Gear Set (41.3 cc)	1
8	**ac** 580070630	Gear Set (51.6 cc)	1
8	**b** 580070653	Gear Set (46.5 cc)	1
8	**de** 580092818	Gear Set (32.5 cc)	1
8	. . . . .	Drive Gear	1
8	. . . . .	Driven Gear	1
9	580070616	Flange	1
10	580070625	Oil Seal	1
11	580070627	Snap Ring	1
	580070628	Kit-Seal	1

FOOTNOTES:

a GDP100-120VX Diesel
b GDP80-90VX Diesel
c GP/GLP100-120VX Gasoline and LPG
d GP/GLP80-90VX Gasoline and LPG
e Paper Industry Option with Low Displacement

©2008 Yale Materials Handling Corporation

HAND LEVERS (FIGURE 11-4)

THREE FUNCTION — WITH DETENTED LEVERS

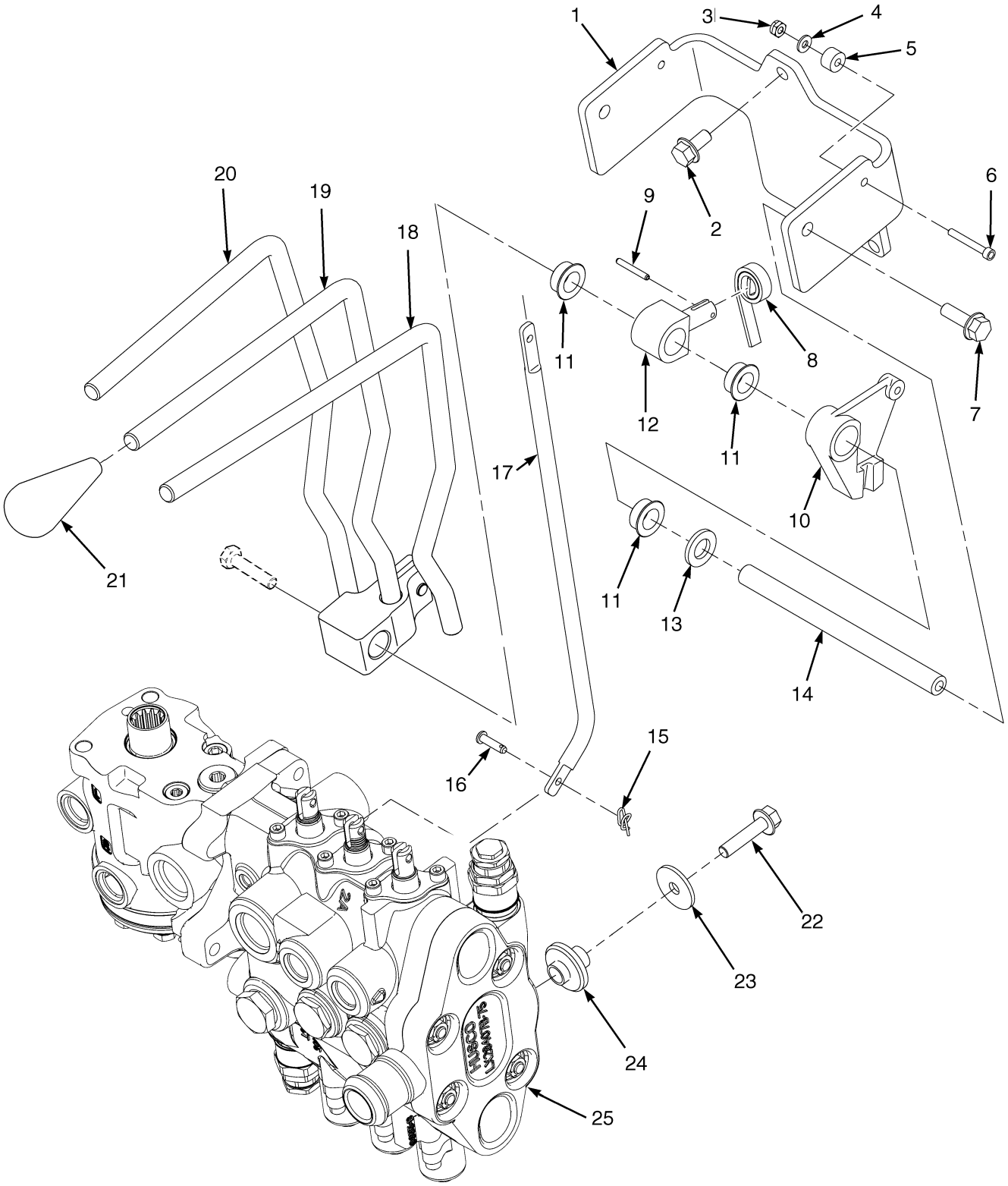

©2008 Yale Materials Handling Corporation

HAND LEVERS

THREE FUNCTION – WITH DETENTED LEVERS

ITEM	PART NO.	DESCRIPTION	QTY
1	580085001	Bracket	1
2	580047714	Capscrew	3
3	505970500	Nut	1
4	449021003	Washer	1
5	580085263	Plate	1
6	580049840	Capscrew	1
7	580056815	Capscrew	2
8	504230239	Spring	1
9	504227270	Roll Pin	1
10	580042392	Lever	2
11	580050978	Bushing	10
12	518797699	Pin (Selector)	1
13	449021010	Washer	2
14	580085002	Shaft (Pivot)	1
15	580056840	Lockring	6
16	500583902	Pin	6
17	580083423	Link	3
18	580084416	Lever (Auxiliary One and Two)	1
19	580084412	Lever (Tilt)	1
20	580084411	Lever	1
21	580056844	Knob	3
22	580058269	Capscrew	3
23	580056666	Washer	3
24	580044129	Isolator	3
25	580090459	Hydraulic Control Valve (☞P19812 [Page 11-16])	1

©2008 Yale Materials Handling Corporation

HAND LEVERS (FIGURE 11-5)

THREE FUNCTION — WITHOUT DETENTED LEVERS

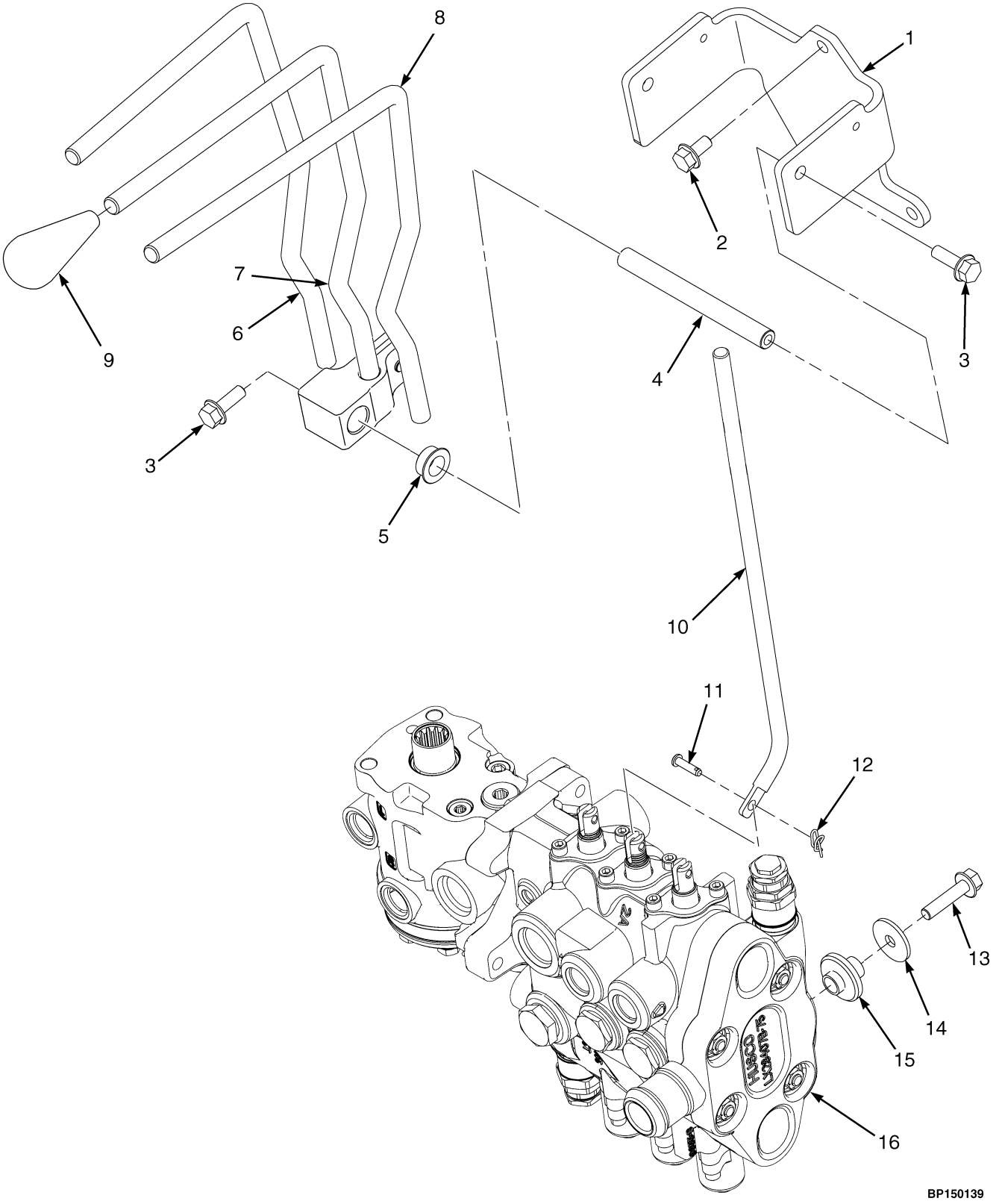

©2008 Yale Materials Handling Corporation

HAND LEVERS

THREE FUNCTION – WITHOUT DETENTED LEVERS

ITEM	PART NO.	DESCRIPTION	QTY
1	580084408	Bracket (Mounting)	1
2	580047714	Capscrew	3
3	580056815	Capscrew	2
4	580085082	Shaft (Pivot)	1
5	580050978	Bushing	6
6	580084411	Lever	1
7	580084412	Lever (Tilt)	1
8	580084413	Lever	1
9	580056844	Knob	3
10	580083423	Link	3
11	500583902	Pin	6
12	580056840	Lockring	6
13	580058269	Capscrew	3
14	580056666	Washer	3
15	580044129	Isolator	3
16	580090459	Hydraulic Control Valve (☞P19812 [Page 11-16])	1

©2008 Yale Materials Handling Corporation

HAND LEVERS (FIGURE 11-6)
FOUR FUNCTION — WITH DETENTED LEVERS

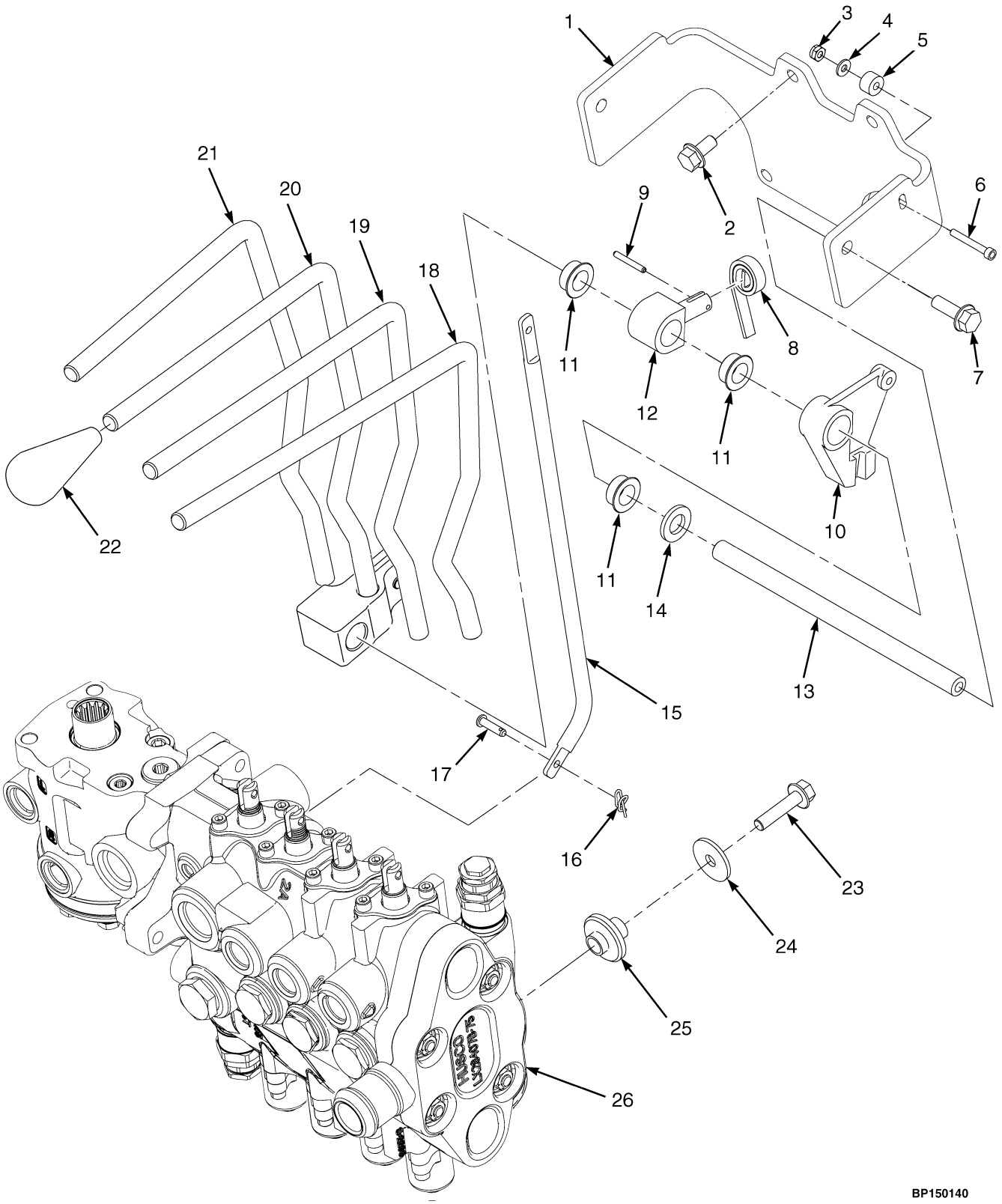

©2008 Yale Materials Handling Corporation

HAND LEVERS

FOUR FUNCTION – WITH DETENTED LEVERS

ITEM	PART NO.	DESCRIPTION	QTY
1	580084410	Bracket	1
2	580047714	Capscrew	4
3	505970500	Nut	1
4	449021003	Washer	1
5	580085263	Plate	1
6	580049840	Capscrew	1
7	580056815	Capscrew	2
8	504230239	Spring	1
9	504227270	Roll Pin	1
10	580042392	Lever	2
11	580050978	Bushing	12
12	518797699	Pin (Selector)	1
13	580085003	Shaft	1
14	449021010	Washer	2
15	580083423	Link	4
16	580056840	Lockring	8
17	500583902	Pin	8
18	580084415	Lever	1
19	580084413	Lever	1
20	580084412	Lever (Tilt)	1
21	580084411	Lever	1
22	580056844	Knob	4
23	580058269	Capscrew	3
24	580056666	Washer	3
25	580044129	Isolator	3
26	580090461	Hydraulic Control Valve (☞P19812 [Page 11-16])	1

©2008 Yale Materials Handling Corporation

HAND LEVERS (FIGURE 11-7)
FOUR FUNCTION — WITHOUT DETENTED LEVERS

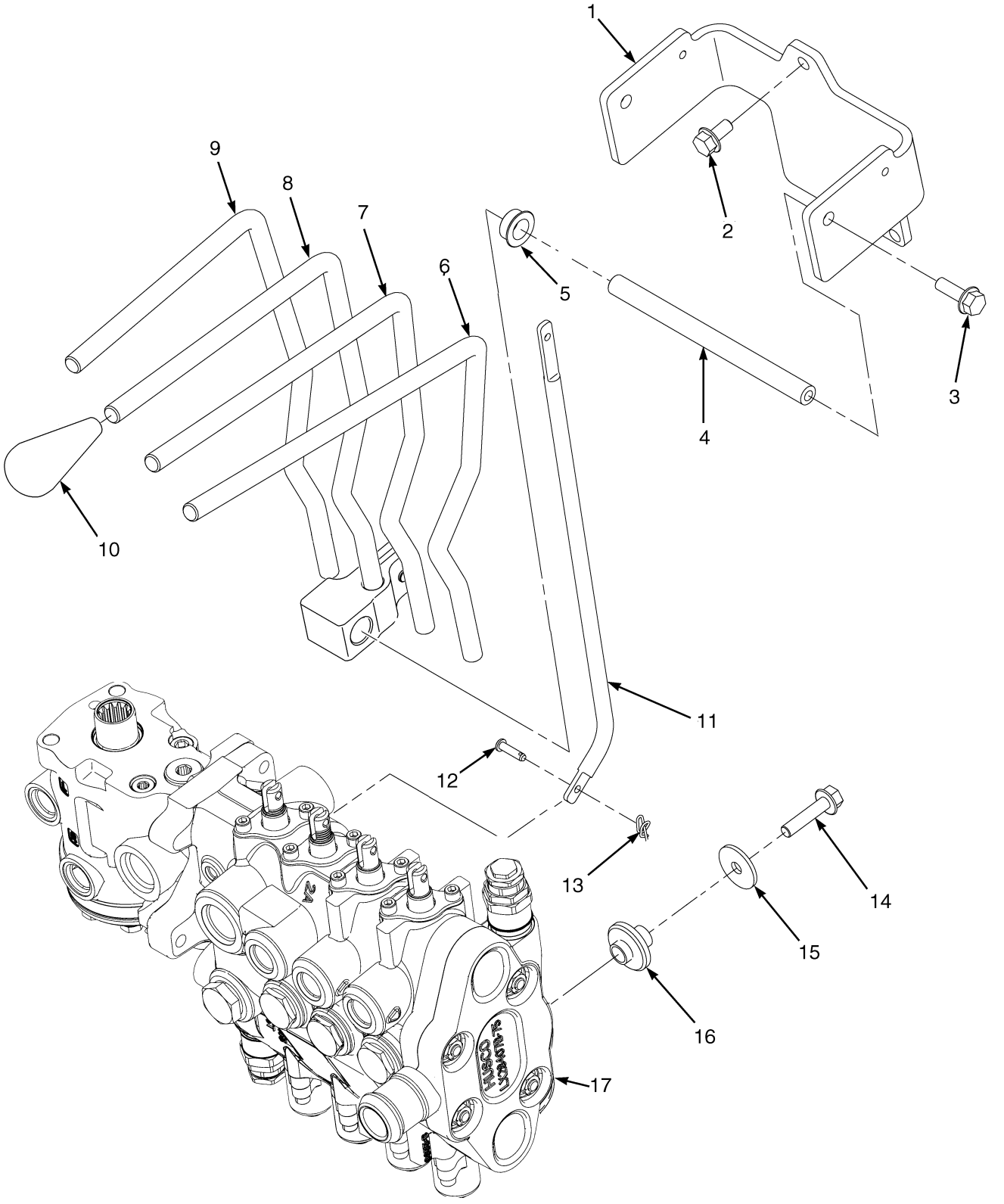

©2008 Yale Materials Handling Corporation

HAND LEVERS

FOUR FUNCTION – WITHOUT DETENTED LEVERS

ITEM	PART NO.	DESCRIPTION	QTY
1	580084409	Bracket	1
2	580047714	Capscrew	3
3	580056815	Capscrew	2
4	580085083	Shaft (Pivot)	1
5	580050978	Bushing	8
6	580084414	Lever (Auxiliary Two)	1
7	580084413	Lever (Auxiliary One)	1
8	580084412	Lever (Tilt)	1
9	580084411	Lever (Hoist)	1
10	580056844	Knob	4
11	580083423	Link	4
12	500583902	Pin	8
13	580056840	Lockring	8
14	580058269	Capscrew	3
15	580056666	Washer	3
16	580044129	Isolator	3
17	580090461	Hydraulic Control Valve (☞P19812 [Page 11-16])	1

©2008 Yale Materials Handling Corporation

CONTROL VALVE ASSEMBLY (FIGURE 11-8)
MANUAL CONTROL VALVE — THREE AND FOUR FUNCTION

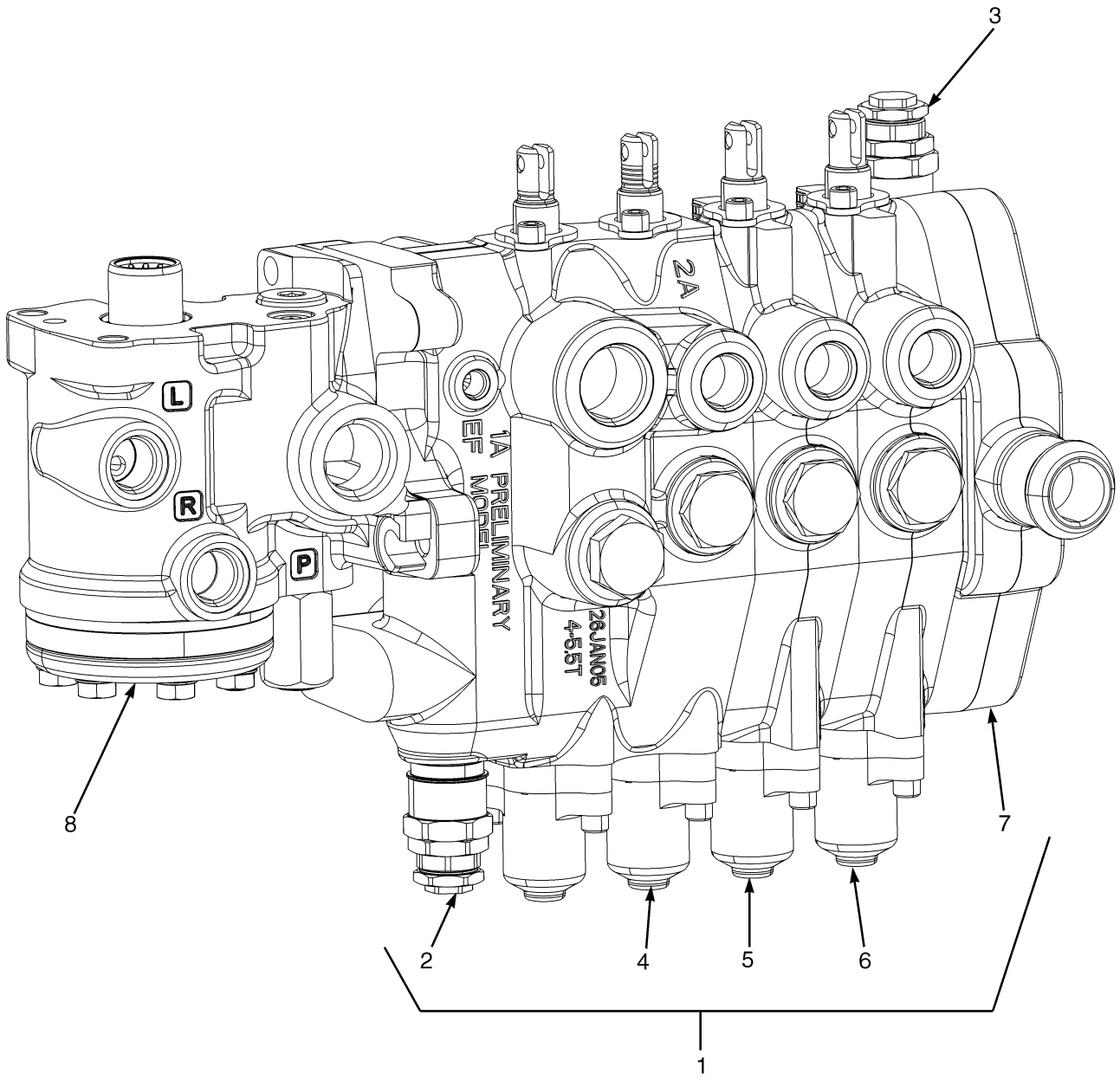

BP140077

©2008 Yale Materials Handling Corporation

CONTROL VALVE ASSEMBLY

MANUAL CONTROL VALVE – THREE AND FOUR FUNCTION

KEY:
A: Three Function
B: Four Function

ITEM	PART NO.	DESCRIPTION	QTY A	QTY B
	580079072	Hydraulic Control Valve	1	..
	580079075	Hydraulic Control Valve	..	1
1	580079076	Hydraulic Control Valve	1	..
1	580085142	Kit-Seal (Three Function)	1	..
1	580079077	Hydraulic Control Valve	..	1
1	580084965	Kit-Seal (Four Function)	..	1
2	580054063	Relief Valve (3100 PSI Main Relief)	1	..
2	580054672	Kit-Seal	1	1
3	580054046	Relief Valve (2250 PSI)	1	1
3	580054684	Kit-Seal	1	1
4	580085141	Valve Section (Lift and Tilt) (☞P19873 [Page 11-18])	1	1
5	580085140	Valve Section (☞P19874 [Page 11-20])	1	1
6	580085196	Valve Section (☞P19874 [Page 11-20])	..	1
7	580054062	Valve Section (☞P19875 [Page 11-22])	1	1
8	580087257	Steering Control Unit (☞P19788 [Page 9-6])	1	1

©2008 Yale Materials Handling Corporation

VALVE ASSEMBLY, LIFT AND TILT (FIGURE 11-9)
MANUAL CONTROL VALVE — THREE AND FOUR FUNCTION

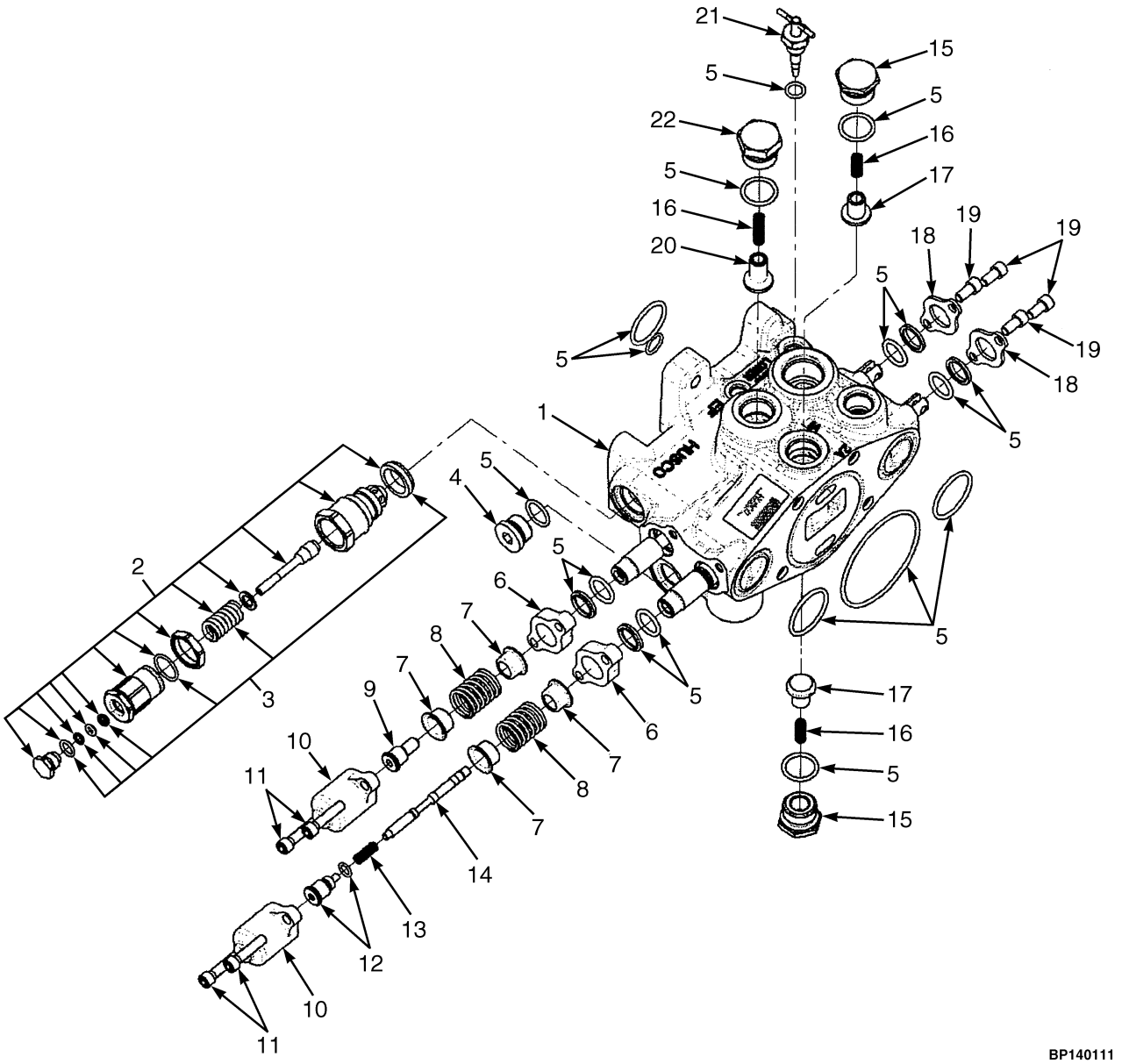

©2008 Yale Materials Handling Corporation

VALVE ASSEMBLY, LIFT AND TILT
MANUAL CONTROL VALVE – THREE AND FOUR FUNCTION

KEY:
A: Three Function
B: Four Function

ITEM	PART NO.	DESCRIPTION	QTY A	QTY B
1	580085141	Valve Section (Lift and Tilt)	1	1
2	580054046	Relief Valve (2250 PSI)	1	1
2	580049019	Relief Valve (3100 PSI Main Relief)	1	1
2	580054995	Plug	1	1
2	580054998	Screw	1	1
2	580054999	Nut	1	1
2	580054996	Washer	1	1
2	580054997	Poppet	1	1
3	580054672	Kit-Seal	1	1
4	580052731	Plug	1	1
5	580085146	Kit-Seal (Lift and Tilt)	1	1
6	. . . . .	Seal Plate	2	2
7	504230236	Spring Seat	4	4
8	504230204	Spring	2	2
9	580056022	Spool End	1	1
10	580054869	Cap	2	2
11	580054044	Capscrew	4	4
12	580056877	Spool End	1	1
13	504230207	Spring	1	1
14	580056024	Piston	1	1
15	580054052	Plug	1	1
16	580006977	Spring	3	3
17	580006976	Poppet	2	2
18	580049294	Plate	2	2
19	502635907	Screw	4	4
20	580054465	Poppet	1	1
21	580085184	Kit-Valve (Manual)	1	1
22	580054462	Plug	1	1
	580084965	Kit-Seal (Four Function)	..	1
	580085142	Kit-Seal (Three Function)	1	..

©2008 Yale Materials Handling Corporation

VALVE ASSEMBLY, AUXILIARY ONE AND TWO (FIGURE 11-10)

MANUAL CONTROL VALVE — THREE AND FOUR FUNCTION

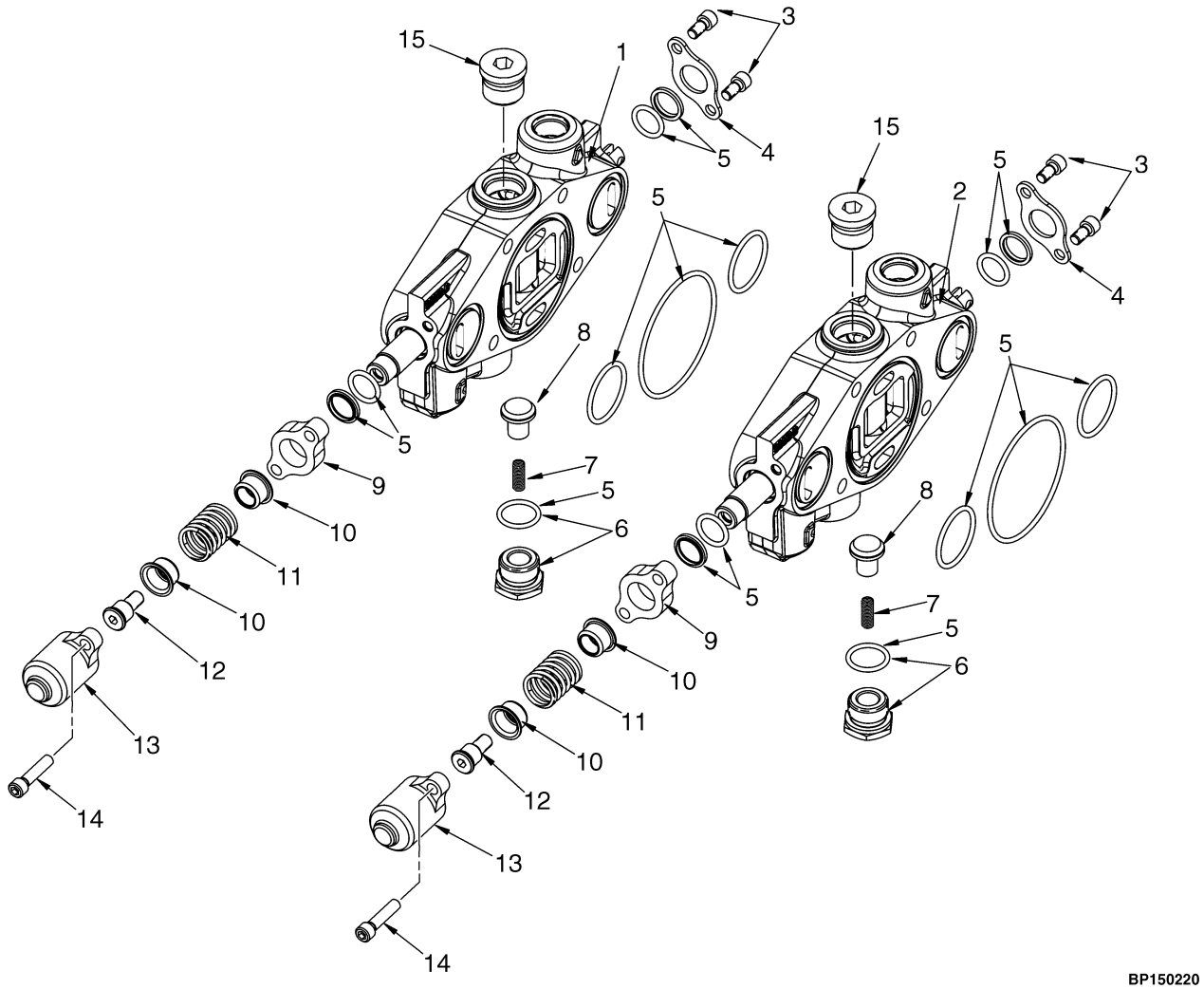

©2008 Yale Materials Handling Corporation

VALVE ASSEMBLY, AUXILIARY ONE AND TWO
MANUAL CONTROL VALVE – THREE AND FOUR FUNCTION

KEY:
A: Three Function
B: Four Function

ITEM	PART NO.	DESCRIPTION	QTY A	QTY B
1	580085140	Valve Section One or Two	1	1
2	580085196	Valve Section One	..	1
3	502635907	Screw	2	2
4	580049294	Plate	1	1
5	580054689	Kit-Seal (Auxiliary One, Two and Three Sections)	1	1
6	580054052	Plug	1	1
6	580013394	Plug	1	1
7	580006977	Spring	1	1
8	580006976	Poppet	1	1
9	. . . . .	Seal Plate	1	1
10	504230236	Spring Seat	1	1
11	504230204	Spring	1	1
12	580056022	Spool End	1	1
13	580054869	Cap	1	1
14	580054044	Capscrew	2	2
15	580054053	Plug	1	1

©2008 Yale Materials Handling Corporation

VALVE ASSEMBLY, OUTLET SECTION (FIGURE 11-11)

MANUAL CONTROL VALVE

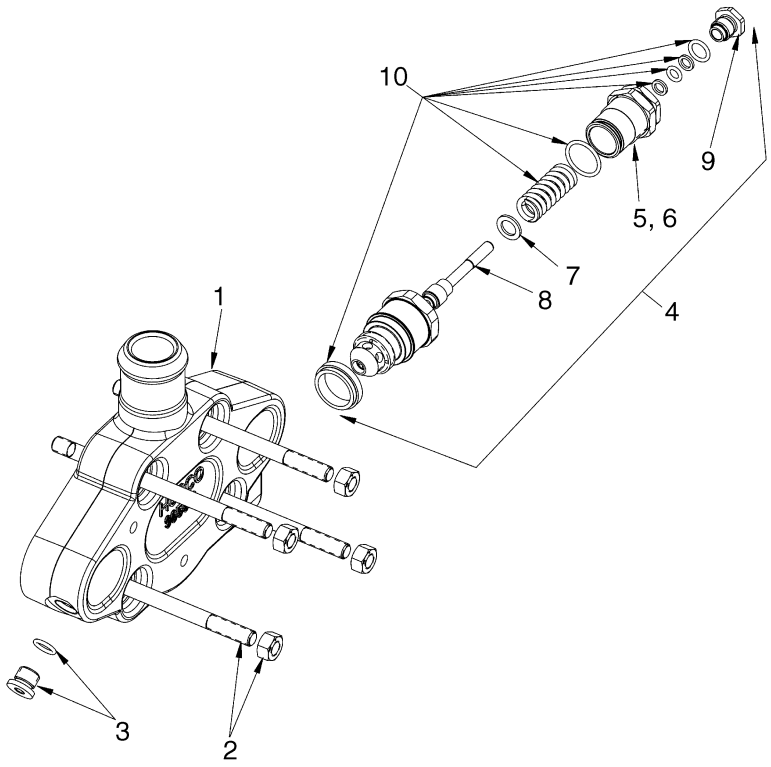

BP140048

ITEM	PART NO.	DESCRIPTION	QTY
1	580054062	Valve Section	1
2	580055166	Kit-Tie Rod (Three Function)	1
2	580054696	Kit-Tie Rod (Four Function)	1
3	580055322	Plug	1
4	580054046	Relief Valve (2250 PSI)	1
5	. . . . .	Nut	1
6	. . . . .	Screw	1
7	. . . . .	Washer	1
8	. . . . .	Poppet	1
9	. . . . .	Plug	1
10	580054684	Kit-Seal	1

©2008 Yale Materials Handling Corporation

NOTES

©2008 Yale Materials Handling Corporation

CONTROL VALVE ASSEMBLY (FIGURE 11-12)
ELECTRONIC CONTROL — THREE FUNCTION

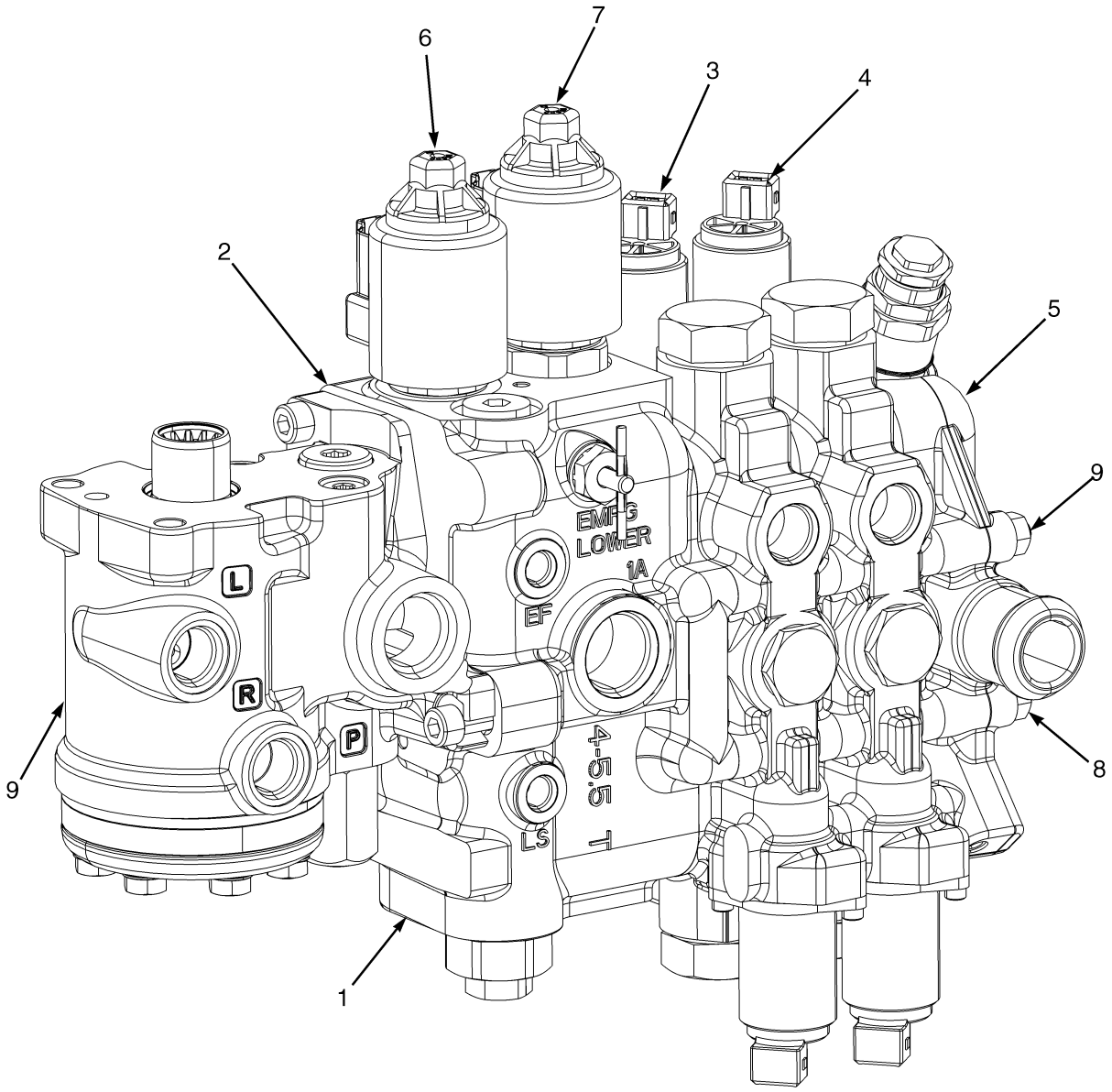

BP150157

©2008 Yale Materials Handling Corporation

CONTROL VALVE ASSEMBLY
ELECTRONIC CONTROL – THREE FUNCTION

ITEM	PART NO.	DESCRIPTION	QTY
	580064789	Hydraulic Control Valve	1
1	580062582	Hydraulic Control Valve	1
2	580072363	Valve Section (☞P19873 [Page 11-18])	1
3	580072364	Valve Section (☞P19879 [Page 11-30])	1
4	580072365	Valve Section (☞P19881 [Page 11-34])	1
5	580054043	Valve Section (☞P19883 [Page 11-38])	1
6	580072368	Kit-Valve (Lower) (☞P19880 [Page 11-32])	1
7	580072367	Kit-Valve (Lift) (☞P19880 [Page 11-32])	1
8	580054054	Kit-Tie Rod	1
9	580087257	Steering Control Unit (☞P19788 [Page 9-6])	1
	ab 580087997	Solenoid Valve (Gasoline and LPG)	1
	b 580089428	Kit-Seal	1
	ab 580093036	Disk (Gasoline and LPG)	1
	b 580087998	Plug	1

FOOTNOTES:

a Hydraulic Anti-Stall

b Not Illustrated

©2008 Yale Materials Handling Corporation

CONTROL VALVE ASSEMBLY (FIGURE 11-13)
ELECTRONIC CONTROL — FOUR FUNCTION

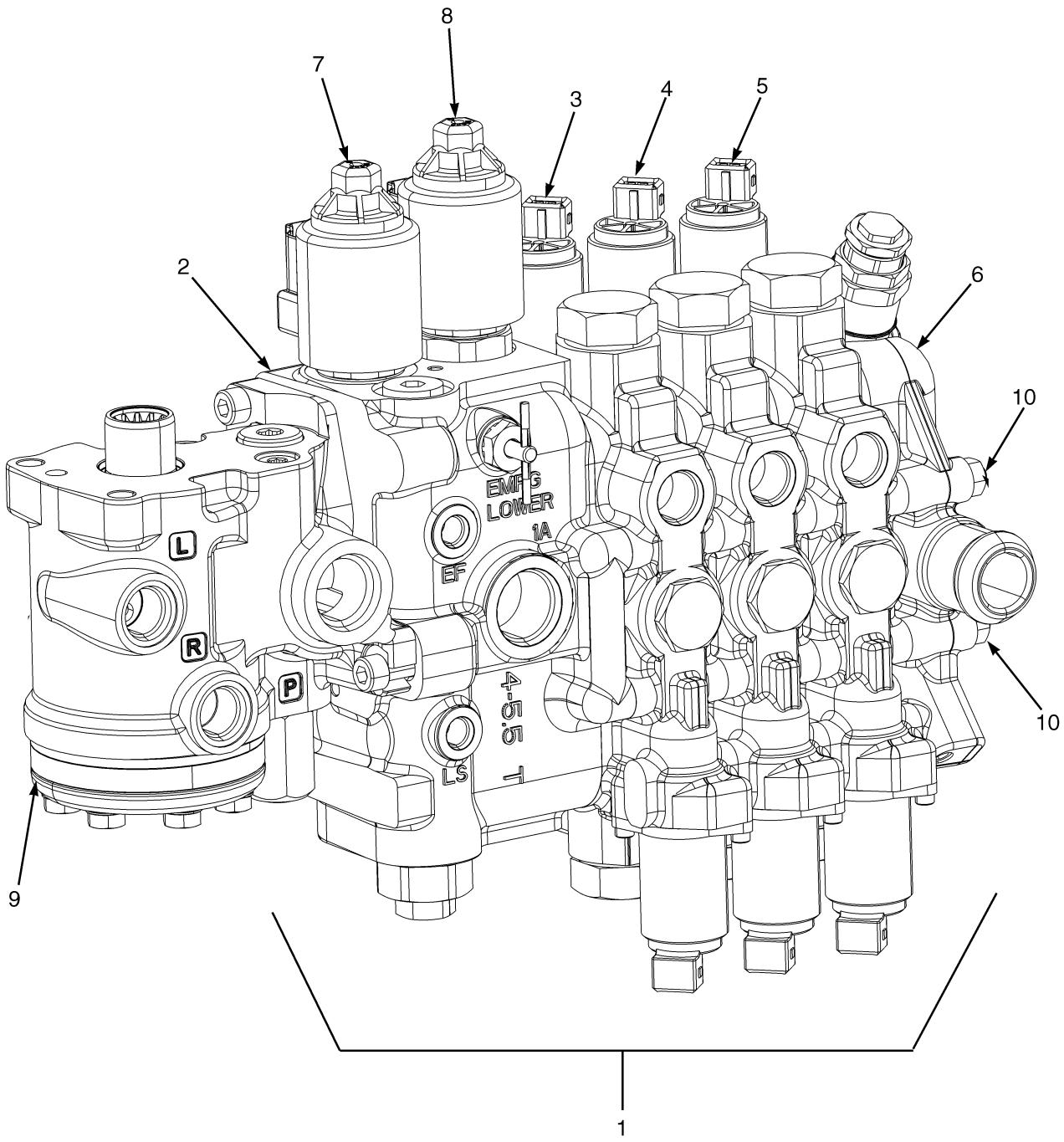

BP140001

©2008 Yale Materials Handling Corporation

CONTROL VALVE ASSEMBLY
ELECTRONIC CONTROL – FOUR FUNCTION

ITEM	PART NO.	DESCRIPTION	QTY
	580064786	Hydraulic Control Valve	1
1	580062584	Hydraulic Control Valve	1
2	580072363	Valve Section (☞P19878 [Page 11-28])	1
3	580072364	Valve Section (☞P19879 [Page 11-30])	1
4	580072365	Valve Section (☞P19881 [Page 11-34])	1
5	580072757	Valve Section (Auxiliary Two and Three) (☞P19882 [Page 11-36])	1
6	580054043	Valve Section (☞P19883 [Page 11-38])	1
7	580072367	Kit-Valve (Lift) (☞P19880 [Page 11-32])	1
8	580072368	Kit-Valve (Lower) (☞P19880 [Page 11-32])	1
9	580087257	Steering Control Unit (☞P19788 [Page 9-6])	1
10	580054692	Kit-Tie Rod	1
	ab 580087997	Solenoid Valve (Gasoline and LPG)	1
	b 580089428	Kit-Seal	1
	ab 580093036	Disk (Gasoline and LPG)	1
	b 580087998	Plug (Diesel)	1

FOOTNOTES:

a Hydraulic Anit-Stall

b Not Illustrated

©2008 Yale Materials Handling Corporation

VALVE ASSEMBLY, LIFT AND LOWER (FIGURE 11-14)
ELECTRONIC CONTROL VALVE — THREE AND FOUR FUNCTION

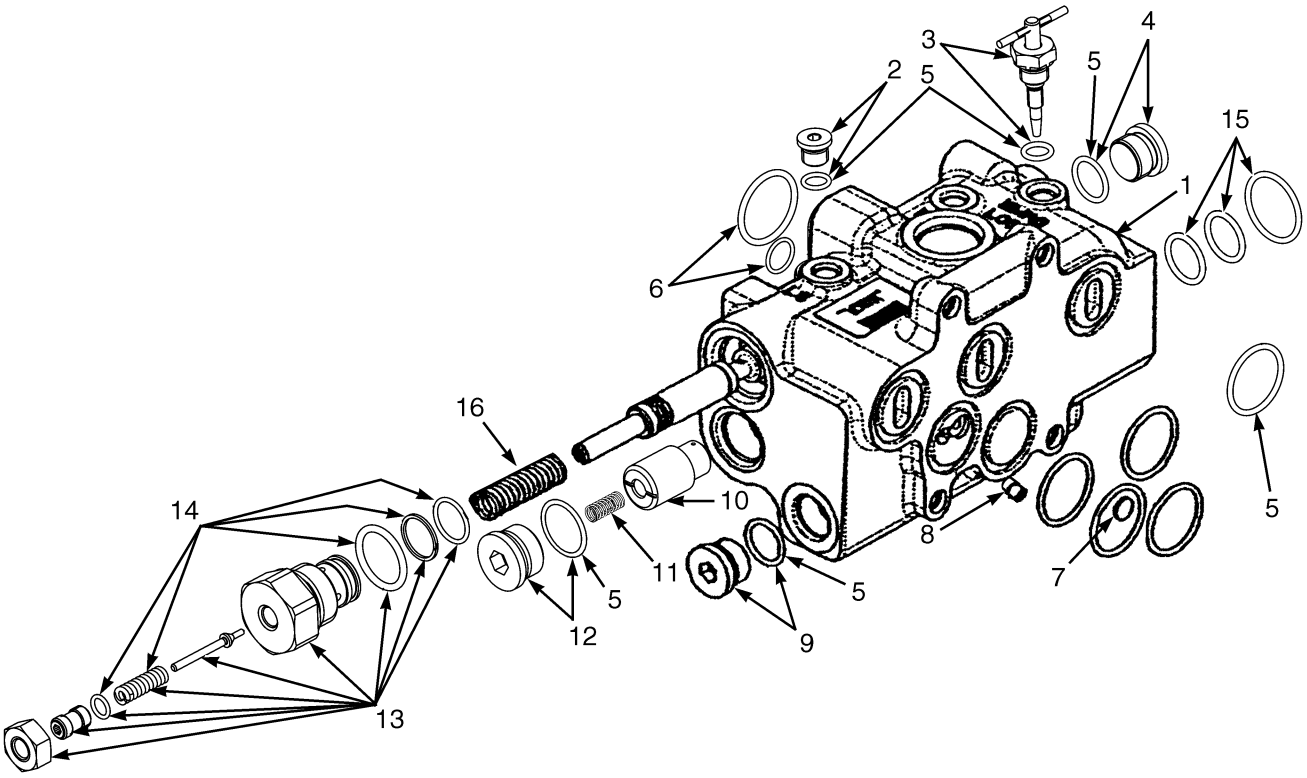

BP140076

©2008 Yale Materials Handling Corporation

VALVE ASSEMBLY, LIFT AND LOWER

ELECTRONIC CONTROL VALVE – THREE AND FOUR FUNCTION

ITEM	PART NO.	DESCRIPTION	QTY
1	580072363	Valve Section	1
2	580055322	Plug	1
2	580004501	Plug	1
3	580056025	Kit-Valve	1
4	580072374	Plug	1
5	580054140	Kit-Seal (Inlet) (Inlet)	1
6	580054147	Kit-Seal (Steering Control Unit Interface)	1
7	580054118	Shuttle Valve	1
8	580054130	Setscrew	1
9	580052731	Plug	1
10	580058139	Poppet	1
11	580054119	Spring	1
12	580054053	Plug	1
13	580072373	Relief Valve (Main)	1
14	580054685	Kit-Relief Valve	1
15	580058138	Kit-Seal (Electro Hydraulic Poppet Valve) (Caged Lower Popet Valve)	AR
16	580072375	Spring	1
	580054144	Kit-Seal (Four Function)	1
	580054145	Kit-Seal (Three Function)	1

©2008 Yale Materials Handling Corporation

VALVE ASSEMBLY, TILT SECTION (FIGURE 11-15)
ELECTRONIC CONTROL VALVE — THREE AND FOUR FUNCTION

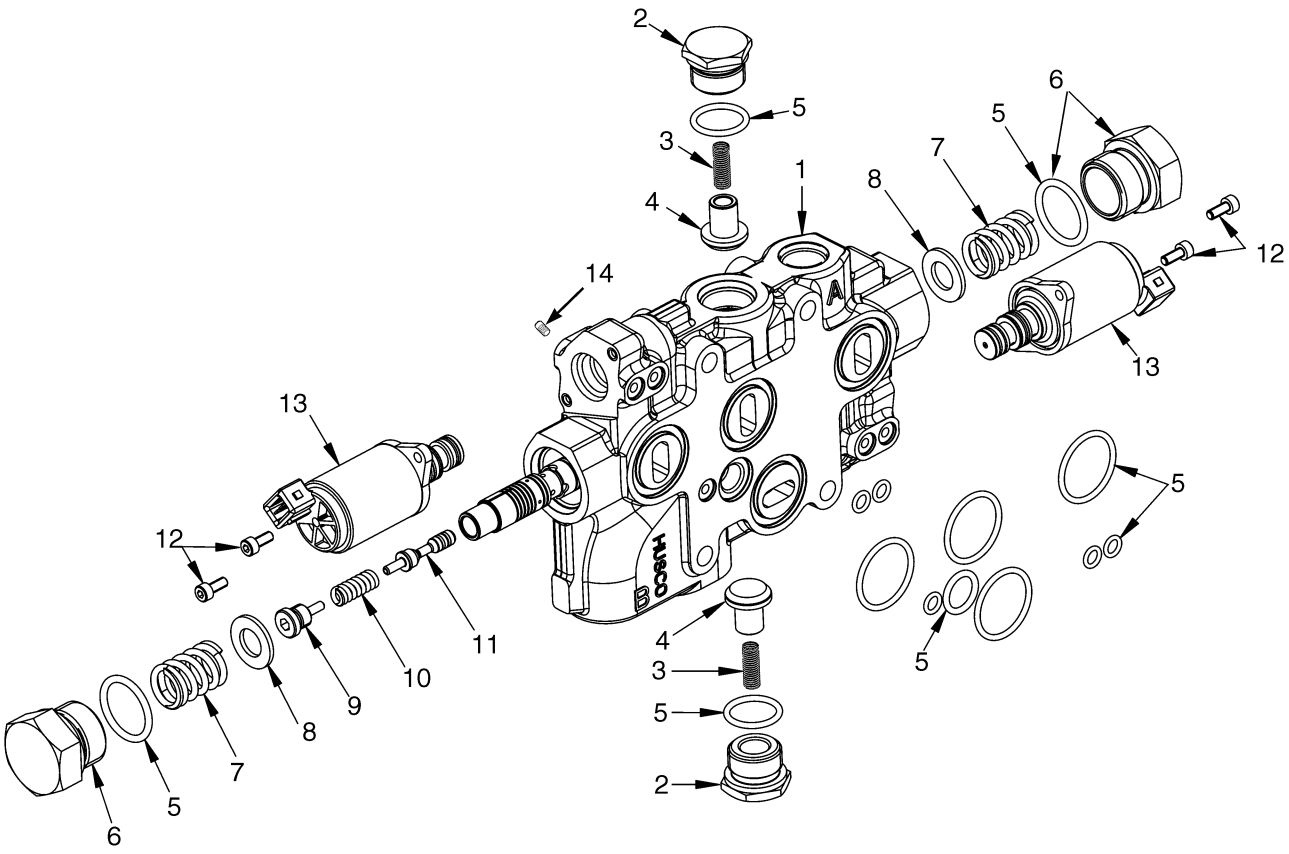

BP140054

©2008 Yale Materials Handling Corporation

VALVE ASSEMBLY, TILT SECTION

ELECTRONIC CONTROL VALVE – THREE AND FOUR FUNCTION

ITEM	PART NO.	DESCRIPTION	QTY
1	580072364	Valve Section	1
2	580054052	Plug	2
3	580006977	Spring	2
4	580006976	Poppet	2
5	580054141	Kit-Seal (Tilt)	1
6	580054131	Plug	2
7	580054125	Spring	2
8	580054126	Washer	2
9	580055016	Spool End	1
10	580055015	Spring	1
11	580054671	Piston and Rod	1
12	580054121	Capscrew	4
13	580054050	Valve	2
13	580054148	Kit-Seal (Pressure Reducing Valve)	1
14	580054129	Setscrew	1

©2008 Yale Materials Handling Corporation

ELECTRO HYDRAULIC POPPET VALVE (FIGURE 11-16)

THREE AND FOUR FUNCTION

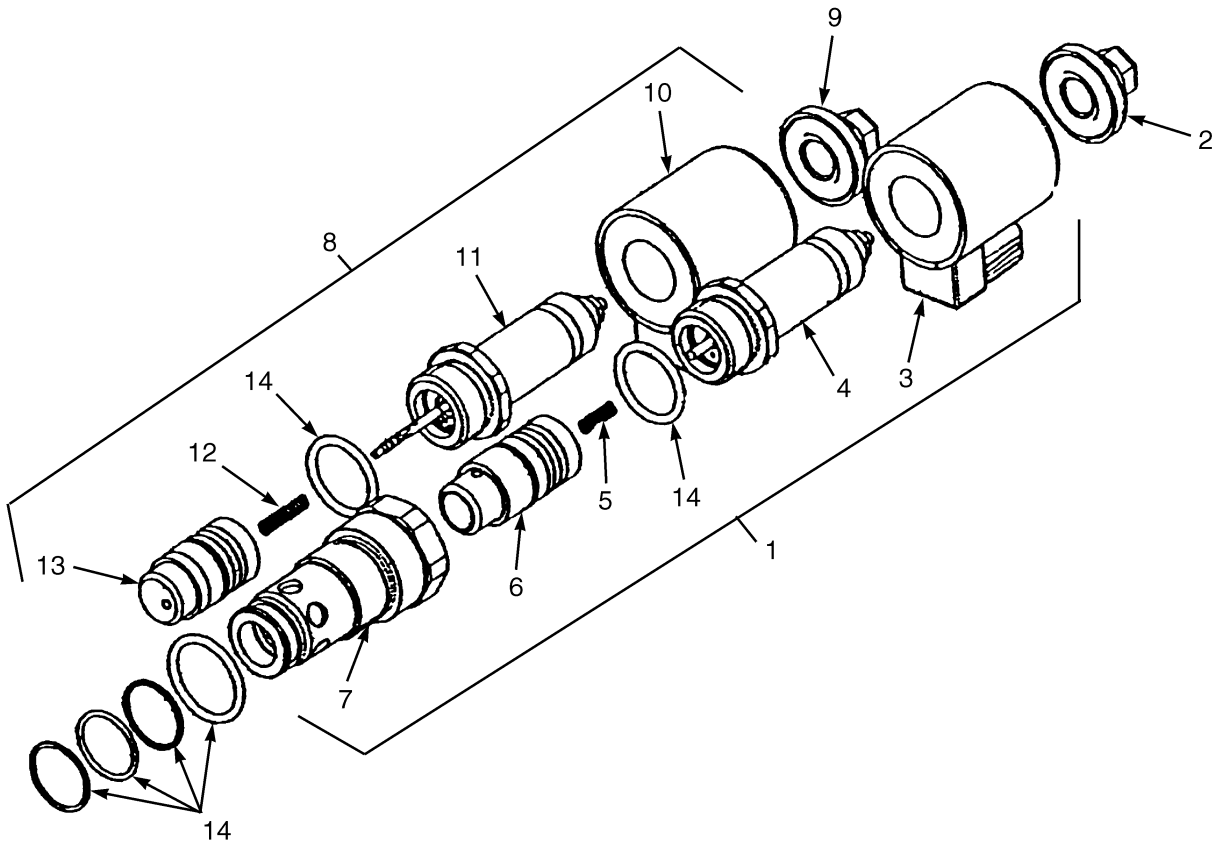

BP140002

©2008 Yale Materials Handling Corporation

ELECTRO HYDRAULIC POPPET VALVE
THREE AND FOUR FUNCTION

ITEM	PART NO.	DESCRIPTION	QTY
1	580072368	Kit-Valve (Lower)	1
2	580072347	Nut	1
3	580054933	Coil	1
4	580072344	Tube (Solenoid)	1
5	580072341	Spring	1
6	580072343	Poppet Valve	1
7	580058015	Sleeve	1
8	580072367	Kit-Valve (Lift)	1
9	580072347	Nut	1
10	580072346	Coil	1
11	580072345	Tube Assy (Solenoid)	1
12	580072348	Spring	1
13	580072342	Poppet Valve	1
14	580058138	Kit-Seal (Electro Hydraulic Poppet Valve)	1

©2008 Yale Materials Handling Corporation

VALVE ASSEMBLY, AUXILIARY ONE SECTION (FIGURE 11-17)

ELECTRONIC CONTROL VALVE — THREE AND FOUR FUNCTION

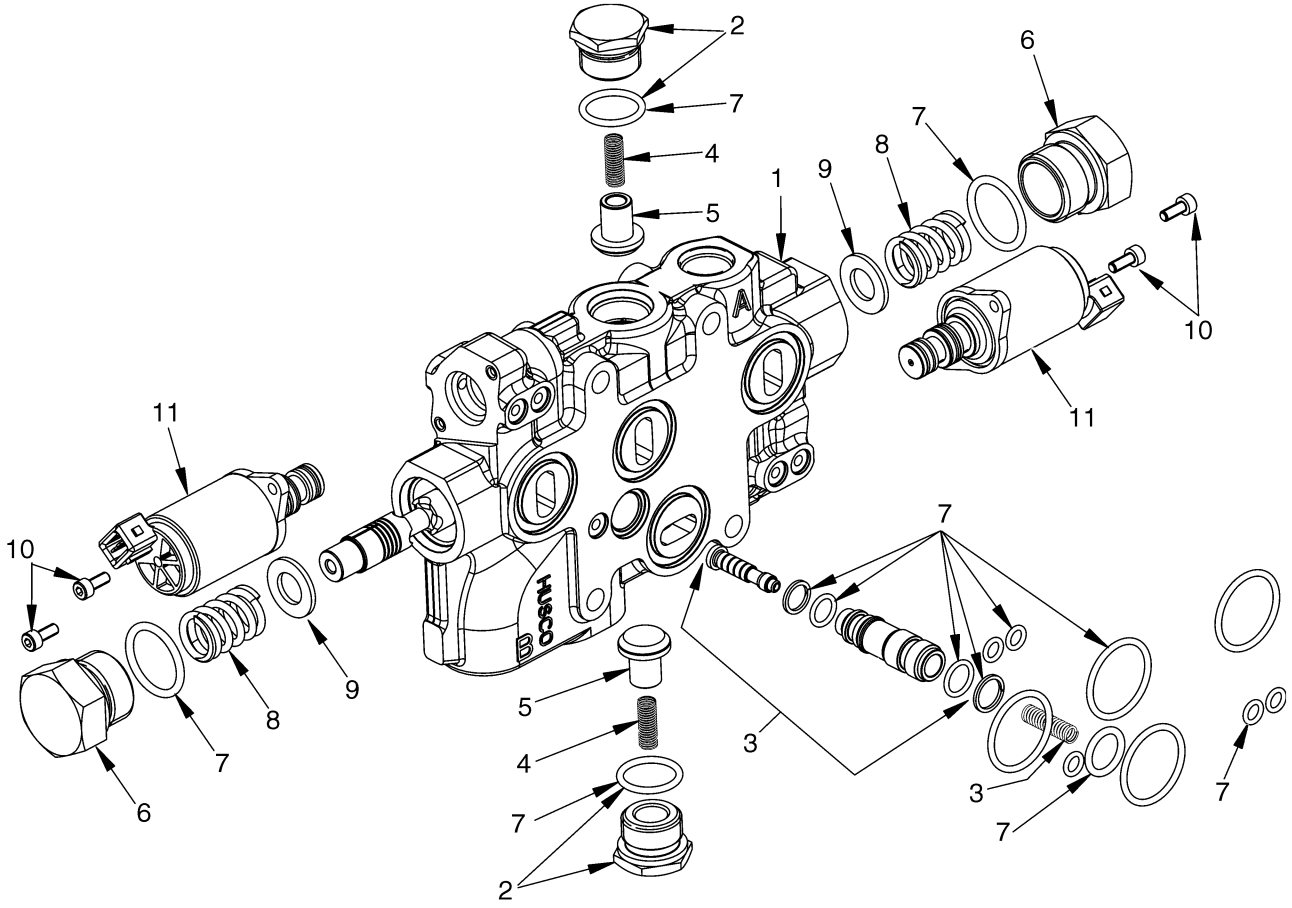

HP140019

©2008 Yale Materials Handling Corporation

VALVE ASSEMBLY, AUXILIARY ONE SECTION
ELECTRONIC CONTROL VALVE – THREE AND FOUR FUNCTION

ITEM	PART NO.	DESCRIPTION	QTY
1	580072365	Valve Section	1
2	580054052	Plug (Tilt/Auxiliary)	1
2	580054053	Plug (Lift)	1
3	580054057	Cartridge Valve	1
3	580054128	Spring	1
3	580072350	Sleeve	1
3	580054870	O-Ring	2
4	580006977	Spring	1
5	580006976	Poppet	1
6	580054131	Plug	2
7	580054142	Kit-Seal (Auxiliary One Section)	1
8	580054125	Spring	2
9	580054126	Washer	2
10	580054121	Capscrew	4
11	580054050	Valve	2
11	580054148	Kit-Seal (Pressure Reducing Valve)	1

©2008 Yale Materials Handling Corporation

VALVE ASSEMBLY, AUXILIARY TWO SECTION (FIGURE 11-18)

ELECTRONIC CONTROL VALVE — FOUR FUNCTION

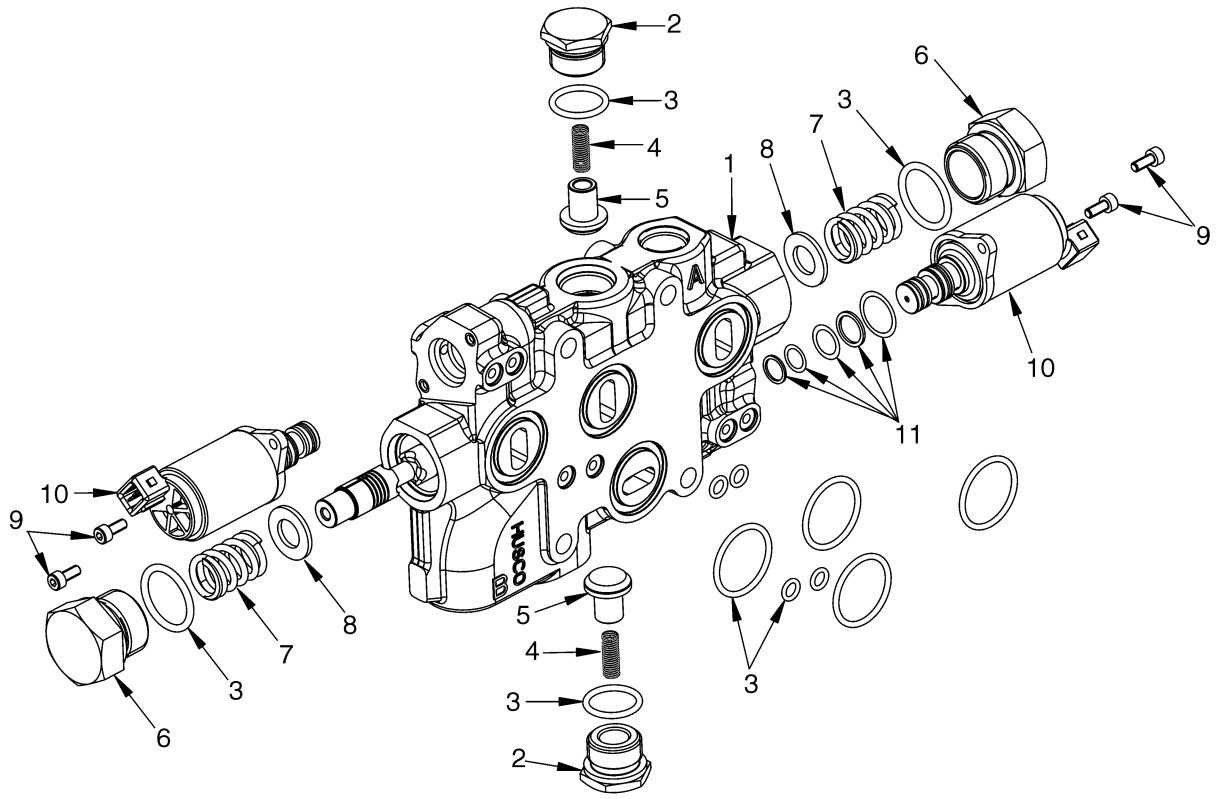

©2008 Yale Materials Handling Corporation

VALVE ASSEMBLY, AUXILIARY TWO SECTION
ELECTRONIC CONTROL VALVE – FOUR FUNCTION

ITEM	PART NO.	DESCRIPTION	QTY
1	580072757	Valve Section	1
2	580054052	Plug (Tilt/Auxiliary)	1
2	580054053	Plug (Lift)	1
3	580054143	Kit-Seal	1
4	580006977	Spring	1
5	580006976	Poppet	1
6	580054131	Plug	2
7	580054125	Spring	2
8	580054126	Washer	2
9	580054121	Capscrew	4
10	580054050	Valve	2
11	580054148	Kit-Seal (Pressure Reducing Valve)	1

©2008 Yale Materials Handling Corporation

VALVE ASSEMBLY, OUTLET SECTION (FIGURE 11-19)
ELECTRONIC CONTROL VALVE — THREE AND FOUR FUNCTION

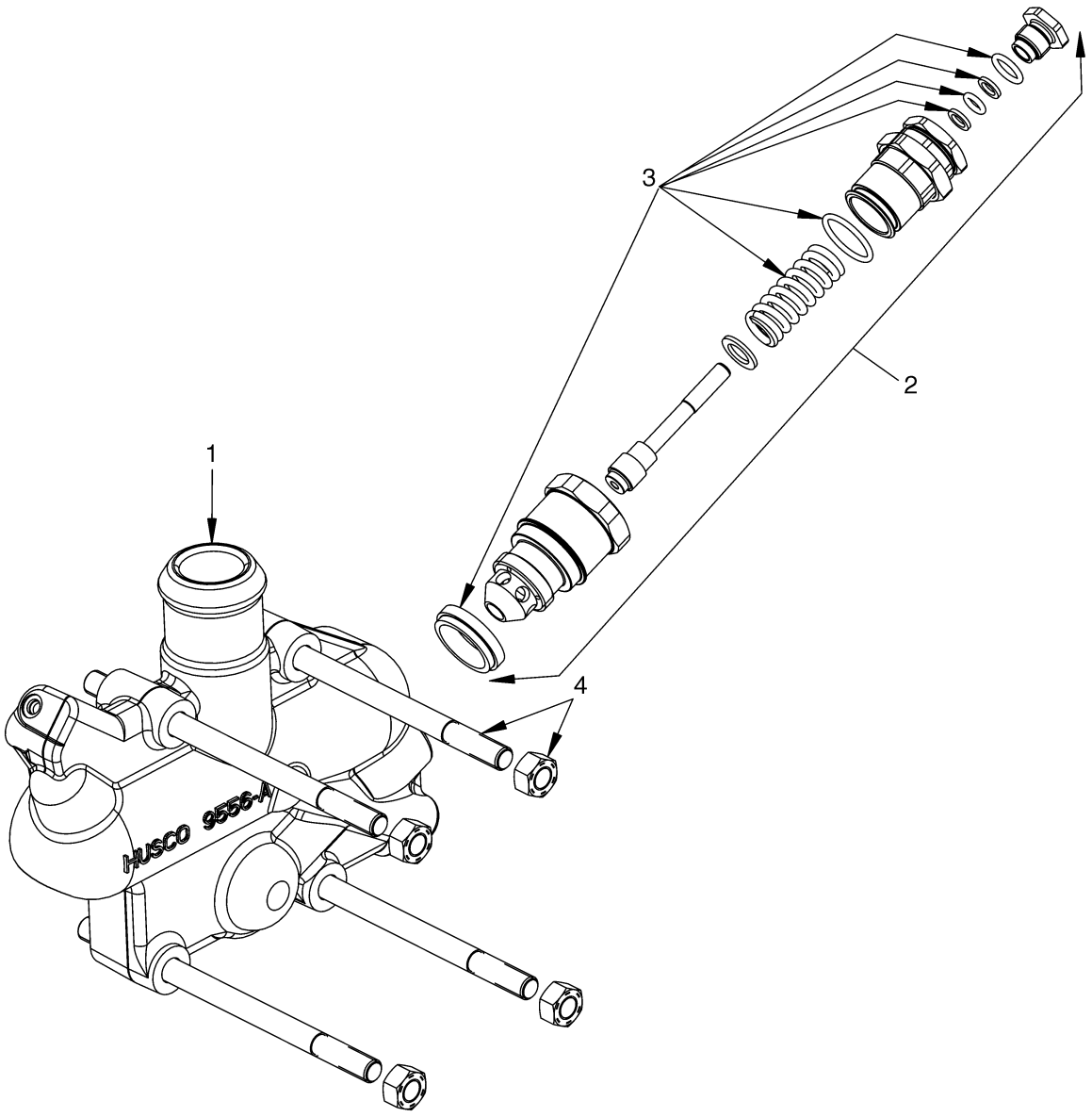

BP140075

©2008 Yale Materials Handling Corporation

VALVE ASSEMBLY, OUTLET SECTION

ELECTRONIC CONTROL VALVE – THREE AND FOUR FUNCTION

ITEM	PART NO.	DESCRIPTION	QTY
1	580054043	Valve Section	1
2	580054046	Relief Valve (2250 PSI)	1
3	580054684	Kit-Seal	1
4	580054054	Kit-Tie Rod (Three Function)	1
4	580054692	Kit-Tie Rod (Four Function)	1

©2008 Yale Materials Handling Corporation

AUXILIARY HOSES (FIGURE 11-20)

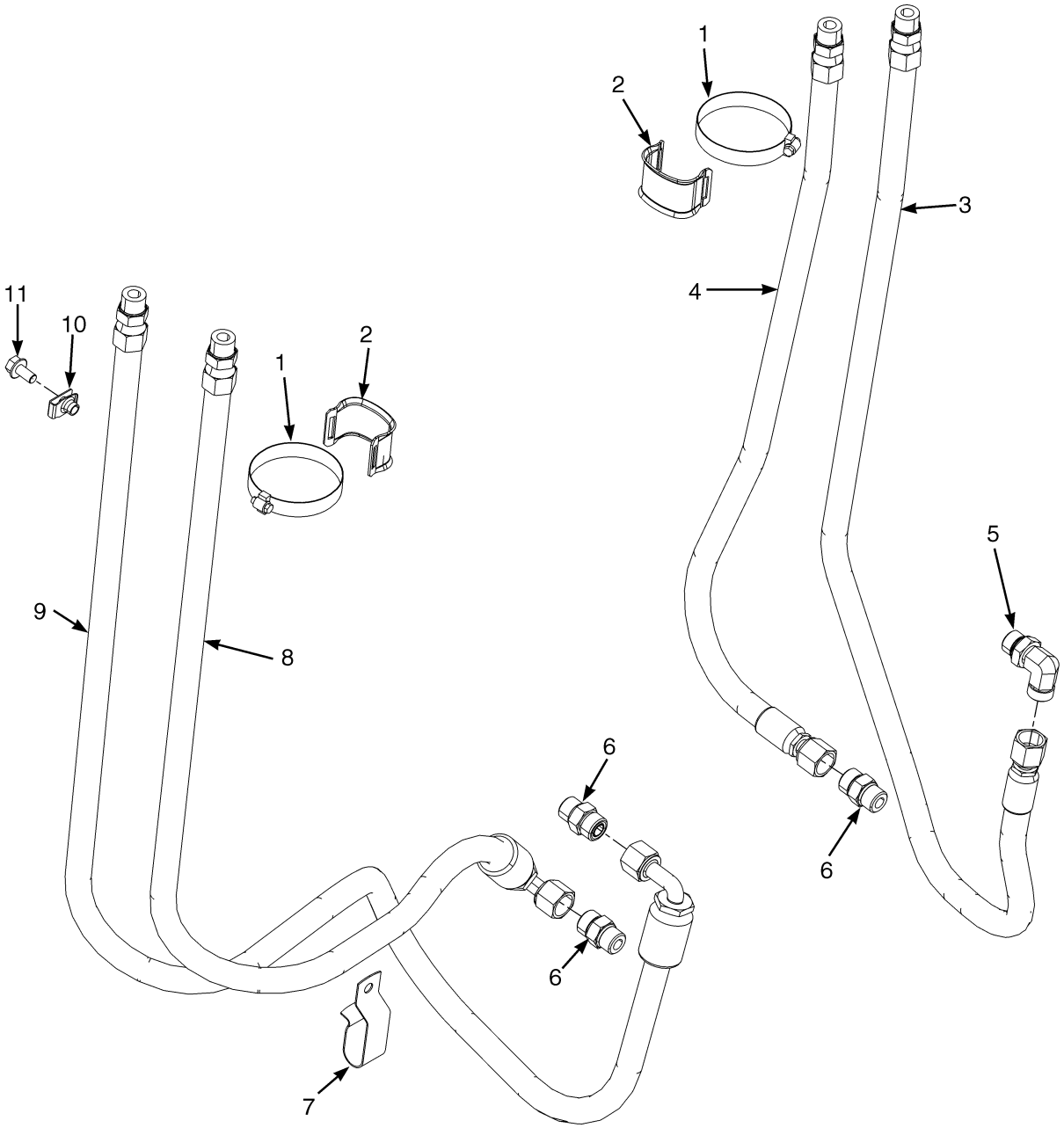

©2008 Yale Materials Handling Corporation

AUXILIARY HOSES

KEY:
A: Third Function
B: Fourth Function

ITEM	PART NO.	DESCRIPTION	QTY A	QTY B
1	505965599	Clamp	1	2
1	052645300	O-Ring	1	1
2	580027355	Hose Clamp	1	2
3	580089156	Hose Assy	1	1
4	580075796	Hose Assy	1	1
5	580020576	Fitting	1	2
6	580020430	Fitting (Electronic Hydraulics)	2	4
6	580063949	O-Ring	1	1
6	052645300	O-Ring	1	1
6	580039350	Fitting (Manual Hydraulics)	2	4
6	580063949	O-Ring	1	1
7	580045558	Clip	..	1
8	580070231	Hose Assy	..	1
9	580068456	Hose Assy	..	1
10	580026621	Nut	1	1
11	580047714	Capscrew	1	1

©2008 Yale Materials Handling Corporation

TILT HOSES (FIGURE 11-21)

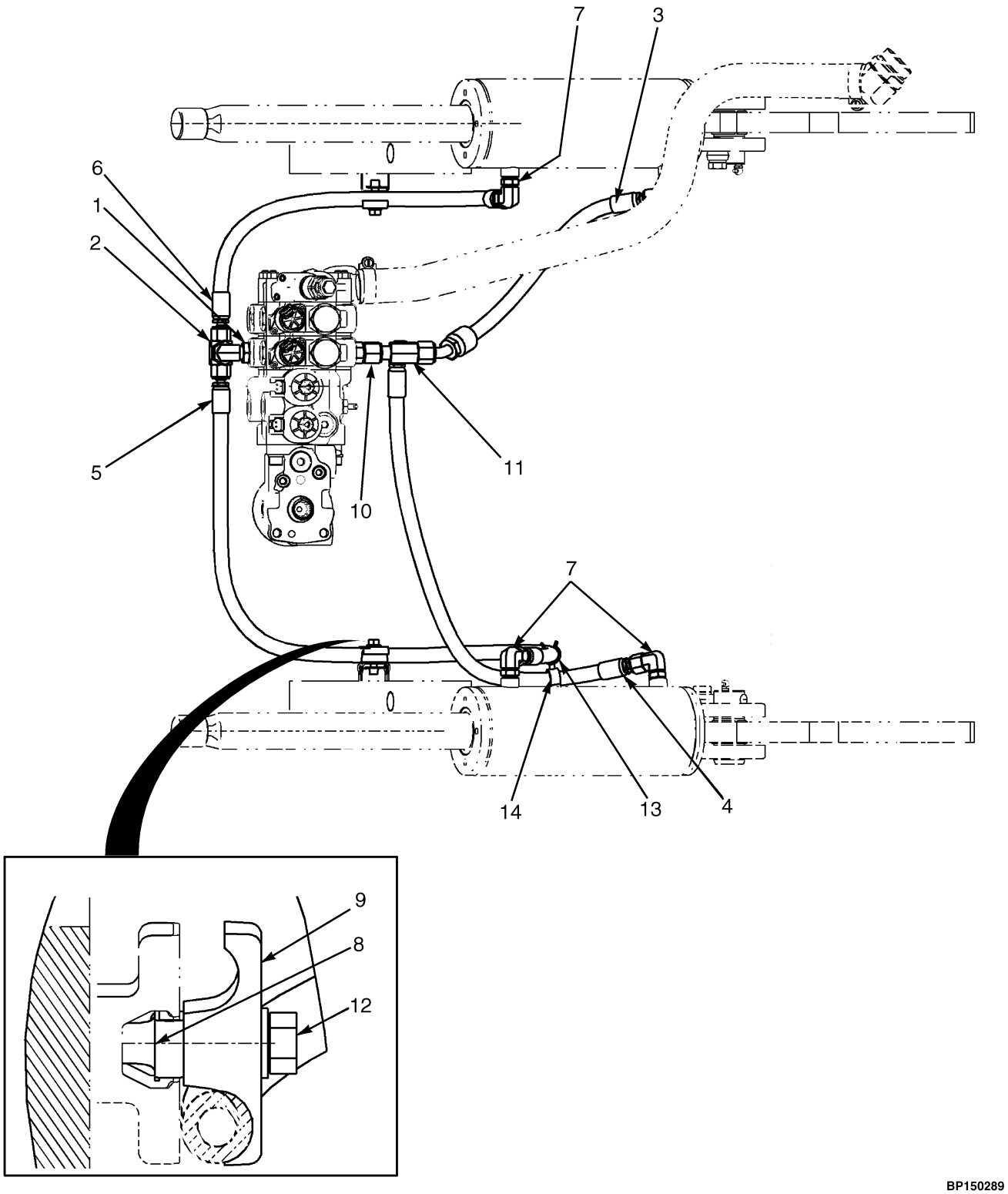

©2008 Yale Materials Handling Corporation

TILT HOSES

ITEM	PART NO.	DESCRIPTION	QTY
1	580055804	Fitting	1
1	504155200	O-Ring	1
1	052645300	O-Ring	1
2	580020468	Fitting	1
2	504155200	O-Ring	1
3	580088591	Hose Assy	1
4	580088588	Hose Assy	1
5	580059048	Hose Assy	1
6	580072516	Hose Assy	1
7	580019865	Fitting	4
7	504155200	O-Ring	1
7	052645200	O-Ring	1
8	580026621	Nut	2
9	580073148	Hose Clamp (Dual Hose)	2
10	580020430	Fitting	1
10	580063949	O-Ring	1
10	052645300	O-Ring	1
11	580019895	Fitting	1
12	580058269	Capscrew	2
13	580042567	Clamp	1
14	580041384	Clamp	1

©2008 Yale Materials Handling Corporation

VENT LINE GROUP (FIGURE 11-22)

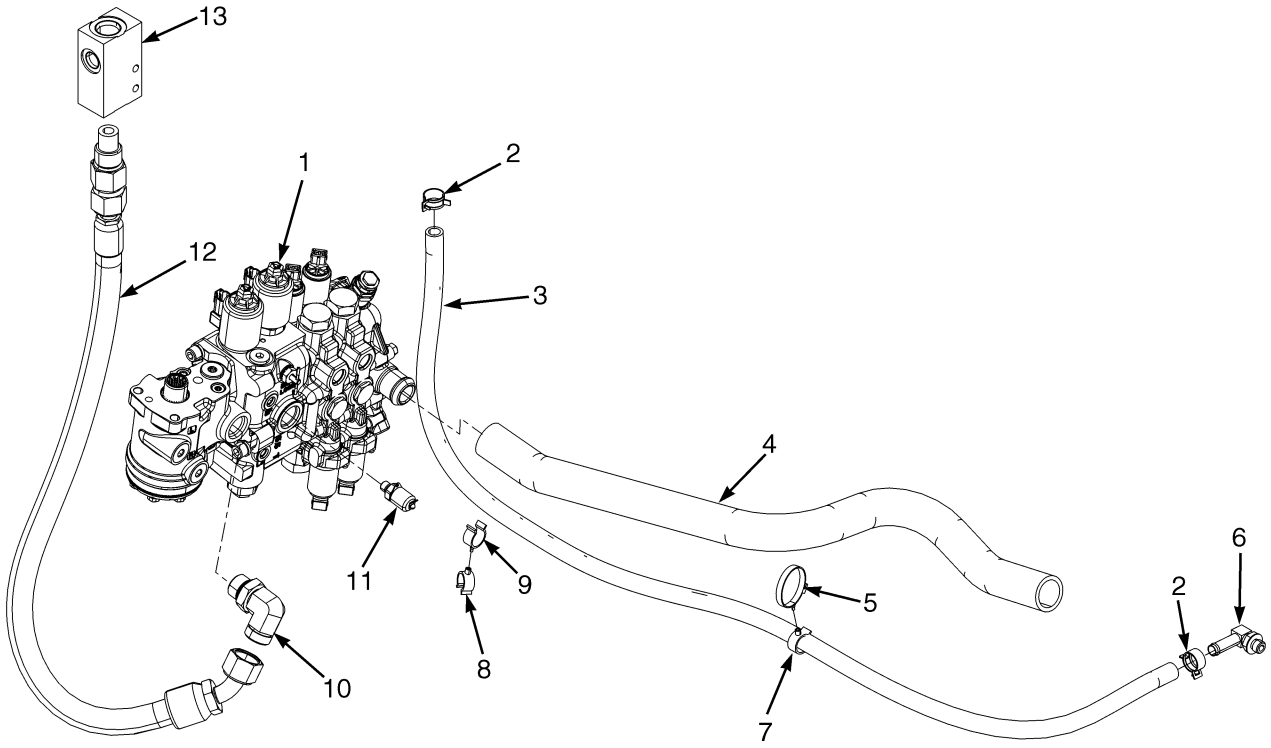

©2008 Yale Materials Handling Corporation

VENT LINE GROUP

ITEM	PART NO.	DESCRIPTION	QTY
1	. . . . .	Hydraulic Control Valve (☞P19812 [Page 11-16], ☞P19876 [Page 11-24], ☞P19877 [Page 11-26])	1
2	580039912	Hose Clamp	2
3	580008281	Hose Assy	1
4	. . . . .	Return Hose (☞P19805 [Page 11-2])	1
5	580041557	Clamp	1
6	030252011	Fitting (2 Stage Limited Free-Lift and 3 Stage Full Free-Lift)	1
6	315976070	Fitting (2 Stage Full Free-Lift and no mast)	1
7	580041369	Clamp (Swivel)	1
8	580041384	Clamp	1
9	580042567	Clamp	1
10	580020577	Fitting	1
11	580041208	Fitting (Diagnostic)	1
12	580060697	Hose Assy	1
13	. . . . .	Lowering Control Valve	1

©2008 Yale Materials Handling Corporation

TILT CYLINDER AND MAST INSTALLATION (FIGURE 11-23)

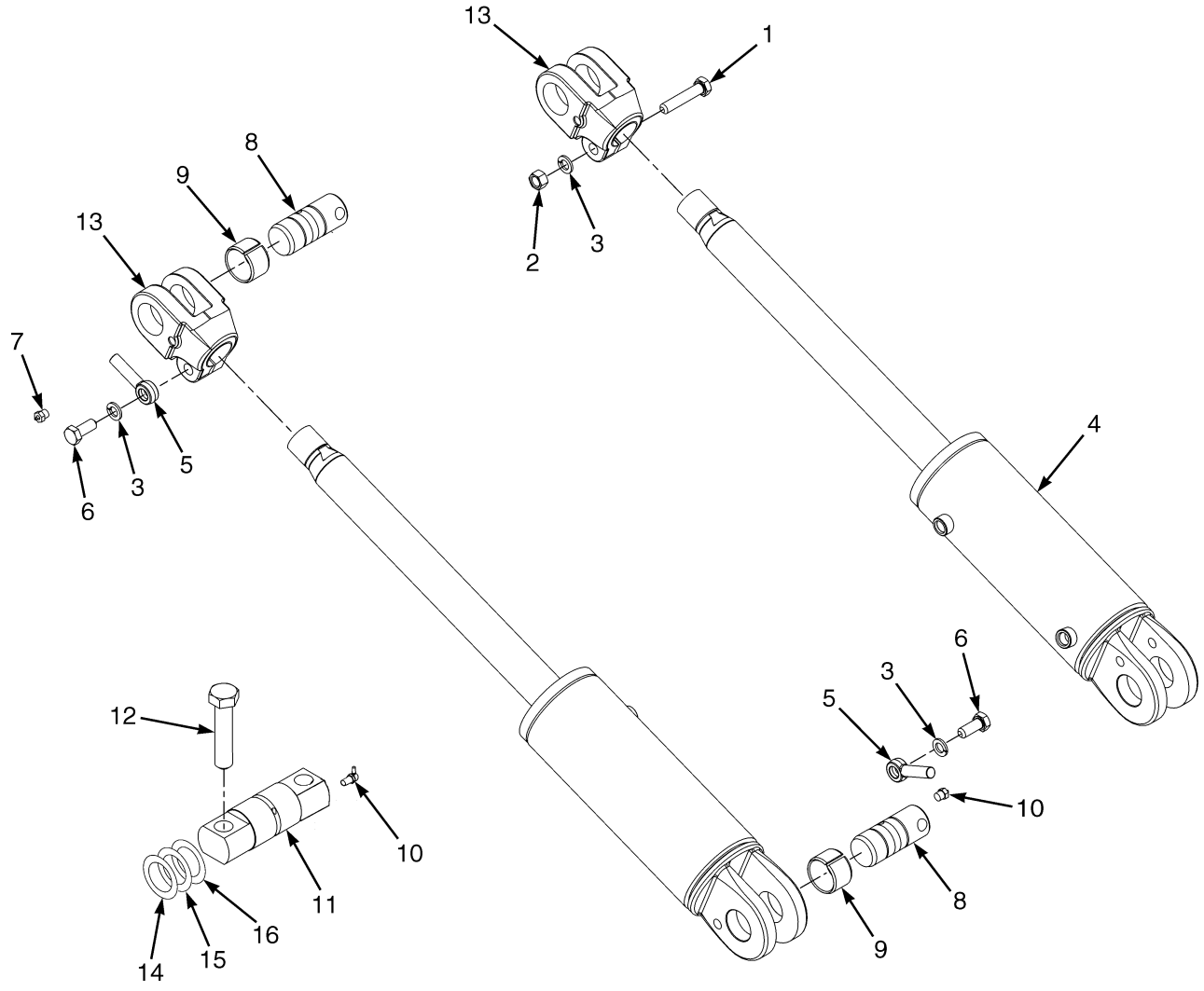

BP150165

©2008 Yale Materials Handling Corporation

TILT CYLINDER AND MAST INSTALLATION

ITEM	PART NO.	DESCRIPTION	QTY
1	580061352	Capscrew	2
2	580056000	Nut	2
3	580055649	Lockwasher	6
4	**a** 580065862	Tilt Cylinder (☞P19815 [Page 11-48])	2
4	**d** 580065863	Tilt Cylinder (☞P19815 [Page 11-48])	2
4	**b** 580069318	Tilt Cylinder (☞P19815 [Page 11-48])	2
4	**c** 580078899	Tilt Cylinder (☞P19815 [Page 11-48])	2
5	520045462	Anchor	4
6	580067388	Capscrew	4
7	015627900	Grease Fitting	2
8	580060732	Pin	8
9	520045464	Bushing	4
10	502139901	Grease Fitting (Mast Installation)	4
11	580062195	Pin (Mast Installation)	2
12	580076742	Capscrew (Mast Installation)	4
13	**bd** 580051925	Rod End	2
13	**ac** 580053983	Rod End	2
14	580085340	Shim	1
15	580085341	Shim	1
16	580085342	Shim	1

FOOTNOTES:

a 12° Forward/6° Back
b 6° Forward/10° Back
c 6° Forward/5° Back
d 6° Forward/6° Back

©2008 Yale Materials Handling Corporation

TILT CYLINDERS (FIGURE 11-24)

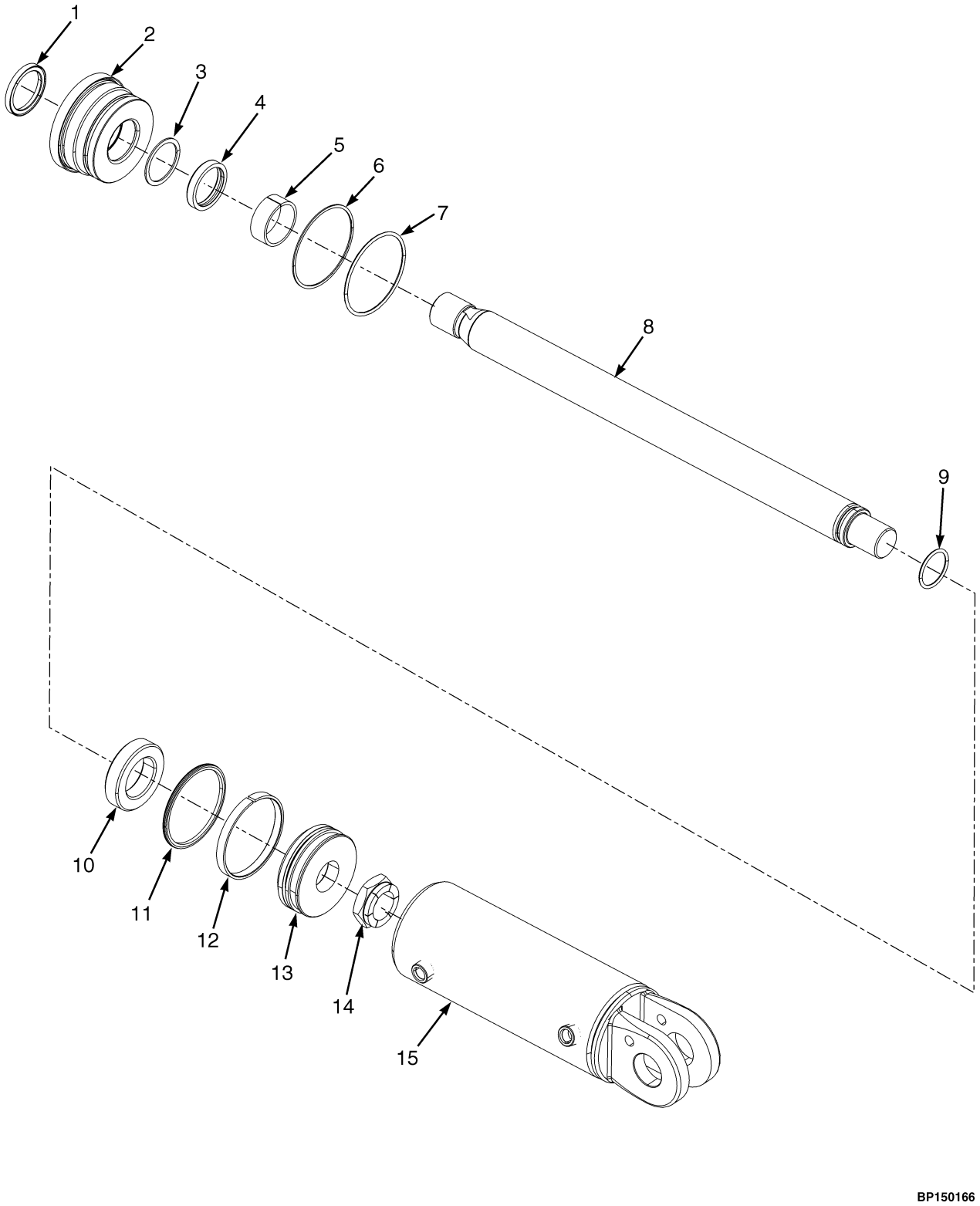

©2008 Yale Materials Handling Corporation

TILT CYLINDERS

ITEM	PART NO.	DESCRIPTION	QTY
	b 580069318	Tilt Cylinder	1
	d 580065863	Tilt Cylinder	1
	a 580065862	Tilt Cylinder	1
	c 580078899	Tilt Cylinder	1
1	520045448	Rod Wiper	1
2	580002231	Gland	1
3	504232218	Back-Up Ring	1
4	580022493	Rod Seal	1
5	504234264	Wear Ring	1
6	502011910	Back-Up Ring	1
7	015492400	O-Ring	1
8	**d** 520153605	Cylinder Rod	1
8	**a** 520153603	Cylinder Rod	1
8	**b** 520153604	Cylinder Rod	1
8	**c** 520153607	Cylinder Rod	1
9	520045450	O-Ring	1
10	580002229	Spacer	1
10	580002230	Spacer	1
11	504305703	Piston Seal	1
12	580014094	Wear Ring	1
13	580014095	Piston	1
14	502637904	Locknut	1
15	520494604	Tube Wldmt-Cylinder	1
15	. . . . .	Tube	1
15	. . . . .	O-Ring	2
15	580082399	Pivot	1
15	580082400	Pivot (Casting)	2
15	580022770	Kit-Seal	1

FOOTNOTES:

a 12° Forward/6° Back
b 6° Forward/10° Back
c 6° Forward/5° Back
d 6° Forward/6° Back

©2008 Yale Materials Handling Corporation

NOTES

©2008 Yale Materials Handling Corporation

12 MAST-TWO STAGE LIMITED FREE-LIFT

SECTION 12
MAST-TWO STAGE LIMITED FREE-LIFT

DESCRIPTION	PAGE
CARRIAGE	
TWO STAGE LIMITED FREE-LIFT	12-18
INNER MAST	
TWO STAGE LIMITED FREE-LIFT	12-6
MAIN CYLINDER (GP/GLP/GDP080-090VX)	
TWO STAGE LIMITED FREE-LIFT	12-14
MAIN CYLINDER (GP/GLP/GDP100-120VX)	
TWO STAGE LIMITED FREE-LIFT	12-16
MAIN LIFT	
TWO STAGE LIMITED FREE-LIFT	12-10
OUTER MAST	
TWO STAGE LIMITED FREE-LIFT	12-2

©2008 Yale Materials Handling Corporation

OUTER MAST (FIGURE 12-1)
TWO STAGE LIMITED FREE-LIFT

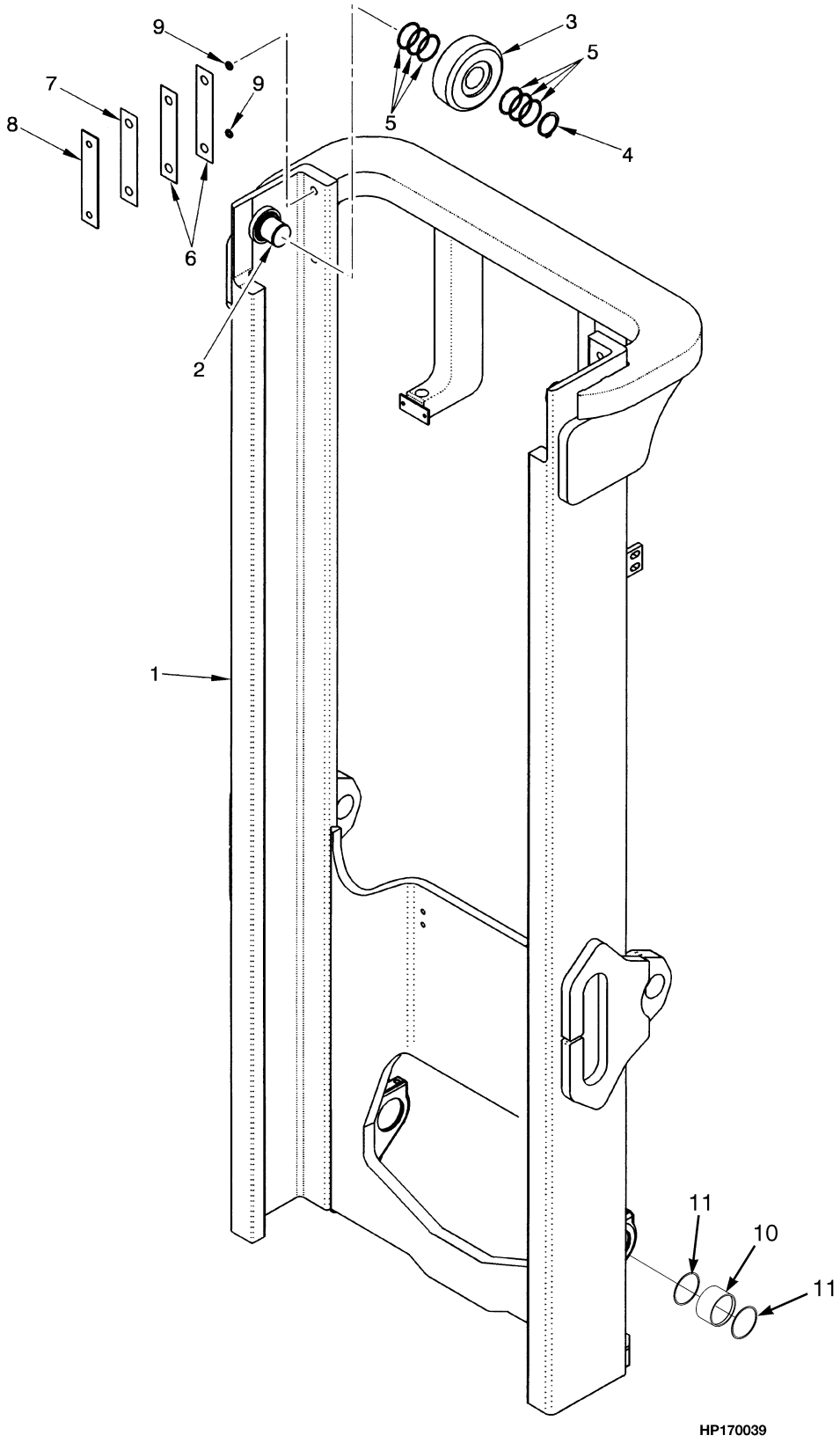

©2008 Yale Materials Handling Corporation

OUTER MAST
TWO STAGE LIMITED FREE-LIFT

GP/GLP/GDP080-090VX

ITEM	DESCRIPTION 1 2 3 4	LIFT HEIGHT TO BOTTOM OF FORKS			
		3000 mm (118.1 in.)	3600 mm (141.7 in.)	4200 mm (165.4 in.)	4900 mm (192.9 in.)
	Mast Group Number	B749 3000	B749 3600	B749 4200	B749 4900
	Mast Assy	580053358	580053364	580053370	580053377
1	Outer Mast	524198257	524198263	524198269	524198276

GP/GLP/GDP100-120VX

ITEM	DESCRIPTION 1 2 3 4	LIFT HEIGHT TO BOTTOM OF FORKS			
		2740 mm (107.9 in.)	3340 mm (131.5 in.)	3940 mm (155.1 in.)	4640 mm (182.7 in.)
	Mast Group Number	B750 2740	B750 3340	B750 3940	B750 4640
	Mast Assy	580053442	580053448	580053454	580053461
1	Outer Mast	524198257	524198263	524198269	524198276

GP/GLP/GDP100-120VX

ITEM	DESCRIPTION 1 2 3 4	LIFT HEIGHT TO BOTTOM OF FORKS	
		5240 mm (206.3 in.)	5840 mm (229.9 in.)
	Mast Group Number	B750 5240	B750 5840
	Mast Assy	580053467	580053473
1	Outer Mast	524198282	524198288

KEY:
A: GP/GLP/GDP080-090VX
B: GP/GLP/GDP100-120VX

ITEM	PART NO.	DESCRIPTION	QTY A	QTY B
	a	Mast Assy	1	1
1	**a**	Outer Mast	1	1
2	580026922	Stubshaft	2	2
3	580010279	Load Roller (124.31 mm)	2	2
4	580012093	Snap Ring	2	2
5	520045153	Shim (0.020 in.)	12	12
6	520045157	Shim (0.020 in.)	AR	AR
7	520045156	Shim (0.007 in.)	AR	AR
8	520045151	Wear Strip	2	2
9	012824300	O-Ring	4	4
10	580019523	Bushing	2	2
11	580012350	Snap Ring	4	4

©2008 Yale Materials Handling Corporation

OUTER MAST
TWO STAGE LIMITED FREE-LIFT

KEY:
A: GP/GLP/GDP080-090VX
B: GP/GLP/GDP100-120VX

ITEM	PART NO.	DESCRIPTION	QTY A	QTY B

FOOTNOTES:
a Refer to Table

©2008 Yale Materials Handling Corporation

NOTES

©2008 Yale Materials Handling Corporation

INNER MAST (FIGURE 12-2)
TWO STAGE LIMITED FREE-LIFT

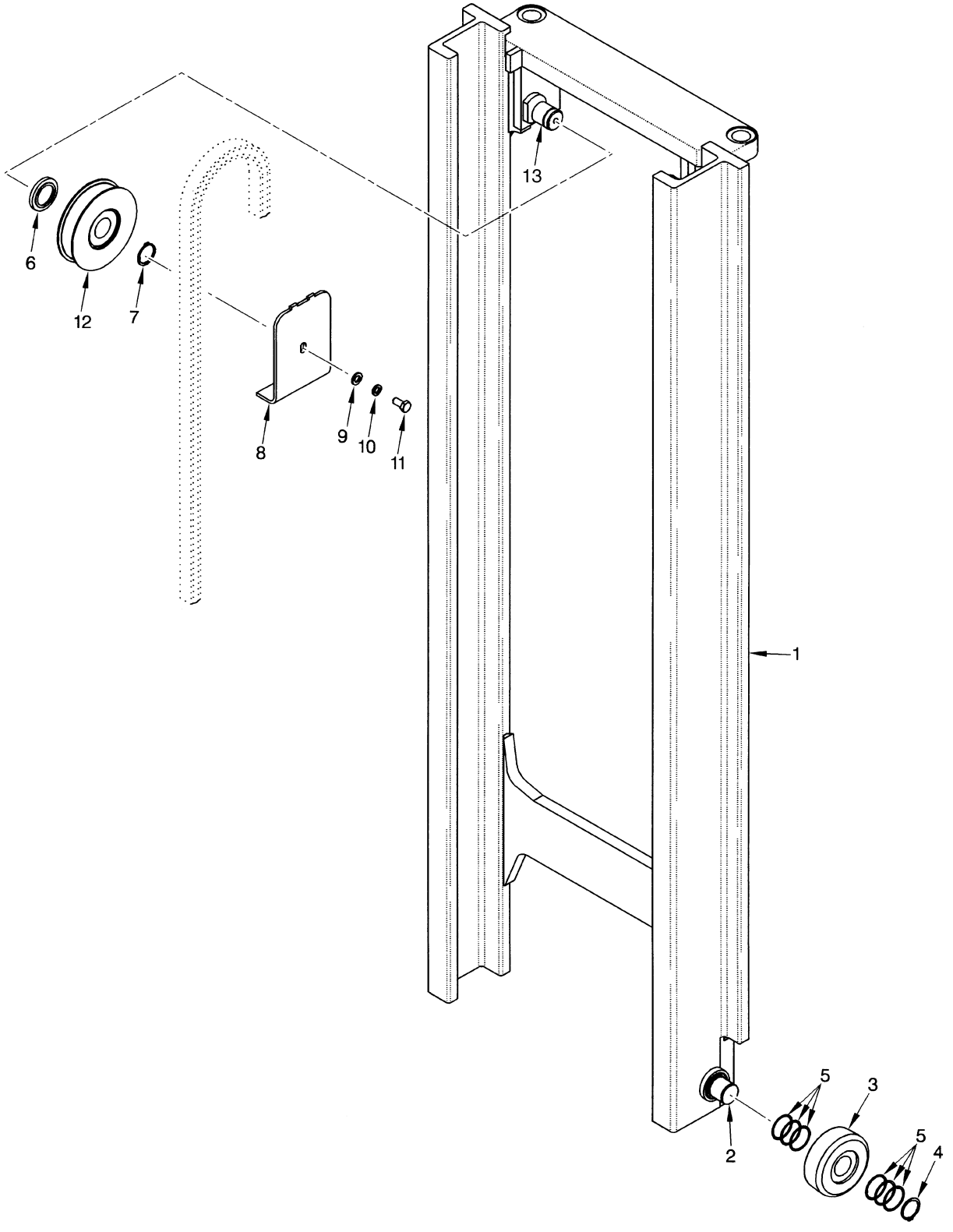

©2008 Yale Materials Handling Corporation

INNER MAST
TWO STAGE LIMITED FREE-LIFT

GP/GLP/GDP080-090VX

ITEM	DESCRIPTION 1 2 3 4	LIFT HEIGHT TO BOTTOM OF FORKS			
		3000 mm (118.1 in.)	3600 mm (141.7 in.)	4200 mm (165.4 in.)	4900 mm (192.9 in.)
	Mast Group Number	B749 3000	B749 3600	B749 4200	B749 4900
	Mast Assy	580053358	580053364	580053370	580053377
1	Inner Mast	580009937	580009940	580009943	580009946

GP/GLP/GDP100-120VX

ITEM	DESCRIPTION 1 2 3 4	LIFT HEIGHT TO BOTTOM OF FORKS			
		2740 mm (107.9 in.)	3340 mm (131.5 in.)	3940 mm (155.1 in.)	4640 mm (182.7 in.)
	Mast Group Number	B750 2740	B750 3340	B750 3940	B750 4640
	Mast Assy	580053442	580053448	580053454	580053461
1	Inner Mast	580009937	580009940	580009943	580009946

GP/GLP/GDP100-120VX

ITEM	DESCRIPTION 1 2 3 4	LIFT HEIGHT TO BOTTOM OF FORKS	
		5240 mm (206.3 in.)	5840 mm (229.9 in.)
	Mast Group Number	B750 5240	B750 5840
	Mast Assy	580053467	580053473
1	Inner Mast	580009948	580009949

KEY:
A: GP/GLP/GDP080-090VX
B: GP/GLP/GDP100-120VX

ITEM	PART NO.	DESCRIPTION	QTY A	QTY B
	a	Mast Assy	1	1
1	**a**	Inner Mast	1	1
2	580026922	Stubshaft	2	2
3	580010279	Load Roller (124.31 mm)	2	2
4	580012093	Snap Ring	2	2
5	520045153	Shim (0.020 in.)	12	12
6	580009884	Spacer	2	2
7	015916500	Snap Ring	2	2
8	580007855	Bracket	2	2
9	580055634	Washer	2	2
10	580055649	Lockwasher	2	2
11	580055743	Capscrew	2	2

©2008 Yale Materials Handling Corporation

INNER MAST
TWO STAGE LIMITED FREE-LIFT

KEY:
A: GP/GLP/GDP080-090VX
B: GP/GLP/GDP100-120VX

ITEM	PART NO.	DESCRIPTION	QTY A	QTY B
12	580007841	Chain Sheave	2	..
12	580007842	Chain Sheave	..	2
13	580013492	Stubshaft	2	2

FOOTNOTES:
a Refer to Table

©2008 Yale Materials Handling Corporation

NOTES

©2008 Yale Materials Handling Corporation

MAIN LIFT (FIGURE 12-3)
TWO STAGE LIMITED FREE-LIFT

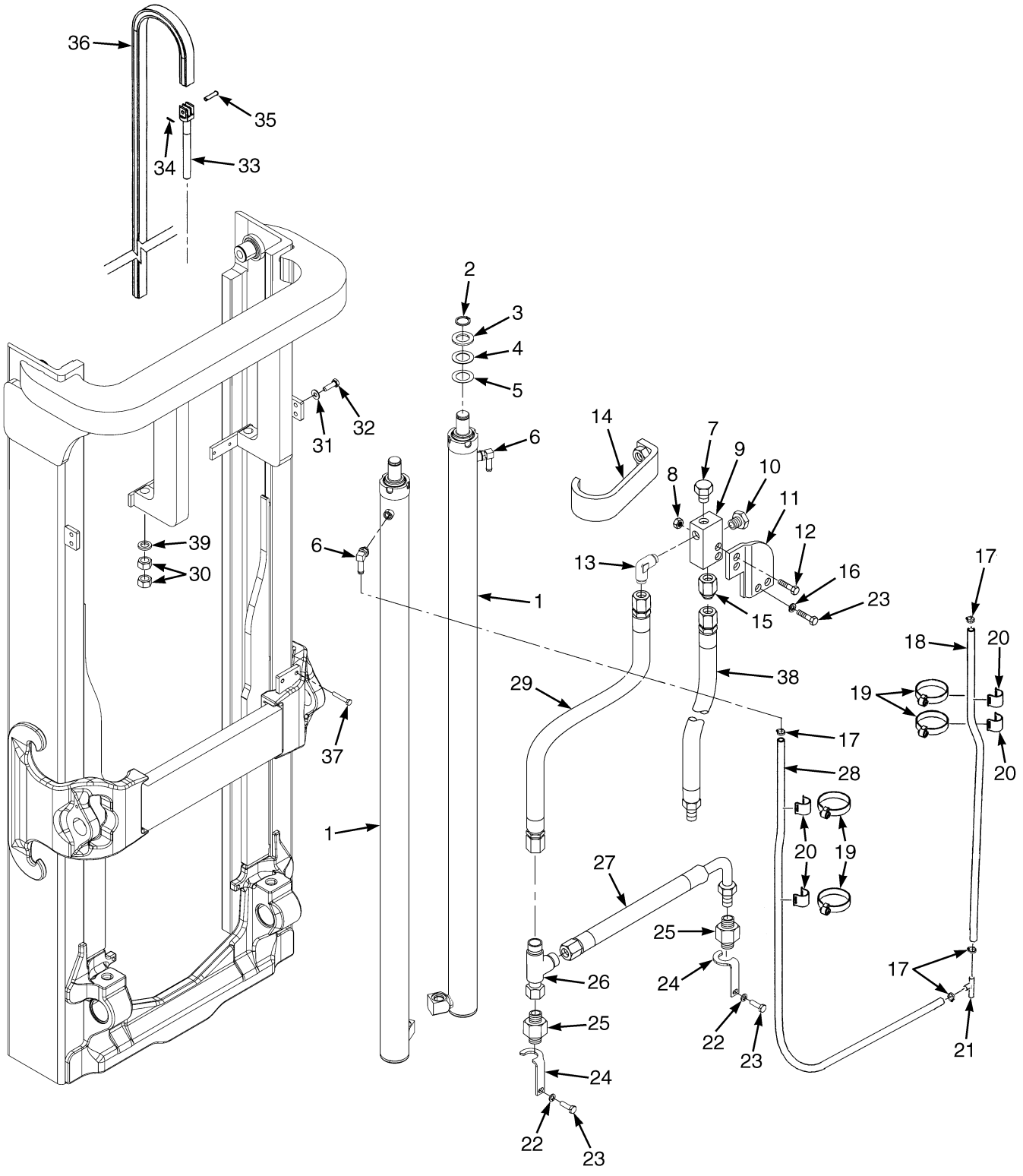

©2008 Yale Materials Handling Corporation

MAIN LIFT
TWO STAGE LIMITED FREE-LIFT

GP/GLP/GDP080-090VX

ITEM	DESCRIPTION 1 2 3 4	LIFT HEIGHT TO BOTTOM OF FORKS			
		3000 mm (118.1 in.)	3600 mm (141.7 in.)	4200 mm (165.4 in.)	4900 mm (192.9 in.)
	Mast Group Number	B749 3000	B749 3600	B749 4200	B749 4900
18	Hose Assy	580014392	580009449	580008284	580060719
28	Hose Assy	580008236	580008240	580008244	580008250
36	Chain	518804662	518804607	518804645	518804663

GP/GLP/GDP100-120VX

ITEM	DESCRIPTION 1 2 3 4	LIFT HEIGHT TO BOTTOM OF FORKS			
		2740 mm (107.9 in.)	3340 mm (131.5 in.)	3940 mm (155.1 in.)	4640 mm (182.7 in.)
	Mast Group Number	B750 2740	B750 3340	B750 3940	B750 4640
18	Hose Assy	580032772	580008252	580008236	580008242
28	Hose Assy	580008228	580008238	580008243	580008249
36	Chain	520045192	580033890	580014172	580014173

GP/GLP/GDP100-120VX

ITEM	DESCRIPTION 1 2 3 4	LIFT HEIGHT TO BOTTOM OF FORKS	
		5240 mm (206.3 in.)	5840 mm (229.9 in.)
	Mast Group Number	B750 5240	B750 5840
18	Hose Assy	580008248	580008231
28	Hose Assy	580008232	580008234
36	Chain	580013102	580007877

KEY:
A: GP/GLP/GDP080-090VX
B: GP/GLP/GDP100-120VX

ITEM	PART NO.	DESCRIPTION	QTY A	QTY B
1	. . . . .	Main Cylinder (☞P19820 [Page 12-14], ☞P19821 [Page 12-16])	2	2
2	500227908	Snap Ring	2	2
3	520045188	Washer	2	2
4	504232202	Shim	AR	AR
5	518795660	Shim	AR	AR
6	030252011	Fitting	2	2
6	052645200	O-Ring	1	1

©2008 Yale Materials Handling Corporation

MAIN LIFT
TWO STAGE LIMITED FREE-LIFT

KEY:
A: GP/GLP/GDP080-090VX
B: GP/GLP/GDP100-120VX

ITEM	PART NO.	DESCRIPTION	QTY A	QTY B
7	080437000	Plug	1	1
7	052645500	O-Ring	1	1
8	580055651	Nut	10	10
9	580007839	Housing	1	1
10	054820000	Plug	1	1
10	505967593	Plug	1	1
10	052645300	O-Ring	1	1
11	580026475	Bracket	1	1
12	580055736	Capscrew	2	2
13	580057932	Fitting	1	1
13	052645300	O-Ring	1	1
14	504407299	Bracket Wldmt	2	2
15	524147484	Lowering Control Valve	1	..
15	524147485	Lowering Control Valve	..	1
16	030252011	Fitting	2	2
17	580007557	Clamp	4	4
18	**a**	Hose Assy	1	1
19	504068737	Strap Clamp	4	..
20	580012383	Hose Clamp	4	4
21	514835800	Fitting	1	1
22	580055739	Capscrew	2	2
23	580055738	Capscrew	4	4
24	524198144	Bracket (LH)	1	1
24	524198146	Bracket (RH)	1	1
25	502978555	Hyd Velocity Fuse	2	..
25	502978556	Hyd Velocity Fuse	..	2
26	580019896	Fitting	1	1
27	524147540	Hose Assy	1	1
28	**a**	Hose Assy	1	1
29	580071057	Hose Assy	1	1
30	580056088	Nut	4	4
31	580055633	Washer	4	4
32	580055741	Capscrew	4	4
33	520045361	Chain Anchor	2	..
33	520045362	Chain Anchor	..	2
34	015417900	Cotter Pin	2	2
35	520045183	Pin (Anchor)	2	..
35	520045195	Pin (Anchor)	..	2
36	**a**	Chain	1	1
37	580055736	Capscrew	2	2
38	580060697	Hose Assy	1	1
39	580071052	Washer	2	2

FOOTNOTES:
a Refer to Table

©2008 Yale Materials Handling Corporation

NOTES

©2008 Yale Materials Handling Corporation

MAIN CYLINDER (GP/GLP/GDP080-090VX) (FIGURE 12-4)
TWO STAGE LIMITED FREE-LIFT

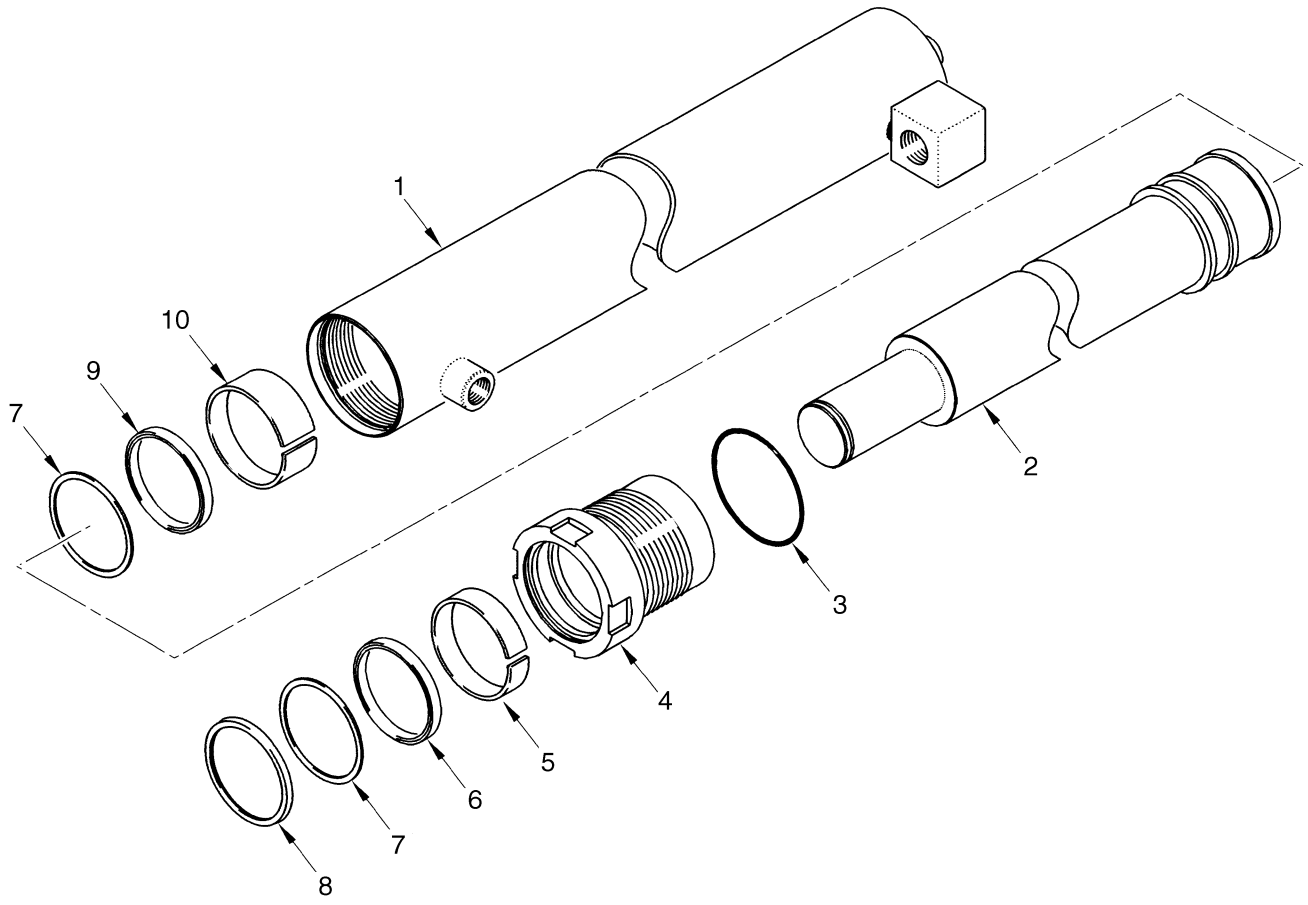

BP170220

©2008 Yale Materials Handling Corporation

MAIN CYLINDER (GP/GLP/GDP080-090VX)

TWO STAGE LIMITED FREE-LIFT

B749

ITEM	DESCRIPTION 1 2 3 4	LIFT HEIGHT TO BOTTOM OF FORKS			
		3000 mm (118.1 in.)	3600 mm (141.7 in.)	4200 mm (165.4 in.)	4900 mm (192.9 in.)
	Mast Group Number	B749 3000	B749 3600	B749 4200	B749 4900
	Cylinder Group Number	8527601	8527607	8527613	8527620
	Cylinder Assy	580056994	580057002	580057097	580057107
1	Tube Wldmt-Cylinder	520425601	520425607	520425613	520425620
2	Cylinder Rod	520406635	520406641	520406647	520406654

ITEM	PART NO.	DESCRIPTION	QTY
	a	Cylinder Assy	2
1	**a**	Tube Wldmt-Cylinder	1
2	**a**	Cylinder Rod	1
3	012823300	O-Ring	1
4	580006894	Gland	1
5	520045162	Wear Ring	1
6	504232292	Rod Seal	1
7	504232217	Back-Up Ring	2
8	580022511	Rod Wiper	1
9	580008814	Rod Seal	1
10	504232291	Wear Ring	1
11	505136062	Kit-Seal	1

FOOTNOTES:

a Refer to Table

©2008 Yale Materials Handling Corporation

MAIN CYLINDER (GP/GLP/GDP100-120VX) (FIGURE 12-5)
TWO STAGE LIMITED FREE-LIFT

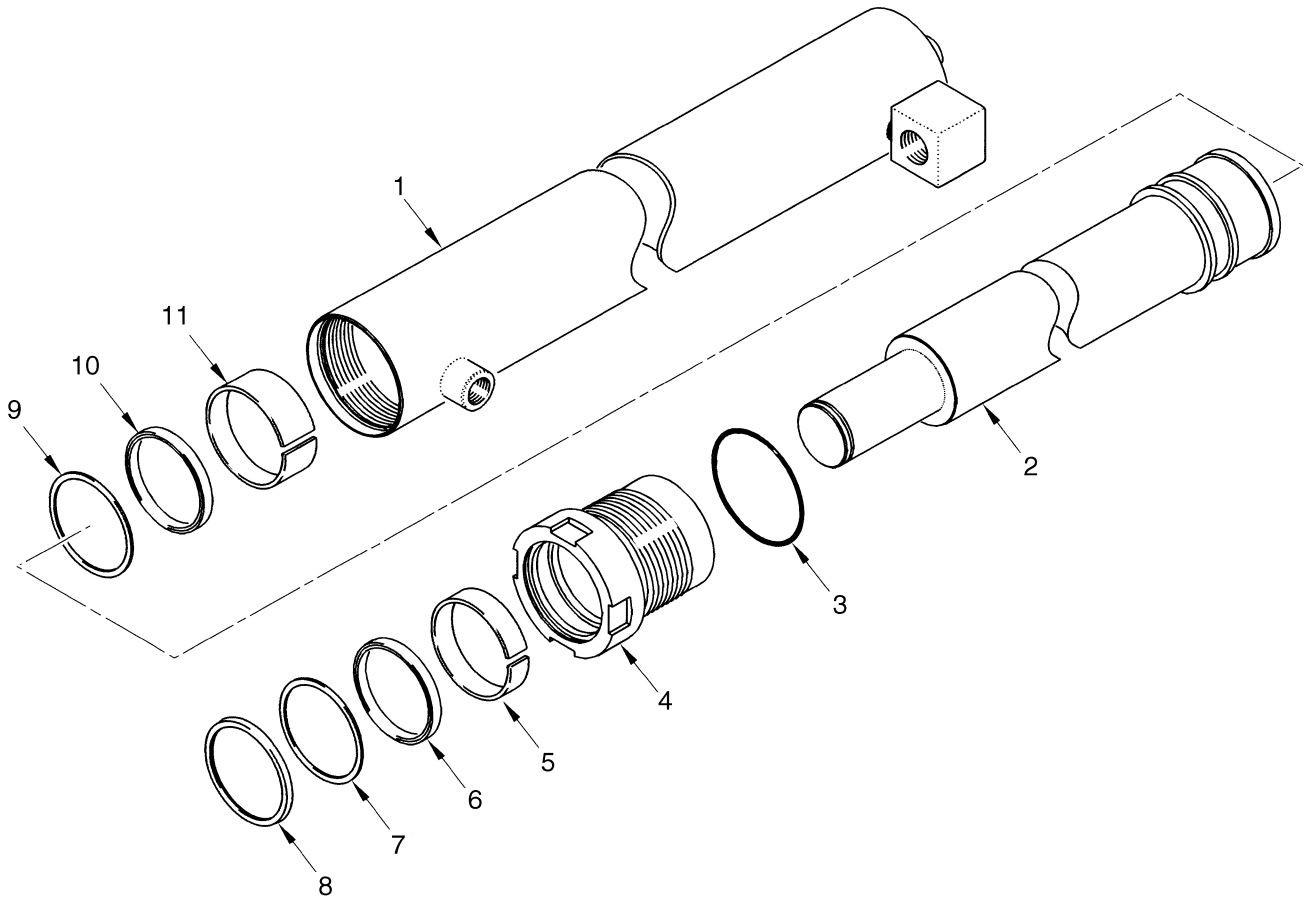

BP170221

©2008 Yale Materials Handling Corporation

MAIN CYLINDER (GP/GLP/GDP100-120VX)
TWO STAGE LIMITED FREE-LIFT

B750

ITEM	DESCRIPTION 1 2 3 4	LIFT HEIGHT TO BOTTOM OF FORKS			
		2740 mm (107.9 in.)	3340 mm (131.5 in.)	3940 mm (155.1 in.)	4640 mm (182.7 in.)
	Mast Group Number	**B750 2740**	**B750 3340**	**B750 3940**	**B750 4640**
	Cylinder Group Number	**8527701**	**8527707**	**8527713**	**8527720**
	Cylinder Assy	580057698	580057704	580057762	580057770
1	Tube Wldmt-Cylinder	520426601	520426607	520426613	520426620
2	Cylinder Rod	520470651	520470657	520470663	520470670

B750

ITEM	DESCRIPTION 1 2 3 4	LIFT HEIGHT TO BOTTOM OF FORKS	
		5240 mm (206.3 in.)	5840 mm (229.9 in.)
	Mast Group Number	**B750 5240**	**B750 5840**
	Cylinder Group Number	**8527726**	**8527753**
	Cylinder Assy	580057783	580058971
1	Tube Wldmt-Cylinder	520426626	520426632
2	Cylinder Rod	520470676	520481616

ITEM	PART NO.	DESCRIPTION	QTY
	a	Cylinder Assy	2
1	**a**	Tube Wldmt-Cylinder	1
2	**a**	Cylinder Rod	1
3	066417000	O-Ring	1
4	580006895	Gland	1
5	504232291	Wear Ring	1
6	580014165	Rod Seal	1
7	580000260	Back-Up Ring	1
8	580022512	Rod Wiper	1
9	520045216	Back-Up Ring	1
10	580008813	Rod Seal	1
11	520045215	Wear Ring	1
	505136063	Kit-Seal	1

FOOTNOTES:
a Refer to Table

©2008 Yale Materials Handling Corporation

CARRIAGE (FIGURE 12-6)
TWO STAGE LIMITED FREE-LIFT

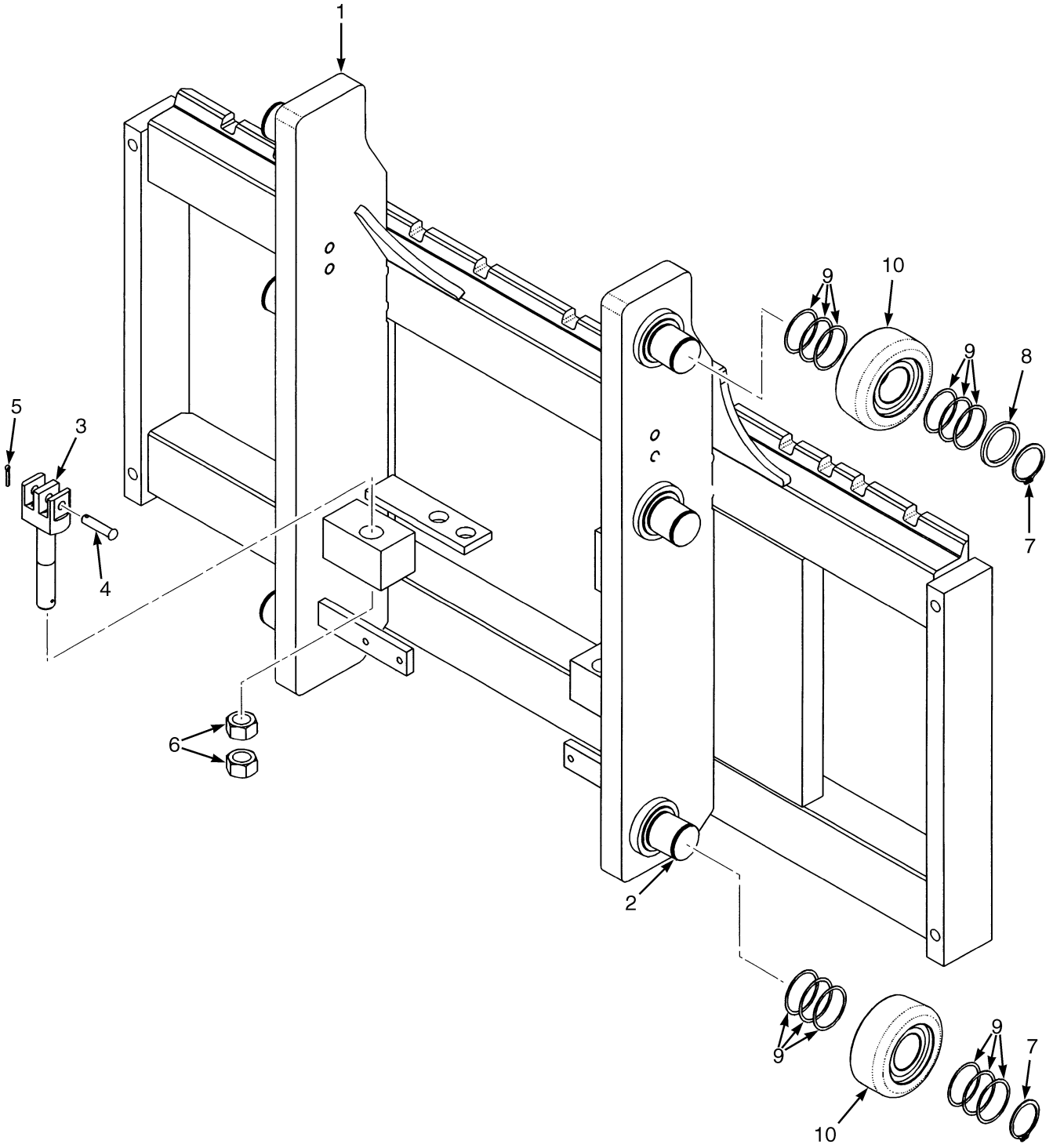

BP170253

©2008 Yale Materials Handling Corporation

CARRIAGE
TWO STAGE LIMITED FREE-LIFT

KEY:
A: H80-90FT
B: H100-120FT

ITEM	PART NO.	DESCRIPTION	QTY A	QTY B
	580006481	Carriage (48 in.)	1	..
	580006483	Carriage (60 in.)	1	..
	580006484	Carriage (48 in.)	..	1
	580006485	Carriage (54 in.)	..	1
	580006486	Carriage (60 in.)	..	1
1	580006412	Carriage Wldmt (48 in.)	1	..
1	580006414	Carriage Wldmt (60 in.)	1	..
1	580006415	Carriage Wldmt (48 in.)	..	1
1	580006416	Carriage Wldmt (54 in.)	..	1
1	580006417	Carriage Wldmt (60 in.)	..	1
2	580026922	Stubshaft	6	6
3	580009893	Chain Anchor	2	..
3	580009922	Chain Anchor	..	2
4	520045183	Pin (Anchor)	2	..
4	520045195	Pin (Anchor)	..	2
5	015417900	Cotter Pin	2	2
6	520045163	Wheel Nut	4	4
7	580012093	Snap Ring	6	6
8	580011609	Spacer	2	2
9	520045153	Shim (0.020 in.)	AR	AR
10	580031673	Load Roller (101.67 mm)	6	6

©2008 Yale Materials Handling Corporation

NOTES

©2008 Yale Materials Handling Corporation

13 MAST-THREE STAGE FULL FREE-LIFT

SECTION 13
MAST-THREE STAGE FULL FREE-LIFT

DESCRIPTION	PAGE
CARRIAGE	
THREE STAGE FULL FREE-LIFT	13-28
FREE-LIFT	
THREE STAGE FULL FREE-LIFT	13-20
FREE-LIFT CYLINDER	
THREE STAGE FULL FREE-LIFT	13-24
INNER MAST	
THREE STAGE FULL FREE-LIFT	13-10
INTERMEDIATE MAST	
THREE STAGE FULL FREE-LIFT	13-6
MAIN LIFT	
THREE STAGE FULL FREE-LIFT	13-12
MAIN LIFT CYLINDER	
THREE STAGE FULL FREE-LIFT	13-16
OUTER MAST	
THREE STAGE FULL FREE-LIFT	13-2

©2008 Yale Materials Handling Corporation

OUTER MAST (FIGURE 13-1)
THREE STAGE FULL FREE-LIFT

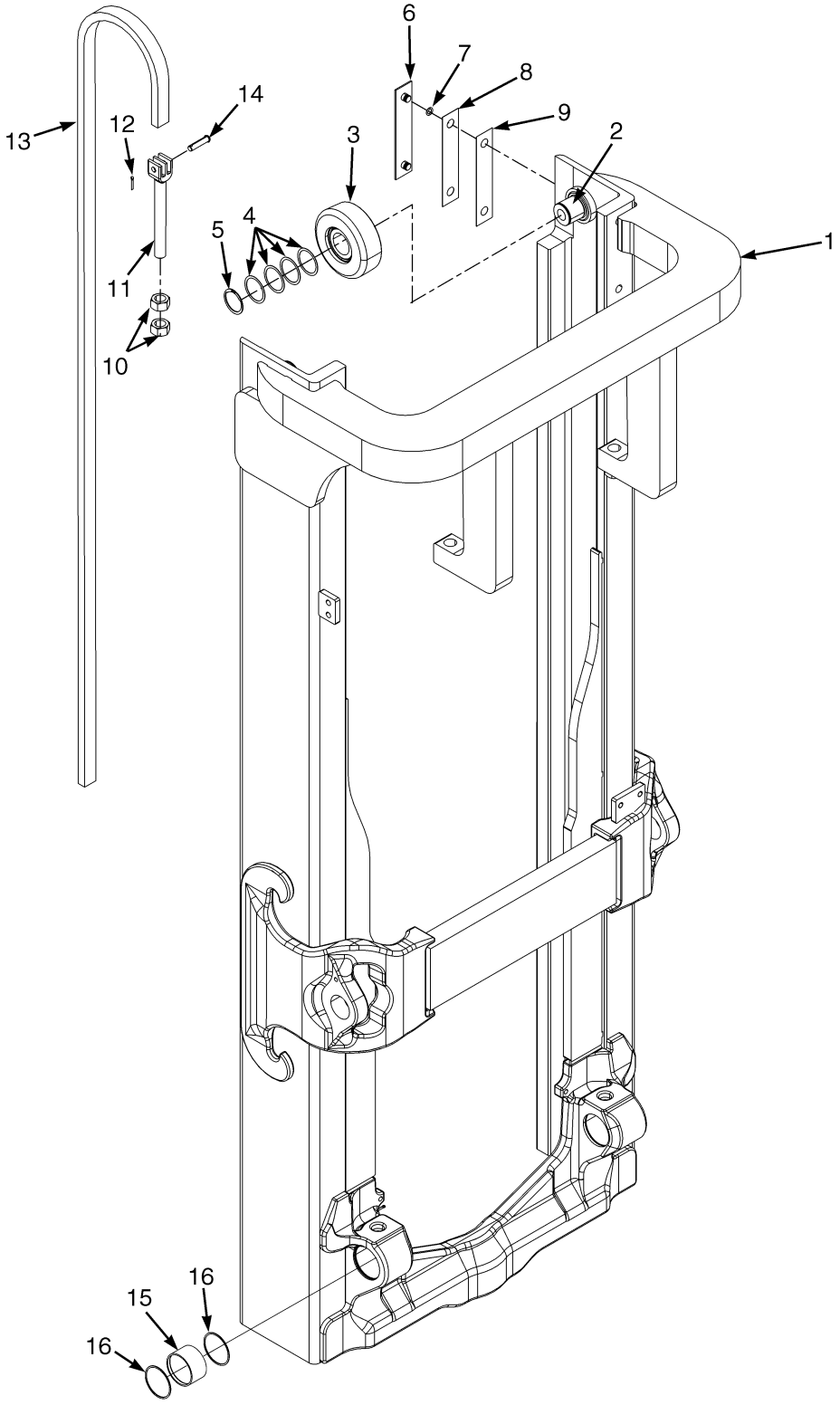

©2008 Yale Materials Handling Corporation

OUTER MASS

THREE STAGE FULL FREE-LIFT

GP/GLP/GDP080-090VX

ITEM	DESCRIPTION 1 2 3 4	LIFT HEIGHT TO BOTTOM OF FORKS			
		4365 mm (171.9 in.)	4665 mm (183.7 in.)	4900 mm (192.9 in.)	5200 mm (204.7 in.)
	Mast Group Number	B751 4365	B751 4665	B751 4900	B751 5200
	Mast Assy	580053539	580053541	580053542	580053544
1	Outer Mast	580053513	580053515	580053516	580053518
13	Chain	520045158	518804662	518804692	518804693

GP/GLP/GDP080-090VX

ITEM	DESCRIPTION 1 2 3 4	LIFT HEIGHT TO BOTTOM OF FORKS	
		5500 mm (216.5 in.)	5950 mm (234.3 in.)
	Mast Group Number	B751 5500	B751 5950
	Mast Assy	580053546	580053549
1	Outer Mast	580053520	580053523
13	Chain	518804607	518804686

GP/GLP/GDP100-120VX

ITEM	DESCRIPTION 1 2 3 4	LIFT HEIGHT TO BOTTOM OF FORKS				
		4087 mm (160.9 in.)	4387 mm (172.7 in.)	4640 mm (182.7 in.)	4940 mm (194.5 in.)	5240 mm (206.3 in.)
	Mast Group Number	B752 4087	B752 4387	B752 4640	B752 4940	B752 5240
	Mast Assy	580053590	580053592	580053593	580053595	580053597
1	Outer Mast	580053513	580053515	580053516	580053518	580053520
13	Chain	520050836	520045192	520052800	520052802	580014164

ITEM	PART NO.	DESCRIPTION	QTY
	a	Mast Assy	1
1	**a**	Outer Mast	1
2	580026922	Stubshaft	2
3	580010279	Load Roller (124.31 mm)	2
4	520045153	Shim (0.020 in.)	AR
5	580012093	Snap Ring	2
6	520045151	Wear Strip	2
7	012824300	O-Ring	4
8	520045157	Shim (0.020 in.)	AR
9	520045156	Shim (0.007 in.)	AR
10	520045163	Wheel Nut	4
11	520045361	Chain Anchor (GP/GLP/GDP080-090VX)	2

©2008 Yale Materials Handling Corporation

OUTER MAST
THREE STAGE FULL FREE-LIFT

ITEM	PART NO.	DESCRIPTION	QTY
11	520045362	Chain Anchor (GP/GLP/GDP100-120VX)	2
12	015417900	Cotter Pin	2
13	**a**	Chain	2
14	520045195	Pin	2
15	580019523	Bushing	2
16	580012350	Snap Ring	4

FOOTNOTES:
a Refer to Table

©2008 Yale Materials Handling Corporation

NOTES

©2008 Yale Materials Handling Corporation

INTERMEDIATE MAST (FIGURE 13-2)
THREE STAGE FULL FREE-LIFT

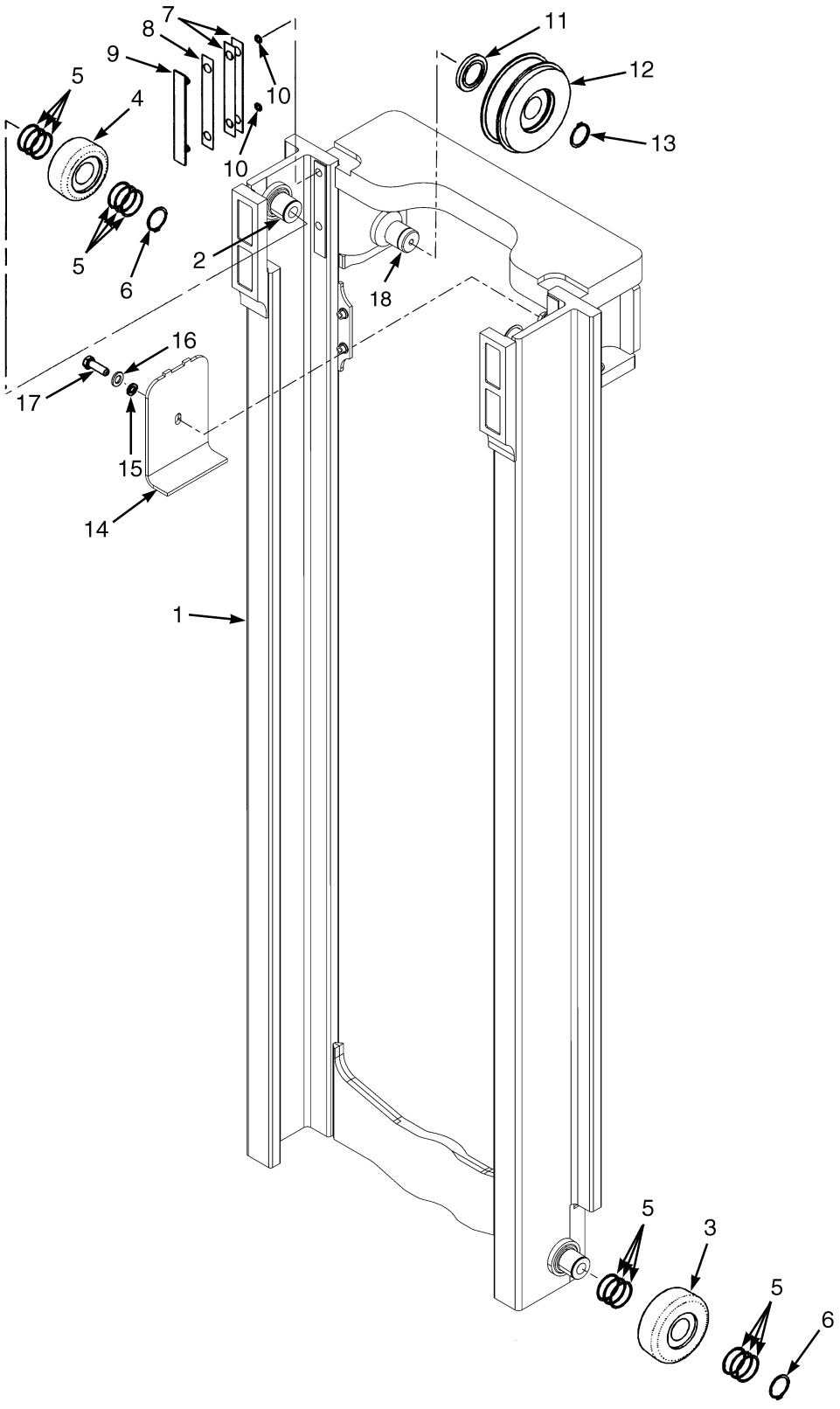

©2008 Yale Materials Handling Corporation

INTERMEDIATE MAST
THREE STAGE FULL FREE-LIFT

GP/GLP/GDP080-090VX

ITEM	DESCRIPTION 1 2 3 4	LIFT HEIGHT TO BOTTOM OF FORKS			
		4365 mm (171.9 in.)	4665 mm (183.7 in.)	4900 mm (192.9 in.)	5200 mm (204.7 in.)
	Mast Group Number	B751 4365	B751 4665	B751 4900	B751 5200
	Mast Assy	580053539	580053541	580053542	580053544
1	Intermediate Mast	580053836	580053838	580053839	580053841

GP/GLP/GDP080-090VX

ITEM	DESCRIPTION 1 2 3 4	LIFT HEIGHT TO BOTTOM OF FORKS	
		5500 mm (216.5 in.)	5950 mm (234.3 in.)
	Mast Group Number	B751 5500	B751 5950
	Mast Assy	580053546	580053549
1	Intermediate Mast	580053843	580053846

GP/GLP/GDP100-120VX

ITEM	DESCRIPTION 1 2 3 4	LIFT HEIGHT TO BOTTOM OF FORKS				
		4087 mm (160.9 in.)	4387 mm (172.7 in.)	4640 mm (182.7 in.)	4940 mm (194.5 in.)	5240 mm (206.3 in.)
	Mast Group Number	B752 4087	B752 4387	B752 4640	B752 4940	B752 5240
	Mast Assy	580053590	580053592	580053593	580053595	580053597
1	Intermediate Mast	580053836	580053838	580053839	580053841	580053843

ITEM	PART NO.	DESCRIPTION	QTY
	b	Mast Assy	1
1	**b**	Intermediate Mast	1
2	580026922	Stubshaft	4
3	580010279	Load Roller (124.31 mm)	2
4	580031673	Load Roller (101.67 mm)	2
5	520045153	Shim (0.020 in.)	24
6	580012093	Snap Ring	4
7	504234265	Shim (0.020 in.)	AR
8	520037804	Shim (0.007 in.)	AR
9	504233279	Wear Strip	2
10	012824300	O-Ring	4
11	580009884	Spacer	2
12	580007844	Chain Sheave (GP/GLP/GDP080-090VX)	2
12	580007973	Chain Sheave	1
12	504234285	Snap Ring	2
12	504235204	Load Roller	1
12	580007845	Chain Sheave (GP/GLP/GDP100-120VX)	2

©2008 Yale Materials Handling Corporation

INTERMEDIATE MAST
THREE STAGE FULL FREE-LIFT

ITEM	PART NO.	DESCRIPTION	QTY
12	580007849	Chain Sheave	1
12	504234285	Snap Ring	2
12	504235204	Load Roller	1
13	015916500	Snap Ring	2
14	580007855	Bracket	1
15	580055649	Lockwasher	1
16	580055634	Washer	1
17	580055743	Capscrew	1
18	580013492	Stubshaft	2
	a 580012981	Insert	4

FOOTNOTES:

a Not Illustrated

b Refer to Table

©2008 Yale Materials Handling Corporation

NOTES

©2008 Yale Materials Handling Corporation

INNER MAST (FIGURE 13-3)
THREE STAGE FULL FREE-LIFT

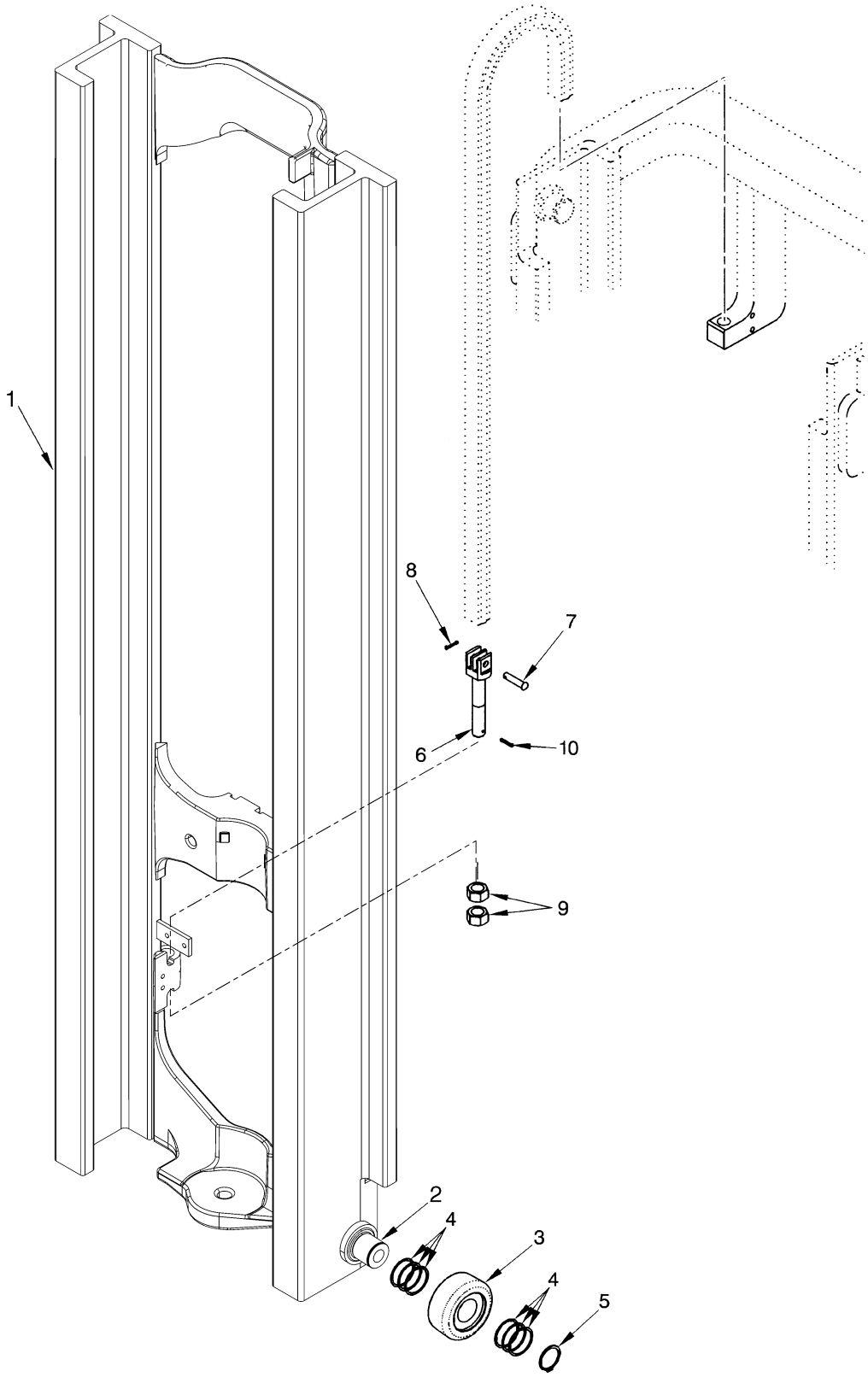

©2008 Yale Materials Handling Corporation

INNER MAST
THREE STAGE FULL FREE-LIFT

GP/GLP/GDP080-090VX

ITEM	DESCRIPTION 1 2 3 4	LIFT HEIGHT TO BOTTOM OF FORKS			
		4365 mm (171.9 in.)	4665 mm (183.7 in.)	4900 mm (192.9 in.)	5200 mm (204.7 in.)
	Mast Group Number	B751 4365	B751 4665	B751 4900	B751 5200
	Mast Assy	580053539	580053541	580053542	580053544
1	Inner Mast	580053587	580053563	580053564	580053566

GP/GLP/GDP080-090VX

ITEM	DESCRIPTION 1 2 3 4	LIFT HEIGHT TO BOTTOM OF FORKS	
		5500 mm (216.5 in.)	5950 mm (234.3 in.)
	Mast Group Number	B751 5500	B751 5950
	Mast Assy	580053546	580053549
1	Inner Mast	580053568	580053571

GP/GLP/GDP100-120VX

ITEM	DESCRIPTION 1 2 3 4	LIFT HEIGHT TO BOTTOM OF FORKS				
		4087 mm (160.9 in.)	4387 mm (172.7 in.)	4640 mm (182.7 in.)	4940 mm (194.5 in.)	5240 mm (206.3 in.)
	Mast Group Number	B752 4087	B752 4387	B752 4640	B752 4940	B752 5240
	Mast Assy	580053590	580053592	580053593	580053595	580053597
1	Inner Mast	580053587	580053563	580053564	580053566	580053568

ITEM	PART NO.	DESCRIPTION	QTY
	a	Mast Assy	1
1	**a**	Inner Mast	1
2	580026922	Stubshaft	2
3	580031673	Load Roller (101.67 mm)	2
4	520045153	Shim (0.020 in.)	AR
5	580012093	Snap Ring	2
6	580009922	Chain Anchor	2
7	520045183	Pin (GP/GLP/GDP080-090VX)	2
7	520045195	Pin (GP/GLP/GDP100-120VX)	2
8	015417900	Cotter Pin	2
9	580056088	Nut	4
10	015418300	Cotter Pin	2

FOOTNOTES:
a Refer to Table

©2008 Yale Materials Handling Corporation

MAIN LIFT (FIGURE 13-4)
THREE STAGE FULL FREE-LIFT

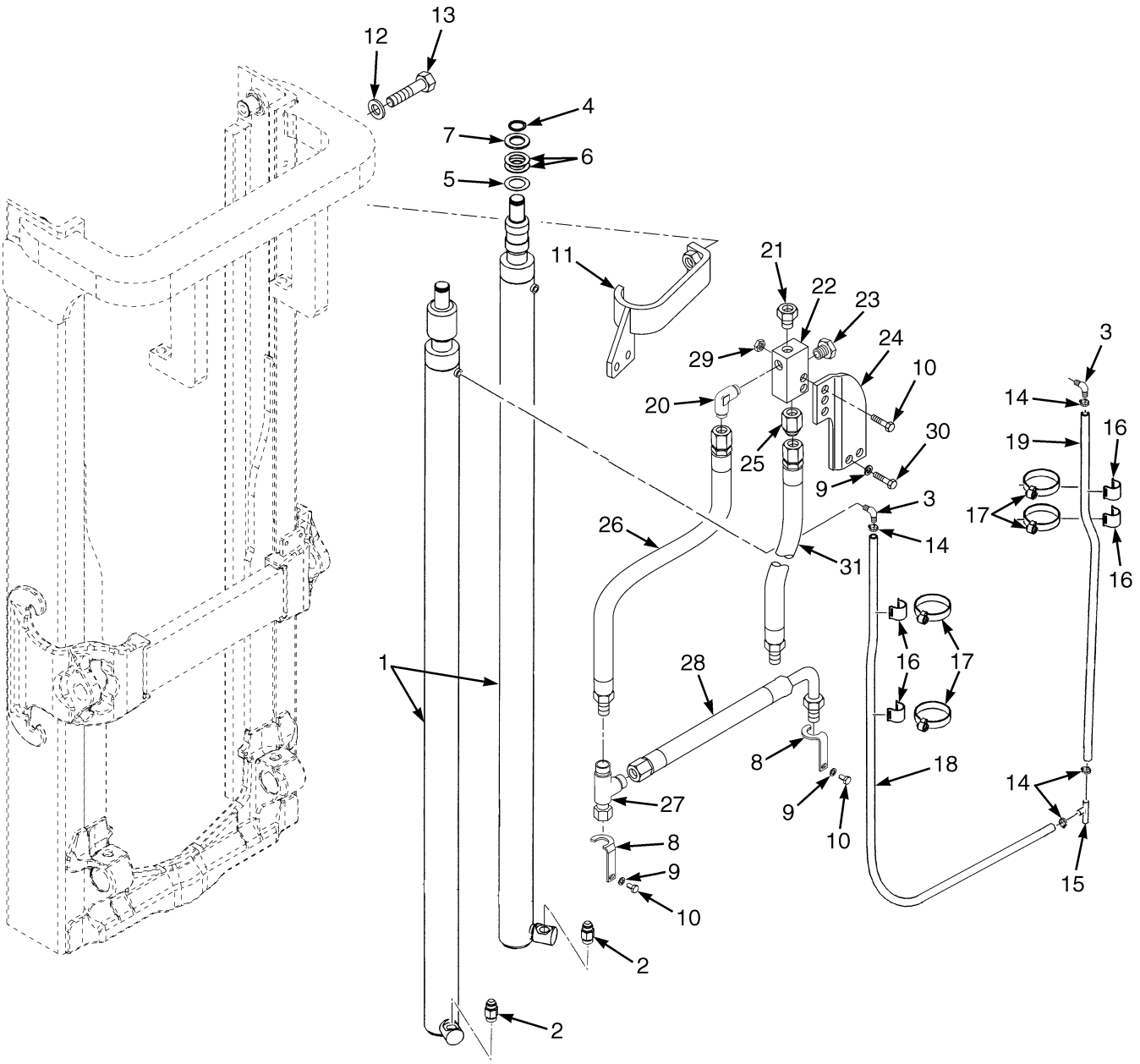

©2008 Yale Materials Handling Corporation

MAIN LIFT
THREE STAGE FULL FREE-LIFT

GP/GLP/GDP080-090VX

ITEM	DESCRIPTION 1 2 3 4	LIFT HEIGHT TO BOTTOM OF FORKS			
		4365 mm (171.9 in.)	4665 mm (183.7 in.)	4900 mm (192.9 in.)	5200 mm (204.7 in.)
	Mast Group Number	B751 4365	B751 4665	B751 4900	B751 5200
18	Hose Assy	580008282	580008236	580013486	580008239
19	Hose Assy	580011616	580009450	580009452	580008252

GP/GLP/GDP080-090VX

ITEM	DESCRIPTION 1 2 3 4	LIFT HEIGHT TO BOTTOM OF FORKS	
		5500 mm (216.5 in.)	5950 mm (234.3 in.)
	Mast Group Number	B751 5500	B751 5950
18	Hose Assy	580008240	580008288
19	Hose Assy	580011466	580008236

GP/GLP/GDP100-120VX

ITEM	DESCRIPTION 1 2 3 4	LIFT HEIGHT TO BOTTOM OF FORKS				
		4087 mm (160.9 in.)	4387 mm (172.7 in.)	4640 mm (182.7 in.)	4940 mm (194.5 in.)	5240 mm (206.3 in.)
	Mast Group Number	B752 4087	B752 4387	B752 4640	B752 4940	B752 5240
18	Hose Assy	580044147	580008256	580011477	580008285	580008287
19	Hose Assy	580008279	580011491	580049228	580008281	580011468

ITEM	PART NO.	DESCRIPTION	QTY
1	. . . . .	Main Cylinder (☞P19838 [Page 13-16])	2
2	**b** 524147531	Hyd Velocity Fuse (12 x 16)	1
2	**b** 502978555	Hyd Velocity Fuse (10 x 10)	2
2	**a** 524147532	Hyd Velocity Fuse (12 x 16)	1
2	**a** 502978556	Hyd Velocity Fuse (10 x 10)	2
3	030252011	Fitting	2
3	052645200	O-Ring	1
4	500227908	Snap Ring	2
5	518795660	Shim	AR
6	504232202	Shim	AR
7	520045188	Washer	2
8	580075259	Bracket (LH)	1
8	580075260	Bracket (RH)	1
9	580055633	Washer	4
10	580055736	Capscrew	2
11	580026923	Bracket (RH)	1
11	580026924	Bracket (LH)	1

©2008 Yale Materials Handling Corporation

MAIN LIFT
THREE STAGE FULL FREE-LIFT

ITEM	PART NO.	DESCRIPTION	QTY
12	580055633	Washer	4
13	580055741	Capscrew	4
14	580007557	Clamp	4
15	514835800	Fitting	1
16	580012383	Hose Clamp	4
17	504068737	Strap Clamp	4
18	**c**	Hose Assy	1
19	**c**	Hose Assy	1
20	580057932	Fitting	1
20	052645300	O-Ring	1
20	580019387	O-Ring	1
21	580020431	Fitting	1
21	580061267	O-Ring	1
21	052645500	O-Ring	1
22	580007839	Housing	1
23	054820000	Plug	1
23	052645300	O-Ring	1
24	580026222	Bracket	1
25	524147484	Lowering Control Valve (GP/GLP/GDP080-090VX)	1
25	524147485	Lowering Control Valve (GP/GLP/GDP100-120VX)	1
26	580071057	Hose Assy	1
27	580019896	Fitting	1
28	524147540	Hose Assy	1
29	580055651	Nut	2
30	580055633	Washer	2
31	580060697	Hose Assy	1

FOOTNOTES:

a GP/GLP100-120VX

b GP/GLP80-90VX

c Refer to Table

©2008 Yale Materials Handling Corporation

NOTES

©2008 Yale Materials Handling Corporation

MAIN LIFT CYLINDER (FIGURE 13-5)
THREE STAGE FULL FREE-LIFT

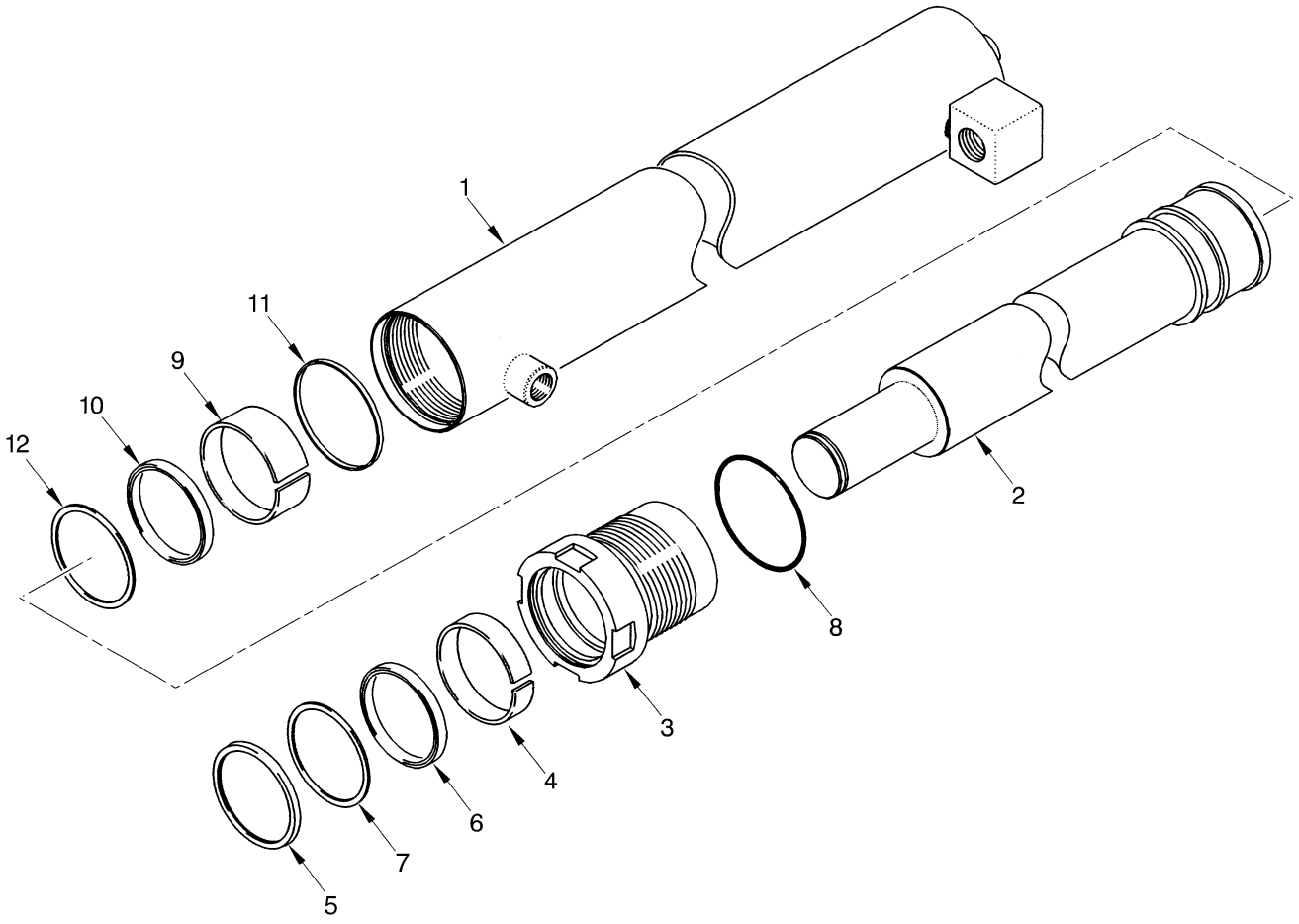

BP170222

©2008 Yale Materials Handling Corporation

MAIN LIFT CYLINDER
THREE STAGE FULL FREE-LIFT

GP/GLP/GDP080-090VX

ITEM	DESCRIPTION 1 2 3 4	LIFT HEIGHT TO BOTTOM OF FORKS			
		4365 mm (171.9 in.)	4665 mm (183.7 in.)	4900 mm (192.9 in.)	5200 mm (204.7 in.)
	Mast Group Number	**B751 4365**	**B751 4665**	**B751 4900**	**B751 5200**
	Cylinder Group Number	**8509701**	**8509703**	**8509704**	**8509706**
	Cylinder Assy	580055952	580055954	580055957	580055956
1	Tube Wldmt-Cylinder	520427601	520427603	520427604	520427606
2	Cylinder Rod	520510601	520510603	520510604	520510606

GP/GLP/GDP080-090VX

ITEM	DESCRIPTION 1 2 3 4	LIFT HEIGHT TO BOTTOM OF FORKS	
		5500 mm (216.5 in.)	5950 mm (234.3 in.)
	Mast Group Number	**B751 5500**	**B751 5950**
	Cylinder Group Number	**8509708**	**8509711**
	Cylinder Assy	580055959	580055993
1	Tube Wldmt-Cylinder	520427608	520427611
2	Cylinder Rod	520510608	520510611

GP/GLP/GDP100-120VX

ITEM	DESCRIPTION 1 2 3 4	LIFT HEIGHT TO BOTTOM OF FORKS				
		4087 mm (160.9 in.)	4387 mm (172.7 in.)	4640 mm (182.7 in.)	4940 mm (194.5 in.)	5240 mm (206.3 in.)
	Mast Group Number	**B752 4087**	**B752 4387**	**B752 4640**	**B752 4940**	**B752 5240**
	Cylinder Group Number	**8509801**	**8509803**	**8509804**	**8509806**	**8509808**
	Cylinder Assy	580056027	580056029	580056030	580056032	580056034
1	Tube Wldmt-Cylinder	520428601	520428603	520428604	520428606	520428608
2	Cylinder Rod	520512601	520512603	520512604	520512606	520512608

©2008 Yale Materials Handling Corporation

MAIN LIFT CYLINDER
THREE STAGE FULL FREE-LIFT

KEY:
A: GP/GLP/GDP080-090VX
B: GP/GLP/GDP100-120VX

ITEM	PART NO.	DESCRIPTION	QTY A	QTY B
	d	Cylinder Assy	2	2
1	**d**	Tube Wldmt-Cylinder	1	1
2	**d**	Cylinder Rod	1	1
3	580006894	Gland	1	..
3	580006896	Gland	..	1
4	520045162	Wear Ring	1	..
4	520045160	Wear Ring	..	1
5	580022511	Rod Wiper	1	..
5	580022513	Rod Wiper	..	1
6	504232205	Rod Seal	..	1
6	504232292	Rod Seal	1	..
7	504232217	Back-Up Ring	2	..
7	504232277	Back-Up Ring	..	1
8	012823300	O-Ring	1	..
8	066417000	O-Ring	..	1
9	504232291	Wear Ring	1	..
9	520045215	Wear Ring	..	1
10	580008814	Rod Seal	1	..
10	580008813	Rod Seal	..	1
11	502895204	Piston Ring	1	..
11	502895206	Piston Ring	..	1
12	520045216	Back-Up Ring	..	1
	ac 504362254	Spacer	1	..
	bc 506080540	Spacer	..	1
14	505136065	Kit-Seal	1	..
14	505136066	Kit-Seal	..	1

FOOTNOTES:
a Lift Heights of 4640mm and Higher
b Lift Heights of 4900mm and Higher
c Not Illustrated
d Refer to Table

©2008 Yale Materials Handling Corporation

NOTES

©2008 Yale Materials Handling Corporation

FREE-LIFT (FIGURE 13-6)
THREE STAGE FULL FREE-LIFT

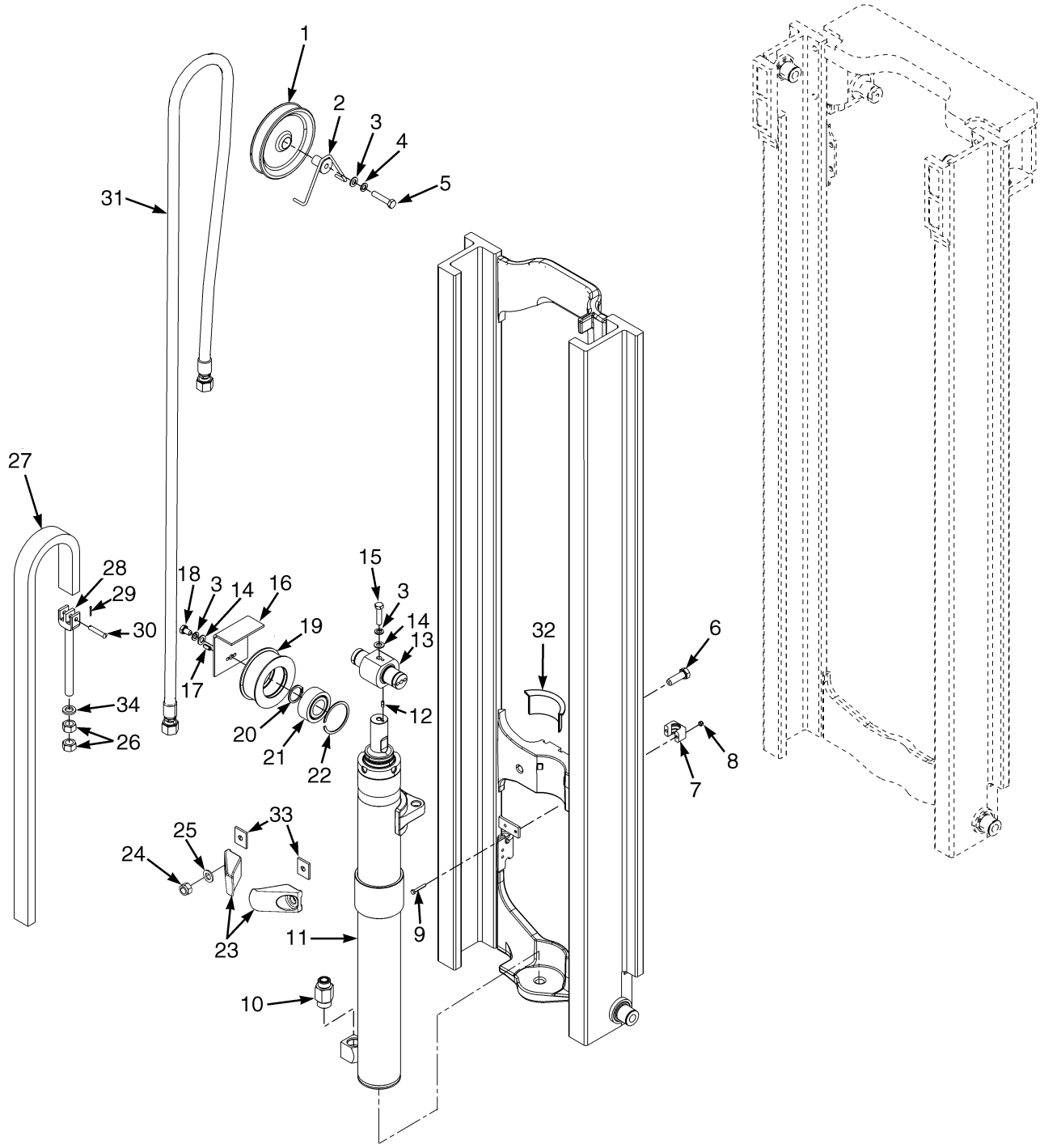

©2008 Yale Materials Handling Corporation

FREE-LIFT
THREE STAGE FULL FREE-LIFT

GP/GLP/GDP080-090VX

ITEM	DESCRIPTION 1 2 3 4	LIFT HEIGHT TO BOTTOM OF FORKS			
		4365 mm (171.9 in.)	4665 mm (183.7 in.)	4900 mm (192.9 in.)	5200 mm (204.7 in.)
	Mast Group Number	B751 4365	B751 4665	B751 4900	B751 5200
27	Chain	580014179	580032776	580014166	520045193
31	Hose Assy	580053862	580053864	580053865	580053867

GP/GLP/GDP080-090VX

ITEM	DESCRIPTION 1 2 3 4	LIFT HEIGHT TO BOTTOM OF FORKS	
		5500 mm (216.5 in.)	5950 mm (234.3 in.)
	Mast Group Number	B751 5500	B751 5950
27	Chain	580014168	520050842
31	Hose Assy	580053870	580053874

GP/GLP/GDP100-120VX

ITEM	DESCRIPTION 1 2 3 4	LIFT HEIGHT TO BOTTOM OF FORKS				
		4087 mm (160.9 in.)	4387 mm (172.7 in.)	4640 mm (182.7 in.)	4940 mm (194.5 in.)	5240 mm (206.3 in.)
	Mast Group Number	B752 4087	B752 4387	B752 4640	B752 4940	B752 5240
27	Chain	580032775	580014167	580033292	580014179	580032776
31	Hose Assy	580053862	580053864	580053865	580053867	580053870

ITEM	PART NO.	DESCRIPTION	QTY
1	580009886	Hose Sheave	1
2	580009887	Stubshaft	1
3	580055649	Lockwasher	4
4	580055634	Washer	4
5	580055745	Capscrew	1
6	580074253	Capscrew	2
7	580009888	Hose Clamp	1
8	580055650	Nut	2
9	580055731	Capscrew	2
10	524147531	Hyd Velocity Fuse (GP/GLP/GDP080-090VX)	1
10	524147532	Hyd Velocity Fuse (GP/GLP/GDP100-120VX)	1
11	. . . . .	Free-Lift Cylinder (☞P19840 [Page 13-24])	1
12	518804610	Pin	1
13	524147349	Crosshead	1
14	580055649	Lockwasher	4
15	524148255	Capscrew	1
16	580009890	Guard	2

©2008 Yale Materials Handling Corporation

FREE-LIFT
THREE STAGE FULL FREE-LIFT

ITEM	PART NO.	DESCRIPTION	QTY
17	954512901	Roll Pin	4
18	580055742	Capscrew	2
19	580007843	Chain Sheave	2
19	580007848	Chain Sheave	1
20	500227914	Snap Ring	2
21	504235204	Load Roller	1
22	504234285	Snap Ring	2
23	**b** 580072022	Bracket	2
23	**a** 580072021	Bracket	2
24	504234266	Nut	2
25	504064758	Ring	2
26	580056088	Nut	4
27	**c**	Chain	2
28	**a** 520045361	Chain Anchor	2
28	**b** 520045362	Chain Anchor	2
29	015417900	Cotter Pin	2
30	520045195	Pin	2
31	**c**	Hose Assy	1
32	580069460	Collar	1
33	580074149	Shim	AR
34	580071052	Washer	2

FOOTNOTES:

a GP/GLP/GDP080-090VX

b GP/GLP/GDP100-120VX

c Refer to Table

©2008 Yale Materials Handling Corporation

NOTES

©2008 Yale Materials Handling Corporation

FREE-LIFT CYLINDER (FIGURE 13-7)
THREE STAGE FULL FREE-LIFT

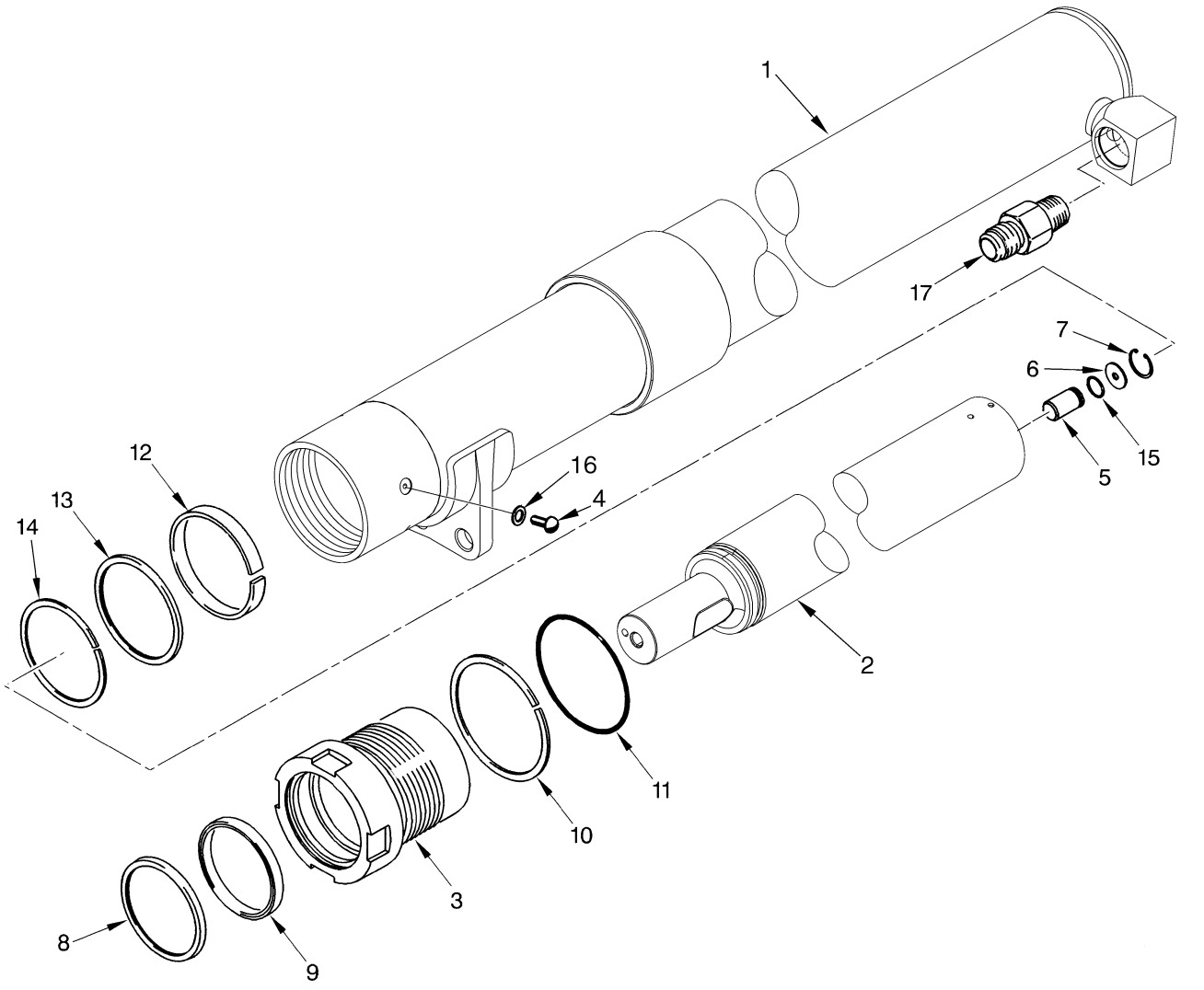

©2008 Yale Materials Handling Corporation

FREE-LIFT CYLINDER
THREE STAGE FULL FREE-LIFT

GP/GLP/GDP080-090VX

ITEM	DESCRIPTION 1 2 3 4	LIFT HEIGHT TO BOTTOM OF FORKS			
		4365 mm (171.9 in.)	4665 mm (183.7 in.)	4900 mm (192.9 in.)	5200 mm (204.7 in.)
	Mast Group Number	**B751 4365**	**B751 4665**	**B751 4900**	**B751 5200**
	Cylinder Group Number	**8501701**	**8544051**	**8501703**	**8544053**
	Cylinder Assy	580055452	580055454	580055456	580055458
1	Tube Wldmt-Cylinder	520650601	520650603	520650605	520650607
2	Cylinder Rod	520576601	520576603	520576604	520576606

GP/GLP/GDP080-090VX

ITEM	DESCRIPTION 1 2 3 4	LIFT HEIGHT TO BOTTOM OF FORKS	
		5500 mm (216.5 in.)	5950 mm (234.3 in.)
	Mast Group Number	**B751 5500**	**B751 5950**
	Cylinder Group Number	**8501705**	**8544055**
	Cylinder Assy	580055460	580089296
1	Tube Wldmt-Cylinder	520650609	520650613
2	Cylinder Rod	520576608	520576611

GP/GLP/GDP100-120VX

ITEM	DESCRIPTION 1 2 3 4	LIFT HEIGHT TO BOTTOM OF FORKS				
		4087 mm (160.9 in.)	4387 mm (172.7 in.)	4640 mm (182.7 in.)	4940 mm (194.5 in.)	5240 mm (206.3 in.)
	Mast Group Number	**B752 4087**	**B752 4387**	**B752 4640**	**B752 4940**	**B752 5240**
	Cylinder Group Number	**8518451**	**8527801**	**8518453**	**8527803**	**8518455**
	Cylinder Assy	580089251	580089253	580089255	580089257	580089259
1	Tube Wldmt-Cylinder	520651601	520651603	520651605	520651607	520651609
2	Cylinder Rod	520580651	520580653	520580654	520580656	520580658

©2008 Yale Materials Handling Corporation

FREE-LIFT CYLINDER
THREE STAGE FULL FREE-LIFT

KEY:
A: GP/GLP/GDP080-090VX
B: GP/GLP/GDP100-120VX

ITEM	PART NO.	DESCRIPTION	QTY A	QTY B
	a	Cylinder Assy	1	1
1	**a**	Tube Wldmt-Cylinder	1	1
2	**a**	Cylinder Rod	1	1
3	520585600	Gland	1	..
3	580046965	Gland	..	1
4	501753904	Screw	1	1
5	504235239	Check Valve	1	1
6	504148200	Washer	1	1
7	501850904	Snap Ring	1	1
8	580054715	Rod Wiper	1	1
9	520045326	Rod Seal	1	1
10	502011923	Back-Up Ring	1	..
10	502011915	Back-Up Ring	..	1
11	066415900	O-Ring	..	1
11	015492400	O-Ring	1	..
12	520045324	Wear Ring	1	..
12	580041728	Wear Ring	..	1
13	520045327	Rod Seal	1	..
13	580046967	Rod Seal	..	1
14	520045331	Back-Up Ring	1	..
14	580041729	Back-Up Ring	..	1
15	580011167	O-Ring	..	1
15	504232230	O-Ring	1	..
16	502687901	Sealing Ring	1	1
17	524147531	Hyd Velocity Fuse	1	..
17	524147532	Hyd Velocity Fuse	..	1
18	505136072	Kit-Seal	1	..
18	524169325	Kit-Seal	..	1

FOOTNOTES:
a Refer to Table

©2008 Yale Materials Handling Corporation

NOTES

©2008 Yale Materials Handling Corporation

CARRIAGE (FIGURE 13-8)
THREE STAGE FULL FREE-LIFT

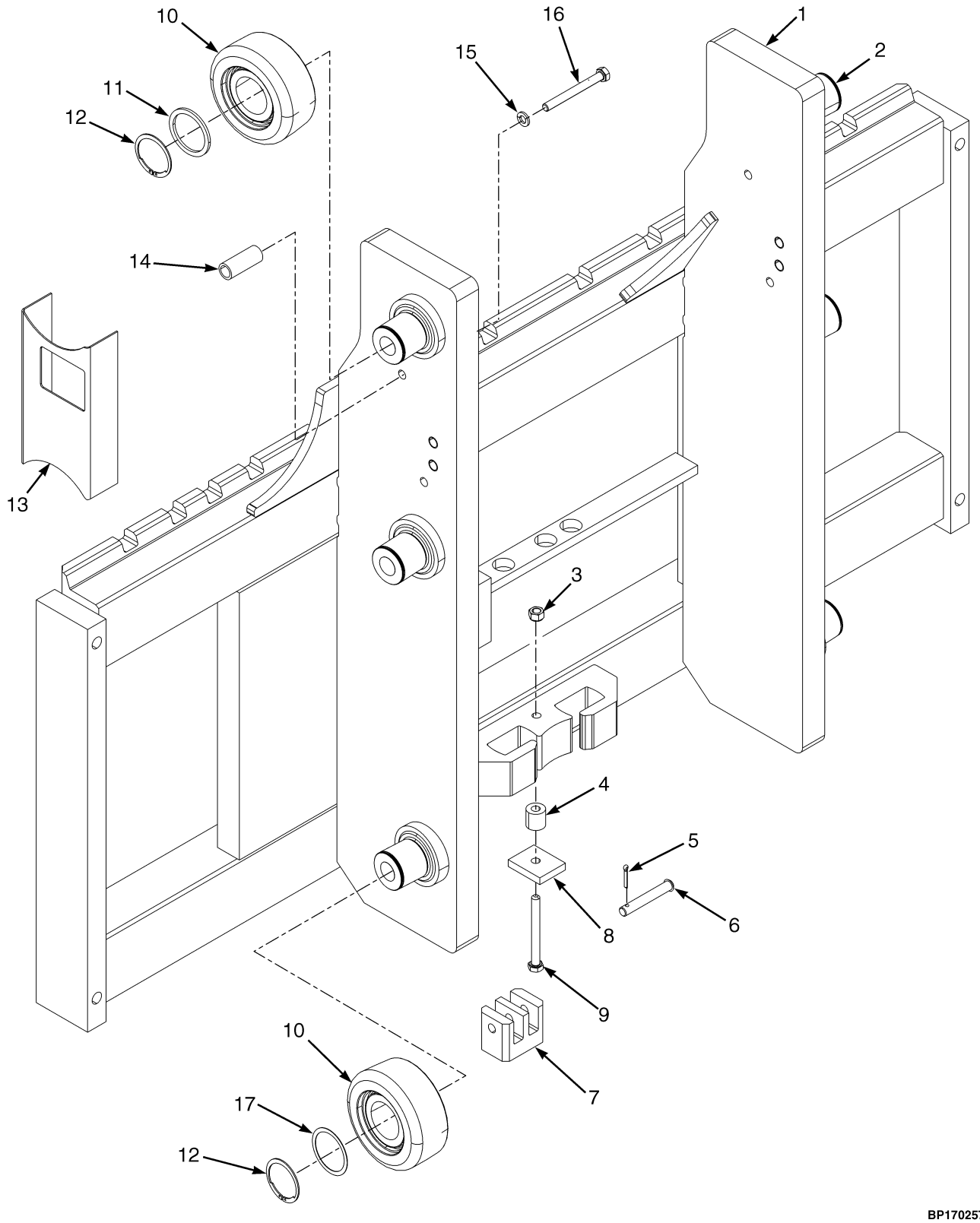

©2008 Yale Materials Handling Corporation

CARRIAGE
THREE STAGE FULL FREE-LIFT

KEY:
A: GP/GLP/GDP080-090VX
B: GP/GLP/GDP100-120VX

ITEM	PART NO.	DESCRIPTION	QTY A	QTY B
	580007023	Carriage (48 in.)	1	..
	580007025	Carriage (60 in.)	1	..
	580007026	Carriage (48 in.)	..	1
	580007027	Carriage (54 in.)	..	1
	580012000	Carriage (54 in.) (Optional)	..	1
	580007028	Carriage (60 in.)	..	1
1	580007011	Carriage Wldmt (48 in.)	1	..
1	580007013	Carriage Wldmt (60 in.)	1	..
1	580007020	Carriage Wldmt (48 in.)	..	1
1	580007021	Carriage Wldmt (54 in.)	..	1
1	580012221	Carriage Wldmt (54 in.) (Optional)	..	1
1	580007022	Carriage Wldmt (60 in.)	..	1
2	580026922	Stubshaft	6	6
3	504230271	Nut	1	1
4	580014174	Spacer	1	1
5	015417900	Cotter Pin	2	2
6	580007125	Pin	2	2
7	580070496	Chain Anchor	2	2
8	580014169	Plate	1	1
9	449001038	Capscrew	1	1
10	580031673	Load Roller (101.67 mm)	6	6
11	580011609	Spacer	2	2
12	580012093	Snap Ring	6	6
13	520045178	Bracket Wldmt (LH)	1	1
13	520045177	Bracket Wldmt (RH)	1	1
14	520045171	Spacer	4	4
15	015026200	Lockwasher	4	4
16	062144100	Capscrew	4	4
17	520045153	Shim (0.020 in.)	24	24

©2008 Yale Materials Handling Corporation

NOTES

©2008 Yale Materials Handling Corporation

14 MAST-TWO STAGE FULL FREE-LIFT

SECTION 14
MAST-TWO STAGE FULL FREE-LIFT

DESCRIPTION	PAGE
CARRIAGE	
TWO STAGE FULL FREE-LIFT	14-18
FREE-LIFT CYLINDER	
TWO STAGE FULL FREE-LIFT	14-14
INNER MAST AND FREE-LIFT	
TWO STAGE FULL FREE-LIFT	14-6
MAIN LIFT CYLINDER	
TWO STAGE FULL FREE-LIFT	14-10
OUTER MAST AND MAIN LIFT	
TWO STAGE FULL FREE-LIFT	14-2

©2008 Yale Materials Handling Corporation

OUTER MAST AND MAIN LIFT (FIGURE 14-1)

TWO STAGE FULL FREE-LIFT

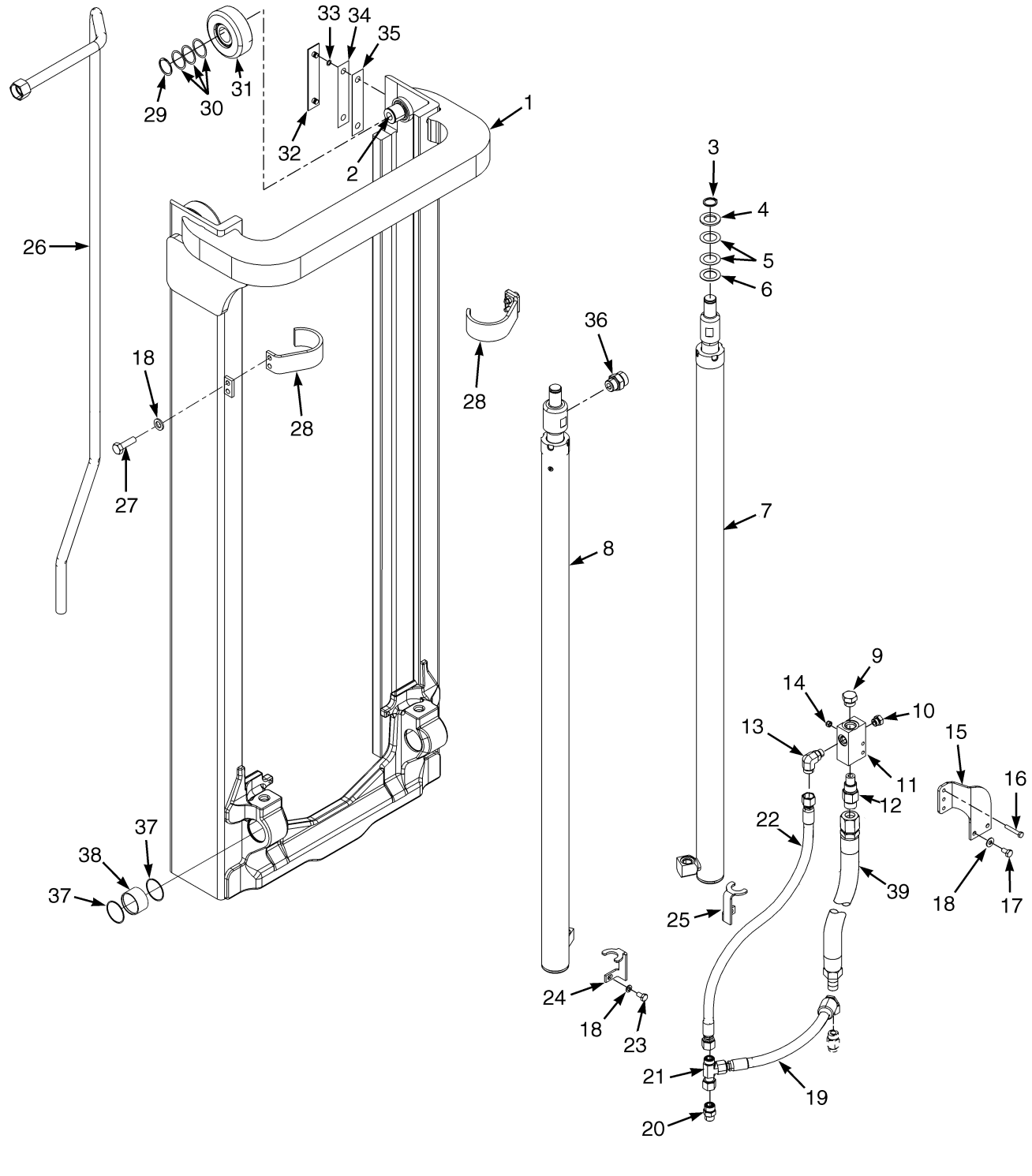

©2008 Yale Materials Handling Corporation

OUTER MAST AND MAIN LIFT
TWO STAGE FULL FREE-LIFT

GP/GLP/GDP080-090VX

ITEM	DESCRIPTION 1 2 3 4	LIFT HEIGHT TO BOTTOM OF FORKS	
		3025 mm (119.1 in.)	3625 mm (142.7 in.)
	Mast Group Number	B753 3025	B753 3625
	Mast Assy	580053627	580053633
1	Outer Mast	580053658	580053664
26	Tube Assy	580053926	580053932

GP/GLP/GDP100-120VX

ITEM	DESCRIPTION 1 2 3 4	LIFT HEIGHT TO BOTTOM OF FORKS	
		2765 mm (108.9 in.)	3365 mm (132.5 in.)
	Mast Group Number	B754 2765	B754 3365
	Mast Assy	580053727	580053733
1	Outer Mast	580053658	580053664
26	Tube Assy	580053926	580053932

KEY:
A: GP/GLP/GDP080-090VX
B: GP/GLP/GDP100-120VX

ITEM	PART NO.	DESCRIPTION	QTY A	QTY B
	b	Mast Assy	1	1
1	**b**	Outer Mast	1	1
2	580026922	Stubshaft	2	2
3	500227908	Snap Ring	2	2
4	520045188	Washer	2	2
5	518795660	Shim	AR	AR
6	504232202	Shim	AR	AR
7	. . . . .	Main Cylinder (RH) (☞P19830 [Page 14-10])	1	1
8	. . . . .	Main Cylinder (LH) (☞P19830 [Page 14-10])	1	1
9	080437000	Plug	1	1
9	052645500	O-Ring	1	1
10	054820000	Plug	1	1
11	580007839	Housing (Control Valve)	1	1
11	052645300	O-Ring	1	1
12	524147484	Lowering Control Valve	1	..
12	052645600	O-Ring	1	..
12	524147485	Lowering Control Valve	..	1
12	052645600	O-Ring	..	1
13	580057932	Fitting	1	1
13	580019387	O-Ring	1	1

©2008 Yale Materials Handling Corporation

OUTER MAST AND MAIN LIFT
TWO STAGE FULL FREE-LIFT

KEY:
A: GP/GLP/GDP080-090VX
B: GP/GLP/GDP100-120VX

ITEM	PART NO.	DESCRIPTION	QTY A	QTY B
13	052645300	O-Ring	1	1
14	580055651	Nut	4	4
15	580026475	Bracket	2	2
16	580055736	Capscrew	2	2
17	580055738	Capscrew	2	2
18	580055633	Washer	6	6
19	524147540	Hose Assy	1	1
20	580019817	Fitting	1	1
20	052645400	O-Ring	1	1
20	580019387	O-Ring	1	1
21	580019896	Fitting	1	1
21	580019387	O-Ring	2	2
22	580071057	Hose Assy	1	1
23	580055739	Capscrew	2	2
24	504407299	Bracket Wldmt	2	2
24	**a** 504407298	Bracket	2	2
25	524198147	Bracket	2	2
26	**b**	Tube Assy	1	1
27	580055741	Capscrew	4	4
28	**a** 524198145	Bracket (LH)	1	1
28	524198147	Bracket (RH)	1	1
29	580012093	Snap Ring	2	2
30	520045153	Shim (0.020 in.)	12	12
31	580010279	Load Roller (124.31 mm)	2	2
32	520045151	Wear Strip	2	2
33	012824300	O-Ring	4	4
34	520045156	Shim (0.007 in.)	AR	AR
35	520045157	Shim (0.020 in.)	AR	AR
36	580008630	Fitting	1	1
37	580012350	Snap Ring	4	4
38	580019523	Bushing	2	2
39	580060697	Hose Assy	1	1

FOOTNOTES:
a Optional
b Refer to Table

©2008 Yale Materials Handling Corporation

NOTES

©2008 Yale Materials Handling Corporation

INNER MAST AND FREE-LIFT (FIGURE 14-2)

TWO STAGE FULL FREE-LIFT

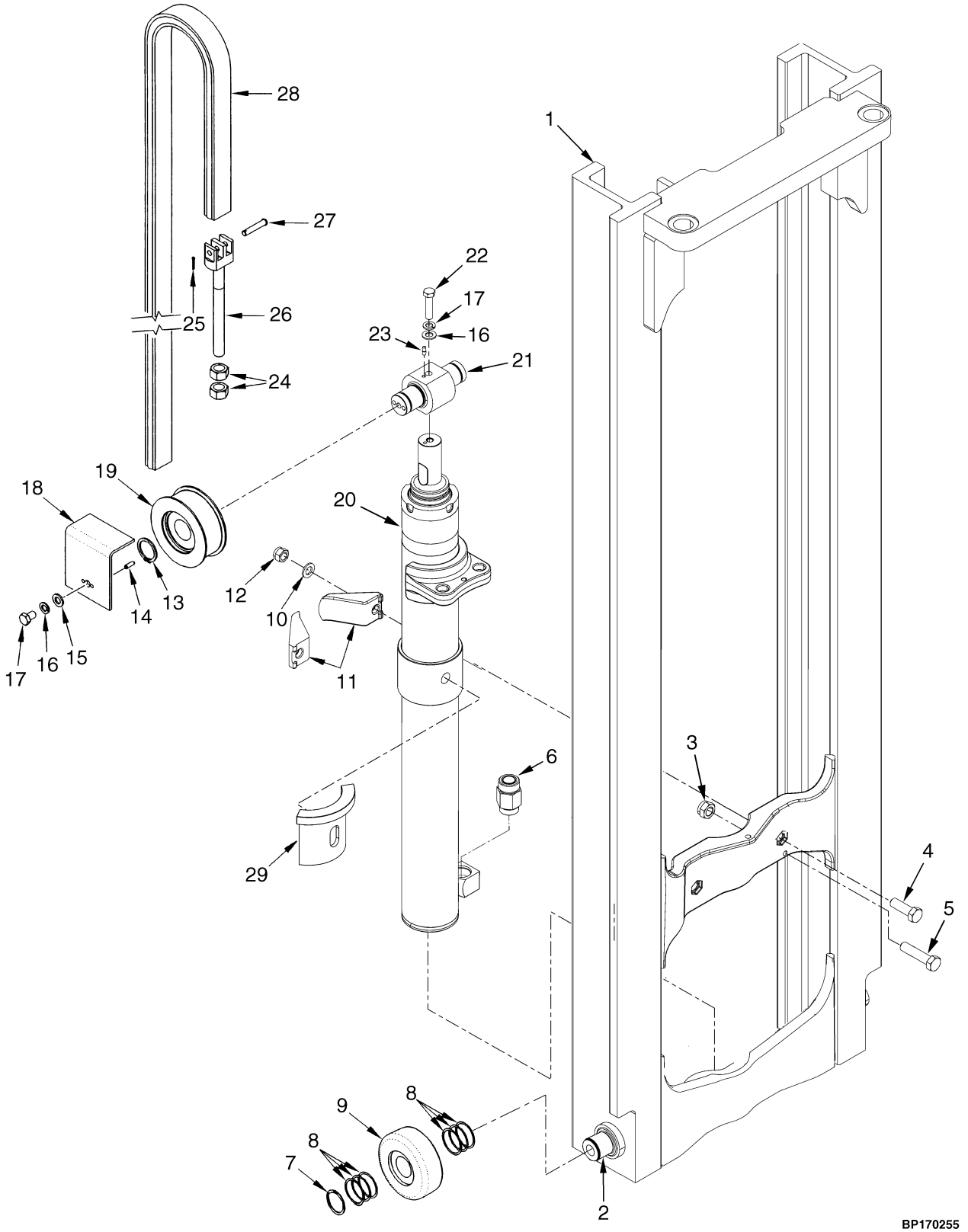

©2008 Yale Materials Handling Corporation

INNER MAST AND FREE-LIFT
TWO STAGE FULL FREE-LIFT

GP/GLP/GDP080-090VX

ITEM	DESCRIPTION 1 2 3 4	LIFT HEIGHT TO BOTTOM OF FORKS	
		3025 mm (119.1 in.)	3625 mm (142.7 in.)
	Mast Group Number	B753 3025	B753 3625
	Mast Assy	580053627	580053633
1	Inner Mast	580053688	580053694
28	Chain	580014179	520045193

GP/GLP/GDP100-120VX

ITEM	DESCRIPTION 1 2 3 4	LIFT HEIGHT TO BOTTOM OF FORKS	
		2765 mm (108.9 in.)	3365 mm (132.5 in.)
	Mast Group Number	B754 2765	B754 3365
	Mast Assy	580053727	580053733
1	Inner Mast	580053688	580053694
28	Chain	580032775	580014179

ITEM	PART NO.	DESCRIPTION	QTY
	a	Mast Assy	1
1	**a**	Inner Mast	1
2	580026922	Stubshaft	4
3	580055651	Nut	3
4	580074253	Capscrew	2
5	580055735	Capscrew	1
6	524147494	Hyd Velocity Fuse (GP/GLP/GDP080-090VX)	1
6	524147495	Hyd Velocity Fuse (GP/GLP/GDP100-120VX)	1
7	580012093	Snap Ring	4
8	520045153	Shim (0.020 in.)	24
9	580010279	Load Roller (124.31 mm)	4
10	504064758	Ring	2
11	580072021	Bracket (GP/GLP/GDP080-090VX)	2
11	580072022	Bracket (GP/GLP/GDP100-120VX)	2
12	504234266	Nut	2
13	500227914	Snap Ring	2
14	954512901	Roll Pin	2
15	580055634	Washer	2
16	580055649	Lockwasher	2
17	580055742	Capscrew	2
18	580009890	Guard	2
19	580007843	Chain Sheave	2
19	580007848	Chain Sheave	1
19	504234285	Snap Ring	2
19	504235204	Load Roller	1

©2008 Yale Materials Handling Corporation

INNER MAST AND FREE-LIFT
TWO STAGE FULL FREE-LIFT

ITEM	PART NO.	DESCRIPTION	QTY
20	. . . . .	Free-Lift Cylinder (☞P19831 [Page 14-14])	1
21	524147349	Crosshead	1
22	524148255	Capscrew	1
23	518804610	Pin	1
24	580056088	Nut	4
25	015417900	Cotter Pin	2
26	520045362	Chain Anchor	2
27	520045195	Pin	2
28	**a**	Chain	2
29	580069460	Collar	1

FOOTNOTES:
a Refer to Table

©2008 Yale Materials Handling Corporation

NOTES

©2008 Yale Materials Handling Corporation

MAIN LIFT CYLINDER (FIGURE 14-3)
TWO STAGE FULL FREE-LIFT

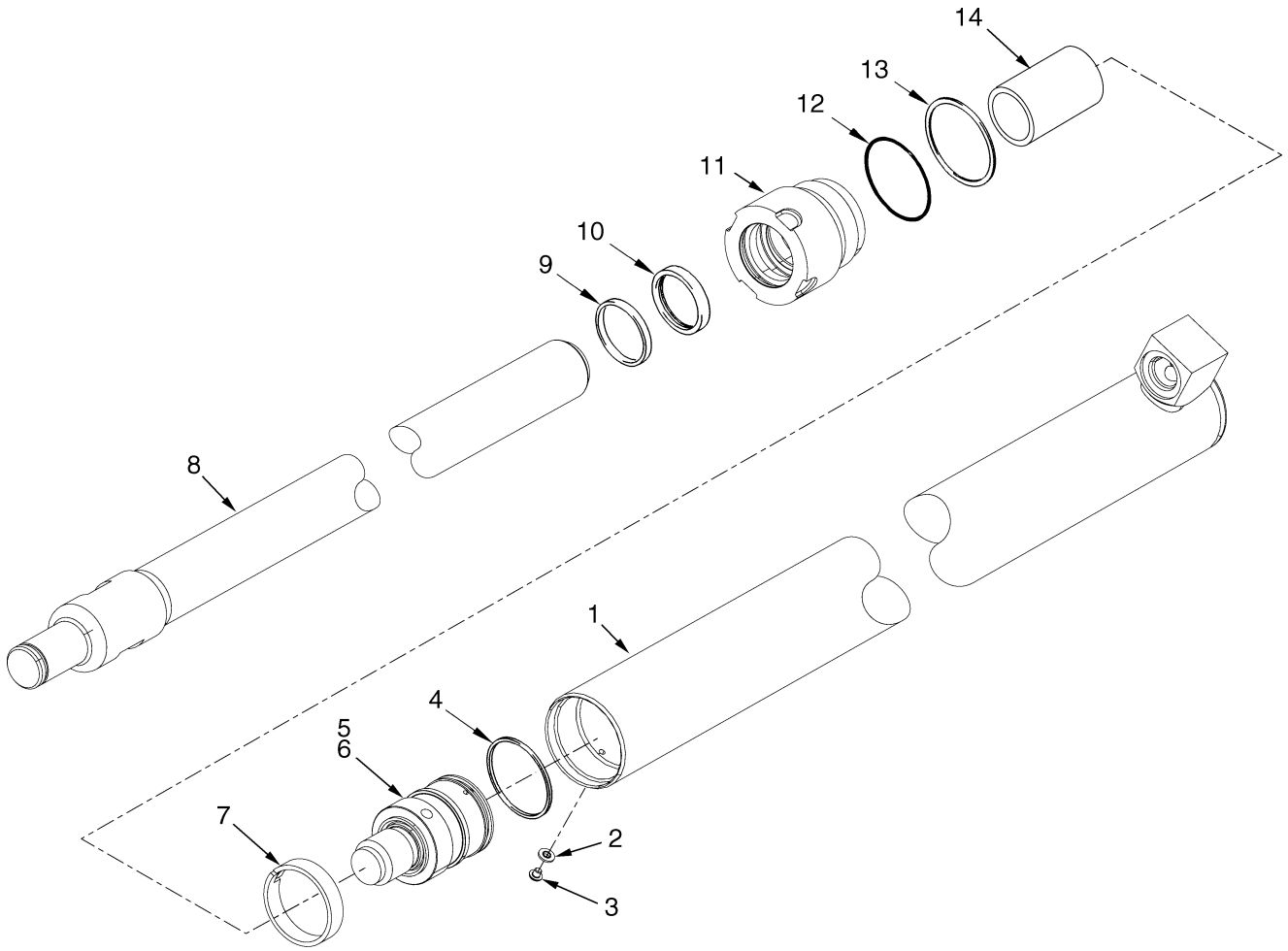

BP170217

©2008 Yale Materials Handling Corporation

MAIN LIFT CYLINDER
TWO STAGE FULL FREE-LIFT

LEFT HAND

ITEM	DESCRIPTION 1 2 3 4	LIFT HEIGHT TO BOTTOM OF FORKS	
		3025 mm (119.1 in.)	3625 mm (142.7 in.)
	Mast Group Number	B753 3025	B753 3625
	Cylinder Group Number	8503251	8503257
	Cylinder Assy	580056098	580056104
1	Tube Wldmt-Cylinder	520429601	520429607
8	Cylinder Rod	580056203	580056213

RIGHT HAND

ITEM	DESCRIPTION 1 2 3 4	LIFT HEIGHT TO BOTTOM OF FORKS	
		3025 mm (119.1 in.)	3625 mm (142.7 in.)
	Mast Group Number	B753 3025	B753 3625
	Cylinder Group Number	8503201	8503207
	Cylinder Assy	580056047	580056064
1	Tube Wldmt-Cylinder	520429601	520429607
8	Cylinder Rod	580056131	580056157

LEFT HAND

ITEM	DESCRIPTION 1 2 3 4	LIFT HEIGHT TO BOTTOM OF FORKS	
		3025 mm (119.1 in.)	3625 mm (142.7 in.)
	Mast Group Number	B754 2765	B754 3365
	Cylinder Group Number	8503351	8503357
	Cylinder Assy	580056288	580056303
1	Tube Wldmt-Cylinder	520429601	520429607
8	Cylinder Rod	580056370	580056384

©2008 Yale Materials Handling Corporation

MAIN LIFT CYLINDER
TWO STAGE FULL FREE-LIFT

RIGHT HAND

ITEM	DESCRIPTION 1 2 3 4	LIFT HEIGHT TO BOTTOM OF FORKS	
		3025 mm (119.1 in.)	3625 mm (142.7 in.)
	Mast Group Number	B754 2765	B754 3365
	Cylinder Group Number	8503301	8503307
	Cylinder Assy	580056248	580056254
1	Tube Wldmt-Cylinder	520429601	520429607
8	Cylinder Rod	580056339	580056345

ITEM	PART NO.	DESCRIPTION	QTY
	d	Cylinder Assy	1
1	**d**	Tube Wldmt-Cylinder	1
2	502687901	Sealing Ring	1
3	501753914	Screw	1
4	**b** 502895204	Piston Ring (RH)	1
5	580016817	Piston (RH)	1
5	580016816	Piston (LH)	1
6	501702903	Loctite	1
7	504017208	Wear Ring	1
8	**d**	Cylinder Rod	1
9	**a** 504450753	Rod Wiper	1
9	520045346	Rod Wiper	1
10	**a** 580022492	Rod Seal	1
10	580022494	Rod Seal	1
11	**a** 580056495	Gland	1
11	580056496	Gland	1
12	504232252	O-Ring	1
13	502011911	Back-Up Ring	1
14	**b** 520045253	Spacer	1
	c 507454554	Sleeve	1
	b 507456511	Kit-Seal (Alternate Part)	1
	a 504287713	Kit-Seal	1

FOOTNOTES:

a B753
b B754
c Not Illustrated
d Refer to Table

©2008 Yale Materials Handling Corporation

NOTES

©2008 Yale Materials Handling Corporation

FREE-LIFT CYLINDER (FIGURE 14-4)
TWO STAGE FULL FREE-LIFT

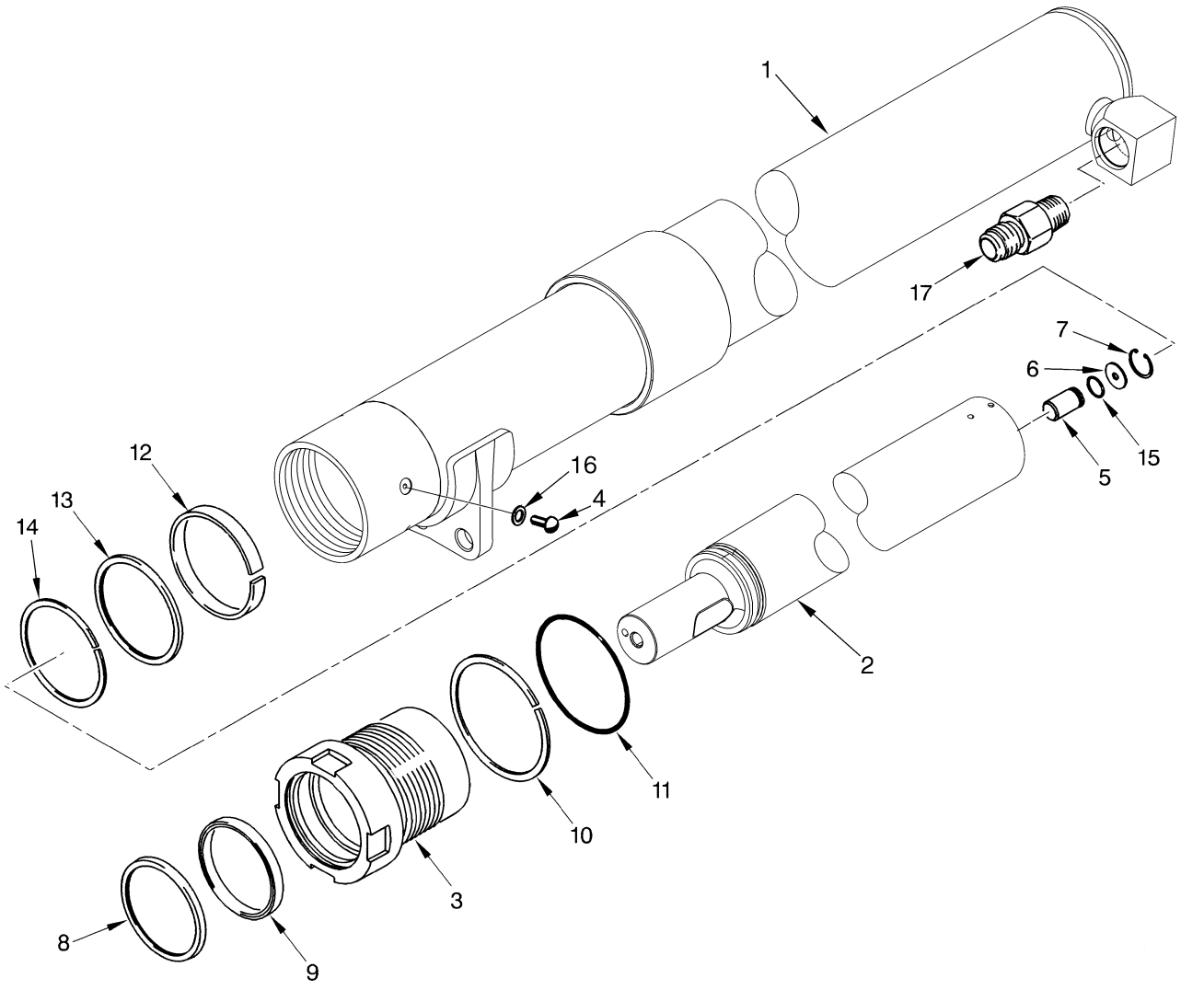

©2008 Yale Materials Handling Corporation

FREE-LIFT CYLINDER
TWO STAGE FULL FREE-LIFT

GP/GLP/GDP080-090VX

ITEM	DESCRIPTION 1 2 3 4	LIFT HEIGHT TO BOTTOM OF FORKS	
		3025 mm (119.1 in.)	3625 mm (142.7 in.)
	Mast Group Number	B753 3025	B753 3625
	Cylinder Group Number	8501701	8544051
	Cylinder Assy	580055452	580055458
1	Tube Wldmt-Cylinder	520650601	520650607
2	Cylinder Rod	520576601	520576606

GP/GLP/GDP100-120VX

ITEM	DESCRIPTION 1 2 3 4	LIFT HEIGHT TO BOTTOM OF FORKS	
		2765 mm (108.9 in.)	3365 mm (132.5 in.)
	Mast Group Number	B754 2765	B754 3365
	Cylinder Group Number	8518451	8527801
	Cylinder Assy	580055654	580055671
1	Tube Wldmt-Cylinder	520651601	520651607
2	Cylinder Rod	520580651	520580656

KEY:
A: GP/GLP/GDP080-090VX
B: GP/GLP/GDP100-120VX

ITEM	PART NO.	DESCRIPTION	QTY A	QTY B
	a	Cylinder Assy	1	1
1	**a**	Tube Wldmt-Cylinder	1	1
2	**a**	Cylinder Rod	1	1
3	520585600	Gland	1	..
3	580046965	Gland	..	1
4	501753904	Screw	1	1
5	504235239	Check Valve	1	1
6	504148200	Washer	1	1
7	501850904	Snap Ring	1	1
8	580054715	Rod Wiper	1	1
9	520045326	Rod Seal	1	1
10	502011923	Back-Up Ring	1	..
10	502011915	Back-Up Ring	..	1

©2008 Yale Materials Handling Corporation

FREE-LIFT CYLINDER
TWO STAGE FULL FREE-LIFT

KEY:
A: GP/GLP/GDP080-090VX
B: GP/GLP/GDP100-120VX

ITEM	PART NO.	DESCRIPTION	QTY A	QTY B
11	015492400	O-Ring	1	..
11	066415900	O-Ring	..	1
12	520045324	Wear Ring	1	..
12	580041728	Wear Ring	..	1
13	520045327	Rod Seal	1	..
13	580046967	Rod Seal	..	1
14	520045331	Back-Up Ring	1	..
14	580041729	Back-Up Ring	..	1
15	504232230	O-Ring	1	..
15	580011167	O-Ring	..	1
16	502687901	Sealing Ring	1	1
17	524147494	Hyd Velocity Fuse	1	..
17	524147495	Hyd Velocity Fuse	..	1
18	505136072	Kit-Seal	1	..
18	524169325	Kit-Seal	..	1

FOOTNOTES:
a Refer to Table

©2008 Yale Materials Handling Corporation

NOTES

©2008 Yale Materials Handling Corporation

CARRIAGE (FIGURE 14-5)
TWO STAGE FULL FREE-LIFT

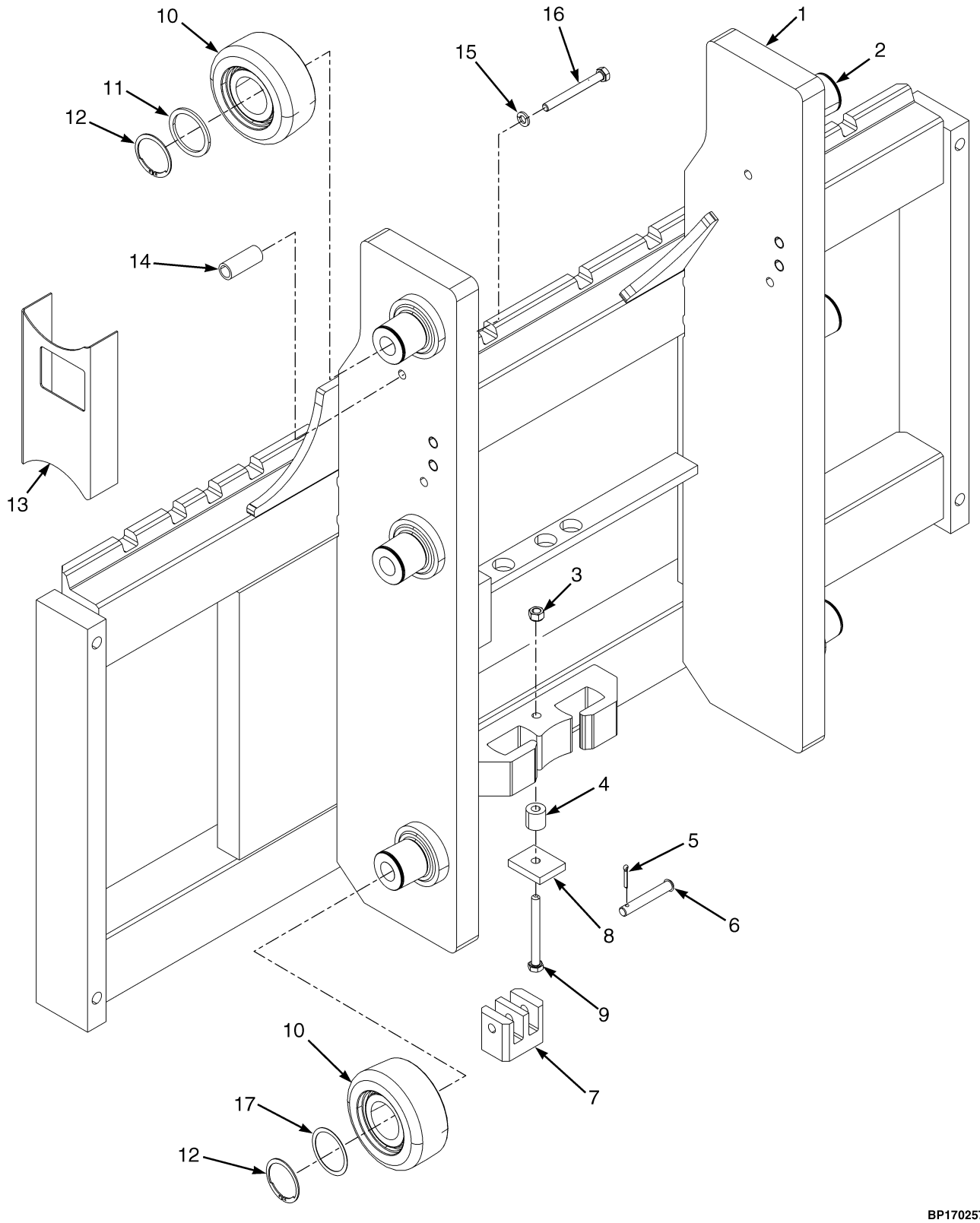

©2008 Yale Materials Handling Corporation

CARRIAGE
TWO STAGE FULL FREE-LIFT

KEY:
A: GP/GLP/GDP080-090VX
B: GP/GLP/GDP100-120VX

ITEM	PART NO.	DESCRIPTION	QTY A	QTY B
	580014049	Carriage (48 in.)	1	..
	580014053	Carriage (60 in.)	1	..
	580014056	Carriage (54 in.)	..	1
	580014059	Carriage (60 in.)	..	1
1	580014214	Carriage Wldmt (48 in.)	1	..
1	580014216	Carriage Wldmt (60 in.)	1	..
1	580014225	Carriage Wldmt (54 in.)	..	1
1	580014226	Carriage Wldmt (60 in.)	..	1
2	580026922	Stubshaft	6	6
3	504230271	Nut	1	1
4	580014174	Spacer	1	1
5	015417900	Cotter Pin	2	2
6	580007125	Pin	2	2
7	580070496	Chain Anchor	2	2
8	580014169	Plate	1	1
9	449001038	Capscrew	1	1
10	580031673	Load Roller (101.67 mm)	6	6
11	580011609	Spacer	2	2
12	580012093	Snap Ring	6	6
13	520045178	Bracket Wldmt (LH)	1	1
13	520045177	Bracket Wldmt (RH)	1	1
14	520045171	Spacer	4	4
15	015026200	Lockwasher	4	4
16	203146300	Capscrew	4	4
17	520045153	Shim (0.020 in.)	24	24

©2008 Yale Materials Handling Corporation

NOTES

©2008 Yale Materials Handling Corporation

15 ATTACHMENTS AND HEADER HOSE GROUP

SECTION 15
ATTACHMENTS AND HEADER HOSE GROUP

DESCRIPTION	PAGE
AUXILIARY TUBE EXTENSIONS	
THREE STAGE FULL FREE-LIFT	15-36
TWO STAGE FULL FREE-LIFT	15-34
TWO STAGE LIMITED FREE-LIFT	15-32
HEADER HOSE	
THREE STAGE FULL FREE-LIFT	15-10
TWO STAGE FULL FREE-LIFT	15-6
TWO STAGE LIMITED FREE-LIFT	15-2
INTEGRAL SIDE-SHIFT ASSEMBLY	
GP/GLP/GDP080-090VX (48 IN. AND 60 IN.) - TWO STAGE LIMITED FREE-LIFT	15-14
GP/GLP/GDP080-090VX (48 IN. AND 60 IN.) - TWO AND THREE STAGE FULL FREE-LIFT	15-22
GP/GLP/GDP100-120VX (54 IN. AND 60 IN.) - TWO STAGE LIMITED FREE-LIFT	15-18
GP/GLP/GDP100-120VX (54 IN. AND 60 IN.) - TWO AND THREE STAGE FULL FREE-LIFT	15-28
INTEGRAL SIDE-SHIFT CARRIAGE	
GP/GLP/GDP080-090VX (48 IN. AND 60 IN.) - TWO STAGE LIMITED FREE-LIFT	15-16
GP/GLP/GDP100-120VX (54 IN. AND 60 IN.) - TWO STAGE LIMITED FREE-LIFT	15-20
GP/GLP/GDP100-120VX (54 IN. AND 60 IN.) - TWO AND THREE STAGE FULL FREE-LIFT	15-30
GP/GLP/GDP80-90VX (48 IN.) - TWO AND THREE STAGE FULL FREE-LIFT	15-24
GP/GLP/GDP80-90VX (60 IN.) - TWO AND THREE STAGE FULL FREE-LIFT	15-26

©2008 Yale Materials Handling Corporation

HEADER HOSE (FIGURE 15-1)
TWO STAGE LIMITED FREE-LIFT

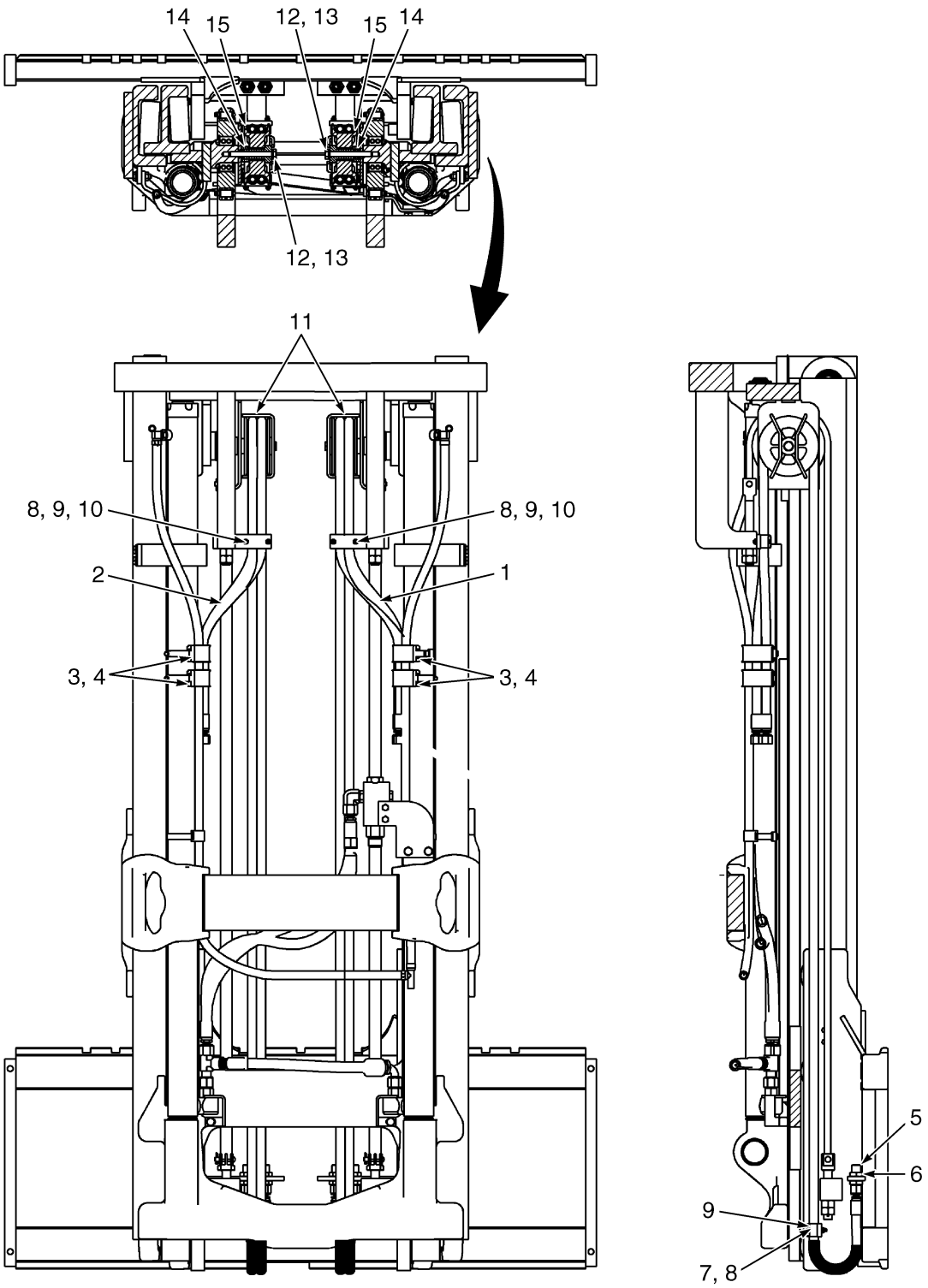

©2008 Yale Materials Handling Corporation

HEADER HOSE

TWO STAGE LIMITED FREE-LIFT

FOUR FUNCTION GP/GLP/GDP080-090VX

ITEM	DESCRIPTION 1 2 3 4	LIFT HEIGHT TO BOTTOM OF FORKS			
		3000 mm (118.1 in.)	3600 mm (141.7 in.)	4200 mm (165.4 in.)	4900 mm (192.9 in.)
	Mast Group Number	B749 3000	B749 3600	B749 4200	B749 4900
	Mast Assy	580053358	580053364	580053370	580053377
1	Hose Assy	580067215	580067221	580067227	580067235
2	Hose Assy	580067215	580067221	580067227	580067235

THREE FUNCTION GP/GLP/GDP080-090VX

ITEM	DESCRIPTION 1 2 3 4	LIFT HEIGHT TO BOTTOM OF FORKS			
		3000 mm (118.1 in.)	3600 mm (141.7 in.)	4200 mm (165.4 in.)	4900 mm (192.9 in.)
	Mast Group Number	B749 3000	B749 3600	B749 4200	B749 4900
	Mast Assy	580053358	580053364	580053370	580053377
1	Hose Assy	580067215	580067221	580067227	580067235

FOUR FUNCTION GP/GLP/GDP100-120VX

ITEM	DESCRIPTION 1 2 3 4	LIFT HEIGHT TO BOTTOM OF FORKS			
		2740 mm (107.9 in.)	3340 mm (131.5 in.)	3940 mm (155.1 in.)	4640 mm (182.7 in.)
	Mast Group Number	B750 2740	B750 3340	B750 3940	B750 4640
	Mast Assy	580053442	580053448	580053454	580053461
1	Hose Assy	580067215	580067221	580067227	580067235
2	Hose Assy	580067215	580067221	580067227	580067235

FOUR FUNCTION GP/GLP/GDP100-120VX

ITEM	DESCRIPTION 1 2 3 4	LIFT HEIGHT TO BOTTOM OF FORKS	
		5240 mm (206.3 in.)	5840 mm (229.9 in.)
	Mast Group Number	B750 5240	B750 5840
	Mast Assy	580053467	580053473
1	Hose Assy	580067238	580071419
2	Hose Assy	580067238	580071419

©2008 Yale Materials Handling Corporation

HEADER HOSE

TWO STAGE LIMITED FREE-LIFT

THREE FUNCTION GP/GLP/GDP100-120VX

ITEM	DESCRIPTION 1 2 3 4	LIFT HEIGHT TO BOTTOM OF FORKS			
		2740 mm (107.9 in.)	3340 mm (131.5 in.)	3940 mm (155.1 in.)	4640 mm (182.7 in.)
	Mast Group Number	B750 2740	B750 3340	B750 3940	B750 4640
	Mast Assy	580053442	580053448	580053454	580053461
1	Hose Assy	580067215	580067221	580067227	580067235

THREE FUNCTION GP/GLP/GDP100-120VX

ITEM	DESCRIPTION 1 2 3 4	LIFT HEIGHT TO BOTTOM OF FORKS	
		5240 mm (206.3 in.)	5840 mm (229.9 in.)
	Mast Group Number	B750 5240	B750 5840
	Mast Assy	580053467	580053473
1	Hose Assy	580067238	580071419

KEY:
A: Three Function
B: Four Function

ITEM	PART NO.	DESCRIPTION	QTY A	QTY B
	a	Mast Assy	1	1
1	**a**	Hose Assy	2	2
2	**a**	Hose Assy	..	2
3	580012772	Hose Clamp	2	4
4	505965586	Clamp	2	4
5	580039425	Fitting	2	4
6	580020987	Fitting	2	4
7	580055731	Capscrew	2	4
8	580055650	Nut	2	4
9	580006903	Hose Clamp	2	4
10	580079946	Capscrew	2	4
11	580028718	Stubshaft	1	2
12	580055747	Capscrew	1	2
13	580055649	Lockwasher	1	1
14	580028717	Spacer	1	2
15	580029125	Hose Sheave	1	2
15	520045187	Bushing	1	2

FOOTNOTES:
a Refer to Table

©2008 Yale Materials Handling Corporation

NOTES

©2008 Yale Materials Handling Corporation

HEADER HOSE (FIGURE 15-2)
TWO STAGE FULL FREE-LIFT

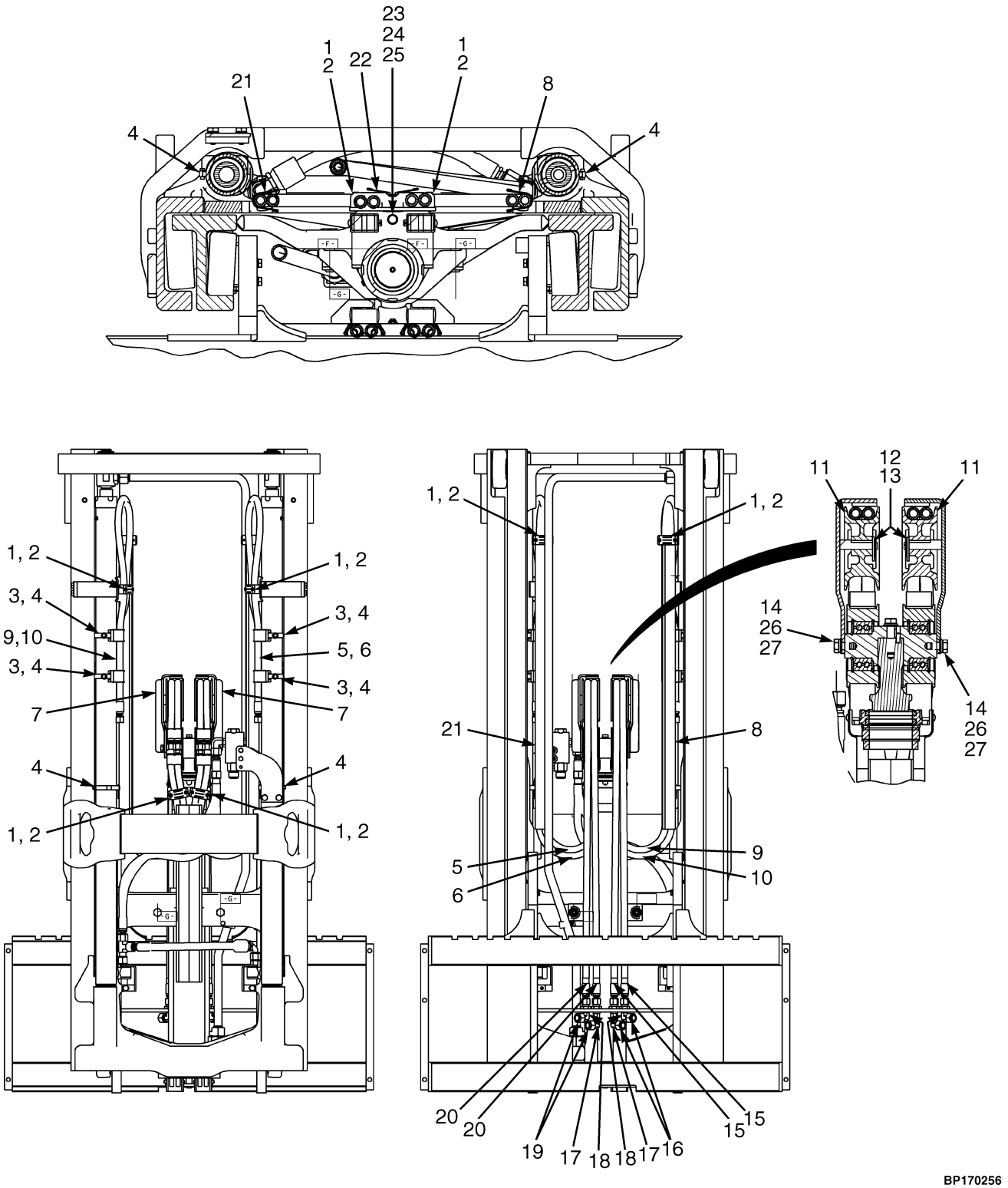

©2008 Yale Materials Handling Corporation

HEADER HOSE

TWO STAGE FULL FREE-LIFT

FOUR FUNCTION GP/GLP/GDP080-090VX

ITEM	DESCRIPTION 1 2 3 4	LIFT HEIGHT TO BOTTOM OF FORKS	
		3025 mm (119.1 in.)	3625 mm (142.7 in.)
	Mast Group Number	B753 3025	B753 3625
8	Hose Guide	580067025	580067032
9	Hose Assy	580067131	580067143
10	Hose Assy	580073277	580073293
15	Hose Assy	524198083	524198089

THREE FUNCTION GP/GLP/GDP080-090VX

ITEM	DESCRIPTION 1 2 3 4	LIFT HEIGHT TO BOTTOM OF FORKS	
		3025 mm (119.1 in.)	3625 mm (142.7 in.)
	Mast Group Number	B753 3025	B753 3625
5	Hose Assy	580067131	580067143
6	Hose Assy	580073277	580073293
20	Hose Assy	524198083	524198089
21	Channel	580066989	580066998
22	Channel	580067069	580067075

FOUR FUNCTION GP/GLP/GDP100-120VX

ITEM	DESCRIPTION 1 2 3 4	LIFT HEIGHT TO BOTTOM OF FORKS	
		2765 mm (108.9 in.)	3365 mm (132.5 in.)
	Mast Group Number	B754 2765	B754 3365
8	Hose Guide	580067025	580067032
9	Hose Assy	580067138	580067144
10	Hose Assy	580073288	580073294
15	Hose Assy	524198114	524198120

©2008 Yale Materials Handling Corporation

HEADER HOSE

TWO STAGE FULL FREE-LIFT

THREE FUNCTION GP/GLP/GDP100-120VX

ITEM	DESCRIPTION 1 2 3 4	LIFT HEIGHT TO BOTTOM OF FORKS	
		2765 mm (108.9 in.)	3365 mm (132.5 in.)
	Mast Group Number	B754 2765	B754 3365
5	Hose Assy	580067138	580067144
6	Hose Assy	580073288	580073294
20	Hose Assy	524198114	524198120
21	Channel	580066989	580066998
22	Channel	580067064	580067072

KEY:
A: Three Function
B: Four Function

ITEM	PART NO.	DESCRIPTION	QTY A	QTY B
1	580006903	Hose Clamp	3	6
2	580055863	Capscrew	6	12
3	580012772	Hose Clamp	2	4
4	580052881	Clamp	3	6
5	**a**	Hose Assy	1	..
6	**a**	Hose Assy	1	..
7	580041883	Bracket Wldmt	1	1
7	580041884	Bracket Wldmt	..	1
8	**a**	Hose Guide	..	1
9	**a**	Hose Assy	..	1
10	**a**	Hose Assy	..	1
11	580029125	Hose Sheave	1	2
11	520045187	Bushing	1	2
12	580055636	Washer	1	2
13	015915200	Snap Ring	1	2
14	954512901	Roll Pin	1	2
15	**a**	Hose Assy	..	2
16	580039425	Fitting	1	2
17	524148190	Fitting	1	1
18	580039402	Fitting	1	1
19	580039425	Fitting	2	4
20	**a**	Hose Assy	1	..
21	**a**	Channel	1	..
22	**a**	Channel	1	..
23	580055631	Washer	1	..
24	580055735	Capscrew	1	..
25	580055646	Lockwasher	1	..
26	580055743	Capscrew	2	2
27	954512901	Roll Pin	2	2

©2008 Yale Materials Handling Corporation

FOOTNOTES:
a Refer to Table

©2008 Yale Materials Handling Corporation

HEADER HOSE (FIGURE 15-3)
THREE STAGE FULL FREE-LIFT

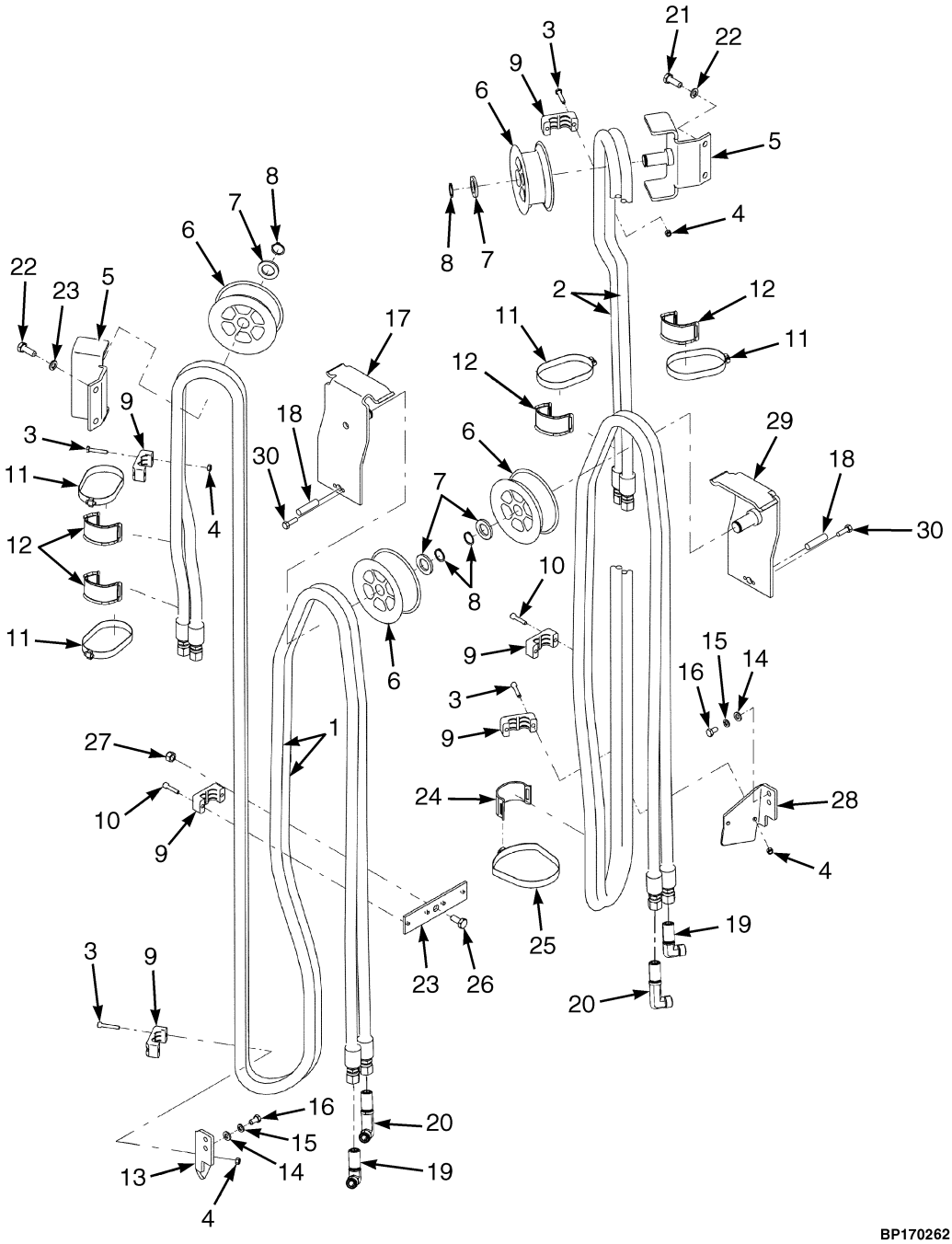

©2008 Yale Materials Handling Corporation

HEADER HOSE
THREE STAGE FULL FREE-LIFT

GP/GLP/GDP080-090VX

ITEM	DESCRIPTION 1 2 3 4	LIFT HEIGHT TO BOTTOM OF FORKS			
		4365 mm (171.9 in.)	4665 mm (183.7 in.)	4900 mm (192.9 in.)	5200 mm (204.7 in.)
	Mast Group Number	B751 4365	B751 4665	B751 4900	B751 5200
	Mast Assy	580053539	580053541	580053542	580053544
1	Hose Assy	580067389	580067391	580067392	580067394
2	Hose Assy	580067389	580067391	580067392	580067394

GP/GLP/GDP080-090VX

ITEM	DESCRIPTION 1 2 3 4	LIFT HEIGHT TO BOTTOM OF FORKS	
		5500 mm (216.5 in.)	5950 mm (234.3 in.)
	Mast Group Number	B751 5500	B751 5950
	Mast Assy	580053546	580053549
1	Hose Assy	580067396	----
2	Hose Assy	580067396	----

GP/GLP/GDP100-120VX

ITEM	DESCRIPTION 1 2 3 4	LIFT HEIGHT TO BOTTOM OF FORKS				
		4087 mm (160.9 in.)	4387 mm (172.7 in.)	4640 mm (182.7 in.)	4940 mm (194.5 in.)	5240 mm (206.3 in.)
	Mast Group Number	B752 4087	B752 4387	B752 4640	B752 4940	B752 5240
	Mast Assy	580053590	580053592	580053593	580053595	580053597
1	Hose Assy	580067413	580067415	580067416	580067418	580067420
2	Hose Assy	580067413	580067415	580067416	580067418	580067420

KEY:
A: Three Function
B: Four Function

ITEM	PART NO.	DESCRIPTION	QTY A	QTY B
	a	Mast Assy	1	1
1	**a**	Hose Assy	2	2
2	**a**	Hose Assy	..	2
3	580055730	Capscrew	4	8
4	580055650	Nut	4	8
5	580009401	Bracket Wldmt	1	2
6	580029125	Hose Sheave	2	4
6	520045187	Bushing	2	4

©2008 Yale Materials Handling Corporation

HEADER HOSE
THREE STAGE FULL FREE-LIFT

KEY:
A: Three Function
B: Four Function

ITEM	PART NO.	DESCRIPTION	QTY A	QTY B
7	580055636	Washer	2	4
8	015915200	Snap Ring	2	4
9	580006903	Hose Clamp	3	6
10	580055863	Capscrew	2	4
11	505965586	Clamp	2	4
12	580012772	Hose Clamp	2	4
13	580009399	Bracket	1	1
14	580055631	Washer	2	4
15	580055646	Lockwasher	2	4
16	580055732	Capscrew	2	4
17	580041883	Bracket Wldmt (RH)	1	1
18	954512901	Roll Pin	2	2
19	580039402	Fitting	1	2
20	524148190	Fitting	1	2
21	580055740	Capscrew	2	4
22	580055648	Lockwasher	2	4
23	580009402	Bracket	1	1
24	580027355	Hose Clamp	2	2
25	580012670	Clamp	1	1
26	580055739	Capscrew	1	1
27	580055652	Nut	1	1
28	580009403	Bracket	..	1
29	580041884	Bracket Wldmt	..	1
30	580055743	Capscrew	2	2

FOOTNOTES:
a Refer to Table

©2008 Yale Materials Handling Corporation

NOTES

©2008 Yale Materials Handling Corporation

INTEGRAL SIDE-SHIFT ASSEMBLY (FIGURE 15-4)

GP/GLP/GDP080-090VX (48 IN. AND 60 IN.) — TWO STAGE LIMITED FREE-LIFT

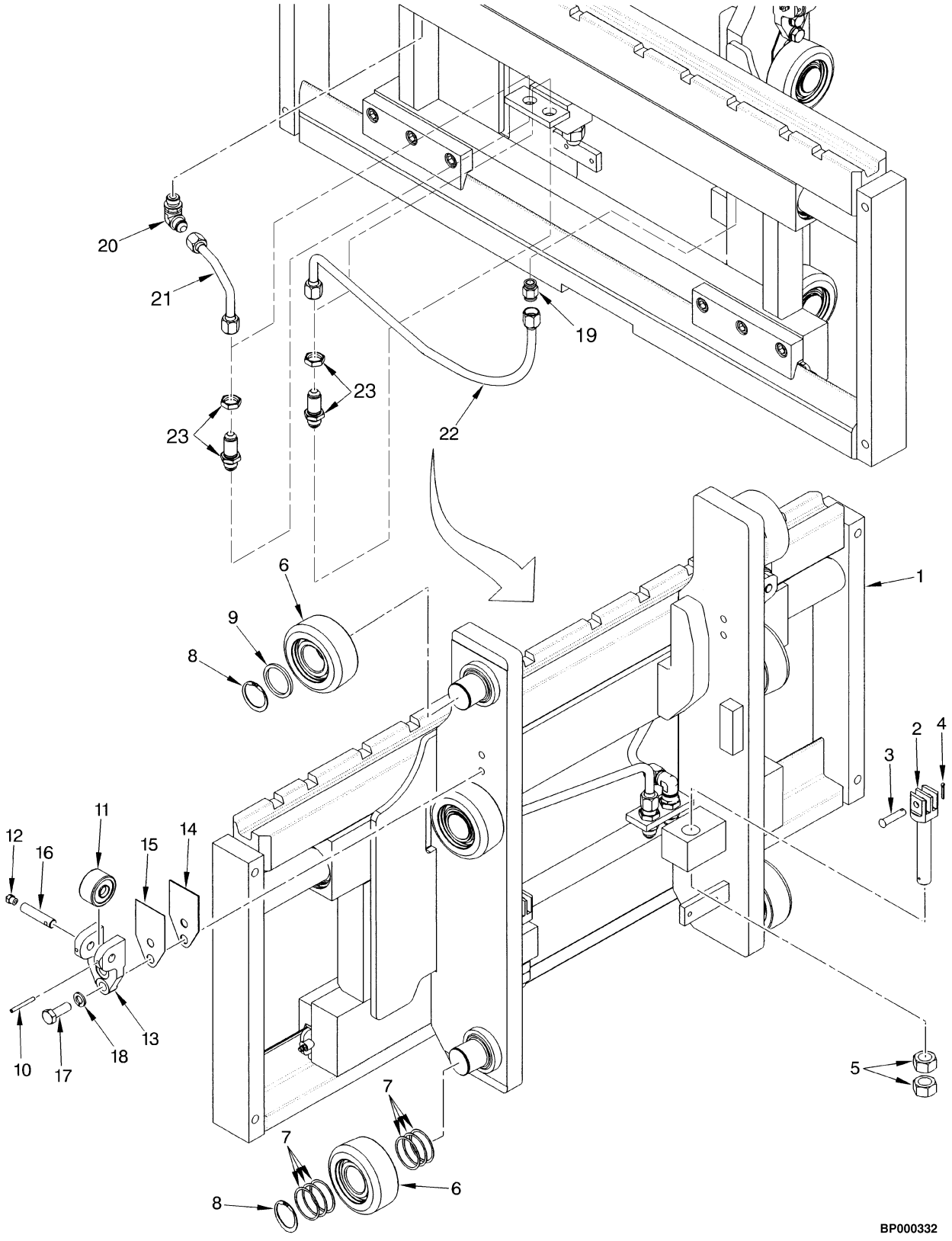

©2008 Yale Materials Handling Corporation

INTEGRAL SIDE-SHIFT ASSEMBLY

GP/GLP/GDP080-090VX (48 IN. AND 60 IN.) – TWO STAGE LIMITED FREE-LIFT

ITEM	PART NO.	DESCRIPTION	QTY
	580012458	Side-Shift Carriage (48 in.) (Group No. 8502066)	1
	580012459	Side-Shift Carriage (60 in.) (Group No. 8502067)	1
1	580012450	Side-Shift Carriage (48 in.) (☞P19826 [Page 15-16])	1
1	580012451	Side-Shift Carriage (60 in.) (☞P19826 [Page 15-16])	1
2	580009893	Chain Anchor	2
3	520045183	Pin	2
4	015417900	Cotter Pin	2
5	520045163	Wheel Nut	4
6	580031673	Load Roller (101.67 mm)	6
7	520045153	Shim (0.020 in.)	24
8	580012093	Snap Ring	6
9	580011609	Spacer	2
10	520045150	Roll Pin	2
11	580012184	Side Roller	2
12	015627900	Grease Fitting	2
13	580012185	Bracket	2
14	520045395	Shim (0.062 in.)	AR
15	520045159	Shim (0.030 in.)	AR
16	580012183	Pin	2
17	449001058	Capscrew	4
18	449022017	Lockwasher	4
19	580020430	Fitting	1
19	052645300	O-Ring	1
19	580063949	O-Ring	1
20	580020576	Fitting	1
20	052645300	O-Ring	1
20	580063949	O-Ring	1
21	580077417	Hose Assy	1
22	580077418	Hose Assy	1
23	056056700	Fitting	2

©2008 Yale Materials Handling Corporation

INTEGRAL SIDE-SHIFT CARRIAGE (FIGURE 15-5)

GP/GLP/GDP080-090VX (48 IN. AND 60 IN.) — TWO STAGE LIMITED FREE-LIFT

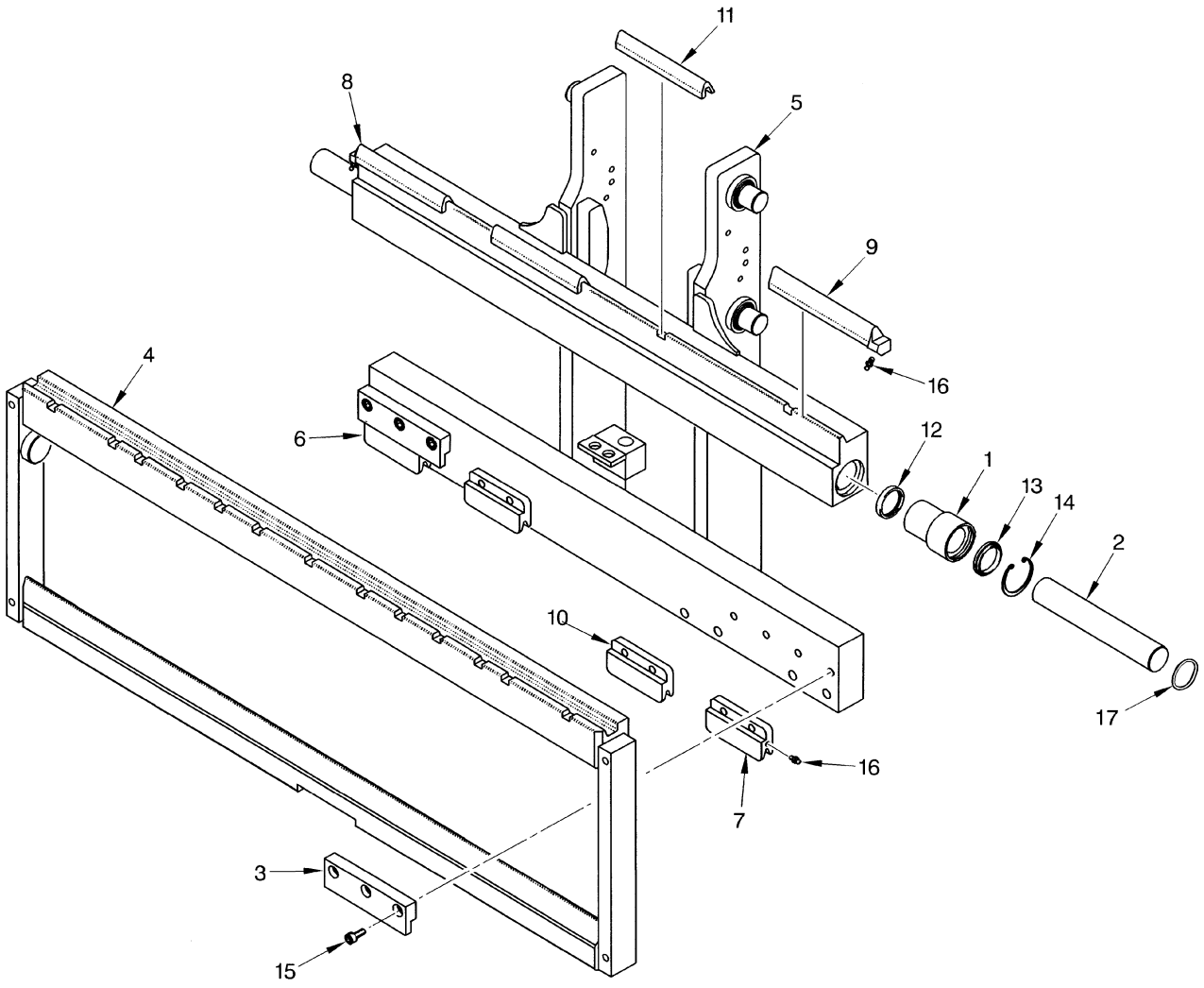

HP000036

©2008 Yale Materials Handling Corporation

INTEGRAL SIDE-SHIFT CARRIAGE

GP/GLP/GDP080-090VX (48 IN. AND 60 IN.) – TWO STAGE LIMITED FREE-LIFT

ITEM	PART NO.	DESCRIPTION	QTY
	580012450	Side-Shift Carriage (48 in.)	1
	580012451	Side-Shift Carriage (60 in.)	1
1	580013212	Bushing	2
2	580013213	Rod	2
3	580013214	Hook	2
4	580039175	Apron (48 in.)	1
4	580039177	Apron (60 in.)	1
5	580013801	Frame (48 in.)	1
5	580013803	Frame (60 in.)	1
6	580013204	Wear Strip (Right Lower)	1
7	580013207	Wear Strip (Left Lower)	1
8	580013208	Wear Strip (Right Upper)	1
9	580013209	Wear Strip (Left Upper)	1
10	580013254	Wear Strip (Lower Center) (60 in.)	2
11	580013253	Wear Strip (Upper Center) (60 in.)	2
12	580086809	Seal	2
13	580013256	Rod Wiper	2
14	580013480	Snap Ring	2
15	580013481	Screw	6
16	015628700	Grease Fitting	4
17	500159904	O-Ring	2
	524169329	Kit-Seal (Class III)	1

©2008 Yale Materials Handling Corporation

INTEGRAL SIDE-SHIFT ASSEMBLY (FIGURE 15-6)

GP/GLP/GDP100-120VX (54 IN. AND 60 IN.) — TWO STAGE LIMITED FREE-LIFT

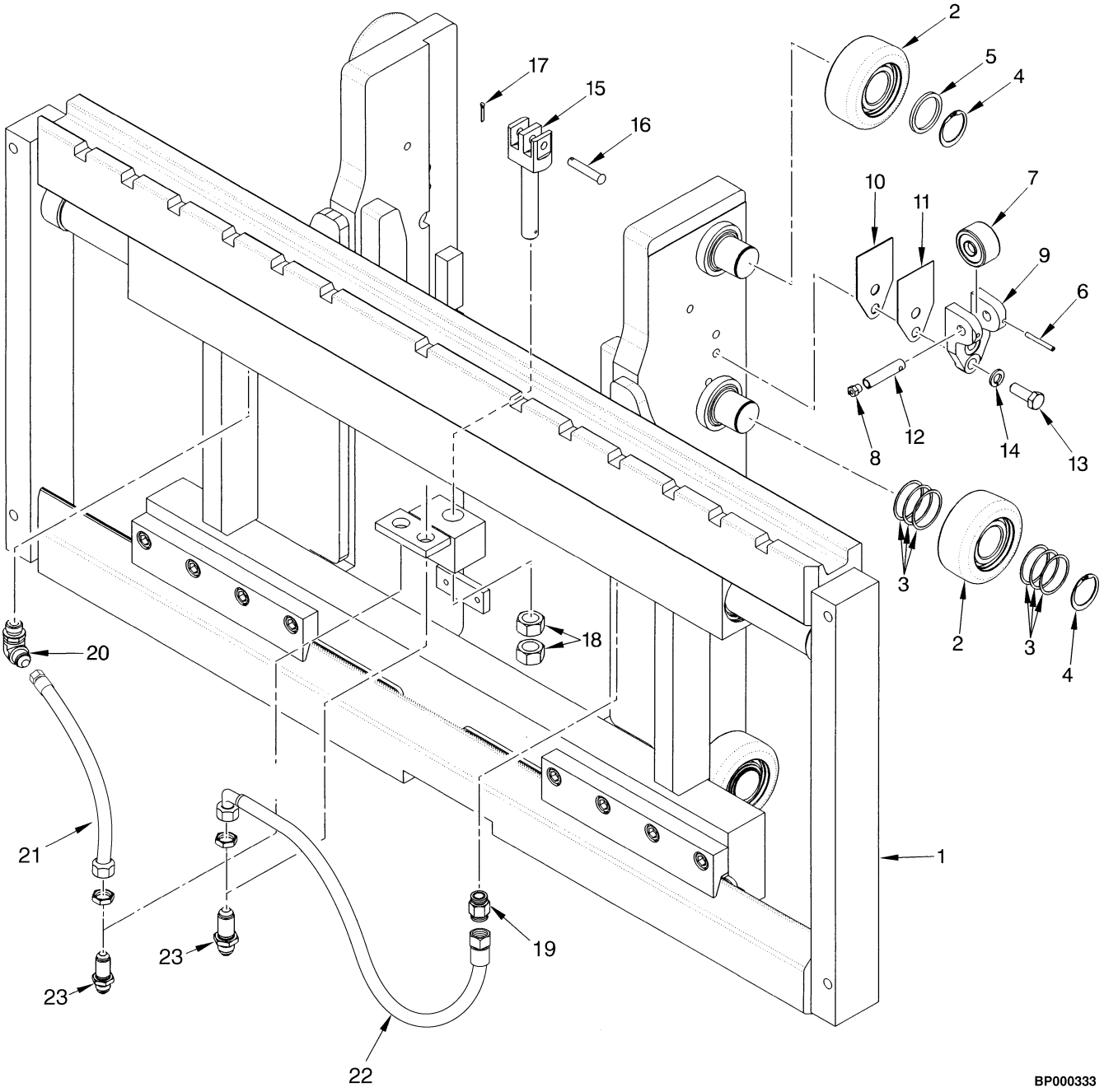

©2008 Yale Materials Handling Corporation

INTEGRAL SIDE-SHIFT ASSEMBLY

GP/GLP/GDP100-120VX (54 IN. AND 60 IN.) – TWO STAGE LIMITED FREE-LIFT

ITEM	PART NO.	DESCRIPTION	QTY
	580012460	Side-Shift Carriage (54 in.) (Group No. 8502068)	1
	580012461	Side-Shift Carriage (60 in.) (Group No. 8502069)	1
1	580012452	Side-Shift Carriage (54 in.) (☞P19827 [Page 15-20])	1
1	580012453	Side-Shift Carriage (60 in.) (☞P19827 [Page 15-20])	1
2	580031673	Load Roller (101.67 mm)	6
3	520045153	Shim (0.020 in.)	24
4	580012093	Snap Ring	6
5	580011609	Spacer	2
6	520045150	Roll Pin	2
7	580084983	Cam Follower	2
8	015627900	Grease Fitting	2
9	580012185	Bracket	2
10	520045395	Shim (0.062 in.)	AR
11	520045159	Shim (0.030 in.)	AR
12	580084984	Pin	2
13	449001058	Capscrew	4
14	449022017	Lockwasher	4
15	580009922	Chain Anchor	2
16	520045195	Pin	2
17	015417900	Cotter Pin	2
18	520045163	Wheel Nut	4
19	580020430	Fitting	1
19	580063949	O-Ring	1
19	052645300	O-Ring	1
20	580020576	Fitting	1
20	052645300	O-Ring	1
20	580063949	O-Ring	1
21	580077416	Hose Assy	1
22	580077415	Hose Assy	1
23	056056700	Fitting	2

©2008 Yale Materials Handling Corporation

INTEGRAL SIDE-SHIFT CARRIAGE (FIGURE 15-7)

GP/GLP/GDP100-120VX (54 IN. AND 60 IN.) — TWO STAGE LIMITED FREE-LIFT

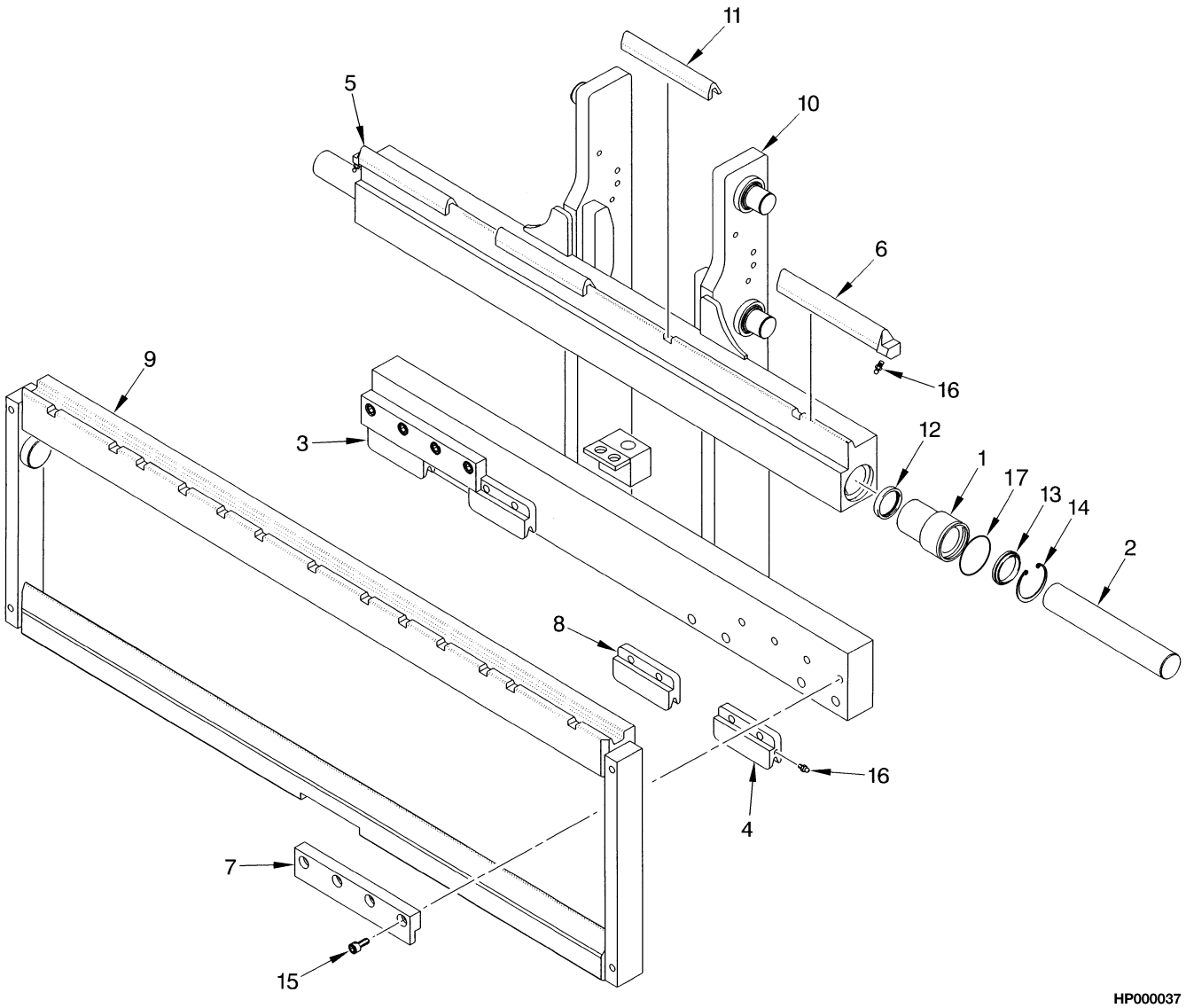

©2008 Yale Materials Handling Corporation

INTEGRAL SIDE-SHIFT CARRIAGE

GP/GLP/GDP100-120VX (54 IN. AND 60 IN.) – TWO STAGE LIMITED FREE-LIFT

ITEM	PART NO.	DESCRIPTION	QTY
	580012452	Side-Shift Carriage (54 in.)	1
	580012453	Side-Shift Carriage (60 in.)	1
1	580013257	Bushing	2
2	580013258	Rod	2
3	580013204	Wear Strip (Right Lower)	1
4	580013207	Wear Strip (Left Lower)	1
5	580013208	Wear Strip (Right Upper)	1
6	580013209	Wear Strip (Left Upper)	1
7	580013259	Hook	2
8	580013254	Wear Strip (Lower Center)	2
9	580039173	Apron (54 in.)	1
9	580039174	Apron (60 in.)	1
10	580013806	Frame (54 in.)	1
10	580013808	Frame (60 in.)	1
11	580013253	Wear Strip (Upper Center)	2
12	580086809	Seal	2
13	580013256	Rod Wiper	2
14	580013483	Snap Ring	2
15	580013481	Screw	8
16	015628700	Grease Fitting	8
17	500159904	O-Ring	2
	524169328	Kit-Seal (Class IV)	1

©2008 Yale Materials Handling Corporation

INTEGRAL SIDE-SHIFT ASSEMBLY (FIGURE 15-8)

GP/GLP/GDP080-090VX (48 IN. AND 60 IN.) — TWO AND THREE STAGE FULL FREE-LIFT

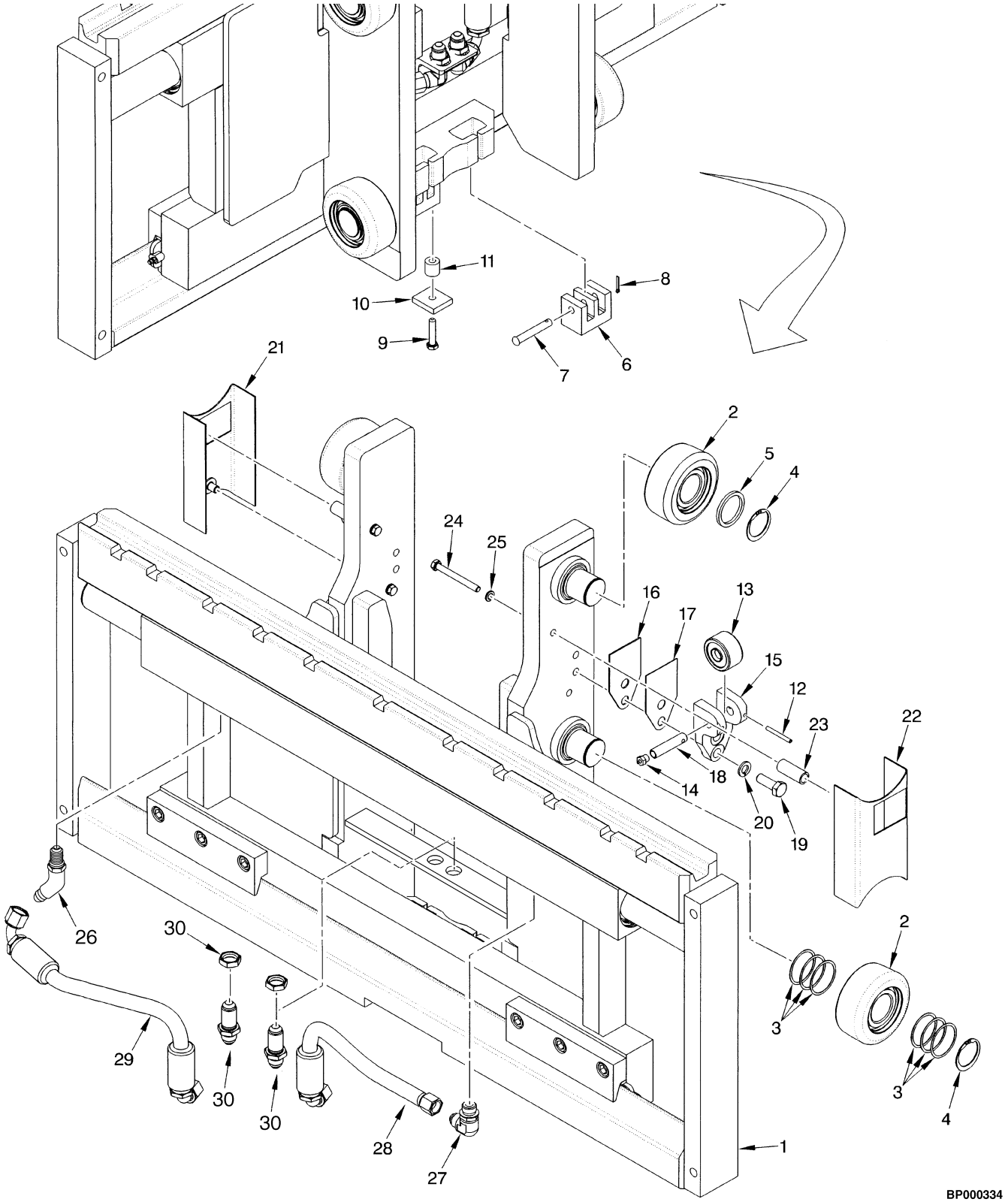

©2008 Yale Materials Handling Corporation

INTEGRAL SIDE-SHIFT ASSEMBLY

GP/GLP/GDP080-090VX (48 IN. AND 60 IN.) – TWO AND THREE STAGE FULL FREE-LIFT

ITEM	PART NO.	DESCRIPTION	QTY
	b 580014145	Side-Shift Carriage (48 in.) (Group No. 8502090)	1
	b 580014147	Side-Shift Carriage (60 in.) (Group No. 8502091)	1
	a 580012462	Side-Shift Carriage (48 in.) (Group No. 8502070)	1
	a 580012463	Side-Shift Carriage (60 in.) (Group No. 8502071)	1
1	. . . . .	Carriage Frame (☞P19845 [Page 15-24], ☞P19846 [Page 15-26])	1
2	580031673	Load Roller (101.67 mm)	6
3	520045153	Shim (0.020 in.)	24
4	580012093	Snap Ring	6
5	580011609	Spacer	2
6	580007124	Chain Anchor	2
7	580007125	Pin	2
8	015417900	Cotter Pin	2
9	449001038	Capscrew	1
10	580014169	Plate	1
11	580014174	Spacer	1
12	520045150	Roll Pin	2
13	580084983	Cam Follower	2
14	015627900	Grease Fitting	2
15	580012185	Bracket	2
16	520045395	Shim (0.062 in.)	AR
17	520045159	Shim (0.030 in.)	AR
18	580084984	Pin (Alternate Part)	2
19	449001058	Capscrew	4
20	449022017	Lockwasher	4
21	520045177	Bracket Wldmt (RH)	1
22	520045178	Bracket Wldmt (LH)	1
23	520045171	Spacer	4
24	062144100	Capscrew	4
25	015026200	Lockwasher	4
26	580039350	Fitting	1
26	580063949	O-Ring	1
26	052645300	O-Ring	1
27	580020576	Fitting	1
27	052645300	O-Ring	1
27	580063949	O-Ring	1
28	580077419	Hose Assy	1
29	580077420	Hose Assy	1
30	056056700	Fitting	2

FOOTNOTES:

a Three Stage Full Free-Lift

b Two Stage Full Free-Lift

©2008 Yale Materials Handling Corporation

INTEGRAL SIDE-SHIFT CARRIAGE (FIGURE 15-9)

GP/GLP/GDP80-90VX (48 IN.) — TWO AND THREE STAGE FULL FREE-LIFT

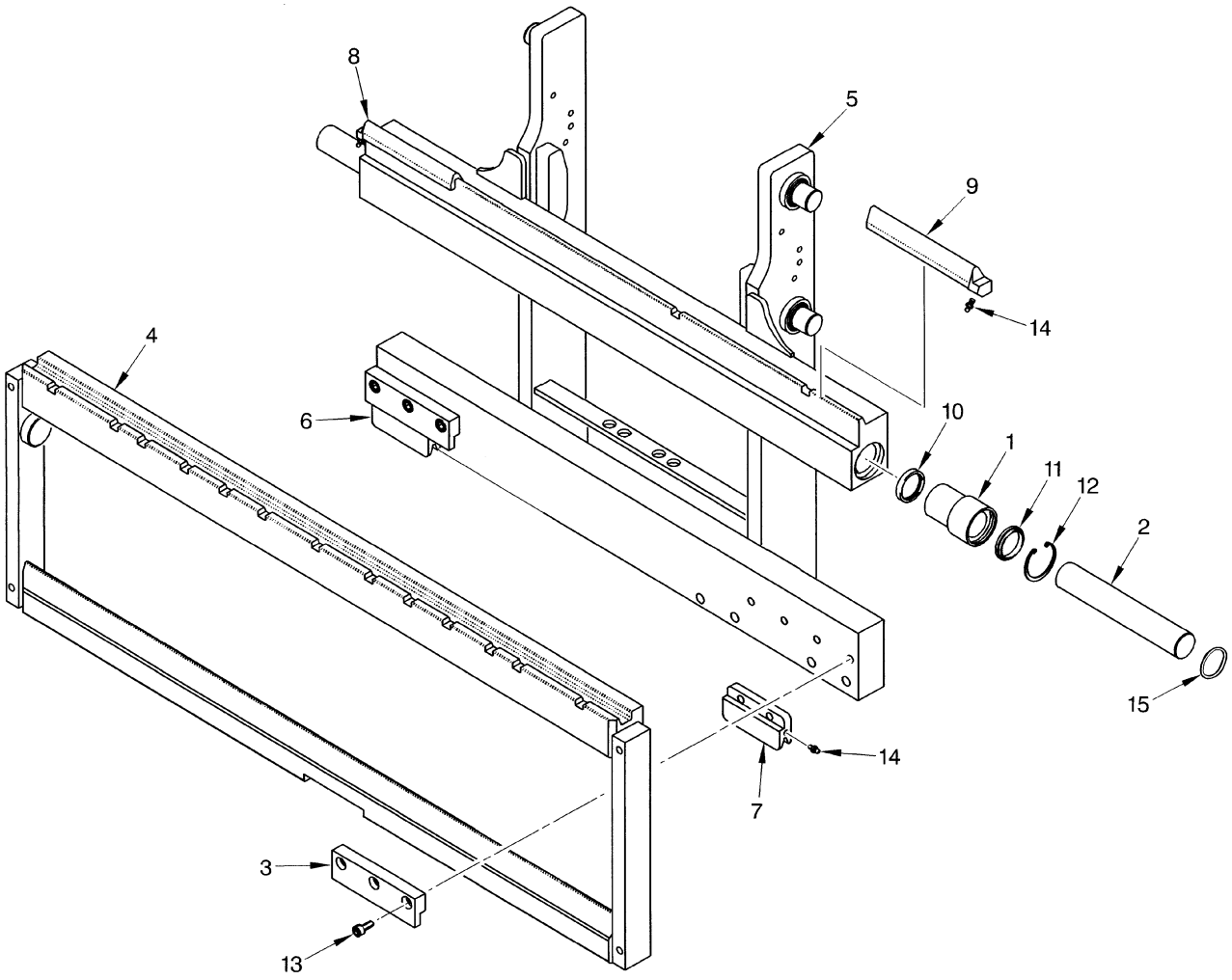

HP000038

©2008 Yale Materials Handling Corporation

INTEGRAL SIDE-SHIFT CARRIAGE

GP/GLP/GDP80-90VX (48 IN.) – TWO AND THREE STAGE FULL FREE-LIFT

ITEM	PART NO.	DESCRIPTION	QTY
	b 580014146	Side-Shift Carriage (48 in.)	1
	a 580012454	Side-Shift Carriage (48 in.)	1
1	580013212	Bushing	2
2	580013213	Rod	2
3	580013214	Hook	2
4	580039175	Apron	1
5	**b** 580018547	Frame	1
5	**a** 580013802	Frame	1
6	580013204	Wear Strip (Right Lower)	1
7	580013207	Wear Strip (Left Lower)	1
8	580013208	Wear Strip (Right Upper)	1
9	580013209	Wear Strip (Left Upper)	1
10	580086809	Seal	2
11	580013256	Rod Wiper	2
12	580013480	Snap Ring	2
13	580013481	Screw	6
14	015628700	Grease Fitting	4
15	500159904	O-Ring	2
	524169329	Kit-Seal (Class III)	1

FOOTNOTES:

a Three Stage Full Free-Lift

b Two Stage Full Free-Lift

©2008 Yale Materials Handling Corporation

INTEGRAL SIDE-SHIFT CARRIAGE (FIGURE 15-10)

GP/GLP/GDP80-90VX (60 IN.) — TWO AND THREE STAGE FULL FREE-LIFT

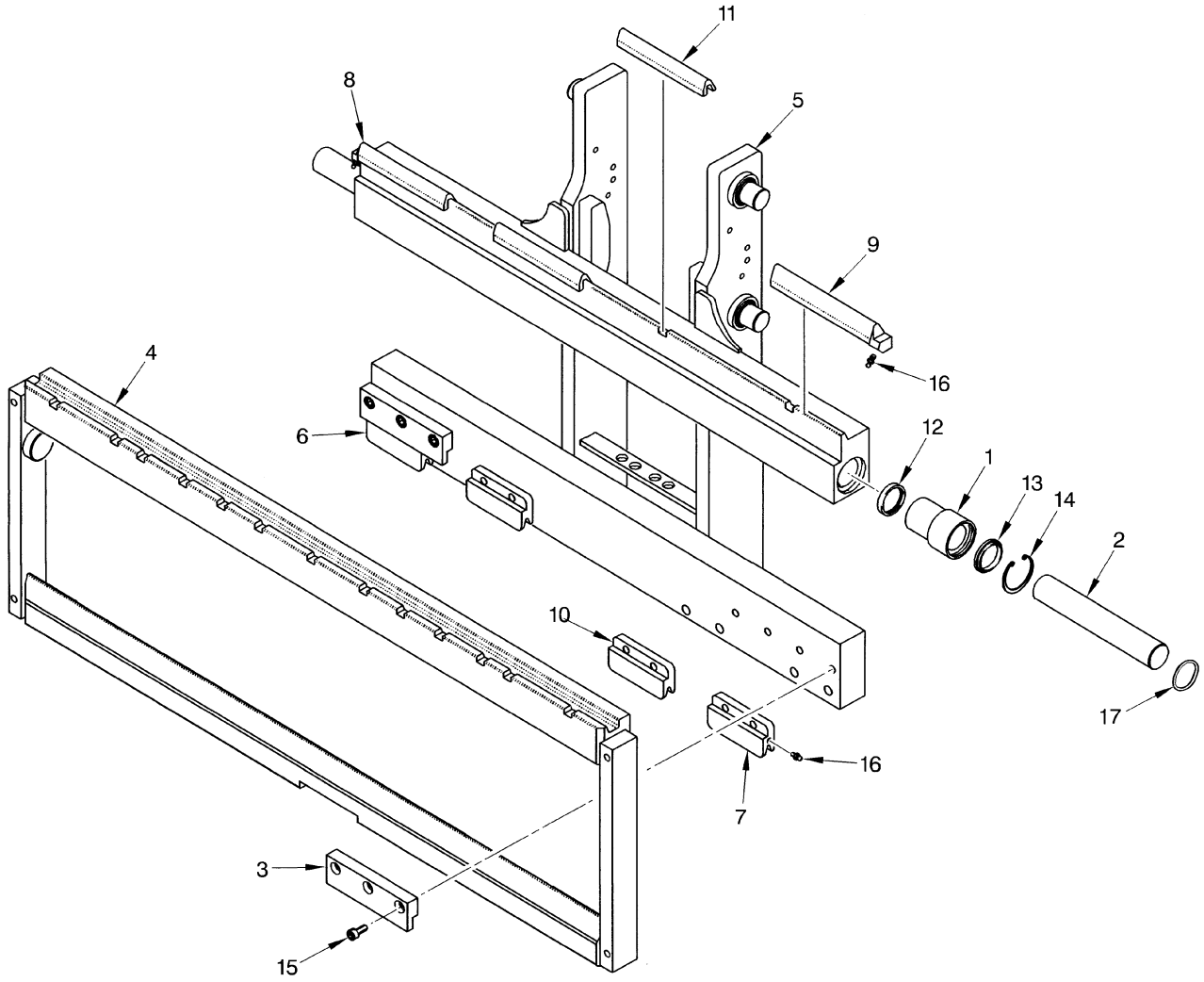

©2008 Yale Materials Handling Corporation

INTEGRAL SIDE-SHIFT CARRIAGE

GP/GLP/GDP80-90VX (60 IN.) – TWO AND THREE STAGE FULL FREE-LIFT

ITEM	PART NO.	DESCRIPTION	QTY
	b 580014150	Side-Shift Carriage (60 in.)	1
	a 580012455	Side-Shift Carriage (60 in.)	1
1	580013212	Bushing	2
2	580013213	Rod	2
3	580013214	Hook	2
4	580039177	Apron	1
5	**b** 580018546	Frame	1
5	**a** 580013804	Frame	1
6	580013204	Wear Strip (Right Lower) (RH Lower)	1
7	580013207	Wear Strip (Left Lower) (LH Lower)	1
8	580013208	Wear Strip (Right Upper) (RH Upper)	1
9	580013209	Wear Strip (Left Upper) (LH Upper)	1
10	580013254	Wear Strip (Lower Center)	2
11	580013253	Wear Strip (Upper Center)	2
12	580086809	Seal	2
13	580013256	Rod Wiper	2
14	580013480	Snap Ring	2
15	580013481	Screw	6
16	015628700	Grease Fitting	4
17	500159904	O-Ring	2
	524169329	Kit-Seal (Class III)	1

FOOTNOTES:

a Three Stage Full Free-Lift

b Two Stage Full Free-Lift

©2008 Yale Materials Handling Corporation

INTEGRAL SIDE-SHIFT ASSEMBLY (FIGURE 15-11)

GP/GLP/GDP100-120VX (54 IN. AND 60 IN.) — TWO AND THREE STAGE FULL FREE-LIFT

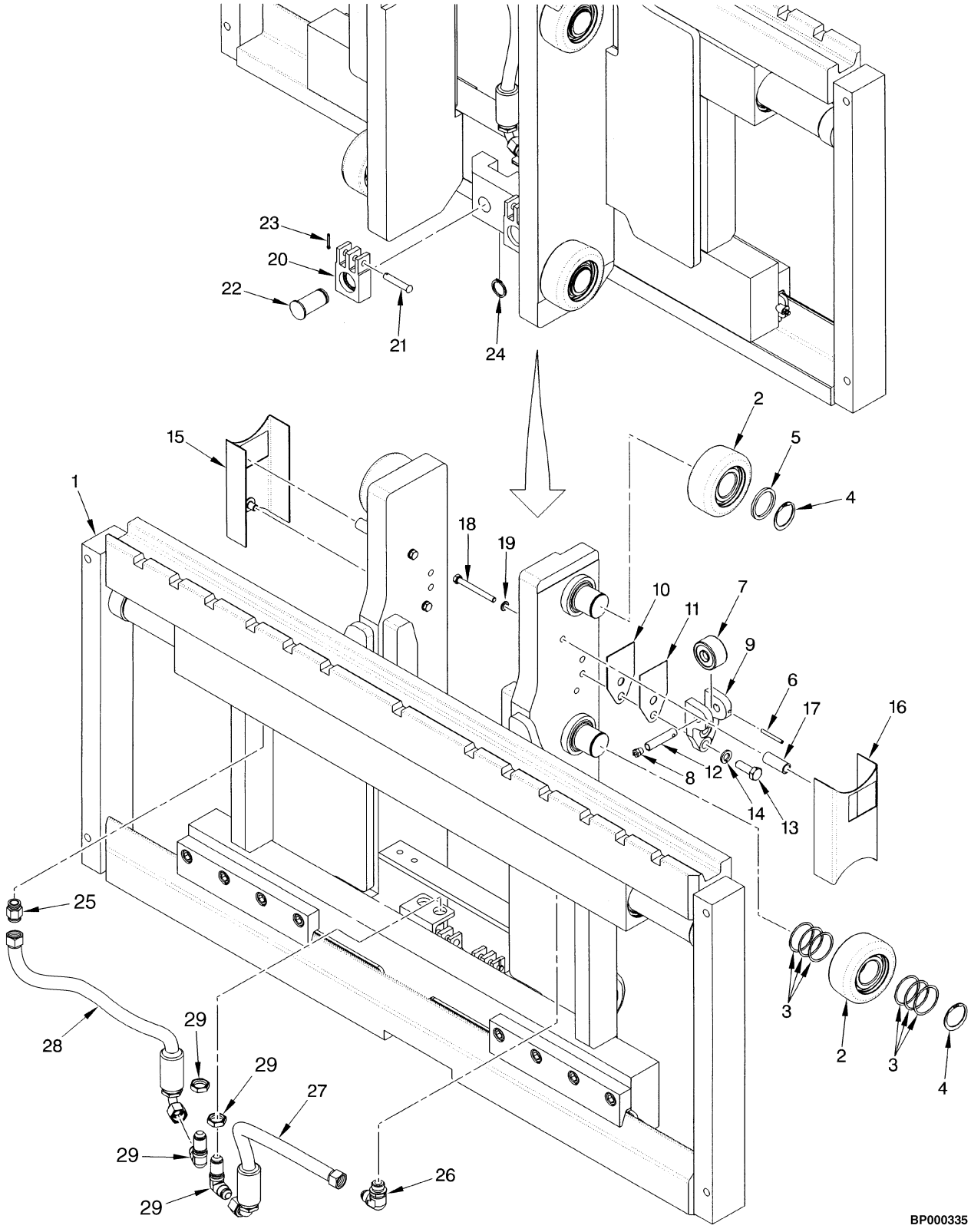

©2008 Yale Materials Handling Corporation

INTEGRAL SIDE-SHIFT ASSEMBLY

GP/GLP/GDP100-120VX (54 IN. AND 60 IN.) – TWO AND THREE STAGE FULL FREE-LIFT

ITEM	PART NO.	DESCRIPTION	QTY
	b 580014148	Side-Shift Carriage (54 in.) (Group No. 8502092)	1
	b 580014149	Side-Shift Carriage (60 in.) (Group No. 8502093)	1
	a 580012464	Side-Shift Carriage (54 in.) (Group No. 8502072)	1
	a 580012465	Side-Shift Carriage (60 in.) (Group No. 8502073)	1
1	. . . . .	Carriage (☞P19848 [Page 15-30])	1
2	580031673	Load Roller (101.67 mm)	6
3	520045153	Shim (0.020 in.)	24
4	580012093	Snap Ring	6
5	580011609	Spacer	2
6	520045150	Roll Pin	2
7	580084983	Cam Follower	2
8	015627900	Grease Fitting	2
9	580012185	Bracket	2
10	520045395	Shim (0.062 in.)	AR
11	520045159	Shim (0.030 in.)	AR
12	580084984	Pin	2
13	449001058	Capscrew	4
14	449022017	Lockwasher	4
15	520045177	Bracket Wldmt (RH)	1
16	520045178	Bracket Wldmt (LH)	1
17	520045171	Spacer	4
18	203146300	Capscrew	3
18	062144100	Capscrew	1
19	015026200	Lockwasher	4
20	580017492	Chain Anchor	2
21	520045195	Pin	2
22	520045182	Pin	2
23	015417900	Cotter Pin	2
24	500227907	Snap Ring	2
25	580020430	Fitting	1
25	580063949	O-Ring	1
25	052645300	O-Ring	1
26	580020576	Fitting	1
26	052645300	O-Ring	1
26	580063949	O-Ring	1
27	580077421	Hose Assy	1
28	580077422	Hose Assy	1
29	056056700	Fitting	2

FOOTNOTES:

a Three Stage Full Free-Lift

b Two Stage Full Free-Lift

©2008 Yale Materials Handling Corporation

INTEGRAL SIDE-SHIFT CARRIAGE (FIGURE 15-12)

GP/GLP/GDP100-120VX (54 IN. AND 60 IN.) — TWO AND THREE STAGE FULL FREE-LIFT

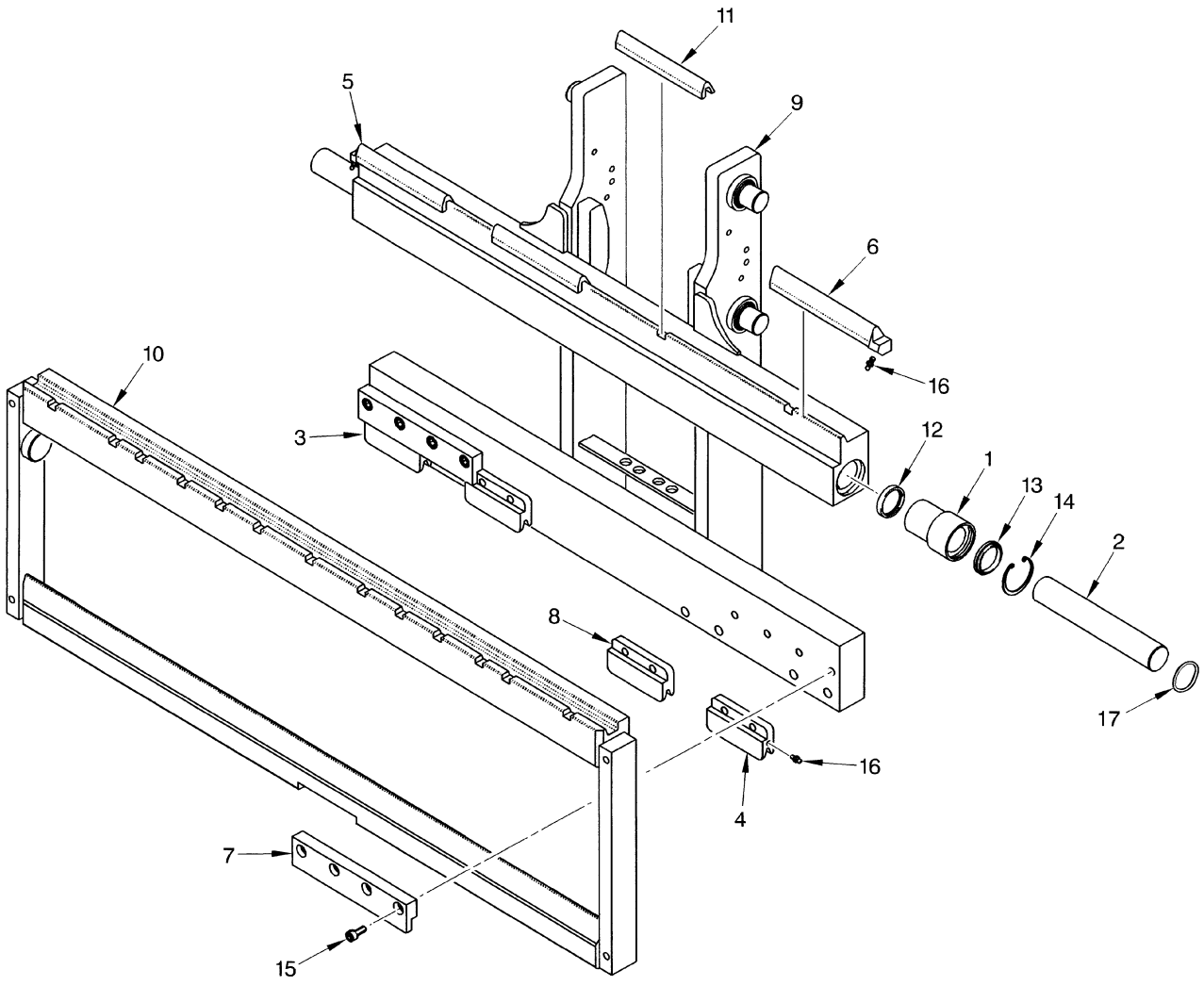

©2008 Yale Materials Handling Corporation

INTEGRAL SIDE-SHIFT CARRIAGE

GP/GLP/GDP100-120VX (54 IN. AND 60 IN.) – TWO AND THREE STAGE FULL FREE-LIFT

ITEM	PART NO.	DESCRIPTION	QTY
	b 580014151	Side-Shift Carriage (54 in.)	1
	b 580014152	Side-Shift Carriage (60 in.)	1
	a 580012456	Side-Shift Carriage (54 in.)	1
	a 580012457	Side-Shift Carriage (60 in.)	1
1	580013257	Bushing	2
2	580013258	Rod	2
3	580013204	Wear Strip (Right Lower)	1
4	580013207	Wear Strip (Left Lower)	1
5	580013208	Wear Strip (Right Upper)	1
6	580013209	Wear Strip (Left Upper)	1
7	580013259	Hook	2
8	580013254	Wear Strip (Lower Center)	2
9	**b** 580018544	Side-Shift Carriage (60 in.)	1
9	**b** 580018545	Frame (54 in.)	1
9	**a** 580013805	Frame (54 in.)	1
9	**a** 580013807	Frame (60 in.)	1
10	580039173	Apron (54 in.)	1
10	580039174	Apron (60 in.)	1
11	580013253	Wear Strip (Upper Center)	2
12	580086809	Seal	2
13	580013256	Rod Wiper	2
14	580013483	Snap Ring	2
15	580013481	Screw	8
16	015628700	Grease Fitting	8
17	500159904	O-Ring	2
	524169328	Kit-Seal (Class IV)	1

FOOTNOTES:

a Three Stage Full Free-Lift

b Two Stage Full Free-Lift

©2008 Yale Materials Handling Corporation

AUXILIARY TUBE EXTENSIONS (FIGURE 15-13)

TWO STAGE LIMITED FREE-LIFT

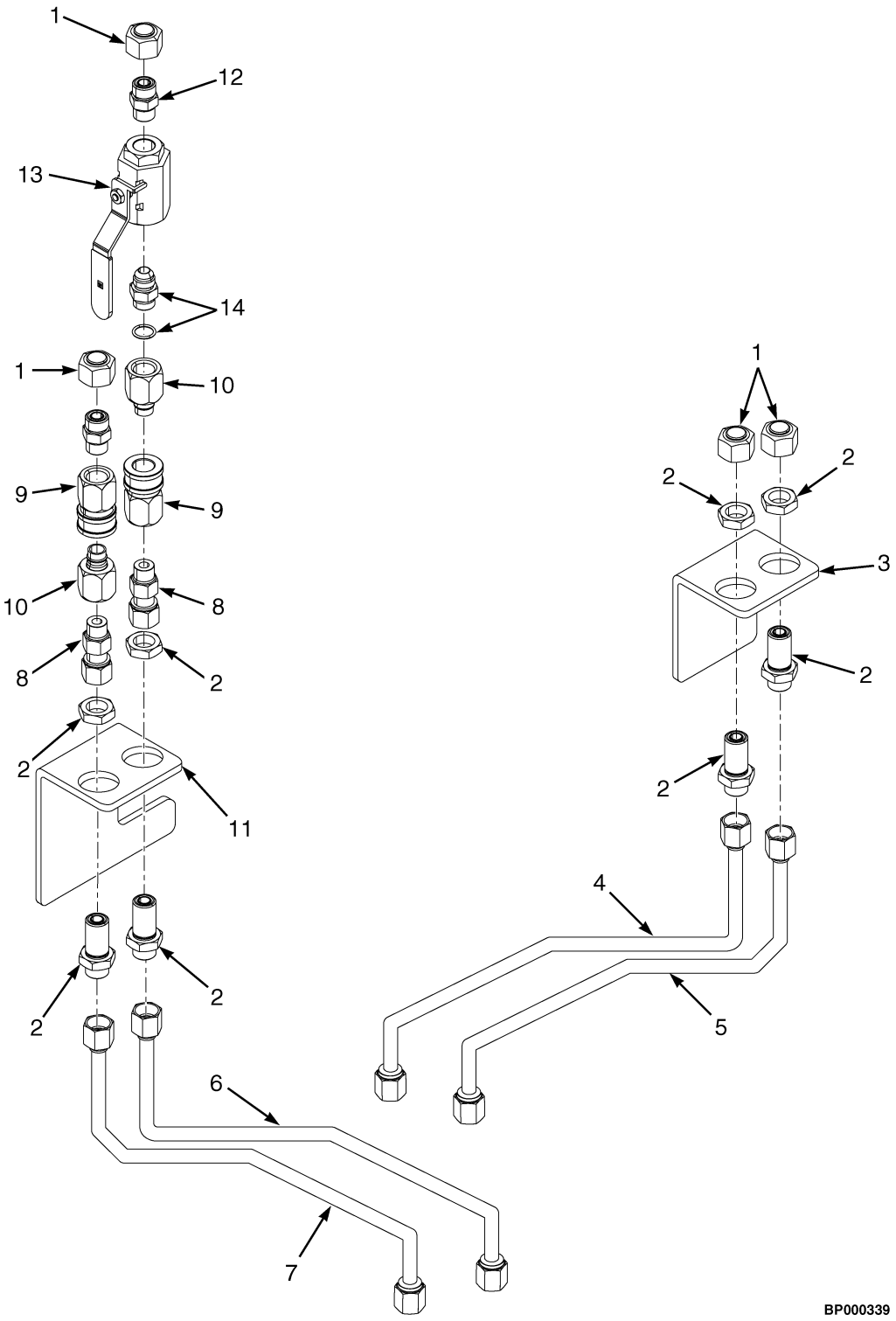

©2008 Yale Materials Handling Corporation

AUXILIARY TUBE EXTENSIONS
TWO STAGE LIMITED FREE-LIFT

KEY:
A: B749, Three Function
B: B749, Four Function
C: B750, Three Function
D: B750, Four Function

ITEM	PART NO.	DESCRIPTION	QTY A	QTY B	QTY C	QTY D
1	580039425	Fitting	2	4	2	4
2	**d** 580020987	Fitting	2	4	2	4
2	**d** 580063949	O-Ring	2	2	2	2
3	580076912	Bracket	1	1	1	1
4	580077280	Tube Assy	1	..	..	..
4	580077284	Tube Assy	..	..	1	..
4	**b** 580077292	Tube Assy	1	..	..	..
5	580077279	Tube Assy	1	..	..	..
5	580077283	Tube Assy	..	..	1	..
5	**b** 580077291	Tube Assy	1	..	..	..
6	580077282	Tube Assy	..	1	..	..
6	580077286	Tube Assy	..	..	..	1
6	**c** 580077288	Tube Assy	..	1	..	..
6	**c** 580077290	Tube Assy	..	..	..	1
6	**b** 580077294	Tube Assy	..	1	..	..
7	580077281	Tube Assy	..	1	..	..
7	580077285	Tube Assy	..	..	..	1
7	**c** 580077287	Tube Assy	..	1	..	..
7	**c** 580077289	Tube Assy	..	..	..	1
7	**b** 580077293	Tube Assy	..	1	..	..
8	580069454	Fitting	2	4	2	4
8	052645300	O-Ring	1	1	1	1
9	518802601	Quick Disconnect Fitting	2	4	2	4
10	518803619	Fitting	2	2	2	2
11	**c** 580077266	Bracket (LH)	1	1	1	1
12	580020430	Fitting	2	4	2	4
12	052645300	O-Ring	1	1	1	1
13	580071068	Drain Valve	1	1	1	1
14	052643300	Fitting	1	1	1	1
14	052645300	O-Ring	1	1	1	1
	a 580037688	Dust Cap	1	2	1	2
	a 580037687	Dust Cap (Not Illustrated)	1	2	1	2

FOOTNOTES:
a Not Illustrated
b Used With Attachment Carriage
c Used With Integral Side-Shift Carriage
d Used without quick disconnect fittings

©2008 Yale Materials Handling Corporation

AUXILIARY TUBE EXTENSIONS (FIGURE 15-14)
TWO STAGE FULL FREE-LIFT

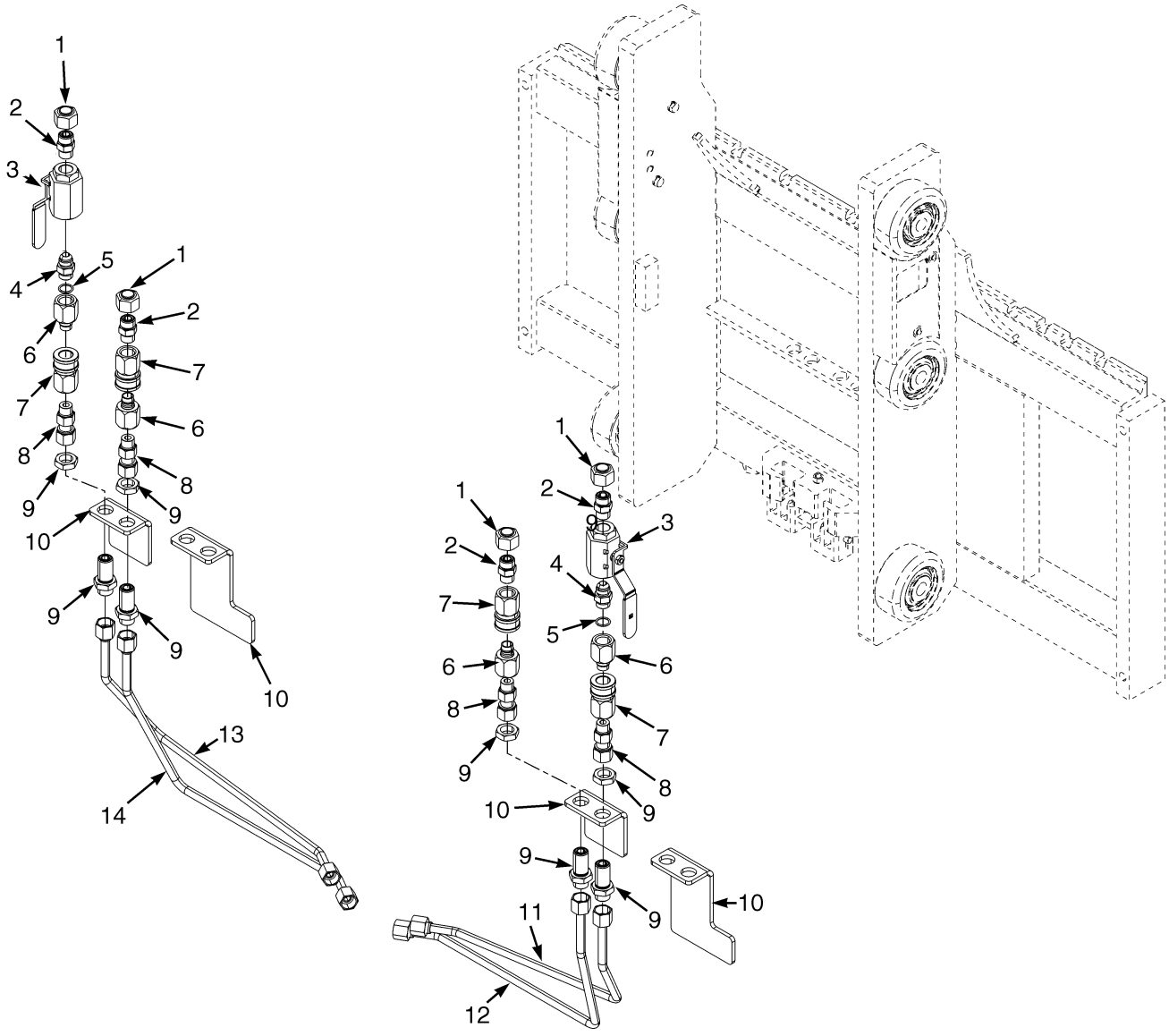

©2008 Yale Materials Handling Corporation

AUXILIARY TUBE EXTENSIONS
TWO STAGE FULL FREE-LIFT

KEY:
A: A753, Three Function, Class III
B: A754, Three Function, Class IV
C: A753, Four Function, Class III
D: A754, Four Function, Class IV

ITEM	PART NO.	DESCRIPTION	QTY A	B	C	D
1	580039425	Fitting	2	2	4	4
2	**e** 580020430	Fitting	2	2	4	4
2	**e** 580063949	O-Ring	1	1	2	2
2	**e** 052645300	O-Ring	1	1	2	2
3	**e** 580071068	Drain Valve	1	1	2	2
4	**e** 052643300	Fitting	1	1	1	2
5	**e** 052645300	O-Ring	1	1	2	2
6	**e** 518803619	Fitting	2	2	4	4
7	**e** 518802601	Quick Disconnect Fitting	2	2	4	4
8	**e** 580069454	Fitting	2	2	4	4
8	052645300	O-Ring	1	1	2	2
9	580020987	Fitting	2	2	4	4
9	580063949	O-Ring	1	1	1	1
10	580076912	Bracket (Standard and Attachment Carriage)	1	1	2	2
10	580077266	Bracket (Integral Carriage)	..	..	2	2
11	**d** 580077648	Tube Assy	1	..	..	..
11	**d** 580077652	Tube Assy	..	1	..	..
11	**b** 580077660	Tube Assy	1	..	..	..
12	**d** 580077649	Tube Assy	1	..	..	..
12	**d** 580077653	Tube Assy	..	1	..	..
12	**b** 580077661	Tube Assy	1	..	..	..
13	**d** 580077650	Tube Assy	..	..	1	..
13	**d** 580077654	Tube Assy	..	..	..	1
13	**c** 580077656	Tube Assy	..	..	1	..
13	**b** 580077662	Tube Assy	..	..	1	..
13	**c** 580077658	Tube Assy	..	..	..	1
14	**d** 580077651	Tube Assy	..	..	1	..
14	**d** 580077655	Tube Assy	..	..	..	1
14	**d** 580077657	Tube Assy	..	..	1	..
14	**c** 580077659	Tube Assy	..	..	..	1
14	**b** 580077663	Tube Assy	..	..	1	..
	a 580037687	Dust Cap	1	1	1	1
	a 580037688	Dust Cap	1	1	1	1

FOOTNOTES:
a Not Illustrated
b Used With Attachment Carriage
c Used With Integral Side-Shift Carriage
d Used With Standard Carriage
e With Quick Disconnect

©2008 Yale Materials Handling Corporation

AUXILIARY TUBE EXTENSIONS (FIGURE 15-15)

THREE STAGE FULL FREE-LIFT

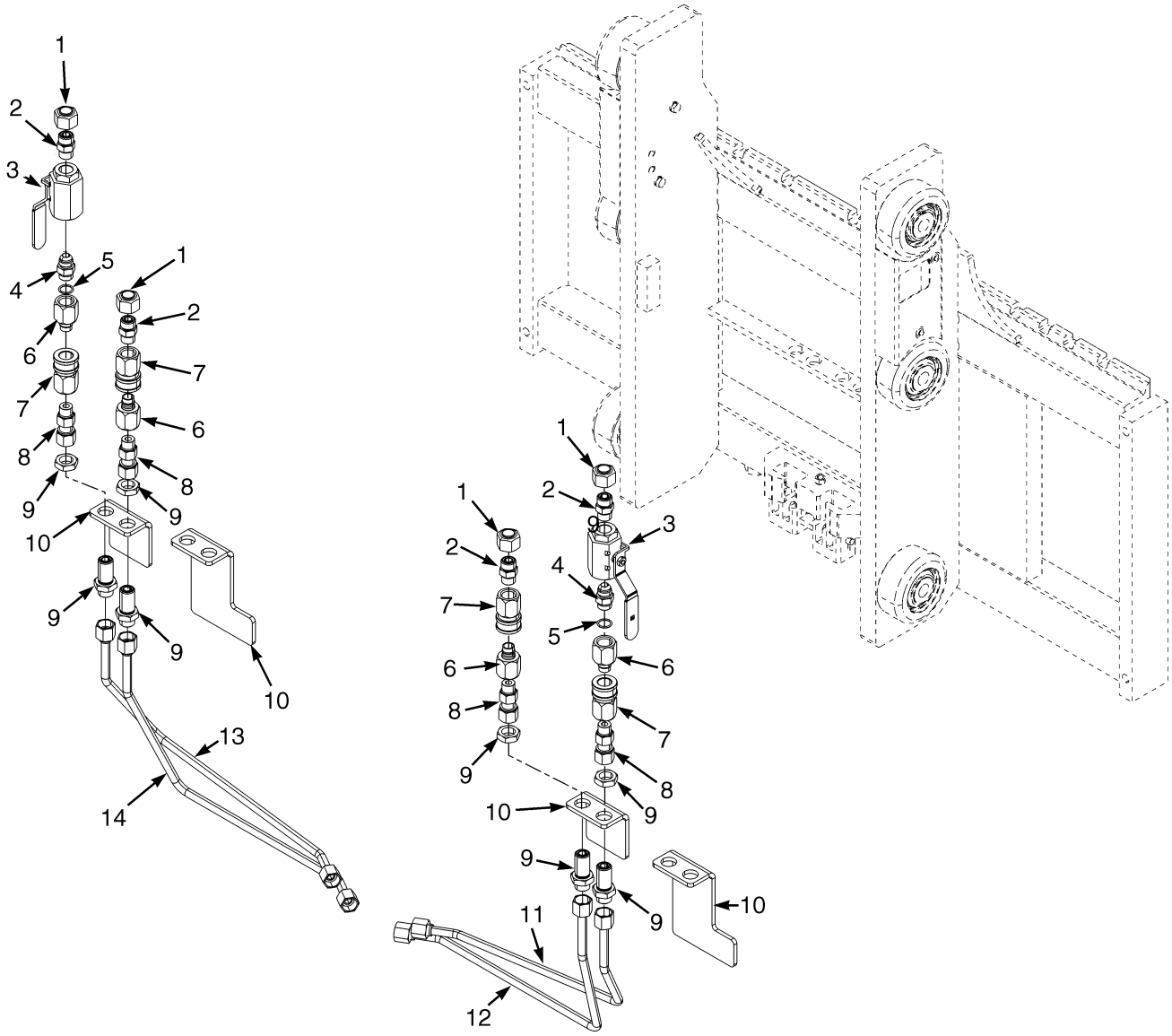

BP020026

©2008 Yale Materials Handling Corporation

AUXILIARY TUBE EXTENSIONS
THREE STAGE FULL FREE-LIFT

KEY:
A: A753, Three Function, Class III
B: A754, Three Function, Class IV
C: A753, Four Function, Class III
D: A754, Four Function, Class IV

ITEM	PART NO.	DESCRIPTION	QTY A	B	C	D
1	580039425	Fitting	2	2	4	4
2	**e** 580020430	Fitting	2	2	4	4
2	**e** 580063949	O-Ring	1	1	2	2
2	**e** 052645300	O-Ring	1	1	2	2
3	**e** 580071068	Drain Valve	1	1	2	2
4	**e** 052643300	Fitting	1	1	1	2
5	**e** 052645300	O-Ring	1	1	2	2
6	**e** 518803619	Fitting	2	2	4	4
7	**e** 518802601	Quick Disconnect Fitting	2	2	4	4
8	**e** 580069454	Fitting	2	2	4	4
8	052645300	O-Ring	1	1	2	2
9	580020987	Fitting	2	2	4	4
9	580063949	O-Ring	1	1	1	1
10	580076912	Bracket (Standard and Attachment Carriage)	1	1	2	2
10	580077266	Bracket (Integral Carriage)	..	..	2	2
11	**d** 580077664	Tube Assy	1	..	..	..
11	**d** 580077652	Tube Assy	..	1	..	..
11	**b** 580077660	Tube Assy	1	..	..	..
12	**d** 580077665	Tube Assy	1	..	..	..
12	**d** 580077653	Tube Assy	..	1	..	..
12	**b** 580077661	Tube Assy	1	..	..	..
13	**d** 580077666	Tube Assy	..	..	1	..
13	**d** 580077654	Tube Assy	..	..	..	1
13	**c** 580077672	Tube Assy	..	..	1	..
13	**c** 580077658	Tube Assy	..	..	..	1
13	**b** 580077662	Tube Assy	..	..	1	..
14	**d** 580077667	Tube Assy	..	..	1	..
14	**d** 580077655	Tube Assy	..	..	..	1
14	**c** 580077673	Tube Assy	..	..	1	..
14	**c** 580077659	Tube Assy	..	..	..	1
14	**b** 580077663	Tube Assy	..	..	1	..
	a 580037687	Dust Cap	1	1	1	1
	a 580037688	Dust Cap	1	1	1	1

FOOTNOTES:
a Not Illustrated
b Used With Attachment Carriage
c Used With Integral Side-Shift Carriage
d Used With Standard Carriage
e With Quick Disconnect

©2008 Yale Materials Handling Corporation

NOTES

©2008 Yale Materials Handling Corporation

SECTION 16
OPTIONS

DESCRIPTION	PAGE
ACCUMULATOR	16-8
BACK-UP ALARM	16-6
DUAL MIRRORS	
WITH CAB	16-4
FIRE EXTINGUISHER	16-5
GM LPG REGULATOR DRAIN KIT	16-12
LIFTING EYES	16-10
MIRROR	16-3
STROBE LIGHT	
LED	16-2

©2008 Yale Materials Handling Corporation

STROBE LIGHT (FIGURE 16-1)
LED

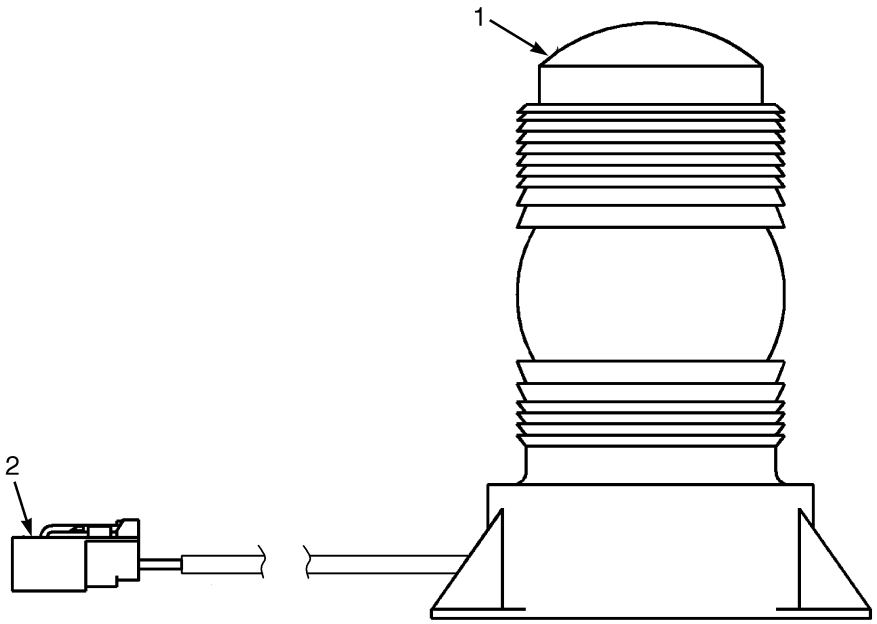

BP000363

ITEM	PART NO.	DESCRIPTION	QTY
	580079615	Strobe Light	1
1	580078920	Strobe Light (LED)	1
2	580041195	Terminal	1
2	580056006	Connector	1
2	580056004	Connector	1
	a 504232297	Guard	1
	a 580051159	Bracket Wldmt	1

FOOTNOTES:
a Not Illustrated

©2008 Yale Materials Handling Corporation

MIRROR (FIGURE 16-2)

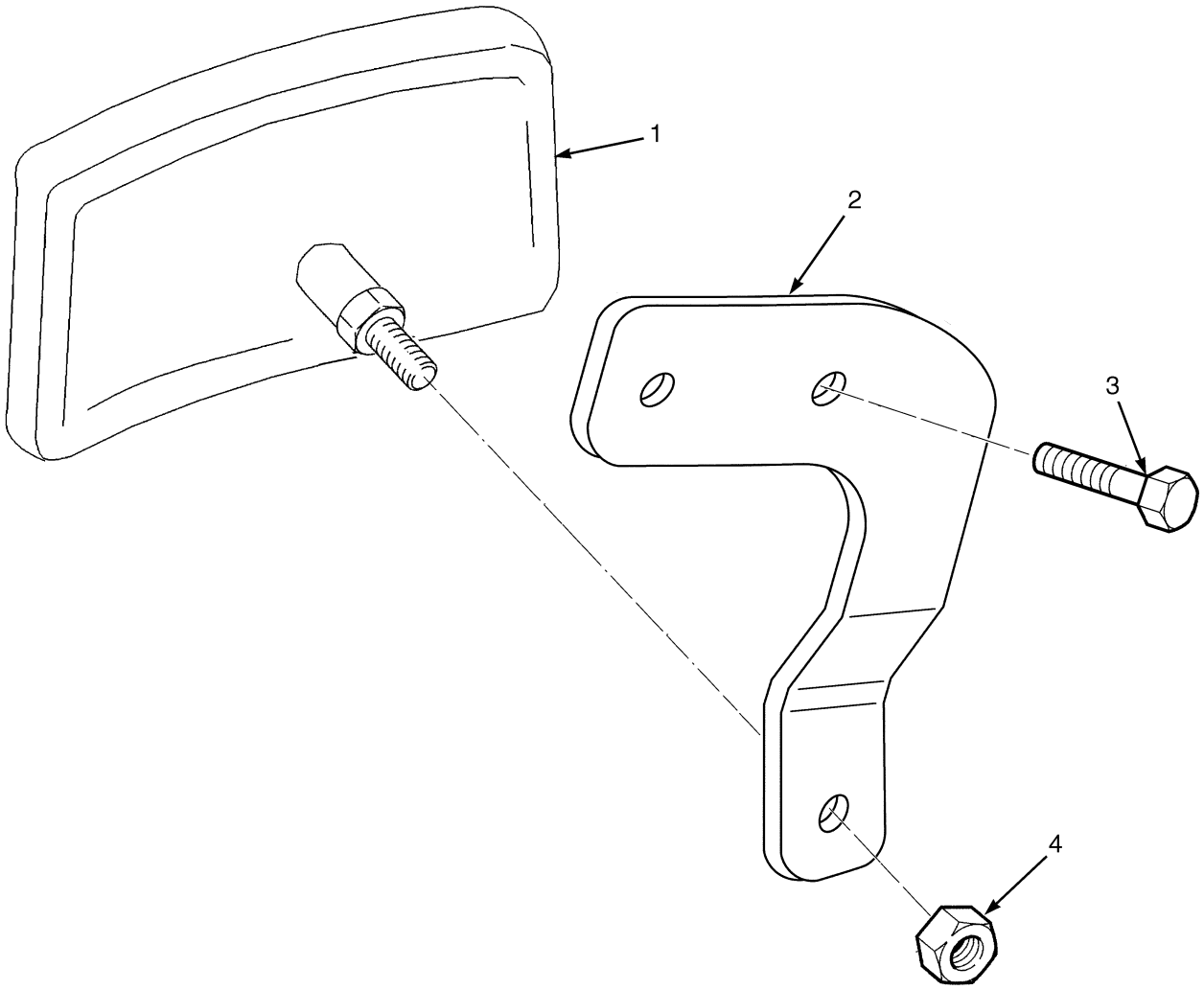

BP000247

ITEM	PART NO.	DESCRIPTION	QTY
1	505975539	Mirror	2
2	580080919	Bracket (RH)	1
2	580080920	Bracket (LH)	1
3	580058269	Capscrew	4
4	580058190	Nut	4

©2008 Yale Materials Handling Corporation

DUAL MIRRORS (FIGURE 16-3)
WITH CAB

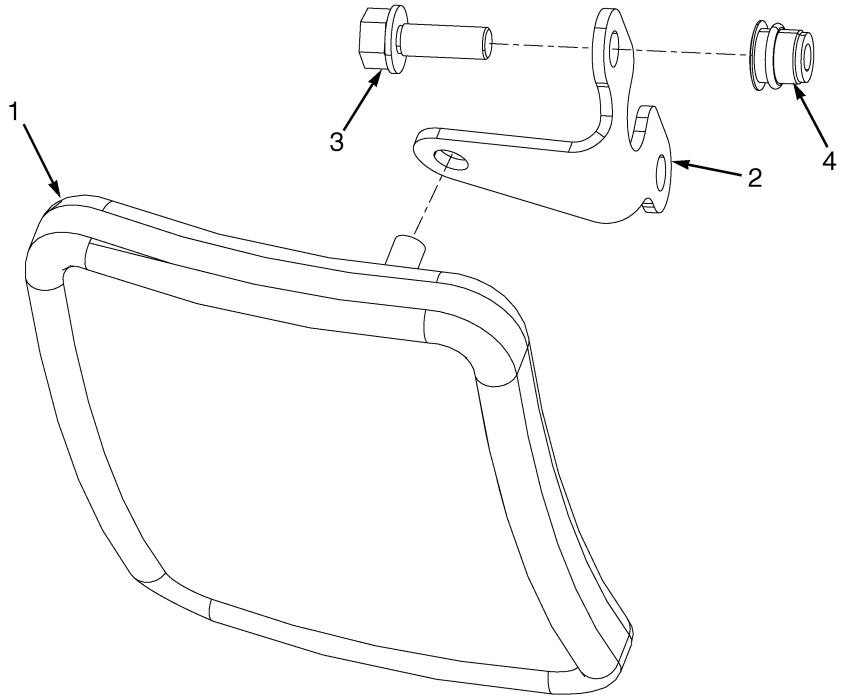

ITEM	PART NO.	DESCRIPTION	QTY
1	505975539	Mirror	2
2	580058808	Bracket	2
3	580056815	Capscrew	4
4	580044861	Insert	4

©2008 Yale Materials Handling Corporation

FIRE EXTINGUISHER (FIGURE 16-4)

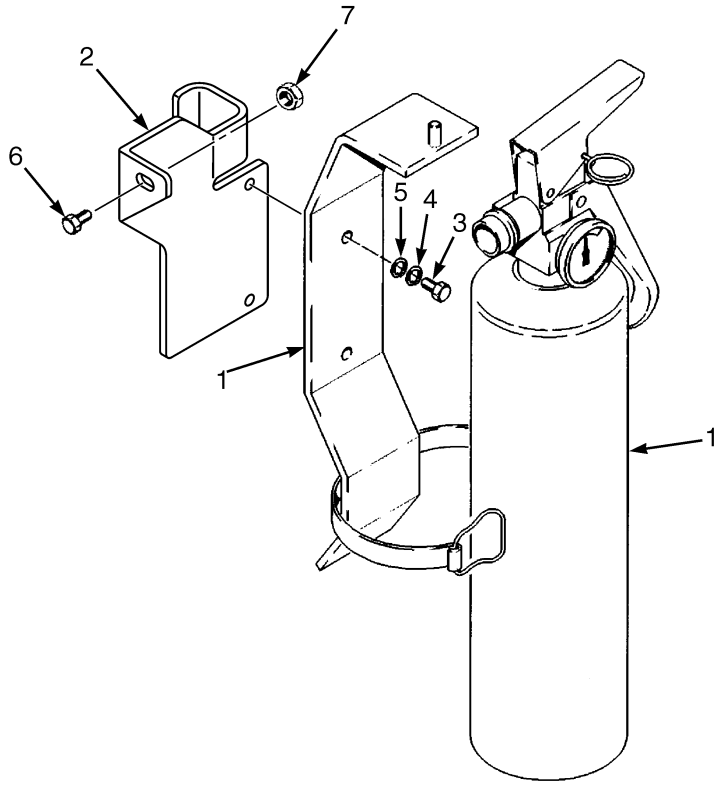

ITEM	PART NO.	DESCRIPTION	QTY
1	504061719	Fire Extinguisher	1
1	580049526	Bracket	1
2	580078070	Bracket (Without Cab)	1
2	580069619	Bracket (With Cab)	1
3	580027621	Screw	2
4	449022021	Washer	2
5	449021002	Washer	2
6	580056815	Capscrew (Without Cab)	1
6	580058212	Capscrew (With Cab)	2
7	580027573	Nut (Flange) (Without Cab)	1
7	580041704	Insert (With Cab)	2

©2008 Yale Materials Handling Corporation

BACK-UP ALARM (FIGURE 16-5)

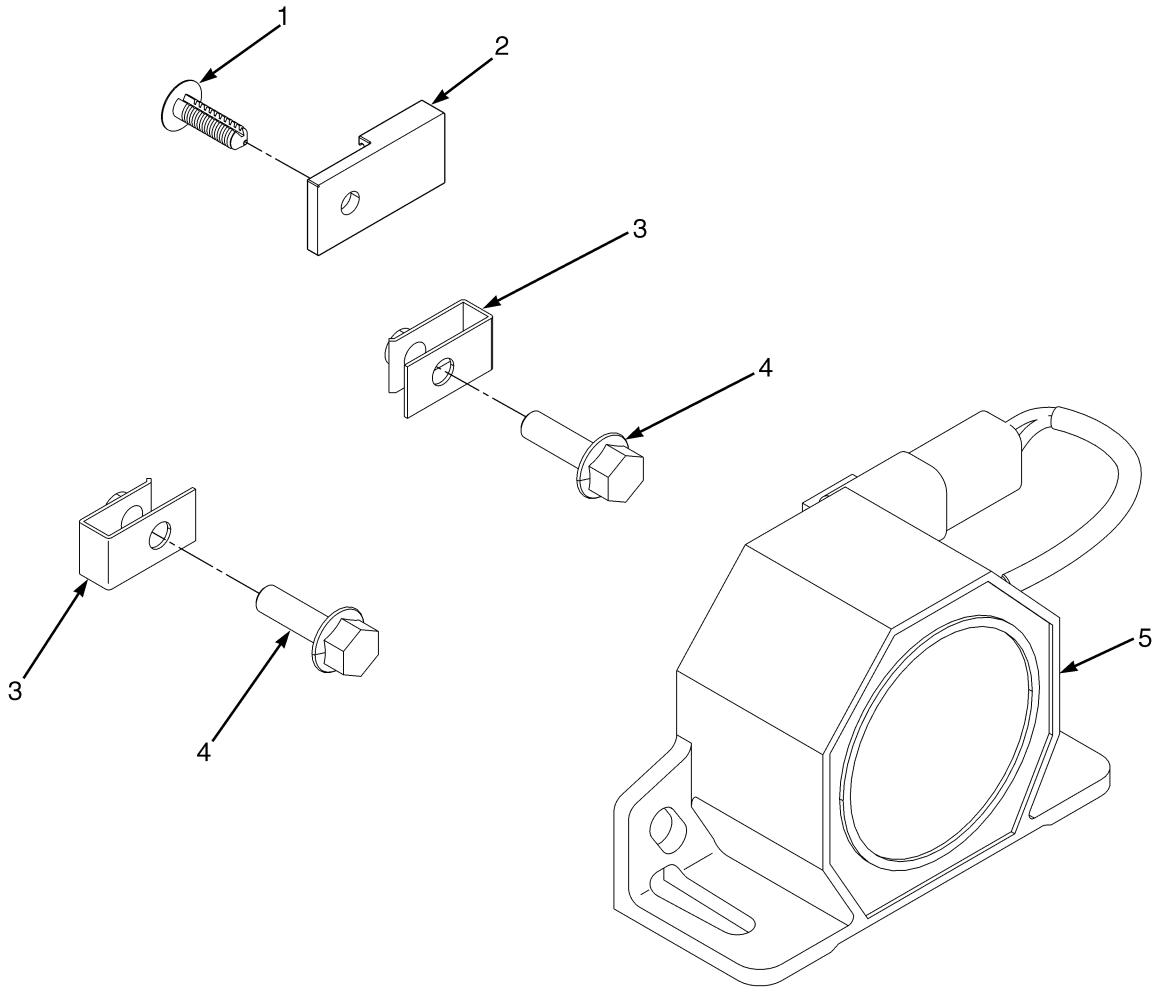

BP000308

©2008 Yale Materials Handling Corporation

BACK-UP ALARM

ITEM	PART NO.	DESCRIPTION	QTY
1	580056613	Fastener	1
2	580026812	Clip	1
3	505970526	Nut	2
4	580039438	Capscrew	2
5	580045132	Back-Up Alarm (82-102 dbA)	1

©2008 Yale Materials Handling Corporation

ACCUMULATOR (FIGURE 16-6)

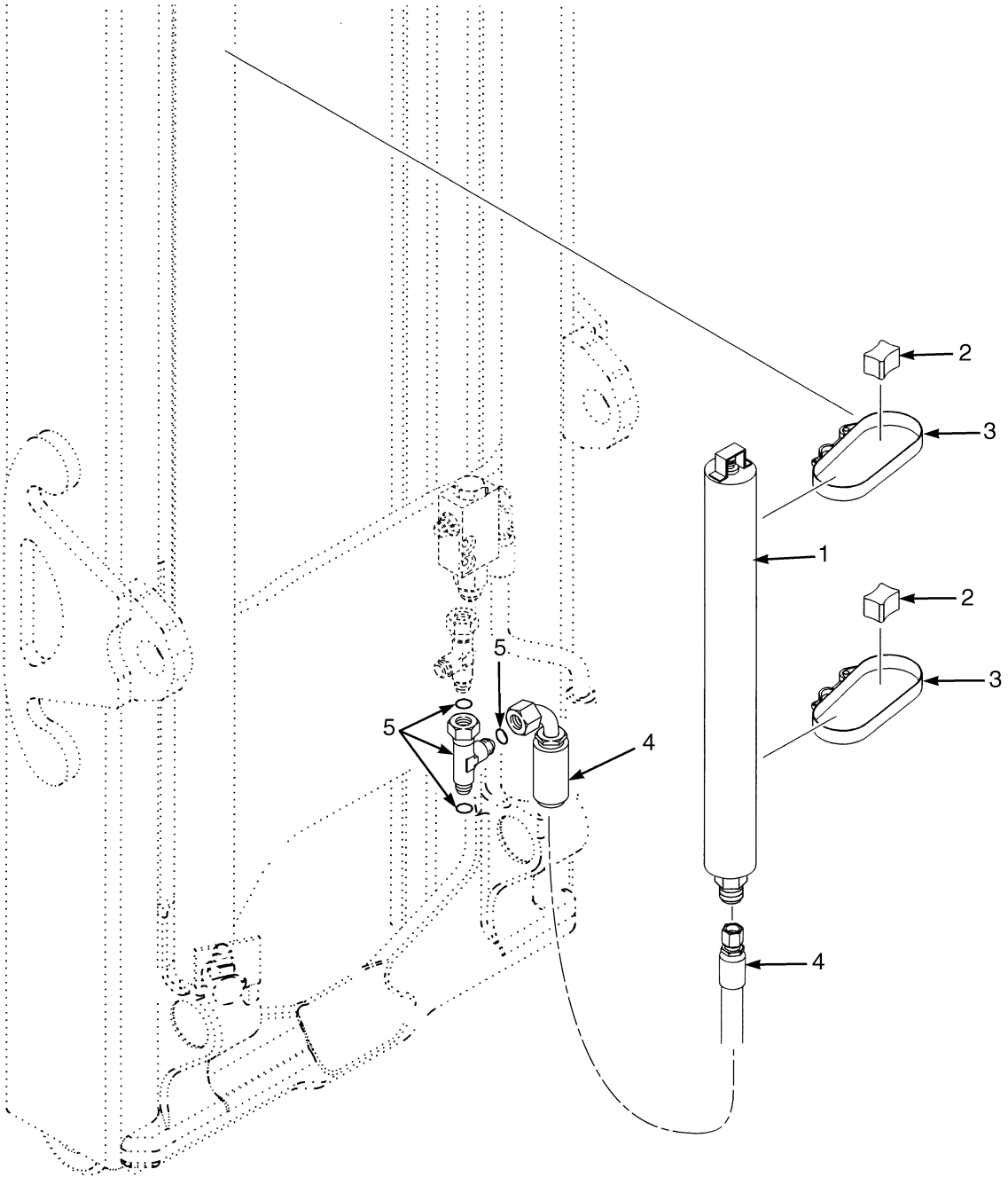

©2008 Yale Materials Handling Corporation

ACCUMULATOR

ITEM	PART NO.	DESCRIPTION	QTY
1	580012572	Accumulator	1
2	580065421	Spacer	2
3	580066235	Clamp	2
4	580075798	Hose Assy	1
5	580019896	Fitting	1
5	580019387	O-Ring	3

©2008 Yale Materials Handling Corporation

LIFTING EYES (FIGURE 16-7)

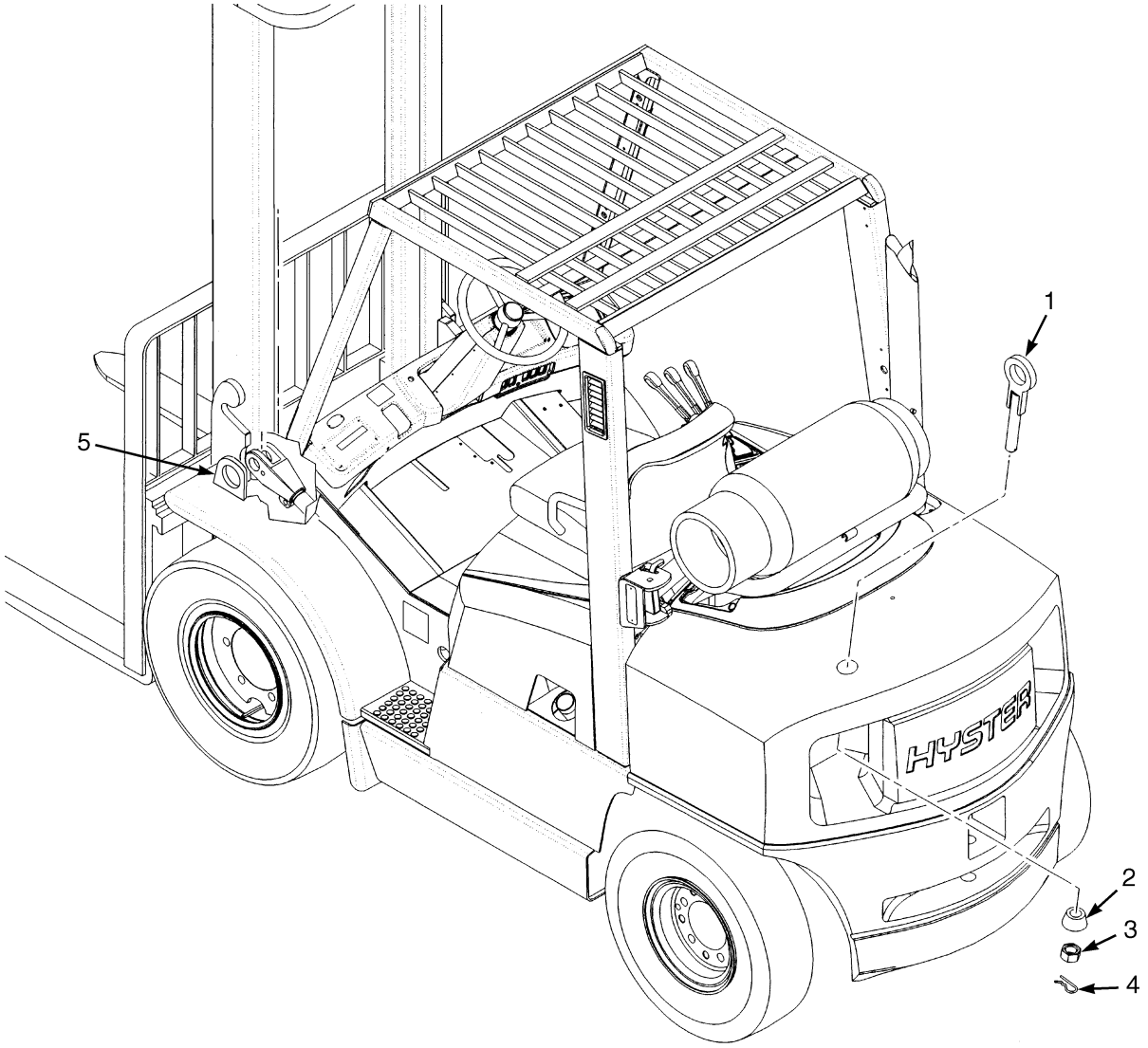

BP000181

ITEM	PART NO.	DESCRIPTION	QTY
1	580078642	Eyebolt	1
2	580015437	Anchor	2
3	937300930	Nut	1
3	580060025	Nut	3
4	015421700	Cotter Pin	2
5	. . . . .	Front Lifting Plate	2

©2008 Yale Materials Handling Corporation

NOTES

©2008 Yale Materials Handling Corporation

GM LPG REGULATOR DRAIN KIT (FIGURE 16-8)

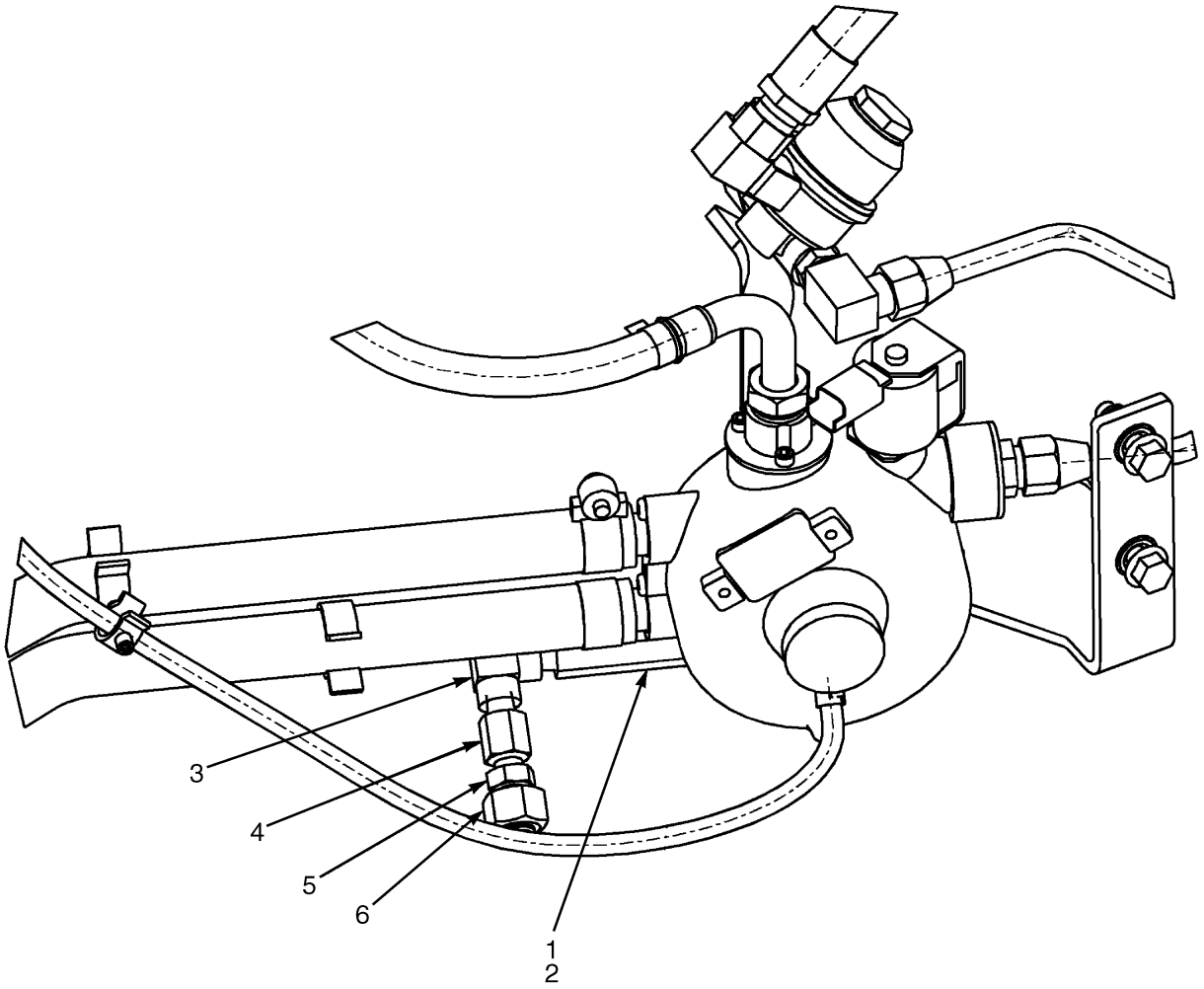

BP000396

©2008 Yale Materials Handling Corporation

GM LPG REGULATOR DRAIN KIT

ITEM	PART NO.	DESCRIPTION	QTY
	524299079	Kit-Service	1
1	580069177	Fitting	1
2	056363300	O-Ring	1
3	1053161DD	Fitting	1
4	900015237	Fitting	1
5	580020445	Fitting	1
6	580039423	Fitting	1
7	**a** 518795676	Loctite	1

FOOTNOTES:

a Not Shown

©2008 Yale Materials Handling Corporation

NOTES

©2008 Yale Materials Handling Corporation

SECTION 17
FIELD CONVERSION KITS

DESCRIPTION	PAGE
AUDIBLE ALARM KITS	17-3
BRAKE AND INCHING PEDAL CONVERSION	17-2
DIRECTIONAL CONTROL KITS	17-2
E-HYDRAULIC CONTROL CONVERSION KITS	17-3
HEADER HOSE CONVERSION KITS	
THREE STAGE FULL FREE-LIFT	17-7
TWO STAGE FULL FREE-LIFT	17-5
TWO STAGE LIMITED FREE-LIFT	17-4
HYDRAULIC CONTROL CONVERSIONS	17-3
LIGHT KITS	17-9
MISCELLANEOUS CONVERSION KITS	17-9
RETURN TO SET TILT KITS	17-2
SEAT CONVERSION KITS	17-2
WEATHER PROTECTION KITS	17-2
WHEEL CONVERSION KITS	17-2

©2008 Yale Materials Handling Corporation

BRAKE AND INCHING PEDAL CONVERSION

DESCRIPTION	PART NUMBER
Dual Pedal with Dry Brakes Kit 80 and 100 BCS	524260158
Kit-Dual Brake Pedal	524260159
Kit-Dual Brake Pedal	524260160

WHEEL CONVERSION KITS

DESCRIPTION	PART NUMBER
Kit-Wide Tread	524260546
Kit-Wide Tread	524260547
Kit-Single to Dual Drive Wheel	524260651
Kit-Single to Dual Drive Wheel	524260652
Kit-Single to Dual Drive Wheel	524260653

SEAT CONVERSION KITS

DESCRIPTION	PART NUMBER
Kit-Swivel Seat Full Susp	524230981
Kit-Swivel Seat Full Susp	524230982
Kit-Swivel Seat Full Susp	524260441
Kit-Swivel Seat Full Susp	524260442

RETURN TO SET TILT KITS

DESCRIPTION	PART NUMBER
Kit-Return to Set Tilt 3 Way	524268025
Kit-Return to Set Tilt 4 Way	524268026
Kit-Return to Set Tilt 3 Way	524268028
Kit-Return to Set Tilt 4 Way	524268029

DIRECTIONAL CONTROL KITS

DESCRIPTION	PART NUMBER
Kit-Fwd/Rev Lever to Fdc	524263337
Kit-Fdc to Fwd/Rev Lever	524227697

WEATHER PROTECTION KITS

DESCRIPTION	PART NUMBER
Kit-Service	524300084
Kit	524300085

©2008 Yale Materials Handling Corporation

AUDIBLE ALARM KITS

DESCRIPTION	PART NUMBER
Kit-Back-Up Alarm	524264437
Kit-Back-Up Alarm	524264438
Kit-Back-Up Alarm	524264439
Kit-Back-Up Alarm	524264440
Kit-Back-Up Alarm	524264441

E-HYDRAULIC CONTROL CONVERSION KITS

DESCRIPTION	PART NUMBER
Kit-Mini Lever Conv 3 Way	524229456
Kit-Mini Lever Conv 3 Way	524245848
Kit-E-Hyd Valve 3 to 4 Way	524269392
Kit-E-Hyd Valve 3 to 4 Way	524269393
Kit-Mini Lever Conv 4 Way	524270047

HYDRAULIC CONTROL CONVERSIONS

DESCRIPTION	PART NUMBER
Kit-Manual Lever Conv 3 Way (without Clamp to 3 Way with Clamp)	524311521
Kit-Manual Lever Conv 3 Way	524312195
Kit-Manual Lever Conv 3 Way	524312193

©2008 Yale Materials Handling Corporation

HEADER HOSE CONVERSION KITS
TWO STAGE LIMITED FREE-LIFT

GP/GLP/GDP080-090VX

DESCRIPTION	LIFT HEIGHT TO BOTTOM OF FORKS		
	3000 mm (118.1 in.)	3600 mm (141.7 in.)	4200 mm (165.4 in.)
Mast Group Number	**B749 3000**	**B749 3600**	**B749 4200**
Kit-Hose Group 2 to 3 Way	524269798	524269800	524269802

GP/GLP/GDP080-090VX

DESCRIPTION	LIFT HEIGHT TO BOTTOM OF FORKS		
	3000 mm (118.1 in.)	3600 mm (141.7 in.)	4200 mm (165.4 in.)
Mast Group Number	**B749 3000**	**B749 3600**	**B749 4200**
Kit-Hose Group 2 to 4 Way	524269799	524269801	524269803

GP/GLP/GDP100-120VX

DESCRIPTION	LIFT HEIGHT TO BOTTOM OF FORKS		
	2740 mm (107.9 in.)	3340 mm (131.5 in.)	3940 mm (155.1 in.)
Mast Group Number	**B750 2740**	**B750 3340**	**B750 3940**
Kit-Hose Group 2 to 3 Way	524269798	524269800	524269802

GP/GLP/GDP100-120VX

DESCRIPTION	LIFT HEIGHT TO BOTTOM OF FORKS		
	2740 mm (107.9 in.)	3340 mm (131.5 in.)	3940 mm (155.1 in.)
Mast Group Number	**B750 2740**	**B750 3340**	**B750 3940**
Kit-Hose Group 2 to 4 Way	524269799	524269801	524269803

©2008 Yale Materials Handling Corporation

HEADER HOSE CONVERSION KITS
TWO STAGE FULL FREE-LIFT

GP/GLP/GDP080-090VX

DESCRIPTION	LIFT HEIGHT TO BOTTOM OF FORKS	
	3025 mm (119.1 in.)	3625 mm (142.7 in.)
Mast Group Number	**B753 3025**	**B753 3625**
Kit-Hose Group 2 to 3 Way	524269784	524269787

GP/GLP/GDP080-090VX

DESCRIPTION	LIFT HEIGHT TO BOTTOM OF FORKS	
	3025 mm (119.1 in.)	3625 mm (142.7 in.)
Mast Group Number	**B753 3025**	**B753 3625**
Kit-Hose Group 2 to 4 Way	524269786	524269789

GP/GLP/GDP080-090VX

DESCRIPTION	LIFT HEIGHT TO BOTTOM OF FORKS	
	3025 mm (119.1 in.)	3625 mm (142.7 in.)
Mast Group Number	**B753 3025**	**B753 3625**
Kit-Hose Group 3 to 4 Way	524269785	524269788

GP/GLP/GDP100-120VX

DESCRIPTION	LIFT HEIGHT TO BOTTOM OF FORKS	
	2765 mm (108.9 in.)	3365 mm (132.5 in.)
Mast Group Number	**B754 2765**	**B754 3365**
Kit-Hose Group 2 to 3 Way	524269790	524269793

©2008 Yale Materials Handling Corporation

GP/GLP/GDP100-120VX

DESCRIPTION	LIFT HEIGHT TO BOTTOM OF FORKS	
	2765 mm (108.9 in.)	**3365 mm (132.5 in.)**
Mast Group Number	**B754 2765**	**B754 3365**
Kit-Hose Group 2 to 4 Way	524269792	524269795

GP/GLP/GDP100-120VX

DESCRIPTION	LIFT HEIGHT TO BOTTOM OF FORKS	
	2765 mm (108.9 in.)	**3365 mm (132.5 in.)**
Mast Group Number	**B754 2765**	**B754 3365**
Kit-Hose Group 3 to 4 Way	524269791	524269794

©2008 Yale Materials Handling Corporation

HEADER HOSE CONVERSION KITS
THREE STAGE FULL FREE-LIFT

GP/GLP/GDP080-090VX

DESCRIPTION	LIFT HEIGHT TO BOTTOM OF FORKS 5200 mm (204.7 in.)
Mast Group Number	**B751 5200**
Kit-Hose Group 2 to 3 Way	524270018

GP/GLP/GDP080-090VX

DESCRIPTION	LIFT HEIGHT TO BOTTOM OF FORKS 5200 mm (204.7 in.)
Mast Group Number	**B751 5200**
Kit-Hose Group 2 to 4 Way	524270020

GP/GLP/GDP080-090VX

DESCRIPTION	LIFT HEIGHT TO BOTTOM OF FORKS 5200 mm (204.7 in.)
Mast Group Number	**B751 5200**
Kit-Hose Group 3 to 4 Way	524270019

GP/GLP/GDP100-120VX

DESCRIPTION	LIFT HEIGHT TO BOTTOM OF FORKS				
	4087 mm (160.9 in.)	**4387 mm (172.7 in.)**	**4640 mm (182.7 in.)**	**4940 mm (194.5 in.)**	**5240 mm (206.3 in.)**
Mast Group Number	**A752 4087**	**A752 4387**	**A752 4640**	**A752 4940**	**A752 5240**
Kit-Hose Group 2 to 3 Way	504328775	504328778	504328781	504328784	504328787

©2008 Yale Materials Handling Corporation

THREE TO FOUR FUNCTION

DESCRIPTION	LIFT HEIGHT TO BOTTOM OF FORKS				
	4087 mm (160.9 in.)	**4365 mm (171.9 in.)**	**4387 mm (172.7 in.)**	**4640 mm (182.7 in.)**	**4665 mm (183.7 in.)**
Mast Group Number	**B752 4087**	**B751 4365**	**B752 4387**	**B752 4640**	**B751 4665**
Kit-Hose Group 3 to 4 Way	524270028	524270010	524270031	524270034	524270013

THREE TO FOUR FUNCTION

DESCRIPTION	LIFT HEIGHT TO BOTTOM OF FORKS			
	4900 mm (192.9 in.)	**4940 mm (194.5 in.)**	**5240 mm (206.3 in.)**	**5500 mm (216.5 in.)**
Mast Group Number	**B751 4900**	**B752 4940**	**B752 5240**	**B751 5500**
Kit-Hose Group 3 to 4 Way	524270016	524270037	524270040	524270022

TWO TO FOUR FUNCTION

DESCRIPTION	LIFT HEIGHT TO BOTTOM OF FORKS				
	4087 mm (160.9 in.)	**4365 mm (171.9 in.)**	**4387 mm (172.7 in.)**	**4640 mm (182.7 in.)**	**4665 mm (183.7 in.)**
Mast Group Number	**B752 4087**	**B751 4365**	**B752 4387**	**B752 4640**	**B751 4665**
Kit-Hose Group 2 to 4 Way	524270029	524270011	524270032	524270035	524270014

TWO TO FOUR FUNCTION

DESCRIPTION	LIFT HEIGHT TO BOTTOM OF FORKS			
	4900 mm (192.9 in.)	**4940 mm (194.5 in.)**	**5240 mm (206.3 in.)**	**5500 mm (216.5 in.)**
Mast Group Number	**B751 4900**	**B752 4940**	**B752 5240**	**B751 5500**
Kit-Hose Group 2 to 4 Way	524270017	524270038	524270041	524270023

©2008 Yale Materials Handling Corporation

TWO TO THREE FUNCTION

DESCRIPTION	LIFT HEIGHT TO BOTTOM OF FORKS				
	4087 mm (160.9 in.)	4365 mm (171.9 in.)	4387 mm (172.7 in.)	4640 mm (182.7 in.)	4665 mm (183.7 in.)
Mast Group Number	**B752 4087**	**B751 4365**	**B752 4387**	**B752 4640**	**B751 4665**
Kit-Hose Group 2 to 3 Way	524270027	524270009	524270030	524270033	524270012

TWO TO THREE FUNCTION

DESCRIPTION	LIFT HEIGHT TO BOTTOM OF FORKS			
	4900 mm (192.9 in.)	4940 mm (194.5 in.)	5240 mm (206.3 in.)	5500 mm (216.5 in.)
Mast Group Number	**B751 4900**	**B752 4940**	**B752 5240**	**B751 5500**
Kit-Hose Group 2 to 3 Way	524270015	524270036	524270039	524270021

LIGHT KITS

DESCRIPTION	PART NUMBER
Kit-Front Drive/Rear Worklight	524264556
Kit-Front Drive/Rear Worklight	524228195
Kit-Light	524264558
Kit-Brake/Tail/Back-Up Light	524228199
Kit-Strobe Light	524264557
Kit-Strobe Light	524228197
Kit-Strobe Light	524263692
Kit-Strobe Light	524291318
Kit-Light	524290669
Kit-Light	524290668

MISCELLANEOUS CONVERSION KITS

DESCRIPTION	PART NUMBER
Kit-Keyswitch to Push-Button	524261866
Kit-Load Weight on Display	524260303
Kit-Fire Extinguisher	**b**524285530
Kit-Fire Extinguisher	**a**524270761
Kit-Powertrain Protection	524230083
Kit-Powertrain Protection	524230093
Kit-Powertrain Protection	524230088

©2008 Yale Materials Handling Corporation

MISCELLANEOUS CONVERSION KITS (CONTINUED)

DESCRIPTION	PART NUMBER
Kit-Air Intake W Pre-Cleaner	524312470
Kit-Mirror	524226924
Kit-Mirror	524242369
Kit-Accumulator	524265038
Kit-Impact Monitoring	524267002
Kit-Impact Monitoring	524272299
Kit-Electronic Monitoring (GM)	524267111
Kit-Electronic Monitoring (Cummins Engine)	524311148
Kit-Lifting Eye	524268998
Kit-Stubshaft	524290093
Kit-Seat Belt	524281279
Kit-Service	524300084

FOOTNOTES:
a With Cab
b Without Cab

©2008 Yale Materials Handling Corporation

18 NUMERICAL INDEX

SECTION 18
NUMERICAL INDEX

PART NO.	PAGE	ITEM
012823300	12-15	3
	13-18	8
012824300	12-3	9
	13-3	7
	13-7	10
	14-4	33
013392500	5-23	4
013393700	1-41	7
014939300	6-11	6
	6-27	23
014979500	10-7	19
	10-13	19
014996900	6-11	8
	6-27	21
015026200	13-29	15
	14-19	15
	15-23	25
	15-29	19
015026400	6-11	7
	6-27	20
015035700	6-11	5
	6-27	22
015125800	7-17	2
	7-19	2
	7-25	2
	7-27	20
	7-29	2
015417900	12-12	34
	12-19	5
	13-4	12
	13-11	8
	13-22	29
	13-29	5
	14-8	25
	14-19	5
	15-15	4
	15-19	17
	15-23	8
	15-29	23
015418300	13-11	10
015418800	9-11	38
015421000	8-5	12
015421700	16-10	4
015492400	11-49	7
	13-26	11
	14-16	11
015627900	11-47	7
	15-15	12
	15-19	8
	15-23	14
	15-29	8
015628700	15-17	16
	15-21	16
	15-25	14
	15-27	16
	15-31	16
015630100	8-5	15
015631500	9-11	18
	9-11	25
015915100	10-7	20
	10-13	20
015915200	15-8	13
	15-12	8
015916500	12-7	7
	13-8	13
015918200	9-11	20
016103700	6-20	2
	6-27	14
019299600	5-19	5
	5-21	9
019930000	5-9	9
023080200	5-13	7
023338500	5-19	22
	5-21	13
030252011	11-45	6
	12-11	6
	12-12	16
	13-13	3
032643500	5-37	16
052643300	15-33	14
	15-35	4
	15-37	4
052645200	9-9	1
	10-3	30
	10-3	35
	10-7	30
	10-7	35
	10-25	9
	11-43	7
	12-11	6
	13-13	3
052645300	9-9	7
	9-9	8
	10-3	32
	10-7	32
	10-25	3
	11-3	4
	11-41	1
	11-41	6
	11-43	1
	11-43	10
	12-12	10
	12-12	13
	13-14	20
	13-14	23
	14-3	11
	14-4	13
	15-15	19
	15-15	20
	15-19	19
	15-19	20
	15-23	26
	15-23	27
	15-29	25
	15-29	26
	15-33	8
	15-33	12
	15-33	14
	15-35	2
	15-35	5
	15-35	8
	15-37	2
	15-37	5
	15-37	8
052645400	14-4	20
052645500	10-3	33
	10-7	33
	11-3	18
	11-3	25
	12-12	7
	13-14	21
	14-3	9
052645600	14-3	12
	14-3	12
052645700	8-5	13
	10-4	45
	10-8	51
	10-11	36
	10-13	42
052645800	11-3	21
053236500	9-11	32
054820000	12-12	10
	13-14	23
	14-3	10
056056700	15-15	23
	15-19	23
	15-23	30
	15-29	29
056260300	5-11	11
	5-23	2
056363300	10-3	38
	10-4	44
	10-4	49
	10-8	38
	10-8	50
	10-8	55
	10-11	16
	10-11	35
	10-13	37
	10-13	41
	16-13	2
056623800	5-9	11
057090400	10-25	25
057390000	8-5	13
059079500	2-5	13
060023600	2-63	5
	6-79	9
061278200	1-65	3
061977400	3-9	4
	3-9	6
	3-9	15
	3-9	19
	3-11	5
	3-13	8
062143700	6-20	3
	6-27	13
062144100	13-29	16
	15-23	24
	15-29	18
062159500	1-39	4
	1-41	1
	1-43	1
	2-21	16
	5-9	18
	5-9	19
062159700	4-3	8
	4-5	7
	4-7	11
	5-11	20
062307300	6-16	6
064570600	7-13	41
	7-23	7
065000900	9-11	15
065001000	9-11	9
065619300	5-37	11
066415900	13-26	11

©2008 Yale Materials Handling Corporation

NUMERICAL INDEX (continued)

PART NO.	PAGE	ITEM
	14-16	11
066417000	12-17	3
	13-18	8
072387301	9-11	2
072387302	9-11	1
080437000	12-12	7
	14-3	9
1053161DD	16-13	3
150121835	6-75	8
	6-79	15
201928200	7-13	29
	7-21	35
	7-23	11
203146300	14-19	16
	15-29	18
258979300	1-9	
	1-21	11
311323023	9-11	28
312823020	10-21	12
312850042	10-4	
	10-8	
315976070	7-15	15
	7-21	30
	11-45	6
449001010	7-15	7
	7-21	33
449001013	7-13	15
	7-21	6
449001024	8-5	22
449001028	8-5	27
449001038	13-29	9
	14-19	9
	15-23	9
449001040	2-29	2
	7-15	27
	7-23	25
449001048	7-2	4
449001050	7-15	20
	7-23	23
449001058	8-5	21
	15-15	17
	15-19	13
	15-23	19
	15-29	13
449001078	7-23	16
449001125	2-13	7
449001160	7-13	36
	7-21	12
	7-23	35
449001302	7-15	2
	7-21	34
449001343	11-3	30
449001412	7-13	37
	7-15	19
	7-23	2
449001415	6-43	2
	8-5	29
449007005	2-35	3
	4-3	15
	4-5	17
	4-7	18
449007050	1-26	9
449015014	1-12	65
	10-3	26
	10-7	28
	10-11	25
	10-13	27
449015098	1-45	4
	1-47	8
	2-5	40
449015112	6-44	7
	10-3	1
	10-7	1
	10-11	1
	10-13	1
449021001	2-5	39
	7-15	21
	7-23	20
449021002	16-5	5
449021003	11-9	4
	11-13	4
449021010	9-11	48
	11-9	13
	11-13	14
449022013	2-5	12
	2-29	14
	7-15	3
	7-21	32
	7-23	17
449022016	6-11	
	6-43	3
	7-13	12
	7-21	5
	8-5	26
449022017	1-65	4
	3-3	8
	7-2	5
	8-5	20
	15-15	18
	15-19	14
	15-23	20
	15-29	14
449022018	7-13	35
	7-15	18
	7-21	11
	7-23	3
	8-5	4
	10-17	9
	10-19	9
449022021	16-5	4
449022041	7-2	7
	9-11	29
449034001	5-21	25
449034011	5-35	8
500017905	5-11	10
500159904	15-17	17
	15-21	17
	15-25	15
	15-27	17
	15-31	17
500167917	9-15	6
500186902	8-11	3
500186908	8-11	5
500204901	5-9	29
	5-19	34
	5-21	43
500227907	15-29	24
500227908	12-11	2
	13-13	4
	14-3	3
500227914	13-22	20
	14-7	13
500390901	7-15	28
	7-23	29
500412904	5-23	18
500505908	7-13	27
	7-21	25
500552902	5-37	17
500583902	11-9	16
	11-11	11
	11-13	17
	11-15	12
500863106	6-6	6
501702901	2-13	9
	5-37	
	7-3	4
	7-4	4
501702902	10-3	19
	10-7	23
	10-11	27
	10-13	22
501702903	14-12	6
501725901	8-6	47
501737903	5-23	22
501753904	13-26	4
	14-15	4
501753914	14-12	3
501850904	13-26	7
	14-15	7
501884906	4-3	
	4-5	
	4-7	28
501884908	2-9	1
501921905	10-21	9
502011910	11-49	6
502011911	14-12	13
502011915	13-26	10
	14-15	10
502011923	13-26	10
	14-15	10
502056903	4-3	11
	4-5	15
	11-3	26
502056905	5-5	2
502056906	5-11	1
	5-23	16
	10-4	43
	10-7	18
	10-11	22
	10-13	18
502058911	5-11	15
502139901	11-47	10
502398908	2-13	6
502507901	5-19	14
	5-21	17
502565902	8-5	17
502565903	9-12	49
502566901	2-5	19
	2-35	5
	4-5	10
502566903	8-5	18
	8-6	55
502566904	7-3	2
	7-4	2
	9-11	16
502600903	1-41	6
502634904	5-37	14
502635907	11-19	19
	11-21	3
502637904	11-49	14
502687901	13-26	16
	14-12	2
	14-16	16
502895204	13-18	11

©2008 Yale Materials Handling Corporation

NUMERICAL INDEX (continued)

PART NO.	PAGE	ITEM
	14-12	4
502895206	13-18	11
502978555	12-12	25
	13-13	2
502978556	12-12	25
	13-13	2
504017208	14-12	7
504058787	5-3	4
	5-5	3
504061719	16-5	1
504064758	13-22	25
	14-7	10
504068737	12-12	19
	13-14	17
504148200	13-26	6
	14-15	6
504155200	10-3	30
	10-3	32
	10-7	30
	10-7	32
	10-25	3
	10-25	9
	10-25	15
	11-43	1
	11-43	2
	11-43	7
504224217	9-11	31
504224218	9-11	42
504224231	9-11	3
504224242	9-11	6
504224266	9-11	11
504224298	9-11	4
504225201	5-37	2
504225236	9-11	8
504225257	1-12	51
504226242	1-11	9
	3-3	23
	3-5	13
	3-9	17
	3-11	15
504226268	8-5	19
504227270	11-9	9
	11-13	9
504227283	9-11	40
504229298	1-21	3
	1-33	2
	1-37	2
504230204	11-19	8
	11-21	11
504230207	11-19	13
504230236	11-19	7
	11-21	10
504230239	11-9	8
	11-13	8
504230271	13-29	3
	14-19	3
504231204	6-76	6
	6-76	8
	6-79	7
	6-79	8
	6-80	23
504231215	1-53	21
504231248	1-53	16
504231252	1-53	18
504231265	1-55	8
504231296	1-53	23
504232202	12-11	4
	13-13	6
	14-3	6
504232205	13-18	6
504232217	12-15	7
	13-18	7
504232218	11-49	3
504232230	13-26	15
	14-16	15
504232234	2-29	6
504232252	14-12	12
504232260	6-20	
504232277	13-18	7
504232291	12-15	10
	12-17	5
	13-18	9
504232292	12-15	6
	13-18	6
504232297	6-37	14
	6-39	14
	16-2	
504233271	1-65	3
504233279	13-7	9
504234264	11-49	5
504234265	13-7	7
504234266	13-22	24
	14-7	12
504234285	13-7	12
	13-8	12
	13-22	22
	14-7	19
504235204	13-7	12
	13-8	12
	13-22	21
	14-7	19
504235239	13-26	5
	14-15	5
504240715	3-3	33
	3-5	3
	3-11	3
504240785	3-3	34
	3-5	2
504240791	5-23	30
504287713	14-12	
504288730	6-49	7
	6-51	34
	6-51	35
	6-51	39
	6-55	10
	6-55	11
	6-55	14
	6-56	16
	6-61	2
	6-62	2
	6-62	5
	6-75	5
	6-79	5
504288733	6-49	8
	6-51	34
	6-51	35
	6-51	40
	6-52	42
	6-55	10
	6-55	11
	6-56	15
	6-56	17
504288740	6-67	7
	6-67	10
	6-71	13
	6-72	27
	6-76	3
504288741	6-61	5
	6-61	6
	6-67	10
	6-68	25
	6-71	16
	6-72	27
	6-72	31
	6-75	1
	6-76	3
	6-79	1
	6-83	4
	6-83	7
	6-83	8
	6-85	4
	6-85	7
504288749	6-68	22
	6-71	14
504305703	11-49	11
504305713	9-15	9
504314701	1-65	1
504314703	1-65	1
504314705	1-65	1
504314706	1-65	1
504314707	1-65	1
504328775		
504328778		
504328781		
504328784		
504328787		
504362254	13-18	
504407298	14-4	24
504407299	12-12	14
	14-4	24
504450740	6-76	1
	6-76	9
	6-79	10
	6-79	12
	6-79	13
	6-80	25
504450741	6-76	4
	6-76	7
	6-79	11
	6-80	26
504450753	14-12	9
504450761	6-76	1
	6-76	9
	6-79	10
	6-79	12
	6-80	25
504574259	1-26	12
505136062	12-15	11
505136063	12-17	
505136065	13-18	14
505136066	13-18	14
505136072	13-26	18
	14-16	18
505849502	1-61	1
505849503	1-61	1
505849504	1-61	1
505849505	1-61	1
505849507	1-61	1
505965586	15-4	4
	15-12	11
505965599	11-41	1
505966507	5-9	6
505966595	4-3	13
	4-5	20

©2008 Yale Materials Handling Corporation

NUMERICAL INDEX (continued)

PART NO.	PAGE	ITEM
	4-7	8
505967516	5-7	1
505967544	8-5	6
	8-6	39
	8-6	53
	8-6	59
505967551	7-13	18
	7-15	24
	7-21	9
	7-23	15
	7-23	21
505967593	12-12	10
505967598	7-13	46
	7-23	5
505968505	6-51	34
	6-51	35
	6-52	41
	6-52	42
	6-55	10
	6-55	11
	6-56	16
	6-56	17
	6-61	3
	6-62	5
505968514	1-9	10
	1-31	4
	6-6	4
	6-47	7
	6-50	28
	6-58	51
	6-75	9
	6-79	16
	6-88	23
	6-92	17
	6-96	17
505968533	1-31	2
505968540	1-9	9
	1-31	3
	6-6	4
505968566	6-50	20
	6-50	22
	6-51	36
	6-55	8
	6-55	9
	6-57	38
	6-57	43
	6-57	45
	6-99	1
505968568	6-41	2
	6-47	10
	6-49	5
	6-49	10
	6-49	18
	6-50	27
	6-50	29
	6-52	43
	6-55	2
	6-56	21
	6-56	23
	6-56	26
	6-57	33
	6-58	50
	6-58	52
	6-83	5
	6-85	5
	6-87	3
	6-87	6
	6-87	11
	6-87	12
	6-87	15
	6-88	18
	6-88	19
	6-88	24
	6-91	7
	6-91	10
	6-91	13
	6-91	14
	6-92	18
	6-95	7
	6-95	10
	6-95	13
	6-95	14
	6-96	18
	6-99	1
	6-99	8
	6-99	9
	6-101	1
	6-101	10
	6-101	11
	6-103	1
505968593	6-50	27
	6-58	50
	6-77	10
	6-103	3
	6-103	7
	6-103	9
505968598	6-68	27
	6-72	28
505970500	11-9	3
	11-13	3
505970526	16-7	3
505970529	6-23	4
505970552	6-76	6
	6-76	8
	6-79	7
	6-79	8
	6-80	23
	6-99	4
	6-101	4
505970570	8-3	7
	8-13	5
505970580	5-23	5
505970592	1-41	
	2-6	53
	2-9	8
	5-9	36
505971526	8-22	4
	8-23	4
	8-24	4
	8-26	4
505971549	8-22	3
	8-23	3
	8-24	3
	8-26	3
505971582	2-6	
505972513	4-7	9
505972554	6-47	18
505972563	4-3	5
	4-5	5
	4-7	2
505972572	4-5	8
505972589	6-88	23
	6-92	17
	6-96	17
505972593	6-68	20
	6-71	2
505973583	9-16	1
505974597	1-53	
505975518	7-30	8
505975539	16-3	1
	16-4	1
505976530	1-53	4
	1-55	1
505976537	6-11	3
	6-15	14
	6-23	13
505976545	1-53	10
505976556	1-53	9
505976566	1-53	25
505977525	1-53	17
505977565	1-53	5
505977581	1-55	12
505978570	1-53	17
505978586	1-53	17
506080540	13-18	
507353800	1-11	10
507454554	14-12	
507456511	14-12	
511405800	2-9	23
	5-23	16
	10-4	43
	10-7	18
	10-11	22
	10-13	18
514214804	5-11	6
	5-23	11
514454800	7-15	16
	7-21	29
	7-30	2
514835800	12-12	21
	13-14	15
518688602	1-60	1
	1-61	1
518688603	1-60	1
	1-61	1
518688604	1-60	1
	1-61	1
518688605	1-61	1
518717602	1-60	1
518717603	1-60	1
518717604	1-60	1
518717605	1-60	1
518717607	1-60	1
518791646	1-47	12
	1-49	
	1-51	9
518793609	1-3	29
518793625	6-75	16
518793684	1-49	8
	1-51	6
518795660	12-11	5
	13-13	5
	14-3	5
518795676	16-13	7
518797699	11-9	12
	11-13	12
518802601	15-33	9
	15-35	7
	15-37	7
518803619	15-33	10
	15-35	6
	15-37	6
518804607	12-12	36
	13-4	13

©2008 Yale Materials Handling Corporation

NUMERICAL INDEX (continued)

PART NO.	PAGE	ITEM
518804610	13-21	12
	14-8	23
518804645	12-12	36
518804662	12-12	36
	13-4	13
518804663	12-12	36
518804686	13-4	13
518804692	13-4	13
518804693	13-4	13
518805632	1-3	4
518806635	5-37	4
	6-47	6
	6-47	17
	6-50	28
	6-51	32
	6-58	51
	6-75	9
	6-79	16
518806645	1-53	11
519996801	1-45	
519996803	1-45	
520035824	6-75	7
520036879	1-43	5
520037804	13-7	8
520037811	10-8	44
	10-13	35
520037891	1-33	13
	1-37	13
520038855	6-55	7
	6-75	6
	6-75	13
	6-79	6
520038875	6-61	1
	6-62	1
	6-75	4
	6-79	4
520041836	1-47	
520041852	1-47	13
520042831	11-3	20
520042832	1-23	8
520042866	2-21	33
520042867	2-25	15
520042869	2-27	5
520043812	2-19	
520044815	9-11	39
520044861	6-68	28
	6-72	20
520045009	6-6	5
520045068	6-49	7
	6-51	39
	6-55	14
520045069	6-49	7
	6-49	8
	6-51	39
	6-51	40
	6-55	14
	6-55	15
	6-62	4
520045073	6-62	4
520045074	6-49	8
	6-51	40
	6-55	15
	6-62	4
520045130	1-55	3
520045150	15-15	10
	15-19	6
	15-23	12
	15-29	6
520045151	12-3	8
	13-3	6
	14-4	32
520045153	12-3	5
	12-7	5
	12-19	9
	13-3	4
	13-7	5
	13-11	4
	13-29	17
	14-4	30
	14-7	8
	14-19	17
	15-15	7
	15-19	3
	15-23	3
	15-29	3
520045156	12-3	7
	13-3	9
	14-4	34
520045157	12-3	6
	13-3	8
	14-4	35
520045158	13-4	13
520045159	15-15	15
	15-19	11
	15-23	17
	15-29	11
520045160	13-18	4
520045162	12-15	5
	13-18	4
520045163	12-19	6
	13-3	10
	15-15	5
	15-19	18
520045171	13-29	14
	14-19	14
	15-23	23
	15-29	17
520045177	13-29	13
	14-19	13
	15-23	21
	15-29	15
520045178	13-29	13
	14-19	13
	15-23	22
	15-29	16
520045182	15-29	22
520045183	12-12	35
	12-19	4
	13-11	7
	15-15	3
520045187	15-4	15
	15-8	11
	15-11	6
520045188	12-11	3
	13-13	7
	14-3	4
520045192	12-12	36
	13-4	13
520045193	13-22	27
	14-8	28
520045195	12-12	35
	12-19	4
	13-4	14
	13-11	7
	13-22	30
	14-8	27
	15-19	16
	15-29	21
520045215	12-17	11
	13-18	9
520045216	12-17	9
	13-18	12
520045253	14-12	14
520045324	13-26	12
	14-16	12
520045326	13-26	9
	14-15	9
520045327	13-26	13
	14-16	13
520045331	13-26	14
	14-16	14
520045346	14-12	9
520045361	12-12	33
	13-3	11
	13-22	28
520045362	12-12	33
	13-4	11
	13-22	28
	14-8	26
520045395	15-15	14
	15-19	10
	15-23	16
	15-29	10
520045448	11-49	1
520045450	11-49	9
520045462	11-47	5
520045464	11-47	9
520045589	9-11	7
520045594	9-12	50
520045672	6-56	20
	6-75	15
	6-80	20
520045804	6-51	32
	6-56	30
	6-58	54
	6-67	6
	6-67	15
	6-68	23
	6-71	12
	6-71	15
	6-72	33
	6-75	18
	6-103	4
	6-103	8
520045805	6-51	32
	6-58	54
	6-67	12
	6-72	30
	6-75	18
	6-103	4
	6-103	8
520046832	2-17	4
520046833	2-17	5
520046835	2-17	7
520046836	2-17	8
520046837	2-17	3
520046840	2-21	15
520046841	2-21	28
520046842	2-27	8
520046844	2-21	38
520046851	2-21	32
520046852	2-21	21
520046854	2-21	40
520046856	2-25	2

©2008 Yale Materials Handling Corporation

NUMERICAL INDEX (continued)

PART NO.	PAGE	ITEM
520046857	2-25	10
520046860	2-25	
520046862	2-25	19
520046863	2-17	2
	2-25	20
520046864	2-25	21
520046865	2-25	22
520047875	2-19	2
520047876	2-19	2
520047877	2-19	3
520047878	2-19	3
520047880	2-19	7
520047888	2-19	12
520049820	9-11	41
520050836	13-4	13
520050842	13-22	27
520052800	13-4	13
520052802	13-4	13
520052851	6-5	20
520053823	2-17	6
520153603	11-49	8
520153604	11-49	8
520153605	11-49	8
520153607	11-49	8
520406635	12-15	2
520406641	12-15	2
520406647	12-15	2
520406654	12-15	2
520425601	12-15	1
520425607	12-15	1
520425613	12-15	1
520425620	12-15	1
520426601	12-17	1
520426607	12-17	1
520426613	12-17	1
520426620	12-17	1
520426626	12-17	1
520426632	12-17	1
520426863	2-13	3
520427601	13-18	1
520427603	13-18	1
520427604	13-18	1
520427606	13-18	1
520427608	13-18	1
520427611	13-18	1
520428601	13-18	1
520428603	13-18	1
520428604	13-18	1
520428606	13-18	1
520428608	13-18	1
520429601	14-12	1
	14-12	1
	14-12	1
520429607	14-12	1
	14-12	1
	14-12	1
	14-12	1
520470651	12-17	2
520470657	12-17	2
520470663	12-17	2
520470670	12-17	2
520470676	12-17	2
520481616	12-17	2
520494604	11-49	15
520510601	13-18	2
520510603	13-18	2
520510604	13-18	2
520510606	13-18	2
520510608	13-18	2
520510611	13-18	2
520512601	13-18	2
520512603	13-18	2
520512604	13-18	2
520512606	13-18	2
520512608	13-18	2
520576601	13-26	2
	14-15	2
520576603	13-26	2
520576604	13-26	2
520576606	13-26	2
	14-15	2
520576608	13-26	2
520576611	13-26	2
520580651	13-26	2
	14-15	2
520580653	13-26	2
520580654	13-26	2
520580656	13-26	2
	14-15	2
520580658	13-26	2
520585600	13-26	3
	14-15	3
520650601	13-26	1
	14-15	1
520650603	13-26	1
520650605	13-26	1
520650607	13-26	1
	14-15	1
520650609	13-26	1
520650613	13-26	1
520651601	13-26	1
	14-15	1
520651603	13-26	1
520651605	13-26	1
520651607	13-26	1
	14-15	1
520651609	13-26	1
524139001	1-65	1
524139002	1-65	1
524139139	1-62	1
524139140	1-62	1
524139141	1-62	1
524139142	1-62	1
524139478	1-65	1
524139480	1-65	1
524147349	13-21	13
	14-8	21
524147484	12-12	15
	13-14	25
	14-3	12
524147485	12-12	15
	13-14	25
	14-3	12
524147494	14-7	6
	14-16	17
524147495	14-7	6
	14-16	17
524147531	13-13	2
	13-21	10
	13-26	17
524147532	13-13	2
	13-21	10
	13-26	17
524147540	12-12	27
	13-14	28
	14-4	19
524148190	15-8	17
	15-12	20
524148255	13-21	15
	14-8	22
524149438	1-11	21
524155833	2-25	1
524162256	1-55	9
524169325	13-26	18
	14-16	18
524169328	15-21	
	15-31	
524169329	15-17	
	15-25	
	15-27	
524198083	15-8	15
	15-8	20
524198089	15-8	15
	15-8	20
524198114	15-8	15
	15-8	20
524198120	15-8	15
	15-8	20
524198144	12-12	24
524198145	14-4	28
524198146	12-12	24
524198147	14-4	25
	14-4	28
524198257	12-3	1
	12-3	1
524198263	12-3	1
	12-3	1
524198269	12-3	1
	12-3	1
524198276	12-3	1
	12-3	1
524198282	12-3	1
524198288	12-3	1
524201323	1-9	16
	1-21	9
524208880	1-53	12
524208881	1-53	20
524208883	1-9	2
524214603	9-15	2
524214788	1-11	30
524214789	1-12	52
524220839	1-15	1
524220840	1-15	1
524220841	1-15	1
524220842	1-15	1
524220846	1-15	2
524220847	1-15	2
524220848	1-15	2
524220849	1-15	2
524228461	1-11	22
524228462	1-11	22
524228463	1-11	43
524231093	1-11	6
524232141	1-55	4
524232161	1-55	5
524232201	1-55	6
524236522	1-53	1
524236523	1-53	1
524236524	1-53	1
524236525	1-53	1
524236526	1-53	1
524236527	1-53	1
524239043	1-11	36

©2008 Yale Materials Handling Corporation

NUMERICAL INDEX (continued)

PART NO.	PAGE	ITEM
524239044	1-11	42
524240425	1-9	1
524240431	1-9	1
524240692	1-9	
524246118	5-35	7
	5-37	
524255979	1-3	17
524256876	1-3	1
	1-3	1
524256878	1-3	1
	1-3	1
524256879	1-3	1
524259220	7-17	6
	7-19	6
	7-25	6
	7-27	6
	7-29	6
524260552	1-29	1
524265153	1-55	7
524265461	1-53	1
524265462	1-53	1
524265464	1-53	1
524265465	1-53	1
524269784		
524269785		
524269786		
524269787		
524269788		
524269789		
524269790		
524269791		
524269792		
524269793		
524269794		
524269795		
524269798		
524269799		
524269800		
524269801		
524269802		
524269803		
524270009		
524270010		
524270011		
524270012		
524270013		
524270014		
524270015		
524270016		
524270017		
524270018		
524270019		
524270020		
524270021		
524270022		
524270023		
524270027		
524270028		
524270029		
524270030		
524270031		
524270032		
524270033		
524270034		
524270035		
524270036		
524270037		
524270038		
524270039		
524270040		
524270041		
524270429	11-7	1
524299079	16-13	
524302330	1-7	1
524302331	1-7	1
524302332	1-7	1
524302333	1-7	1
524302335	1-7	1
524302424	1-21	1
	1-23	
	1-25	
	1-26	
	1-29	
	1-31	
	1-33	
	1-35	
	1-37	
524309070	1-3	1
524309072	1-3	1
524309074	1-3	1
524309075	1-3	1
524309076	1-3	1
524310789	1-53	7
524316719	1-19	1
524318746	1-11	6
580000242	10-4	47
	10-8	53
	10-11	23
	10-13	28
580000260	12-17	7
580000309	2-19	22
580000316	2-19	17
580000318	2-21	24
580000322	2-27	9
580000338	2-9	14
580000341	2-5	15
580000554	6-67	12
	6-72	30
580000559	6-67	7
	6-68	22
	6-68	25
	6-71	13
	6-71	14
	6-72	31
580000868	10-4	41
	10-8	41
	10-11	33
	10-13	32
580001007	1-53	2
580001039	2-21	41
580001617	2-21	9
580001619	2-21	10
580001744	2-19	5
580001756	2-35	6
580001875	9-11	10
580001878	9-11	37
580002014	9-11	33
580002229	11-49	10
580002230	11-49	10
580002231	11-49	2
580002329	2-29	8
580002460	6-15	5
	6-15	8
	8-5	37
580002638	8-13	9
580002885	4-3	19
	4-5	22
	4-7	25
580003427	5-7	5
580003941	8-3	9
	8-13	11
	9-12	51
580004501	11-29	2
580004502	2-5	37
580004505	6-16	4
580004592	1-3	25
	5-35	6
580005048	2-29	9
580005640	10-3	34
	10-7	34
	10-25	7
580005926	5-11	17
580006367	9-15	7
580006412	12-19	1
580006414	12-19	1
580006415	12-19	1
580006416	12-19	1
580006417	12-19	1
580006481	12-19	
580006483	12-19	
580006484	12-19	
580006485	12-19	
580006486	12-19	
580006526	6-75	11
	6-75	12
	6-79	17
	6-79	18
580006553	6-15	4
	6-15	13
	6-23	6
580006840	1-60	
	1-61	
	1-62	
580006841	1-60	5
	1-61	5
	1-62	5
580006842	1-60	4
	1-61	4
	1-62	4
580006843	1-60	3
	1-61	3
	1-62	3
580006844	1-60	2
	1-61	2
	1-62	2
580006894	12-15	4
	13-18	3
580006895	12-17	4
580006896	13-18	3
580006903	15-4	9
	15-8	1
	15-12	9
580006976	11-19	17
	11-21	8
	11-31	4
	11-35	5
	11-37	5
580006977	11-19	16
	11-21	7
	11-31	3
	11-35	4
	11-37	4
580007011	13-29	1
580007013	13-29	1

©2008 Yale Materials Handling Corporation

NUMERICAL INDEX (continued)

PART NO.	PAGE	ITEM
580007020	13-29	1
580007021	13-29	1
580007022	13-29	1
580007023	13-29	
580007025	13-29	
580007026	13-29	
580007027	13-29	
580007028	13-29	
580007059	4-3	14
580007124	15-23	6
580007125	13-29	6
	14-19	6
	15-23	7
580007557	12-12	17
	13-14	14
580007558	5-3	2
580007621	3-3	2
	3-5	4
580007683	2-9	13
580007707	10-25	7
580007719	5-23	3
580007839	12-12	9
	13-14	22
	14-3	11
580007841	12-8	12
580007842	12-8	12
580007843	13-22	19
	14-7	19
580007844	13-7	12
580007845	13-7	12
580007848	13-22	19
	14-7	19
580007849	13-8	12
580007855	12-7	8
	13-8	14
580007877	12-12	36
580007973	13-7	12
580008064	1-55	2
580008220	5-9	8
580008228	12-12	28
580008231	12-12	18
580008232	12-12	28
580008234	12-12	28
580008236	12-12	18
	12-12	28
	13-14	18
	13-14	19
580008238	12-12	28
580008239	13-14	18
580008240	12-12	28
	13-14	18
580008242	12-12	18
580008243	12-12	28
580008244	12-12	28
580008248	12-12	18
580008249	12-12	28
580008250	12-12	28
580008252	12-12	18
	13-14	19
580008256	13-14	18
580008277	9-11	21
580008279	13-14	19
580008281	11-45	3
	13-14	19
580008282	13-14	18
580008284	12-12	18
580008285	13-14	18
580008287	13-14	18
580008288	13-14	18
580008338	1-55	11
580008487	2-5	14
580008575	2-21	14
580008599	2-19	21
580008600	2-19	23
580008630	14-4	36
580008703	5-21	2
580008775	2-17	9
580008777	2-19	8
580008813	12-17	10
	13-18	10
580008814	12-15	9
	13-18	10
580009061	7-23	26
580009125	2-29	3
580009266	2-19	11
580009275	2-21	30
580009276	2-21	30
580009292	2-63	19
580009399	15-12	13
580009401	15-11	5
580009402	15-12	23
580009403	15-12	28
580009449	12-12	18
580009450	13-14	19
580009452	13-14	19
580009637	9-11	26
580009733	9-11	15
580009734	9-11	15
580009744	9-11	12
580009745	9-11	13
580009746	9-11	14
580009778	5-9	5
580009884	12-7	6
	13-7	11
580009886	13-21	1
580009887	13-21	2
580009888	13-21	7
580009890	13-21	16
	14-7	18
580009893	12-19	3
	15-15	2
580009922	12-19	3
	13-11	6
	15-19	15
580009937	12-7	1
	12-7	1
580009940	12-7	1
	12-7	1
580009943	12-7	1
	12-7	1
580009946	12-7	1
	12-7	1
580009948	12-7	1
580009949	12-7	1
580010279	12-3	3
	12-7	3
	13-3	3
	13-7	3
	14-4	31
	14-7	9
580010432	5-37	13
580010433	5-37	10
580010544	6-61	4
	6-63	8
580010545	6-61	3
	6-62	5
580010571	6-37	11
	6-87	7
580010739	6-67	9
	6-72	25
580011097	8-25	1
	8-25	1
580011108	7-15	10
	7-23	33
580011167	13-26	15
	14-16	15
580011466	13-14	19
580011468	13-14	19
580011477	13-14	18
580011491	13-14	19
580011609	12-19	8
	13-29	11
	14-19	11
	15-15	9
	15-19	5
	15-23	5
	15-29	5
580011616	13-14	19
580012000	13-29	
580012093	12-3	4
	12-7	4
	12-19	7
	13-3	5
	13-7	6
	13-11	5
	13-29	12
	14-4	29
	14-7	7
	14-19	12
	15-15	8
	15-19	4
	15-23	4
	15-29	4
580012183	15-15	16
580012184	15-15	11
580012185	15-15	13
	15-19	9
	15-23	15
	15-29	9
580012221	13-29	1
580012323	6-61	2
	6-62	2
	6-75	5
	6-79	5
580012324	6-61	1
	6-62	1
	6-75	4
	6-79	4
580012350	12-3	11
	13-4	16
	14-4	37
580012383	12-12	20
	13-14	16
580012450	15-15	1
	15-17	
580012451	15-15	1
	15-17	
580012452	15-19	1
	15-21	
580012453	15-19	1
	15-21	
580012454	15-25	
580012455	15-27	
580012456	15-31	

©2008 Yale Materials Handling Corporation

NUMERICAL INDEX (continued)

PART NO.	PAGE	ITEM
580012457	15-31	
580012458	15-15	
580012459	15-15	
580012460	15-19	
580012461	15-19	
580012462	15-23	
580012463	15-23	
580012464	15-29	
580012465	15-29	
580012572	16-9	1
580012670	15-12	25
580012772	15-4	3
	15-8	3
	15-12	12
580012858	6-13	8
580012981	13-8	
580012987	1-11	34
	3-9	7
580013102	12-12	36
580013204	15-17	6
	15-21	3
	15-25	6
	15-27	6
	15-31	3
580013207	15-17	7
	15-21	4
	15-25	7
	15-27	7
	15-31	4
580013208	15-17	8
	15-21	5
	15-25	8
	15-27	8
	15-31	5
580013209	15-17	9
	15-21	6
	15-25	9
	15-27	9
	15-31	6
580013212	15-17	1
	15-25	1
	15-27	1
580013213	15-17	2
	15-25	2
	15-27	2
580013214	15-17	3
	15-25	3
	15-27	3
580013253	15-17	11
	15-21	11
	15-27	11
	15-31	11
580013254	15-17	10
	15-21	8
	15-27	10
	15-31	8
580013256	15-17	13
	15-21	13
	15-25	11
	15-27	13
	15-31	13
580013257	15-21	1
	15-31	1
580013258	15-21	2
	15-31	2
580013259	15-21	7
	15-31	7
580013394	11-21	6
580013419	1-49	
	1-51	
580013420	1-49	
	1-51	
580013421	1-49	
	1-51	
580013422	1-49	
	1-51	
580013423	1-49	
	1-51	
580013425	1-49	
	1-51	
580013480	15-17	14
	15-25	12
	15-27	14
580013481	15-17	15
	15-21	15
	15-25	13
	15-27	15
	15-31	15
580013483	15-21	14
	15-31	14
580013486	13-14	18
580013492	12-8	13
	13-8	18
580013508	1-65	2
580013801	15-17	5
580013802	15-25	5
580013803	15-17	5
580013804	15-27	5
580013805	15-31	9
580013806	15-21	10
580013807	15-31	9
580013808	15-21	10
580013937	6-5	20
580014009	1-21	5
	1-33	3
	1-37	3
580014013	1-37	14
580014049	14-19	
580014053	14-19	
580014056	14-19	
580014059	14-19	
580014094	11-49	12
580014095	11-49	13
580014145	15-23	
580014146	15-25	
580014147	15-23	
580014148	15-29	
580014149	15-29	
580014150	15-27	
580014151	15-31	
580014152	15-31	
580014161	9-11	35
580014163	9-11	36
580014164	13-4	13
580014165	12-17	6
580014166	13-22	27
580014167	13-22	27
580014168	13-22	27
580014169	13-29	8
	14-19	8
	15-23	10
580014172	12-12	36
580014173	12-12	36
580014174	13-29	4
	14-19	4
	15-23	11
580014179	13-22	27
	13-22	27
	14-8	28
	14-8	28
580014188	8-25	1
580014189	8-25	1
580014214	14-19	1
580014216	14-19	1
580014225	14-19	1
580014226	14-19	1
580014386	6-67	9
	6-72	24
580014392	12-12	18
580014462	1-49	1
	1-51	1
580014463	1-49	1
	1-51	1
580014465	1-49	
	1-51	
580014466	1-49	2
	1-51	3
580014467	1-49	2
	1-51	3
580014471	1-49	6
	1-51	7
580014473	1-49	5
	1-51	5
	1-51	
580014766	1-26	10
580014838	2-17	1
	2-25	24
580014840	2-25	18
580014841	2-25	25
580014862	9-16	1
580014866	8-25	1
580014869	8-26	1
580014954	9-16	1
580014955	8-25	1
580014956	8-25	1
580014960	8-25	1
580014962	8-25	1
580014987	8-25	1
	8-25	1
	8-25	1
	8-26	1
	9-16	1
580015022	2-63	11
580015148	2-19	6
580015437	16-10	2
580015529	1-21	7
580015530	1-33	4
	1-37	5
580015531	1-33	10
	1-37	6
580015673	6-15	11
580015760	1-23	7
580015761	1-23	7
580015806	8-25	1
580016584	1-21	4
580016765	5-11	9
580016816	14-12	5
580016817	14-12	5
580017034	5-9	10
580017492	15-29	20
580018544	15-31	9
580018545	15-31	9
580018546	15-27	5
580018547	15-25	5

©2008 Yale Materials Handling Corporation

NUMERICAL INDEX (continued)

PART NO.	PAGE	ITEM
580018653	1-47	5
580018888	1-49	
	1-51	
	1-51	
580019119	6-41	2
	6-49	15
	6-49	18
	6-50	24
	6-50	25
	6-50	26
	6-50	29
	6-51	30
	6-51	31
	6-57	35
	6-57	39
	6-57	42
	6-58	47
	6-58	48
	6-58	49
	6-58	52
	6-58	53
	6-83	1
	6-83	11
	6-85	1
	6-87	1
	6-88	17
	6-88	22
	6-88	23
	6-91	1
	6-91	12
	6-92	16
	6-92	17
	6-95	1
	6-95	12
	6-96	16
	6-96	17
	6-103	1
580019139	6-87	6
	6-87	11
	6-87	12
	6-91	7
	6-95	7
580019140	6-87	6
	6-87	11
	6-87	12
	6-91	7
	6-95	7
580019245	6-103	6
580019246	6-103	6
580019341	6-103	2
580019387	13-14	20
	14-3	13
	14-4	20
	14-4	21
	16-9	5
580019523	12-3	10
	13-4	15
	14-4	38
580019805	10-25	18
580019808	10-25	17
580019817	7-7	3
	7-11	8
	14-4	20
580019860	10-3	38
	10-7	38
580019865	11-43	7
580019895	11-43	11
580019896	12-12	26
	13-14	27
	14-4	21
	16-9	5
580020060	3-3	15
580020430	9-9	7
	11-41	6
	11-43	10
	15-15	19
	15-19	19
	15-29	25
	15-33	12
	15-35	2
	15-37	2
580020431	11-3	18
	13-14	21
580020445	16-13	5
580020468	11-43	2
580020576	10-25	11
	11-41	5
	15-15	20
	15-19	20
	15-23	27
	15-29	26
580020577	11-3	25
	11-45	10
580020930	2-17	10
580020942	5-37	5
	6-47	5
	6-47	16
	6-50	28
	6-58	51
	6-75	9
	6-79	16
580020943	6-47	8
	6-49	10
	6-55	2
	6-56	26
	6-77	10
	6-87	3
	6-87	15
	6-88	24
	6-91	10
	6-92	18
	6-95	10
	6-96	18
580020944	6-47	9
	6-49	10
	6-55	2
	6-56	26
	6-77	10
	6-87	3
	6-87	15
	6-88	24
	6-91	10
	6-92	18
	6-95	10
	6-96	18
580020987	15-4	6
	15-33	2
	15-35	9
	15-37	9
580021087	6-49	5
	6-52	43
	6-56	21
	6-56	23
	6-57	33
	6-83	5
	6-85	5
	6-88	19
	6-91	14
	6-95	14
	6-99	8
	6-99	9
	6-101	10
	6-101	11
	6-103	3
	6-103	7
	6-103	9
580021088	6-49	5
	6-52	43
	6-56	21
	6-56	23
	6-57	33
	6-83	5
	6-85	5
	6-95	14
	6-99	8
	6-99	9
	6-101	10
	6-101	11
	6-103	3
	6-103	7
	6-103	9
580021345	1-33	9
	1-35	13
	1-37	16
580022492	14-12	10
580022493	11-49	4
580022494	14-12	10
580022511	12-15	8
	13-18	5
580022512	12-17	8
580022513	13-18	5
580022770	11-49	15
580022859	6-50	29
	6-58	52
580022866	6-99	6
	6-99	7
	6-101	8
	6-101	9
580022878	6-101	5
	6-101	6
580022893	1-9	8
	6-6	4
580022964	1-23	9
580022990	6-67	6
	6-68	23
	6-71	12
	6-72	33
580022993	6-67	6
	6-68	23
	6-71	12
	6-72	33
	6-75	18
580023052	6-28	1
580023845	6-49	8
	6-51	34
	6-51	40
	6-55	11
	6-56	15
	6-56	17
	6-61	1
	6-62	1
	6-62	4
	6-75	4
	6-79	4

©2008 Yale Materials Handling Corporation

NUMERICAL INDEX (continued)

PART NO.	PAGE	ITEM
580023854	6-5	12
	6-28	
580023865	6-61	7
	6-63	6
580023866	6-61	7
	6-62	6
580023869	6-61	7
	6-63	6
580023878	6-61	3
	6-62	5
580023944	6-83	4
	6-85	4
580025194	2-5	17
	4-5	12
580025557	6-83	10
	6-85	9
	6-88	19
	6-91	14
580025558	6-68	24
	6-72	32
	6-99	3
	6-99	5
	6-99	6
	6-99	7
	6-101	3
	6-101	5
	6-101	6
	6-101	7
	6-101	8
	6-101	9
580025559	6-49	2
	6-56	29
	6-75	10
	6-79	14
	6-99	2
	6-101	2
580025560	6-9	10
	6-11	28
	6-55	3
	6-76	5
	6-83	2
	6-85	2
	6-87	10
	6-91	6
	6-95	6
580025567	6-55	12
580025779	6-61	5
	6-75	1
	6-79	1
580025849	6-61	3
	6-62	5
580026222	13-14	24
580026475	12-12	11
	14-4	15
580026610	11-3	9
580026621	1-11	27
	1-43	3
	2-63	6
	3-3	21
	3-5	19
	3-9	13
	3-11	8
	5-11	18
	5-23	19
	6-5	7
	7-7	6
	7-9	4
	7-11	1
	9-9	2
	11-41	10
	11-43	8
580026649	6-51	32
	6-56	30
	6-58	54
	6-67	15
	6-71	15
	6-103	4
	6-103	8
580026803	2-19	18
580026808	6-49	14
	6-57	37
	6-87	16
	6-91	11
	6-95	11
580026810	1-47	9
	1-49	
580026812	1-49	
	1-51	10
	5-37	15
	6-5	14
	6-6	2
	6-31	5
	6-47	2
	10-3	6
	10-7	6
	10-11	6
	10-13	6
	10-21	3
	16-7	2
580026813	6-41	2
	6-50	27
	6-50	29
	6-58	50
	6-58	52
	6-99	1
	6-101	1
	6-103	1
580026816	6-88	23
	6-92	17
	6-96	17
580026863	2-17	4
580026922	12-3	2
	12-7	2
	12-19	2
	13-3	2
	13-7	2
	13-11	2
	13-29	2
	14-3	2
	14-7	2
	14-19	2
580026923	13-13	11
580026924	13-13	11
580026931	2-19	27
580026934	1-53	3
580027206	6-49	18
580027207	6-49	18
580027355	11-41	2
	15-12	24
580027572	1-3	2
	1-3	37
	2-5	10
	2-29	4
	3-3	14
	3-5	17
580027573	5-23	13
	6-5	2
	6-9	
	6-11	
	6-28	
	11-3	11
	11-3	29
	11-5	5
	16-5	7
580027611	6-67	6
	6-67	12
	6-68	23
	6-71	12
	6-72	30
	6-72	33
580027612	6-75	18
	6-103	4
	6-103	8
580027619	6-67	14
	6-72	29
580027620	6-55	4
	6-55	5
580027621	16-5	3
580027945	2-15	4
	2-38	6
580028186	6-71	16
580028441	6-76	2
580028717	15-4	14
580028718	15-4	11
580029125	15-4	15
	15-8	11
	15-11	6
580029990	5-6	4
580030876	6-49	6
	6-56	32
	6-61	8
	6-63	7
	6-75	2
	6-79	2
	6-83	3
	6-85	3
	6-91	3
	6-95	3
580030878	6-49	1
	6-56	27
	6-83	9
	6-85	8
	6-87	5
	6-103	5
580030966	1-3	27
	1-19	3
	2-6	54
	3-3	20
	3-5	18
	3-9	8
	3-9	16
	3-11	14
	4-3	4
	4-5	4
	4-7	7
	5-3	11
	5-5	9
	8-13	2
	10-3	14
	10-7	7
580030968	3-3	3
	3-5	8
	6-31	8
580030969	2-11	8

©2008 Yale Materials Handling Corporation

NUMERICAL INDEX (continued)

PART NO.	PAGE	ITEM
580030970	3-3	32
	3-5	2
	3-9	3
	5-23	26
580030975	1-29	3
	8-5	3
	10-3	12
	10-7	14
	10-11	12
	10-13	14
580031673	12-19	10
	13-7	4
	13-11	3
	13-29	10
	14-19	10
	15-15	6
	15-19	2
	15-23	2
	15-29	2
580031754	2-31	3
580032011	9-2	1
580032023	6-9	14
	6-11	24
580032038	6-50	22
	6-57	45
	6-75	8
	6-79	15
580032039	6-75	8
	6-79	15
580032269	5-11	14
580032619	2-21	43
580032621	2-21	36
580032622	2-21	34
580032627	2-19	13
580032772	12-12	18
580032775	13-22	27
	14-8	28
580032776	13-22	27
	13-22	27
580032975	8-5	30
580033292	13-22	27
580033515	6-51	32
	6-51	37
	6-58	54
580033516	6-56	30
	6-67	15
	6-71	15
580033519	6-67	12
	6-72	30
580033537	6-51	31
	6-56	30
	6-58	54
	6-67	12
	6-67	15
	6-72	30
	6-72	31
580033852	6-61	6
580033876	8-5	34
580033877	8-5	34
580033878	8-5	34
580033879	8-5	34
580033880	8-5	34
580033885	1-65	5
580033890	12-12	36
580034310	8-5	38
580034311	8-5	38
580034312	8-6	38
580034313	8-6	38
580034504	6-51	35
	6-55	10
580034505	6-51	34
	6-55	11
580034506	6-52	42
	6-56	17
580034507	6-51	41
	6-56	16
580034509	6-51	34
	6-51	35
	6-51	41
	6-52	42
	6-55	10
	6-55	11
	6-56	16
	6-56	17
580034540	6-6	4
580034616	6-67	9
	6-72	26
580034643	8-6	41
580034658	6-49	15
	6-51	34
	6-51	35
	6-52	41
	6-52	42
	6-55	10
	6-55	11
	6-56	16
	6-56	17
580034747	8-25	1
580035200	6-67	9
	6-72	24
580035563	9-11	45
580035695	7-13	30
	7-21	20
580035731	7-30	5
580036023	7-13	4
	7-23	32
580036349	6-61	7
	6-62	6
580036351	6-67	14
	6-72	29
580036358	6-61	7
	6-63	6
580036575	6-28	3
580036576	6-28	4
580036599	6-28	2
580036662	2-5	28
580036666	11-3	
580036667	1-9	
580036688	2-63	2
580036691	11-3	13
580036738	5-11	
580036751	6-28	5
580036752	6-28	6
580036870	5-11	16
	5-23	32
580036910	6-87	2
580036940	6-50	27
	6-58	50
580036941	6-99	1
	6-99	1
	6-101	1
580036942	6-41	2
580036943	6-103	1
580036981	6-49	15
	6-50	26
	6-51	31
	6-57	35
	6-57	42
	6-58	49
	6-87	17
	6-91	12
	6-95	12
580036982	6-50	25
	6-58	48
	6-87	1
	6-91	1
	6-95	1
580036983	6-58	53
580036984	6-50	24
	6-57	47
	6-88	22
	6-91	16
	6-95	16
580036986	6-49	15
	6-50	30
	6-57	35
	6-57	42
	6-58	53
	6-87	1
	6-87	17
	6-88	22
	6-91	1
	6-91	12
	6-91	16
	6-95	1
	6-95	12
	6-95	16
580037008	5-9	35
580037013	7-30	9
580037160	6-9	17
	6-11	11
580037179	1-3	7
580037180	2-5	35
	5-9	2
	5-11	25
	6-5	18
	6-9	18
	6-11	36
	6-27	11
	6-31	4
	6-31	11
	10-3	9
	10-7	11
	10-11	9
	10-13	11
	10-21	7
580037181	5-9	1
	5-15	
580037205	1-11	18
580037206	1-11	2
580037207	6-37	1
	6-39	1
580037209	6-37	2
	6-39	2
580037219	5-11	27
580037325	4-3	1
	4-5	1
	4-7	6
580037328	3-3	5
	3-5	10
580037329	3-3	4
	3-5	9

©2008 Yale Materials Handling Corporation

NUMERICAL INDEX (continued)

PART NO.	PAGE	ITEM
580037670	6-49	11
	6-56	25
	6-87	14
	6-91	9
	6-95	9
580037687	15-33	
	15-35	
	15-37	
580037688	15-33	
	15-35	
	15-37	
580037700	5-35	5
580037719	1-3	36
580037836	8-5	32
580037904	6-29	8
580038033	1-12	50
580038063	5-35	3
580038186	6-99	3
	6-99	5
	6-101	3
	6-101	7
580038290	5-37	6
580038312	4-3	24
	4-5	
580038661	6-87	4
	6-91	2
	6-95	2
580038751	6-31	10
	6-101	
580038826	6-31	3
580038891	5-19	23
	5-21	33
580038894	5-19	21
	5-21	15
580038895	5-19	11
	5-21	11
580039016	6-16	5
580039158	6-87	4
	6-91	2
	6-95	2
580039173	15-21	9
	15-31	10
580039174	15-21	9
	15-31	10
580039175	15-17	4
	15-25	4
580039177	15-17	4
	15-27	4
580039194	6-88	18
	6-91	13
	6-95	13
580039251	6-37	20
580039278	6-37	19
580039347	10-3	30
	10-7	30
	10-25	9
580039350	9-9	8
	11-41	6
	15-23	26
580039351	9-9	1
580039353	7-9	10
580039364	10-25	20
580039365	10-25	15
580039385	10-3	38
	10-7	38
	10-25	20
580039402	15-8	18
	15-12	19
580039423	16-13	6
580039425	15-4	5
	15-8	16
	15-8	19
	15-33	1
	15-35	1
	15-37	1
580039438	2-5	2
	2-11	5
	6-5	11
	6-11	9
	6-27	19
	16-7	4
580039490	6-83	11
	6-85	10
580039491	6-83	11
	6-85	10
580039499	6-49	16
	6-50	30
	6-57	36
580039500	6-49	16
	6-57	36
580039502	6-50	24
	6-50	25
	6-50	26
	6-57	47
	6-58	48
	6-58	49
580039513	6-49	3
	6-49	15
	6-49	16
	6-49	17
	6-50	24
	6-50	25
	6-50	26
	6-51	30
	6-51	31
	6-56	31
	6-57	35
	6-57	36
	6-57	42
	6-57	47
	6-58	48
	6-58	49
	6-58	53
	6-87	1
	6-87	17
	6-88	22
	6-91	1
	6-91	12
	6-91	16
	6-95	1
	6-95	12
	6-95	16
	6-103	6
580039514	6-57	39
580039566	3-3	11
	3-5	11
580039599	5-9	16
580039610	3-3	12
	3-5	15
580039672	2-5	33
580039764	6-49	12
	6-57	41
	6-88	21
	6-91	15
	6-95	15
580039846	6-29	6
580039847	6-29	11
580039851	6-51	38
	6-58	55
580039890	2-11	1
	2-11	1
	2-63	17
580039892	5-3	16
580039900	1-3	28
	2-6	51
	2-9	11
	2-9	27
	6-5	11
	6-28	
580039909	2-63	10
580039911	2-63	8
580039912	11-3	6
	11-45	2
580039914	10-25	26
580040090	6-31	10
	6-99	
580040120	6-51	33
	6-55	13
	6-87	9
	6-91	5
	6-95	5
580040128	10-3	27
	10-8	48
	10-11	26
	10-13	39
580040177	4-3	17
	4-5	19
	4-7	20
580040374	6-11	3
	6-15	14
	6-23	15
580040737	6-16	7
580040786	7-17	14
	7-19	14
	7-25	14
	7-27	14
	7-29	14
580040787	7-17	16
	7-19	16
	7-25	15
	7-27	15
	7-29	16
580040796	7-19	19
	7-25	20
	7-27	21
	7-29	19
580040820	6-50	19
	6-50	21
	6-51	36
	6-55	9
	6-57	38
	6-57	44
580040821	6-50	19
	6-50	21
	6-51	36
	6-55	9
	6-57	38
	6-57	44
580040822	6-50	20
	6-51	37
	6-55	8
	6-57	43
	6-68	21
	6-71	3

©2008 Yale Materials Handling Corporation

NUMERICAL INDEX (continued)

PART NO.	PAGE	ITEM
	6-103	2
580040823	6-103	2
580040850	1-47	11
	1-49	
	1-51	11
	6-37	9
	6-39	9
580041195	6-83	1
	6-83	11
	6-85	1
	6-85	10
	16-2	2
580041208	11-45	11
580041257	2-6	50
580041258	2-5	45
580041360	6-39	20
580041369	6-47	19
	10-25	4
	11-45	7
580041371	6-47	13
580041384	5-9	32
	11-43	14
	11-45	8
580041462	6-103	4
	6-103	8
580041557	1-39	2
	5-9	31
	6-9	16
	6-11	20
	6-27	9
	11-45	5
580041641	6-56	19
580041704	1-9	3
	1-11	1
	5-6	5
	6-11	32
	6-27	27
	6-37	8
	6-37	17
	16-5	7
580041711	1-11	5
	5-13	2
	5-17	1
580041728	13-26	12
	14-16	12
580041729	13-26	14
	14-16	14
580041768	6-5	1
580041883	15-8	7
	15-12	17
580041884	15-8	7
	15-12	29
580041947	5-19	19
	5-21	29
580042194	7-3	3
	7-4	3
580042219	6-67	19
	6-71	1
580042221	6-49	3
	6-49	17
	6-56	31
580042222	6-49	3
	6-49	17
	6-56	31
580042227	9-11	
580042228	9-11	44
580042229	9-11	5
580042230	9-11	43
580042328	5-9	12
	7-9	8
580042330	5-9	13
	6-47	12
580042331	6-11	30
	6-27	17
580042354	2-9	21
580042392	11-9	10
	11-13	10
580042567	7-9	7
	11-43	13
	11-45	9
580042698	6-67	9
	6-72	24
580042794	6-11	29
	6-27	24
	10-3	16
	10-8	47
	10-25	5
580042842	1-41	4
	5-9	33
	10-3	17
	10-8	46
580042867	2-9	26
580042922	2-5	38
580042932	5-3	8
	5-5	8
580042947	6-67	1
	6-72	21
580042963	1-17	4
	1-17	4
	6-20	4
580043001	2-5	9
580043031	6-28	7
580043203	7-30	6
580043308	9-16	1
580043467	6-50	23
	6-55	1
	6-57	46
580043644	7-23	41
	7-30	12
580043696	2-9	25
580043866	5-35	11
580043885	6-83	7
	6-85	7
580043895	1-51	
580043915	6-50	23
	6-55	1
	6-57	46
580043943	8-5	9
580044081	2-31	2
580044129	11-9	24
	11-11	15
	11-13	25
	11-15	16
580044147	13-14	18
580044565	8-3	5
580044741	8-5	25
580044742	8-5	14
580044744	8-5	16
580044785	10-3	4
	10-7	4
	10-11	4
	10-13	4
	10-21	2
580044798	8-3	4
580044800	8-6	43
580044852	6-41	3
	6-83	6
	6-85	6
	6-87	8
	6-91	4
	6-95	4
580044854	6-41	3
	6-83	6
	6-85	6
	6-87	8
	6-91	4
	6-95	4
580044859	1-11	15
	1-12	61
	6-39	17
580044860	1-3	31
	1-19	4
	4-3	2
	4-5	2
	4-7	5
	5-3	12
	5-9	3
	8-13	8
	10-3	15
	10-8	43
	10-11	15
	10-13	34
580044861	1-9	13
	16-4	4
580044862	5-5	11
580044908	6-55	6
	6-75	3
	6-79	3
580044998	8-5	23
580045059	7-15	23
	7-23	19
580045062	7-13	24
	7-21	17
580045064	7-13	26
	7-21	18
580045072	7-13	25
	7-21	36
580045132	16-7	5
580045338	9-2	3
580045480	6-103	4
	6-103	8
580045558	9-9	3
	11-41	7
580046107	11-3	15
580046138	1-12	57
580046139	1-12	54
580046263	6-5	17
580046273	7-13	23
	7-21	16
580046274	7-13	43
	7-23	31
580046277	7-13	38
	7-23	6
580046280	7-13	2
	7-23	38
580046304	4-3	7
580046311	5-11	12
580046399	9-2	3
580046431	4-5	6
580046451	5-5	12
580046499	2-9	3
	2-25	3
580046603	8-6	46
580046629	2-9	24

©2008 Yale Materials Handling Corporation

NUMERICAL INDEX (continued)

PART NO.	PAGE	ITEM
	5-11	21
	5-17	5
580046654	2-9	17
580046769	7-13	22
	7-15	8
	7-21	24
580046832	5-11	19
580046833	4-3	6
580046965	13-26	3
	14-15	3
580046967	13-26	13
	14-16	13
580047034	6-44	8
	10-3	3
	10-7	3
	10-11	3
	10-13	3
	10-21	6
580047046	6-29	4
580047047	6-29	12
580047048	6-29	5
580047049	6-29	3
580047056	7-4	1
580047057	7-4	1
580047058	7-3	1
580047182	2-5	36
580047183	6-16	2
580047200	6-29	10
580047527	5-37	12
580047691	6-29	7
580047714	1-43	6
	2-5	21
	5-3	13
	5-11	3
	5-23	15
	5-35	4
	6-5	4
	6-9	2
	6-11	13
	6-29	9
	6-47	14
	7-7	7
	7-9	3
	7-11	2
	9-9	6
	10-3	11
	10-7	13
	10-11	11
	10-13	13
	11-3	17
	11-9	2
	11-11	2
	11-13	2
	11-15	2
	11-41	11
580047742	10-3	25
	10-7	10
	10-11	24
	10-13	10
580047772	7-15	4
	7-21	13
580047839	7-13	39
	7-23	9
580047884	8-6	42
580047889	8-11	7
580047890	8-11	1
580047919	2-5	1
	2-9	2
	2-11	4
	6-9	12
	6-11	27
	10-3	10
	10-7	12
	10-11	10
	10-13	12
580048175	9-11	46
580048273	6-9	4
	6-11	21
580048274	5-13	1
	5-17	3
580048278	5-13	4
	5-17	2
580048287	5-13	9
580048292	5-13	15
580048293	5-13	3
580048315	9-15	4
580048458	2-15	5
	2-38	5
580048573	1-11	4
580048576	5-3	15
580048738	7-13	14
	7-21	8
580048802	6-37	10
580048804	2-19	11
580048851	8-5	11
	8-9	1
580048863	2-6	56
580048869	5-17	4
580048873	5-17	4
580048875	5-17	4
580048879	2-25	13
580048895	6-83	8
580048919	2-25	4
	6-13	
580048979	6-13	3
580048980	6-13	5
580048981	6-13	6
580048982	6-13	7
580049010	2-63	15
	8-13	6
	10-21	10
580049011	1-3	22
	2-6	57
	2-11	
	5-13	5
	6-9	11
	6-11	26
	6-27	25
	10-4	48
	10-8	54
	10-11	38
	10-14	44
580049019	11-19	2
580049105	2-6	55
580049106	2-5	30
580049173	2-6	52
580049224	6-39	7
580049225	6-39	8
580049228	13-14	19
580049229	2-63	4
	5-9	4
	5-11	5
	5-23	12
580049231	3-9	14
	3-11	7
	5-23	20
	6-27	2
	7-9	11
	10-4	40
	10-8	40
	10-11	32
	10-13	31
	10-21	13
580049292	6-49	13
	6-57	40
580049294	11-19	18
	11-21	4
580049322	6-76	4
	6-76	7
	6-79	11
	6-79	13
	6-80	26
580049387	2-5	26
580049389	5-23	
580049526	16-5	1
580049555	6-11	35
	6-27	18
	6-47	11
580049559	6-9	8
	6-11	22
	6-27	7
580049602	11-3	2
	11-5	6
580049608	6-31	9
580049609	6-31	9
580049610	6-31	9
580049758	1-3	11
	1-11	16
	3-11	17
580049806	9-5	21
580049807	9-5	25
580049808	9-5	1
580049809	9-5	8
580049810	9-5	11
580049811	9-5	13
580049812	9-5	16
580049814	1-43	4
	7-7	4
	7-9	6
	7-11	4
580049815	6-68	24
	6-72	32
	6-99	3
	6-99	5
	6-99	6
	6-99	7
	6-101	3
	6-101	5
	6-101	6
	6-101	7
	6-101	8
	6-101	9
580049835	1-11	26
580049836	1-11	29
580049840	1-3	38
	11-9	6
	11-13	6
580049883	1-49	4
	1-51	2
580049884	1-49	
	1-51	2
	1-51	
580049886	1-49	
580049887	1-47	

©2008 Yale Materials Handling Corporation

NUMERICAL INDEX (continued)

PART NO.	PAGE	ITEM
	1-49	
	1-51	
580049891	1-45	1
	1-47	
580049892	1-45	2
580049893	1-45	2
580049895	1-45	1
580049897	1-47	2
580049898	1-47	2
580049900	1-47	6
580049906	1-45	1
580049915	1-3	21
	1-3	21
580050042	2-15	8
	2-29	1
	7-15	25
	7-23	4
580050043	8-22	1
	8-23	1
580050044	8-22	1
	8-23	1
580050045	8-24	1
580050046	8-24	1
580050047	8-22	1
	8-23	1
580050048	8-22	1
	8-23	1
580050049	8-24	1
580050050	8-24	1
580050293	6-15	3
	6-23	5
580050296	8-5	28
580050409	2-5	8
580050410	2-9	22
580050475	5-11	26
580050487	6-80	21
580050627	6-50	19
	6-50	21
	6-50	23
	6-51	36
	6-52	41
	6-55	1
	6-55	9
	6-57	38
	6-57	44
	6-57	46
580050641	11-3	23
580050676	5-37	9
	10-3	7
	10-7	8
	10-11	7
	10-13	8
	10-21	4
580050923	1-39	5
580050933	6-29	12
580050959	1-9	6
580050978	11-9	11
	11-11	5
	11-13	11
	11-15	5
580051025	6-62	3
	6-71	4
	6-71	5
	6-71	6
	6-71	17
	6-71	18
	6-71	19
580051159	6-37	13
	6-39	13
	16-2	
580051168	6-37	3
	6-39	3
580051169	5-21	22
580051336	8-9	
580051337	8-9	2
580051383	2-15	6
	2-38	2
	2-38	4
580051384	2-15	7
	2-38	9
580051572	1-47	1
580051573	1-47	1
580051574	1-47	4
580051575	1-47	4
580051610	2-29	5
580051670	7-2	3
580051703	6-88	18
	6-91	13
	6-95	13
580051704	6-88	20
	6-91	13
	6-95	13
580051746	7-2	2
580051747	1-9	5
580051779	1-59	1
580051780	1-59	2
580051781	1-59	3
580051783	1-59	3
580051784	1-59	3
580051785	1-59	3
580051786	1-59	3
580051787	1-59	3
580051788	1-59	3
580051789	1-59	3
580051790	1-59	3
580051791	1-59	3
580051796	7-13	19
	7-21	26
	7-23	40
580051800	6-27	5
580051805	1-49	4
	1-51	2
580051808	6-13	1
580051809	6-13	2
580051832	1-3	16
580051847	3-3	24
	3-5	22
580051890	2-9	9
580051925	11-47	13
580051941	1-9	11
	1-29	5
	2-15	11
580052018	7-2	6
580052019	6-15	12
	6-23	13
	6-68	27
580052062	2-5	43
580052115	11-3	5
580052148	11-3	1
	11-5	
580052156	1-12	55
580052203	1-59	
580052259	5-19	16
	5-21	19
580052264	9-11	24
580052279	10-3	22
	10-11	21
580052280	10-7	24
	10-13	23
580052281	10-8	45
	10-13	36
580052283	9-11	23
580052292	1-12	62
580052351	10-8	49
580052353	10-7	25
	10-13	24
580052360	9-11	19
580052361	9-11	22
580052409	1-12	60
580052422	1-39	1
	1-43	2
580052430	5-9	17
580052434	5-9	22
580052474	2-23	
	2-25	9
580052511	9-15	3
580052527	5-11	8
580052661	5-35	9
580052672	5-9	20
580052679	8-3	8
	8-13	12
	8-15	17
580052680	1-39	3
580052685	6-11	34
	6-27	30
	6-44	5
580052689	5-19	15
	5-21	18
580052691	5-19	13
	5-21	16
580052701	10-11	31
	10-13	30
	10-22	
580052711	2-5	31
580052731	11-19	4
	11-29	9
580052736	2-63	12
	10-25	2
580052864	8-6	38
580052865	8-6	38
580052866	8-6	38
580052867	8-6	38
580052881	15-8	4
580052931	10-3	29
	10-11	29
580052933	10-7	26
	10-13	25
580052978	5-11	7
580052982	6-11	31
	6-27	26
580052989	6-11	3
580052999	2-5	3
580053000	5-9	30
	5-19	35
	5-21	44
580053098	1-7	5
580053099	2-5	34
580053107	5-23	8
580053110	7-17	
	7-19	
580053272	1-17	1
580053358	12-3	
	12-7	
	15-4	

©2008 Yale Materials Handling Corporation

NUMERICAL INDEX (continued)

PART NO.	PAGE	ITEM
	15-4	
580053364	12-3	
	12-7	
	15-4	
	15-4	
580053370	12-3	
	12-7	
	15-4	
	15-4	
580053377	12-3	
	12-7	
	15-4	
	15-4	
580053442	12-3	
	12-7	
	15-4	
	15-4	
580053448	12-3	
	12-7	
	15-4	
	15-4	
580053454	12-3	
	12-7	
	15-4	
	15-4	
580053461	12-3	
	12-7	
	15-4	
	15-4	
580053467	12-3	
	12-7	
	15-4	
	15-4	
580053473	12-3	
	12-7	
	15-4	
	15-4	
580053484	6-41	5
580053493	5-19	6
	5-21	8
580053495	5-21	20
580053496	5-21	24
580053498	5-19	17
	5-21	28
580053513	13-3	1
	13-3	1
580053515	13-3	1
	13-3	1
580053516	13-3	1
	13-3	1
580053518	13-3	1
	13-3	1
580053520	13-3	1
	13-3	1
580053523	13-3	1
580053539	13-3	
	13-7	
	13-11	
	15-11	
580053541	13-3	
	13-7	
	13-11	
	15-11	
580053542	13-3	
	13-7	
	13-11	
	15-11	
580053544	13-3	
	13-7	
	13-11	
	15-11	
580053546	13-3	
	13-7	
	13-11	
	15-11	
580053549	13-3	
	13-7	
	13-11	
	15-11	
580053563	13-11	1
	13-11	1
580053564	13-11	1
	13-11	1
580053566	13-11	1
	13-11	1
580053568	13-11	1
	13-11	1
580053571	13-11	1
580053587	13-11	1
	13-11	1
580053590	13-3	
	13-7	
	13-11	
	15-11	
580053592	13-3	
	13-7	
	13-11	
	15-11	
580053593	13-3	
	13-7	
	13-11	
	15-11	
580053595	13-3	
	13-7	
	13-11	
	15-11	
580053597	13-3	
	13-7	
	13-11	
	15-11	
580053627	14-3	
	14-7	
580053633	14-3	
	14-7	
580053658	14-3	1
	14-3	1
580053664	14-3	1
	14-3	1
580053688	14-7	1
	14-7	1
580053694	14-7	1
	14-7	1
580053727	14-3	
	14-7	
580053733	14-3	
	14-7	
580053784	11-3	21
580053836	13-7	1
	13-7	1
580053838	13-7	1
	13-7	1
580053839	13-7	1
	13-7	1
580053841	13-7	1
	13-7	1
580053843	13-7	1
	13-7	1
580053846	13-7	1
580053862	13-22	31
	13-22	31
580053864	13-22	31
	13-22	31
580053865	13-22	31
	13-22	31
580053867	13-22	31
	13-22	31
580053870	13-22	31
	13-22	31
580053874	13-22	31
580053914	4-3	23
	4-5	27
580053926	14-4	26
	14-4	26
580053932	14-4	26
	14-4	26
580053960	6-15	7
580053965	2-23	
580053966	2-23	
580053967	2-23	
580053968	2-23	
580053969	2-23	
580053970	2-23	
580053983	11-47	13
580054021	3-3	10
	3-5	7
580054023	6-11	4
	6-27	1
580054043	11-25	5
	11-27	6
	11-39	1
580054044	11-19	11
	11-21	14
580054046	11-17	3
	11-19	2
	11-22	4
	11-39	2
580054050	11-31	13
	11-35	11
	11-37	10
580054052	11-19	15
	11-21	6
	11-31	2
	11-35	2
	11-37	2
580054053	11-21	15
	11-29	12
	11-35	2
	11-37	2
580054054	11-25	8
	11-39	4
580054057	11-35	3
580054062	11-17	7
	11-22	1
580054063	11-17	2
580054118	11-29	7
580054119	11-29	11
580054121	11-31	12
	11-35	10
	11-37	9
580054125	11-31	7
	11-35	8
	11-37	7
580054126	11-31	8
	11-35	9

©2008 Yale Materials Handling Corporation

NUMERICAL INDEX (continued)

PART NO.	PAGE	ITEM
	11-37	8
580054128	11-35	3
580054129	11-31	14
580054130	11-29	8
580054131	11-31	6
	11-35	6
	11-37	6
580054140	11-29	5
580054141	11-31	5
580054142	11-35	7
580054143	11-37	3
580054144	11-29	
580054145	11-29	
580054147	11-29	6
580054148	11-31	13
	11-35	11
	11-37	11
580054153	10-13	40
580054169	5-9	27
	5-19	37
	5-21	46
580054232	2-11	9
580054461	5-3	3
580054462	11-19	22
580054465	11-19	20
580054472	5-11	24
580054477	6-6	4
580054478	6-6	6
580054499	5-9	15
580054569	9-7	
580054671	11-31	11
580054672	11-17	2
	11-19	3
580054683	5-37	3
580054684	11-17	3
	11-22	10
	11-39	3
580054685	11-29	14
580054687	3-3	27
	3-5	26
580054689	11-21	5
580054692	11-27	10
	11-39	4
580054696	11-22	2
580054715	13-26	8
	14-15	8
580054716	3-3	29
	3-5	23
580054717	3-3	16
580054719	3-3	18
580054721	3-3	7
580054724	3-3	28
	3-5	27
580054732	4-3	12
	4-5	16
580054734	4-3	12
	4-5	16
580054736	4-5	13
580054738	4-5	13
580054740	4-3	9
580054742	4-3	9
580054869	11-19	10
	11-21	13
580054870	11-35	3
580054933	11-33	3
580054995	11-19	2
580054996	11-19	2
580054997	11-19	2
580054998	11-19	2
580054999	11-19	2
580055015	11-31	10
580055016	11-31	9
580055166	11-22	2
580055170	1-57	3
580055171	1-57	2
580055172	1-57	6
580055173	1-57	7
580055174	1-57	4
580055175	1-57	8
580055177	1-57	9
580055178	1-57	10
580055179	1-57	11
580055193	7-17	8
	7-19	8
	7-25	8
	7-27	8
	7-29	8
580055194	3-3	25
	3-5	5
580055195	7-17	9
	7-19	9
	7-25	9
	7-27	9
	7-29	9
580055196	7-17	10
	7-19	10
	7-25	10
	7-27	10
	7-29	10
580055201	7-27	18
580055202	7-17	20
580055203	7-17	18
	7-19	18
	7-25	17
	7-27	17
	7-29	18
580055204	7-17	7
	7-19	7
	7-25	7
	7-27	7
	7-29	7
580055216	7-17	17
	7-19	17
	7-25	16
	7-27	16
	7-29	17
580055247	3-3	25
	3-5	5
580055257	10-8	49
580055299	10-7	21
580055312	1-53	22
580055322	11-22	3
	11-29	2
580055452	13-26	
	14-15	
580055454	13-26	
580055456	13-26	
580055458	13-26	
	14-15	
580055460	13-26	
580055553	7-15	22
	7-23	22
580055561	5-3	7
580055631	15-8	23
	15-12	14
580055632	5-21	23
580055633	12-12	31
	13-13	9
	13-14	12
	13-14	30
	14-4	18
580055634	5-19	20
	5-21	14
	12-7	9
	13-8	16
	13-21	4
	14-7	15
580055636	15-8	12
	15-12	7
580055645	8-13	10
580055646	15-8	25
	15-12	15
580055648	15-12	22
580055649	11-47	3
	12-7	10
	13-8	15
	13-21	3
	13-21	14
	14-7	16
	15-4	13
580055650	13-21	8
	15-4	8
	15-11	4
580055651	12-12	8
	13-14	29
	14-4	14
	14-7	3
580055652	15-12	27
580055654	14-15	
580055671	14-15	
580055730	15-11	3
580055731	13-21	9
	15-4	7
580055732	5-19	12
	5-21	12
	15-12	16
580055734	1-12	64
580055735	14-7	5
	15-8	24
580055736	5-19	4
	5-21	4
	12-12	12
	12-12	37
	13-13	10
	14-4	16
580055738	12-12	23
	14-4	17
580055739	12-12	22
	14-4	23
	15-12	26
580055740	15-12	21
580055741	12-12	32
	13-14	13
	14-4	27
580055742	13-22	18
	14-7	17
580055743	12-7	11
	13-8	17
	15-8	26
	15-12	30
580055745	13-21	5
580055747	15-4	12
580055798	7-9	2
580055804	10-3	32

©2008 Yale Materials Handling Corporation

NUMERICAL INDEX (continued)

PART NO.	PAGE	ITEM
	10-7	32
	10-25	3
	11-43	1
580055825	10-25	22
580055858	5-19	25
	5-21	35
580055861	5-19	24
	5-21	34
580055863	15-8	2
	15-12	10
580055882	5-15	7
580055883	5-15	1
580055884	5-15	2
580055885	5-15	3
580055952	13-18	
580055954	13-18	
580055956	13-18	
580055957	13-18	
580055959	13-18	
580055993	13-18	
580056000	5-21	31
	11-47	2
580056003	1-11	40
580056004	16-2	2
580056006	16-2	2
580056021	9-7	37
580056022	11-19	9
	11-21	12
580056024	11-19	14
580056025	11-29	3
580056027	13-18	
580056029	13-18	
580056030	13-18	
580056032	13-18	
580056034	13-18	
580056047	14-12	
580056062	5-21	26
580056063	5-21	21
580056064	14-12	
580056088	12-12	30
	13-11	9
	13-22	26
	14-8	24
580056094	5-19	3
	5-21	3
580056098	14-12	
580056104	14-12	
580056131	14-12	8
580056147	8-3	10
580056157	14-12	8
580056203	14-12	8
580056213	14-12	8
580056224	1-11	25
580056248	14-12	
580056254	14-12	
580056272	7-15	17
	7-23	18
580056288	14-12	
580056303	14-12	
580056331	8-13	12
580056332	8-13	12
580056337	11-3	7
580056339	14-12	8
580056345	14-12	8
580056370	14-12	8
580056373	10-3	36
	10-7	36
580056380	6-76	6
	6-76	8
	6-79	7
	6-79	8
	6-80	23
580056381	3-3	9
	3-5	14
	3-5	21
	3-9	18
	3-11	16
580056384	14-12	8
580056430	1-55	10
580056459	5-35	14
580056460	5-35	13
580056463	7-15	5
	7-21	14
580056465	7-13	7
580056466	7-30	3
580056479	8-3	1
	8-13	13
580056486	5-11	4
580056487	6-6	1
580056489	5-11	2
580056495	14-12	11
580056496	14-12	11
580056514	1-53	6
580056515	1-53	6
580056526	1-9	14
	1-29	9
580056527	1-3	32
580056528	1-9	12
	1-29	13
	2-38	10
580056530	1-11	19
580056532	1-53	8
580056613	6-5	15
	6-6	3
	6-31	6
	6-47	3
	16-7	1
580056614	6-31	7
580056624	10-4	42
	10-8	42
	10-11	34
	10-13	33
	10-21	14
580056625	10-3	2
	10-7	2
	10-11	2
	10-13	2
580056638	10-25	13
580056657	10-25	10
580056666	11-9	23
	11-11	14
	11-13	24
	11-15	15
580056730	6-5	9
	6-28	
580056793	1-17	2
580056794	1-17	2
580056795	1-17	2
580056796	1-17	2
580056797	1-17	3
580056798	1-17	3
580056799	1-17	3
580056800	1-17	3
580056815	1-9	15
	1-11	20
	1-19	2
	1-29	6
	10-11	14
	10-13	7
	11-9	7
	11-11	3
	11-13	7
	11-15	3
	16-4	3
	16-5	6
580056839	5-35	10
580056840	6-11	1
	6-27	3
	11-9	15
	11-11	12
	11-13	16
	11-15	13
580056844	11-9	21
	11-11	9
	11-13	22
	11-15	10
580056877	11-19	12
580056992	5-23	10
580056994	12-15	
580057002	12-15	
580057097	12-15	
580057107	12-15	
580057231	4-3	14
	4-5	21
	4-7	27
580057259	1-49	5
	1-49	
	1-51	
580057300	5-37	1
580057342	1-53	13
580057364	3-3	22
	3-5	20
580057698	12-17	
580057704	12-17	
580057762	12-17	
580057770	12-17	
580057783	12-17	
580057831	10-3	18
	10-7	22
	10-11	18
	10-13	21
580057855	5-15	6
580057857	5-15	5
580057859	7-23	12
580057860	5-15	4
580057932	7-9	1
	12-12	13
	13-14	20
	14-3	13
580058009	2-29	7
	5-9	24
	5-19	30
580058015	11-33	7
580058017	5-21	32
	5-21	38
580058078	9-2	4
580058135	1-3	9
580058137	1-3	15
580058138	11-29	15
	11-33	14
580058139	11-29	10
580058187	9-15	
580058188	6-37	16
	6-39	16

©2008 Yale Materials Handling Corporation

NUMERICAL INDEX (continued)

PART NO.	PAGE	ITEM
580058190	1-3	20
	6-44	2
	16-3	4
580058192	1-15	4
580058212	1-9	4
	1-11	3
	6-37	7
	6-37	18
	6-39	18
	16-5	6
580058268	6-75	20
580058269	1-11	31
	10-3	5
	10-7	5
	10-11	5
	10-13	5
	11-9	22
	11-11	13
	11-13	23
	11-15	14
	11-43	12
	16-3	3
580058270	1-19	5
580058314	6-37	15
	6-39	15
580058315	1-11	39
580058319	1-11	48
580058320	1-11	38
580058321	1-11	46
580058357	1-53	14
580058383	1-3	26
580058447	1-9	7
580058669	6-49	9
	6-56	28
580058690	6-19	5
580058734	1-11	8
580058773	1-53	15
580058798	1-11	44
580058808	16-4	2
580058821	1-53	19
580058909	1-12	59
580058910	1-12	59
580058930	1-57	1
580058971	12-17	
580059048	11-43	5
580059127	1-29	11
580059253	6-68	25
	6-72	31
580059254	10-3	37
	10-7	37
	10-11	30
	10-13	29
580059293	6-15	9
580059320	2-9	7
580059335	1-11	12
580059353	2-15	1
580059355	2-15	1
580059393	5-9	34
580059493	1-21	6
580059631	7-13	21
	7-21	15
580059637	7-30	13
580059638	7-30	10
580059639	7-30	11
580059784	5-9	28
	5-19	32
	5-21	42
580059788	1-53	15
580059816	1-45	6
	1-47	10
	1-49	7
	1-51	8
580059828	2-15	9
580059919	1-12	62
580060014	6-5	16
580060025	16-10	3
580060060	1-49	
580060061	1-49	
580060074	1-51	
580060075	1-51	
580060257	1-29	7
580060283	2-11	7
580060284	2-11	2
580060285	2-11	10
580060289	8-9	4
580060455	8-3	6
	8-13	4
580060564	5-3	10
580060576	10-3	20
	10-7	16
	10-11	19
	10-13	16
580060625	6-29	2
580060626	6-29	2
580060645	6-44	4
580060697	11-45	12
	12-12	38
	13-14	31
	14-4	39
580060719	12-12	18
580060732	11-47	8
580060755	7-17	
	7-19	
	7-25	
	7-27	
	7-29	
580060778	2-29	12
580060780	7-13	28
580060837	6-44	3
580060846	5-9	14
580060870	1-12	53
580060996	10-22	
580061267	11-3	18
	11-3	25
	13-14	21
580061291	1-11	47
580061352	11-47	1
580061571	7-9	12
580061696	1-11	33
580061697	1-11	49
580061830	11-3	19
	11-7	
580061850	6-33	
	6-33	
	6-33	
	6-35	
	6-35	
	6-35	
580061852	6-33	
	6-33	
	6-33	
	6-33	
	6-35	
	6-35	
	6-35	
	6-35	
580062078	1-45	3
	1-47	3
	1-49	3
	1-51	4
580062145	8-5	2
580062195	11-47	11
580062216	6-75	21
	6-80	24
580062311	6-31	2
580062582	11-25	1
580062584	11-27	1
580062910	6-35	
	6-35	
	6-35	
	6-35	
	6-35	6
580063044	2-43	15
580063065	6-19	3
580063092	2-43	15
580063288	3-3	10
	3-5	7
580063369	2-25	29
580063571	6-55	12
580063616	6-11	3
	6-15	15
	6-23	14
580063617	6-15	6
	6-23	7
	6-23	10
580063618	6-15	2
	6-23	2
580063624	8-11	6
580063625	8-11	2
580063697	6-41	3
	6-83	6
	6-85	6
	6-87	8
	6-91	4
	6-95	4
580063713	4-3	3
580063714	4-3	3
580063751	6-41	3
	6-83	6
	6-85	6
	6-87	8
	6-91	4
	6-95	4
580063909	1-7	2
580063913	1-11	45
580063934	2-5	20
	4-5	11
580063949	9-9	1
	9-9	7
	9-9	8
	10-3	33
	10-7	33
	11-41	6
	11-41	6
	11-43	10
	15-15	19
	15-15	20
	15-19	19
	15-19	20
	15-23	26
	15-23	27
	15-29	25
	15-29	26
	15-33	2

©2008 Yale Materials Handling Corporation

NUMERICAL INDEX (continued)

PART NO.	PAGE	ITEM
	15-35	2
	15-35	9
	15-37	2
	15-37	9
580063952	10-21	15
580063961	2-15	10
580063962	1-11	7
580064049	5-9	21
580064083	1-11	14
580064084	1-11	11
580064114	7-9	15
580064115	7-11	6
580064147	1-12	55
580064367	6-9	13
	6-11	25
	6-61	
580064368	6-9	13
	6-11	25
	6-62	
580064565	6-47	4
580064567	6-47	1
580064595	8-9	
580064598	6-41	1
580064599	6-39	12
	6-41	4
580064627	1-3	19
580064733	6-41	6
580064736	9-2	6
580064786	11-27	
580064789	11-25	
580064805	9-2	7
580064820	11-3	22
580064821	11-3	14
580064825	6-71	4
	6-71	5
	6-71	6
	6-71	17
	6-71	18
	6-71	19
580064880	6-67	8
	6-72	23
580064906	1-3	8
580064907	1-3	10
580064909	1-3	13
580064910	1-3	24
580064911	1-3	34
580064913	1-3	33
580064914	1-3	23
580064915	10-3	35
	10-7	35
	10-25	8
580064917	6-47	15
580064920	7-9	9
580064921	7-7	5
	7-11	5
580064923	6-68	24
	6-72	32
580065002	9-2	2
580065030	8-6	58
580065066	8-5	2
580065386	1-3	5
580065421	16-9	2
580065523	2-9	15
580065858	2-9	16
580065860	8-6	57
580065861	8-6	57
580065862	11-47	4
	11-49	
580065863	11-47	4
	11-49	
580065961	1-49	
	1-51	
580065981	2-9	28
580066219	6-5	19
580066235	16-9	3
580066272	11-3	8
580066452	11-3	28
580066463	6-43	4
580066542	6-43	6
580066556	1-41	3
580066569	1-3	18
580066583	7-13	17
	7-21	28
580066585	7-13	16
	7-21	27
580066671	1-15	5
580066672	1-15	6
580066704	11-3	19
	11-7	
580066710	2-11	3
580066768	1-29	12
580066770	5-11	13
	5-23	9
580066841	7-30	4
580066842	7-30	4
580066865	8-3	3
	8-5	
580066867	8-3	3
	8-5	
580066989	15-8	21
	15-8	21
580066998	15-8	21
	15-8	21
580067025	15-8	8
	15-8	8
580067028	6-11	33
580067032	15-8	8
	15-8	8
580067064	15-8	22
580067069	15-8	22
580067072	15-8	22
580067075	15-8	22
580067131	15-8	5
	15-8	9
580067138	15-8	5
	15-8	9
580067143	15-8	5
	15-8	9
580067144	15-8	5
	15-8	9
580067215	15-4	1
	15-4	1
	15-4	1
	15-4	1
	15-4	2
	15-4	2
580067221	15-4	1
	15-4	1
	15-4	1
	15-4	1
	15-4	2
	15-4	2
580067227	15-4	1
	15-4	1
	15-4	1
	15-4	1
	15-4	2
	15-4	2
580067235	15-4	1
	15-4	1
	15-4	1
	15-4	1
	15-4	2
	15-4	2
580067238	15-4	1
	15-4	1
	15-4	2
580067256	11-3	3
580067346	8-5	6
580067372	11-5	1
580067388	11-47	6
580067389	15-11	1
	15-11	2
580067391	15-11	1
	15-11	2
580067392	15-11	1
	15-11	2
580067394	15-11	1
	15-11	2
580067396	15-11	1
	15-11	2
580067413	15-11	1
	15-11	2
580067415	15-11	1
	15-11	2
580067416	15-11	1
	15-11	2
580067418	15-11	1
	15-11	2
580067420	15-11	1
	15-11	2
580067465	7-30	1
580067472	8-22	2
	8-26	2
580067473	8-23	2
	8-26	2
580067474	8-24	2
	8-26	2
580067475	8-22	2
	8-26	2
580067476	8-23	2
	8-26	2
580067477	8-24	2
	8-26	2
580067484	9-16	2
580067615	2-13	5
580067616	2-13	1
580067617	2-13	4
580067641	2-13	2
580067686	8-6	54
580067818	6-43	5
580068084	11-3	10
580068109	1-11	13
580068120	6-62	3
580068206	5-19	26
	5-21	36
580068208	6-20	7
580068456	11-41	9
580068489	1-49	
580068490	1-49	
580068631	1-51	
580068633	1-51	
580068690	9-11	27
	9-15	

©2008 Yale Materials Handling Corporation

NUMERICAL INDEX (continued)

PART NO.	PAGE	ITEM
580068957	6-5	13
580069175	5-19	27
	5-21	37
580069177	16-13	1
580069318	11-47	4
	11-49	
580069323	10-22	
580069324	10-22	
580069337	5-7	3
580069339	5-7	2
580069454	15-33	8
	15-35	8
	15-37	8
580069460	13-22	32
	14-8	29
580069559	8-6	48
580069560	8-6	49
580069561	8-6	49
580069619	16-5	2
580069656	1-3	6
580069704	6-83	1
	6-85	1
580069705	6-83	1
	6-85	1
580069753	1-57	12
580069759	1-57	5
580069796	1-25	13
580069797	1-25	7
580069840	6-43	1
	6-85	
580069841	6-43	1
	6-83	
580069854	8-15	22
580069855	8-15	21
580069856	8-18	33
580069857	8-18	32
580069858	8-18	31
580069859	8-18	30
580069860	8-18	29
580069861	8-18	28
580069862	8-18	27
580069863	8-17	26
580069864	8-17	26
580069865	8-17	26
580069866	8-17	26
580069867	8-17	26
580069868	8-17	26
580069869	8-17	26
580069870	8-17	26
580069871	8-17	26
580069872	8-17	26
580069873	8-17	26
580069874	8-17	26
580069875	8-17	26
580069876	8-17	26
580069878	8-17	24
580069882	8-17	21
580069883	8-17	20
580069884	8-17	19
580069885	8-17	8
580069888	8-17	9
580069889	8-17	17
580069890	8-17	10
580069891	8-17	11
580069892	8-17	18
580069893	8-17	16
580069894	8-17	14
580069895	8-17	15
580069896	8-17	13
580069897	8-17	12
580069900	8-17	4
580069901	8-17	5
580069902	8-17	6
580069903	8-17	1
580069913	8-15	34
580069914	8-15	32
580069915	8-15	31
580069916	8-15	33
580069917	8-15	30
580069918	8-15	29
580069919	8-15	28
580069922	8-15	23
580069924	8-15	19
580069931	8-15	12
580069932	8-15	3
580069936	8-15	4
580069944	8-15	6
580069947	8-21	23
580069948	8-21	22
580069949	8-15	1
	8-21	21
580069950	8-21	18
580069951	8-21	16
580069952	8-21	14
580069953	8-21	15
580069954	8-21	13
580069955	8-21	12
580069958	8-21	2
580069959	8-21	3
580069961	8-21	5
580069962	8-21	6
580069965	8-21	24
580069966	8-21	20
580069967	8-21	19
580069985	8-17	8
580069986	4-3	6
580069988	4-3	6
580070000	2-9	20
580070009	10-25	12
580070010	10-25	14
580070016	10-3	8
	10-7	9
	10-11	8
	10-13	9
580070231	11-41	8
580070353	7-13	10
	7-21	4
580070454	2-13	
580070455	2-5	25
580070456	2-5	23
580070459	6-61	7
	6-63	6
580070496	13-29	7
	14-19	7
580070556	11-5	2
580070557	11-5	3
580070562	11-5	
580070615	11-7	3
580070616	11-7	9
580070617	11-7	6
580070618	11-7	4
580070619	11-7	5
580070622	11-7	1
580070623	11-7	2
580070625	11-7	10
580070627	11-7	11
580070628	11-7	
580070629	11-7	8
580070630	11-7	8
580070653	11-7	8
580070656	11-3	19
	11-7	
580070675	1-3	14
580070721	4-5	14
580070745	6-44	1
580070814	3-7	6
580070999	8-13	3
	8-13	7
580071013	11-3	12
580071048	6-44	9
580071052	12-12	39
	13-22	34
580071057	12-12	29
	13-14	26
	14-4	22
580071066	6-49	4
	6-56	22
	6-56	24
	6-57	34
580071068	15-33	13
	15-35	3
	15-37	3
580071073	1-11	35
580071074	1-11	41
580071113	10-3	33
	10-7	33
580071200	2-19	2
580071203	2-21	1
580071204	2-5	11
580071205	2-21	42
580071226	2-67	10
	2-71	5
580071252	2-29	11
580071308	2-25	23
580071319	10-19	10
580071320	10-19	10
580071321	10-17	4
580071322	10-19	4
580071329	10-17	6
580071330	10-17	6
580071333	10-19	6
580071334	10-19	6
580071340	10-17	3
	10-19	3
580071341	10-17	2
	10-19	2
580071342	11-5	4
580071419	15-4	1
	15-4	1
	15-4	2
580071505	1-49	
	1-51	
580071547	8-17	22
580071548	8-17	22
580071549	8-17	22
580071550	8-17	23
580071551	8-17	25
580071552	8-17	2
580071553	8-17	3
580071555	8-15	35
580071556	8-15	27
580071560	8-15	20
580071561	8-15	16
580071562	8-15	15

©2008 Yale Materials Handling Corporation

NUMERICAL INDEX (continued)

PART NO.	PAGE	ITEM
580071563	8-15	14
580071564	8-15	13
580071566	8-15	10
580071567	8-15	11
580071568	8-15	25
580071569	8-15	36
580071570	8-15	36
580071571	8-15	5
580071572	8-15	8
580071573	8-15	2
580071574	8-15	18
580071575	8-21	11
580071576	8-21	1
580071578	8-21	9
580071579	8-21	8
580071588	8-21	17
580071589	8-21	7
580071604	8-17	8
580071674	8-17	8
580072018	2-5	6
580072019	2-5	5
580072021	13-22	23
	14-7	11
580072022	13-22	23
	14-7	11
580072047	2-6	
	2-9	19
	6-9	3
	6-11	15
580072090	2-9	4
580072091	1-39	7
	2-11	6
580072127	6-9	6
	6-11	17
580072341	11-33	5
580072342	11-33	13
580072343	11-33	6
580072344	11-33	4
580072345	11-33	11
580072346	11-33	10
580072347	11-33	2
	11-33	9
580072348	11-33	12
580072350	11-35	3
580072363	11-25	2
	11-27	2
	11-29	1
580072364	11-25	3
	11-27	3
	11-31	1
580072365	11-25	4
	11-27	4
	11-35	1
580072367	11-25	7
	11-27	7
	11-33	8
580072368	11-25	6
	11-27	8
	11-33	1
580072373	11-29	13
580072374	11-29	4
580072375	11-29	16
580072389	11-3	4
580072459	5-21	30
580072475	6-9	5
	6-11	16
580072477	5-13	6
580072478	5-13	6
580072480	5-13	8
580072481	5-13	10
580072482	5-13	11
580072483	5-13	12
580072484	5-13	13
580072485	5-13	14
580072487	5-13	
580072516	11-43	6
580072519	11-3	24
580072559	4-5	14
580072563	4-3	10
580072615	2-6	
580072635	6-44	6
580072662	7-9	5
	7-11	3
580072683	8-11	8
580072684	1-21	12
580072744	1-3	18
	1-3	18
580072757	11-27	5
	11-37	1
580072761	8-5	1
580072762	8-6	61
580072812	5-19	18
	5-21	27
580072818	1-11	23
580072819	1-11	24
580072976	3-7	
580072982	7-13	13
	7-21	7
580073148	11-43	9
580073246	10-19	12
580073277	15-8	6
	15-8	10
580073288	15-8	6
	15-8	10
580073293	15-8	6
	15-8	10
580073294	15-8	6
	15-8	10
580073345	7-13	6
580073351	11-7	1
580073352	2-9	5
580073353	2-9	6
580073407	1-29	2
580073519	6-23	11
580073520	6-23	3
580073522	1-29	10
580073538	2-5	27
580073539	2-5	29
580073550	1-29	4
580073556	6-16	1
580073577	7-9	14
580073617	6-75	18
580073670	10-25	27
580073671	10-25	29
580073741	1-3	35
580073755	6-5	5
580073781	10-25	28
580073882	10-21	11
580073903	9-16	3
580073904	9-16	4
580073942	2-5	24
580074023	5-23	7
580074110	6-5	3
580074133	9-11	34
580074143	7-9	13
580074149	13-22	33
580074174	5-19	10
	5-21	10
580074187	9-15	5
580074253	13-21	6
	14-7	4
580074261	6-5	10
	6-28	
580074439	3-3	19
580074461	3-5	16
580074462	3-3	19
580074463	3-5	16
580074469	11-3	31
580074515	10-7	27
	10-13	26
580074525	8-13	9
	8-26	
580074543	7-27	3
	7-29	3
580074544	7-29	20
580074545	7-27	19
580074546	7-25	3
580074547	7-25	19
580074709	10-25	23
580074710	10-25	16
580074748	1-3	
580074749	1-4	
580074750	1-4	
580074751	6-9	15
	6-11	23
580074759	7-13	8
	10-25	1
580074768	10-3	31
	10-7	31
	10-25	6
580074788	6-9	7
	6-11	19
580074862	10-25	19
580074877	6-15	15
580074879	1-19	6
580074887	7-13	40
	7-23	10
580074888	7-13	31
	7-21	19
580074889	7-15	14
	7-23	14
580074890	7-13	3
	7-23	37
580074891	7-13	11
	7-21	2
580074892	7-13	44
	7-23	1
580074893	7-13	34
	7-21	10
580074894	7-13	45
	7-23	36
580074948	1-29	14
580074995	8-15	1
580074996	8-15	1
580074998	8-15	37
580074999	8-15	37
580075000	8-15	37
580075002	8-17	22
580075003	8-17	7
580075007	2-5	7
580075010	3-3	26
	3-5	24
580075019	2-25	8
580075035	7-21	31

©2008 Yale Materials Handling Corporation

NUMERICAL INDEX (continued)

PART NO.	PAGE	ITEM
580075037	7-23	28
580075039	7-21	1
580075050	7-15	11
	7-23	34
580075099	10-3	28
580075100	10-11	28
580075101	10-3	28
580075147	4-3	10
580075203	7-21	
	7-23	
580075204	7-21	
	7-23	
580075259	13-13	8
580075260	13-13	8
580075331	10-25	24
580075334	10-25	21
580075342	9-15	8
580075394	9-11	30
580075397	2-5	22
580075454	2-5	41
580075506	4-3	18
	4-5	26
	4-7	22
580075790	6-23	12
580075791	6-75	17
	6-80	22
580075792	6-75	17
	6-80	22
580075796	11-41	4
580075798	16-9	4
580075837	7-15	30
580075838	7-13	5
580075839	7-15	6
580075851	10-4	45
580076302	6-39	11
580076313	6-5	20
580076315	6-5	20
580076324	10-19	10
580076325	10-19	10
580076326	10-17	12
580076329	10-19	12
580076340	8-15	9
580076341	8-21	4
580076342	8-21	10
580076344	7-13	
	7-15	
580076345	7-13	
	7-15	
580076523	10-21	8
580076524	10-21	8
580076731	6-11	12
580076742	11-47	12
580076769	10-4	46
	10-8	52
	10-11	37
	10-14	43
580076790	10-3	21
	10-7	17
	10-11	20
	10-13	17
580076897	10-3	24
	10-7	29
	10-11	17
	10-13	38
580076912	15-33	3
	15-35	10
	15-37	10
580076931	7-25	
580076932	7-27	
580076933	7-29	
580076934	7-15	12
	7-17	
580076935	7-15	13
	7-19	
580077041	8-21	20
580077069	1-25	6
580077071	1-23	6
580077072	1-25	5
580077073	1-23	2
580077074	1-23	3
580077075	1-23	1
580077076	1-23	4
580077077	1-23	4
580077078	1-23	5
580077079	1-23	10
	1-31	
580077080	1-23	11
580077083	1-25	12
580077084	1-25	8
580077085	1-25	3
580077086	1-25	2
580077088	1-23	12
	6-37	12
580077089	1-26	11
580077090	1-26	8
580077092	1-25	9
580077094	1-25	14
580077095	1-25	11
580077096	1-25	10
580077097	1-25	1
580077098	1-37	1
580077099	1-33	6
	1-37	10
580077100	1-33	5
	1-37	7
580077101	1-37	11
580077102	1-37	17
580077103	1-37	9
580077104	1-35	17
	1-37	4
580077105	1-35	15
	1-37	15
580077106	1-37	12
580077119	1-33	1
	1-35	1
580077121	1-33	12
580077122	1-33	8
580077126	1-35	4
580077127	1-35	10
580077128	1-35	20
580077129	1-35	3
580077130	1-35	14
580077131	1-35	16
580077132	1-35	12
580077133	1-35	11
580077134	1-35	7
580077135	1-35	2
580077136	1-35	18
580077137	1-35	6
580077138	1-35	5
580077139	1-35	19
580077141	1-26	3
580077143	1-26	4
580077144	1-26	5
580077145	1-26	6
580077146	1-26	1
580077148	1-31	1
580077266	15-33	11
	15-35	10
	15-37	10
580077279	15-33	5
580077280	15-33	4
580077281	15-33	7
580077282	15-33	6
580077283	15-33	5
580077284	15-33	4
580077285	15-33	7
580077286	15-33	6
580077287	15-33	7
580077288	15-33	6
580077289	15-33	7
580077290	15-33	6
580077291	15-33	5
580077292	15-33	4
580077293	15-33	7
580077294	15-33	6
580077298	10-13	17
580077299	10-3	21
	10-7	17
	10-11	20
	10-13	17
580077305	6-11	12
580077316	10-4	
	10-8	
580077359	6-41	7
580077415	15-19	22
580077416	15-19	21
580077417	15-15	21
580077418	15-15	22
580077419	15-23	28
580077420	15-23	29
580077421	15-29	27
580077422	15-29	28
580077524	8-17	26
580077526	8-15	24
580077530	6-9	1
	6-11	38
	6-15	1
580077531	6-9	20
	6-11	14
	6-15	7
580077590	6-5	6
580077615	10-4	49
	10-8	55
	10-11	16
	10-13	37
580077616	10-4	44
	10-8	50
	10-11	35
	10-13	41
580077648	15-35	11
580077649	15-35	12
580077650	15-35	13
580077651	15-35	14
580077652	15-35	11
	15-37	11
580077653	15-35	12
	15-37	12
580077654	15-35	13
	15-37	13
580077655	15-35	14
	15-37	14
580077656	15-35	13
580077657	15-35	14

©2008 Yale Materials Handling Corporation

NUMERICAL INDEX (continued)

PART NO.	PAGE	ITEM
580077658	15-35	13
	15-37	13
580077659	15-35	14
	15-37	14
580077660	15-35	11
	15-37	11
580077661	15-35	12
	15-37	12
580077662	15-35	13
	15-37	13
580077663	15-35	14
	15-37	14
580077664	15-37	11
580077665	15-37	12
580077666	15-37	13
580077667	15-37	14
580077670	5-3	5
580077671	5-3	18
580077672	15-37	13
580077673	15-37	14
580077675	2-9	10
	6-67	
580077676	2-9	10
	6-71	
580077713	3-3	6
	3-5	12
580077741	5-19	8
	5-21	6
580077753	7-11	7
580077822	1-35	9
580077853	1-25	4
580077901	5-3	9
	5-5	7
580078070	16-5	2
580078097	3-3	31
	3-5	1
580078098	3-3	31
	3-5	1
580078160	7-30	7
580078280	1-11	32
580078334	6-15	10
580078361	1-47	
	1-51	
580078403	6-77	11
580078489	6-11	10
	6-76	
580078582	7-17	3
580078583	7-17	19
	7-19	20
580078584	7-19	3
580078589	7-27	2
580078642	16-10	1
580078690	9-5	8
580078691	9-5	1
580078892	7-25	
	7-27	
	7-29	
580078899	11-47	4
	11-49	
580078918	7-17	
	7-19	
580078920	16-2	1
580078974	7-25	
	7-27	
	7-29	
580079000	7-15	26
	7-23	24
580079072	11-17	
580079075	11-17	
580079076	11-17	1
580079077	11-17	1
580079180	2-5	18
	4-5	9
580079527	7-13	32
	7-21	23
580079539	2-17	2
580079540	2-17	1
	2-25	24
580079608	7-15	29
580079611	9-16	1
580079615	6-37	6
	6-39	6
	16-2	
580079689	2-31	7
580079850	3-7	1
580079851	3-7	5
580079852	3-7	2
580079854	3-7	4
580079856	3-7	4
580079857	3-7	3
580079858	3-7	3
580079916	2-29	15
	7-2	1
580079937	9-15	1
580079946	15-4	10
580079948	8-5	7
580079953	2-21	37
580079956	2-21	37
580079973	6-61	4
	6-63	8
580079982	7-15	9
	7-23	30
580079983	6-39	10
580080011	10-3	21
	10-7	17
	10-11	20
	10-13	17
580080021	5-35	2
580080022	5-35	1
580080121	2-6	55
580080122	2-6	55
580080127	1-47	10
	1-49	7
	1-51	8
580080129	7-9	15
580080130	7-11	6
580080134	7-9	14
580080137	7-11	7
580080176	10-4	39
	10-8	39
	10-22	
580080198	6-67	2
	6-72	22
580080199	6-67	2
	6-72	22
580080368	5-35	1
580080377	5-19	29
	5-21	40
580080808	6-67	2
	6-72	22
580080812	1-25	15
580080919	16-3	2
580080920	16-3	2
580080971	10-21	
580080972	10-21	
580080977	5-19	7
	5-21	5
580081499	10-21	1
580081500	10-21	1
580081524	5-19	31
580081786	9-2	5
	9-5	
580081787	9-2	5
	9-5	
580081812	6-33	4
	6-35	4
580081830	6-44	10
580082181	7-13	9
	7-21	3
580082399	11-49	15
580082400	11-49	15
580082486	6-31	1
	6-87	
580082487	6-31	1
	6-91	
	6-95	
580082531	6-37	5
	6-39	5
580082532	6-37	4
	6-39	4
580082533	6-37	4
	6-39	4
580082534	6-37	4
	6-39	4
580082537	7-23	27
	7-30	7
580082622	6-19	7
580082844	2-29	13
580083010	11-3	16
580083020	1-12	58
580083104	1-29	8
580083135	5-3	17
580083152	6-23	9
580083156	1-21	8
580083309	3-3	17
580083423	11-9	17
	11-11	10
	11-13	15
	11-15	11
580083559	2-38	3
580083689	2-38	8
	5-23	25
580083690	2-38	1
580083733	4-3	22
	4-5	25
	4-7	26
580083864	5-5	1
580083865	3-9	1
580083866	3-9	9
580083868	3-9	9
580083869	3-11	4
580083872	1-39	6
580083873	5-5	6
580083874	5-5	5
580083875	5-5	4
580084189	7-30	
580084190	7-30	
580084304	2-38	11
580084334	5-19	1
580084351	5-21	1
580084377	5-9	23
	5-19	
580084379	5-9	23
	5-21	

©2008 Yale Materials Handling Corporation

NUMERICAL INDEX (continued)

PART NO.	PAGE	ITEM
580084408	11-11	1
580084409	11-15	1
580084410	11-13	1
580084411	11-9	20
	11-11	6
	11-13	21
	11-15	9
580084412	11-9	19
	11-11	7
	11-13	20
	11-15	8
580084413	11-11	8
	11-13	19
	11-15	7
580084414	11-15	6
580084415	11-13	18
580084416	11-9	18
580084457	4-7	10
580084458	4-7	21
580084459	4-7	10
580084460	4-7	21
580084488	5-3	14
580084515	2-35	2
580084517	4-7	13
580084518	4-7	16
580084558	4-7	17
580084587	1-7	3
580084601	5-23	1
580084621	3-9	2
580084626	10-21	1
580084651	2-35	1
580084760	8-13	1
	8-15	
	8-17	
	8-21	
580084762	8-13	1
	8-15	
	8-17	
	8-21	
580084763	8-13	1
	8-15	
	8-17	
	8-21	
580084764	8-13	1
	8-15	
	8-17	
	8-21	
580084813	6-23	8
580084814	6-23	1
	6-27	8
580084815	6-23	8
	6-27	29
580084823	6-27	6
580084827	8-11	9
580084828	8-5	10
580084829	8-6	40
	8-11	
580084965	11-17	1
	11-19	
580084983	15-19	7
	15-23	13
	15-29	7
580084984	15-19	12
	15-23	18
	15-29	12
580085001	11-9	1
580085002	11-9	14
580085003	11-13	13
580085082	11-11	4
580085083	11-15	4
580085140	11-17	5
	11-21	1
580085141	11-17	4
	11-19	1
580085142	11-17	1
	11-19	
580085146	11-19	5
580085184	11-19	21
580085192	1-35	8
580085196	11-17	6
	11-21	2
580085229	3-9	10
	3-11	10
580085259	7-7	1
580085260	7-7	2
580085263	11-9	5
	11-13	5
580085340	11-47	14
580085341	11-47	15
580085342	11-47	16
580085520	2-5	47
	2-25	26
580085521	2-5	42
580085536	10-22	1
580085537	10-22	2
580085539	10-22	2
580085989	5-19	28
	5-21	39
580086074	4-3	25
	4-5	28
580086076	6-27	16
	6-75	
580086129	2-9	12
580086130	2-9	12
580086159	4-7	1
580086521	6-39	19
	6-103	
580086538	2-35	7
	4-7	15
580086627	4-7	14
580086769	6-19	6
580086809	15-17	12
	15-21	12
	15-25	10
	15-27	12
	15-31	12
580086877	1-45	
580086881	1-45	
580086882	1-47	
580086883	1-47	
580086884	1-47	
580086885	1-47	
580086924	2-15	2
580087144	3-9	11
	3-11	12
580087145	3-9	11
580087148	1-26	2
580087196	1-11	37
580087197	1-11	28
580087257	9-7	
	11-17	8
	11-25	9
	11-27	9
580087447	2-5	48
	2-25	27
580087459	2-63	16
580087460	2-63	1
580087464	2-63	18
580087490	6-27	4
	6-27	28
580087533	5-6	1
580087536	4-7	29
580087546	6-29	1
580087547	6-29	
580087619	5-6	2
580087627	2-63	13
580087629	5-17	4
580087659	1-45	4
	1-47	8
580087666	3-3	1
	3-5	6
580087794	2-63	9
580087797	2-63	3
580087837	6-57	39
580087838	6-57	39
580087847	5-17	4
580087866	4-7	15
580087913	2-31	
	2-32	
	2-35	
	2-36	
	2-37	
	2-39	
	2-41	
	2-43	
	2-45	
	2-47	
	2-48	
	2-51	
	2-52	
	2-55	
	2-56	
	2-59	
	2-61	
	2-64	
	2-65	
	2-67	
	2-69	
	2-71	
	2-73	
	5-24	
	5-27	
	5-29	
	5-31	
	5-32	
	5-33	
	6-19	
	6-21	
	6-24	
580087935	6-9	9
	6-11	18
580087948	6-27	12
580087974	3-11	1
580087977	6-20	6
580087997	11-25	
	11-27	
580087998	11-25	
	11-27	
580088001	3-9	5
	3-11	6
580088013	6-20	5
580088060	9-9	4
580088184	1-25	16
580088186	5-23	14

©2008 Yale Materials Handling Corporation

NUMERICAL INDEX (continued)

PART NO.	PAGE	ITEM
	5-23	23
580088189	5-23	24
580088190	2-69	10
	5-23	27
	5-29	11
	5-31	6
	5-31	12
580088191	5-23	28
	5-29	5
	5-31	10
580088192	2-69	8
	5-23	29
	5-29	8
	5-31	3
	5-31	11
580088196	5-5	1
580088343	4-7	14
580088347	8-5	24
580088348	8-5	24
580088351	8-5	35
580088352	8-5	35
580088369	6-79	
580088471	4-7	12
580088532	6-75	19
580088535	6-75	14
	6-79	19
580088580	3-11	13
580088588	11-43	4
580088591	11-43	3
580088706	9-9	5
580088707	9-9	5
580088708	9-9	4
580088767	2-21	3
580088773	2-21	13
580088774	2-21	12
580088831	2-21	37
580088832	2-22	
580088833	2-22	
580088845	2-21	31
580088846	2-21	29
580088847	2-21	35
580088849	2-25	3
580088853	4-7	17
580088892	3-3	30
	3-5	25
580089111	3-3	13
580089116	2-25	12
580089120	2-25	12
580089121	2-25	12
580089156	11-41	3
580089187	11-3	19
	11-7	
580089251	13-26	
580089253	13-26	
580089255	13-26	
580089257	13-26	
580089259	13-26	
580089296	13-26	
580089324	1-51	
580089428	11-25	
	11-27	
580089441	2-63	7
580089451	6-31	1
580089452	6-31	1
580089467	1-35	10
580089522	5-17	4
580089523	5-17	4
580089687	3-13	1
580089688	3-13	3
580089694	2-63	14
580089966	6-35	1
580089967	6-33	1
580089970	6-35	1
580089971	6-33	1
580089972	6-35	1
580089976	6-33	1
580089977	6-35	1
580089978	6-33	1
580090014	3-13	2
580090015	3-13	4
580090016	3-13	5
580090017	3-13	6
580090018	3-13	7
580090150	5-7	4
580090152	5-3	1
	5-7	
580090153	1-3	30
580090154	1-3	3
580090160	10-19	
580090161	10-19	
580090162	10-17	18
	10-19	18
580090163	10-17	18
	10-19	18
580090166	10-19	1
580090167	10-19	1
580090168	10-19	11
580090177	10-17	11
580090227	6-5	8
	6-49	
580090239	11-3	27
580090276	2-17	8
580090341	5-5	1
580090360	8-15	26
580090361	6-33	
	6-33	
	6-33	
	6-33	
	6-35	
	6-35	
	6-35	
	6-35	
580090362	6-33	
	6-33	
	6-33	
	6-35	
	6-35	
	6-35	
580090374	5-9	7
580090387	5-9	7
580090459	11-9	25
	11-11	16
580090461	11-13	26
	11-15	17
580090489	4-7	28
580090494	1-33	7
	1-37	8
580090506	5-17	4
580090678	1-47	7
580090679	1-45	5
580090786	6-5	8
	6-55	
580090823	11-3	33
580090824	11-3	32
580090886	1-21	10
580090920	2-64	1
580090921	2-64	2
	2-71	6
580090927	2-43	3
580090929	2-43	4
580090930	2-43	5
580090941	2-43	6
580090942	2-43	7
580090943	2-43	8
580090944	2-43	9
580090945	2-43	12
580090946	2-43	13
580090947	2-43	14
580090948	2-61	1
580090949	2-61	2
580090954	2-65	2
580090955	2-56	1
580090956	2-56	2
580090957	2-56	3
580090958	2-56	4
580090959	2-56	5
580090960	2-56	6
580090961	2-56	8
580090967	2-64	2
580090968	2-65	1
580090969	2-65	3
580090970	2-65	4
580090971	2-65	5
580090972	2-39	1
580090973	2-39	2
580090989	2-71	3
580090991	2-41	14
580091025	5-31	2
580091026	5-31	4
580091027	5-31	5
580091028	5-31	7
580091029	5-31	8
580091030	5-31	9
580091031	5-29	2
580091034	2-31	1
580091040	5-29	9
580091041	5-29	10
580091046	5-29	12
580091047	5-29	13
580091048	5-29	14
580091050	5-29	15
580091051	5-29	16
580091052	5-29	17
580091053	5-29	18
580091054	2-31	8
580091056	2-37	2
580091064	2-67	7
	5-24	1
580091065	2-31	9
	5-24	2
580091066	5-24	3
580091067	5-24	4
580091068	5-24	5
580091069	5-24	6
580091070	5-24	7
580091071	5-24	8
580091072	5-24	9
580091073	5-32	1
580091074	5-32	2
580091075	5-32	3
	5-33	1
580091077	5-32	5
	5-33	2
580091078	2-67	8

©2008 Yale Materials Handling Corporation

NUMERICAL INDEX (continued)

PART NO.	PAGE	ITEM
580091079	2-67	9
580091080	5-29	4
580091081	2-37	1
580091082	5-29	6
580091083	5-29	7
580091084	2-48	1
580091086	2-47	3
580091087	2-47	4
580091088	2-47	5
580091089	2-47	6
580091090	2-47	7
580091091	2-71	7
580091093	2-48	2
580091094	2-71	4
580091095	2-71	1
580091096	2-41	1
	2-71	2
580091097	2-48	3
580091098	2-48	4
580091099	2-48	5
580091100	2-48	6
580091101	2-48	7
580091102	2-48	8
580091103	2-52	1
580091104	2-52	2
580091105	2-52	3
580091106	2-52	4
580091107	2-52	5
580091108	2-52	6
580091109	2-47	1
	2-47	8
	2-51	2
	5-29	1
	5-31	1
580091110	2-47	9
580091111	2-47	12
580091112	2-47	10
580091113	2-47	11
580091116	2-51	1
	2-69	2
580091117	6-19	11
580091118	2-51	3
580091120	2-51	5
580091121	2-51	6
580091122	2-51	7
580091123	2-51	8
580091124	6-19	12
580091125	2-32	1
	2-47	2
	6-19	1
580091126	6-19	2
580091127	6-19	4
580091132	6-19	13
580091133	6-19	14
580091134	6-19	15
580091135	6-19	16
580091136	2-55	5
580091137	2-55	6
580091141	2-32	2
	5-27	1
580091142	2-32	3
580091143	2-32	4
580091145	2-55	1
580091146	2-55	2
580091147	2-55	7
580091148	2-55	4
580091149	2-32	5
580091150	2-32	8
580091151	2-45	1
580091152	2-45	2
580091153	2-45	3
580091154	2-45	4
580091155	2-45	5
580091156	2-45	6
580091157	2-45	7
580091158	2-45	9
580091160	2-69	3
	5-27	13
580091161	5-27	14
580091162	5-27	17
580091163	2-45	12
580091164	5-27	18
580091257	2-45	8
580091258	5-27	16
580091259	5-27	15
580091260	5-27	2
580091261	5-27	3
580091262	5-27	4
580091263	5-27	5
580091264	5-27	6
580091265	5-27	7
580091266	5-27	8
580091267	5-27	9
580091268	5-27	10
580091269	5-27	11
580091271	2-67	1
580091272	2-67	2
580091273	2-67	3
580091274	2-67	4
580091275	2-67	5
580091276	2-36	1
580091277	2-36	2
580091278	2-36	3
580091279	2-36	4
580091280	2-36	5
580091281	2-36	6
580091282	2-36	7
580091283	2-36	8
580091284	2-36	9
580091285	2-36	10
580091286	2-67	11
580091287	2-36	11
580091288	2-36	12
580091289	6-21	2
	6-24	2
580091290	6-21	1
	6-24	1
580091291	2-73	3
580091292	2-73	1
580091293	2-73	2
580091294	2-69	1
580091296	2-69	4
580091297	2-69	5
580091298	2-69	6
580091299	2-69	7
580091300	2-69	9
580091301	2-69	11
580091302	2-69	12
580091303	2-69	13
580091304	2-69	14
580091305	2-69	15
580091306	2-69	16
580091307	2-69	17
580091308	2-59	1
580091309	2-59	2
580091310	2-59	3
580091311	2-59	4
580091312	2-59	5
580091314	2-41	12
580091315	2-41	13
580091316	2-41	7
580091317	2-41	
580091367	10-22	1
580091436	5-5	10
580091787	2-41	2
580091788	2-41	3
580091789	2-41	4
580091790	2-41	5
580091791	2-41	6
580091792	2-41	10
580091793	2-41	11
580092015	1-21	2
580092016	1-21	2
580092020	2-73	4
	5-29	3
580092021	6-19	8
580092022	6-19	10
580092075	2-43	1
580092142	4-5	3
	4-5	3
	4-7	4
580092169	5-23	
580092280	8-6	56
	10-17	
580092281	8-6	56
	10-17	
580092284	10-17	1
580092285	10-17	1
580092286	10-17	10
580092287	10-17	10
580092310	2-31	6
580092311	2-31	5
580092312	2-31	4
580092330	4-5	29
	4-7	4
580092554	2-5	
	2-9	
	2-11	
	2-15	
	2-17	
	2-19	
	2-21	
	2-25	
	2-27	
580092555	2-5	
	2-9	
	2-11	
	2-15	
	2-17	
	2-19	
	2-21	
	2-25	
	2-27	
580092630	1-41	2
580092631	1-41	5
580092818	11-7	8
580092822	11-7	1
580092833	2-32	6
580093036	11-25	
	11-27	
580093311	3-9	12
	3-11	2
580093312	3-9	12
580093313	3-11	9

©2008 Yale Materials Handling Corporation

NUMERICAL INDEX (continued)

PART NO.	PAGE	ITEM
	3-11	11
580093502	2-37	3
580093602	5-23	17
580093603	5-23	21
580094090	1-26	7
580094100	5-9	15
580094156	2-41	6
580094157	2-41	8
580094158	2-41	9
580094382	5-23	31
580094469	6-65	1
580094500	2-32	7
580094501	2-59	6
580094502	2-59	7
580094503	2-59	8
580094607	2-51	4
580094645	6-19	9
640046913	2-13	8
640088904	7-15	1
	7-21	37
640088905	7-13	42
	7-23	8
810528500	10-3	23
	10-8	51
	10-11	36
	10-13	42
810646400	7-13	1
	7-23	39
900001230	4-3	19
	4-5	22
900001231	4-3	20
	4-5	23
	4-7	24
900003207	6-27	31
900003231	2-9	18
900003260	4-3	21
	4-5	24
	4-7	23
900005237	2-19	4
900005247	2-29	10
900005254	2-19	10
900005255	2-19	15
	2-21	25
900005256	2-19	14
900005257	2-19	16
900005278	2-19	20
900005280	2-19	9
	2-19	19
900005282	2-21	2
900005286	2-21	6
900005287	2-21	7
900005288	2-21	8
900005294	2-22	
900005297	2-27	11
900006201	2-27	10
900006204	2-27	1
900006205	2-27	2
900006206	2-27	3
900006207	2-27	4
900006208	2-27	6
900006209	2-27	7
900006211	2-21	26
900006213	2-21	39
900006219	2-19	24
900006220	2-19	25
900006231	2-21	41
900006233	2-21	18
900006234	2-21	19
900006236	2-21	23
900006239	2-21	22
900006240	2-21	20
900006247	2-25	3
900006248	2-25	5
	6-13	4
900006250	2-25	6
900006251	2-19	26
900006256	2-25	11
900006257	2-25	14
900006259	2-25	17
900006264	2-23	
900006272	2-25	16
900006280	2-23	
900006282	2-21	27
900011212	6-11	2
	6-27	32
900011247	2-5	46
	2-25	28
900011248	2-25	7
	5-3	6
900011253	2-6	49
900011268	2-5	16
900015229	2-5	44
	2-21	11
900015237	16-13	4
900015240	2-21	17
900017264	6-16	3
	6-20	1
	6-27	15
901466103	8-3	11
	8-13	9
902254806	8-9	5
906196100	8-5	36
909267300	5-9	25
	5-19	33
	5-21	41
	5-23	6
909367300	8-6	44
909368300	8-6	51
909882405	9-11	47
909904403	1-12	56
909932413	8-6	50
909932414	8-6	52
909964401	8-5	8
910065119	6-56	18
911851100	5-11	23
912207300	5-11	22
912514300	5-9	26
	5-19	36
	5-21	45
916522400	3-3	35
	3-5	3
919891402	5-11	24
922365300	1-11	17
922627300	10-3	13
	10-7	15
	10-11	13
	10-13	15
924234401	8-5	31
931011914	1-7	7
931014904	9-11	17
931017916	8-6	60
931017917	2-38	7
	7-2	8
931017919	2-15	3
932201916	7-13	33
	7-21	22
932202908	1-3	12
932727908	5-19	9
	5-21	7
932728908	1-12	63
	5-6	3
932731908	1-15	3
934404300	10-7	17
	10-11	20
	10-13	17
937100903	1-33	11
937100904	6-9	
	6-12	
937300930	16-10	3
940004903	2-35	4
	4-3	16
	4-5	18
	4-7	19
940102912	8-3	2
	8-13	14
940600906	5-35	12
	10-21	5
940600908	6-9	19
	6-11	37
	6-27	10
940800912	8-6	45
950409907	7-23	13
950409918	8-11	4
950513905	8-5	33
952405902	6-87	13
	6-91	8
	6-95	8
952408901	6-87	13
	6-91	8
	6-95	8
954512901	13-22	17
	14-7	14
	15-8	14
	15-8	27
	15-12	18
954513908	1-7	4
954514907	7-13	20
	7-21	21
955400912	1-7	6

©2008 Yale Materials Handling Corporation

NUMERICAL INDEX (continued)

NOTES

©2008 Yale Materials Handling Corporation

19 USER SUPPORT INFORMATION

SECTION 19
USER SUPPORT INFORMATION

DESCRIPTION	PAGE
OPERATOR TRAINING	19-2
SERVICE PARTS ORDERING INSTRUCTIONS	19-2
SERVICE TRAINING COURSE	19-2
SERVICE TRAINING MATERIALS	19-2
TECHNICAL SERVICE PUBLICATIONS	19-2

©2008 Yale Materials Handling Corporation

Your investment in a Yale Industrial Truck is important to you and to your Yale Dealer. You measure the return on that investment through the performance of these trucks and the drivers who operate and the mechanics who service them safely and efficiency. The following information is intended to help you to achieve your investments objectives:

SERVICE PARTS ORDERING INSTRUCTIONS

HOW TO ORDER SERVICE PARTS

In order to prevent delay, too much communication and to have your orders filled correctly, quickly, and at the least possible cost, the following is the correct procedure to use to order replacement parts.

WHEN ORDERING PARTS

Contact your authorized Yale Industrial Truck Dealer giving them the following information:

1. Your Purchase order number.
2. Complete addresses for sending the invoice and parts.
3. Tell us how you want your parts sent. If we do not get this information, we will send the parts using the lowest priced method.
4. Correct part number(s) and description(s). Use your parts manual as a reference.
5. Model and serial number of the truck.

TECHNICAL SERVICE PUBLICATIONS

Technical literature, with detailed information, is available at a nominal fee to assist users to effectively maintain Yale Industrial Trucks in a safe, useful condition. Part Manuals with complete replacement parts identification, Service Maintenance Manuals which provide service and overhaul procedures and additional copies of the Operating Manual can be obtained from your Yale Industrial Truck Dealer.

To provide instructions for safely operating and servicing Yale Industrial Trucks, each truck is equipped with an operators manual. It describes various operating techniques and safety warnings to the operator. It contains a guide to safe maintenance practices and recommended schedules for maintenance. if the operators manual is missing from any Yale Industrial Truck, it should be replaced. Replacement copies are available for a nominal fee from your Yale Dealer.

OPERATOR TRAINING

The Yale "Basic Operator Training" program helps industrial truck users increase their materials handling production and safety through correct lift truck operation, training, and motivation. The Yale program is based upon real life experience – not theoretical concepts. We developed a "complete" program that is totally self-contained – incorporating the most modern instructional techniques including elements of self-study, audio-visual support (both video and slides), and classroom study.

SERVICE TRAINING COURSE

Operators and Yale dealer service technicians can improve their technical ability for maintaining and repairing Yale Industrial Trucks, which decreases repair time and cost, by taking Yale Service Training courses. Different types of mechanical, electric, and electronic subjects are available. Courses can be held at customer or Dealer locations in addition to regularly scheduled courses which are held at Yale Corporate Headquarters in Greenville, NC.

SERVICE TRAINING MATERIALS

Your own service training can be supported through a complete line of Yale Service Training materials. An Index is available from your Yale Dealer which lists textbooks, audio-visual programs and films. These materials will provide your training staff with everything necessary for training your group.

For additional information or assistance in obtaining these user support publications and programs, contact:

Yale Materials Handling Corporation
1400 Sullivan Drive
Caller No. 12011
Greenville, NC 27834-2011

©2008 Yale Materials Handling Corporation

Yale Materials Handling Corporation
1400 Sullivan Drive
Caller No. 12011
Greenville, NC 27834-2011

524329168
©Yale Corp.
08/2008