RUTHZIL TRATOR COMERCIAL DE PEÇAS LTDA 11 97083-6812 ROLANDO CITRANGULO

PARTS MANUAL

GLP 050 TG, GLP 060 TG, GP 050 TG, GP 060 TG

(A875)

OUTUBRO 2002

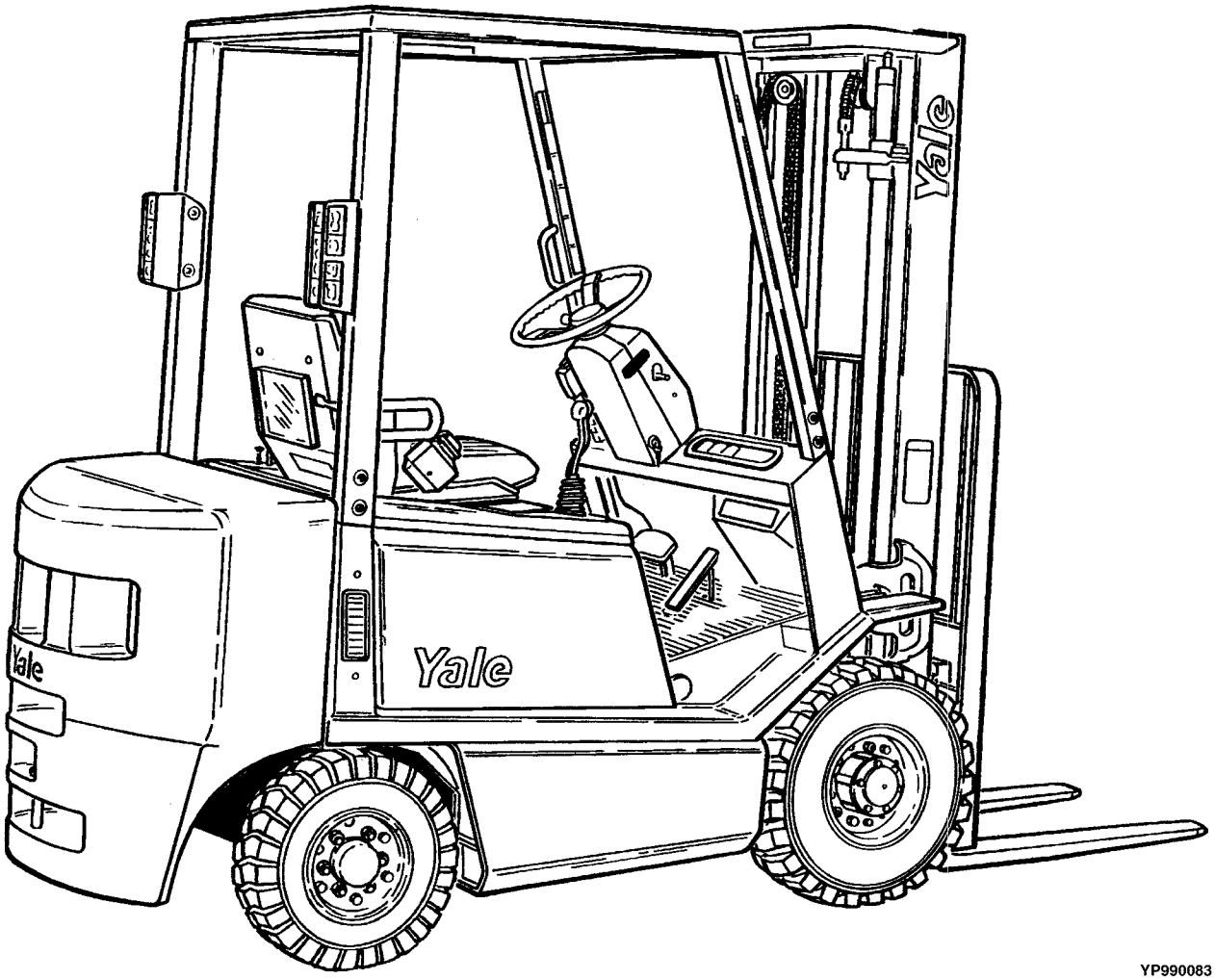

YP990083

Yale Materials Handling Corporation
1400 Sullivan Drive
Caller No. 12011
Greenville, NC 27834-2011

P/N 520371744
© Yale Corp.
10/2002

MODEL NOMENCLATURE

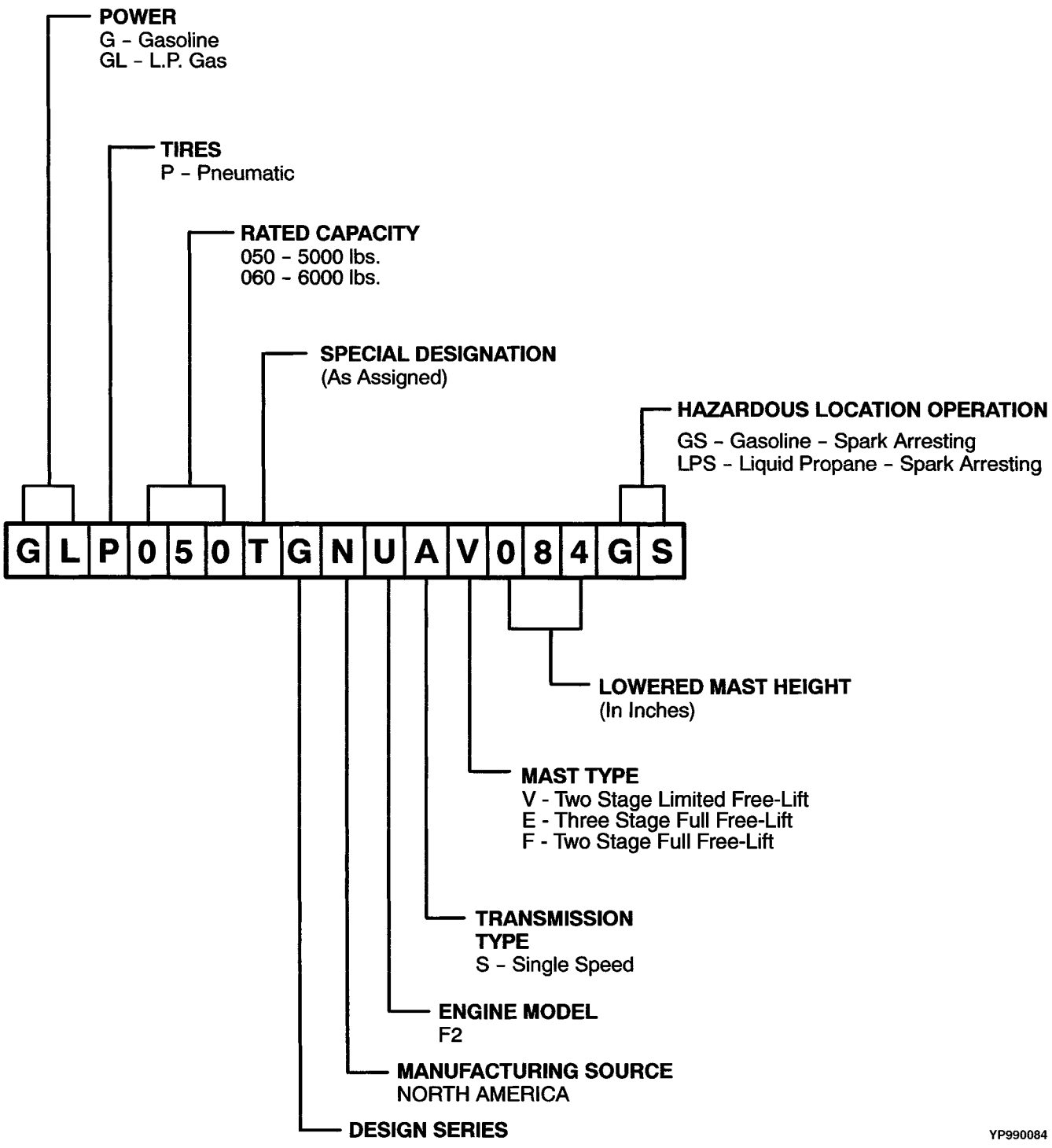

NOTE:
This parts manual contains alternate pages for certain assemblies. The truck model code can be used to determine many of the assemblies on your lift truck (power, tire type, mast type). The complete truck model and serial number are stamped into the nameplate. See Identification of Truck Serial Number on Page xii for further information.

Yale Industrial Trucks

SECTIONS

1	GENERAL TRUCK
2	ENGINE ASSEMBLY
3	EXHAUST SYSTEM
4	COOLING SYSTEM
5	FUEL SYSTEM
6	ELECTRICAL SYSTEM
7	TRANSMISSION
8	DRIVE AXLE
9	STEERING SYSTEM
10	BRAKE SYSTEM
11	HYDRAULIC SYSTEM
12	LIFTING MECHANISM
13	ATTACHMENTS AND HEADER HOSE GROUP
14	OPTIONS
15	FIELD CONVERSION KITS
16	NUMERICAL INDEX
17	USER SUPPORT INFORMATION

This Parts Manual is divided into 17 major sections which are listed above. Quick reference to these sections can be made by placing the right thumb on the tab of the desired section, bending the book back and thumbing the pages to the corresponding tab.

ALPHABETICAL INDEX

DESCRIPTION	PAGE NO.
A	
ABBREVIATIONS QUICK REFERENCE SHEET	ix
AIR CLEANER AND MOUNTING	
⇒S/N A875B-10761	5-40
S/N A875B-10761⇔S/N A875B-13057Y	5-42
S/N A875B-13058⇒	5-44
ALPHABETICAL INDEX	i
ALTERNATOR	6-6
TYPE GS AND LPS	6-8
AMBER FLASHING BEACON	14-6
AUDIBLE ALARM	15-2, 14-16
B	
BRAKE	10-2
BRAKE LINES	10-10
BRAKE PEDAL LINKAGE	10-8
C	
CAMSHAFT AND VALVES	2-8
CARBURETOR	
GASOLINE	5-22
LPG	
CLOSED LOOP	
S/N A875B-10761⇒	5-32
OPEN LOOP	
S/N A875B-10761⇒	5-28
⇒S/N A875B-3166	5-24
S/N A875B-3166⇔S/N A875B-10761	5-26
CARRIAGE	
THREE STAGE FULL FREE-LIFT	12-50
TWO STAGE FULL FREE-LIFT	12-70
TWO STAGE LIMITED FREE-LIFT	12-18
CONTROL VALVE	15-3
FOUR FUNCTION	11-48
⇒S/N A875B-2678W	7-8
S/N A875B-2679W⇒	7-12
THREE FUNCTION	11-44
CONVERTER	
LPG	
⇒S/N A875B-10761	5-38
COUNTERWEIGHT	1-12
CRANKSHAFT AND PISTONS	2-6
CYLINDER BLOCK	2-2
CYLINDER HEAD	2-4

DESCRIPTION	PAGE NO.
D	
DIFFERENTIAL	
D/B 07/1998⇒	7-26
⇒D/B 07/1998	7-22
DISTRIBUTOR	6-4
DRIVE AXLE	8-2
DRIVE TIRE AND FENDER GP 050 TG	15-2
DRIVE TIRE AND FENDER GP 060 TG	15-3
DRIVE, TURN, AND SIDE LIGHTS	14-8
DUEL FUEL	15-4
E	
ELECTRICAL	6-14
COWL	6-26
ENGINE	6-2
LPG WITH LOW EMISSIONS	
S/N A875B-12121Y⇒ EXC. 13136-13149	6-18
TYPE GS AND LPS	6-24
EMISSION CONTROLS	
GASOLINE AND LPG	
⇒S/N PENDING PER ECN 75880 (LPG)	3-4
ENGINE MOUNT	2-16
ENGINE SHUTDOWN SYSTEM	6-22
EXHAUST	
TWO WAY CATALYTIC CONVERTOR	3-8
F	
FIRE EXTINGUISHER	14-18
FLOW VALVE	11-22
FLYWHEEL AND TORQUE CONVERTER	2-14
FOOT DIRECTIONAL CONTROL PEDAL	5-52
FOOT DIRECTIONAL CONTROL PEDAL LINKAGE	5-50
FORK	
GP/GLP 050 TG	1-20
GP/GLP 060 TG	1-21
FORWARD AND REVERSE CLUTCH	
⇒S/N T080M-04189	7-16
S/N T080M-04190⇔S/N T080M-04775	7-18
S/N T080M-04776⇒	7-20
FRAME AND FLOORPLATES	1-4
FREE LIFT	
THREE STAGE FULL FREE-LIFT	
GP/GLP 060 TG	12-36
GP/GPL 050 TG	12-32
TWO STAGE FULL FREE-LIFT	
GP/GLP 050 TG	12-58
GP/GLP 060 TG	12-60
FREE-LIFT CYLINDER	
THREE STAGE FULL FREE-LIFT	
GP/GLP 050 TG	12-46

DESCRIPTION **PAGE NO.**

F (continued)

GP/GLP 060 TG 12-48
TWO STAGE FULL FREE-LIFT
GP/GLP 050 TG 12-66
GP/GLP 060 TG 12-68
FUEL
GASOLINE AND LPG
⇒S/N A875B-13149Y 5-4
LPG
S/N A875B-13150Y⇒ 5-6
FUEL LOCK FILTER ASSEMBLY
LPG
⇒S/N A875B-10761 5-36
FUEL SYSTEM
GASOLINE 5-8
LPG
⇒S/N A875B-10761 5-10
S/N A875B-10761⇔S/N A875B-13149Y 5-12
WITH LOW EMISSIONS
S/N A875B-13150⇒ INC. 12121-13135 5-14

G

GASOLINE AND LPG 15-3
GENERAL TRUCK 1-2
GOVERNOR
GASOLINE AND LPG
⇒S/N A875B-13149 EXC. 12121-13135 5-18
LPG
S/N A875B-13150⇒ INC. 12121-13135 5-20

H

HEADER HOSE
THREE STAGE FULL FREE-LIFT
S/N B508V-24130⇒, S/N B563V-09116⇒ 13-24
⇒S/N B508V-24130, ⇒S/N B563V-09116 13-20
TWO STAGE FULL FREE-LIFT
S/N B509V-03723⇒, S/N B564V-05762⇒ 13-32
⇒S/N B509V-03723, ⇒S/N B564V-05762 13-28
TWO STAGE LIMITED FREE-LIFT
S/N B507V-03172⇒, S/N B562V-02418⇒ 13-16
⇒S/N B507V-03172, ⇒S/N B562V-02418 13-12
HEADER HOSE CONVERSION KITS THREE STAGE FULL FREE-LIFT GP/GLP 050 TG 15-7
HEADER HOSE CONVERSION KITS THREE STAGE FULL FREE-LIFT GP/GLP 060 TG 15-8
HEADER HOSE CONVERSION KITS TWO STAGE FULL FREE-LIFT GP/GLP 050 TG 15-10
HEADER HOSE CONVERSION KITS TWO STAGE FULL FREE-LIFT GP/GLP 060 TG 15-12
HEADER HOSE CONVERSION KITS TWO STAGE LIMITED FREE-LIFT GP/GLP 050 TG 15-5
HEADER HOSE CONVERSION KITS TWO STAGE LIMITED FREE-LIFT GP/GLP 060 TG 15-6
HOOD 1-8
HOOD LINER 1-10

DESCRIPTION **PAGE NO.**

H (continued)

HOW TO FIND THE DESIRED PART NUMBER xi
HOW TO USE THE ILLUSTRATED PARTS MANUAL xi
HYDRAULIC PUMP
DOUBLE GEAR
⇒S/N A875B-05101 INC. 5165, 5284, 5403, 5540 11-18
S/N A875B-5101⇒ EXC. 5102-5139 11-20
SINGLE GEAR
⇒S/N A875B-05101 INC. 5165, 5284, 5403, 5540 11-14
S/N A875B-5101⇒ EXC. 5102-5139 11-16
HYDRAULICS
S/N A875B-10872⇒ 11-10
⇒S/N PENDING PER ECN 76000 11-2
S/N PENDING PER ECN 76000⇔S/N A875B-10872 11-6

I

IDENTIFICATION OF ATTACHMENT AND SIDE-SHIFT CARRIAGE SERIAL NUMBERS xiv
IDENTIFICATION OF MAST SERIAL NUMBER xiii
IDENTIFICATION OF TRUCK SERIAL NUMBER xii
INNER MAST
THREE STAGE FULL FREE-LIFT 12-24
TWO STAGE FULL FREE-LIFT 12-54
TWO STAGE LIMITED FREE-LIFT 12-6
INSTRUMENT CLUSTER 6-28
INTEGRAL SIDE-SHIFT CARRIAGE
THREE STAGE FULL FREE-LIFT 13-42
TWO STAGE FULL FREE-LIFT 13-40
TWO STAGE LIMITED FREE-LIFT 13-38
INTEGRAL SIDE-SHIFT CYLINDER 13-36
INTEGRAL SIDE-SHIFT HYDRAULIC HOSES
TWO AND THREE STAGE FULL FREE-LIFT
GP/GLP 060 TG 13-46
TWO STAGE LIMITED FREE-LIFT 13-44
TWO, THREE AND FOUR STAGE FULL FREE-LIFT
GP/GLP 050 TG 13-45
INTERMEDIATE MAST
THREE STAGE FULL FREE-LIFT 12-22

L

LABEL AND PLATE LOCATION 1-15
LIFT
TWO STAGE LIMITED FREE-LIFT 12-8
LIFT CYLINDER
TWO STAGE LIMITED FREE-LIFT
GP/GLP 050 TG 12-12
GP/GLP 060 TG 12-15
LIFTING EYES 14-2
LIGHTS 15-2, 14-14
LOAD BACKREST WELDMENT 1-18

DESCRIPTION **PAGE NO.**

L (continued)

LOW NOISE 1-32

M

MAIN CYLINDER
THREE STAGE FULL FREE-LIFT
GP/GLP 050 TG 12-40
GP/GLP 060 TG 12-44
TWO STAGE FULL FREE-LIFT
LEFT HAND, GP/GLP 050 TG 12-62
LEFT HAND, GP/GLP 060 TG 12-64
RIGHT HAND, GP/GLP 050 TG 12-63
RIGHT HAND, GP/GLP 060 TG 12-65
MAIN LIFT
THREE STAGE FULL FREE-LIFT
GP/GLP 050 TG 12-26
GP/GLP 060 TG 12-30
TWO STAGE FULL FREE-LIFT 12-56
MANIFOLD VALVE
S/N A875B-15479Y⇒ INC. 15474-15476 7-15
MANIFOLDS 3-2
MAST INSTALLATION 11-26
MAST TILT GP/GLP 050 TG 15-4
MAST TILT GP/GLP 060 TG 15-4
MASTER CYLINDER 10-6
MASTER PART SHEET CROSS-REFERENCE xvi
MIRROR 15-3
MUFFLER AND EXHAUST PIPES 3-6
LPG WITH LOW EMISSIONS
S/N PENDING PER ECN 75875⇒ 3-12

O

OIL PUMP AND FILTER 2-12
OUTER MAST
THREE STAGE FULL FREE-LIFT 12-20
TWO STAGE FULL FREE-LIFT 12-52
TWO STAGE LIMITED FREE-LIFT 12-4

P

PARKING BRAKE LEVER 10-4
PUMP DRIVE 7-28

R

RADIATOR 15-3
RADIATOR AND HOSES
S/N A875B-0738⇔S/N PENDING PER ECN 95530-01 4-8
⇒S/N A875B-07838 4-6
RADIATORS AND HOSES

DESCRIPTION **PAGE NO.**

R (continued)

S/N PENDING PER ECN 95530-01⇒ 4-10
REGULATOR
CLOSED LOOP
S/N A875B-10761⇒ 5-34
OPEN LOOP
S/N A875B-10761⇒ 5-30
ROTATING BEACON 14-4

S

SEAT
FULL SUSPENSION
SHEET 1 OF 2
S/N PENDING PER ECN 92036-07⇒ 1-24
SHEET 2 OF 2
S/N PENDING PER ECN 92036-07⇒ 1-26
NON-SUSPENSION 1-30
SEMI-SUSPENSION
⇒S/N PENDING PER ECN 92036-07 1-22
SUSPENSION WITH HIP RESTRAINT 1-28
SHIFT LINKAGE
⇒S/N A875B-10943X 9-8
S/N A875B-10944X⇒ 9-10
SIDE-SHIFT CARRIAGE
GP/GLP 050 TG 13-2
GP/GLP 060 TG 13-6
SIDE-SHIFT CYLINDER 13-10
STARTER
GASOLINE AND LPG
⇒S/N A875B-6003 6-10
S/N A875B-6004⇒ 6-12
STEERING AXLE 9-16
STEERING CONTROL UNIT
S/N PENDING PER ECN 76000⇒ 9-14
⇒S/N PENDING PER ECN 76000 9-12
STEERING CYLINDER 9-18
STEERING POD
S/N PENDING PER ECN 76000⇒ 9-4
⇒S/N PENDING PER ECN 76000 9-2
STROBE LIGHT 14-12

T

TANK
LPG 5-16
THROTTLE LINKAGE
S/N A875B-10761⇒ 5-48
⇒S/N A875B-10761 5-46
TILT CYLINDER 11-24
TIMING GEAR COVER AND OIL PAN 2-10

DESCRIPTION **PAGE NO.**

T (continued)

TIRE AND WHEEL
DRIVE WHEEL
GP/GLP 050 TG 8-6
GP/GLP 060 TG 8-8
STEER WHEEL
GP/GLP 050 TG 9-20
GP/GLP 060 TG 9-22
TRANSMISSION
1 OF 2 7-2
2 OF 2 7-6
TRANSMISSION COOLING
⇒S/N A875B-19844Z 7-30
S/N A875B-19845Z⇒ 7-32
TUBE EXTENSION TWO STAGE AND THREE STAGE FULL FREE-LIFT 15-4
TUBE EXTENSION TWO STAGE LIMITED FREE-LIFT 15-4

V

VALVE ATTACHING PARTS
FOUR FUNCTION
S/N A875B-10872⇒ 11-40
⇒S/N A875B-10872 11-36
THREE FUNCTION
S/N A875B-10872⇒ 11-32
⇒S/N A875B-10872 11-28
VERTICAL EXHAUST 3-10

W

WATER PUMP
⇒S/N A875B-12120Y INC. 13136-13149 4-2
S/N A875B-12121Y⇒ EXC. 13136-13149 4-4
WIRE HARNESS
CHASSIS
GASOLINE AND LPG
S/N A875B-5026⇔S/N A875B-10760 6-40
LPG
S/N A875B-10761⇔S/N PENDING PER ECN 95530-01 6-42
S/N PENDING PER ECN 95530-01⇒ 6-44
⇒S/N A875B-5025 6-38
COWL
S/N PENDING PER ECN 76000⇒ 6-36
⇒S/N PENDING PER ECN 76000 6-32
ENGINE
⇒S/N A875B-03165 6-46
S/N A875B-03166⇒ 6-48
ENGINE SHUTDOWN SYSTEM 6-50
INSTRUMENT CLUSTER 6-30
LPG
S/N A875B-10761⇒ 6-52

DESCRIPTION **PAGE NO.**

W (continued)

LPG ENGINE
CLOSED LOOP
S/N A875B-12121Y⇒ EXC. 13136-13149 6-54

ABBREVIATIONS QUICK REFERENCE SHEET

Listed below are abbreviations used in parts manuals to denote the following expressions:

TERM	DEFINITION	TERM	DEFINITION
Amp	Amperes	MSTS	Microprocessor Spark Timing System
AR	As Required	NPT	National Pipe Threads
BDI	Battery Discharge Indicators	O/S	Oversize
BWI	Brush Wear Indicator	PTO	Power Take Off
CE	Communicator End	RPM	Revolutions per Minute
CRE	Corrosive Environment	S/N	Serial Number
D/B	Date Break	TMM	Truck Management Module
dbA	Decibel "A" Scale	UL Type D	Diesel-Powered Safety Rating
DE	Drive End	UL Type DS	Diesel-Powered Safety Rating
ECM	Electronic Control Module	UL Type E	Battery-Powered Safety Rating
ECN	Engineering Change Notice	UL Type EE	Battery-Powered Safety Rating
EEPROM	Electrically Erasable Programmable Read Only Memory	UL Type ES	Battery-Powered Safety Rating
		UL Type G	Gasoline-Powered Safety Rating
EPROM	Electrically Programmable Read Only Memory	UL Type GS	Gasoline-Powered Safety Rating
		UL Type LP	Gas-Powered Safety Rating
FRE	Freezer Environment	UL Type LPS	LP Gas-Powered Safety Rating
in.	inches	U/S	Undersize
LPG	Liquefied Petroleum Gas	UL	Underwriters Laboratory
MAP	Manifold Absolute Pressure	V	Volts
mm	millimeters		

HOW TO USE THE ILLUSTRATED PARTS MANUAL

This parts manual describes and illustrates assemblies, subassemblies, and detail parts needed for service replacement.

The different constructions are indicated by keys and footnotes. The callouts correspond to descriptions found on the next page.

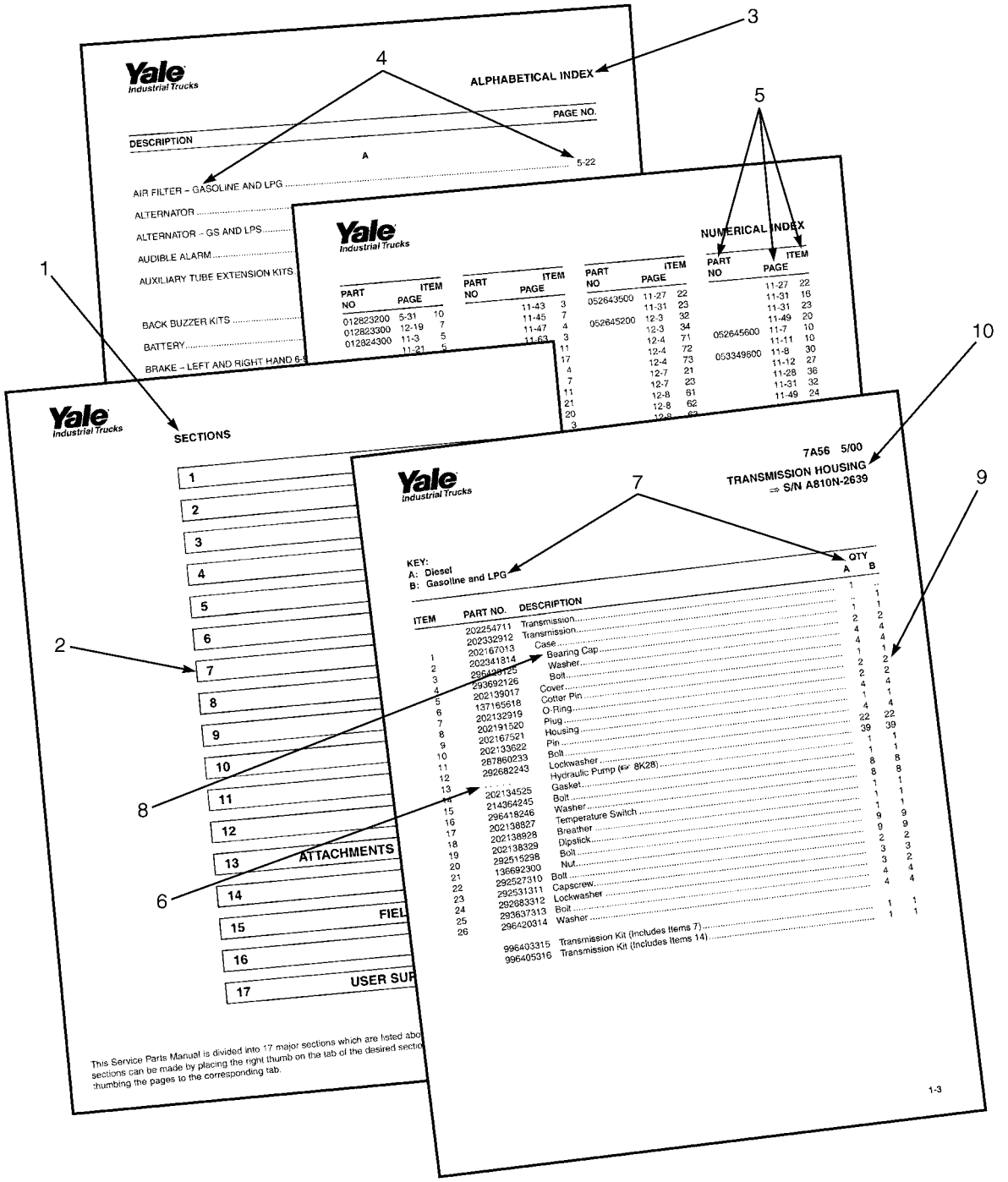

HOW TO FIND THE DESIRED PART NUMBER

WHEN THE PART NUMBER AND THE NEXT HIGHER ASSEMBLY IS NOT KNOWN:

1. Determine the function and application of the part required. Turn to the Sections Page. Choose the general area of reference most likely to include the part.
2. Turn to the section you chose. Use the Section Table of Contents to determine the assembly which would normally contain the part required. Then locate the part on the assembly breakdown page.

WHEN THE PART NUMBER IS NOT KNOWN AND THE NEXT HIGHER ASSEMBLY IS KNOWN:

3. Determine the assembly the required part is used on. Turn to the Alphabetical Index on Page i.
4. Locate the assembly the required part is used on and turn to the page indicated for that assembly. Then locate the part on the assembly breakdown page.

WHEN THE PART NUMBER IS KNOWN:

5. Use the Numerical Index on Page 16-1 to find the part number. Turn to the page listed and locate the part as indicated by the item number.

GENERAL:

The assembly breakdowns include part numbers, descriptions, quantities required, keys and footnotes to help in selecting correct parts.

6. Five periods in the PART NO. column (. . . . .) indicate that the part is either *Not Serviced Separately* or there is a reference to another figure. A figure reference is denoted by a pointing hand followed by a parts page number in the DESCRIPTION column (☞7A56)
7. Keys are used to show two or more similar assemblies, RH and LH assembly parts, etc. Select the appropriate key, "A", "B", "C", "D", or "E" and the corresponding quantity column to find the required parts. Two periods in the QTY column (..) indicate that the part is not used for that assembly.
8. Indented descriptions under the DESCRIPTION column are used to indicate assemblies and subparts of assemblies. In the example on the previous page, *BEARING CAP* (Item 2) is a subpart of the major assembly *CASE*.
9. Quantities shown are for one assembly. The quantities of the subpart *BEARING CAP* are indicated as two and two. This means two per *CASE* assembly.
10. Serial number breaks identify the most current parts information and are shown as follows:
    ⇒ **S/N A810N-2639**
    Indicates last serial number affected.
    S/N A810N-2640 ⇒
    Indicates the first serial number affected.
    S/N A810N-1553 ⇔ S/N A810N-3291
    Indicates a range of serial numbers affected.

    ECN numbers for pending serial numbers are shown to allow for the inclusion of the most current parts information and are identified as follows:
    ⇒ **S/N Pending Per ECN 63243**
    Indicates a pending serial number for last unit affected.
    S/N Pending Per ECN 63243 ⇒
    Indicates a pending serial number for first unit affected.

    Date breaks are used to indicate when a change occurred but a subsequent serial number break was not recorded. This is an arbitrary date usually based on the ECN release and are identified as follows:
    ⇒ **D/B 3/00**
    Indicates that a change occurred sometime within that month for the item affected.
    D/B 3/00 ⇒
    Indicates that a change occurred sometime within that month for the item affected.
    D/B 3/00 ⇔ D/B 4/00
    Indicates a range of production dates of the item affected.

    Contact your local dealer for Yale lift trucks for serial number information for items with a ECN or a date break.

ORDERING PARTS:

When ordering replacement parts, give the unit serial number, part number, name of part and quantity required.

For any further information on parts, service, or ordering, consult your local dealer for Yale lift trucks.

IDENTIFICATION OF TRUCK SERIAL NUMBER

X	OOO	X	OOOO	X
(1)	(2)	(3)	(4)	(5)

NOTE: Serial Number breakdown is only for trucks built after 1994.

(1) and (2) The first letter and three numbers indicate the truck unit code.

(3) The second letter indicates the plant of manufacture.

(4) The four or five digit number indicates the production sequence number of the truck.

(5) The final letter indicates the year of manufacture starting with "A" in 1957 and 1980. The letters "I", "O", and "Q" will not be used.

For pending serial numbers contact your local dealer for Yale lift trucks.

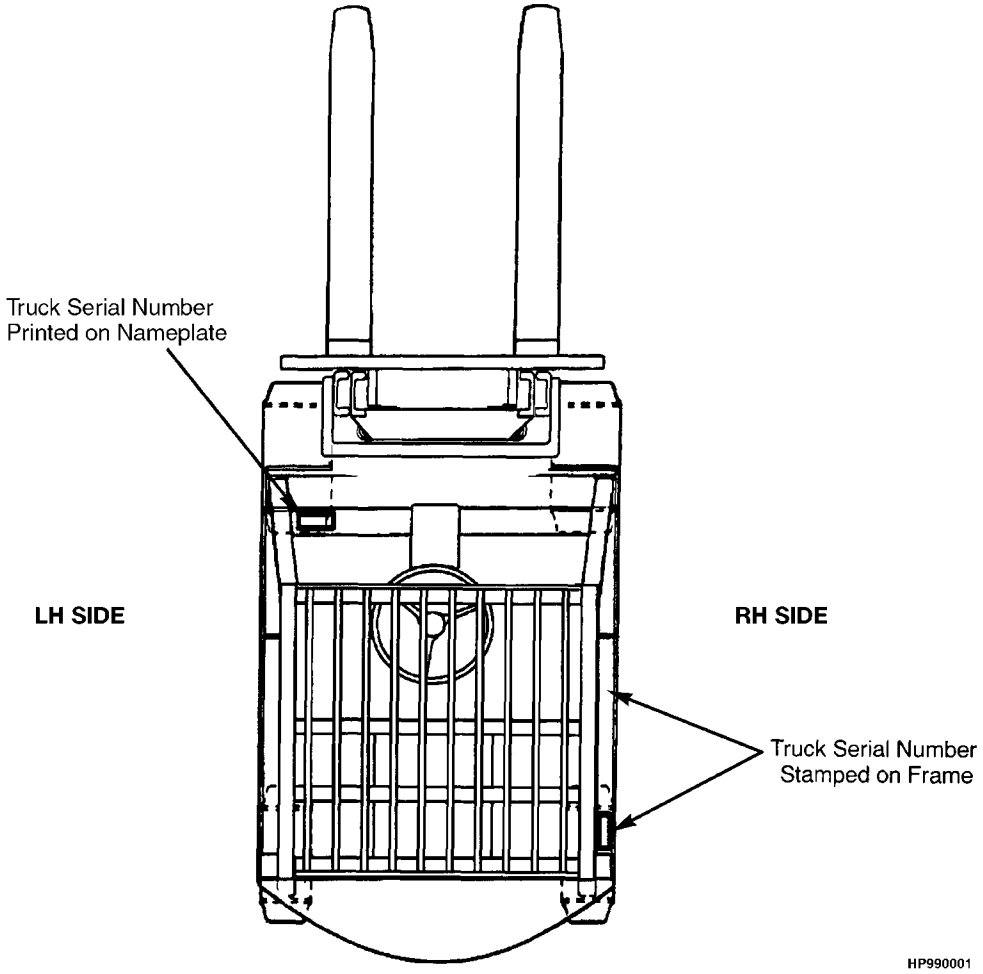

Parts referred to in this book as right or left hand parts are in accordance with the illustration above.

IDENTIFICATION OF MAST SERIAL NUMBER

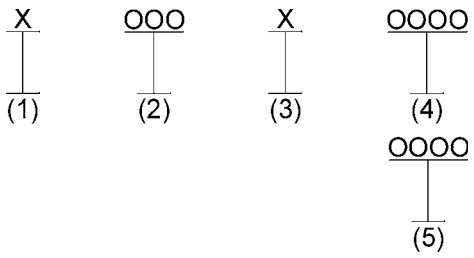

(1) and (2) The first letter and number indicates the mast unit code.

(3) The second letter indicates the plant of manufacture.

(4) The four or five digit number indicates the production sequence number of the mast.

(5) Carriage travel in millimeters stamped just below the serial number.

Mast Group identification consists of mast unit code (1) and (2) plus carriage travel (5).

For pending production sequence numbers contact your local dealer for Yale lift trucks.

LIFT EQUIPMENT IDENTIFICATION

1. Fork part number, capacity rating, plant code letter, and date of manufacture are stamped approximately six inches below the top of most forks.

2. The carriage group number is stamped on the right hand side of the top crossmember (pin type) or on the back of the right hand end of the bottom crossmember (hook type). A date code has two letters in line with or below the carriage group number.

3. The mast identification number has a unit code, a letter indicating the plant of manufacture, and a serial number. Underneath the production sequence number is a four digit number that indicates the carriage travel in millimeters.

4. Tilt and lift cylinder group numbers are stamped on the cylinder shell.

   Always refer to the group, serial, or part number when ordering service parts.

   Modification of masts and carriages by SPED (Special Products Engineering Department) are identified by a model prefix code beginning with the letter "S". contact your dealer for Yale lift trucks for information on these assemblies.

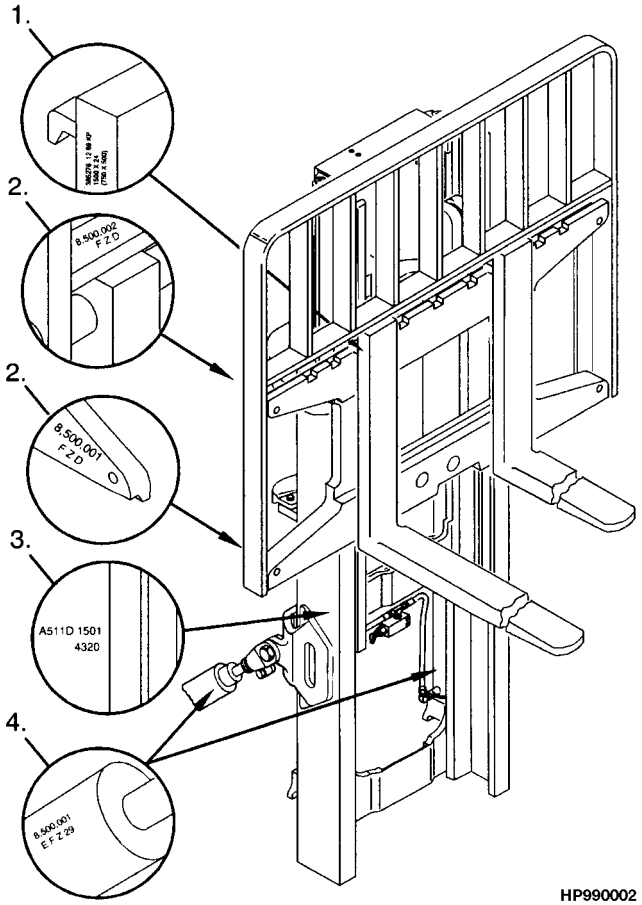

HP990002

IDENTIFICATION OF ATTACHMENT AND SIDE-SHIFT CARRIAGE SERIAL NUMBERS

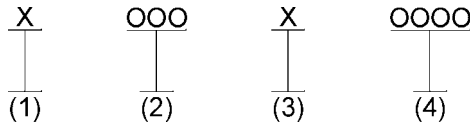

(1) and (2) The first letter and three numbers indicate the attachment unit code.

(3) The second letter indicates the plant of manufacture.

(4) The four or five digit number indicates the production sequence number.

For pending production sequence numbers contact your local dealer for Yale lift trucks.

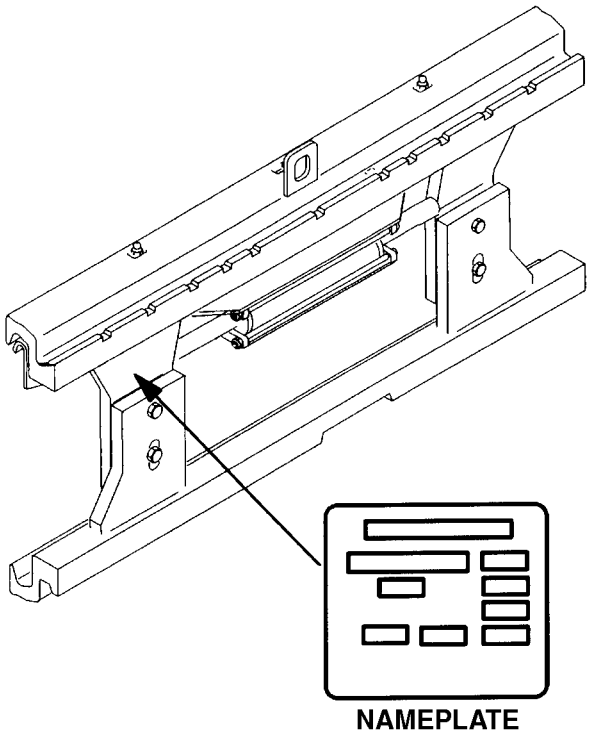

Side-shift carriages and attachments have nameplates. Use the serial number found on the nameplate to identify the attachment.

Always refer to the group, serial, or part number when ordering service parts.

Modifications of attachments and side-shift carriages by SPED (Special Products Engineering Department) are identified by a model prefix code beginning with the letter "S". Contact your dealer for Yale lift trucks for information on these assemblies.

MASTER PART SHEET CROSS-REFERENCE

NOTE: Throughout this manual are references to Part Sheet Numbers. These references are usually found after the description of a part or assembly. The Part Sheet Number is found on the upper left- or righthand corner of the parts pages.

EXAMPLE:

ITEM	PART NO.	DESCRIPTION	QTY
31	505965530	Steering Cylinder (☞ 6E67)	1
32	504224261	Pin	4

Below is a numerical listing of Part Sheet Numbers found in this parts book and what page number they are on.

PART SHEET	PAGE NO.
P10026	1-30
P10027	3-6
P10055	7-26
P10144	11-14
P10149	11-18
P10150	11-26
P10157	11-44
P10158	11-48
P10159	12-4
P10159	12-6
P10159	12-8
P10160	12-18
P10161	12-20
P10161	12-22
P10161	12-24
P10161	12-26
P10161	12-30
P10161	12-32
P10161	12-36
P10165	12-50
P10170	12-12
P10170	12-15
P10174	12-40
P10174	12-44
P10175	12-46
P10175	12-48
P10176	12-52
P10176	12-54
P10176	12-56
P10176	12-58
P10176	12-60
P10188	12-62
P10188	12-63
P10188	12-64
P10188	12-65
P10189	12-66
P10189	12-68
P10191	12-70
P10194	13-2
P10195	13-6
P10197	13-10
P10199	13-12
P10201	13-20
P10203	13-28
P10211	1-2
P10212	1-4
P10213	1-10
P10214	1-12
P10218	1-18
P10223	2-2
P10223	2-4
P10223	2-6
P10223	2-8
P10223	2-10
P10226	6-26
P10227	2-14
P10228	3-10
P10229	4-2
P10230	4-6
P10231	5-24
P10232	1-20
P10232	1-21
P10233	5-10
P10234	5-38
P10235	6-2
P10237	6-8
P10239	6-30
P10241	6-38
P10242	6-46
P10245	7-2
P10246	7-16
P10248	7-28
P10249	7-30
P10250	8-2
P10252	10-4
P10253	10-10
P10254	9-2
P10258	8-6
P10259	9-20
P10292	5-52
P10293	11-2
P10294	11-22
P10297	1-14
P10483	5-46
P10484	5-50
P10499	6-4
P10800	1-22
P10801	1-32
P10802	1-8
P10803	9-16
P10804	9-22
P10805	8-8
P10806	2-12
P10807	2-16
P10808	3-2
P10809	3-4
P10810	5-4
P10811	5-8
P10812	5-16
P10813	5-18
P10815	5-36
P10816	5-40
P10817	6-6
P10818	6-10
P10819	6-24
P10821	7-8
P10822	9-8
P10824	10-6

PART SHEET	PAGE NO.
P10825	10-8
P10826	9-18
P10827	9-12
P10828	11-24
P10829	11-28
P10830	11-36
P10831	14-2
P10835	14-16
P10836	14-18
P10837	6-28
P10844	5-22
P10936	13-16
P10937	13-32
P10938	13-24
P10991	14-14
P11050	1-28
P11061	14-8
P11063	14-4
P11064	14-12
P11127	6-12
P11161	5-26
P11167	11-16
P11171	11-20
P11500	6-14
P11811	6-40
P11830	4-8
P11858	6-32
P11861	9-4
P11862	9-10
P11864	6-36
P11866	11-6
P11867	5-30
P11882	9-14
P11949	1-24
P11950	1-26
P11981	5-48
P11990	5-12
P11991	5-28
P11992	5-42
P12106	6-42
P12107	6-48
P12108	6-52
P12163	3-12
P12167	11-10
P12168	11-32
P12169	11-40
P12192	5-14
P12193	6-18
P12216	5-32
P12217	5-34
P12227	4-4
P12230	5-20
P12235	5-6
P12580	13-38
P12581	13-40
P12582	13-42
P12583	13-36
P12584	13-44
P12585	13-45
P12586	13-46
P13081	6-22
P13084	6-50
P13153	14-6
P13161	10-2
P13178	5-44
P13208	7-32
P13267	6-44
P13268	3-8
P13271	4-10
P13280	7-6
P13281	7-15
P13282	7-18
P13283	7-20
P13284	7-22
P13285	6-54
P13286	7-12

1 GENERAL TRUCK

SECTION 1
GENERAL TRUCK

DESCRIPTION	PAGE
COUNTERWEIGHT	1-12
FORK	
GP/GLP 050 TG	1-20
GP/GLP 060 TG	1-21
FRAME AND FLOORPLATES	1-4
GENERAL TRUCK	1-2
HOOD	1-8
HOOD LINER	1-10
LABEL AND PLATE LOCATION	1-15
LOAD BACKREST WELDMENT	1-18
LOW NOISE	1-32
SEAT	
FULL SUSPENSION	
SHEET 1 OF 2	
S/N PENDING PER ECN 92036-07⇒	1-24
SHEET 2 OF 2	
S/N PENDING PER ECN 92036-07⇒	1-26
NON-SUSPENSION	1-30
SEMI-SUSPENSION	
⇒S/N PENDING PER ECN 92036-07	1-22
SUSPENSION WITH HIP RESTRAINT	1-28

GENERAL TRUCK

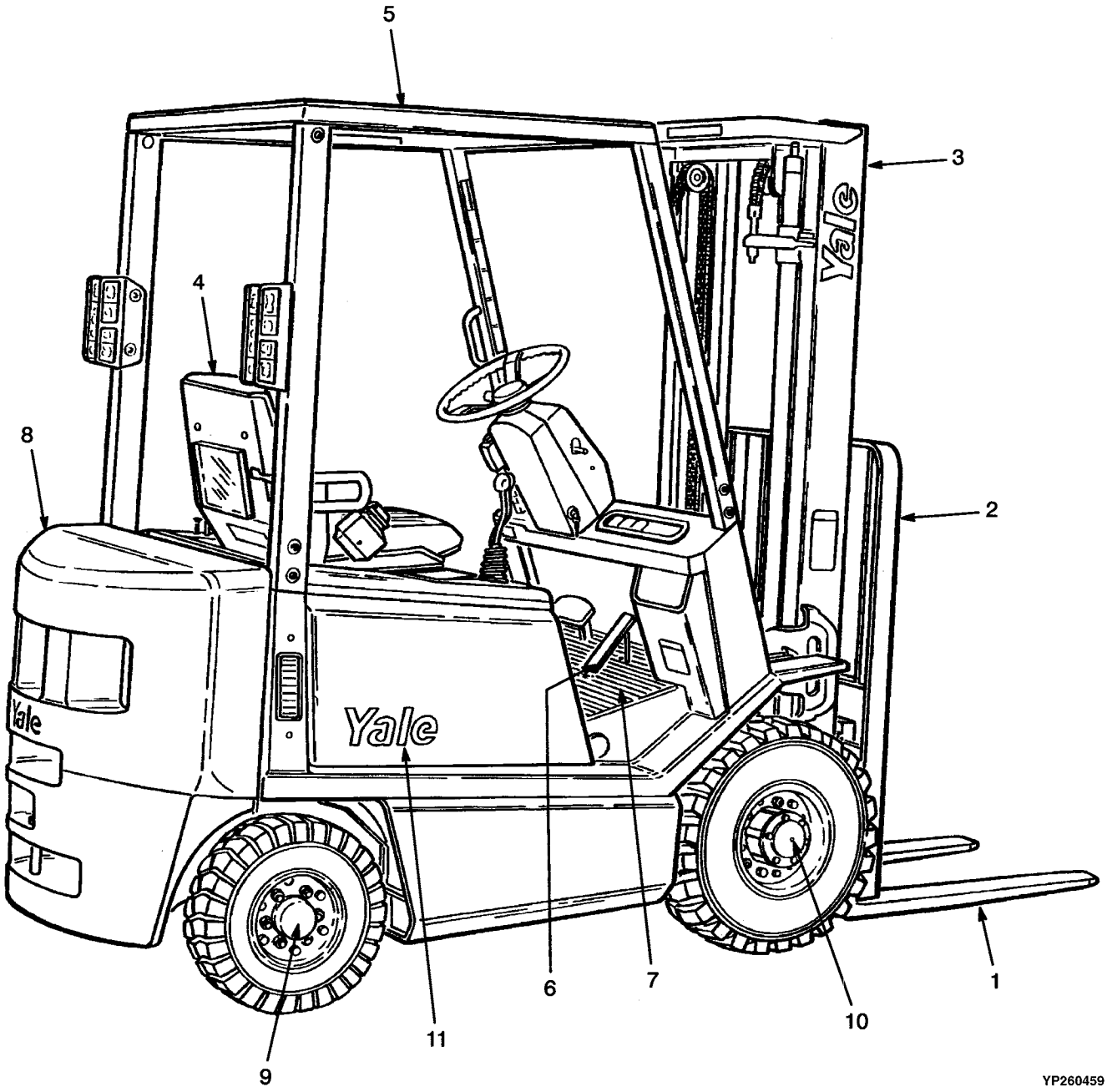

ITEM	PART NO.	DESCRIPTION	QTY
1	. . . . .	Fork (☞ P10232, P10232)	2
2	. . . . .	Load Backrest (☞ P10218)	1
3	. . . . .	Mast-Two Stage Limited Free-Lift (☞ P10159)	1
3	. . . . .	Mast-Two Stage Full Free-Lift (☞ P10176)	1
3	. . . . .	Mast-Three Stage Full Free-Lift (☞ P10161)	1
4	. . . . .	Operator Seat (☞ P10800, P11949, P11950, P11050, P10026)	1
5	. . . . .	Overhead Guard (☞ P10212)	1
6	. . . . .	Throttle Pedal (☞ P10483, P11981)	1
7	. . . . .	Floorplates/Cowl (☞ P10212)	1
8	. . . . .	Counterweight (☞ P10214)	1
9	. . . . .	Steer Axle (☞ P10803)	1
10	. . . . .	Drive Axle Assembly (☞ P10250)	1
11	. . . . .	Label and Plate Location (☞ P10297)	AR

FRAME AND FLOORPLATES

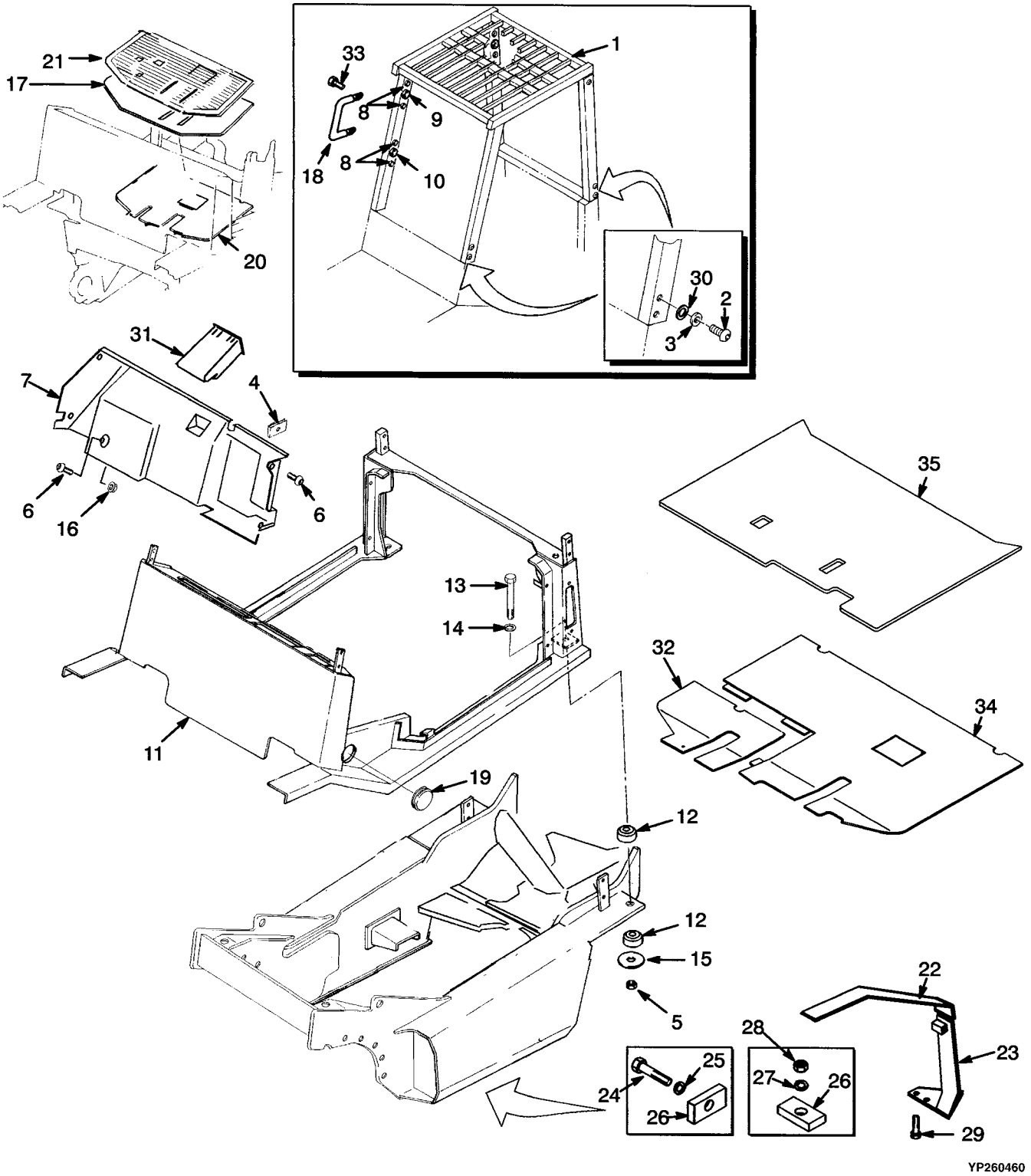

ITEM		PART NO.	DESCRIPTION	QTY
1		505968580	Overhead Guard (Raised)	1
1		505974518	Overhead Guard (Standard)	1
2		504262755	Capscrew	8
3		904310409	Washer	8
4		505972586	Nut	4
5		520053804	Nut	4
6		505970553	Capscrew	6
7	**ce**	504240966	Cover	1
7	**cf**	524141550	Cover	1
7	**be**	524138905	Cover	1
7	**bf**	524141551	Cover	1
8		504241782	Plug	12
9		504241783	Plug	5
10		504241784	Plug	4
11	**e**	504240727	Frame	1
11	**f**	524141542	Frame	1
12	**g**	520045006	Mount	4
12	**h**	580011994	Mount	4
13		931006914	Capscrew	4
14		449021010	Washer	4
15		505966562	Washer	4
16		505970579	Nut	2
17		504315706	Sound Liner	1
18		900001242	Handle	1
19		505972576	Plug	2
20	**c**	504240766	Floorplate	1
20	**c**	504241791	Floorplate (Low Noise)	1
21	**c**	504240787	Floor Mat (Low Noise)	1
21	**c**	504240990	Floor Mat	1
22	**a**	505973529	Fender (RH)	1
22	**d**	505973563	Fender (RH)	1
22	**d**	505973576	Fender (LH)	1
22	**a**	505973595	Fender (LH)	1
23	**a**	505973505	Fender (LH)	1
23	**a**	505973508	Fender (RH)	1
23	**d**	505973509	Fender (RH)	1
23	**d**	505973598	Fender (LH)	1
24		449001302	Capscrew	8
25		449022013	Lockwasher	12
26		900001254	Bar	12
27		504071785	Washer	4
28		449015044	Nut	4
29		449001015	Capscrew	4
30		504262754	Washer	8
31	**c**	520036895	Storage Compartment	1
32	**b**	524139616	Floorplate (RH)	1
33		504060774	Screw	2
34	**b**	504315702	Floorplate	1
34	**b**	504315705	Floorplate (Low Noise)	1

FRAME AND FLOORPLATES

ITEM		PART NO.	DESCRIPTION	QTY
35	**b**	504315708	Floor Mat	1
35	**b**	504315736	Floor Mat (Low Noise)	1

FOOTNOTES:

a Dual Tire
b Foot Directional Control Pedal
c Forward and Reverse Shift Lever
d Wide Tire
e ⇒ S/N PENDING PER ECN 76000
f S/N PENDING PER ECN 76000 ⇒
g ⇒ D/B 07/1998
h D/B 07/1998 ⇒

NOTES

Yale Industrial Trucks

HOOD

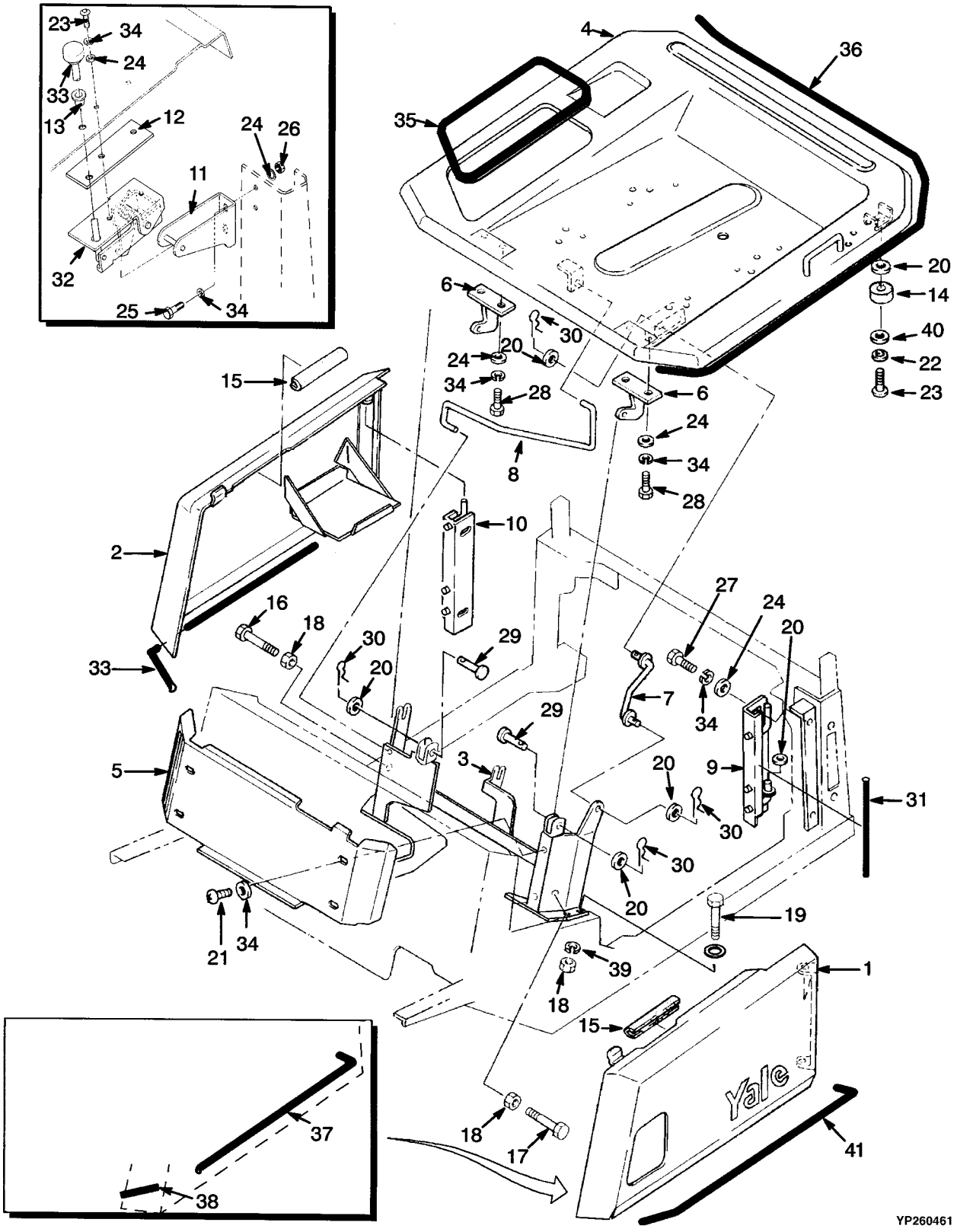

ITEM		PART NO.	DESCRIPTION	QTY
1		504240979	Door (LH) (Gasoline)	1
1		504240980	Door (LH) (LPG)	1
2		504240985	Door (RH)	1
3		505972577	Support	1
4	**a**	908594716	Cover	1
4	**b**	908594741	Cover	1
5		909835611	Plate	1
6		504240757	Hinge	2
7		922134300	Support	1
8	**b**	504281774	Spring	1
8	**a**	920546403	Spring	1
9		504240856	Hinge (LH)	1
10		504240857	Hinge (RH)	1
11		923533400	Hook Assembly	1
12		922134300	Support	1
13		912630306	Bushing	1
14		917426300	Cushion (Rubber)	2
15		912291312	Trim	2
16		505974549	Capscrew	1
17		449001029	Capscrew	1
18		449015044	Nut	6
19		449001302	Capscrew	4
20		449021006	Washer	AR
21		932729903	Capscrew	4
22		449021001	Washer	2
23		932729907	Capscrew	4
24		449022016	Lockwasher	14
25		449001014	Capscrew	2
26		449015014	Nut	2
27		449001415	Capscrew	4
28		449001013	Capscrew	4
29		912326300	Pin	2
30		965801908	Cotter Pin	4
31		916748304	Seal	2
32		923532400	Arm	1
33		928036300	Push Rod	1
34		504226242	Washer	18
35		923179401	Strip	1
36		923179404	Strip	1
37		916748308	Seal (LH) (Gasoline)	1
38		916748327	Seal	1
39		449022013	Lockwasher	4
40		502398907	Washer	AR
41		916748303	Seal (LH) (LPG)	2

FOOTNOTES:

a ⇒ S/N A875B-10335

b S/N A875B-10335 ⇒

HOOD LINER

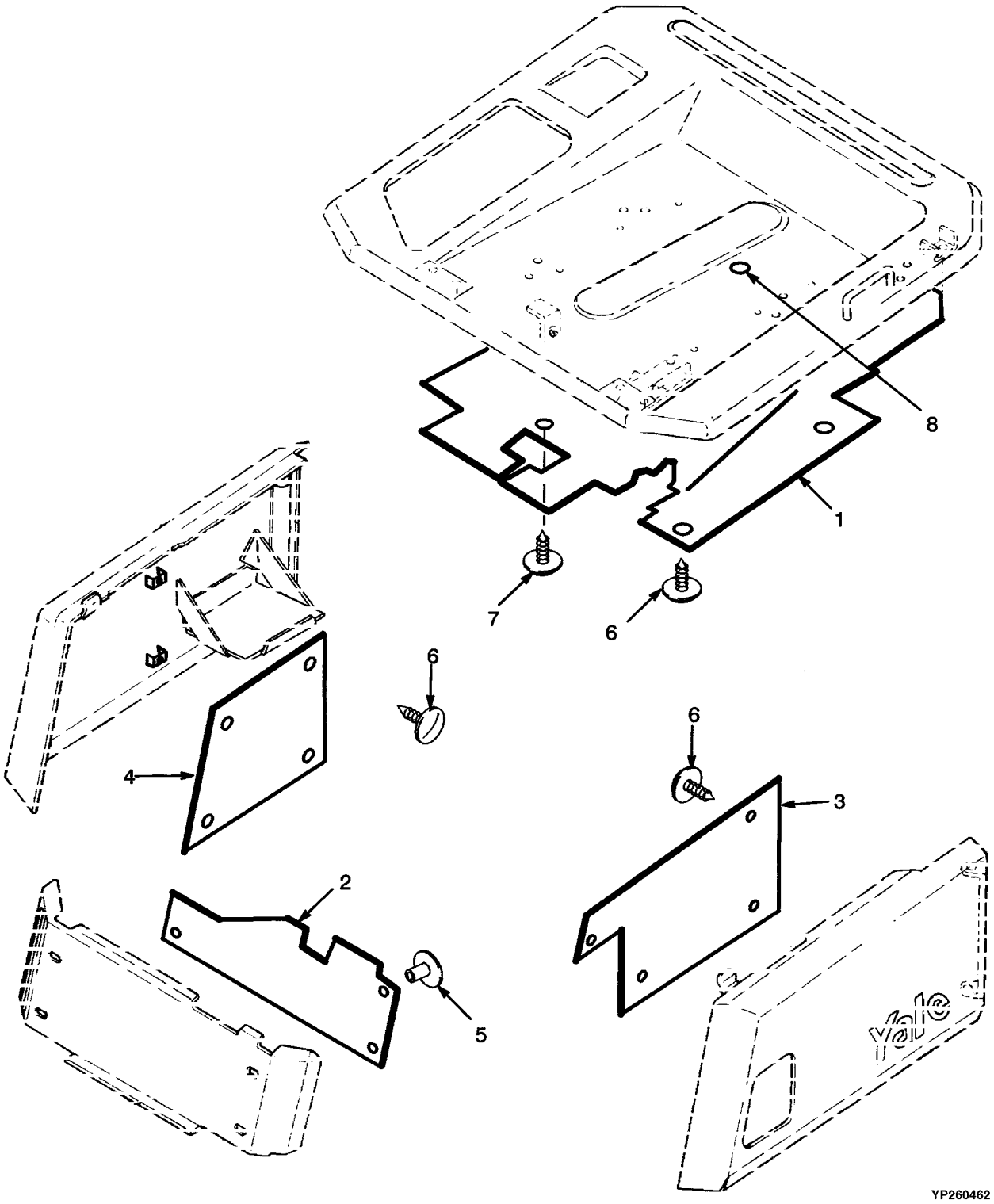

Yale Industrial Trucks

HOOD LINER

ITEM	PART NO.	DESCRIPTION	QTY
1	504241701	Liner (Hood)	1
2	504246763	Liner (Front Cover)	1
3	504241724	Liner (LH Door)	1
4	504241725	Liner (RH Door)	1
5	900003273	Button	3
6	518793609	Fastener	14
7	580001090	Fastener	1
8	014195600	Grommet	2

COUNTERWEIGHT

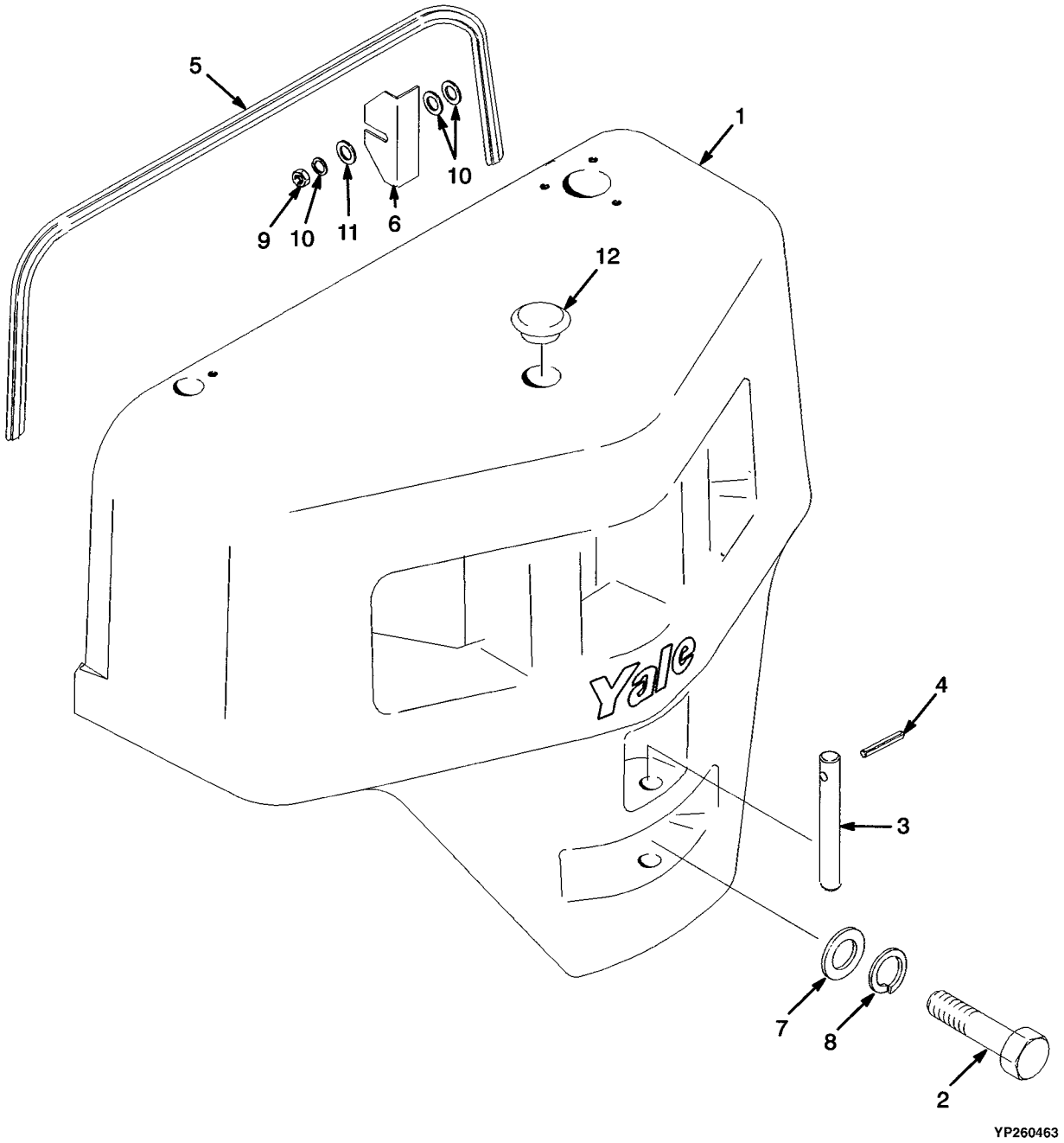

ITEM	PART NO.	DESCRIPTION	QTY
1	505975574	Counterweight (GP/GLP 060 TG)	1
1	505975581	Counterweight (GP/GLP 050 TG)	1
2	449001405	Capscrew (GP/GLP 050 TG)	1
2	449001435	Capscrew (GP/GLP 060 TG)	1
3	505972541	Pin	1
4	449034061	Pin	1
5	504246769	Seal	1
5	916748322	Seal (Rubber) (Optional)	1
6	505970557	Shim (0.109 in.)	AR
6	580000884	Shim (0.059 in.)	AR
7	505970538	Washer	1
8	955400911	Lockwasher	1
9	449015014	Nut	4
10	504226242	Washer	12
11	449022016	Lockwasher	4
12	504241796	Plug	1

LABEL AND PLATE LOCATION

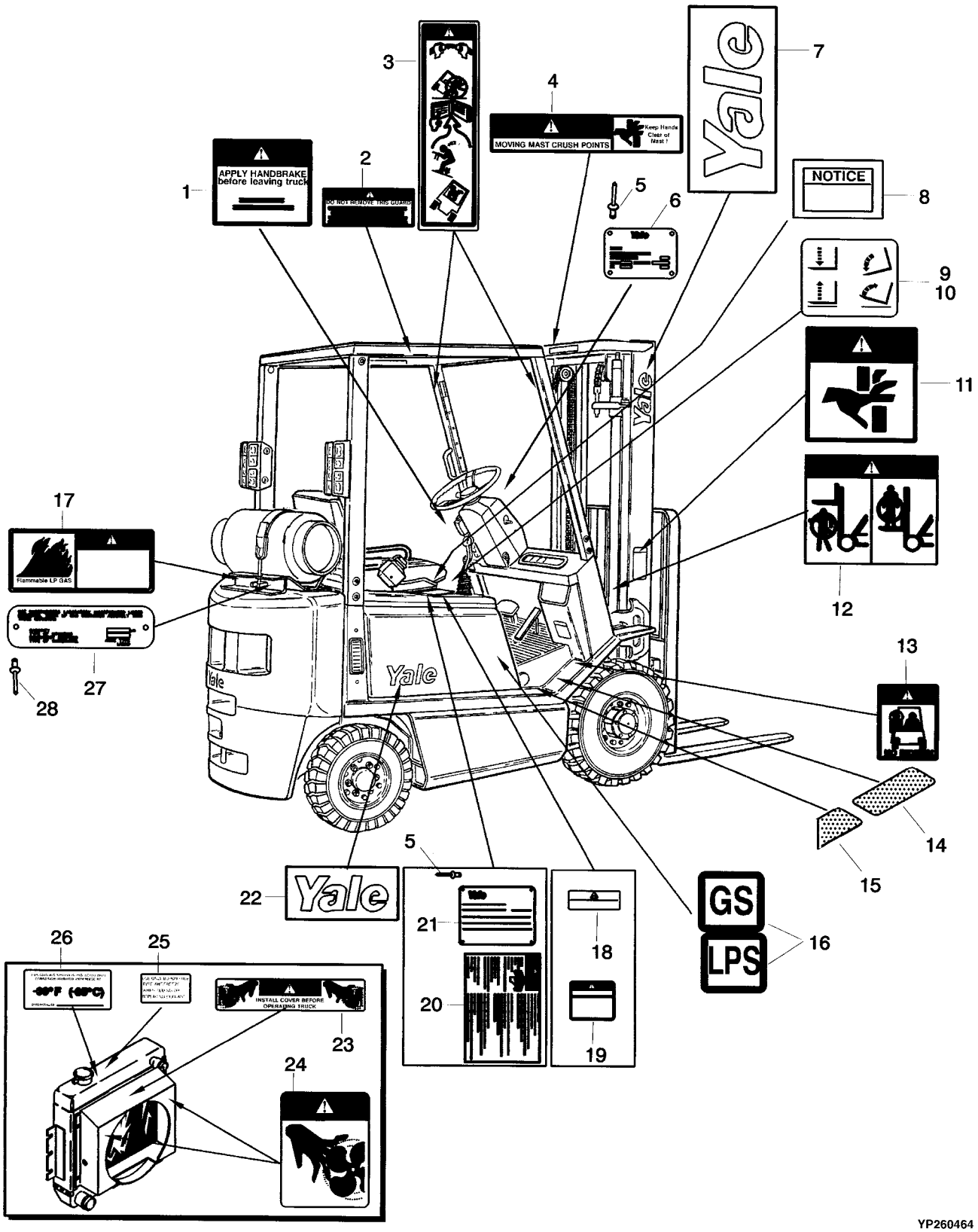

Direct Acting or Push Away Levers	9174923-	04	06	07	09	08	02	03	11	05
"H" Pattern Levers	5167893-	07	09	10	12	11	05	06	04	08

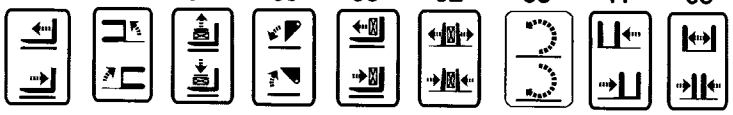

YP260545

ITEM		PART NO.	DESCRIPTION	QTY
1		504575274	Label (Park Brake without Seat Brake)	1
2	a	. . . . .	Label (Overhead Guard Impact)	2
3		504231296	Label (Operator Restraint)	1
4		504231215	Label (Mast Warning)	1
5		505977534	Rivet	4
6	a	. . . . .	Nameplate	1
7		912331302	Label (Yale)	2
8		513572100	Label (Filter Removal Warning)	1
9		917492304	Label (Auxiliary Function - Reach)	1
9		917492306	Label (Auxiliary Function - Swing)	1
9		917492307	Label (Auxiliary Function - Stabilizer)	1
9		917492309	Label (Auxiliary Function - Scoop)	1
9		917492308	Label (Auxiliary Function - Push/Pull)	1
9		917492302	Label (Auxiliary Function - Clamp)	1
9		917492303	Label (Auxiliary Function - Rotate)	1
9		917492311	Label (Auxiliary Function - Side-Shift)	1
9		917492305	Label (Auxiliary Function - Spreader)	1
9		516789307	Label (Auxiliary Function - Reach)	1
9		516789309	Label (Auxiliary Function - Swing)	1
9		516789310	Label (Auxiliary Function - Stabilizer)	1
9		516789312	Label (Auxiliary Function - Dump)	1
9		516789311	Label (Auxiliary Function - Push/Pull)	1
9		516789305	Label (Auxiliary Function - Clamp)	1
9		516789306	Label (Auxiliary Function - Rotate)	1
9		516789304	Label (Auxiliary Function - Side-Shift)	1
9		516789308	Label (Auxiliary Function - Spread)	1
10		516789303	Label (Auxilliary Function - Tilt)	1
10		917492312	Label (Auxilliary Function - Blank)	1
11		504231252	Label (Pinch Point)	2
12		505976595	Label (Mast Warning)	2
13		504231248	Label (No Riders)	2
14		504246778	Pad	2
15		504240859	Pad (LH)	1
15		504240860	Pad (RH)	1
16		505977525	Label (Type GS)	2
17		505977565	Label (Flammable LP Gas)	1
18		505978556	Label (Battery Disconnect)	1
19		505977581	Label (Warning)	1
20		505977535	Label (Operator Warning)	1
21	a	. . . . .	Capacity Plate	1
22		912845301	Label (Yale)	2
23		505976556	Label (Fan Warning)	2

LABEL AND PLATE LOCATION

ITEM	PART NO.	DESCRIPTION	QTY
24	505976566	Label (Fan Warning)	1
25	518806645	Label (Boron Free Antifreeze Only)	AR
26	505976545	Label (Antifreeze)	1
27	580026934	Label (LPG Tank)	AR
28	505976530	Rivet	2
	504279799	Label Kit (Includes Items 1, 3-4, 11-13, 20, 22-23)	1

FOOTNOTES:

a Contact Your Local Yale Dealer

NOTES

LOAD BACKREST WELDMENT

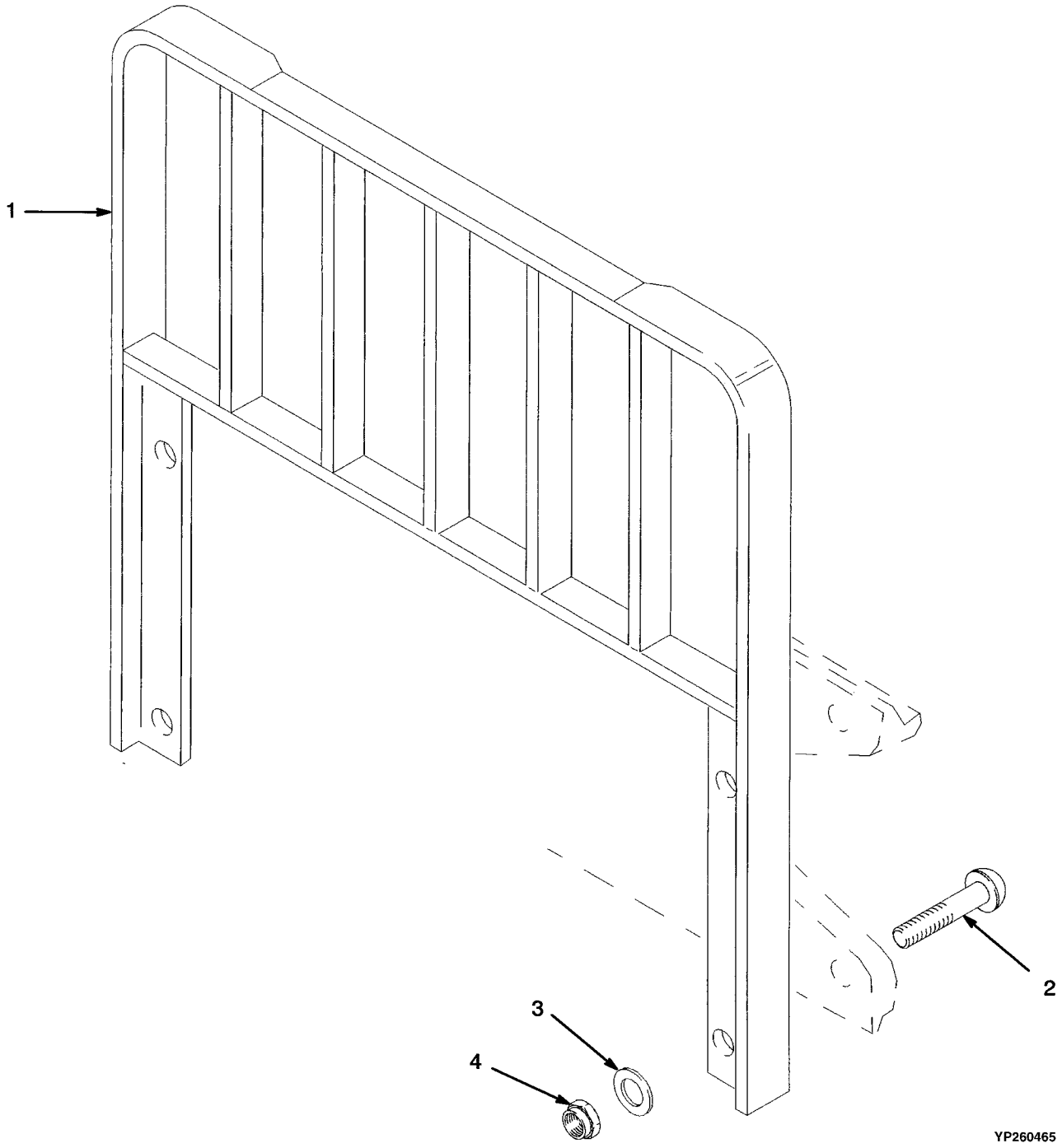

Yale Industrial Trucks

LOAD BACKREST WELDMENT

ITEM		PART NO.	DESCRIPTION	QTY
1		504242751	Load Backrest Extension (38.5 in.) (GP/GLP 050 TG)	1
1		504240704	Load Backrest Extension (38.5 in.) (GP/GLP 060 TG)	1
1		504242746	Load Backrest Extension (42 in.) (GP/GLP 050 TG)	1
1		504242747	Load Backrest Extension (42 in.) (GP/GLP 060 TG)	1
1		504263702	Load Backrest Extension (48 in.) (GP/GLP 050 TG)	1
1		504263703	Load Backrest Extension (48 in.) (GP/GLP 060 TG)	1
2		505960578	Capscrew	4
3		061278200	Washer	4
3	**a**	504233271	Washer	4
4		909882405	Nut	4

FOOTNOTES:

a Optional

Yale Industrial Trucks

FORK
(GP/GLP 050 TG)

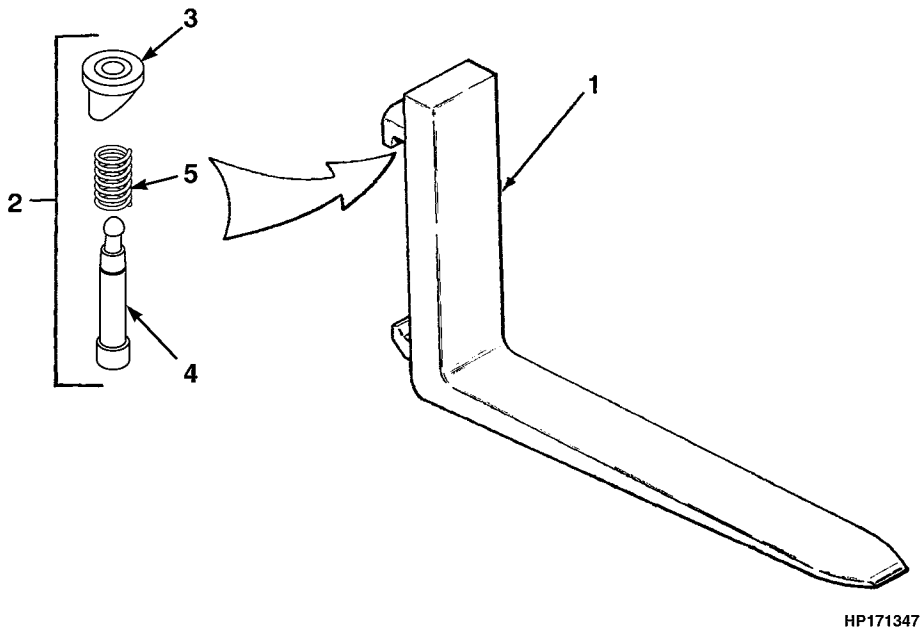

ITEM	PART NO.	DESCRIPTION	QTY
1	504110201	Fork (36 in.)	2
1	504110202	Fork (42 in.)	2
1	504110203	Fork (48 in.)	2
1	504110204	Fork (54 in.)	1
1	504110205	Fork (60 in.)	2
1	518647602	Fork (42 in.)	2
1	518647603	Fork (48 in.)	2
1	518647604	Fork (54 in.)	2
1	518647605	Fork (60 in.)	2
1	518649601	Fork (36 in.)	2
1	518649602	Fork (42 in.)	2
1	518649603	Fork (48 in.)	2
1	752780402	Fork (36 in.)	2
1	752780422	Fork (30 in.)	2
2	580026744	Latch Kit	2
3	. . . . .	Knob	1
4	. . . . .	Pin	1
5	. . . . .	Spring	1

Yale Industrial Trucks

FORK
(GP/GLP 060 TG)

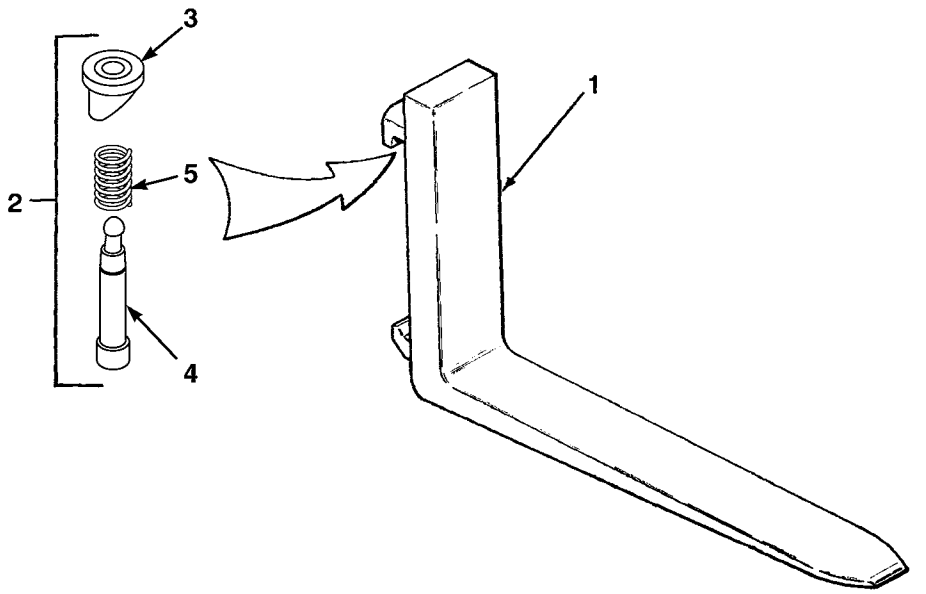

ITEM	PART NO.	DESCRIPTION	QTY
1	503998701	Fork (36 in.)	2
1	503998702	Fork (42 in.)	2
1	503998703	Fork (48 in.)	2
1	503998704	Fork (54 in.)	2
1	503998705	Fork (60 in.)	2
1	505862501	Fork (36 in.)	2
1	505862502	Fork (42 in.)	2
1	505862503	Fork (48 in.)	2
1	505862504	Fork (54 in.)	2
1	518650601	Fork (36 in.)	2
1	518650602	Fork (42 in.)	2
1	518650603	Fork (48 in.)	2
1	518650604	Fork (54 in.)	2
2	580026744	Latch Kit	2
3	. . . . .	Knob	1
4	. . . . .	Pin	1
5	. . . . .	Spring	1

Yale Industrial Trucks

SEAT
(SEMI-SUSPENSION)
(⇒S/N PENDING PER ECN 92036-07)

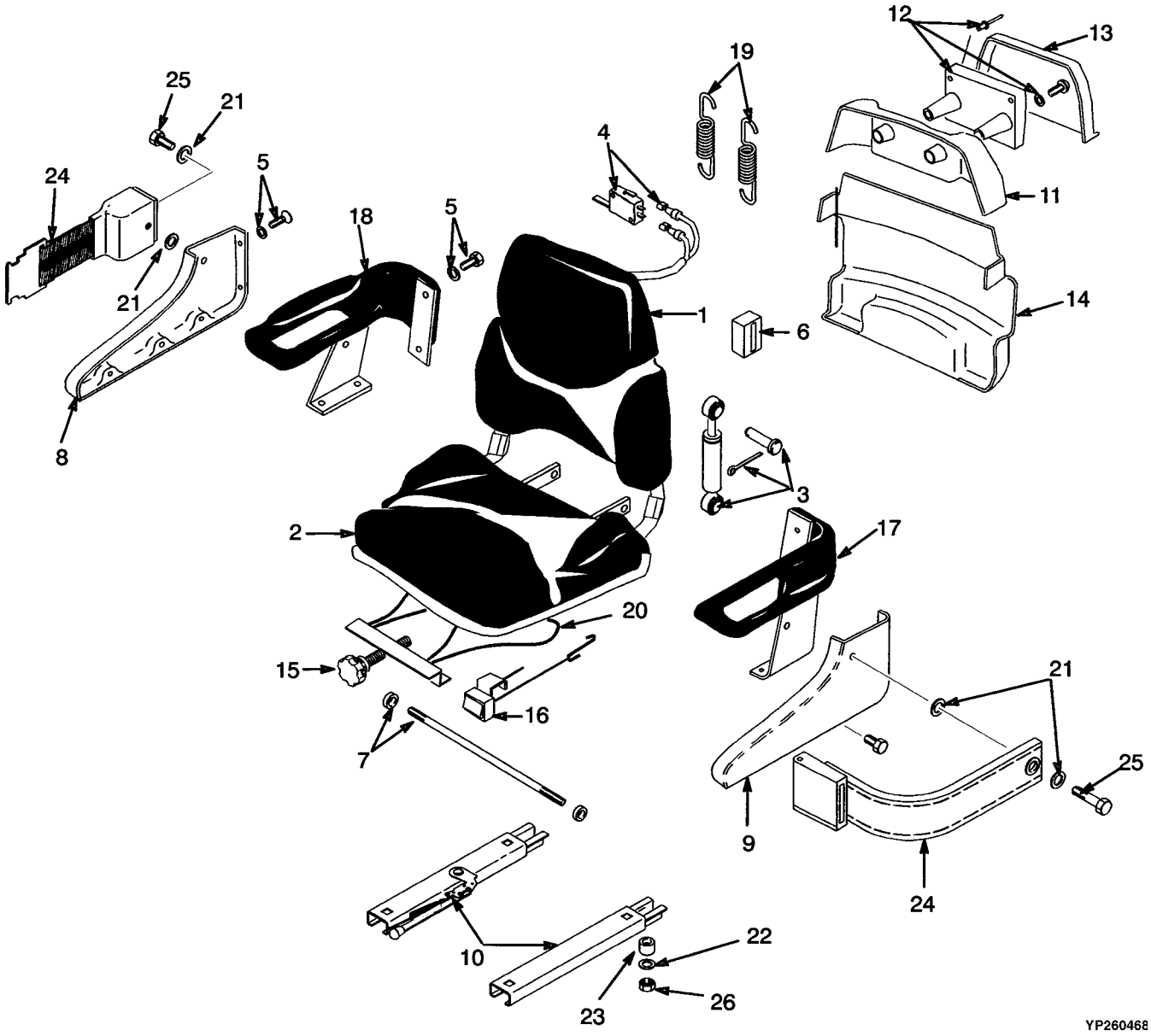

Yale Industrial Trucks

SEAT
(SEMI-SUSPENSION)
(⇒S/N PENDING PER ECN 92036-07)

ITEM		PART NO.	DESCRIPTION	QTY
		504305741	Seat (Fabric)	1
		504305742	Seat (Vinyl)	1
1		504259766	Back Cushion (Vinyl)	1
1		504259773	Back Cushion (Fabric)	1
1	**a**	504289704	Back Cushion	1
1	**a**	504289706	Back Cushion	1
2		504259767	Seat Cushion (Vinyl)	1
2		504259774	Seat Cushion (Fabric)	1
2	**a**	504289705	Seat Cushion	1
2	**a**	504289707	Seat Cushion	1
3		520041836	Shock Absorber Kit	1
4		518793606	Switch	1
5		520041844	Hardware Kit	1
6		520041870	Block	1
7		520041896	Shaft and Bearing Kit	1
8		580000245	Cover (RH)	1
9		580000246	Cover (LH)	1
10		580010435	Slide Rail Kit	1
11		504259768	Cover Kit (Upper)	1
12		520041852	Holder Kit	1
13		520041822	Cover	1
14		504259770	Cover	1
15		520041829	Knob Kit	1
16		520041849	Tape Kit	1
17		504259771	Hip Restraint (LH)	1
18		504259772	Hip Restraint (RH)	1
19		520041644	Suspension Spring Kit	1
20		520041883	Suspension Cable Kit	1
21		023604600	Washer	4
22		504223217	Washer	4
23		752821400	Spacer	1
24		518796683	Seat Belt	1
25		504223249	Capscrew	2
26		504238298	Nut	4

FOOTNOTES:
a Optional

SEAT
(FULL SUSPENSION) (SHEET 1 OF 2)
(S/N PENDING PER ECN 92036-07⇒)

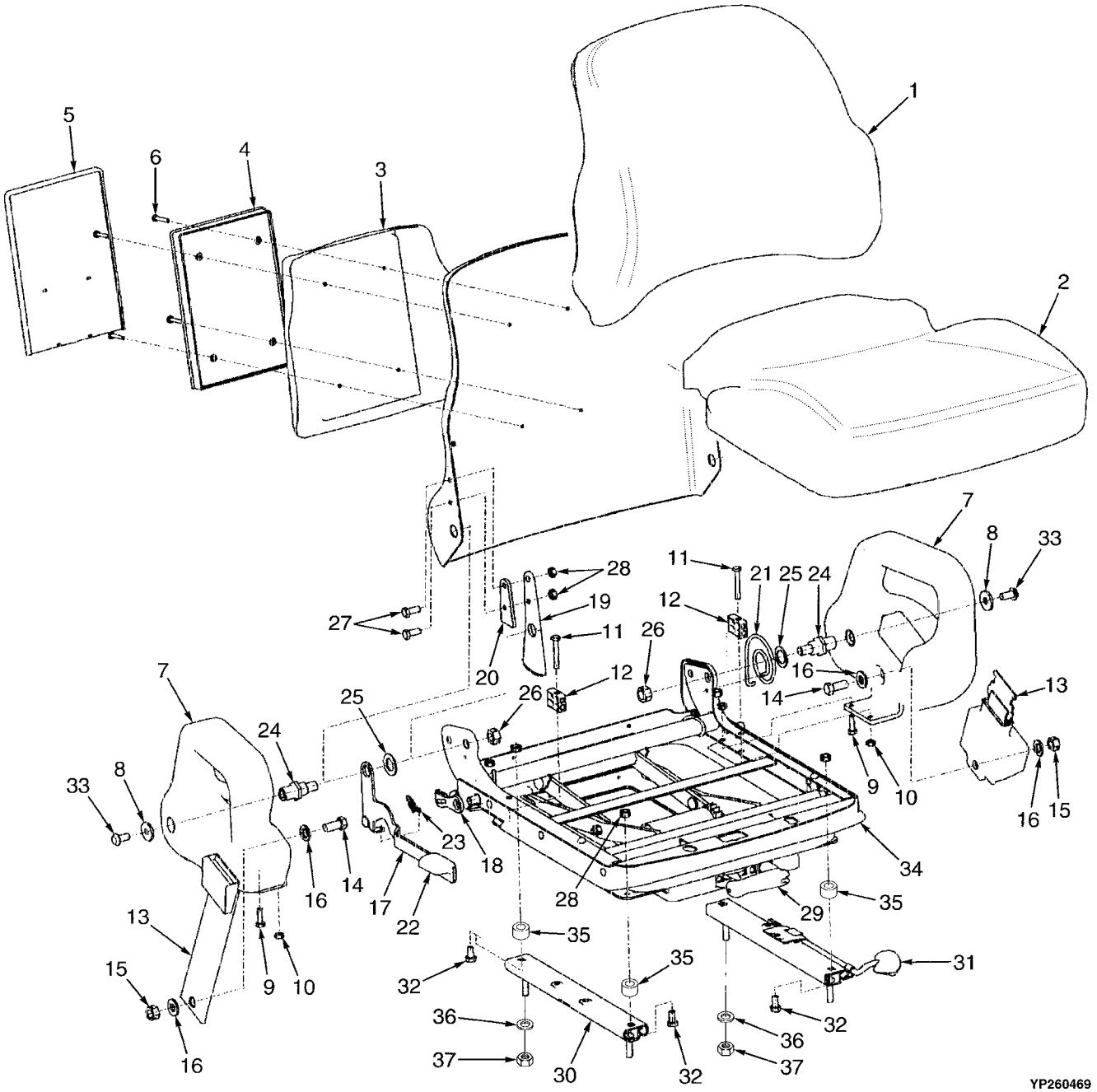

Yale Industrial Trucks

SEAT
(FULL SUSPENSION) (SHEET 1 OF 2)
(S/N PENDING PER ECN 92036-07⇒)

ITEM	PART NO.	DESCRIPTION	QTY
	524144896	Suspension Seat (Vinyl)	1
	524144897	Suspension Seat (Fabric)	1
1	580014462	Back Cushion (Vinyl)	1
1	580014463	Back Cushion (Fabric)	1
2	580023146	Seat Cushion (Vinyl)	1
2	580023147	Seat Cushion (Fabric)	1
3	. . . . .	Riser	1
4	. . . . .	Box	1
5	. . . . .	Cover	1
6	. . . . .	Screw	4
7	. . . . .	Hip Restraint (RH)	1
7	. . . . .	Hip Restraint (LH)	1
8	. . . . .	Washer	2
9	. . . . .	Bolt	2
10	. . . . .	Nut	10
11	. . . . .	Bolt	2
12	. . . . .	Block	2
13	. . . . .	Seat Belt	1
14	. . . . .	Bolt	2
15	. . . . .	Nut	2
16	. . . . .	Washer	4
17	. . . . .	Handle	1
18	. . . . .	Latch Kit	1
19	. . . . .	Bracket	1
20	. . . . .	Spacer	1
21	. . . . .	Spring	1
22	. . . . .	Knob	1
23	. . . . .	Spring Extension	1
24	. . . . .	Pivot	2
25	. . . . .	Washer	2
26	. . . . .	Nut	2
27	. . . . .	Bolt	2
28	. . . . .	Nut	6
29	580014473	Handle Kit	1
30	. . . . .	Slide (RH)	1
31	. . . . .	Slide (LH)	1
32	. . . . .	Bolt	4
33	. . . . .	Screw	2
34	580014469	Suspension Kit	1
35	524145453	Spacer	4
36	023604600	Washer	4
37	504238298	Nut	4
	580014465	Manual Holder Kit (Includes Items 3-6)	1
	580014466	Hip Restraint Kit (RH) (Includes Items 7-12, 33)	1
	580014467	Hip Restraint Kit (LH) (Includes Items 7-12, 33)	1
	580014468	Seat Belt Kit (Includes Items 13-16)	1
	580014474	Recliner Kit (Includes Items 17-28)	1
	580014471	Slide Kit (Includes Items 30-32)	1

SEAT
(FULL SUSPENSION) (SHEET 2 OF 2)
(S/N PENDING PER ECN 92036-07⇒)

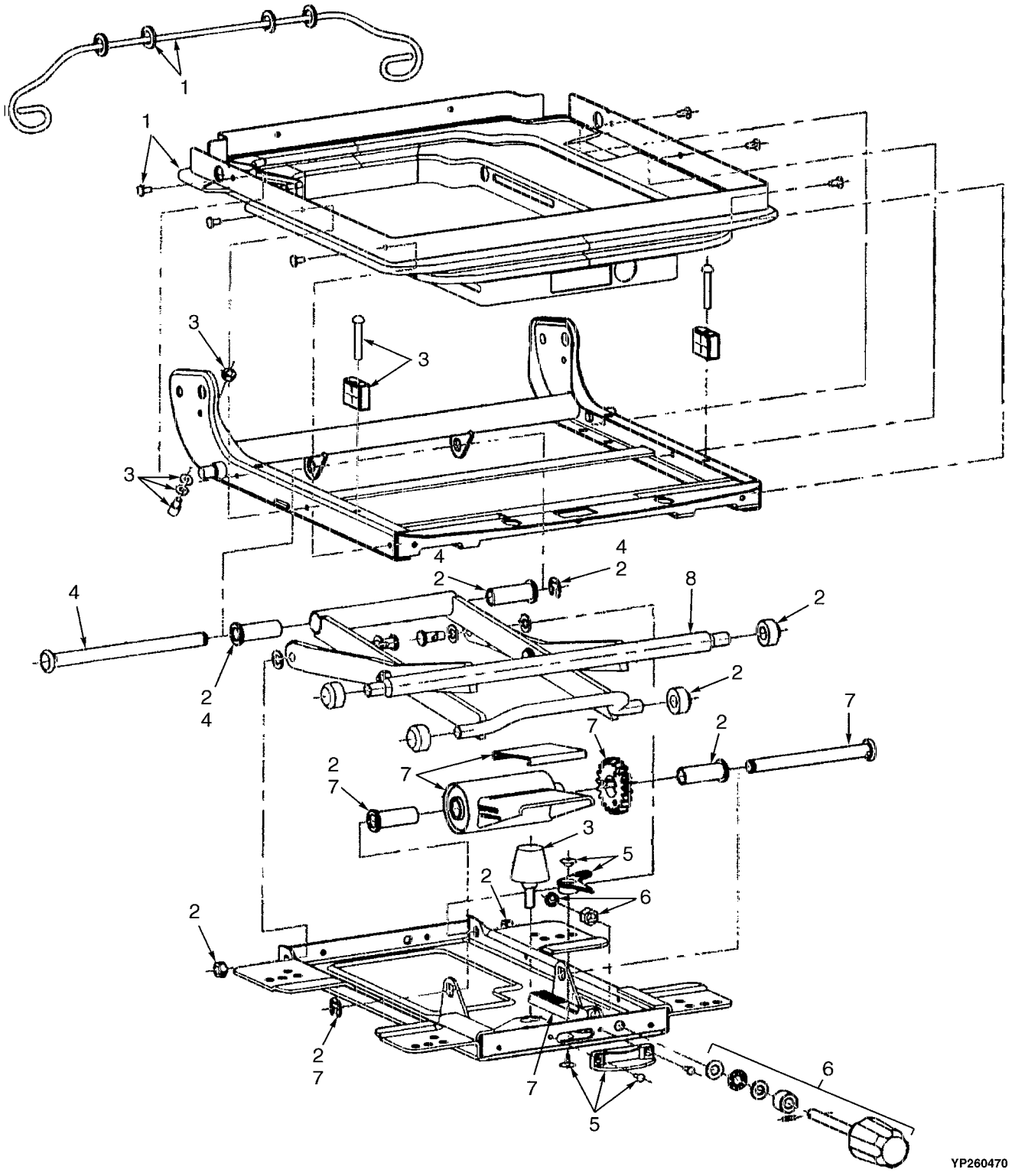

Yale Industrial Trucks

SEAT
(FULL SUSPENSION) (SHEET 2 OF 2)
(S/N PENDING PER ECN 92036-07⇒)

ITEM	PART NO.	DESCRIPTION	QTY
	524144896	Suspension Seat (Vinyl)	1
	524144897	Suspension Seat (Fabric)	1
1	580013419	Boot Kit	1
2	580013420	Roller and Bearing Kit	1
3	580013421	Bumper and Stop Kit	1
4	580013422	Bearing Shaft Kit	1
5	580013423	Weight Adjuster Kit	1
6	580013427	Knob	1
7	580013425	Suspension Spring Kit	1
8	580014470	Scissor Assembly	1

Yale Industrial Trucks

SEAT
(SUSPENSION WITH HIP RESTRAINT)

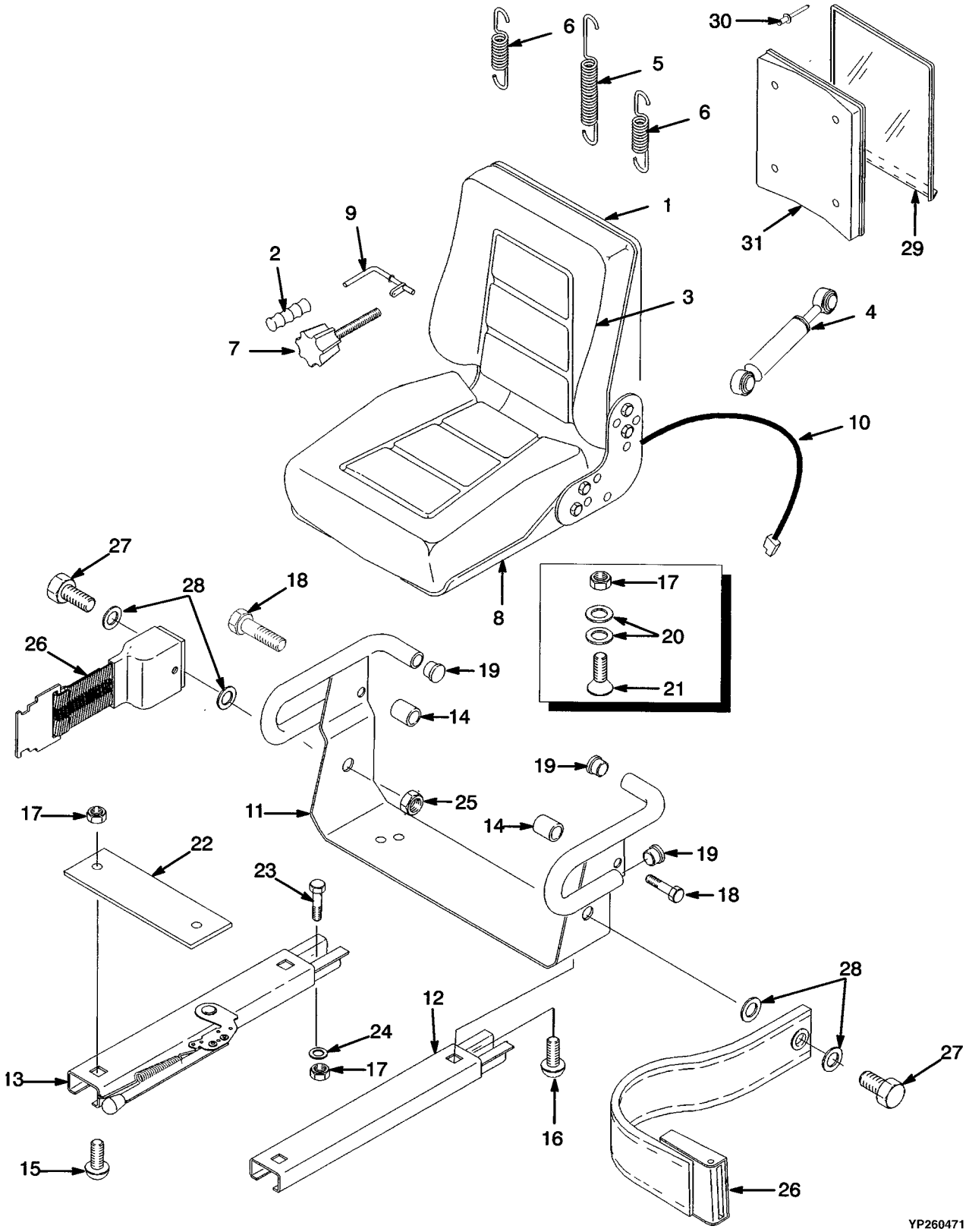

Yale Industrial Trucks

SEAT
(SUSPENSION WITH HIP RESTRAINT)

ITEM	PART NO.	DESCRIPTION	QTY
	504245777	Seat Assembly (Vinyl)	1
1	505974567	Seat (Vinyl)	1
2	440066253	Knob	1
3	440066256	Back Cushion (Vinyl)	1
4	504224203	Shock Absorber	1
5	504224286	Spring	1
6	504224273	Spring	2
7	504224254	Spindle (Adjuster)	1
8	150019502	Seat Pan	1
9	504237273	Lever	1
10	504575276	Switch	1
11	505975564	Hip Restraint	1
12	505974541	Seat Rail (LH)	1
13	505974582	Seat Rail (RH)	1
14	505974509	Spacer	2
15	501753902	Capscrew	2
16	505974536	Capscrew	2
17	504238298	Nut	8
18	505974591	Capscrew	2
19	504226209	Plug	4
20	016103700	Washer	4
21	074259300	Capscrew	2
22	505974524	Plate	1
23	062232800	Capscrew	4
24	023604600	Washer	4
25	504223224	Nut	2
26	518796683	Seat Belt	1
27	504223249	Capscrew	2
28	504223217	Washer	4
29	519996803	Cover (Information Case)	1
30	501904909	Rivet	1
31	519996802	Base (Information Case)	1

Yale Industrial Trucks

SEAT
(NON-SUSPENSION)

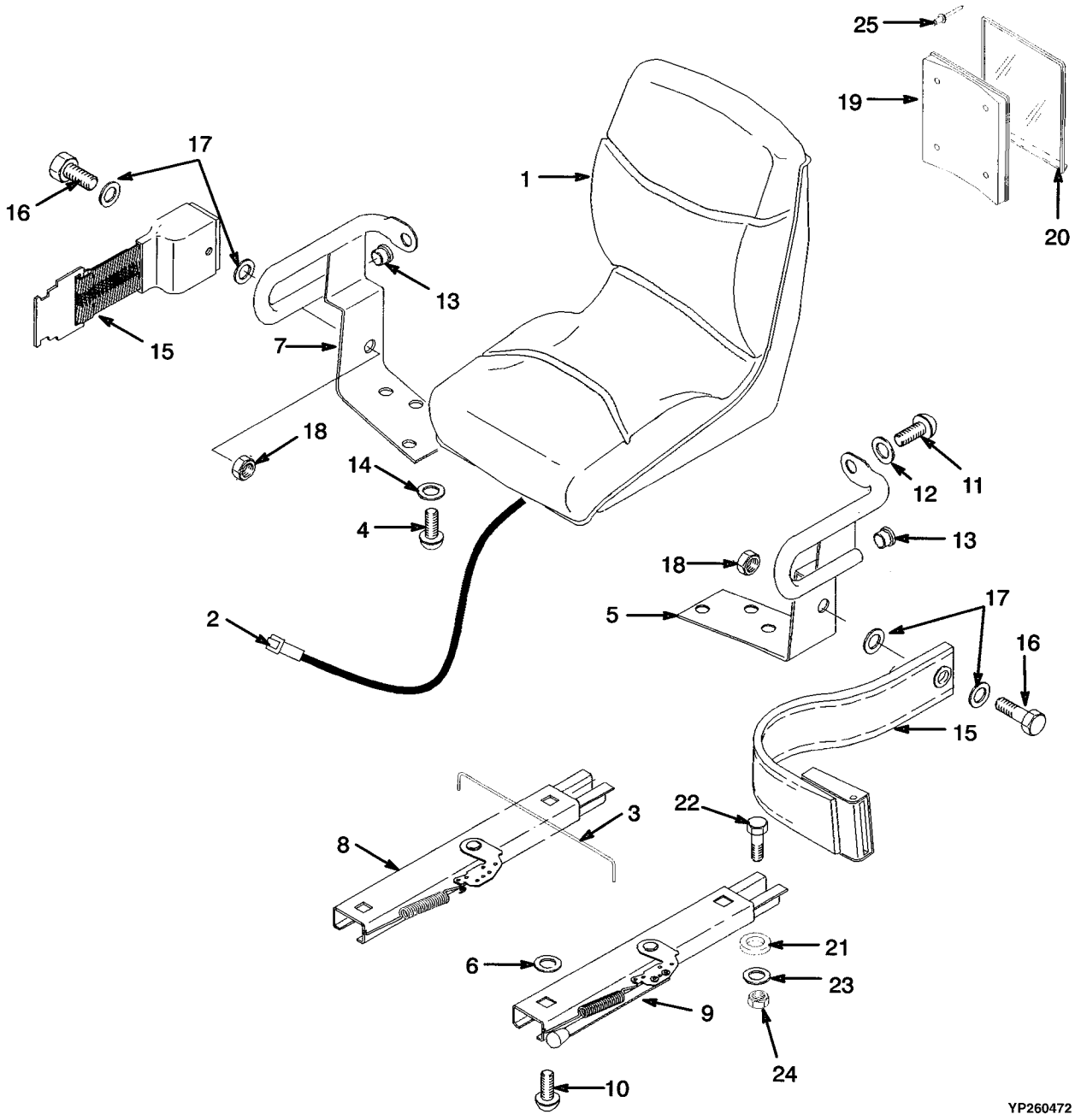

Yale Industrial Trucks

SEAT
(NON-SUSPENSION)

ITEM	PART NO.	DESCRIPTION	QTY
	504305737	Seat Assembly (Fabric)	1
	504305738	Seat Assembly (Vinyl)	1
1	504268740	Seat (Vinyl)	1
1	504268741	Seat (Fabric)	1
1	504305730	Seat Assembly (Vinyl)	1
1	504305731	Seat Assembly (Fabric)	1
2	504305734	Switch	1
3	504804733	Rod	1
4	501753902	Capscrew	4
5	504268729	Hip Restraint (LH)	1
6	504233267	Washer	4
7	504268730	Hip Restraint (RH)	1
8	504804731	Seat Rail	1
9	504804730	Seat Rail (LH)	1
10	504804732	Capscrew	4
11	504239208	Capscrew	2
12	504239228	Washer	2
13	504226209	Plug	2
14	016103700	Washer	4
15	518796683	Seat Belt	1
16	504223249	Capscrew	2
17	504223217	Washer	4
18	504223224	Nut	2
19	519996802	Base (Information Case)	1
20	519996803	Cover (Information Case)	1
21	752821400	Spacer	2
22	062232800	Capscrew	4
23	023604600	Washer	4
24	504238298	Nut	4
25	501904909	Rivet	4

LOW NOISE

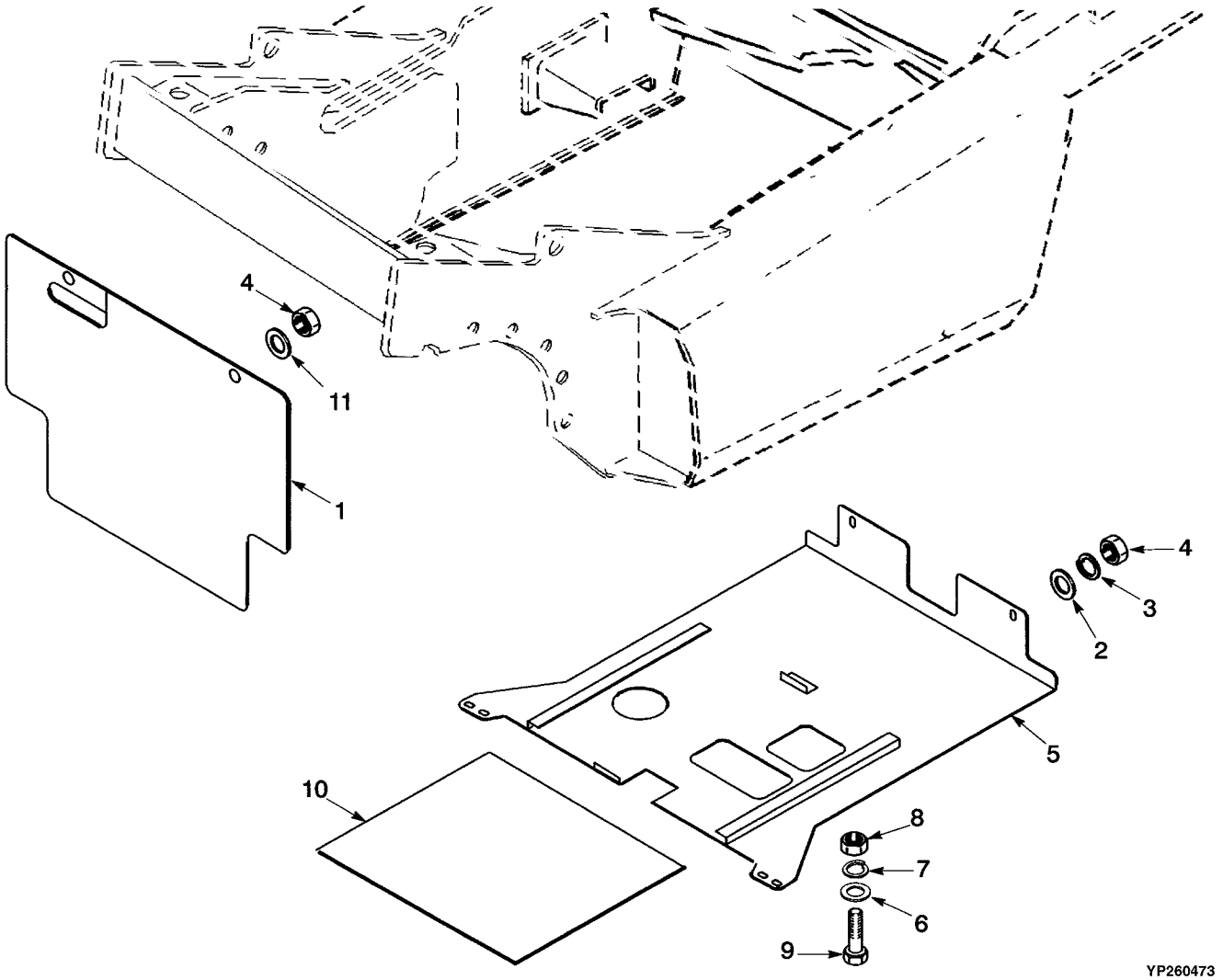

ITEM	PART NO.	DESCRIPTION	QTY
1	505976581	Liner	1
2	504226242	Washer	2
3	449022016	Lockwasher	2
4	449015098	Nut	3
5	504246731	Cover	1
6	504071785	Washer	2
7	449022013	Lockwasher	2
8	449015044	Nut	2
9	449001023	Capscrew	2
10	504246733	Mat	1
11	505972502	Washer	1

NOTES

2 ENGINE ASSEMBLY

SECTION 2
ENGINE ASSEMBLY

DESCRIPTION	PAGE
CAMSHAFT AND VALVES	2-8
CRANKSHAFT AND PISTONS	2-6
CYLINDER BLOCK	2-2
CYLINDER HEAD	2-4
ENGINE MOUNT	2-16
FLYWHEEL AND TORQUE CONVERTER	2-14
OIL PUMP AND FILTER	2-12
TIMING GEAR COVER AND OIL PAN	2-10

CYLINDER BLOCK

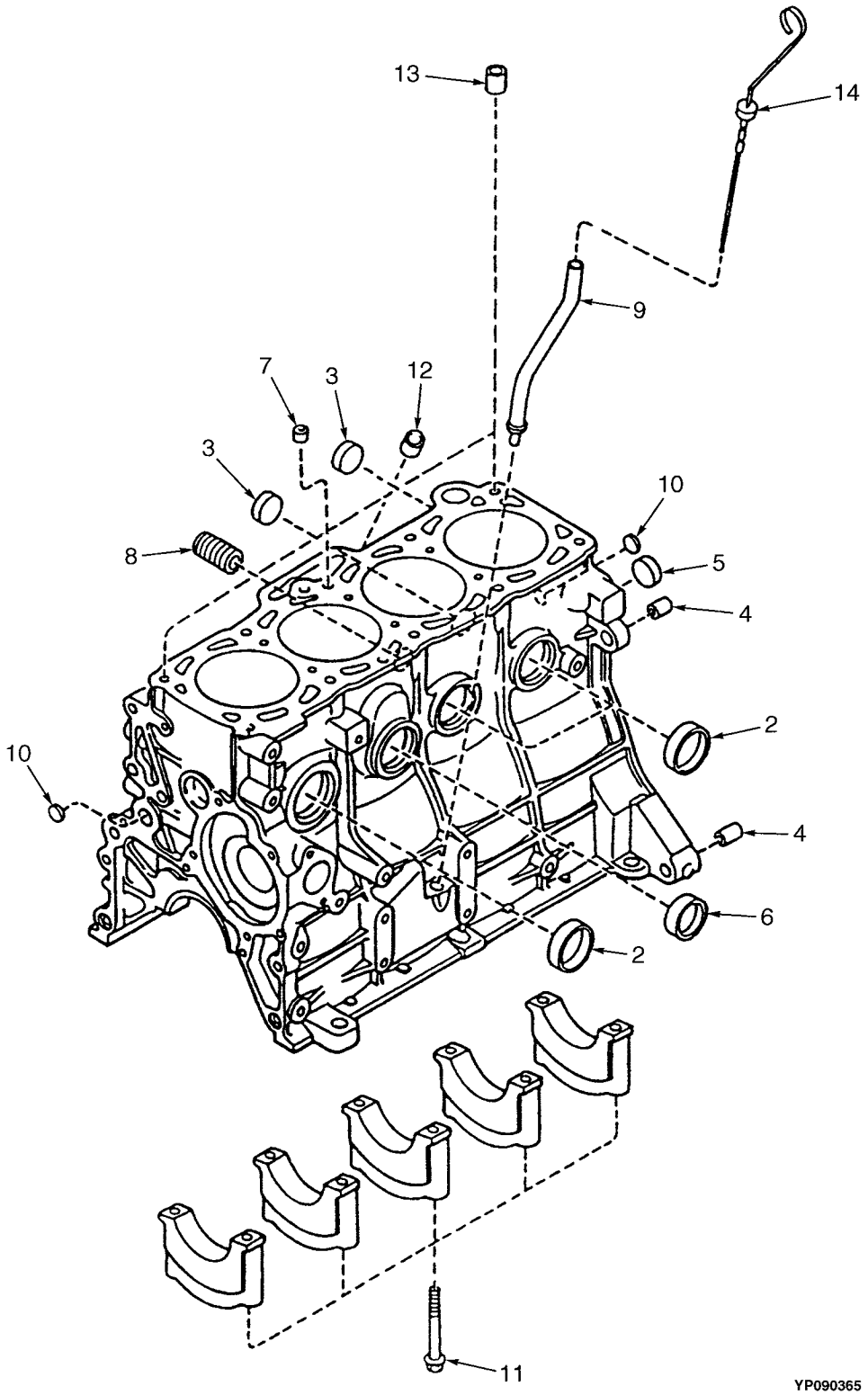

ITEM		PART NO.	DESCRIPTION	QTY
		504281765	Engine (Gasoline)	1
	a	504281766	Engine (LPG)	1
	b	524139864	Engine	1
	c	524143954	Engine	1
1		901574802	Cylinder Block	1
2		504259756	Plug	4
3		901015826	Plug	2
4		901291813	Pin	2
5		900542813	Plug	1
6		901271816	Plug	1
7		901574814	Plug	1
8		901291803	Gasket	1
9		901291804	Pipe	1
10		900281820	Plug (Blind)	2
11		901291814	Bolt	10
12		900281819	Plug	1
13		901291801	Pin	2
14		901291807	Dipstick	1

FOOTNOTES:

a ⇒ S/N A875B-10761

b S/N A875B-10761 ⇒

c S/N B875B-13150Y ⇒ INC. 12121-13135

Yale Industrial Trucks

CYLINDER HEAD

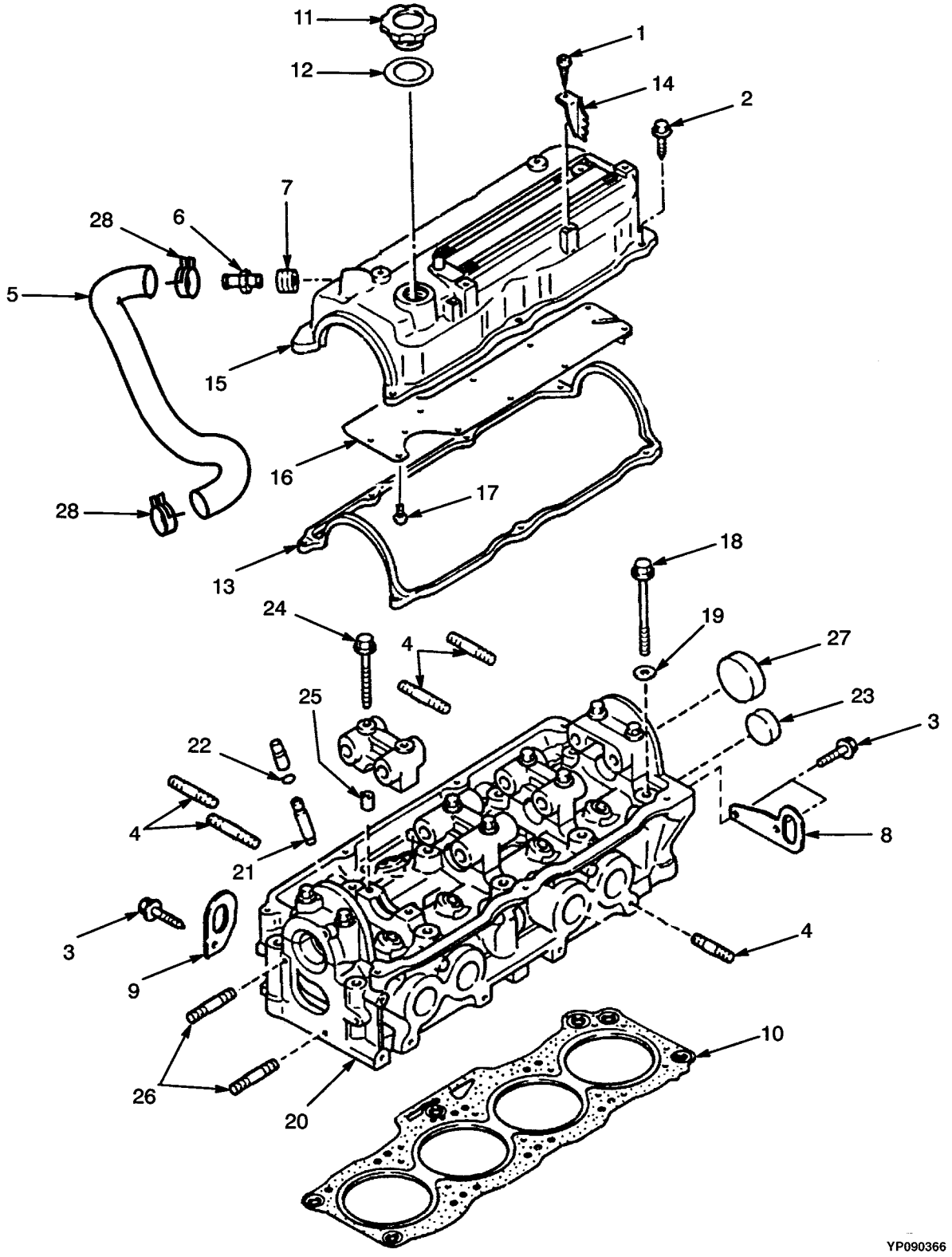

ITEM	PART NO.	DESCRIPTION	QTY
1	901290824	Screw	1
2	901290825	Capscrew	6
3	901290828	Bolt	1
4	901085837	Stud	10
5	505960501	Hose (PCV)	1
6	901290819	Valve (PCV)	1
7	901290818	Seal	1
8	901290842	Hanger (Rear)	1
9	901290816	Bracket (Front)	1
10	504259764	Gasket	1
11	901270814	Cap	1
12	901270815	Gasket	1
13	901290811	Gasket	1
14	505960516	Protector (Protector)	2
15	901290834	Cover	1
16	901290808	Plate	1
17	901848826	Screw	12
18	901290803	Bolt	10
19	901290804	Washer	10
20	901290836	Cylinder Head	1
21	901290838	Valve Guide	8
22	901270802	Clip	1
23	901271817	Plug	1
24	901290831	Capscrew	10
25	901290832	Pin	10
26	901290829	Stud	2
27	901290806	Cap	1
28	505959558	Clamp	2
	504259763	Gasket Kit (Includes Items 10, 13)	1

CRANKSHAFT AND PISTONS

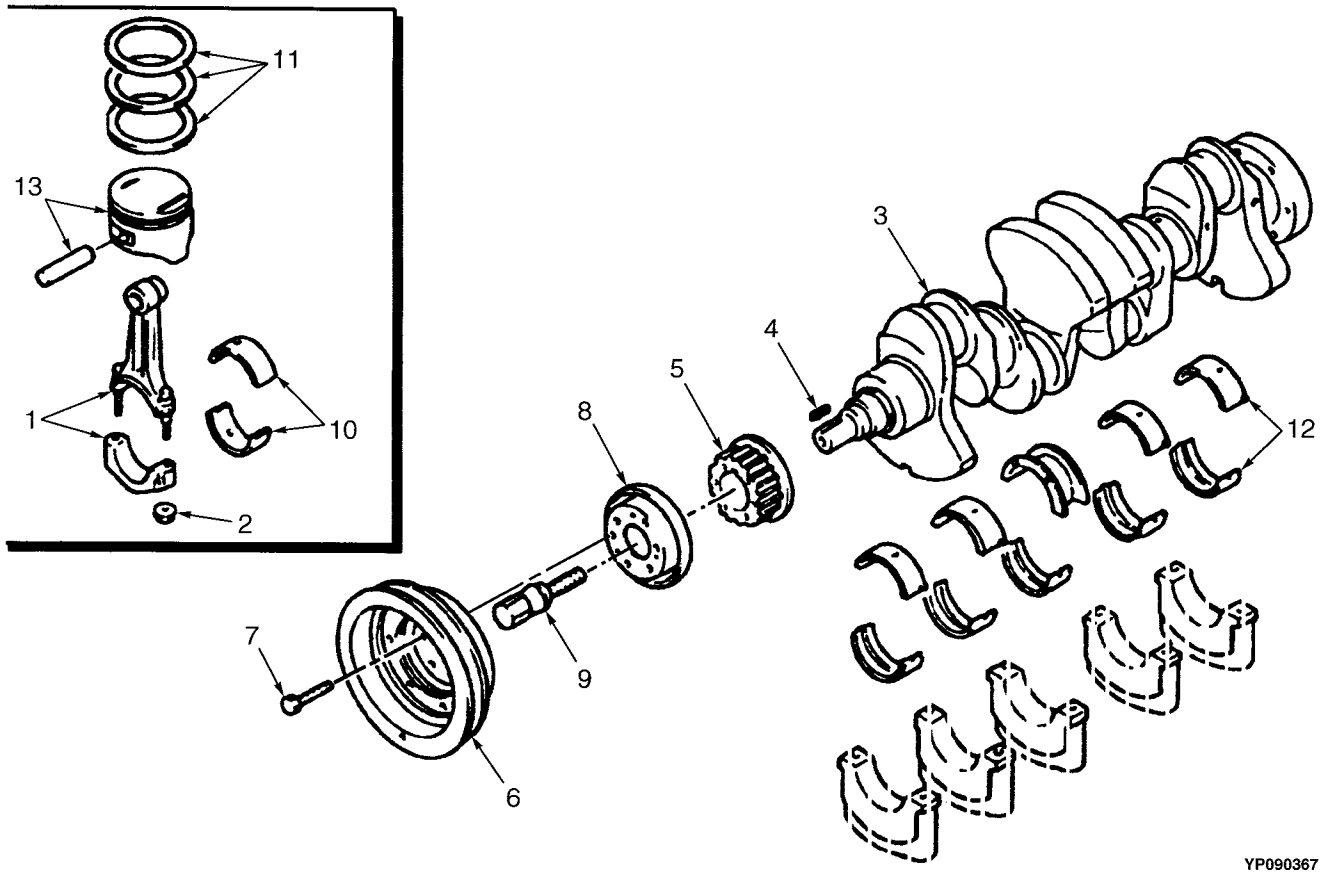

ITEM		PART NO.	DESCRIPTION	QTY
1		901576801	Piston Rod	4
2		901293825	Nut	8
3		504259744	Crankshaft	1
4		505960548	Key	1
5		504259745	Pulley	1
6		504259746	Pulley (Gasoline)	1
6	**b**	580024212	Pulley (LPG)	1
7		504259747	Bolt (Gasoline)	6
7	**b**	505960536	Bolt (LPG)	6
8		504259748	Plate	1
9		504259749	Bolt	1
10		901293811	Bearing Set (Standard)	1
10		901293812	Bearing Set (0.010 in. O/S)	1
10		901293813	Bearing Set (0.020 in. O/S)	1
10		901293814	Bearing Set (0.030 in. O/S)	1
11	**b**	580024213	Piston Ring (Standard)	1
11	**b**	580024214	Piston Ring (0.020 in. O/S)	1
11	**b**	580024215	Piston Ring (0.010 in. O/S)	1
11	**a**	901293851	Piston Ring Set (Standard)	1
11	**a**	901293852	Piston Ring Set (0.010 in. O/S)	1
11	**a**	901293853	Piston Ring Set (0.020 in. O/S)	1
12		901293861	Bearing Set (Standard)	1
12		901293862	Bearing Set (0.010 in. O/S)	1
12		901293863	Bearing Set (0.020 in. O/S)	1
12		901293864	Bearing Set (0.030 in. O/S)	1
13		901576841	Piston (Standard)	4
13		901576842	Piston (0.010 in. O/S)	4
13		901576843	Piston (0.020 in. O/S)	4

FOOTNOTES:

a ⇒ S/N A875B-13149Y EXC. 12121-13135

b S/N A875B-13150Y ⇒ INC. 12121-13135

CAMSHAFT AND VALVES

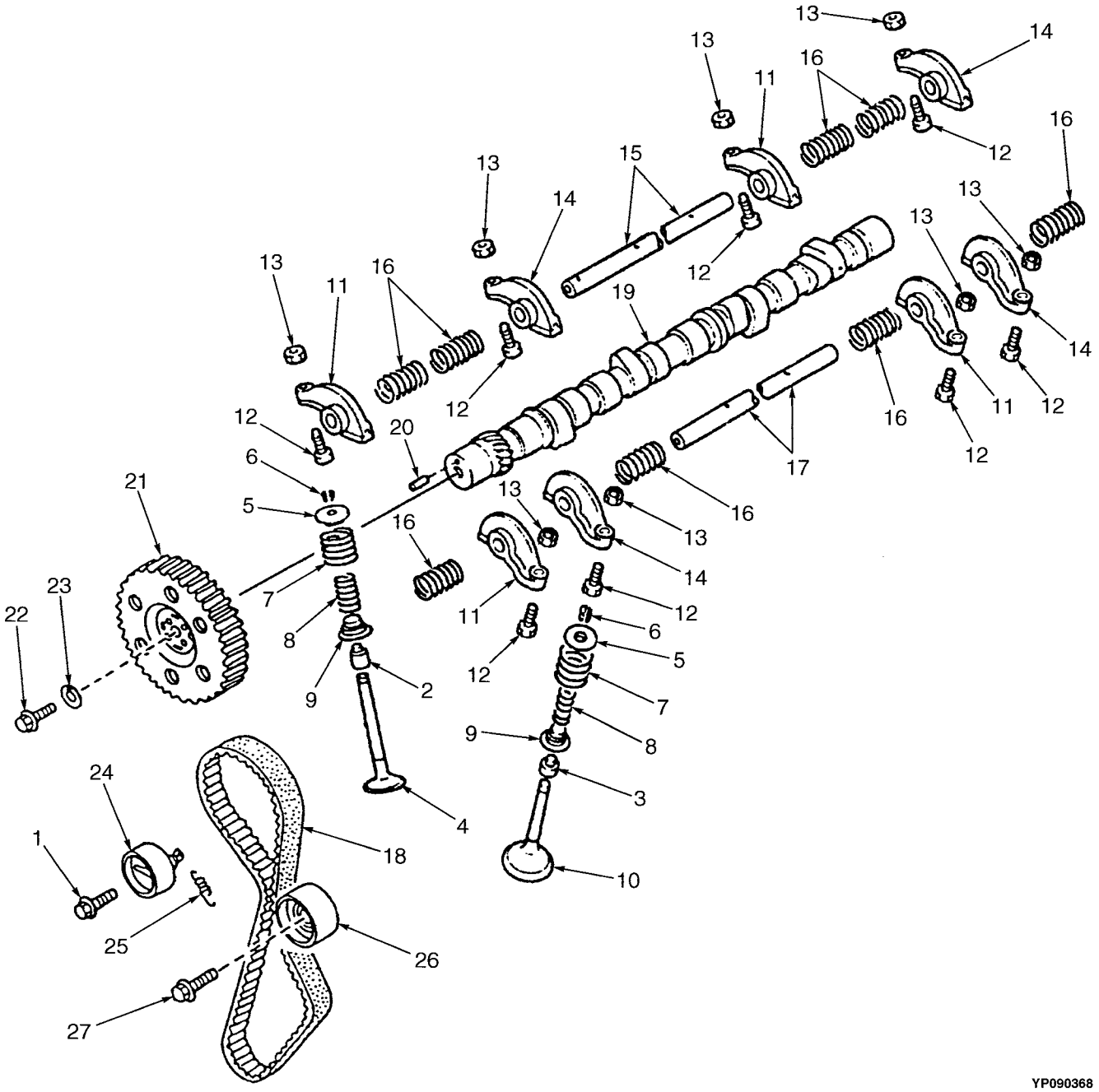

ITEM	PART NO.	DESCRIPTION	QTY
1	901294825	Bolt	1
2	901274801	Seal	4
3	901290837	Seal	4
4	901294838	Valve (Intake)	4
5	901294802	Valve Seat	8
6	900284852	Retainer	16
7	901294833	Spring	8
8	901294832	Spring	8
9	901294806	Seat	8
10	901294839	Valve (Exhaust)	4
11	901294834	Rocker Arm	4
12	901294836	Screw	8
13	901294837	Nut	8
14	901294835	Rocker Arm	4
15	901294813	Shaft	1
16	901294814	Spring	1
17	901294815	Shaft	1
18	901577816	Timing Belt	1
19	505959568	Camshaft	1
20	901294824	Pin	1
21	901577818	Pulley	1
22	901294827	Bolt	1
23	901294828	Washer	1
24	901577822	Belt Tensioner	1
25	901577821	Spring	1
26	901577823	Idler	1
27	901302839	Bolt	1

TIMING GEAR COVER AND OIL PAN

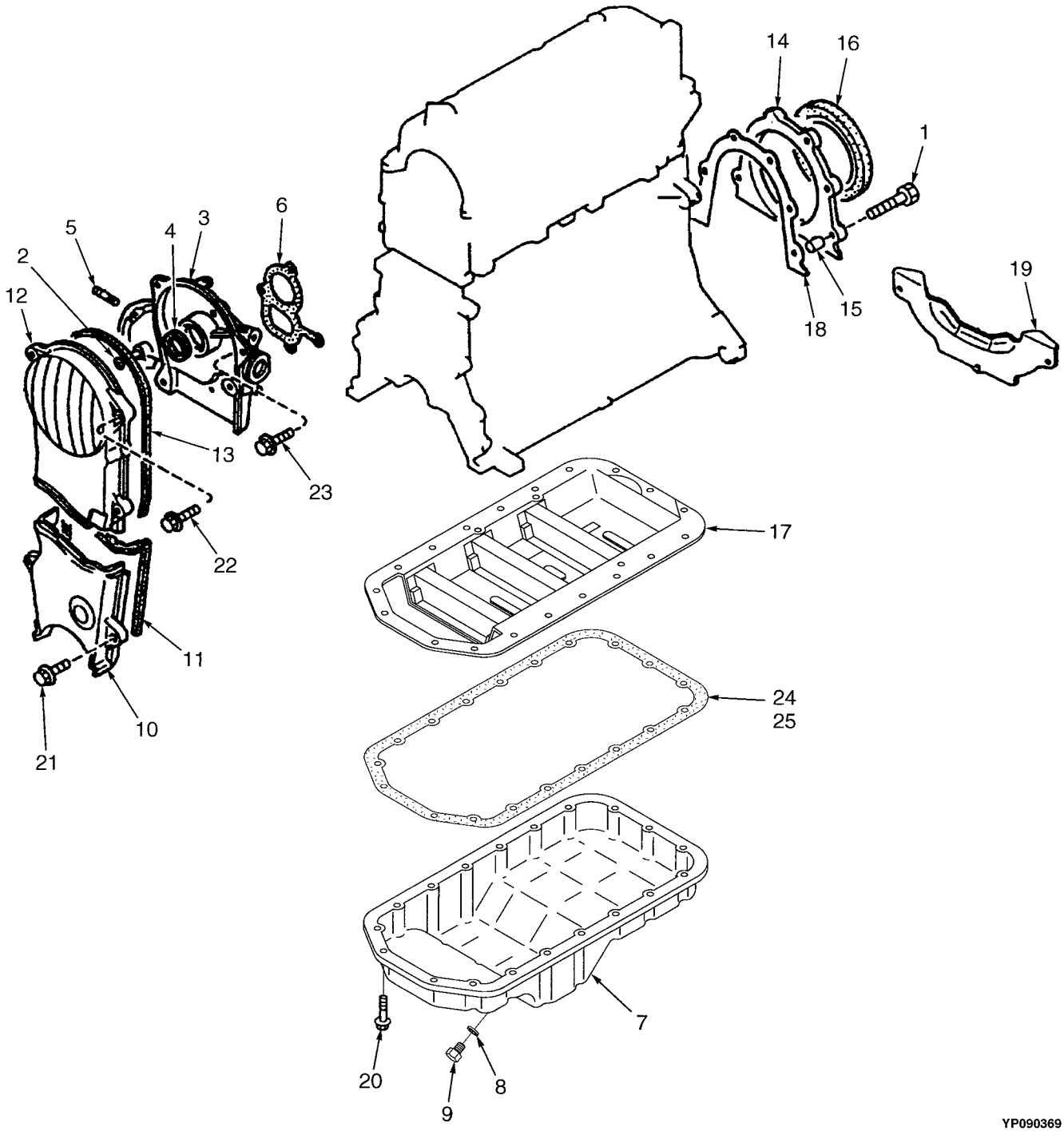

ITEM		PART NO.	DESCRIPTION	QTY
1		901575820	Bolt	6
2		900559852	Nut	1
3	**b**	580024221	Housing	1
3	**a**	901575825	Housing	1
4		901292811	Oil Seal	1
5		901292816	Stud	1
6		901292831	Gasket	1
7		901575803	Pan	1
8		900543845	Gasket	1
9		901272802	Drain Plug	1
10	**b**	580024222	Cover	1
10	**ac**	901575807	Cover	1
11		901575808	Gasket	1
12		901575809	Cover	1
13		901575810	Cover	1
14		901292812	Cover (Rear)	1
15		505960538	Pin	2
16		901292814	Oil Seal (Rear)	1
17		901575822	Plate	1
18		901292832	Gasket	1
19		911378400	Cover	1
20		901272820	Capscrew	19
21	**b**	901290825	Capscrew	2
21	**ac**	901290828	Bolt	2
22	**ac**	901282833	Screw	4
22	**b**	901290825	Capscrew	4
23	**b**	901292819	Capscrew	2
23	**ac**	901292820	Bolt	2
24		901085820	Sealant	1
25		901292806	Gasket (Oil Pan)	1
		504259763	Gasket Kit (Includes Items 4, 6, 11, 13-14, 16, 24-25)	1

FOOTNOTES:

a ⇒ S/N A875B-13149Y

b S/N A875B-13150Y ⇒ INC. 12121-13135

c ⇒ S/N PENDING PER ECN 75880

OIL PUMP AND FILTER

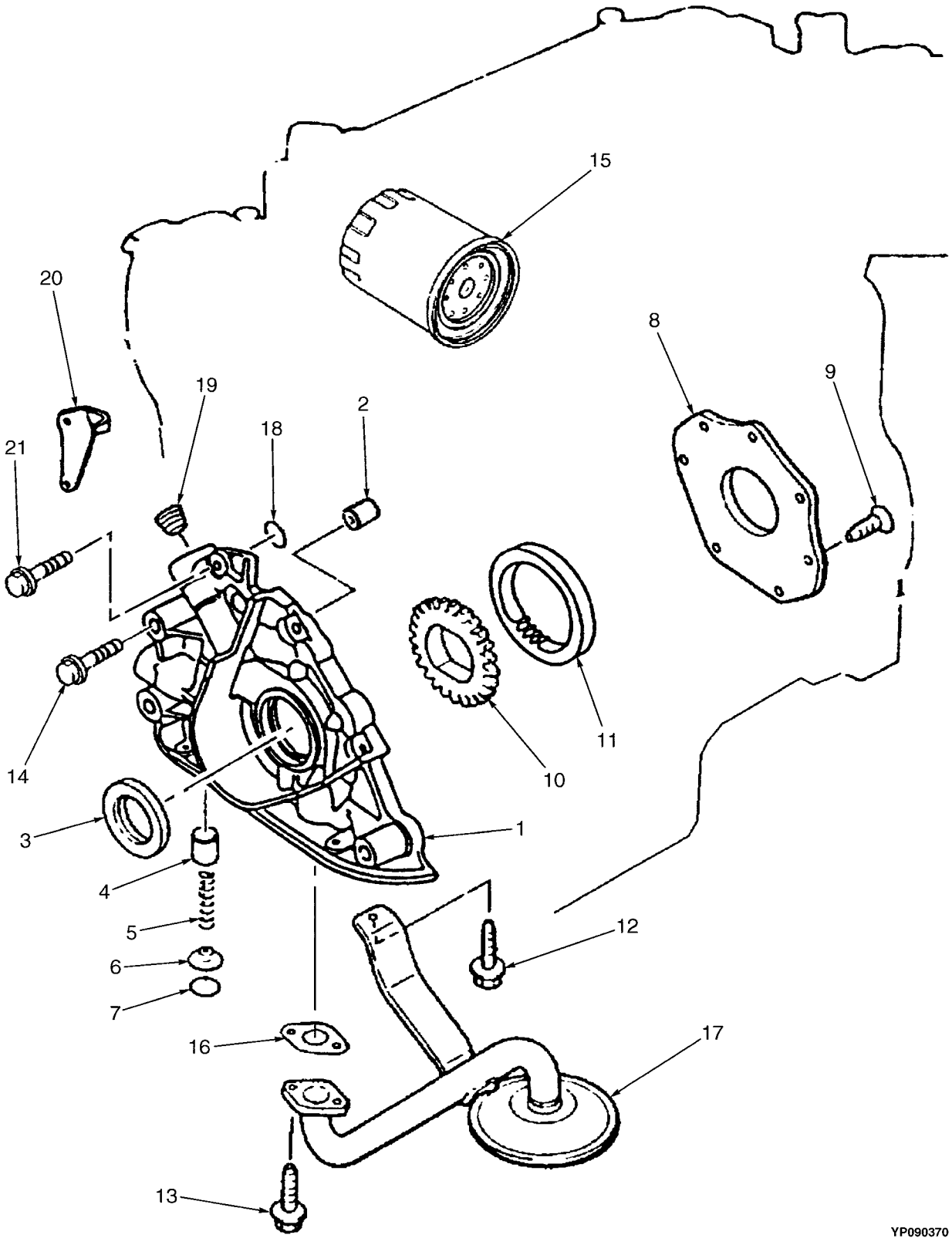

ITEM		PART NO.	DESCRIPTION	QTY
1	**b**	580001828	Pump	1
1	**a**	901578805	Pump	1
2		901271803	Pin	2
3		901292811	Oil Seal	1
4	**b**	580001826	Plunger	1
4	**a**	900291802	Plunger	1
5		900291803	Spring	1
6		900291804	Seat	1
7		901301821	Snap Ring	1
8		901578809	Cover	1
9	**b**	580001829	Screw	7
9	**a**	901301810	Screw	7
10		901578811	Gear	1
11		901578812	Gear	1
12		901282833	Screw	1
13		901301818	Screw	1
14		901292819	Capscrew	1
15		901301815	Filter	1
16		901301822	Gasket	1
17		901578817	Strainer	1
18		901301802	O-Ring	1
19	**a**	504258742	Plug	1
19	**b**	580024166	Plug	1
20	**b**	580024167	Pin (Top Indicator)	1
21	**b**	901301816	Bolt	2
		504259763	Gasket Kit (Includes Items 16, 18)	1

FOOTNOTES:

a ⇒ S/N PENDING PER ECN 75880

b S/N PENDING PER ECN 75880 ⇒

FLYWHEEL AND TORQUE CONVERTER

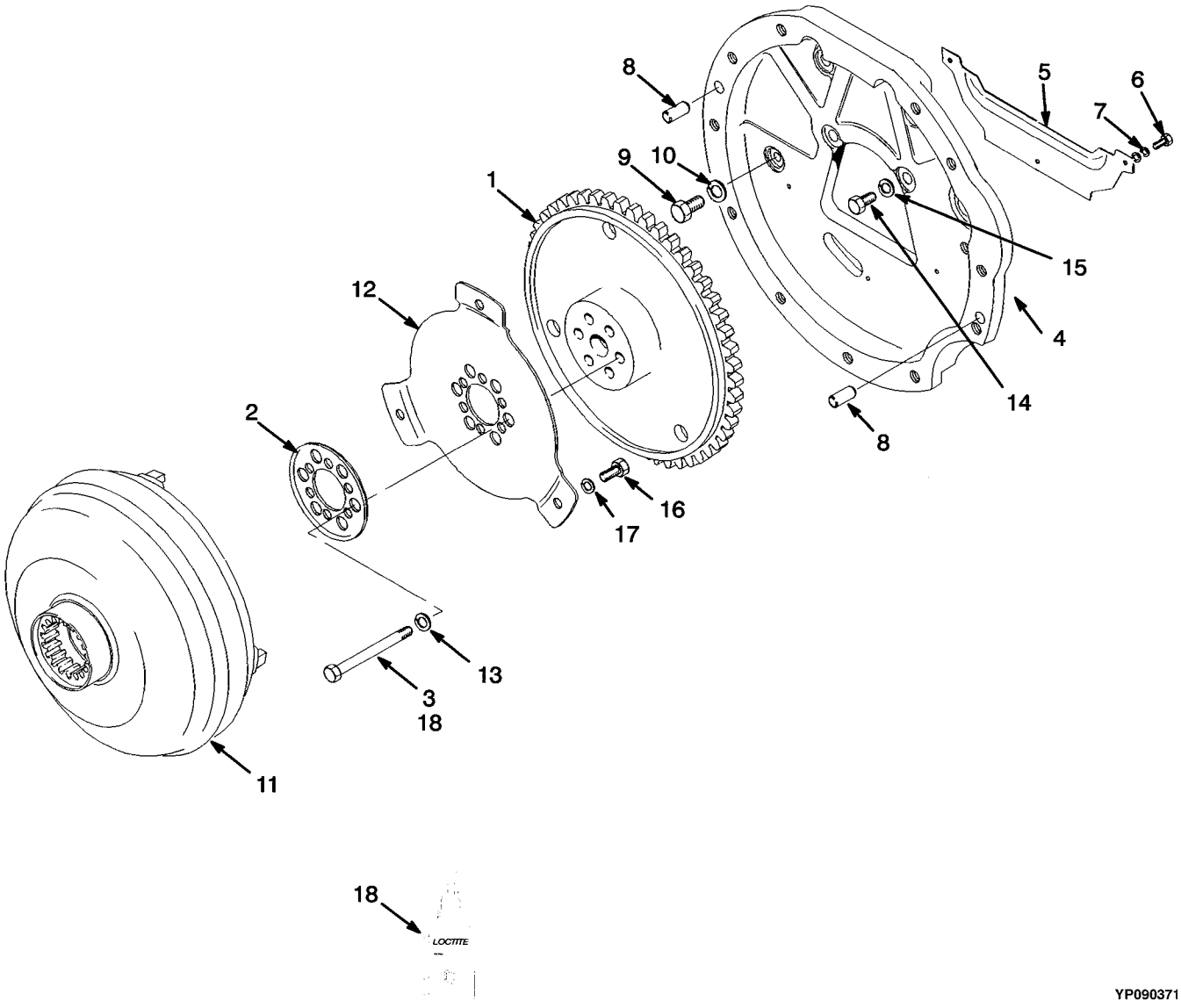

ITEM		PART NO.	DESCRIPTION	QTY
1		580000141	Flywheel	1
1		580000991	Spacer	1
2		505972560	Washer	1
3		505959555	Capscrew	6
4		520035895	Housing	1
5		911378400	Cover	1
6		449001160	Capscrew	3
7		449022018	Lockwasher	3
8		900005257	Pin	2
9		505970543	Capscrew	6
10		940102909	Washer	6
11	**a**	504298717	Torque Converter (No. 3.15)	1
11	**b**	580018266	Torque Converter (No. 3.15)	1
12		504298718	Plate	1
13		502566902	Washer	6
14		449001241	Capscrew	1
15		502566901	Washer	1
16		505969515	Bolt	4
17		505970574	Washer	3
18		501702901	Sealant	AR

FOOTNOTES:

a ⇒ S/N PENDING PER ECN 73478

b S/N PENDING PER ECN 73478 ⇒

ENGINE MOUNT

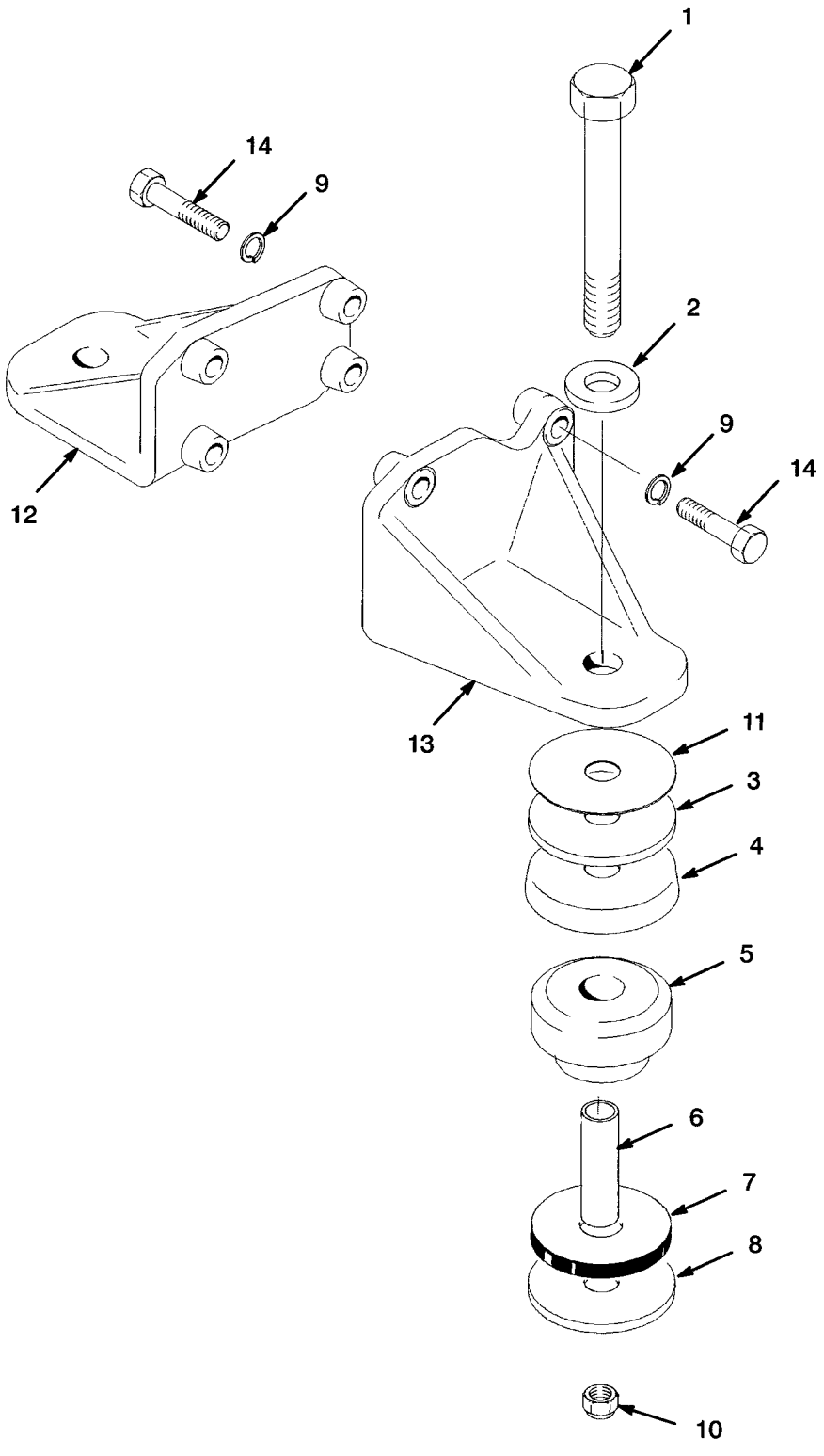

Yale Industrial Trucks

ENGINE MOUNT

ITEM	PART NO.	DESCRIPTION	QTY
1	449001230	Capscrew	2
2	505970501	Washer	2
3	505970584	Washer	2
4	505970577	Cup	2
5	505970515	Isolator	2
6	505970535	Spacer	2
7	505970556	Bumper	2
8	505966562	Washer	2
9	449022013	Lockwasher	8
10	909882405	Nut	2
11	505970521	Spacer	AR
12	505970530	Bracket (LH)	1
13	505970508	Bracket (RH)	1
14	505959591	Capscrew	8

NOTES

3 EXHAUST SYSTEM

SECTION 3
EXHAUST SYSTEM

DESCRIPTION	PAGE
EMISSION CONTROLS	
GASOLINE AND LPG	
⇒S/N PENDING PER ECN 75880 (LPG)	3-4
EXHAUST	
TWO WAY CATALYTIC CONVERTOR	3-8
MANIFOLDS	3-2
MUFFLER AND EXHAUST PIPES	3-6
LPG WITH LOW EMISSIONS	
S/N PENDING PER ECN 75875⇒	3-12
VERTICAL EXHAUST	3-10

MANIFOLDS

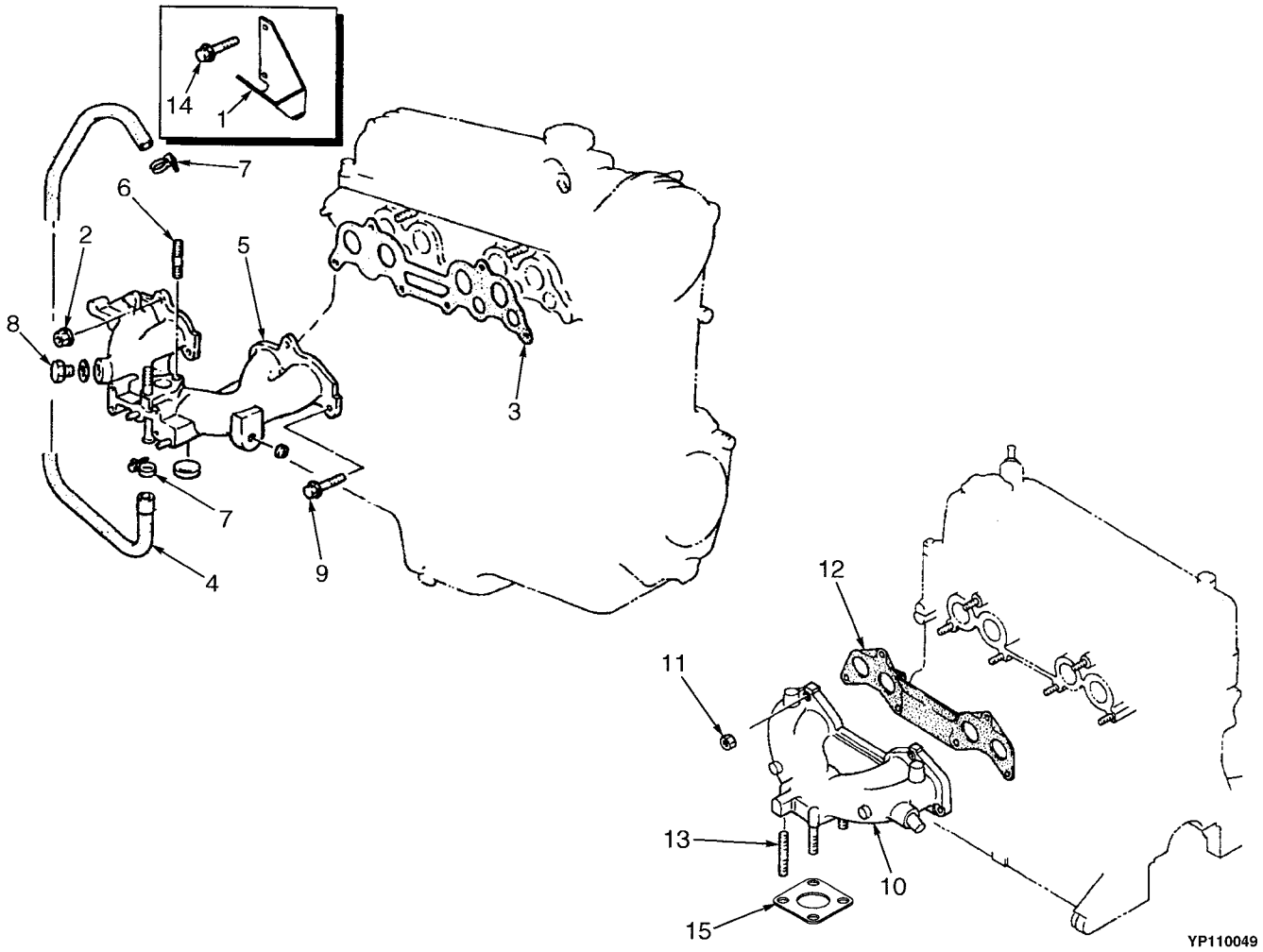

ITEM		PART NO.	DESCRIPTION	QTY
1	**a**	505959543	Bracket (LPG)	1
1	**b**	580021306	Bracket (LPG)	1
1	**c**	580024229	Bracket (LPG) (Closed Loop)	1
2		900559852	Nut	4
3		901295820	Gasket	1
4		505960582	Hose (Gasoline)	1
5	**a**	505959594	Manifold	1
5	**b**	504258754	Manifold (Intake)	1
6	**a**	901849814	Stud	2
6	**b**	504258755	Stud	2
7		505959558	Clamp	3
8		505959552	Cap	1
9		901295811	Bolt	2
10		901296801	Manifold (Exhaust)	1
11		901276803	Nut	6
12		901296804	Gasket	1
13		901276809	Stud	4
14		901290828	Bolt	2
15	**b**	912189300	Gasket	1
		504259763	Gasket Kit (Includes Items 3, 12)	1

FOOTNOTES:

a ⇒ S/N A875B-10760X

b S/N A875B-10761X ⇒

c S/N A875B-13150Y ⇒ INC. 12121-13135

EMISSION CONTROLS
(GASOLINE AND LPG)
(⇒S/N PENDING PER ECN 75880 (LPG))

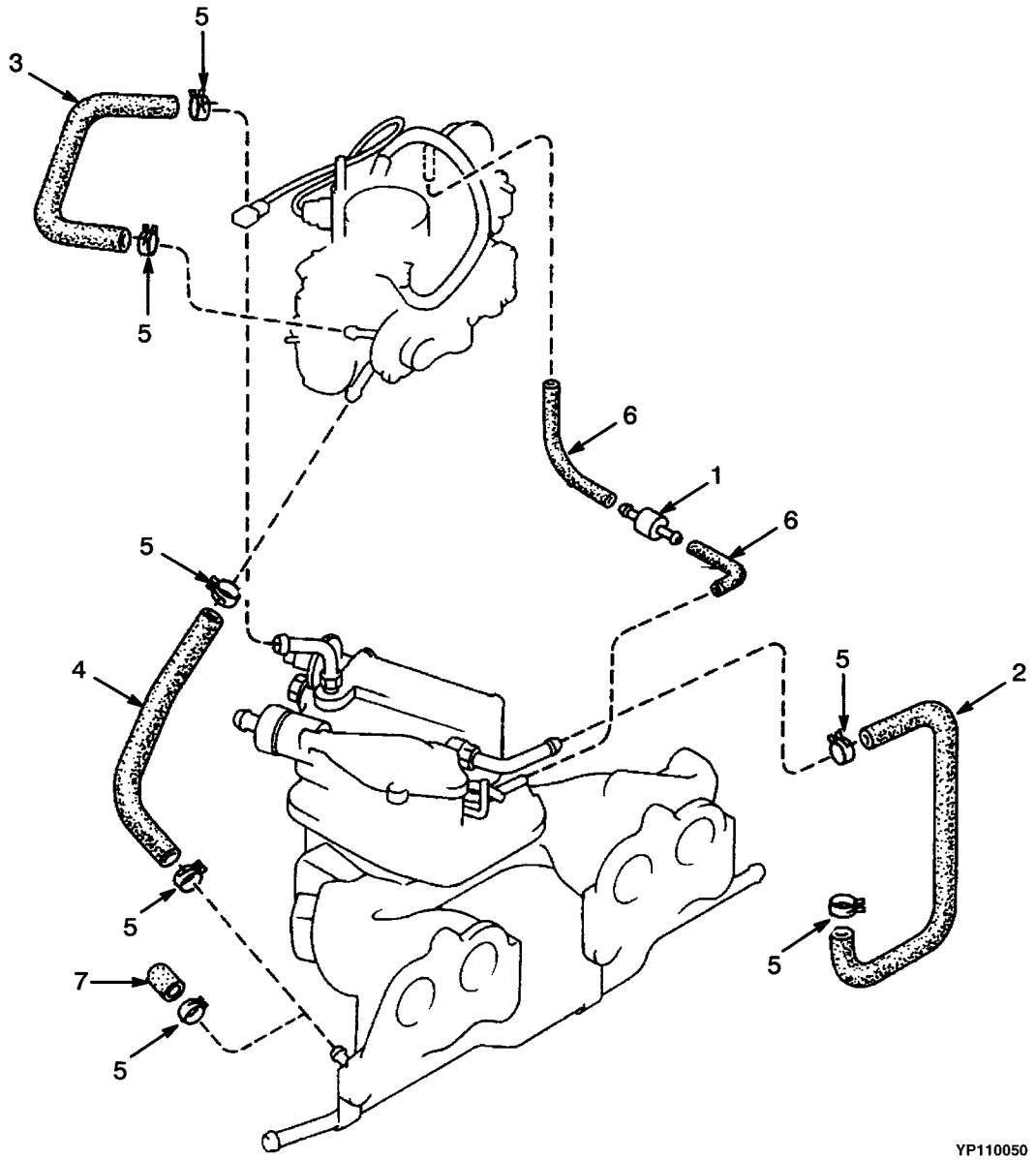

Yale Industrial Trucks

EMISSION CONTROLS (GASOLINE AND LPG) (⇒S/N PENDING PER ECN 75880 (LPG))

KEY:
A: Gasoline
B: LPG

ITEM	PART NO.	DESCRIPTION	QTY A	QTY B
1	504258743	Valve	1	..
1	504259757	Valve	..	1
2	505960582	Hose	1	..
3	505960569	Hose	1	..
4	520041841	Hose	1	..
5	505959558	Clamp	..	2
5	505959558	Clamp	6	..
6	900549883	Hose	..	1
7	505960531	Cap	..	1

MUFFLER AND EXHAUST PIPES

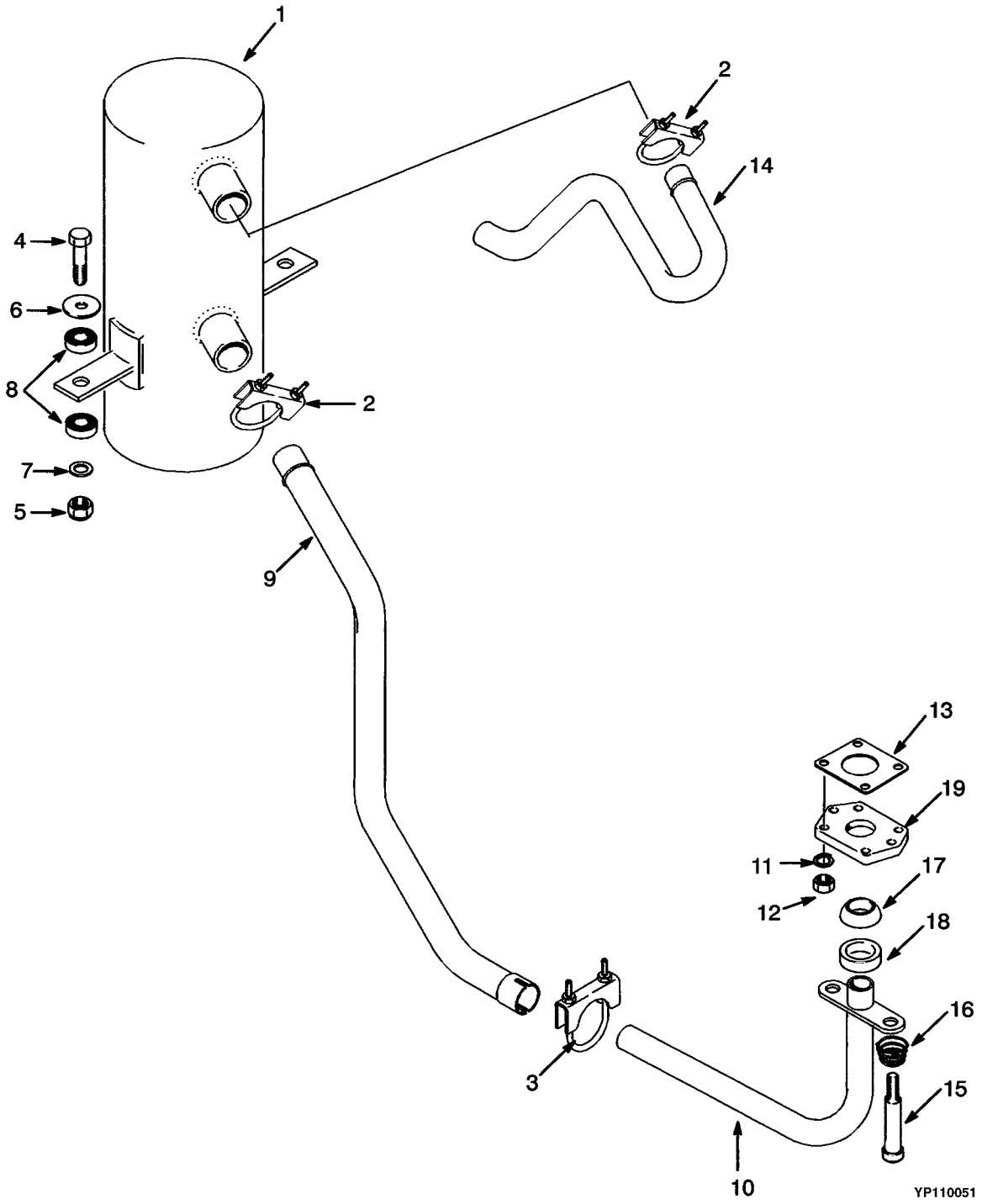

ITEM	PART NO.	DESCRIPTION	QTY
1	505973514	Muffler (Type GS and LPS)	1
1	505973538	Muffler	1
2	057092500	Clamp	2
3	016388300	Clamp	1
4	449001138	Capscrew	2
5	909882404	Nut	2
6	900063101	Washer	2
7	449021006	Washer	2
8	905733100	Cushion	4
9	505966589	Tube	1
10	505973501	Tube	1
11	449022016	Lockwasher	4
12	449015014	Nut	4
13	912189300	Gasket	1
14	504240716	Tube	1
15	505966508	Capscrew	2
16	505966580	Spring	2
17	505966594	Seal	1
18	505966542	Spacer	1
19	580020695	Adapter	1

Yale Industrial Trucks

EXHAUST
(TWO WAY CATALYTIC CONVERTOR)

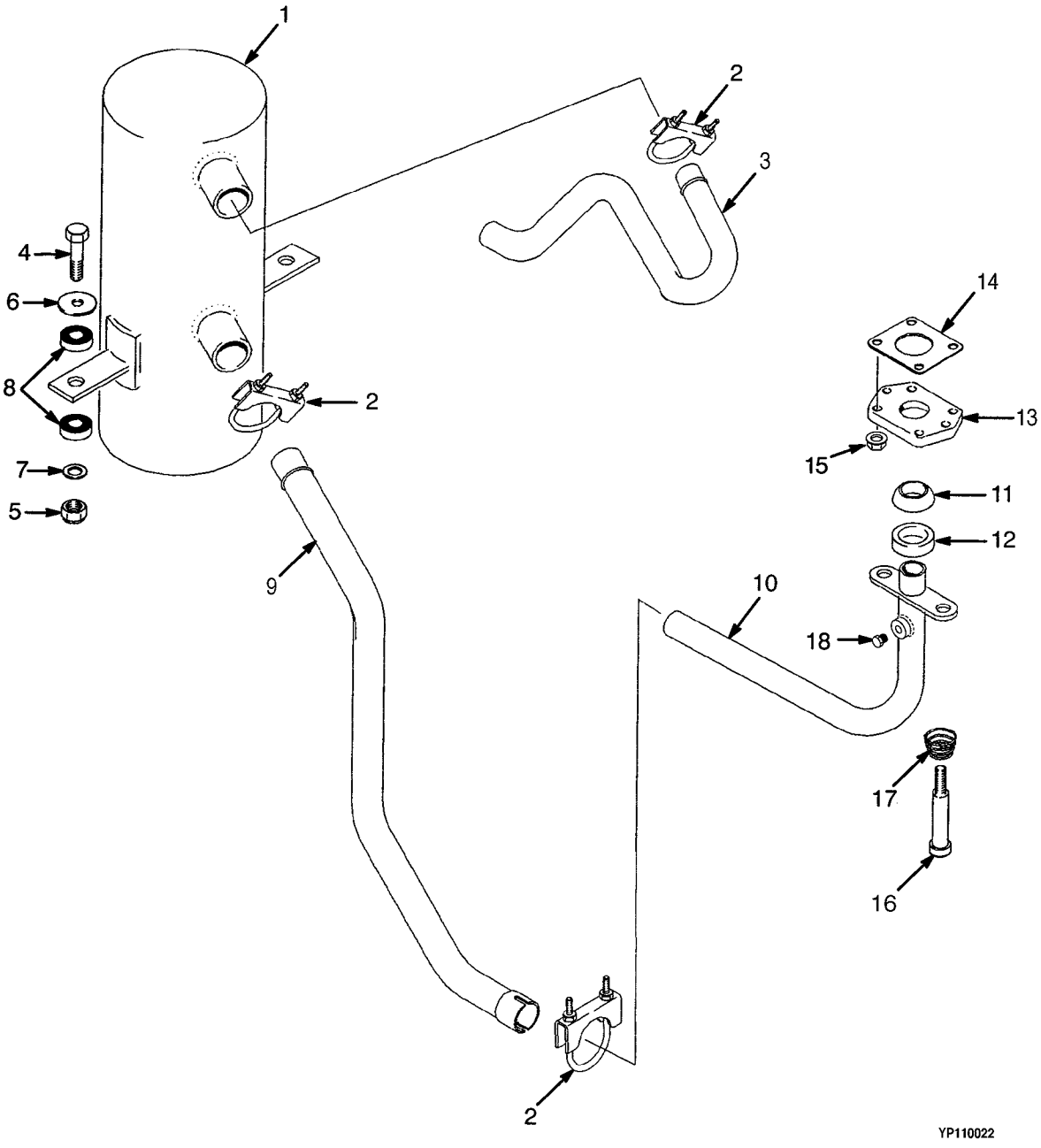

Yale Industrial Trucks

EXHAUST
(TWO WAY CATALYTIC CONVERTOR)

ITEM	PART NO.	DESCRIPTION	QTY
1	505973596	Muffler	1
2	057029500	Clamp	3
3	580023078	Exhaust Pipe	1
4	449001138	Capscrew	2
5	909882404	Nut	2
6	900063101	Washer	2
7	449021006	Washer	2
8	905733100	Cushion	4
9	505966589	Tube	1
10	505966501	Tube	1
11	505966594	Seal	1
12	505966542	Spacer	1
13	912189300	Gasket	1
14	580020695	Adapter	1
15	449015014	Nut	4
16	505966508	Capscrew	2
17	505966580	Spring	2
18	580012728	Plug	1
18	580030554	Washer	1

VERTICAL EXHAUST

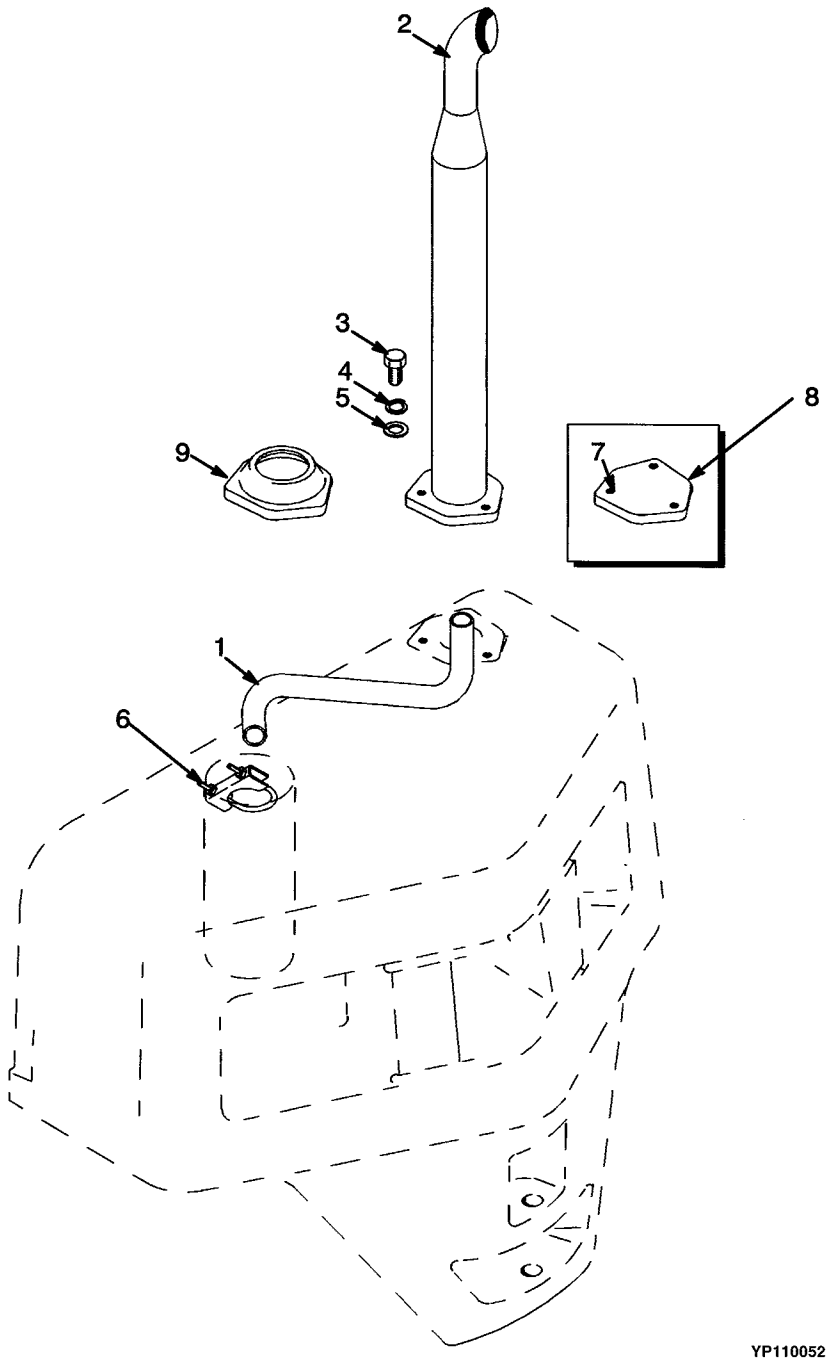

ITEM	PART NO.	DESCRIPTION	QTY
1	504240717	Tube	1
2	505968587	Exhaust Pipe	1
3	449001023	Capscrew	3
4	449022013	Lockwasher	3
5	449021006	Washer	3
6	057092500	Clamp	1
7	504240785	Fastener	3
8	504240715	Cover (Counterweight Exhaust)	1
9	504804729	Cover (LPG)	1
9	916522400	Cover (Gasoline)	1

Yale Industrial Trucks

MUFFLER AND EXHAUST PIPES
(LPG WITH LOW EMISSIONS)
(S/N PENDING PER ECN 75875⇒)

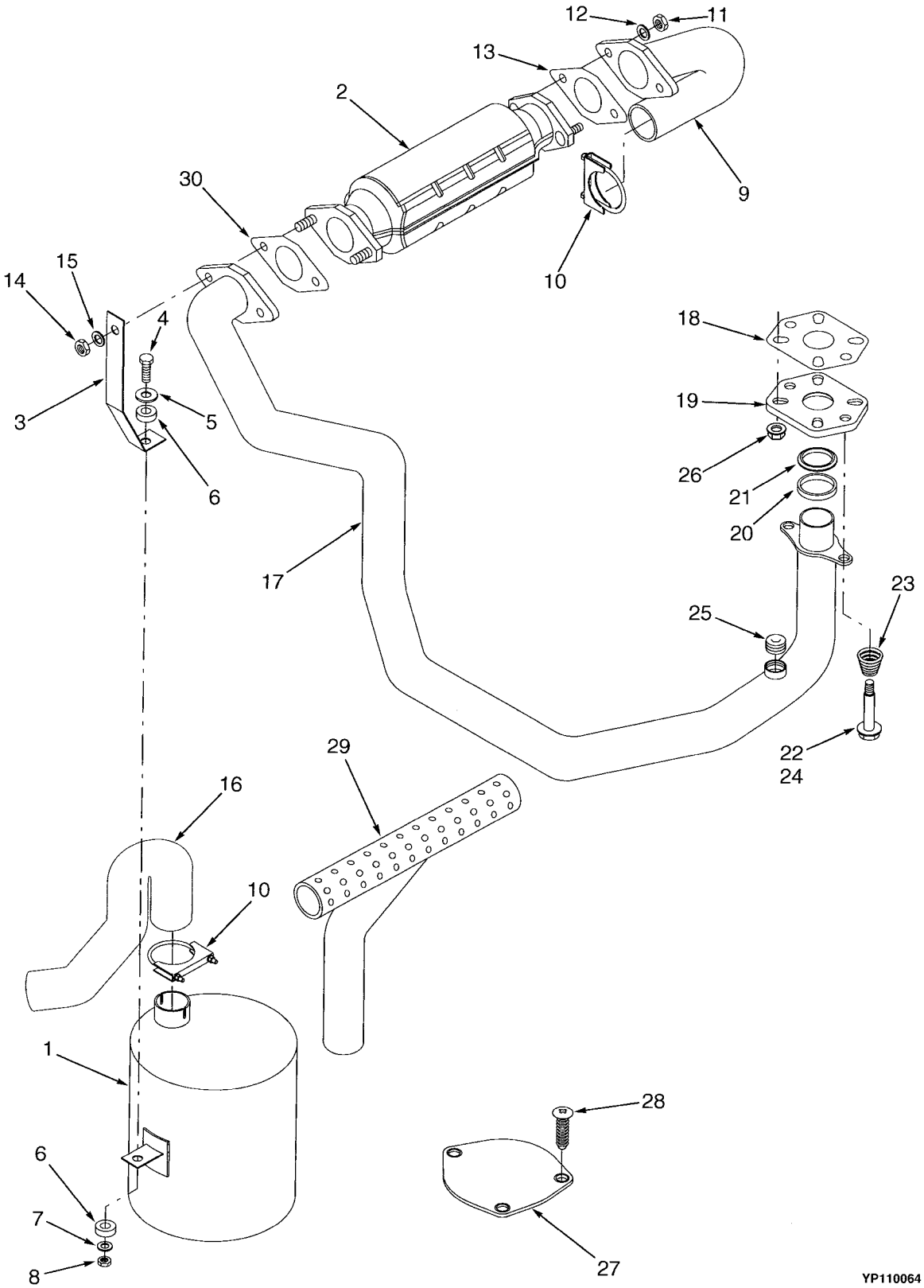

Yale Industrial Trucks

MUFFLER AND EXHAUST PIPES (LPG WITH LOW EMISSIONS) (S/N PENDING PER ECN 75875⇒)

ITEM	PART NO.	DESCRIPTION	QTY
1	580016565	Muffler	1
2	580019850	Catalytic Converter	1
3	580015545	Bracket	1
4	449001138	Capscrew	2
5	900063101	Washer	2
6	905733100	Cushion	4
7	449021006	Washer	2
8	909882404	Nut	2
9	580015801	Tube	1
10	057092500	Clamp	2
11	580020060	Nut	2
12	449022017	Lockwasher	2
13	580015804	Gasket	1
14	449015014	Nut	4
15	449022016	Lockwasher	4
16	524139863	Tube	1
17	580023137	Tube	1
18	912189300	Gasket	1
19	580020695	Adapter	1
20	505966542	Spacer	1
21	505966594	Seal	1
22	504226218	Lubricant	AR
23	505966580	Spring	2
24	505966508	Capscrew	2
25	580012728	Plug	1
26	580027572	Nut	4
27	504240715	Cover (Counterweight)	1
28	504240785	Fastener	3
29	580020062	Exhaust Pipe (Type LPS)	1
30	580015803	Gasket	1

NOTES

4 COOLING SYSTEM

SECTION 4
COOLING SYSTEM

DESCRIPTION	PAGE
RADIATOR AND HOSES	
S/N A875B-0738⇔S/N PENDING PER ECN 95530-01	4-8
⇒S/N A875B-07838	4-6
RADIATORS AND HOSES	
S/N PENDING PER ECN 95530-01⇒	4-10
WATER PUMP	
⇒S/N A875B-12120Y INC. 13136-13149	4-2
S/N A875B-12121Y⇒ EXC. 13136-13149	4-4

Yale Industrial Trucks

WATER PUMP
(⇒S/N A875B-12120Y INC. 13136-13149)

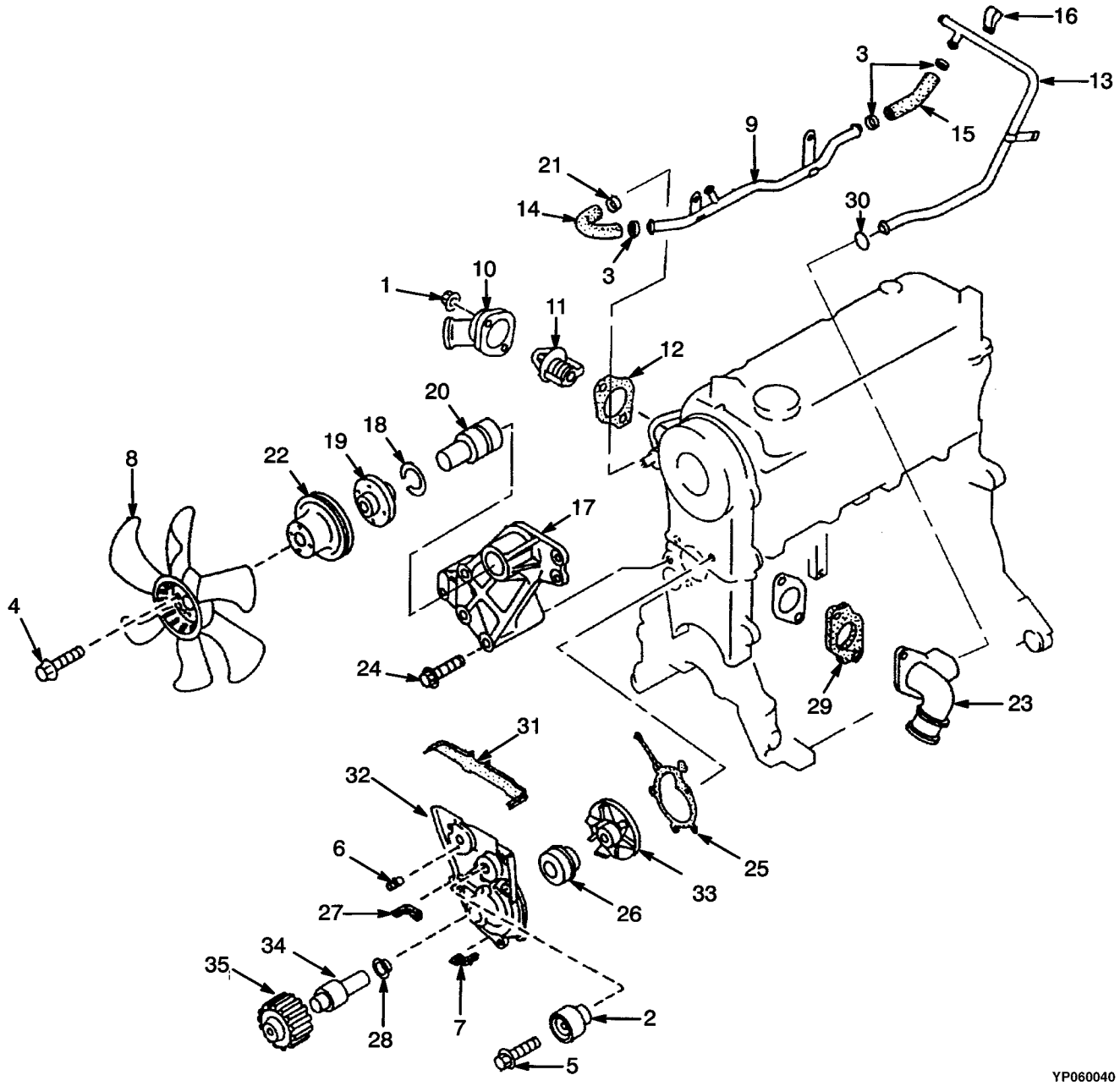

Yale Industrial Trucks

WATER PUMP
(⇒S/N A875B-12120Y INC. 13136-13149)

ITEM	PART NO.	DESCRIPTION	QTY
1	900559852	Nut	3
2	901577823	Idler	1
3	505959558	Clamp	3
4	504256792	Screw	1
5	901302839	Bolt	2
6	901302840	Stud	1
7	901579803	Seal	1
8	901302844	Fan	1
9	901579810	Pipe	1
10	901302814	Cover	1
11	901282847	Thermostat	1
12	901282846	Gasket	1
13	504256796	Pipe	1
14	901579807	Hose	1
15	901579806	Hose	1
16	901579818	Clip	1
17	901579824	Bracket	1
18	504258725	Clip	1
19	901579825	Hub	1
20	901579827	Shaft	1
21	505960539	Clamp	1
22	520045020	Pulley	1
23	901579811	Pipe	1
24	504258737	Screw	3
25	901579805	Gasket	1
26	901096876	Seal	1
27	901579802	Seal	1
28	901302807	Plate	1
29	901579833	Gasket	1
30	901302821	O-Ring	1
31	901579804	Seal	1
32	901579801	Pump Assembly	1
33	. . . . .	Impeller	1
34	. . . . .	Shaft	1
35	901302808	Pulley	1
	504259763	Gasket Kit (Includes Items 7, 12, 25, 27, 29-31)	1

Yale Industrial Trucks

WATER PUMP
(S/N A875B-12121Y⇒ EXC. 13136-13149)

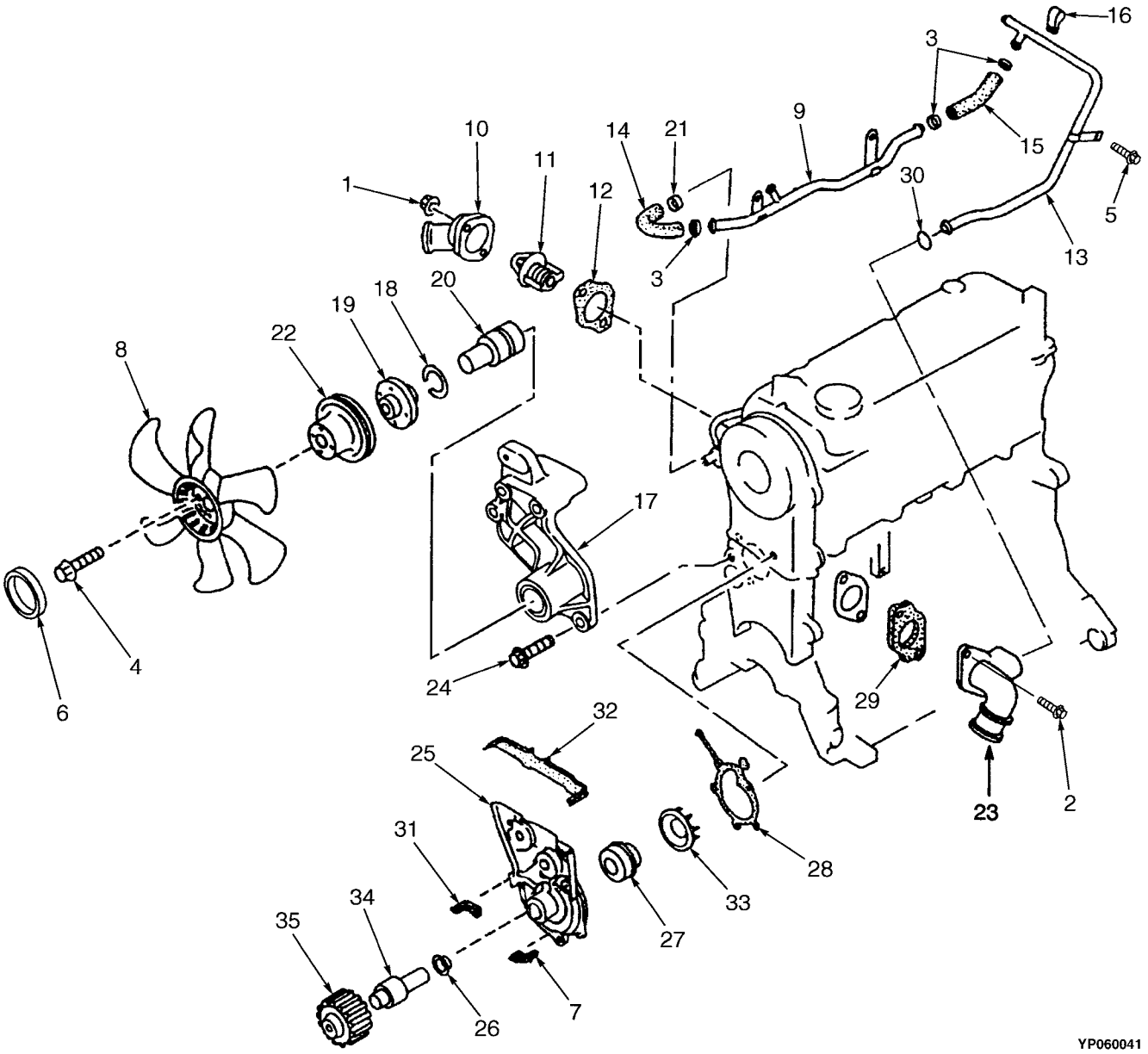

Yale Industrial Trucks

WATER PUMP
(S/N A875B-12121Y⇒ EXC. 13136-13149)

ITEM	PART NO.	DESCRIPTION	QTY
1	900559852	Nut	2
2	901292819	Capscrew	2
3	505959558	Clamp	3
4	901301818	Screw	1
5	901302834	Bolt	1
6	520045099	Spacer	1
7	901579803	Seal	1
8	901302844	Fan	1
9	505960521	Pipe	1
10	901302814	Cover	1
11	580024168	Thermostat	1
12	901282846	Gasket	1
13	505960514	Pipe	1
14	505960550	Hose	1
15	505960588	Hose	1
16	901579818	Clip	1
17	901302824	Bracket	1
18	901282830	Lock Ring	1
19	901302804	Hub	1
20	901282827	Shaft	1
21	505959558	Clamp	1
22	520045021	Pulley	1
23	901302811	Pipe (Inlet)	1
24	900526814	Capscrew	3
25	505960579	Pump	1
26	901302807	Plate	1
27	901096876	Seal	1
28	901302845	Gasket	1
29	901302846	Gasket	1
30	901302821	O-Ring	1
31	901579802	Seal	1
32	. . . . .	Seal	1
33	. . . . .	Impeller	1
34	. . . . .	Shaft	1
35	. . . . .	Pulley	1
	901579801	Pump Assembly (Includes Items 7, 25-35)	1
	504259763	Gasket Kit (Includes Items 7, 12, 25, 28-30, 32)	1

Yale Industrial Trucks

RADIATOR AND HOSES
(⇒S/N A875B-07838)

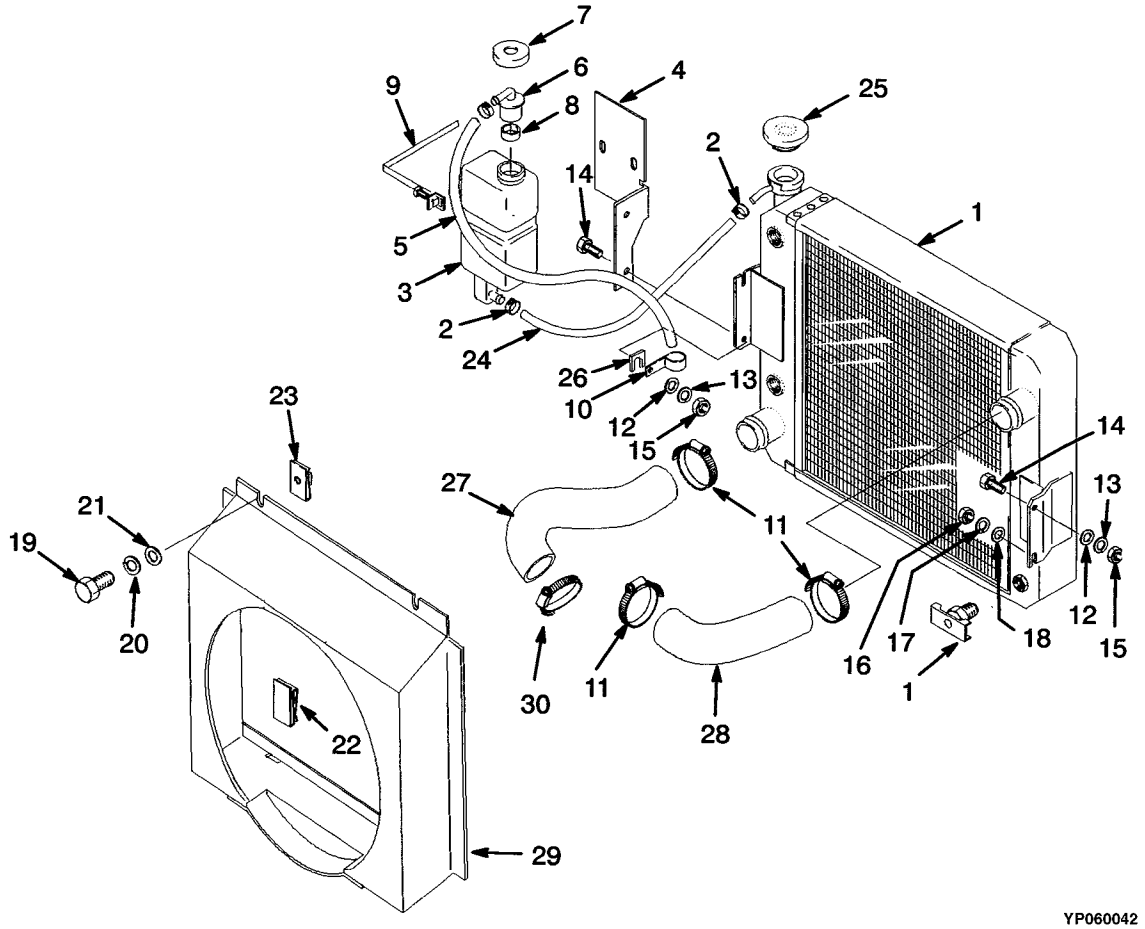

Yale Industrial Trucks

RADIATOR AND HOSES
(⇒S/N A875B-07838)

ITEM	PART NO.	DESCRIPTION	QTY
1	580011814	Radiator (Standard)	1
1	580011816	Radiator (Anti-Clog)	1
1	505964506	Cooler	1
1	505964559	Plug	1
2	511405800	Clamp	2
3	900001226	Reservoir	1
4	505972557	Bracket	1
5	580002394	Hose	1
6	900001230	Outlet	1
7	900001231	Cap	1
8	900003260	Bushing	1
9	900001227	Strap	1
10	060023600	Clamp	1
11	502056904	Clamp	4
12	449022013	Lockwasher	3
13	449021006	Washer	3
14	449001302	Capscrew	3
15	449015044	Nut	3
16	449015014	Nut	1
17	449022016	Lockwasher	1
18	504226242	Washer	1
19	930101903	Screw	2
20	505972505	Washer	2
21	449022019	Lockwasher	2
22	505972572	Clip	2
23	505972504	Nut	2
24	505972513	Tube	1
25	505972563	Cap	1
26	505972548	Shim	AR
27	505969585	Hose (Lower)	1
28	505977530	Hose (Upper)	1
29	505972580	Shroud (Fan)	1
30	062159700	Clamp	2

Yale Industrial Trucks

RADIATOR AND HOSES
(S/N A875B-0738⇔S/N PENDING PER ECN 95530-01)

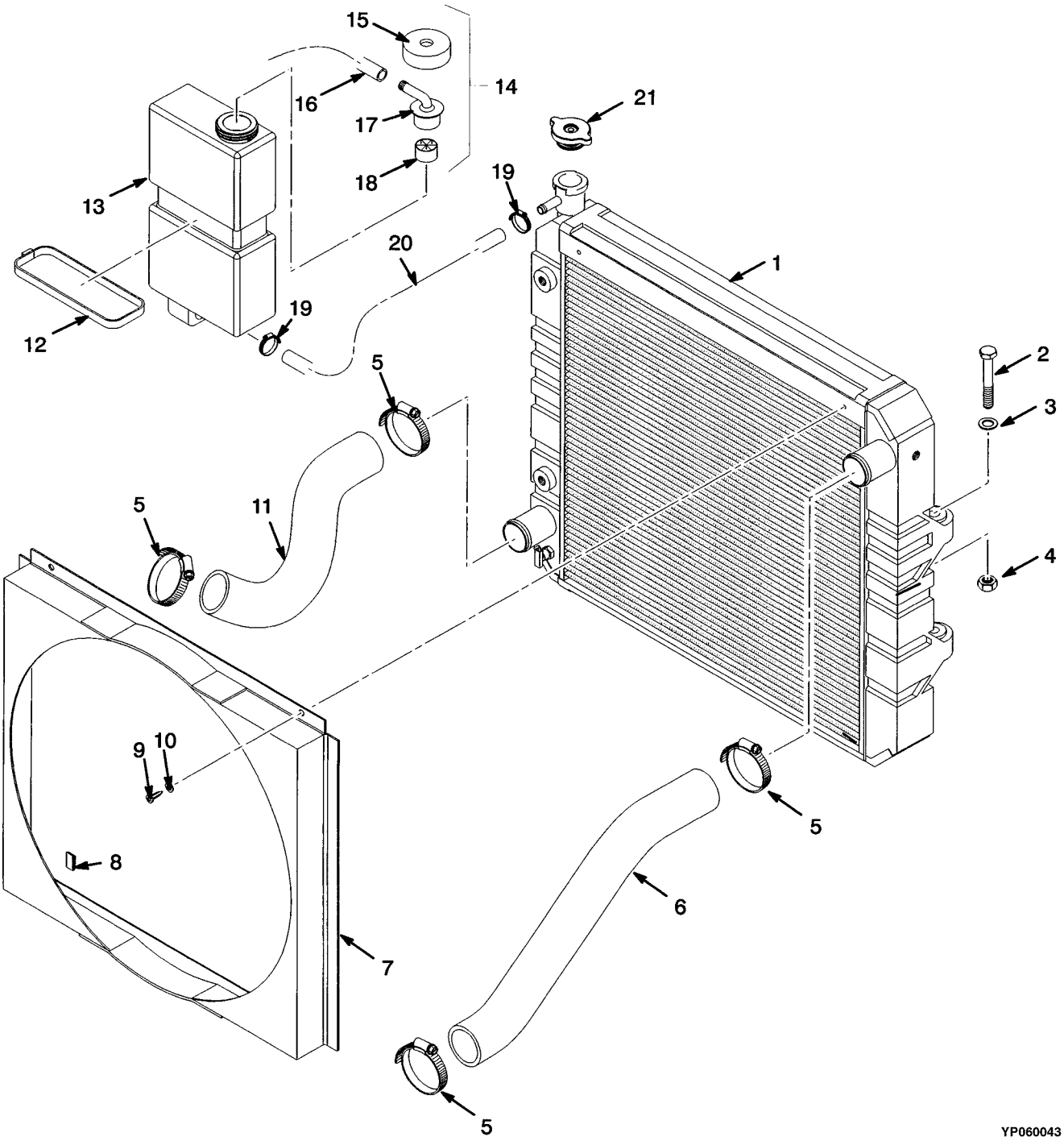

Yale Industrial Trucks

RADIATOR AND HOSES
(S/N A875B-0738⇔S/N PENDING PER ECN 95530-01)

ITEM	PART NO.	DESCRIPTION	QTY
1	580015726	Radiator	1
1	580017327	Plug	1
1	580017328	Isolator Kit	1
2	449001050	Capscrew	4
3	449021001	Washer	4
4	449015014	Nut	4
5	502056904	Clamp	4
6	505969585	Hose (Lower)	1
7	580015730	Shroud (Fan)	1
8	505972572	Clip	2
9	909904403	Screw	2
10	502398902	Washer	2
11	505977530	Hose (Upper)	1
12	900001227	Strap	1
13	900001226	Reservoir	1
14	505972579	Outlet Assembly	1
15	900001231	Cap	1
16	580002394	Hose	1
17	900001230	Outlet	1
18	900003260	Bushing	1
19	511405800	Clamp	2
20	505972513	Tube	1
21	505972563	Cap	1

Yale Industrial Trucks

RADIATORS AND HOSES
(S/N PENDING PER ECN 95530-01⇒)

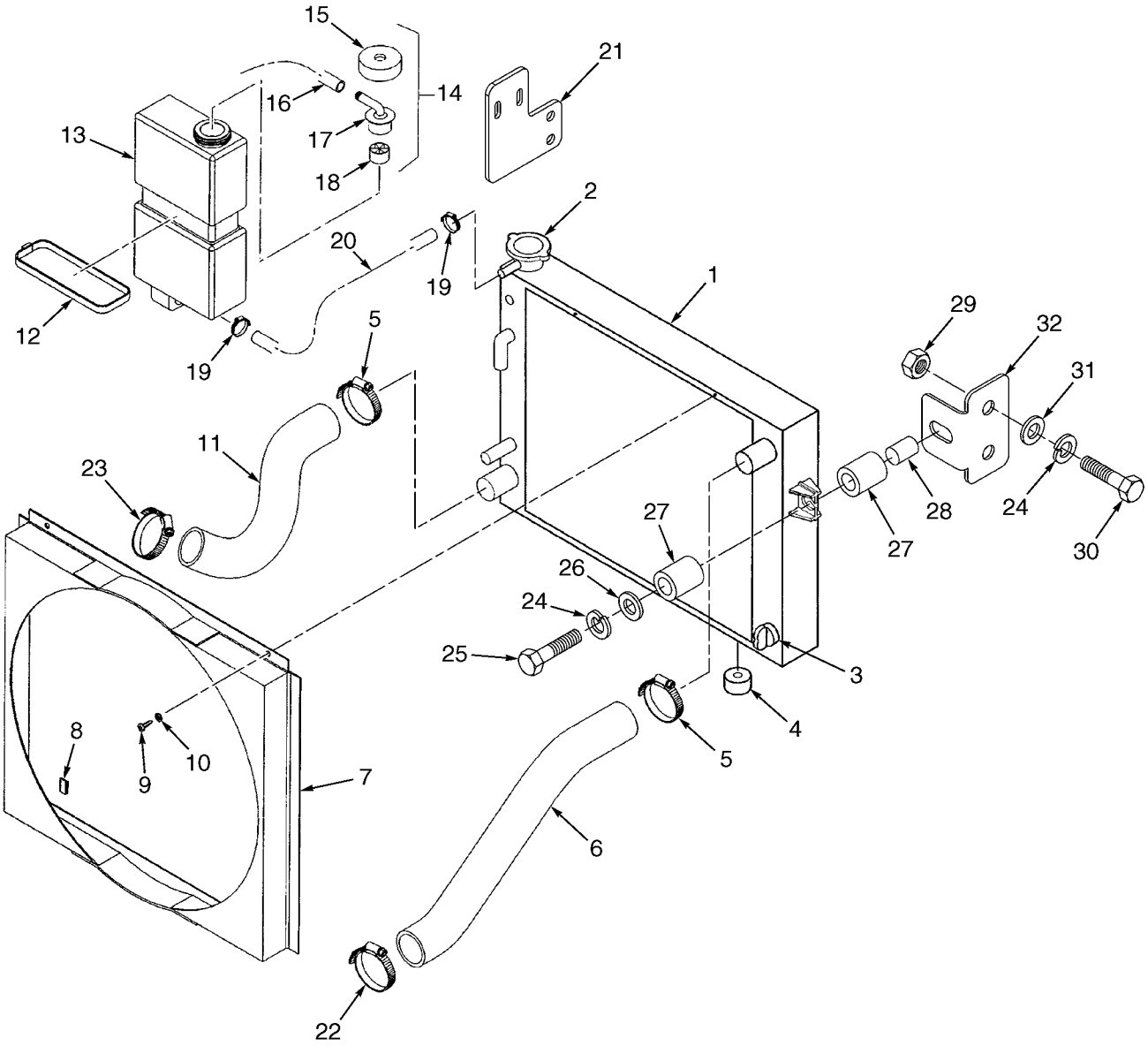

YP090184

Yale Industrial Trucks

RADIATORS AND HOSES
(S/N PENDING PER ECN 95530-01⇒)

ITEM	PART NO.	DESCRIPTION	QTY
1	580035305	Radiator (Standard Core)	1
1	580035840	Radiator (Open Core)	1
2	900001231	Cap	1
3	580036680	Drain Plug	1
4	909145100	Cushion (Rubber)	2
5	502056904	Clamp	2
6	580036218	Hose (Upper)	1
7	580036531	Shroud (Fan)	1
8	505972572	Clip	2
9	909904403	Screw	2
10	502398902	Washer	2
11	505969585	Hose (Lower)	1
12	900001227	Strap	1
13	900001226	Reservoir	1
14	505972579	Outlet Assembly	1
15	900001231	Cap	1
16	580002394	Hose	AR
17	900001230	Outlet	1
18	900003260	Bushing	1
19	900011286	Clamp	2
20	505972513	Tube	1
21	580036679	Bracket	2
22	062159700	Clamp	1
23	502056903	Clamp	1
24	449022016	Lockwasher	6
25	449001073	Capscrew	2
26	580019578	Washer	2
27	900064101	Isolator	4
28	930738300	Spacer	2
29	449015014	Nut	6
30	449001134	Capscrew	4
31	449021001	Washer	10
32	580035881	Bracket	2

NOTES

5 FUEL SYSTEM

SECTION 5
FUEL SYSTEM

DESCRIPTION	PAGE
AIR CLEANER AND MOUNTING	
⇒S/N A875B-10761	5-40
S/N A875B-10761⇔S/N A875B-13057Y	5-42
S/N A875B-13058⇒	5-44
CARBURETOR	
GASOLINE	5-22
LPG	
CLOSED LOOP	
S/N A875B-10761⇒	5-32
OPEN LOOP	
S/N A875B-10761⇒	5-28
⇒S/N A875B-3166	5-24
S/N A875B-3166⇔S/N A875B-10761	5-26
CONVERTER	
LPG	
⇒S/N A875B-10761	5-38
FOOT DIRECTIONAL CONTROL PEDAL	5-52
FOOT DIRECTIONAL CONTROL PEDAL LINKAGE	5-50
FUEL	
GASOLINE AND LPG	
⇒S/N A875B-13149Y	5-4
LPG	
S/N A875B-13150Y⇒	5-6
FUEL LOCK FILTER ASSEMBLY	
LPG	
⇒S/N A875B-10761	5-36
FUEL SYSTEM	
GASOLINE	5-8
LPG	
⇒S/N A875B-10761	5-10
S/N A875B-10761⇔S/N A875B-13149Y	5-12
WITH LOW EMISSIONS	
S/N A875B-13150⇒ INC. 12121-13135	5-14
GOVERNOR	
GASOLINE AND LPG	
⇒S/N A875B-13149 EXC. 12121-13135	5-18
LPG	
S/N A875B-13150⇒ INC. 12121-13135	5-20
REGULATOR	
CLOSED LOOP	
S/N A875B-10761⇒	5-34
OPEN LOOP	
S/N A875B-10761⇒	5-30
TANK	
LPG	5-16
THROTTLE LINKAGE	
S/N A875B-10761⇒	5-48

DESCRIPTION	PAGE
⇒S/N A875B-10761	5-46

NOTES

FUEL
(GASOLINE AND LPG)
(⇒S/N A875B-13149Y)

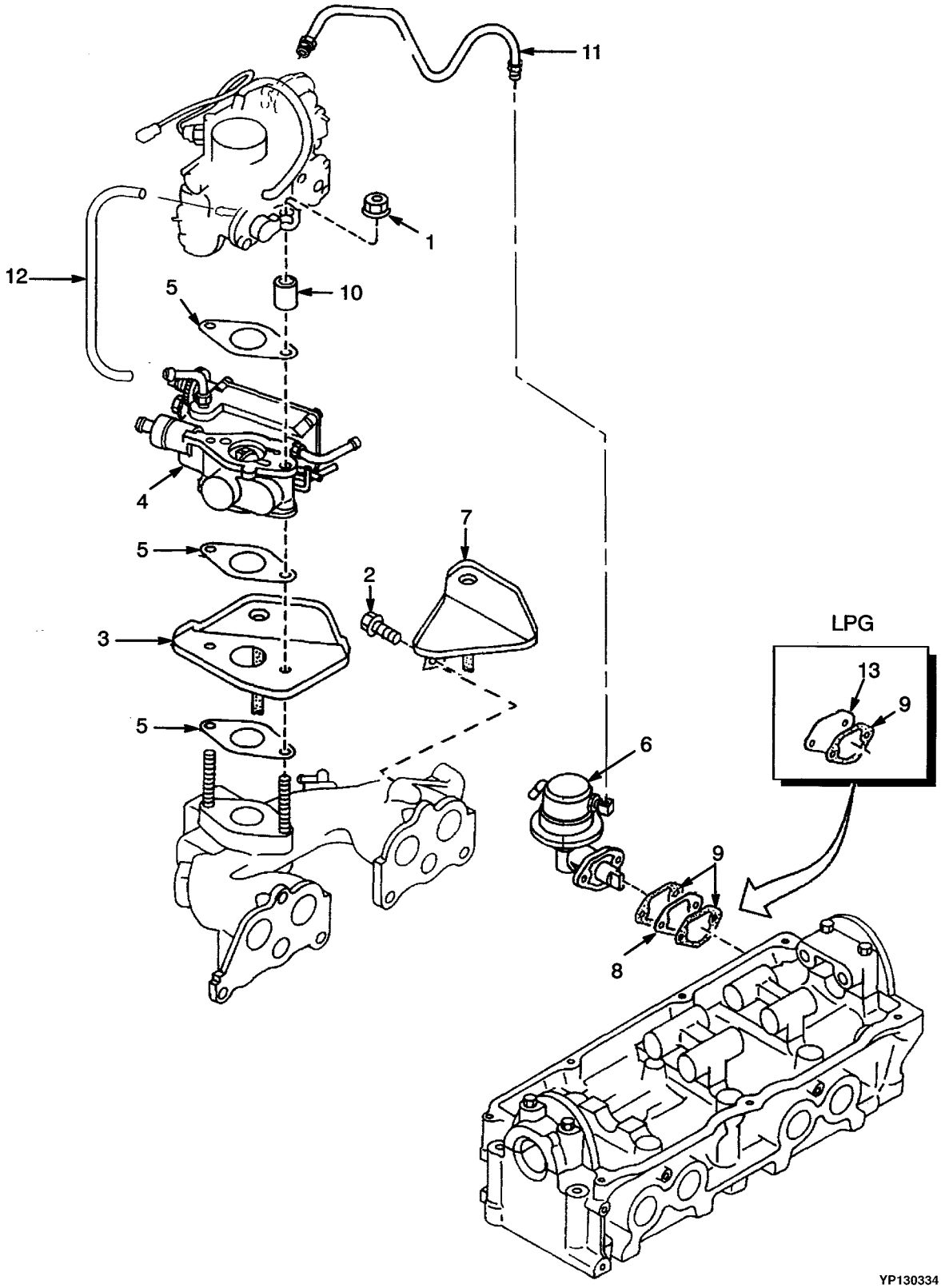

Yale Industrial Trucks

FUEL
(GASOLINE AND LPG)
(⇒S/N A875B-13149Y)

ITEM		PART NO.	DESCRIPTION	QTY
1		900559852	Nut	2
2		901282833	Screw	1
3	**a**	505959584	Deflector	1
4	**b**	505959527	Governor (LPG) (☞ P10813)	1
5		505959588	Gasket	3
6	**a**	901300819	Fuel Pump	1
7	**a**	901300825	Deflector	1
8	**a**	901300809	Insulator	1
9		901300827	Gasket	2
10	**b**	504258757	Spacer	2
11	**a**	505959590	Pipe	1
12		505960507	Hose	1
13	**b**	910983100	Cover	1
		504259763	Gasket Kit (Includes Item 9)	1

FOOTNOTES:
a Gasoline
b LPG

FUEL
(LPG)
(S/N A875B-13150Y⇒)

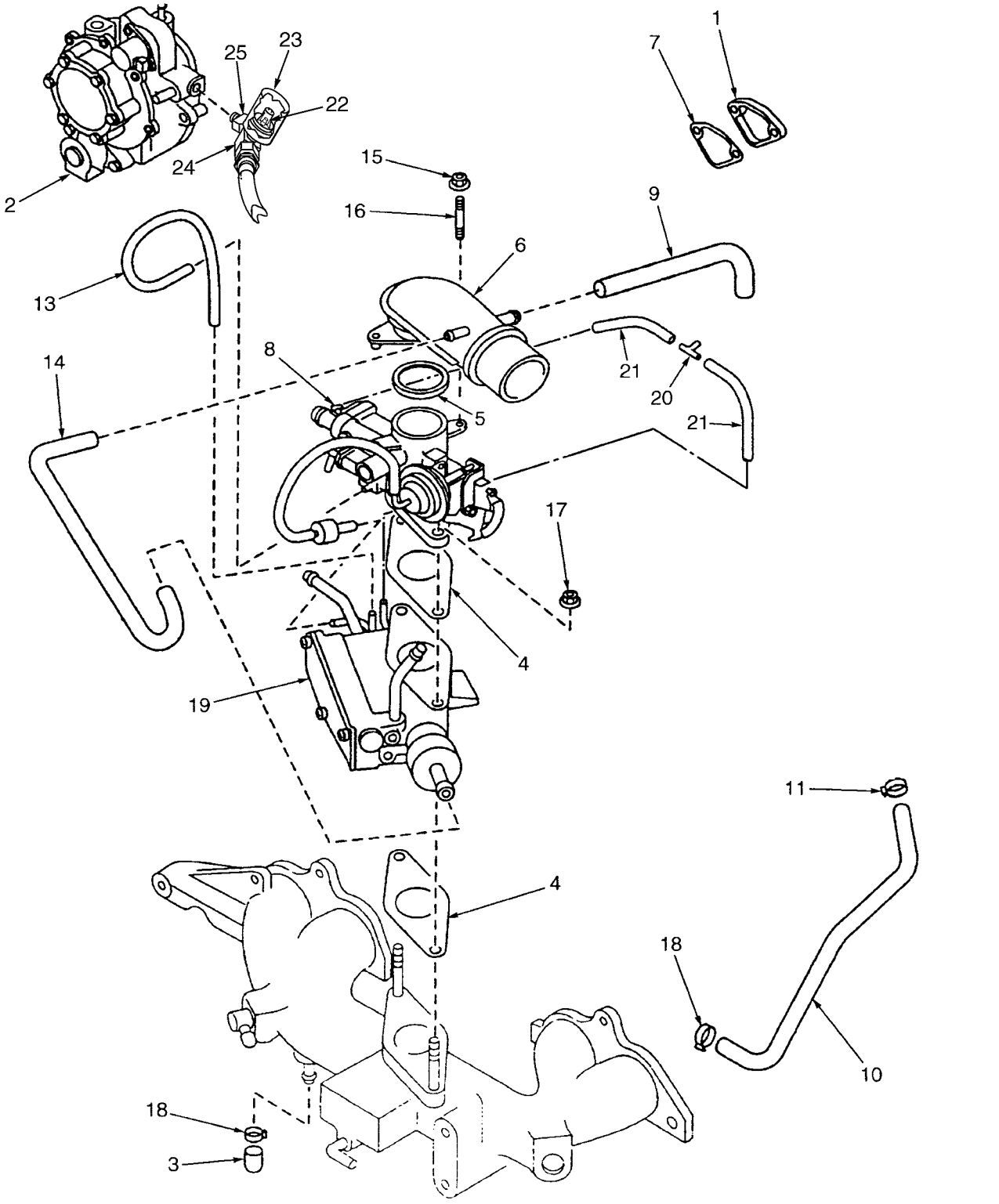

Yale Industrial Trucks

FUEL
(LPG)
(S/N A875B-13150Y⇒)

ITEM	PART NO.	DESCRIPTION	QTY
1	910983100	Cover (LPG)	1
2	580014564	Regulator (Open Loop) (☞ P11867)	1
2	580020005	Regulator (Closed Loop) (☞ P12217)	1
3	505959552	Cap	1
4	505959588	Gasket	2
5	580015812	Seal	1
6	505959589	Filter Assembly	1
7	901300827	Gasket	1
8	580022709	Carburetor (Open Loop) (☞ P11991)	1
8	580022756	Carburetor (Closed Loop) (☞ P12216)	1
9	505960524	Hose	1
10	901300827	Gasket	1
11	505960501	Hose (PCV)	1
12	580024169	Clamp	1
13	900549803	Hose	1
14	901277819	Hose	1
15	901851831	Nut	2
16	505959547	Stud	2
17	900559852	Nut	2
18	505968558	Secondary Lock	1
19	580024162	Governor (2.2 L) (LPG) (☞ P12230)	1
20	504258744	Connector	1
21	580024158	Hose	1
22	059154500	Pressure Switch	1
23	520045009	Boot	1
24	505966511	Fitting	1
25	580033717	Fitting	1

Yale Industrial Trucks

FUEL SYSTEM (GASOLINE)

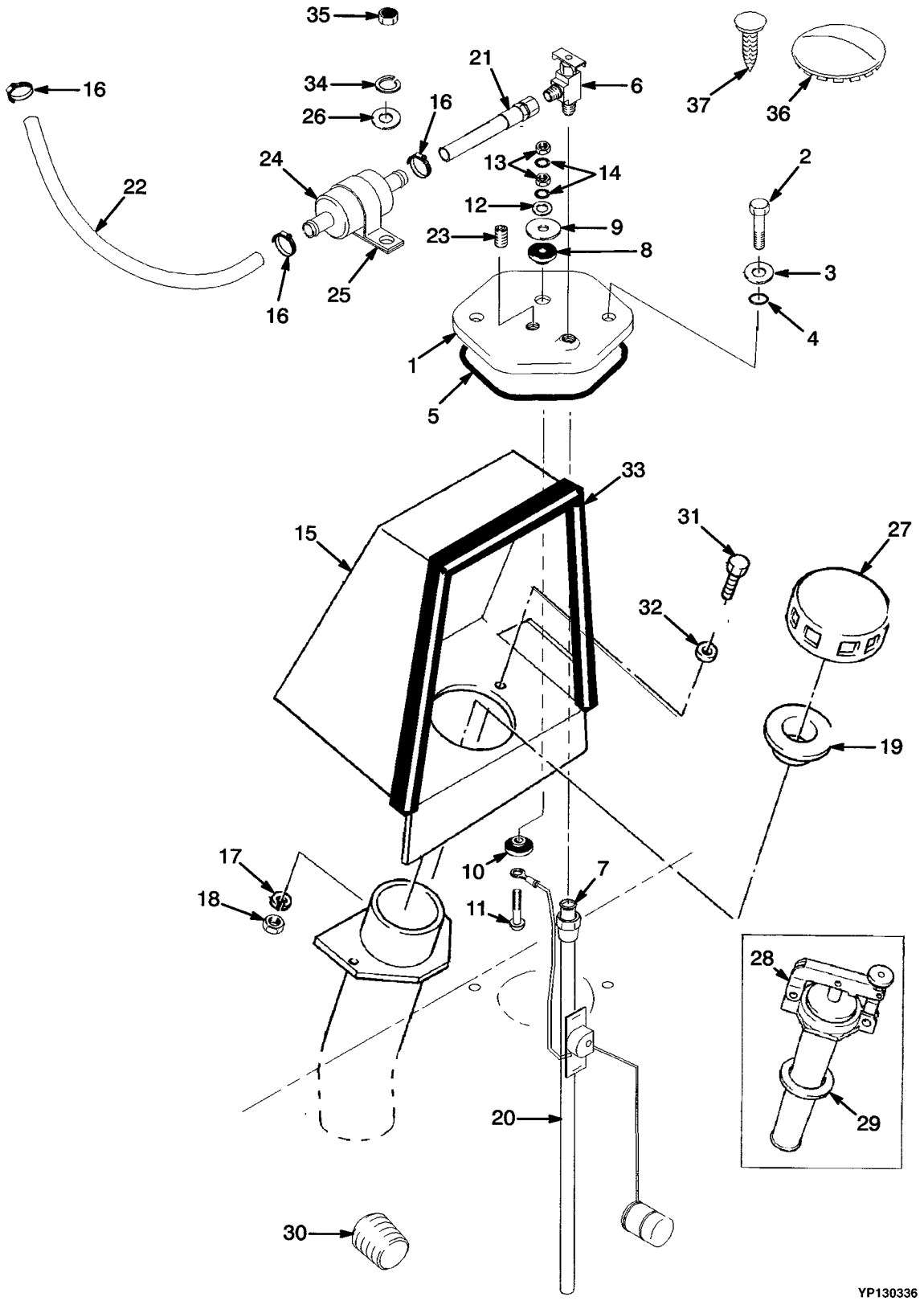

ITEM		PART NO.	DESCRIPTION	QTY
1	**e**	505973530	Cover	1
2		504060774	Screw	2
3		504226242	Washer	2
4		514214804	O-Ring	2
5		505966504	Seal	1
6	**a**	505973593	Valve (Shut Off)	1
6	**bc**	900007271	Valve	1
7	**c**	505970506	Fitting	1
8	**c**	505973559	Washer	1
9	**c**	505973555	Washer	1
10	**c**	505974580	Washer	1
11	**c**	505959511	Screw	1
12	**c**	016103300	Washer	1
13	**c**	505959525	Nut	2
14	**c**	505959519	Lockwasher	2
15		580006893	Shield	1
16		511405800	Clamp	3
17		449022018	Lockwasher	2
18		449015002	Nut	2
19		912207300	Gasket	1
20	**c**	505971562	Fuel Sender	1
20	**d**	524139070	Fuel Sender	1
21	**a**	505971548	Hose	1
21	**b**	580011155	Hose	1
22		901177109	Hose	1
23	**c**	014931500	Fitting	1
23	**d**	500428902	Fitting	1
24		900001224	Fuel Filter	1
25		505971587	Clamp	1
26		504226242	Washer	1
27		919891401	Cap	1
28		911458400	Fuel Cap (Optional)	1
29		911851100	Gasket (Optional)	1
30		505975508	Fitting	1
31		930102903	Screw	2
32		449021003	Washer	2
33		915495401	Seal	1
34		449022016	Lockwasher	1
35		449015014	Nut	1
36		504241796	Plug	1
37		504240785	Fastener	1

FOOTNOTES:

a ⇒ S/N A875B-01948
b S/N A875B-01948 ⇒
c ⇒ S/N A875B-05417
d S/N A875B-05417 ⇒
e ⇒ S/N PENDING PER ECN 95332-03

Yale Industrial Trucks

FUEL SYSTEM
(LPG)
(⇒S/N A875B-10761)

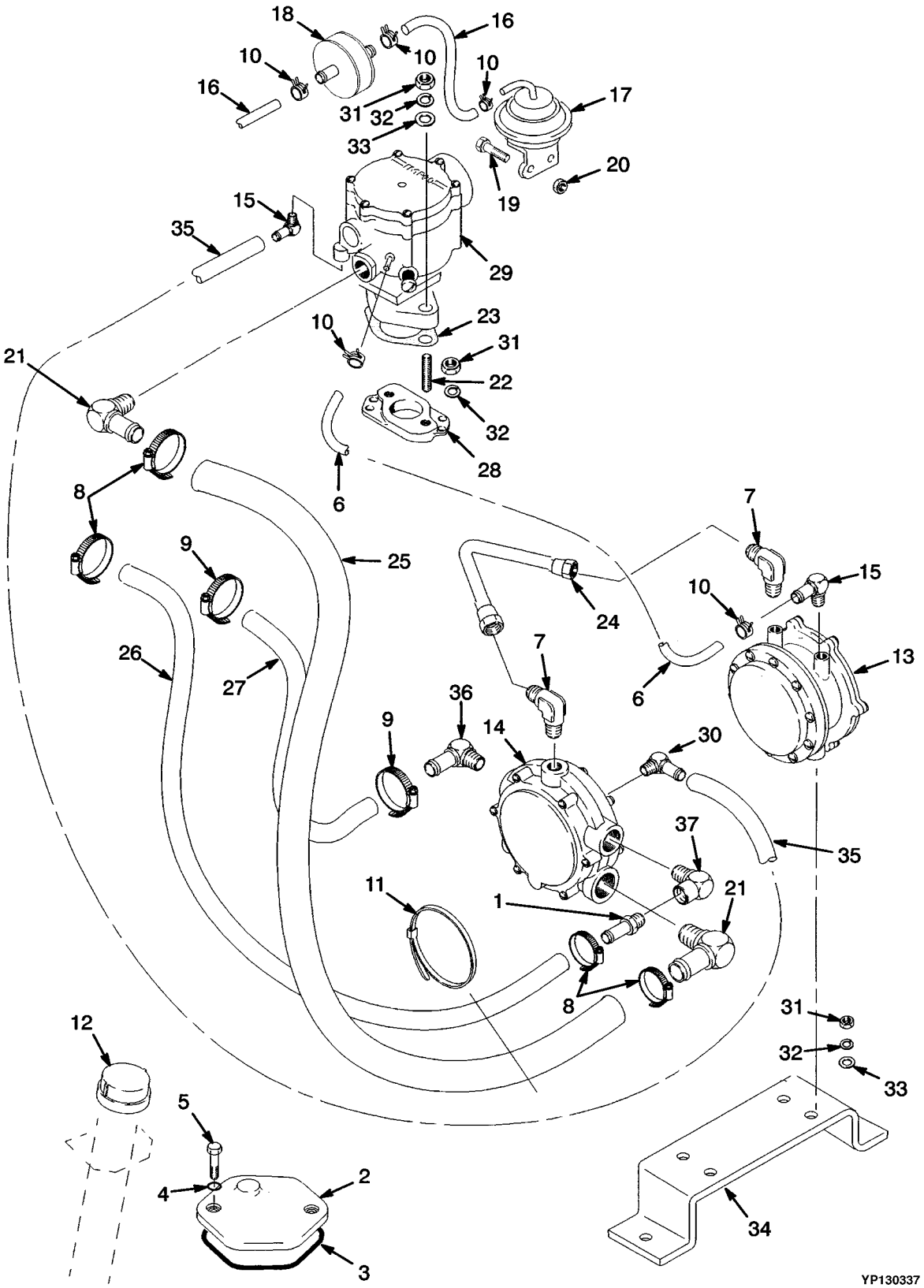

Yale Industrial Trucks

FUEL SYSTEM
(LPG)
(⇒S/N A875B-10761)

ITEM		PART NO.	DESCRIPTION	QTY
1		502600903	Fitting	1
2		520039889	Sealant	AR
2		580001183	Plate	1
3		505966504	Seal	1
4		514214804	O-Ring	2
5		504060774	Screw	2
6		504240988	Hose	1
7		056623800	Fitting	2
8		062159500	Clamp	4
9		502056906	Clamp	2
10		505966507	Clamp	6
11		312850034	Strap Clamp	4
12		505970550	Fitting	1
13		505966558	Filter and Lock-Off Valve (☞ P10815)	1
14		580002388	Convertor (LPG) (☞ P10234)	1
15		505966529	Fitting	2
16		505966545	Hose	2
17		505966521	Actuator	1
18		505966525	Valve	1
19		505966547	Capscrew	2
20		505966543	Nut	2
21		057851800	Fitting	2
22		505969540	Stud	2
23		505969561	Gasket	1
24		505969508	Tube	1
25		900005223	Hose	1
26		505969528	Hose	1
27		505970507	Hose	1
28		505969504	Spacer	1
29	**a**	518808623	Carburetor (☞ P10231)	1
29	**b**	580009145	Carburetor (☞ P11161)	1
30		518796637	Valve	1
31		449015014	Nut	6
32		449022016	Lockwasher	6
33		502566901	Washer	4
34		524135950	Bracket	1
35		518802658	Hose	1
36		054947700	Fitting	1
37		013393700	Fitting	1

FOOTNOTES:
a ⇒ S/N A875B-3166
b S/N A875B-3166⇔S/N A875B-10761

Yale Industrial Trucks

FUEL SYSTEM
(LPG)
(S/N A875B-10761⇔S/N A875B-13149Y)

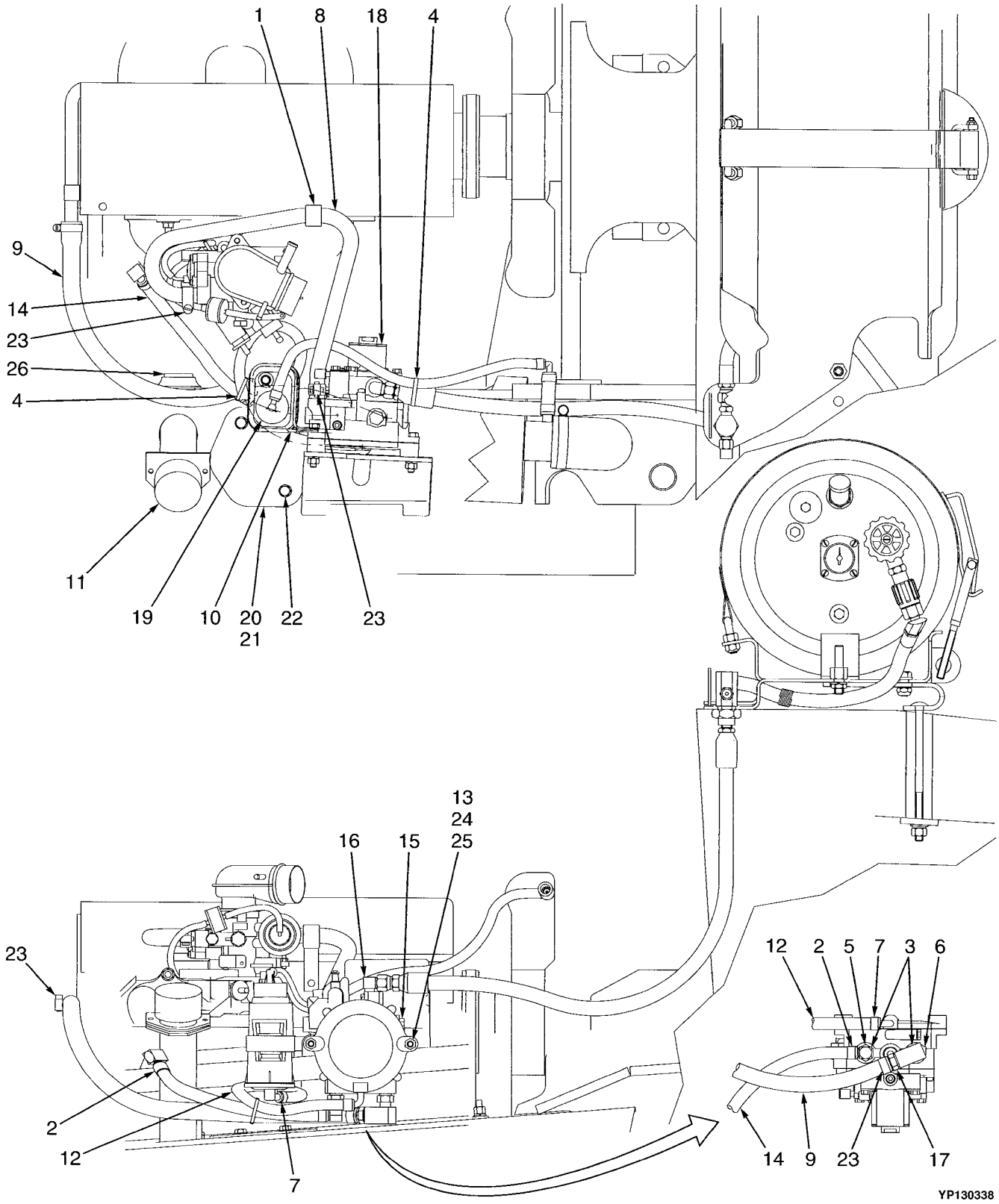

Yale Industrial Trucks

FUEL SYSTEM
(LPG)
(S/N A875B-10761⇔S/N A875B-13149Y)

ITEM	PART NO.	DESCRIPTION	QTY
1	580016907	Bracket	1
2	511405800	Clamp	2
3	015759100	Fitting	2
4	312850034	Strap Clamp	2
5	056260300	Fitting	1
6	720260903	Fitting	1
7	580006007	Clamp	1
8	524141648	Hose	1
9	580007708	Hose	1
10	580016001	Clamp	1
11	505970550	Fitting	1
12	901177124	Hose	1
13	449001050	Capscrew	2
14	580000417	Hose	1
15	501884906	Fitting	1
16	056623800	Fitting	1
17	502600903	Fitting	1
18	580014564	Regulator (☞ P11867)	1
19	580016906	Resonator	1
19	580017218	Plug	1
19	580017219	Clip	1
20	580001183	Plate	1
21	520039889	Sealant	AR
22	504060774	Screw	2
23	062159500	Clamp	4
24	449015014	Nut	2
25	449022016	Lockwasher	2
26	505975508	Fitting	1

Yale Industrial Trucks

FUEL SYSTEM
(LPG) (WITH LOW EMISSIONS)
(S/N A875B-13150⇒ INC. 12121-13135)

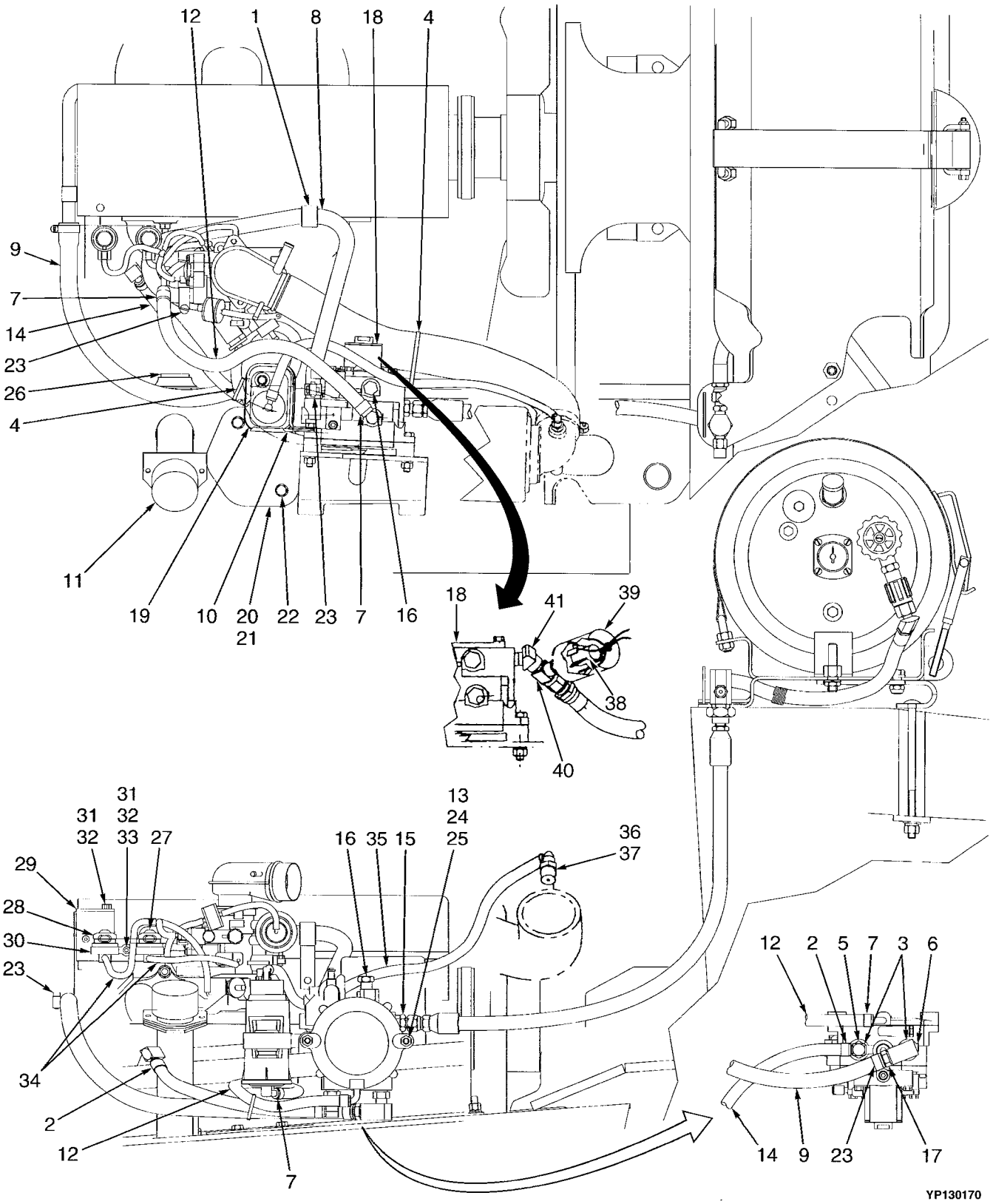

Yale Industrial Trucks

FUEL SYSTEM
(LPG) (WITH LOW EMISSIONS)
(S/N A875B-13150⇒ INC. 12121-13135)

ITEM	PART NO.	DESCRIPTION	QTY
1	580016907	Bracket	1
2	511405800	Clamp	2
3	015759100	Fitting	2
4	312850034	Strap Clamp	2
5	056260300	Fitting	1
6	720260903	Fitting	1
7	580006007	Clamp	3
8	524141648	Hose	1
9	580021222	Hose	1
10	580016001	Clamp	1
11	505970550	Fitting	1
12	901177124	Hose	2
13	449001050	Capscrew	2
14	580000417	Hose	1
15	909267300	Fitting	1
16	501884906	Fitting	1
17	502600903	Fitting	1
18	580020005	Regulator (☞ P12217)	1
19	580016906	Resonator	1
19	580017218	Plug	1
19	580017219	Clip	1
20	580001183	Plate	1
21	520039889	Sealant	AR
22	504060774	Screw	2
23	062159500	Clamp	4
24	449015014	Nut	2
25	449022016	Lockwasher	2
26	505975508	Fitting	1
27	580020000	Switch (Idle)	1
28	580020002	Switch (W.O.T.)	1
29	580020202	Bracket	1
30	580020203	Clamp	1
31	449001114	Capscrew	2
32	449022018	Lockwasher	2
33	449015002	Nut	1
34	580000442	Hose	2
35	580021160	Hose	1
36	580017225	Fitting	1
37	580017325	Fitting	1
38	059154500	Pressure Switch	1
39	520045009	Boot	1
40	505966511	Fitting	1
41	580033717	Fitting	1

Yale Industrial Trucks

TANK
(LPG)

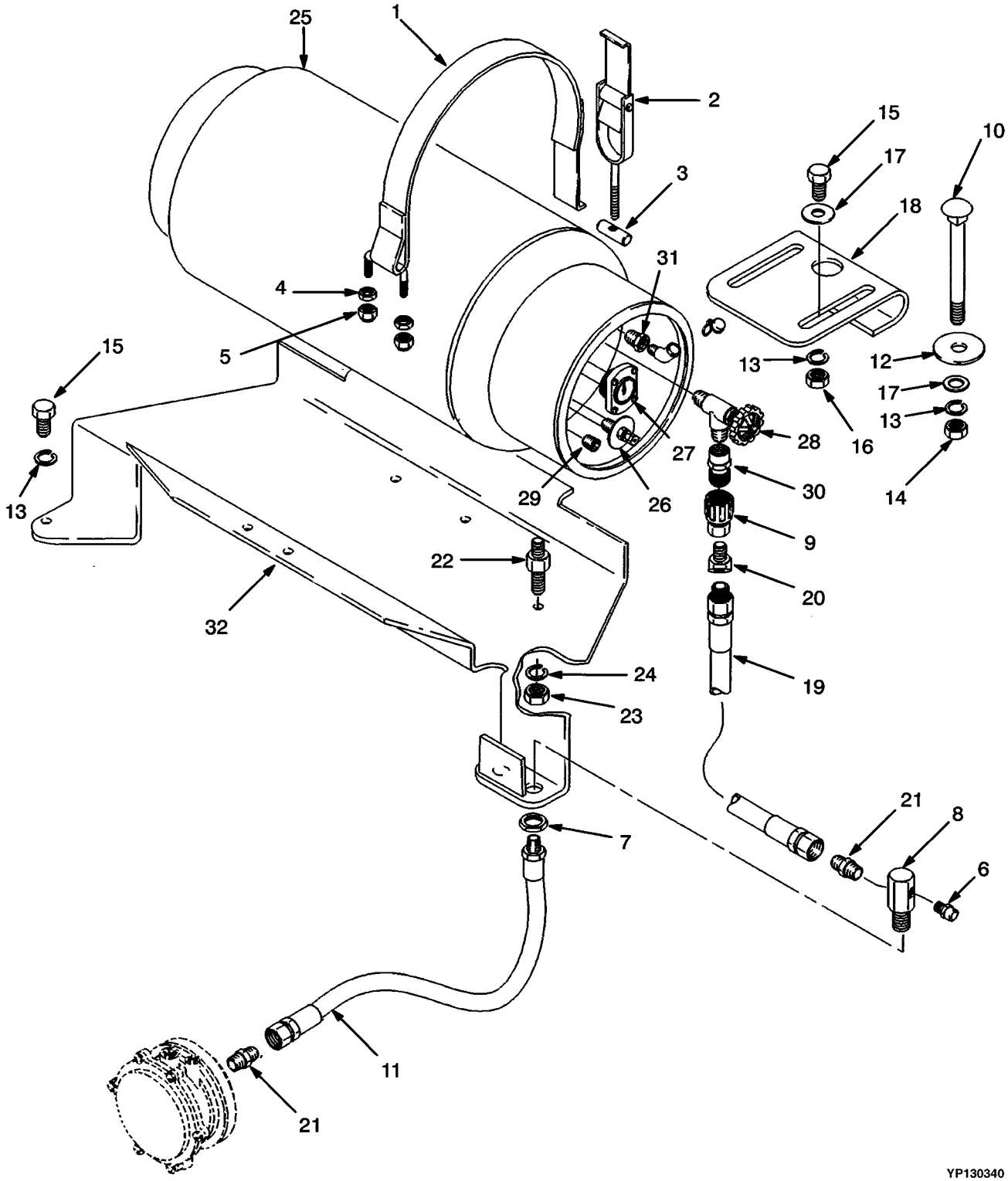

Yale Industrial Trucks

TANK (LPG)

ITEM		PART NO.	DESCRIPTION	QTY
1		518798680	Strap	1
2		520044837	Latch	1
3		900001238	Nut	1
4		449015044	Nut	2
5		909882404	Nut	2
6		019299600	Relief Valve	1
7		050030900	Nut	1
8		518798643	Fitting	1
9		912514300	Disconnect	1
10		900003259	Bolt	1
11	**a**	520053824	Hose	1
11	**b**	580024627	Hose	1
12		505966562	Washer	1
13		449022013	Lockwasher	5
14		449015044	Nut	1
15		449001023	Capscrew	4
16		909882404	Nut	2
17		449021006	Washer	3
18		504268775	Bracket	1
19		518798671	Hose	1
20		013394200	Fitting	1
21		909267300	Fitting	2
22		900007209	Pin	1
23		449015020	Nut	1
24		449022017	Lockwasher	1
25		510683602	Tank (LPG) (33.5 lb. Steel)	1
25		510683605	Tank (LPG) (33.5 lb. Aluminum)	1
26		505966541	Gauge	1
27		505966512	Gauge	1
28		505966591	Valve	1
29		505966575	Valve	1
30		054966400	Coupling	1
31		505966597	Valve	1
32		520044838	Bracket	1

FOOTNOTES:

a ⇒ S/N A875B-14528

b S/N A875B-14529 ⇒

GOVERNOR
(GASOLINE AND LPG)
(⇒S/N A875B-13149 EXC. 12121-13135)

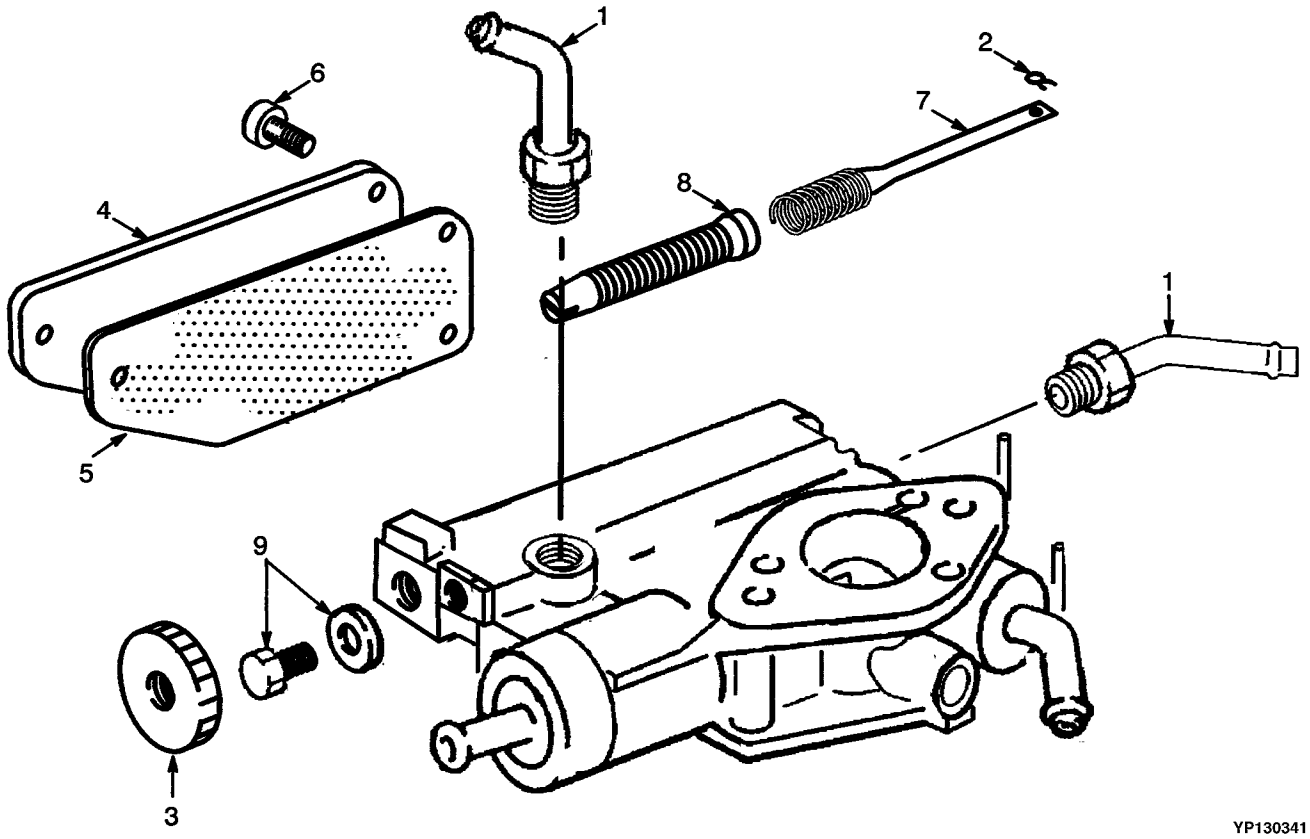

Yale Industrial Trucks

GOVERNOR
(GASOLINE AND LPG)
(⇒S/N A875B-13149 EXC. 12121-13135)

ITEM	PART NO.	DESCRIPTION	QTY
	505959527	Governor	1
1	505966533	Connector	2
2	901279804	Snap Ring	1
3	901279806	Bushing	1
4	505966528	Cover	1
5	505966588	Gasket	1
6	505966564	Screw	3
7	505966561	Spring	1
8	901279812	Screw	1
9	505966539	Bolt	1

GOVERNOR
(LPG)
(S/N A875B-13150⇒ INC. 12121-13135)

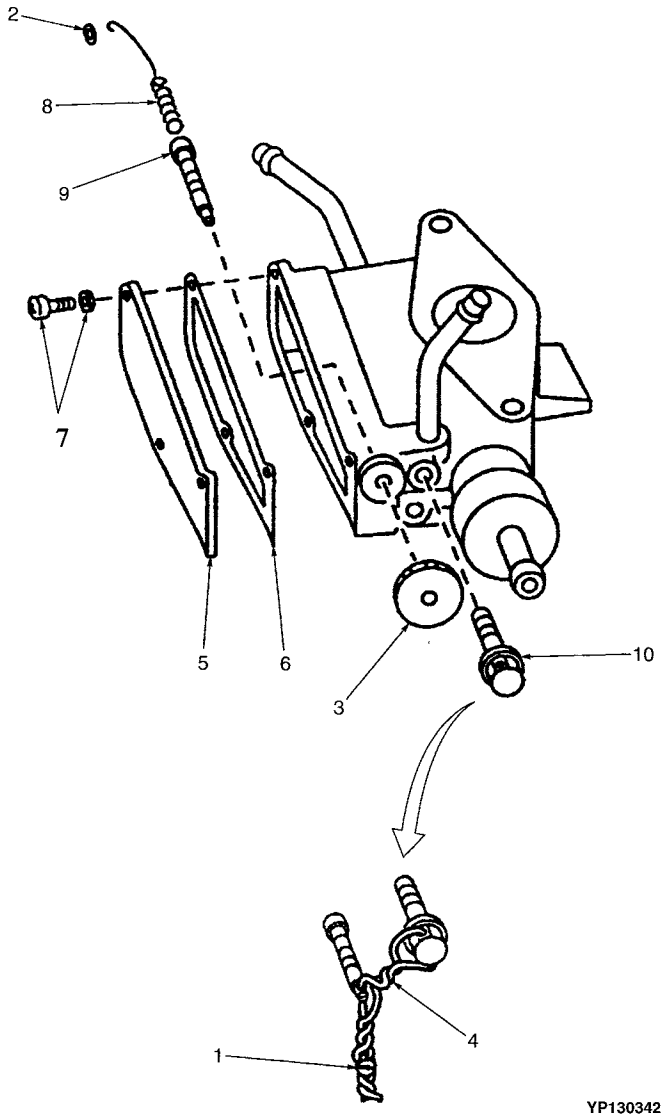

Yale Industrial Trucks

GOVERNOR
(LPG)
(S/N A875B-13150⇒ INC. 12121-13135)

ITEM	PART NO.	DESCRIPTION	QTY
	580024162	Governor (2.2 L)	1
1	901279803	Seal	1
2	901279804	Snap Ring	1
3	901279806	Bushing	1
4	901279807	Wire	1
5	505966528	Cover	1
6	505966588	Gasket	1
7	505966564	Screw	3
8	505966561	Spring	1
9	901279812	Screw	1
10	505966539	Bolt	1

Yale Industrial Trucks

CARBURETOR
(GASOLINE)

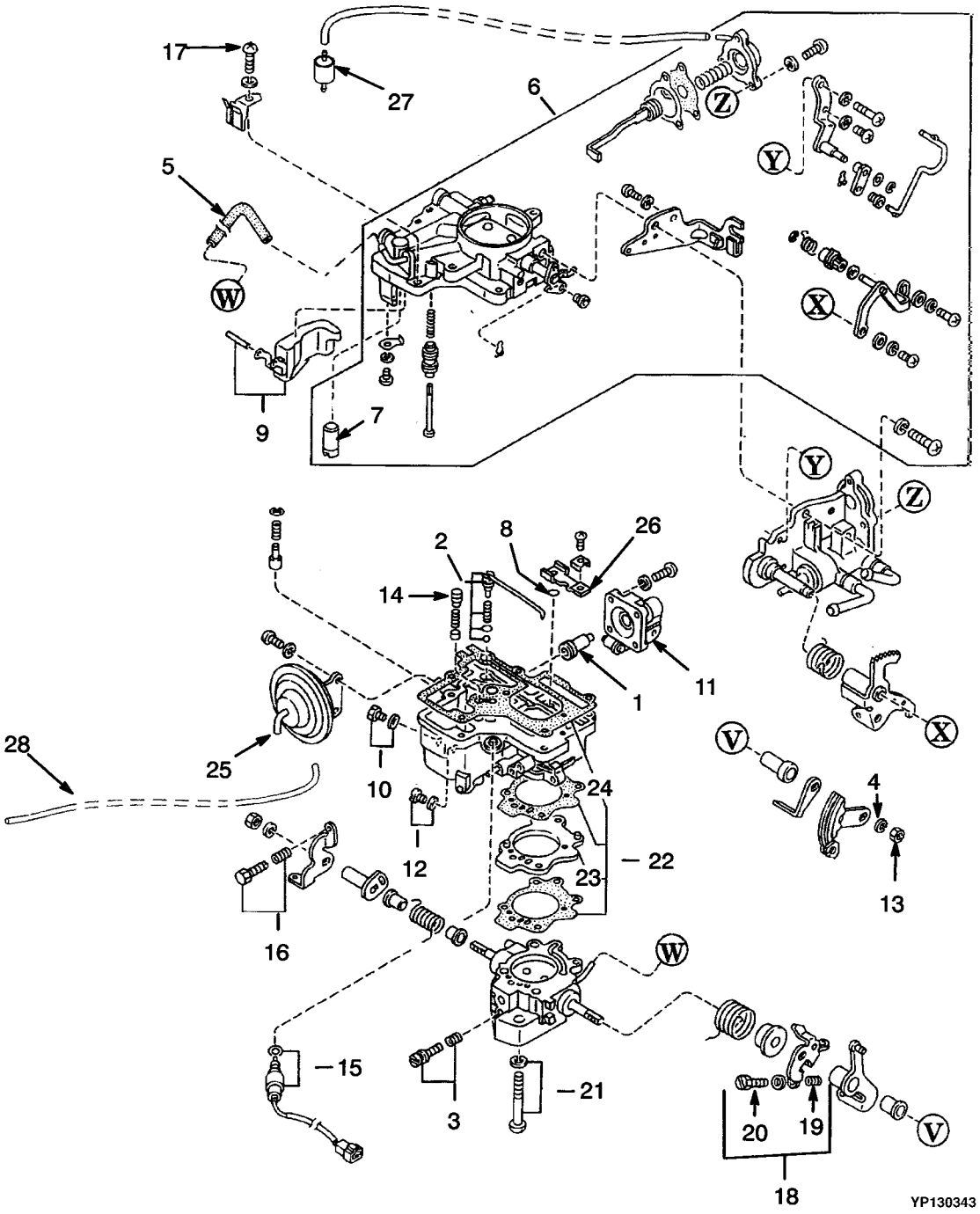

Yale Industrial Trucks

CARBURETOR (GASOLINE)

ITEM	PART NO.	DESCRIPTION	QTY
	580008419	Carburetor	1
1	505959524	Pump	1
2	505959586	Nozzle	1
3	505959520	Setscrew	1
4	505960511	Washer	2
5	505960507	Hose (Vacuum)	1
6	505959581	Horn	1
7	505960563	Valve	1
8	505960534	O-Ring	1
9	505960572	Float	1
10	505960519	Plug	1
11	504258748	Arm	1
12	505960551	Jet	1
13	505960557	Nut	2
14	505960570	Jet	1
15	505960564	Valve	1
16	505960554	Setscrew	1
17	505960573	Screw and Washer	1
18	505960546	Setscrew	1
19	504258749	Screw	1
20	504258750	Screw	1
21	505960555	Screw	1
22	505960513	Gasket Kit	1
23	504258747	Gasket	1
24	504258751	Insulator	1
25	505960571	Diaphragm	1
26	505960553	Compensator	1
27	520052832	Jet	1
28	. . . . .	Tube (Vacuum)	1

Yale Industrial Trucks

CARBURETOR
(LPG)
(⇒S/N A875B-3166)

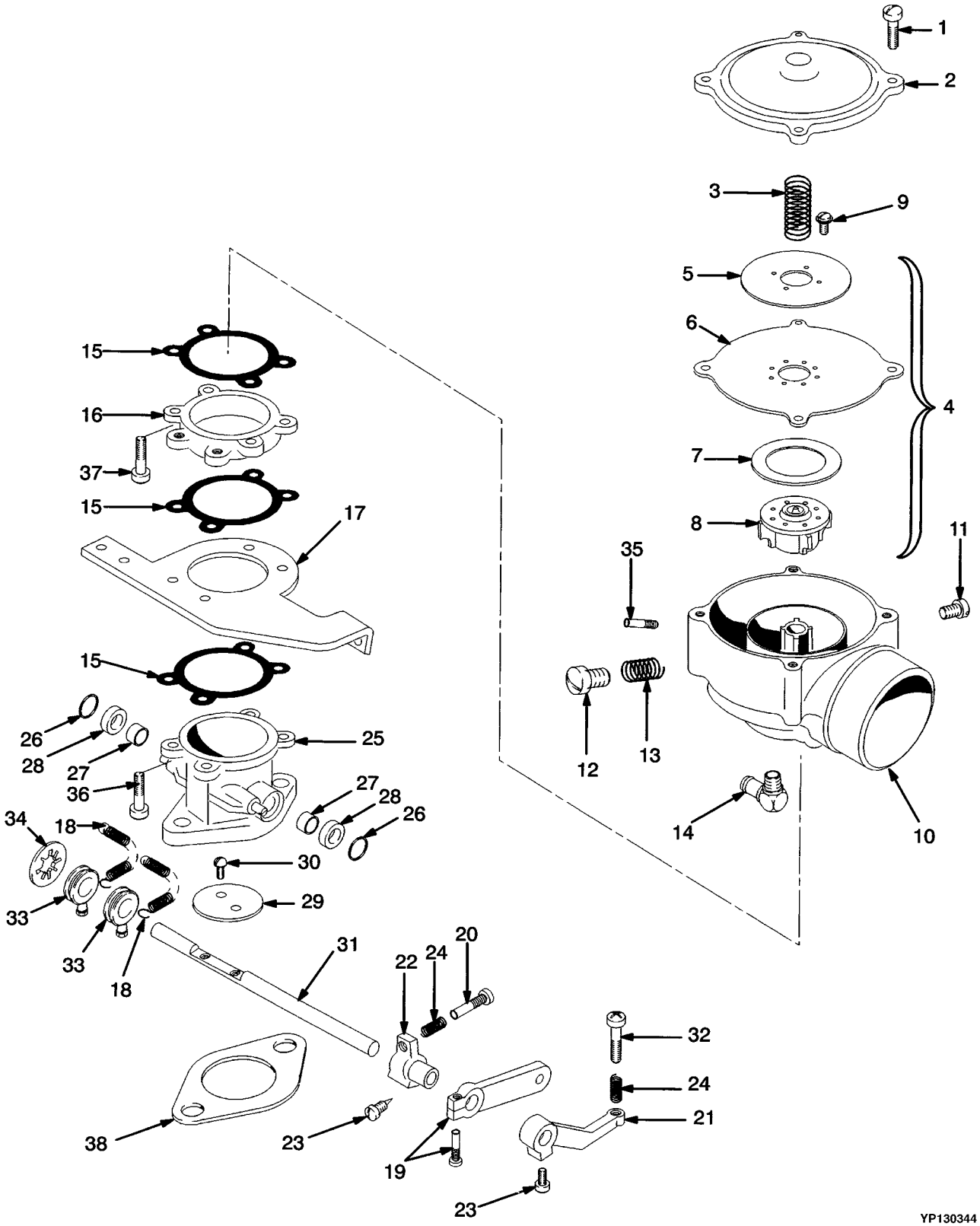

Yale Industrial Trucks

CARBURETOR
(LPG)
(⇒S/N A875B-3166)

ITEM	PART NO.	DESCRIPTION	QTY
	518808623	Carburetor	1
1	014920400	Screw	4
2	516987802	Cover	1
3	900971803	Spring	1
4	580001216	Valve and Diaphragm Kit	1
5	. . . . .	Plate	1
6	900971806	Diaphragm	1
7	900971807	Ring	1
8	. . . . .	Valve	1
9	502632901	Screw	4
10	901062802	Horn Body	1
11	505963547	Screw	2
12	901347801	Screw	1
13	505963552	Spring	1
14	909939100	Fitting	1
15	516987808	Gasket	3
16	505963553	Spacer	1
17	505963508	Bracket	1
18	505963599	Spring	2
19	518808622	Lever	1
20	014927600	Screw	2
21	505963550	Lever	1
22	901062807	Lever	1
23	505963525	Screw	1
24	516987822	Spring	2
25	505963548	Throttle Body	1
26	516987817	Seal	2
27	520040827	Seal	2
28	518354802	Flywheel	1
29	516987818	Bearing	2
30	014861000	Screw	2
31	. . . . .	Shaft	1
32	516987809	Screw	4
33	520038834	Screw	2
34	520038884	Nut	1
35	909939100	Fitting	1
36	516987809	Screw	4
37	520038834	Screw	4
38	580000411	Gasket	1

Yale Industrial Trucks

CARBURETOR
(LPG)
(S/N A875B-3166⇔S/N A875B-10761)

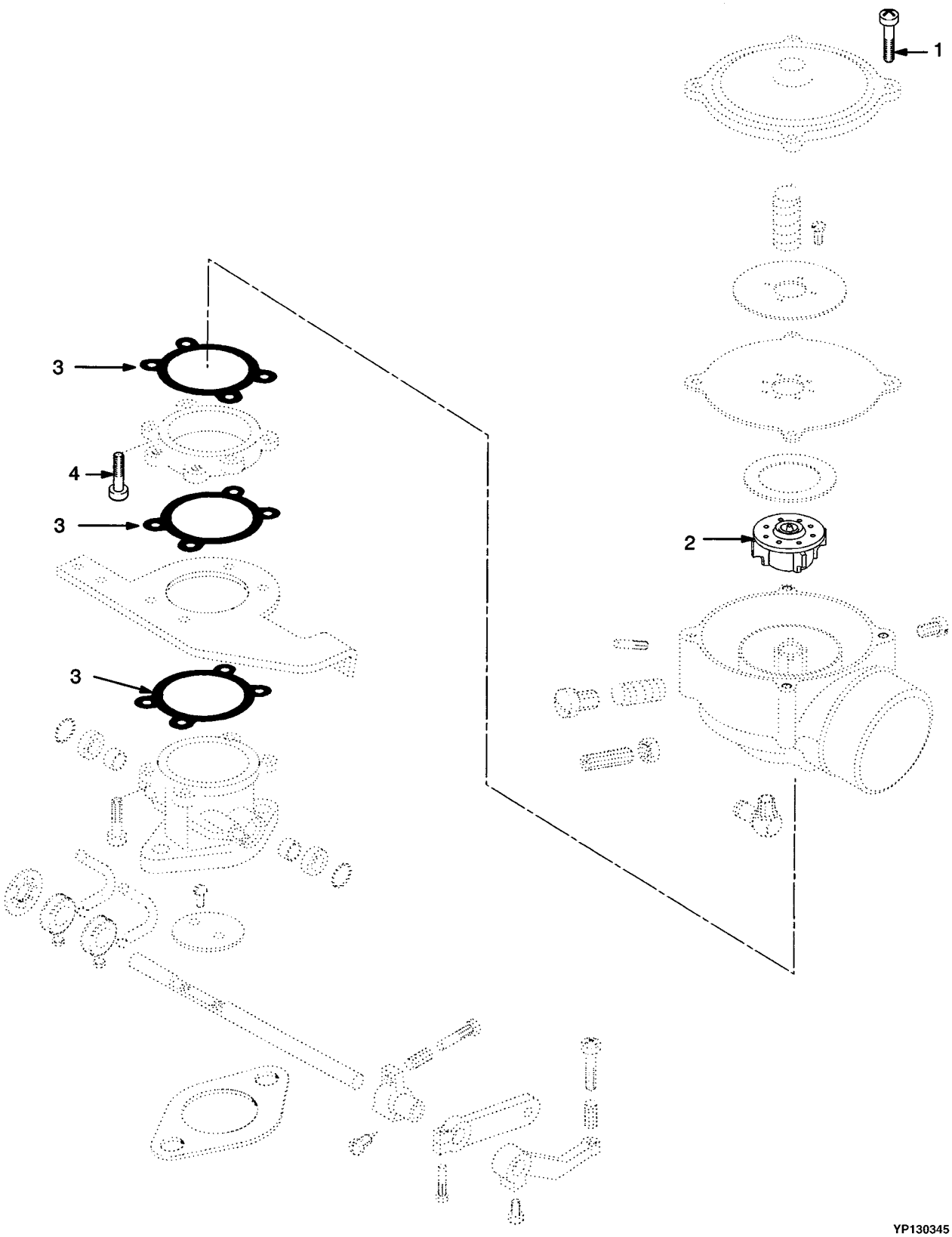

Yale Industrial Trucks

CARBURETOR
(LPG)
(S/N A875B-3166⇔S/N A875B-10761)

ITEM	PART NO.	DESCRIPTION	QTY
	580009145	Carburetor	1
1	014920400	Screw	4
2	580011226	Valve	1
3	516987808	Gasket	3
4	516987809	Screw	4

Yale Industrial Trucks

CARBURETOR
(LPG) (OPEN LOOP)
(S/N A875B-10761⇒)

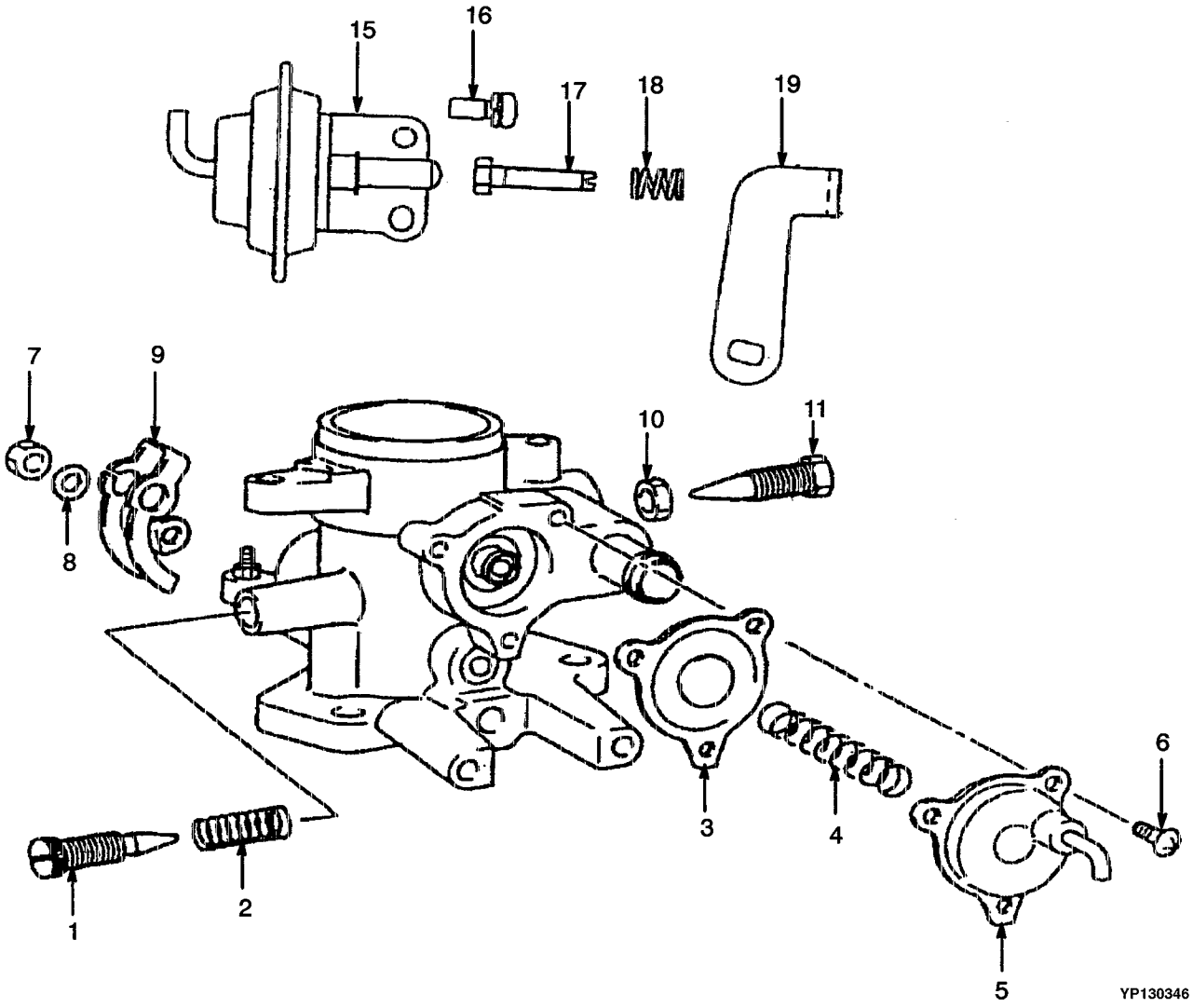

Yale Industrial Trucks

CARBURETOR
(LPG) (OPEN LOOP)
(S/N A875B-10761⇒)

ITEM	PART NO.	DESCRIPTION	QTY
	580022709	Carburetor	1
1	580022710	Screw (Adjust)	1
2	580022711	Spring	1
3	580022712	Diaphragm	1
4	580022713	Spring (Diaphragm)	1
5	580022714	Cover	1
6	580022715	Screw	3
7	580022716	Nut	1
8	580022717	Washer	1
9	580022718	Lever	1
10	580022719	Nut (Power Adjust)	1
11	580022720	Screw (Adjust)	1
12	580022721	Gasket	1
13	580022722	Plug	1
14	580022723	Jet	1
15	580022724	Diaphragm	1
16	580022725	Screw	2
17	580022726	Bolt	1
18	580022727	Spring (Idle Adjust)	1
19	580022728	Lever	1
20	505966525	Valve	1

Yale Industrial Trucks

REGULATOR
(OPEN LOOP)
(S/N A875B-10761⇒)

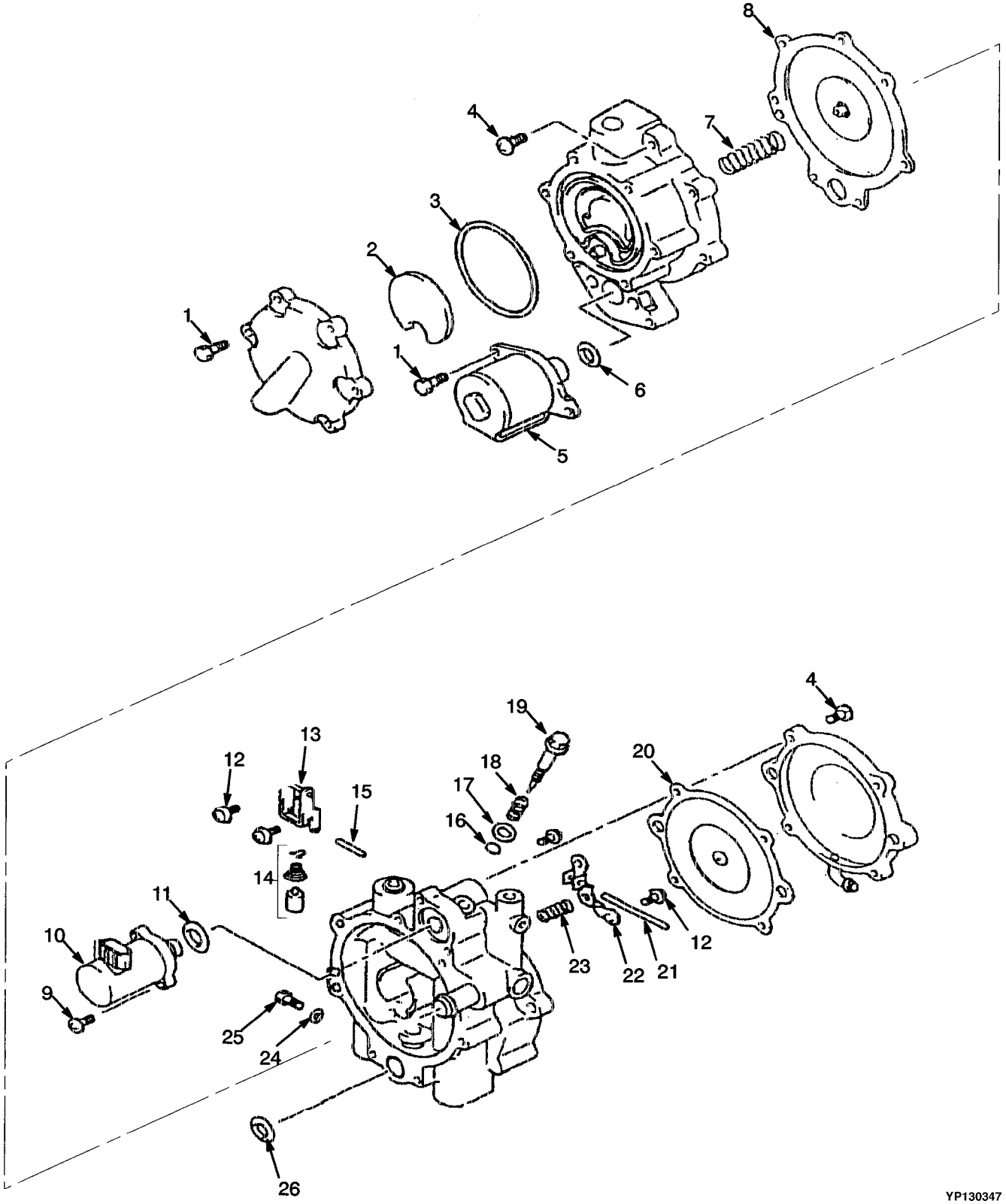

Yale Industrial Trucks

REGULATOR
(OPEN LOOP)
(S/N A875B-10761⇒)

ITEM	PART NO.	DESCRIPTION	QTY
	580014564	Regulator	1
1	580017189	Bolt (With Washer)	8
2	580017190	Filter	1
3	580017192	O-Ring	1
4	580017193	Screw	11
5	580017194	Valve	1
6	580017195	O-Ring	1
7	580017196	Spring	1
8	580017197	Diaphragm	1
9	580017199	Screw	2
10	580024681	Valve (Solenoid)	1
11	580017200	O-Ring	1
12	580017201	Screw	1
13	580017202	Lever	1
14	580017203	Valve	1
15	580017204	Pin	1
16	580017208	O-Ring	1
17	580017209	Washer	1
18	580017210	Spring	1
19	580017211	Screw	1
20	580017215	Diaphragm	1
21	580017214	Pin	1
22	580017213	Valve	1
23	580017212	Spring	1
24	580017206	Gasket	1
25	580017205	Plug	1
26	580017207	O-Ring	1
	580017216	Valve Kit (Includes Items 14-15, 21-22)	1
	580017217	Diaphragm Kit (Includes Items 2-3, 6, 8, 11, 16, 20, 26)	1

CARBURETOR
(LPG) (CLOSED LOOP)
(S/N A875B-10761⇒)

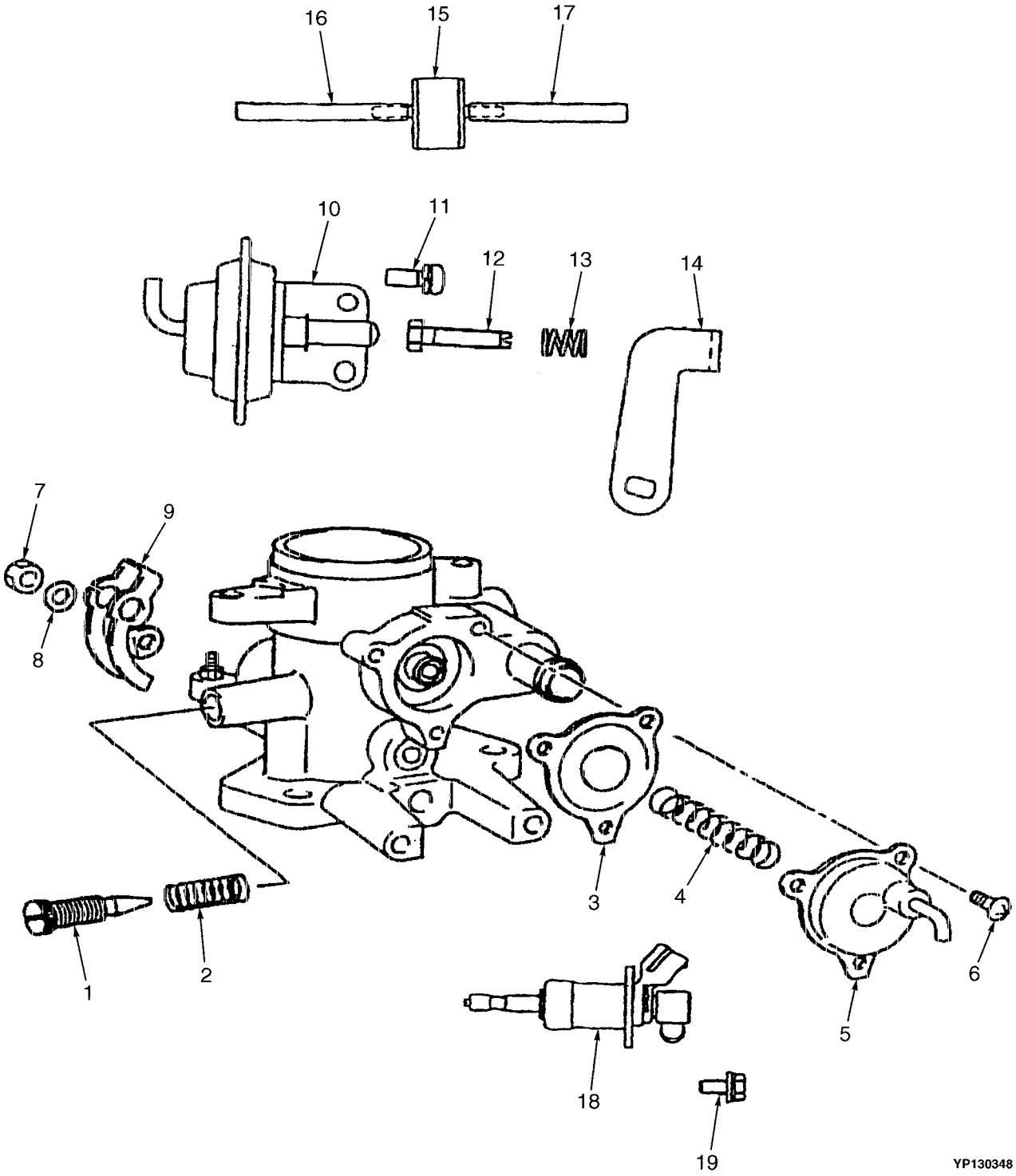

Yale Industrial Trucks

CARBURETOR
(LPG) (CLOSED LOOP)
(S/N A875B-10761⇒)

ITEM	PART NO.	DESCRIPTION	QTY
	580022756	Carburetor	1
1	580022710	Screw (Adjust)	1
2	580022711	Spring	1
3	580022712	Diaphragm	1
4	580022713	Spring (Diaphragm)	1
5	580022714	Cover	1
6	580022715	Screw	3
7	580022716	Nut	1
8	580022717	Washer	1
9	580022718	Lever	1
10	580022724	Diaphragm	1
11	580022725	Screw	2
12	580022726	Bolt	1
13	580022727	Spring (Idle Adjust)	1
14	580022728	Lever	1
15	505966525	Valve	1
16	580022729	Hose (Vacuum)	1
17	580022730	Hose (Vacuum)	1
18	580023752	Injector Assembly	1
19	580023753	Bolt (With Washer)	1

Yale Industrial Trucks

REGULATOR
(CLOSED LOOP)
(S/N A875B-10761⇒)

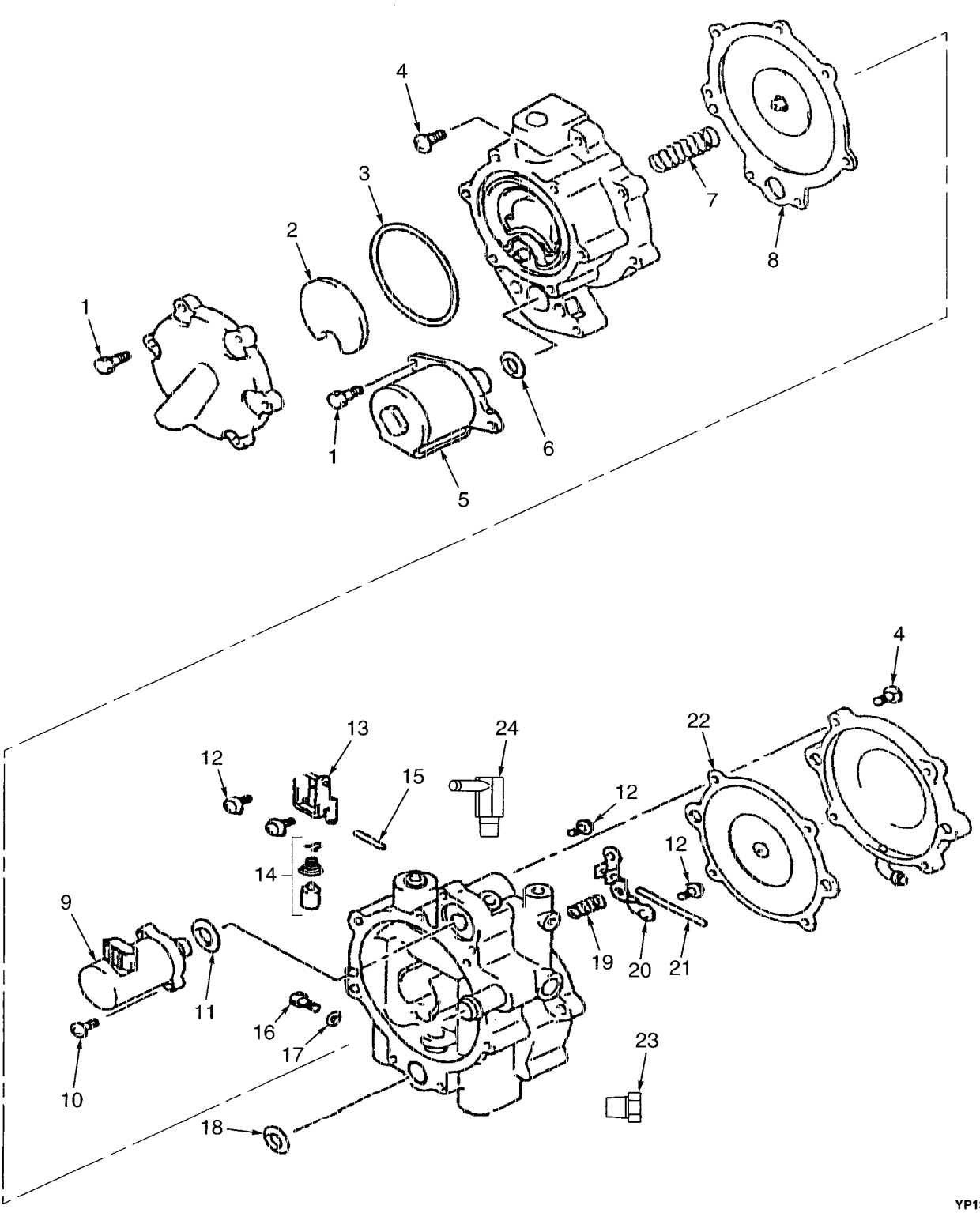

Yale Industrial Trucks

REGULATOR
(CLOSED LOOP)
(S/N A875B-10761⇒)

ITEM	PART NO.	DESCRIPTION	QTY
	580020005	Regulator	1
1	580017189	Bolt (With Washer)	8
2	580017190	Filter	1
3	580017192	O-Ring	1
4	580017193	Screw	11
5	580017194	Valve	1
6	580017195	O-Ring	1
7	580017196	Spring (First Regulator)	1
8	580017197	Diaphragm (First Regulator)	1
9	580024681	Valve (Solenoid)	1
10	580017199	Screw	2
11	580017200	O-Ring	1
12	580017201	Screw	4
13	580017202	Lever	1
14	580017203	Valve	1
15	580017204	Pin	1
16	580017205	Plug	1
17	580017206	Gasket	1
18	580017207	O-Ring	1
19	580017212	Spring (Second Regulator)	1
20	580017213	Valve	1
21	580017214	Pin	1
22	580017215	Diaphragm (Second Regulator)	1
23	580022999	Plug	1
24	580023714	Fitting	1
	580017216	Valve Kit (Includes Items 14-15, 20-21)	1
	580017217	Diaphragm Kit (Includes Items 2-3, 6, 8, 11, 18, 22)	1

Yale Industrial Trucks

FUEL LOCK FILTER ASSEMBLY
(LPG)
(⇒S/N A875B-10761)

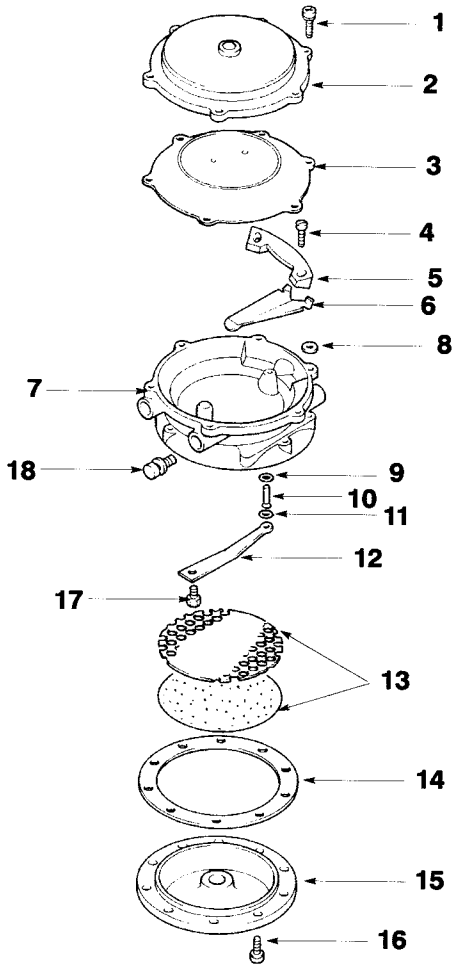

Yale Industrial Trucks

FUEL LOCK FILTER ASSEMBLY (LPG) (⇒S/N A875B-10761)

ITEM	PART NO.	DESCRIPTION	QTY
	505966558	Filter and Lock-Off Valve	1
1	. . . . .	Screw	6
2	900970802	Cover	1
3	. . . . .	Diaphragm Assembly	1
4	900970804	Screw	2
5	. . . . .	Fulcrum	1
6	900970806	Lever	1
7	900970807	Body Assembly	1
8	. . . . .	Washer	1
9	. . . . .	Seal	1
10	. . . . .	Pin	1
11	. . . . .	Seat	1
12	900970813	Spring	1
13	900004281	Filter	1
14	. . . . .	Gasket	1
15	900970818	Cover	1
16	580003608	Screw	10
17	900970814	Screw	1
18	900969813	Screw and Washer	2
	505970572	Repair Kit (Includes Items 1, 3, 5, 8-11, 14, 16)	1

CONVERTER
(LPG)
(⇒S/N A875B-10761)

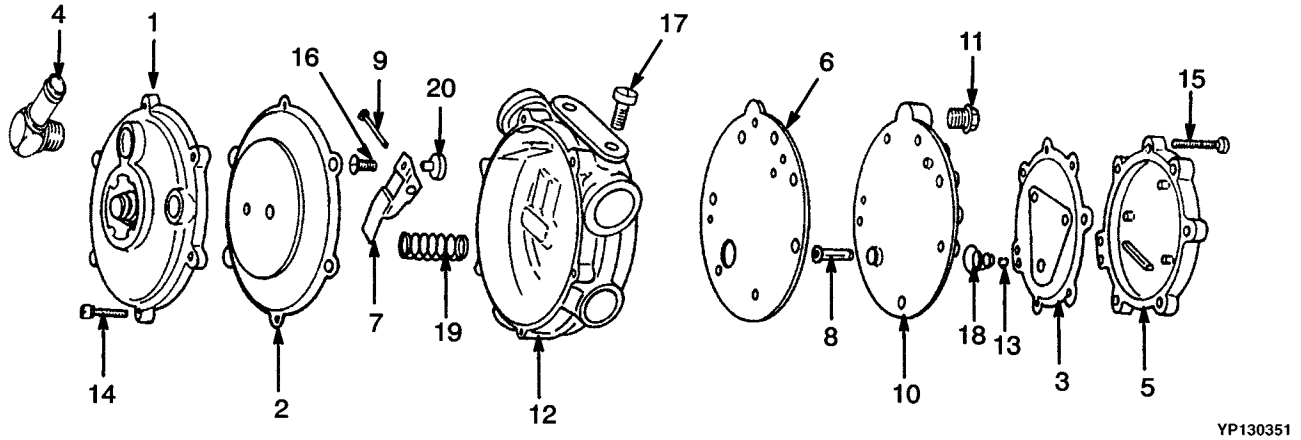

ITEM	PART NO.	DESCRIPTION	QTY
	580002388	Convertor	1
1	580001739	Cover Assembly	1
2	. . . . .	Diaphragm Assembly	1
3	. . . . .	Diaphragm	1
4	518796637	Valve	1
5	518807665	Cover	1
6	. . . . .	Gasket	1
7	505959534	Lever	1
8	. . . . .	Valve Pin (Primary)	1
9	900969808	Pin	1
10	518807627	Cover Plate	1
11	900969817	Plug	1
12	580001740	Body	1
13	. . . . .	E-Ring	1
14	580000052	Screw	6
15	580001737	Capscrew	7
16	580001736	Screw	1
17	900969813	Screw and Washer	2
18	580001735	Spring	1
19	900969811	Spring (Blue)	1
20	. . . . .	Seat	1
	580007732	Repair Kit (Includes Items 2-3, 6, 8, 13, 20)	1

NOTES

Yale Industrial Trucks

AIR CLEANER AND MOUNTING
(⇒S/N A875B-10761)

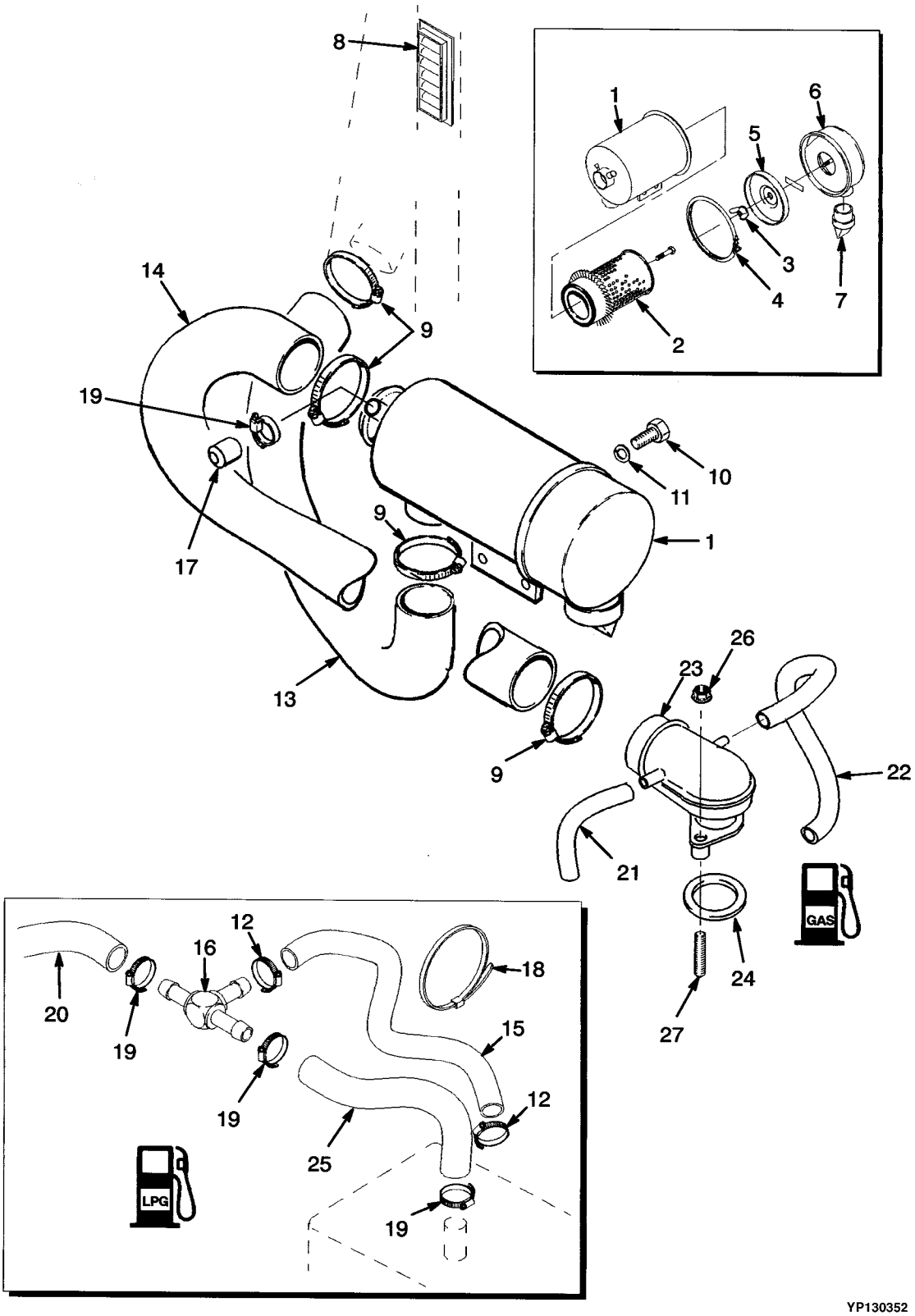

Yale Industrial Trucks

AIR CLEANER AND MOUNTING (⇒S/N A875B-10761)

KEY:
A: Gasoline
B: LPG

ITEM		PART NO.	DESCRIPTION	QTY A	QTY B
1		505972575	Air Filter	1	..
2		504240863	Element	1	..
3		907271604	Nut and Gasket	1	..
4		505967510	Clamp	1	..
5		907271605	Baffle	1	..
6		505967549	Cup	1	..
7		505967516	Valve	1	..
8		919334400	Grill	1	1
9		960100925	Clamp	4	4
10		449001023	Capscrew	2	2
11		449022013	Lockwasher	2	2
12		511405800	Clamp	..	2
13		504240842	Hose	1	1
14	**a**	505977506	Hose	..	1
14	**a**	505977572	Hose	1	..
14	**b**	580015018	Hose	1	1
15		505970523	Hose	..	1
16		520037853	Fitting	..	1
17		505972556	Plug	1	..
18		504070790	Strap Clamp	..	3
19		502056906	Clamp	1	..
19		502056906	Clamp	..	4
20		518798696	Hose	..	1
21		505960524	Hose	1	..
22		901277819	Hose	1	..
23		505959589	Filter Assembly	1	..
24		505959504	Seal	1	..
25		505970505	Hose	..	1
26		901854831	Nut	2	..
27		505959547	Stud	2	..

FOOTNOTES:
a ⇒ S/N A875B-10761
b S/N A875B-10761 ⇒

Yale Industrial Trucks

AIR CLEANER AND MOUNTING
(S/N A875B-10761⇔S/N A875B-13057Y)

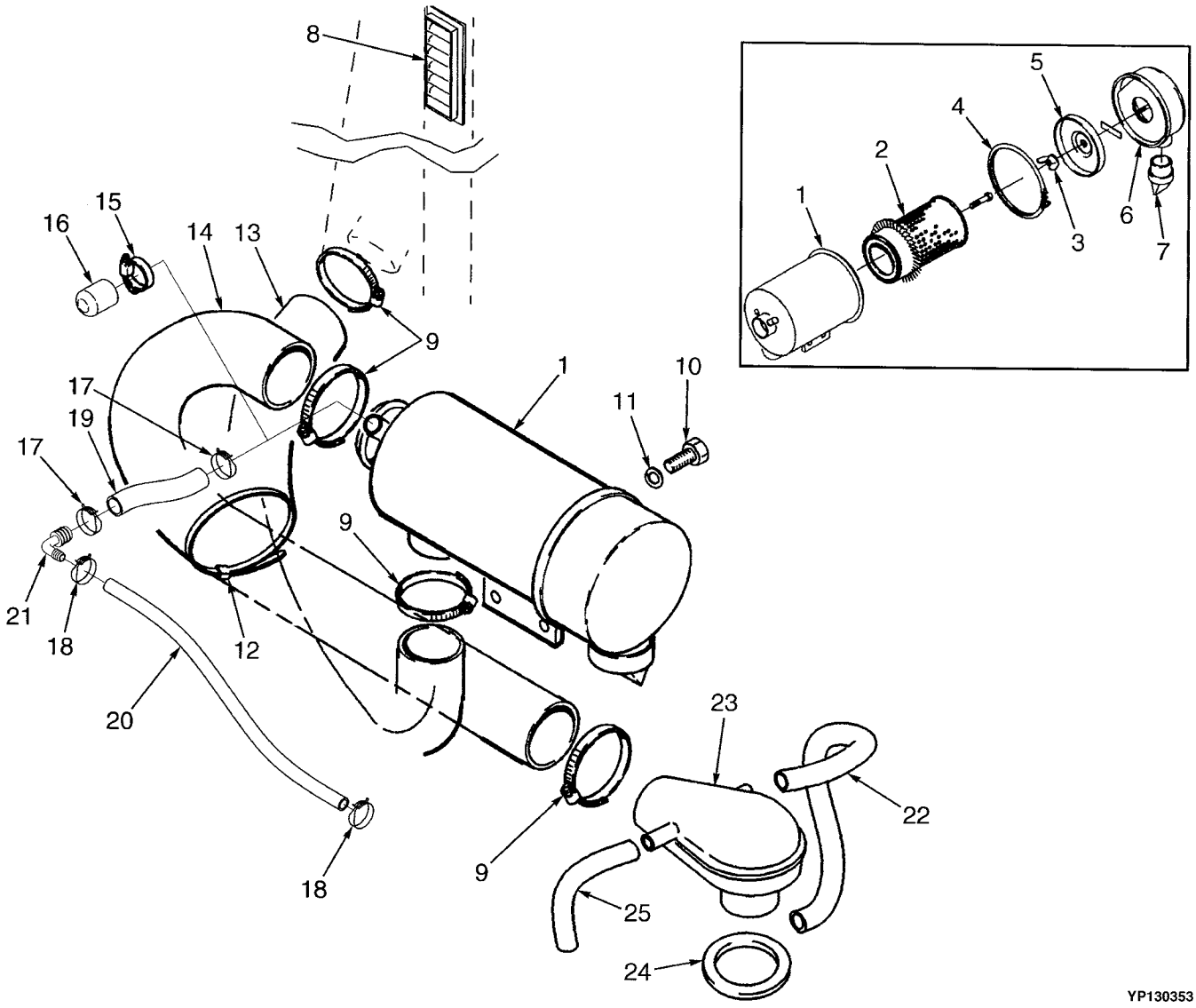

Yale Industrial Trucks

AIR CLEANER AND MOUNTING
(S/N A875B-10761⇔S/N A875B-13057Y)

ITEM		PART NO.	DESCRIPTION	QTY
1		505972575	Air Filter	1
2		504240863	Element	1
3		907271604	Nut and Gasket	1
4		505967510	Clamp	1
5		907271605	Baffle	1
6		505967549	Cup	1
7		505967516	Valve	1
8		919334400	Grill	1
9		960100925	Clamp	4
10		449001023	Capscrew	2
11		449022013	Lockwasher	2
12		511405800	Clamp	2
13		504240842	Hose	1
14		505977506	Hose	1
15	**a**	505972556	Plug	1
16	**a**	502056906	Clamp	1
17	**b**	580007557	Clamp	2
18	**b**	505966595	Clamp	2
19	**b**	580021221	Hose	1
20	**b**	580021160	Hose	1
21	**b**	580014917	Fitting	1
22		901277819	Hose	1
23		505959589	Filter Assembly	1
24		505959504	Seal	1
25		505960524	Hose	1

FOOTNOTES:
a Gasoline
b LPG

Yale Industrial Trucks

AIR CLEANER AND MOUNTING
(S/N A875B-13058⇒)

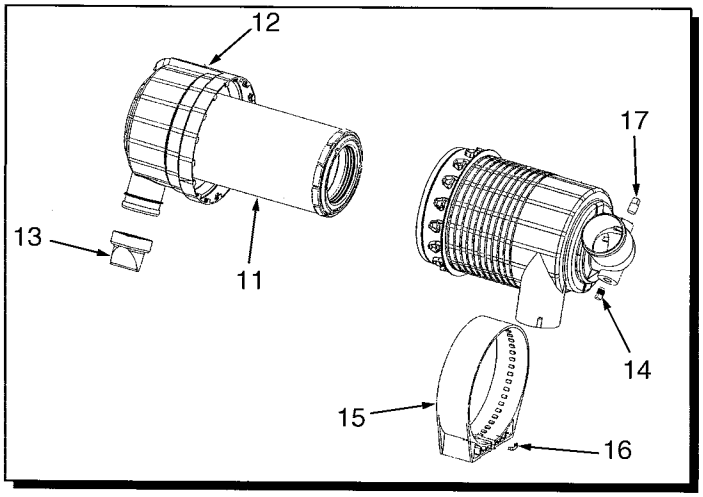

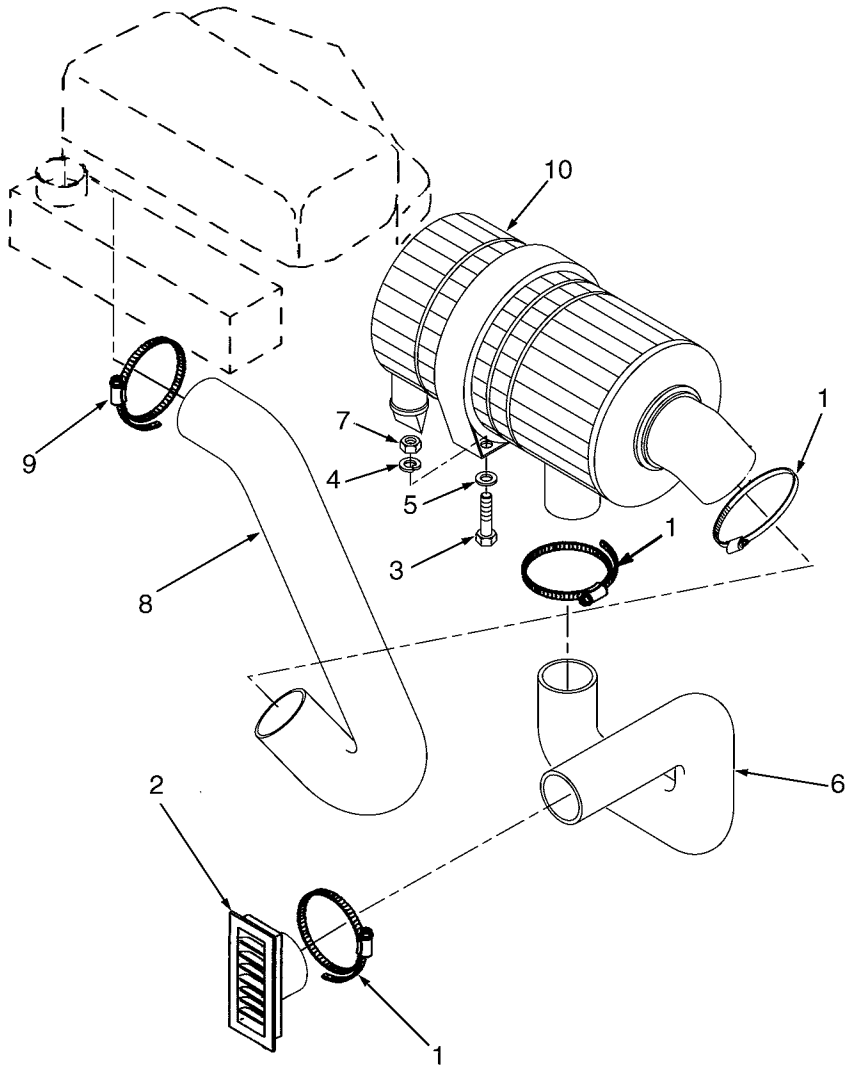

Yale Industrial Trucks

AIR CLEANER AND MOUNTING
(S/N A875B-13058⇒)

ITEM	PART NO.	DESCRIPTION	QTY
1	580000180	Clamp	3
2	919334400	Grill	1
3	580031236	Stud	2
4	449022016	Lockwasher	2
5	449021001	Washer	2
6	580023188	Hose	1
7	504230271	Nut	2
8	580026626	Hose	1
9	062159700	Clamp	1
10	580021208	Air Filter (Single Element)	1
10	580021209	Air Filter (Dual Element)	1
11	520045026	Element (Single Element)	1
11	580000543	Element (Dual Element)	1
12	580023141	Cover	1
13	580023142	Valve	1
14	580010994	Plug	1
15	580023143	Bracket	1
16	580023144	Clip	2
17	520045029	Plug	1

Yale Industrial Trucks

THROTTLE LINKAGE
(⇒S/N A875B-10761)

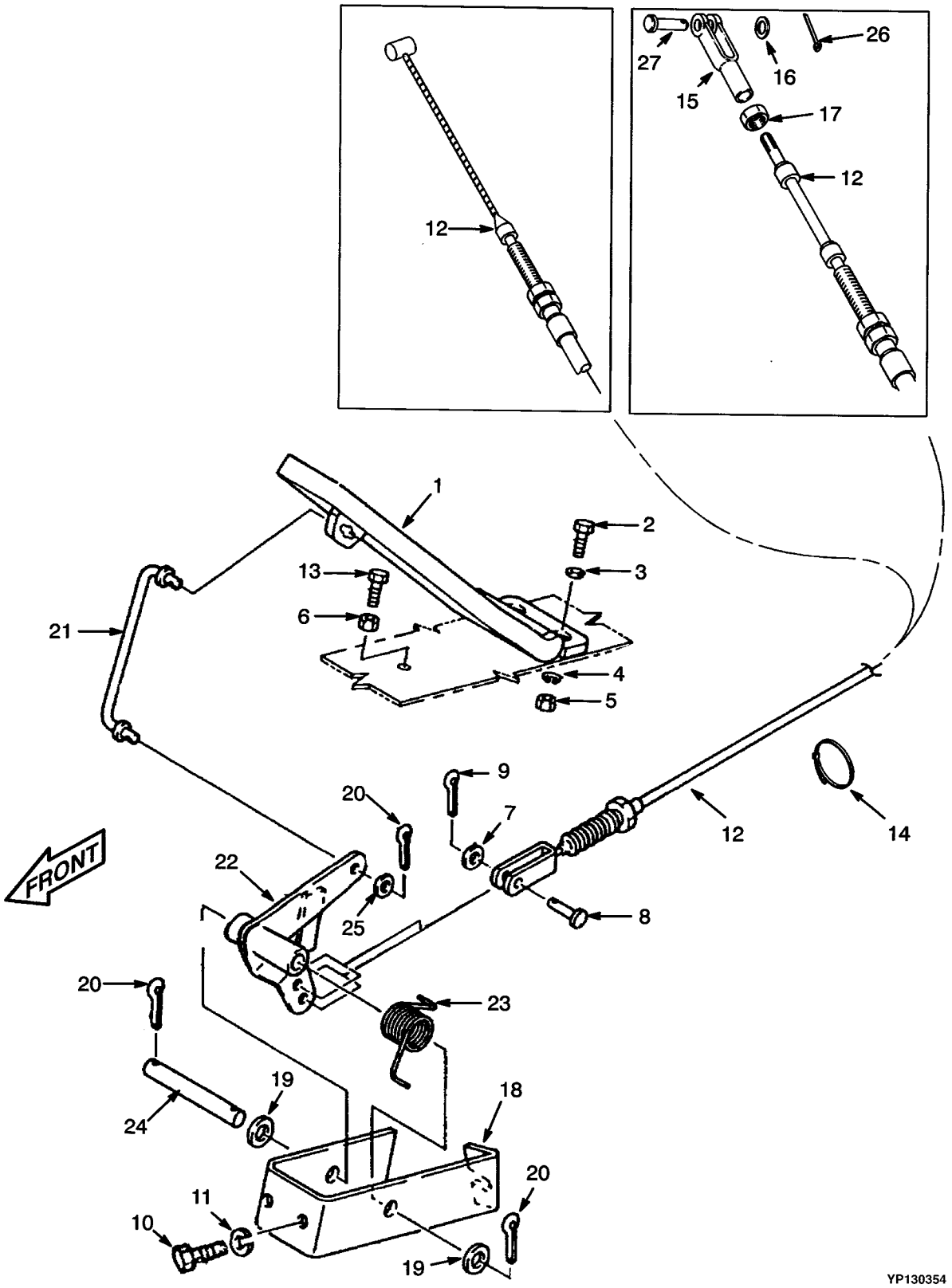

Yale Industrial Trucks

THROTTLE LINKAGE
(⇒S/N A875B-10761)

ITEM		PART NO.	DESCRIPTION	QTY
1		915356400	Pedal	1
2		449007018	Screw	2
3		449021003	Washer	2
4		449022018	Lockwasher	2
5		449015002	Nut	2
6		449015014	Nut	1
7	**b**	449021002	Washer	1
8	**b**	500583902	Rod End Pin	1
8	**a**	504227203	Rod End Pin	1
9	**b**	015414700	Cotter Pin	1
9	**a**	015416200	Cotter Pin	1
10		932729905	Screw	2
11		504262752	Washer	2
12	**bd**	505969520	Cable	1
12	**bc**	505973531	Cable	1
12	**ac**	580008260	Cable	1
12	**ad**	580008261	Cable	1
13	**b**	449001014	Capscrew	1
14		312850034	Strap Clamp	2
15	**d**	518808629	Rod End	1
16	**d**	449021002	Washer	1
17	**d**	014939300	Nut	1
18	**b**	505973503	Crank Assembly	1
18		518798651	Bracket	1
19		449021006	Washer	2
20		015416200	Cotter Pin	3
21		917767300	Rod	1
22		916327400	Bellcrank	1
23		900588100	Spring	1
24		900839101	Pin	1
25		449021003	Washer	1
26	**d**	015414700	Cotter Pin	1
27	**d**	500583902	Rod End Pin	1

FOOTNOTES:

a Directional Control Pedal
b Forward and Reverse
c Gasoline
d LPG

Yale Industrial Trucks

THROTTLE LINKAGE
(S/N A875B-10761⇒)

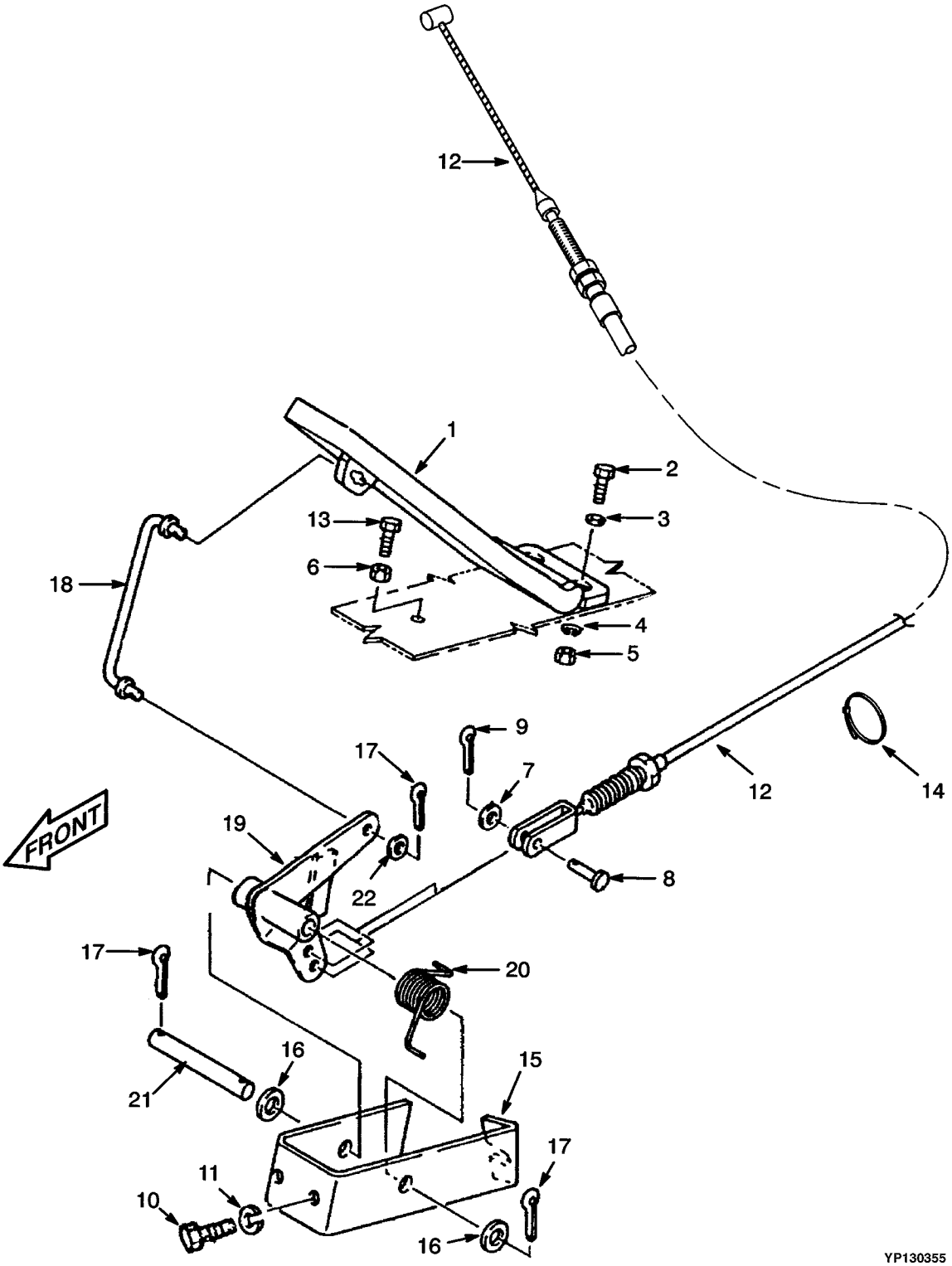

Yale Industrial Trucks

THROTTLE LINKAGE
(S/N A875B-10761⇒)

ITEM		PART NO.	DESCRIPTION	QTY
1		915356400	Pedal	1
2		449007018	Screw	2
3		449021003	Washer	2
4		449022018	Lockwasher	2
5		449015002	Nut	2
6		449015014	Nut	1
7	**b**	449021002	Washer	1
8	**b**	500583902	Rod End Pin	1
8	**a**	504227203	Rod End Pin	1
9	**b**	015414700	Cotter Pin	1
9	**a**	015416200	Cotter Pin	1
10		932729905	Screw	2
11		504262752	Washer	2
12	**b**	505973531	Cable	1
12	**a**	580008260	Cable	1
13		449001014	Capscrew	1
14		312850034	Strap Clamp	2
15	**b**	505973503	Crank Assembly	1
15		518798651	Bracket	1
16		449021006	Washer	2
17		015416200	Cotter Pin	3
18		917767300	Rod	1
19		916327400	Bellcrank	1
20		900588100	Spring	1
21		900839101	Pin	1
22		449021003	Washer	1

FOOTNOTES:
a Directional Control Pedal
b Forward and Reverse

FOOT DIRECTIONAL CONTROL PEDAL LINKAGE

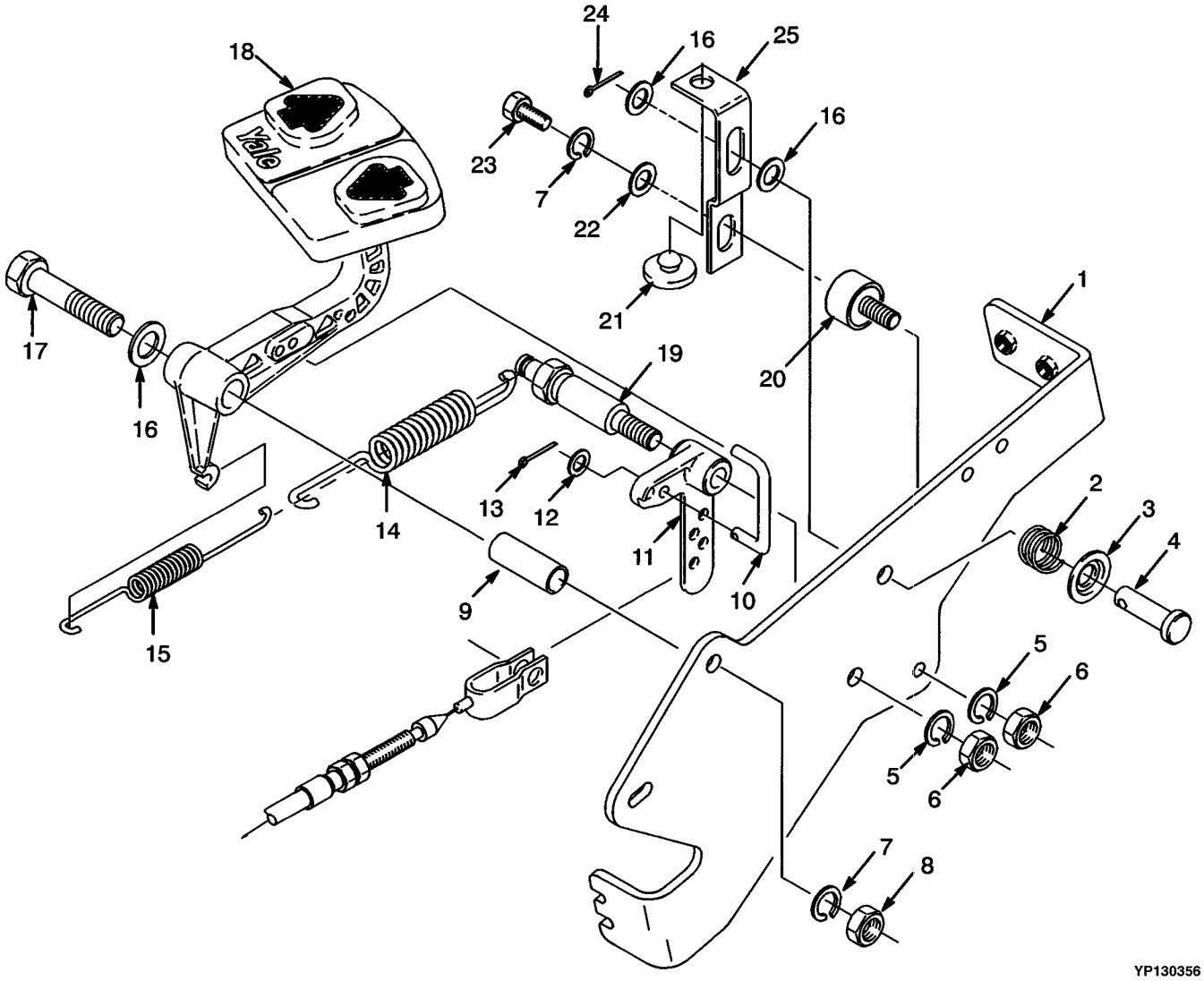

Yale Industrial Trucks

FOOT DIRECTIONAL CONTROL PEDAL LINKAGE

ITEM	PART NO.	DESCRIPTION	QTY
	524137389	Pedal	1
1	504315724	Bracket	1
2	580005856	Spring	1
3	580005857	Cap	1
4	504237211	Pin	1
5	449022013	Lockwasher	2
6	449015044	Nut	2
7	449022016	Lockwasher	2
8	449015014	Nut	1
9	504228258	Tube	1
10	504315711	Rod	1
11	580000987	Crank	1
12	449021003	Washer	1
13	015414700	Cotter Pin	1
14	580000986	Spring	1
15	580000985	Spring	1
16	504071785	Washer	3
17	931005916	Capscrew	1
18	504315732	Foot Directional Control Pedal (☞ P10292)	1
19	580000983	Shaft	1
20	580005858	Mount	1
21	580000984	Bumper	1
22	504226242	Washer	1
23	449001415	Capscrew	1
24	015416200	Cotter Pin	1
25	580005855	Bracket	1

FOOT DIRECTIONAL CONTROL PEDAL

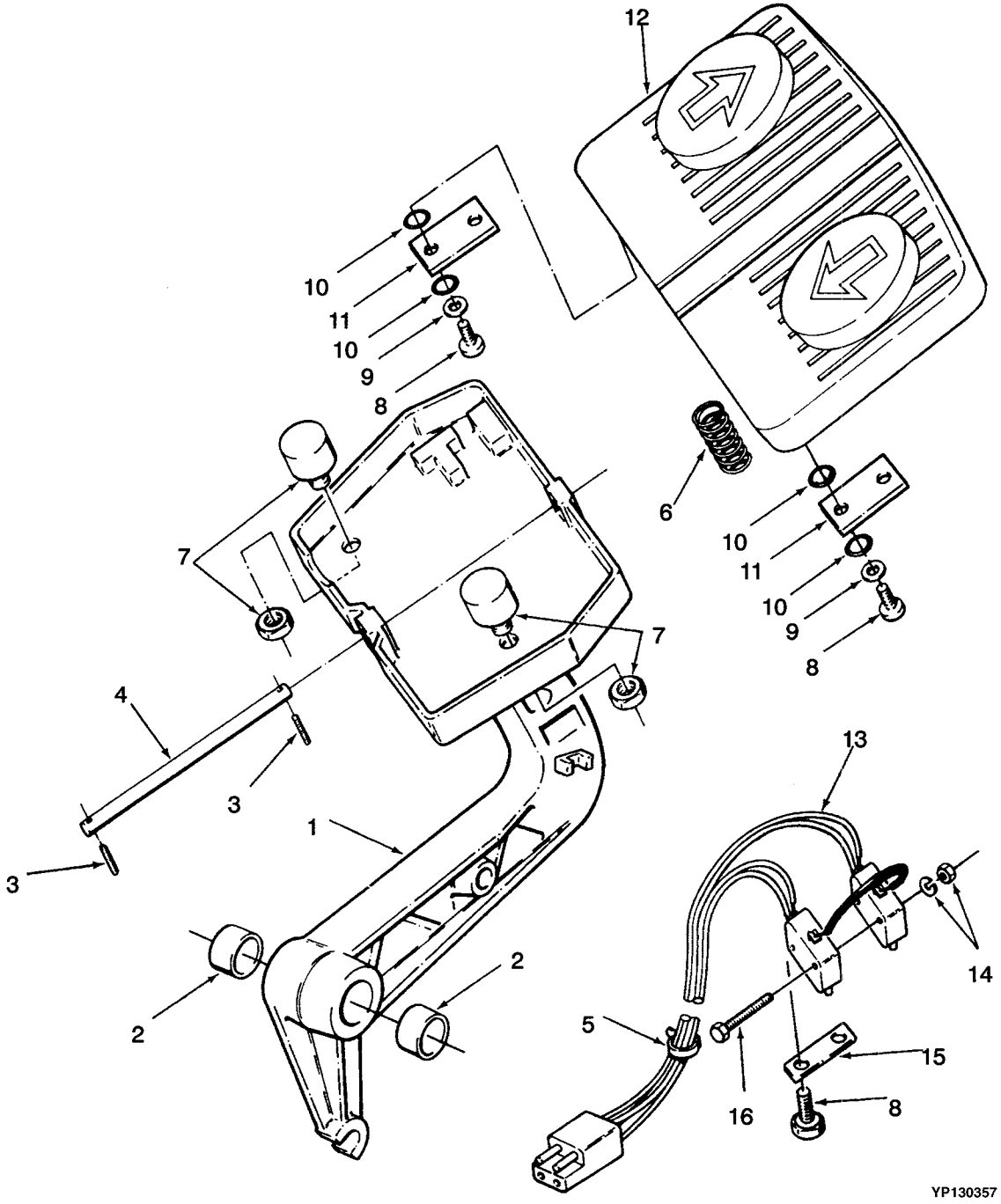

ITEM	PART NO.	DESCRIPTION	QTY
	504315732	Foot Directional Control Pedal	1
1	580003819	Pedal	1
2	580003820	Bushing	2
3	501702901	Sealant	AR
3	504449749	Screw	2
4	580003821	Pin	1
5	312850042	Strap Clamp	3
6	580003822	Spring	1
7	580003823	Magnet	2
7	580003824	Nut	2
8	580003829	Screw	6
9	580003825	Washer	4
10	012823200	O-Ring	8
11	580003826	Plate	2
12	504315733	Pad	1
13	580003827	Switch Assembly	1
14	032643500	Nut	2
14	500552902	Lockwasher	2
15	580003830	Retainer	1
16	580003828	Screw	2

NOTES

6 ELECTRICAL SYSTEM

SECTION 6
ELECTRICAL SYSTEM

DESCRIPTION	PAGE
ALTERNATOR	6-6
TYPE GS AND LPS	6-8
DISTRIBUTOR	6-4
ELECTRICAL	6-14
COWL	6-26
ENGINE	6-2
LPG WITH LOW EMISSIONS	
S/N A875B-12121Y⇒ EXC. 13136-13149	6-18
TYPE GS AND LPS	6-24
ENGINE SHUTDOWN SYSTEM	6-22
INSTRUMENT CLUSTER	6-28
STARTER	
GASOLINE AND LPG	
⇒S/N A875B-6003	6-10
S/N A875B-6004⇒	6-12
WIRE HARNESS	
CHASSIS	
GASOLINE AND LPG	
S/N A875B-5026⇔S/N A875B-10760	6-40
LPG	
S/N A875B-10761⇔S/N PENDING PER ECN 95530-01	6-42
S/N PENDING PER ECN 95530-01⇒	6-44
⇒S/N A875B-5025	6-38
COWL	
S/N PENDING PER ECN 76000⇒	6-36
⇒S/N PENDING PER ECN 76000	6-32
ENGINE	
⇒S/N A875B-03165	6-46
S/N A875B-03166⇒	6-48
ENGINE SHUTDOWN SYSTEM	6-50
INSTRUMENT CLUSTER	6-30
LPG	
S/N A875B-10761⇒	6-52
LPG ENGINE	
CLOSED LOOP	
S/N A875B-12121Y⇒ EXC. 13136-13149	6-54

ELECTRICAL
(ENGINE)

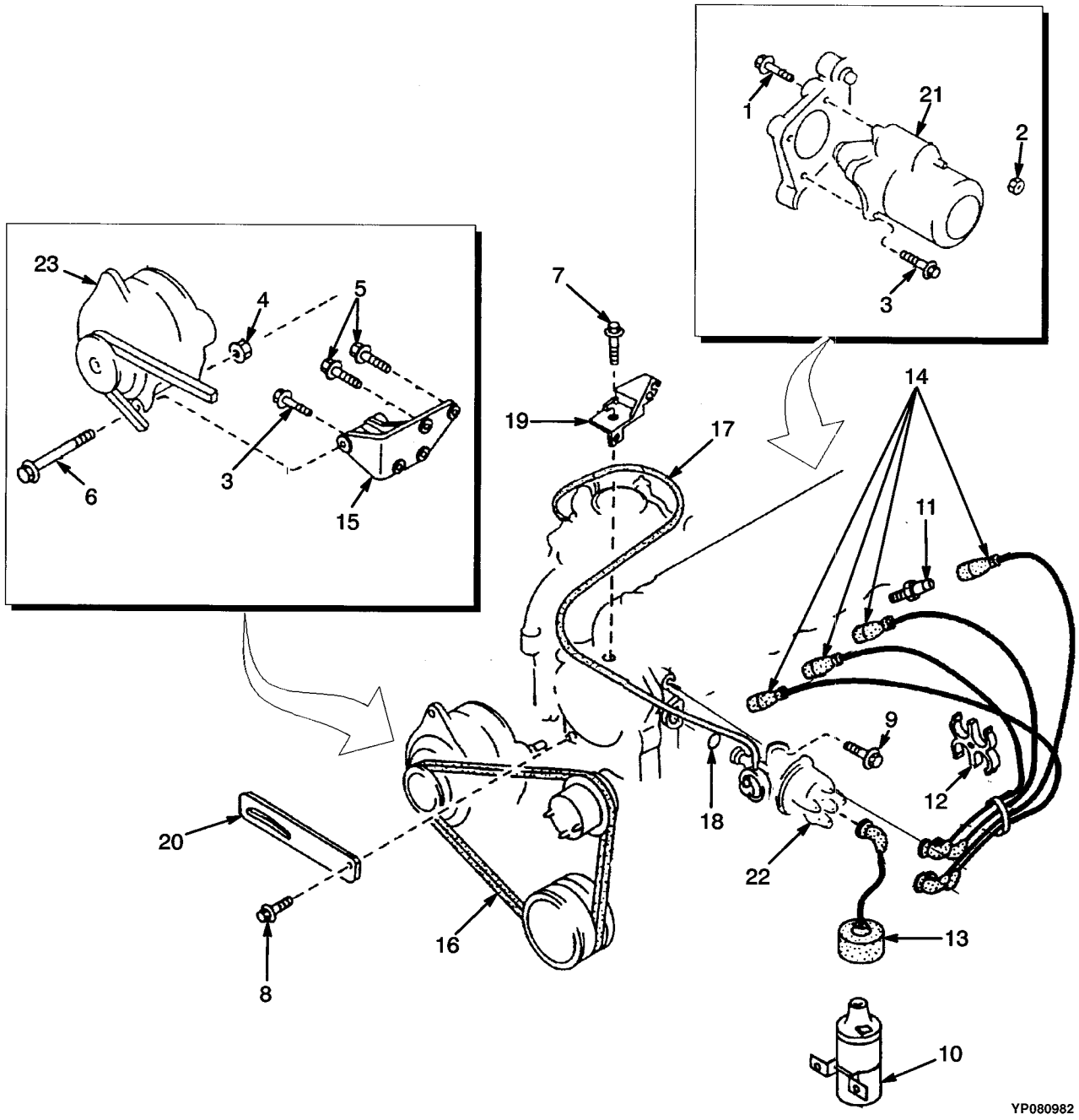

ITEM	PART NO.	DESCRIPTION	QTY
1	901097809	Screw	1
2	505960590	Nut	1
3	901085834	Bolt	2
4	901860805	Nut	1
5	900724803	Bolt	2
6	505960552	Screw	1
7	505960581	Screw	1
8	901292820	Bolt	1
9	901303832	Bolt	1
10	505960580	Coil	1
11	505960535	Spark Plug	4
12	505960549	Support	1
13	505960585	Coil Wire	1
14	505976593	Cable Kit	1
15	901950814	Bracket	1
16	520045019	Belt	1
17	900549883	Hose	1
18	900294855	O-Ring	1
19	901303811	Protector	1
20	901950812	Strap	1
21	912978600	Starter (☞ P10818)	1
21	918139600	Starter (☞ P11127)	1
22	580001111	Distributor (☞ P10499)	1
23	580000990	Alternator (☞ P10817)	1
23	580001184	Alternator (Type GS and LPS) (☞ P10237)	1
	504259763	Gasket Kit (Includes Item 18)	1

DISTRIBUTOR

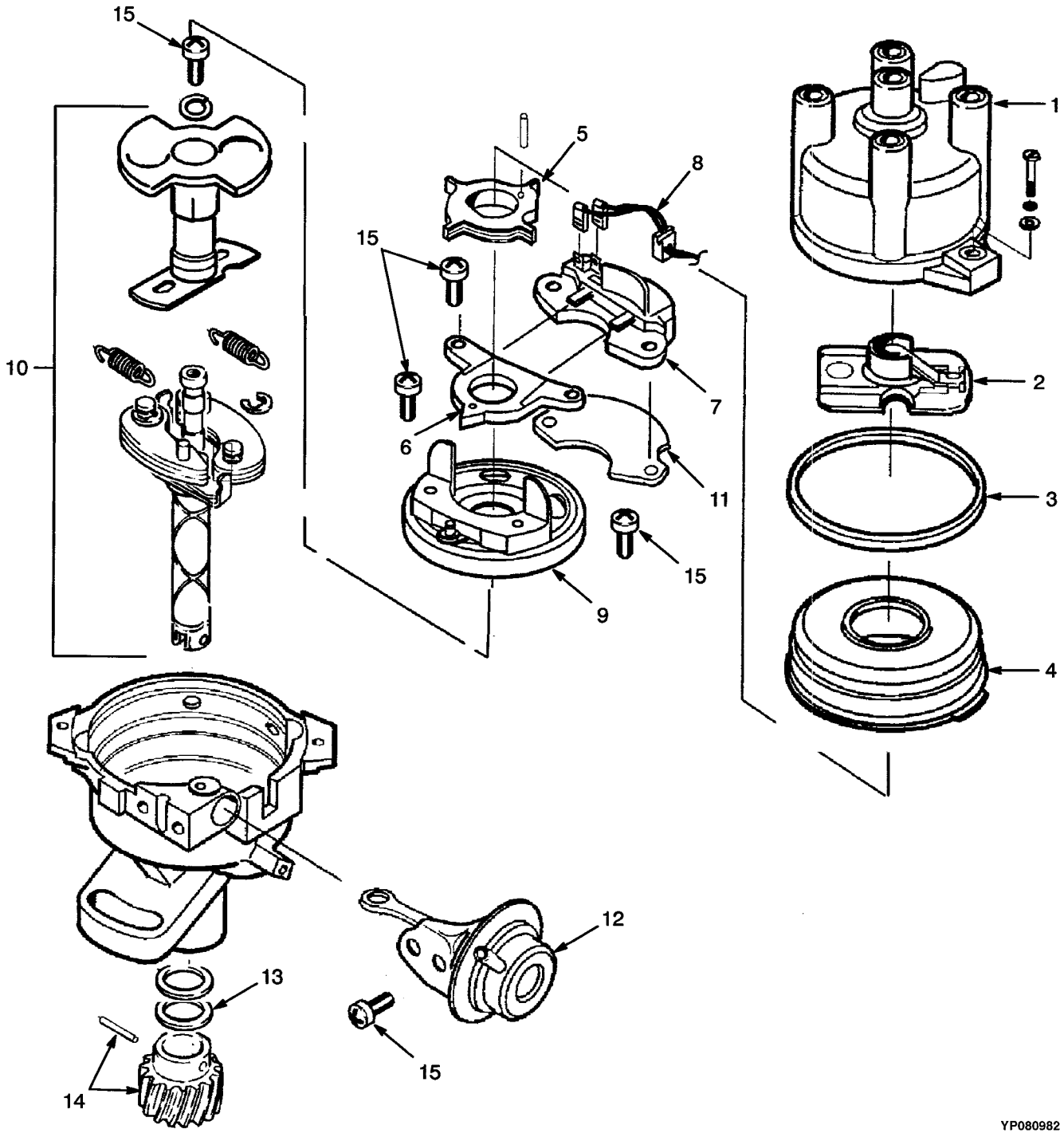

ITEM	PART NO.	DESCRIPTION	QTY
	580001111	Distributor	1
1	901580802	Cap	1
2	150022510	Rotor	1
3	901953803	Heatsink	1
4	901357805	Cover	1
5	901953804	Rotor	1
6	901953806	Pick-Up Set	1
7	901953809	Igniter	1
8	580001112	Wire	1
9	901953810	Breaker	1
10	901953811	Governor Set	1
11	901357804	Packing	1
12	901953817	Vacuum Set	1
13	901357814	Oil Seal	1
14	901304823	Coupling	1
15	901953816	Screw	1

ALTERNATOR

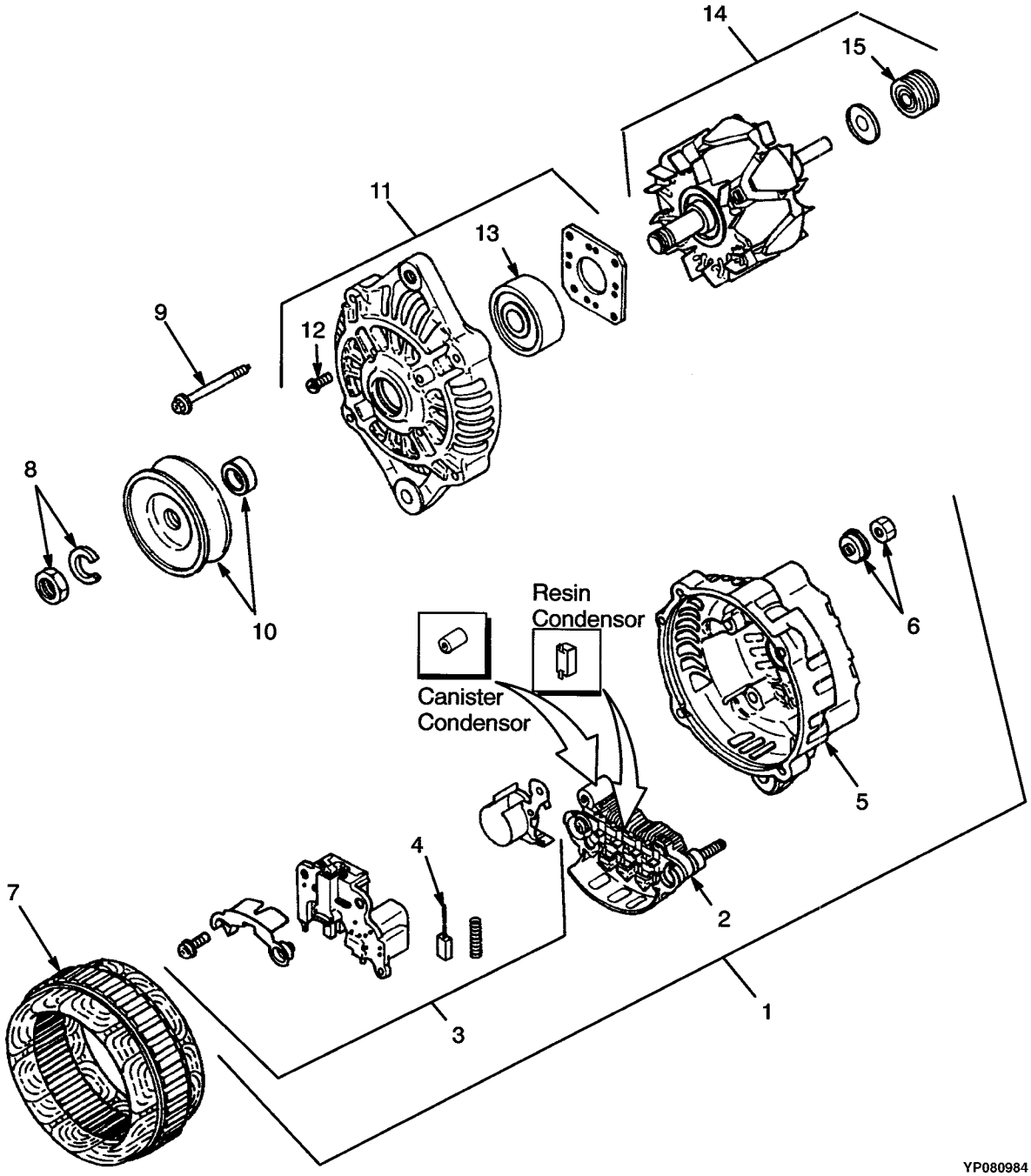
14
15
11
13
9
12
8
10
Resin
Condensor
Canister
Condensor
6
5
4
7
2
3
1
YP080984

ITEM	PART NO.	DESCRIPTION	QTY
	580000990	Alternator	1
1	902260803	Cover	1
2	902260806	Rectifier	1
3	902260807	Regulator	1
4	901861812	Brush	2
5	901948805	Cover (Rear)	1
6	901948804	Nut	1
7	901948802	Stator	1
8	901861815	Nut	1
9	901861816	Screw	1
10	901948815	Pulley	1
11	901948811	Cover	1
12	901948813	Screw	1
13	901861819	Bearing	1
14	901948809	Rotor	1
15	901948810	Bearing	1

Yale Industrial Trucks

ALTERNATOR
(TYPE GS AND LPS)

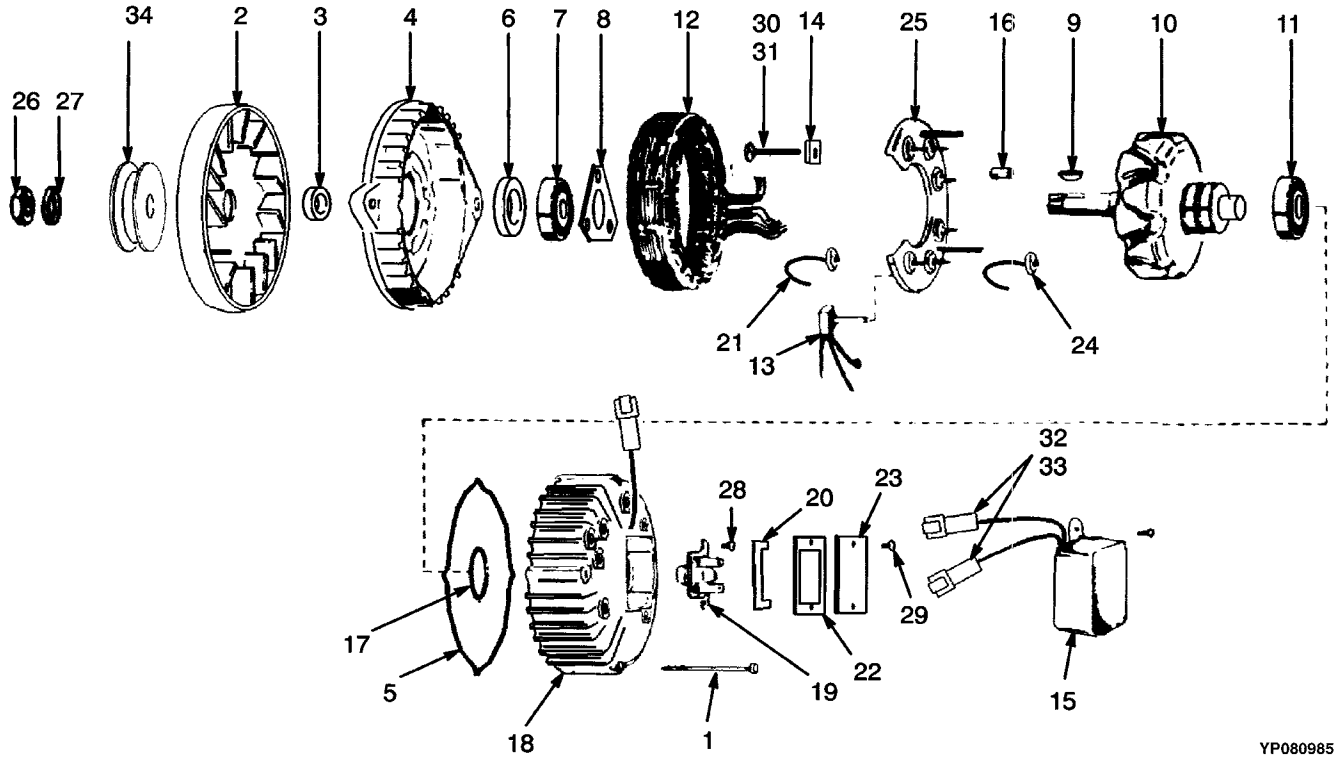

Yale Industrial Trucks

ALTERNATOR
(TYPE GS AND LPS)

ITEM	PART NO.	DESCRIPTION	QTY
	580001184	Alternator	1
1	580001139	Bolt	4
2	504804748	Fan	1
3	580001130	Spacer	1
4	580001173	Housing (Front)	1
5	520024816	Gasket	1
6	580001131	Seal	1
7	520024807	Bearing (Front)	1
8	520024809	Retainer	1
9	580001174	Key	1
10	520024802	Rotor	1
11	520024808	Bearing (Rear)	1
12	520024803	Stator	1
13	520024825	Diode	1
14	520024822	Insulator	1
15	580001133	Voltage Regulator	1
16	520024819	Sleeve	1
17	520024810	Retainer	1
18	520024804	Housing (Rear)	1
19	520024812	Brush Assembly	1
20	520024820	Insulation	1
21	520024818	Diode (Positive)	1
22	580001132	Gasket	1
23	520024823	Brush Cover	1
24	520024817	Diode (Negative)	1
25	520024811	Heat Sink	1
26	580001159	Nut	1
27	580001172	Lockwasher	1
28	580001162	Screw	2
29	580001164	Screw	2
30	580001135	Bolt (1.38 in.)	1
31	580001137	Bolt (1.75 in.)	1
32	504450740	Connector	1
33	504450741	Connector	1
34	580001223	Pulley	1

STARTER
(GASOLINE AND LPG)
(⇒S/N A875B-6003)

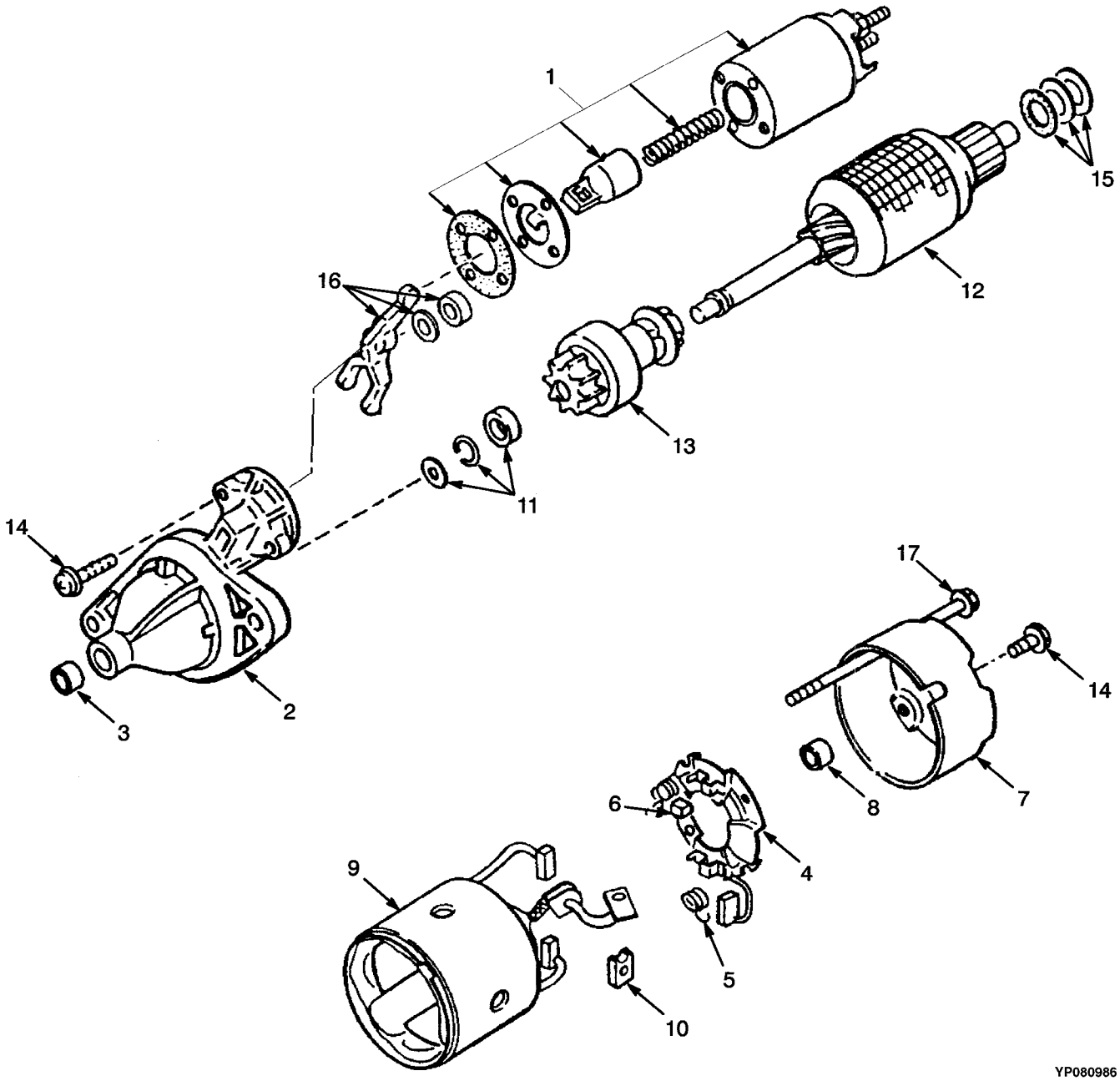

Yale Industrial Trucks

STARTER
(GASOLINE AND LPG)
(⇒S/N A875B-6003)

ITEM	PART NO.	DESCRIPTION	QTY
	912978600	Starter	1
1	901991817	Switch	1
2	901991803	Bracket	1
3	901286812	Sleeve	1
4	901286814	Brush Holder	1
5	900296827	Brush Spring	3
6	901286816	Brush	1
7	901286811	Bracket (Rear)	1
8	901286813	Sleeve (Rear)	1
9	901991802	Yoke	1
10	901286818	Brush	2
11	901286820	Stopper Set	1
12	901286819	Armature	1
13	901286806	Clutch	1
14	901286807	Screw	1
15	901286804	Washer	1
16	901286809	Lever	1
17	901286810	Bolt	2

STARTER
(GASOLINE AND LPG)
(S/N A875B-6004⇒)

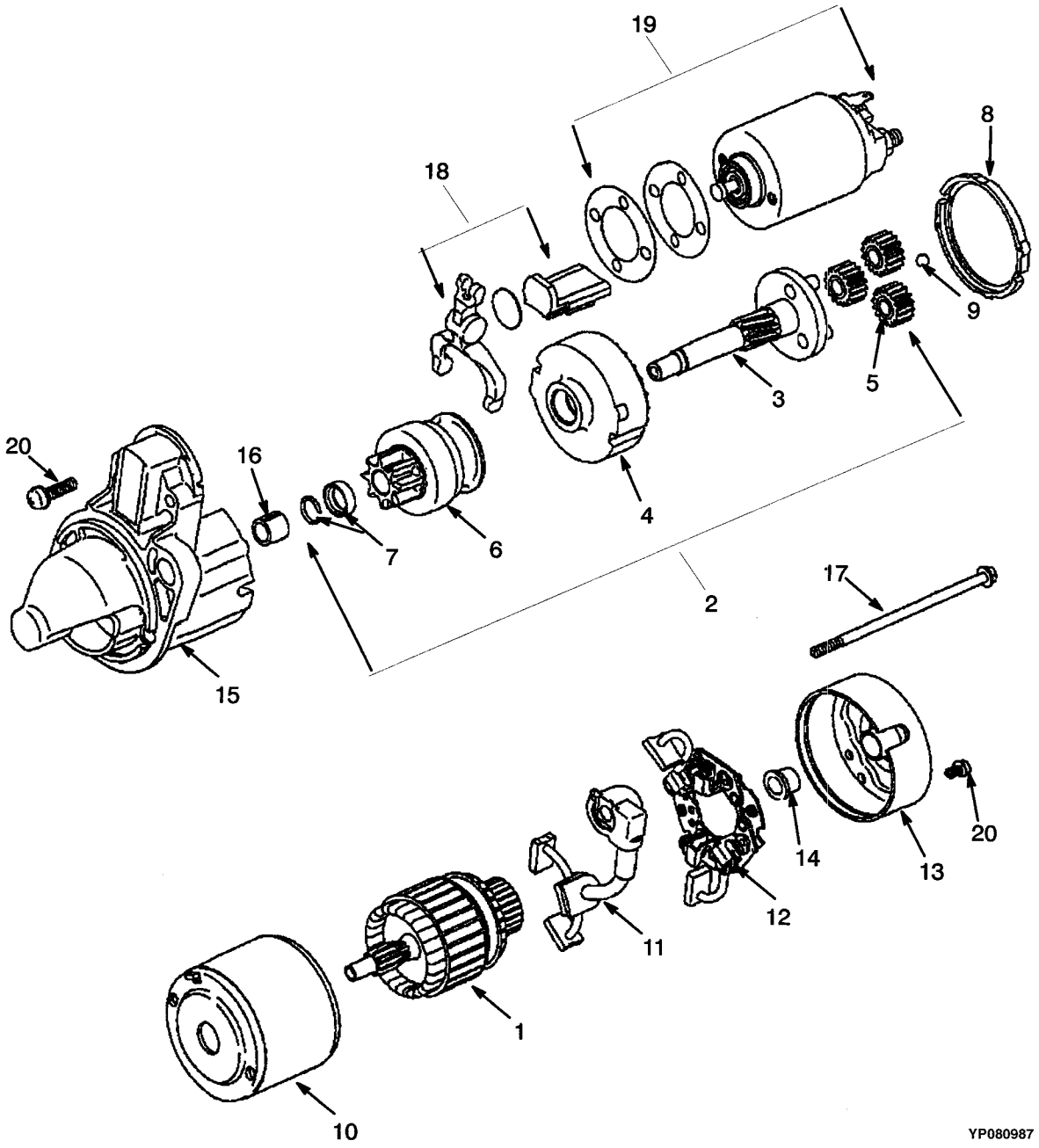

Yale Industrial Trucks

STARTER
(GASOLINE AND LPG)
(S/N A875B-6004⇒)

ITEM	PART NO.	DESCRIPTION	QTY
	918139600	Starter	1
1	902361801	Armature	1
2	902361802	Shaft	1
3	902361803	Shaft	1
4	902361804	Gear	1
5	902361805	Gear	3
6	902361806	Pinion Set	1
7	902361807	Stop	1
8	902361808	Packing	1
9	902361809	Ball	1
10	902361810	Yoke	1
11	902361811	Brush	1
12	902361812	Brush Holder	1
12	902361813	Spring	2
12	902361814	Spring	2
13	902361815	Bracket	1
14	902361816	Bearing	1
15	902361817	Bracket	1
16	901286812	Sleeve	1
17	902361818	Bolt	2
18	902361819	Lever	1
19	902361820	Switch	1
20	901286807	Screw	1

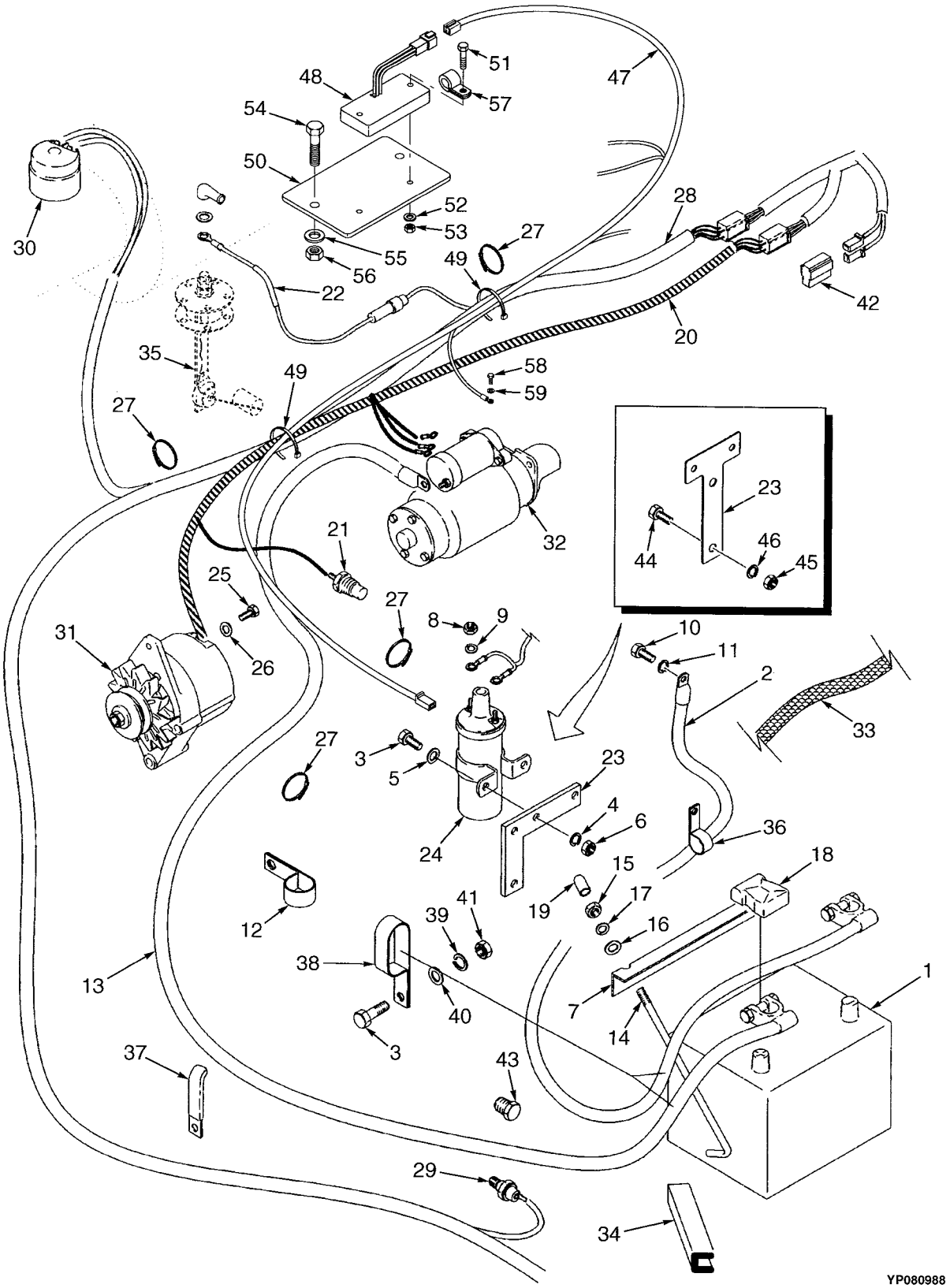
48
51
47
54
57
50
52
28
53
27
30
55
49
56
22
42
20
35
58
49
59
27
23
21
32
44
46
45
25
27
8
9
10
31
11
26
2
33
27
3
23
5
4
6
36
24
18
15
12
19
17
41
39
16
38
1
13
40
7
14
3
37
43
29
34
YP080988

ITEM		PART NO.	DESCRIPTION	QTY
1		520052851	Battery (Wet)	1
2		504262756	Cable	1
3		449001013	Capscrew	3
4		449022016	Lockwasher	3
5		504226242	Washer	3
6		449015014	Nut	2
7		900003223	Bracket	1
8		937100904	Nut	2
9		449022021	Lockwasher	2
10		449001418	Capscrew	1
11		449022013	Lockwasher	1
12		505970511	Clamp	1
13		504262757	Battery Cable	1
14		920388300	Link	2
15		449015002	Nut	2
16		502398902	Washer	2
17		449022018	Lockwasher	2
18		904201102	Boot	1
19		505972506	Cap	2
20		580000217	Wire Harness (Engine) (☞ P10242)	1
20		580008432	Wire Harness (Engine) (☞ P12107)	1
21		901860807	Pressure Switch (Oil Pressure) (Optional)	1
21		911955100	Switch (Oil Pressure)	1
22	**a**	505973547	Wire Harness (Fuel Probe) (Gasoline)	1
23	**e**	504240995	Bracket	1
23	**f**	524142996	Bracket	1
24		505960580	Coil	1
25		449007013	Screw	1
26		940600906	Washer	1
27		504241704	Strap Clamp	AR
28	**h**	504298716	Wire Harness (Chassis) (☞ P10241)	1
28	**b**	580012675	Wire Harness (Chassis) (☞ P11811)	1
28	**c**	580016634	Wire Harness (Chassis) (☞ P12106)	1
28	**g**	580036602	Wire Harness (Chassis) (☞ P13267)	1
29	**c**	900001233	Coolant Sender	1
30		505973588	Switch (Restriction)	1
31		580000990	Alternator (☞ P10817)	1
32		912978600	Starter (☞ P10818)	1
32		918139600	Starter (☞ P11127)	1
33		910065119	Conduit	AR
34		504258715	Trim	1
35		505971562	Fuel Sender	1
36		504236269	Clamp	1
37		910271101	Clamp	2
38		312823020	Clamp	2
39		449022016	Lockwasher	1
40		449021001	Washer	1
41		449015014	Nut	1
42		910453400	Diode	3
43		501884906	Fitting	1

ITEM		PART NO.	DESCRIPTION	QTY
44	**f**	449001016	Capscrew	2
45	**f**	449015044	Nut	2
46	**f**	449021006	Washer	2
47	**d**	580016597	Wire Harness (LPG) (☞ P12108)	1
48	**d**	580015899	Switch Assembly (Revolution)	2
49	**d**	312850032	Tie Strap	1
50	**d**	524143377	Bracket	1
51	**d**	930101909	Screw	2
52	**d**	940004903	Washer	2
53	**d**	580003615	Nut	2
54	**d**	449001121	Capscrew	2
55	**d**	449022018	Lockwasher	2
56	**d**	449015002	Nut	2
57	**d**	580014572	Clamp	1
58	**d**	449001160	Capscrew	1
59	**d**	940600907	Washer	1

FOOTNOTES:

a ⇒ S/N A875B-05026
b D/B 10/1999⇔S/N A875B-10736
c S/N A875B-10736⇔S/N PENDING PER ECN 95530-01
d S/N A875B-10761 ⇒
e ⇒ S/N A875B-7838
f S/N A875B-7838 ⇒
g S/N PENDING PER ECN 95530-01 ⇒
h ⇒ D/B 10/1999

NOTES

ELECTRICAL
(LPG WITH LOW EMISSIONS)
(S/N A875B-12121Y⇒ EXC. 13136-13149)

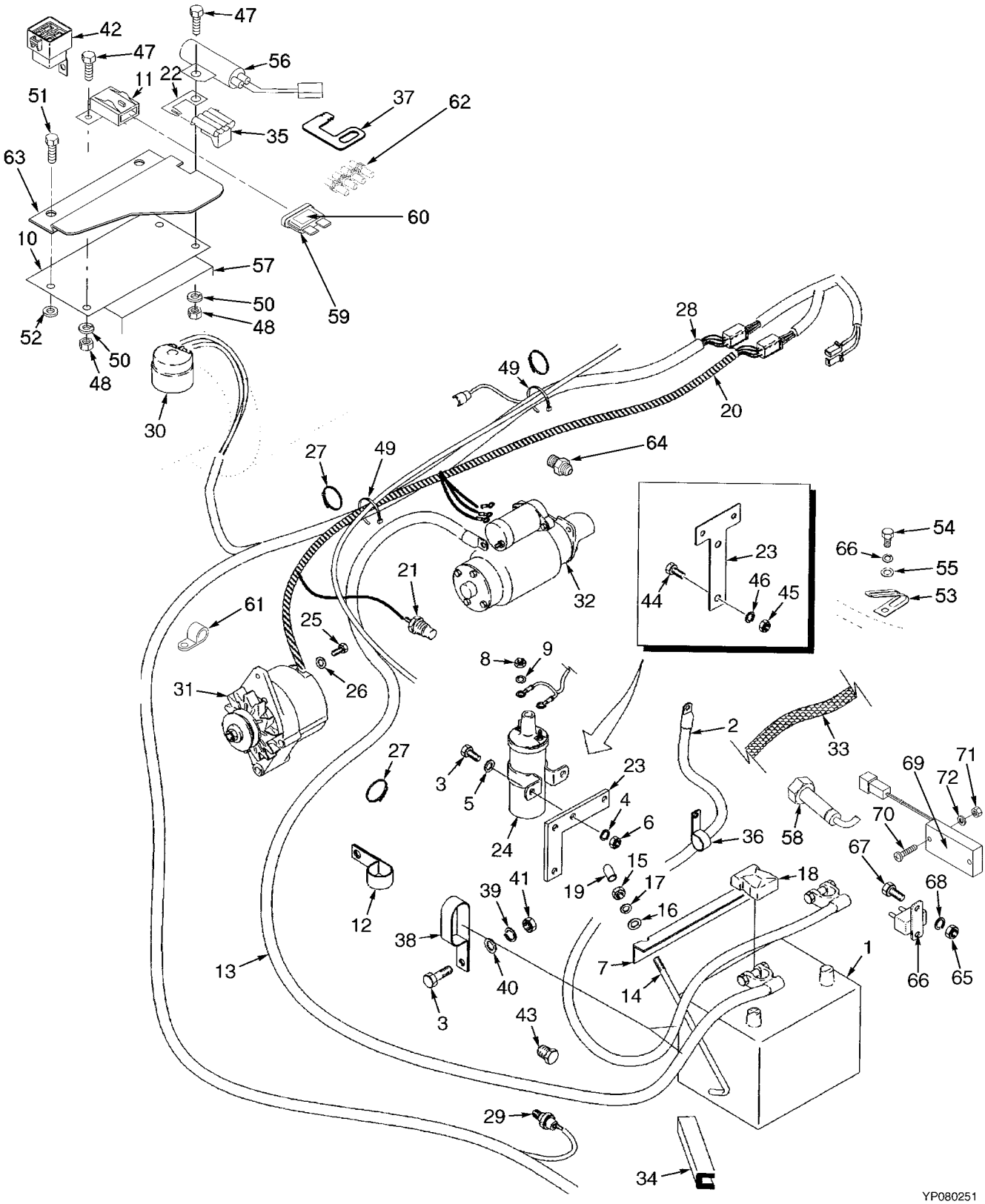

Yale Industrial Trucks

ELECTRICAL
(LPG WITH LOW EMISSIONS)
(S/N A875B-12121Y⇒ EXC. 13136-13149)

ITEM		PART NO.	DESCRIPTION	QTY
1		520052851	Battery (Wet)	1
2		504262756	Cable	1
3		449001013	Capscrew	3
4		449022016	Lockwasher	3
5		504226242	Washer	3
6		449015014	Nut	2
7		900003223	Bracket	1
8		937100904	Nut	2
10		524146751	Bracket	1
11		900010278	Cover	1
12		505970511	Clamp	1
13		524158105	Battery Cable	1
14		920388300	Link	2
15		449015002	Nut	2
16		502398902	Washer	2
17		449022018	Lockwasher	2
18		904201102	Boot	1
19		505972506	Cap	2
20	**b**	580019697	Wire Harness (Engine) (☞ P13285)	1
21		911955100	Switch	1
21		901860807	Pressure Switch (Optional)	1
22		580018270	Clip	1
23		524142996	Bracket	1
24		505960580	Coil	1
25		449001013	Capscrew	1
26		940600906	Washer	1
27		504241704	Strap Clamp	AR
28	**a**	580016634	Wire Harness (Chassis) (☞ P12106)	1
28	**f**	580036602	Wire Harness (Chassis) (☞ P13267)	1
29	**e**	900001233	Coolant Sender	1
30		505973588	Switch (Restriction)	1
31		580000990	Alternator	1
31		580001184	Alternator (Type GS and LPS)	1
32	**c**	912978600	Starter	1
32	**d**	918139600	Starter	1
33		910065119	Conduit	AR
34		504258715	Trim	1
35		580023138	Connector	1
36		504236269	Clamp	1
37		580000566	Clip	1
38		312823020	Clamp	2
39		449022016	Lockwasher	1
40		449021001	Washer	1
41		449015014	Nut	1
42		520038816	Relay	1
43		501884906	Fitting	1
44		449001016	Capscrew	2
45		449015044	Nut	2
46		449021006	Washer	2
47		449001121	Capscrew	4

ELECTRICAL
(LPG WITH LOW EMISSIONS)
(S/N A875B-12121Y⇒ EXC. 13136-13149)

ITEM	PART NO.	DESCRIPTION	QTY
48	449015002	Nut	4
49	312850032	Tie Strap	AR
50	449022018	Lockwasher	6
51	505976561	Capscrew	1
52	449022013	Lockwasher	1
53	910271101	Clamp	3
54	449001412	Capscrew	2
55	449021003	Washer	2
56	580018190	Resistor	1
57	580018189	Controller	1
58	580020001	Sensor	1
59	520037882	Fuse	1
60	580022741	Label (1A)	1
61	900015238	Clamp	2
62	580027612	Plug	4
63	524148288	Shield	1
64	052337300	Fitting	1
65	014939300	Nut	2
66	520038849	Circuit Breaker	1
67	580033287	Capscrew	2
68	449022021	Lockwasher	2
69	580020759	PC Board	1
70	449001272	Capscrew	2
71	505970500	Nut	2
72	449021003	Washer	1

FOOTNOTES:
a S/N A875B-10736⇔S/N PENDING PER ECN 95530-01
b S/N A875B-12121 ⇒
c ⇒ S/N A875B-6004
d S/N A875B-6004 ⇒
e ⇒ S/N PENDING PER ECN 95530-01
f S/N PENDING PER ECN 95530-01 ⇒

NOTES

ENGINE SHUTDOWN SYSTEM

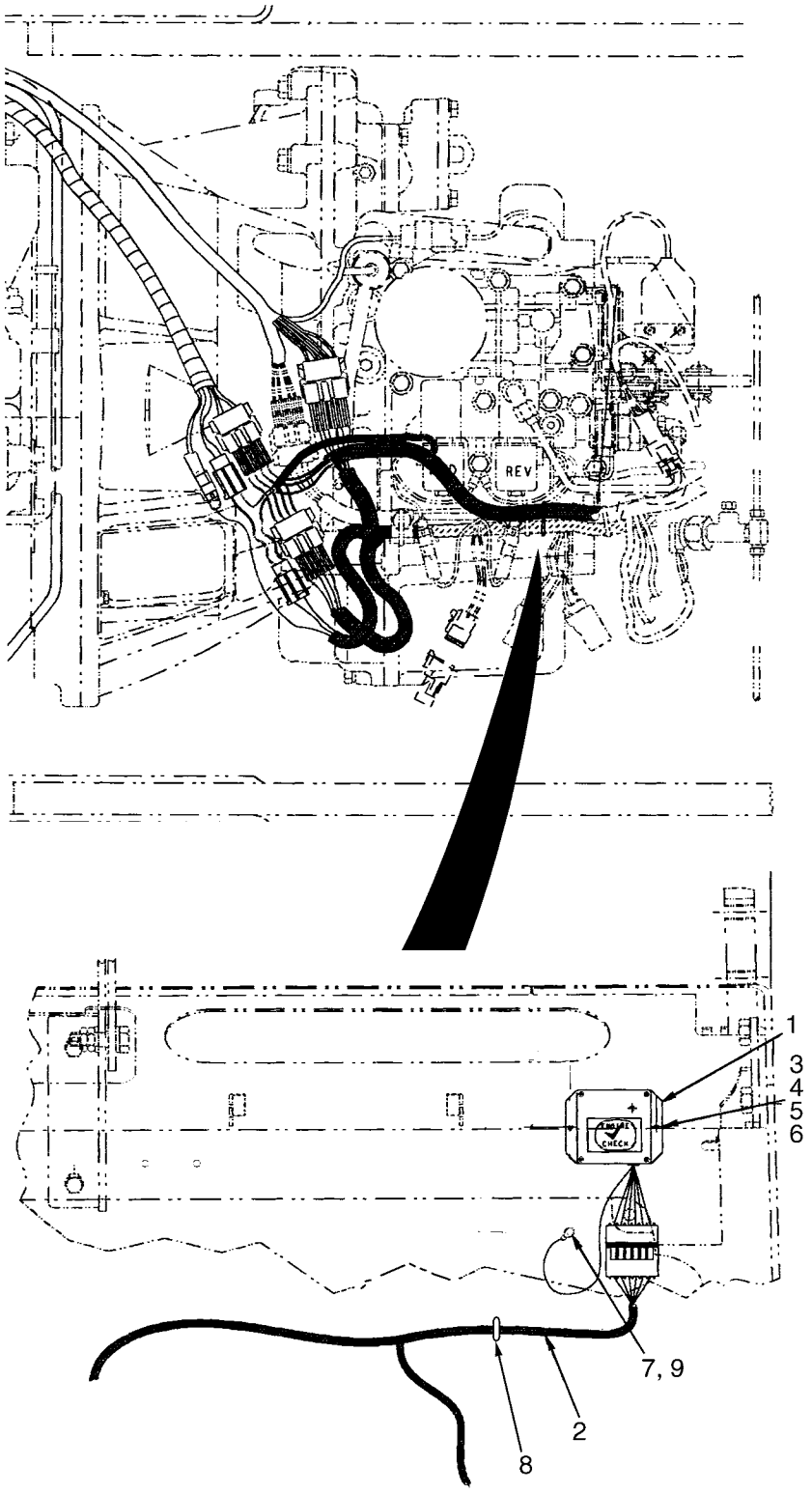

YP080087

ITEM	PART NO.	DESCRIPTION	QTY
1	524154218	Controller	1
1	580031587	Connector	1
1	505968522	Seal	6
1	505968523	Terminal	6
1	504450739	Terminal	1
1	505968517	Conduit	1
1	910065119	Conduit	1
2	524154220	Wire Harness (☞ P13084)	1
3	520038861	Capscrew	3
4	449021002	Washer	2
5	449022021	Lockwasher	3
6	937100904	Nut	3
7	449021002	Washer	1
8	312850032	Tie Strap	1
9	940600906	Washer	1

ELECTRICAL
(TYPE GS AND LPS)

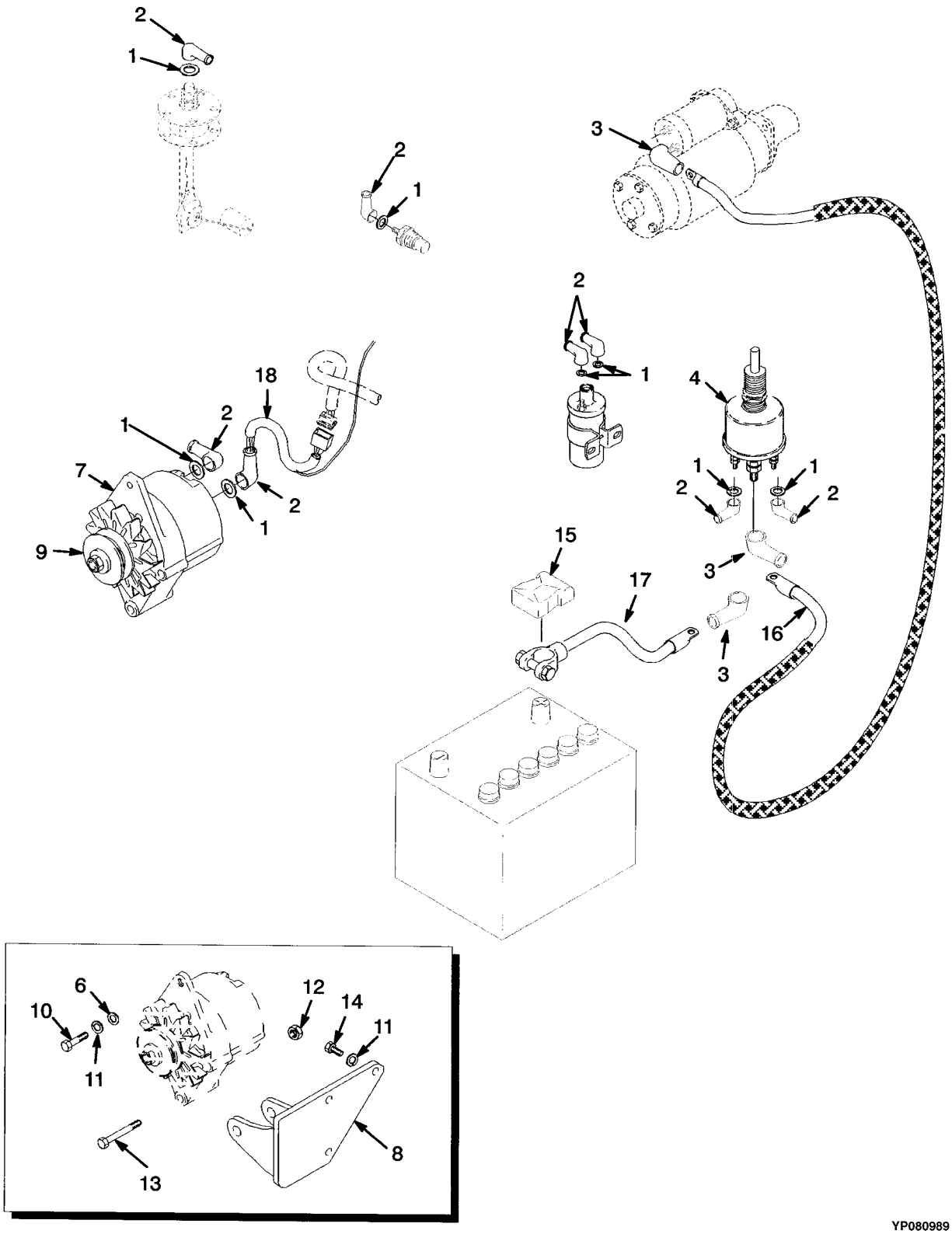

YP080989

ITEM		PART NO.	DESCRIPTION	QTY
1		502398902	Washer	7
2	**a**	505970552	Boot	8
2	**b**	505970552	Boot	7
3		505976537	Boot	3
4		900003263	Switch (Disconnect)	1
5		449022013	Lockwasher	1
6		016103700	Washer	AR
7		580001184	Alternator (☞ P10237)	1
8		900005206	Bracket (Type GS and LPS)	1
9		580001223	Pulley	1
9		501702902	Thread Sealer	AR
10		062143700	Capscrew	1
11		015026200	Lockwasher	1
12		504238298	Nut	1
13		062144100	Capscrew	1
14		449001023	Capscrew	3
15		505972567	Boot	1
16		505976552	Battery Cable	1
17		505976570	Battery Cable	1
18		504241723	Wire Harness (Alternator)	1

FOOTNOTES:

a ⇒ S/N PENDING PER ECN 95530-01

b S/N PENDING PER ECN 95530-01 ⇒

ELECTRICAL
(COWL)

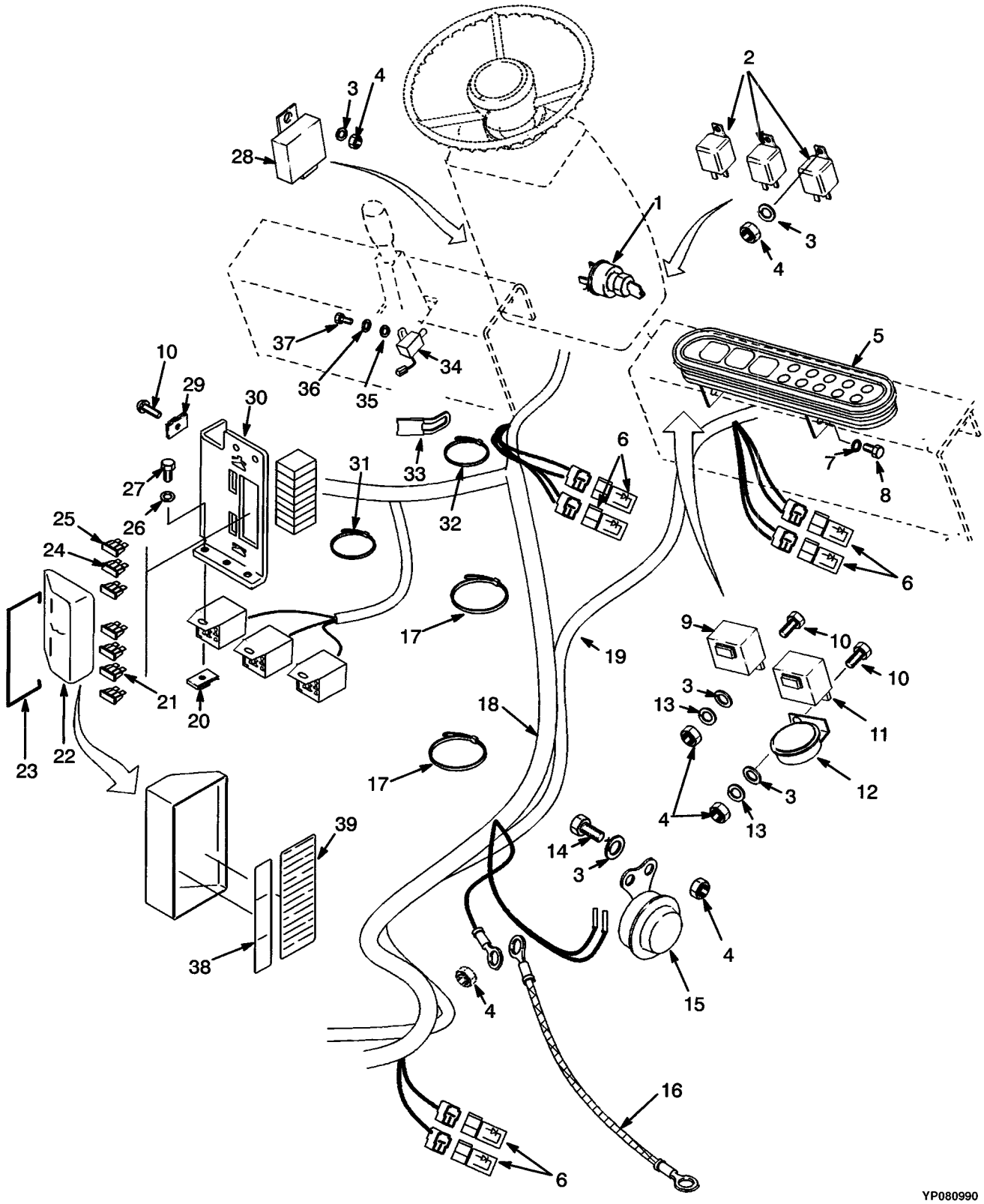

ITEM		PART NO.	DESCRIPTION	QTY
1		504240838	Ignition Switch	1
1		504240712	Key	1
2		917314402	Relay	3
3		449022018	Lockwasher	5
4		449015002	Nut	5
5		. . . . .	Instrument Cluster (☞ P10837)	1
6		910453400	Diode	6
7		504226242	Washer	2
8		449001091	Capscrew	2
9		919707400	Relay	1
10		505970553	Capscrew	4
11		919713400	Controller	1
12		909453400	Buzzer	1
13		449021003	Washer	2
14		449001170	Capscrew	2
15		580023894	Horn	1
15		580024592	Horn (GS/LPS)	1
16		505972571	Wire Harness (Ground)	1
17		312850032	Tie Strap	2
18	**a**	504315734	Wire Harness (Cowl) (☞ P11858)	1
18	**b**	524141611	Wire Harness (Cowl) (☞ P11864)	1
19		524135566	Wire Harness (Instrument Panel) (☞ P10239)	1
20		520038864	Nut	3
21		505972587	Fuse (30 Amp)	1
22		505972534	Cover	1
23		505972520	Latch (Cover)	1
24		505972555	Fuse (10 Amp)	1
25		505972528	Fuse (5 Amp)	1
26		449021002	Washer	3
27		930102903	Screw	3
28		915463400	Controller (Electronic)	1
29		505972586	Nut	2
30		504298714	Bracket	1
31		312850032	Tie Strap	AR
32		520038838	Strap Clamp	1
33		505976597	Strap	1
34		911137400	Park Brake Switch	1
35		940004902	Washer	2
36		449022022	Lockwasher	2
37		449007035	Screw	2
38		505968594	Label (Accessory Fuse)	1
39		504298715	Label (Fuse Box)	1

FOOTNOTES:

a ⇒ S/N A875B-10943

b S/N A875B-10944 ⇒

INSTRUMENT CLUSTER

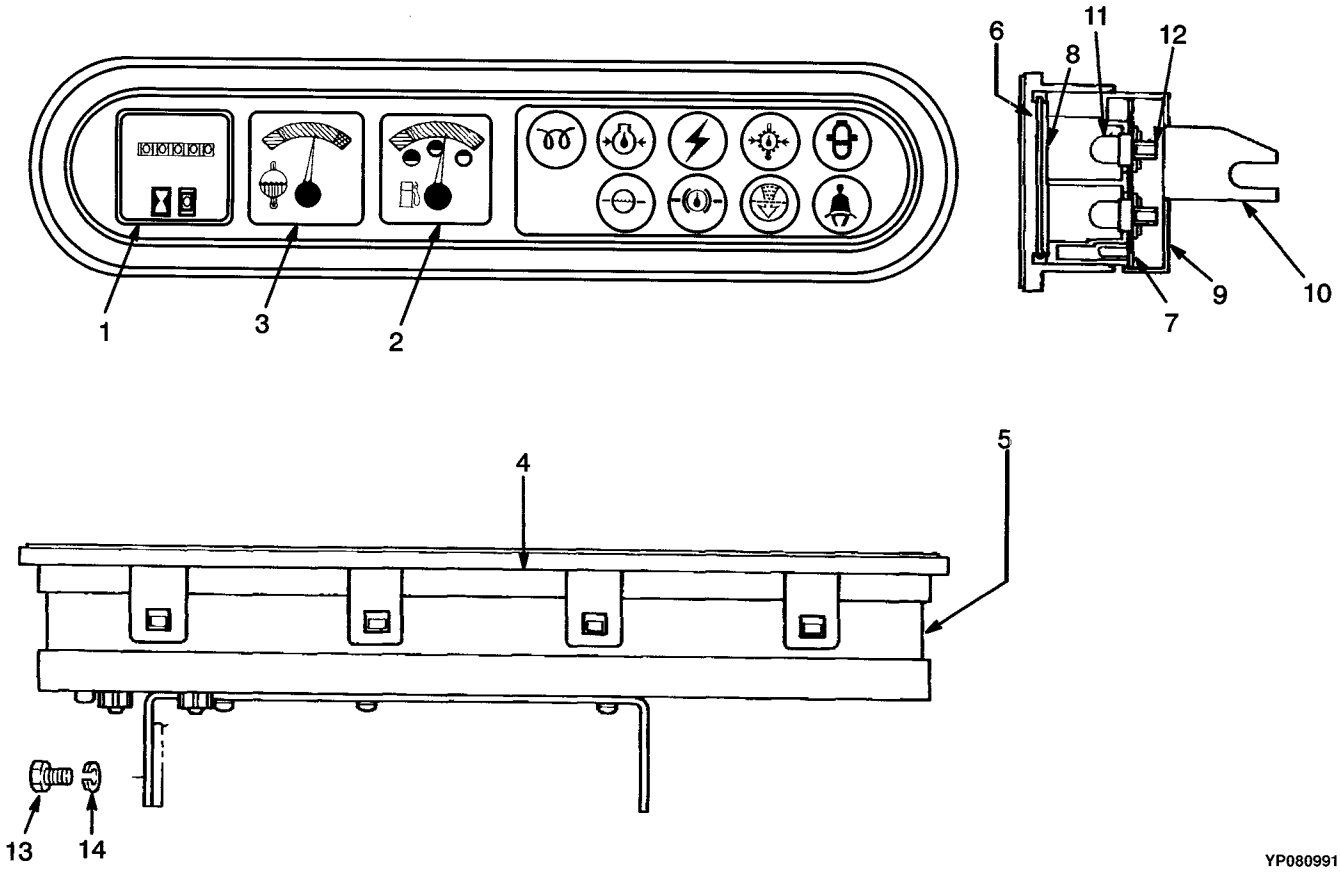

KEY:
A: Gasoline
B: LPG

ITEM		PART NO.	DESCRIPTION	QTY A	QTY B
	b	907077701	Instrument Panel	1	..
	b	907077702	Instrument Panel	..	1
	a	907077703	Instrument Panel	1	..
	a	907077704	Instrument Panel	..	1
	bc	907077707	Instrument Panel (With Low Emissions)	..	1
	ac	907077708	Instrument Panel (With Low Emissions)	..	1
1		901506861	Hourmeter	1	..
2		901506862	Gauge	1	..
3		901506863	Temperature Gauge	1	1
4		901506841	Hood	1	1
5		901506864	Case	1	1
6		901506817	Glass	1	1
7	**b**	901506866	Plate	1	..
7	**b**	901506867	Plate	..	1
7	**a**	901506868	Plate	1	..
7	**a**	901506869	Plate	..	1
8		901506870	Plate	1	..
8		901506871	Plate	..	1
9		901506872	Case	1	1
10		901506839	Bracket	1	1
11		900411802	Bulb	6	6
12		901506840	Socket	6	6
13		449001091	Capscrew	2	2
14		504226242	Washer	2	2

FOOTNOTES:
a Premium
b Standard
c S/N A875B-12121Y ⇒ EXC. 13136-13149

Yale Industrial Trucks

WIRE HARNESS
(INSTRUMENT CLUSTER)

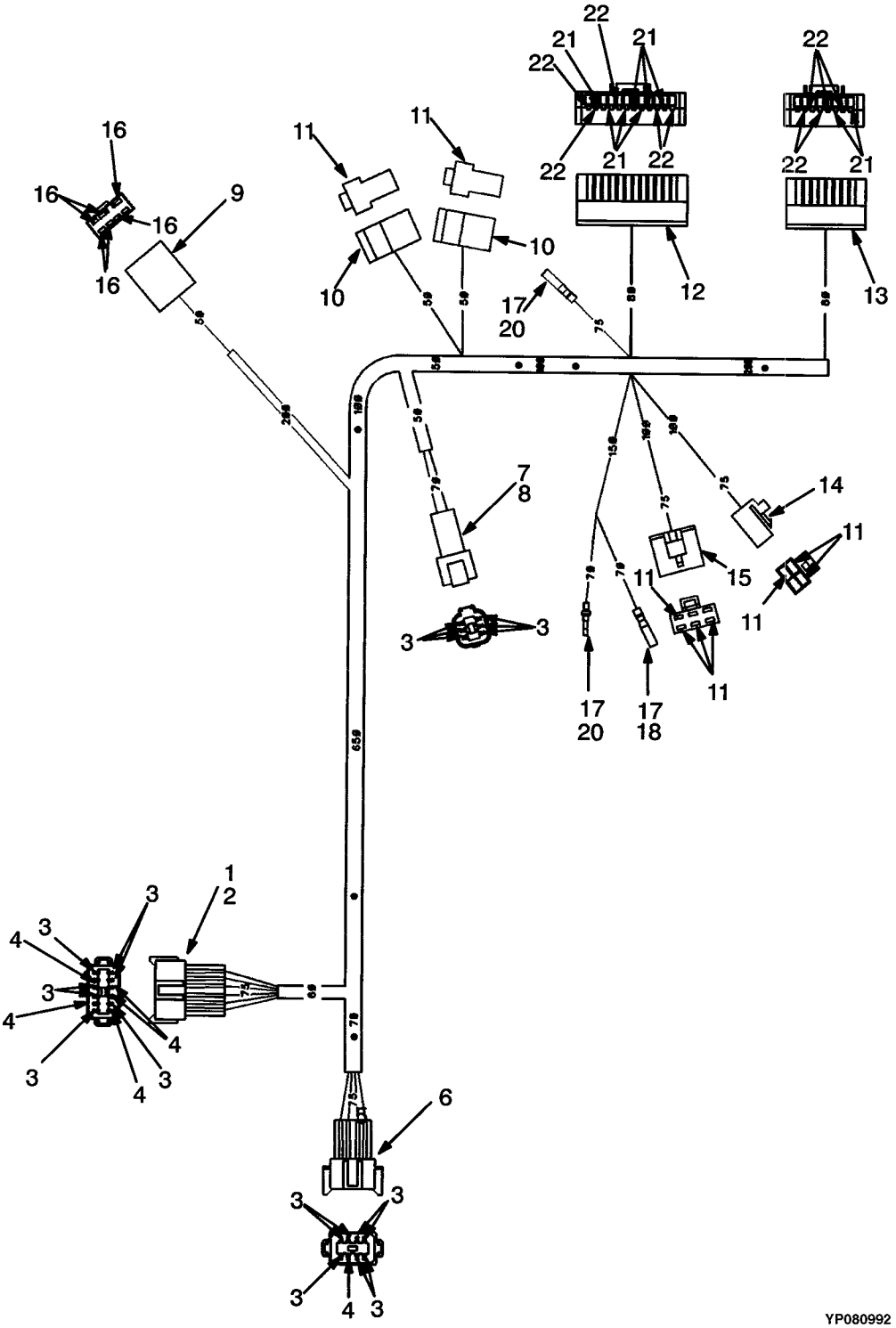

Yale Industrial Trucks

WIRE HARNESS (INSTRUMENT CLUSTER)

ITEM	PART NO.	DESCRIPTION	QTY
	524135566	Wire Harness (Cluster)	1
1	505972544	Connector Body	1
2	505972589	Secondary Lock	1
3	505972554	Pin	20
4	505968566	Plug	6
5	505972593	Connector	1
6	505972507	Secondary Lock	1
7	518803678	Connector	1
8	518806641	Secondary Lock	1
9	913213410	Connector Body	1
10	505968511	Connector Body	2
11	505966522	Terminal	11
12	924130411	Connector	1
13	924130412	Connector	1
14	505972531	Connector Body	1
15	520045061	Connector Body	1
16	913213402	Electrical Fitting	6
17	952408904	Electrical Fitting	2
18	952405902	Sleeve	1
19	952408901	Sleeve	1
20	952405901	Electrical Fitting	2
21	924130401	Terminal	10
22	924130402	Connector	9

WIRE HARNESS
(COWL)
(⇒S/N PENDING PER ECN 76000)

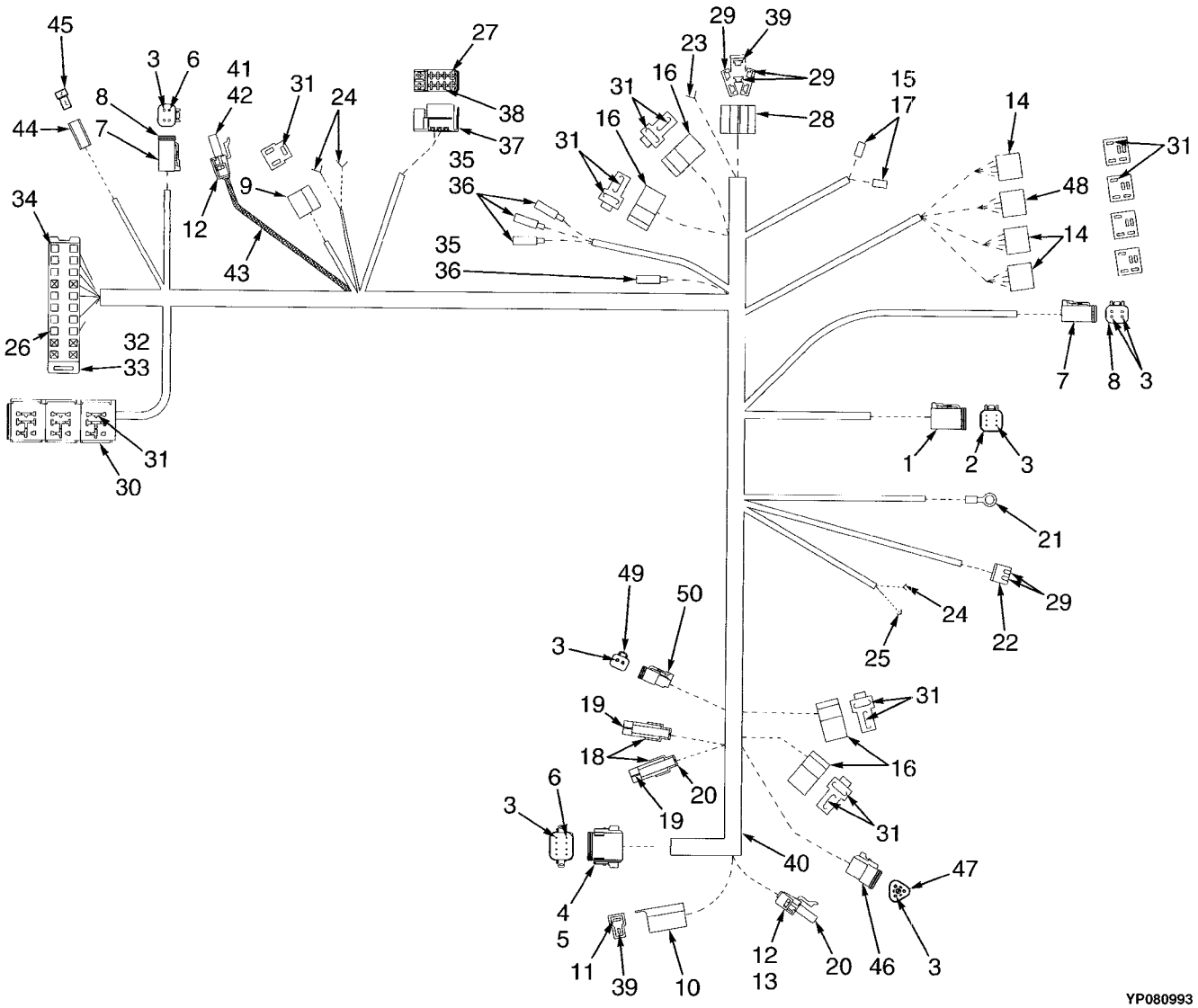

Yale Industrial Trucks

WIRE HARNESS
(COWL)
(⇒S/N PENDING PER ECN 76000)

ITEM	PART NO.	DESCRIPTION	QTY
	504315734	Wire Harness (Cowl)	1
1	518806610	Connector	1
2	518806687	Lock	1
3	505968568	Socket	20
4	505968519	Connector	1
5	505968558	Secondary Lock	1
6	505968566	Plug	1
7	504064701	Connector	1
8	580001849	Lock	1
9	907953306	Connector	1
10	504450742	Connector	1
11	504450761	Terminal	1
12	505968555	Connector	2
13	505968523	Terminal	1
14	910581102	Connector	3
15	913213431	Connector	2
16	505968511	Connector Body	4
17	913213401	Connector	2
18	505968576	Connector	3
19	505968551	Terminal	2
20	505968522	Seal	3
21	520044822	Terminal	1
22	520045064	Connector Body	1
23	520038827	Electrical Fitting	1
24	500383916	Terminal	3
25	502719903	Electrical Fitting	1
26	580006437	Electrical Fitting	3
27	580006438	Electrical Fitting	7
28	506395549	Connector	1
29	580006439	Blade	4
30	505972552	Socket	3
31	520052845	Electrical Fitting	32
32	580001195	Fuse Holder	1
33	580001196	Lock	1
34	580006441	Electrical Fitting	11
35	952408902	Sleeve	4
36	952405902	Sleeve	4
37	520049838	Socket	1
38	580006440	Electrical Fitting	1
39	520045875	Terminal	2
40	505968538	Conduit	AR
41	505968572	Terminal	1
42	505968505	Seal	1
43	505968517	Conduit	1
44	504450743	Connector	1
45	504236265	Connector	2
46	504064720	Plug	1
47	505064754	Lock	1
48	580008192	Connector	1

WIRE HARNESS
(COWL)
(⇒S/N PENDING PER ECN 76000)

ITEM	PART NO.	DESCRIPTION	QTY
49	505968535	Lock	1
50	505968501	Connector	1

NOTES

Yale Industrial Trucks

WIRE HARNESS
(COWL)
(S/N PENDING PER ECN 76000⇒)

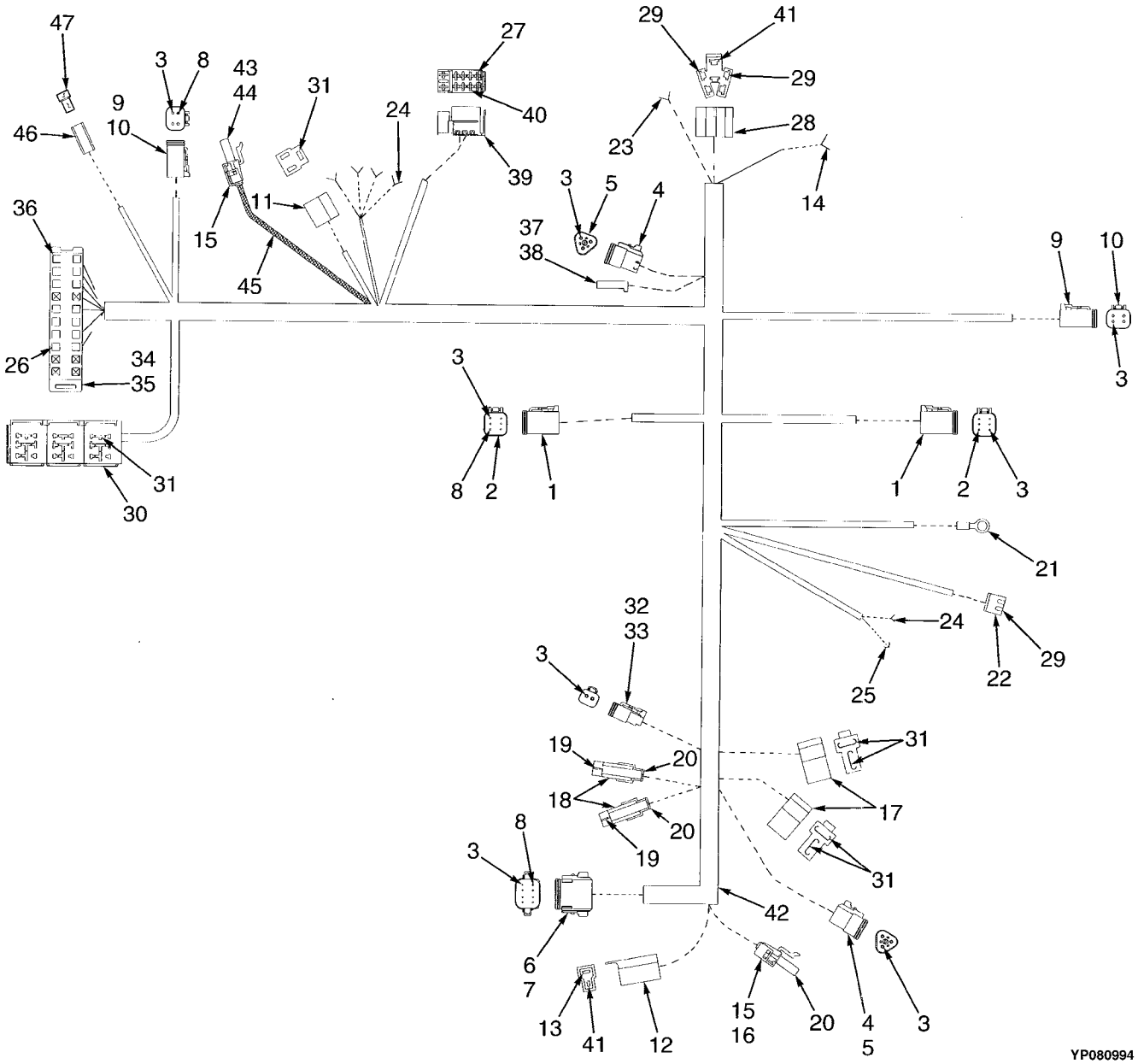

Yale Industrial Trucks

WIRE HARNESS
(COWL)
(S/N PENDING PER ECN 76000⇒)

ITEM	PART NO.	DESCRIPTION	QTY
	524149132	Wire Harness (Cowl)	1
1	518806610	Connector	2
2	518806687	Lock	2
3	505968568	Socket	33
4	504064720	Plug	2
5	505064754	Lock	2
6	505968519	Connector	1
7	505968558	Secondary Lock	1
8	505968566	Plug	3
9	504064701	Connector	2
10	580001849	Lock	2
11	907953306	Connector	1
12	504450742	Connector	1
13	504450761	Terminal	1
14	520038868	Electrical Fitting	1
15	505968555	Connector	2
16	505968522	Seal	1
17	505968511	Connector Body	2
18	505968576	Connector	2
19	505968551	Terminal	2
20	505968522	Seal	3
21	520044822	Terminal	1
22	520045064	Connector Body	1
23	520038827	Electrical Fitting	1
24	500383916	Terminal	5
25	502719903	Electrical Fitting	1
26	580006437	Electrical Fitting	3
27	580006438	Electrical Fitting	7
28	506395549	Connector	1
29	580006439	Blade	5
30	505972552	Socket	3
31	520052845	Electrical Fitting	16
32	505968501	Connector	1
33	505968535	Lock	1
34	580001195	Fuse Holder	1
35	580001196	Lock	1
36	580006441	Electrical Fitting	11
37	505968524	Terminal	1
38	504232237	Connector Body	1
39	520049838	Socket	1
40	580006440	Electrical Fitting	1
41	520045875	Terminal	2
42	505968538	Conduit	AR
43	505968572	Terminal	1
44	505968505	Seal	1
45	505968517	Conduit	1
46	504450743	Connector	1
47	504236265	Connector	2

Yale Industrial Trucks

WIRE HARNESS
(CHASSIS)
(⇒S/N A875B-5025)

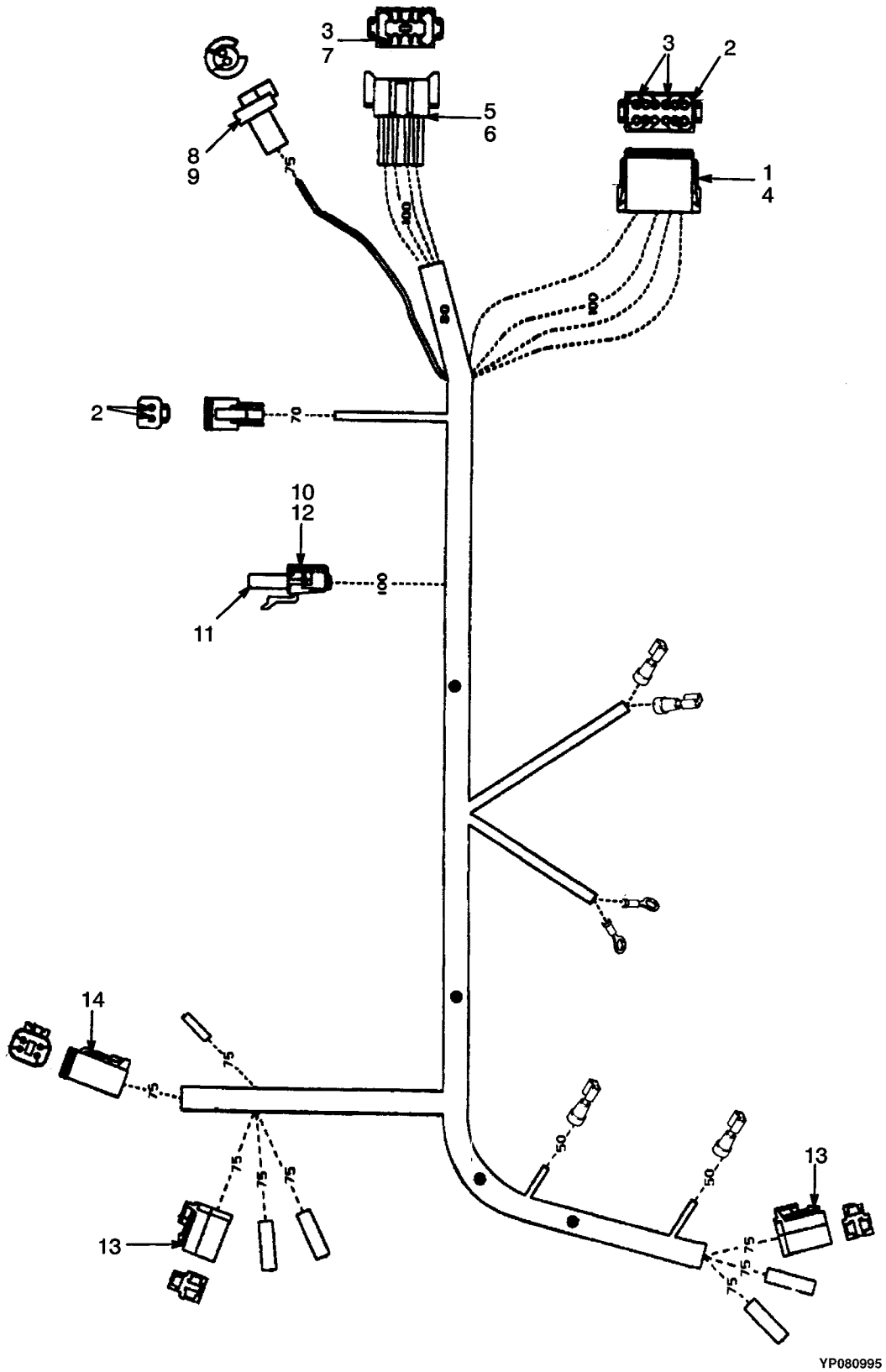

Yale Industrial Trucks

WIRE HARNESS
(CHASSIS)
(⇒S/N A875B-5025)

ITEM	PART NO.	DESCRIPTION	QTY
	504298716	Wire Harness (Chassis)	1
1	505968588	Connector Body	1
2	505968568	Socket	11
3	505968566	Plug	8
4	505968536	Lock	1
5	505972593	Connector	1
6	505972507	Secondary Lock	1
7	505968514	Pin	7
8	912906311	Connector	1
9	912906332	Seal	1
10	505968555	Connector	1
11	505968572	Terminal	1
12	505968505	Seal	1
13	580006141	Connector	2
14	504064701	Connector	2

Yale Industrial Trucks

WIRE HARNESS
(CHASSIS) (GASOLINE AND LPG)
(S/N A875B-5026⇔S/N A875B-10760)

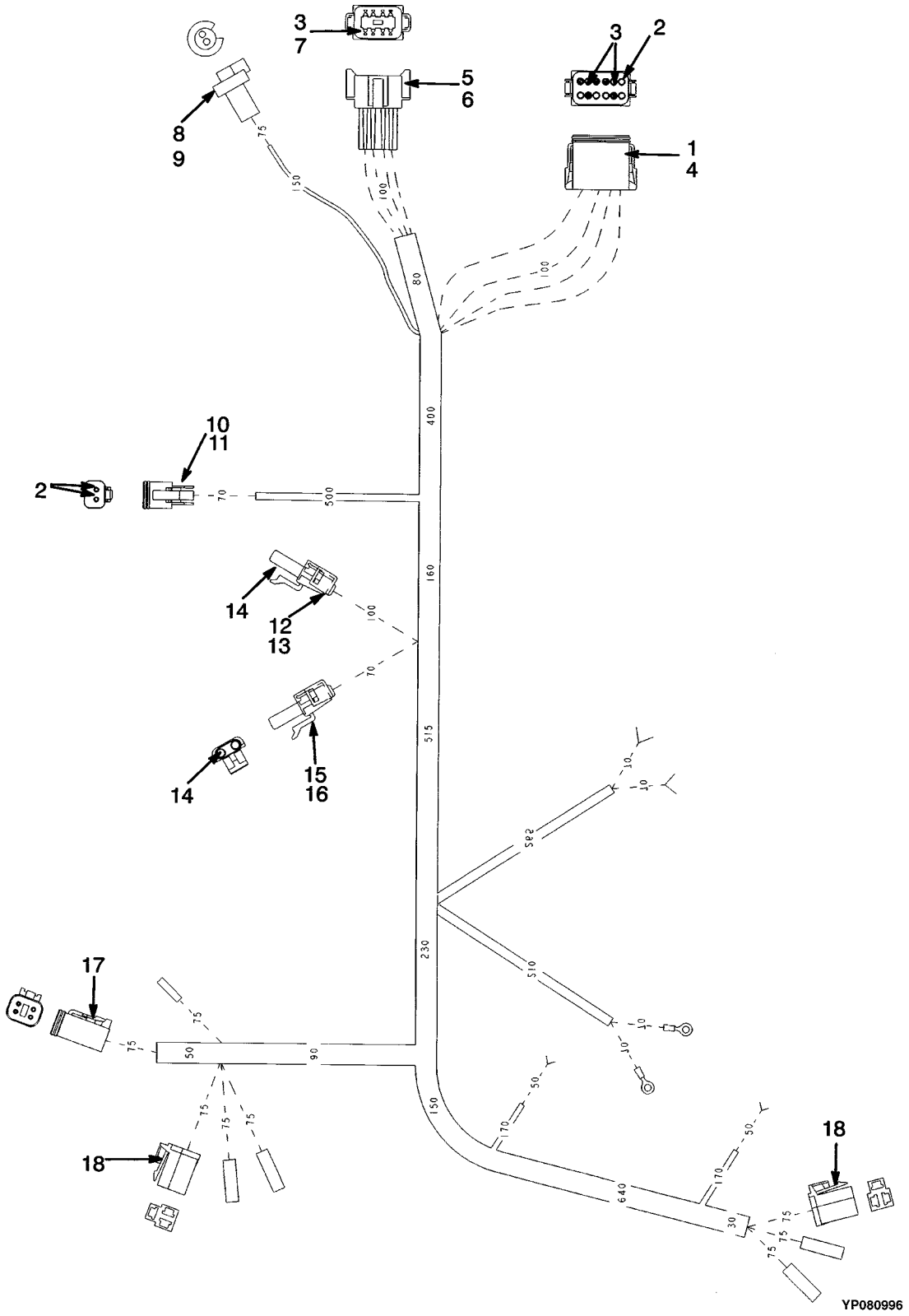

Yale Industrial Trucks

WIRE HARNESS
(CHASSIS) (GASOLINE AND LPG)
(S/N A875B-5026⇔S/N A875B-10760)

ITEM	PART NO.	DESCRIPTION	QTY
	580012675	Wire Harness (Chassis)	1
1	505968588	Connector Body (Cluster Harness)	1
2	505968568	Socket	11
3	505968568	Socket	8
4	505968536	Lock	1
5	505972593	Connector (Cowl Harness)	1
6	505972507	Secondary Lock	1
7	505968514	Pin	7
8	912906311	Connector	1
9	912906332	Seal	1
10	505968501	Connector (Seat Switch)	1
11	505968535	Lock	1
12	505968555	Connector (Fuel Sender)	1
13	505968572	Terminal	1
14	505968505	Seal	1
15	580012323	Plug	1
16	580012468	Seal	1
17	504064701	Connector	1
18	580006141	Connector	2

WIRE HARNESS
(CHASSIS) (LPG)
(S/N A875B-10761⇔S/N PENDING PER ECN 95530-01)

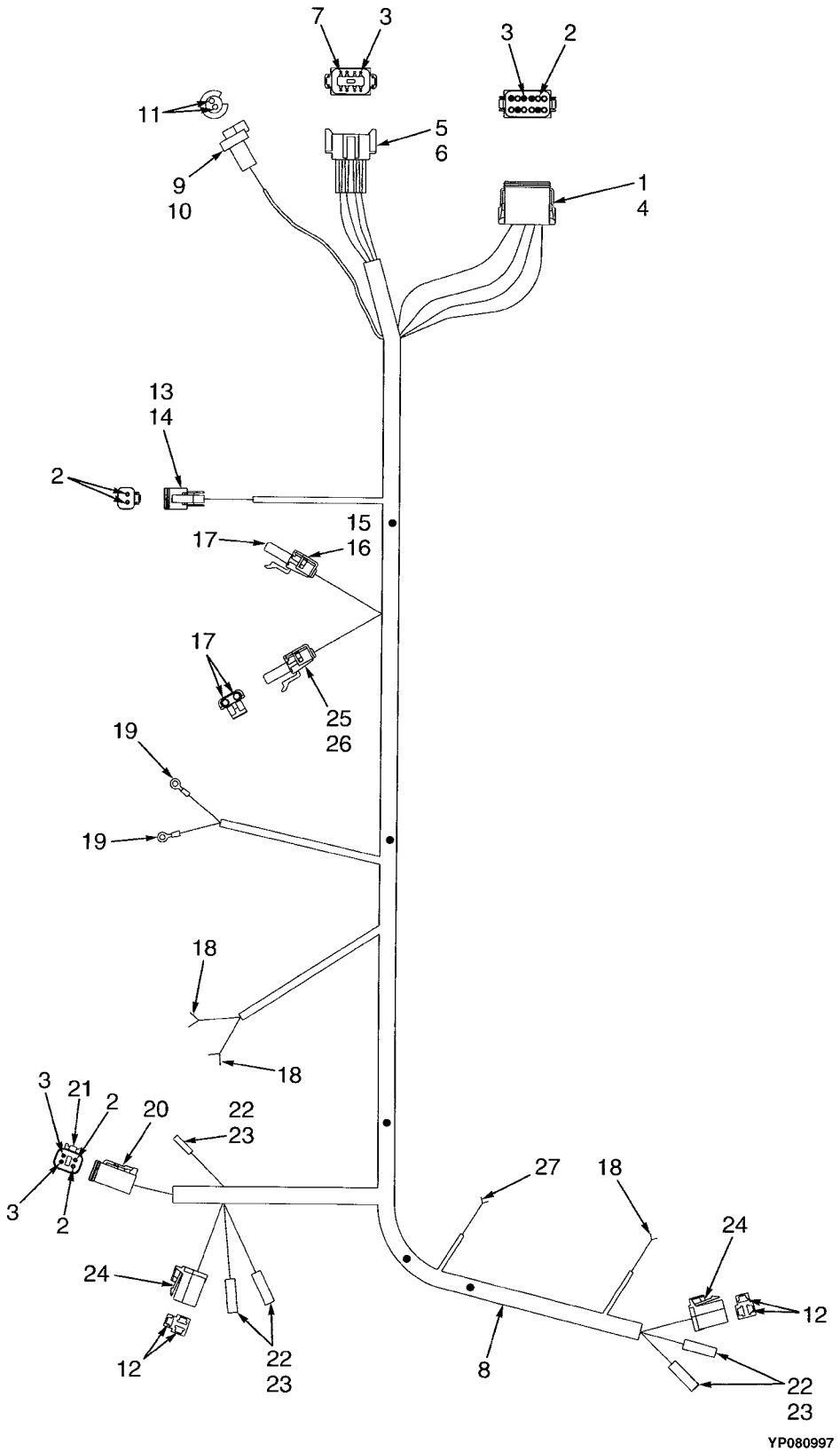

Yale Industrial Trucks

WIRE HARNESS
(CHASSIS) (LPG)
(S/N A875B-10761⇔S/N PENDING PER ECN 95530-01)

ITEM	PART NO.	DESCRIPTION	QTY
	580016634	Wire Harness (Chassis)	1
1	505968588	Connector Body	1
2	505968568	Socket	11
3	505968566	Plug	8
4	505968536	Lock	1
5	505972593	Connector	1
6	505972507	Secondary Lock	1
7	505968514	Pin	7
8	505968538	Conduit	AR
9	912906311	Connector	1
10	912906332	Seal	1
11	912906504	Electrical Fitting	2
12	580021302	Fitting	12
13	505968501	Connector	1
14	505968535	Lock	1
15	505968555	Connector	1
16	505968505	Seal	1
17	505968572	Terminal	3
18	504059730	Electrical Fitting	3
19	505968529	Connector	2
20	504064701	Connector	1
21	580001849	Lock	1
22	952408901	Sleeve	5
23	952405902	Sleeve	5
24	580006141	Connector	1
25	580012323	Plug	1
26	580012468	Seal	1
27	500383916	Terminal	1

Yale Industrial Trucks

WIRE HARNESS
(CHASSIS) (LPG)
(S/N PENDING PER ECN 95530-01⇒)

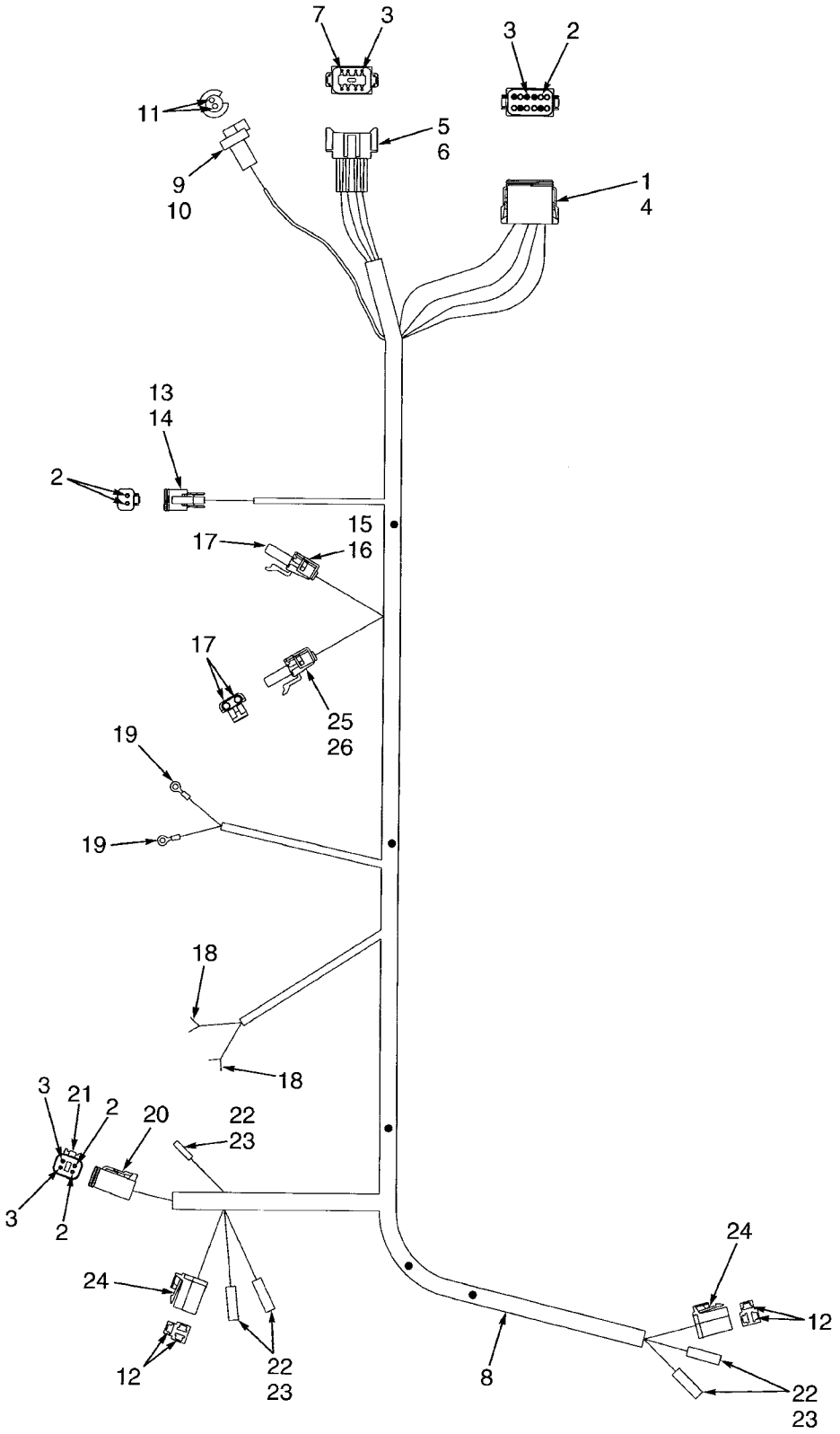

Yale Industrial Trucks

WIRE HARNESS (CHASSIS) (LPG) (S/N PENDING PER ECN 95530-01⇒)

ITEM	PART NO.	DESCRIPTION	QTY
	580036602	Wire Harness (Chassis)	1
1	505968588	Connector Body (Cluster Harness)	1
2	505968568	Socket	11
3	505968566	Plug	8
4	505968536	Lock	1
5	505972593	Connector (Cowl Harness)	1
6	505972507	Secondary Lock	1
7	505968514	Pin	7
8	505968538	Conduit	AR
9	912906311	Connector	1
10	912906332	Seal	1
11	912906504	Electrical Fitting	2
12	580021302	Fitting	6
13	505968501	Connector (Seat Switch)	1
14	505968535	Lock	1
15	505968555	Connector (Fuel Sender)	1
16	505968505	Seal	1
17	505968572	Terminal	3
18	504059730	Electrical Fitting	2
19	505968529	Connector	2
20	504064701	Connector	1
21	580001849	Lock	1
22	952408901	Sleeve	5
23	952405902	Sleeve	5
24	580006141	Connector	2
25	580012323	Plug	1
26	580012468	Seal	1

Yale Industrial Trucks

WIRE HARNESS
(ENGINE)
(⇒S/N A875B-03165)

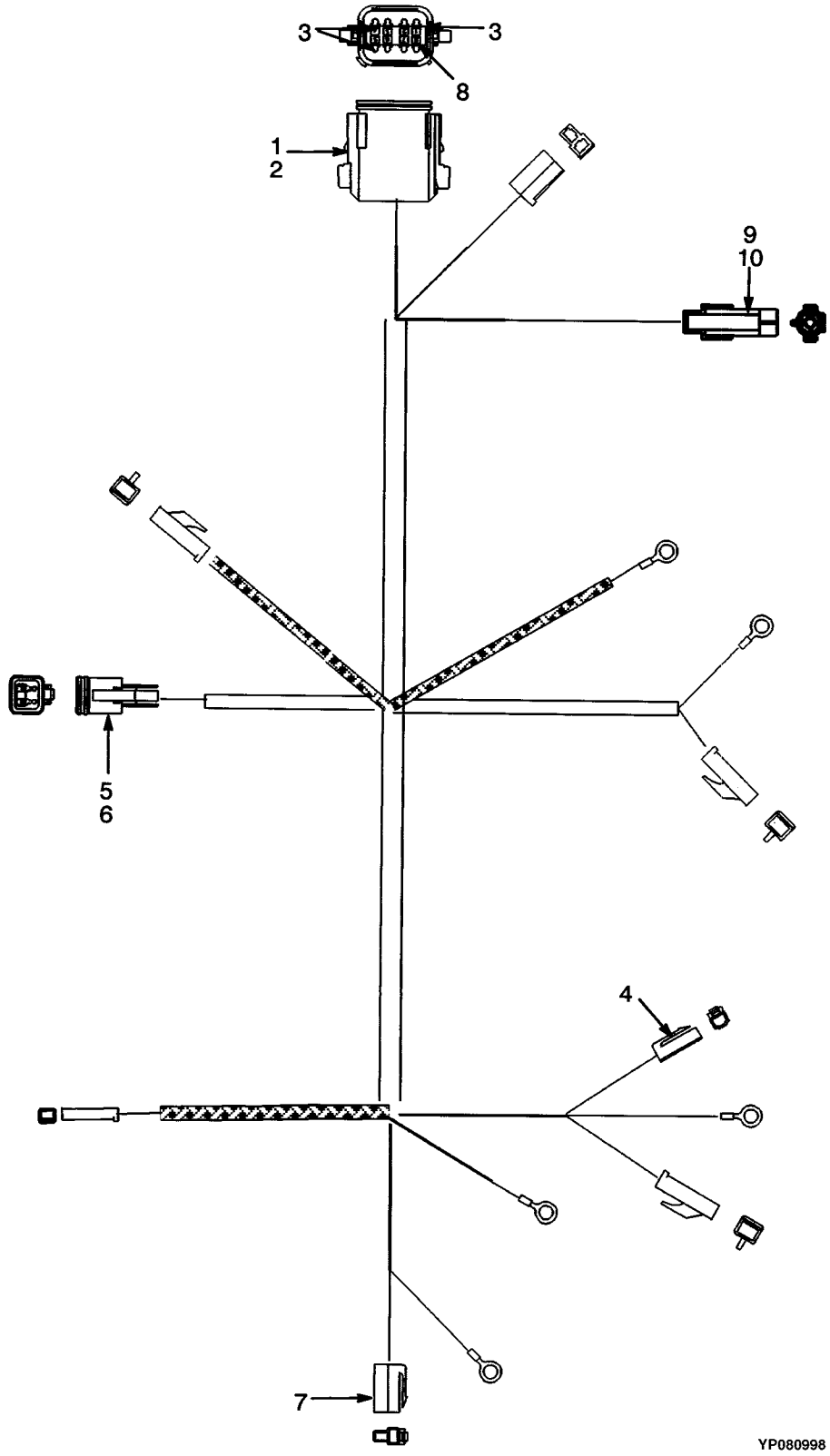

Yale Industrial Trucks

WIRE HARNESS
(ENGINE)
(⇒S/N A875B-03165)

ITEM	PART NO.	DESCRIPTION	QTY
	580000217	Wire Harness	1
1	505968519	Connector	1
2	518806687	Lock	1
3	505968568	Socket	5
4	505968506	Connector	1
5	505968501	Connector	1
6	505968535	Lock	1
7	505968511	Connector Body	1
8	505968566	Plug	3
9	505968576	Connector	1
10	505968551	Terminal	1

WIRE HARNESS
(ENGINE)
(S/N A875B-03166⇒)

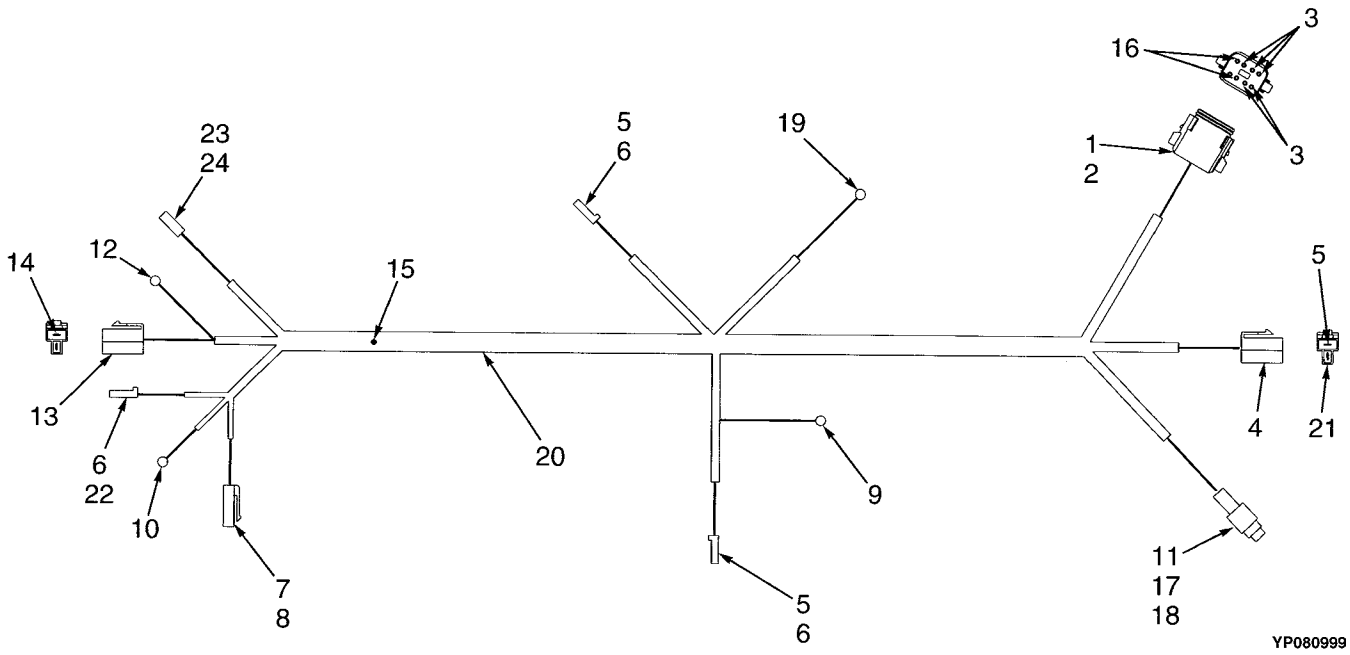

Yale Industrial Trucks

WIRE HARNESS
(ENGINE)
(S/N A875B-03166⇒)

ITEM	PART NO.	DESCRIPTION	QTY
	580008432	Wire Harness	1
1	505968519	Connector	1
2	505968558	Secondary Lock	1
3	505968568	Socket	5
4	504450743	Connector	1
5	505968524	Terminal	3
6	504450741	Connector	3
7	505968506	Connector	1
8	505968589	Connector	1
9	505968563	Terminal	1
10	505968529	Connector	1
11	505968522	Seal	1
12	520045874	Terminal	1
13	505968511	Connector Body	1
14	505966522	Terminal	2
15	520045824	Splice	1
16	505968566	Plug	3
17	505968576	Connector	1
18	505968551	Terminal	1
19	504060749	Terminal	1
20	505968538	Conduit	AR
21	505968595	Blade	1
22	505968562	Terminal	1
23	952408902	Sleeve	1
24	952405902	Sleeve	1

Yale Industrial Trucks

WIRE HARNESS
(ENGINE SHUTDOWN SYSTEM)

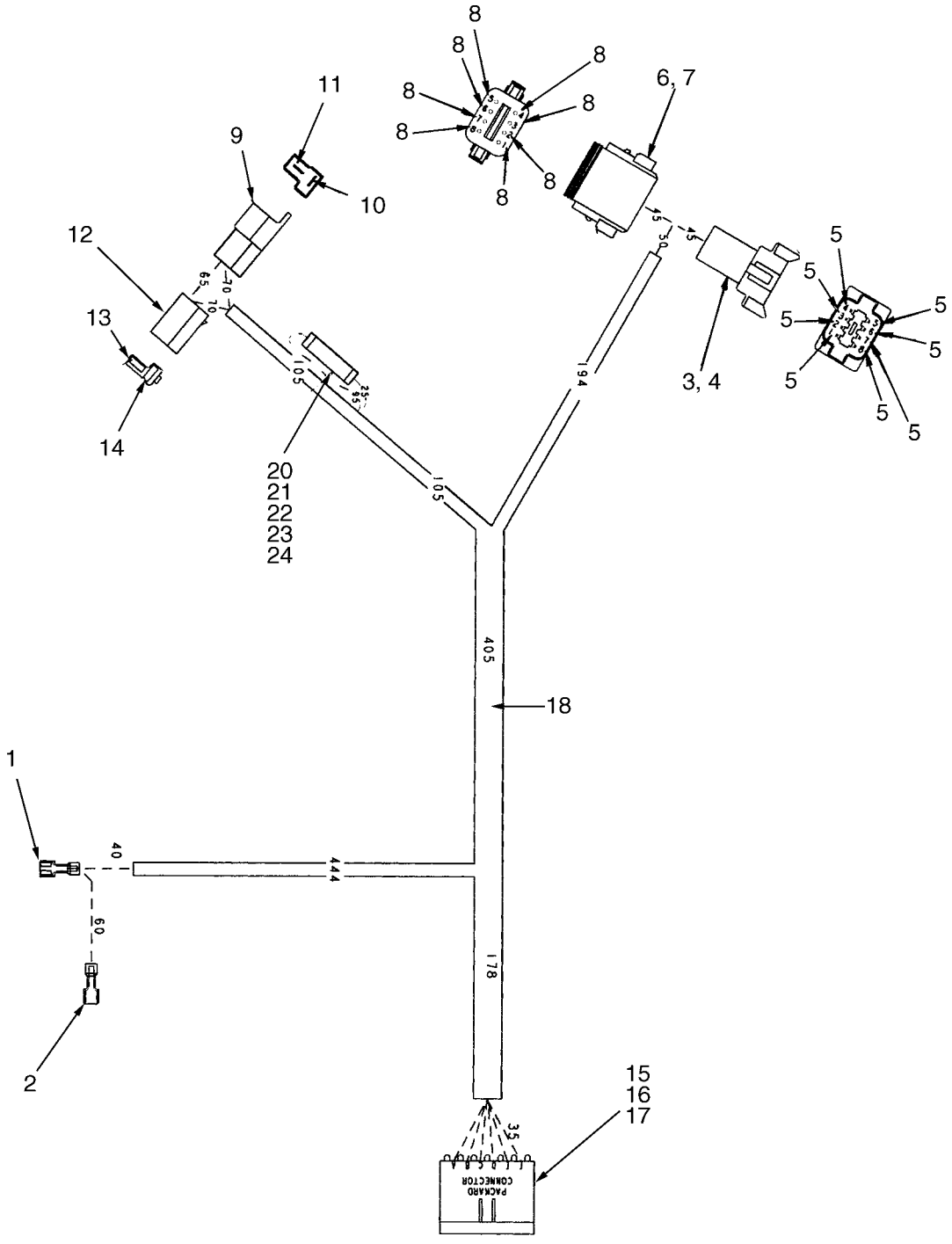

YP080088

Yale Industrial Trucks

WIRE HARNESS
(ENGINE SHUTDOWN SYSTEM)

ITEM	PART NO.	DESCRIPTION	QTY
	524154220	Wire Harness	1
1	500383916	Terminal	1
2	502719903	Electrical Fitting	1
3	505972593	Connector	1
4	505972507	Secondary Lock	1
5	505972554	Pin	6
6	505968519	Connector	1
7	505968558	Secondary Lock	1
8	505064713	Terminal	6
9	504450742	Connector	1
10	504450761	Terminal	1
11	580000293	Terminal	1
12	504450743	Connector	1
13	505968595	Blade	1
14	504236265	Connector	1
15	580031586	Connector	1
16	505968522	Seal	6
17	505968551	Terminal	6
18	505968538	Conduit	1
19	504231204	Heat Shrink Tubing	3
20	504238209	Fuse (15 Amp)	1
21	580018900	Fuse Holder	1
22	520037895	Cap	1
23	520037871	Spring	1
24	520037888	Contact	2

WIRE HARNESS
(LPG)
(S/N A875B-10761⇒)

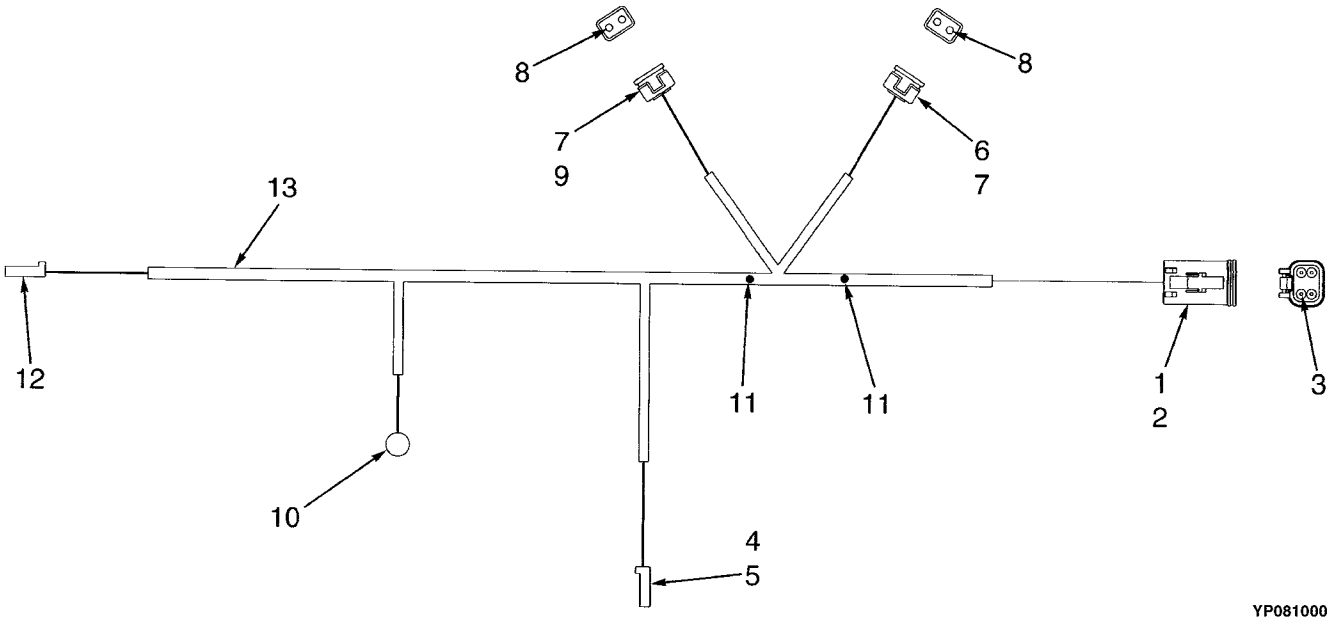

ITEM	PART NO.	DESCRIPTION	QTY
	580016597	Wire Harness	1
1	504064701	Connector	1
2	580001849	Lock	1
3	505968568	Socket	4
4	580010920	Connector	1
5	520038895	Terminal	1
6	580015588	Connector	1
7	580016599	Seal	4
8	580016598	Socket	4
9	580015589	Connector	1
10	505968529	Connector	1
11	520044856	Splice	2
12	504060718	Terminal	1
13	505968538	Conduit	AR

NOTES

WIRE HARNESS
(LPG ENGINE) (CLOSED LOOP)
(S/N A875B-12121Y⇒ EXC. 13136-13149)

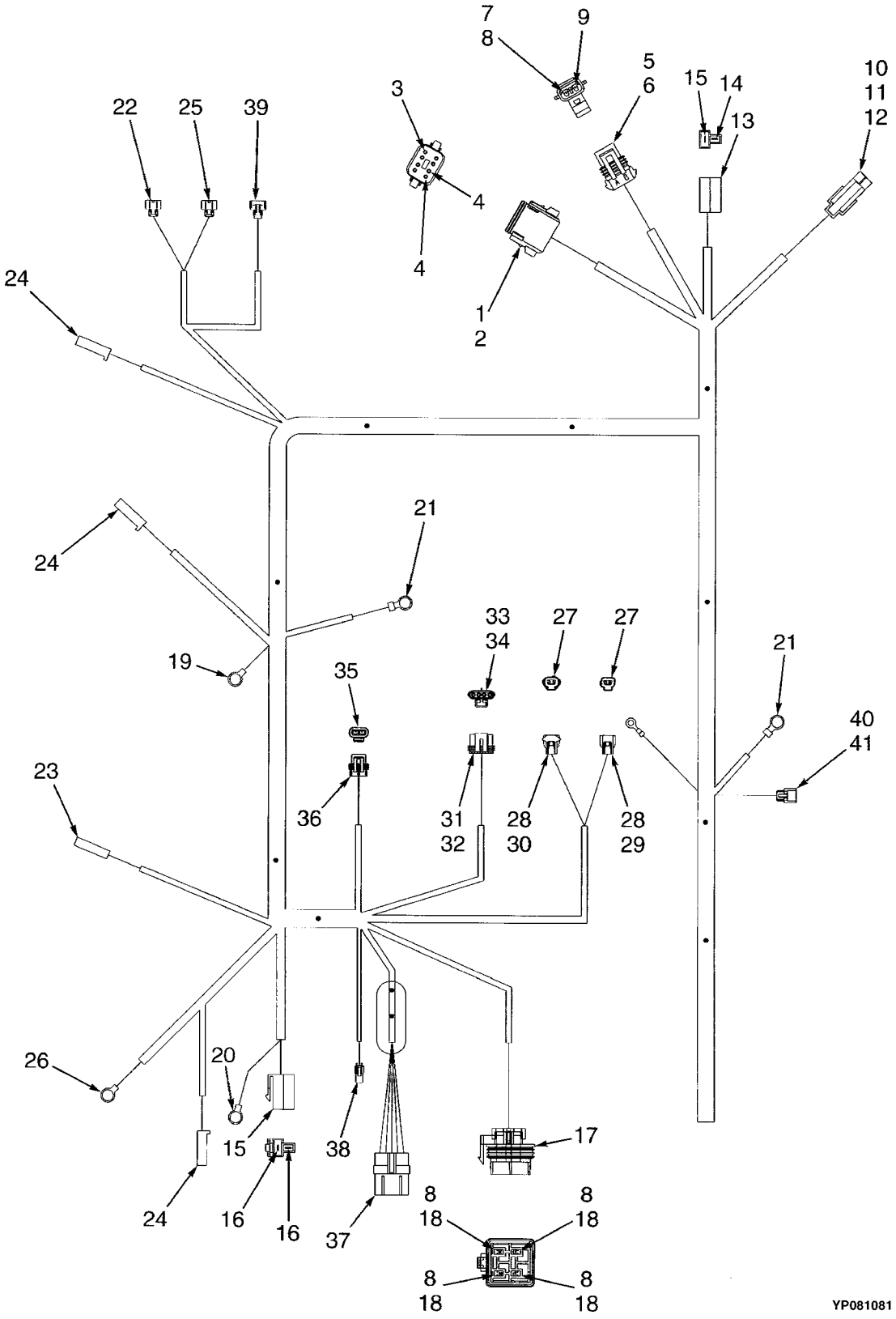

Yale Industrial Trucks

WIRE HARNESS
(LPG ENGINE) (CLOSED LOOP)
(S/N A875B-12121Y⇒ EXC. 13136-13149)

ITEM	PART NO.	DESCRIPTION	QTY
	580019697	Wire Harness (Engine)	1
1	505968519	Connector	1
2	505968588	Connector Body	1
3	505968568	Socket	6
4	505968566	Plug	2
5	520044938	Connector Body	1
6	504288739	Secondary Lock	1
7	520045073	Terminal	1
8	505968522	Seal	4
9	520045873	Plug	1
10	505968576	Connector	1
11	505968551	Terminal	1
12	505968522	Seal	1
13	504450743	Connector	1
14	505968595	Blade	1
15	505968511	Connector Body	1
16	505966522	Terminal	2
17	520040859	Connector	1
18	520040815	Terminal	2
19	505968563	Terminal	1
20	520045874	Terminal	2
21	520045865	Terminal	2
22	580022994	Connector	1
23	952408901	Sleeve	1
24	504450741	Connector	3
25	580020642	Connector	1
26	952405902	Sleeve	1
27	580016598	Socket	4
28	580016599	Seal	2
29	580015589	Connector	1
30	580015588	Connector	1
31	580022990	Connector	1
32	580022993	Lock	1
33	580022991	Seal	4
34	580023152	Terminal	4
35	580000561	Terminal	2
36	520044938	Connector Body	1
37	580022998	Connector	1
38	580022995	Connector	1
39	580022996	Connector	1
40	580022997	Connector	1
41	580019051	Lock Plate	1

NOTES

7 TRANSMISSION

SECTION 7
TRANSMISSION

DESCRIPTION	PAGE
CONTROL VALVE	
⇒S/N A875B-2678W	7-8
S/N A875B-2679W⇒	7-12
DIFFERENTIAL	
D/B 07/1998⇒	7-26
⇒D/B 07/1998	7-22
FORWARD AND REVERSE CLUTCH	
⇒S/N T080M-04189	7-16
S/N T080M-04190⇔S/N T080M-04775	7-18
S/N T080M-04776⇒	7-20
MANIFOLD VALVE	
S/N A875B-15479Y⇒ INC. 15474-15476	7-15
PUMP DRIVE	7-28
TRANSMISSION	
1 OF 2	7-2
2 OF 2	7-6
TRANSMISSION COOLING	
⇒S/N A875B-19844Z	7-30
S/N A875B-19845Z⇒	7-32

Yale Industrial Trucks

TRANSMISSION
(1 OF 2)

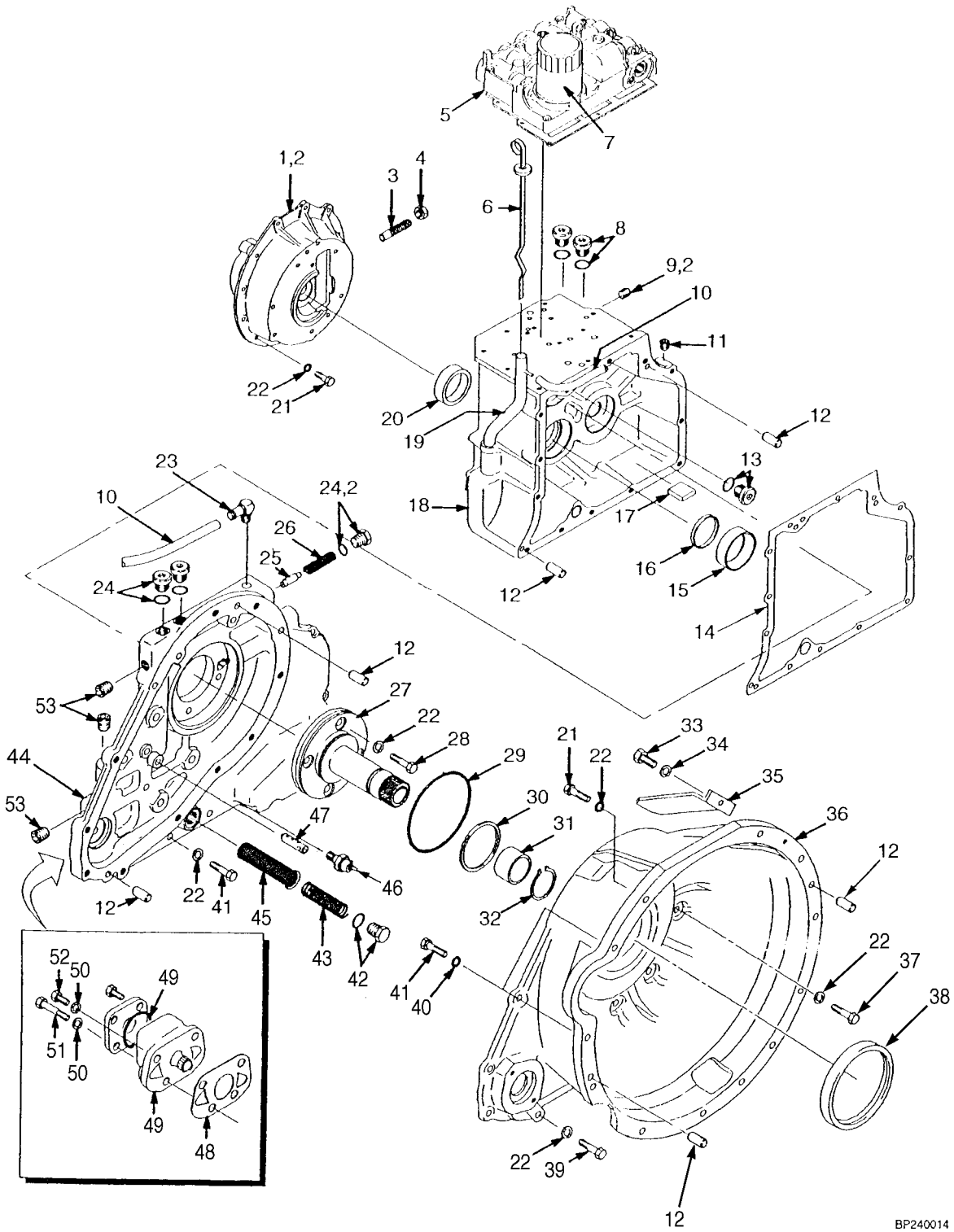

Yale Industrial Trucks

TRANSMISSION (1 OF 2)

ITEM		PART NO.	DESCRIPTION	QTY
	a	580001154	Transmission	1
	bg	580009349	Transmission	1
	ch	580020389	Transmission	1
	d	580024522	Transmission	1
1	**i**	505971504	Differential	1
1	**j**	580001783	Differential	1
2		520042831	Adhesive	AR
3		504226279	Screw	1
4		066537700	Nut	1
5		520052877	Control Valve	1
5	**b**	580009340	Control Valve	1
6		505967554	Dipstick	1
7		505966578	Filter	1
8		500390903	Fitting	2
8		052645100	O-Ring	2
9		500428902	Fitting	1
10		505967562	Hose	1
10		926739301	Hose (Optional)	1
11		014931500	Fitting	1
12		505967544	Pin	4
13		315976070	Fitting	1
13		052645200	O-Ring	1
14		505967579	Gasket	1
15		072387332	Bearing Cup	1
16		505967550	Seal	1
17		505967598	Magnet	1
18		505967501	Housing	1
19		505967535	Tube	1
20		054803600	Bearing Cup	1
21		449001015	Capscrew	21
22		449022013	Lockwasher	21
23		505967560	Fitting	1
24		505967551	Fitting	3
24		052645300	O-Ring	3
25		505967514	Spool	1
26		580009332	Spring (Main Relief)	1
27		580000887	Stator	1
28		449001302	Capscrew	4
29		505967511	O-Ring	1
30		505971544	O-Ring	1
31		505967538	Spacer	1
32		015916500	Snap Ring	1
33		449001114	Capscrew	2
34		449022018	Lockwasher	2
35		518807602	Cover	2
36		518807614	Housing (Torque Converter)	1
37		449001029	Capscrew	4
38	**e**	505967503	Seal	1
38	**f**	580025891	Seal	1
39		449001010	Capscrew	16

TRANSMISSION
(1 OF 2)

ITEM	PART NO.	DESCRIPTION	QTY
40	449022017	Lockwasher	2
41	449001069	Capscrew	2
42	057390000	Fitting	1
42	052645700	O-Ring	1
43	505967588	Spring	1
44	505969569	Cover	1
45	505967534	Screen	1
46	505967573	Temperature Switch	1
47	505967591	Tube	1
48	505967584	Gasket	1
49	505963502	Pump	1
49	505963566	Seal	1
50	449022016	Lockwasher	4
51	449001076	Capscrew	2
52	449001134	Capscrew	2
53	500428901	Fitting	3

FOOTNOTES:
a ⇒ S/N A875B-02678W
b S/N A875B-02679W ⇒
c ⇒ S/N A875B-15478 EXC. 15474-15476
d S/N A875B-15479 ⇒ INC. 15474-15476
e ⇒ S/N A875B-15482
f S/N A875B-15483 ⇒
g ⇒ S/N T080M-04189
h S/N T080M-04190 ⇒
i ⇒ D/B 07/1998
j D/B 07/1998 ⇒

NOTES

TRANSMISSION
(2 OF 2)

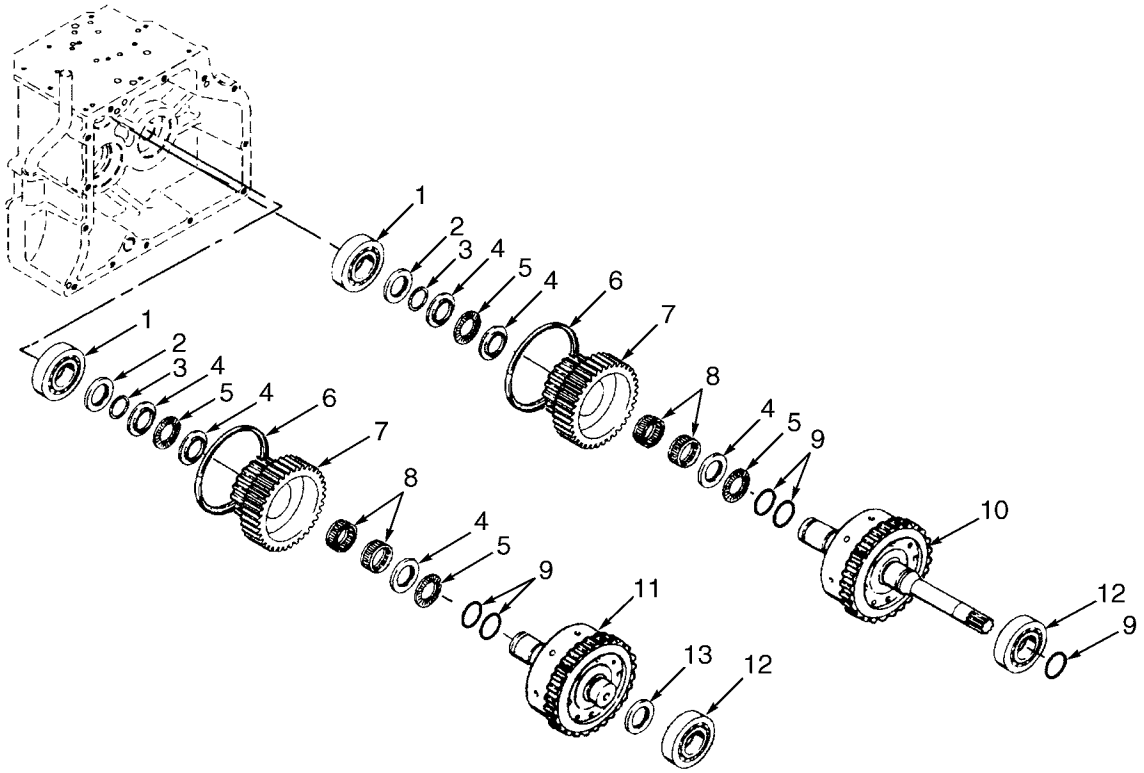

BP240015

Yale Industrial Trucks

TRANSMISSION
(2 OF 2)

ITEM		PART NO.	DESCRIPTION	QTY
	a	580001154	Transmission	1
	be	580009349	Transmission	1
	cf	580020389	Transmission	1
	d	580024522	Transmission	1
1		201638000	Ball Bearing	1
2		580001123	Washer	1
3		505967520	Snap Ring	1
4		580001122	Washer	3
5		580001121	Bearing (Thrust)	2
6		580012280	O-Ring	1
7	**e**	580001119	Gear	1
7	**f**	580020380	Gear	1
8		580001120	Bearing	2
9		505967545	O-Ring (Forward)	3
9		505967545	O-Ring (Reverse)	2
10	**e**	580001138	Clutch Assembly (Forward)	1
10	**g**	580020385	Clutch Assembly (Forward)	1
10	**h**	580024491	Clutch Assembly (Forward)	1
11	**e**	580001140	Clutch Assembly (Reverse)	1
11	**g**	580020386	Clutch Assembly (Reverse)	1
11	**h**	580024492	Clutch Assembly (Reverse)	1
12		015125800	Ball Bearing	1
13		580001124	Spacer (Reverse Clutch Only)	1

FOOTNOTES:
a ⇒ S/N A875B-02678W
b S/N A875B-02679W ⇒
c S/N A875B-15478 ⇒ EXC. 15474-15476
d S/N A875B-15479 ⇒ INC. 15474-15476
e ⇒ S/N T080M-04189
f S/N T080M-04190 ⇒
g S/N T080M-04190⇔S/N T080M-04775
h S/N T080M-04776 ⇒

Yale Industrial Trucks

CONTROL VALVE
(⇒S/N A875B-2678W)

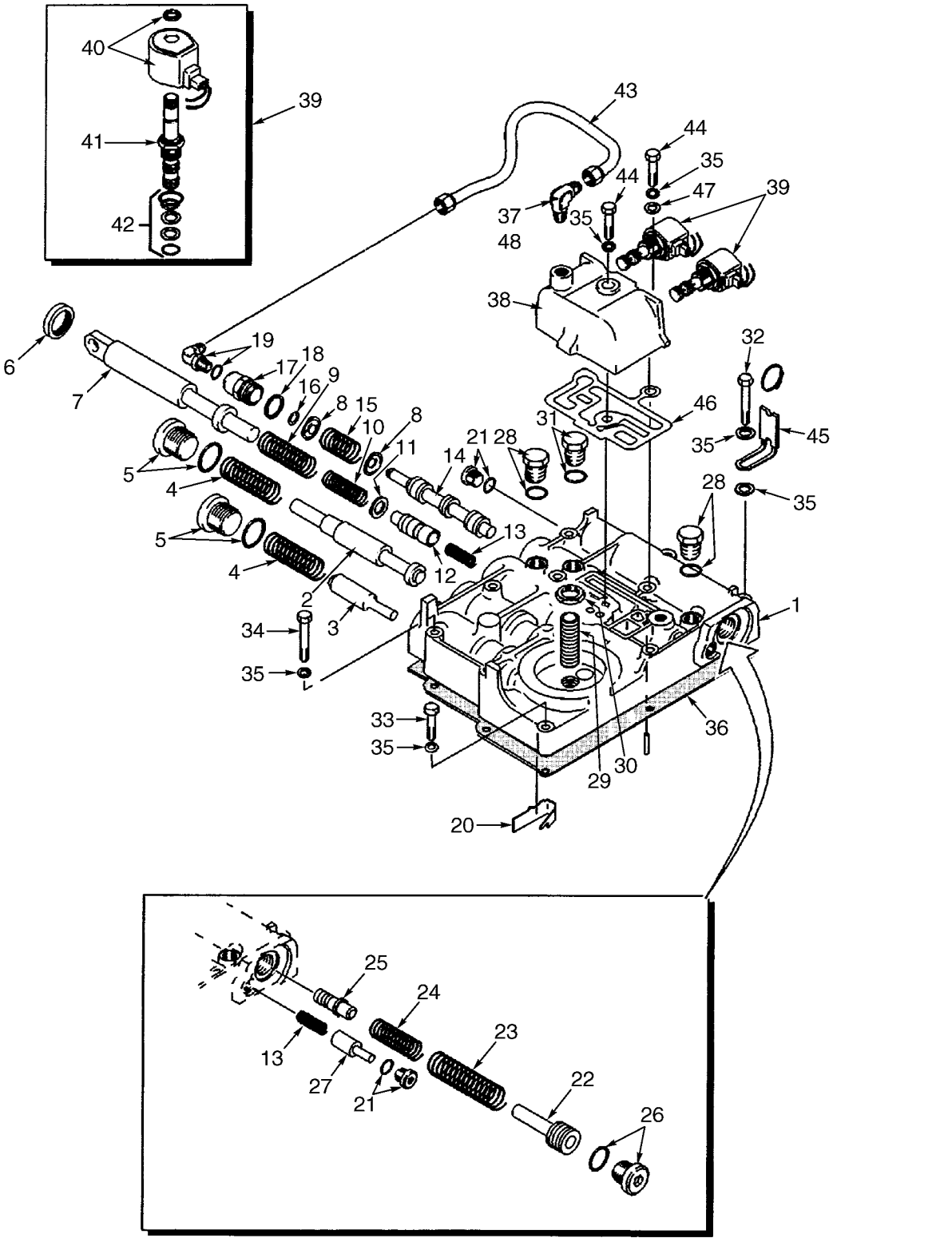

BP240017

Yale Industrial Trucks

CONTROL VALVE
(⇒S/N A875B-2678W)

ITEM		PART NO.	DESCRIPTION	QTY
		520052877	Control Valve	1
1		520052868	Body	1
2		505971540	Spool	1
3		505971525	Spool	1
4		505971584	Spring	2
5		505967551	Fitting	2
5		052645300	O-Ring	1
6		505971500	Oil Seal	1
7		505971506	Plunger	1
8		505970514	Cap	2
9		505972570	Spring	1
10		505972501	Spring	1
11		502566901	Washer	1
12		505972511	Spool (Inching)	1
13		505971595	Spring	2
14		505970564	Spool	1
15		505970516	Spring	1
16		505971511	Snap Ring	1
17		505970593	Cap	1
18		505970581	Gasket	1
19		056363100	Fitting	1
19		056363300	O-Ring	1
20		505971558	Stop (Inching)	1
21		315976070	Fitting	2
21		052645200	O-Ring	1
22		505971535	Spool (Trimmer)	1
23		505971567	Spring	1
24		505971546	Spring	1
25		505971508	Spool (Accumulator)	1
26		505971539	Fitting	1
26		052645600	O-Ring	1
27		505971568	Spool (Dump)	1
28		058429300	Fitting	2
28		052645100	O-Ring	1
29		505970545	Nipple	1
30		066537700	Nut	1
31		500390903	Fitting	1
31		052645100	O-Ring	1
32		449001172	Capscrew	3
33		449001028	Capscrew	1
34		449001050	Capscrew	3
35		449021001	Washer	11
36		580012294	Gasket	1
37		013378300	Fitting	1
38		520052871	Manifold Valve	1
39		520052876	Solenoid Valve	2
40		520053873	Nut	1
40		505963584	Coil	1
41		505963557	Cartridge	1
42	**a**	520053870	Seal Kit	1

CONTROL VALVE
(⇒S/N A875B-2678W)

ITEM	PART NO.	DESCRIPTION	QTY
43	505971550	Tube	1
44	449001073	Capscrew	4
45	504231226	Clamp	1
46	505971566	Gasket	1
47	015040100	Washer	1
48	505970592	Sealant	AR
	505974558	Seal Kit (Includes Items 5-6, 18-19, 21, 26, 28)	1

FOOTNOTES:
a Services One Solenoid Valve

NOTES

Yale Industrial Trucks

CONTROL VALVE
(S/N A875B-2679W⇒)

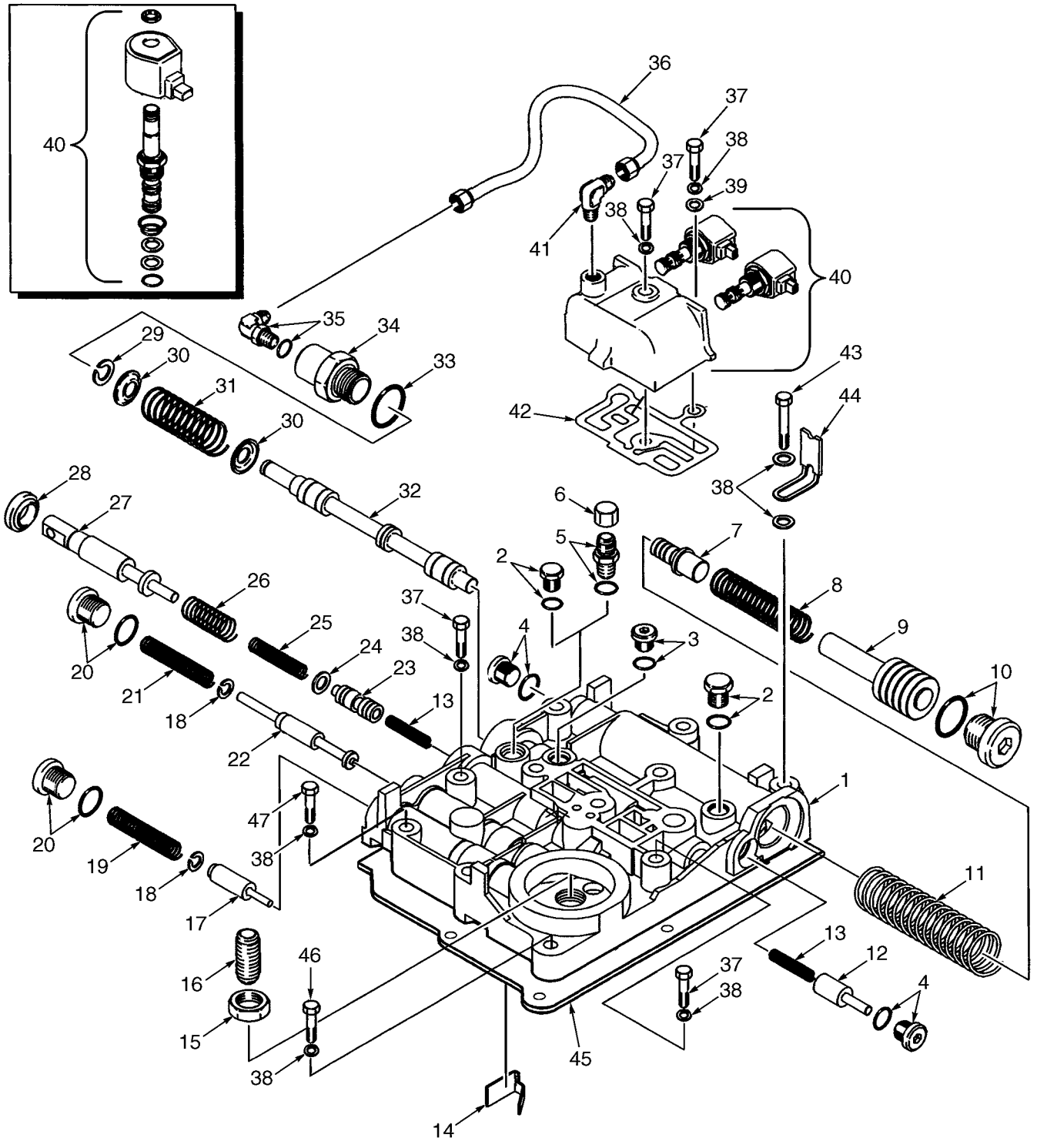

BP140009

Yale Industrial Trucks

CONTROL VALVE
(S/N A875B-2679W⇒)

ITEM		PART NO.	DESCRIPTION	QTY
		580009340	Control Valve	1
1		580009251	Body	1
2		058429300	Fitting	1
2		052645100	O-Ring	1
3		500390903	Fitting	2
3		052645100	O-Ring	1
4		315976070	Fitting	2
4		052645200	O-Ring	1
5		134023101	Fitting	1
5		052645100	O-Ring	1
6		500179904	Fitting	1
7		505971535	Spool (Trimmer)	1
8		505971567	Spring	2
9		505971508	Spool (Accumulator)	1
10		505971539	Fitting	1
10		052645100	O-Ring	1
11		505971546	Spring	1
12		505971568	Spool (Dump)	1
13		505971595	Spring	1
14		505971558	Stop (Inching)	2
15		066537700	Nut	1
16		505970545	Nipple	1
17		580009252	Spool (Regulator)	1
18		580009212	Snap Ring	1
19		580009253	Spring	1
20		505967551	Fitting	1
20		052645300	O-Ring	1
21		580009721	Spring	2
22		580009254	Spool (Pack Regulator)	1
23		580018439	Spool (Inching)	1
24		502566901	Washer	1
25		580008808	Spring	1
26		505972570	Spring	1
27		505971506	Plunger	1
28		505971500	Oil Seal	1
29	**c**	505971511	Snap Ring	1
29	**d**	580024421	Snap Ring	1
30		505970514	Cap	1
31		505970516	Spring	1
32		580021205	Spool (Forward and Reverse)	1
33		505970581	Gasket	1
34		505970593	Cap	1
35		056363100	Fitting	1
35		056363300	O-Ring	1
36		505971550	Tube	1
37		449001078	Capscrew	4
38		449021001	Washer	12
39		015040100	Washer	1
40	**a**	520052871	Manifold Valve	1
40		580002090	Solenoid Valve	2

CONTROL VALVE
(S/N A875B-2679W⇒)

ITEM		PART NO.	DESCRIPTION	QTY
40		520053873	Nut	1
40		580000883	Coil	1
40		580000882	Cartridge	1
40		520053870	Seal Kit	1
40	**b**	580011163	Manifold Valve (☞ P13281)	1
41		013378300	Fitting	1
42		520052872	Gasket	1
43		449001172	Capscrew	3
44		580000082	Strap	1
45		580012294	Gasket	1
46		449001028	Capscrew	1
47		449001050	Capscrew	3
		505974558	Seal Kit (Includes Items 2-5, 10, 20, 28, 35, 42, 45)	1

FOOTNOTES:
a ⇒ S/N A875B-15478 Excludes 15474-15476
b S/N A875B-15479 ⇒ Includes 15474-15476
c ⇒ S/N T080M-04383
d S/N T080M-04384 ⇒

Yale Industrial Trucks

MANIFOLD VALVE
(S/N A875B-15479Y⇒ INC. 15474-15476)

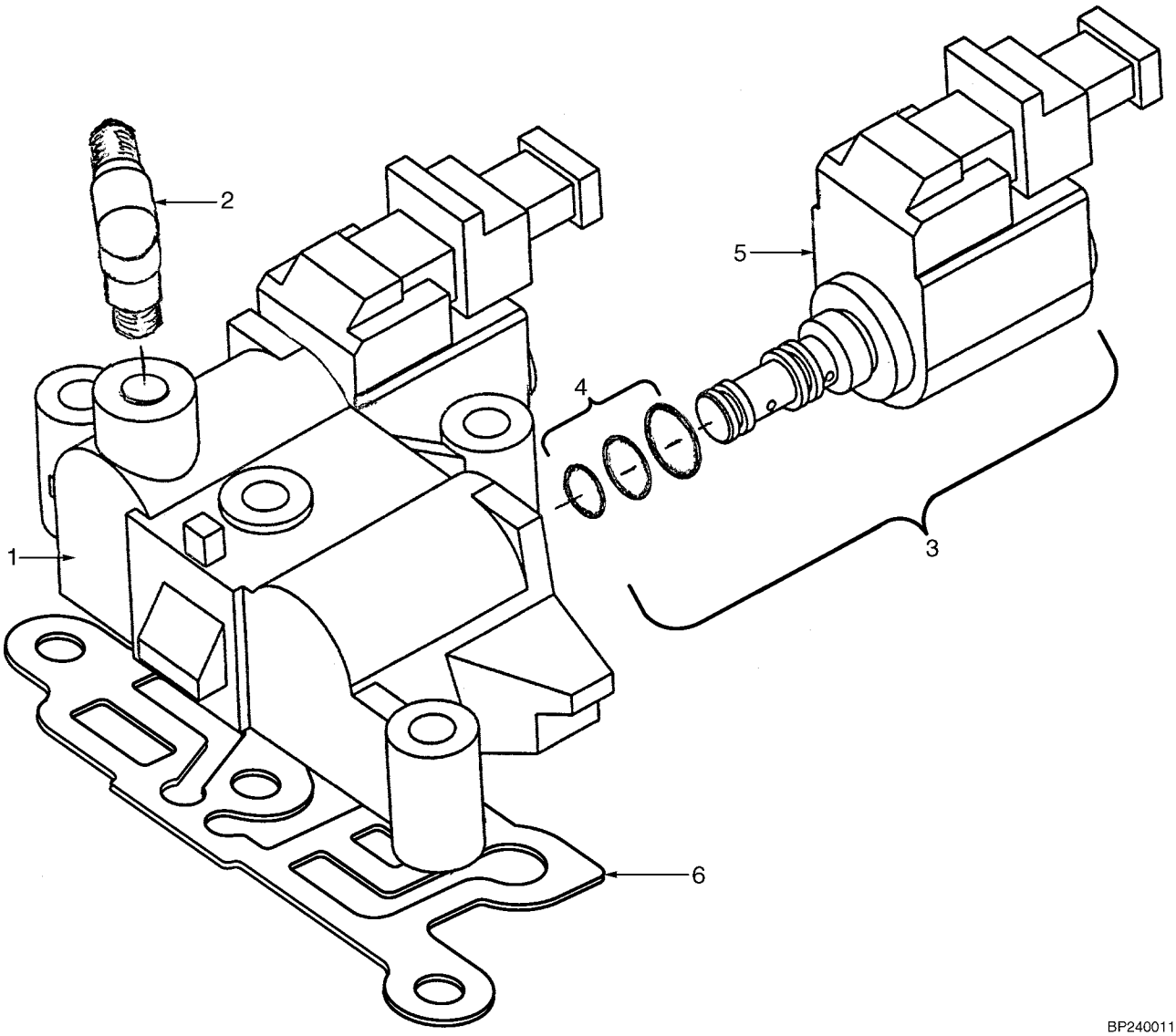

BP240011

ITEM		PART NO.	DESCRIPTION	QTY
		580011163	Manifold Valve	1
1		580004500	Manifold	1
2		013378300	Fitting	1
2		505970592	Sealant	AR
3		580011162	Solenoid Valve	2
4	**a**	520053870	Seal Kit	1
5		580011753	Coil	1
6		520052872	Gasket	1

FOOTNOTES:

a Services One Solenoid Valve

FORWARD AND REVERSE CLUTCH
(⇒S/N T080M-04189)

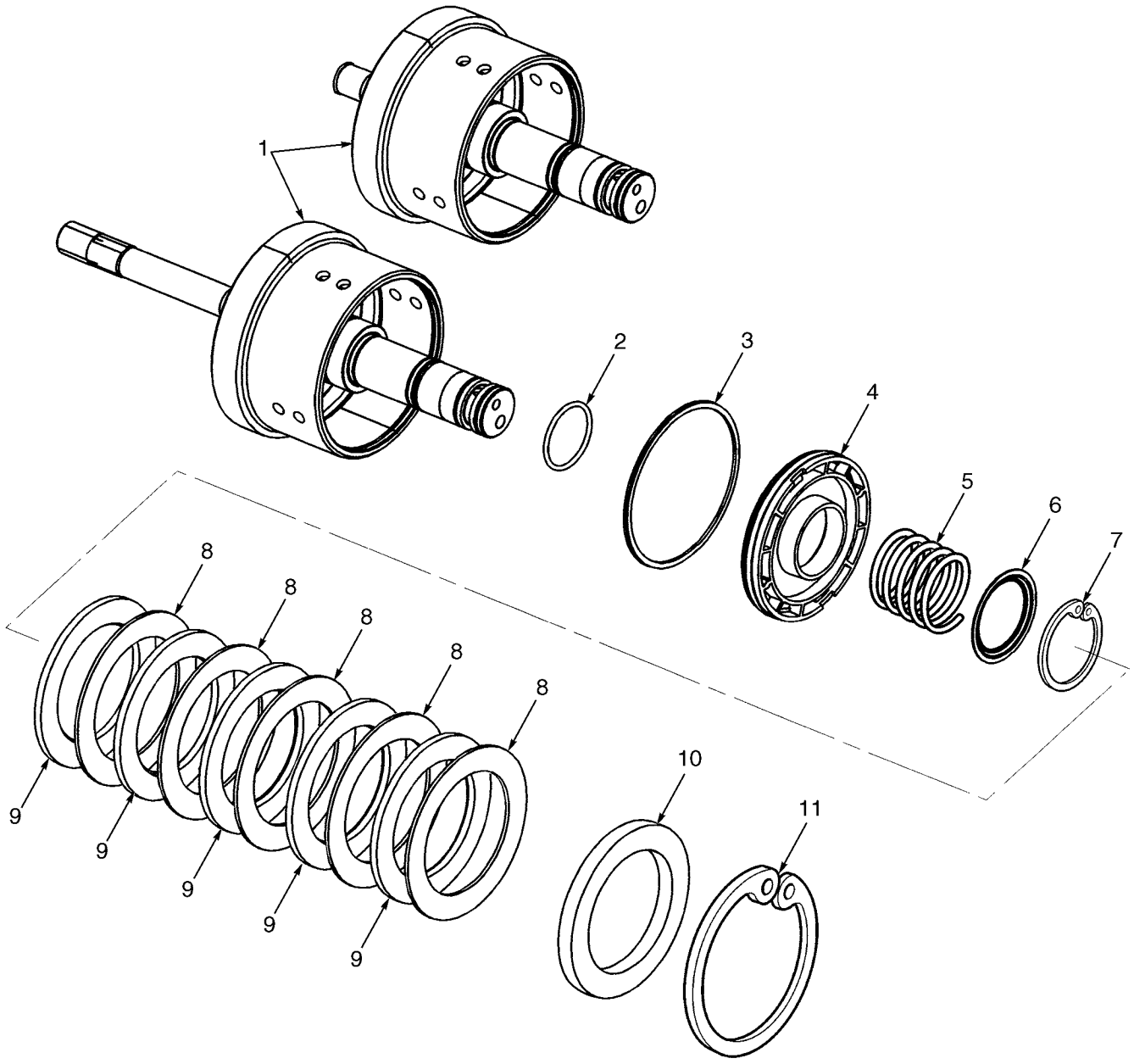

BP240013

Yale Industrial Trucks

FORWARD AND REVERSE CLUTCH
(⇒S/N T080M-04189)

ITEM	PART NO.	DESCRIPTION	QTY
	580001138	Clutch Assembly (Forward)	1
	580001140	Clutch Assembly (Reverse)	1
1	580001146	Shaft (Forward, Long Shaft)	1
1	580001149	Shaft (Reverse, Short Shaft)	1
2	580001161	O-Ring	1
3	505971555	Seal	1
4	580001165	Piston	1
5	580001163	Spring	1
6	580001167	Guide	1
7	580001169	Snap Ring	1
8	505971578	Plate (Separator)	5
9	505971559	Plate (Friction)	5
9	580019516	Plate (Friction)	1
10	580001691	Plate (Pressure)	1
11	505971572	Snap Ring	1

Yale Industrial Trucks

FORWARD AND REVERSE CLUTCH
(S/N T080M-04190⇔S/N T080M-04775)

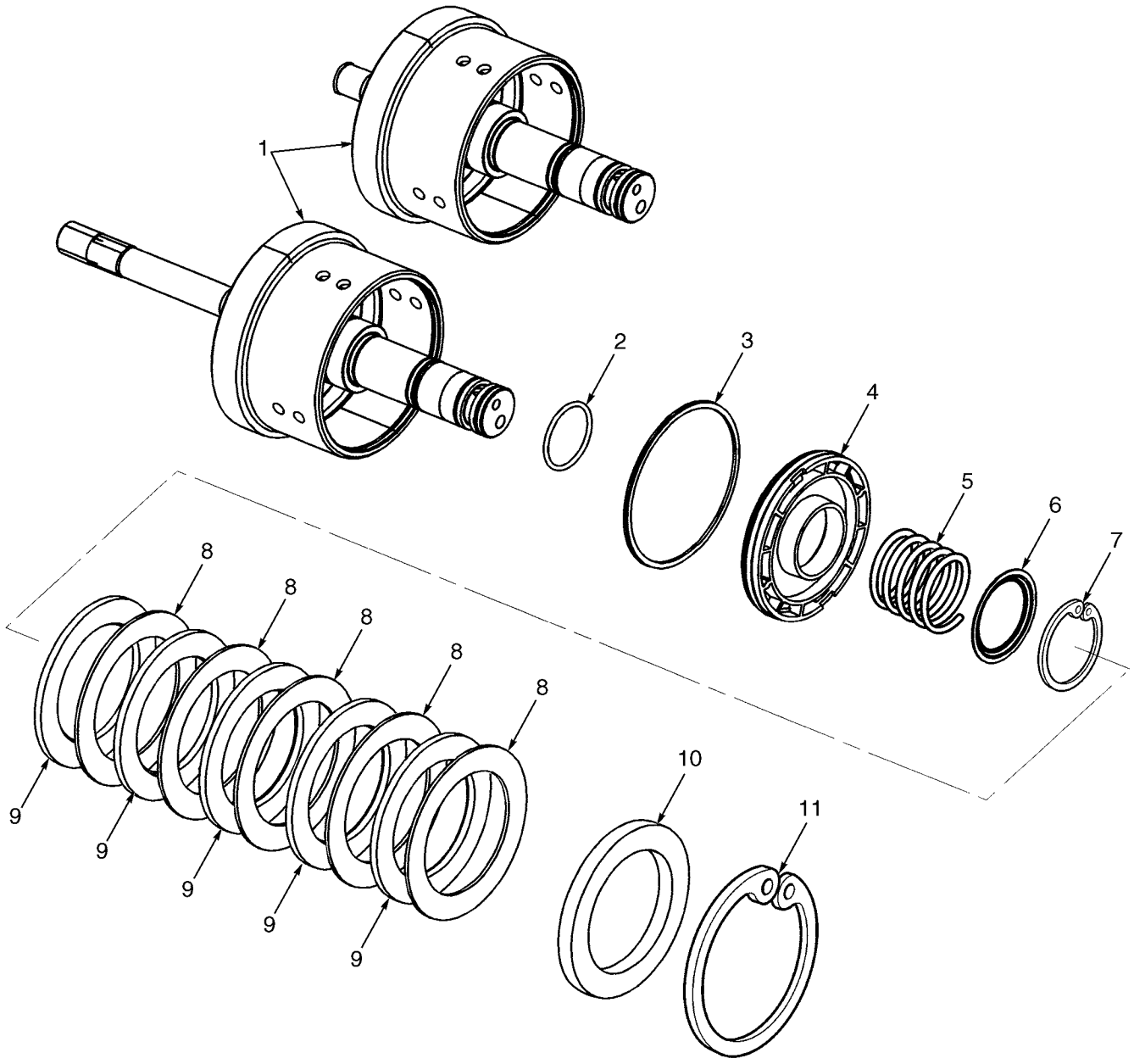

BP240013

Yale Industrial Trucks

FORWARD AND REVERSE CLUTCH
(S/N T080M-04190⇔S/N T080M-04775)

ITEM	PART NO.	DESCRIPTION	QTY
	580020385	Clutch Assembly (Forward)	1
	580020386	Clutch Assembly (Reverse)	1
1	580001146	Shaft (Forward, Long Shaft)	1
1	580001149	Shaft (Reverse, Short Shaft)	1
2	580001161	O-Ring	1
3	505971555	Seal	1
4	580001165	Piston	1
5	580001163	Spring	1
6	580001167	Guide	1
7	580001169	Snap Ring	1
8	580019516	Plate (Friction)	5
9	580020036	Plate (Separator)	5
10	580001691	Plate (Pressure)	1
11	505971572	Snap Ring	1

Yale Industrial Trucks

FORWARD AND REVERSE CLUTCH
(S/N T080M-04776⇒)

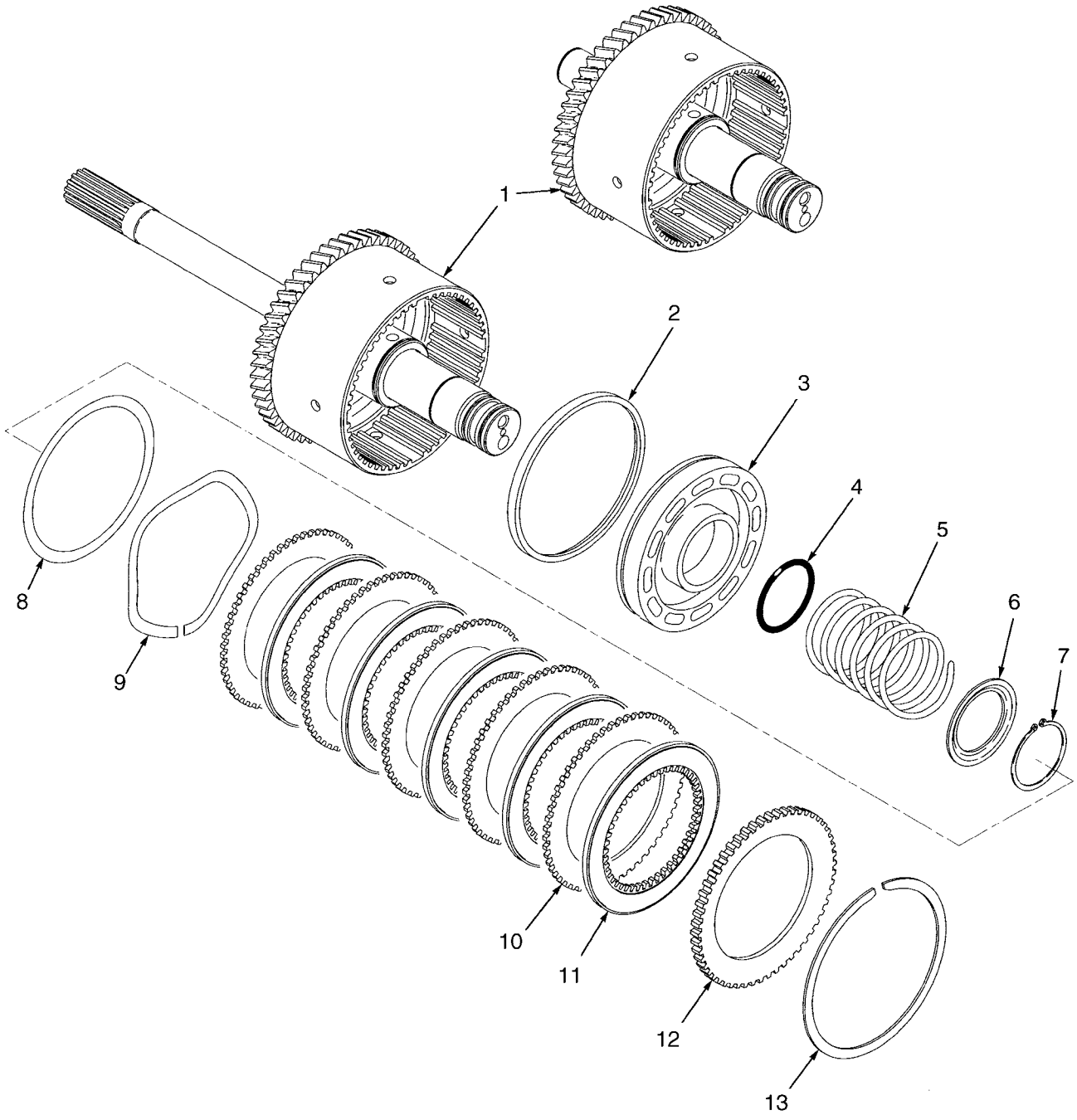

Yale Industrial Trucks

FORWARD AND REVERSE CLUTCH
(S/N T080M-04776⇒)

ITEM		PART NO.	DESCRIPTION	QTY
		580024491	Clutch Assembly (Forward)	1
		580024492	Clutch Assembly (Reverse)	1
1		580020382	Shaft (Forward, Long Shaft)	1
1		580020383	Shaft (Reverse, Short Shaft)	1
2		505971555	Seal	1
3	**a**	580020047	Piston	1
3	**b**	580035104	Piston	1
4		580001161	O-Ring	1
5		580001163	Spring	1
6		580001167	Guide	1
7		580001169	Snap Ring	1
8	**a**	580015103	Back-Up Washer	1
8	**b**	580032798	Back-Up Washer	1
9	**a**	580015104	Wave Spring	1
9	**b**	580034918	Wave Spring	1
9	**b**	580035103	Wave Spring (Optional)	1
10		580020036	Plate (Separator)	5
11		580019516	Plate (Friction)	5
12		580001691	Plate (Pressure)	1
12		580020040	Plate (Pressure, Optional)	1
12		580020041	Plate (Pressure, Stepped, Optional)	1
13		505971572	Snap Ring	1

FOOTNOTES:

a ⇒ S/N PENDING PER ECN 74028

b S/N PENDING PER ECN 74028 ⇒

Yale Industrial Trucks

DIFFERENTIAL
(⇒D/B 07/1998)

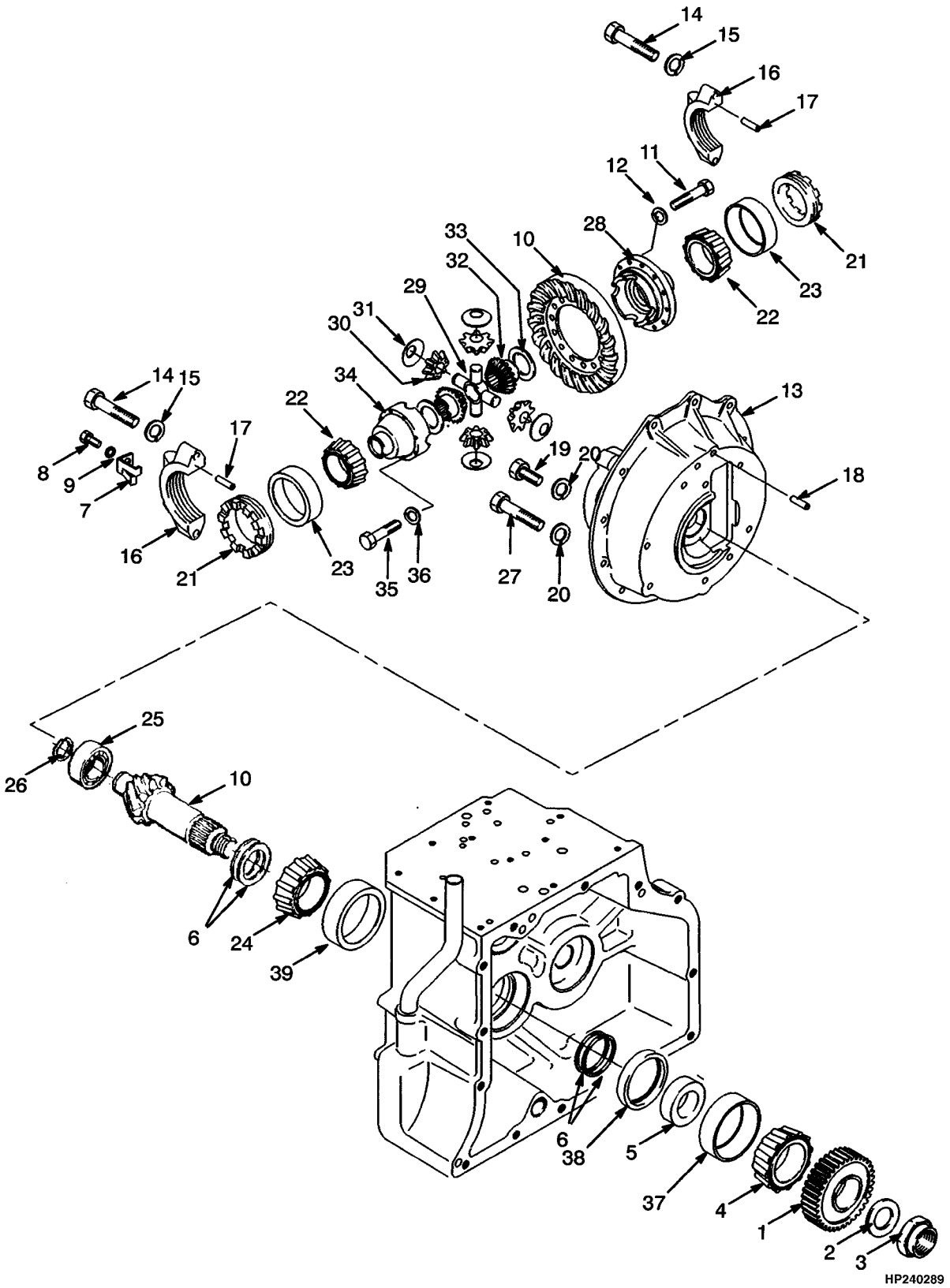

Yale Industrial Trucks

DIFFERENTIAL
(⇒D/B 07/1998)

ITEM		PART NO.	DESCRIPTION	QTY
1		580001479	Gear (Output)	1
2		505967587	Washer	1
3		505967556	Nut	1
4		072387331	Bearing Cone	1
5		505967572	Spacer	1
6		504227210	Shim (0.014 in.)	2
6		504227295	Shim (0.015 in.)	2
6		504227275	Shim (0.016 in.)	4
6		504227287	Shim (0.020 in.)	4
6		504223244	Shim (0.022 in.)	3
6		504223269	Shim (0.025 in.)	3
7		504226235	Lock Plate	2
8		449001415	Capscrew	2
9		449022016	Lockwasher	2
10	**a**	505971585	Gear Set (Hypoid)	1
10	**b**	580018443	Gear Set (Hypoid)	1
11		505970520	Bolt	12
12		580015366	Washer	12
13		505971557	Housing	1
14		505969532	Capscrew	4
15		502012902	Washer	4
16		505971518	Bearing Cup	2
17		504226268	Pin	4
18		449034079	Pin	1
19		449001302	Capscrew	8
20		449022013	Lockwasher	10
21		505971527	Nut	2
22		065124700	Bearing Cone	2
23		054590500	Bearing Cup	2
24		504229295	Bearing Cone	1
25		505970549	Roller Bearing	1
26		502759901	Snap Ring	1
27		449001069	Capscrew	2
28		505971504	Differential	1
28		505975544	Housing (Flanged)	1
29		505971517	Spider	1
30		505971580	Pinion	4
31		505971537	Washer	4
32		505971591	Gear (Side)	2
33		505971529	Washer	2
34		505976523	Housing	1
35		505969574	Capscrew	8
36		504226225	Washer	8
37		072387332	Bearing Cup	1
38		505967550	Seal	1

DIFFERENTIAL
(⇒D/B 07/1998)

ITEM	PART NO.	DESCRIPTION	QTY
39	054803600	Bearing Cup	1
	505967550	Seal (Includes Item)	1

FOOTNOTES:
a ⇒ S/N T080M-04987
b S/N T080M-04988 ⇒

NOTES

DIFFERENTIAL
(D/B 07/1998⇒)

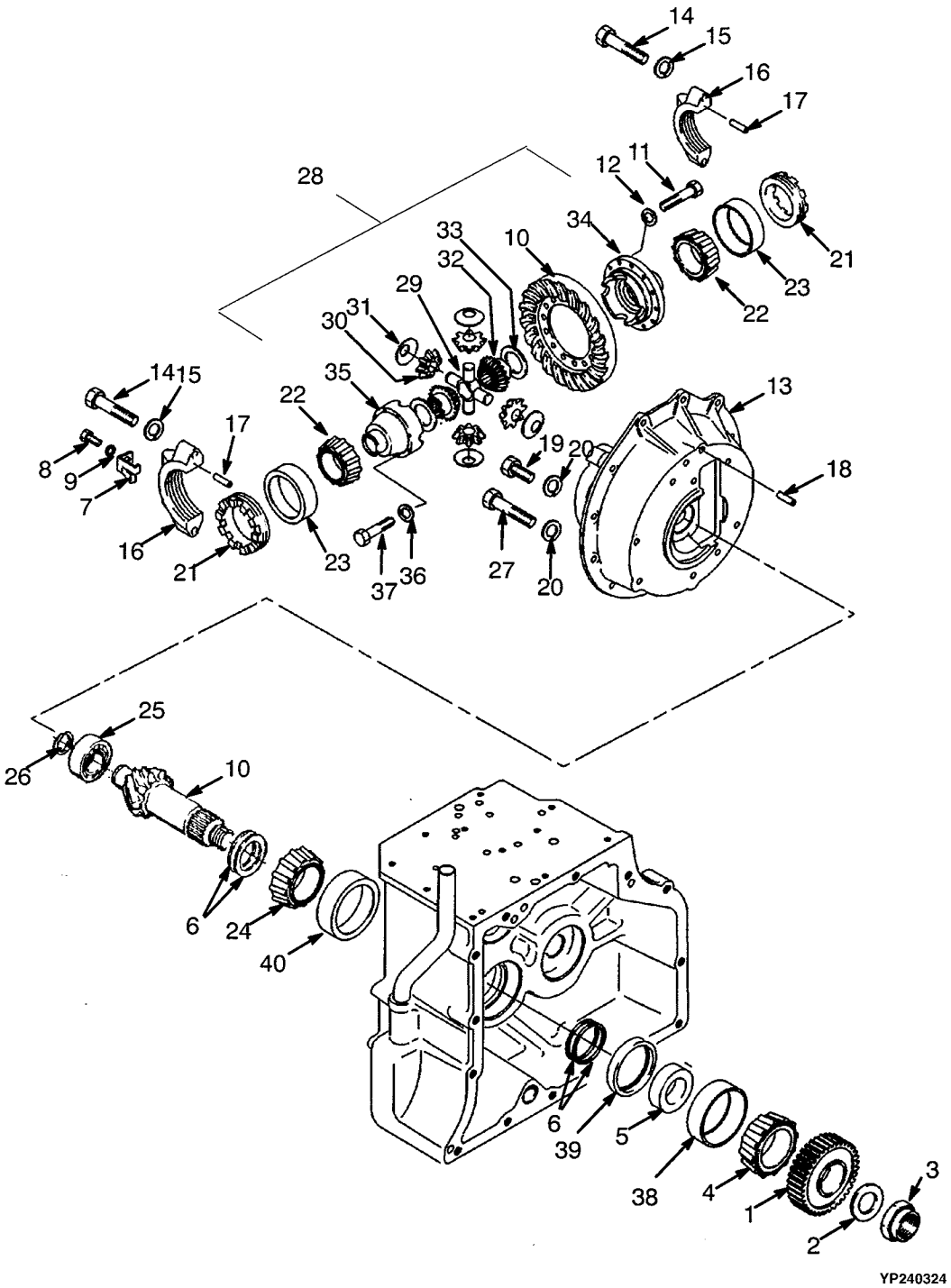

Yale Industrial Trucks

DIFFERENTIAL
(D/B 07/1998⇒)

ITEM	PART NO.	DESCRIPTION	QTY
1	580001479	Gear (Output)	1
2	505967587	Washer	1
3	505967556	Nut	1
4	072387331	Bearing Cone	1
5	505967572	Spacer	1
6	504223244	Shim (0.022 in.)	3
6	504223269	Shim (0.025 in.)	3
6	504227210	Shim (0.014 in.)	2
6	504227275	Shim (0.016 in.)	4
6	504227287	Shim (0.020 in.)	4
6	504227295	Shim (0.015 in.)	2
7	504226235	Lock Plate	2
8	449001415	Capscrew	2
9	449022016	Lockwasher	2
10	580018443	Gear Set (Hypoid)	1
11	505970520	Bolt	12
12	580015366	Washer	12
13	505971557	Housing	1
14	505969532	Capscrew	4
15	502012902	Washer	4
16	505971518	Bearing Cup	2
17	504226268	Pin	4
18	449034079	Pin	1
19	449001302	Capscrew	8
20	449022013	Lockwasher	10
21	505971527	Nut	2
22	065124700	Bearing Cone	2
23	054590500	Bearing Cup	2
24	504229295	Bearing Cone	1
25	505970549	Roller Bearing	1
26	502759901	Snap Ring	1
27	449001069	Capscrew	2
28	580001783	Differential	1
29	580001792	Spider	2
30	580001788	Pinion	4
31	580001790	Washer	4
32	580001786	Gear	2
33	580001787	Washer	2
34	580001784	Housing	1
35	580001785	Housing	1
36	580001793	Washer	8
37	931015915	Capscrew	8
38	072387332	Bearing Cup	1
39	505967550	Seal	1
40	054803600	Bearing Cup	1

PUMP DRIVE

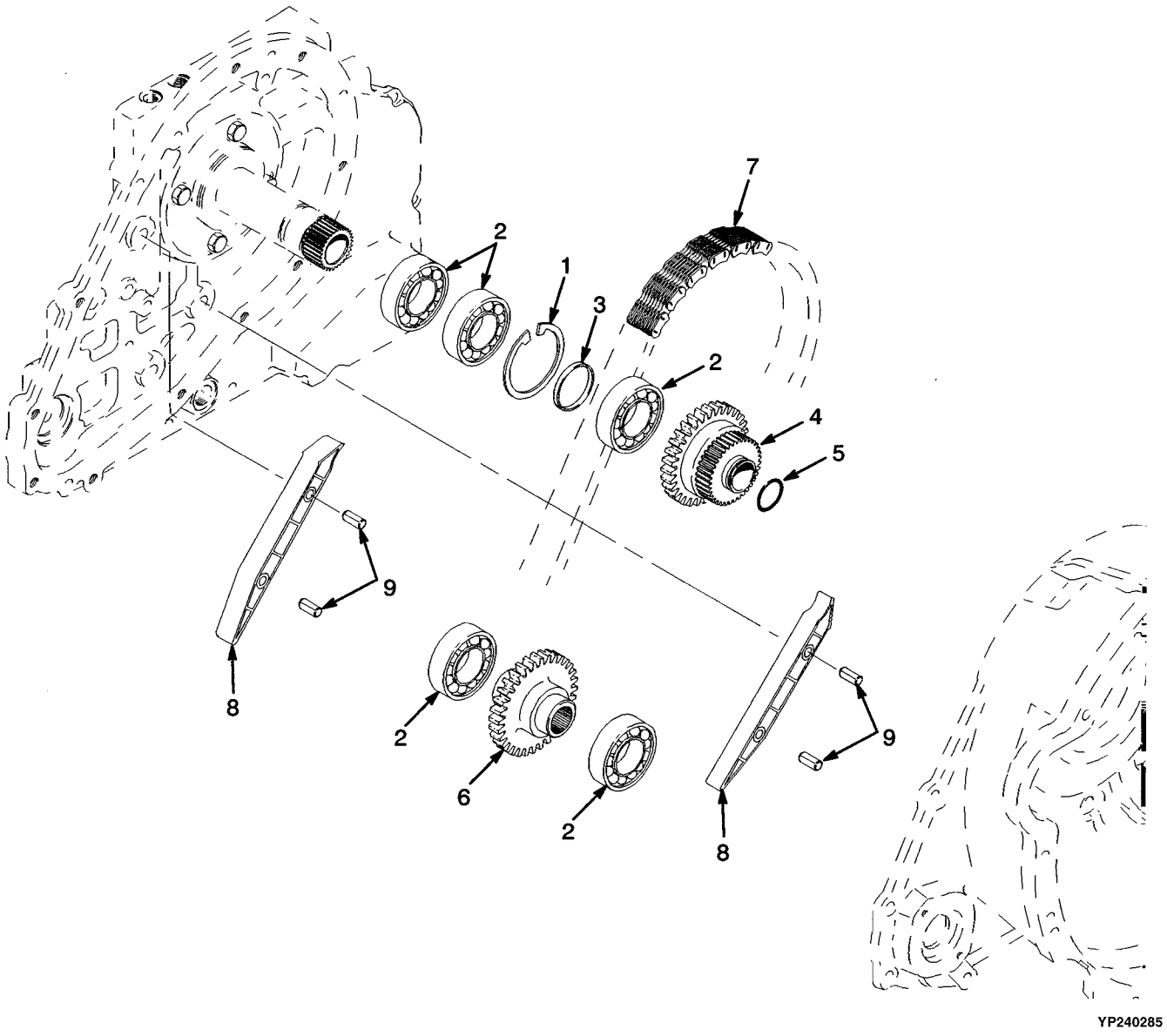

ITEM		PART NO.	DESCRIPTION	QTY
1		640046918	Snap Ring	1
2		500025905	Ball Bearing	4
3		580002393	Spacer	1
4	**a**	505967567	Sprocket (Input)	1
4	**b**	580018265	Sprocket (Input)	1
5		505967542	O-Ring	1
6		505967589	Sprocket (Pump)	1
7		505967537	Chain	1
8		505967597	Snubber	2
9		030533700	Pin	4

FOOTNOTES:

a ⇒ S/N T080B-38815

b S/N T080B-38816 ⇒

TRANSMISSION COOLING
(⇒S/N A875B-19844Z)

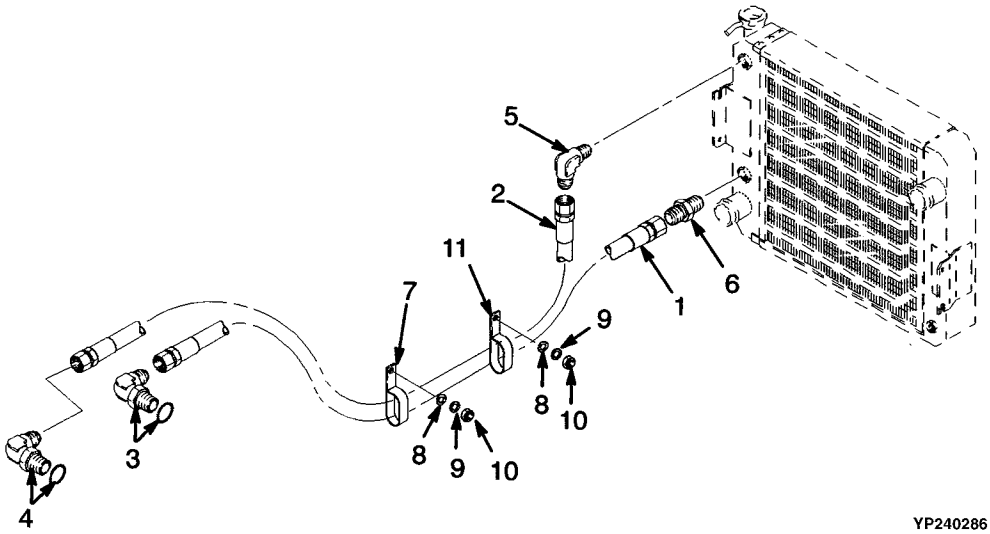

ITEM	PART NO.	DESCRIPTION	QTY
1	520052843	Hose	1
2	520036868	Hose	1
3	057040500	Fitting	1
3	052645300	O-Ring	1
4	013386300	Fitting	1
4	052645200	O-Ring	1
5	013379500	Fitting	1
6	013377500	Fitting	1
7	505970560	Clamp	2
8	449021001	Washer	2
9	449022016	Lockwasher	2
10	449015014	Nut	2
11	504240791	Clamp	1

NOTES

Yale Industrial Trucks

TRANSMISSION COOLING
(S/N A875B-19845Z⇒)

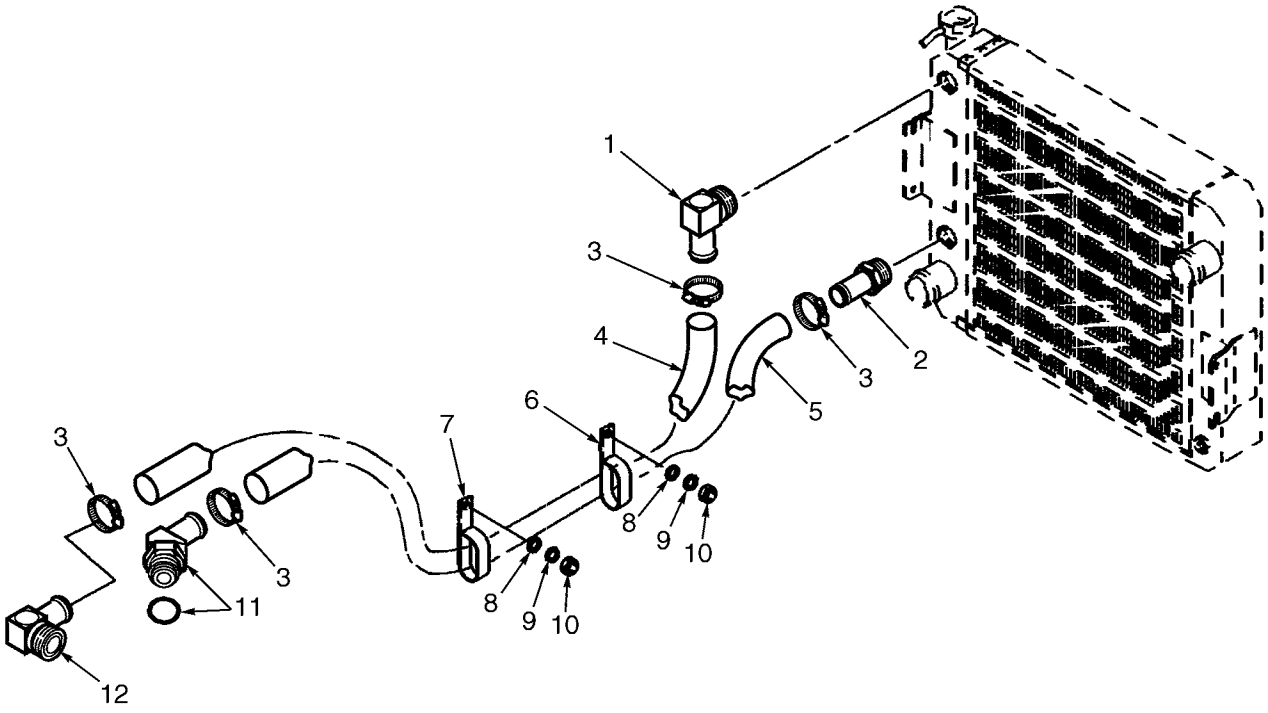

BP240007

Yale Industrial Trucks

TRANSMISSION COOLING
(S/N A875B-19845Z⇒)

ITEM		PART NO.	DESCRIPTION	QTY
1	**a**	013393300	Fitting	1
2	**a**	013393400	Fitting	1
3		502056903	Clamp	4
4		580033788	Hose (Radiator Upper)	1
5		580033789	Hose (Radiator Lower)	1
6		504240791	Clamp (Insulated)	1
7		502056904	Clamp	1
8		449021001	Washer	2
9		449022016	Lockwasher	2
10		449015014	Nut	2
11		316445008	Fitting	1
11		052645300	O-Ring	1
12		580000376	Fitting	1
12		520042831	Adhesive	AR

FOOTNOTES:

a ⇒ S/N PENDING PER ECN 95530-01

NOTES

8 DRIVE AXLE

SECTION 8
DRIVE AXLE

DESCRIPTION	PAGE
DRIVE AXLE	8-2
TIRE AND WHEEL	
DRIVE WHEEL	
GP/GLP 050 TG	8-6
GP/GLP 060 TG	8-8

DRIVE AXLE

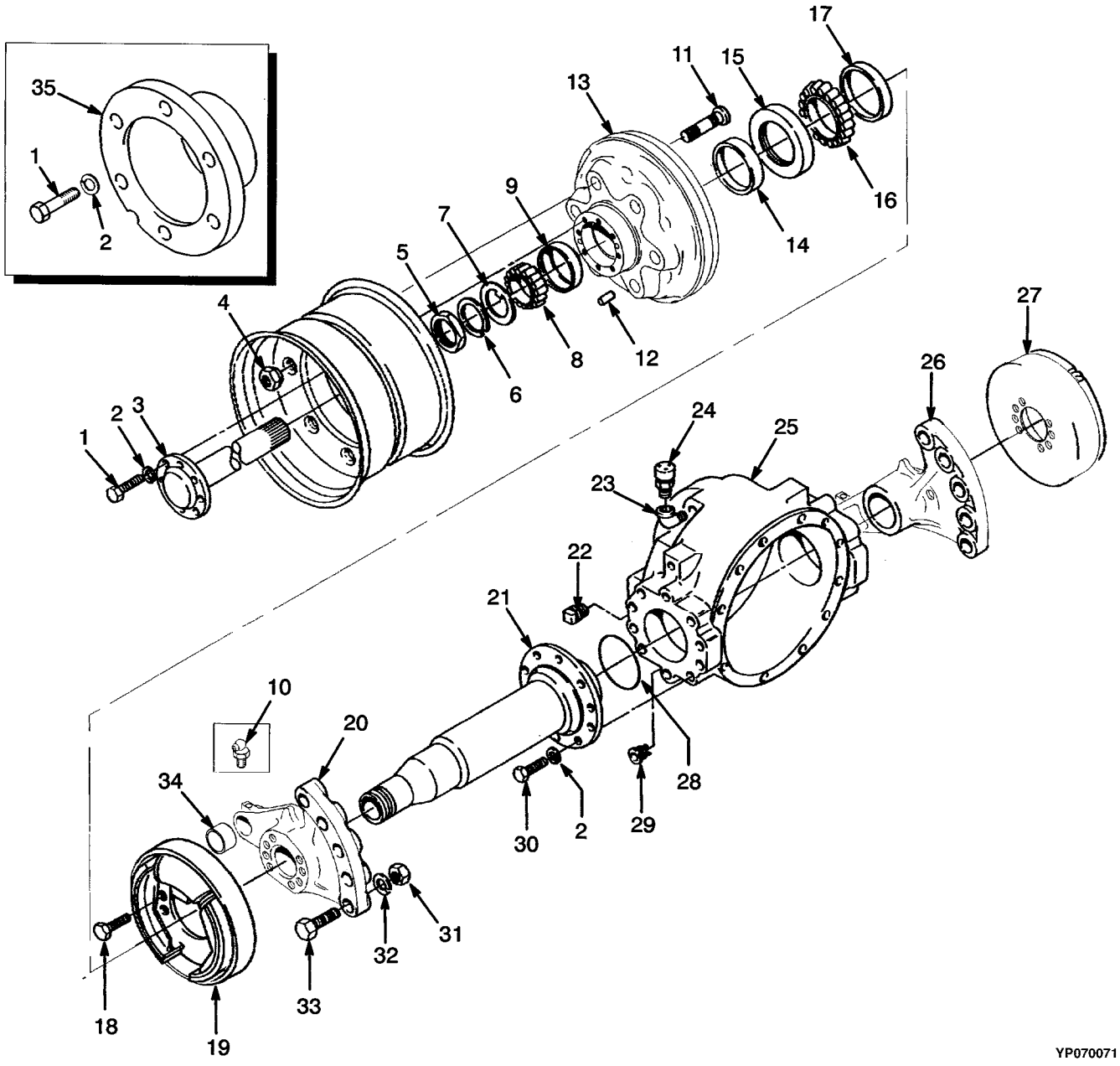
35
1
2
17
11
15
13
16
14
9
7
5
4
8
12
6
27
26
2
3
1
24
25
23
22
21
10
20
34
28
30
2
29
31
32
33
18
19
YP070071

ITEM		PART NO.	DESCRIPTION	QTY
1	**a**	505970540	Capscrew	16
1		505971592	Capscrew	16
2		449022017	Lockwasher	36
2	**a**	449022017	Lockwasher	52
3		500009917	Sealant	AR
3		580001794	Shaft	2
4	**d**	505969526	Lug Nut	12
4	**e**	580032889	Lug Nut	12
4	**ad**	505969526	Lug Nut	24
4	**ae**	580032889	Lug Nut	24
5		720243905	Nut	2
6		133289313	Lockwasher	2
7		501935904	Washer	2
8		502029911	Bearing Cone	2
9		502059912	Bearing Cup	2
10		015628100	Lube Fitting	2
11		505969581	Wheel Stud	12
11	**a**	505969581	Wheel Stud	24
12		505971545	Pin	4
13		505971577	Brake Drum	2
14		505971570	Seal	2
15		502029936	Bearing Cup	2
16		502029935	Bearing Cone	2
17		505959512	Seal	2
18		505965551	Lock Bolt	16
19		505963567	Brake Assembly (LH) (☞ P13161)	1
20		505971502	Bracket (LH)	1
21		504226218	Lubricant	AR
21		505971588	Spindle	2
22		014932500	Fitting	1
23		019930000	Fitting	1
24		015630100	Plug	1
25		520042831	Adhesive	AR
25		505971542	Housing	1
26		505971589	Bracket (RH)	1
27	**b**	505963529	Brake Assembly (RH) (☞ P13161)	1
27	**c**	580021708	Brake Assembly (RH)	1
28		504224251	O-Ring	2
29		505970537	Fitting	1
30		449001058	Capscrew	20
31		449015018	Nut	10
32		449022010	Lockwasher	10
33		449001453	Capscrew	10

DRIVE AXLE

ITEM		PART NO.	DESCRIPTION	QTY
34		505965585	Bushing	2
35	**a**	505973518	Spacer	2

FOOTNOTES:

a Dual Wheel Application
b ⇒ S/N A875B-16431Y
c S/N A875B-16432Y ⇒
d ⇒ S/N A875B-170502Z
e S/N A875B-17503Z ⇒

NOTES

Yale Industrial Trucks

TIRE AND WHEEL
(DRIVE WHEEL) (GP/GLP 050 TG)

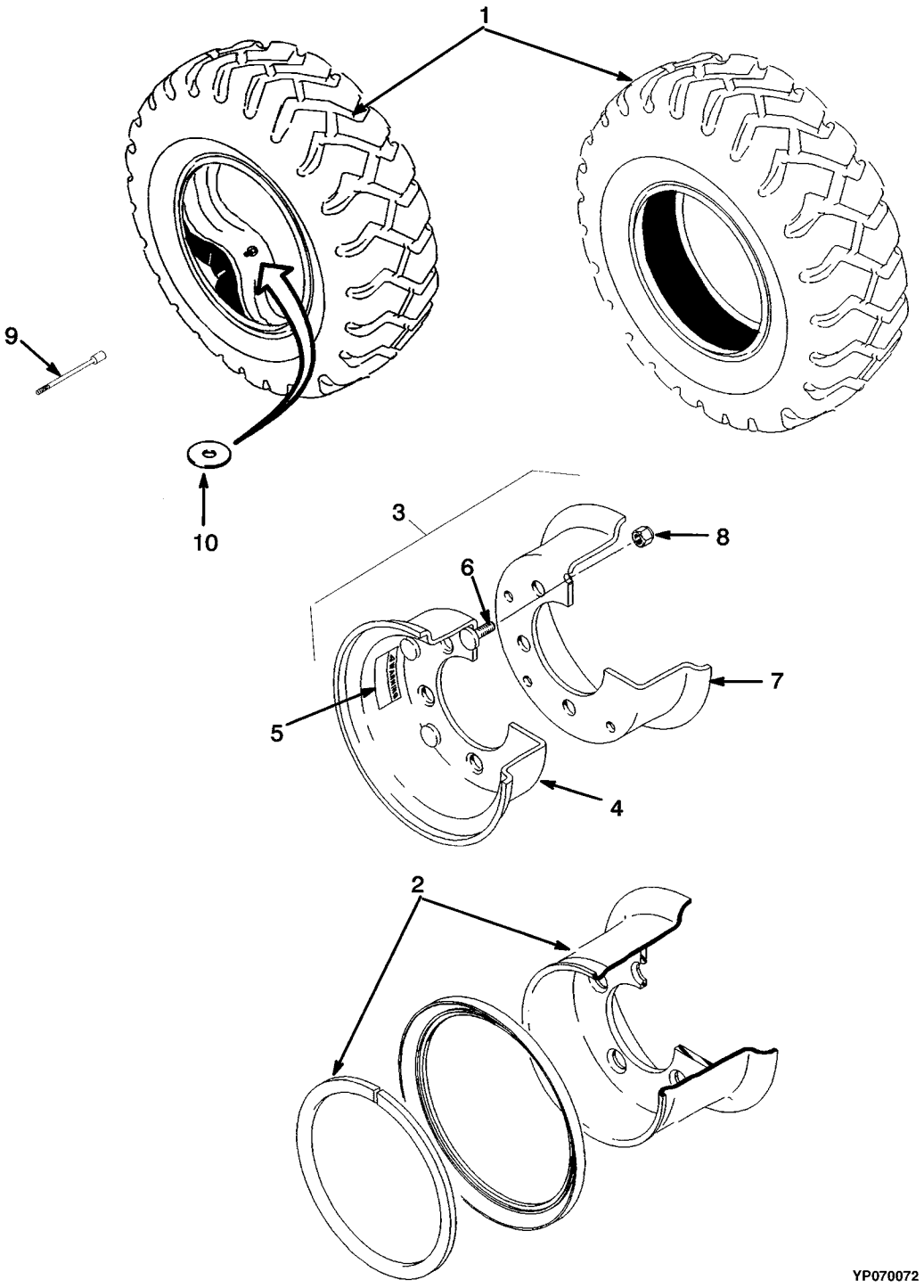

Yale Industrial Trucks

TIRE AND WHEEL (DRIVE WHEEL) (GP/GLP 050 TG)

ITEM		PART NO.	DESCRIPTION	QTY
1	**bc**	505970525	Tire	4
1	**be**	505970525	Tire	2
1	**bd**	505970565	Tire Assembly	2
1	**ac**	505978598	Tire Assembly	4
1	**ae**	505978598	Tire Assembly	2
1		505978534	Tire	1
1		. . . . .	Flap	1
1		505969564	Tube	1
2	**bc**	505973516	Wheel	4
2	**be**	505973516	Wheel	2
2	**bd**	505971522	Wheel	2
3	**ac**	505971593	Wheel	4
3	**ae**	505971593	Wheel	2
4		505971574	Wheel	1
5		505971656	Label (Warning)	1
6		505971509	Bolt	6
7		505971534	Wheel	1
8		502097907	Nut	6
9	**c**	505971586	Valve	1
10	**d**	520044952	Washer	1

FOOTNOTES:

a 7.00 X 12PR Pneumatic
b 7.00 X 12PR Solid
c Dual
d Pneumatic Wide
e Single

TIRE AND WHEEL
(DRIVE WHEEL) (GP/GLP 060 TG)

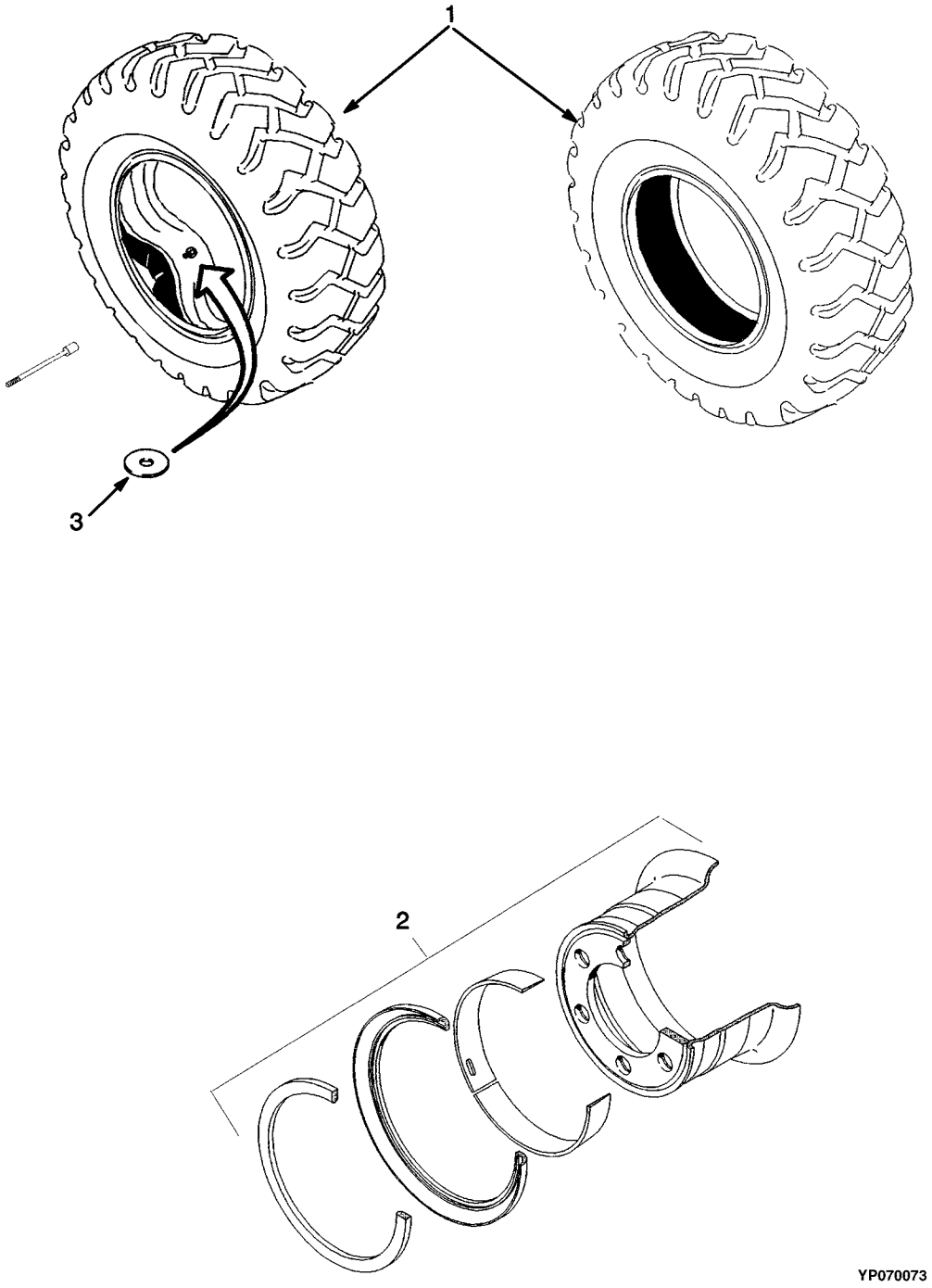

Yale Industrial Trucks

TIRE AND WHEEL
(DRIVE WHEEL) (GP/GLP 060 TG)

KEY:
A: Single Solid Pneumatic
B: Wide Solid Pneumatic

ITEM	PART NO.	DESCRIPTION	QTY A	QTY B
1	505970518	Tire Assembly (28.00 x 9-15PR)	2	2
1	505978566	Tire (28.00 x 9-15PR)	2	2
1	505978512	Tire	1	1
1	. . . . .	Flap	1	1
1	505970596	Tube	1	1
2	505975507	Wheel (28.00 x 9-15PR)	2	..
2	505971536	Wheel (28.00 x 9-15PR)	..	2
3	520044952	Washer	..	1

NOTES

9 STEERING SYSTEM

SECTION 9
STEERING SYSTEM

DESCRIPTION	PAGE
SHIFT LINKAGE	
⇒S/N A875B-10943X	9-8
S/N A875B-10944X⇒	9-10
STEERING AXLE	9-16
STEERING CONTROL UNIT	
S/N PENDING PER ECN 76000⇒	9-14
⇒S/N PENDING PER ECN 76000	9-12
STEERING CYLINDER	9-18
STEERING POD	
S/N PENDING PER ECN 76000⇒	9-4
⇒S/N PENDING PER ECN 76000	9-2
TIRE AND WHEEL	
STEER WHEEL	
GP/GLP 050 TG	9-20
GP/GLP 060 TG	9-22

Yale Industrial Trucks

STEERING POD
(⇒S/N PENDING PER ECN 76000)

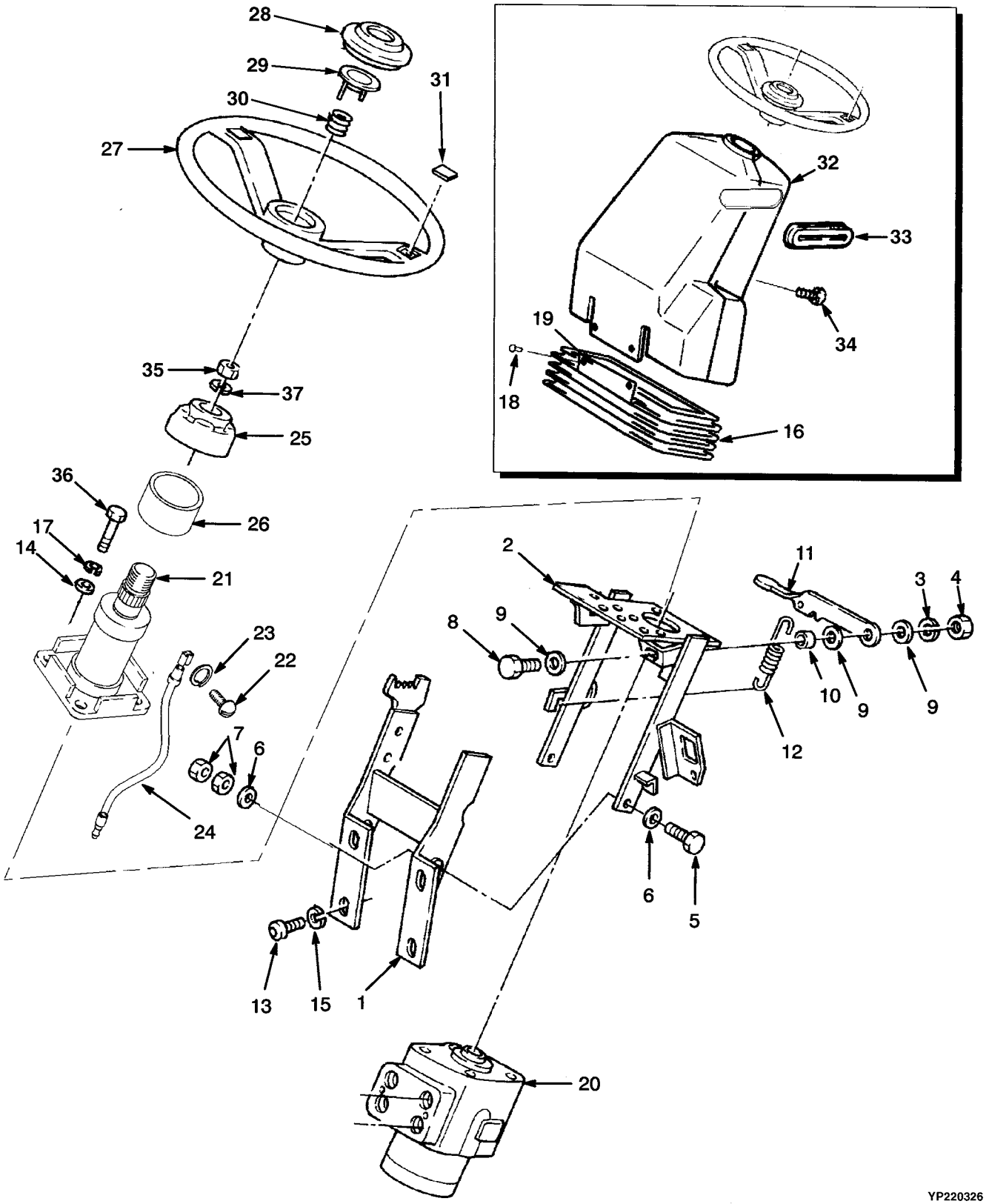

Yale Industrial Trucks

STEERING POD
(⇒S/N PENDING PER ECN 76000)

ITEM	PART NO.	DESCRIPTION	QTY
1	504240728	Bracket	1
2	912372600	Support	1
3	449022016	Lockwasher	1
4	449015014	Nut	1
5	930115905	Bolt	2
6	502566902	Washer	4
7	449015020	Nut	4
8	449001134	Capscrew	1
9	904310402	Lockwasher	3
10	916644300	Spacer	1
11	921652300	Lever	1
12	916658300	Spring	1
13	505976563	Capscrew	4
14	449021006	Washer	4
15	504262753	Washer	4
16	504240991	Boot	1
17	449022013	Lockwasher	4
18	504241790	Fastener	2
19	504241788	Strap	1
20	905604602	Steering Unit (☞ P10827)	1
21	911204600	Steering Column Assembly	1
22	901769801	Screw	1
23	901769802	Washer	1
24	901769803	Wire Assembly	1
25	901769804	Cover	1
26	901769805	Cover	1
27	915304603	Wheel Assembly	1
28	902173801	Pad	1
29	902173802	Horn Swtich	1
30	. . . . .	Spring	1
31	902173813	Cap	1
32	915483401	Cover Assembly (With Turn Signals)	1
32	915483402	Cover Assembly (Without Turn Signals)	1
33	921698300	Boot (With Turn Signals)	2
33	934592300	Boot (Without Turn Signals)	1
34	909904403	Screw	5
35	937501909	Nut	1
36	904100100	Capscrew	4
37	449022020	Lockwasher	1

Yale Industrial Trucks

STEERING POD
(S/N PENDING PER ECN 76000⇒)

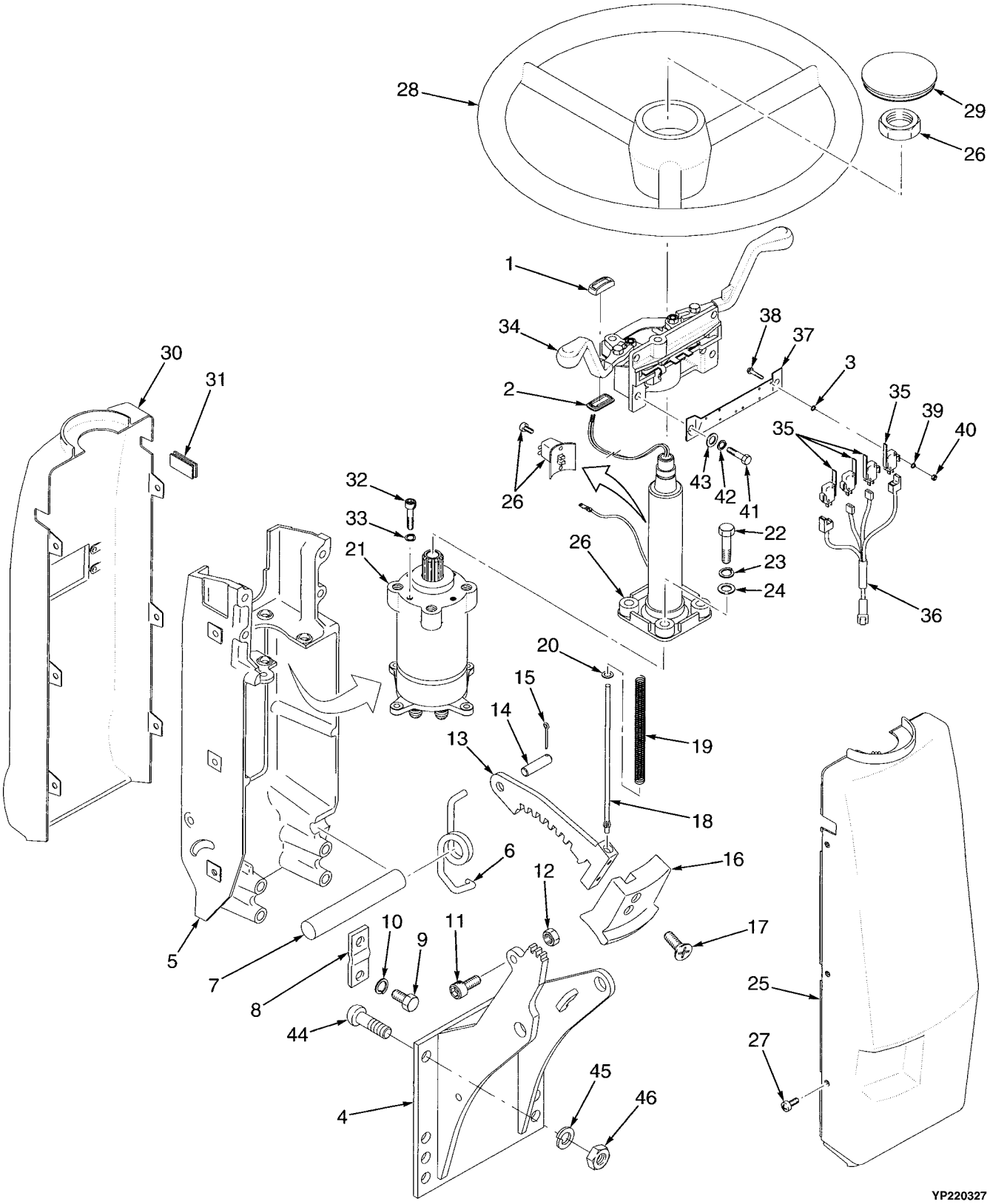

Yale Industrial Trucks

STEERING POD
(S/N PENDING PER ECN 76000⇒)

KEY:
A: Foot Directional Control Pedal
B: Forward and Reverse Shift Lever

ITEM		PART NO.	DESCRIPTION	QTY A	QTY B
1		505977573	Bracket	..	1
1		520045067	Socket	1	..
2		505977573	Bracket (Dual Shift Lever)	..	1
2		520045067	Socket (Single Shift Lever)	..	1
3		500030902	Lockwasher	8	8
4		524139306	Bracket	1	1
5		505977597	Bracket	1	1
6		520037801	Spring	1	1
7		505977562	Shaft	1	1
8		505977538	Plate	2	2
9		449001014	Capscrew	4	4
10		449022016	Lockwasher	4	4
11		932201904	Capscrew	1	1
12		449015098	Nut	1	1
13		518796642	Latch	1	1
14		505977589	Pin	1	1
15		015416200	Cotter Pin	1	1
16		505977566	Latch	1	1
17		449004080	Screw	2	2
18		505977509	Rod	1	1
19		504574273	Spring	1	1
20		449021002	Washer	1	1
21		580001100	Steering Control Unit (☞ P11882)	1	1
22		059719100	Capscrew	4	4
23		015026400	Lockwasher	4	4
24		016104000	Washer	4	4
25	**bc**	504260742	Cover (Lower)	1	..
25	**ad**	504504703	Cover (Lower)	1	..
26		580001202	Steering Column	1	1
26		518794682	Nut	1	1
26		580008094	Terminal Kit	1	1
27		580030014	Screw	6	6
28		504227269	Steering Wheel	1	1
29		524135211	Horn Button	1	1
30	**c**	504260741	Cover (Upper)	1	..
30	**ad**	504503703	Cover (Upper)	1	..
31		520045057	Plug	2	..
32		932200902	Capscrew	4	4
33		518807647	Lockwasher	4	4
34	**b**	520038825	Shift Lever Assembly	..	1
34	**a**	504574275	Shift Lever Assembly	..	1
35		505967585	Switch	..	4
36		520038893	Wire Harness	..	1
37		505977550	Plate	..	1
38		504225202	Screw	..	8
39		500552902	Lockwasher	..	8

STEERING POD
(S/N PENDING PER ECN 76000⇒)

ITEM	PART NO.	DESCRIPTION	QTY A	QTY B
40	032643500	Nut	..	8
41	449001412	Capscrew	..	8
42	449022018	Lockwasher	..	4
43	449021003	Washer	..	4
44	505976563	Capscrew	4	4
45	449022013	Lockwasher	4	4
46	449015044	Nut	4	4

FOOTNOTES:
a Dual Shift Lever
b Single Shift Lever
c With Turn Signals
d Without Turn Signals

NOTES

Yale Industrial Trucks

SHIFT LINKAGE
(⇒S/N A875B-10943X)

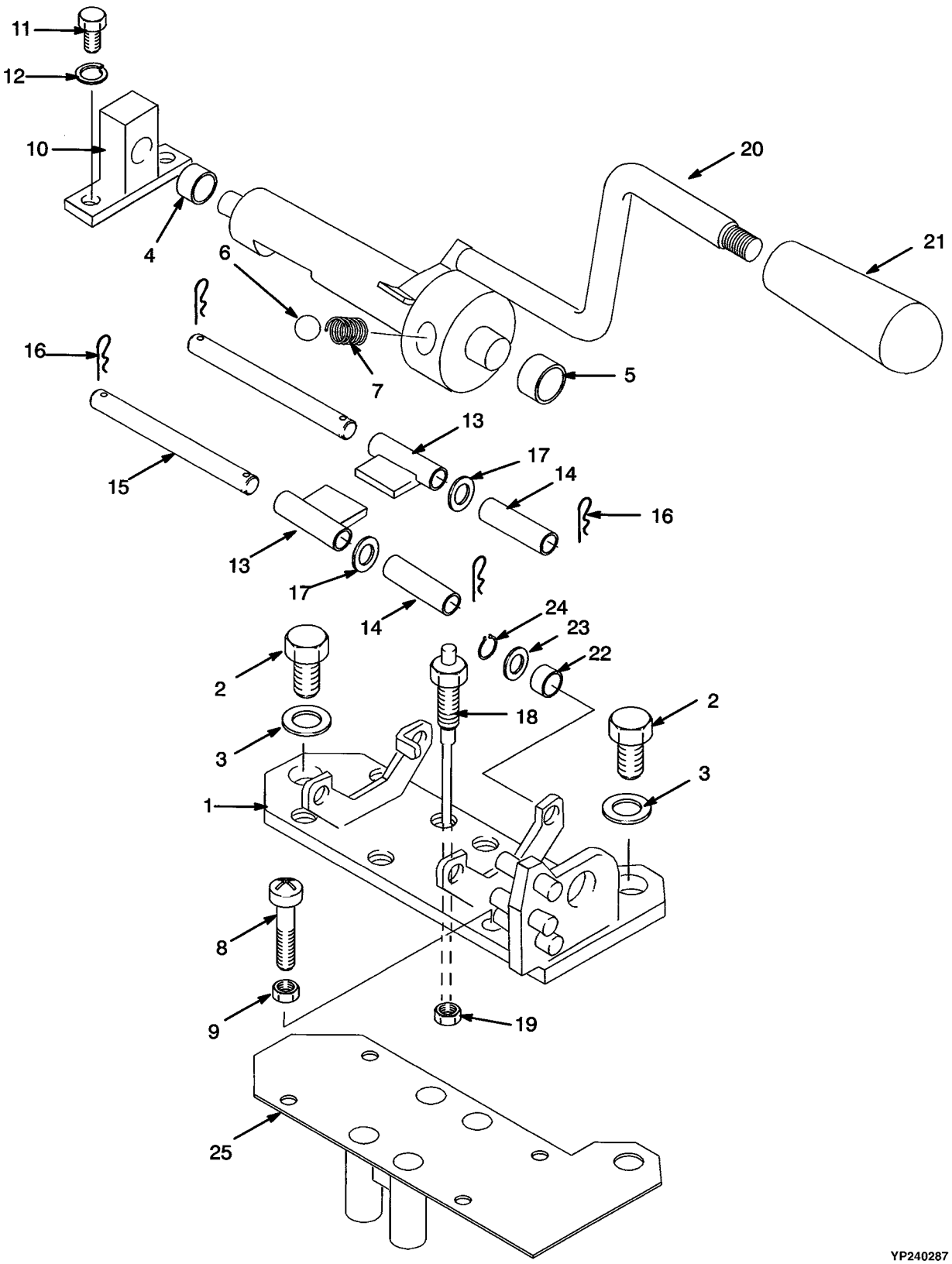

Yale Industrial Trucks

SHIFT LINKAGE
(⇒S/N A875B-10943X)

ITEM	PART NO.	DESCRIPTION	QTY
1	914413600	Support	1
2	449001023	Capscrew	2
3	449022013	Lockwasher	2
4	912630304	Bushing	1
5	912630302	Bushing	1
6	950400920	Ball	1
7	916680300	Spring	1
8	449007050	Screw	2
9	937100905	Nut	2
10	924250300	Support	1
11	930103903	Bolt	2
12	449022018	Lockwasher	2
13	926888300	Switch	2
14	914649100	Collar	2
15	914329101	Pin	2
16	449025001	Cotter Pin	4
17	940002905	Washer	2
18	920852300	Switch	2
19	937501907	Nut	2
20	912356601	Lever	1
21	913875601	Shift Lever	1
22	931487301	Bearing	1
23	449021001	Washer	1
24	925180301	Snap Ring	1
25	926724401	Cover	1

SHIFT LINKAGE
(S/N A875B-10944X⇒)

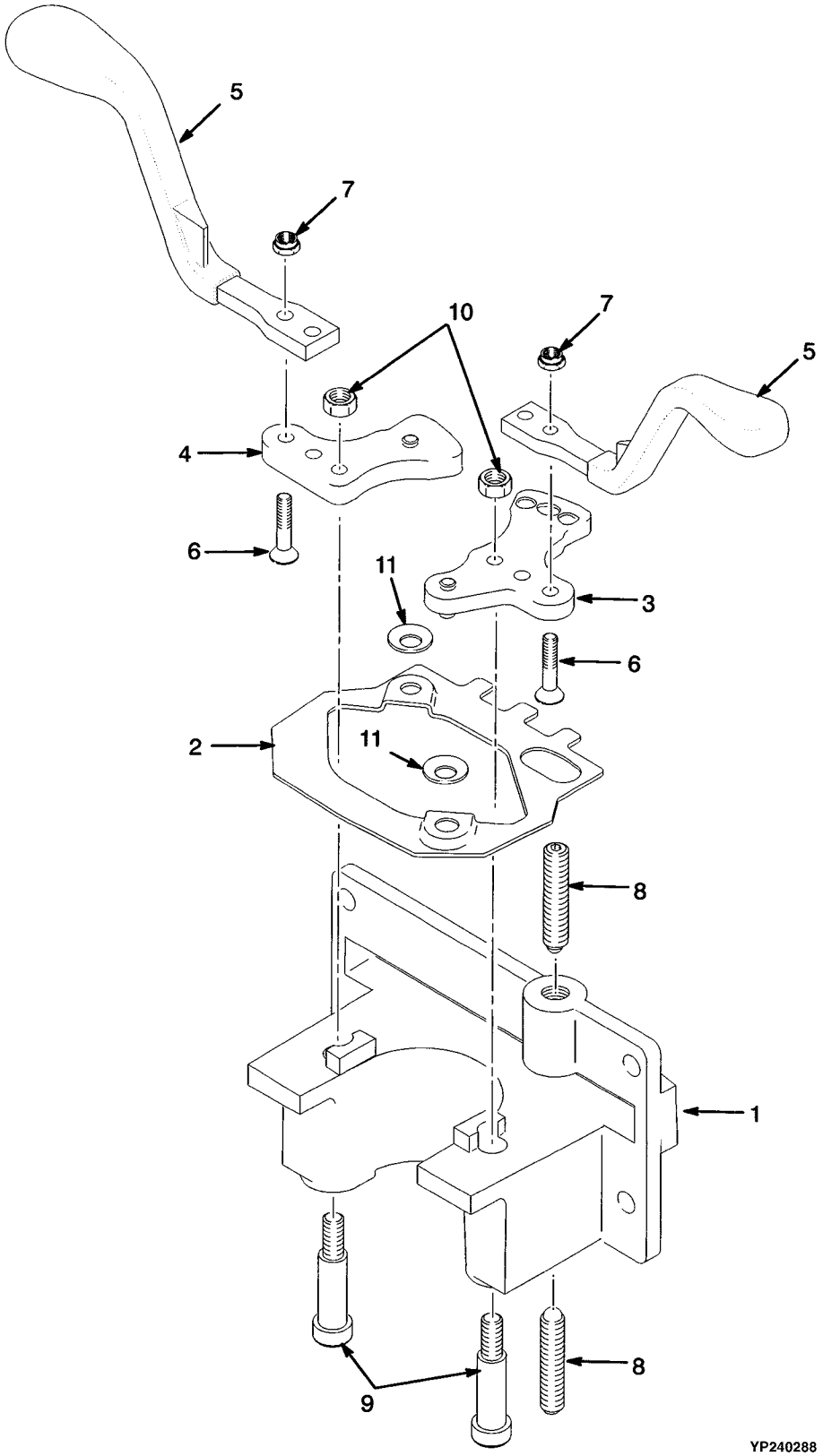

Yale Industrial Trucks

SHIFT LINKAGE
(S/N A875B-10944X⇒)

KEY:
A: Single Shift Lever
B: Dual Shift Lever

ITEM		PART NO.	DESCRIPTION	QTY A	QTY B
		504574275	Shift Lever Assembly	..	1
		520038825	Shift Lever Assembly	1	..
1		504574276	Base	1	1
2		504574277	Link	1	1
3		505977569	Crank	1	1
4		505977542	Crank	1	1
5		505977598	Shift Lever	1	2
6		505977590	Capscrew	2	4
7		449015112	Nut	2	4
8	**a**	505977526	Spring Plunger	2	2
8	**b**	580022130	Spring Plunger	2	2
9		505977516	Bolt	2	2
10		449015002	Nut	2	2
11		505977500	Washer	4	4

FOOTNOTES:
a ⇒ S/N A875B-11645
b S/N A875B-11646 ⇒

STEERING CONTROL UNIT
(⇒S/N PENDING PER ECN 76000)

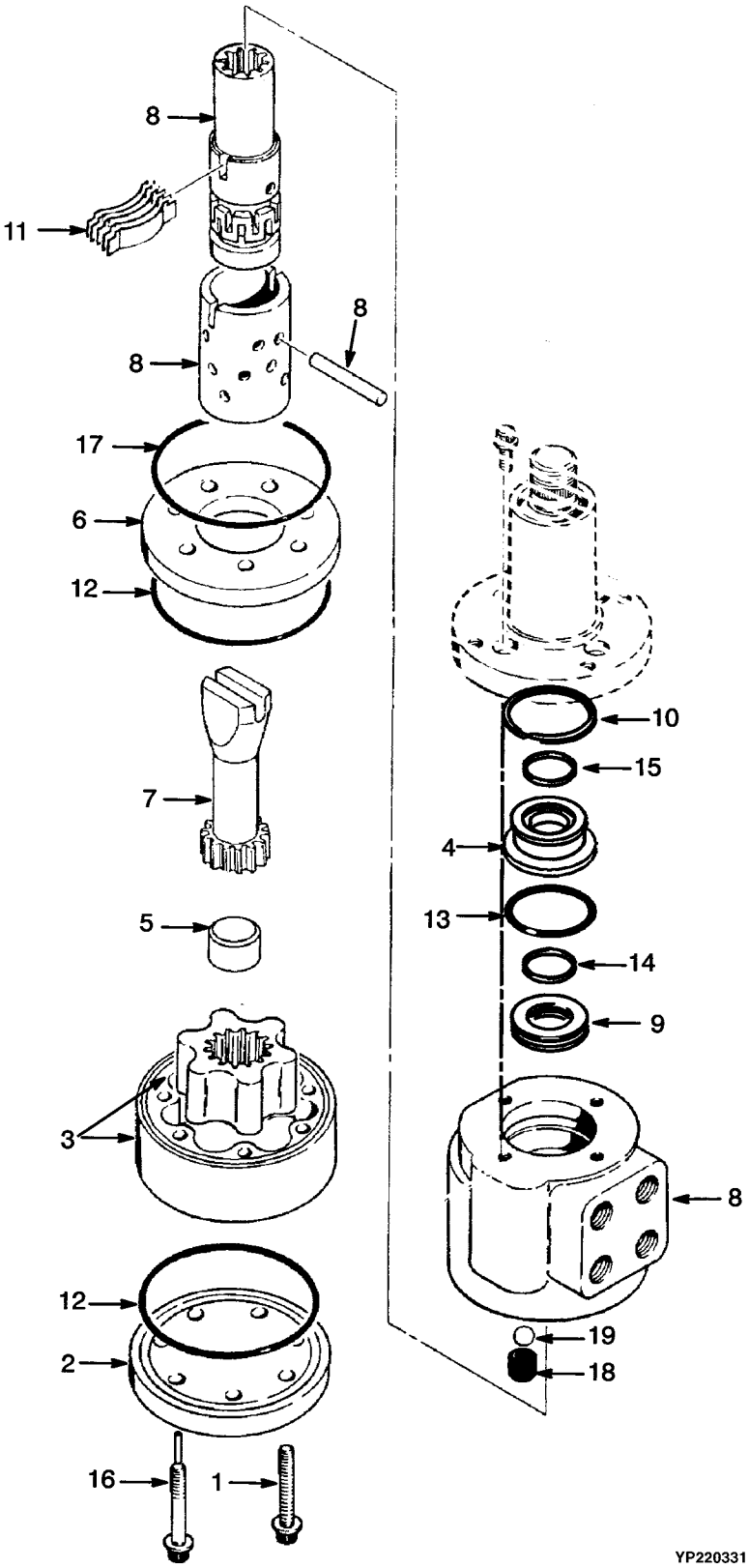

Yale Industrial Trucks

STEERING CONTROL UNIT
(⇒S/N PENDING PER ECN 76000)

ITEM	PART NO.	DESCRIPTION	QTY
	905604602	Steering Unit	1
1	517812801	Screw	7
2	517812816	Cap	7
3	517812805	Gear Set	1
4	517812809	Bushing	1
5	517812802	Spacer	1
6	517812815	Plate	1
7	504214800	Drive	1
8	902201821	Control Kit	1
9	517812810	Bearing Kit	1
10	517812808	Snap Ring	1
11	063447900	Spring	4
11	901001803	Spring	2
12	. . . . .	O-Ring	2
13	. . . . .	O-Ring	1
14	. . . . .	Oil Seal	1
15	. . . . .	Seal	1
16	902201811	Screw	1
17	. . . . .	O-Ring	1
18	902201801	Screw	1
19	902201802	Ball	1
	902201850	Seal Kit (Includes Items 12-15, 17)	1
	902201821	Control Kit (Includes Item 11)	1

Yale Industrial Trucks

STEERING CONTROL UNIT
(S/N PENDING PER ECN 76000⇒)

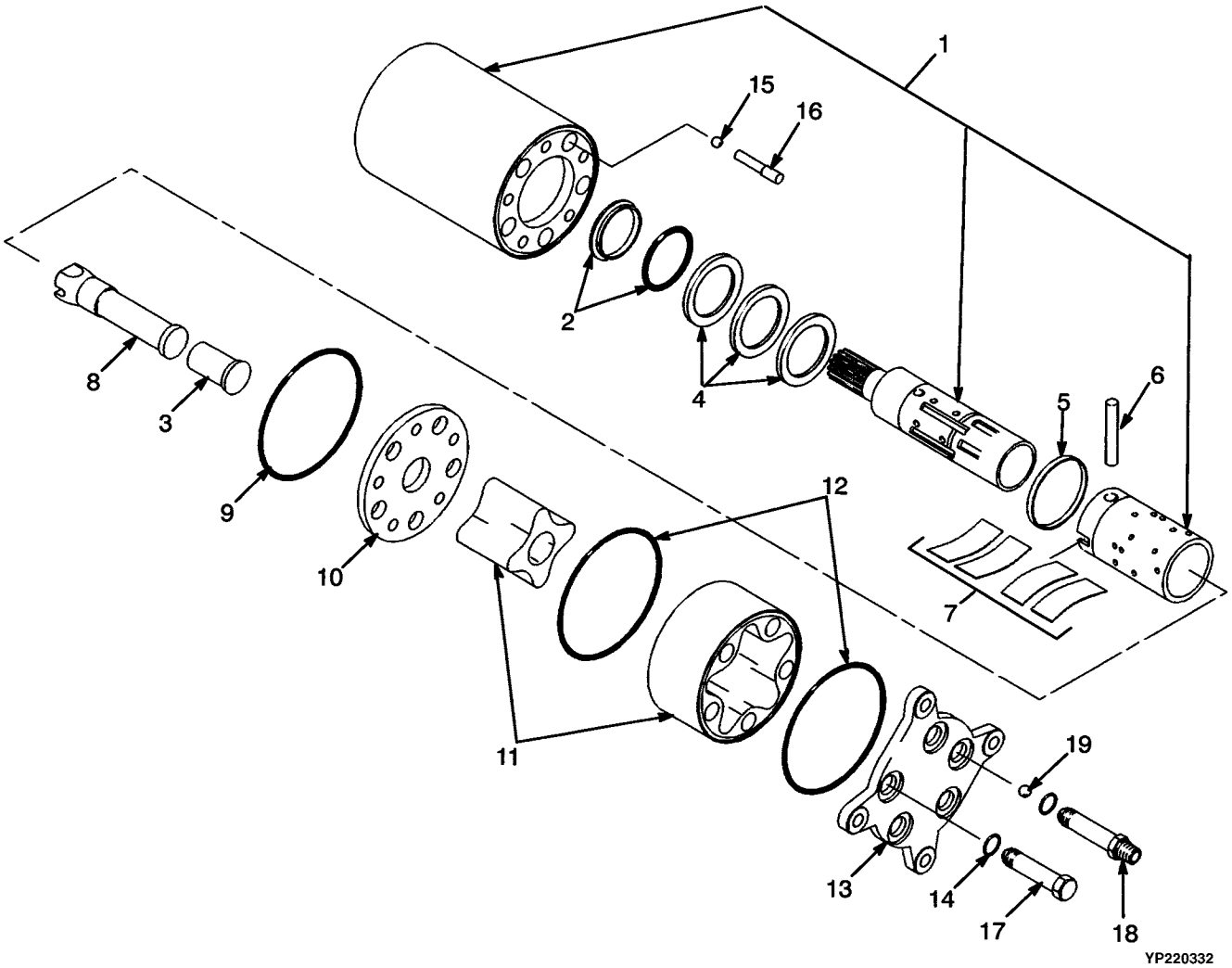

Yale Industrial Trucks

STEERING CONTROL UNIT
(S/N PENDING PER ECN 76000⇒)

ITEM	PART NO.	DESCRIPTION	QTY
	580001100	Steering Control Unit	1
1	. . . . .	Housing	1
1	. . . . .	Spool	1
1	. . . . .	Sleeve	1
2	. . . . .	Seal	1
3	580000354	Spacer	1
4	580000350	Bearing	1
5	580002113	Ring	1
6	580000351	Pin	1
7	580002114	Spring	1
8	580000353	Shaft	1
9	. . . . .	O-Ring	1
10	580000356	Plate	1
11	580002104	Gear Set	1
12	. . . . .	O-Ring	2
13	580002115	Cover	1
14	. . . . .	O-Ring	5
15	518794667	Ball	1
16	580000349	Stop	1
17	580002105	Screw	1
17	. . . . .	O-Ring	1
18	580002106	Screw	4
18	. . . . .	O-Ring	1
19	580000360	Ball	1
	580002112	Seal Kit (Includes Items 2, 9, 12, 14)	2

STEERING AXLE

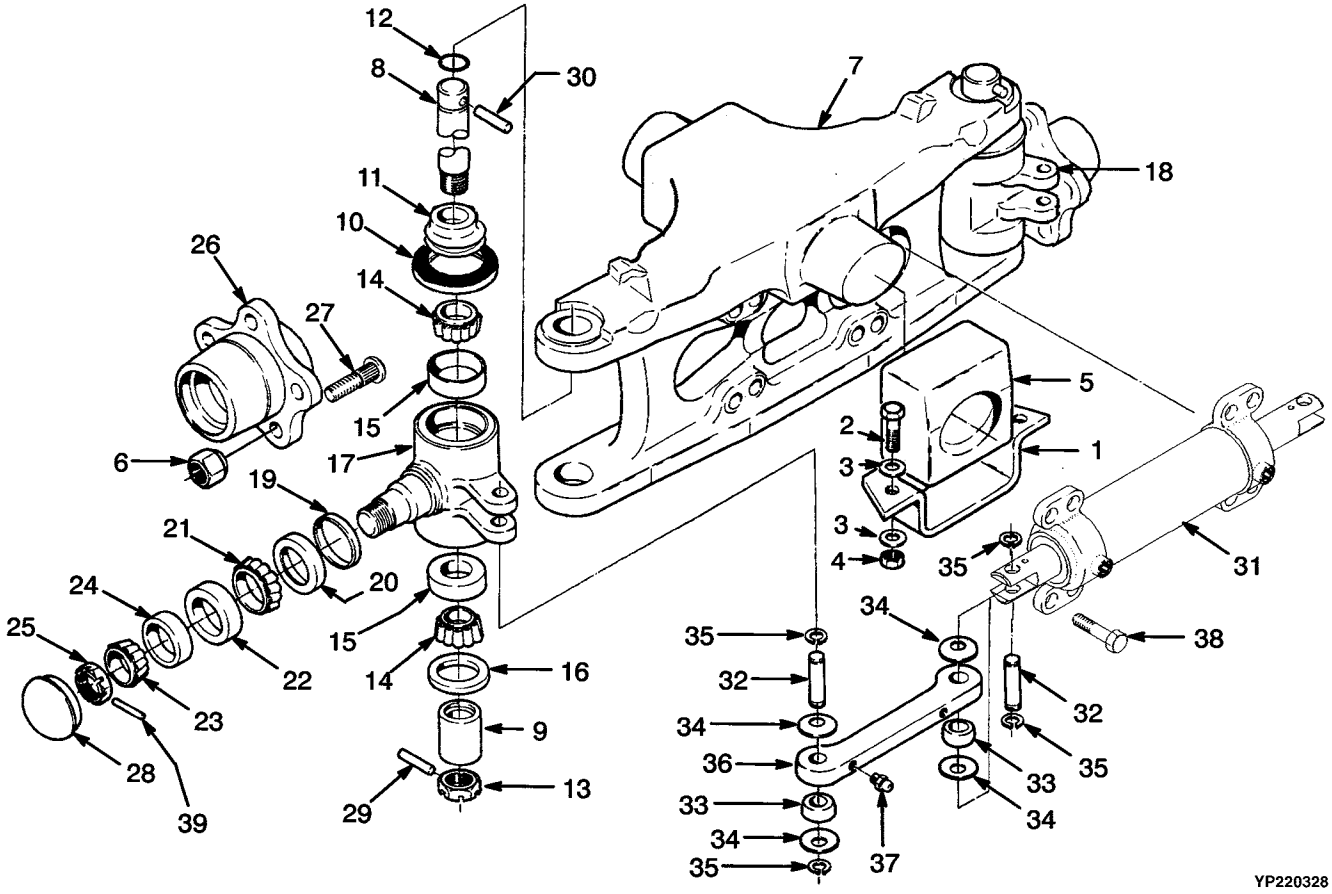

ITEM	PART NO.	DESCRIPTION	QTY
1	505972551	Plate	2
2	502565903	Capscrew	4
3	449021010	Washer	8
4	909882405	Nut	4
6	504225265	Lug Nut	10
7	505971596	Steering Axle	1
8	505971521	Pin	2
9	505971590	Sleeve	2
10	505971512	Seal	2
11	505971538	Spacer	2
12	505969521	O-Ring	2
13	505971513	Nut	2
14	059695600	Bearing Cone	4
15	059695500	Bearing Cup	4
16	505970544	Oil Seal	2
17	505971533	Spindle (LH)	1
18	505971579	Spindle (RH)	1
19	504224218	Oil Seal	2
20	504224217	Wear Sleeve	2
21	055076600	Bearing Cone	2
22	065744300	Bearing Cup	2
23	505971516	Bearing Cone	2
24	505971507	Bearing Cup	2
25	520044815	Nut	2
26	505971581	Hub	2
27	505972584	Wheel Stud	10
28	504227283	Hub Cap	2
29	015418400	Cotter Pin	2
30	505969551	Pin	2
31	505965530	Steering Cylinder (☞ P10826)	1
32	504224261	Pin	4
33	505972565	Bushing	4
34	505972590	Washer	8
35	015918200	Snap Ring	8
36	505972530	Tie Rod	2
37	015631500	Grease Fitting	6
38	311323023	Capscrew	8
39	015418600	Cotter Pin	2
	505974556	Brake Kit (Includes Items 8-12, 14-16, 20, 30)	2

STEERING CYLINDER

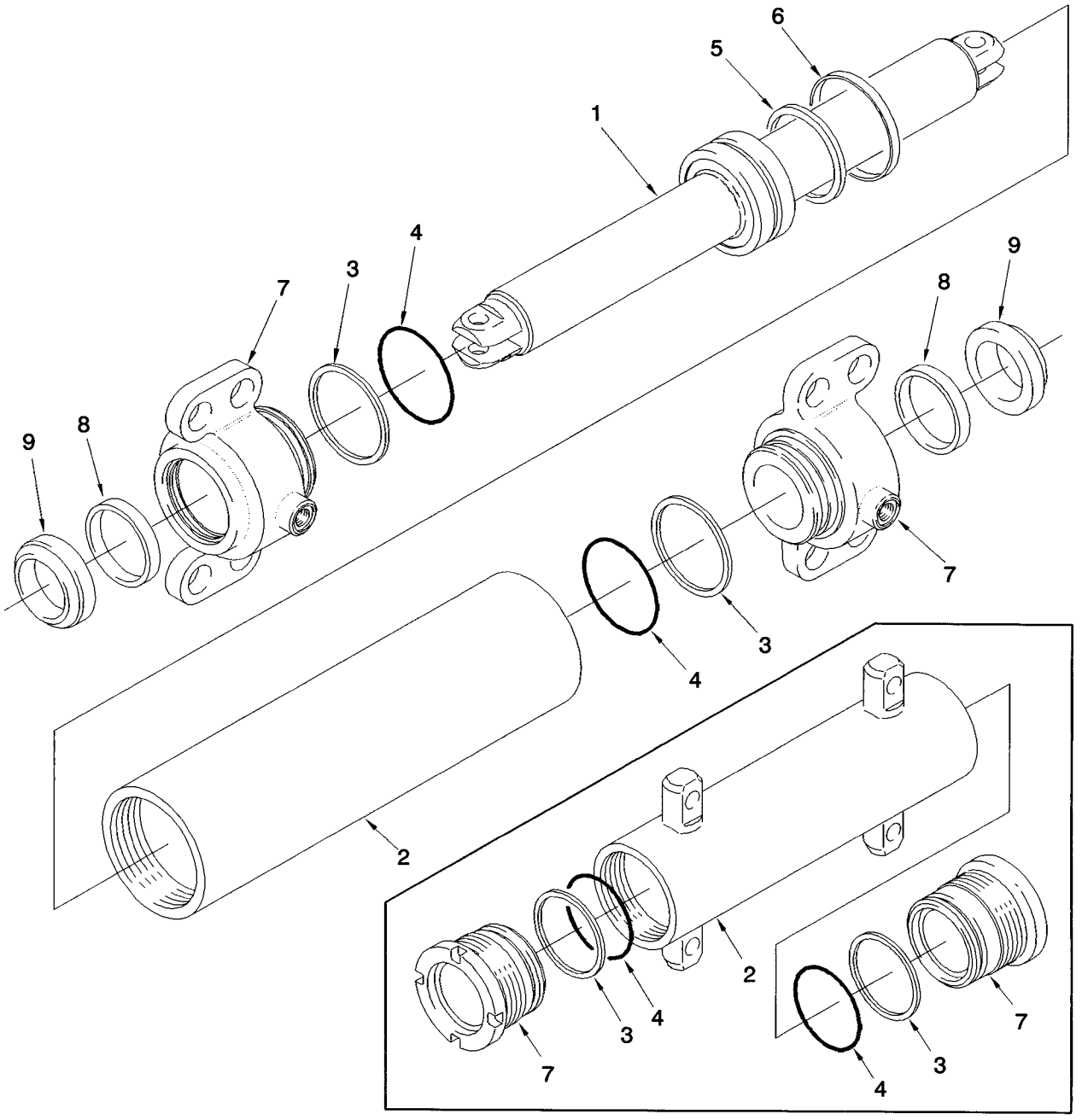

YP220333

ITEM	PART NO.	DESCRIPTION	QTY
	505965530	Steering Cylinder	1
1	505975505	Rod	1
2	505975513	Tube	1
3	502011903	Back-Up Ring	2
4	505970555	O-Ring	2
5	015493400	O-Ring	1
6	504305702	Piston Seal	1
7	505975582	End Cap	2
8	504225211	Seal	2
9	504225226	Wiper Ring	2
	580026958	Seal Kit (Includes Items 3-6, 8-9)	1

Yale Industrial Trucks

TIRE AND WHEEL
(STEER WHEEL) (GP/GLP 050 TG)

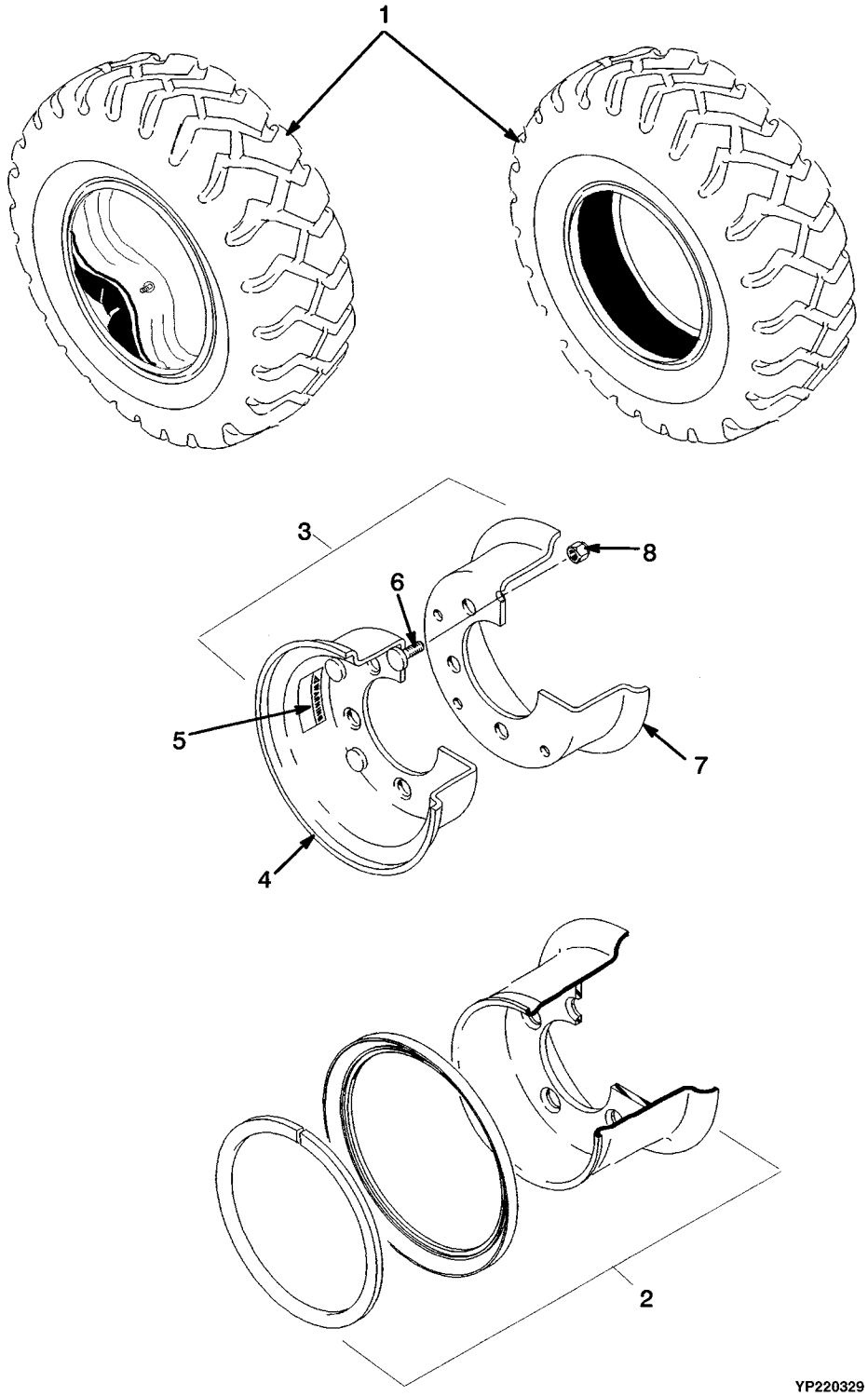

Yale Industrial Trucks

TIRE AND WHEEL
(STEER WHEEL) (GP/GLP 050 TG)

ITEM	PART NO.	DESCRIPTION	QTY
1	505970542	Tire (Solid) (6.00 x 9 PR Solid)	2
1	505978545	Tire Assembly (6.00 x 9 PR Pneumatic)	2
1	505978524	Tire	1
1	505971560	Tube	1
1	. . . . .	Flap	1
2	505973512	Wheel Assembly (6.00 x 9 PR Solid)	2
3	505970534	Wheel Assembly (6.00 x 9 PR Pneumatic)	2
4	505970590	Wheel	1
5	505971656	Label (Warning)	2
6	505971509	Bolt	5
7	505971530	Wheel	1
8	502097907	Nut	5

Yale Industrial Trucks

TIRE AND WHEEL
(STEER WHEEL) (GP/GLP 060 TG)

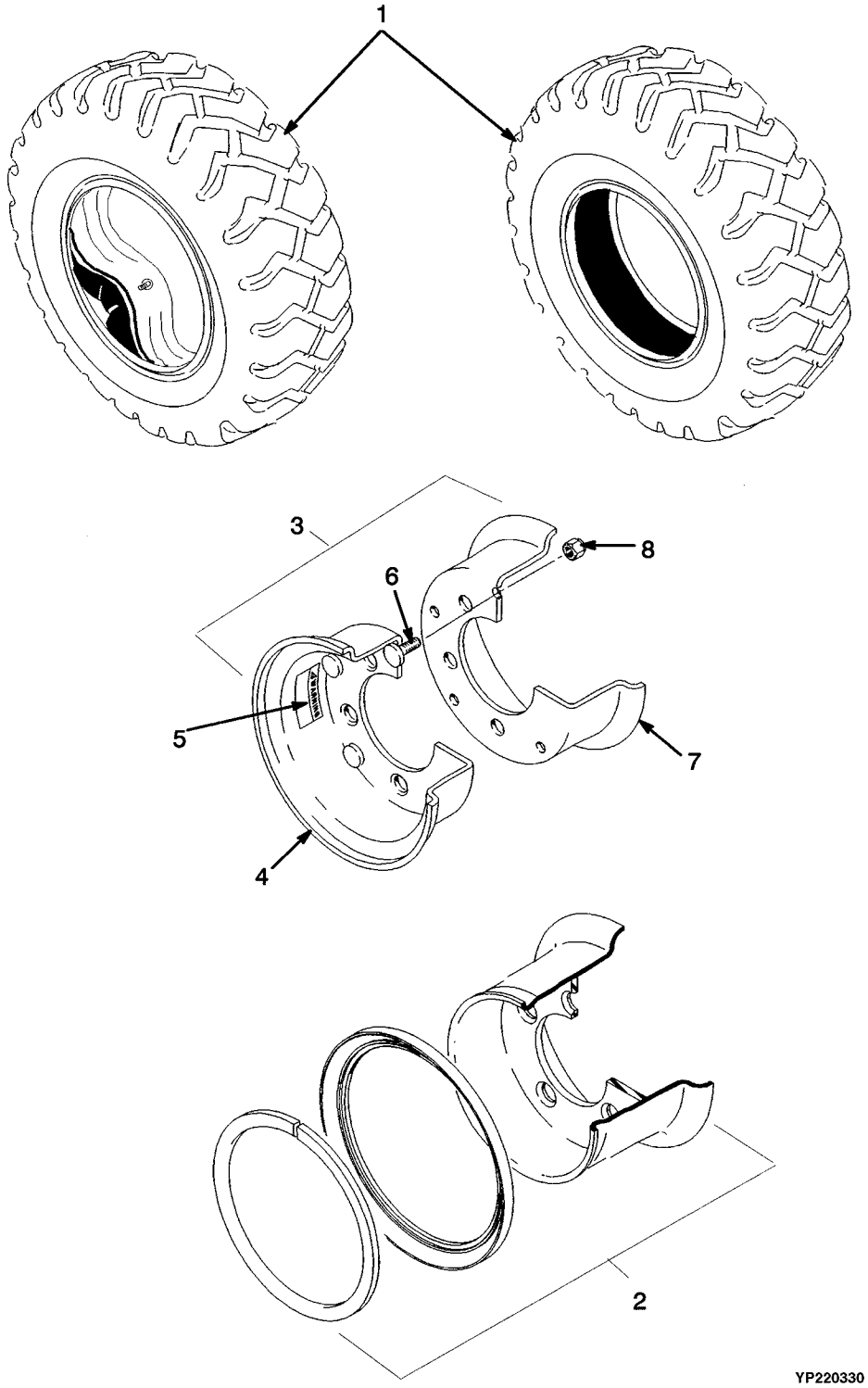

Yale Industrial Trucks

TIRE AND WHEEL
(STEER WHEEL) (GP/GLP 060 TG)

ITEM	PART NO.	DESCRIPTION	QTY
1	900003255	Tire (Solid) (6.50 x 10 PR Solid)	2
1	505978531	Tire Assembly (6.50 x 10 PR Pneumatic)	2
1	505978542	Tire	1
1	505970527	Tube	1
1	. . . . .	Flap	1
2	505971569	Wheel Assembly (6.50 x 10 PR Solid)	2
3	505969554	Wheel Assembly (6.50 x 10 PR Pneumatic)	2
4	505970504	Wheel	1
5	. . . . .	Label (Warning)	1
6	505970548	Stud	5
7	505971553	Wheel	1
8	502097905	Nut	5

NOTES

10 BRAKE SYSTEM

SECTION 10
BRAKE SYSTEM

DESCRIPTION	PAGE
BRAKE	10-2
BRAKE LINES	10-10
BRAKE PEDAL LINKAGE	10-8
MASTER CYLINDER	10-6
PARKING BRAKE LEVER	10-4

BRAKE

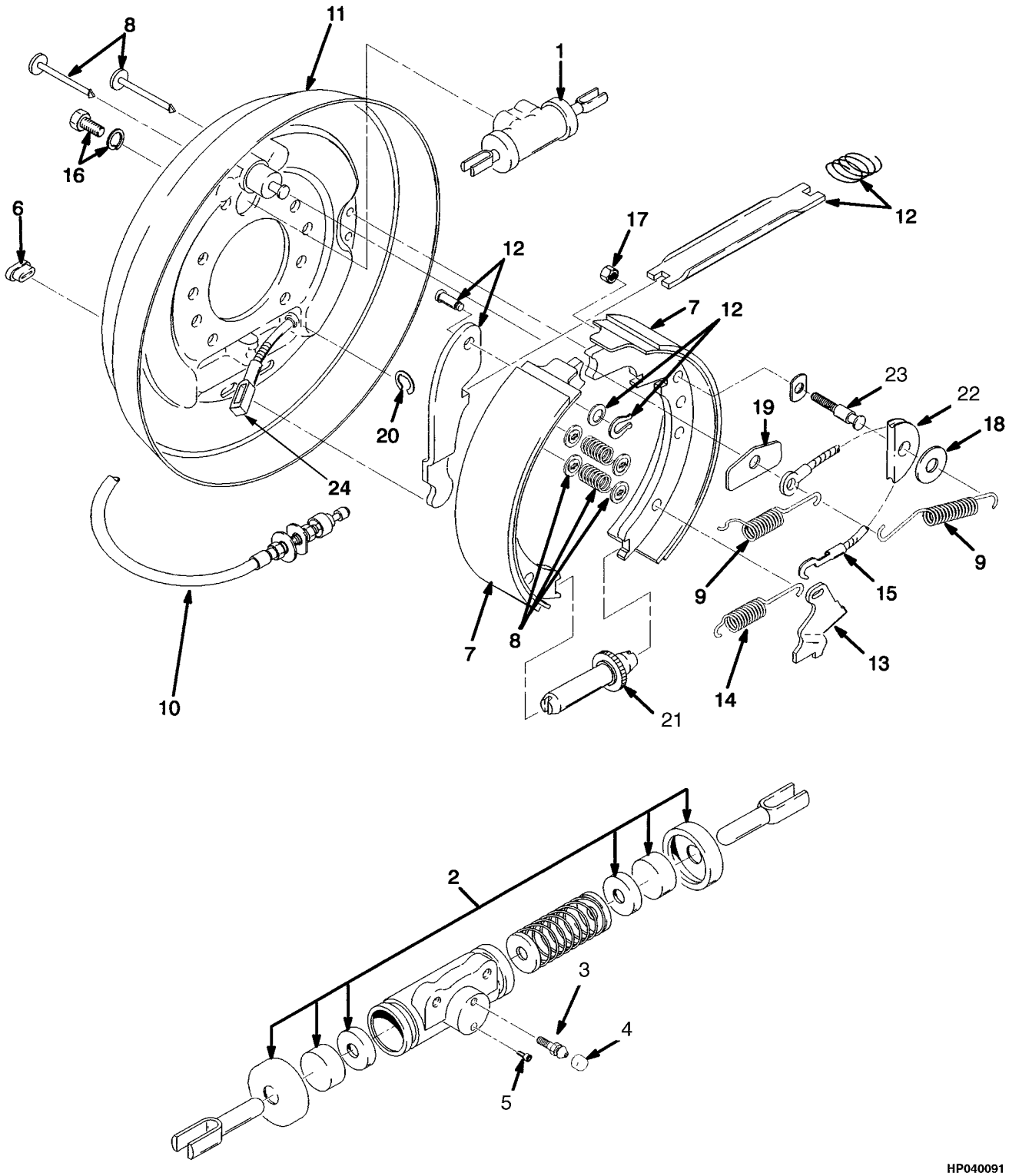
8
11
1
16
6
17
12
12
12
7
23
22
19
18
20
24
9
15
9
7
8
13
14
10
21
2
3
4
5
HP040091

ITEM		PART NO.	DESCRIPTION	QTY
	a	505963567	Brake Assembly (LH)	1
	b	580021707	Brake Assembly (LH)	1
	a	505963529	Brake Assembly (RH)	1
	b	580021708	Brake Assembly (RH)	1
1		505963500	Wheel Cylinder	1
2		505963578	Wheel Cylinder Kit	1
2		936302302	Cup and Boot Kit	1
3		900488834	Bleeder Screw	1
4		900488835	Cap	1
5		. . . . .	Plug	1
6		900488827	Cover	1
7		580032688	Shoe and Lining Assembly Kit (LH and RH)	1
8		904258300	Shoe Hold Down Kit	1
9		913589300	Spring Kit	1
10		901985804	Cable (LH)	1
10		505963522	Cable (RH)	1
11	**a**	900488841	Plate (LH)	1
11	**b**	580030127	Plate (LH)	1
11	**a**	900488842	Plate (RH)	1
11	**b**	580030128	Plate (RH)	1
12		903198401	Parking Brake Kit (LH)	1
12		903198402	Parking Brake Kit (RH)	1
13		900488811	Lever (LH)	1
13		900488812	Lever (RH)	1
14		900488816	Spring	1
15		900488838	Cable Assembly	1
16		900488825	Bolt	2
17		. . . . .	Nut	1
18		. . . . .	Washer	1
19		900488817	Guide	1
20		900488826	Snap Ring	1
21		900488809	Adjuster (LH)	1
21		900488810	Adjuster (RH)	1
22		. . . . .	Sheave	1
23		. . . . .	Pin	1
24	**b**	900488821	Strut	1
24	**b**	900488822	Strut	1
		919139450	Sheave Kit (Includes Items 17-18, 22-23)	1

FOOTNOTES:

a ⇒ S/N T056M-04847

b S/N T056M-04848 ⇒

Yale Industrial Trucks

PARKING BRAKE LEVER

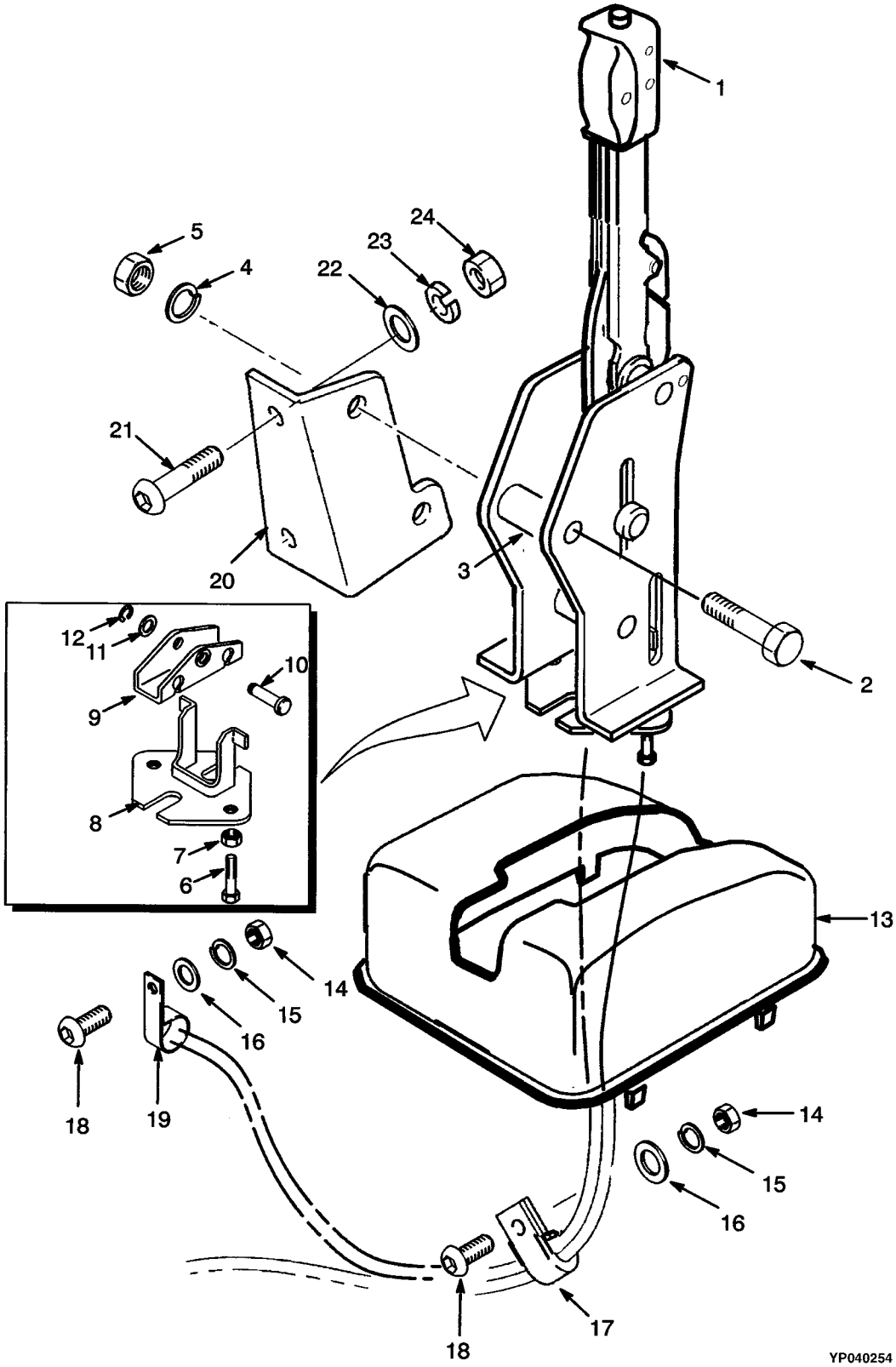

Yale Industrial Trucks

PARKING BRAKE LEVER

ITEM	PART NO.	DESCRIPTION	QTY
1	916611600	Parking Brake Assembly	1
2	449001069	Capscrew	1
3	921006302	Spacer	1
4	449022013	Lockwasher	1
5	909905404	Nut	1
6	909910401	Bolt	2
7	937300908	Nut	1
8	922189400	Guide	1
9	926001300	Yoke	1
10	921021300	Pin	1
11	940002906	Washer	1
12	910175100	Snap Ring	1
13	925745400	Cover	1
14	449015014	Nut	2
15	449022016	Lockwasher	2
16	449021001	Washer	3
17	500412906	Clamp	2
18	505976542	Capscrew	2
19	518793674	Clamp	3
20	524140161	Bracket	1
21	505976563	Capscrew	2
22	449021006	Washer	2
23	449022013	Lockwasher	2
24	501737903	Nut	2

MASTER CYLINDER

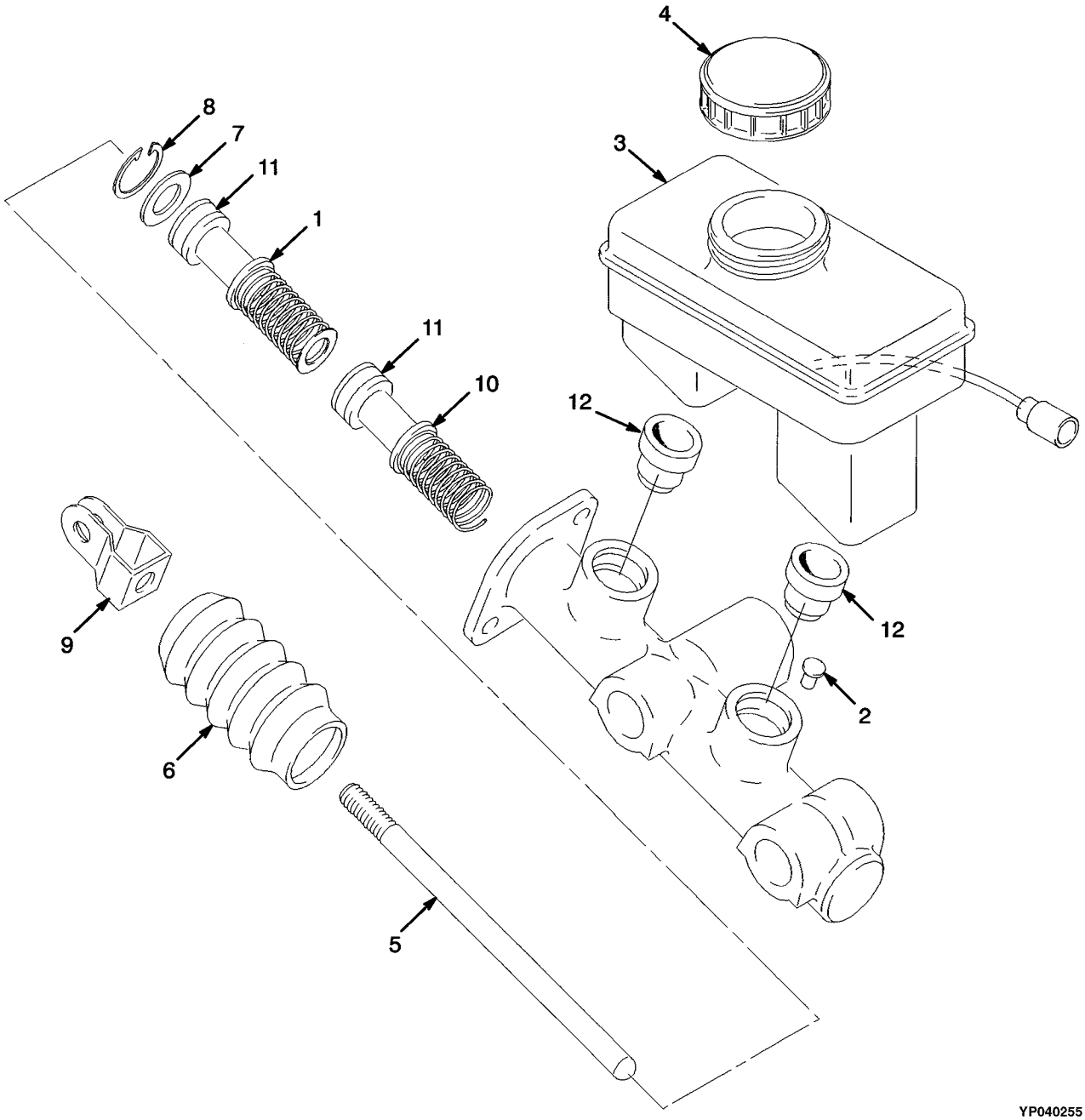

ITEM	PART NO.	DESCRIPTION	QTY
	505963537	Master Cylinder	1
1	505963544	Piston	1
2	505963540	Pin	1
3	505963519	Reservoir	1
4	505963583	Cap	1
5	505964540	Rod	1
6	505964578	Cover	1
7	505964586	Washer	1
8	505964597	Snap Ring	1
9	505964577	Clevis	1
10	505963565	Piston	1
11	. . . . .	Seal	2
12	. . . . .	Seal	2
	505963564	Seal Kit (Includes Items 11-12)	1

BRAKE PEDAL LINKAGE

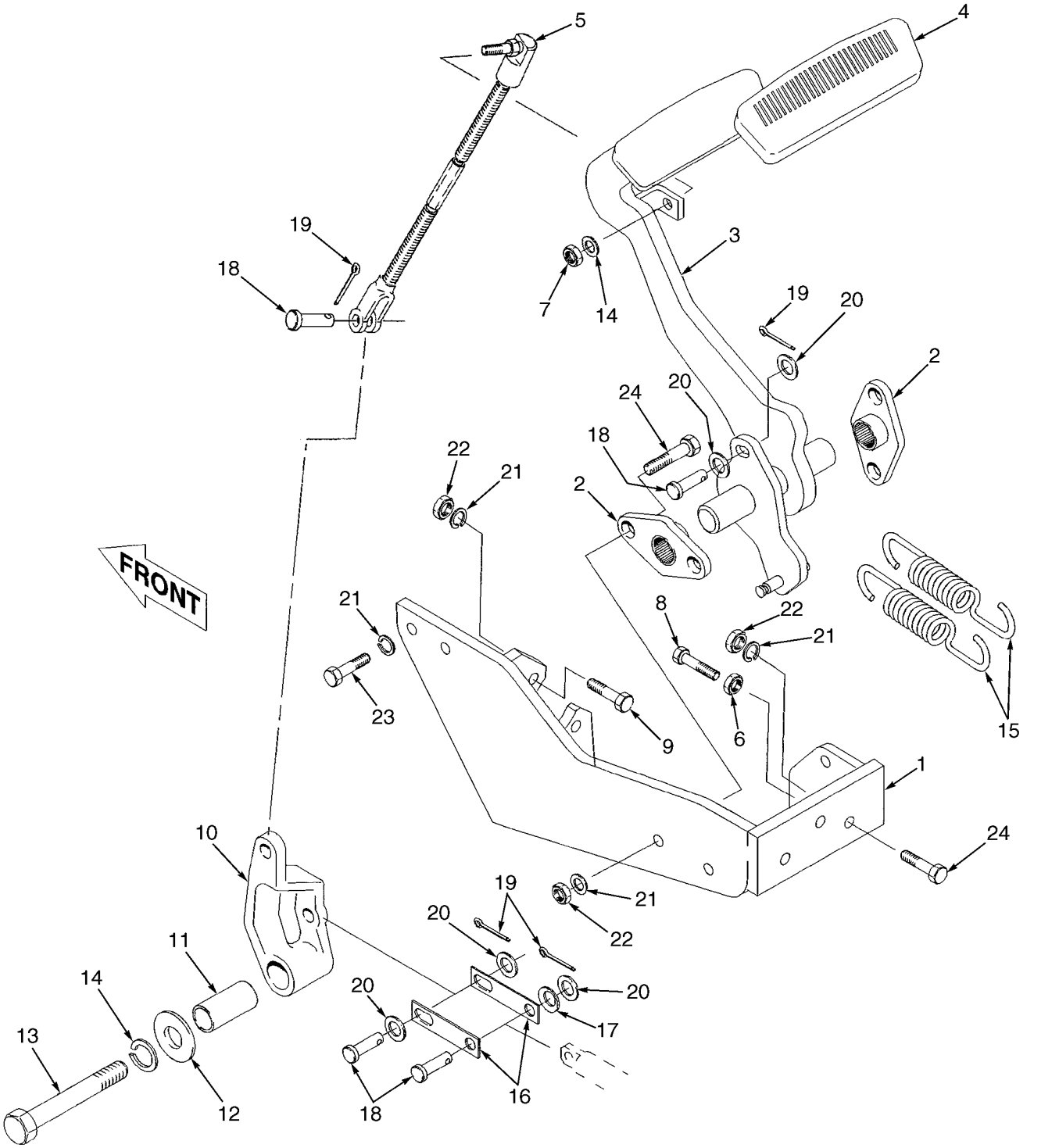

Yale Industrial Trucks

BRAKE PEDAL LINKAGE

ITEM	PART NO.	DESCRIPTION	QTY
1	505972599	Bracket	1
2	505972578	Bushing	2
3	505972591	Pedal	1
4	900001201	Pad	1
5	580032753	Link Assembly (Inching)	1
6	449015020	Nut	1
7	014972700	Nut	1
8	449001389	Capscrew	1
9	449001015	Capscrew	2
10	505972581	Crank	1
11	505972500	Spacer	1
12	505972502	Washer	1
13	449001076	Capscrew	1
14	449022016	Lockwasher	2
15	505972508	Spring	2
16	505972540	Link	2
17	505974532	Washer	1
18	504237211	Pin	4
19	015416200	Cotter Pin	4
20	449021006	Washer	7
21	449022013	Lockwasher	8
22	449015044	Nut	6
23	449001023	Capscrew	2
24	449001302	Capscrew	6

BRAKE LINES

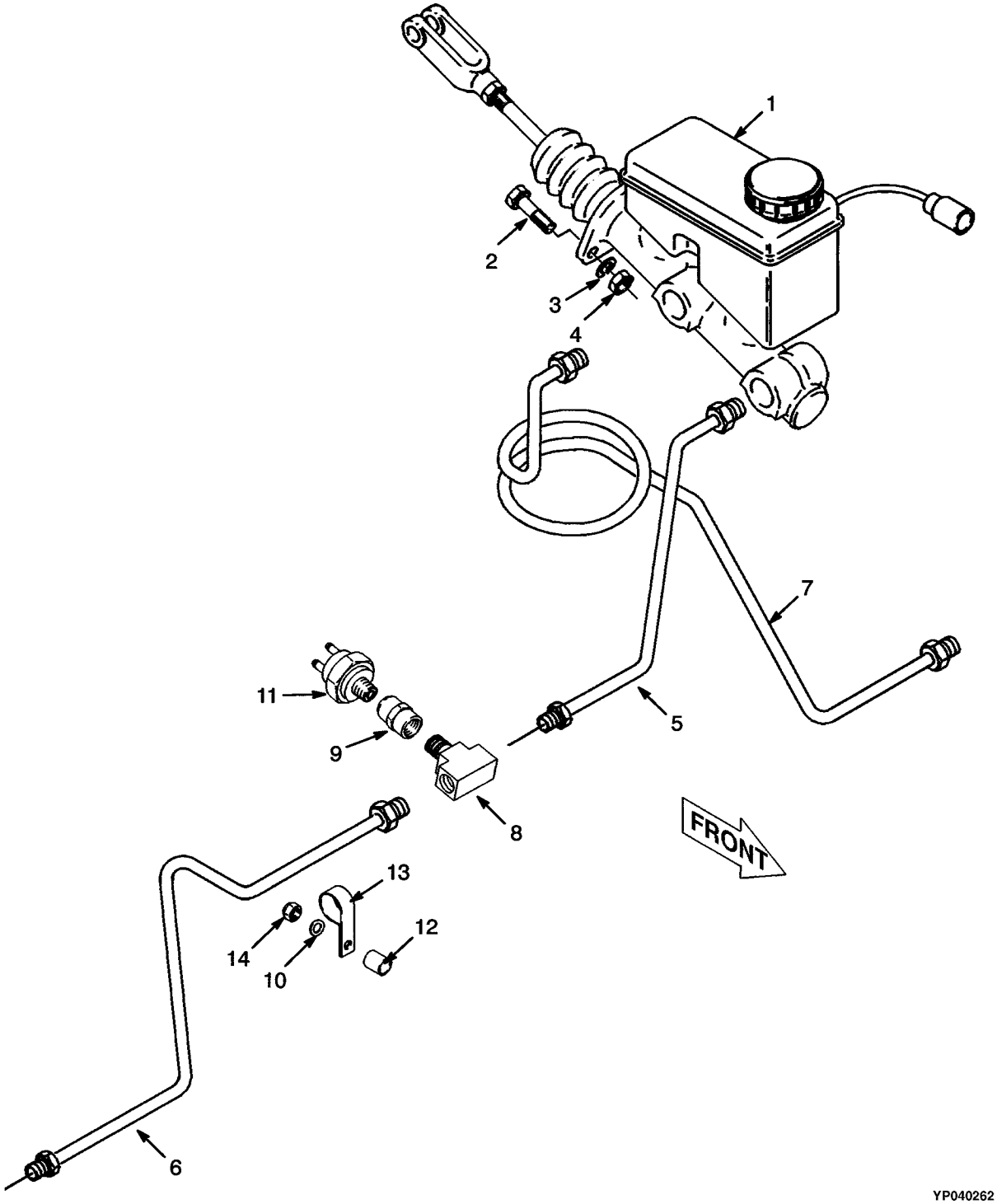

ITEM	PART NO.	DESCRIPTION	QTY
1	505963537	Master Cylinder (☞ P10824)	1
2	449001015	Capscrew	2
3	449022013	Lockwasher	2
4	449015044	Nut	2
5	520042810	Hose (RH)	1
6	505972543	Tube (RH)	1
7	580001782	Tube (LH)	1
8	013376100	Fitting	1
9	502079902	Fitting	1
10	504226242	Washer	1
11	505972532	Pressure Switch	1
12	505972583	Spacer	1
13	505972517	Clamp	1
14	449015098	Nut	1

NOTES

11 HYDRAULIC SYSTEM

SECTION 11
HYDRAULIC SYSTEM

DESCRIPTION	PAGE
CONTROL VALVE	
FOUR FUNCTION	11-48
THREE FUNCTION	11-44
FLOW VALVE	11-22
HYDRAULIC PUMP	
DOUBLE GEAR	
⇒S/N A875B-05101 INC. 5165, 5284, 5403, 5540	11-18
S/N A875B-5101⇒ EXC. 5102-5139	11-20
SINGLE GEAR	
⇒S/N A875B-05101 INC. 5165, 5284, 5403, 5540	11-14
S/N A875B-5101⇒ EXC. 5102-5139	11-16
HYDRAULICS	
S/N A875B-10872⇒	11-10
⇒S/N PENDING PER ECN 76000	11-2
S/N PENDING PER ECN 76000⇔S/N A875B-10872	11-6
MAST INSTALLATION	11-26
TILT CYLINDER	11-24
VALVE ATTACHING PARTS	
FOUR FUNCTION	
S/N A875B-10872⇒	11-40
⇒S/N A875B-10872	11-36
THREE FUNCTION	
S/N A875B-10872⇒	11-32
⇒S/N A875B-10872	11-28

Yale Industrial Trucks

HYDRAULICS
(⇒S/N PENDING PER ECN 76000)

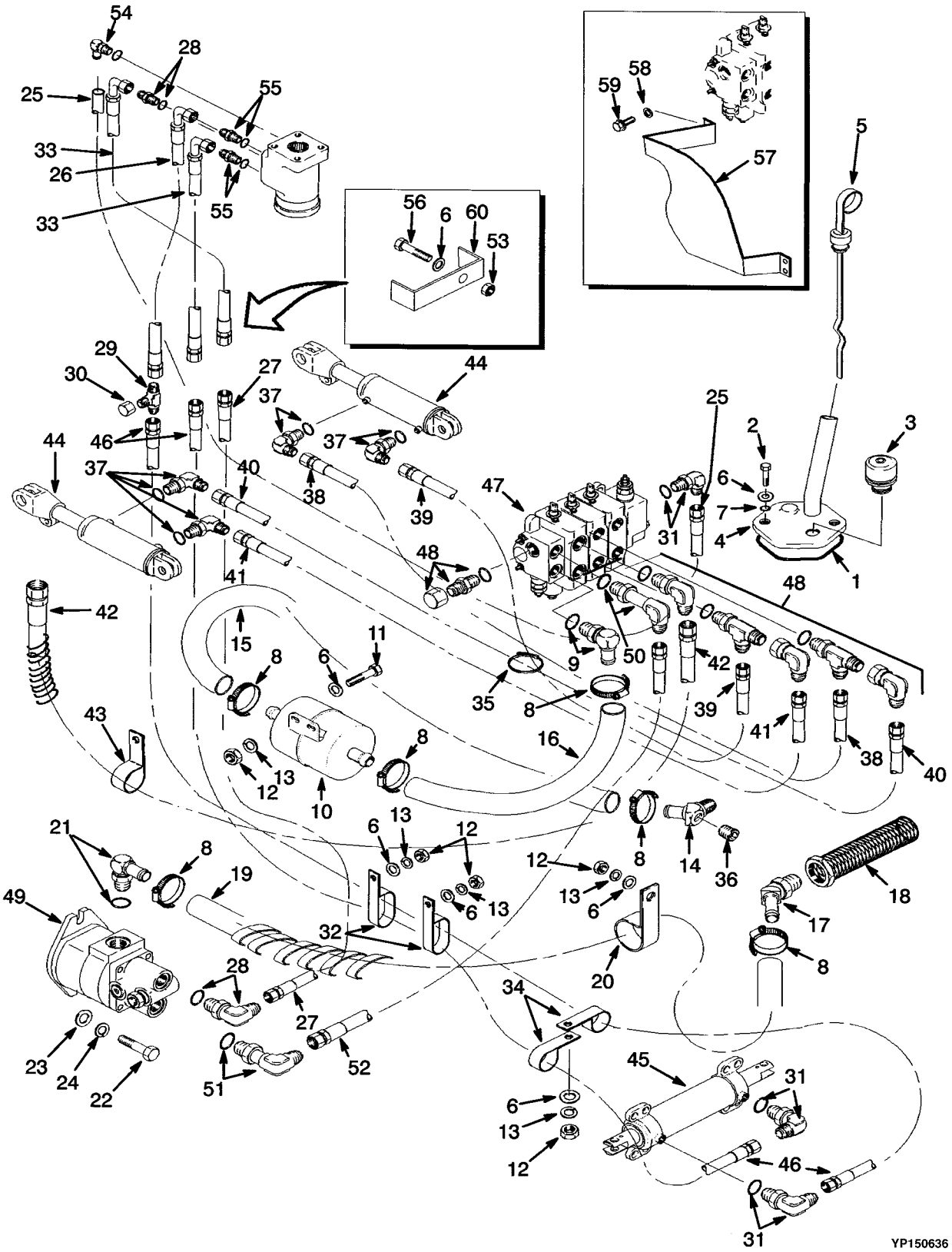

Yale Industrial Trucks

HYDRAULICS
(⇒S/N PENDING PER ECN 76000)

ITEM		PART NO.	DESCRIPTION	QTY
1		505966504	Seal	1
2		504060774	Screw	2
3		518794681	Breather	1
4		504264764	Cover	1
5		504240741	Dipstick	1
6		449021001	Washer	13
7		514214804	O-Ring	2
8		502056904	Clamp	6
9		505973507	Fitting	1
10		505973580	Filter	1
11		449001134	Capscrew	2
12		449015014	Nut	12
13		449022016	Lockwasher	8
14		505973542	Fitting	1
15		505969598	Hose	1
16		580000910	Hose	1
17	**c**	505970533	Fitting	1
18	**c**	505973557	Screen	1
18	**d**	580014237	Screen	1
19		580008527	Hose (Suction)	1
20		504240234	Clamp	1
21		505973510	Fitting	1
22		505972514	Capscrew	2
23		449022013	Lockwasher	2
24		449021006	Washer	2
25		524135091	Hose	1
26		504240788	Hose	1
27		520052842	Hose	1
28		055729800	Fitting	2
29		900003205	Fitting	1
30		500179904	Fitting	1
31		052642200	Hydraulic Fitting	3
31		052645200	O-Ring	4
32		500412904	Clamp	2
33		524136650	Hose	2
34		501921910	Clamp	2
35		312850034	Strap Clamp	4
36		500428902	Fitting	1
37		056363100	Fitting	4
37		056363300	O-Ring	4
38		505973522	Hose	1
39		505973574	Hose	1
40		505973511	Hose	1
41		505973568	Hose	1
42		505975532	Hose	1
43		505971501	Clamp	1
44		518841601	Tilt Cylinder (Tilt) (☞ P10828)	2
45		505965530	Steering Cylinder (☞ P10826)	1
46		580001398	Hose	2
47	**a**	580000026	Control Valve (Three Function) (☞ P10157)	1

Yale Industrial Trucks

HYDRAULICS
(⇒S/N PENDING PER ECN 76000)

ITEM		PART NO.	DESCRIPTION	QTY
47	**b**	580018326	Control Valve (Three Function) (☞ P10157)	1
47	**a**	580000027	Control Valve (Four Function) (☞ P10158)	1
47	**b**	580016423	Control Valve (Four Function) (☞ P10158)	1
48		. . . . .	Fittings (Three Function) (☞ P10829, P12168)	..
48		. . . . .	Fittings (Four Function) (☞ P10830, P12169)	..
49		580001749	Hydraulic Pump (Single Gear) (☞ P10144)	1
49		580011188	Hydraulic Pump (Single Gear) (☞ P11167)	1
49		580002068	Hydraulic Pump (Double Gear) (☞ P10149)	1
49		580011191	Hydraulic Pump (Double Gear) (☞ P11171)	1
50		505973526	Fitting	1
50		052645400	O-Ring	1
51		052229600	Fitting (With Double Gear Pump)	1
51		052645400	O-Ring	1
51		502546902	Fitting (With Single Gear Pump)	1
51		052645400	O-Ring	1
52		505973566	Hose	1
53		449015098	Nut	1
54		909086300	Valve	1
55		055746400	Fitting	2
55		052645300	O-Ring	2
56		520039801	Capscrew	1
57		504264775	Shield	1
58		449022016	Lockwasher	1
59		449015014	Nut	1
60		520039830	Bracket	1

FOOTNOTES:
a ⇒ S/N A875B-10871
b S/N A875B-10872 ⇒
c ⇒ S/N A875B-8251
d S/N A875B-8251 ⇒

NOTES

Yale Industrial Trucks

HYDRAULICS
(S/N PENDING PER ECN 76000⇔S/N A875B-10872)

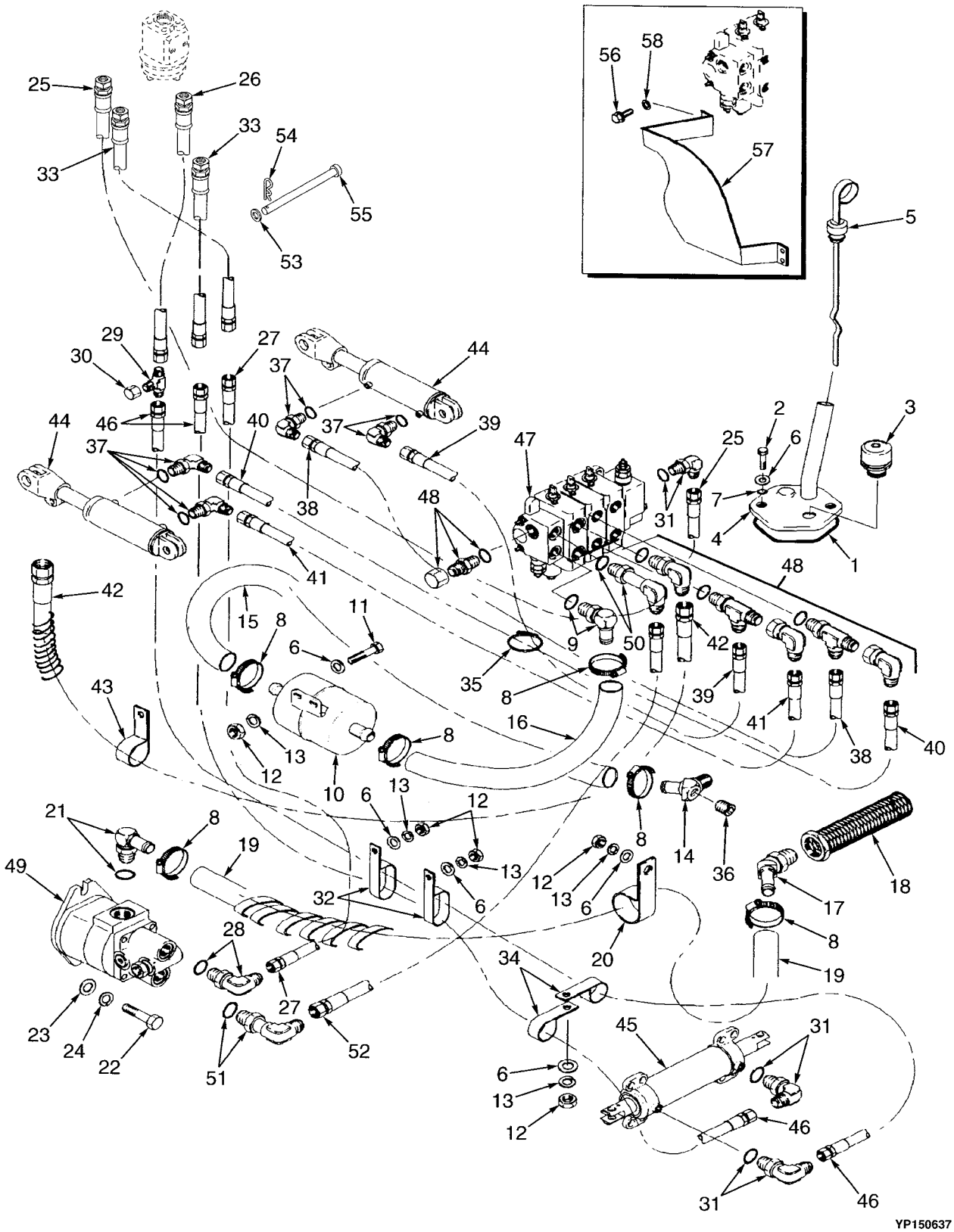

Yale Industrial Trucks

HYDRAULICS
(S/N PENDING PER ECN 76000⇔S/N A875B-10872)

ITEM		PART NO.	DESCRIPTION	QTY
1		505966504	Seal	1
2		504060774	Screw	2
3		518794681	Breather	1
4		504264764	Cover	1
5		504240741	Dipstick	1
6		449021001	Washer	13
7		514214804	O-Ring	2
8		502056904	Clamp	6
9		505973507	Fitting	1
10		505973580	Filter	1
11		449001134	Capscrew	2
12		449015014	Nut	12
13		449022016	Lockwasher	8
14		505973542	Fitting	1
15		505969598	Hose	1
16		580000910	Hose	1
17		580014237	Screen	1
18		580014237	Screen	1
19		580008527	Hose (Suction)	1
20		504240234	Clamp	1
21		505973510	Fitting	1
22		505972514	Capscrew	2
23		449022013	Lockwasher	2
24		449021006	Washer	2
25		524142630	Hose	1
26		524142631	Hose	1
27		520052842	Hose	1
28		055729800	Fitting	2
28		052645200	O-Ring	1
29		900003205	Fitting	1
30		500179904	Fitting	1
31		052642200	Hydraulic Fitting	3
31		052645200	O-Ring	1
32		500412904	Clamp	2
33		524142650	Hose	2
34		501921910	Clamp	2
35		312850034	Strap Clamp	4
36		500428902	Fitting	1
37		056363100	Fitting	4
37		056363300	O-Ring	4
38		505973522	Hose	1
39		505973574	Hose	1
40		505973511	Hose	1
41		505973568	Hose	1
42		505975532	Hose	1
43		505971501	Clamp	1
44		518841601	Tilt Cylinder (Tilt) (☞ P10828)	2
45		505965530	Steering Cylinder (☞ P10826)	1
46		580001398	Hose	2
47	**a**	580000026	Control Valve (Three Function) (☞ P10157)	1

Yale Industrial Trucks

HYDRAULICS
(S/N PENDING PER ECN 76000⇔S/N A875B-10872)

ITEM		PART NO.	DESCRIPTION	QTY
47	**b**	580018326	Control Valve (Three Function) (☞ P10157)	1
47	**a**	580000027	Control Valve (Four Function) (☞ P10158)	1
47	**b**	580016423	Control Valve (Four Function) (☞ P10158)	1
48		. . . . .	Fittings (Three Function) (☞ P10829, P12168)	..
48		. . . . .	Fittings (Four Function) (☞ P10830, P12169)	..
49		580001749	Hydraulic Pump (Single Gear) (☞ P10144)	1
49		580011188	Hydraulic Pump (Single Gear) (☞ P11167)	1
49		580002068	Hydraulic Pump (Double Gear) (☞ P10149)	1
49		580011191	Hydraulic Pump (Double Gear) (☞ P11171)	1
50		505973526	Fitting	1
50		052645400	O-Ring	1
51		052229600	Fitting (With Double Gear Pump)	1
51		052645400	O-Ring	1
51		502546902	Fitting (With Single Gear Pump)	1
51		052645400	O-Ring	1
52		505973566	Hose	1
53		449021003	Washer	2
54		965801904	Cotter Pin	1
55		520037856	Rod End Pin	1
56		449015014	Nut	1
57		504264775	Shield	1
58		449022016	Lockwasher	1

FOOTNOTES:

a ⇒ S/N A875B-10871

b S/N A875B-10872 ⇒

NOTES

Yale Industrial Trucks

HYDRAULICS
(S/N A875B-10872⇒)

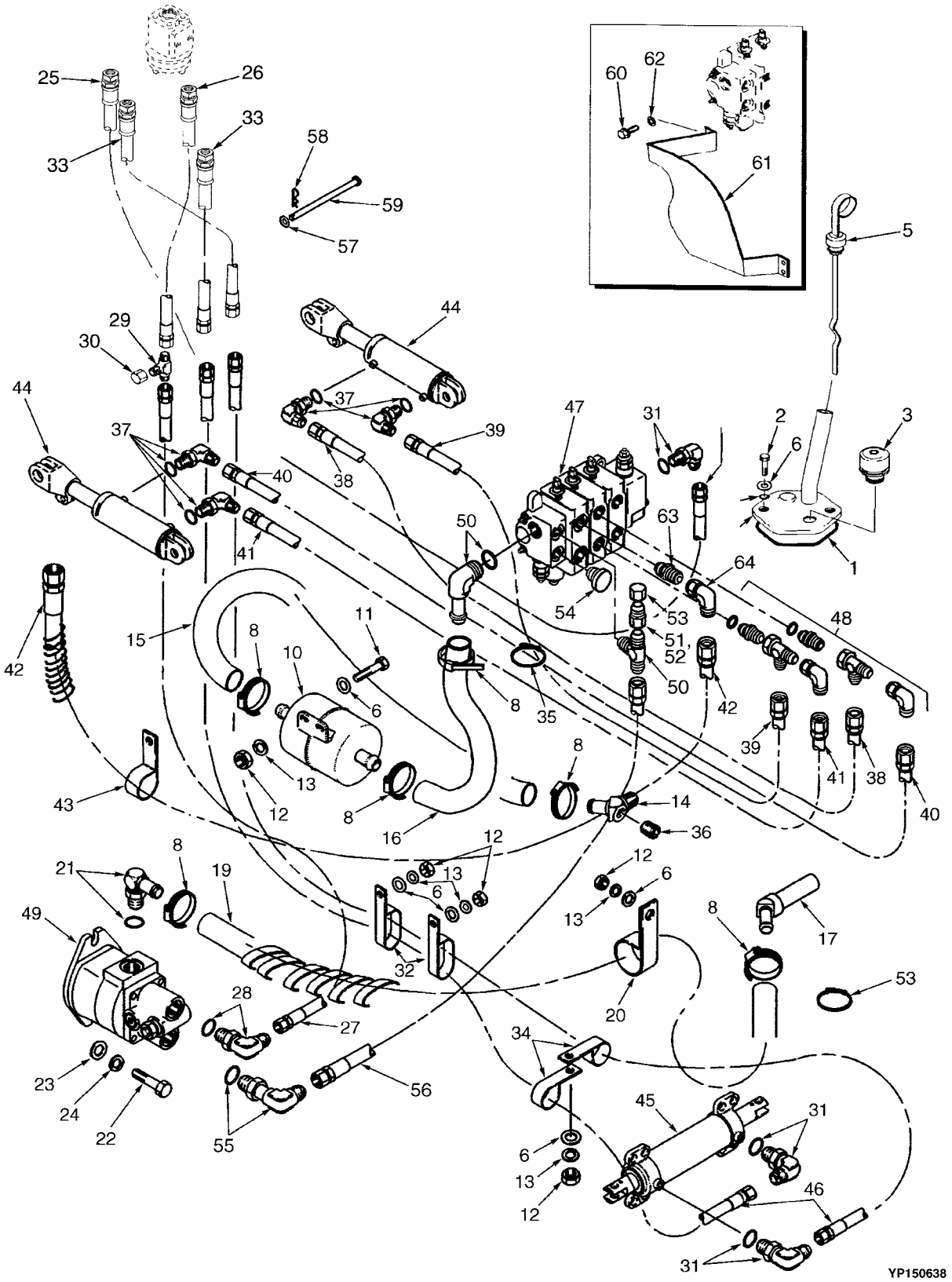

Yale Industrial Trucks

HYDRAULICS
(S/N A875B-10872⇒)

ITEM		PART NO.	DESCRIPTION	QTY
1		505966504	Seal	1
2		504060774	Screw	2
3		518794681	Breather	1
4		504264764	Cover	1
5		504240741	Dipstick	1
6		449021001	Washer	13
7		514214804	O-Ring	2
8		502056904	Clamp	6
9		505973507	Fitting	1
10		505973580	Filter	1
11		449001134	Capscrew	2
12		449015014	Nut	12
13		449022016	Lockwasher	8
14		505973542	Fitting	1
15		505969598	Hose	1
16		580000910	Hose	1
17		580014237	Screen	1
18		580014237	Screen	1
19		580008527	Hose (Suction)	1
20		504240234	Clamp	1
21		505973510	Fitting	1
22		505972514	Capscrew	2
23		449022013	Lockwasher	2
24		449021006	Washer	2
25		524142630	Hose	1
26		524142631	Hose	1
27		520052842	Hose	1
28		055729800	Fitting	2
28		052645200	O-Ring	1
29		900003205	Fitting	1
30		500179904	Fitting	1
31		052642200	Hydraulic Fitting	3
31		052645200	O-Ring	1
32		500412904	Clamp	2
33		524142650	Hose	2
34		501921910	Clamp	2
35		312850034	Strap Clamp	4
36		500428902	Fitting	1
37		056363100	Fitting	4
37		056363300	O-Ring	4
38		505973522	Hose	1
39		505973574	Hose	1
40		505973511	Hose	1
41		505973568	Hose	1
42		505975532	Hose	1
43		505971501	Clamp	1
44		518841601	Tilt Cylinder (☞ P10828)	2
45		505965530	Steering Cylinder (☞ P10826)	1
46		580001398	Hose	2
47	**a**	580000026	Control Valve (Three Function) (☞ P10157)	1

HYDRAULICS
(S/N A875B-10872⇒)

ITEM		PART NO.	DESCRIPTION	QTY
47	**b**	580018326	Control Valve (Three Function) (☞ P10157)	1
47	**a**	580000027	Control Valve (Four Function) (☞ P10158)	1
47	**b**	580016423	Control Valve (Four Function) (☞ P10158)	1
48		. . . . .	Fittings (Three Function) (☞ P10829, P12168)	..
48		. . . . .	Fittings (Four Function) (☞ P10830, P12169)	..
49		580001749	Hydraulic Pump (Single Gear) (☞ P10144)	1
49		580011188	Hydraulic Pump (Single Gear) (☞ P11167)	1
49		580002068	Hydraulic Pump (Double Gear) (☞ P10149)	1
49		580011191	Hydraulic Pump (Double Gear) (☞ P11171)	1
50		052641400	Fitting	1
50		052645400	O-Ring	1
51		053349800	Fitting	1
52		580002909	Fitting	1
53		500179904	Fitting	1
54		514454800	Fitting	1
55		052229600	Fitting (With Double Gear Pump)	1
55		052645400	O-Ring	1
55		052643400	Fitting (With Single Gear Pump)	1
55		052645400	O-Ring	1
56		505973566	Hose	1
57		449021003	Washer	2
58		965801904	Cotter Pin	1
59		520037856	Rod End Pin	1
60		449015014	Nut	1
61		504264775	Shield	1
62		449022016	Lockwasher	1
63		316540046	Fitting	1
63		052645300	O-Ring	1
64		500228905	Fitting	1

FOOTNOTES:
a ⇒ S/N A875B-10871
b S/N A875B-10872 ⇒

NOTES

Yale Industrial Trucks

HYDRAULIC PUMP
(SINGLE GEAR)
(⇒S/N A875B-05101 INC. 5165, 5284, 5403, 5540)

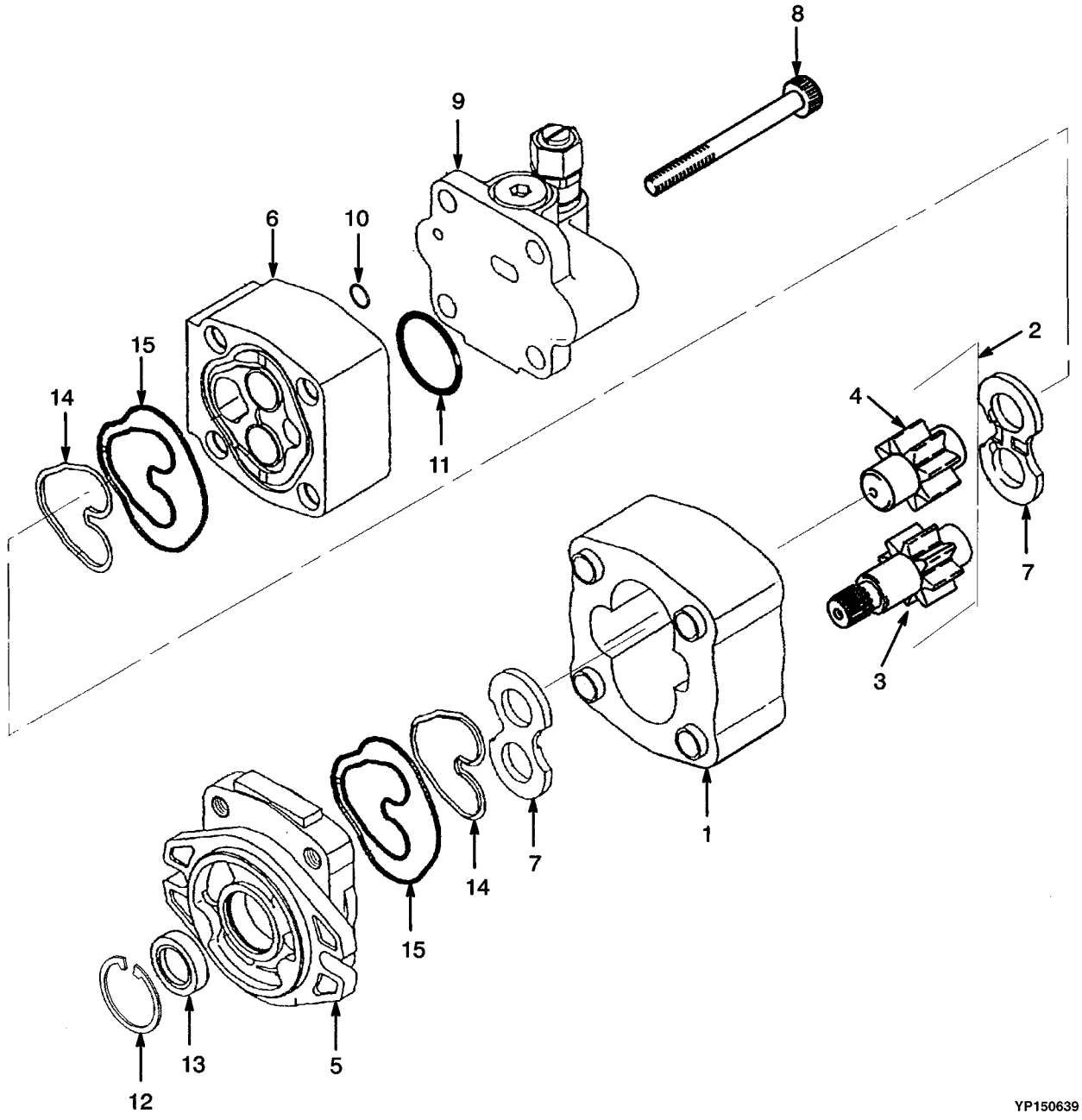

Yale Industrial Trucks

HYDRAULIC PUMP
(SINGLE GEAR)
(⇒S/N A875B-05101 INC. 5165, 5284, 5403, 5540)

ITEM	PART NO.	DESCRIPTION	QTY
	580001749	Hydraulic Pump	1
1	. . . . .	Gear Plate	1
2	520041837	Gear Set	1
3	. . . . .	Drive Gear	1
4	. . . . .	Driven Gear	1
5	580004729	Flange	1
6	580004730	Cover	1
7	580004731	Plate	2
8	580004732	Screw	4
9	518806631	Valve (☞ P10294)	1
10	. . . . .	O-Ring	1
11	. . . . .	O-Ring	1
12	. . . . .	Snap Ring	1
13	. . . . .	Oil Seal	1
14	. . . . .	Back-Up	2
15	. . . . .	Seal (Plate)	2
	505964573	Seal Kit (Includes Items 10-15)	1

HYDRAULIC PUMP
(SINGLE GEAR)
(S/N A875B-5101⇒ EXC. 5102-5139)

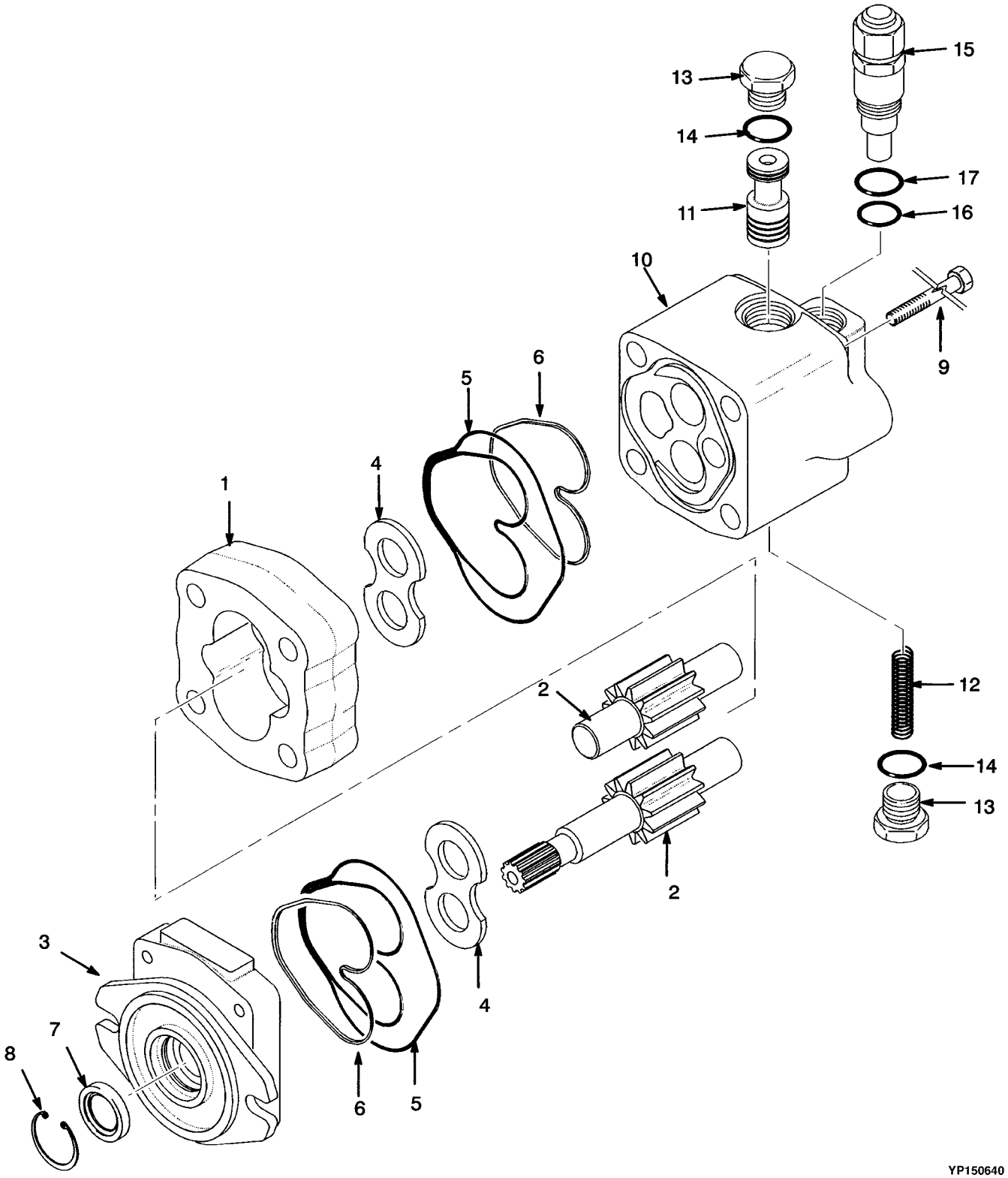

Yale Industrial Trucks

HYDRAULIC PUMP
(SINGLE GEAR)
(S/N A875B-5101⇒ EXC. 5102-5139)

ITEM	PART NO.	DESCRIPTION	QTY
	580011188	Hydraulic Pump	1
1	. . . . .	Gear Plate	1
2	520041887	Hose Assembly	1
2	. . . . .	Drive Gear	1
2	. . . . .	Driven Gear	1
3	580004729	Flange	1
4	580004731	Plate	2
5	. . . . .	Seal (Plate)	2
6	. . . . .	Back-Up	2
7	. . . . .	Oil Seal	1
8	. . . . .	Snap Ring	1
9	580012154	Screw	4
10	. . . . .	Body	1
11	. . . . .	Plunger	1
12	. . . . .	Spring	1
13	. . . . .	Plug	2
14	. . . . .	O-Ring	2
15	580012158	Valve Kit	1
16	. . . . .	O-Ring	1
17	. . . . .	O-Ring	1
	580012159	Seal Kit (Includes Items 5-8)	1
	580012160	Seal Kit (Includes Items 14-17)	1
	580012161	Pump Kit (Includes Items 10-14)	1

Yale Industrial Trucks

HYDRAULIC PUMP
(DOUBLE GEAR)
(⇒S/N A875B-05101 INC. 5165, 5284, 5403, 5540)

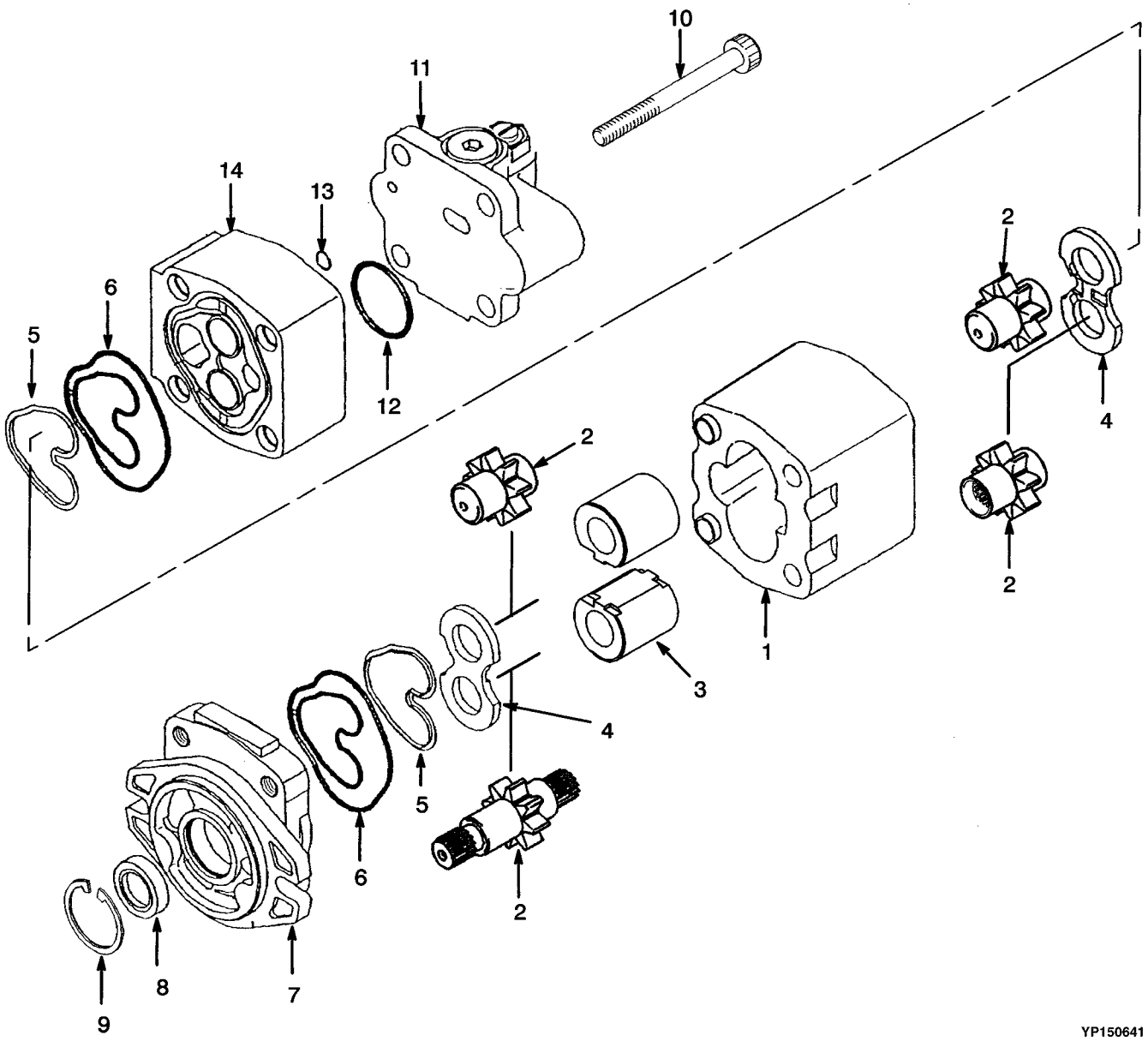

Yale Industrial Trucks

HYDRAULIC PUMP (DOUBLE GEAR) (⇒S/N A875B-05101 INC. 5165, 5284, 5403, 5540)

ITEM	PART NO.	DESCRIPTION	QTY
	580002068	Hydraulic Pump	1
1	. . . . .	Gear Plate	1
2	580004733	Gear Set	1
3	. . . . .	Bush	2
4	580004731	Plate	2
5	. . . . .	Back-Up Ring	2
6	. . . . .	Seal	2
7	580004729	Flange	1
8	. . . . .	Oil Seal	1
9	. . . . .	Snap Ring	1
10	580004739	Screw	4
11	. . . . .	Flow Valve (☞ P10294)	1
12	. . . . .	O-Ring	1
13	. . . . .	O-Ring	1
14	580004730	Cover	1
	505964573	Seal Kit (Includes Items 5-6, 8-9, 12-13)	1

Yale Industrial Trucks

HYDRAULIC PUMP
(DOUBLE GEAR)
(S/N A875B-5101⇒ EXC. 5102-5139)

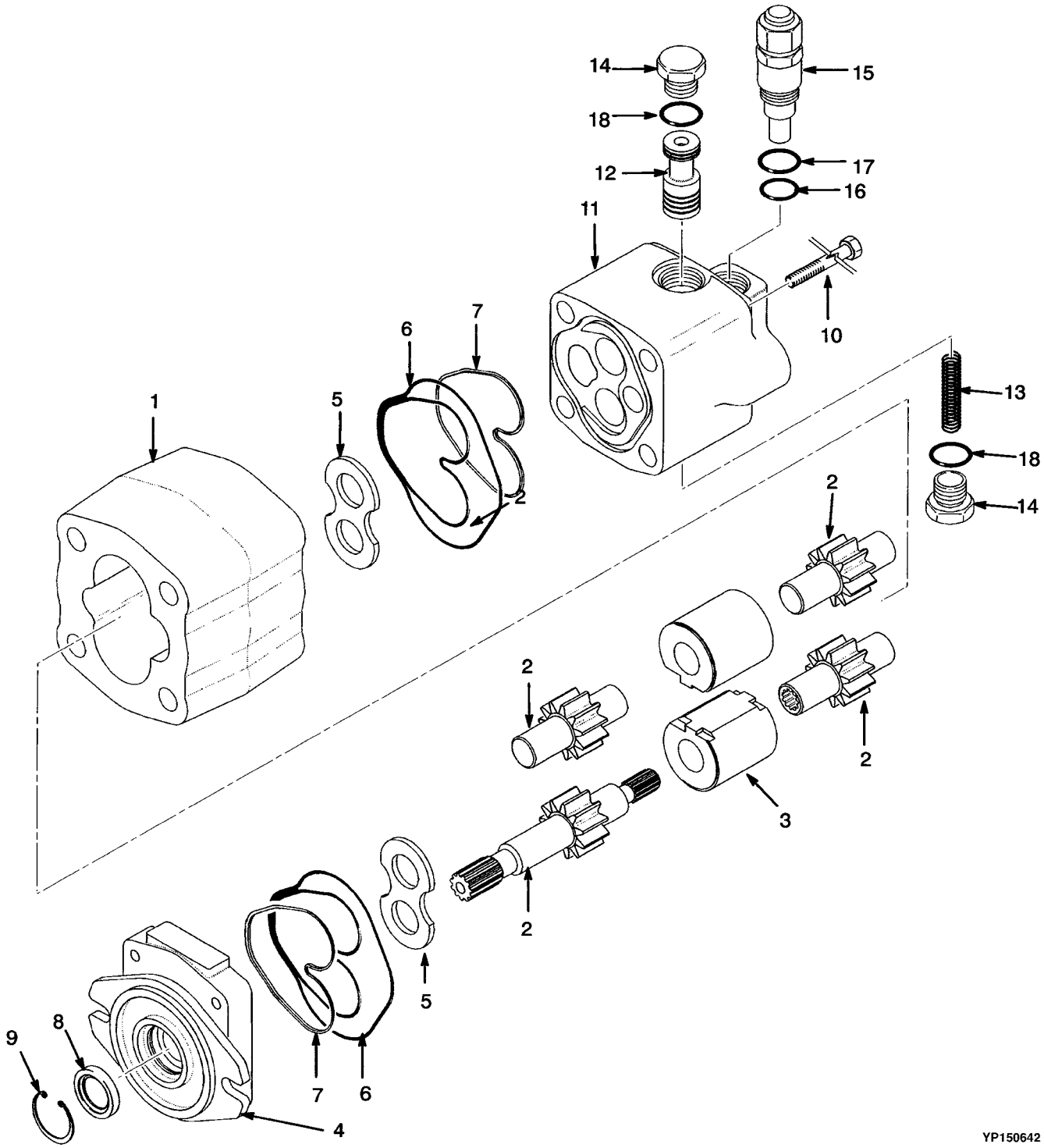

Yale Industrial Trucks

HYDRAULIC PUMP (DOUBLE GEAR) (S/N A875B-5101⇒ EXC. 5102-5139)

ITEM	PART NO.	DESCRIPTION	QTY
	580011191	Hydraulic Pump	1
1	. . . . .	Body	1
2	580004733	Gear Set	1
2	. . . . .	Drive Gear	1
2	. . . . .	Driven Gear	1
3	. . . . .	Bush	1
4	580004738	Flange	1
5	580004731	Plate	2
6	. . . . .	Seal (Plate)	2
7	. . . . .	Back-Up	2
8	. . . . .	Oil Seal	1
9	. . . . .	Snap Ring	1
10	580004732	Screw	4
11	. . . . .	Body	1
12	. . . . .	Plunger	1
13	. . . . .	Spring	1
14	. . . . .	Plug	2
15	580012158	Valve Kit	1
16	505964565	O-Ring	1
17	. . . . .	O-Ring	1
18	. . . . .	O-Ring	2
	580012159	Seal Kit (Includes Items 6-9)	1
	580012160	Seal Kit (Includes Items 15-18)	1
	580012161	Pump Kit (Includes Items 11-14, 18)	1

FLOW VALVE

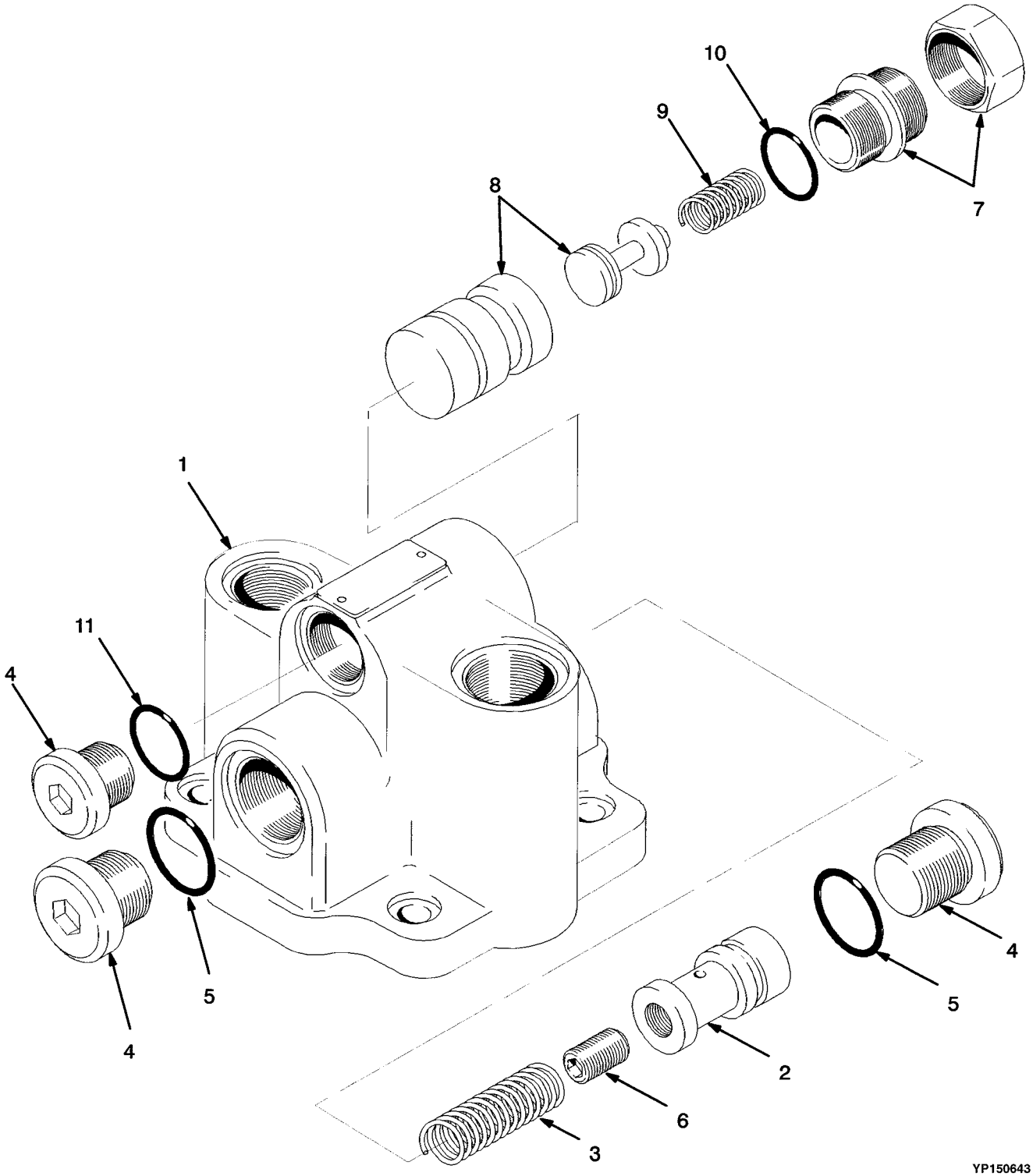

ITEM	PART NO.	DESCRIPTION	QTY
	518806631	Valve	1
1	. . . . .	Body	1
2	. . . . .	Plunger	1
3	505964529	Spring	1
4	505964564	Plug	3
5	052645400	O-Ring	3
6	505964513	Plug	1
7	518806626	Adjuster Kit	1
8	. . . . .	Housing	1
8	. . . . .	Poppet	1
9	518806648	Spring	1
10	. . . . .	O-Ring	1
11	. . . . .	O-Ring	1
	518806673	Seal Kit (Includes Items 5, 10-11)	1
	518806615	Seal Kit (Includes Item 8)	1

TILT CYLINDER

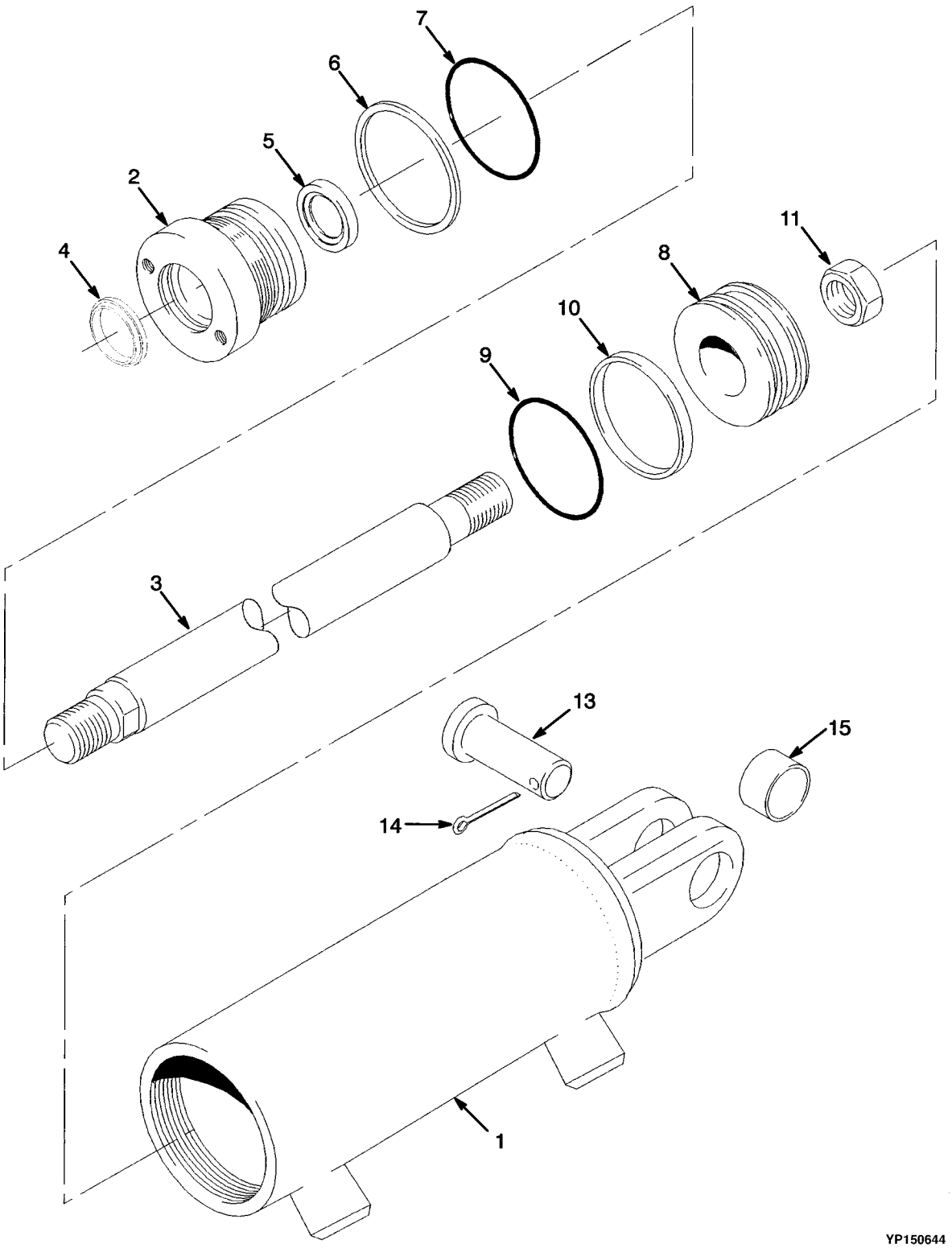

ITEM	PART NO.	DESCRIPTION	QTY
	518841601	Tilt Cylinder	1
1	518842601	Shell	1
2	518852600	Gland	1
3	506001501	Rod (Piston)	1
4	580022514	Wiper Ring	1
5	580022505	Rod Seal	1
6	502011914	Back-Up Ring	1
7	015493400	O-Ring	1
8	506002500	Piston	1
9	012824200	O-Ring	1
10	580011967	Seal	1
11	502637902	Nut	1
12	504229225	Bushing	2
13	505974573	Rod End Pin	2
14	015420300	Cotter Pin	2
	580022411	Seal Kit (Includes Items 4-7, 9-10)	1

MAST INSTALLATION

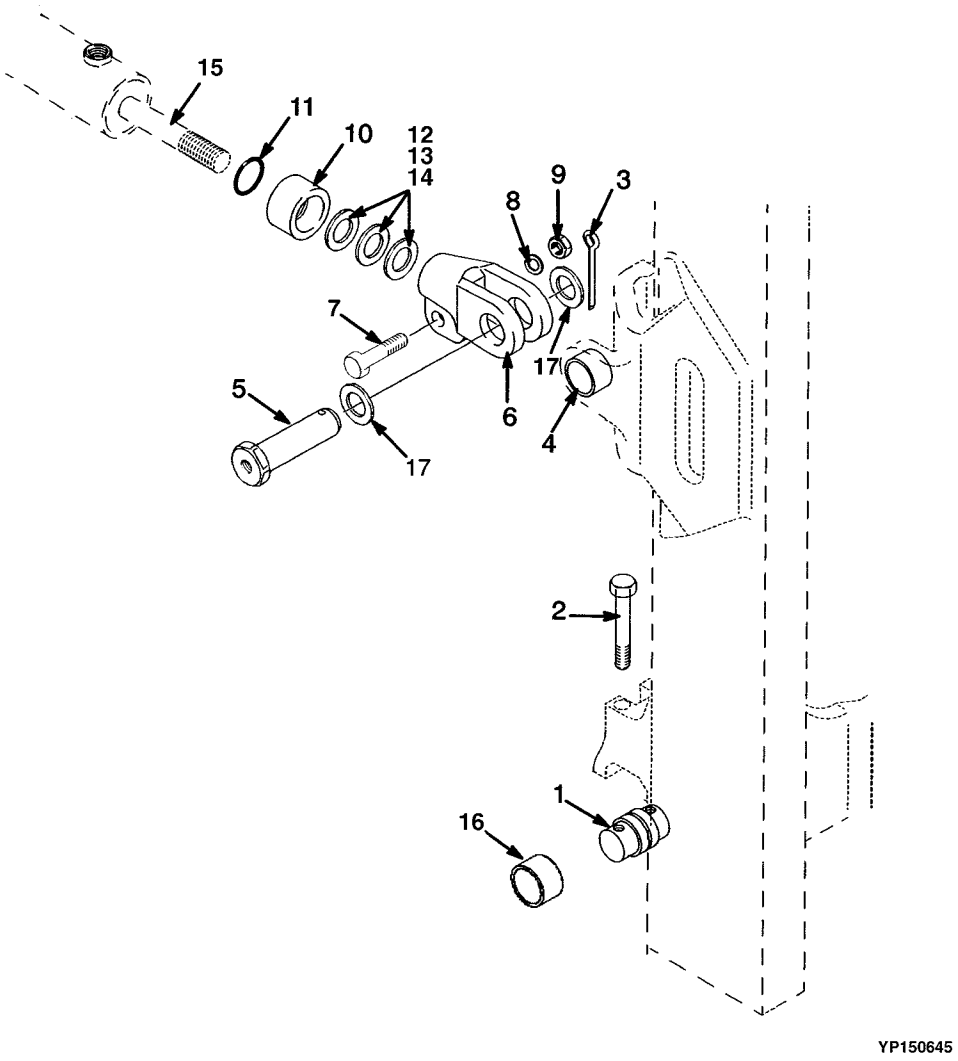

ITEM		PART NO.	DESCRIPTION	QTY
1		518809677	Pin	2
2		932203916	Capscrew	4
3		015420300	Cotter Pin	2
4		504229225	Bushing	2
5		505974573	Rod End Pin	2
6	**c**	505974594	Rod End	2
6	**b**	505974594	Rod End	2
6	**a**	900005207	Rod End	2
7		311321033	Capscrew	2
8		449022017	Lockwasher	2
9		449015029	Nut	2
10	**c**	580000395	Spacer	2
11	**c**	012828000	O-Ring	2
12	**c**	505970567	Shim (0.060 in.)	AR
13	**c**	505974501	Shim (0.030 in.)	AR
14	**c**	505978585	Shim	AR
15		518841601	Tilt Cylinder (☞ P10828)	2
16		505965585	Bushing	2
17		580024553	Washer	2

FOOTNOTES:

a 10° Back/10° Forward Tilt

b 10° Back/6° Forward Tilt

c 6° Forward/6° Back Tilt

Yale Industrial Trucks

VALVE ATTACHING PARTS (THREE FUNCTION) (⇒S/N A875B-10872)

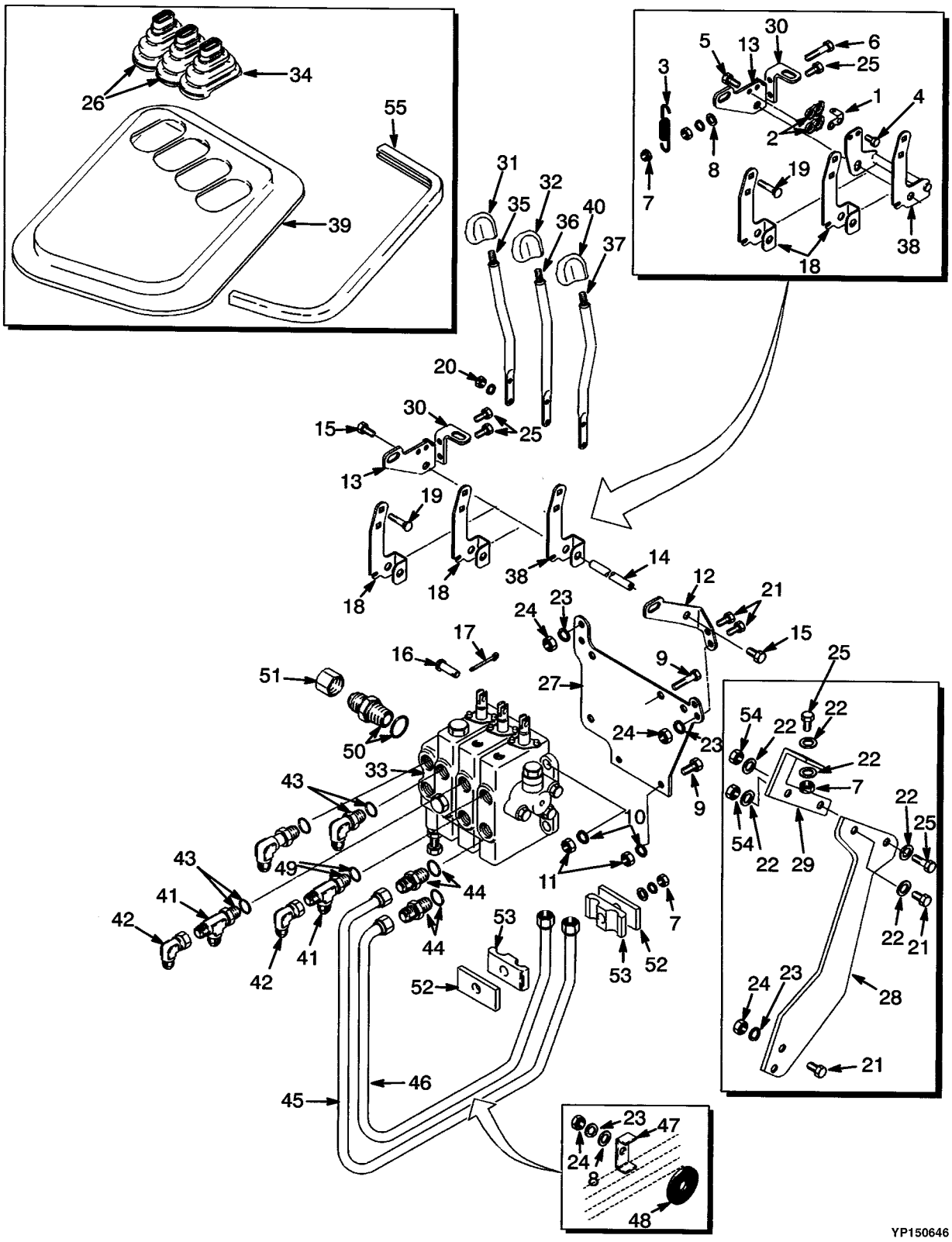

Yale Industrial Trucks

VALVE ATTACHING PARTS (THREE FUNCTION) (⇒S/N A875B-10872)

ITEM	PART NO.	DESCRIPTION	QTY
1	505962557	Plate	1
2	505972585	Lock	2
3	505972523	Spring	1
4	449001239	Capscrew	2
5	931013901	Capscrew	2
6	449001028	Capscrew	1
7	449015098	Nut	5
8	449021001	Washer	2
9	449001015	Capscrew	3
10	449022013	Lockwasher	3
11	449015044	Nut	3
12	505972568	Bracket (RH)	1
13	505972549	Bracket (LH)	1
14	505972561	Pivot	1
15	505972503	Capscrew	2
16	500583902	Rod End Pin	3
17	015414700	Cotter Pin	3
18	504241737	Crank	2
19	504241771	Screw	6
20	505970500	Nut	6
21	449001014	Capscrew	7
22	504226242	Washer	8
23	449022016	Lockwasher	9
24	449015014	Nut	7
25	449001134	Capscrew (With Detent)	2
25	449001134	Capscrew (Without Detent)	3
26	504241730	Boot	2
27	505974586	Bracket	1
28	504240954	Bracket	1
29	504240953	Bracket	1
30	504240952	Bracket	1
31	916054401	Knob	1
32	916054402	Knob	1
33	580000026	Control Valve (☞ P10157)	1
34	504241731	Boot	1
35	504240729	Lever (Hoist)	1
36	504240730	Lever (Tilt)	1
37	504240731	Lever (Three Function)	1
38	504241737	Crank (Without Detent)	1
38	504241739	Bellcrank (With Detent)	1
39	504241742	Cover	1
40	916054403	Knob	1
41	720307903	Fitting	2
42	500421901	Fitting	2
43	057300800	Fitting	2
43	052645300	O-Ring	2
44	052643300	Fitting	2
44	052645300	O-Ring	2
45	504240732	Tube	1
46	504240733	Tube	1

Yale Industrial Trucks

VALVE ATTACHING PARTS (THREE FUNCTION) (⇒S/N A875B-10872)

ITEM	PART NO.	DESCRIPTION	QTY
47	505973577	Clamp	1
48	505973517	Washer (Rubber)	1
49	064824400	Fitting	1
49	052645300	O-Ring	1
50	134023104	Fitting	1
50	052645400	O-Ring	1
51	500179904	Fitting	1
52	505973585	Plate	2
53	505973554	Clamp	2
54	504230271	Nut	2
55	912291315	Trim	1

NOTES

Yale Industrial Trucks

VALVE ATTACHING PARTS
(THREE FUNCTION)
(S/N A875B-10872⇒)

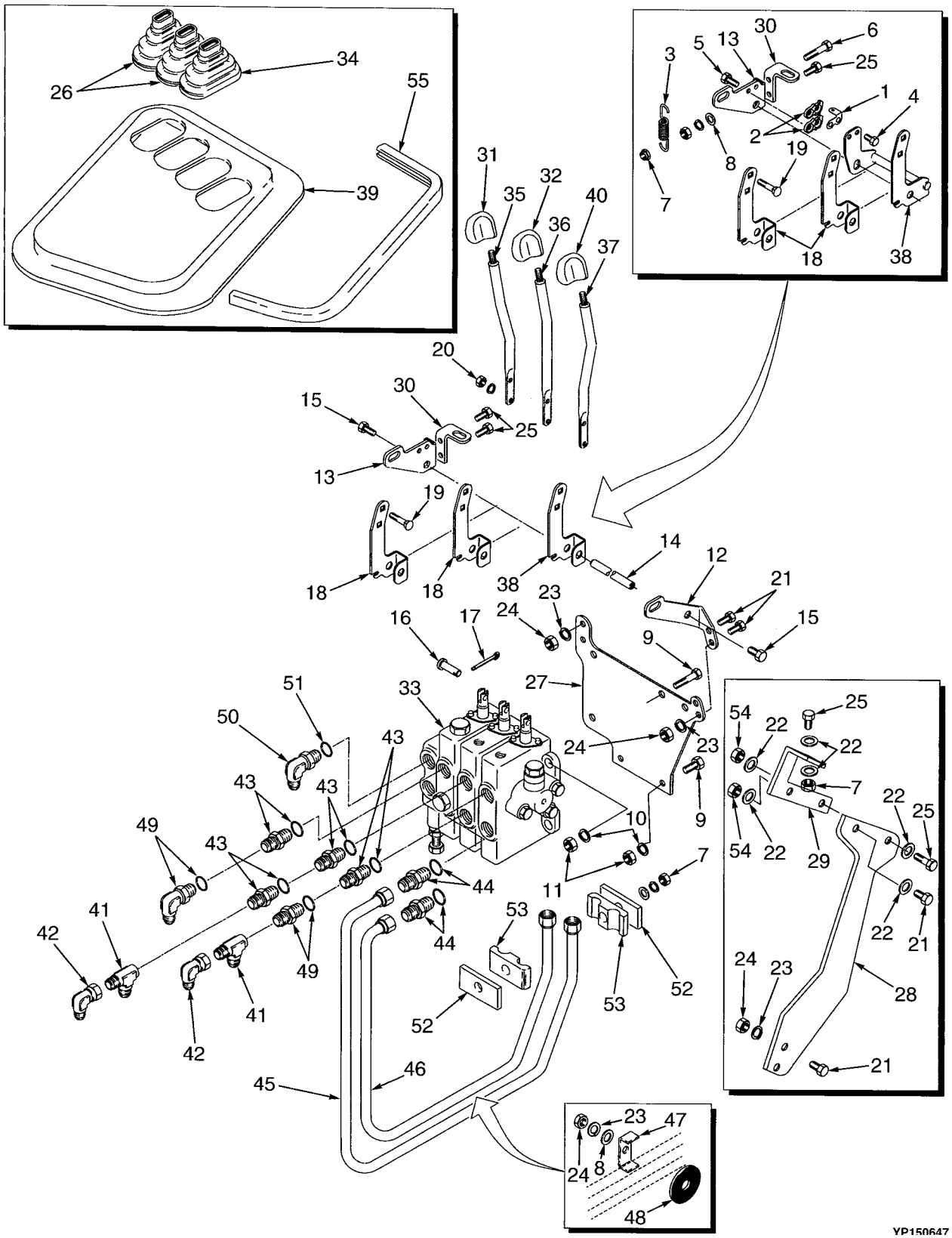

Yale Industrial Trucks

VALVE ATTACHING PARTS (THREE FUNCTION) (S/N A875B-10872⇒)

ITEM	PART NO.	DESCRIPTION	QTY
1	505962557	Plate	1
2	505972585	Lock	2
3	505972523	Spring	1
4	449001239	Capscrew	2
5	931013901	Capscrew	2
6	449001028	Capscrew	1
7	449015098	Nut	5
8	449021001	Washer	2
9	449001015	Capscrew	3
10	449022013	Lockwasher	3
11	449015044	Nut	3
12	505972568	Bracket (RH)	1
13	505972549	Bracket (LH)	1
14	505972561	Pivot	1
15	505972503	Capscrew	2
16	500583902	Rod End Pin	3
17	015414700	Cotter Pin	3
18	504241737	Crank	2
19	504241771	Screw	6
20	505970500	Nut	6
21	449001014	Capscrew	7
22	504226242	Washer	8
23	449022016	Lockwasher	9
24	449015014	Nut	7
25	449001134	Capscrew (With Detent)	2
25	449001134	Capscrew (Without Detent)	3
26	504241730	Boot	2
27	505974586	Bracket	1
28	504240954	Bracket	1
29	504240953	Bracket	1
30	504240952	Bracket	1
31	916054401	Knob	1
32	916054402	Knob	1
33	580018326	Control Valve (☞ P10157)	1
34	504241731	Boot	1
35	504240729	Lever (Hoist)	1
36	504240730	Lever (Tilt)	1
37	504240731	Lever (3rd Function)	1
38	504241737	Crank (Without Detent)	1
38	504241739	Bellcrank (With Detent)	1
39	504241742	Cover	1
40	916054403	Knob	1
41	720307903	Fitting	2
42	500421901	Fitting	2
43	057300800	Fitting	2
43	052645300	O-Ring	2
44	052643300	Fitting	2
44	052645300	O-Ring	2
45	504240732	Tube	1
46	504240733	Tube	1

Yale Industrial Trucks

VALVE ATTACHING PARTS (THREE FUNCTION) (S/N A875B-10872⇒)

ITEM	PART NO.	DESCRIPTION	QTY
47	505973577	Clamp	1
48	505973517	Washer (Rubber)	1
49	064824400	Fitting	1
49	052645300	O-Ring	1
50	500228905	Fitting	1
51	316540046	Fitting	1
51	052645300	O-Ring	1
52	505973585	Plate	2
53	505973554	Clamp	2
54	504230271	Nut	2
55	912291315	Trim	1

NOTES

Yale Industrial Trucks

VALVE ATTACHING PARTS (FOUR FUNCTION) (⇒S/N A875B-10872)

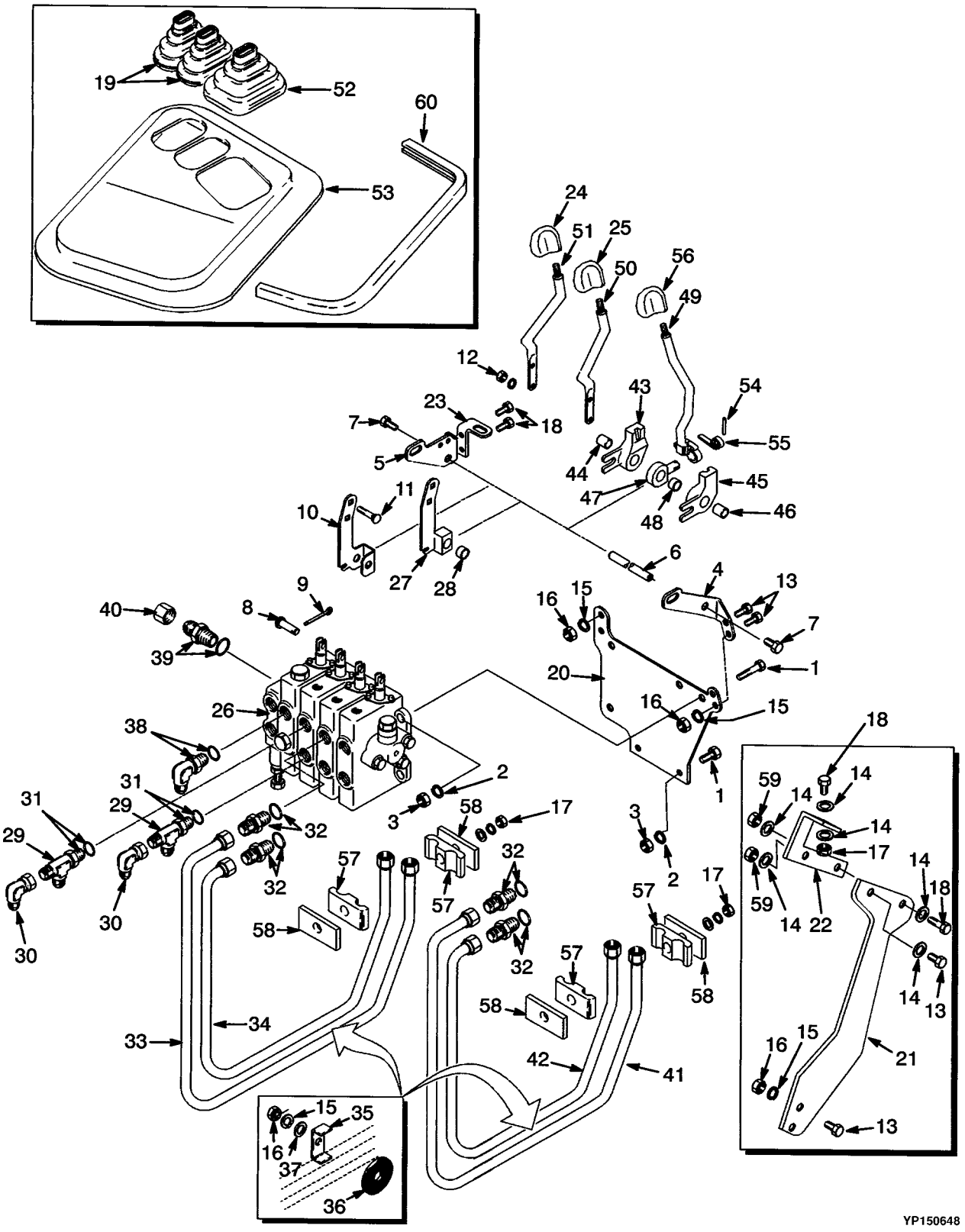

YP150648

Yale Industrial Trucks

VALVE ATTACHING PARTS (FOUR FUNCTION) (⇒S/N A875B-10872)

ITEM		PART NO.	DESCRIPTION	QTY
1		449001015	Capscrew	3
2		449022013	Lockwasher	3
3		449015044	Nut	3
4		505972568	Bracket (RH)	1
5		505972549	Bracket (LH)	1
6		505972561	Pivot	1
7		505972503	Capscrew	2
8		500583902	Rod End Pin	4
9		015414700	Cotter Pin	4
10		504241737	Crank	1
11		504241771	Screw	4
12		505970500	Nut	4
13		449001014	Capscrew	7
14		504226242	Washer	8
15		449022016	Lockwasher	10
16		449015014	Nut	8
17		449015098	Nut	4
18		449001134	Capscrew	3
19		504241730	Boot	2
20		505974586	Bracket	1
21		504240954	Bracket	1
22		504240953	Bracket	1
23		504240952	Bracket	1
24		916054401	Knob	1
25		916054402	Knob	1
26		580000027	Control Valve (☞ P10158)	1
27		504245799	Crank	1
28		504245794	Bushing	1
29		720307903	Fitting	2
30		500421901	Fitting	2
31		057300800	Fitting	2
31		052645300	O-Ring	2
32		052643300	Fitting	4
32		052645300	O-Ring	4
33		504240732	Tube	1
34		504240733	Tube	1
35		505973577	Clamp	2
36		505973517	Washer (Rubber)	2
37		449021001	Washer	2
38		064824400	Fitting	1
38		052645300	O-Ring	1
39	**a**	134023104	Fitting	1
39	**a**	052645400	O-Ring	1
40	**a**	500179904	Fitting	1
41		504306703	Tube	1
42		504306704	Tube	1
43		504240928	Lever (LH)	1
44		504245794	Bushing	1
45		504240932	Lever (RH)	1
46		504245796	Bushing	1

VALVE ATTACHING PARTS
(FOUR FUNCTION)
(⇒S/N A875B-10872)

ITEM	PART NO.	DESCRIPTION	QTY
47	504240930	Pivot	1
48	504245795	Bushing	1
49	504241700	Lever (Tilt)	1
50	504240730	Lever (Hoist)	1
51	504240729	Lever (Auxiliary)	1
52	504241732	Boot	1
53	504241741	Cover	1
54	504227270	Pin	1
55	504230239	Spring	1
56	916054403	Knob	1
57	505973554	Clamp	4
58	505973585	Plate	4
59	504230271	Nut	2
60	912291315	Trim	1

FOOTNOTES:
a ⇒ S/N PENDING PER ECN 76001

NOTES

Yale Industrial Trucks

VALVE ATTACHING PARTS
(FOUR FUNCTION)
(S/N A875B-10872⇒)

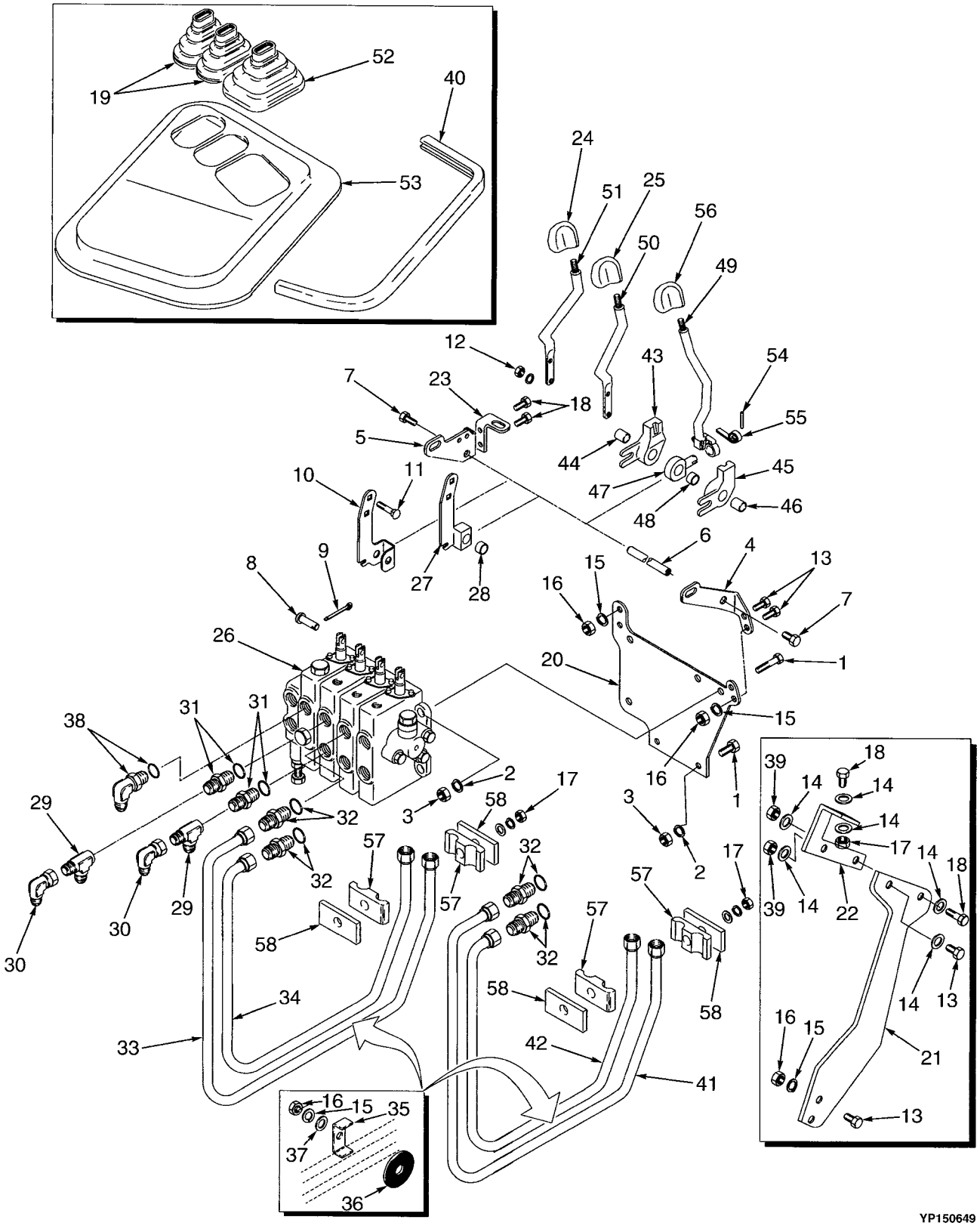

Yale Industrial Trucks

VALVE ATTACHING PARTS (FOUR FUNCTION) (S/N A875B-10872⇒)

ITEM	PART NO.	DESCRIPTION	QTY
1	449001015	Capscrew	3
2	449022013	Lockwasher	3
3	449015044	Nut	3
4	505972568	Bracket (RH)	1
5	505972549	Bracket (LH)	1
6	505972561	Pivot	1
7	505972503	Capscrew	2
8	500583902	Rod End Pin	4
9	015414700	Cotter Pin	4
10	504241737	Crank	1
11	504241771	Screw	4
12	505970500	Nut	4
13	449001014	Capscrew	7
14	504226242	Washer	8
15	449022016	Lockwasher	10
16	449015014	Nut	8
17	449015098	Nut	4
18	449001134	Capscrew	3
19	504241730	Boot	2
20	505974586	Bracket	1
21	504240954	Bracket	1
22	504240953	Bracket	1
23	504240952	Bracket	1
24	916054401	Knob	1
25	916054402	Knob	1
26	580016423	Control Valve (☞ P10158)	1
27	504245799	Crank	1
28	504245794	Bushing	1
29	720307903	Fitting	2
30	500421901	Fitting	2
31	057300800	Fitting	2
31	052645300	O-Ring	2
32	052643300	Fitting	4
32	052645300	O-Ring	4
33	504240732	Tube	1
34	504240733	Tube	1
35	505973577	Clamp	2
36	505973517	Washer (Rubber)	2
37	449021001	Washer	2
38	054368800	Fitting	1
38	316540046	Fitting	1
39	053349600	Fitting	1
40	912291315	Trim	1
41	504306703	Tube	1
42	504306704	Tube	1
43	504240928	Lever (LH)	1
44	504245794	Bushing	1
45	504240932	Lever (RH)	1
46	504245796	Bushing	1
47	504240930	Pivot	1

VALVE ATTACHING PARTS
(FOUR FUNCTION)
(S/N A875B-10872⇒)

ITEM	PART NO.	DESCRIPTION	QTY
48	504245795	Bushing	1
49	504241700	Lever (Tilt)	1
50	504240730	Lever (Hoist)	1
51	504240729	Lever (Auxiliary)	1
52	504241732	Boot	1
53	504241741	Cover	1
54	504227270	Pin	1
55	504230239	Spring	1
56	916054403	Knob	1
57	505973554	Clamp	4
58	505973585	Plate	4
59	504230271	Nut	2

NOTES

Yale Industrial Trucks

CONTROL VALVE (THREE FUNCTION)

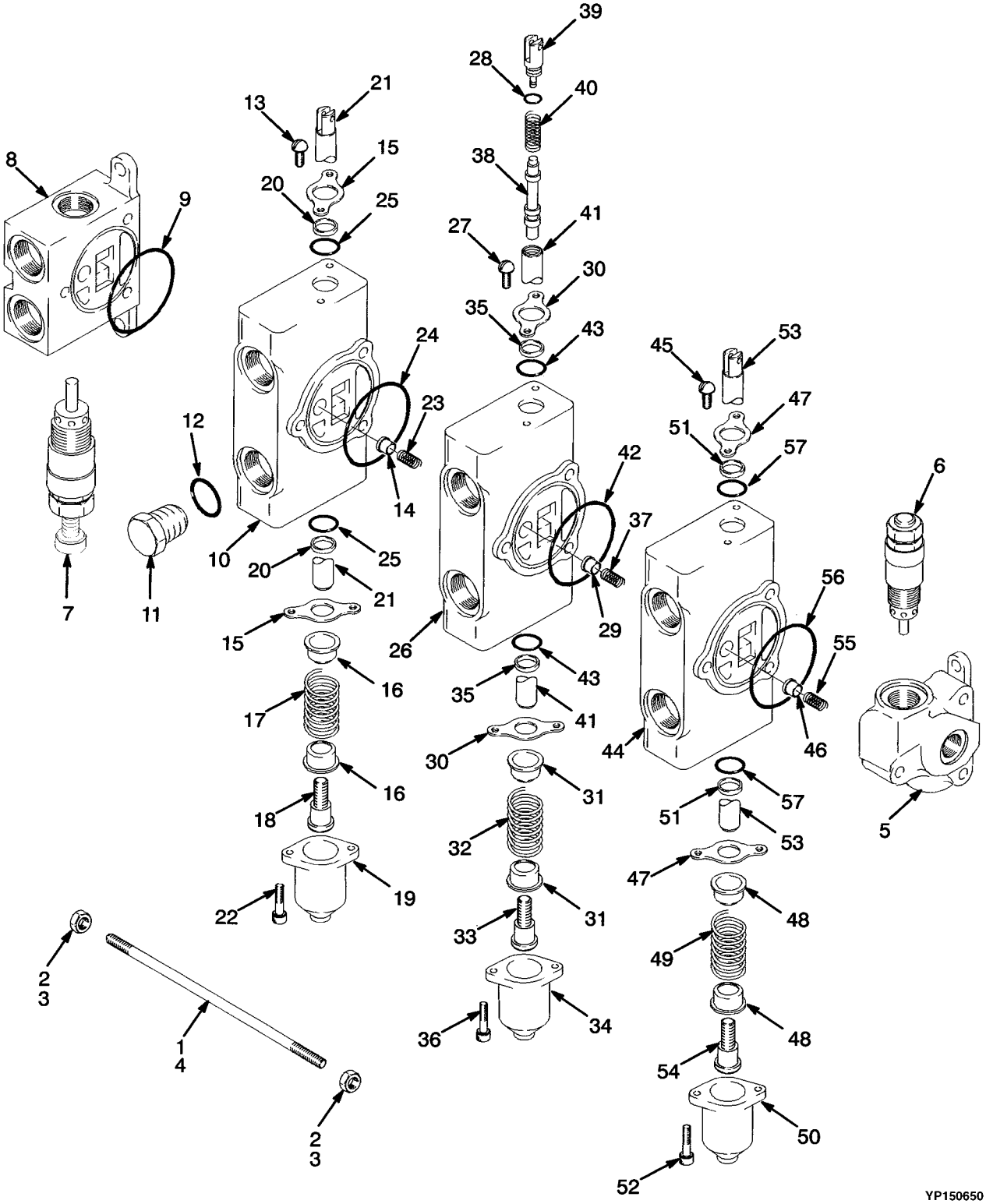

Yale Industrial Trucks

CONTROL VALVE (THREE FUNCTION)

ITEM	PART NO.	DESCRIPTION	QTY
a	580000026	Control Valve	1
b	580018326	Control Valve	1
1	520292816	Rod	1
2	520292813	Nut	2
3	014936600	Nut	4
4	520292815	Rod	2
5	580000463	Valve (Outlet)	1
6	504230293	Relief Valve	1
6	504232220	Seal Kit	1
7	505966500	Relief Valve	1
7	505966531	Seal Kit	1
8	580023277	Valve Section (Inlet)	1
9	012823300	O-Ring	1
10	505966544	Spool (Lift)	1
11	505967593	Plug	1
12	052645300	O-Ring	1
13	502635907	Screw	2
14	504230234	Poppet	1
15	504230246	Seal Plate	2
16	504230298	Spring Seat	2
17	520292801	Spring	1
18	504230209	Spool End	1
19	504230282	Cap	1
20	520292811	Wiper	2
21	. . . . .	Spool	1
22	504234226	Capscrew	2
23	504230255	Spring	1
24	012823300	O-Ring	1
25	505967575	O-Ring	2
26	505966502	Spool (Tilt)	1
27	502635907	Screw	2
28	062128400	O-Ring	1
29	504230234	Poppet	1
30	504230246	Seal Plate	2
31	504230298	Spring Seat	1
32	520292801	Spring	1
33	504230209	Spool End	1
34	504230282	Cap	1
35	520292811	Wiper	2
36	504234226	Capscrew	2
37	504230255	Spring	1
38	505967595	Piston	1
39	505967552	Piston End	1
40	504230207	Spring	1
41	. . . . .	Spool	1
42	012823300	O-Ring	1
43	505967575	O-Ring	2
44	505966527	Spool (Auxiliary)	1
45	502635907	Screw	2
46	504230234	Poppet	1

CONTROL VALVE
(THREE FUNCTION)

ITEM	PART NO.	DESCRIPTION	QTY
47	504230246	Seal Plate	2
48	504230298	Spring Seat	2
49	520292801	Spring	1
50	504230282	Cap	1
51	520292811	Wiper	2
52	504234226	Capscrew	2
53	. . . . .	Spool	1
54	504230209	Spool End	1
55	504230255	Spring	1
56	012823300	O-Ring	1
57	505967575	O-Ring	2
	504230296	Tie Rod Kit (Includes Items 1-4)	1

FOOTNOTES:
a ⇒ S/N A875B-10872
b S/N A875B-10872 ⇒

NOTES

Yale Industrial Trucks

CONTROL VALVE (FOUR FUNCTION)

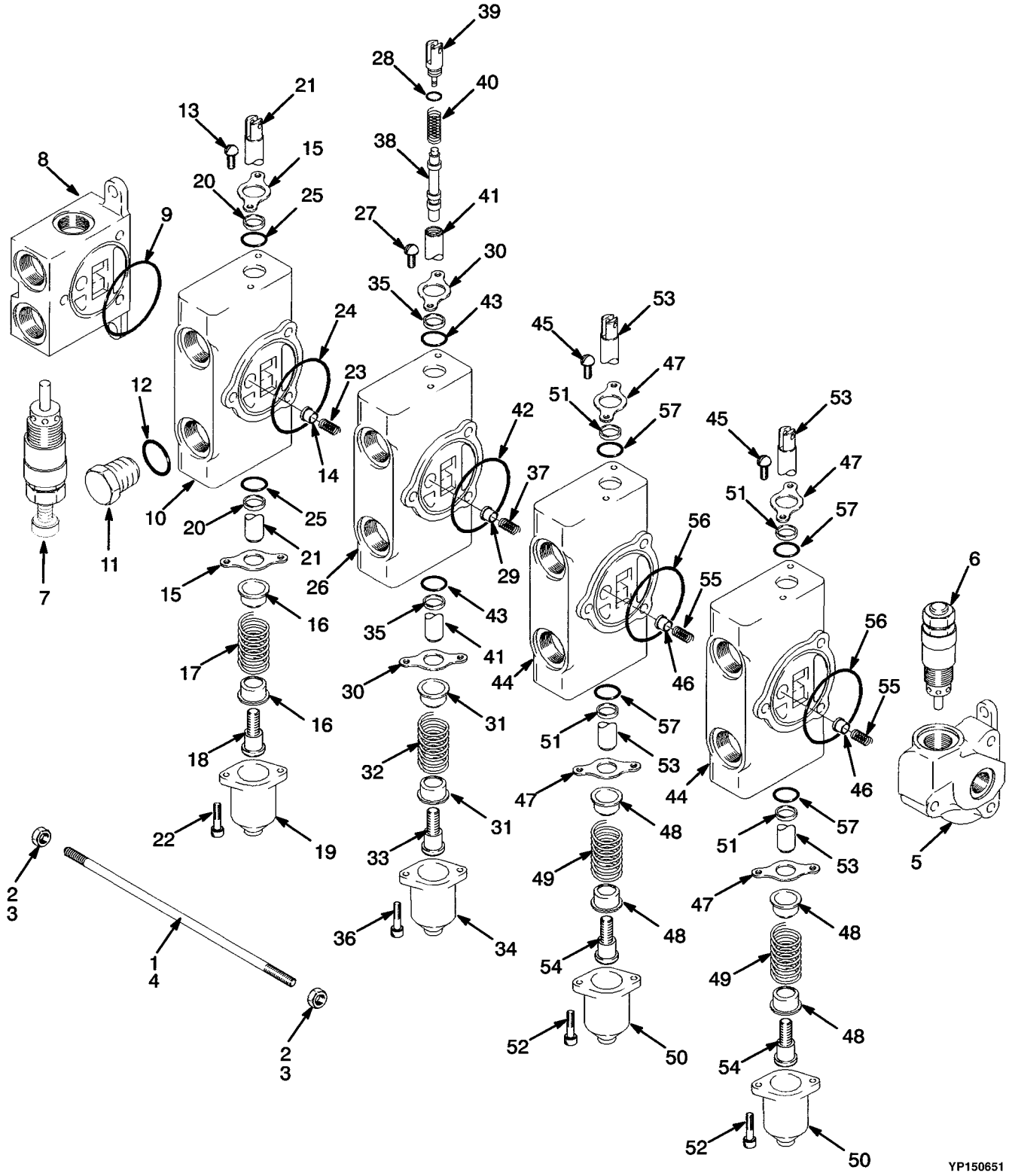

Yale Industrial Trucks

CONTROL VALVE (FOUR FUNCTION)

ITEM	PART NO.	DESCRIPTION	QTY
a	580000027	Control Valve	1
b	580016423	Control Valve	1
1	520292818	Rod	1
2	520292813	Nut	2
3	014936600	Nut	4
4	520292817	Rod	2
5	580000463	Valve (Outlet)	1
6	504230293	Relief Valve	1
6	504232220	Seal Kit	1
7	505966500	Relief Valve	1
7	505966531	Seal Kit	1
8	580023277	Valve Section (Inlet)	1
9	012823300	O-Ring	1
10	505966544	Spool (Lift)	1
11	505967593	Plug	1
12	052645300	O-Ring	1
13	502635907	Screw	2
14	504230234	Poppet	1
15	504230246	Seal Plate	2
16	504230298	Spring Seat	2
17	520292801	Spring	1
18	504230209	Spool End	1
19	504230282	Cap	1
20	520292811	Wiper	2
21	. . . . .	Spool	1
22	504234226	Capscrew	2
23	504230255	Spring	1
24	012823300	O-Ring	1
25	505967575	O-Ring	2
26	505966502	Spool (Tilt)	1
27	502635907	Screw	2
28	062128400	O-Ring	1
29	504230234	Poppet	1
30	504230246	Seal Plate	2
31	504230298	Spring Seat	1
32	520292801	Spring	1
33	504230209	Spool End	1
34	504230282	Cap	1
35	520292811	Wiper	2
36	504234226	Capscrew	2
37	504230255	Spring	1
38	505967595	Piston	1
39	505967552	Piston End	1
40	504230207	Spring	1
41	. . . . .	Spool	1
42	012823300	O-Ring	1
43	505967575	O-Ring	2
44	505966527	Spool (Auxiliary)	2
45	502635907	Screw	2
46	504230234	Poppet	1

CONTROL VALVE
(FOUR FUNCTION)

ITEM	PART NO.	DESCRIPTION	QTY
47	504230246	Seal Plate	2
48	504230298	Spring Seat	2
49	520292801	Spring	1
50	504230282	Cap	1
51	520292811	Wiper	2
52	504234226	Capscrew	2
53	. . . . .	Spool	1
54	504230209	Spool End	1
55	504230255	Spring	1
56	012823300	O-Ring	1
57	505967575	O-Ring	2
	504230215	Tie Rod Kit (Includes Items 1-4)	1

FOOTNOTES:
a ⇒ S/N A875B-10872
b S/N A875B-10872 ⇒

12 LIFTING MECHANISM

SECTION 12
LIFTING MECHANISM

DESCRIPTION	PAGE
CARRIAGE	
THREE STAGE FULL FREE-LIFT	12-50
TWO STAGE FULL FREE-LIFT	12-70
TWO STAGE LIMITED FREE-LIFT	12-18
FREE LIFT	
THREE STAGE FULL FREE-LIFT	
GP/GLP 060 TG	12-36
GP/GPL 050 TG	12-32
TWO STAGE FULL FREE-LIFT	
GP/GLP 050 TG	12-58
GP/GLP 060 TG	12-60
FREE-LIFT CYLINDER	
THREE STAGE FULL FREE-LIFT	
GP/GLP 050 TG	12-46
GP/GLP 060 TG	12-48
TWO STAGE FULL FREE-LIFT	
GP/GLP 050 TG	12-66
GP/GLP 060 TG	12-68
INNER MAST	
THREE STAGE FULL FREE-LIFT	12-24
TWO STAGE FULL FREE-LIFT	12-54
TWO STAGE LIMITED FREE-LIFT	12-6
INTERMEDIATE MAST	
THREE STAGE FULL FREE-LIFT	12-22
LIFT	
TWO STAGE LIMITED FREE-LIFT	12-8
LIFT CYLINDER	
TWO STAGE LIMITED FREE-LIFT	
GP/GLP 050 TG	12-12
GP/GLP 060 TG	12-15
MAIN CYLINDER	
THREE STAGE FULL FREE-LIFT	
GP/GLP 050 TG	12-40
GP/GLP 060 TG	12-44
TWO STAGE FULL FREE-LIFT	
LEFT HAND, GP/GLP 050 TG	12-62
LEFT HAND, GP/GLP 060 TG	12-64
RIGHT HAND, GP/GLP 050 TG	12-63
RIGHT HAND, GP/GLP 060 TG	12-65
MAIN LIFT	
THREE STAGE FULL FREE-LIFT	
GP/GLP 050 TG	12-26
GP/GLP 060 TG	12-30
TWO STAGE FULL FREE-LIFT	12-56
OUTER MAST	
THREE STAGE FULL FREE-LIFT	12-20
TWO STAGE FULL FREE-LIFT	12-52

DESCRIPTION	PAGE
TWO STAGE LIMITED FREE-LIFT	12-4

NOTES

Yale Industrial Trucks

OUTER MAST
(TWO STAGE LIMITED FREE-LIFT)

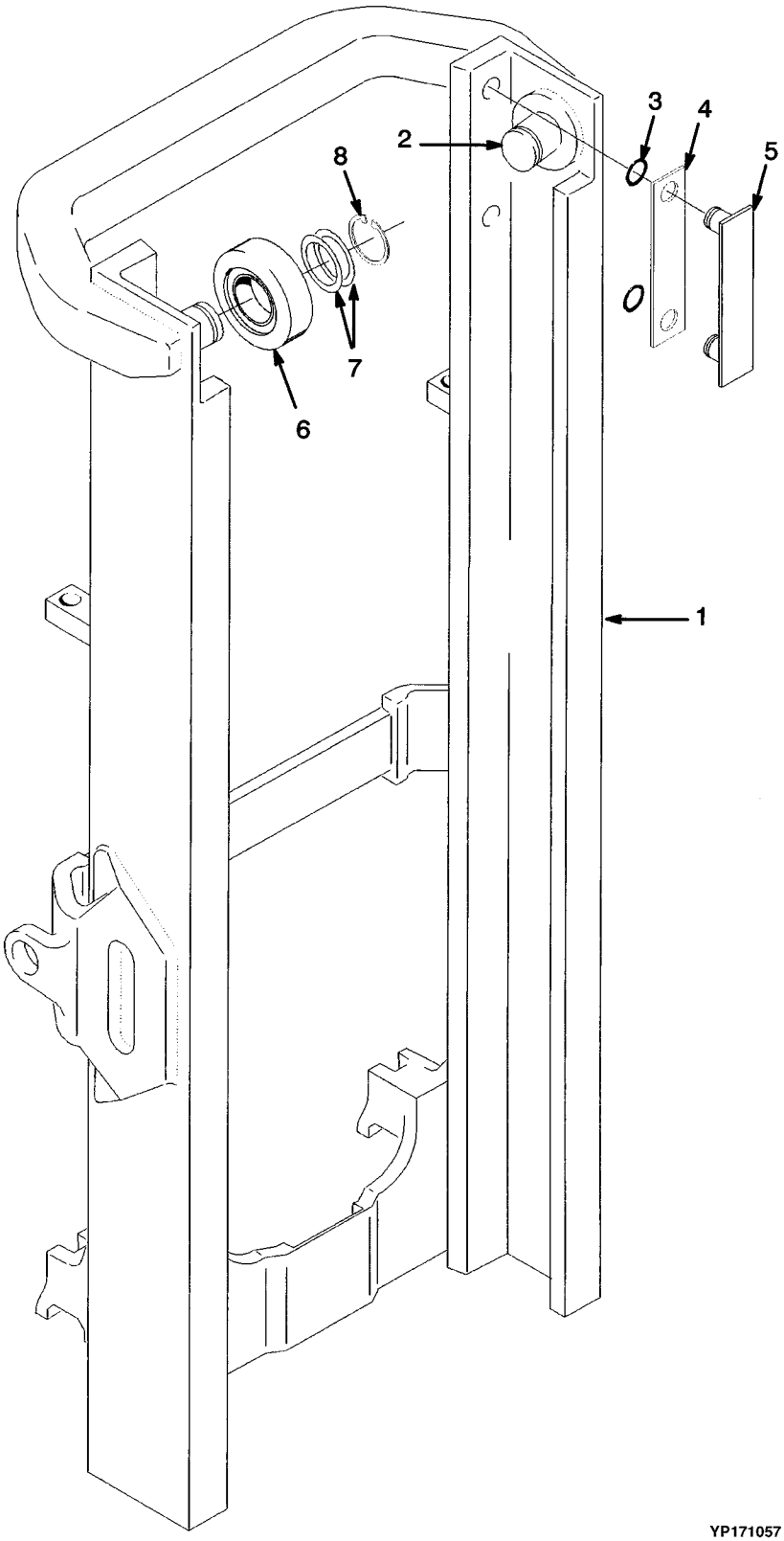

Yale Industrial Trucks

GP/GLP 050 TG

ITEM	DESCRIPTION	OALH		
		78.0 in.	84.0 in.	94.0 in.
	Mast Group Number	B507 2992	B507 3292	B507 3692
1	Outer Mast	504065758	504065762	504065757

GP/GLP 050 TG (CONT.)

ITEM	DESCRIPTION	OALH		
		96.0 in.	110.0 in.	119.0 in.
	Mast Group Number	B507 3792	B507 4292	B507 4792
1	Outer Mast	504065777	504065717	504065776

GP/GLP 060 TG

ITEM	DESCRIPTION	OALH				
		78.0 in.	84.0 in.	94.0 in.	108.0 in.	117.4 in.
	Mast Group Number	B562 2859	B562 3159	B562 3659	B562 4159	B562 4659
1	Outer Mast	504065758	504065762	504065777	504065717	504065776

ITEM		PART NO.	DESCRIPTION	QTY
1	**a**	. . . . .	Outer Mast	1
2		504066700	Stubshaft	2
3		012824300	O-Ring	4
4		504234265	Shim (0.020 in.)	4
4		520037804	Shim (0.007 in.) (Optional)	AR
5		504233279	Bearing Strip	2
6		520036837	Load Roller	2
7		504233232	Shim (0.020 in.)	AR
8		015916300	Snap Ring	2

FOOTNOTES:
a Refer to Table

Yale Industrial Trucks

INNER MAST
(TWO STAGE LIMITED FREE-LIFT)

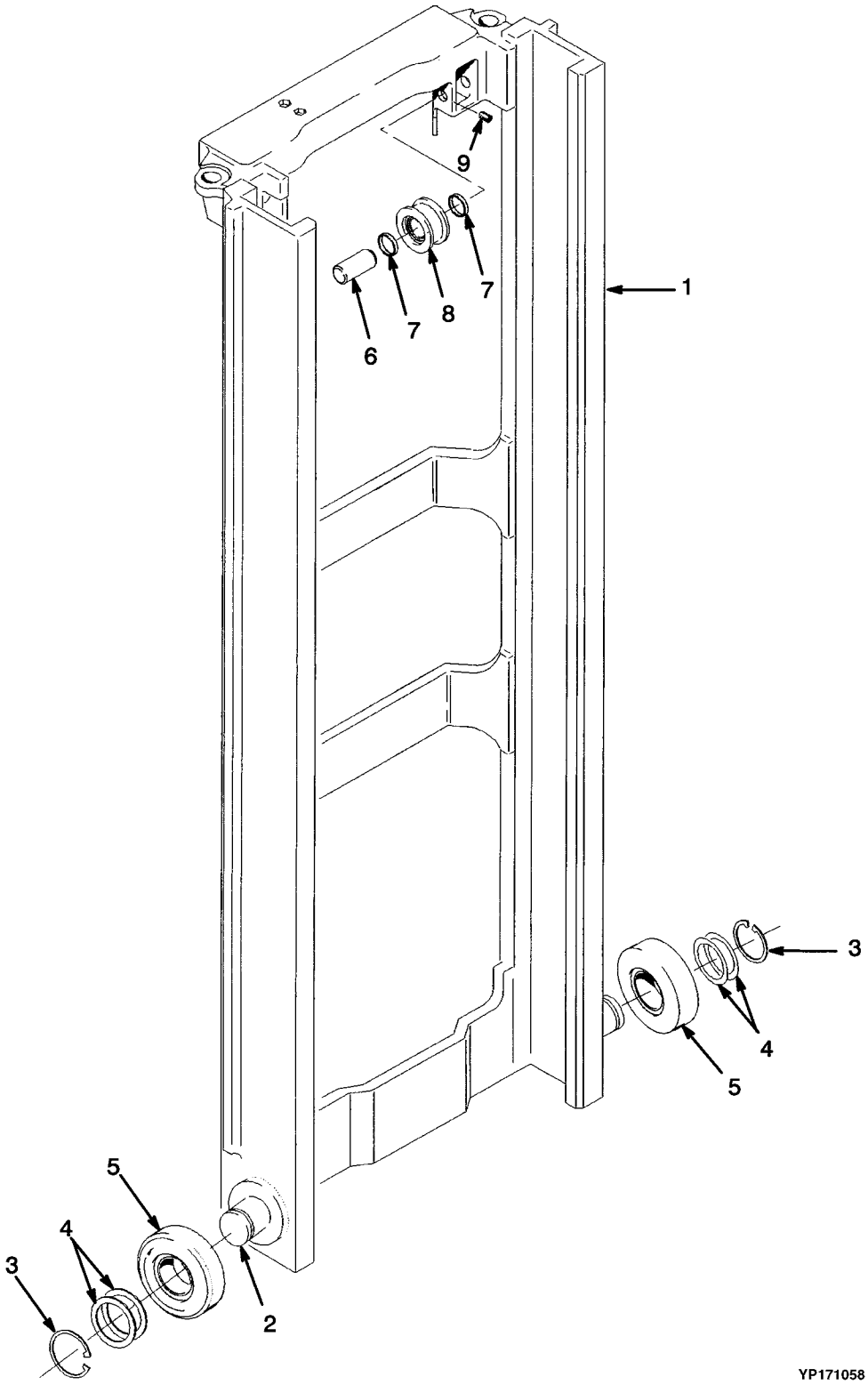

GP/GLP 050 TG

ITEM	DESCRIPTION	OALH		
		78.0 in.	84.0 in.	94.0 in.
	Mast Group Number	B507 2992	B507 3292	B507 3692
1	Inner Mast	504072774	504072723	504072755

GP/GLP 050 TG (CONT.)

ITEM	DESCRIPTION	OALH		
		96.0 in.	110.0 in.	119.0 in.
	Mast Group Number	B507 3792	B507 4292	B507 4792
1	Inner Mast	504072786	504074773	504074776

GP/GLP 060 TG

ITEM	DESCRIPTION	OALH				
		78.0 in.	84.0 in.	94.0 in.	108.0 in.	117.4 in.
	Mast Group Number	B562 2859	B562 3159	B562 3659	B562 4159	B562 4659
1	Inner Mast	504072774	504072723	504072786	504074773	504072776

ITEM	PART NO.	DESCRIPTION	QTY
1	**a**	Inner Mast	1
2	504066700	Stubshaft	2
3	015916300	Snap Ring	2
4	504233232	Shim (0.020 in.)	AR
5	520036837	Load Roller	2
6	518801662	Pin	2
7	504281792	Spacer	4
8	504281794	Chain Sheave Assembly (GP/GLP 050 TG)	2
8	504281793	Chain Sheave Assembly (GP/GLP 060 TG)	2
8	504282703	Chain Sheave (GP/GLP 050 TG)	1
8	504282702	Chain Sheave (GP/GLP 060 TG)	1
8	500343914	Snap Ring	2
8	520040899	Bearing	1
9	449034021	Pin	4

FOOTNOTES:
a Refer to Table

Yale Industrial Trucks

LIFT
(TWO STAGE LIMITED FREE-LIFT)

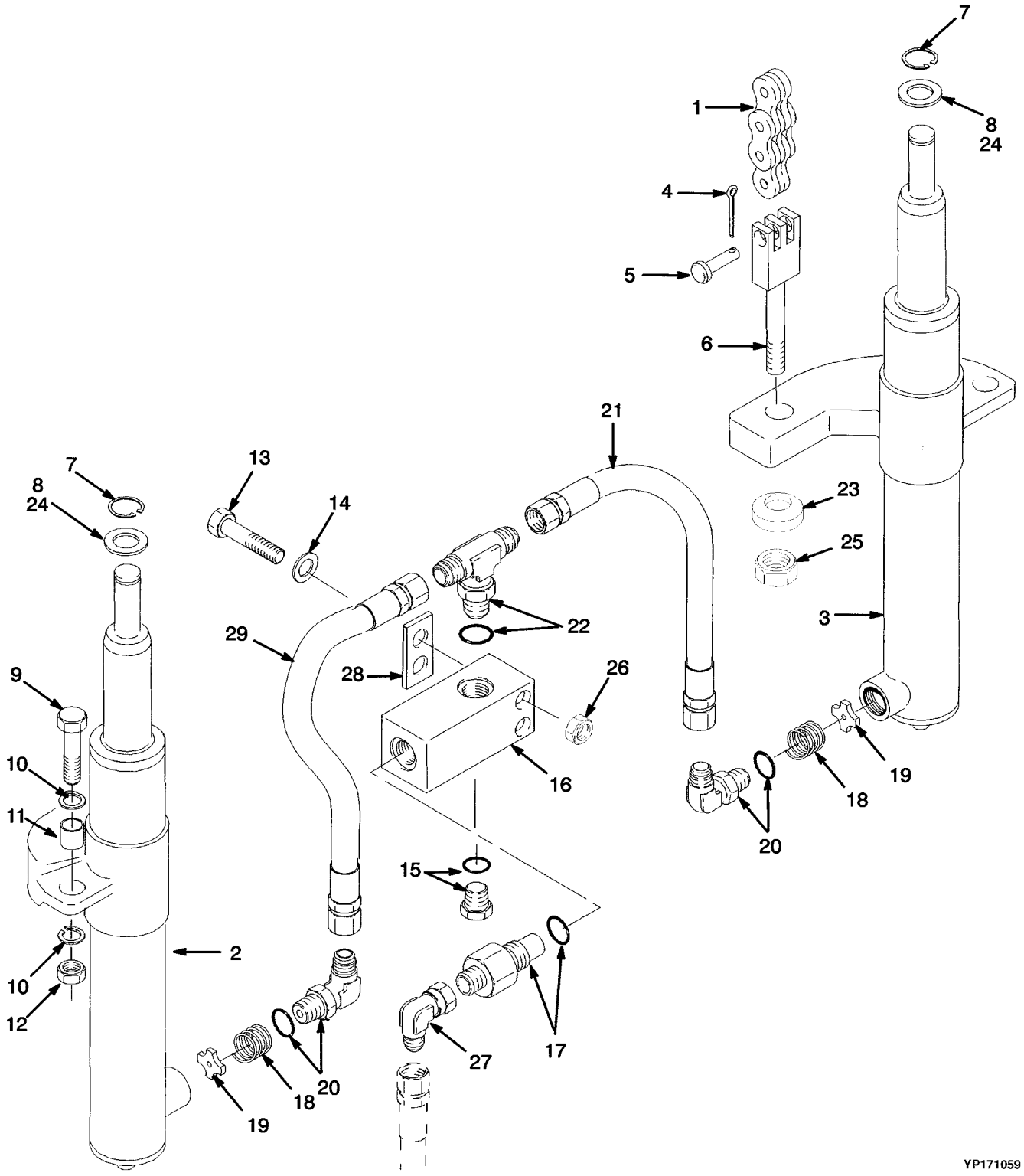

GP/GLP 050 TG

ITEM	DESCRIPTION	OALH		
		78.0 in.	84.0 in.	94.0 in.
	Mast Group Number	B507 2992	B507 3292	B507 3692
1	Chain	504075738	900002264	504065747

GP/GLP 050 TG (CONT.)

ITEM	DESCRIPTION	OALH		
		96.0 in.	110.0 in.	119.0 in.
	Mast Group Number	B507 3792	B507 4292	B507 4792
1	Chain	504075722	504075780	504065759

GP/GLP 060 TG

ITEM	DESCRIPTION	OALH				
		78.0 in.	84.0 in.	94.0 in.	108.0 in.	117.4 in.
	Mast Group Number	B562 2859	B562 3159	B562 3659	B562 4159	B562 4659
1	Chain	504072794	504066760	504066744	518791679	504066775

ITEM		PART NO.	DESCRIPTION	QTY
1	a	. . . . .	Chain	2
2		. . . . .	Cylinder (RH (☞ P10170, P10170)	1
3		. . . . .	Cylinder (LH) (☞ P10170, P10170)	1
4		015415900	Cotter Pin	2
5		580033718	Pin	2
6		518801644	Chain Anchor (GP/GLP 050 TG)	2
6		518801615	Chain Anchor (GP/GLP 060 TG)	2
7		500227907	Snap Ring	2
8		504064767	Washer (0.060 in.)	AR
9		449001068	Capscrew	2
10		502566902	Washer	4
11		504064739	Spacer	2
12		909882405	Nut	2
13		449001172	Capscrew	2
14		449021001	Washer	2
15		080437000	Fitting	1
15		052645500	O-Ring	1
16		520044803	Housing	1
16		504064742	Housing (Optional)	1
17		504575298	Control Valve (Lowering) (GP/GLP 050 TG)	1
17		504064721	Control Valve (Lowering) (GP/GLP 060 TG)	1
17		052645600	O-Ring	1
18		504240229	Spring	2
19		504064761	Washer	2
20		504064729	Fitting	2

LIFT
(TWO STAGE LIMITED FREE-LIFT)

ITEM	PART NO.	DESCRIPTION	QTY
20	052645400	O-Ring	1
21	504064740	Hose	1
22	052641400	Fitting	1
22	052645400	O-Ring	1
23	504064758	Base Ring	2
24	504064769	Washer (0.010 in.) (0.010 in.)	AR
24	504069791	Washer (0.030 in.) (0.030 in.)	AR
24	504069702	Washer (0.060 in.) (0.060 in.)	AR
25	504234266	Nut	2
26	504230271	Nut	2
27	053349600	Fitting	1
28	504069765	Spacer	1
29	580010912	Hose	1

FOOTNOTES:
a Refer to Table

NOTES

LIFT CYLINDER
(TWO STAGE LIMITED FREE-LIFT) (GP/GLP 050 TG)

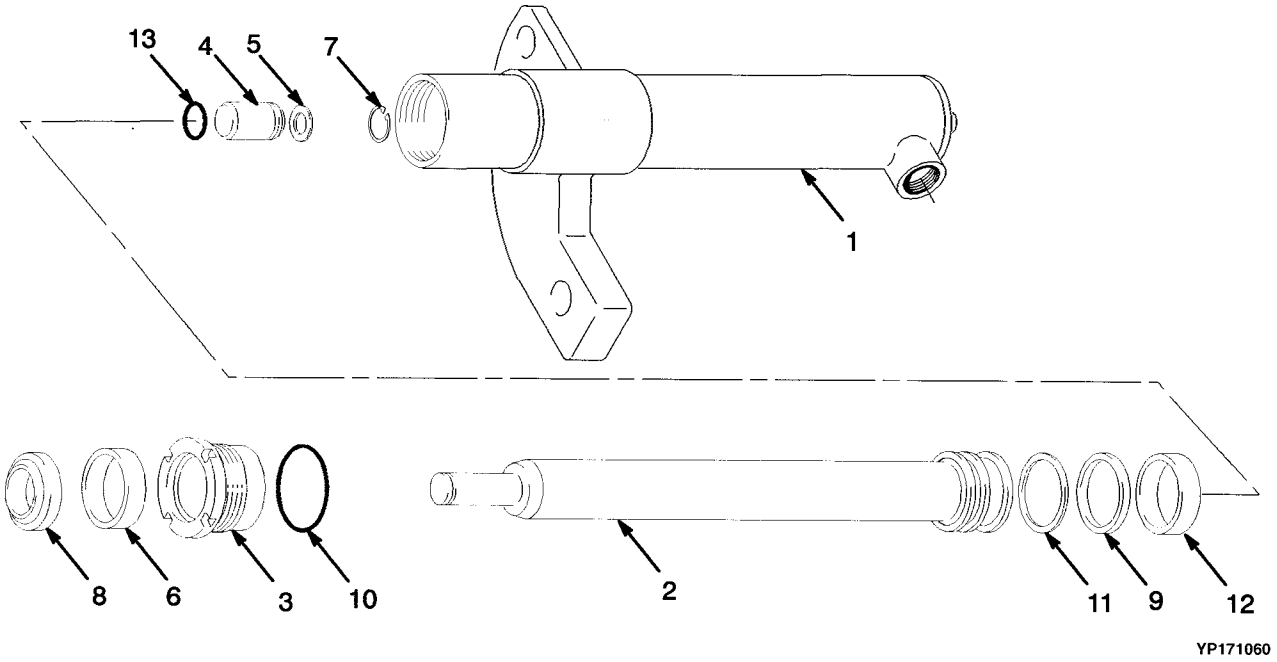

Yale Industrial Trucks

LEFT HAND

ITEM	DESCRIPTION	OALH		
		78.0 in.	84.0 in.	94.0 in.
	Mast Group Number	B507 2992	B507 3292	B507 3692
	Cylinder Group Number	8600006	8600009	8600013
	Cylinder	519459606	519459609	519459613
1	Shell	519458606	519458609	519458613
2	Rod	519457606	519457609	519457613

LEFT HAND (CONT.)

ITEM	DESCRIPTION	OALH		
		96.0 in.	110.0 in.	119.0 in.
	Mast Group Number	B507 3792	B507 4292	B507 4792
	Cylinder Group Number	8600014	8600020	8600101
	Cylinder	519459614	519459620	519463601
1	Shell	519458614	519458620	519462601
2	Rod	519457614	519457620	519461601

RIGHT HAND

ITEM	DESCRIPTION	OALH		
		78.0 in.	84.0 in.	94.0 in.
	Mast Group Number	B507 2992	B507 3292	B507 3692
	Cylinder Group Number	8600056	8600059	8600063
	Cylinder	519459656	519459659	519459663
1	Shell	519458656	519458659	519458663
2	Rod	519457606	519457609	519457613

LIFT CYLINDER
(TWO STAGE LIMITED FREE-LIFT) (GP/GLP 050 TG)

RIGHT HAND (CONT.)

ITEM	DESCRIPTION	OALH		
		96.0 in.	110.0 in.	119.0 in.
	Mast Group Number	B507 3792	B507 4292	B507 4792
	Cylinder Group Number	8600064	8600070	8600151
	Cylinder	519459664	519459670	519463651
1	Shell	519458663	519458670	519462651
2	Rod	519457614	519457620	519461601

ITEM		PART NO.	DESCRIPTION	QTY
	a	. . . . .	Cylinder	1
1	**a**	. . . . .	Shell	1
2	**a**	. . . . .	Rod	1
3		506408500	Gland	1
4		504235239	Check Valve	1
5		504148200	Washer	1
6		580022502	Rod Seal	1
7		501850904	Snap Ring	1
8		504163200	Wiper Ring	1
9		504450755	Seal	1
10		012827100	O-Ring	1
11		504450733	Back-Up Plate	1
12		504024203	Wear Ring	1
13		504232230	O-Ring	1
		505136039	Seal Kit (Includes Items 6, 8-10, 12-13)	1

FOOTNOTES:
a Refer to Table

Yale Industrial Trucks

LIFT CYLINDER
(TWO STAGE LIMITED FREE-LIFT) (GP/GLP 060 TG)

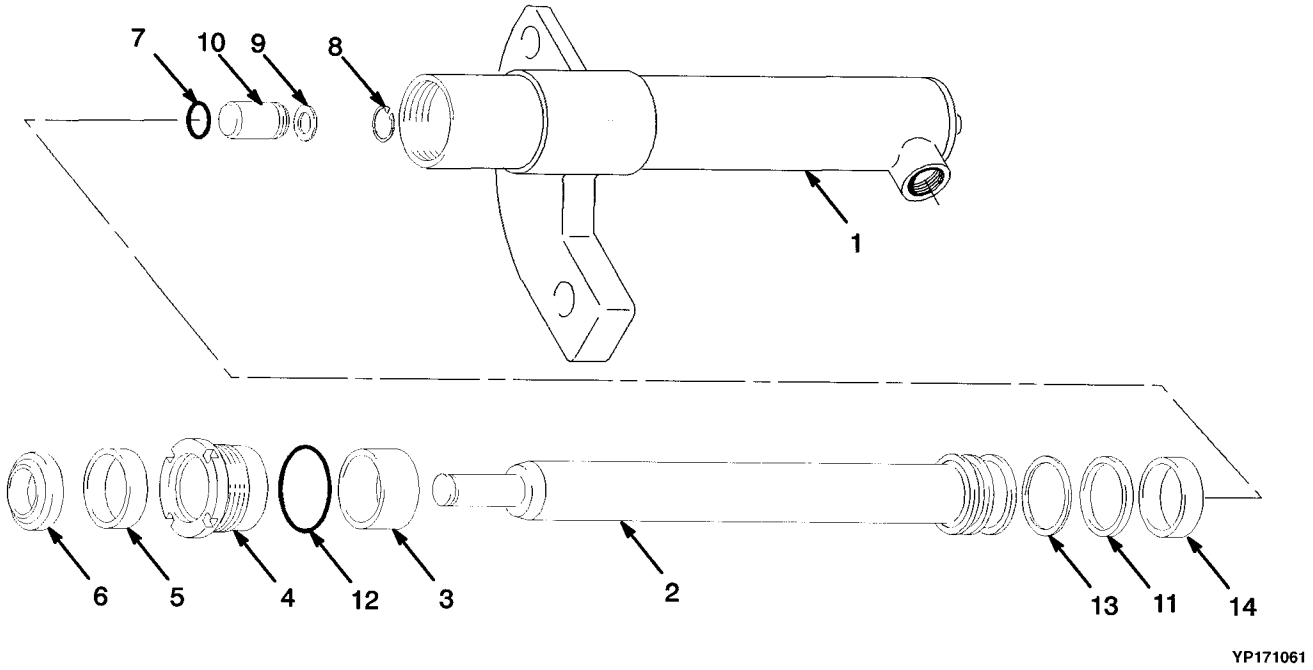

YP171061

LEFT HAND

ITEM	DESCRIPTION	OALH				
		78.0 in.	84.0 in.	94.0 in.	108.0 in.	117.4 in.
	Mast Group Number	B562 2859	B562 3159	B562 3659	B562 4159	B562 4659
	Cylinder Group Number	8600206	8600209	8600214	8600302	8600307
	Lift Cylinder	518833606	518833609	518833614	518837602	518837607
1	Shell	518832606	518832609	518832614	518836602	518836607
2	Rod	518831606	518831609	518831614	518835602	518835607
3	Spacer	505657515	505657515	505657515	504258211	504258211
4	Gland	518985600	518985600	518985600	506045500	506045500
5	Rod Seal	580022502	580022502	580022502	502787902	502787902
6	Wiper Ring	504163200	504163200	504163200	504450753	504450753

Yale Industrial Trucks

LIFT CYLINDER
(TWO STAGE LIMITED FREE-LIFT) (GP/GLP 060 TG)

RIGHT HAND

ITEM	DESCRIPTION	OALH				
		78.0 in.	84.0 in.	94.0 in.	108.0 in.	117.4 in.
	Mast Group Number	B562 2859	B562 3159	B562 3659	B562 4159	B562 4659
	Cylinder Group Number	8600256	8600259	8600264	8600352	8600357
	Lift Cylinder	518833656	518833659	518833664	518837652	518837657
1	Shell	518832656	518832659	518832664	518836652	518836657
2	Rod	518831606	518831609	518831614	518835602	518835607
3	Spacer	505657515	505657515	505657515	504258211	504258211
4	Gland	518985600	518985600	518985600	506045500	506045500
5	Rod Seal	580022502	580022502	580022502	502787902	502787902
6	Wiper Ring	504163200	504163200	504163200	504450753	504450753

ITEM	PART NO.	DESCRIPTION	QTY
	a	Lift Cylinder	1
1	**a**	Shell	1
2	**a**	Rod	1
3	**a**	Spacer	1
4	**a**	Gland	1
5	**a**	Rod Seal	1
6	**a**	Wiper Ring	1
7	504232230	O-Ring	1
8	501850904	Snap Ring	1
9	504148200	Washer	1
10	504235239	Check Valve	1
11	504160200	Seal	1
12	015492900	O-Ring	1
13	504161200	Back-Up Ring	1
14	504024202	Wear Ring	1
	505136035	Seal Kit (Includes Items 7, 9-14)	1

FOOTNOTES:
a Refer to Table

NOTES

Yale Industrial Trucks

CARRIAGE
(TWO STAGE LIMITED FREE-LIFT)

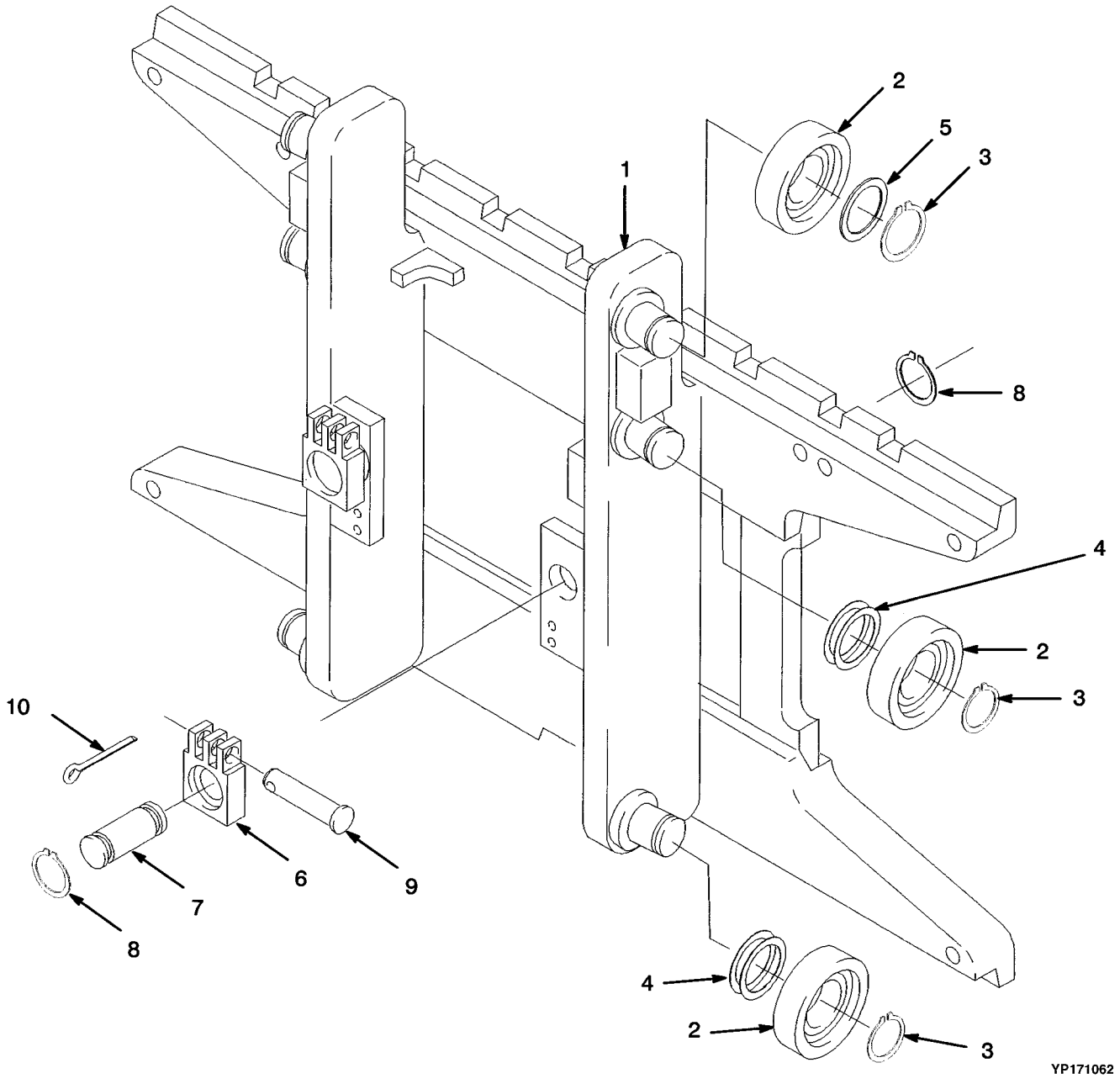

Yale Industrial Trucks

CARRIAGE
(TWO STAGE LIMITED FREE-LIFT)

KEY:
A: GP/GLP 050 TG
B: GP/GLP 060 TG

ITEM	PART NO.	DESCRIPTION	QTY A	QTY B
	505974555	Carriage Assembly (48 in.)	1	..
	505975533	Carriage Assembly (42 in.)	1	..
	505975510	Carriage Assembly (42 in)	..	1
	505974598	Carriage Assembly (48 in.)	..	1
1	504072733	Carriage (42 in.)	1	..
1	505977592	Carriage (48 in.)	1	..
1	504072791	Carriage (42 in.)	..	1
1	505977599	Carriage (48 in.)	..	1
2	520036816	Load Roller	6	6
3	015916500	Snap Ring	6	6
4	504071779	Shim (0.020 in.)	AR	AR
5	504072717	Spacer	2	2
6	505978544	Chain Anchor (Dual Hole)	2	..
6	580027877	Chain Anchor (Single Hole) (Optional)	2	..
6	505978527	Chain Anchor (Dual Hole)	..	2
6	580027879	Chain Anchor (Single Hole) (Optional)	..	2
7	504072799	Pin	2	2
8	500227907	Snap Ring	4	4
9	580033718	Pin	2	2
10	015415900	Cotter Pin	2	2

OUTER MAST
(THREE STAGE FULL FREE-LIFT)

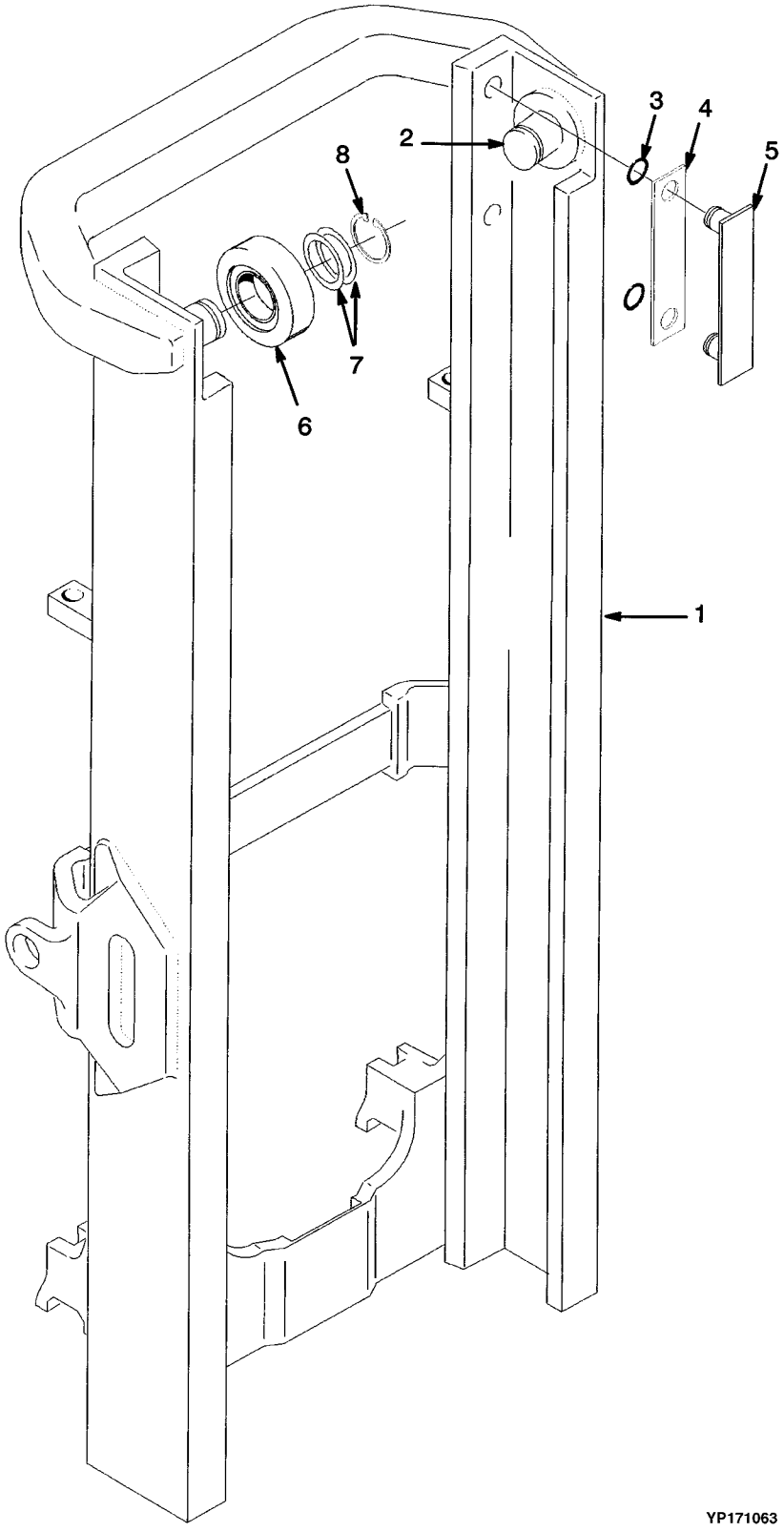

Yale Industrial Trucks

OUTER MAST
(THREE STAGE FULL FREE-LIFT)

GP/GLP 050 TG

ITEM	DESCRIPTION	OALH		
		76.0 in.	80.0 in.	82.0 in.
	Mast Group Number	B508 4310	B508 4460	B508 4760
1	Outer Mast	504065766	504065758	504065752

GP/GLP 050 TG (CONT.)

ITEM	DESCRIPTION	OALH		
		84.0 in.	88.0 in.	94.0 in.
	Mast Group Number	B508 4910	B508 5060	B508 5510
1	Outer Mast	504065762	504065750	504065777

GP/GLP 060 TG

ITEM	DESCRIPTION	OALH				
		76.0 in.	82.0 in.	84.0 in.	88.0 in.	94.0 in.
	Mast Group Number	B563 4118	B563 4568	B563 4718	B563 4868	B563 5318
1	Outer Mast	504065758	504065752	504065762	504065750	504065777

ITEM		PART NO.	DESCRIPTION	QTY
1	**a**	. . . . .	Outer Mast	1
2		504066700	Stubshaft	2
3		012824300	O-Ring	4
4		504234265	Shim (0.020 in.)	4
4		520037804	Shim (0.007 in.) (Optional)	AR
5		504233279	Bearing Strip	2
6		520036837	Load Roller	2
7		504233232	Shim (0.020 in.)	AR
8		015916300	Snap Ring	2

FOOTNOTES:
a Refer to Table

Yale Industrial Trucks

INTERMEDIATE MAST
(THREE STAGE FULL FREE-LIFT)

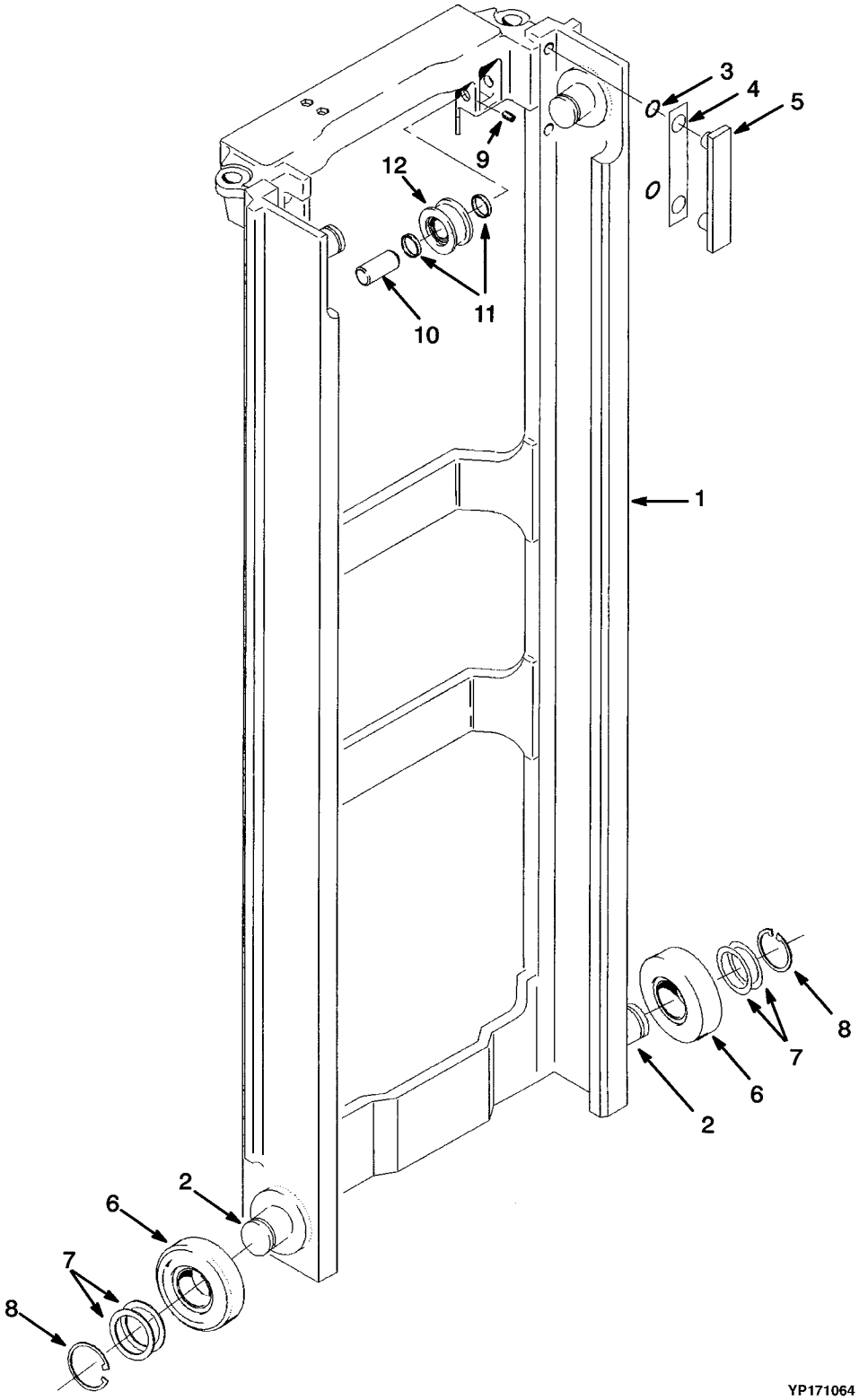

GP/GLP 050 TG

ITEM	DESCRIPTION	OALH		
		76.0 in.	80.0 in.	82.0 in.
	Mast Group Number	B508 4310	B508 4460	B508 4760
1	Intermediate Mast	505959571	505959501	504062765

GP/GLP 050 TG (CONT.)

ITEM	DESCRIPTION	OALH		
		84.0 in.	88.0 in.	94.0 in.
	Mast Group Number	B508 4910	B508 5060	B508 5510
1	Intermediate Mast	504062738	504062799	504062725

GP/GLP 060 TG

ITEM	DESCRIPTION	OALH				
		76.0 in.	82.0 in.	84.0 in.	88.0 in.	94.0 in.
	Mast Group Number	B563 4118	B563 4568	B563 4718	B563 4868	B563 5318
1	Intermediate Mast	505959571	504062765	504062738	504062799	504062725

ITEM		PART NO.	DESCRIPTION	QTY
1	**a**	. . . . .	Intermediate Mast	1
2		504066700	Stubshaft	4
3		012824300	O-Ring	4
4		504234265	Shim (0.020 in.)	4
4		520037804	Shim (0.007 in.) (Optional)	4
5		504233279	Bearing Strip	2
6		520036837	Load Roller	2
7		504233232	Shim (0.020 in.)	AR
8		015916300	Snap Ring	4
9		449034021	Pin	2
10		518801662	Pin	2
11		504281792	Spacer	4
12		504281794	Chain Sheave Assembly (GP/GLP 050 TG)	2
12		504281793	Chain Sheave Assembly (GP/GLP 060 TG)	2
12		504282703	Chain Sheave (GP/GLP 050 TG)	1
12		504282702	Chain Sheave (GP/GLP 060 TG)	1
12		500343914	Snap Ring	2
12		520040899	Bearing	1

FOOTNOTES:
a Refer to Table

Yale Industrial Trucks

INNER MAST
(THREE STAGE FULL FREE-LIFT)

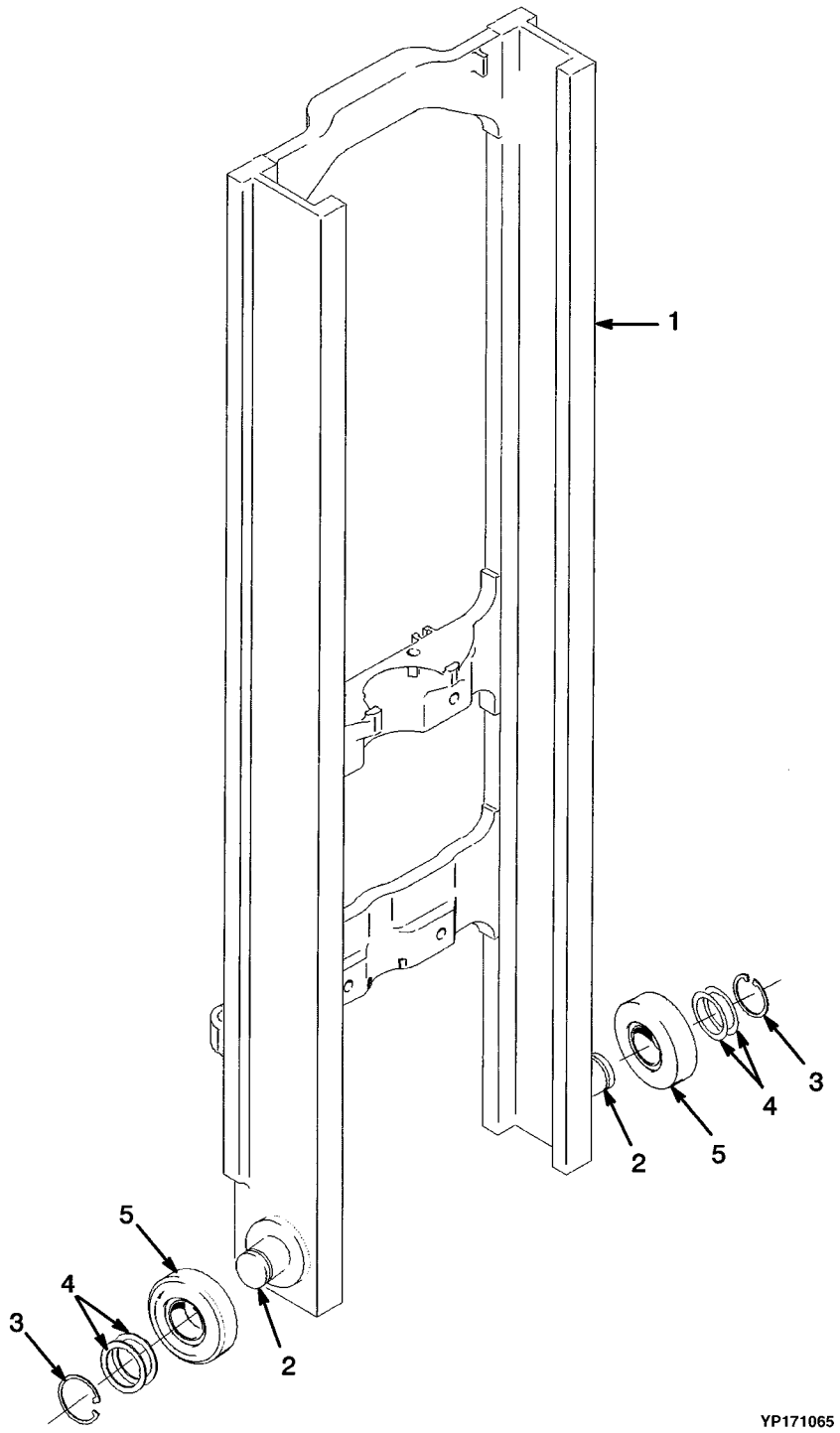

Yale Industrial Trucks

GP/GLP 050 TG

ITEM	DESCRIPTION	OALH		
		76.0 in.	80.0 in.	82.0 in.
	Mast Group Number	B508 4310	B508 4460	B508 4760
1	Inner Mast	520039802	520039800	520039877

GP/GLP 050 TG (CONT.)

ITEM	DESCRIPTION	OALH		
		84.0 in.	88.0 in.	94.0 in.
	Mast Group Number	B508 4910	B508 5060	B508 5510
1	Inner Mast	520039852	520039832	520039848

GP/GLP 060 TG

ITEM	DESCRIPTION	OALH				
		76.0 in.	82.0 in.	84.0 in.	88.0 in.	94.0 in.
	Mast Group Number	B563 4118	B563 4568	B563 4718	B563 4868	B563 5318
1	Inner Mast	520039802	520039877	520039852	520039832	520039848

ITEM		PART NO.	DESCRIPTION	QTY
1	**a**	. . . . .	Inner Mast	1
2		504066700	Stubshaft	2
3		015916300	Snap Ring	2
4		504233232	Shim (0.020 in.)	AR
4		520037804	Shim (0.007 in.) (Optional)	4
5		520036837	Load Roller	2

FOOTNOTES:
a Refer to Table

Yale Industrial Trucks

MAIN LIFT
(THREE STAGE FULL FREE-LIFT) (GP/GLP 050 TG)

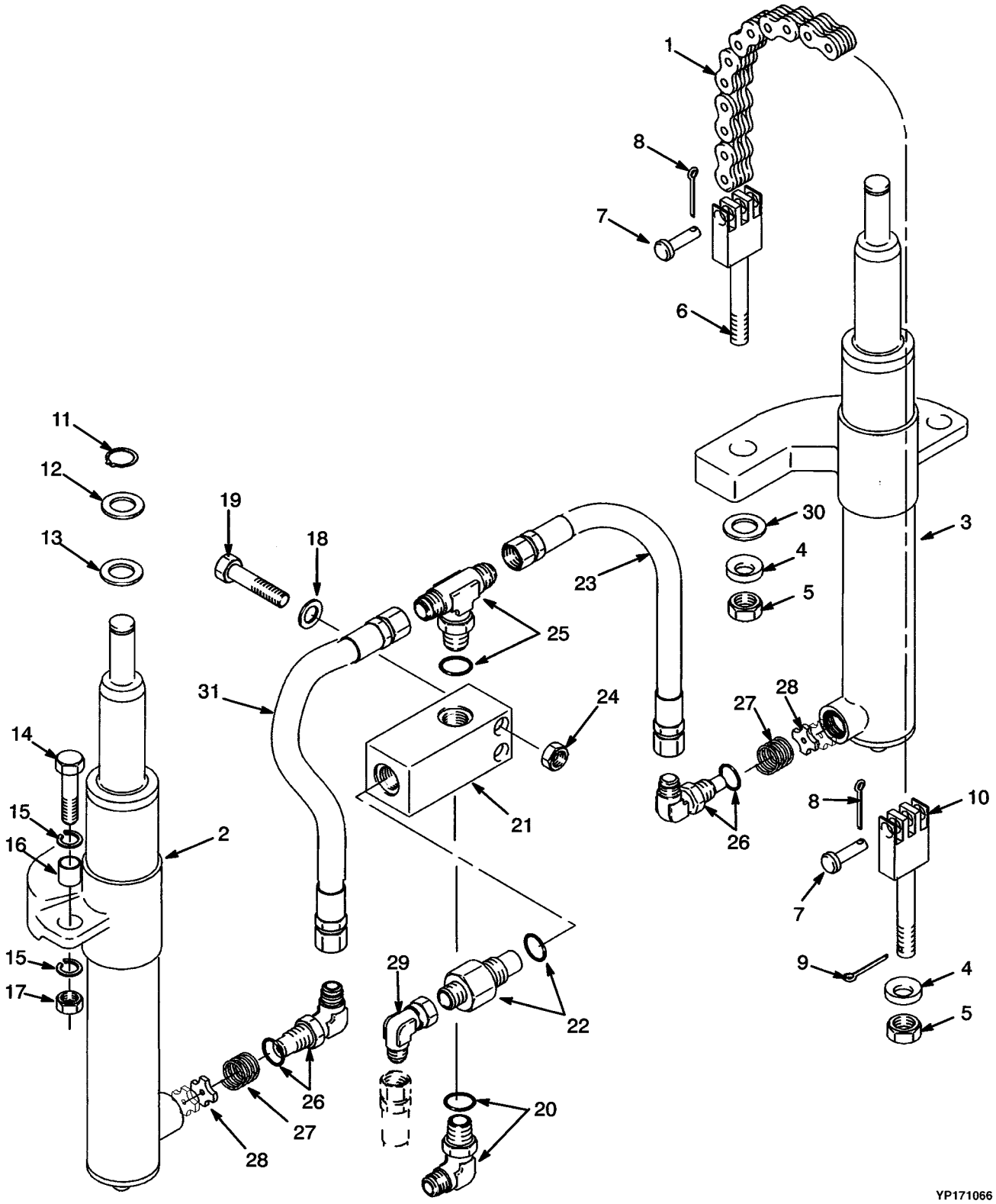

Yale Industrial Trucks

MAIN LIFT
(THREE STAGE FULL FREE-LIFT) (GP/GLP 050 TG)

ITEM	DESCRIPTION	OALH		
		76.0 in.	80.0 in.	82.0 in.
	Mast Group Number	B508 4310	B508 4460	B508 4760
1	Chain	504064784	504075738	504064703

ITEM	DESCRIPTION	OALH		
		84.0 in.	88.0 in.	94.0 in.
	Mast Group Number	B508 4910	B508 5060	B508 5510
1	Chain	504064780	518791631	504064746

ITEM		PART NO.	DESCRIPTION	QTY
1	**a**	. . . . .	Chain	2
2		. . . . .	Cylinder (RH) (☞ P10174)	1
3		. . . . .	Cylinder (LH) (☞ P10174)	1
4		504064758	Base Ring	4
5		504234266	Nut	4
6		518801644	Chain Anchor	2
7		580033718	Pin	4
8		015415900	Cotter Pin	4
9		015418200	Cotter Pin	2
10		504075767	Chain Anchor	2
11		500227907	Snap Ring	2
12		504064767	Washer	2
13		504064769	Washer (0.010 in.)	AR
13		504069702	Washer (0.060 in.)	AR
13		504069791	Washer (0.030 in.)	AR
14		449001068	Capscrew	2
15		502566902	Washer	4
16		504064739	Spacer	2
17		909882405	Nut	2
18		449021001	Washer	2
19		449001052	Capscrew	2
20		500111905	Fitting	1
20		052645500	O-Ring	1
21		504064742	Housing	1
22		504575298	Control Valve (Lowering)	1
22		052645600	O-Ring	1
23		504064740	Hose	1
24		504230271	Nut	2
25		052641400	Fitting	1
25		052645400	O-Ring	1
26		504064729	Fitting	2
26		052645400	O-Ring	1
27		504240229	Spring	2
28		504064761	Washer	2
29		053349600	Fitting	1

MAIN LIFT
(THREE STAGE FULL FREE-LIFT) (GP/GLP 050 TG)

ITEM	PART NO.	DESCRIPTION	QTY
30	449021019	Lockwasher	1
31	580010912	Hose	1

FOOTNOTES:
a Refer to Table

NOTES

Yale Industrial Trucks

MAIN LIFT
(THREE STAGE FULL FREE-LIFT) (GP/GLP 060 TG)

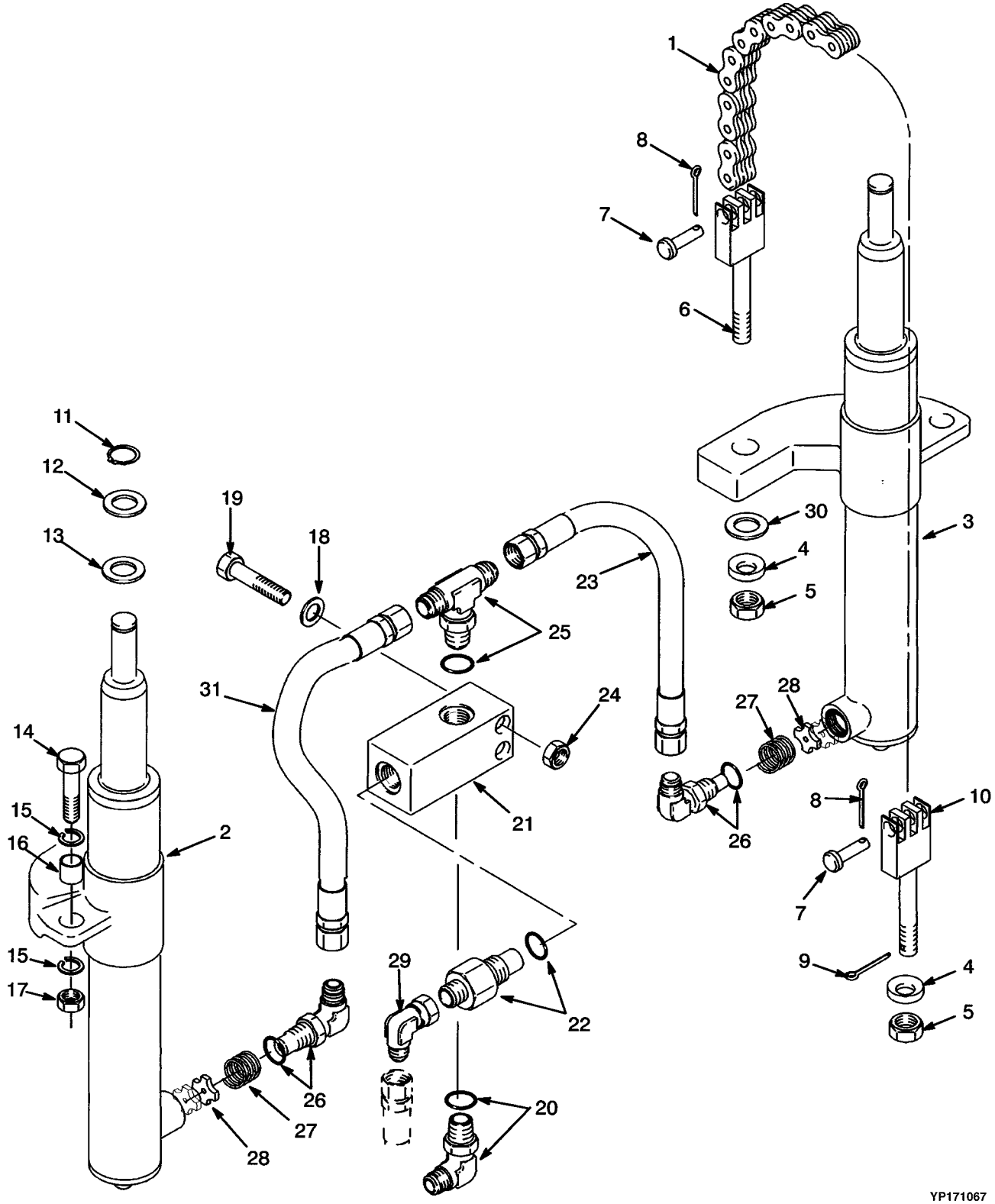

Yale Industrial Trucks

MAIN LIFT
(THREE STAGE FULL FREE-LIFT) (GP/GLP 060 TG)

ITEM	DESCRIPTION	OALH				
		76.0 in.	82.0 in.	84.0 in.	88.0 in.	94.0 in.
	Mast Group Number	B563 4118	B563 4568	B563 4718	B563 4868	B563 5318
1	Chain	504065719	504066711	504066718	504072710	504066783

ITEM		PART NO.	DESCRIPTION	QTY
1	**a**	. . . . .	Chain	2
2		. . . . .	Cylinder (RH) (☞ P10174)	1
3		. . . . .	Cylinder (LH) (☞ P10174)	1
4		504064758	Base Ring	4
5		504234266	Nut	4
6		518801615	Chain Anchor	2
7		580033718	Pin	4
8		015415900	Cotter Pin	4
9		015418200	Cotter Pin	2
10		504064751	Chain Anchor	2
11		500227907	Snap Ring	2
12		504064767	Washer	2
13		504064769	Washer (0.010 in.)	AR
13		504069702	Washer (0.060 in.)	AR
13		504069791	Washer (0.030 in.)	AR
14		449001068	Capscrew	2
15		502566902	Washer	4
16		504064739	Spacer	2
17		909882405	Nut	2
18		449021001	Washer	2
19		449001052	Capscrew	2
20		500111905	Fitting	1
20		052645500	O-Ring	1
21		504064742	Housing	1
22		504064721	Control Valve (Lowering)	1
22		052645600	O-Ring	1
23		504064740	Hose	1
24		504230271	Nut	2
25		052641400	Fitting	1
25		052645400	O-Ring	1
26		504064729	Fitting	2
26		052645400	O-Ring	1
27		504240229	Spring	2
28		504064761	Washer	2
29		053349600	Fitting	1
30		449021019	Lockwasher	1
31		580010912	Hose	1

FOOTNOTES:

a Refer to Table

Yale Industrial Trucks

FREE LIFT
(THREE STAGE FULL FREE-LIFT) (GP/GPL 050 TG)

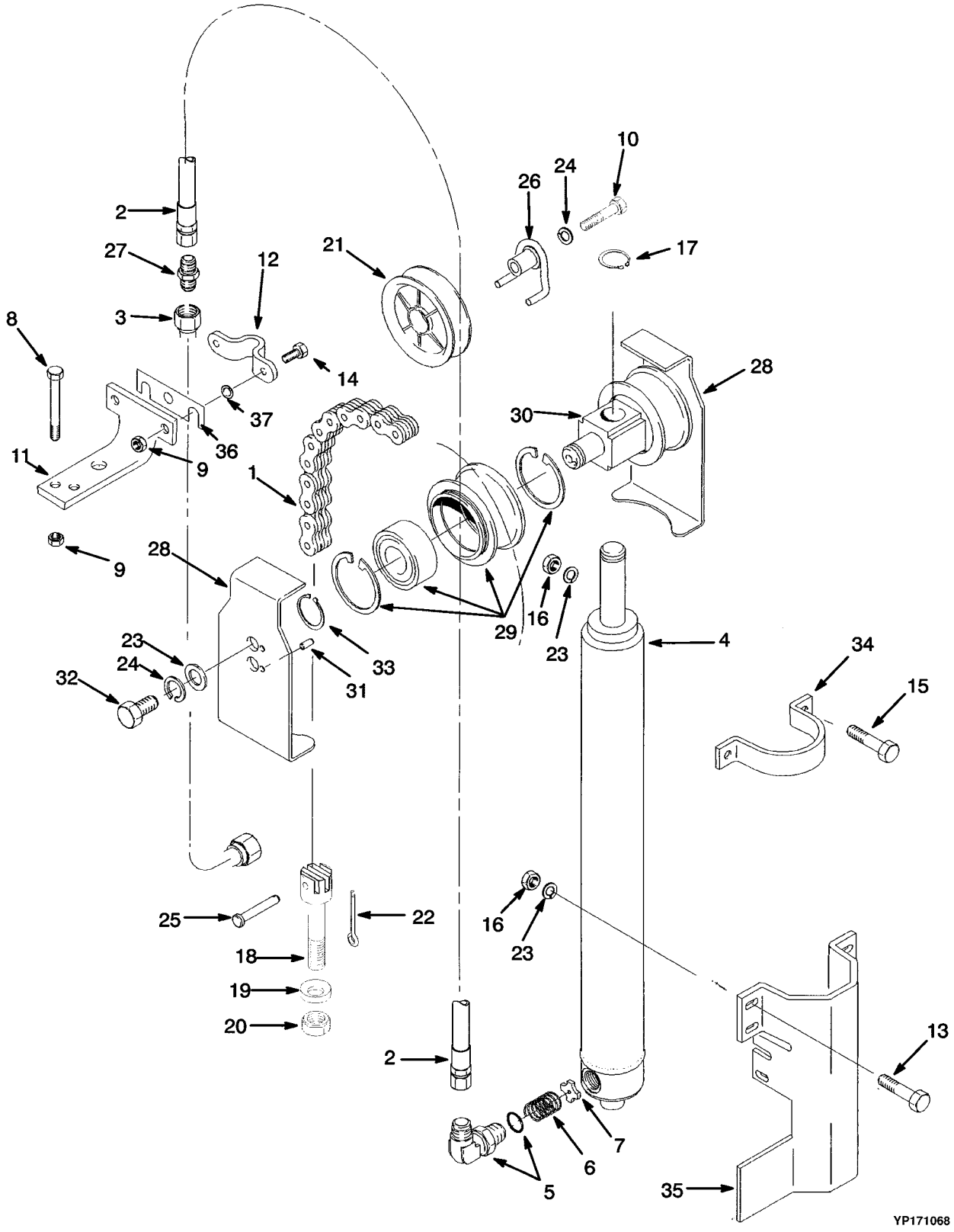

Yale Industrial Trucks

FREE LIFT
(THREE STAGE FULL FREE-LIFT) (GP/GPL 050 TG)

ITEM	DESCRIPTION	OALH		
		76.0 in.	80.0 in.	82.0 in.
	Mast Group Number	B508 4310	B508 4460	B508 4760
1	Chain	504064745	504064792	504064760
2	Hose	504064707	504064737	504064785
3	Tube	504064723	504064772	504064736

ITEM	DESCRIPTION	OALH		
		84.0 in.	88.0 in.	94.0 in.
	Mast Group Number	B508 4910	B508 5060	B508 5510
1	Chain	504064794	504064775	504075738
2	Hose	504064786	504064719	504064711
3	Tube	504064779	504064710	504064743

ITEM		PART NO.	DESCRIPTION	QTY
1	**a**	. . . . .	Chain	2
2	**a**	. . . . .	Hose	1
3	**a**	. . . . .	Tube	1
4		. . . . .	Lift Cylinder (☞ P10175)	1
5		504064702	Fitting	1
5		052645400	O-Ring	1
6		504064795	Spring	1
7		504064734	Washer	1
8		449001172	Capscrew	2
9		504230271	Nut	3
10		449001389	Capscrew	1
11		505966572	Bracket	1
12		505966510	Clamp	1
13		449001004	Capscrew	4
14		449001014	Capscrew	1
15		449001049	Capscrew	2
16		909882405	Nut	6
17		500227907	Snap Ring	1
18		518801644	Chain Anchor	2
19		504064758	Base Ring	2
20		504234266	Nut	2
21		504064782	Sheave	1
22		015415900	Cotter Pin	2
23		449021010	Washer	8
24		449022017	Lockwasher	3
25		580033718	Pin	2
26		900002259	Stubshaft	1
27		501877901	Fitting	1
28		504075784	Chain Guard	2
29		504281796	Chain Sheave Assembly	2
29		504281796	Chain Sheave Assembly	1
29		500343914	Snap Ring	2

FREE LIFT
(THREE STAGE FULL FREE-LIFT) (GP/GPL 050 TG)

ITEM	PART NO.	DESCRIPTION	QTY
29	520040899	Bearing	1
30	504281795	Crosshead	1
31	449034054	Pin	2
32	449001007	Capscrew	2
33	500227910	Snap Ring	2
34	580012382	Clamp	1
35	505973584	Bracket	1
36	504223295	Spacer	AR
37	449021001	Washer	2

FOOTNOTES:
a Refer to Table

NOTES

Yale Industrial Trucks

FREE LIFT
(THREE STAGE FULL FREE-LIFT) (GP/GLP 060 TG)

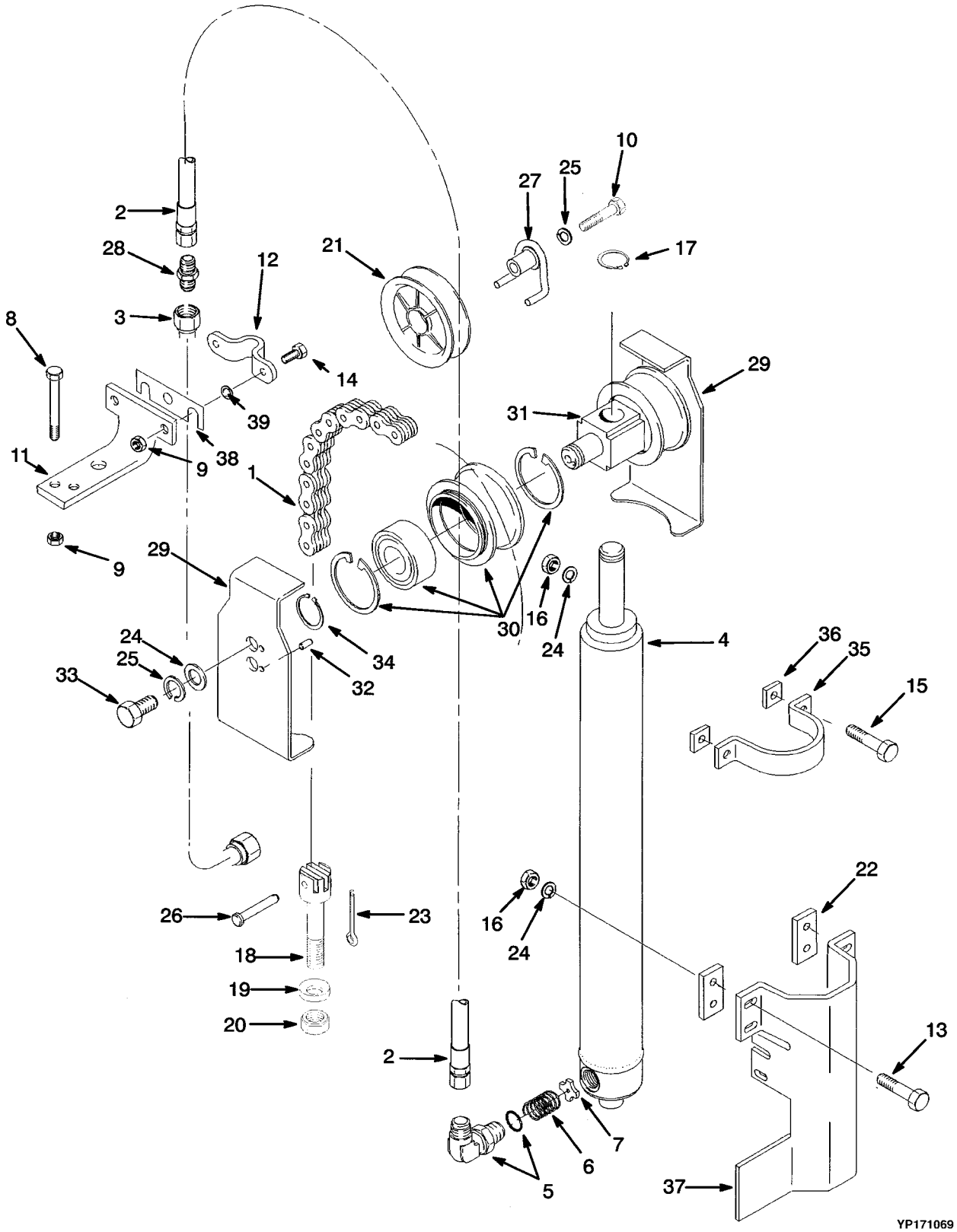

Yale Industrial Trucks

FREE LIFT
(THREE STAGE FULL FREE-LIFT) (GP/GLP 060 TG)

ITEM	DESCRIPTION	OALH				
		76.0 in.	82.0 in.	84.0 in.	88.0 in.	94.0 in.
	Mast Group Number	B563 4118	B563 4568	B563 4718	B563 4868	B563 5318
1	Chain	504065755	518791678	504065700	504065767	504072794
2	Hose	504064707	504064785	504064786	504064719	504064711
3	Tube	504064723	504064736	504064779	504064710	504064743

ITEM		PART NO.	DESCRIPTION	QTY
1	**a**	. . . . .	Chain	2
2	**a**	. . . . .	Hose	1
3	**a**	. . . . .	Tube	1
4		. . . . .	Lift Cylinder (☞ P10175)	1
5		504064702	Fitting	1
5		052645400	O-Ring	1
6		504064795	Spring	1
7		504064734	Washer	1
8		449001172	Capscrew	2
9		504230271	Nut	3
10		449001389	Capscrew	1
11		505966572	Bracket	1
12		505966510	Clamp	1
13		449001004	Capscrew	4
14		449001014	Capscrew	1
15		449001018	Capscrew	2
16		909882405	Nut	6
17		500227907	Snap Ring	1
18		518801615	Chain Anchor	2
19		504064758	Base Ring	2
20		504234266	Nut	2
21		504064782	Sheave	1
22		504064778	Spacer	1
23		015415900	Cotter Pin	2
24		449021010	Washer	8
25		449022017	Lockwasher	3
26		580033718	Pin	2
27		900002259	Stubshaft	1
28		501877901	Fitting	1
29		504075785	Guard	2
30		504281797	Chain Sheave Assembly	2
30		504282701	Sheave	1
30		500343914	Snap Ring	2
30		520040899	Bearing	1
31		504281795	Crosshead	1
32		449034054	Pin	2
33		449001007	Capscrew	2
34		500227910	Snap Ring	2
35		580012382	Clamp	1
36		504064718	Spacer	2
37		505973584	Bracket	1

FREE LIFT
(THREE STAGE FULL FREE-LIFT) (GP/GLP 060 TG)

ITEM	PART NO.	DESCRIPTION	QTY
38	504223295	Spacer	AR
39	449021001	Washer	2

FOOTNOTES:
a Refer to Table

NOTES

MAIN CYLINDER
(THREE STAGE FULL FREE-LIFT) (GP/GLP 050 TG)

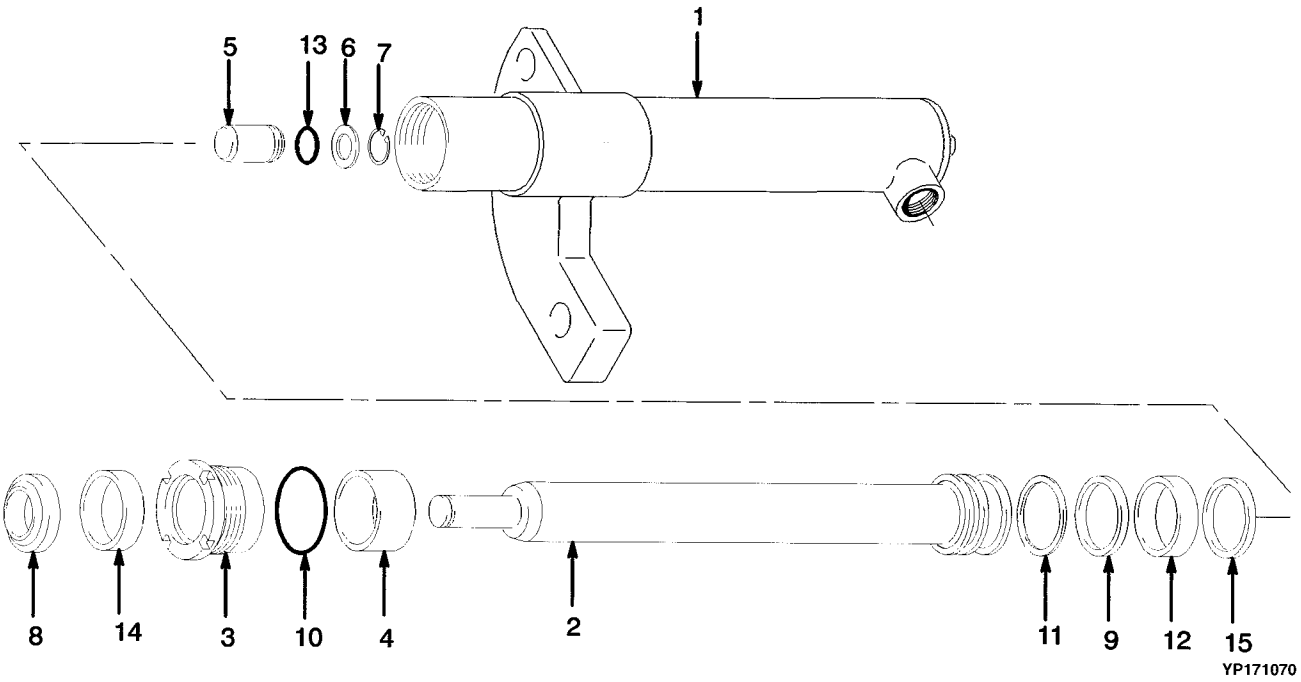

Yale Industrial Trucks

MAIN CYLINDER
(THREE STAGE FULL FREE-LIFT) (GP/GLP 050 TG)

LEFT HAND

ITEM	DESCRIPTION	OALH		
		76.0 in.	80.0 in.	82.0 in.
	Mast Group Number	B508 4310	B508 4460	B508 4760
	Cylinder Group Number	8600405	8600406	8600408
	Cylinder	519467605	519467606	519467608
1	Tube	519466605	519466606	519466608
2	Rod	519465605	519465606	519465608

LEFT HAND (CONT.)

ITEM	DESCRIPTION	OALH		
		84.0 in.	88.0 in.	94.0 in.
	Mast Group Number	B508 4910	B508 5060	B508 5510
	Cylinder Group Number	8600409	8600410	8600413
	Cylinder	519467609	519467610	519467613
1	Tube	519466609	519466610	519466613
2	Rod	519465609	519465610	519465613

RIGHT HAND

ITEM	DESCRIPTION	OALH		
		76.0 in.	80.0 in.	82.0 in.
	Mast Group Number	B508 4310	B508 4460	B508 4760
	Cylinder Group Number	8600455	8600456	8600458
	Cylinder	519467655	519467656	519467658
1	Tube	519466655	519466656	519466658
2	Rod	519465605	519465606	519465608

MAIN CYLINDER
(THREE STAGE FULL FREE-LIFT) (GP/GLP 050 TG)

RIGHT HAND (CONT.)

ITEM	DESCRIPTION	OALH		
		84.0 in.	88.0 in.	94.0 in.
	Mast Group Number	B508 4910	B508 5060	B508 5510
	Cylinder Group Number	8600459	8600460	8600463
	Cylinder	519467659	519467660	519467663
1	Tube	519466659	519466660	519466663
2	Rod	519465609	519465610	519465613

ITEM		PART NO.	DESCRIPTION	QTY
	a	. . . . .	Cylinder	1
1	**a**	. . . . .	Tube	1
2	**a**	. . . . .	Rod	1
3		506410500	Gland	1
4		505657522	Spacer (For OALH 90 in. and 96 in.)	
5		504235239	Check Valve	1
6		504148200	Washer	1
7		501850904	Snap Ring	1
8		504163200	Wiper Ring	1
9		504450755	Seal	1
10		012827100	O-Ring	1
11		504450733	Back-Up Plate	1
12		504024203	Wear Ring	1
13		504232230	O-Ring	1
14		580022502	Rod Seal	1
15		502895203	Piston Ring	1
		505136041	Seal Kit (Includes Items 8-11, 13-15)	1

FOOTNOTES:
a Refer to Table

NOTES

MAIN CYLINDER
(THREE STAGE FULL FREE-LIFT) (GP/GLP 060 TG)

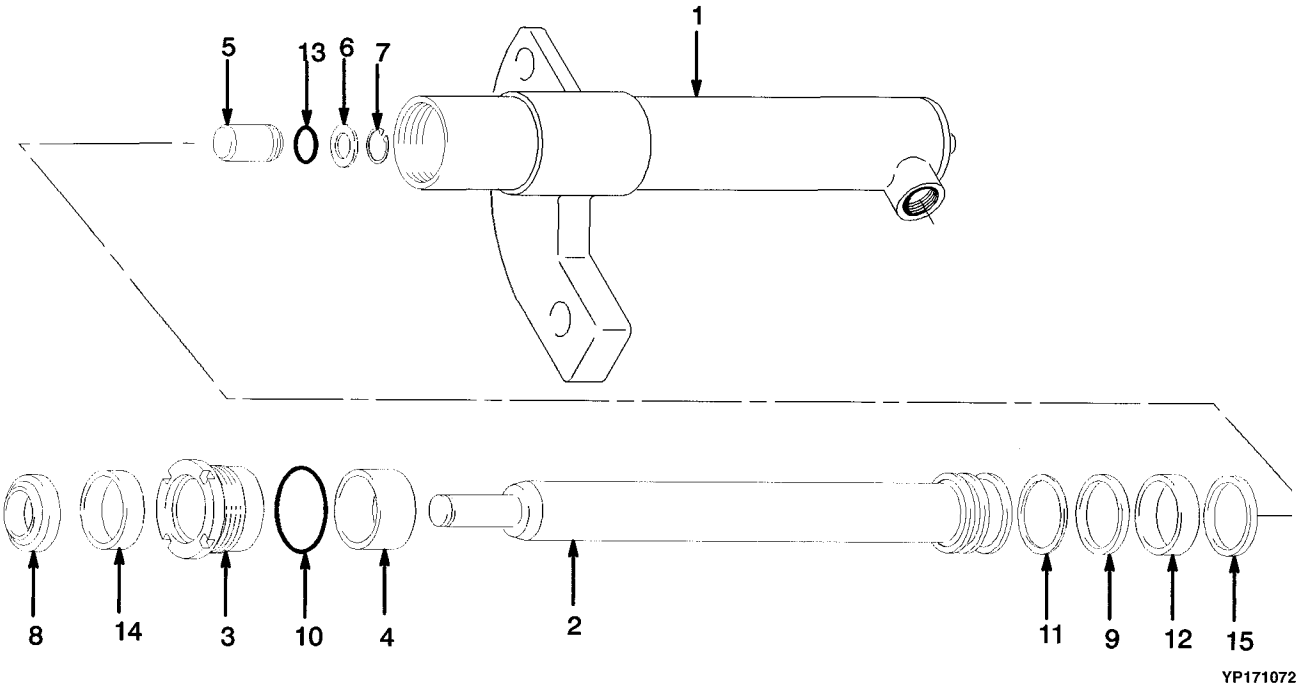

Yale Industrial Trucks

MAIN CYLINDER
(THREE STAGE FULL FREE-LIFT) (GP/GLP 060 TG)

LEFT HAND

ITEM	DESCRIPTION	OALH				
		76.0 in.	82.0 in.	84.0 in.	88.0 in.	94.0 in.
	Mast Group Number	B563 4118	B563 4568	B563 4718	B563 4868	B563 5318
	Cylinder Group Number	8600505	8600508	8600509	8600510	8600513
	Cylinder	518897605	518897608	518897609	518897610	518897613
1	Tube	518896605	518896608	518896609	518896610	518896613
2	Rod	518895605	518895608	518895609	518895610	518895613

RIGHT HAND

ITEM	DESCRIPTION	OALH				
		76.0 in.	82.0 in.	84.0 in.	88.0 in.	94.0 in.
	Mast Group Number	B563 4118	B563 4568	B563 4718	B563 4868	B563 5318
	Cylinder Group Number	8600555	8600558	8600559	8600560	8600563
	Cylinder	518897655	518897658	518897659	518897660	518897663
1	Tube	518896655	518896658	518896659	518896660	518896663
2	Rod	518895605	518895608	518895609	518895610	518895613

ITEM	PART NO.	DESCRIPTION	QTY
	a	Cylinder	1
1	**a**	Tube	1
2	**a**	Rod	1
3	505587500	Gland	1
4	505657512	Spacer (For OALH 79 in., 85 in., 87 in.)	1
4	505657517	Spacer (For OALH 91 in. and 97 in.)	1
5	504235239	Check Valve	1
6	504148200	Washer	1
7	501850904	Snap Ring	1
8	504163200	Wiper Ring	1
9	504160200	Seal	1
10	015492900	O-Ring	1
11	504161200	Back-Up Ring	1
12	504024202	Wear Ring	1
13	504232230	O-Ring	1
14	580022502	Rod Seal	1
15	502895201	Piston Ring	1
	505136037	Seal Kit (Includes Items 8-11, 13-15)	1

FOOTNOTES:
a Refer to Table

Yale Industrial Trucks

FREE-LIFT CYLINDER
(THREE STAGE FULL FREE-LIFT) (GP/GLP 050 TG)

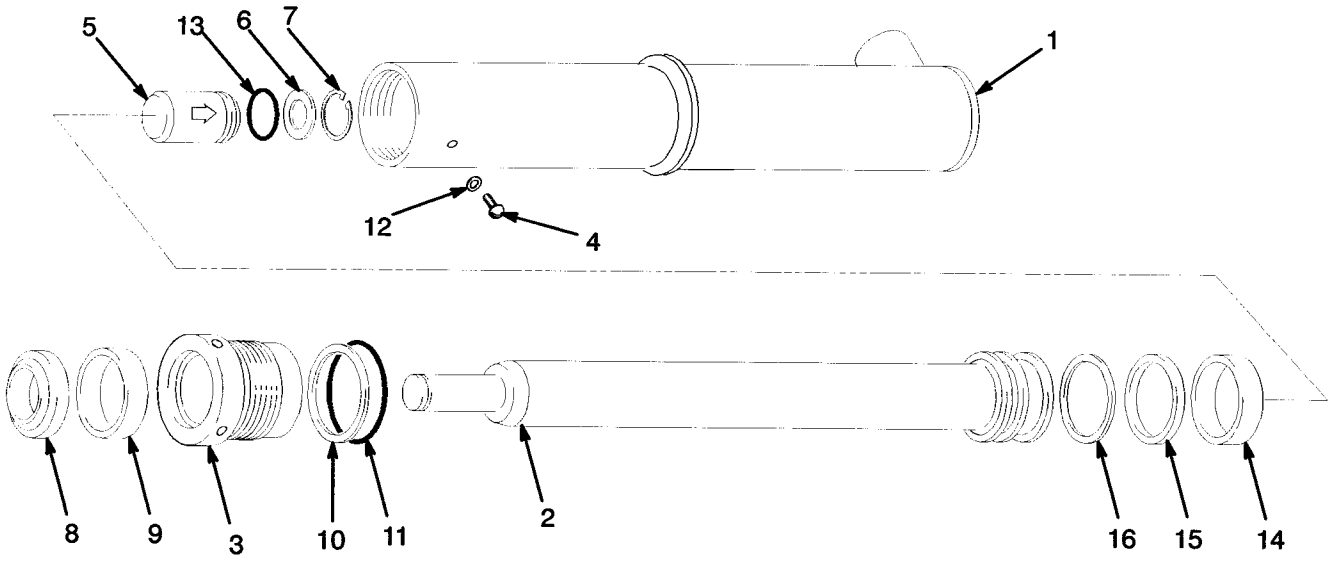

Yale Industrial Trucks

FREE-LIFT CYLINDER
(THREE STAGE FULL FREE-LIFT) (GP/GLP 050 TG)

ITEM	DESCRIPTION	OALH		
		76.0 in.	80.0 in.	82.0 in.
	Mast Group Number	B508 4310	B508 4460	B508 4760
	Cylinder Group Number	8602406	8602407	8602409
	Lift Cylinder	518791691	518791697	518791668
1	Shell	520106606	520106607	520106609
2	Rod	520087607	520087608	520087610

ITEM	DESCRIPTION	OALH		
		84.0 in.	88.0 in.	94.0 in.
	Mast Group Number	B508 4910	B508 5060	B508 5510
	Cylinder Group Number	8602410	8602412	8602415
	Lift Cylinder	518791611	518792606	518792615
1	Shell	520106610	520106612	520106615
2	Rod	520087611	520087613	520087639

ITEM	PART NO.	DESCRIPTION	QTY
	a	Lift Cylinder	1
1	**a**	Shell	1
2	**a**	Rod	1
3	519493600	Gland	1
4	501753904	Screw	1
5	504235239	Check Valve	1
6	504148200	Washer	1
7	501850904	Snap Ring	1
8	504450758	Wiper Ring	1
9	502787903	Seal	1
10	502011903	Back-Up Ring	1
11	500348901	O-Ring	1
12	502687901	Seal	1
13	504232230	O-Ring	1
14	504024210	Wear Ring	1
15	504450734	Seal	1
16	504450732	Back-Up Ring	1
	505136046	Seal Kit (Includes Items 8, 10-16)	1

FOOTNOTES:
a Refer to Table

FREE-LIFT CYLINDER
(THREE STAGE FULL FREE-LIFT) (GP/GLP 060 TG)

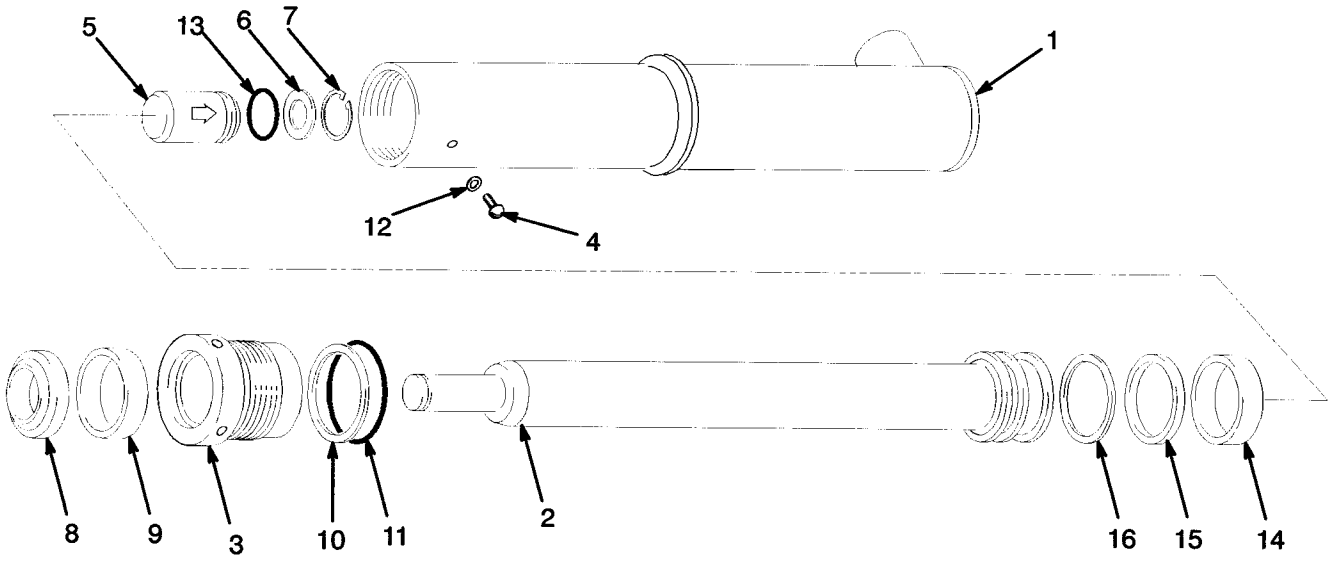

Yale Industrial Trucks

FREE-LIFT CYLINDER
(THREE STAGE FULL FREE-LIFT) (GP/GLP 060 TG)

ITEM	DESCRIPTION	OALH				
		76.0 in.	82.0 in.	84.0 in.	88.0 in.	94.0 in.
	Mast Group Number	B563 4118	B563 4568	B563 4718	B563 4868	B563 5318
	Cylinder Group Number	8603507	8603510	8603511	8603513	8603516
	Lift Cylinder	518792636	518792679	518792639	518792684	518792673
1	Shell	520107607	520107610	520107611	520107613	520107616
2	Rod	518941608	518941611	518941612	518941614	518941617

ITEM	PART NO.	DESCRIPTION	QTY
	a	Lift Cylinder	1
1	**a**	Shell	1
2	**a**	Rod	1
3	518938600	Gland	1
4	501753904	Screw	1
5	504235239	Check Valve	1
6	504148200	Washer	1
7	501850904	Snap Ring	1
8	504450758	Wiper Ring	1
9	502787903	Seal	1
10	502011929	Back-Up Ring	1
11	015493500	O-Ring	1
12	502687901	Seal	1
13	504232230	O-Ring	1
14	504450757	Wear Ring	1
15	504450754	Seal	1
16	504450756	Back-Up Ring	1
	505136047	Seal Kit (Includes Items 8-16)	1

FOOTNOTES:
a Refer to Table

Yale Industrial Trucks

CARRIAGE
(THREE STAGE FULL FREE-LIFT)

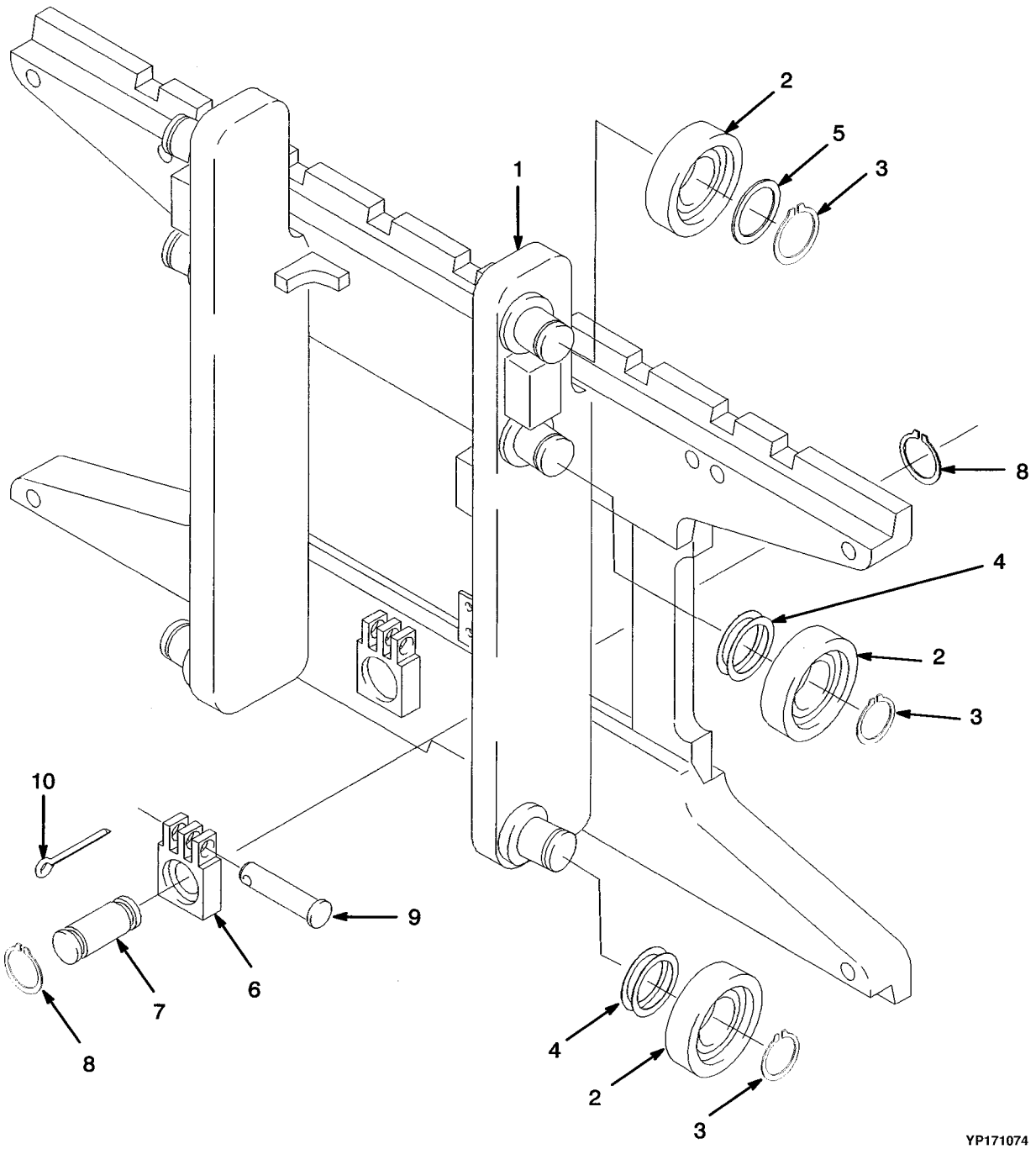

Yale Industrial Trucks

CARRIAGE
(THREE STAGE FULL FREE-LIFT)

KEY:
A: GP/GLP 050 TG
B: GP/GLP 060 TG

ITEM	PART NO.	DESCRIPTION	QTY A	QTY B
	520040834	Carriage Assembly (42 in.)	1	..
	520040805	Carriage Assembly (48 in.)	1	..
	520040848	Carriage Assembly (42 in.)	..	1
	520040812	Carriage Assembly (48 in.)	..	1
1	520041804	Frame (42 in.)	1	..
1	520041842	Frame (48 in.)	1	..
1	520041806	Frame (42 in.)	..	1
1	520041865	Frame (48 in.)	..	1
2	520036852	Load Roller	6	6
3	015916300	Snap Ring	6	6
4	504233232	Shim (0.020 in.)	AR	AR
5	504235278	Spacer	2	2
6	505978544	Chain Anchor (Dual Hole)	2	..
6	580027878	Chain Anchor (Single Hole) (Optional)	2	..
6	505978527	Chain Anchor (Dual Hole)	..	2
6	580027880	Chain Anchor (Single Hole) (Optional)	..	2
7	504071702	Pin	2	2
8	500227907	Snap Ring	4	4
9	580033718	Pin	2	2
10	015415900	Cotter Pin	2	2

Yale Industrial Trucks

OUTER MAST
(TWO STAGE FULL FREE-LIFT)

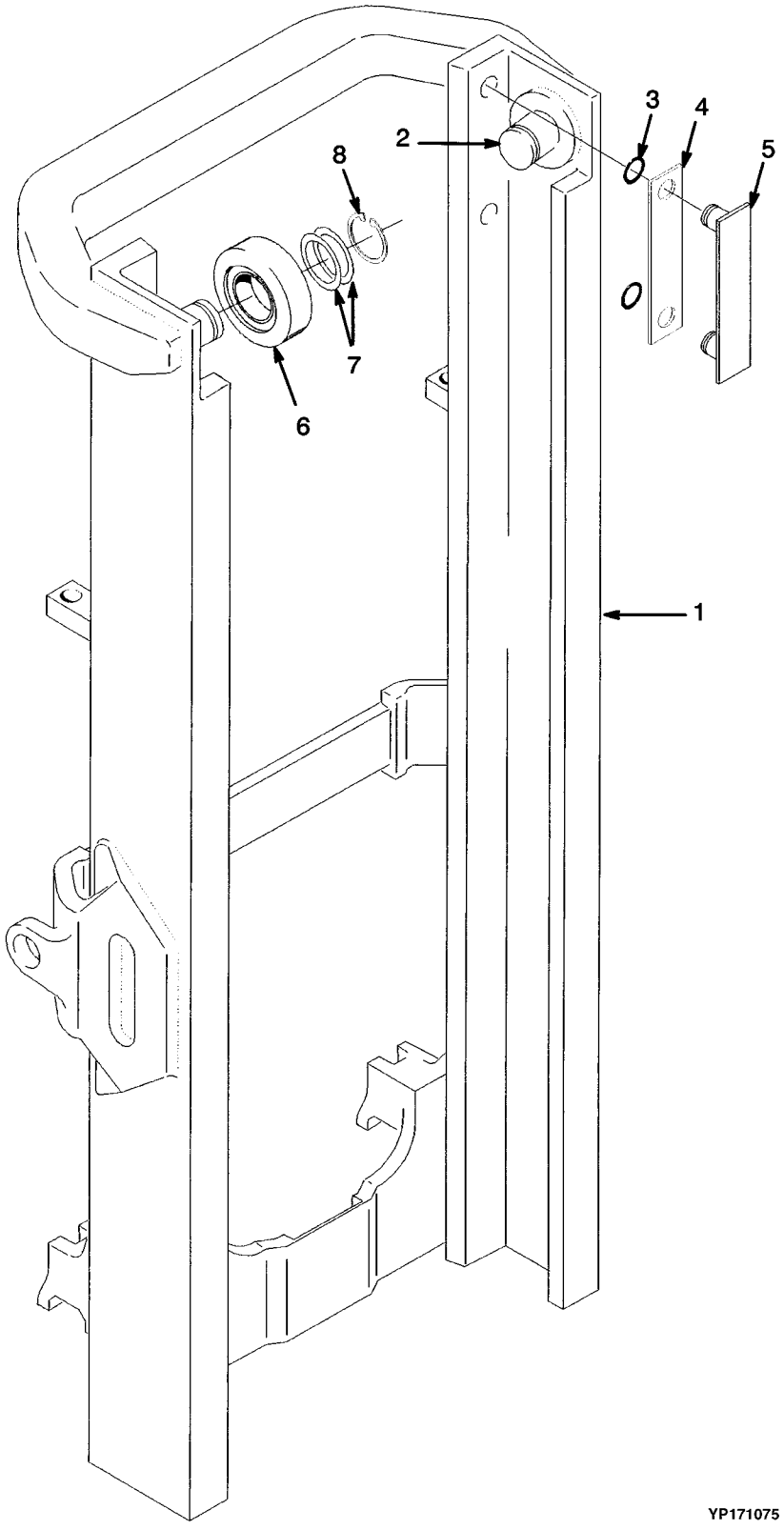

Yale Industrial Trucks

GP/GLP 050 TG

ITEM	DESCRIPTION	OALH		
		78.0 in.	84.0 in.	94.0 in.
	Mast Group Number	B509 2962	B509 3262	B509 3762
1	Outer Mast	504065758	504065762	504065777

GP/GLP 060 TG

ITEM	DESCRIPTION	OALH		
		78.0 in.	84.0 in.	94.0 in.
	Mast Group Number	B564 2860	B564 3160	B564 3660
1	Outer Mast	504065758	504065762	504065777

ITEM		PART NO.	DESCRIPTION	QTY
1	**a**	. . . . .	Outer Mast	1
2		504066700	Stubshaft	2
3		012824300	O-Ring	4
4		504234265	Shim (0.020 in.)	4
5		520037804	Shim (0.007 in.) (Optional)	2
6		520036837	Load Roller	2
7		504233232	Shim (0.020 in.)	AR
8		015916300	Snap Ring	2

FOOTNOTES:
a Refer to Table

Yale Industrial Trucks

INNER MAST
(TWO STAGE FULL FREE-LIFT)

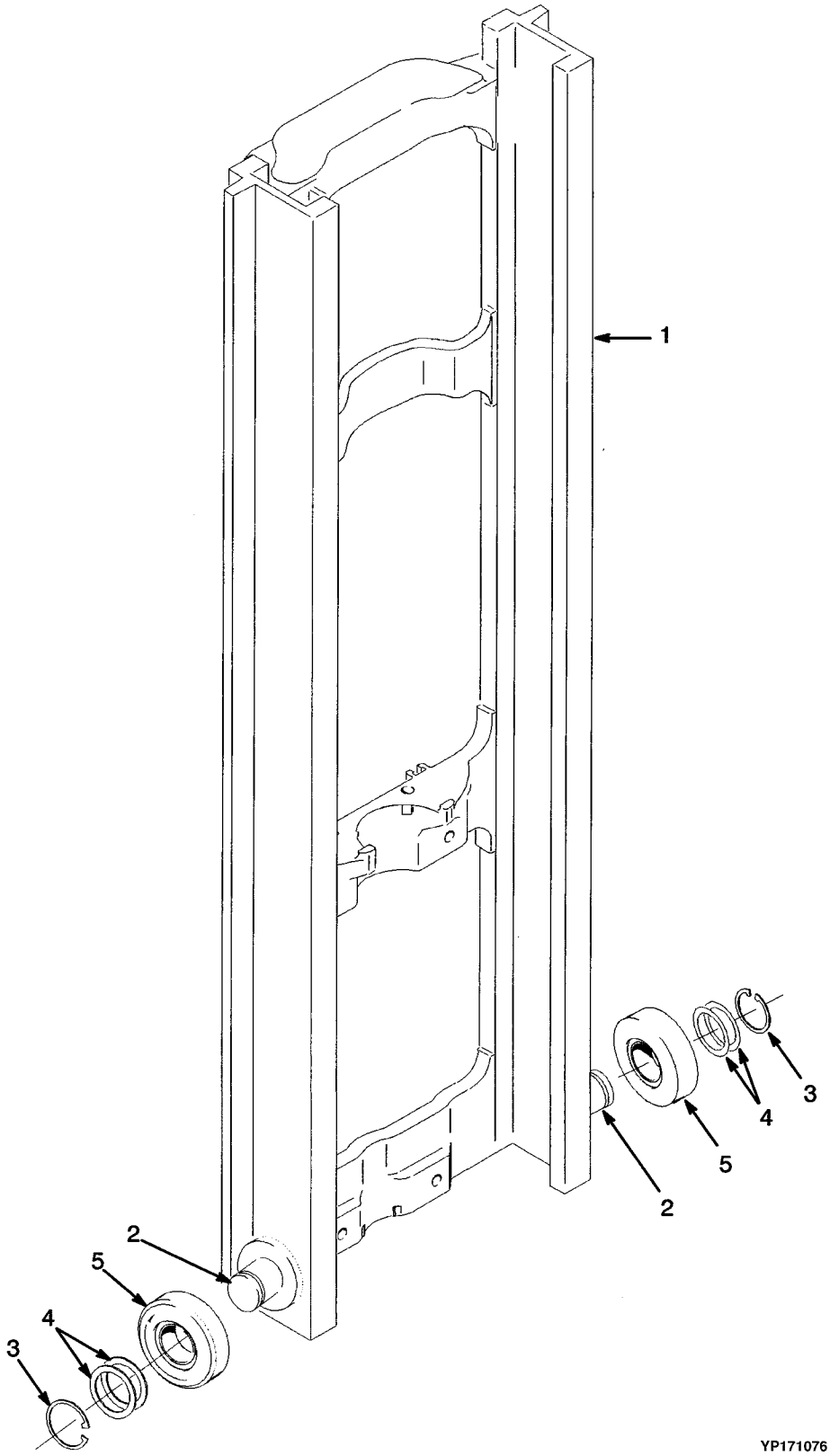

Yale Industrial Trucks

GP/GLP 050 TG

ITEM	DESCRIPTION	OALH		
		78.0 in.	84.0 in.	94.0 in.
	Mast Group Number	B509 2962	B509 3262	B509 3762
1	Inner Mast	504074703	504074785	504063749

GP/GLP 060 TG

ITEM	DESCRIPTION	OALH		
		78.0 in.	84.0 in.	94.0 in.
	Mast Group Number	B564 2860	B564 3160	B564 3660
1	Inner Mast	504074703	504074785	504063749

ITEM		PART NO.	DESCRIPTION	QTY
1	**a**	. . . . .	Inner Mast	1
2		504066700	Stubshaft	2
3		015916300	Snap Ring	2
4		504233232	Shim (0.020 in.)	AR
5		520036837	Load Roller	2

FOOTNOTES:
a Refer to Table

MAIN LIFT
(TWO STAGE FULL FREE-LIFT)

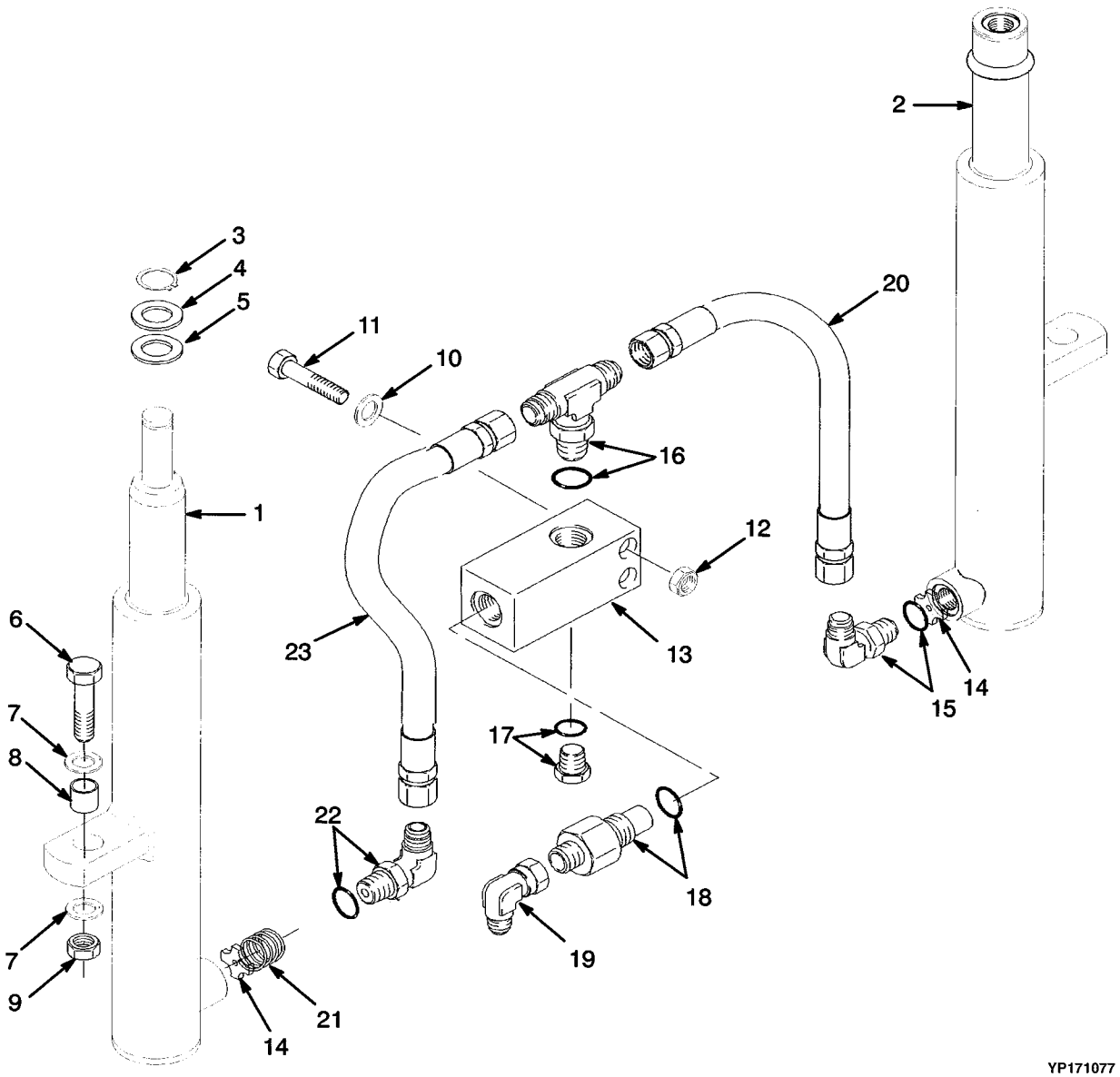

Yale Industrial Trucks

MAIN LIFT
(TWO STAGE FULL FREE-LIFT)

ITEM	PART NO.	DESCRIPTION	QTY
1	. . . . .	Cylinder (RH) (☞ P10188, P10188)	1
2	. . . . .	Cylinder (LH) (☞ P10188, P10188)	1
3	500227907	Snap Ring	1
4	504064767	Washer	1
5	504064769	Washer (0.010 in.)	AR
5	504069702	Washer (0.060 in.)	AR
5	504069791	Washer (0.030 in.)	AR
6	449001068	Capscrew	2
7	502566902	Washer	4
8	504064739	Spacer	2
9	909882405	Nut	2
10	449021001	Washer	2
11	449001052	Capscrew	2
12	504230271	Nut	2
13	504064742	Housing	1
13	520044803	Housing (Optional)	1
14	504064761	Washer	1
15	052229600	Fitting	1
15	052645400	O-Ring	1
16	052641400	Fitting	1
16	052645400	O-Ring	1
17	080437000	Fitting	1
17	052645500	O-Ring	1
18	504575298	Control Valve (Lowering)	1
18	052645600	O-Ring	1
19	053349600	Fitting	1
20	504064740	Hose	1
21	504240229	Spring	1
22	504064729	Fitting	1
22	052645400	O-Ring	1
23	580010912	Hose	1

Yale Industrial Trucks

FREE LIFT
(TWO STAGE FULL FREE-LIFT) (GP/GLP 050 TG)

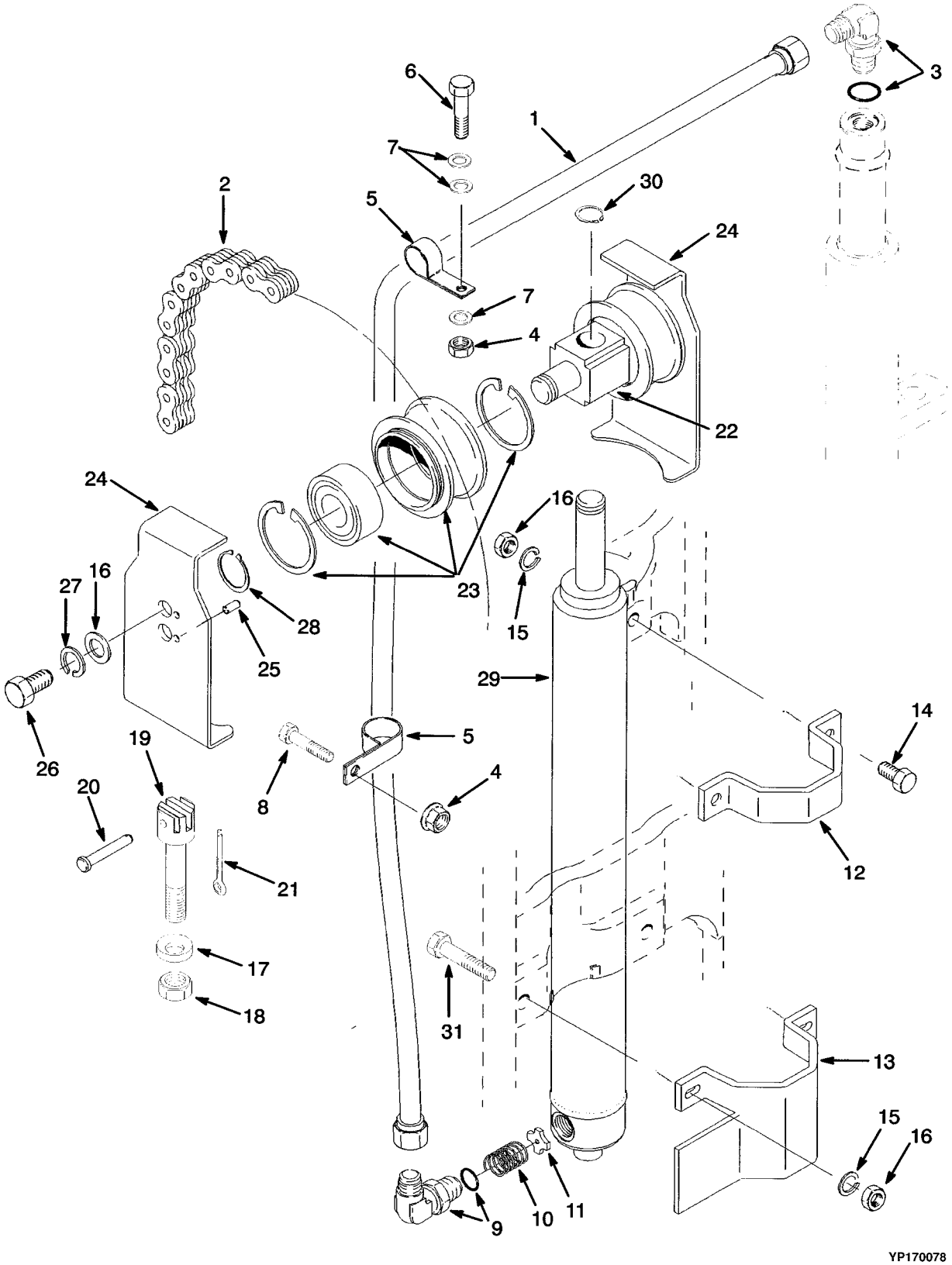

Yale Industrial Trucks

FREE LIFT
(TWO STAGE FULL FREE-LIFT) (GP/GLP 050 TG)

ITEM	DESCRIPTION	OALH		
		78.0 in.	84.0 in.	94.0 in.
	Mast Group Number	B509 2962	B509 3262	B509 3762
1	Tube	504069783	504069782	504069716
2	Chain	504064745	504064760	504064784

ITEM		PART NO.	DESCRIPTION	QTY
1	**a**	. . . . .	Tube	1
2	**a**	. . . . .	Chain	2
3		520044802	Fitting	1
3		052645400	O-Ring	1
4		909882404	Nut	1
5		504069724	Clamp	2
6		932202907	Capscrew	1
7		449021006	Washer	3
8		449001302	Capscrew	1
9		505973536	Fitting	1
9		052645400	O-Ring	1
10		504064795	Spring	1
11		504064734	Washer	1
12		580012382	Clamp	1
13		505973527	Bracket	1
14		449001049	Capscrew	2
15		449021010	Washer	6
16		909882405	Nut	4
17		504064758	Base Ring	2
18		504234266	Nut	2
19		518801644	Chain Anchor	2
20		580033718	Pin	2
21		015415900	Cotter Pin	2
22		504281795	Crosshead	1
23		504281796	Chain Sheave Assembly	2
23		504281799	Chain Sheave	1
23		500343914	Snap Ring	2
23		520040899	Bearing	1
24		504301785	Guard	2
25		449034054	Pin	2
26		449001007	Capscrew	2
27		449022017	Lockwasher	2
28		500227910	Snap Ring	2
29		. . . . .	Lift Cylinder (☞ P10189)	1
30		500227907	Snap Ring	1
31		449001004	Capscrew	2

FOOTNOTES:
a Refer to Table

Yale Industrial Trucks

FREE LIFT
(TWO STAGE FULL FREE-LIFT) (GP/GLP 060 TG)

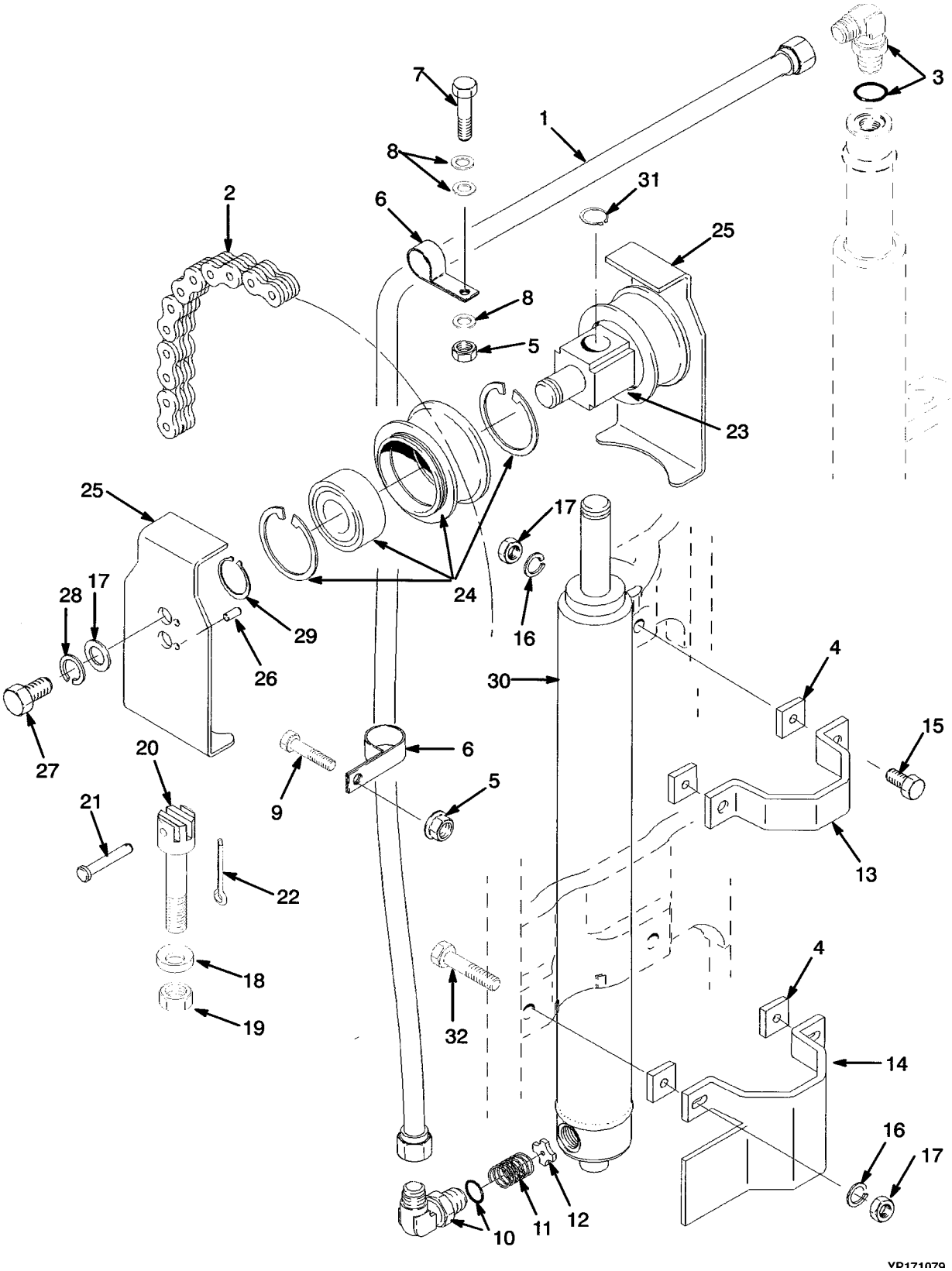

Yale Industrial Trucks

FREE LIFT
(TWO STAGE FULL FREE-LIFT) (GP/GLP 060 TG)

ITEM	DESCRIPTION	OALH		
		78.0 in.	84.0 in.	94.0 in.
	Mast Group Number	B564 2860	B564 3160	B564 3660
1	Tube	504069783	504069782	504069716
2	Chain	504066797	504066737	504065701

ITEM		PART NO.	DESCRIPTION	QTY
1	**a**	. . . . .	Tube	1
2	**a**	. . . . .	Chain	2
3		520044802	Fitting	1
3		052645400	O-Ring	1
4		504064710	Tube	4
5		909882404	Nut	2
6		504069724	Clamp	2
7		449001010	Capscrew	1
8		449021006	Washer	3
9		449001302	Capscrew	1
10		505973536	Fitting	1
10		052645400	O-Ring	1
11		504064795	Spring	1
12		504064734	Washer	1
13		580012382	Clamp	1
14		505973527	Bracket	1
15		449001049	Capscrew	2
16		449021010	Washer	6
17		909882405	Nut	4
18		504064758	Base Ring	2
19		504234266	Nut	2
20		518801615	Chain Anchor	2
21		580033718	Pin	2
22		015415900	Cotter Pin	2
23		504281795	Crosshead	1
24		504281797	Chain Sheave Assembly	2
24		504282701	Sheave	1
24		500343914	Snap Ring	2
24		520040899	Bearing	1
25		504301785	Guard	2
26		449034054	Pin	2
27		449001007	Capscrew	2
28		449022017	Lockwasher	2
29		500227910	Snap Ring	2
30		. . . . .	Lift Cylinder (☞ P10189)	1
31		500227907	Snap Ring	1
32		449001004	Capscrew	2

FOOTNOTES:

a Refer to Table

MAIN CYLINDER
(TWO STAGE FULL FREE-LIFT) (LEFT HAND, GP/GLP 050 TG)

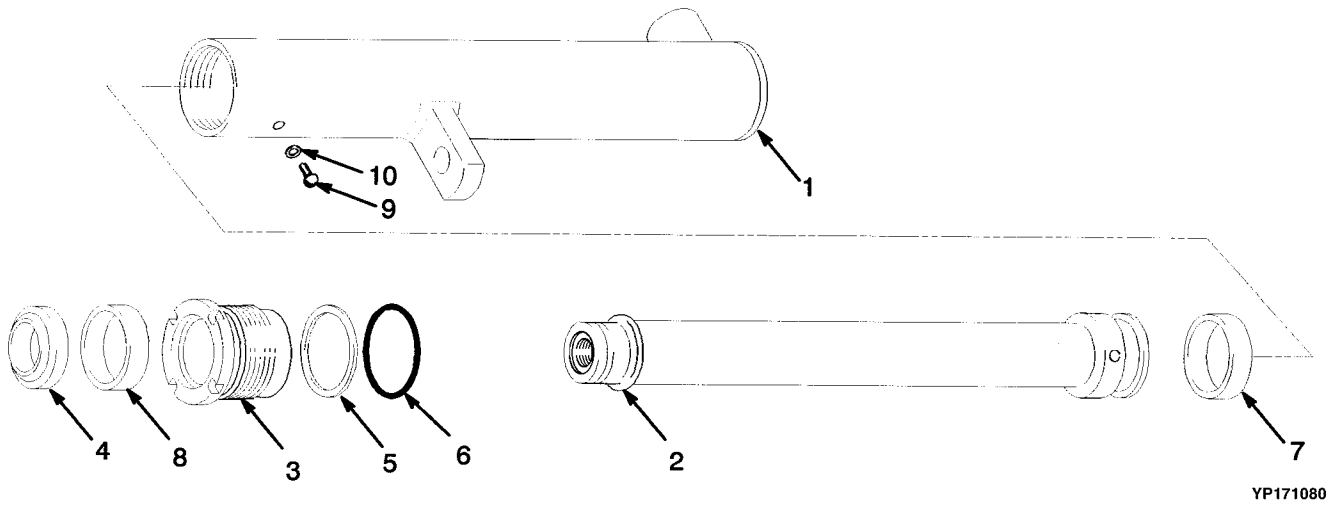

ITEM	DESCRIPTION	OALH		
		78.0 in.	84.0 in.	94.0 in.
	Mast Group Number	B509 2962	B509 3262	B509 3762
	Cylinder Group Number	8600706	8600709	8600714
	Lift Cylinder	519510606	519510609	519510614
1	Shell	518989606	518989609	518989614
2	Rod	518988606	518988609	518988614

ITEM	PART NO.	DESCRIPTION	QTY
	a	Lift Cylinder	1
1	**a**	Shell	1
2	**a**	Rod	1
3	518985600	Gland	1
4	504163200	Wiper Ring	1
5	502011909	Back-Up Ring	1
6	015492900	O-Ring	1
7	504017203	Wear Ring	1
8	580022502	Rod Seal	1
9	501753914	Capscrew	1
10	502687901	Seal	1
	505136048	Seal Kit (Includes Items 4-8, 10)	1

FOOTNOTES:
a Refer to Table

Yale Industrial Trucks

MAIN CYLINDER
(TWO STAGE FULL FREE-LIFT) (RIGHT HAND, GP/GLP 050 TG)

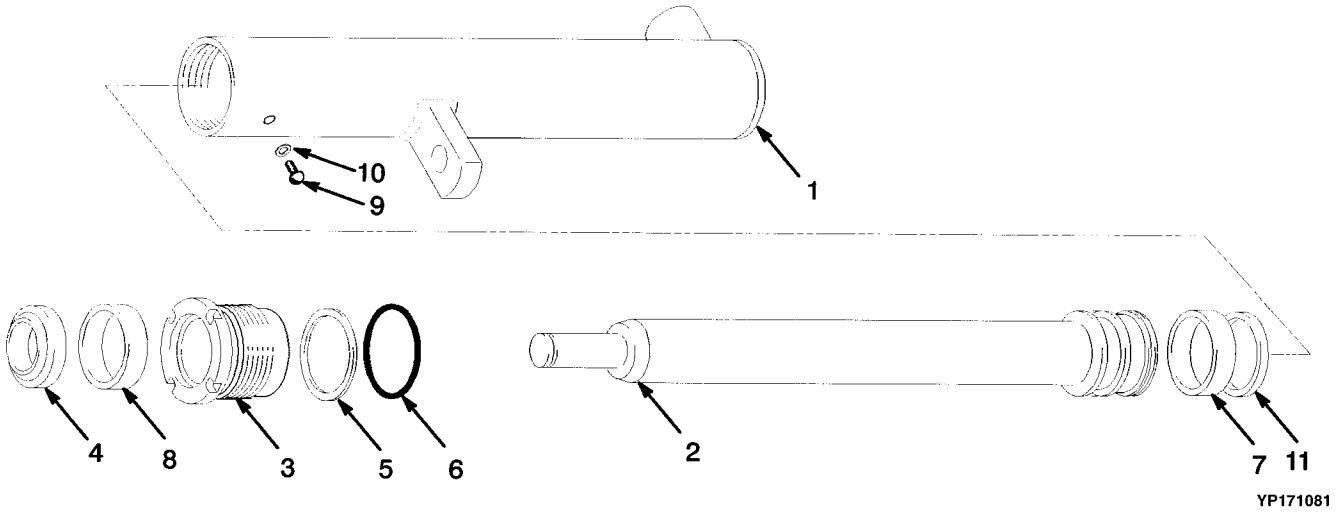

ITEM	DESCRIPTION	OALH		
		78.0 in.	84.0 in.	94.0 in.
	Mast Group Number	B509 2962	B509 3262	B509 3762
	Cylinder Group Number	8600806	8600809	8600814
	Lift Cylinder	519682606	519682609	519682614
1	Shell	519681606	519681609	519681614
2	Rod	519680606	519680609	519680614

ITEM		PART NO.	DESCRIPTION	QTY
	a	. . . . .	Lift Cylinder	1
1	**a**	. . . . .	Shell	1
2	**a**	. . . . .	Rod	1
3		518985600	Gland	1
4		504163200	Wiper Ring	1
5		502011909	Back-Up Ring	1
6		015492900	O-Ring	1
7		504017203	Wear Ring	1
8		580022502	Rod Seal	1
9		501753914	Capscrew	1
10		502687901	Seal	1
		505136051	Seal Kit (Includes Items 4-8, 10)	1

FOOTNOTES:
a Refer to Table

MAIN CYLINDER
(TWO STAGE FULL FREE-LIFT) (LEFT HAND, GP/GLP 060 TG)

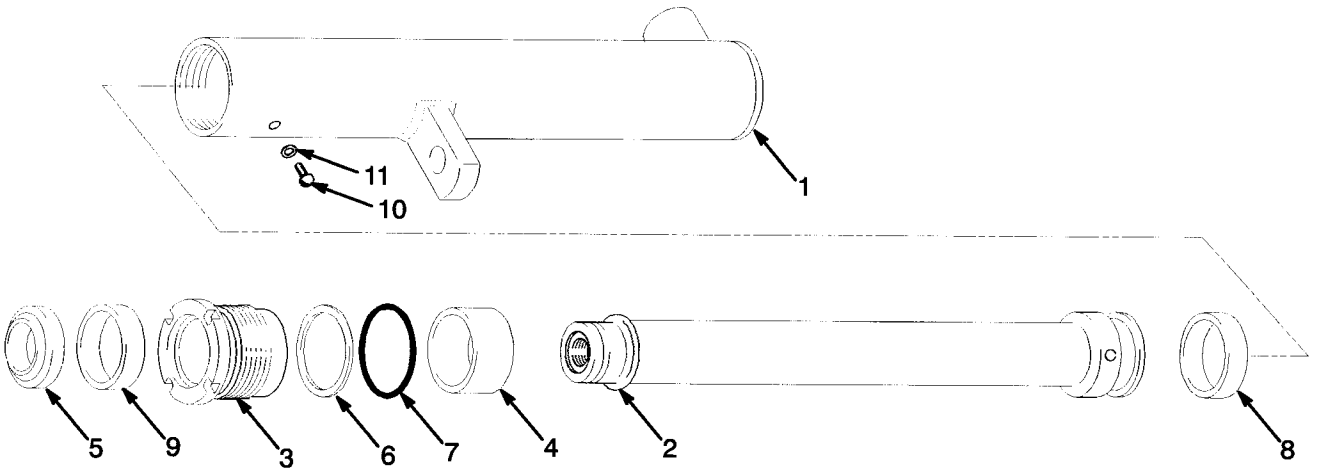

YP171082

ITEM	DESCRIPTION	OALH		
		78.0 in.	84.0 in.	94.0 in.
	Mast Group Number	B564 2860	B564 3160	B564 3660
	Cylinder Group Number	8600906	8601009	8601014
	Lift Cylinder	518990606	518990609	518990614
1	Shell	518989606	518989609	518989614
2	Rod	518988606	518988609	518988614

ITEM		PART NO.	DESCRIPTION	QTY
	a	. . . . .	Lift Cylinder	1
1	**a**	. . . . .	Shell	1
2	**a**	. . . . .	Rod	1
3		518985600	Gland	1
4		505657513	Spacer	1
5		504163200	Wiper Ring	1
6		502011909	Back-Up Ring	1
7		015492900	O-Ring	1
8		504017203	Wear Ring	1
9		580022502	Rod Seal	1
10		501753914	Capscrew	1
11		502687901	Seal	1
		505136048	Seal Kit (Includes Items 5-9, 11-12)	1

FOOTNOTES:
a Refer to Table

Yale Industrial Trucks

MAIN CYLINDER
(TWO STAGE FULL FREE-LIFT) (RIGHT HAND, GP/GLP 060 TG)

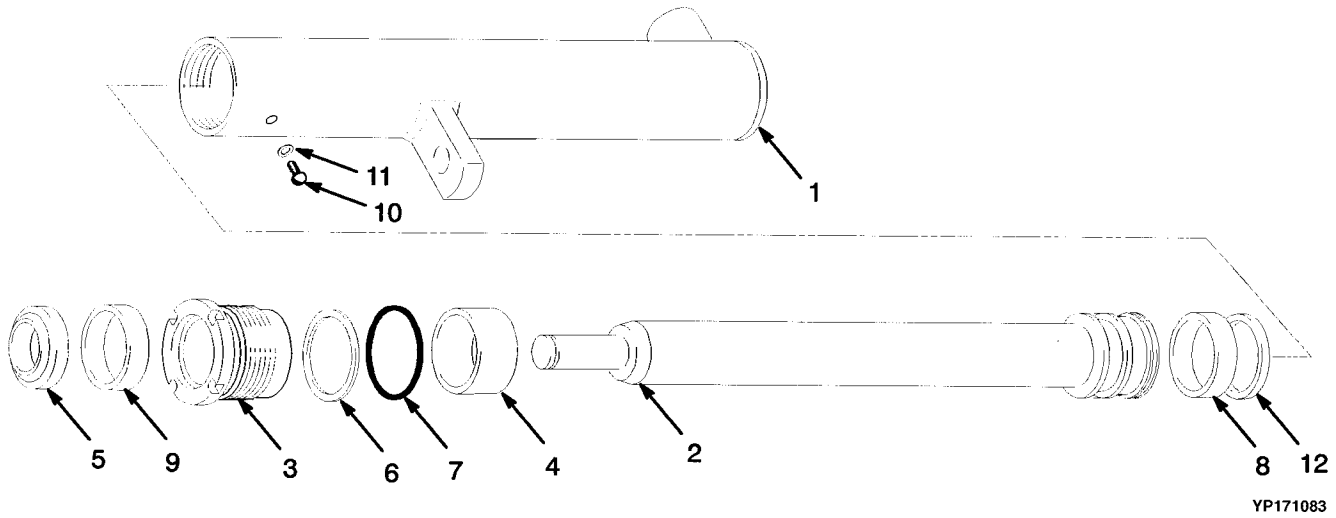

ITEM	DESCRIPTION	OALH		
		78.0 in.	84.0 in.	94.0 in.
	Mast Group Number	B564 2860	B564 3160	B564 3660
	Cylinder Group Number	8601006	8601009	8601014
	Lift Cylinder	519683606	519683609	519683614
1	Shell	519681606	519681609	519681614
2	Rod	519680606	519680609	519680614

ITEM	PART NO.	DESCRIPTION	QTY
	a	Lift Cylinder	1
1	**a**	Shell	1
2	**a**	Rod	1
3	518985600	Gland	1
4	505657513	Spacer	1
5	504163200	Wiper Ring	1
6	502011909	Back-Up Ring	1
7	015492900	O-Ring	1
8	504017203	Wear Ring	1
9	580022502	Rod Seal	1
10	501753914	Capscrew	1
11	502687901	Seal	1
12	502895201	Piston Ring	1
	505136051	Seal Kit (Includes Items 5-9, 11-12)	1

FOOTNOTES:
a Refer to Table

Yale Industrial Trucks

FREE-LIFT CYLINDER
(TWO STAGE FULL FREE-LIFT) (GP/GLP 050 TG)

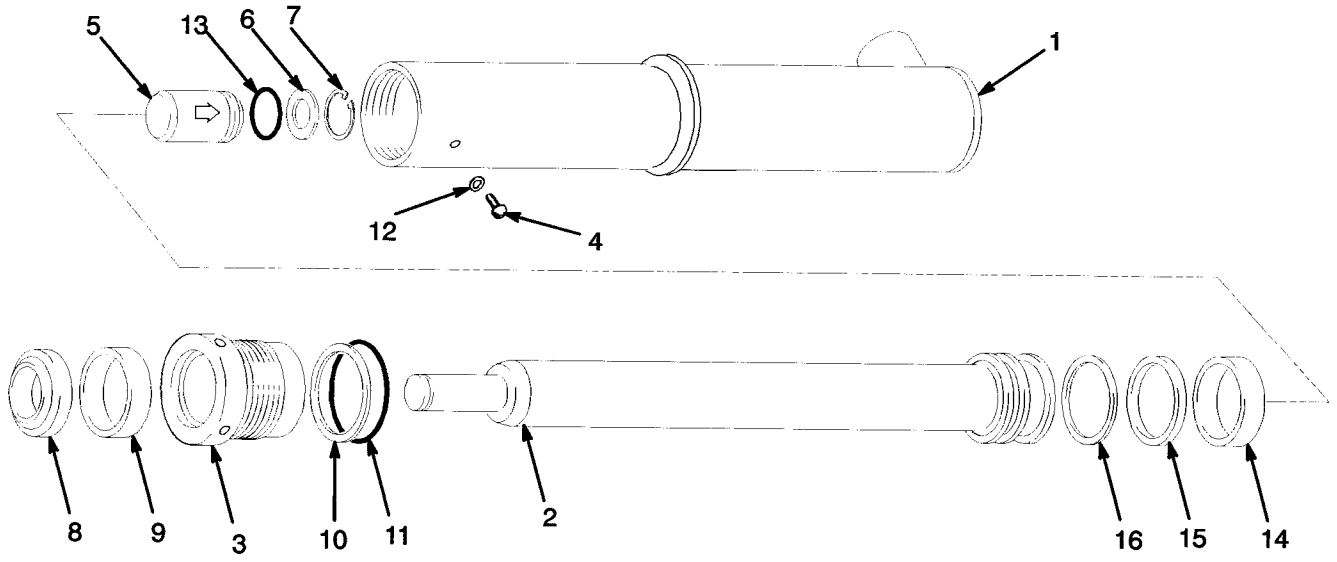

Yale Industrial Trucks

FREE-LIFT CYLINDER
(TWO STAGE FULL FREE-LIFT) (GP/GLP 050 TG)

ITEM	DESCRIPTION	OALH		
		78.0 in.	84.0 in.	94.0 in.
	Mast Group Number	B509 2962	B509 3262	B509 3762
	Cylinder Group Number	8602406	8602409	8602414
	Lift Cylinder	518791691	518791668	518792628
1	Shell	520106606	520106609	520106614
2	Rod	519492607	519492610	519492615

ITEM		PART NO.	DESCRIPTION	QTY
	a	. . . . .	Lift Cylinder	1
1	**a**	. . . . .	Shell	1
2	**a**	. . . . .	Rod	1
3		519493600	Gland	1
4		501753914	Capscrew	1
5		504235239	Check Valve	1
6		504148200	Washer	1
7		501850904	Snap Ring	1
8		504450758	Wiper Ring	1
9		502787903	Seal	1
10		502011903	Back-Up Ring	1
11		500348901	O-Ring	1
12		502687901	Seal	1
13		504232230	O-Ring	1
14		504024210	Wear Ring	1
15		504450734	Seal	1
16		504450732	Back-Up Ring	1
		505136046	Seal Kit (Includes Items 8-16)	1

FOOTNOTES:
a Refer to Table

FREE-LIFT CYLINDER
(TWO STAGE FULL FREE-LIFT) (GP/GLP 060 TG)

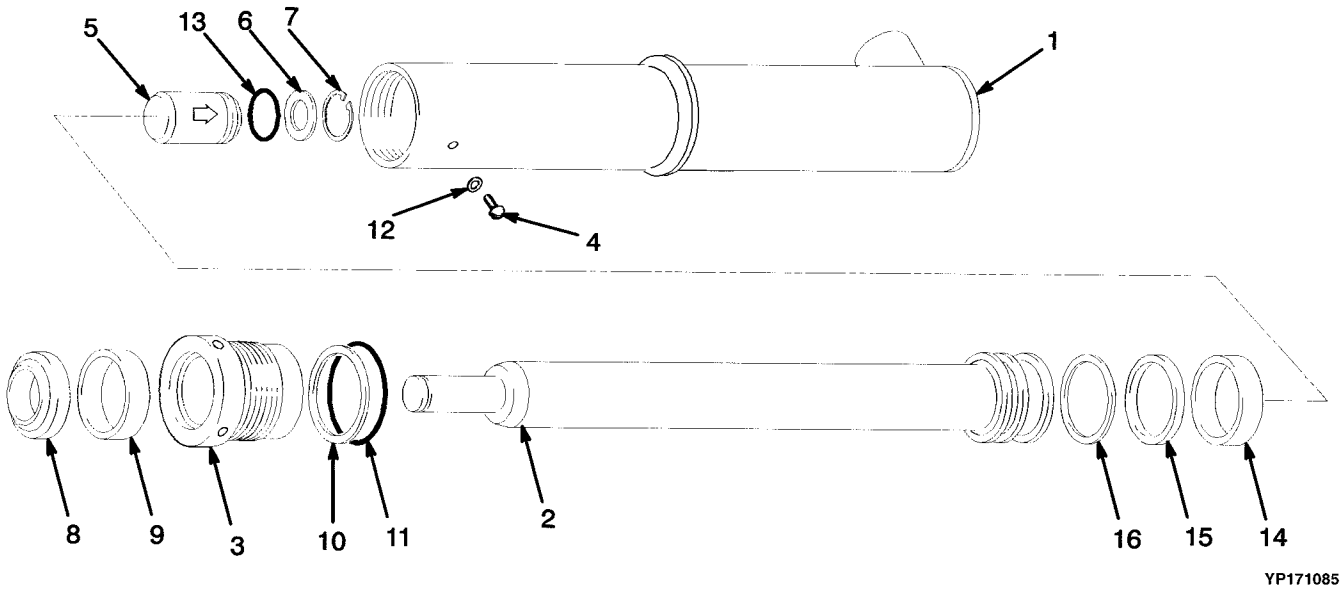

Yale Industrial Trucks

FREE-LIFT CYLINDER
(TWO STAGE FULL FREE-LIFT) (GP/GLP 060 TG)

ITEM	DESCRIPTION	OALH		
		78.0 in.	84.0 in.	94.0 in.
	Mast Group Number	B564 2860	B564 3160	B564 3660
	Cylinder Group Number	8602506	8602509	8602514
	Lift Cylinder	518792652	518792601	518792634
1	Shell	520107606	520107609	520107614
2	Rod	518941607	518941610	518941615

ITEM	PART NO.	DESCRIPTION	QTY
	a	Lift Cylinder	1
1	**a**	Shell	1
2	**a**	Rod	1
3	519493600	Gland	1
4	501753914	Capscrew	1
5	504235239	Check Valve	1
6	504148200	Washer	1
7	501850904	Snap Ring	1
8	504450758	Wiper Ring	1
9	502787903	Seal	1
10	502011903	Back-Up Ring	1
11	015493500	O-Ring	1
12	502687901	Seal	1
13	504232230	O-Ring	1
14	504450757	Wear Ring	1
15	504450754	Seal	1
16	504450756	Back-Up Ring	1
	505136047	Seal Kit (Includes Items 8-16)	1

FOOTNOTES:
a Refer to Table

CARRIAGE
(TWO STAGE FULL FREE-LIFT)

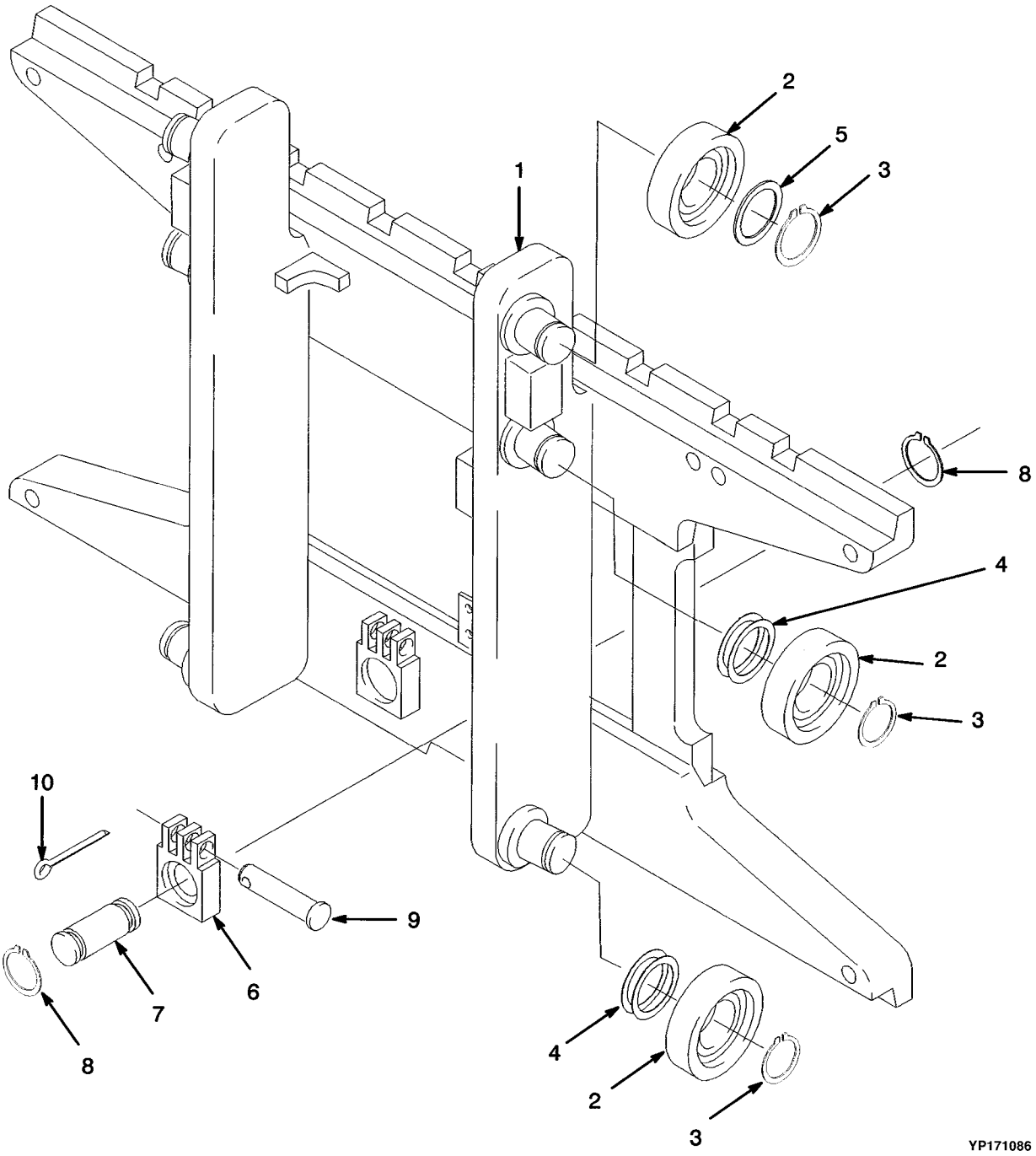

Yale Industrial Trucks

CARRIAGE
(TWO STAGE FULL FREE-LIFT)

KEY:
A: GP/GLP 050 TG
B: GP/GLP 060 TG

ITEM	PART NO.	DESCRIPTION	QTY A	QTY B
	505975556	Carriage Assembly (42 in.) (42 in.)	1	..
	505974546	Carriage Assembly (48 in.) (48 in.)	1	..
	505975547	Carriage Assembly (42 in.) (42 in.)	..	1
	505974520	Carriage Assembly (48 in.) (48 in.)	..	1
1	504072707	Carriage (42 in.)	1	..
1	505977543	Carriage (48 in.)	1	..
1	504072745	Carriage (42 in.)	..	1
1	505977557	Carriage (48 in.)	..	1
2	520036816	Load Roller	6	6
3	015916500	Snap Ring	6	6
4	504071779	Shim (0.020 in.)	AR	AR
5	504072717	Spacer	2	2
6	505978544	Chain Anchor (Dual Hole)	2	..
6	580027878	Chain Anchor (Single Hole) (Optional)	2	..
6	505978527	Chain Anchor (Dual Hole)	..	2
6	580027880	Chain Anchor (Single Hole) (Optional)	..	2
7	504071702	Pin	2	2
8	500227907	Snap Ring	4	4
9	580033718	Pin	2	2
10	015415900	Cotter Pin	2	2

NOTES

13 ATTACHMENTS AND HEADER HOSE GROUP

SECTION 13
ATTACHMENTS AND HEADER HOSE GROUP

DESCRIPTION	PAGE
HEADER HOSE	
THREE STAGE FULL FREE-LIFT	
S/N B508V-24130⇒, S/N B563V-09116⇒	13-24
⇒S/N B508V-24130, ⇒S/N B563V-09116	13-20
TWO STAGE FULL FREE-LIFT	
S/N B509V-03723⇒, S/N B564V-05762⇒	13-32
⇒S/N B509V-03723, ⇒S/N B564V-05762	13-28
TWO STAGE LIMITED FREE-LIFT	
S/N B507V-03172⇒, S/N B562V-02418⇒	13-16
⇒S/N B507V-03172, ⇒S/N B562V-02418	13-12
INTEGRAL SIDE-SHIFT CARRIAGE	
THREE STAGE FULL FREE-LIFT	13-42
TWO STAGE FULL FREE-LIFT	13-40
TWO STAGE LIMITED FREE-LIFT	13-38
INTEGRAL SIDE-SHIFT CYLINDER	13-36
INTEGRAL SIDE-SHIFT HYDRAULIC HOSES	
TWO AND THREE STAGE FULL FREE-LIFT	
GP/GLP 060 TG	13-46
TWO STAGE LIMITED FREE-LIFT	13-44
TWO, THREE AND FOUR STAGE FULL FREE-LIFT	
GP/GLP 050 TG	13-45
SIDE-SHIFT CARRIAGE	
GP/GLP 050 TG	13-2
GP/GLP 060 TG	13-6
SIDE-SHIFT CYLINDER	13-10

Yale Industrial Trucks

SIDE-SHIFT CARRIAGE
(GP/GLP 050 TG)

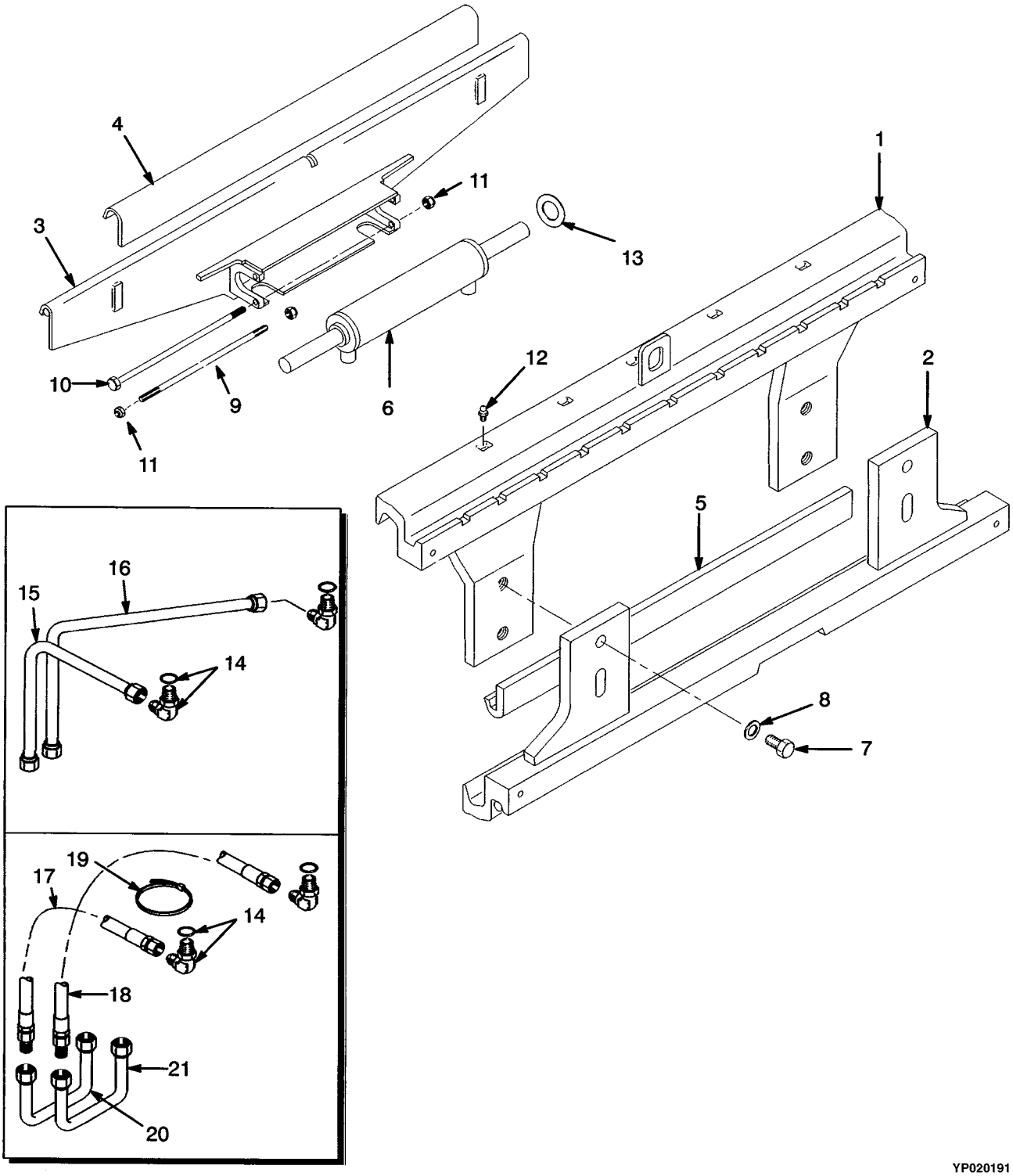

Yale Industrial Trucks

SIDE-SHIFT CARRIAGE (GP/GLP 050 TG)

ITEM		PART NO.	DESCRIPTION	QTY
	c	504243714	Side-Shift Carriage (38 in.)	1
	d	506250524	Side-Shift Carriage (38 in.)	1
	c	504243712	Side-Shift Carriage (42 in.)	1
	d	506250525	Side-Shift Carriage (42 in.)	1
	c	504263788	Side-Shift Carriage (48 in.)	1
	d	506250526	Side-Shift Carriage (48 in.)	1
1	**b**	504071728	Apron (42 in.) (Top)	1
1	**b**	518801652	Apron (48 in.) (Top)	1
1	**b**	900003215	Apron (38 in.)	1
2	**a**	518807605	Apron (38 in.)	1
2	**a**	580010507	Shim (38 in.) (Lower Bearing)	6
2	**a**	518807699	Apron (42 in.) (Lower)	1
2	**a**	580010509	Shim (42 in.) (Lower Bearing)	6
2	**a**	518807682	Apron (48 in.) (Lower)	1
2	**a**	580010512	Shim (48 in.) (Lower Bearing)	6
3	**c**	580002518	Support (38 in.)	1
3	**c**	580002520	Support (42 in.)	1
3	**c**	580002522	Support (48 in.)	1
3	**d**	580010525	Support (38 in.)	1
3	**d**	580010527	Support (42 in.) (42 in.)	1
3	**d**	580010529	Support (48 in.) (48 in.)	1
4	**bc**	504071799	Bearing (Top)	1
4	**bc**	518801665	Bearing (Top)	1
4	**bd**	580010516	Bearing (Top)	1
4	**bd**	580010518	Bearing (Top) (42 in.)	1
4	**bd**	580010520	Bearing (Top) (48 in.)	1
4	**bc**	900003218	Bearing (Top)	1
5	**a**	504071778	Bearing (Lower)	1
5	**a**	518808609	Bearing (Lower)	1
5	**a**	518808644	Bearing (Lower)	1
6		519666601	Side-Shift Cylinder (☞ P10197)	1
7		504061740	Capscrew	4
8		504061794	Washer	4
9		504061746	Rod (Optional)	2
10		518801602	Capscrew	2
11		504230271	Nut (Optional)	4
12		015628700	Lube Fitting	3
12		504230271	Nut	4
13		504061795	Shim (0.020 in.)	AR
14		504061728	Fitting	2
14		056363300	O-Ring	1
15		504071718	Tube (Two Stage Limited Free-Lift)	1
16		504071727	Tube (Two Stage Limited Free-Lift)	1
17		520049875	Hose (Two Stage Full Free-Lift, Three Stage Full Free-Lift)	1
18		520049876	Hose (Two Stage Full Free-Lift, Three Stage Full Free-Lift)	1
19		312850042	Strap Clamp (Two Stage Full Free-Lift, Three Stage Full Free-Lift)	1

SIDE-SHIFT CARRIAGE
(GP/GLP 050 TG)

ITEM	PART NO.	DESCRIPTION	QTY
20	504297725	Tube (Two Stage Full Free-Lift, Three Stage Full Free-Lift)	1
21	504297726	Tube (Two Stage Full Free-Lift, Three Stage Full Free-Lift)	1

FOOTNOTES:
a Bottom
b Top
c ⇒ S/N B601V-05326
d S/N B601V-05326 ⇒

NOTES

Yale Industrial Trucks

SIDE-SHIFT CARRIAGE
(GP/GLP 060 TG)

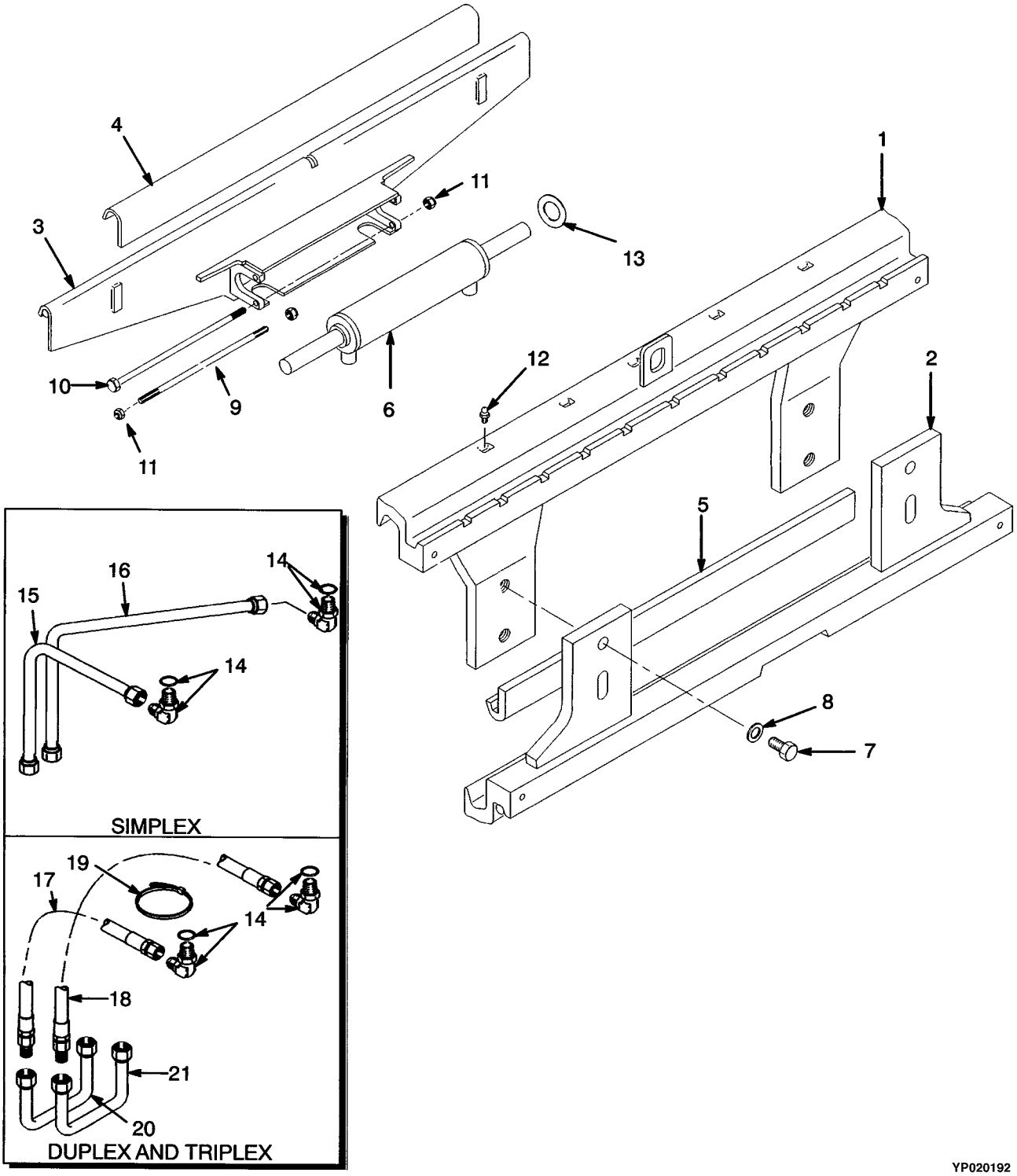

Yale Industrial Trucks

SIDE-SHIFT CARRIAGE (GP/GLP 060 TG)

ITEM		PART NO.	DESCRIPTION	QTY
	e	504243715	Side-Shift Carriage (42 in.)	1
	e	504246710	Side-Shift Carriage (48 in.)	1
	e	504263725	Side-Shift Carriage (38 in.)	1
	f	506250530	Side-Shift Carriage (38 in.)	1
	f	506250531	Carriage (42 in.)	1
	f	506250532	Carriage (48 in.)	1
1	**b**	504071735	Apron (42 in.) (Top)	1
1	**b**	505975580	Apron (48 in.) (Top)	1
1	**b**	518801631	Apron (38 in.) (Top)	1
2	**a**	518808608	Apron (38 in.) (Lower)	1
2	**a**	518808621	Apron (42 in.) (Lower)	1
2	**a**	518808684	Apron (48 in.) (Lower)	1
2	**af**	580010507	Shim (38 in.) (Lower Bearing)	6
2	**af**	580010509	Shim (42 in.) (Lower Bearing)	6
2	**af**	580010512	Shim (48 in.) (Lower Bearing)	6
3	**e**	580002525	Support (38 in.)	1
3	**e**	580002526	Support (42 in.)	1
3	**e**	580002529	Support (48 in.)	1
3	**f**	580010556	Support (38 in.)	1
3	**f**	580010557	Support (42 in.) (42 in.)	1
3	**f**	580010560	Support (48 in.)	1
4	**be**	504071742	Bearing (Top)	1
4	**be**	505975599	Bearing (Top)	1
4	**be**	518796624	Bearing (Top)	1
4	**bf**	580010538	Bearing (Top)	1
4	**bf**	580010539	Bearing (Top) (42 in.)	1
5	**a**	504071745	Bearing (Lower) (42 in.)	1
5	**a**	504071773	Bearing (Lower)	1
5	**a**	518808671	Bearing (Lower) (38 in.)	1
5	**b**	580010542	Bearing (Top)	1
6		519668601	Side-Shift Cylinder	1
7		504071770	Capscrew	4
8		504071792	Washer	4
9		504061746	Rod (Optional)	2
10		518801602	Capscrew	2
11		504230271	Nut (Optional)	4
11		504230271	Nut	4
12		015628700	Lube Fitting	3
13		504061795	Shim (0.020 in.)	AR
14		504061728	Fitting	2
14		056363300	O-Ring	1
15	**d**	504071780	Tube	1
16	**d**	504071737	Tube	1
17	**c**	520049875	Hose	1
18	**c**	520049876	Hose	1
19	**c**	312850042	Strap Clamp	1

SIDE-SHIFT CARRIAGE
(GP/GLP 060 TG)

ITEM		PART NO.	DESCRIPTION	QTY
20	**c**	504297725	Tube	1
21	**c**	504297726	Tube	1

FOOTNOTES:
a Bottom
b Top
c Two Stage Full Free-Lift, Three Stage Full Free-Lift
d Two Stage Limited Free-Lift
e ⇒ S/N B603V-03012
f S/N B630V-03012 ⇒

NOTES

SIDE-SHIFT CYLINDER

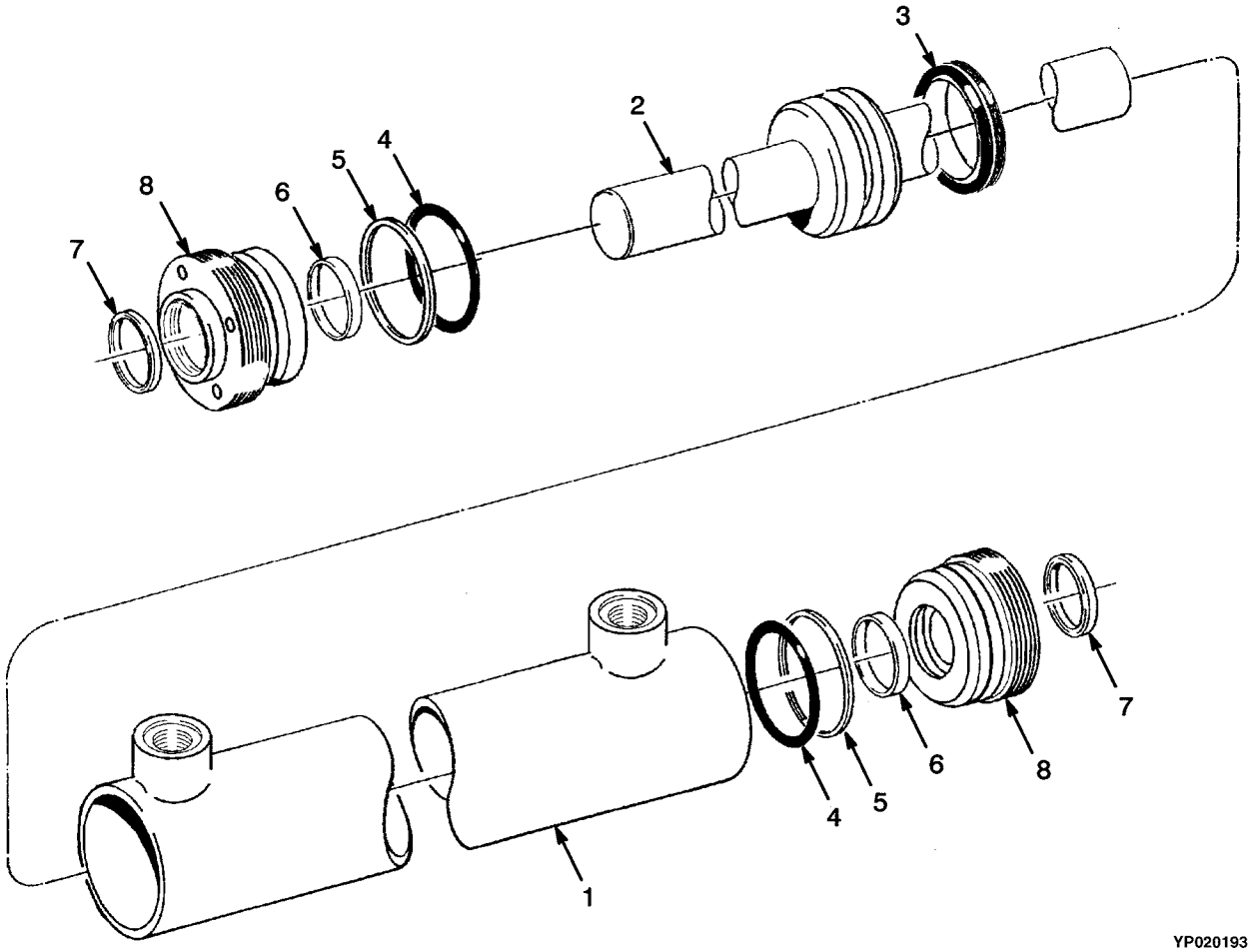

KEY:
A: GP/GLP 050 TG
B: GP/GLP 060 TG

ITEM	PART NO.	DESCRIPTION	QTY A	QTY B
	519666601	Side-Shift Cylinder	1	..
	519668601	Side-Shift Cylinder	..	1
1	519665601	Shell	1	..
1	519667601	Shell	..	1
2	519664602	Rod	..	1
3	504020504	Seal	1	..
3	504020507	Seal	..	1
4	012825700	O-Ring	2	..
4	015492900	O-Ring	..	2
5	500167924	Back-Up Ring	2	..
5	502011909	Back-Up Ring	..	2
6	504234288	Seal	2	2
7	504232210	Wiper Ring	2	2
8	506552501	Gland	2	..
8	506552502	Gland	..	2
	505136053	Seal Kit (Includes Items 4, 6, 8-9)	1	..
	505136054	Seal Kit (Includes Items 5, 7-9)	..	1

HEADER HOSE
(TWO STAGE LIMITED FREE-LIFT)
(⇒S/N B507V-03172, ⇒S/N B562V-02418)

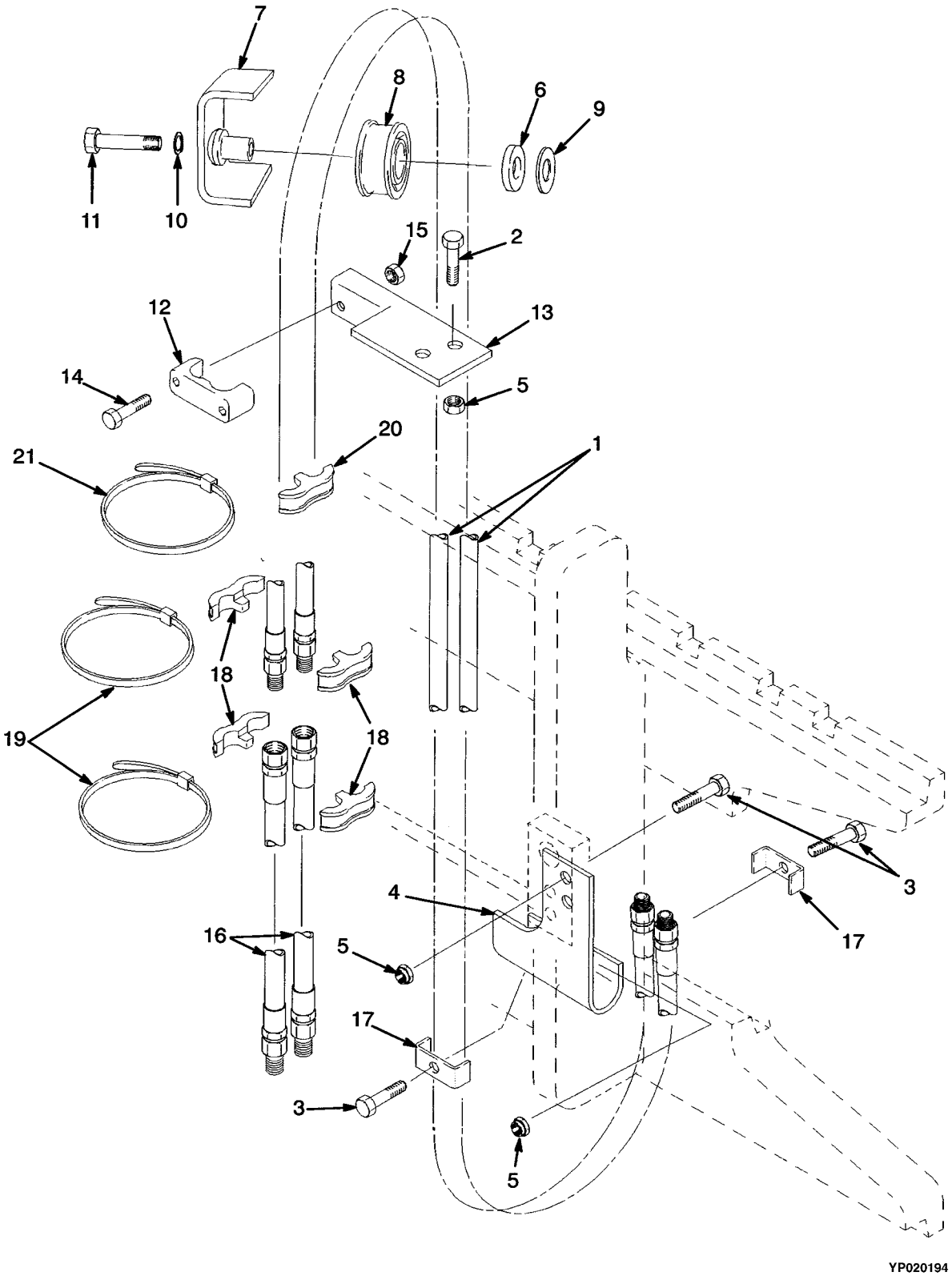

Yale Industrial Trucks

HEADER HOSE
(TWO STAGE LIMITED FREE-LIFT)
(⇒S/N B507V-03172, ⇒S/N B562V-02418)

GP/GLP 050 TG

ITEM	DESCRIPTION	OALH		
		78.0 in.	84.0 in.	94.0 in.
	Mast Group Number	B507 2992	B507 3292	B507 3692
1	Hose	504068724	504068789	504068729
20	Clamp	----	----	504068704
21	Strap Clamp	----	----	504068737

GP/GLP 050 TG (CONT.)

ITEM	DESCRIPTION	OALH		
		96.0 in.	110.0 in.	119.0 in.
	Mast Group Number	B507 3792	B507 4292	B507 4792
1	Hose	504068755	504068760	504068717
20	Clamp	504068704	504068704	504068704
21	Strap Clamp	504068737	504068737	504068737

GP/GLP 060 TG

ITEM	DESCRIPTION	OALH				
		78.0 in.	84.0 in.	94.0 in.	108.0 in.	117.4 in.
	Mast Group Number	B562 2859	B562 3159	B562 3659	B562 4159	B562 4659
1	Hose	504068724	504068789	504068755	504068760	504068717
20	Clamp	----	----	504068704	504068704	504068704
21	Strap Clamp	----	----	504068737	504068737	504068737

KEY:
A: Three Function
B: Four Function

ITEM		PART NO.	DESCRIPTION	QTY A	QTY B
1	a	. . . . .	Hose	2	4
2		449001172	Capscrew	2	4
3		449001028	Capscrew	4	8
4		504069707	Bracket (RH)	1	2
4		504069711	Bracket (LH)	..	1
5		504230271	Nut	6	12
6		505962533	Spacer	1	2
7		505961568	Stubshaft	2	4
8		504301775	Sheave	1	2
9		504070716	Washer	1	2
10		449022017	Lockwasher	1	2
11		449001389	Capscrew	1	2
12		504068794	Clamp	1	2

HEADER HOSE
(TWO STAGE LIMITED FREE-LIFT)
(⇒S/N B507V-03172, ⇒S/N B562V-02418)

ITEM		PART NO.	DESCRIPTION	QTY A	QTY B
13		504068705	Bracket (LH)	..	1
13		504068772	Bracket (RH)	1	1
14		449001272	Capscrew	4	8
15		504231270	Nut	2	4
16		504068703	Hose (LH)	..	2
16		504068790	Hose (RH)	2	2
17		505962578	Clamp	2	4
18		504068704	Clamp	4	8
19		504068737	Strap Clamp	2	4
20	**a**	. . . . .	Clamp	2	4
21	**a**	. . . . .	Strap Clamp	1	2

FOOTNOTES:
a Refer to Table

NOTES

Yale Industrial Trucks

HEADER HOSE
(TWO STAGE LIMITED FREE-LIFT)
(S/N B507V-03172⇒, S/N B562V-02418⇒)

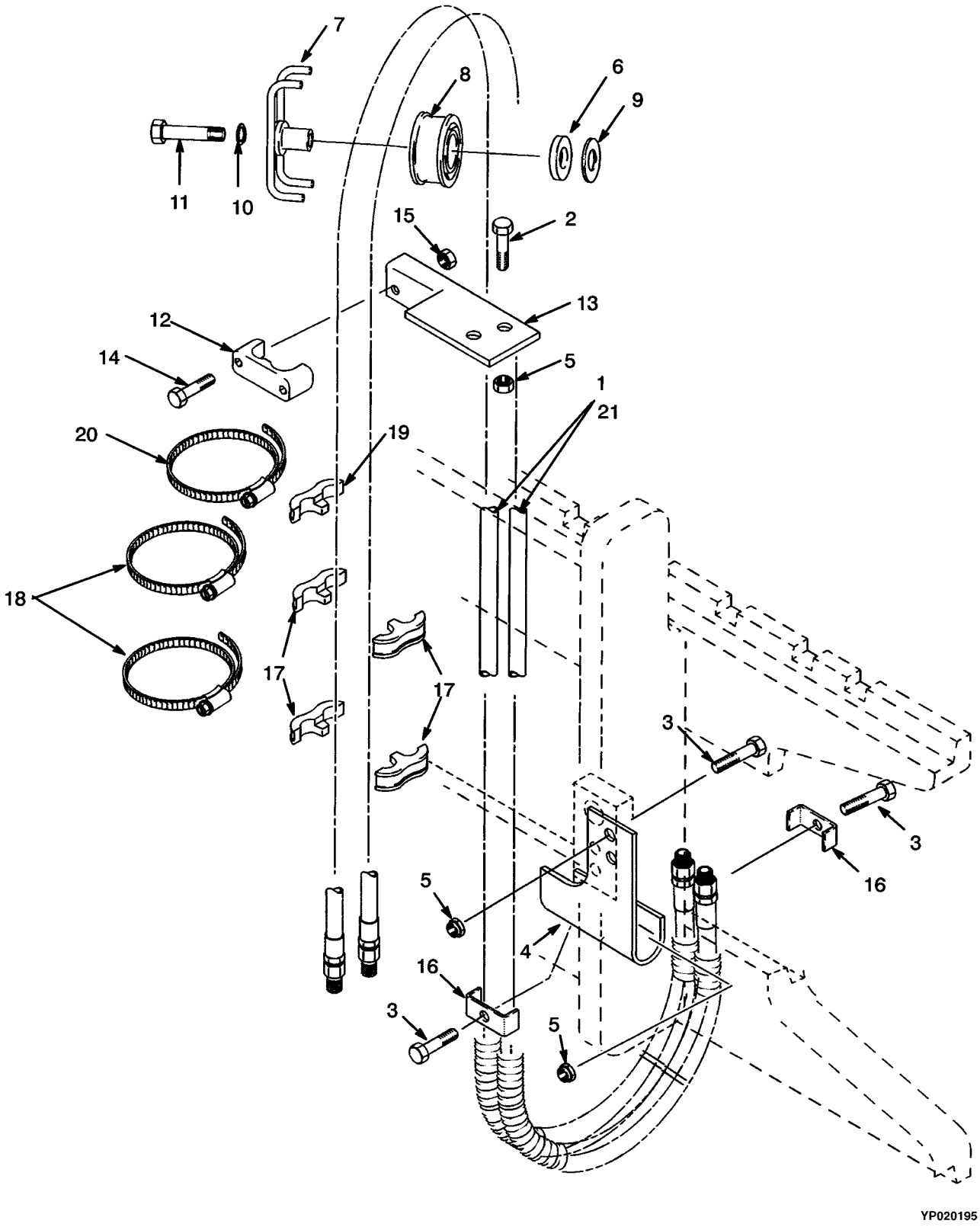

Yale Industrial Trucks

HEADER HOSE
(TWO STAGE LIMITED FREE-LIFT)
(S/N B507V-03172⇒, S/N B562V-02418⇒)

GP/GLP 050 TG

ITEM	DESCRIPTION	OALH		
		78.0 in.	84.0 in.	94.0 in.
	Mast Group Number	B507 2992	B507 3292	B507 3692
1	Hose	505969533	505967529	505967596
19	Clamp	----	----	504068704
20	Clamp	----	----	505965586
21	Hose	506253593	505969571	506254509

GP/GLP 050 TG (CONT.)

ITEM	DESCRIPTION	OALH		
		96.0 in.	110.0 in.	119.0 in.
	Mast Group Number	B507 3792	B507 4292	B507 4792
1	Hose	505967559	504068738	505967599
19	Clamp	504068704	504068704	504068704
20	Clamp	505965586	505965586	505965586
21	Hose	506254512	506254545	506254541

GP/GLP 060 TG

ITEM	DESCRIPTION	OALH				
		78.0 in.	84.0 in.	94.0 in.	108.0 in.	117.4 in.
	Mast Group Number	B562 2859	B562 3159	B562 3659	B562 4159	B562 4659
1	Hose	505969533	505967529	505967596	505967559	505967599
19	Clamp	----	----	504068704	504068704	504068704
20	Clamp	----	----	505965586	505965586	505965586
21	Hose	506253593	505969571	506254512	506254545	506254541

KEY:
A: Three Function
B: Four Function

ITEM		PART NO.	DESCRIPTION	QTY A	QTY B
1	a	. . . . .	Hose	2	4
2		449001172	Capscrew	2	2
3		449001028	Capscrew	4	8
4		504069707	Bracket (RH)	1	2
4		504069711	Bracket (LH)	..	1
5		504230271	Nut	6	12
6		505962533	Spacer	1	2
7		505961568	Stubshaft	2	4
8		504301775	Sheave	1	2

HEADER HOSE
(TWO STAGE LIMITED FREE-LIFT)
(S/N B507V-03172⇒, S/N B562V-02418⇒)

ITEM		PART NO.	DESCRIPTION	QTY A	QTY B
9		504070716	Washer	1	2
10		449022017	Lockwasher	1	2
11		449001389	Capscrew	1	2
12		504068794	Clamp	1	2
13		504068705	Bracket (LH)	..	1
13		504068772	Bracket (RH)	1	1
14		449001272	Capscrew	2	4
15		504231270	Nut	2	4
16		505962578	Clamp	2	4
17		504068704	Clamp	4	8
18		505965586	Clamp	2	4
19	**a**	. . . . .	Clamp	1	2
20	**a**	. . . . .	Clamp	1	2
21	**a**	. . . . .	Hose	..	2

FOOTNOTES:
a Refer to Table

NOTES

HEADER HOSE
(THREE STAGE FULL FREE-LIFT)
(⇒S/N B508V-24130, ⇒S/N B563V-09116)

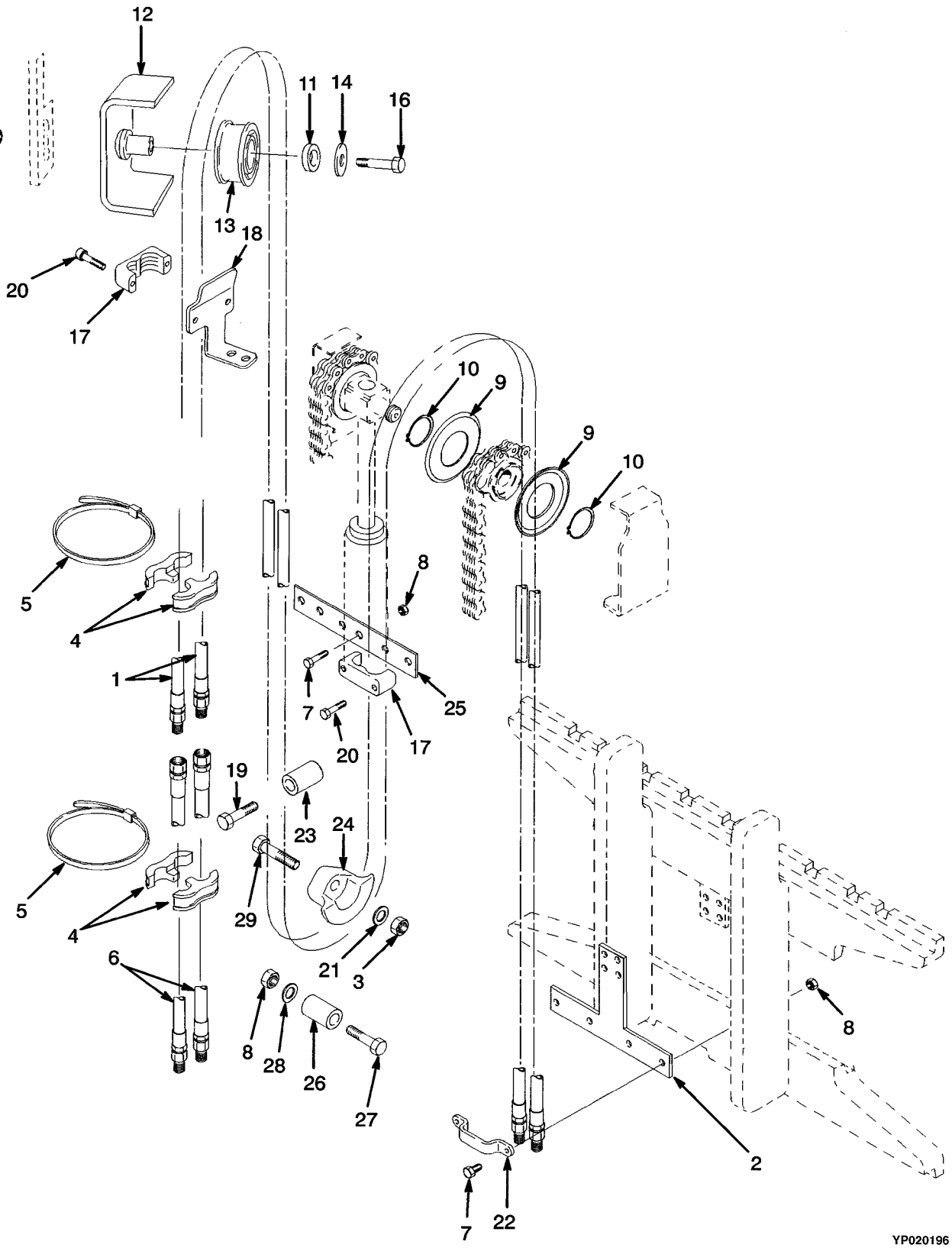

Yale Industrial Trucks

HEADER HOSE
(THREE STAGE FULL FREE-LIFT)
(⇒S/N B508V-24130, ⇒S/N B563V-09116)

GP/GLP 050 TG

ITEM	DESCRIPTION	OALH		
		76.0 in.	80.0 in.	82.0 in.
	Mast Group Number	B508 4310	B508 4460	B508 4760
1	Hose	504070700	505968542	505968581
2	Bracket	504297721	504297721	504297721

GP/GLP 050 TG (CONT.)

ITEM	DESCRIPTION	OALH		
		84.0 in.	88.0 in.	94.0 in.
	Mast Group Number	B508 4910	B508 5060	B508 5510
1	Hose	504070785	504070703	505968541
2	Bracket	504297721	504297721	504297721

GP/GLP 060 TG

ITEM	DESCRIPTION	OALH				
		76.0 in.	82.0 in.	84.0 in.	88.0 in.	94.0 in.
	Mast Group Number	B563 4118	B563 4568	B563 4718	B563 4868	B563 5318
1	Hose	504070700	505968581	504070785	504070703	505968541
2	Bracket	504297722	504297722	504297722	504297722	504297722

KEY:
A: Three Function
B: Four Function

ITEM		PART NO.	DESCRIPTION	QTY A	QTY B
1	a	. . . . .	Hose	2	4
2	a	. . . . .	Bracket	1	2
3		909882404	Nut	1	2
4		504068704	Clamp	4	8
5		504068737	Strap Clamp	2	4
6		504068790	Hose (RH)	2	4
6		504068703	Hose (LH)	..	2
7		449001014	Capscrew	8	16
8		504230271	Nut	9	18
9		504070756	Hose Guide	2	4
10		504070721	Snap Ring	2	4
11		505962533	Spacer	1	2
12		505961568	Stubshaft	1	2
13		504301775	Sheave	1	2
14		504070716	Washer	2	4
15		520053804	Nut	2	4
16		449001389	Capscrew	2	4

HEADER HOSE
(THREE STAGE FULL FREE-LIFT)
(⇒S/N B508V-24130, ⇒S/N B563V-09116)

ITEM	PART NO.	DESCRIPTION	QTY A	QTY B
17	504068794	Clamp	2	4
18	504069792	Bracket (LH)	..	1
18	504070735	Bracket (RH)	1	1
19	449001117	Capscrew	1	2
20	932107905	Capscrew	4	4
21	504071785	Washer	1	2
22	505978597	Clamp	1	2
23	504069761	Tube	1	2
24	520039810	Hose Guide (RH)	1	2
24	520039872	Hose Guide (LH)	..	1
25	504069740	Plate	1	1
26	504071766	Restraint	1	2
27	449001052	Capscrew	1	2
28	504226242	Washer	1	2
29	449001015	Capscrew	1	2

FOOTNOTES:
a Refer to Table

NOTES

Yale Industrial Trucks

HEADER HOSE
(THREE STAGE FULL FREE-LIFT)
(S/N B508V-24130⇒, S/N B563V-09116⇒)

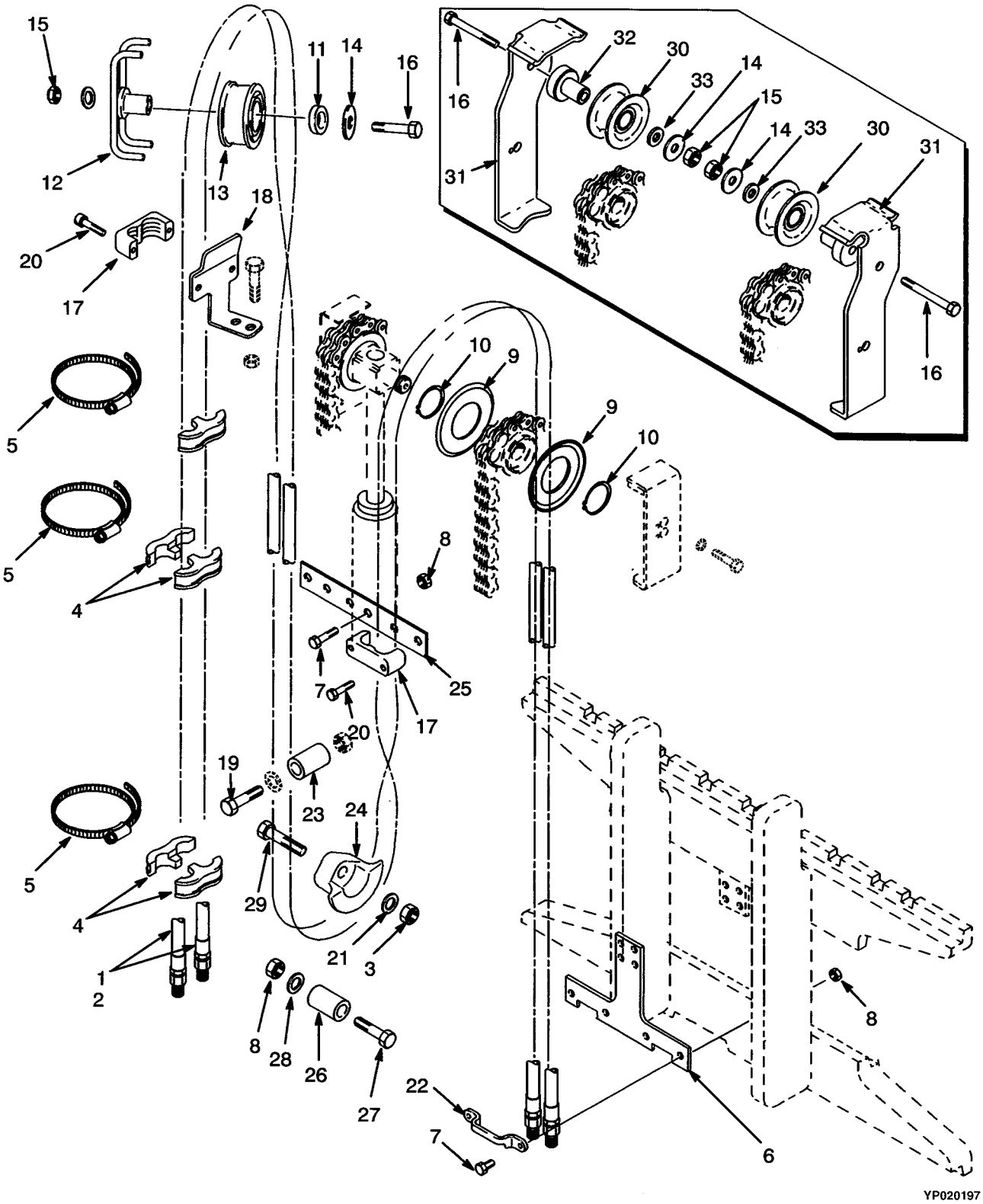

Yale Industrial Trucks

HEADER HOSE
(THREE STAGE FULL FREE-LIFT)
(S/N B508V-24130⇒, S/N B563V-09116⇒)

GP/GLP 050 TG

ITEM	DESCRIPTION	OALH		
		76.0 in.	80.0 in.	82.0 in.
	Mast Group Number	B508 4310	B508 4460	B508 4760
1	Hose	505969572	505969557	505968581
2	Hose	900004233	504063766	506256551
6	Bracket	504297721	504297721	504297721

GP/GLP 050 TG (CONT.)

ITEM	DESCRIPTION	OALH		
		84.0 in.	88.0 in.	94.0 in.
	Mast Group Number	B508 4910	B508 5060	B508 5510
1	Hose	505969548	518799644	518799631
2	Hose	518799665	505968570	506254595
6	Bracket	504297721	504297721	504297721

GP/GLP 060 TG

ITEM	DESCRIPTION	OALH				
		76.0 in.	82.0 in.	84.0 in.	88.0 in.	94.0 in.
	Mast Group Number	B563 4118	B563 4568	B563 4718	B563 4868	B563 5318
1	Hose	505969572	518799673	505969548	518799644	518799631
2	Hose	900004233	506256551	518799665	505968570	506254595
6	Bracket	504297722	504297722	504297722	504297722	504297722

KEY:
A: Three Function
B: Four Function

ITEM		PART NO.	DESCRIPTION	QTY A	QTY B
1	a	. . . . .	Hose	2	2
2	a	. . . . .	Hose	..	2
3		909882404	Nut	1	2
4		504068704	Clamp	4	8
5		505965586	Clamp	2	4
6	a	. . . . .	Bracket	1	2
7		449001014	Capscrew	8	10
8		504230271	Nut	9	10
9		504070756	Hose Guide	2	4
10		504070721	Snap Ring	2	4
11		505962533	Spacer	1	2
12		505961568	Stubshaft	1	2
13		504301775	Sheave	1	2

HEADER HOSE
(THREE STAGE FULL FREE-LIFT)
(S/N B508V-24130⇒, S/N B563V-09116⇒)

ITEM	PART NO.	DESCRIPTION	QTY A	QTY B
14	504070716	Washer	2	4
15	520053804	Nut	2	4
16	449001389	Capscrew	2	4
17	504068794	Clamp	2	4
18	504069792	Bracket (LH)	..	1
18	504070735	Bracket (RH)	1	2
19	449001117	Capscrew	1	2
20	932107905	Capscrew	2	4
21	504071785	Washer	1	2
22	505978597	Clamp	1	2
23	504069761	Tube	1	2
24	520039810	Hose Guide (RH)	1	2
24	520039872	Hose Guide (LH)	..	1
25	504069740	Plate	1	2
26	504071766	Restraint	1	2
27	449001052	Capscrew	1	2
28	504226242	Washer	1	2
29	449001015	Capscrew	1	2
31	580009288	Bracket (RH)	1	1
32	580009289	Bracket (LH)	..	1
33	580009291	Spacer	1	2
34	504070764	Sheave	1	2
35	580009290	Stubshaft	1	2

FOOTNOTES:
a Refer to Table

NOTES

HEADER HOSE
(TWO STAGE FULL FREE-LIFT)
(⇒S/N B509V-03723, ⇒S/N B564V-05762)

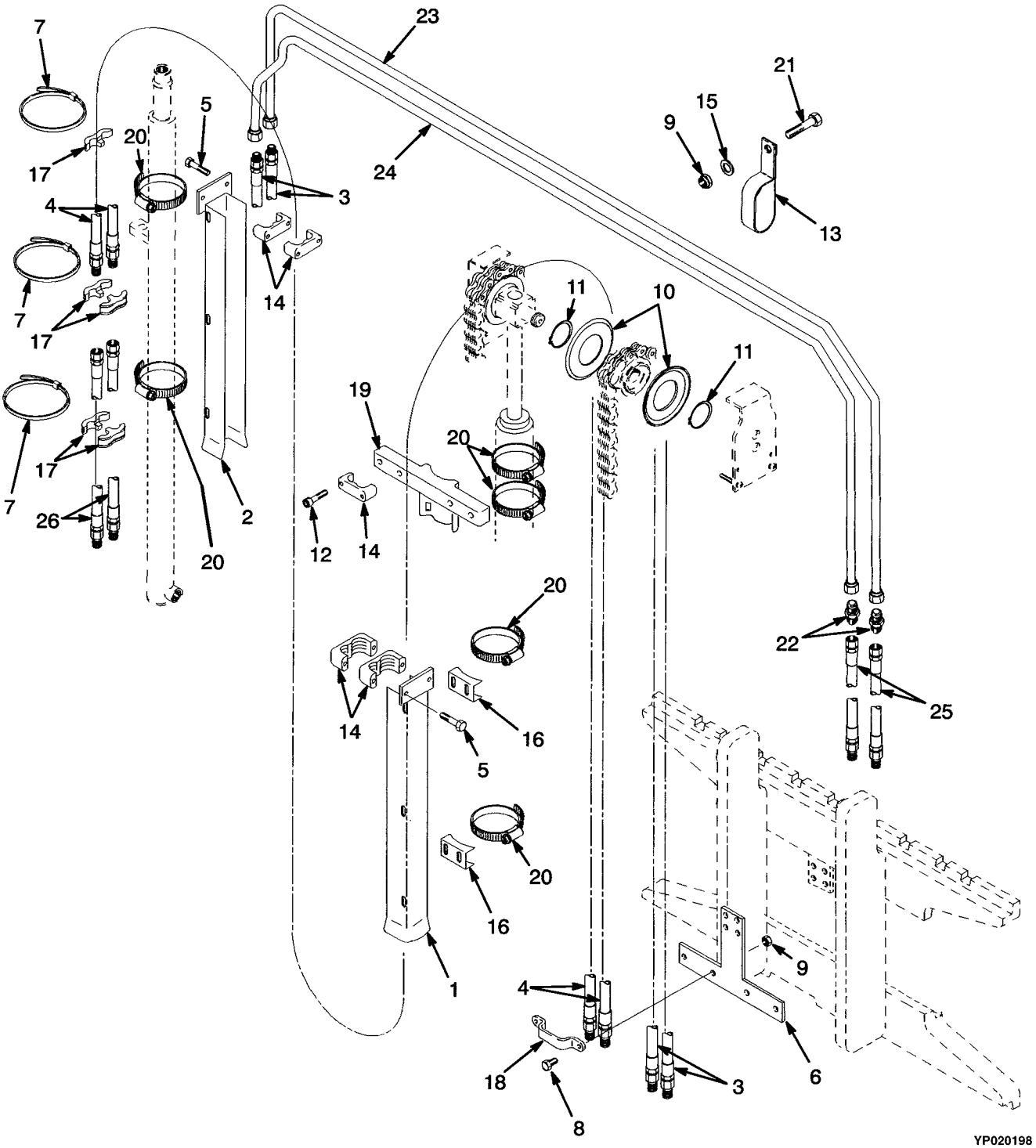

Yale Industrial Trucks

HEADER HOSE
(TWO STAGE FULL FREE-LIFT)
(⇒S/N B509V-03723, ⇒S/N B564V-05762)

GP/GLP 050 TG

ITEM	DESCRIPTION	OALH		
		78.0 in.	84.0 in.	94.0 in.
	Mast Group Number	B509 2962	B509 3262	B509 3762
1	Channel	518795675	505978552	900004210
2	Channel	900004216	900004217	505976557
3	Hose	520047863	----	----
4	Hose	520047854	----	----
6	Bracket	504297721	504297721	504297721
23	Tube	504070726	504070713	504070784
24	Tube	504068779	504068710	504069771

GP/GLP 060 TG

ITEM	DESCRIPTION	OALH		
		78.0 in.	84.0 in.	94.0 in.
	Mast Group Number	B564 2860	B564 3160	B564 3660
1	Channel	518795675	505978552	900004214
2	Channel	900004216	900004217	505976557
3	Hose	520047863	----	----
4	Hose	520047854	----	----
6	Bracket	504297722	504297722	504297722
23	Tube	504070726	504070713	504070784
24	Tube	504068779	504068710	504069771

KEY:
A: Three Function
B: Four Function

ITEM		PART NO.	DESCRIPTION	QTY A	QTY B
1	**a**	. . . . .	Channel	1	1
2	**a**	. . . . .	Channel	1	1
3	**a**	. . . . .	Hose	2	2
4	**a**	. . . . .	Hose	..	2
5		504057704	Bolt	4	..
5		932107909	Capscrew	..	4
6	**a**	. . . . .	Bracket	1	1
7		504068737	Strap Clamp	3	6
8		449001014	Capscrew	5	10
9		504230271	Nut	7	9
10		504070756	Hose Guide	2	4
11		504070721	Snap Ring	2	4
12		504057704	Bolt	2	4
13		500412906	Clamp	1	1

HEADER HOSE
(TWO STAGE FULL FREE-LIFT)
(⇒S/N B509V-03723, ⇒S/N B564V-05762)

ITEM		PART NO.	DESCRIPTION	QTY A	QTY B
14		504068794	Clamp	3	6
15		449021001	Washer	1	1
16		505959500	Clamp	2	2
17		504068704	Clamp	5	10
18		505978597	Clamp	1	2
19		505961505	Bracket	1	1
20		066891800	Clamp	6	6
21		449001134	Capscrew	1	1
22		013397900	Fitting	2	2
23	**a**	. . . . .	Tube	1	1
24	**a**	. . . . .	Tube	1	1
25		504068790	Hose	2	2
26		504068703	Hose	..	2

FOOTNOTES:
a Refer to Table

NOTES

Yale Industrial Trucks

HEADER HOSE
(TWO STAGE FULL FREE-LIFT)
(S/N B509V-03723⇒, S/N B564V-05762⇒)

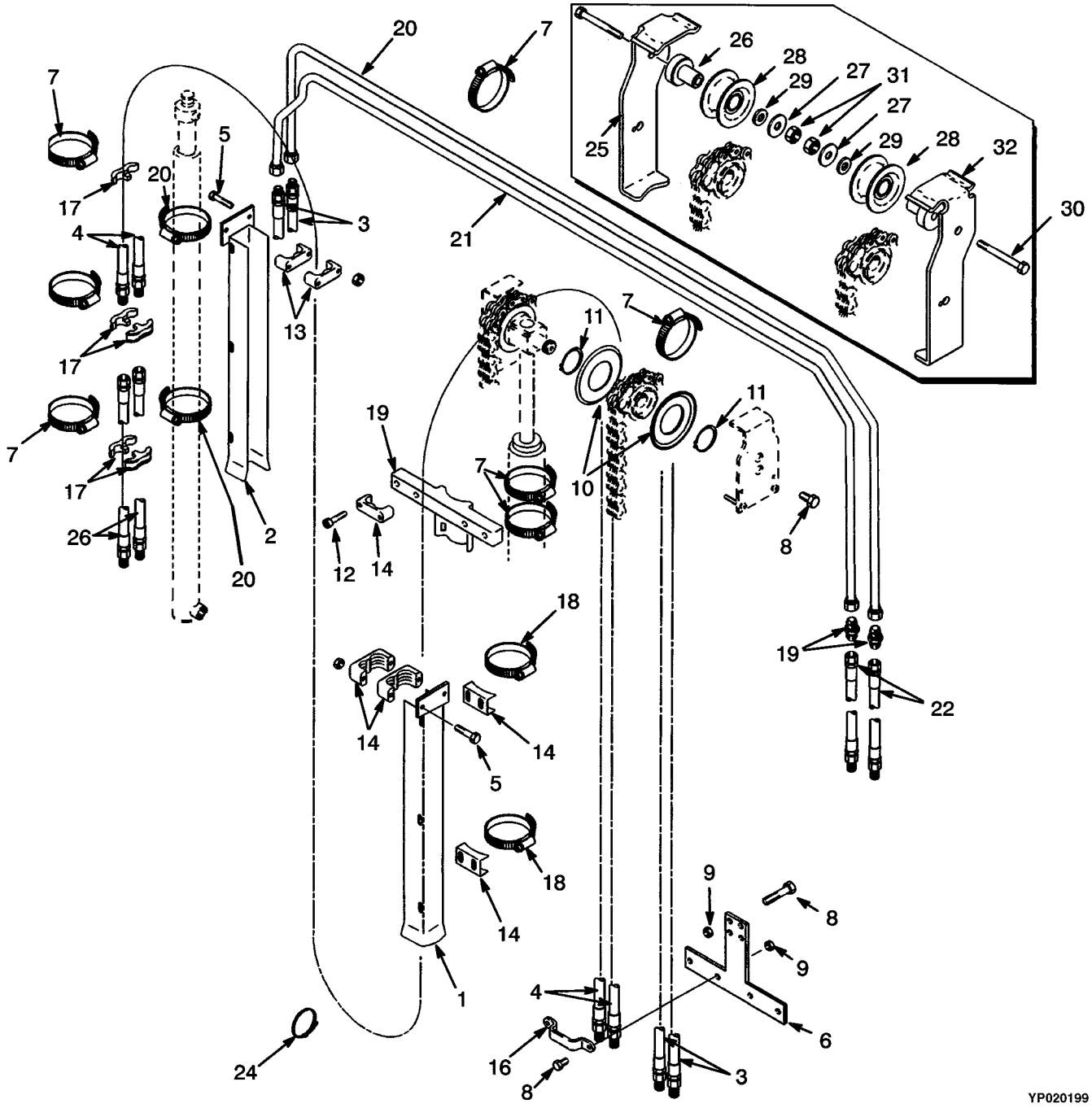

Yale Industrial Trucks

HEADER HOSE
(TWO STAGE FULL FREE-LIFT)
(S/N B509V-03723⇒, S/N B564V-05762⇒)

GP/GLP 050 TG

ITEM	DESCRIPTION	OALH		
		78.0 in.	84.0 in.	94.0 in.
	Mast Group Number	B509 2962	B509 3262	B509 3762
1	Channel	518795675	505978552	900004210
2	Channel	900004216	900004217	505976557
3	Hose	504062735	505969566	520047855
4	Hose	900004230	518799679	505968582
6	Bracket	504297721	504297721	504297721
20	Tube	504070726	504070713	504070784
21	Tube	504068779	504068710	504069771

GP/GLP 060 TG

ITEM	DESCRIPTION	OALH		
		78.0 in.	84.0 in.	94.0 in.
	Mast Group Number	B564 2860	B564 3160	B564 3660
1	Channel	518795675	505978552	900004214
2	Channel	900004216	900004217	505976557
3	Hose	504062735	505969566	520047855
4	Hose	900004230	518799679	505968582
6	Bracket	504297722	504297722	504297722
20	Tube	504070726	504070713	504070784
21	Tube	504068779	504068710	504069771

KEY:
A: Three Function
B: Four Function

ITEM		PART NO.	DESCRIPTION	QTY A	QTY B
1	**a**	. . . . .	Channel	1	1
2	**a**	. . . . .	Channel	1	1
3	**a**	. . . . .	Hose	2	2
4	**a**	. . . . .	Hose	..	2
5		932107909	Capscrew	..	4
5		932200905	Capscrew	4	..
6	**a**	. . . . .	Bracket	1	1
7		505965586	Clamp	9	12
8		449001014	Capscrew	6	8
9		504230271	Nut	6	8
10		504070756	Hose Guide	2	4
11		504070721	Snap Ring	2	4
12		932200905	Capscrew	2	2
13		504068794	Clamp	2	3

Yale Industrial Trucks

HEADER HOSE
(TWO STAGE FULL FREE-LIFT)
(S/N B509V-03723⇒, S/N B564V-05762⇒)

ITEM		PART NO.	DESCRIPTION	QTY A	QTY B
14		505959500	Clamp	2	2
15		504068704	Clamp	5	10
16		505978597	Clamp	1	2
17		505961505	Bracket	1	1
18		505965599	Clamp	2	2
19		013397900	Fitting	2	2
20	**a**	. . . . .	Tube	1	1
21	**a**	. . . . .	Tube	1	1
22		504068790	Hose	2	2
23		504068703	Hose	1	2
24		504070790	Strap Clamp	..	2
25		580009288	Bracket (RH)	1	1
26		580009290	Stubshaft	1	2
27		580009291	Spacer	1	2
28		504070764	Sheave	1	2
29		504070716	Washer	1	2
30		449001389	Capscrew	1	2
31		909882405	Nut	1	2
32		580009289	Bracket (LH)	..	1

FOOTNOTES:
a Refer to Table

NOTES

INTEGRAL SIDE-SHIFT CYLINDER

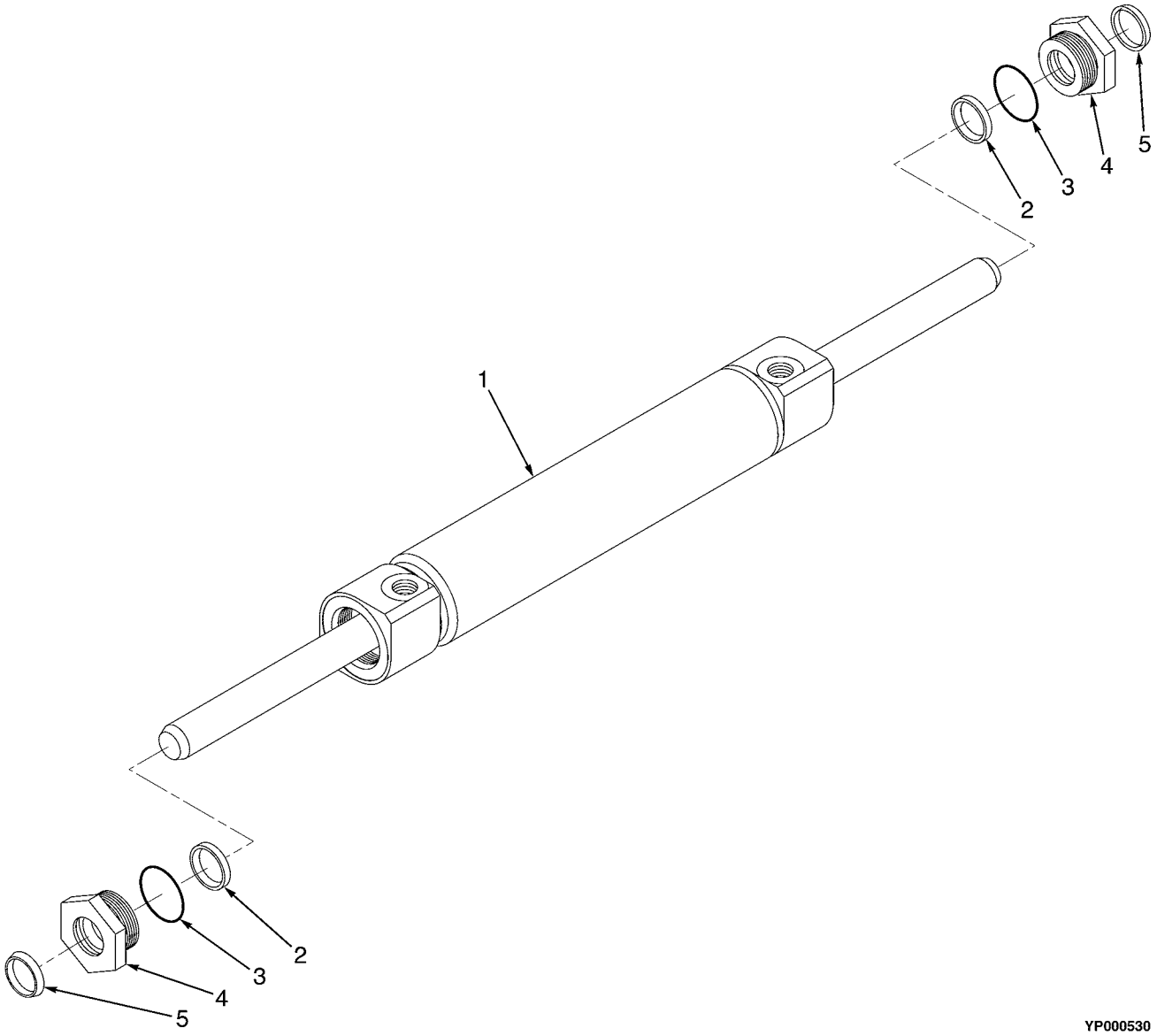

ITEM		PART NO.	DESCRIPTION	QTY
	b	580020709	Cylinder Assembly	1
	a	580020708	Cylinder Assembly	1
1	**a**	580020710	Cylinder	1
1	**b**	580020711	Cylinder	1
2		580020721	Rod Seal	2
3		580020719	O-Ring	2
4		580026724	Retainer	2
5		580020741	Rod Wiper	2
		580027520	Seal Kit (Includes Items 2-3, 5)	1

FOOTNOTES:

a GP/GLP 050 TG

b GP/GLP 060 TG

Yale Industrial Trucks

INTEGRAL SIDE-SHIFT CARRIAGE (TWO STAGE LIMITED FREE-LIFT)

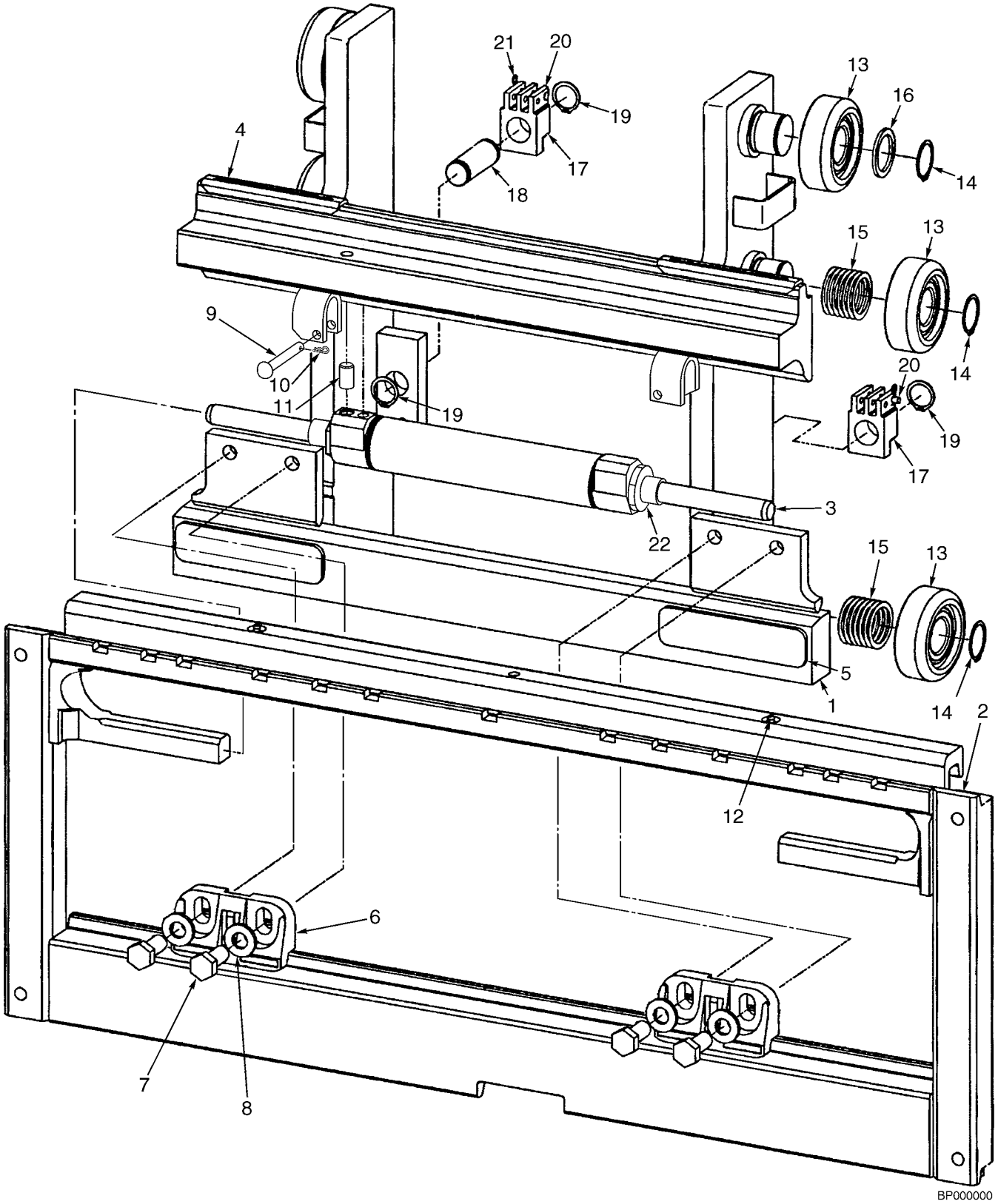

Yale Industrial Trucks

INTEGRAL SIDE-SHIFT CARRIAGE (TWO STAGE LIMITED FREE-LIFT)

ITEM		PART NO.	DESCRIPTION	QTY
	a	580023764	Side-Shift Carriage (38 in.)	1
	b	580023982	Side-Shift Carriage (38 in.)	1
	a	580023768	Side-Shift Carriage (42 in.)	1
	b	580023980	Side-Shift Carriage (42 in.)	1
	a	580023771	Side-Shift Carriage (48 in.)	1
	b	580023981	Side-Shift Carriage (48 in.)	1
1	**a**	580023791	Frame (38 in.) (Inner)	1
1	**b**	580020700	Frame (38 in.) (Inner)	1
1	**a**	580023795	Frame (42 in., 48 in.) (Inner)	1
1	**b**	580026773	Frame (42 in., 48 in.) (Inner)	1
2	**a**	580023799	Frame (38 in.)	1
2	**b**	580023783	Frame (38 in.) (Outer)	1
2	**a**	580023800	Frame (42 in.) (Outer)	1
2	**b**	580023784	Frame (42 in.) (Outer)	1
2	**a**	580023801	Frame (48 in.) (Outer)	1
2	**b**	580023785	Frame (48 in.) (Outer)	1
3		580020708	Cylinder Assembly (☞ P12583)	1
4	**a**	580020724	Bearing (Upper)	2
4	**b**	580020725	Bearing (Upper)	2
5	**a**	580020726	Bearing (Lower)	2
5	**b**	580020727	Bearing (Lower)	2
6		580020723	Hook (Lower)	4
7		449001400	Capscrew	4
8		061278300	Washer	4
9		580026721	Pin	2
10		580026723	Cotter Pin	2
11		580026725	Pin	1
12		015628700	Lube Fitting	2
13		520036816	Load Roller	6
14		015916500	Snap Ring	6
15		504071779	Shim (0.020 in.)	28
16		504072717	Spacer	6
17		505978544	Chain Anchor (Dual Hole)	2
17		580027877	Chain Anchor (Single Hole)	2
18		504071702	Pin	2
19		500227907	Snap Ring	4
20		580033718	Pin	2
21		015415900	Cotter Pin	2
22		580026720	Shim	AR

FOOTNOTES:

a GP/GLP 050 TG

b GP/GLP 060 TG

Yale Industrial Trucks

INTEGRAL SIDE-SHIFT CARRIAGE
(TWO STAGE FULL FREE-LIFT)

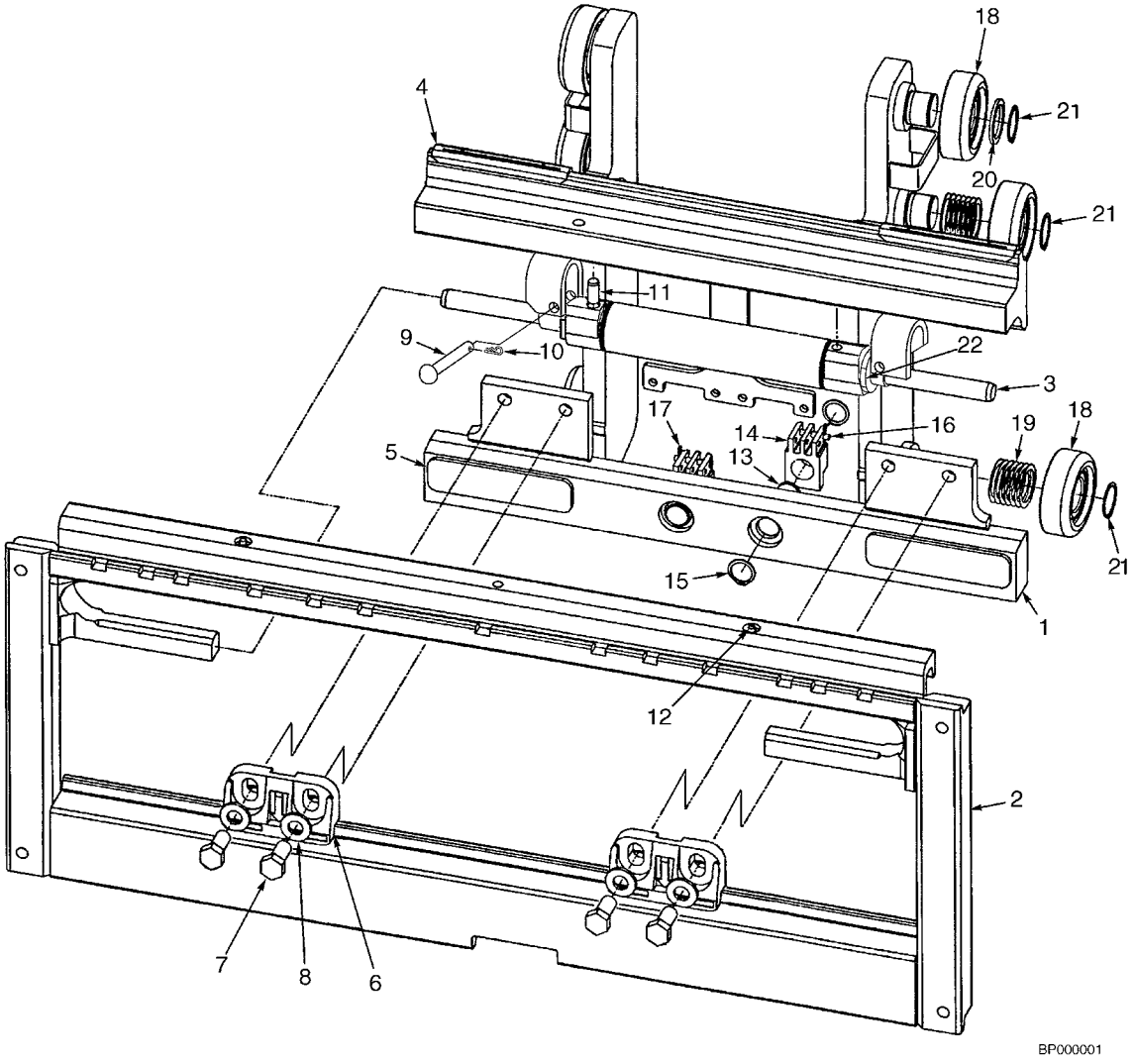

Yale Industrial Trucks

INTEGRAL SIDE-SHIFT CARRIAGE (TWO STAGE FULL FREE-LIFT)

ITEM		PART NO.	DESCRIPTION	QTY
	a	580023765	Side-Shift Carriage (38 in.)	1
	b	580023774	Side-Shift Carriage (38 in.)	1
	a	580023769	Side-Shift Carriage (42 in.)	1
	b	580023776	Side-Shift Carriage (42 in.)	1
	a	580023772	Side-Shift Carriage (48 in.)	1
	b	580023778	Side-Shift Carriage (48 in.)	1
1	**a**	580023792	Frame (38 in.) (Inner)	1
1	**b**	580020703	Frame (38 in.) (Inner)	1
1	**a**	580023796	Frame (42 in., 48 in.) (Inner)	1
1	**b**	580023781	Frame (42 in., 48 in.) (Inner)	1
2	**a**	580023799	Frame (38 in.)	1
2	**b**	580023783	Frame (38 in.) (Outer)	1
2	**a**	580023800	Frame (42 in.) (Outer)	1
2	**b**	580023784	Frame (42 in.) (Outer)	1
2	**a**	580023801	Frame (48 in.) (Outer)	1
2	**b**	580023785	Frame (48 in.) (Outer)	1
3		580020708	Cylinder Assembly	1
4		580020724	Bearing (Upper)	2
5		580020726	Bearing (Lower)	2
6		580020723	Hook (Lower)	4
7		449001400	Capscrew	4
8		061278300	Washer	4
9		580026721	Pin	2
10		580026723	Cotter Pin	2
11		580026725	Pin	1
12		015628700	Lube Fitting	2
13		580023595	Pin	2
14		505978544	Chain Anchor (Dual Hole)	2
14		580027878	Chain Anchor (Single Hole)	2
15		500227907	Snap Ring	4
16		580033718	Pin	2
17		015415900	Cotter Pin	2
18		520036816	Load Roller	6
19		504071779	Shim (0.020 in.)	28
20		504072717	Spacer	6
21		015916300	Snap Ring	6
22		580026720	Shim	AR

FOOTNOTES:

a GP/GLP 050 TG

b GP/GLP 060 TG

Yale Industrial Trucks

INTEGRAL SIDE-SHIFT CARRIAGE
(THREE STAGE FULL FREE-LIFT)

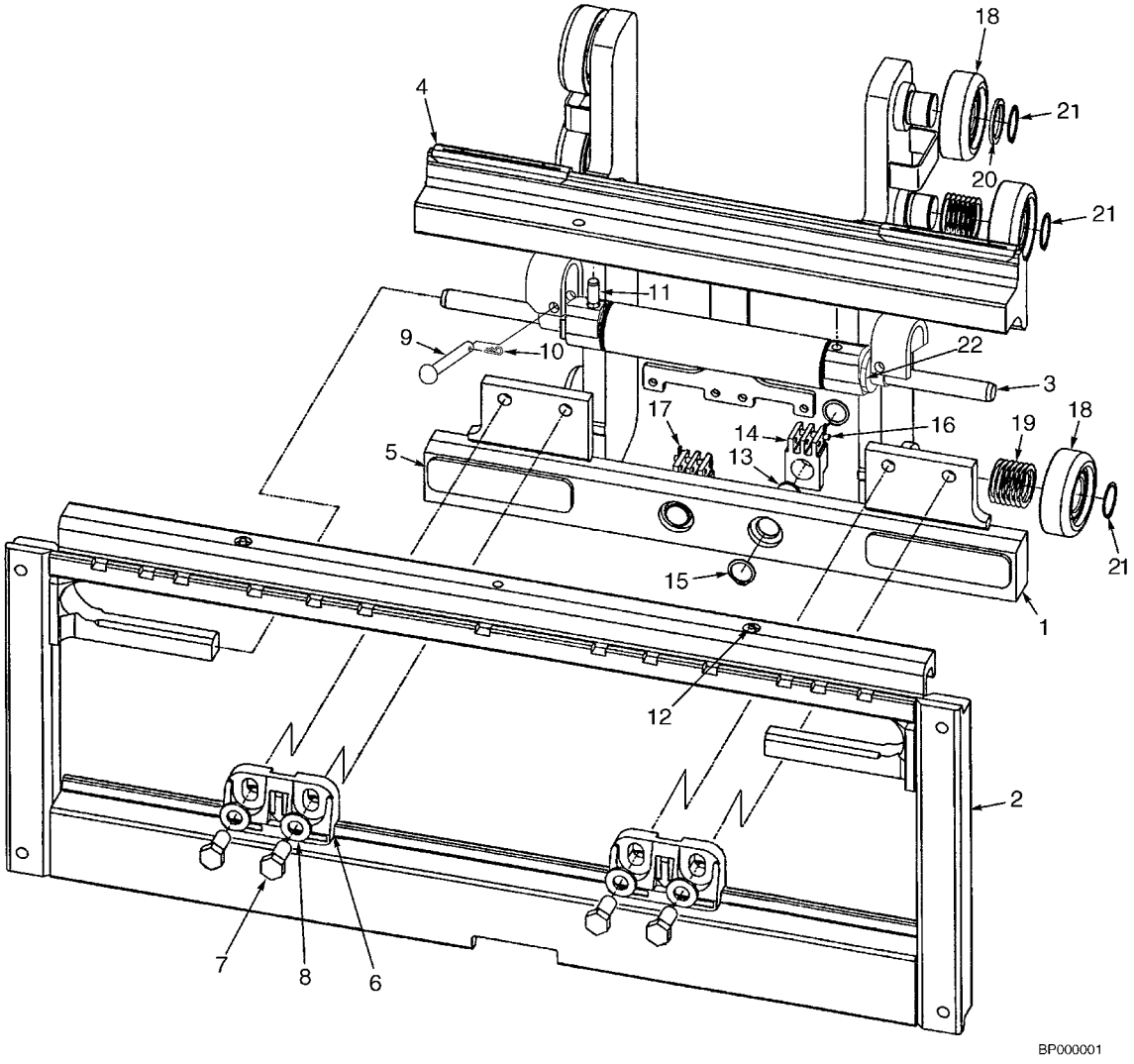

Yale Industrial Trucks

INTEGRAL SIDE-SHIFT CARRIAGE (THREE STAGE FULL FREE-LIFT)

ITEM		PART NO.	DESCRIPTION	QTY
	a	580023766	Side-Shift Carriage (38 in.)	1
	b	580023775	Side-Shift Carriage (38 in.)	1
	a	580023770	Side-Shift Carriage (42 in.)	1
	b	580023777	Side-Shift Carriage (42 in.)	1
	a	580023773	Side-Shift Carriage (48 in.)	1
	b	580023779	Side-Shift Carriage (48 in.)	1
1	**a**	580023793	Frame (38 in.) (Inner)	1
1	**b**	580023780	Frame (38 in.) (Inner)	1
1	**a**	580023797	Frame (42 in., 48 in.) (Inner)	1
1	**b**	580023784	Frame (42 in.) (Outer)	1
2	**a**	580023799	Frame (38 in.)	1
2	**b**	580023783	Frame (38 in.) (Outer)	1
2	**a**	580023800	Frame (42 in.) (Outer)	1
2	**b**	580023784	Frame (42 in.) (Outer)	1
2	**a**	580023801	Frame (48 in.) (Outer)	1
2	**b**	580023785	Frame (48 in.) (Outer)	1
3		580020708	Cylinder Assembly (☞ P12583)	1
4		580020724	Bearing (Upper)	2
5		580020726	Bearing (Lower)	2
6		580020723	Hook (Lower)	4
7		449001400	Capscrew	4
8		061278300	Washer	4
9		580026721	Pin	2
10		580026723	Cotter Pin	2
11		580026725	Pin	1
12		015628700	Lube Fitting	2
13		580023595	Pin	2
14		505978544	Chain Anchor (Dual Hole)	2
14		580027878	Chain Anchor (Single Hole)	2
15		500227907	Snap Ring	4
16		580033718	Pin	2
17		015415900	Cotter Pin	2
18		520036852	Load Roller	6
19		504233232	Shim (0.020 in.)	28
20		504235278	Spacer	6
21		015916300	Snap Ring	6
22		580026720	Shim	AR

FOOTNOTES:

a GP/GLP 050 TG

b GP/GLP 060 TG

INTEGRAL SIDE-SHIFT HYDRAULIC HOSES (TWO STAGE LIMITED FREE-LIFT)

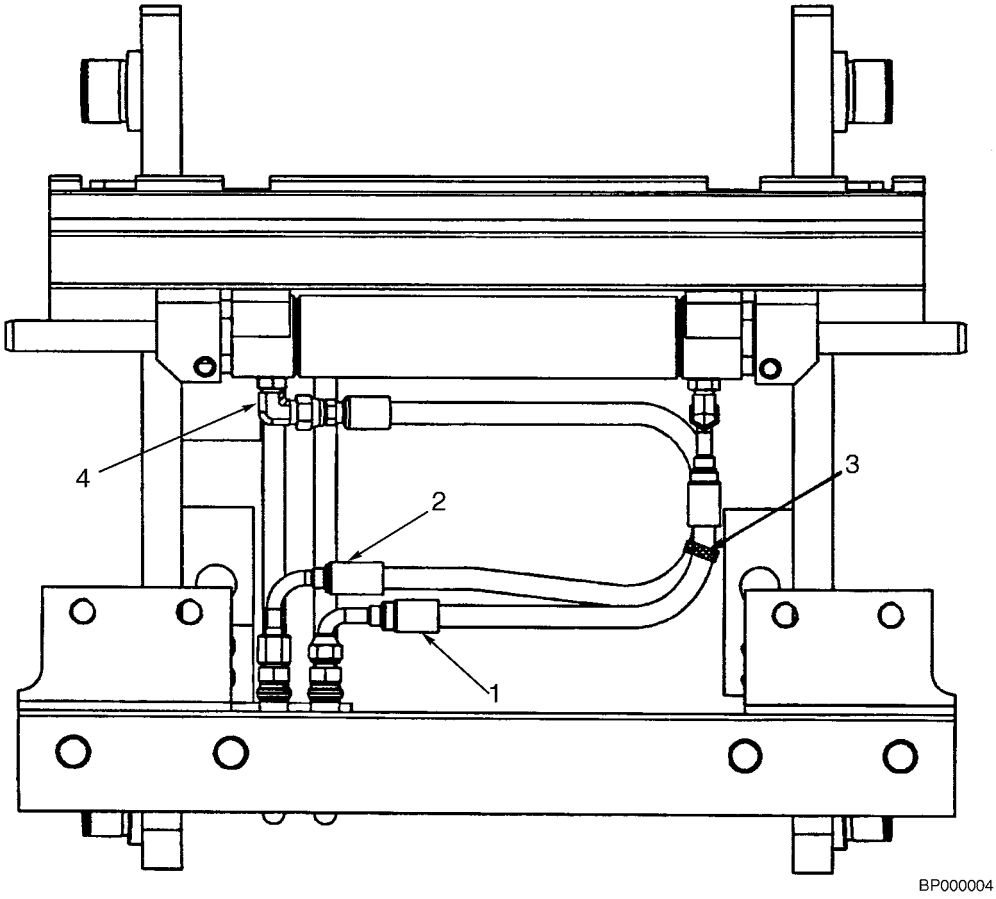

ITEM		PART NO.	DESCRIPTION	QTY
1	**a**	580020735	Hose Assembly	1
1	**b**	580020739	Hose Assembly	1
2	**a**	580020734	Hose Assembly	1
2	**b**	580020738	Hose	1
3		312850042	Strap Clamp	1
4		052642200	Hydraulic Fitting	2
4		052645200	O-Ring	2

FOOTNOTES:
a GP/GLP 050 TG
b GP/GLP 060 TG

Yale Industrial Trucks

INTEGRAL SIDE-SHIFT HYDRAULIC HOSES (TWO, THREE AND FOUR STAGE FULL FREE-LIFT) (GP/GLP 050 TG)

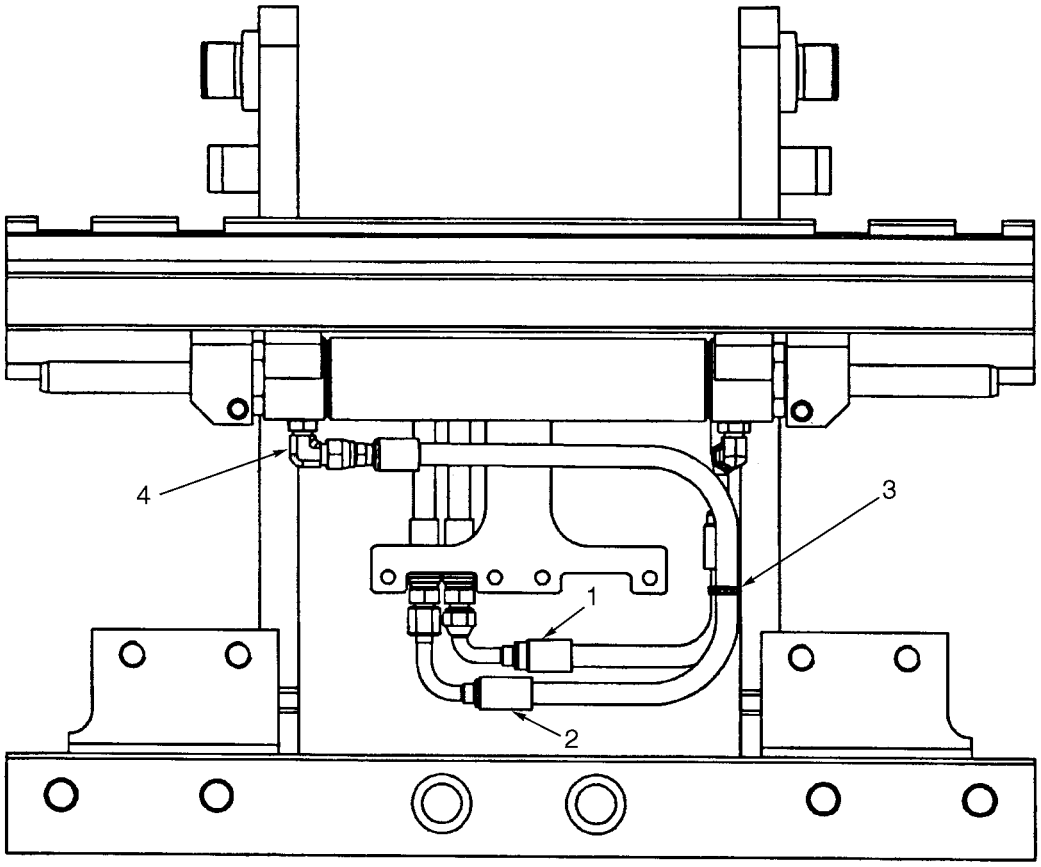

ITEM		PART NO.	DESCRIPTION	QTY
1	**c**	580024133	Hose	1
1	**b**	580020731	Hose	1
1	**a**	580020737	Hose	1
2	**c**	580020730	Hose	1
2	**b**	580020742	Hose	1
2	**a**	580020736	Hose	1
3		312850042	Strap Clamp	1
4		052642200	Hydraulic Fitting	2
4		052645200	O-Ring	2

FOOTNOTES:

a Four Stage Full Free-Lift
b Three Stage Full Free-Lift
c Two Stage Full Free-Lift

INTEGRAL SIDE-SHIFT HYDRAULIC HOSES (TWO AND THREE STAGE FULL FREE-LIFT) (GP/GLP 060 TG)

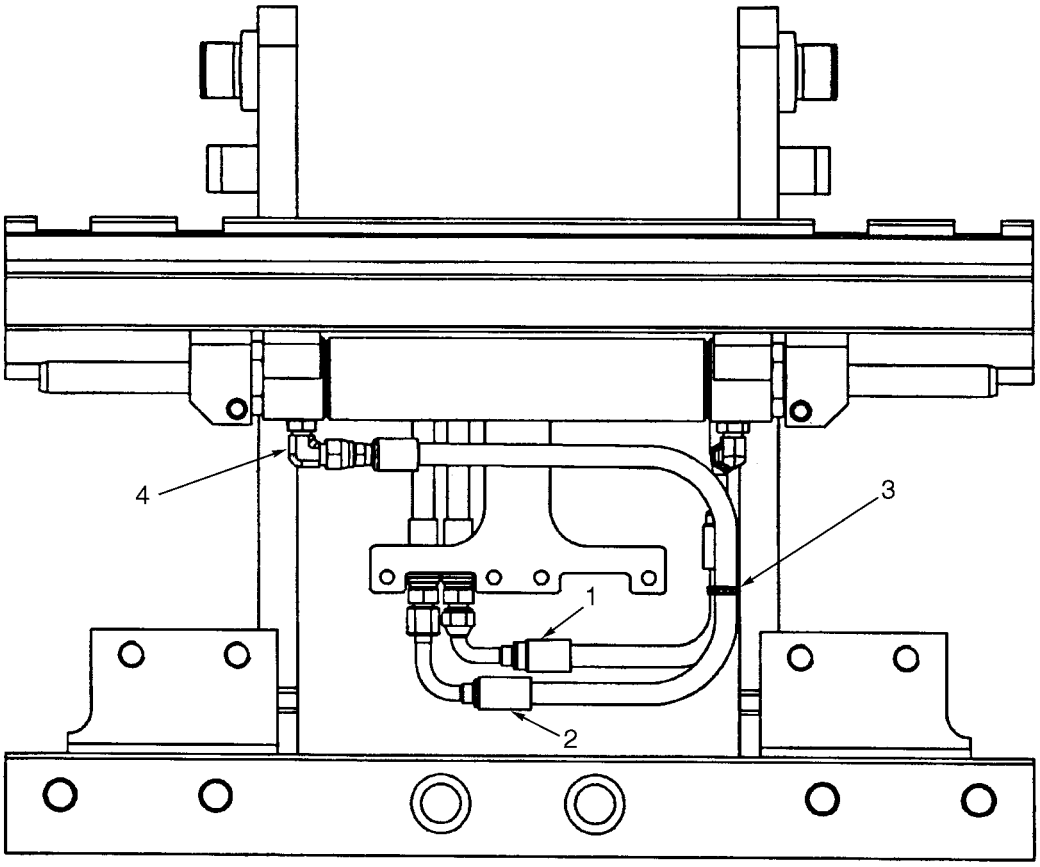

BP000003

ITEM		PART NO.	DESCRIPTION	QTY
1	**b**	580024150	Hose	1
1	**a**	580020720	Hose	1
2	**b**	580024149	Hose	1
2	**a**	580020742	Hose	1
3		312850042	Strap Clamp	1
4		052642200	Hydraulic Fitting	2
4		052645200	O-Ring	2

FOOTNOTES:

a Three Stage Full Free-Lift

b Two Stage Full Free-Lift

14 OPTIONS

SECTION 14
OPTIONS

DESCRIPTION	PAGE
AMBER FLASHING BEACON	14-6
AUDIBLE ALARM	14-16
DRIVE, TURN, AND SIDE LIGHTS	14-8
FIRE EXTINGUISHER	14-18
LIFTING EYES	14-2
LIGHTS	14-14
ROTATING BEACON	14-4
STROBE LIGHT	14-12

LIFTING EYES

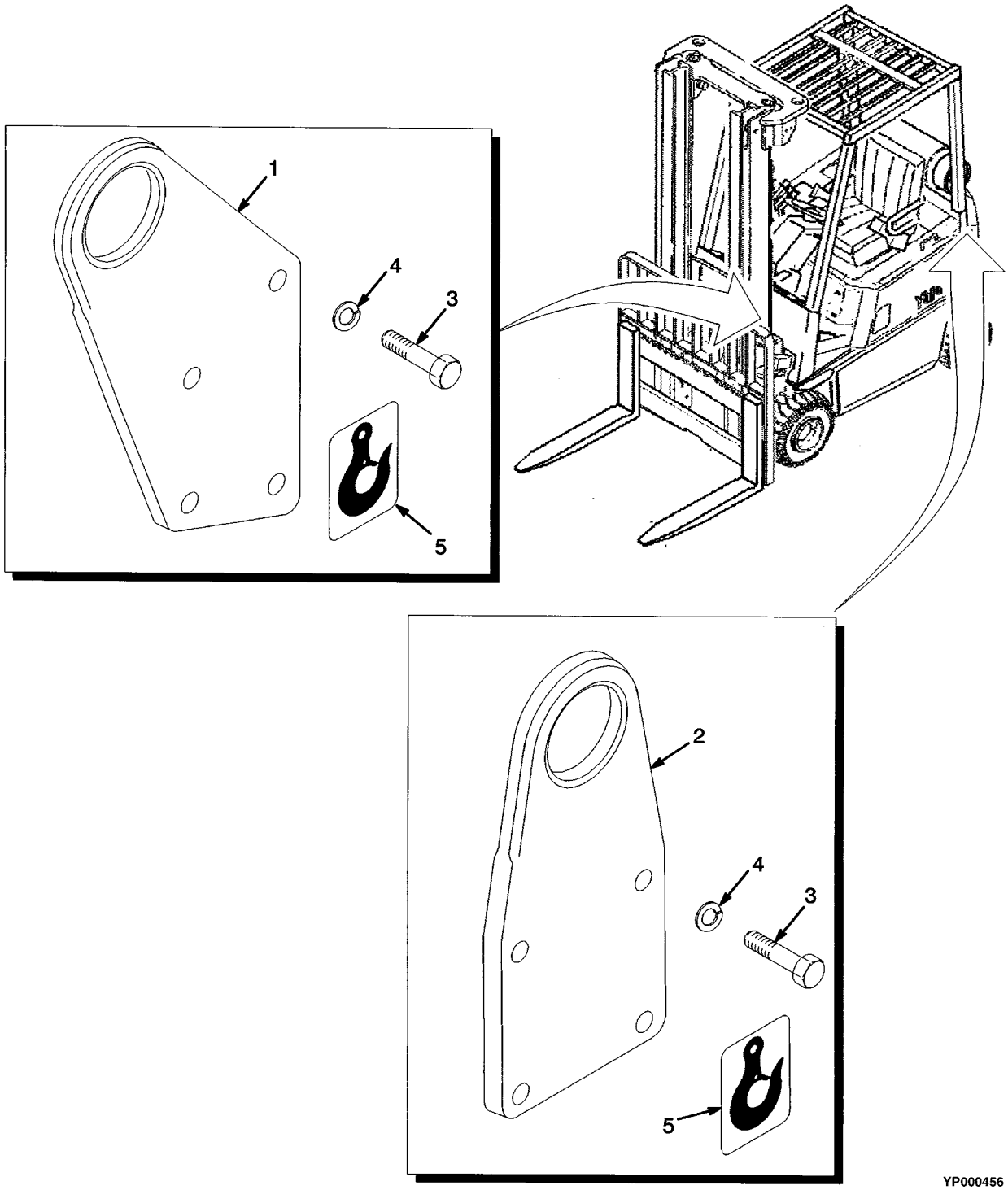

ITEM	PART NO.	DESCRIPTION	QTY
1	505974566	Lifting Eye (Front)	2
2	504240858	Lifting Eye (Rear)	2
3	311321035	Capscrew	16
4	449022017	Lockwasher	16
5	505974597	Label (Lifting Eye)	4

ROTATING BEACON

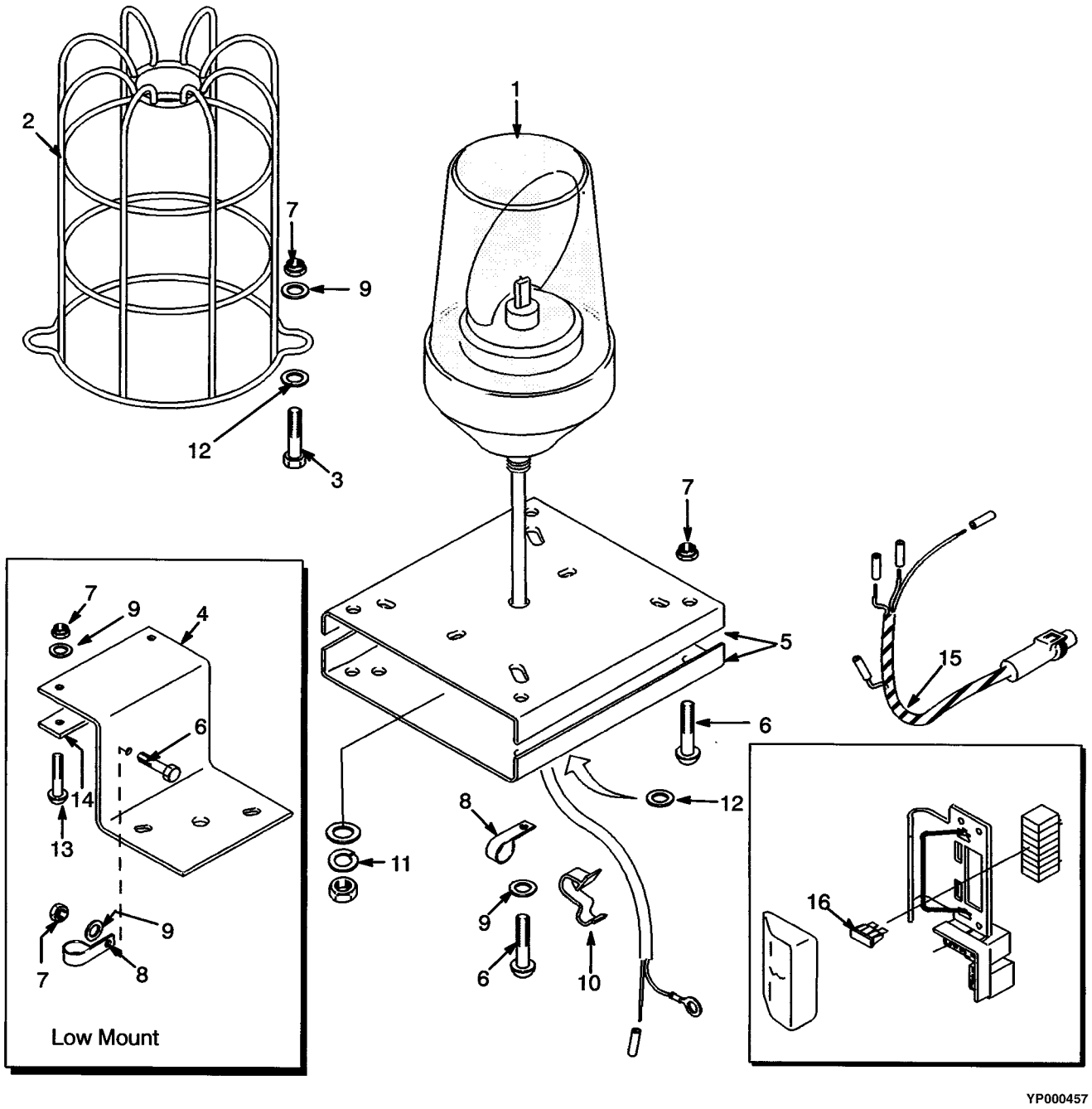

Yale Industrial Trucks

ROTATING BEACON

ITEM		PART NO.	DESCRIPTION	QTY
1		900003235	Rotating Beacon Assembly	1
1	**a**	265926200	Rotating Beacon	1
1		296322914	Lens	1
1		296322912	Bulb	1
1		. . . . .	Motor	1
1	**b**	520045141	Rotating Beacon	1
1		580000039	Lens	1
1		504232212	Bulb	1
1		520046872	Belt	1
2		150019302	Guard	1
3	**a**	449007016	Screw	2
4	**b**	518794665	Bracket	1
5	**a**	900003230	Bracket	2
6	**b**	449007016	Screw	2
6	**a**	449007052	Screw	4
7	**b**	504231270	Nut	5
7	**a**	504231270	Nut	6
8	**b**	900003231	Clamp	1
9	**a**	449021003	Washer	2
9	**b**	449021003	Washer	5
10		516905800	Clamp	4
11	**a**	449021006	Washer	1
12	**b**	449021006	Washer	2
12	**a**	504226242	Washer	2
13	**b**	449007052	Screw	2
14	**b**	900003241	Bar	1
15		900003244	Wire Harness	1
16		900003243	Fuse (25 Amp)	1

FOOTNOTES:

a High Mount

b Low Mount

AMBER FLASHING BEACON

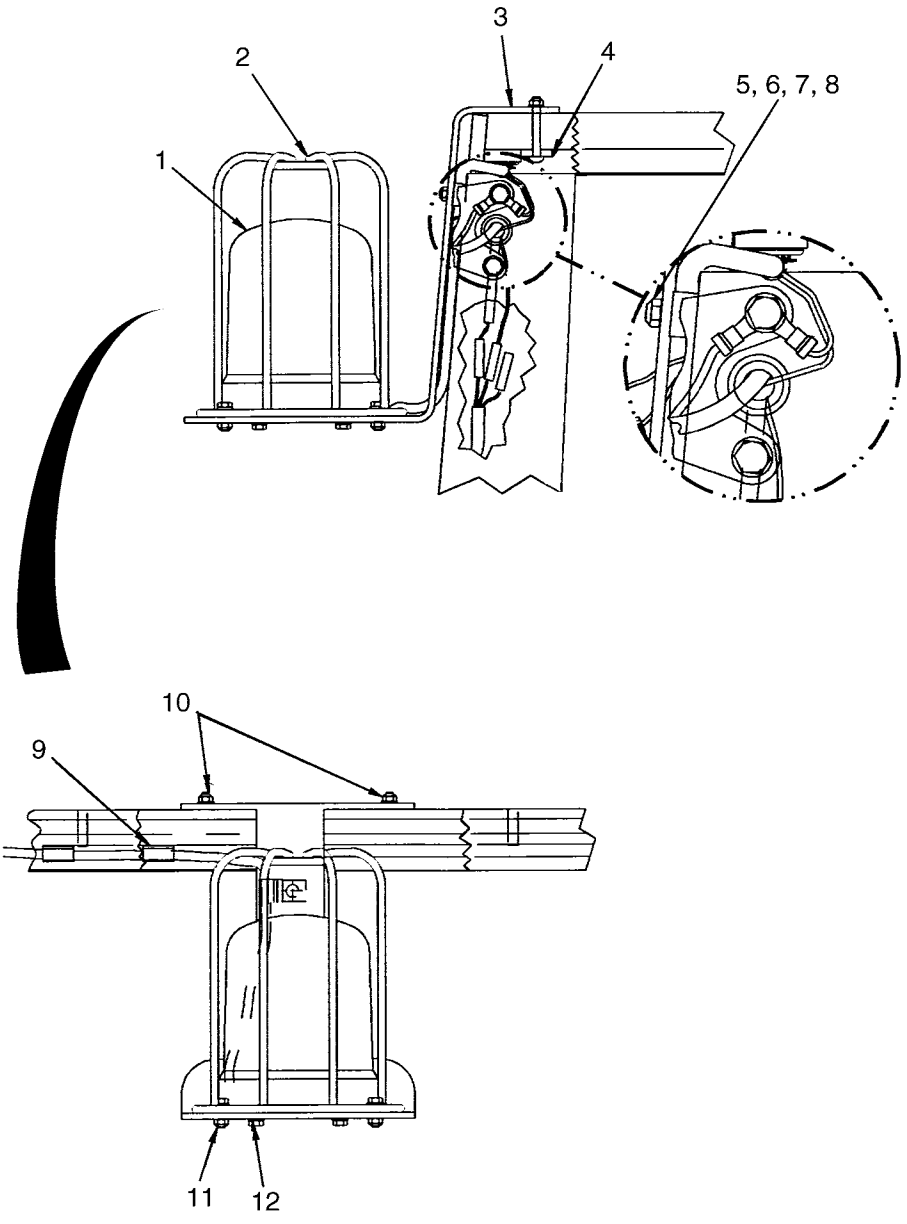

YP000059

Yale Industrial Trucks

AMBER FLASHING BEACON

ITEM	PART NO.	DESCRIPTION	QTY
	580033730	Amber Beacon Assembly	1
1	580033459	Light	1
1	150020402	Bulb	1
1	150020408	Dome Lens	1
1	524161342	Inner Lens	1
1	524161344	Light Shield	1
2	150019302	Guard	1
3	580033473	Bracket	1
4	900003241	Bar	1
5	449007016	Screw	3
6	504231270	Nut	5
7	900003231	Clamp	1
8	449021003	Washer	5
9	516905800	Clamp	4
10	449007052	Screw	2
11	449021006	Washer	2
12	502757901	Screw	2

DRIVE, TURN, AND SIDE LIGHTS

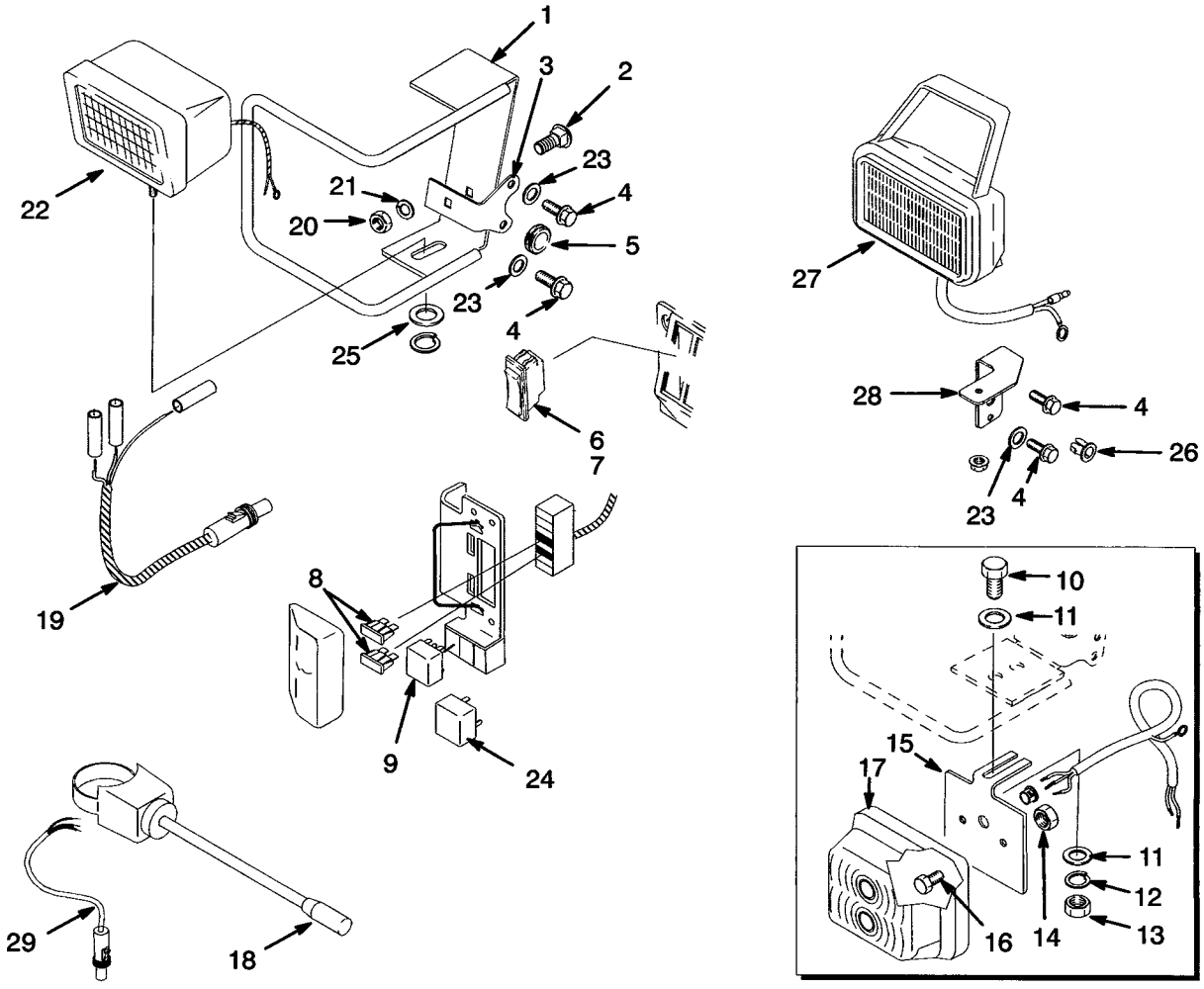

BP000086

KEY:
A: Drive Light With Spotlight
B: Spotlight Without Drive Light
C: Rear Drive Light
D: Drive, Turn and Spotlight

ITEM		PART NO.	DESCRIPTION	QTY A	B	C	D
1		504268794	Bracket (Rear)	..	..	1	..
1		518801606	Bracket (LH)	1	..	..	1
1		518801699	Bracket (RH)	1	..	..	1
2		518801686	Bolt	2	..	1	2
3		518801611	Bracket	2	..	1	2
4		504060774	Screw	6	2	3	6
5		900003245	Grommet	2	..	1	2
6		505974531	Lens	1	..	1	1
7		505974539	Switch	1	..	1	1
8		900003243	Fuse (25 Amp)	2	1	2	2
9		505976568	Flasher	..	..	..	1
10		449001023	Capscrew	..	..	..	2
11		502566904	Washer	..	..	..	4
12		449022013	Lockwasher	..	..	..	2
13		449015044	Nut	..	..	..	2
14		059482800	Nut	..	..	..	4
15		900003256	Plate	..	..	..	2
16		516987826	Screw	..	..	..	4
17		580001959	Sidelight Assembly	..	..	..	2
17		296322908	Lens	..	..	..	1
17		296323310	Bulb (Light)	..	..	..	1
17		296323311	Bulb (Flasher)	..	..	..	1
18	**a**	923546400	Switch (Turn Signal)	..	..	..	1
18	**b**	580000032	Switch (Turn Signal)	..	..	..	1
19		900003244	Wire Harness	2	1	1	2
20		504229298	Nut	2	..	1	2
21		502566901	Washer	2	..	1	2
22		505975585	Headlight Assembly	2	..	1	2
22		518798659	Flood Lens	1	..	1	1
22		520041809	Bulb	1	..	1	1
23		940400908	Lockwasher	5	1	2	5
24		518796658	Check Relay	1	1	..	1
25		505972502	Washer	2	..	1	2
26		901263101	Bushing	1	1	..	1
27		900003237	Spotlight Assembly	1	1	..	1
27		505974514	Light	1	1	..	1
27		505974516	Bulb	1	1	..	1
27		505974560	Switch	1	1	..	1
28		900003239	Bracket	1	1	..	1
29	**b**	520038856	Wire Harness	..	..	..	1
29		520038850	Connector	..	..	..	1

DRIVE, TURN, AND SIDE LIGHTS

ITEM	PART NO.	DESCRIPTION	QTY A	QTY B	QTY C	QTY D
29	520038872	Lock	..	..	..	1
29	520038865	Pin	..	..	..	3

FOOTNOTES:

a ⇒ S/N PENDING PER ECN 76000

b S/N PENDING PER ECN 76000 ⇒

NOTES

Yale Industrial Trucks

STROBE LIGHT

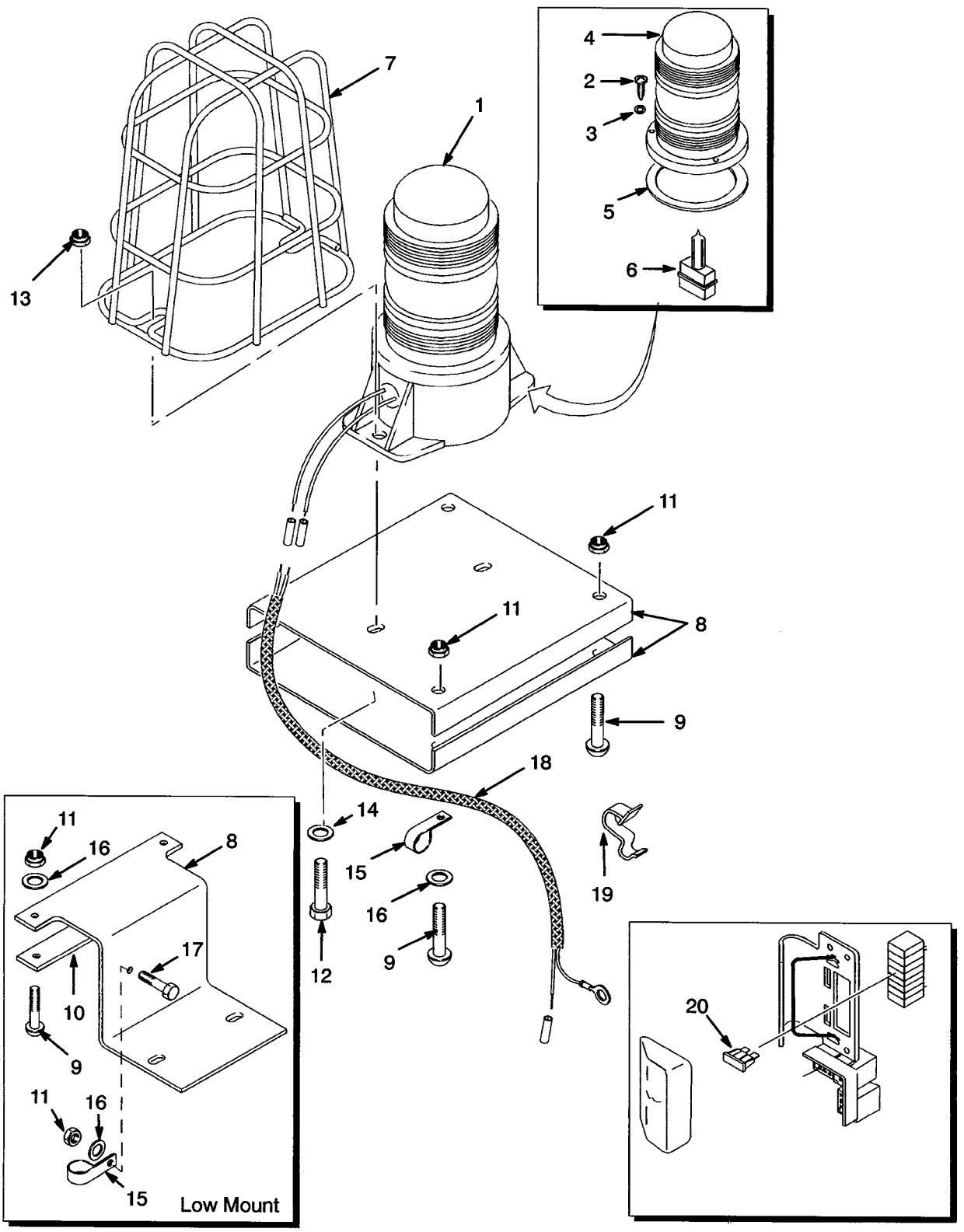

YP000459

Yale Industrial Trucks

STROBE LIGHT

ITEM		PART NO.	DESCRIPTION	QTY
1		580000037	Strobe Light	1
2		. . . . .	Screw	3
3		. . . . .	O-Ring	3
4		580000039	Lens	1
5		. . . . .	O-Ring	1
6		504232212	Bulb	1
7		504232297	Guard	1
8	**a**	900003230	Bracket	1
8	**b**	900003240	Bracket	1
9	**b**	449007052	Screw	2
9	**a**	449007052	Screw	4
10	**b**	900003241	Bar	1
11	**b**	504231270	Nut	3
11	**a**	504231270	Nut	4
12		900003247	Screw	2
13		059482800	Nut	2
14		016103300	Washer	2
15		900003231	Clamp	1
16	**a**	449021003	Washer	1
16	**b**	449021003	Washer	3
17	**b**	449007018	Screw	1
18		900003244	Wire Harness	1
19		516905800	Clamp	4
20		900003243	Fuse (25 Amp)	1

FOOTNOTES:
a High Mount
b Low Mount

LIGHTS

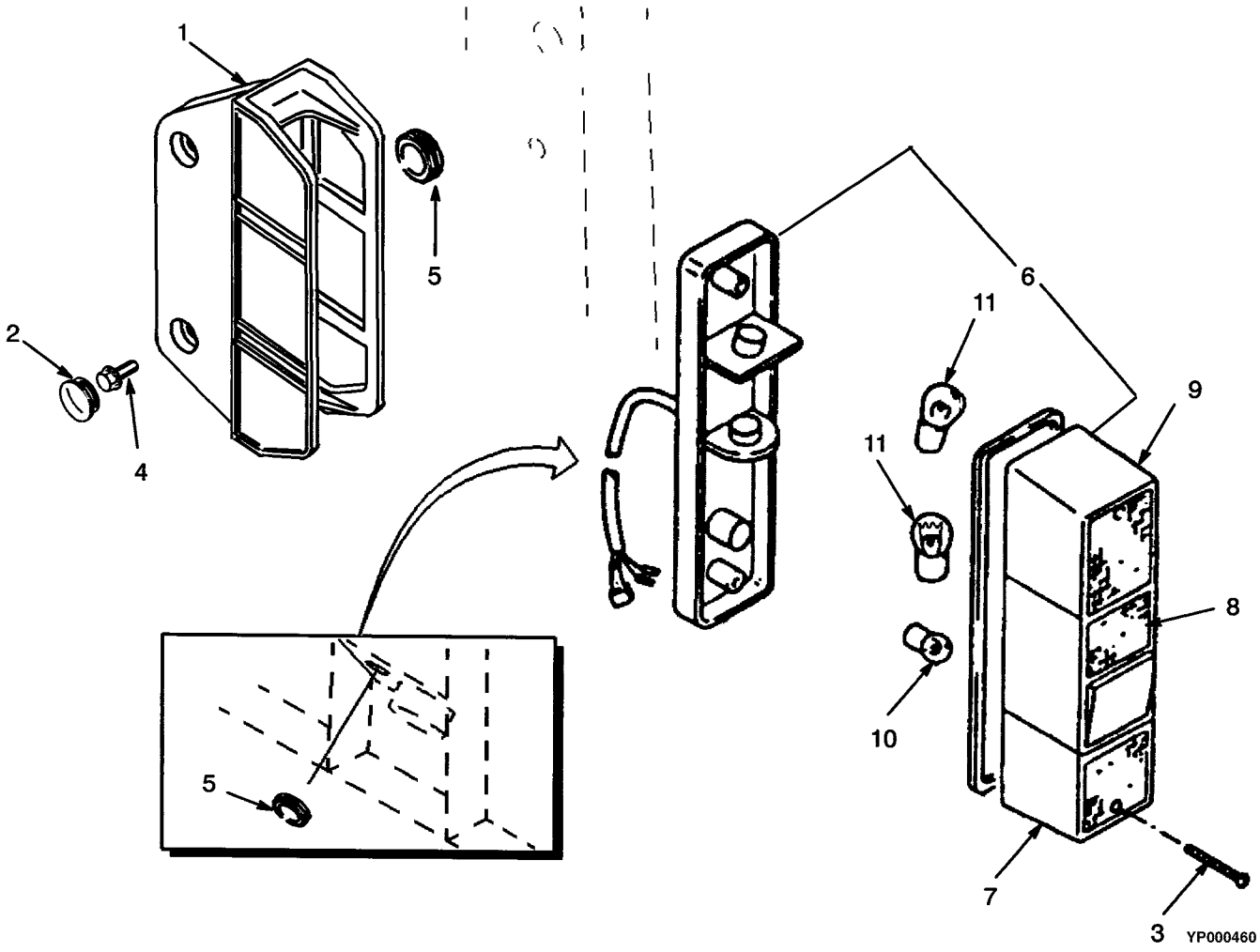

ITEM	PART NO.	DESCRIPTION	QTY
1	580000118	Bracket	2
2	580000119	Plug	2
3	. . . . .	Screw	2
4	504060774	Screw	4
5	505976544	Grommet	3
6	520038845	Light Assembly	2
6	. . . . .	Wire Harness	1
7	518800691	Lens (Clear)	1
8	518800650	Lens (Red)	1
9	520045058	Lens (Amber)	1
10	901162818	Bulb (12 Volt)	1
11	060050500	Bulb	2

AUDIBLE ALARM

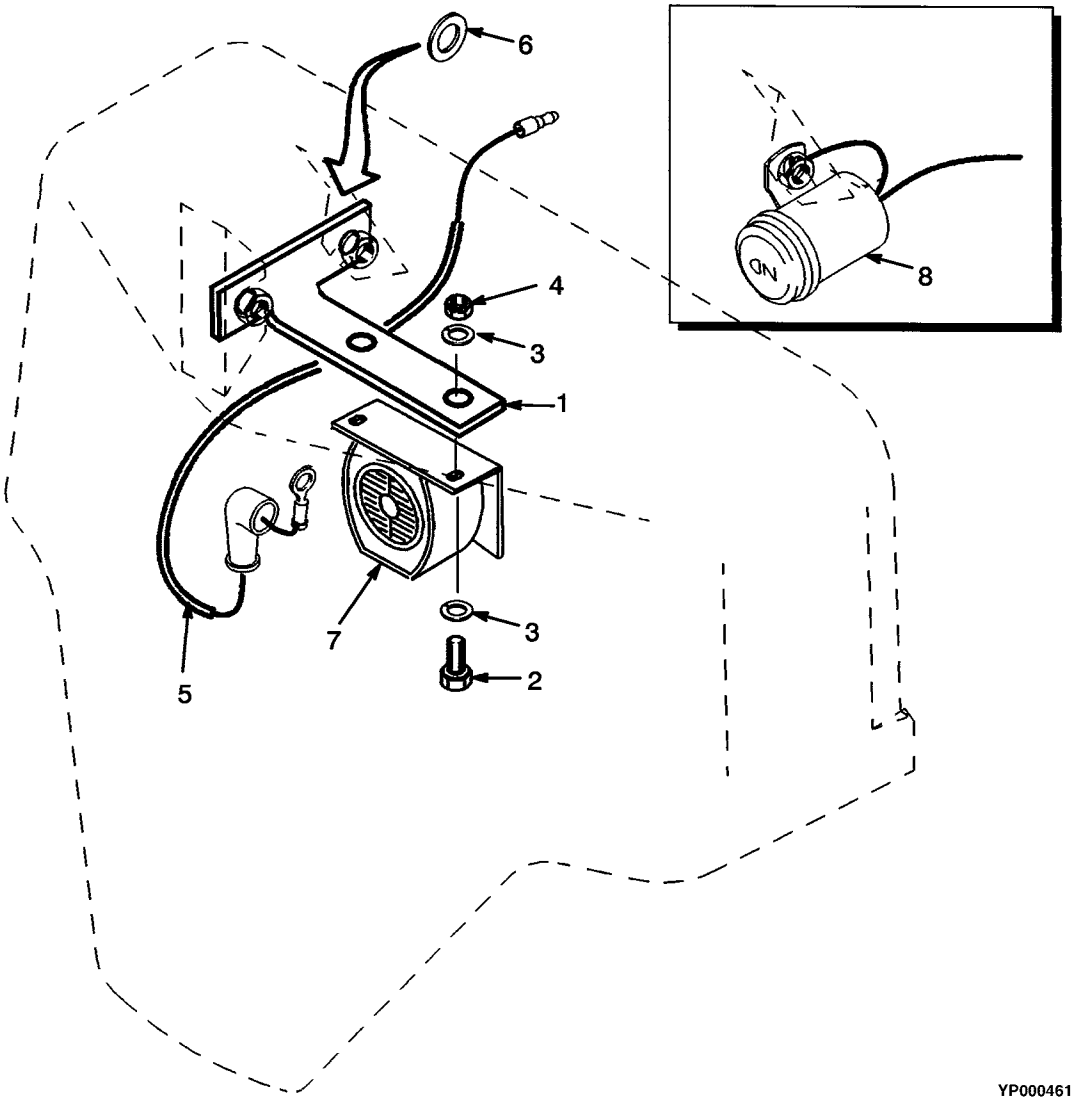

ITEM		PART NO.	DESCRIPTION	QTY
1		505969527	Bracket	1
1	**a**	580024257	Bracket	1
2		449001412	Capscrew	2
3		940102905	Lockwasher	4
4		505970500	Nut	2
5		505969558	Wire Harness	1
6		504226242	Washer	AR
7		150019310	Alarm (87 dBA)	1
7		150019322	Alarm (97 dBA)	1
7		505969500	Alarm (102 dBA)	1
7		505969543	Alarm (107 dBA)	1
7		505969593	Alarm (82-102 dBA)	1
8		906468400	Horn (90 dBA)	1

FOOTNOTES:

a Low Emissions System

FIRE EXTINGUISHER

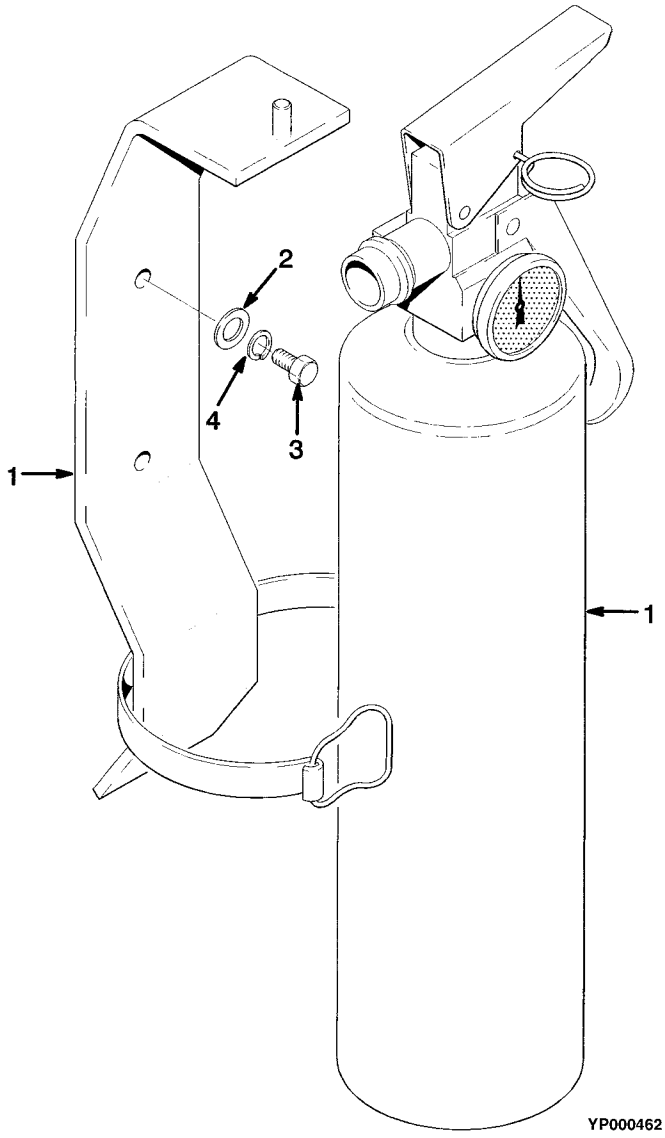

ITEM	PART NO.	DESCRIPTION	QTY
1	504061719	Fire Extinguisher	1
2	449022021	Lockwasher	2
3	518798654	Screw	2
4	449021002	Washer	2

NOTES

15 FIELD CONVERSION KITS

SECTION 15
FIELD CONVERSION KITS

DESCRIPTION	PAGE
AUDIBLE ALARM	15-2
CONTROL VALVE	15-3
DRIVE TIRE AND FENDER GP 050 TG	15-2
DRIVE TIRE AND FENDER GP 060 TG	15-3
DUEL FUEL	15-4
GASOLINE AND LPG	15-3
HEADER HOSE CONVERSION KITS THREE STAGE FULL FREE-LIFT GP/GLP 050 TG	15-7
HEADER HOSE CONVERSION KITS THREE STAGE FULL FREE-LIFT GP/GLP 060 TG	15-8
HEADER HOSE CONVERSION KITS TWO STAGE FULL FREE-LIFT GP/GLP 050 TG	15-10
HEADER HOSE CONVERSION KITS TWO STAGE FULL FREE-LIFT GP/GLP 060 TG	15-12
HEADER HOSE CONVERSION KITS TWO STAGE LIMITED FREE-LIFT GP/GLP 050 TG	15-5
HEADER HOSE CONVERSION KITS TWO STAGE LIMITED FREE-LIFT GP/GLP 060 TG	15-6
LIGHTS	15-2
MAST TILT GP/GLP 050 TG	15-4
MAST TILT GP/GLP 060 TG	15-4
MIRROR	15-3
RADIATOR	15-3
TUBE EXTENSION TWO STAGE AND THREE STAGE FULL FREE-LIFT	15-4
TUBE EXTENSION TWO STAGE LIMITED FREE-LIFT	15-4

LIGHTS

DESCRIPTION	PART NUMBER
Drive and Spotlight (Front)	504259782
Spotlight (Without Drive Lights)	504262791
Drive Light (Rear) (With Headlights)	504259783
Drive Light (Rear) (Without Headlights)	504259784
Rotating Beacon (High Mount)	504259785
Rotating Beacon (Low Mount)	504259786
Strobe (High Mount)	504259787
Strobe (Low Mount)	504259788
Drive Light, Turn Signal, Spotlight Kit	504259797

AUDIBLE ALARM

DESCRIPTION	PART NUMBER
Audible Alarm Kit (87 dbA)	504262729
Audible Alarm Kit (90 dbA)	504262734
Audible Alarm Kit (97 dbA)	504262730
Audible Alarm Kit (102 dbA)	504262731
Audible Alarm Kit (107 dbA)	504262732
Audible Alarm Kit (82-102 dbA)	504262733
87 db Audible Alarm Kit	524139881
97 db Audible Alarm Kit	524139882
102 db Audible Alarm Kit	524139883
107 db Audible Alarm Kit	524139884
82-102 db Audible Alarm Kit	524139885
90 db Audible Alarm Kit	524139886

DRIVE TIRE AND FENDER GP 050 TG

DESCRIPTION	PART NUMBER
Tire (Wide Tread)	504258700
Rim (Standard Tread to Dual with Pneumatic Tire) (3 Piece)	504258706
Rim (Standard Tread to Dual without Pneumatic Tire) (3 Piece)	504258707
Rim (Standard Tread to Dual with Pneumatic Tire) (3 Piece)	504268797
Rim (Standard Tread to Dual with Pneumatic Tire) (2 Piece)	504258702
Rim (Standard Tread to Dual without Pneumatic Tire) (2 Piece)	504258703

DRIVE TIRE AND FENDER GP 060 TG

DESCRIPTION	PART NUMBER
Tire (Wide Tread)	504258701
Rim (Standard Tread to Dual with Pneumatic Tire) (3 Piece)	504258708
Rim (Standard Tread to Dual without Pneumatic Tire) (3 Piece)	504258709
Rim (Standard Tread to Dual with Pneumatic Tire) (3 Piece)	505970565
Rim (Standard Tread to Dual with Pneumatic Tire) (2 Piece)	504258704
Rim (Standard Tread to Dual without Pneumatic Tire) (2 Piece)	504258705

CONTROL VALVE

DESCRIPTION	PART NUMBER
Three Function (without Clamp Attachment) to Three Function (with Clamp Attachment)	504262763
Three Function (with Clamp Attachment) to Three Function (without Clamp Attachment)	504262764
Three Function (with Clamp Attachment) to Four Function	504262765
Three Function (without Clamp Attachment) to Four Function	504262766

MIRROR

DESCRIPTION	PART NUMBER
Raised Overhead Guard (without Cab Mirror Mount)	504264751
Cab Mirror Mount	504264752

RADIATOR

DESCRIPTION	PART NUMBER
Radiator Conversion Kit	524143282

GASOLINE AND LPG

DESCRIPTION	PART NUMBER
Engine Kit	524136294

DUEL FUEL

DESCRIPTION	PART NUMBER
Fuel Conversion Kit (Dual)	150040701
Converter and Lock-Off Kit	150040706
Solenoid Kit	150040710

MAST TILT GP/GLP 050 TG

DESCRIPTION	PART NUMBER
Mast Tilt (5° Forward/4° Back) (Without Rod End) (With Backtilt Spacer 580000395)	504288754

MAST TILT GP/GLP 060 TG

DESCRIPTION	PART NUMBER
Mast Tilt (5° Forward/5° Back)	504284766
Non-Rotator Kit (Four Function) (6° Forward/10° Back to 10° Forward/6° Back)	504265705

TUBE EXTENSION TWO STAGE LIMITED FREE-LIFT

DESCRIPTION	PART NUMBER
Rotator Kit (Three Function) (1/2 in.) (GP/GLP 050 TG)	504276759
Rotator Kit (Three Function) (1/2 in.) (GP/GLP 060 TG)	504276760

TUBE EXTENSION TWO STAGE AND THREE STAGE FULL FREE-LIFT

DESCRIPTION	PART NUMBER
Rotator Kit (Three Function) (1/2 in.) (GP/GLP 050 TG)	504276755
Non-Rotator Kit (Three Function) (1/2 in.) (GP/GLP 050 TG)	504265702
Non-Rotator Kit (Four Function) (1/2 in.) (GP/GLP 050 TG)	504265703
Rotator Kit (Three Function) (1/2 in.) (GP/GLP 060 TG)	504276756
Non-Rotator Kit (Three Function) (1/2 in.) (GP/GLP 060 TG)	504265704
Non-Rotator Kit (Four Function) (1/2 in.) (GP/GLP 060 TG)	504265705

HEADER HOSE CONVERSION KITS TWO STAGE LIMITED FREE-LIFT GP/GLP 050 TG

Two to Three Function Conversion

DESCRIPTION	OALH						QTY
	78.0 in.	84.0 in.	94.0 in.	96.0 in.	110.0 in.	119.0 in.	
Mast Group Number	B507 2992	B507 3292	B507 3692	B507 3792	B507 4292	B507 4792	
Attaching Kit	504069717	504069717	504069717	504069717	504069717	504069717	1
Clamp	504068704	504068704	504068704	504068704	504068704	504068704	1
Clamp	505965586	505965586	505965586	505965586	505965586	505965586	1
Hose	504068724	504068789	505967574	504068729	505967541	505967530	2

Two to Four Function Conversion

DESCRIPTION	OALH						QTY
	78.0 in.	84.0 in.	94.0 in.	96.0 in.	110.0 in.	119.0 in.	
Mast Group Number	B507 2992	B507 3292	B507 3692	B507 3792	B507 4292	B507 4792	
Attaching Kit	504069717	504069717	504069717	504069717	504069717	504069717	1
Attaching Kit	504069706	504069706	504069706	504069706	504069706	504069706	1
Clamp	504068704	504068704	504068704	504068704	504068704	504068704	2
Clamp	505965586	505965586	505965586	505965586	505965586	505965586	2
Hose	504068724	504068789	505967574	504068729	505967541	505967530	4

Three to Four Function Conversion

DESCRIPTION	OALH						QTY
	78.0 in.	84.0 in.	94.0 in.	96.0 in.	110.0 in.	119.0 in.	
Mast Group Number	B507 2992	B507 3292	B507 3692	B507 3792	B507 4292	B507 4792	
Attaching Kit	504069706	504069706	504069706	504069706	504069706	504069706	1
Clamp	504068704	504068704	504068704	504068704	504068704	504068704	1
Clamp	505965586	505965586	505965586	505965586	505965586	505965586	1
Hose	504068724	504068789	505967574	504068729	505967541	505967530	2

HEADER HOSE CONVERSION KITS TWO STAGE LIMITED FREE-LIFT GP/GLP 060 TG

Two to Three Function Conversion

DESCRIPTION	OALH					QTY
	78.0 in.	84.0 in.	94.0 in.	108.0 in.	117.4 in.	
Mast Group Number	B562 2859	B562 3159	B562 3659	B562 4159	B562 4659	
Attaching Kit	504069717	504069717	504069717	504069717	504069717	1
Clamp	504068704	504068704	504068704	504068704	504068704	1
Clamp	505965586	505965586	505965586	505965586	505965586	1
Hose	504068724	504068789	505967574	505967541	505967530	2

Two to Four Function Conversion

DESCRIPTION	OALH					QTY
	78.0 in.	84.0 in.	94.0 in.	108.0 in.	117.4 in.	
Mast Group Number	B562 2859	B562 3159	B562 3659	B562 4159	B562 4659	
Attaching Kit	504069717	504069717	504069717	504069717	504069717	1
Attaching Kit	504069706	504069706	504069706	504069706	504069706	1
Clamp	504068704	504068704	504068704	504068704	504068704	2
Clamp	505965586	505965586	505965586	505965586	505965586	2
Hose	504068724	504068789	505967574	505967541	505967530	4

HEADER HOSE CONVERSION KITS THREE STAGE FULL FREE-LIFT GP/GLP 050 TG

Two to Three Function Conversion

DESCRIPTION	OALH						QTY
	76.0 in.	80.0 in.	82.0 in.	84.0 in.	88.0 in.	94.0 in.	
Mast Group Number	B508 4310	B508 4460	B508 4760	B508 4910	B508 5060	B508 5510	
Attaching Kit	504071774	504071774	504071774	504071774	504071774	504071774	1
Bracket	504297721	504297721	504297721	504297721	504297721	504297721	1
Hose	505969572	505969557	505969548	505969548	518799644	518799631	2

Two to Four Function Conversion

DESCRIPTION	OALH						QTY
	76.0 in.	80.0 in.	82.0 in.	84.0 in.	88.0 in.	94.0 in.	
Mast Group Number	B508 4310	B508 4460	B508 4760	B508 4910	B508 5060	B508 5510	
Attaching Kit	504071774	504071774	504071774	504071774	504071774	504071774	1
Attaching Kit	504069776	504069776	504069776	504069776	504069776	504069776	1
Bracket	504297721	504297721	504297721	504297721	504297721	504297721	1
Hose	505969572	505969557	505969548	505969548	518799644	518799631	2

Three to Four Function Conversion

DESCRIPTION	OALH						QTY
	76.0 in.	80.0 in.	82.0 in.	84.0 in.	88.0 in.	94.0 in.	
Mast Group Number	B508 4310	B508 4460	B508 4760	B508 4910	B508 5060	B508 5510	
Attaching Kit	504069776	504069776	504069776	504069776	504069776	504069776	1
Hose	505969572	505969557	505969548	505969548	518799644	518799631	2

HEADER HOSE CONVERSION KITS THREE STAGE FULL FREE-LIFT GP/GLP 060 TG

Two to Three Function Conversion

DESCRIPTION	OALH					QTY
	76.0 in.	82.0 in.	84.0 in.	88.0 in.	94.0 in.	
Mast Group Number	B563 4118	B563 4568	B563 4718	B563 4868	B563 5318	
Attaching Kit	504071774	504071774	504071774	504071774	504071774	1
Bracket	504297722	504297722	504297722	504297722	504297722	1
Hose	505969572	518799673	505969548	518799644	518799631	2

Two to Four Function Conversion

DESCRIPTION	OALH					QTY
	76.0 in.	82.0 in.	84.0 in.	88.0 in.	94.0 in.	
Mast Group Number	B563 4118	B563 4568	B563 4718	B563 4868	B563 5318	
Attaching Kit	504071774	504071774	504071774	504071774	504071774	1
Attaching Kit	504069776	504069776	504069776	504069776	504069776	1
Bracket	504297722	504297722	504297722	504297722	504297722	1
Hose	505969572	518799673	505969548	518799644	518799631	2

Three to Four Function Conversion

DESCRIPTION	OALH					QTY
	76.0 in.	82.0 in.	84.0 in.	88.0 in.	94.0 in.	
Mast Group Number	B563 4118	B563 4568	B563 4718	B563 4868	B563 5318	
Attaching Kit	504069776	504069776	504069776	504069776	504069776	1
Hose	505969572	518799673	505969548	518799644	518799631	2

HEADER HOSE CONVERSION KITS TWO STAGE FULL FREE-LIFT GP/GLP 050 TG

Two to Three Function Conversion

DESCRIPTION	OALH			QTY
	78.0 in.	84.0 in.	94.0 in.	
Mast Group Number	B509 2962	B509 3262	B509 3762	
Attaching Kit	504254790	504254790	504254790	1
Channel	518795675	505978552	900004210	1
Channel	900004216	900004217	505976557	1
Hose	504062735	505969566	520047855	2
Tube	504070726	504070713	504070784	1
Tube	504068779	504068710	504069771	1
Bracket	504297722	504297722	504297722	1

Two to Four Function Conversion

DESCRIPTION	OALH			QTY
	78.0 in.	84.0 in.	94.0 in.	
Mast Group Number	B509 2962	B509 3262	B509 3762	
Attaching Kit	504254790	504254790	504254790	1
Channel	518795675	505978552	900004210	1
Channel	900004216	900004217	505976557	1
Hose	504062735	505969566	520047855	2
Hose	900004230	518799679	505968582	2
Tube	504070726	504070713	504070784	1
Tube	504068779	504068710	504069771	1

HEADER HOSE CONVERSION KITS TWO STAGE FULL FREE-LIFT GP/GLP 050 TG (Continued)

Two to Four Function Conversion (Continued)

DESCRIPTION	OALH			QTY
	78.0 in.	84.0 in.	94.0 in.	
Mast Group Number	B509 2962	B509 3262	B509 3762	
Bracket	504297722	504297722	504297722	1

Three to Four Function Conversion

DESCRIPTION	OALH			QTY
	78.0 in.	84.0 in.	94.0 in.	
Mast Group Number	B509 2962	B509 3262	B509 3762	
Attaching Kit	504254791	504254791	504254791	1
Hose	900004230	518799679	505968582	2

HEADER HOSE CONVERSION KITS TWO STAGE FULL FREE-LIFT GP/GLP 060 TG

Two to Three Function Conversion

DESCRIPTION	OALH			QTY
	78.0 in.	84.0 in.	94.0 in.	
Mast Group Number	B564 2860	B564 3160	B564 3660	
Attaching Kit	504254791	504254791	504254791	1
Channel	518795675	505978552	900004214	1
Channel	900004216	900004217	505976557	1
Hose	504062735	505969566	520047855	2
Tube	504070726	504070713	504070784	1
Tube	504068779	504068710	504069771	1

Two to Four Function Conversion

DESCRIPTION	OALH			QTY
	78.0 in.	84.0 in.	94.0 in.	
Mast Group Number	B564 2860	B564 3160	B564 3660	
Attaching Kit	504254791	504254791	504254791	1
Channel	518795675	505978552	900004214	1
Channel	900004216	900004217	505976557	1
Hose	504062735	505969566	520047855	2
Hose	900004230	518799679	505968582	2
Tube	504070726	504070713	504070784	1

HEADER HOSE CONVERSION KITS TWO STAGE FULL FREE-LIFT GP/GLP 060 TG (Continued)

Two to Four Function Conversion (Continued)

DESCRIPTION	OALH			QTY
	78.0 in.	84.0 in.	94.0 in.	
Mast Group Number	B564 2860	B564 3160	B564 3660	
Tube	504068779	504068710	504069771	1

Three to Four Function Conversion

DESCRIPTION	OALH			QTY
	78.0 in.	84.0 in.	94.0 in.	
Mast Group Number	B564 2860	B564 3160	B564 3660	
Attaching Kit	504254791	504254791	504254791	1
Hose	900004230	518799679	505968582	2

16 NUMERICAL INDEX

PART NO.	PG.	ITEM
012823200	5-53	10
012823300	11-45	9
	11-45	24
	11-45	42
	11-46	56
	11-49	9
	11-49	24
	11-49	42
	11-50	56
012824200	11-25	9
012824300	12-5	3
	12-21	3
	12-23	3
	12-53	3
012825700	13-11	4
012827100	12-14	10
	12-42	10
012828000	11-27	11
013376100	10-11	8
013377500	7-30	6
013378300	7-9	37
	7-14	41
	7-15	2
013379500	7-30	5
013386300	7-30	4
013393300	7-33	1
013393400	7-33	2
013393700	5-11	37
013394200	5-17	20
013397900	13-30	22
	13-34	19
014195600	1-11	8
014861000	5-25	30
014920400	5-25	1
	5-27	1
014927600	5-25	20
014931500	5-9	23
	7-3	11
014932500	8-3	22
014936600	11-45	3
	11-49	3
014939300	5-47	17
	6-20	65
014972700	10-9	7
015026200	6-25	11
015026400	9-5	23
015040100	7-10	47
	7-13	39
015125800	7-7	12
015414700	5-47	9
	5-47	26
	5-49	9
	5-51	13
	11-29	17
	11-33	17
	11-37	9
	11-41	9
015415900	12-9	4
	12-19	10
	12-27	8
	12-31	8
	12-33	22
	12-37	23
	12-51	10
	12-59	21
	12-61	22
	12-71	10
	13-39	21
	13-41	17
	13-43	17
015416200	5-47	9
	5-47	20
	5-49	9
	5-49	17
	5-51	24
	9-5	15
	10-9	19
015418200	12-27	9
	12-31	9
015418400	9-17	29
015418600	9-17	39
015420300	11-25	14
	11-27	3
015492900	12-16	12
	12-45	10
	12-62	6
	12-63	6
	12-64	7
	12-65	7
	13-11	4
015493400	9-19	5
	11-25	7
015493500	12-49	11
	12-69	11
015628100	8-3	10
015628700	13-3	12
	13-7	12
	13-39	12
	13-41	12
	13-43	12
015630100	8-3	24
015631500	9-17	37
015759100	5-13	3
	5-15	3
015916300	12-5	8
	12-7	3
	12-21	8
	12-23	8
	12-25	3
	12-51	3
	12-53	8
	12-55	3
	13-41	21
	13-43	21
015916500	7-3	32
	12-19	3
	12-71	3
	13-39	14
015918200	9-17	35
016103300	5-9	12
	14-13	14
016103700	1-29	20
	1-31	14
	6-25	6
016104000	9-5	24
016388300	3-7	3
019299600	5-17	6
019930000	8-3	23
023604600	1-23	21
	1-25	36
	1-29	24
	1-31	23
030533700	7-29	9
032643500	5-53	14
	9-5	40
050030900	5-17	7
052229600	11-4	51
	11-8	51
	11-12	55
	12-57	15
052337300	6-20	64
052641400	11-12	50
	12-10	22
	12-27	25
	12-31	25
	12-57	16
052642200	11-3	31
	11-7	31
	11-11	31
	13-44	4
	13-45	4
	13-46	4
052643300	11-29	44
	11-33	44
	11-37	32
	11-41	32
052643400	11-12	55
052645100	7-3	8
	7-9	28
	7-9	31
	7-13	2
	7-13	3
	7-13	5
	7-13	10
052645200	7-3	13
	7-9	21
	7-13	4
	7-30	4
	11-3	31
	11-7	28
	11-7	31
	11-11	28
	11-11	31
	13-44	4
	13-45	4
	13-46	4
052645300	7-3	24
	7-9	5
	7-13	20
	7-30	3
	7-33	11
	11-4	55
	11-12	63
	11-29	43
	11-29	44
	11-30	49
	11-33	43
	11-33	44
	11-34	49
	11-34	51
	11-37	31
	11-37	32
	11-37	38
	11-41	31
	11-41	32
	11-45	12
	11-49	12
052645400	11-4	50
	11-4	51
	11-4	51
	11-8	50
	11-8	51
	11-8	51
	11-12	50

PART NO.	PG.	ITEM
	11-12	55
	11-12	55
	11-23	5
	11-30	50
	11-37	39
	12-9	20
	12-10	22
	12-27	25
	12-27	26
	12-31	25
	12-31	26
	12-33	5
	12-37	5
	12-57	15
	12-57	16
	12-57	22
	12-59	3
	12-59	9
	12-61	3
	12-61	10
052645500	12-9	15
	12-27	20
	12-31	20
	12-57	17
052645600	7-9	26
	12-9	17
	12-27	22
	12-31	22
	12-57	18
052645700	7-4	42
053349600	11-41	39
	12-10	27
	12-27	29
	12-31	29
	12-57	19
053349800	11-12	51
054368800	11-41	38
054590500	7-23	23
	7-27	23
054803600	7-3	20
	7-23	39
	7-27	40
054947700	5-11	36
054966400	5-17	30
055076600	9-17	21
055729800	11-3	28
	11-7	28
	11-11	28
055746400	11-4	55
056260300	5-13	5
	5-15	5
056363100	7-9	19
	7-13	35
	11-3	37
	11-7	37
	11-11	37
056363300	7-9	19
	7-13	35
	11-3	37
	11-7	37
	11-11	37
	13-3	14
	13-7	14
056623800	5-11	7
	5-13	16
057029500	3-9	2
057040500	7-30	3
057092500	3-7	2
	3-11	6
	3-13	10
057300800	11-29	43
	11-33	43
	11-37	31
	11-41	31
057390000	7-4	42
057851800	5-11	21
058429300	7-9	28
	7-13	2
059154500	5-7	22
	5-15	38
059482800	14-9	14
	14-13	13
059695500	9-17	15
059695600	9-17	14
059719100	9-5	22
060023600	4-7	10
060050500	14-15	11
061278200	1-19	3
061278300	13-39	8
	13-41	8
	13-43	8
062128400	11-45	28
	11-49	28
062143700	6-25	10
062144100	6-25	13
062159500	5-11	8
	5-13	23
	5-15	23
062159700	4-7	30
	4-11	22
	5-45	9
062232800	1-29	23
	1-31	22
063447900	9-13	11
064824400	11-30	49
	11-34	49
	11-37	38
065124700	7-23	22
	7-27	22
065744300	9-17	22
066537700	7-3	4
	7-9	30
	7-13	15
066891800	13-30	20
072387331	7-23	4
	7-27	4
072387332	7-3	15
	7-23	37
	7-27	38
074259300	1-29	21
080437000	12-9	15
	12-57	17
133289313	8-3	6
134023101	7-13	5
134023104	11-30	50
	11-37	39
150019302	14-5	2
	14-7	2
150019310	14-17	7
150019322	14-17	7
150019502	1-29	8
150020402	14-7	1
150020408	14-7	1
150022510	6-5	2
201638000	7-7	1
265926200	14-5	1
296322908	14-9	17
296322912	14-5	1
296322914	14-5	1
296323310	14-9	17
296323311	14-9	17
311321033	11-27	7
311321035	14-3	3
311323023	9-17	38
312823020	6-15	38
	6-19	38
312850032	6-16	49
	6-20	49
	6-23	8
	6-27	17
	6-27	31
312850034	5-11	11
	5-13	4
	5-15	4
	5-47	14
	5-49	14
	11-3	35
	11-7	35
	11-11	35
312850042	5-53	5
	13-3	19
	13-7	19
	13-44	3
	13-45	3
	13-46	3
315976070	7-3	13
	7-9	21
	7-13	4
316445008	7-33	11
316540046	11-12	63
	11-34	51
	11-41	38
440066253	1-29	2
440066256	1-29	3
449001004	12-33	13
	12-37	13
	12-59	31
	12-61	32
449001007	12-34	32
	12-37	33
	12-59	26
	12-61	27
449001010	7-3	39
	12-61	7
449001013	1-9	28
	6-15	3
	6-19	3
	6-19	25
449001014	1-9	25
	5-47	13
	5-49	13
	9-5	9
	11-29	21
	11-33	21
	11-37	13
	11-41	13
	12-33	14
	12-37	14
	13-21	7
	13-25	7
	13-29	8
	13-33	8
449001015	1-5	29
	7-3	21

PART NO.	PG.	ITEM
	10-9	9
	10-11	2
	11-29	9
	11-33	9
	11-37	1
	11-41	1
	13-22	29
	13-26	29
449001016	6-15	44
	6-19	44
449001018	12-37	15
449001023	1-33	9
	3-11	3
	5-17	15
	5-41	10
	5-43	10
	6-25	14
	9-9	2
	10-9	23
	14-9	10
449001028	7-9	33
	7-14	46
	11-29	6
	11-33	6
	13-13	3
	13-17	3
449001029	1-9	17
	7-3	37
449001049	12-33	15
	12-59	14
	12-61	15
449001050	4-9	2
	5-13	13
	5-15	13
	7-9	34
	7-14	47
449001052	12-27	19
	12-31	19
	12-57	11
	13-22	27
	13-26	27
449001058	8-3	30
449001068	12-9	9
	12-27	14
	12-31	14
	12-57	6
449001069	7-4	41
	7-23	27
	7-27	27
	10-5	2
449001073	4-11	25
	7-10	44
449001076	7-4	51
	10-9	13
449001078	7-13	37
449001091	6-27	8
	6-29	13
449001114	5-15	31
	7-3	33
449001117	13-22	19
	13-26	19
449001121	6-16	54
	6-19	47
449001134	4-11	30
	7-4	52
	9-3	8
	11-3	11
	11-7	11
	11-11	11
	11-29	25
	11-29	25
	11-33	25
	11-33	25
	11-37	18
	11-41	18
	13-30	21
449001138	3-7	4
	3-9	4
	3-13	4
449001160	2-15	6
	6-16	58
449001170	6-27	14
449001172	7-9	32
	7-14	43
	12-9	13
	12-33	8
	12-37	8
	13-13	2
	13-17	2
449001230	2-17	1
449001239	11-29	4
	11-33	4
449001241	2-15	14
449001272	6-20	70
	13-14	14
	13-18	14
449001302	1-5	24
	1-9	19
	4-7	14
	7-3	28
	7-23	19
	7-27	19
	10-9	24
	12-59	8
	12-61	9
449001389	10-9	8
	12-33	10
	12-37	10
	13-13	11
	13-18	11
	13-21	16
	13-26	16
	13-34	30
449001400	13-39	7
	13-41	7
	13-43	7
449001405	1-13	2
449001412	6-20	54
	9-6	41
	14-17	2
449001415	1-9	27
	5-51	23
	7-23	8
	7-27	8
449001418	6-15	10
449001435	1-13	2
449001453	8-3	33
449004080	9-5	17
449007013	6-15	25
449007016	14-5	3
	14-5	6
	14-7	5
449007018	5-47	2
	5-49	2
	14-13	17
449007035	6-27	37
449007050	9-9	8
449007052	14-5	6
	14-5	13
	14-7	10
	14-13	9
	14-13	9
449015002	5-9	18
	5-15	33
	5-47	5
	5-49	5
	6-15	15
	6-16	56
	6-19	15
	6-19	48
	6-27	4
	9-11	10
449015014	1-9	26
	1-13	9
	3-7	12
	3-9	15
	3-13	14
	4-7	16
	4-9	4
	4-11	29
	5-9	35
	5-11	31
	5-13	24
	5-15	24
	5-47	6
	5-49	6
	5-51	8
	6-15	6
	6-15	41
	6-19	6
	6-19	41
	7-30	10
	7-33	10
	9-3	4
	10-5	14
	11-3	12
	11-4	59
	11-7	12
	11-8	56
	11-11	12
	11-12	60
	11-29	24
	11-33	24
	11-37	16
	11-41	16
449015018	8-3	31
449015020	5-17	23
	9-3	7
	10-9	6
449015029	11-27	9
449015044	1-5	28
	1-9	18
	1-33	8
	4-7	15
	5-17	4
	5-17	14
	5-51	6
	6-16	45
	6-19	45
	9-6	46
	10-9	22
	10-11	4
	11-29	11
	11-33	11

PART NO.	PG.	ITEM
	11-37	3
	11-41	3
	14-9	13
449015098	1-33	4
	9-5	12
	10-11	14
	11-4	53
	11-29	7
	11-33	7
	11-37	17
	11-41	17
449015112	9-11	7
449021001	1-9	22
	4-9	3
	4-11	31
	5-45	5
	6-15	40
	6-19	40
	7-9	35
	7-13	38
	7-30	8
	7-33	8
	9-9	23
	10-5	16
	11-3	6
	11-7	6
	11-11	6
	11-29	8
	11-33	8
	11-37	37
	11-41	37
	12-9	14
	12-27	18
	12-31	18
	12-34	37
	12-38	39
	12-57	10
	13-30	15
449021002	5-47	7
	5-47	16
	5-49	7
	6-23	4
	6-23	7
	6-27	26
	9-5	20
	14-19	4
449021003	5-9	32
	5-47	3
	5-47	25
	5-49	3
	5-49	22
	5-51	12
	6-20	55
	6-20	72
	6-27	13
	9-6	43
	11-8	53
	11-12	57
	14-5	9
	14-5	9
	14-7	8
	14-13	16
	14-13	16
449021006	1-9	20
	3-7	7
	3-9	7
	3-11	5
	3-13	7
	4-7	13
	5-17	17
	5-47	19
	5-49	16
	6-16	46
	6-19	46
	9-3	14
	10-5	22
	10-9	20
	11-3	24
	11-7	24
	11-11	24
	12-59	7
	12-61	8
	14-5	11
	14-5	12
	14-7	11
449021010	1-5	14
	9-17	3
	12-33	23
	12-37	24
	12-59	15
	12-61	16
449021019	12-27	30
	12-31	30
449022010	8-3	32
449022013	1-5	25
	1-9	39
	1-33	7
	2-17	9
	3-11	4
	4-7	12
	5-17	13
	5-41	11
	5-43	11
	5-51	5
	6-15	11
	6-20	52
	6-25	5
	7-3	22
	7-23	20
	7-27	20
	9-3	17
	9-6	45
	9-9	3
	10-5	4
	10-5	23
	10-9	21
	10-11	3
	11-3	23
	11-7	23
	11-11	23
	11-29	10
	11-33	10
	11-37	2
	11-41	2
	14-9	12
449022016	1-9	24
	1-13	11
	1-33	3
	3-7	11
	3-13	15
	4-7	17
	4-11	24
	5-9	34
	5-11	32
	5-13	25
	5-15	25
	5-45	4
	5-51	7
	6-15	4
	6-15	39
	6-19	4
	6-19	39
	7-4	50
	7-23	9
	7-27	9
	7-30	9
	7-33	9
	9-3	3
	9-5	10
	10-5	15
	10-9	14
	11-3	13
	11-4	58
	11-7	13
	11-8	58
	11-11	13
	11-12	62
	11-29	23
	11-33	23
	11-37	15
	11-41	15
449022017	3-13	12
	5-17	24
	7-3	40
	8-3	2
	8-3	2
	11-27	8
	12-33	24
	12-37	25
	12-59	27
	12-61	28
	13-13	10
	13-18	10
	14-3	4
449022018	2-15	7
	5-9	17
	5-15	32
	5-47	4
	5-49	4
	6-15	17
	6-16	55
	6-19	17
	6-20	50
	6-27	3
	7-3	34
	9-6	42
	9-9	12
449022019	4-7	21
449022020	9-3	37
449022021	6-15	9
	6-20	68
	6-23	5
	14-19	2
449022022	6-27	36
449025001	9-9	16
449034021	12-7	9
	12-23	9
449034054	12-34	31
	12-37	32
	12-59	25
	12-61	26
449034061	1-13	4
449034079	7-23	18
	7-27	18

PART NO.	PG.	ITEM
500009917	8-3	3
500025905	7-29	2
500030902	9-5	3
500111905	12-27	20
	12-31	20
500167924	13-11	5
500179904	7-13	6
	11-3	30
	11-7	30
	11-11	30
	11-12	53
	11-30	51
	11-37	40
500227907	12-9	7
	12-19	8
	12-27	11
	12-31	11
	12-33	17
	12-37	17
	12-51	8
	12-57	3
	12-59	30
	12-61	31
	12-71	8
	13-39	19
	13-41	15
	13-43	15
500227910	12-34	33
	12-37	34
	12-59	28
	12-61	29
500228905	11-12	64
	11-34	50
500343914	12-7	8
	12-23	12
	12-33	29
	12-37	30
	12-59	23
	12-61	24
500348901	12-47	11
	12-67	11
500383916	6-33	24
	6-37	24
	6-43	27
	6-51	1
500390903	7-3	8
	7-9	31
	7-13	3
500412904	11-3	32
	11-7	32
	11-11	32
500412906	10-5	17
	13-29	13
500421901	11-29	42
	11-33	42
	11-37	30
	11-41	30
500428901	7-4	53
500428902	5-9	23
	7-3	9
	11-3	36
	11-7	36
	11-11	36
500552902	5-53	14
	9-5	39
500583902	5-47	8
	5-47	27
	5-49	8
	11-29	16
	11-33	16
	11-37	8
	11-41	8
501702901	2-15	18
	5-53	3
501702902	6-25	9
501737903	10-5	24
501753902	1-29	15
	1-31	4
501753904	12-47	4
	12-49	4
501753914	12-62	9
	12-63	9
	12-64	10
	12-65	10
	12-67	4
	12-69	4
501850904	12-14	7
	12-16	8
	12-42	7
	12-45	7
	12-47	7
	12-49	7
	12-67	7
	12-69	7
501877901	12-33	27
	12-37	28
501884906	5-13	15
	5-15	16
	6-15	43
	6-19	43
501904909	1-29	30
	1-31	25
501921910	11-3	34
	11-7	34
	11-11	34
501935904	8-3	7
502011903	9-19	3
	12-47	10
	12-67	10
	12-69	10
502011909	12-62	5
	12-63	5
	12-64	6
	12-65	6
	13-11	5
502011914	11-25	6
502011929	12-49	10
502012902	7-23	15
	7-27	15
502029911	8-3	8
502029935	8-3	16
502029936	8-3	15
502056903	4-11	23
	7-33	3
502056904	4-7	11
	4-9	5
	4-11	5
	7-33	7
	11-3	8
	11-7	8
	11-11	8
502056906	5-11	9
	5-41	19
	5-41	19
	5-43	16
502059912	8-3	9
502079902	10-11	9
502097905	9-23	8
502097907	8-7	8
	9-21	8
502398902	4-9	10
	4-11	10
	6-15	16
	6-19	16
	6-25	1
502398907	1-9	40
502546902	11-4	51
	11-8	51
502565903	9-17	2
502566901	2-15	15
	5-11	33
	7-9	11
	7-13	24
	14-9	21
502566902	2-15	13
	9-3	6
	12-9	10
	12-27	15
	12-31	15
	12-57	7
502566904	14-9	11
502600903	5-11	1
	5-13	17
	5-15	17
502632901	5-25	9
502635907	11-45	13
	11-45	27
	11-45	45
	11-49	13
	11-49	27
	11-49	45
502637902	11-25	11
502687901	12-47	12
	12-49	12
	12-62	10
	12-63	10
	12-64	11
	12-65	11
	12-67	12
	12-69	12
502719903	6-33	25
	6-37	25
	6-51	2
502757901	14-7	12
502759901	7-23	26
	7-27	26
502787902	12-16	5
502787903	12-47	9
	12-49	9
	12-67	9
	12-69	9
502895201	12-45	15
	12-65	12
502895203	12-42	15
503998701	1-21	1
503998702	1-21	1
503998703	1-21	1
503998704	1-21	1
503998705	1-21	1
504017203	12-62	7
	12-63	7
	12-64	8
	12-65	8
504020504	13-11	3

PART NO.	PG.	ITEM
504020507	13-11	3
504024202	12-16	14
	12-45	12
504024203	12-14	12
	12-42	12
504024210	12-47	14
	12-67	14
504057704	13-29	5
	13-29	12
504059730	6-43	18
	6-45	18
504060718	6-52	12
504060749	6-49	19
504060774	1-5	33
	5-9	2
	5-11	5
	5-13	22
	5-15	22
	11-3	2
	11-7	2
	11-11	2
	14-9	4
	14-15	4
504061719	14-19	1
504061728	13-3	14
	13-7	14
504061740	13-3	7
504061746	13-3	9
	13-7	9
504061794	13-3	8
504061795	13-3	13
	13-7	13
504062725	12-23	1
504062735	13-33	3
504062738	12-23	1
504062765	12-23	1
504062799	12-23	1
504063749	12-55	1
504063766	13-25	2
504064701	6-33	7
	6-37	9
	6-39	14
	6-41	17
	6-43	20
	6-45	20
	6-52	1
504064702	12-33	5
	12-37	5
504064703	12-27	1
504064707	12-33	2
	12-37	2
504064710	12-33	3
	12-37	3
	12-61	4
504064711	12-33	2
	12-37	2
504064718	12-37	36
504064719	12-33	2
	12-37	2
504064720	6-33	46
	6-37	4
504064721	12-9	17
	12-31	22
504064723	12-33	3
	12-37	3
504064729	12-9	20
	12-27	26
	12-31	26
	12-57	22
504064734	12-33	7
	12-37	7
	12-59	11
	12-61	12
504064736	12-33	3
	12-37	3
504064737	12-33	2
504064739	12-9	11
	12-27	16
	12-31	16
	12-57	8
504064740	12-10	21
	12-27	23
	12-31	23
	12-57	20
504064742	12-9	16
	12-27	21
	12-31	21
	12-57	13
504064743	12-33	3
	12-37	3
504064745	12-33	1
	12-59	2
504064746	12-27	1
504064751	12-31	10
504064758	12-10	23
	12-27	4
	12-31	4
	12-33	19
	12-37	19
	12-59	17
	12-61	18
504064760	12-33	1
	12-59	2
504064761	12-9	19
	12-27	28
	12-31	28
	12-57	14
504064767	12-9	8
	12-27	12
	12-31	12
	12-57	4
504064769	12-10	24
	12-27	13
	12-31	13
	12-57	5
504064772	12-33	3
504064775	12-33	1
504064778	12-37	22
504064779	12-33	3
	12-37	3
504064780	12-27	1
504064782	12-33	21
	12-37	21
504064784	12-27	1
	12-59	2
504064785	12-33	2
	12-37	2
504064786	12-33	2
	12-37	2
504064792	12-33	1
504064794	12-33	1
504064795	12-33	6
	12-37	6
	12-59	10
	12-61	11
504065700	12-37	1
504065701	12-61	2
504065717	12-5	1
504065719	12-31	1
504065747	12-9	1
504065750	12-21	1
504065752	12-21	1
504065755	12-37	1
504065757	12-5	1
504065758	12-5	1
	12-21	1
	12-53	1
504065759	12-9	1
504065762	12-5	1
	12-21	1
	12-53	1
504065766	12-21	1
504065767	12-37	1
504065776	12-5	1
504065777	12-5	1
	12-21	1
	12-53	1
504066700	12-5	2
	12-7	2
	12-21	2
	12-23	2
	12-25	2
	12-53	2
	12-55	2
504066711	12-31	1
504066718	12-31	1
504066737	12-61	2
504066744	12-9	1
504066760	12-9	1
504066775	12-9	1
504066783	12-31	1
504066797	12-61	2
504068703	13-14	16
	13-21	6
	13-30	26
	13-34	23
504068704	13-14	20
	13-14	18
	13-18	19
	13-18	17
	13-21	4
	13-25	4
	13-30	17
	13-34	15
504068705	13-13	13
	13-18	13
504068710	13-30	24
	13-34	21
504068717	13-13	1
504068724	13-13	1
504068729	13-13	1
504068737	13-14	21
	13-14	19
	13-21	5
	13-29	7
504068738	13-17	1
504068755	13-13	1
504068760	13-13	1
504068772	13-14	13
	13-18	13
504068779	13-30	24
	13-34	21
504068789	13-13	1
504068790	13-14	16

PART NO.	PG.	ITEM
	13-21	6
	13-30	25
	13-34	22
504068794	13-13	12
	13-18	12
	13-21	17
	13-26	17
	13-29	14
	13-33	13
504069702	12-10	24
	12-27	13
	12-31	13
	12-57	5
504069707	13-13	4
	13-17	4
504069711	13-13	4
	13-17	4
504069716	12-59	1
	12-61	1
504069724	12-59	5
	12-61	6
504069740	13-22	25
	13-26	25
504069761	13-22	23
	13-26	23
504069765	12-10	28
504069771	13-30	24
	13-34	21
504069782	12-59	1
	12-61	1
504069783	12-59	1
	12-61	1
504069791	12-10	24
	12-27	13
	12-31	13
	12-57	5
504069792	13-22	18
	13-26	18
504070700	13-21	1
504070703	13-21	1
504070713	13-30	23
	13-34	20
504070716	13-13	9
	13-17	9
	13-21	14
	13-25	14
	13-34	29
504070721	13-21	10
	13-25	10
	13-29	11
	13-33	11
504070726	13-30	23
	13-34	20
504070735	13-22	18
	13-26	18
504070756	13-21	9
	13-25	9
	13-29	10
	13-33	10
504070764	13-26	34
	13-34	28
504070784	13-30	23
	13-34	20
504070785	13-21	1
504070790	5-41	18
	13-34	24
504071702	12-51	7
	12-71	7
	13-39	18
504071718	13-3	15
504071727	13-3	16
504071728	13-3	1
504071735	13-7	1
504071737	13-7	16
504071742	13-7	4
504071745	13-7	5
504071766	13-22	26
	13-26	26
504071770	13-7	7
504071773	13-7	5
504071778	13-3	5
504071779	12-19	4
	12-71	4
	13-39	15
	13-41	19
504071780	13-7	15
504071785	1-5	27
	1-33	6
	5-51	16
	13-22	21
	13-26	21
504071792	13-7	8
504071799	13-3	4
504072707	12-71	1
504072710	12-31	1
504072717	12-19	5
	12-71	5
	13-39	16
	13-41	20
504072723	12-7	1
504072733	12-19	1
504072745	12-71	1
504072755	12-7	1
504072774	12-7	1
504072776	12-7	1
504072786	12-7	1
504072791	12-19	1
504072794	12-9	1
	12-37	1
504072799	12-19	7
504074703	12-55	1
504074773	12-7	1
504074776	12-7	1
504074785	12-55	1
504075722	12-9	1
504075738	12-9	1
	12-27	1
	12-33	1
504075767	12-27	10
504075780	12-9	1
504075784	12-33	28
504075785	12-37	29
504110201	1-20	1
504110202	1-20	1
504110203	1-20	1
504110204	1-20	1
504110205	1-20	1
504148200	12-14	5
	12-16	9
	12-42	6
	12-45	6
	12-47	6
	12-49	6
	12-67	6
	12-69	6
504160200	12-16	11
	12-45	9
504161200	12-16	13
	12-45	11
504163200	12-14	8
	12-16	6
	12-42	8
	12-45	8
	12-62	4
	12-63	4
	12-64	5
	12-65	5
504214800	9-13	7
504223217	1-23	22
	1-29	28
	1-31	17
504223224	1-29	25
	1-31	18
504223244	7-23	6
	7-27	6
504223249	1-23	25
	1-29	27
	1-31	16
504223269	7-23	6
	7-27	6
504223295	12-34	36
	12-37	38
504224203	1-29	4
504224217	9-17	20
504224218	9-17	19
504224251	8-3	28
504224254	1-29	7
504224261	9-17	32
504224273	1-29	6
504224286	1-29	5
504225202	9-5	38
504225211	9-19	8
504225226	9-19	9
504225265	9-17	6
504226209	1-29	19
	1-31	13
504226218	3-13	22
	8-3	21
504226225	7-23	36
504226235	7-23	7
	7-27	7
504226242	1-9	34
	1-13	10
	1-33	2
	4-7	18
	5-9	3
	5-9	26
	5-51	22
	6-15	5
	6-19	5
	6-27	7
	6-29	14
	10-11	10
	11-29	22
	11-33	22
	11-37	14
	11-41	14
	13-22	28
	13-26	28
	14-5	12
	14-17	6
504226268	7-23	17
	7-27	17
504226279	7-3	3

PART NO.	PG.	ITEM
504227203	5-47	8
	5-49	8
504227210	7-23	6
	7-27	6
504227269	9-5	28
504227270	11-38	54
	11-42	54
504227275	7-23	6
	7-27	6
504227283	9-17	28
504227287	7-23	6
	7-27	6
504227295	7-23	6
	7-27	6
504228258	5-51	9
504229225	11-25	12
	11-27	4
504229295	7-23	24
	7-27	24
504229298	14-9	20
504230207	11-45	40
	11-49	40
504230209	11-45	18
	11-45	33
	11-46	54
	11-49	18
	11-49	33
	11-50	54
504230215	11-50	58
504230234	11-45	14
	11-45	29
	11-45	46
	11-49	14
	11-49	29
	11-49	46
504230239	11-38	55
	11-42	55
504230246	11-45	15
	11-45	30
	11-45	47
	11-49	15
	11-49	30
	11-49	47
504230255	11-45	23
	11-45	37
	11-46	55
	11-49	23
	11-49	37
	11-50	55
504230271	5-45	7
	11-30	54
	11-34	54
	11-38	59
	11-42	59
	12-10	26
	12-27	24
	12-31	24
	12-33	9
	12-37	9
	12-57	12
	13-3	11
	13-3	12
	13-7	11
	13-7	11
	13-13	5
	13-17	5
	13-21	8
	13-25	8
	13-29	9
	13-33	9
504230282	11-45	19
	11-45	34
	11-46	50
	11-49	19
	11-49	34
	11-50	50
504230293	11-45	6
	11-49	6
504230296	11-46	58
504230298	11-45	16
	11-45	31
	11-46	48
	11-49	16
	11-49	31
	11-50	48
504231204	6-51	19
504231215	1-15	4
504231226	7-10	45
504231248	1-15	13
504231252	1-15	11
504231270	13-14	15
	13-18	15
	14-5	7
	14-5	7
	14-7	6
	14-13	11
	14-13	11
504231296	1-15	3
504232210	13-11	7
504232212	14-5	1
	14-13	6
504232220	11-45	6
	11-49	6
504232230	12-14	13
	12-16	7
	12-42	13
	12-45	13
	12-47	13
	12-49	13
	12-67	13
	12-69	13
504232237	6-37	38
504232297	14-13	7
504233232	12-5	7
	12-7	4
	12-21	7
	12-23	7
	12-25	4
	12-51	4
	12-53	7
	12-55	4
	13-43	19
504233267	1-31	6
504233271	1-19	3
504233279	12-5	5
	12-21	5
	12-23	5
504234226	11-45	22
	11-45	36
	11-46	52
	11-49	22
	11-49	36
	11-50	52
504234265	12-5	4
	12-21	4
	12-23	4
	12-53	4
504234266	12-10	25
	12-27	5
	12-31	5
	12-33	20
	12-37	20
	12-59	18
	12-61	19
504234288	13-11	6
504235239	12-14	4
	12-16	10
	12-42	5
	12-45	5
	12-47	5
	12-49	5
	12-67	5
	12-69	5
504235278	12-51	5
	13-43	20
504236265	6-33	45
	6-37	47
	6-51	14
504236269	6-15	36
	6-19	36
504237211	5-51	4
	10-9	18
504237273	1-29	9
504238209	6-51	20
504238298	1-23	26
	1-25	37
	1-29	17
	1-31	24
	6-25	12
504239208	1-31	11
504239228	1-31	12
504240229	12-9	18
	12-27	27
	12-31	27
	12-57	21
504240234	11-3	20
	11-7	20
	11-11	20
504240704	1-19	1
504240712	6-27	1
504240715	3-11	8
	3-13	27
504240716	3-7	14
504240717	3-11	1
504240727	1-5	11
504240728	9-3	1
504240729	11-29	35
	11-33	35
	11-38	51
	11-42	51
504240730	11-29	36
	11-33	36
	11-38	50
	11-42	50
504240731	11-29	37
	11-33	37
504240732	11-29	45
	11-33	45
	11-37	33
	11-41	33
504240733	11-29	46
	11-33	46
	11-37	34
	11-41	34

PART NO.	PG.	ITEM
504240741	11-3	5
	11-7	5
	11-11	5
504240757	1-9	6
504240766	1-5	20
504240785	3-11	7
	3-13	28
	5-9	37
504240787	1-5	21
504240788	11-3	26
504240791	7-30	11
	7-33	6
504240838	6-27	1
504240842	5-41	13
	5-43	13
504240856	1-9	9
504240857	1-9	10
504240858	14-3	2
504240859	1-15	15
504240860	1-15	15
504240863	5-41	2
	5-43	2
504240928	11-37	43
	11-41	43
504240930	11-37	47
	11-41	47
504240932	11-37	45
	11-41	45
504240952	11-29	30
	11-33	30
	11-37	23
	11-41	23
504240953	11-29	29
	11-33	29
	11-37	22
	11-41	22
504240954	11-29	28
	11-33	28
	11-37	21
	11-41	21
504240966	1-5	7
504240979	1-9	1
504240980	1-9	1
504240985	1-9	2
504240988	5-11	6
504240990	1-5	21
504240991	9-3	16
504240995	6-15	23
504241700	11-38	49
	11-42	49
504241701	1-11	1
504241704	6-15	27
	6-19	27
504241723	6-25	18
504241724	1-11	3
504241725	1-11	4
504241730	11-29	26
	11-33	26
	11-37	19
	11-41	19
504241731	11-29	34
	11-33	34
504241732	11-38	52
	11-42	52
504241737	11-29	18
	11-29	38
	11-33	18
	11-33	38
	11-37	10
	11-41	10
504241739	11-29	38
	11-33	38
504241741	11-38	53
	11-42	53
504241742	11-29	39
	11-33	39
504241771	11-29	19
	11-33	19
	11-37	11
	11-41	11
504241782	1-5	8
504241783	1-5	9
504241784	1-5	10
504241788	9-3	19
504241790	9-3	18
504241791	1-5	20
504241796	1-13	12
	5-9	36
504242746	1-19	1
504242747	1-19	1
504242751	1-19	1
504243712	13-3	
504243714	13-3	
504243715	13-7	
504245777	1-29	
504245794	11-37	28
	11-37	44
	11-41	28
	11-41	44
504245795	11-38	48
	11-41	48
504245796	11-37	46
	11-41	46
504245799	11-37	27
	11-41	27
504246710	13-7	
504246731	1-33	5
504246733	1-33	10
504246763	1-11	2
504246769	1-13	5
504246778	1-15	14
504256792	4-3	4
504256796	4-3	13
504258211	12-16	3
504258715	6-15	34
	6-19	34
504258725	4-3	18
504258737	4-3	24
504258742	2-13	19
504258743	3-5	1
504258744	5-7	20
504258747	5-23	23
504258748	5-23	11
504258749	5-23	19
504258750	5-23	20
504258751	5-23	24
504258754	3-3	5
504258755	3-3	6
504258757	5-5	10
504259744	2-7	3
504259745	2-7	5
504259746	2-7	6
504259747	2-7	7
504259748	2-7	8
504259749	2-7	9
504259756	2-3	2
504259757	3-5	1
504259763	2-5	29
	2-11	26
	2-13	22
	3-3	16
	4-3	36
	4-5	37
	5-5	14
	6-3	24
504259764	2-5	10
504259766	1-23	1
504259767	1-23	2
504259768	1-23	11
504259770	1-23	14
504259771	1-23	17
504259772	1-23	18
504259773	1-23	1
504259774	1-23	2
504260741	9-5	30
504260742	9-5	25
504262752	5-47	11
	5-49	11
504262753	9-3	15
504262754	1-5	30
504262755	1-5	2
504262756	6-15	2
	6-19	2
504262757	6-15	13
504263702	1-19	1
504263703	1-19	1
504263725	13-7	
504263788	13-3	
504264764	11-3	4
	11-7	4
	11-11	4
504264775	11-4	57
	11-8	57
	11-12	61
504268729	1-31	5
504268730	1-31	7
504268740	1-31	1
504268741	1-31	1
504268775	5-17	18
504268794	14-9	1
504279799	1-16	29
504281765	2-3	
504281766	2-3	
504281774	1-9	8
504281792	12-7	7
	12-23	11
504281793	12-7	8
	12-23	12
504281794	12-7	8
	12-23	12
504281795	12-34	30
	12-37	31
	12-59	22
	12-61	23
504281796	12-33	29
	12-33	29
	12-59	23
504281797	12-37	30
	12-61	24
504281799	12-59	23
504282701	12-37	30
	12-61	24
504282702	12-7	8
	12-23	12

PART NO.	PG.	ITEM
504282703	12-7	8
	12-23	12
504288739	6-55	6
504289704	1-23	1
504289705	1-23	2
504289706	1-23	1
504289707	1-23	2
504297721	13-21	2
	13-25	6
	13-29	6
	13-33	6
504297722	13-21	2
	13-25	6
	13-29	6
	13-33	6
504297725	13-3	20
	13-7	20
504297726	13-4	21
	13-8	21
504298714	6-27	30
504298715	6-27	39
504298716	6-15	28
	6-39	
504298717	2-15	11
504298718	2-15	12
504301775	13-13	8
	13-17	8
	13-21	13
	13-25	13
504301785	12-59	24
	12-61	25
504305702	9-19	6
504305730	1-31	1
504305731	1-31	1
504305734	1-31	2
504305737	1-31	
504305738	1-31	
504305741	1-23	
504305742	1-23	
504306703	11-37	41
	11-41	41
504306704	11-37	42
	11-41	42
504315702	1-5	34
504315705	1-5	34
504315706	1-5	17
504315708	1-5	35
504315711	5-51	10
504315724	5-51	1
504315732	5-51	18
	5-53	
504315733	5-53	12
504315734	6-27	18
	6-33	
504315736	1-6	35
504449749	5-53	3
504450732	12-47	16
	12-67	16
504450733	12-14	11
	12-42	11
504450734	12-47	15
	12-67	15
504450739	6-23	1
504450740	6-9	32
504450741	6-9	33
	6-49	6
	6-55	24
504450742	6-33	10
	6-37	12
	6-51	9
504450743	6-33	44
	6-37	46
	6-49	4
	6-51	12
	6-55	13
504450753	12-16	6
504450754	12-49	15
	12-69	15
504450755	12-14	9
	12-42	9
504450756	12-49	16
	12-69	16
504450757	12-49	14
	12-69	14
504450758	12-47	8
	12-49	8
	12-67	8
	12-69	8
504450761	6-33	11
	6-37	13
	6-51	10
504503703	9-5	30
504504703	9-5	25
504574273	9-5	19
504574275	9-5	34
	9-11	
504574276	9-11	1
504574277	9-11	2
504575274	1-15	1
504575276	1-29	10
504575298	12-9	17
	12-27	22
	12-57	18
504804729	3-11	9
504804730	1-31	9
504804731	1-31	8
504804732	1-31	10
504804733	1-31	3
504804748	6-9	2
505064713	6-51	8
505064754	6-33	47
	6-37	5
505136035	12-16	15
505136037	12-45	16
505136039	12-14	14
505136041	12-42	16
505136046	12-47	17
	12-67	17
505136047	12-49	17
	12-69	17
505136048	12-62	11
	12-64	12
505136051	12-63	11
	12-65	12
505136053	13-11	9
505136054	13-11	10
505587500	12-45	3
505657512	12-45	4
505657513	12-64	4
	12-65	4
505657515	12-16	3
505657517	12-45	4
505657522	12-42	4
505862501	1-21	1
505862502	1-21	1
505862503	1-21	1
505862504	1-21	1
505959500	13-30	16
	13-33	14
505959501	12-23	1
505959504	5-41	24
	5-43	24
505959511	5-9	11
505959512	8-3	17
505959519	5-9	14
505959520	5-23	3
505959524	5-23	1
505959525	5-9	13
505959527	5-5	4
	5-19	
505959534	5-38	7
505959543	3-3	1
505959547	5-7	16
	5-41	27
505959552	3-3	8
	5-7	3
505959555	2-15	3
505959558	2-5	28
	3-3	7
	3-5	5
	3-5	5
	4-3	3
	4-5	3
	4-5	21
505959568	2-9	19
505959571	12-23	1
505959581	5-23	6
505959584	5-5	3
505959586	5-23	2
505959588	5-5	5
	5-7	4
505959589	5-7	6
	5-41	23
	5-43	23
505959590	5-5	11
505959591	2-17	14
505959594	3-3	5
505960501	2-5	5
	5-7	11
505960507	5-5	12
	5-23	5
505960511	5-23	4
505960513	5-23	22
505960514	4-5	13
505960516	2-5	14
505960519	5-23	10
505960521	4-5	9
505960524	5-7	9
	5-41	21
	5-43	25
505960531	3-5	7
505960534	5-23	8
505960535	6-3	11
505960536	2-7	7
505960538	2-11	15
505960539	4-3	21
505960546	5-23	18
505960548	2-7	4
505960549	6-3	12
505960550	4-5	14
505960551	5-23	12
505960552	6-3	6
505960553	5-23	26
505960554	5-23	16

PART NO.	PG.	ITEM
505960555	5-23	21
505960557	5-23	13
505960563	5-23	7
505960564	5-23	15
505960569	3-5	3
505960570	5-23	14
505960571	5-23	25
505960572	5-23	9
505960573	5-23	17
505960578	1-19	2
505960579	4-5	25
505960580	6-3	10
	6-15	24
	6-19	24
505960581	6-3	7
505960582	3-3	4
	3-5	2
505960585	6-3	13
505960588	4-5	15
505960590	6-3	2
505961505	13-30	19
	13-34	17
505961568	13-13	7
	13-17	7
	13-21	12
	13-25	12
505962533	13-13	6
	13-17	6
	13-21	11
	13-25	11
505962557	11-29	1
	11-33	1
505962578	13-14	17
	13-18	16
505963500	10-3	1
505963502	7-4	49
505963508	5-25	17
505963519	10-7	3
505963522	10-3	10
505963525	5-25	23
505963529	8-3	27
	10-3	
505963537	10-7	
	10-11	1
505963540	10-7	2
505963544	10-7	1
505963547	5-25	11
505963548	5-25	25
505963550	5-25	21
505963552	5-25	13
505963553	5-25	16
505963557	7-9	41
505963564	10-7	13
505963565	10-7	10
505963566	7-4	49
505963567	8-3	19
	10-3	
505963578	10-3	2
505963583	10-7	4
505963584	7-9	40
505963599	5-25	18
505964506	4-7	1
505964513	11-23	6
505964529	11-23	3
505964540	10-7	5
505964559	4-7	1
505964564	11-23	4
505964565	11-21	16
505964573	11-15	16
	11-19	15
505964577	10-7	9
505964578	10-7	6
505964586	10-7	7
505964597	10-7	8
505965530	9-17	31
	9-19	
	11-3	45
	11-7	45
	11-11	45
505965551	8-3	18
505965585	8-3	34
	11-27	16
505965586	13-18	20
	13-18	18
	13-25	5
	13-33	7
505965599	13-34	18
505966500	11-45	7
	11-49	7
505966501	3-9	10
505966502	11-45	26
	11-49	26
505966504	5-9	5
	5-11	3
	11-3	1
	11-7	1
	11-11	1
505966507	5-11	10
505966508	3-7	15
	3-9	16
	3-13	24
505966510	12-33	12
	12-37	12
505966511	5-7	24
	5-15	40
505966512	5-17	27
505966521	5-11	17
505966522	6-31	11
	6-49	14
	6-55	16
505966525	5-11	18
	5-29	20
	5-33	15
505966527	11-45	44
	11-49	44
505966528	5-19	4
	5-21	5
505966529	5-11	15
505966531	11-45	7
	11-49	7
505966533	5-19	1
505966539	5-19	9
	5-21	10
505966541	5-17	26
505966542	3-7	18
	3-9	12
	3-13	20
505966543	5-11	20
505966544	11-45	10
	11-49	10
505966545	5-11	16
505966547	5-11	19
505966558	5-11	13
	5-37	
505966561	5-19	7
	5-21	8
505966562	1-5	15
	2-17	8
	5-17	12
505966564	5-19	6
	5-21	7
505966572	12-33	11
	12-37	11
505966575	5-17	29
505966578	7-3	7
505966580	3-7	16
	3-9	17
	3-13	23
505966588	5-19	5
	5-21	6
505966589	3-7	9
	3-9	9
505966591	5-17	28
505966594	3-7	17
	3-9	11
	3-13	21
505966595	5-43	18
505966597	5-17	31
505967501	7-3	18
505967503	7-3	38
505967510	5-41	4
	5-43	4
505967511	7-3	29
505967514	7-3	25
505967516	5-41	7
	5-43	7
505967520	7-7	3
505967529	13-17	1
505967534	7-4	45
505967535	7-3	19
505967537	7-29	7
505967538	7-3	31
505967542	7-29	5
505967544	7-3	12
505967545	7-7	9
	7-7	9
505967549	5-41	6
	5-43	6
505967550	7-3	16
	7-23	38
	7-24	40
	7-27	39
505967551	7-3	24
	7-9	5
	7-13	20
505967552	11-45	39
	11-49	39
505967554	7-3	6
505967556	7-23	3
	7-27	3
505967559	13-17	1
505967560	7-3	23
505967562	7-3	10
505967567	7-29	4
505967572	7-23	5
	7-27	5
505967573	7-4	46
505967575	11-45	25
	11-45	43
	11-46	57
	11-49	25
	11-49	43
	11-50	57
505967579	7-3	14

PART NO.	PG.	ITEM
505967584	7-4	48
505967585	9-5	35
505967587	7-23	2
	7-27	2
505967588	7-4	43
505967589	7-29	6
505967591	7-4	47
505967593	11-45	11
	11-49	11
505967595	11-45	38
	11-49	38
505967596	13-17	1
505967597	7-29	8
505967598	7-3	17
505967599	13-17	1
505968501	6-34	50
	6-37	32
	6-41	10
	6-43	13
	6-45	13
	6-47	5
505968505	6-33	42
	6-37	44
	6-39	12
	6-41	14
	6-43	16
	6-45	16
505968506	6-47	4
	6-49	7
505968511	6-31	10
	6-33	16
	6-37	17
	6-47	7
	6-49	13
	6-55	15
505968514	6-39	7
	6-41	7
	6-43	7
	6-45	7
505968517	6-23	1
	6-33	43
	6-37	45
505968519	6-33	4
	6-37	6
	6-47	1
	6-49	1
	6-51	6
	6-55	1
505968522	6-23	1
	6-33	20
	6-37	16
	6-37	20
	6-49	11
	6-51	16
	6-55	8
	6-55	12
505968523	6-23	1
	6-33	13
505968524	6-37	37
	6-49	5
505968529	6-43	19
	6-45	19
	6-49	10
	6-52	10
505968535	6-33	49
	6-37	33
	6-41	11
	6-43	14
	6-45	14
	6-47	6
505968536	6-39	4
	6-41	4
	6-43	4
	6-45	4
505968538	6-33	40
	6-37	42
	6-43	8
	6-45	8
	6-49	20
	6-51	18
	6-52	13
505968541	13-21	1
505968542	13-21	1
505968551	6-33	19
	6-37	19
	6-47	10
	6-49	18
	6-51	17
	6-55	11
505968555	6-33	12
	6-37	15
	6-39	10
	6-41	12
	6-43	15
	6-45	15
505968558	5-7	18
	6-33	5
	6-37	7
	6-49	2
	6-51	7
505968562	6-49	22
505968563	6-49	9
	6-55	19
505968566	6-31	4
	6-33	6
	6-37	8
	6-39	3
	6-43	3
	6-45	3
	6-47	8
	6-49	16
	6-55	4
505968568	6-33	3
	6-37	3
	6-39	2
	6-41	2
	6-41	3
	6-43	2
	6-45	2
	6-47	3
	6-49	3
	6-52	3
	6-55	3
505968570	13-25	2
505968572	6-33	41
	6-37	43
	6-39	11
	6-41	13
	6-43	17
	6-45	17
505968576	6-33	18
	6-37	18
	6-47	9
	6-49	17
	6-55	10
505968580	1-5	1
505968581	13-21	1
	13-25	1
505968582	13-33	4
505968587	3-11	2
505968588	6-39	1
	6-41	1
	6-43	1
	6-45	1
	6-55	2
505968589	6-49	8
505968594	6-27	38
505968595	6-49	21
	6-51	13
	6-55	14
505969500	14-17	7
505969504	5-11	28
505969508	5-11	24
505969515	2-15	16
505969520	5-47	12
505969521	9-17	12
505969526	8-3	4
	8-3	4
505969527	14-17	1
505969528	5-11	26
505969532	7-23	14
	7-27	14
505969533	13-17	1
505969540	5-11	22
505969543	14-17	7
505969548	13-25	1
505969551	9-17	30
505969554	9-23	3
505969557	13-25	1
505969558	14-17	5
505969561	5-11	23
505969564	8-7	1
505969566	13-33	3
505969569	7-4	44
505969571	13-18	21
505969572	13-25	1
505969574	7-23	35
505969581	8-3	11
	8-3	11
505969585	4-7	27
	4-9	6
	4-11	11
505969593	14-17	7
505969598	11-3	15
	11-7	15
	11-11	15
505970500	6-20	71
	11-29	20
	11-33	20
	11-37	12
	11-41	12
	14-17	4
505970501	2-17	2
505970504	9-23	4
505970505	5-41	25
505970506	5-9	7
505970507	5-11	27
505970508	2-17	13
505970511	6-15	12
	6-19	12
505970514	7-9	8
	7-13	30
505970515	2-17	5
505970516	7-9	15

PART NO.	PG.	ITEM
	7-13	31
505970518	8-9	1
505970520	7-23	11
	7-27	11
505970521	2-17	11
505970523	5-41	15
505970525	8-7	1
	8-7	1
505970527	9-23	1
505970530	2-17	12
505970533	11-3	17
505970534	9-21	3
505970535	2-17	6
505970537	8-3	29
505970538	1-13	7
505970540	8-3	1
505970542	9-21	1
505970543	2-15	9
505970544	9-17	16
505970545	7-9	29
	7-13	16
505970548	9-23	6
505970549	7-23	25
	7-27	25
505970550	5-11	12
	5-13	11
	5-15	11
505970552	6-25	2
	6-25	2
505970553	1-5	6
	6-27	10
505970555	9-19	4
505970556	2-17	7
505970557	1-13	6
505970560	7-30	7
505970564	7-9	14
505970565	8-7	1
505970567	11-27	12
505970572	5-37	19
505970574	2-15	17
505970577	2-17	4
505970579	1-5	16
505970581	7-9	18
	7-13	33
505970584	2-17	3
505970590	9-21	4
505970592	7-10	48
	7-15	2
505970593	7-9	17
	7-13	34
505970596	8-9	1
505971500	7-9	6
	7-13	28
505971501	11-3	43
	11-7	43
	11-11	43
505971502	8-3	20
505971504	7-3	1
	7-23	28
505971506	7-9	7
	7-13	27
505971507	9-17	24
505971508	7-9	25
	7-13	9
505971509	8-7	6
	9-21	6
505971511	7-9	16
	7-13	29
505971512	9-17	10
505971513	9-17	13
505971516	9-17	23
505971517	7-23	29
505971518	7-23	16
	7-27	16
505971521	9-17	8
505971522	8-7	2
505971525	7-9	3
505971527	7-23	21
	7-27	21
505971529	7-23	33
505971530	9-21	7
505971533	9-17	17
505971534	8-7	7
505971535	7-9	22
	7-13	7
505971536	8-9	2
505971537	7-23	31
505971538	9-17	11
505971539	7-9	26
	7-13	10
505971540	7-9	2
505971542	8-3	25
505971544	7-3	30
505971545	8-3	12
505971546	7-9	24
	7-13	11
505971548	5-9	21
505971550	7-9	43
	7-13	36
505971553	9-23	7
505971555	7-17	3
	7-19	3
	7-21	2
505971557	7-23	13
	7-27	13
505971558	7-9	20
	7-13	14
505971559	7-17	9
505971560	9-21	1
505971562	5-9	20
	6-15	35
505971566	7-10	46
505971567	7-9	23
	7-13	8
505971568	7-9	27
	7-13	12
505971569	9-23	2
505971570	8-3	14
505971572	7-17	11
	7-19	11
	7-21	13
505971574	8-7	4
505971577	8-3	13
505971578	7-17	8
505971579	9-17	18
505971580	7-23	30
505971581	9-17	26
505971584	7-9	4
505971585	7-23	10
505971586	8-7	9
505971587	5-9	25
505971588	8-3	21
505971589	8-3	26
505971590	9-17	9
505971591	7-23	32
505971592	8-3	1
505971593	8-7	3
	8-7	3
505971595	7-9	13
	7-13	13
505971596	9-17	7
505971656	8-7	5
	9-21	5
505972500	10-9	11
505972501	7-9	10
505972502	1-33	11
	10-9	12
	14-9	25
505972503	11-29	15
	11-33	15
	11-37	7
	11-41	7
505972504	4-7	23
505972505	4-7	20
505972506	6-15	19
	6-19	19
505972507	6-31	6
	6-39	6
	6-41	6
	6-43	6
	6-45	6
	6-51	4
505972508	10-9	15
505972511	7-9	12
505972513	4-7	24
	4-9	20
	4-11	20
505972514	11-3	22
	11-7	22
	11-11	22
505972517	10-11	13
505972520	6-27	23
505972523	11-29	3
	11-33	3
505972528	6-27	25
505972530	9-17	36
505972531	6-31	14
505972532	10-11	11
505972534	6-27	22
505972540	10-9	16
505972541	1-13	3
505972543	10-11	6
505972544	6-31	1
505972548	4-7	26
505972549	11-29	13
	11-33	13
	11-37	5
	11-41	5
505972551	9-17	1
505972552	6-33	30
	6-37	30
505972554	6-31	3
	6-51	5
505972555	6-27	24
505972556	5-41	17
	5-43	15
505972557	4-7	4
505972560	2-15	2
505972561	11-29	14
	11-33	14
	11-37	6
	11-41	6
505972563	4-7	25
	4-9	21

PART NO.	PG.	ITEM
505972565	9-17	33
505972567	6-25	15
505972568	11-29	12
	11-33	12
	11-37	4
	11-41	4
505972570	7-9	9
	7-13	26
505972571	6-27	16
505972572	4-7	22
	4-9	8
	4-11	8
505972575	5-41	1
	5-43	1
505972576	1-5	19
505972577	1-9	3
505972578	10-9	2
505972579	4-9	14
	4-11	14
505972580	4-7	29
505972581	10-9	10
505972583	10-11	12
505972584	9-17	27
505972585	11-29	2
	11-33	2
505972586	1-5	4
	6-27	29
505972587	6-27	21
505972589	6-31	2
505972590	9-17	34
505972591	10-9	3
505972593	6-31	5
	6-39	5
	6-41	5
	6-43	5
	6-45	5
	6-51	3
505972599	10-9	1
505973501	3-7	10
505973503	5-47	18
	5-49	15
505973505	1-5	23
505973507	11-3	9
	11-7	9
	11-11	9
505973508	1-5	23
505973509	1-5	23
505973510	11-3	21
	11-7	21
	11-11	21
505973511	11-3	40
	11-7	40
	11-11	40
505973512	9-21	2
505973514	3-7	1
505973516	8-7	2
	8-7	2
505973517	11-30	48
	11-34	48
	11-37	36
	11-41	36
505973518	8-4	35
505973522	11-3	38
	11-7	38
	11-11	38
505973526	11-4	50
	11-8	50
505973527	12-59	13
	12-61	14
505973529	1-5	22
505973530	5-9	1
505973531	5-47	12
	5-49	12
505973536	12-59	9
	12-61	10
505973538	3-7	1
505973542	11-3	14
	11-7	14
	11-11	14
505973547	6-15	22
505973554	11-30	53
	11-34	53
	11-38	57
	11-42	57
505973555	5-9	9
505973557	11-3	18
505973559	5-9	8
505973563	1-5	22
505973566	11-4	52
	11-8	52
	11-12	56
505973568	11-3	41
	11-7	41
	11-11	41
505973574	11-3	39
	11-7	39
	11-11	39
505973576	1-5	22
505973577	11-29	47
	11-33	47
	11-37	35
	11-41	35
505973580	11-3	10
	11-7	10
	11-11	10
505973584	12-34	35
	12-37	37
505973585	11-30	52
	11-34	52
	11-38	58
	11-42	58
505973588	6-15	30
	6-19	30
505973593	5-9	6
505973595	1-5	22
505973596	3-9	1
505973598	1-5	23
505974501	11-27	13
505974509	1-29	14
505974514	14-9	27
505974516	14-9	27
505974518	1-5	1
505974520	12-71	
505974524	1-29	22
505974531	14-9	6
505974532	10-9	17
505974536	1-29	16
505974539	14-9	7
505974541	1-29	12
505974546	12-71	
505974549	1-9	16
505974555	12-19	
505974556	9-17	40
505974558	7-10	49
	7-14	48
505974560	14-9	27
505974566	14-3	1
505974567	1-29	1
505974573	11-25	13
	11-27	5
505974580	5-9	10
505974582	1-29	13
505974586	11-29	27
	11-33	27
	11-37	20
	11-41	20
505974591	1-29	18
505974594	11-27	6
	11-27	6
505974597	14-3	5
505974598	12-19	
505975505	9-19	1
505975507	8-9	2
505975508	5-9	30
	5-13	26
	5-15	26
505975510	12-19	
505975513	9-19	2
505975532	11-3	42
	11-7	42
	11-11	42
505975533	12-19	
505975544	7-23	28
505975547	12-71	
505975556	12-71	
505975564	1-29	11
505975574	1-13	1
505975580	13-7	1
505975581	1-13	1
505975582	9-19	7
505975585	14-9	22
505975599	13-7	4
505976523	7-23	34
505976530	1-16	28
505976537	6-25	3
505976542	10-5	18
505976544	14-15	5
505976545	1-16	26
505976552	6-25	16
505976556	1-15	23
505976557	13-29	2
	13-33	2
505976561	6-20	51
505976563	9-3	13
	9-6	44
	10-5	21
505976566	1-15	24
505976568	14-9	9
505976570	6-25	17
505976581	1-33	1
505976593	6-3	14
505976595	1-15	12
505976597	6-27	33
505977500	9-11	11
505977506	5-41	14
	5-43	14
505977509	9-5	18
505977516	9-11	9
505977525	1-15	16
505977526	9-11	8
505977530	4-7	28
	4-9	11
505977534	1-15	5
505977535	1-15	20

PART NO.	PG.	ITEM
505977538	9-5	8
505977542	9-11	4
505977543	12-71	1
505977550	9-5	37
505977557	12-71	1
505977562	9-5	7
505977565	1-15	17
505977566	9-5	16
505977569	9-11	3
505977572	5-41	14
505977573	9-5	1
	9-5	2
505977581	1-15	19
505977589	9-5	14
505977590	9-11	6
505977592	12-19	1
505977597	9-5	5
505977598	9-11	5
505977599	12-19	1
505978512	8-9	1
505978524	9-21	1
505978527	12-19	6
	12-51	6
	12-71	6
505978531	9-23	1
505978534	8-7	1
505978542	9-23	1
505978544	12-19	6
	12-51	6
	12-71	6
	13-39	17
	13-41	14
	13-43	14
505978545	9-21	1
505978552	13-29	1
	13-33	1
505978556	1-15	18
505978566	8-9	1
505978585	11-27	14
505978597	13-22	22
	13-26	22
	13-30	18
	13-34	16
505978598	8-7	1
	8-7	1
506001501	11-25	3
506002500	11-25	8
506045500	12-16	4
506250524	13-3	
506250525	13-3	
506250526	13-3	
506250530	13-7	
506250531	13-7	
506250532	13-7	
506253593	13-18	21
506254509	13-18	21
506254512	13-18	21
506254541	13-18	21
506254545	13-18	21
506254595	13-25	2
506256551	13-25	2
506395549	6-33	28
	6-37	28
506408500	12-14	3
506410500	12-42	3
506552501	13-11	8
506552502	13-11	8
510683602	5-17	25
510683605	5-17	25
511405800	4-7	2
	4-9	19
	5-9	16
	5-13	2
	5-15	2
	5-41	12
	5-43	12
513572100	1-15	8
514214804	5-9	4
	5-11	4
	11-3	7
	11-7	7
	11-11	7
514454800	11-12	54
516789303	1-15	10
516789304	1-15	9
516789305	1-15	9
516789306	1-15	9
516789307	1-15	9
516789308	1-15	9
516789309	1-15	9
516789310	1-15	9
516789311	1-15	9
516789312	1-15	9
516905800	14-5	10
	14-7	9
	14-13	19
516987802	5-25	2
516987808	5-25	15
	5-27	3
516987809	5-25	32
	5-25	36
	5-27	4
516987817	5-25	26
516987818	5-25	29
516987822	5-25	24
516987826	14-9	16
517812801	9-13	1
517812802	9-13	5
517812805	9-13	3
517812808	9-13	10
517812809	9-13	4
517812810	9-13	9
517812815	9-13	6
517812816	9-13	2
518354802	5-25	28
518647602	1-20	1
518647603	1-20	1
518647604	1-20	1
518647605	1-20	1
518649601	1-20	1
518649602	1-20	1
518649603	1-20	1
518650601	1-21	1
518650602	1-21	1
518650603	1-21	1
518650604	1-21	1
518791611	12-47	
518791631	12-27	1
518791668	12-47	
	12-67	
518791678	12-37	1
518791679	12-9	1
518791691	12-47	
	12-67	
518791697	12-47	
518792601	12-69	
518792606	12-47	
518792615	12-47	
518792628	12-67	
518792634	12-69	
518792636	12-49	
518792639	12-49	
518792652	12-69	
518792673	12-49	
518792679	12-49	
518792684	12-49	
518793606	1-23	4
518793609	1-11	6
518793674	10-5	19
518794665	14-5	4
518794667	9-15	15
518794681	11-3	3
	11-7	3
	11-11	3
518794682	9-5	26
518795675	13-29	1
	13-33	1
518796624	13-7	4
518796637	5-11	30
	5-38	4
518796642	9-5	13
518796658	14-9	24
518796683	1-23	24
	1-29	26
	1-31	15
518798643	5-17	8
518798651	5-47	18
	5-49	15
518798654	14-19	3
518798659	14-9	22
518798671	5-17	19
518798680	5-17	1
518798696	5-41	20
518799631	13-25	1
518799644	13-25	1
518799665	13-25	2
518799673	13-25	1
518799679	13-33	4
518800650	14-15	8
518800691	14-15	7
518801602	13-3	10
	13-7	10
518801606	14-9	1
518801611	14-9	3
518801615	12-9	6
	12-31	6
	12-37	18
	12-61	20
518801631	13-7	1
518801644	12-9	6
	12-27	6
	12-33	18
	12-59	19
518801652	13-3	1
518801662	12-7	6
	12-23	10
518801665	13-3	4
518801686	14-9	2
518801699	14-9	1
518802658	5-11	35
518803678	6-31	7
518806610	6-33	1
	6-37	1
518806615	11-23	13

PART NO.	PG.	ITEM
518806626	11-23	7
518806631	11-15	9
	11-23	
518806641	6-31	8
518806645	1-16	25
518806648	11-23	9
518806673	11-23	12
518806687	6-33	2
	6-37	2
	6-47	2
518807602	7-3	35
518807605	13-3	2
518807614	7-3	36
518807627	5-38	10
518807647	9-5	33
518807665	5-38	5
518807682	13-3	2
518807699	13-3	2
518808608	13-7	2
518808609	13-3	5
518808621	13-7	2
518808622	5-25	19
518808623	5-11	29
	5-25	
518808629	5-47	15
518808644	13-3	5
518808671	13-7	5
518808684	13-7	2
518809677	11-27	1
518831606	12-16	2
518831609	12-16	2
518831614	12-16	2
518832606	12-16	1
518832609	12-16	1
518832614	12-16	1
518832656	12-16	1
518832659	12-16	1
518832664	12-16	1
518833606	12-16	
518833609	12-16	
518833614	12-16	
518833656	12-16	
518833659	12-16	
518833664	12-16	
518835602	12-16	2
518835607	12-16	2
518836602	12-16	1
518836607	12-16	1
518836652	12-16	1
518836657	12-16	1
518837602	12-16	
518837607	12-16	
518837652	12-16	
518837657	12-16	
518841601	11-3	44
	11-7	44
	11-11	44
	11-25	
	11-27	15
518842601	11-25	1
518852600	11-25	2
518895605	12-45	2
518895608	12-45	2
518895609	12-45	2
518895610	12-45	2
518895613	12-45	2
518896605	12-45	1
518896608	12-45	1
518896609	12-45	1
518896610	12-45	1
518896613	12-45	1
518896655	12-45	1
518896658	12-45	1
518896659	12-45	1
518896660	12-45	1
518896663	12-45	1
518897605	12-45	
518897608	12-45	
518897609	12-45	
518897610	12-45	
518897613	12-45	
518897655	12-45	
518897658	12-45	
518897659	12-45	
518897660	12-45	
518897663	12-45	
518938600	12-49	3
518941607	12-69	2
518941608	12-49	2
518941610	12-69	2
518941611	12-49	2
518941612	12-49	2
518941614	12-49	2
518941615	12-69	2
518941617	12-49	2
518985600	12-16	4
	12-62	3
	12-63	3
	12-64	3
	12-65	3
518988606	12-62	2
	12-64	2
518988609	12-62	2
	12-64	2
518988614	12-62	2
	12-64	2
518989606	12-62	1
	12-64	1
518989609	12-62	1
	12-64	1
518989614	12-62	1
	12-64	1
518990606	12-64	
518990609	12-64	
518990614	12-64	
519457606	12-14	2
519457609	12-14	2
519457613	12-14	2
519457614	12-14	2
519457620	12-14	2
519458606	12-14	1
519458609	12-14	1
519458613	12-14	1
519458614	12-14	1
519458620	12-14	1
519458656	12-14	1
519458659	12-14	1
519458663	12-14	1
519458670	12-14	1
519459606	12-14	
519459609	12-14	
519459613	12-14	
519459614	12-14	
519459620	12-14	
519459656	12-14	
519459659	12-14	
519459663	12-14	
519459664	12-14	
519459670	12-14	
519461601	12-14	2
519462601	12-14	1
519462651	12-14	1
519463601	12-14	
519463651	12-14	
519465605	12-42	2
519465606	12-42	2
519465608	12-42	2
519465609	12-42	2
519465610	12-42	2
519465613	12-42	2
519466605	12-42	1
519466606	12-42	1
519466608	12-42	1
519466609	12-42	1
519466610	12-42	1
519466613	12-42	1
519466655	12-42	1
519466656	12-42	1
519466658	12-42	1
519466659	12-42	1
519466660	12-42	1
519466663	12-42	1
519467605	12-42	
519467606	12-42	
519467608	12-42	
519467609	12-42	
519467610	12-42	
519467613	12-42	
519467655	12-42	
519467656	12-42	
519467658	12-42	
519467659	12-42	
519467660	12-42	
519467663	12-42	
519492607	12-67	2
519492610	12-67	2
519492615	12-67	2
519493600	12-47	3
	12-67	3
	12-69	3
519510606	12-62	
519510609	12-62	
519510614	12-62	
519664602	13-11	2
519665601	13-11	1
519666601	13-3	6
	13-11	
519667601	13-11	1
519668601	13-7	6
	13-11	
519680606	12-63	2
	12-65	2
519680609	12-63	2
	12-65	2
519680614	12-63	2
	12-65	2
519681606	12-63	1
	12-65	1
519681609	12-63	1
	12-65	1
519681614	12-63	1
	12-65	1
519682606	12-63	
519682609	12-63	

PART NO.	PG.	ITEM
519682614	12-63	
519683606	12-65	
519683609	12-65	
519683614	12-65	
519996802	1-29	31
	1-31	19
519996803	1-29	29
	1-31	20
520024802	6-9	10
520024803	6-9	12
520024804	6-9	18
520024807	6-9	7
520024808	6-9	11
520024809	6-9	8
520024810	6-9	17
520024811	6-9	25
520024812	6-9	19
520024816	6-9	5
520024817	6-9	24
520024818	6-9	21
520024819	6-9	16
520024820	6-9	20
520024822	6-9	14
520024823	6-9	23
520024825	6-9	13
520035895	2-15	4
520036816	12-19	2
	12-71	2
	13-39	13
	13-41	18
520036837	12-5	6
	12-7	5
	12-21	6
	12-23	6
	12-25	5
	12-53	6
	12-55	5
520036852	12-51	2
	13-43	18
520036868	7-30	2
520036895	1-5	31
520037801	9-5	6
520037804	12-5	4
	12-21	4
	12-23	4
	12-25	4
	12-53	5
520037853	5-41	16
520037856	11-8	55
	11-12	59
520037871	6-51	23
520037882	6-20	59
520037888	6-51	24
520037895	6-51	22
520038816	6-19	42
520038825	9-5	34
	9-11	
520038827	6-33	23
	6-37	23
520038834	5-25	33
	5-25	37
520038838	6-27	32
520038845	14-15	6
520038849	6-20	66
520038850	14-9	29
520038856	14-9	29
520038861	6-23	3
520038864	6-27	20
520038865	14-10	29
520038868	6-37	14
520038872	14-9	29
520038884	5-25	34
520038893	9-5	36
520038895	6-52	5
520039800	12-25	1
520039801	11-4	56
520039802	12-25	1
520039810	13-22	24
	13-26	24
520039830	11-4	60
520039832	12-25	1
520039848	12-25	1
520039852	12-25	1
520039872	13-22	24
	13-26	24
520039877	12-25	1
520039889	5-11	2
	5-13	21
	5-15	21
520040805	12-51	
520040812	12-51	
520040815	6-55	18
520040827	5-25	27
520040834	12-51	
520040848	12-51	
520040859	6-55	17
520040899	12-7	8
	12-23	12
	12-33	29
	12-37	30
	12-59	23
	12-61	24
520041644	1-23	19
520041804	12-51	1
520041806	12-51	1
520041809	14-9	22
520041822	1-23	13
520041829	1-23	15
520041836	1-23	3
520041837	11-15	2
520041841	3-5	4
520041842	12-51	1
520041844	1-23	5
520041849	1-23	16
520041852	1-23	12
520041865	12-51	1
520041870	1-23	6
520041883	1-23	20
520041887	11-17	2
520041896	1-23	7
520042810	10-11	5
520042831	7-3	2
	7-33	12
	8-3	25
520044802	12-59	3
	12-61	3
520044803	12-9	16
	12-57	13
520044815	9-17	25
520044822	6-33	21
	6-37	21
520044837	5-17	2
520044838	5-17	32
520044856	6-52	11
520044938	6-55	5
	6-55	36
520044952	8-7	10
	8-9	3
520045006	1-5	12
520045009	5-7	23
	5-15	39
520045019	6-3	16
520045020	4-3	22
520045021	4-5	22
520045026	5-45	11
520045029	5-45	17
520045057	9-5	31
520045058	14-15	9
520045061	6-31	15
520045064	6-33	22
	6-37	22
520045067	9-5	1
	9-5	2
520045073	6-55	7
520045099	4-5	6
520045141	14-5	1
520045824	6-49	15
520045865	6-55	21
520045873	6-55	9
520045874	6-49	12
	6-55	20
520045875	6-33	39
	6-37	41
520046872	14-5	1
520047854	13-29	4
520047855	13-33	3
520047863	13-29	3
520049838	6-33	37
	6-37	39
520049875	13-3	17
	13-7	17
520049876	13-3	18
	13-7	18
520052832	5-23	27
520052842	11-3	27
	11-7	27
	11-11	27
520052843	7-30	1
520052845	6-33	31
	6-37	31
520052851	6-15	1
	6-19	1
520052868	7-9	1
520052871	7-9	38
	7-13	40
520052872	7-14	42
	7-15	6
520052876	7-9	39
520052877	7-3	5
	7-9	
520053804	1-5	5
	13-21	15
	13-26	15
520053824	5-17	11
520053870	7-9	42
	7-14	40
	7-15	4
520053873	7-9	40
	7-13	40
520087607	12-47	2
520087608	12-47	2
520087610	12-47	2
520087611	12-47	2
520087613	12-47	2

PART NO.	PG.	ITEM
520087639	12-47	2
520106606	12-47	1
	12-67	1
520106607	12-47	1
520106609	12-47	1
	12-67	1
520106610	12-47	1
520106612	12-47	1
520106614	12-67	1
520106615	12-47	1
520107606	12-69	1
520107607	12-49	1
520107609	12-69	1
520107610	12-49	1
520107611	12-49	1
520107613	12-49	1
520107614	12-69	1
520107616	12-49	1
520292801	11-45	17
	11-45	32
	11-46	49
	11-49	17
	11-49	32
	11-50	49
520292811	11-45	20
	11-45	35
	11-46	51
	11-49	20
	11-49	35
	11-50	51
520292813	11-45	2
	11-49	2
520292815	11-45	4
520292816	11-45	1
520292817	11-49	4
520292818	11-49	1
524135091	11-3	25
524135211	9-5	29
524135566	6-27	19
	6-31	
524135950	5-11	34
524136650	11-3	33
524137389	5-51	
524138905	1-5	7
524139070	5-9	20
524139306	9-5	4
524139616	1-5	32
524139863	3-13	16
524139864	2-3	
524140161	10-5	20
524141542	1-5	11
524141550	1-5	7
524141551	1-5	7
524141611	6-27	18
524141648	5-13	8
	5-15	8
524142630	11-7	25
	11-11	25
524142631	11-7	26
	11-11	26
524142650	11-7	33
	11-11	33
524142996	6-15	23
	6-19	23
524143377	6-16	50
524143954	2-3	
524144896	1-25	
	1-27	
524144897	1-25	
	1-27	
524145453	1-25	35
524146751	6-19	10
524148288	6-20	63
524149132	6-37	
524154218	6-23	1
524154220	6-23	2
	6-51	
524158105	6-19	13
524161342	14-7	1
524161344	14-7	1
580000026	11-3	47
	11-7	47
	11-11	47
	11-29	33
	11-45	
580000027	11-4	47
	11-8	47
	11-12	47
	11-37	26
	11-49	
580000032	14-9	18
580000037	14-13	1
580000039	14-5	1
	14-13	4
580000052	5-38	14
580000082	7-14	44
580000118	14-15	1
580000119	14-15	2
580000141	2-15	1
580000180	5-45	1
580000217	6-15	20
	6-47	
580000245	1-23	8
580000246	1-23	9
580000293	6-51	11
580000349	9-15	16
580000350	9-15	4
580000351	9-15	6
580000353	9-15	8
580000354	9-15	3
580000356	9-15	10
580000360	9-15	19
580000376	7-33	12
580000395	11-27	10
580000411	5-25	38
580000417	5-13	14
	5-15	14
580000442	5-15	34
580000463	11-45	5
	11-49	5
580000543	5-45	11
580000561	6-55	35
580000566	6-19	37
580000882	7-14	40
580000883	7-14	40
580000884	1-13	6
580000887	7-3	27
580000910	11-3	16
	11-7	16
	11-11	16
580000983	5-51	19
580000984	5-51	21
580000985	5-51	15
580000986	5-51	14
580000987	5-51	11
580000990	6-3	23
	6-7	
	6-15	31
	6-19	31
580000991	2-15	1
580001090	1-11	7
580001100	9-5	21
	9-15	
580001111	6-3	22
	6-5	
580001112	6-5	8
580001119	7-7	7
580001120	7-7	8
580001121	7-7	5
580001122	7-7	4
580001123	7-7	2
580001124	7-7	13
580001130	6-9	3
580001131	6-9	6
580001132	6-9	22
580001133	6-9	15
580001135	6-9	30
580001137	6-9	31
580001138	7-7	10
	7-17	
580001139	6-9	1
580001140	7-7	11
	7-17	
580001146	7-17	1
	7-19	1
580001149	7-17	1
	7-19	1
580001154	7-3	
	7-7	
580001159	6-9	26
580001161	7-17	2
	7-19	2
	7-21	4
580001162	6-9	28
580001163	7-17	5
	7-19	5
	7-21	5
580001164	6-9	29
580001165	7-17	4
	7-19	4
580001167	7-17	6
	7-19	6
	7-21	6
580001169	7-17	7
	7-19	7
	7-21	7
580001172	6-9	27
580001173	6-9	4
580001174	6-9	9
580001183	5-11	2
	5-13	20
	5-15	20
580001184	6-3	23
	6-9	
	6-19	31
	6-25	7
580001195	6-33	32
	6-37	34
580001196	6-33	33
	6-37	35
580001202	9-5	26
580001216	5-25	4
580001223	6-9	34
	6-25	9

PART NO.	PG.	ITEM
580001398	11-3	46
	11-7	46
	11-11	46
580001479	7-23	1
	7-27	1
580001691	7-17	10
	7-19	10
	7-21	12
580001735	5-38	18
580001736	5-38	16
580001737	5-38	15
580001739	5-38	1
580001740	5-38	12
580001749	11-4	49
	11-8	49
	11-12	49
	11-15	
580001782	10-11	7
580001783	7-3	1
	7-27	28
580001784	7-27	34
580001785	7-27	35
580001786	7-27	32
580001787	7-27	33
580001788	7-27	30
580001790	7-27	31
580001792	7-27	29
580001793	7-27	36
580001794	8-3	3
580001826	2-13	4
580001828	2-13	1
580001829	2-13	9
580001849	6-33	8
	6-37	10
	6-43	21
	6-45	21
	6-52	2
580001959	14-9	17
580002068	11-4	49
	11-8	49
	11-12	49
	11-19	
580002090	7-13	40
580002104	9-15	11
580002105	9-15	17
580002106	9-15	18
580002112	9-15	20
580002113	9-15	5
580002114	9-15	7
580002115	9-15	13
580002388	5-11	14
	5-38	
580002393	7-29	3
580002394	4-7	5
	4-9	16
	4-11	16
580002518	13-3	3
580002520	13-3	3
580002522	13-3	3
580002525	13-7	3
580002526	13-7	3
580002529	13-7	3
580002909	11-12	52
580003608	5-37	16
580003615	6-16	53
580003819	5-53	1
580003820	5-53	2
580003821	5-53	4
580003822	5-53	6
580003823	5-53	7
580003824	5-53	7
580003825	5-53	9
580003826	5-53	11
580003827	5-53	13
580003828	5-53	16
580003829	5-53	8
580003830	5-53	15
580004500	7-15	1
580004729	11-15	5
	11-17	3
	11-19	7
580004730	11-15	6
	11-19	14
580004731	11-15	7
	11-17	4
	11-19	4
	11-21	5
580004732	11-15	8
	11-21	10
580004733	11-19	2
	11-21	2
580004738	11-21	4
580004739	11-19	10
580005855	5-51	25
580005856	5-51	2
580005857	5-51	3
580005858	5-51	20
580006007	5-13	7
	5-15	7
580006141	6-39	13
	6-41	18
	6-43	24
	6-45	24
580006437	6-33	26
	6-37	26
580006438	6-33	27
	6-37	27
580006439	6-33	29
	6-37	29
580006440	6-33	38
	6-37	40
580006441	6-33	34
	6-37	36
580006893	5-9	15
580007557	5-43	17
580007708	5-13	9
580007732	5-38	21
580008094	9-5	26
580008192	6-33	48
580008260	5-47	12
	5-49	12
580008261	5-47	12
580008419	5-23	
580008432	6-15	20
	6-49	
580008527	11-3	19
	11-7	19
	11-11	19
580008808	7-13	25
580009145	5-11	29
	5-27	
580009212	7-13	18
580009251	7-13	1
580009252	7-13	17
580009253	7-13	19
580009254	7-13	22
580009288	13-26	31
	13-34	25
580009289	13-26	32
	13-34	32
580009290	13-26	35
	13-34	26
580009291	13-26	33
	13-34	27
580009332	7-3	26
580009340	7-3	5
	7-13	
580009349	7-3	
	7-7	
580009721	7-13	21
580010435	1-23	10
580010507	13-3	2
	13-7	2
580010509	13-3	2
	13-7	2
580010512	13-3	2
	13-7	2
580010516	13-3	4
580010518	13-3	4
580010520	13-3	4
580010525	13-3	3
580010527	13-3	3
580010529	13-3	3
580010538	13-7	4
580010539	13-7	4
580010542	13-7	5
580010556	13-7	3
580010557	13-7	3
580010560	13-7	3
580010912	12-10	29
	12-28	31
	12-31	31
	12-57	23
580010920	6-52	4
580010994	5-45	14
580011155	5-9	21
580011162	7-15	3
580011163	7-14	40
	7-15	
580011188	11-4	49
	11-8	49
	11-12	49
	11-17	
580011191	11-4	49
	11-8	49
	11-12	49
	11-21	
580011226	5-27	2
580011753	7-15	5
580011814	4-7	1
580011816	4-7	1
580011967	11-25	10
580011994	1-5	12
580012154	11-17	9
580012158	11-17	15
	11-21	15
580012159	11-17	18
	11-21	19
580012160	11-17	19
	11-21	20
580012161	11-17	20
	11-21	21
580012280	7-7	6
580012294	7-9	36

PART NO.	PG.	ITEM
	7-14	45
580012323	6-41	15
	6-43	25
	6-45	25
580012382	12-34	34
	12-37	35
	12-59	12
	12-61	13
580012468	6-41	16
	6-43	26
	6-45	26
580012675	6-15	28
	6-41	
580012728	3-9	18
	3-13	25
580013419	1-27	1
580013420	1-27	2
580013421	1-27	3
580013422	1-27	4
580013423	1-27	5
580013425	1-27	7
580013427	1-27	6
580014237	11-3	18
	11-7	17
	11-7	18
	11-11	17
	11-11	18
580014462	1-25	1
580014463	1-25	1
580014465	1-25	38
580014466	1-25	39
580014467	1-25	40
580014468	1-25	41
580014469	1-25	34
580014470	1-27	8
580014471	1-25	43
580014473	1-25	29
580014474	1-25	42
580014564	5-7	2
	5-13	18
	5-31	
580014572	6-16	57
580014917	5-43	21
580015018	5-41	14
580015103	7-21	8
580015104	7-21	9
580015366	7-23	12
	7-27	12
580015545	3-13	3
580015588	6-52	6
	6-55	30
580015589	6-52	9
	6-55	29
580015726	4-9	1
580015730	4-9	7
580015801	3-13	9
580015803	3-13	30
580015804	3-13	13
580015812	5-7	5
580015899	6-16	48
580016001	5-13	10
	5-15	10
580016423	11-4	47
	11-8	47
	11-12	47
	11-41	26
	11-49	
580016565	3-13	1
580016597	6-16	47
	6-52	
580016598	6-52	8
	6-55	27
580016599	6-52	7
	6-55	28
580016634	6-15	28
	6-19	28
	6-43	
580016906	5-13	19
	5-15	19
580016907	5-13	1
	5-15	1
580017189	5-31	1
	5-35	1
580017190	5-31	2
	5-35	2
580017192	5-31	3
	5-35	3
580017193	5-31	4
	5-35	4
580017194	5-31	5
	5-35	5
580017195	5-31	6
	5-35	6
580017196	5-31	7
	5-35	7
580017197	5-31	8
	5-35	8
580017199	5-31	9
	5-35	10
580017200	5-31	11
	5-35	11
580017201	5-31	12
	5-35	12
580017202	5-31	13
	5-35	13
580017203	5-31	14
	5-35	14
580017204	5-31	15
	5-35	15
580017205	5-31	25
	5-35	16
580017206	5-31	24
	5-35	17
580017207	5-31	26
	5-35	18
580017208	5-31	16
580017209	5-31	17
580017210	5-31	18
580017211	5-31	19
580017212	5-31	23
	5-35	19
580017213	5-31	22
	5-35	20
580017214	5-31	21
	5-35	21
580017215	5-31	20
	5-35	22
580017216	5-31	27
	5-35	25
580017217	5-31	28
	5-35	26
580017218	5-13	19
	5-15	19
580017219	5-13	19
	5-15	19
580017225	5-15	36
580017325	5-15	37
580017327	4-9	1
580017328	4-9	1
580018189	6-20	57
580018190	6-20	56
580018265	7-29	4
580018266	2-15	11
580018270	6-19	22
580018326	11-3	47
	11-7	47
	11-11	47
	11-33	33
	11-45	
580018439	7-13	23
580018443	7-23	10
	7-27	10
580018900	6-51	21
580019051	6-55	41
580019516	7-17	9
	7-19	8
	7-21	11
580019578	4-11	26
580019697	6-19	20
	6-55	
580019850	3-13	2
580020000	5-15	27
580020001	6-20	58
580020002	5-15	28
580020005	5-7	2
	5-15	18
	5-35	
580020036	7-19	9
	7-21	10
580020040	7-21	12
580020041	7-21	12
580020047	7-21	3
580020060	3-13	11
580020062	3-13	29
580020202	5-15	29
580020203	5-15	30
580020380	7-7	7
580020382	7-21	1
580020383	7-21	1
580020385	7-7	10
	7-19	
580020386	7-7	11
	7-19	
580020389	7-3	
	7-7	
580020642	6-55	25
580020695	3-7	19
	3-9	14
	3-13	19
580020700	13-39	1
580020703	13-41	1
580020708	13-37	
	13-39	3
	13-41	3
	13-43	3
580020709	13-37	
580020710	13-37	1
580020711	13-37	1
580020719	13-37	3
580020720	13-46	1
580020721	13-37	2
580020723	13-39	6
	13-41	6
	13-43	6

PART NO.	PG.	ITEM
580020724	13-39	4
	13-41	4
	13-43	4
580020725	13-39	4
580020726	13-39	5
	13-41	5
	13-43	5
580020727	13-39	5
580020730	13-45	2
580020731	13-45	1
580020734	13-44	2
580020735	13-44	1
580020736	13-45	2
580020737	13-45	1
580020738	13-44	2
580020739	13-44	1
580020741	13-37	5
580020742	13-45	2
	13-46	2
580020759	6-20	69
580021160	5-15	35
	5-43	20
580021205	7-13	32
580021208	5-45	10
580021209	5-45	10
580021221	5-43	19
580021222	5-15	9
580021302	6-43	12
	6-45	12
580021306	3-3	1
580021707	10-3	
580021708	8-3	27
	10-3	
580022130	9-11	8
580022411	11-25	15
580022502	12-14	6
	12-16	5
	12-42	14
	12-45	14
	12-62	8
	12-63	8
	12-64	9
	12-65	9
580022505	11-25	5
580022514	11-25	4
580022709	5-7	8
	5-29	
580022710	5-29	1
	5-33	1
580022711	5-29	2
	5-33	2
580022712	5-29	3
	5-33	3
580022713	5-29	4
	5-33	4
580022714	5-29	5
	5-33	5
580022715	5-29	6
	5-33	6
580022716	5-29	7
	5-33	7
580022717	5-29	8
	5-33	8
580022718	5-29	9
	5-33	9
580022719	5-29	10
580022720	5-29	11
580022721	5-29	12
580022722	5-29	13
580022723	5-29	14
580022724	5-29	15
	5-33	10
580022725	5-29	16
	5-33	11
580022726	5-29	17
	5-33	12
580022727	5-29	18
	5-33	13
580022728	5-29	19
	5-33	14
580022729	5-33	16
580022730	5-33	17
580022741	6-20	60
580022756	5-7	8
	5-33	
580022990	6-55	31
580022991	6-55	33
580022993	6-55	32
580022994	6-55	22
580022995	6-55	38
580022996	6-55	39
580022997	6-55	40
580022998	6-55	37
580022999	5-35	23
580023078	3-9	3
580023137	3-13	17
580023138	6-19	35
580023141	5-45	12
580023142	5-45	13
580023143	5-45	15
580023144	5-45	16
580023146	1-25	2
580023147	1-25	2
580023152	6-55	34
580023188	5-45	6
580023277	11-45	8
	11-49	8
580023595	13-41	13
	13-43	13
580023714	5-35	24
580023752	5-33	18
580023753	5-33	19
580023764	13-39	
580023765	13-41	
580023766	13-43	
580023768	13-39	
580023769	13-41	
580023770	13-43	
580023771	13-39	
580023772	13-41	
580023773	13-43	
580023774	13-41	
580023775	13-43	
580023776	13-41	
580023777	13-43	
580023778	13-41	
580023779	13-43	
580023780	13-43	1
580023781	13-41	1
580023783	13-39	2
	13-41	2
	13-43	2
580023784	13-39	2
	13-41	2
	13-43	1
	13-43	2
580023785	13-39	2
	13-41	2
	13-43	2
580023791	13-39	1
580023792	13-41	1
580023793	13-43	1
580023795	13-39	1
580023796	13-41	1
580023797	13-43	1
580023799	13-39	2
	13-41	2
	13-43	2
580023800	13-39	2
	13-41	2
	13-43	2
580023801	13-39	2
	13-41	2
	13-43	2
580023894	6-27	15
580023980	13-39	
580023981	13-39	
580023982	13-39	
580024133	13-45	1
580024149	13-46	2
580024150	13-46	1
580024158	5-7	21
580024162	5-7	19
	5-21	
580024166	2-13	19
580024167	2-13	20
580024168	4-5	11
580024169	5-7	12
580024212	2-7	6
580024213	2-7	11
580024214	2-7	11
580024215	2-7	11
580024221	2-11	3
580024222	2-11	10
580024229	3-3	1
580024257	14-17	1
580024421	7-13	29
580024491	7-7	10
	7-21	
580024492	7-7	11
	7-21	
580024522	7-3	
	7-7	
580024553	11-27	17
580024592	6-27	15
580024627	5-17	11
580024681	5-31	10
	5-35	9
580025891	7-3	38
580026626	5-45	8
580026720	13-39	22
	13-41	22
	13-43	22
580026721	13-39	9
	13-41	9
	13-43	9
580026723	13-39	10
	13-41	10
	13-43	10
580026724	13-37	4
580026725	13-39	11
	13-41	11
	13-43	11
580026744	1-20	2

PART NO.	PG.	ITEM
	1-21	2
580026773	13-39	1
580026934	1-16	27
580026958	9-19	10
580027520	13-37	6
580027572	3-13	26
580027612	6-20	62
580027877	12-19	6
	13-39	17
580027878	12-51	6
	12-71	6
	13-41	14
	13-43	14
580027879	12-19	6
580027880	12-51	6
	12-71	6
580030014	9-5	27
580030127	10-3	11
580030128	10-3	11
580030554	3-9	18
580031236	5-45	3
580031586	6-51	15
580031587	6-23	1
580032688	10-3	7
580032753	10-9	5
580032798	7-21	8
580032889	8-3	4
	8-3	4
580033287	6-20	67
580033459	14-7	1
580033473	14-7	3
580033717	5-7	25
	5-15	41
580033718	12-9	5
	12-19	9
	12-27	7
	12-31	7
	12-33	25
	12-37	26
	12-51	9
	12-59	20
	12-61	21
	12-71	9
	13-39	20
	13-41	16
	13-43	16
580033730	14-7	
580033788	7-33	4
580033789	7-33	5
580034918	7-21	9
580035103	7-21	9
580035104	7-21	3
580035305	4-11	1
580035840	4-11	1
580035881	4-11	32
580036218	4-11	6
580036531	4-11	7
580036602	6-15	28
	6-19	28
	6-45	
580036679	4-11	21
580036680	4-11	3
640046918	7-29	1
720243905	8-3	5
720260903	5-13	6
	5-15	6
720307903	11-29	41
	11-33	41
	11-37	29
	11-41	29
752780402	1-20	1
752780422	1-20	1
752821400	1-23	23
	1-31	21
900001201	10-9	4
900001224	5-9	24
900001226	4-7	3
	4-9	13
	4-11	13
900001227	4-7	9
	4-9	12
	4-11	12
900001230	4-7	6
	4-9	17
	4-11	17
900001231	4-7	7
	4-9	15
	4-11	2
	4-11	15
900001233	6-15	29
	6-19	29
900001238	5-17	3
900001242	1-5	18
900001254	1-5	26
900002259	12-33	26
	12-37	27
900002264	12-9	1
900003205	11-3	29
	11-7	29
	11-11	29
900003215	13-3	1
900003218	13-3	4
900003223	6-15	7
	6-19	7
900003230	14-5	5
	14-13	8
900003231	14-5	8
	14-7	7
	14-13	15
900003235	14-5	1
900003237	14-9	27
900003239	14-9	28
900003240	14-13	8
900003241	14-5	14
	14-7	4
	14-13	10
900003243	14-5	16
	14-9	8
	14-13	20
900003244	14-5	15
	14-9	19
	14-13	18
900003245	14-9	5
900003247	14-13	12
900003255	9-23	1
900003256	14-9	15
900003259	5-17	10
900003260	4-7	8
	4-9	18
	4-11	18
900003263	6-25	4
900003273	1-11	5
900004210	13-29	1
	13-33	1
900004214	13-29	1
	13-33	1
900004216	13-29	2
	13-33	2
900004217	13-29	2
	13-33	2
900004230	13-33	4
900004233	13-25	2
900004281	5-37	13
900005206	6-25	8
900005207	11-27	6
900005223	5-11	25
900005257	2-15	8
900007209	5-17	22
900007271	5-9	6
900010278	6-19	11
900011286	4-11	19
900015238	6-20	61
900063101	3-7	6
	3-9	6
	3-13	5
900064101	4-11	27
900281819	2-3	12
900281820	2-3	10
900284852	2-9	6
900291802	2-13	4
900291803	2-13	5
900291804	2-13	6
900294855	6-3	18
900296827	6-11	5
900411802	6-29	11
900488809	10-3	21
900488810	10-3	21
900488811	10-3	13
900488812	10-3	13
900488816	10-3	14
900488817	10-3	19
900488821	10-3	24
900488822	10-3	24
900488825	10-3	16
900488826	10-3	20
900488827	10-3	6
900488834	10-3	3
900488835	10-3	4
900488838	10-3	15
900488841	10-3	11
900488842	10-3	11
900526814	4-5	24
900542813	2-3	5
900543845	2-11	8
900549803	5-7	13
900549883	3-5	6
	6-3	17
900559852	2-11	2
	3-3	2
	4-3	1
	4-5	1
	5-5	1
	5-7	17
900588100	5-47	23
	5-49	20
900724803	6-3	5
900839101	5-47	24
	5-49	21
900969808	5-38	9
900969811	5-38	19
900969813	5-37	18
	5-38	17
900969817	5-38	11
900970802	5-37	2

PART NO.	PG.	ITEM
900970804	5-37	4
900970806	5-37	6
900970807	5-37	7
900970813	5-37	12
900970814	5-37	17
900970818	5-37	15
900971803	5-25	3
900971806	5-25	6
900971807	5-25	7
901001803	9-13	11
901015826	2-3	3
901062802	5-25	10
901062807	5-25	22
901085820	2-11	24
901085834	6-3	3
901085837	2-5	4
901096876	4-3	26
	4-5	27
901097809	6-3	1
901162818	14-15	10
901177109	5-9	22
901177124	5-13	12
	5-15	12
901263101	14-9	26
901270802	2-5	22
901270814	2-5	11
901270815	2-5	12
901271803	2-13	2
901271816	2-3	6
901271817	2-5	23
901272802	2-11	9
901272820	2-11	20
901274801	2-9	2
901276803	3-3	11
901276809	3-3	13
901277819	5-7	14
	5-41	22
	5-43	22
901279803	5-21	1
901279804	5-19	2
	5-21	2
901279806	5-19	3
	5-21	3
901279807	5-21	4
901279812	5-19	8
	5-21	9
901282827	4-5	20
901282830	4-5	18
901282833	2-11	22
	2-13	12
	5-5	2
901282846	4-3	12
	4-5	12
901282847	4-3	11
901286804	6-11	15
901286806	6-11	13
901286807	6-11	14
	6-13	20
901286809	6-11	16
901286810	6-11	17
901286811	6-11	7
901286812	6-11	3
	6-13	16
901286813	6-11	8
901286814	6-11	4
901286816	6-11	6
901286818	6-11	10
901286819	6-11	12
901286820	6-11	11
901290803	2-5	18
901290804	2-5	19
901290806	2-5	27
901290808	2-5	16
901290811	2-5	13
901290816	2-5	9
901290818	2-5	7
901290819	2-5	6
901290824	2-5	1
901290825	2-5	2
	2-11	21
	2-11	22
901290828	2-5	3
	2-11	21
	3-3	14
901290829	2-5	26
901290831	2-5	24
901290832	2-5	25
901290834	2-5	15
901290836	2-5	20
901290837	2-9	3
901290838	2-5	21
901290842	2-5	8
901291801	2-3	13
901291803	2-3	8
901291804	2-3	9
901291807	2-3	14
901291813	2-3	4
901291814	2-3	11
901292806	2-11	25
901292811	2-11	4
	2-13	3
901292812	2-11	14
901292814	2-11	16
901292816	2-11	5
901292819	2-11	23
	2-13	14
	4-5	2
901292820	2-11	23
	6-3	8
901292831	2-11	6
901292832	2-11	18
901293811	2-7	10
901293812	2-7	10
901293813	2-7	10
901293814	2-7	10
901293825	2-7	2
901293851	2-7	11
901293852	2-7	11
901293853	2-7	11
901293861	2-7	12
901293862	2-7	12
901293863	2-7	12
901293864	2-7	12
901294802	2-9	5
901294806	2-9	9
901294813	2-9	15
901294814	2-9	16
901294815	2-9	17
901294824	2-9	20
901294825	2-9	1
901294827	2-9	22
901294828	2-9	23
901294832	2-9	8
901294833	2-9	7
901294834	2-9	11
901294835	2-9	14
901294836	2-9	12
901294837	2-9	13
901294838	2-9	4
901294839	2-9	10
901295811	3-3	9
901295820	3-3	3
901296801	3-3	10
901296804	3-3	12
901300809	5-5	8
901300819	5-5	6
901300825	5-5	7
901300827	5-5	9
	5-7	7
	5-7	10
901301802	2-13	18
901301810	2-13	9
901301815	2-13	15
901301816	2-13	21
901301818	2-13	13
	4-5	4
901301821	2-13	7
901301822	2-13	16
901302804	4-5	19
901302807	4-3	28
	4-5	26
901302808	4-3	35
901302811	4-5	23
901302814	4-3	10
	4-5	10
901302821	4-3	30
	4-5	30
901302824	4-5	17
901302834	4-5	5
901302839	2-9	27
	4-3	5
901302840	4-3	6
901302844	4-3	8
	4-5	8
901302845	4-5	28
901302846	4-5	29
901303811	6-3	19
901303832	6-3	9
901304823	6-5	14
901347801	5-25	12
901357804	6-5	11
901357805	6-5	4
901357814	6-5	13
901506817	6-29	6
901506839	6-29	10
901506840	6-29	12
901506841	6-29	4
901506861	6-29	1
901506862	6-29	2
901506863	6-29	3
901506864	6-29	5
901506866	6-29	7
901506867	6-29	7
901506868	6-29	7
901506869	6-29	7
901506870	6-29	8
901506871	6-29	8
901506872	6-29	9
901574802	2-3	1
901574814	2-3	7
901575803	2-11	7
901575807	2-11	10
901575808	2-11	11
901575809	2-11	12

PART NO.	PG.	ITEM
901575810	2-11	13
901575820	2-11	1
901575822	2-11	17
901575825	2-11	3
901576801	2-7	1
901576841	2-7	13
901576842	2-7	13
901576843	2-7	13
901577816	2-9	18
901577818	2-9	21
901577821	2-9	25
901577822	2-9	24
901577823	2-9	26
	4-3	2
901578805	2-13	1
901578809	2-13	8
901578811	2-13	10
901578812	2-13	11
901578817	2-13	17
901579801	4-3	32
	4-5	36
901579802	4-3	27
	4-5	31
901579803	4-3	7
	4-5	7
901579804	4-3	31
901579805	4-3	25
901579806	4-3	15
901579807	4-3	14
901579810	4-3	9
901579811	4-3	23
901579818	4-3	16
	4-5	16
901579824	4-3	17
901579825	4-3	19
901579827	4-3	20
901579833	4-3	29
901580802	6-5	1
901769801	9-3	22
901769802	9-3	23
901769803	9-3	24
901769804	9-3	25
901769805	9-3	26
901848826	2-5	17
901849814	3-3	6
901851831	5-7	15
901854831	5-41	26
901860805	6-3	4
901860807	6-15	21
	6-19	21
901861812	6-7	4
901861815	6-7	8
901861816	6-7	9
901861819	6-7	13
901948802	6-7	7
901948804	6-7	6
901948805	6-7	5
901948809	6-7	14
901948810	6-7	15
901948811	6-7	11
901948813	6-7	12
901948815	6-7	10
901950812	6-3	20
901950814	6-3	15
901953803	6-5	3
901953804	6-5	5
901953806	6-5	6
901953809	6-5	7
901953810	6-5	9
901953811	6-5	10
901953816	6-5	15
901953817	6-5	12
901985804	10-3	10
901991802	6-11	9
901991803	6-11	2
901991817	6-11	1
902173801	9-3	28
902173802	9-3	29
902173813	9-3	31
902201801	9-13	18
902201802	9-13	19
902201811	9-13	16
902201821	9-13	8
	9-13	21
902201850	9-13	20
902260803	6-7	1
902260806	6-7	2
902260807	6-7	3
902361801	6-13	1
902361802	6-13	2
902361803	6-13	3
902361804	6-13	4
902361805	6-13	5
902361806	6-13	6
902361807	6-13	7
902361808	6-13	8
902361809	6-13	9
902361810	6-13	10
902361811	6-13	11
902361812	6-13	12
902361813	6-13	12
902361814	6-13	12
902361815	6-13	13
902361816	6-13	14
902361817	6-13	15
902361818	6-13	17
902361819	6-13	18
902361820	6-13	19
903198401	10-3	12
903198402	10-3	12
904100100	9-3	36
904201102	6-15	18
	6-19	18
904258300	10-3	8
904310402	9-3	9
904310409	1-5	3
905604602	9-3	20
	9-13	
905733100	3-7	8
	3-9	8
	3-13	6
906468400	14-17	8
907077701	6-29	
907077702	6-29	
907077703	6-29	
907077704	6-29	
907077707	6-29	
907077708	6-29	
907271604	5-41	3
	5-43	3
907271605	5-41	5
	5-43	5
907953306	6-33	9
	6-37	11
908594716	1-9	4
908594741	1-9	4
909086300	11-4	54
909145100	4-11	4
909267300	5-15	15
	5-17	21
909453400	6-27	12
909835611	1-9	5
909882404	3-7	5
	3-9	5
	3-13	8
	5-17	5
	5-17	16
	12-59	4
	12-61	5
	13-21	3
	13-25	3
909882405	1-19	4
	2-17	10
	9-17	4
	12-9	12
	12-27	17
	12-31	17
	12-33	16
	12-37	16
	12-57	9
	12-59	16
	12-61	17
	13-34	31
909904403	4-9	9
	4-11	9
	9-3	34
909905404	10-5	5
909910401	10-5	6
909939100	5-25	14
	5-25	35
910065119	6-15	33
	6-19	33
	6-23	1
910175100	10-5	12
910271101	6-15	37
	6-20	53
910453400	6-15	42
	6-27	6
910581102	6-33	14
910983100	5-5	13
	5-7	1
911137400	6-27	34
911204600	9-3	21
911378400	2-11	19
	2-15	5
911458400	5-9	28
911851100	5-9	29
911955100	6-15	21
	6-19	21
912189300	3-3	15
	3-7	13
	3-9	13
	3-13	18
912207300	5-9	19
912291312	1-9	15
912291315	11-30	55
	11-34	55
	11-38	60
	11-41	40
912326300	1-9	29
912331302	1-15	7
912356601	9-9	20
912372600	9-3	2
912514300	5-17	9

PART NO.	PG.	ITEM
912630302	9-9	5
912630304	9-9	4
912630306	1-9	13
912845301	1-15	22
912906311	6-39	8
	6-41	8
	6-43	9
	6-45	9
912906332	6-39	9
	6-41	9
	6-43	10
	6-45	10
912906504	6-43	11
	6-45	11
912978600	6-3	21
	6-11	
	6-15	32
	6-19	32
913213401	6-33	17
913213402	6-31	16
913213410	6-31	9
913213431	6-33	15
913589300	10-3	9
913875601	9-9	21
914329101	9-9	15
914413600	9-9	1
914649100	9-9	14
915304603	9-3	27
915356400	5-47	1
	5-49	1
915463400	6-27	28
915483401	9-3	32
915483402	9-3	32
915495401	5-9	33
916054401	11-29	31
	11-33	31
	11-37	24
	11-41	24
916054402	11-29	32
	11-33	32
	11-37	25
	11-41	25
916054403	11-29	40
	11-33	40
	11-38	56
	11-42	56
916327400	5-47	22
	5-49	19
916522400	3-11	9
916611600	10-5	1
916644300	9-3	10
916658300	9-3	12
916680300	9-9	7
916748303	1-9	41
916748304	1-9	31
916748308	1-9	37
916748322	1-13	5
916748327	1-9	38
917314402	6-27	2
917426300	1-9	14
917492302	1-15	9
917492303	1-15	9
917492304	1-15	9
917492305	1-15	9
917492306	1-15	9
917492307	1-15	9
917492308	1-15	9
917492309	1-15	9
917492311	1-15	9
917492312	1-15	10
917767300	5-47	21
	5-49	18
918139600	6-3	21
	6-13	
	6-15	32
	6-19	32
919139450	10-3	25
919334400	5-41	8
	5-43	8
	5-45	2
919707400	6-27	9
919713400	6-27	11
919891401	5-9	27
920388300	6-15	14
	6-19	14
920546403	1-9	8
920852300	9-9	18
921006302	10-5	3
921021300	10-5	10
921652300	9-3	11
921698300	9-3	33
922134300	1-9	7
	1-9	12
922189400	10-5	8
923179401	1-9	35
923179404	1-9	36
923532400	1-9	32
923533400	1-9	11
923546400	14-9	18
924130401	6-31	21
924130402	6-31	22
924130411	6-31	12
924130412	6-31	13
924250300	9-9	10
925180301	9-9	24
925745400	10-5	13
926001300	10-5	9
926724401	9-9	25
926739301	7-3	10
926888300	9-9	13
928036300	1-9	33
930101903	4-7	19
930101909	6-16	51
930102903	5-9	31
	6-27	27
930103903	9-9	11
930115905	9-3	5
930738300	4-11	28
931005916	5-51	17
931006914	1-5	13
931013901	11-29	5
	11-33	5
931015915	7-27	37
931487301	9-9	22
932107905	13-22	20
	13-26	20
932107909	13-29	5
	13-33	5
932200902	9-5	32
932200905	13-33	5
	13-33	12
932201904	9-5	11
932202907	12-59	6
932203916	11-27	2
932729903	1-9	21
932729905	5-47	10
	5-49	10
932729907	1-9	23
934592300	9-3	33
936302302	10-3	2
937100904	6-15	8
	6-19	8
	6-23	6
937100905	9-9	9
937300908	10-5	7
937501907	9-9	19
937501909	9-3	35
940002905	9-9	17
940002906	10-5	11
940004902	6-27	35
940004903	6-16	52
940102905	14-17	3
940102909	2-15	10
940400908	14-9	23
940600906	6-15	26
	6-19	26
	6-23	9
940600907	6-16	59
950400920	9-9	6
952405901	6-31	20
952405902	6-31	18
	6-33	36
	6-43	23
	6-45	23
	6-49	24
	6-55	26
952408901	6-31	19
	6-43	22
	6-45	22
	6-55	23
952408902	6-33	35
	6-49	23
952408904	6-31	17
955400911	1-13	8
960100925	5-41	9
	5-43	9
965801904	11-8	54
	11-12	58
965801908	1-9	30

NOTES

17 USER SUPPORT INFORMATION

SECTION 17
USER SUPPORT INFORMATION

DESCRIPTION	PAGE
OPERATOR TRAINING	17-2
SERVICE PARTS ORDERING INSTRUCTIONS	17-2
SERVICE TRAINING COURSE	17-2
SERVICE TRAINING MATERIALS	17-2
TECHNICAL SERVICE PUBLICATIONS	17-2

Your investment in a Yale Industrial Truck is important to you and to your Yale Dealer. You measure the return on that investment through the performance of these trucks and the drivers who operate and the mechanics who service them safely and efficiency. The following information and programs are intended to help you to achieve your investments objectives:

SERVICE PARTS ORDERING INSTRUCTIONS

HOW TO ORDER SERVICE PARTS

In order to prevent delay, too much communication and to have your orders filled correctly, quickly, and at the least possible cost, the following is the correct procedure to use to order replacement parts.

WHEN ORDERING PARTS

Contact your authorized Yale Industrial Truck Dealer giving them the following information:

1. Your Purchase order number.
2. Complete addresses for sending the invoice and parts.
3. Tell us how you want your parts sent. If we do not get this information, we will send the parts using the lowest priced method.
4. Correct part number(s) and description(s). Use your parts manual as a reference.
5. Model and serial number of the truck.

TECHNICAL SERVICE PUBLICATIONS

Technical literature, with detailed information, is available at a nominal fee to assist users to effectively maintain Yale Industrial Trucks in a safe, useful condition. Part Manuals with complete replacement parts identification, Service Maintenance Manuals which provide service and overhaul procedures and additional copies of the Operating Manual can be obtained from your Yale Industrial Truck Dealer.

SERVICE MAINTENANCE MANUAL-
PART NO. 520371744

OPERATING MANUAL-
PART NO. 520371709

To provide instructions for safely operating and servicing Yale Industrial Trucks, each truck is equipped with an operators manual. It describes various operating techniques and safety warnings to the operator. It contains a guide to safe maintenance practices and recommended schedules for maintenance. If the operators manual is missing from any Yale Industrial Truck, it should be replaced. Replacement copies are available for a nominal fee from your Yale Dealer.

OPERATOR TRAINING

The Yale "Basic Operator Training" program helps industrial truck users increase their materials handling production and safety through correct lift truck operation, training, and motivation. The Yale program is based upon real life experienceñnot theoretical concepts. We developed a "complete" program that is totally self-containedñincorporating the most modern instructional techniques including elements of self-study, audio-visual support (both video and slides), and classroom study.

SERVICE TRAINING COURSE

Operators and Yale dealer service technicians can improve their technical ability for maintaining and repairing Yale Industrial Trucks, which decreases repair time and cost, by taking Yale Service Training courses. Different types of mechanical, electric, and electronic subjects are available. Courses can be held at customer or Dealer locations in addition to regularly scheduled courses which are held at Yale Corporate Headquarters in Greenville, NC.

SERVICE TRAINING MATERIALS

Your own service training can be supported through a complete line of Yale Service Training materials. An Index is available from your Yale Dealer which lists textbooks, audio-visual programs and films. These materials will provide your training staff with everything necessary for training your group.

For additional information or assistance in obtaining these user support publications and programs, contact:

Yale Materials Handling Corporation
1400 Sullivan Drive
Caller No. 12011
Greenville, NC 27834-2011

Yale Materials Handling Corporation
1400 Sullivan Drive
Caller No. 12011
Greenville, NC 27834-2011

520371744