RUTHZIL TRATOR COMERCIAL DE PEÇAS LTDA 11 97083-6812 ROLANDO CITRANGULO

PARTS MANUAL

GP/GLP/GDP135 VX, GP/GLP/GDP155VX (D878)

JANEIRO 2014

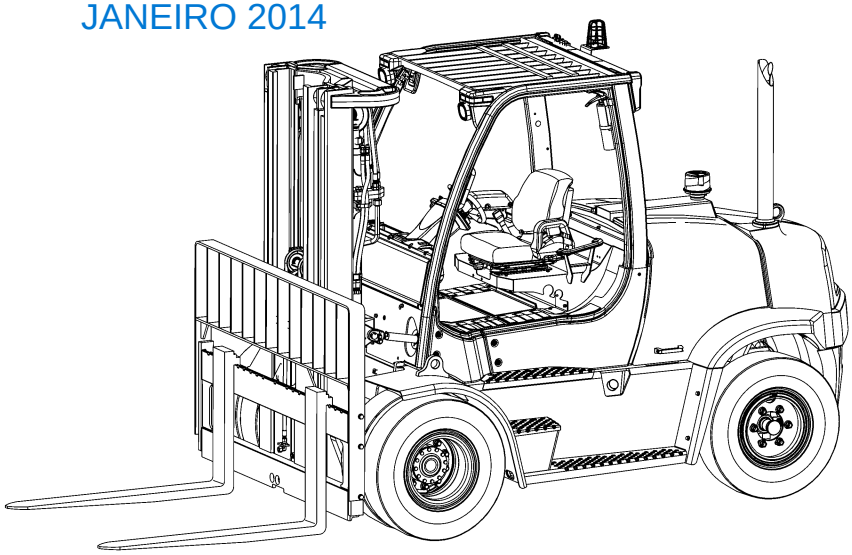

Yale Materials Handling Corporation
1400 Sullivan Drive
Caller No. 12011
Greenville, NC 27834-2011

524329200
©Yale Corp.
01/2014

MODEL NOMENCLATURE

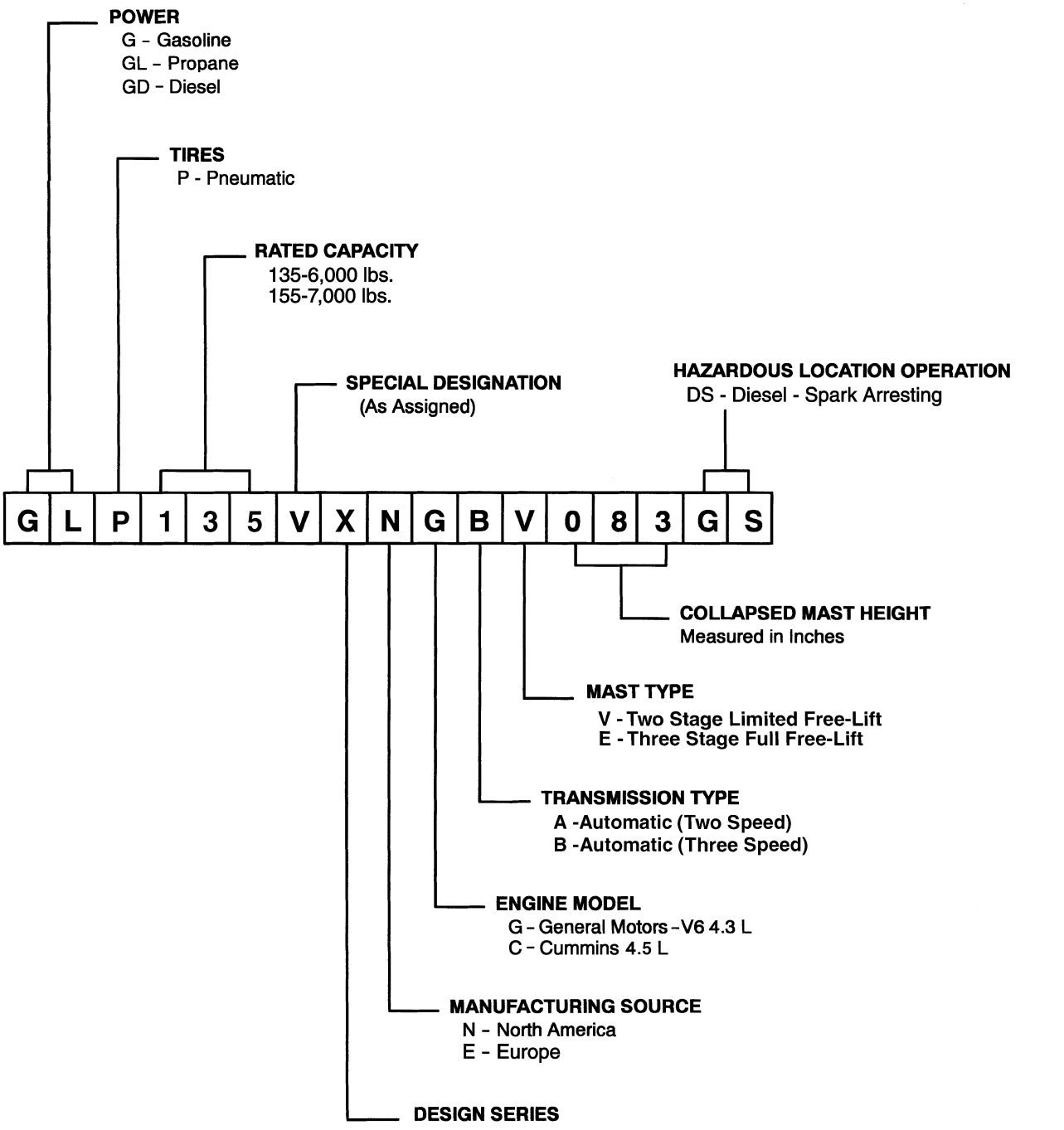

YP990169

NOTE: This parts manual contains alternate pages for certain assemblies. The truck model code can be used to determine many of the assemblies on your lift truck (power, tire type, mast type). The complete truck model and serial number are stamped into the nameplate. See for further information.

Yale

SECTIONS

1	GENERAL TRUCK
2	ENGINE ASSEMBLY
3	EXHAUST SYSTEM
4	COOLING SYSTEM
5	FUEL SYSTEM
6	ELECTRICAL SYSTEM
7	TRANSMISSION
8	DRIVE AXLE
9	STEERING SYSTEM
10	BRAKE SYSTEM
11	HYDRAULIC SYSTEM
12	MAST-TWO STAGE LIMITED FREE-LIFT
13	MAST-THREE STAGE FULL FREE-LIFT
14	ATTACHMENTS AND HEADER HOSE GROUP
15	OPTIONS
16	FIELD CONVERSION KITS
17	NUMERICAL INDEX

This Parts Manual is divided into 18 major sections which are listed above. Quick reference to these sections can be made by placing the right thumb on the tab of the desired section, bending the book back and thumbing the pages to the corresponding tab.

18 USER SUPPORT INFORMATION

This Parts Manual is divided into 18 major sections which are listed above. Quick reference to these sections can be made by placing the right thumb on the tab of the desired section, bending the book back and thumbing the pages to the corresponding tab.

TABLE OF CONTENTS

DESCRIPTION	PAGE
A	
ACCUMULATOR	15-10
ADD-ON OPTION KITS	16-3
AIR FILTER	5-10
AIR INTAKE	
CUMMINS QSB 3.3L DIESEL	5-8
GM 4.3L GASOLINE AND LPG - GFI OPTION	5-4
GM 4.3L LPG AND GASOLINE - PSI OPTION (S/N D878V02178K →)	5-6
AIR INTAKE MANIFOLD	
CUMMINS QSB 3.3L DIESEL	2-100
ALTERNATOR AND MOUNTING	
CUMMINS QSB 3.3L DIESEL	6-36
GM 4.3L LPG - PSI OPTION (S/N D878V02178K →)	6-22
ARMREST ASSEMBLY	
MINI-LEVER MODULES	1-64
ASSEMBLED ENGINE	
GM 4.3L GASOLINE AND LPG (GFI OPTION) - SHEET 1 OF 3	2-12
GM 4.3L GASOLINE AND LPG (GFI OPTION) - SHEET 2 OF 3	2-16
GM 4.3L GASOLINE AND LPG (GFI OPTION) - SHEET 3 OF 3	2-20
ATTACHMENT CARRIAGE	
VALVE AND HOSES (S/N A613V04806K →) (S/N A614V02744K →)	14-42
WITH FORK POSITIONER AND BACKREST (S/N A613V04806K →) (S/N A614V02744K →)	14-38
ATTACHMENT MOUNTING KITS	16-2
AUXILIARY FUNCTION HOSES	
TWO STAGE LIMITED FREE-LIFT	14-20
AUXILIARY ONE SECTION	
ELECTRONIC CONTROL VALVE - THREE AND FOUR FUNCTION (→ 6/2009)	11-50
ELECTRONIC CONTROLLER - THREE AND FOUR FUNCTION (6/2009 →)	11-52
AUXILIARY TUBE EXTENSION KIT	16-7
AUXILIARY TUBE EXTENSIONS	
THREE STAGE FULL FREE-LIFT - WITHOUT QUICK DISCONNECT FITTINGS (S/N A614V02262H →)	14-56
THREE STAGE FULL FREE-LIFT - MANUAL HYDRAULICS WITH QUICK DISCONNECT FITTINGS (S/N A614V02262H →)	14-58
THREE STAGE FULL FREE-LIFT - E-HYDRAULICS WITH QUICK DISCONNECT FITTINGS (S/N A614V02262H →)	14-60
THREE STAGE FULL FREE LIFT WITH SIDE SHIFT FORK POSITIONER CARRIAGE - WITHOUT QUICK DISCONNECT FITTINGS (S/N A614V02262H →)	14-62
THREE STAGE FULL FREE LIFT WITH SIDE SHIFT FORK POSITIONER CARRIAGE - MANUAL HYDRAULICS WITH QUICK DISCONNECT FITTINGS (S/N A614V02262H →)	14-64
THREE STAGE FULL FREE LIFT WITH SIDE SHIFT FORK POSITIONER CARRIAGE - E-HYDRAULICS WITH QUICK DISCONNECT FITTINGS (S/N A614V02262H →)	14-66
TWO STAGE LIMITED FREE-LIFT - WITHOUT QUICK DISCONNECT FITTINGS (S/N A613V03307H →)	14-50
TWO STAGE LIMITED FREE-LIFT - MANUAL HYDRAULICS WITH QUICK DISCONNECT FITTINGS (S/N A613V03307H →)	14-52
TWO STAGE LIMITED FREE-LIFT - E-HYDRAULICS WITH QUICK DISCONNECT FITTINGS (S/N A613V03307H →)	14-54

©2014 Yale Materials Handling Corporation

TABLE OF CONTENTS (continued)

DESCRIPTION	PAGE
AUXILIARY TWO SECTION	
ELECTRONIC CONTROL VALVE - FOUR FUNCTION (→ 6/2009)	11-54
ELECTRONIC CONTROL VALVE - FOUR FUNCTION (6/2009 →)	11-56
B	
BACKREST	
WITH FORK POSITIONER (S/N A614V02744K →) (S/N A613V04806K →)	14-48
BACK-UP ALARM	15-6
BATTERY AND CONTROL CABLE DISCONNECT SWITCH	6-66
BATTERY CABLES	
CUMMINS QSB 3.3L DIESEL	6-40
GM 4.3L GASOLINE AND LPG	6-26
BRAKE AND INCHING PEDAL CONVERSION	16-2
BRAKE COOLING SYSTEM	
SINGLE AND DUAL PEDAL	10-14
BRAKE PEDAL LINKAGE	
DUAL PEDAL	10-6
SINGLE PEDAL	10-2
C	
CAB	
ATTACHING PARTS - SHEET 1 OF 2	1-26
ATTACHING PARTS - SHEET 2 OF 2	1-28
HEATER - WITHOUT AIR CONDITIONING	1-42
HEATER AND HOSES - CUMMINS QSB 3.3L DIESEL	1-38
HEATER AND HOSES - GM 4.3L GASOLINE AND LPG	1-40
LEFT HAND DOOR ASSEMBLY	1-34
MAIN ASSEMBLY	1-24
RIGHT HAND DOOR ASSEMBLY	1-36
WINDOW WIPER SYSTEM	1-32
WINDOWS	1-30
CAMSHAFT	
CUMMINS QSB 3.3L DIESEL	2-83
CAMSHAFT AND OIL PAN	
GM 4.3L LPG - PSI OPTION (S/N D878V02178K →)	2-44
GM 4.3L GASOLINE AND LPG - GFI OPTION	2-40
CARRIAGE	
PIN TYPE - TWO STAGE LIMITED FREE-LIFT	14-8
PIN TYPE - THREE STAGE FULL FREE-LIFT	14-10
THREE STAGE FULL FREE-LIFT - HOOK TYPE	14-6
TWO STAGE LIMITED FREE-LIFT - HOOK TYPE	14-4
CARRIER ASSEMBLY	
S/N A613V04806K → S/N A614V02744K →	14-46
CHARGE PUMP	7-42
COIL ASSEMBLY	
GM 4.3L GASOLINE AND LPG - GFI OPTION	2-56
COMPARTMENT PLATFORM	1-12
CONTROL VALVE	
THREE SPEED TRANSMISSION	7-24

©2014 Yale Materials Handling Corporation

TABLE OF CONTENTS (continued)

DESCRIPTION	PAGE
TWO SPEED TRANSMISSION	7-40
CONTROL VALVE AND STEERING UNIT ASSEMBLY	
ELECTRO-HYDRAULIC - THREE FUNCTION (6/2009 →)	11-38
ELECTRO-HYDRAULIC - FOUR FUNCTION (6/2009 →)	11-42
ELECTRONIC CONTROL - THREE FUNCTION (→ 6/2009)	11-36
ELECTRONIC CONTROL - FOUR FUNCTION (→ 6/2009)	11-40
MANUAL CONTROL - THREE FUNCTION	11-24
MANUAL CONTROL - FOUR FUNCTION	11-26
CONTROL VALVE LOCKOUT GROUP	
MANUAL CONTROL VALVE	11-22
COOLANT HOSES	
GM 4.3L LPG WITH CAB - PSI OPTION	5-21
COOLING SYSTEM	
CUMMINS QSB 3.3L	4-6
GM 4.3L GASOLINE AND LPG	4-2
COUNTERWEIGHTS AND FENDERS	1-22
COWL ELECTRICAL	
ELECTRIC HYDRAULIC	6-8
MANUAL HYDRAULIC	6-10
COWL MOUNT	1-20
CRANKCASE BREATHER	
CUMMINS QSB 3.3L DIESEL	2-92
CRANKSHAFT	
CUMMINS QSB 3.3L DIESEL	2-90
CRANKSHAFT PULLEY	
GM 4.3L GASOLINE AND LPG - PSI OPTION (S/N D878V02178K →)	2-30
CYLINDER BLOCK	
CUMMINS QSB 3.3L DIESEL	2-72
GM 4.3L GASOLINE AND LPG	2-36
CYLINDER HEAD	
CUMMINS QSB 3.3L DIESEL	2-74
GM 4.3L GASOLINE AND LPG	2-34
D	
DIFFERENTIAL	8-6
DIPSTICK AND BREATHER	11-8
DISTRIBUTER AND COIL	
GM 4.3L GASOLINE AND LPG - PSI OPTION (S/N D878V02178K →)	2-57
DISTRIBUTOR ASSEMBLY	
GM 4.3L GASOLINE AND LPG	6-24
DRIVE AXLE AND ATTACHING PARTS	
WET BRAKE	8-3
DRIVE AXLE HOUSING AND HUB	8-4
DRIVE TIRE AND WHEEL	8-2
DUAL MIRRORS	
WITH CAB	15-8
WITH OVERHEAD GUARD	15-9

©2014 Yale Materials Handling Corporation

TABLE OF CONTENTS (continued)

DESCRIPTION	PAGE
E	
E-HYDRAULIC CONTROL CONVERSION KITS	
ELECTRICAL MOUNTING PLATE	
GM 4.3L LPG - PSI OPTION (S/N D878V02178K →)	2-6
ELECTRICAL MOUNTING PLATE AND LIFTING EYE	
GM 4.3L GASOLINE - PSI OPTION	2-8
ELECTRICAL SYSTEM	
RIGHT HAND CHASSIS - GM 4.3L GASOLINE AND LPG	6-4
RIGHT HAND CHASSIS - CUMMINS QSB 3.3L DIESEL	6-6
ELECTRO HYDRAULIC POPPET VALVE	
ELECTRONIC CONTROL VALVE - THREE AND FOUR FUNCTION	11-48
ELECTRONIC CONTROL LEVERS	
MINI-LEVER MODULE (FOUR FUNCTION) (→ S/N D878V01751H)	6-46
MINI-LEVER MODULE (THREE FUNCTION) (→ S/N D878V01751H)	6-48
ELECTRONIC CONTROL MODULE AND SENSORS	
CUMMINS QSB 3.3L DIESEL	6-44
ELECTRONIC MINI LEVER LABELS	
DUAL FUNCTION	1-72
SINGLE FUNCTION	1-70
ENGINE CONTROL MODULE AND SENSORS	
GM 4.3L LPG - PSI OPTION (S/N D878V02178K →)	6-19
GM 4.3L GASOLINE - PSI OPTION	6-20
ENGINE ELECTRICAL SYSTEM	
CUMMINS QSB 3.3L DIESEL	6-30
CUMMINS QSB 3.3L DIESEL - UL TYPE DS	6-34
GM 4.3L GASOLINE AND LPG - PSI OPTION	6-16
GM 4.3L, GASOLINE AND LPG - GFI OPTION	6-14
ENGINE MOUNTING	
CUMMINS QSB 3.3L DIESEL	2-61
GM 4.3L GASOLINE AND LPG	2-4
EXHAUST MANIFOLD	
CUMMINS QSB 3.3L DIESEL	2-98
EXHAUST MANIFOLDS	
GM 4.3L GASOLINE AND LPG - PSI OPTION (S/N D878V02178K →)	2-31
EXHAUST SYSTEM	
CUMMINS QSB 3.3L DIESEL	3-2
GM 4.3L GASOLINE AND LPG - GFI OPTION	3-4
GM 4.3L GASOLINE AND LPG - PSI (S/N D878V02178K →)	3-6
F	
FAN ASSEMBLY	
CUMMINS QSB 3.3L DIESEL	2-64
GM 4.3L, GASOLINE AND LPG - PSI OPTION (S/N D878V02178K →)	2-26
FAN MOUNT ASSEMBLY	
GM 4.3L GASOLINE AND LPG - GFI OPTION	2-22
GM 4.3L, GASOLINE AND LPG - PSI OPTION (S/N D878V02178K →)	2-24
FIRE EXTINGUISHER	
WITH CAB	15-3
WITH OVERHEAD GUARD	15-4

©2014 Yale Materials Handling Corporation

TABLE OF CONTENTS (continued)

DESCRIPTION	PAGE
FLOORPLATES AND COVERS	1-10
FLYWHEEL AND HOUSING	
CUMMINS QSB 3.3L DIESEL	2-62
GM 4.3L GASOLINE AND LPG	2-10
FOOT DIRECTIONAL CONTROL PEDAL ASSEMBLY	
→ PENDING PER ECN 154533	5-56
FORK POSITIONER ASSEMBLY	
→ S/N A613V04805K → S/N A614V02743K	14-24
S/N A613V04806K → S/N A614V02744K →	14-44
FORK POSITIONER CYLINDER	
→ S/N A613V04805K → S/N A614V02743K	14-26
FORKS	
PIN TYPE	1-78
STANDARD	1-77
FORWARD CLUTCH HIGH AND OUTPUT SHAFT	
THREE SPEED TRANSMISSION - FWD2	7-20
FORWARD CLUTCH LOW	
TWO SPEED TRANSMISSION	7-34
FORWARD CLUTCH LOW AND SECOND SHAFT	
THREE SPEED TRANSMISSION - FWD1, RANGE2	7-18
FREE-LIFT	
THREE STAGE FULL FREE-LIFT	13-16
FREE-LIFT CYLINDER	
THREE STAGE FULL FREE-LIFT	13-18
FUEL CAP	
DIESEL	5-46
FUEL FILTER	
CUMMINS QSB 3.3L DIESEL	5-54
FUEL FILTER PLUMBING	
CUMMINS QSB 3.3L DIESEL	5-52
FUEL INJECTION PUMP	
CUMMINS QSB 3.3L DIESEL	5-47
FUEL INJECTOR AND INJECTOR PLUMBING	
CUMMINS QSB 3.3L DIESEL	5-48
FUEL PUMP PLUMBING	
CUMMINS QSB 3.3L DIESEL	5-50
FUEL SENDING UNIT	
GM 4.3L GASOLINE - PSI OPTION	5-18
FUEL SUPPLY SYSTEM	
GM 4.3L GASOLINE - GFI OPTION	5-12
GM 4.3L LPG - PSI OPTION (S/N D878V02178K →)	5-28
GM 4.3L LPG WITH OVERHEAD GUARD OR PCV DOOR CAB - GFI OPTION (→ S/N D878V02177K)	5-26
GM 4.3L LPG WITH STEEL DOOR CAB	5-22
FUEL SYSTEM	
CUMMINS QSB 3.3L DIESEL	5-44
GM 4.3L GASOLINE - PSI OPTION	5-14

©2014 Yale Materials Handling Corporation

TABLE OF CONTENTS (continued)

DESCRIPTION	PAGE
FULL SUSPENSION SEAT	
MANUAL AND ELECTRO-HYDRAULIC — SWIVEL AND NON SWIVEL - SHEET 1 OF 4 (S/N D878V01752H →)	1-56
RECLINER AND DAMPER KITS - SHEET 2 OF 4	1-58
SERVICE KITS FOR NON SWIVEL AND SWIVEL - SHEET 3 OF 4	1-60
WITH AND WITHOUT ELECTRONIC CONTROLS (→ S/N D878V01751H)	1-54
FULL SUSPENSION SWIVEL SEAT	
WITH AND WITHOUT ELECTRONIC CONTROLS (→ S/N D878V01751H)	1-52
FUSE BOX	
GM 4.3L LPG - PSI OPTION (S/N D878V02178K →)	6-23
G	
GEAR PUMP	
STEERING	11-12
GEAR PUMP ASSEMBLY	11-10
GM LPG REGULATOR DRAIN KIT	15-12
H	
HAND LEVERS	
FOUR FUNCTION - WITH DETENTED LEVERS	11-18
FOUR FUNCTION - WITHOUT DETENTED LEVERS	11-20
THREE FUNCTION - WITH DETENTED LEVERS	11-14
THREE FUNCTION - WITHOUT DETENTED LEVERS	11-16
HANG-ON SIDE-SHIFT CARRIAGE	
WITH FORK POSITIONER AND BACKREST	14-22
HANG-ON SIDE-SHIFT CARRIAGE AND HOSES	
WITH BACKREST AND FORK POSITIONER (S/N A613V04806K →) (S/N A614V02744K →)	14-36
HEADER HOSE CONVERSION KITS	
HEADER HOSES AND AUXILIARY TUBE	
THREE STAGE FULL FREE-LIFT	14-16
TWO STAGE LIMITED FREE-LIFT	14-12
HEATER CONTROL	1-44
HOIST HOSE AND ATTACHING PARTS	11-69
HOOD ASSEMBLY	1-4
HYDRAULIC CONTROL CONVERSIONS	
HYDRAULIC FILTER	11-6
HYDRAULIC SUPPLY AND RETURN	11-2
I	
IMPACT SENSOR	6-68
INNER MAST	
THREE STAGE FULL FREE-LIFT	13-6
TWO STAGE LIMITED FREE-LIFT	12-4
INSTRUMENT CLUSTER	6-12
INTAKE AIR FUEL MODULE	
GM4.3L GASOLINE - PSI OPTION	2-54
INTERIOR PANELS AND COVERS	1-6
INTERMEDIATE MAST	
THREE STAGE FULL FREE-LIFT	13-4

©2014 Yale Materials Handling Corporation

TABLE OF CONTENTS (continued)

DESCRIPTION	PAGE
L	
LABELS	
EXTERIOR	1-68
HYDRAULIC CONTROL LABELS - CONTROL LEVER	1-80
INTERIOR	1-66
LIFTING BRACKET	
CUMMINS QSB 3.3L DIESEL	2-70
LIFTING EYE	15-14
LIGHTS	
BRAKE, TAIL, BACKUP, SIDE, TURN SIGNALS, WORK, STROBE - WITH CAB	6-54
BRAKE, TAIL, BACKUP, SIDE, TURN SIGNALS, WORK, STROBE - WITH OVERHEAD GUARD	6-56
LOAD BACKREST EXTENSION	1-76
LOAD WEIGH ELECTRICAL	6-64
LPG CONVERTER	
GM 4.3L LPG - PSI OPTION (S/N D878V02178K →)	5-39
LPG LOCK OFF	
GM 4.3L - PSI OPTION (S/N D878V02178K →)	5-40
LPG REGULATOR	
GM 4.3L - GFI OPTION (→ S/N D878V02177K)	5-36
LPG REGULATOR AND MIXER	
GM 4.3L - PSI OPTION (S/N D878V02178K →)	5-38
M	
MAIN LIFT	
THREE STAGE FULL FREE-LIFT	13-8
TWO STAGE LIMITED FREE-LIFT	12-6
MAIN LIFT CYLINDER	
TWO STAGE LIMITED FREE-LIFT	12-10
MAIN LIFT CYLINDERS	
THREE STAGE FULL FREE-LIFT	13-12
MAST ELECTRICAL	6-62
MID INLET SECTION	
MANUAL AND ELECTRONIC CONTROL VALVE - THREE AND FOUR FUNCTION	11-28
MINI LEVER MODULE LABELS	
HYDRAULIC CONTROL FUNCTIONS	1-74
MINI-LEVER CONTROLS	
WITH ARMREST - THREE FUNCTION	6-50
WITH ARMREST - FOUR FUNCTION	6-52
MISCELLANEOUS CONVERSION KITS	16-3
N	
NON SUSPENSION SEAT	
WITH HIP RESTRAINT (→ S/N D878V01751H)	1-46
WITHOUT ELECTRONIC CONTROLS (S/N D878V01752H →)	1-48
WITHOUT ELECTRONIC CONTROLS - OPTIONAL	1-50
O	
OIL FILLER ARRANGEMENT	
CUMMINS QSB 3.3L DIESEL	2-82

©2014 Yale Materials Handling Corporation

TABLE OF CONTENTS (continued)

DESCRIPTION	PAGE
OIL FILTER AND COOLER	
CUMMINS QSB 3.3L DIESEL	2-78
OIL LEVEL GAUGE	
CUMMINS QSB 3.3L DIESEL	2-104
OIL PAN	
CUMMINS QSB 3.3L DIESEL	2-76
OIL PUMP	
GM 4.3L GASOLINE AND LPG	2-58
OIL PUMP AND FRONT GEAR COVER	
CUMMINS QSB 3.3L DIESEL	2-80
OUTER MAST	
THREE STAGE FULL FREE-LIFT	13-2
TWO STAGE LIMITED FREE-LIFT	12-2
OUTLET SECTION	
ELECTRONIC CONTROL VALVE - THREE AND FOUR FUNCTION WITHOUT ANTI-STALL SOLENOID (→ 6/2009)	11-58
ELECTRONIC CONTROL VALVE - THREE AND FOUR FUNCTION WITH ANTI-STALL SOLENOID (6/2009 →)	11-60
MANUAL CONTROL VALVE - THREE AND FOUR FUNCTION	11-34
OUTPUT SHAFT	
TWO SPEED TRANSMISSION	7-38
OVERHEAD GUARD	1-14
P	
PARK BRAKE ASSEMBLY	
→ S/N D878V02174J	10-10
S/N D878V02175K →	10-12
PISTON AND CONNECTING ROD	
CUMMINS QSB 3.3L DIESEL	2-88
POWER DISTRIBUTION MODULE	6-70
PULLEY AND TENSIONER	
GM 4.3L GASOLINE AND LPG - PSI OPTION	2-28
PUMP DRIVE	7-44
R	
RADIATOR MOUNTING	
CUMMINS QSB 3.3L DIESEL	4-4
REPLACEMENT KITS	16-8
REVERSE CLUTCH	
TWO SPEED TRANSMISSION	7-36
REVERSE CLUTCH AND FIRST SHAFT	
THREE SPEED TRANSMISSION - REV1, RANGE 1	7-22
ROCKER ARM SHAFT	
CUMMINS QSB 3.3L DIESEL	2-86
S	
SEALED ALTERNATOR AND MOUNTING	
CUMMINS QSB 3.3L DIESEL	6-38
SEAT ATTACHING PARTS	
NOT INCLUDED WITH SEAT - SHEET 4 OF 4 (S/N D878V01752H →)	1-62

©2014 Yale Materials Handling Corporation

TABLE OF CONTENTS (continued)

DESCRIPTION	PAGE
SEAT CONVERSION KITS	16-2
SEAT PAN AND COVERS	1-8
SIDE-SHIFT ASSEMBLY	
→ S/N A613V04805K → S/N A614V02743K	14-28
WITHOUT FORK POSITIONER (S/N A613V03724J →) (S/N A614V02455J →)	14-32
SIDE-SHIFT CYLINDER	
→ S/N A613V04805K → S/N A614V02743K	14-30
WITH FORK POSITIONER (S/N A613V04806K →) (S/N A614V02744K →)	14-40
WITHOUT FORK POSITIONER (S/N A613V03724J →) (S/N A614V02455J →)	14-34
SINGLE AND DUAL LPG TANK BRACKETS	5-42
SOUND ABATEMENT	
DIESEL	1-16
GASOLINE AND LPG	1-18
SPARK PLUGS AND WIRES	
GM 4.3L GASOLINE AND LPG - PSI OPTION (S/N D878V02178K →)	6-18
STARTER	
GM 4.3L	6-28
STARTER MOTOR	
CUMMINS QSB 3.3L DIESEL	6-42
STARTING AID	
CUMMINS QSB 3.3L DIESEL	2-102
STEER AXLE	
→ S/N D878V01828H	9-8
S/N D878V01829H →	9-12
STEER COLUMN AND ATTACHING PARTS	
DIESEL	9-3
GASOLINE AND LPG	9-2
STEER CYLINDER	
→ S/N D878V01828H	9-15
S/N D878V01829H →	9-16
STEER TIRE AND WHEEL	9-22
STEERING COLUMN ASSEMBLY	
GASOLINE AND LPG	9-4
ISOLATED, DIESEL	9-6
STEERING CONTROL UNIT	9-20
STEERING LINES	9-18
STROBE LIGHT	
LED	15-2

T

THERMOSTAT	
CUMMINS QSB 3.3L DIESEL	2-66
THERMOSTAT AND WATER OUTLET HOUSING	
GM 4.3L LPG - PSI OPTION (S/N D878V02178K →)	2-32
GM 4.3L GASOLINE - PSI OPTION	2-33
THROTTLE BODY	
GM 4.3L LPG - PSI OPTION (S/N D878V02178K →)	5-34
GM 4.3L GASOLINE - PSI OPTION	5-20

©2014 Yale Materials Handling Corporation

TABLE OF CONTENTS (continued)

DESCRIPTION	PAGE
THROTTLE BODY ASSEMBLY	
GM 4.3L LPG (→ S/N D878V01730H)	5-30
GM 4.3L LPG - GFI OPTION (S/N D878V01731H ↔ S/N D878V02177K)	5-32
THROTTLE BODY ASSEMBLY AND FUEL RAIL	
GM 4.3L GASOLINE - GFI OPTION	5-16
THROTTLE PEDAL ASSEMBLY AND ATTACHING PARTS	
FOOT DIRECTIONAL CONTROL (PENDING PER ECN 154533 →)	5-60
STANDARD PEDAL	5-58
TILT CYLINDER AND MAST INSTALLATION	11-62
TILT CYLINDERS	11-64
TILT HYDRAULICS	11-66
TORQUE CONVERTER	
CUMMINS QSB 3.3L DIESEL	7-6
GM 4.3L GASOLINE AND LPG	7-4
TRANSMISSION ASSEMBLY	
THREE SPEED - SHEET 1 0F 2 (→ S/N D878V01705G)	7-10
THREE SPEED - SHEET 2 OF 2 (→ S/N D878V01705G)	7-12
THREE SPEED - SHEET 1 OF 2 (S/N D878V01706G →)	7-14
THREE SPEED - SHEET 2 OF 2 (S/N D878V01706G →)	7-16
TWO SPEED - SHEET 1 OF 2 (→ S/N D878V01678G)	7-26
TWO SPEED - SHEET 2 0F 2 (→ S/N D878V01678G)	7-28
TWO SPEED - SHEET 1 OF 2 (S/N D878V01679G →)	7-30
TWO SPEED - SHEET 2 OF 2 (S/N D878V01679G →)	7-32
TRANSMISSION COOLING	
WITH EXTERNAL OIL COOLER	7-8
TRANSMISSION ELECTRICAL SYSTEM	
THREE SPEED TRANSMISSION	6-60
TWO SPEED TRANSMISSION	6-58
TRANSMISSION MOUNT	7-2
TURBOCHARGER	
CUMMINS QSB 3.3L DIESEL	2-94
TURBOCHARGER PLUMBING	
CUMMINS QSB 3.3L DIESEL	2-96
V	
VALVE ASSEMBLY, AUXILIARY ONE AND TWO	
MANUAL CONTROL VALVE - THREE AND FOUR FUNCTION	11-32
VALVE ASSEMBLY, LIFT AND LOWER	
ELECTRONIC CONTROL VALVE - THREE AND FOUR FUNCTION	11-44
VALVE ASSEMBLY, LIFT AND TILT	
MANUAL CONTROL VALVE - THREE AND FOUR FUNCTION	11-30
VALVE ASSEMBLY, TILT SECTION	
ELECTRONIC CONTROL VALVE - THREE AND FOUR FUNCTION	11-46
VALVE COVER	
CUMMINS QSB 3.3L DIESEL	2-84
VALVE COVER AND INLET MANIFOLD	
GM 4.3L GASOLINE AND LPG - GFI OPTION	2-48
GM 4.3L GASOLINE AND LPG - PSI OPTION	2-52
VENT LINES	11-68

©2014 Yale Materials Handling Corporation

TABLE OF CONTENTS (continued)

DESCRIPTION	PAGE
VIBRATION DAMPER	
CUMMINS QSB 3.3L DIESEL	2-103
W	
WATER BYPASS	
GM 4.3L GASOLINE - PSI OPTION	2-60
WATER OULET CONNECTION	
CUMMINS QSB 3.3L DIESEL	2-65
WATER PUMP AND PULLEY	
CUMMINS QSB 3.3L DIESEL	2-68
WATER SEPARATOR	
CUMMINS QSB 3.3L DIESEL	5-55
WET BRAKE ASSEMBLY	8-8
WIRE HARNESS	
ADAPTER - LOW FUEL PRESSURE	6-172
ALTERNATOR - CUMMINS QSB 3.3L DIESEL	6-150
COWL WITH FOOT DIRECTIONAL CONTROL PEDAL - WITH HYDRAULIC PUMP SOLENOID	6-138
COWL WITH FOOT DIRECTIONAL CONTROL PEDAL - WITH RETURN TO SET TILT / WITH HYDRAULIC PUMP SOLENOID	6-142
COWL WITH FORWARD/REVERSE LEVER - WITH HYDRAULIC PUMP SOLENOID	6-134
ELECTRONIC CONTROL VALVE - THREE FUNCTION	6-162
ELECTRONIC CONTROL VALVE - FOUR FUNCTION	6-164
ENGINE - GM 4.3L LPG (→ S/N D878V01730H)	6-72
ENGINE - GM 4.3L GASOLINE (→ S/N D878V01730H)	6-84
ENGINE - CUMMINS QSB 3.3L DIESEL	6-92
LEFT HAND CHASSIS - GM 4.3L GASOLINE (→ S/N D878V01730H)	6-124
LEFT HAND CHASSIS - GM 4.3L GASOLINE (SERIES 2010) (S/N D878V01731H →)	6-126
LEFT HAND CHASSIS - GM 4.3L LPG (→ S/N D878V01730H)	6-128
LEFT HAND CHASSIS - GM 4.3L LPG (2010 SERIES)(WITH PREMIUM LOW FUEL SENSOR) (S/N D878V01731H →)	6-130
LEFT HAND CHASSIS - GM 4.3L LPG (2010 SERIES)(WITHOUT PREMIUM LOW FUEL SENSOR) (S/N D878V01731H →)	6-132
LIGHTS WITH OVERHEAD GUARD	6-166
LOW FUEL SENSOR	6-170
REAR - GM 4.3L GASOLINE AND LPG	6-94
REAR - CUMMINS QSB 3.3L DIESEL	6-96
RIGHT HAND CHASSIS - GM 4.3L GASOLINE AND LPG (→ S/N D878V01870H)	6-98
RIGHT HAND CHASSIS - GM 4.3L GASOLINE AND LPG (S/N D878V01871H →)	6-104
RIGHT HAND CHASSIS - CUMMINS QSB 3.3L DIESEL (→ S/N D878V01858H)	6-110
RIGHT HAND CHASSIS - CUMMINS QSB 3.3L DIESEL (S/N D878V01859H →)	6-116
SEALED ALTERNATOR - CUMMINS QSB 3.3L DIESEL	6-152
SEAT JUMPER (→ S/N D878V01858H)	6-122
TRANSMISSION - THREE SPEED	6-156
TRANSMISSION - TWO SPEED	6-160
WORK LIGHT JUMPER - WITH TWO STAGE MASTS	6-168
WIRE HARNESS (COWL)	
WITH FORWARD AND REVERSE LEVER - WITH HYDRAULIC PUMP SOLENOID	6-146
WIRE HARNESS (ENGINE)	
GM 4.3L GASOLINE (2010 SERIES) (S/N D878V01731H →)	6-88

©2014 Yale Materials Handling Corporation

TABLE OF CONTENTS (continued)

DESCRIPTION	PAGE
GM 4.3L LPG (2010 SERIES) - GFI OPTION (S/N D878V01731H ↔ S/N D878V02177K)	6-76
GM 4.3L, LPG - PSI OPTION (S/N D878V02178K →)	6-80

©2014 Yale Materials Handling Corporation

ABBREVIATIONS QUICK REFERENCE SHEET

Listed below are abbreviations used in parts manuals to denote the following expressions:

TERM	DEFINITION
Amp	Amperes
AR	As Required
BDI	Battery Discharge Indicators
BWI	Brush Wear Indicator
CE	Communicator End
CRE	Corrosive Environment
D/B	Date Break
dbA	Decibel "A" Scale
DE	Drive End
ECH	Empty Container Handler
ECH-3	Empty Container Handler - 3 High Stacking
ECH-4	Empty Container Handler - 4 High Stacking
ECH-5	Empty Container Handler - 5 High Stacking
ECH-6	Empty Container Handler - 6 High Stacking
ECH-7	Empty Container Handler - 7 High Stacking
ECM	Electronic Control Module
ECN	Engineering Change Notice
EEPROM	Electrically Erasable Programmable Read Only Memory
EPA	US Environmental Protection Agency
EPROM	Electrically Programmable Read Only Memory

TERM	DEFINITION
FRE	Freezer Environment
in.	inches
LPG	Liquefied Petroleum Gas
MAP	Manifold Absolute Pressure
mm	millimeters
MSTS	Microprocessor Spark Timing System
NPT	National Pipe Threads
O/S	Oversize
PTO	Power Take Off
RPM	Revolutions per Minute
S/N	Serial Number
TMM	Truck Management Module
UL Type D	Diesel-Powered Safety Rating
UL Type DS	Diesel-Powered Safety Rating
UL Type E	Battery-Powered Safety Rating
UL Type EE	Battery-Powered Safety Rating
UL Type ES	Battery-Powered Safety Rating
UL Type G	Gasoline-Powered Safety Rating
UL Type GS	Gasoline-Powered Safety Rating
UL Type LP	Gas-Powered Safety Rating
UL Type LPS	LP Gas-Powered Safety Rating
U/S	Undersize
UL	Underwriters Laboratory
V	Volts

©2014 Yale Materials Handling Corporation

HOW TO USE THE ILLUSTRATED PARTS MANUAL

This parts manual describes and illustrates assemblies, subassemblies, and detail parts needed for service replacement.

The different constructions are indicated by keys and footnotes. The callouts correspond to descriptions found on the next page.

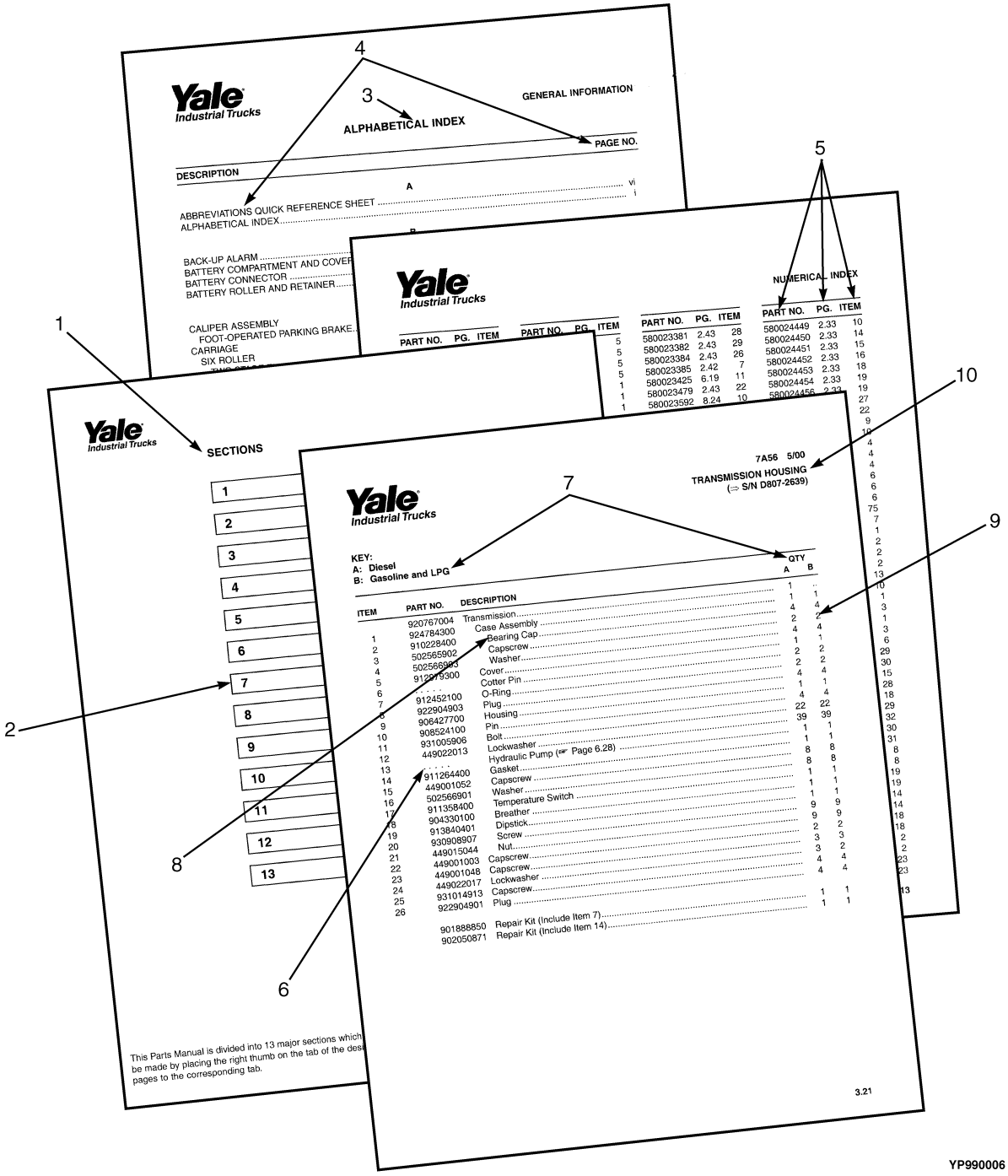

©2014 Yale Materials Handling Corporation

HOW TO FIND THE DESIRED PART NUMBER

WHEN THE PART NUMBER AND THE NEXT HIGHER ASSEMBLY IS NOT KNOWN:

1. Determine the function and application of the part required. Turn to the Sections Page. Choose the general area of reference most likely to include the part.
2. Turn to the section you chose. Use the Section Table of Contents to determine the assembly which would normally contain the part required. Then locate the part on the assembly breakdown page.

WHEN THE PART NUMBER IS NOT KNOWN AND THE NEXT HIGHER ASSEMBLY IS KNOWN:

3. Determine the assembly the required part is used on. Turn to the Table of Contents (Page i).
4. Locate the assembly the required part is used on and turn to the page indicated for that assembly. Then locate the part on the assembly breakdown page.

WHEN THE PART NUMBER IS KNOWN:

5. Use the Numerical Index (Page 17-1) to find the part number. Turn to the page listed and locate the part as indicated by the item number.

GENERAL:

The assembly breakdowns include part numbers, descriptions, quantities required, keys and footnotes to help in selecting correct parts.

6. Parts Supersession Information. Part numbers that have this history will be displayed in the parts list in the order that they were superseded (from oldest to newest). The superseded part numbers will be shown with a line through them.

   Five periods in the PART NO. column (. . . . .) indicate that the part is either *Not Serviced Separately* or there is a reference to another figure. A figure reference is denoted by a pointing hand followed by a parts page number in the DESCRIPTION column (☞7A56)
7. Keys are used to show two or more similar assemblies, RH and LH assembly parts, etc. Select the appropriate key, "A", "B", "C", "D", or "E" and the corresponding quantity column to find the required parts. Two periods in the QTY column (..) indicate that the part is not used for that assembly.
8. Indented descriptions under the DESCRIPTION column are used to indicate assemblies and subparts of assemblies. In the example on the previous page, *BEARING CAP* (Item 2) is a subpart of the major assembly *CASE*.
9. Quantities shown are for one assembly. The quantities of the subpart *BEARING CAP* are indicated as two and two. This means two per *CASE* assembly.
10. Serial number breaks identify the most current parts information and are shown as follows:
    → **S/N A810N2639**
    Indicates last serial number affected.
    S/N A810N2640 →
    Indicates the first serial number affected.
    S/N A810N1553 ↔ S/N A810N3291
    Indicates a range of serial numbers affected.

    ECN numbers for pending serial numbers are shown to allow for the inclusion of the most current parts information and are identified as follows:
    → **S/N Pending Per ECN 63243**
    Indicates a pending serial number for last unit affected.
    S/N Pending Per ECN 63243 →
    Indicates a pending serial number for first unit affected.

    Date breaks are used to indicate when a change occurred but a subsequent serial number break was not recorded. This is an arbitrary date usually based on the ECN release and are identified as follows:
    → **D/B 3/00**
    Indicates that a change occurred sometime within that month for the item affected.
    D/B 3/00 →
    Indicates that a change occurred sometime within that month for the item affected.
    D/B 3/00 ↔ D/B 4/00
    Indicates a range of production dates of the item affected.

    Contact your local dealer for Yale lift trucks for serial number information for items with a ECN or a date break.

ORDERING PARTS:

When ordering replacement parts, give the unit serial number, part number, name of part and quantity required.

For any further information on parts, service, or ordering, consult your local dealer for Yale lift trucks.

©2014 Yale Materials Handling Corporation

IDENTIFICATION OF TRUCK SERIAL NUMBERS

X	OOO	X	OOOO	X
(1)	(2)	(3)	(4)	(5)

NOTE: Serial Number breakdown is only for trucks built after 1994.

(1) and (2) The first letter and three numbers indicate the truck unit code.

(3) The second letter indicates the plant of manufacture.

(4) The four or five digit number indicates the production sequence number of the truck.

(5) The final letter indicates the year of manufacture starting with "A" in 1957, 1980, and 2003. The letters "I", "O", and "Q" will not be used.

For pending serial numbers contact your local dealer for Yale lift trucks.

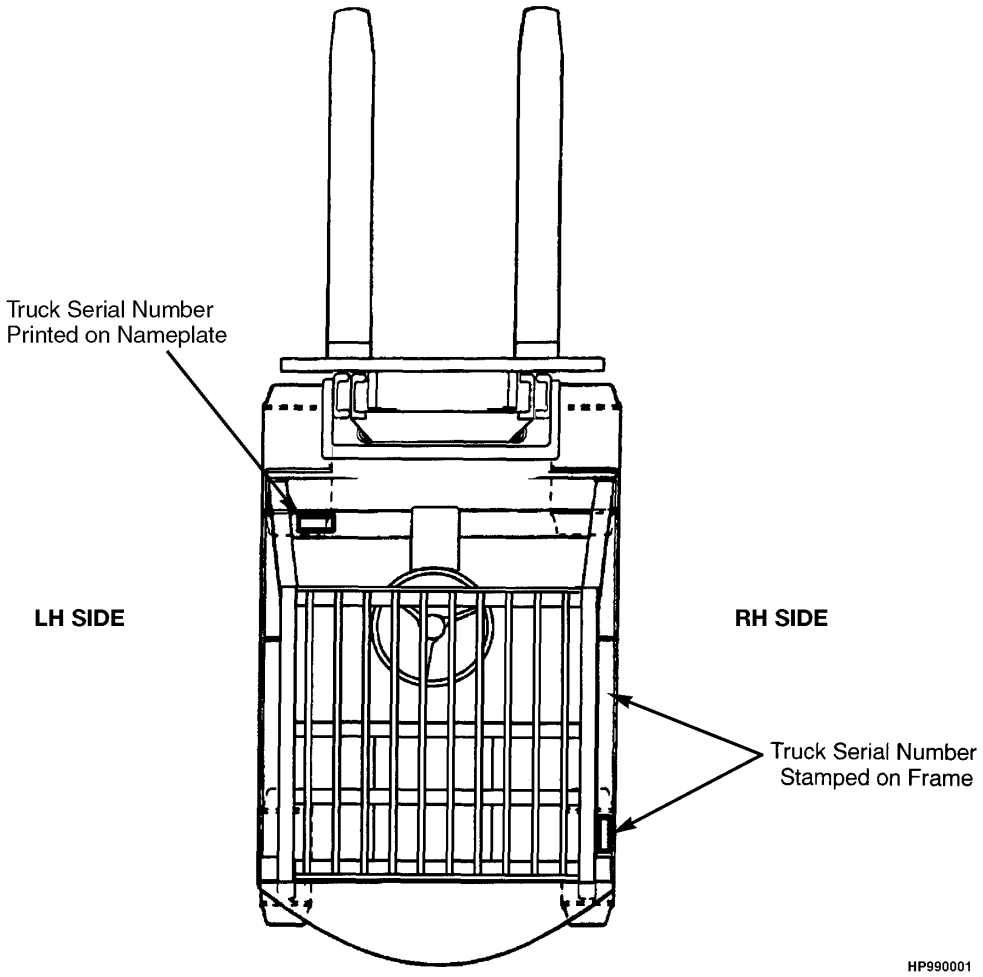

Parts referred to in this book as right or left hand parts are in accordance with the illustration above.

©2014 Yale Materials Handling Corporation

IDENTIFICATION OF MAST SERIAL NUMBERS

X OOO X OOOO

(1) (2) (3) (4)

OOOO

(5)

(1) and (2) The first letter and number indicates the mast unit code.

(3) The second letter indicates the plant of manufacture.

(4) The four or five digit number indicates the production sequence number of the mast.

(5) Carriage travel in millimeters stamped just below the serial number.

Mast Group identification consists of mast unit code (1) and (2) plus carriage travel (5).

For pending production sequence numbers contact your local dealer for Yale lift trucks.

LIFT EQUIPMENT IDENTIFICATION

1. Fork part number, capacity rating, plant code letter, and date of manufacture are stamped approximately six inches below the top of most forks.
2. The carriage group number is stamped on the right hand side of the top crossmember (pin type) or on the back of the right hand end of the bottom crossmember (hook type). A date code has two letters in line with or below the carriage group number.
3. The mast identification number has a unit code, a letter indicating the plant of manufacture, and a serial number. Underneath the production sequence number is a four digit number that indicates the carriage travel in millimeters.
4. Tilt and lift cylinder group numbers are stamped on the cylinder shell.

   Always refer to the group, serial, or part number when ordering service parts.

   Modification of masts and carriages by SPED (Special Products Engineering Department) are identified by a model prefix code beginning with the letter "S". contact your dealer for Yale lift trucks for information on these assemblies.

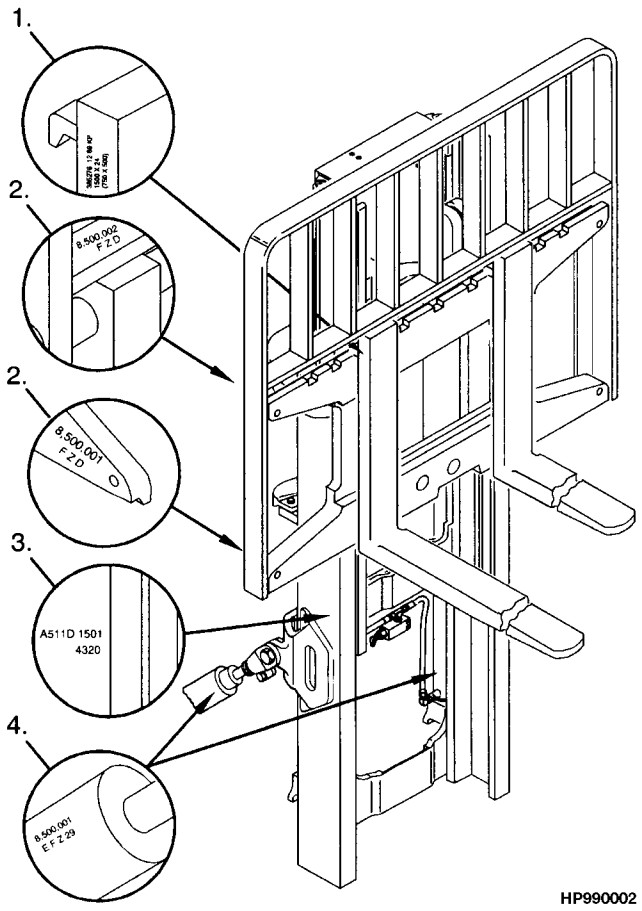

©2014 Yale Materials Handling Corporation

IDENTIFICATION OF ATTACHMENT AND SIDE-SHIFT CARRIAGE SERIAL NUMBERS

X OOO X OOOO

(1) (2) (3) (4)

(1) and (2) The first letter and three numbers indicate the attachment unit code.

(3) The second letter indicates the plant of manufacture.

(4) The four or five digit number indicates the production sequence number.

For pending production sequence numbers contact your local dealer for Yale lift trucks.

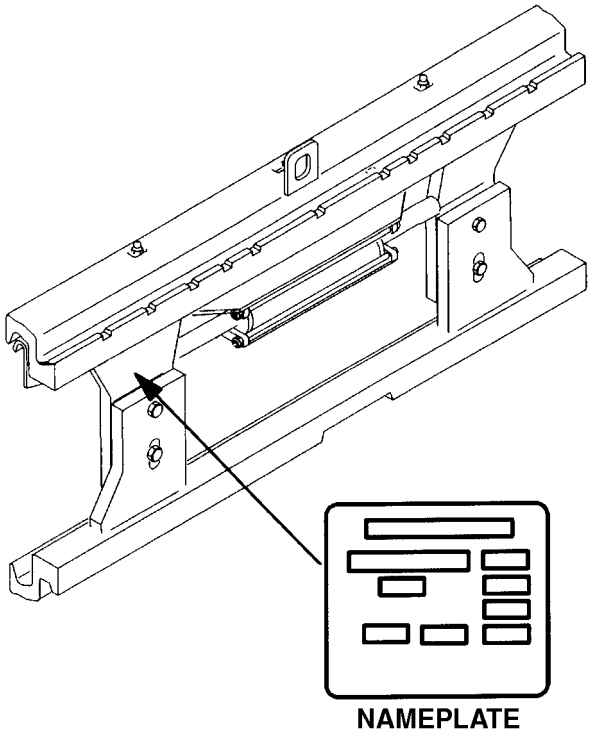

Side-shift carriages and attachments have nameplates. Use the serial number found on the nameplate to identify the attachment.

Always refer to the group, serial, or part number when ordering service parts.

Modifications of attachments and side-shift carriages by SPED (Special Products Engineering Department) are identified by a model prefix code beginning with the letter "S". Contact your dealer for Yale lift trucks for information on these assemblies.

©2014 Yale Materials Handling Corporation

PUBLICATIONS

Every new lift truck is provided with an OPERATING MANUAL. This manual has information that the operator must know for inspection and operation of the lift truck.

SERVICE MAINTENANCE MANUALS, which provide service and overhaul procedures, and PARTS MANUALS with complete replacement part identification, are available at a nominal fee from your Yale dealer to assist users in effectively maintaining Yale lift trucks in a safe, useful condition. See the list below for information on ordering specific publications for this model lift truck.

PUBLICATION	YALE PART NUMBER
Operating Manual	524288834
Service Manual (Complete)	524329208
Parts Manual	524329200

©2014 Yale Materials Handling Corporation

MASTER PART SHEET CROSS-REFERENCE

NOTE: Throughout this manual are references to Part Sheet Numbers. These references are usually found after the description of a part or assembly. The Part Sheet Number is found on the upper left- or righthand corner of the parts pages.

EXAMPLE:

ITEM	PART NO.	DESCRIPTION	QTY
31	505965530	Steering Cylinder (☞6E67 [Figure 4-3])	1
32	504224261	Pin	4

Below is a numerical listing of Part Sheet Numbers found in this parts book and what page number they are on.

PART SHEET	PAGE
P10122	1-4
P19916	6-94
P19917	6-96
P19918	6-146
P19921	6-138
P19922	6-142
P20123	1-6
P20124	1-8
P20125	1-10
P20127	1-14
P20128	1-24
P20129	1-26
P20140	1-28
P20141	1-30
P20142	1-32
P20143	1-34
P20144	1-36
P20145	1-22
P20146	1-42
P20147	1-16
P20148	1-46
P20149	1-54
P20150	1-52
P20151	1-80
P20152	1-20
P20153	1-68
P20154	1-66
P20155	1-77
P20156	1-78
P20157	1-76
P20158	1-18
P20159	2-4
P20160	2-10
P20161	2-12
P20162	2-16
P20163	2-20
P20164	2-34
P20165	2-36
P20166	2-40
P20167	2-48
P20168	2-58
P20169	2-56
P20170	2-70
P20171	2-72
P20172	2-74
P20173	2-62
P20175	2-76
P20175	2-68
P20176	2-78
P20177	2-80
P20178	2-82
P20179	2-83
P20180	2-84
P20181	2-86
P20182	2-88
P20183	2-90
P20184	2-94
P20185	2-96
P20186	2-98
P20187	2-100
P20188	2-102
P20189	2-103
P20190	2-92
P20191	3-2
P20192	3-4
P20193	2-22
P20194	4-2
P20195	4-4
P20196	4-6
P20197	2-64
P20198	2-66
P20199	5-4
P20200	5-10
P20201	5-12
P20202	5-16
P20203	5-42
P20204	5-47
P20205	5-50
P20206	5-48
P20207	5-52
P20208	5-54
P20209	5-55
P20212	5-44
P20213	5-56
P20214	5-22
P20215	5-26
P20216	5-30
P20217	6-4
P20218	6-6
P20219	6-8
P20220	6-10
P20221	6-12
P20222	6-14
P20223	6-24
P20224	6-26
P20225	6-36
P20226	6-30
P20227	6-34
P20228	6-40
P20229	6-38
P20230	6-42
P20231	6-44
P20232	6-58
P20233	6-60
P20234	6-54
P20235	6-46
P20236	6-48
P20237	6-62

©2014 Yale Materials Handling Corporation

PART SHEET	PAGE
P20238	6-64
P20239	6-68
P20240	6-70
P20241	6-72
P20242	6-92
P20243	6-84
P20244	6-98
P20245	6-110
P20246	6-124
P20247	6-128
P20249	6-134
P20251	6-150
P20252	6-152
P20253	6-156
P20254	6-160
P20255	6-162
P20256	6-164
P20257	6-166
P20258	6-168
P20259	7-2
P20260	7-4
P20261	7-6
P20262	7-8
P20263	7-18
P20264	7-20
P20265	7-22
P20266	7-24
P20267	7-26
P20268	7-28
P20269	7-36
P20270	7-38
P20271	7-34
P20272	7-40
P20273	7-42
P20274	7-44
P20275	8-2
P20276	8-3
P20277	8-4
P20278	8-6
P20279	8-8
P20280	9-4
P20281	9-2
P20282	9-8
P20283	9-15
P20284	9-18
P20285	9-20
P20286	9-22
P20287	10-2
P20288	10-6
P20289	10-10
P20290	10-14
P20291	11-2
P20292	11-10
P20293	11-12
P20294	11-14
P20295	11-16
P20296	11-18
P20297	11-20
P20298	11-24
P20299	11-26
P20300	11-28
P20301	11-30
P20302	11-32
P20303	11-34
P20304	11-36
P20305	11-40
P20306	11-44
P20307	11-46
P20308	11-48
P20309	11-50
P20310	11-54
P20311	11-60
P20312	11-62
P20313	11-66
P20314	11-6
P20315	11-68
P20316	11-69
P20317	12-2
P20318	12-4
P20319	12-6
P20320	12-10
P20321	13-2
P20322	13-4
P20323	13-6
P20324	13-8
P20325	13-12
P20326	13-16
P20327	13-18
P20328	14-4
P20329	14-6
P20340	14-12
P20341	14-16
P20342	14-20
P20343	15-2
P20344	15-3
P20345	15-4
P20346	15-6
P20347	15-8
P20348	15-9
P20349	15-10
P20350	14-22
P20351	14-24
P20352	14-28
P20353	14-26
P20354	14-30
P20355	15-12
P20356	5-36
P20357	1-70
P20358	1-72
P20359	7-10
P20360	7-12
P20364	6-56
P20415	14-8
P20416	14-10
P20641	5-8
P20697	15-14
P20719	6-28
P20731	7-14
P20732	7-16
P20733	7-30
P20734	7-32
P20833	11-64
P20849	11-38
P20850	11-42
P21015	11-52
P21016	11-56
P21017	11-58
P21017	1-12
P21085	6-66
P21108	6-170
P21133	2-104
P21195	9-3
P21199	1-38
P21200	1-44
P21326	5-46
P21367	6-88
P21368	6-76
P21389	6-126
P21390	6-130
P21425	5-32
P21434	6-132
P21597	1-48
P21641	2-61
P21642	1-40
P21654	1-56
P21671	6-50
P21672	6-52
P21694	1-64
P21728	1-58
P21861	9-12
P21862	9-16
P22079	6-104
P22080	6-116

©2014 Yale Materials Handling Corporation

PART SHEET	PAGE
P22121	6-122
P22158	14-50
P22159	14-52
P22166	14-54
P22170	14-56
P22171	14-58
P22172	14-60
P22185	14-62
P22186	14-64
P22187	14-66
P22215	1-74
P22418	2-65
P23100	11-22
P23187	14-32
P23188	14-34
P23233	5-6
P23238	3-6
P23311	2-6
P23312	2-24
P23313	2-26
P23314	2-28
P23315	2-30
P23316	2-31
P23317	2-32
P23318	2-44
P23319	2-52
P23320	2-57
P23321	5-28
P23322	5-34
P23323	5-38
P23324	5-39
P23325	5-40
P23326	6-18
P23327	6-19
P23327	6-22
P23328	6-23
P23331	6-80
P23591	10-12
P23892	2-8
P23893	2-33
P23894	2-54
P23895	2-60
P23896	5-20
P23897	5-14
P23898	5-18
P23899	5-21
P23900	6-16
P23901	6-20
P23922	6-172
P23953	1-50
P23962	9-6
P25482	5-60
P25483	5-58
P25813	14-36
P25814	14-38
P25815	14-40
P25816	14-42
P25817	14-44
P25818	14-46
P25819	14-48
P25866	1-62
P26850	11-8
P27032	1-60

©2014 Yale Materials Handling Corporation

1 GENERAL TRUCK

SECTION 1
GENERAL TRUCK

DESCRIPTION	PAGE
ARMREST ASSEMBLY	
MINI-LEVER MODULES	1-64
CAB	
ATTACHING PARTS - SHEET 1 OF 2	1-26
ATTACHING PARTS - SHEET 2 OF 2	1-28
HEATER - WITHOUT AIR CONDITIONING	1-42
HEATER AND HOSES - CUMMINS QSB 3.3L DIESEL	1-38
HEATER AND HOSES - GM 4.3L GASOLINE AND LPG	1-40
LEFT HAND DOOR ASSEMBLY	1-34
MAIN ASSEMBLY	1-24
RIGHT HAND DOOR ASSEMBLY	1-36
WINDOW WIPER SYSTEM	1-32
WINDOWS	1-30
COMPARTMENT PLATFORM	1-12
COUNTERWEIGHTS AND FENDERS	1-22
COWL MOUNT	1-20
ELECTRONIC MINI LEVER LABELS	
DUAL FUNCTION	1-72
SINGLE FUNCTION	1-70
FLOORPLATES AND COVERS	1-10
FORKS	
PIN TYPE	1-78
STANDARD	1-77
FULL SUSPENSION SEAT	
MANUAL AND ELECTRO-HYDRAULIC — SWIVEL AND NON SWIVEL - SHEET 1 OF 4 (S/N D878V01752H →)	1-56
RECLINER AND DAMPER KITS - SHEET 2 OF 4	1-58
SERVICE KITS FOR NON SWIVEL AND SWIVEL - SHEET 3 OF 4	1-60
WITH AND WITHOUT ELECTRONIC CONTROLS (→ S/N D878V01751H)	1-54
FULL SUSPENSION SWIVEL SEAT	
WITH AND WITHOUT ELECTRONIC CONTROLS (→ S/N D878V01751H)	1-52
HEATER CONTROL	1-44
HOOD ASSEMBLY	1-4
INTERIOR PANELS AND COVERS	1-6
LABELS	
EXTERIOR	1-68
HYDRAULIC CONTROL LABELS - CONTROL LEVER	1-80
INTERIOR	1-66
LOAD BACKREST EXTENSION	1-76
MINI LEVER MODULE LABELS	
HYDRAULIC CONTROL FUNCTIONS	1-74
NON SUSPENSION SEAT	
WITH HIP RESTRAINT (→ S/N D878V01751H)	1-46
WITHOUT ELECTRONIC CONTROLS (S/N D878V01752H →)	1-48
WITHOUT ELECTRONIC CONTROLS - OPTIONAL	1-50
OVERHEAD GUARD	1-14
SEAT ATTACHING PARTS	
NOT INCLUDED WITH SEAT - SHEET 4 OF 4 (S/N D878V01752H →)	1-62
SEAT PAN AND COVERS	1-8

©2014 Yale Materials Handling Corporation

SECTION 1
GENERAL TRUCK

DESCRIPTION	PAGE
SOUND ABATEMENT	
DIESEL	1-16
GASOLINE AND LPG	1-18

©2014 Yale Materials Handling Corporation

NOTES

©2014 Yale Materials Handling Corporation

HOOD ASSEMBLY (FIGURE 1-1)

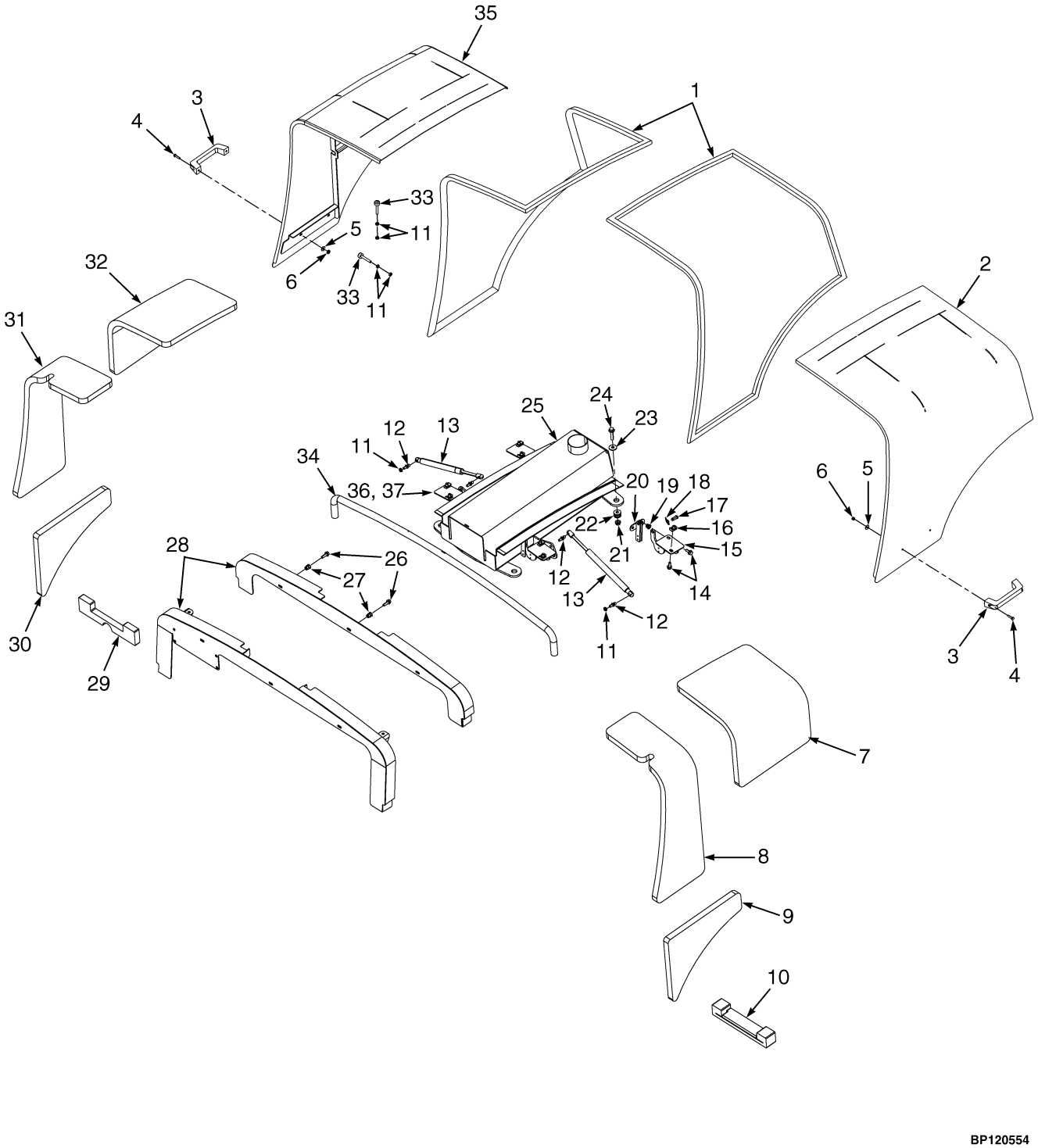

©2014 Yale Materials Handling Corporation

HOOD ASSEMBLY

ITEM	PART NO.	DESCRIPTION	QTY
1	580086801	Seal	2
2	524298575	Hood (LH) (With Overhead Guard)	1
2	524298574	Hood (LH) (With Cab)	1
3	504235245	Handle	2
4	449001121	Capscrew	4
5	580017101	Washer	4
6	580055650	Nut	4
7	580078722	Sound Liner (LH)	1
8	580083675	Sound Liner (LH)	1
9	580078724	Sound Liner (LH)	1
10	580067512	Seal	1
11	580060019	Nut	12
11	449021001	Washer (Not Illustrated)	8
12	582004516	Ball Stud	4
12	580049915	Ball Stud (Alternate Part)	4
13	582005653	Gas Spring	2
14	580049231	Capscrew	16
15	580082458	Hinge	4
15	580088049	Hinge (Alternate Part)	2
16	580026621	Nut	8
17	580056624	Pin (Rod End)	4
18	580000868	Locking Cotter Pin	4
19	580044861	Insert	8
20	580084838	Hinge (Base)	2
20	580088048	Hinge (Base) (Alternate Part)	2
21	580027572	Nut	4
22	080143400	Motor Mount	4
23	518796686	Washer	4
24	580049331	Capscrew	4
25	580083446	Hood Support	1
26	580030966	Capscrew	3
27	580044860	Insert	3
28	524275588	Crossmember (With Overhead Guard)	1
28	524275589	Crossmember (With Cab)	1
29	580065933	Seal	1
30	580078725	Sound Liner (RH)	1
31	580083674	Sound Liner (RH)	1
32	580078720	Sound Liner (RH)	1
33	580058383	Bumper (Hood)	4
34	580067529	Seal	1
35	524298546	Hood (RH) (With Overhead Guard)	1
35	524298545	Hood (RH) (With Cab)	1

©2014 Yale Materials Handling Corporation

INTERIOR PANELS AND COVERS (FIGURE 1-2)

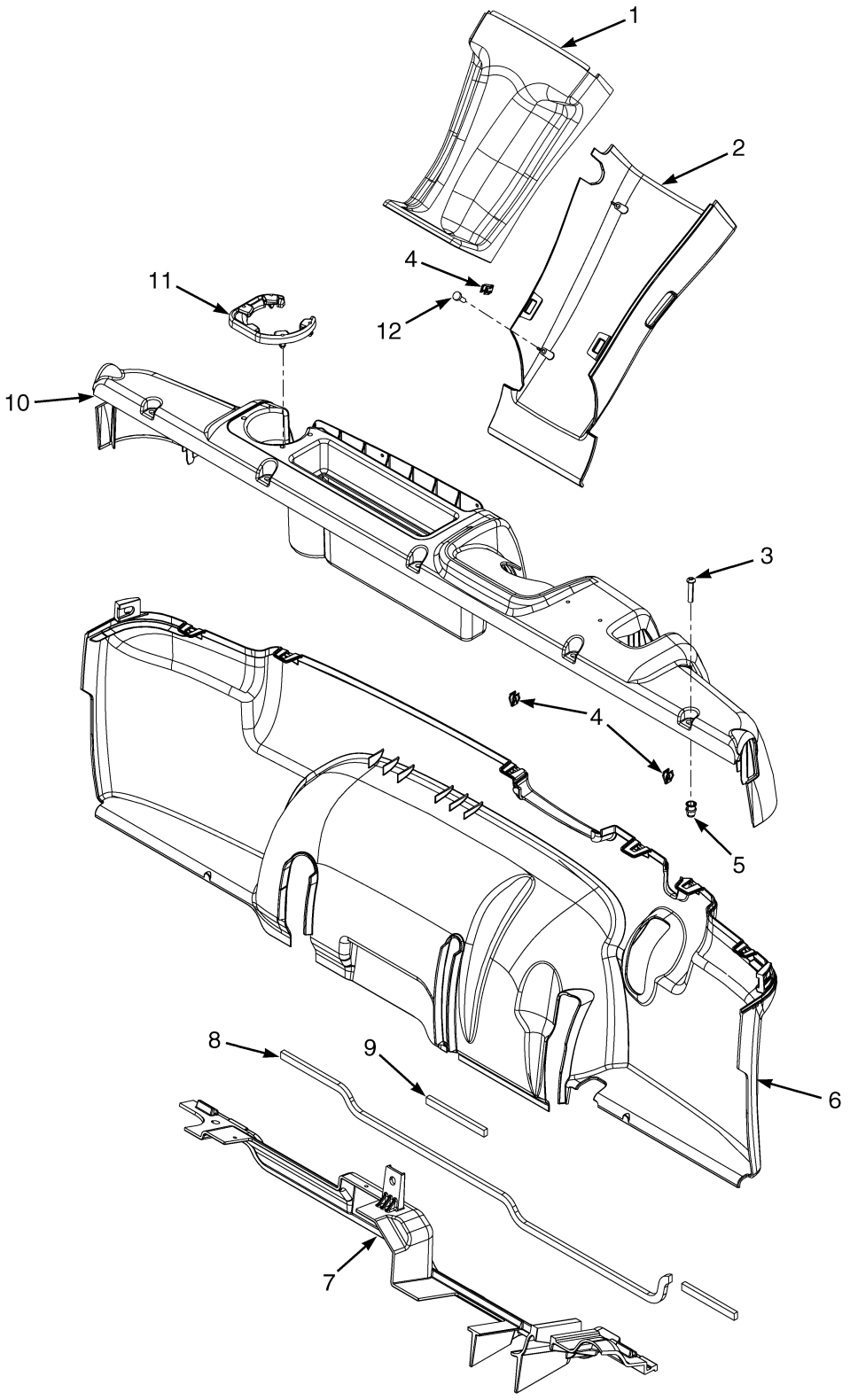

©2014 Yale Materials Handling Corporation

INTERIOR PANELS AND COVERS

KEY:
A: Manual Hydraulics
B: Electronic Hydraulics

ITEM	PART NO.	DESCRIPTION	QTY A	QTY B
1	580083020	Cover (Steering Column Upper)	1	1
2	580046138	Cover (Steering Column Lower)	1	1
3	932728908	Capscrew	5	5
3	**a** 582001891	Capscrew	4	4
3	**a** 580003442	Fastener	1	1
4	580046139	Clip	8	8
5	580044859	Insert	5	5
6	580052292	Panel (Single Pedal)	1	1
6	580059919	Panel (Dual Pedal)	1	1
7	580077564	Cover Plate	1	..
7	580077566	Cover Plate	..	1
8	580077585	Seal	1	1
9	580077584	Seal	1	1
10	580058909	Dash Panel	1	..
10	580058910	Dash Panel	..	1
11	580052409	Cup Holder	1	1
12	909904403	Screw	2	2

FOOTNOTES:

a With Alternate Fastener

©2014 Yale Materials Handling Corporation

SEAT PAN AND COVERS (FIGURE 1-3)

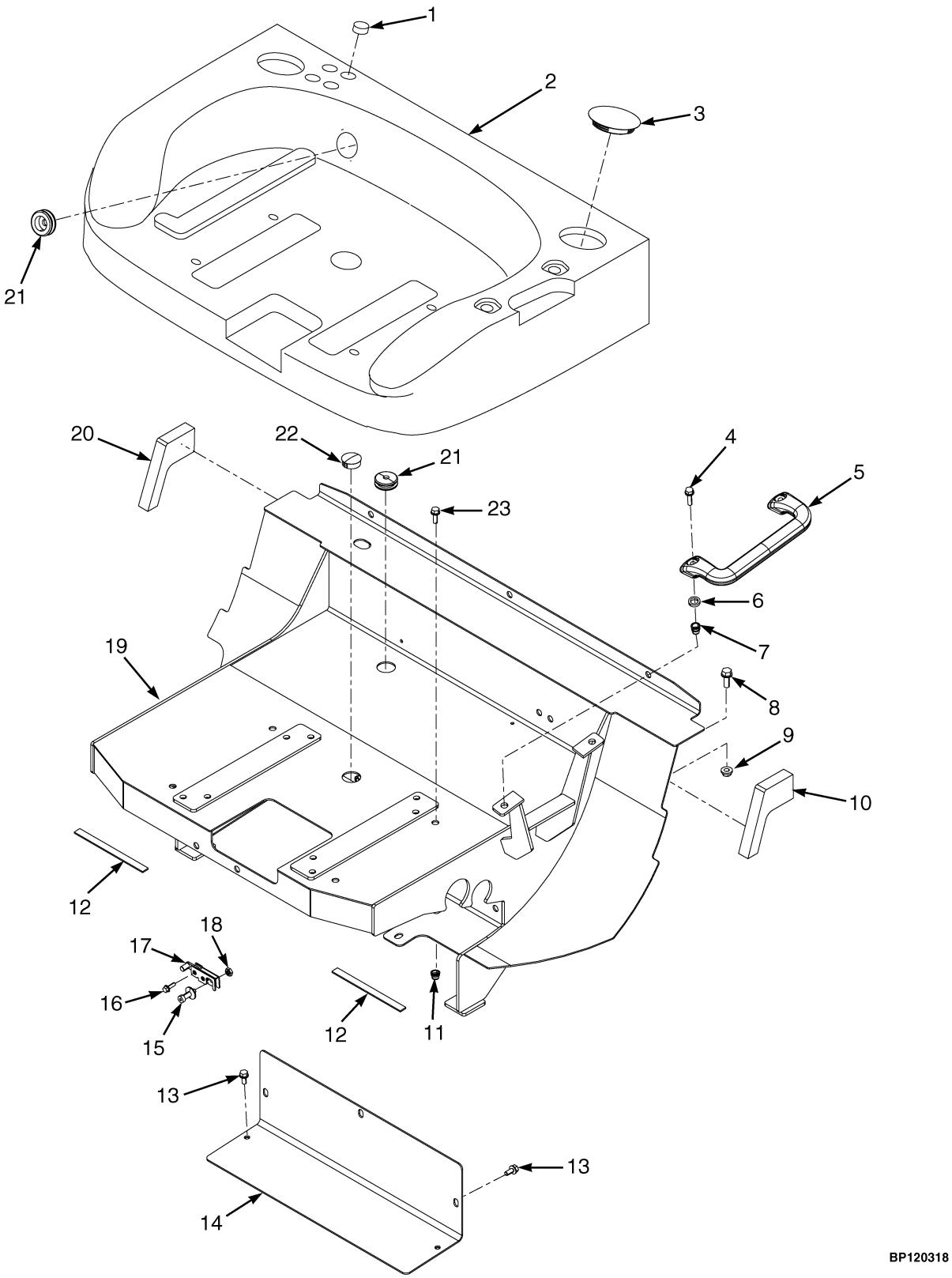

©2014 Yale Materials Handling Corporation

SEAT PAN AND COVERS

KEY:
A: With Cab
B: Without Cab

ITEM	PART NO.	DESCRIPTION	QTY A	QTY B
1	580083001	Insert	4	..
2	**a** 580077811	Cover (Seat Surround)	1	..
2	**b** 580077812	Cover (Seat Surround)	..	1
2	524260440	Plug	1	1
3	925776402	Cap	1	1
4	580058269	Capscrew	2	2
5	580056526	Handle (Grab)	1	1
6	580078134	Spacer	2	2
7	580044860	Insert	2	2
8	580064483	Capscrew	4	4
9	580058191	Nut	4	4
10	580067605	Seal (LH)	1	1
11	580044861	Insert	9	9
12	580078131	Seal	2	2
13	580065022	Capscrew	3	5
14	580077522	Cover	1	..
14	580077523	Cover	..	1
15	580064981	Striker Bolt	1	1
16	580039438	Capscrew	2	2
17	580064982	Latch	1	1
18	580008580	Nut	1	1
19	580082436	Seat Pan	1	1
20	580067606	Seal (RH)	1	1
21	580051832	Grommet	2	2
21	582014835	Grommet (Alternate Part)	2	2
22	**c** 580058137	Plug	2	2
22	**d** 580058137	Plug	1	1
23	580056815	Capscrew	20	20

FOOTNOTES:

a With Cab
b With Overhead Guard
c With Swivel Seat
d Without Swivel Seat

©2014 Yale Materials Handling Corporation

FLOORPLATES AND COVERS (FIGURE 1-4)

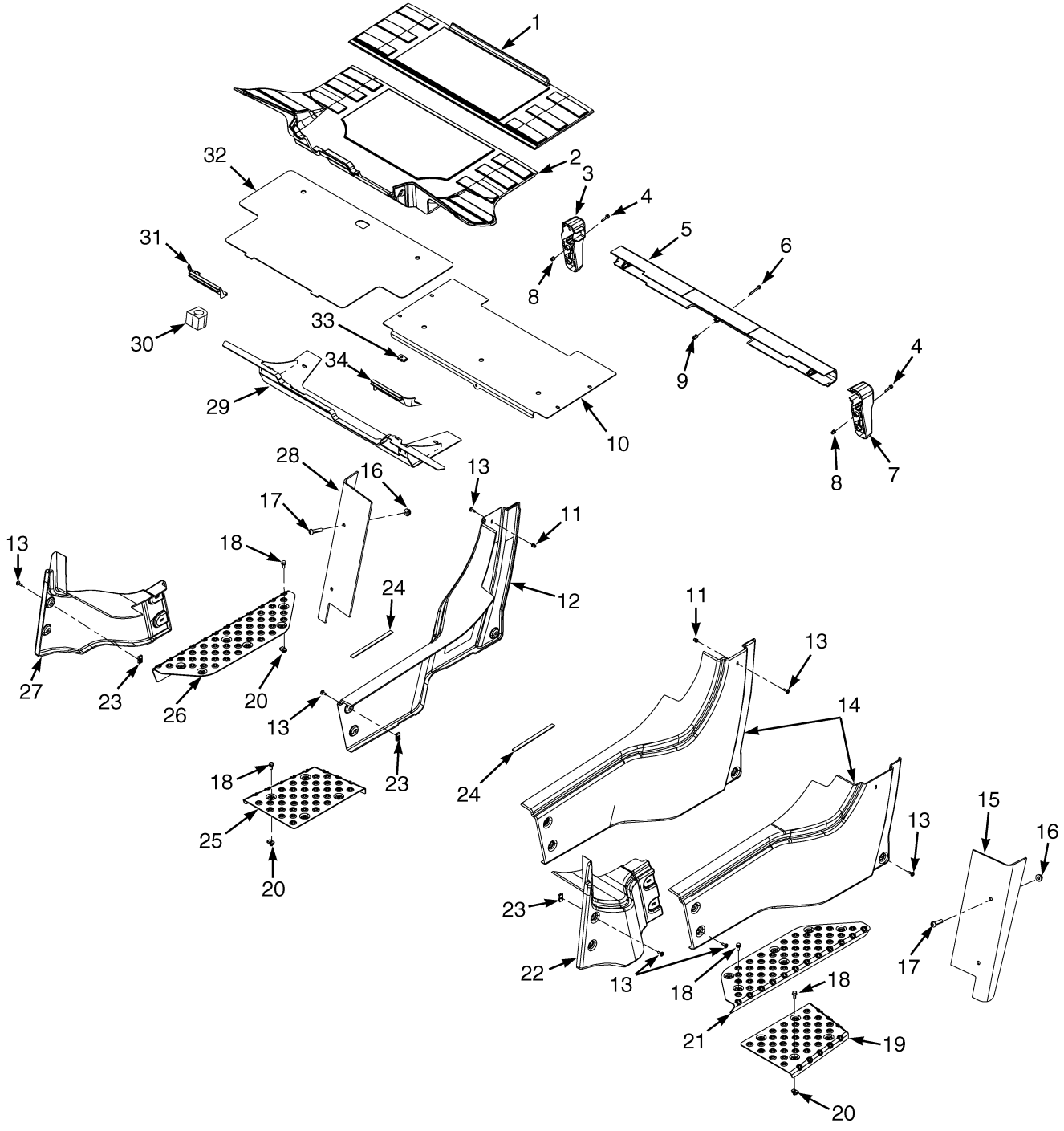

©2014 Yale Materials Handling Corporation

FLOORPLATES AND COVERS

KEY:
A: Without Cab
B: With Cab

ITEM	PART NO.	DESCRIPTION	QTY A	QTY B
1	580077409	Floormat (Rear)	1	1
2	580077408	Floormat (Front)	1	1
3	**d** 580037206	Tail Light Base (RH)	1	1
3	**e** 580092936	Tail Light Base (RH)	1	1
4	580058212	Capscrew	4	4
5	580048573	Cover (Rear Crossmember)	1	1
6	580041711	Capscrew	3	3
7	**d** 580037205	Tail Light Base (LH)	1	1
7	**e** 580092937	Tail Light Base (LH)	1	1
8	580041704	Insert	4	4
9	580044859	Insert	3	3
10	580082371	Floorplate (Rear)	1	1
11	580041704	Insert	2	2
12	**a** 524274772	Cover (RH) (Rear)	1	..
12	**b** 524274773	Cover (RH) (Rear)	1	..
12	**a** 524274778	Cover (RH) (Rear)	..	1
12	**b** 524274777	Cover (RH) (RH) (Rear)	..	1
13	580056530	Screw	12	12
14	524274771	Cover (LH) (Rear)	1	..
14	524274776	Cover (LH) (Rear)	..	1
15	**c** 524260530	Plate	1	1
16	**c** 580058192	Nut	4	4
17	**c** 932731910	Capscrew	4	4
18	580065022	Capscrew	10	10
19	524246347	Plate (Lower LH Tread)	1	1
20	580026621	Nut	23	33
21	524246345	Plate (Upper LH Tread)	1	1
22	524274774	Cover	..	1
23	504225257	Nut	10	10
24	580078132	Seal	2	2
25	524246348	Plate (Lower RH Tread) (RH)	1	1
26	524246346	Plate (Upper RH Tread)	1	1
27	524274775	Cover	..	1
28	524260531	Plate	1	1
29	580064839	Floorplate	1	1
30	580038033	Grommet	1	1
31	580076408	Seal (RH)	1	1
32	580064968	Floorplate	1	1
33	580012987	Nut	8	8
34	580076407	Seal (LH)	1	1

FOOTNOTES:

a GM 4.3L Gasoline and Cummins 3.3L Diesel
b GM 4.3L LPG
c → S/N D878V01651G
d → S/N D878V01669G
e S/N D878V01670G →

©2014 Yale Materials Handling Corporation

COMPARTMENT PLATFORM (FIGURE 1-5)

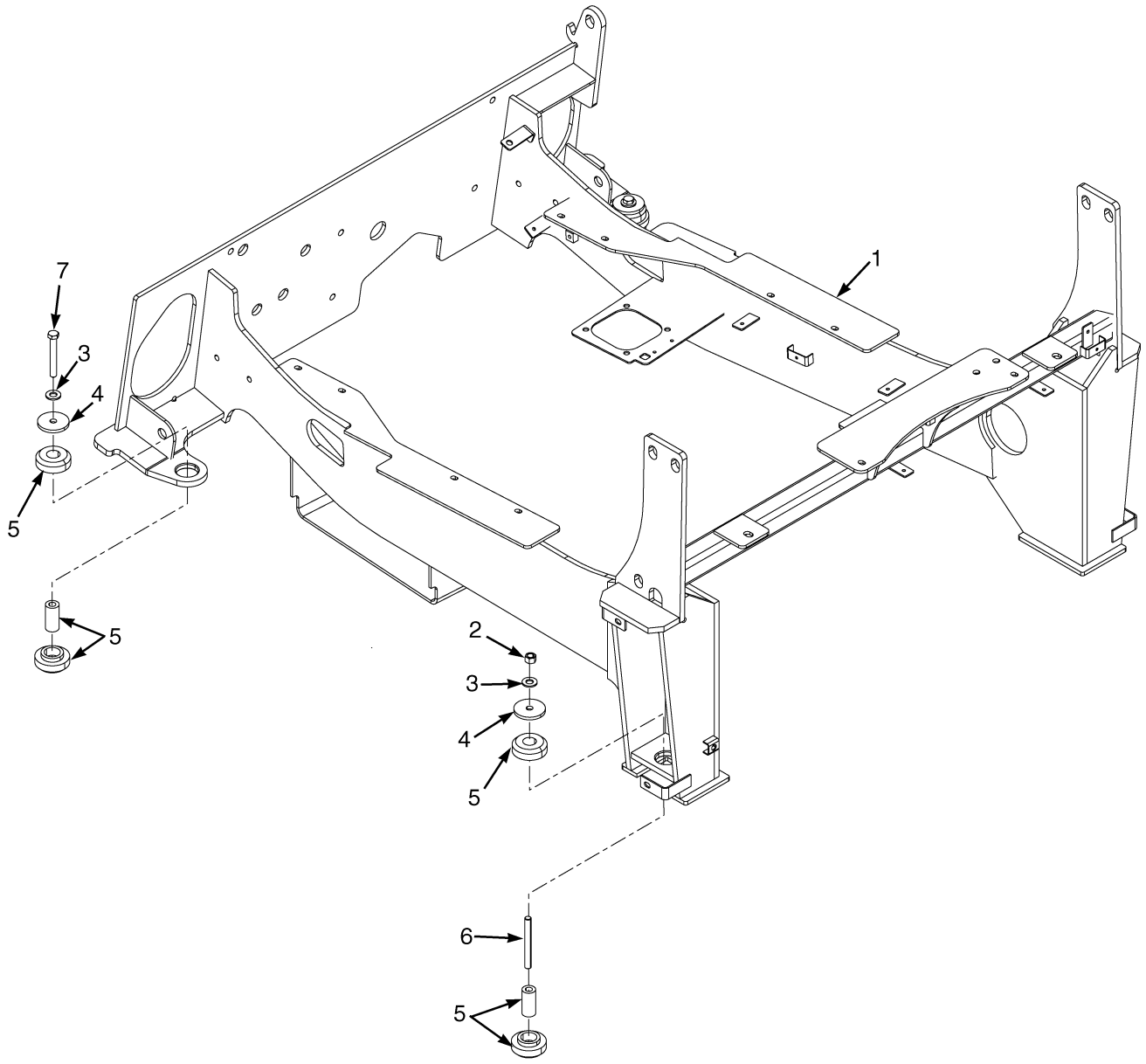

©2014 Yale Materials Handling Corporation

COMPARTMENT PLATFORM

ITEM	PART NO.	DESCRIPTION	QTY
1	**a** 524251262	Module	1
1	**b** 524337907	Operator Module	1
2	909882405	Nut	2
3	504233271	Washer	4
4	505966562	Washer	4
5	580082448	Isolator	4
6	504323759	Stud	2
7	931015915	Capscrew	2

FOOTNOTES:

a → S/N D878V01650G

b S/N D878V01651G →

©2014 Yale Materials Handling Corporation

OVERHEAD GUARD (FIGURE 1-6)

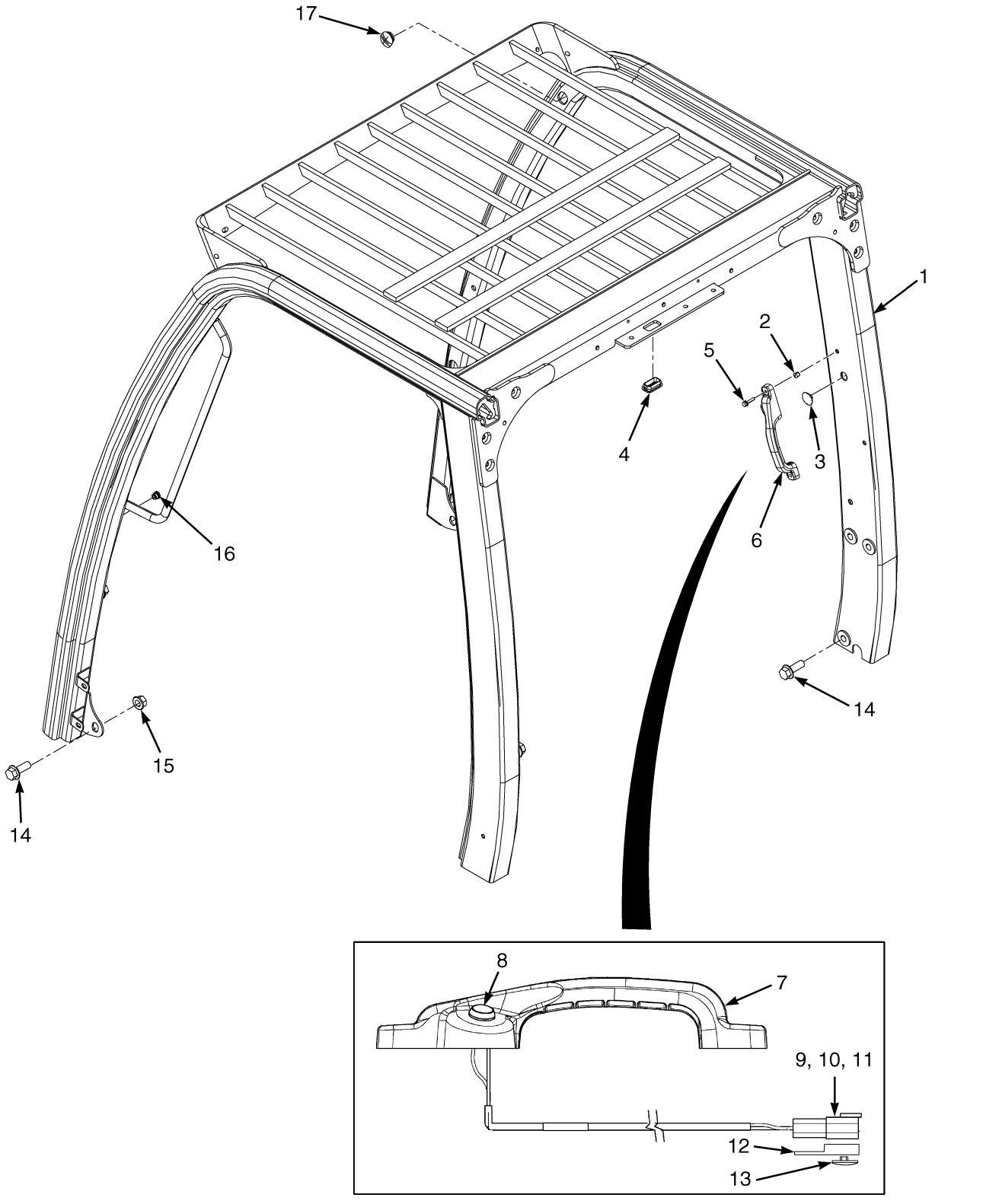

©2014 Yale Materials Handling Corporation

OVERHEAD GUARD

ITEM	PART NO.	DESCRIPTION	QTY
1	524294779	Overhead Guard	1
2	258979300	Plug	4
3	524240692	Plug	1
4	524208883	Grommet	1
5	**b** 580058212	Capscrew	2
6	**b** 580051747	Handle (Assembly) (Alternate Horn Button)	1
7	580050959	Handle	1
8	580058447	Push Button Switch	1
9	580022893	Connector (2 Pin)	1
10	505968540	Connector (Secondary Lock)	1
11	505968514	Terminal (Pin)	2
12	**b** 580026812	Clip	1
13	**b** 580056613	Fastener	1
14	580066681	Capscrew	10
15	580058194	Nut	2
16	580044861	Insert	2
17	524201323	Grommet	2
	a 580083174	Grommet	1

FOOTNOTES:

a Not Illustrated

b Optional

©2014 Yale Materials Handling Corporation

SOUND ABATEMENT (FIGURE 1-7)
DIESEL

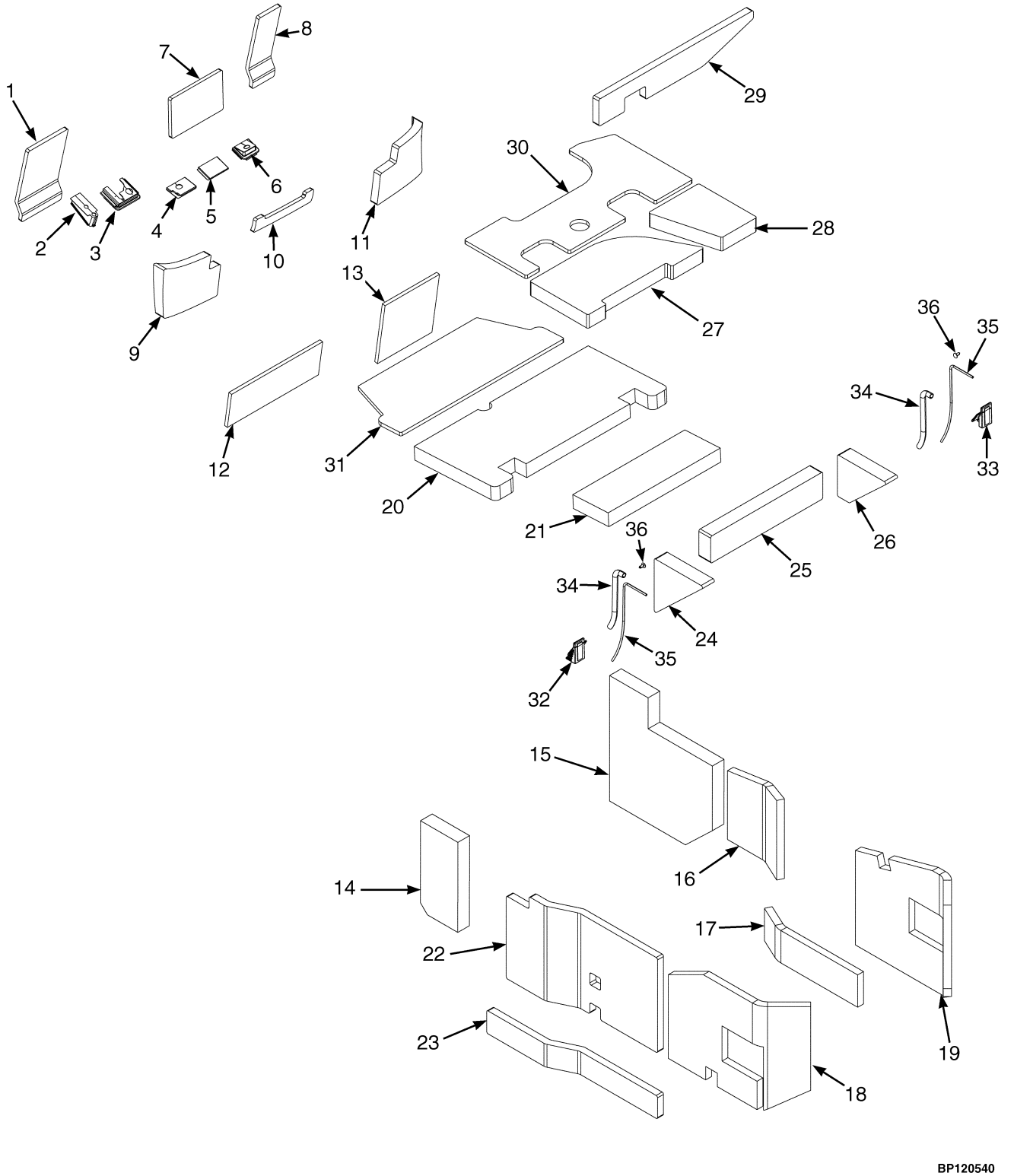

©2014 Yale Materials Handling Corporation

SOUND ABATEMENT
DIESEL

KEY:
A: Cab
B: Overhead Guard

ITEM	PART NO.	DESCRIPTION	QTY A	QTY B
1	580078726	Sound Liner (Cowl Plate)	1	1
2	**cd** 580059607	Seal	1	..
3	**cd** 580046349	Seal	1	..
4	**c** 580046392	Seal	1	..
5	**c** 580046391	Seal	1	..
6	**c** 580078576	Seal	1	..
7	580068007	Sound Liner	1	1
8	580078727	Sound Liner (Cowl Plate)	1	1
9	580068081	Sound Liner (Dash) (LH)	1	1
10	580067860	Sound Liner	1	1
11	580068080	Sound Liner (Foam) (RH)	1	1
12	580091418	Sound Liner (Frame Cowl)	1	1
13	580091415	Sound Liner (Frame Cowl)	1	1
14	580091413	Sound Liner (LH)	..	1
15	580091419	Sound Liner (RH)	..	1
16	580091631	Sound Liner (RH)	..	1
17	580091630	Sound Liner (RH)	..	1
18	580093066	Sound Liner (LH)	..	1
19	580093813	Sound Liner (RH)	..	1
20	580091416	Sound Liner (Rear Floor Plate)	..	1
21	580091417	Sound Liner (Cover Plate)	..	1
22	580078728	Sound Liner (LH) (Frame)	1	1
23	580078729	Sound Liner (LH) (Frame)	1	1
24	580078739	Sound Liner (Seat Support LH)	1	1
25	580078737	Sound Liner	1	1
26	580078738	Sound Liner (Seat Support RH)	1	1
27	580078735	Sound Liner	1	1
28	580078736	Sound Liner	1	1
29	580078734	Sound Liner	1	1
30	580078740	Sound Liner (Seat Pan)	1	1
31	580078733	Sound Liner (Front Floor Plate)	1	1
32	580083106	Plug (LH)	1	..
33	580083107	Plug (RH)	1	..
34	580085401	Seal	2	..
35	580085400	Seal	2	..
36	580003442	Fastener	2	..
	ab 580093812	Sound Liner	2	2

FOOTNOTES:

a Inside Top of Module Plate
b Not Illustrated
c With Electronic Hydraulics
d With Manual Hydraulics

©2014 Yale Materials Handling Corporation

SOUND ABATEMENT (FIGURE 1-8)
GASOLINE AND LPG

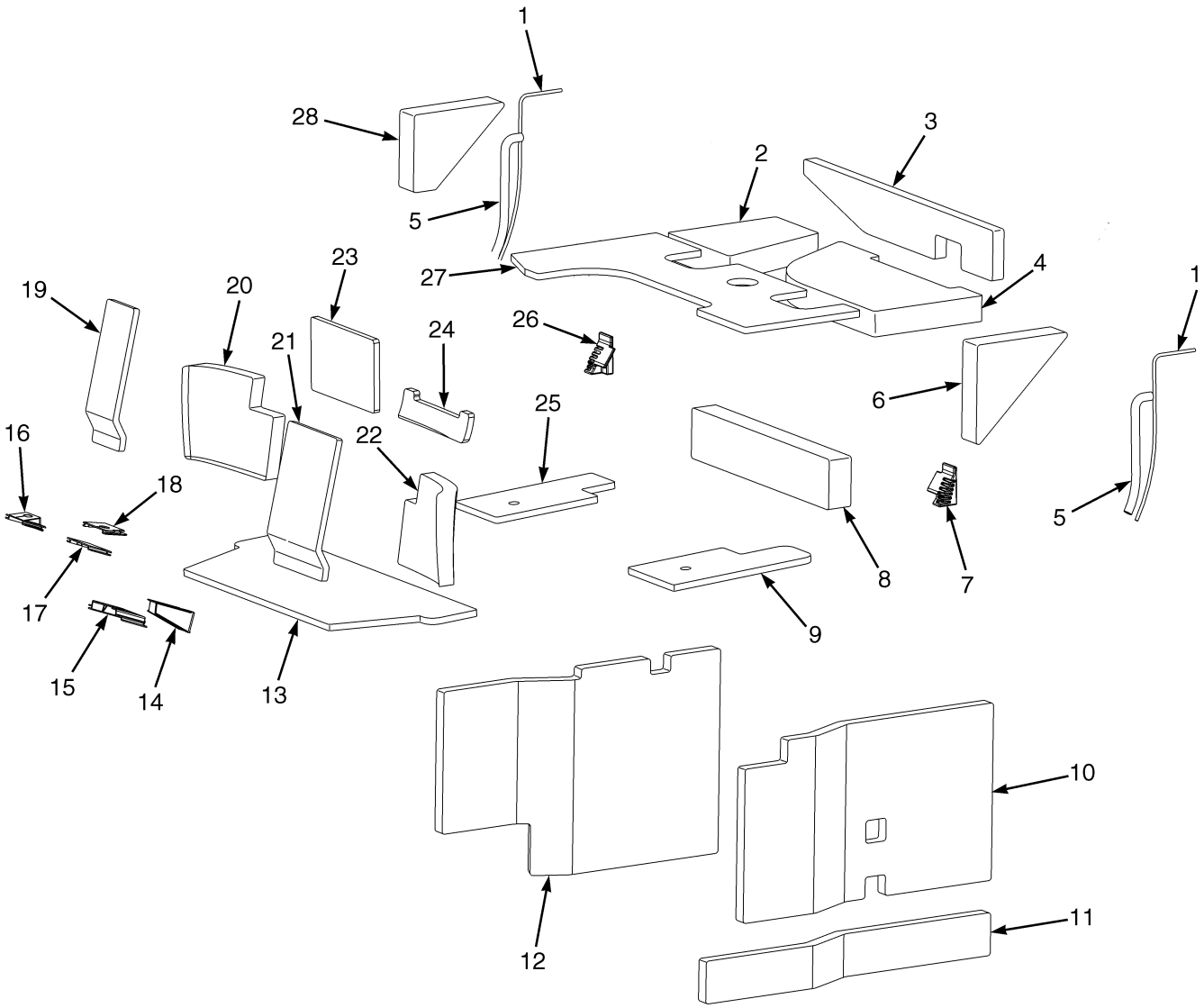

©2014 Yale Materials Handling Corporation

SOUND ABATEMENT
GASOLINE AND LPG

ITEM	PART NO.	DESCRIPTION	QTY
1	580085400	Seal	2
2	580078736	Sound Liner (Seat Support)	1
3	580078734	Sound Liner (Seat Support)	1
4	580078735	Sound Liner (Seat Support)	1
5	580085401	Seal	2
6	580078739	Sound Liner (Seat Support LH) (Seat Support LH)	1
7	580083106	Plug (LH)	1
8	580078737	Sound Liner	1
9	580078731	Sound Liner (Rear Floorplate)	1
10	580078728	Sound Liner (LH) (Frame)	1
11	580078729	Sound Liner (LH) (Frame)	1
12	580078730	Sound Liner (RH) (Frame)	1
13	580078733	Sound Liner (Front Floor Plate) (Front Floorplate)	1
14	580059607	Seal	1
15	580046349	Seal	1
16	**c** 580078576	Seal	1
17	**c** 580046391	Seal	1
18	**c** 580046392	Seal	1
19	580078727	Sound Liner (Cowl Plate) (Cowl Plate)	1
20	580068080	Sound Liner (Foam) (RH) (Dash)	1
21	580078726	Sound Liner (Cowl Plate) (Cowl Plate)	1
22	580068081	Sound Liner (Dash) (LH) (Dash)	1
23	580068007	Sound Liner	1
24	580067860	Sound Liner	1
25	580078732	Sound Liner (Rear Floorplate)	1
26	580083107	Plug (RH)	1
27	580078740	Sound Liner (Seat Pan)	1
28	580078738	Sound Liner (Seat Support RH) (Seat Support RH)	1
	ab 580093812	Sound Liner	2

FOOTNOTES:

a Inside Top of Module Plate
b Not Illustrated
c With Electronic Hydraulics

©2014 Yale Materials Handling Corporation

COWL MOUNT (FIGURE 1-9)

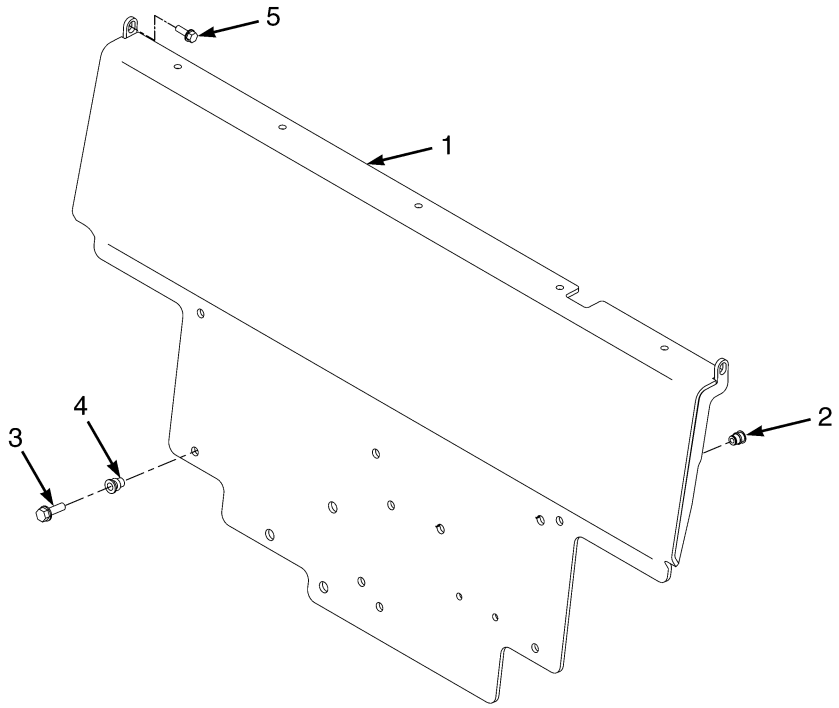

BP120323

ITEM	PART NO.	DESCRIPTION	QTY
1	524316721	Cowl	1
2	580044860	Insert	2
3	580058270	Capscrew	6
4	580074879	Insert	6
5	580056815	Capscrew	2

©2014 Yale Materials Handling Corporation

NOTES

©2014 Yale Materials Handling Corporation

COUNTERWEIGHTS AND FENDERS (FIGURE 1-10)

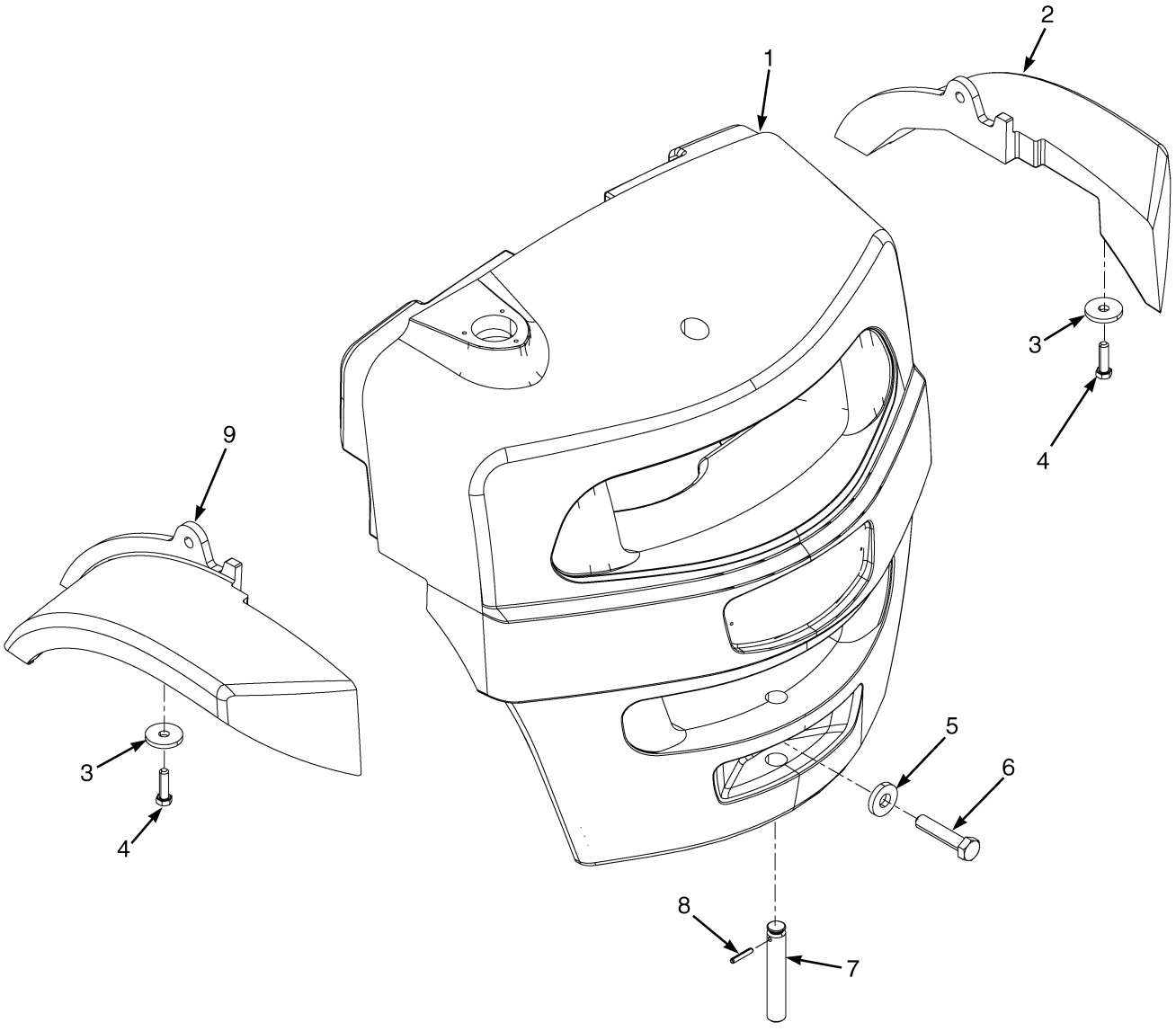

©2014 Yale Materials Handling Corporation

COUNTERWEIGHTS AND FENDERS

ITEM	PART NO.	DESCRIPTION	QTY
1	524246838	Counterweight (135VX)	1
1	524246839	Counterweight (155VX)	1
2	524246841	Fender (RH)	1
3	580003869	Washer	4
4	449001452	Capscrew	4
5	580053098	Washer	1
6	931011916	Capscrew	1
7	580082445	Tow Pin	1
8	449034061	Roll Pin	1
9	524246840	Fender (LH)	1

©2014 Yale Materials Handling Corporation

CAB (FIGURE 1-11)
MAIN ASSEMBLY

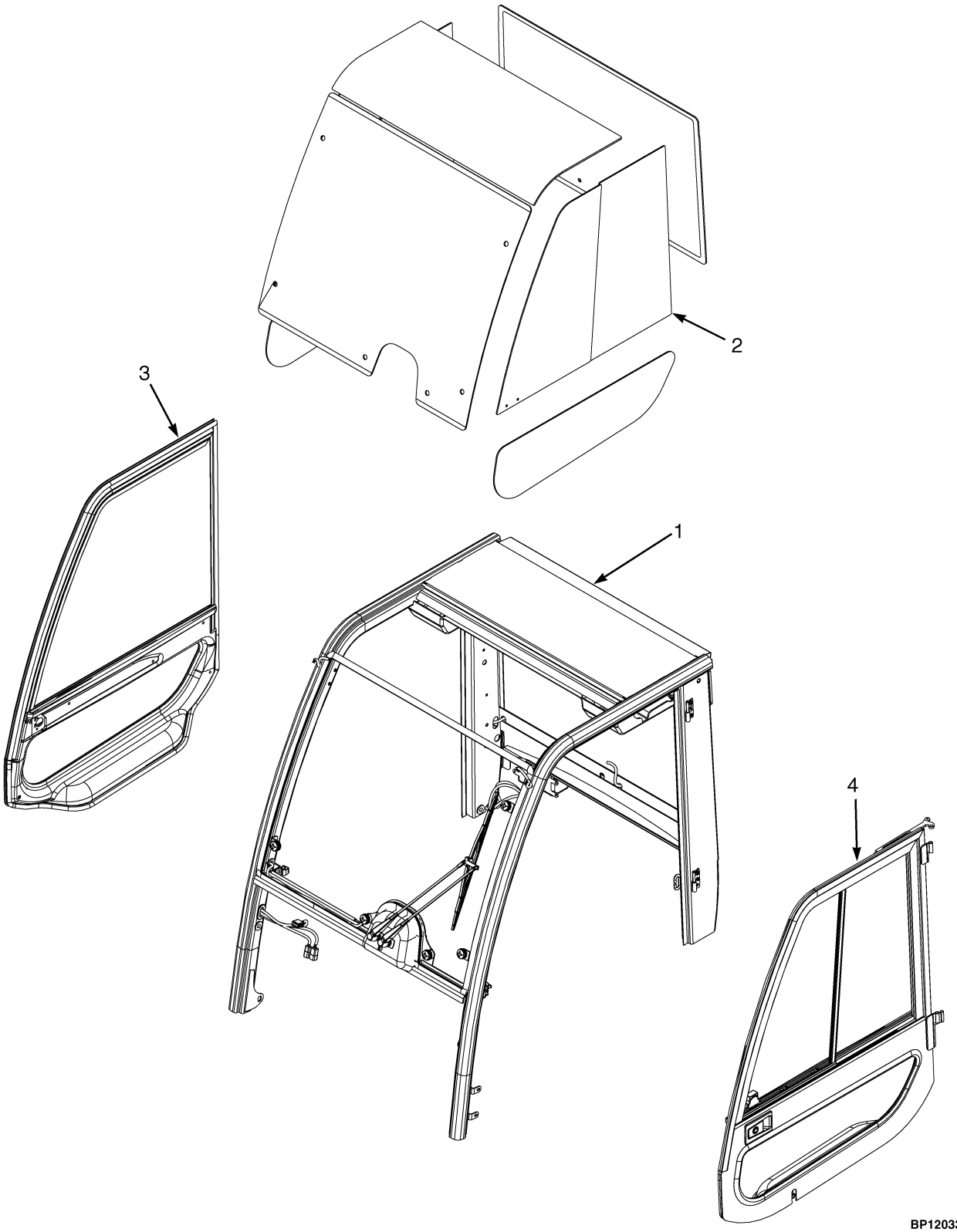

©2014 Yale Materials Handling Corporation

CAB
MAIN ASSEMBLY

ITEM	PART NO.	DESCRIPTION	QTY
1	524305879	Cab (☞P20129 [Page 1-26], ☞P20140 [Page 1-28], ☞P20142 [Page 1-32])	1
2	. . . . .	Cab Glass	1
3	524291223	Door (RH) (☞P20144 [Page 1-36])	1
4	524291221	Door (LH) (☞P20143 [Page 1-34])	1

©2014 Yale Materials Handling Corporation

CAB (FIGURE 1-12)
ATTACHING PARTS — SHEET 1 OF 2

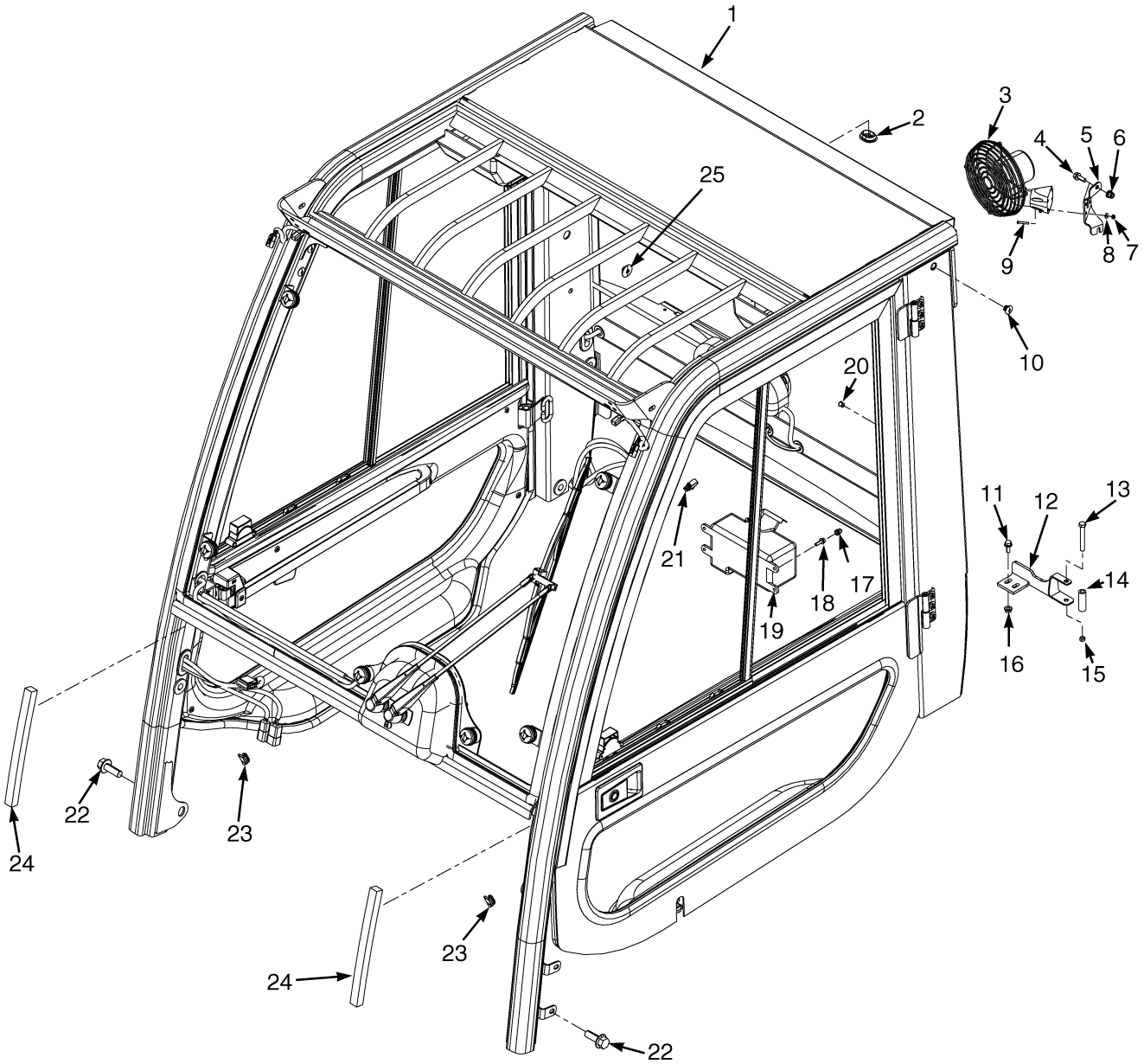

©2014 Yale Materials Handling Corporation

CAB

ATTACHING PARTS – SHEET 1 OF 2

ITEM	PART NO.	DESCRIPTION	QTY
1	524305879	Cab (With Steel Doors)	1
2	524201323	Grommet	1
3	580026712	Fan Assembly	1
4	580056815	Capscrew	2
5	580066767	Bracket	1
6	580044861	Insert	2
7	449015012	Nut	1
8	449022019	Lockwasher	4
9	580051168	Screw	4
10	580090886	Hole Plug	8
11	580049231	Capscrew	4
12	580084646	Striker	2
13	580084758	Bolt	2
14	580077852	Hose Assy	2
15	580055861	Nut	2
16	580027573	Nut (Flange)	4
17	580041704	Insert	4
18	580039438	Capscrew	4
19	580077853	Reservoir	1
19	580081898	Cap	1
19	580096037	Pump (Windshield Washer, 12V)	1
20	258979300	Plug	4
21	580039799	Clip	1
22	449001400	Capscrew	10
23	580059127	Seal	2
24	582018586	Seal	2
25	524240692	Plug	1

©2014 Yale Materials Handling Corporation

CAB (FIGURE 1-13)
ATTACHING PARTS — SHEET 2 OF 2

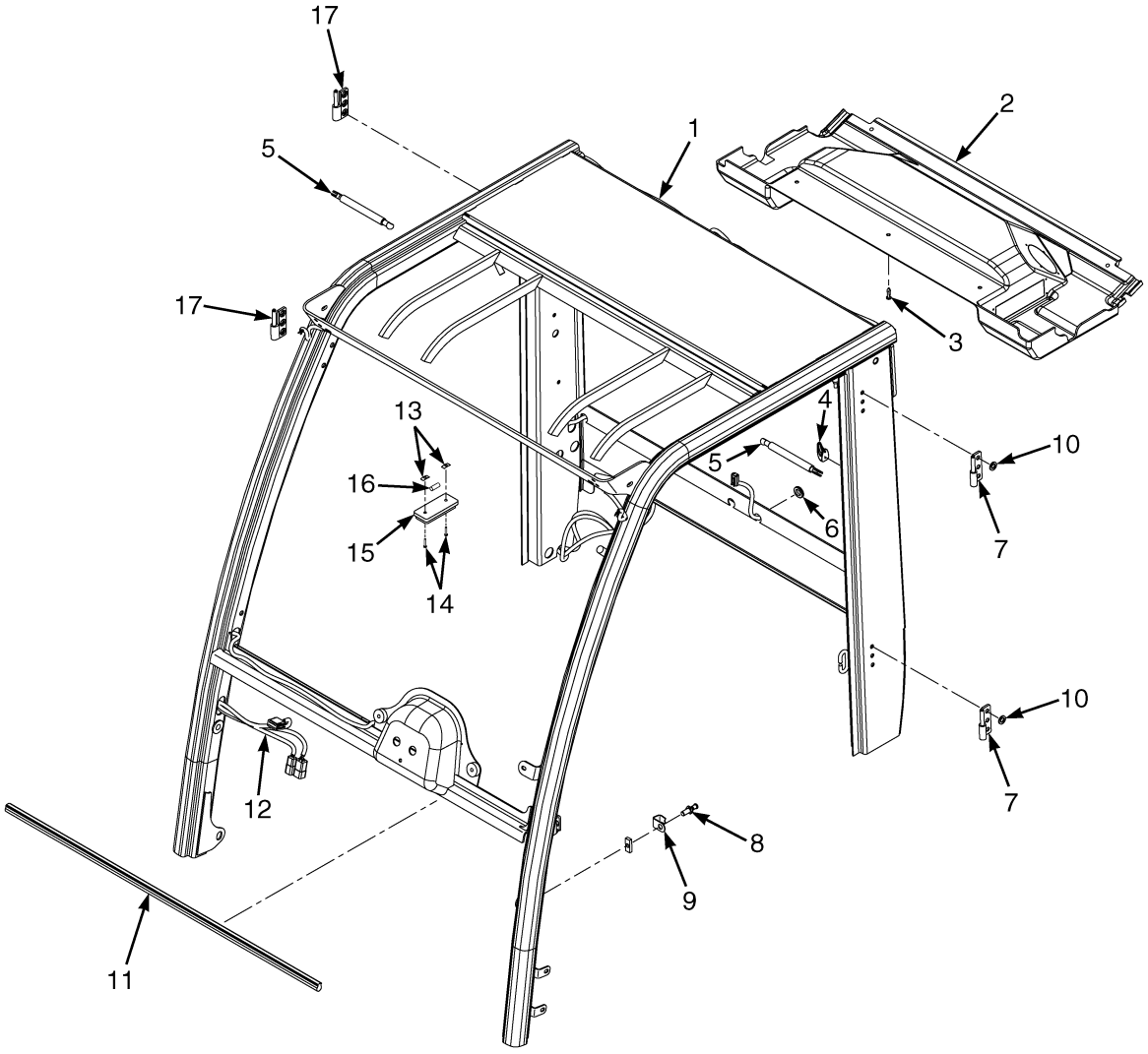

©2014 Yale Materials Handling Corporation

CAB

ATTACHING PARTS – SHEET 2 OF 2

ITEM	PART NO.	DESCRIPTION	QTY
	524305879	Cab	1
1	. . . . .	Cab Frame	1
2	580080814	Headliner	1
3	580015531	Insert	5
4	580077071	Coat Hook	1
5	580080815	Gas Spring	2
5	582015922	Gas Spring (Alternate Part)	2
6	580014787	Grommet	3
7	524281926	Hinge	2
8	580080812	Bolt	2
9	580088184	Striker	2
10	520042832	Washer	12
11	580077087	Seal (Front Cowl)	1
12	580077088	Wire Harness (Cab)	1
13	580077643	Fastener	2
14	580021628	Screw	2
15	580014801	Dome Light	1
16	580014800	Bulb	1
17	524281927	Hinge	2
	a 580015530	Block	1
	a 580080860	Plug (Head Liner)	2
	a 582015924	Ball Stud (for Gas Spring)	2

FOOTNOTES:

a Not Illustrated

©2014 Yale Materials Handling Corporation

CAB (FIGURE 1-14)
WINDOWS

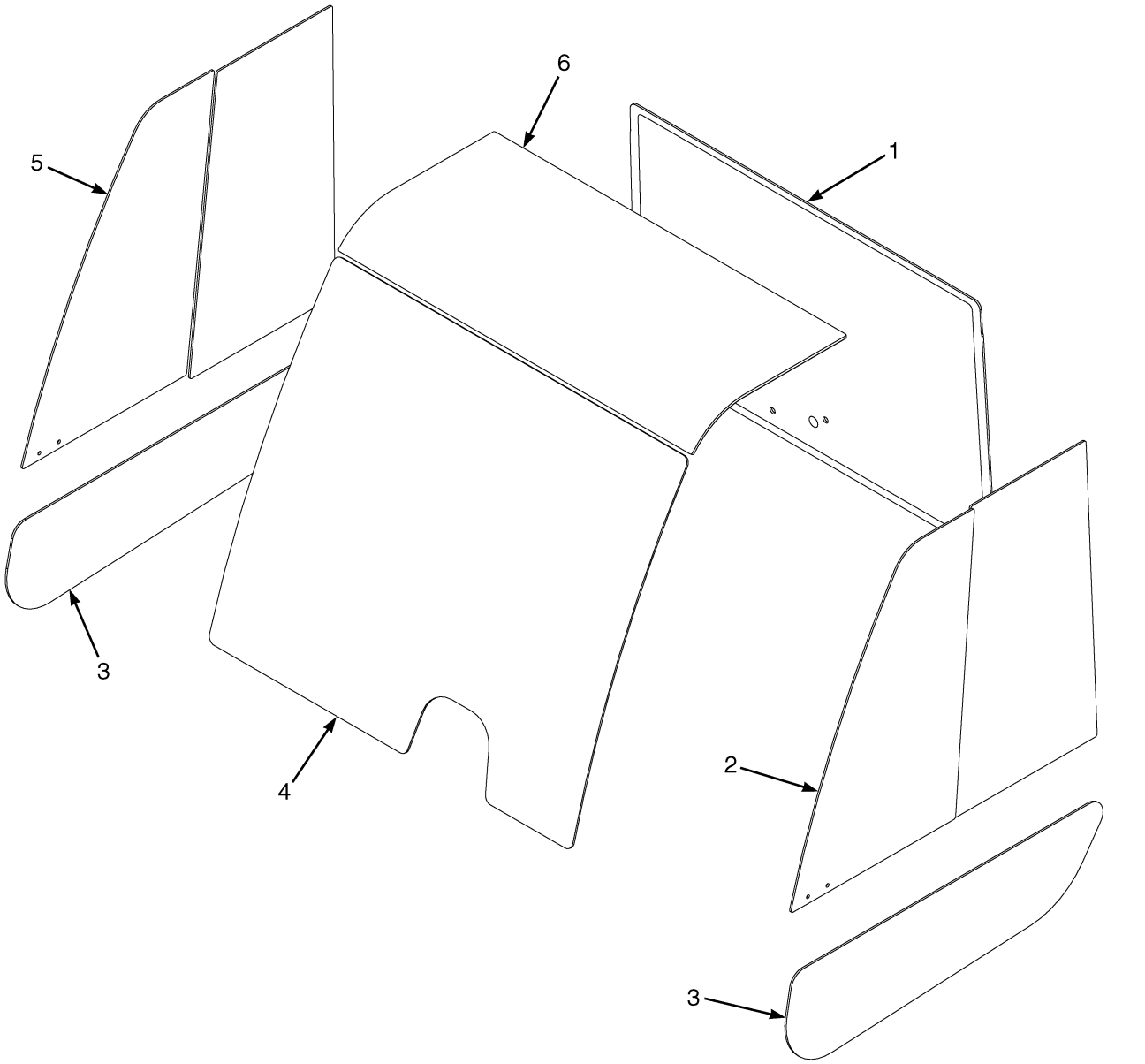

©2014 Yale Materials Handling Corporation

CAB
WINDOWS

ITEM	PART NO.	DESCRIPTION	QTY
1	580080876	Window (Rear)	1
2	580080871	Sliding Window (LH Slider)	1
2	~~580093701~~		
	580093700	Latch	1
2	582016712	Kit-Repair Sliding Window (LH)	1
2	582001907	Screw	2
2	582006686	Strip (Plastic)	1
3	580080872	Window (Lower Door)	2
4	580094090	Front Window	1
5	580080874	Sliding Window (RH Slider)	1
5	~~580093701~~		
	580093700	Latch	1
5	582016711	Kit-Repair Sliding Window (RH)	1
5	582001907	Screw	2
5	582006686	Strip (Plastic)	1
6	580077141	Window (Top)	1
6	580087148	Foam Lining (Top Window)	1
	580027947	Kit-Glue	1
	580027279	Activator	1
	580027280	Adhesive	1
	a 582028994	Felt	1

FOOTNOTES:

a Not Illustrated

©2014 Yale Materials Handling Corporation

CAB (FIGURE 1-15)
WINDOW WIPER SYSTEM

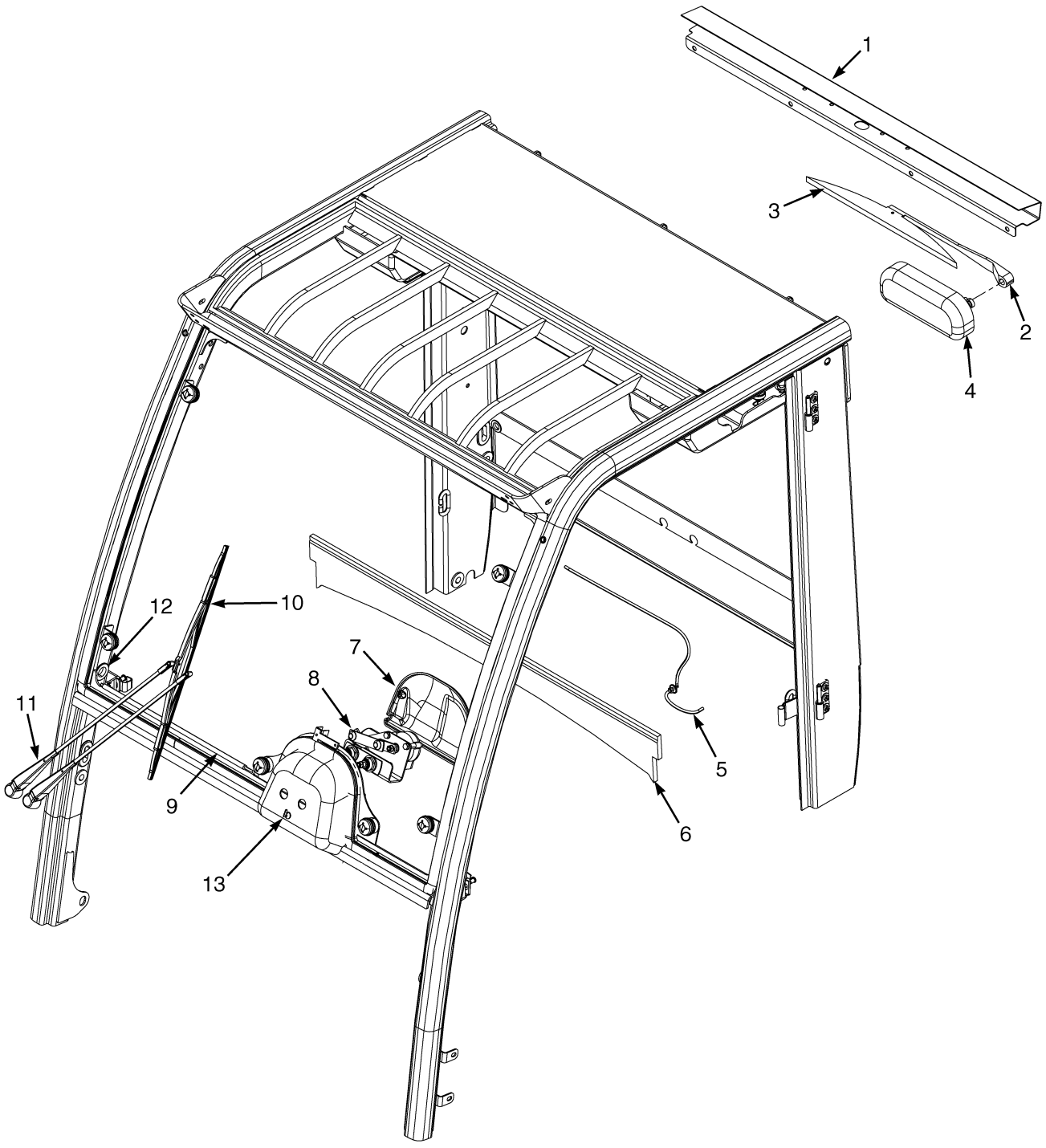

©2014 Yale Materials Handling Corporation

CAB
WINDOW WIPER SYSTEM

ITEM	PART NO.	DESCRIPTION	QTY
	524305879	Cab	1
1	580080809	Cover (Tail Light)	1
2	580014779	Wiper Arm (Rear)	1
3	580080819	Wiper Blade (Rear)	1
4	580080810	Wiper Motor (Rear)	1
5	580080818	Hose	1
6	580080813	Trim (Rear)	1
7	580077069	Cover (Without A/C) (Front Wiper)	1
8	580069797	Wiper Motor (Without A/C) (Front)	1
9	580080816	Trim (Front Window)	1
10	580014763	Wiper Blade (Front) (Front)	1
11	580069796	Wiper Arm (Front)	1
12	580015529	Grommet	1
13	580077072	Connector	2
	a 580077095	Connector (washer hose)	1

FOOTNOTES:

a Not Illustrated

©2014 Yale Materials Handling Corporation

CAB (FIGURE 1-16)
LEFT HAND DOOR ASSEMBLY

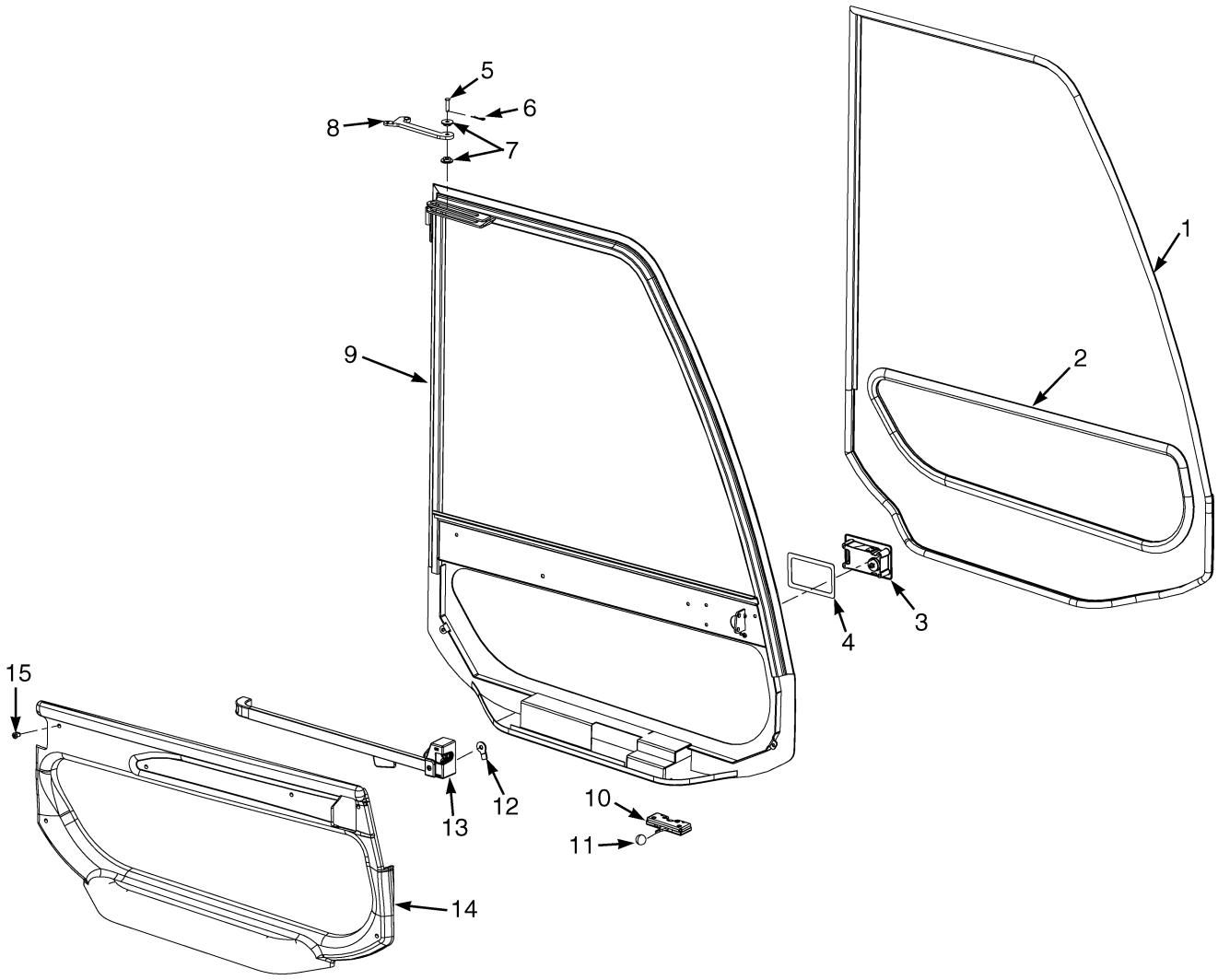

©2014 Yale Materials Handling Corporation

CAB
LEFT HAND DOOR ASSEMBLY

ITEM	PART NO.	DESCRIPTION	QTY
	524291221	Door (LH)	1
1	580080857	Seal	1
2	580080858	Seal	1
3	580077099	Latch (Door)	1
4	580077100	Seal (Door Latch)	1
5	. . . . .	Pin	1
6	. . . . .	Cotter Pin	1
7	580090219	Bushing	1
8	580080861	Link	1
9	. . . . .	Door (LH)	1
10	580080855	Latch Door Stop	1
11	580080856	Knob	1
12	580077101	Lever (LH Door)	1
13	580014013	Door Handle	1
14	580080859	Panel	1
15	580080860	Plug	5
	a 580015531	Insert	1
	a 520037891	Capscrew	2
	a 580090220	Strap (Door Restraint)	1
	a 580015530	Block	1
	a 580021345	Screw	1
	a 580090494	Door Key	1

FOOTNOTES:

a Not Illustrated

©2014 Yale Materials Handling Corporation

CAB (FIGURE 1-17)
RIGHT HAND DOOR ASSEMBLY

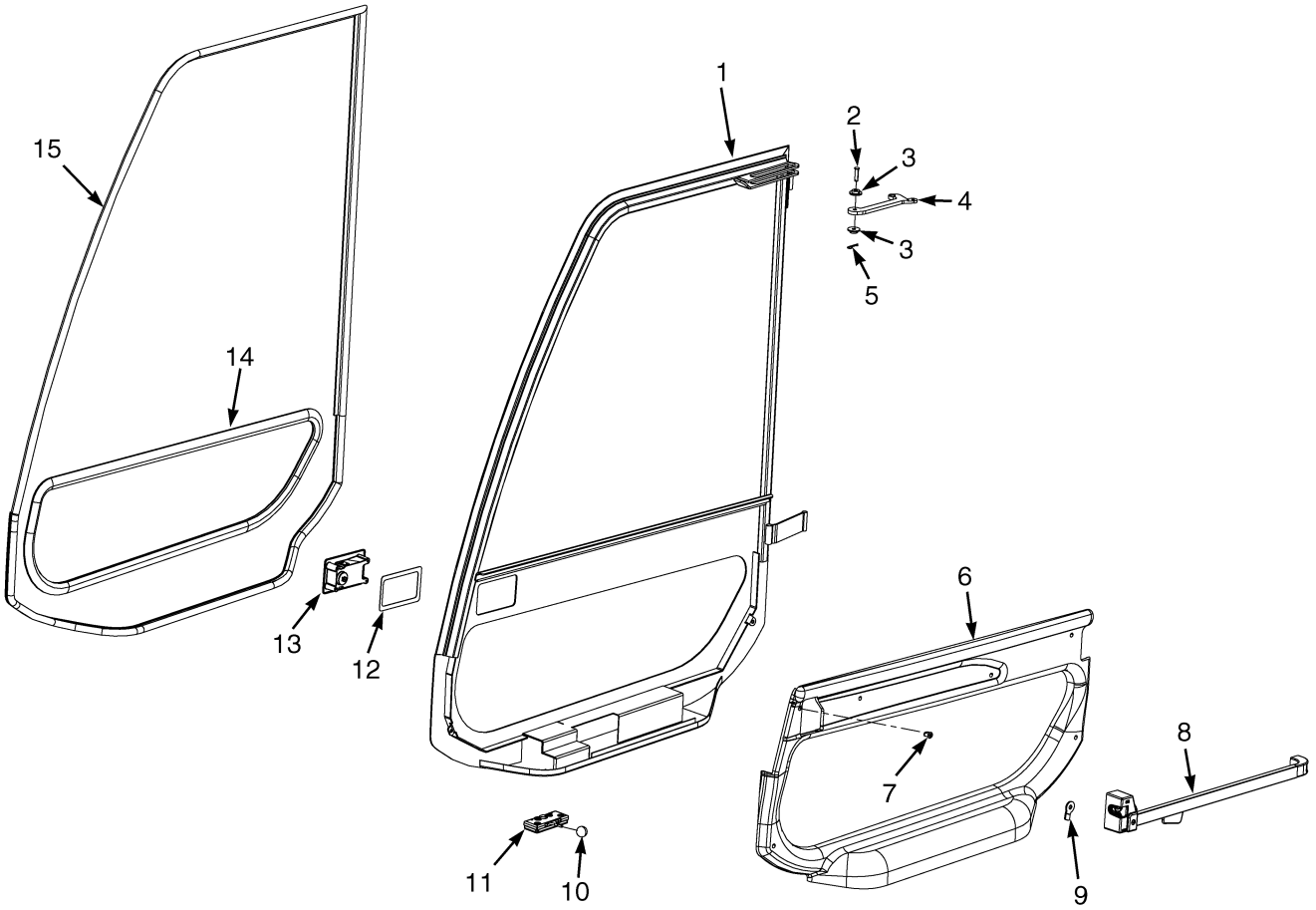

©2014 Yale Materials Handling Corporation

CAB
RIGHT HAND DOOR ASSEMBLY

ITEM	PART NO.	DESCRIPTION	QTY
	524291223	Door (RH)	1
1	. . . . .	Door (RH)	1
2	. . . . .	Pin	1
3	580090219	Bushing	1
4	580080869	Link	1
5	. . . . .	Cotter Pin	1
6	580080867	Panel (RH)	1
7	580080860	Plug	5
8	580014016	Door Handle	1
9	580077101	Lever (LH Door)	1
10	580080856	Knob	1
11	580015530	Block	2
12	580077100	Seal (Door Latch)	1
13	580077099	Latch (Door)	1
14	580080858	Seal	1
15	580080868	Seal	1
	a 580015531	Insert	1
	a 520037891	Capscrew	2
	a 580021345	Screw	1
	a 580090220	Strap (Door Restraint)	1
	a 580015530	Block	2
	a 580090494	Door Key	1

FOOTNOTES:

a Not Illustrated

©2014 Yale Materials Handling Corporation

CAB (FIGURE 1-18)
HEATER AND HOSES — CUMMINS QSB 3.3L DIESEL

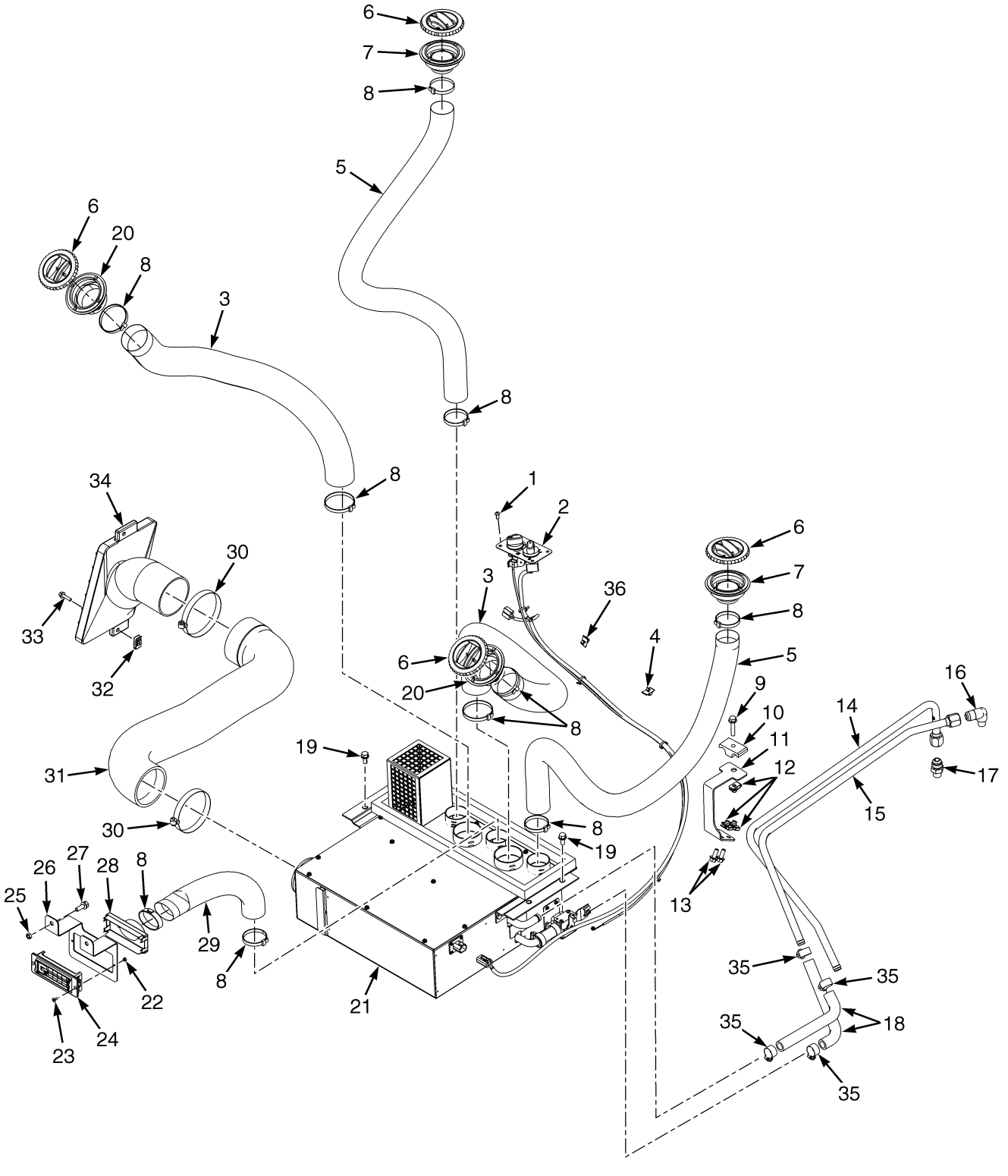

HP121217

©2014 Yale Materials Handling Corporation

CAB

HEATER AND HOSES – CUMMINS QSB 3.3L DIESEL

ITEM	PART NO.	DESCRIPTION	QTY
1	580083871	Capscrew	4
2	580087861	Heater Control (☞P21200 [Page 1-44])	1
3	~~580077687~~		
	582030665	Hose	2
4	580052685	Clip	2
5	580077689	Hose	2
6	580077682	Louver	4
7	580077683	Adapter	2
8	903259104	Strap Clamp	10
9	580030967	Capscrew	1
10	580073148	Hose Clamp (Dual Hose)	1
11	580092998	Bracket	1
12	580026621	Nut	3
13	580049231	Capscrew	2
14	580086609	Tube Assy (Heater Out)	1
15	580086608	Tube Assy (Heater In)	1
16	013378900	37 Deg Flared Ftg	1
17	013378800	Fitting	1
18	580086628	Hose	2
19	580065022	Capscrew	4
20	580077684	Adapter	2
21	580077680	Heater (12V)	1
22	937100903	Nut	2
23	449004063	Screw	2
24	580077685	Vent	1
25	580044861	Insert	2
26	580077688	Bracket	1
27	580056815	Capscrew	2
28	580077690	Adapter (Rectangular)	1
29	~~580077686~~		
	582030666	Hose	1
30	066891800	Clamp	2
31	~~580076488~~		
	582018837	Hose	1
32	504225257	Nut	2
33	580049840	Capscrew	2
34	580076487	Vent	1
35	062159500	Clamp	4
	a 580025570	Fuse (15 Amp) (Heater Fan)	1

FOOTNOTES:

a Not Illustrated

©2014 Yale Materials Handling Corporation

CAB (FIGURE 1-19)
HEATER AND HOSES — GM 4.3L GASOLINE AND LPG

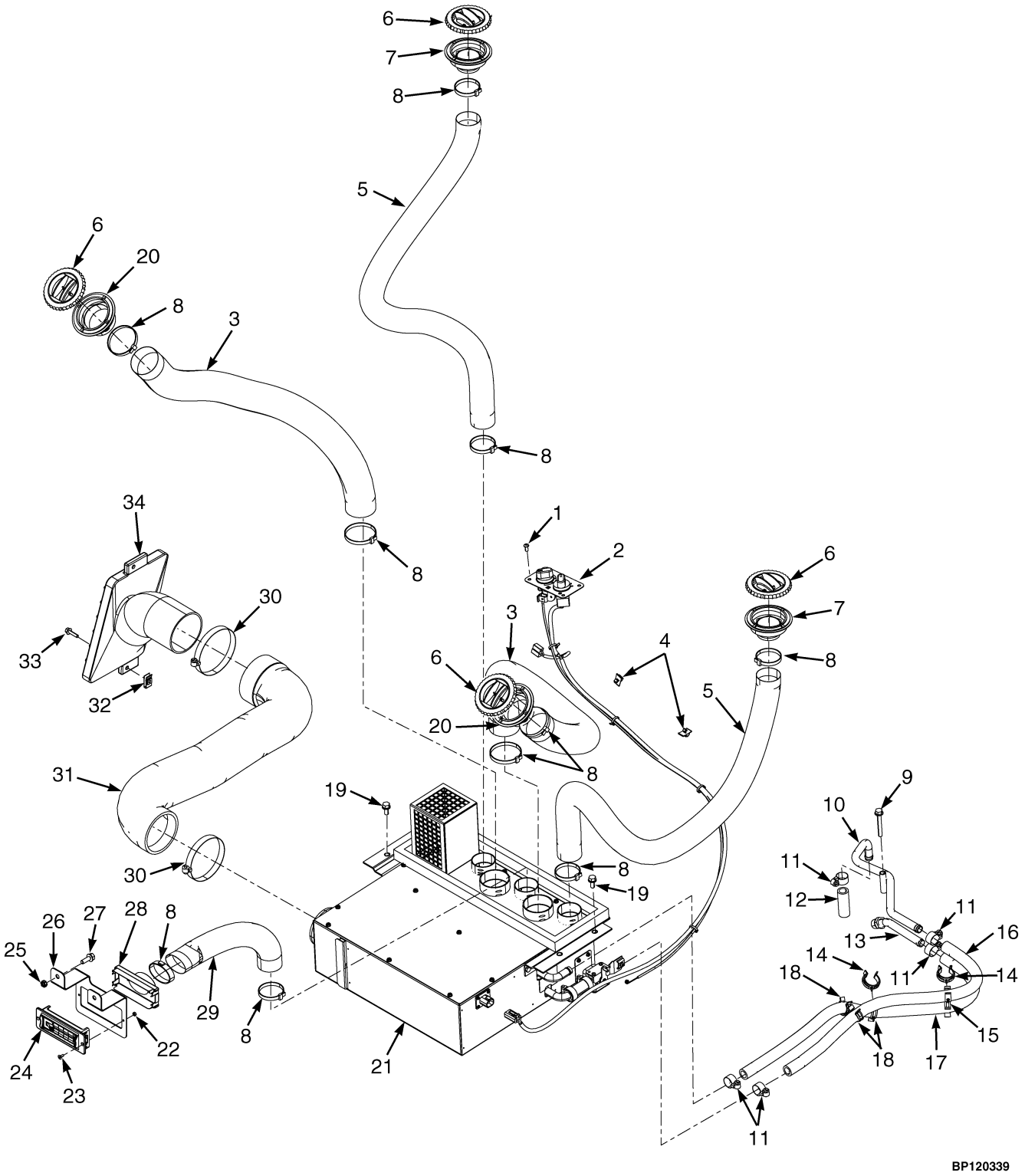

BP120339

©2014 Yale Materials Handling Corporation

CAB

HEATER AND HOSES – GM 4.3L GASOLINE AND LPG

ITEM	PART NO.	DESCRIPTION	QTY
1	580083871	Capscrew	4
2	580087861	Heater Control (☞P21200 [Page 1-44])	1
3	~~580077687~~		
	582030665	Hose (Front)	2
4	580052685	Clip	2
5	580077689	Hose (Rear)	2
6	580077682	Louver	4
7	580077683	Adapter	2
8	903259104	Strap Clamp	10
9	**a** 580030969	Capscrew	1
10	**a** 580050923	Tube	1
11	**a** 062159500	Clamp	5
11	**b** 062159500	Clamp	4
12	**a** 580083872	Hose	1
13	**a** 580072091	Tube	1
14	580049555	Clamp (Swivel)	2
15	580066556	Clamp (Swivel) (GFI Series)	1
16	580076806	Hose (GFI Series)	1
16	580052399	Hose (PSI Series)	1
17	580076807	Hose (GFI Series)	1
17	580082556	Hose (PSI Series)	1
18	580052680	Clamp (Swivel)	4
19	580065022	Capscrew	4
20	580077684	Adapter	2
21	580077680	Heater (12V)	1
22	937100903	Nut	2
23	449004063	Screw	2
24	580077685	Vent	1
25	580044861	Insert	2
26	580077688	Bracket	1
27	580056815	Capscrew	2
28	580077690	Adapter (Rectangular)	1
29	~~580077686~~		
	582030666	Hose	1
30	066891800	Clamp	2
31	~~580076488~~		
	582018837	Hose	1
32	504225257	Nut	2
33	580049840	Capscrew	2
34	580076487	Vent	1
	c 580025570	Fuse (15 Amp) (Heater Fan)	1

FOOTNOTES:

a GM 4.3L Gasoline
b GM 4.3L LPG
c Not Illustrated

©2014 Yale Materials Handling Corporation

CAB (FIGURE 1-20)
HEATER — WITHOUT AIR CONDITIONING

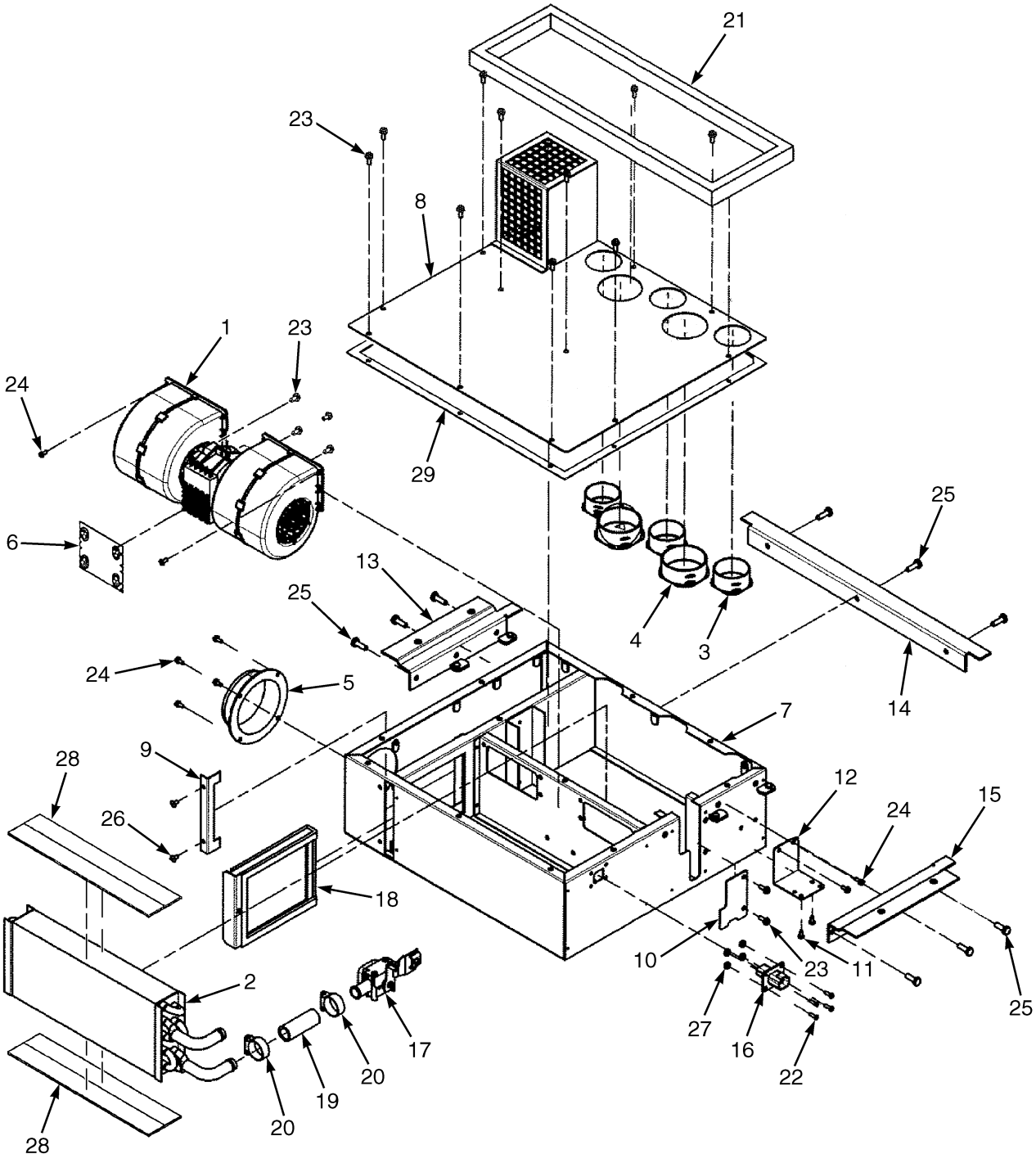

BP121239

©2014 Yale Materials Handling Corporation

CAB

HEATER – WITHOUT AIR CONDITIONING

ITEM	PART NO.	DESCRIPTION	QTY
	580077680	Heater	1
1	580083258	Heater (Blower)	1
2	580083259	Heater (Coil)	1
3	580083260	Adapter (2.0 inch)	3
4	580083261	Adapter (2.5 inch)	2
5	580083262	Adapter (3.5 inch)	1
6	582004102	Plate (Blower)	1
7	582035766	Enclosure	1
8	582035767	Cover	1
9	582035768	Bracket	1
10	582035769	Cover	1
11	580083277	Screw (Plastic)	2
12	582035770	Bracket	1
13	582035771	Flange	1
14	582035772	Flange	1
15	582035773	Flange	1
16	580083272	Wire Harness	1
17	580083273	Valve	1
18	580083274	Filter	1
19	~~580020184~~		
	582024764	Hose-Bulk (M)	1
20	580083275	Clamp	2
21	580083276	Gasket	1
22	582035898	Screw	4
23	582004103	Screw	17
24	580083279	Screw	8
25	582004107	Screw	9
26	504231213	Rivet	2
27	021197300	Nut	4
28	582028595	Foam	4
29	582004108	Seal	1

©2014 Yale Materials Handling Corporation

HEATER CONTROL (FIGURE 1-21)

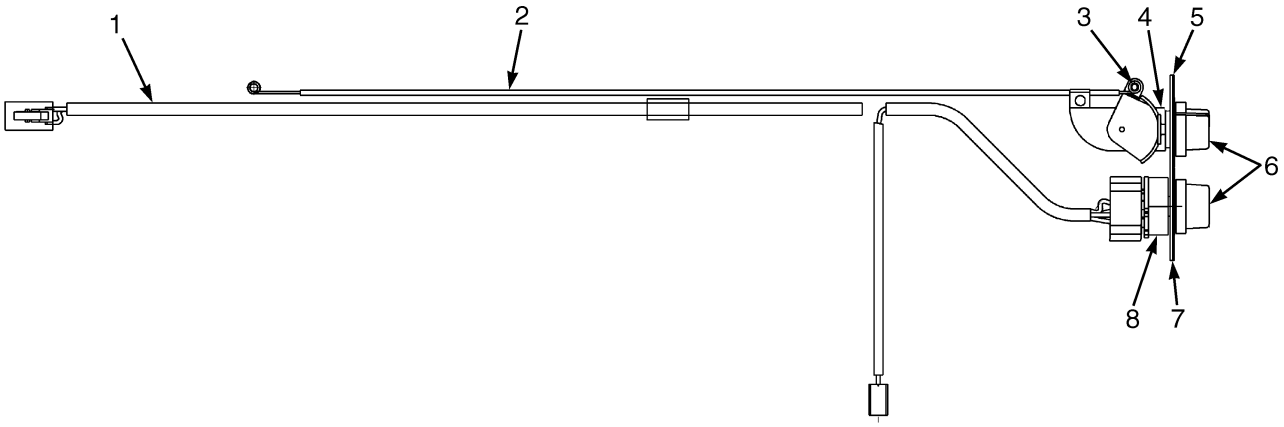

BP120564

ITEM	PART NO.	DESCRIPTION	QTY
	580087861	Heater Control	1
1	580090552	Wire Harness (Heater Control)	1
2	580090553	Push-Pull Cable	1
3	580020192	Switch (180 deg)	1
4	580090555	Shim	2
5	580090554	Label	1
6	580020190	Knob	2
7	580090551	Mounting Plate	1
8	580020189	Switch , Blower (with Nut)	1

©2014 Yale Materials Handling Corporation

NOTES

©2014 Yale Materials Handling Corporation

NON SUSPENSION SEAT (FIGURE 1-22)
WITH HIP RESTRAINT (→ S/N D878V01751H)

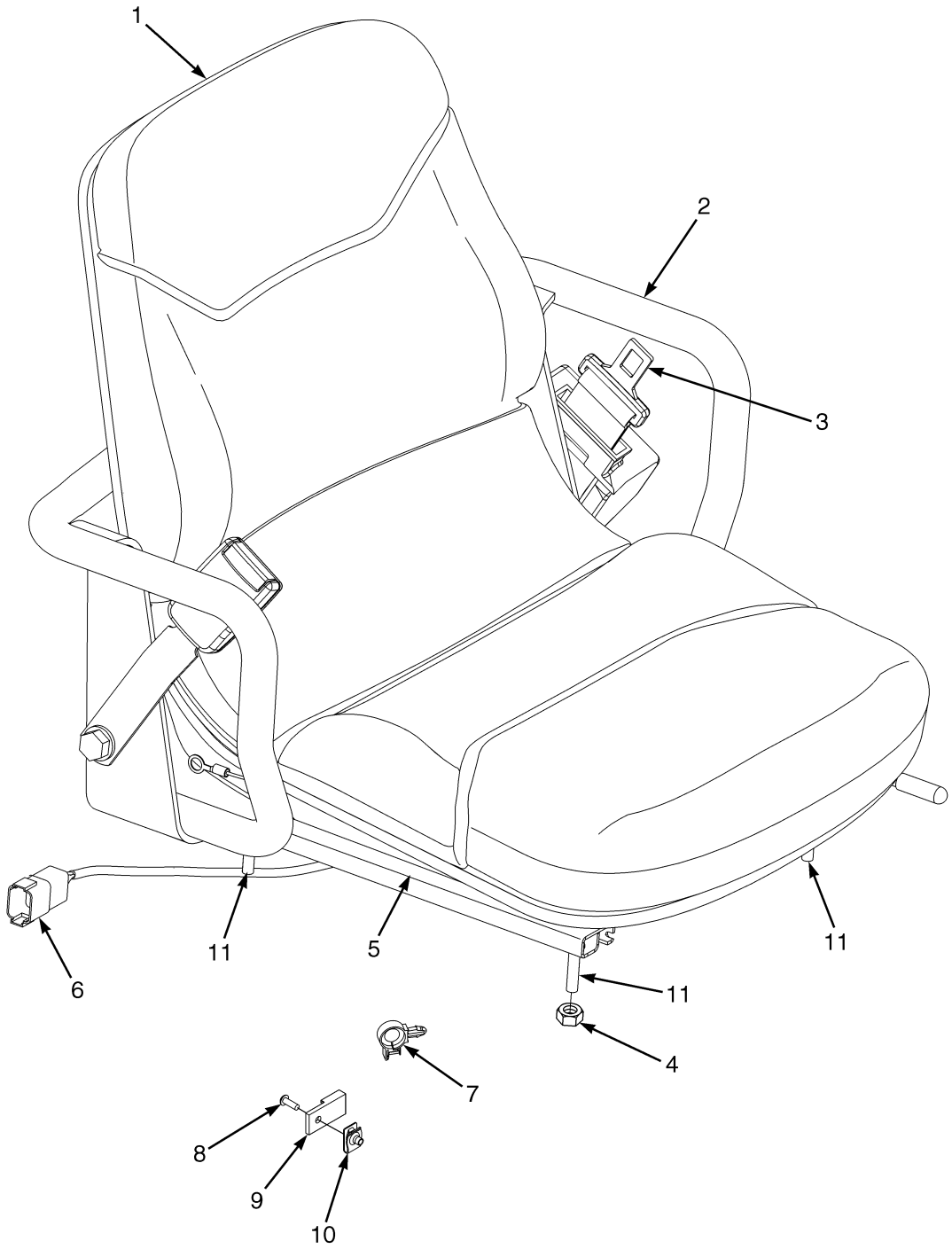

©2014 Yale Materials Handling Corporation

NON SUSPENSION SEAT

WITH HIP RESTRAINT (→ S/N D878V01751H)

ITEM	PART NO.	DESCRIPTION	QTY
	b 580086877	Seat-Non Suspension Assembly (Vinyl) (Vinyl)	1
	c 580087978	Seat-Non Suspension (Vinyl)	1
	c 580087979	Seat-Non Suspension (Cloth)	1
	b 580086881	Seat-Non Suspension (Cloth)	1
1	580049906	Kit-Seat Cushion (Vinyl)	1
1	580049895	Kit-Seat Cushion (Cloth)	1
1	**ab** 580049891	Sensor (Operator Presence)	1
1	**ac** 580097531	Sensor (Operator Presence)	1
2	580049893	Hip Restraint (RH)	1
2	580049892	Hip Restraint (LH)	1
3	580062078	Kit-Seat Belt (Black)	1
3	524281279	Kit-Seat Belt (Red)	1
4	449015098	Nut	4
5	580090679	Kit-Seat Rail	1
6	580059816	Wire Harness	1
7	580026810	Clip	1
8	518791646	Capscrew	1
9	580026812	Clip	1
10	580040850	Nut (Clip)	1
11	580087659	Stud	4

FOOTNOTES:

a Not Illustrated
b → 10/2008
c 10/2008 →

©2014 Yale Materials Handling Corporation

NON SUSPENSION SEAT (FIGURE 1-23)

WITHOUT ELECTRONIC CONTROLS (S/N D878V01752H →)

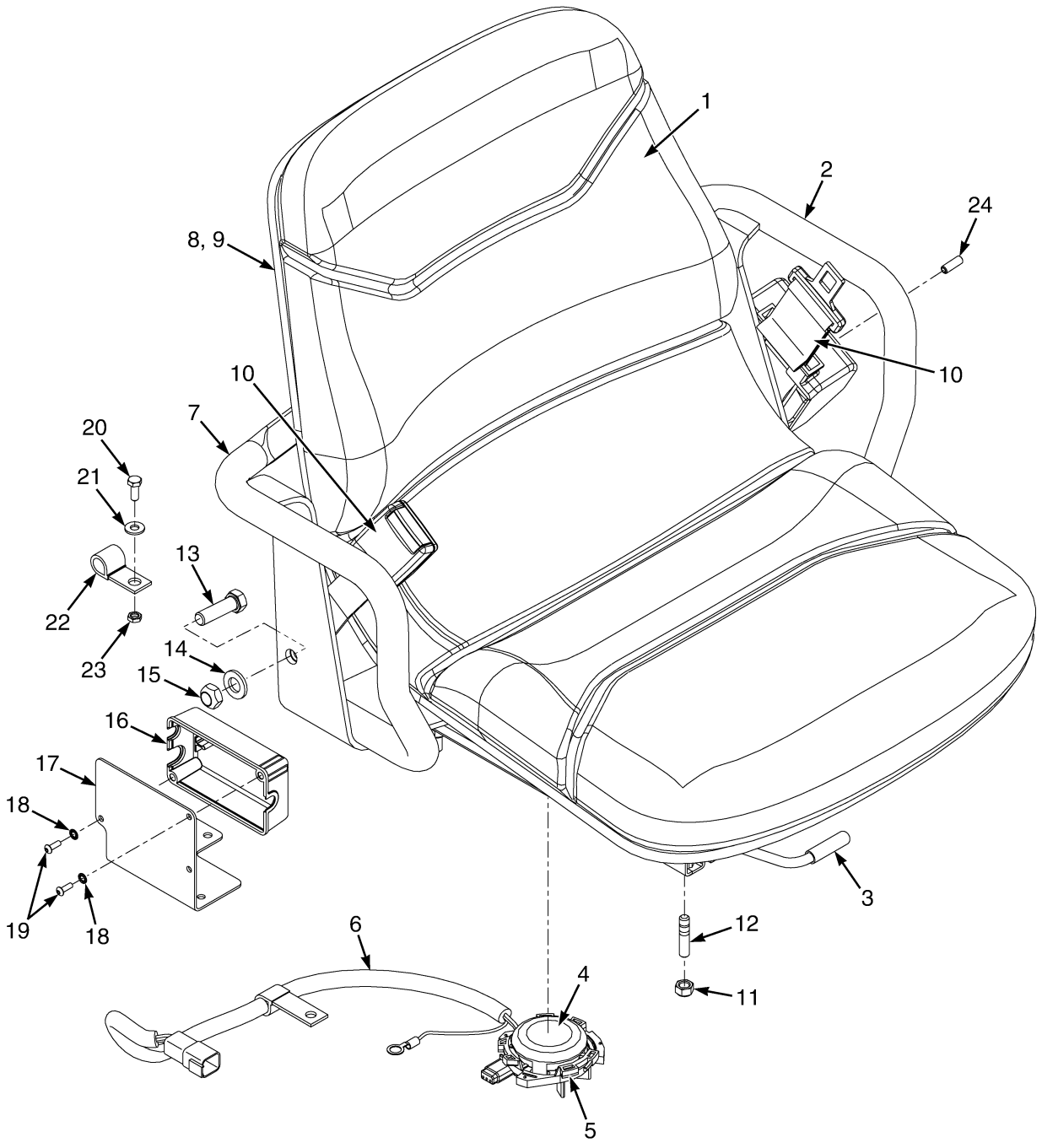

©2014 Yale Materials Handling Corporation

NON SUSPENSION SEAT

WITHOUT ELECTRONIC CONTROLS (S/N D878V01752H →)

ITEM	PART NO.	DESCRIPTION	QTY
	582003574	Seat-Non Suspension (Vinyl)	1
1	580049906	Kit-Seat Cushion (Vinyl)	1
2	580049892	Hip Restraint (LH)	1
3	580090679	Kit-Seat Rail	1
4	580097531	Sensor (Operator Presence)	1
5	582000813	Bracket (Operator Presence Sensor)	1
6	582005028	Wire Harness	1
7	580049893	Hip Restraint (RH)	1
8	580056926	Box	1
9	580018614	Cover	1
10	580062078	Kit-Seat Belt (Black)	1
10	524281279	Kit-Seat Belt (Red)	1
11	449015098	Nut	4
12	580087659	Stud	4
13	520082877	Capscrew	2
14	580056005	Washer	6
15	502097909	Locknut	2
16	580092987	Cover (Seat-Side Electrical)	1
17	582002621	Cover Plate	1
18	940400905	Washer	2
19	580092732	Capscrew	2
20	449001412	Capscrew	2
21	016103500	Washer	1
22	580046396	Clamp	1
23	580060018	Nut	2

©2014 Yale Materials Handling Corporation

NON SUSPENSION SEAT (FIGURE 1-24)
WITHOUT ELECTRONIC CONTROLS — OPTIONAL

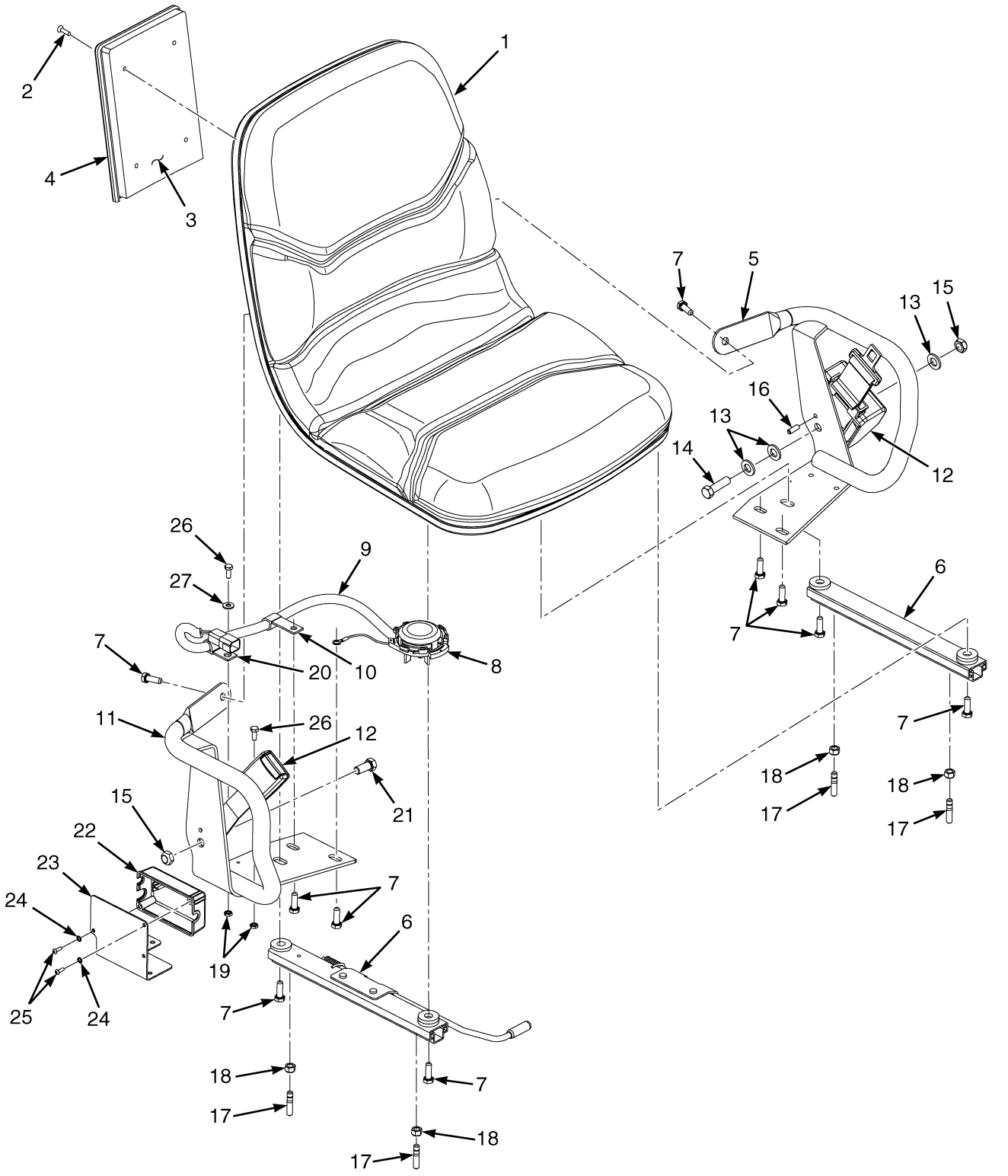

©2014 Yale Materials Handling Corporation

NON SUSPENSION SEAT
WITHOUT ELECTRONIC CONTROLS – OPTIONAL

ITEM	PART NO.	DESCRIPTION	QTY
	582017111	Seat-Non Suspension (Vinyl)	1
1	582017112	Seat-Non Suspension (Base)	1
2	449004073	Screw	4
3	582017709	Box (Operator Manual Storage)	1
4	582017579	Cover (Manual Storage Box)	1
5	. . . . .	Hip Restraint (LH)	1
6	582020971	Seat Rail (Assembly)	2
7	449001014	Screw	10
8	582017110	Sensor (Operator Presence) (Operator Presence)	1
9	582017707	Wire Harness (Operator Presence System)	1
10	580093232	Clamp	1
11	. . . . .	Hip Restraint (RH)	1
12	580062078	Kit-Seat Belt (Black)	1
12	524281279	Kit-Seat Belt (Red)	1
13	580056005	Washer	3
14	520082877	Capscrew	1
15	502097909	Locknut	2
16	023021000	Roll Pin	1
17	580087659	Stud	4
18	504230271	Nut	4
19	580060018	Nut	2
20	580046396	Clamp	1
21	582014024	Capscrew	1
22	580092987	Cover (Seat-Side Electrical)	1
23	582002621	Cover Plate	1
24	940400905	Washer	2
25	580092732	Capscrew	2
26	449001412	Capscrew	2
27	016103500	Washer	1

©2014 Yale Materials Handling Corporation

FULL SUSPENSION SWIVEL SEAT (FIGURE 1-25)
WITH AND WITHOUT ELECTRONIC CONTROLS (→ S/N D878V01751H)

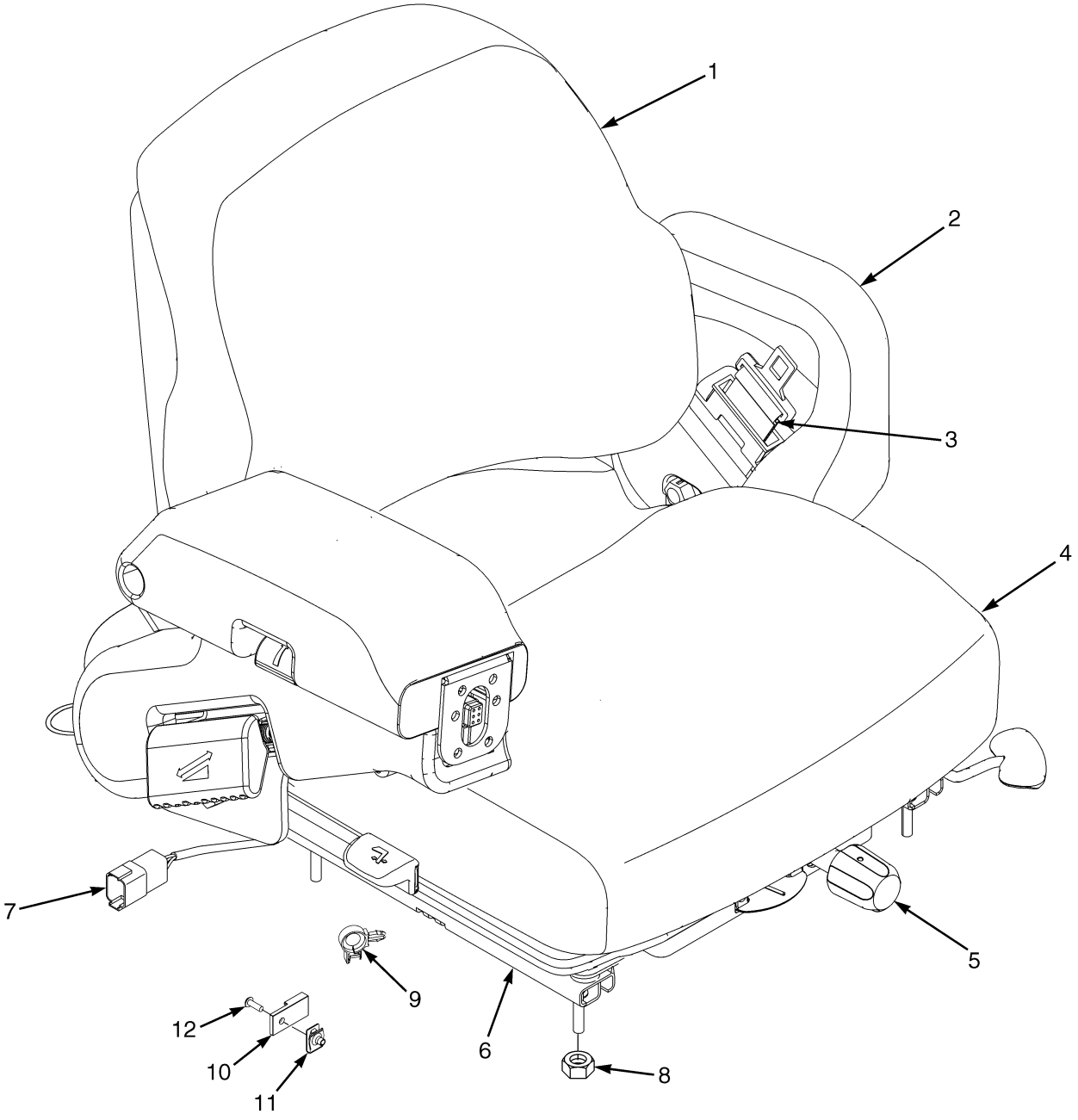

©2014 Yale Materials Handling Corporation

FULL SUSPENSION SWIVEL SEAT

WITH AND WITHOUT ELECTRONIC CONTROLS (→ S/N D878V01751H)

KEY:
A: Full Suspension with Hip Restraints
B: Full Suspension with Electronic Control Arm

ITEM	PART NO.	DESCRIPTION	QTY A	QTY B
	580060074	Seat-Full Suspension (Vinyl)	1	..
	580060075	Seat-Full Suspension (Cloth)	1	..
	580068631	Seat-Full Suspension (Vinyl)	..	1
	580068633	Seat Assy -Full Suspension (Cloth)	..	1
1	580014462	Seat Cushion (Back Cushion) (Vinyl)	1	1
1	580014463	Seat Cushion (Back Cushion) (Cloth)	1	1
2	580014467	Hip Restraint (LH)	1	1
2	580014466	Hip Restraint (RH)	1	..
3	580062078	Kit-Seat Belt (Black)	1	1
3	524281279	Kit-Seat Belt (Red)	1	1
4	580049883	Seat Cushion (Vinyl)	1	1
4	580051805	Seat Cushion (Cloth)	1	1
5	580014473	Kit-Weight Adjuster	1	..
5	580057259	Knob Assembly	1	1
5	580065961	Handle	1	1
6	580014471	Kit-Seat Rail	1	1
7	580059816	Wire Harness	1	..
7	580080127	Wire Harness	..	1
8	518793684	Nut	4	4
9	580026810	Clip	..	1
10	580026812	Clip	..	1
11	580040850	Nut (Clip)	..	1
12	518791646	Capscrew	..	1
	a 580018888	Kit-Gas Spring (Mounted to the rear of the seat)	1	1
	a 580078361	Foam for Right hand Forearm Cushion/Rest (Cap)(Electronic Control Arm)	..	1
	a 580049887	Knob (Electronic Control Arm)	..	1
	a 580014465	Information Case (Kit)	1	1
	a 580013425	Kit-Spring	1	1
	a 580089324	Kit-Swivel Seat Full Susp	1	1
	a 580013421	Kit-Bumper	1	1
	a 580013419	Kit-Boot	1	1
	a 580013422	Kit-Shaft and Bearing	1	1
	a 580013420	Kit-Bearing	1	1
	a 580013423	Kit-Weight Adjuster Indicator	1	1
	a 580049884	Sensor (Operator Presence)	1	1
	a 580043895	Lever (Swivel Release)	1	1

FOOTNOTES:

a Not Illustrated

©2014 Yale Materials Handling Corporation

FULL SUSPENSION SEAT (FIGURE 1-26)

WITH AND WITHOUT ELECTRONIC CONTROLS (→ S/N D878V01751H)

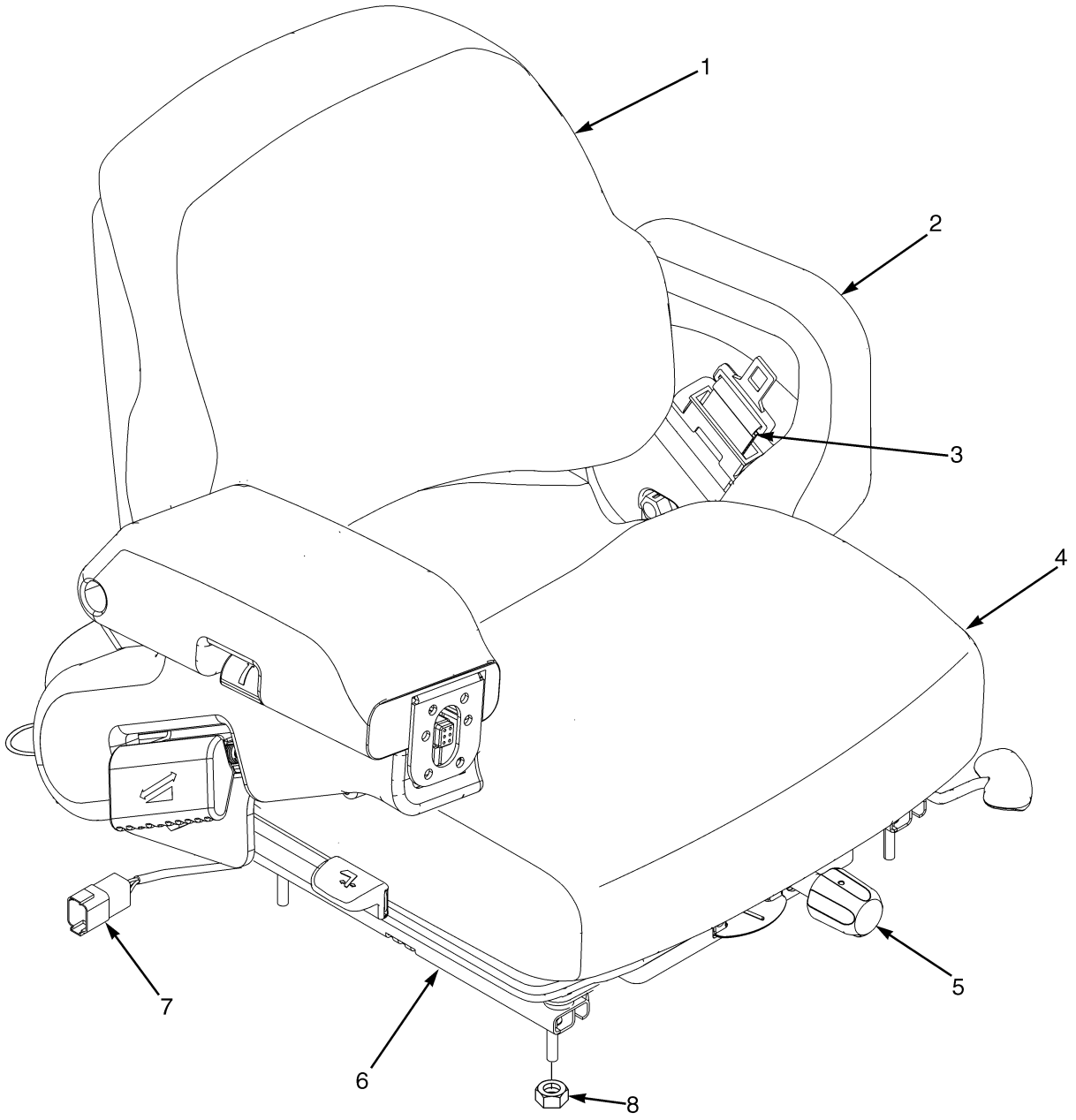

BP120127

©2014 Yale Materials Handling Corporation

FULL SUSPENSION SEAT

WITH AND WITHOUT ELECTRONIC CONTROLS (→ S/N D878V01751H)

KEY:

A: Full Suspension (Vinyl)
B: Full Suspension (Cloth)
C: Full Suspension (Vinyl with Electronic Control Arm)
D: Full Suspension (Cloth with Electronic Control Arm)

ITEM	PART NO.	DESCRIPTION	QTY A	B	C	D
	580060060	Seat-Full Suspension (Vinyl)	1	..	..	..
	580060061	Seat-Full Suspension (Cloth)	..	1	..	..
	580068489	Seat-Full Suspension (Vinyl)	..	..	1	..
	580068490	Seat-Full Suspension (Cloth)	..	..	..	1
1	580014462	Seat Cushion (Back Cushion) (Vinyl)	1	..	1	..
1	580014463	Seat Cushion (Back Cushion) (Cloth)	..	1	..	1
2	580014467	Hip Restraint (LH)	1	1	1	1
2	580014466	Hip Restraint (RH)	1	1	..	..
3	580062078	Kit-Seat Belt (Black)	1	1	1	1
3	524281279	Kit-Seat Belt (Red)	1	1	1	1
4	580049883	Seat Cushion (Vinyl)	1	..	1	..
4	580051805	Seat Cushion (Cloth)	..	1	..	1
5	580014473	Kit-Weight Adjuster	1	1	..	..
5	580057259	Knob Assembly	1	1	..	..
5	580065961	Handle	1	1	..	..
6	580014471	Kit-Seat Rail	1	1	1	1
7	580059816	Wire Harness	1	1	..	..
7	580080127	Wire Harness	..	..	1	1
8	518793684	Nut	4	4	4	4
	a 580026810	Clip	..	..	1	1
	a 580026812	Clip	..	..	1	1
	a 580040850	Nut (Clip)	..	..	1	1
	a 518791646	Capscrew	..	..	1	1
	a 580018888	Kit-Gas Spring (Mounted to the rear of the seat)	1	1	..	..
	a 580049886	Cap (Electronic Control Arm)	..	..	1	1
	a 580049887	Knob (Electronic Control Arm)	..	..	1	1
	a 580014465	Information Case (Kit)	1	1	1	1
	a 580013425	Kit-Spring	1	1	1	1
	a 580071505	Weight Adjust Rack	1	1	1	1
	a 580013421	Kit-Bumper	1	1	1	1
	a 580013419	Kit-Boot	1	1	1	1
	a 580013422	Kit-Shaft and Bearing	1	1	1	1
	a 580013420	Kit-Bearing	1	1	1	1
	a 580013423	Kit-Weight Adjuster Indicator	1	1	1	1
	a 580049884	Sensor (Operator Presence)	1	1	1	1

FOOTNOTES:

a Not Illustrated

©2014 Yale Materials Handling Corporation

FULL SUSPENSION SEAT (FIGURE 1-27)

MANUAL AND ELECTRO-HYDRAULIC — SWIVEL AND NON SWIVEL — SHEET 1 OF 4

(S/N D878V01752H →)

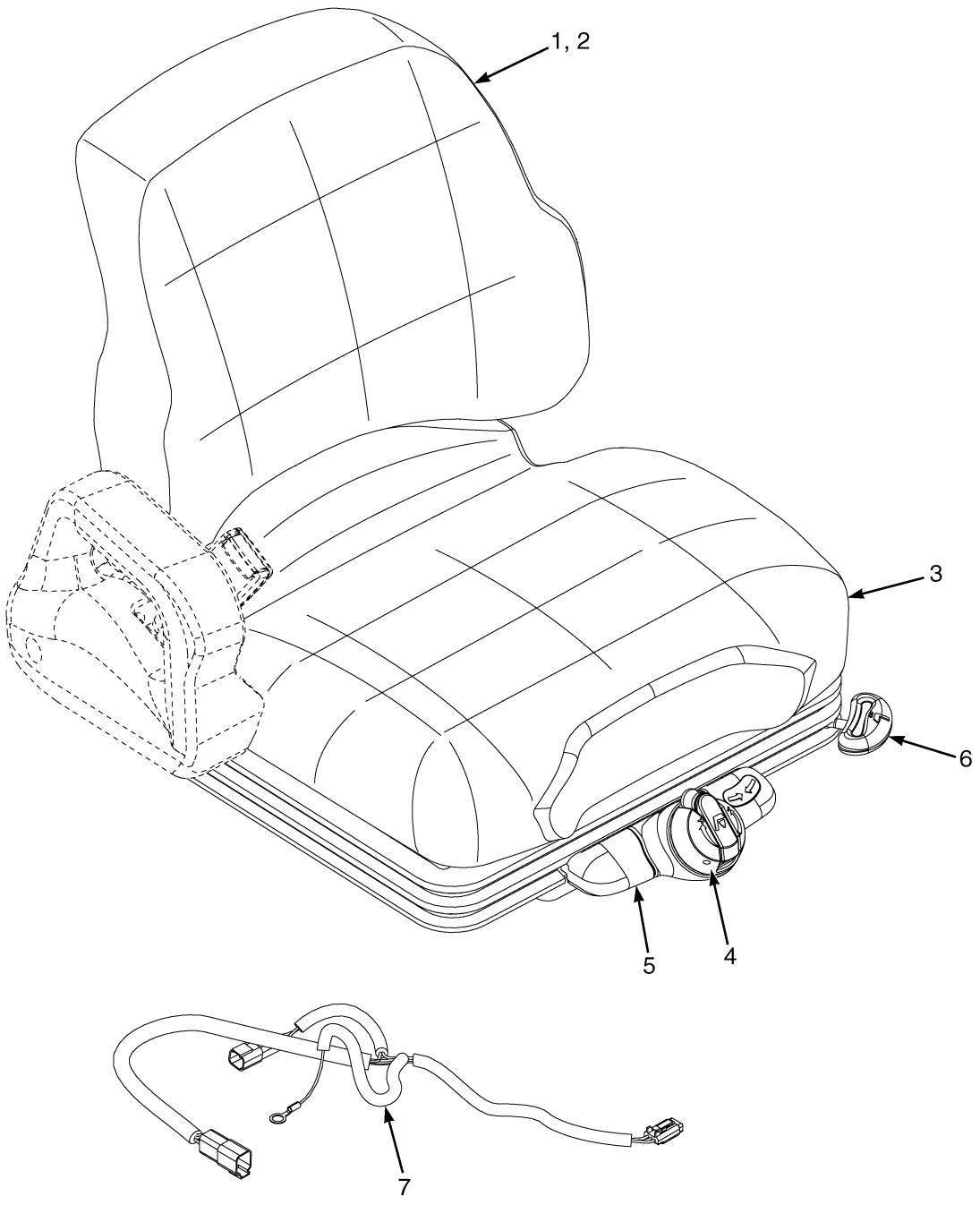

BP121050

©2014 Yale Materials Handling Corporation

FULL SUSPENSION SEAT

MANUAL AND ELECTRO-HYDRAULIC — SWIVEL AND NON SWIVEL – SHEET 1 OF 4

(S/N D878V01752H →)

ITEM	PART NO.	DESCRIPTION	QTY
	582003582	Seat-Full Suspension (Vinyl) (Non-Swivel)	1
	582003583	Seat-Full Suspension (Cloth) (Non-Swivel)	1
	~~580086311~~		
	582003584	Seat-Full Suspension (Vinyl) (Swivel)	1
	~~580086310~~		
	582003585	Seat-Full Suspension (Cloth) (Swivel)	1
1	**b** 580095473	Kit-Cushion (Seat and Back, Cloth)	1
1	**b** 580095476	Kit-Cushion (Seat and Back, Vinyl)	1
2	**b** 580095474	Kit-Cushion (Back Cushion, Vinyl)	1
2	**b** 580095471	Kit-Cushion (Back Cushion, Cloth)	1
2	. . . . .	Back Cushion	1
2	. . . . .	Screw	2
3	**b** 580095475	Kit-Seat Cushion (Vinyl)	1
3	**b** 580095472	Kit-Seat Cushion (Cloth)	1
3	. . . . .	Seat Cushion	1
3	. . . . .	Spring	2
3	. . . . .	Cotter Pin	2
4	**b** 580095462	Kit-Weight Adjuster (☞P27032 [Page 1-60])	1
5	**b** 580095463	Kit-Service (Front Panel) (Non Swivel) (☞P27032 [Page 1-60])	1
6	**b** 580095477	Kit-Seat Rail (With Swivel)	1
6	582018841	Kit-Seat Rail (Non Swivel)	1
6	. . . . .	Locking Rail	1
6	. . . . .	Slave Rail	1
6	. . . . .	Bolt	4
6	. . . . .	Nut	4
7	**b** 582005028	Wire Harness	1
	bc 580014465	Information Case (Kit)	1
	bc 582012046	Bracket (Angle Controller)	1
	bc 582020235	Lever Spring Pull	1
	b 580049884	Sensor (Operator Presence)	1
	a 582015786	Kit -Non-Swivel Set	1
	a 582015787	Kit Swivel Set	1

FOOTNOTES:

a Also includes tether and 580095461 Kit-Recliner on sheet 2

b Included with seat

c Not Illustrated

©2014 Yale Materials Handling Corporation

FULL SUSPENSION SEAT (FIGURE 1-28)
RECLINER AND DAMPER KITS — SHEET 2 OF 4

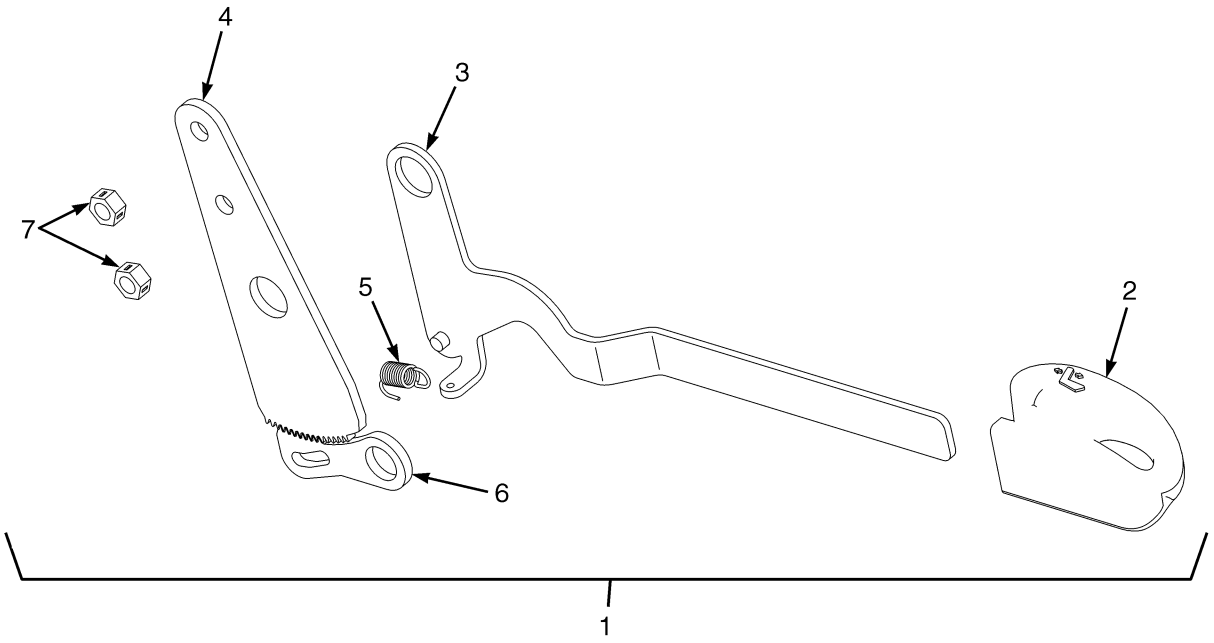

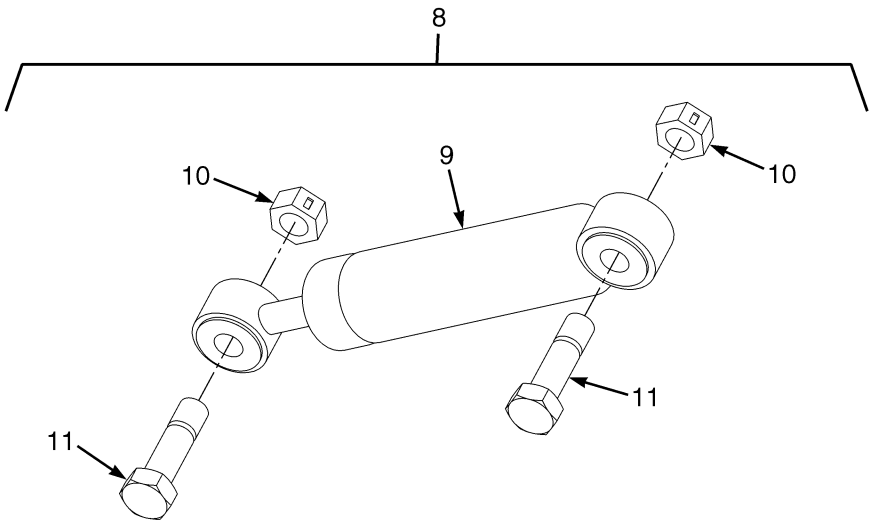

BP120646

©2014 Yale Materials Handling Corporation

FULL SUSPENSION SEAT

RECLINER AND DAMPER KITS – SHEET 2 OF 4

ITEM	PART NO.	DESCRIPTION	QTY
1	580095461	Kit-Recliner (Back Seat Adjustment)	1
2	. . . . .	Knob	1
3	. . . . .	Lever	1
4	580018642	Plate	1
5	. . . . .	Spring	1
6	580018643	Latch	1
7	580057307	Nut	2
8	580095460	Kit-Damper Service	1
9	580057260	Damper	1
10	580057307	Nut	2
11	580057266	Bolt	2

©2014 Yale Materials Handling Corporation

FULL SUSPENSION SEAT (FIGURE 1-29)

SERVICE KITS FOR NON SWIVEL AND SWIVEL — SHEET 3 OF 4

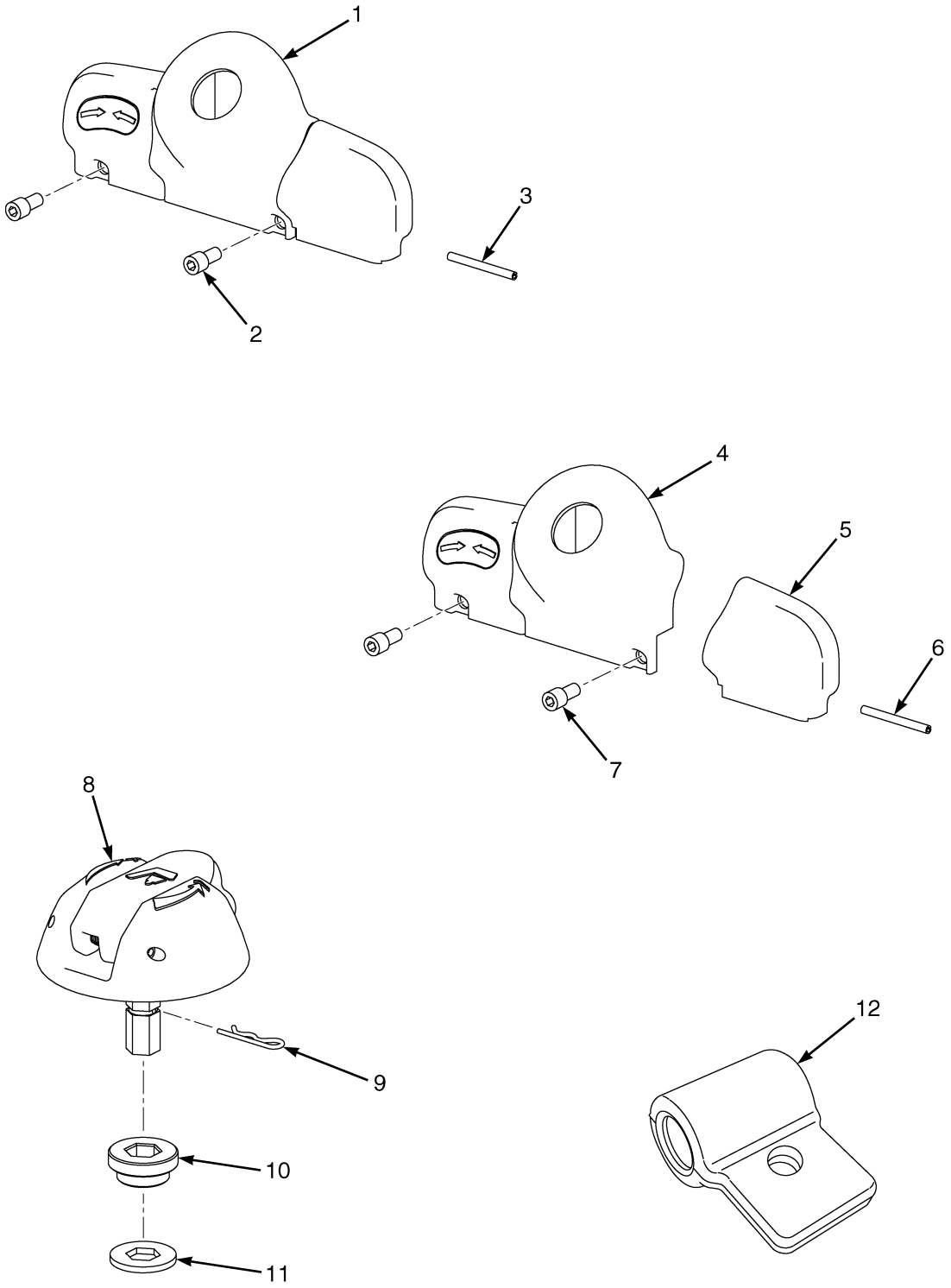

©2014 Yale Materials Handling Corporation

FULL SUSPENSION SEAT

SERVICE KITS FOR NON SWIVEL AND SWIVEL – SHEET 3 OF 4

ITEM	PART NO.	DESCRIPTION	QTY
	582015786	Kit -Non-Swivel Set	1
	582015787	Kit Swivel Set	1
1	580095463	Kit-Service (Front Panel) (Non Swivel)	1
1	. . . . .	Front Panel	1
2	. . . . .	Capscrew	2
3	. . . . .	Roll Pin	1
4	580095464	Kit-Service (Front Panel) (With Swivel)	1
4	. . . . .	Front Panel	1
5	. . . . .	Swivel Knob	1
6	. . . . .	Roll Pin	1
7	. . . . .	Capscrew	2
8	580095462	Kit-Weight Adjuster	1
8	. . . . .	Knob	1
9	. . . . .	Cotter Pin	1
10	. . . . .	Bushing	1
11	. . . . .	Washer	1
12	582020235	Lever Spring Pull	2

©2014 Yale Materials Handling Corporation

SEAT ATTACHING PARTS (FIGURE 1-30)

NOT INCLUDED WITH SEAT — SHEET 4 OF 4 (S/N D878V01752H →)

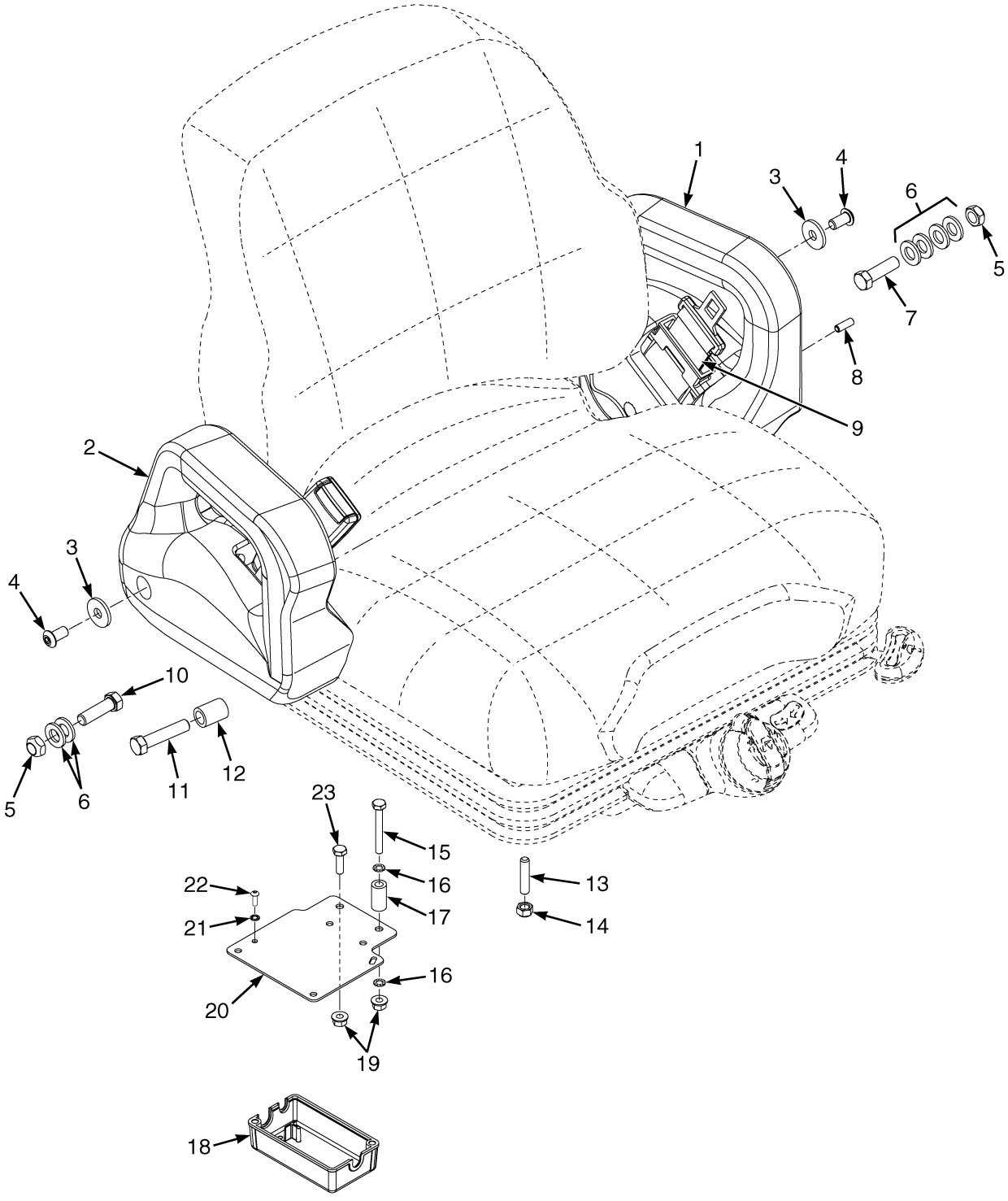

©2014 Yale Materials Handling Corporation

SEAT ATTACHING PARTS

NOT INCLUDED WITH SEAT – SHEET 4 OF 4 (S/N D878V01752H →)

KEY:
A: With Mini Levers
B: With Manual Levers

ITEM	PART NO.	DESCRIPTION	QTY A	QTY B
1	582013862	Armrest (Left-Hand Side)	1	1
2	580084956	Armrest (Right-Hand Side)	..	1
2	582002564	Armrest (Slider for Mini Lever) (☞P21694 [Page 1-64])	1	..
2	. . . . .	Mini-Lever Modules (☞P21671 [Page 6-50], ☞P21672 [Page 6-52])	1	..
3	580057451	Washer	1	..
3	582002619	Spacer	1	2
4	311207098	Screw	1	..
4	580012279	Capscrew	1	2
5	502097909	Locknut	2	2
6	580056005	Washer	3	3
7	520082877	Capscrew	1	1
8	023021000	Roll Pin	1	1
9	580062078	Kit-Seat Belt (Black)	1	1
9	524281279	Kit-Seat Belt (Red)	1	1
10	582014024	Capscrew	..	1
11	582007018	Capscrew	1	..
12	580093325	Spacer	1	..
13	580087659	Stud	4	4
14	504230271	Nut	4	4
15	062151600	Capscrew	1	2
16	940600907	Washer	1	2
17	582002535	Spacer	1	2
18	580092987	Cover (Seat-Side Electrical)	1	1
19	518803677	Nut	2	4
20	582002534	Cover Plate	1	1
21	940400905	Washer	2	2
22	580092732	Capscrew	2	2
23	203142800	Capscrew	1	2
	a 312850042	Strap Clamp	1	1
	580095465	Kit-Service Internal Tether-80 MM Travel	1	1
	580095466	Kit-Service Internal Tether-56 MM Travel	1	1
	580095467	Kit-Service Internal Tether-40 MM Travel	1	1

FOOTNOTES:

a Not Illustrated

©2014 Yale Materials Handling Corporation

ARMREST ASSEMBLY (FIGURE 1-31)

MINI-LEVER MODULES

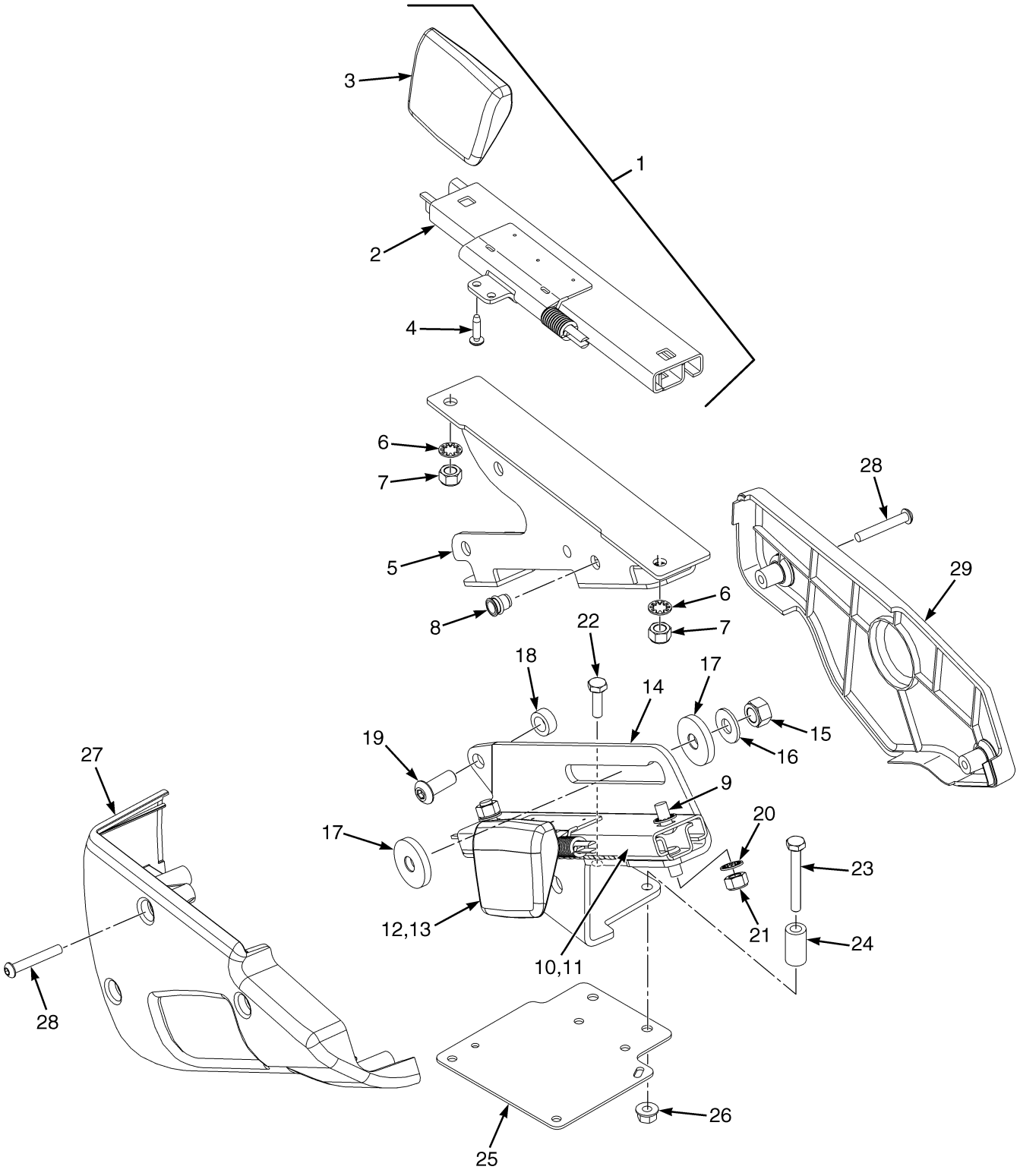

©2014 Yale Materials Handling Corporation

ARMREST ASSEMBLY
MINI-LEVER MODULES

ITEM	PART NO.	DESCRIPTION	QTY
	582002564	Armrest (Slider for Mini Lever)	1
1	. . . . .	Slider Assembly	1
2	580083302	Armrest (Slider)	1
3	580096260	Handle (Slider)	1
4	580097245	Screw	2
5	582002565	Bracket Wldmt	1
6	940400908	Washer	4
7	504230271	Nut	4
8	580041704	Insert	3
9	580032377	Capscrew	2
10	. . . . .	Slider Assembly	1
11	580083302	Armrest (Slider)	1
12	580096260	Handle (Slider)	1
13	580097245	Screw	2
14	582003682	Bracket	1
15	909882404	Nut	1
16	504071785	Washer	1
17	580092815	Washer	2
18	582002619	Spacer	1
19	580012279	Capscrew	1
20	940400908	Washer	2
21	504230271	Nut	2
22	203142800	Capscrew	1
23	062151600	Capscrew	1
24	582002535	Spacer	1
25	582002534	Cover Plate	1
26	518803677	Nut	2
27	582003730	Cover	1
28	932728910	Capscrew	5
29	582003731	Cover	1

©2014 Yale Materials Handling Corporation

LABELS (FIGURE 1-32)
INTERIOR

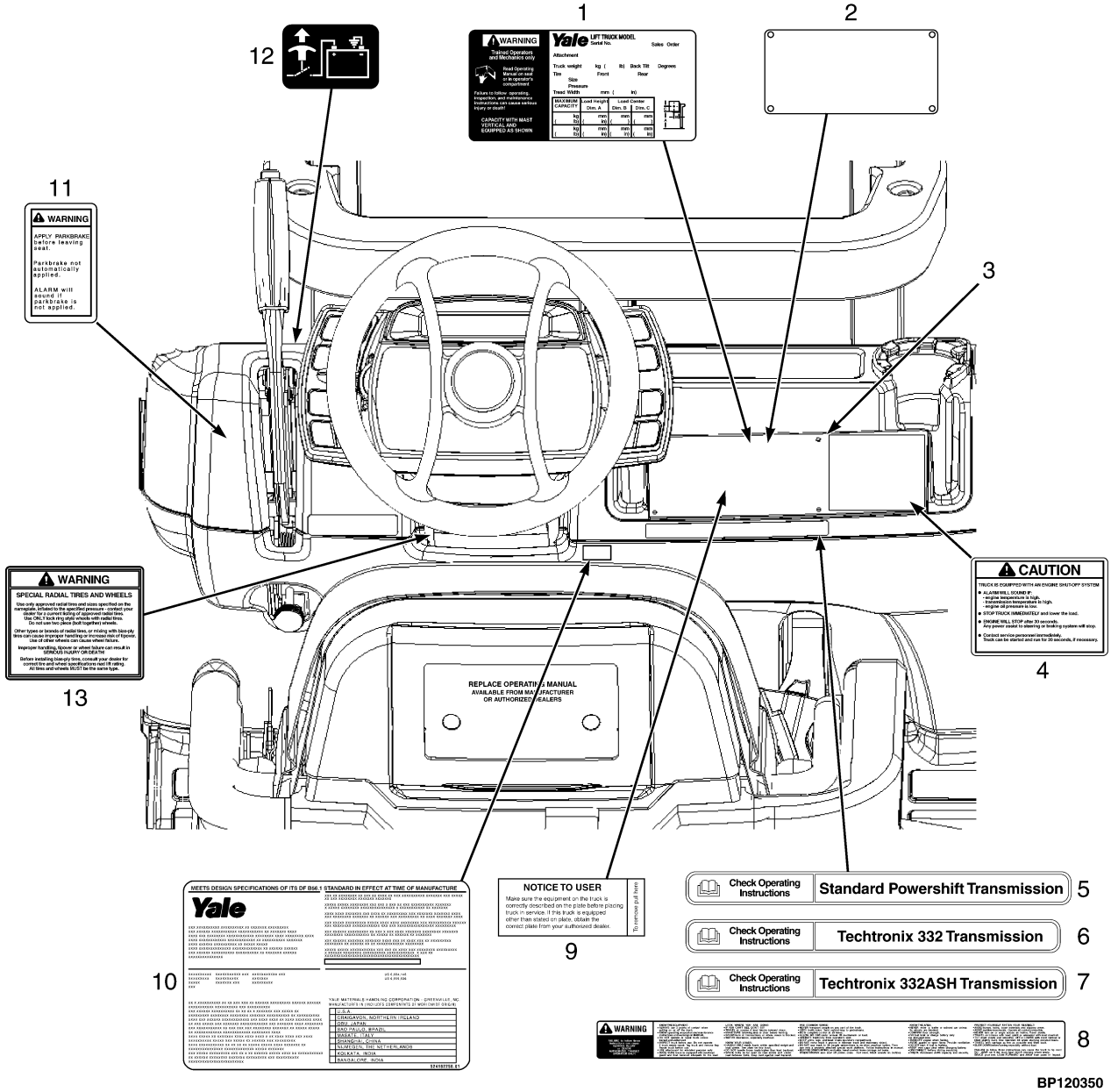

BP120350

©2014 Yale Materials Handling Corporation

LABELS
INTERIOR

ITEM	PART NO.	DESCRIPTION	QTY
1	**a**	Nameplate	1
2	580008064	Nameplate Cover	1
3	505976530	Rivet	4
4	520045130	Label (Drive Train Protection)	1
5	524274078	Label (Standard Powershift Transmission)	1
6	**b** 524274136	Label (Techtronix 332 Transmission)	1
7	**b** 524274108	Label (Techtronix 332ASH Transmission)	1
8	580055312	Label (Operator Warning)	1
9	504231265	Nameplate (Complete Truck)	1
10	524162256	Label (Patents and Trademarks)	1
11	580056430	Label (Parking Brake Warning)	1
12	**d** 580008338	Label (Battery Switch)	1
	c 580090736	Label (ECM Code) (Standard Transmission Only) (☞P20231 [Page 6-44])	1

FOOTNOTES:

a Contact Your Local Yale Dealer
b Electronic Transmission
c Not Illustrated
d UL Type DS

©2014 Yale Materials Handling Corporation

LABELS (FIGURE 1-33)
EXTERIOR

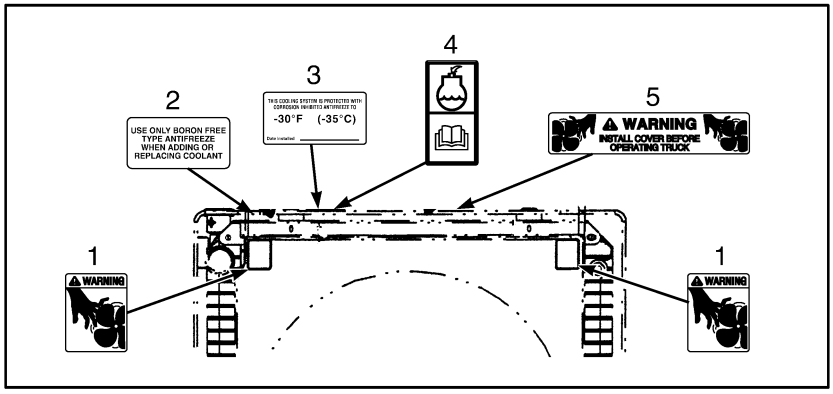

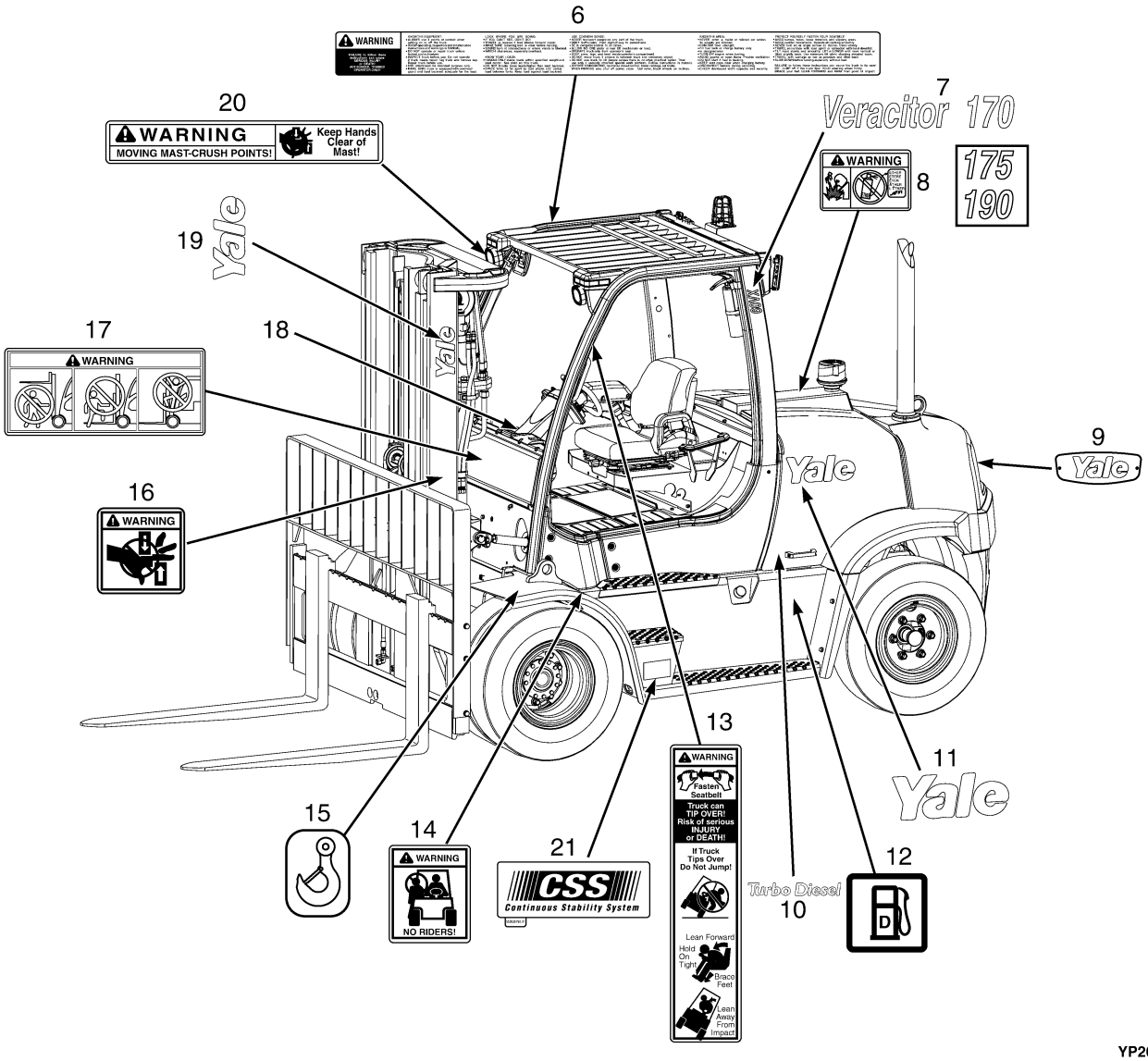

YP260365

©2014 Yale Materials Handling Corporation

LABELS
EXTERIOR

ITEM	PART NO.	DESCRIPTION	QTY
1	505976556	Label (Fan Warning)	2
2	518806645	Label (Boron-Free Antifreeze)	1
3	505976545	Label (Antifreeze)	1
4	580072751	Label (Coolant Fill)	1
5	505976566	Label (Fan Warning)	1
6	**e** 580055312	Label (Operator Warning)	1
7	**e** 524270799	Label (Veracitor 135VX) (RH) (Mounted On Overhead Guard)	1
7	**e** 524270800	Label (Veracitor 155VX) (RH) (Mounted On Overhead Guard)	1
7	**e** 524270801	Label (135VX) (LH) (Mounted On Overhead Guard)	1
7	**e** 524270802	Label (155VX) (LH) (Mounted On Overhead Guard)	1
7	**d** 524270799	Label (Veracitor 135VX) (Mounted On Door)	2
7	**d** 524270800	Label (Veracitor 155VX) (Mounted On Door)	2
8	**b** 580001007	Label (Ether Warning)	1
9	**f** 524310789	Label (Yale Logo)	1
9	**g** 550070558	Label	1
10	524320077	Label (Turbo Diesel)	1
11	524270797	Label (Yale)	2
12	580056514	Label (Unleaded Fuel Only)	1
12	**b** 580056515	Label (Fuel Fill)	1
13	504231296	Label (Operator Restraint)	2
14	504231248	Label (No Riders)	2
15	505974597	Label (Lifting Eye)	3
16	504231252	Label (Pinch Point)	2
17	580058821	Label (Mast Warning)	2
18	**a**	Inspection Plate	1
19	524270798	Label (Yale)	2
20	504231215	Label (Mast Warning)	1
21	550036790	Label (Stability System) (Stability System)	2
	ch 582003593	Label (Hydraulic Quick Disconnect)	1

FOOTNOTES:

a Contact Your Local Yale Dealer
b Diesel
c Not Illustrated
d With Cab
e Without Cab
f → 2/2013
g 2/2013 →
h 5/2010 →

©2014 Yale Materials Handling Corporation

ELECTRONIC MINI LEVER LABELS (FIGURE 1-34)

SINGLE FUNCTION

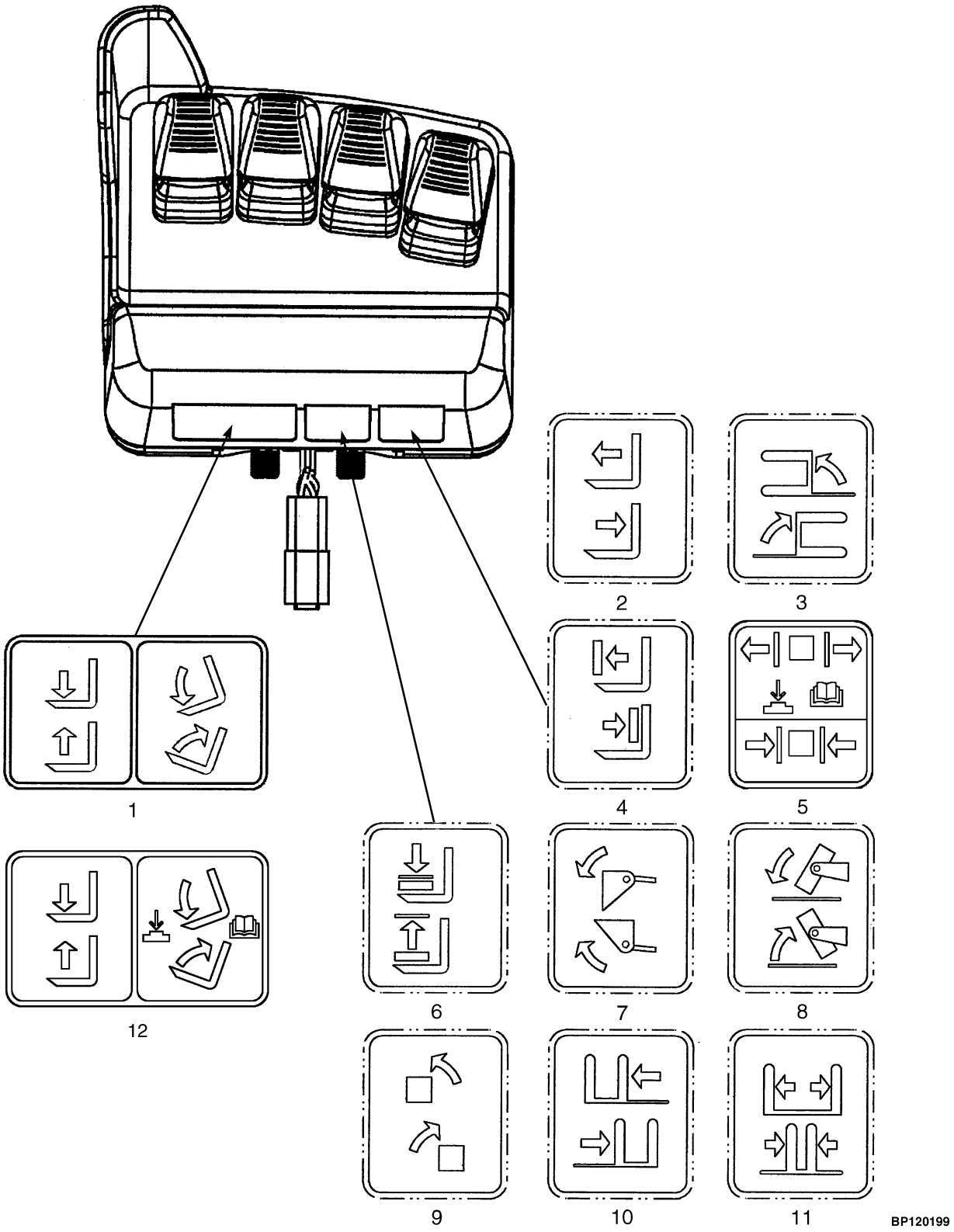

©2014 Yale Materials Handling Corporation

ELECTRONIC MINI LEVER LABELS

SINGLE FUNCTION

ITEM	PART NO.	DESCRIPTION	QTY
1	580058930	Label (Hoist and Tilt)	1
2	580055171	Label (Reach)	1
3	580055170	Label (Swing)	1
4	580055174	Label (Push/Pull)	1
5	580069759	Label (Clamp)	1
6	580055172	Label (Load Stabilizer)	1
7	580055173	Label (Scoop)	1
8	580055175	Label (Upender)	1
9	580055177	Label (Rotate)	1
10	580055178	Label (Side-Shift)	1
11	580055179	Label (Fork Spread)	1
12	580069753	Label (Hoist and Tilt with Return to Set Tilt)	1

©2014 Yale Materials Handling Corporation

ELECTRONIC MINI LEVER LABELS (FIGURE 1-35)

DUAL FUNCTION

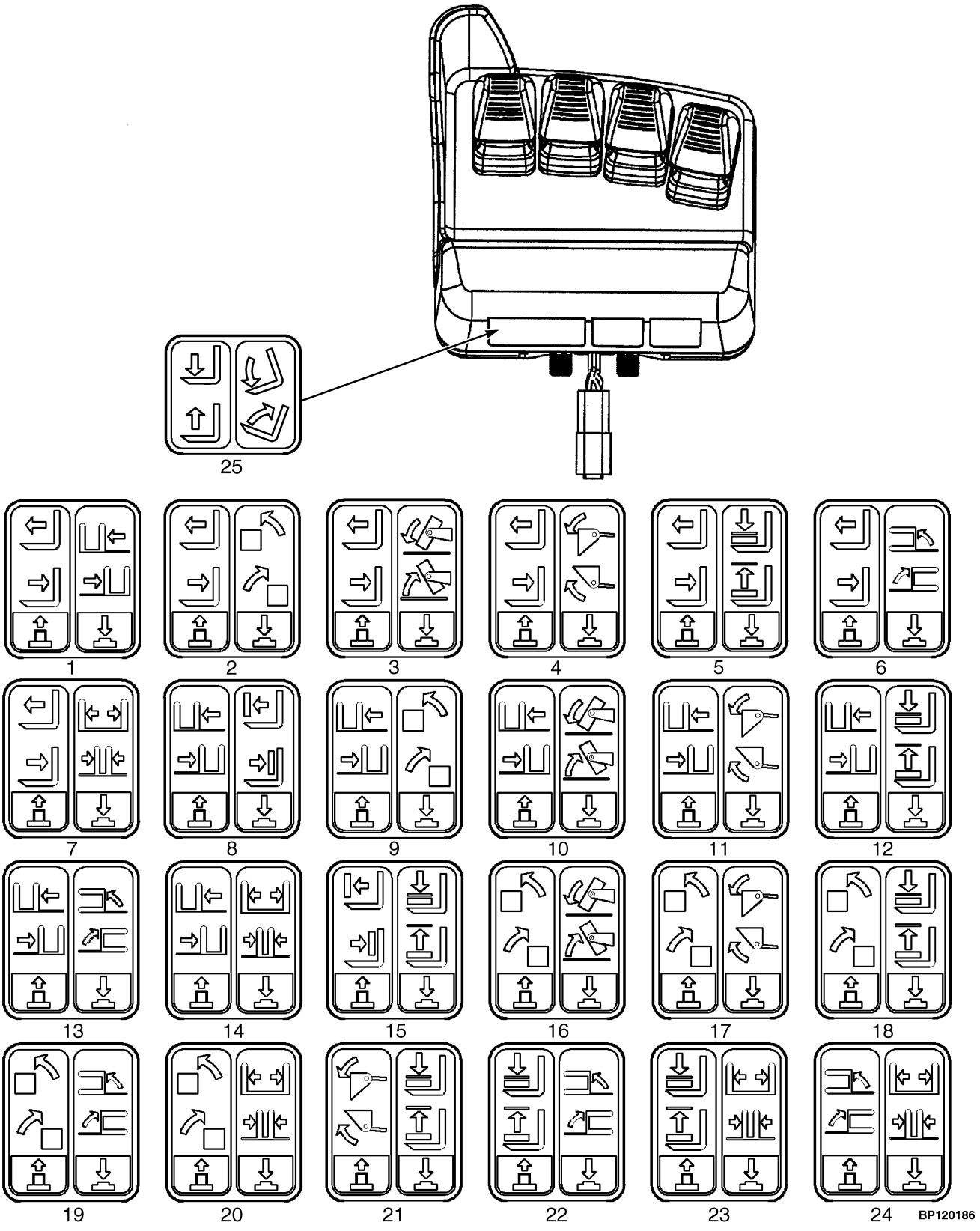

©2014 Yale Materials Handling Corporation

ELECTRONIC MINI LEVER LABELS
DUAL FUNCTION

ITEM	PART NO.	DESCRIPTION	QTY
1	580065903	Label (Reach/Side-Shift)	1
2	580065904	Label (Reach/Rotate)	1
3	580065905	Label (Reach/Upender)	1
4	580065906	Label (Reach/Scoop)	1
5	580065907	Label (Reach/Load Stabilizer)	1
6	580065908	Label (Reach/Swing)	1
7	580065909	Label (Reach/Fork Spread)	1
8	580065910	Label (Side-Shift/Push or Pull)	1
9	580065911	Label (Side-Shift/Rotate)	1
10	580065912	Label (Side-Shift/Upender)	1
11	580065913	Label (Side-Shift/Scoop)	1
12	580065914	Label (Side-Shift/Load)	1
13	580065915	Label (Side-Shift/Swing)	1
14	580065916	Label (Side-Shift/Fork Spread)	1
15	580065917	Label (Push or Pull/Load)	1
16	580065918	Label (Rotate/Upender)	1
17	580065919	Label (Rotate/Scoop)	1
18	580065920	Label (Rotate/Load Stabilizer)	1
19	580065921	Label (Rotate/Swing)	1
20	580065922	Label (Rotate/Fork Spreader)	1
21	580065923	Label (Scoop/Load Stabilizer)	1
22	580065924	Label (Load Stabilizer/Swing)	1
23	580065925	Label (Load Stabilizer/Fork Spread)	1
24	580065926	Label (Swing/Fork Spread)	1
25	580058930	Label (Hoist and Tilt)	1

©2014 Yale Materials Handling Corporation

MINI LEVER MODULE LABELS (FIGURE 1-36)
HYDRAULIC CONTROL FUNCTIONS

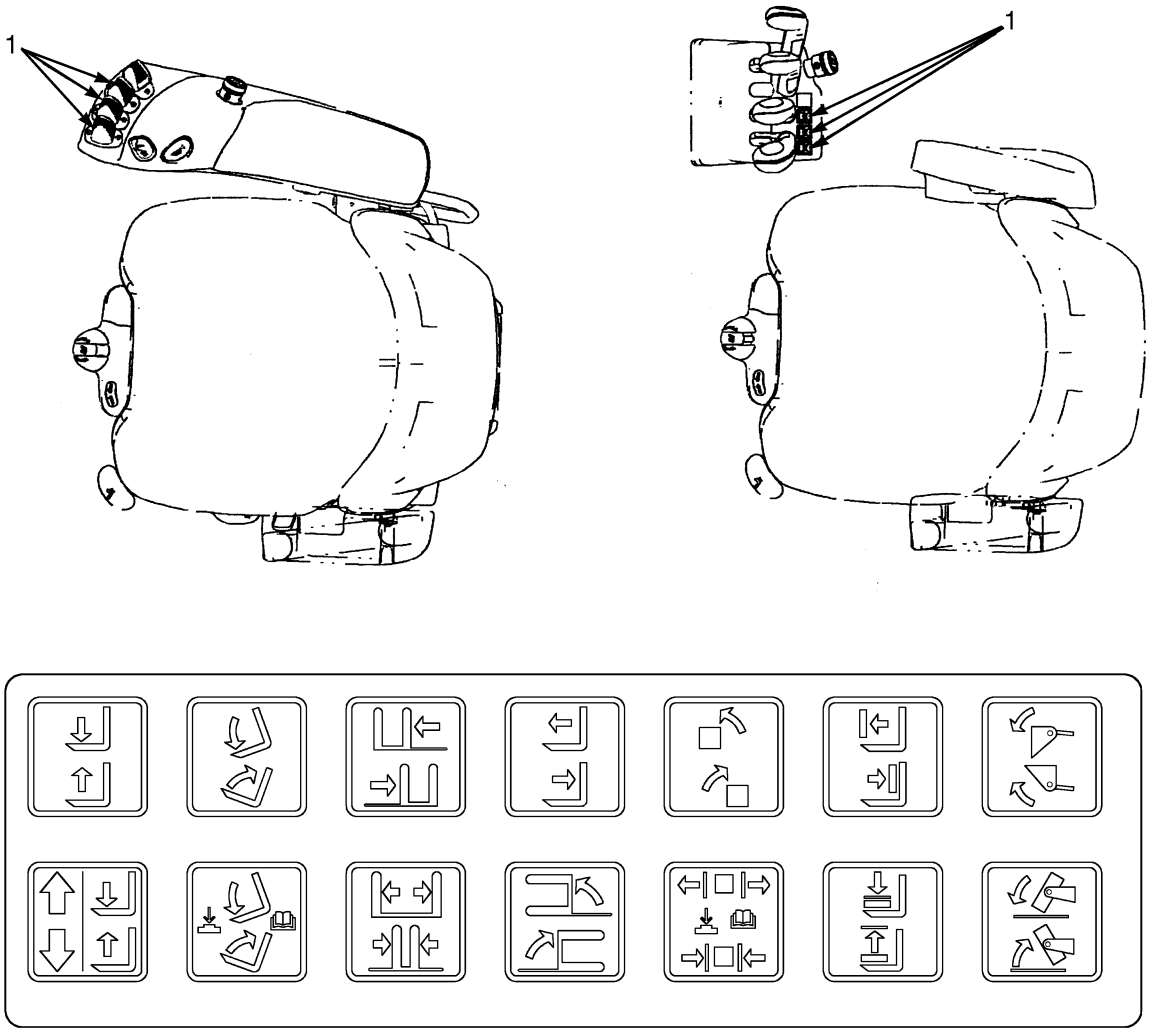

BP120427

©2014 Yale Materials Handling Corporation

MINI LEVER MODULE LABELS
HYDRAULIC CONTROL FUNCTIONS

ITEM	PART NO.	DESCRIPTION	QTY
1	580087338	Label	1

©2014 Yale Materials Handling Corporation

LOAD BACKREST EXTENSION (FIGURE 1-37)

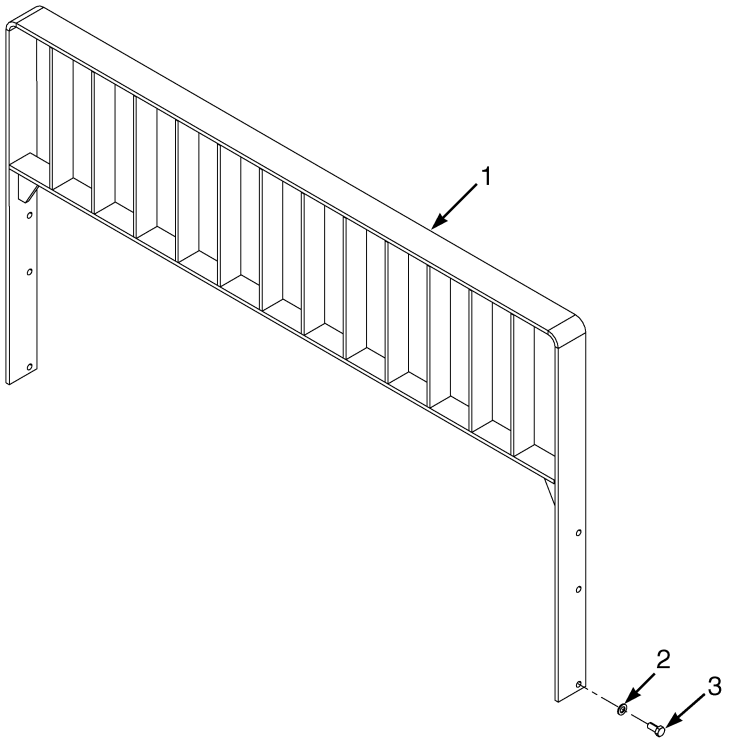

ITEM	PART NO.	DESCRIPTION	QTY
1	524136935	Load Backrest (78 in.) (Pin Type)	1
1	524287262	Load Backrest (78 in.) (Hook Type)	1
2	580056008	Washer	6
3	580055980	Capscrew	6

©2014 Yale Materials Handling Corporation

FORKS (FIGURE 1-38)
STANDARD

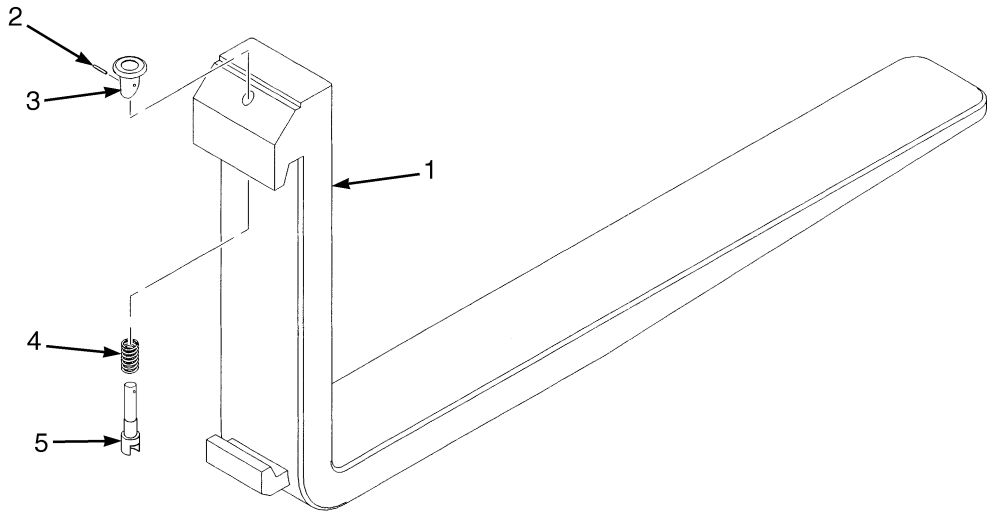

BP000187

ITEM	PART NO.	DESCRIPTION	QTY
1	505849503	Fork (48 in.)	2
1	505849504	Fork (54 in.)	2
1	505849505	Fork (60 in.)	2
1	505849507	Fork (72 in.)	2
1	524282312	Fork (96 in.)	2
1	253915404	Fork (47 in.)	1
1	524136404	Fork (51 in.)	1
1	253915405	Fork (59 in.)	1
1	253915414	Fork (71 in.)	1
1	524282313	Fork (96 in.)	1
2	580035001	Pin	1
3	580034999	Knob	1
4	580026753	Spring	1
5	580035018	Pin	1
	580035019	Kit-Latch (Class IV)	2

©2014 Yale Materials Handling Corporation

FORKS (FIGURE 1-39)
PIN TYPE

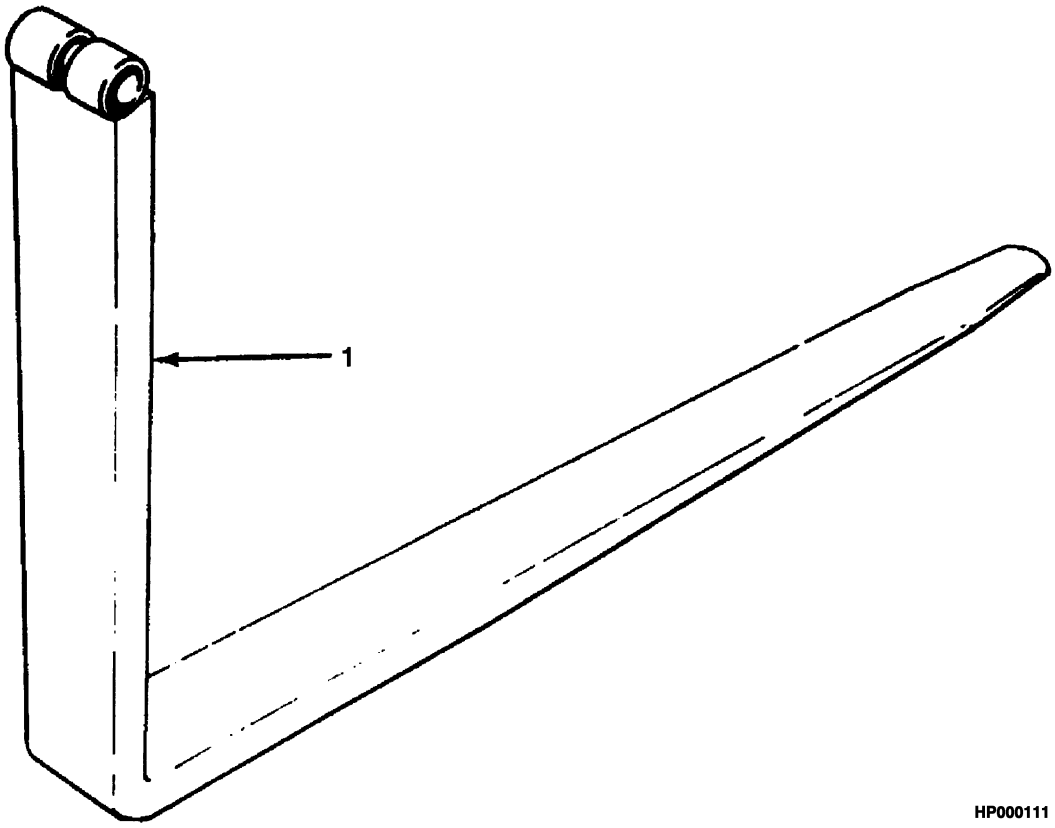

©2014 Yale Materials Handling Corporation

FORKS
PIN TYPE

ITEM	PART NO.	DESCRIPTION	QTY
1	524136782	Fork (48 in.)	2
1	524136784	Fork (54 in.)	2
1	524136787	Fork (60 in.)	2
1	524136790	Fork (72 in.)	2
1	524136794	Fork (96 in.)	2

©2014 Yale Materials Handling Corporation

LABELS (FIGURE 1-40)
HYDRAULIC CONTROL LABELS — CONTROL LEVER

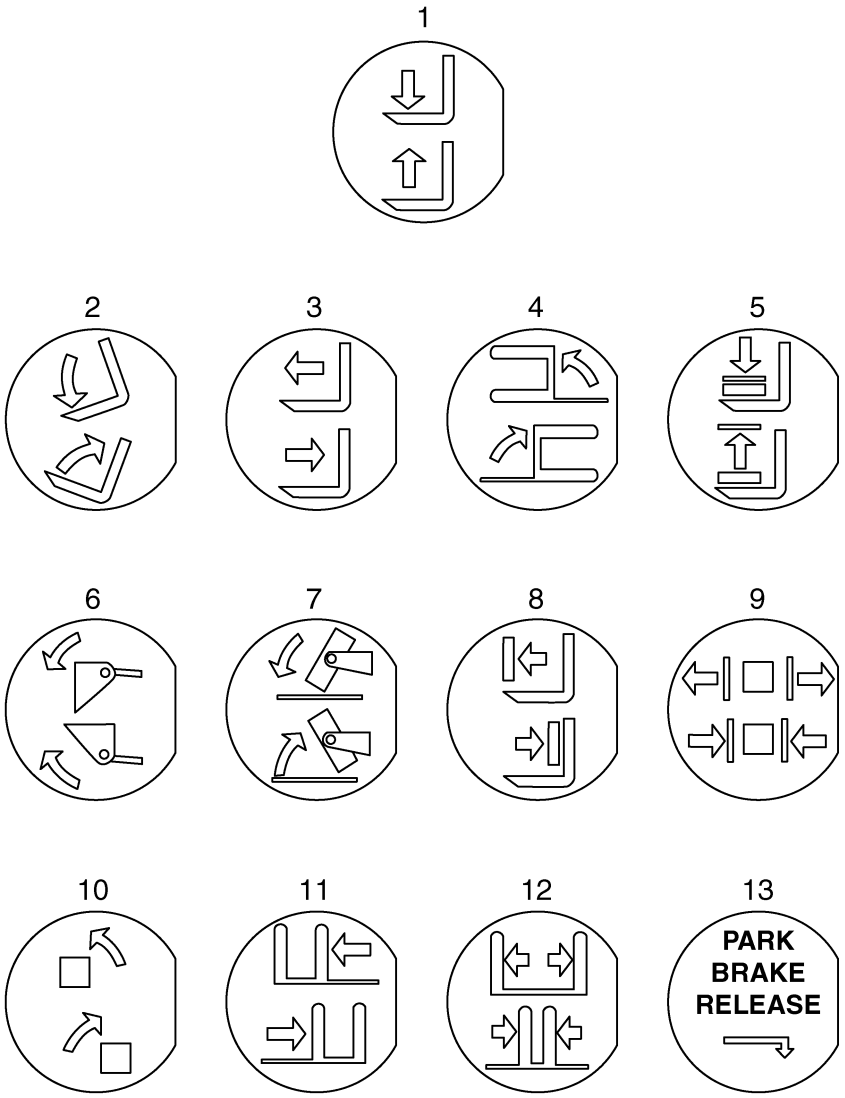

BP120880

©2014 Yale Materials Handling Corporation

LABELS

HYDRAULIC CONTROL LABELS – CONTROL LEVER

ITEM	PART NO.	DESCRIPTION	QTY
1	~~580051779~~		
	582016074	Lens with label (Hoist)	1
2	~~580051780~~		
	582016075	Lens with label (Tilt)	1
3	582016076	Lens with label (Reach)	1
4	582016077	Lens with label (Swing)	1
5	582016078	Lens with label (Load Stabilizer)	1
6	582016079	Lens with label (Scoop)	1
7	582016080	Lens with label (Upender)	1
8	582016081	Lens with Label (Push and Pull)	1
9	582016082	Lens with label (Clamp)	1
10	582016083	Lens with label (Rotate)	1
11	~~580051790~~		
	582016084	Lens with label (Side-Shift)	1
12	582016085	Lens with Label (Fork Spread)	1
13	582016086	Lens with label (Park Brake Release)	1

©2014 Yale Materials Handling Corporation

NOTES

©2014 Yale Materials Handling Corporation

2 ENGINE ASSEMBLY

SECTION 2
ENGINE ASSEMBLY

DESCRIPTION	PAGE
AIR INTAKE MANIFOLD	
CUMMINS QSB 3.3L DIESEL	2-100
ASSEMBLED ENGINE	
GM 4.3L GASOLINE AND LPG (GFI OPTION) - SHEET 1 OF 3	2-12
GM 4.3L GASOLINE AND LPG (GFI OPTION) - SHEET 2 OF 3	2-16
GM 4.3L GASOLINE AND LPG (GFI OPTION) - SHEET 3 OF 3	2-20
CAMSHAFT	
CUMMINS QSB 3.3L DIESEL	2-83
CAMSHAFT AND OIL PAN	
GM 4.3L LPG - PSI OPTION (S/N D878V02178K →)	2-44
GM 4.3L GASOLINE AND LPG - GFI OPTION	2-40
COIL ASSEMBLY	
GM 4.3L GASOLINE AND LPG - GFI OPTION	2-56
CRANKCASE BREATHER	
CUMMINS QSB 3.3L DIESEL	2-92
CRANKSHAFT	
CUMMINS QSB 3.3L DIESEL	2-90
CRANKSHAFT PULLEY	
GM 4.3L GASOLINE AND LPG - PSI OPTION (S/N D878V02178K →)	2-30
CYLINDER BLOCK	
CUMMINS QSB 3.3L DIESEL	2-72
GM 4.3L GASOLINE AND LPG	2-36
CYLINDER HEAD	
CUMMINS QSB 3.3L DIESEL	2-74
GM 4.3L GASOLINE AND LPG	2-34
DISTRIBUTER AND COIL	
GM 4.3L GASOLINE AND LPG - PSI OPTION (S/N D878V02178K →)	2-57
ELECTRICAL MOUNTING PLATE	
GM 4.3L LPG - PSI OPTION (S/N D878V02178K →)	2-6
ELECTRICAL MOUNTING PLATE AND LIFTING EYE	
GM 4.3L GASOLINE - PSI OPTION	2-8
ENGINE MOUNTING	
CUMMINS QSB 3.3L DIESEL	2-61
GM 4.3L GASOLINE AND LPG	2-4
EXHAUST MANIFOLD	
CUMMINS QSB 3.3L DIESEL	2-98
EXHAUST MANIFOLDS	
GM 4.3L GASOLINE AND LPG - PSI OPTION (S/N D878V02178K →)	2-31
FAN ASSEMBLY	
CUMMINS QSB 3.3L DIESEL	2-64
GM 4.3L, GASOLINE AND LPG - PSI OPTION (S/N D878V02178K →)	2-26
FAN MOUNT ASSEMBLY	
GM 4.3L GASOLINE AND LPG - GFI OPTION	2-22
GM 4.3L, GASOLINE AND LPG - PSI OPTION (S/N D878V02178K →)	2-24
FLYWHEEL AND HOUSING	
CUMMINS QSB 3.3L DIESEL	2-62
GM 4.3L GASOLINE AND LPG	2-10
INTAKE AIR FUEL MODULE	
GM4.3L GASOLINE - PSI OPTION	2-54

©2014 Yale Materials Handling Corporation

SECTION 2
ENGINE ASSEMBLY

DESCRIPTION	PAGE
LIFTING BRACKET	
CUMMINS QSB 3.3L DIESEL	2-70
OIL FILLER ARRANGEMENT	
CUMMINS QSB 3.3L DIESEL	2-82
OIL FILTER AND COOLER	
CUMMINS QSB 3.3L DIESEL	2-78
OIL LEVEL GAUGE	
CUMMINS QSB 3.3L DIESEL	2-104
OIL PAN	
CUMMINS QSB 3.3L DIESEL	2-76
OIL PUMP	
GM 4.3L GASOLINE AND LPG	2-58
OIL PUMP AND FRONT GEAR COVER	
CUMMINS QSB 3.3L DIESEL	2-80
PISTON AND CONNECTING ROD	
CUMMINS QSB 3.3L DIESEL	2-88
PULLEY AND TENSIONER	
GM 4.3L GASOLINE AND LPG - PSI OPTION	2-28
ROCKER ARM SHAFT	
CUMMINS QSB 3.3L DIESEL	2-86
STARTING AID	
CUMMINS QSB 3.3L DIESEL	2-102
THERMOSTAT	
CUMMINS QSB 3.3L DIESEL	2-66
THERMOSTAT AND WATER OUTLET HOUSING	
GM 4.3L LPG - PSI OPTION (S/N D878V02178K →)	2-32
GM 4.3L GASOLINE - PSI OPTION	2-33
TURBOCHARGER	
CUMMINS QSB 3.3L DIESEL	2-94
TURBOCHARGER PLUMBING	
CUMMINS QSB 3.3L DIESEL	2-96
VALVE COVER	
CUMMINS QSB 3.3L DIESEL	2-84
VALVE COVER AND INLET MANIFOLD	
GM 4.3L GASOLINE AND LPG - GFI OPTION	2-48
GM 4.3L GASOLINE AND LPG - PSI OPTION	2-52
VIBRATION DAMPER	
CUMMINS QSB 3.3L DIESEL	2-103
WATER BYPASS	
GM 4.3L GASOLINE - PSI OPTION	2-60
WATER OULET CONNECTION	
CUMMINS QSB 3.3L DIESEL	2-65
WATER PUMP AND PULLEY	
CUMMINS QSB 3.3L DIESEL	2-68

©2014 Yale Materials Handling Corporation

NOTES

©2014 Yale Materials Handling Corporation

ENGINE MOUNTING (FIGURE 2-1)

GM 4.3L GASOLINE AND LPG

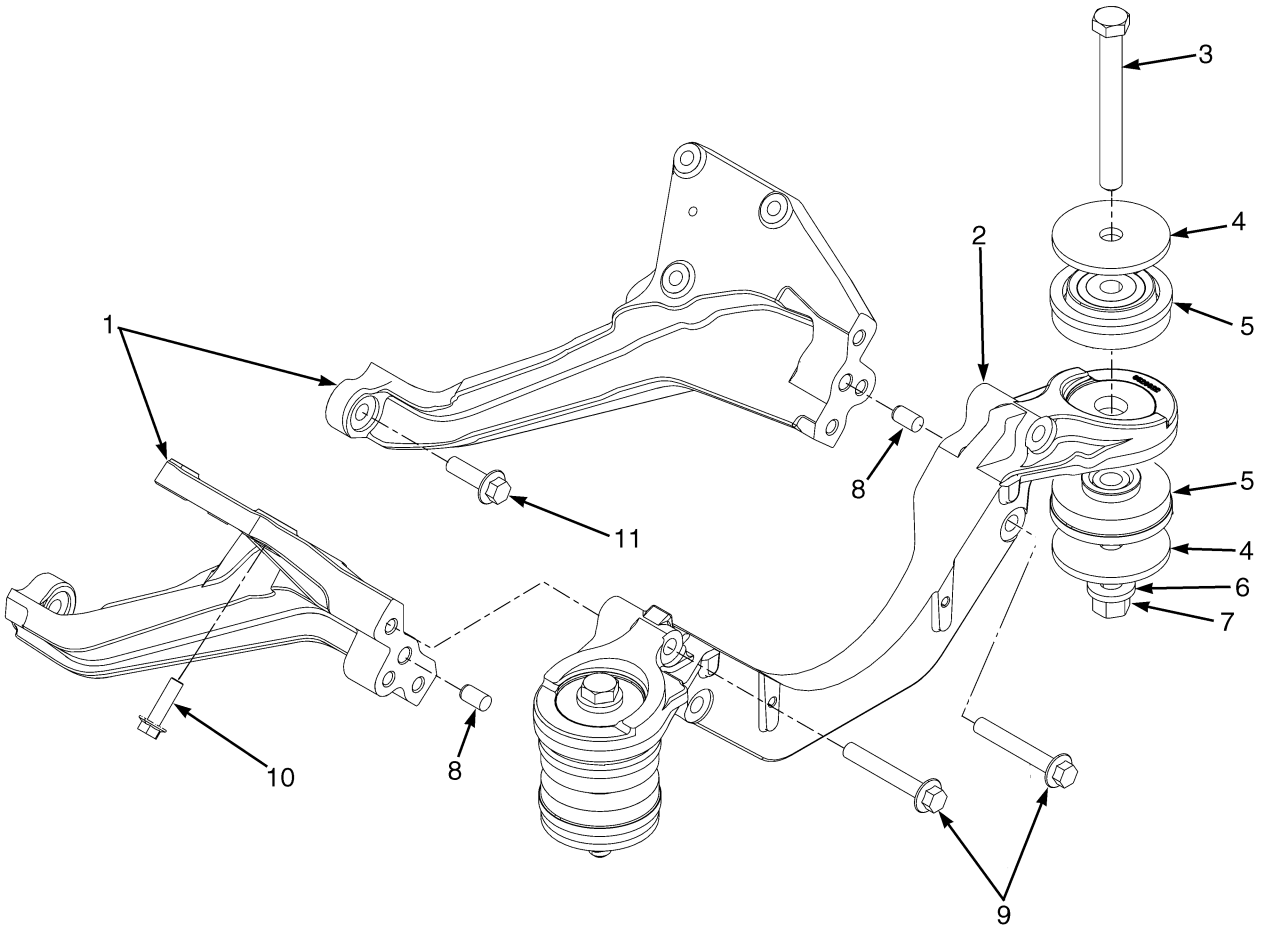

BP090325

©2014 Yale Materials Handling Corporation

ENGINE MOUNTING

GM 4.3L GASOLINE AND LPG

ITEM	PART NO.	DESCRIPTION	QTY
1	580059353	Mount (LH)	1
1	580059355	Mount (RH)	1
2	580084557	Rubber Mount (Crossmember)	1
3	931017919	Capscrew	2
4	580048458	Washer	4
5	580051383	Isolator	4
6	580027945	Washer	2
7	580051384	Nut (Flange)	2
8	580050042	Dowel	2
9	580059828	Capscrew	6
10	580063961	Capscrew	6
11	580051941	Capscrew	2

©2014 Yale Materials Handling Corporation

ELECTRICAL MOUNTING PLATE (FIGURE 2-2)

GM 4.3L LPG — PSI OPTION (S/N D878V02178K →)

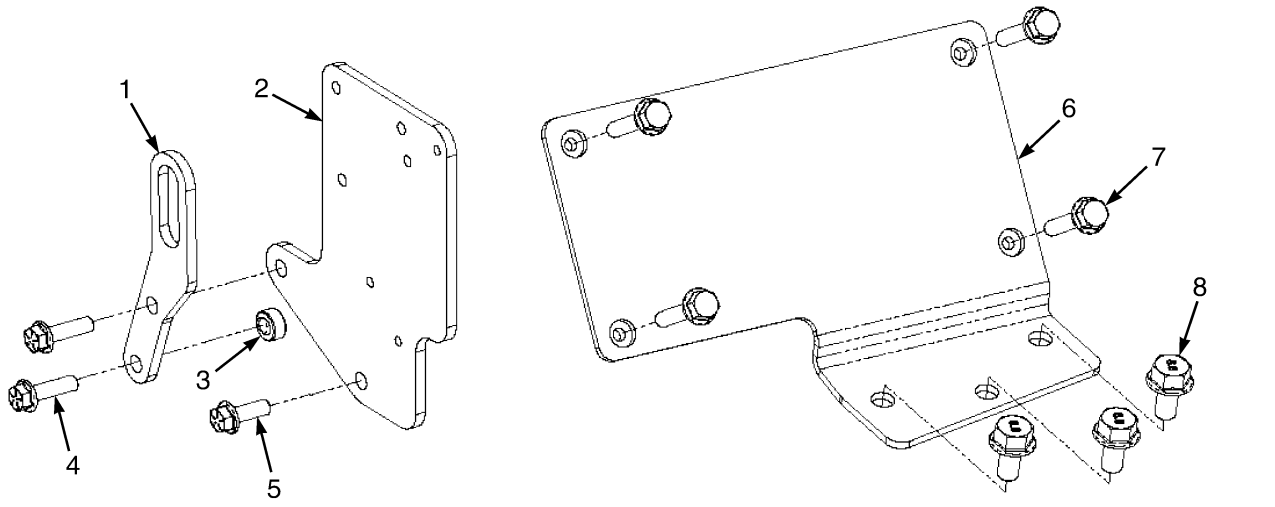

ITEM	PART NO.	DESCRIPTION	QTY
1	582007432	Bracket (LIfting Eye)	1
2	582016958	Bracket (Electrical)	1
3	582016999	Spacer	1
4	582017000	Bolt	2
5	582017000	Bolt	1
6	582016979	Bracket (ECU)	1
7	580047714	Capscrew	3
8	582007539	Bolt	4

©2014 Yale Materials Handling Corporation

NOTES

©2014 Yale Materials Handling Corporation

ELECTRICAL MOUNTING PLATE AND LIFTING EYE (FIGURE 2-3)

GM 4.3L GASOLINE — PSI OPTION

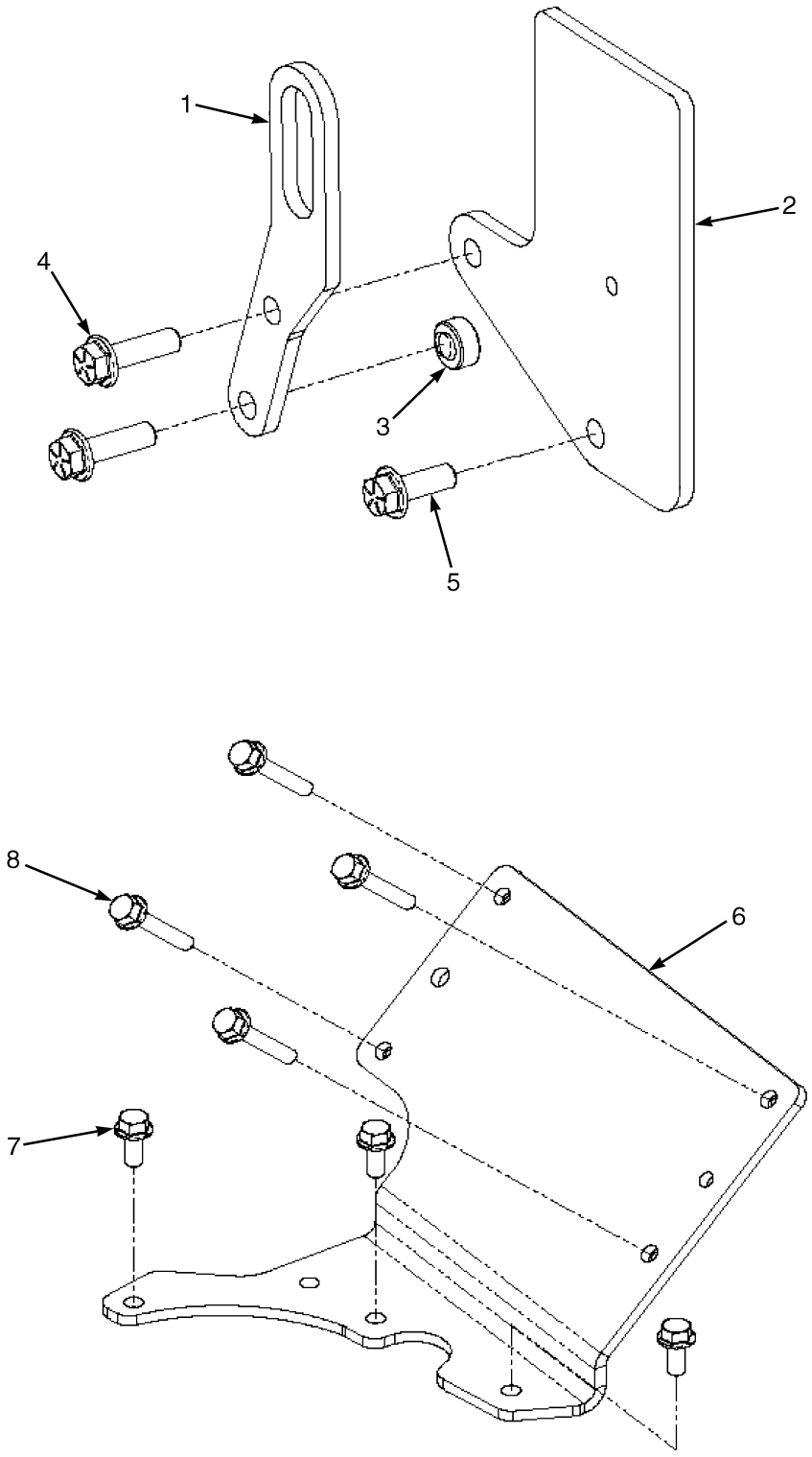

©2014 Yale Materials Handling Corporation

ELECTRICAL MOUNTING PLATE AND LIFTING EYE

GM 4.3L GASOLINE – PSI OPTION

ITEM	PART NO.	DESCRIPTION	QTY
	582016864	Engine Assy-Gas	1
1	582007432	Bracket (Lifting Eye)	1
2	582021759	Bracket	1
3	582016999	Spacer	1
4	582017000	Bolt	2
5	~~580000619~~		
	020772500	Screw	1
6	582021758	Bracket (ECU Mounting)	1
7	580049011	Capscrew	3
8	582007539	Bolt	4

©2014 Yale Materials Handling Corporation

FLYWHEEL AND HOUSING (FIGURE 2-4)

GM 4.3L GASOLINE AND LPG

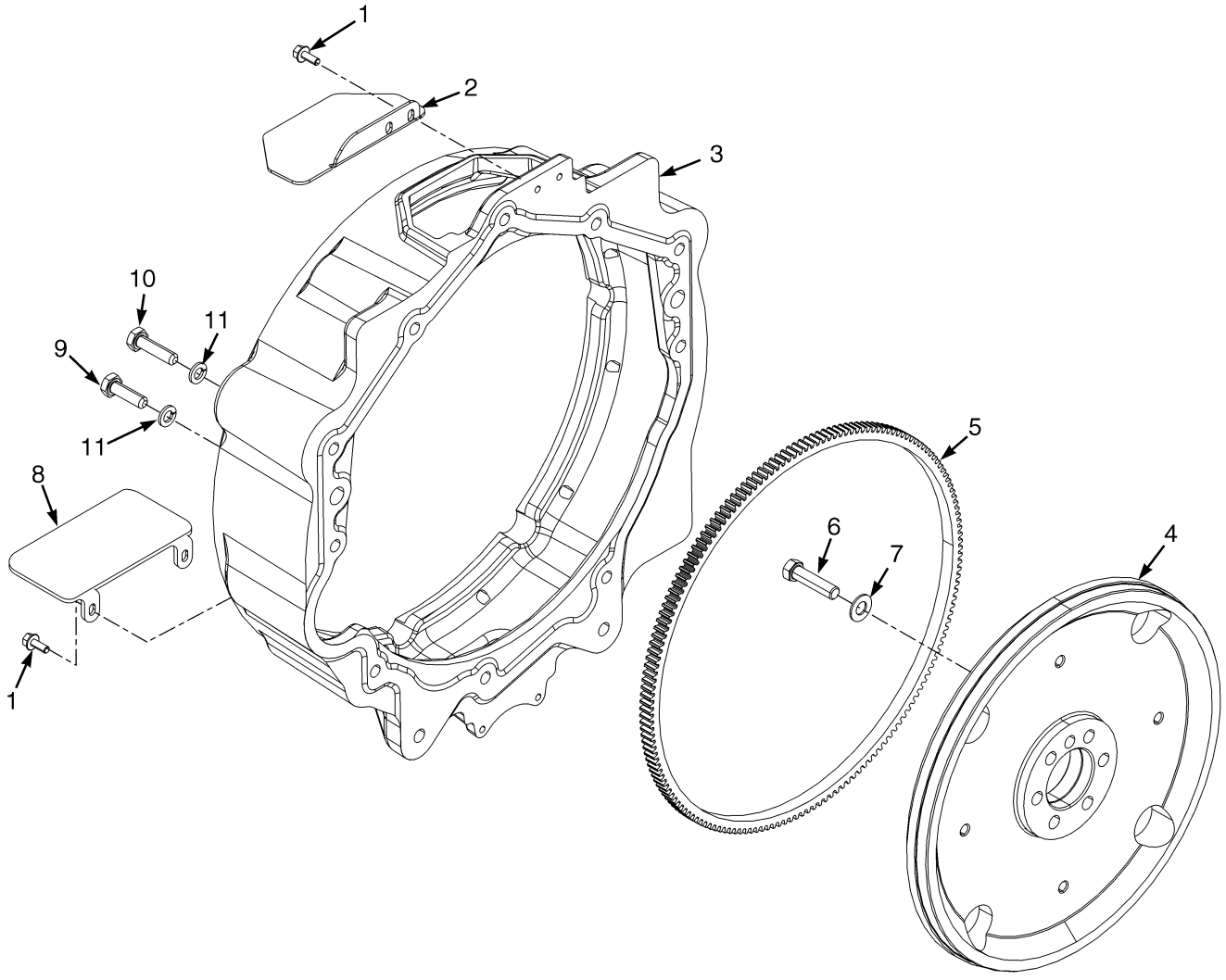

©2014 Yale Materials Handling Corporation

FLYWHEEL AND HOUSING
GM 4.3L GASOLINE AND LPG

ITEM	PART NO.	DESCRIPTION	QTY
	580077730	Engine Assy-Gas (2008 Series)	1
	580092555	Engine Assy-Gas (2009 Series)	1
	580077674	Engine Assy-LPG (2008 Series)	1
	580092554	Engine Assy-LPG (2009 Series)	1
1	580049011	Capscrew	4
2	580079296	Cover	1
3	580079294	Housing	1
4	580073616	Flywheel	1
5	580005117	Ring Gear	1
6	580012186	Capscrew	6
7	582030667	Washer	6
8	580079295	Cover Plate	1
9	580058270	Capscrew	12
10	449001040	Capscrew	9
11	~~504057795~~		
	449022013	Lockwasher	9

©2014 Yale Materials Handling Corporation

ASSEMBLED ENGINE (FIGURE 2-5)

GM 4.3L GASOLINE AND LPG (GFI OPTION) — SHEET 1 OF 3

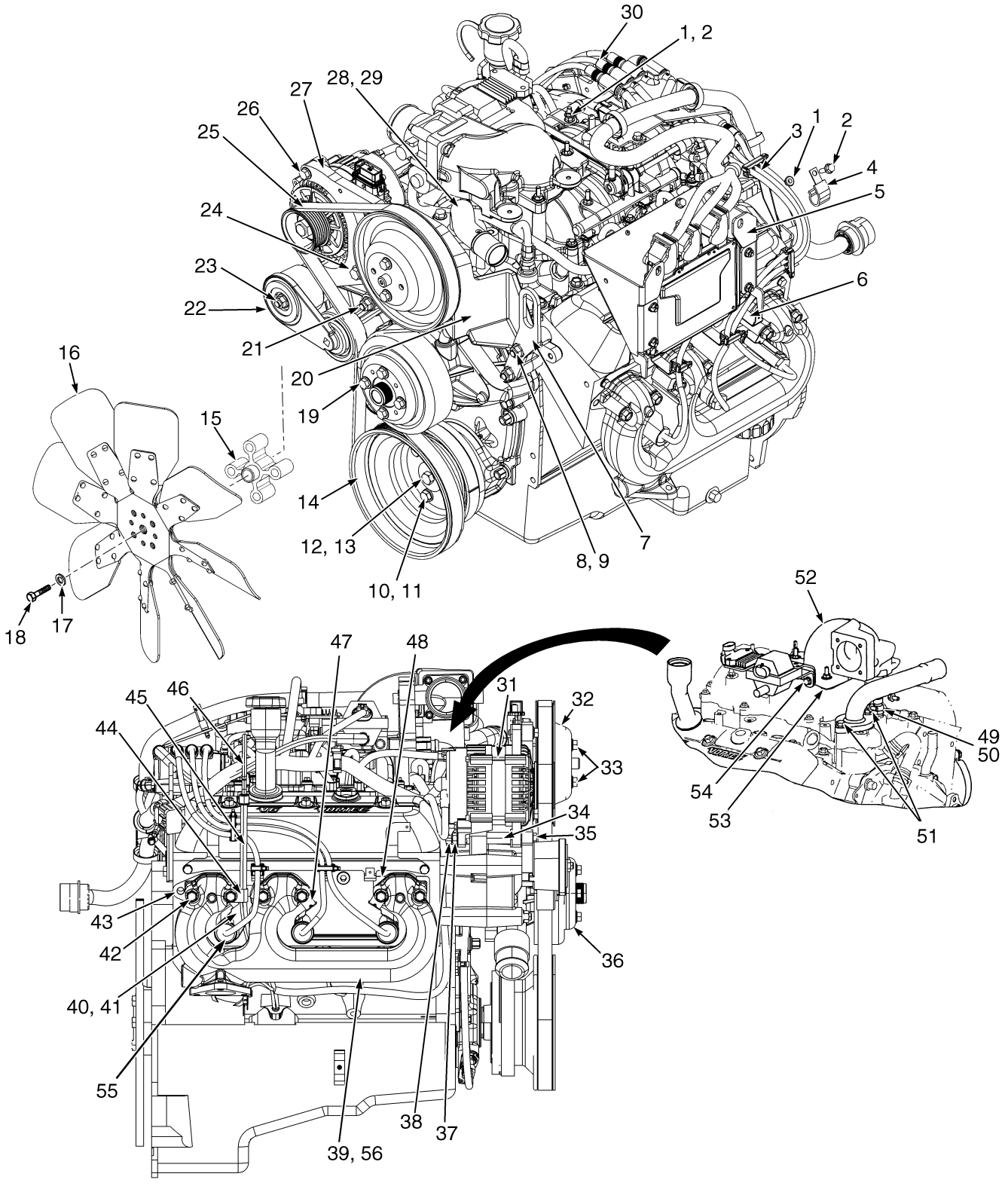

BP090443

©2014 Yale Materials Handling Corporation

ASSEMBLED ENGINE

GM 4.3L GASOLINE AND LPG (GFI OPTION) – SHEET 1 OF 3

ITEM	PART NO.	DESCRIPTION	QTY
	580077730	Engine Assy-Gas (2008 Series)	1
	580092555	Engine Assy-Gas (2009 Series)	1
	582001154	Engine Assy -Gas (2010 Series)	1
	582008137	Engine Assy -Gas (2011 Series)	1
	582015000	Engine Assy -Gas (2012 Series)	1
	580077674	Engine Assy-LPG (2008 Series)	1
	580092554	Engine Assy-LPG (2009 Series)	1
	582001153	Engine Assy -LPG (2010 Series)	1
	582007608	Engine Assy -LPG (Heavy Duty) (Optional)	1
	582008138	Engine Assy -LPG (2011 Series)	1
1	~~580004321~~		
	580047919	Nut	6
2	580039438	Capscrew	6
3	. . . . .	Spark Plug Wires (LH)	1
4	580072018	Clamp	2
5	580075007	Bracket (2007-2012 Series)	1
6	580050409	Bracket	2
7	580043001	Bracket	1
8	580027572	Nut	5
9	~~582007447~~		
	580071204	Stud	2
10	~~504057795~~		
	449022013	Lockwasher	3
11	059079500	Capscrew	3
12	~~582007440~~		
	580008487	Washer	1
13	580000341	Capscrew	1
14	~~582007441~~		
	900011268	Pulley	1
15	580025194	Spacer	1
16	580069430	Fan	1
17	502566901	Washer	4
18	580063934	Capscrew	4
19	580047714	Capscrew	4
20	580075397	Fan Mount Assembly (☞P20193 [Page 2-22])	1
21	~~582007448~~		
	580070456	Stud	2
22	580073942	Belt Tensioner	1
23	~~582007446~~		
	580070455	Stud	1
24	580049387	Capscrew	1
25	580073538	V-Belt (Serpentine 6 Rib Micro)	1
26	580036662	Capscrew	1
27	~~582007743~~		
	580073539	Bracket (Alternator)	1
28	580049106	Thermostat Housing	1
29	580052711	Thermostat (Bypass Type 197 Degree With Seal)	1
30	. . . . .	Spark Plug Wires (RH)	1
31	~~582007742~~		
	580039672	Alternator	1

©2014 Yale Materials Handling Corporation

ASSEMBLED ENGINE

GM 4.3L GASOLINE AND LPG (GFI OPTION) – SHEET 1 OF 3

ITEM	PART NO.	DESCRIPTION	QTY
32	580053099	Fan Pulley (Fan)	1
33	580037180	Capscrew	2
34	580047182	Spacer	1
35	580004502	Capscrew	1
36	~~582007580~~		
	580042922	Pulley (Water Pump)	1
37	449021001	Washer	1
38	449015098	Nut	1
39	580075454	Manifold (Exhaust)	2
39	582002808	Exhaust Manifold (Heavy Duty)	2
40	580085521	Exhaust Shield	2
41	580052062	Shield	1
42	900015229	Bolt	12
43	580041258	Gasket (Exhaust)	2
44	900011247	Clamp	1
45	580085520	Dipstick Tube (2008-2011 Series)	1
46	580087447	Dipstick	1
47	900011253	Shield	2
48	580041257	Gasket	2
49	580049173	Sensor (Coolant Temperature)	1
50	505970592	Sealant	AR
51	580030966	Capscrew	2
52	580080122	Adapter (Gasoline) (2008-2011 Series)	1
52	580080121	Adapter (LPG)	1
52	580049105	Sleeve	2
53	580048863	Gasket	1
54	580049011	Capscrew	2
	580072615	Kit-Ignition Cable (Spark Plug Wires and Coil Wire)	1
55	580095070	Heat Shield (Spark Plug)	6
56	580070814	Wrap (Manifold)	2

©2014 Yale Materials Handling Corporation

NOTES

©2014 Yale Materials Handling Corporation

ASSEMBLED ENGINE (FIGURE 2-6)

GM 4.3L GASOLINE AND LPG (GFI OPTION) — SHEET 2 OF 3

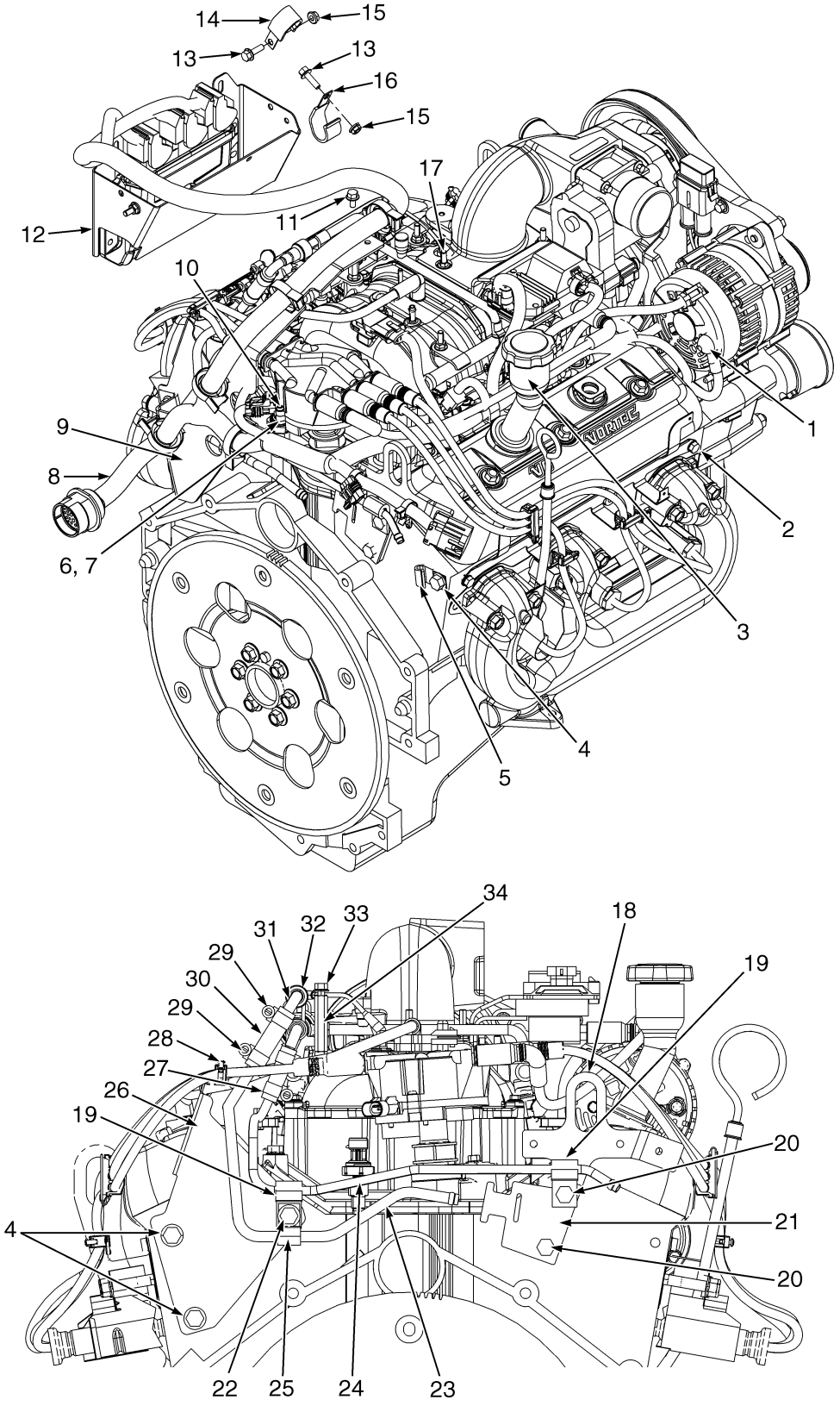

©2014 Yale Materials Handling Corporation

ASSEMBLED ENGINE

GM 4.3L GASOLINE AND LPG (GFI OPTION) – SHEET 2 OF 3

KEY:
A: Gasoline
B: LPG

ITEM	PART NO.	DESCRIPTION	QTY A	QTY B
	580077730	Engine Assy-Gas (2008 Series)	1	..
	580092555	Engine Assy-Gas (2009 Series)	1	..
	582001154	Engine Assy -Gas (2010 Series)	1	..
	582008137	Engine Assy -Gas (2011 Series)	1	..
	582015000	Engine Assy -Gas (2012 Series)	1	..
	580077674	Engine Assy-LPG (2008 Series)	..	1
	580092554	Engine Assy-LPG (2009 Series)	..	1
	582001153	Engine Assy -LPG (2010 Series)	..	1
	582007608	Engine Assy -LPG (Heavy Duty) (Optional)	..	1
	582008138	Engine Assy -LPG (2011 Series)	..	1
1	~~580004321~~			
	580047919	Nut	1	1
2	580072090	Screw	4	4
3	580046499	Filler Neck	1	1
4	580072047	Screw	4	4
5	505971582	Clamp	2	2
6	580059320	Fitting	1	1
7	505970592	Sealant	AR	AR
8	580077675	Wire Harness (Engine) (2008-2009 Series) (☞P20243 [Page 6-84])	1	..
8	582001117	Wire Harness (Engine) (2010-2012 Series) (☞P21367 [Page 6-88])	1	..
8	580077676	Wire Harness (Engine) (2008-2009 Series) (☞P20241 [Page 6-72])	..	1
8	582001122	Wire Harness (Engine) (☞P21368 [Page 6-76])	..	1
9	580073353	Bracket	1	1
10	580051890	Pressure Transducer Sensor (Oil Pressure)	1	1
11	580039900	Capscrew	3	3
12	580086129	Engine Control Module (2008-2009 Engine ECU)	..	1
12	582003650	Engine Control Module (With Catalytic Converter)	..	1
12	582003651	Engine Control Module (Without Catalytic Converter)	..	1
12	580086130	Engine Control Module (2008-2009 Engine ECU)	1	..
12	582003649	Engine Control Module (2010-2012 Series)	1	..
13	580039438	Capscrew	6	6
14	580072018	Clamp	1	1
15	~~580004321~~			
	580047919	Nut	6	6
16	580072019	Clamp	2	2
17	580054232	Fitting	1	1
18	580073352	Bracket	1	1
19	580007683	Clamp	2	..
20	580000338	Screw	2	2
21	580065523	Bracket	1	..
22	580072047	Screw	1	1
23	580065858	Tube	1	..

©2014 Yale Materials Handling Corporation

ASSEMBLED ENGINE

GM 4.3L GASOLINE AND LPG (GFI OPTION) – SHEET 2 OF 3

KEY:
A: Gasoline
B: LPG

ITEM	PART NO.	DESCRIPTION	QTY A	QTY B
24	580046654	Tube	1	..
25	900003231	Clamp	1	..
26	580070000	Bracket	1	..
27	580042354	Hose	1	..
28	580050410	Retainer (Three Wire Clip)	1	1
29	511405800	Clamp	4	..
30	580046629	Hose	1	..
31	580043696	Elbow (3/8 90 degree Elbow)	1	..
32	580042867	Fitting	1	..
33	580039900	Capscrew	5	5
34	580065981	Adapter	1	1
	a 501884908	Fitting	1	1

FOOTNOTES:

a Not Illustrated

©2014 Yale Materials Handling Corporation

NOTES

©2014 Yale Materials Handling Corporation

ASSEMBLED ENGINE (FIGURE 2-7)

GM 4.3L GASOLINE AND LPG (GFI OPTION) — SHEET 3 OF 3

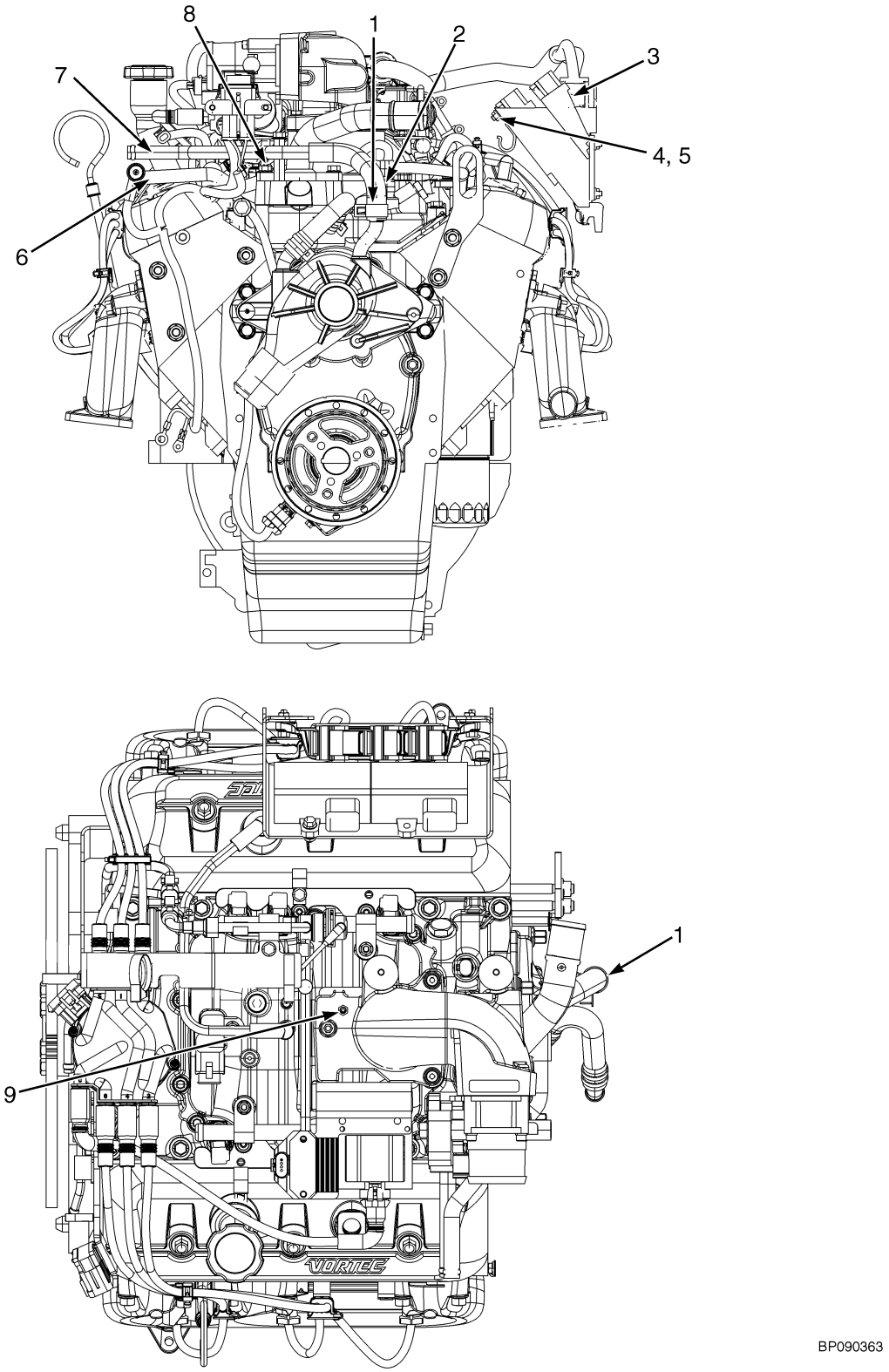

©2014 Yale Materials Handling Corporation

ASSEMBLED ENGINE

GM 4.3L GASOLINE AND LPG (GFI OPTION) – SHEET 3 OF 3

ITEM	PART NO.	DESCRIPTION	QTY
	580077730	Engine Assy-Gas (2008 Series)	1
	580092555	Engine Assy-Gas (2009 Series)	1
	582001154	Engine Assy -Gas (2010 Series)	1
	582008137	Engine Assy -Gas (2011 Series)	1
	582015000	Engine Assy -Gas (2012 Series)	1
	580077674	Engine Assy-LPG (2008 Series)	1
	580092554	Engine Assy-LPG (2009 Series)	1
	582001153	Engine Assy -LPG (2010 Series)	1
	582007608	Engine Assy -LPG (Heavy Duty) (Optional)	1
	582008138	Engine Assy -LPG (2011 Series)	1
1	062159500	Clamp	2
1	**a** 062159500	Clamp	1
2	**b** 580060284	Hose	1
3	**bc** 580066710	Module (Injector Driver)	2
4	~~580004321~~		
	580047919	Nut	6
5	580039438	Capscrew	6
6	**b** 580072091	Tube	1
7	**b** 580060283	Tube	1
8	**b** 580030969	Capscrew	1
9	**b** 580054232	Fitting	1

FOOTNOTES:

a Gasoline Engine
b LPG Engine
c Used up through 2009 series

©2014 Yale Materials Handling Corporation

FAN MOUNT ASSEMBLY (FIGURE 2-8)

GM 4.3L GASOLINE AND LPG — GFI OPTION

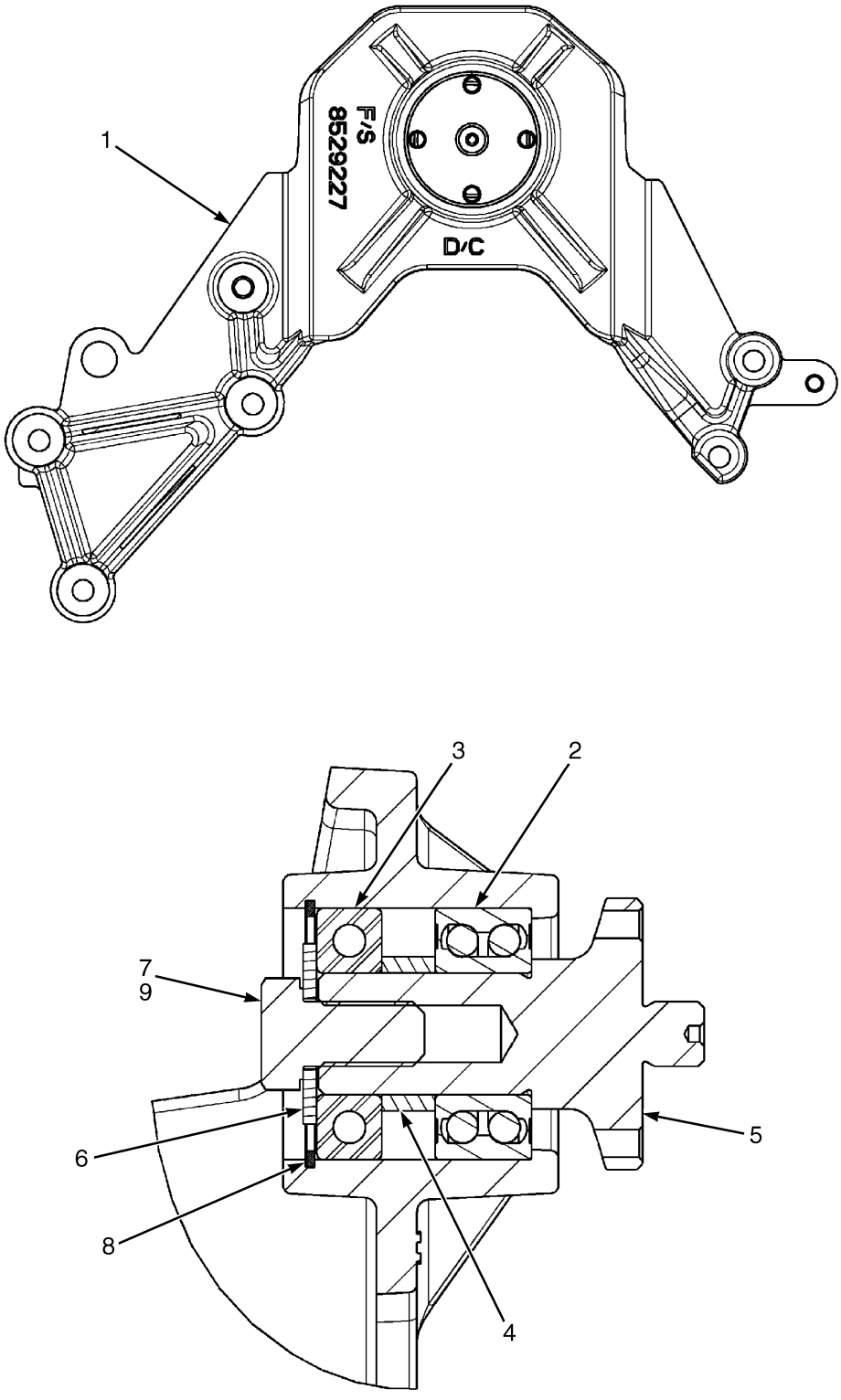

©2014 Yale Materials Handling Corporation

FAN MOUNT ASSEMBLY

GM 4.3L GASOLINE AND LPG – GFI OPTION

ITEM	PART NO.	DESCRIPTION	QTY
	580075397	Fan Mount Assembly	1
1	~~582007449~~		
	580067616	Bracket	1
2	580067641	Ball Bearing	1
3	520426863	Bearing	1
4	~~582007452~~		
	580067617	Spacer	1
5	~~582007453~~		
	580067615	Shaft	1
6	502398908	Washer	1
7	449001125	Capscrew	1
8	~~580027009~~		
	640046913	Snap Ring	1
9	501702901	Loctite	AR

©2014 Yale Materials Handling Corporation

FAN MOUNT ASSEMBLY (FIGURE 2-9)

GM 4.3L, GASOLINE AND LPG — PSI OPTION (S/N D878V02178K →)

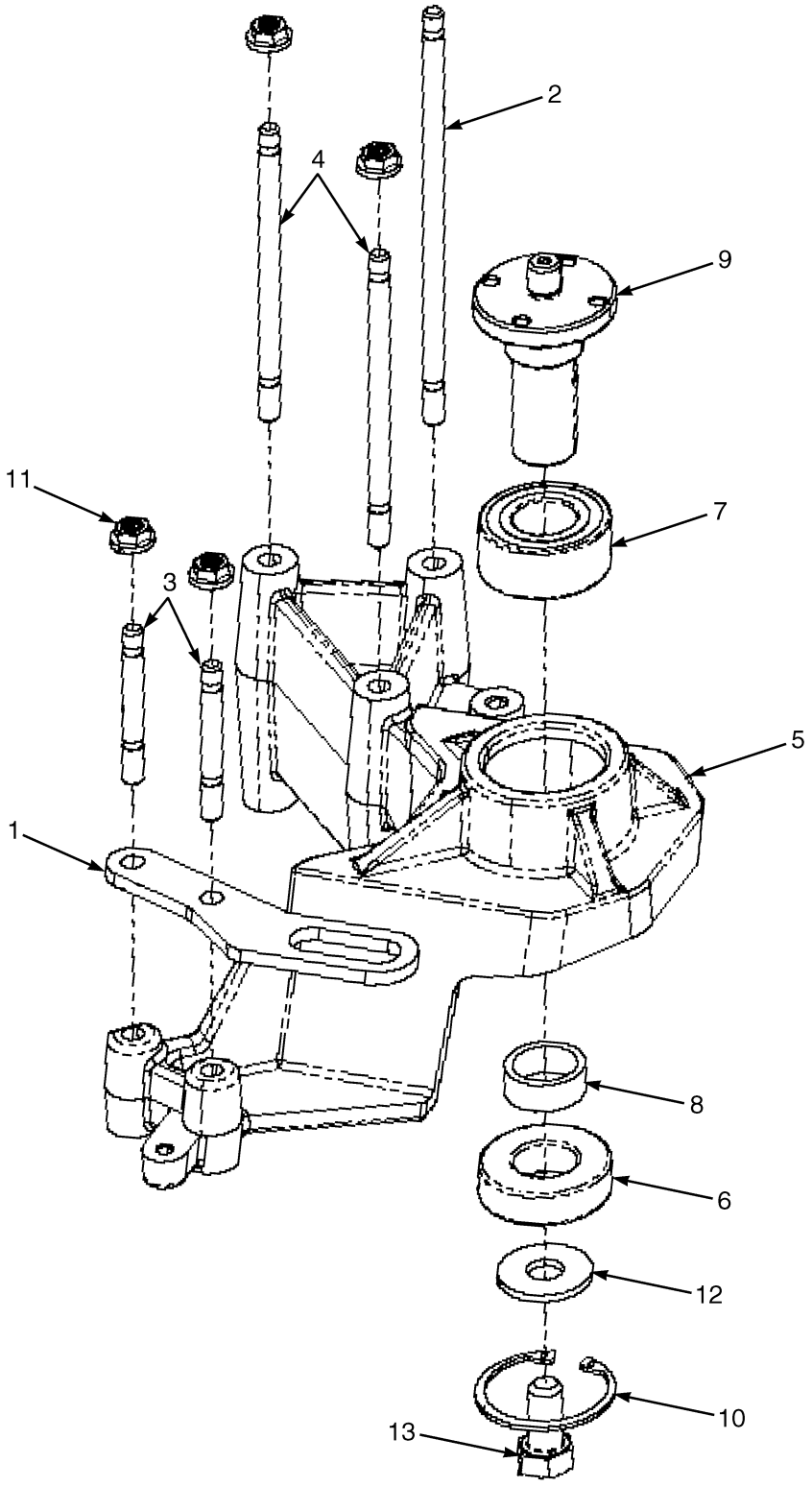

©2014 Yale Materials Handling Corporation

FAN MOUNT ASSEMBLY

GM 4.3L, GASOLINE AND LPG – PSI OPTION (S/N D878V02178K →)

ITEM	PART NO.	DESCRIPTION	QTY
1	582007432	Bracket	1
2	~~582007446~~		
	580070455	Stud	1
3	~~582007447~~		
	580071204	Stud	2
4	~~582007448~~		
	580070456	Stud	2
5	~~582007449~~		
	580067616	Bracket	1
6	582007450	Ball Bearing	1
7	582007451	Ball Bearing	1
8	~~582007452~~		
	580067617	Spacer	1
9	~~582007453~~		
	580067615	Shaft	1
10	582007454	Snap Ring	1
11	580027572	Nut	4
12	015040600	Lockwasher	1
13	449001125	Capscrew	1

©2014 Yale Materials Handling Corporation

FAN ASSEMBLY (FIGURE 2-10)

GM 4.3L, GASOLINE AND LPG — PSI OPTION (S/N D878V02178K →)

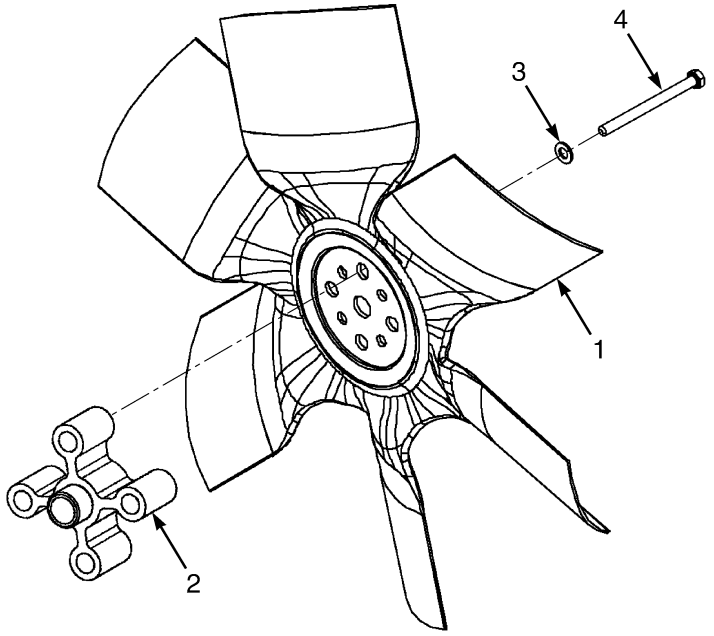

BP090468

ITEM	PART NO.	DESCRIPTION	QTY
1	580084515	Fan (18" Composite)	1
2	580025194	Spacer	1
3	502566901	Washer	4
4	580063934	Capscrew	4

©2014 Yale Materials Handling Corporation

NOTES

©2014 Yale Materials Handling Corporation

PULLEY AND TENSIONER (FIGURE 2-11)

GM 4.3L GASOLINE AND LPG — PSI OPTION

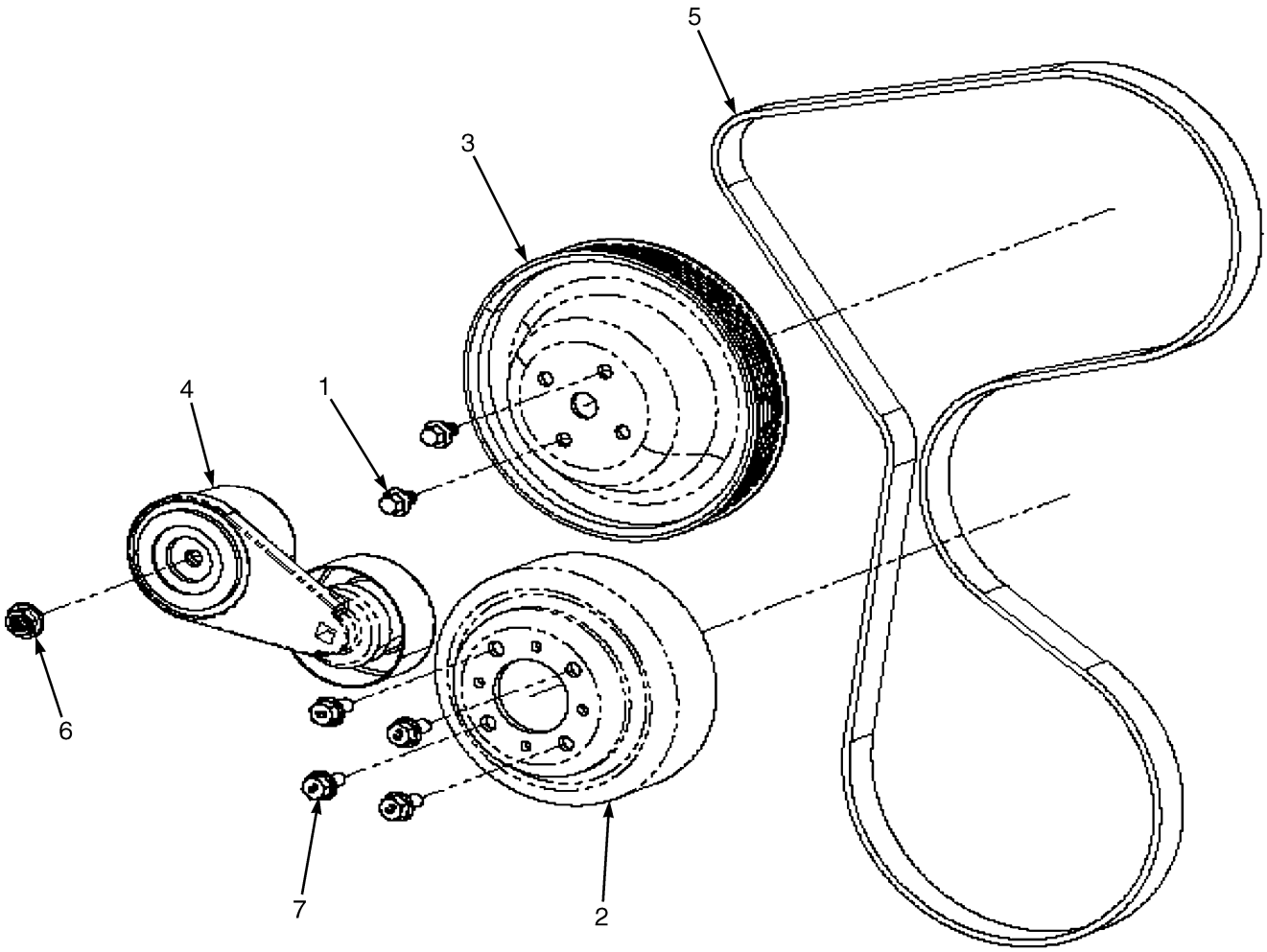

BP090458

©2014 Yale Materials Handling Corporation

PULLEY AND TENSIONER

GM 4.3L GASOLINE AND LPG – PSI OPTION

ITEM	PART NO.	DESCRIPTION	QTY
	582016865	Engine Assy-LPG	1
	582016867	Engine Assy-LPG (Heavy Duty)	1
	582016864	Engine Assy-Gas (PSI)	1
1	582007579	Bolt	2
2	~~582007580~~		
	580042922	Pulley (Water Pump)	1
3	582007581	Fan Pulley	1
4	582007582	Tensioner	1
5	580073538	V-Belt (Serpentine 6 Rib Micro)	1
6	580027572	Nut	1
7	580047714	Capscrew	4

©2014 Yale Materials Handling Corporation

CRANKSHAFT PULLEY (FIGURE 2-12)

GM 4.3L GASOLINE AND LPG — PSI OPTION (S/N D878V02178K →)

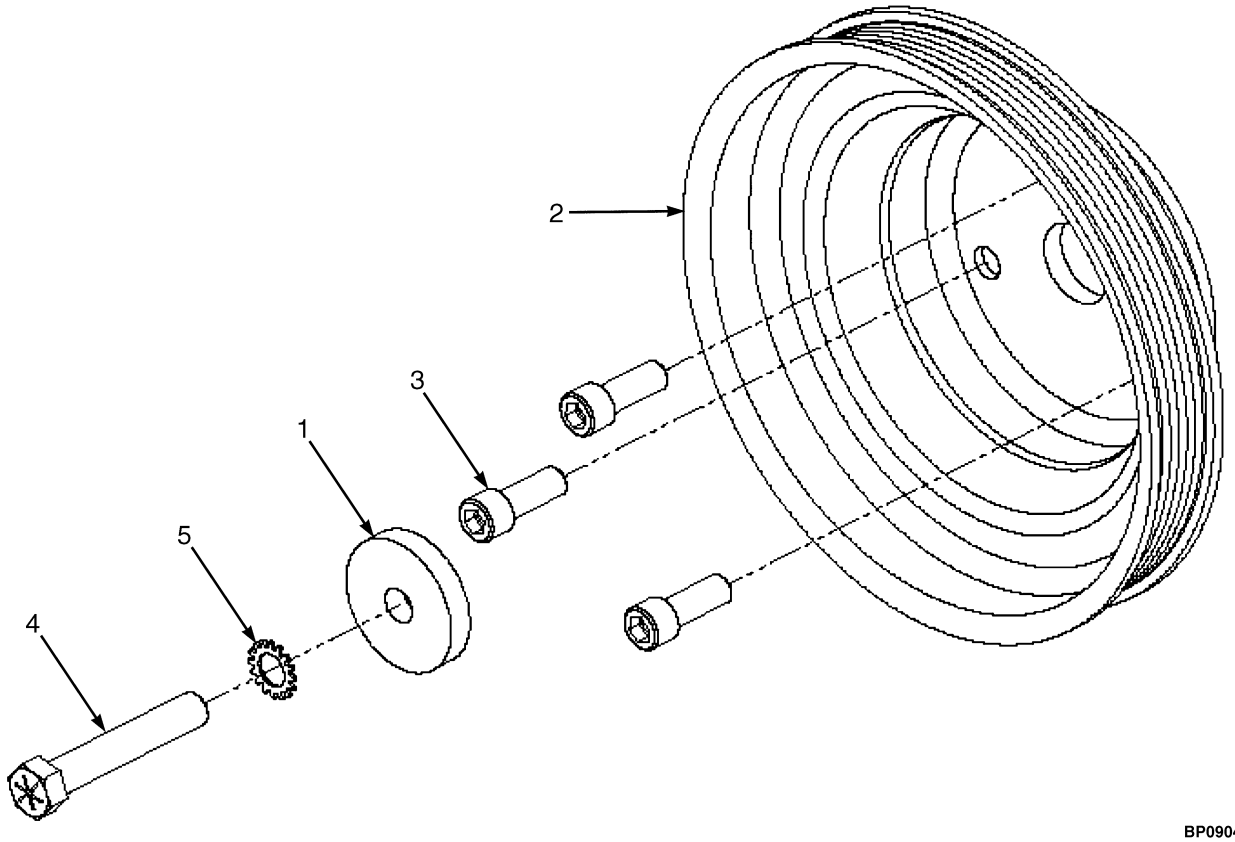

BP090465

ITEM	PART NO.	DESCRIPTION	QTY
	582016865	Engine Assy-LPG	1
	582016867	Engine Assy-LPG (Heavy Duty)	1
	582016864	Engine Assy-Gas (PSI)	1
1	~~582007440~~		
	580008487	Washer	1
2	~~582007441~~		
	900011268	Pulley	1
3	0377631OW	Capscrew	3
4	582007809	Capscrew	1
5	015040300	Lockwasher	1

©2014 Yale Materials Handling Corporation

EXHAUST MANIFOLDS (FIGURE 2-13)

GM 4.3L GASOLINE AND LPG — PSI OPTION (S/N D878V02178K →)

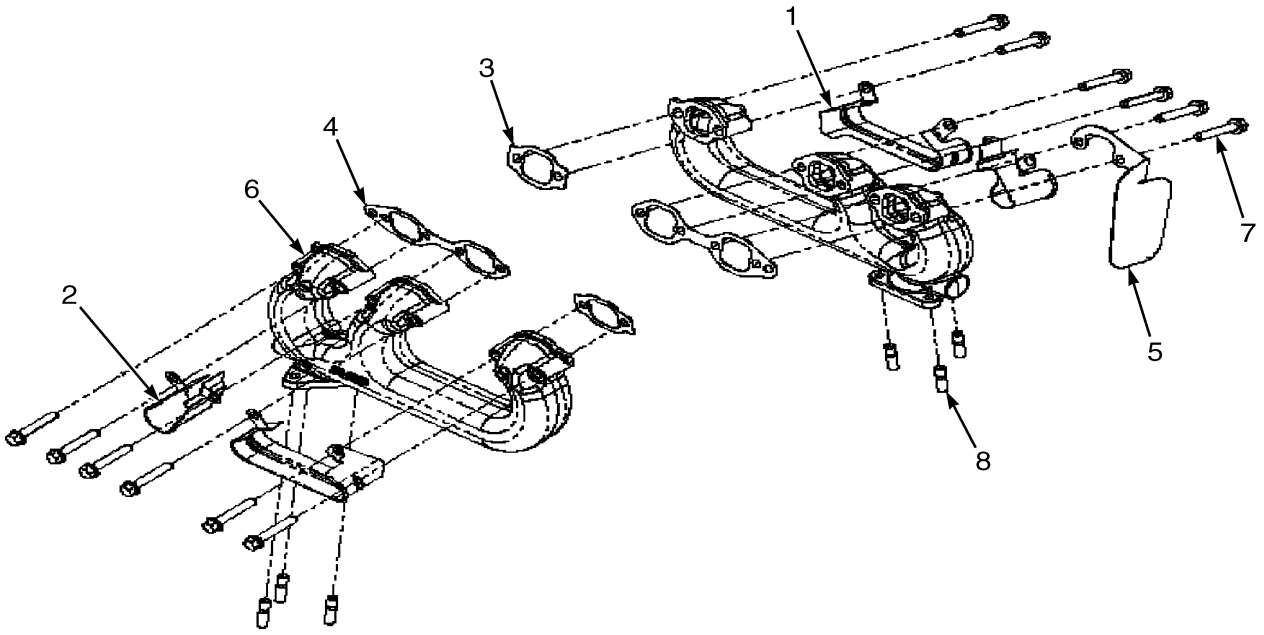

BP090459

ITEM	PART NO.	DESCRIPTION	QTY
	582016865	Engine Assy-LPG	1
	582016867	Engine Assy-LPG (Heavy Duty)	1
	582016864	Engine Assy-Gas (PSI)	1
1	900011253	Shield	2
2	580052062	Shield	1
3	582016982	Gasket	2
4	582016983	Gasket	2
5	580036920	Heat Shield	1
6	582016984	Exhaust Manifold (Standard)	2
6	582016991	Exhaust Manifold (Heavy Duty)	2
7	900015229	Bolt	12
8	~~580054724~~		
	582014783	Stud	6

©2014 Yale Materials Handling Corporation

THERMOSTAT AND WATER OUTLET HOUSING (FIGURE 2-14)

GM 4.3L LPG — PSI OPTION (S/N D878V02178K →)

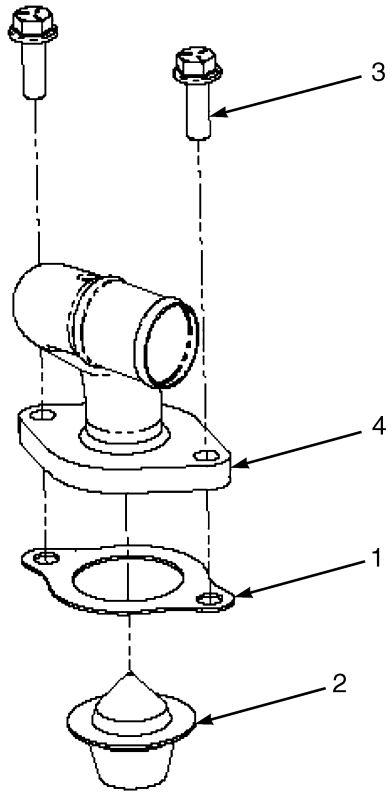

BP090461

ITEM	PART NO.	DESCRIPTION	QTY
	582016865	Engine Assy-LPG	1
	582016867	Engine Assy-LPG (Heavy Duty)	1
1	582007437	Gasket	1
2	582007438	Thermostat	1
3	~~580000619~~		
	020772500	Screw	2
4	582016981	Thermostat Housing	1

©2014 Yale Materials Handling Corporation

THERMOSTAT AND WATER OUTLET HOUSING (FIGURE 2-15)

GM 4.3L GASOLINE — PSI OPTION

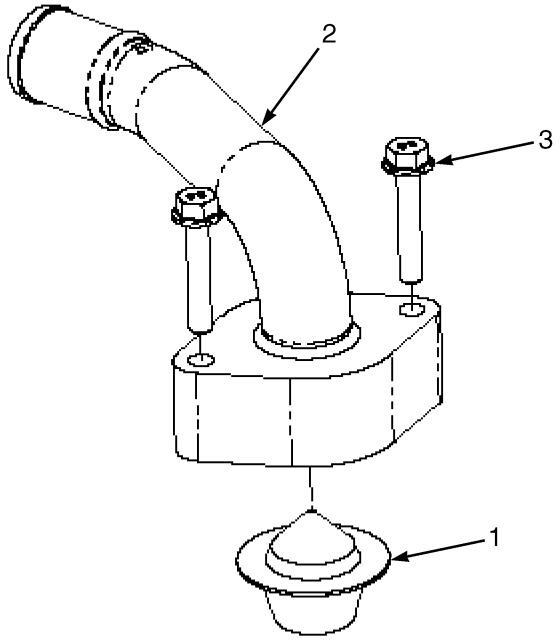

BP090520

ITEM	PART NO.	DESCRIPTION	QTY
	582016864	Engine Assy-Gas	1
1	582021748	Thermostat	1
2	582021749	Water Outlet	1
3	582021750	Bolt	2

©2014 Yale Materials Handling Corporation

CYLINDER HEAD (FIGURE 2-16)
GM 4.3L GASOLINE AND LPG

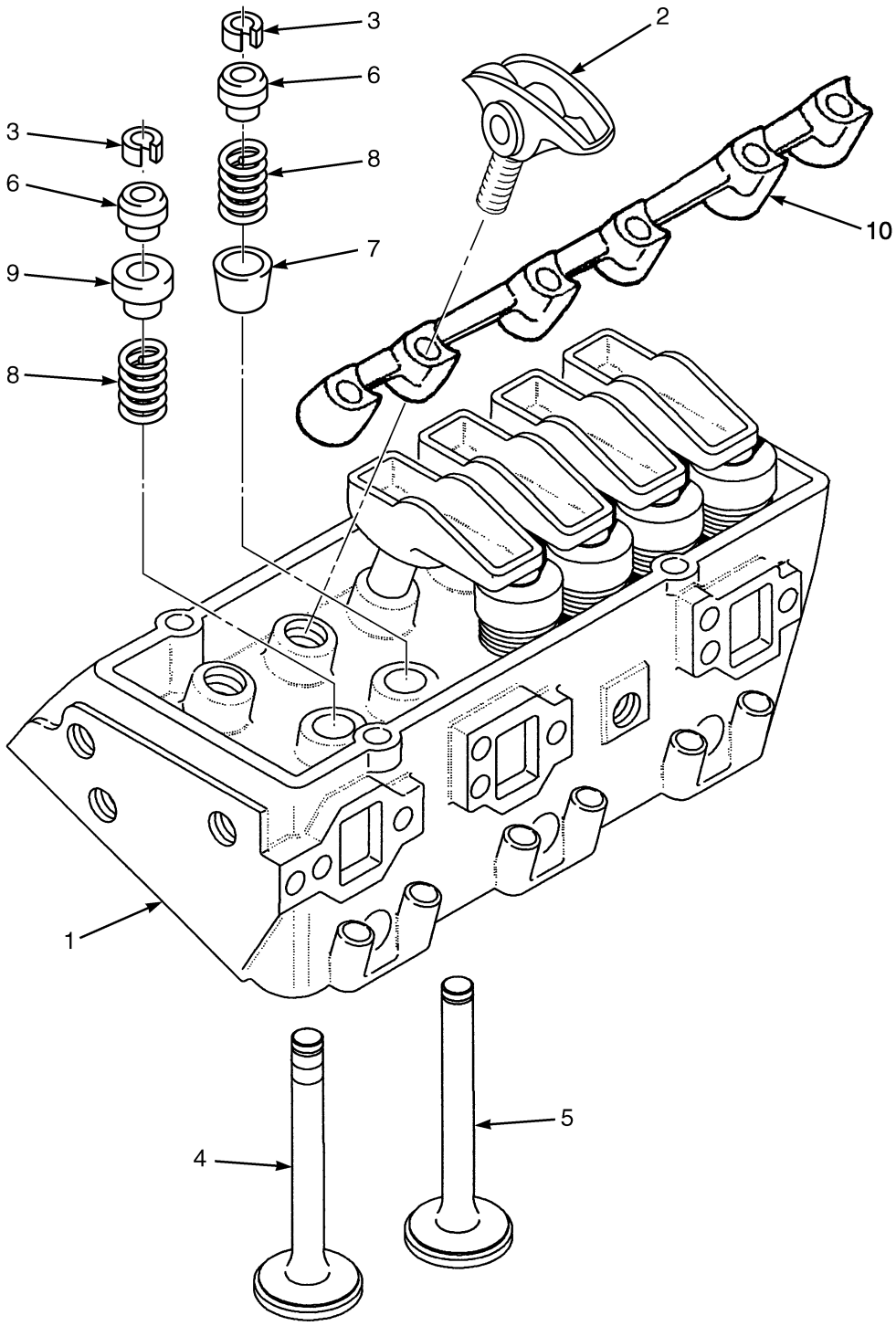

©2014 Yale Materials Handling Corporation

CYLINDER HEAD
GM 4.3L GASOLINE AND LPG

ITEM	PART NO.	DESCRIPTION	QTY
	580077730	Engine Assy-Gas (2008 Series)	1
	580092555	Engine Assy-Gas (2009 Series)	1
	582001154	Engine Assy -Gas (2010 Series)	1
	582008137	Engine Assy -Gas (2011 Series)	1
	582015000	Engine Assy -Gas (2012 Series) (GFI Series)	1
	582016864	Engine Assy-Gas (PSI Series)	1
	580077674	Engine Assy-LPG (2008 Series)	1
	580092554	Engine Assy-LPG (2009 Series)	1
	582001153	Engine Assy -LPG (2010 Series)	1
	582007608	Engine Assy -LPG (Heavy Duty) (Optional)	1
	a 582008138	Engine Assy -LPG (2011 Series) (GFI Series)	1
	b 582016865	Engine Assy-LPG (PSI Series)	1
	b 582016867	Engine Assy-LPG (Heavy Duty) (PSI Series)	1
1	580014838	Cylinder Head (Gasoline)	2
1	580079540	Cylinder Head (LPG)(2007-201 Series)	2
1	520046865	Cylinder Head Gasket	1
1	582006716	Kit-Service (Head-LPG) (Heavy Duty with Intake Seat Insert)	2
2	580079539	Rocker Arm (2007-2012 Series)	12
2	520046863	Bolt	4
3	520046837	Valve Stop	24
4	520046832	Exhaust Valve (Gasoline)	6
4	580026863	Exhaust Valve (LPG)	6
5	520046833	Inlet Valve	6
6	520053823	Cap	12
7	520046835	Seal (Black-Intake) (Intake)	12
8	520046836	Spring (Gasoline)	12
8	580090276	Spring (LPG)	1
9	580008775	Seal (Orange-Exhaust) (Exhaust)	12
10	580020930	Support (Rocker Arm)	2

FOOTNOTES:

a → S/N D878V02177K

b S/N D878V02178K →

©2014 Yale Materials Handling Corporation

CYLINDER BLOCK (FIGURE 2-17)

GM 4.3L GASOLINE AND LPG

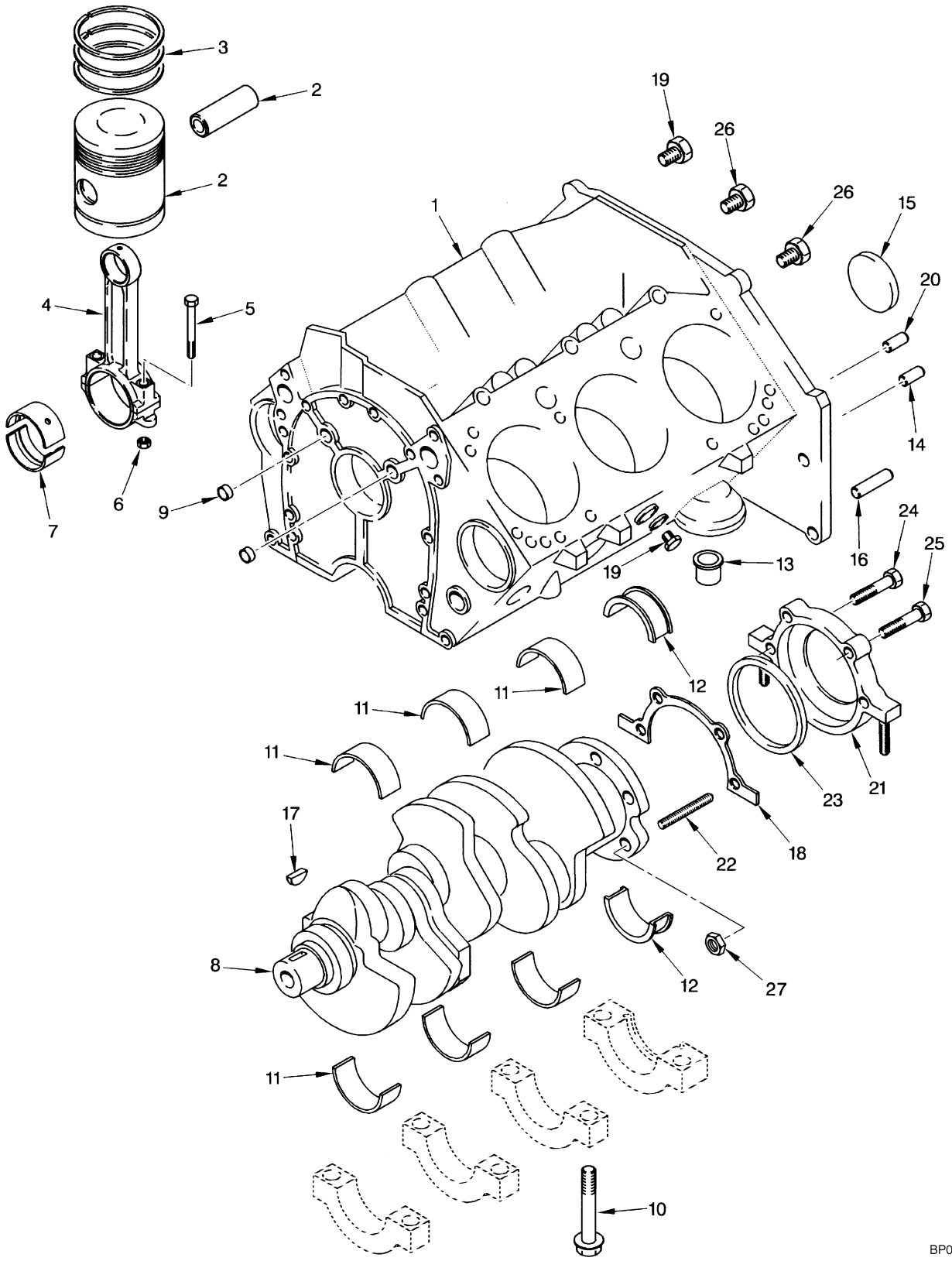

©2014 Yale Materials Handling Corporation

CYLINDER BLOCK
GM 4.3L GASOLINE AND LPG

ITEM	PART NO.	DESCRIPTION	QTY
	580077730	Engine Assy-Gas (2008 Series)	1
	580092555	Engine Assy-Gas (2009 Series)	1
	582001154	Engine Assy -Gas (2010 Series)	1
	582008137	Engine Assy -Gas (2011 Series)	1
	582015000	Engine Assy -Gas (2012 Series) (GFI Series)	1
	582016864	Engine Assy-Gas (PSI Series)	1
	580077674	Engine Assy-LPG (2008 Series)	1
	580092554	Engine Assy-LPG (2009 Series)	1
	582001153	Engine Assy -LPG (2010 Series)	1
	582007608	Engine Assy -LPG (Heavy Duty) (Optional)	1
	b 582008138	Engine Assy -LPG (2011 Series) (GFI Series)	1
	c 582016865	Engine Assy-LPG (PSI Series)	1
	c 582016867	Engine Assy-LPG (Heavy Duty) (PSI Series)	1
1	. . . . .	Short Block Assembly	1
2	520047875	Kit-Piston with Pin (Standard)	6
2	520047876	Kit-Piston with Pin (0.020 O/S)	6
2	580071200	Kit-Piston with Pin (0.005 in O/S)	6
3	520047877	Kit-Piston Ring (Standard)	6
3	520047878	Kit-Piston Ring (0.020 O/S)	6
4	**b** 900005237	Piston Rod (GFI Series)	6
4	**c** 582016152	Rod Assy (Piston) (PSI Series)	1
5	582016151	Bolt (PSI Series)	2
5	580001744	Bolt (GFI Series)	2
6	580015148	Nut	2
7	520047880	Piston Rod Bearing (Connecting Rod)	6
8	580008777	Crankshaft	1
9	900005280	Plug (RH)	3
10	900005254	Bolt	10
11	580048804	Bearing Set (Standard)	3
11	580009266	Bearing Set (0.020 in. O/S)	3
12	**b** 520047888	Bearing Set (0.010 in. O/S) (GFI Series)	1
12	**c** 520047886	Bearing Set (0.001 in.) (PSI Series)	1
13	580032627	Valve	1
14	900005256	Pin	4
15	900005255	Plug	1
16	900005257	Pin	2
17	580000316	Key	1
18	580026803	Gasket	1
19	580032617	Plug (2007-2011 Series)	2
19	900005280	Plug (PSI Series)	2
20	900005278	Pin (CR/SHF RR Seal Retainer)	1
21	580008599	Retainer	1
22	580000309	Stud	2
23	580008600	Seal	1
24	900006219	Bolt	1
24	582016989	Bolt (PSI Series)	1
25	~~900006220~~		
	582022300	Bolt	1
25	582016989	Bolt (PSI Series)	1
26	900006251	Plug	4

©2014 Yale Materials Handling Corporation

CYLINDER BLOCK
GM 4.3L GASOLINE AND LPG

ITEM	PART NO.	DESCRIPTION	QTY
27	580026931	Nut	1
	a 520043812	Plug (PSI Series)	8

FOOTNOTES:

a Not Illustrated
b → S/N D878V02177K
c S/N D878V02178K →

©2014 Yale Materials Handling Corporation

NOTES

©2014 Yale Materials Handling Corporation

CAMSHAFT AND OIL PAN (FIGURE 2-18)

GM 4.3L GASOLINE AND LPG — GFI OPTION

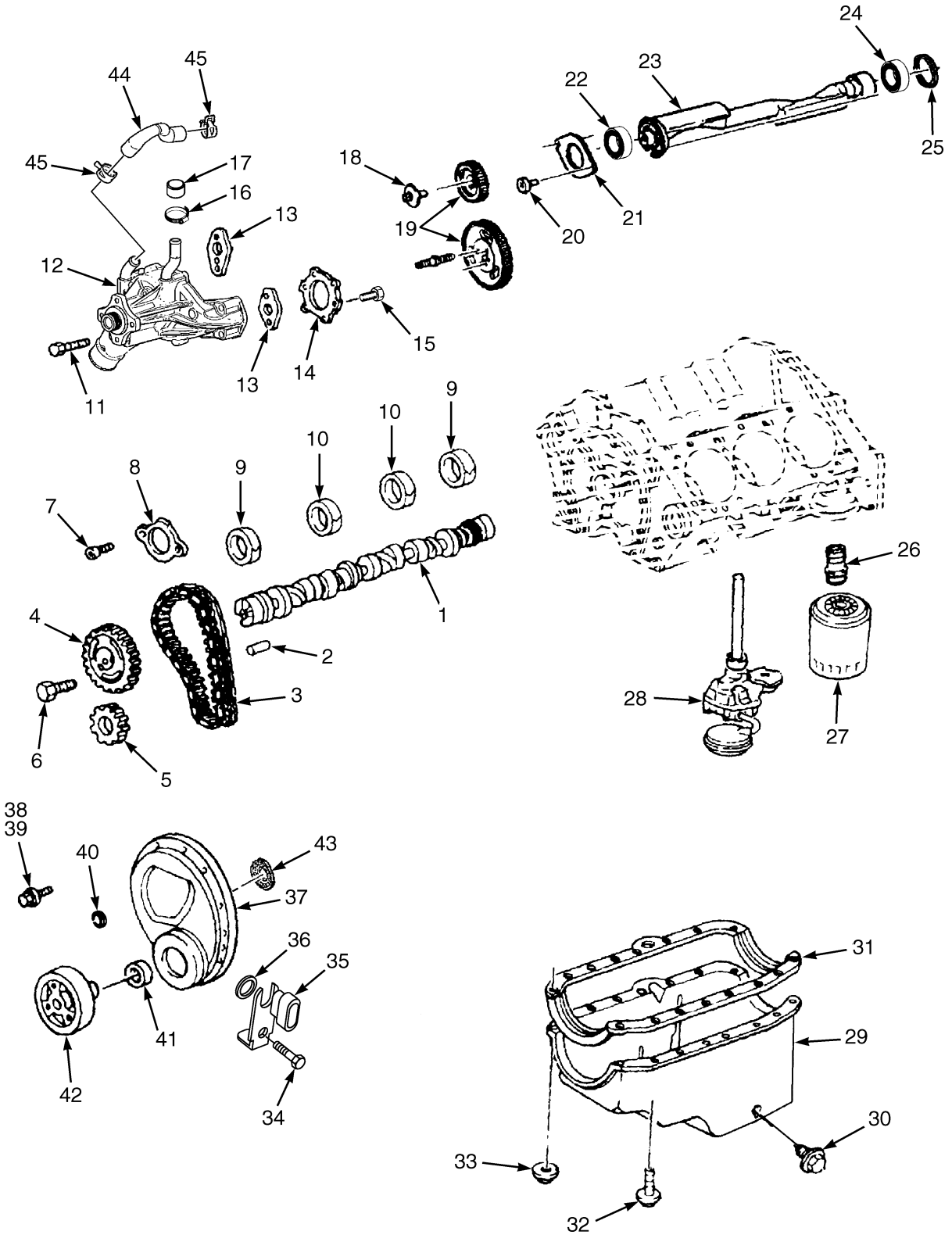

BP090277

©2014 Yale Materials Handling Corporation

CAMSHAFT AND OIL PAN
GM 4.3L GASOLINE AND LPG – GFI OPTION

ITEM	PART NO.	DESCRIPTION	QTY
	580077730	Engine Assy-Gas (2008 Series)	1
	580092555	Engine Assy-Gas (2009 Series)	1
	582001154	Engine Assy -Gas (2010 Series)	1
	582008137	Engine Assy -Gas (2011 Series)	1
	582015000	Engine Assy -Gas (2012 Series)	1
	580077674	Engine Assy-LPG (2008 Series)	1
	580092554	Engine Assy-LPG (2009 Series)	1
	582001153	Engine Assy -LPG (2010 Series)	1
	582007608	Engine Assy -LPG (Heavy Duty) (Optional)	1
	582008138	Engine Assy -LPG (2011 Series)	1
1	580071203	Camshaft	1
2	900005282	Pin	1
3	580088767	Kit-Repair Cable Chain (Timing Chain)	1
3	. . . . .	Timing Chain	1
4	. . . . .	Sprocket	1
5	. . . . .	Sprocket	1
6	900005286	Bolt	3
7	900005287	Bolt	2
8	900005288	Retainer	1
9	580001617	Bearing (2.020)	2
10	580001619	Bearing (2.000)	2
11	900015229	Bolt	4
12	580088774	Water Pump (2008-2012 Series)	1
13	580088773	Gasket	1
14	580008575	Gasket	1
15	520046840	Bolt	10
16	062159500	Clamp	1
17	900015240	Cap	1
18	900006233	Bolt	6
19	900006234	Kit-Gear (Balancer)	1
20	900006240	Bolt	2
21	520046852	Retainer	1
22	900006239	Bearing	1
23	900006236	Shaft	1
24	580000318	Bearing	1
25	900005255	Plug	2
26	900006211	Fitting	1
27	900006282	Oil Filter	1
28	520046841	Engine Oil Pump	1
29	580088846	Oil Pan	1
30	580009275	Screw	1
30	580009276	Gasket	1
31	580088845	Gasket	1
32	520046851	Bolt	10
33	520042866	Nut	1
34	580032622	Bolt	1
35	580088847	Sensor (Crankshaft Position)	1
36	580032621	O-Ring	1
37	580088831	Engine Cover (Front Cover)	1
37	580079953	Bracket	1

©2014 Yale Materials Handling Corporation

CAMSHAFT AND OIL PAN

GM 4.3L GASOLINE AND LPG – GFI OPTION

ITEM	PART NO.	DESCRIPTION	QTY
37	580079956	Shoe (Tensioner)	1
38	520046844	Bolt	4
39	900006213	Bolt	2
40	520046854	Grommet	6
41	580090589	Oil Seal	1
42	580071205	Damper	1
43	580032619	Ring (Crankshaft Position Sensor)	1
43	582001910	Ring (Crankshaft Position Sensor) (Alternate Part)	1
44	580071308	Hose Assy (Water Pump Bypass)	1
45	580014841	Clamp	2
	a 580088832	Pin	2
	a 580088833	Gasket (Engine Front Cover)	1

FOOTNOTES:

a Not Illustrated

©2014 Yale Materials Handling Corporation

NOTES

©2014 Yale Materials Handling Corporation

CAMSHAFT AND OIL PAN (FIGURE 2-19)

GM 4.3L LPG — PSI OPTION (S/N D878V02178K →)

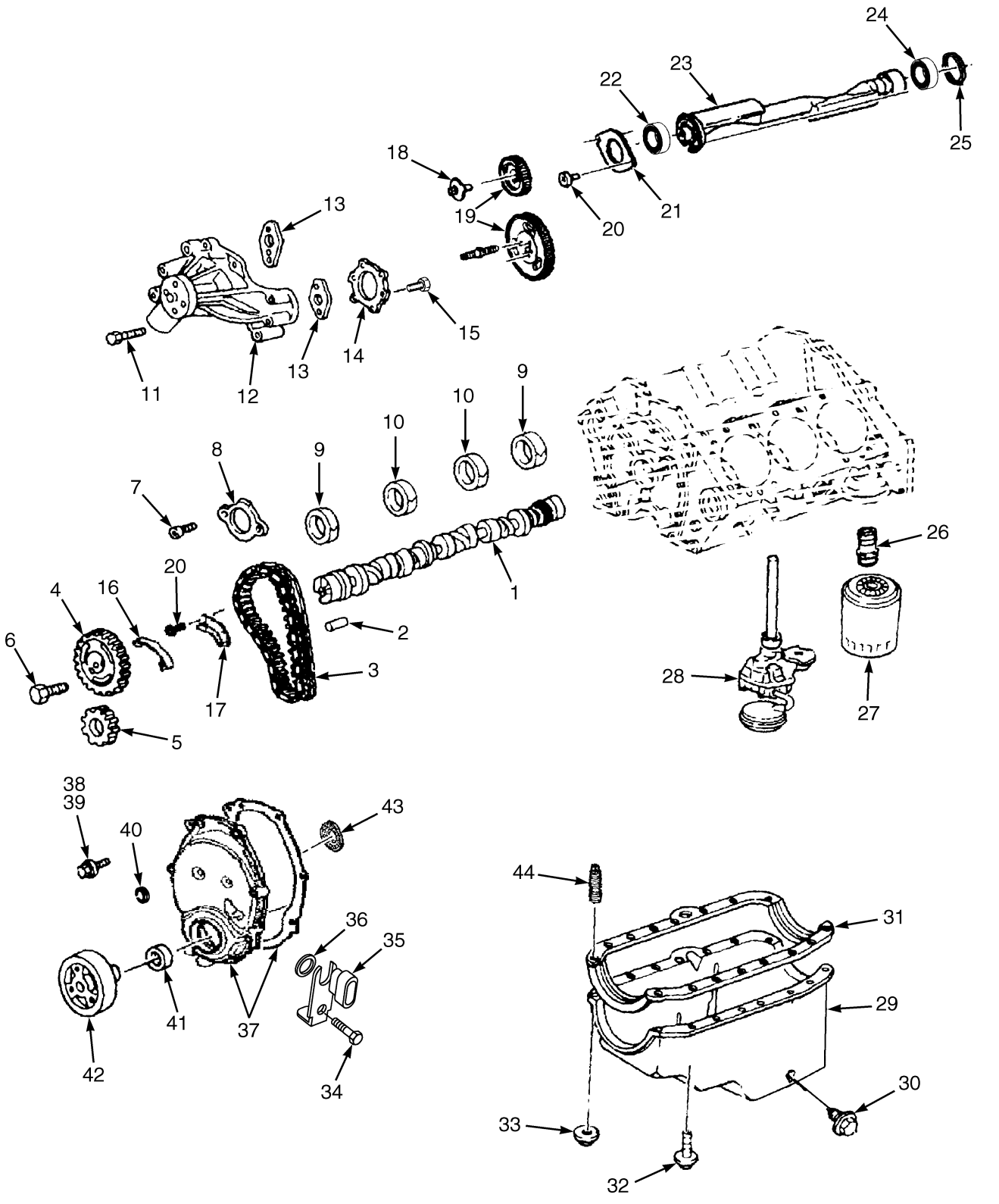

©2014 Yale Materials Handling Corporation

CAMSHAFT AND OIL PAN

GM 4.3L LPG – PSI OPTION (S/N D878V02178K →)

ITEM	PART NO.	DESCRIPTION	QTY
	582016865	Engine Assy-LPG	1
	582016867	Engine Assy-LPG (Heavy Duty)	1
	582016864	Engine Assy-Gas (PSI)	1
1	580071203	Camshaft	1
2	900005282	Pin	1
3	580088767	Kit-Repair Cable Chain	1
3	. . . . .	Timing Chain	1
4	. . . . .	Sprocket	1
5	. . . . .	Sprocket	1
6	900005286	Bolt	3
7	900005287	Bolt	2
8	900005288	Retainer	1
9	580001617	Bearing (2.020)	2
10	580001619	Bearing (2.000)	2
11	900015229	Bolt	4
12	582016986	Water Pump	1
13	900005292	Gasket	1
14	580008575	Gasket	1
15	580087935	Bolt	10
16	580079956	Shoe (Tensioner)	1
17	580079953	Bracket	1
18	900006233	Bolt	6
19	900006234	Kit-Gear	1
20	900006240	Bolt	3
21	520046852	Retainer	1
22	580000318	Bearing	1
22	580000318	Bearing (PSI)	1
23	900006236	Shaft	1
24	580000318	Bearing	1
25	900005255	Plug	2
26	900006211	Fitting	1
27	900006282	Oil Filter	1
28	520046841	Engine Oil Pump (☞P20168 [Page 2-58])	1
29	580088846	Oil Pan	1
30	580009275	Screw	1
30	580009276	Gasket	1
31	580088845	Gasket	1
32	520046851	Bolt	10
33	520042866	Nut	1
34	580032622	Bolt	1
35	580088847	Sensor (Crankshaft Position)	1
36	580032621	O-Ring	1
37	580088831	Engine Cover (Front Cover)	1
37	580088833	Gasket (Engine Front Cover)	1
38	520046844	Bolt	4
39	900006213	Bolt	2
40	520046854	Grommet	6
41	580090589	Oil Seal	1
42	580071205	Damper	1
43	580032619	Ring (Crankshaft Position Sensor)	1

©2014 Yale Materials Handling Corporation

CAMSHAFT AND OIL PAN

GM 4.3L LPG – PSI OPTION (S/N D878V02178K →)

ITEM	PART NO.	DESCRIPTION	QTY
44	900006218	Stud (Oil Pan)	1

©2014 Yale Materials Handling Corporation

NOTES

©2014 Yale Materials Handling Corporation

VALVE COVER AND INLET MANIFOLD (FIGURE 2-20)

GM 4.3L GASOLINE AND LPG — GFI OPTION

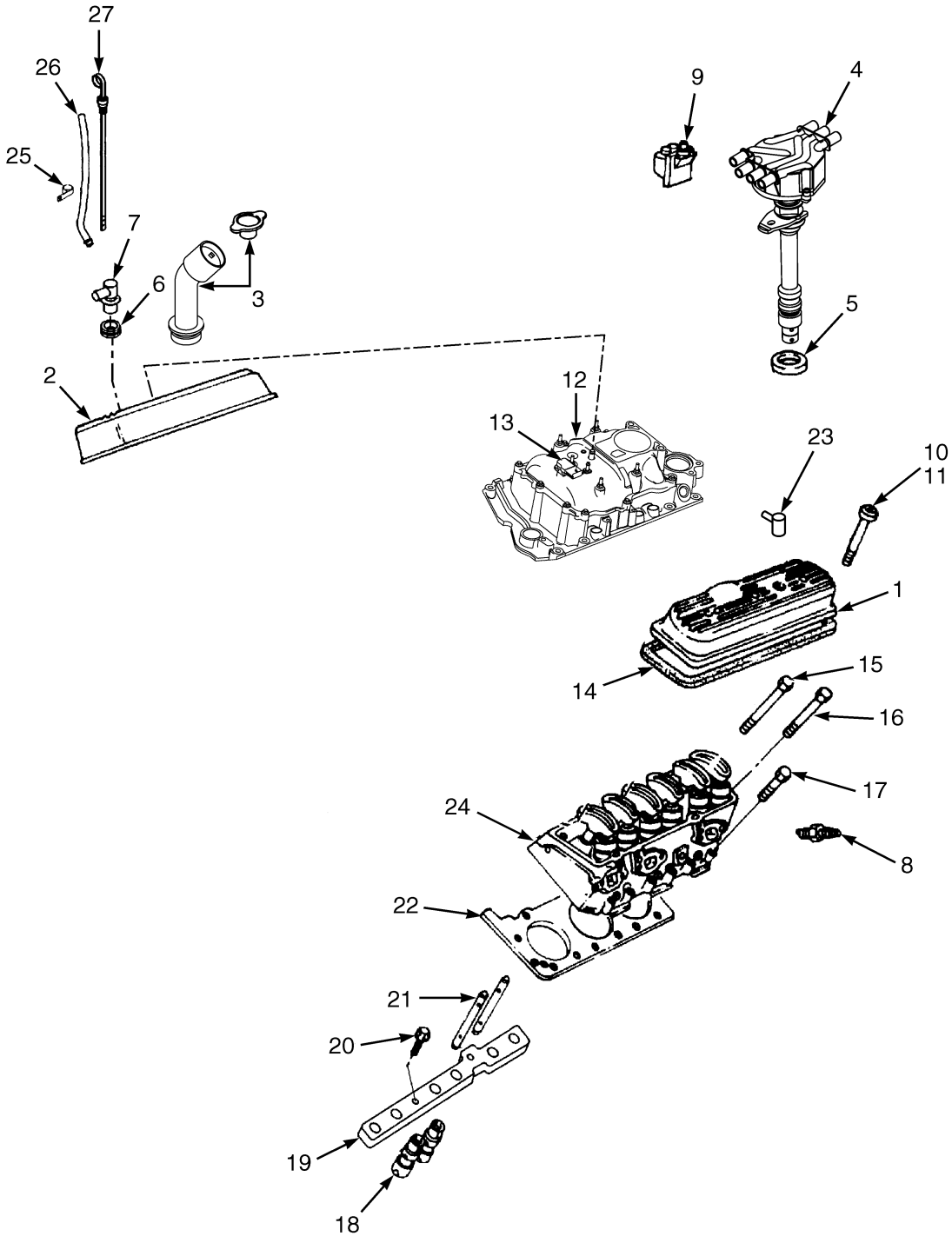

©2014 Yale Materials Handling Corporation

VALVE COVER AND INLET MANIFOLD

GM 4.3L GASOLINE AND LPG – GFI OPTION

ITEM	PART NO.	DESCRIPTION	QTY
	580077730	Engine Assy-Gas (2008 Series)	1
	580092555	Engine Assy-Gas (2009 Series)	1
	582001154	Engine Assy -Gas (2010 Series)	1
	582008137	Engine Assy -Gas (2011 Series)	1
	582015000	Engine Assy -Gas (2012 Series)	1
	580077674	Engine Assy-LPG (2008 Series)	1
	580092554	Engine Assy-LPG (2009 Series)	1
	582001153	Engine Assy -LPG (2010 Series)	1
	582007608	Engine Assy -LPG (Heavy Duty) (Optional)	1
	582008138	Engine Assy -LPG (2011 Series)	1
1	524155833	Cover (LH)	1
2	520046856	Cover (RH)	1
3	580046499	Filler Neck	1
3	900006247	Cap	1
3	580088849	Cap	1
4	580048919	Distributor Assembly	1
5	900006248	Gasket	1
6	900006250	Grommet	3
7	900011248	Fitting	1
8	580075019	Spark Plug	6
9	580052474	Ignition Coil Assembly	1
10	520046857	Grommet	6
11	900006256	Bolt	6
12	580089120	Manifold Assy	1
12	580089116	Intake Manifold (Lower)	1
12	580089121	Intake Manifold (Upper)	1
12	~~582007584~~		
	520046858	Bolt	8
12	580048882	Gasket	1
13	~~582007461~~		
	580048879	Sensor (Temperature manifold absolute pressure)	1
14	900006257	Gasket	2
15	**a** 520042867	Bolt (Long)	10
16	**a** 900006272	Bolt (Medium)	4
17	**a** 900006259	Bolt (Short)	12
18	580014840	Valve Lifter	12
19	520046862	Guide	2
20	520046863	Bolt	2
21	520046864	Push Rod	12
22	520046865	Cylinder Head Gasket	1
23	580063369	Fitting (90 Degree)	1
24	580014838	Cylinder Head (Gasoline)	2
24	580079540	Cylinder Head (LPG)(2007-2011 Series)	2
24	582006716	Kit-Service (Head-LPG) (Heavy Duty with Intake Seat Insert)	2
25	900011247	Clamp	1
26	580085520	Dipstick Tube	1
27	580087447	Dipstick (2008-2012 Series)	1
	520046860	Kit-Gasket (The kit includes two intake manifold gaskets) (Intake Manifold)	1

©2014 Yale Materials Handling Corporation

FOOTNOTES:

a Quantity is listed for both heads

©2014 Yale Materials Handling Corporation

NOTES

©2014 Yale Materials Handling Corporation

VALVE COVER AND INLET MANIFOLD (FIGURE 2-21)

GM 4.3L GASOLINE AND LPG — PSI OPTION

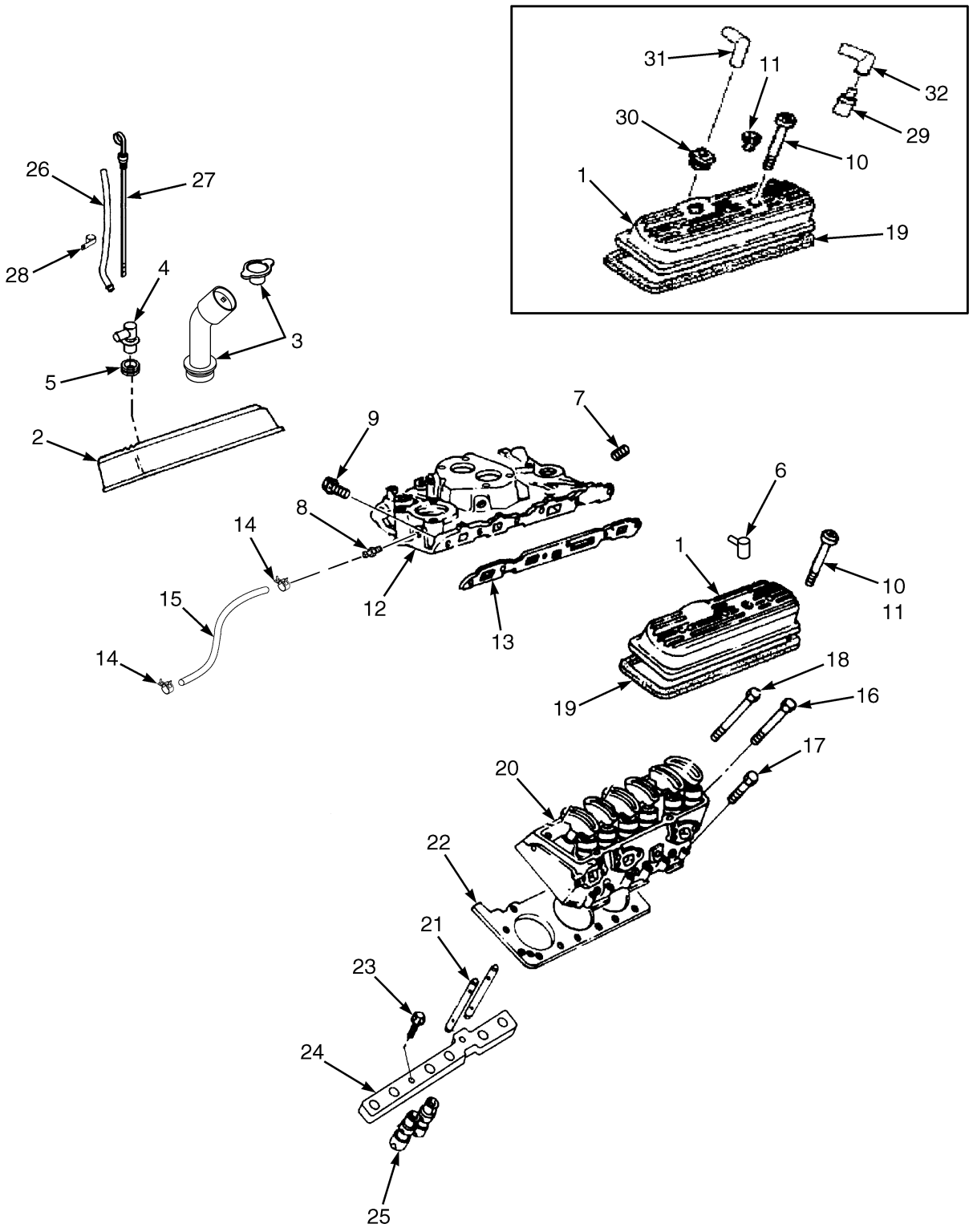

BP090525

©2014 Yale Materials Handling Corporation

VALVE COVER AND INLET MANIFOLD

GM 4.3L GASOLINE AND LPG – PSI OPTION

ITEM	PART NO.	DESCRIPTION	QTY
	582016865	Engine Assy-LPG	1
	582016867	Engine Assy-LPG (Heavy Duty)	1
	582016864	Engine Assy-Gas (PSI)	1
1	524155833	Cover (LH)	1
2	520046856	Cover (RH)	1
3	580046499	Filler Neck	1
3	580088849	Cap	1
4	900011248	Fitting	1
5	900006250	Grommet	3
6	582016978	Fitting	1
7	900006251	Plug	1
8	582016965	Fitting	1
9	~~582007584~~		
	520046858	Bolt	8
10	900006256	Bolt	6
11	520046857	Grommet	6
12	580071281	Intake Manifold	1
12	. . . . .	Intake Air Fuel Module (Gasoline)	1
13	520046860	Kit-Gasket (The kit includes two intake manifold gaskets)	1
14	582007585	Clamp	2
15	580008601	Hose Assy (Water Pump Bypass)	1
16	900006272	Bolt (Medium)	4
17	900006259	Bolt (Short)	12
18	520042867	Bolt (Long)	10
19	900006257	Gasket	2
20	580079540	Cylinder Head (Standard) (☞P20164 [Page 2-34])	1
20	582006716	Kit-Service (Head-LPG) (Heavy Duty)	1
21	520046864	Push Rod	12
22	520046865	Cylinder Head Gasket	2
23	900006240	Bolt	2
24	520046862	Guide	2
25	520046861	Valve Lifter	12
26	580085520	Dipstick Tube	1
27	580087447	Dipstick	1
28	900011247	Clamp	1
29	580094854	PCV Valve (Gasoline)	1
30	900006250	Grommet (Gasoline)	1
31	900011248	Fitting (RH Valve Cover, Gasoline)	1
32	582016978	Fitting (LH Valve Cover, Gasoline)	1

©2014 Yale Materials Handling Corporation

INTAKE AIR FUEL MODULE (FIGURE 2-22)

GM4.3L GASOLINE — PSI OPTION

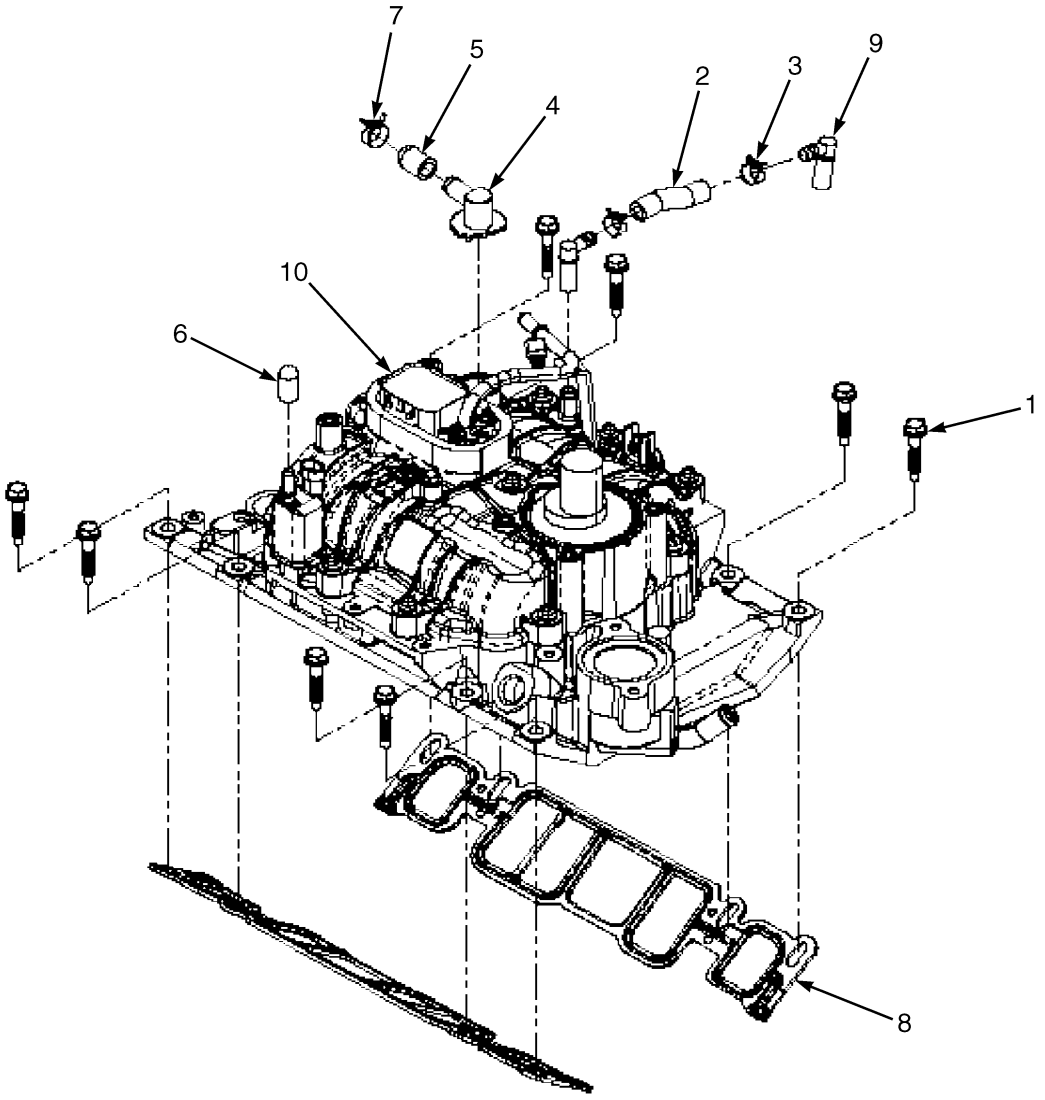

BP090523

©2014 Yale Materials Handling Corporation

INTAKE AIR FUEL MODULE

GM4.3L GASOLINE – PSI OPTION

ITEM	PART NO.	DESCRIPTION	QTY
	582016864	Engine Assy-Gas	1
1	~~582007584~~		
	520046858	Bolt	8
2	582021741	Hose (Fuel) (3 in.)	1
3	582007547	Clamp	2
4	582021742	Fitting	1
5	582021743	Cap (Vacuum)	1
6	582021744	Cap (Rubber)	1
7	582021745	Hose Clamp	1
8	582021746	Gasket (Intake)	2
9	582016978	Fitting	1
10	582021747	Intake Manifold	1

©2014 Yale Materials Handling Corporation

COIL ASSEMBLY (FIGURE 2-23)
GM 4.3L GASOLINE AND LPG — GFI OPTION

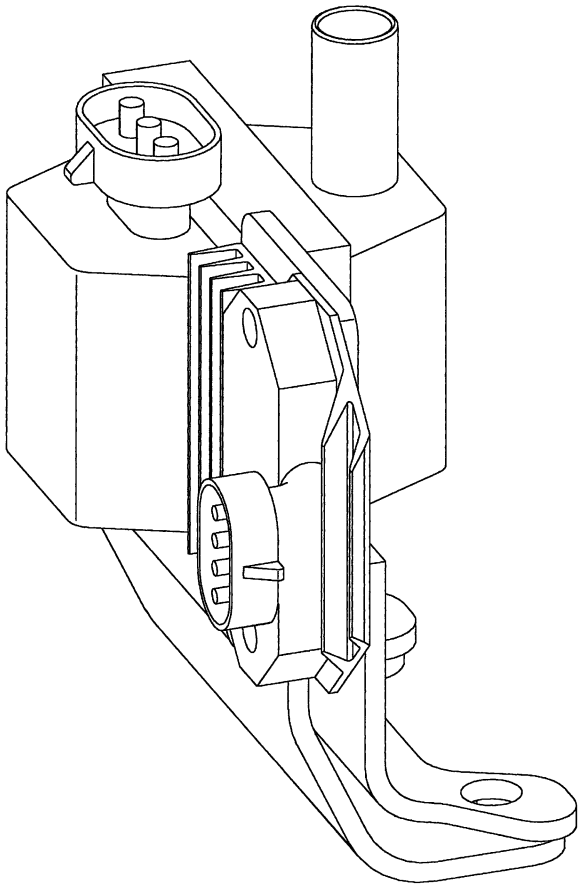

BP090140

ITEM	PART NO.	DESCRIPTION	QTY
	580052474	Ignition Coil Assembly	1
	580053965	Bracket	1
	900006264	Bolt	4
	580053966	Module	1
	580053967	Heatsink	1
	580053968	Screw	2
	580053969	Ignition Coil	1
	900006280	Nut	1
	580053970	Bracket	1

©2014 Yale Materials Handling Corporation

DISTRIBUTER AND COIL (FIGURE 2-24)

GM 4.3L GASOLINE AND LPG — PSI OPTION (S/N D878V02178K →)

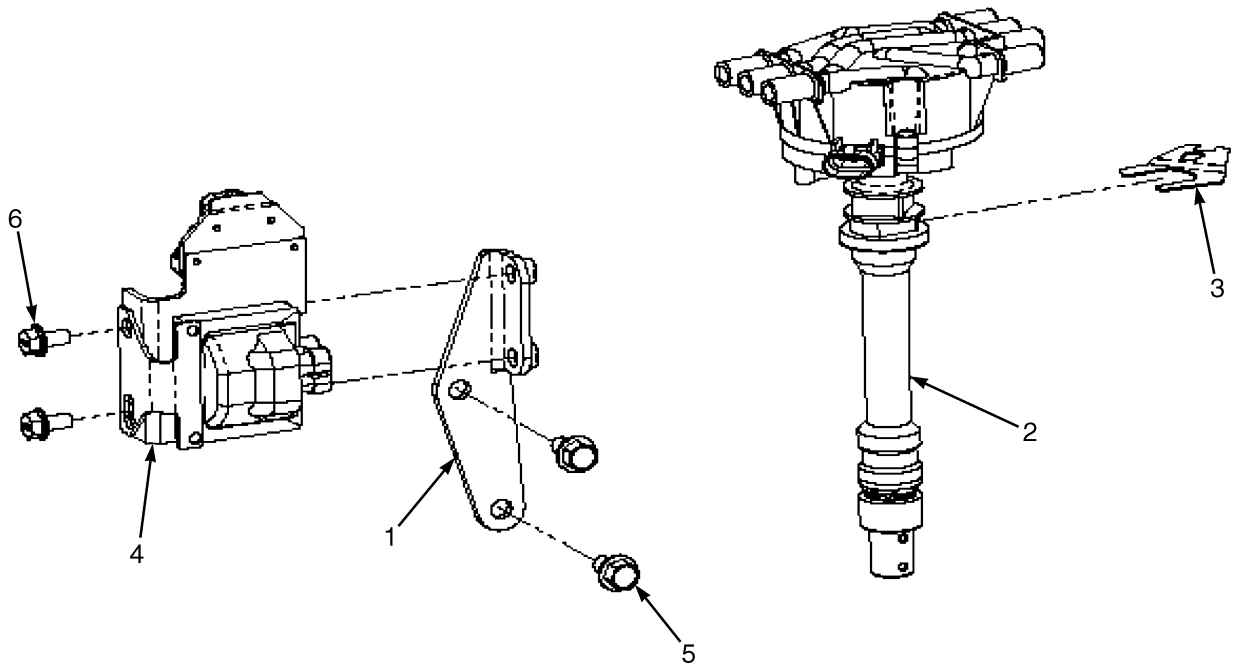

BP090462

ITEM	PART NO.	DESCRIPTION	QTY
1	582016962	Bracket	1
2	580048919	Distributor Assembly (☞P20223 [Page 6-24])	1
3	~~582007473~~		
	580052790	Yoke (Distributor)	1
4	582007474	Ignition Coil	1
5	014711300	Capscrew	2
6	580047714	Capscrew	2

©2014 Yale Materials Handling Corporation

OIL PUMP (FIGURE 2-25)
GM 4.3L GASOLINE AND LPG

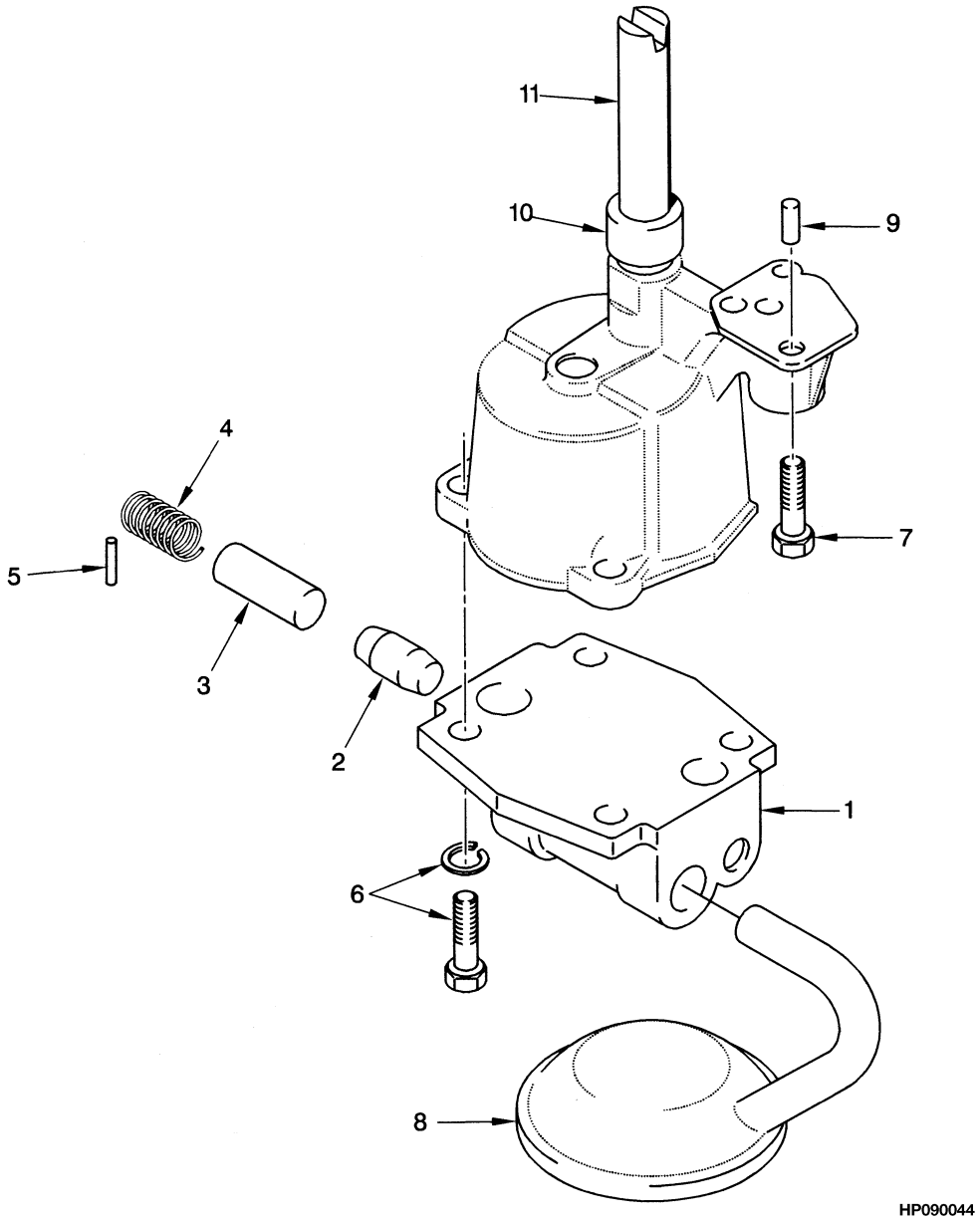

©2014 Yale Materials Handling Corporation

OIL PUMP

GM 4.3L GASOLINE AND LPG

ITEM	PART NO.	DESCRIPTION	QTY
	580077730	Engine Assy-Gas (2008 Series)	1
	580092555	Engine Assy-Gas (2009 Series)	1
	582001154	Engine Assy -Gas (2010 Series)	1
	582008137	Engine Assy -Gas (2011 Series)	1
	582015000	Engine Assy -Gas (2012 Series)	1
	580077674	Engine Assy-LPG (2008 Series)	1
	580092554	Engine Assy-LPG (2009 Series)	1
	582001153	Engine Assy -LPG (2010 Series)	1
	582007608	Engine Assy -LPG (Heavy Duty) (Optional)	1
	520046841	Engine Oil Pump	1
	582008138	Engine Assy -LPG (2011 Series)	1
	582016865	Engine Assy-LPG (PSI Series)	1
	582016867	Engine Assy-LPG (Heavy Duty) (PSI Series)	1
	582016864	Engine Assy-Gas (PSI Series)	1
1	900006204	Cover	1
2	900006205	Stop	1
3	900006206	Regulator Valve	1
4	900006207	Spring	1
5	520042869	Pin	1
6	501738901	Capscrew	2
7	900006209	Bolt	1
8	520046842	Screen	1
9	580000322	Pin	2
10	900006201	Retainer	1
11	900005297	Shaft	1

©2014 Yale Materials Handling Corporation

WATER BYPASS (FIGURE 2-26)
GM 4.3L GASOLINE — PSI OPTION

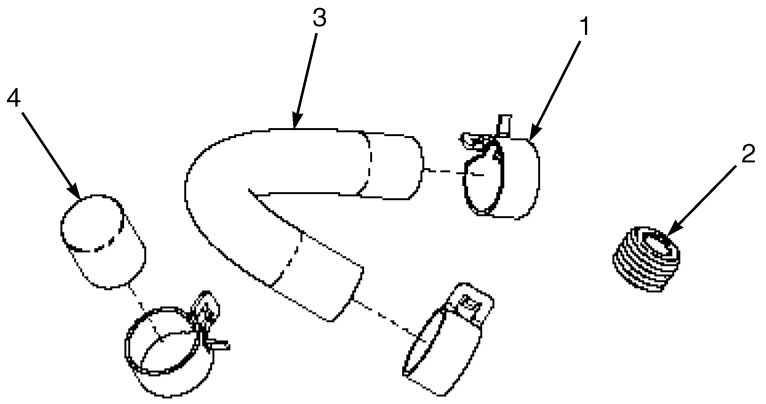

ITEM	PART NO.	DESCRIPTION	QTY
	582016864	Engine Assy-Gas	1
1	582007549	Clamp	3
2	582007740	Plug	1
3	582021760	Hose (Water Pump)	1
4	582021761	Cap (Rubber)	1

©2014 Yale Materials Handling Corporation

ENGINE MOUNTING (FIGURE 2-27)
CUMMINS QSB 3.3L DIESEL

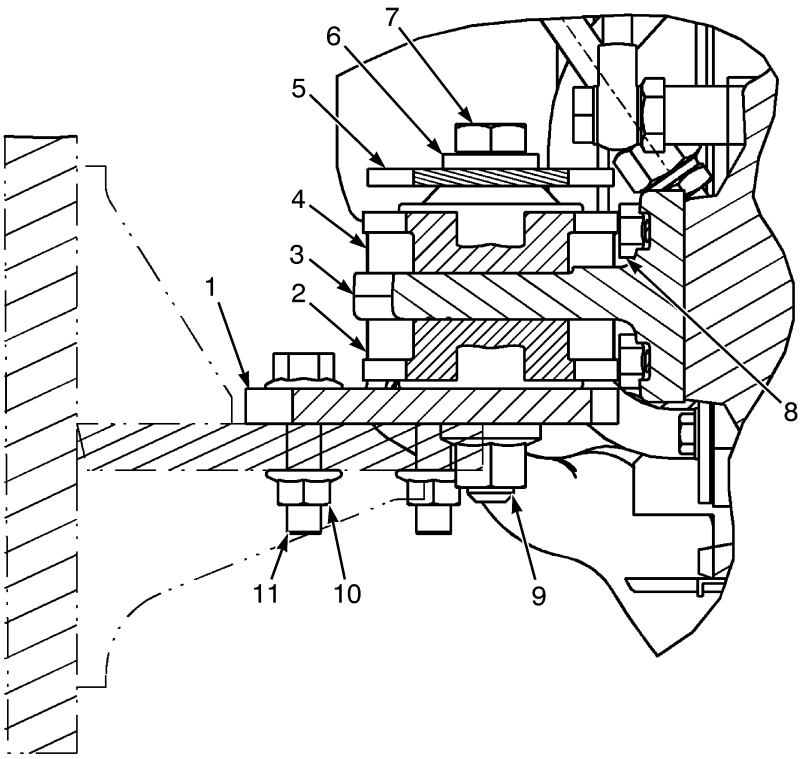

BP090391

ITEM	PART NO.	DESCRIPTION	QTY
	580081186	Engine Assy-Diesel	1
1	580093298	Mounting Plate (LH)	1
1	580093299	Mounting Plate (RH)	1
2	580051383	Isolator	2
3	580083559	Motor Mount	2
4	580051383	Isolator	2
5	580048458	Washer	2
6	580027945	Washer	2
7	931017917	Capscrew	2
8	580083689	Bolt	8
9	580051384	Nut (Flange)	2
10	~~580004218~~		
	580056528	Nut (Shoulder)	6
11	580084304	Capscrew	6

©2014 Yale Materials Handling Corporation

FLYWHEEL AND HOUSING (FIGURE 2-28)

CUMMINS QSB 3.3L DIESEL

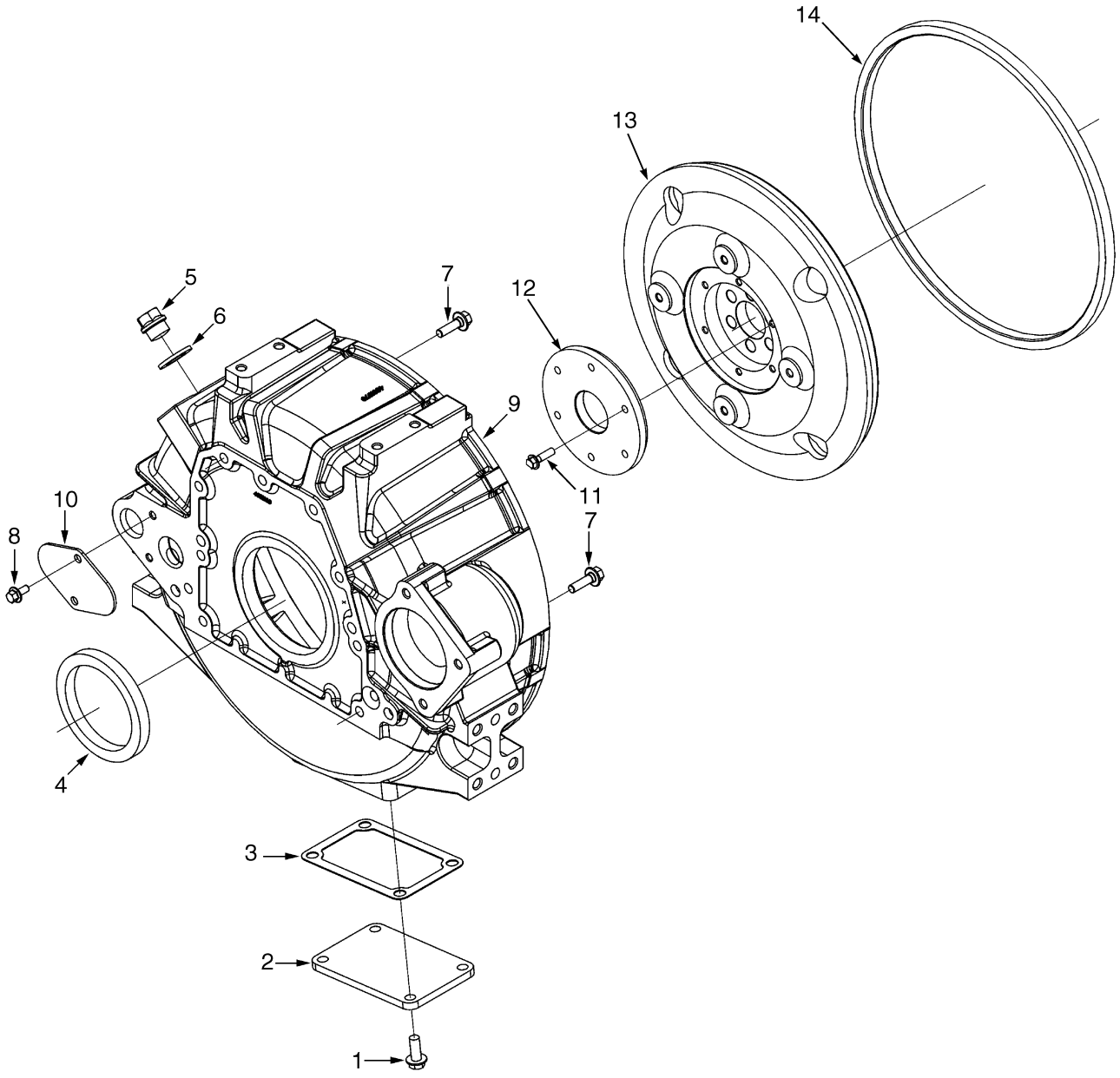

©2014 Yale Materials Handling Corporation

FLYWHEEL AND HOUSING

CUMMINS QSB 3.3L DIESEL

ITEM	PART NO.	DESCRIPTION	QTY
	580087914	Engine Assy-Diesel	1
	580093608	Engine Assy-Diesel (99 Horsepower. Only available with 3x2 Transmission)	1
1	580091031	Capscrew	4
2	580091032	Cover Plate	1
3	580091033	Gasket	1
4	580091034	Oil Seal	1
5	580091120	Plug	1
6	580091123	Washer	1
7	580044081	Capscrew	11
8	580031754	Capscrew	2
9	580091038	Flywheel Housing	1
10	580091039	Cover Plate	1
11	~~580090977~~		
	582010337	Capscrew	6
12	580091058	Adapter	1
13	580091060	Flywheel	1
14	580074489	Ring Gear	1
15	580091054	Capscrew	6
16	580091065	Washer	6

©2014 Yale Materials Handling Corporation

FAN ASSEMBLY (FIGURE 2-29)
CUMMINS QSB 3.3L DIESEL

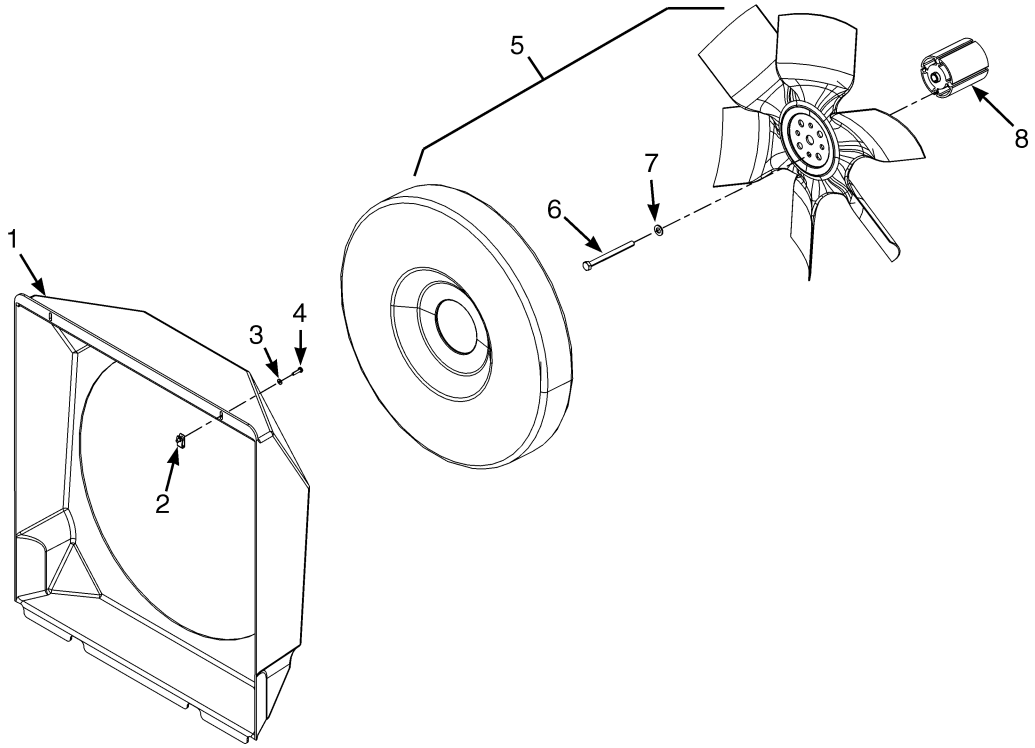

BP060057

ITEM	PART NO.	DESCRIPTION	QTY
	580087914	Engine Assy-Diesel	1
	580093608	Engine Assy-Diesel (99 Horsepower. Only available with 3x2 Transmission)	1
1	580086539	Shroud	1
2	580040177	Nut	2
3	016103200	Washer	2
4	449007005	Screw	2
5	580084515	Fan (18" Composite)	1
6	449001120	Capscrew	4
7	502566901	Washer	4
8	580084650	Spacer	1

©2014 Yale Materials Handling Corporation

WATER OULET CONNECTION (FIGURE 2-30)
CUMMINS QSB 3.3L DIESEL

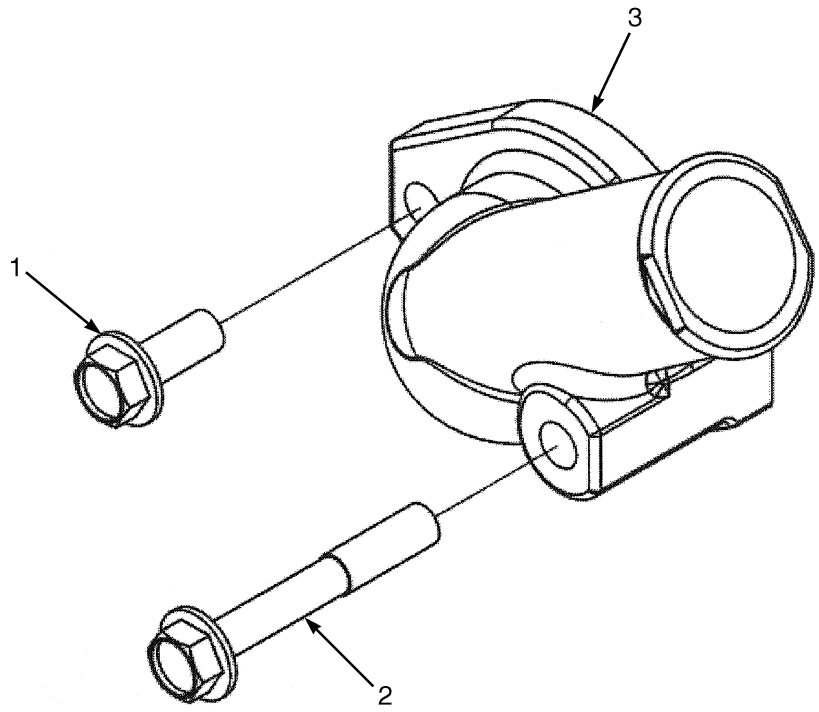

BP090455

ITEM	PART NO.	DESCRIPTION	QTY
	580087914	Engine Assy-Diesel	1
1	580091125	Capscrew	1
2	580091086	Capscrew	1
3	580091318	Connector (Water Outlet)	1

©2014 Yale Materials Handling Corporation

THERMOSTAT (FIGURE 2-31)
CUMMINS QSB 3.3L DIESEL

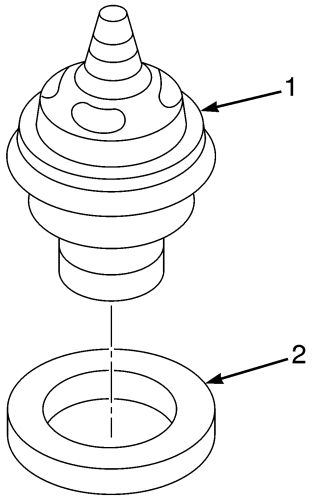

BP090406

ITEM	PART NO.	DESCRIPTION	QTY
	580087914	Engine Assy-Diesel	1
	580093608	Engine Assy-Diesel (99 Horsepower. Only available with 3x2 Transmission)	1
1	580090972	Kit-Thermostat	1
2	580090973	Gasket	1

©2014 Yale Materials Handling Corporation

NOTES

©2014 Yale Materials Handling Corporation

WATER PUMP AND PULLEY (FIGURE 2-32)

CUMMINS QSB 3.3L DIESEL

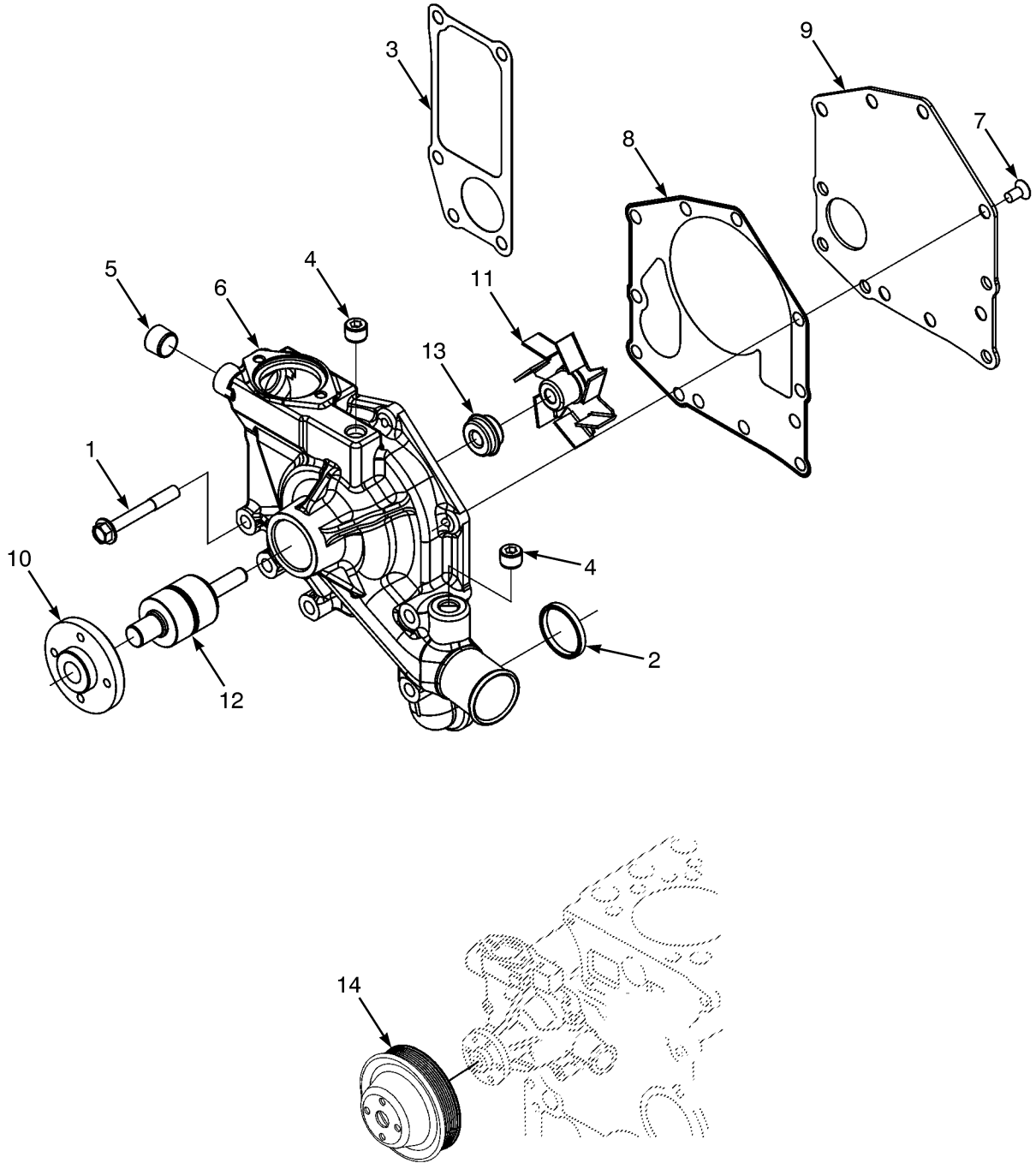

©2014 Yale Materials Handling Corporation

WATER PUMP AND PULLEY

CUMMINS QSB 3.3L DIESEL

ITEM	PART NO.	DESCRIPTION	QTY
	580087914	Engine Assy-Diesel	1
	580093608	Engine Assy-Diesel (99 Horsepower. Only available with 3x2 Transmission)	1
1	580091096	Capscrew	4
2	580091787	Seal	1
3	580091788	Gasket	1
4	580091789	Plug	2
5	580091790	Plug	1
6	. . . . .	Water Pump	1
6	580094156	Body	1
7	580091316	Capscrew	7
8	. . . . .	Gasket	1
9	580094158	Cover Plate	1
10	580091792	Boss	1
11	580091793	Impeller	1
12	~~580091314~~		
	582017941	Shaft	1
13	~~580091315~~ ~~582020204~~		
	580091315	Seal	1
14	580090991	Water Pump Pulley	1
	a 580091317	V-Belt	1
	b 580092078	Kit-Repair Water Pump	1

FOOTNOTES:

a Not Illustrated

b Water pump part 580091791 is an optional water pump that could be included in this kit.

©2014 Yale Materials Handling Corporation

LIFTING BRACKET (FIGURE 2-33)
CUMMINS QSB 3.3L DIESEL

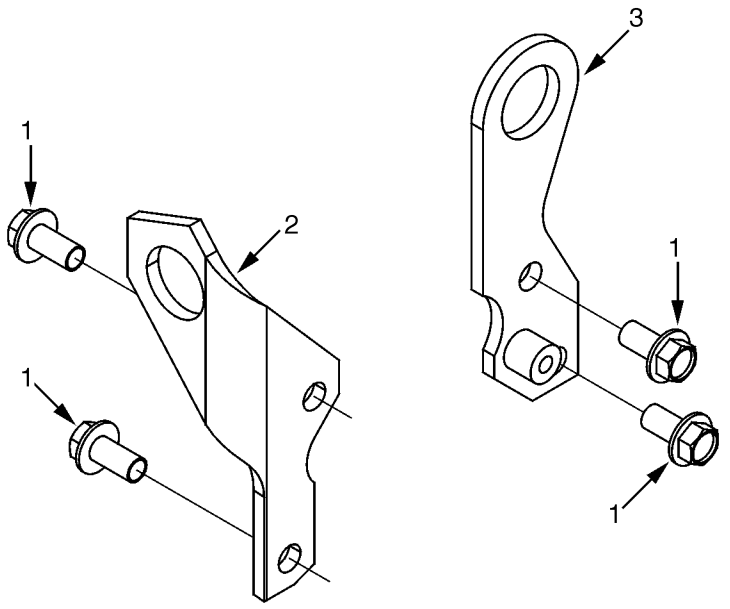

BP090402

ITEM	PART NO.	DESCRIPTION	QTY
	580087914	Engine Assy-Diesel	1
	580093608	Engine Assy-Diesel (99 Horsepower. Only available with 3x2 Transmission)	1
1	580091081	Capscrew	4
2	580091056	Bracket	1
3	580093502	Bracket	1

©2014 Yale Materials Handling Corporation

NOTES

©2014 Yale Materials Handling Corporation

CYLINDER BLOCK (FIGURE 2-34)
CUMMINS QSB 3.3L DIESEL

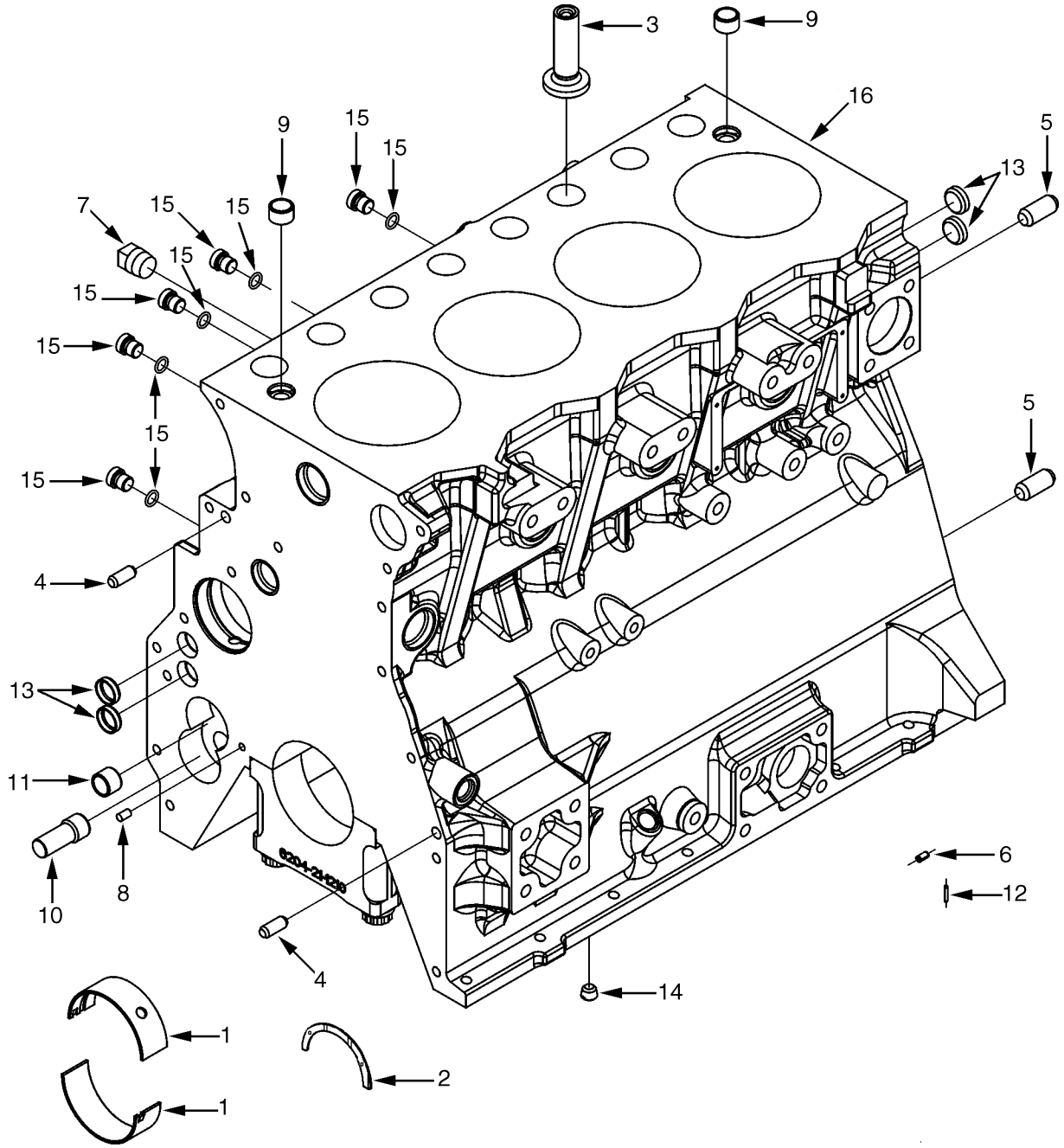

BP090292

©2014 Yale Materials Handling Corporation

CYLINDER BLOCK
CUMMINS QSB 3.3L DIESEL

ITEM	PART NO.	DESCRIPTION	QTY
	580087914	Engine Assy-Diesel	1
	580093608	Engine Assy-Diesel (99 Horsepower. Only available with 3x2 Transmission)	1
1	580092075	Kit-Bearing	1
2	. . . . .	Thrust Bearing	1
3	580090927	Valve Tappet	8
4	580090929	Dowel Pin	2
5	580090930	Dowel Pin	2
6	580090941	Dowel Pin	6
7	580090942	Plug	1
8	580090943	Dowel	1
9	580090944	Dowel	2
10	. . . . .	Shaft (Lube Oil Pump)	1
11	. . . . .	Bushing	1
12	580090945	Dowel	4
13	580090946	Plug	4
14	580090947	Plug	1
15	580063044	Plug Assembly	5
15	580063092	O-Ring	1
16	. . . . .	Cylinder Block	1

©2014 Yale Materials Handling Corporation

CYLINDER HEAD (FIGURE 2-35)
CUMMINS QSB 3.3L DIESEL

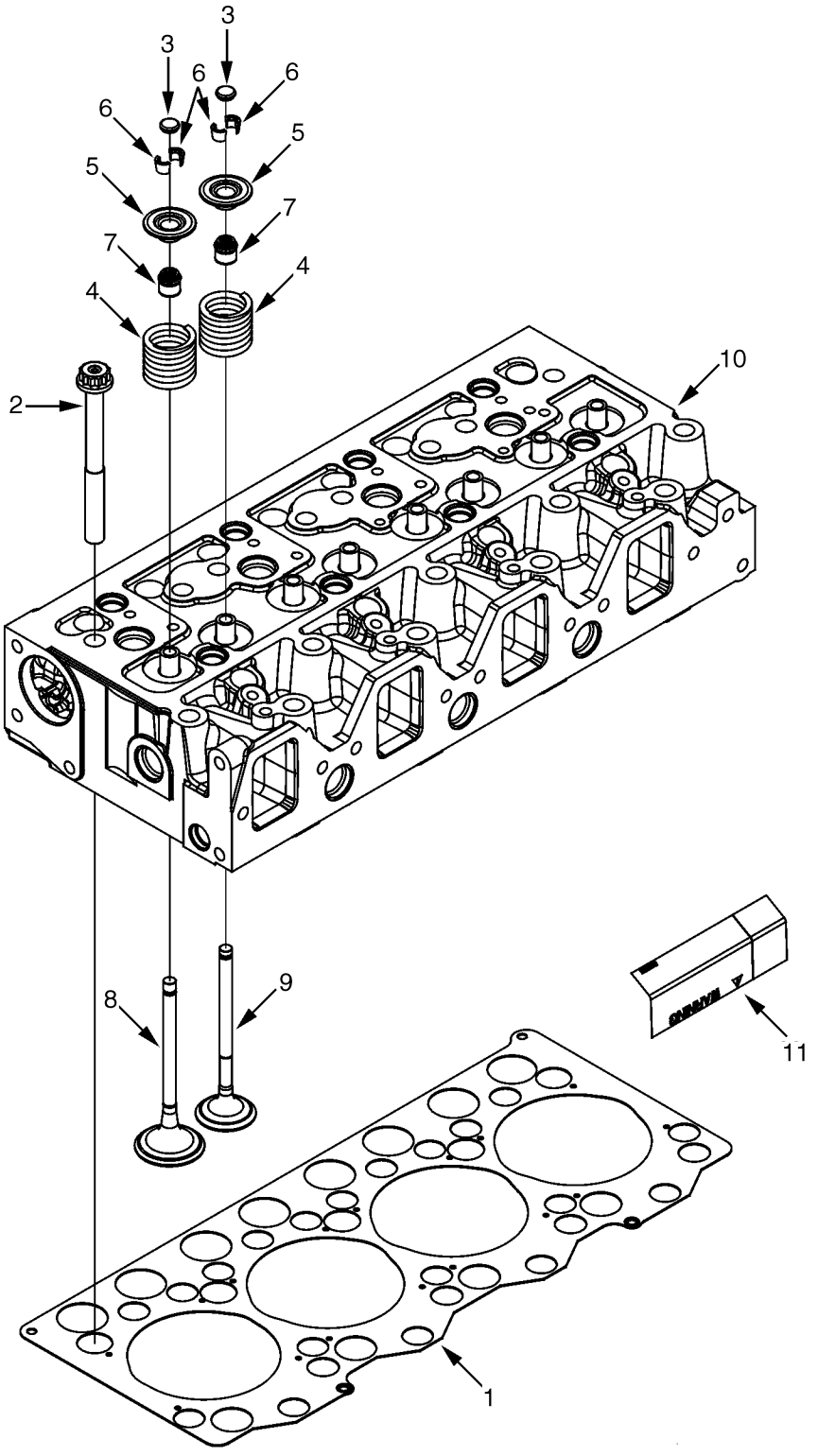

©2014 Yale Materials Handling Corporation

CYLINDER HEAD
CUMMINS QSB 3.3L DIESEL

ITEM	PART NO.	DESCRIPTION	QTY
	580087914	Engine Assy-Diesel	1
	580093608	Engine Assy-Diesel (99 Horsepower. Only available with 3x2 Transmission)	1
1	580091151	Cylinder Head Gasket	1
2	580091152	Capscrew	17
3	580091153	Cap	8
4	580091154	Spring	8
5	580091155	Retainer	8
6	580091156	Valve (Collet)	16
7	580091157	Seal (Valve Stem)	8
8	580091257	Inlet Valve	4
9	580091158	Exhaust Valve	4
10	. . . . .	Cylinder Head	1
11	. . . . .	Decal	1
	580091163	Kit-Cylinder Head	1

©2014 Yale Materials Handling Corporation

OIL PAN (FIGURE 2-36)
CUMMINS QSB 3.3L DIESEL

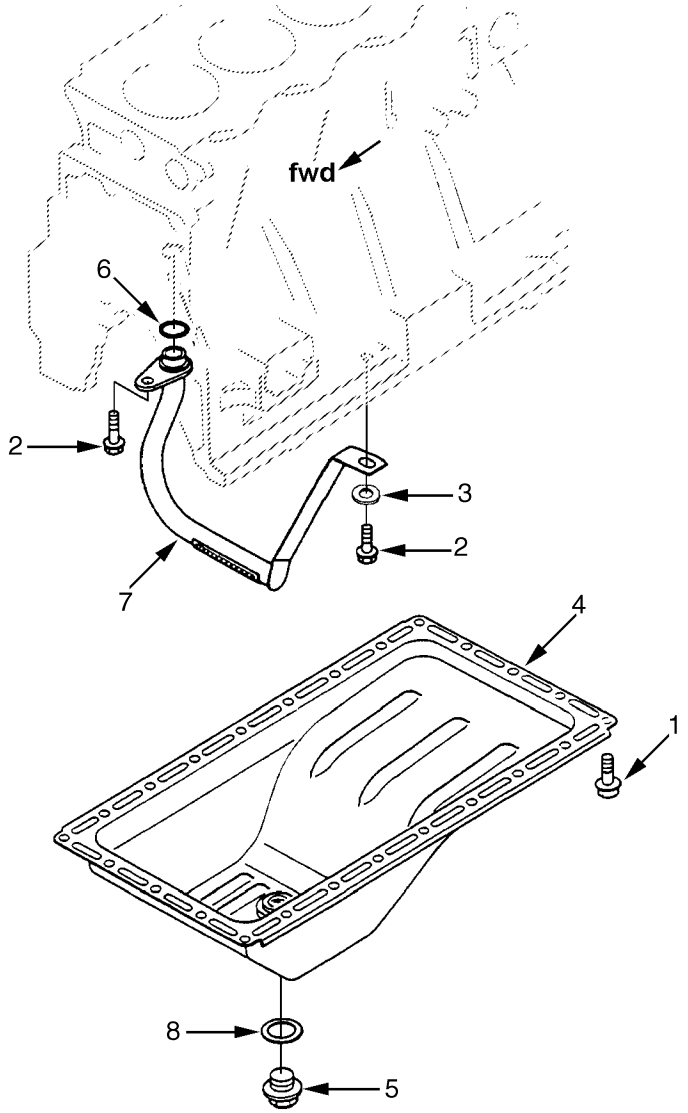

BP090395

©2014 Yale Materials Handling Corporation

OIL PAN

CUMMINS QSB 3.3L DIESEL

ITEM	PART NO.	DESCRIPTION	QTY
	580087914	Engine Assy-Diesel	1
	580093608	Engine Assy-Diesel (99 Horsepower. Only available with 3x2 Transmission)	1
1	580091116	Capscrew	24
2	580091109	Capscrew	2
3	580091118	Washer	1
4	580094607	Oil Pan	1
5	580091120	Plug	1
6	580091121	Seal	1
7	580091122	Tube	1
8	580091123	Washer	1

©2014 Yale Materials Handling Corporation

OIL FILTER AND COOLER (FIGURE 2-37)

CUMMINS QSB 3.3L DIESEL

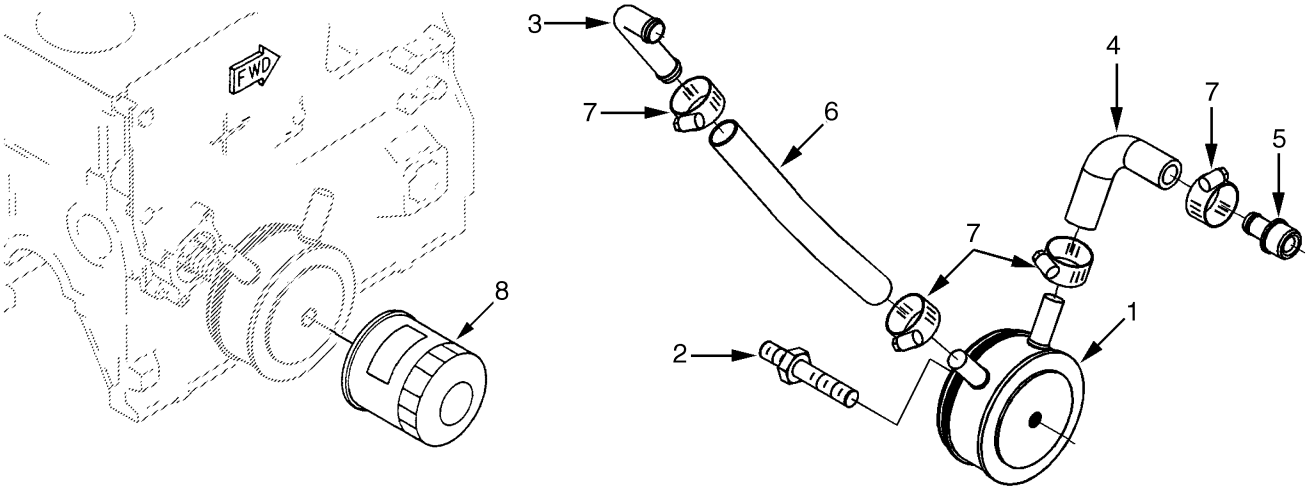

BP090403

ITEM	PART NO.	DESCRIPTION	QTY
	580087914	Engine Assy-Diesel	1
	580093608	Engine Assy-Diesel (99 Horsepower. Only available with 3x2 Transmission)	1
1	580091100	Oil Cooler	1
2	580091101	Coupling	1
3	580091097	Coupling	1
4	580091098	Hose	1
5	580091093	Coupling	1
6	580091099	Hose	1
7	580091084	Hose Clamp	4
8	580091102	Oil Filter	1

©2014 Yale Materials Handling Corporation

NOTES

©2014 Yale Materials Handling Corporation

OIL PUMP AND FRONT GEAR COVER (FIGURE 2-38)

CUMMINS QSB 3.3L DIESEL

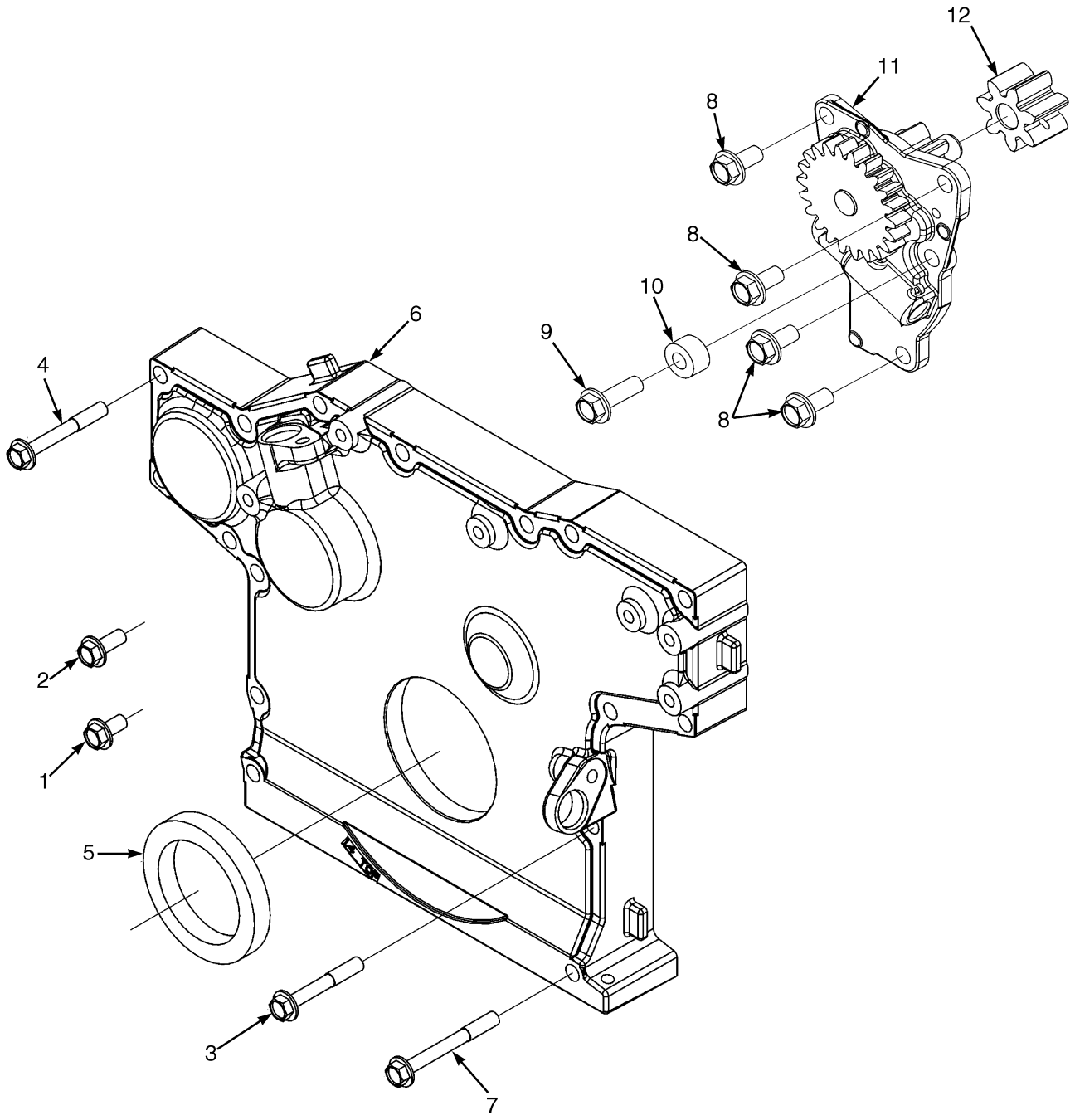

©2014 Yale Materials Handling Corporation

OIL PUMP AND FRONT GEAR COVER

CUMMINS QSB 3.3L DIESEL

ITEM	PART NO.	DESCRIPTION	QTY
	580087914	Engine Assy-Diesel	1
	580093608	Engine Assy-Diesel (99 Horsepower. Only available with 3x2 Transmission)	1
1	580091109	Capscrew	2
2	580091125	Capscrew	2
3	580091086	Capscrew	6
4	580091087	Capscrew	8
5	580091088	Oil Seal	1
6	580091089	Cover	1
7	580091090	Capscrew	2
8	580091109	Capscrew	4
9	~~580091110~~		
	580061680	Capscrew (Flange)	1
10	580091112	Spacer	1
11	580091113	Oil Pump	1
12	580091111	Gear	1

©2014 Yale Materials Handling Corporation

OIL FILLER ARRANGEMENT (FIGURE 2-39)
CUMMINS QSB 3.3L DIESEL

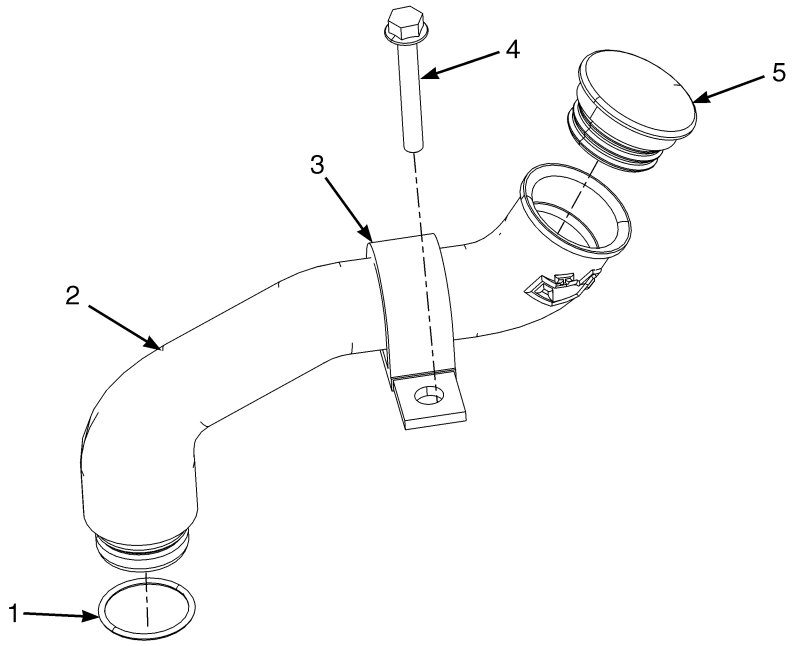

BP090413

ITEM	PART NO.	DESCRIPTION	QTY
	580087914	Engine Assy-Diesel	1
	580093608	Engine Assy-Diesel (99 Horsepower. Only available with 3x2 Transmission)	1
1	640057903	O-Ring	2
2	580091024	Tube	1
3	580014092	Clamp	1
4	580030969	Capscrew	1
5	580091114	Cap	1

©2014 Yale Materials Handling Corporation

CAMSHAFT (FIGURE 2-40)
CUMMINS QSB 3.3L DIESEL

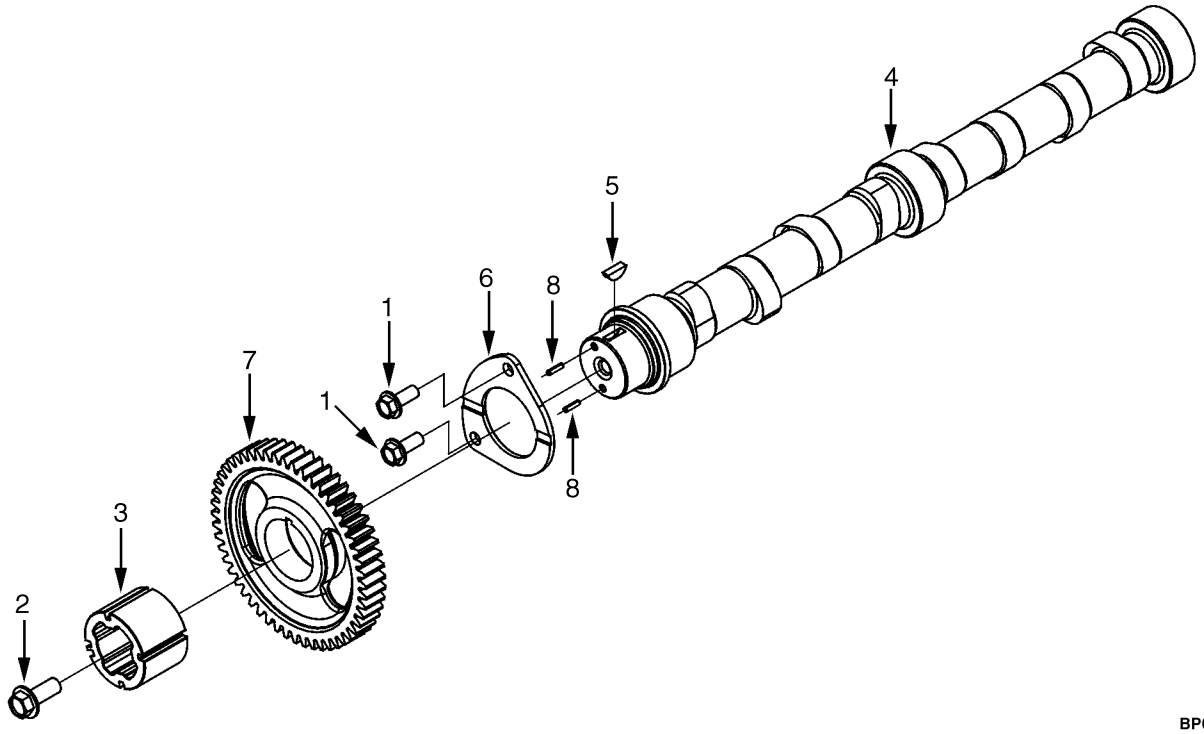

BP090393

ITEM	PART NO.	DESCRIPTION	QTY
	580087914	Engine Assy-Diesel	1
	580093608	Engine Assy-Diesel (99 Horsepower. Only available with 3x2 Transmission)	1
1	580091125	Capscrew	2
2	580091141	Capscrew	1
3	580091142	Adapter (Position Sensor)	1
4	580091143	Camshaft	1
5	580091149	Key	1
6	580092833	Plate (Clamping)	1
7	580094500	Gear	1
8	580091150	Cotter Pin	2

©2014 Yale Materials Handling Corporation

VALVE COVER (FIGURE 2-41)
CUMMINS QSB 3.3L DIESEL

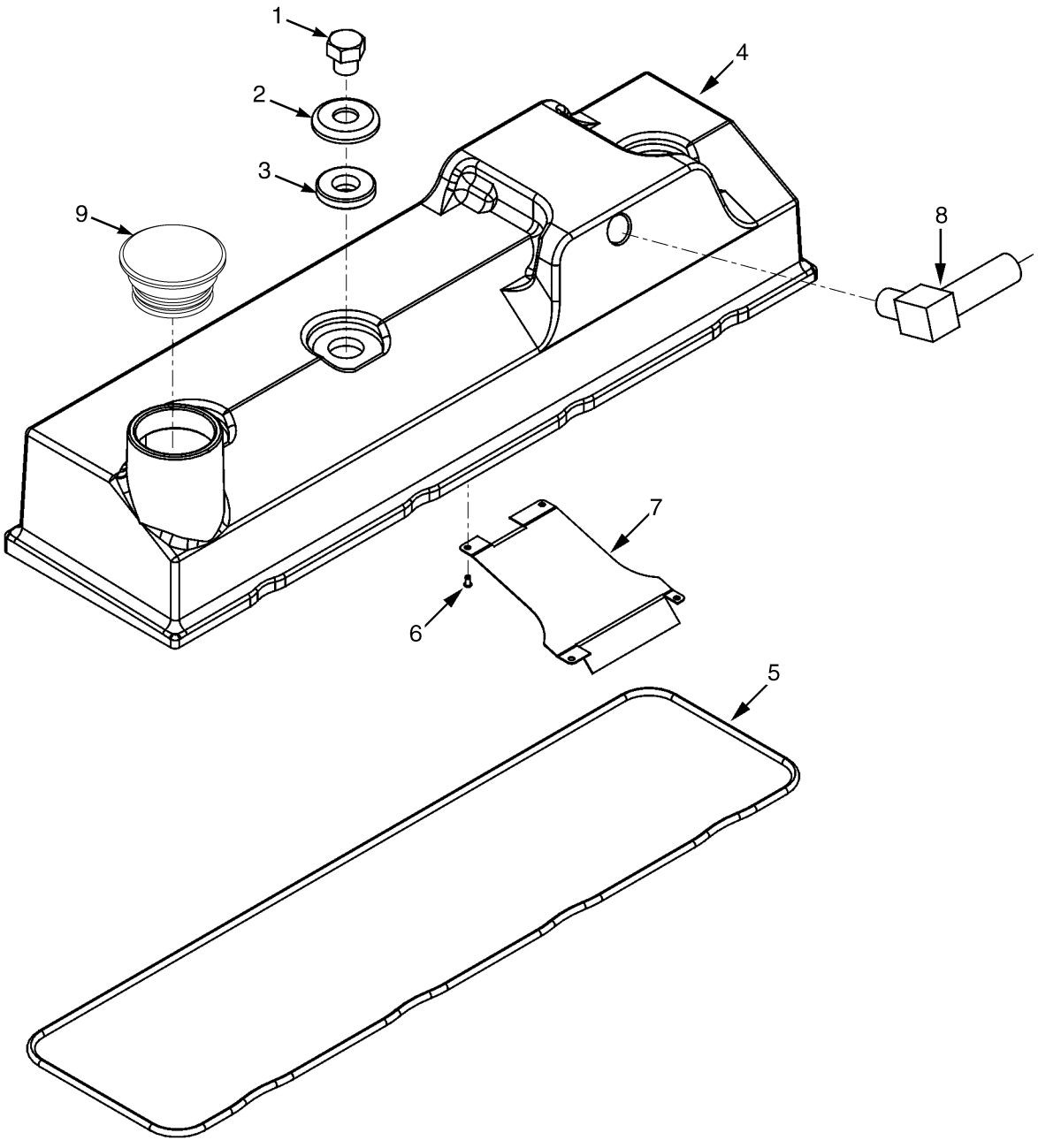

©2014 Yale Materials Handling Corporation

VALVE COVER

CUMMINS QSB 3.3L DIESEL

ITEM	PART NO.	DESCRIPTION	QTY
	580087914	Engine Assy-Diesel	1
	580093608	Engine Assy-Diesel (99 Horsepower. Only available with 3x2 Transmission)	1
1	580091308	Locknut	3
2	580091309	Washer	3
3	580091310	Gasket	3
4	580091311	Cover	1
5	~~580091313~~		
	582026776	Gasket	1
6	. . . . .	Rivet	4
7	. . . . .	Cover Plate	1
8	. . . . .	Tube	1
9	580091114	Cap	1

©2014 Yale Materials Handling Corporation

ROCKER ARM SHAFT (FIGURE 2-42)

CUMMINS QSB 3.3L DIESEL

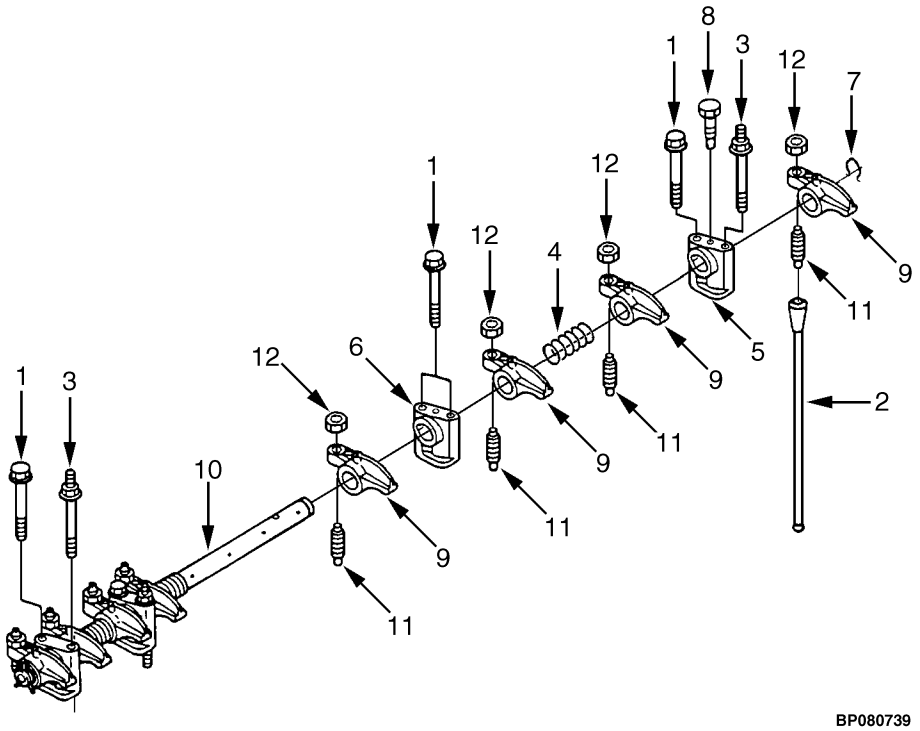

ITEM	PART NO.	DESCRIPTION	QTY
	580087914	Engine Assy-Diesel	1
	580093608	Engine Assy-Diesel (99 Horsepower. Only available with 3x2 Transmission)	1
1	580091276	Capscrew	5
2	580091277	Push Rod	8
3	580091278	Capscrew	3
4	580091279	Spring	3
5	580091280	Support	1
6	580091281	Support	3
7	580091282	Clip	2
8	580091283	Capscrew	1
9	580091284	Lever	8
10	580091285	Shaft	1
11	580091287	Screw	8
12	580091288	Locknut	8

©2014 Yale Materials Handling Corporation

NOTES

©2014 Yale Materials Handling Corporation

PISTON AND CONNECTING ROD (FIGURE 2-43)

CUMMINS QSB 3.3L DIESEL

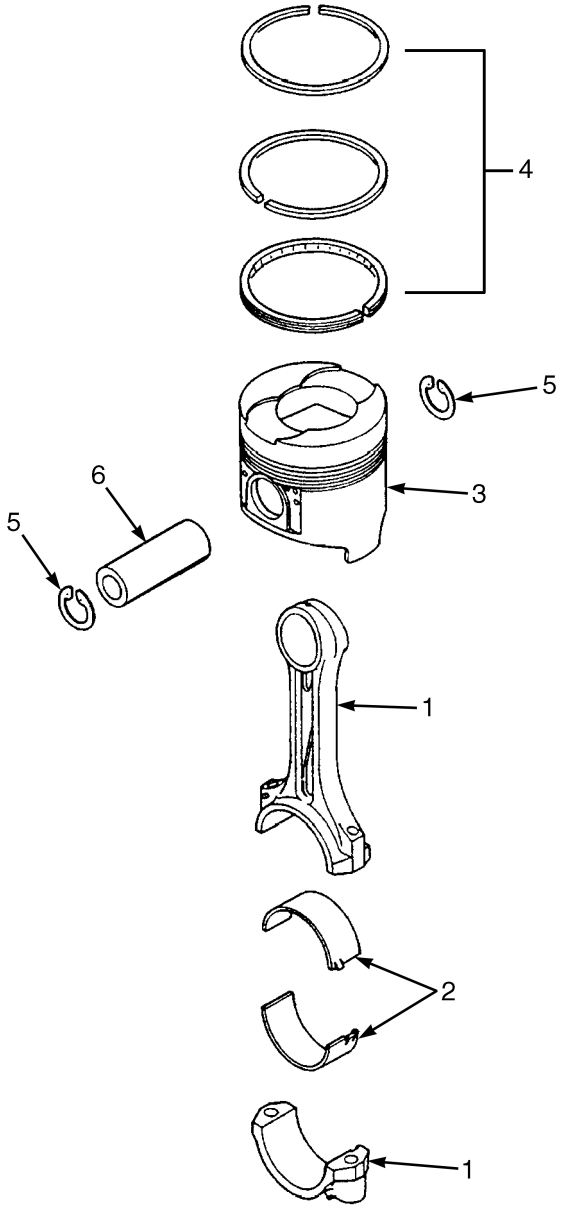

BP090228

©2014 Yale Materials Handling Corporation

PISTON AND CONNECTING ROD
CUMMINS QSB 3.3L DIESEL

ITEM	PART NO.	DESCRIPTION	QTY
	580087914	Engine Assy-Diesel	1
	580093608	Engine Assy-Diesel (99 Horsepower. Only available with 3x2 Transmission)	1
1	~~580091137~~		
	582020540	Kit-Piston Rod	4
1	582020974	Capscrew	2
2	582015482	Bearing Set	1
	580091147	Kit-Piston	4
3	. . . . .	Piston	1
4	580091148	Piston Ring Set	1
5	580091145	Retaining Ring	2
6	580091136	Pin	4

©2014 Yale Materials Handling Corporation

CRANKSHAFT (FIGURE 2-44)
CUMMINS QSB 3.3L DIESEL

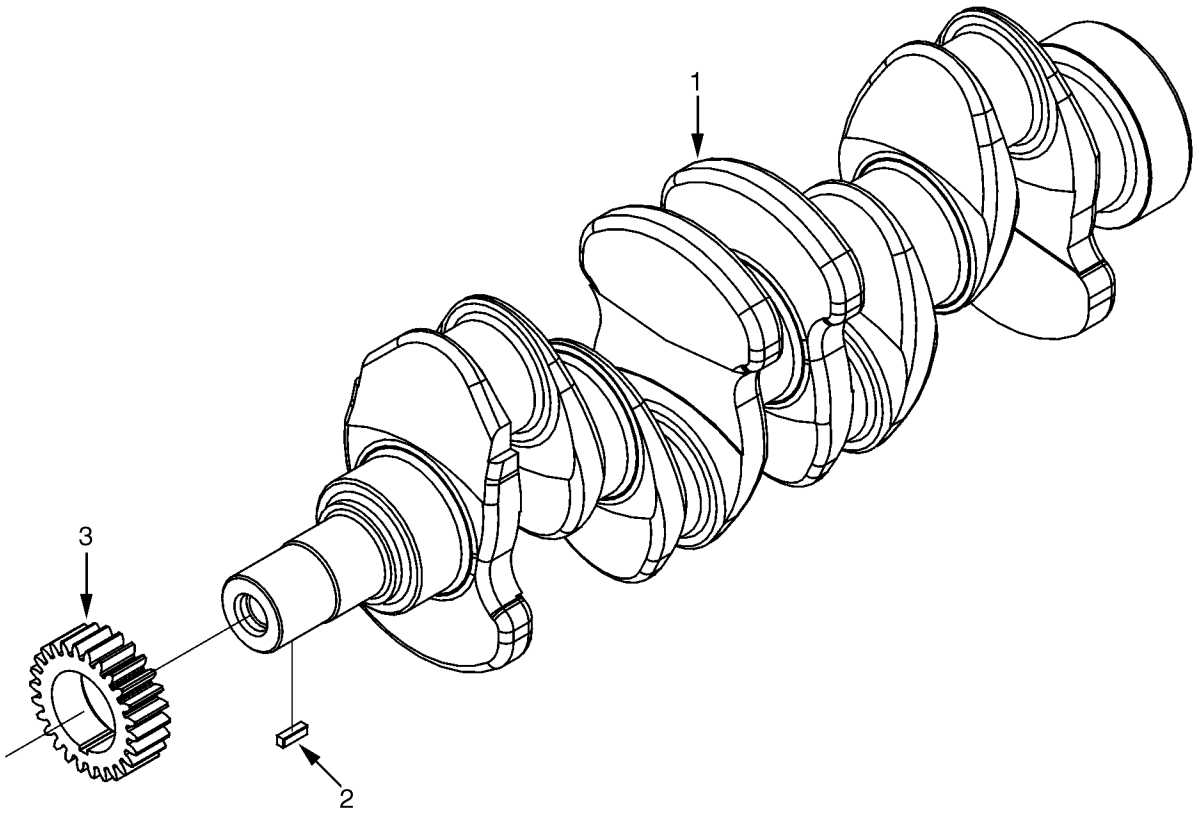

BP090178

©2014 Yale Materials Handling Corporation

CRANKSHAFT

CUMMINS QSB 3.3L DIESEL

ITEM	PART NO.	DESCRIPTION	QTY
	580087914	Engine Assy-Diesel	1
	580093608	Engine Assy-Diesel (99 Horsepower. Only available with 3x2 Transmission)	1
1	580090948	Crankshaft	1
2	580090949	Woodruff Key	1
3	. . . . .	Crankshaft Gear	1

©2014 Yale Materials Handling Corporation

CRANKCASE BREATHER (FIGURE 2-45)

CUMMINS QSB 3.3L DIESEL

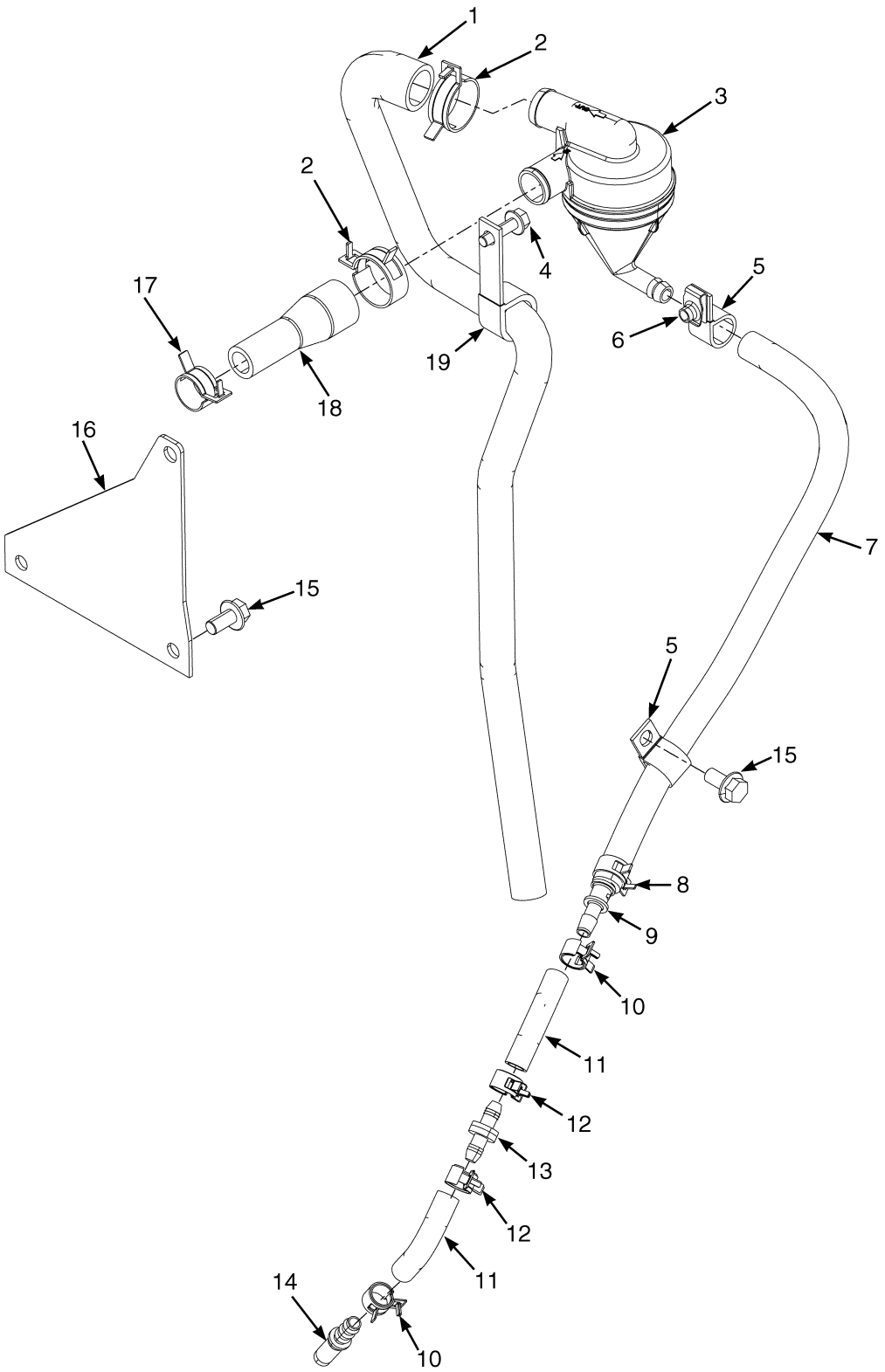

©2014 Yale Materials Handling Corporation

CRANKCASE BREATHER
CUMMINS QSB 3.3L DIESEL

ITEM	PART NO.	DESCRIPTION	QTY
	580087914	Engine Assy-Diesel	1
	580093608	Engine Assy-Diesel (99 Horsepower. Only available with 3x2 Transmission)	1
1	580087460	Hose	1
2	580036688	Hose Clamp	2
3	580087797	Separator	1
4	580049229	Capscrew	1
5	060023600	Clamp	2
6	580026621	Nut	1
7	580089441	Hose	1
8	580039911	Hose Clamp	1
9	580087794	Reducer	1
10	580039909	Hose Clamp	1
11	580015022	Hose	2
12	580052736	Hose Clamp	4
13	580087627	Check Valve	1
14	580089694	Fitting	1
15	580049010	Capscrew	3
16	580087459	Bracket	1
17	580039890	Hose Clamp	1
18	580087464	Hose	1
19	580009292	Clamp	1

©2014 Yale Materials Handling Corporation

TURBOCHARGER (FIGURE 2-46)
CUMMINS QSB 3.3L DIESEL

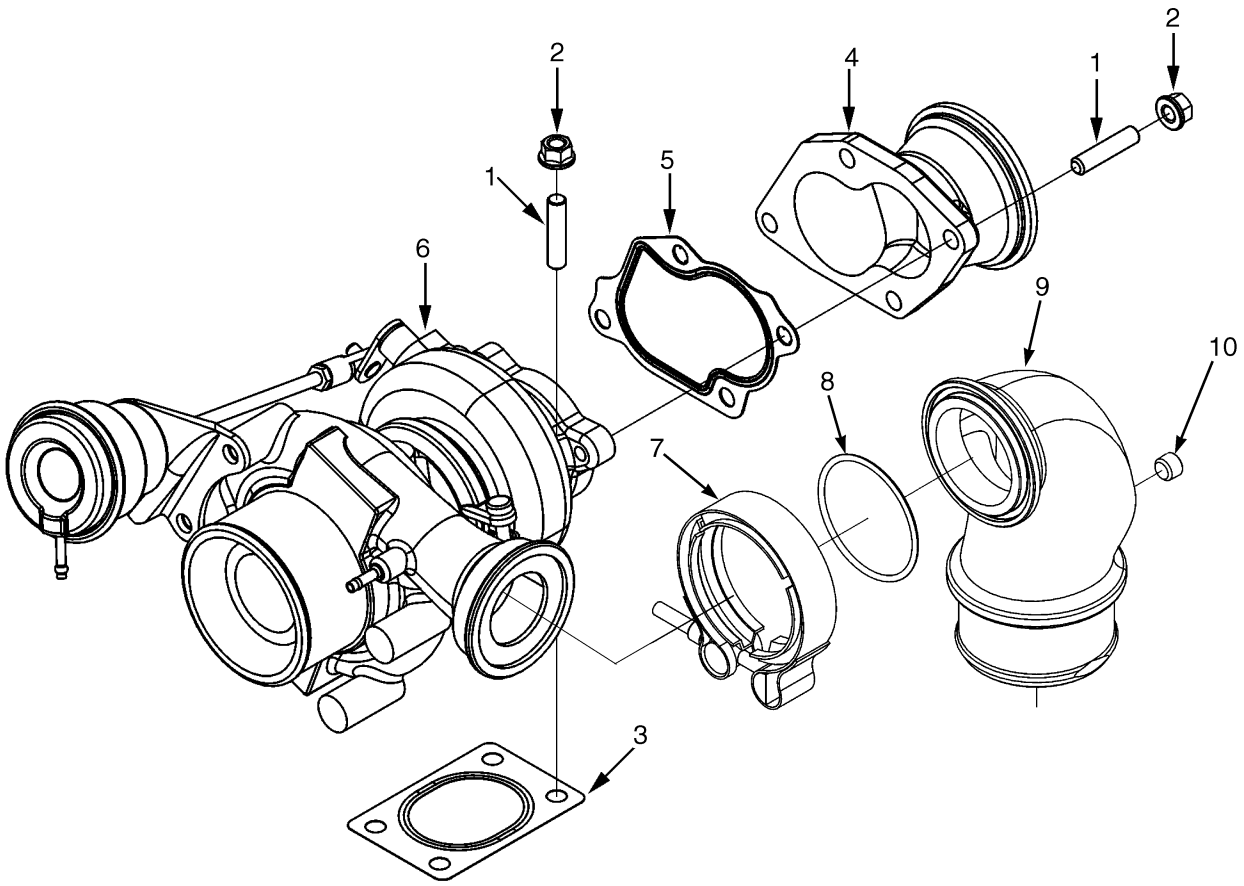

BP090396

©2014 Yale Materials Handling Corporation

TURBOCHARGER

CUMMINS QSB 3.3L DIESEL

ITEM	PART NO.	DESCRIPTION	QTY
	580087914	Engine Assy-Diesel	1
	580093608	Engine Assy-Diesel (99 Horsepower. Only available with 3x2 Transmission)	1
1	580091271	Stud	4
2	580091272	Nut	4
3	580091273	Gasket	1
4	580091274	Connector	1
5	580091275	Gasket	1
6	. . . . .	Turbocharger	1
7	580091064	Clamp	1
8	580091078	Seal	1
9	580091079	Pipe	1
10	580071226	Fitting	1
	580091286	Kit-Turbocharger and Gasket	1

©2014 Yale Materials Handling Corporation

TURBOCHARGER PLUMBING (FIGURE 2-47)

CUMMINS QSB 3.3L DIESEL

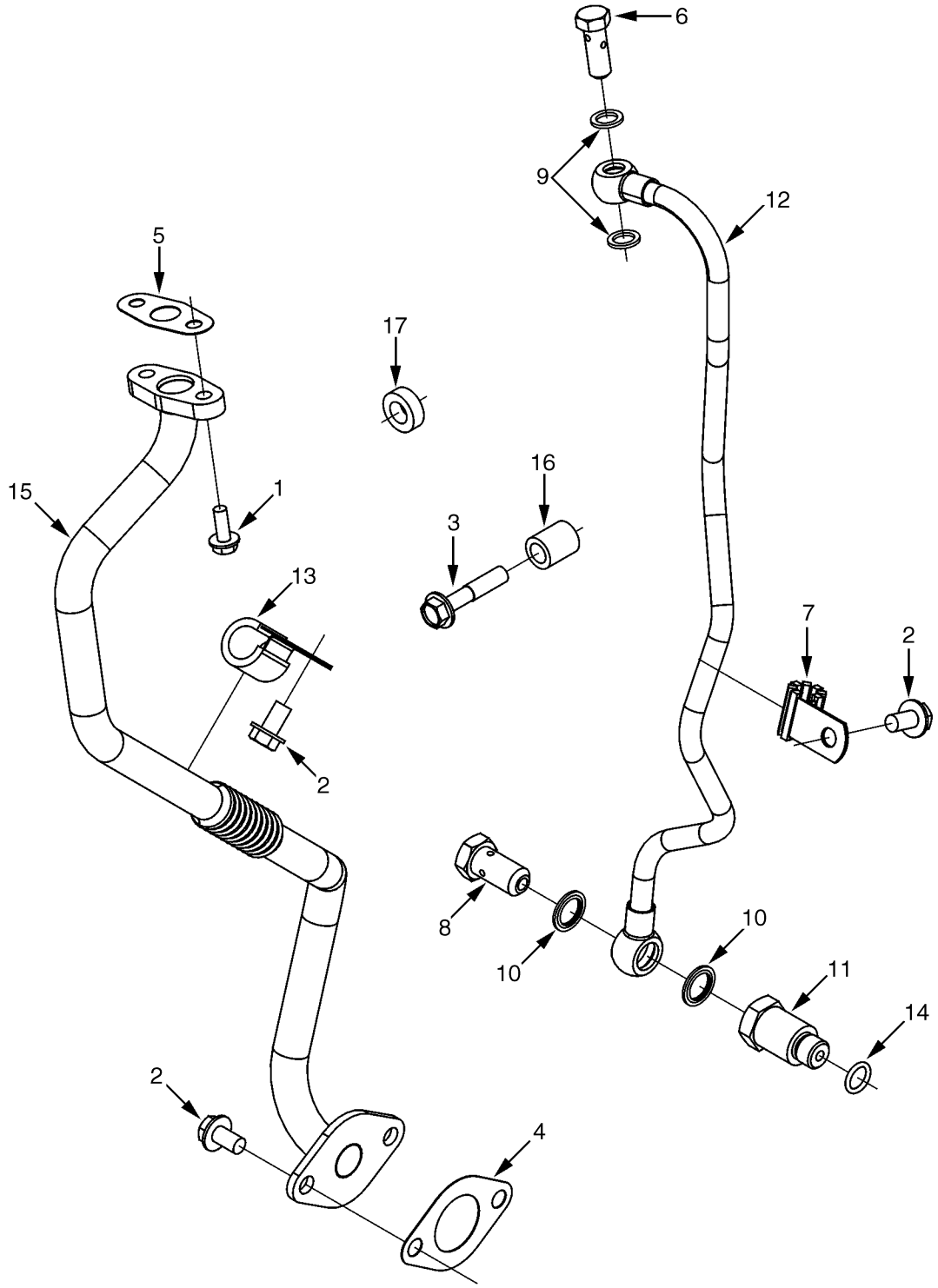

©2014 Yale Materials Handling Corporation

TURBOCHARGER PLUMBING

CUMMINS QSB 3.3L DIESEL

ITEM	PART NO.	DESCRIPTION	QTY
	580087914	Engine Assy-Diesel	1
	580093608	Engine Assy-Diesel (99 Horsepower. Only available with 3x2 Transmission)	1
1	580091294	Capscrew	2
2	580091116	Capscrew	2
3	580091160	Capscrew	2
4	580091296	Gasket (Oil Drain)	1
5	580091297	Gasket (Oil Drain)	1
6	580091298	Screw (Banjo Connector)	1
7	580091299	Clip	1
8	580088192	Screw (Banjo Connector)	1
9	580091300	Washer	2
10	580088190	Sealing Ring	2
11	580091301	Boot	1
12	580091302	Tube (Oil Supply)	1
13	580091303	Clip	1
14	580091304	Seal	1
15	580091305	Tube (Oil Drain)	1
16	580091306	Spacer	1
17	580091307	Spacer	1

©2014 Yale Materials Handling Corporation

EXHAUST MANIFOLD (FIGURE 2-48)

CUMMINS QSB 3.3L DIESEL

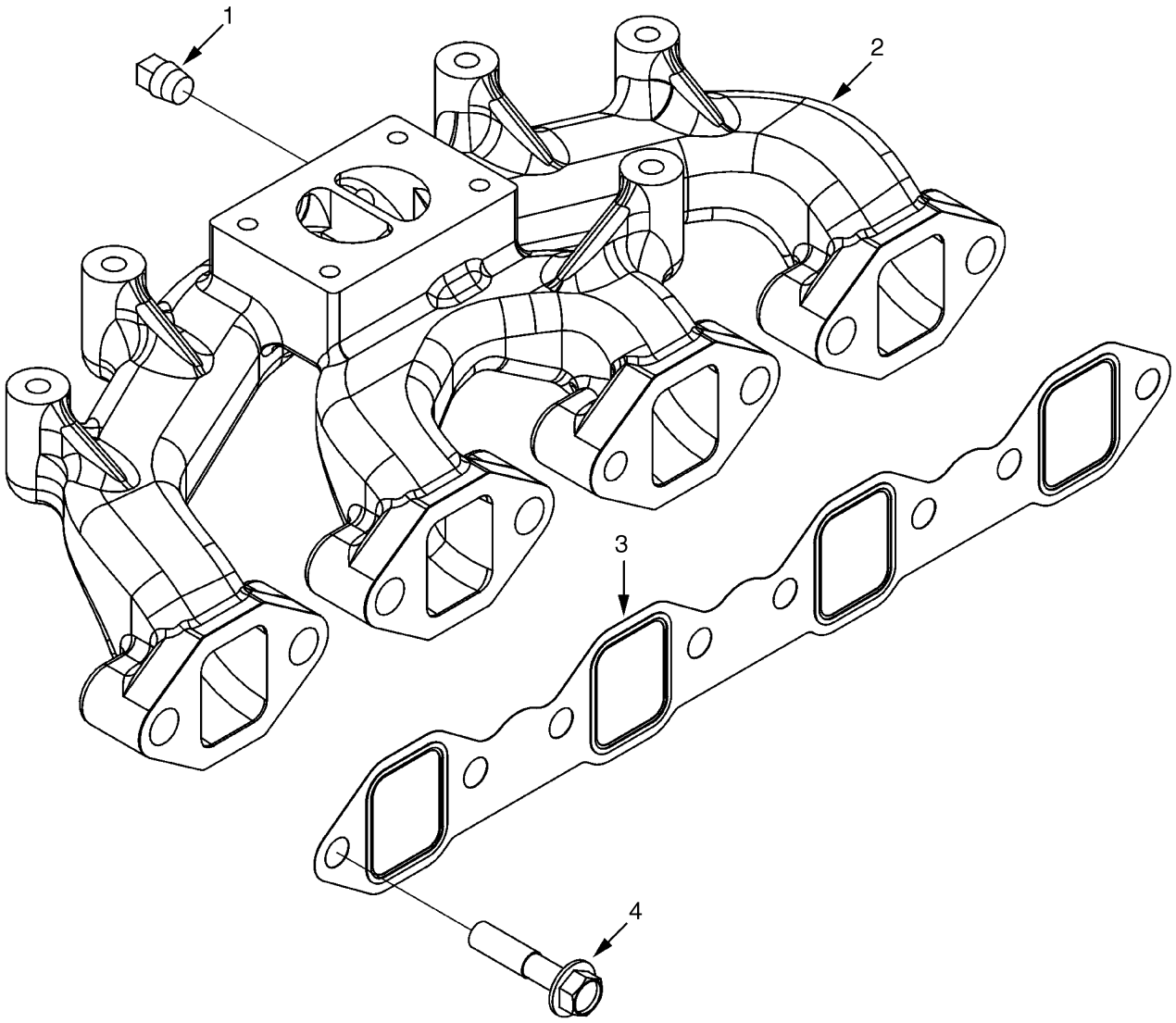

BP090259

©2014 Yale Materials Handling Corporation

EXHAUST MANIFOLD
CUMMINS QSB 3.3L DIESEL

ITEM	PART NO.	DESCRIPTION	QTY
	580087914	Engine Assy-Diesel	1
	580093608	Engine Assy-Diesel (99 Horsepower. Only available with 3x2 Transmission)	1
1	580091292	Plug	1
2	580091293	Exhaust Manifold	1
3	580091291	Gasket	1
4	580092020	Capscrew	7

©2014 Yale Materials Handling Corporation

AIR INTAKE MANIFOLD (FIGURE 2-49)

CUMMINS QSB 3.3L DIESEL

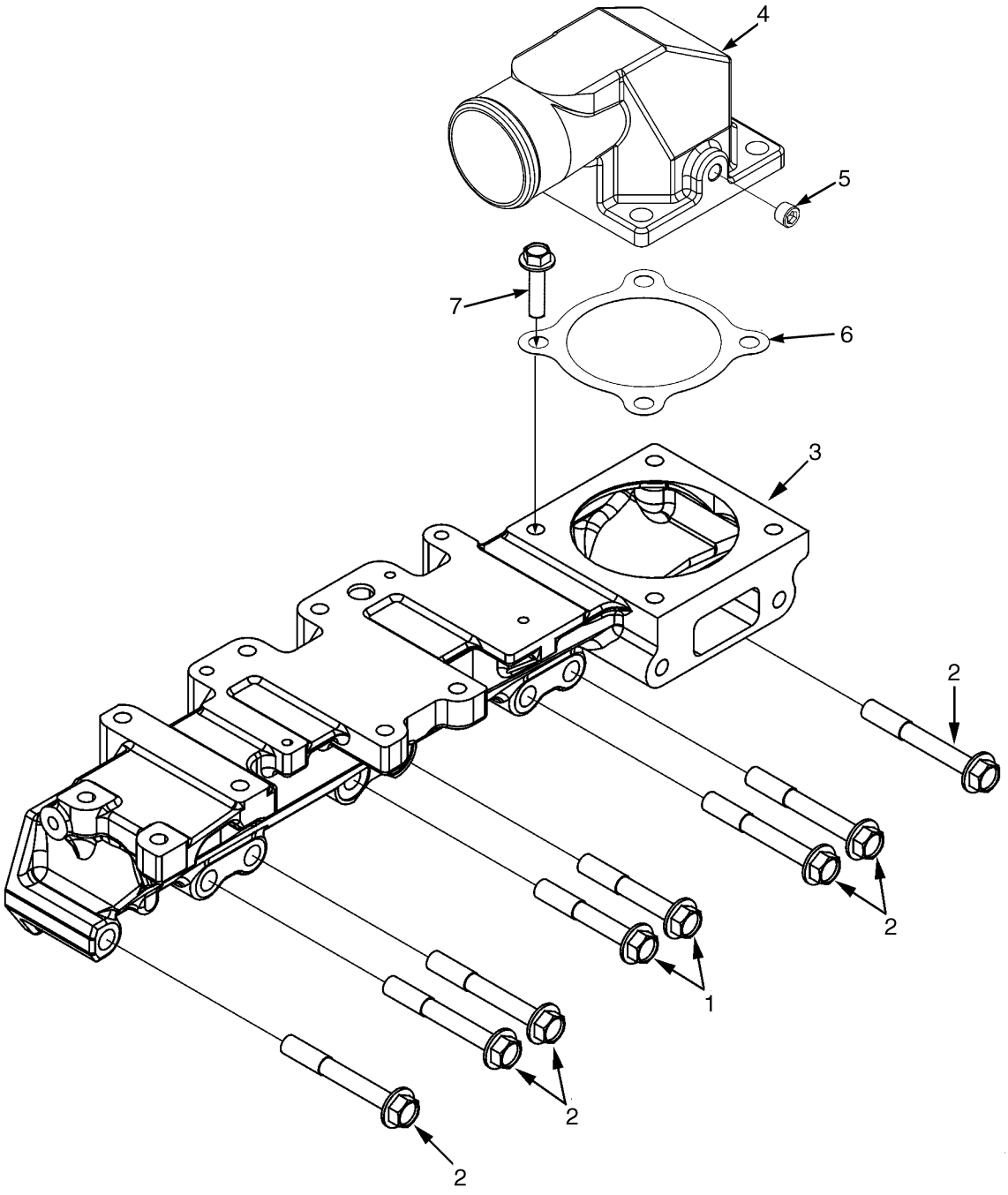

©2014 Yale Materials Handling Corporation

AIR INTAKE MANIFOLD
CUMMINS QSB 3.3L DIESEL

ITEM	PART NO.	DESCRIPTION	QTY
	580087914	Engine Assy-Diesel	1
	580093608	Engine Assy-Diesel (99 Horsepower. Only available with 3x2 Transmission)	1
1	580091095	Capscrew	2
2	580091096	Capscrew	6
3	580090989	Intake Manifold	1
4	580091094	Connector (Air Intake)	1
5	580071226	Fitting	1
6	580090921	Gasket	1
7	580091091	Capscrew	4

©2014 Yale Materials Handling Corporation

STARTING AID (FIGURE 2-50)
CUMMINS QSB 3.3L DIESEL

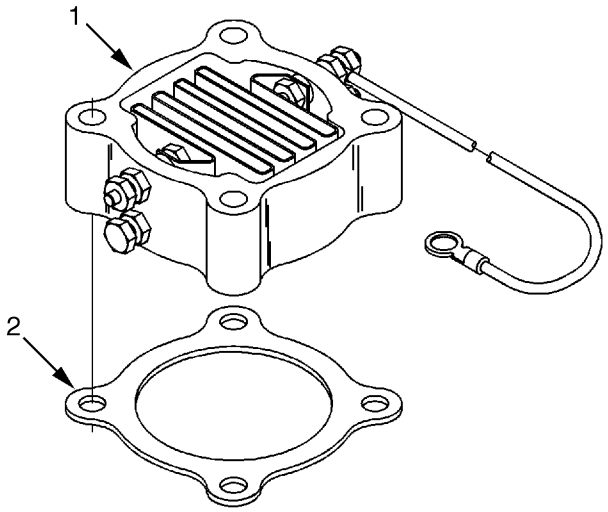

BP090404

ITEM	PART NO.	DESCRIPTION	QTY
	580087914	Engine Assy-Diesel	1
	580093608	Engine Assy-Diesel (99 Horsepower. Only available with 3x2 Transmission)	1
1	580090920	Heater	1
1	580096502	Heater (Alternate Part)	1
2	580090921	Gasket	1

©2014 Yale Materials Handling Corporation

VIBRATION DAMPER (FIGURE 2-51)

CUMMINS QSB 3.3L DIESEL

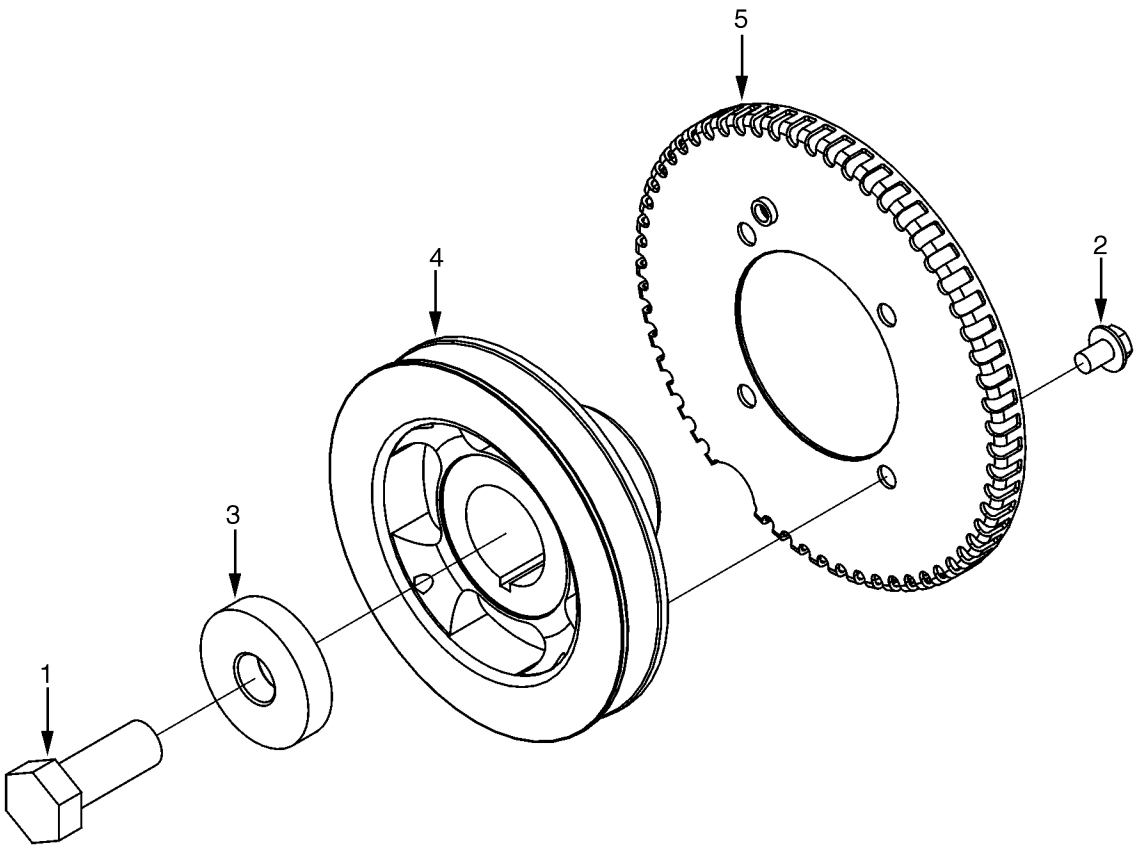

BP090400

ITEM	PART NO.	DESCRIPTION	QTY
	580087914	Engine Assy-Diesel	1
	580093608	Engine Assy-Diesel (99 Horsepower. Only available with 3x2 Transmission)	1
1	580090968	Capscrew	1
2	580090954	Capscrew	4
3	580090969	Plate	1
4	580090970	Crankshaft Pulley	1
5	580090971	Ring (Speed Indicator)	1

©2014 Yale Materials Handling Corporation

OIL LEVEL GAUGE (FIGURE 2-52)

CUMMINS QSB 3.3L DIESEL

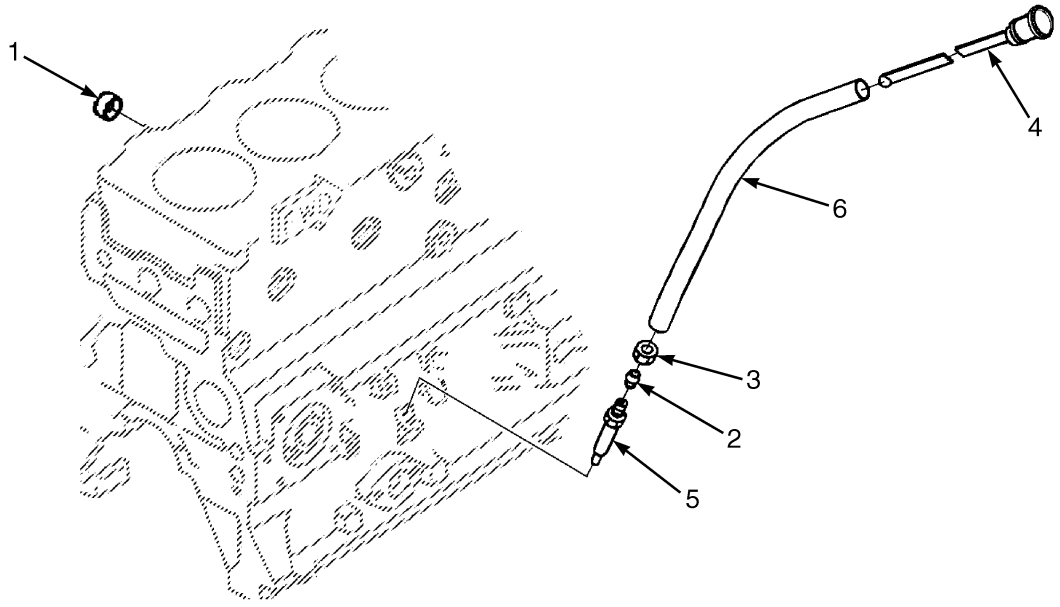

BP090409

ITEM	PART NO.	DESCRIPTION	QTY
1	580091103	Plug	1
2	580091104	Collar	1
3	580091105	Nut	1
4	580091106	Dipstick	1
5	580091107	Dipstick Tube (Lower)	1
6	580091108	Dipstick Tube (Upper)	1

©2014 Yale Materials Handling Corporation

3 EXHAUST SYSTEM

SECTION 3
EXHAUST SYSTEM

DESCRIPTION	PAGE
EXHAUST SYSTEM	
CUMMINS QSB 3.3L DIESEL	3-2
GM 4.3L GASOLINE AND LPG - GFI OPTION	3-4
GM 4.3L GASOLINE AND LPG - PSI (S/N D878V02178K →)	3-6

©2014 Yale Materials Handling Corporation

EXHAUST SYSTEM (FIGURE 3-1)
CUMMINS QSB 3.3L DIESEL

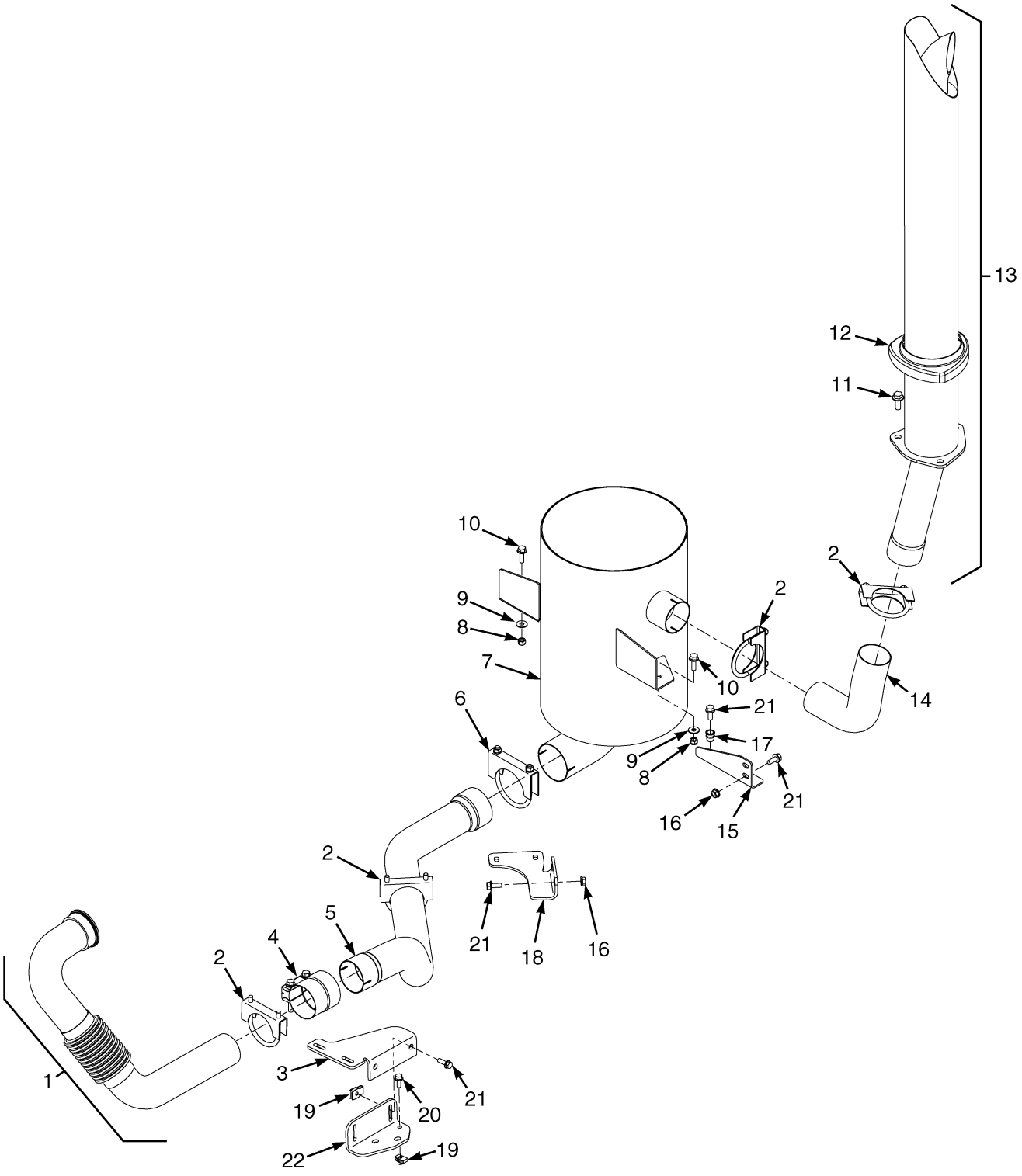

BP090412

©2014 Yale Materials Handling Corporation

EXHAUST SYSTEM
CUMMINS QSB 3.3L DIESEL

ITEM	PART NO.	DESCRIPTION	QTY
1	580085229	Exhaust Pipe	1
2	061977400	Clamp	4
3	582005389	Bracket (Exhaust)	1
4	582005135	Clamp	1
5	580093632	Exhaust Pipe	1
6	580002719	Clamp	1
7	580092618	Muffler	1
8	580056381	Locknut	2
9	504226242	Washer	2
10	580030966	Capscrew	2
11	580030970	Capscrew	3
12	580084621	Cover	1
13	580084470	Overhead Exhaust	1
14	580084471	Exhaust Pipe	1
15	580089562	Bracket	1
16	580027573	Nut (Flange)	4
17	580044860	Insert	2
18	580093634	Bracket	1
19	580012987	Nut	2
20	580049231	Capscrew	5
21	580030966	Capscrew	2
22	582005391	Bracket (Exhaust)	1

©2014 Yale Materials Handling Corporation

EXHAUST SYSTEM (FIGURE 3-2)

GM 4.3L GASOLINE AND LPG — GFI OPTION

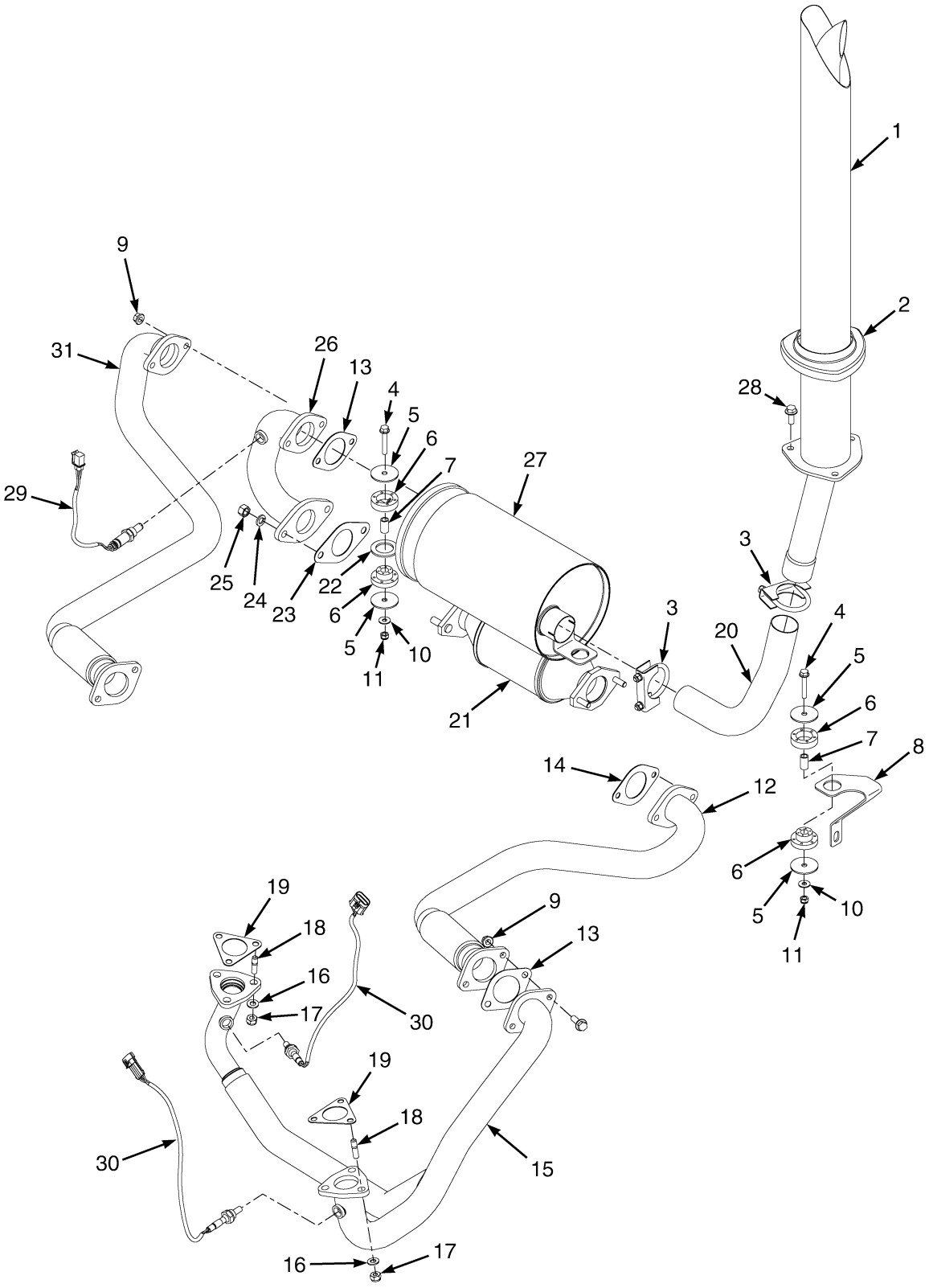

©2014 Yale Materials Handling Corporation

EXHAUST SYSTEM

GM 4.3L GASOLINE AND LPG – GFI OPTION

KEY:
A: With Catalytic Converter
B: Without Catalytic Converter

ITEM	PART NO.	DESCRIPTION	QTY A	QTY B
1	580066347	Tail Pipe	1	1
2	916522400	Cover	1	1
3	580007621	Clamp	2	2
4	580030968	Capscrew	2	2
5	**b** 580037329	Washer	4	4
6	**b** 580037328	Mount	2	2
6	**c** 580097537	Isolator	4	4
7	**b** 580077713	Spacer	2	2
7	**c** 582000157	Spacer	2	2
8	580077759	Bracket	1	..
9	580027572	Nut	6	4
10	504226242	Washer	2	2
11	580056381	Locknut	2	2
12	580081560	Exhaust Pipe	1	..
13	580039610	Gasket	2	2
14	580054719	Gasket	1	..
15	580088894	Exhaust Pipe	1	1
16	449021006	Washer	6	6
17	580054687	Locknut	6	6
18	~~580054724~~			
	582014783	Stud	6	6
19	580054716	Gasket	2	2
19	582001884	Gasket (Alternate Part)	2	2
20	580066348	Exhaust Pipe	1	1
21	580083309	Catalytic Converter	1	..
21	582001097	Catalytic Converter (2010 Series)	1	..
22	580039566	Washer	1	2
23	580054717	Gasket	1	..
24	449022017	Lockwasher	2	..
25	580020060	Nut	2	..
26	580074438	Exhaust Pipe	1	..
26	~~582002170~~			
	582008482	Exhaust Pipe (Alternate Part)	1	..
26	580081558	Exhaust Pipe	..	1
27	580063288	Muffler (Crimped)	1	1
27	**a** 580054021	Muffler (Welded)	1	1
28	580030970	Capscrew	3	3
29	582005368	Sensor (Oxygen) (2010 Series)	1	..
30	580048273	Oxygen Sensor (With Wire Harness) (2010 Series)	2	2

FOOTNOTES:

a Optional
b → S/N D878V01721G
c S/N D878V01722G →

©2014 Yale Materials Handling Corporation

EXHAUST SYSTEM (FIGURE 3-3)

GM 4.3L GASOLINE AND LPG — PSI (S/N D878V02178K →)

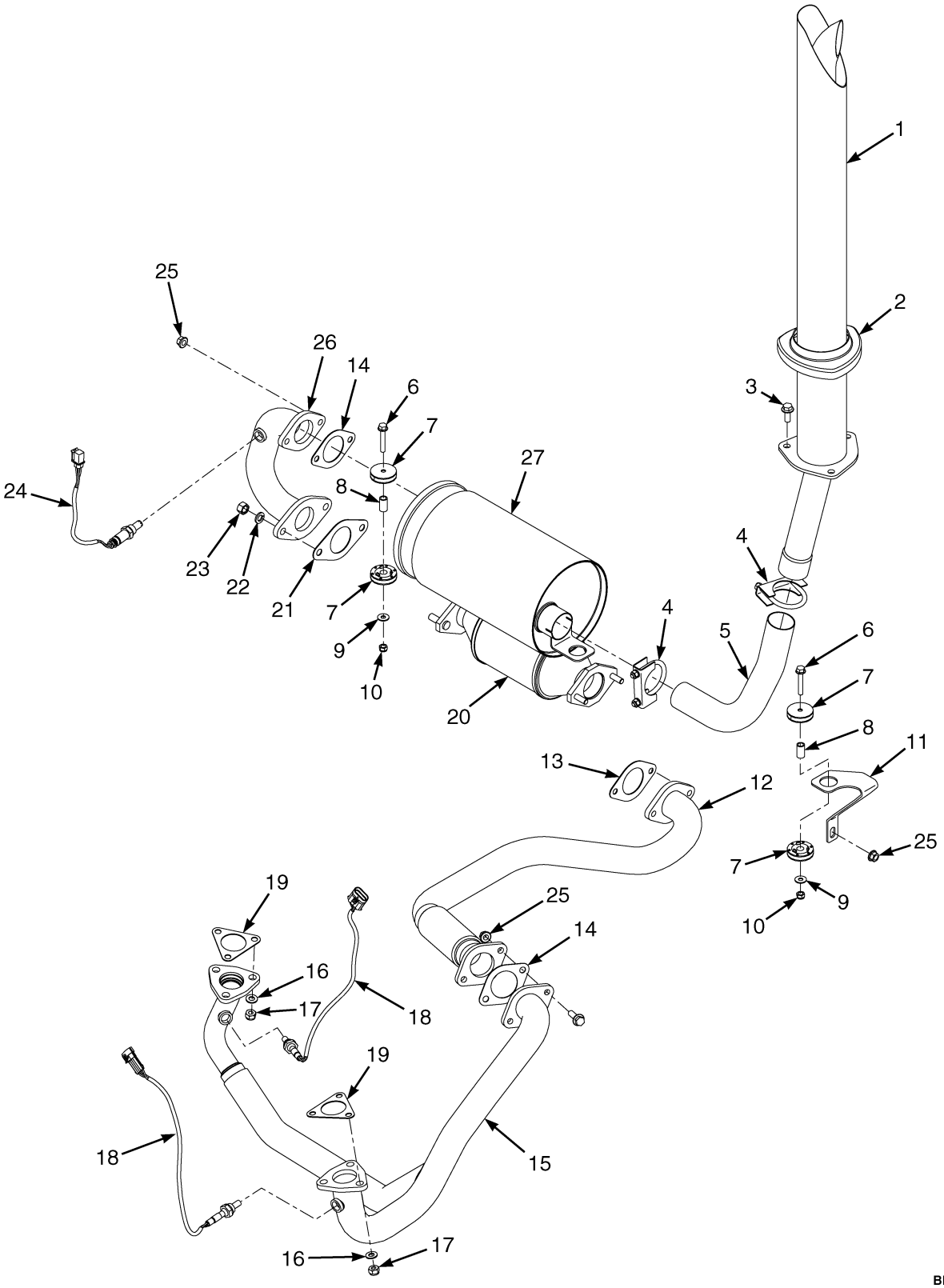

©2014 Yale Materials Handling Corporation

EXHAUST SYSTEM

GM 4.3L GASOLINE AND LPG – PSI (S/N D878V02178K →)

ITEM	PART NO.	DESCRIPTION	QTY
1	580066347	Tail Pipe	1
2	916522400	Cover	1
3	580030970	Capscrew	3
4	580007621	Clamp	2
5	580066348	Exhaust Pipe	1
6	580030968	Capscrew	2
7	580097537	Isolator	4
8	582000157	Spacer	2
9	504226242	Washer	2
10	580056381	Locknut	2
11	580077759	Bracket	1
12	580081560	Exhaust Pipe	1
13	580054719	Gasket	1
14	580039610	Gasket	2
15	582016814	Exhaust Pipe	1
16	449021006	Washer	6
17	580054687	Locknut	6
18	580048273	Oxygen Sensor (With Wire Harness)	2
19	582001884	Gasket (Multi Layer)	2
20	582016623	Catalytic Converter	1
21	580054717	Gasket	1
22	449022017	Lockwasher	2
23	580020060	Nut	2
24	582005368	Sensor (Oxygen)	1
25	580027572	Nut	6
26	~~582002170~~		
	582008482	Exhaust Pipe	1
27	**a** 580054021	Muffler (Welded)	1
27	580063288	Muffler (Crimped)	1

FOOTNOTES:

a Optional

©2014 Yale Materials Handling Corporation

NOTES

©2014 Yale Materials Handling Corporation

4 COOLING SYSTEM

SECTION 4
COOLING SYSTEM

DESCRIPTION	PAGE
COOLING SYSTEM	
CUMMINS QSB 3.3L	4-6
GM 4.3L GASOLINE AND LPG	4-2
RADIATOR MOUNTING	
CUMMINS QSB 3.3L DIESEL	4-4

©2014 Yale Materials Handling Corporation

COOLING SYSTEM (FIGURE 4-1)

GM 4.3L GASOLINE AND LPG

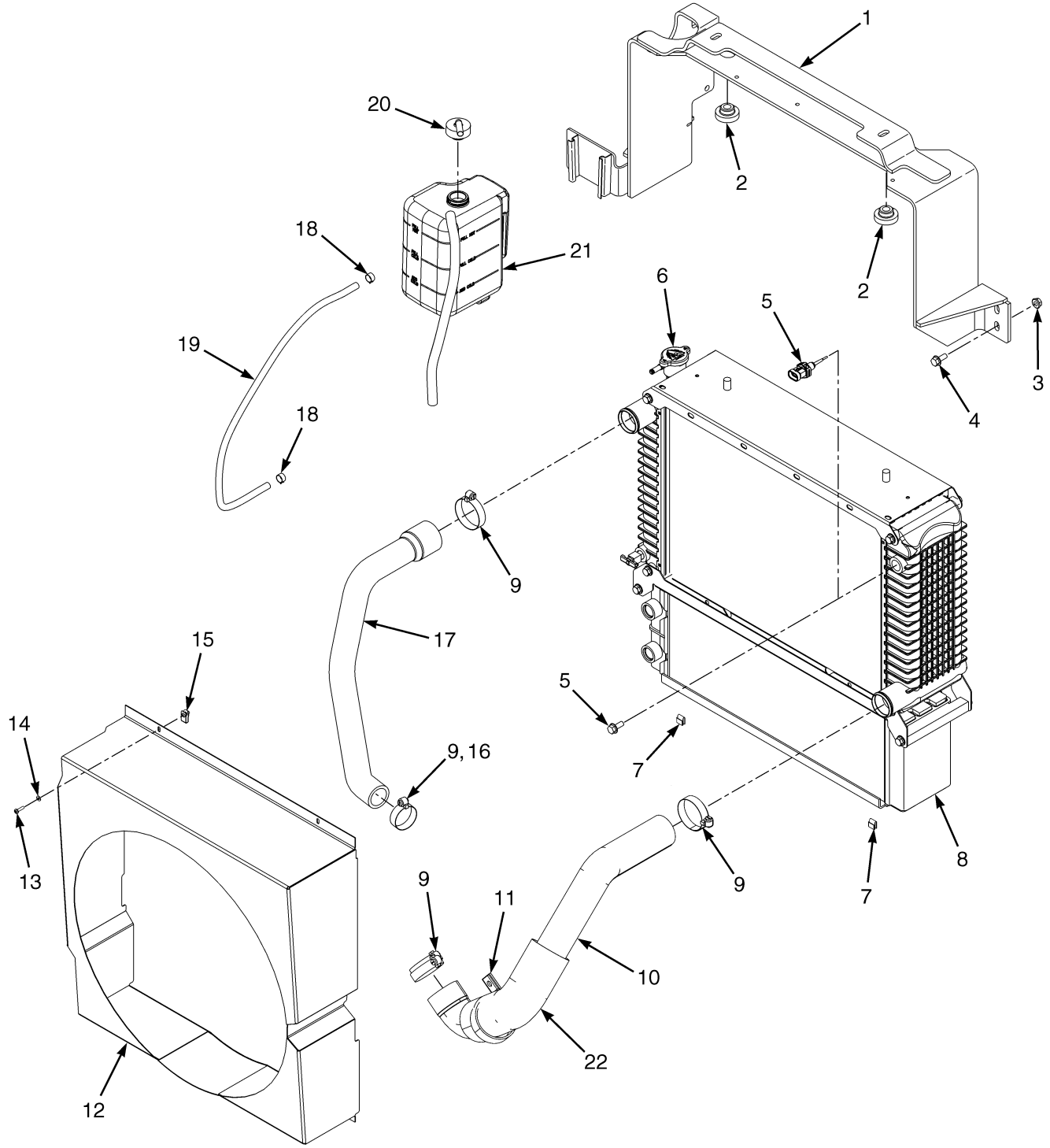

©2014 Yale Materials Handling Corporation

COOLING SYSTEM
GM 4.3L GASOLINE AND LPG

ITEM	PART NO.	DESCRIPTION	QTY
1	580084525	Support	1
2	580037325	Isolator	4
3	580027573	Nut (Flange)	4
4	580030966	Capscrew	4
5	580038312	Sensor (Low Coolant Level)	1
5	**a** 501884906	Fitting	1
6	580002881	Radiator Cap	1
7	580046304	Clip	2
8	**b** 580046833	Radiator (Assembly)	1
8	**b** 580069988	Radiator	1
8	**b** 580069986	Oil Cooler	1
8	**c** 582003826	Radiator (Assembly)	1
8	**c** 582016191	Radiator	1
8	**c** 582016197	Oil Cooler	1
8	**c** 582016199	Drain Valve	1
8	**c** 582016200	Nut	2
8	**c** 582016201	Bolt	8
8	**c** 582016202	Bolt	4
9	062159700	Clamp	3
10	~~580080740~~		
	582028993	Hose	1
11	580024366	Clamp (Insulated)	1
12	580064316	Shroud	1
13	449007005	Screw	2
14	940004903	Washer	2
15	580040177	Nut	2
16	502056903	Clamp	1
17	580062968	Radiator Hose (Upper)	1
18	505966595	Clamp	2
19	580007059	Hose	1
20	. . . . .	Outlet Assembly	1
20	900003260	Bushing	1
20	900001231	Cap	1
20	580083733	Hose	1
21	580075506	Reservoir	1
21	582010019	Seal (Not Illustrated)	1
22	580085098	Cover	1

FOOTNOTES:

a Without Low Coolant Sensor
b → 9/2011
c 9/2011 →

©2014 Yale Materials Handling Corporation

RADIATOR MOUNTING (FIGURE 4-2)

CUMMINS QSB 3.3L DIESEL

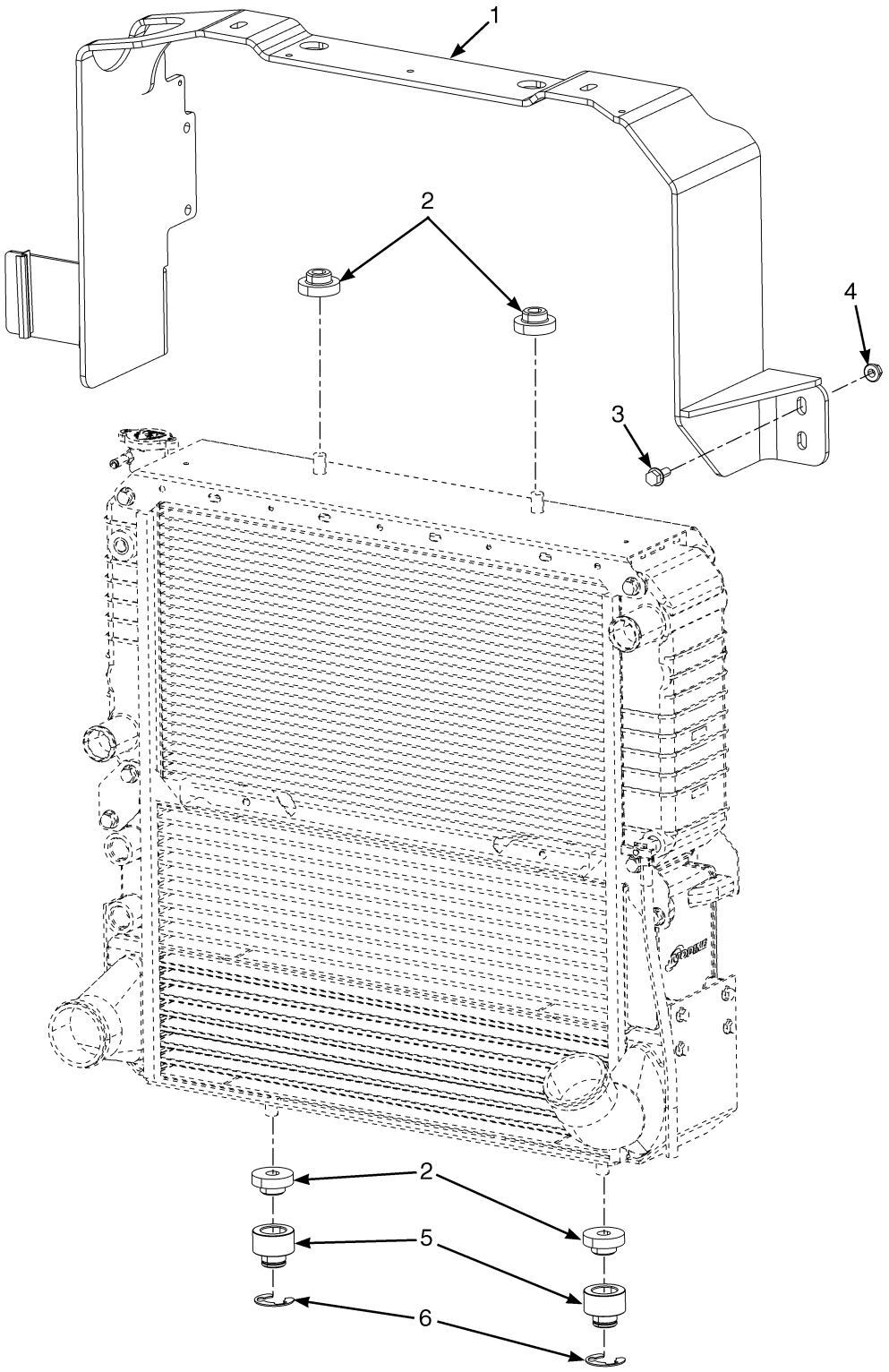

BP060060

©2014 Yale Materials Handling Corporation

RADIATOR MOUNTING
CUMMINS QSB 3.3L DIESEL

ITEM	PART NO.	DESCRIPTION	QTY
1	580084830	Bracket Wldmt	1
2	580037325	Isolator	4
3	580049231	Capscrew	4
4	580027573	Nut (Flange)	4
5	580084835	Spacer	2
6	580060694	Retainer	2

©2014 Yale Materials Handling Corporation

COOLING SYSTEM (FIGURE 4-3)

CUMMINS QSB 3.3L

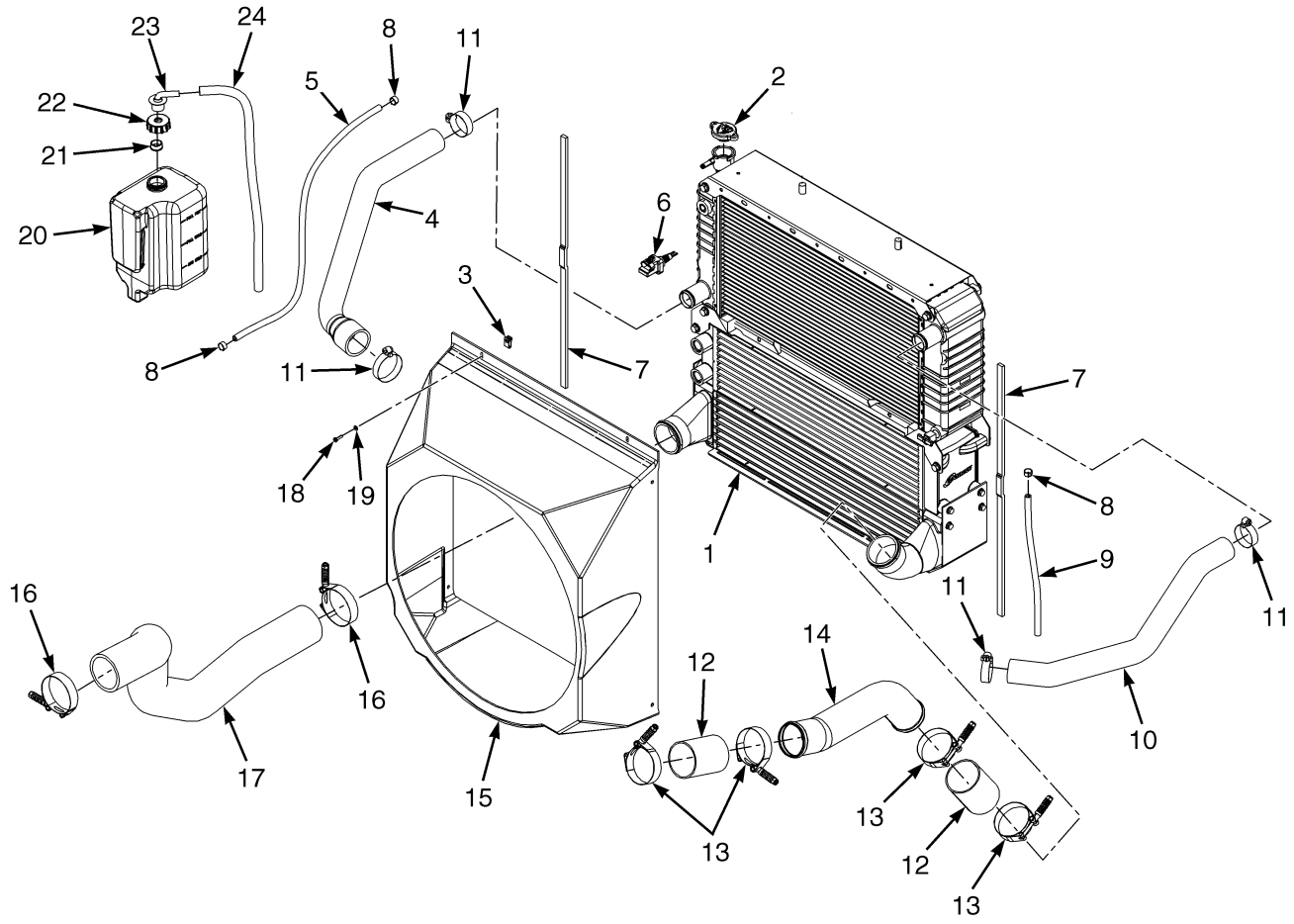

©2014 Yale Materials Handling Corporation

COOLING SYSTEM
CUMMINS QSB 3.3L

ITEM	PART NO.	DESCRIPTION	QTY
1	580086159	Radiator Assembly	1
1	580089792	Radiator	1
1	580089798	Capscrew	6
1	580089793	Air Cooler	1
1	580089794	Oil Cooler	1
1	580090079	Side Plate	1
1	580089798	Capscrew	8
2	505972563	Radiator Cap	1
3	580040177	Nut	2
4	580084399	Radiator Hose (Lower)	..
5	580007059	Hose	1
6	580090489	Sensor (Coolant Level)	1
6	**a** 501884906	Fitting (Without Coolant Sensor)	1
7	580087536	Seal	2
8	505966595	Clamp	3
9	505972513	Hose	1
10	580084401	Radiator Hose (Upper)	1
11	062159700	Clamp	4
12	580088471	Hose	2
13	580084517	Clamp	4
14	580086631	Tube	1
15	580086539	Shroud	1
16	580084518	Clamp	2
17	580085418	Hose	1
18	449007005	Screw	2
19	016103200	Washer	2
20	580075506	Reservoir	1
21	900003260	Bushing	1
22	900001231	Cap	1
23	580002885	Outlet Assembly	1
24	580083733	Hose	1

FOOTNOTES:

a Not Illustrated

©2014 Yale Materials Handling Corporation

NOTES

©2014 Yale Materials Handling Corporation

5 FUEL SYSTEM

SECTION 5
FUEL SYSTEM

DESCRIPTION	PAGE
AIR FILTER	5-10
AIR INTAKE	
CUMMINS QSB 3.3L DIESEL	5-8
GM 4.3L GASOLINE AND LPG - GFI OPTION	5-4
GM 4.3L LPG AND GASOLINE - PSI OPTION (S/N D878V02178K →)	5-6
COOLANT HOSES	
GM 4.3L LPG WITH CAB - PSI OPTION	5-21
FOOT DIRECTIONAL CONTROL PEDAL ASSEMBLY	
→ PENDING PER ECN 154533	5-56
FUEL CAP	
DIESEL	5-46
FUEL FILTER	
CUMMINS QSB 3.3L DIESEL	5-54
FUEL FILTER PLUMBING	
CUMMINS QSB 3.3L DIESEL	5-52
FUEL INJECTION PUMP	
CUMMINS QSB 3.3L DIESEL	5-47
FUEL INJECTOR AND INJECTOR PLUMBING	
CUMMINS QSB 3.3L DIESEL	5-48
FUEL PUMP PLUMBING	
CUMMINS QSB 3.3L DIESEL	5-50
FUEL SENDING UNIT	
GM 4.3L GASOLINE - PSI OPTION	5-18
FUEL SUPPLY SYSTEM	
GM 4.3L GASOLINE - GFI OPTION	5-12
GM 4.3L LPG - PSI OPTION (S/N D878V02178K →)	5-28
GM 4.3L LPG WITH OVERHEAD GUARD OR PCV DOOR CAB - GFI OPTION (→ S/N D878V02177K)	5-26
GM 4.3L LPG WITH STEEL DOOR CAB	5-22
FUEL SYSTEM	
CUMMINS QSB 3.3L DIESEL	5-44
GM 4.3L GASOLINE - PSI OPTION	5-14
LPG CONVERTER	
GM 4.3L LPG - PSI OPTION (S/N D878V02178K →)	5-39
LPG LOCK OFF	
GM 4.3L - PSI OPTION (S/N D878V02178K →)	5-40
LPG REGULATOR	
GM 4.3L - GFI OPTION (→ S/N D878V02177K)	5-36
LPG REGULATOR AND MIXER	
GM 4.3L - PSI OPTION (S/N D878V02178K →)	5-38
SINGLE AND DUAL LPG TANK BRACKETS	5-42
THROTTLE BODY	
GM 4.3L LPG - PSI OPTION (S/N D878V02178K →)	5-34
GM 4.3L GASOLINE - PSI OPTION	5-20
THROTTLE BODY ASSEMBLY	
GM 4.3L LPG (→ S/N D878V01730H)	5-30
GM 4.3L LPG - GFI OPTION (S/N D878V01731H ↔ S/N D878V02177K)	5-32
THROTTLE BODY ASSEMBLY AND FUEL RAIL	
GM 4.3L GASOLINE - GFI OPTION	5-16

©2014 Yale Materials Handling Corporation

SECTION 5
FUEL SYSTEM

DESCRIPTION	PAGE
THROTTLE PEDAL ASSEMBLY AND ATTACHING PARTS	
FOOT DIRECTIONAL CONTROL (PENDING PER ECN 154533 →)	5-60
STANDARD PEDAL	5-58
WATER SEPARATOR	
CUMMINS QSB 3.3L DIESEL	5-55

©2014 Yale Materials Handling Corporation

NOTES

©2014 Yale Materials Handling Corporation

AIR INTAKE (FIGURE 5-1)
GM 4.3L GASOLINE AND LPG — GFI OPTION

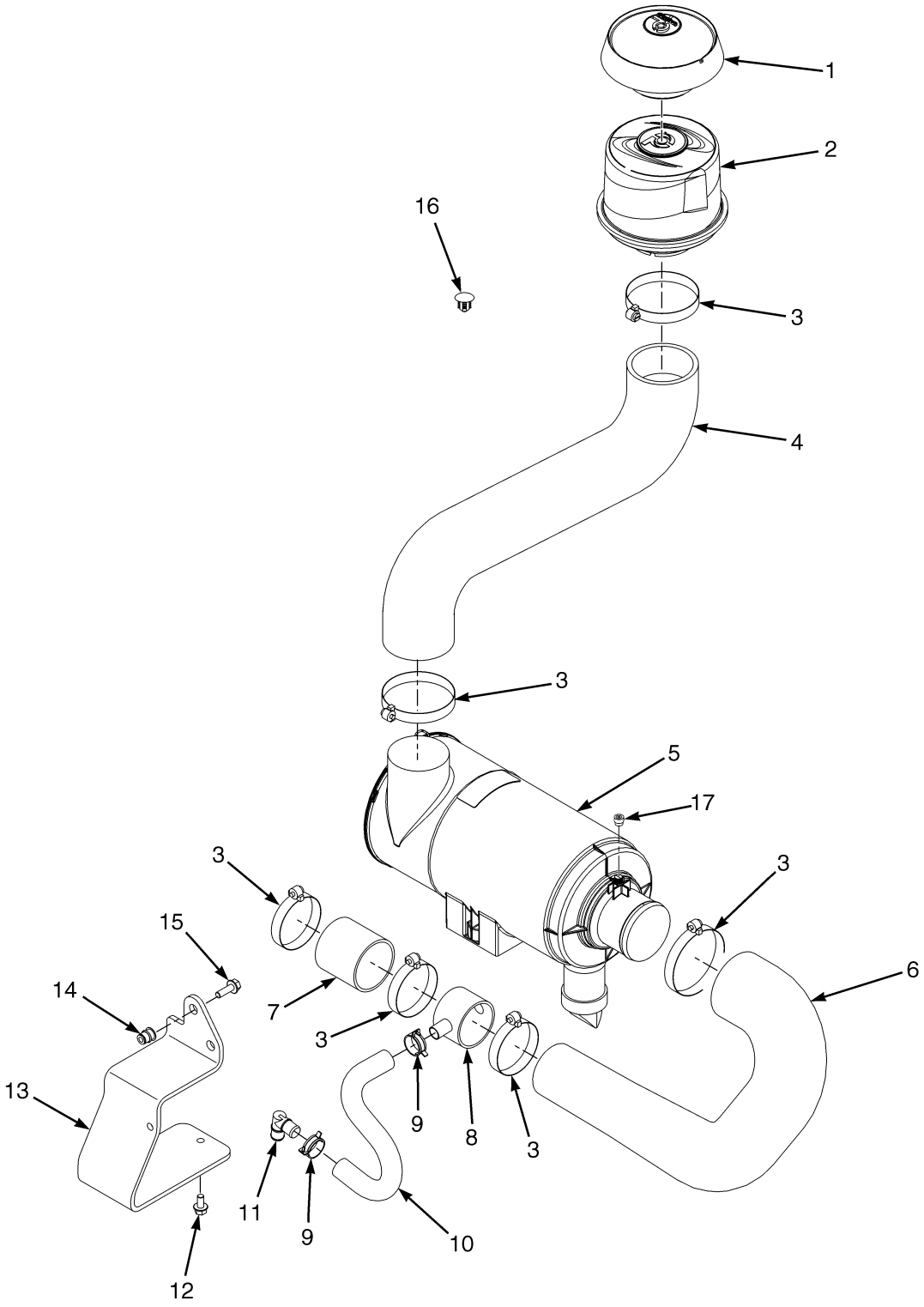

©2014 Yale Materials Handling Corporation

AIR INTAKE

GM 4.3L GASOLINE AND LPG – GFI OPTION

ITEM	PART NO.	DESCRIPTION	QTY
1	932582301	Cap	1
2	580037049	Pre-Cleaner	1
3	504058787	Hose Clamp	6
4	580066199	Hose (Dirty Air)	1
5	**a** 580090151	Air Filter Assembly (☞P20200 [Page 5-10])	1
5	**a** 582014038	Air Filter Assembly (☞P20200 [Page 5-10])	1
6	580087575	Hose (Clean Air)	1
7	580087573	Hose (Air Intake)	1
8	580083135	Coupler (PCV)	1
9	580039914	Hose Clamp	2
10	580077738	Hose	1
11	900011248	Fitting	1
12	580047714	Capscrew	2
13	580074812	Bracket	1
14	580044860	Insert	2
15	580030966	Capscrew	2
16	580059493	Plug	2
17	580046971	Indicator (Restriction)	1

FOOTNOTES:

a 8/2011 →

©2014 Yale Materials Handling Corporation

AIR INTAKE (FIGURE 5-2)

GM 4.3L LPG AND GASOLINE — PSI OPTION (S/N D878V02178K →)

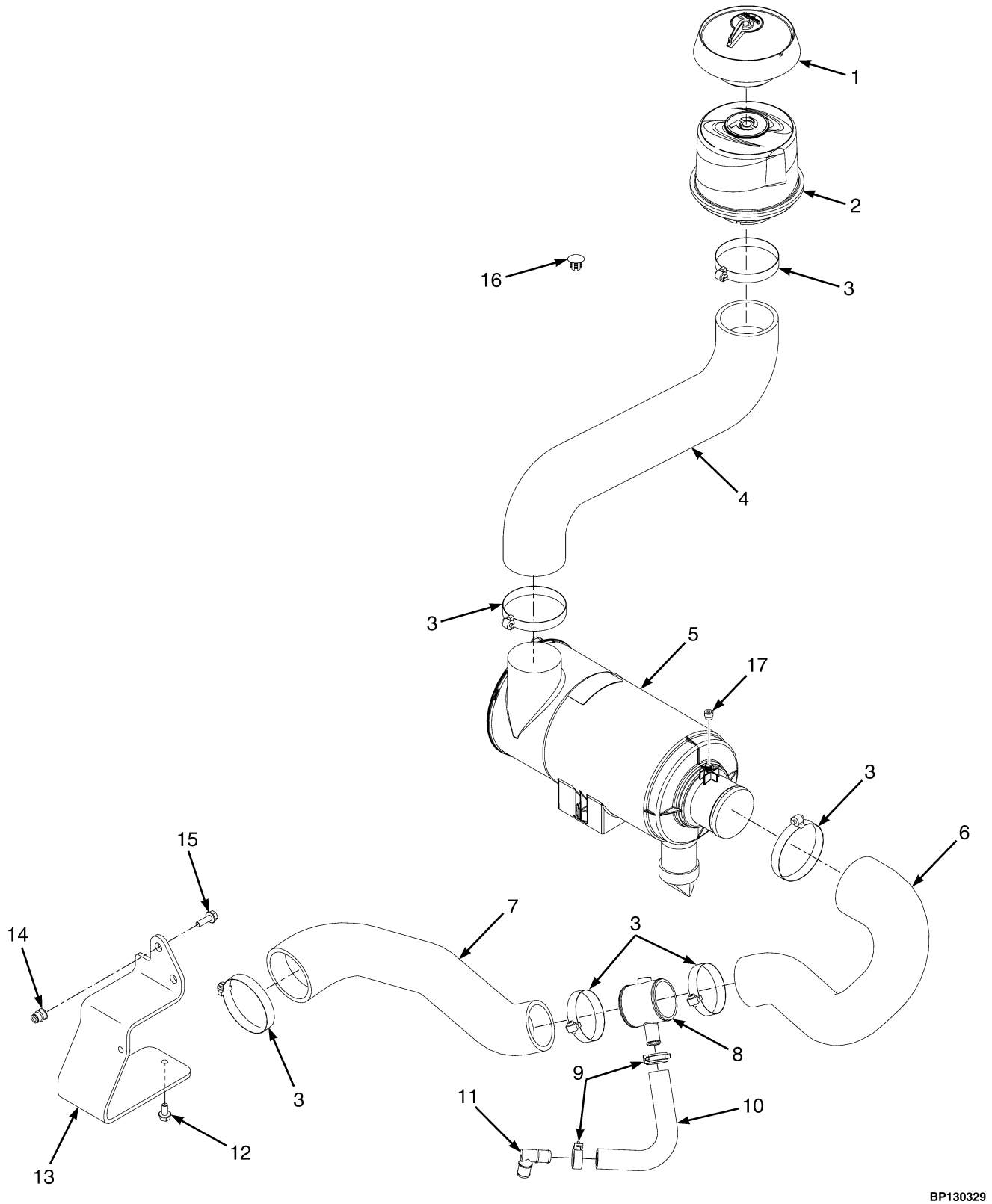

©2014 Yale Materials Handling Corporation

AIR INTAKE

GM 4.3L LPG AND GASOLINE – PSI OPTION (S/N D878V02178K →)

ITEM	PART NO.	DESCRIPTION	QTY
1	932582301	Cap	1
2	580037049	Pre-Cleaner	1
3	504058787	Hose Clamp	6
4	580066199	Hose (Dirty Air)	1
5	582014038	Air Filter Assembly (☞P20200 [Page 5-10])	1
6	582016728	Hose (Clean Air)	1
7	582016638	Hose (Clean Air)	1
8	580083135	Coupler (PCV)	1
9	580039914	Hose Clamp	2
10	~~582016452~~		
	582018523	Hose (PCV Vent)	1
11	900011248	Fitting	1
12	580047714	Capscrew	2
13	580074812	Bracket	1
14	580044860	Insert	2
15	580030966	Capscrew	2
16	580059493	Plug	2
17	580046971	Indicator (Restriction)	1
	a 580042842	Clamp	1
	a 580041557	Clamp	1

FOOTNOTES:

a Not Illustrated

©2014 Yale Materials Handling Corporation

AIR INTAKE (FIGURE 5-3)
CUMMINS QSB 3.3L DIESEL

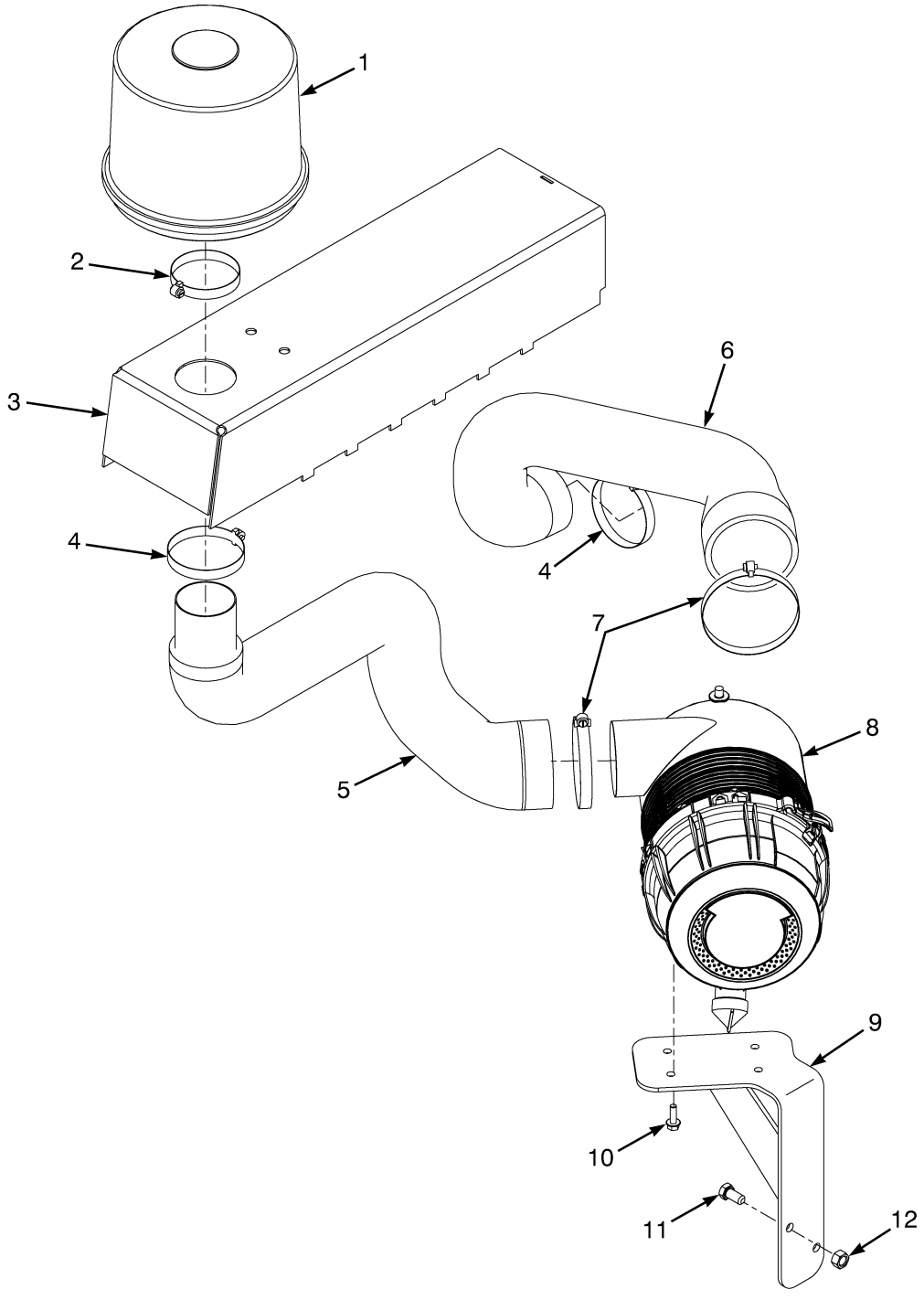

©2014 Yale Materials Handling Corporation

AIR INTAKE

CUMMINS QSB 3.3L DIESEL

ITEM	PART NO.	DESCRIPTION	QTY
1	932582301	Cap	1
1	580082074	Pre-Cleaner	1
2	580090364	Clamp	1
3	580083446	Hood Support	1
4	504058787	Hose Clamp	2
5	580084247	Hose (Dirty Air)	1
6	580083960	Hose (Clean Air)	1
7	502056905	Clamp	2
8	580085163	Air Filter	1
8	580088196	Filter Element	1
8	580090343	Kit-Cover	1
9	580083958	Bracket Wldmt	1
10	580030966	Capscrew	4
11	931015903	Capscrew	2
12	580033885	Nut	2

©2014 Yale Materials Handling Corporation

AIR FILTER (FIGURE 5-4)

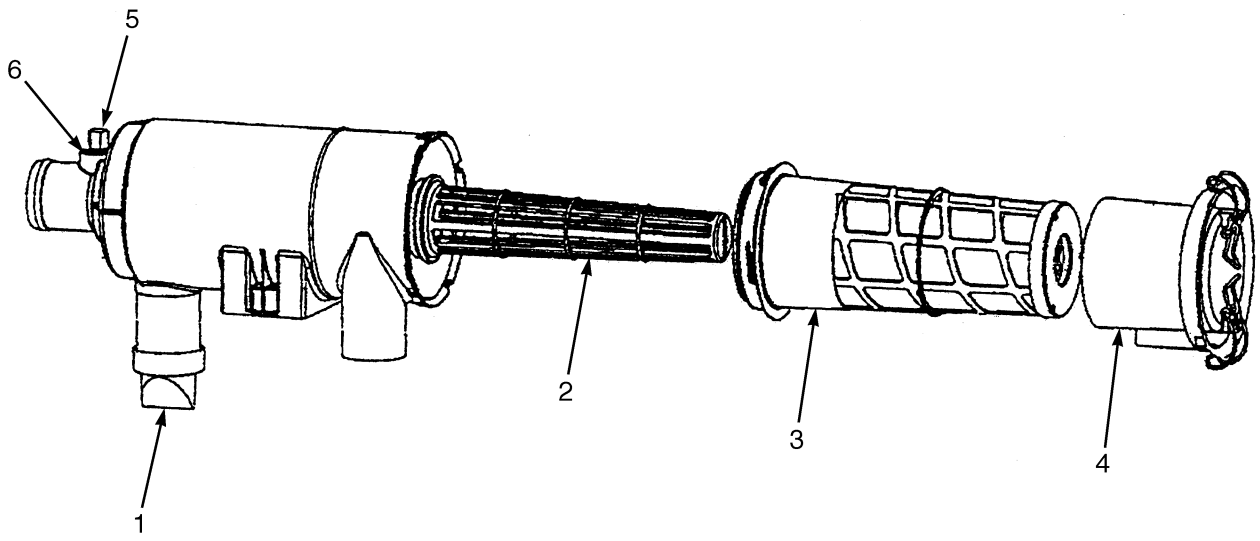

BP070054

ITEM	PART NO.	DESCRIPTION	QTY
	a 580090151	Air Filter Assembly	1
	a 582014038	Air Filter Assembly	1
1	505967516	Valve	1
2	580069339	Inner Liner Assy (Cage)	1
3	580069337	Filter Element	1
4	580090150	Cover	1
5	580003427	Cap	1
6	**a** 582013700	Connector (Pipe Nipple)	1

FOOTNOTES:

a 8/2011 →

©2014 Yale Materials Handling Corporation

NOTES

©2014 Yale Materials Handling Corporation

FUEL SUPPLY SYSTEM (FIGURE 5-5)

GM 4.3L GASOLINE — GFI OPTION

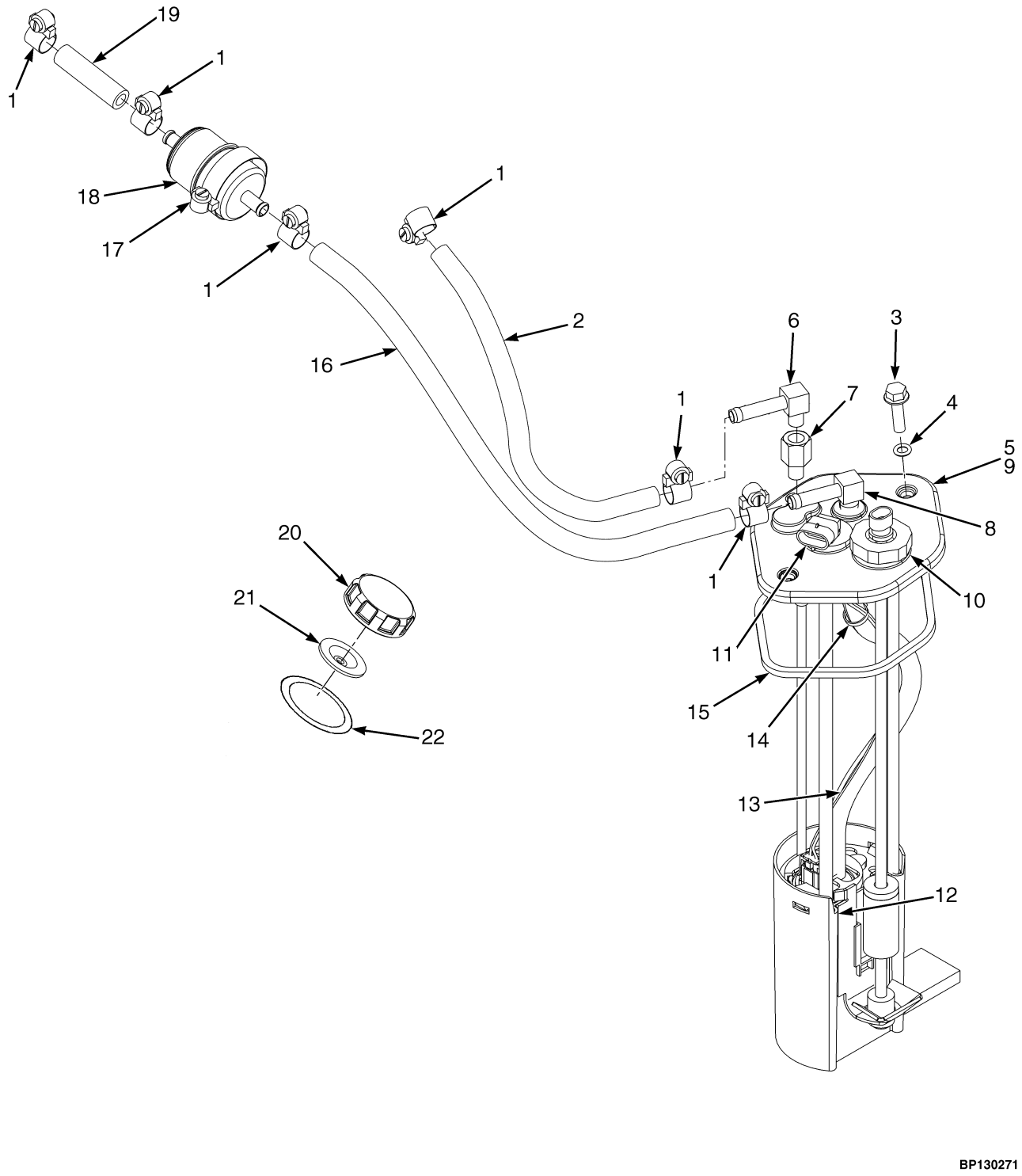

©2014 Yale Materials Handling Corporation

FUEL SUPPLY SYSTEM
GM 4.3L GASOLINE – GFI OPTION

ITEM	PART NO.	DESCRIPTION	QTY
1	502056906	Clamp	6
2	580065094	Hose	1
3	580049229	Capscrew	2
4	514214804	O-Ring	1
5	580065096	Fuel Sender	1
6	580048219	Fitting	1
7	500017905	Fitting	1
8	056260300	Fitting	1
9	580046311	Cover	1
10	580046394	Fuel Sender	1
11	580032269	Connector	1
12	580059327	Bracket	1
13	580079442	Wire Harness	1
14	312850042	Strap Clamp	1
15	580036870	Quad Ring	1
16	580056486	Hose	1
17	062159700	Clamp	1
18	580046832	Fuel Filter	1
19	580046629	Hose	1
20	580054472	Fuel Cap	1
21	580036738	Grommet	1
22	504236273	Shim (0.020 in.)	1
	a 580036666	Plug (With O-Ring for Drain) (Fuel Tank Drain)	1

FOOTNOTES:

a Not Illustrated

©2014 Yale Materials Handling Corporation

FUEL SYSTEM (FIGURE 5-6)
GM 4.3L GASOLINE — PSI OPTION

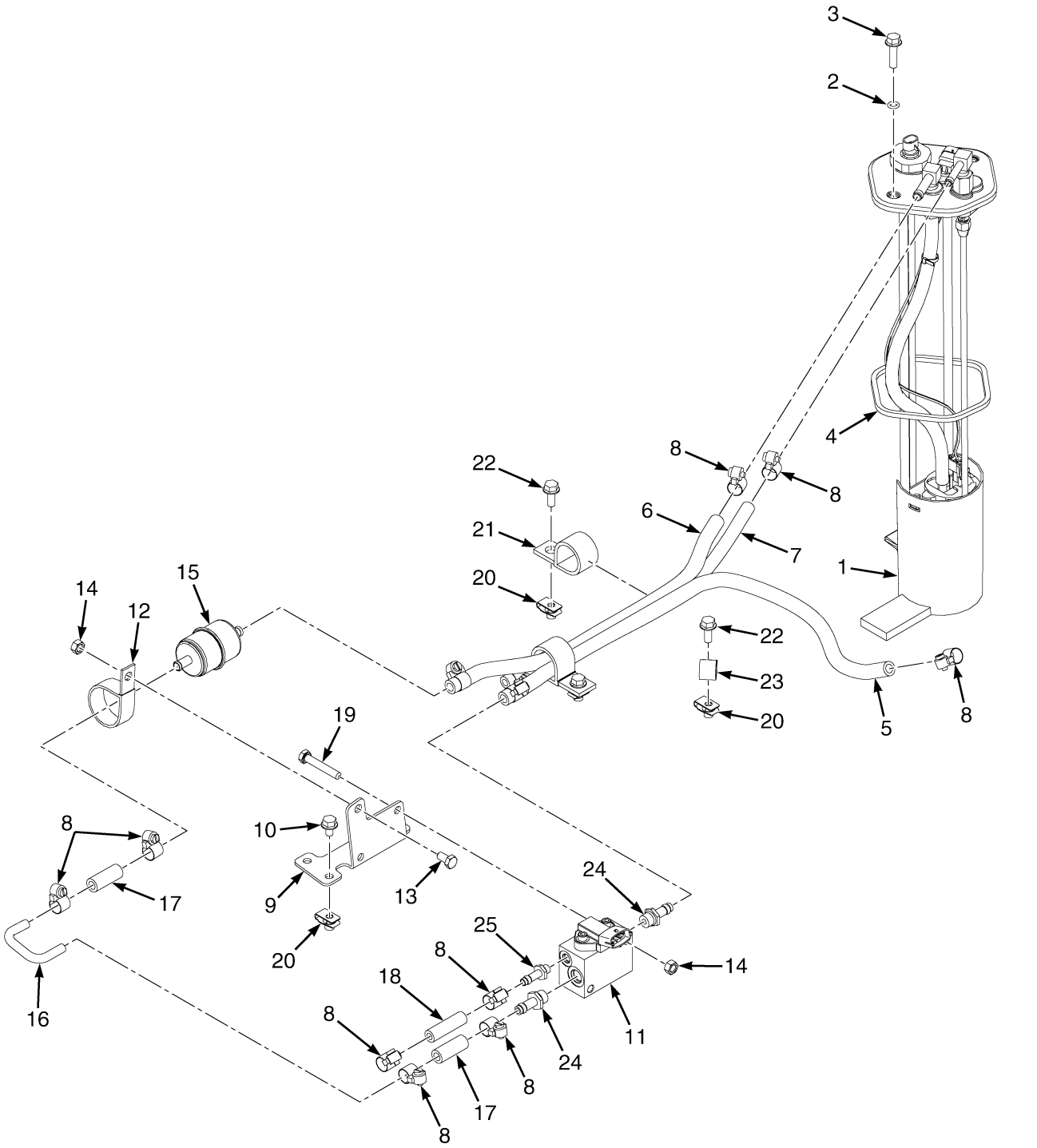

BP130354

©2014 Yale Materials Handling Corporation

FUEL SYSTEM
GM 4.3L GASOLINE – PSI OPTION

ITEM	PART NO.	DESCRIPTION	QTY
1	~~582020376~~		
	582025061	Fuel Pump	1
2	514214804	O-Ring	2
3	580049229	Capscrew	2
4	580036870	Quad Ring	1
5	582020644	Hose	1
6	582020634	Hose	1
7	582020645	Hose	1
8	502056906	Clamp	12
9	582020447	Bracket	1
10	580037180	Capscrew	2
11	582020446	Manifold Assy	1
12	580044519	Clamp	1
13	449001415	Capscrew	1
14	449015014	Nut	3
15	580046832	Fuel Filter	1
16	582020449	Tube Assy	1
17	582020444	Hose	2
18	580042354	Hose	1
19	449001050	Capscrew	2
20	580026621	Nut	5
21	580008640	Clamp	2
22	580049231	Capscrew	3
23	580008371	Clamp	1
	a 502058911	Adhesive	AR

FOOTNOTES:

a Not Illustrated

©2014 Yale Materials Handling Corporation

THROTTLE BODY ASSEMBLY AND FUEL RAIL (FIGURE 5-7)

GM 4.3L GASOLINE — GFI OPTION

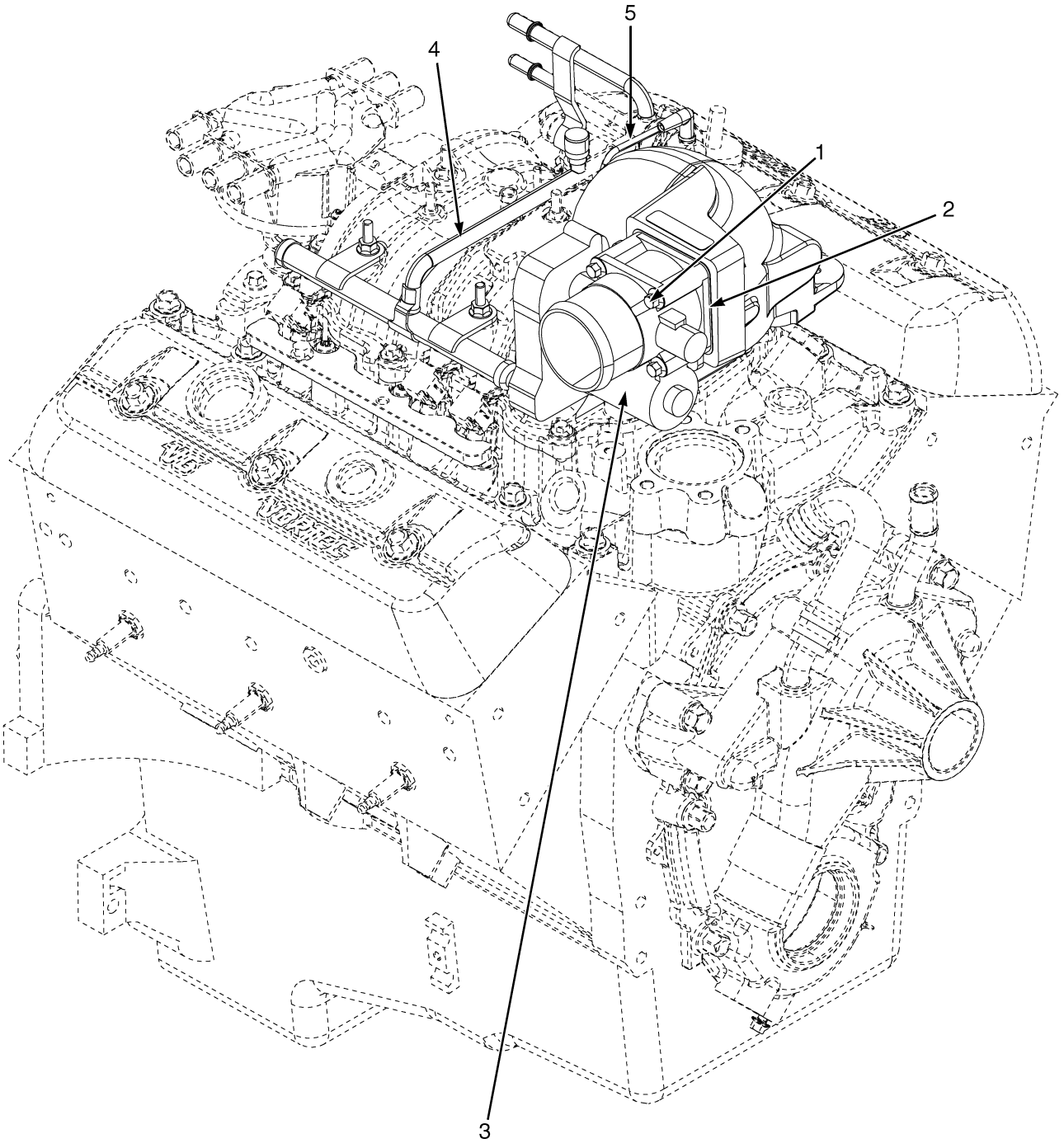

BP130267

©2014 Yale Materials Handling Corporation

THROTTLE BODY ASSEMBLY AND FUEL RAIL

GM 4.3L GASOLINE – GFI OPTION

ITEM	PART NO.	DESCRIPTION	QTY
1	580041711	Capscrew	4
2	580048278	Gasket (Throttle Body)	1
3	580048274	Throttle Body	1
4	580087847	Tube Assy (Fuel Rail Assembly)	1
4	580048875	Injector	6
4	580087629	Retainer	6
4	580090506	Clip	1
4	580048873	Regulator	1
4	580089522	Fuel Rail	1
4	580089523	Pressure Valve	1
5	580046629	Hose	1

©2014 Yale Materials Handling Corporation

FUEL SENDING UNIT (FIGURE 5-8)

GM 4.3L GASOLINE — PSI OPTION

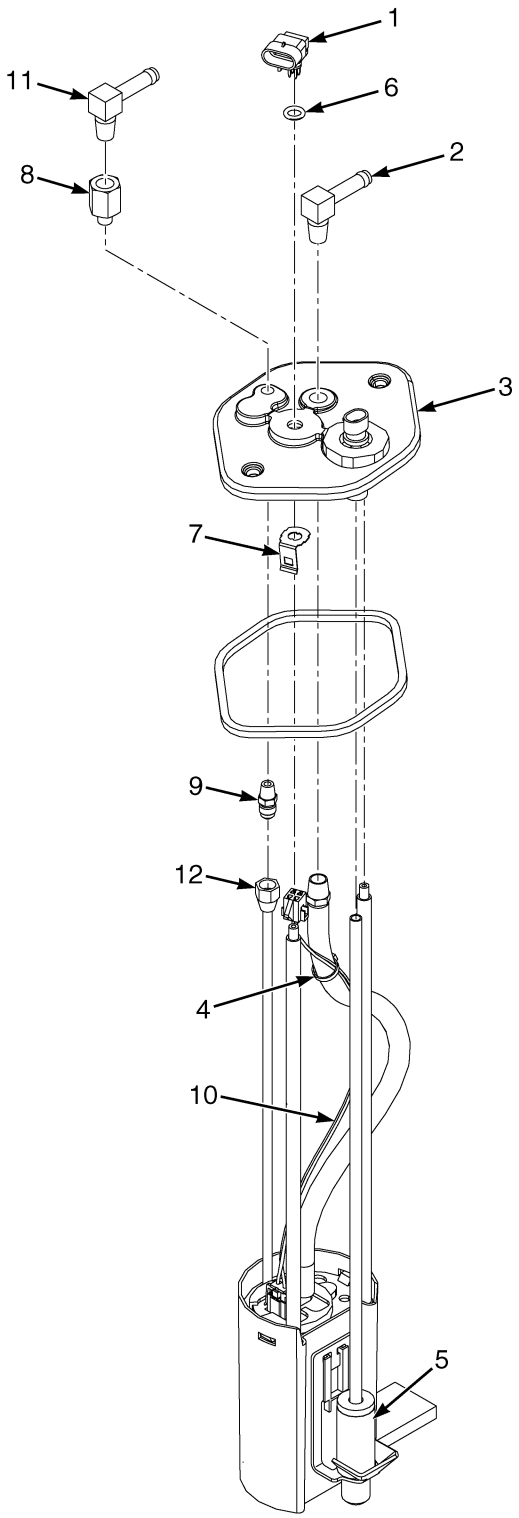

BP130356

©2014 Yale Materials Handling Corporation

FUEL SENDING UNIT
GM 4.3L GASOLINE – PSI OPTION

ITEM	PART NO.	DESCRIPTION	QTY
	~~582020376~~		
	582025061	Fuel Pump	1
1	580032269	Connector	1
2	580048219	Fitting	1
3	580046311	Cover	1
4	312850042	Strap Clamp	1
5	580046394	Fuel Sender	1
6	900011220	O-Ring	1
7	580048219	Fitting	1
8	500017905	Fitting	1
9	. . . . .	Pipe Fitting	1
10	580079442	Wire Harness	1
11	056260300	Fitting	1
12	580050924	Fitting	1

©2014 Yale Materials Handling Corporation

THROTTLE BODY (FIGURE 5-9)

GM 4.3L GASOLINE — PSI OPTION

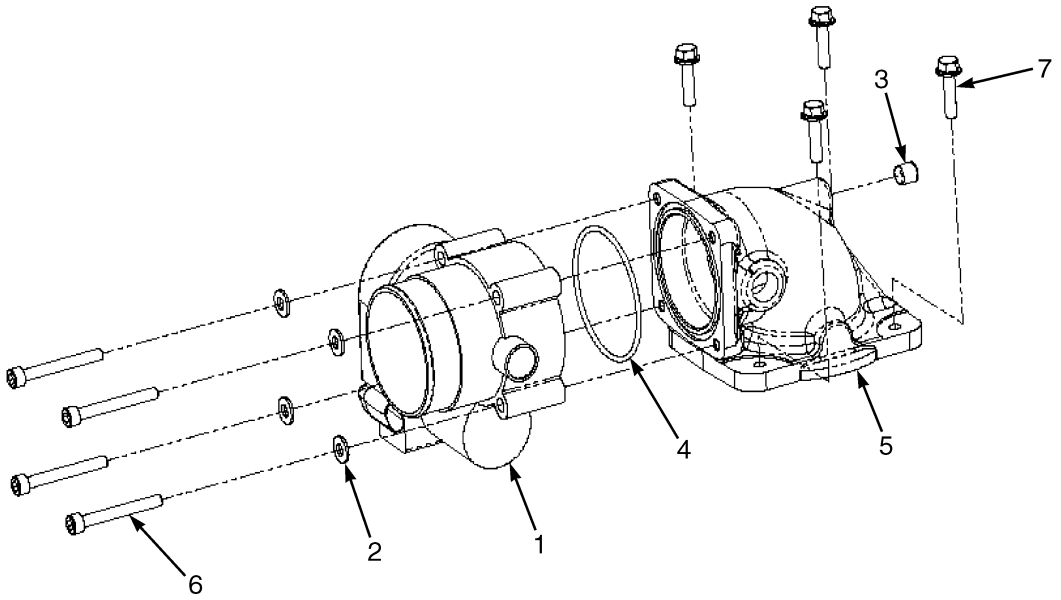

BP090524

ITEM	PART NO.	DESCRIPTION	QTY
	582016864	Engine Assy-Gas	1
1	582007560	Throttle Body	1
2	582021754	Washer	4
3	582007577	Plug	1
4	582007563	O-Ring	2
5	582021755	Adapter	1
6	582021756	Bolt	4
7	582021757	Bolt	4

©2014 Yale Materials Handling Corporation

COOLANT HOSES (FIGURE 5-10)
GM 4.3L LPG WITH CAB — PSI OPTION

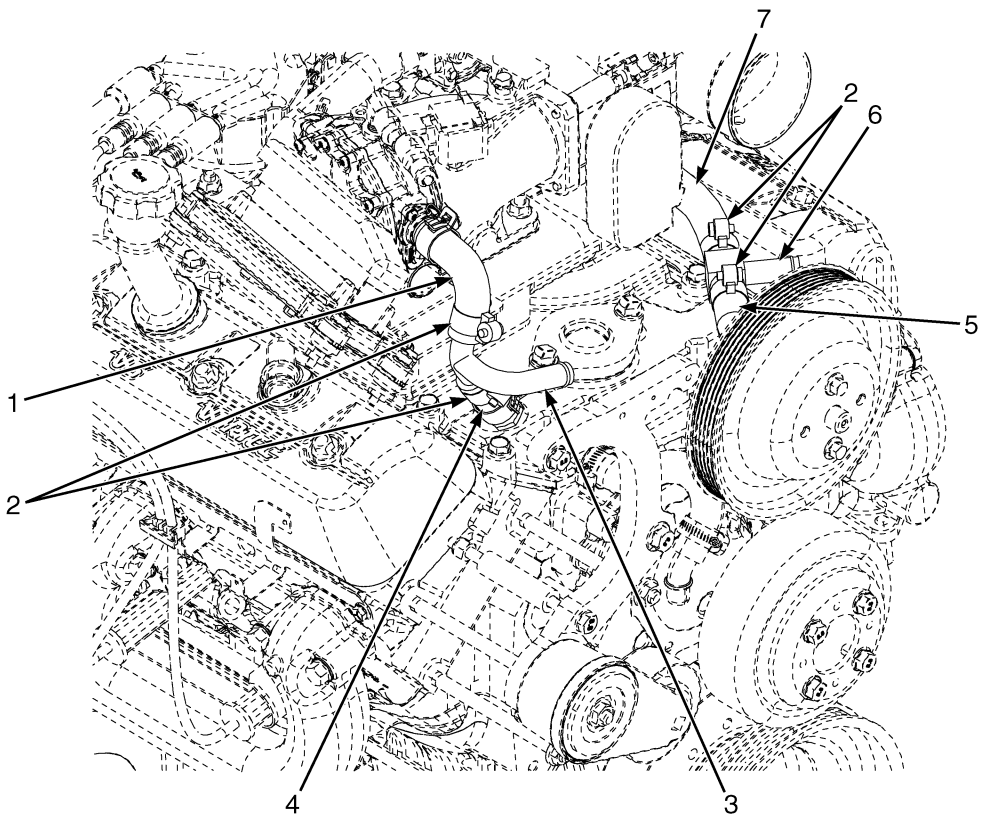

BP120850

ITEM	PART NO.	DESCRIPTION	QTY
1	582016949	Hose (Coolant)	1
2	062159500	Clamp	4
3	582016953	Tube	1
4	582016950	Hose (Coolant)	1
5	582016951	Hose (Coolant)	1
6	580052672	Fitting	1
7	582016952	Hose (Coolant)	1

©2014 Yale Materials Handling Corporation

FUEL SUPPLY SYSTEM (FIGURE 5-11)

GM 4.3L LPG WITH STEEL DOOR CAB

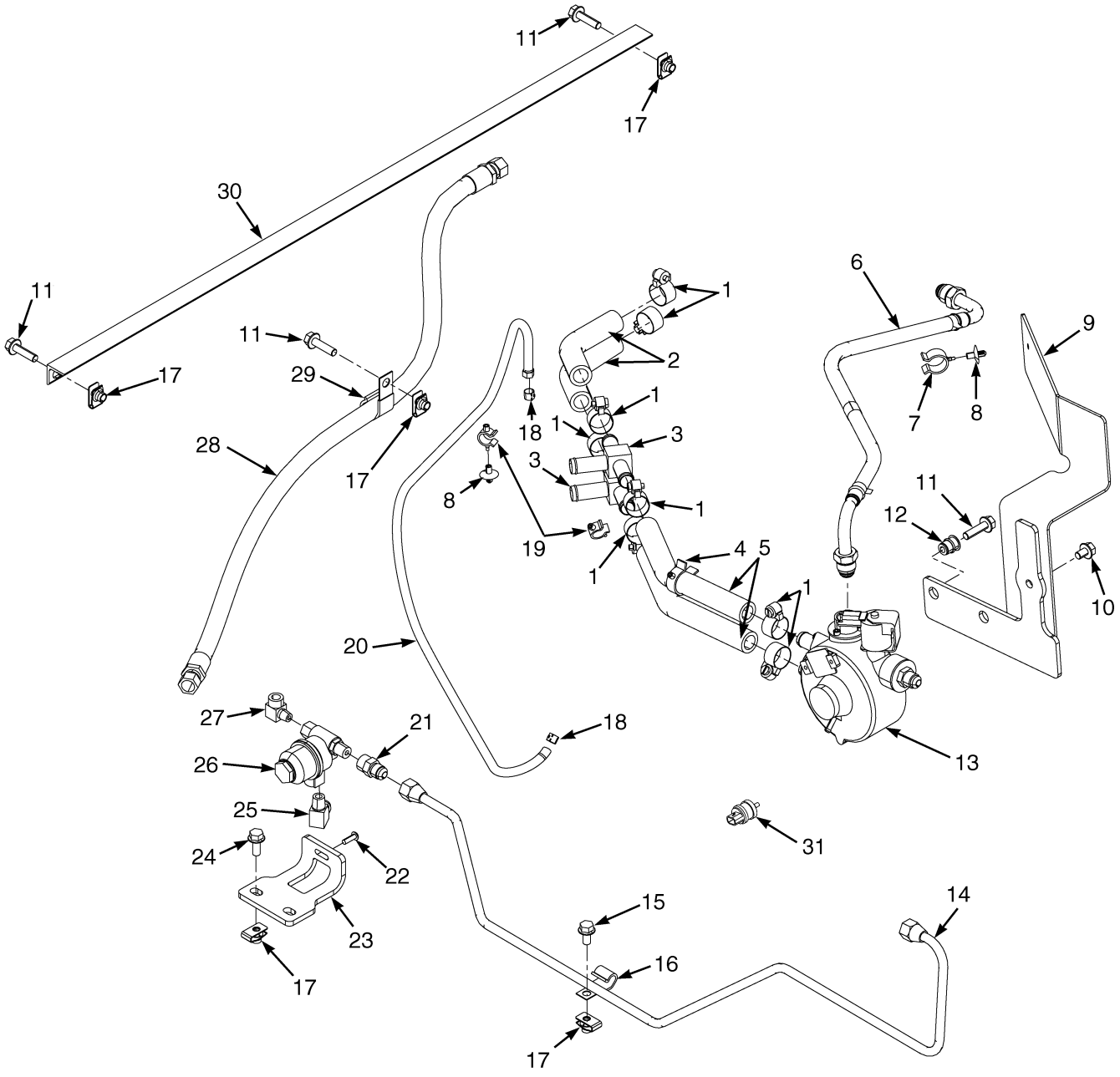

BP130273

©2014 Yale Materials Handling Corporation

FUEL SUPPLY SYSTEM
GM 4.3L LPG WITH STEEL DOOR CAB

ITEM	PART NO.	DESCRIPTION	QTY
1	062159500	Clamp	8
2	580078337	Coolant Hose	2
3	580052672	Fitting	2
4	580042328	Clamp (Swivel)	1
5	580078338	Coolant Hose	2
6	580054499	Hose (Vapor)	1
6	580094100	Kit-O-Ring	1
7	580042567	Clamp (Swivel)	1
8	580042842	Clamp	2
9	580074249	Bracket	1
10	580037180	Capscrew	2
11	580049229	Capscrew	5
12	580044860	Insert	2
13	**e** ~~580037181~~		
	582001994	LPG Converter (☞P20356 [Page 5-36])	1
13	**g** ~~580037181~~		
	582001994	LPG Converter (☞P20356 [Page 5-36])	1
14	**b** 580074430	Tube	1
14	**a** 580096443	Tube Assy	1
15	580047714	Capscrew	1
16	580000453	Clamp	1
17	580026621	Nut	6
18	505966507	Clamp	2
19	580042330	Clamp (Swivel)	2
20	580009778	Hose	1
21	019919600	Fitting	1
22	580008220	Capscrew	2
23	580074250	Bracket	1
24	580049231	Capscrew	2
25	056623800	Fitting	1
26	**d** 580051579	Fuel Filter (LPG)	1
26	**f** 580090374	Fuel Filter (LPG)	1
26	**d** 580055305	Kit-Filter Element	1
26	**f** 580090387	Kit-Filter Element	1
26	. . . . .	O-Ring	1
26	. . . . .	Filter Element	1
26	. . . . .	O-Ring	1
26	. . . . .	Seal	1
27	**b** 019930000	Fitting	1
27	**a** 501884905	Fitting (Pipe Plug) (Not Shown)	1
28	580064997	Hose Assy	1
29	580008353	Clamp	1
30	580077921	Bracket	1
31	580037008	Pressure Switch (Low Fuel)	1
	ac 582001213	Sensor (Vapor)	1
	ac 580096453	Fitting (Vapor Sensor)	1

©2014 Yale Materials Handling Corporation

FOOTNOTES:

a For use only with premium low fuel sensor.
b For use only without premium low fuel sensor.
c Not Illustrated
d → S/N D878V01554F
e → S/N D878V01708G
f S/N D878V01555F →
g S/N D878V01708G →

©2014 Yale Materials Handling Corporation

NOTES

©2014 Yale Materials Handling Corporation

FUEL SUPPLY SYSTEM (FIGURE 5-12)

GM 4.3L LPG WITH OVERHEAD GUARD OR PCV DOOR CAB — GFI OPTION (→ S/N D878V02177K)

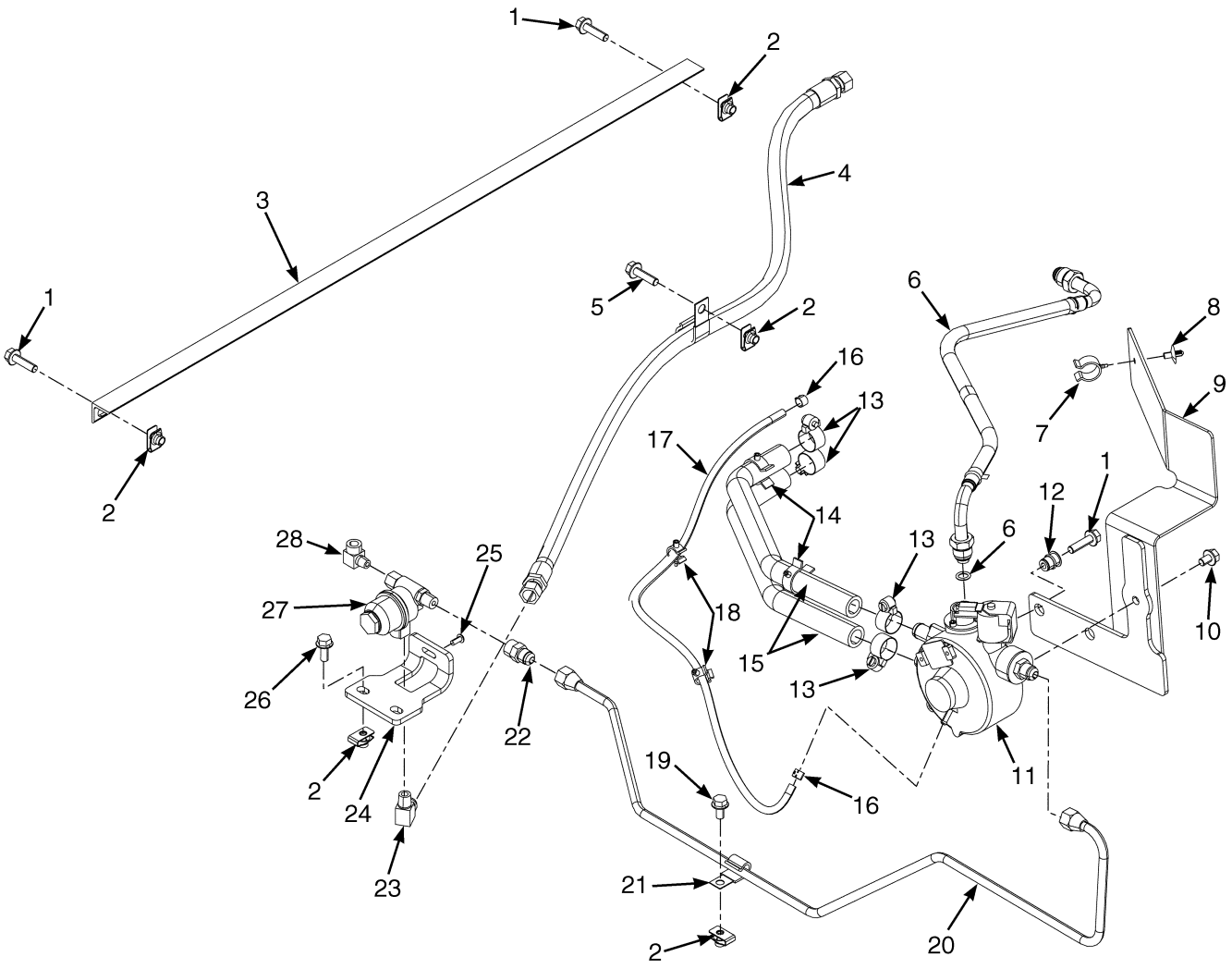

©2014 Yale Materials Handling Corporation

FUEL SUPPLY SYSTEM

GM 4.3L LPG WITH OVERHEAD GUARD OR PCV DOOR CAB – GFI OPTION (→ S/N D878V02177K)

ITEM	PART NO.	DESCRIPTION	QTY
1	580049229	Capscrew	5
2	580026621	Nut	6
3	580077921	Bracket	1
4	580064997	Hose Assy	1
5	580008353	Clamp	1
6	580054499	Hose	1
6	. . . . .	O-Ring	2
7	580042567	Clamp (Swivel)	1
8	580042842	Clamp	1
9	580074249	Bracket	1
10	580037180	Capscrew	1
11	**d** ~~580037181~~		
	582001994	LPG Converter (☞P20356 [Page 5-36])	1
11	**e** ~~580037181~~		
	582001994	LPG Converter (☞P20356 [Page 5-36])	1
12	580044860	Insert	2
13	062159500	Clamp	4
14	580042328	Clamp (Swivel)	2
15	580052434	Coolant Hose	2
16	505966507	Clamp	2
17	580009778	Hose	1
18	580042330	Clamp (Swivel)	2
19	580047714	Capscrew	1
20	**a** 580074430	Tube	1
20	**b** 580096443	Tube Assy	1
21	580000453	Clamp	1
22	019919600	Fitting	1
23	056623800	Fitting	1
24	580074250	Bracket	1
25	580008220	Capscrew	2
26	580049231	Capscrew	2
27	580090374	Fuel Filter (LPG)	1
28	**a** 019930000	Fitting	1
28	**b** 501884905	Fitting (Pipe Plug) (Not Shown)	1
	bc 582001213	Sensor (Vapor)	1
	bc 580096453	Fitting (Vapor Sensor)	1

FOOTNOTES:

a For use only without premium low fuel sensor.
b For use with premium low fuel sensor.
c Not Illustrated
d → S/N D878V01708G
e S/N D878V01708G →

©2014 Yale Materials Handling Corporation

FUEL SUPPLY SYSTEM (FIGURE 5-13)

GM 4.3L LPG — PSI OPTION (S/N D878V02178K →)

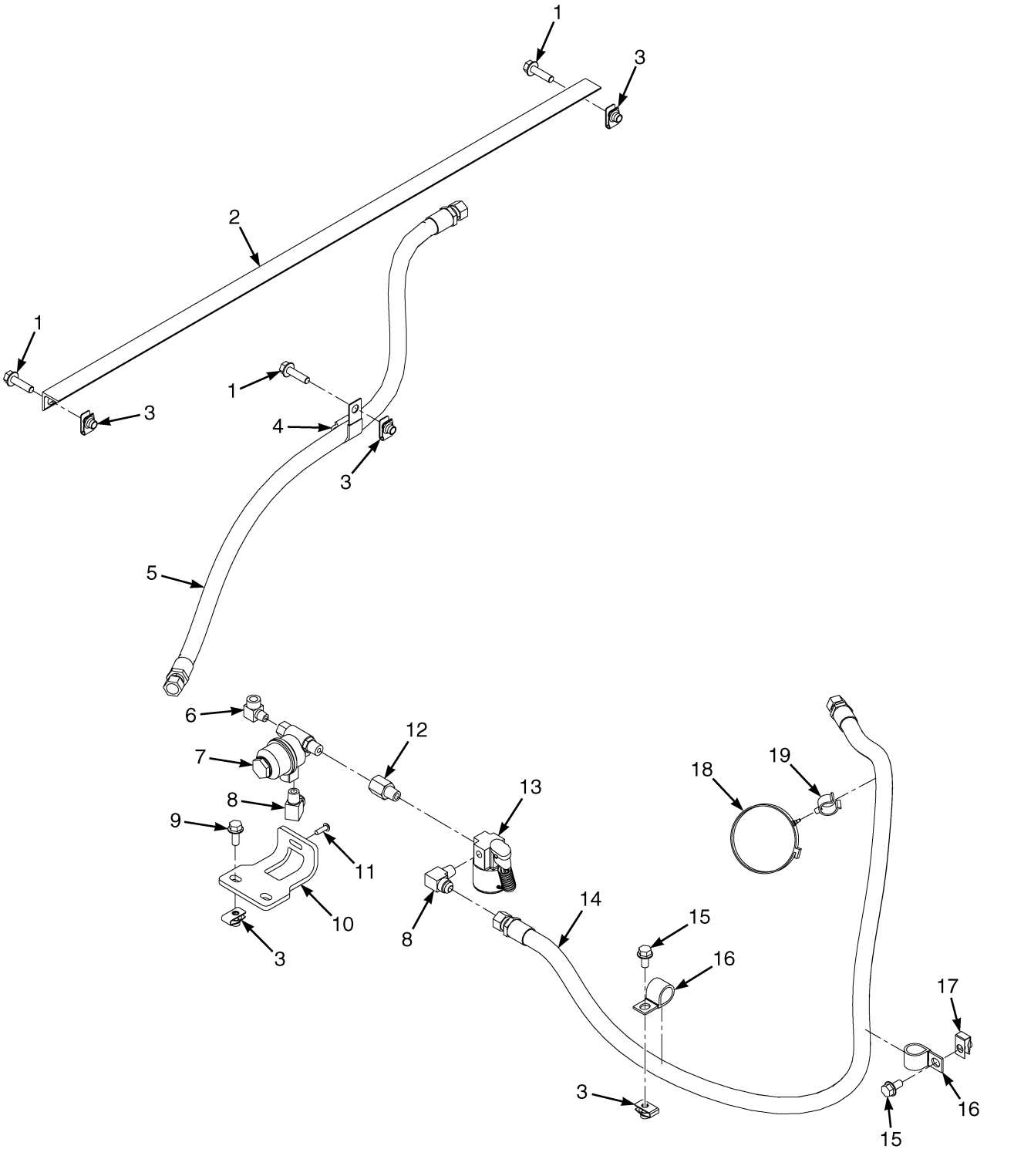

©2014 Yale Materials Handling Corporation

FUEL SUPPLY SYSTEM

GM 4.3L LPG – PSI OPTION (S/N D878V02178K →)

KEY:
A: With Premium Low-Fuel System
B: Without Premium Low-Fuel System

ITEM	PART NO.	DESCRIPTION	QTY A	QTY B
1	580049229	Capscrew	3	3
2	580077921	Bracket	1	1
3	580026621	Nut	6	6
4	580008353	Clamp	1	1
5	580064997	Hose Assy	1	1
6	501884905	Fitting (Pipe Plug)	1	..
6	019930000	Fitting	..	1
7	580090374	Fuel Filter (LPG)	1	1
8	056623800	Fitting	2	1
9	580049231	Capscrew	2	2
10	580074250	Bracket	1	1
11	580008220	Capscrew	2	2
12	505970580	Fitting	1	1
13	582001213	Sensor	1	..
13	019919600	Fitting	..	1
14	582016845	Hose Assy	1	1
15	580047714	Capscrew	2	2
16	060023600	Clamp	2	2
17	580008988	Nut (Fold Over)	1	1
18	580041557	Clamp	1	1
19	580041384	Clamp (Swivel)	1	1
	a 505970592	Sealant	AR	AR

FOOTNOTES:

a Not Illustrated

©2014 Yale Materials Handling Corporation

THROTTLE BODY ASSEMBLY (FIGURE 5-14)

GM 4.3L LPG (→ S/N D878V01730H)

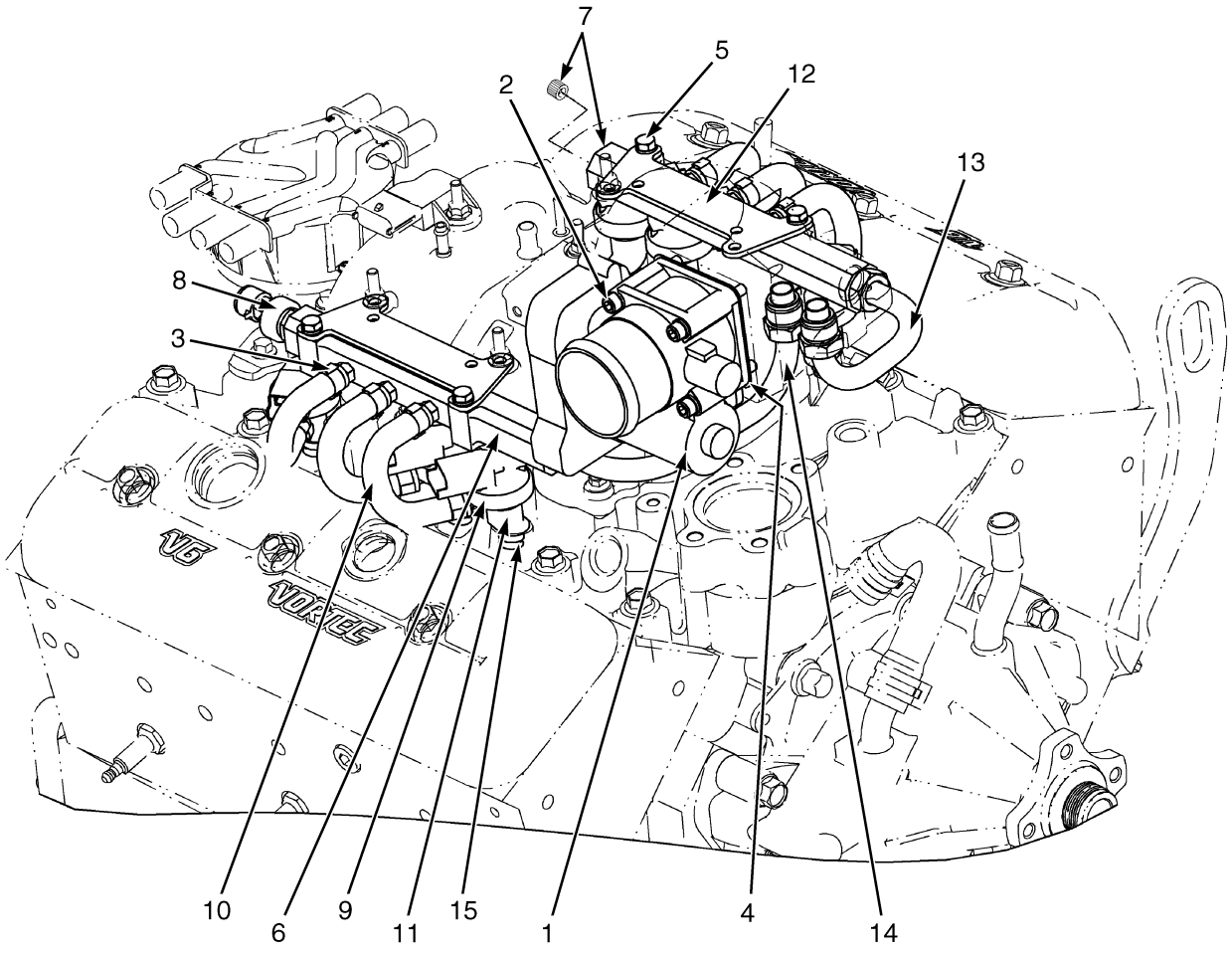

BP090275

©2014 Yale Materials Handling Corporation

THROTTLE BODY ASSEMBLY

GM 4.3L LPG (→ S/N D878V01730H)

ITEM	PART NO.	DESCRIPTION	QTY
1	580048274	Throttle Body	1
2	580041711	Capscrew	4
3	580048293	Hose Clamp	12
4	580048278	Gasket (Throttle Body)	1
5	580049011	Capscrew	4
6	580072477	Fuel Rail	1
6	580072478	Fuel Rail	1
6	580072479	Fuel Rail	1
7	**c** 023080200	Fitting	1
8	**a** 580072480	Sensor (Fuel Air Pressure)	1
9	580048287	Injector (LPG)	6
10	580072481	Hose	6
11	580072482	Adapter	6
12	580072483	Bracket	2
13	580072484	Tube Assy	1
14	580072485	Tube Assy	1
15	580048292	O-Ring	6
	b 580072487	Bracket	2

FOOTNOTES:

a Left Rail Only
b Not Illustrated
c Right Rail Only

©2014 Yale Materials Handling Corporation

THROTTLE BODY ASSEMBLY (FIGURE 5-15)

GM 4.3L LPG — GFI OPTION (S/N D878V01731H ↔ S/N D878V02177K)

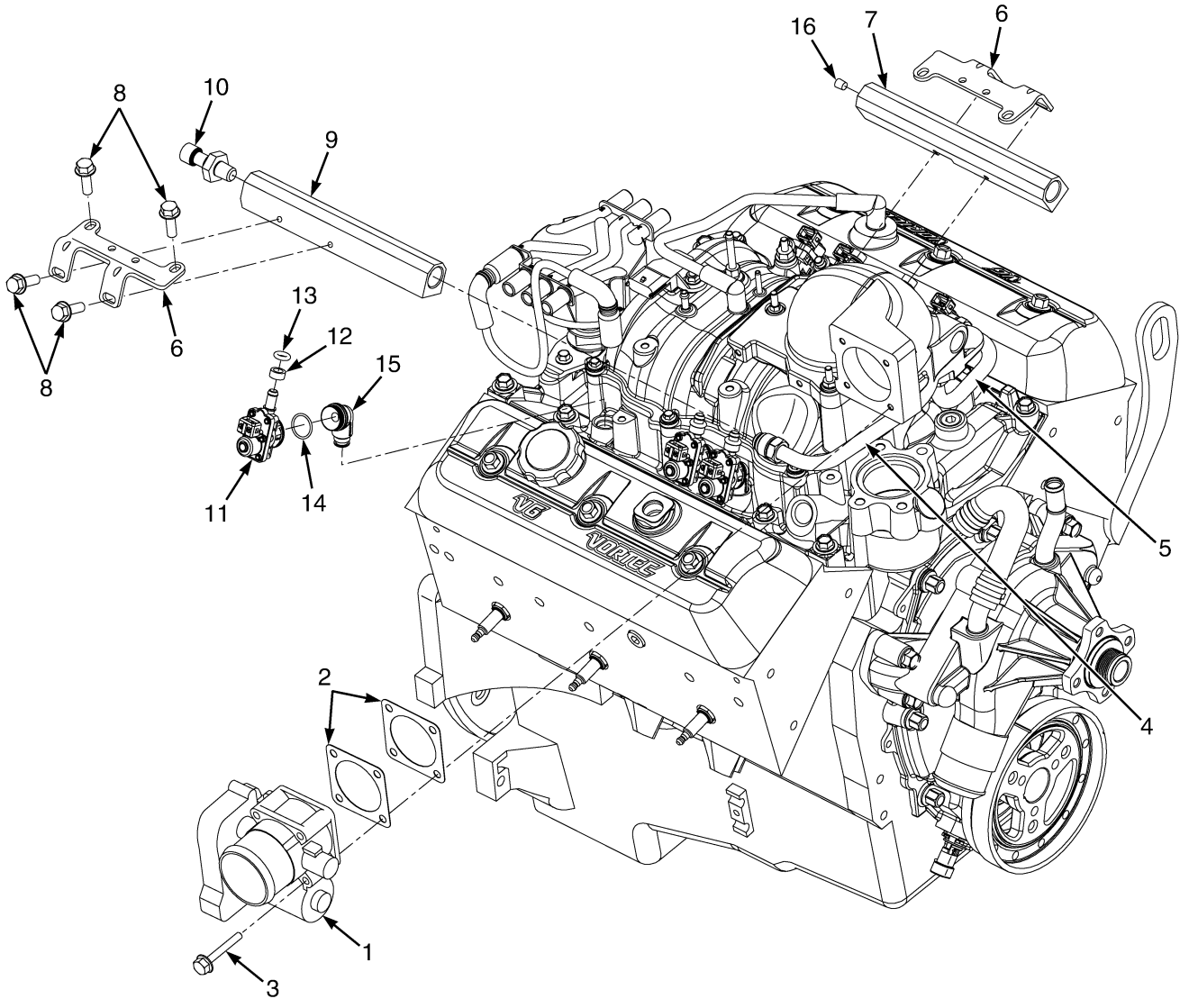

©2014 Yale Materials Handling Corporation

THROTTLE BODY ASSEMBLY

GM 4.3L LPG – GFI OPTION (S/N D878V01731H ↔ S/N D878V02177K)

ITEM	PART NO.	DESCRIPTION	QTY
1	580048274	Throttle Body	1
2	580048278	Gasket (Throttle Body)	1
3	580041711	Capscrew	4
4	580072485	Tube Assy	1
5	580072484	Tube Assy	1
6	582005158	Bracket	2
7	582005157	Fuel Rail (LH)	1
8	580049011	Capscrew	8
9	582005156	Fuel Rail (RH)	1
10	580072480	Sensor (Fuel Air Pressure)	1
11	582005129	Injector	6
12	582005130	O-Ring	6
13	582005131	O-Ring	6
14	582005127	O-Ring	6
15	582005132	Adapter	6
15	580048292	O-Ring	6
15	580072486	Lubricant	AR
16	023080200	Fitting	1
	505970592	Sealant	AR

©2014 Yale Materials Handling Corporation

THROTTLE BODY (FIGURE 5-16)

GM 4.3L LPG — PSI OPTION (S/N D878V02178K →)

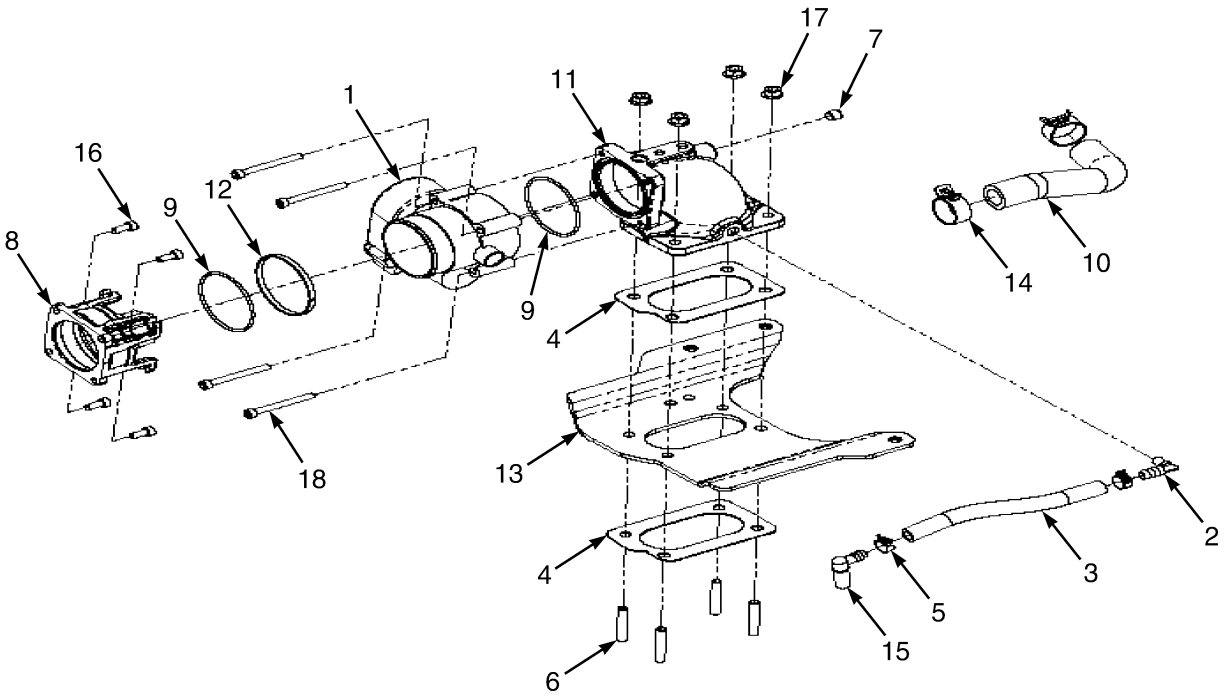

BP130338

ITEM	PART NO.	DESCRIPTION	QTY
1	582007560	Throttle Body	1
2	582016973	Fitting	1
3	582016974	Hose (8 in.)	1
4	582016975	Gasket	2
5	582007547	Clamp	2
6	582007561	Stud	4
7	582007577	Plug	1
8	582007562	Adapter	1
9	582007563	O-Ring	2
10	582016960	Hose	1
11	582016976	Adapter	1
12	582007564	Spacer	1
13	582016977	Bracket	1
14	582007556	Clamp	2
15	582016978	Fitting	1
16	580022962	Capscrew	4
17	580008580	Nut	4
18	580012179	Screw	4

©2014 Yale Materials Handling Corporation

NOTES

©2014 Yale Materials Handling Corporation

LPG REGULATOR (FIGURE 5-17)
GM 4.3L — GFI OPTION (→ S/N D878V02177K)

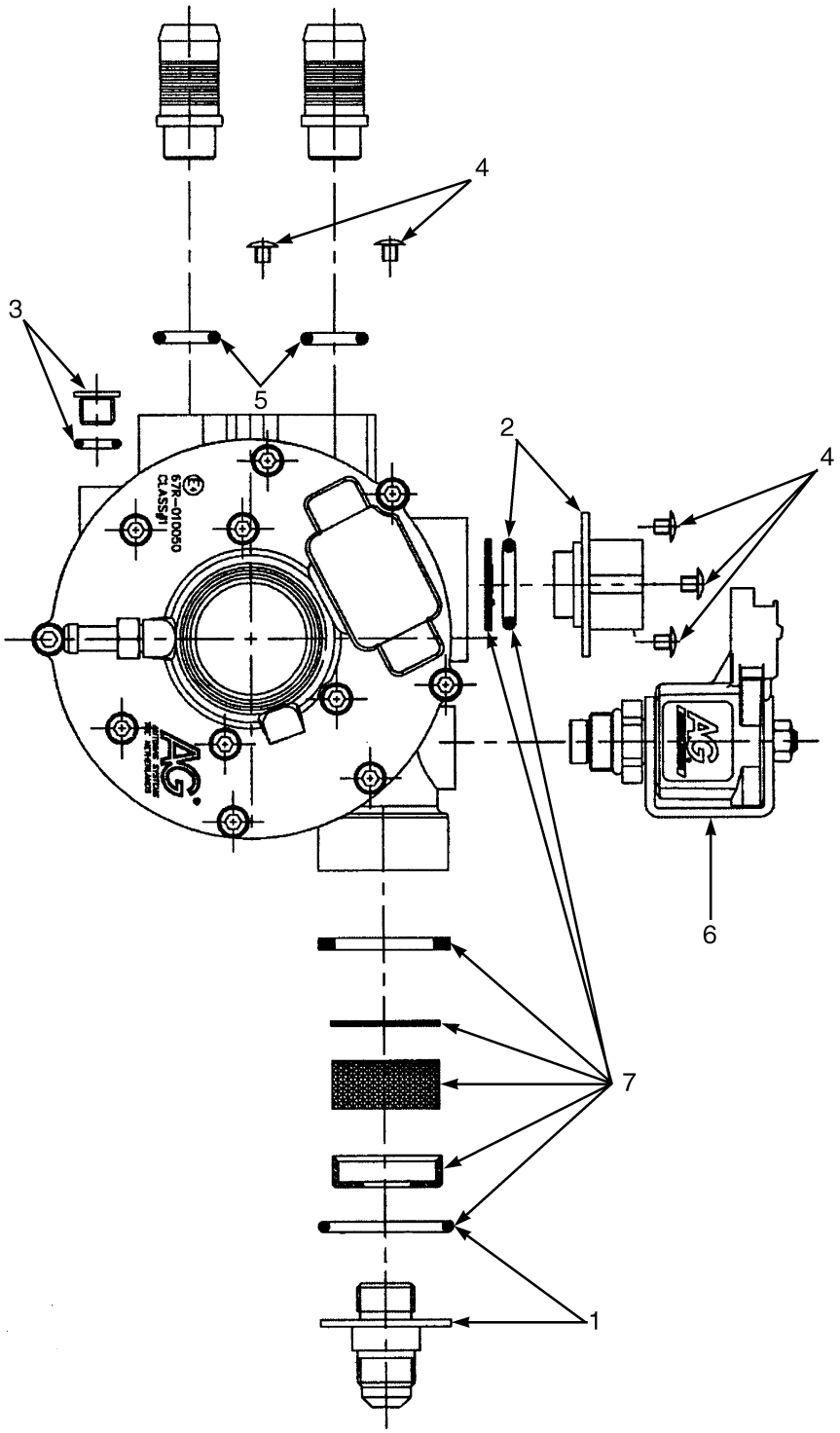

©2014 Yale Materials Handling Corporation

LPG REGULATOR

GM 4.3L – GFI OPTION (→ S/N D878V02177K)

ITEM	PART NO.	DESCRIPTION	QTY
	~~580037181~~		
	582001994	LPG Converter	1
1	580055883	Fitting (Inlet Fitting With O-Ring)	1
2	580055884	Fitting (Outlet Fitting With O-Ring)	1
3	580055885	Drain Plug (With O-Ring)	1
4	580057860	Kit-Screw (With Connector Screw)	1
5	580057857	Kit-O-Ring (With Coolant Fitting O-Ring)	1
6	580057855	LPG Lock-Off	1
7	580055882	Kit-Filter	1
7	. . . . .	O-Ring	1
7	. . . . .	Plastic Cap	1
7	. . . . .	Foam Filter	1
7	. . . . .	Paper Filter	1
7	. . . . .	Rubber Washer	1
7	. . . . .	Screen	1
	580091352	Kit-Repair LPG Converter	1
	. . . . .	Diaphragm	1
	. . . . .	Barrier, Lower	1
	. . . . .	Barrier, Upper	1
	. . . . .	Rubber Seal, High Pressure	1
	. . . . .	Support (For Rubber Seal)	1
	. . . . .	Pivot Pin	1
	. . . . .	Screw (For Pivot Pin)	1
	. . . . .	Washer	1
	. . . . .	Washer, Anti-Friction	1
	582000783	Fitting	1

©2014 Yale Materials Handling Corporation

LPG REGULATOR AND MIXER (FIGURE 5-18)

GM 4.3L — PSI OPTION (S/N D878V02178K →)

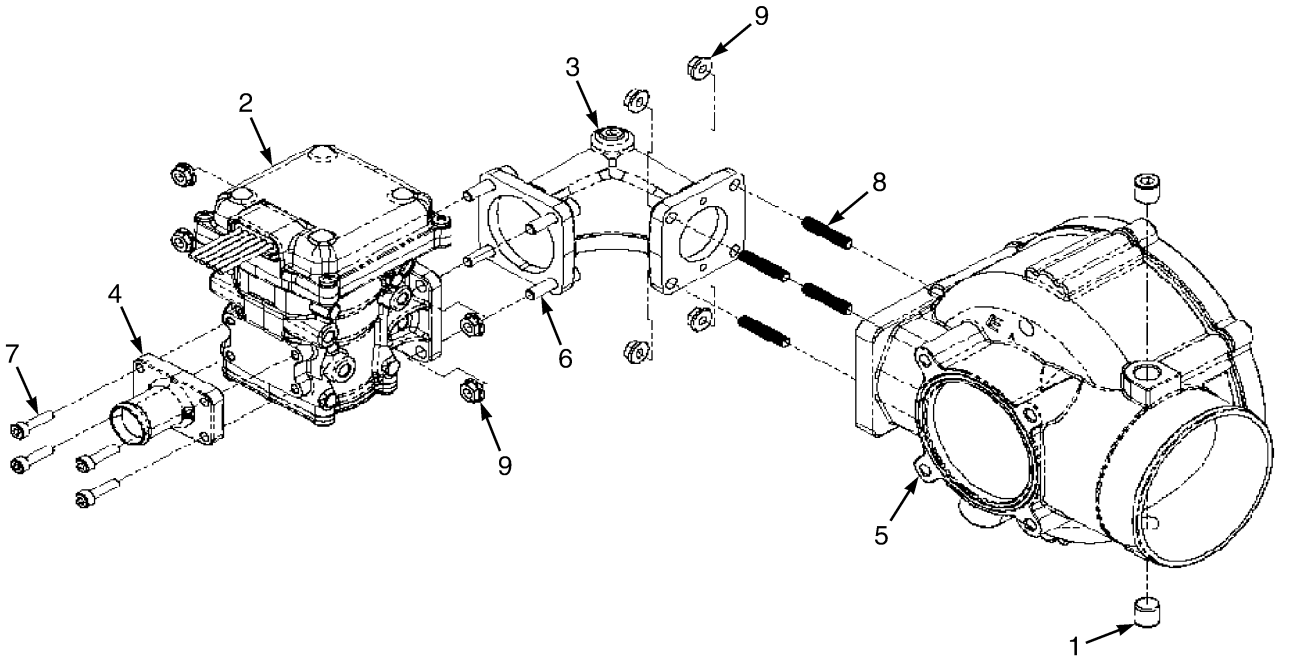

ITEM	PART NO.	DESCRIPTION	QTY
1	582007577	Plug	2
2	582007576	Regulator	1
3	582016980	Adapter	1
4	582007575	Fitting	1
5	582007574	Carburetor (Mixer)	1
5	582022306	Kit-Repair	1
6	504057775	Screw	4
7	580006764	Capscrew	4
8	582007578	Stud	4
9	580051432	Nut	8

©2014 Yale Materials Handling Corporation

LPG CONVERTER (FIGURE 5-19)

GM 4.3L LPG — PSI OPTION (S/N D878V02178K →)

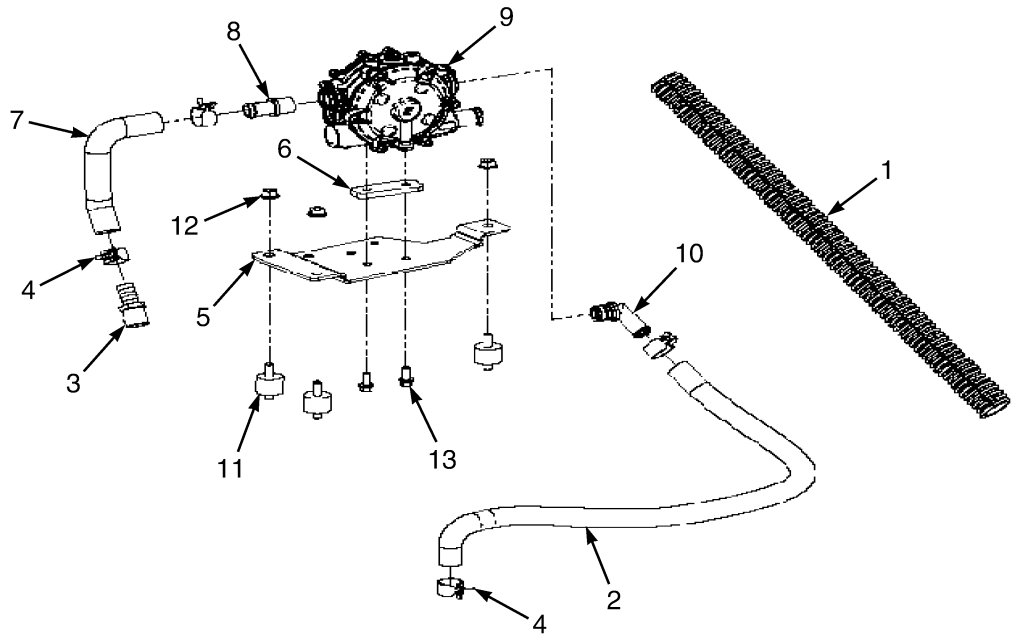

ITEM	PART NO.	DESCRIPTION	QTY
1	582016964	Conduit (20 in.)	AR
2	582007543	Hose	1
3	582016965	Fitting	1
4	582007549	Clamp	4
5	582016966	Bracket	1
6	582016967	Spacer	1
7	582016968	Hose	1
8	582016969	Fitting	1
9	582016970	Regulator	1
9	582016998	Kit-Regulator Repair	1
10	582016971	Fitting	1
11	582016972	Isolator	3
12	580027573	Nut (Flange)	3
13	580049011	Capscrew	2

©2014 Yale Materials Handling Corporation

LPG LOCK OFF (FIGURE 5-20)

GM 4.3L — PSI OPTION (S/N D878V02178K →)

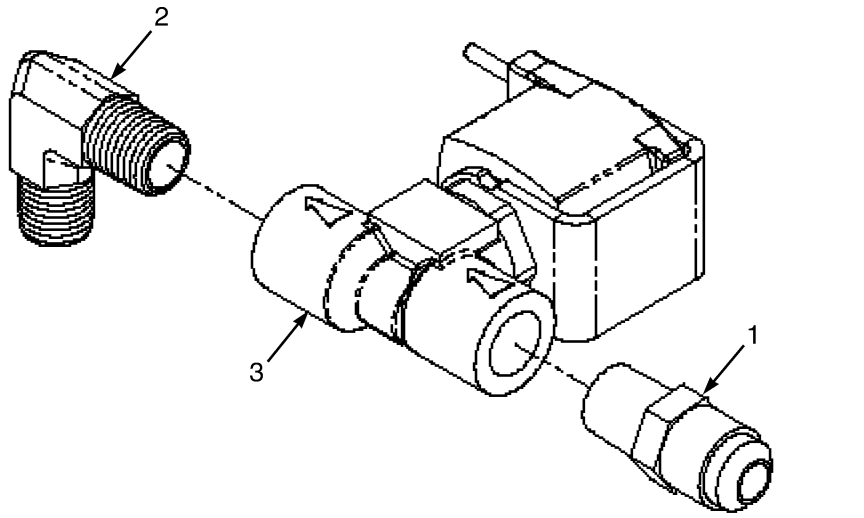

ITEM	PART NO.	DESCRIPTION	QTY
1	582007434	Fitting	1
2	582007435	Fitting	1
3	582007436	Valve (Lock-Off)	1

©2014 Yale Materials Handling Corporation

NOTES

©2014 Yale Materials Handling Corporation

SINGLE AND DUAL LPG TANK BRACKETS (FIGURE 5-21)

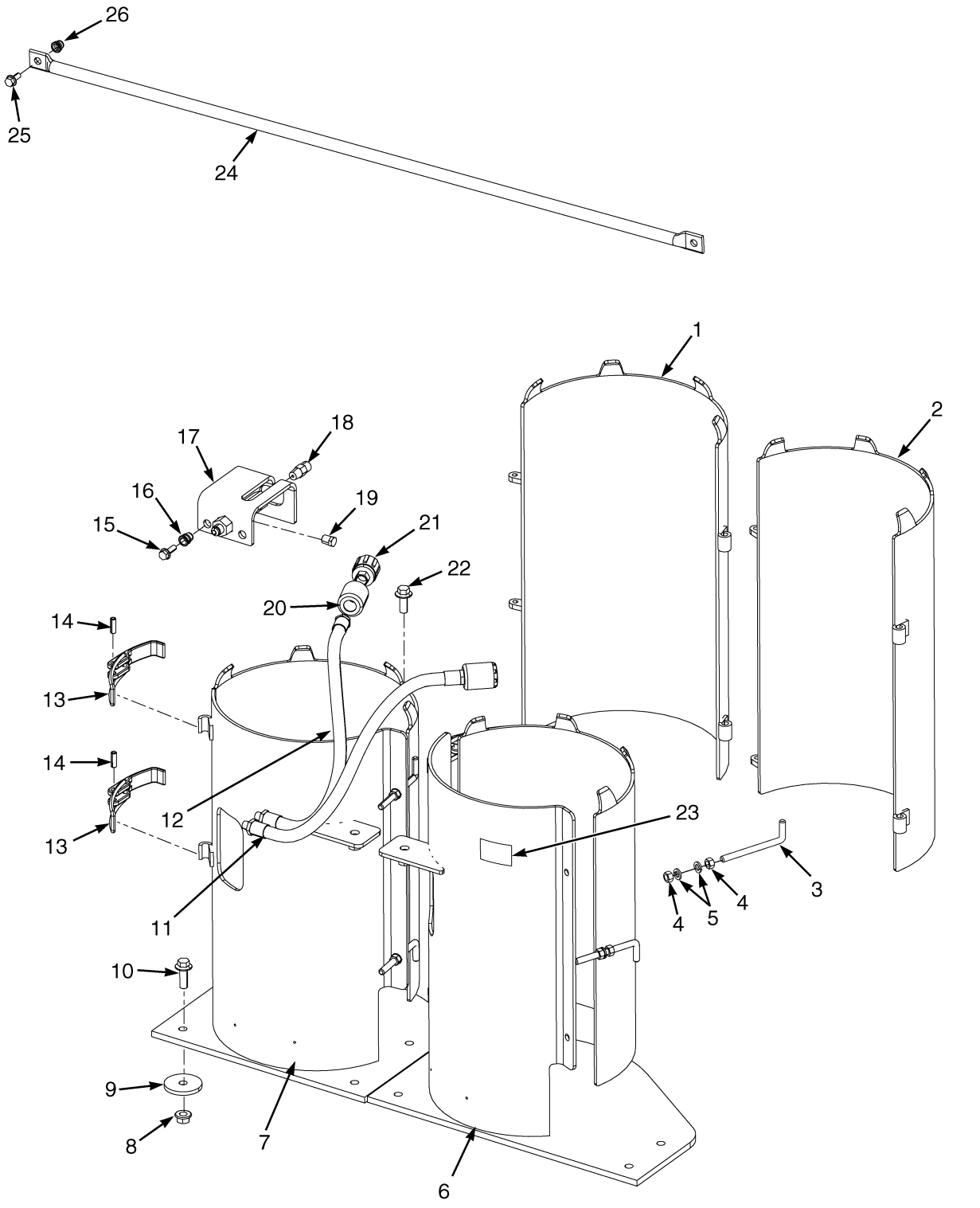

©2014 Yale Materials Handling Corporation

SINGLE AND DUAL LPG TANK BRACKETS

KEY:
A: Single
B: Dual

ITEM	PART NO.	DESCRIPTION	QTY A	QTY B
1	580078204	Cover (43.5 lb Front)	1	..
1	580078203	Cover (33.5 lb Front)	..	1
2	580078355	Cover (43.5 lb Rear)	..	1
2	580078202	Cover (33.5 lb Rear)	..	1
3	580007704	Pin	2	4
4	014939700	Nut	4	8
5	015026400	Lockwasher	4	8
6	~~580081810~~			
	580085061	Bracket (33.5, 43.5 lb Rear)	..	1
7	~~580081809~~			
	580085060	Bracket (33.5, 43.5 lb Front)	1	1
8	~~580004218~~			
	580056528	Nut (Shoulder)	5	10
9	505966562	Washer	4	8
10	580056667	Capscrew	4	8
11	580078345	Hose Assy (43.5 lb)	1	2
12	580067062	Hose Assy (33.5 lb)	1	2
13	580082554	Latch	2	4
14	057043500	Roll Pin	2	4
15	580030966	Capscrew	2	2
16	580044860	Insert	2	2
17	580067063	Bracket Wldmt	1	1
18	019299600	Relief Valve	1	1
19	501884906	Fitting	1	..
20	580053000	Sleeve	1	2
21	912514300	Fitting	1	2
22	580056527	Capscrew	1	2
23	505977565	Label (Flammable LP-Gas)	1	1
24	580082987	Barrier	1	1
25	580049231	Capscrew	2	2
26	580044861	Insert	2	2
	a 580026934	Nameplate (LP Tank)	1	2
	a 580026933	Nameplate (LP Tank)	..	2
	a 505976530	Rivet	4	6
	a 580083670	Label (LPG Tank Quantity)	..	1

FOOTNOTES:

a Not Illustrated

©2014 Yale Materials Handling Corporation

FUEL SYSTEM (FIGURE 5-22)
CUMMINS QSB 3.3L DIESEL

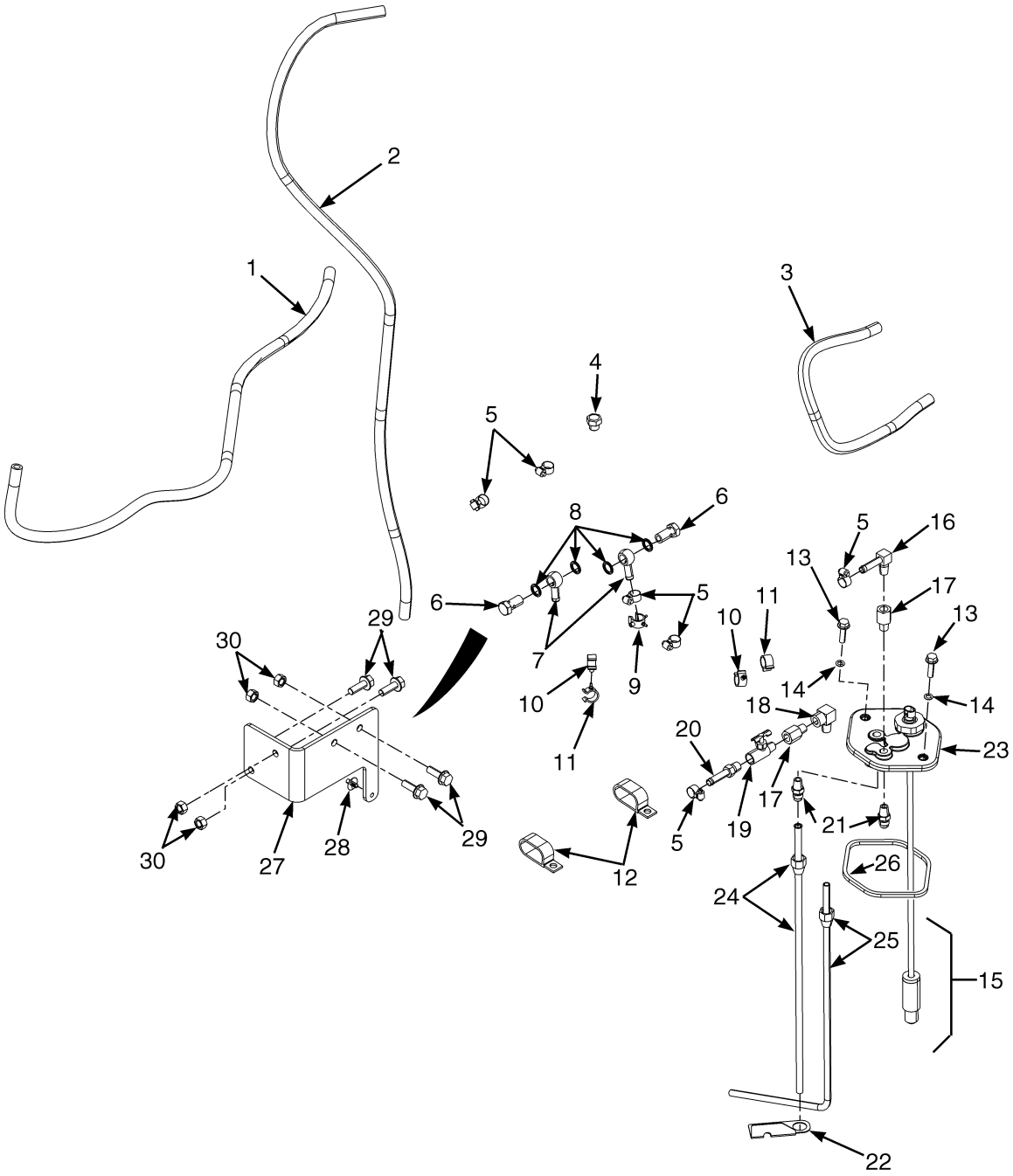

©2014 Yale Materials Handling Corporation

FUEL SYSTEM
CUMMINS QSB 3.3L DIESEL

ITEM	PART NO.	DESCRIPTION	QTY
1	580094366	Hose	1
2	580094367	Hose	1
3	580094368	Hose	1
4	580088189	Plug	1
5	511405800	Clamp	6
6	580088192	Screw	2
7	580088191	Fitting	2
8	580088190	Sealing Ring	4
9	580041373	Clamp	1
10	580064599	Clamp	2
11	580042794	Clamp (Swivel)	2
12	900003207	Clamp	2
13	580049229	Capscrew	2
14	514214804	O-Ring	2
15	580087419	Fuel Sender Assembly	1
15	580046394	Fuel Sender	1
16	056260300	Fitting	1
17	505970580	Fitting	1
18	013392500	Fitting	1
19	580007719	Drain Valve (Shutoff)	1
20	056155000	Fitting	1
21	909267300	Fitting	2
22	. . . . .	Bracket	1
23	580056992	Cover	1
24	580059471	Tube-Wldmt	1
25	580074866	Tube	1
26	580036870	Quad Ring	1
27	~~580087418~~		
	582016831	Bracket	1
28	580042842	Clamp	1
29	580083689	Bolt	4
30	501737903	Nut	4

©2014 Yale Materials Handling Corporation

FUEL CAP (FIGURE 5-23)
DIESEL

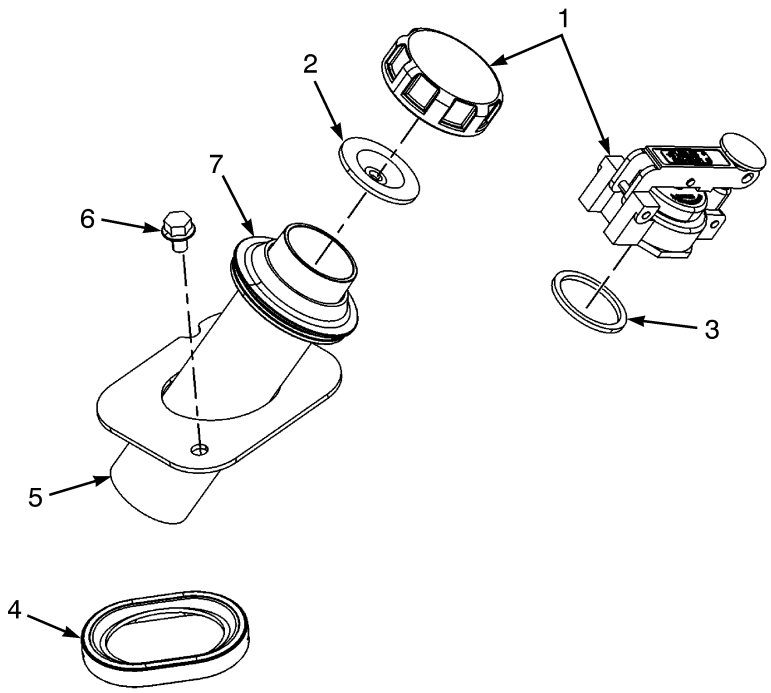

BP130296

ITEM	PART NO.	DESCRIPTION	QTY
1	919890404	Fuel Cap	1
1	**a** 580054472	Fuel Cap	1
2	912207300	Gasket	1
3	**a** 911851100	Gasket	1
4	~~580037219~~		
	580060203	Seal	1
5	580050475	Pipe (Fill)	1
6	580037180	Capscrew	2
7	580036738	Grommet	1

FOOTNOTES:

a Safety Option

©2014 Yale Materials Handling Corporation

FUEL INJECTION PUMP (FIGURE 5-24)

CUMMINS QSB 3.3L DIESEL

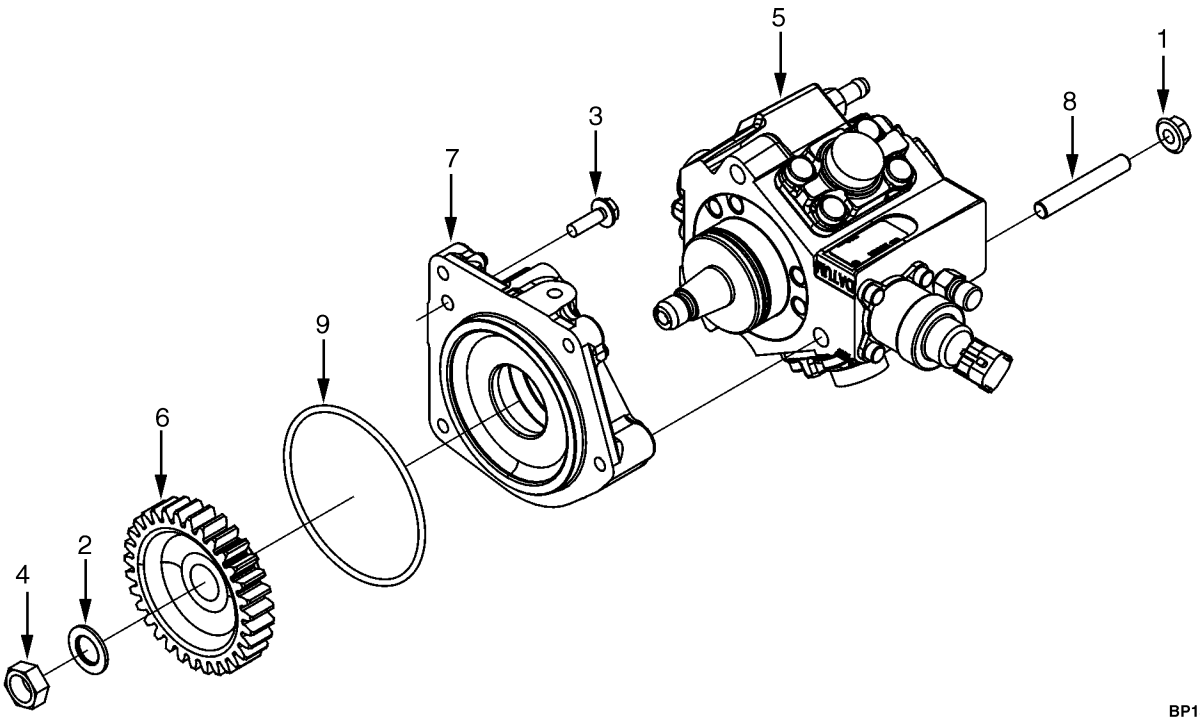

BP130035

ITEM	PART NO.	DESCRIPTION	QTY
	580087914	Engine Assy-Diesel	1
	580093608	Engine Assy-Diesel (99 Horsepower. Only available with 3x2 Transmission)	1
1	580091064	Clamp	3
2	580091065	Washer	1
3	580091066	Capscrew	1
4	580091067	Nut	1
5	580091068	Fuel Injection Pump	1
5	582016376	Solenoid Valve	1
6	580091069	Gear	1
7	580091070	Support	1
8	580091071	Stud	3
9	580091072	Seal	1

©2014 Yale Materials Handling Corporation

FUEL INJECTOR AND INJECTOR PLUMBING (FIGURE 5-25)

CUMMINS QSB 3.3L DIESEL

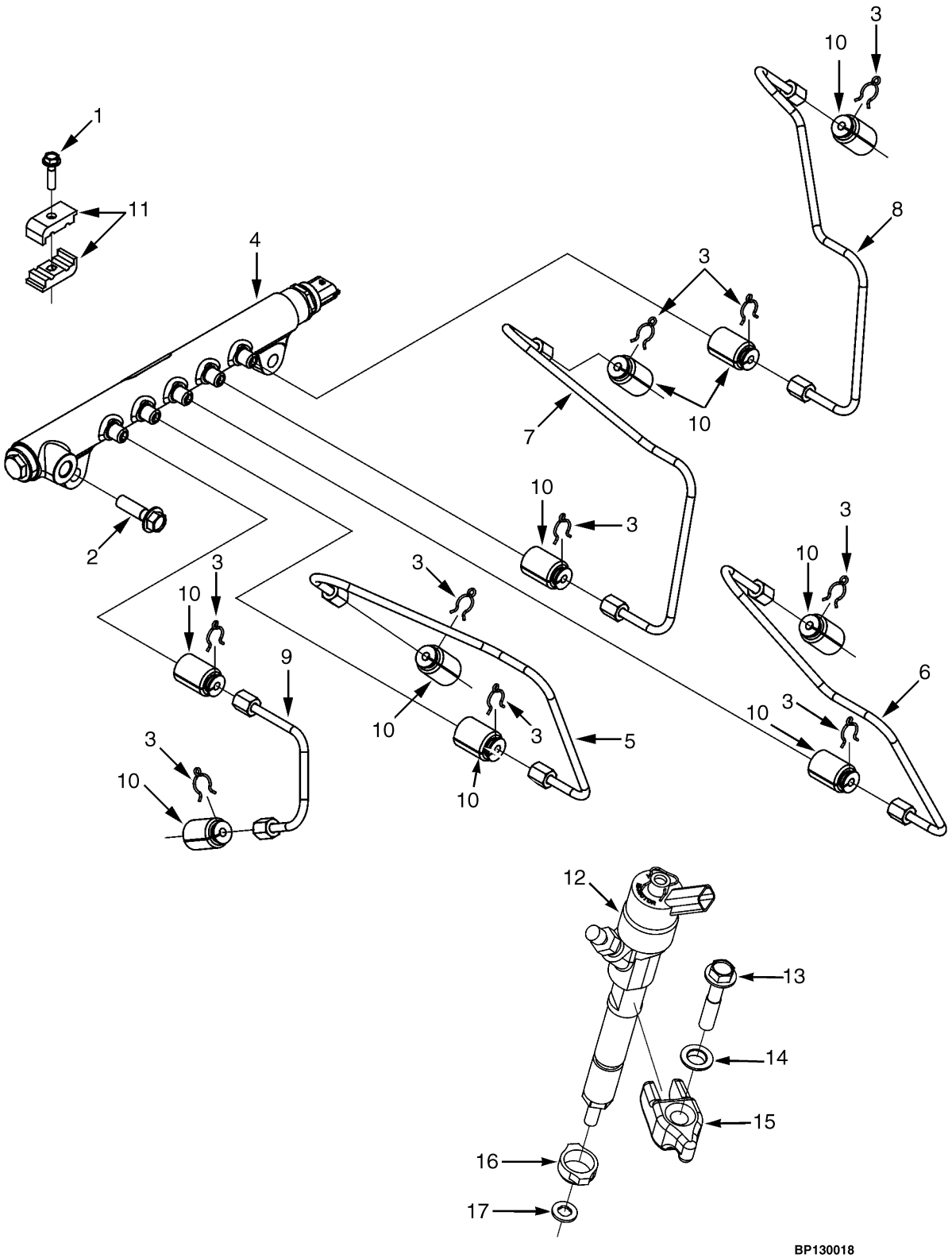

©2014 Yale Materials Handling Corporation

FUEL INJECTOR AND INJECTOR PLUMBING

CUMMINS QSB 3.3L DIESEL

ITEM	PART NO.	DESCRIPTION	QTY
	580087914	Engine Assy-Diesel	1
	580093608	Engine Assy-Diesel (99 Horsepower. Only available with 3x2 Transmission)	1
1	580091141	Capscrew	2
2	580091260	Capscrew	2
3	580091261	Clip	10
4	580091262	Manifold (Fuel Rail)	1
4	582024929	Sensor (Fuel Pressure)	1
5	580091263	Tube (Injector Fuel Supply)	1
6	580091264	Tube (Injector Fuel Supply)	1
7	580091265	Tube (Injector Fuel Supply)	1
8	580091266	Tube (Injector Fuel Supply)	1
9	580091267	Tube (Injector Fuel Supply)	1
10	580091268	Cover	10
11	580091269	Clamp	4
12	. . . . .	Injector	4
13	580091160	Capscrew	4
14	580091161	Washer	4
15	580091259	Capscrew	4
16	580091258	Dust Seal	4
17	580091162	Gasket	4
	580091164	Kit-Injector	4

©2014 Yale Materials Handling Corporation

FUEL PUMP PLUMBING (FIGURE 5-26)
CUMMINS QSB 3.3L DIESEL

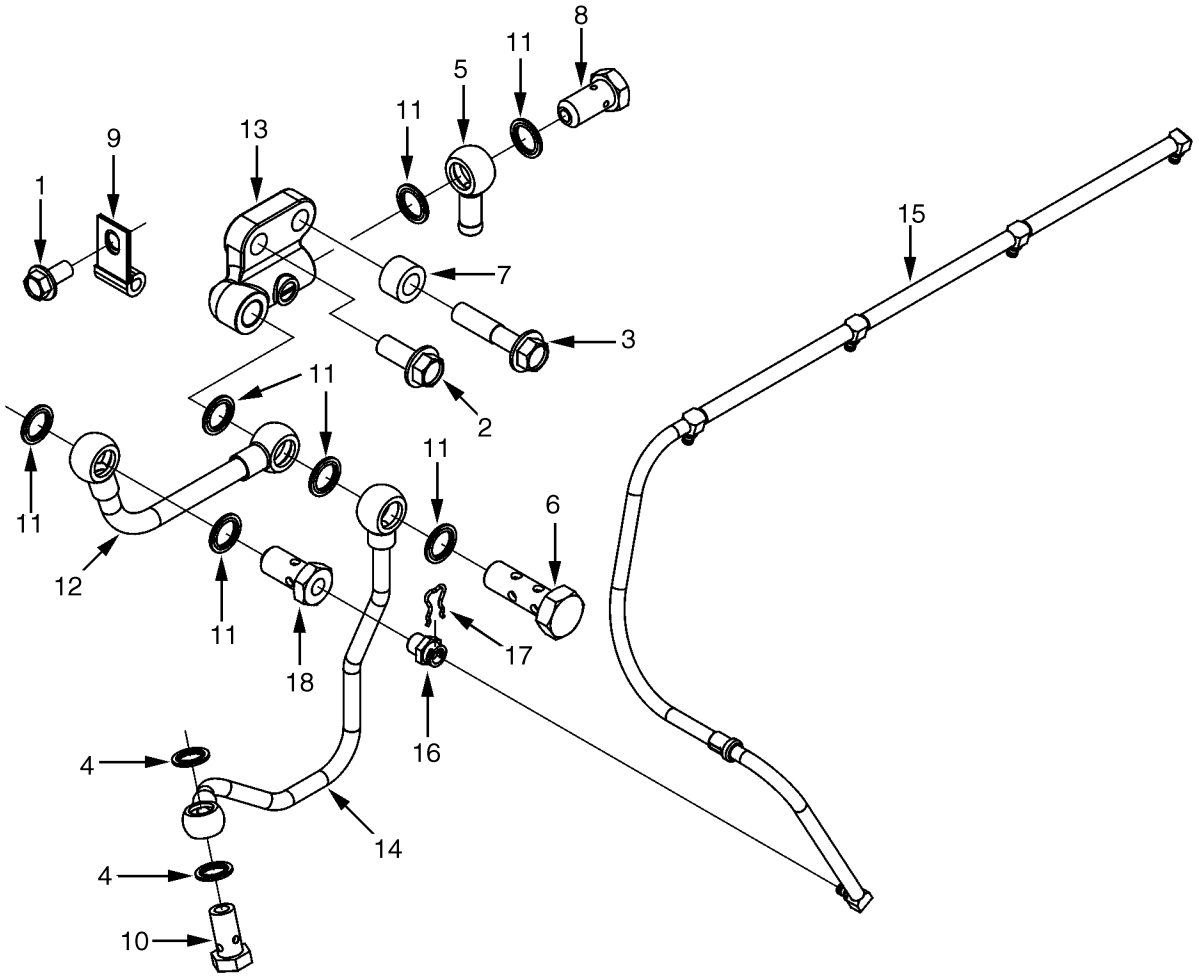

BP130020

©2014 Yale Materials Handling Corporation

FUEL PUMP PLUMBING
CUMMINS QSB 3.3L DIESEL

ITEM	PART NO.	DESCRIPTION	QTY
	580087914	Engine Assy-Diesel	1
	580093608	Engine Assy-Diesel (99 Horsepower. Only available with 3x2 Transmission)	1
1	580091109	Capscrew	1
2	580091031	Capscrew	1
3	580092020	Capscrew	1
4	580091080	Gasket	2
5	580088191	Fitting (Banjo Connector)	1
6	580091082	Screw (Banjo Connector)	1
7	580091083	Spacer	1
8	580088192	Screw (Banjo Connector)	1
9	580091040	Clip	1
10	580091041	Screw (Banjo Connector)	1
11	580088190	Sealing Ring	7
12	580091046	Tube (Fuel Supply)	1
13	580091047	Adapter (Fuel Connector)	1
14	580091048	Tube (Fuel Supply)	1
15	580091050	Hose	1
16	~~580091051~~		
	582006923	Connector (Banjo)	1
17	580091052	Roll Pin	1
18	580091053	Screw (Banjo Connector)	1

©2014 Yale Materials Handling Corporation

FUEL FILTER PLUMBING (FIGURE 5-27)

CUMMINS QSB 3.3L DIESEL

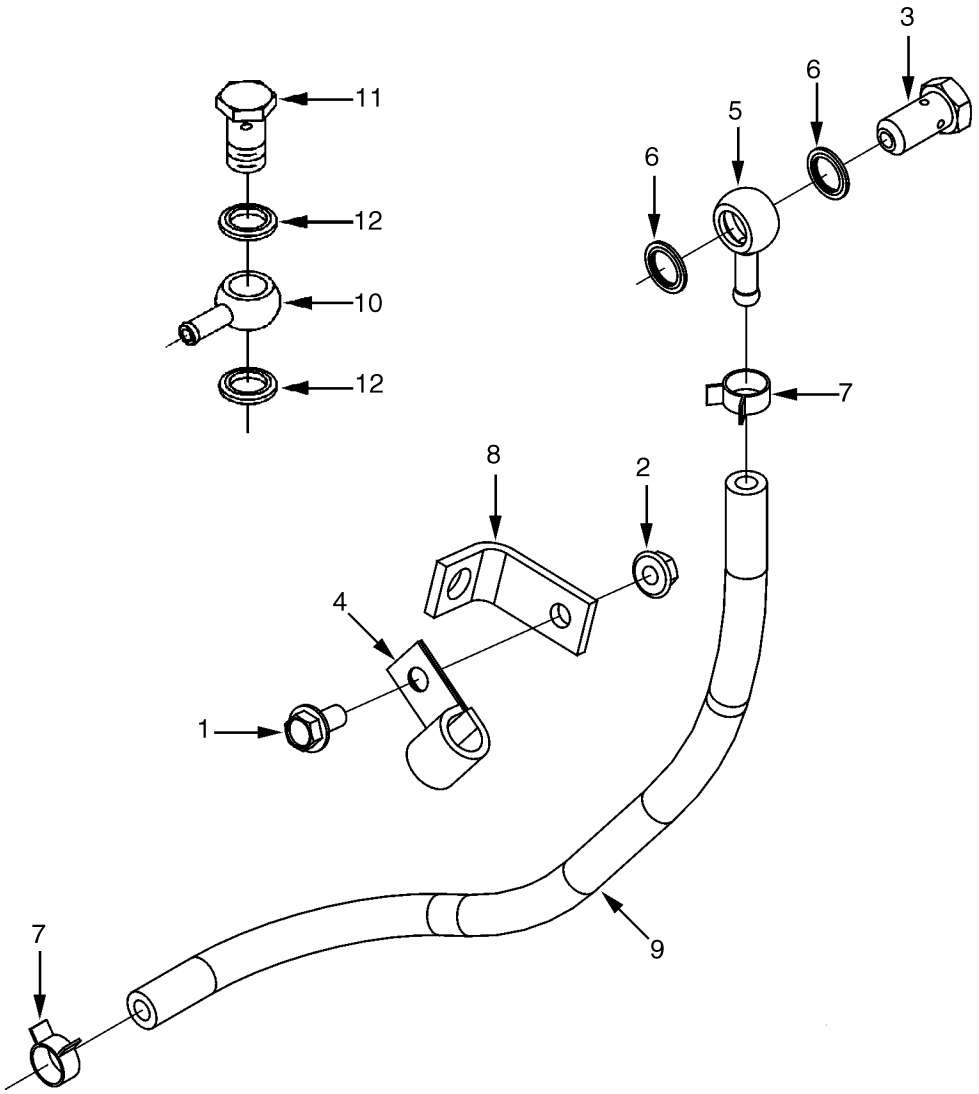

BP130042

©2014 Yale Materials Handling Corporation

FUEL FILTER PLUMBING
CUMMINS QSB 3.3L DIESEL

ITEM	PART NO.	DESCRIPTION	QTY
	580087914	Engine Assy-Diesel	1
	580093608	Engine Assy-Diesel (99 Horsepower. Only available with 3x2 Transmission)	1
1	**b** 580091109	Capscrew	1
2	**b** 580091025	Nut	1
3	**b** 580088192	Screw (Banjo Connector)	1
4	**b** 580091026	Clip	1
5	**b** 580091027	Coupling	1
6	**b** 580088190	Sealing Ring	2
6	582002917	Washer (Copper) (Alternate Part)	2
7	**b** 580091028	Clip	2
8	**b** 580091029	Plate (Clamping)	1
9	**b** 580091030	Hose	1
10	**a** 580088191	Fitting (Banjo Connector)	1
11	**a** 580088192	Screw	1
12	**a** 580088190	Sealing Ring	2
12	582002917	Washer (Copper) (Alternate Part)	2

FOOTNOTES:

a Fuel Inlet

b Mounting Location: Fuel Pump Side Middle Mount

©2014 Yale Materials Handling Corporation

FUEL FILTER (FIGURE 5-28)
CUMMINS QSB 3.3L DIESEL

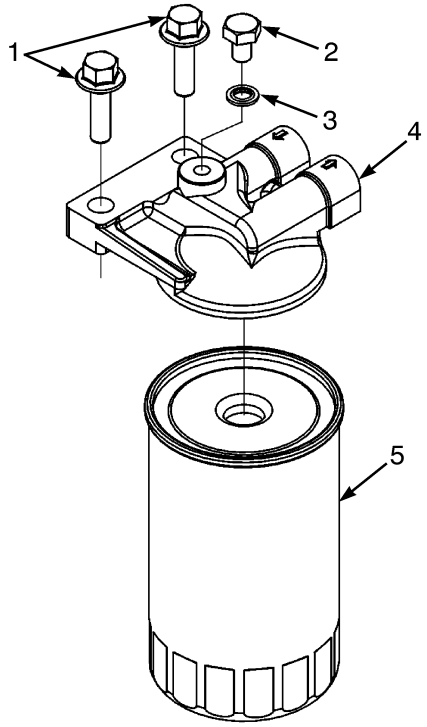

BP130150

ITEM	PART NO.	DESCRIPTION	QTY
	580087914	Engine Assy-Diesel	1
	580093608	Engine Assy-Diesel (99 Horsepower. Only available with 3x2 Transmission)	1
1	580044081	Capscrew	1
2	580090993	Plug	1
3	580090994	Washer	1
4	580090995	Filter Head	1
5	580090996	Fuel Filter	1

©2014 Yale Materials Handling Corporation

WATER SEPARATOR (FIGURE 5-29)
CUMMINS QSB 3.3L DIESEL

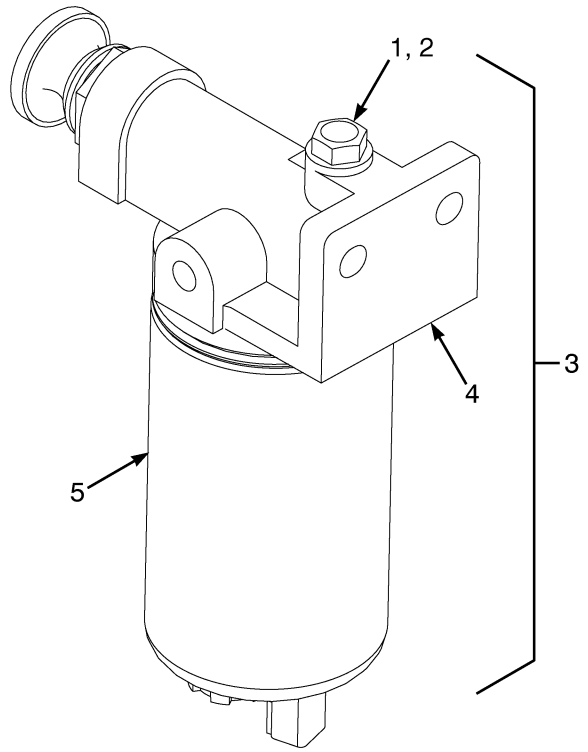

BP130138

ITEM	PART NO.	DESCRIPTION	QTY
	580087914	Engine Assy-Diesel	1
	580093608	Engine Assy-Diesel (99 Horsepower. Only available with 3x2 Transmission)	1
1	580091073	Plug	1
2	580091074	Seal	1
3	580091075	Fuel Filter	1
4	. . . . .	Filter Head	1
5	580091077	Cartridge (Includes Sensor)	1

©2014 Yale Materials Handling Corporation

FOOT DIRECTIONAL CONTROL PEDAL ASSEMBLY (FIGURE 5-30)

(→ PENDING PER ECN 154533)

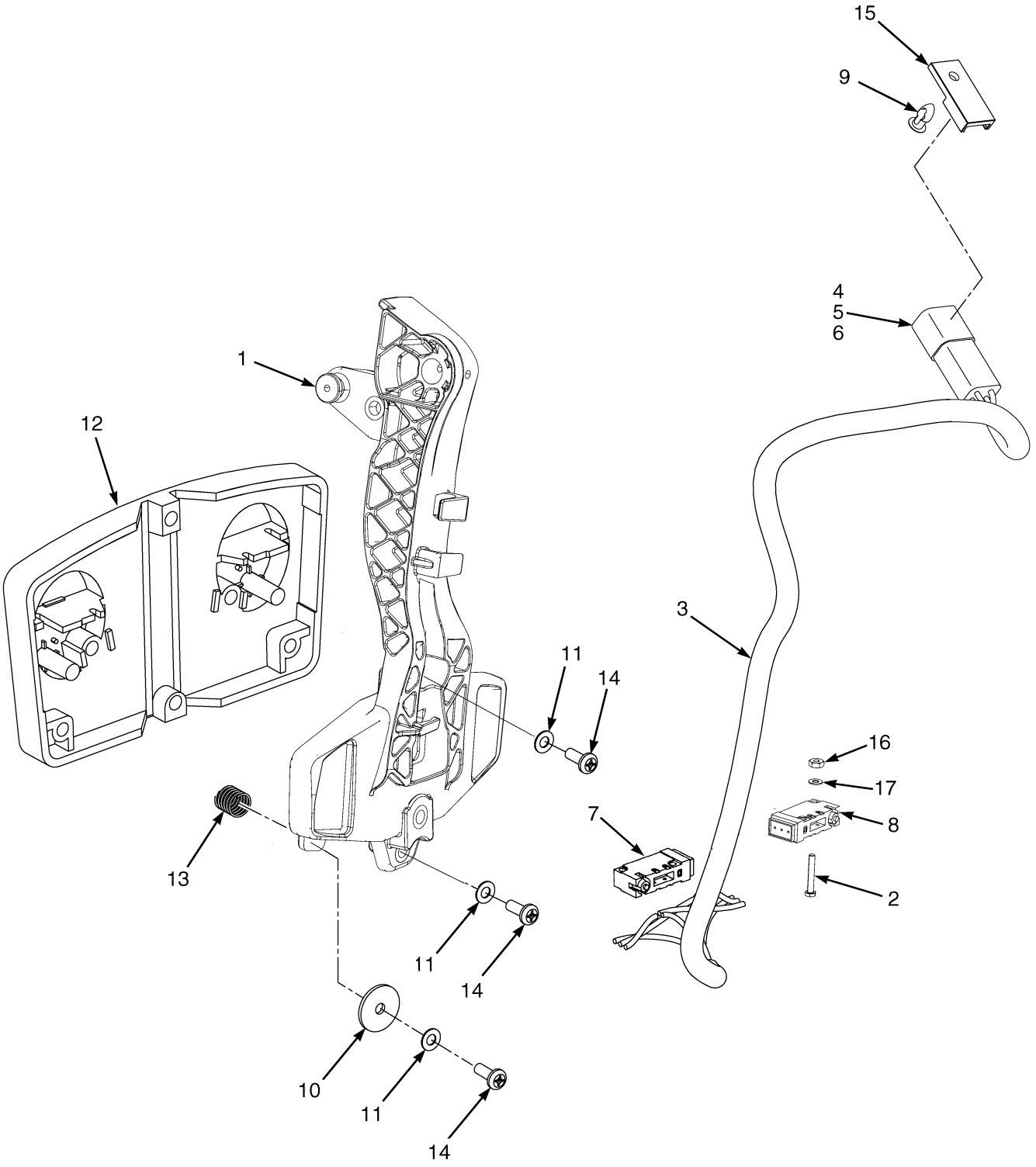

©2014 Yale Materials Handling Corporation

FOOT DIRECTIONAL CONTROL PEDAL ASSEMBLY

(→ PENDING PER ECN 154533)

ITEM	PART NO.	DESCRIPTION	QTY
	524246118	Foot Directional Control Pedal	1
1	580057300	Pedal	1
2	504225201	Screw	4
3	580054683	Wire Harness	1
4	518806635	Connector (Secondary Lock)	1
5	580020942	Connector (4 Way)	1
6	580038290	Terminal	4
7	. . . . .	Switch	1
8	. . . . .	Switch	1
9	580056613	Fastener	1
10	580010433	Washer	2
11	065619300	Lockwasher	4
12	524137230	Pad	1
13	580010432	Spring	2
14	502634904	Screw	4
15	580026812	Clip	1
16	032643500	Nut	4
17	500552902	Lockwasher	4

©2014 Yale Materials Handling Corporation

THROTTLE PEDAL ASSEMBLY AND ATTACHING PARTS (FIGURE 5-31)

STANDARD PEDAL

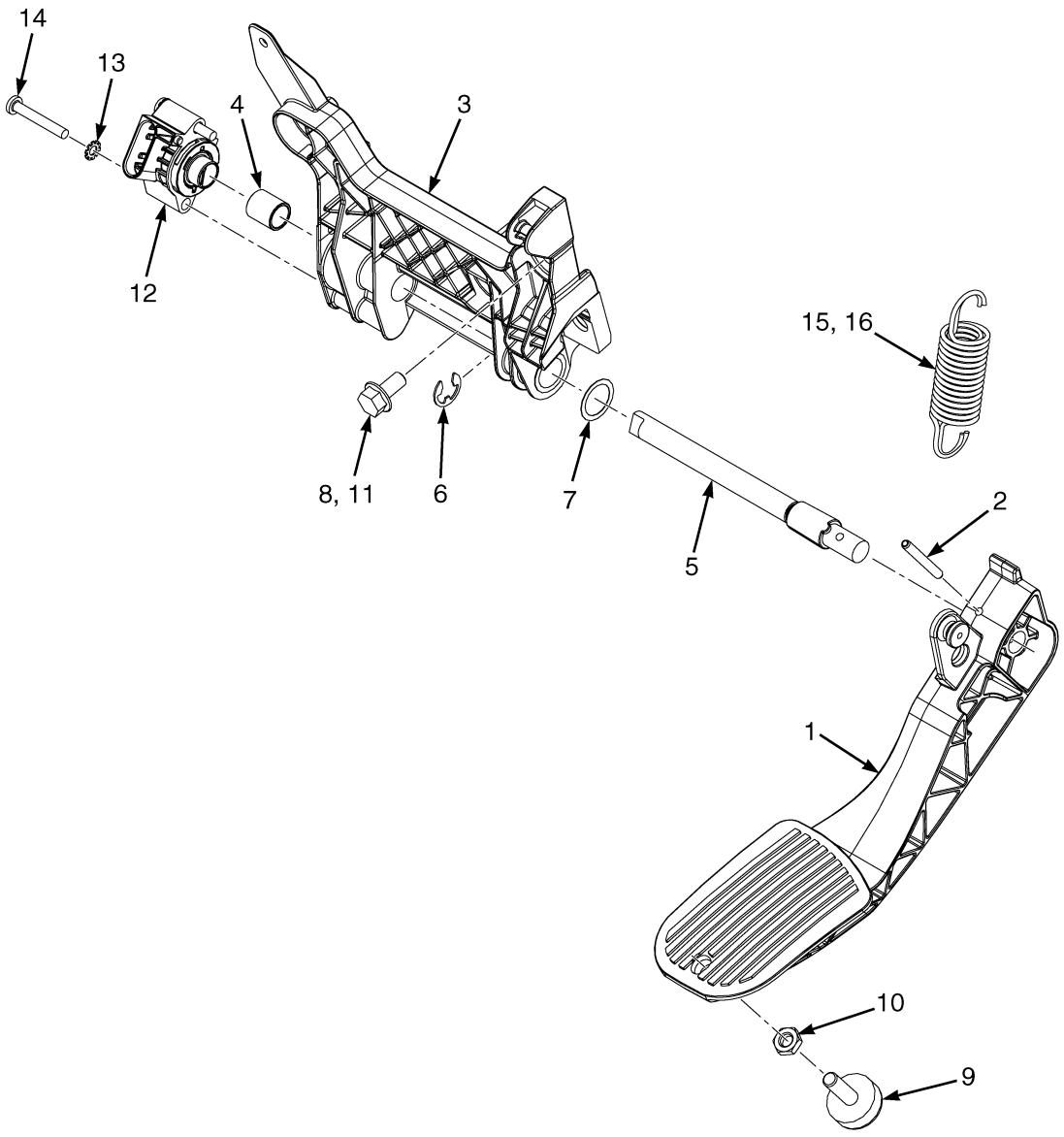

©2014 Yale Materials Handling Corporation

THROTTLE PEDAL ASSEMBLY AND ATTACHING PARTS
STANDARD PEDAL

ITEM	PART NO.	DESCRIPTION	QTY
1	580052661	Pedal (Standard)	1
2	449034011	Roll Pin	1
3	**a** 580080022	Throttle Plate	1
3	**b** 582022686	Base Assembly (Throttle)	1
3	582017700	Molding	1
4	580080368	Bushing	1
5	580080021	Shaft	1
6	580038063	E-Ring	1
7	580079933	Shim	AR
8	580047714	Capscrew	3
9	580037700	Screw (Stop)	1
10	580004592	Nut	1
11	501702904	Loctite	AR
12	580043866	Sensor (Hall Throttle Position)	1
13	940600906	Washer	2
14	580056839	Capscrew	2
15	580056460	Spring (Inner)	1
16	580056459	Spring (Outer)	1

FOOTNOTES:

a → PENDING PER ECN 154533

b PENDING PER ECN 154533 →

©2014 Yale Materials Handling Corporation

THROTTLE PEDAL ASSEMBLY AND ATTACHING PARTS (FIGURE 5-32)

FOOT DIRECTIONAL CONTROL (PENDING PER ECN 154533 →)

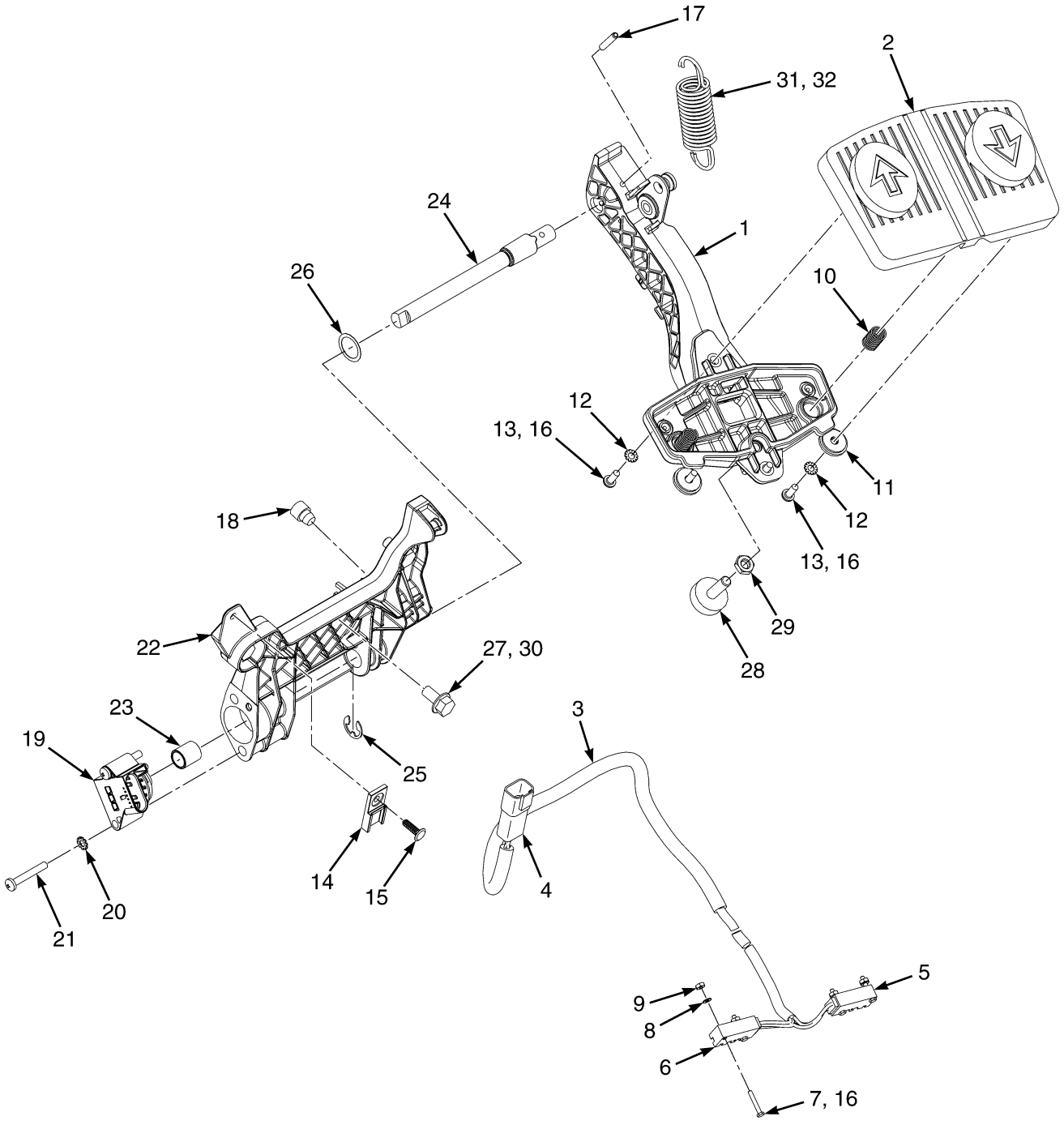

©2014 Yale Materials Handling Corporation

THROTTLE PEDAL ASSEMBLY AND ATTACHING PARTS

FOOT DIRECTIONAL CONTROL (PENDING PER ECN 154533 →)

ITEM	PART NO.	DESCRIPTION	QTY
	550054058	Pedal Assy	1
1	580057300	Pedal	1
2	580047527	Pad	1
3	580054683	Wire Harness	1
4	. . . . .	Connector Assembly (To Cowl Harness)	1
4	580020942	Connector (4 Way)	1
4	518806635	Connector (Secondary Lock) (Secondary Lock)	1
4	580038290	Terminal	4
5	. . . . .	Switch (Reverse)	1
6	. . . . .	Switch (Forward)	1
7	504225201	Screw	4
8	500552902	Lockwasher	4
9	032643500	Nut	4
10	580010432	Spring	2
11	582017066	Washer (Bonded)	2
12	065619300	Lockwasher	2
13	502634904	Screw	2
14	580026812	Clip	1
15	580056613	Fastener	1
16	501702901	Loctite	AR
17	449034005	Roll Pin	1
18	582014045	Isolator (Throttle Pedal)	1
19	580043866	Sensor (Hall Throttle Position) (To Cowl Harness)	1
20	940600906	Washer	2
21	580056839	Capscrew	2
22	**a** 580080022	Throttle Plate	1
22	**b** 582022686	Base Assembly (Throttle)	1
22	582017700	Molding	1
23	580080368	Bushing	1
24	580080021	Shaft	1
25	580038063	E-Ring	1
26	580079933	Shim	AR
27	580047714	Capscrew	3
28	580037700	Screw (Stop)	1
29	580004592	Nut	1
30	501702904	Loctite	AR
31	580056460	Spring (Inner)	1
32	580056459	Spring (Outer)	1

FOOTNOTES:

a → PENDING PER ECN 154533

b PENDING PER ECN 154533 →

©2014 Yale Materials Handling Corporation

NOTES

©2014 Yale Materials Handling Corporation

6 ELECTRICAL SYSTEM

SECTION 6
ELECTRICAL SYSTEM

DESCRIPTION	PAGE
ALTERNATOR AND MOUNTING	
CUMMINS QSB 3.3L DIESEL	6-36
GM 4.3L LPG - PSI OPTION (S/N D878V02178K →)	6-22
BATTERY AND CONTROL CABLE DISCONNECT SWITCH	6-66
BATTERY CABLES	
CUMMINS QSB 3.3L DIESEL	6-40
GM 4.3L GASOLINE AND LPG	6-26
COWL ELECTRICAL	
ELECTRIC HYDRAULIC	6-8
MANUAL HYDRAULIC	6-10
DISTRIBUTOR ASSEMBLY	
GM 4.3L GASOLINE AND LPG	6-24
ELECTRICAL SYSTEM	
RIGHT HAND CHASSIS - GM 4.3L GASOLINE AND LPG	6-4
RIGHT HAND CHASSIS - CUMMINS QSB 3.3L DIESEL	6-6
ELECTRONIC CONTROL LEVERS	
MINI-LEVER MODULE (FOUR FUNCTION) (→ S/N D878V01751H)	6-46
MINI-LEVER MODULE (THREE FUNCTION) (→ S/N D878V01751H)	6-48
ELECTRONIC CONTROL MODULE AND SENSORS	
CUMMINS QSB 3.3L DIESEL	6-44
ENGINE CONTROL MODULE AND SENSORS	
GM 4.3L LPG - PSI OPTION (S/N D878V02178K →)	6-19
GM 4.3L GASOLINE - PSI OPTION	6-20
ENGINE ELECTRICAL SYSTEM	
CUMMINS QSB 3.3L DIESEL	6-30
CUMMINS QSB 3.3L DIESEL - UL TYPE DS	6-34
GM 4.3L GASOLINE AND LPG - PSI OPTION	6-16
GM 4.3L, GASOLINE AND LPG - GFI OPTION	6-14
FUSE BOX	
GM 4.3L LPG - PSI OPTION (S/N D878V02178K →)	6-23
IMPACT SENSOR	6-68
INSTRUMENT CLUSTER	6-12
LIGHTS	
BRAKE, TAIL, BACKUP, SIDE, TURN SIGNALS, WORK, STROBE - WITH CAB	6-54
BRAKE, TAIL, BACKUP, SIDE, TURN SIGNALS, WORK, STROBE - WITH OVERHEAD GUARD	6-56
LOAD WEIGH ELECTRICAL	6-64
MAST ELECTRICAL	6-62
MINI-LEVER CONTROLS	
WITH ARMREST - THREE FUNCTION	6-50
WITH ARMREST - FOUR FUNCTION	6-52
POWER DISTRIBUTION MODULE	6-70
SEALED ALTERNATOR AND MOUNTING	
CUMMINS QSB 3.3L DIESEL	6-38
SPARK PLUGS AND WIRES	
GM 4.3L GASOLINE AND LPG - PSI OPTION (S/N D878V02178K →)	6-18
STARTER	
GM 4.3L	6-28
STARTER MOTOR	
CUMMINS QSB 3.3L DIESEL	6-42

©2014 Yale Materials Handling Corporation

SECTION 6
ELECTRICAL SYSTEM

DESCRIPTION	PAGE
TRANSMISSION ELECTRICAL SYSTEM	
THREE SPEED TRANSMISSION	6-60
TWO SPEED TRANSMISSION	6-58
WIRE HARNESS	
ADAPTER - LOW FUEL PRESSURE	6-172
ALTERNATOR - CUMMINS QSB 3.3L DIESEL	6-150
COWL WITH FOOT DIRECTIONAL CONTROL PEDAL - WITH HYDRAULIC PUMP SOLENOID	6-138
COWL WITH FOOT DIRECTIONAL CONTROL PEDAL - WITH RETURN TO SET TILT / WITH HYDRAULIC PUMP SOLENOID	6-142
COWL WITH FORWARD/REVERSE LEVER - WITH HYDRAULIC PUMP SOLENOID	6-134
ELECTRONIC CONTROL VALVE - THREE FUNCTION	6-162
ELECTRONIC CONTROL VALVE - FOUR FUNCTION	6-164
ENGINE - GM 4.3L LPG (→ S/N D878V01730H)	6-72
ENGINE - GM 4.3L GASOLINE (→ S/N D878V01730H)	6-84
ENGINE - CUMMINS QSB 3.3L DIESEL	6-92
LEFT HAND CHASSIS - GM 4.3L GASOLINE (→ S/N D878V01730H)	6-124
LEFT HAND CHASSIS - GM 4.3L GASOLINE (SERIES 2010) (S/N D878V01731H →)	6-126
LEFT HAND CHASSIS - GM 4.3L LPG (→ S/N D878V01730H)	6-128
LEFT HAND CHASSIS - GM 4.3L LPG (2010 SERIES)(WITH PREMIUM LOW FUEL SENSOR) (S/N D878V01731H →)	6-130
LEFT HAND CHASSIS - GM 4.3L LPG (2010 SERIES)(WITHOUT PREMIUM LOW FUEL SENSOR) (S/N D878V01731H →)	6-132
LIGHTS WITH OVERHEAD GUARD	6-166
LOW FUEL SENSOR	6-170
REAR - GM 4.3L GASOLINE AND LPG	6-94
REAR - CUMMINS QSB 3.3L DIESEL	6-96
RIGHT HAND CHASSIS - GM 4.3L GASOLINE AND LPG (→ S/N D878V01870H)	6-98
RIGHT HAND CHASSIS - GM 4.3L GASOLINE AND LPG (S/N D878V01871H →)	6-104
RIGHT HAND CHASSIS - CUMMINS QSB 3.3L DIESEL (→ S/N D878V01858H)	6-110
RIGHT HAND CHASSIS - CUMMINS QSB 3.3L DIESEL (S/N D878V01859H →)	6-116
SEALED ALTERNATOR - CUMMINS QSB 3.3L DIESEL	6-152
SEAT JUMPER (→ S/N D878V01858H)	6-122
TRANSMISSION - THREE SPEED	6-156
TRANSMISSION - TWO SPEED	6-160
WORK LIGHT JUMPER - WITH TWO STAGE MASTS	6-168
WIRE HARNESS (COWL)	
WITH FORWARD AND REVERSE LEVER - WITH HYDRAULIC PUMP SOLENOID	6-146
WIRE HARNESS (ENGINE)	
GM 4.3L GASOLINE (2010 SERIES) (S/N D878V01731H →)	6-88
GM 4.3L LPG (2010 SERIES) - GFI OPTION (S/N D878V01731H ↔ S/N D878V02177K)	6-76
GM 4.3L, LPG - PSI OPTION (S/N D878V02178K →)	6-80

©2014 Yale Materials Handling Corporation

NOTES

©2014 Yale Materials Handling Corporation

ELECTRICAL SYSTEM (FIGURE 6-1)

RIGHT HAND CHASSIS — GM 4.3L GASOLINE AND LPG

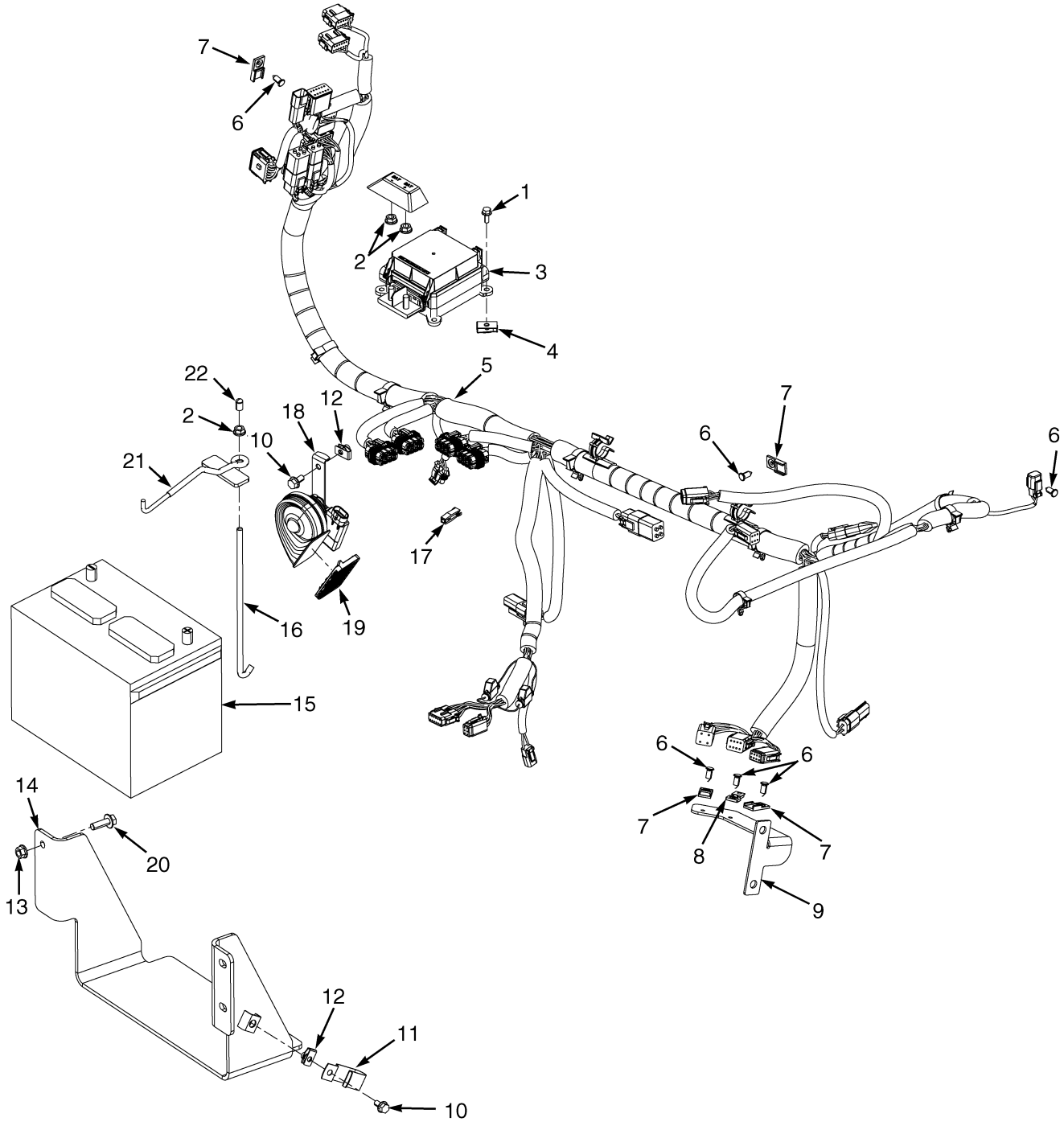

BP080583

©2014 Yale Materials Handling Corporation

ELECTRICAL SYSTEM

RIGHT HAND CHASSIS – GM 4.3L GASOLINE AND LPG

ITEM	PART NO.	DESCRIPTION	QTY
1	580049011	Capscrew	4
1	580039438	Capscrew (Alternate Part)	4
2	580027573	Nut (Flange)	3
3	580074261	Fuse Box (☞P20240 [Page 6-70])	1
4	505970526	Nut	4
5	**b** 580090275	Wire Harness (RH Chassis) (☞P20244 [Page 6-98])	1
5	**c** 582008322	Wire Harness (RH Chassis) (☞P22079 [Page 6-104])	1
6	580056613	Fastener	9
7	580026812	Clip	7
8	580039588	Clip	1
9	580081484	Bracket	1
10	580047714	Capscrew	3
11	580045558	Clip	2
12	580026621	Nut	3
13	580027572	Nut	3
14	580083843	Battery Tray	1
15	580076315	Start Battery Wet	1
16	580046263	Link (Battery Hold Down)	1
17	580023854	Fuse Puller	1
18	~~580068957~~ ~~582019735~~ 582031914	Horn (Electronic)	1
19	580074512	Shield	1
20	580046451	Capscrew	3
21	580074110	Link (Battery Hold Down)	1
22	580041768	Cap	1
	a 580060014	Connector	1
	a 582001375	Wire Harness (Seat Jumper) (☞P22121 [Page 6-122])	1
	a 582019367	Wire Harness (Jumper) (Horn Jumper)	1

FOOTNOTES:

a Not Illustrated
b → S/N D878V01870H
c S/N D878V01871H →

©2014 Yale Materials Handling Corporation

ELECTRICAL SYSTEM (FIGURE 6-2)

RIGHT HAND CHASSIS — CUMMINS QSB 3.3L DIESEL

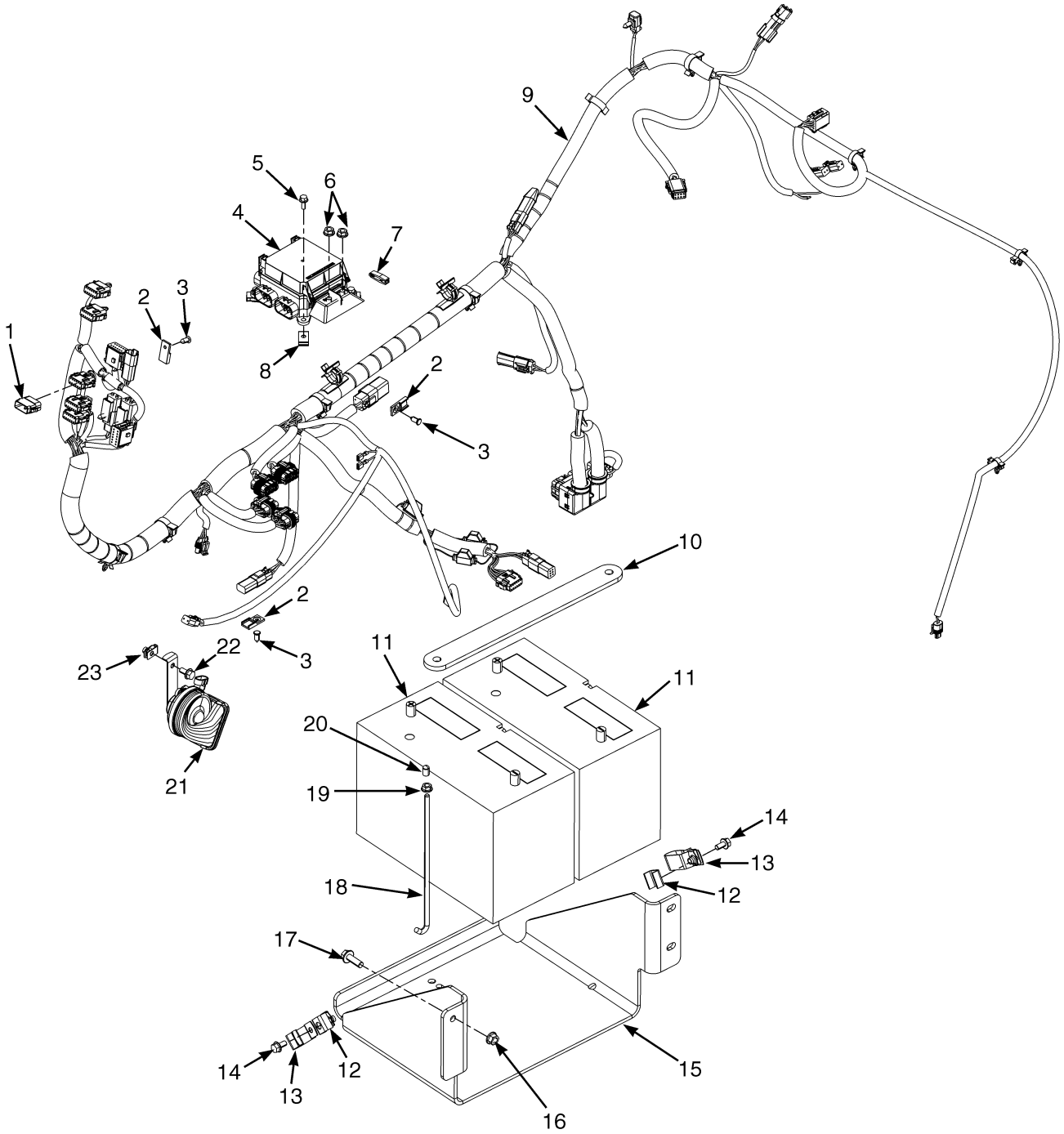

BP080763

©2014 Yale Materials Handling Corporation

ELECTRICAL SYSTEM

RIGHT HAND CHASSIS – CUMMINS QSB 3.3L DIESEL

ITEM	PART NO.	DESCRIPTION	QTY
1	580060014	Connector	1
2	580026812	Clip	5
3	580056613	Fastener	6
4	580074261	Fuse Box	1
5	580049011	Capscrew	4
5	580039438	Capscrew (Alternate Part)	4
6	580027573	Nut (Flange)	2
7	580023854	Fuse Puller	1
8	505970526	Nut	4
9	**c** 580090275	Wire Harness (RH Chassis) (☞P20245 [Page 6-110])	1
9	**d** 582008323	Wire Harness (RH Chassis) (☞P22080 [Page 6-116])	1
10	580083846	Bracket	1
11	580076315	Start Battery Wet	2
11	**b** 580013937	Start Battery Wet	2
12	580026621	Nut	1
13	580045558	Clip	1
14	580047714	Capscrew	1
15	580083845	Battery Tray	1
15	582006592	Battery Tray (Alternate Part)	1
16	580027572	Nut	3
17	580046451	Capscrew	3
18	580046263	Link (Battery Hold Down)	2
19	580027573	Nut (Flange)	2
20	580041768	Cap	2
21	~~580068957~~ ~~582019735~~ 582031914	Horn (Electronic)	1
22	580047714	Capscrew	1
23	580026621	Nut	1
	a 582001375	Wire Harness (Seat Jumper) (☞P22121 [Page 6-122])	1
	a 582019367	Wire Harness (Jumper) (Horn Jumper)	1

FOOTNOTES:

a Not Illustrated
b Optional
c → S/N D878V01858H
d S/N D878V01859H →

©2014 Yale Materials Handling Corporation

COWL ELECTRICAL (FIGURE 6-3)
ELECTRIC HYDRAULIC

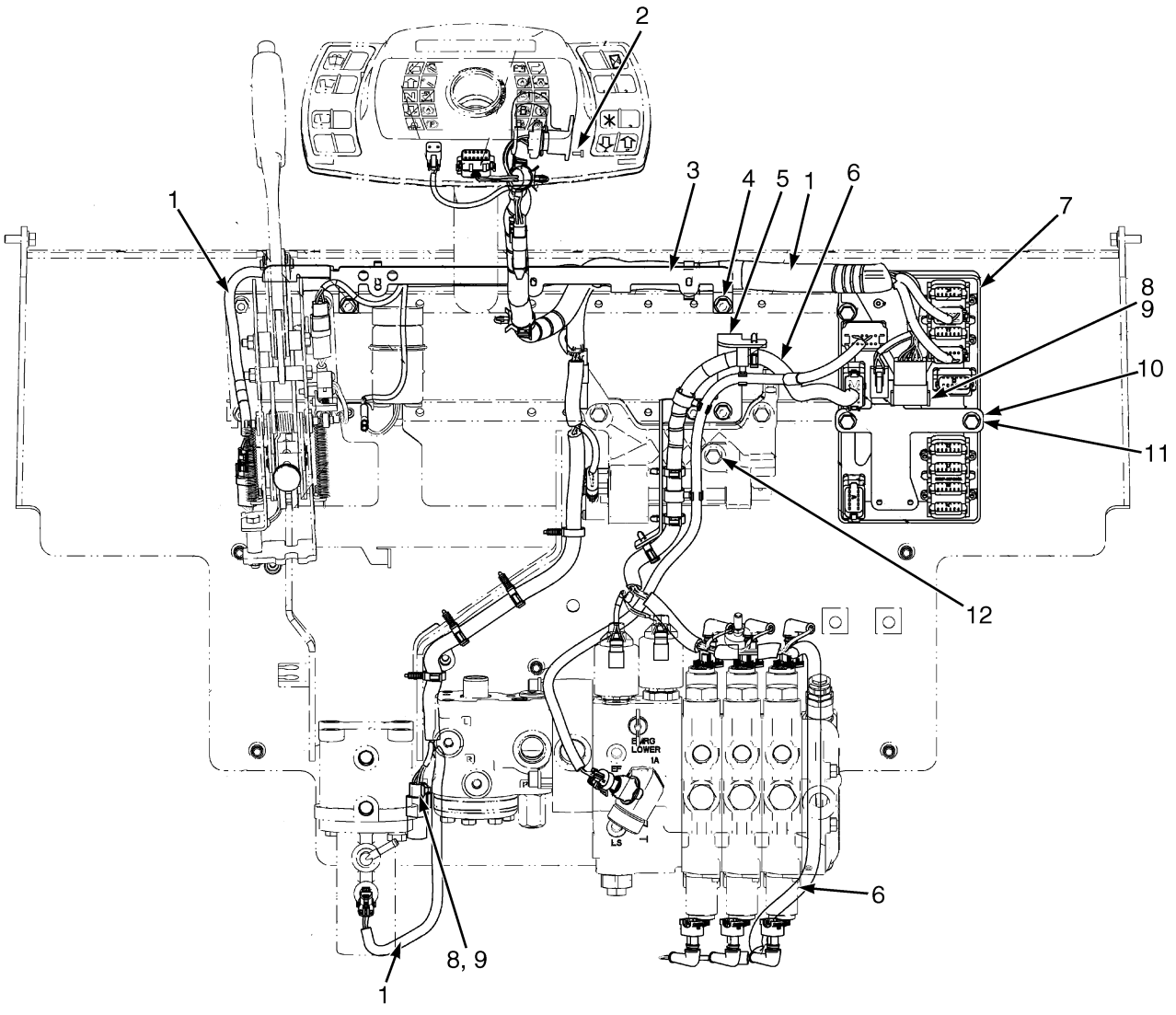

©2014 Yale Materials Handling Corporation

COWL ELECTRICAL
ELECTRIC HYDRAULIC

KEY:
A: With Return to Set Tilt
B: Without Return to Set Tilt

ITEM	PART NO.	DESCRIPTION	QTY A	QTY B
1	**e** 580082486	Wire Harness (Cowl with Foot Directional Control Pedal) (☞P19921 [Page 6-138])	1	..
1	**e** 580082487	Wire Harness (☞P19918 [Page 6-146])	..	1
2	580047200	Screw	2	2
3	580062311	Bracket	1	1
3	580096474	Bracket (Left Hand) (Alternate Part)	1	1
3	580096475	Bracket (Right Hand) (Alternate Part)	1	1
4	580037180	Capscrew	2	2
4	580037180	Capscrew (Alternate Part)	2	2
5	580038826	Bracket	1	1
6	**a** 580038751	Wire Harness (Control Valve) (☞P20256 [Page 6-164])	1	1
6	**c** 580040090	Wire Harness (Control Valve) (☞P20255 [Page 6-162])	1	1
7	**f** 580049609	Vehicle System Manager (VSM) (w/ Electro-Hydraulics)	1	1
7	**d** 580049610	Vehicle System Manager (VSM) (w/ Cab and Manual or Electro-Hydraulics)	1	1
8	580026812	Clip	3	1
9	580056613	Fastener	3	1
10	580056614	Bracket	1	1
11	580030968	Capscrew	3	3
12	580037180	Capscrew	2	2
	b 580050194	Dust Cap	1	1

FOOTNOTES:

a Four Function
b Not Illustrated
c Three Function
d With Cab
e With Hydraulic Pump Solenoid
f With Overhead Guard

©2014 Yale Materials Handling Corporation

COWL ELECTRICAL (FIGURE 6-4)
MANUAL HYDRAULIC

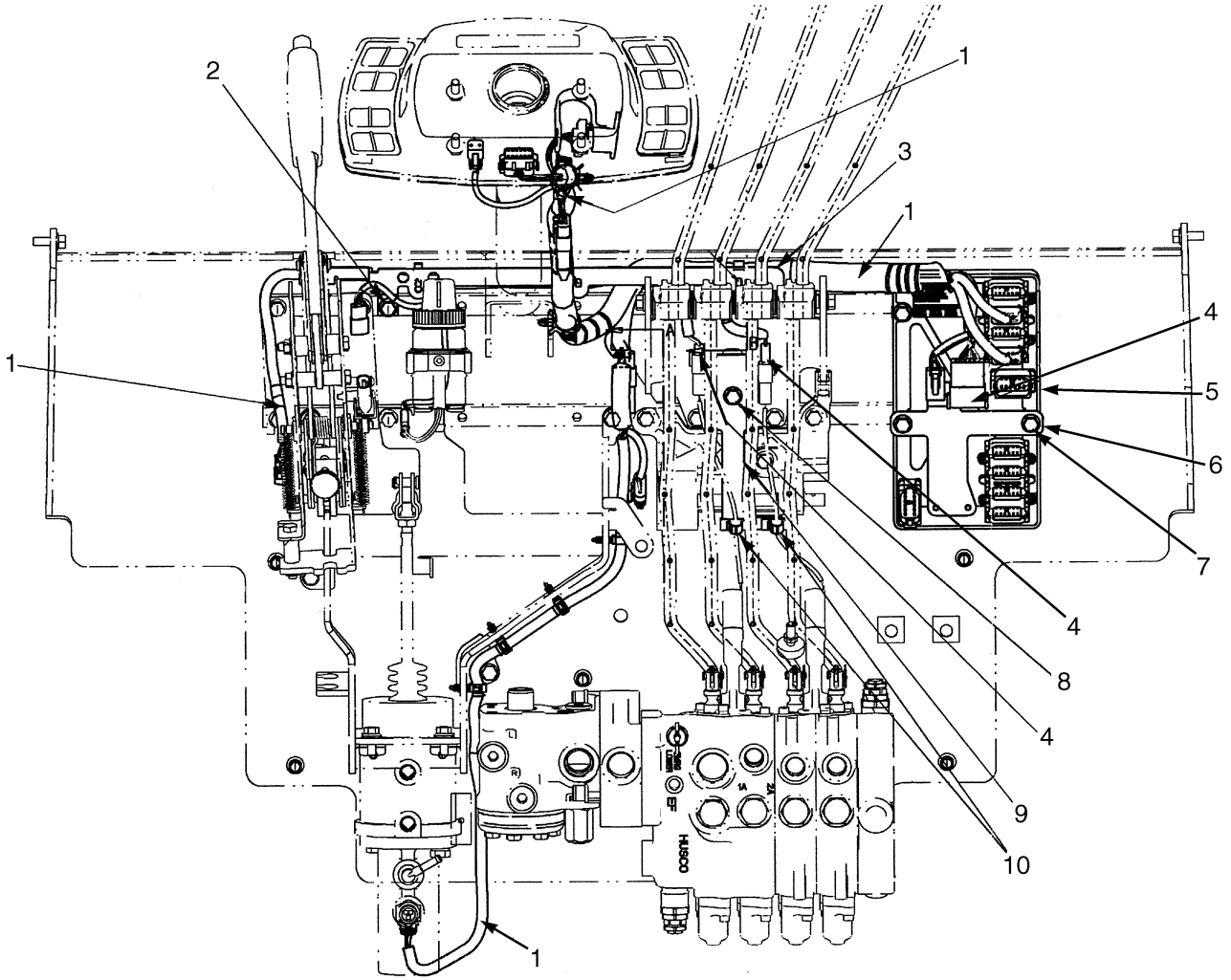

©2014 Yale Materials Handling Corporation

COWL ELECTRICAL
MANUAL HYDRAULIC

ITEM	PART NO.	DESCRIPTION	QTY
1	580089451	Wire Harness (With Foot Directional Control Pedal) (☞P19921 [Page 6-138])	1
1	582003490	Wire Harness (With Foot Directional Control Pedal) (Alternate Part) (☞P19921 [Page 6-138])	1
1	580089452	Wire Harness (Forward/Reverse Lever) (☞P20249 [Page 6-134])	1
1	582003491	Wire Harness (With Forward/Reverse Lever) (Alternate Part) (☞P19918 [Page 6-146])	1
2	580037180	Capscrew	2
3	580062311	Bracket	1
3	580096474	Bracket (Left Hand) (Alternate Part)	1
3	580096475	Bracket (Right Hand) (Alternate Part)	1
4	580026812	Clip	4
4	580056613	Fastener	4
5	580049608	Vehicle System Manager (VSM) (w/ Manual Hydraulics)	1
6	580056614	Bracket	1
7	580030968	Capscrew	3
8	580036662	Capscrew	1
8	580008988	Nut (Fold Over)	1
9	580089534	Bracket	1
10	580052685	Clip	2

©2014 Yale Materials Handling Corporation

INSTRUMENT CLUSTER (FIGURE 6-5)

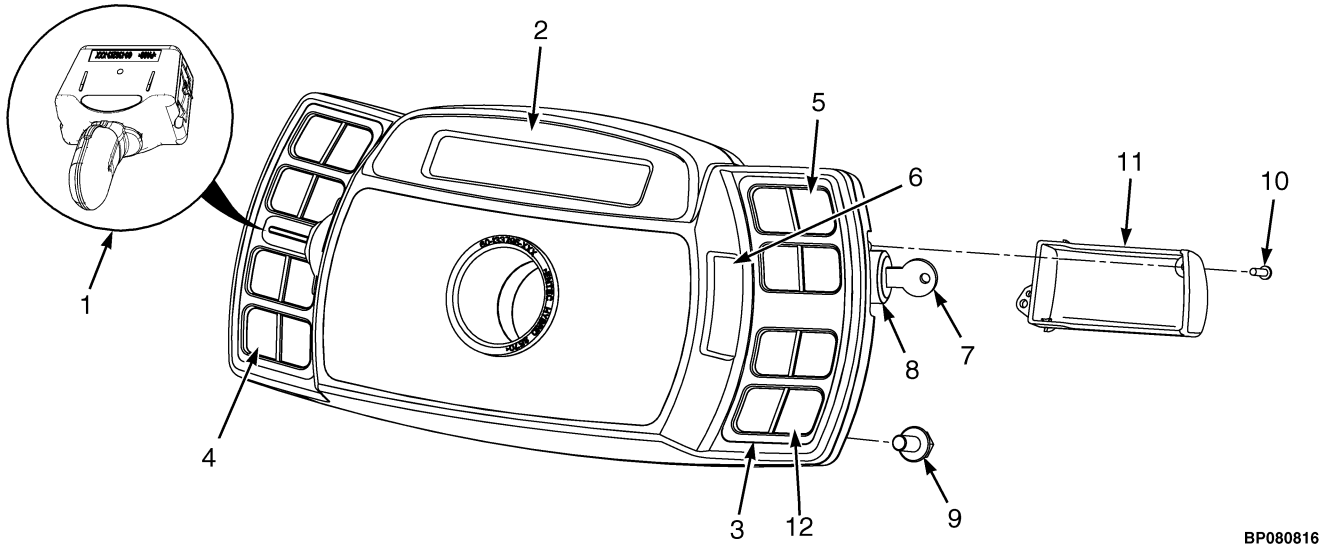

ITEM	PART NO.	DESCRIPTION	QTY
1	**b** 580087546	Lever (Detent Forward and Reverse)	1
1	**c** 582005136	Lever (Detent Forward and Reverse)	1
2	580060626	Display (With Cab)	1
2	580060625	Display (With Overhead Guard)	1
3	580047049	Bezel (Display Cluster)	2
4	580050933	Label (Blank) (LH Display with Overhead Guard)	1
4	580047047	Label (LH Display with Cab)	1
5	580047048	Label (RH Display, All Options)	1
6	580039846	Cover (Without Turn Signals) (Display Lever)	1
7	504240712	Key Set	1
8	580037904	Ignition Switch (Without Keys)	1
9	580047714	Capscrew	4
10	580047200	Screw	5
11	580039847	Cover (Keyswitch)	1
12	**a** 580047046	Label (RH Display)	1

FOOTNOTES:

a Remove Panels From Overlay as Required For Truck Configuration.

b → S/N D878V01735H

c S/N D878V01736H →

©2014 Yale Materials Handling Corporation

NOTES

©2014 Yale Materials Handling Corporation

ENGINE ELECTRICAL SYSTEM (FIGURE 6-6)

GM 4.3L, GASOLINE AND LPG — GFI OPTION

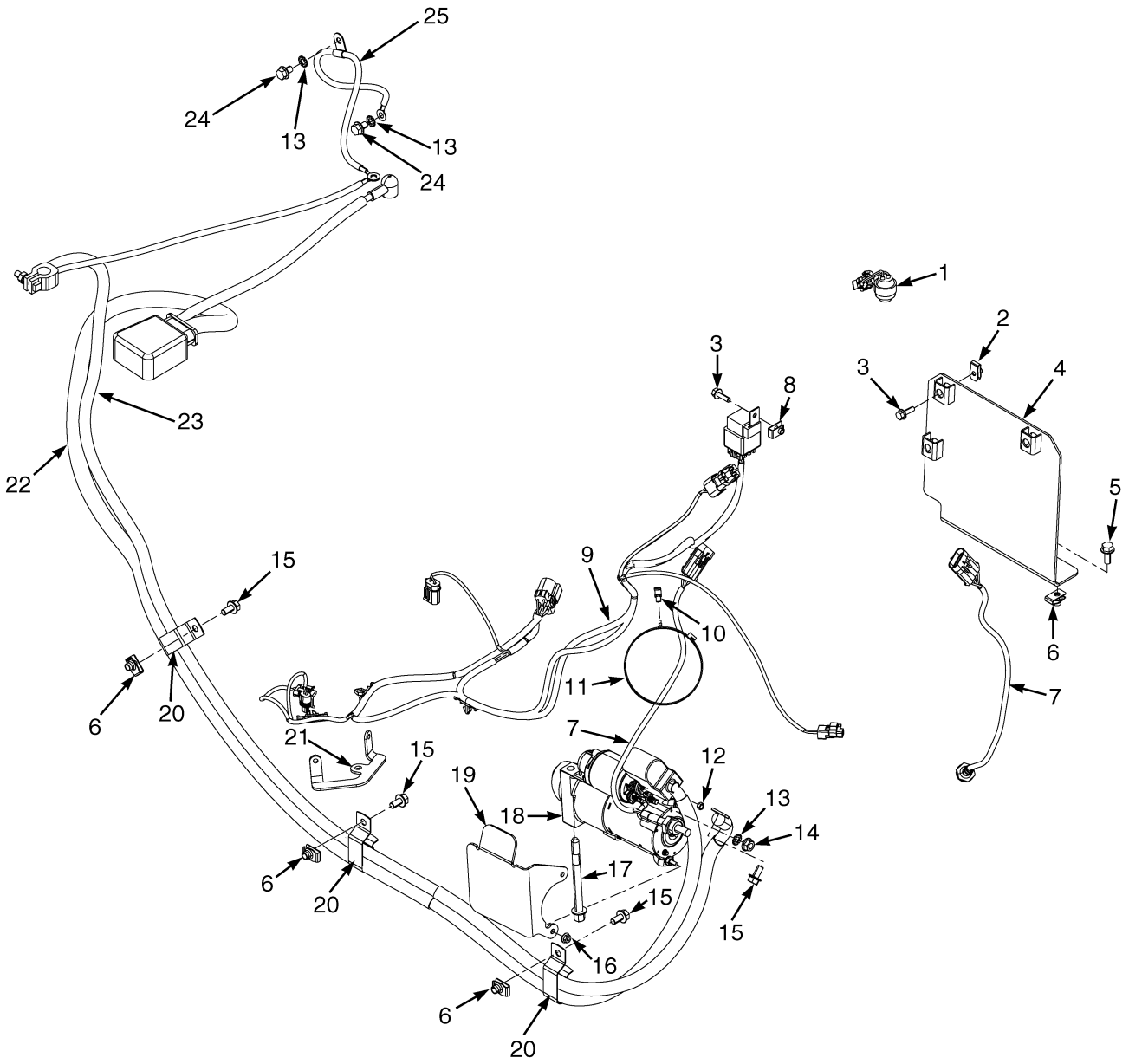

BP080590

©2014 Yale Materials Handling Corporation

ENGINE ELECTRICAL SYSTEM
GM 4.3L, GASOLINE AND LPG – GFI OPTION

KEY:
A: Gasoline
B: LPG

ITEM	PART NO.	DESCRIPTION	QTY A	QTY B
1	580037160	Sensor (Air Flow Restriction)	1	1
2	580051800	Nut (Foldover)	3	3
3	580039438	Capscrew	4	4
4	580078811	Bracket Wldmt	1	1
5	580049231	Capscrew	3	3
6	580026621	Nut	6	6
7	580048273	Oxygen Sensor (With Wire Harness)	2	2
8	505970526	Nut	1	1
9	**a** 580078572	Wire Harness (LH Chassis) (2008-2009 Series) (☞P20246 [Page 6-124])	1	..
9	**a** 580078573	Wire Harness (LH Chassis) (2008-2009 Series) (☞P20247 [Page 6-128])	..	1
9	**b** 582004906	Wire Harness (LH Chassis) (2010 Series) (☞P21389 [Page 6-126])	1	..
9	**b** 582004797	Wire Harness (LH Chassis) (2010 Series) (☞P21390 [Page 6-130])	..	1
9	**b** 582004802	Wire Harness (LH Chassis) (2010 Series) (☞P21434 [Page 6-132])	..	1
10	580049559	Clamp (Swivel)	1	1
11	580041557	Clamp	1	1
12	937100904	Nut	1	1
13	940600908	Washer	3	3
14	580027573	Nut (Flange)	1	1
15	580047714	Capscrew	4	4
16	580072127	Nut	2	2
17	580006579	Bolt	2	2
17	580087935	Bolt (Alternate Part)	2	2
18	580074751	Starter (☞P20719 [Page 6-28])	1	1
19	580074788	Bracket	1	1
20	580045558	Clip	3	3
21	580032023	Bracket	1	..
22	580083531	Battery Cable (Positive) (☞P20224 [Page 6-26])	1	1
23	580083532	Battery Cable (Negative) (☞P20224 [Page 6-26])	1	1
23	580067708	Terminal (Part not replaceable service with assembly)	1	1
24	580037180	Capscrew	2	2
25	580077308	Battery Cable (Negative)	1	1
25	580006553	E-Ring	2	2
25	580050293	E-Ring	1	1

FOOTNOTES:

a → S/N D878V01730H

b S/N D878V01731H →

©2014 Yale Materials Handling Corporation

ENGINE ELECTRICAL SYSTEM (FIGURE 6-7)

GM 4.3L GASOLINE AND LPG — PSI OPTION

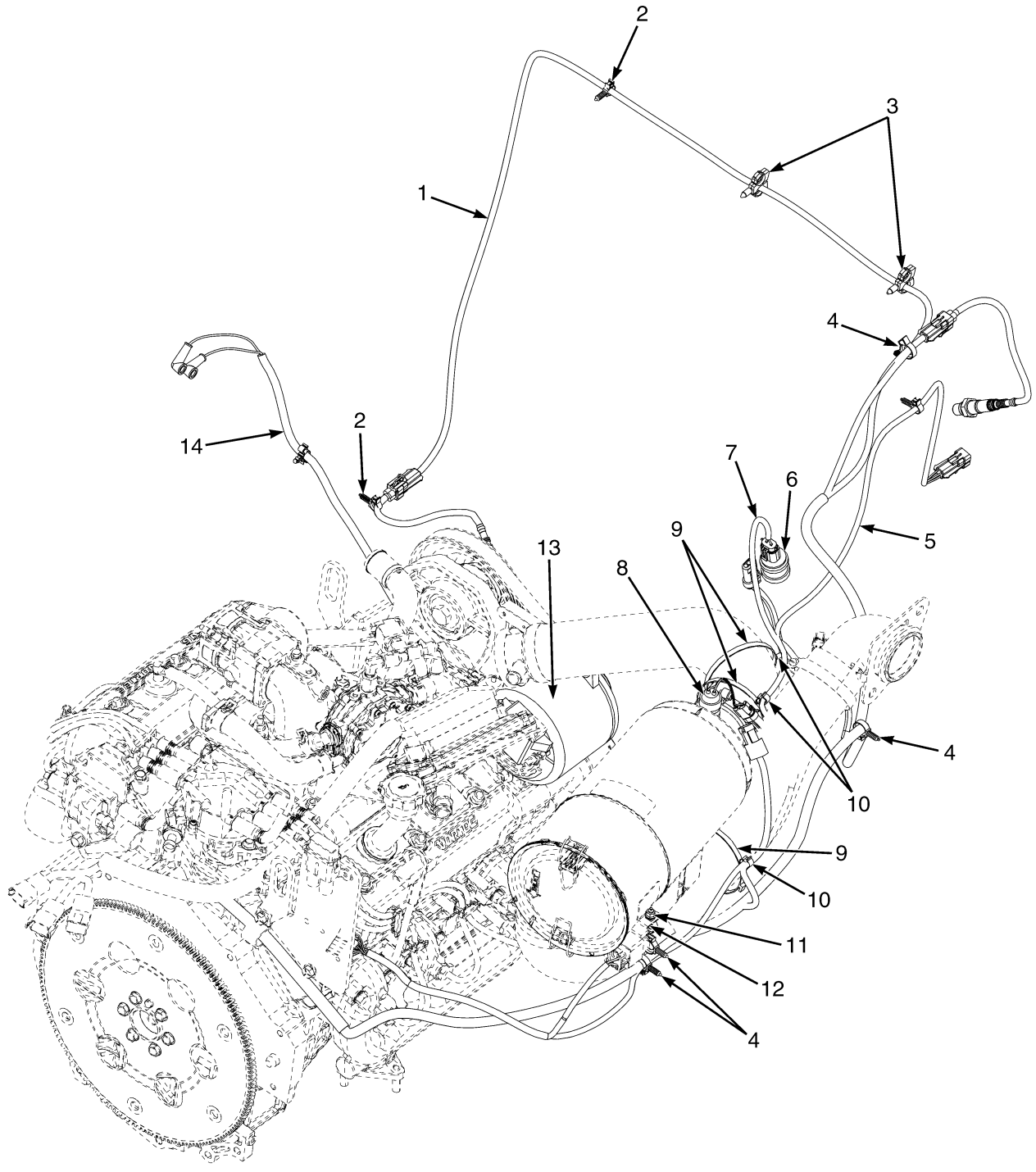

BP081227

©2014 Yale Materials Handling Corporation

ENGINE ELECTRICAL SYSTEM

GM 4.3L GASOLINE AND LPG – PSI OPTION

ITEM	PART NO.	DESCRIPTION	QTY
1	582016959	Wire Harness (Engine) (LPG) (☞P21367 [Page 6-88])	1
1	582021753	Wire Harness (Engine) (Gas)	1
2	580030876	Clip	2
3	580077156	Clip	2
4	580030878	Clip	4
5	582004804	Wire Harness (LH Chassis) (☞P21434 [Page 6-132])	1
6	580037008	Pressure Switch (Low Fuel)	1
7	582002989	Wire Harness (☞P23922 [Page 6-172])	1
8	580037160	Sensor (Air Flow Restriction)	1
9	580041557	Clamp	4
10	580049559	Clamp (Swivel)	4
11	580049011	Capscrew	1
12	~~580004321~~		
	580047919	Nut	1
13	~~582007742~~		
	580039672	Alternator (☞P23327 [Page 6-22])	1
14	580078489	Wire Harness Sealed Alternator	1
	a 582020445	Bracket (Gasoline Harness)	1

FOOTNOTES:

a Not Illustrated

©2014 Yale Materials Handling Corporation

SPARK PLUGS AND WIRES (FIGURE 6-8)

GM 4.3L GASOLINE AND LPG — PSI OPTION (S/N D878V02178K →)

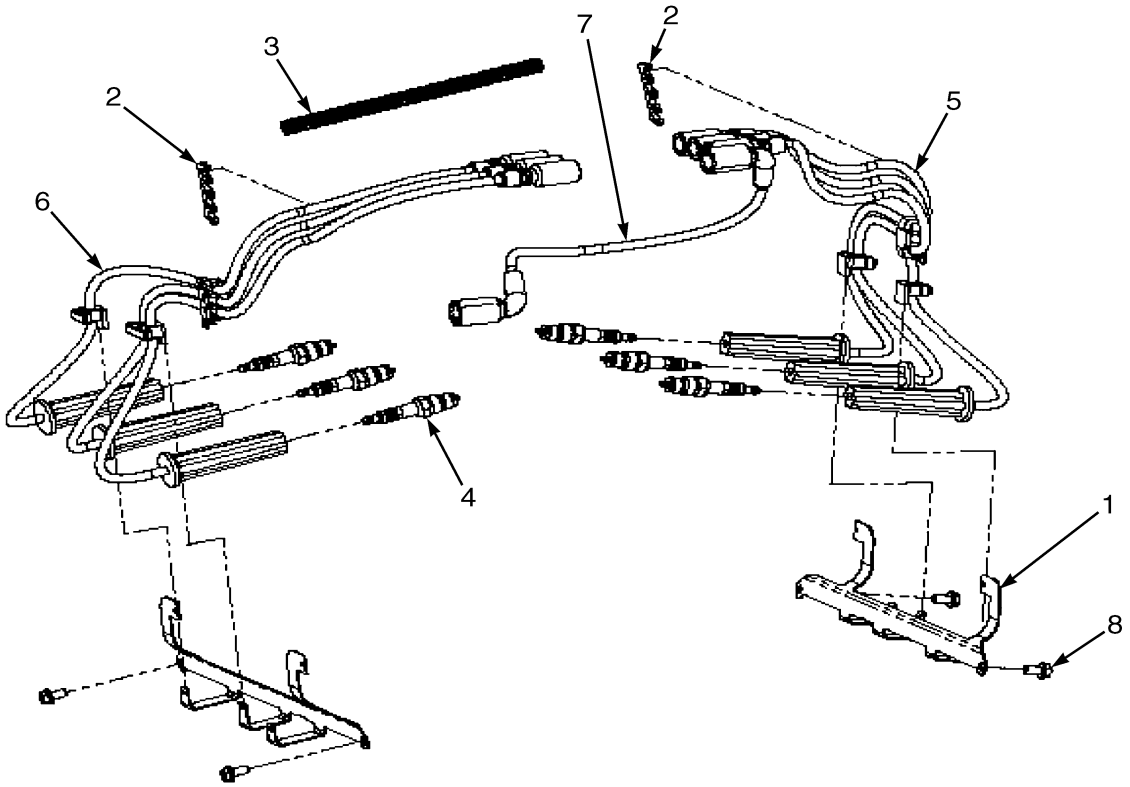

BP090464

ITEM	PART NO.	DESCRIPTION	QTY
1	580050409	Bracket	2
2	582007477	Separator	2
3	582016961	Conduit (46 in.)	AR
4	580000864	Spark Plug	6
5	. . . . .	Spark Plug Harness (RH)	1
6	. . . . .	Spark Plug Harness (LH)	1
7	. . . . .	Coil Wire	1
8	203756300	Capscrew	4
	a 580072615	Kit-Ignition Cable (Spark Plug Wires and Coil Wire)	1
	a 582016959	Wire Harness (LPG Engine) (☞P23331 [Page 6-80])	1
	a 582021753	Wire Harness (Gas Engine)	1
	a 580050410	Retainer (Three Wire Clip)	3
	a 580050411	Retainer (Dual Wire Clip)	2
	a 580050412	Retainer (Single Wire Clip)	2

FOOTNOTES:

a Not Illustrated

©2014 Yale Materials Handling Corporation

ENGINE CONTROL MODULE AND SENSORS (FIGURE 6-9)

GM 4.3L LPG — PSI OPTION (S/N D878V02178K →)

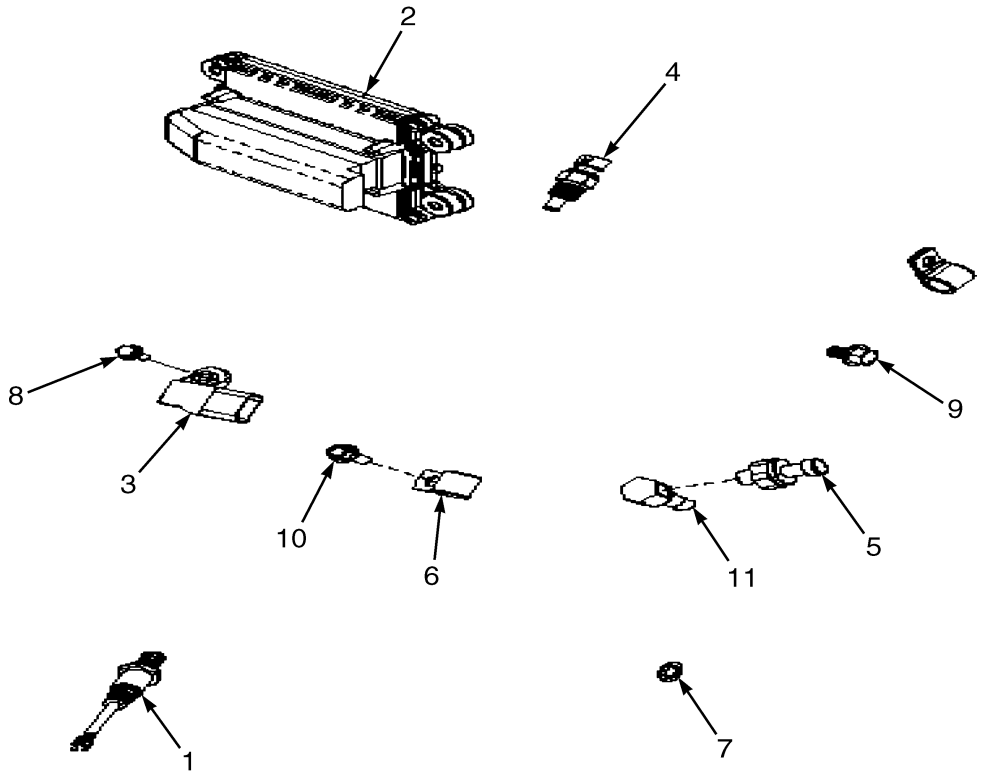

BP090463

ITEM	PART NO.	DESCRIPTION	QTY
1	580076752	Sensor (Oxygen)	2
2	582016996	Electronic Control Module	1
3	~~582007461~~		
	580048879	Sensor (Temperature manifold absolute pressure) (T-Map)	1
4	582007462	Sensor (Coolant) (Coolant)	1
5	582007463	Pressure Sender (Oil) (Oil)	1
6	505970529	Clamp	2
7	582007466	Washer	1
8	580049011	Capscrew	1
9	020772200	Bolt	2
10	582017722	Capscrew	1
11	582007468	Fitting	1
	a 582016959	Wire Harness	1

FOOTNOTES:

a Not Illustrated

©2014 Yale Materials Handling Corporation

ENGINE CONTROL MODULE AND SENSORS (FIGURE 6-10)

GM 4.3L GASOLINE — PSI OPTION

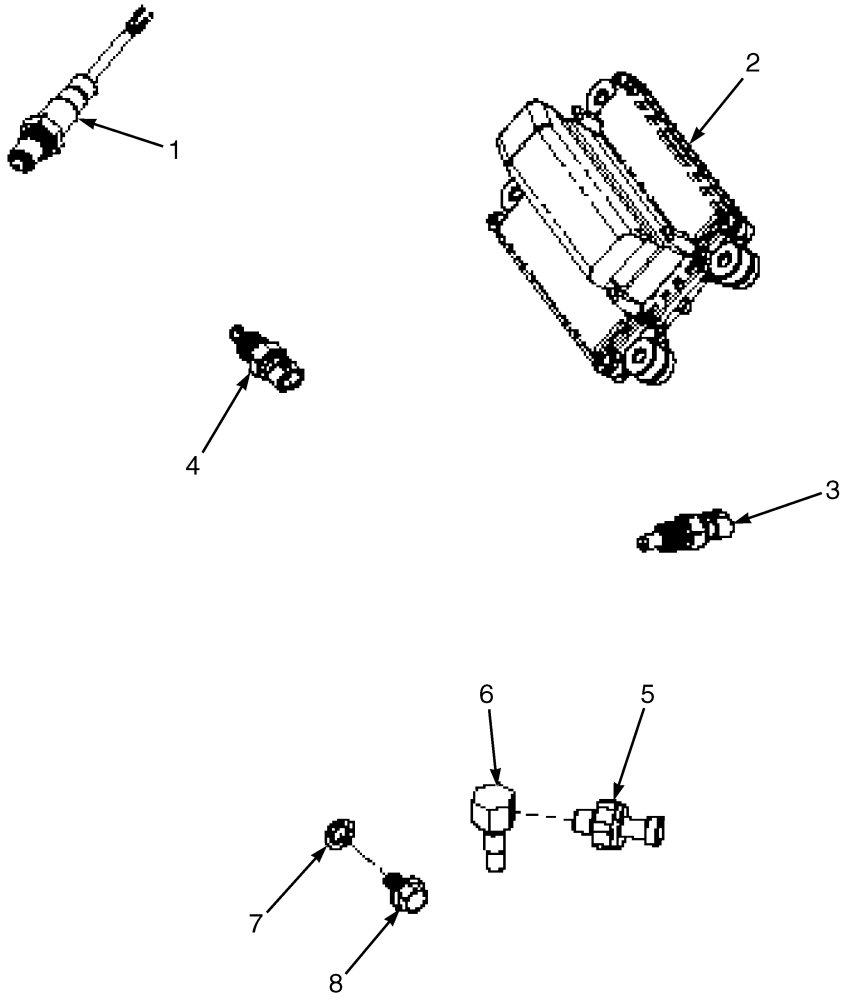

BP090526

©2014 Yale Materials Handling Corporation

ENGINE CONTROL MODULE AND SENSORS

GM 4.3L GASOLINE – PSI OPTION

ITEM	PART NO.	DESCRIPTION	QTY
1	580076752	Sensor (Oxygen)	2
2	582021751	Electronic Control Module	1
3	582007462	Sensor (Coolant) (Coolant)	1
4	582021752	Sensor (Inlet)	1
5	582007463	Pressure Sender (Oil)	1
6	582007468	Fitting (Oil Pressure)	1
7	582007466	Washer	1
8	020772200	Bolt	1
	a 582021753	Wire Harness	1

FOOTNOTES:

a Not Illustrated

©2014 Yale Materials Handling Corporation

ALTERNATOR AND MOUNTING (FIGURE 6-11)

GM 4.3L LPG — PSI OPTION (S/N D878V02178K →)

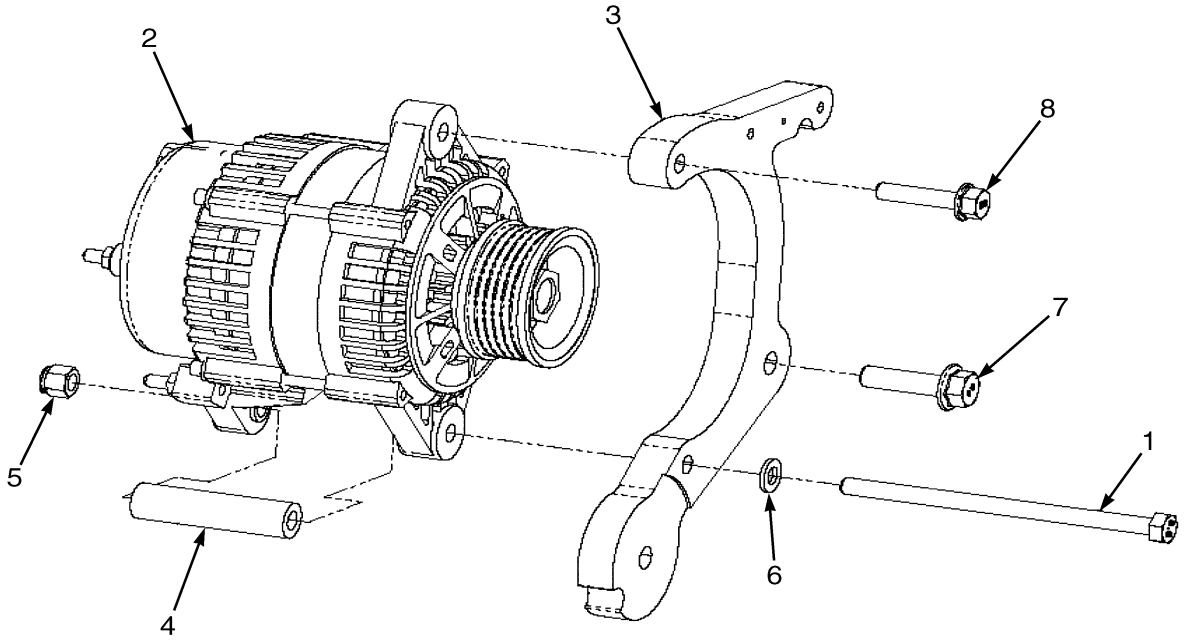

BP090460

ITEM	PART NO.	DESCRIPTION	QTY
1	580004502	Capscrew	1
2	~~582007742~~		
	580039672	Alternator	1
3	~~582007743~~		
	580073539	Bracket (Alternator)	1
4	580047182	Spacer	1
5	582007811	Nut	1
6	449021001	Washer	1
7	580049387	Capscrew	1
8	580036662	Capscrew	1

©2014 Yale Materials Handling Corporation

FUSE BOX (FIGURE 6-12)

GM 4.3L LPG — PSI OPTION (S/N D878V02178K →)

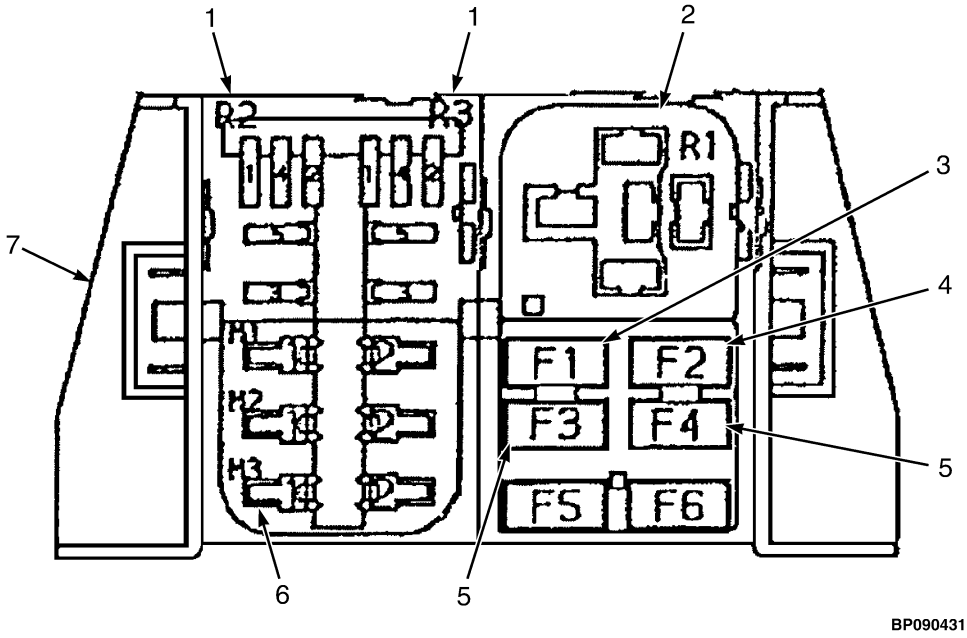

ITEM	PART NO.	DESCRIPTION	QTY
1	580052071	Relay (Power and Fuel Pump)	2
2	580052070	Relay (Starter)	1
3	580025569	Fuse (10 Amp)	1
4	580025567	Fuse (5 Amp)	1
5	580025570	Fuse (15 Amp)	2
6	520038807	Fuse (50 Amp)	1
7	~~580052073~~		
	580052233	Cover (Bottom-Fuse Box)	1

©2014 Yale Materials Handling Corporation

DISTRIBUTOR ASSEMBLY (FIGURE 6-13)
GM 4.3L GASOLINE AND LPG

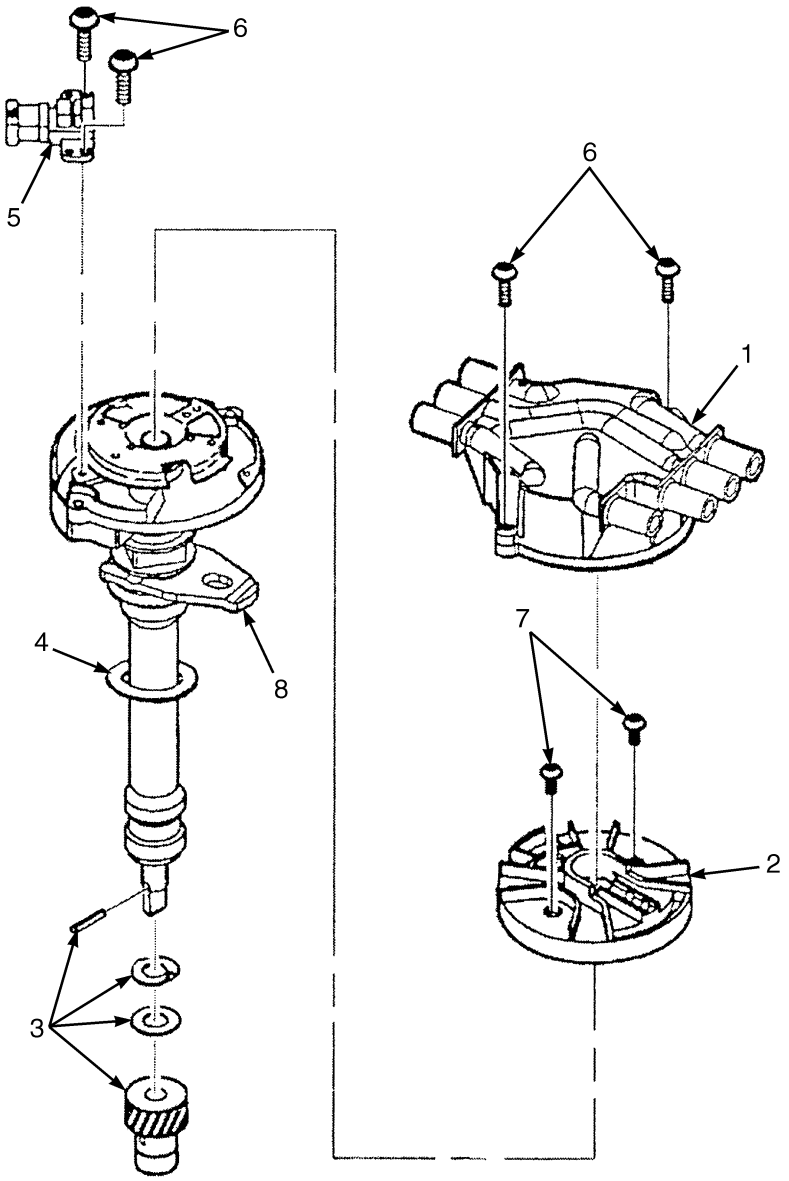

BP080184

ITEM	PART NO.	DESCRIPTION	QTY
	580048919	Distributor Assembly	1
1	580051808	Distributor Cap	1
2	580051809	Rotor	1
3	580048979	Kit-Gear	1
4	900006248	Gasket	1
5	580048980	Sensor (Cam)	1
6	580048981	Screw	4
7	580048982	Screw	2
8	~~582007470~~		
	580012858	Clamp	1

©2014 Yale Materials Handling Corporation

NOTES

©2014 Yale Materials Handling Corporation

BATTERY CABLES (FIGURE 6-14)

GM 4.3L GASOLINE AND LPG

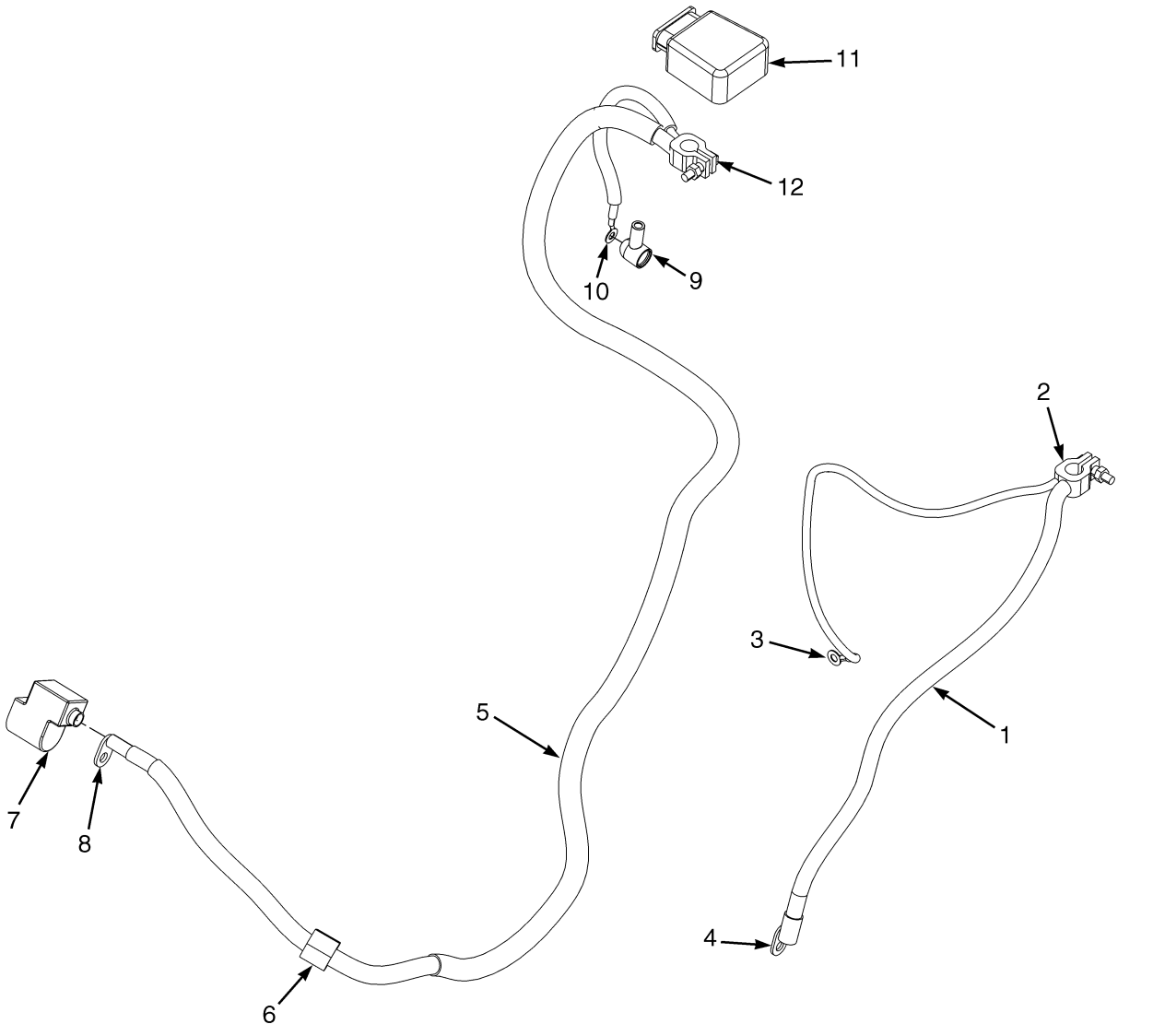

©2014 Yale Materials Handling Corporation

BATTERY CABLES

GM 4.3L GASOLINE AND LPG

ITEM	PART NO.	DESCRIPTION	QTY
1	580083532	Battery Cable (Negative)	1
2	580063618	Terminal	1
2	580067708	Terminal (Part not replaceable service with assembly)	1
3	580006553	E-Ring	1
4	580063617	Terminal	1
5	580083531	Battery Cable (Positive)	1
6	580002460	Clamp	1
7	580059293	Boot	1
8	. . . . .	Terminal	1
9	580052019	Boot	1
10	580006553	E-Ring	1
11	580040374	Boot	1
12	580063616	Terminal	1

©2014 Yale Materials Handling Corporation

STARTER (FIGURE 6-15)
GM 4.3L

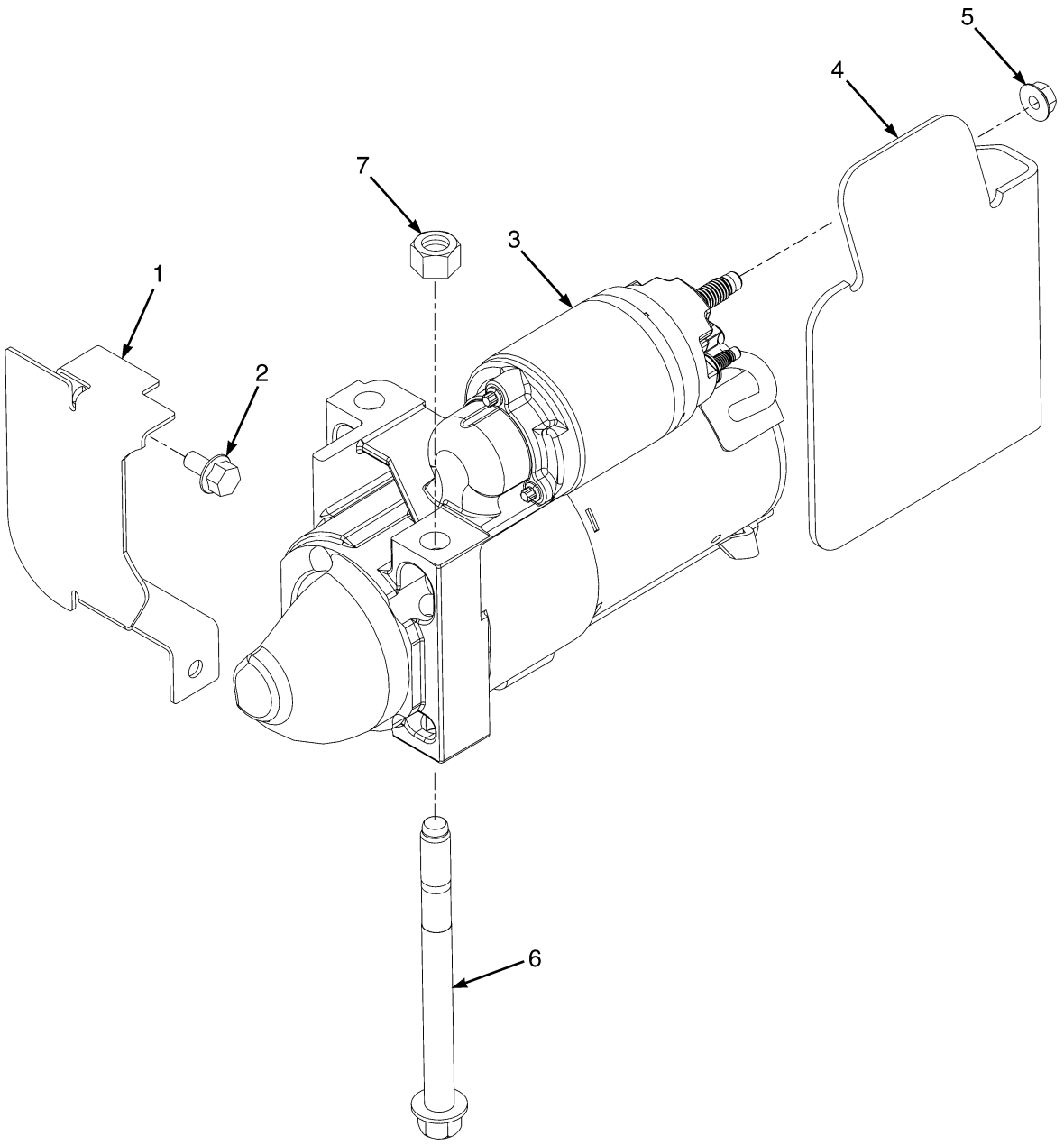

©2014 Yale Materials Handling Corporation

STARTER
GM 4.3L

ITEM	PART NO.	DESCRIPTION	QTY
1	580094685	Dust Shield	1
2	580039900	Capscrew	2
2	**a** 449001160	Capscrew (Alternate Part)	2
2	**b** 580083871	Capscrew	2
3	580074751	Starter	1
4	580074788	Bracket (Heat Shield)	1
5	580072127	Nut	2
6	580087935	Bolt	2
7	**b** 937100904	Nut	1

FOOTNOTES:

a GFI Option

b PSI Option

©2014 Yale Materials Handling Corporation

ENGINE ELECTRICAL SYSTEM (FIGURE 6-16)

CUMMINS QSB 3.3L DIESEL

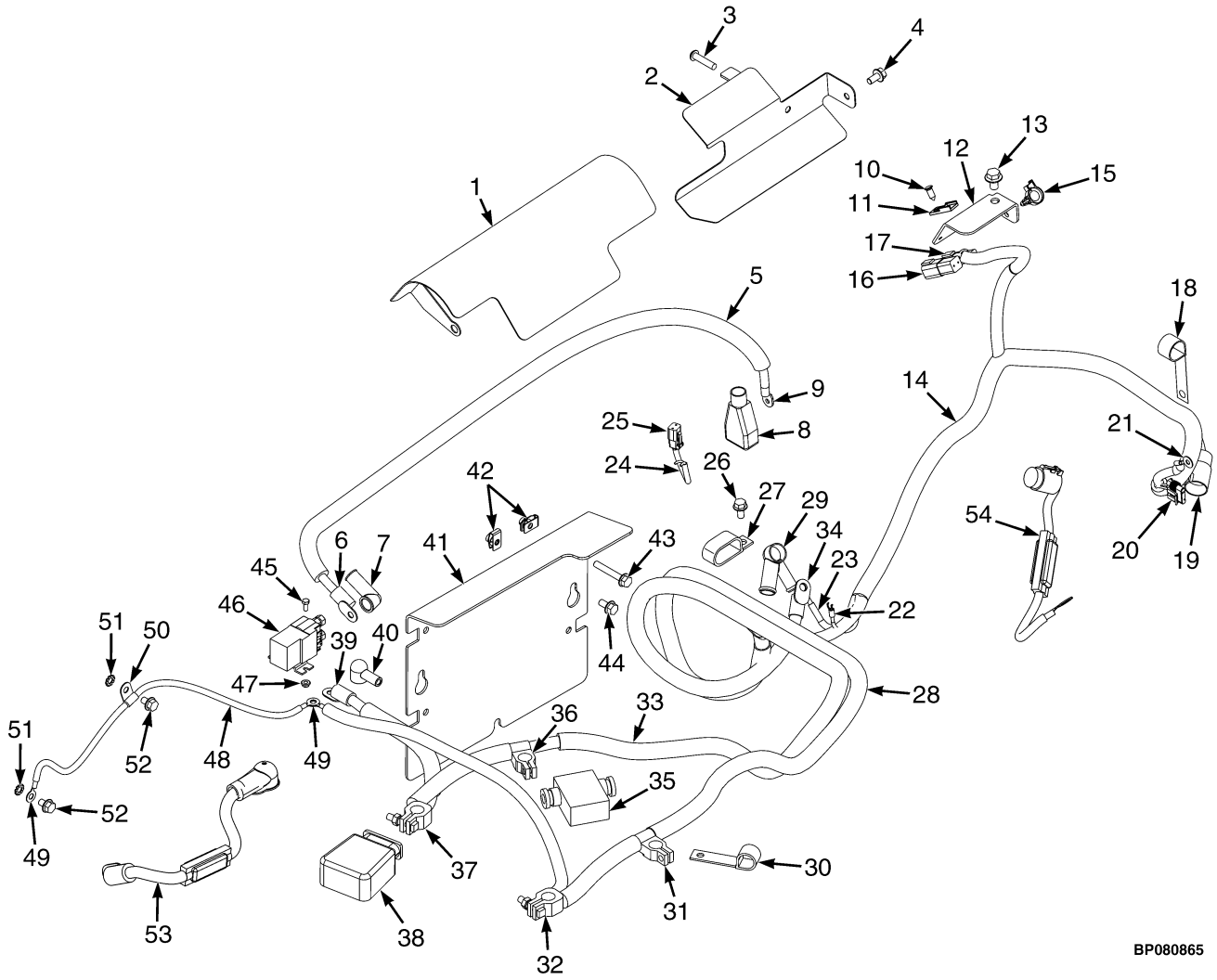

©2014 Yale Materials Handling Corporation

ENGINE ELECTRICAL SYSTEM
CUMMINS QSB 3.3L DIESEL

ITEM	PART NO.	DESCRIPTION	QTY
1	580095215	Shield (Starter)	1
1	**a** 580090917	Foam (Seal)	1
2	580090876	Bracket Wldmt (Fuel Pump Shield)	1
3	580025509	Capscrew	1
4	580047714	Capscrew	1
5	580084820	Battery Cable (Positive)	1
5	580035028	Battery Cable (Red)	AR
6	580078665	Terminal (Battery)	1
7	505976537	Boot	1
8	505972567	Boot	1
9	06205330D	E-Ring	1
10	580056613	Fastener	2
11	580026812	Clip	2
12	580087995	Bracket (Wire Harness)	1
13	580037179	Capscrew	1
14	580096446	Wire Harness (Alternator) (☞P20251 [Page 6-150])	1
15	580025559	Clip	1
16	580032038	Connector	1
17	580022893	Connector (2 Pin)	1
18	518793625	Clamp	1
19	580075791	Receptacle	1
20	580073617	Connector	1
21	580006553	E-Ring	1
22	580088535	E Ftg Spade Term #10	1
23	580006526	E-Ring	2
24	580087877	Wire Harness (2 Pin Extension)	1
25	580021087	Connector (2 Way)	1
26	580037179	Capscrew	2
27	900003207	Clamp	2
28	580084819	Battery Cable (Negative)	1
28	580073520	Battery Cable	AR
29	580072370	Boot	1
30	580015673	Clamp	2
31	580084550	Terminal	1
32	580063618	Terminal	1
32	580067708	Terminal (Part not replaceable service with assembly) (Alternate Part)	1
33	580096575	Battery Cable (Positive)	1
33	580073519	Battery Cable (Red)	AR
34	580063617	Terminal	1
35	580060862	Boot	1
36	580084551	Terminal	1
37	580063616	Terminal	1
38	580040374	Boot	1
39	580075790	Terminal	1
40	580052019	Boot	1
41	580084901	Bracket (Engine Control Module)	1
42	580026621	Nut (Foldover)	7
43	580030968	Capscrew	4
44	580047714	Capscrew	3
45	449001268	Capscrew	2

©2014 Yale Materials Handling Corporation

ENGINE ELECTRICAL SYSTEM
CUMMINS QSB 3.3L DIESEL

ITEM	PART NO.	DESCRIPTION	QTY
46	580075465	Contactor	1
47	580051432	Nut	2
48	580077308	Battery Cable (Negative)	1
48	580076450	Wire-Bulk	AR
49	580006553	E-Ring	2
50	580050293	E-Ring	1
51	940600908	Washer	2
52	580047714	Capscrew	2
53	580091326	Battery Cable (Negative), 200 Amp (To Contactor)	1
53	580078665	Terminal (Battery)	2
53	580049075	Boot	1
54	580091327	Battery Cable (100 Amp) (To Alternator)	1
54	505968563	E-Ring	1
54	580034357	Boot	1
54	580078666	Connector Body	1
54	580078667	Socket	1
54	582021912	Seal	1

FOOTNOTES:

a Not Illustrated

©2014 Yale Materials Handling Corporation

NOTES

©2014 Yale Materials Handling Corporation

ENGINE ELECTRICAL SYSTEM (FIGURE 6-17)

CUMMINS QSB 3.3L DIESEL — UL TYPE DS

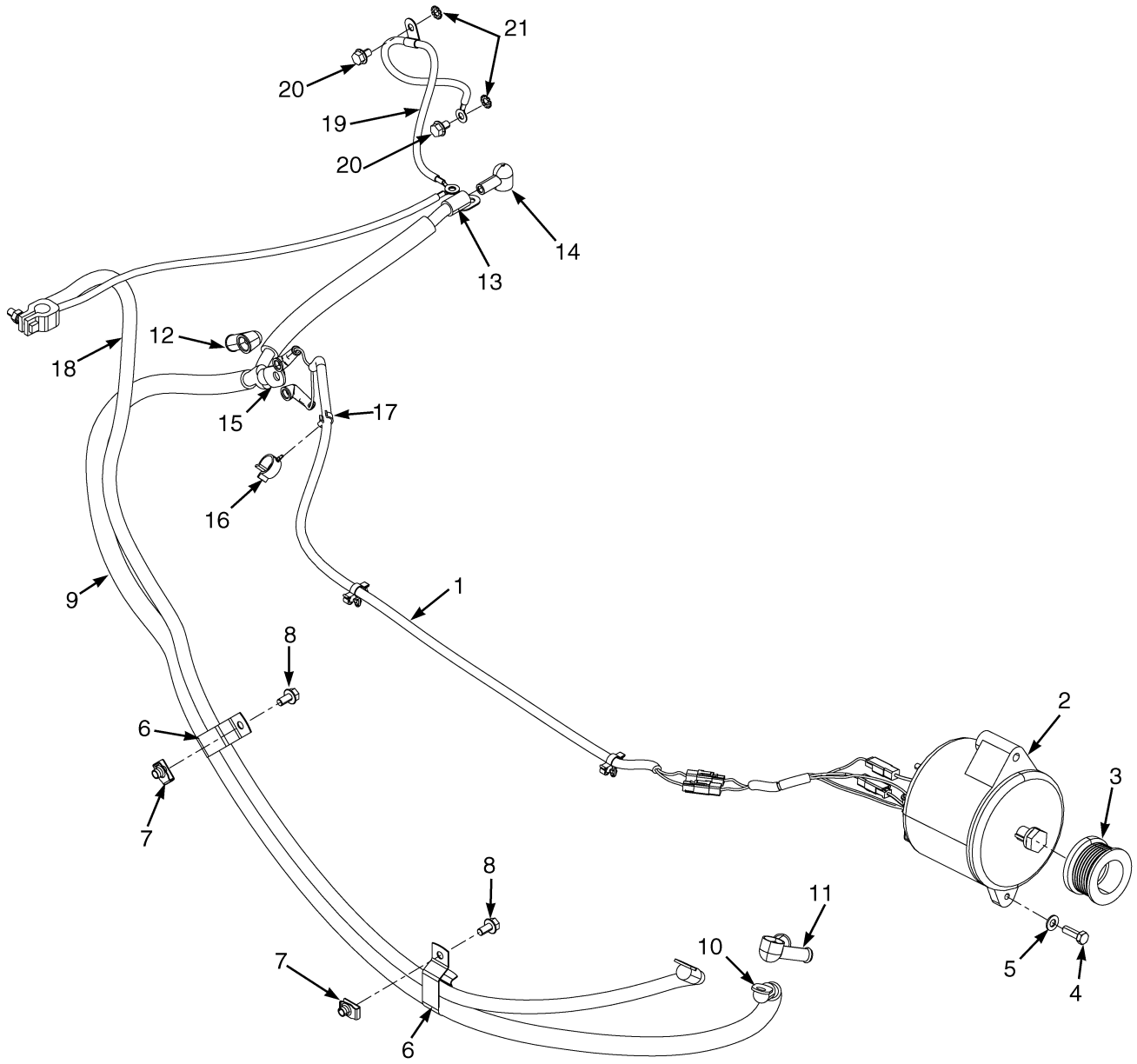

©2014 Yale Materials Handling Corporation

ENGINE ELECTRICAL SYSTEM

CUMMINS QSB 3.3L DIESEL – UL TYPE DS

ITEM	PART NO.	DESCRIPTION	QTY
1	580088392	Wire Harness (Sealed Alternator) (☞P20252 [Page 6-152])	1
2	900017264	Alternator (Sealed) (☞P20229 [Page 6-38])	1
3	580075789	Pulley	1
4	062143700	Capscrew	1
5	016103700	Washer	1
6	580045558	Clip	2
7	580026621	Nut	2
8	580047714	Capscrew	2
9	580084821	Battery Cable (Positive)	1
9	580073519	Battery Cable (Red)	AR
9	580076451	Battery Cable (Red)	AR
10	580063617	Terminal	1
11	580083152	Boot	1
12	505976537	Boot	1
13	580075790	Terminal	1
14	580052019	Boot	1
15	580074877	Terminal	1
16	580042567	Clamp (Swivel)	1
17	580049559	Clamp (Swivel)	1
18	580084819	Battery Cable (Negative)	1
18	580067708	Terminal (Part not replaceable service with assembly)	1
19	580077308	Battery Cable	1
19	580006553	E-Ring	2
19	580050293	E-Ring	1
20	580037180	Capscrew	2
21	940600908	Washer	2

©2014 Yale Materials Handling Corporation

ALTERNATOR AND MOUNTING (FIGURE 6-18)

CUMMINS QSB 3.3L DIESEL

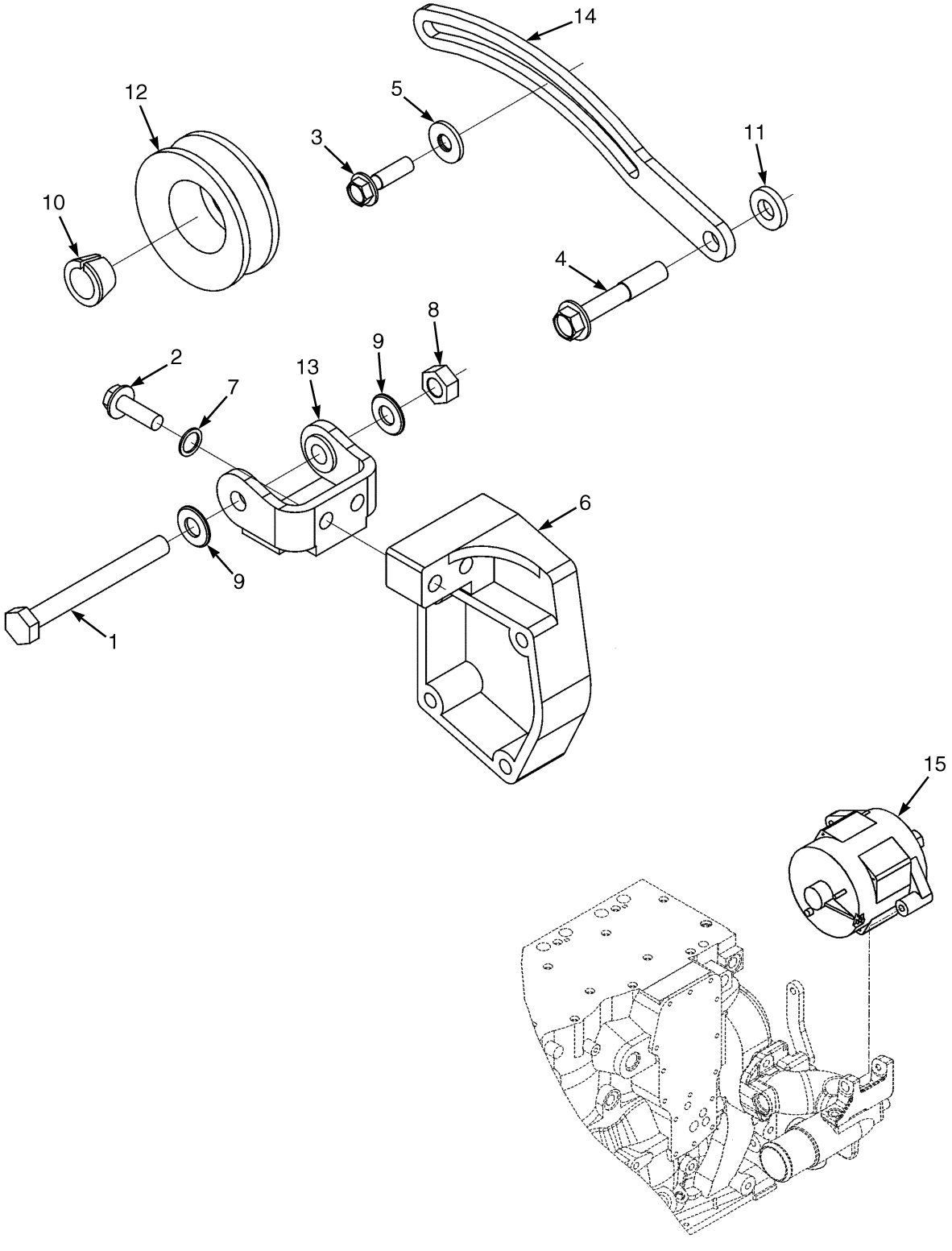

BP090401

©2014 Yale Materials Handling Corporation

ALTERNATOR AND MOUNTING

CUMMINS QSB 3.3L DIESEL

ITEM	PART NO.	DESCRIPTION	QTY
	580087914	Engine Assy-Diesel	1
	580093608	Engine Assy-Diesel (99 Horsepower. Only available with 3x2 Transmission)	1
1	~~580090975~~		
	582010336	Capscrew	1
2	~~580091110~~		
	580061680	Capscrew (Flange)	2
3	~~580090977~~		
	582010337	Capscrew	1
4	580090978	Capscrew	1
5	580090979	Spacer	1
6	580090985	Support	1
7	. . . . .	Washer	2
8	580090982	Nut	1
9	580090983	Washer	2
10	580073821	Retainer	1
11	580090980	Spacer	1
12	580090984	Pulley	1
13	580090986	Bracket	1
13	. . . . .	Bushing	1
14	580090981	Plate (Pivot)	1
15	580073806	Alternator (Without Pulley)	1
15	582002415	Alternator (Without Pulley)	1

©2014 Yale Materials Handling Corporation

SEALED ALTERNATOR AND MOUNTING (FIGURE 6-19)
CUMMINS QSB 3.3L DIESEL

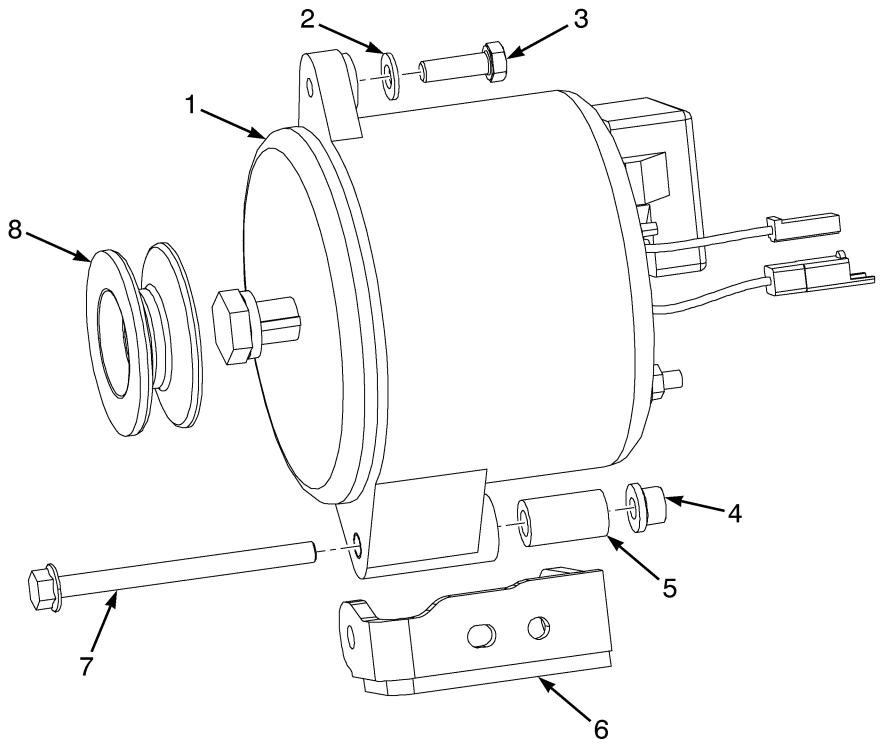

BP080748

ITEM	PART NO.	DESCRIPTION	QTY
	580087914	Engine Assy-Diesel	1
	580093608	Engine Assy-Diesel (99 Horsepower. Only available with 3x2 Transmission)	1
1	900017264	Alternator (Sealed)	1
2	016103700	Washer	1
3	062143700	Capscrew	1
4	580042963	Locknut	1
5	580088013	Spacer	1
6	580087977	Bracket Wldmt	1
7	580068208	Bolt	1
	504232260	Thread Sealant	AR
	580087948	Pulley (Alternator)	1
9	580040737	Spacer	1
	a 580040737	Spacer	1

FOOTNOTES:

a Not Illustrated

©2014 Yale Materials Handling Corporation

NOTES

©2014 Yale Materials Handling Corporation

BATTERY CABLES (FIGURE 6-20)

CUMMINS QSB 3.3L DIESEL

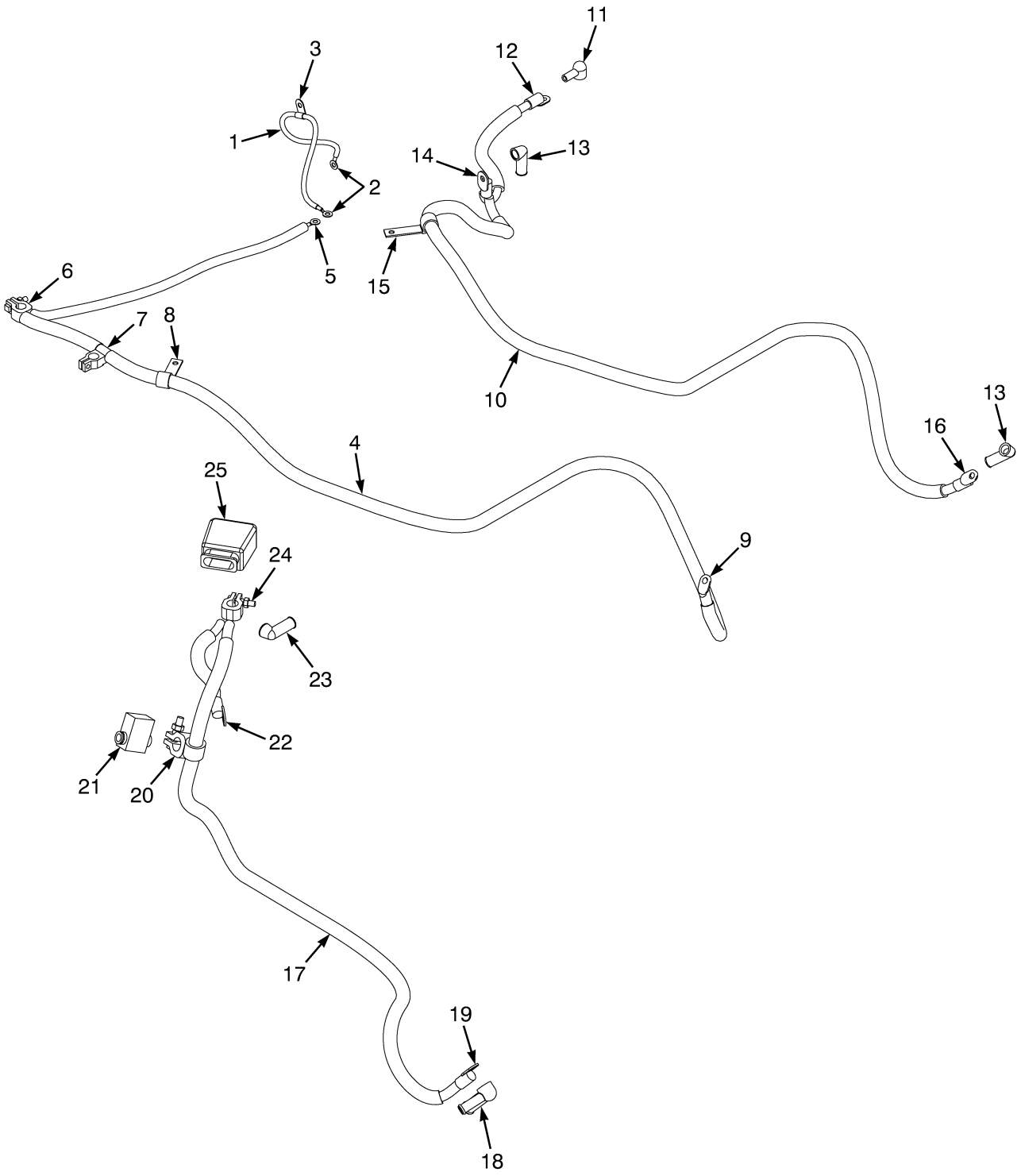

BP080856

©2014 Yale Materials Handling Corporation

BATTERY CABLES
CUMMINS QSB 3.3L DIESEL

ITEM	PART NO.	DESCRIPTION	QTY
1	580077308	Battery Cable (Negative)	1
2	580006553	E-Ring	2
3	580050293	E-Ring	1
4	580084819	Battery Cable (Negative)	1
5	580006553	E-Ring	1
6	580063618	Terminal	1
6	580067708	Terminal (Part not replaceable service with assembly)	1
7	580084550	Terminal	1
8	580015673	Clamp	1
9	. . . . .	Terminal	1
10	580084821	Battery Cable (Positive) (UL Type DS)	1
10	580096576	Battery Cable (Positive) (UL Type DS) (Alternate Part)	1
11	580052019	Boot	1
12	580075790	Terminal	1
13	505976537	Boot	2
14	580074877	Terminal	1
15	580015673	Clamp	1
16	580063617	Terminal	1
17	580096575	Battery Cable (Positive) (Positive) (Standard Diesel)	1
18	505976537	Boot	1
19	580063617	Terminal	1
20	580084551	Terminal	1
21	580060862	Boot	1
22	580075790	Terminal	1
23	580052019	Boot	1
24	580063616	Terminal	1
25	580040374	Boot	1

©2014 Yale Materials Handling Corporation

STARTER MOTOR (FIGURE 6-21)
CUMMINS QSB 3.3L DIESEL

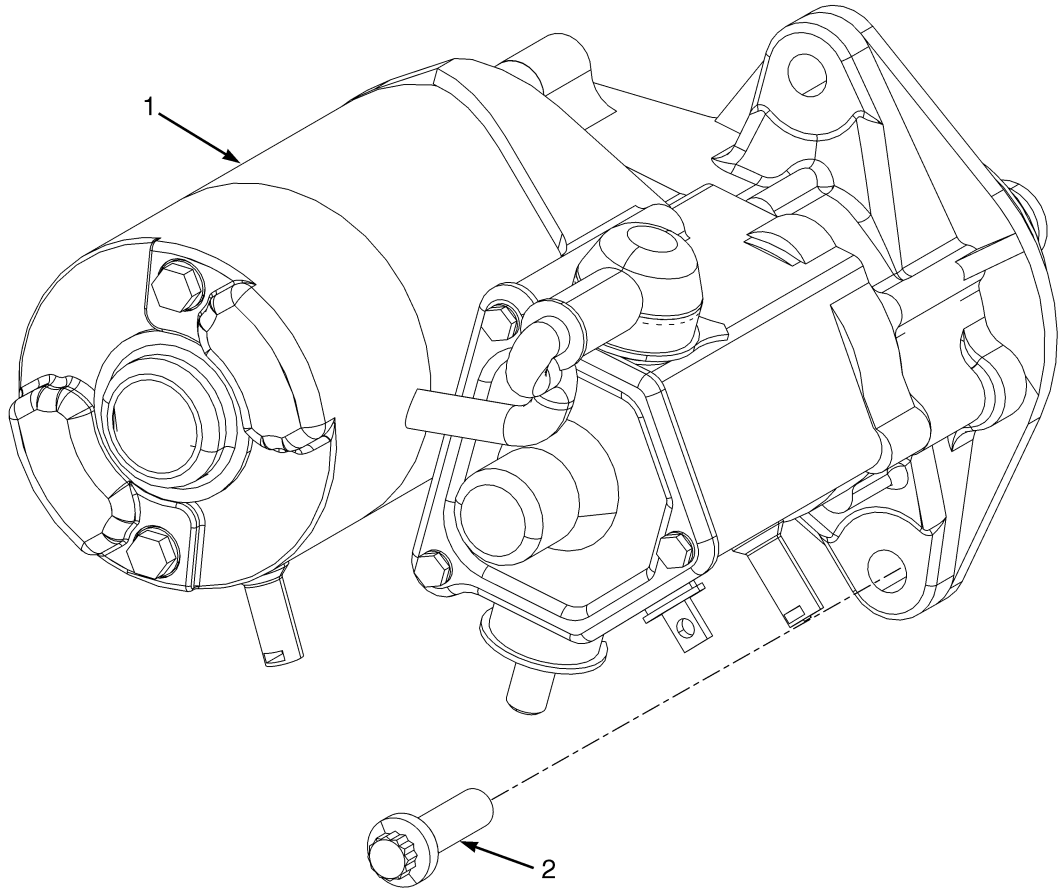

BP090305

ITEM	PART NO.	DESCRIPTION	QTY
	580087914	Engine Assy-Diesel	1
	580093608	Engine Assy-Diesel (99 Horsepower. Only available with 3x2 Transmission)	1
1	580091290	Motor (Starter)	1
2	580091289	Capscrew	3
2	580097046	Capscrew	3
	a 580095215	Shield	1

FOOTNOTES:

a Not Illustrated

©2014 Yale Materials Handling Corporation

NOTES

©2014 Yale Materials Handling Corporation

ELECTRONIC CONTROL MODULE AND SENSORS (FIGURE 6-22)

CUMMINS QSB 3.3L DIESEL

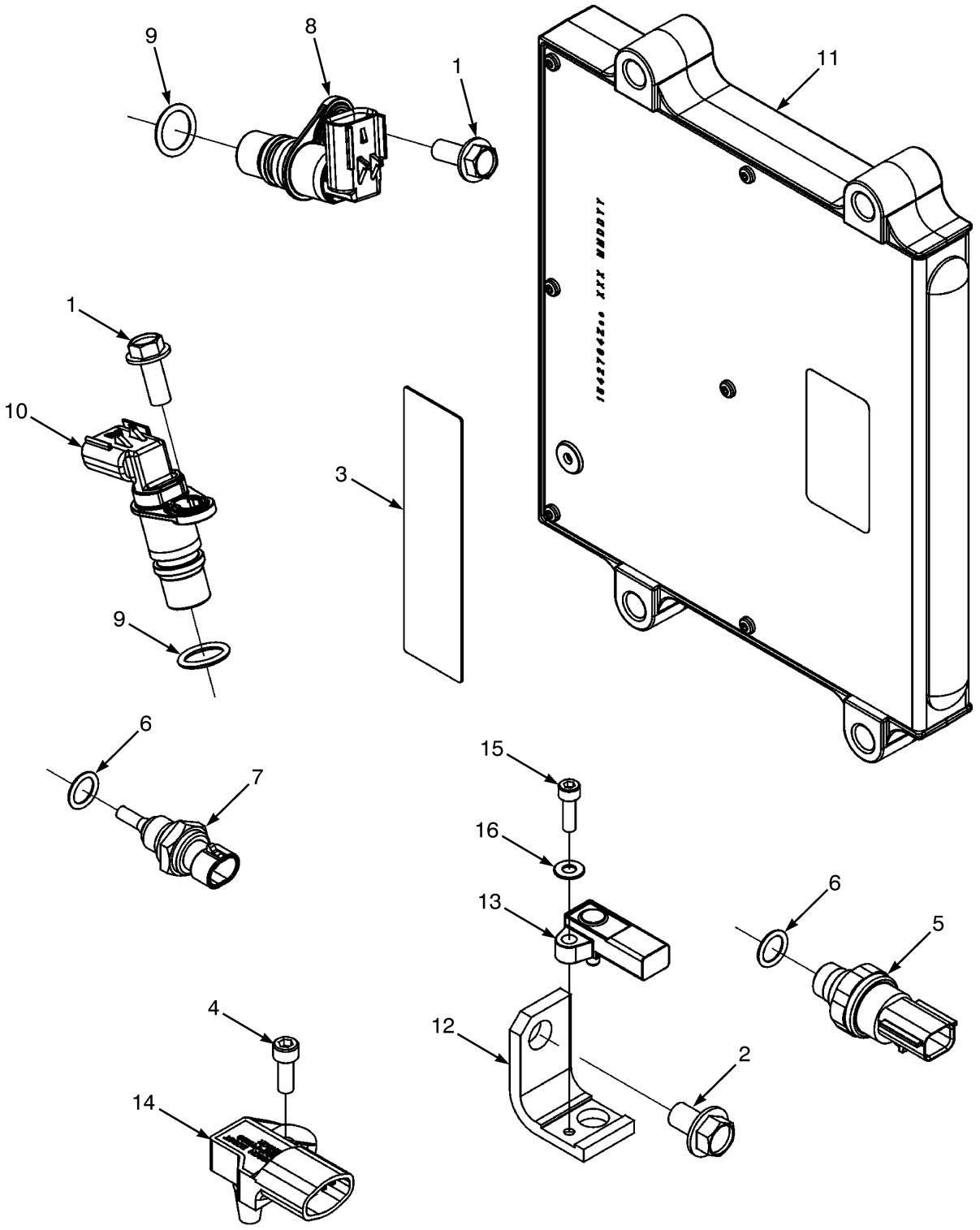

©2014 Yale Materials Handling Corporation

ELECTRONIC CONTROL MODULE AND SENSORS

CUMMINS QSB 3.3L DIESEL

ITEM	PART NO.	DESCRIPTION	QTY
	580087914	Engine Assy-Diesel	1
	580093608	Engine Assy-Diesel (99 Horsepower. Only available with 3x2 Transmission)	1
1	580091125	Capscrew	2
2	580091126	Capscrew	1
3	580063065	Data Plate	1
4	580091127	Capscrew	1
5	580058690	Switch, Oil Pressure	1
6	580086769	O-Ring	2
7	~~580082622~~		
	580091129	Sensor Assembly (Temperature)	1
8	580092021	Sensor (Crankshaft Speed and Position)	1
9	580094645	O-Ring	2
10	580092022	Cam Position Sensor	1
11	580091117	Electronic Control Module	1
12	580091124	Support	1
13	580091132	Sensor (Ambient Air Pressure)	1
14	580091133	Sensor (Temperature) (Intake ManifoldTemperature)	1
15	580091134	Capscrew	1
16	580091135	Washer	1
	a 580090736	Label (ECM Code) (Standard Transmission)	1

FOOTNOTES:

a Not Illustrated

©2014 Yale Materials Handling Corporation

ELECTRONIC CONTROL LEVERS (FIGURE 6-23)

MINI-LEVER MODULE (FOUR FUNCTION) (→ S/N D878V01751H)

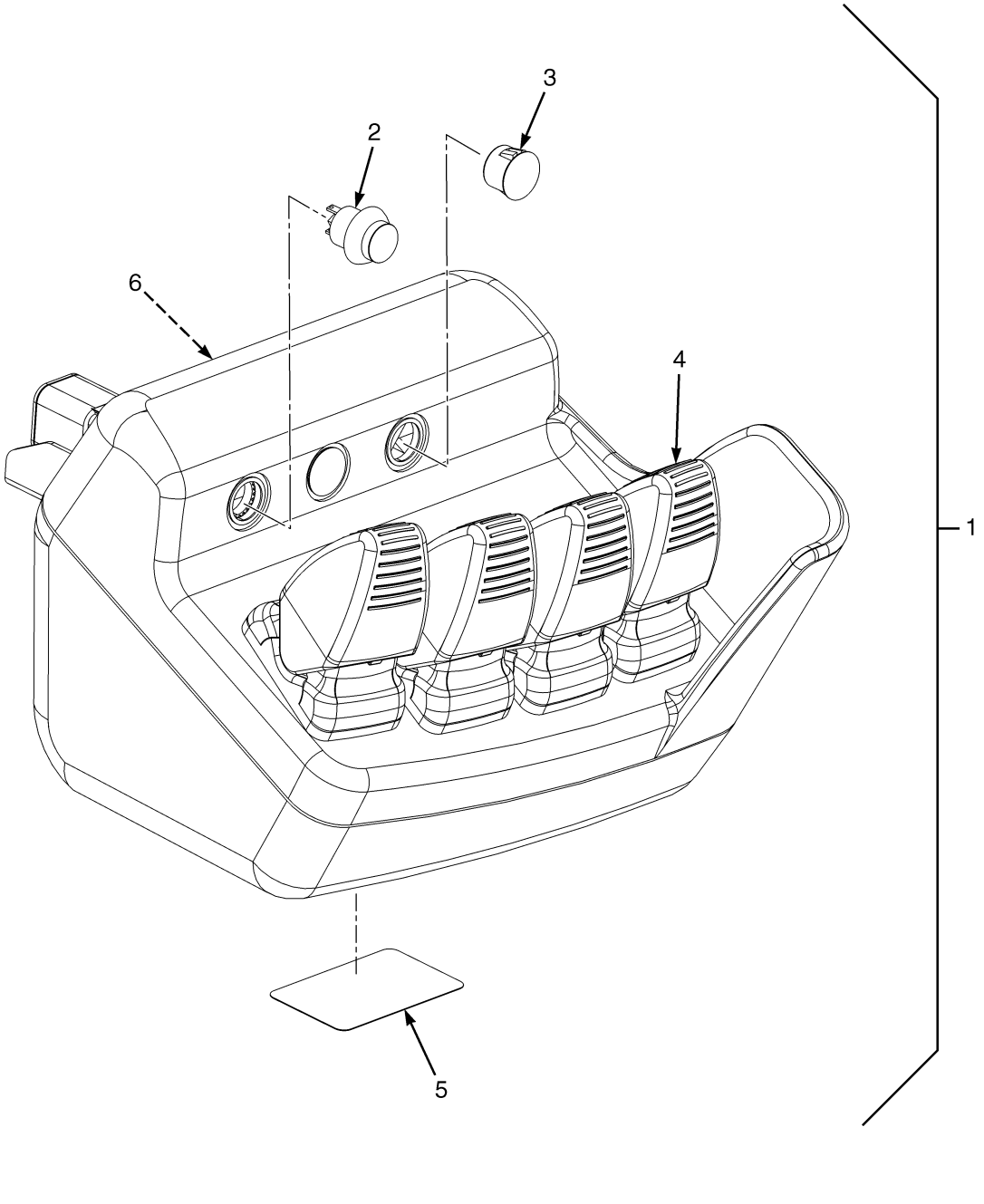

©2014 Yale Materials Handling Corporation

ELECTRONIC CONTROL LEVERS

MINI-LEVER MODULE (FOUR FUNCTION) (→ S/N D878V01751H)

ITEM	PART NO.	DESCRIPTION	QTY
1	580089967	Mini-Lever Module (8544614)	1
	580090361	Kit-Mini-Lever (Non-Clamping)	4
	b 580061852	Kit-Plug (Interlock Switch Plug)	3
1	580089971	Mini-Lever Module (8544618) (With Clamping)	1
	580090361	Kit-Mini-Lever (Non-Clamping)	3
	580090362	Kit-Mini-Lever (Clamping)	1
	c 580061850	Kit-Switch (Interlock Switch)	1
	b 580061852	Kit-Plug (Interlock Switch Plug)	1
1	580089976	Mini-Lever Module (8544620) (With Return to Set Tilt)	1
	580090361	Kit-Mini-Lever (Non-Clamping)	3
	a 580090362	Kit-Mini-Lever (Clamping)	1
	c 580061850	Kit-Switch (Interlock Switch)	1
	b 580061852	Kit-Plug (Interlock Switch Plug)	2
1	580089978	Mini-Lever Module (8544622) (Clamping and Return to Set Tilt)	1
	580090361	Kit-Mini-Lever (Non-Clamping)	2
	c 580061850	Kit-Switch (Interlock Switch)	2
	b 580061852	Kit-Plug (Interlock Switch Plug)	1
1	580090362	Kit-Mini-Lever (Clamping)	2
2	. . . . .	Momentary Switch	AR
3	. . . . .	Plug (Momentary Switch)	AR
4	. . . . .	Mini-Lever	AR
4	580081812	Handle (Mini-Lever)	1
5	. . . . .	Label	1
6	. . . . .	Control Labels	1

FOOTNOTES:

a Kit Includes: 1 Interlock Mini-Lever (must be used in combination with a Momentary Interlock Switch), 1 Gasket, 4 Screws (parts are NSS)

b Kit Includes: 1 Momentary Switch Hole Plug, 1 Gasket (parts are NSS)

c Kit Includes: 1 Momentary Switch, 1 Lockwasher, 1 Gasket, 1 Nut (parts are NSS)

©2014 Yale Materials Handling Corporation

ELECTRONIC CONTROL LEVERS (FIGURE 6-24)

MINI-LEVER MODULE (THREE FUNCTION) (→ S/N D878V01751H)

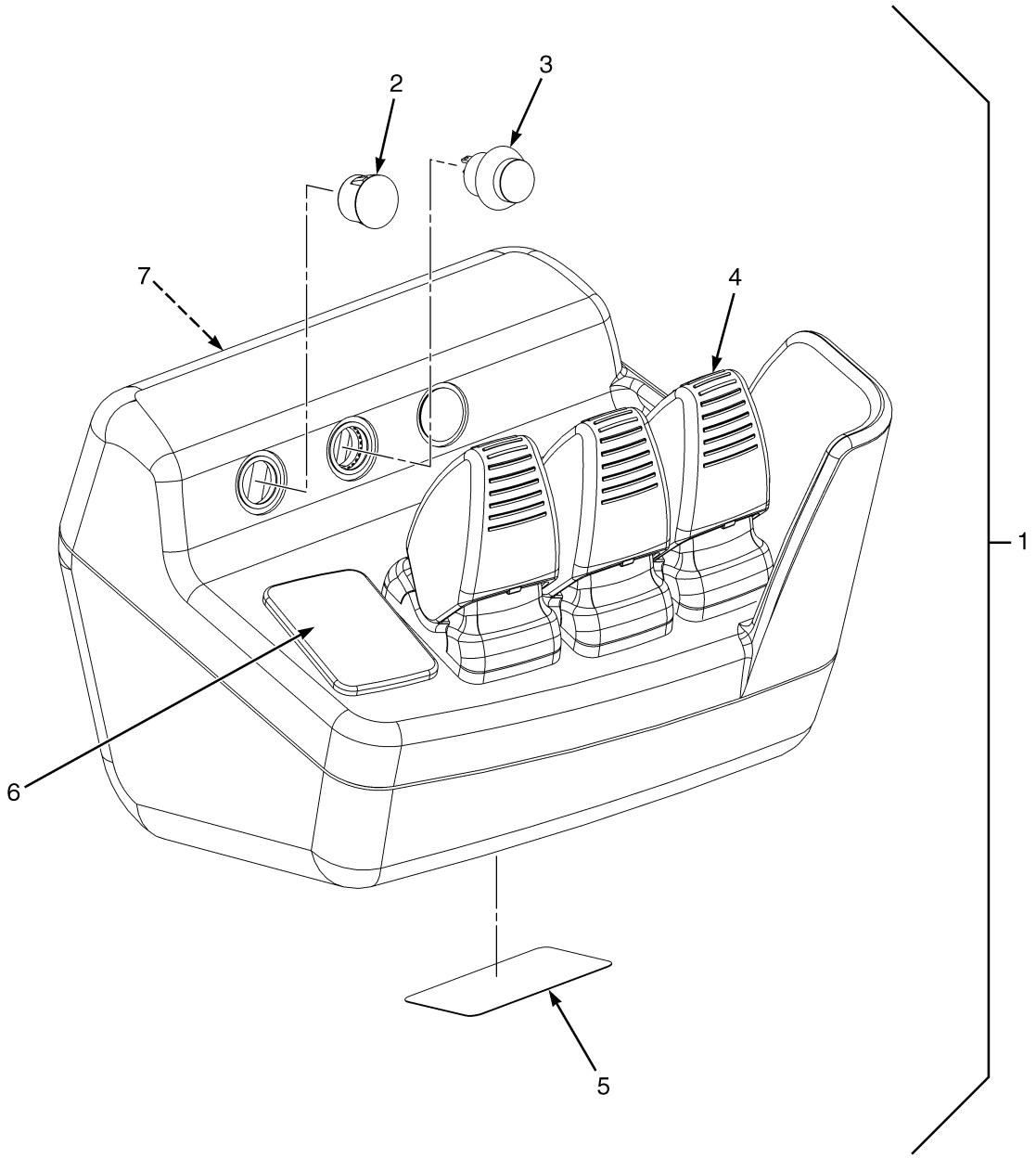

BP150259

©2014 Yale Materials Handling Corporation

ELECTRONIC CONTROL LEVERS

MINI-LEVER MODULE (THREE FUNCTION) (→ S/N D878V01751H)

ITEM	PART NO.	DESCRIPTION	QTY
1	580089966	Mini-Lever (8544613)	1
	580090361	Kit-Mini-Lever (Non-Clamping)	3
	b 580062910	Plug	1
	c 580061852	Kit-Plug (Interlock Switch Plug)	3
1	580089970	Mini-Lever (8544617) (With Clamping)	1
	a 580061852	Kit-Plug (Interlock Switch Plug)	1
	d 580061850	Kit-Switch (Interlock Switch)	1
	b 580062910	Plug	1
	c 580090361	Kit-Mini-Lever (Non-Clamping)	2
	580090362	Kit-Mini-Lever (Clamping)	1
1	580089972	Mini-Lever (8544619) (With Return To Set Tilt)	1
	a 580061852	Kit-Plug (Interlock Switch Plug)	2
	d 580061850	Kit-Switch (Interlock Switch)	1
	b 580062910	Plug	1
	c 580090361	Kit-Mini-Lever (Non-Clamping)	2
	580090362	Kit-Mini-Lever (Clamping)	1
1	580089977	Mini-Lever (8544621) (With Clamping and Return to set Tilt)	1
	d 580061850	Kit-Switch (Interlock Switch)	2
	b 580062910	Plug	2
	c 580061852	Kit-Plug (Interlock Switch Plug)	1
	580090361	Kit-Mini-Lever (Non-Clamping)	1
	580090362	Kit-Mini-Lever (Clamping)	2
2	. . . . .	Plug (Momentary Switch)	AR
3	. . . . .	Momentary Switch	AR
4	. . . . .	Mini-Lever	AR
4	580081812	Handle (Mini-Lever)	1
5	. . . . .	Label (Shows Production Part Number)	1
6	580062910	Plug (Mini-Lever)	1
7	. . . . .	Control Labels	1

FOOTNOTES:

a Kit Includes: 1 Interlock Rocker (must be used in combination with a Momentary Interlock Switch), 1 Gasket, 4 Screws (parts are NSS)

b Kit Includes: 1 Mini-Lever Plug, 1 Gasket (parts are NSS)

c Kit Includes: 1 Momentary Interlock Switch Plug, 1 Gasket (parts are NSS)

d Kit Includes: 1 Momentary Switch, 1 Lockwasher, 1 Gasket, 1 Nut (parts are NSS)

©2014 Yale Materials Handling Corporation

MINI-LEVER CONTROLS (FIGURE 6-25)

WITH ARMREST — THREE FUNCTION

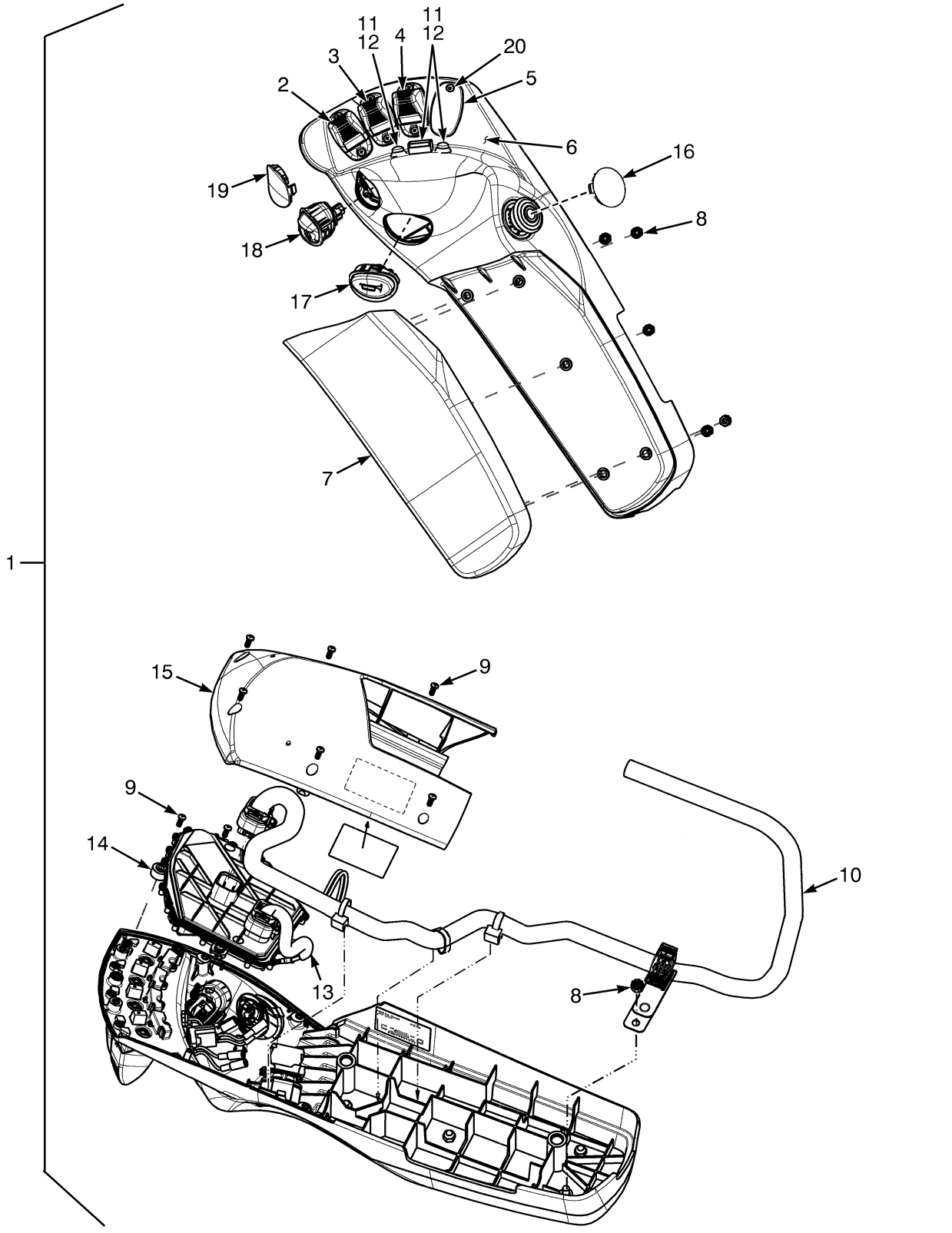

©2014 Yale Materials Handling Corporation

MINI-LEVER CONTROLS
WITH ARMREST – THREE FUNCTION

KEY:
A: Without Directional Control Switch
B: With Directional Control Switch

ITEM	PART NO.	DESCRIPTION	QTY A	QTY B
1	582001049	Mini-Lever Assembly	1	..
1	**c** 582001128	Mini-Lever Assembly	1	..
1	**a** 582001053	Mini-Lever Assembly	1	..
1	**b** 582001055	Mini-Lever Assembly	1	..
1	582001057	Mini-Lever Assembly	..	1
1	**c** 582001060	Mini-Lever Assembly	..	1
1	**a** 582001062	Mini-Lever Assembly	..	1
1	**b** 582001064	Mini-Lever Assembly	..	1
2	. . . . .	Lever Position 1	1	1
2	580096227	Lever (Single Function)	1	1
3	. . . . .	Lever Position 2	1	1
3	580096227	Lever (Single Function)	1	1
3	**a** 580096229	Lever (With Override)	1	1
4	. . . . .	Lever Position 3	1	1
4	580096227	Lever (Single Function)	1	1
4	**c** 580096228	Lever (Clamping)	1	1
5	580093297	Plug	1	1
6	580097446	Armrest (Without Push Buttons)	1	1
6	**ac** 582003674	Armrest (With Push Buttons)	1	1
7	580097388	Cushion (Armrest)	1	1
8	580097432	Nut	5	5
9	580093745	Capscrew	6	6
10	582005939	Wire Harness	1	1
11	**c** 580095849	Push Button (Position 3)	1	1
11	**b** 580095849	Push Button (Position 2 and 3)	2	2
11	**a** 580095849	Push Button (Position 2)	1	1
12	**c** 580096147	Cover (Push Button)	1	1
12	**b** 580096147	Cover (Push Button)	1	1
13	580095850	Wire Harness (Forward/Reverse Switch in the MLM) (Push Buttons)	1	1
14	~~580097449~~ 582005940	Printed Circuit Board	1	1
15	580097447	Cover (Bottom Armrest)	1	1
16	582001086	Plug	1	1
17	580097389	Horn Button	1	1
18	580096412	Switch (Directional Control)	..	1
19	580096411	Plug (Directional Control Switch)	1	..
20	580093745	Capscrew	8	8

FOOTNOTES:

a Return to Set Tilt
b Three Function Clamp with Return to Set Tilt
c With Clamping

©2014 Yale Materials Handling Corporation

MINI-LEVER CONTROLS (FIGURE 6-26)
WITH ARMREST — FOUR FUNCTION

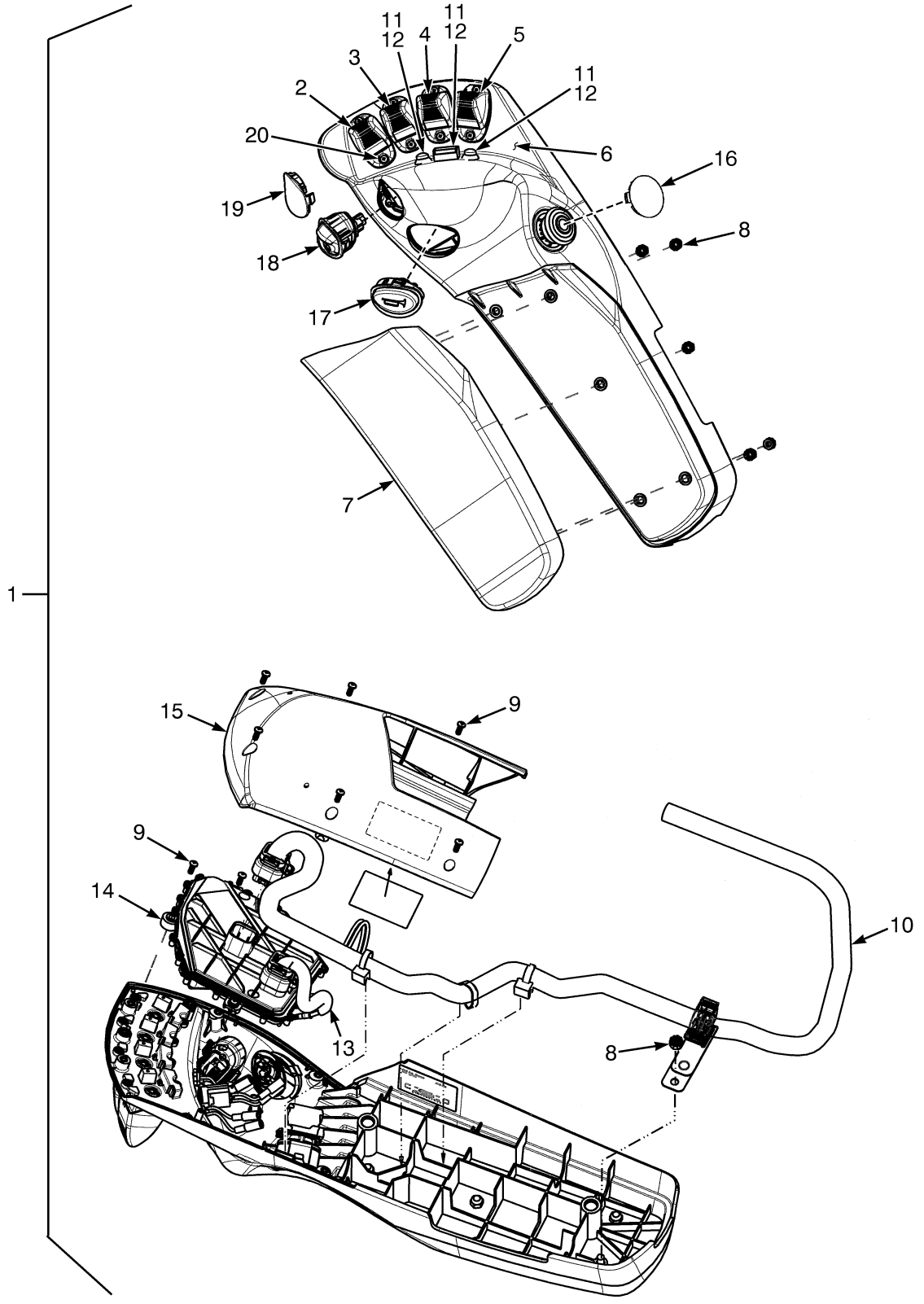

©2014 Yale Materials Handling Corporation

MINI-LEVER CONTROLS
WITH ARMREST – FOUR FUNCTION

KEY:
A: Without Directional Control Switch
B: With Directional Control Switch

ITEM	PART NO.	DESCRIPTION	QTY A	QTY B
1	582001050	Mini-Lever Assembly	1	..
1	**a** 582001052	Mini-Lever Assembly	1	..
1	**c** 582001054	Mini-Lever Assembly	1	..
1	**b** 582001056	Mini-Lever Assembly	1	..
1	582001058	Mini-Lever Assembly	..	1
1	**a** 582001061	Mini-Lever Assembly	..	1
1	**c** 582001063	Mini-Lever Assembly	..	1
1	**b** 582001065	Mini-Lever Assembly	..	1
2	. . . . .	Lever Position 1	1	1
2	580096227	Lever (Single Function)	1	1
3	. . . . .	Lever Position 2	1	1
3	580096227	Lever (Single Function)	1	1
3	**b** 580096229	Lever (With Override)	1	1
4	. . . . .	Lever Position 3	1	1
4	580096227	Lever (Single Function)	1	1
5	. . . . .	Lever Position 4	1	1
5	580096227	Lever (Single Function)	1	1
5	**ab** 580096228	Lever (Clamping)	1	1
6	580097446	Armrest (Without Push Buttons)	1	1
6	**abc** 582003674	Armrest (With Push Buttons)	1	1
7	580097388	Cushion (Armrest)	1	1
8	580097432	Nut	5	5
9	580093745	Capscrew	6	6
10	582005939	Wire Harness	1	1
11	**a** 580095849	Push Button	1	1
11	**b** 580095849	Push Button	2	2
12	**a** 580096147	Cover (Push Button)	2	2
12	**b** 580096147	Cover (Push Button)	1	1
13	580095850	Wire Harness (Forward/Reverse Switch in the MLM) (Push Buttons)	1	1
14	~~580097449~~ 582005940	Printed Circuit Board	1	1
15	580097447	Cover (Bottom Armrest)	1	1
16	582001086	Plug	1	1
17	580097389	Horn Button	1	1
18	580096412	Switch (Directional Control)	..	1
19	580096411	Plug (Directional Control Switch)	1	..
20	580093745	Capscrew	8	8

FOOTNOTES:

a With Clamping
b With Clamping and Return to Set Tilt
c With Return to Set Tilt

©2014 Yale Materials Handling Corporation

LIGHTS (FIGURE 6-27)

BRAKE, TAIL, BACKUP, SIDE, TURN SIGNALS, WORK, STROBE — WITH CAB

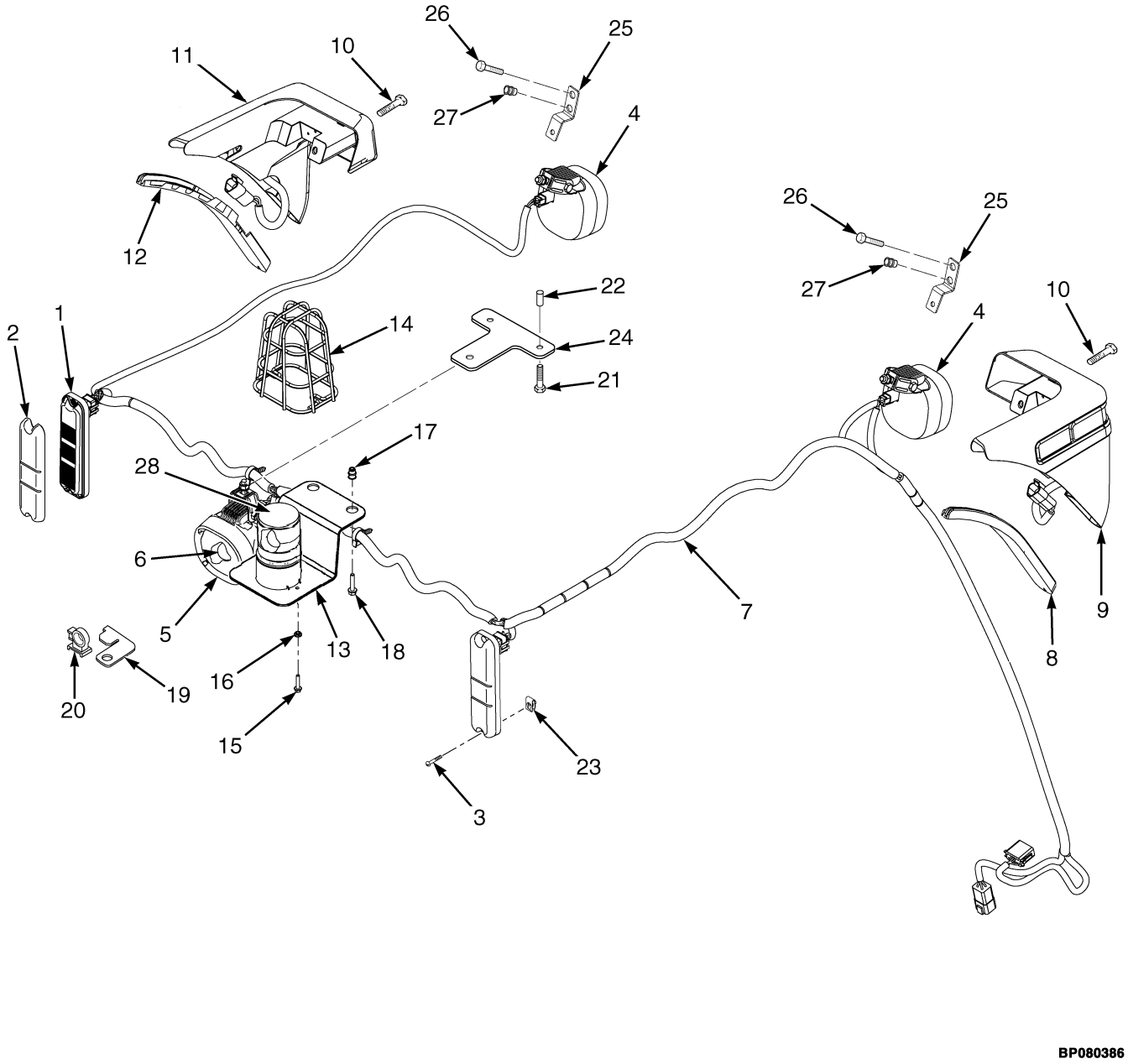

BP080386

©2014 Yale Materials Handling Corporation

LIGHTS

BRAKE, TAIL, BACKUP, SIDE, TURN SIGNALS, WORK, STROBE – WITH CAB

ITEM	PART NO.	DESCRIPTION	QTY
1	580037207	Brake/Backup Light (Stop,Turn,Tail, And Back-Up)	2
1	580092936	Tail Light Base (RH) (Not Shown)	1
1	580092937	Tail Light Base (LH) (Not Shown)	1
2	580037209	Reflector (Tail)	2
3	580051168	Screw	4
4	580082533	Work Light (RH Front) (Halogen)	1
4	580092290	Head/Work Light (RH Front) (LED)	1
4	580082534	Work Light (LH Front) (Halogen)	1
4	580092291	Head/Work Light (LH Front) (LED)	1
5	580082532	Work Light (Rear) (Halogen)	1
5	580092289	Head/Work Light (Rear) (LED) (LED)	1
5	580084235	Bracket (Without Cab)	1
5	580092838	Bracket (Use with LED Light)	1
6	580082531	Bulb (Halogen)	1
7	580077088	Wire Harness (Cab)	1
8	580065477	Trim (RH)	1
9	580052128	Turn Signal Light (RH Front)	1
10	580065022	Capscrew	4
11	580052129	Turn Signal Light (LH Front)	1
12	580065478	Trim (LH)	1
13	580051159	Bracket Wldmt	1
14	504232297	Guard (Strobe Light)	1
15	580058314	Capscrew	2
16	580058188	Nut	2
17	580041704	Insert	2
18	580058212	Capscrew	2
19	580093868	Bracket	1
20	580039251	Clip	1
21	580058212	Capscrew	2
22	580041704	Insert	2
23	580040850	Nut (Clip)	4
24	580048802	Bracket	1
24	580093868	Bracket (Alternate Part)	1
25	580084240	Bracket (With Cab)	2
26	580056815	Capscrew	4
27	580044861	Insert	4
28	580079615	Strobe Light Assembly	1

©2014 Yale Materials Handling Corporation

LIGHTS (FIGURE 6-28)

BRAKE, TAIL, BACKUP, SIDE, TURN SIGNALS, WORK, STROBE — WITH OVERHEAD GUARD

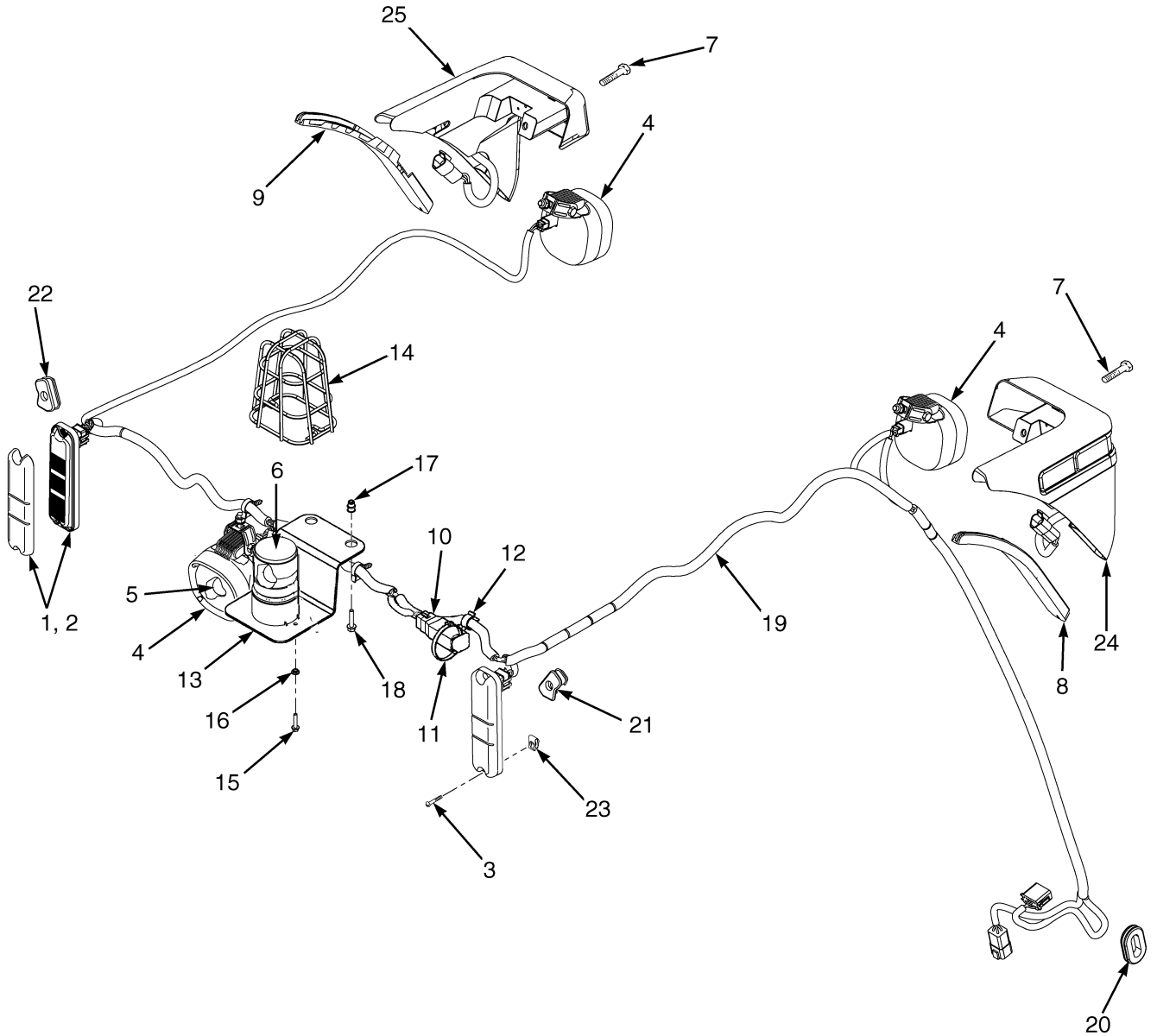

©2014 Yale Materials Handling Corporation

LIGHTS

BRAKE, TAIL, BACKUP, SIDE, TURN SIGNALS, WORK, STROBE – WITH OVERHEAD GUARD

ITEM	PART NO.	DESCRIPTION	QTY
1	580037207	Brake/Backup Light (Stop,Turn,Tail, And Back-Up)	2
1	580092936	Tail Light Base (RH)	1
1	580092937	Tail Light Base (LH)	1
2	580037209	Reflector (Tail)	2
3	580051168	Screw	4
4	580082532	Work Light (Rear) (Halogen)	1
4	580092289	Head/Work Light (Rear) (LED) (LED)	1
4	580082535	Work Light (RH Front) (Halogen)	1
4	580092290	Head/Work Light (RH Front) (LED)	1
4	580082536	Work Light (LH Front) (Halogen)	1
4	580092291	Head/Work Light (LH Front) (LED)	1
5	580082531	Bulb (Halogen)	1
6	580079615	Strobe Light Assembly	1
7	580065022	Capscrew	4
8	580065474	Trim (RH)	1
9	580065476	Trim (LH)	1
10	580079983	Wire Harness	1
10	580040822	Connector	1
10	580040823	Connector	1
10	580019341	Terminal (Pin)	4
10	580072801	Resistor	3
11	580076302	Clamp (Swivel)	1
12	580064599	Clamp	1
13	580051159	Bracket Wldmt	1
14	504232297	Guard (Strobe Light)	1
15	580058314	Capscrew	2
16	580058188	Nut	2
17	580044859	Insert	2
18	580058212	Capscrew	2
19	580086522	Wire Harness (Lights) (☞P20257 [Page 6-166])	1
20	580041360	Grommet (Vehicle System Manager)	1
21	580049224	Grommet (RH Tail Light)	1
22	580049225	Grommet (LH Tail Light)	1
23	580040850	Nut (Clip)	4
24	580052128	Turn Signal Light (RH Front)	1
24	580052130	Cap (Black Plastic)	2
24	580022894	Connector	1
24	520038872	Connector	1
24	505968514	Terminal (Pin)	3
25	580052129	Turn Signal Light (LH Front)	1
25	580052130	Cap (Black Plastic)	2
25	580022894	Connector	1
25	520038872	Connector	1
25	505968514	Terminal (Pin)	3

©2014 Yale Materials Handling Corporation

TRANSMISSION ELECTRICAL SYSTEM (FIGURE 6-29)

TWO SPEED TRANSMISSION

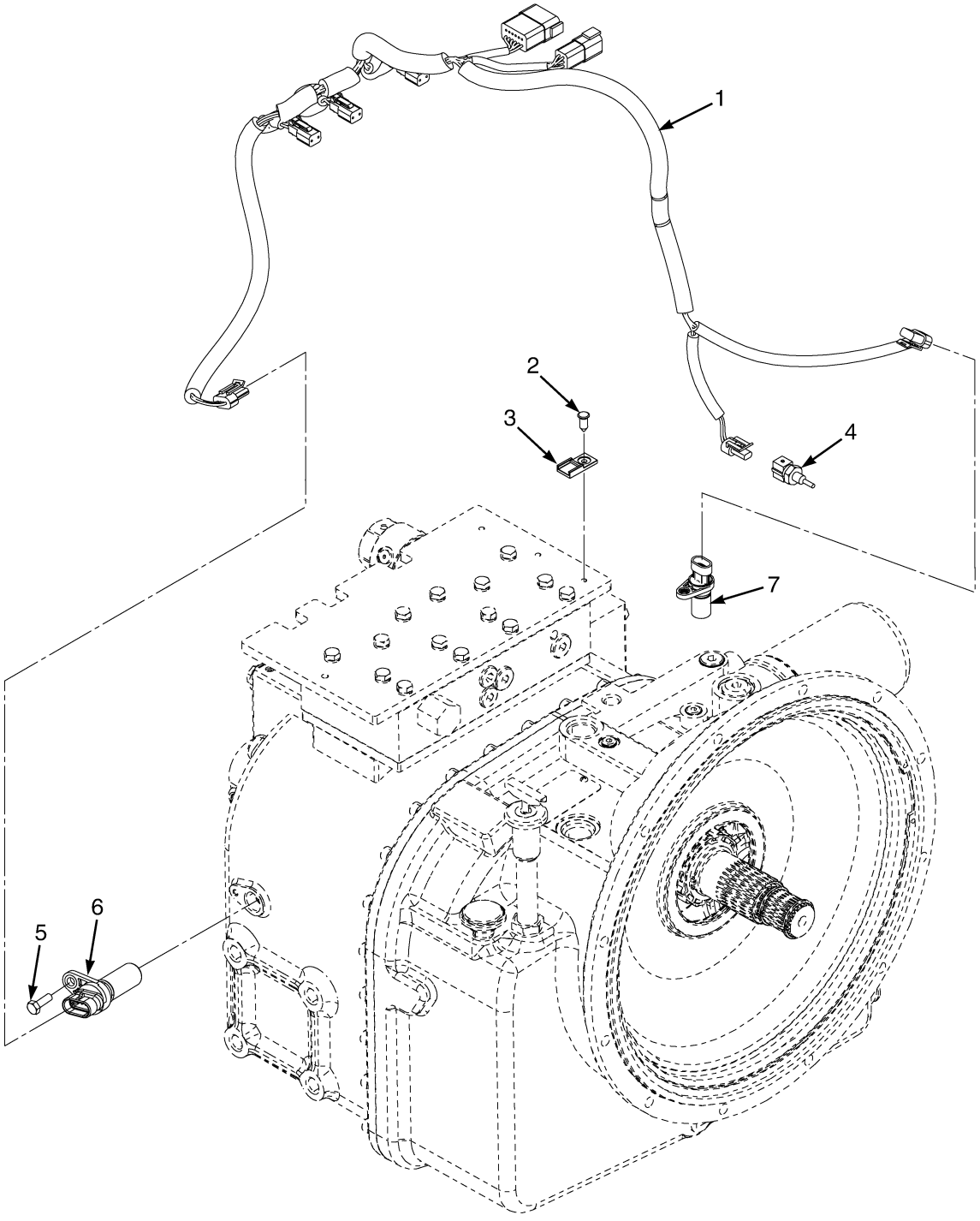

BP080573

©2014 Yale Materials Handling Corporation

TRANSMISSION ELECTRICAL SYSTEM
TWO SPEED TRANSMISSION

ITEM	PART NO.	DESCRIPTION	QTY
1	580090665	Wire Harness (Transmission) (☞P20254 [Page 6-160])	1
2	580056613	Fastener	2
3	580026812	Clip	2
4	580036023	Temperature Sensor	1
5	580049011	Capscrew	1
6	580045059	Sensor (Input Speed, TISS)	1
7	580056272	Sensor (Output Speed, TOSS)	1

©2014 Yale Materials Handling Corporation

TRANSMISSION ELECTRICAL SYSTEM (FIGURE 6-30)

THREE SPEED TRANSMISSION

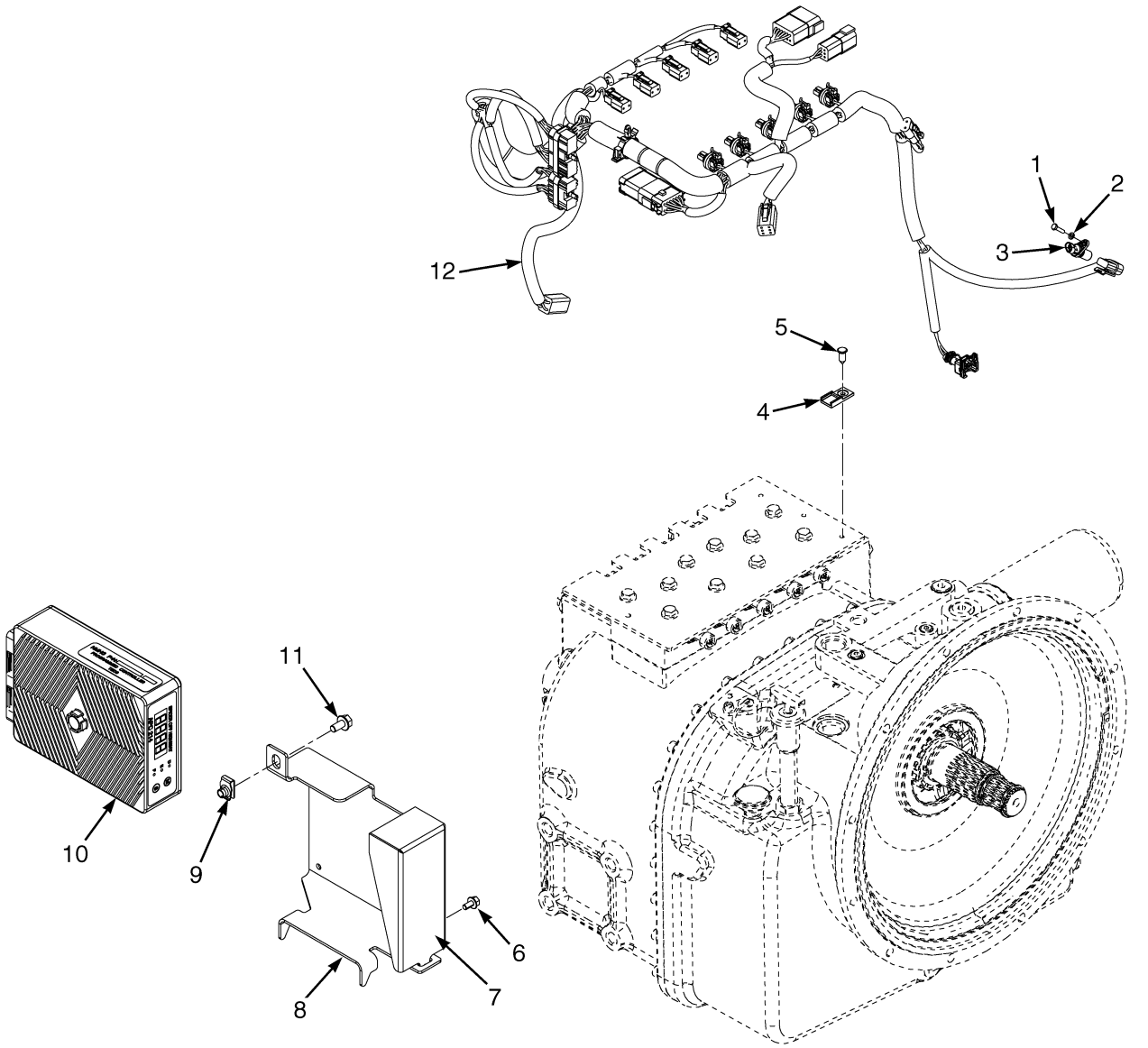

©2014 Yale Materials Handling Corporation

TRANSMISSION ELECTRICAL SYSTEM
THREE SPEED TRANSMISSION

ITEM	PART NO.	DESCRIPTION	QTY
1	580049011	Capscrew	1
2	449022018	Washer	1
3	580045059	Sensor (Input Speed, TISS)	1
4	580026812	Clip	4
5	580056613	Fastener	4
6	580039900	Capscrew	4
7	580064046	Cover	1
8	580083371	Bracket	1
9	580026621	Nut	1
10	**ad** 580093862	Controller	1
10	**ae** 582004527	Controller	1
10	**bd** 580093864	Controller	1
10	**be** 582004529	Controller	1
10	**cd** 580072631	Controller	1
10	**ce** 582004519	Controller	1
10	**cd** 580075282	Controller (Extended Function)	1
10	**ce** 582004523	Controller (Extended Function)	1
10	**ad** 582002576	Controller (Extended Function)	1
10	**ae** 582004528	Transmission Controller (Extended Function)	1
10	**bd** 582002575	Controller (Extended Function)	1
10	**be** 582004530	Transmission Controller	1
11	580047714	Capscrew	1
12	580090664	Wire Harness (Transmission, Three Speed) (☞P20253 [Page 6-156])	1

FOOTNOTES:

a Cummins QSB 3.3L 80 Horsepower
b Cummins QSB 3.3L 99 Horsepower
c GM 4.3L Gasoline and LPG
d → S/N D878V01731H
e S/N D878V01732H →

©2014 Yale Materials Handling Corporation

MAST ELECTRICAL (FIGURE 6-31)

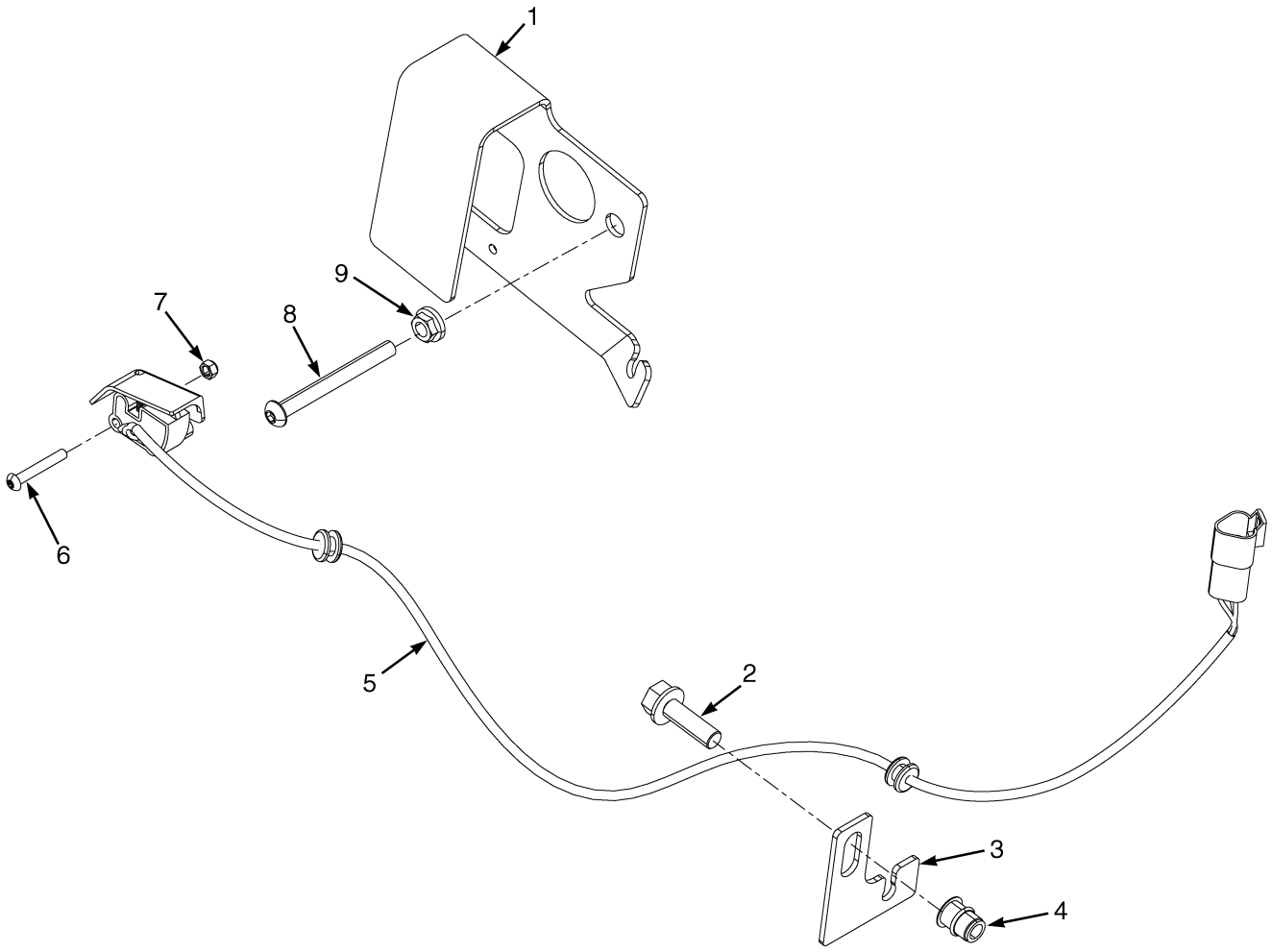

BP080602

©2014 Yale Materials Handling Corporation

MAST ELECTRICAL

ITEM	PART NO.	DESCRIPTION	QTY
1	580082318	Bracket	1
2	580058270	Capscrew	1
3	580077708	Bracket	1
4	580044862	Insert	1
5	580077709	Sensor (Mast Position)	1
6	580047034	Capscrew	2
7	449015112	Locknut	2
8	580072635	Capscrew	1
9	580058190	Nut	1

©2014 Yale Materials Handling Corporation

LOAD WEIGH ELECTRICAL (FIGURE 6-32)

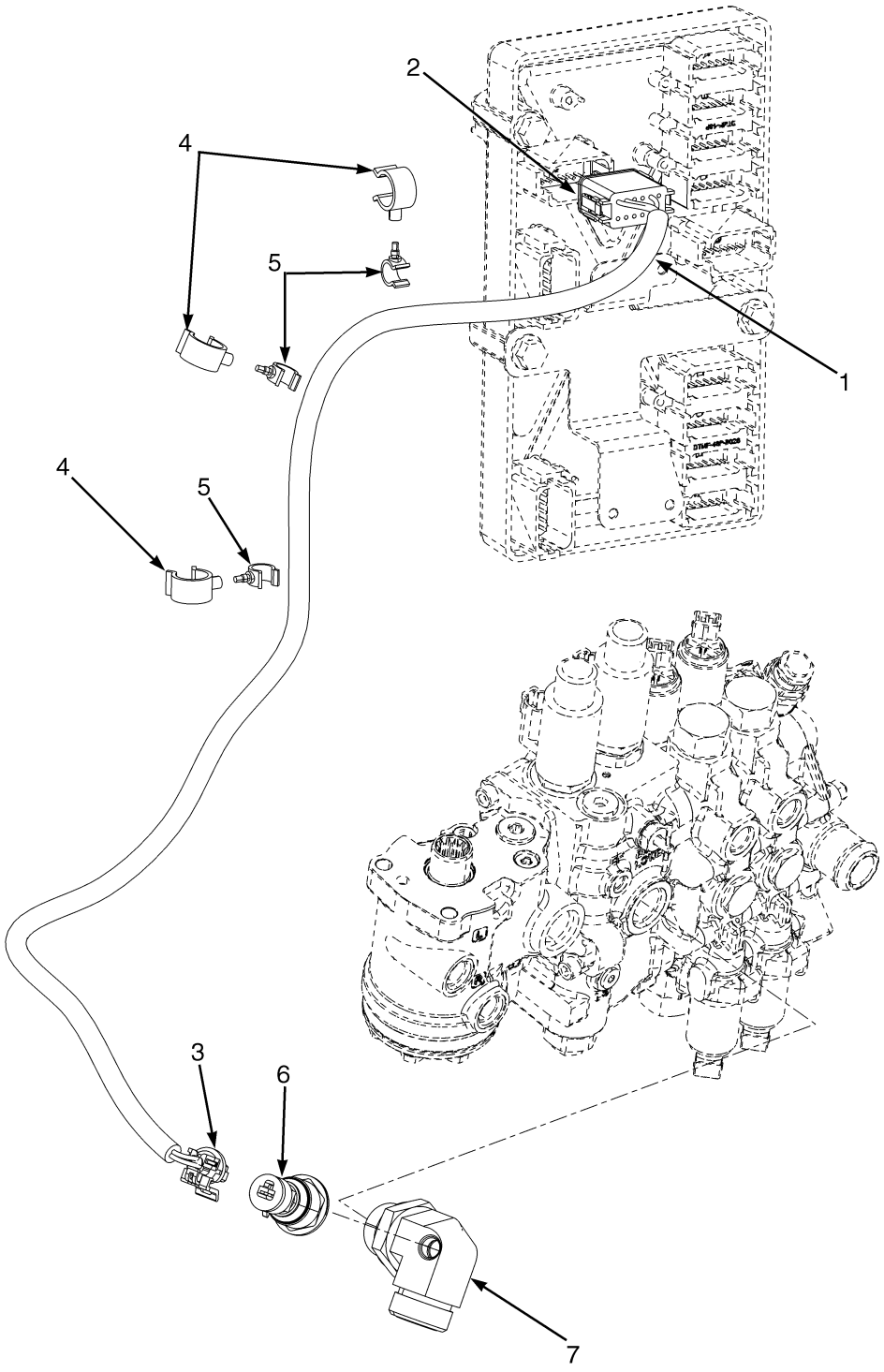

©2014 Yale Materials Handling Corporation

LOAD WEIGH ELECTRICAL

ITEM	PART NO.	DESCRIPTION	QTY
1	580064598	Wire Harness (Load Weigh)	1
2	580036942	Connector	1
2	580026813	Connector	1
2	505968568	Terminal (Socket)	3
2	580019119	Plug	9
3	580063697	Connector	1
3	580063751	Connector (Secondary Lock)	1
3	580044852	Terminal (Socket)	3
3	580044854	Seal	3
4	580064599	Clamp	3
5	580053484	Clamp	3
6	580064733	Sensor (Load Sensing)	1
7	580077359	Fitting	1

©2014 Yale Materials Handling Corporation

BATTERY AND CONTROL CABLE DISCONNECT SWITCH (FIGURE 6-33)

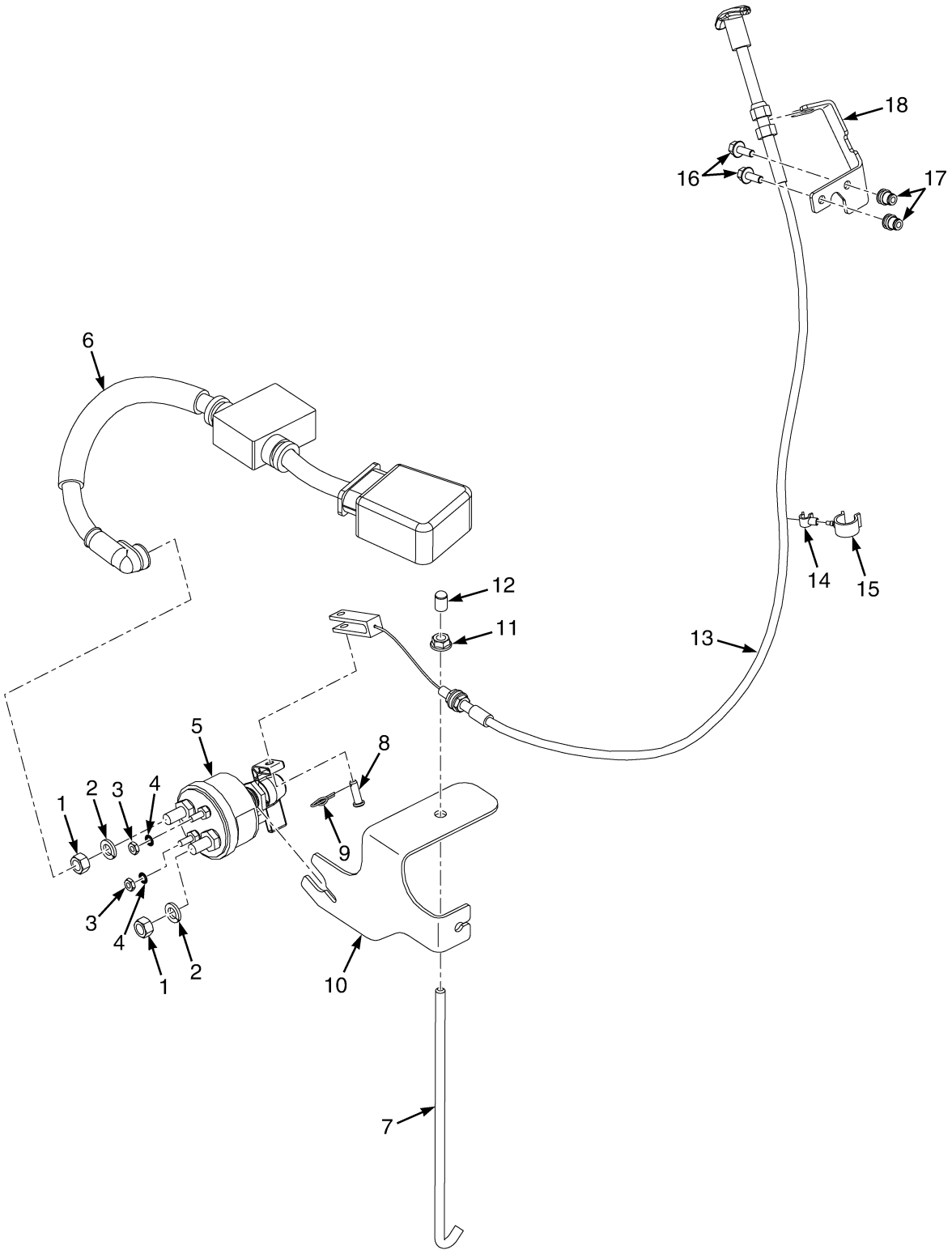

©2014 Yale Materials Handling Corporation

BATTERY AND CONTROL CABLE DISCONNECT SWITCH

ITEM	PART NO.	DESCRIPTION	QTY
1	014996900	Nut	2
2	015026400	Lockwasher	2
3	014939300	Nut	2
4	015035700	Lockwasher	2
5	580054023	Switch	1
6	580083851	Battery Cable	1
7	580046263	Link (Battery Hold Down)	1
8	900011212	Pin	1
9	580056840	Locking Ring Cotter Pin	1
10	580082869	Formed Bracket	1
11	580027573	Nut (Flange)	1
12	580041768	Cap	1
13	580077236	Cable Assy	1
14	580042331	Clamp (Swivel)	1
15	580042794	Clamp (Swivel)	1
16	580049011	Capscrew	2
17	580041704	Insert	2
18	580052982	Bracket	1
18	580096476	Bracket (Alternate Part)	1

©2014 Yale Materials Handling Corporation

IMPACT SENSOR (FIGURE 6-34)

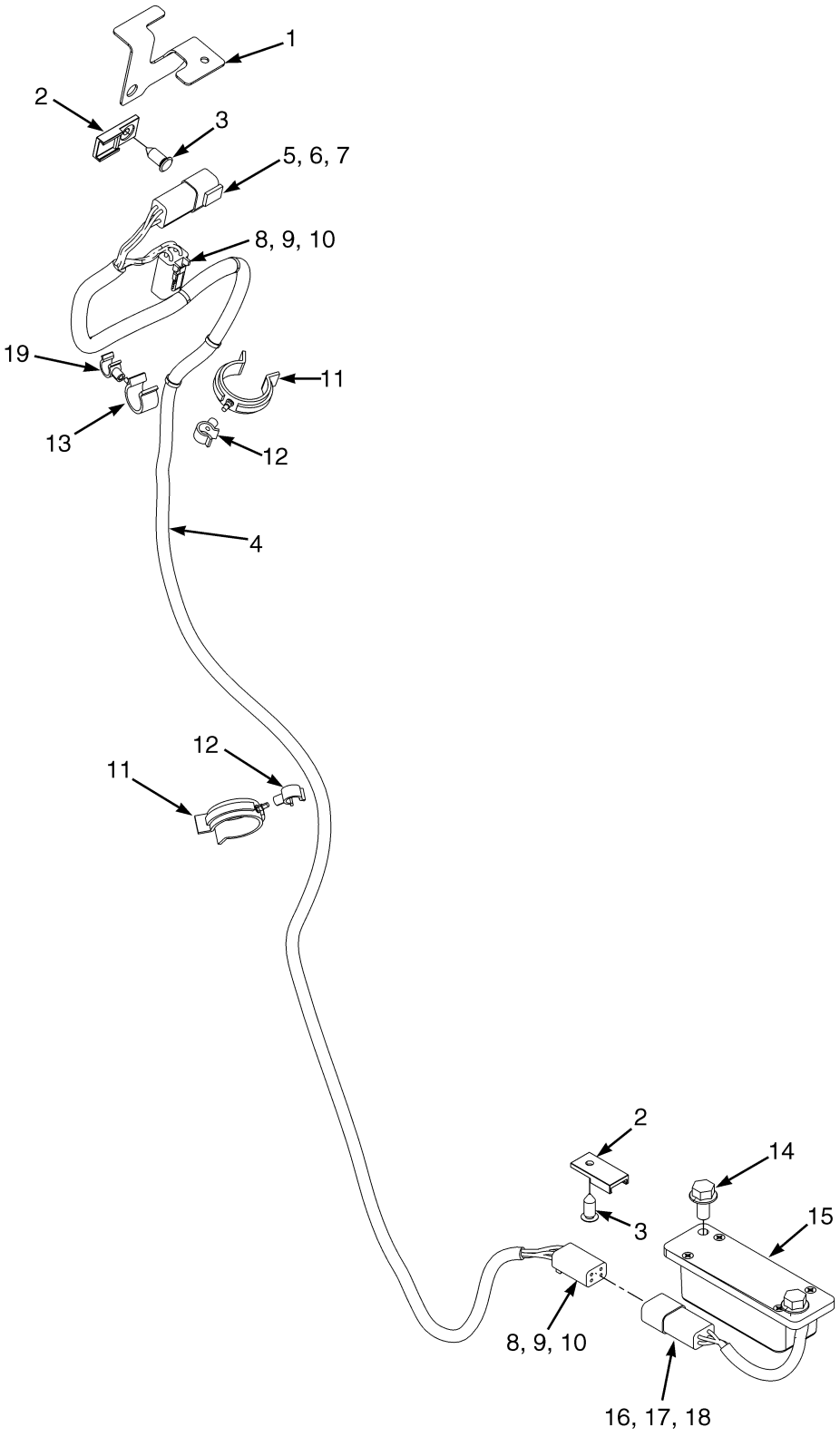

©2014 Yale Materials Handling Corporation

IMPACT SENSOR

ITEM	PART NO.	DESCRIPTION	QTY
1	580064567	Bracket	1
2	580026812	Clip	2
3	580056613	Fastener	2
3	524303892	Fastener (Alternate Part)	1
4	580064565	Wire Harness (Impact Sensor)	1
5	580020942	Connector (4 Way)	1
6	518806635	Connector (Secondary Lock)	1
7	505968514	Terminal (Pin)	4
8	580020943	Connector (4-Way)	2
9	580020944	Connector	2
10	505968568	Terminal (Socket)	8
11	580049555	Clamp (Swivel)	2
12	580042330	Clamp (Swivel)	2
13	580041371	Clamp (Swivel)	1
14	580047714	Capscrew	2
14	449001415	Capscrew (Alternate Part)	2
14	449021001	Washer (Alternate Part)	2
15	580064917	Sensor (Impact)	1
16	580020942	Connector (4 Way)	1
17	518806635	Connector (Secondary Lock)	1
18	505972554	Terminal	4
19	580041369	Clamp (Swivel)	1

©2014 Yale Materials Handling Corporation

POWER DISTRIBUTION MODULE (FIGURE 6-35)

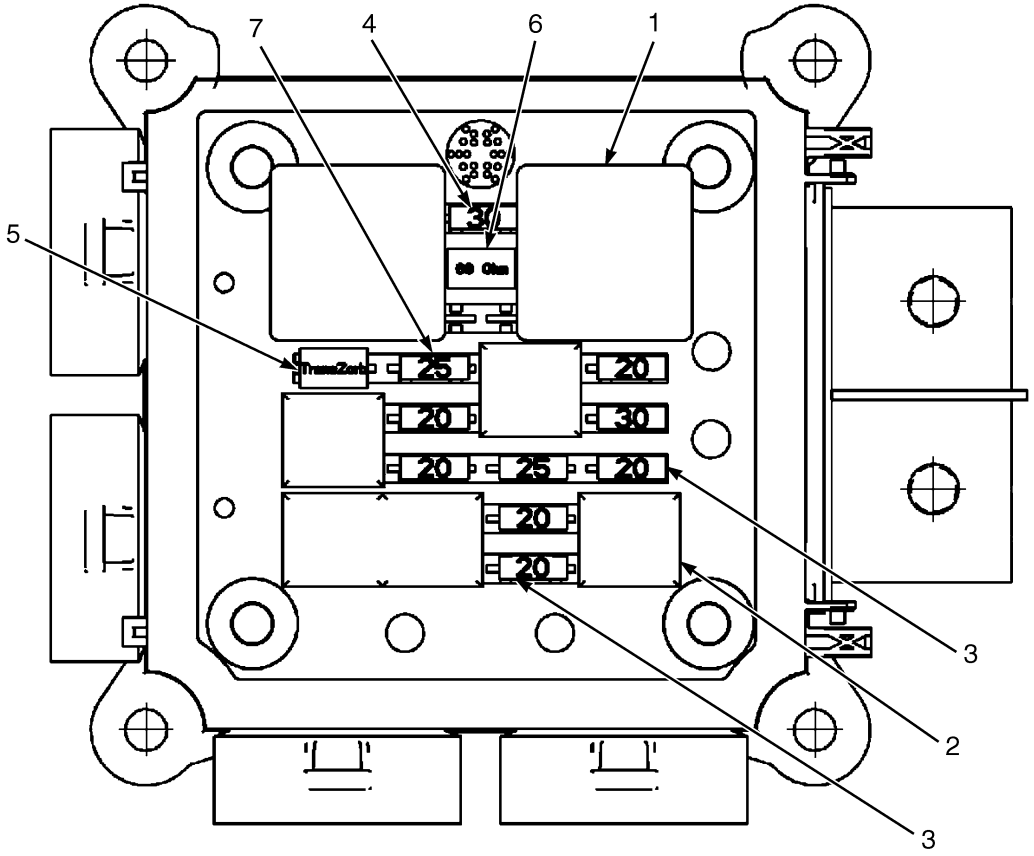

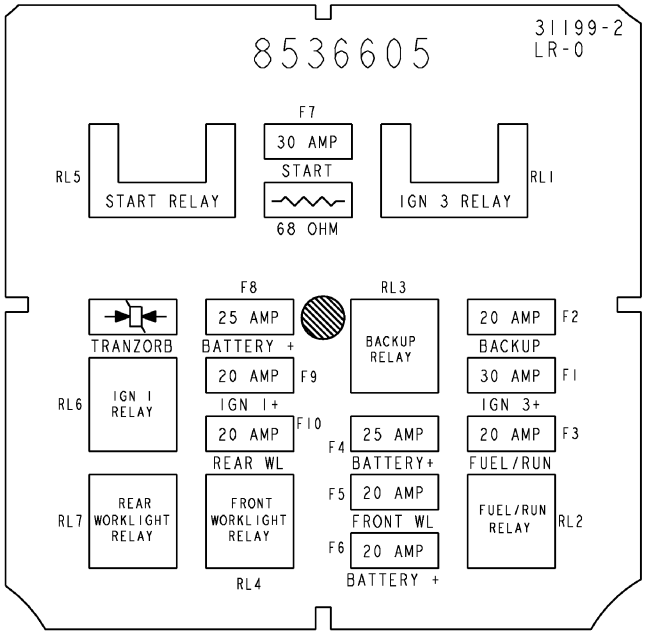

BP080485

©2014 Yale Materials Handling Corporation

POWER DISTRIBUTION MODULE

ITEM	PART NO.	DESCRIPTION	QTY
	580074261	Fuse Box	1
1	580023052	Relay (30 Amp)	2
2	580036599	Relay (20 Amp)	5
3	580036575	Fuse (20 Amp)	6
4	580036576	Fuse (30 Amp)	2
5	580036751	Semiconductor	1
6	580036752	Resistor (68 Ohm, 5 Watt)	1
7	580043031	Fuse (25 Amp)	2
	a 582020336	Fuse Box Cover	1

FOOTNOTES:

a Not Illustrated

©2014 Yale Materials Handling Corporation

WIRE HARNESS (FIGURE 6-36)

ENGINE — GM 4.3L LPG (→ S/N D878V01730H)

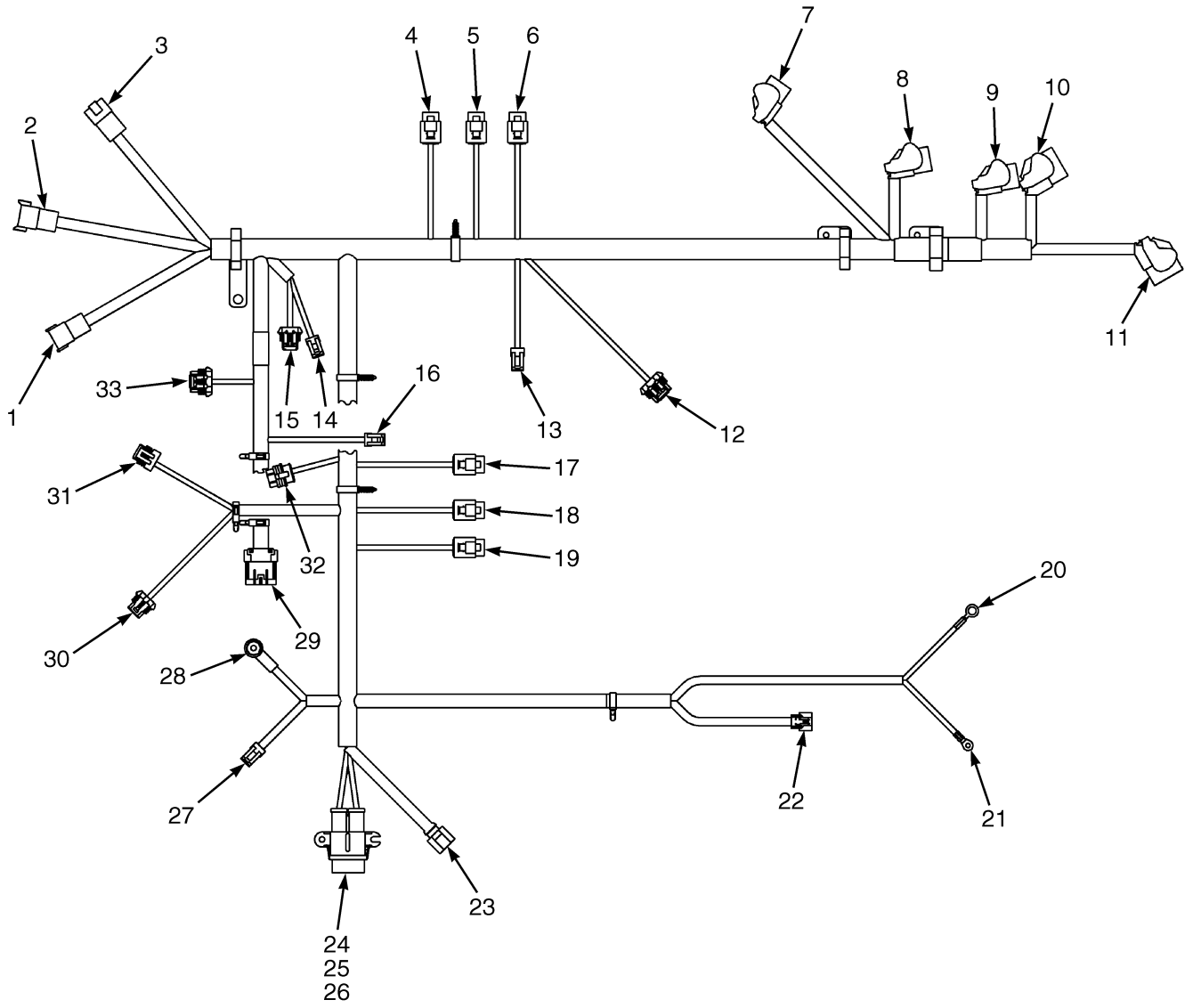

©2014 Yale Materials Handling Corporation

WIRE HARNESS

ENGINE – GM 4.3L LPG (→ S/N D878V01730H)

ITEM	PART NO.	DESCRIPTION	QTY
	580077676	Wire Harness (Engine) (2008-2009 Series)	1
1	. . . . .	Connector Assembly (Chassis Harness)	1
1	580042219	Connector (8 Pin)	1
2	. . . . .	Connector Assembly (Chassis Harness)	1
2	505972593	Connector (8 Pin)	1
3	. . . . .	Connector Assembly (Chassis Harness)	1
3	580040822	Connector	1
4	. . . . .	Connector Assembly (Injector #5)	1
4	580051025	Terminal	2
4	580064825	Connector	1
5	. . . . .	Connector Assembly (Injector #3)	1
5	580051025	Terminal	2
5	580064825	Connector	1
6	. . . . .	Connector Assembly (Injector #1)	1
6	580051025	Terminal	2
6	580064825	Connector	1
7	. . . . .	Connector Assembly	1
8	. . . . .	Connector Assembly	1
9	. . . . .	Connector Assembly	1
10	. . . . .	Connector Assembly	1
11	. . . . .	Connector Assembly	1
12	. . . . .	Connector Assembly (RH Oxygen Sensor)	1
12	580022990	Connector Body	1
12	580027611	Electrical Terminal	4
12	520045804	Terminal	4
12	580022993	Connector	1
13	. . . . .	Connector Assembly (Connector)	1
13	504288740	Connector	1
13	580000559	Terminal	2
14	. . . . .	Connector Assembly (Oil Pressure)	1
14	504288749	Connector	1
14	580000559	Terminal	3
15	. . . . .	Connector Assembly (Cam Sensor)	1
15	580033516	Connector	1
15	580033537	Connector Lock	1
15	520045804	Terminal	3
15	580026649	Wire Seal	3
16	. . . . .	Connector Assembly (Fuel Pressure)	1
16	580028186	Connector	1
16	504288741	Terminal	3
17	. . . . .	Connector Assembly (Injector 6)	1
17	580051025	Terminal	2
17	580064825	Connector	1
18	. . . . .	Connector Assembly (Injector 4)	1
18	580051025	Terminal	2
18	580064825	Connector	1
19	. . . . .	Connector Assembly (Injector 2)	1
19	580051025	Terminal	2
19	580064825	Connector	1
20	. . . . .	Connector Assembly (Battery)	1

©2014 Yale Materials Handling Corporation

WIRE HARNESS

ENGINE – GM 4.3L LPG (→ S/N D878V01730H)

ITEM	PART NO.	DESCRIPTION	QTY
20	520044861	E-Ring	1
21	. . . . .	Connector Assembly (Starter)	1
21	580042947	Ring Terminal	1
22	. . . . .	Connector Assembly (Crank Position Sensor)	1
22	580080198	Electrical Connector	1
22	580080199	Electrical Terminal	3
22	580080808	Seal	3
23	. . . . .	Connector Assembly	1
23	580064880	Connector	1
24	. . . . .	Connector Assembly	1
24	580042698	Fuse Holder	1
24	580014386	Fuse (60 Amp)	1
24	580035200	Terminal	2
25	. . . . .	Connector Assembly (Cover)	1
25	580010739	Cover (With Seal)	1
26	. . . . .	Connector Assembly	1
26	580034616	Seal	1
27	. . . . .	Connector Assembly (Alternator)	1
27	504288741	Terminal	2
27	504288740	Connector	1
28	. . . . .	Connector Assembly (Alternator)	1
28	505968598	E-Ring	1
29	. . . . .	Connector Assembly (LH Chassis Harness)	1
29	580027619	Clip	1
29	580036351	Connector	1
30	. . . . .	Connector Assembly (Coil)	1
30	580033519	Connector	1
30	580027611	Electrical Terminal	2
30	580033537	Connector Lock	1
30	520045805	Seal	3
30	580000554	Seal	1
31	. . . . .	Connector Assembly (Ignition)	1
31	580059253	Connector	1
31	580000559	Terminal	1
31	504288741	Terminal	3
31	580033537	Connector Lock	1
32	. . . . .	Connector Assembly (Map Sensor)	1
32	580064923	Connector	1
32	580025558	Terminal	4
32	580049815	Seal	4
33	. . . . .	Connector Assembly (LH Oxygen Sensor)	1
33	580022993	Connector	1
33	520045804	Terminal	4
33	580027611	Electrical Terminal	4
33	580022990	Connector Body	1

©2014 Yale Materials Handling Corporation

NOTES

©2014 Yale Materials Handling Corporation

WIRE HARNESS (ENGINE) (FIGURE 6-37)

GM 4.3L LPG (2010 SERIES) — GFI OPTION (S/N D878V01731H ↔ S/N D878V02177K)

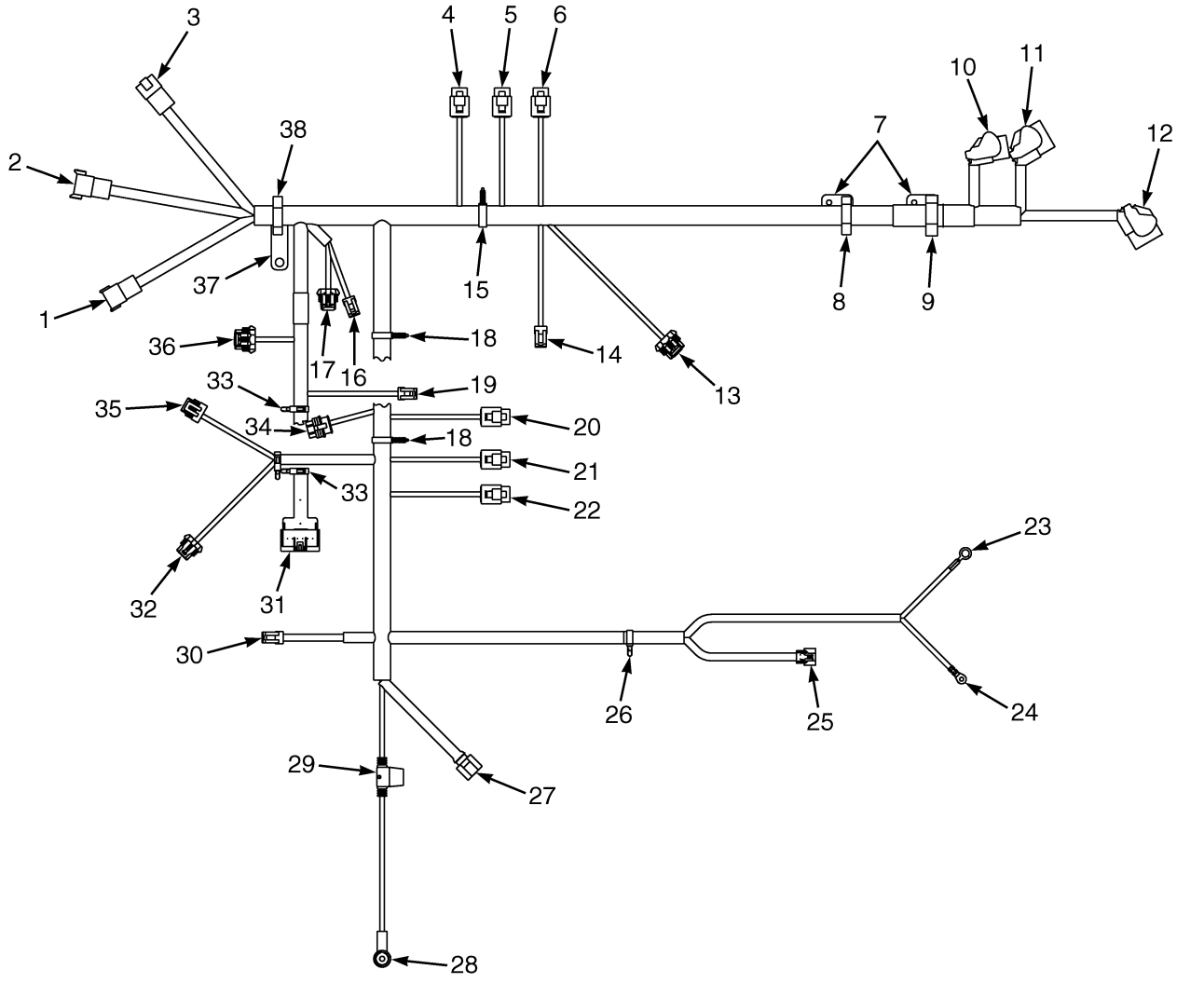

©2014 Yale Materials Handling Corporation

WIRE HARNESS (ENGINE)

GM 4.3L LPG (2010 SERIES) – GFI OPTION (S/N D878V01731H ↔ S/N D878V02177K)

ITEM	PART NO.	DESCRIPTION	QTY
	582001122	Wire Harness (Engine)	1
1	. . . . .	Connector Assembly (Chassis Harness)	1
1	580042219	Connector (8 Pin)	1
2	. . . . .	Connector Assembly (Chassis Harness)	1
2	505972593	Connector (8 Pin)	1
3	. . . . .	Connector Assembly (Chassis Harness)	1
3	580040822	Connector	1
4	. . . . .	Connector Assembly (Injector #5)	1
4	580051025	Terminal	2
4	580064825	Connector	1
5	. . . . .	Connector Assembly (Injector #3)	1
5	580051025	Terminal	2
5	580064825	Connector	1
6	. . . . .	Connector Assembly (Injector #1)	1
6	580051025	Terminal	2
6	580064825	Connector	1
7	580048720	Clip	2
8	580039254	Clip	2
9	580039255	Clip	1
10	. . . . .	Connector Assembly (CP 203)	1
11	. . . . .	Connector Assembly (CP 204)	1
12	. . . . .	Connector Assembly (CP 205)	1
13	. . . . .	Connector Assembly (Right Hand Oxygen Sensor)	1
13	580022990	Connector Body	1
13	580027611	Electrical Terminal	4
13	520045804	Terminal	4
13	580022993	Connector	1
14	. . . . .	Connector Assembly (CTS)	1
14	504288740	Connector	1
14	580000559	Terminal	2
15	580030877	Clip	1
16	. . . . .	Connector Assembly (Oil Pressure)	1
16	504288749	Connector	1
16	580000559	Terminal	3
17	. . . . .	Connector Assembly (Cam Sensor)	1
17	580033516	Connector	1
17	580033537	Connector Lock	1
17	520045804	Terminal	3
17	580026649	Wire Seal	3
18	580070400	Clip	2
19	. . . . .	Connector Assembly (Fuel ABS Pressure)	1
19	580028186	Connector	1
19	504288741	Terminal	3
20	. . . . .	Connector Assembly (Injector #6)	1
20	580064825	Connector	1
20	580051025	Terminal	2
21	. . . . .	Connector Assembly (Injector #4)	1
21	580064825	Connector	1
21	580051025	Terminal	2
22	. . . . .	Connector Assembly (Injector #2)	1

©2014 Yale Materials Handling Corporation

WIRE HARNESS (ENGINE)

GM 4.3L LPG (2010 SERIES) – GFI OPTION (S/N D878V01731H ↔ S/N D878V02177K)

ITEM	PART NO.	DESCRIPTION	QTY
22	580064825	Connector	1
22	580051025	Terminal	2
23	. . . . .	Connector Assembly (Battery, Positive)	1
23	520044861	E-Ring	1
24	. . . . .	Connector Assembly (Starter)	1
24	580042947	Ring Terminal	1
25	. . . . .	Connector Assembly (Crank Position)	1
25	580080198	Electrical Connector	1
25	580080199	Electrical Terminal	3
25	580080808	Seal	3
25	582000335	Retainer	1
26	580026810	Clip	1
27	. . . . .	Connector Assembly (Electronic Throttle Body)	1
27	580064880	Connector	1
28	. . . . .	Connector Assembly (Alternator Positive)	1
28	505968598	E-Ring	1
28	580052019	Boot	1
29	. . . . .	Connector Assembly (Alternator Inline Fuse)	1
29	582002799	Fuse	1
29	582002667	Connector (Fuse Holder)	1
30	. . . . .	Connector Assembly (Alternator)	1
30	504288741	Terminal	2
30	504288740	Connector	1
31	. . . . .	Connector Assembly (Left Hand Oxygen Sensor)	1
31	580027619	Clip	1
31	582001869	Connector	1
32	. . . . .	Connector Assembly (Coil)	1
32	580033519	Connector	1
32	580027611	Electrical Terminal	2
32	580033537	Connector Lock	1
32	520045805	Seal	3
32	580000554	Seal	1
33	580026809	Clip	3
34	. . . . .	Connector Assembly (MAP/MAT)	1
34	580064923	Connector	1
34	580025558	Terminal	4
34	580049815	Seal	4
35	. . . . .	Connector Assembly (Ignition)	1
35	580059253	Connector	1
35	580000559	Terminal	1
35	504288741	Terminal	3
35	580033537	Connector Lock	1
36	. . . . .	Connector Assembly (Left Hand Oxygen Sensor)	1
36	580022993	Connector	1
36	520045804	Terminal	4
36	580027611	Electrical Terminal	4
36	580022990	Connector Body	1
37	580056894	Bracket	1
38	580039254	Clip	2

©2014 Yale Materials Handling Corporation

NOTES

©2014 Yale Materials Handling Corporation

WIRE HARNESS (ENGINE) (FIGURE 6-38)

GM 4.3L, LPG — PSI OPTION (S/N D878V02178K →)

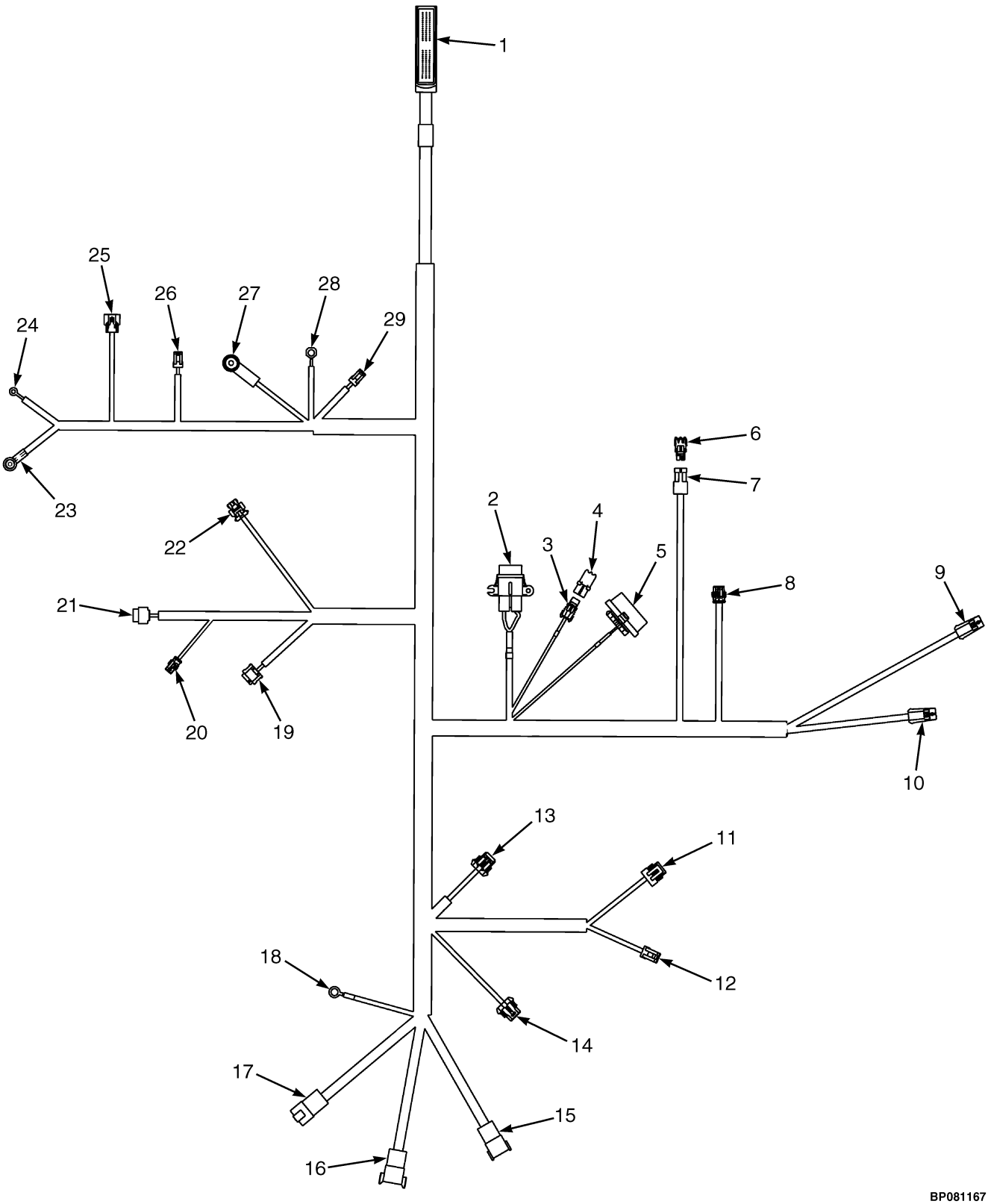

©2014 Yale Materials Handling Corporation

WIRE HARNESS (ENGINE)

GM 4.3L, LPG – PSI OPTION (S/N D878V02178K →)

ITEM	PART NO.	DESCRIPTION	QTY
	582016959	Wire Harness	1
1	. . . . .	Connector Assembly (Engine Control Unit)	1
1	580075380	Connector	1
1	580080032	Terminal (Gold)	32
1	580051026	Plug	54
1	582011406	Connector Lock	1
1	582011407	Strain Relief (Cover)	1
1	582010203	Terminal	4
2	. . . . .	Connector Assembly (Alternate Fuse)	1
2	580042698	Fuse Holder	1
2	580010739	Cover (With Seal)	1
2	580023860	Terminal	2
2	580034616	Seal	2
2	580026808	Clip	1
3	. . . . .	Connector Assembly (ECU Diagnostic Connector)	1
3	580075375	Connector	1
3	580080026	Terminal	8
3	580075376	Spacer	1
4	580075378	Cap	1
5	. . . . .	Connector Assembly (Mini Fuses)	1
5	504288731	Connector	1
5	504288733	Terminal	3
5	580034658	Terminal	1
5	504288730	Seal	2
5	505968505	Seal	6
5	504288732	Lock	1
5	580075368	Cap	1
5	580075369	Clip	1
5	580025567	Fuse (5 Amp)	2
6	. . . . .	Connector Assembly (Air Filter Restriction)	1
6	580012323	Connector	1
6	504288730	Seal	2
7	505968505	Seal	6
7	520038875	Terminal	2
7	580012324	Connector	1
8	. . . . .	Connector Assembly (Low Fuel)	1
8	580062118	Connector (3 Way)	1
8	580035034	Terminal (Pin)	3
8	580040456	Wire Seal	3
9	. . . . .	Connector Assembly (Pre-Catalyst 02 Sensor)	1
9	580025799	Housing	1
9	580080031	Terminal (Gold)	4
9	580026649	Wire Seal	5
9	580080030	Lock	1
10	. . . . .	Connector Assembly (Pre-Catalyst 02 Sensor)	1
10	580025799	Housing	1
10	580080031	Terminal (Gold)	4
10	580026649	Wire Seal	5
10	580080030	Lock	1
11	. . . . .	Connector Assembly (Ignition Module)	1

©2014 Yale Materials Handling Corporation

WIRE HARNESS (ENGINE)

GM 4.3L, LPG – PSI OPTION (S/N D878V02178K →)

ITEM	PART NO.	DESCRIPTION	QTY
11	580044852	Terminal (Socket)	4
11	580044854	Seal	4
11	580059253	Connector	1
11	580033537	Connector Lock	1
12	. . . . .	Connector Assembly (Oil Pressure)	1
12	580044852	Terminal (Socket)	3
12	580063751	Connector (Secondary Lock)	1
12	580044854	Seal	3
12	580063697	Connector	1
13	. . . . .	Connector Asembly (Cam Sensor)	1
13	520045804	Terminal	3
13	580033537	Connector Lock	1
13	580033516	Connector	1
14	. . . . .	Connector Assembly (Ignition Coil)	1
14	580033519	Connector	1
14	520045804	Terminal	3
14	580033537	Connector Lock	1
14	520045805	Seal	5
14	580027612	Plug (Cavity Plug)	1
15	. . . . .	Connector Assembly (Vehicle Interface Connector)	1
15	580026812	Clip	1
15	580042219	Connector (8 Pin)	1
15	580041195	Terminal Pin	8
15	580042220	Connector (Secondary Lock) (Lock)	1
16	. . . . .	Connector Assembly (Vehicle Interface Connector)	1
16	580071962	Housing	1
16	505972507	Connector (Secondary Lock) (Lock)	1
16	505968514	Terminal (Pin)	7
16	505968566	Plug	1
16	580039588	Clip	1
17	. . . . .	Connector Assembly (Vehicle Interface Connector)	1
17	580040822	Connector	1
17	580019341	Terminal (Pin)	4
17	580026812	Clip	1
17	580040823	Connector (Lock)	1
18	580078647	E-Ring (Engine Ground)	1
19	. . . . .	Connector Assembly (Throttle)	1
19	580056679	Connector Body	1
19	580082329	Terminal	6
19	580039602	Seal	6
20	. . . . .	Connector Assembly (LPG Lockoff)	1
20	520045804	Terminal	1
20	580026649	Wire Seal	1
20	580041518	Connector	1
20	580008413	Terminal (E FTG SEC LOCK)	1
21	. . . . .	Connector Assembly (TMAP)	1
21	580052097	Plug	1
21	580052099	Terminal	4
21	580052098	Wire Seal	4
22	. . . . .	Connector Assembly CPS269)	1

©2014 Yale Materials Handling Corporation

WIRE HARNESS (ENGINE)

GM 4.3L, LPG – PSI OPTION (S/N D878V02178K →)

ITEM	PART NO.	DESCRIPTION	QTY
22	919243462	Plug	1
22	919243425	Connector	1
22	580049402	Terminal	5
22	919243452	Wire Seal	1
22	919243445	Connector Lock	1
23	580035278	E-Ring (Starter Solenoid)	1
23	505970552	Boot	1
24	505968563	E-Ring (Starter B+)	1
25	. . . . .	Connector Assembly (Crank Position Sensor)	1
25	580080198	Electrical Connector	1
25	580080199	Electrical Terminal	3
25	580080808	Seal	3
25	582000335	Retainer	1
26	. . . . .	Connector Assembly (Alternator)	1
26	580044127	Connector (2 Way)	1
26	580044852	Terminal (Socket)	2
26	580044854	Seal	2
27	505968598	E-Ring (Alternator Positive)	1
27	580034357	Boot	1
28	505968598	E-Ring (Alternator Ground)	1
29	. . . . .	Connector Assembly (Engine Coolant Temp)	1
29	580044127	Connector (2 Way)	1
29	580044852	Terminal (Socket)	2
29	580044854	Seal	2

©2014 Yale Materials Handling Corporation

WIRE HARNESS (FIGURE 6-39)
ENGINE — GM 4.3L GASOLINE (→ S/N D878V01730H)

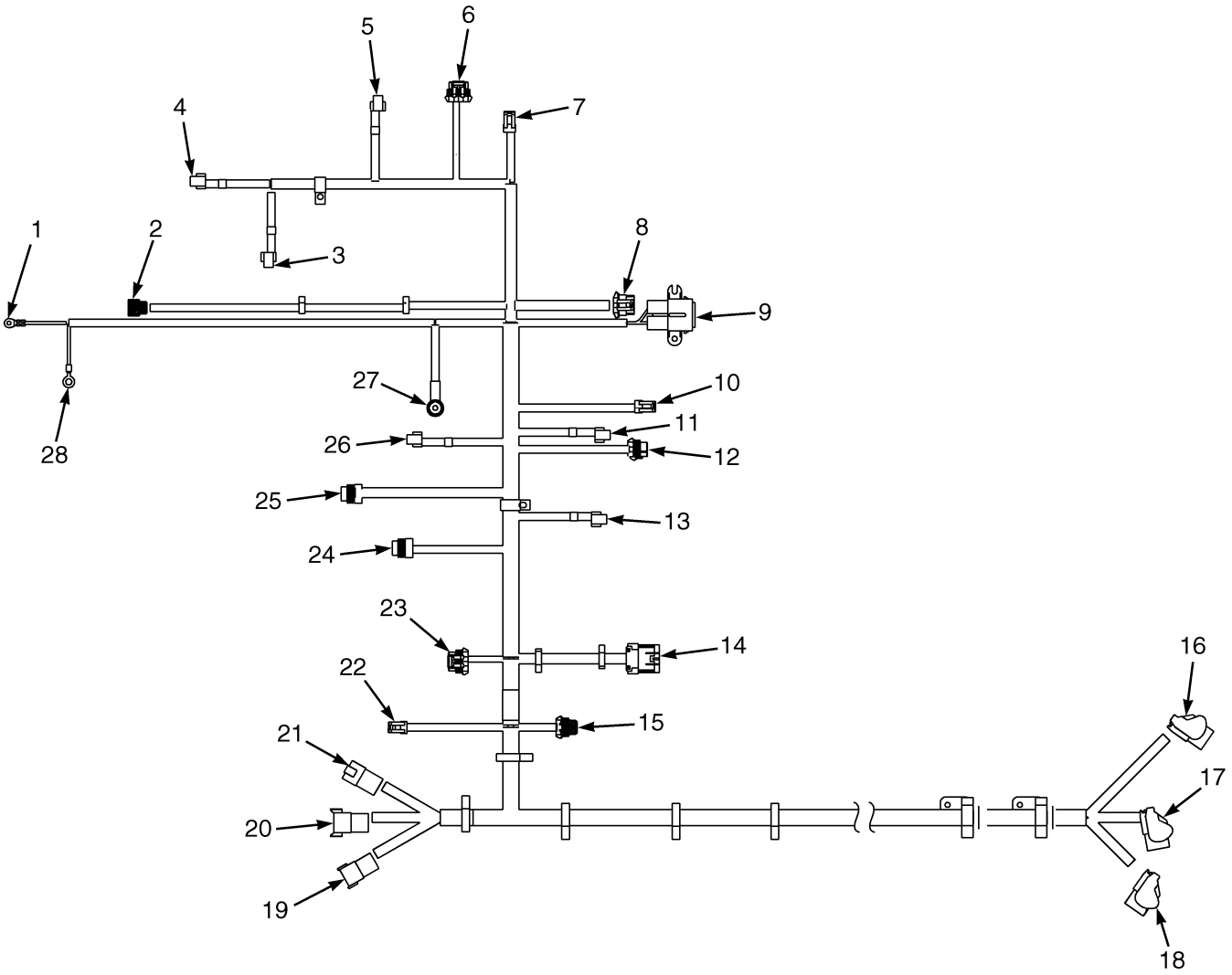

BP080685

©2014 Yale Materials Handling Corporation

WIRE HARNESS

ENGINE – GM 4.3L GASOLINE (→ S/N D878V01730H)

ITEM	PART NO.	DESCRIPTION	QTY
	580077675	Wire Harness (Engine) (2008-2009 Series)	1
1	. . . . .	Connector Assembly (Starter)	1
1	580042947	Ring Terminal	1
2	. . . . .	Connector Assembly (Crank Position)	1
2	580080198	Electrical Connector	1
2	580080199	Electrical Terminal	3
2	580080808	Seal	3
3	. . . . .	Connector Assembly (Injector 3)	1
4	. . . . .	Connector Assembly (Injector 5)	1
5	. . . . .	Connector Assembly (Injector 1)	1
6	. . . . .	Connector Assembly (Right Oxygen Sensor)	1
6	580022990	Connector Body	1
6	520045804	Terminal	4
6	580027611	Electrical Terminal	4
6	580022993	Connector	1
7	. . . . .	Connector Assembly (Temperature Sensor)	1
7	504288740	Connector	1
7	580000559	Terminal	2
8	. . . . .	Connector Assembly (Connector)	1
8	580064880	Connector	1
9	. . . . .	Connector Assembly (Connector)	1
9	580042698	Fuse Holder	1
9	580014386	Fuse (60 Amp)	1
9	580010739	Cover (With Seal)	1
9	580034616	Seal	2
9	580035200	Terminal	2
10	. . . . .	Connector Assembly (Alternator)	1
10	504288740	Connector	1
10	504288741	Terminal	2
11	. . . . .	Connector Assembly (Injector 2)	1
12	. . . . .	Connector Assembly (Coil)	1
12	580033519	Connector	1
12	580027611	Electrical Terminal	2
12	520045805	Seal	3
12	580000554	Seal	1
12	580033537	Connector Lock	1
13	. . . . .	Connector Assembly (Injector 6)	1
14	. . . . .	Connector Assembly (LH Chassis)	1
14	580036351	Connector	1
14	580027619	Clip	1
15	. . . . .	Connector Assembly (Cam Positioner Sensor)	1
15	580033516	Connector	1
15	580033537	Connector Lock	1
15	520045804	Terminal	3
15	580026649	Wire Seal	3
16	. . . . .	Connector Assembly (Connector)	1
17	. . . . .	Connector Assembly (Connector)	1
18	. . . . .	Connector Assembly (Connector)	1
19	. . . . .	Connector Assembly (Chassis Harness)	1
19	580042219	Connector (8 Pin)	1

©2014 Yale Materials Handling Corporation

WIRE HARNESS

ENGINE – GM 4.3L GASOLINE (→ S/N D878V01730H)

ITEM	PART NO.	DESCRIPTION	QTY
20	. . . . .	Connector Assembly (Chassis Harness)	1
20	505972593	Connector (8 Pin)	1
21	. . . . .	Connector Assembly (Chassis Harness)	1
21	580040822	Connector	1
22	. . . . .	Connector Assembly (Oil Pressure)	1
22	504288749	Connector	1
22	580000559	Terminal	3
23	. . . . .	Connector Assembly (Left Oxygen Sensor)	1
23	580022990	Connector Body	1
23	520045804	Terminal	4
23	580027611	Electrical Terminal	4
23	580022993	Connector	1
24	. . . . .	Connector Assembly (Map Sensor)	1
24	580064923	Connector	1
24	580025558	Terminal	4
24	580049815	Seal	4
25	. . . . .	Connector Assembly (Ignition)	1
25	580059253	Connector	1
25	580000559	Terminal	1
25	580033537	Connector Lock	1
25	504288741	Terminal	3
26	. . . . .	Connector Assembly (Injector 4)	1
27	. . . . .	Connector Assembly (Alternator)	1
27	505968598	E-Ring	1
27	580052019	Boot	1
28	. . . . .	Connector Assembly (Battery)	1
28	520044861	E-Ring	1

©2014 Yale Materials Handling Corporation

NOTES

©2014 Yale Materials Handling Corporation

WIRE HARNESS (ENGINE) (FIGURE 6-40)

GM 4.3L GASOLINE (2010 SERIES) (S/N D878V01731H →)

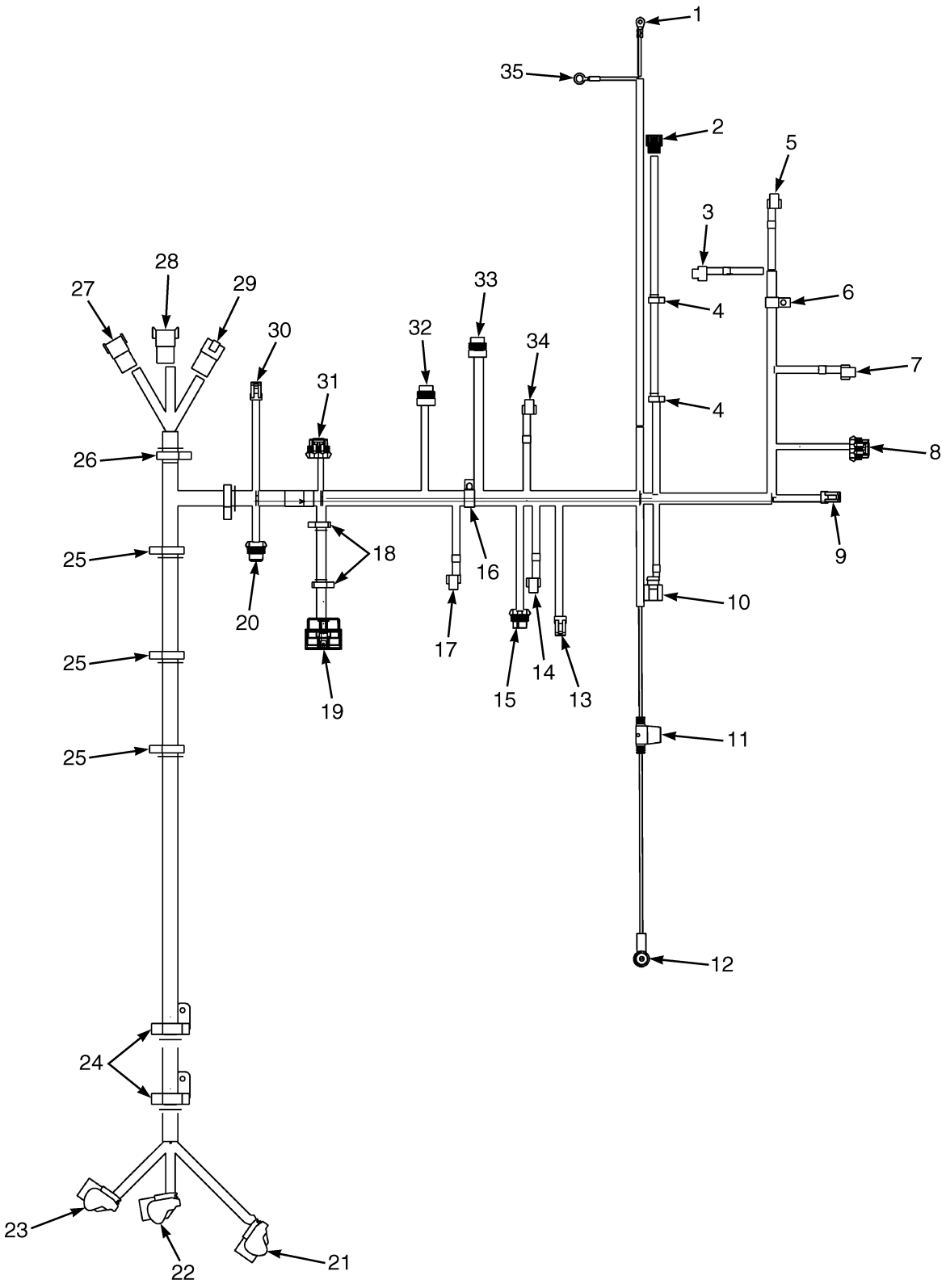

©2014 Yale Materials Handling Corporation

WIRE HARNESS (ENGINE)

GM 4.3L GASOLINE (2010 SERIES) (S/N D878V01731H →)

ITEM	PART NO.	DESCRIPTION	QTY
	582001117	Wire Harness (Engine) (2010-2012 Series)	1
1	. . . . .	Connector Assembly (Starter)	1
1	580042947	Ring Terminal	1
2	. . . . .	Connector Assembly (Crank Position)	1
2	580080198	Electrical Connector	1
2	580080199	Electrical Terminal	3
2	580080808	Seal	3
2	582000335	Retainer	1
3	. . . . .	Connector Assembly (Injector #3)	1
4	580030876	Clip	2
5	. . . . .	Connector Assembly (Injector #5)	1
6	520044834	Clamp	1
7	. . . . .	Connector Assembly (Injector #1)	1
8	. . . . .	Connector Assembly (Right Oxygen Sensor)	1
8	580022990	Connector Body	1
8	520045804	Terminal	4
8	580027611	Electrical Terminal	4
8	580022993	Connector	1
9	. . . . .	Connector Assembly (Coolant Temperature Sensor)	1
9	504288740	Connector	1
9	580000559	Terminal	2
10	. . . . .	Connector Assembly (Electronic Throttle Body)	1
10	580064880	Connector	1
11	. . . . .	Connector Assembly (Alternator Inline Fuse)	1
11	582002799	Fuse	1
11	582002667	Connector (Fuse Holder)	1
12	. . . . .	Connector Assembly (Alternator, Positive)	1
12	505968598	E-Ring	1
12	580052019	Boot	1
13	. . . . .	Connector Assembly (Alternator)	1
13	504288740	Connector	1
13	504288741	Terminal	1
14	. . . . .	Connector Assembly (Injector #4)	1
15	. . . . .	Connector Assembly (Coil)	1
15	580033519	Connector	1
15	580027611	Electrical Terminal	2
15	520045805	Seal	3
15	580000554	Seal	1
15	580033537	Connector Lock	1
16	505976550	Clamp	1
17	. . . . .	Connector Assembly (Injector #6)	1
18	580026809	Clip	2
19	. . . . .	Connector Assembly (To Left Hand Chassis Harness)	1
19	582001869	Connector	1
19	580027619	Clip	1
20	. . . . .	Connector Assembly (Cam Position Sensor)	1
20	580033516	Connector	1
20	580033537	Connector Lock	1
20	520045804	Terminal	3
20	580026649	Wire Seal	3

©2014 Yale Materials Handling Corporation

WIRE HARNESS (ENGINE)

GM 4.3L GASOLINE (2010 SERIES) (S/N D878V01731H →)

ITEM	PART NO.	DESCRIPTION	QTY
21	. . . . .	Connector Assembly (Connector)	1
22	. . . . .	Connector Assembly (Connector)	1
23	. . . . .	Connector Assembly (Connector)	1
24	580048720	Clip	2
24	580039255	Clip	2
25	580045045	Clip	4
26	580045045	Clip	1
27	. . . . .	Connector Assembly (Chassis Harness)	1
27	580042219	Connector (8 Pin)	1
28	. . . . .	Connector Assembly (Chassis Harness)	1
28	505972593	Connector (8 Pin)	1
29	. . . . .	Connector Assembly (Connector)	1
29	580040822	Connector	1
30	. . . . .	Connector Assembly (Oil Pressure)	1
30	504288749	Connector	1
30	580000559	Terminal	3
31	. . . . .	Connector Assembly (Left Oxygen Sensor)	1
31	580022990	Connector Body	1
31	520045804	Terminal	4
31	580027611	Electrical Terminal	4
31	580022993	Connector	1
32	. . . . .	Connector Assembly (MAP/MAT Sensor)	1
32	580064923	Connector	1
32	580025558	Terminal	4
32	580049815	Seal	4
33	. . . . .	Connector Assembly (Ignition)	1
33	580059253	Connector	1
33	580000559	Terminal	1
33	580033537	Connector Lock	1
33	504288741	Terminal	3
34	. . . . .	Connector Assembly (Injector #4)	1
35	. . . . .	Connector Assembly (Battery, Positive)	1
35	520044861	E-Ring	1

©2014 Yale Materials Handling Corporation

NOTES

©2014 Yale Materials Handling Corporation

WIRE HARNESS (FIGURE 6-41)
ENGINE — CUMMINS QSB 3.3L DIESEL

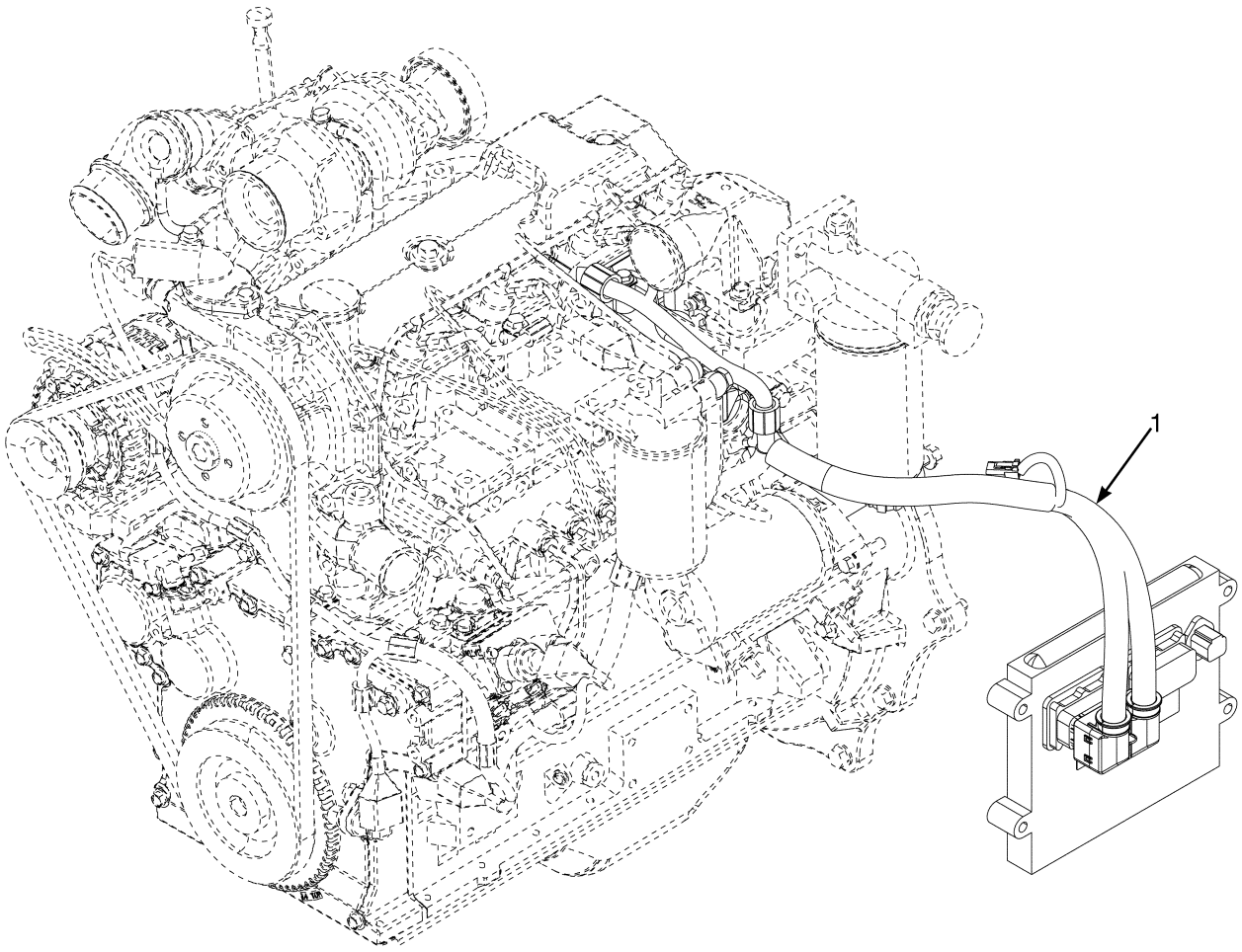

BP090411

©2014 Yale Materials Handling Corporation

WIRE HARNESS

ENGINE – CUMMINS QSB 3.3L DIESEL

ITEM	PART NO.	DESCRIPTION	QTY
1	580094469	Wire Harness (Engine)	1

©2014 Yale Materials Handling Corporation

WIRE HARNESS (FIGURE 6-42)
REAR — GM 4.3L GASOLINE AND LPG

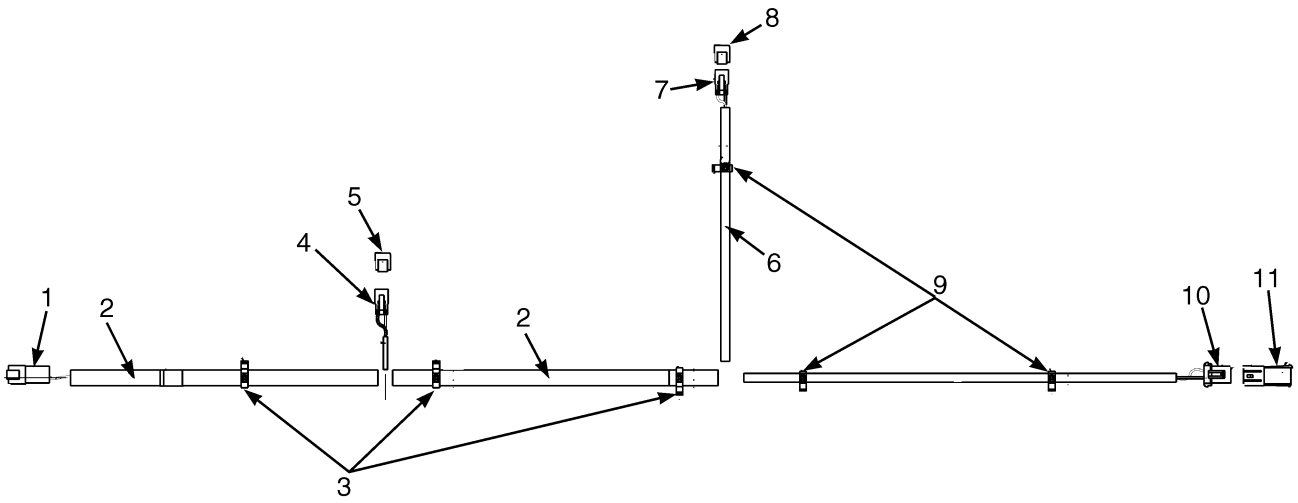

BP080753

©2014 Yale Materials Handling Corporation

WIRE HARNESS

REAR – GM 4.3L GASOLINE AND LPG

ITEM	PART NO.	DESCRIPTION	QTY
	580076478	Wire Harness (Rear)	1
1	. . . . .	Connector Assembly (To RH Chassis Harness)	1
1	580023951	Connector	1
1	518806641	Connector (Seconday Lock)	1
1	505968514	Terminal (Pin)	6
2	910065119	Conduit	AR
3	580030878	Clip	3
4	. . . . .	Connector Assembly (To Keyswitch Harness)	1
4	580021087	Connector (2 Way)	1
4	580021088	Connector (Secondary Lock)	1
4	505968568	Terminal (Socket)	2
5	. . . . .	Connector Assembly (Endcap)	1
5	580071066	Connector	1
6	580044908	Conduit	AR
7	. . . . .	Connector Assembly (Backup Alarm)	1
7	580021087	Connector (2 Way)	1
7	580021088	Connector (Secondary Lock)	1
7	505968568	Terminal (Socket)	2
8	. . . . .	Connector Assembly (Endcap)	1
8	580071066	Connector	1
9	580030876	Clip	3
10	. . . . .	Connector Assembly (Coolant Level)	1
10	582022672	Connector	1
10	520045069	Terminal (Seconday Lock)	1
10	504288733	Terminal	2
10	580023845	Seal	2
11	. . . . .	Connector Assembly (Endcap)	1
11	520045068	Connector	1
11	520045069	Terminal (Seconday Lock)	1
11	504288730	Seal	2

©2014 Yale Materials Handling Corporation

WIRE HARNESS (FIGURE 6-43)
REAR — CUMMINS QSB 3.3L DIESEL

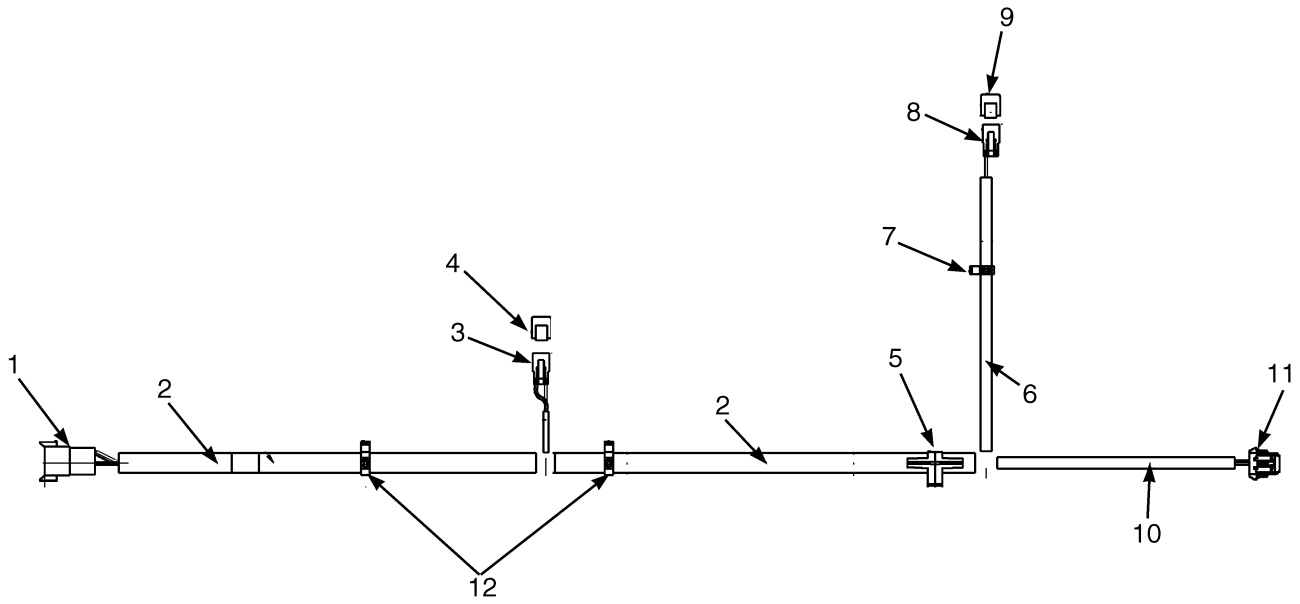

©2014 Yale Materials Handling Corporation

WIRE HARNESS

REAR – CUMMINS QSB 3.3L DIESEL

ITEM	PART NO.	DESCRIPTION	QTY
	580090795	Wire Harness (Rear)	1
1	. . . . .	Connector Assembly (To RH Chassis Harness)	1
1	580071962	Housing	1
1	505972507	Connector (Secondary Lock)	1
1	505968514	Terminal (Pin)	7
1	580019119	Plug	1
2	910065119	Conduit	AR
3	. . . . .	Connector Assembly (To Keyswitch Harness)	1
3	580021087	Connector (2 Way)	1
3	580021088	Connector (Secondary Lock)	1
3	505968568	Terminal (Socket)	2
4	. . . . .	Connector Assembly (Endcap)	1
4	580071066	Connector	1
5	580058669	Clip	1
6	580044908	Conduit	AR
7	580030876	Clip	1
8	. . . . .	Connector Assembly (Backup Alarm)	1
8	580021087	Connector (2 Way)	1
8	580021088	Connector (Secondary Lock)	1
8	505968568	Terminal (Socket)	2
9	. . . . .	Connector Assembly (Endcap)	1
9	580071066	Connector	1
10	580044908	Conduit	AR
11	. . . . .	Connector Assembly (Coolant Level)	1
11	580033516	Connector	1
11	580033537	Connector Lock	1
11	520045804	Terminal	3
11	580026649	Wire Seal	3
12	580030878	Clip	3

©2014 Yale Materials Handling Corporation

WIRE HARNESS (FIGURE 6-44)

RIGHT HAND CHASSIS — GM 4.3L GASOLINE AND LPG (→ S/N D878V01870H)

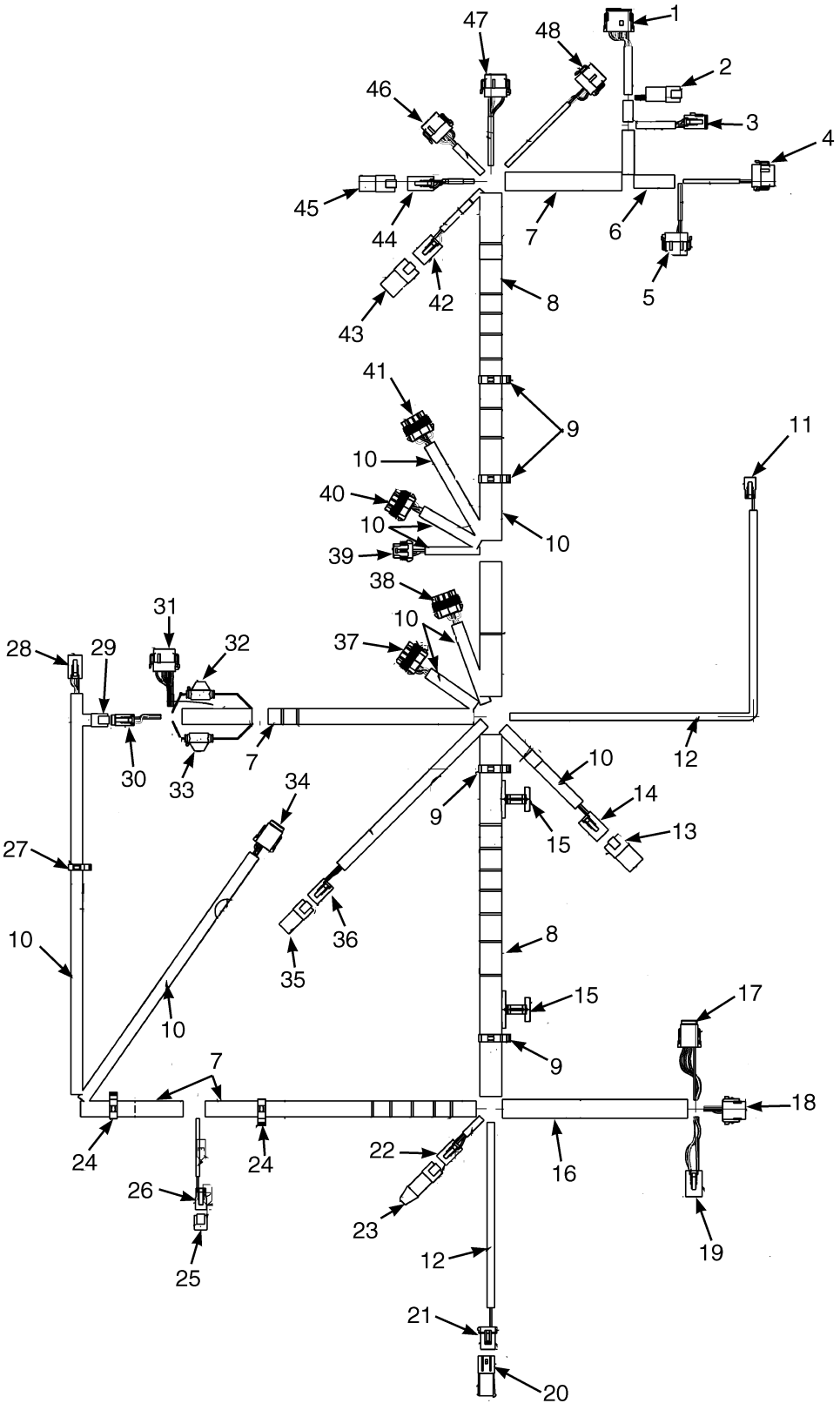

©2014 Yale Materials Handling Corporation

WIRE HARNESS

RIGHT HAND CHASSIS – GM 4.3L GASOLINE AND LPG (→ S/N D878V01870H)

ITEM	PART NO.	DESCRIPTION	QTY
	580090274	Wire Harness (Right Hand Chassis Harness)	1
1	. . . . .	Connector Assembly (Vehicle System Manager)	1
1	580036940	Connector	1
1	580026813	Connector	1
1	505968568	Terminal (Socket)	8
1	505968593	Terminal (Socket)	1
2	. . . . .	Connector Assembly (To Cowl Harness)	1
2	580020942	Connector (4 Way)	1
2	518806635	Connector (Secondary Lock)	1
2	505968514	Terminal (Pin)	4
3	. . . . .	Connector Assembly (To Cowl Harness)	1
3	580022859	Connector (12-Way)	1
3	580026813	Connector	1
3	505968568	Terminal (Socket)	10
3	580019119	Plug	2
4	. . . . .	Connector Assembly (Vehicle System Manager)	1
4	580036981	Connector	1
4	580036986	Connector	1
4	580039513	Terminal	3
4	580019119	Plug	9
5	. . . . .	Connector Assembly (Vehicle System Manager)	1
5	580036983	Connector	1
5	580036986	Connector	1
5	580039513	Terminal	3
5	580019119	Plug	9
6	910065119	Conduit	AR
7	520045672	Conduit	AR
8	580041641	Conduit	AR
9	580039764	Clip	4
10	520038855	Conduit	AR
11	. . . . .	Connector Assembly (Hydraulic Solenoid)	1
11	580021087	Connector (2 Way)	1
11	580021088	Connector (Secondary Lock)	1
11	505968568	Terminal (Socket)	2
12	580044908	Conduit	AR
13	. . . . .	Connector Assembly (Endcap)	1
13	580040822	Connector	1
13	505968566	Plug	4
14	. . . . .	Connector Assembly (Accessory Two)	1
14	580040820	Connector	1
14	580040821	Connector (Lock)	1
14	505968566	Plug	1
14	580050627	Terminal	3
15	580069342	Clip	2
16	505970586	Conduit	2
17	. . . . .	Connector Assembly (To Engine Harness)	1
17	580042221	Connector	1
17	580042222	Connector	1
17	580039513	Terminal	8
18	. . . . .	Connector Assembly (To Engine Harness)	1

©2014 Yale Materials Handling Corporation

WIRE HARNESS

RIGHT HAND CHASSIS – GM 4.3L GASOLINE AND LPG (→ S/N D878V01870H)

ITEM	PART NO.	DESCRIPTION	QTY
18	580027206	Connector	1
18	580027207	Connector	1
18	505968568	Terminal (Socket)	7
18	580019119	Plug	1
19	. . . . .	Connector Assembly (To Engine Harness)	1
19	580040820	Connector	1
19	580040821	Connector (Lock)	1
19	580050627	Terminal	4
20	. . . . .	Connector Assembly (Endcap)	1
20	520045068	Connector	1
20	520045069	Terminal (Seconday Lock)	1
20	504288730	Seal	2
21	. . . . .	Connector Assembly (Hydraulic Filter)	1
21	520045074	Plug	1
21	520045069	Terminal (Seconday Lock)	1
21	504288733	Terminal	2
21	580023845	Seal	2
22	. . . . .	Connector Assembly (Bus Terminal Two)	1
22	580020943	Connector (4-Way)	1
22	580020944	Connector	1
22	505968568	Terminal (Socket)	4
23	. . . . .	Connector Assembly (Endcap)	1
23	580037670	Connector (With Resistor)	1
24	580039799	Clip	2
25	. . . . .	Connector Assembly (Endcap)	1
25	580071066	Connector	1
26	. . . . .	Connector Assembly (Alternate Horn Button)	1
26	580021087	Connector (2 Way)	1
26	580021088	Connector (Secondary Lock)	1
26	505968568	Terminal (Socket)	2
27	580025559	Clip	1
28	. . . . .	Connector Assembly (To Rear Harness)	1
28	580022861	Connector (6 Way Housing)	1
28	580036992	Connector	1
28	505968568	Terminal (Socket)	6
29	. . . . .	Connector Assembly (Endcap)	1
29	580039490	Connector	1
29	580019119	Plug	6
30	. . . . .	Connector Assembly (To Transmission Harness)	1
30	580039499	Connector	1
30	580039500	Connector (Lock)	1
30	580039513	Terminal	5
30	580019119	Plug	1
31	. . . . .	Connector Assembly (To Transmission Harness)	1
31	580036981	Connector	1
31	580036986	Connector	1
31	580039513	Terminal	12
32	. . . . .	Connector Assembly (Ignition Fuse)	1
32	580063571	Fuse Holder	1
32	580025568	Fuse (7.5 Amp)	1

©2014 Yale Materials Handling Corporation

WIRE HARNESS

RIGHT HAND CHASSIS – GM 4.3L GASOLINE AND LPG (→ S/N D878V01870H)

ITEM	PART NO.	DESCRIPTION	QTY
33	. . . . .	Connector Assembly (Battery Fuse)	1
33	580063571	Fuse Holder	1
33	580025568	Fuse (7.5 Amp)	1
34	. . . . .	Connector Assembly (To Seat Harness)	1
34	580042221	Connector	1
34	580042222	Connector	1
34	580039513	Terminal	8
35	. . . . .	Connector Assembly (Endcap)	1
35	580036910	Connector	1
36	. . . . .	Connector Assembly (Impact Sensor)	1
36	580020943	Connector (4-Way)	1
36	580020944	Connector	1
36	505968568	Terminal (Socket)	4
37	. . . . .	Connector Assembly (Power Distribution Module)	1
37	580034504	Connector	1
37	580034509	Lock	1
37	505968505	Seal	7
37	504288730	Seal	1
37	504288733	Terminal	4
37	580034658	Terminal	3
38	. . . . .	Connector Assembly (Power Distribution Module)	1
38	580034505	Connector	1
38	580034509	Lock	1
38	505968505	Seal	5
38	504288730	Seal	1
38	504288733	Terminal	6
38	580034658	Terminal	1
38	580023845	Seal	2
39	. . . . .	Connector Assembly (Horn)	1
39	580033515	Connector	1
39	580033537	Connector Lock	1
39	520045805	Seal	2
39	520045804	Terminal	3
39	580026649	Wire Seal	1
40	. . . . .	Connector Assembly (Power Distribution Module)	1
40	580034507	Connector	1
40	580034509	Lock	1
40	504288730	Seal	1
40	505968505	Seal	7
40	580034658	Terminal	7
41	. . . . .	Connector Assembly (Power Distribution Module)	1
41	580034506	Connector	1
41	580034509	Lock	1
41	505968505	Seal	8
41	504288733	Terminal	5
41	580034658	Terminal	3
42	. . . . .	Connector Assembly (To Lights/Cab Harness)	1
42	580040820	Connector	1
42	580040821	Connector (Lock)	1
42	580050627	Terminal	4

©2014 Yale Materials Handling Corporation

WIRE HARNESS

RIGHT HAND CHASSIS – GM 4.3L GASOLINE AND LPG (→ S/N D878V01870H)

ITEM	PART NO.	DESCRIPTION	QTY
43	. . . . .	Connector Assembly (Endcap)	1
43	580040822	Connector	1
43	505968566	Plug	4
44	. . . . .	Connector Assembly (Accessory One)	1
44	580043467	Connector	1
44	580043915	Connector	1
44	580050627	Terminal	1
45	. . . . .	Connector Assembly (Endcap)	1
45	580032038	Connector	1
45	505968566	Plug	2
46	. . . . .	Connector Assembly (Vehicle System Manager)	1
46	580036981	Connector	1
46	580039502	Connector	1
46	580039513	Terminal	6
46	580019119	Plug	6
47	. . . . .	Connector Assembly (Vehicle System Manager)	1
47	580036982	Connector	1
47	580039502	Connector	1
47	580039513	Terminal	6
47	580019119	Plug	6
48	. . . . .	Connector Assembly (Vehicle System Manager)	1
48	580036984	Connector	1
48	580039502	Connector	1
48	580039513	Terminal	4
48	580019119	Plug	8

©2014 Yale Materials Handling Corporation

NOTES

©2014 Yale Materials Handling Corporation

WIRE HARNESS (FIGURE 6-45)

RIGHT HAND CHASSIS — GM 4.3L GASOLINE AND LPG (S/N D878V01871H →)

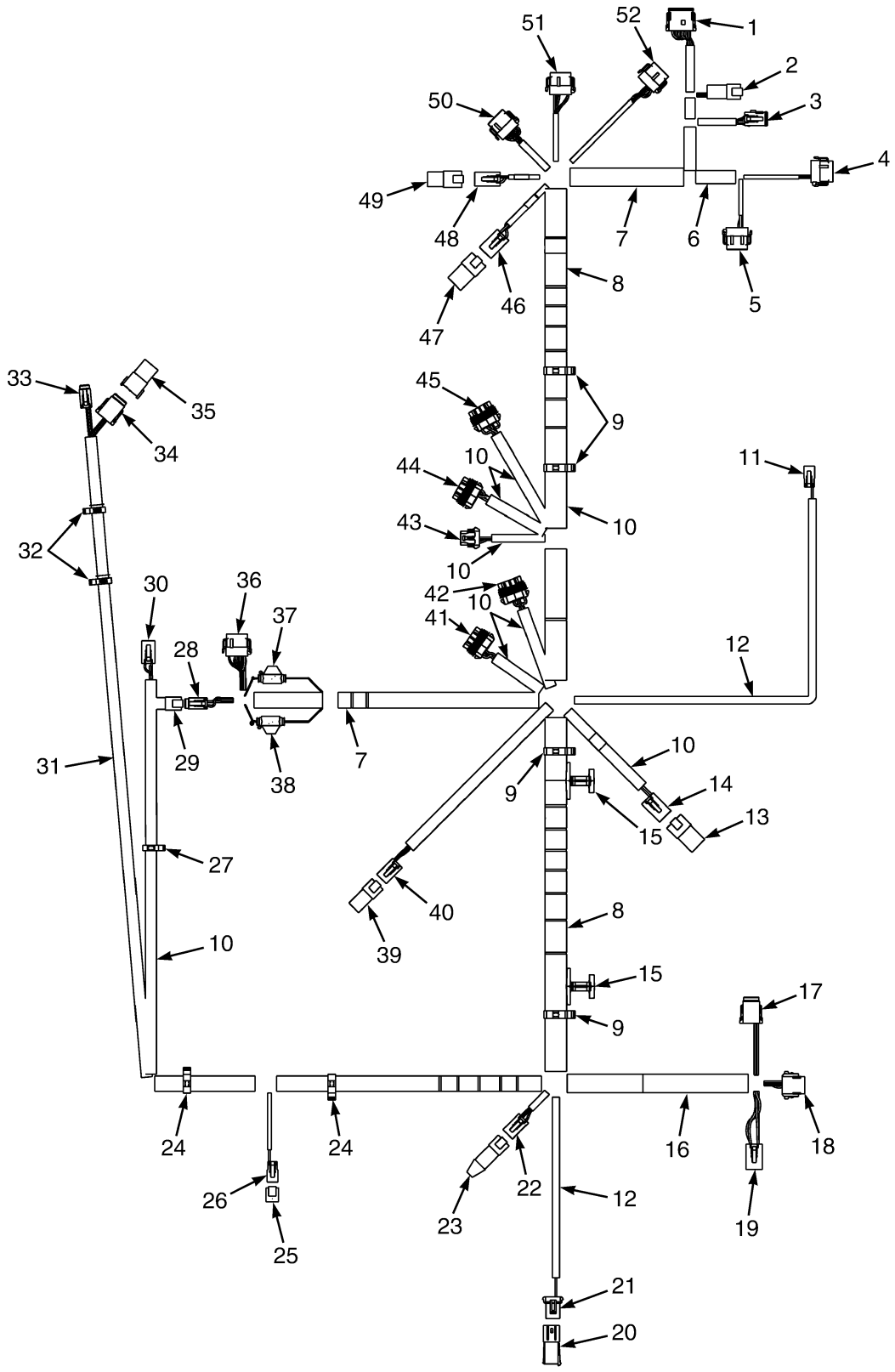

BP080988

©2014 Yale Materials Handling Corporation

WIRE HARNESS

RIGHT HAND CHASSIS – GM 4.3L GASOLINE AND LPG (S/N D878V01871H →)

ITEM	PART NO.	DESCRIPTION	QTY
	582008322	Wire Harness (Right Hand Chassis Harness)	1
1	. . . . .	Connector Assembly (Vehicle System Manager)	1
1	580036940	Connector	1
1	580026813	Connector (Secondary Lock)	1
1	505968568	Terminal (Socket)	8
1	505968593	Terminal (Socket)	1
2	. . . . .	Connector Assembly (To Cowl Harness)	1
2	580020942	Connector (4 Way)	1
2	518806635	Connector (Secondary Lock)	1
2	505968514	Terminal (Pin)	4
3	. . . . .	Connector Assembly (To Cowl Harness)	1
3	580022859	Connector (12-Way)	1
3	580026813	Connector (Secondary Lock)	1
3	505968568	Terminal (Socket)	10
3	580019119	Plug	2
4	. . . . .	Connector Assembly (Vehicle System Manager)	1
4	580036981	Connector	1
4	580036986	Connector (Secondary Lock)	1
4	580039513	Terminal	3
4	580019119	Plug	9
5	. . . . .	Connector Assembly (Vehicle System Manager)	1
5	580036983	Connector	1
5	580036986	Connector (Secondary Lock)	1
5	580039513	Terminal	3
5	580019119	Plug	9
6	910065119	Conduit	AR
7	520045672	Conduit	AR
8	580041641	Conduit	AR
9	580039764	Clip	4
10	520038855	Conduit	AR
11	. . . . .	Connector Assembly (Hydraulic Solenoid)	1
11	580021087	Connector (2 Way)	1
11	580021088	Connector (Secondary Lock) (Secondary Lock)	1
11	505968568	Terminal (Socket)	2
12	580044908	Conduit	AR
13	. . . . .	Connector Assembly (Endcap)	1
13	580040822	Connector	1
13	505968566	Plug	4
14	. . . . .	Connector Assembly (Accessory Two)	1
14	580040820	Connector	1
14	580040821	Connector (Lock) (Secondary Lock)	1
14	505968566	Plug	1
14	580050627	Terminal	3
15	580069342	Clip	2
16	505970586	Conduit	2
17	. . . . .	Connector Assembly (To Engine Harness)	1
17	580042221	Connector	1
17	580042222	Connector (Secondary Lock)	1
17	580039513	Terminal	8
18	. . . . .	Connector Assembly (To Engine Harness)	1

©2014 Yale Materials Handling Corporation

WIRE HARNESS

RIGHT HAND CHASSIS – GM 4.3L GASOLINE AND LPG (S/N D878V01871H →)

ITEM	PART NO.	DESCRIPTION	QTY
18	580027206	Connector	1
18	580027207	Connector (Secondary Lock)	1
18	505968568	Terminal (Socket)	7
18	580019119	Plug	1
19	. . . . .	Connector Assembly (To Engine Harness)	1
19	580040820	Connector	1
19	580040821	Connector (Lock) (Secondary Lock)	1
19	580050627	Terminal	4
20	. . . . .	Connector Assembly (Endcap)	1
20	520045068	Connector	1
20	520045069	Terminal (Seconday Lock) (Secondary Lock)	1
20	504288730	Seal	2
21	. . . . .	Connector Assembly (Hydraulic Filter)	1
21	520045074	Plug	1
21	520045069	Terminal (Seconday Lock) (Secondary Lock)	1
21	504288733	Terminal	2
21	580023845	Seal	2
22	. . . . .	Connector Assembly (Bus Terminal Two)	1
22	580020943	Connector (4-Way)	1
22	580020944	Connector	1
22	505968568	Terminal (Socket)	4
23	. . . . .	Connector Assembly (Endcap)	1
23	580037670	Connector (With Resistor)	1
24	580039799	Clip	2
25	. . . . .	Connector Assembly (Endcap)	1
25	580071066	Connector	1
26	. . . . .	Connector Assembly (Alternate Horn Button)	1
26	580021087	Connector (2 Way)	1
26	580021088	Connector (Secondary Lock) (Secondary Lock)	1
26	505968568	Terminal (Socket)	2
27	580025559	Clip	1
28	. . . . .	Connector Assembly (To Transmission Harness)	1
28	580039499	Connector	1
28	580039500	Connector (Lock) (Secondary Lock)	1
28	580039513	Terminal	5
28	580019119	Plug	1
29	. . . . .	Connector Assembly (Endcap)	1
29	580039490	Connector	1
29	580019119	Plug	6
30	. . . . .	Connector Assembly (To Rear Harness)	1
30	580022861	Connector (6 Way Housing)	1
30	580036992	Connector	1
30	505968568	Terminal (Socket)	6
31	580094353	Conduit	1
32	580030878	Clip	2
33	. . . . .	Connector Assembly (To Seat Harness)	1
33	580039499	Connector	1
33	580039500	Connector (Lock) (Secondary Lock)	1
33	580039513	Terminal	4
33	580019119	Plug	2

©2014 Yale Materials Handling Corporation

WIRE HARNESS

RIGHT HAND CHASSIS – GM 4.3L GASOLINE AND LPG (S/N D878V01871H →)

ITEM	PART NO.	DESCRIPTION	QTY
34	. . . . .	Connector Assembly (To MLM Harness)	1
34	580042221	Connector	1
34	580042222	Connector (Secondary Lock)	1
34	580039513	Terminal	5
34	580019119	Plug	3
35	. . . . .	Connector Assembly (Endcap)	1
35	580042219	Connector (8 Pin)	1
35	580019119	Plug	2
36	. . . . .	Connector Assembly (To Transmission Harness)	1
36	580036981	Connector	1
36	580036986	Connector (Secondary Lock)	1
36	580039513	Terminal	12
37	. . . . .	Connector Assembly (Ignition Fuse)	1
37	580063571	Fuse Holder	1
37	580025568	Fuse (7.5 Amp)	1
38	. . . . .	Connector Assembly (Battery Fuse)	1
38	580063571	Fuse Holder	1
38	580025568	Fuse (7.5 Amp)	1
39	. . . . .	Connector Assembly (Endcap)	1
39	580036910	Connector	1
40	. . . . .	Connector Assembly (Impact Sensor)	1
40	580020943	Connector (4-Way)	1
40	580020944	Connector	1
40	505968568	Terminal (Socket)	4
41	. . . . .	Connector Assembly (Power Distribution Module)	1
41	580034504	Connector	1
41	580034509	Lock	1
41	505968505	Seal	7
41	504288730	Seal	1
41	504288733	Terminal	4
41	580034658	Terminal	3
42	. . . . .	Connector Assembly (Power Distribution Module)	1
42	580034505	Connector	1
42	580034509	Lock	1
42	505968505	Seal	5
42	504288730	Seal	1
42	504288733	Terminal	6
42	580034658	Terminal	1
42	580023845	Seal	2
43	. . . . .	Connector Assembly (Horn)	1
43	580033515	Connector	1
43	580033537	Connector Lock	1
43	520045805	Seal	2
43	520045804	Terminal	3
43	580026649	Wire Seal	1
44	. . . . .	Connector Assembly (Power Distribution Module)	1
44	580034507	Connector	1
44	580034509	Lock	1
44	504288730	Seal	1
44	505968505	Seal	7

©2014 Yale Materials Handling Corporation

WIRE HARNESS

RIGHT HAND CHASSIS – GM 4.3L GASOLINE AND LPG (S/N D878V01871H →)

ITEM	PART NO.	DESCRIPTION	QTY
44	580034658	Terminal	7
45	. . . . .	Connector Assembly (Power Distribution Module)	1
45	580034506	Connector	1
45	580034509	Lock	1
45	505968505	Seal	8
45	504288733	Terminal	5
45	580034658	Terminal	3
46	. . . . .	Connector Assembly (To Lights/Cab Harness)	1
46	580040820	Connector	1
46	580040821	Connector (Lock) (Secondary Lock)	1
46	580050627	Terminal	4
47	. . . . .	Connector Assembly (Endcap)	1
47	580040822	Connector	1
47	505968566	Plug	4
48	. . . . .	Connector Assembly (Accessory One)	1
48	580043915	Connector	1
48	580043467	Connector	1
48	580050627	Terminal	1
49	. . . . .	Connector Assembly (Endcap)	1
49	580032038	Connector	1
49	505968566	Plug	2
50	. . . . .	Connector Assembly (Vehicle System Manager)	1
50	580036981	Connector	1
50	580039502	Connector (Secondary Lock)	1
50	580039513	Terminal	6
50	580019119	Plug	6
51	. . . . .	Connector Assembly (Vehicle System Manager)	1
51	580036982	Connector	1
51	580039502	Connector (Secondary Lock)	1
51	580039513	Terminal	6
51	580019119	Plug	6
52	. . . . .	Connector Assembly (Vehicle System Manager)	1
52	580036984	Connector	1
52	580039502	Connector (Secondary Lock)	1
52	580039513	Terminal	4
52	580019119	Plug	8

©2014 Yale Materials Handling Corporation

NOTES

©2014 Yale Materials Handling Corporation

WIRE HARNESS (FIGURE 6-46)

RIGHT HAND CHASSIS — CUMMINS QSB 3.3L DIESEL (→ S/N D878V01858H)

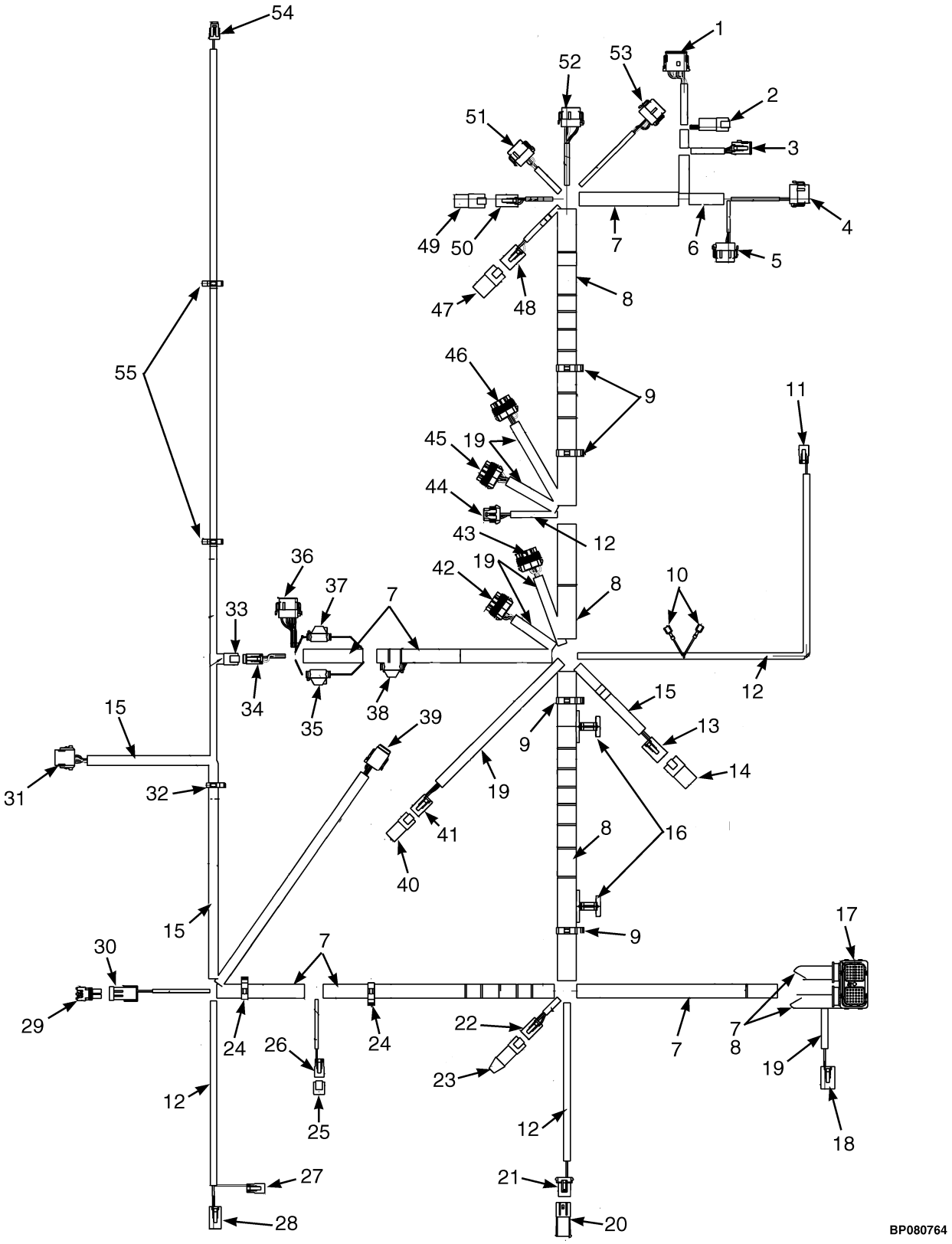

©2014 Yale Materials Handling Corporation

WIRE HARNESS

RIGHT HAND CHASSIS – CUMMINS QSB 3.3L DIESEL (→ S/N D878V01858H)

ITEM	PART NO.	DESCRIPTION	QTY
	580090275	Wire Harness (Right Hand Chassis)	1
1	. . . . .	Connector Assembly (Vehicle System Manager)	1
1	580036940	Connector	1
1	580026813	Connector	1
1	505968568	Terminal (Socket)	8
1	505968593	Terminal (Socket)	4
2	. . . . .	Connector Assembly (To Cowl Harness)	1
2	580020942	Connector (4 Way)	1
2	518806635	Connector (Secondary Lock)	1
2	505968514	Terminal (Pin)	4
3	. . . . .	Connector Assembly (To Cowl Harness)	1
3	580022859	Connector (12-Way)	1
3	580026813	Connector	1
3	505968568	Terminal (Socket)	10
3	580019119	Plug	2
4	. . . . .	Connector Assembly (Vehicle System Manager)	1
4	580036981	Connector	1
4	580036986	Connector	1
4	580039513	Terminal	3
4	580019119	Plug	9
5	. . . . .	Connector Assembly (Vehicle System Manager)	1
5	580036983	Connector	1
5	580036986	Connector	1
5	580039513	Terminal	3
5	580019119	Plug	9
6	910065119	Conduit	AR
7	520045672	Conduit	AR
8	580041641	Conduit	AR
9	580039764	Clip	4
10	. . . . .	Connector Assembly (Contactor Ground)	1
10	580027620	Connector Body	1
10	. . . . .	Connector Assembly (Contactor Signal)	1
10	580027620	Connector Body	1
11	. . . . .	Connector Assembly (Hydraulic Solenoid)	1
11	580021087	Connector (2 Way)	1
11	580021088	Connector (Secondary Lock)	1
11	505968568	Terminal (Socket)	2
12	580044908	Conduit	1
13	. . . . .	Connector Assembly (Accessory 2)	1
13	580040820	Connector	1
13	580040821	Connector (Lock)	1
13	505968566	Plug	1
13	580050627	Terminal	3
14	. . . . .	Connector Assembly (Endcap)	1
14	580040822	Connector	1
14	505968566	Plug	6
15	520038855	Conduit	AR
16	580069342	Clip	2
17	. . . . .	Connector Assembly (Engine Control Module)	1
17	580087837	Connector	1

©2014 Yale Materials Handling Corporation

WIRE HARNESS

RIGHT HAND CHASSIS – CUMMINS QSB 3.3L DIESEL (→ S/N D878V01858H)

ITEM	PART NO.	DESCRIPTION	QTY
17	580087838	Strain Relief	1
17	580019119	Plug	46
17	580039514	Terminal	14
18	. . . . .	Connector Assembly (Engine Control Module)	1
18	580040820	Connector	1
18	580040821	Connector (Lock)	1
18	505968566	Plug	2
18	580050627	Terminal	2
19	520038855	Conduit	AR
20	. . . . .	Connector Assembly (Endcap)	1
20	520045068	Connector	1
20	520045074	Plug	1
20	504288730	Seal	2
21	. . . . .	Connector Assembly (Hydraulic Filter)	1
21	520045074	Plug	1
21	520045069	Terminal (Seconday Lock)	1
21	504288733	Terminal	1
21	580023845	Seal	2
22	. . . . .	Connector Assembly (Bus Terminal 2)	1
22	580020943	Connector (4-Way)	1
22	580020944	Connector	1
22	505968568	Terminal (Socket)	4
23	. . . . .	Connector Assembly (Endcap with Resistor)	1
23	580037670	Connector (With Resistor)	1
24	580039799	Clip	2
25	. . . . .	Connector Assembly (Endcap)	1
25	580071066	Connector	1
26	. . . . .	Connector Assembly (Alternate Horn Button)	1
26	580021087	Connector (2 Way)	1
26	580021088	Connector (Secondary Lock)	1
26	505968568	Terminal (Socket)	2
27	. . . . .	Connector Assembly (To Alternator Harness)	1
27	580021087	Connector (2 Way)	1
27	580021088	Connector (Secondary Lock)	1
27	505968568	Terminal (Socket)	1
27	580019119	Plug	1
28	. . . . .	Connector Assembly (To Alternator Harness)	1
28	580043467	Connector	1
28	580043915	Connector	1
28	580050627	Terminal	2
29	. . . . .	Connector Assembly (Endcap)	1
29	580012323	Connector	1
29	504288730	Seal	2
30	. . . . .	Connector Assembly (Air Restriction Sensor)	1
30	580012324	Connector	1
30	520038875	Terminal	2
30	580023845	Seal	2
31	. . . . .	Connector Assembly (To Rear Harness)	1
31	580027206	Connector	1
31	580027207	Connector	1

©2014 Yale Materials Handling Corporation

WIRE HARNESS

RIGHT HAND CHASSIS – CUMMINS QSB 3.3L DIESEL (→ S/N D878V01858H)

ITEM	PART NO.	DESCRIPTION	QTY
31	505968568	Terminal (Socket)	7
31	520045804	Terminal	1
32	580025559	Clip	1
33	. . . . .	Connector Assembly (Endcap)	1
33	580039490	Connector	1
33	580019119	Plug	6
34	. . . . .	Connector Assembly (To Transmission Harness)	1
34	580039499	Connector	1
34	580039500	Connector (Lock)	1
34	580039513	Terminal	5
34	580019119	Plug	1
35	. . . . .	Connector Assembly (Battery Fuse)	1
35	580063571	Fuse Holder	1
35	580025568	Fuse (7.5 Amp)	1
36	. . . . .	Connector Assembly (To Transmission Harness)	1
36	580036981	Connector	1
36	580036986	Connector	1
36	580039513	Terminal	12
37	. . . . .	Connector Assembly (Ignition Fuse)	1
37	580063571	Fuse Holder	1
37	580025568	Fuse (7.5 Amp)	1
38	. . . . .	Connector Assembly (Ignition Fuse)	1
38	580063571	Fuse Holder	1
38	580025567	Fuse (5 Amp)	1
39	. . . . .	Connector Assembly (To Seat Harness)	1
39	580042221	Connector	1
39	580042222	Connector	1
39	580039513	Terminal	8
40	. . . . .	Connector Assembly (Endcap)	1
40	580036910	Connector	1
41	. . . . .	Connector Assembly (Impact Sensor)	1
41	580020943	Connector (4-Way)	1
41	580020944	Connector	1
41	505968568	Terminal (Socket)	4
42	. . . . .	Connector Assembly (Power Distribution Module)	1
42	580034504	Connector	1
42	580034509	Lock	1
42	505968505	Seal	7
42	504288730	Seal	1
42	504288733	Terminal	4
42	580034658	Terminal	3
43	. . . . .	Connector Assembly (Power Distribution Module)	1
43	580034505	Connector	1
43	580034509	Lock	1
43	505968505	Seal	5
43	504288730	Seal	2
43	504288733	Terminal	5
43	580034658	Terminal	1
43	580023845	Seal	1
44	. . . . .	Connector Assembly (Horn)	1

©2014 Yale Materials Handling Corporation

WIRE HARNESS

RIGHT HAND CHASSIS – CUMMINS QSB 3.3L DIESEL (→ S/N D878V01858H)

ITEM	PART NO.	DESCRIPTION	QTY
44	580033515	Connector	1
44	580033537	Connector Lock	1
44	520045805	Seal	2
44	520045804	Terminal	3
44	580026649	Wire Seal	1
45	. . . . .	Connector Assembly (Power Distribution Module)	1
45	580034507	Connector	1
45	580034509	Lock	1
45	505968505	Seal	7
45	504288730	Seal	1
45	580034658	Terminal	7
46	. . . . .	Connector Assembly (Power Distribution Module)	1
46	580034506	Connector	1
46	580034509	Lock	4
46	505968505	Seal	7
46	580023845	Seal	1
46	504288733	Terminal	5
46	580034658	Terminal	3
47	. . . . .	Connector Assembly (Endcap)	1
47	580040822	Connector	1
47	505968566	Plug	4
48	. . . . .	Connector Assembly (To Lights/Cab Harness)	1
48	580040820	Connector	1
48	580040821	Connector (Lock)	1
48	580050627	Terminal	4
49	. . . . .	Connector Assembly (Endcap)	1
49	580032038	Connector	1
49	505968566	Plug	2
50	. . . . .	Connector Assembly (Accessory 1)	1
50	580043467	Connector	1
50	580043915	Connector	1
50	580050627	Terminal	2
51	. . . . .	Connector Assembly (Vehicle System Manager)	1
51	580036981	Connector	1
51	580039502	Connector	1
51	580039513	Terminal	8
51	580050627	Terminal	4
52	. . . . .	Connector Assembly (Vehicle System Manager)	1
52	580036982	Connector	1
52	580039502	Connector	1
52	580039513	Terminal	6
52	580019119	Plug	6
53	. . . . .	Connector Assembly (Vehicle System Manager)	1
53	580036984	Connector	1
53	580039502	Connector	1
53	580039513	Terminal	4
53	580019119	Plug	8
54	. . . . .	Connector Assembly (Fuel Level)	1
54	580025779	Connector	1
54	504288741	Terminal	2

©2014 Yale Materials Handling Corporation

WIRE HARNESS

RIGHT HAND CHASSIS – CUMMINS QSB 3.3L DIESEL (→ S/N D878V01858H)

ITEM	PART NO.	DESCRIPTION	QTY
55	580025560	Clip	2

©2014 Yale Materials Handling Corporation

WIRE HARNESS (FIGURE 6-47)

RIGHT HAND CHASSIS — CUMMINS QSB 3.3L DIESEL (S/N D878V01859H →)

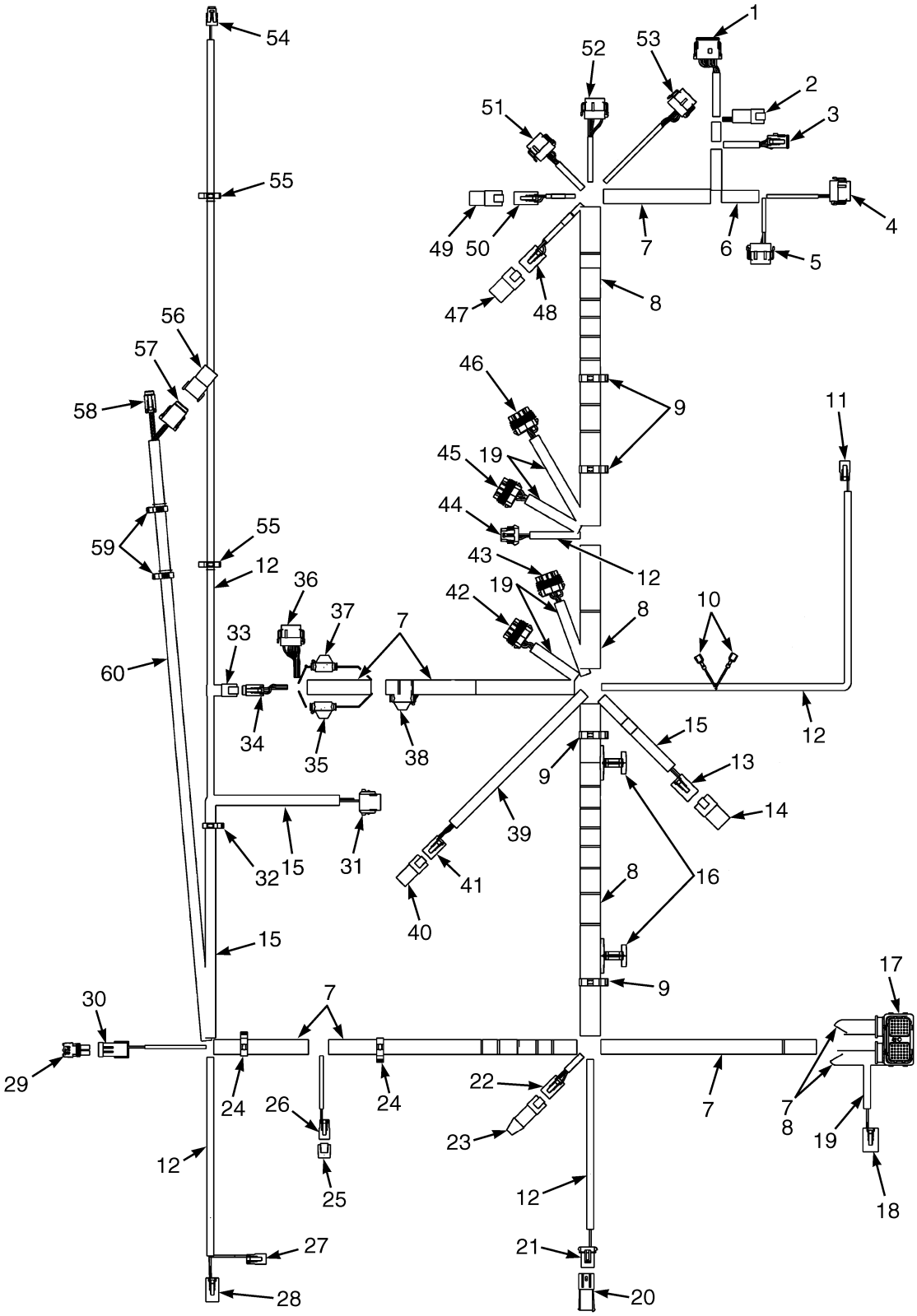

©2014 Yale Materials Handling Corporation

WIRE HARNESS

RIGHT HAND CHASSIS – CUMMINS QSB 3.3L DIESEL (S/N D878V01859H →)

ITEM	PART NO.	DESCRIPTION	QTY
	582008323	Wire Harness (RH Chassis)	1
1	. . . . .	Connector Assembly (Vehicle System Manager)	1
1	580036940	Connector	1
1	580026813	Connector (Secondary Lock)	1
1	505968568	Terminal (Socket)	8
1	505968593	Terminal (Socket)	4
2	. . . . .	Connector Assembly (To Cowl Harness)	1
2	580020942	Connector (4 Way)	1
2	518806635	Connector (Secondary Lock) (Secondary Lock)	1
2	505968514	Terminal (Pin)	4
3	. . . . .	Connector Assembly (To Cowl Harness)	1
3	580022859	Connector (12-Way)	1
3	580026813	Connector (Secondary Lock)	1
3	505968568	Terminal (Socket)	10
3	580019119	Plug	2
4	. . . . .	Connector Assembly (Vehicle System Manager)	1
4	580036981	Connector	1
4	580036986	Connector (Secondary Lock)	1
4	580039513	Terminal	3
4	580019119	Plug	9
5	. . . . .	Connector Assembly (Vehicle System Manager)	1
5	580036983	Connector	1
5	580036986	Connector (Secondary Lock)	1
5	580039513	Terminal	3
5	580019119	Plug	9
6	910065119	Conduit	AR
7	520045672	Conduit	AR
8	580041641	Conduit	AR
9	580039764	Clip	4
10	. . . . .	Connector Assembly (Contactor Ground)	1
10	580027620	Connector Body	1
10	. . . . .	Connector Assembly (Contactor Signal)	1
10	580027620	Connector Body	1
11	. . . . .	Connector Assembly (Hydraulic Solenoid)	1
11	580021087	Connector (2 Way)	1
11	580021088	Connector (Secondary Lock) (Secondary Lock)	1
11	505968568	Terminal (Socket)	2
12	580044908	Conduit	1
13	. . . . .	Connector Assembly (Accessory 2)	1
13	580040820	Connector	1
13	580040821	Connector (Lock) (Secondary Lock)	1
13	505968566	Plug	1
13	580050627	Terminal	3
14	. . . . .	Connector Assembly (Endcap)	1
14	580040822	Connector	1
14	505968566	Plug	6
15	520038855	Conduit	AR
16	580069342	Clip	2
17	. . . . .	Connector Assembly (Engine Control Module)	1
17	580087837	Connector	1

©2014 Yale Materials Handling Corporation

WIRE HARNESS

RIGHT HAND CHASSIS – CUMMINS QSB 3.3L DIESEL (S/N D878V01859H →)

ITEM	PART NO.	DESCRIPTION	QTY
17	580087838	Strain Relief	1
17	580019119	Plug	46
17	580039514	Terminal	14
18	. . . . .	Connector Assembly (Engine Control Module)	1
18	580040820	Connector	1
18	580040821	Connector (Lock) (Secondary Lock)	1
18	505968566	Plug	2
18	580050627	Terminal	2
19	520038855	Conduit	AR
20	. . . . .	Connector Assembly (Endcap)	1
20	520045068	Connector	1
20	520045074	Plug	1
20	504288730	Seal	2
21	. . . . .	Connector Assembly (Hydraulic Filter)	1
21	520045074	Plug	1
21	520045069	Terminal (Seconday Lock) (Secondary Lock)	1
21	504288733	Terminal	1
21	580023845	Seal	2
22	. . . . .	Connector Assembly (Bus Terminal 2)	1
22	580020943	Connector (4-Way)	1
22	580020944	Connector (Secondary Lock)	1
22	505968568	Terminal (Socket)	4
23	. . . . .	Connector Assembly (Endcap with Resistor)	1
23	580037670	Connector (With Resistor)	1
24	580039799	Clip	2
25	. . . . .	Connector Assembly (Endcap)	1
25	580071066	Connector	1
26	. . . . .	Connector Assembly (Alternate Horn Button)	1
26	580021087	Connector (2 Way)	1
26	580021088	Connector (Secondary Lock) (Secondary Lock)	1
26	505968568	Terminal (Socket)	2
27	. . . . .	Connector Assembly (To Alternator Harness)	1
27	580021087	Connector (2 Way)	1
27	580021088	Connector (Secondary Lock) (Secondary Lock)	1
27	505968568	Terminal (Socket)	1
27	580019119	Plug	1
28	. . . . .	Connector Assembly (To Alternator Harness)	1
28	580043467	Connector	1
28	580043915	Connector (Secondary Lock)	1
28	580050627	Terminal	2
29	. . . . .	Connector Assembly (Endcap)	1
29	580012323	Connector	1
29	504288730	Seal	2
30	. . . . .	Connector Assembly (Air Restriction Sensor)	1
30	580012324	Connector	1
30	520038875	Terminal	2
30	580023845	Seal	2
31	. . . . .	Connector Assembly (To Rear Harness)	1
31	580027206	Connector	1
31	580027207	Connector (Secondary Lock)	1

©2014 Yale Materials Handling Corporation

WIRE HARNESS

RIGHT HAND CHASSIS – CUMMINS QSB 3.3L DIESEL (S/N D878V01859H →)

ITEM	PART NO.	DESCRIPTION	QTY
31	505968568	Terminal (Socket)	7
31	520045804	Terminal	1
32	580025559	Clip	1
33	. . . . .	Connector Assembly (Endcap)	1
33	580039490	Connector	1
33	580019119	Plug	6
34	. . . . .	Connector Assembly (To Transmission Harness)	1
34	580039499	Connector	1
34	580039500	Connector (Lock) (Secondary Lock)	1
34	580039513	Terminal	5
34	580019119	Plug	1
35	. . . . .	Connector Assembly (Battery Fuse)	1
35	580063571	Fuse Holder	1
35	580025568	Fuse (7.5 Amp)	1
36	. . . . .	Connector Assembly (To Transmission Harness)	1
36	580036981	Connector	1
36	580036986	Connector (Secondary Lock)	1
36	580039513	Terminal	12
37	. . . . .	Connector Assembly (Ignition Fuse)	1
37	580063571	Fuse Holder	1
37	580025568	Fuse (7.5 Amp)	1
38	. . . . .	Connector Assembly (Ignition Fuse)	1
38	580063571	Fuse Holder	1
38	580025567	Fuse (5 Amp)	1
39	520038855	Conduit	AR
40	. . . . .	Connector Assembly (Endcap)	1
40	580036910	Connector	1
41	. . . . .	Connector Assembly (Impact Sensor)	1
41	580020943	Connector (4-Way)	1
41	580020944	Connector (Secondary Lock)	1
41	505968568	Terminal (Socket)	4
42	. . . . .	Connector Assembly (Power Distribution Module)	1
42	580034504	Connector	1
42	580034509	Lock (Secondary Lock)	1
42	505968505	Seal	7
42	504288730	Seal	1
42	504288733	Terminal	4
42	580034658	Terminal	3
43	. . . . .	Connector Assembly (Power Distribution Module)	1
43	580034505	Connector	1
43	580034509	Lock (Secondary Lock)	1
43	505968505	Seal	5
43	504288730	Seal	2
43	504288733	Terminal	5
43	580034658	Terminal	1
43	580023845	Seal	1
44	. . . . .	Connector Assembly (Horn)	1
44	580033515	Connector	1
44	580033537	Connector Lock (Secondary Lock)	1
44	520045805	Seal	2

©2014 Yale Materials Handling Corporation

WIRE HARNESS

RIGHT HAND CHASSIS – CUMMINS QSB 3.3L DIESEL (S/N D878V01859H →)

ITEM	PART NO.	DESCRIPTION	QTY
44	520045804	Terminal	3
44	580026649	Wire Seal	1
45	. . . . .	Connector Assembly (Power Distribution Module)	1
45	580034507	Connector	1
45	580034509	Lock (Secondary Lock)	1
45	505968505	Seal	7
45	504288730	Seal	1
45	580034658	Terminal	7
46	. . . . .	Connector Assembly (Power Distribution Module)	1
46	580034506	Connector	1
46	580034509	Lock	4
46	505968505	Seal	7
46	580023845	Seal	1
46	504288733	Terminal	5
46	580034658	Terminal	3
47	. . . . .	Connector Assembly (Endcap)	1
47	580040822	Connector	1
47	505968566	Plug	4
48	. . . . .	Connector Assembly (To Lights/Cab Harness)	1
48	580040820	Connector	1
48	580040821	Connector (Lock) (Secondary Lock)	1
48	580050627	Terminal	4
49	. . . . .	Connector Assembly (Endcap)	1
49	580032038	Connector	1
49	505968566	Plug	2
50	. . . . .	Connector Assembly (Accessory 1)	1
50	580043467	Connector	1
50	580043915	Connector (Secondary Lock)	1
50	580050627	Terminal	2
51	. . . . .	Connector Assembly (Vehicle System Manager)	1
51	580036981	Connector	1
51	580039502	Connector (Secondary Lock)	1
51	580039513	Terminal	8
51	580050627	Terminal	4
52	. . . . .	Connector Assembly (Vehicle System Manager)	1
52	580036982	Connector	1
52	580039502	Connector (Secondary Lock)	1
52	580039513	Terminal	6
52	580019119	Plug	6
53	. . . . .	Connector Assembly (Vehicle System Manager)	1
53	580036984	Connector	1
53	580039502	Connector (Secondary Lock)	1
53	580039513	Terminal	4
53	580019119	Plug	8
54	. . . . .	Connector Assembly (Fuel Level)	1
54	580025779	Connector	1
54	504288741	Terminal	2
55	580025560	Clip	2
56	. . . . .	Connector Assembly (Endcap)	1
56	580042219	Connector (8 Pin)	1

©2014 Yale Materials Handling Corporation

WIRE HARNESS

RIGHT HAND CHASSIS – CUMMINS QSB 3.3L DIESEL (S/N D878V01859H →)

ITEM	PART NO.	DESCRIPTION	QTY
56	580019119	Plug	8
57	. . . . .	Connector Assembly (MLM Harness)	1
57	580042221	Connector	1
57	580042222	Connector (Secondary Lock)	1
57	580039513	Terminal	5
57	580019119	Plug	3
58	. . . . .	Connector Assembly (Seat Harness)	1
58	580039499	Connector	1
58	580039500	Connector (Lock) (Secondary Lock)	1
58	580039513	Terminal	4
58	580019119	Plug	2
59	580030878	Clip	2
60	580094353	Conduit	AR

©2014 Yale Materials Handling Corporation

WIRE HARNESS (FIGURE 6-48)
SEAT JUMPER (→ S/N D878V01858H)

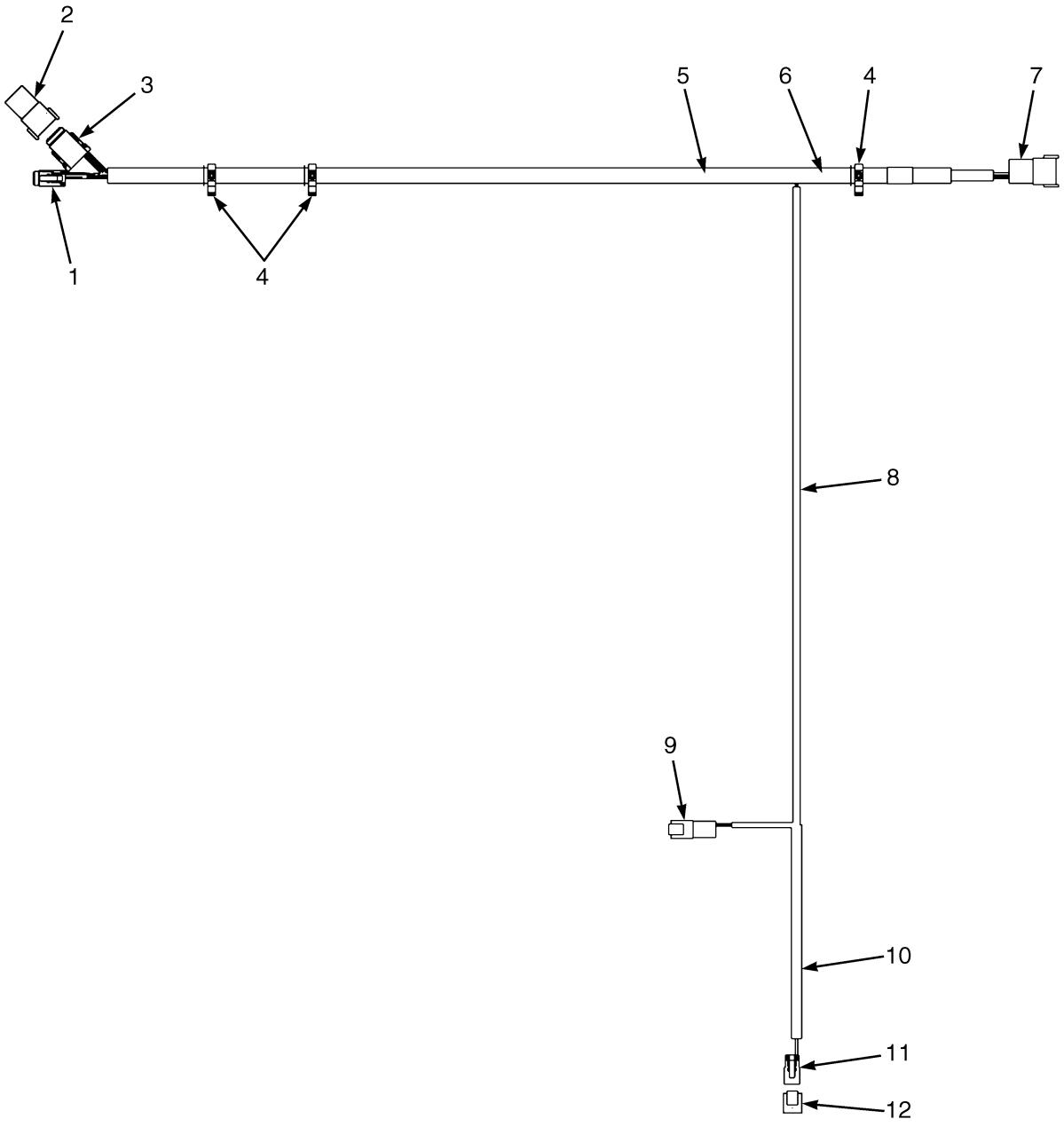

©2014 Yale Materials Handling Corporation

WIRE HARNESS

SEAT JUMPER (→ S/N D878V01858H)

ITEM	PART NO.	DESCRIPTION	QTY
	582001375	Wire Harness	1
1	. . . . .	Connector Assembly (Seat Harness)	1
1	580039499	Connector	1
1	580039500	Connector (Lock) (Lock)	1
1	580039513	Terminal (Pin)	4
1	580019119	Plug	2
2	. . . . .	Connector Assembly (MLM Harness)	1
2	580042221	Connector	1
2	580042222	Connector (Lock)	1
2	580039513	Terminal (Pin)	5
2	580019119	Plug	3
3	. . . . .	End Cap	1
3	580042219	Connector (8 Pin)	1
3	580019119	Plug	8
4	580030878	Clip	2
5	580094353	Conduit	AR
6	520038855	Conduit	AR
7	. . . . .	Connector Assembly (RH Chassis Harness)	1
7	580042219	Connector (8 Pin)	1
7	580042220	Connector (Secondary Lock) (Lock)	1
7	580041195	Terminal Pin (Pin)	8
8	580093612	Conduit	AR
9	. . . . .	Connector Assembly (RH Chassis Harness)	1
9	580022893	Connector (2 Pin)	1
9	505968540	Connector (Secondary Lock)	1
9	505968514	Terminal (Pin)	2
10	580044908	Conduit	AR
11	. . . . .	Connector Assembly (Alternate Horn Button)	1
11	580021087	Connector (2 Way)	1
11	580021088	Connector (Secondary Lock) (Lock)	1
11	505968568	Terminal (Socket)	2
12	580071066	Connector (End Cap)	1

©2014 Yale Materials Handling Corporation

WIRE HARNESS (FIGURE 6-49)

LEFT HAND CHASSIS — GM 4.3L GASOLINE (→ S/N D878V01730H)

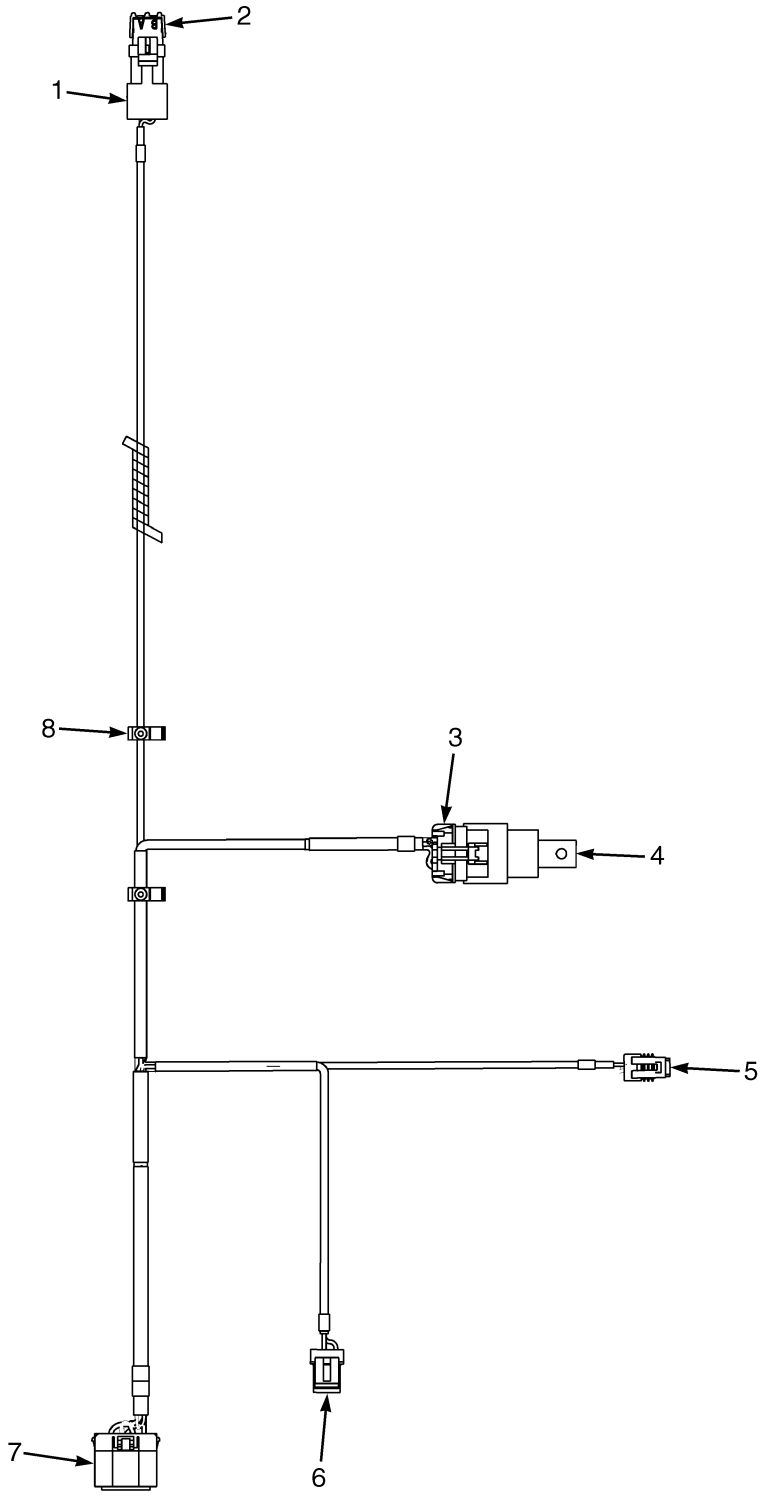

©2014 Yale Materials Handling Corporation

WIRE HARNESS

LEFT HAND CHASSIS – GM 4.3L GASOLINE (→ S/N D878V01730H)

ITEM	PART NO.	DESCRIPTION	QTY
	580078572	Wire Harness (LH Chassis)	1
1	. . . . .	End Cap	1
1	580010544	Relay	1
2	. . . . .	Connector Assembly (Air Restriction Cap)	1
2	580012323	Connector	1
2	504288730	Seal	2
3	. . . . .	Connector Assembly (Air Restriction)	1
3	580023845	Seal	2
3	580012324	Connector	1
3	520038875	Terminal	2
4	580041512	Clip	1
5	. . . . .	Connector Assembly (Fuel Level)	1
5	580025779	Connector	1
5	504288741	Terminal	2
6	. . . . .	Connector Assembly (Fuel Pump)	1
6	580033852	Connector	1
6	504288741	Terminal	2
7	. . . . .	Connector Assembly (To Engine Harness)	1
7	580036349	Connector	1
7	580023866	Terminal	3
7	580023865	Terminal	5
7	580070459	Seal	5
7	580023869	Wire Seal	3
7	580036358	Connector Lock	1
8	. . . . .	Connector Assembly (Latch Relay)	1
8	580010545	Connector Body	1
8	505968505	Seal	4
8	580023878	Terminal	4
8	580025849	Sealant	1

©2014 Yale Materials Handling Corporation

WIRE HARNESS (FIGURE 6-50)

LEFT HAND CHASSIS — GM 4.3L GASOLINE (SERIES 2010) (S/N D878V01731H →)

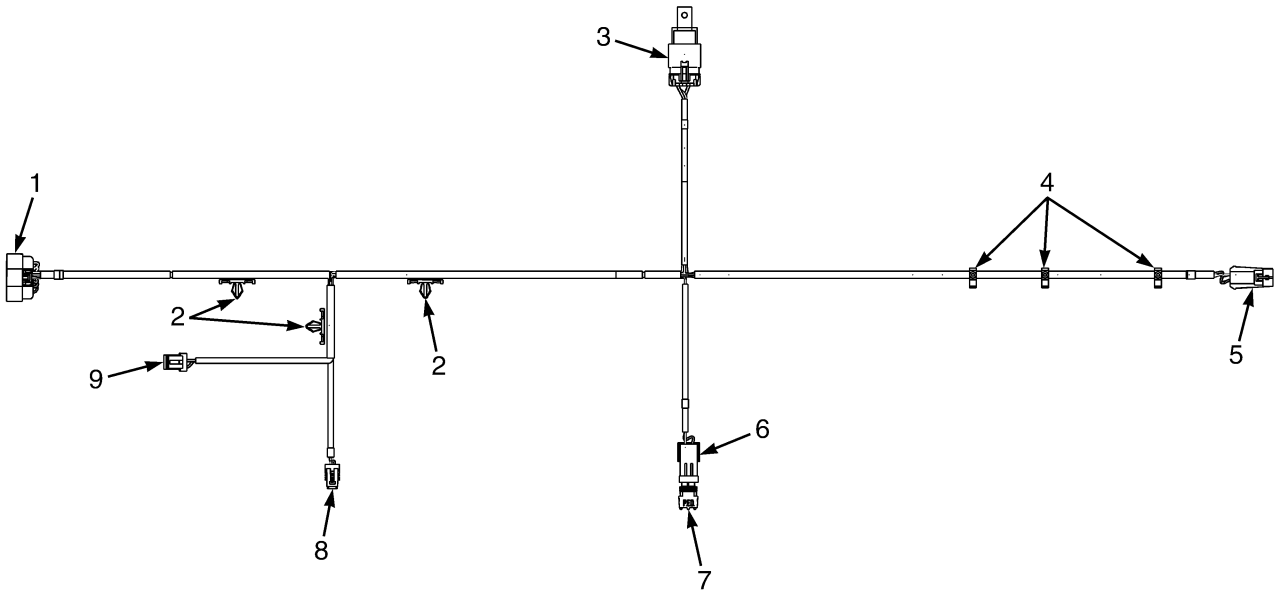

©2014 Yale Materials Handling Corporation

WIRE HARNESS

LEFT HAND CHASSIS – GM 4.3L GASOLINE (SERIES 2010) (S/N D878V01731H →)

ITEM	PART NO.	DESCRIPTION	QTY
	582004906	Wire Harness (LH Chassis) (Left Hand Chassis)	1
1	. . . . .	Connector Assembly (To Engine Harness)	1
1	582001878	Connector	1
1	580036358	Connector Lock	1
1	580023866	Terminal	3
1	580023865	Terminal	9
1	580023869	Wire Seal	3
1	580070459	Seal	9
2	580041512	Clip	3
3	. . . . .	Connector Assembly (Latch Relay)	1
3	580010545	Connector Body	1
3	580027512	Lock	1
3	504288730	Seal	1
3	580023878	Terminal	4
3	505968505	Seal	4
4	580030876	Clip	3
5	. . . . .	Connector Assembly (Rear Oxygen Sensor)	1
5	580025799	Housing	1
5	580080030	Lock	1
5	580023152	Terminal (Male)	4
5	580026649	Wire Seal	4
6	. . . . .	Connector Assembly (Air Restriction Sensor)	1
6	580012324	Connector	1
6	520038875	Terminal	2
6	580023845	Seal	2
7	. . . . .	Connector Assembly (Air Restriction Sensor Cap)	1
7	580012323	Connector	1
7	504288730	Seal	2
8	. . . . .	Connector Assembly (Fuel Level)	1
8	580025779	Connector	1
8	504288741	Terminal	2
9	. . . . .	Connector Assembly (Fuel Pump)	1
9	580033852	Connector	1
9	504288741	Terminal	2

©2014 Yale Materials Handling Corporation

WIRE HARNESS (FIGURE 6-51)

LEFT HAND CHASSIS — GM 4.3L LPG (→ S/N D878V01730H)

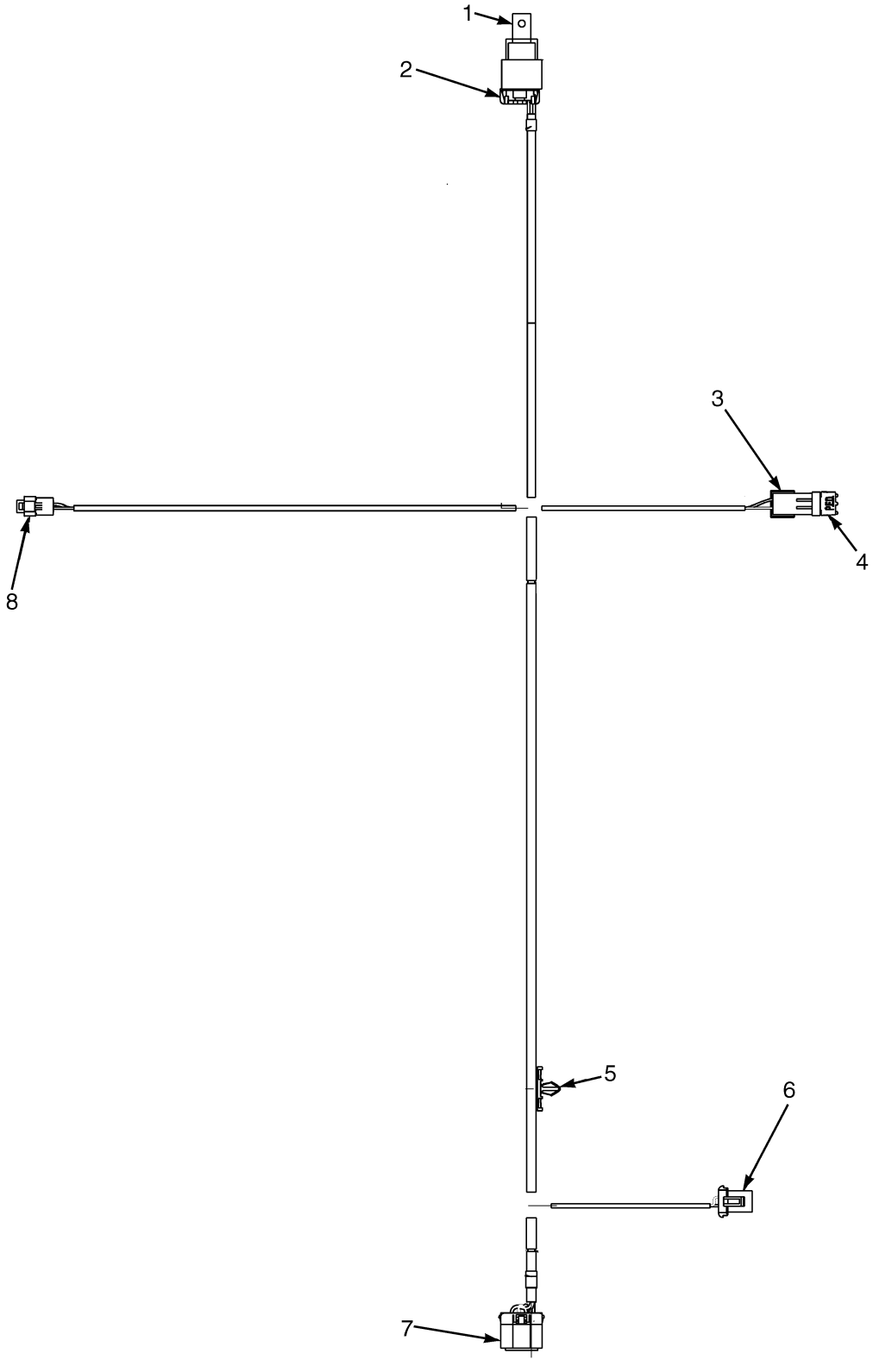

©2014 Yale Materials Handling Corporation

WIRE HARNESS

LEFT HAND CHASSIS – GM 4.3L LPG (→ S/N D878V01730H)

ITEM	PART NO.	DESCRIPTION	QTY
	580078573	Wire Harness (LH Chassis)	1
1	580010544	Relay	1
2	. . . . .	Connector Assembly (Latch Relay)	1
2	580010545	Connector Body	1
2	505968505	Seal	4
2	504288730	Seal	1
2	580023878	Terminal	4
2	580025849	Sealant	1
3	. . . . .	Connector Assembly (Air Restriction)	1
3	580012324	Connector	1
3	520038875	Terminal	2
3	580023845	Seal	2
4	. . . . .	Connector Assembly (Air Restriction Cap)	1
4	504288730	Seal	2
4	580012323	Connector	1
5	580041512	Clip	1
6	. . . . .	Connector Assembly (Low LPG Switch)	1
6	520045074	Plug	1
6	520045073	Terminal	2
6	580023845	Seal	2
6	520045069	Terminal (Seconday Lock)	1
7	. . . . .	Connector Assembly (To Engine Wire Harness)	1
7	580036349	Connector	1
7	580023866	Terminal	3
7	580023865	Terminal	5
7	580023869	Wire Seal	3
7	580070459	Seal	5
7	580036358	Connector Lock	1
8	. . . . .	Connector Assembly (LPG Lockoff)	1
8	580068120	Connector	1
8	580051025	Terminal	2

©2014 Yale Materials Handling Corporation

WIRE HARNESS (FIGURE 6-52)

LEFT HAND CHASSIS — GM 4.3L LPG (2010 SERIES)(WITH PREMIUM LOW FUEL SENSOR) (S/N D878V01731H →)

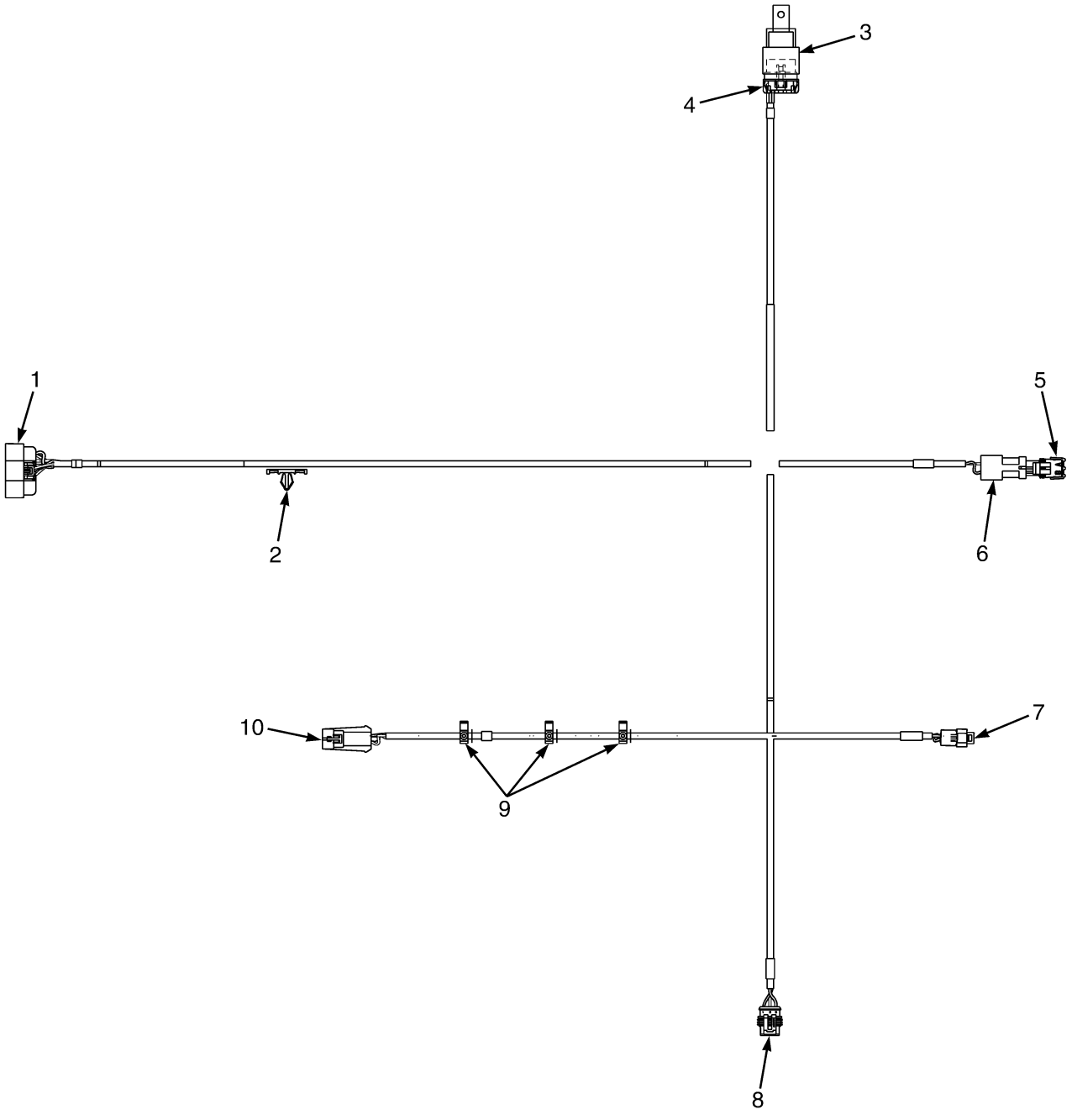

©2014 Yale Materials Handling Corporation

WIRE HARNESS

LEFT HAND CHASSIS – GM 4.3L LPG (2010 SERIES)(WITH PREMIUM LOW FUEL SENSOR) (S/N D878V01731H →)

ITEM	PART NO.	DESCRIPTION	QTY
	582004797	Wire Harness (LH Chassis) (Left Hand Chassis)	1
1	. . . . .	Connector Assembly (To Engine Harness)	1
1	582001878	Connector	1
1	580036358	Connector Lock	1
1	580023866	Terminal	3
1	580023865	Terminal	9
1	580023869	Wire Seal	3
1	580070459	Seal	9
2	580041512	Clip	1
3	. . . . .	Connector Assembly (Relay)	1
3	580012323	Connector	1
4	. . . . .	Connector Assembly (Latching Relay)	1
4	580010545	Connector Body	1
4	580027512	Lock	1
4	504288730	Seal	1
4	580023878	Terminal	4
4	505968505	Seal	4
5	. . . . .	Connector Assembly (Air Restriction Sensor Cap)	1
5	580012323	Connector	1
5	504288730	Seal	2
6	. . . . .	Connector Assembly (Air Restriction Sensor)	1
6	580012324	Connector	1
6	520038875	Terminal	2
6	580023845	Seal	2
7	. . . . .	Connector Assembly (LPG Lockoff)	1
7	580068120	Connector	1
7	582003501	Terminal	2
8	. . . . .	Connector Assembly (Low LPG Sensor)	1
8	580062118	Connector (3 Way)	1
8	580035034	Terminal (Pin)	3
8	505968505	Seal	3
9	580030876	Clip	3
10	. . . . .	Connector Assembly (Rear Oxygen Sensor)	1
10	580025799	Housing	1
10	580080030	Lock	1
10	580023152	Terminal (Male)	4
10	580026649	Wire Seal	4

©2014 Yale Materials Handling Corporation

WIRE HARNESS (FIGURE 6-53)

LEFT HAND CHASSIS — GM 4.3L LPG (2010 SERIES)(WITHOUT PREMIUM LOW FUEL SENSOR) (S/N D878V01731H →)

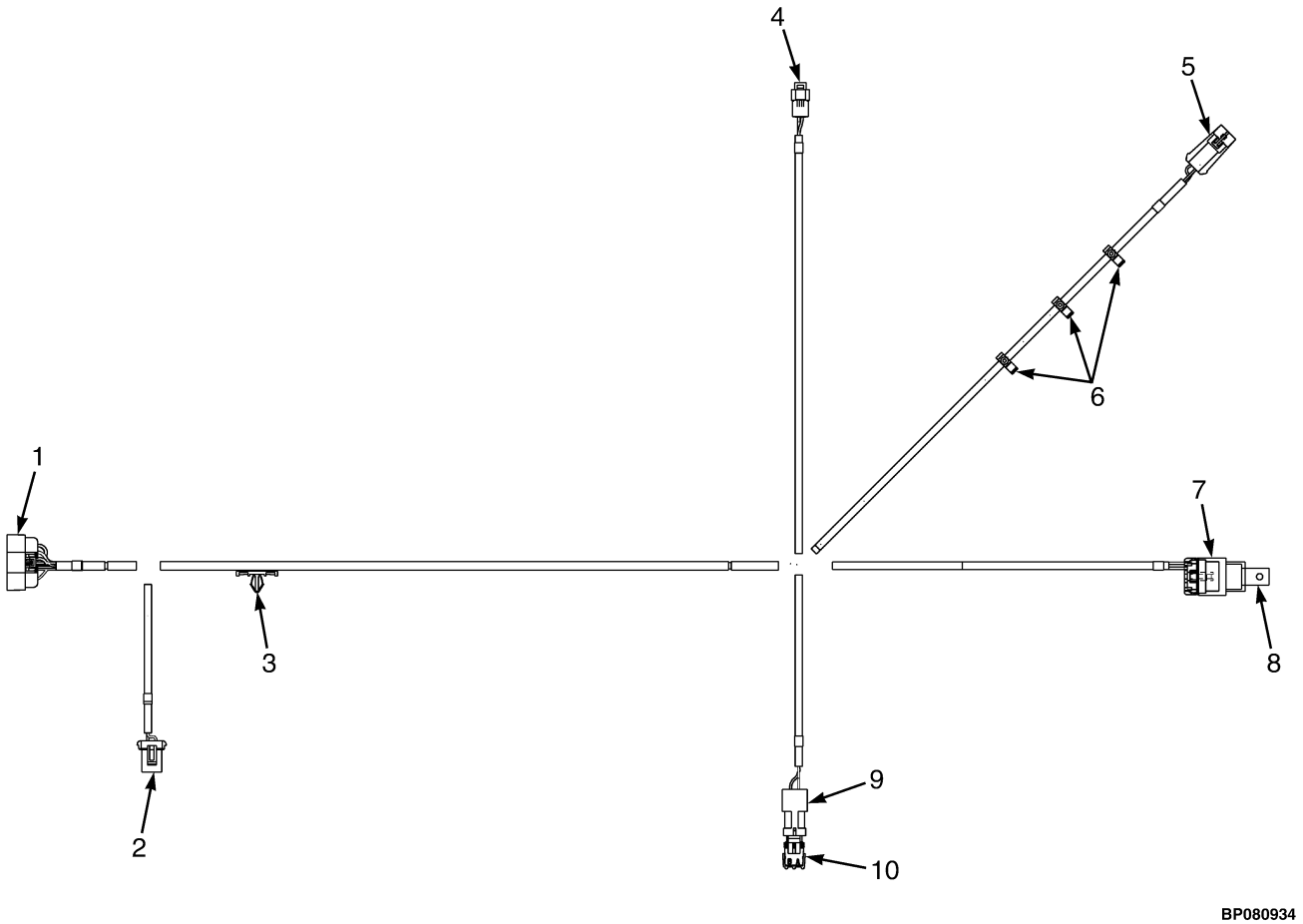

©2014 Yale Materials Handling Corporation

WIRE HARNESS

LEFT HAND CHASSIS – GM 4.3L LPG (2010 SERIES)(WITHOUT PREMIUM LOW FUEL SENSOR) (S/N D878V01731H →)

ITEM	PART NO.	DESCRIPTION	QTY
	582004802	Wire Harness (LH Chassis) (Left Hand Chassis)	1
1	. . . . .	Connector Assembly (To Engine Harness)	1
1	582001878	Connector	1
1	580036358	Connector Lock	1
1	580023866	Terminal	3
1	580023865	Terminal	9
1	580023869	Wire Seal	3
1	580070459	Seal	9
2	. . . . .	Connector Assembly (Low LPG Switch)	1
2	520045074	Plug	1
2	520045069	Terminal (Seconday Lock)	1
2	520045073	Terminal	2
2	580023845	Seal	2
3	580041512	Clip	1
4	. . . . .	Connector Assembly (LPG Lockoff)	1
4	580068120	Connector	1
4	582003501	Terminal	2
5	. . . . .	Connector Assembly (Rear Oxygen Sensor)	1
5	580025799	Housing	1
5	580080030	Lock	1
5	580023152	Terminal (Male)	4
5	580026649	Wire Seal	4
6	580030876	Clip	3
7	. . . . .	Connector Assembly (Latch Relay)	1
7	580010545	Connector Body	1
7	580027512	Lock	1
7	504288730	Seal	1
7	580023878	Terminal	4
7	505968505	Seal	4
8	. . . . .	Connector Assembly (Relay)	1
8	580010544	Relay	1
9	. . . . .	Connector Assembly (Air Restriction Sensor)	1
9	580012324	Connector	1
9	520038875	Terminal	2
9	580023845	Seal	2
10	. . . . .	Connector Assembly (Air Restriction Sensor Cap)	1
10	580012323	Connector	1
10	504288730	Seal	2

©2014 Yale Materials Handling Corporation

WIRE HARNESS (FIGURE 6-54)

COWL WITH FORWARD/REVERSE LEVER — WITH HYDRAULIC PUMP SOLENOID

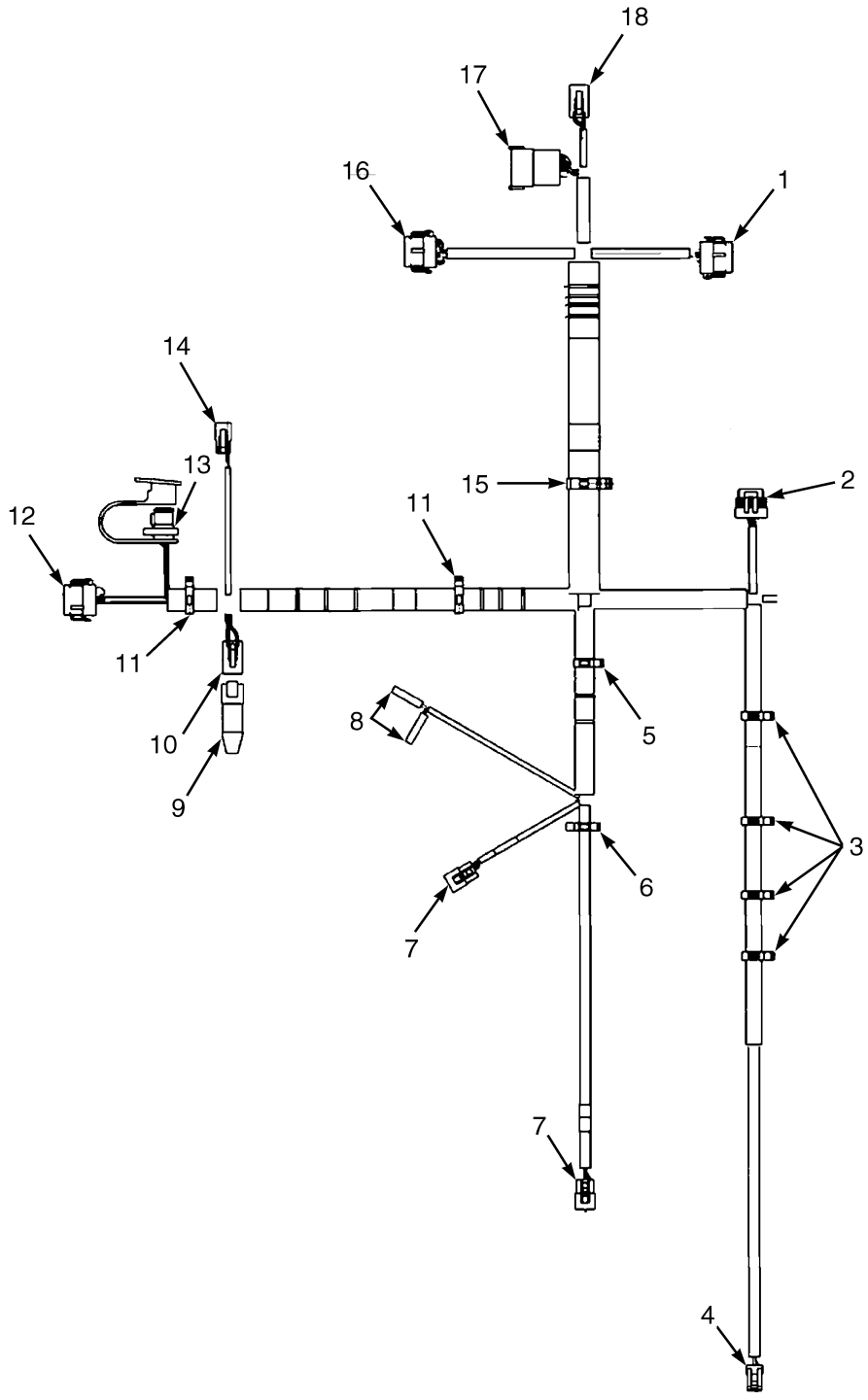

BP080443

©2014 Yale Materials Handling Corporation

WIRE HARNESS

COWL WITH FORWARD/REVERSE LEVER – WITH HYDRAULIC PUMP SOLENOID

ITEM	PART NO.	DESCRIPTION	QTY
	580082487	Wire Harness	1
1	. . . . .	Connector Assembly (Vehicle System Manager)	1
1	580036982	Connector	1
1	580039513	Terminal	7
1	580019119	Plug	5
1	580036986	Connector	1
2	. . . . .	Connector Assembly (Accelerator Pedal Sensor)	1
2	580038661	Connector	1
2	580039158	Terminal	6
3	580030876	Clip	4
4	. . . . .	Connector Assembly (Brake Pressure)	1
4	580063697	Connector	1
4	580063751	Connector (Secondary Lock)	1
4	580044852	Terminal (Socket)	3
4	580044854	Seal	3
5	580040120	Clip	1
6	580025560	Clip	1
7	. . . . .	Connector Assembly (Park Brake)	2
7	580019139	Connector (3-Way)	1
7	580019140	Connector (Secondary Lock)	1
7	505968568	Terminal (Socket)	3
8	. . . . .	Connector Assembly (Brake Fluid)	2
8	952408901	Sleeve	1
8	952405902	Terminal	1
9	580037670	Connector (With Resistor) (End Cap)	1
10	. . . . .	Connector Assembly	1
10	580020943	Connector (4-Way)	1
10	580020944	Connector	1
10	505968568	Terminal (Socket)	4
11	580026808	Clip	2
12	. . . . .	Connector Assembly (Display)	1
12	580036981	Connector	1
12	580036986	Connector	1
12	580039513	Terminal	5
12	580019119	Plug	7
13	. . . . .	Connector Assembly (J1939 Diagnostic)	1
13	580051703	Connector	1
13	580039194	Connector (Secondary Lock)	1
13	505968568	Terminal (Socket)	3
13	580051704	Dust Cap	1
14	. . . . .	Connector Assembly (Horn Button)	1
14	580021087	Connector (2 Way)	1
14	580025557	Clip	1
14	505968568	Terminal (Socket)	2
15	580039764	Clip	1
16	. . . . .	Connector Assembly (Vehicle System Manager)	1
16	580036984	Connector	1
16	580036986	Connector	1
16	580039513	Terminal	7
16	580019119	Plug	5

©2014 Yale Materials Handling Corporation

WIRE HARNESS

COWL WITH FORWARD/REVERSE LEVER – WITH HYDRAULIC PUMP SOLENOID

ITEM	PART NO.	DESCRIPTION	QTY
17	. . . . .	Connector Assembly (To RH Chassis)	1
17	580026816	Connector	1
17	505972589	Secondary Lock	1
17	505968514	Terminal (Pin)	7
17	580019119	Plug	5
18	. . . . .	Connector Assembly (To RH Chassis)	1
18	580020943	Connector (4-Way)	1
18	580020944	Connector	1
18	505968568	Terminal (Socket)	4

©2014 Yale Materials Handling Corporation

NOTES

©2014 Yale Materials Handling Corporation

WIRE HARNESS (FIGURE 6-55)

COWL WITH FOOT DIRECTIONAL CONTROL PEDAL — WITH HYDRAULIC PUMP SOLENOID

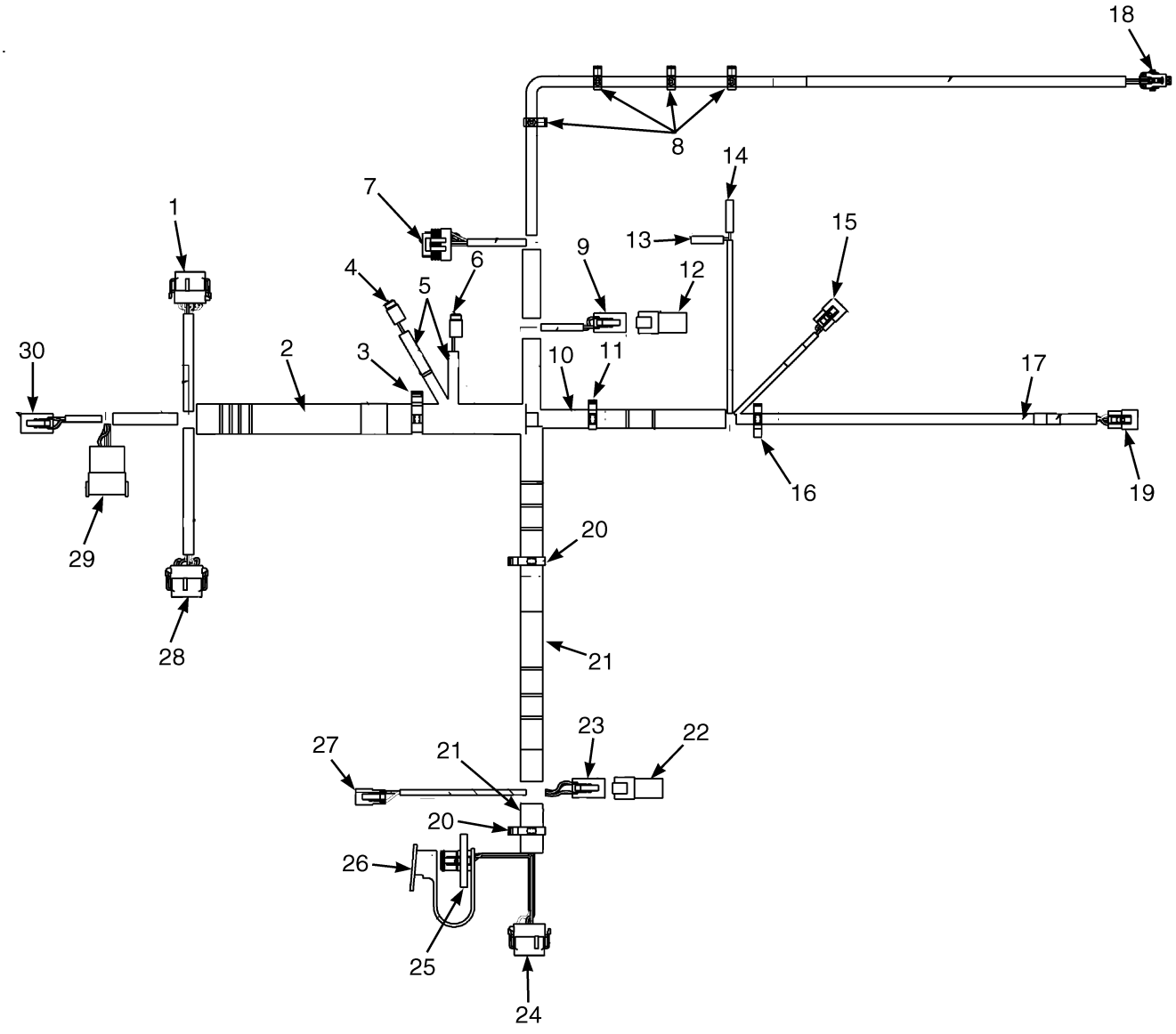

BP080757

©2014 Yale Materials Handling Corporation

WIRE HARNESS

COWL WITH FOOT DIRECTIONAL CONTROL PEDAL – WITH HYDRAULIC PUMP SOLENOID

ITEM	PART NO.	DESCRIPTION	QTY
	580089451	Wire Harness	1
	582003490	Wire Harness (Alternate Part)	1
1	. . . . .	Connector Assembly (Vehicle System Manager)	1
1	580036982	Connector	1
1	580036986	Connector	1
1	580039513	Terminal	12
2	580041641	Conduit	AR
3	580039764	Clip	1
4	. . . . .	Connector Assembly (Hydraulic Lockout Solenoid 2)	1
4	580019245	Connector (2 Socket)	1
4	580019246	Connector (Seconday Lock)	1
4	580039513	Terminal	2
5	580044908	Conduit	AR
6	. . . . .	Connector Assembly	1
6	580019245	Connector (2 Socket)	1
6	580019246	Connector (Seconday Lock)	1
6	580039513	Terminal	2
7	. . . . .	Connector Assembly	1
7	580038661	Connector	1
7	580039158	Terminal	6
8	580030876	Clip	4
9	. . . . .	Connector Assembly (To FDC Harness)	1
9	580020943	Connector (4-Way)	1
9	580020944	Connector	1
9	505968568	Terminal (Socket)	4
10	910065119	Conduit	AR
11	580040120	Clip	1
12	. . . . .	Connector Assembly (Endcap)	1
12	580036910	Connector	1
13	. . . . .	Connector Assembly (Brake Fluid)	1
13	952405902	Terminal	1
13	952408901	Sleeve	1
14	. . . . .	Connector Assembly (Brake Fluid)	1
14	952405902	Terminal	1
14	952408901	Sleeve	1
15	. . . . .	Connector Assembly (Park Brake)	1
15	580019139	Connector (3-Way)	1
15	580019140	Connector (Secondary Lock)	1
15	505968568	Terminal (Socket)	3
15	580094544	Connector (Alternate Part)	1
15	580094546	Terminal (Alternate Part)	3
16	580025560	Clip	1
17	580044908	Conduit	AR
18	. . . . .	Connector Assembly (Brake Pressure)	1
18	580063697	Connector	1
18	580063751	Connector (Secondary Lock)	1
18	580044852	Terminal (Socket)	3
18	580044854	Seal	3
19	. . . . .	Connector Assembly (Brake Pressure)	1
19	580019139	Connector (3-Way)	1

©2014 Yale Materials Handling Corporation

WIRE HARNESS

COWL WITH FOOT DIRECTIONAL CONTROL PEDAL – WITH HYDRAULIC PUMP SOLENOID

ITEM	PART NO.	DESCRIPTION	QTY
19	580019140	Connector (Secondary Lock)	1
19	505968568	Terminal (Socket)	3
19	580094544	Connector (Alternate Part)	1
19	580094546	Terminal (Alternate Part)	3
20	580026808	Clip	2
21	520045672	Conduit	AR
22	. . . . .	Connector Assembly (Endcap with Resistor)	1
22	580037670	Connector (With Resistor)	1
23	. . . . .	Connector Assembly (Bus Terminal 1)	1
23	580020943	Connector (4-Way)	1
23	580020944	Connector	1
23	505968568	Terminal (Socket)	4
24	. . . . .	Connector Assembly (Display)	1
24	580036981	Connector	1
24	580036986	Connector	1
24	580039513	Terminal	5
24	580019119	Plug	7
25	. . . . .	Connector Assembly (J1939 Diagnostic)	1
25	580051703	Connector	1
25	580039194	Connector (Secondary Lock)	1
25	505968568	Terminal (Socket)	3
26	580051704	Dust Cap	1
27	. . . . .	Connector Assembly (Horn Button)	1
27	580021087	Connector (2 Way)	1
27	580021088	Connector (Secondary Lock)	1
27	505968568	Terminal (Socket)	2
28	. . . . .	Connector Assembly (Vehicle System Manager)	1
28	580036984	Connector	1
28	580036986	Connector	1
28	580039513	Terminal	7
28	580019119	Plug	5
29	. . . . .	Connector Assembly (To RH Chassis Harness)	1
29	580026816	Connector	1
29	505972589	Secondary Lock	1
29	505968514	Terminal (Pin)	7
29	580019119	Plug	5
30	. . . . .	Connector Assembly (To RH Chassis Harness)	1
30	580020943	Connector (4-Way)	1
30	580020944	Connector	1
30	505968568	Terminal (Socket)	4

©2014 Yale Materials Handling Corporation

NOTES

©2014 Yale Materials Handling Corporation

WIRE HARNESS (FIGURE 6-56)

COWL WITH FOOT DIRECTIONAL CONTROL PEDAL — WITH RETURN TO SET TILT / WITH HYDRAULIC PUMP SOLENOID

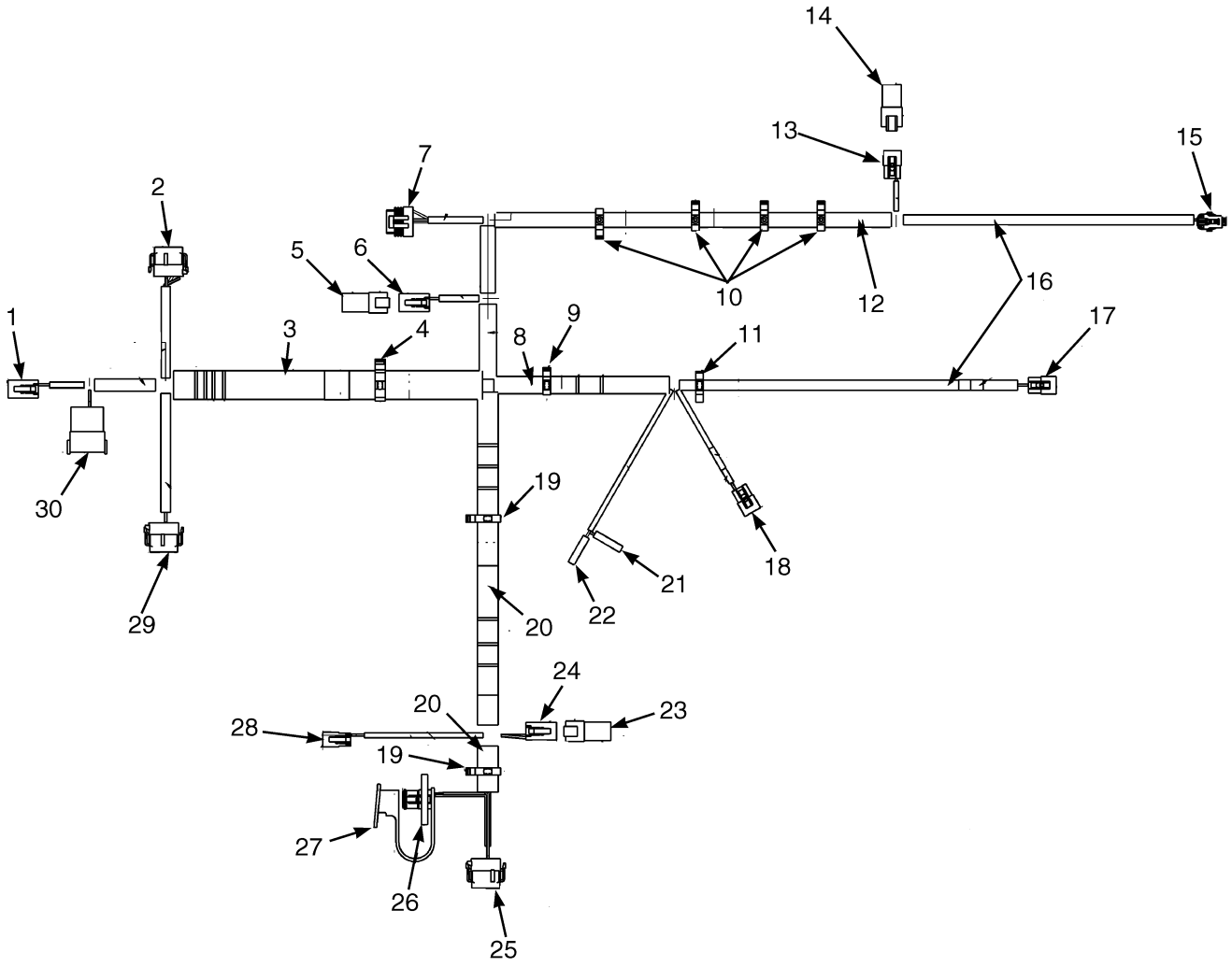

BP080758

©2014 Yale Materials Handling Corporation

WIRE HARNESS

COWL WITH FOOT DIRECTIONAL CONTROL PEDAL – WITH RETURN TO SET TILT / WITH HYDRAULIC PUMP SOLENOID

ITEM	PART NO.	DESCRIPTION	QTY
	580082486	Wire Harness	1
1	. . . . .	Connector Assembly (To RH Chassis Harness)	1
1	580020943	Connector (4-Way)	1
1	580020944	Connector	1
1	505968568	Terminal (Socket)	4
2	. . . . .	Connector Assembly (Vehicle System Manager)	1
2	580036982	Connector	1
2	580036986	Connector	1
2	580039513	Terminal	11
2	580019119	Plug	1
3	580041641	Conduit	AR
4	580039764	Clip	1
5	. . . . .	Connector Assembly (Endcap)	1
5	580036910	Connector	1
6	. . . . .	Connector Assembly (To FDC Harness)	1
6	580020943	Connector (4-Way)	1
6	580020944	Connector	1
6	505968568	Terminal (Socket)	4
7	. . . . .	Connector Assembly (Accelerator Pedal Sensor)	1
7	580038661	Connector	1
7	580039158	Terminal	6
8	910065119	Conduit	AR
9	580040120	Clip	1
10	580030878	Clip	4
11	580025560	Clip	1
12	520038855	Conduit	AR
13	. . . . .	Connector Assembly (To Mast Harness)	1
13	580019139	Connector (3-Way)	1
13	580019140	Connector (Secondary Lock)	1
13	505968568	Terminal (Socket)	3
14	. . . . .	Connector Assembly (Endcap)	1
14	580010571	Connector (End Cap)	1
15	. . . . .	Connector Assembly (Brake Pressure)	1
15	580063697	Connector	1
15	580063751	Connector (Secondary Lock)	1
15	580044852	Terminal (Socket)	3
15	580044854	Seal	3
16	580044908	Conduit	AR
17	. . . . .	Connector Assembly (Brake Pedal)	1
17	580019139	Connector (3-Way)	1
17	580019140	Connector (Secondary Lock)	1
17	505968568	Terminal (Socket)	1
18	. . . . .	Connector Assembly (Park Brake)	1
18	580019139	Connector (3-Way)	1
18	580019140	Connector (Secondary Lock)	1
18	505968568	Terminal (Socket)	3
19	580026808	Clip	2
20	520045672	Conduit	AR
21	. . . . .	Connector Assembly (Brake Fluid)	1

©2014 Yale Materials Handling Corporation

WIRE HARNESS

COWL WITH FOOT DIRECTIONAL CONTROL PEDAL – WITH RETURN TO SET TILT / WITH HYDRAULIC PUMP SOLENOID

ITEM	PART NO.	DESCRIPTION	QTY
21	952408901	Sleeve	1
21	952405902	Terminal	1
22	. . . . .	Connector Assembly (Brake Fluid)	1
22	952408901	Sleeve	1
22	952405902	Terminal	1
23	. . . . .	Connector Assembly (Endcap With Resistor)	1
23	580037670	Connector (With Resistor)	1
24	. . . . .	Connector Assembly (Bus Terminal 1)	1
24	580020943	Connector (4-Way)	1
24	580020944	Connector	1
24	505968568	Terminal (Socket)	4
25	. . . . .	Connector Assembly (Display)	1
25	580036981	Connector	1
25	580036986	Connector	1
25	580039513	Terminal	5
25	580019119	Plug	7
26	. . . . .	Connector Assembly (J1939 Diagnostic)	1
26	580051703	Connector	1
26	580036986	Connector	1
26	505968568	Terminal (Socket)	1
27	580051704	Dust Cap	1
28	. . . . .	Connector Assembly (Horn Button)	1
28	580021087	Connector (2 Way)	1
28	580021088	Connector (Secondary Lock)	1
28	505968568	Terminal (Socket)	2
29	. . . . .	Connector Assembly (Vehicle System Manager)	1
29	580036984	Connector	1
29	580036986	Connector	1
29	580039513	Terminal	7
29	580019119	Plug	5
30	. . . . .	Connector Assembly (To RH Chassis Harness)	1
30	580026816	Connector	1
30	505972589	Secondary Lock	1
30	505968514	Terminal (Pin)	10
30	580019119	Plug	2

©2014 Yale Materials Handling Corporation

NOTES

©2014 Yale Materials Handling Corporation

WIRE HARNESS (COWL) (FIGURE 6-57)

WITH FORWARD AND REVERSE LEVER — WITH HYDRAULIC PUMP SOLENOID

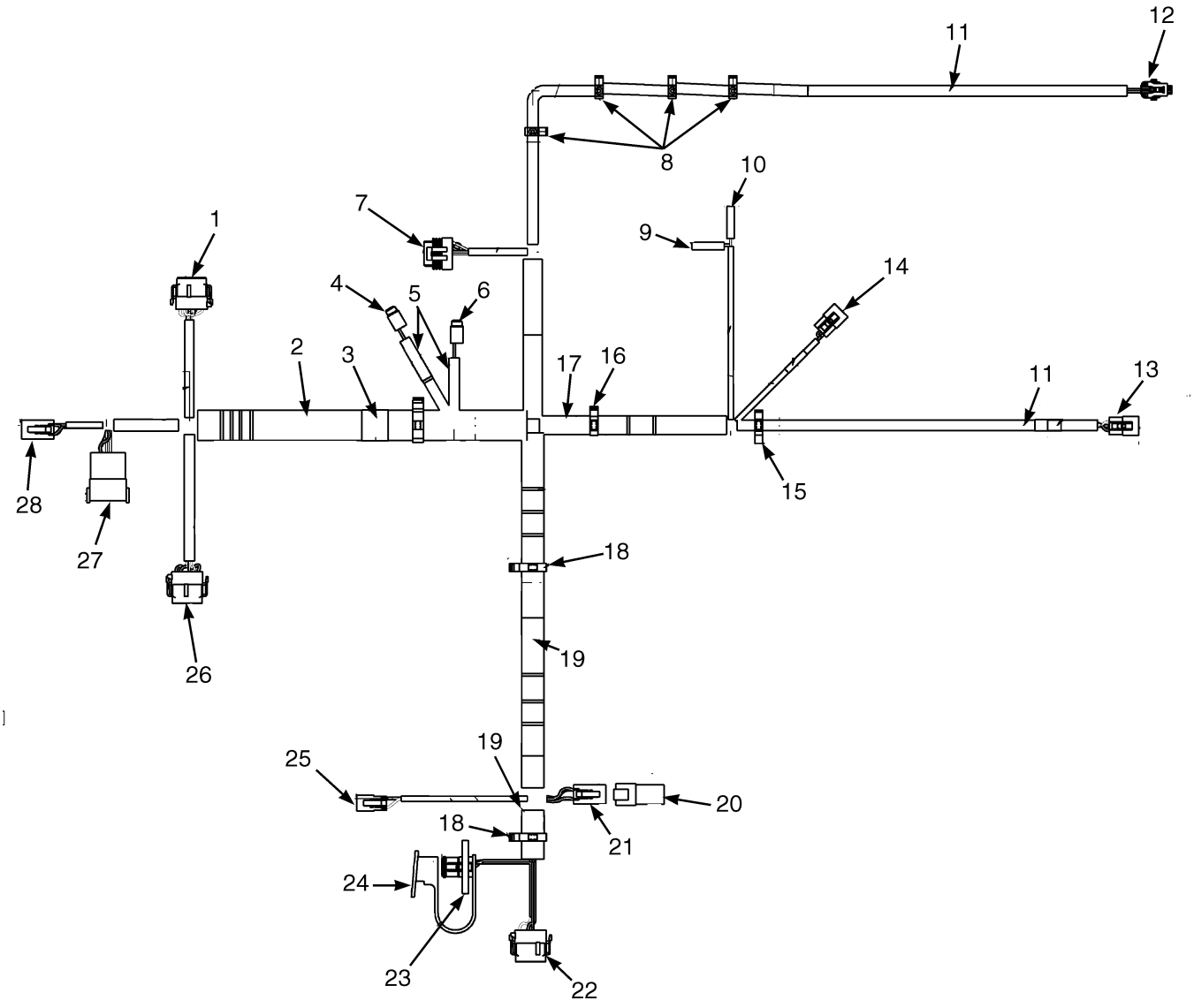

BP080755

©2014 Yale Materials Handling Corporation

WIRE HARNESS (COWL)

WITH FORWARD AND REVERSE LEVER – WITH HYDRAULIC PUMP SOLENOID

ITEM	PART NO.	DESCRIPTION	QTY
	580089452	Wire Harness	1
	582003491	Wire Harness (Alternate Part)	1
1	. . . . .	Connector Assembly (Vehicle System Manager)	1
1	580036982	Connector	1
1	580036986	Connector	1
1	580039513	Terminal	8
1	580019119	Plug	4
2	580041641	Conduit	AR
3	580039764	Clip	1
4	. . . . .	Connector Assembly (Hydraulic Lockout Solenoid 2)	1
4	580019245	Connector (2 Socket)	1
4	580019246	Connector (Seconday Lock)	1
4	580039513	Terminal	2
5	580044908	Conduit	AR
6	. . . . .	Connector Assembly (Hydraulic Lockout Solenoid 1)	1
6	580019245	Connector (2 Socket)	1
6	580019246	Connector (Seconday Lock)	1
6	580039513	Terminal	2
7	. . . . .	Connector Assembly (Accelerator Pedal)	1
7	580038661	Connector	1
7	580039158	Terminal	6
8	580030876	Clip	4
9	. . . . .	Connector Assembly (Brake Fluid)	1
9	580051729	Terminal	1
9	952408901	Sleeve	1
10	. . . . .	Connector Assembly (Brake Fluid)	1
10	580051729	Terminal	1
10	952408901	Sleeve	1
11	580044908	Conduit	AR
12	. . . . .	Connector Assembly (Brake Pressure)	1
12	580063697	Connector	1
12	580063751	Connector (Secondary Lock)	1
12	580044852	Terminal (Socket)	3
12	580044854	Seal	3
13	. . . . .	Connector Assembly (Brake Pedal)	1
13	580019139	Connector (3-Way)	1
13	580019140	Connector (Secondary Lock)	1
13	505968514	Terminal (Pin)	3
13	580094544	Connector (Alternate Part)	1
13	580094546	Terminal (Alternate Part)	3
14	. . . . .	Connector Assembly (Park Brake)	1
14	580019139	Connector (3-Way)	1
14	580019140	Connector (Secondary Lock)	1
14	505968568	Terminal (Socket)	3
14	580094544	Connector (Alternate Part)	1
14	580094546	Terminal (Alternate Part)	3
15	580025560	Clip	1
16	580040120	Clip	1
17	910065119	Conduit	AR
18	580026808	Clip	2

©2014 Yale Materials Handling Corporation

WIRE HARNESS (COWL)

WITH FORWARD AND REVERSE LEVER – WITH HYDRAULIC PUMP SOLENOID

ITEM	PART NO.	DESCRIPTION	QTY
19	520045672	Conduit	AR
20	. . . . .	Connector Assembly (Endcap With Resistor)	1
20	580037670	Connector (With Resistor)	1
21	. . . . .	Connector Assembly (Bus Terminal 1)	1
21	580020943	Connector (4-Way)	1
21	580020944	Connector	1
21	505968568	Terminal (Socket)	4
22	. . . . .	Connector Assembly (Display)	1
22	580036981	Connector	1
22	580036986	Connector	1
22	580039513	Terminal	5
22	580019119	Plug	7
23	. . . . .	Connector Assembly (J1939 Diagnostic)	1
23	580051703	Connector	1
23	580039194	Connector (Secondary Lock)	1
23	505968568	Terminal (Socket)	3
24	580051704	Dust Cap	1
25	. . . . .	Connector Assembly (Horn Button)	1
25	580021087	Connector (2 Way)	1
25	580021088	Connector (Secondary Lock)	1
25	505968568	Terminal (Socket)	2
26	. . . . .	Connector Assembly (Vehicle System Manager)	1
26	580036984	Connector	1
26	580036986	Connector	1
26	580039513	Terminal	7
26	580019119	Plug	5
27	. . . . .	Connector Assembly (To RH Chassis Harness)	1
27	580026816	Connector	1
27	505972589	Secondary Lock	1
27	505968514	Terminal (Pin)	7
27	580019119	Plug	5
28	. . . . .	Connector Assembly (To RH Chassis Harness)	1
28	580020943	Connector (4-Way)	1
28	580020944	Connector	1
28	505968568	Terminal (Socket)	4

©2014 Yale Materials Handling Corporation

NOTES

©2014 Yale Materials Handling Corporation

WIRE HARNESS (FIGURE 6-58)
ALTERNATOR — CUMMINS QSB 3.3L DIESEL

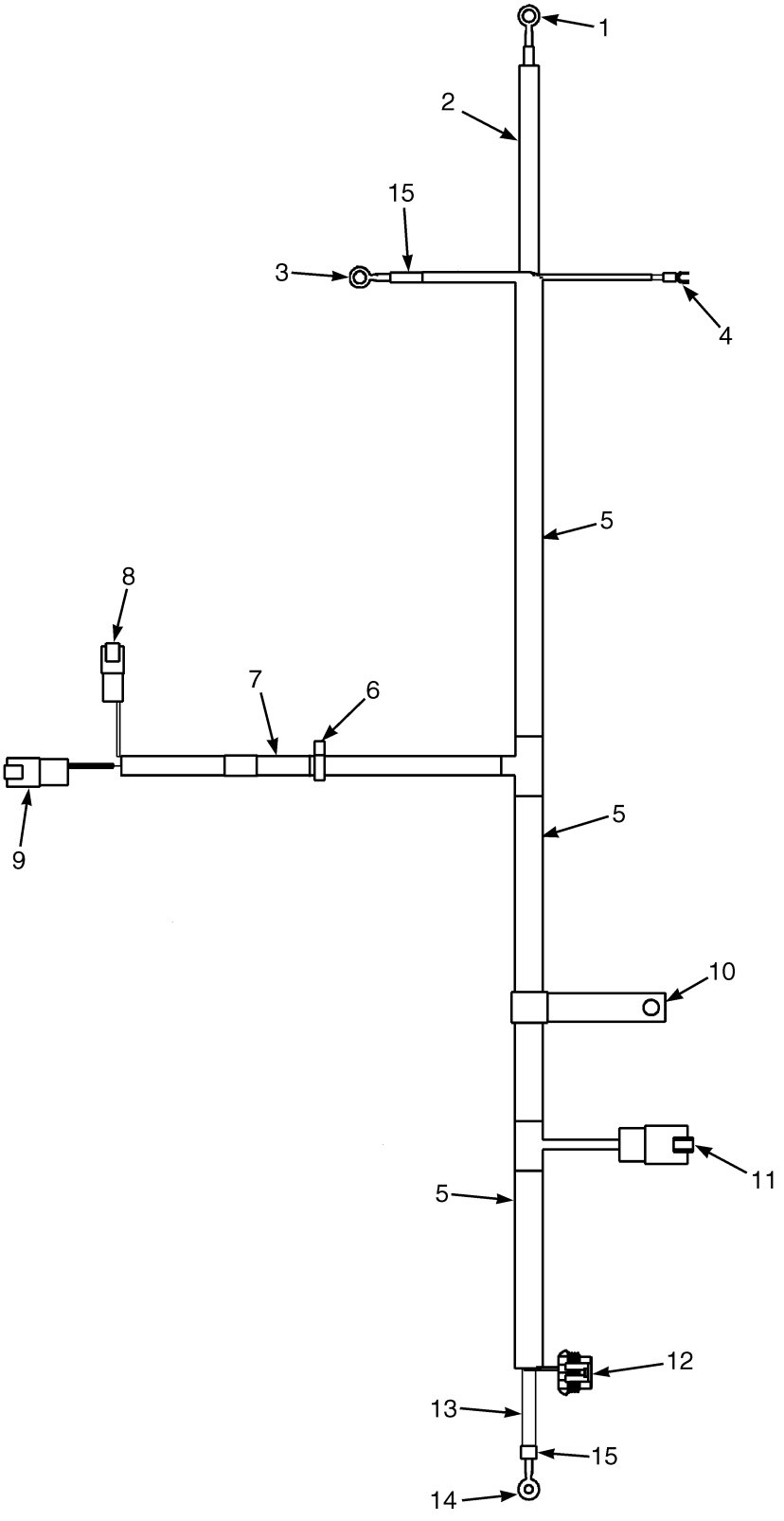

©2014 Yale Materials Handling Corporation

WIRE HARNESS

ALTERNATOR – CUMMINS QSB 3.3L DIESEL

ITEM	PART NO.	DESCRIPTION	QTY
	580088034	Wire Harness (Alternator)	1
	580096446	Wire Harness (Alternator) (Alternate Part)	1
1	. . . . .	Connector Assembly (Starter Negative Stud)	1
1	580006526	E-Ring	1
2	520038855	Conduit	AR
3	. . . . .	Connector Assembly (Starter Positive Stud)	1
3	580006526	E-Ring	1
4	. . . . .	Connector Assembly (Starter Solenoid)	1
4	580088535	E Ftg Spade Term #10	1
5	520045672	Conduit	AR
6	580025559	Clip	1
7	520038855	Conduit	1
8	. . . . .	Connector Assembly (To Right Hand Chassis Harness)	1
8	580022893	Connector (2 Pin)	1
8	505968540	Connector (Secondary Lock)	1
8	505968514	Terminal (Pin)	1
8	580019119	Plug	1
9	. . . . .	Connector Assembly (To Right Hand Chassis Harness)	1
9	580032038	Connector	1
9	580032039	Connector	1
9	150121835	Terminal	2
10	518793625	Clamp	1
11	. . . . .	Connector Assembly (Alternator Fuse)	1
11	580075791	Receptacle	1
11	580075792	Pin	1
12	. . . . .	Connector Assembly (Alternator)	1
12	580073617	Connector	1
12	580022993	Connector	1
12	520045804	Terminal	2
12	580027612	Plug (Cavity Plug)	2
12	520045805	Seal	2
13	580088532	Sleeve	AR
14	. . . . .	Connector Assembly (Alternator Ground)	1
14	580062216	E-Ring	1
15	580058268	Heat Shrink	AR

©2014 Yale Materials Handling Corporation

WIRE HARNESS (FIGURE 6-59)
SEALED ALTERNATOR — CUMMINS QSB 3.3L DIESEL

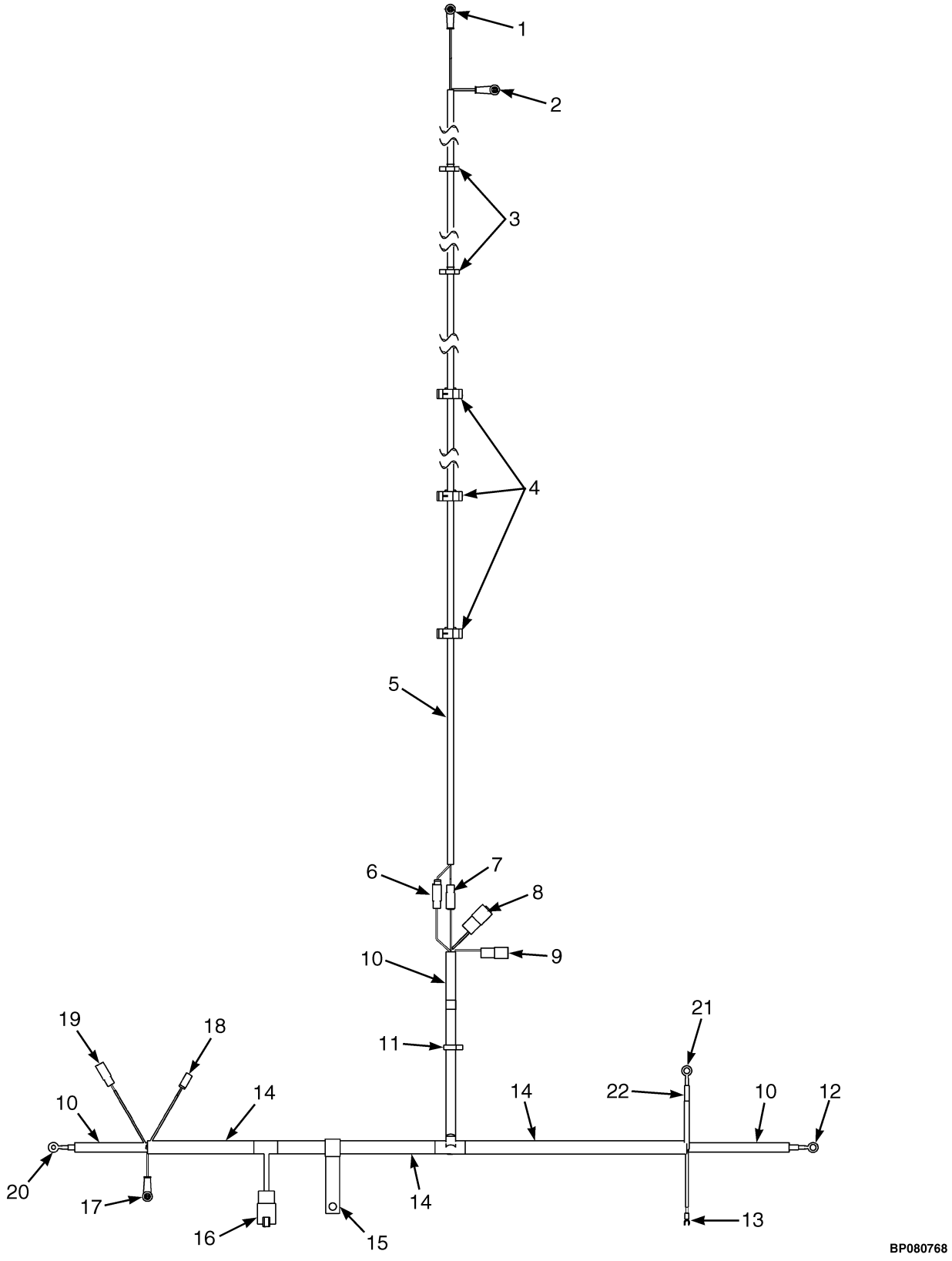

©2014 Yale Materials Handling Corporation

WIRE HARNESS
SEALED ALTERNATOR – CUMMINS QSB 3.3L DIESEL

ITEM	PART NO.	DESCRIPTION	QTY
	580088392	Wire Harness (Sealed Alternator)	1
	580096449	Wire Harness (Sealed Alternator) (Alternate Part)	1
1	. . . . .	Connector Assembly (Disconnect Switch)	1
1	580056380	E-Ring	1
1	505970552	Boot	1
1	504231204	Heat Shrink	AR
2	. . . . .	Connector Assembly (Disconnect Switch)	1
2	580056380	E-Ring	1
2	505970552	Boot	1
2	504231204	Heat Shrink	AR
3	580025560	Clip	2
4	580054380	Clip	3
5	580044908	Conduit	AR
6	. . . . .	Connector Assembly (Disconnect Switch Link)	1
6	504450741	Connector Body	1
6	504450740	Connector Body	1
6	580049322	Terminal	1
6	504450761	Terminal	1
7	. . . . .	Connector Assembly (Disconnect Switch Link)	1
7	504450740	Connector Body	1
7	504450741	Connector Body	1
7	580049322	Terminal	1
7	504450761	Terminal	1
8	. . . . .	Connector Assembly (To Right Hand Chassis Harness)	1
8	580032038	Connector	1
8	580032039	Connector	1
8	150121835	Terminal	2
9	. . . . .	Connector Assembly (To Right Hand Chassis Harness)	1
9	580022893	Connector (2 Pin)	1
9	505968540	Connector (Secondary Lock)	1
9	505968514	Terminal (Pin)	1
9	580019119	Plug	1
10	520038855	Conduit	AR
11	580025559	Clip	1
12	. . . . .	Connector Assembly (Starter Negative Stud)	1
12	580006526	E-Ring	1
13	. . . . .	Connector Assembly (Starter Solenoid)	1
13	580088535	E Ftg Spade Term #10	1
14	520045672	Conduit	AR
15	518793625	Clamp	1
16	. . . . .	Connector Assembly (Alternator Fuse)	1
16	580075791	Receptacle	1
16	580075792	Pin	1
17	. . . . .	Connector Assembly (Alternator D+)	1
17	580056380	E-Ring	1
17	505970552	Boot	1
17	504231204	Heat Shrink	AR
18	. . . . .	Connector Assembly (Alternator Excite)	1
18	504450740	Connector Body	1
18	504450761	Terminal	1

©2014 Yale Materials Handling Corporation

WIRE HARNESS

SEALED ALTERNATOR – CUMMINS QSB 3.3L DIESEL

ITEM	PART NO.	DESCRIPTION	QTY
19	. . . . .	Connector Assembly (Alternator Field)	1
19	504450740	Connector Body	1
19	504450761	Terminal	1
20	. . . . .	Connector Assembly (Alternator Ground)	1
20	580062216	E-Ring	1
21	. . . . .	Connector Assembly (Starter Positive Stud)	1
21	580006526	E-Ring	1
22	580058268	Heat Shrink	AR

©2014 Yale Materials Handling Corporation

NOTES

©2014 Yale Materials Handling Corporation

WIRE HARNESS (FIGURE 6-60)
TRANSMISSION — THREE SPEED

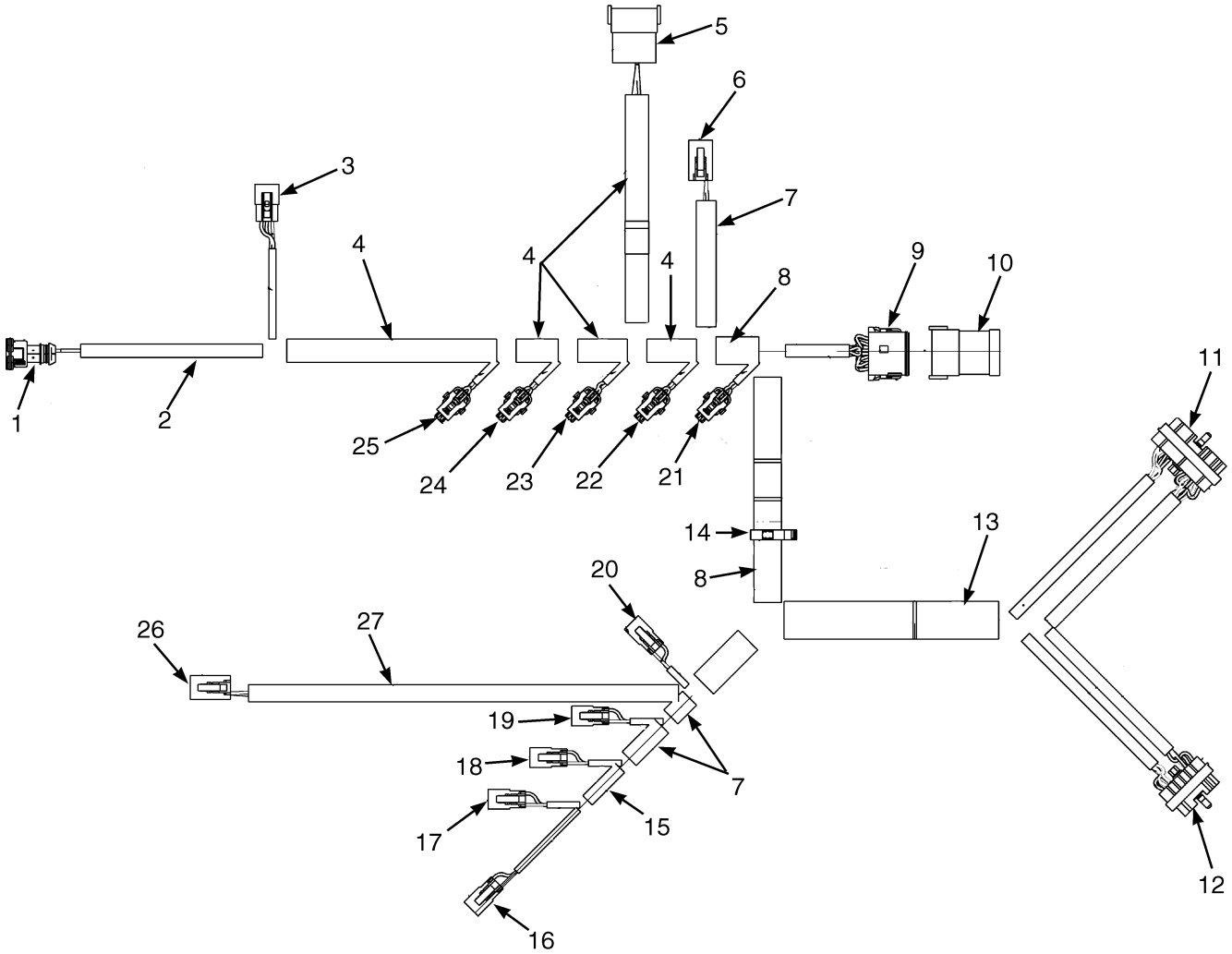

©2014 Yale Materials Handling Corporation

WIRE HARNESS
TRANSMISSION – THREE SPEED

ITEM	PART NO.	DESCRIPTION	QTY
	580090664	Wire Harness (Transmission, Three Speed)	1
1	. . . . .	Connector Assembly (Sump Temperature)	1
1	580022866	Connector (2-Way)	1
1	580025558	Terminal	2
1	580049815	Seal	2
2	580044908	Conduit	AR
3	. . . . .	Connector Assembly (Intermediate Speed)	1
3	580019139	Connector (3-Way)	1
3	580019140	Connector (Secondary Lock)	1
3	505968568	Terminal (Socket)	3
4	910065119	Conduit	AR
5	. . . . .	Connector Assembly (To Right Hand Chassis Harness)	1
5	580069704	Connector	1
5	580069705	Connector	1
5	580019119	Plug	6
5	580041195	Terminal Pin	6
6	. . . . .	Connector Assembly (Turbine Shaft RPM)	1
6	580022861	Connector (6 Way Housing)	1
6	580036992	Connector	1
6	505968568	Terminal (Socket)	5
6	580019119	Plug	1
7	520038855	Conduit	AR
8	520045672	Conduit	AR
9	. . . . .	Connector Assembly (Bus Bar)	1
9	580036941	Connector	1
9	580026813	Connector	1
9	505968568	Terminal (Socket)	12
10	. . . . .	Connector Assembly (Bus Bar)	1
10	580063570	Connector	1
11	. . . . .	Connector Assembly (APC214-CRP129)	1
11	580063572	Connector	1
11	520045873	Plug	10
11	580039158	Terminal	20
12	. . . . .	Connector Assembly (APC-CRP129)	1
12	580063573	Connector	1
12	520045873	Plug	4
12	580039158	Terminal	14
13	580041641	Conduit	AR
14	580070400	Clip	1
15	580044908	Conduit	AR
16	. . . . .	Connector Assembly (Forward One Solenoid)	1
16	580021087	Connector (2 Way)	1
16	580021088	Connector (Secondary Lock)	1
16	505968568	Terminal (Socket)	2
17	. . . . .	Connector Assembly (Range Two Solenoid)	1
17	580021087	Connector (2 Way)	1
17	580021088	Connector (Secondary Lock)	1
17	505968568	Terminal (Socket)	2
18	. . . . .	Connector Assembly (Forward Two Solenoid)	1
18	580021087	Connector (2 Way)	1

©2014 Yale Materials Handling Corporation

WIRE HARNESS
TRANSMISSION – THREE SPEED

ITEM	PART NO.	DESCRIPTION	QTY
18	580021088	Connector (Secondary Lock)	1
18	505968568	Terminal (Socket)	2
19	. . . . .	Connector Assembly (Range One Solenoid)	1
19	580021087	Connector (2 Way)	1
19	580021088	Connector (Secondary Lock)	1
19	505968568	Terminal (Socket)	1
20	. . . . .	Connector Assembly (Reverse One Solenoid)	1
20	580021087	Connector (2 Way)	1
20	580021088	Connector (Secondary Lock)	1
20	505968568	Terminal (Socket)	1
21	. . . . .	Connector Assembly (Reverse One Pressure)	1
21	580063697	Connector	1
21	580063751	Connector (Secondary Lock)	1
21	580044852	Terminal (Socket)	3
21	580044854	Seal	3
22	. . . . .	Connector Assembly (Range One Pressure)	1
22	580063697	Connector	1
22	580063751	Connector (Secondary Lock)	1
22	580044852	Terminal (Socket)	3
22	580044854	Seal	3
23	. . . . .	Connector Assembly (Forward Two Pressure)	1
23	580063697	Connector	1
23	580063751	Connector (Secondary Lock)	1
23	580044852	Terminal (Socket)	3
23	580044854	Seal	3
24	. . . . .	Connector Assembly (Range Two Pressure)	1
24	580063697	Connector	1
24	580063751	Connector (Secondary Lock)	1
24	580044852	Terminal (Socket)	3
24	580044854	Seal	3
25	. . . . .	Connector Assembly (Forward One Pressure)	1
25	580063697	Connector	1
25	580063751	Connector (Secondary Lock)	1
25	580044852	Terminal (Socket)	3
25	580044854	Seal	3
26	. . . . .	Connector Assembly (Tail Shaft RPM)	1
26	580022861	Connector (6 Way Housing)	1
26	580036992	Connector	1
26	505968568	Terminal (Socket)	5
26	580019119	Plug	1
27	504232281	Conduit	AR

©2014 Yale Materials Handling Corporation

NOTES

©2014 Yale Materials Handling Corporation

WIRE HARNESS (FIGURE 6-61)
TRANSMISSION — TWO SPEED

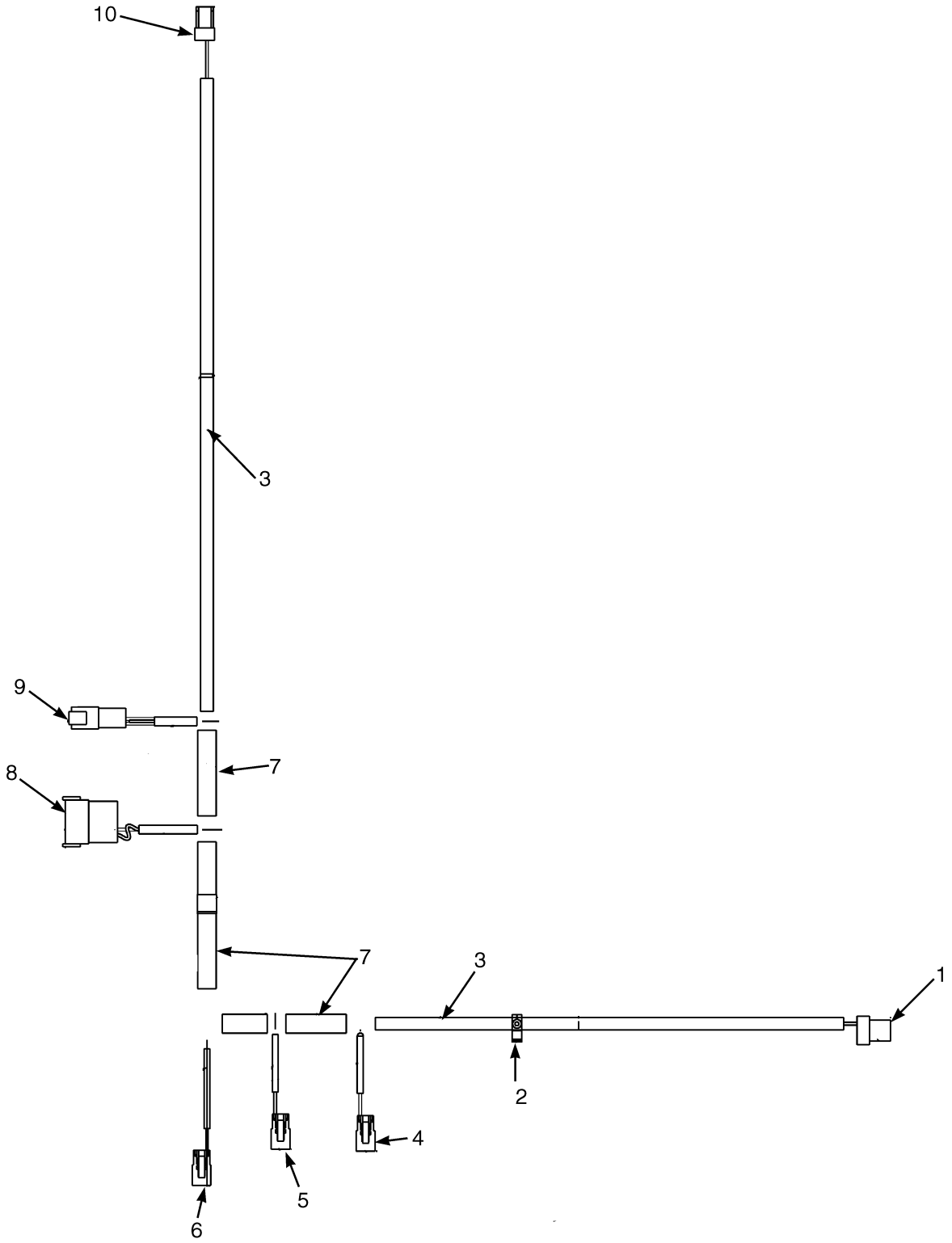

©2014 Yale Materials Handling Corporation

WIRE HARNESS
TRANSMISSION – TWO SPEED

ITEM	PART NO.	DESCRIPTION	QTY
	580090665	Wire Harness (Transmission)	1
1	. . . . .	Connector Assembly (Output Speed)	1
1	580048895	Connector	1
1	504288741	Terminal	1
2	580030876	Clip	1
3	580044908	Conduit	AR
4	. . . . .	Connector Assembly (Reverse 1 Solenoid)	1
4	580021087	Connector (2 Way)	1
4	580021088	Connector (Secondary Lock)	1
4	505968568	Terminal (Socket)	2
5	. . . . .	Connector Assembly (Range 1 Solenoid)	1
5	580021087	Connector (2 Way)	1
5	580021088	Connector (Secondary Lock)	1
5	505968568	Terminal (Socket)	2
6	. . . . .	Connector Assembly (Forward 1 Solenoid)	1
6	580021087	Connector (2 Way)	1
6	580021088	Connector (Secondary Lock)	1
6	505968568	Terminal (Socket)	2
7	520038855	Conduit	AR
8	. . . . .	Connector Assembly (To Right Hand Chassis Harness)	1
8	580069704	Connector	1
8	580069705	Connector	1
8	580041195	Terminal Pin	6
8	580019119	Plug	6
9	. . . . .	Connector Assembly (To Right Hand Chassis Harness)	1
9	580039490	Connector	1
9	580039491	Connector (Secondary Lock)	1
9	580041195	Terminal Pin	5
9	580019119	Plug	1

©2014 Yale Materials Handling Corporation

WIRE HARNESS (FIGURE 6-62)
ELECTRONIC CONTROL VALVE — THREE FUNCTION

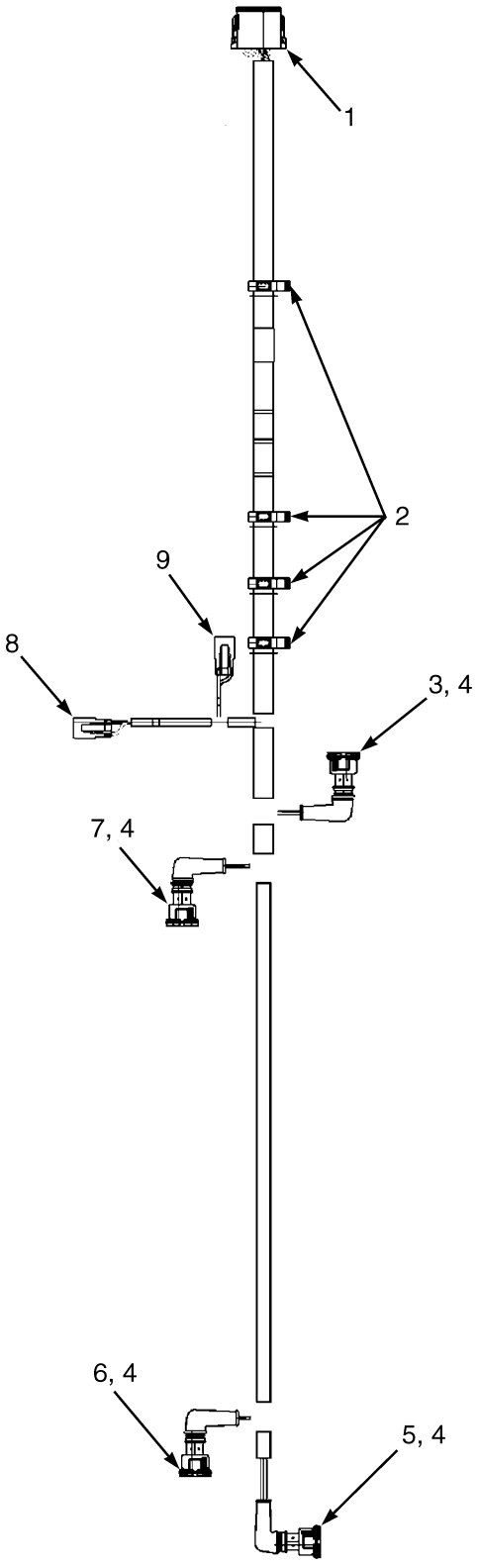

HP081569

©2014 Yale Materials Handling Corporation

WIRE HARNESS

ELECTRONIC CONTROL VALVE – THREE FUNCTION

ITEM	PART NO.	DESCRIPTION	QTY
	580040090	Wire Harness (Control Valve)	1
1	. . . . .	Connector Assembly (Vehicle System Manager)	1
1	580036941	Connector	1
1	505968568	Terminal (Socket)	9
1	505968566	Plug	3
1	580036941	Connector	1
1	580026813	Connector	1
2	580025559	Clip	4
3	. . . . .	Connector Assembly (2A Tilt)	1
3	580038186	Connector	1
3	580049815	Seal	2
3	580025558	Terminal	2
4	505970552	Boot	4
5	. . . . .	Connector Assembly (2B Tilt)	1
5	580038186	Connector	1
5	580049815	Seal	2
5	580025558	Terminal	2
6	. . . . .	Connector Assembly (3B Auxiliary 1)	1
6	580022866	Connector (2-Way)	1
6	580049815	Seal	2
6	580025558	Terminal	2
7	. . . . .	Connector Assembly (3A Auxiliary 1)	1
7	580022866	Connector (2-Way)	1
7	580049815	Seal	2
7	580025558	Terminal	2
8	. . . . .	Connector Assembly (Lift)	1
8	580021087	Connector (2 Way)	1
8	505968568	Terminal (Socket)	2
8	580021088	Connector (Secondary Lock)	1
9	. . . . .	Connector Assembly (Lower)	1
9	580021087	Connector (2 Way)	1
9	505968568	Terminal (Socket)	2
9	580021088	Connector (Secondary Lock)	1

©2014 Yale Materials Handling Corporation

WIRE HARNESS (FIGURE 6-63)
ELECTRONIC CONTROL VALVE — FOUR FUNCTION

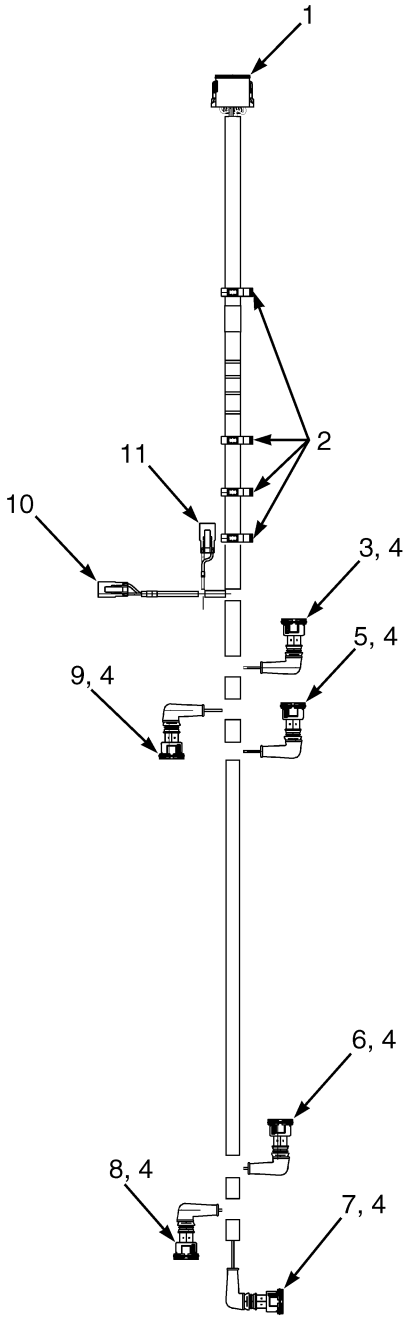

HP081568

©2014 Yale Materials Handling Corporation

WIRE HARNESS

ELECTRONIC CONTROL VALVE – FOUR FUNCTION

ITEM	PART NO.	DESCRIPTION	QTY
	580038751	Wire Harness (Control Valve)	1
1	. . . . .	Connector Assembly (Vehicle System Manager)	1
1	580036941	Connector	1
1	505968568	Terminal (Socket)	12
1	580026813	Connector	1
2	580025559	Clip	4
3	. . . . .	Connector Assembly (2A Tilt)	1
3	580038186	Connector	1
3	580049815	Seal	2
3	580025558	Terminal	2
4	505970552	Boot	6
5	580022878	Connector (4A Auxiliary 2)	1
5	580049815	Seal	2
5	580025558	Terminal	2
6	580022878	Connector (4B Auxiliary 2)	1
6	580049815	Seal	2
6	580025558	Terminal	2
7	. . . . .	Connector Assembly (2B Tilt)	1
7	580038186	Connector	1
7	580049815	Seal	2
7	580025558	Terminal	2
8	. . . . .	Connector Assembly (3B Auxiliary 1)	1
8	580022866	Connector (2-Way)	1
8	580049815	Seal	2
8	580025558	Terminal	2
9	. . . . .	Connector Assembly (3A Auxiliary 1)	1
9	580022866	Connector (2-Way)	1
9	580049815	Seal	2
9	580025558	Terminal	2
10	. . . . .	Connector Assembly (Lift)	1
10	580021087	Connector (2 Way)	1
10	505968568	Terminal (Socket)	2
10	580021088	Connector (Secondary Lock)	1
11	. . . . .	Connector Assembly (Lower)	1
11	580021087	Connector (2 Way)	1
11	505968568	Terminal (Socket)	2
11	580021088	Connector (Secondary Lock)	1

©2014 Yale Materials Handling Corporation

WIRE HARNESS (FIGURE 6-64)
LIGHTS WITH OVERHEAD GUARD

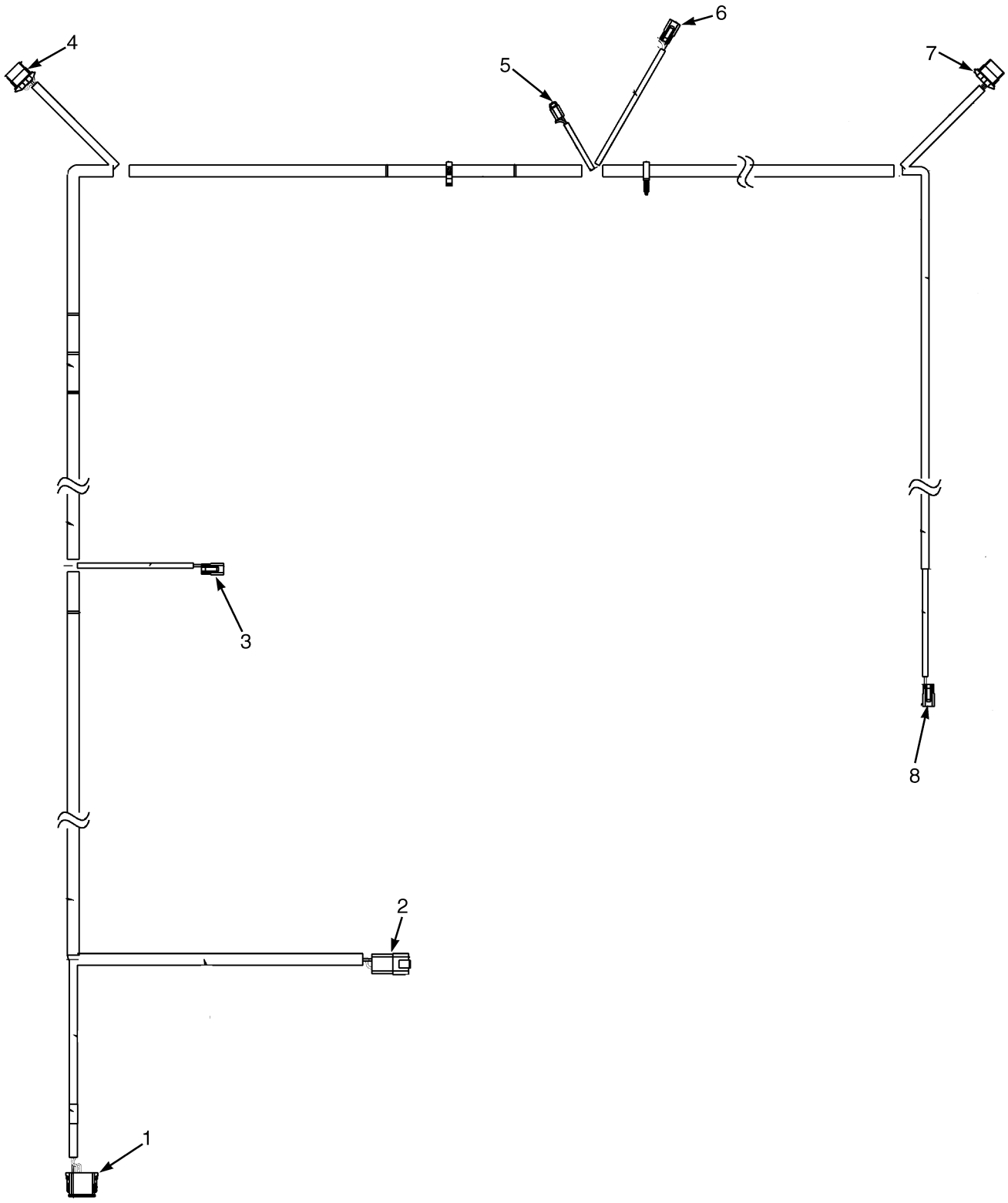

©2014 Yale Materials Handling Corporation

WIRE HARNESS
LIGHTS WITH OVERHEAD GUARD

ITEM	PART NO.	DESCRIPTION	QTY
	580086521	Wire Harness (Lights)	1
1	. . . . .	Connector Assembly (Harness Attachment)	1
1	580036943	Connector	1
1	580026813	Connector	1
1	505968568	Terminal (Socket)	3
1	580019119	Plug	9
2	. . . . .	Connector Assembly (RH Chassis)	1
2	580040822	Connector	1
2	580040823	Connector	1
2	580019341	Terminal (Pin)	4
3	. . . . .	Connector Assembly (RH Front Work Light)	1
3	580021087	Connector (2 Way)	1
3	580021088	Connector (Secondary Lock)	1
3	505968593	Terminal (Socket)	2
4	. . . . .	Connector Assembly (RH Rear Signal)	1
4	580041462	Connector	1
4	580045480	Connector (Secondary Lock)	1
4	520045804	Terminal	4
4	520045805	Seal	1
4	580027612	Plug (Cavity Plug)	2
4	580026649	Wire Seal	3
5	. . . . .	Connector Assembly (Strobe)	1
5	580019245	Connector (2 Socket)	1
5	580019246	Connector (Seconday Lock)	1
5	580039513	Terminal	2
6	. . . . .	Connector Assembly (Rear Work Light)	1
6	580021087	Connector (2 Way)	1
6	580021088	Connector (Secondary Lock)	1
6	505968593	Terminal (Socket)	2
7	. . . . .	Connector Assembly (RH Rear Signal)	1
7	580041462	Connector	1
7	580045480	Connector (Secondary Lock)	1
7	520045804	Terminal	4
7	520045805	Seal	1
7	580027612	Plug (Cavity Plug)	2
7	580026649	Wire Seal	3
8	. . . . .	Connector Assembly (LH Front Work Light)	1
8	580021087	Connector (2 Way)	1
8	580021088	Connector (Secondary Lock)	1
8	505968593	Terminal (Socket)	2

©2014 Yale Materials Handling Corporation

WIRE HARNESS (FIGURE 6-65)
WORK LIGHT JUMPER — WITH TWO STAGE MASTS

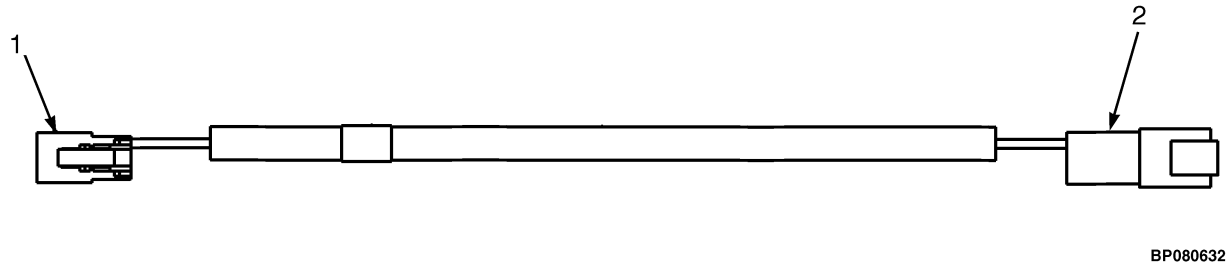

ITEM	PART NO.	DESCRIPTION	QTY
	580084241	Wire Harness (Work Light Jumper)	1
1	. . . . .	Connector Assembly (To Work Light)	1
1	580021087	Connector (2 Way)	1
1	580021088	Connector (Secondary Lock)	1
1	505968568	Terminal (Socket)	2
2	. . . . .	Connector Assembly (To Harness)	1
2	580022893	Connector (2 Pin)	1
2	505968540	Connector (Secondary Lock)	1
2	505968514	Terminal (Pin)	2

©2014 Yale Materials Handling Corporation

NOTES

©2014 Yale Materials Handling Corporation

WIRE HARNESS (FIGURE 6-66)
LOW FUEL SENSOR

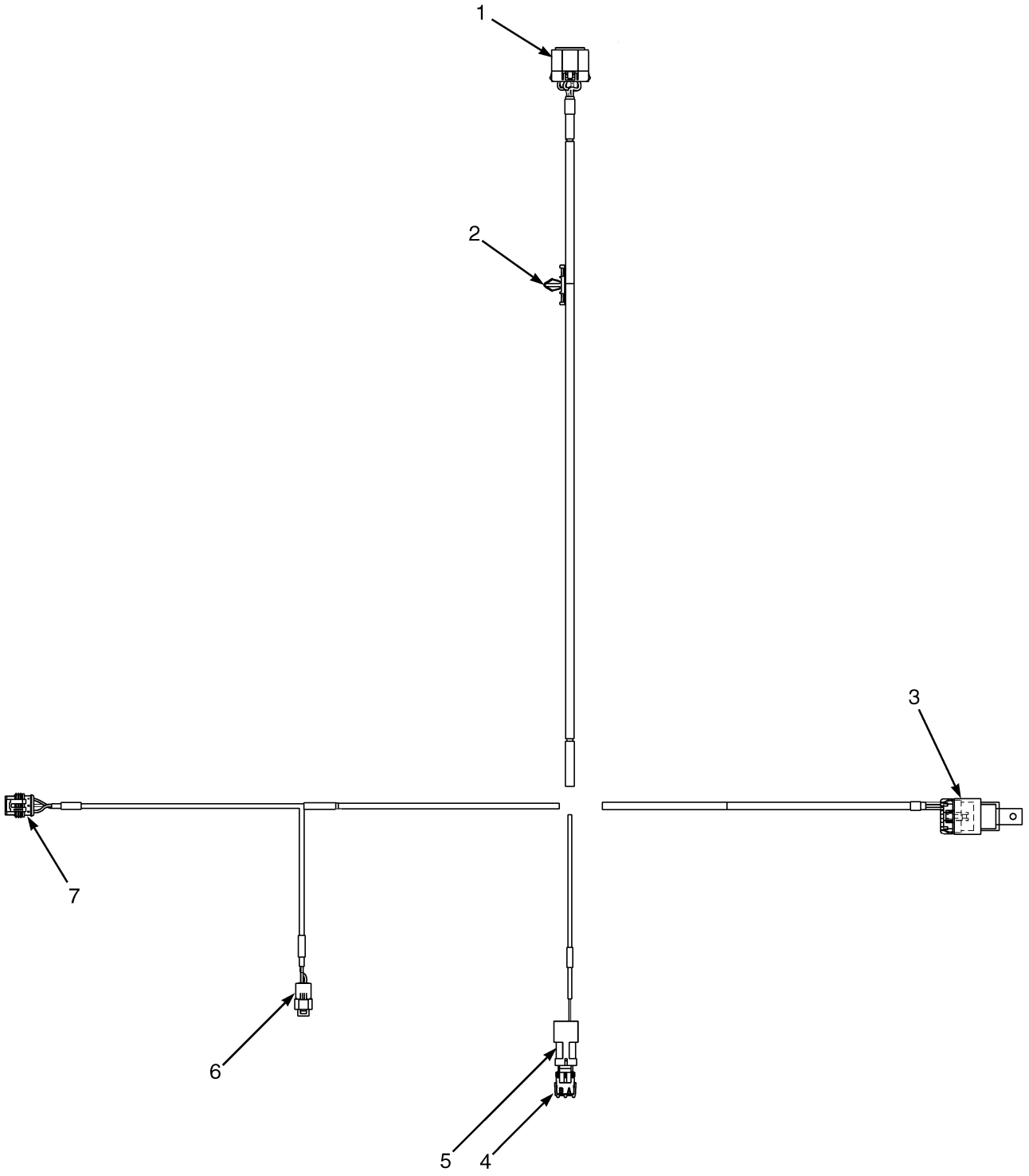

©2014 Yale Materials Handling Corporation

WIRE HARNESS
LOW FUEL SENSOR

ITEM	PART NO.	DESCRIPTION	QTY
	582001417	Wire Harness (Low Fuel Sensor)	1
1	. . . . .	Connector Assembly (To Engine Harness)	1
1	580036349	Connector	1
1	580036358	Connector Lock	1
1	580023866	Terminal	3
1	580023865	Terminal	5
1	580033597	Seal	3
1	580070459	Seal	5
2	580041512	Clip	1
3	. . . . .	Connector Assembly (Latching Relay)	1
3	580010544	Relay	1
3	580010545	Connector Body	1
3	580027512	Lock	1
3	504288730	Seal	1
3	580023878	Terminal	4
3	505968505	Seal	4
4	. . . . .	Connector Assembly (Air Restriction Sensor Cap)	1
4	580012321	Diode	1
4	504288730	Seal	2
5	. . . . .	Connector Assembly (Air Restriction Sensor)	1
5	580012324	Connector	1
5	520038875	Terminal	2
5	580023845	Seal	2
6	. . . . .	Connector Assembly (LPG Lockoff)	1
6	580068120	Connector	1
6	580051025	Terminal	2
7	. . . . .	Connector Assembly (Low LPG Sensor)	1
7	580062118	Connector (3 Way)	1
7	580035034	Terminal (Pin)	3
7	580040456	Wire Seal	1

©2014 Yale Materials Handling Corporation

WIRE HARNESS (FIGURE 6-67)
ADAPTER — LOW FUEL PRESSURE

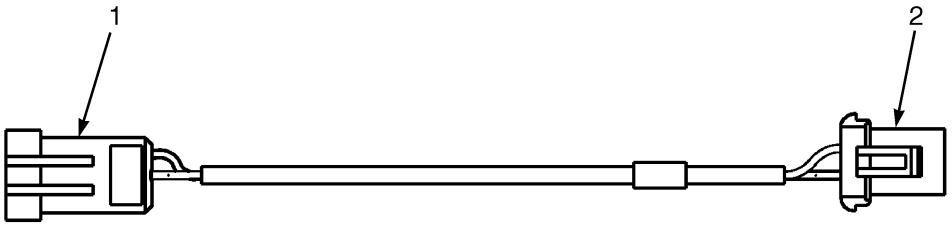

HP082028

ITEM	PART NO.	DESCRIPTION	QTY
	582002989	Wire Harness	1
1	. . . . .	Connector Assembly (To LH Chassis Harness)	1
1	272478100	Connector (3 Way)	1
1	278131700	Pin Terminal	2
1	580050847	Plug	1
1	580040456	Wire Seal	2
2	. . . . .	Connector Assembly (Low LPG Switch)	1
2	520045074	Plug	1
2	520045069	Terminal (Seconday Lock)	1
2	504288733	Terminal	2
2	580023845	Seal	2

©2014 Yale Materials Handling Corporation

7 TRANSMISSION

SECTION 7
TRANSMISSION

DESCRIPTION	PAGE
CHARGE PUMP	7-42
CONTROL VALVE	
THREE SPEED TRANSMISSION	7-24
TWO SPEED TRANSMISSION	7-40
FORWARD CLUTCH HIGH AND OUTPUT SHAFT	
THREE SPEED TRANSMISSION - FWD2	7-20
FORWARD CLUTCH LOW	
TWO SPEED TRANSMISSION	7-34
FORWARD CLUTCH LOW AND SECOND SHAFT	
THREE SPEED TRANSMISSION - FWD1, RANGE2	7-18
OUTPUT SHAFT	
TWO SPEED TRANSMISSION	7-38
PUMP DRIVE	7-44
REVERSE CLUTCH	
TWO SPEED TRANSMISSION	7-36
REVERSE CLUTCH AND FIRST SHAFT	
THREE SPEED TRANSMISSION - REV1, RANGE 1	7-22
TORQUE CONVERTER	
CUMMINS QSB 3.3L DIESEL	7-6
GM 4.3L GASOLINE AND LPG	7-4
TRANSMISSION ASSEMBLY	
THREE SPEED - SHEET 1 0F 2 (→ S/N D878V01705G)	7-10
THREE SPEED - SHEET 2 OF 2 (→ S/N D878V01705G)	7-12
THREE SPEED - SHEET 1 OF 2 (S/N D878V01706G →)	7-14
THREE SPEED - SHEET 2 OF 2 (S/N D878V01706G →)	7-16
TWO SPEED - SHEET 1 OF 2 (→ S/N D878V01678G)	7-26
TWO SPEED - SHEET 2 0F 2 (→ S/N D878V01678G)	7-28
TWO SPEED - SHEET 1 OF 2 (S/N D878V01679G →)	7-30
TWO SPEED - SHEET 2 OF 2 (S/N D878V01679G →)	7-32
TRANSMISSION COOLING	
WITH EXTERNAL OIL COOLER	7-8
TRANSMISSION MOUNT	7-2

©2014 Yale Materials Handling Corporation

TRANSMISSION MOUNT (FIGURE 7-1)

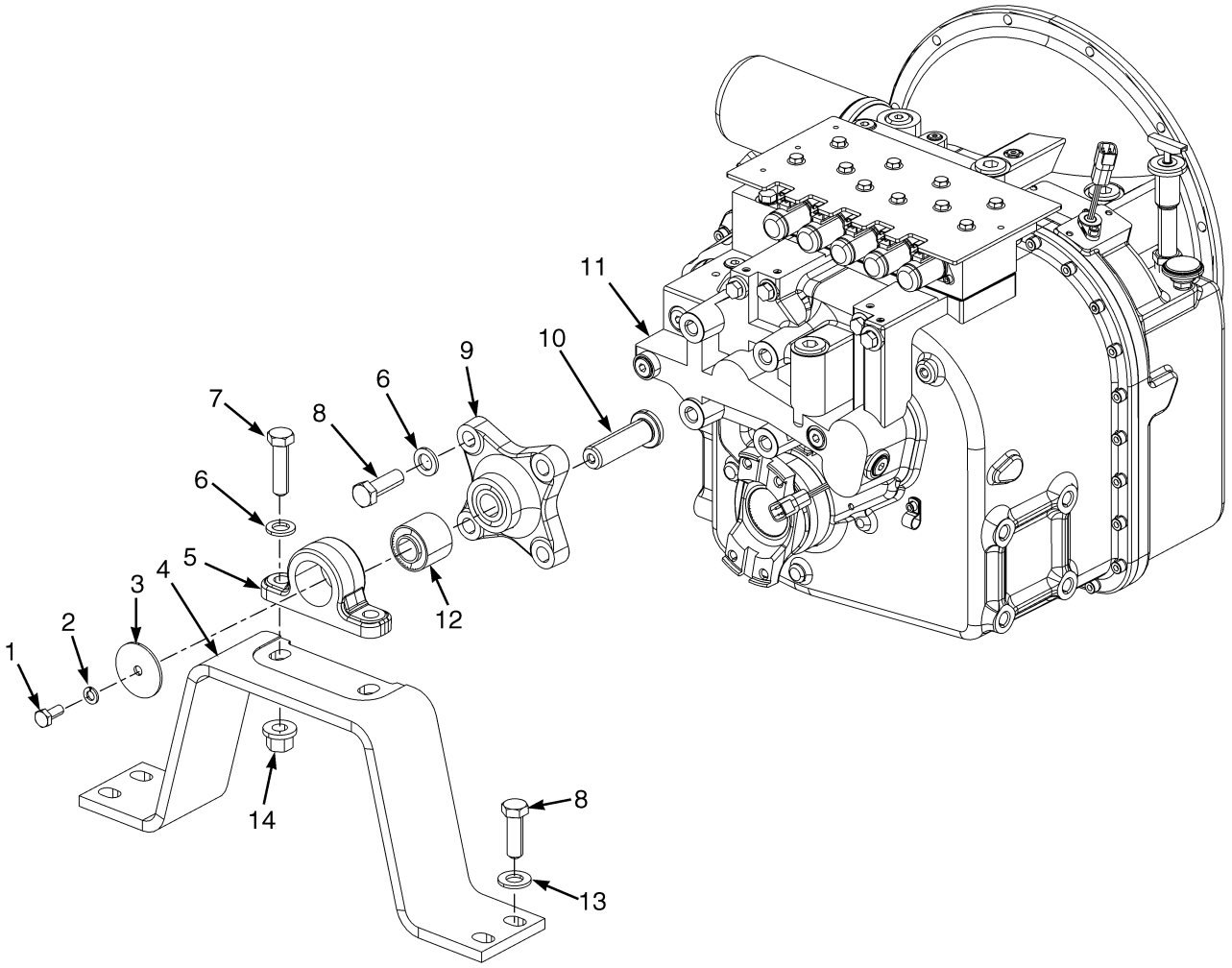

BP240128

©2014 Yale Materials Handling Corporation

TRANSMISSION MOUNT

ITEM	PART NO.	DESCRIPTION	QTY
1	449001023	Capscrew	1
2	~~504057795~~		
	449022013	Lockwasher	1
3	580063482	Washer	1
4	580063480	Crossmember	1
5	580063478	Housing (Bushing)	1
6	502566903	Washer	6
7	502565901	Capscrew	2
8	311323023	Capscrew	8
9	580069314	Bracket (Isolator)	1
10	580063481	Pin	1
11	**a** 580085902	Transmission Assy (Two Speed) (☞P20267 [Page 7-26], ☞P20268 [Page 7-28])	1
11	**f** 580096452	Transmission Assy (Two Speed) (☞P20733 [Page 7-30], ☞P20734 [Page 7-32])	1
11	**e** 582013838	Transmission Assy (Two Speed) (☞P20733 [Page 7-30], ☞P20734 [Page 7-32])	1
11	**c** 580085901	Transmission Assy (Three Speed) (☞P20359 [Page 7-10], ☞P20360 [Page 7-12])	1
11	**b** 580096451	Transmission Assy (Three Speed) (☞P20731 [Page 7-14], ☞P20732 [Page 7-16])	1
11	**d** 582003791	Transmission Assy (Three Speed)	1
12	580063477	Bushing	1
13	580049879	Washer	4
14	580051384	Nut (Flange)	2

FOOTNOTES:

a → S/N D878V01678G
b S/N D878V01705G ↔ S/N D878V01721G
c S/N D878V01705G →
d S/N D878V01722G →
e S/N D878E01501J →
f S/N D878V01679G →

©2014 Yale Materials Handling Corporation

TORQUE CONVERTER (FIGURE 7-2)

GM 4.3L GASOLINE AND LPG

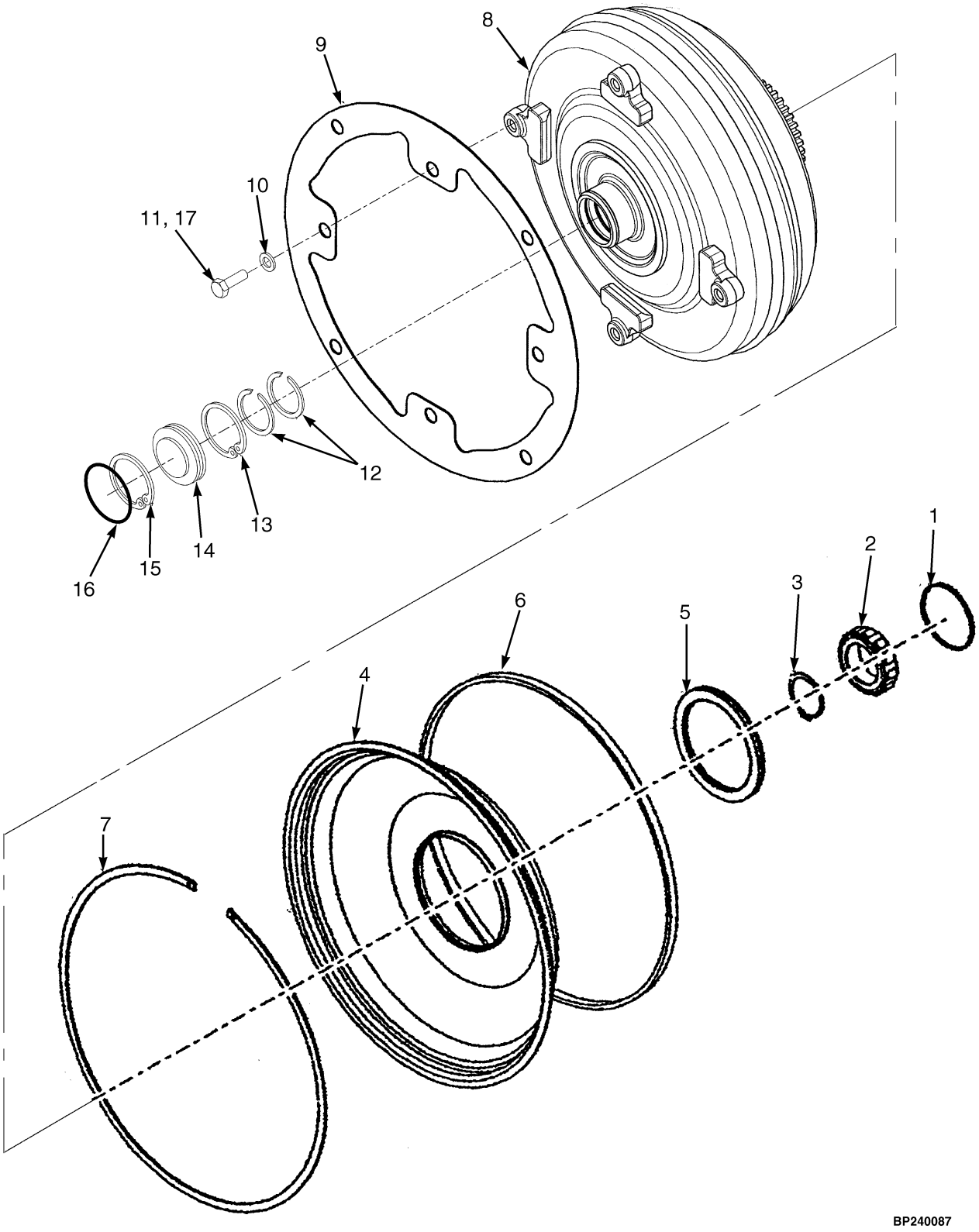

©2014 Yale Materials Handling Corporation

TORQUE CONVERTER
GM 4.3L GASOLINE AND LPG

ITEM	PART NO.	DESCRIPTION	QTY
1	580080729	Piston Ring	1
2	580080730	Bearing	1
3	580080731	Snap Ring	1
4	580089185	Baffle And Oil Seal	1
5	580089186	Oil Seal	1
6	580048413	Seal	1
7	580048414	Retaining Ring	1
8	580081763	Torque Converter (2.61 Stall Ratio) (2.61 Stall Ratio)	1
8	580081762	Torque Converter (3.17 Stall Ratio) (3.17 Stall Ratio)	1
9	580079376	Mounting Plate	3
10	502566904	Washer	8
11	580042194	Capscrew	8
12	580004107	Snap Ring	2
13	064570800	Snap Ring	1
14	580079378	Plug	1
15	501862901	Snap Ring	1
16	580084772	O-Ring	1
17	501702901	Loctite	AR

©2014 Yale Materials Handling Corporation

TORQUE CONVERTER (FIGURE 7-3)

CUMMINS QSB 3.3L DIESEL

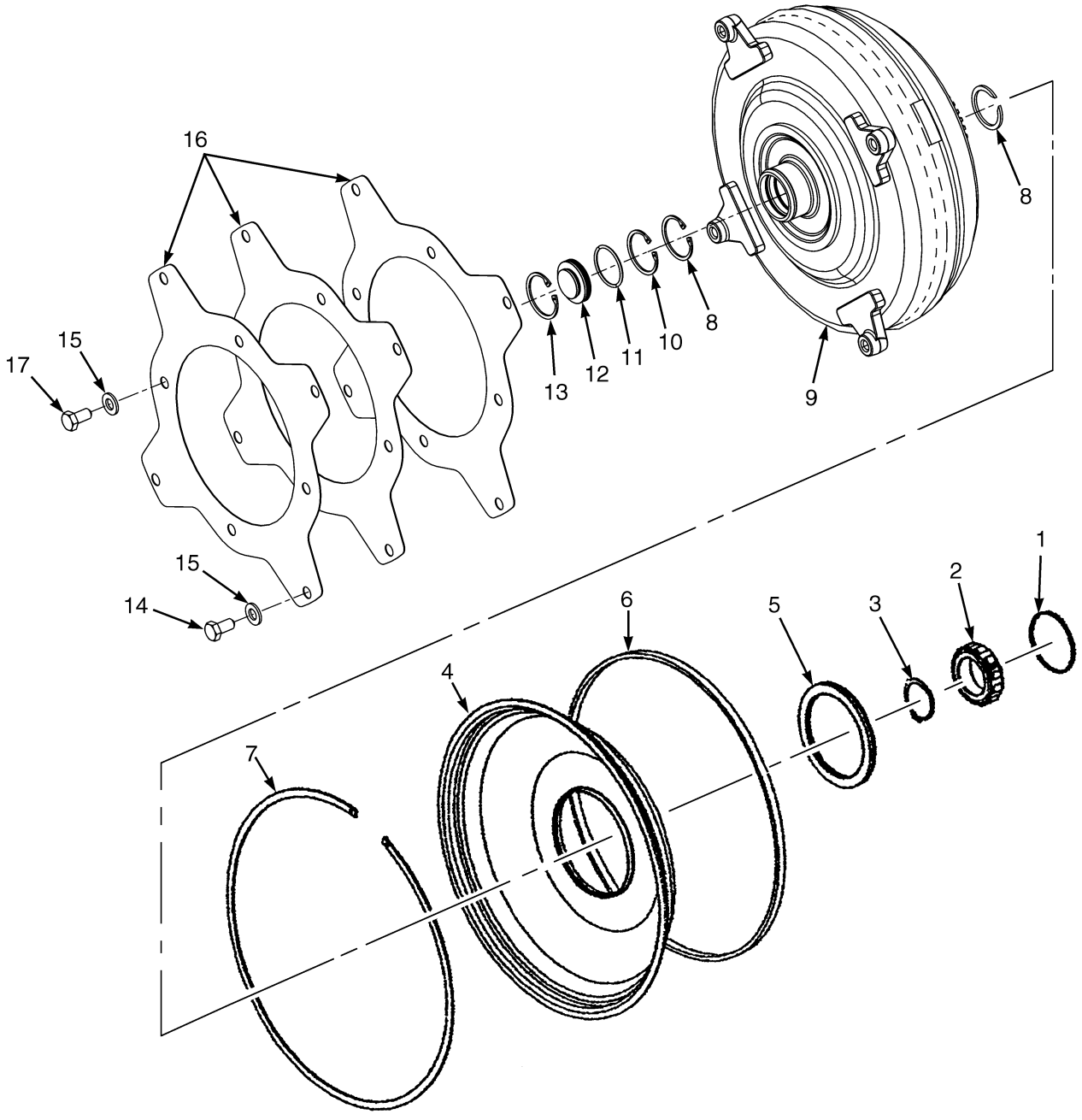

©2014 Yale Materials Handling Corporation

TORQUE CONVERTER
CUMMINS QSB 3.3L DIESEL

ITEM	PART NO.	DESCRIPTION	QTY
1	580080729	Piston Ring	1
2	580080730	Bearing	1
3	580080731	Snap Ring	1
	580048397	Baffle And Seal Assembly	1
4	580089185	Baffle And Oil Seal	1
5	580048330	Seal	1
5	580089186	Oil Seal	1
6	580048413	Seal	1
7	580048414	Retaining Ring	1
8	580080732	Snap Ring	2
9	580081764	Torque Converter (3.17 Stall Ratio)	1
10	064570800	Snap Ring	1
11	580084772	O-Ring	1
12	580079378	Plug	1
13	501862901	Snap Ring	1
14	931014902	Capscrew	4
15	502566904	Washer	8
16	580085523	Flex Plate	3
17	580042194	Capscrew	4

©2014 Yale Materials Handling Corporation

TRANSMISSION COOLING (FIGURE 7-4)
WITH EXTERNAL OIL COOLER

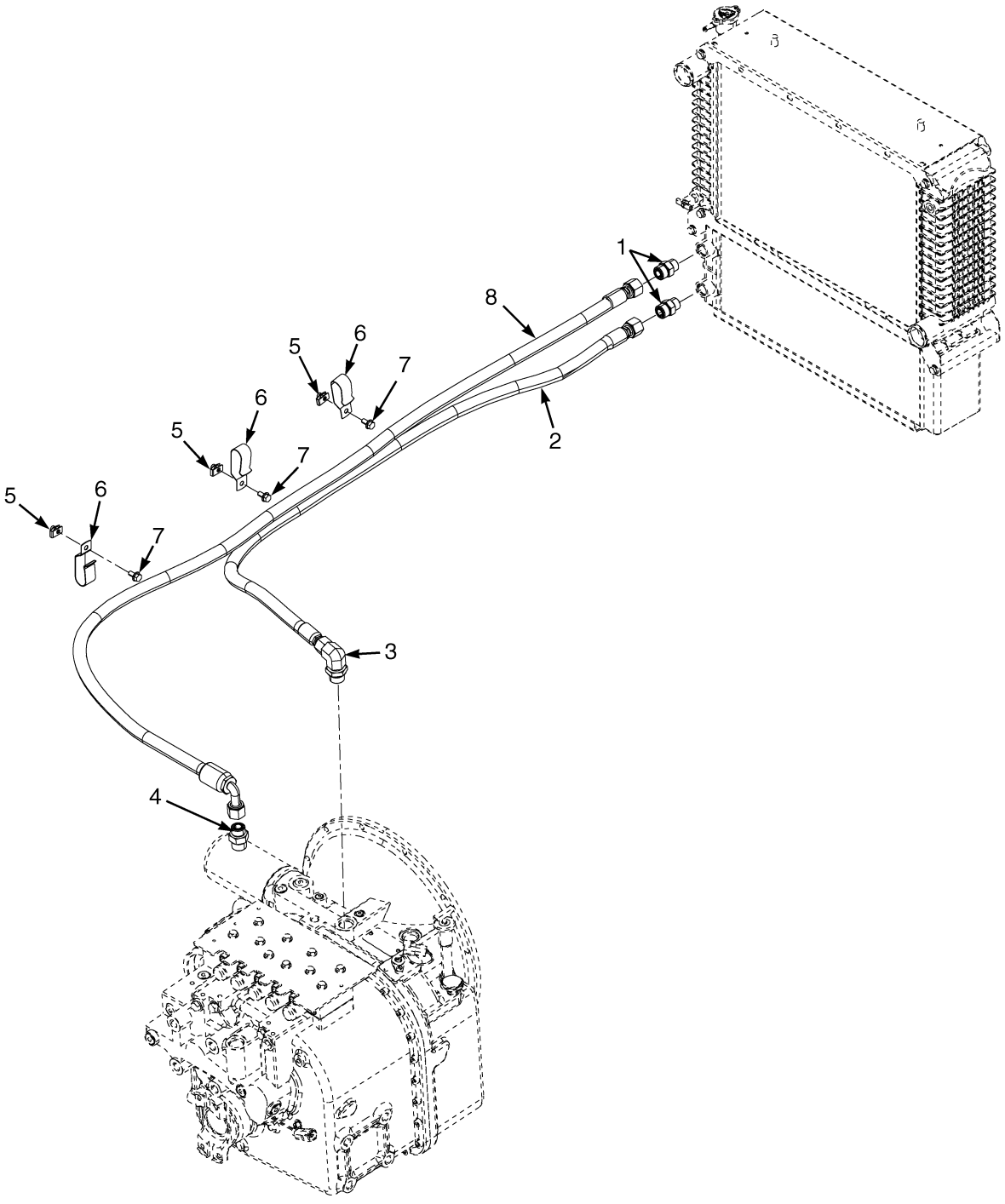

BP240125

©2014 Yale Materials Handling Corporation

TRANSMISSION COOLING
WITH EXTERNAL OIL COOLER

ITEM	PART NO.	DESCRIPTION	QTY
1	580019817	Fitting	2
1	580019387	O-Ring	1
1	052645400	O-Ring	1
2	580085320	Hose Assy	1
3	580019871	Fitting	1
3	580019387	O-Ring	1
3	052645500	O-Ring	1
4	580020577	Fitting	1
4	052645500	O-Ring	1
4	580039389	O-Ring	1
5	580026621	Nut	3
6	580049814	Clip	3
7	580047714	Capscrew	3
8	580085322	Hose Assy	1

©2014 Yale Materials Handling Corporation

TRANSMISSION ASSEMBLY (FIGURE 7-5)

THREE SPEED — SHEET 1 0F 2 (→ S/N D878V01705G)

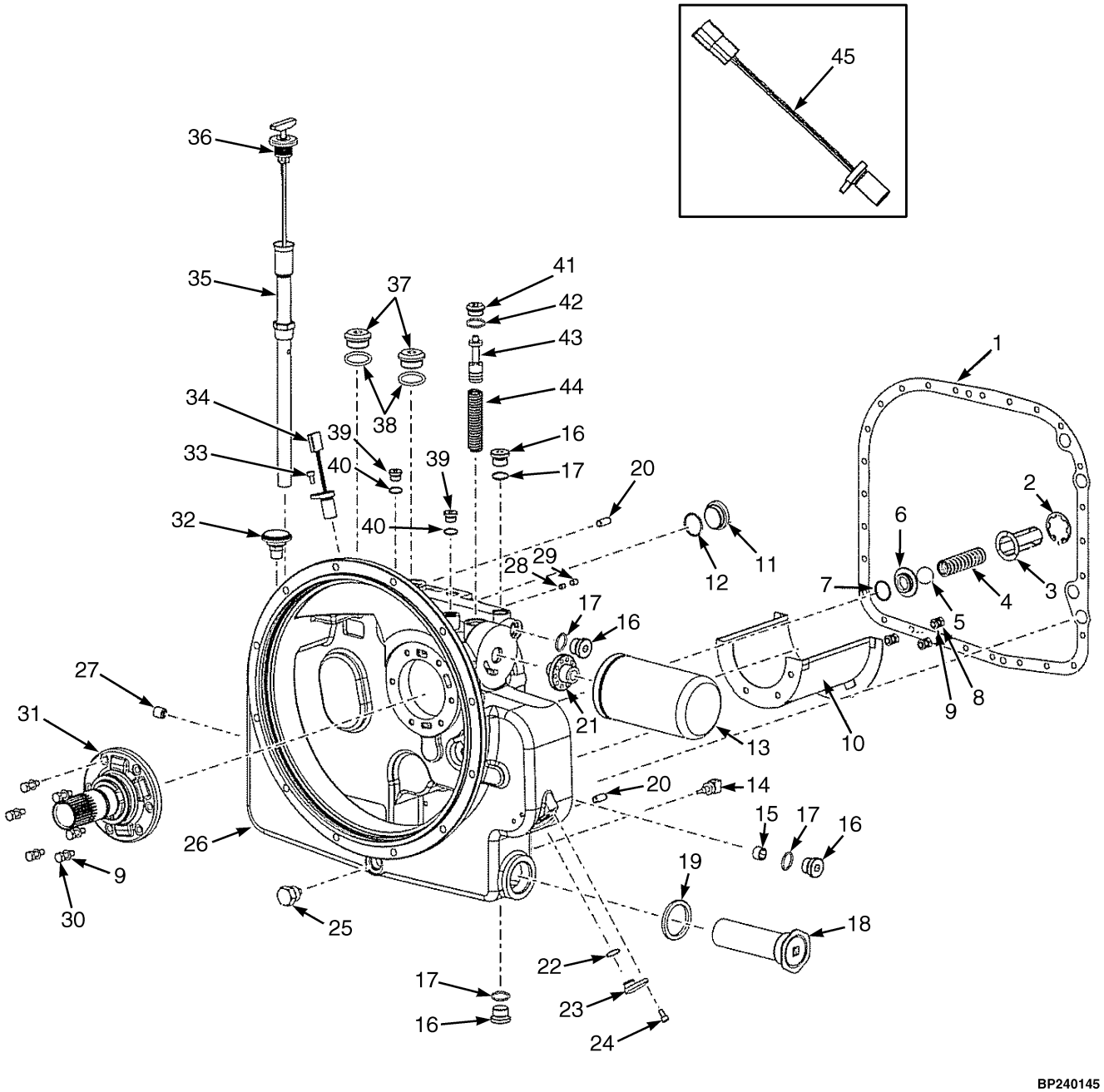

©2014 Yale Materials Handling Corporation

TRANSMISSION ASSEMBLY

THREE SPEED – SHEET 1 0F 2 (→ S/N D878V01705G)

ITEM	PART NO.	DESCRIPTION	QTY
	580085901	Transmission Assy (Three Speed)	1
1	580080563	Gasket	1
2	580080554	Snap Ring	1
3	580080553	Retainer	1
4	580080552	Spring	1
5	580080551	Ball	1
6	580080550	Spacer	1
7	580080549	O-Ring	1
8	580070555	Screw	3
9	580059371	Lockwasher	9
10	580080562	Baffle	1
11	580070331	Plug	1
12	580070332	O-Ring	1
13	580048036	Transmission Filter	1
14	580080555	Sensor (Temperature)	1
15	580080564	Plug	1
16	580080558	Plug	4
17	012826900	O-Ring	4
18	580048327	Screen	1
19	580048326	Gasket	1
20	580048323	Pin	2
21	580080737	Adapter	1
22	580048444	O-Ring	1
23	580080567	Plug	1
24	580047963	Capscrew	2
25	580048356	Drain Plug	1
26	580089178	Converter Housing	1
27	. . . . .	Plug	1
28	. . . . .	Plug	1
29	. . . . .	Plug	1
30	580080557	Screw	6
31	580080556	Support (Stator)	1
32	580048329	Breather	1
33	580047963	Capscrew	2
34	580080568	Sensor (TISS)	1
35	580080560	Dipstick Tube	1
36	580080561	Dipstick	1
37	580047971	Plug	2
38	052645500	O-Ring	1
39	580080559	Plug	2
40	580048052	O-Ring	1
41	524248305	Plug	1
42	580080739	O-Ring	1
43	580080565	Spool	1
44	580080566	Spring	1
45	. . . . .	Intermediate Shaft Speed Sensor (Behind Filter) (☞P20360 [Page 7-12])	1
	580080734	Kit-Gasket	1
	580089189	Kit-Gasket	1

©2014 Yale Materials Handling Corporation

TRANSMISSION ASSEMBLY (FIGURE 7-6)

THREE SPEED — SHEET 2 OF 2 (→ S/N D878V01705G)

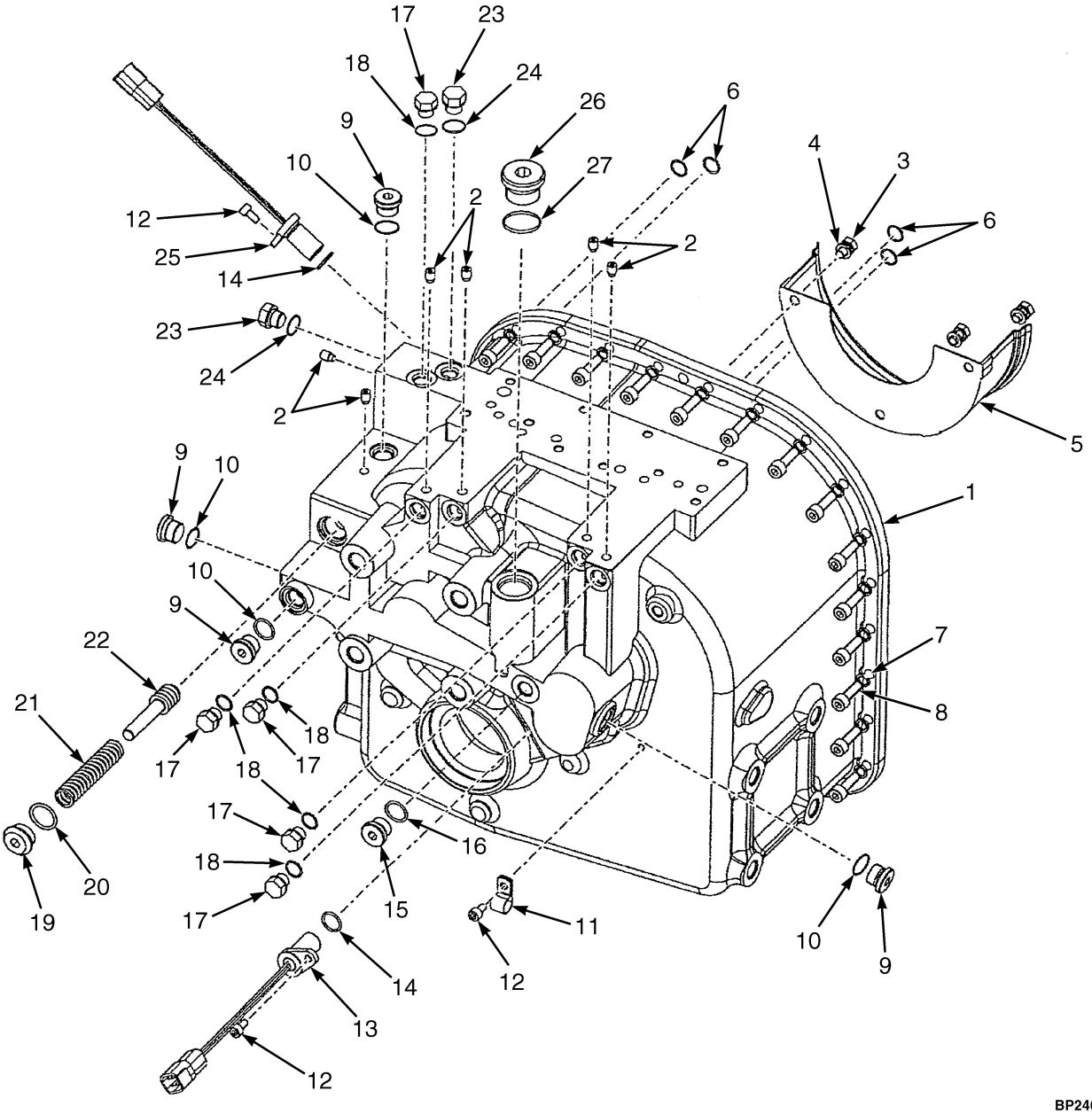

©2014 Yale Materials Handling Corporation

TRANSMISSION ASSEMBLY

THREE SPEED – SHEET 2 OF 2 (→ S/N D878V01705G)

ITEM	PART NO.	DESCRIPTION	QTY
	580085901	Transmission Assy (Three Speed)	1
1	580080577	Transmission Housing	1
2	580080578	Plug	6
3	580070555	Screw	3
4	580059371	Lockwasher	3
5	580080579	Baffle	1
6	580004117	O-Ring	4
7	580048042	Lockwasher	27
8	580080557	Screw	27
9	580080558	Plug	4
10	012826900	O-Ring	4
11	580080585	Clip	1
12	580047963	Capscrew	3
13	580080583	Sensor (Output Speed, TOSS)	1
14	580048444	O-Ring	2
15	580080584	Plug	1
16	012826900	O-Ring	1
17	058429300	Plug	5
18	052645100	O-Ring	5
19	524248305	Plug	1
20	580080739	O-Ring	1
21	580080581	Spring	1
22	580080580	Spool	1
23	060242700	Plug	2
24	052645200	O-Ring	2
25	580080582	Sensor (Intermediate Speed Sensor)	1
26	580047971	Plug	1
27	052645500	O-Ring	1

©2014 Yale Materials Handling Corporation

TRANSMISSION ASSEMBLY (FIGURE 7-7)

THREE SPEED — SHEET 1 OF 2 (S/N D878V01706G →)

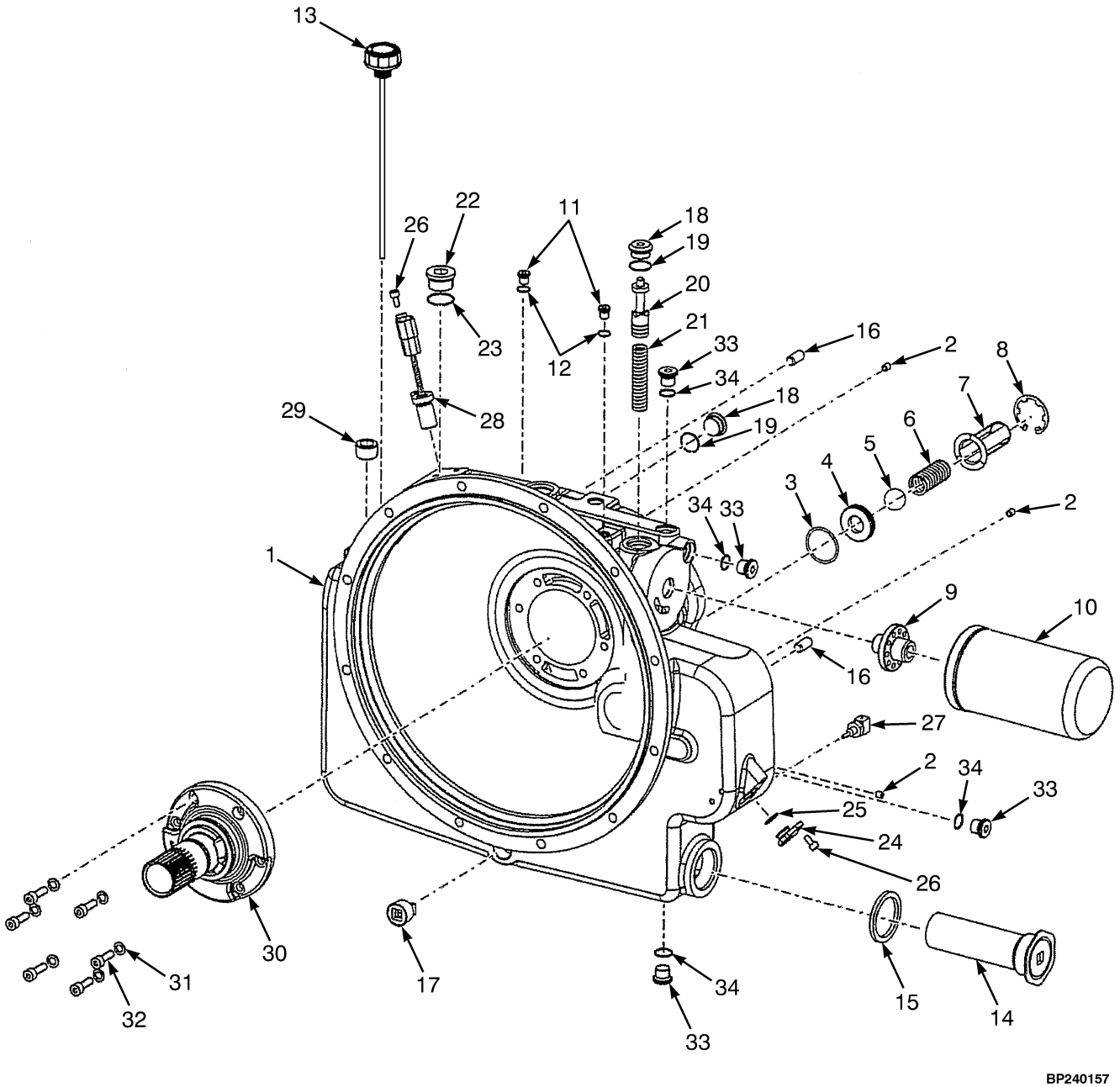

©2014 Yale Materials Handling Corporation

TRANSMISSION ASSEMBLY

THREE SPEED – SHEET 1 OF 2 (S/N D878V01706G →)

ITEM	PART NO.	DESCRIPTION	QTY
	a 580096451	Transmission Assy (Three Speed)	1
	b 582003791	Transmission Assy (Three Speed)	1
1	580096855	Converter Housing	1
2	580080578	Plug	3
3	580096856	O-Ring	1
4	580096857	Spacer	1
5	580080551	Ball	1
6	580080552	Spring	1
7	580080553	Retainer	1
8	580080554	Snap Ring	1
9	580080737	Adapter	1
10	580048036	Transmission Filter	1
11	580080559	Plug	2
12	580048052	O-Ring	2
13	580096858	Dipstick And Breather	1
14	580048327	Screen	1
15	580048326	Gasket	1
16	580048323	Pin	2
17	580048356	Drain Plug	1
18	524248305	Plug	2
19	580080739	O-Ring	1
20	580080565	Spool	1
21	580080566	Spring	1
22	580047971	Plug	1
23	052645500	O-Ring	1
24	580080567	Plug	1
25	580048444	O-Ring	1
26	580047963	Capscrew	2
27	580080555	Sensor (Temperature)	1
28	580080568	Sensor (TISS)	1
29	580096902	Plug	1
30	580080556	Support (Stator)	1
31	580059371	Lockwasher	6
32	580080557	Screw	6
33	580080558	Plug	2
34	012826900	O-Ring	2
	580097521	Kit-Gasket	1

FOOTNOTES:

a → S/N D878V01721G

b S/N D878V01722G →

©2014 Yale Materials Handling Corporation

TRANSMISSION ASSEMBLY (FIGURE 7-8)

THREE SPEED — SHEET 2 OF 2 (S/N D878V01706G →)

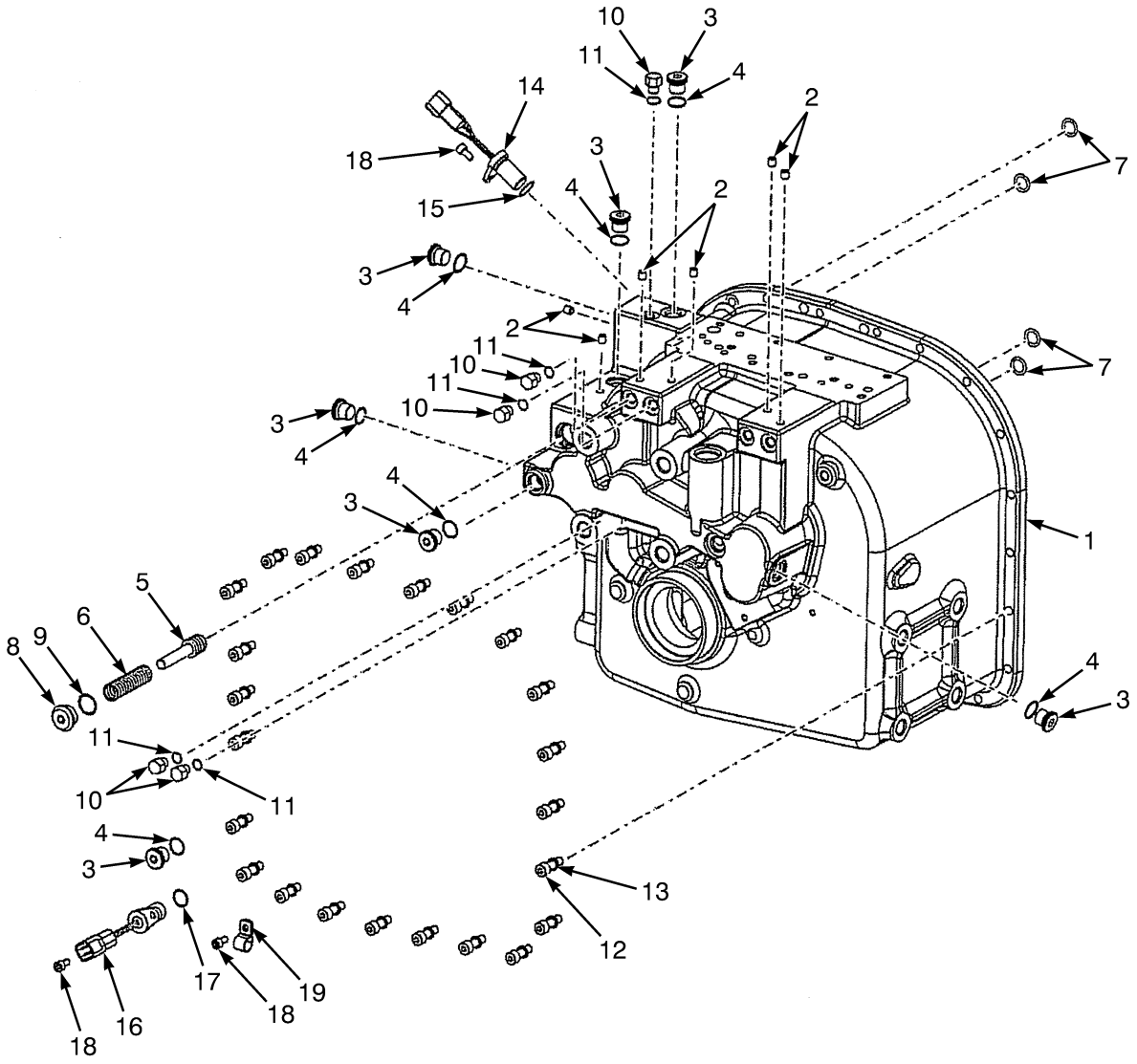

BP240158

©2014 Yale Materials Handling Corporation

TRANSMISSION ASSEMBLY

THREE SPEED – SHEET 2 OF 2 (S/N D878V01706G →)

ITEM	PART NO.	DESCRIPTION	QTY
	a 580096451	Transmission Assy (Three Speed)	1
	b 582003791	Transmission Assy (Three Speed)	1
1	580096860	Transmission Housing	1
2	580080578	Plug	6
3	580080558	Plug	7
4	012826900	O-Ring	7
5	580080580	Spool	1
6	580080581	Spring	1
7	580004117	O-Ring	4
8	524248305	Plug	1
9	580080739	O-Ring	1
10	580048051	Plug	5
11	580048052	O-Ring	5
12	580080557	Screw	23
13	580048042	Lockwasher	23
14	580080582	Sensor (Intermediate Speed Sensor)	1
15	580048444	O-Ring	1
16	580080583	Sensor (Output Speed, TOSS)	1
17	580048444	O-Ring	1
18	580047963	Capscrew	3
19	580080585	Clip	1

FOOTNOTES:

a → S/N D878V01721G

b S/N D878V01722G →

©2014 Yale Materials Handling Corporation

FORWARD CLUTCH LOW AND SECOND SHAFT (FIGURE 7-9)

THREE SPEED TRANSMISSION — FWD1, RANGE2

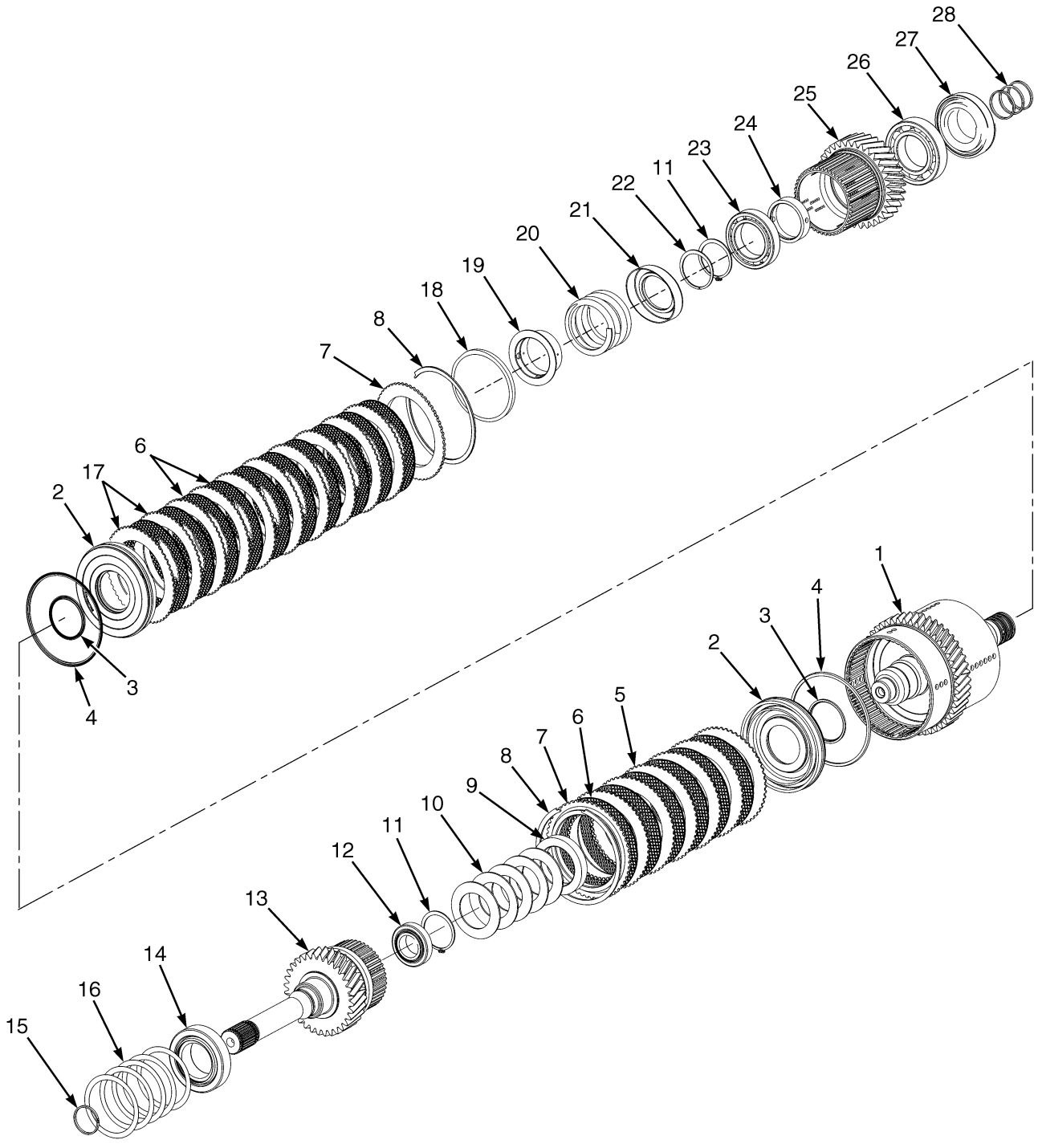

©2014 Yale Materials Handling Corporation

FORWARD CLUTCH LOW AND SECOND SHAFT

THREE SPEED TRANSMISSION – FWD1, RANGE2

ITEM	PART NO.	DESCRIPTION	QTY
1	**a** 580080606	Shaft (RANGE2)	1
1	**b** 580096862	Shaft	1
2	580080607	Clutch Piston	2
3	580080608	Seal	1
4	580048380	Piston Seal	1
5	580080609	Friction Disk (Inner, High Density)	17
6	580048009	Separator Plate (Outer)	6
7	580080613	Plate	2
8	580048379	Snap Ring	2
9	580080619	Spacer	1
10	580080618	Disk Spring	1
11	580080622	Snap Ring	3
12	580080623	Bearing	1
13	580080624	Shaft (Forward)	1
14	580080625	Bearing	1
15	580048029	Piston Ring	1
16	580080626	Shim	AR
16	580080627	Shim	AR
16	580080628	Shim	AR
16	**b** 580096866	Shim	AR
17	580080610	Separator Plate (Outer)	11
18	**a** ~~580080614~~		
	580096863	Sealing Ring	1
18	**b** ~~580080614~~		
	580096863	Sealing Ring	1
19	580080616	Retainer	1
20	580080615	Spring	1
21	**a** 580080617	Retainer	1
21	**b** 580080639	Retainer	1
22	**a** 580080629	Snap Ring	1
22	**b** 580096867	Retaining Ring	1
23	580048336	Bearing	1
24	**a** 580080621	Spacer	1
24	**b** 580096865	Spacer	1
25	**a** 580080620	Gear	1
25	**b** 580096864	Clutch Gear	1
26	**a** 580076339	Bearing	1
26	**b** 580092730	Bearing	1
27	580080611	Bearing	1
28	580048029	Piston Ring	3

FOOTNOTES:

a → S/N D878V01705G

b S/N D878V01706G →

©2014 Yale Materials Handling Corporation

FORWARD CLUTCH HIGH AND OUTPUT SHAFT (FIGURE 7-10)

THREE SPEED TRANSMISSION — FWD2

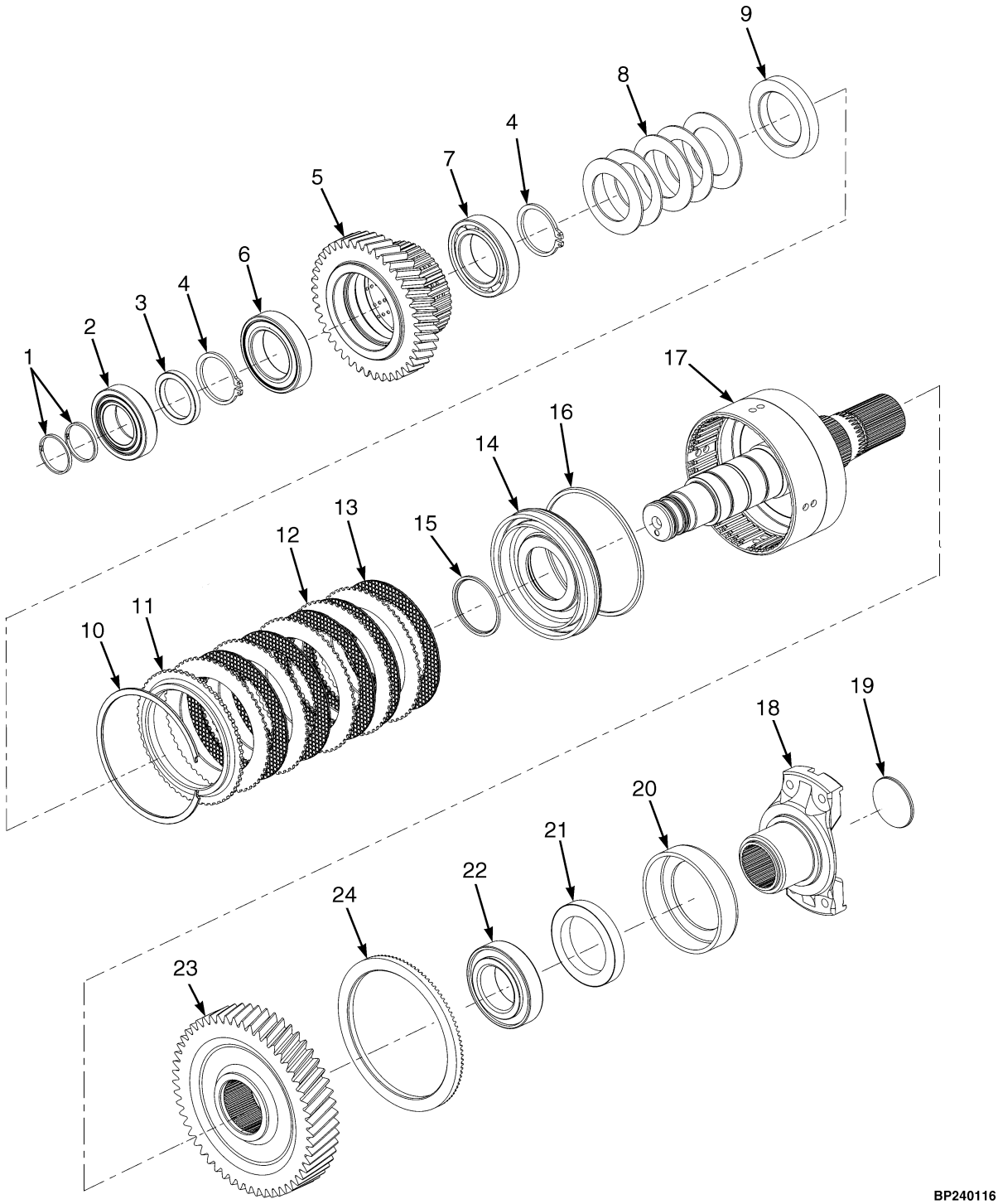

©2014 Yale Materials Handling Corporation

FORWARD CLUTCH HIGH AND OUTPUT SHAFT
THREE SPEED TRANSMISSION – FWD2

ITEM	PART NO.	DESCRIPTION	QTY
1	580048029	Piston Ring	2
2	**c** 580080660	Bearing	1
2	**d** 580096872	Bearing	1
3	**b** 580080658	Spacer	1
4	580080622	Snap Ring	2
5	**d** 580096871	Gear	1
5	**ad** 580096867	Retaining Ring	1
6	580048409	Bearing	1
7	580048336	Bearing	1
8	580080618	Disk Spring	1
9	580080619	Spacer	1
10	580048379	Snap Ring	1
11	580080613	Plate	1
12	580048009	Separator Plate (Outer)	5
13	580080609	Friction Disk (Inner, High Density)	5
14	580080607	Clutch Piston	1
15	580080608	Seal	1
16	580048380	Piston Seal	1
17	**c** 580080657	Shaft (Output and FWD2)	1
17	**d** 580096870	Shaft	1
18	**c** 580080665	Flange	1
18	**d** 580096873	Flange	1
19	580080667	Plug	1
20	580080666	Cover	1
21	580080664	Oil Seal	1
22	580080661	Bearing	1
23	580092451	Transmission Gear (Output with Tone Ring)	1
24	. . . . .	Ring	1

FOOTNOTES:

a Not Illustrated
b Not used with this application
c → S/N D878V01705G
d S/N D878V01706G →

©2014 Yale Materials Handling Corporation

REVERSE CLUTCH AND FIRST SHAFT (FIGURE 7-11)

THREE SPEED TRANSMISSION — REV1, RANGE 1

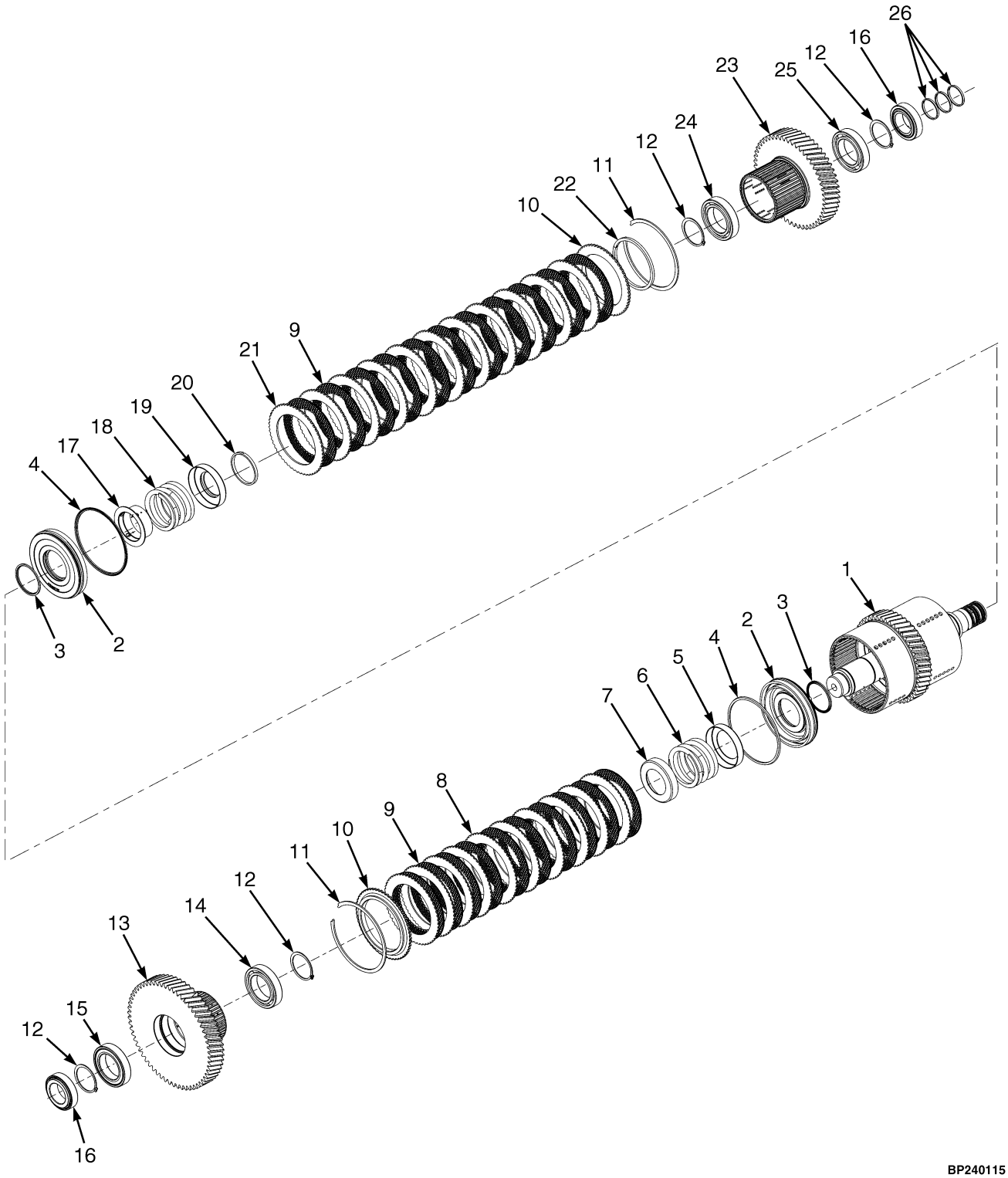

©2014 Yale Materials Handling Corporation

REVERSE CLUTCH AND FIRST SHAFT

THREE SPEED TRANSMISSION – REV1, RANGE 1

ITEM	PART NO.	DESCRIPTION	QTY
1	**a** 580080637	Shaft	1
1	**b** 580096868	Shaft	1
2	580080607	Clutch Piston	2
3	580080608	Seal	1
4	580048380	Piston Seal	1
5	580080638	Retainer	1
6	580080643	Spring	1
7	**a** 580080617	Retainer	1
8	580048009	Separator Plate (Outer)	10
9	580080609	Friction Disk (Inner, High Density)	21
10	580080613	Plate	2
11	580048379	Snap Ring	2
12	580080622	Snap Ring	5
13	**a** 580080642	Gear (1st Clutch) (RANGE1)	1
13	**b** 580097241	Gear (1st Clutch) (RANGE1)	1
13	**b** 580096867	Retaining Ring	2
14	580048336	Bearing	1
15	580048409	Bearing	1
16	580080640	Bearing	2
17	580080616	Retainer	1
18	580080615	Spring	1
19	580080639	Retainer	2
20	580080629	Snap Ring	1
21	580080610	Separator Plate (Outer)	11
22	**a** ~~580080614~~ 580096863	Sealing Ring	1
22	**b** ~~580080614~~ 580096863	Sealing Ring	1
23	**a** 580080641	Gear (REV1)	1
23	**b** 580096869	Gear (REV1)	1
23	**b** 580096867	Retaining Ring	2
24	580048336	Bearing	1
25	580048409	Bearing	1
26	580048029	Piston Ring	3

FOOTNOTES:

a → S/N D878V01705G

b S/N D878V01706G →

©2014 Yale Materials Handling Corporation

CONTROL VALVE (FIGURE 7-12)
THREE SPEED TRANSMISSION

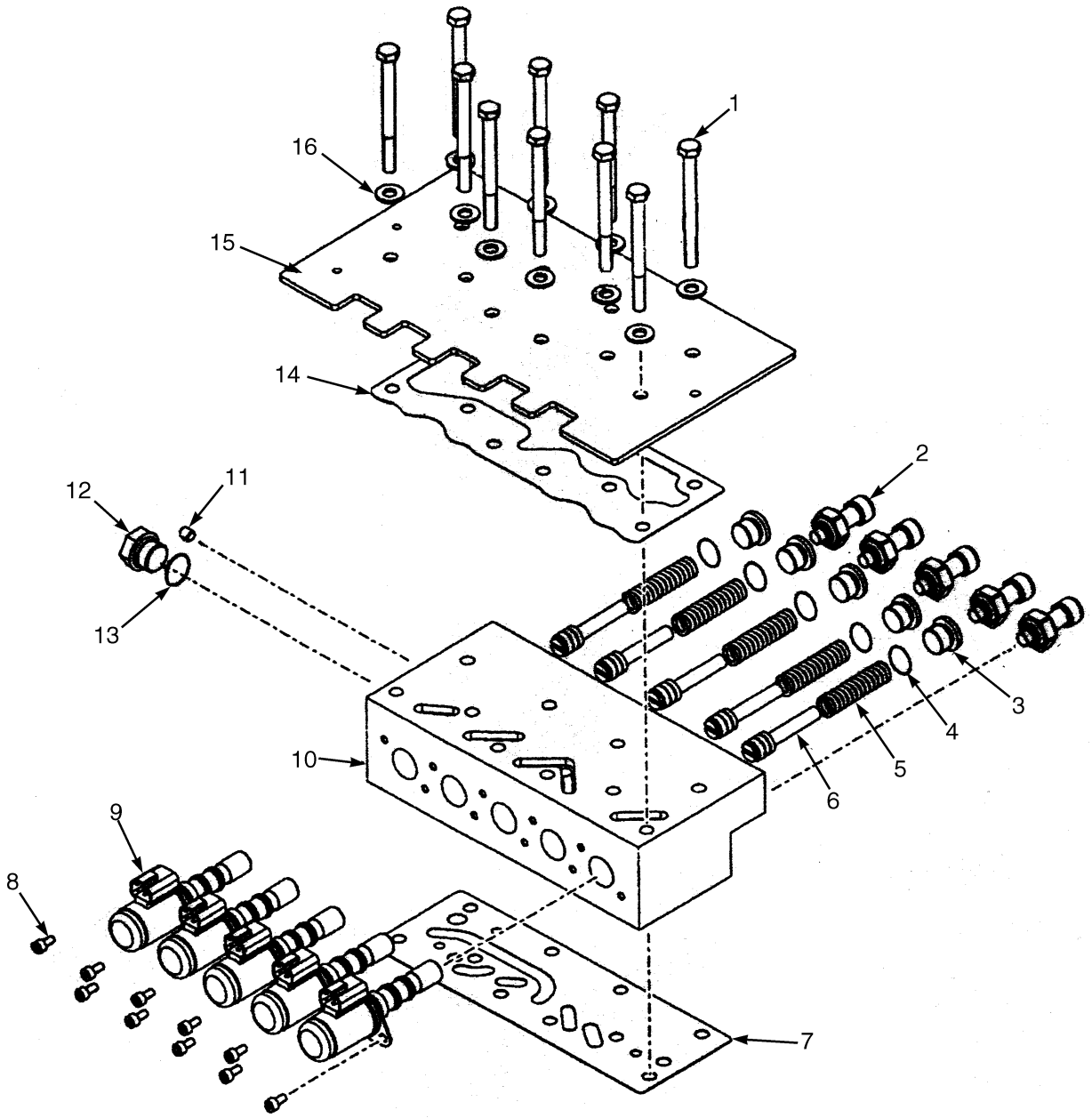

©2014 Yale Materials Handling Corporation

CONTROL VALVE
THREE SPEED TRANSMISSION

ITEM	PART NO.	DESCRIPTION	QTY
	a 580092452	Valve	1
	b 582005810	Valve Assembly	1
1	580048053	Capscrew	10
2	580080675	Sensor (Valve Pressure)	5
3	580080681	Plug	5
4	580004117	O-Ring	1
5	**b** 582010904	Spring	5
6	**a**	Spool	5
6	**b** 582005813	Spool	5
6	**b** 582005814	Pin	5
7	580080678	Gasket	1
8	580080680	Capscrew	10
9	**a** 580080674	Solenoid Valve	5
9	**b** 582005812	Solenoid	1
9	582004787	O-Ring	1
9	582004788	Retainer	2
10	**a** 580080672	Body	1
10	**b** 582005811	Valve	1
11	580080673	Plug	1
12	062128100	Plug	1
13	052645300	O-Ring	1
14	580080676	Gasket	1
15	580080677	Cover (Control Valve)	1
16	**a** 580080679	Washer	10
16	**b** 580059371	Lockwasher	10

FOOTNOTES:

a → S/N D878V01721G

b S/N D878V01722G →

©2014 Yale Materials Handling Corporation

TRANSMISSION ASSEMBLY (FIGURE 7-13)

TWO SPEED — SHEET 1 OF 2 (→ S/N D878V01678G)

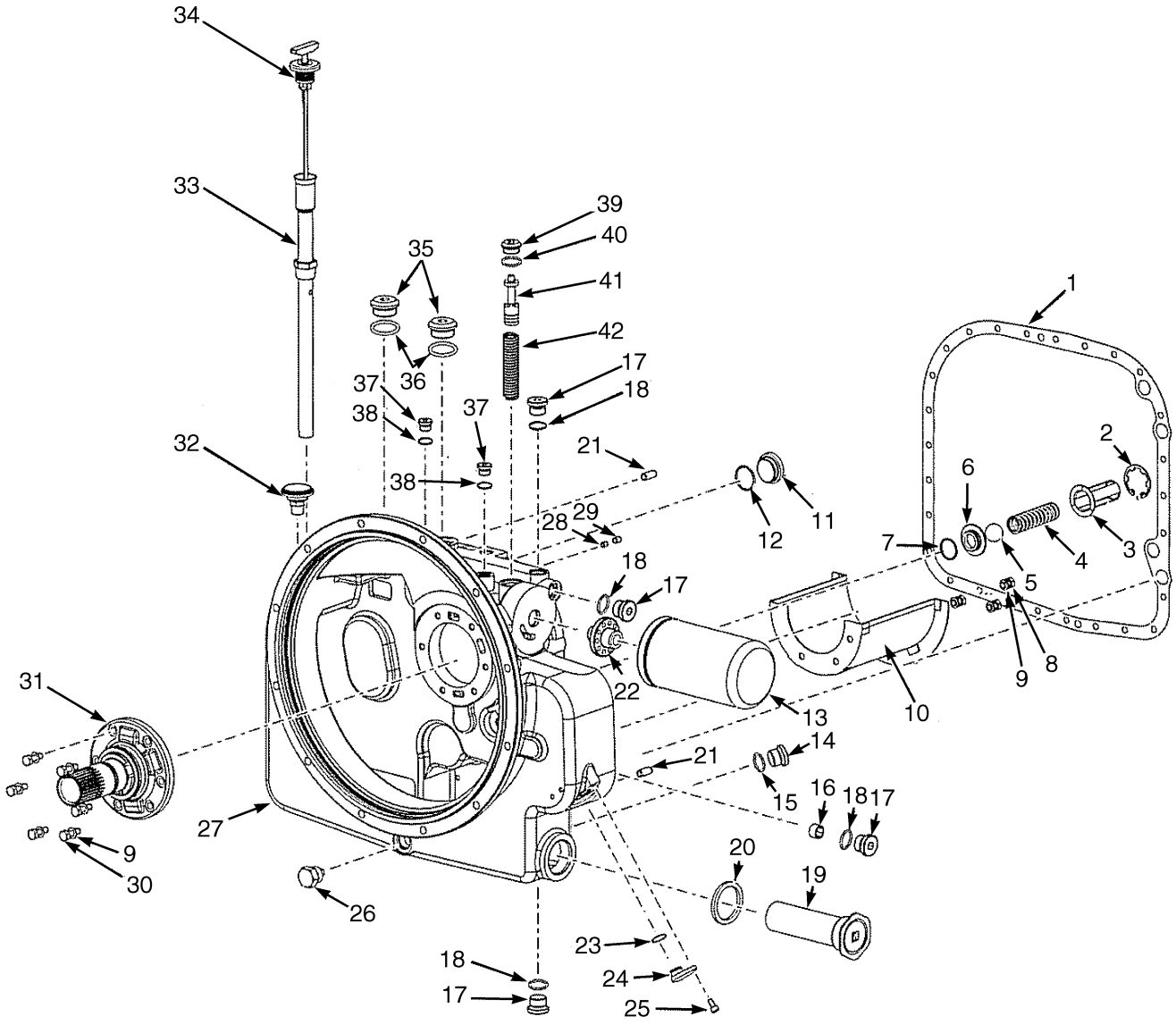

©2014 Yale Materials Handling Corporation

TRANSMISSION ASSEMBLY

TWO SPEED – SHEET 1 OF 2 (→ S/N D878V01678G)

ITEM	PART NO.	DESCRIPTION	QTY
	580085902	Transmission Assy (Two Speed)	1
1	580080563	Gasket	1
2	580080554	Snap Ring	1
3	580080553	Retainer	1
4	580080552	Spring	1
5	580080551	Ball	1
6	580080550	Spacer	1
7	580080549	O-Ring	1
8	580070555	Screw	3
9	580059371	Lockwasher	9
10	580080562	Baffle	1
11	580070331	Plug	1
12	580070332	O-Ring	1
13	580080570	Transmission Filter	1
14	580089240	Plug	1
15	524248303	O-Ring	1
16	. . . . .	Plug	1
17	580080558	Plug	4
18	012826900	O-Ring	4
19	580048327	Screen	1
20	580048326	Gasket	1
21	580048323	Pin	2
22	580080737	Adapter	1
23	580048444	O-Ring	1
24	580080567	Plug	1
25	580047963	Capscrew	1
26	580048356	Drain Plug	1
27	580089219	Converter Housing	1
28	. . . . .	Plug	1
29	. . . . .	Plug	1
30	580080557	Screw	6
31	580080556	Support (Stator)	6
32	580048329	Breather	1
33	580080560	Dipstick Tube	1
34	580080561	Dipstick	1
35	580047971	Plug	2
36	052645500	O-Ring	1
37	580080559	Plug	2
38	580048052	O-Ring	2
39	524248305	Plug	2
40	580080739	O-Ring	1
41	580080565	Spool	1
42	580080566	Spring	1
	580080734	Kit-Gasket	1
	580089189	Kit-Gasket	1

©2014 Yale Materials Handling Corporation

TRANSMISSION ASSEMBLY (FIGURE 7-14)

TWO SPEED — SHEET 2 0F 2 (→ S/N D878V01678G)

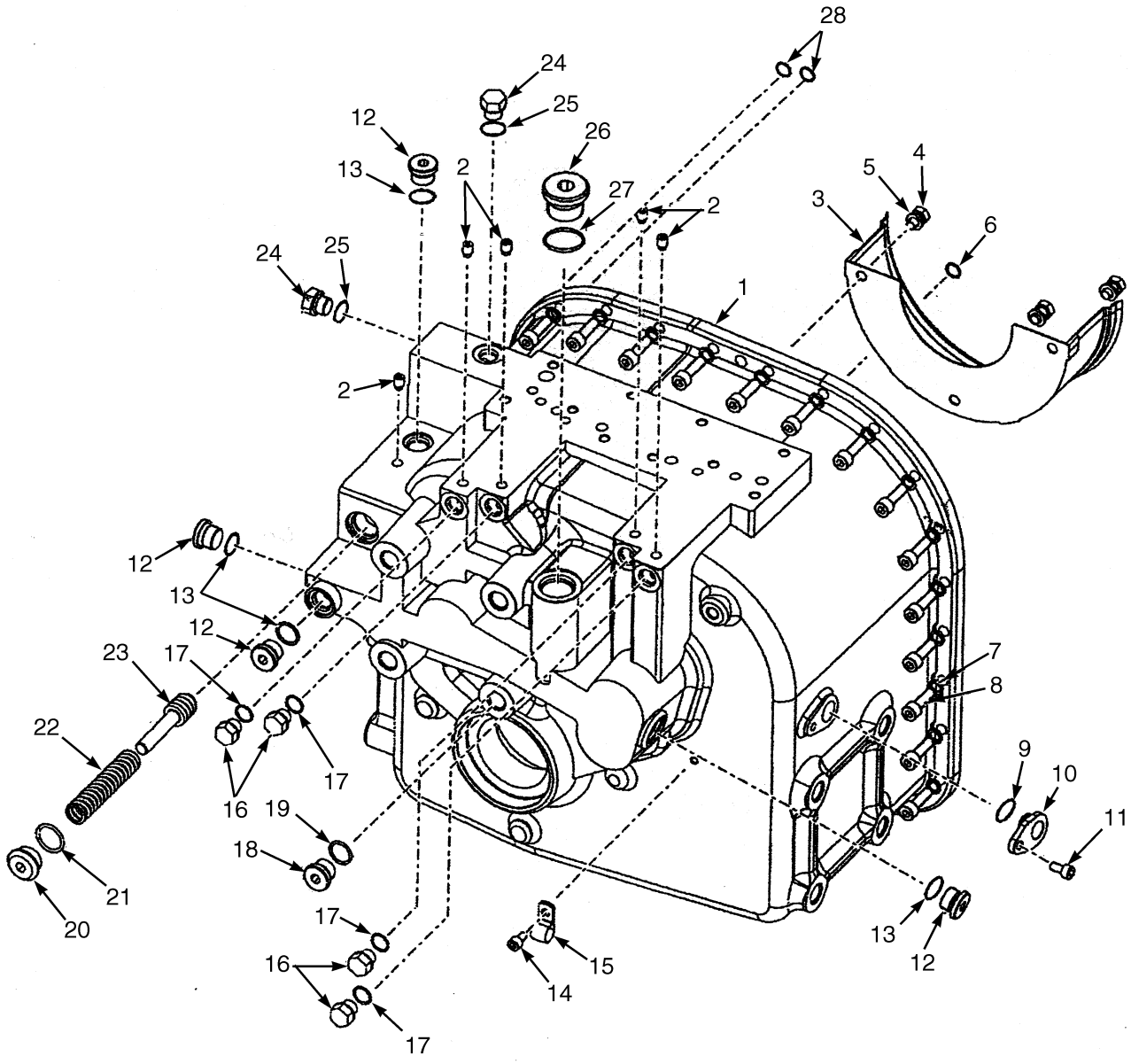

BP240118

©2014 Yale Materials Handling Corporation

TRANSMISSION ASSEMBLY

TWO SPEED – SHEET 2 0F 2 (→ S/N D878V01678G)

ITEM	PART NO.	DESCRIPTION	QTY
	580085902	Transmission Assy (Two Speed)	1
1	580080586	Case	1
2	580080578	Plug	5
3	580080579	Baffle	1
4	580070555	Screw	3
5	580059371	Lockwasher	3
6	580004117	O-Ring	3
7	580048042	Lockwasher	27
8	580080557	Screw	27
9	580048444	O-Ring	1
10	580080567	Plug	1
11	580047963	Capscrew	2
12	580080558	Plug	4
13	012826900	O-Ring	4
14	580047963	Capscrew	2
15	580080585	Clip	1
16	058429300	Plug	4
17	052645100	O-Ring	4
18	580080584	Plug	1
19	012826900	O-Ring	1
20	524248305	Plug	1
21	580080739	O-Ring	1
22	580080581	Spring	1
23	580080580	Spool	1
24	060242700	Plug	2
25	052645200	O-Ring	2
26	580047971	Plug	1
27	052645500	O-Ring	1
28	580004117	O-Ring	3

©2014 Yale Materials Handling Corporation

TRANSMISSION ASSEMBLY (FIGURE 7-15)

TWO SPEED — SHEET 1 OF 2 (S/N D878V01679G →)

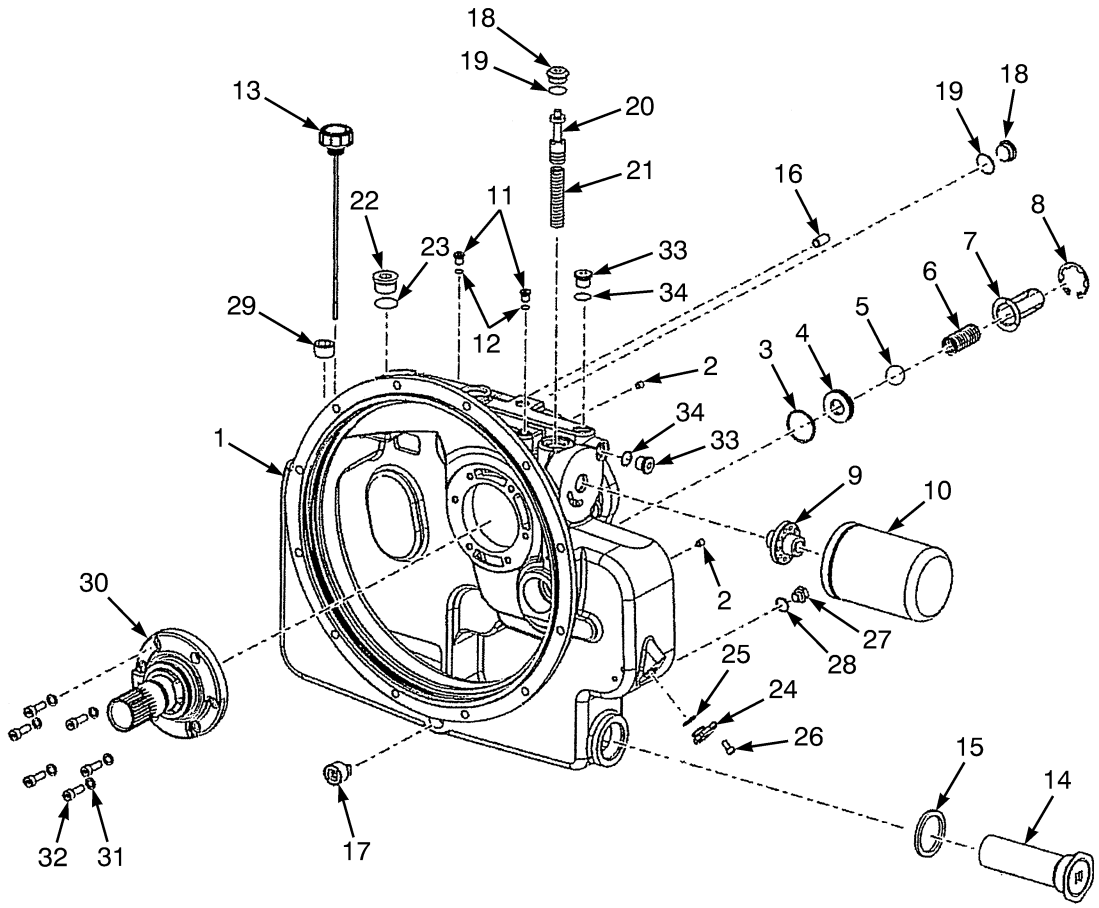

BP080830

©2014 Yale Materials Handling Corporation

TRANSMISSION ASSEMBLY

TWO SPEED – SHEET 1 OF 2 (S/N D878V01679G →)

ITEM	PART NO.	DESCRIPTION	QTY
	a 580096452	Transmission Assy (Two Speed)	1
	b 582013838	Transmission Assy (Two Speed)	1
1	580096879	Converter Housing	1
2	580080578	Plug	1
3	580096856	O-Ring	1
4	580096857	Spacer	1
5	580080551	Ball	1
6	580080552	Spring	1
7	580080553	Retainer	1
8	580080554	Snap Ring	1
9	580080737	Adapter	1
10	580080570	Transmission Filter	1
11	580080559	Plug	2
12	580048052	O-Ring	2
13	580096858	Dipstick And Breather	1
14	580048327	Screen	1
15	580048326	Gasket	1
16	580048323	Pin	2
17	580048356	Drain Plug	1
18	524248305	Plug	2
19	580080739	O-Ring	2
20	580080565	Spool	1
21	580080566	Spring	1
22	580047971	Plug	1
23	052645500	O-Ring	1
24	580080567	Plug	1
25	580048444	O-Ring	1
26	580047963	Capscrew	1
27	580089240	Plug	1
28	580089220	Washer	1
29	580096902	Plug	1
30	580080556	Support (Stator)	1
31	580059371	Lockwasher	6
32	580080557	Screw	6
33	580080558	Plug	2
34	012826900	O-Ring	2
	580097522	Kit-Gasket	1

FOOTNOTES:

a → 2/2012

b 2/2012 →

©2014 Yale Materials Handling Corporation

TRANSMISSION ASSEMBLY (FIGURE 7-16)

TWO SPEED — SHEET 2 OF 2 (S/N D878V01679G →)

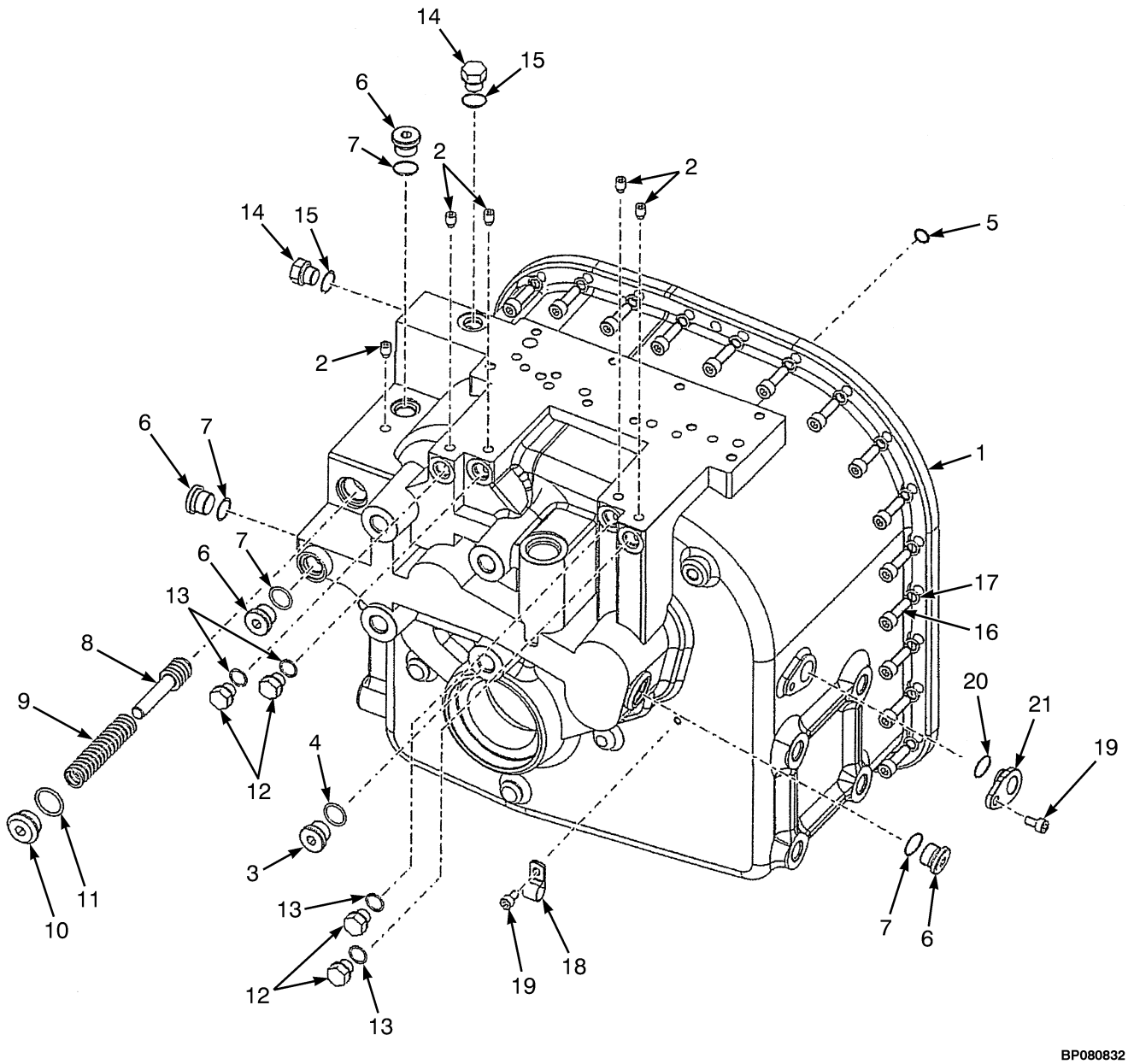

©2014 Yale Materials Handling Corporation

TRANSMISSION ASSEMBLY

TWO SPEED – SHEET 2 OF 2 (S/N D878V01679G →)

ITEM	PART NO.	DESCRIPTION	QTY
	a 580096452	Transmission Assy (Two Speed)	1
	b 582013838	Transmission Assy (Two Speed)	1
1	580096880	Transmission Housing	1
2	580080578	Plug	5
3	580080584	Plug	1
4	012826900	O-Ring	1
5	580004117	O-Ring	3
6	580080558	Plug	4
7	012826900	O-Ring	4
8	580080580	Spool	1
9	580080581	Spring	1
10	524248305	Plug	1
11	580080739	O-Ring	1
12	580048051	Plug	4
13	580048052	O-Ring	4
14	060242700	Plug	2
15	052645200	O-Ring	2
16	580080557	Screw	23
17	580048042	Lockwasher	23
18	580080585	Clip	1
19	580047963	Capscrew	2
20	580080567	Plug	1
21	580048444	O-Ring	1

FOOTNOTES:

a → 2/2012

b 2/2012 →

©2014 Yale Materials Handling Corporation

FORWARD CLUTCH LOW (FIGURE 7-17)
TWO SPEED TRANSMISSION

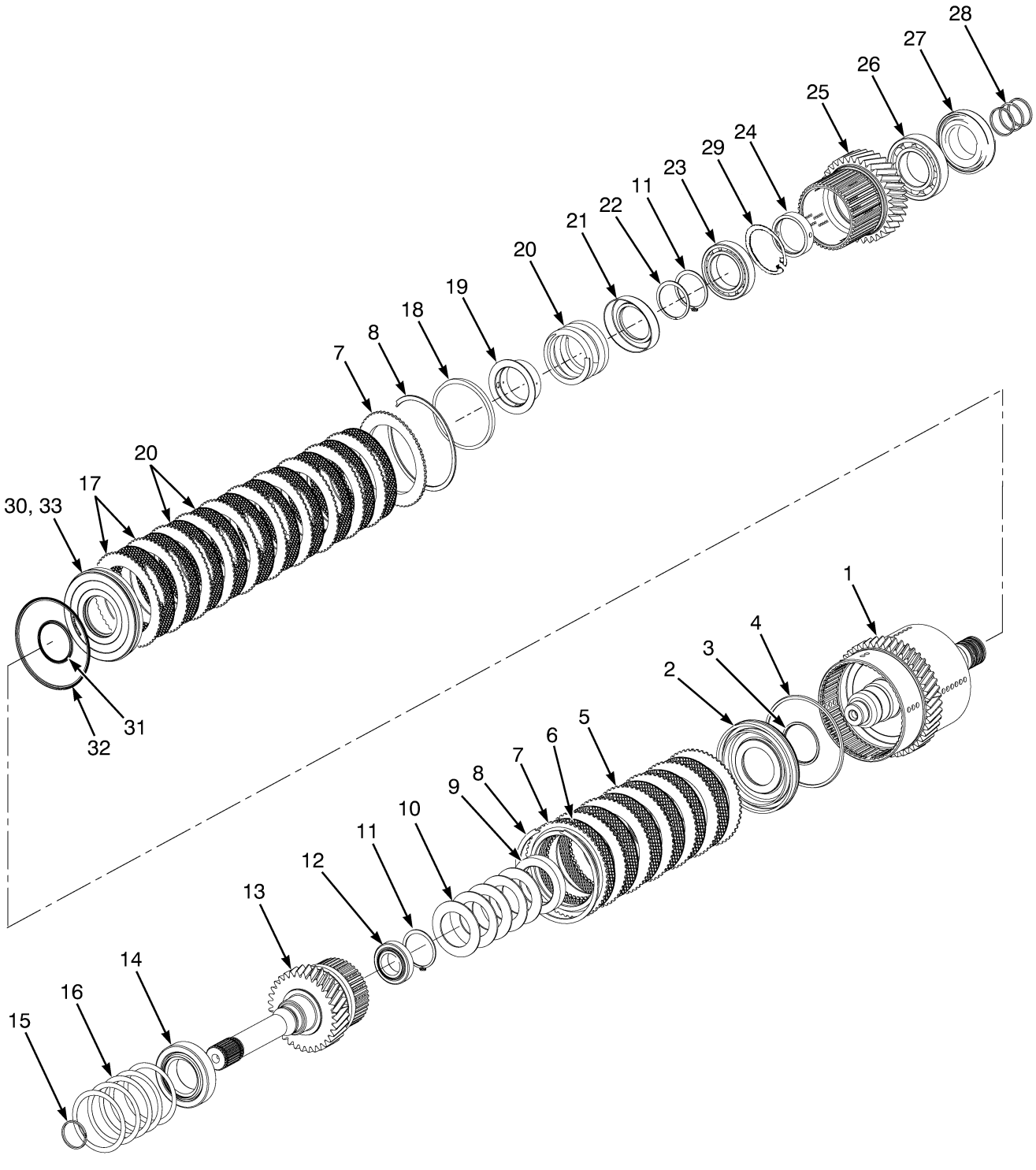

©2014 Yale Materials Handling Corporation

FORWARD CLUTCH LOW
TWO SPEED TRANSMISSION

ITEM	PART NO.	DESCRIPTION	QTY
1	**a** 580080606	Shaft	1
1	**b** 580096862	Shaft	1
2	580080607	Clutch Piston	2
3	580080608	Seal	1
4	580048380	Piston Seal	1
5	580080609	Friction Disk (Inner, High Density)	17
6	580048009	Separator Plate (Outer)	6
7	580080613	Plate	2
8	580048379	Snap Ring	2
9	580080619	Spacer	1
10	580080618	Disk Spring	1
11	580080622	Snap Ring	2
12	580080623	Bearing	1
13	580080624	Shaft (Forward)	1
14	580080625	Bearing	1
15	580048029	Piston Ring	1
16	580080626	Shim	AR
16	580080627	Shim	AR
16	580080628	Shim	AR
16	**b** 580096866	Shim	AR
17	580080610	Separator Plate (Outer)	11
18	~~580080614~~		
	580096863	Sealing Ring	1
19	580080616	Retainer	1
20	580080615	Spring	1
21	**a** 580080617	Retainer	1
21	**b** 580096867	Retaining Ring	1
22	580080629	Snap Ring	1
23	580048336	Bearing	1
24	**a** 580080621	Spacer	1
24	**b** 580096865	Spacer	1
25	**a** 580080634	Gear (Forward Clutch)	1
25	**b** 580096898	Clutch Gear	1
26	**a** 580076339	Bearing	1
26	**b** 580092730	Bearing	1
27	580080611	Bearing	1
28	580048029	Piston Ring	3
29	**b** 580096867	Retaining Ring	1
30	580080612	Clutch Pack	1
31	580080608	Seal	1
32	580048380	Piston Seal	1
33	. . . . .	Screen	1

FOOTNOTES:

a → S/N D878V01678G

b S/N D878V01679G →

©2014 Yale Materials Handling Corporation

REVERSE CLUTCH (FIGURE 7-18)
TWO SPEED TRANSMISSION

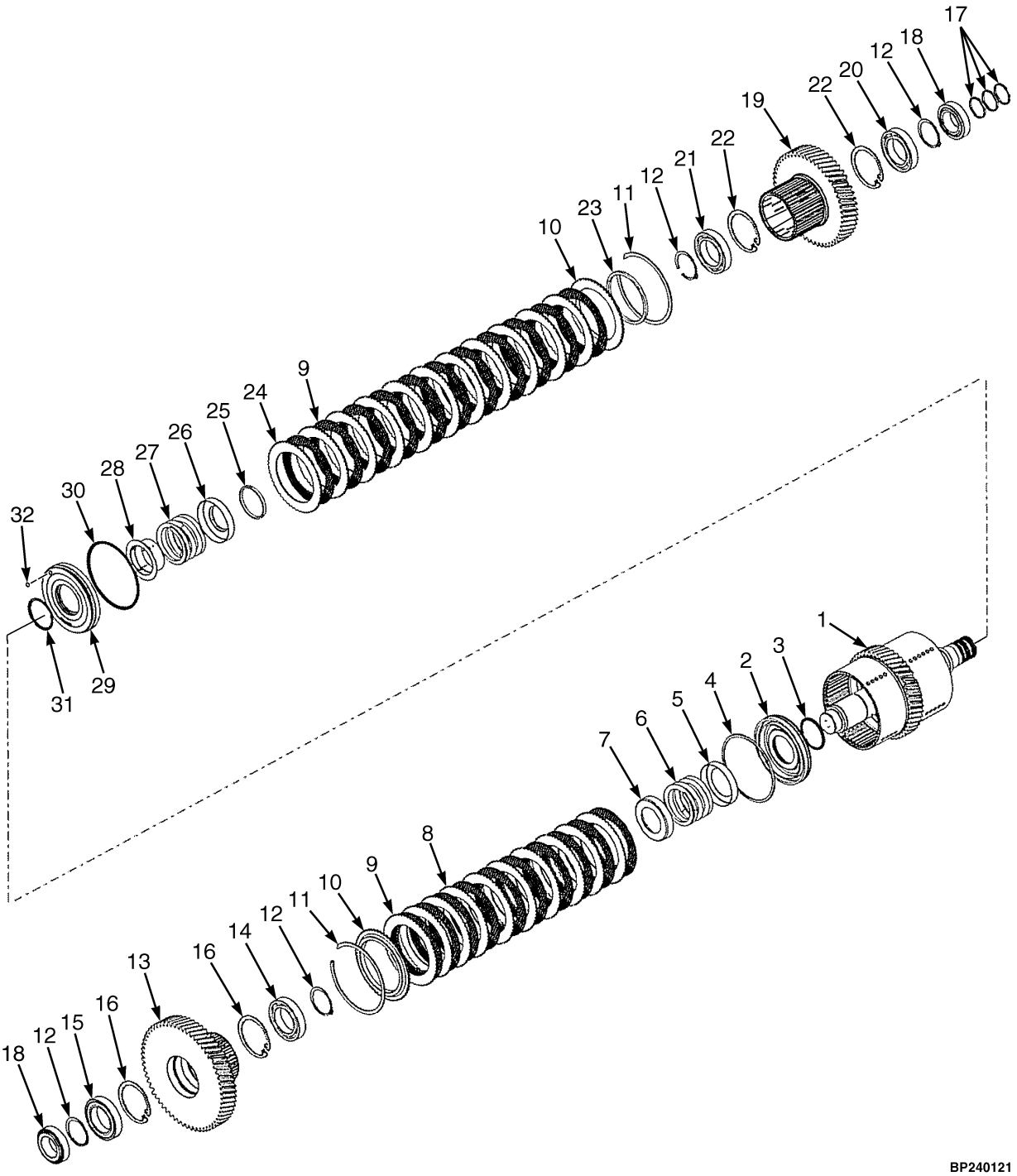

©2014 Yale Materials Handling Corporation

REVERSE CLUTCH
TWO SPEED TRANSMISSION

ITEM	PART NO.	DESCRIPTION	QTY
1	**a** 580080637	Shaft	1
1	**b** 580096868	Shaft	1
2	580080607	Clutch Piston	1
3	580080608	Seal	1
4	580048380	Piston Seal	1
5	580080638	Retainer	1
6	580080643	Spring	1
7	580080617	Retainer	1
8	580048009	Separator Plate (Outer)	10
9	580080609	Friction Disk (Inner, High Density)	21
10	580080613	Plate	2
11	580048379	Snap Ring	2
12	580080622	Snap Ring	4
13	**a** 580080642	Gear (1st Clutch)	1
13	**b** 580097241	Gear (1st Clutch)	1
14	580048336	Bearing	1
15	580048409	Bearing	1
16	**b** 580096867	Retaining Ring	1
17	580048029	Piston Ring	3
18	580080640	Bearing	2
19	**a** 580080644	Gear (Reverse Clutch)	1
19	**b** 580096899	Gear	1
20	580048409	Bearing	1
21	580048336	Bearing	1
22	**b** 580096867	Retaining Ring	1
23	~~580080614~~		
	580096863	Sealing Ring	1
24	580080610	Separator Plate (Outer)	11
25	**a** 580080629	Snap Ring	1
25	**b** 580080622	Snap Ring	1
26	580080639	Retainer	1
27	580080615	Spring	1
28	580080616	Retainer	1
29	580080612	Clutch Pack	1
30	580048380	Piston Seal	1
31	580080608	Seal	1
32	. . . . .	Screen	1

FOOTNOTES:

a → S/N D878V01678G

b S/N D878V01679G →

©2014 Yale Materials Handling Corporation

OUTPUT SHAFT (FIGURE 7-19)
TWO SPEED TRANSMISSION

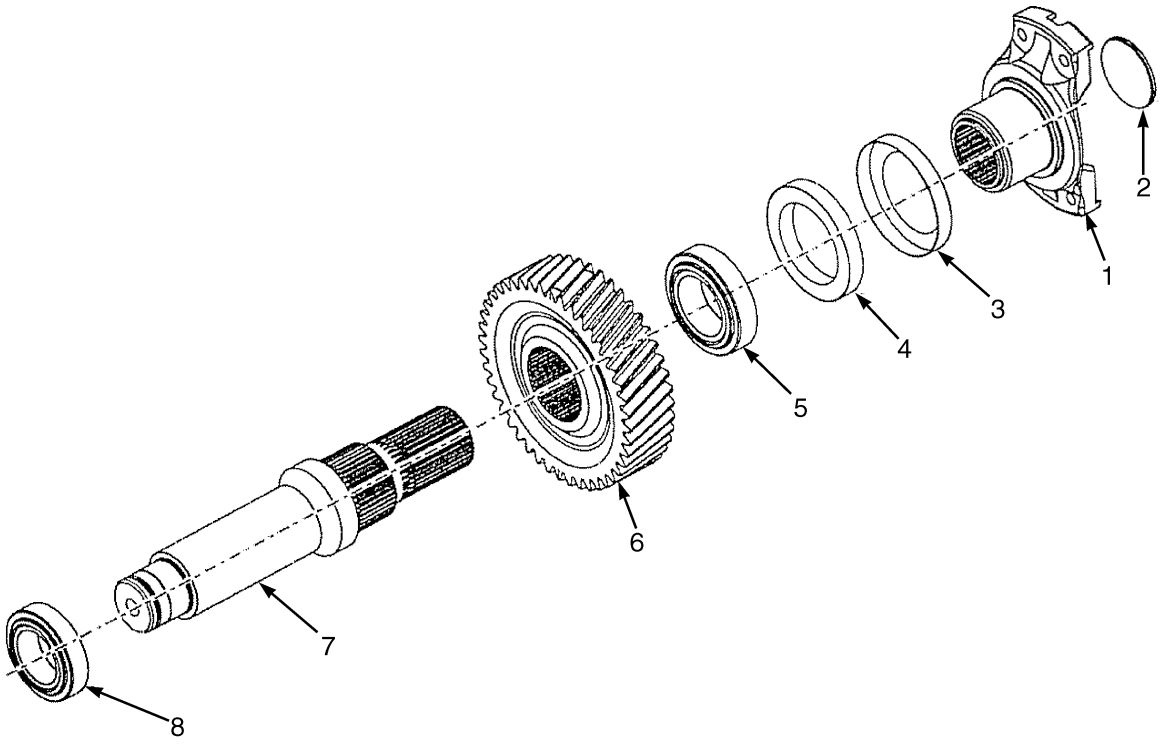

BP240122

ITEM	PART NO.	DESCRIPTION	QTY
1	580080665	Flange	1
1	**a** 580092494	Flange	1
1	**b** 580096873	Flange	1
2	**a** 580080667	Plug	1
2	**b** 580096874	Plug	1
3	580080666	Cover	1
4	580080664	Oil Seal	1
5	580080669	Bearing	1
6	. . . . .	Gear	1
7	580080668	Shaft	1
7	580092493	Shaft Assembly	1
8	580080640	Bearing	1

FOOTNOTES:

a → S/N D878V01678G

b S/N D878V01679G →

©2014 Yale Materials Handling Corporation

NOTES

©2014 Yale Materials Handling Corporation

CONTROL VALVE (FIGURE 7-20)
TWO SPEED TRANSMISSION

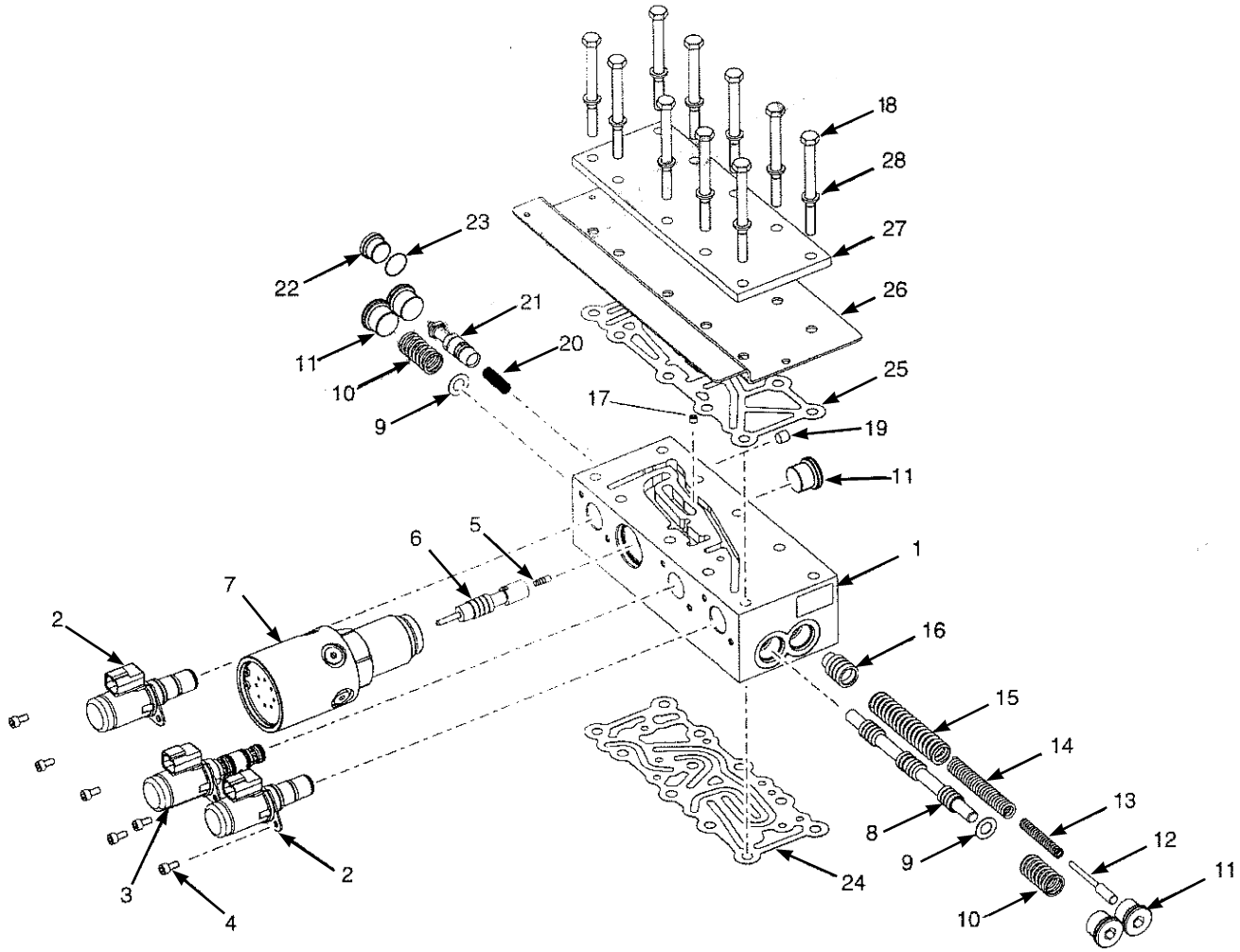

BP240144

©2014 Yale Materials Handling Corporation

CONTROL VALVE
TWO SPEED TRANSMISSION

ITEM	PART NO.	DESCRIPTION	QTY
	a 580089221	Hydraulic Control Valve	1
1	**b** 582013987	Valve (Transmission) (Hydraulic Valve)	1
2	580080683	Solenoid	2
3	580080686	Solenoid	1
4	580080680	Capscrew	6
5	580082216	Piston (Inching)	1
6	580089222	Spool	1
7	~~580080685~~		
	580089223	Inching Valve	1
8	580089224	Spool	1
9	580089225	Spacer	2
10	580089226	Spring	2
11	580089227	Plug	5
12	580089228	Pin	1
13	580089229	Spring	1
14	580082206	Spring	1
15	580089230	Spring	1
16	580089231	Spool	1
17	580089232	Plug	1
18	580048053	Capscrew	10
19	580089233	Plug	1
20	580089234	Spring	1
21	580089235	Spool	1
22	~~580059132~~		
	505967551	Fitting	1
23	052645300	O-Ring	1
24	580089236	Gasket (Body To Transmission Case)	1
25	580089237	Gasket (Cover to Body)	1
26	580089238	Plate (Solenoid Protection)	1
27	580089239	Cover (Control Valve)	1
28	580059371	Lockwasher	10

FOOTNOTES:

a → 2/2012

b 2/2012 →

©2014 Yale Materials Handling Corporation

CHARGE PUMP (FIGURE 7-21)

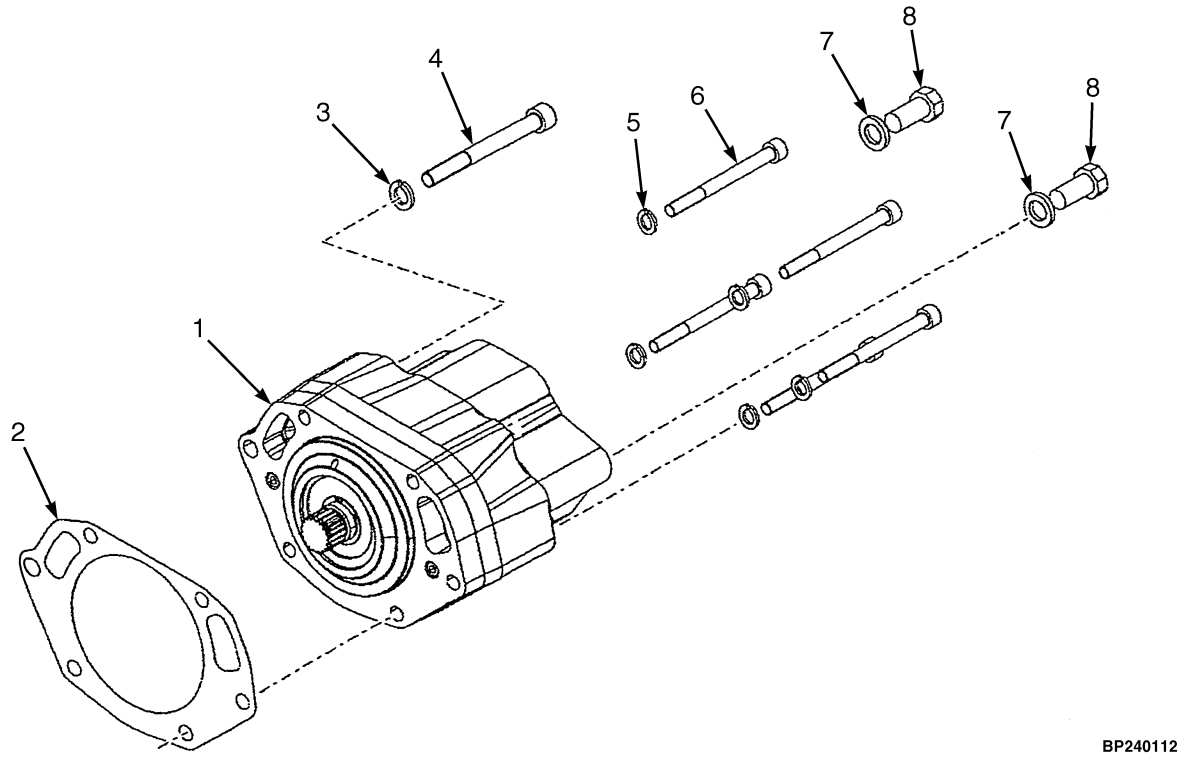

ITEM	PART NO.	DESCRIPTION	QTY
1	580080590	Charge Pump	1
2	580080591	Gasket	1
3	580077147	Lockwasher	1
4	580080593	Capscrew	1
5	580059371	Lockwasher	5
6	580080592	Capscrew	5
7	580080738	Lockwasher	2
8	580080594	Capscrew	2
	a 582023144	O-Ring	1

FOOTNOTES:

a Not Illustrated

©2014 Yale Materials Handling Corporation

NOTES

©2014 Yale Materials Handling Corporation

PUMP DRIVE (FIGURE 7-22)

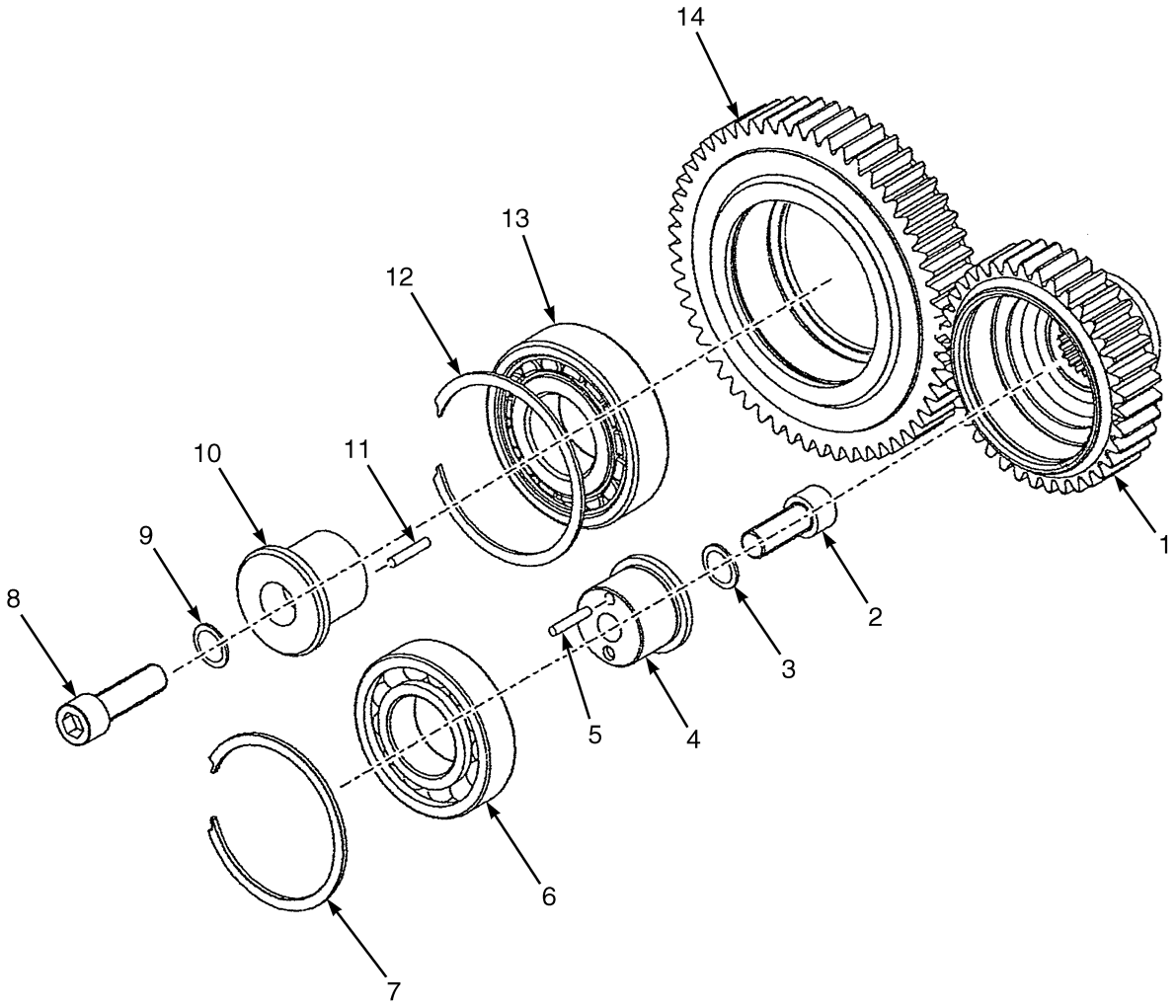

©2014 Yale Materials Handling Corporation

PUMP DRIVE

ITEM	PART NO.	DESCRIPTION	QTY
1	580089184	Drive Gear	1
2	580080604	Capscrew	1
3	580070516	Lockwasher	1
4	580080603	Support	1
5	580080605	Pin	1
6	**ab** 580080601	Ball Bearing	1
6	**cd** 580096861	Ball Bearing	1
7	580083472	Retaining Ring	1
8	580080598	Screw	1
9	580080599	Lockwasher	1
10	580080597	Support	1
11	580080596	Pin	1
12	580080736	Snap Ring	1
13	580080735	Bearing	1
14	580089183	Idler Gear (Pump Drive)	1

FOOTNOTES:

a → S/N D878V01678G (Two Speed)
b → S/N D878V01705G (Three Speed)
c S/N D878V01679G → (Two Speed)
d S/N D878V01706G → (Three Speed)

©2014 Yale Materials Handling Corporation

NOTES

©2014 Yale Materials Handling Corporation

8 DRIVE AXLE

SECTION 8
DRIVE AXLE

DESCRIPTION	PAGE
DIFFERENTIAL	8-6
DRIVE AXLE AND ATTACHING PARTS WET BRAKE	8-3
DRIVE AXLE HOUSING AND HUB	8-4
DRIVE TIRE AND WHEEL	8-2
WET BRAKE ASSEMBLY	8-8

©2014 Yale Materials Handling Corporation

DRIVE TIRE AND WHEEL (FIGURE 8-1)

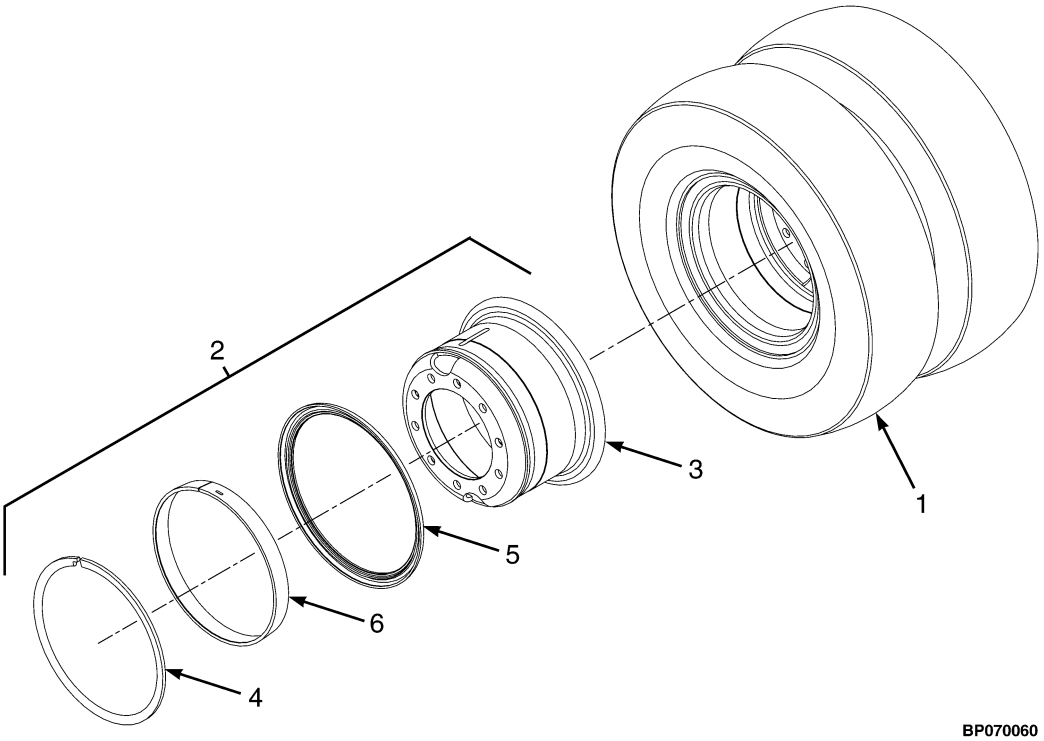

KEY:
A: 8.25 x 15 Pneumatic
B: 8.25 x 15 Solid Pneumatic

ITEM	PART NO.	DESCRIPTION	QTY A	QTY B
1	580050050	Tire (Monarch)	..	4
1	580081172	Tire (Monarch)	..	4
1	580050050	Tire (Monarch) (Alternate Part)	..	4
1	580014962	Pneumatic Tire (Radial)	4	..
1	**a** 580014869	Tubeless Bead Seal	1	1
1	**a** 580014987	Tubeless Bead Seal Valve	1	1
1	580050049	Tire (Trell) Alternate Part)	..	4
2	580078075	Wheel Assy (6.5 x 15)	4	4
2	580078075	Wheel Assy (6.5 x 15) (Trell)	..	4
3	582021051	Wheel	1	1
4	505971515	Wheel Lock Ring	1	1
5	580006798	Wheel Side Ring	1	1
6	580057316	Wedge Band	1	1

FOOTNOTES:

a Radial Tires Only

©2014 Yale Materials Handling Corporation

DRIVE AXLE AND ATTACHING PARTS (FIGURE 8-2)

WET BRAKE

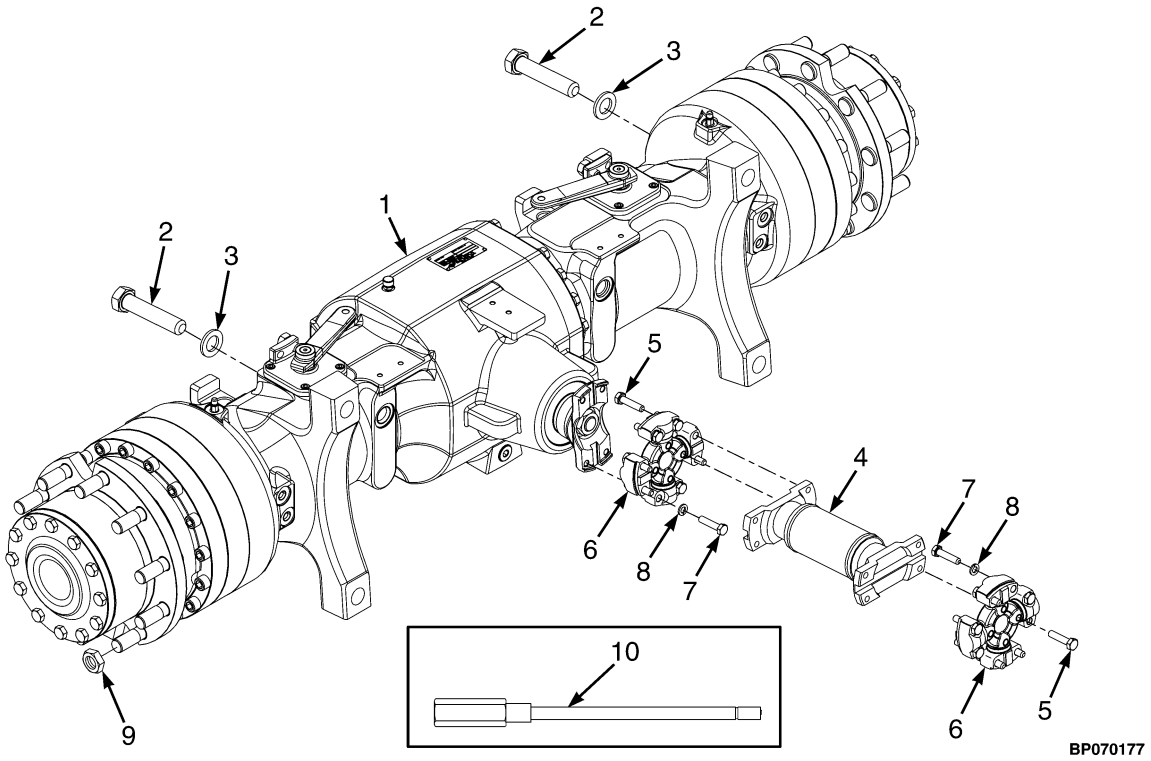

KEY:
A: GP/GLP/GDP135VX
B: GP/GLP/GDP155VX

ITEM	PART NO.	DESCRIPTION	QTY A	QTY B
1	**ae** 580064079	Drive Axle (14.8 Ratio)	1	..
1	**d** 580064080	Drive Axle (15.4 Ratio)	..	1
2	580056479	Capscrew	4	4
3	940102912	Washer	4	4
4	580061778	Drive Shaft	1	1
4	580086018	Yoke	1	1
5	580086017	Capscrew	8	8
6	580086013	Universal Joint	2	2
7	580051831	Capscrew	8	8
8	~~504057795~~			
	449022013	Lockwasher	8	8
9	580003941	Wheel Nut	20	20
10	**b** 580002638	Extension (Valve Stem)	2	2
10	**c** 901466103	Extension (Valve Stem)	2	2

FOOTNOTES:

a Cummins 3.3L Diesel
b Used with Bias Ply Tires
c Used with Radial Tires
d Used with Two and Three Speed Transmissions
e Used with Two Speed Transmissions

©2014 Yale Materials Handling Corporation

DRIVE AXLE HOUSING AND HUB (FIGURE 8-3)

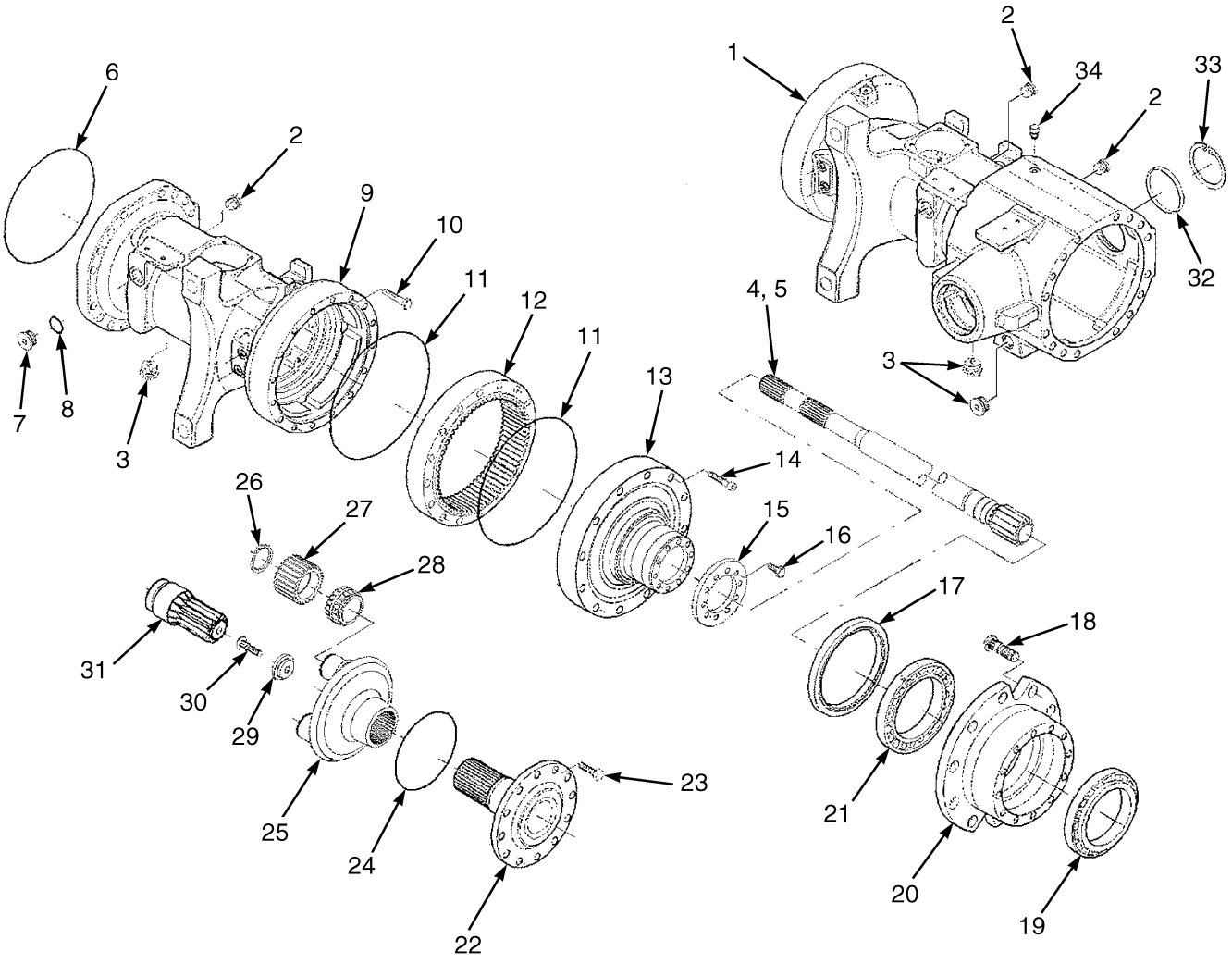

BP070057

©2014 Yale Materials Handling Corporation

DRIVE AXLE HOUSING AND HUB

ITEM	PART NO.	DESCRIPTION	QTY
	580064079	Drive Axle (14.8 Ratio)	1
	580064080	Drive Axle (15.4 Ratio)	1
1	580081713	Drive Axle Housing (LH)	1
2	580069854	Plug	3
3	580069855	Drain Plug	3
4	580081731	Shaft (Short)	1
5	580081732	Shaft (Long)	1
6	580076232	O-Ring	1
7	580074995	Plug	2
8	580069949	O-Ring	2
9	580081733	Drive Axle Housing (RH)	1
10	580081714	Bolt	16
11	580081715	O-Ring	4
12	580081716	Ring Gear	2
13	580081723	Flange	2
14	580081717	Bolt	32
15	580081725	Washer	2
16	580081726	Bolt	20
17	580081718	Ring	2
18	580081721	Stud	20
19	580081724	Roller Bearing	2
20	580081720	Wheel Hub	2
21	580081719	Roller Bearing	2
22	580081727	Shaft (Half)	2
23	580069922	Bolt	24
24	580081722	O-Ring	2
25	580081712	Carrier	2
25	. . . . .	Planetary Gear Carrier	2
26	580076247	Snap Ring	6
27	580076248	Gear	6
28	580076249	Bearing	6
29	580081730	Spacer	2
30	580081729	Bolt	2
31	580081728	Pinion	2
32	580076210	Plug	1
33	580086333	Snap Ring	1
34	580069886	Plug (Ventilation)	1

©2014 Yale Materials Handling Corporation

DIFFERENTIAL (FIGURE 8-4)

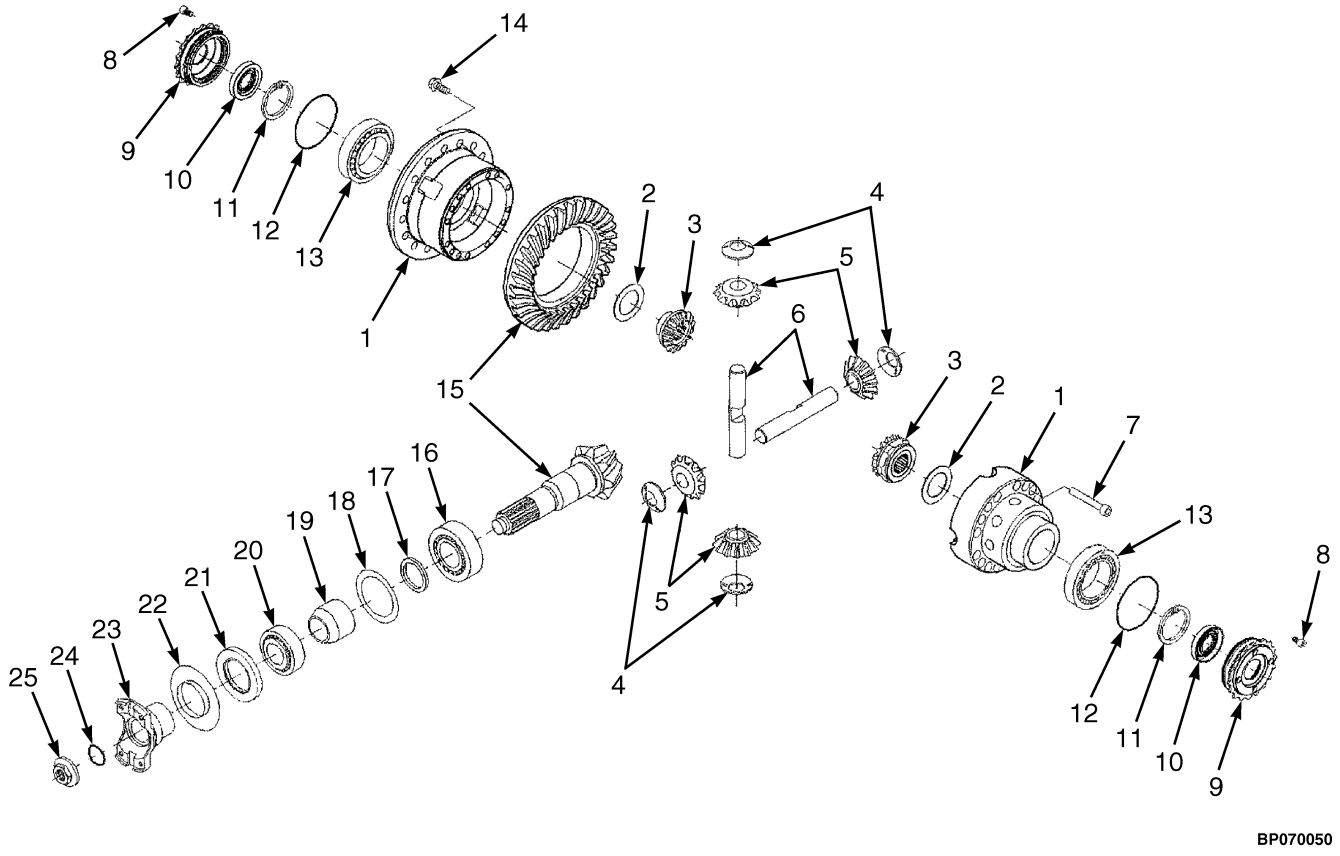

©2014 Yale Materials Handling Corporation

DIFFERENTIAL

ITEM	PART NO.	DESCRIPTION	QTY
	580064079	Drive Axle (14.8 Ratio)	1
	580064080	Drive Axle (15.4 Ratio)	1
	580076229	Differential	1
1	580076223	Differential Carrier	1
2	580076224	Washer	2
3	580076225	Gear	2
4	580076227	Washer	4
5	580076228	Pinion	4
6	580076226	Pin	2
7	580076230	Bolt	15
8	580069903	Bolt	2
9	580076219	Nut	2
10	580076220	Seal	2
11	580086333	Snap Ring	2
12	580076218	O-Ring	2
13	580076221	Bearing	2
14	580076222	Bolt	2
15	580076217	Gear and Pinion (14.8 Overall Ratio)	1
15	580076404	Gear and Pinion (15.4 Overall Ratio)	1
16	580076216	Bearing	1
17	580081758	Kit-Shim	1
18	580076211	Shim (0.1 mm)	1
18	580076212	Shim (0.2 mm)	1
18	580076213	Shim (0.5 mm)	1
18	580076214	Shim (0.15 mm)	1
19	580076208	Spacer	1
20	580069883	Bearing	1
21	580076207	Seal	1
22	580076206	Cover Plate	1
23	580076204	Flange	1
24	580076205	O-Ring	1
25	580076203	Nut	1

©2014 Yale Materials Handling Corporation

WET BRAKE ASSEMBLY (FIGURE 8-5)

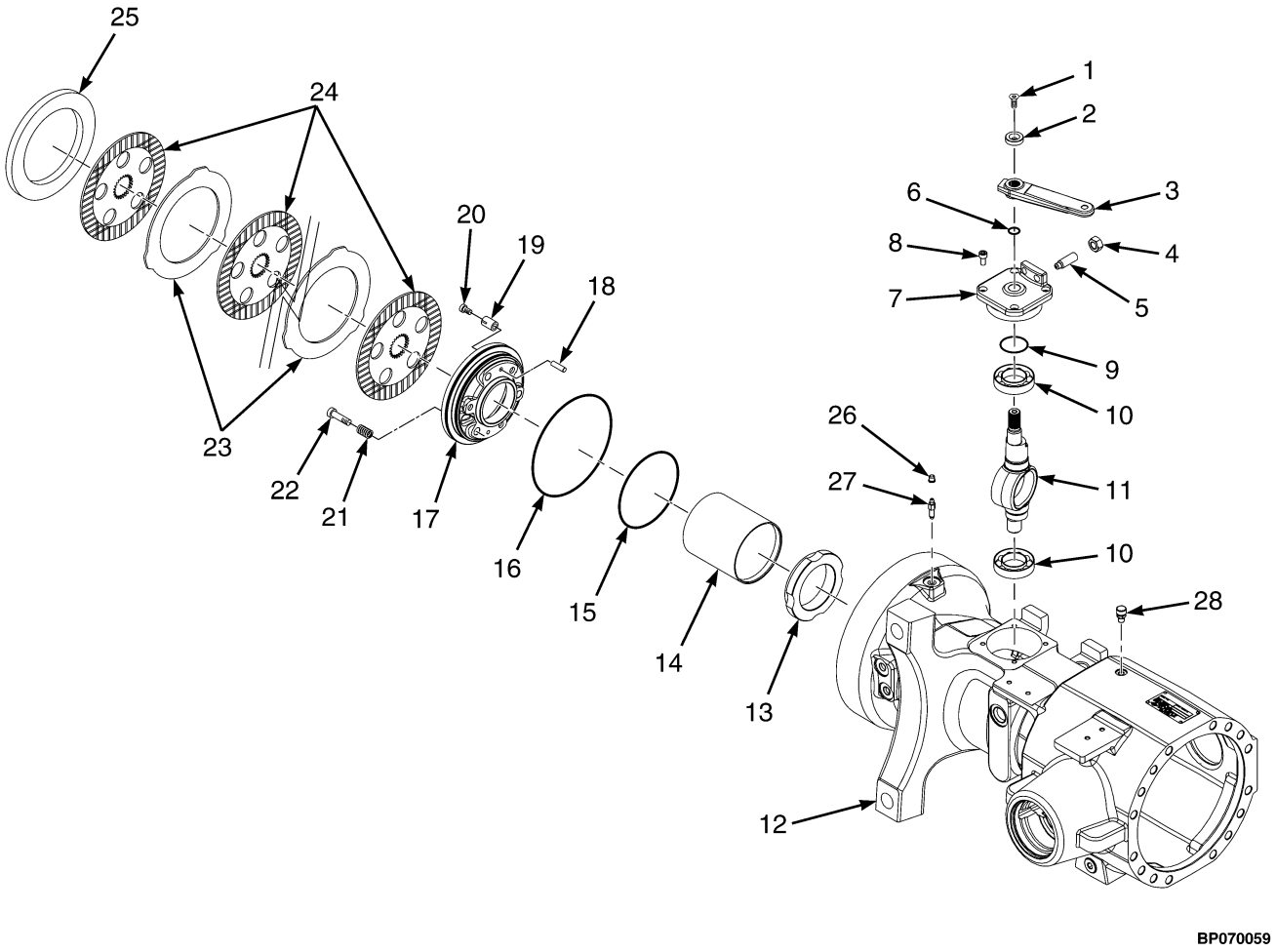

©2014 Yale Materials Handling Corporation

WET BRAKE ASSEMBLY

ITEM	PART NO.	DESCRIPTION	QTY
	580064079	Drive Axle (14.8 Ratio)	1
	580064080	Drive Axle (15.4 Ratio)	1
1	580069947	Bolt	2
2	580069965	Spacer	2
3	580081734	Lever	2
4	580069967	Nut	2
5	580081735	Bolt	2
6	580069949	O-Ring	2
7	580081736	Bushing	2
8	580069950	Bolt	8
9	580069951	O-Ring	2
10	580069952	Bearing	4
11	580069953	Lever	2
12	~~580076277~~		
	580095304	Plug	6
13	580071576	Disk	2
14	580081738	Spacer	2
15	580081741	Seal	2
16	580081740	O-Ring	2
17	580081742	Piston	2
18	580076266	Dowel	4
19	580069961	Spring	6
20	580081743	Bolt	6
21	580081737	Spring	6
22	580081746	Bolt	6
23	580081745	Disk (Intermediate)	8
24	580081744	Disk (Friction)	6
25	580081739	Disk	2
26	580069954	Plug (Cap)	1
27	580069955	Stud (Bleeding)	1
28	580076207	Seal (Oil Breather)	1

©2014 Yale Materials Handling Corporation

NOTES

©2014 Yale Materials Handling Corporation

9 STEERING SYSTEM

SECTION 9
STEERING SYSTEM

DESCRIPTION	PAGE
STEER AXLE	
→ S/N D878V01828H	9-8
S/N D878V01829H →	9-12
STEER COLUMN AND ATTACHING PARTS	
DIESEL	9-3
GASOLINE AND LPG	9-2
STEER CYLINDER	
→ S/N D878V01828H	9-15
S/N D878V01829H →	9-16
STEER TIRE AND WHEEL	9-22
STEERING COLUMN ASSEMBLY	
GASOLINE AND LPG	9-4
ISOLATED, DIESEL	9-6
STEERING CONTROL UNIT	9-20
STEERING LINES	9-18

©2014 Yale Materials Handling Corporation

STEER COLUMN AND ATTACHING PARTS (FIGURE 9-1)

GASOLINE AND LPG

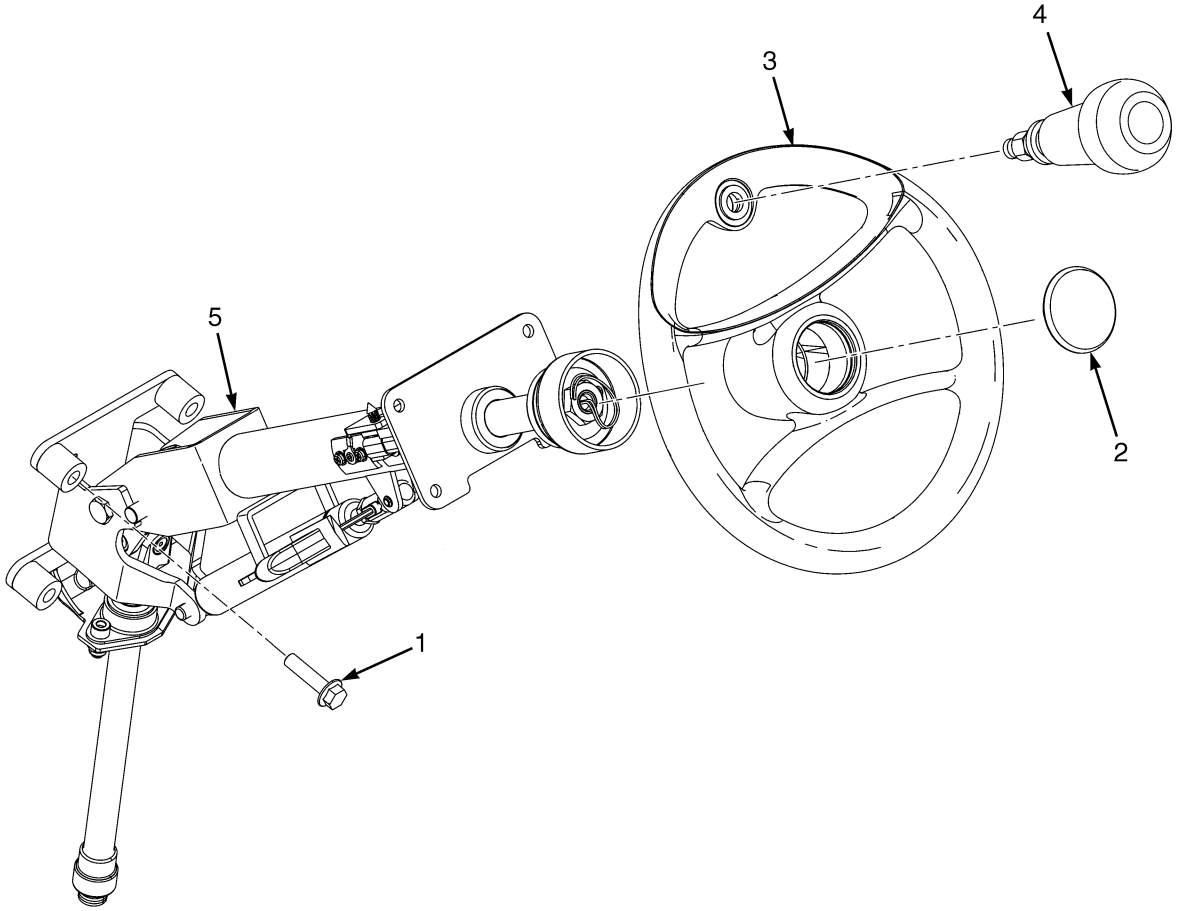

HP220500

ITEM	PART NO.	DESCRIPTION	QTY
1	580032011	Capscrew	4
2	580065002	Horn Button	1
3	580046399	Steering Wheel (Without Spinner Knob)	1
3	580045338	Steering Wheel (With Spinner)	1
4	580058078	Knob Assembly	1
4	580086874	Knob , Spinner	1
4	580086875	Cap	1
4	580086876	Insert	1
5	**a** 580081787	Steering Column (☞P20280 [Page 9-4])	1
5	**b** 582010289	Steering Column (☞P20280 [Page 9-4])	1

FOOTNOTES:

a → S/N D878V01890J

b S/N D878V01891J →

©2014 Yale Materials Handling Corporation

STEER COLUMN AND ATTACHING PARTS (FIGURE 9-2)

DIESEL

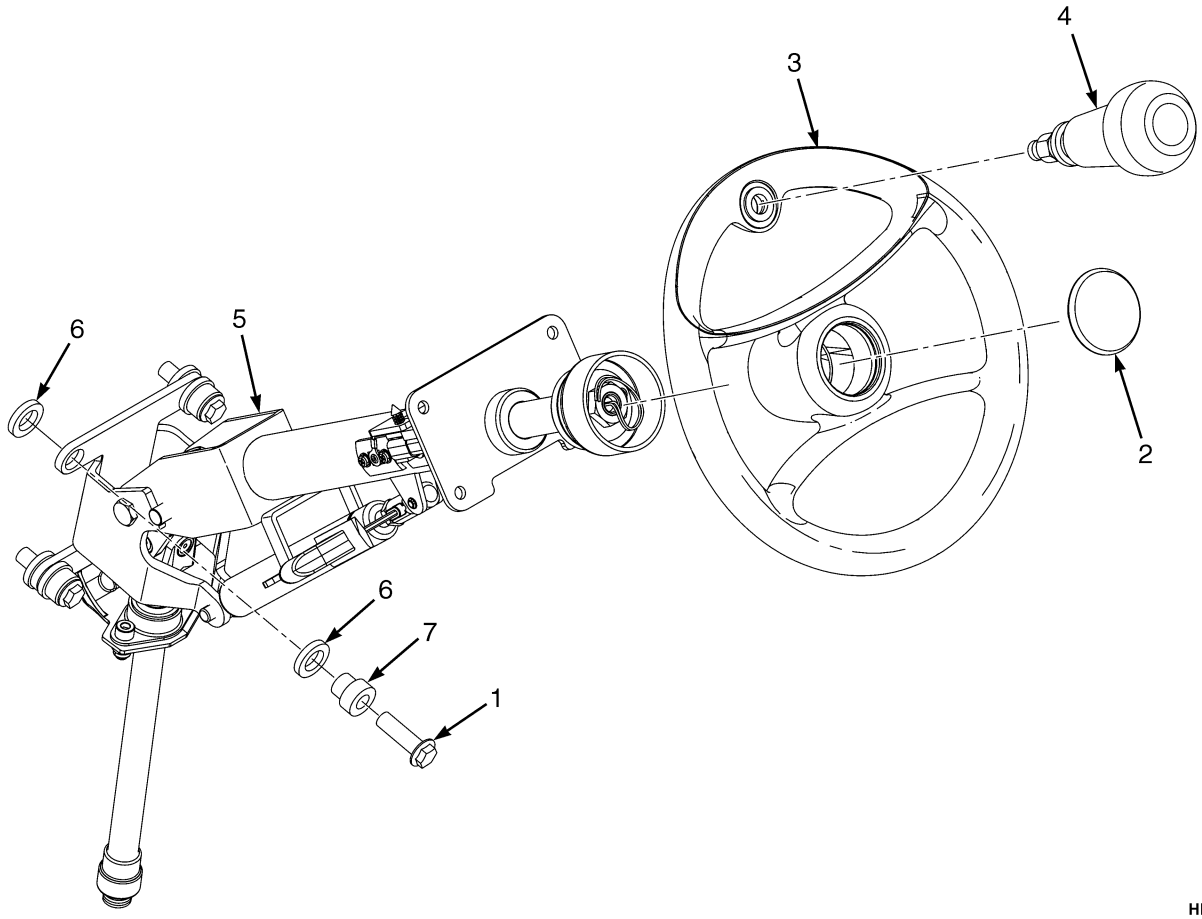

HP220499

ITEM	PART NO.	DESCRIPTION	QTY
1	580032011	Capscrew	4
2	580065002	Horn Button	1
3	580046399	Steering Wheel (Without Spinner Knob)	1
3	580045338	Steering Wheel (With Spinner)	1
4	580058078	Knob Assembly	1
4	580086874	Knob , Spinner	1
4	580086875	Cap	1
4	580086876	Insert	1
5	**a** 580081786	Steering Column (☞P23962 [Page 9-6])	1
5	**b** 582010292	Steering Column (☞P23962 [Page 9-6])	1
5	**c** 582012579	Steering Column (☞P23962 [Page 9-6])	1
6	580064736	Isolator	8
7	580064805	Spacer	4

FOOTNOTES:

a → S/N D878V01896J

b S/N D878V01897J ↔ S/N D878V02244K

c S/N D878V02245K →

©2014 Yale Materials Handling Corporation

STEERING COLUMN ASSEMBLY (FIGURE 9-3)

GASOLINE AND LPG

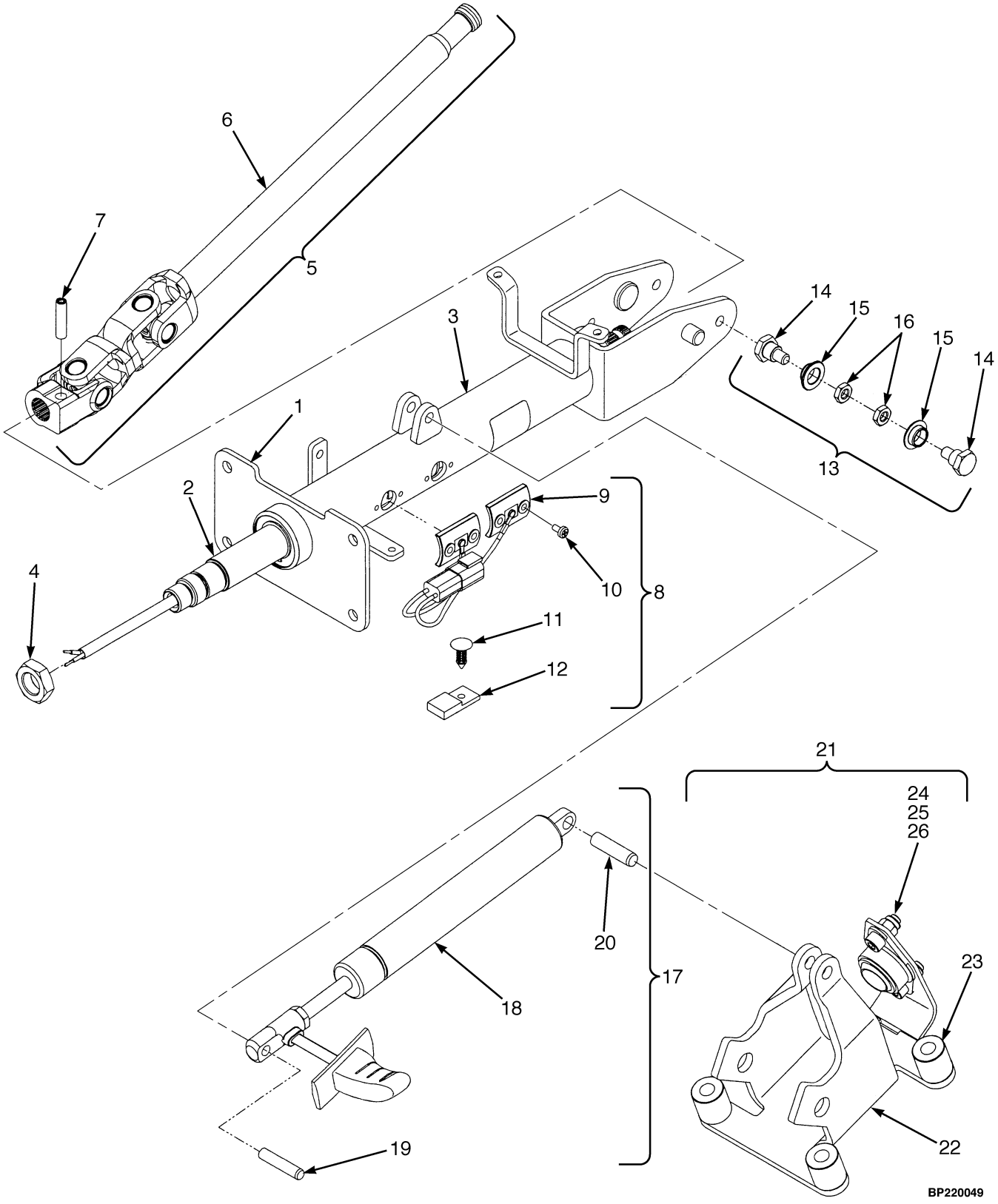

©2014 Yale Materials Handling Corporation

STEERING COLUMN ASSEMBLY
GASOLINE AND LPG

ITEM	PART NO.	DESCRIPTION	QTY
	a 580081787	Steering Column (Gasoline and LPG)	1
	b 582010289	Steering Column (Gasoline and LPG)	1
1	**a** 580078690	Kit-Shaft (Upper)	1
1	**b** 582012601	Kit (Shaft Upper)	1
2	. . . . .	Shaft Assembly (Upper)	1
3	. . . . .	Housing	1
4	580049810	Kit-Nut	1
4	. . . . .	Nut	2
5	580049811	Kit-Shaft (Lower)	1
6	. . . . .	Shaft Assembly (Lower)	1
7	. . . . .	Pin	1
8	580049812	Kit-Contact	1
9	. . . . .	Contact Assembly (Horn)	1
10	. . . . .	Screw	4
11	. . . . .	Fastener	1
12	. . . . .	Connector	1
13	580049806	Kit-Pivot (Lower)	1
14	. . . . .	Bolt (Pivot)	2
15	. . . . .	Bushing	2
16	. . . . .	Nut	2
17	580049807	Kit-Gas Spring	1
18	. . . . .	Gas Spring	1
19	. . . . .	Pin	1
20	. . . . .	Pin	1
21	580049808	Kit-Support (Gasoline and LPG)	1
21	. . . . .	Joint	1
22	. . . . .	Support	1
23	. . . . .	Spacer (Gasoline and LPG Only)	4
24	. . . . .	Nut	2
25	. . . . .	Washer	2
26	. . . . .	Screw	2

FOOTNOTES:

a → S/N D878V01890J

b S/N D878V01891J →

©2014 Yale Materials Handling Corporation

STEERING COLUMN ASSEMBLY (FIGURE 9-4)
ISOLATED, DIESEL

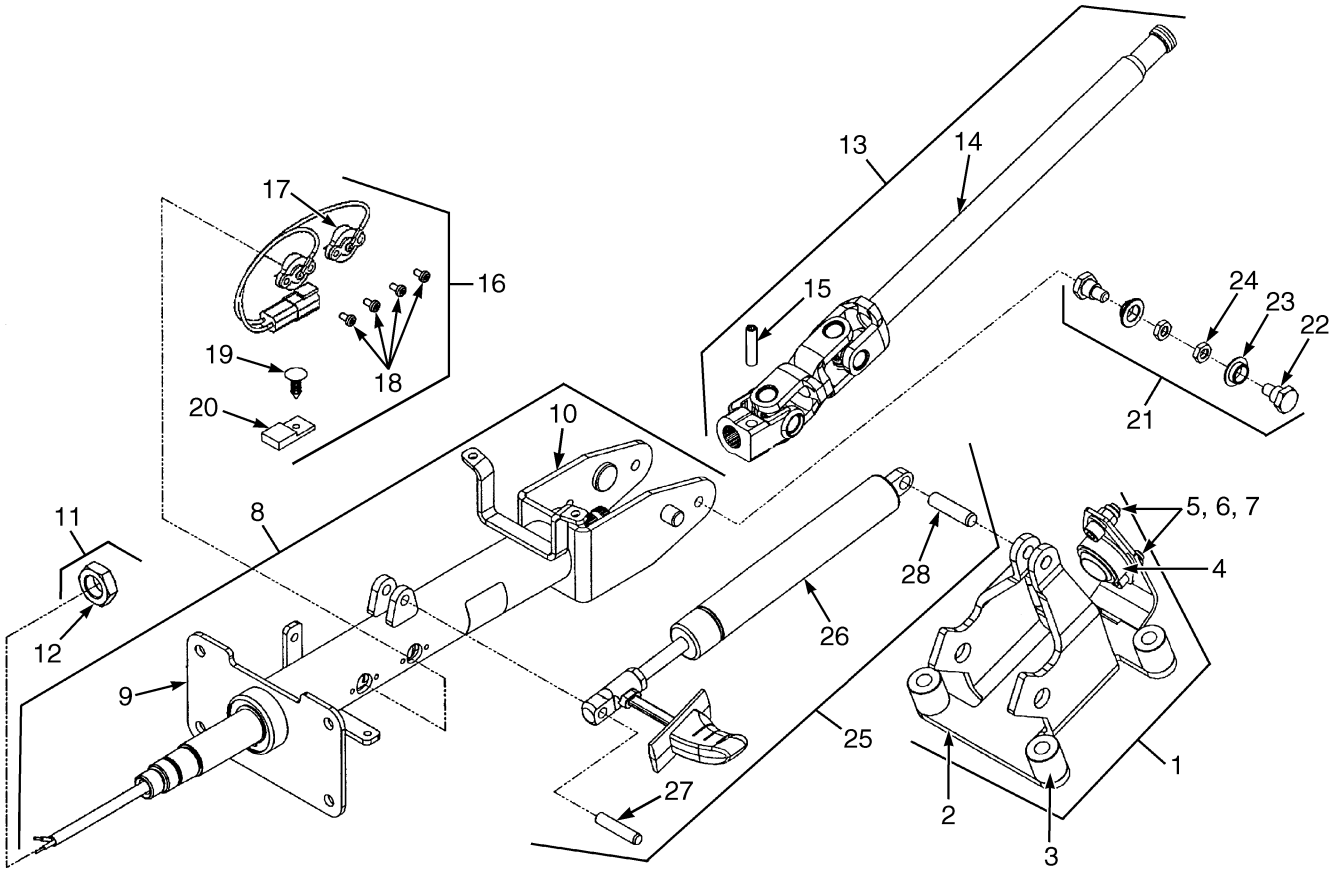

©2014 Yale Materials Handling Corporation

STEERING COLUMN ASSEMBLY
ISOLATED, DIESEL

ITEM	PART NO.	DESCRIPTION	QTY
	a 580081786	Steering Column	1
	c 582010292	Steering Column	1
	d 582012579	Steering Column	1
1	**b** 580078691	Kit-Support	1
1	**d** 582016325	Kit-Support	1
2	. . . . .	Support	1
3	. . . . .	Spacer	4
4	. . . . .	Joint	1
5	. . . . .	Nut	2
6	. . . . .	Washer	2
7	. . . . .	Screw	2
8	**a** 580078690	Kit-Shaft (Upper)	1
8	**c** 582012601	Kit (Shaft Upper)	1
8	**d** 582016326	Kit-Shaft (Upper)	1
9	. . . . .	Shaft Assembly (Upper)	1
10	. . . . .	Housing Assembly	1
11	**b** 580049810	Kit-Nut	1
11	**d** 582016327	Kit-Nut	1
12	. . . . .	Nut	2
13	**b** 580049811	Kit-Shaft (Lower)	1
13	**d** 582016328	Kit-Shaft (Lower)	1
14	. . . . .	Shaft Assembly (Lower)	1
15	. . . . .	Pin	1
16	**b** 580049812	Kit-Contact	1
16	**d** 582016329	Kit-Contact	1
17	. . . . .	Contact Assembly (Horn)	1
18	. . . . .	Screw	4
19	. . . . .	Fastener	1
20	. . . . .	Connector	1
21	**b** 580049806	Kit-Pivot (Lower)	1
21	**d** 582016330	Kit Pivot (Lower)	1
22	. . . . .	Bolt (Pivot)	2
23	. . . . .	Bushing	2
24	. . . . .	Nut	2
25	**b** 580049807	Kit-Gas Spring	1
25	**d** 582016331	Kit-Gas Spring	1
26	. . . . .	Gas Spring	1
27	. . . . .	Pin	1
28	. . . . .	Pin	1

FOOTNOTES:

a → S/N D878V01896J
b → S/N D878V02244K
c S/N D878V01897J ↔ S/N D878V02244K
d S/N D878V02245K →

©2014 Yale Materials Handling Corporation

STEER AXLE (FIGURE 9-5)
(→ S/N D878V01828H)

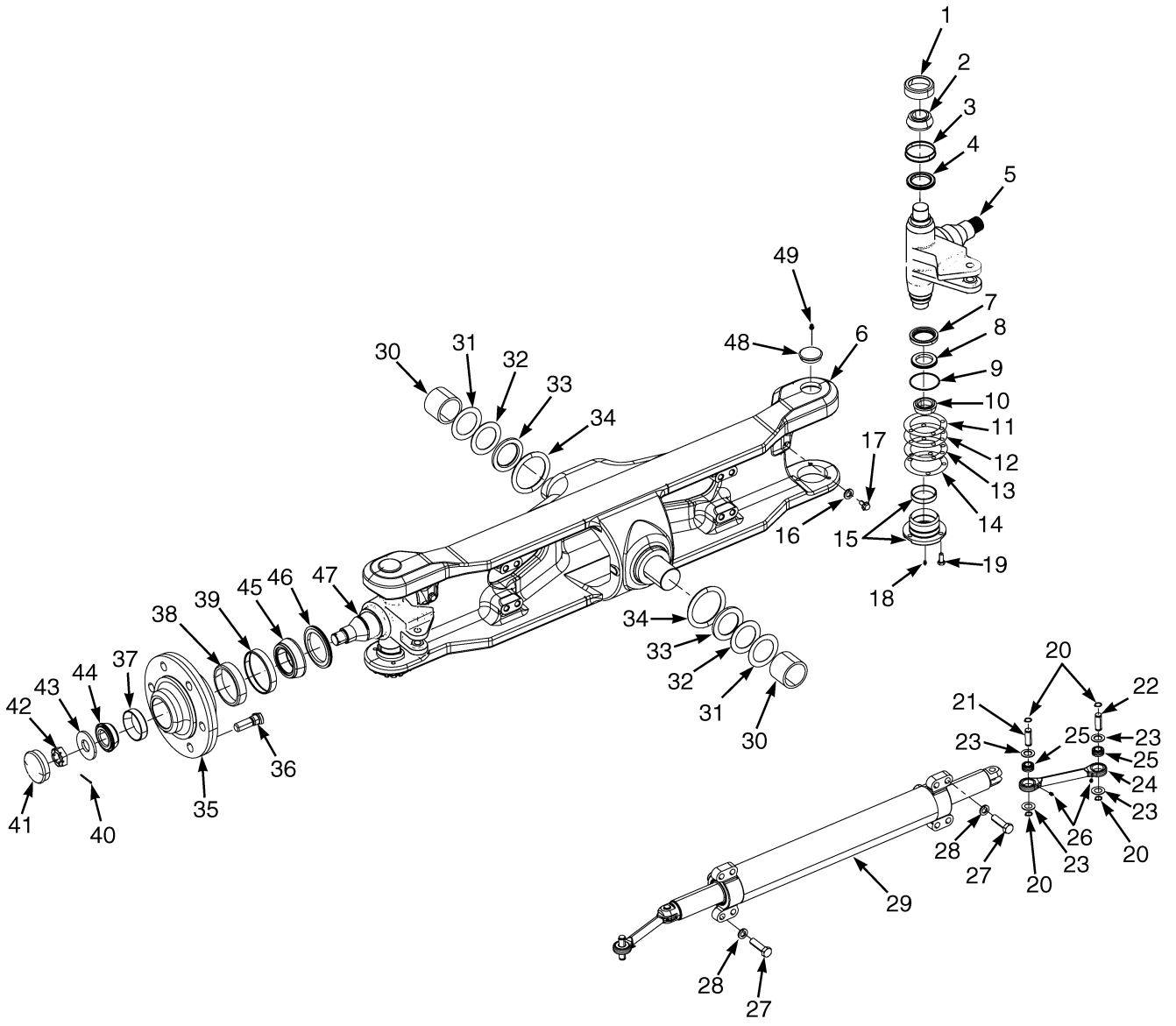

BP220104

©2014 Yale Materials Handling Corporation

STEER AXLE

(→ S/N D878V01828H)

ITEM	PART NO.	DESCRIPTION	QTY
	a 580081635	Steering Axle Assy	1
	b 582003023	Steering Axle Assy	1
1	072387302	Bearing Cup	2
2	072387301	Bearing Cone	2
3	504224231	Wear Sleeve	2
4	504224298	Seal	2
5	580011846	Spindle (RH)	1
6	**a** 580007166	Steering Axle (Frame)	1
6	**b** 580093275	Steering Axle (Frame)	1
7	504224242	Seal	2
8	520045589	Seal	2
9	504225236	O-Ring	2
10	065001000	Bearing Cone	2
11	504224222	Shim (0.005 in.)	3
12	504224232	Shim (0.007 in.)	3
13	504224292	Shim (0.020 in.)	2
14	580050203	Shim (0.002 in.)	2
15	580007182	Bearing Cap (Assembly)	2
15	580007183	Bearing Cap	1
15	065000900	Bearing Cup	1
16	449021006	Washer	2
17	580049010	Capscrew	2
18	015631500	Grease Fitting	2
19	931014904	Capscrew	6
20	015918200	Snap Ring	8
21	580052360	Pin	2
22	580052359	Pin	2
23	580008277	Seal	8
24	**a** 580052282	Tie Rod (Assembly)	1
24	**a** 580011850	Tie Rod	1
24	**b** 580085409	Tie Rod Assembly	1
24	**b** 580085296	Tie Rod (Fabricated)	1
24	580095221	Tie Rod (Cast, Optional)	1
25	580052264	Spherical Roller Bearing	1
26	015631500	Grease Fitting	2
27	502565901	Capscrew	8
28	449022041	Lockwasher	8
29	580064660	Steering Cylinder (☞P20283 [Page 9-15])	1
30	580003485	Bushing	2
31	580003484	Shim (0.040 in.)	AR
32	580003483	Shim (0.110 in.)	AR
33	580003486	Flange	2
34	580003482	Sealing Ring	2
35	580082310	Wheel Hub	2
36	580002014	Wheel Stud	12
37	502175921	Bearing Cup	2
38	053239100	Bearing Cup	2
39	580003603	Wear Sleeve	2
40	015418400	Cotter Pin (1-1/2 in.)	2
40	015418500	Cotter Pin (1-3/4 in.)	1

©2014 Yale Materials Handling Corporation

STEER AXLE
(→ S/N D878V01828H)

ITEM	PART NO.	DESCRIPTION	QTY
41	504227283	Cap	2
42	504240211	Wheel Nut (Spindle)	2
43	580007181	Washer	2
44	502175920	Bearing Cone	2
45	060733800	Bearing Cone	2
46	580003602	Seal	2
47	580011849	Spindle (LH)	1
48	504224266	Plug	2
49	022784400	Grease Fitting	2
	501702902	Loctite	AR

FOOTNOTES:

a → S/N D878V01700G

b S/N D878V01701G →

©2014 Yale Materials Handling Corporation

NOTES

©2014 Yale Materials Handling Corporation

STEER AXLE (FIGURE 9-6)

(S/N D878V01829H →)

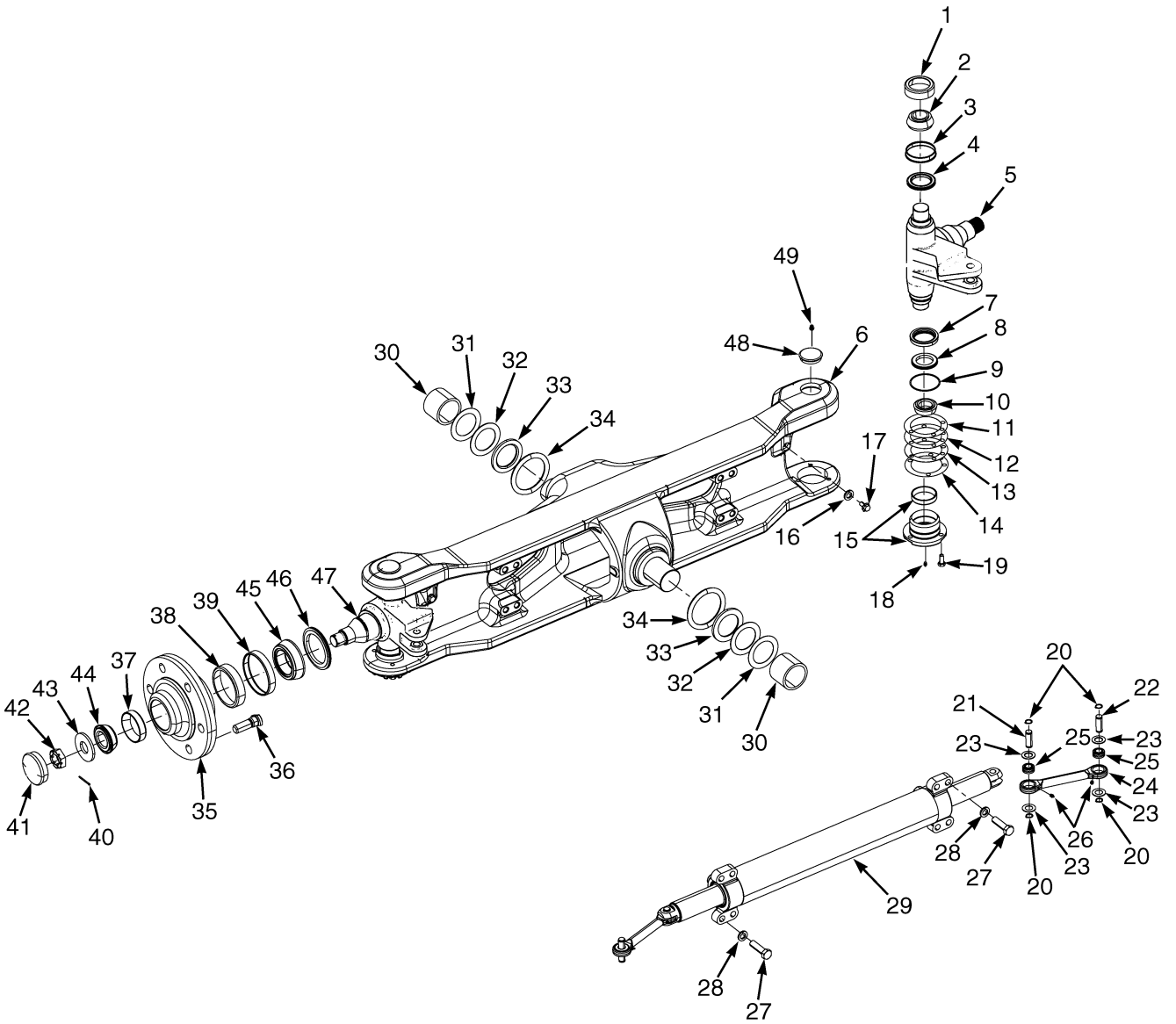

BP220104

©2014 Yale Materials Handling Corporation

STEER AXLE

(S/N D878V01829H →)

ITEM	PART NO.	DESCRIPTION	QTY
	580087538	Steering Axle	1
1	072387302	Bearing Cup	2
2	072387301	Bearing Cone	2
3	504224231	Wear Sleeve	2
4	504224298	Seal	2
5	~~580087242~~		
	582013199	Spindle (RH)	1
6	580093275	Steering Axle (Frame)	1
7	504224242	Seal	2
8	520045589	Seal	2
9	504225236	O-Ring	2
10	065001000	Bearing Cone	2
11	504224222	Shim (0.005 in.)	3
12	504224232	Shim (0.007 in.)	3
13	504224292	Shim (0.020 in.)	2
14	580050203	Shim (0.002 in.)	2
15	582003526	Bearing Cap Assembly	2
15	580007183	Bearing Cap	1
15	580007184	Bearing Cup	1
16	449021006	Washer	2
17	580049010	Capscrew	2
18	015631500	Grease Fitting	2
19	931014904	Capscrew	6
20	015915100	Snap Ring	8
21	580086289	Pin	2
22	580086288	Pin	2
23	580091329	Seal	8
24	580086263	Tie Rod	2
25	580085583	Bushing	2
26	015631500	Grease Fitting	2
27	502565901	Capscrew	8
28	449022041	Lockwasher	8
29	580093975	Steering Cylinder (☞P21862 [Page 9-16])	1
30	580003485	Bushing	2
31	580003484	Shim (0.040 in.)	AR
32	580003483	Shim (0.110 in.)	AR
33	580003486	Flange	2
34	580003482	Sealing Ring	2
35	580082310	Wheel Hub	2
36	580002014	Wheel Stud	12
37	502175921	Bearing Cup	2
38	053239100	Bearing Cup	2
39	580003603	Wear Sleeve	2
40	015418400	Cotter Pin	2
41	504227283	Cap	2
42	504240211	Wheel Nut (Spindle)	2
43	580007181	Washer	2
44	502175920	Bearing Cone	2
45	060733800	Bearing Cone	2
46	580003602	Seal	2

©2014 Yale Materials Handling Corporation

STEER AXLE
(S/N D878V01829H →)

ITEM	PART NO.	DESCRIPTION	QTY
47	~~580087241~~		
	582013198	Spindle (LH)	1
48	504224266	Plug	2
49	022784400	Grease Fitting	2
	501702902	Loctite	AR

©2014 Yale Materials Handling Corporation

STEER CYLINDER (FIGURE 9-7)

(→ S/N D878V01828H)

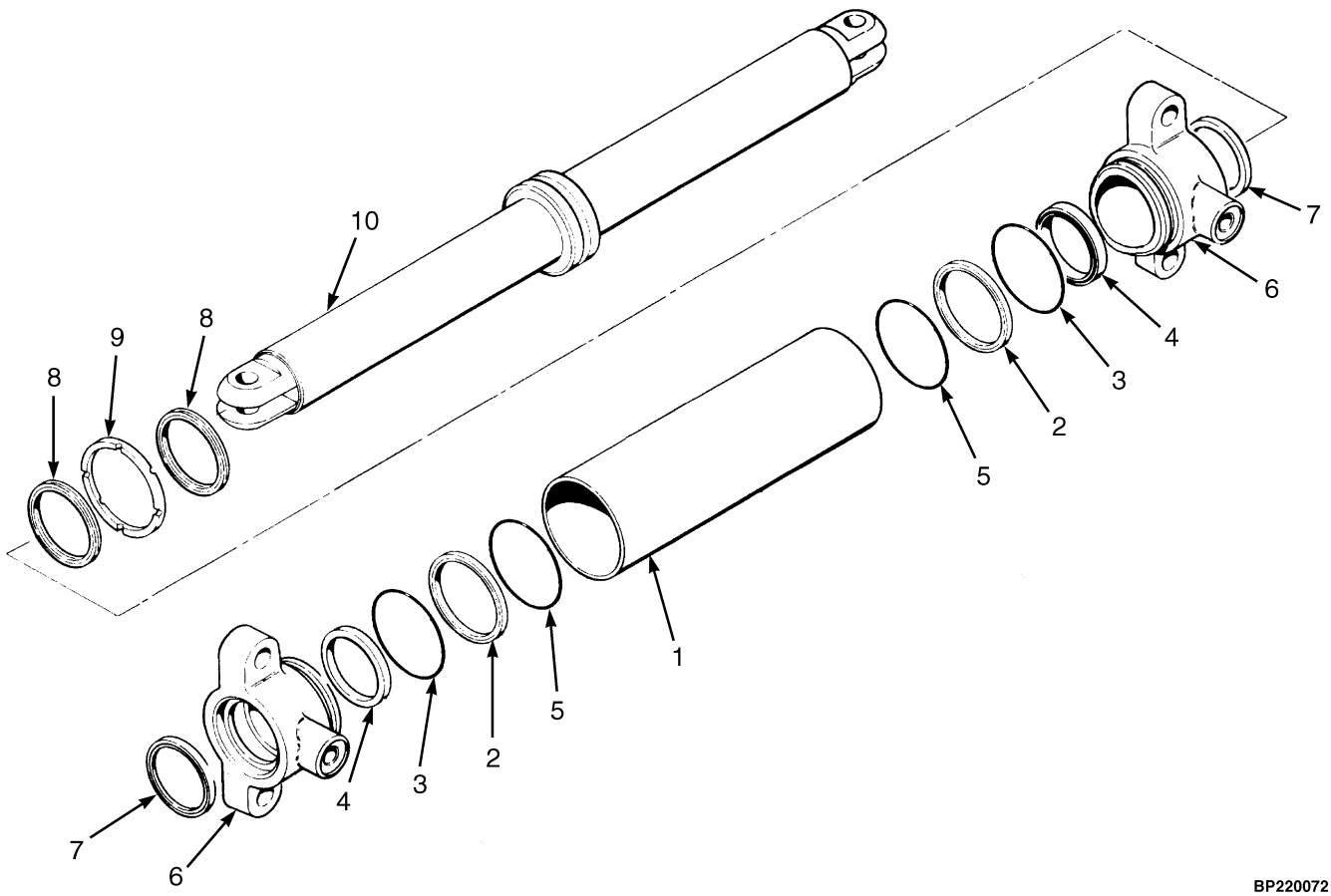

BP220072

ITEM	PART NO.	DESCRIPTION	QTY
	580064660	Steering Cylinder	1
1	580007158	Tube Wldmt-Cylinder	1
2	500167906	Back-Up Ring	2
3	501712902	O-Ring	2
4	580052511	Rod Seal	2
5	015493500	O-Ring	2
6	580060394	End Cap	2
7	524214603	Rod Wiper	2
8	580065978	Wear Ring	2
9	504305712	Seal	2
10	580065976	Piston Rod	1
	580071006	Kit-Seal	1
	580097242	Kit-Seal (Alternate Part)	1

©2014 Yale Materials Handling Corporation

STEER CYLINDER (FIGURE 9-8)

(S/N D878V01829H →)

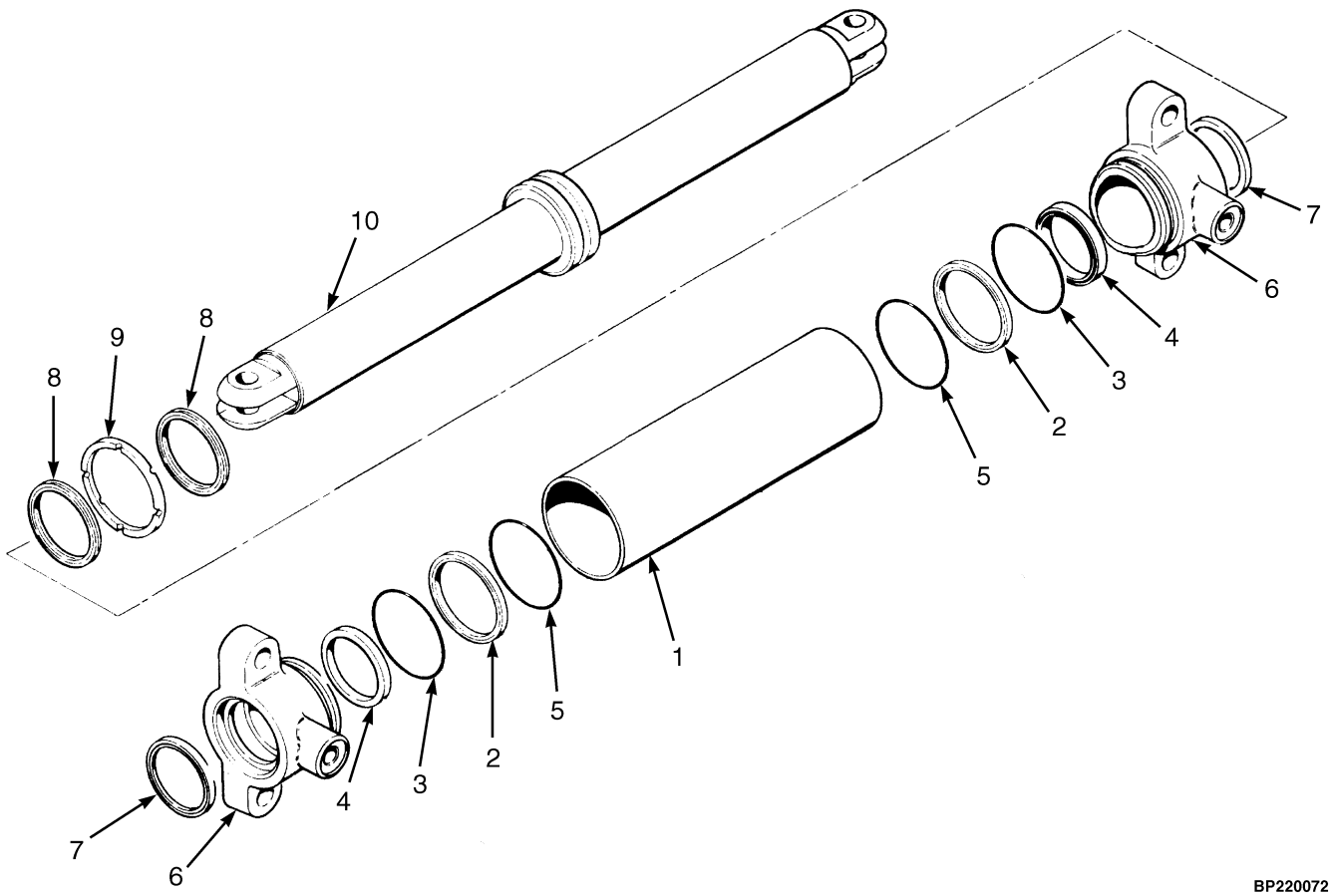

BP220072

ITEM	PART NO.	DESCRIPTION	QTY
	580093975	Steering Cylinder	1
1	580007158	Tube Wldmt-Cylinder	1
2	500167906	Back-Up Ring	2
3	501712902	O-Ring	2
4	580052511	Rod Seal	2
5	015493500	O-Ring	2
6	580060394	End Cap	2
7	524214603	Rod Wiper	2
8	580065978	Wear Ring	2
9	504305712	Seal	2
10	580096179	Cylinder Rod	1
	580097242	Kit-Seal	1

©2014 Yale Materials Handling Corporation

NOTES

©2014 Yale Materials Handling Corporation

STEERING LINES (FIGURE 9-9)

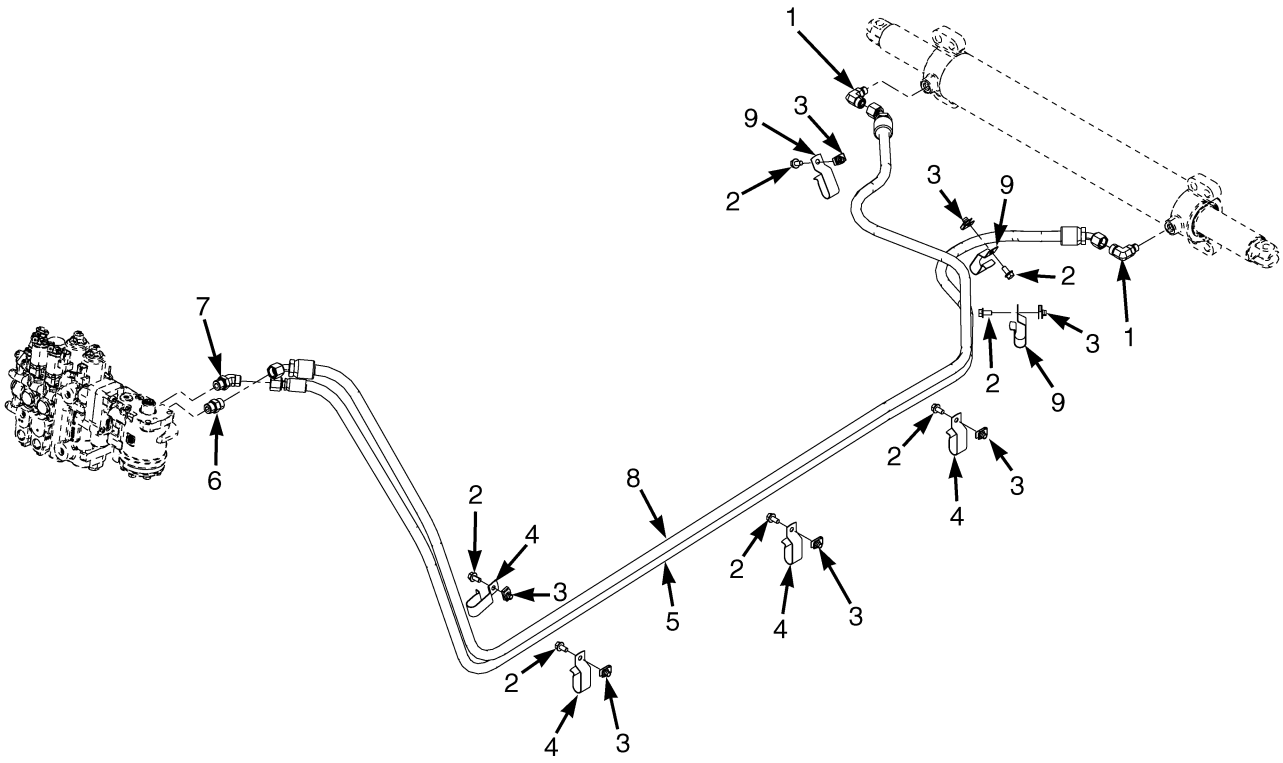

BP220107

©2014 Yale Materials Handling Corporation

STEERING LINES

ITEM	PART NO.	DESCRIPTION	QTY
1	580019866	Fitting	2
1	580063949	O-Ring	1
1	052645200	O-Ring	1
2	580047714	Capscrew	7
3	580026621	Nut	7
4	580045558	Clip	4
5	580088711	Hose Assy	1
6	580020430	Fitting	1
6	580063949	O-Ring	1
6	052645300	O-Ring	1
7	580039350	Fitting	1
7	580063949	O-Ring	1
7	052645300	O-Ring	1
8	580088712	Hose Assy	1
9	580049814	Clip	3

©2014 Yale Materials Handling Corporation

STEERING CONTROL UNIT (FIGURE 9-10)

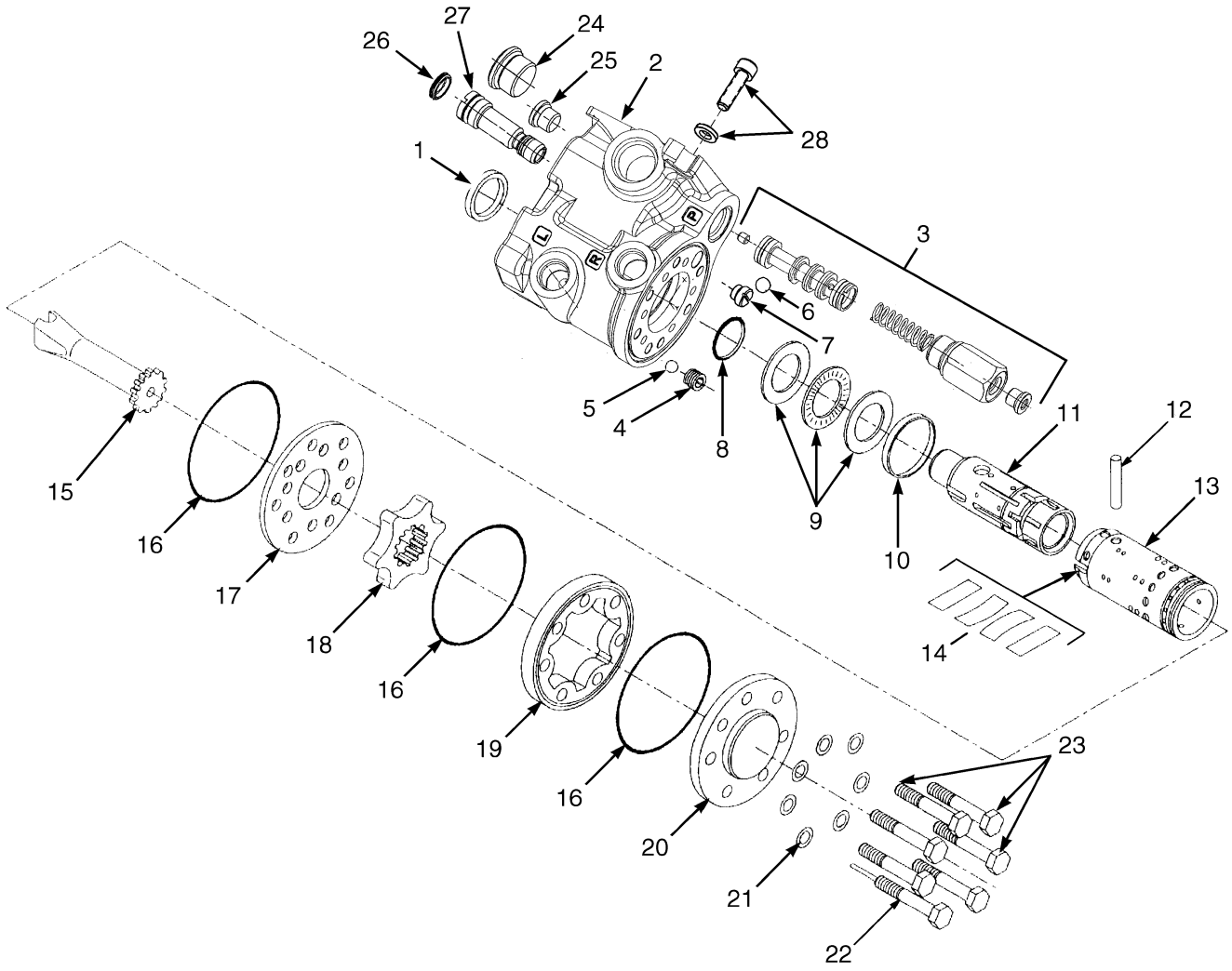

BP220103

©2014 Yale Materials Handling Corporation

STEERING CONTROL UNIT

ITEM	PART NO.	DESCRIPTION	QTY
	580087257	Steering Control Unit (200cc)	1
1	. . . . .	Dust Seal	1
2	. . . . .	Housing	1
3	. . . . .	Relief Valve	1
4	. . . . .	Bushing	1
5	. . . . .	Check Ball	1
6	. . . . .	Check Ball	1
7	. . . . .	Seat	1
8	. . . . .	O-Ring	1
9	. . . . .	Bearing Set	1
10	. . . . .	Ring	1
11	. . . . .	Spool	1
12	. . . . .	Pin	1
13	. . . . .	Sleeve	1
14	. . . . .	Spring Set	1
15	. . . . .	Shaft	1
16	. . . . .	O-Ring	3
17	. . . . .	Plate	1
18	. . . . .	Gear Set	1
19	. . . . .	Gear Ring	1
20	. . . . .	Cover	1
21	. . . . .	Washer	7
22	. . . . .	Special Screw	2
23	. . . . .	Capscrew	5
24	. . . . .	Priority Valve Plug	1
25	. . . . .	Diagnostic Plug (Supply Pressure)	1
26	. . . . .	Cap	1
27	. . . . .	System Relief Valve	1
28	. . . . .	Mounting Bolts	1
	580054569	Kit-Seal (Steering Control Unit)	1
	524309591	Kit (Load Sense Alteration Kit)	1

©2014 Yale Materials Handling Corporation

STEER TIRE AND WHEEL (FIGURE 9-11)

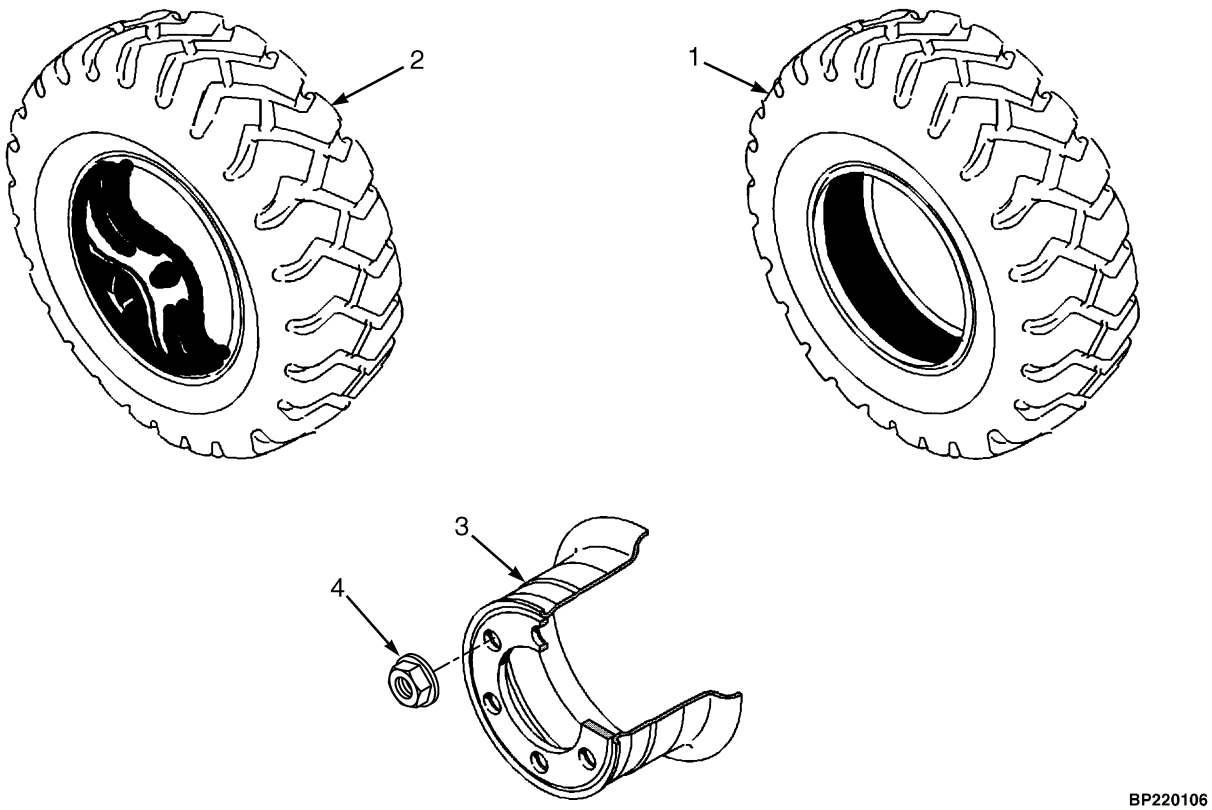

KEY:
A: 8.25 x 15-14 PR
B: 8.25 x 15 Solid Pneumatic
C: 8.25 R15 Radial

ITEM	PART NO.	DESCRIPTION	QTY A	QTY B	QTY C
1	**a** 580050050	Tire (Monarch)	..	2	..
1	**b** 580081172	Tire (Monarch)	..	2	..
1	580050050	Tire (Monarch) (Alternate Part)	..	2	..
1	580050049	Tire (Trell)	2	..	..
2	580014962	Pneumatic Tire	..	..	2
2	580014869	Tubeless Bead Seal	..	..	1
2	580014987	Tubeless Bead Seal Valve	..	..	1
3	580078076	Wheel Assy	2	2	2
4	580003941	Wheel Nut	12	12	12

FOOTNOTES:

a Soft Ride

b Standard Hardness

©2014 Yale Materials Handling Corporation

10 BRAKE SYSTEM

SECTION 10
BRAKE SYSTEM

DESCRIPTION	PAGE
BRAKE COOLING SYSTEM	
SINGLE AND DUAL PEDAL	10-14
BRAKE PEDAL LINKAGE	
DUAL PEDAL	10-6
SINGLE PEDAL	10-2
PARK BRAKE ASSEMBLY	
→ S/N D878V02174J	10-10
S/N D878V02175K →	10-12

©2014 Yale Materials Handling Corporation

BRAKE PEDAL LINKAGE (FIGURE 10-1)

SINGLE PEDAL

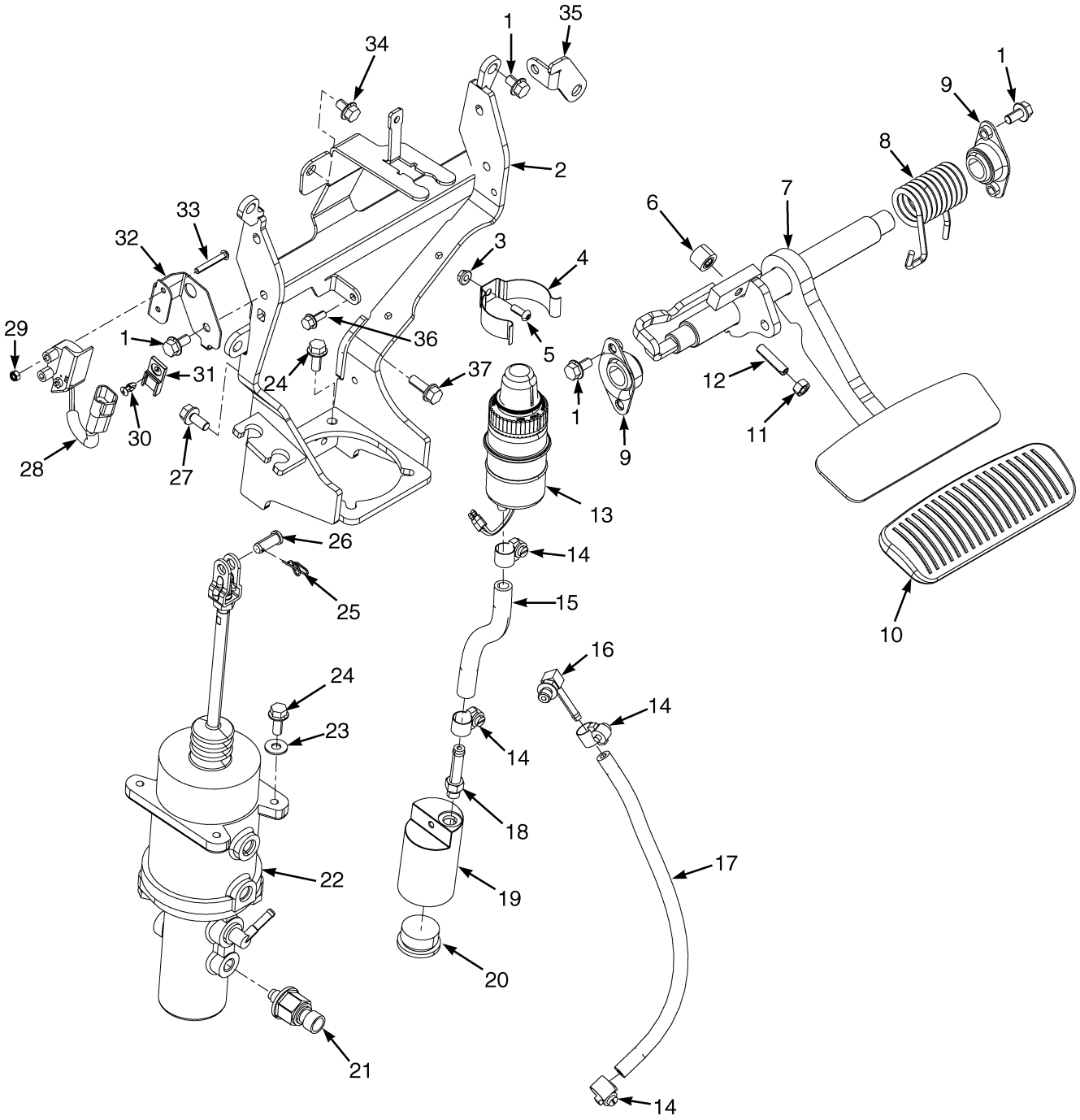

©2014 Yale Materials Handling Corporation

BRAKE PEDAL LINKAGE
SINGLE PEDAL

ITEM	PART NO.	DESCRIPTION	QTY
1	580047714	Capscrew	6
2	580083473	Bracket	1
3	~~580004321~~		
	580047919	Nut	1
4	922627300	Holder	1
5	580030975	Screw (Button Head)	1
6	580047742	Bumper	1
7	580077770	Pedal	1
7	580096888	Brake Pedal (Alternate Part)	1
8	580052279	Spring (RH)	1
9	580057831	Bushing	2
10	580052931	Rubber Pad	1
11	449015014	Nut	1
12	580040128	Bolt	1
13	580076790	Reservoir	1
13	934404300	Tank	1
13	580080011	Diaphragm	1
13	580077299	Cap	1
14	502056906	Clamp	4
15	580076897	Hose	1
16	580077616	Fitting	1
16	056363300	O-Ring	1
17	580000242	Hose (Brake Feed)	1
18	580077615	Fitting	1
18	056363300	O-Ring	1
19	580076769	Cylinder Block	1
20	810528500	Fitting	1
20	052645700	O-Ring	1
21	580059254	Transducer (Brake Pressure)	1
22	580064232	Master Cylinder	1
22	580085743	Brake Booster	1
22	580085744	Master Cylinder	1
22	~~580085745~~		
	582032889	Kit-Repair Master Cylinder (Major)	1
22	580085746	Kit-Repair Master Cylinder (Minor)	1
23	580056003	Washer	2
24	580049231	Capscrew	4
25	580000868	Locking Cotter Pin	1
26	580056624	Pin (Rod End)	1
27	580065022	Capscrew	2
28	580044785	Sensor (Brake Position) (Inching)	1
28	580044785	Sensor (Brake Position) (Alternate Part)	1
29	449015112	Locknut	2
30	580050676	Clip (Key Hole)	1
30	937100904	Nut (Alternate Part)	2
31	580026812	Clip	1
31	580095974	Capscrew (Alternate Part)	1
32	580056625	Bracket (Inching Sensor)	1
32	582001972	Mount (Inching Sensor)(Alternate Part)	1
33	580047034	Capscrew	2

©2014 Yale Materials Handling Corporation

BRAKE PEDAL LINKAGE
SINGLE PEDAL

ITEM	PART NO.	DESCRIPTION	QTY
33	582004169	Screw (Button Head)(Alternate Part)	1
34	580037180	Capscrew	1
35	~~580060576~~		
	582029016	Plate	1
36	580049011	Capscrew	1
37	580056815	Capscrew	2
	a 580077316	Label (Brake Fluid Warning)	1
	a 312850042	Strap Clamp	1

FOOTNOTES:

a Not Illustrated

©2014 Yale Materials Handling Corporation

NOTES

©2014 Yale Materials Handling Corporation

BRAKE PEDAL LINKAGE (FIGURE 10-2)

DUAL PEDAL

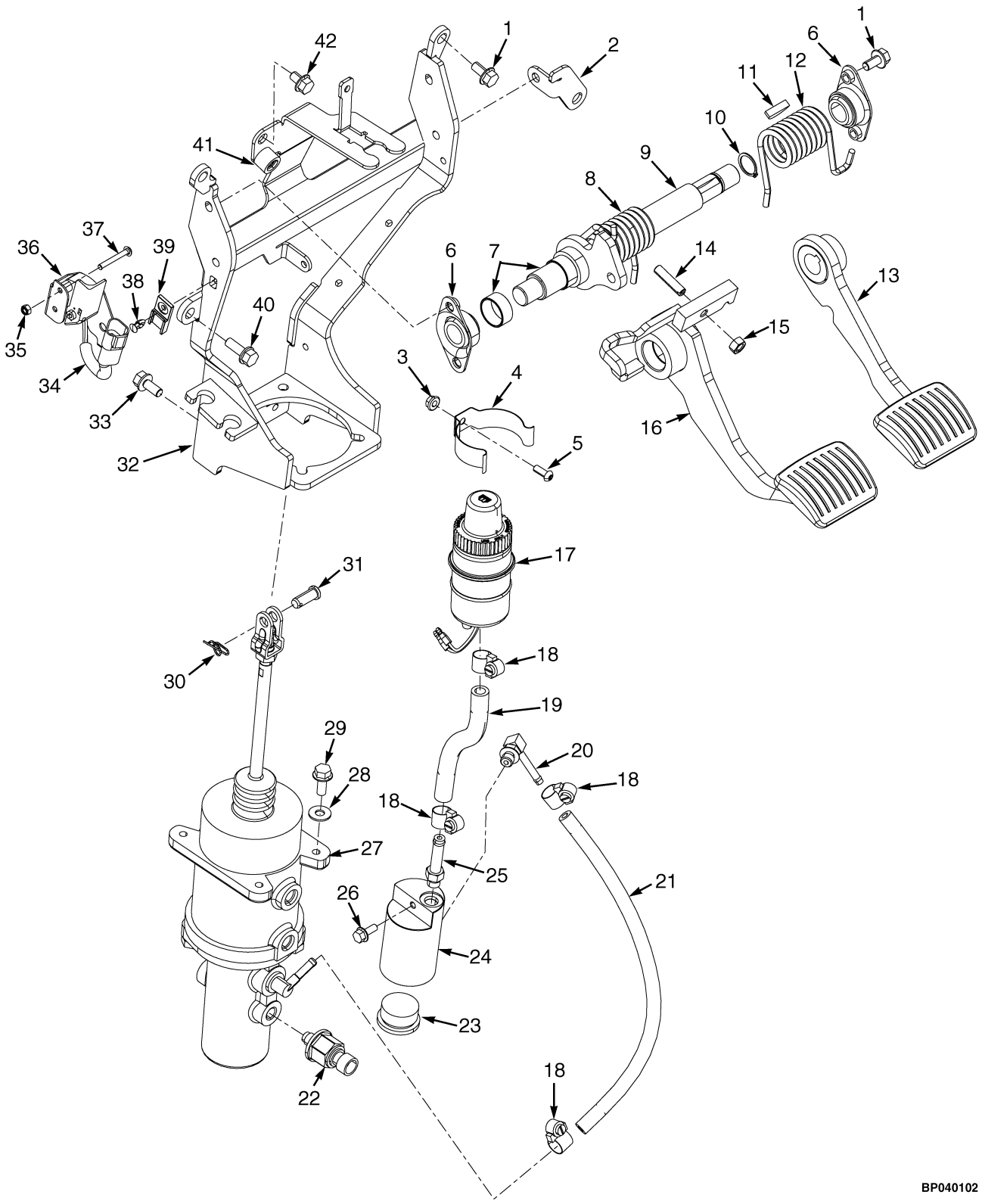

©2014 Yale Materials Handling Corporation

BRAKE PEDAL LINKAGE
DUAL PEDAL

ITEM	PART NO.	DESCRIPTION	QTY
1	580047714	Capscrew	6
2	~~580060576~~		
	582029016	Plate	1
3	~~580004321~~		
	580047919	Nut	1
4	922627300	Holder	1
5	580030975	Screw (Button Head)	1
6	580057831	Bushing	2
7	520037811	Bushing	2
8	580052281	Spring (LH)	1
9	580064601	Crank	1
10	015915100	Snap Ring	1
11	014979500	Woodruff Key	1
12	580052280	Spring (RH)	1
13	580052353	Brake Pedal (RH)	1
13	580052933	Pad	2
14	580040128	Bolt	1
15	449015014	Nut	1
16	580074515	Brake Pedal (LH)	1
16	582001971	Inching Pedal (Left Hand) (Alternate Part)	1
16	580052933	Pad	1
17	580076790	Reservoir	1
17	934404300	Tank	1
17	580080011	Diaphragm	1
17	580077299	Cap	1
18	502056906	Clamp	4
19	580076897	Hose	1
20	580077616	Fitting	1
20	056363300	O-Ring	1
21	580000242	Hose (Brake Feed)	1
22	580059254	Transducer (Brake Pressure)	1
23	810528500	Fitting	1
23	052645700	O-Ring	1
24	580076769	Cylinder Block	1
25	580077615	Fitting	1
25	056363300	O-Ring	1
26	580049011	Capscrew	1
27	580064232	Master Cylinder	1
27	580085743	Brake Booster	1
27	580085744	Master Cylinder	1
27	~~580085745~~		
	582032889	Kit-Repair Master Cylinder (Major)	1
27	580085746	Kit-Repair Master Cylinder (Minor)	1
28	580056003	Washer	2
29	580049231	Capscrew	4
30	580000868	Locking Cotter Pin	1
31	580056624	Pin (Rod End)	1
32	580064601	Crank	1
33	580065022	Capscrew	2
34	580044785	Sensor (Brake Position) (Inching)	1

©2014 Yale Materials Handling Corporation

BRAKE PEDAL LINKAGE
DUAL PEDAL

ITEM	PART NO.	DESCRIPTION	QTY
34	580044785	Sensor (Brake Position) (ALternate Part)	1
35	449015112	Locknut	2
36	580056625	Bracket (Inching Sensor)	1
36	582001972	Mount (Inchinig Sensor)(Alternate Part)	1
37	580047034	Capscrew	2
37	582004169	Screw (Button Head)(Alternate Part)	1
38	580050676	Clip (Key Hole)	1
38	937100904	Nut (Alternate Part)	1
39	580026812	Clip (Connector)	1
39	580095973	Capscrew (Alternate Part)	1
40	580056815	Capscrew	2
41	580047742	Bumper	1
42	580037180	Capscrew	1
	a 580077316	Label (Brake Fluid Warning)	1
	a 312850042	Strap Clamp	1
	501702902	Loctite	AR

FOOTNOTES:

a Not Illustrated

©2014 Yale Materials Handling Corporation

NOTES

©2014 Yale Materials Handling Corporation

PARK BRAKE ASSEMBLY (FIGURE 10-3)

(→ S/N D878V02174J)

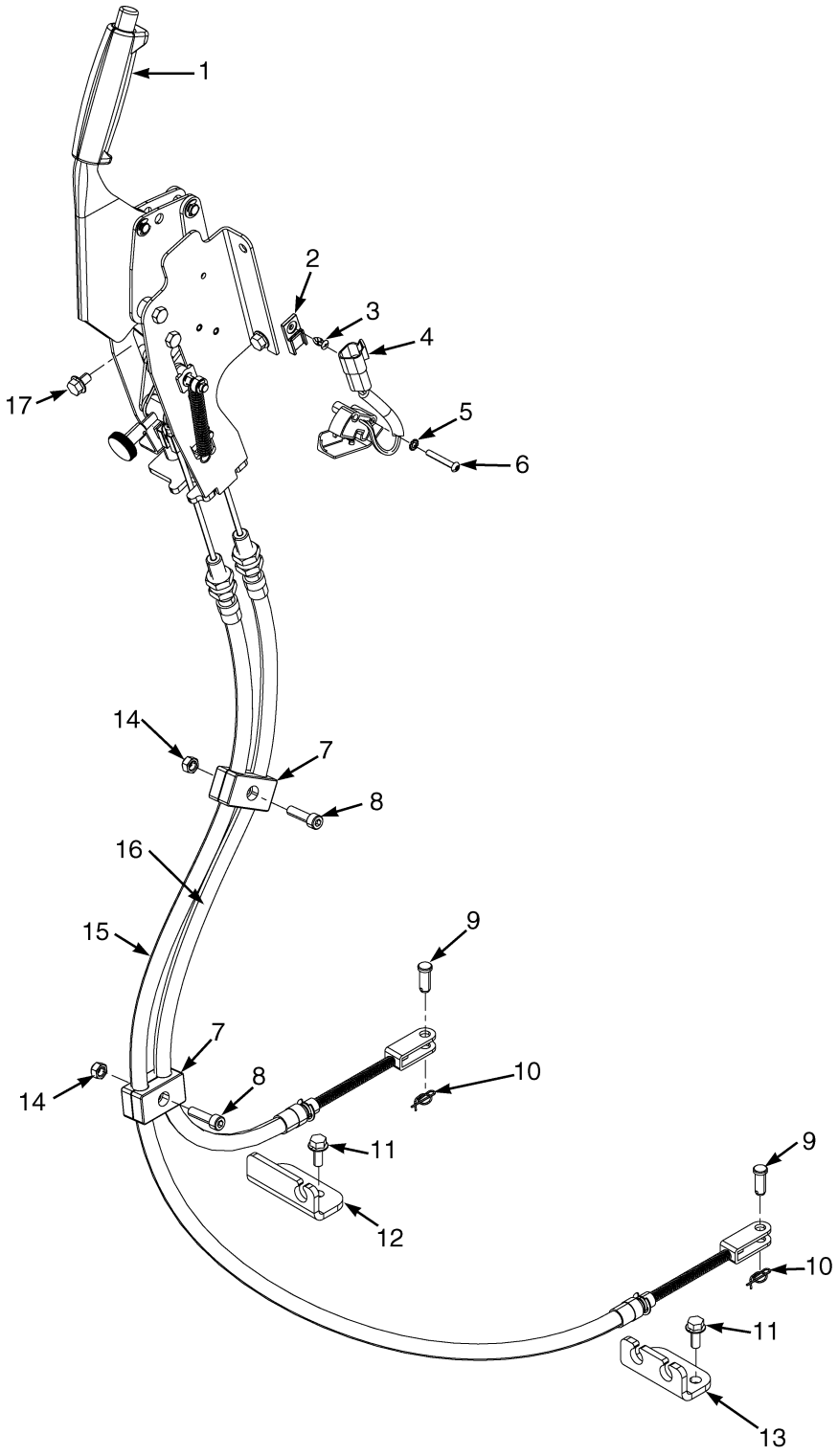

©2014 Yale Materials Handling Corporation

PARK BRAKE ASSEMBLY

(→ S/N D878V02174J)

ITEM	PART NO.	DESCRIPTION	QTY
	580080971	Parking Brake Assy (Non Cab, With Overhead Guard)	1
	580080972	Parking Brake Assy (Cab)	1
1	580081499	Parking Brake Lever Assy	1
1	580081500	Parking Brake Lever (Cab)	1
1	580084626	Grip	1
2	580026812	Clip	1
3	580050676	Clip (Key Hole)	1
4	580044785	Sensor (Brake Position)	1
5	940600906	Washer	2
6	580047034	Capscrew	2
7	580083236	Clamp	2
8	449001204	Capscrew	2
9	580056624	Pin (Rod End)	2
10	580000868	Locking Cotter Pin	2
11	580049231	Capscrew	4
12	580081697	Bracket	1
13	580063366	Bracket	1
14	449015135	Nut	2
15	580068098	Parking Brake Cable (RH)	1
15	582011916	Parking Brake Cable (RH) (Alternate Part)	1
16	580068097	Parking Brake Cable (LH)	1
16	582011917	Parking Brake Cable (LH) (Alternate Part)	1
17	580037180	Capscrew	4

©2014 Yale Materials Handling Corporation

PARK BRAKE ASSEMBLY (FIGURE 10-4)

(S/N D878V02175K →)

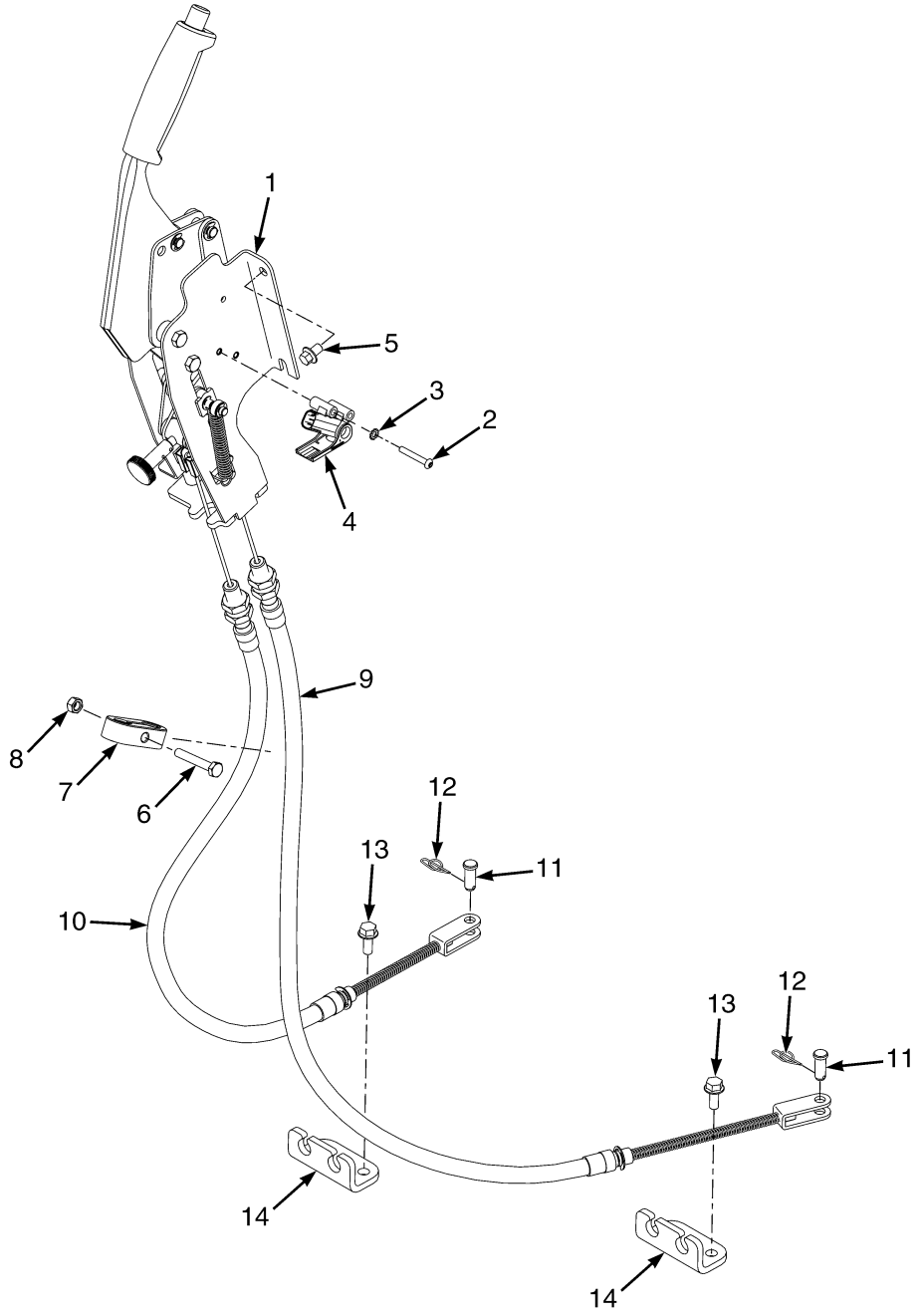

BP040196

©2014 Yale Materials Handling Corporation

PARK BRAKE ASSEMBLY

(S/N D878V02175K →)

ITEM	PART NO.	DESCRIPTION	QTY
1	582017144	Parking Brake Assembly (Without Cab)	1
1	582017145	Parking Brake Assembly (With Cab)	1
1	582017138	Parking Brake Lever (Without Cab)	1
1	582017139	Parking Brake Lever (With Cab)	1
2	582004169	Screw	2
3	940600906	Washer	2
4	580083939	Sensor (Brake Position)	1
5	582004724	Capscrew	4
6	449001204	Capscrew	2
7	580083236	Clamp	2
8	449015135	Nut	2
9	582011916	Parking Brake Cable (RH)	1
10	582011917	Parking Brake Cable (LH)	1
11	580056624	Pin (Rod End)	2
12	580000868	Locking Cotter Pin	2
13	580049231	Capscrew	4
14	582013267	Bracket	2

©2014 Yale Materials Handling Corporation

BRAKE COOLING SYSTEM (FIGURE 10-5)

SINGLE AND DUAL PEDAL

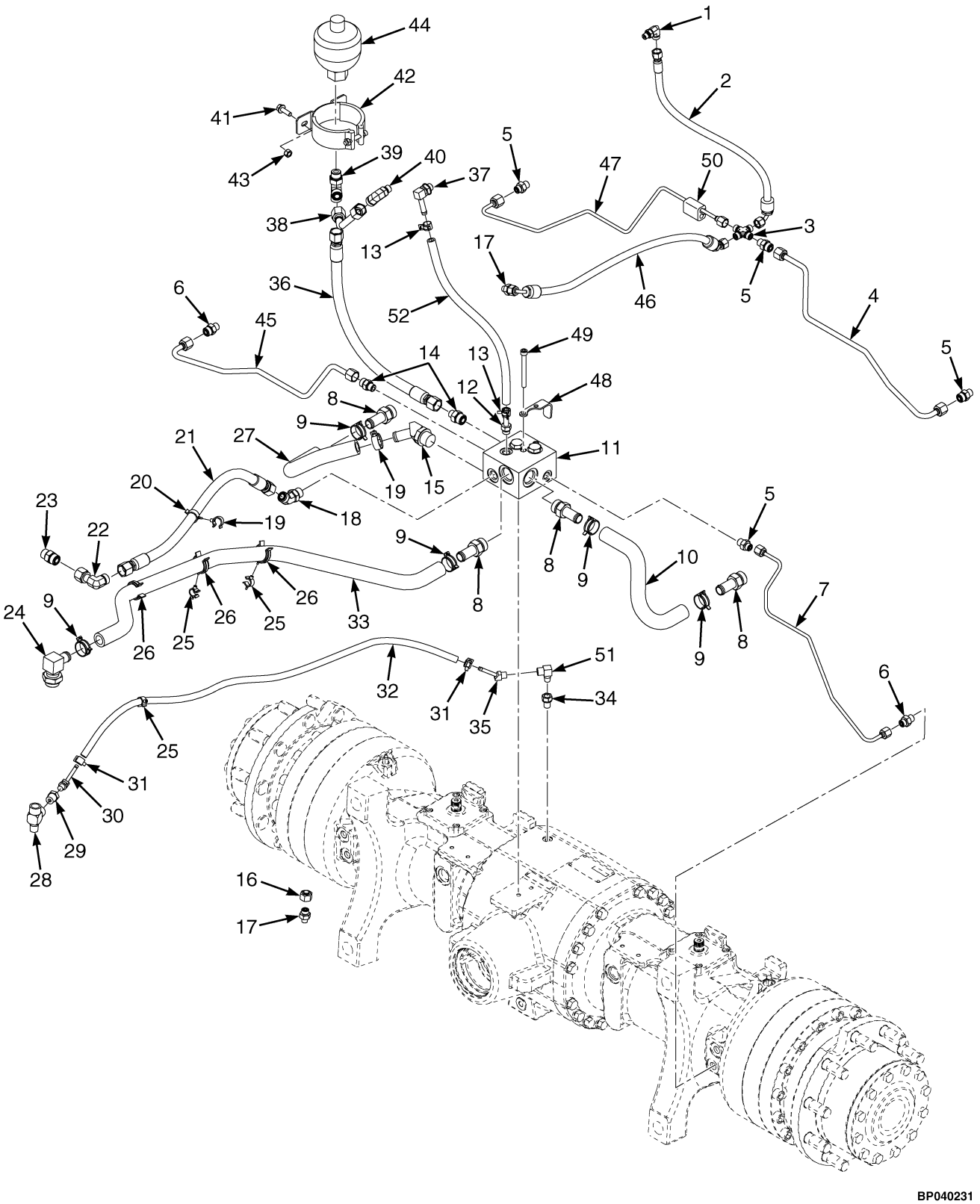

©2014 Yale Materials Handling Corporation

BRAKE COOLING SYSTEM
SINGLE AND DUAL PEDAL

ITEM	PART NO.	DESCRIPTION	QTY
1	580019860	Fitting	1
1	504155200	O-Ring	1
1	052645200	O-Ring	1
2	580077844	Hose Assy	1
3	580079931	Fitting (Tee)	1
4	580077866	Tube	1
5	580019808	Fitting	4
5	052645200	O-Ring	1
6	580019806	Fitting	2
6	580039385	O-Ring	1
6	052645200	O-Ring	1
7	580077841	Tube	1
8	057090400	Fitting	4
8	052645500	O-Ring	1
9	580039914	Hose Clamp	6
10	580077848	Hose	1
11	580075262	Manifold	1
11	580067863	Check Valve	2
11	580033397	Kit-Seal	1
12	501704901	Fitting	1
12	052645200	O-Ring	1
13	580052736	Hose Clamp	2
14	580019813	Fitting	1
14	580063949	O-Ring	1
14	052645200	O-Ring	1
15	520045433	Fitting	1
15	052645500	O-Ring	1
16	580039423	Fitting	1
16	580063949	O-Ring	1
17	580019805	Fitting	2
17	580039385	O-Ring	1
17	056363300	O-Ring	1
18	580039350	Fitting	1
18	580063949	O-Ring	1
18	052645300	O-Ring	1
19	580064599	Clamp	1
20	580042567	Clamp (Swivel)	1
21	580077845	Hose Assy	1
22	580019837	Fitting	1
22	580063949	O-Ring	1
23	580020430	Fitting	1
23	052645300	O-Ring	1
23	580063949	O-Ring	1
24	580079932	Fitting	1
24	052645500	O-Ring	1
25	580042330	Clamp (Swivel)	3
26	580049555	Clamp (Swivel)	3
27	580075263	Hose	1
28	059235200	Fitting	1
29	015759100	Fitting	1

©2014 Yale Materials Handling Corporation

BRAKE COOLING SYSTEM
SINGLE AND DUAL PEDAL

ITEM	PART NO.	DESCRIPTION	QTY
30	580084020	Fitting	1
31	580070768	Hose Clamp	2
32	580083324	Hose	1
33	580077846	Hose (High Temperature)	1
34	580083087	Adapter	1
35	135523102	Fitting	1
35	505967560	Fitting (Hose) (Alternate Part)	1
36	580055299	Hose Assy	1
37	059726400	Fitting	1
37	052645200	O-Ring	1
38	580082372	Tube Assy	1
39	580059998	Fitting	1
39	580063949	O-Ring	2
39	052645300	O-Ring	1
40	580019866	Fitting	1
40	580063949	O-Ring	1
40	052645200	O-Ring	1
41	580030966	Capscrew	2
42	580079671	Clamp	1
43	504230271	Nut	2
44	580066356	Accumulator	1
45	580077843	Tube	1
46	580080038	Hose Assy	1
47	580077864	Tube	1
48	580077798	Bracket	1
49	932201916	Capscrew	2
50	580075331	Block	1
51	502400901	Fitting (Pipe) (Alternate Part)	1
52	580077847	Hose	1

©2014 Yale Materials Handling Corporation

11 HYDRAULIC SYSTEM

SECTION 11
HYDRAULIC SYSTEM

DESCRIPTION	PAGE
AUXILIARY ONE SECTION	
ELECTRONIC CONTROL VALVE - THREE AND FOUR FUNCTION (→ 6/2009)	11-50
ELECTRONIC CONTROLLER - THREE AND FOUR FUNCTION (6/2009 →)	11-52
AUXILIARY TWO SECTION	
ELECTRONIC CONTROL VALVE - FOUR FUNCTION (→ 6/2009)	11-54
ELECTRONIC CONTROL VALVE - FOUR FUNCTION (6/2009 →)	11-56
CONTROL VALVE AND STEERING UNIT ASSEMBLY	
ELECTRO-HYDRAULIC - THREE FUNCTION (6/2009 →)	11-38
ELECTRO-HYDRAULIC - FOUR FUNCTION (6/2009 →)	11-42
ELECTRONIC CONTROL - THREE FUNCTION (→ 6/2009)	11-36
ELECTRONIC CONTROL - FOUR FUNCTION (→ 6/2009)	11-40
MANUAL CONTROL - THREE FUNCTION	11-24
MANUAL CONTROL - FOUR FUNCTION	11-26
CONTROL VALVE LOCKOUT GROUP	
MANUAL CONTROL VALVE	11-22
DIPSTICK AND BREATHER	11-8
ELECTRO HYDRAULIC POPPET VALVE	
ELECTRONIC CONTROL VALVE - THREE AND FOUR FUNCTION	11-48
GEAR PUMP	
STEERING	11-12
GEAR PUMP ASSEMBLY	11-10
HAND LEVERS	
FOUR FUNCTION - WITH DETENTED LEVERS	11-18
FOUR FUNCTION - WITHOUT DETENTED LEVERS	11-20
THREE FUNCTION - WITH DETENTED LEVERS	11-14
THREE FUNCTION - WITHOUT DETENTED LEVERS	11-16
HOIST HOSE AND ATTACHING PARTS	11-69
HYDRAULIC FILTER	11-6
HYDRAULIC SUPPLY AND RETURN	11-2
MID INLET SECTION	
MANUAL AND ELECTRONIC CONTROL VALVE - THREE AND FOUR FUNCTION	11-28
OUTLET SECTION	
ELECTRONIC CONTROL VALVE - THREE AND FOUR FUNCTION WITHOUT ANTI-STALL SOLENOID (→ 6/2009)	11-58
ELECTRONIC CONTROL VALVE - THREE AND FOUR FUNCTION WITH ANTI-STALL SOLENOID (6/2009 →)	11-60
MANUAL CONTROL VALVE - THREE AND FOUR FUNCTION	11-34
TILT CYLINDER AND MAST INSTALLATION	11-62
TILT CYLINDERS	11-64
TILT HYDRAULICS	11-66
VALVE ASSEMBLY, AUXILIARY ONE AND TWO	
MANUAL CONTROL VALVE - THREE AND FOUR FUNCTION	11-32
VALVE ASSEMBLY, LIFT AND LOWER	
ELECTRONIC CONTROL VALVE - THREE AND FOUR FUNCTION	11-44
VALVE ASSEMBLY, LIFT AND TILT	
MANUAL CONTROL VALVE - THREE AND FOUR FUNCTION	11-30
VALVE ASSEMBLY, TILT SECTION	
ELECTRONIC CONTROL VALVE - THREE AND FOUR FUNCTION	11-46
VENT LINES	11-68

©2014 Yale Materials Handling Corporation

HYDRAULIC SUPPLY AND RETURN (FIGURE 11-1)

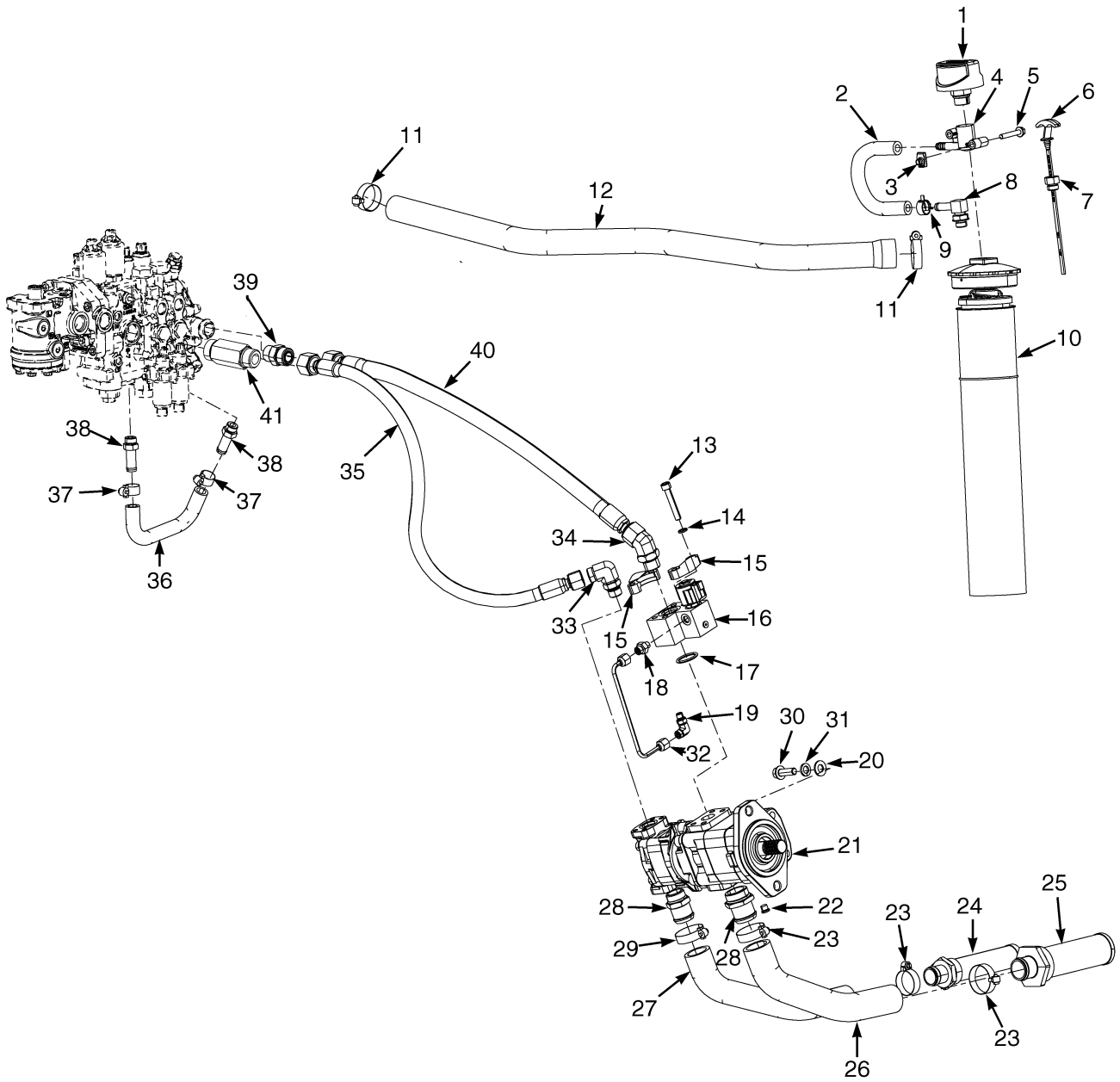

©2014 Yale Materials Handling Corporation

HYDRAULIC SUPPLY AND RETURN

ITEM	PART NO.	DESCRIPTION	QTY
1	580056337	Breather	1
1	052645500	O-Ring	1
2	580082896	Hose	1
3	580026621	Nut	2
4	580056336	Adapter (Breather)	1
5	580030968	Capscrew	2
6	580084267	Dipstick	1
7	055746400	Fitting	1
7	052645300	O-Ring	1
8	315976062	Fitting	1
9	580039913	Hose Clamp	1
10	580063282	Hydraulic Filter (☞P20314 [Page 11-6])	1
11	062159700	Clamp	2
12	580074766	Hose Assy	1
13	**b** 580085547	Capscrew	4
13	**a** 580022965	Capscrew	4
14	**a** 519244838	Lockwasher	4
15	**a** 064426800	Clamp (Split Half)	2
16	**b** 580082402	Solenoid Valve	1
16	580083280	Plug	1
16	580083281	Coil	1
16	580083282	Solenoid Valve	1
17	**ab** 580031730	O-Ring	1
18	**b** 580019805	Fitting	1
19	**b** 580019860	Fitting	1
20	016110000	Washer	2
21	**d** 580088024	Gear Pump (41.3 cc) (Electronic Hydraulics) (☞P20292 [Page 11-10])	1
21	**d** 580083318	Gear Pump (41.3 cc) (Manual Hydraulics) (☞P20292 [Page 11-10])	1
21	**f** 580083401	Gear Pump (46.5cc) (Manual Hydraulic) (☞P20292 [Page 11-10])	1
22	**c** 315976062	Fitting	1
23	502056903	Clamp	4
24	580071011	Strainer	1
24	052645900	O-Ring	1
25	580071012	Strainer	1
25	580071103	O-Ring	1
26	580066406	Hose	1
27	580066358	Hose	1
28	580053784	Adapter	1
28	052645800	O-Ring	1
29	580052324	Adapter (Suction)	1
29	052645700	O-Ring	1
30	580073545	Capscrew	2
31	015026600	Washer	2
32	**b** 580082437	Tube	1
33	580056465	Fitting	1
33	052645400	O-Ring	1
33	580019387	O-Ring	1
34	**b** 580039356	Fitting	1
35	580066405	Hose Assy	1
36	580090240	Hose (Three Function)	1
36	580089863	Hose (Four Function)	1

©2014 Yale Materials Handling Corporation

HYDRAULIC SUPPLY AND RETURN

ITEM	PART NO.	DESCRIPTION	QTY
37	062159500	Clamp	2
38	500154908	Fitting	2
38	052645300	O-Ring	1
39	580020431	Fitting	2
39	580061267	O-Ring	1
39	052645500	O-Ring	1
40	**b** 580082870	Hose Assy	1
40	**a** 580082544	Hose Assy	1
41	580084886	Fitting	1
	580068717	Kit-Valve	1
	e 580036666	Plug (With O-Ring for Drain) (Hydraulic Tank Drain)	1
	ae 580087997	Solenoid Valve	1
	580089428	Kit-Seal	1
	b 580093037	Disk	1

FOOTNOTES:

a Anti-Stall with E-Hydraulics Up to 6/30/2009
b Anti-Stall with Manual Hydraulics
c GDP135VX Diesel
d GP/GLP135-155VX Gasoline and LPG and GDP155VX Diesel
e Not Illustrated
f → S/N D878V01650G

©2014 Yale Materials Handling Corporation

NOTES

©2014 Yale Materials Handling Corporation

HYDRAULIC FILTER (FIGURE 11-2)

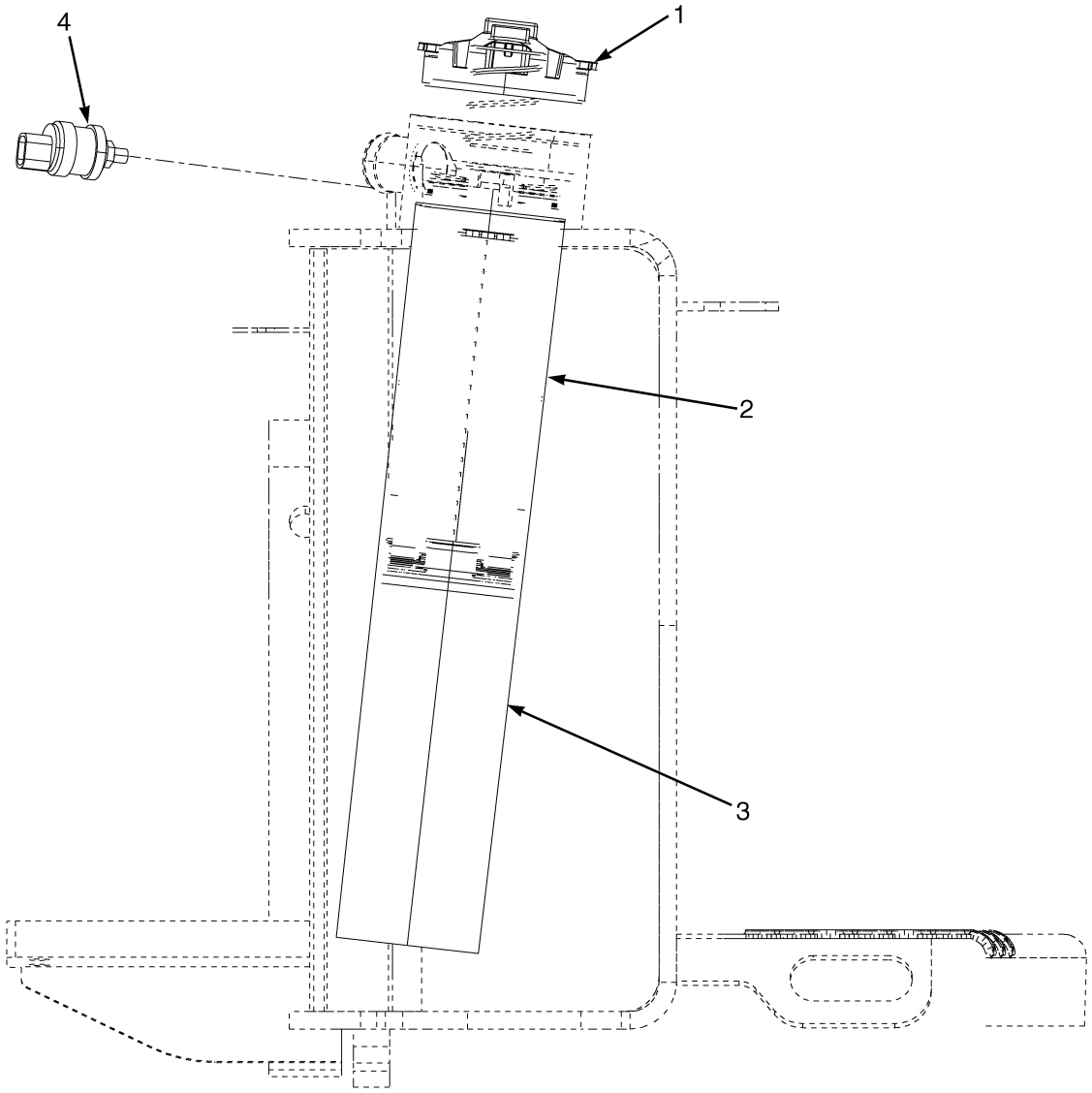

BP150209

©2014 Yale Materials Handling Corporation

HYDRAULIC FILTER

ITEM	PART NO.	DESCRIPTION	QTY
1	580067372	Cap Assembly	1
1	582002950	Cap (Alternate Part)	1
1	580096460	O-Ring	1
1	. . . . .	Spring	1
2	. . . . .	Bowl Assembly	1
3	580067377	Hydraulic Filter	1
3	. . . . .	O-Ring	1
4	**a** 580049602	Pressure Switch	1
	580070562	Kit-O-Ring	1
5	582002951	Kit-O-Ring (Alternate Part)	1

FOOTNOTES:

a With Electronic Monitoring Package

©2014 Yale Materials Handling Corporation

DIPSTICK AND BREATHER (FIGURE 11-3)

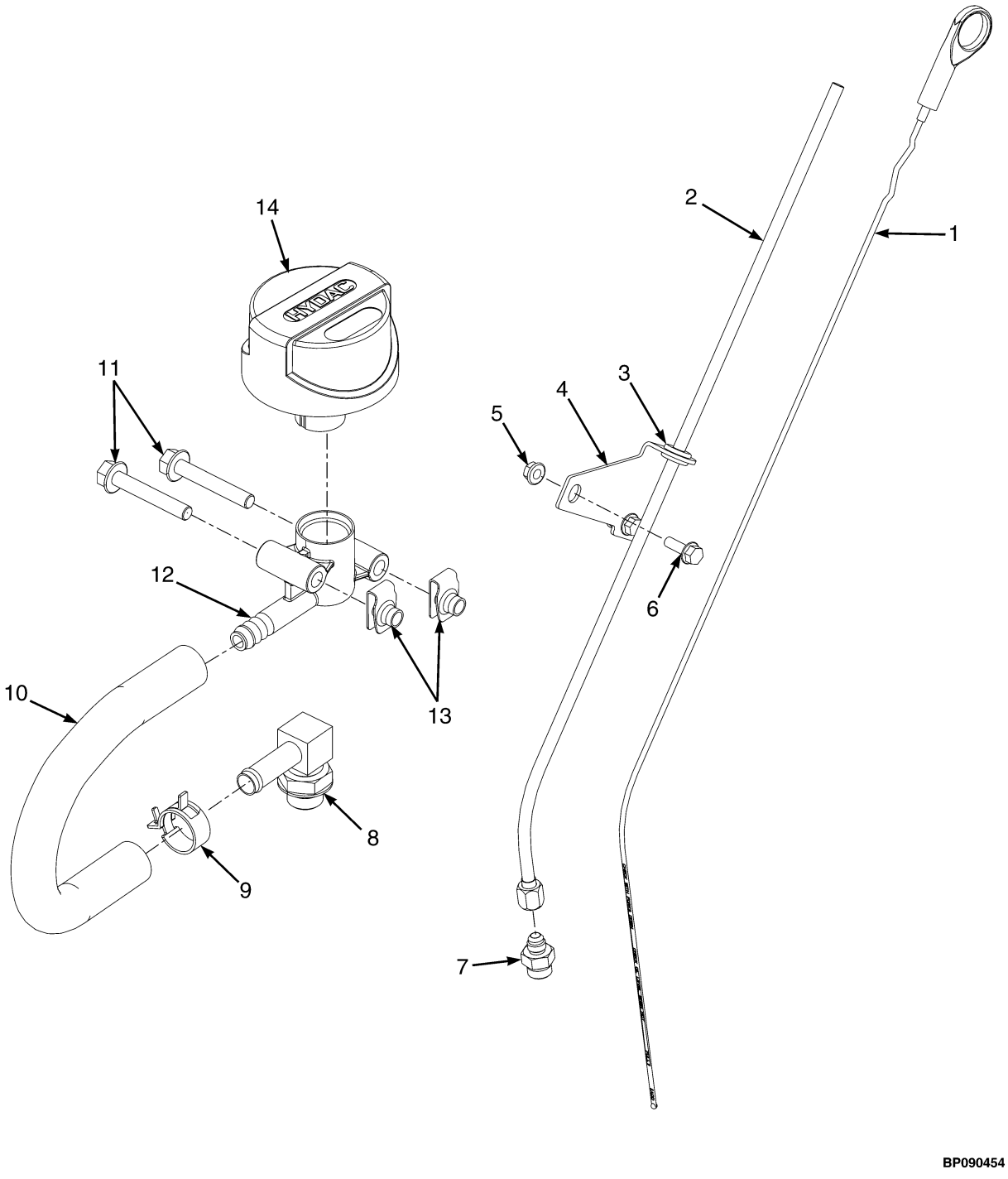

©2014 Yale Materials Handling Corporation

DIPSTICK AND BREATHER

ITEM	PART NO.	DESCRIPTION	QTY
1	582006778	Dipstick	1
2	582016832	Dipstick Tube	1
3	504238289	Grommet	1
4	582016837	Bracket	1
5	580027572	Nut	2
6	580063961	Capscrew	2
7	055746400	Fitting	1
7	052645300	O-Ring	1
8	500154904	Fitting	1
8	052645300	O-Ring	1
9	580039913	Hose Clamp	1
10	580082896	Hose	1
11	580030968	Capscrew	2
12	580056336	Adapter (Breather)	1
13	580026621	Nut	2
14	580056337	Breather	1
14	052645500	O-Ring	1
	a 580036666	Plug (With O-Ring for Drain)	1

FOOTNOTES:

a Not Illustrated

©2014 Yale Materials Handling Corporation

GEAR PUMP ASSEMBLY (FIGURE 11-4)

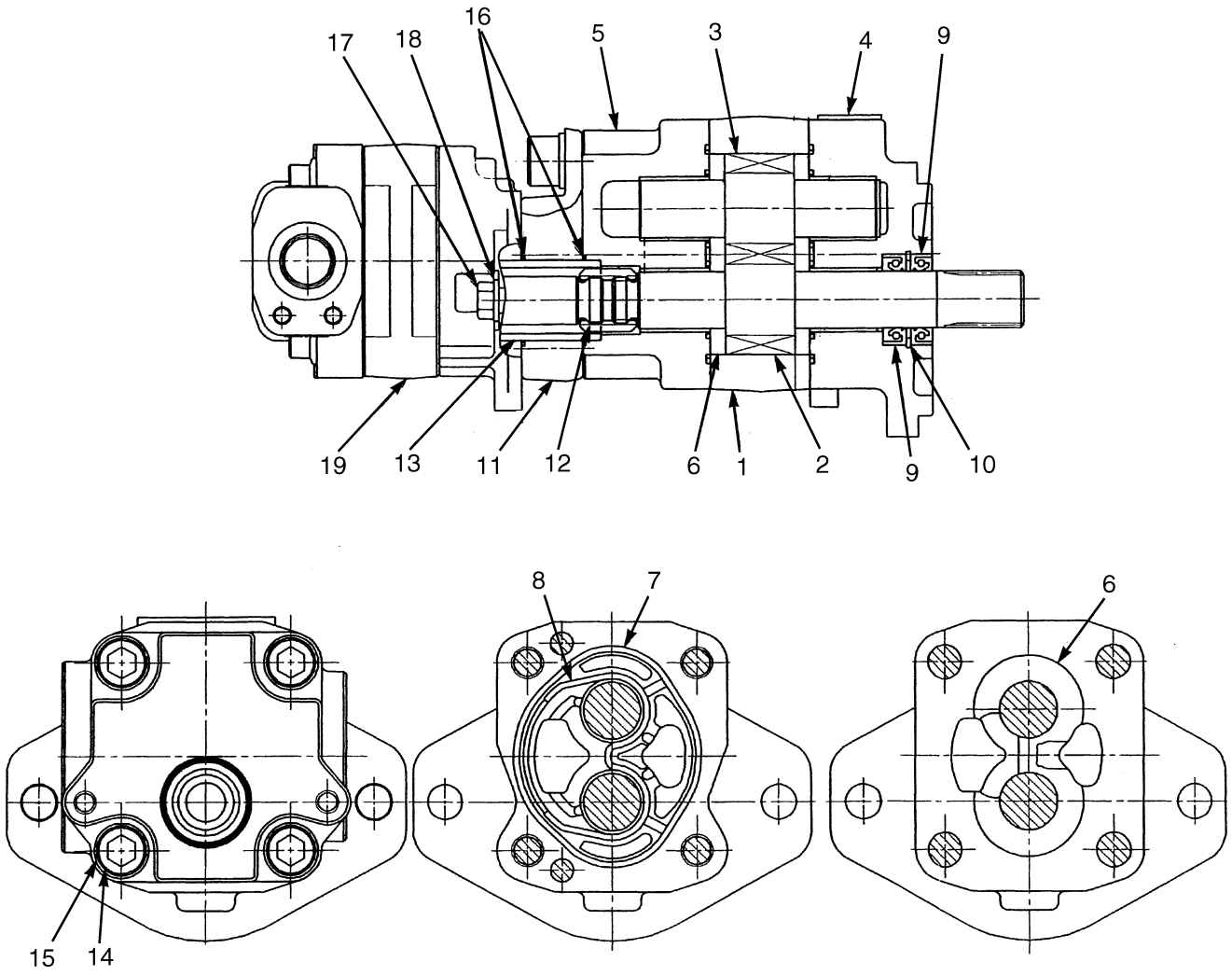

BP150211

©2014 Yale Materials Handling Corporation

GEAR PUMP ASSEMBLY

KEY:
A: Manual Hydraulics
B: Electronic Hydraulics

ITEM	PART NO.	DESCRIPTION	QTY A	QTY B
	580083318	Gear Pump	1	..
	580088024	Gear Pump	..	1
	a 580083401	Gear Pump	1	..
1	580083553	Housing	1	..
1	. . . . .	Housing	..	1
2	. . . . .	Drive Gear	1	1
3	. . . . .	Driven Gear	1	1
4	580081561	Flange	1	1
5	580083476	Cover Plate	1	1
6	580070617	Pressure Plate	2	2
7	580070618	Plate (Seal)	2	2
8	580070619	Back-Up Ring	2	2
9	580070625	Oil Seal	2	2
10	580070627	Snap Ring	1	1
11	580081563	Plate (Adapter)	1	1
12	580084860	Coupling	1	1
13	580081565	Dowel	1	1
14	580081567	Bolt	4	4
15	580070623	Washer	4	4
16	580081566	O-Ring	2	2
17	580081568	Bolt	2	2
18	580081569	Washer	2	2
19	580084861	Gear Pump (Steering) (☞P20293 [Page 11-12])	1	1
	580084862	Gear Set	1	1
	580081572	Kit-Seal	1	1

FOOTNOTES:

a → S/N D878V01650G

©2014 Yale Materials Handling Corporation

GEAR PUMP (FIGURE 11-5)
STEERING

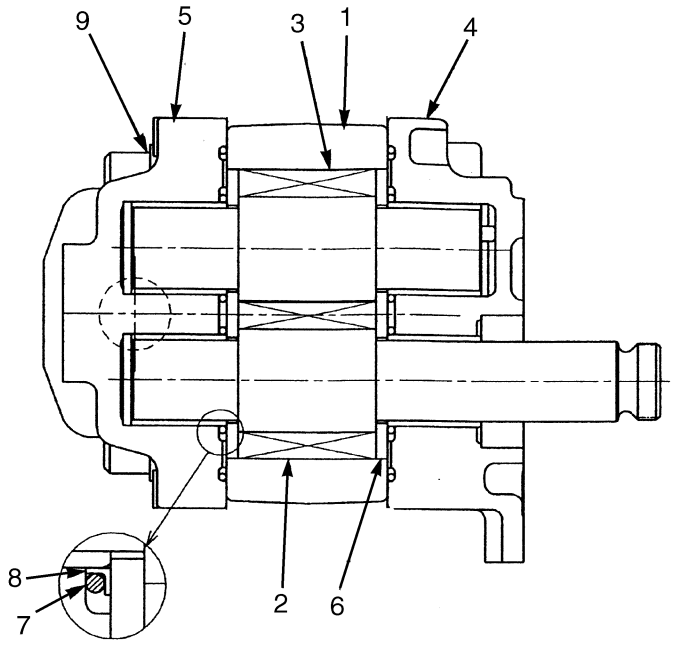

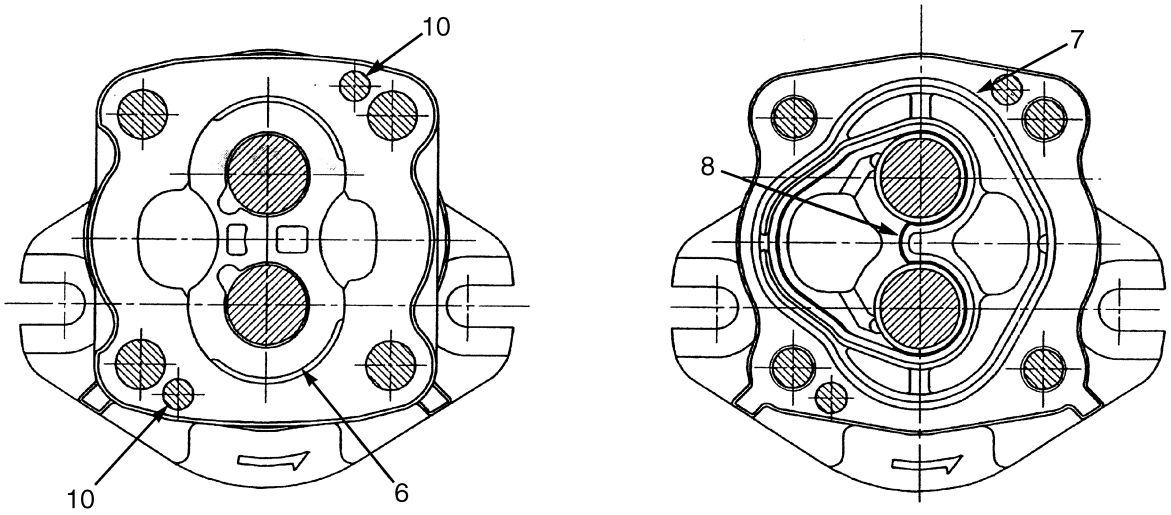

BP150210

©2014 Yale Materials Handling Corporation

GEAR PUMP
STEERING

ITEM	PART NO.	DESCRIPTION	QTY
	580084861	Gear Pump (Steering)	1
1	. . . . .	Gear Housing	1
2	. . . . .	Drive Gear	1
3	. . . . .	Driven Gear	1
4	580081576	Flange	1
5	580081577	Cover	1
6	580054029	Side Plate	2
7	. . . . .	Seal Plate	2
8	. . . . .	Back-Up Ring	2
9	580054027	Screw	4
10	580054028	Dowel	4
	580084864	Gear Set	1
	580081579	Kit-Repair	1

©2014 Yale Materials Handling Corporation

HAND LEVERS (FIGURE 11-6)
THREE FUNCTION — WITH DETENTED LEVERS

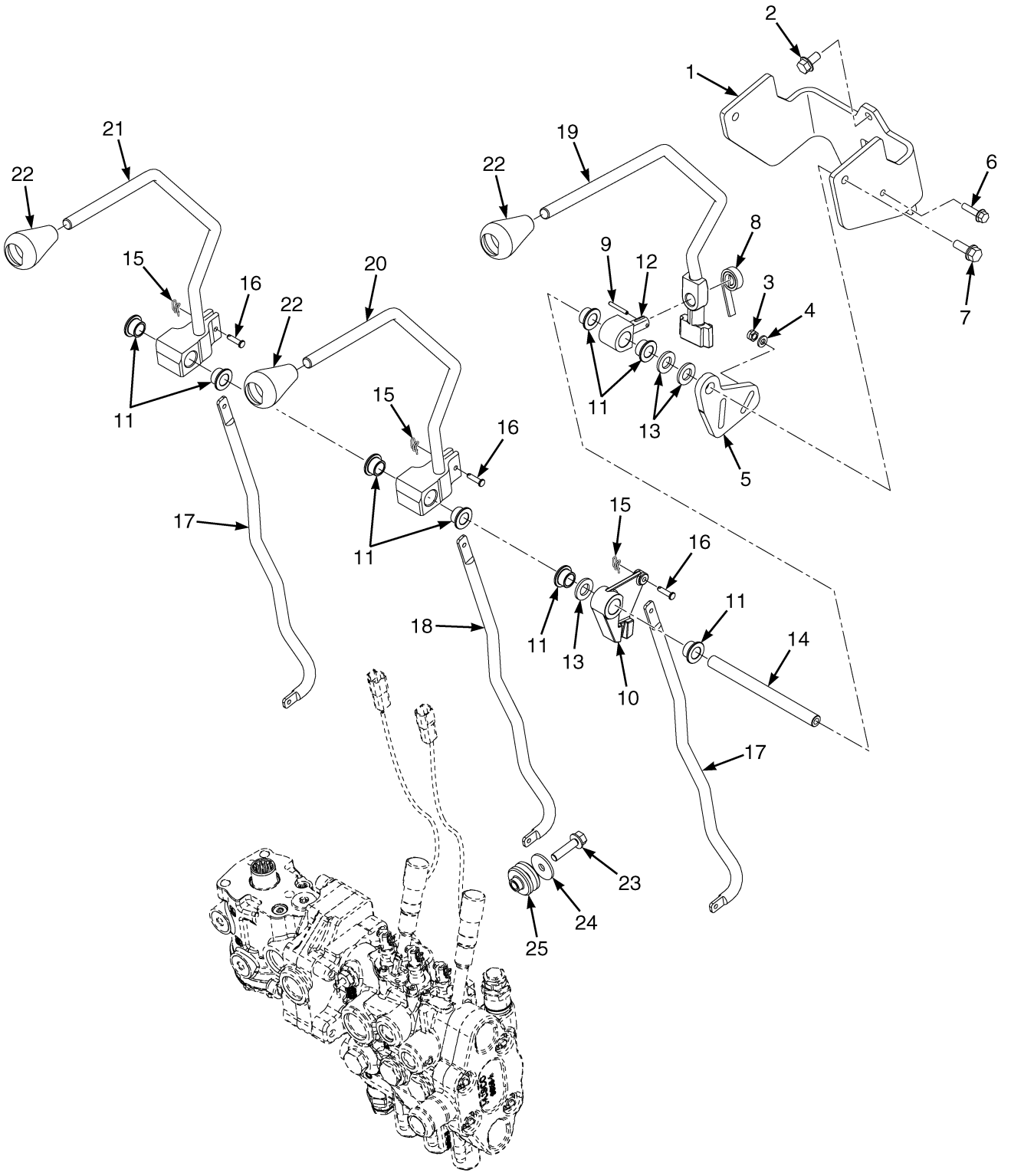

©2014 Yale Materials Handling Corporation

HAND LEVERS

THREE FUNCTION – WITH DETENTED LEVERS

ITEM	PART NO.	DESCRIPTION	QTY
1	580085001	Bracket	1
2	580047714	Capscrew	3
3	505970500	Nut	1
4	449021003	Washer	1
5	580085263	Plate	1
6	580049840	Capscrew	1
7	580056815	Capscrew	2
8	504230239	Spring	1
9	504227270	Roll Pin	1
10	580042392	Lever	1
11	580050978	Bushing	8
12	518797699	Pin (Selector)	1
13	449021010	Washer	3
14	580085002	Shaft (Pivot)	1
15	580056840	Locking Ring Cotter Pin	6
16	500583902	Pin	6
17	580086069	Link	2
18	580095133	Link	1
19	580084416	Lever (Auxiliary One and Two) (Alternate Part)	1
20	580084412	Lever (Tilt)	1
21	580084411	Lever	1
22	~~580056844~~		
	582016189	Knob	3
23	580058269	Capscrew	3
24	580056666	Washer	3
25	580044129	Isolator	3
	. . . . .	Hydraulic Control Valve (☞P20298 [Page 11-24])	1

©2014 Yale Materials Handling Corporation

HAND LEVERS (FIGURE 11-7)
THREE FUNCTION — WITHOUT DETENTED LEVERS

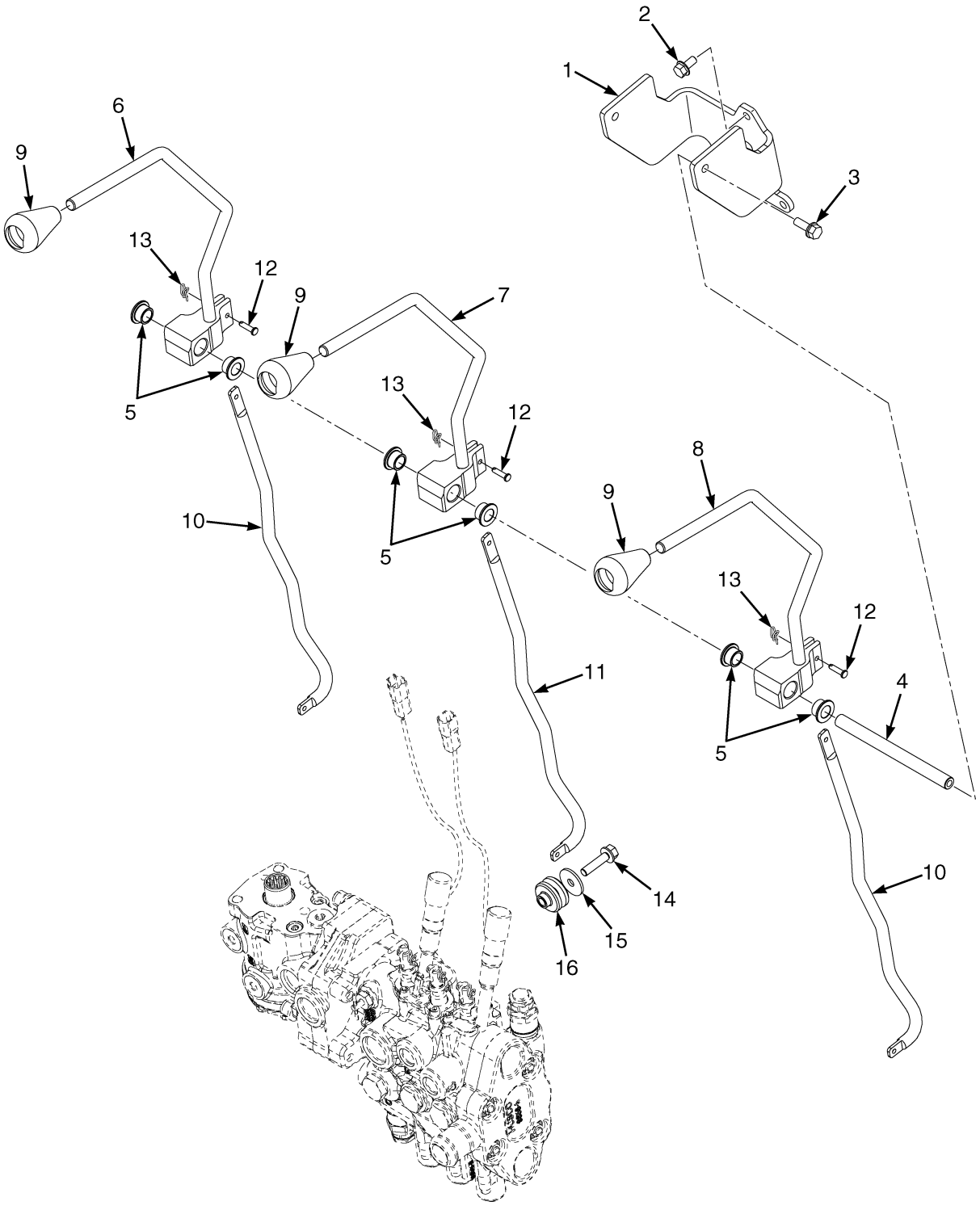

©2014 Yale Materials Handling Corporation

HAND LEVERS

THREE FUNCTION – WITHOUT DETENTED LEVERS

ITEM	PART NO.	DESCRIPTION	QTY
1	580084408	Bracket (Mounting)	1
2	580047714	Capscrew	3
3	580056815	Capscrew	2
4	580085082	Shaft (Pivot)	1
5	580050978	Bushing	6
6	580084411	Lever	1
7	580084412	Lever (Tilt)	1
8	580084413	Lever (Auxiliary One)	1
9	~~580056844~~		
	582016189	Knob	3
10	580095132	Link	2
11	580095133	Link	1
12	500583902	Pin	6
13	580056840	Locking Ring Cotter Pin	6
14	580058269	Capscrew	3
15	580056666	Washer	3
16	580044129	Isolator	3
	. . . . .	Hydraulic Control Valve (☞P20298 [Page 11-24])	1

©2014 Yale Materials Handling Corporation

HAND LEVERS (FIGURE 11-8)
FOUR FUNCTION — WITH DETENTED LEVERS

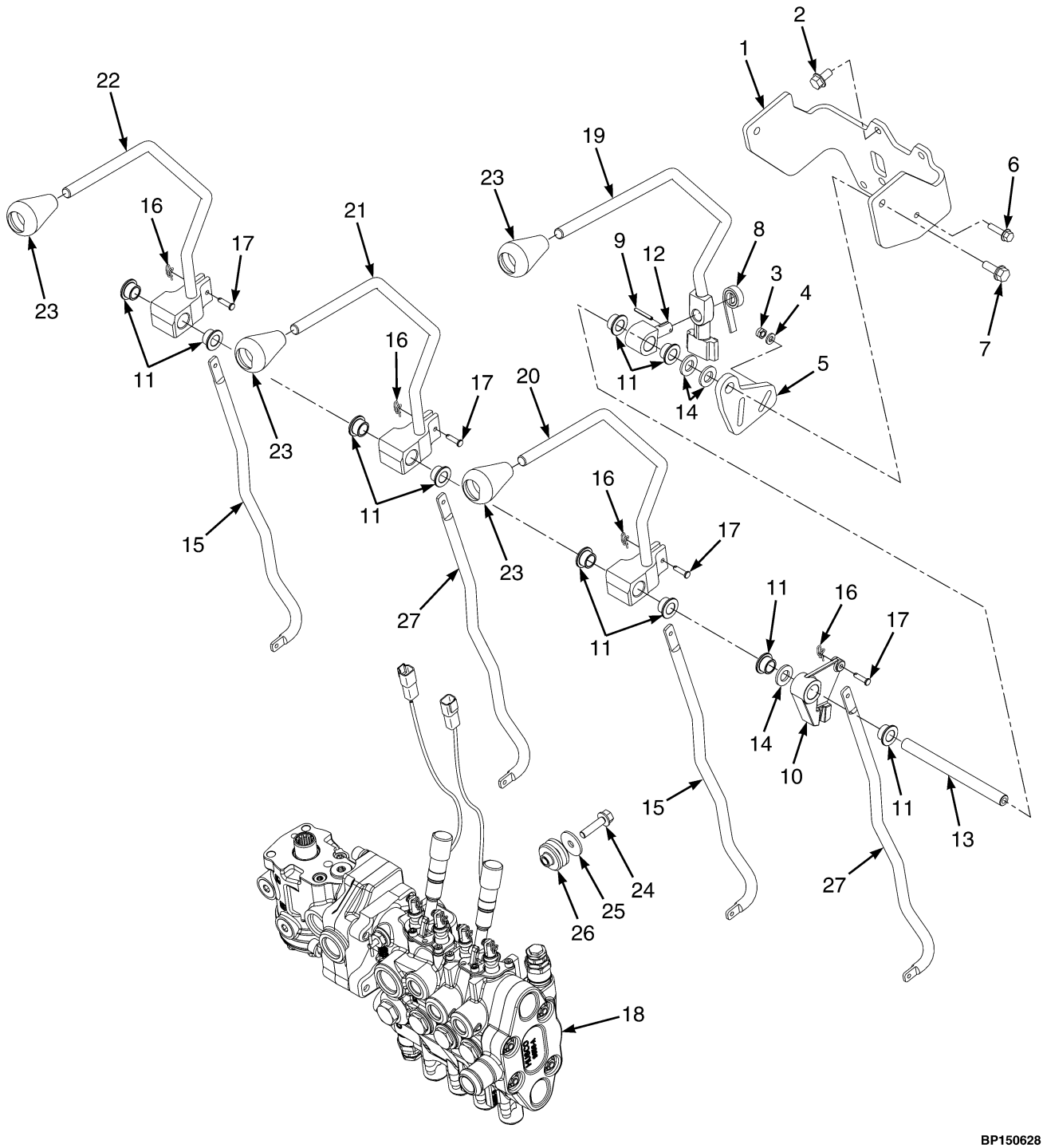

©2014 Yale Materials Handling Corporation

HAND LEVERS

FOUR FUNCTION – WITH DETENTED LEVERS

ITEM	PART NO.	DESCRIPTION	QTY
1	580084410	Bracket	1
2	580047714	Capscrew	4
3	505970500	Nut	1
4	449021003	Washer	1
5	580085263	Plate	1
6	580049840	Capscrew	1
7	580056815	Capscrew	2
8	504230239	Spring	1
9	504227270	Roll Pin	1
10	580042392	Lever	1
11	580050978	Bushing	10
12	518797699	Pin (Selector)	1
13	580085003	Shaft	1
14	449021010	Washer	3
15	580086069	Link	4
15	580095132	Link	2
16	580056840	Locking Ring Cotter Pin	8
17	500583902	Pin	8
18	580085074	Hydraulic Control Valve (☞P20297 [Page 11-20])	1
19	580084415	Lever (Auxiliary Two and Three)	1
20	580084413	Lever (Auxiliary One)	1
21	580084412	Lever (Tilt)	1
22	580084411	Lever	1
23	~~580056844~~		
	582016189	Knob	4
23	580052203	Lens (Blank)	1
24	580058269	Capscrew	3
25	580056666	Washer	3
26	580044129	Isolator	3
27	580095133	Link	2

©2014 Yale Materials Handling Corporation

HAND LEVERS (FIGURE 11-9)
FOUR FUNCTION — WITHOUT DETENTED LEVERS

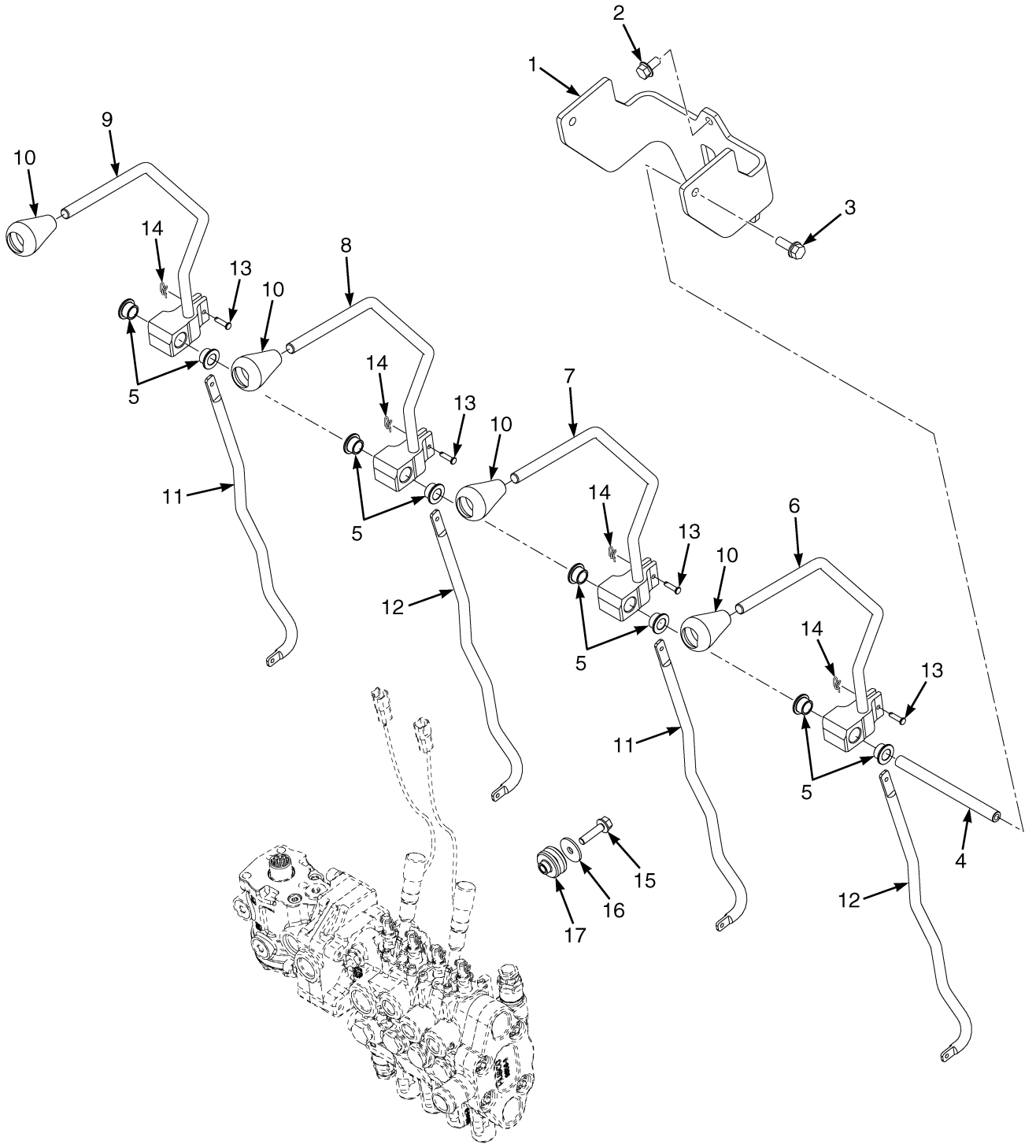

BP150200

©2014 Yale Materials Handling Corporation

HAND LEVERS

FOUR FUNCTION – WITHOUT DETENTED LEVERS

ITEM	PART NO.	DESCRIPTION	QTY
1	580084409	Bracket	1
2	580047714	Capscrew	3
3	580056815	Capscrew	2
4	580085083	Shaft (Pivot)	1
5	580050978	Bushing	8
6	580084414	Lever (Auxiliary Two)	1
7	580084413	Lever (Auxiliary One)	1
8	580084412	Lever (Tilt)	1
9	580084411	Lever	1
10	~~580056844~~		
	582016189	Knob	4
10	580052203	Lens (Blank)	1
11	580086069	Link	4
12	500583902	Pin	8
13	580056840	Locking Ring Cotter Pin	8
14	580058269	Capscrew	3
15	580056666	Washer	3
16	580044129	Isolator	3
17	580085074	Hydraulic Control Valve (☞P20299 [Page 11-26])	1

©2014 Yale Materials Handling Corporation

CONTROL VALVE LOCKOUT GROUP (FIGURE 11-10)
MANUAL CONTROL VALVE

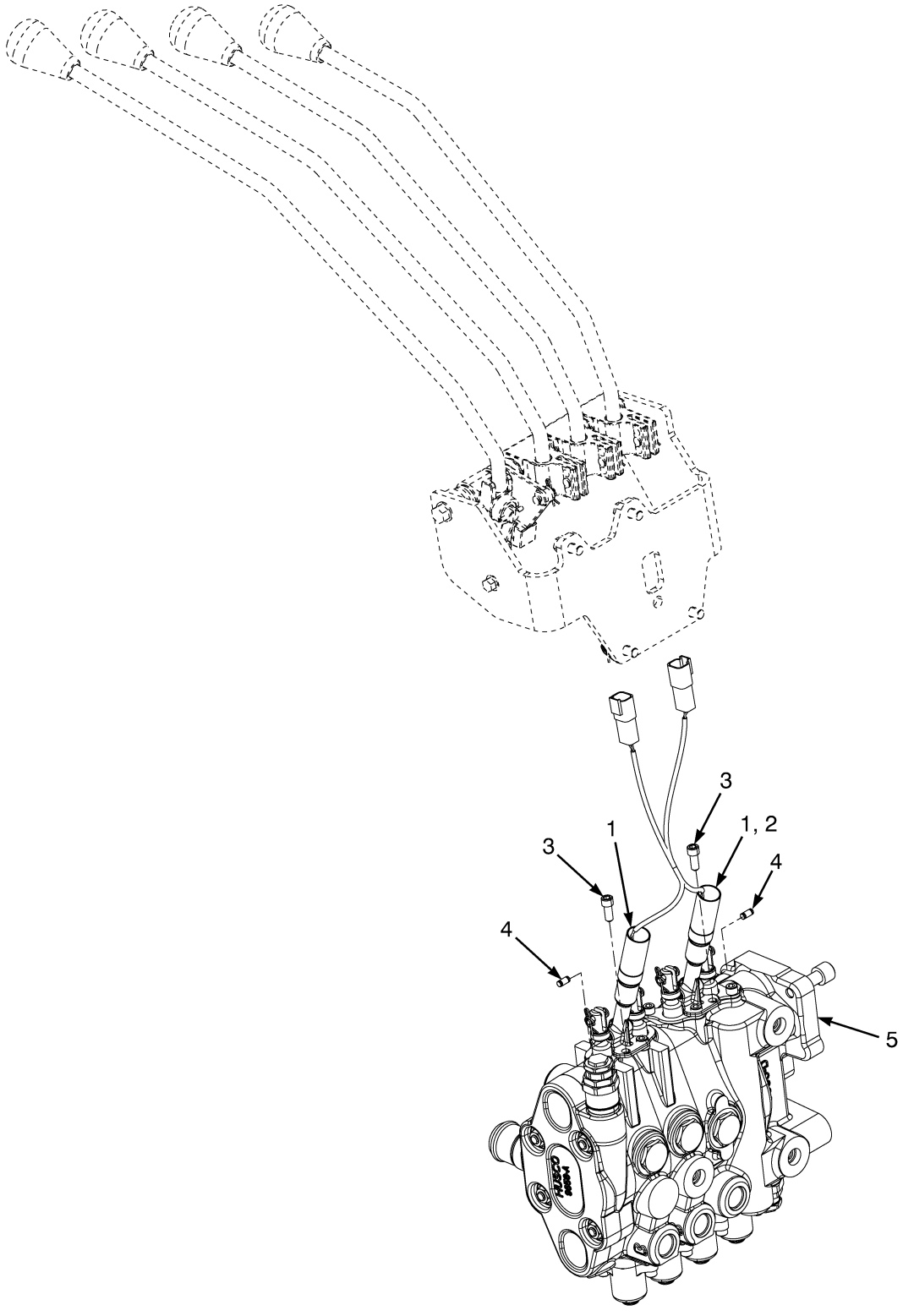

©2014 Yale Materials Handling Corporation

CONTROL VALVE LOCKOUT GROUP
MANUAL CONTROL VALVE

KEY:
A: 3 Function
B: 4 Function

ITEM	PART NO.	DESCRIPTION	QTY A	QTY B
1	580088718	Solenoid Assembly (Double Function)	1	2
2	580088729	Solenoid Assembly (Single Function)	1	..
3	580052297	Capscrew	4	4
4	580085134	Needle Roller	3	4
5	. . . . .	Manual Control Valve (☞P20298 [Page 11-24], ☞P20299 [Page 11-26])	1	1

©2014 Yale Materials Handling Corporation

CONTROL VALVE AND STEERING UNIT ASSEMBLY (FIGURE 11-11)

MANUAL CONTROL — THREE FUNCTION

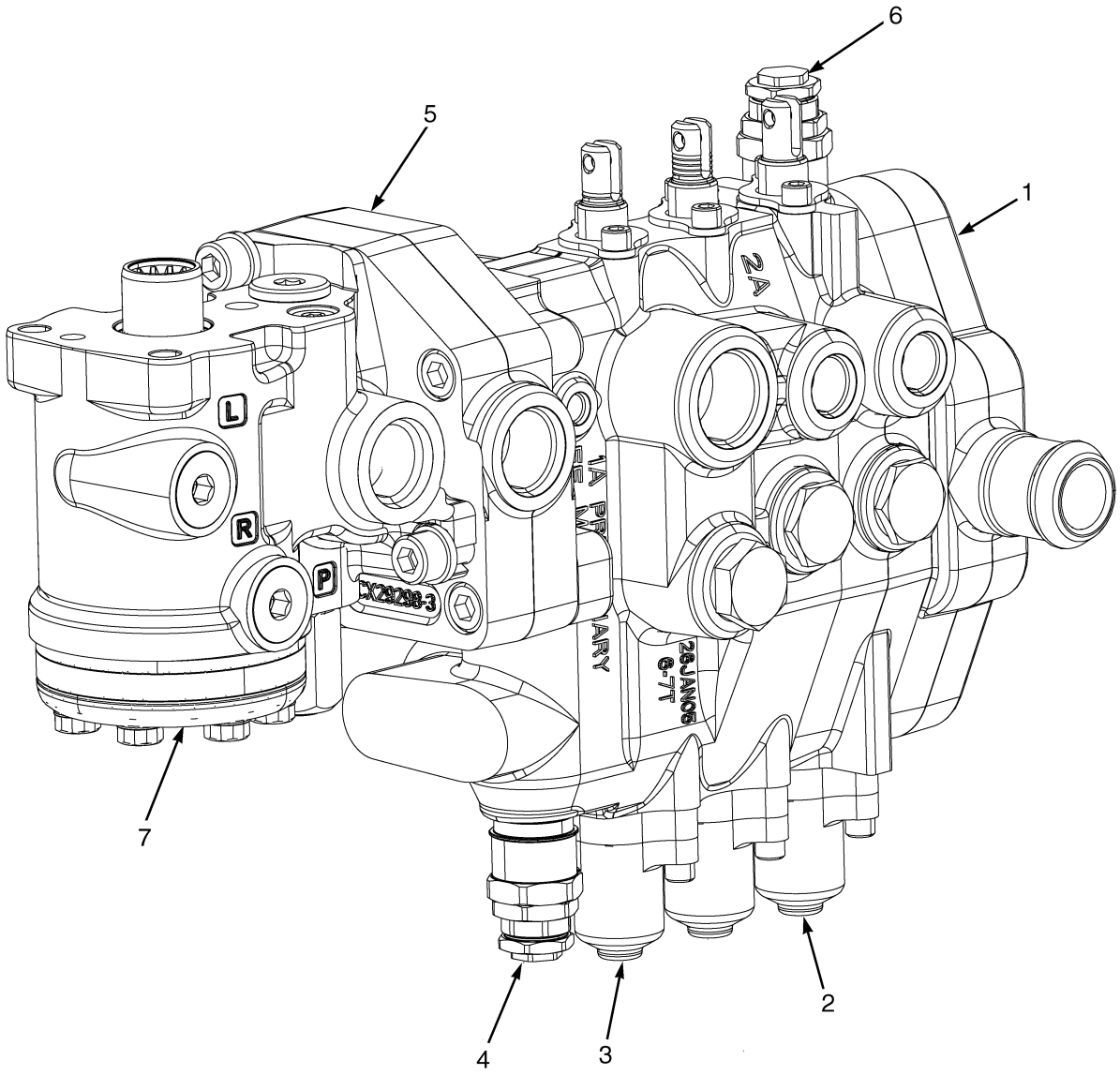

BP140088

©2014 Yale Materials Handling Corporation

CONTROL VALVE AND STEERING UNIT ASSEMBLY

MANUAL CONTROL – THREE FUNCTION

ITEM	PART NO.	DESCRIPTION	QTY
	580085072	Hydraulic Control Valve	1
	580085075	Hydraulic Control Valve	1
	580085142	Kit-Seal (Three Function)	1
1	580081670	Valve Section (Outlet) (☞P20303 [Page 11-34])	1
2	580085195	Valve Section (Lift And Tilt) (☞P20302 [Page 11-32])	1
3	580085194	Valve Section (Aux. 1) (Lift and Tilt) (☞P20301 [Page 11-30])	1
4	580054063	Relief Valve (3100 PSI) (Main Relief)	1
5	580081664	Valve Section (Inlet) (☞P20300 [Page 11-28])	1
6	580054046	Relief Valve (Secondary) (2250 PSI)	1
7	580087257	Steering Control Unit (☞P20285 [Page 9-20])	1
	580081663	Kit-Capscrew	1

©2014 Yale Materials Handling Corporation

CONTROL VALVE AND STEERING UNIT ASSEMBLY (FIGURE 11-12)

MANUAL CONTROL — FOUR FUNCTION

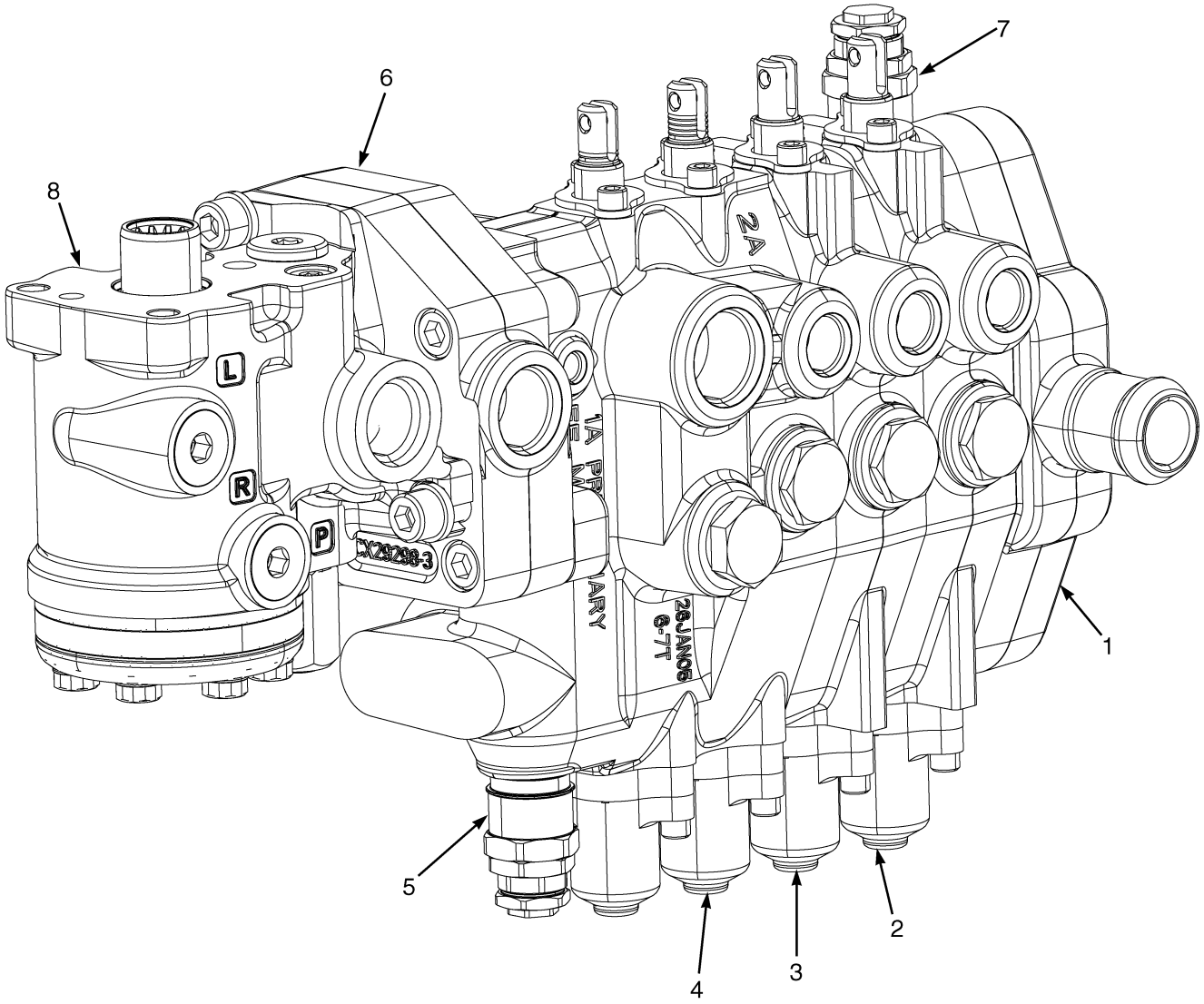

BP140094

©2014 Yale Materials Handling Corporation

CONTROL VALVE AND STEERING UNIT ASSEMBLY

MANUAL CONTROL – FOUR FUNCTION

ITEM	PART NO.	DESCRIPTION	QTY
	580085074	Hydraulic Control Valve	1
	580085076	Hydraulic Control Valve	1
	580084965	Kit-Seal (Four Function)	1
1	580081670	Valve Section (Outlet) (☞P20303 [Page 11-34])	1
2	580085193	Valve Section (☞P20302 [Page 11-32])	1
3	580085195	Valve Section (Lift And Tilt) (☞P20302 [Page 11-32])	1
4	580085194	Valve Section (Aux. 1) (Lift and Tilt) (☞P20301 [Page 11-30])	1
5	580054063	Relief Valve (3100 PSI) (Main Relief)	1
6	580081664	Valve Section (Inlet) (☞P20300 [Page 11-28])	1
7	580054046	Relief Valve (Secondary) (2250 PSI)	1
8	580087257	Steering Control Unit (☞P20285 [Page 9-20])	1
	580081663	Kit-Capscrew	1

©2014 Yale Materials Handling Corporation

MID INLET SECTION (FIGURE 11-13)
MANUAL AND ELECTRONIC CONTROL VALVE — THREE AND FOUR FUNCTION

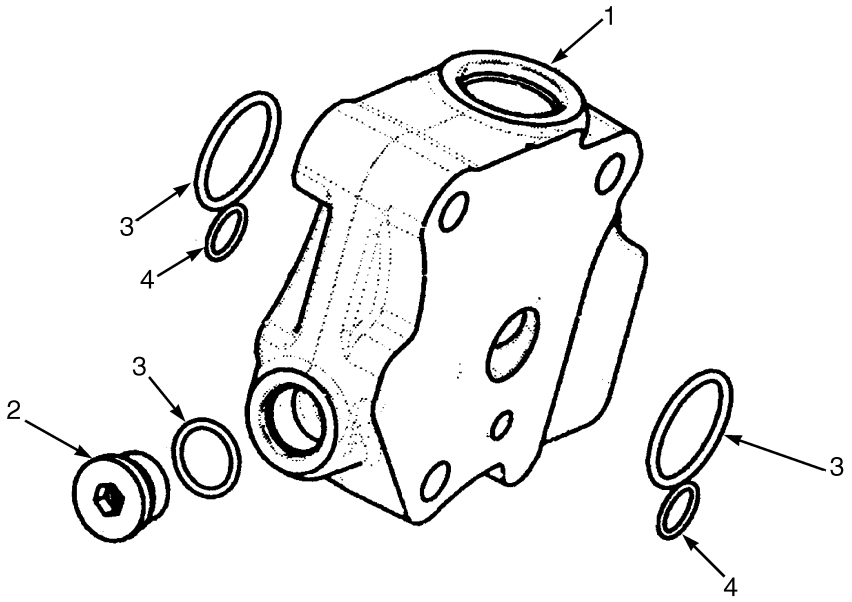

BP140091

ITEM	PART NO.	DESCRIPTION	QTY
1	580081664	Valve Section (Inlet)	1
2	580052731	Plug	1
3	580054686	Kit-Seal (Inlet/Tilt Section)	1
4	580054147	Kit-Seal (Steering Control Unit Interface)	1
	580054688	Kit-Seal (Three Function)	1

©2014 Yale Materials Handling Corporation

NOTES

©2014 Yale Materials Handling Corporation

VALVE ASSEMBLY, LIFT AND TILT (FIGURE 11-14)
MANUAL CONTROL VALVE — THREE AND FOUR FUNCTION

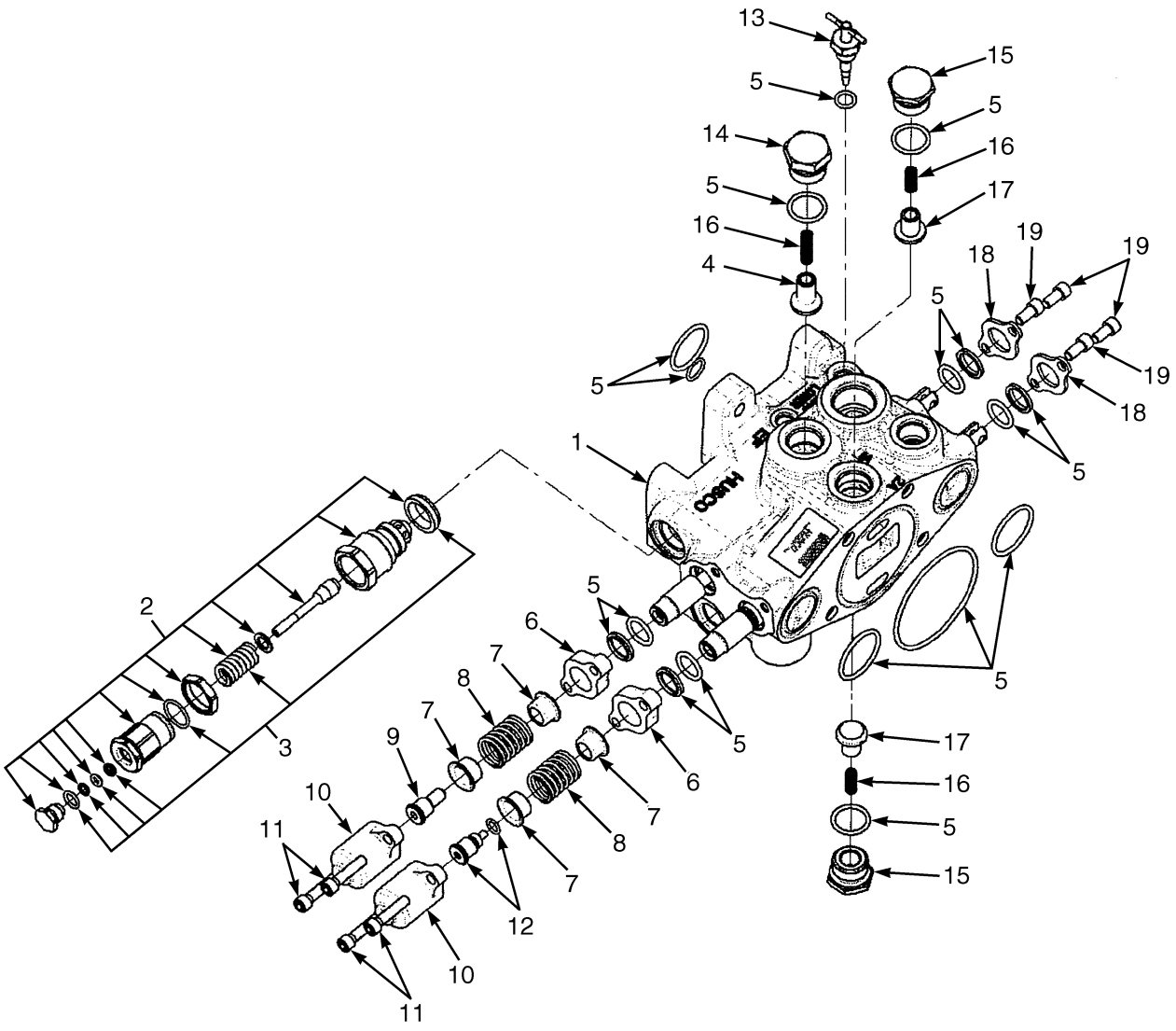

BP140118

©2014 Yale Materials Handling Corporation

VALVE ASSEMBLY, LIFT AND TILT
MANUAL CONTROL VALVE – THREE AND FOUR FUNCTION

KEY:
A: Three Function
B: Four Function

ITEM	PART NO.	DESCRIPTION	QTY A	QTY B
1	580085194	Valve Section (Aux. 1)	1	1
2	580054046	Relief Valve (Secondary) (2250 PSI)	1	1
2	580054063	Relief Valve (3100 PSI) (Main Relief)	1	1
2	580054995	Plug	1	1
2	580054998	Screw	1	1
2	580054999	Nut	1	1
2	580054996	Washer	1	1
2	580054997	Poppet	1	1
3	580054672	Kit-Seal and Spring	1	1
4	580054465	Poppet	1	1
5	580085146	Kit-Seal (Lift and Tilt)	1	1
6	. . . . .	Seal Plate	2	2
7	504230236	Spring Seat	4	4
8	504230204	Spring	2	2
9	580056022	Spool End	1	1
10	580054869	Cap	2	2
11	~~580072235~~			
	580054044	Capscrew	4	4
12	580056877	Spool End	1	1
13	580085184	Kit-Valve (Manual Lower Assembly)	1	1
14	580054462	Plug	1	1
15	580054052	Plug Assembly	1	1
16	580006977	Spring	3	3
17	580006976	Poppet	2	2
18	580049294	Plate	2	2
19	502635907	Screw	4	4
	580084965	Kit-Seal (Four Function)	..	1
	580085142	Kit-Seal (Three Function)	1	..

©2014 Yale Materials Handling Corporation

VALVE ASSEMBLY, AUXILIARY ONE AND TWO (FIGURE 11-15)

MANUAL CONTROL VALVE — THREE AND FOUR FUNCTION

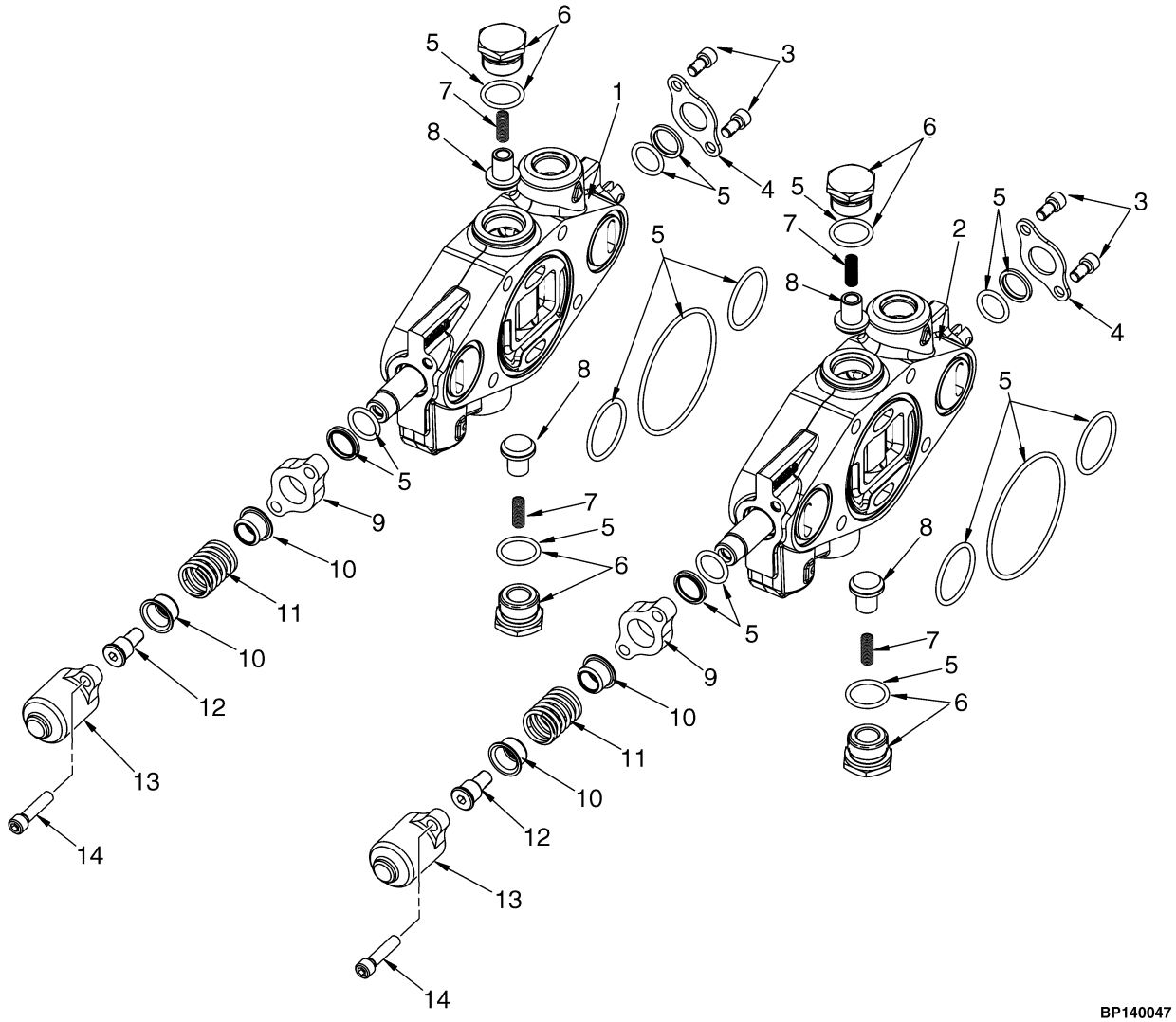

©2014 Yale Materials Handling Corporation

VALVE ASSEMBLY, AUXILIARY ONE AND TWO
MANUAL CONTROL VALVE – THREE AND FOUR FUNCTION

KEY:
A: Three Function
B: Four Function

ITEM	PART NO.	DESCRIPTION	QTY A	QTY B
1	580085195	Valve Section (Lift And Tilt)	1	1
2	580085193	Valve Section	..	1
3	502635907	Screw	2	2
4	580049294	Plate	1	1
5	580054689	Kit-Seal (Auxiliary Functions)	1	1
6	580054052	Plug Assembly	2	2
6	580013394	Plug	2	2
7	580006977	Spring	2	2
8	580006976	Poppet	2	2
9	. . . . .	Seal Plate	1	1
10	504230236	Spring Seat	2	2
11	504230204	Spring	1	1
12	580056022	Spool End	1	1
13	580054869	Cap	1	1
14	~~580072235~~			
	580054044	Capscrew	2	2
	580054688	Kit-Seal (Three Function)	1	1

©2014 Yale Materials Handling Corporation

OUTLET SECTION (FIGURE 11-16)
MANUAL CONTROL VALVE — THREE AND FOUR FUNCTION

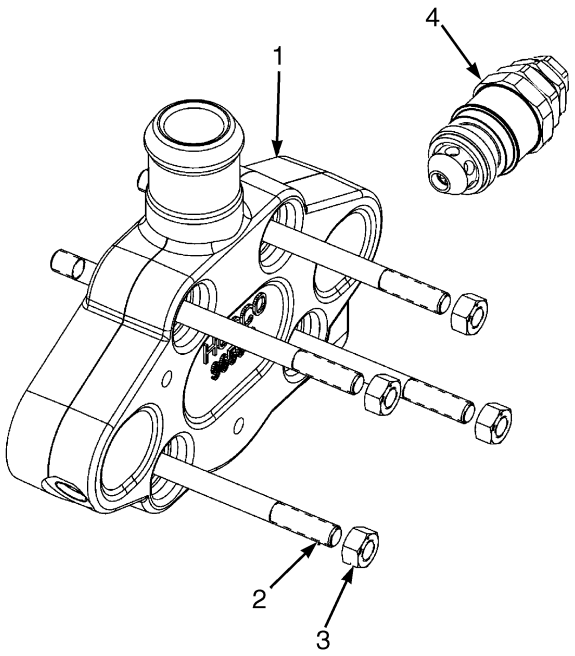

BP140090

ITEM	PART NO.	DESCRIPTION	QTY
1	580081670	Valve Section (Outlet)	1
2	580055166	Kit-Tie Rod (Three Function)	1
2	580054696	Kit-Tie Rod (Four Function)	1
3	014936600	Nut	4
4	580054046	Relief Valve (Secondary) (2250 PSI)	1
4	580054684	Kit-Seal and Spring	1

©2014 Yale Materials Handling Corporation

NOTES

©2014 Yale Materials Handling Corporation

CONTROL VALVE AND STEERING UNIT ASSEMBLY (FIGURE 11-17)

ELECTRONIC CONTROL — THREE FUNCTION (→ 6/2009)

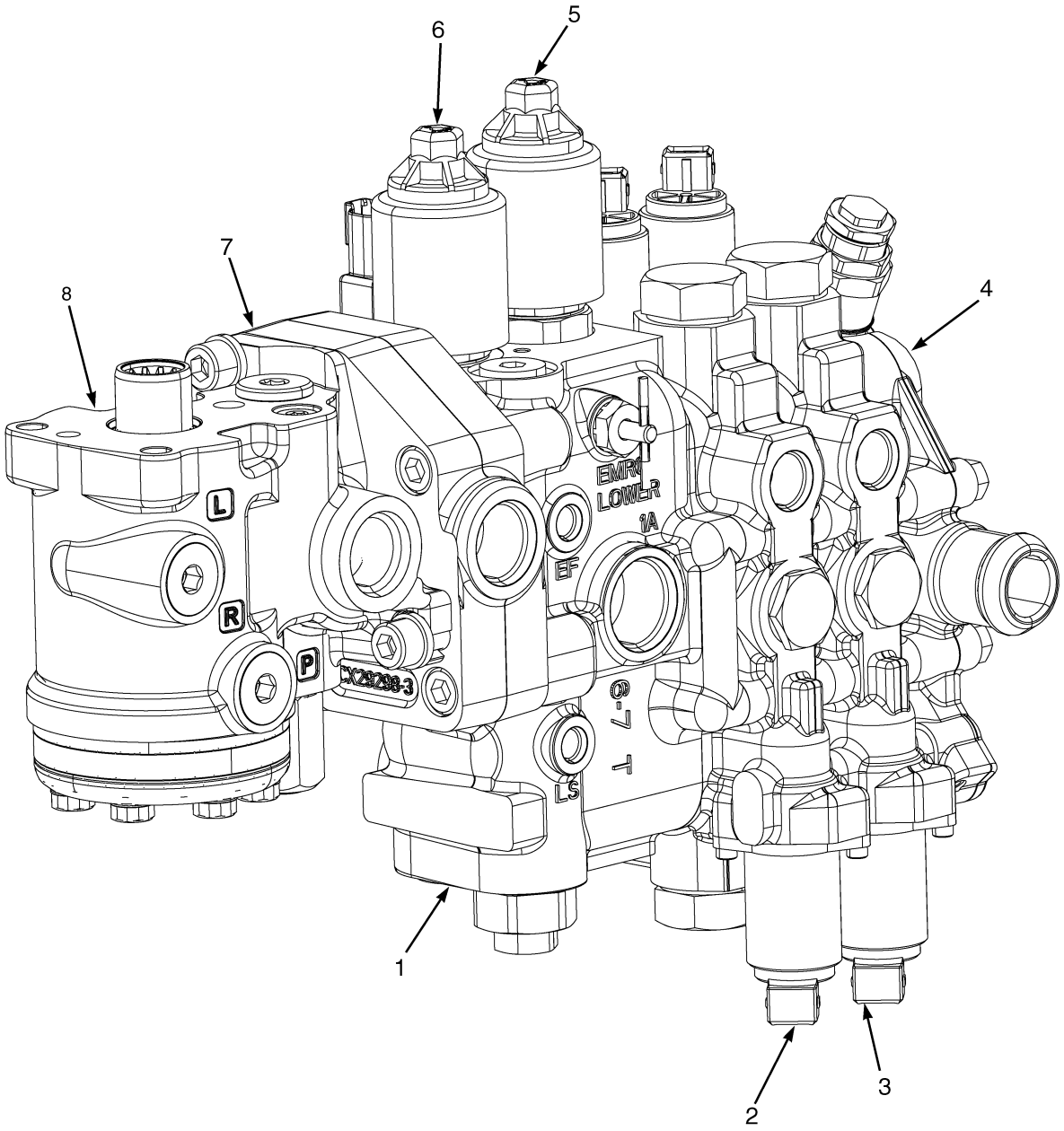

©2014 Yale Materials Handling Corporation

CONTROL VALVE AND STEERING UNIT ASSEMBLY

ELECTRONIC CONTROL – THREE FUNCTION (→ 6/2009)

ITEM	PART NO.	DESCRIPTION	QTY
	580077912	Hydraulic Control Valve (Assembly With Steering Control Unit)	1
	580074726	Hydraulic Control Valve Assembly	1
1	580081666	Body (☞P20306 [Page 11-44])	1
2	580081667	Valve Section (☞P20307 [Page 11-46])	1
3	580072365	Valve Section (Auxiliary One) (☞P20309 [Page 11-50])	1
4	580054043	Valve Section (Outlet) (☞P20311 [Page 11-60])	1
5	580072368	Kit-Valve (Lower) (☞P20308 [Page 11-48])	1
6	580072367	Kit-Valve (Lift) (☞P20308 [Page 11-48])	1
7	580081664	Valve Section (Inlet) (☞P20300 [Page 11-28])	1
8	580087257	Steering Control Unit (☞P20285 [Page 9-20])	1
	a 580081668	Kit-Valve (Anti Stall)	1
	a 580081663	Kit-Capscrew	1
	a 580054054	Kit-Tie Rod	1
	580054145	Kit-Seal (Master 3 Function)	1

FOOTNOTES:

a Not Illustrated

©2014 Yale Materials Handling Corporation

CONTROL VALVE AND STEERING UNIT ASSEMBLY (FIGURE 11-18)
ELECTRO-HYDRAULIC — THREE FUNCTION (6/2009 →)

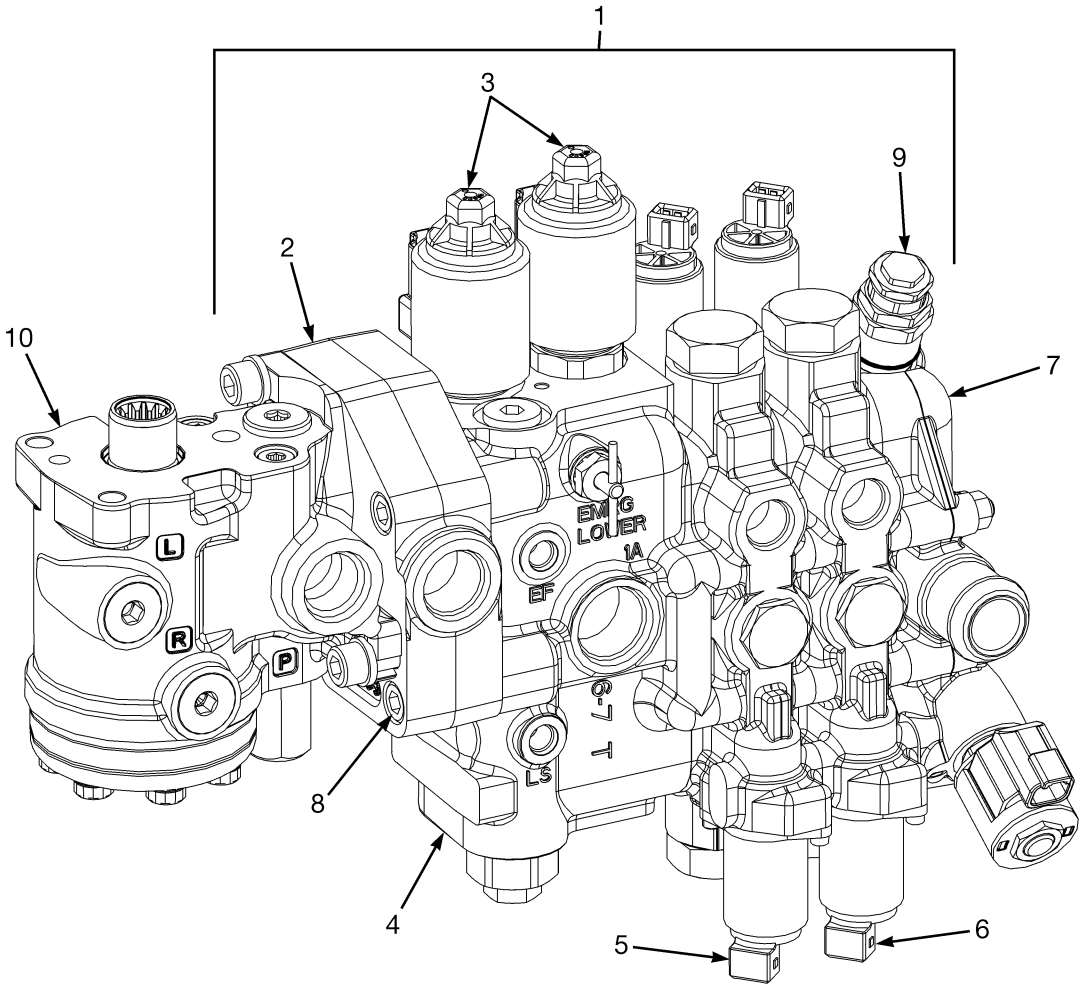

BP140166

©2014 Yale Materials Handling Corporation

CONTROL VALVE AND STEERING UNIT ASSEMBLY

ELECTRO-HYDRAULIC – THREE FUNCTION (6/2009 →)

ITEM	PART NO.	DESCRIPTION	QTY
	580087718	Hydraulic Control Valve (Assembly With Steering Control Unit)	1
1	580087725	Hydraulic Control Valve Assembly	1
2	580081664	Valve Section (Inlet) (☞P20300 [Page 11-28])	1
3	580081666	Body (EHPV Section Assembly) (☞P20308 [Page 11-48])	1
4	580097122	Valve Section (Tilt) (☞P20307 [Page 11-46])	1
5	580097124	Valve Section (Aux. 1) (☞P20309 [Page 11-50])	1
6	580097123	Valve Section (Outlet) (☞P20311 [Page 11-60])	1
7	580081663	Kit-Capscrew	1
7	580072338	Washer	5
7	580081710	Capscrew	3
8	580097007	Relief Valve (Secondary)	1
8	580054684	Kit-Seal and Spring	1
9	580087258	Steering Control Unit (☞P20285 [Page 9-20])	1
9	580054569	Kit-Seal (Steering Control Unit)	1
	580054054	Kit-Tie Rod	1
	580054145	Kit-Seal (Master 3 Function)	1

©2014 Yale Materials Handling Corporation

CONTROL VALVE AND STEERING UNIT ASSEMBLY (FIGURE 11-19)

ELECTRONIC CONTROL — FOUR FUNCTION (→ 6/2009)

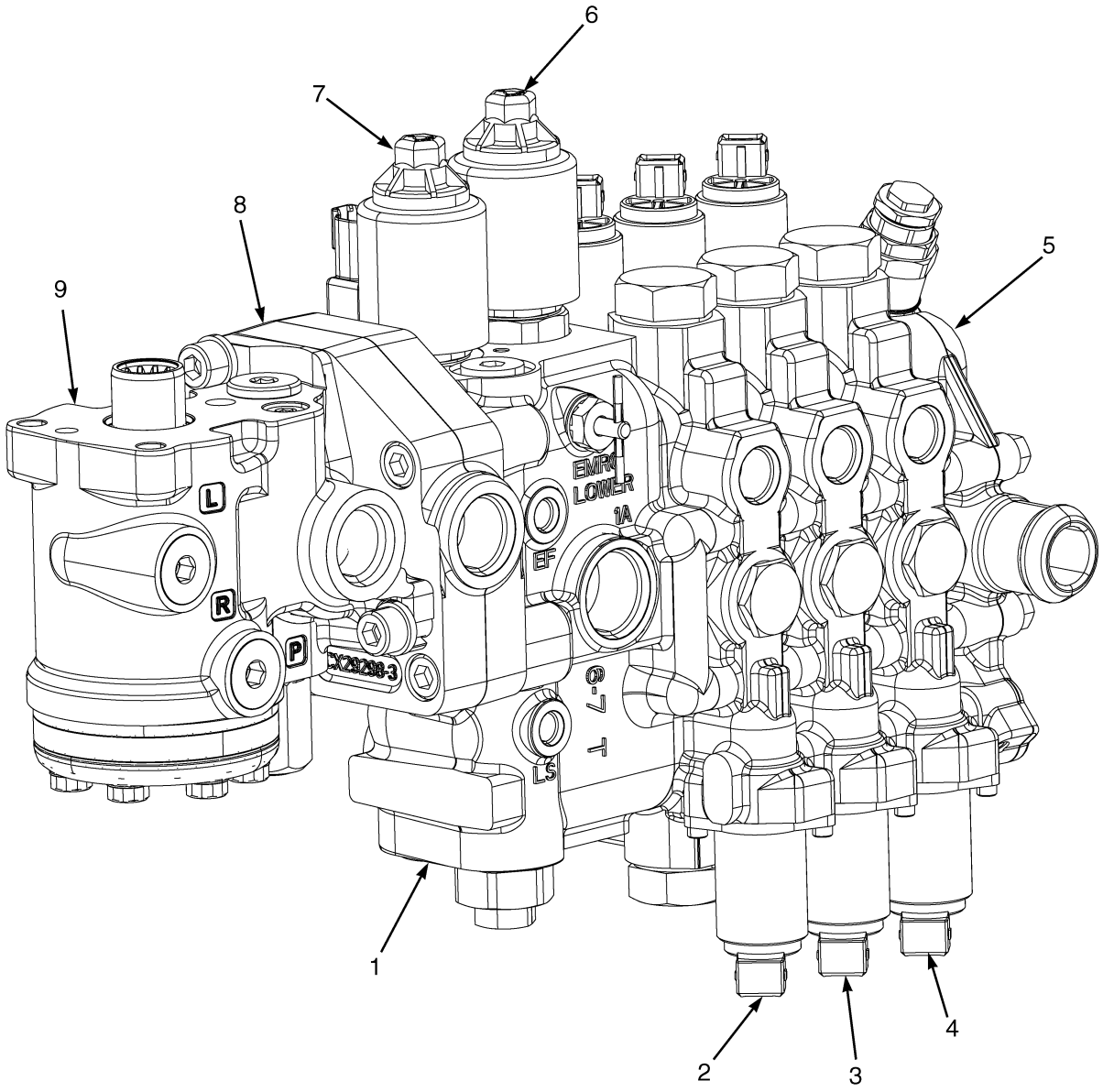

BP140093

©2014 Yale Materials Handling Corporation

CONTROL VALVE AND STEERING UNIT ASSEMBLY

ELECTRONIC CONTROL – FOUR FUNCTION (→ 6/2009)

ITEM	PART NO.	DESCRIPTION	QTY
	580077913	Hydraulic Control Valve (Assembly With Steering Control Unit)	1
	580074728	Hydraulic Control Valve Assembly	1
1	580081666	Body (☞P20306 [Page 11-44])	1
2	580081667	Valve Section (☞P20307 [Page 11-46])	1
3	580072365	Valve Section (Auxiliary One) (☞P20309 [Page 11-50])	1
4	580072757	Valve Section (Auxiliary Two and Three) (☞P20310 [Page 11-54])	1
5	580054043	Valve Section (Outlet) (☞P20311 [Page 11-60])	1
6	580072368	Kit-Valve (Lower) (☞P20308 [Page 11-48])	1
7	580072367	Kit-Valve (Lift) (☞P20308 [Page 11-48])	1
8	580081664	Valve Section (Inlet) (☞P20300 [Page 11-28])	1
9	580087257	Steering Control Unit (☞P20285 [Page 9-20])	1
	580081668	Kit-Valve (Anti Stall)	1
	580054692	Kit-Tie Rod	1
	580081663	Kit-Capscrew	1
	580054144	Kit-Seal (Master 4 Function)	1

©2014 Yale Materials Handling Corporation

CONTROL VALVE AND STEERING UNIT ASSEMBLY (FIGURE 11-20)

ELECTRO-HYDRAULIC — FOUR FUNCTION (6/2009 →)

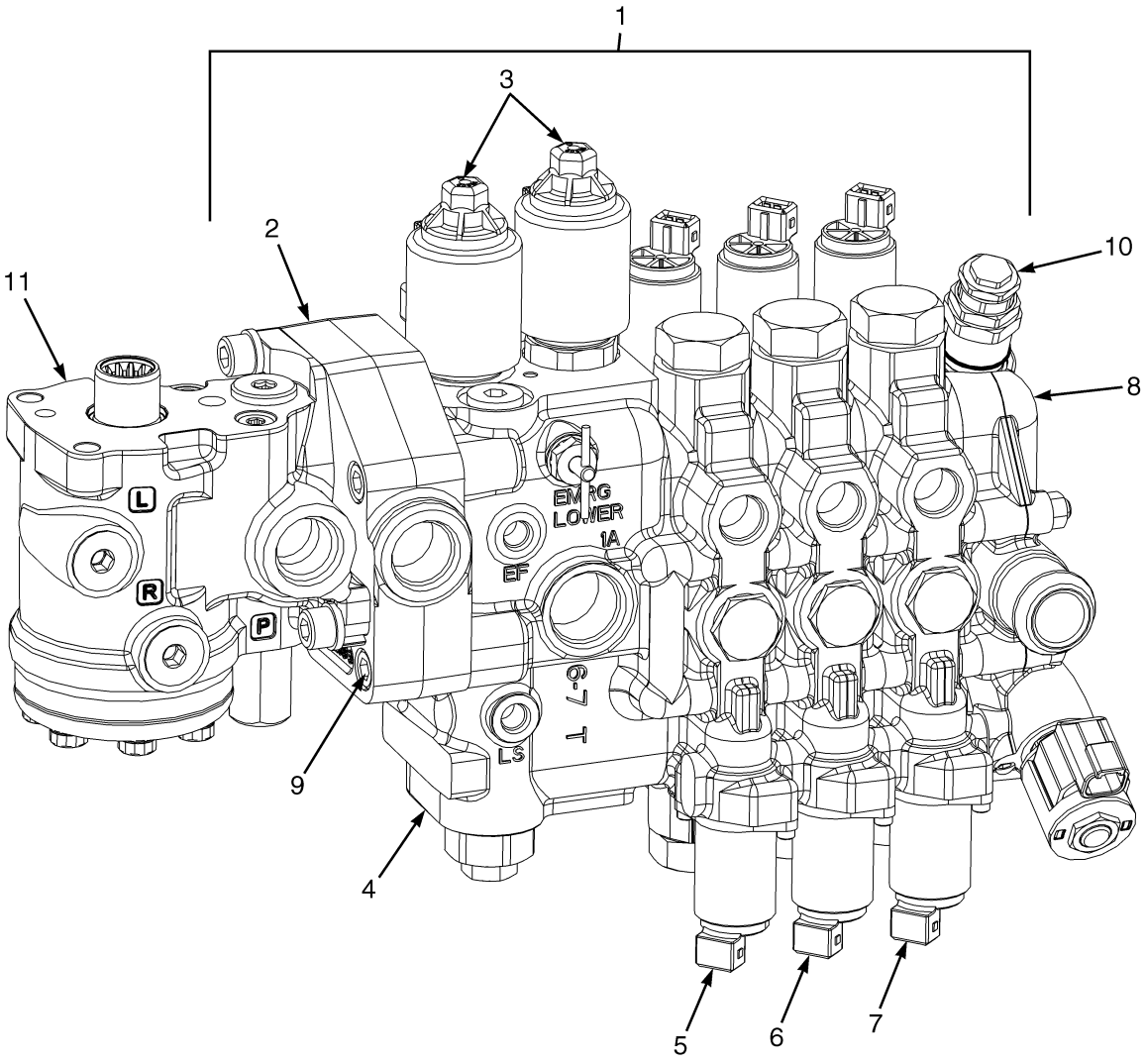

BP140168

©2014 Yale Materials Handling Corporation

CONTROL VALVE AND STEERING UNIT ASSEMBLY

ELECTRO-HYDRAULIC – FOUR FUNCTION (6/2009 →)

ITEM	PART NO.	DESCRIPTION	QTY
	580087720	Hydraulic Control Valve (Assembly With Steering Control Unit)	1
1	580087726	Hydraulic Control Valve Assembly	1
2	580081664	Valve Section (Inlet) (☞P20300 [Page 11-28])	1
3	580081666	Body (EHPV Section Assembly) (☞P20308 [Page 11-48])	1
4	580097122	Valve Section (Tilt) (☞P20301 [Page 11-30])	1
5	580097124	Valve Section (Aux. 1) (☞P20302 [Page 11-32])	1
6	580097125	Valve Section (Auxiliary Two) (☞P20310 [Page 11-54])	1
7	580097123	Valve Section (Outlet) (☞P20311 [Page 11-60])	1
8	580081663	Kit-Capscrew	1
8	580072338	Washer	5
8	580081710	Capscrew	3
9	580097007	Relief Valve (Secondary)	1
9	580054684	Kit-Seal and Spring	1
10	580087258	Steering Control Unit (☞P20285 [Page 9-20])	1
10	580054569	Kit-Seal (Steering Control Unit)	1
	580054692	Kit-Tie Rod	1
	580054144	Kit-Seal (Master 4 Function)	1

©2014 Yale Materials Handling Corporation

VALVE ASSEMBLY, LIFT AND LOWER (FIGURE 11-21)
ELECTRONIC CONTROL VALVE — THREE AND FOUR FUNCTION

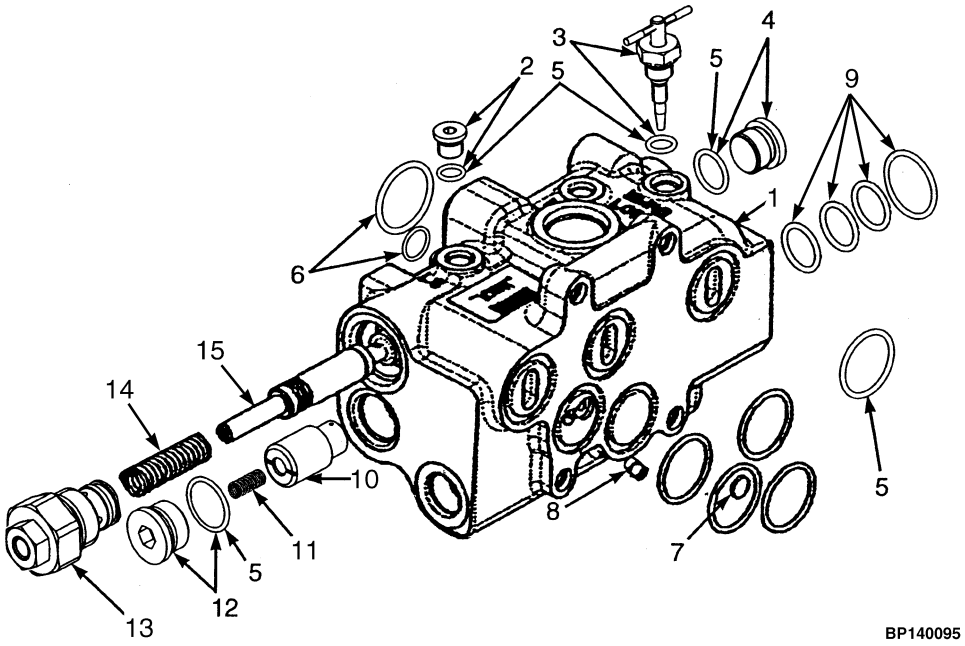

©2014 Yale Materials Handling Corporation

VALVE ASSEMBLY, LIFT AND LOWER
ELECTRONIC CONTROL VALVE – THREE AND FOUR FUNCTION

ITEM	PART NO.	DESCRIPTION	QTY
1	580081666	Body	1
2	580055322	Plug Assembly	1
2	580004501	Plug	1
3	580056025	Kit-Valve (Manual Lowering)	1
4	580072374	Plug	1
5	580054140	Kit-Seal (Inlet)	1
6	580054147	Kit-Seal (Steering Control Unit Interface)	1
7	580054118	Shuttle Valve	1
8	580054130	Setscrew	1
9	580058138	Kit-Seal (Electro Hydraulic Poppet Valve)	AR
10	580058139	Poppet	1
11	580054119	Spring	1
12	580054053	Plug Assembly	1
13	580054045	Relief Valve (Main)	1
13	580054685	Kit-Relief Valve	1
14	580081813	Spring	1
15	580081819	Spool Actuator	1
	b 580054145	Kit-Seal (Master 3 Function)	1
	a 580054144	Kit-Seal (Master 4 Function)	1

FOOTNOTES:

a Four Function Only

b Three Function Only

©2014 Yale Materials Handling Corporation

VALVE ASSEMBLY, TILT SECTION (FIGURE 11-22)
ELECTRONIC CONTROL VALVE — THREE AND FOUR FUNCTION

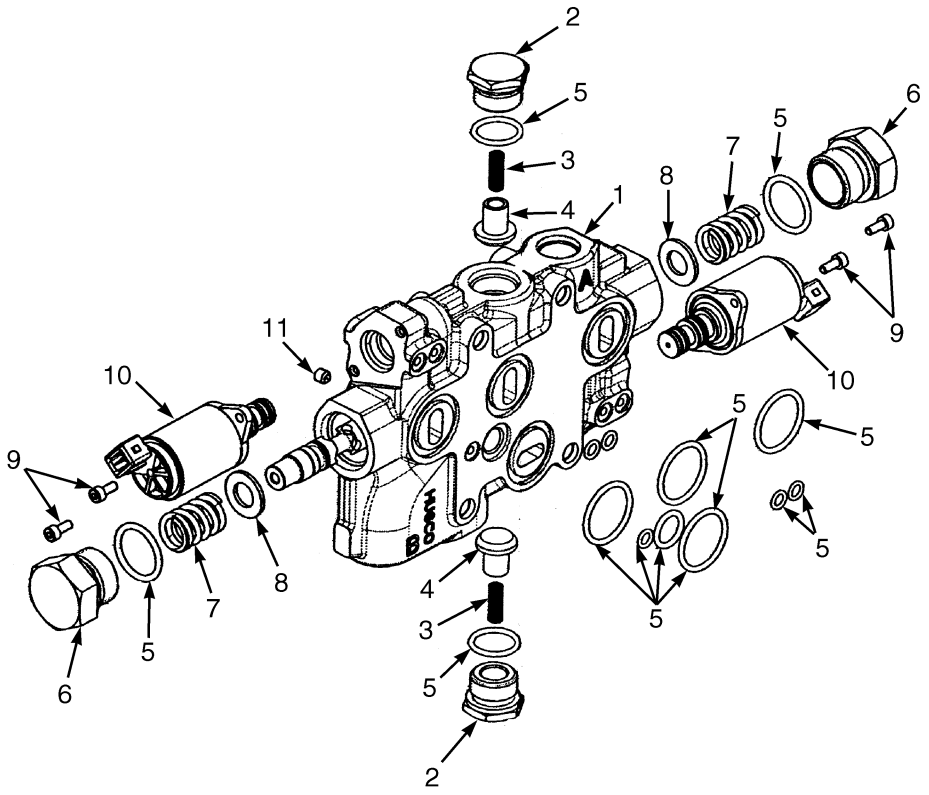

BP140096

©2014 Yale Materials Handling Corporation

VALVE ASSEMBLY, TILT SECTION

ELECTRONIC CONTROL VALVE – THREE AND FOUR FUNCTION

ITEM	PART NO.	DESCRIPTION	QTY
1	**c** 580081667	Valve Section (Tilt)	1
1	**d** 580097122	Valve Section (Tilt)	1
2	580054052	Plug Assembly	2
3	580006977	Spring	2
4	580006976	Poppet	2
5	580054141	Kit-Seal (Tilt)	1
6	580054131	Plug	2
7	580054125	Spring	2
8	580054126	Washer	2
9	580054121	Capscrew	4
10	580054050	Valve (Pressure Reducing)	2
10	~~580054148~~		
	582002731	Kit-Seal (Solenoid Pressure Reducing)	1
11	580054129	Setscrew	1
	b 580054145	Kit-Seal (Master 3 Function)	1
	a 580054144	Kit-Seal (Master 4 Function)	1

FOOTNOTES:

a Four Function Only
b Three Function Only
c → 6/2009
d 6/2009 →

©2014 Yale Materials Handling Corporation

ELECTRO HYDRAULIC POPPET VALVE (FIGURE 11-23)
ELECTRONIC CONTROL VALVE — THREE AND FOUR FUNCTION

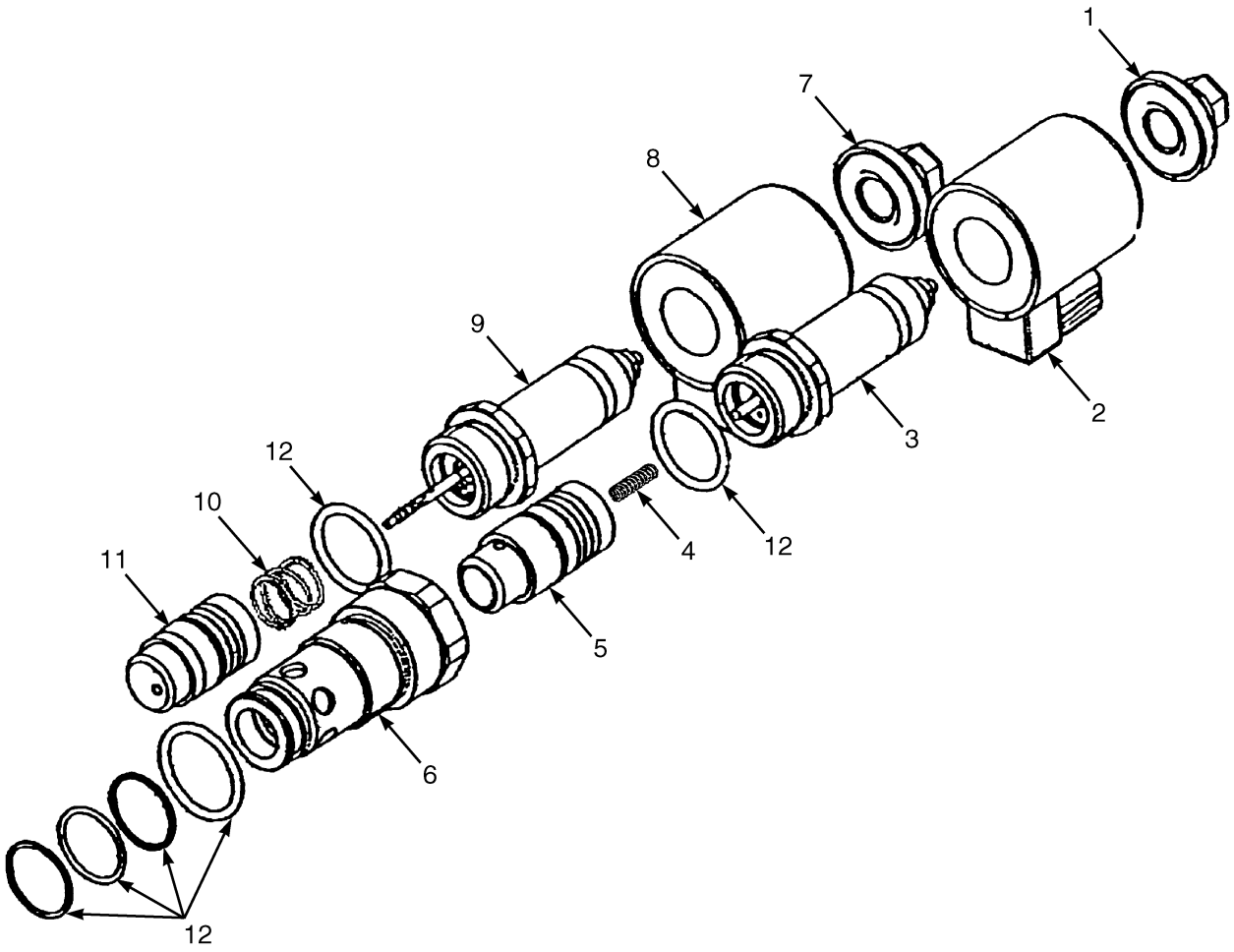

BP140098

©2014 Yale Materials Handling Corporation

ELECTRO HYDRAULIC POPPET VALVE

ELECTRONIC CONTROL VALVE – THREE AND FOUR FUNCTION

ITEM	PART NO.	DESCRIPTION	QTY
	a 580072368	Kit-Valve (Lower)	1
	b 580094289	Poppet Valve (Lower)	1
1	580072347	Nut	1
2	580054933	Coil	1
3	580072344	Tube (Solenoid)	1
4	580072341	Spring	1
5	**a** 580072343	Poppet Valve	1
5	**b** 580094305	Poppet Valve	1
6	580058015	Sleeve	1
	580072367	Kit-Valve (Lift)	1
7	580072347	Nut	1
8	580072346	Coil	1
9	580072345	Tube Assy (Solenoid)	1
10	~~580072348~~		
	580081755	Spring	1
11	580072342	Poppet Valve	1
12	580058138	Kit-Seal (Electro Hydraulic Poppet Valve)	1

FOOTNOTES:

a → 6/2009

b 6/2009 →

©2014 Yale Materials Handling Corporation

AUXILIARY ONE SECTION (FIGURE 11-24)

ELECTRONIC CONTROL VALVE — THREE AND FOUR FUNCTION (→ 6/2009)

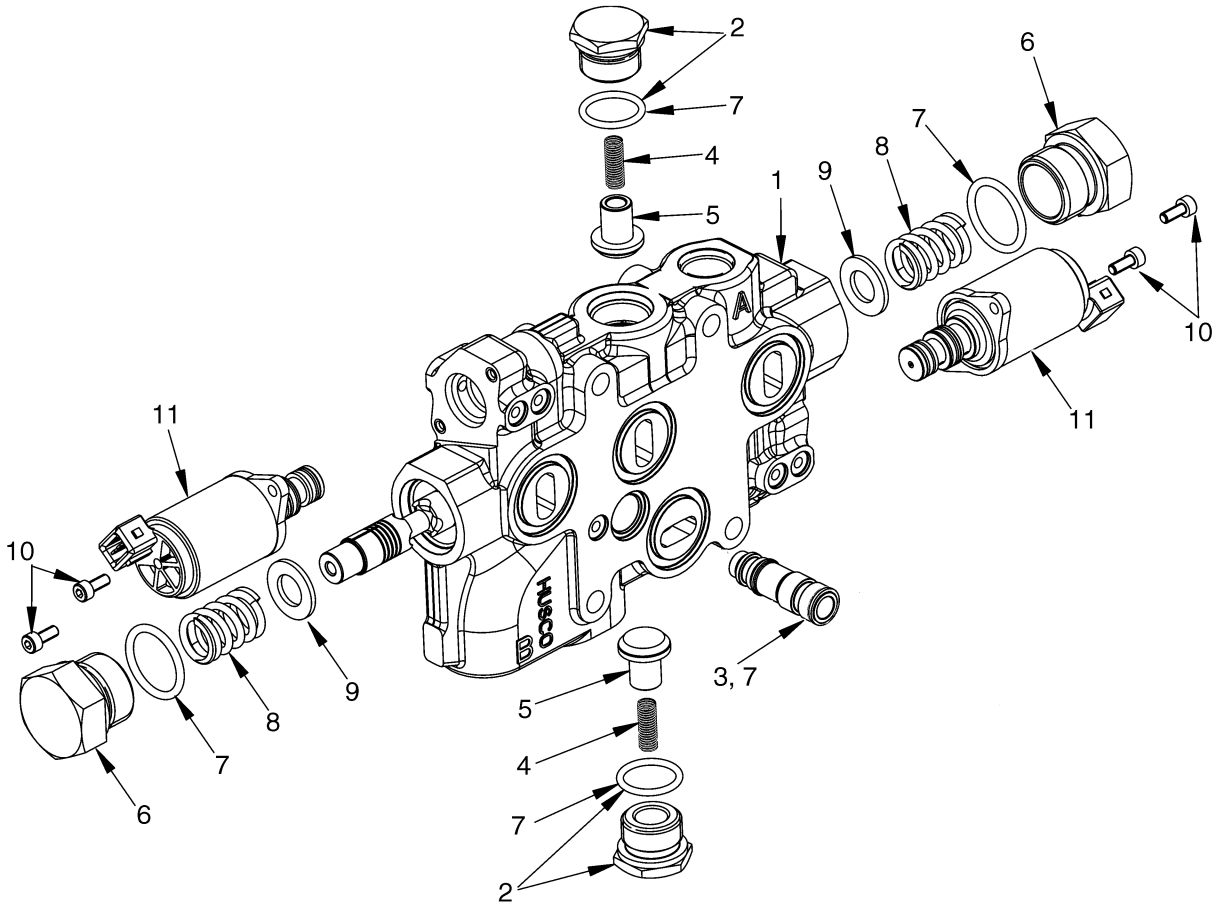

BP140099

©2014 Yale Materials Handling Corporation

AUXILIARY ONE SECTION

ELECTRONIC CONTROL VALVE – THREE AND FOUR FUNCTION (→ 6/2009)

ITEM	PART NO.	DESCRIPTION	QTY
1	580072365	Valve Section (Auxiliary One)	1
2	580054052	Plug Assembly (Tilt/Auxiliary)	1
2	580054053	Plug Assembly (Lift)	1
3	580054057	Cartridge Valve	1
3	580054128	Spring	1
3	580072350	Sleeve	1
3	580054870	O-Ring	2
4	580006977	Spring	1
5	580006976	Poppet	1
6	580054131	Plug	2
7	580054142	Kit-Seal (Auxiliary Section)	1
8	580054125	Spring	2
9	580054126	Washer	2
10	580054121	Capscrew	4
11	580054050	Valve (Pressure Reducing)	2
	~~580054148~~		
	582002731	Kit-Seal (Solenoid Pressure Reducing)	1
	b 580054145	Kit-Seal (Master 3 Function)	1
	a 580054144	Kit-Seal (Master 4 Function)	1

FOOTNOTES:

a Four Function Only

b Three Function Only

©2014 Yale Materials Handling Corporation

AUXILIARY ONE SECTION (FIGURE 11-25)
ELECTRONIC CONTROLLER — THREE AND FOUR FUNCTION (6/2009 →)

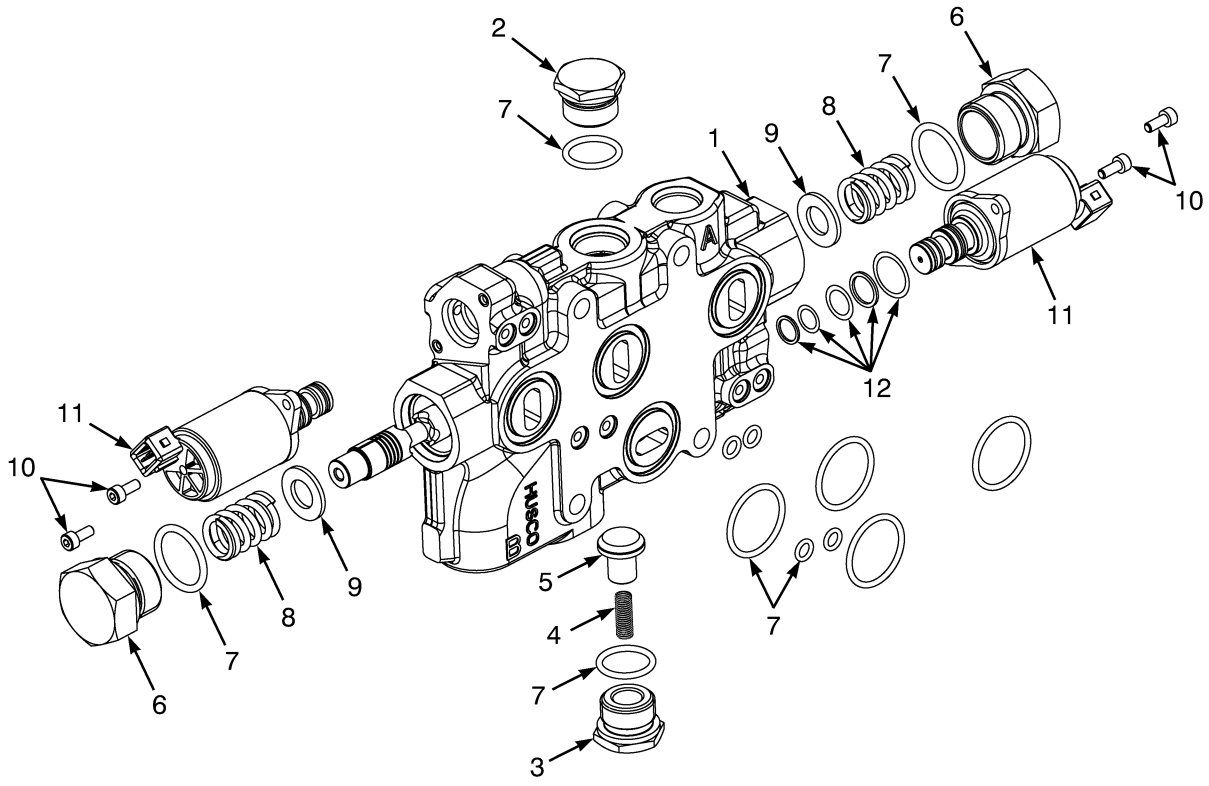

BP140153

©2014 Yale Materials Handling Corporation

AUXILIARY ONE SECTION

ELECTRONIC CONTROLLER – THREE AND FOUR FUNCTION (6/2009 →)

ITEM	PART NO.	DESCRIPTION	QTY
1	580097124	Valve Section (Aux. 1)	1
2	580054053	Plug Assembly	1
3	580054052	Plug Assembly	1
3	580013394	Plug	1
4	580006977	Spring	2
5	580006976	Poppet	2
6	580054131	Plug	1
7	580054142	Kit-Seal (Auxiliary Section)	1
8	580054125	Spring	2
9	580054126	Washer	2
10	580083823	Capscrew	4
11	580054050	Valve (Pressure Reducing)	2
12	~~580054148~~		
	582002731	Kit-Seal (Solenoid Pressure Reducing)	2

©2014 Yale Materials Handling Corporation

AUXILIARY TWO SECTION (FIGURE 11-26)
ELECTRONIC CONTROL VALVE — FOUR FUNCTION (→ 6/2009)

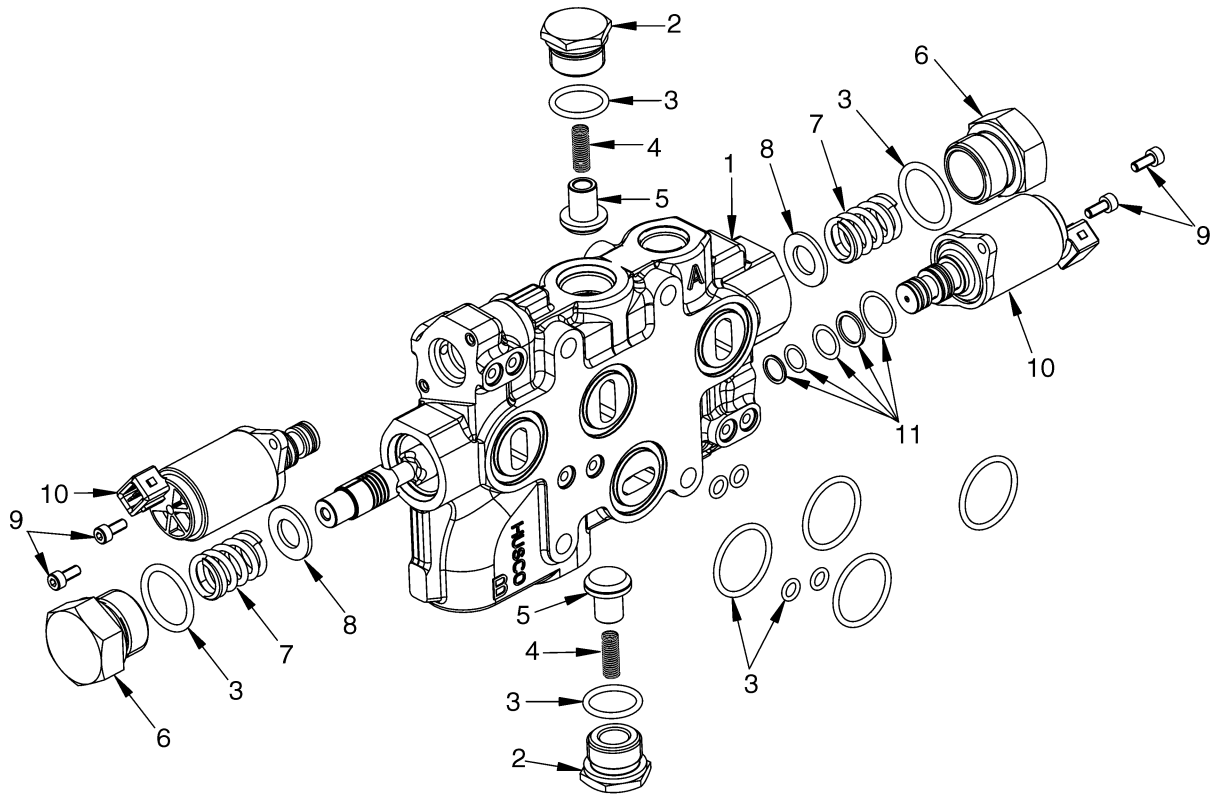

©2014 Yale Materials Handling Corporation

AUXILIARY TWO SECTION

ELECTRONIC CONTROL VALVE – FOUR FUNCTION (→ 6/2009)

ITEM	PART NO.	DESCRIPTION	QTY
1	580072757	Valve Section	1
2	580054052	Plug Assembly (Tilt/Auxiliary)	1
2	580054053	Plug Assembly (Lift)	1
3	580054143	Kit-Seal (Auxiliary Section)	1
4	580006977	Spring	2
5	580006976	Poppet	2
6	580054131	Plug	2
7	580054125	Spring	2
8	580054126	Washer	2
9	580054121	Capscrew	4
10	580054050	Valve (Pressure Reducing)	2
11	580054147	Kit-Seal (Steering Control Unit Interface)	1
	580054144	Kit-Seal (Master 4 Function)	1

©2014 Yale Materials Handling Corporation

AUXILIARY TWO SECTION (FIGURE 11-27)
ELECTRONIC CONTROL VALVE — FOUR FUNCTION (6/2009 →)

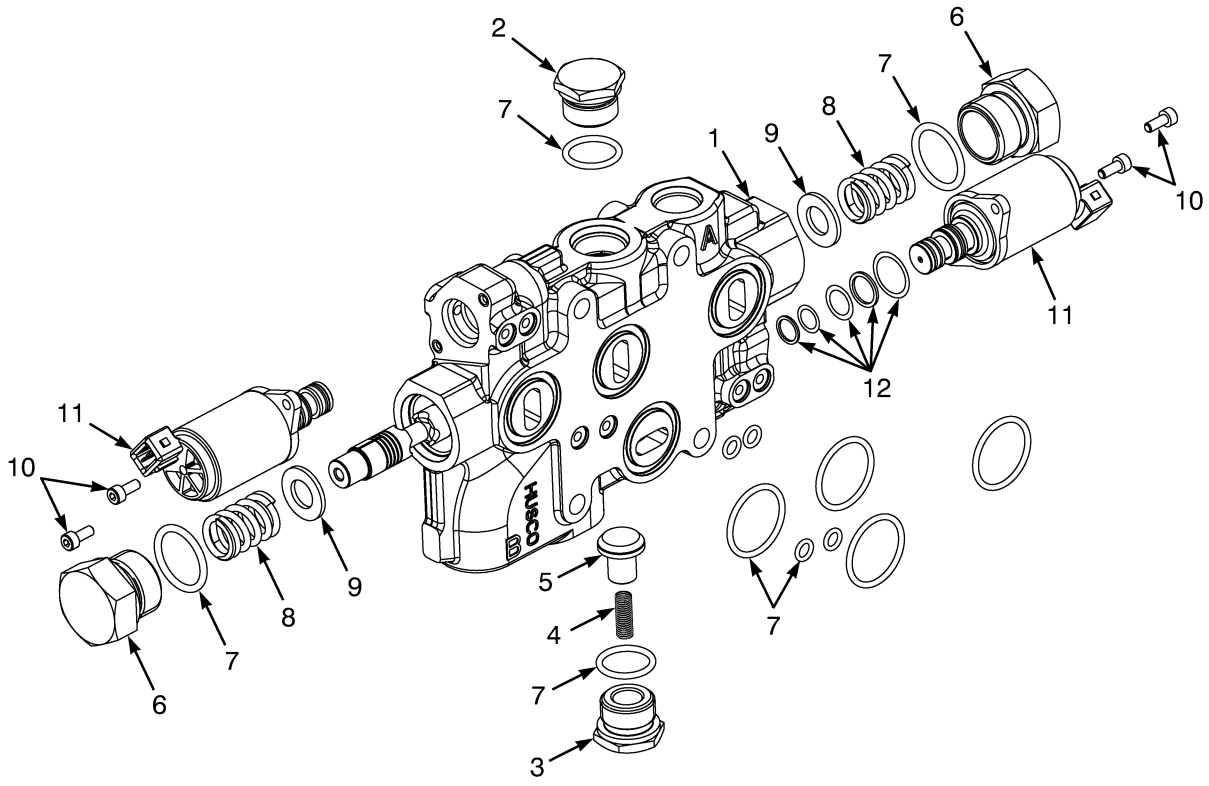

BP140153

©2014 Yale Materials Handling Corporation

AUXILIARY TWO SECTION

ELECTRONIC CONTROL VALVE – FOUR FUNCTION (6/2009 →)

ITEM	PART NO.	DESCRIPTION	QTY
1	580097125	Valve Section (Auxiliary Two)	1
2	580054053	Plug Assembly	1
3	580054052	Plug Assembly	1
3	580013394	Plug	1
4	580006977	Spring	2
5	580006976	Poppet	2
6	580054131	Plug	1
7	580054143	Kit-Seal (Auxiliary Section)	1
8	580054125	Spring	2
9	580054126	Washer	2
10	580083823	Capscrew	4
11	580054050	Valve (Pressure Reducing)	2
12	580054147	Kit-Seal (Steering Control Unit Interface)	2

©2014 Yale Materials Handling Corporation

OUTLET SECTION (FIGURE 11-28)

ELECTRONIC CONTROL VALVE — THREE AND FOUR FUNCTION WITHOUT ANTI-STALL SOLENOID (→ 6/2009)

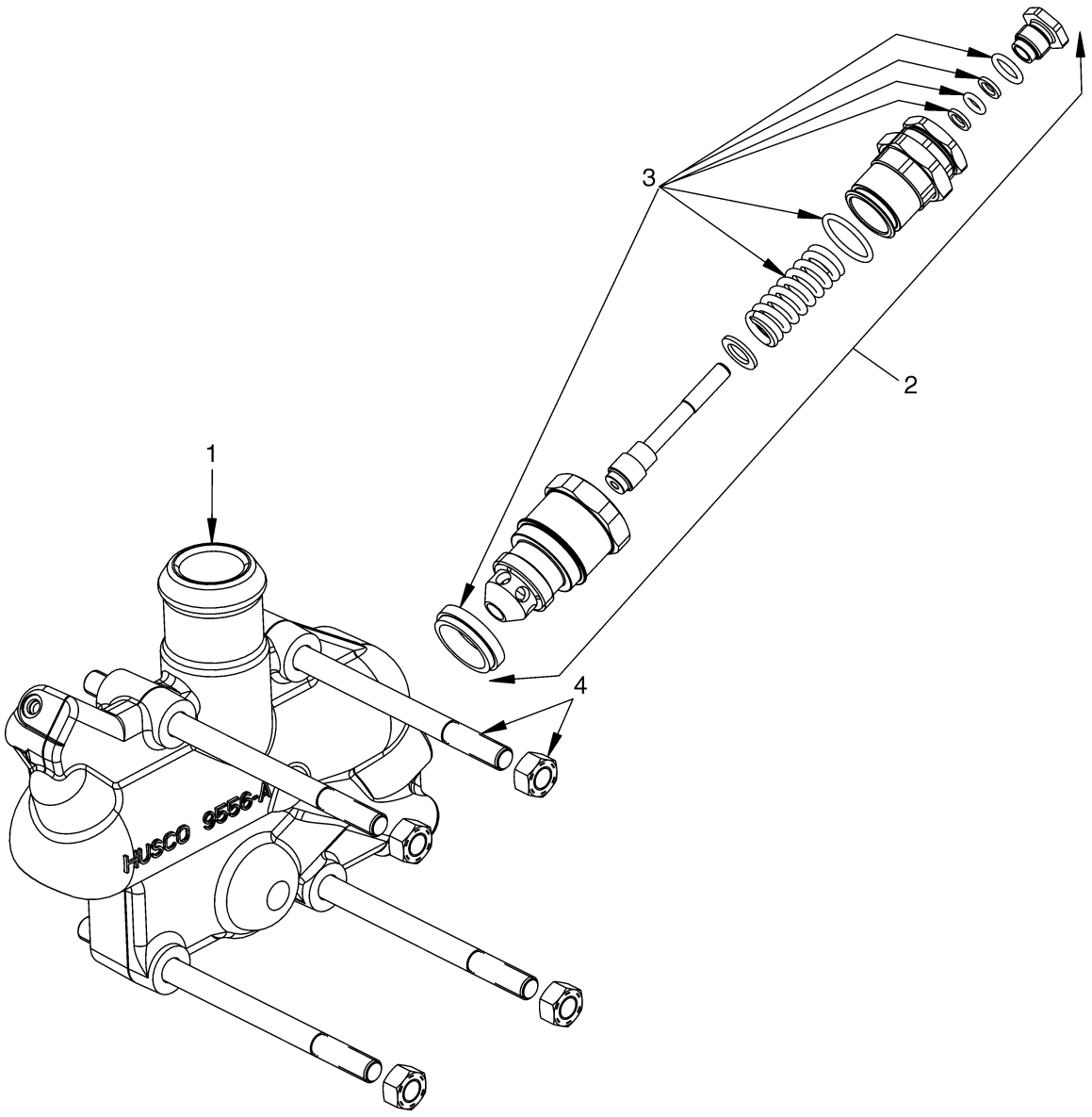

BP140075

©2014 Yale Materials Handling Corporation

OUTLET SECTION

ELECTRONIC CONTROL VALVE – THREE AND FOUR FUNCTION WITHOUT ANTI-STALL SOLENOID (→ 6/2009)

ITEM	PART NO.	DESCRIPTION	QTY
1	580054043	Valve Section (Outlet)	1
2	580054046	Relief Valve (Secondary) (2250 PSI)	1
3	580054684	Kit-Seal and Spring	1
4	580054054	Kit-Tie Rod (Three Function)	1
4	580054692	Kit-Tie Rod (Four Function)	1
4	014936600	Nut	4

©2014 Yale Materials Handling Corporation

OUTLET SECTION (FIGURE 11-29)

ELECTRONIC CONTROL VALVE — THREE AND FOUR FUNCTION WITH ANTI-STALL SOLENOID (6/2009 →)

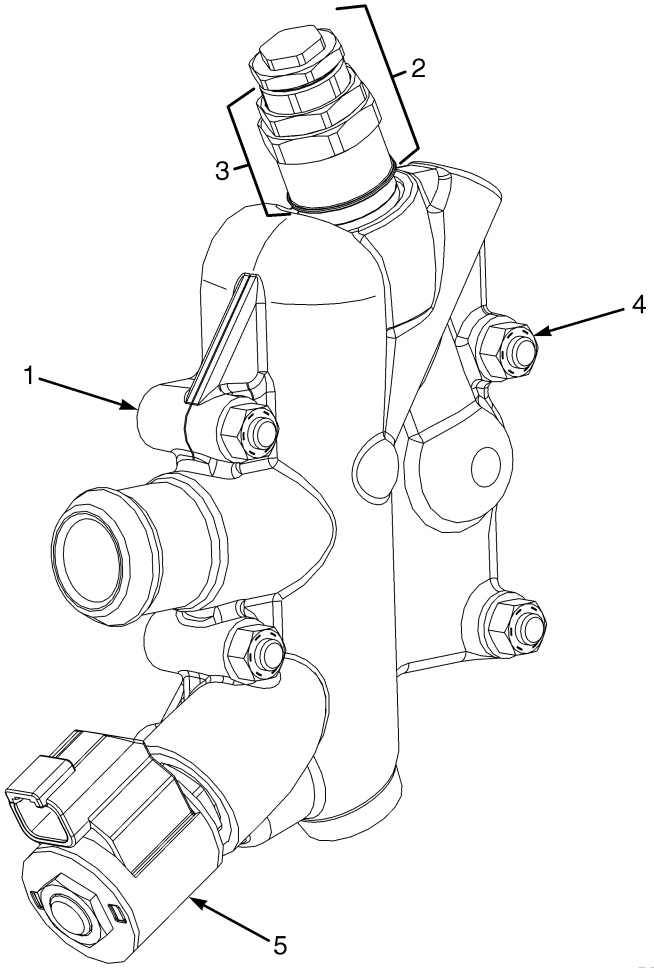

©2014 Yale Materials Handling Corporation

OUTLET SECTION

ELECTRONIC CONTROL VALVE – THREE AND FOUR FUNCTION WITH ANTI-STALL SOLENOID (6/2009 →)

ITEM	PART NO.	DESCRIPTION	QTY
1	580097123	Valve Section (Outlet)	1
2	580054046	Relief Valve (Secondary) (2250 PSI)	1
3	580054684	Kit-Seal and Spring	1
4	580054054	Kit-Tie Rod (Three Function)	1
4	580054692	Kit-Tie Rod (Four Function)	1
4	014936600	Nut	4
5	580087997	Solenoid Valve	1
5	580089428	Kit-Seal	1

©2014 Yale Materials Handling Corporation

TILT CYLINDER AND MAST INSTALLATION (FIGURE 11-30)

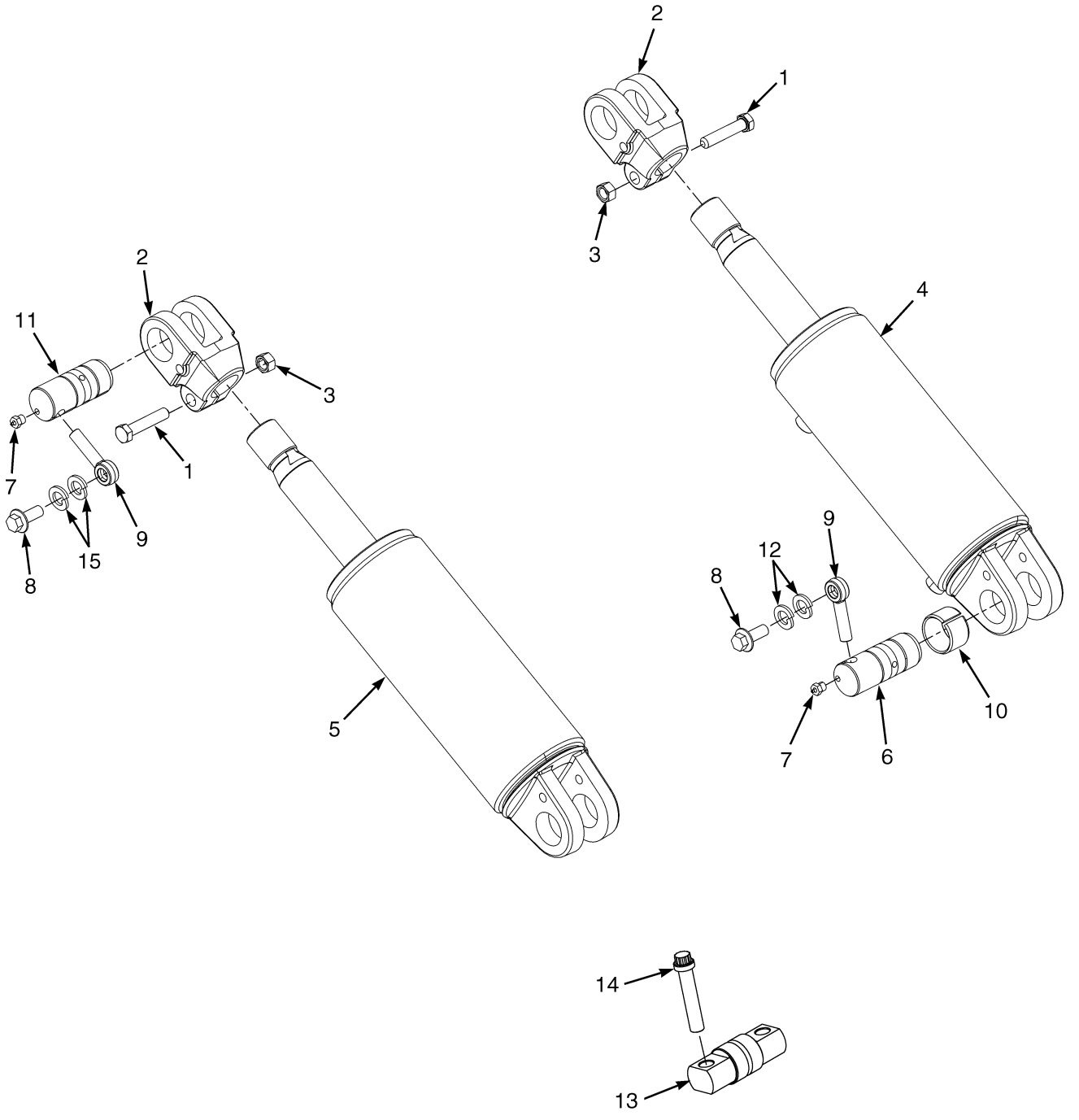

©2014 Yale Materials Handling Corporation

TILT CYLINDER AND MAST INSTALLATION

ITEM	PART NO.	DESCRIPTION	QTY
1	580061352	Capscrew	2
2	580051925	Rod End (Three Stage)	2
3	580056000	Nut	2
4	**b** 580066764	Tilt Cylinder (RH) (☞P20833 [Page 11-64])	1
4	**a** 580066765	Tilt Cylinder (RH) (☞P20833 [Page 11-64])	1
5	**b** 580074282	Tilt Cylinder (LH) (☞P20833 [Page 11-64])	1
5	**a** 580074283	Tilt Cylinder (LH) (☞P20833 [Page 11-64])	1
6	580066673	Pin	2
7	015627900	Grease Fitting	4
8	580067388	Capscrew	4
9	520045462	Anchor	2
10	580066674	Bushing	2
11	580060732	Pin	2
12	580055649	Lockwasher	2
13	580066676	Pin	2
14	931019914	Capscrew	4
15	580056005	Washer	2

FOOTNOTES:

a 5° Forward/10° Back

b 5° Forward/6° Back

©2014 Yale Materials Handling Corporation

TILT CYLINDERS (FIGURE 11-31)

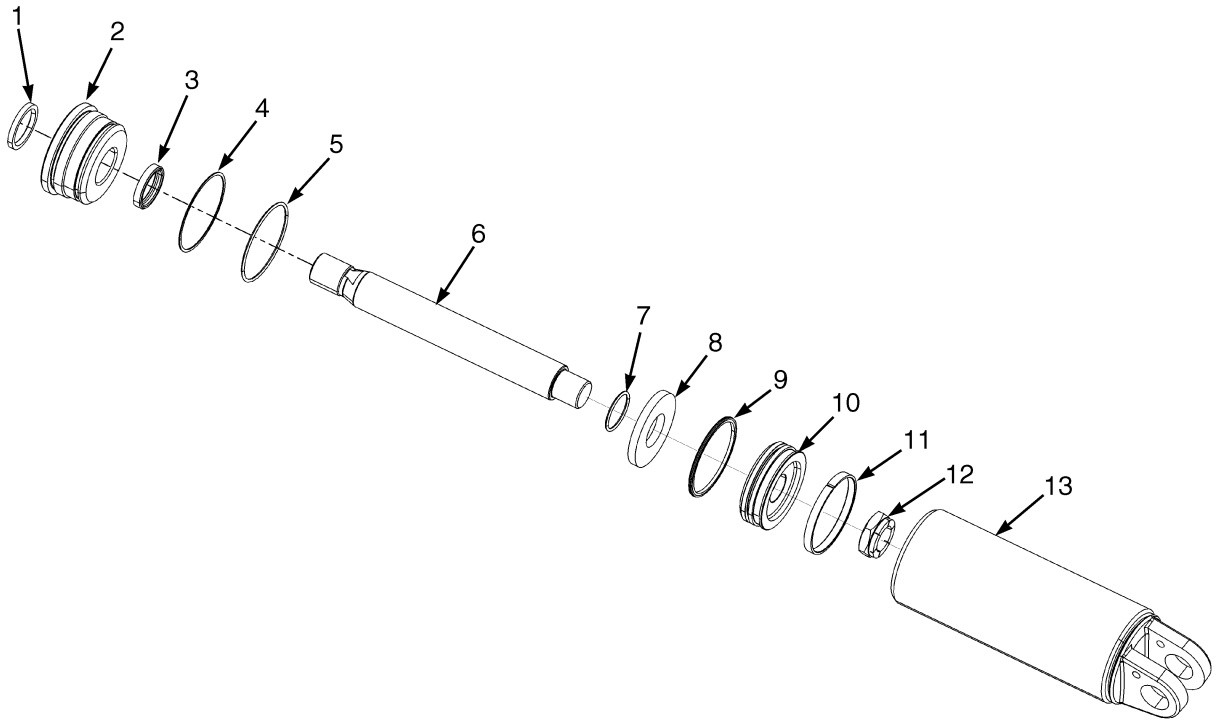

BP150197

©2014 Yale Materials Handling Corporation

TILT CYLINDERS

KEY:
A: 5 Degrees Forward/6 Degrees Back
B: 5 Degrees Forward/10 Degrees Back

ITEM	PART NO.	DESCRIPTION	QTY A	QTY B
	580074282	Tilt Cylinder (LH)	1	..
	580074283	Tilt Cylinder (LH)	..	1
	580066764	Tilt Cylinder (RH)	1	..
	580066765	Tilt Cylinder (RH)	..	1
1	520045448	Rod Wiper	1	1
2	580006745	End Plug	1	1
3	580022493	Rod Seal	1	1
4	580006739	Back-Up Ring	1	1
5	501949902	O-Ring	1	1
6	524240806	Cylinder Rod	1	..
6	524240830	Cylinder Rod	..	1
7	580006743	O-Ring	1	1
8	506304101	Spacer	1	..
9	504305710	Piston Seal	1	1
10	580006744	Wear Ring	1	1
11	580006742	Piston	1	1
12	502637904	Locknut	1	1
13	580082894	Tube Wldmt-Cylinder (RH)	1	..
13	580074280	Tube Wldmt-Cylinder (LH)	1	..
13	580074281	Tube Wldmt-Cylinder (LH)	..	1
13	580082895	Tube Wldmt-Cylinder (RH)	..	1
	580023428	Kit-Seal	1	1

©2014 Yale Materials Handling Corporation

TILT HYDRAULICS (FIGURE 11-32)

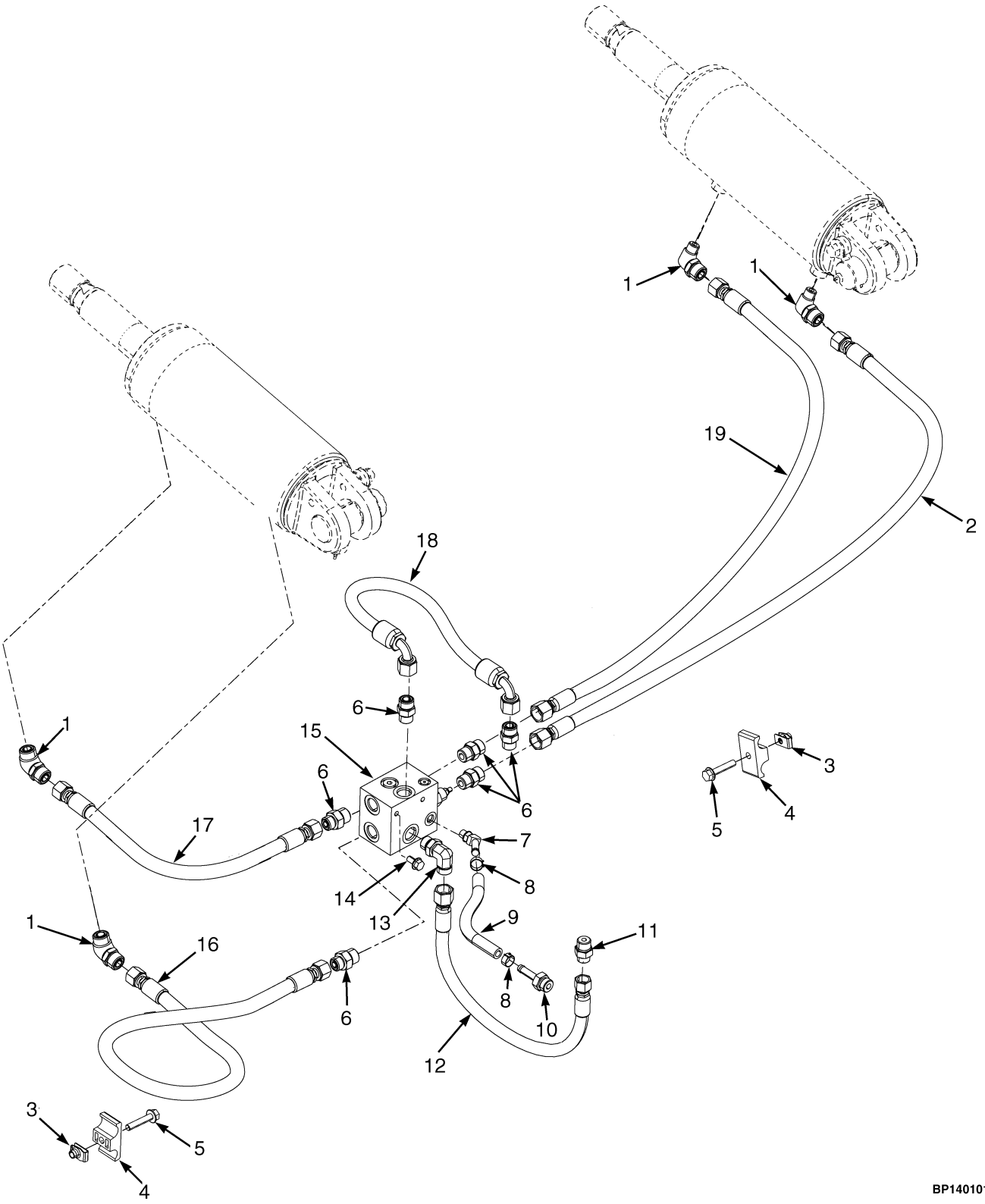

©2014 Yale Materials Handling Corporation

TILT HYDRAULICS

ITEM	PART NO.	DESCRIPTION	QTY
1	580019865	Fitting	4
1	504155200	O-Ring	1
1	052645200	O-Ring	1
2	580075491	Hose Assy	1
3	580026621	Nut	2
4	580073148	Hose Clamp (Dual Hose)	2
5	580058269	Capscrew	2
6	580020430	Fitting	6
6	580063949	O-Ring	1
6	052645300	O-Ring	1
7	580080018	Fitting	1
8	900011244	Clamp	2
9	580079375	Hose	1
10	580077924	Fitting	1
10	052645300	O-Ring	1
11	580019810	Fitting	1
11	504155200	O-Ring	1
11	052645300	O-Ring	1
12	580075468	Hose Assy	1
13	580020576	Fitting	1
13	580063949	O-Ring	1
13	052645300	O-Ring	1
14	580047714	Capscrew	2
15	580077544	Valve Block Assembly	1
15	580077546	Valve Block	1
15	580077543	Valve-Counterbalance	1
16	580075490	Hose Assy	1
17	580075489	Hose	1
18	580075487	Hose Assy	1
19	580075492	Hose Assy	1

©2014 Yale Materials Handling Corporation

VENT LINES (FIGURE 11-33)

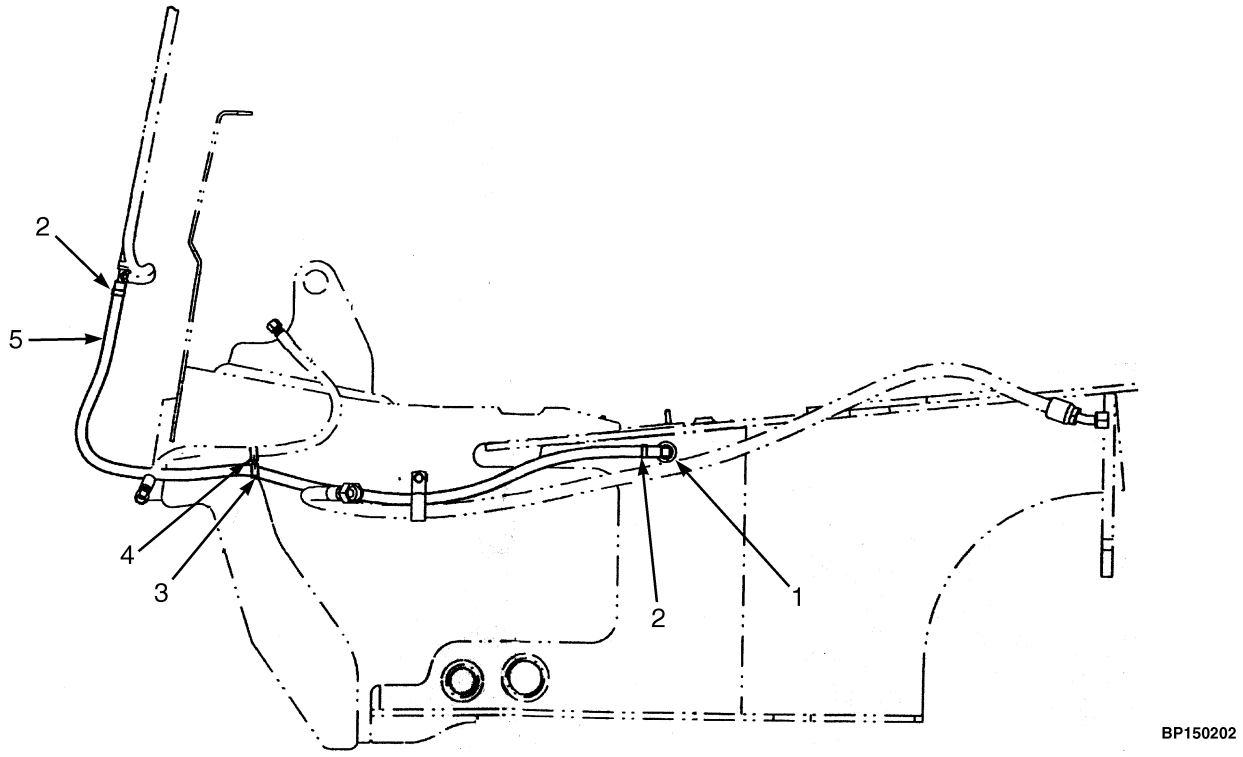

ITEM	PART NO.	DESCRIPTION	QTY
1	316445008	Fitting	1
1	**a** ~~580059132~~		
	505967551	Fitting	1
1	052645300	O-Ring	1
2	580007557	Clamp	2
3	580042567	Clamp (Swivel)	1
4	580041369	Clamp (Swivel)	1
5	580008253	Hose Assy	1

FOOTNOTES:

a Used for mast removal

©2014 Yale Materials Handling Corporation

HOIST HOSE AND ATTACHING PARTS (FIGURE 11-34)

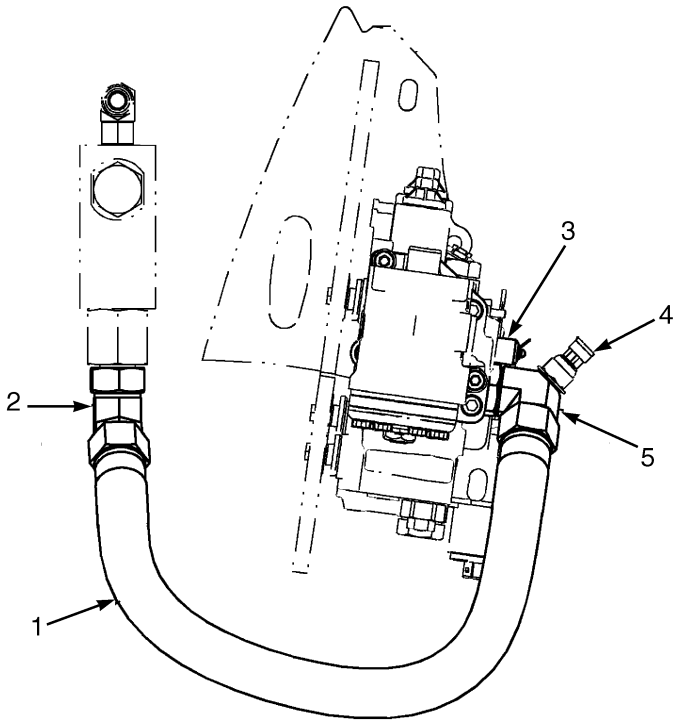

BP150216

ITEM	PART NO.	DESCRIPTION	QTY
1	580087377	Hose Assy	1
2	580020579	Fitting	1
3	580041208	Fitting (Diagnostic)	1
4	580064647	Fitting	1
5	580062204	Fitting	1
5	580029083	O-Ring	1
5	052645600	O-Ring	1

©2014 Yale Materials Handling Corporation

NOTES

©2014 Yale Materials Handling Corporation

12 MAST-TWO STAGE LIMITED FREE-LIFT

SECTION 12
MAST-TWO STAGE LIMITED FREE-LIFT

DESCRIPTION	PAGE
INNER MAST	
TWO STAGE LIMITED FREE-LIFT	12-4
MAIN LIFT	
TWO STAGE LIMITED FREE-LIFT	12-6
MAIN LIFT CYLINDER	
TWO STAGE LIMITED FREE-LIFT	12-10
OUTER MAST	
TWO STAGE LIMITED FREE-LIFT	12-2

©2014 Yale Materials Handling Corporation

OUTER MASS (FIGURE 12-1)

TWO STAGE LIMITED FREE-LIFT

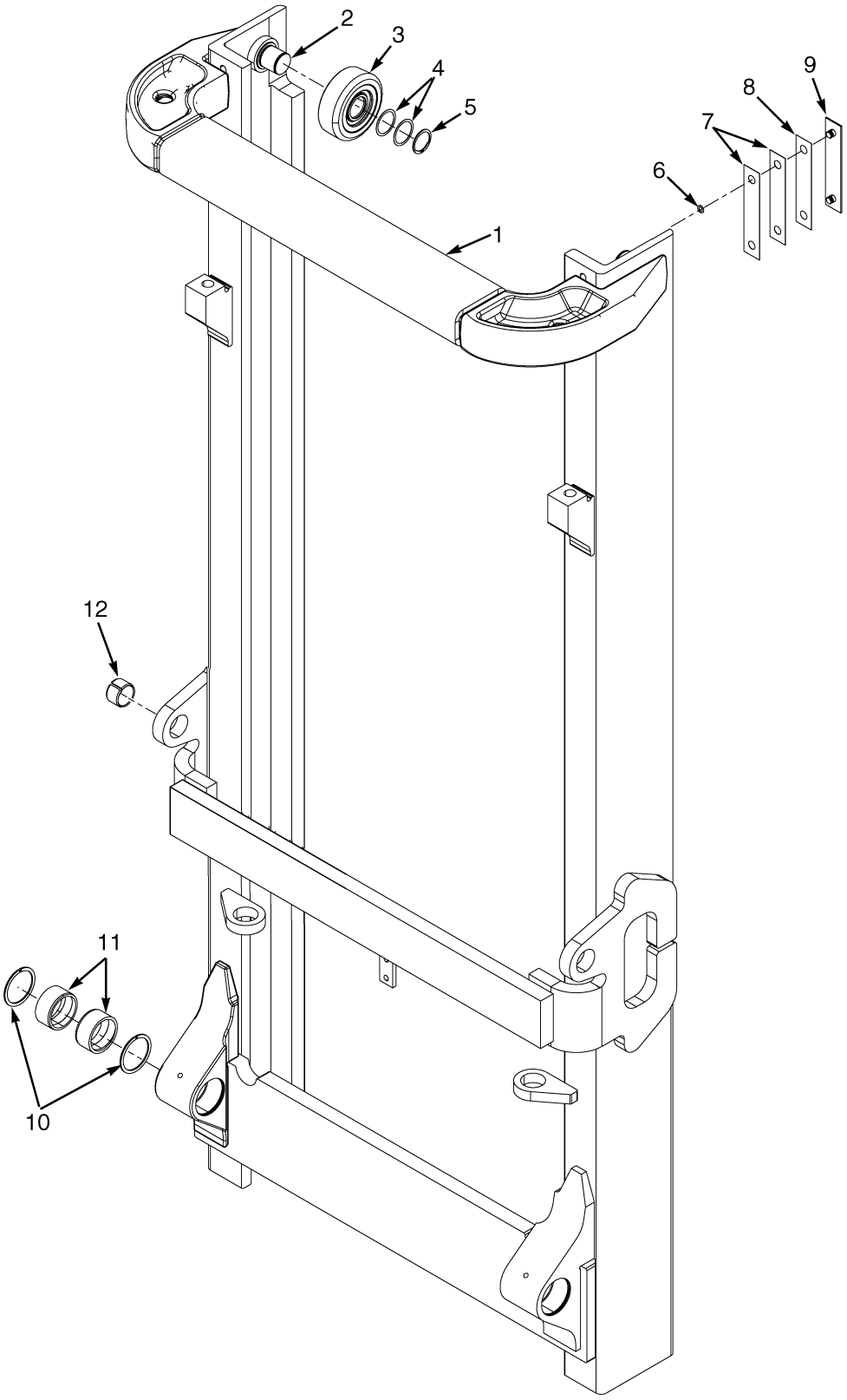

©2014 Yale Materials Handling Corporation

OUTER MASS

TWO STAGE LIMITED FREE-LIFT

A613

ITEM	DESCRIPTION 1 2 3 4	LIFT HEIGHT TO BOTTOM OF FORKS				
		2940 mm (115.7 in.)	3340 mm (131.5 in.)	4340 mm (170.9 in.)	5340 mm (210.2 in.)	5940 mm (233.9 in.)
	Mast Group Number	A613 2940	A613 3340	A613 4340	A613 5340	A613 5940
	Mast Assy	524198301	524198303	524198308	524198313	524198316
1	Outer Mast	580065984	580065986	580065991	580074844	580074847

ITEM	PART NO.	DESCRIPTION	QTY
	a	Mast Assy	1
1	**a**	Outer Mast	1
2	520045197	Stubshaft	2
3	520045370	Load Roller ("A") (126.75/126.49)	2
4	520045153	Shim	AR
5	031202200	Snap Ring	2
6	012824300	O-Ring	4
7	520045157	Shim (0.020 in.)	4
8	520045156	Shim (0.007 in.)	AR
9	520045151	Wear Strip	2
10	580066241	Snap Ring	4
11	580066240	Bushing	4
12	520045464	Bushing	2

FOOTNOTES:

a Refer to Table

©2014 Yale Materials Handling Corporation

INNER MAST (FIGURE 12-2)
TWO STAGE LIMITED FREE-LIFT

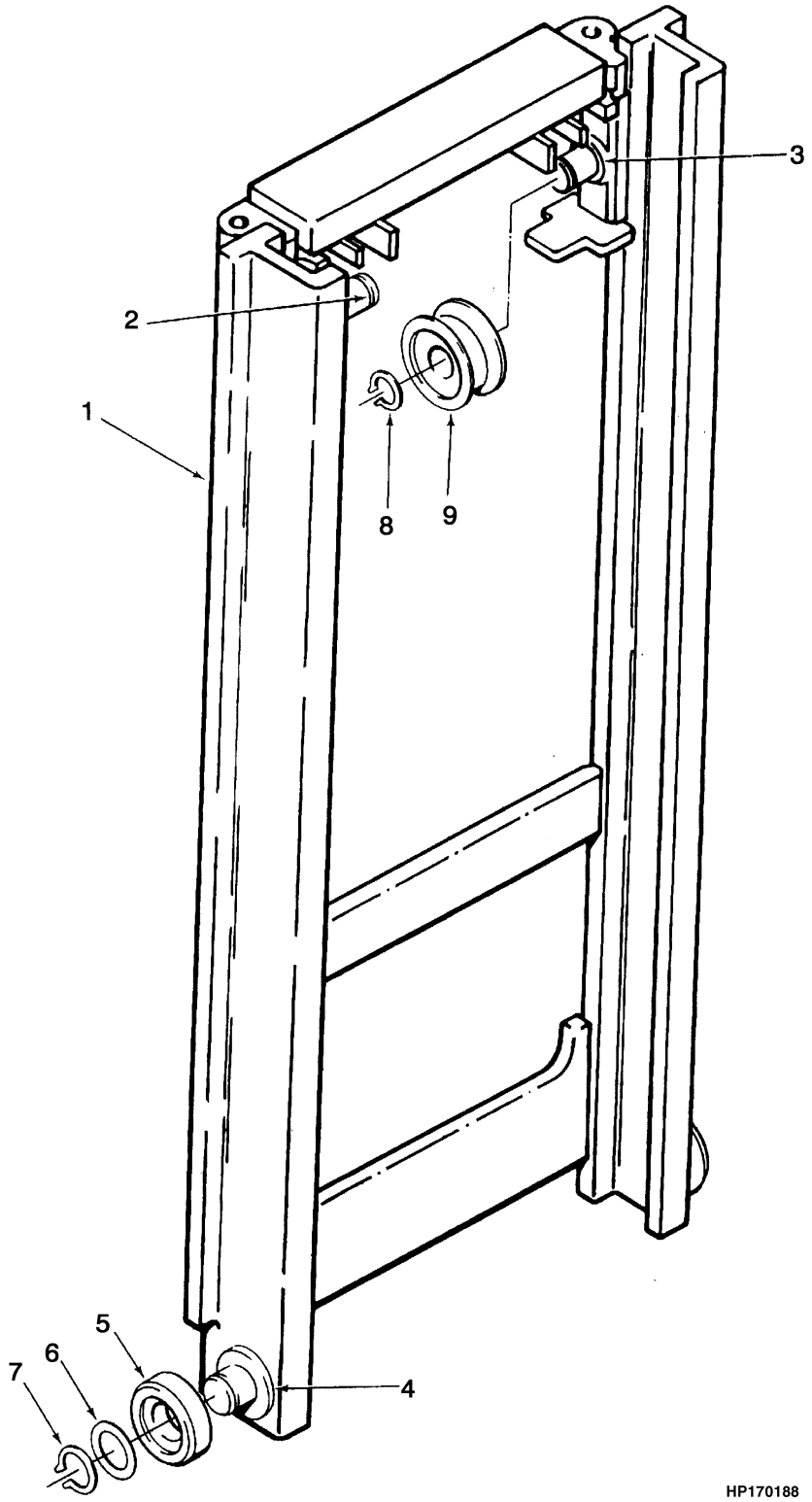

©2014 Yale Materials Handling Corporation

INNER MAST
TWO STAGE LIMITED FREE-LIFT

A613

ITEM	DESCRIPTION 1 2 3 4	LIFT HEIGHT TO BOTTOM OF FORKS				
		2940 mm (115.7 in.)	3340 mm (131.5 in.)	4340 mm (170.9 in.)	5340 mm (210.2 in.)	5940 mm (233.9 in.)
	Mast Group Number	A613 2940	A613 3340	A613 4340	A613 5340	A613 5940
	Mast Assy	524198301	524198303	524198308	524198313	524198316
1	Inner Mast	580074904	580006103	580006104	580006105	580006106

ITEM	PART NO.	DESCRIPTION	QTY
	b	Mast Assy	1
1	**b**	Inner Mast	1
2	580008868	Stubshaft	1
3	580008869	Stubshaft	1
4	520045197	Stubshaft	2
5	**a** 520045370	Load Roller ("A") (126.75/126.49)	2
6	520045153	Shim	AR
7	031202200	Snap Ring	2
8	054585400	Snap Ring	2
9	580008870	Chain Sheave	2

FOOTNOTES:

a Letter on Inside Face

b Refer to Table

©2014 Yale Materials Handling Corporation

MAIN LIFT (FIGURE 12-3)
TWO STAGE LIMITED FREE-LIFT

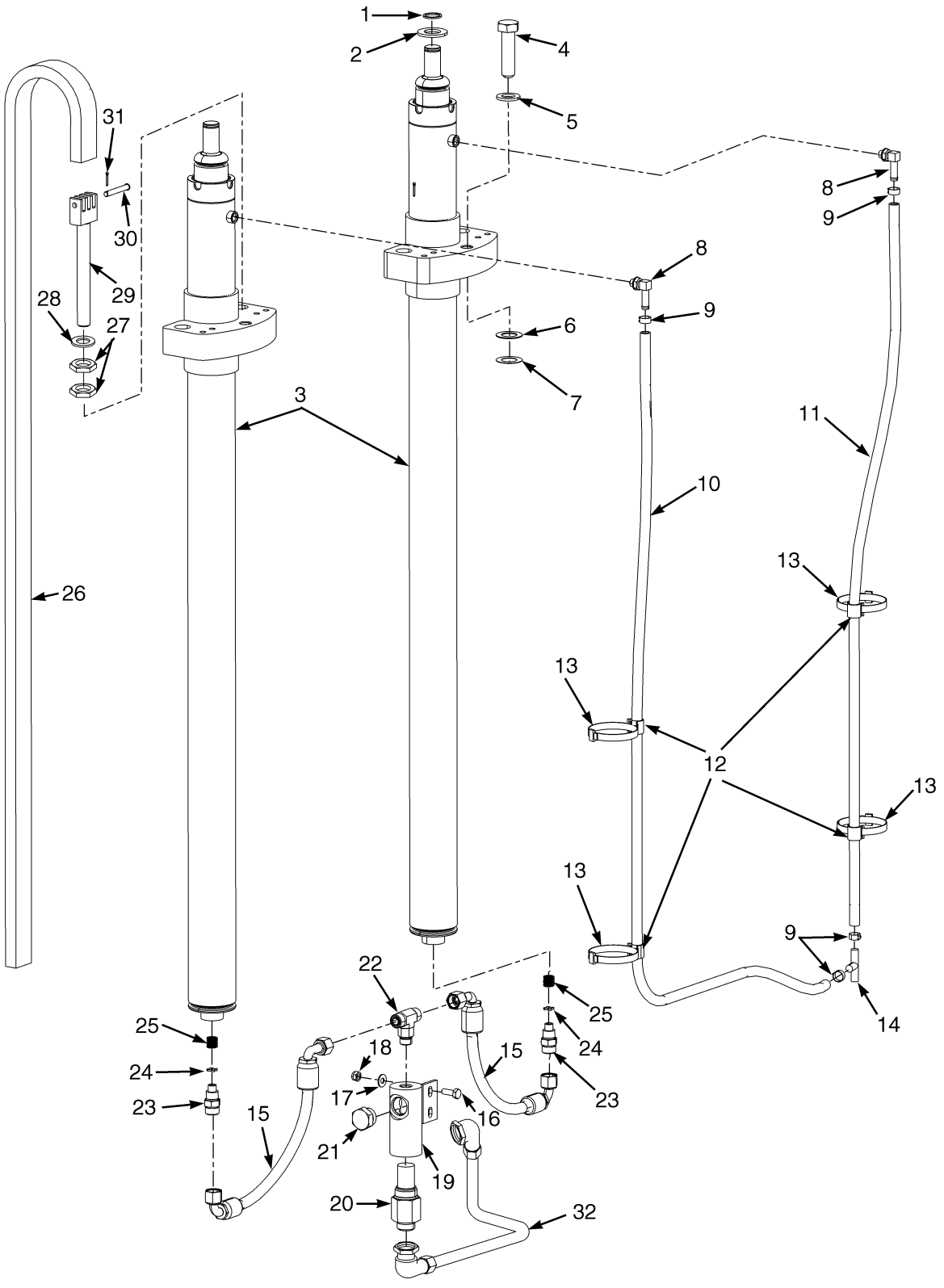

©2014 Yale Materials Handling Corporation

MAIN LIFT
TWO STAGE LIMITED FREE-LIFT

A613

ITEM	DESCRIPTION 1 2 3 4	LIFT HEIGHT TO BOTTOM OF FORKS				
		2940 mm (115.7 in.)	3340 mm (131.5 in.)	4340 mm (170.9 in.)	5340 mm (210.2 in.)	5940 mm (233.9 in.)
	Mast Group Number	A613 2940	A613 3340	A613 4340	A613 5340	A613 5940
10	Hose Assy	580008286	580009453	580008249	580083948	580008235
11	Hose Assy	580079291	580011483	580009453	580008249	580072998
26	Chain	580070080	580007088	580007089	580007090	580007091

ITEM	PART NO.	DESCRIPTION	QTY
1	500227908	Snap Ring	2
2	580071044	Washer	2
3	. . . . .	Main Cylinder (☞P20320 [Page 12-10])	2
4	580071040	Capscrew	2
5	580071043	Lockwasher	2
6	505970567	Shim	AR
7	505974501	Shim	AR
8	030252011	Fitting	2
9	580007557	Clamp	4
10	**a**	Hose Assy	1
11	**a**	Hose Assy	1
12	580012383	Hose Clamp	4
13	504068737	Clamp	6
14	514835800	Fitting	1
15	580064320	Hose Assy	2
16	580055740	Capscrew	2
17	580055633	Washer	2
18	580055652	Nut	2
19	580071603	Housing	1
20	580020760	Lowering Control Valve	1
20	052645800	O-Ring	1
20	580029083	O-Ring	1
21	057390000	Plug	1
21	052645700	O-Ring	1
22	580039183	Fitting	1
23	580064145	Fitting	4
24	580008876	Washer	2
25	580008875	Spring	2
26	**a**	Chain	2
27	580071054	Nut	4
28	580008871	Kit-Washer	2
29	580008123	Chain Anchor	2
30	580008124	Pin	2
31	015417900	Cotter Pin	2
32	580087377	Hose Assy	1

©2014 Yale Materials Handling Corporation

FOOTNOTES:

a Refer to Table

©2014 Yale Materials Handling Corporation

NOTES

©2014 Yale Materials Handling Corporation

MAIN LIFT CYLINDER (FIGURE 12-4)
TWO STAGE LIMITED FREE-LIFT

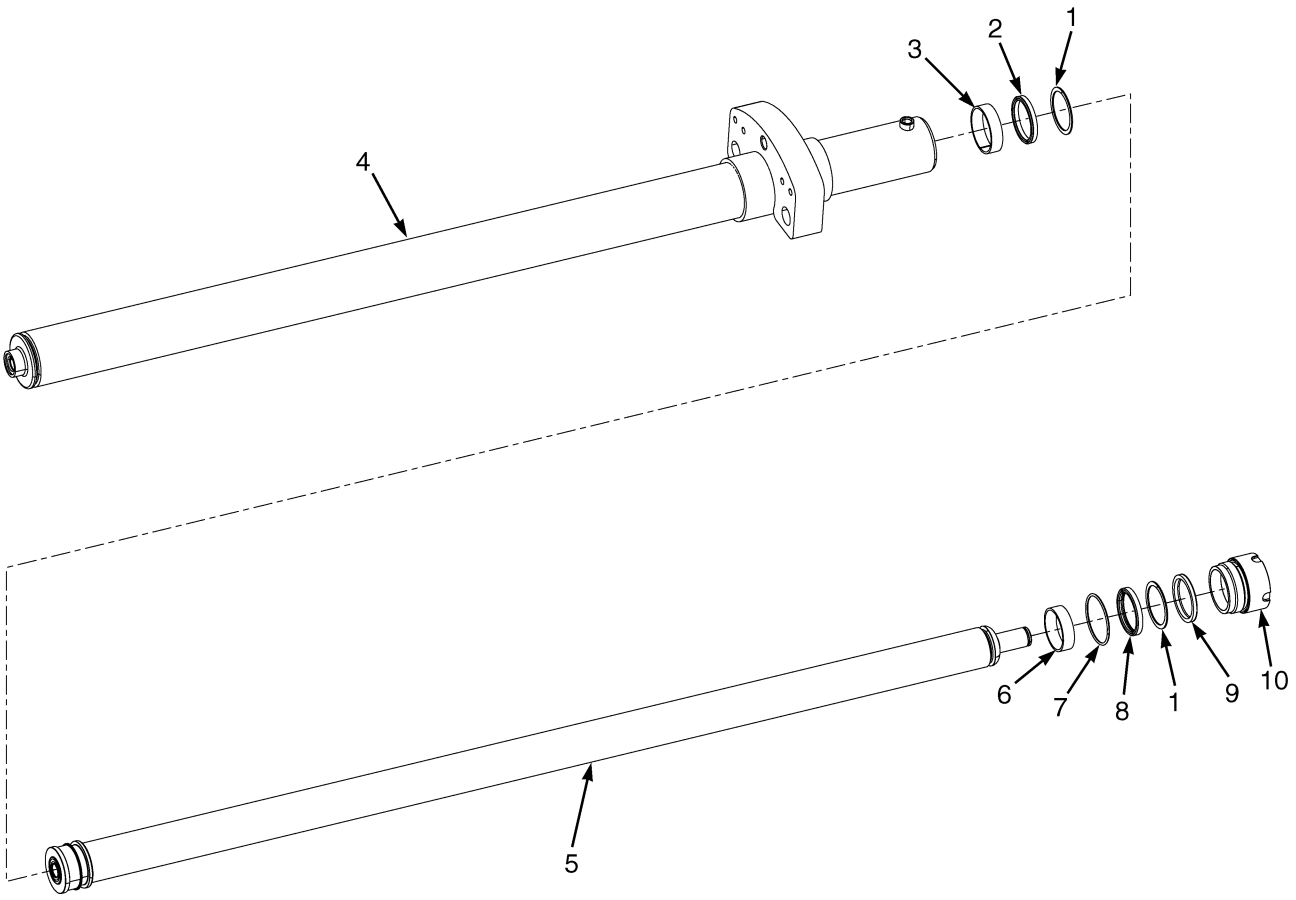

BP170274

©2014 Yale Materials Handling Corporation

MAIN LIFT CYLINDER
TWO STAGE LIMITED FREE-LIFT

A613

ITEM	DESCRIPTION 1 2 3 4	LIFT HEIGHT TO BOTTOM OF FORKS				
		2940 mm (115.7 in.)	3340 mm (131.5 in.)	4340 mm (170.9 in.)	5340 mm (210.2 in.)	5940 mm (233.9 in.)
	Mast Group Number	**A613 2940**	**A613 3340**	**A613 4340**	**A613 5340**	**A613 5940**
	Cylinder Group Number	**8609104**	**8609106**	**8609111**	**8609116**	**8609119**
	Cylinder Assy	580070021	580070023	580070028	580070033	580070036
4	Tube Wldmt-Cylinder	520260604	520260606	520260611	520260616	520260619
5	Cylinder Rod	520416604	520416606	520416611	520416616	520416619

ITEM	PART NO.	DESCRIPTION	QTY
	b	Cylinder Assy	2
1	504450756	Back-Up Ring	2
2	504450754	Rod Seal	2
3	520045161	Wear Ring	1
4	**b**	Tube Wldmt-Cylinder	1
5	**b**	Cylinder Rod	1
6	504232231	Wear Ring	1
7	015493500	O-Ring	1
8	504804792	Seal	1
9	580069061	Rod Wiper	1
10	580068586	Gland	1
	ac 580007102	Spacer	1
	524169526	Kit-Seal	1

FOOTNOTES:

a Not Illustrated
b Refer to Table
c Used with 5940 mm Lift Height

©2014 Yale Materials Handling Corporation

NOTES

©2014 Yale Materials Handling Corporation

13 MAST-THREE STAGE FULL FREE-LIFT

SECTION 13
MAST-THREE STAGE FULL FREE-LIFT

DESCRIPTION	PAGE
FREE-LIFT	
THREE STAGE FULL FREE-LIFT	13-16
FREE-LIFT CYLINDER	
THREE STAGE FULL FREE-LIFT	13-18
INNER MAST	
THREE STAGE FULL FREE-LIFT	13-6
INTERMEDIATE MAST	
THREE STAGE FULL FREE-LIFT	13-4
MAIN LIFT	
THREE STAGE FULL FREE-LIFT	13-8
MAIN LIFT CYLINDERS	
THREE STAGE FULL FREE-LIFT	13-12
OUTER MAST	
THREE STAGE FULL FREE-LIFT	13-2

©2014 Yale Materials Handling Corporation

OUTER MAST (FIGURE 13-1)
THREE STAGE FULL FREE-LIFT

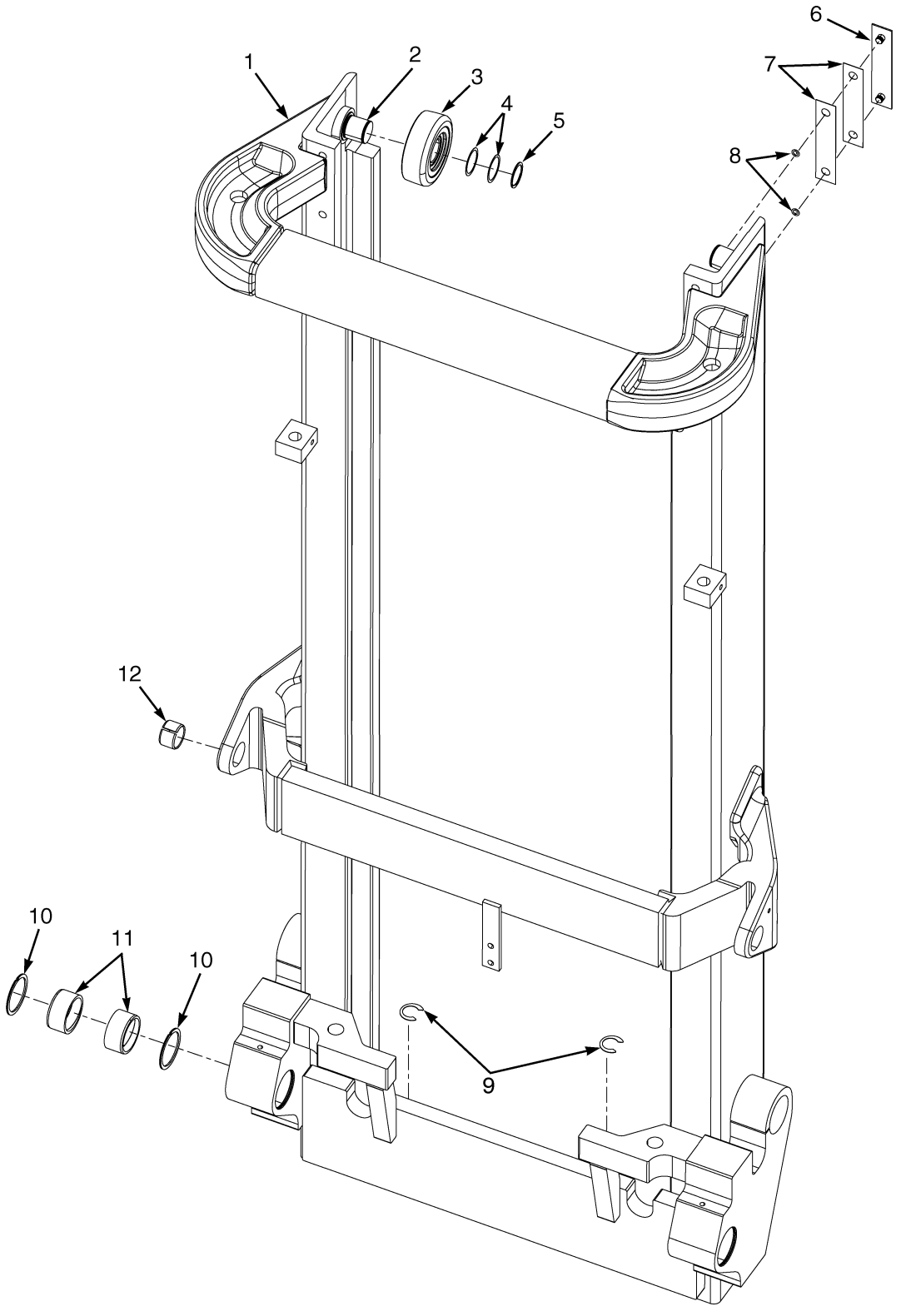

©2014 Yale Materials Handling Corporation

OUTER MASS

THREE STAGE FULL FREE-LIFT

A614

ITEM	DESCRIPTION 1 2 3 4	LIFT HEIGHT TO BOTTOM OF FORKS		
		4640 mm (182.7 in.)	5540 mm (218.1 in.)	6140 mm (241.7 in.)
	Mast Group Number	A614 4640	A614 5540	A614 6140
	Mast Assy	524198331	524198334	524198336
1	Outer Mast	580065993	580065996	580074927

ITEM	PART NO.	DESCRIPTION	QTY
	a	Mast Assy	1
1	**a**	Outer Mast	1
2	520045197	Stubshaft	2
3	520045370	Load Roller ("A") (126.75/126.49)	2
4	520045153	Shim	AR
5	031202200	Snap Ring	2
6	520045151	Wear Strip	2
7	520045157	Shim (0.020 in.)	AR
8	012824300	O-Ring	2
9	580008893	Shim	AR
10	580066241	Snap Ring	4
11	580066240	Bushing	4
12	520045464	Bushing	2

FOOTNOTES:

a Refer to Table

©2014 Yale Materials Handling Corporation

INTERMEDIATE MAST (FIGURE 13-2)
THREE STAGE FULL FREE-LIFT

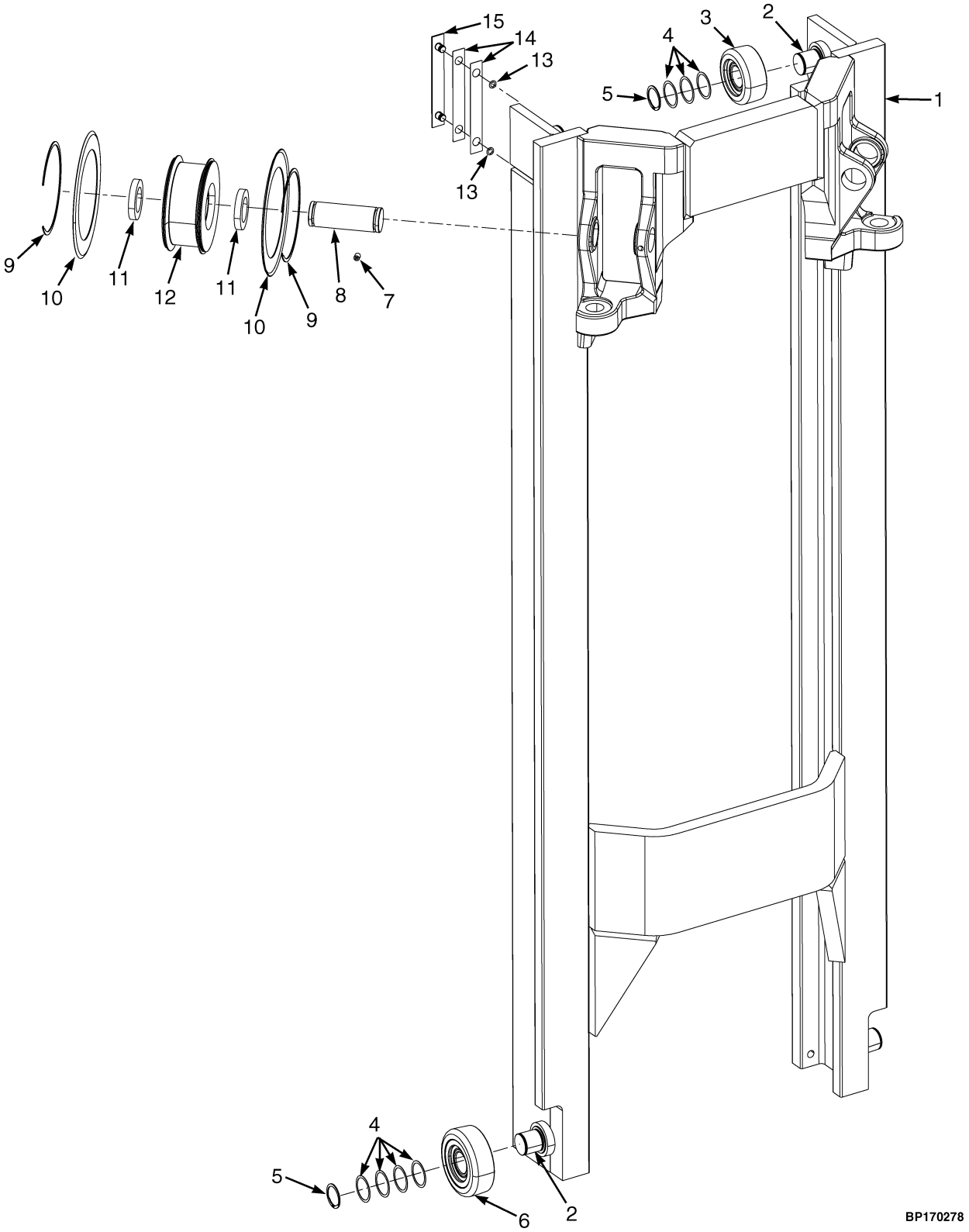

©2014 Yale Materials Handling Corporation

INTERMEDIATE MAST
THREE STAGE FULL FREE-LIFT

A614

ITEM	DESCRIPTION 1 2 3 4	LIFT HEIGHT TO BOTTOM OF FORKS		
		4640 mm (182.7 in.)	5540 mm (218.1 in.)	6140 mm (241.7 in.)
	Mast Group Number	A614 4640	A614 5540	A614 6140
	Mast Assy	524198331	524198334	524198336
1	Intermediate Mast	524198148	580006113	524198222

ITEM	PART NO.	DESCRIPTION	QTY
	a	Mast Assy	1
1	**a**	Intermediate Mast	1
2	520045197	Stubshaft	4
3	520045369	Load Roller ("A") (103.68/103.42)	2
4	520045153	Shim	AR
5	031202200	Snap Ring	4
6	520045370	Load Roller ("A") (126.75/126.49)	2
7	449013047	Setscrew	2
8	580008885	Pin	2
9	580008882	Snap Ring	4
10	580008883	Plate	4
11	580008881	Spacer	4
12	580008884	Chain Sheave	2
13	012824300	O-Ring	4
14	504234265	Shim (0.020 in.)	AR
15	504233279	Wear Strip	2

FOOTNOTES:

a Refer to Table

©2014 Yale Materials Handling Corporation

INNER MAST (FIGURE 13-3)
THREE STAGE FULL FREE-LIFT

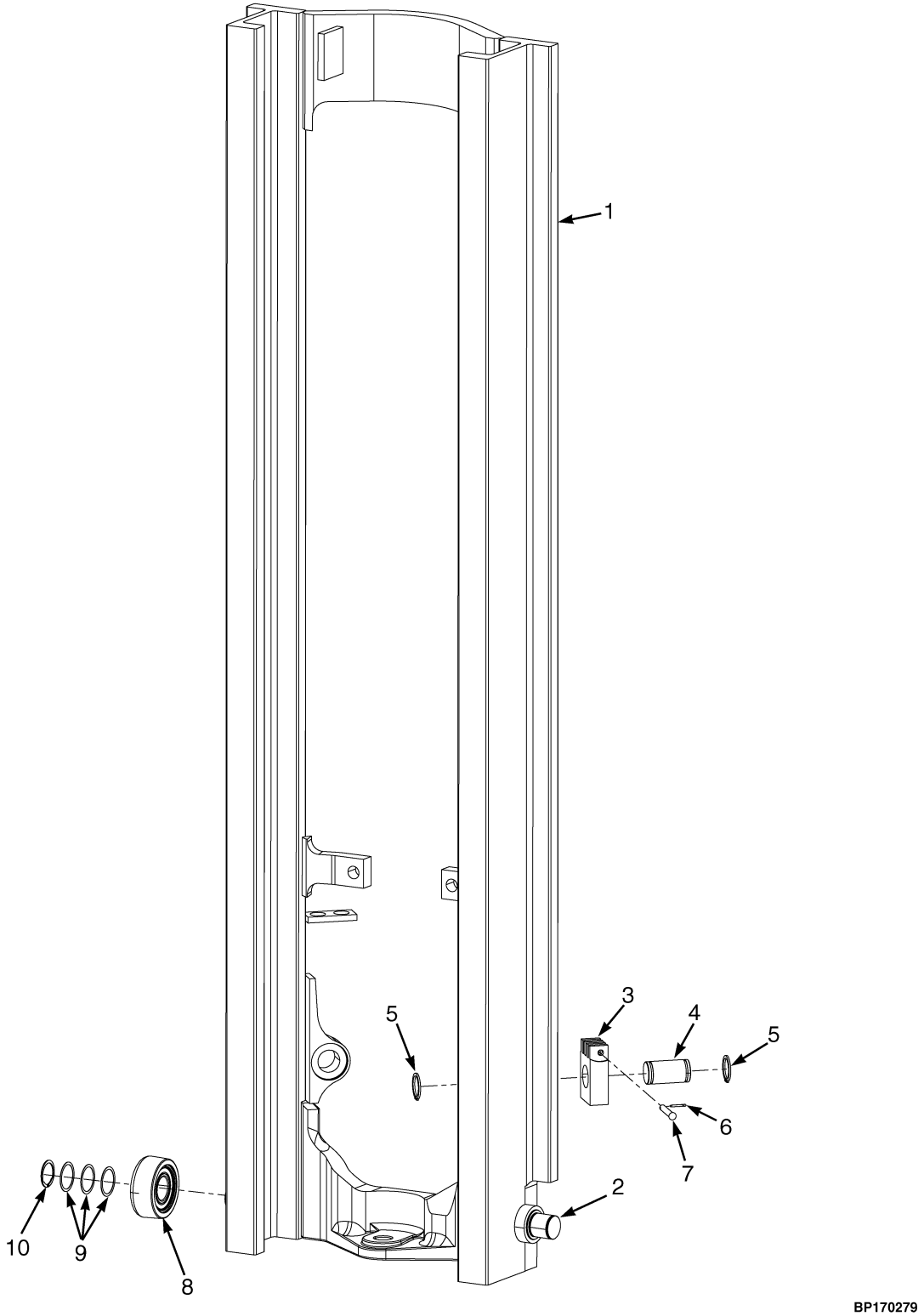

©2014 Yale Materials Handling Corporation

INNER MAST
THREE STAGE FULL FREE-LIFT

A614

ITEM	DESCRIPTION 1 2 3 4	LIFT HEIGHT TO BOTTOM OF FORKS		
		4640 mm (182.7 in.)	5540 mm (218.1 in.)	6140 mm (241.7 in.)
	Mast Group Number	A614 4640	A614 5540	A614 6140
	Mast Assy	524198331	524198334	524198336
1	Inner Mast	524198240	580006117	524198244

ITEM	PART NO.	DESCRIPTION	QTY
	a	Mast Assy	1
1	**a**	Inner Mast	1
2	580009581	Stubshaft	2
3	580008125	Chain Anchor	2
4	580008886	Pin	2
5	066965800	Snap Ring	4
6	015417900	Cotter Pin	4
7	580008124	Pin	2
8	520045369	Load Roller ("A") (103.68/103.42)	2
9	520045153	Shim	AR
10	031202200	Snap Ring	2

FOOTNOTES:

a Refer to Table

©2014 Yale Materials Handling Corporation

MAIN LIFT (FIGURE 13-4)
THREE STAGE FULL FREE-LIFT

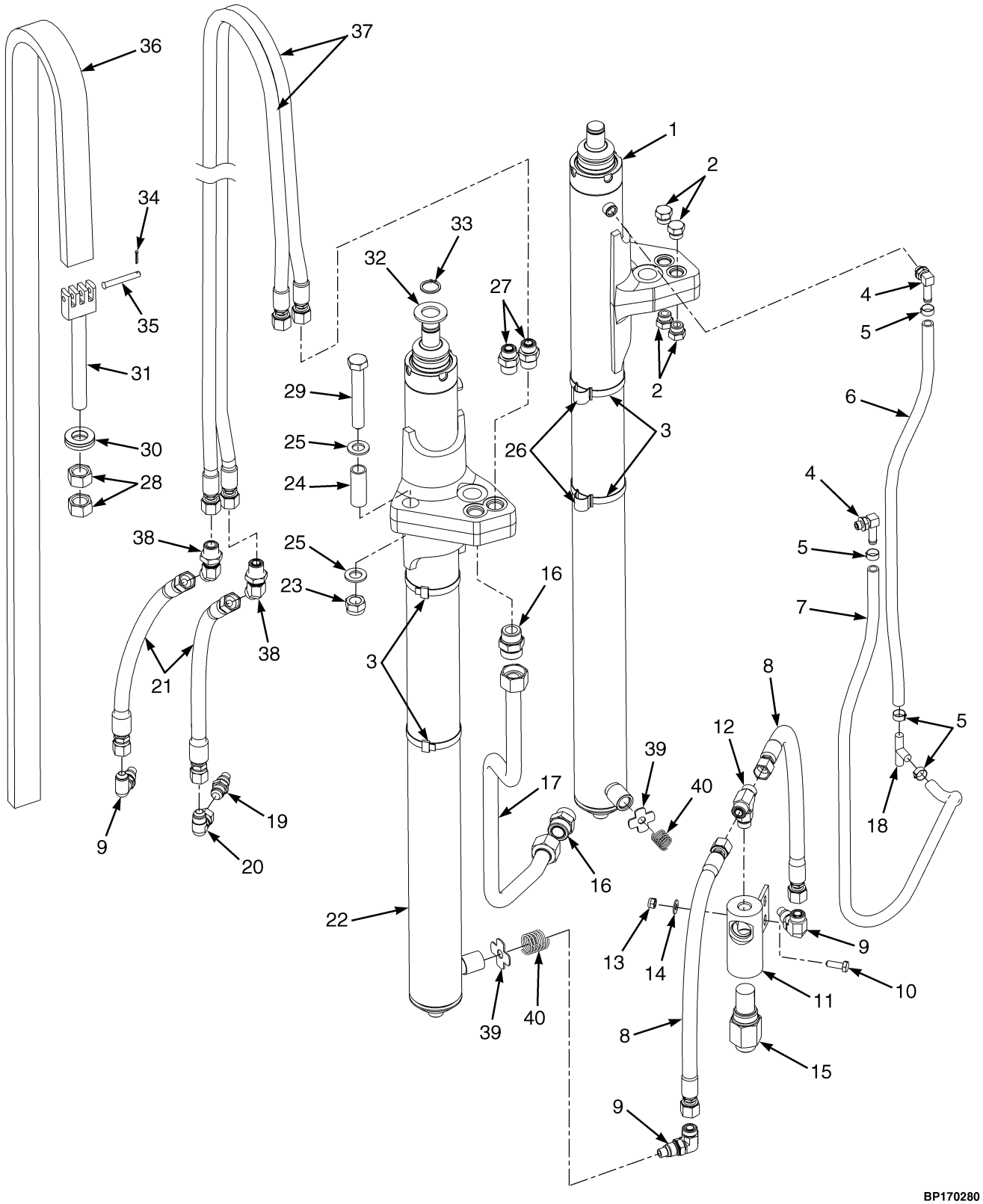

©2014 Yale Materials Handling Corporation

MAIN LIFT
THREE STAGE FULL FREE-LIFT

A614

ITEM	DESCRIPTION 1 2 3 4	LIFT HEIGHT TO BOTTOM OF FORKS		
		4640 mm (182.7 in.)	5540 mm (218.1 in.)	6140 mm (241.7 in.)
	Mast Group Number	A614 4640	A614 5540	A614 6140
6	Hose Assy	580011616	580079291	580008283
7	Hose Assy	580008282	580008239	580008242
17	Tube Weldment	580069270	580069273	580069275
36	Chain	580070085	580007104	580070091
37	Hose Assy	580070114	580064139	580070118

ITEM	PART NO.	DESCRIPTION	QTY
1	. . . . .	Lift Cylinder (RH) (☞P20325 [Page 13-12])	1
2	055160000	Fitting	4
2	052645400	O-Ring	1
3	504068737	Clamp	4
4	030252011	Fitting	2
4	052645200	O-Ring	1
5	580007557	Clamp	4
6	**a**	Hose Assy	1
7	**a**	Hose Assy	1
8	502654912	Hose Assy	2
9	504064729	Fitting	3
9	052645400	O-Ring	1
10	580055740	Capscrew	2
11	580071603	Housing	1
12	052641400	Fitting	1
12	052645400	O-Ring	1
13	580055652	Nut	2
14	580055633	Washer	2
15	580020760	Lowering Control Valve	1
16	580020432	Fitting	2
16	580029083	O-Ring	1
16	052645700	O-Ring	1
17	**a**	Tube Weldment	1
18	514835800	Fitting	1
19	504233244	Fitting	1
19	. . . . .	O-Ring	1
20	053349600	Fitting	1
21	580064321	Hose Assy	2
22	. . . . .	Lift Cylinder (LH) (☞P20325 [Page 13-12])	1
23	580071053	Nut	4
24	580008892	Spacer	2
25	580071052	Washer	8
26	580012383	Hose Clamp	4
27	580019819	Fitting	2

©2014 Yale Materials Handling Corporation

MAIN LIFT
THREE STAGE FULL FREE-LIFT

ITEM	PART NO.	DESCRIPTION	QTY
27	052645500	O-Ring	1
27	580019387	O-Ring	1
28	580071054	Nut	4
29	580071039	Capscrew	4
30	580008871	Kit-Washer	2
31	580008123	Chain Anchor	2
32	580071044	Washer	2
33	500227908	Snap Ring	2
34	015417900	Cotter Pin	4
35	580008124	Pin	2
36	**a**	Chain	2
37	**a**	Hose Assy	1
38	580039411	Fitting	2
38	580019387	O-Ring	2
39	580076680	Hose Assy	1
39	580084472	Hose Assy (Alternate Part)	1
39	580087377	Hose Assy	1
40	580008888	Washer	2
41	580008875	Spring	2

FOOTNOTES:

a Refer to Table

©2014 Yale Materials Handling Corporation

NOTES

©2014 Yale Materials Handling Corporation

MAIN LIFT CYLINDERS (FIGURE 13-5)
THREE STAGE FULL FREE-LIFT

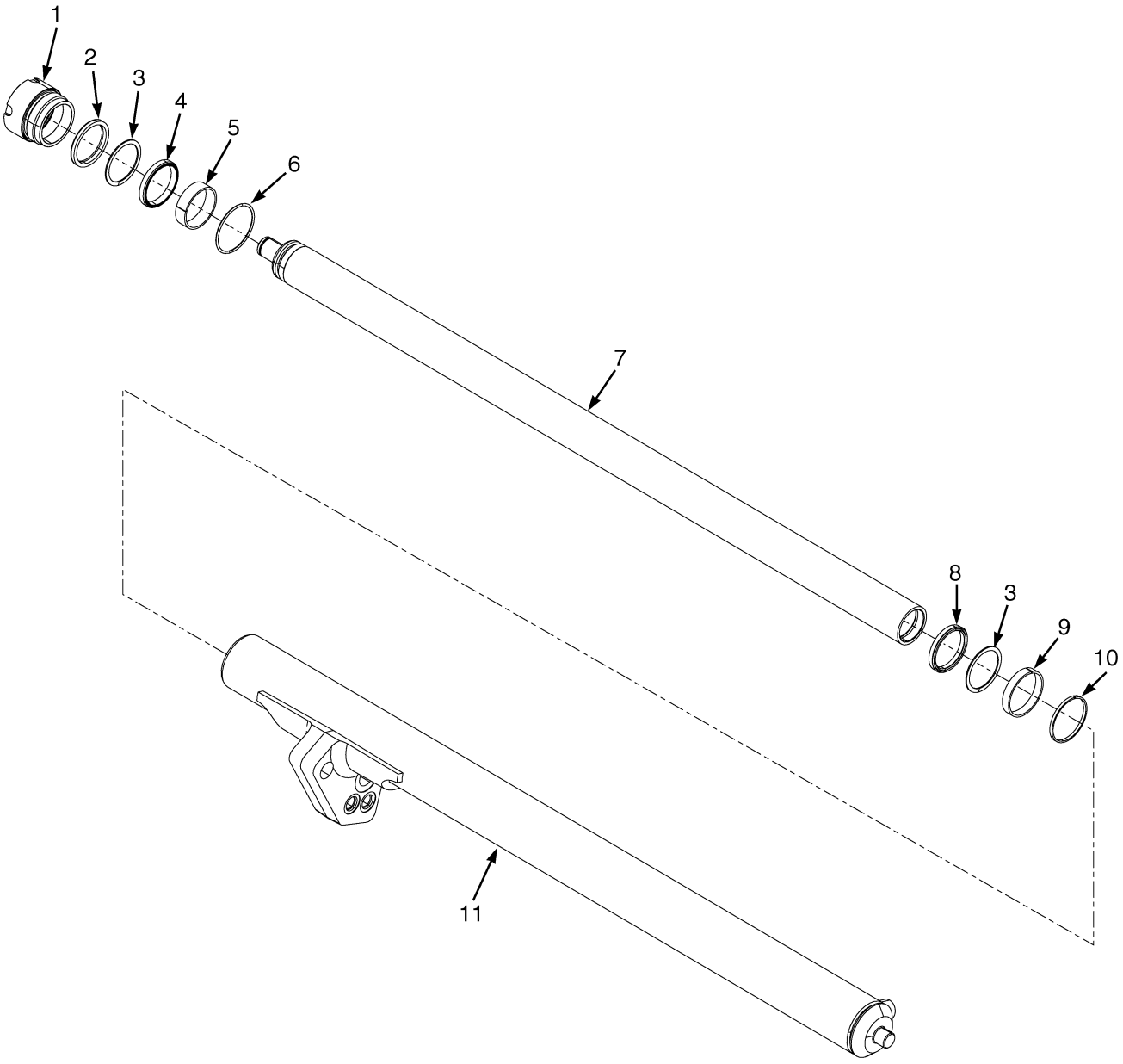

©2014 Yale Materials Handling Corporation

MAIN LIFT CYLINDERS
THREE STAGE FULL FREE-LIFT

LEFT HAND

ITEM	DESCRIPTION 1 2 3 4	LIFT HEIGHT TO BOTTOM OF FORKS		
		4640 mm (182.7 in.)	5540 mm (218.1 in.)	6140 mm (241.7 in.)
	Mast Group Number	**A614 4640**	**A614 5540**	**A614 6140**
	Cylinder Group Number	**8609204**	**8609207**	**8609209**
	Cylinder Assy	580071429	580071432	580071434
7	Cylinder Rod	520417604	520417607	520417609
11	Tube Wldmt-Cylinder	520261604	520261607	520261609
12	Spacer	----	----	580007273

RIGHT HAND

ITEM	DESCRIPTION 1 2 3 4	LIFT HEIGHT TO BOTTOM OF FORKS		
		4640 mm (182.7 in.)	5540 mm (218.1 in.)	6140 mm (241.7 in.)
	Mast Group Number	**A614 4640**	**A614 5540**	**A614 6140**
	Cylinder Group Number	**8609254**	**8609257**	**8609259**
	Cylinder Assy	580071451	580071454	580071456
7	Cylinder Rod	520417604	520417607	520417609
11	Tube Wldmt-Cylinder	520261654	520261657	520261659
12	Spacer	----	----	580007273

ITEM	PART NO.	DESCRIPTION	QTY
	a	Cylinder Assy	1
1	580068586	Gland	2
2	580069061	Rod Wiper	2
3	504450756	Back-Up Ring	2
4	580022506	Rod Seal	2
5	504232231	Wear Ring	2
6	015493500	O-Ring	2
7	**a**	Cylinder Rod	1
8	504450754	Rod Seal	2
9	504450757	Wear Ring	2
10	580006720	Piston Ring	2
11	**a**	Tube Wldmt-Cylinder	2
12	**a**	Spacer	1
	524265255	Kit-Seal	1

©2014 Yale Materials Handling Corporation

FOOTNOTES:

a Refer to Table

©2014 Yale Materials Handling Corporation

NOTES

©2014 Yale Materials Handling Corporation

FREE-LIFT (FIGURE 13-6)
THREE STAGE FULL FREE-LIFT

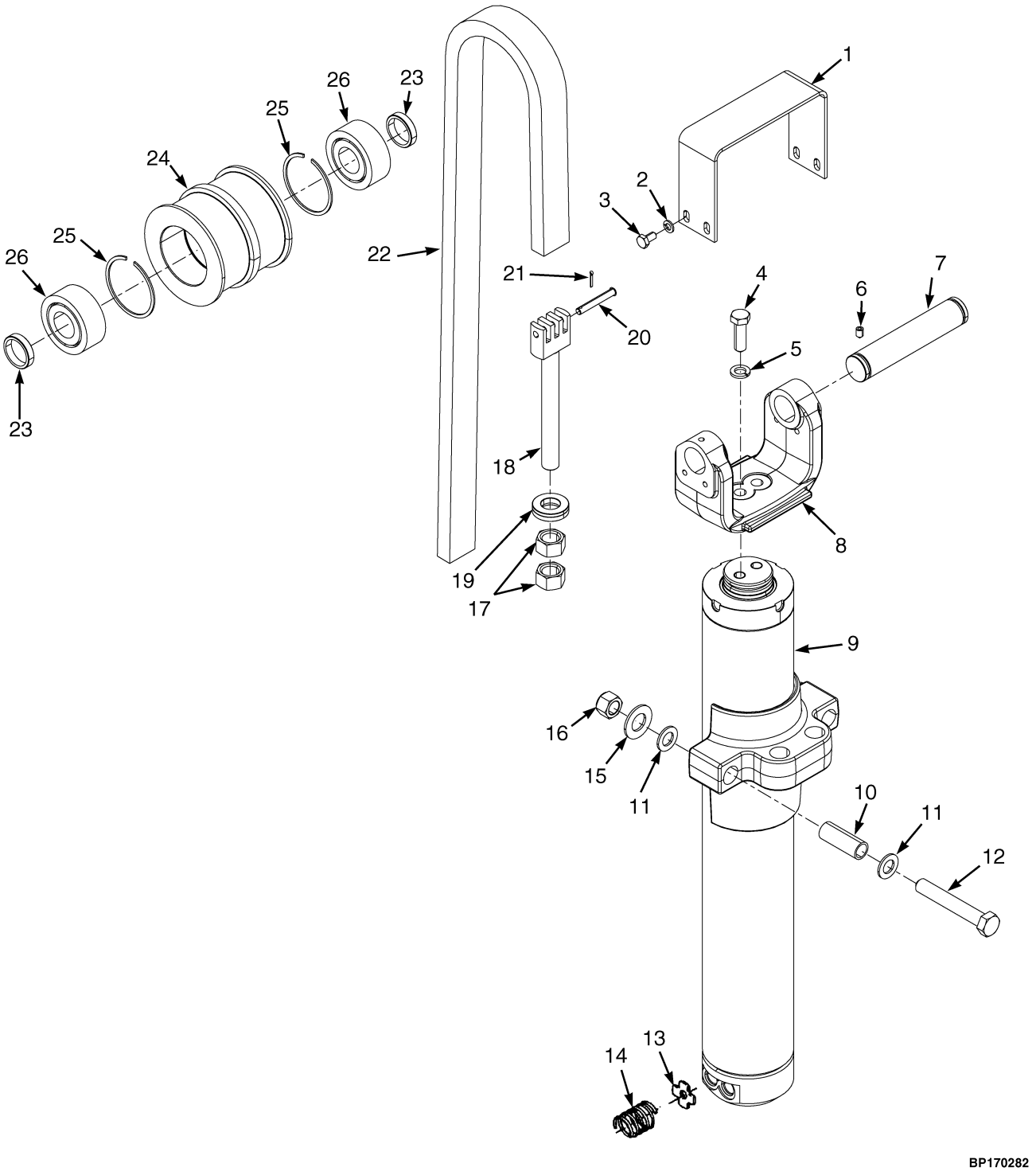

©2014 Yale Materials Handling Corporation

FREE-LIFT
THREE STAGE FULL FREE-LIFT

A614

ITEM	DESCRIPTION 1 2 3 4	LIFT HEIGHT TO BOTTOM OF FORKS		
		4640 mm (182.7 in.)	5540 mm (218.1 in.)	6140 mm (241.7 in.)
	Mast Group Number	A614 4640	A614 5540	A614 6140
22	Chain	580007258	580007282	580007260

ITEM	PART NO.	DESCRIPTION	QTY
1	580008897	Chain Guard	1
2	580071048	Washer	4
3	580062129	Capscrew	4
4	524147749	Capscrew	2
5	580056008	Washer	2
6	449013047	Setscrew	1
7	580008894	Pin	1
8	580008895	Crosshead	1
9	. . . . .	Lift Cylinder (☞P20327 [Page 13-18])	1
10	580008892	Spacer	2
11	580071052	Washer	4
12	580071039	Capscrew	2
13	580008888	Washer	2
14	580008875	Spring	2
15	580071055	Washer	2
16	580071053	Nut	4
17	580071054	Nut	4
18	580008123	Chain Anchor	2
19	580008871	Kit-Washer	2
20	580008124	Pin	2
21	015417900	Cotter Pin	4
22	**a**	Chain	2
23	504233242	Spacer	2
24	580047561	Chain Sheave	1
24	580008896	Chain Sheave	1
25	500343915	Snap Ring	2
26	520045189	Ball Bearing	2

FOOTNOTES:

a Refer to Table

©2014 Yale Materials Handling Corporation

FREE-LIFT CYLINDER (FIGURE 13-7)
THREE STAGE FULL FREE-LIFT

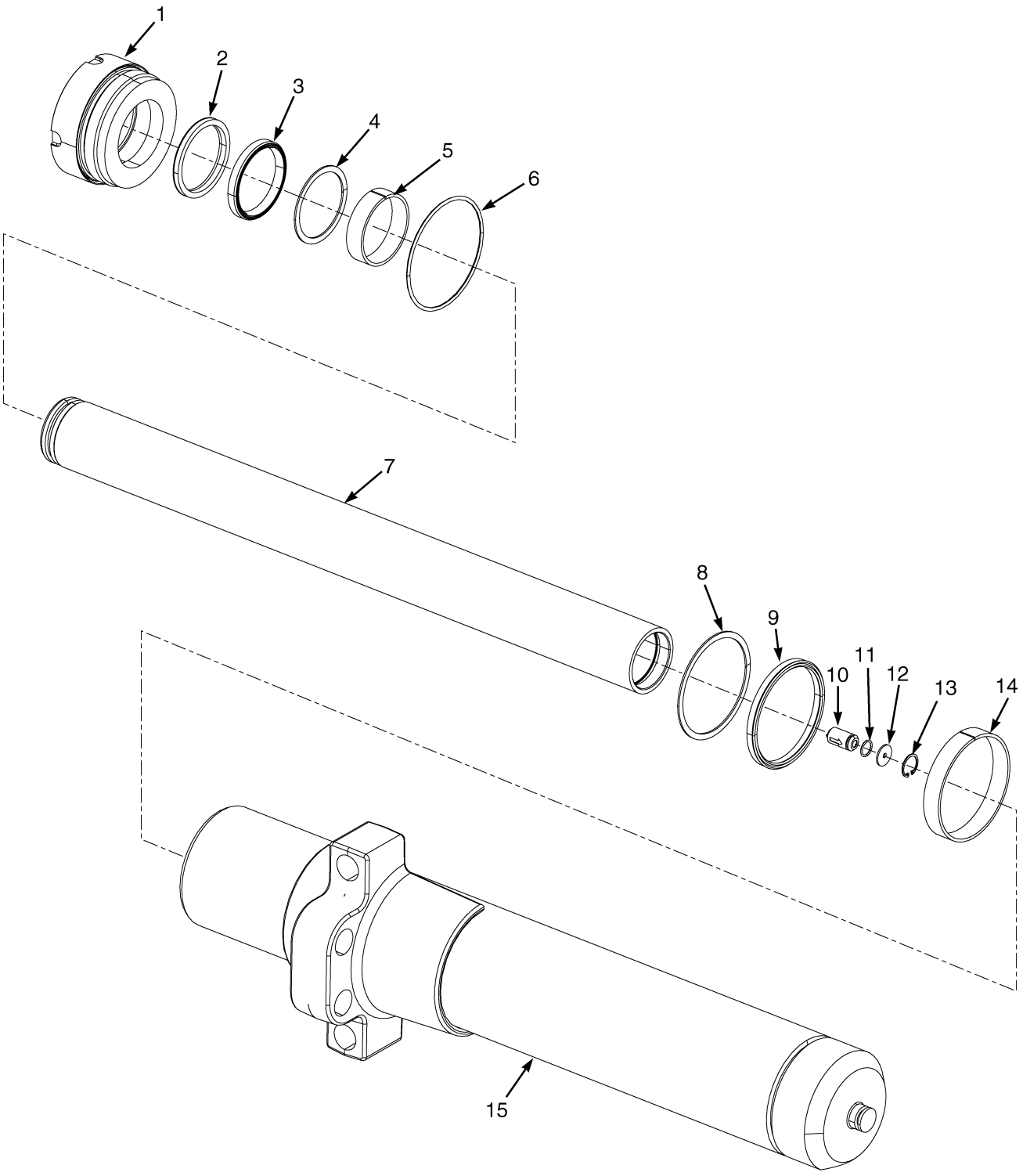

©2014 Yale Materials Handling Corporation

FREE-LIFT CYLINDER
THREE STAGE FULL FREE-LIFT

A614

ITEM	DESCRIPTION 1 2 3 4	LIFT HEIGHT TO BOTTOM OF FORKS		
		4640 mm (182.7 in.)	5540 mm (218.1 in.)	6140 mm (241.7 in.)
	Mast Group Number	**A614 4640**	**A614 5540**	**A614 6140**
	Cylinder Group Number	**8609304**	**8609307**	**8609309**
	Cylinder Assy	580069791	580069794	580070916
7	Cylinder Rod	519429615	519429627	519429635
15	Tube Wldmt-Cylinder	520262604	520262607	520262609

ITEM	PART NO.	DESCRIPTION	QTY
	a	Cylinder Assy	1
1	580069787	Gland	1
2	580054715	Rod Wiper	1
3	580000826	Seal	1
4	520045330	Back-Up Ring	1
5	520045161	Wear Ring	1
6	015483300	O-Ring	1
7	**a**	Cylinder Rod	1
8	580006721	Back-Up Ring	1
9	580002762	Rod Seal	1
10	504235239	Check Valve	1
11	580011167	O-Ring	1
12	504148200	Washer	1
13	501850904	Snap Ring	1
14	580002760	Wear Ring	1
15	**a**	Tube Wldmt-Cylinder	1
	524169527	Kit-Seal	1

FOOTNOTES:

a Refer to Table

©2014 Yale Materials Handling Corporation

NOTES

©2014 Yale Materials Handling Corporation

14 ATTACHMENTS AND HEADER HOSE GROUP

SECTION 14
ATTACHMENTS AND HEADER HOSE GROUP

DESCRIPTION	PAGE
ATTACHMENT CARRIAGE	
VALVE AND HOSES (S/N A613V04806K →) (S/N A614V02744K →)	14-42
WITH FORK POSITIONER AND BACKREST (S/N A613V04806K →) (S/N A614V02744K →)	14-38
AUXILIARY FUNCTION HOSES	
TWO STAGE LIMITED FREE-LIFT	14-20
AUXILIARY TUBE EXTENSIONS	
THREE STAGE FULL FREE-LIFT - WITHOUT QUICK DISCONNECT FITTINGS (S/N A614V02262H →)	14-56
THREE STAGE FULL FREE-LIFT - MANUAL HYDRAULICS WITH QUICK DISCONNECT FITTINGS (S/N A614V02262H →)	14-58
THREE STAGE FULL FREE-LIFT - E-HYDRAULICS WITH QUICK DISCONNECT FITTINGS (S/N A614V02262H →)	14-60
THREE STAGE FULL FREE LIFT WITH SIDE SHIFT FORK POSITIONER CARRIAGE - WITHOUT QUICK DISCONNECT FITTINGS (S/N A614V02262H →)	14-62
THREE STAGE FULL FREE LIFT WITH SIDE SHIFT FORK POSITIONER CARRIAGE - MANUAL HYDRAULICS WITH QUICK DISCONNECT FITTINGS (S/N A614V02262H →)	14-64
THREE STAGE FULL FREE LIFT WITH SIDE SHIFT FORK POSITIONER CARRIAGE - E-HYDRAULICS WITH QUICK DISCONNECT FITTINGS (S/N A614V02262H →)	14-66
TWO STAGE LIMITED FREE-LIFT - WITHOUT QUICK DISCONNECT FITTINGS (S/N A613V03307H →)	14-50
TWO STAGE LIMITED FREE-LIFT - MANUAL HYDRAULICS WITH QUICK DISCONNECT FITTINGS (S/N A613V03307H →)	14-52
TWO STAGE LIMITED FREE-LIFT - E-HYDRAULICS WITH QUICK DISCONNECT FITTINGS (S/N A613V03307H →)	14-54
BACKREST	
WITH FORK POSITIONER (S/N A614V02744K →) (S/N A613V04806K →)	14-48
CARRIAGE	
PIN TYPE - TWO STAGE LIMITED FREE-LIFT	14-8
PIN TYPE - THREE STAGE FULL FREE-LIFT	14-10
THREE STAGE FULL FREE-LIFT - HOOK TYPE	14-6
TWO STAGE LIMITED FREE-LIFT - HOOK TYPE	14-4
CARRIER ASSEMBLY	
S/N A613V04806K → S/N A614V02744K →	14-46
FORK POSITIONER ASSEMBLY	
→ S/N A613V04805K → S/N A614V02743K	14-24
S/N A613V04806K → S/N A614V02744K →	14-44
FORK POSITIONER CYLINDER	
→ S/N A613V04805K → S/N A614V02743K	14-26
HANG-ON SIDE-SHIFT CARRIAGE	
WITH FORK POSITIONER AND BACKREST	14-22
HANG-ON SIDE-SHIFT CARRIAGE AND HOSES	
WITH BACKREST AND FORK POSITIONER (S/N A613V04806K →) (S/N A614V02744K →)	14-36
HEADER HOSES AND AUXILIARY TUBE	
THREE STAGE FULL FREE-LIFT	14-16
TWO STAGE LIMITED FREE-LIFT	14-12
SIDE-SHIFT ASSEMBLY	
→ S/N A613V04805K → S/N A614V02743K	14-28
WITHOUT FORK POSITIONER (S/N A613V03724J →) (S/N A614V02455J →)	14-32

©2014 Yale Materials Handling Corporation

SECTION 14
ATTACHMENTS AND HEADER HOSE GROUP

DESCRIPTION	PAGE
SIDE-SHIFT CYLINDER	
→ S/N A613V04805K → S/N A614V02743K	14-30
WITH FORK POSITIONER (S/N A613V04806K →) (S/N A614V02744K →)	14-40
WITHOUT FORK POSITIONER (S/N A613V03724J →) (S/N A614V02455J →)	14-34

©2014 Yale Materials Handling Corporation

NOTES

©2014 Yale Materials Handling Corporation

CARRIAGE (FIGURE 14-1)
TWO STAGE LIMITED FREE-LIFT — HOOK TYPE

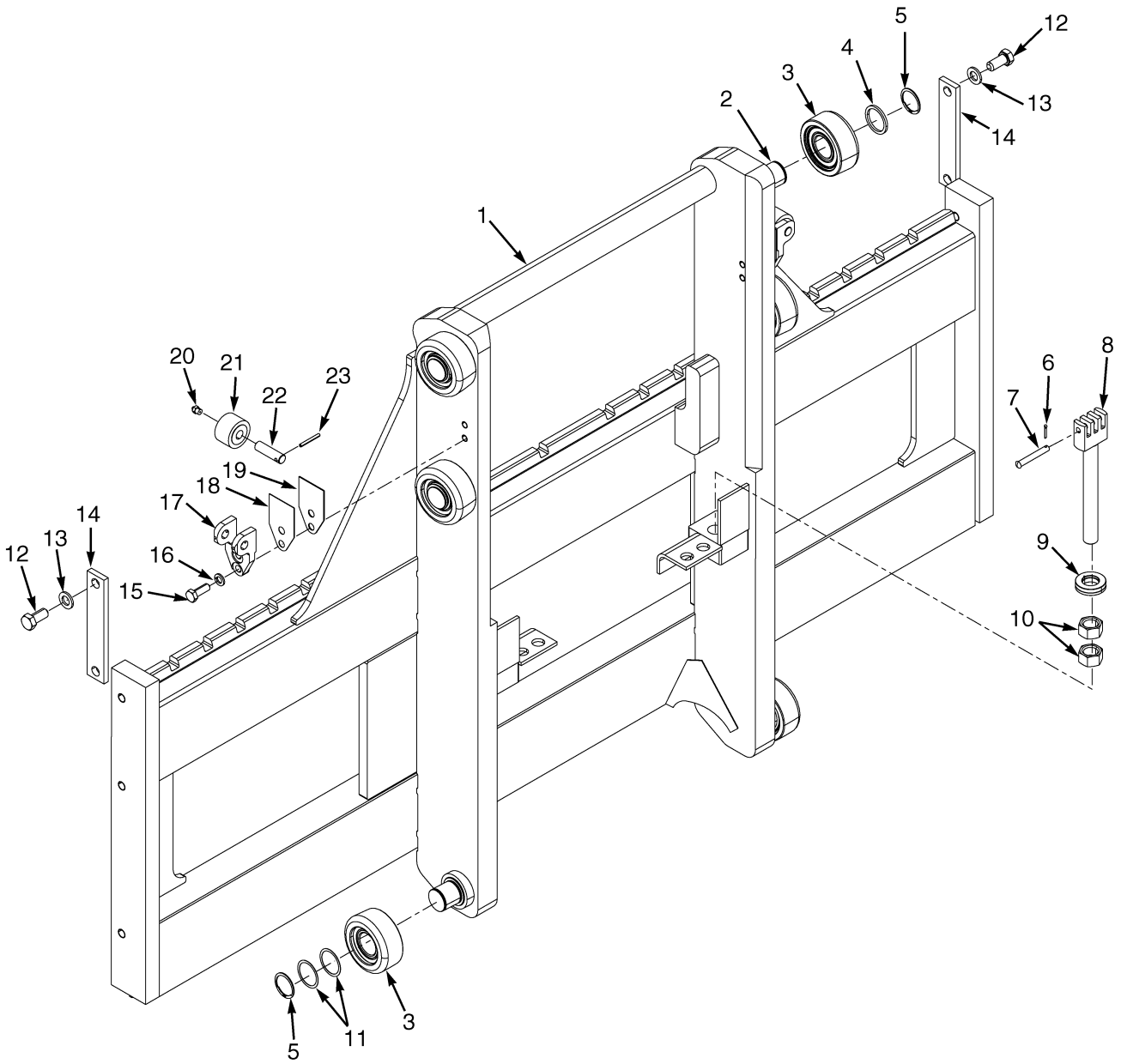

©2014 Yale Materials Handling Corporation

CARRIAGE

TWO STAGE LIMITED FREE-LIFT – HOOK TYPE

ITEM	PART NO.	DESCRIPTION	QTY
	580077555	Carriage	1
1	580090673	Carriage (Hook Type)	1
2	520045197	Stubshaft	6
3	**a** 520045369	Load Roller ("A") (103.68/103.42)	6
4	504072717	Spacer	2
5	031202200	Snap Ring	6
6	015417900	Cotter Pin	2
7	580008124	Pin	2
8	580008123	Chain Anchor	2
9	580008871	Kit-Washer	2
10	580078174	Nut	4
11	520045153	Shim	AR
12	580055980	Capscrew	4
13	580056008	Washer	4
14	580046381	Plate	2
15	**b** ~~582021324~~		
	449001058	Capscrew	4
16	**b** 449022017	Lockwasher	4
17	**b** 520045166	Bracket	2
18	**b** 520045159	Shim (0.030 in.)	AR
19	**b** 520045395	Shim (0.062 in.)	AR
20	**b** 015627900	Grease Fitting	2
21	**b** 520045165	Side Roller	2
22	**b** 520045167	Pin	2
23	**b** 520045150	Roll Pin	2

FOOTNOTES:

a Letter on Inside Face

b With Attachments

©2014 Yale Materials Handling Corporation

CARRIAGE (FIGURE 14-2)
THREE STAGE FULL FREE-LIFT — HOOK TYPE

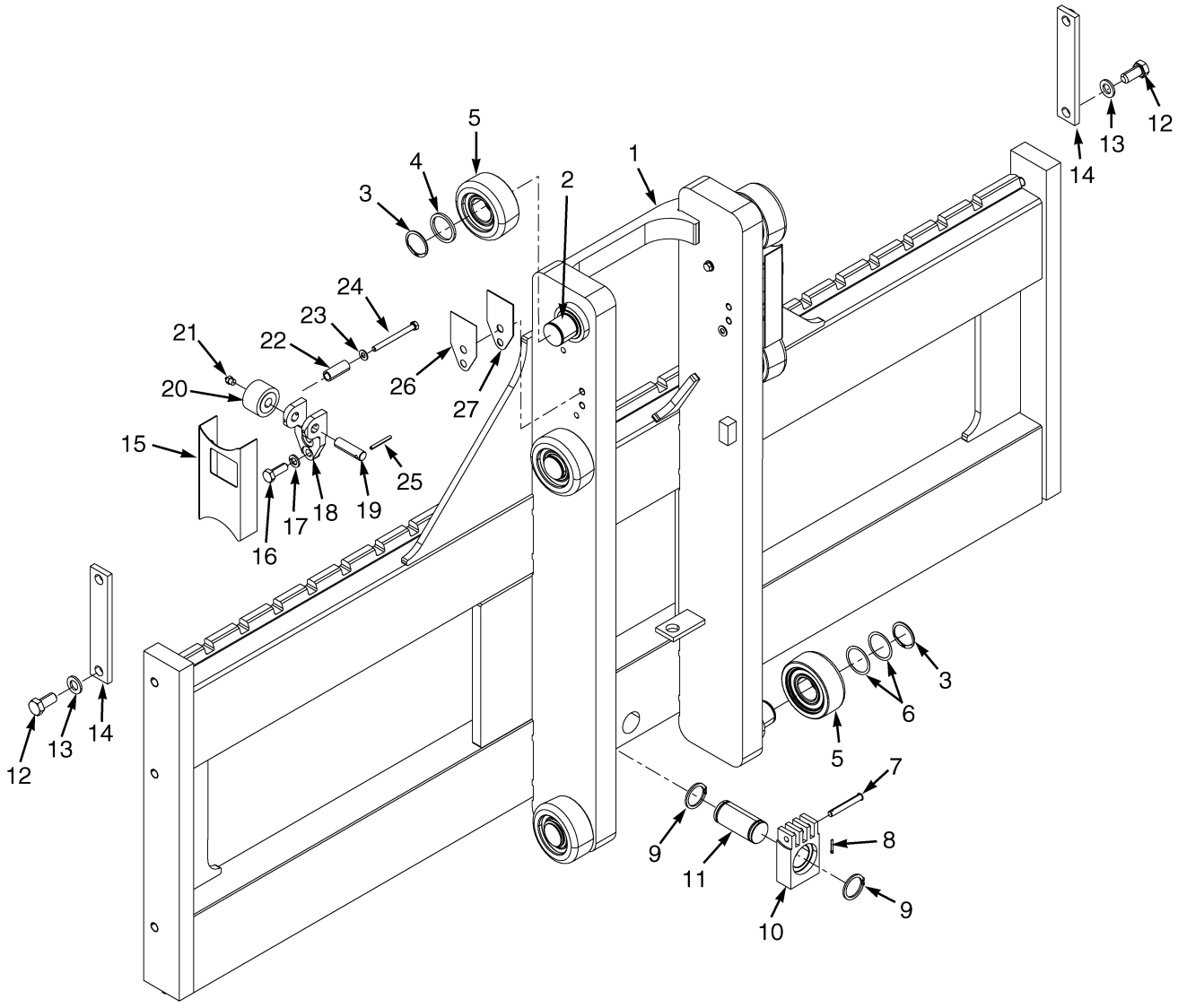

©2014 Yale Materials Handling Corporation

CARRIAGE

THREE STAGE FULL FREE-LIFT – HOOK TYPE

ITEM	PART NO.	DESCRIPTION	QTY
	524198200	Carriage (Hook Type)	1
	580005918	Carriage (78 in.) (Pin Type)	1
1	580077971	Carriage Wldmt (Hook Type)	1
1	580006125	Carriage Wldmt (Pin Type)	1
2	520045197	Stubshaft	6
3	031202200	Snap Ring	6
4	504072717	Spacer	2
5	**a** 520045369	Load Roller ("A") (103.68/103.42)	AR
6	520045153	Shim	AR
7	580008124	Pin	2
8	015417900	Cotter Pin	2
9	066965800	Snap Ring	4
10	580008125	Chain Anchor	2
11	580008898	Pin	2
12	580055980	Capscrew	4
13	580056008	Washer	4
14	580046381	Plate	2
15	520045177	Bracket Wldmt (Guard RH)	1
15	520045178	Bracket Wldmt (Guard LH)	1
16	**b** ~~582021324~~		
	449001058	Capscrew	4
17	**b** 449022017	Lockwasher	4
18	**b** 520045166	Bracket	2
19	**b** 520045167	Pin	2
20	**b** 520045165	Side Roller	2
21	**b** 015627900	Grease Fitting	2
22	520045171	Spacer	4
23	580078176	Washer	4
24	580078175	Capscrew	4
25	**b** 520045150	Roll Pin	2
26	**b** 520045159	Shim (0.030 in.)	AR
27	**b** 520045395	Shim (0.062 in.)	AR

FOOTNOTES:

a Letter on Inside Face

b With Attachments

©2014 Yale Materials Handling Corporation

CARRIAGE (FIGURE 14-3)

PIN TYPE — TWO STAGE LIMITED FREE-LIFT

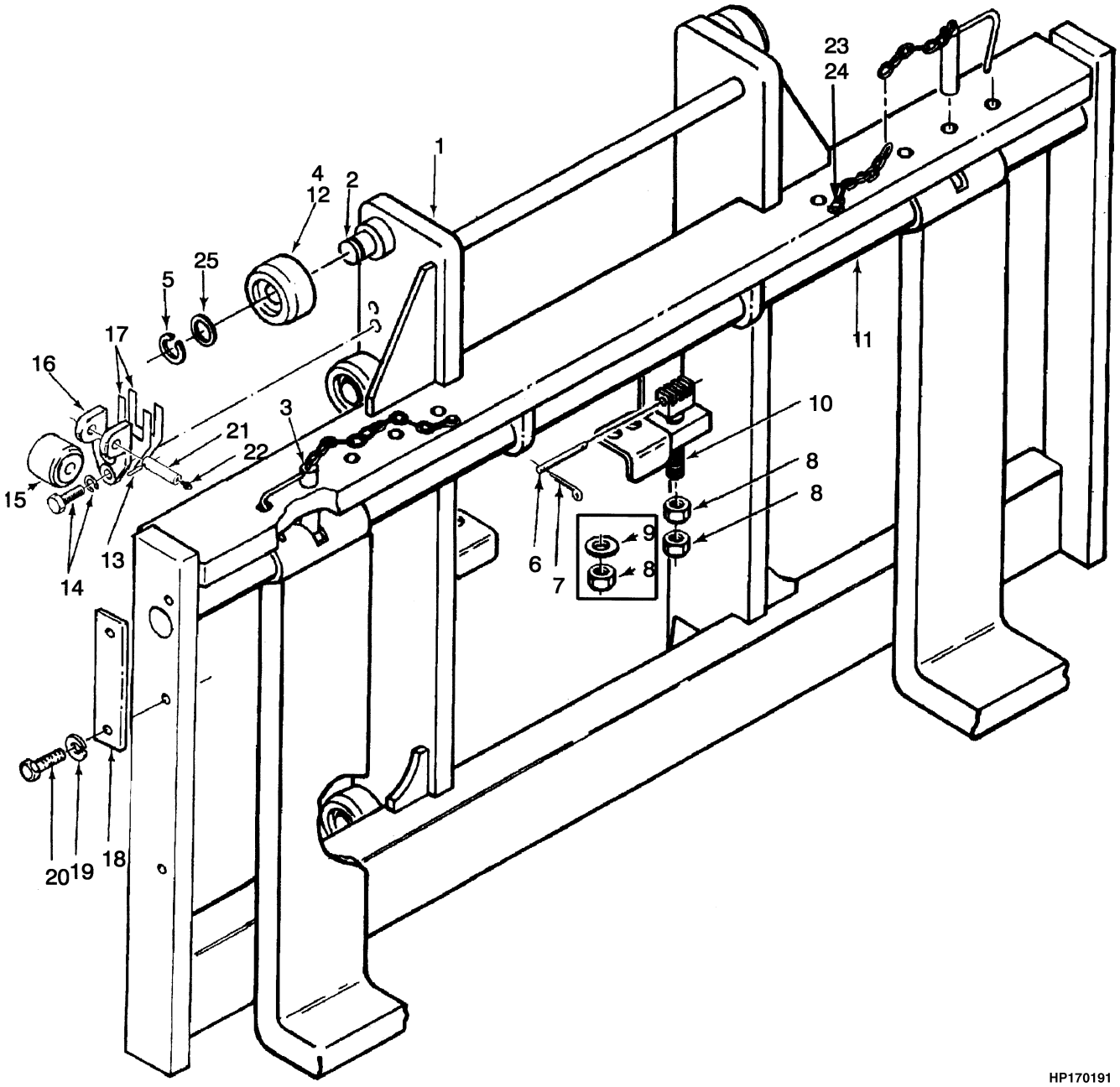

©2014 Yale Materials Handling Corporation

CARRIAGE

PIN TYPE – TWO STAGE LIMITED FREE-LIFT

ITEM	PART NO.	DESCRIPTION	QTY
	580005919	Carriage (78 in.) (1980 mm)	1
1	580006122	Carriage Wldmt	1
2	520045197	Stubshaft	6
3	580008878	Pin	2
4	520045153	Shim	AR
5	031202200	Snap Ring	6
6	580008124	Pin	2
7	015417900	Cotter Pin	2
8	449015087	Nut	4
9	580008871	Kit-Washer	2
10	580008123	Chain Anchor	2
11	580008879	Pin	2
12	**a** 520045369	Load Roller ("A") (103.68/103.42) (0.060 in.)	AR
13	**b** 520045150	Roll Pin	2
14	**b** ~~582021324~~		
	449001058	Capscrew	4
14	**b** 449022017	Lockwasher	4
15	**b** 520045165	Side Roller	2
16	**b** 520045166	Bracket	2
17	**b** 520045159	Shim (0.030 in.)	AR
17	**b** 520045395	Shim (0.062 in.)	AR
18	580046381	Plate	2
19	449022041	Lockwasher	4
20	449001400	Capscrew	4
21	**b** 520045167	Pin	2
22	**b** 015627900	Grease Fitting	2
23	449001418	Capscrew	2
24	502566904	Washer	2
25	504072717	Spacer	2

FOOTNOTES:

a Letter on Inside Face

b Optional

©2014 Yale Materials Handling Corporation

CARRIAGE (FIGURE 14-4)

PIN TYPE — THREE STAGE FULL FREE-LIFT

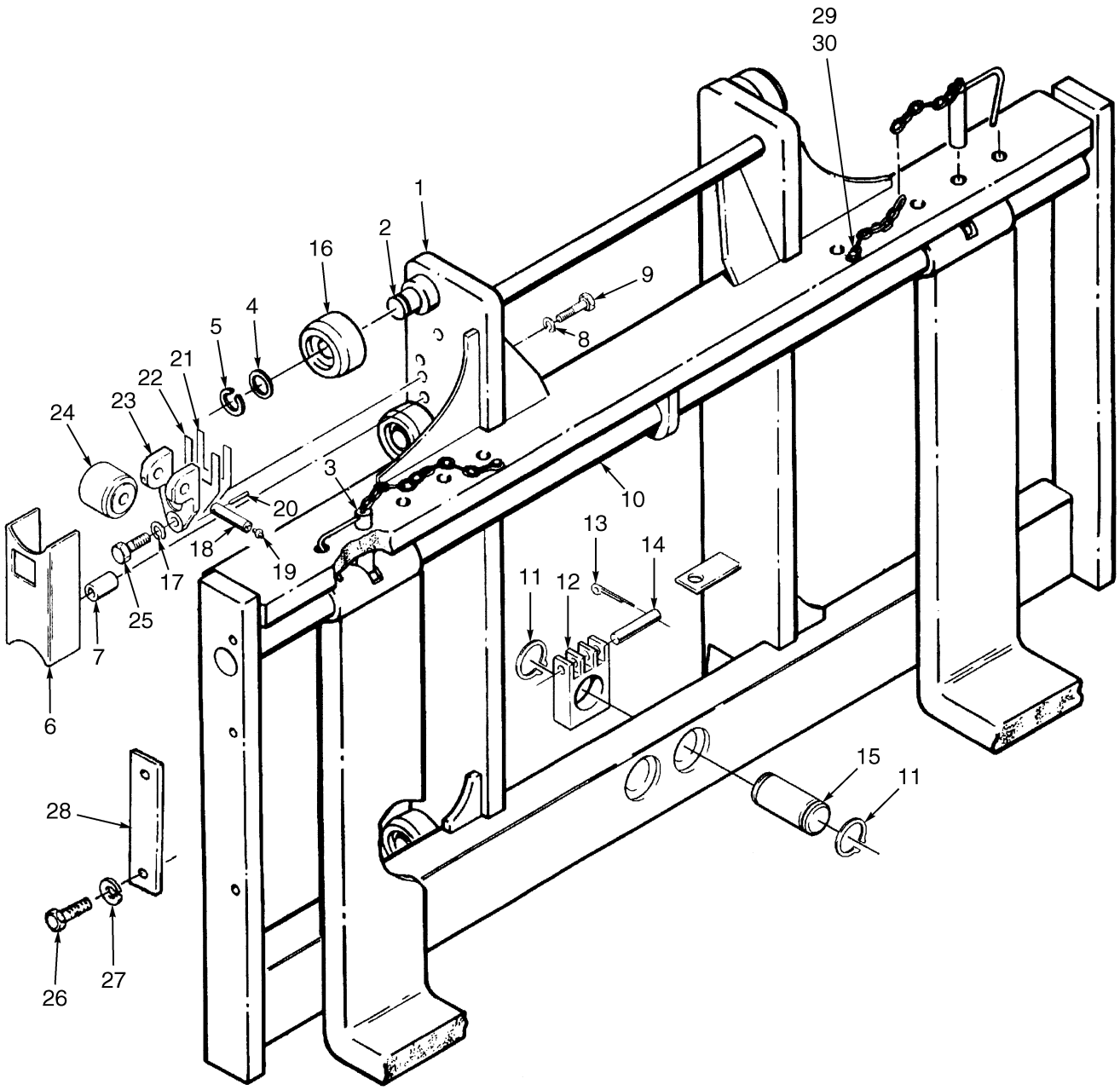

HP170606

©2014 Yale Materials Handling Corporation

CARRIAGE

PIN TYPE – THREE STAGE FULL FREE-LIFT

ITEM	PART NO.	DESCRIPTION	QTY
	580005918	Carriage (78 in.) (1980 mm)	1
1	580006125	Carriage Wldmt	1
2	520045197	Stubshaft	6
3	580008878	Pin	2
4	520045153	Shim (Bottom Four Rollers)	AR
4	504072717	Spacer (Top Two Rollers)	2
5	031202200	Snap Ring	6
6	520045177	Bracket Wldmt (Guard RH)	1
6	520045178	Bracket Wldmt (Guard LH)	1
7	520045171	Spacer	4
8	015026200	Lockwasher	4
9	203146400	Capscrew	4
10	580008879	Pin	2
11	066965800	Snap Ring	4
12	580008125	Chain Anchor	2
13	015417900	Cotter Pin	2
14	580008124	Pin	2
15	580008898	Pin	2
16	**a** 520045369	Load Roller ("A") (103.68/103.42) (0.060 in.)	AR
17	**b** 449022017	Lockwasher	4
18	**b** 520045167	Pin	2
19	**b** 015627900	Grease Fitting	2
20	**b** 520045150	Roll Pin	2
21	**b** 520045159	Shim (0.030 in.)	AR
22	**b** 520045395	Shim (0.062 in.)	AR
23	**b** 520045166	Bracket	2
24	**b** 520045165	Side Roller	2
25	**b** ~~582021324~~		
	449001058	Capscrew	4
26	449001400	Capscrew	4
27	449022041	Lockwasher	4
28	580046381	Plate	2
29	449001418	Capscrew	2
30	502566904	Washer	2

FOOTNOTES:

a Letter on Inside Face

b Optional

©2014 Yale Materials Handling Corporation

HEADER HOSES AND AUXILIARY TUBE (FIGURE 14-5)

TWO STAGE LIMITED FREE-LIFT

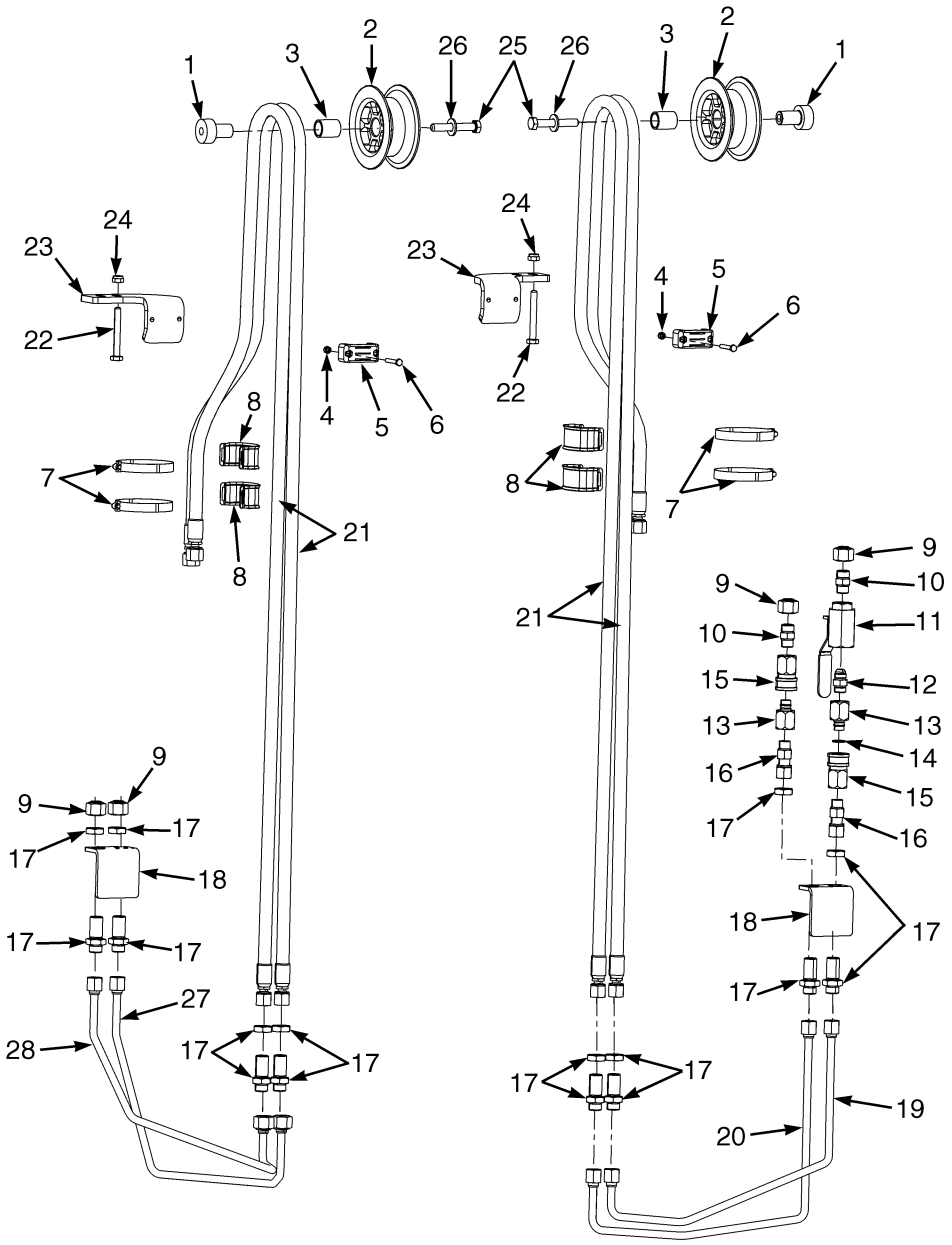

BP170291

©2014 Yale Materials Handling Corporation

HEADER HOSES AND AUXILIARY TUBE

TWO STAGE LIMITED FREE-LIFT

A613

ITEM	DESCRIPTION 1 2 3 4	LIFT HEIGHT TO BOTTOM OF FORKS				
		2940 mm (115.7 in.)	3340 mm (131.5 in.)	4340 mm (170.9 in.)	5340 mm (210.2 in.)	5940 mm (233.9 in.)
	Mast Group Number	A613 2940	A613 3340	A613 4340	A613 5340	A613 5940
	Mast Assy	524198301	524198303	524198308	524198313	524198316
21	Hose Assy	580072132	580072134	580072139	580072144	580072145

KEY:
A: Three function
B: Four Function

ITEM	PART NO.	DESCRIPTION	QTY A	QTY B
	a	Mast Assy	1	1
1	520045244	Stubshaft	1	2
2	580029125	Hose Sheave	1	2
3	520045187	Bushing	1	2
4	580055650	Nut	2	4
5	580006903	Hose Clamp	1	2
6	580055731	Capscrew	2	4
7	505965599	Clamp	2	4
8	580012772	Hose Clamp	2	4
9	580039425	Fitting	2	4
10	**b** 580020430	Fitting	2	2
10	052645300	O-Ring	1	1
10	580063949	O-Ring	1	1
11	**bc** 580071068	Drain Valve	1	1
12	**bc** 052643300	Fitting	1	1
12	**c** 052645300	O-Ring	1	1
13	**b** 518803619	Fitting	2	2
14	**b** 052645300	O-Ring	1	1
15	**b** 518802601	Quick Disconnect Fitting	2	2
16	**c** 580069454	Fitting	2	2
16	**c** 580063949	O-Ring	1	1
17	580020987	Fitting	4	6
17	580063949	O-Ring	1	1
18	580076912	Bracket	1	2
19	580078959	Tube Assy	..	1
20	580078960	Tube Assy	..	1
21	**a**	Hose Assy	2	4
22	580071041	Capscrew	2	4
23	580064308	Bracket (RH)	1	1
23	580064307	Bracket (LH)	..	1
24	580055652	Nut	2	4
25	580055746	Capscrew	1	2
26	580056007	Washer	1	2
27	580078958	Tube Assy	1	..

©2014 Yale Materials Handling Corporation

HEADER HOSES AND AUXILIARY TUBE
TWO STAGE LIMITED FREE-LIFT

KEY:
A: Three function
B: Four Function

ITEM	PART NO.	DESCRIPTION	QTY A	QTY B
28	580078957	Tube Assy	1	..

FOOTNOTES:

a Refer to Table
b With Quick Discconnect Fittings
c → PENDING PER ECN 10594308

©2014 Yale Materials Handling Corporation

NOTES

©2014 Yale Materials Handling Corporation

HEADER HOSES AND AUXILIARY TUBE (FIGURE 14-6)

THREE STAGE FULL FREE-LIFT

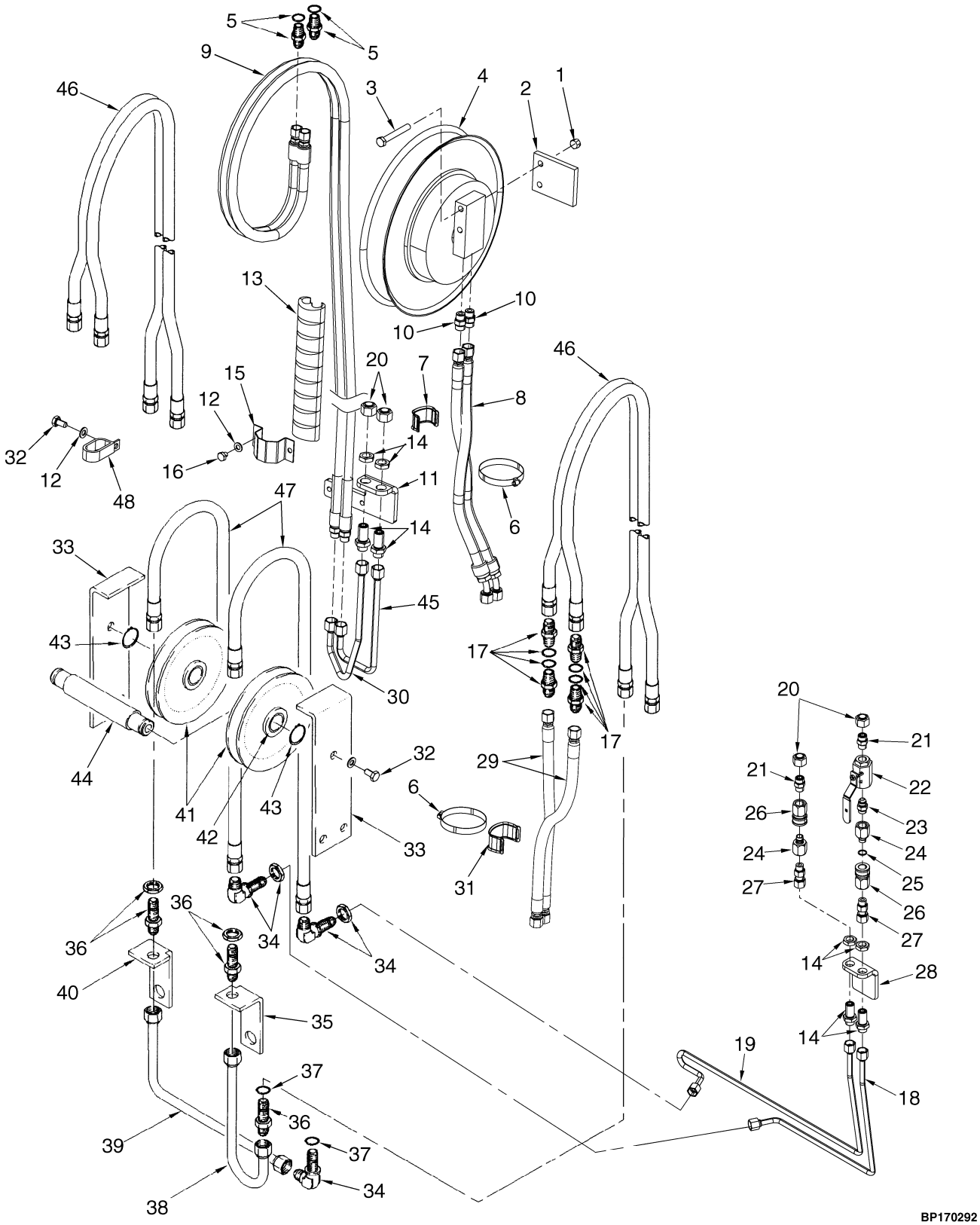

©2014 Yale Materials Handling Corporation

HEADER HOSES AND AUXILIARY TUBE
THREE STAGE FULL FREE-LIFT

A614

ITEM	DESCRIPTION 1 2 3 4	LIFT HEIGHT TO BOTTOM OF FORKS		
		4640 mm (182.7 in.)	5540 mm (218.1 in.)	6140 mm (241.7 in.)
	Mast Group Number	A614 4640	A614 5540	A614 6140
8	Hose Assy	580072158	580072161	524198086
9	Hose Assy	580062332	580062334	580062334
29	Hose Assy	580072197	580072200	580072202
46	Hose Assy	580072218	580072221	580072223
47	Hose Assy	580072178	580072181	580072183

KEY:
A: Three Function
B: Four Function

ITEM	PART NO.	DESCRIPTION	QTY A	QTY B
1	580056001	Nut	..	2
2	580006335	Mounting Plate	..	1
3	580061562	Capscrew	..	2
4	520048843	Hose Reel (Left Hand)	1	..
4	520045265	Hose Reel (Right Hand)	..	1
4	520045333	Kit-Seal	1	1
5	052643300	Fitting	..	2
5	052645300	O-Ring	..	1
6	505965599	Clamp	AR	AR
7	580027355	Hose Clamp	..	2
8	**b**	Hose Assy	..	2
9	**b**	Hose Assy	..	2
10	580020430	Fitting	..	2
10	052645300	O-Ring	..	1
10	580063949	O-Ring	..	1
11	580069679	Bracket (Optional)	..	1
13	520045263	Strain Relief	..	1
14	580020987	Fitting	..	2
14	580063949	O-Ring	..	1
15	520045264	Bracket	..	1
16	580061717	Capscrew	..	2
16	580095288	Capscrew (Alternate Part)	..	2
17	580019814	Fitting	4	4
17	052645400	O-Ring	1	1
17	580063949	O-Ring	1	1
18	580077936	Tube Assy	1	1
19	580078962	Tube Assy	1	1
20	580039425	Fitting	2	4
21	**c** 580020430	Fitting	..	2
21	052645300	O-Ring	1	1

©2014 Yale Materials Handling Corporation

HEADER HOSES AND AUXILIARY TUBE
THREE STAGE FULL FREE-LIFT

KEY:
A: Three Function
B: Four Function

ITEM	PART NO.	DESCRIPTION	QTY A	QTY B
21	580063949	O-Ring	1	1
22	**cd** 580071068	Drain Valve	1	1
23	**cd** 052643300	Fitting	..	1
23	**d** 052645300	O-Ring	1	1
24	**c** 518803619	Fitting	2	2
25	**c** 052645300	O-Ring	1	1
26	**c** 518802601	Quick Disconnect Fitting	2	2
27	**cd** 580069454	Fitting	2	2
27	**d** 580063949	O-Ring	1	1
27	**d** 052645300	O-Ring	1	1
28	580076912	Bracket	1	1
29	**b**	Hose Assy	2	2
30	580077816	Tube Assy	..	1
31	580012772	Hose Clamp	AR	AR
32	580062129	Capscrew	3	3
33	580006331	Bracket	2	2
34	580039402	Fitting	3	3
34	580063949	O-Ring	1	1
35	580006334	Bracket	1	1
36	580020987	Fitting	3	3
36	580019387	O-Ring	1	1
37	580070719	Shim	2	2
38	580081252	Tube Assy	1	1
39	580081249	Tube Assy	1	1
40	580006333	Bracket	1	1
41	520045169	Sheave	2	2
42	520045154	Bushing	1	1
43	500227905	Snap Ring	2	2
44	580072424	Shaft	1	1
45	580077815	Tube Assy	..	1
46	**b**	Hose Assy	2	2
47	**b**	Hose Assy	2	2
48	504062736	Clamp	..	1
49	580062129	Capscrew	2	3
	a 580037688	Dust Cap	1	1
	a 580037687	Dust Cap	1	1

FOOTNOTES:

a Not Illustrated
b Refer to Table
c With Quick Disconnect Fittings
d → PENDING PER ECN 10594308

©2014 Yale Materials Handling Corporation

NOTES

©2014 Yale Materials Handling Corporation

AUXILIARY FUNCTION HOSES (FIGURE 14-7)

TWO STAGE LIMITED FREE-LIFT

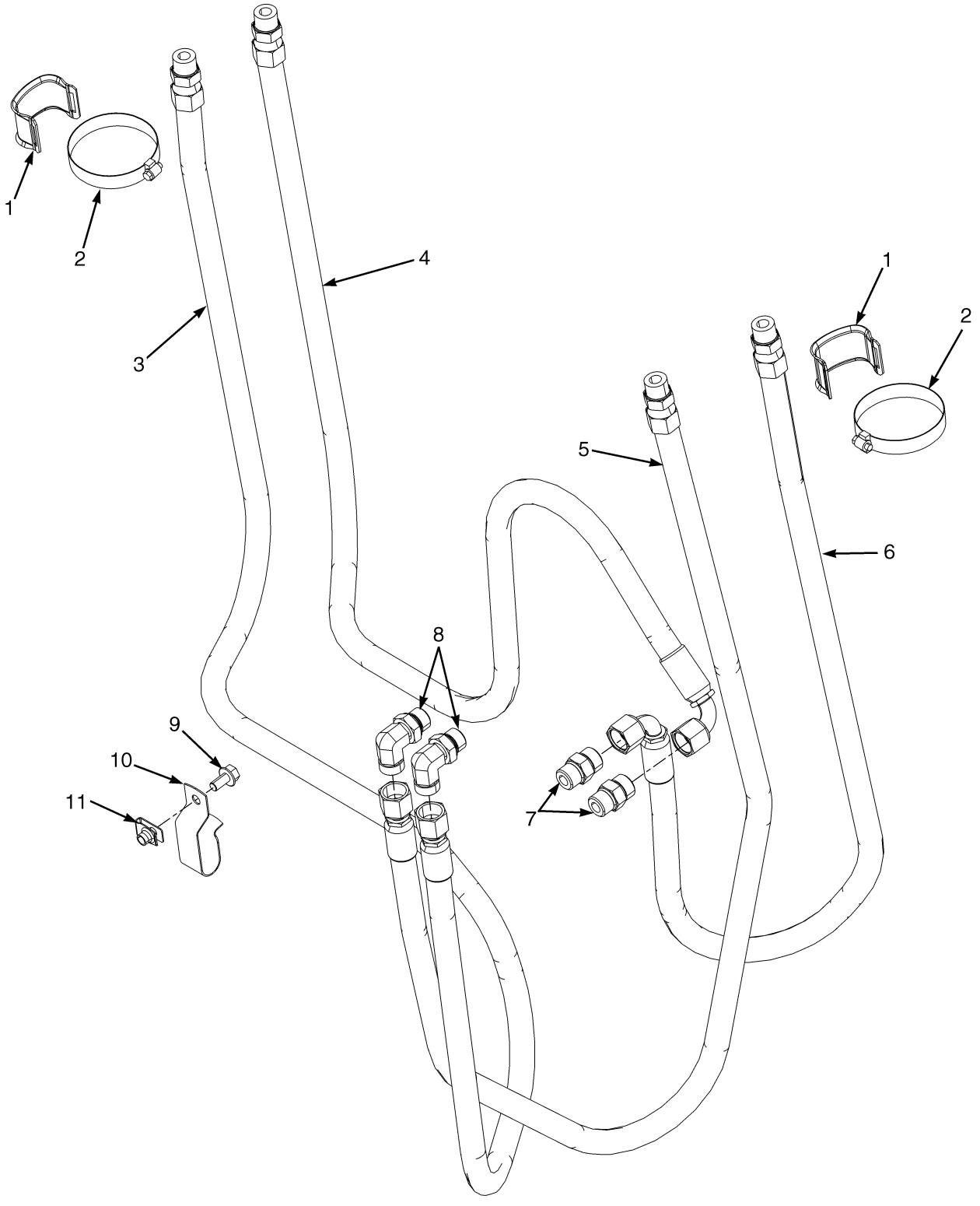

©2014 Yale Materials Handling Corporation

AUXILIARY FUNCTION HOSES
TWO STAGE LIMITED FREE-LIFT

KEY:
A: Three Function
B: Four Function

ITEM	PART NO.	DESCRIPTION	QTY A	QTY B
1	580027355	Hose Clamp	1	1
2	505965599	Clamp	1	1
3	580076437	Hydraulic Hose Asm (Four Function)	..	1
4	580076438	Hydraulic Hose Asm (Four Function)	..	1
5	580060076	Hydraulic Hose Asm (Three Function)	1	..
6	580060078	Hydraulic Hose Asm (Three Function)	1	..
7	580020430	Fitting	1	1
8	580020576	Fitting	1	1
9	580047714	Capscrew	..	1
10	580045558	Clip	..	1
11	580026621	Nut	..	1

©2014 Yale Materials Handling Corporation

HANG-ON SIDE-SHIFT CARRIAGE (FIGURE 14-8)
WITH FORK POSITIONER AND BACKREST

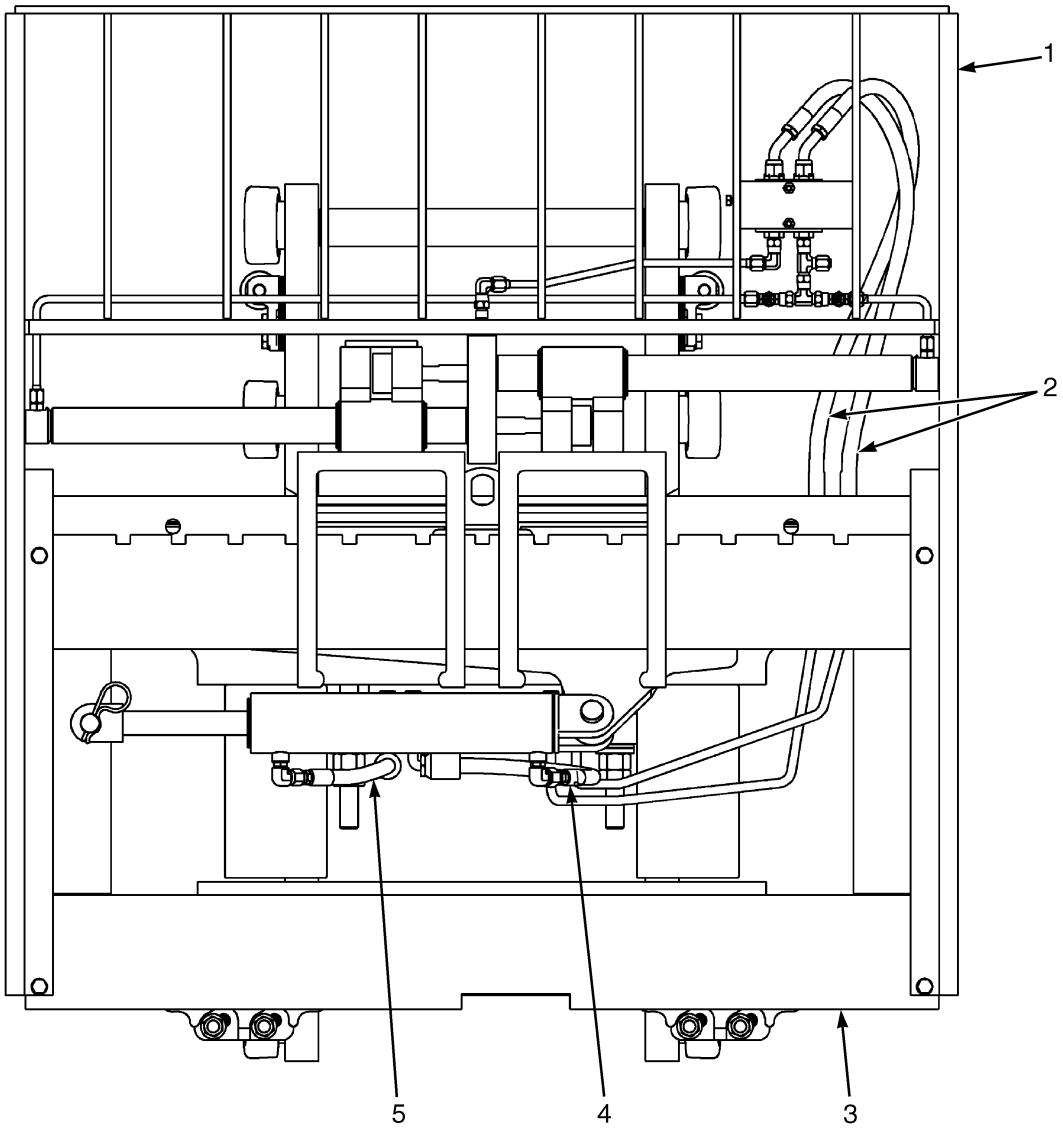

©2014 Yale Materials Handling Corporation

HANG-ON SIDE-SHIFT CARRIAGE
WITH FORK POSITIONER AND BACKREST

KEY:
A: Two Stage Limited Free-Lift
B: Three Stage Full Free-Lift

ITEM	PART NO.	DESCRIPTION	QTY A	QTY B
	bc 580080918	Side-Shift Carriage	1	1
1	**bc** 580084298	Fork Positioner Assy (☞P20351 [Page 14-24])	1	1
2	**bc** 580080636	Hose Assy	2	2
3	**bc** 580084297	Side-Shift Carriage (☞P20352 [Page 14-28])	1	1
3	**ade** 582013183	Hang-ON Side Shift (☞P23187 [Page 14-32])	1	1
4	**b** 580080632	Hose Assy	1	..
4	**ad** 582013128	Hose Assy	1	..
4	**c** 580080635	Hose Assy	..	1
4	**ae** 582013130	Hose Assy	..	1
5	**b** 580080631	Hose Assy	1	..
5	**ad** 582013127	Hose Assy	1	..
5	**c** 580080633	Hose Assy	..	1
5	**ae** 582013130	Hose Assy	..	1

FOOTNOTES:

a Without Fork Positioner
b → S/N A613V04805K
c → S/N A614V02743K
d S/N A613V03724J →
e S/N A614V02455J →

©2014 Yale Materials Handling Corporation

FORK POSITIONER ASSEMBLY (FIGURE 14-9)

(→ S/N A613V04805K) (→ S/N A614V02743K)

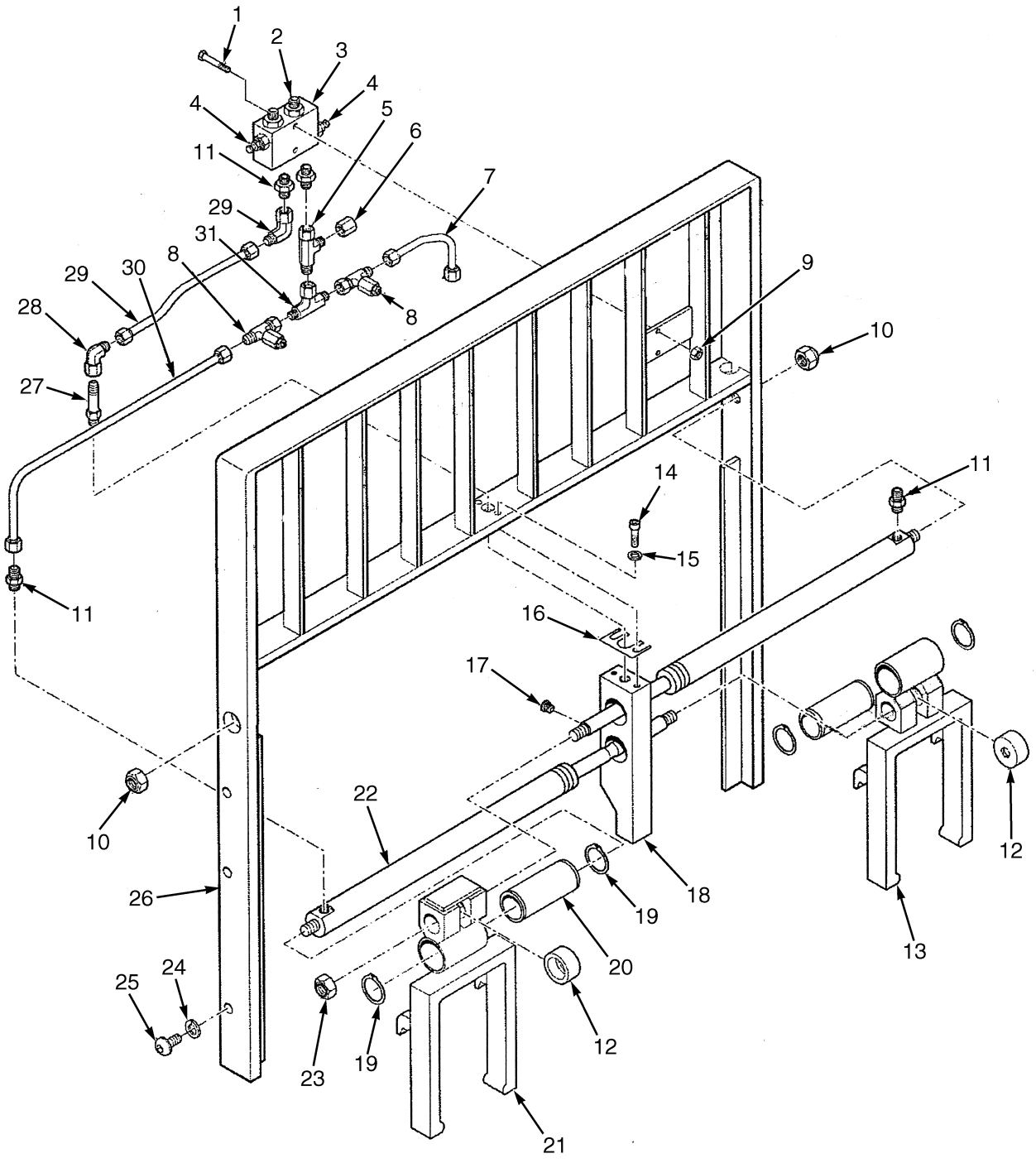

BP000373

©2014 Yale Materials Handling Corporation

FORK POSITIONER ASSEMBLY

(→ S/N A613V04805K) (→ S/N A614V02743K)

ITEM	PART NO.	DESCRIPTION	QTY
	580084298	Fork Positioner Assy	1
1	580084134	Capscrew	2
2	580084143	Fitting	2
3	580084127	Valve Block	1
4	580084075	Valve	2
5	580084130	Fitting	1
6	580084137	Nut	1
7	580084136	Tube	1
8	580084133	Fitting	2
8	580084160	T-Fitting	1
8	580084270	O-Ring	1
8	580084161	Setscrew	1
8	580084162	Cap	1
8	580084163	Nut	1
9	580084135	Nut	2
10	580084122	Nut	2
11	580084128	Fitting	4
12	580084119	Lug	2
13	580084262	Fork Frame (LH)	1
14	580084121	Capscrew	2
15	580084144	Lockwasher	2
16	580084118	Shim	1
17	580084123	Plug	1
18	580084140	Plate	1
19	580084074	Snap Ring	4
20	580084120	Bushing	2
21	580084261	Fork Frame (RH)	1
22	580084260	Cylinder Assy (☞P20353 [Page 14-26])	2
23	580084132	Nut	2
24	580084263	Plug	6
25	580084264	Capscrew	6
26	580084259	Frame	1
27	580084076	Fitting	1
28	580084129	Fitting	2
29	580084266	Tube	1
30	580084265	Tube	1
31	580084131	Fitting	1

©2014 Yale Materials Handling Corporation

FORK POSITIONER CYLINDER (FIGURE 14-10)

(→ S/N A613V04805K) (→ S/N A614V02743K)

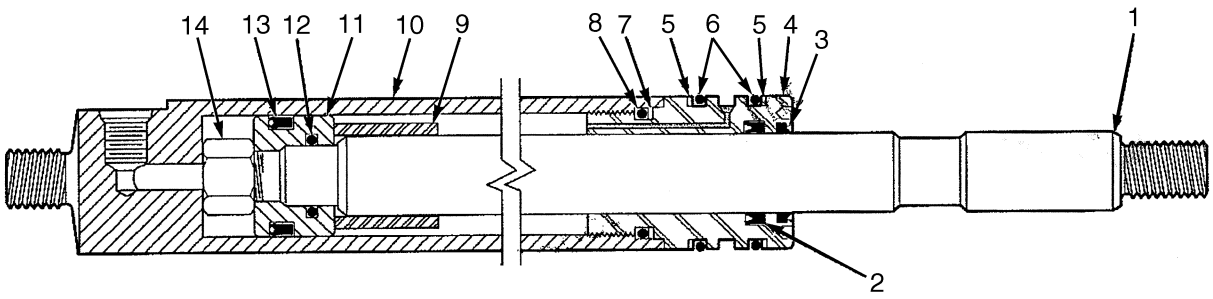

BP000374

ITEM	PART NO.	DESCRIPTION	QTY
	580084260	Cylinder Assy	1
1	. . . . .	Rod	1
2	. . . . .	Rod Seal	1
3	. . . . .	Wiper	1
4	580084148	Retainer	1
5	. . . . .	Back Up Ring	2
6	. . . . .	O-Ring	2
7	. . . . .	Back Up Ring	1
8	. . . . .	O-Ring	1
9	580084149	Spacer	1
10	. . . . .	Shell	1
11	580084147	Piston	1
12	. . . . .	O-Ring	1
13	. . . . .	Piston Seal	1
14	580084132	Nut	1
	580084159	Kit-Seal	1

©2014 Yale Materials Handling Corporation

NOTES

©2014 Yale Materials Handling Corporation

SIDE-SHIFT ASSEMBLY (FIGURE 14-11)

(→ S/N A613V04805K) (→ S/N A614V02743K)

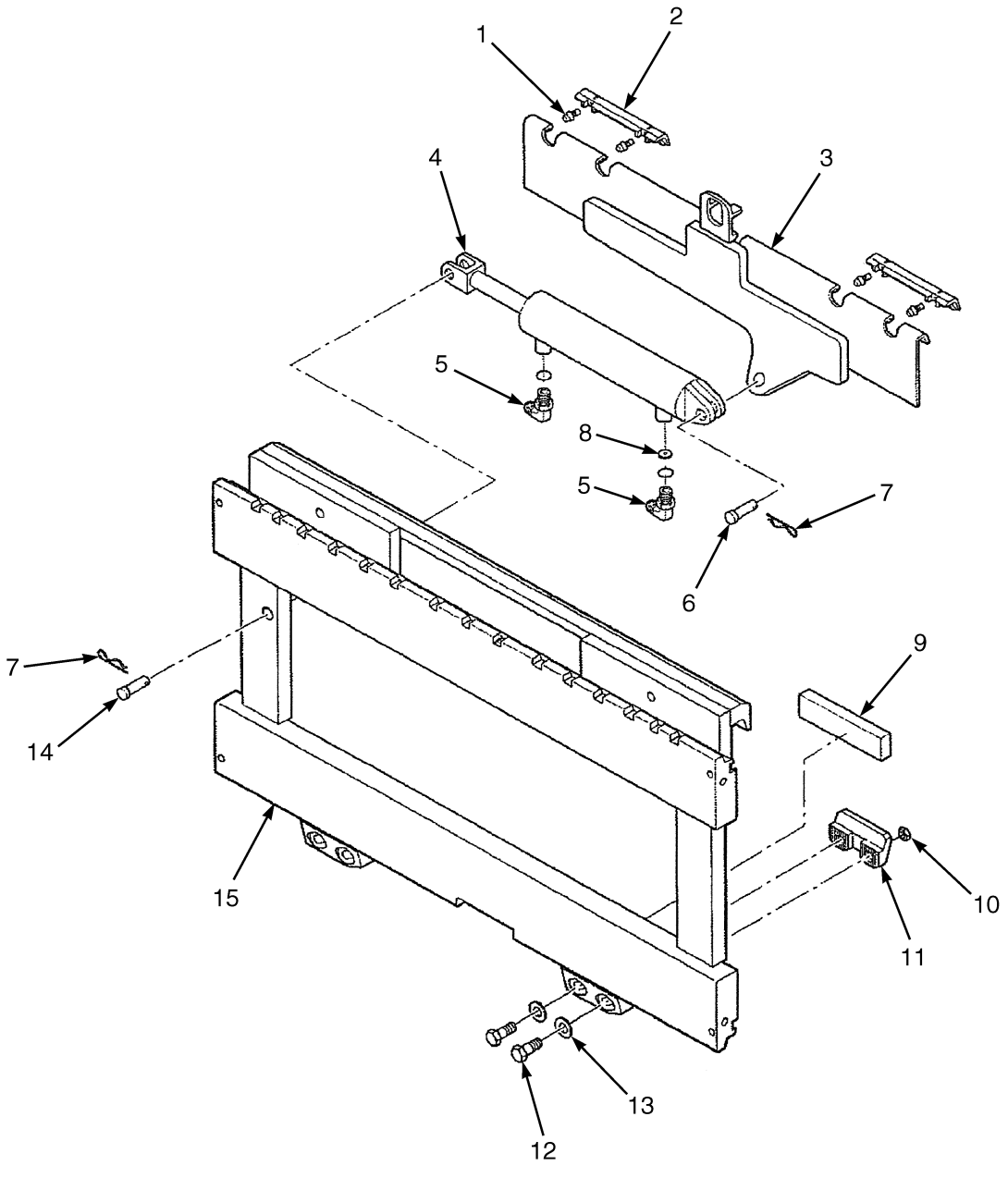

©2014 Yale Materials Handling Corporation

SIDE-SHIFT ASSEMBLY

(→ S/N A613V04805K) (→ S/N A614V02743K)

ITEM	PART NO.	DESCRIPTION	QTY
	580084297	Side-Shift Carriage	1
1	580084024	Grease Fitting	4
2	580084025	Bearing	2
3	580084026	Bracket	1
4	580084032	Cylinder Assy (☞P20354 [Page 14-30])	1
5	580084027	Fitting	2
5	. . . . .	O-Ring	1
6	580084031	Pin	1
7	580084030	Cotter Pin	2
8	580084039	Thrust Washer (Restrictor)	1
9	580084036	Bearing (Lower)	3
10	580084029	Nut	4
11	580084037	Hook	2
12	580084035	Capscrew	4
13	061278300	Washer	4
14	580084038	Pin	1
15	. . . . .	Faceplate	1
	580084040	Kit-Service	1

©2014 Yale Materials Handling Corporation

SIDE-SHIFT CYLINDER (FIGURE 14-12)

(→ S/N A613V04805K) (→ S/N A614V02743K)

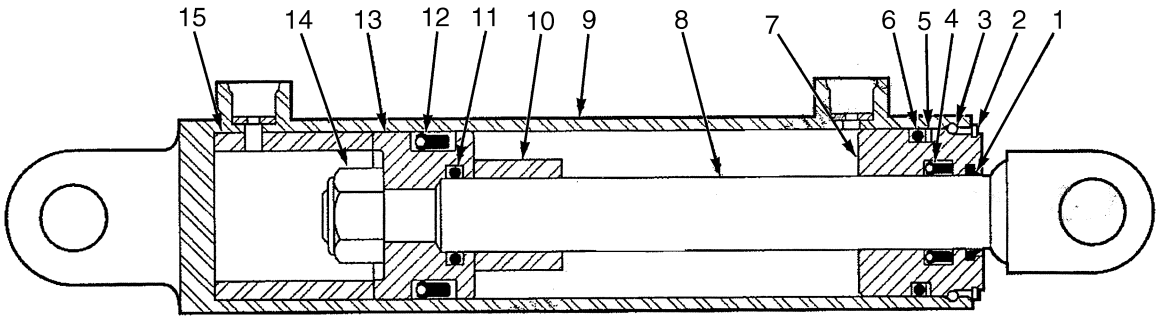

BP000375

ITEM	PART NO.	DESCRIPTION	QTY
	580084032	Cylinder Assy	1
1	580084047	Wiper	1
2	580084046	Snap Ring	1
3	580084045	Retaining Ring	1
4	580084044	Seal	1
5	580084053	Back-UP Ring	1
6	580084052	O-Ring	1
7	580084051	Retainer	1
8	. . . . .	Rod	1
9	. . . . .	Shell	1
10	. . . . .	Spacer (Rod)	1
11	580084056	O-Ring	1
12	580084054	Seal	1
13	580084050	Piston	1
14	580084043	Nut	1
15	580084055	Spacer (Head)	1
	580084069	Kit-Seal	1

©2014 Yale Materials Handling Corporation

NOTES

©2014 Yale Materials Handling Corporation

SIDE-SHIFT ASSEMBLY (FIGURE 14-13)

WITHOUT FORK POSITIONER (S/N A613V03724J →) (S/N A614V02455J →)

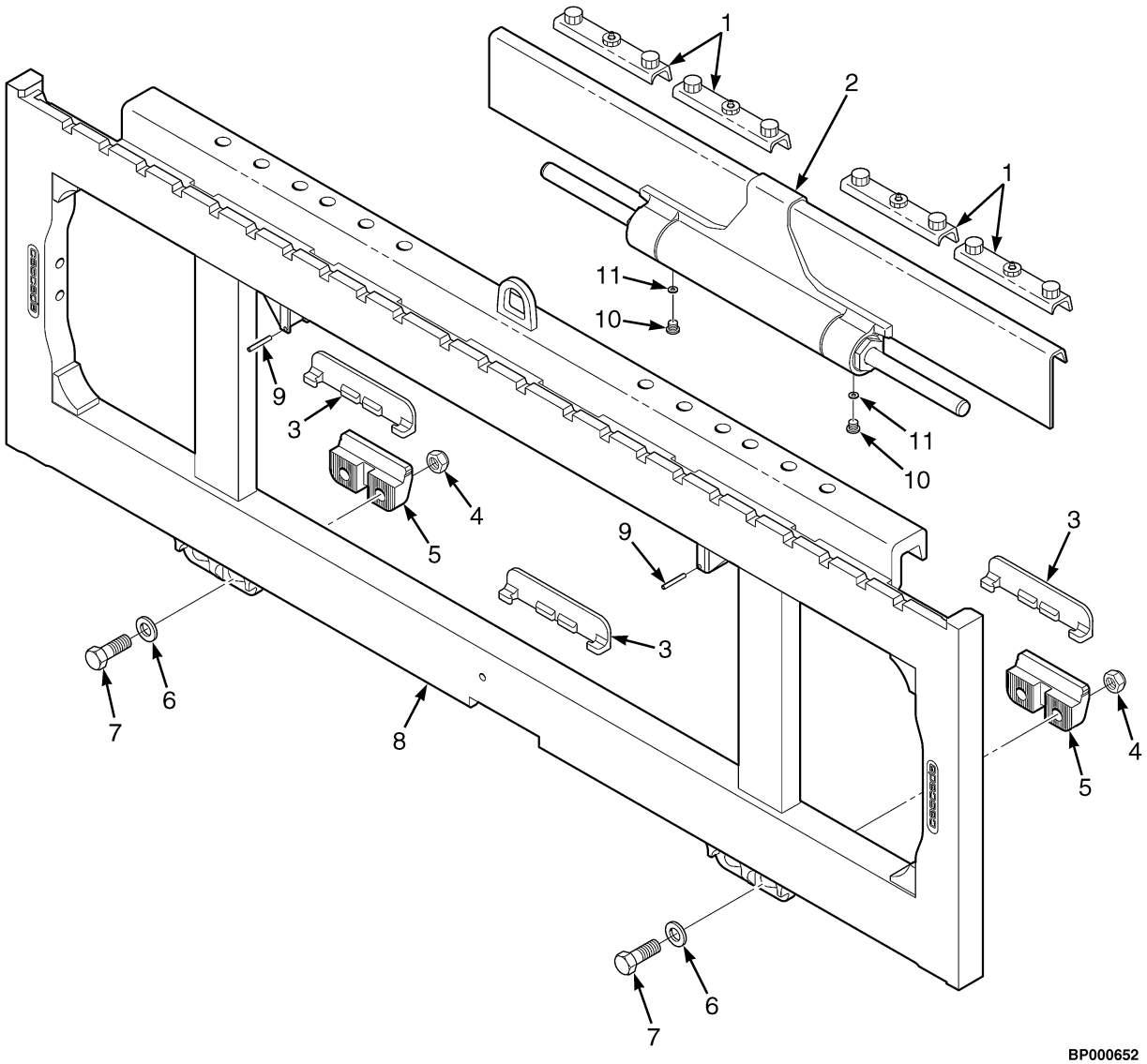

©2014 Yale Materials Handling Corporation

SIDE-SHIFT ASSEMBLY

WITHOUT FORK POSITIONER (S/N A613V03724J →) (S/N A614V02455J →)

ITEM	PART NO.	DESCRIPTION	QTY
	582013183	Hang-ON Side Shift	1
1	582014012	Bearing	4
2	582014006	Cylinder Assy (☞P23188 [Page 14-34])	1
3	582003453	Bearing	3
4	582014014	Nut	4
5	582014015	Hook	2
6	580092446	Washer	4
7	582014016	Capscrew	4
8	582014017	Frame	1
9	582014019	Roll Pin	2
10	582014020	Plug	2
11	580092343	Washer	1
11	582006868	Restrictor	2
	582014013	Kit-Lower Hook	1

©2014 Yale Materials Handling Corporation

SIDE-SHIFT CYLINDER (FIGURE 14-14)

WITHOUT FORK POSITIONER (S/N A613V03724J →) (S/N A614V02455J →)

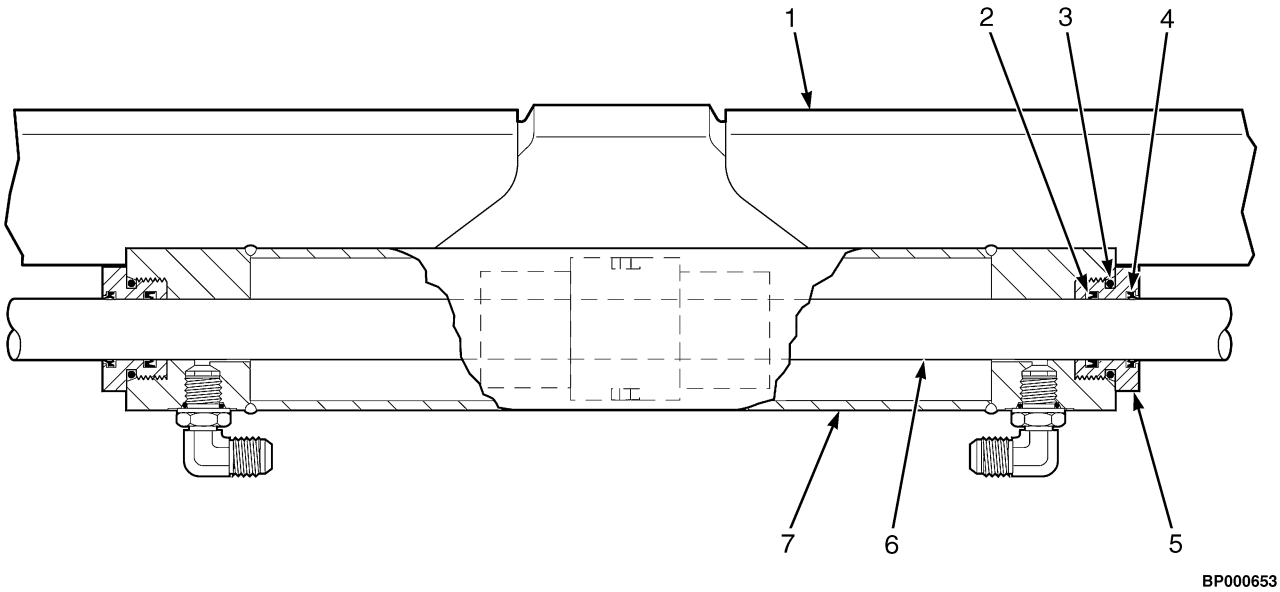

ITEM	PART NO.	DESCRIPTION	QTY
1	582014006	Cylinder Assy	1
2	582014007	Rod Seal	2
3	582014008	O-Ring	2
4	582014009	Rod Wiper	2
5	582014010	Retainer	2
6	. . . . .	Rod	1
7	. . . . .	Cylinder Shelf	1
8	582014011	Kit-Seal	1

©2014 Yale Materials Handling Corporation

NOTES

©2014 Yale Materials Handling Corporation

HANG-ON SIDE-SHIFT CARRIAGE AND HOSES (FIGURE 14-15)
WITH BACKREST AND FORK POSITIONER (S/N A613V04806K →) (S/N A614V02744K →)

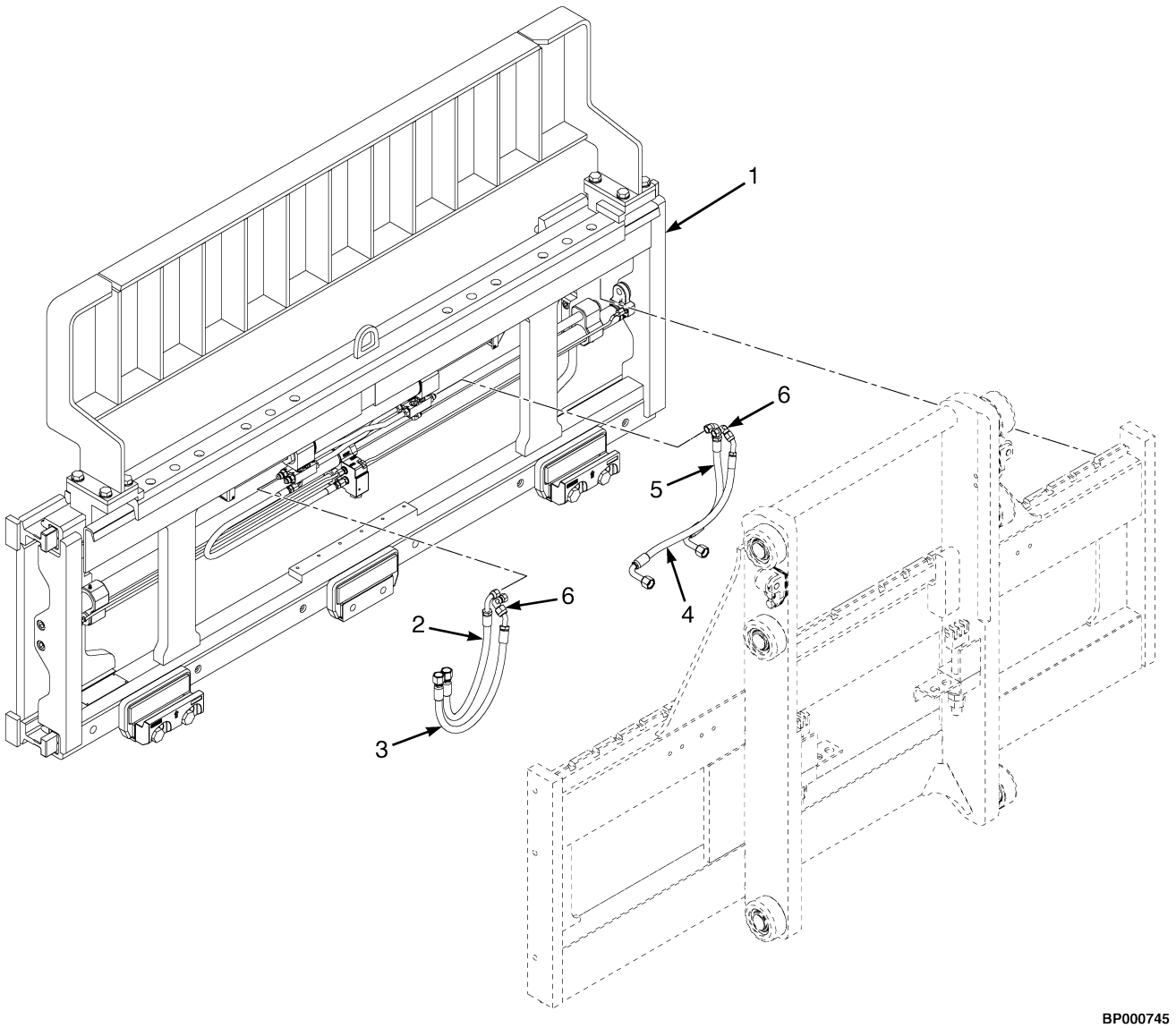

©2014 Yale Materials Handling Corporation

HANG-ON SIDE-SHIFT CARRIAGE AND HOSES

WITH BACKREST AND FORK POSITIONER (S/N A613V04806K →) (S/N A614V02744K →)

KEY:
A: Two Stage Limited Free-lift
B: Three Stage Full Free-lift

ITEM	PART NO.	DESCRIPTION	QTY A	QTY B
1	550037499	Attachment (Hang On Side-Shift with Fork Positioner)	1	1
2	582019837	Hose Assy	1	..
2	582019841	Hose Assy	..	1
3	582019837	Hose Assy	1	..
3	582019842	Hose Assy	..	1
4	582019837	Hose Assy	1	..
4	582019840	Hose Assy	..	1
5	582019837	Hose Assy	1	..
5	582019839	Hose Assy	..	1
6	059803100	Fitting	2	2

©2014 Yale Materials Handling Corporation

ATTACHMENT CARRIAGE (FIGURE 14-16)

WITH FORK POSITIONER AND BACKREST (S/N A613V04806K →) (S/N A614V02744K →)

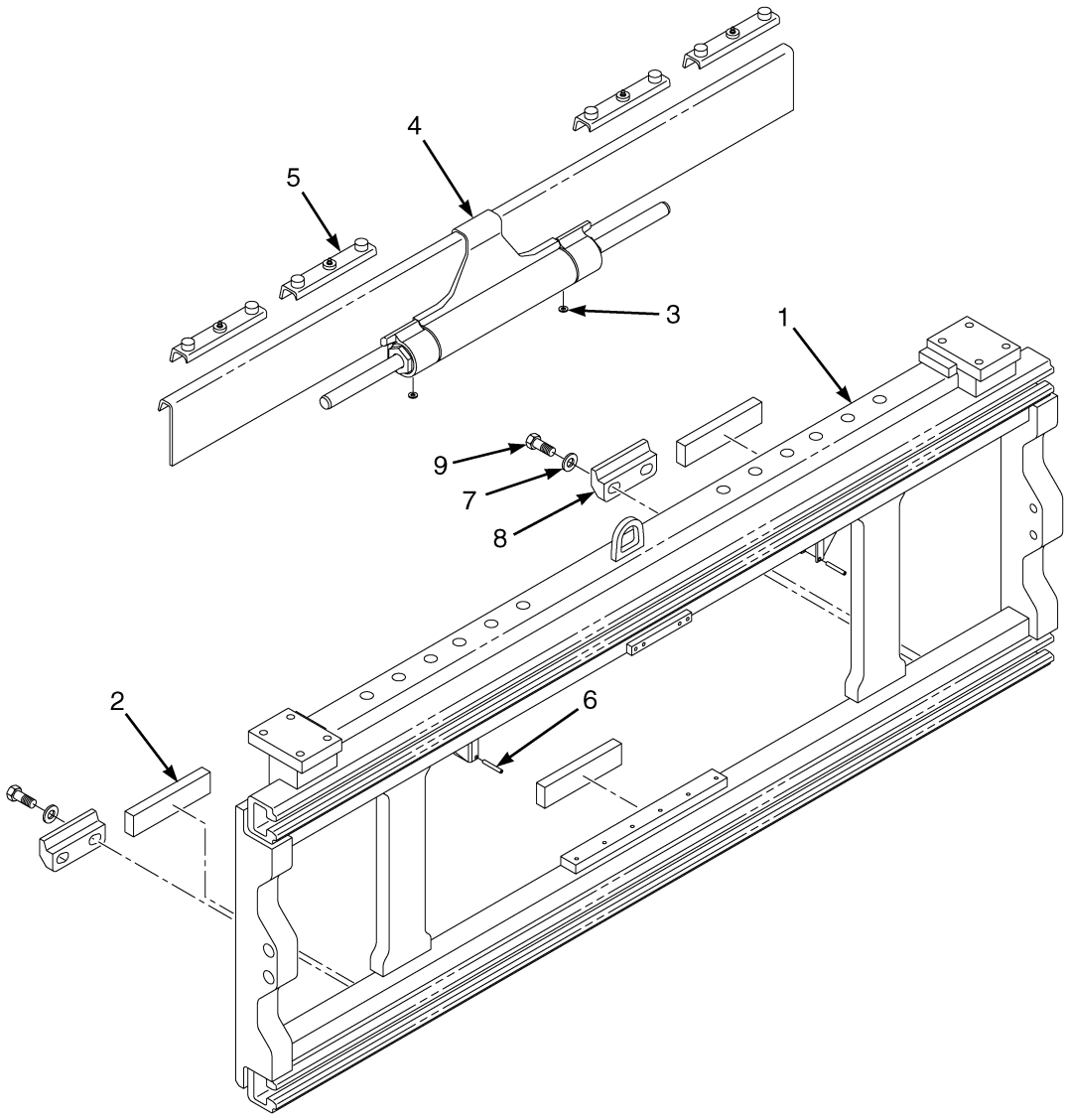

BP020043

©2014 Yale Materials Handling Corporation

ATTACHMENT CARRIAGE

WITH FORK POSITIONER AND BACKREST (S/N A613V04806K →) (S/N A614V02744K →)

ITEM	PART NO.	DESCRIPTION	QTY
	550037499	Attachment (Hang On Side-Shift with Fork Positioner) (Carriage)	1
1	582027289	Frame Wldmt	1
2	582027346	Bearing (Lower)	4
3	580092343	Washer (Restrictor)	1
3	582006868	Restrictor (Flow)	1
4	582027295	Sideshift Cylinder (☞P25815 [Page 14-40])	1
5	582014012	Bearing (Upper)	4
6	582014019	Roll Pin	2
7	580092446	Washer	4
8	582027293	Hook	2
9	582027294	Capscrew	4

©2014 Yale Materials Handling Corporation

SIDE-SHIFT CYLINDER (FIGURE 14-17)
WITH FORK POSITIONER (S/N A613V04806K →) (S/N A614V02744K →)

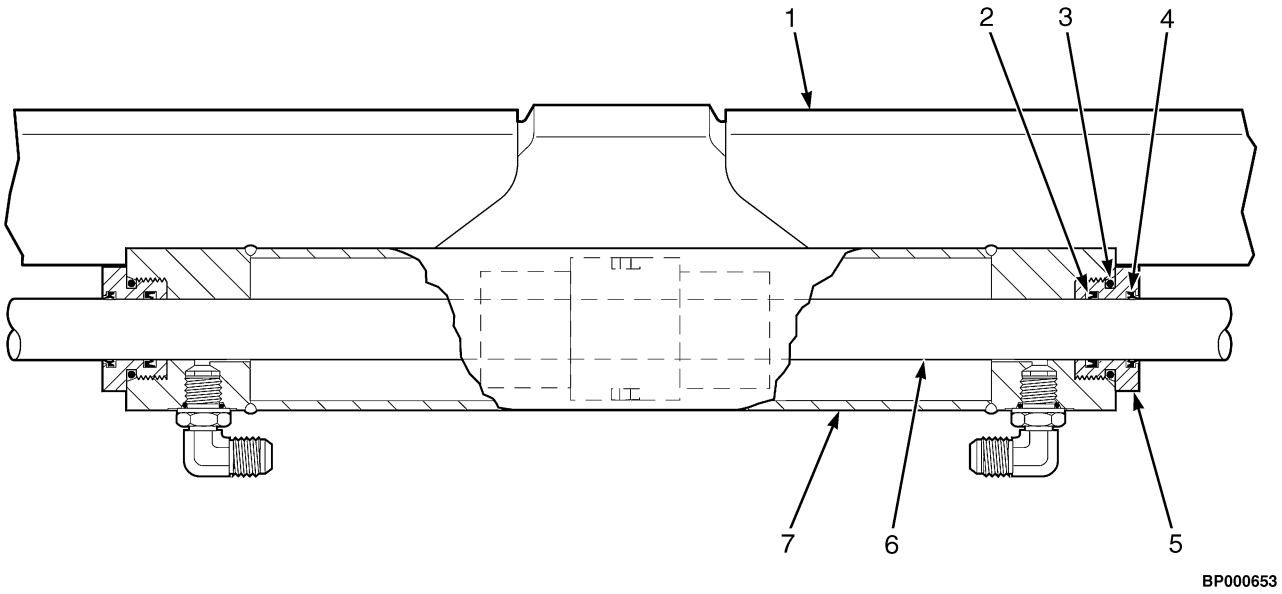

ITEM	PART NO.	DESCRIPTION	QTY
1	582027295	Sideshift Cylinder	1
2	582014007	Rod Seal	2
3	582014008	O-Ring	2
4	582014009	Rod Wiper	2
5	582014010	Retainer	2
6	. . . . .	Rod	1
7	. . . . .	Cylinder Shelf	1
8	582014011	Kit-Seal	1

©2014 Yale Materials Handling Corporation

NOTES

©2014 Yale Materials Handling Corporation

ATTACHMENT CARRIAGE (FIGURE 14-18)

VALVE AND HOSES (S/N A613V04806K →) (S/N A614V02744K →)

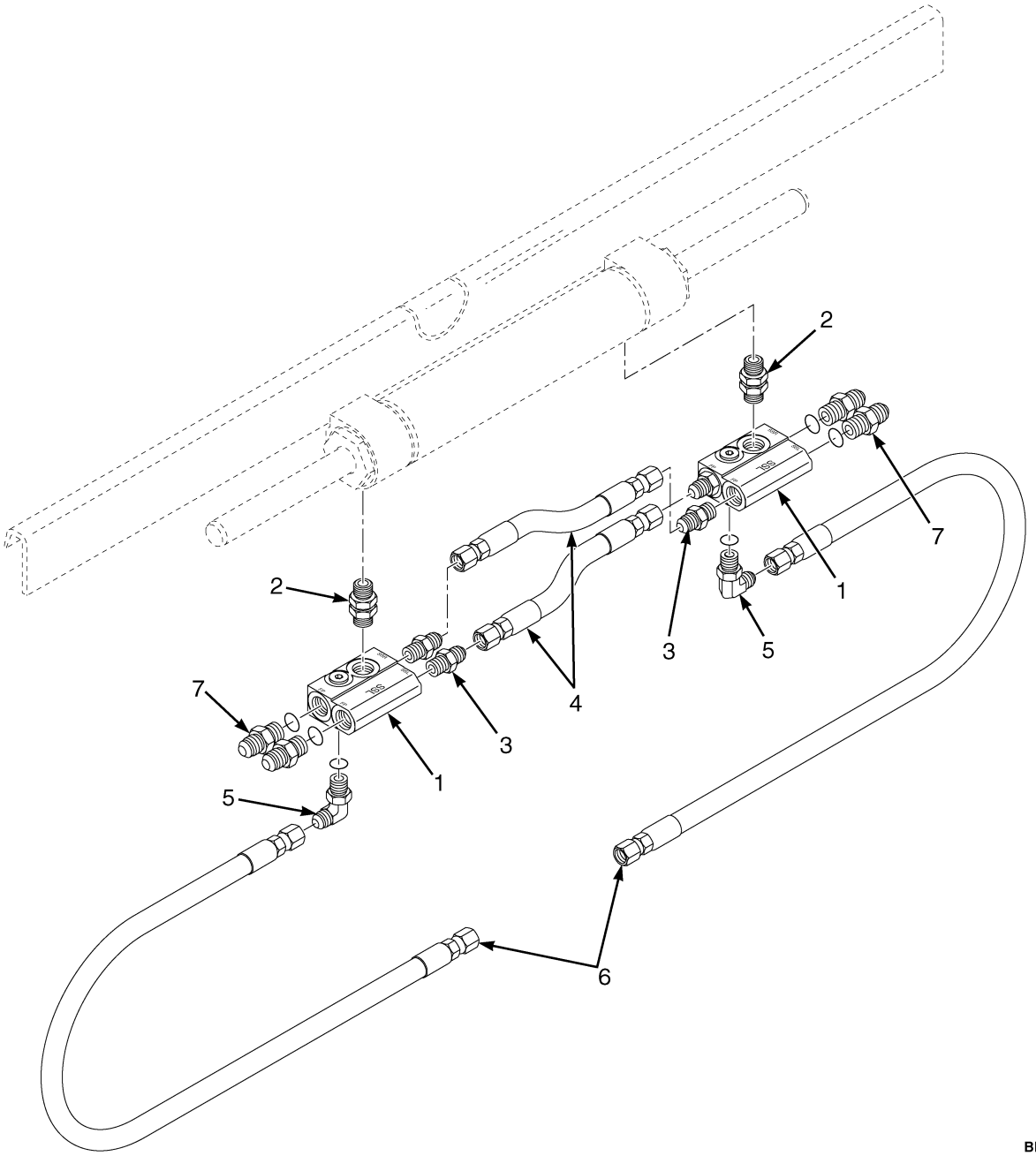

©2014 Yale Materials Handling Corporation

ATTACHMENT CARRIAGE

VALVE AND HOSES (S/N A613V04806K →) (S/N A614V02744K →)

ITEM	PART NO.	DESCRIPTION	QTY
1	582027299	Valve	2
2	582027300	Fitting	2
3	582027301	Fitting	4
4	582027302	Hose (11.4")	2
5	582027303	Fitting	2
6	582027304	Hose (31.3")	2
7	580084143	Fitting	4

©2014 Yale Materials Handling Corporation

FORK POSITIONER ASSEMBLY (FIGURE 14-19)

(S/N A613V04806K →) (S/N A614V02744K →)

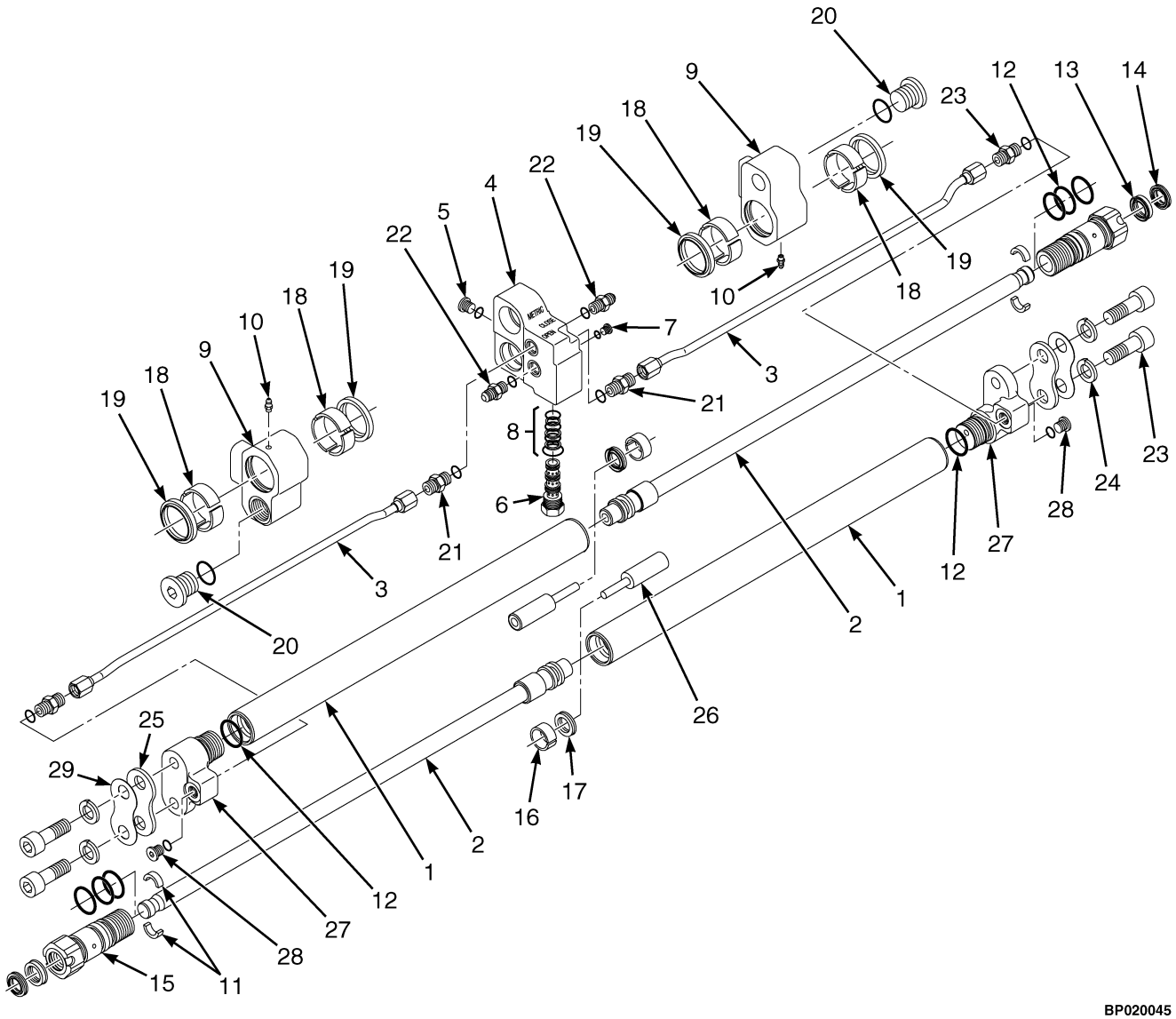

BP020045

©2014 Yale Materials Handling Corporation

FORK POSITIONER ASSEMBLY

(S/N A613V04806K →) (S/N A614V02744K →)

ITEM	PART NO.	DESCRIPTION	QTY
	582028591	Kit-Fork Positioner Assembly	1
1	. . . . .	Cylinder Shell	2
2	. . . . .	Cylinder Rod	2
3	582028589	Tube Assembly	2
4	582027335	Manifold Assy	1
4	582027311	Manifold	1
5	580084123	Plug	1
6	582027332	Cartridge (Flow Divider)	1
7	582027316	Plug	1
8	582027334	Kit-Seal	1
9	582027312	Lug Manifold	2
10	582027313	Grease Fitting	2
11	582027318	Retainer	2
12	582027319	Retainer (O-Ring)	8
13	580020721	Rod Seal	2
14	582027320	Retainer (Rod Wiper)	2
15	582027321	Keeper (Half Ring)	4
16	582027322	Wear Ring (Piston)	2
17	582027323	Piston Seal	2
18	582027324	Bearing	4
19	582027325	Wiper	4
20	582027326	Plug	2
21	582027327	Fitting	4
22	582027328	Fitting	2
23	582027329	Capscrew	4
24	582027330	Lockwasher	4
25	582027331	Spacer	2
26	582027314	Spacer	2
27	582027315	Cylinder Head	2
28	582027316	Plug	2
29	582027317	Shim	8
	582027336	Kit Cylinder Service	1

©2014 Yale Materials Handling Corporation

CARRIER ASSEMBLY (FIGURE 14-20)
(S/N A613V04806K →) (S/N A614V02744K →)

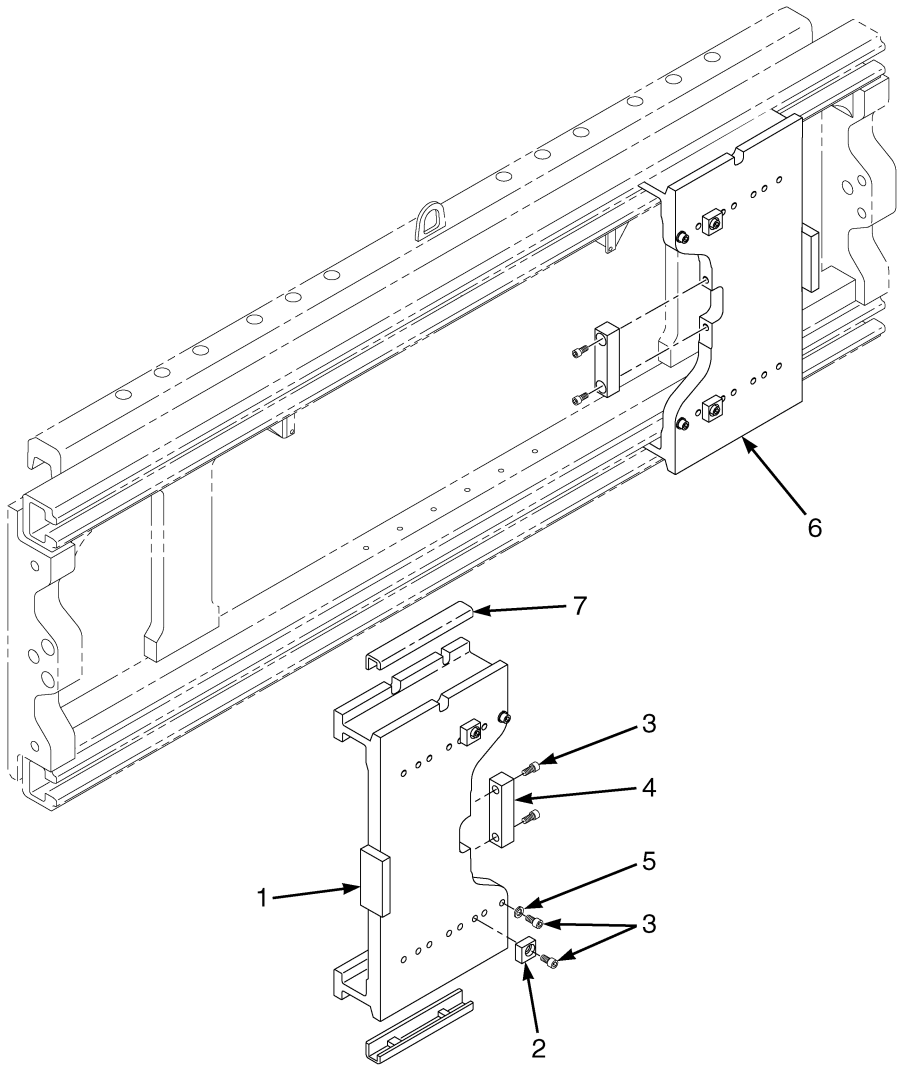

BP020046

©2014 Yale Materials Handling Corporation

CARRIER ASSEMBLY

(S/N A613V04806K →) (S/N A614V02744K →)

ITEM	PART NO.	DESCRIPTION	QTY
1	582028747	Carrier (RH)	1
2	582028748	Block	4
3	582028749	Capscrew	12
4	582027343	Carrier Stop	2
5	582027342	Capscrew	4
6	582028750	Carrier (LH)	1
7	582027346	Bearing	8

©2014 Yale Materials Handling Corporation

BACKREST (FIGURE 14-21)
WITH FORK POSITIONER (S/N A614V02744K →) (S/N A613V04806K →)

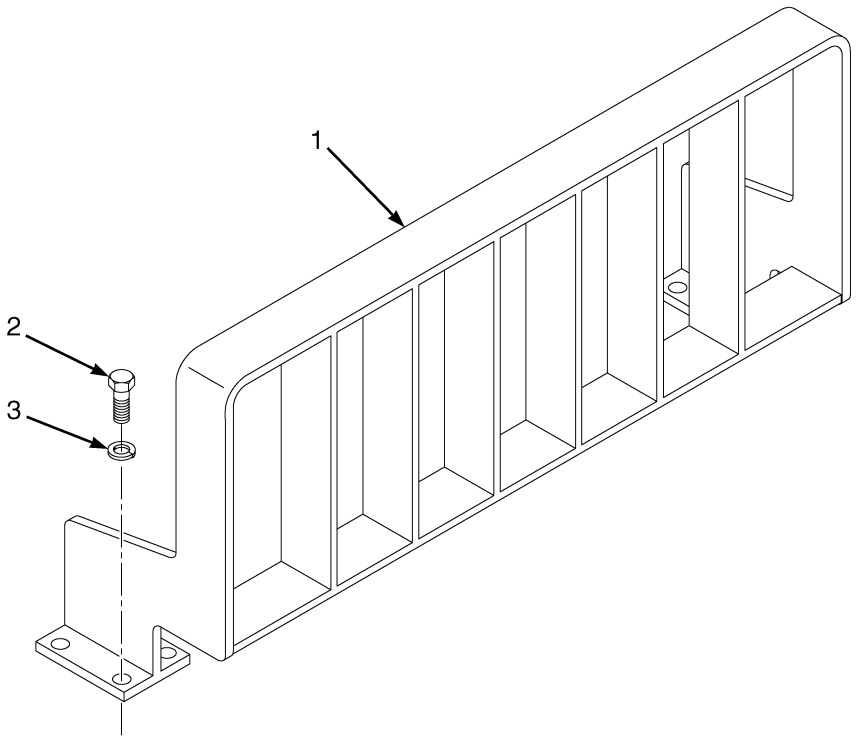

BP020047

ITEM	PART NO.	DESCRIPTION	QTY
	582028592	Load Backrest Assembly	1
1	582028593	Load Backrest	1
2	582027350	Capscrew	8
3	582027351	Lockwasher	8

©2014 Yale Materials Handling Corporation

NOTES

©2014 Yale Materials Handling Corporation

AUXILIARY TUBE EXTENSIONS (FIGURE 14-22)

TWO STAGE LIMITED FREE-LIFT — WITHOUT QUICK DISCONNECT FITTINGS (S/N A613V03307H →)

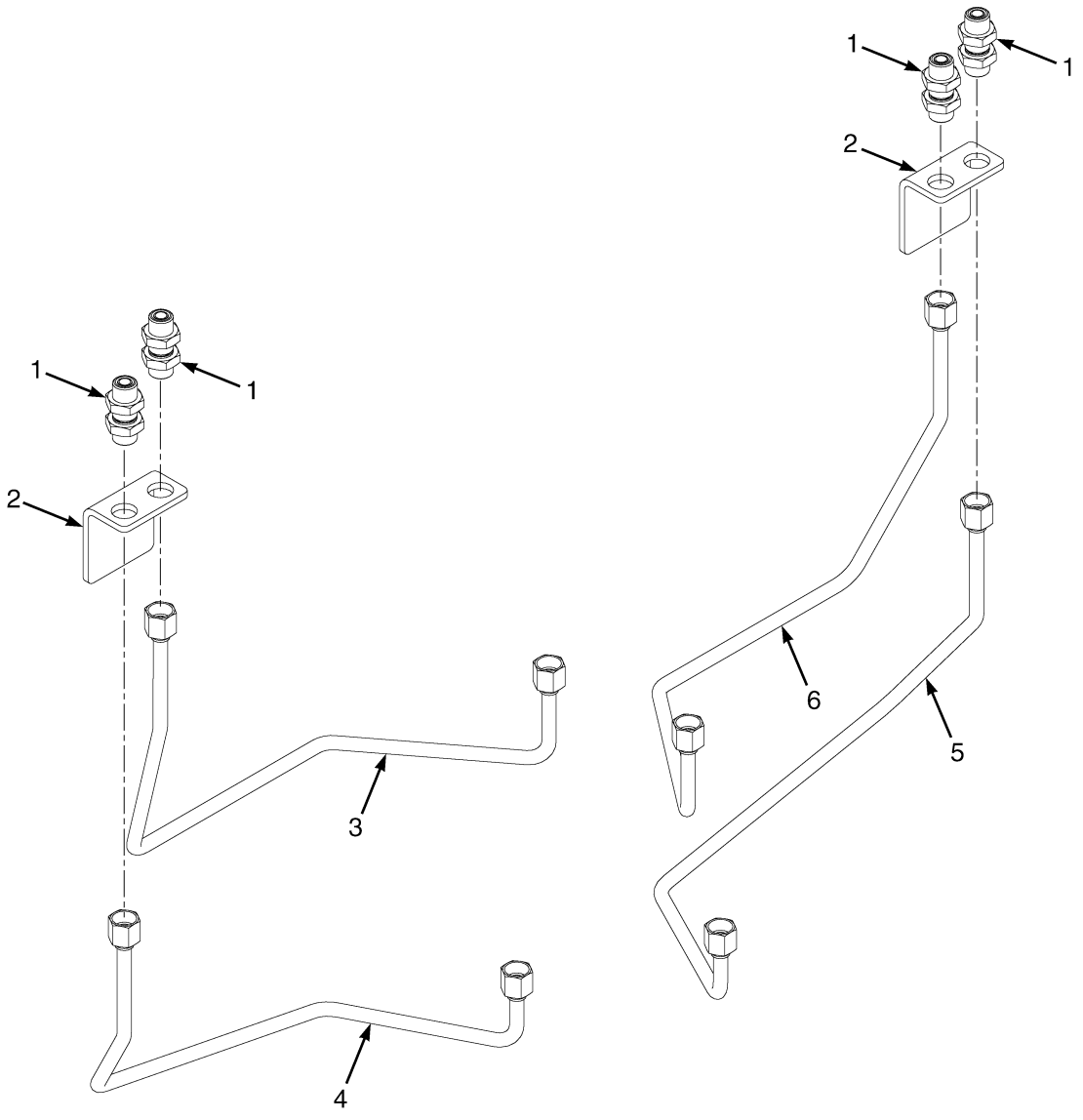

©2014 Yale Materials Handling Corporation

AUXILIARY TUBE EXTENSIONS

TWO STAGE LIMITED FREE-LIFT – WITHOUT QUICK DISCONNECT FITTINGS (S/N A613V03307H →)

KEY:
A: A613 Three Function
B: A613 Four Function

ITEM	PART NO.	DESCRIPTION	QTY A	QTY B
1	580020987	Fitting	2	4
2	580076912	Bracket	1	2
3	580078960	Tube Assy	..	1
4	580078959	Tube Assy	..	1
5	580078957	Tube Assy	1	1
6	580078958	Tube Assy	1	1

©2014 Yale Materials Handling Corporation

AUXILIARY TUBE EXTENSIONS (FIGURE 14-23)

TWO STAGE LIMITED FREE-LIFT — MANUAL HYDRAULICS WITH QUICK DISCONNECT FITTINGS (S/N A613V03307H →)

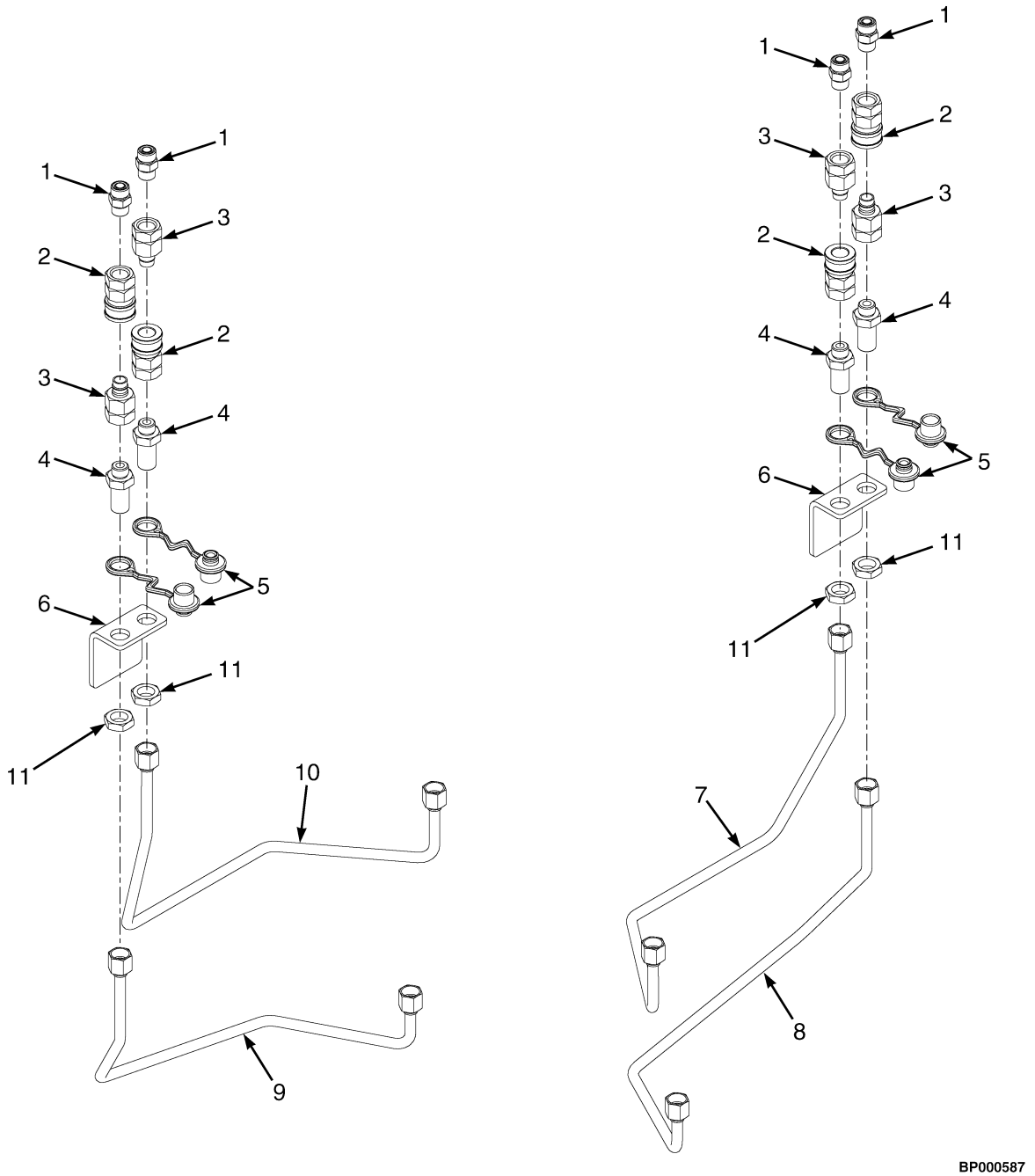

©2014 Yale Materials Handling Corporation

AUXILIARY TUBE EXTENSIONS

TWO STAGE LIMITED FREE-LIFT – MANUAL HYDRAULICS WITH QUICK DISCONNECT FITTINGS (S/N A613V03307H →)

KEY:
A: A613 Three Function
B: A613 Four Function

ITEM	PART NO.	DESCRIPTION	QTY A	QTY B
1	580020430	Fitting	2	4
2	518802601	Quick Disconnect Fitting	2	4
3	518803619	Fitting (Quick Disconnect)	2	4
4	582003626	Bulkhead (Fitting)	2	4
5	580097250	Dust Cover	2	4
6	580076912	Bracket	1	2
7	580078958	Tube Assy	1	1
8	580078957	Tube Assy	1	1
9	580078959	Tube Assy	..	1
10	580078960	Tube Assy	..	1

©2014 Yale Materials Handling Corporation

AUXILIARY TUBE EXTENSIONS (FIGURE 14-24)

TWO STAGE LIMITED FREE-LIFT — E-HYDRAULICS WITH QUICK DISCONNECT FITTINGS (S/N A613V03307H →)

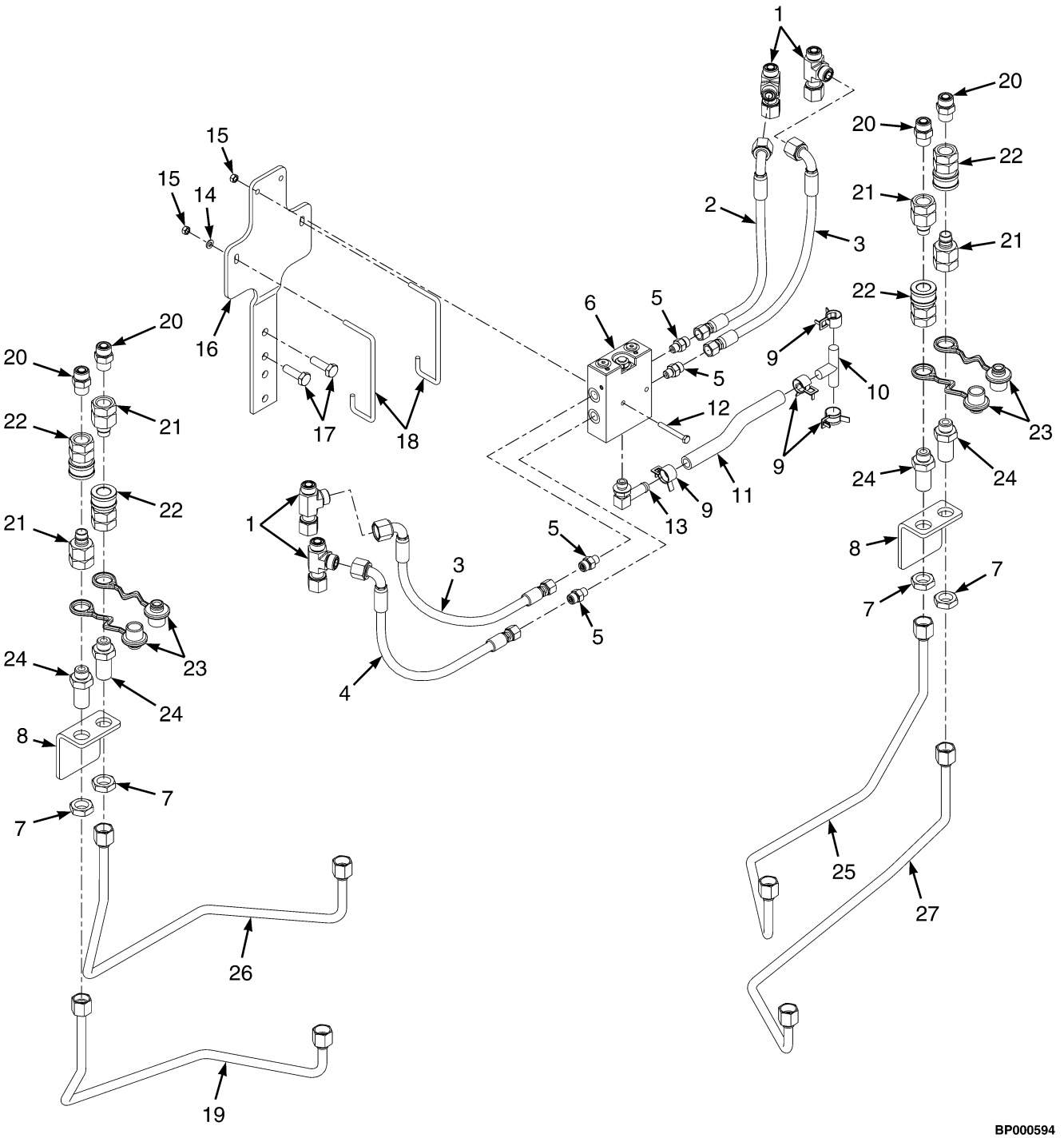

©2014 Yale Materials Handling Corporation

AUXILIARY TUBE EXTENSIONS

TWO STAGE LIMITED FREE-LIFT – E-HYDRAULICS WITH QUICK DISCONNECT FITTINGS (S/N A613V03307H →)

KEY:
A: A613 Three Function
B: A613 Four Function

ITEM	PART NO.	DESCRIPTION	QTY A	QTY B
1	580019895	Fitting	2	4
2	582005258	Hose Assy	..	1
3	582005259	Hose Assy	..	1
4	449015135	Nut	2	2
5	580019805	Fitting	2	4
6	580097368	Valve (Single Aux)	1	..
6	580097369	Valve (Dual Aux)	..	1
7	582005256	Hose Assy	1	1
8	582005259	Hose Assy	1	1
9	580036687	Clamp	4	4
10	514835800	Fitting	1	1
11	580072611	Hose	1	1
12	449001273	Capscrew	2	2
13	030252011	Fitting	1	1
13	052645200	O-Ring	1	1
14	580086384	Washer	2	2
15	449015135	Nut	2	2
16	582005035	Bracket	1	1
17	580055741	Capscrew	2	2
18	582005030	Hook	2	2
19	580078959	Tube Assy	..	1
20	580020430	Fitting	2	4
21	518803619	Fitting (Quick Disconnect)	2	4
22	518802601	Quick Disconnect Fitting	2	4
23	580097250	Dust Cover	2	4
24	582003626	Bulkhead (Fitting)	2	4
25	580076912	Bracket	1	2
26	580078960	Tube Assy	..	1
27	580078957	Tube Assy	1	1
28	580078958	Tube Assy	1	1

©2014 Yale Materials Handling Corporation

AUXILIARY TUBE EXTENSIONS (FIGURE 14-25)

THREE STAGE FULL FREE-LIFT — WITHOUT QUICK DISCONNECT FITTINGS (S/N A614V02262H →)

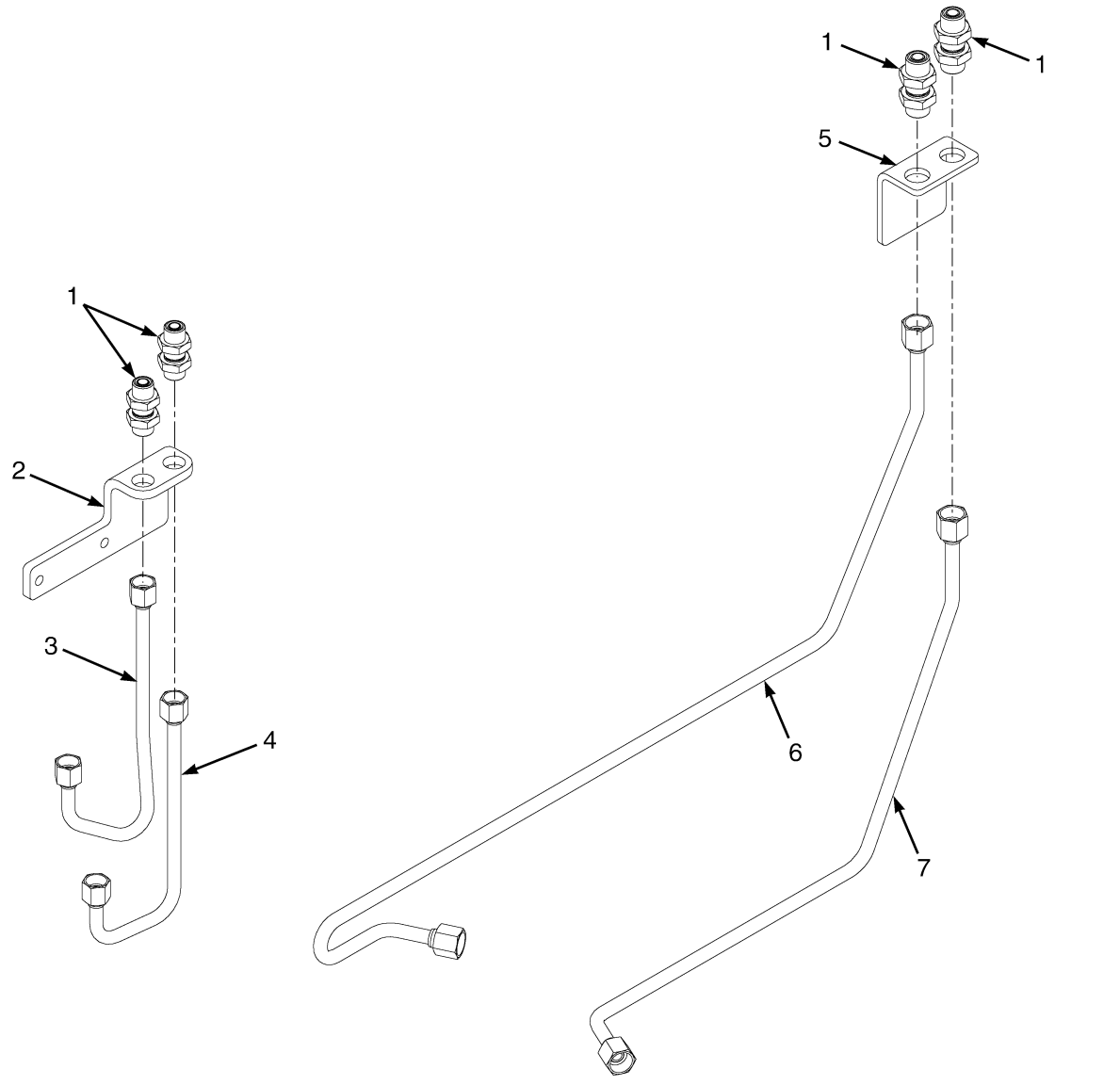

©2014 Yale Materials Handling Corporation

AUXILIARY TUBE EXTENSIONS

THREE STAGE FULL FREE-LIFT – WITHOUT QUICK DISCONNECT FITTINGS (S/N A614V02262H →)

KEY:
A: A614 Three Function
B: A614 Four Function

ITEM	PART NO.	DESCRIPTION	QTY A	QTY B
1	580020987	Fitting	2	4
2	580076912	Bracket	1	2
3	580078962	Tube Assy	1	1
4	580078962	Tube Assy	1	1
	a 580077816	Tube Assy (LH)	..	1
	a 580077815	Tube Assy (RH)	..	1

FOOTNOTES:

a Not Illustrated

©2014 Yale Materials Handling Corporation

AUXILIARY TUBE EXTENSIONS (FIGURE 14-26)

THREE STAGE FULL FREE-LIFT — MANUAL HYDRAULICS WITH QUICK DISCONNECT FITTINGS (S/N A614V02262H →)

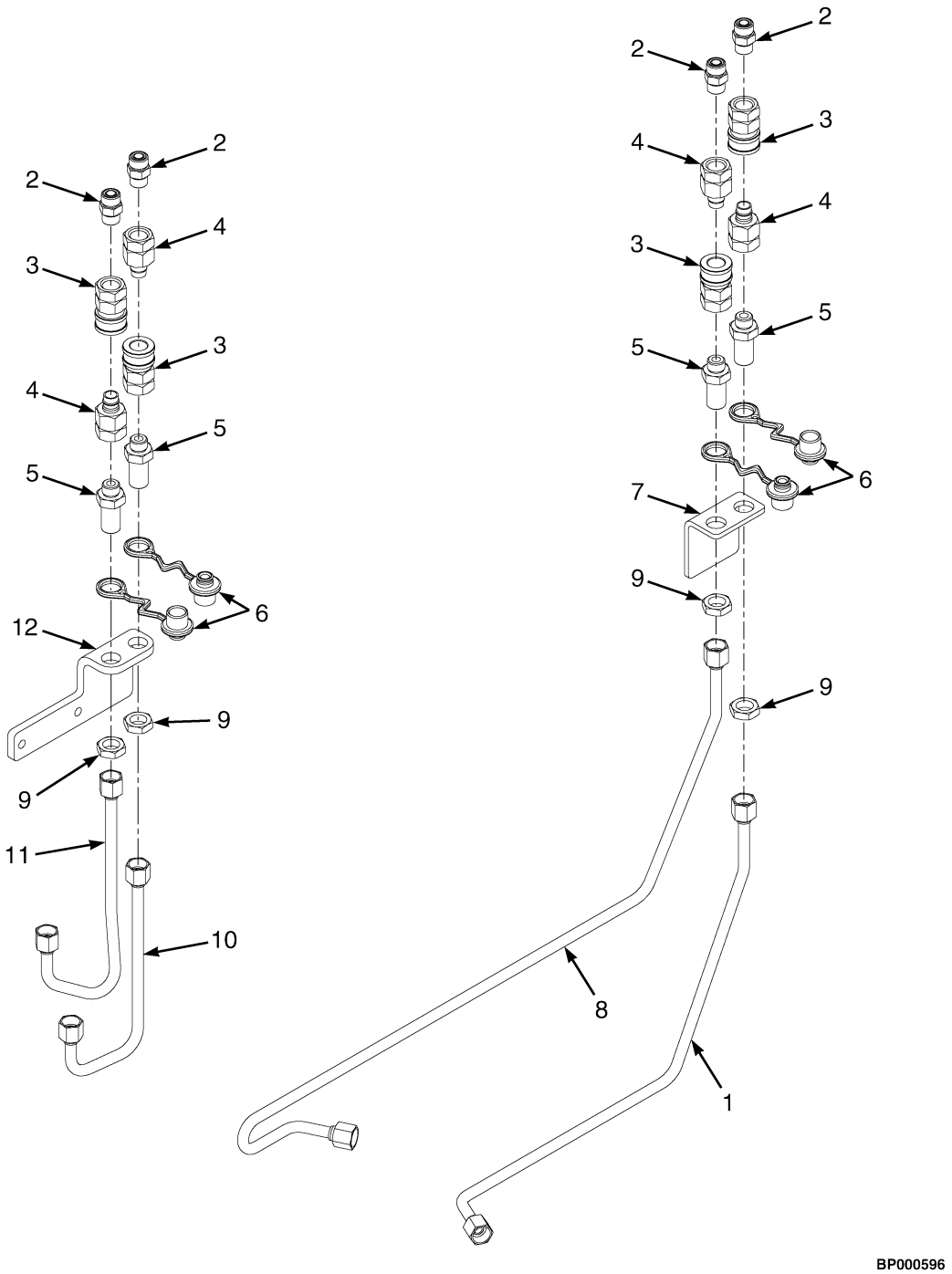

©2014 Yale Materials Handling Corporation

AUXILIARY TUBE EXTENSIONS

THREE STAGE FULL FREE-LIFT – MANUAL HYDRAULICS WITH QUICK DISCONNECT FITTINGS (S/N A614V02262H →)

KEY:
A: A614 Three Function
B: A614 Four Function

ITEM	PART NO.	DESCRIPTION	QTY A	QTY B
1	580078962	Tube Assy	1	1
2	580020430	Fitting	2	4
3	518802601	Quick Disconnect Fitting	2	4
4	518803619	Fitting (Quick Disconnect)	2	4
5	582003626	Bulkhead (Fitting)	2	4
6	580097250	Dust Cover	2	4
7	580076912	Bracket	1	2
8	580078961	Tube Assy	1	1
	a 580077816	Tube Assy (LH)	..	1
	a 580077815	Tube Assy (RH)	..	1

FOOTNOTES:

a Not Illustrated

©2014 Yale Materials Handling Corporation

AUXILIARY TUBE EXTENSIONS (FIGURE 14-27)

THREE STAGE FULL FREE-LIFT — E-HYDRAULICS WITH QUICK DISCONNECT FITTINGS (S/N A614V02262H →)

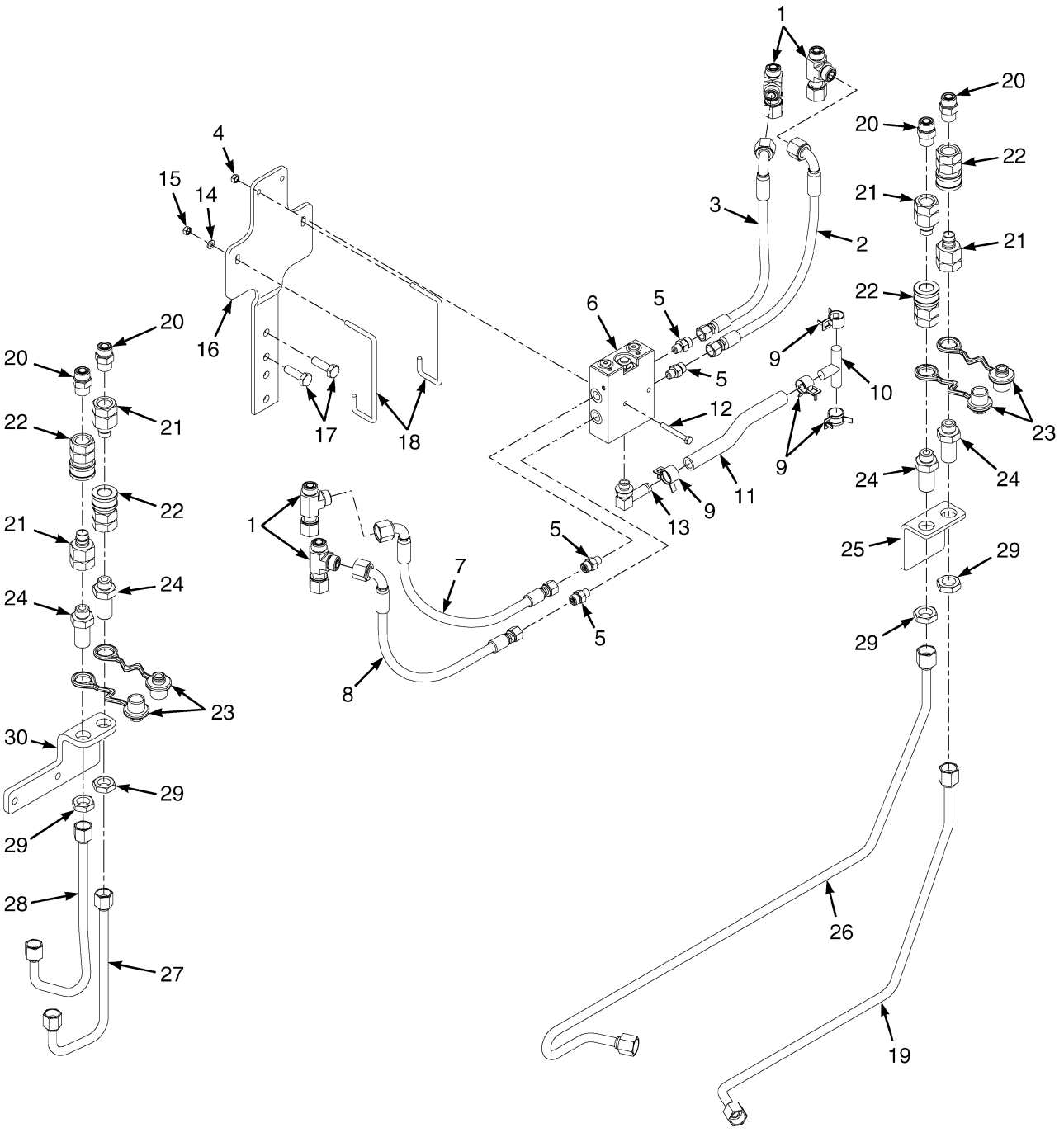

BP000597

©2014 Yale Materials Handling Corporation

AUXILIARY TUBE EXTENSIONS

THREE STAGE FULL FREE-LIFT – E-HYDRAULICS WITH QUICK DISCONNECT FITTINGS (S/N A614V02262H →)

KEY:
A: A614 Three Function
B: A614 Four Function

ITEM	PART NO.	DESCRIPTION	QTY A	QTY B
1	580019895	Fitting	2	4
2	582005258	Hose Assy	..	1
3	582005259	Hose Assy	..	1
4	449015135	Nut	2	2
5	580019805	Fitting	2	4
6	580097368	Valve (Single Aux)	1	..
6	580097368	Valve (Dual Aux)	..	1
7	582005256	Hose Assy	1	1
8	582005259	Hose Assy	1	1
9	580036687	Clamp	4	4
10	514835800	Fitting	1	1
11	580072611	Hose	1	1
12	449001273	Capscrew	2	2
13	030252011	Fitting	1	1
13	052645200	O-Ring	1	1
14	580086384	Washer	2	2
15	449015135	Nut	2	2
16	582005035	Bracket	1	1
17	580055741	Capscrew	2	2
18	582005030	Hook	2	2
19	580078962	Tube Assy	1	1
20	580020430	Fitting	2	4
21	518803619	Fitting (Quick Disconnect)	2	4
22	518802601	Quick Disconnect Fitting	2	4
23	580097250	Dust Cover	2	4
24	582003626	Bulkhead (Fitting)	2	4
25	580076912	Bracket	1	2
26	580078961	Tube Assy	1	1
	a 580077815	Tube Assy (RH)	..	1
	a 580077816	Tube Assy (LH)	..	1

FOOTNOTES:

a Not Illustrated

©2014 Yale Materials Handling Corporation

AUXILIARY TUBE EXTENSIONS (FIGURE 14-28)

THREE STAGE FULL FREE LIFT WITH SIDE SHIFT FORK POSITIONER CARRIAGE — WITHOUT QUICK DISCONNECT FITTINGS (S/N A614V02262H →)

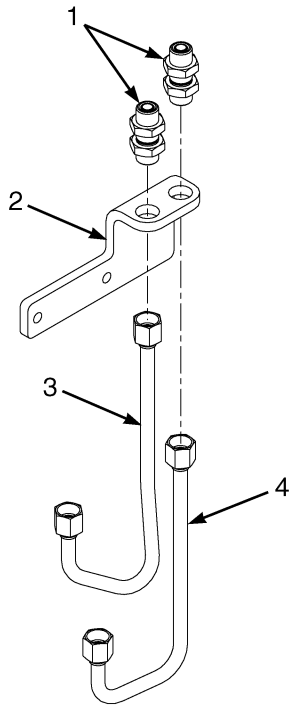

BP000609

ITEM	PART NO.	DESCRIPTION	QTY
1	580020987	Fitting	2
2	580069679	Bracket	1
3	580077816	Tube Assy	1
4	580077815	Tube Assy	1

©2014 Yale Materials Handling Corporation

NOTES

©2014 Yale Materials Handling Corporation

AUXILIARY TUBE EXTENSIONS (FIGURE 14-29)

THREE STAGE FULL FREE LIFT WITH SIDE SHIFT FORK POSITIONER CARRIAGE — MANUAL HYDRAULICS WITH QUICK DISCONNECT FITTINGS (S/N A614V02262H →)

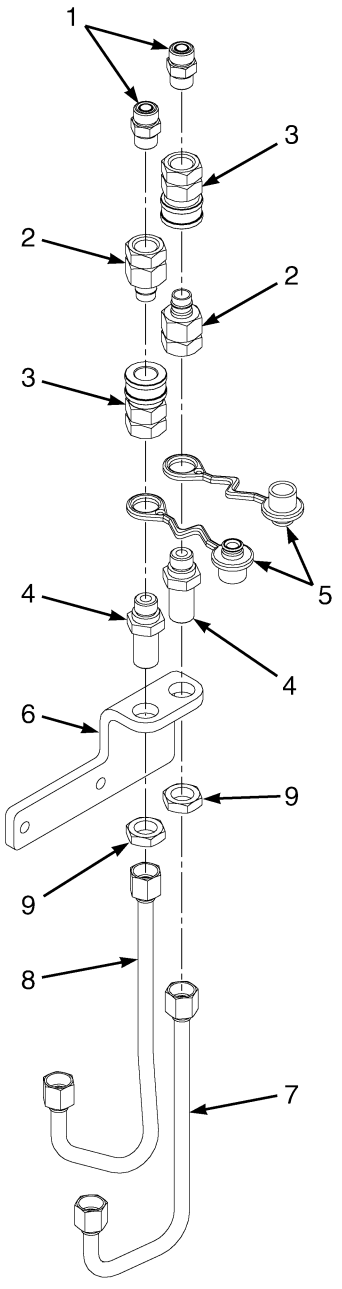

BP000607

©2014 Yale Materials Handling Corporation

AUXILIARY TUBE EXTENSIONS

THREE STAGE FULL FREE LIFT WITH SIDE SHIFT FORK POSITIONER CARRIAGE – MANUAL HYDRAULICS WITH QUICK DISCONNECT FITTINGS (S/N A614V02262H →)

ITEM	PART NO.	DESCRIPTION	QTY
1	580020430	Fitting	2
2	518803619	Fitting (Quick Disconnect)	2
3	518802601	Quick Disconnect Fitting	2
4	582003626	Bulkhead	2
5	580097250	Dust Cover	2
6	580069679	Bracket	1
7	580077816	Tube Assy	1
8	580077815	Tube Assy	1

©2014 Yale Materials Handling Corporation

AUXILIARY TUBE EXTENSIONS (FIGURE 14-30)

THREE STAGE FULL FREE LIFT WITH SIDE SHIFT FORK POSITIONER CARRIAGE — E-HYDRAULICS WITH QUICK DISCONNECT FITTINGS (S/N A614V02262H →)

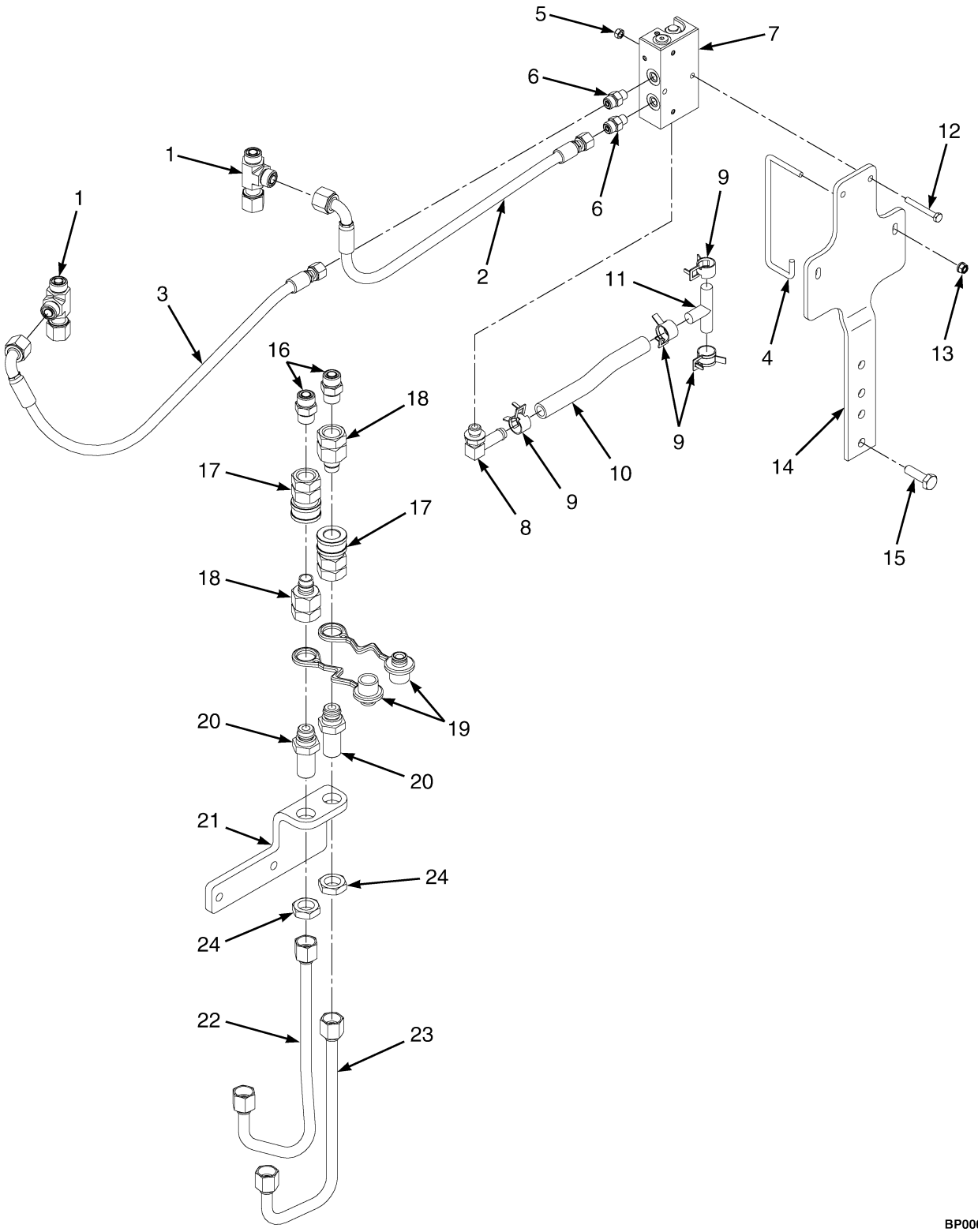

©2014 Yale Materials Handling Corporation

AUXILIARY TUBE EXTENSIONS

THREE STAGE FULL FREE LIFT WITH SIDE SHIFT FORK POSITIONER CARRIAGE – E-HYDRAULICS WITH QUICK DISCONNECT FITTINGS (S/N A614V02262H →)

ITEM	PART NO.	DESCRIPTION	QTY
1	580019895	Fitting	2
2	582005490	Hose Assy	1
3	582005259	Hose Assy	1
4	582005037	Hook	2
5	449015135	Nut	2
6	580019805	Fitting	2
7	580097368	Valve	1
8	030252011	Fitting	1
9	580036687	Clamp	4
10	580072611	Hose	1
11	514835800	Fitting	1
12	449001273	Capscrew	2
13	449015135	Nut	2
14	582005035	Bracket	1
15	580055741	Capscrew	2
16	580020430	Fitting	2
17	518802601	Quick Disconnect Fitting	2
18	518803619	Fitting (Quick Disconnect)	2
19	580097250	Dust Cover	2
20	582003626	Bulkhead	2
21	580069679	Bracket	1
22	580077816	Tube Assy	1
23	580077815	Tube Assy	1

©2014 Yale Materials Handling Corporation

NOTES

©2014 Yale Materials Handling Corporation

SECTION 15
OPTIONS

DESCRIPTION	PAGE
ACCUMULATOR	15-10
BACK-UP ALARM	15-6
DUAL MIRRORS	
WITH CAB	15-8
WITH OVERHEAD GUARD	15-9
FIRE EXTINGUISHER	
WITH CAB	15-3
WITH OVERHEAD GUARD	15-4
GM LPG REGULATOR DRAIN KIT	15-12
LIFTING EYE	15-14
STROBE LIGHT	
LED	15-2

©2014 Yale Materials Handling Corporation

STROBE LIGHT (FIGURE 15-1)
LED

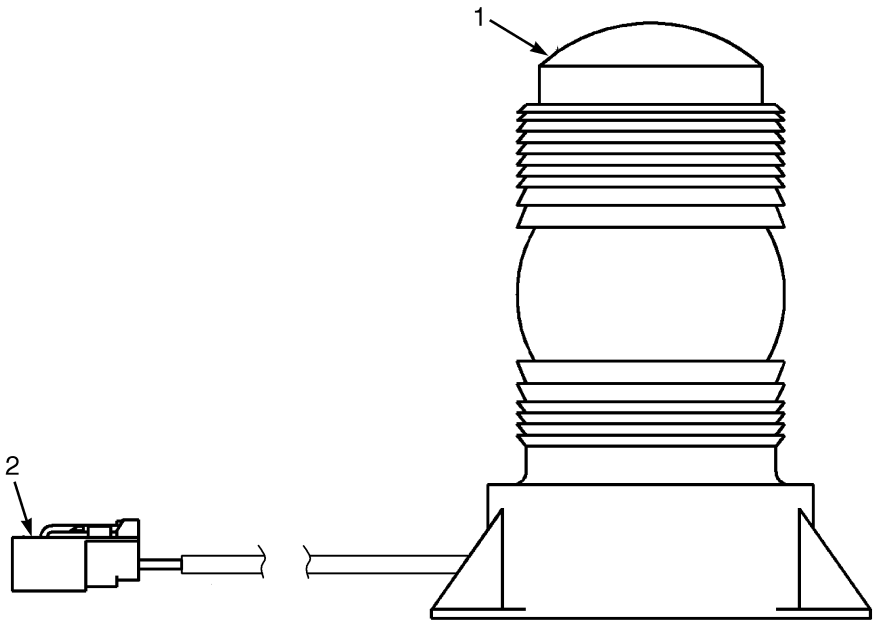

BP000363

ITEM	PART NO.	DESCRIPTION	QTY
	580079615	Strobe Light Assembly	1
1	580078920	Strobe Light (Amber LED)	1
2	580041195	Terminal Pin	1
2	580056006	Connector (2 Pin)	1
2	580056004	Connector (Secondary Lock)	1

©2014 Yale Materials Handling Corporation

FIRE EXTINGUISHER (FIGURE 15-2)
WITH CAB

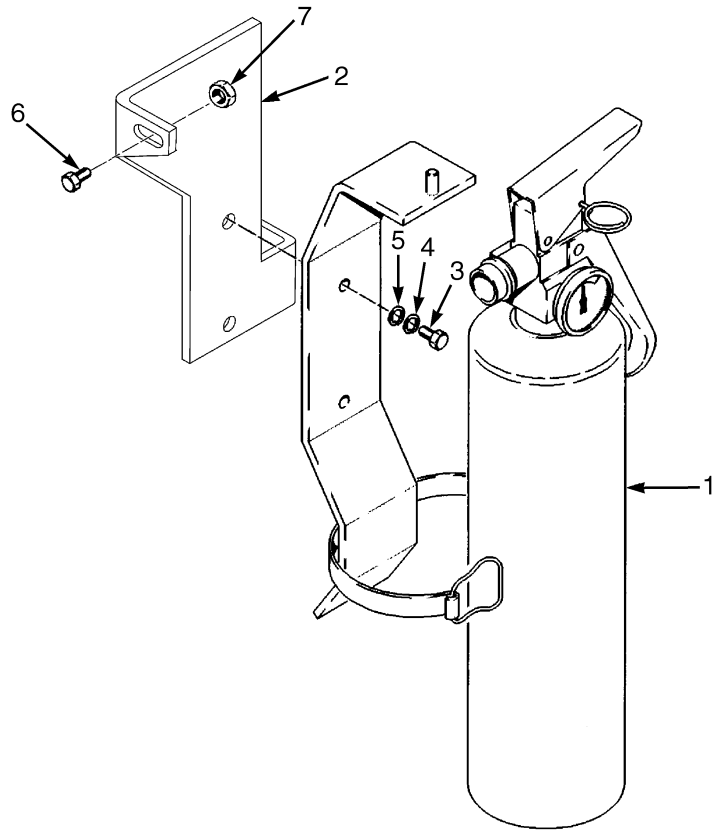

BP000252

ITEM	PART NO.	DESCRIPTION	QTY
1	504061719	Fire Extinguisher	1
1	580049526	Bracket	1
2	580056229	Bracket	1
3	580027621	Screw	2
4	449022021	Washer	2
5	449021002	Washer	2
6	580056815	Capscrew	1
7	580027573	Nut (Flange)	1

©2014 Yale Materials Handling Corporation

FIRE EXTINGUISHER (FIGURE 15-3)
WITH OVERHEAD GUARD

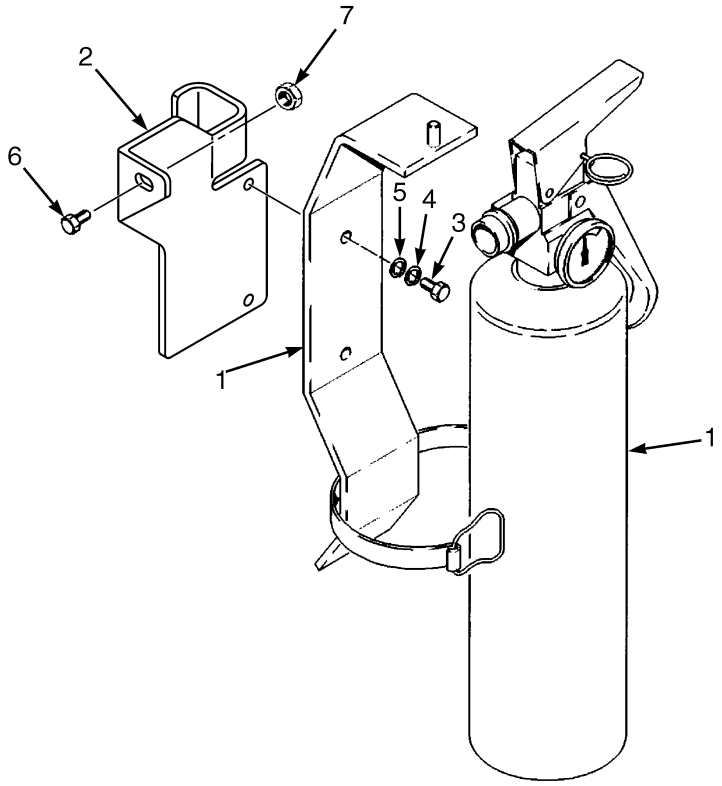

BP000354

ITEM	PART NO.	DESCRIPTION	QTY
1	504061719	Fire Extinguisher	1
1	580049526	Bracket	1
2	580078070	Bracket	1
3	580027621	Screw	2
4	449022021	Washer	2
5	449021002	Washer	2
6	580056815	Capscrew	1
7	580027573	Nut (Flange)	1

©2014 Yale Materials Handling Corporation

NOTES

©2014 Yale Materials Handling Corporation

BACK-UP ALARM (FIGURE 15-4)

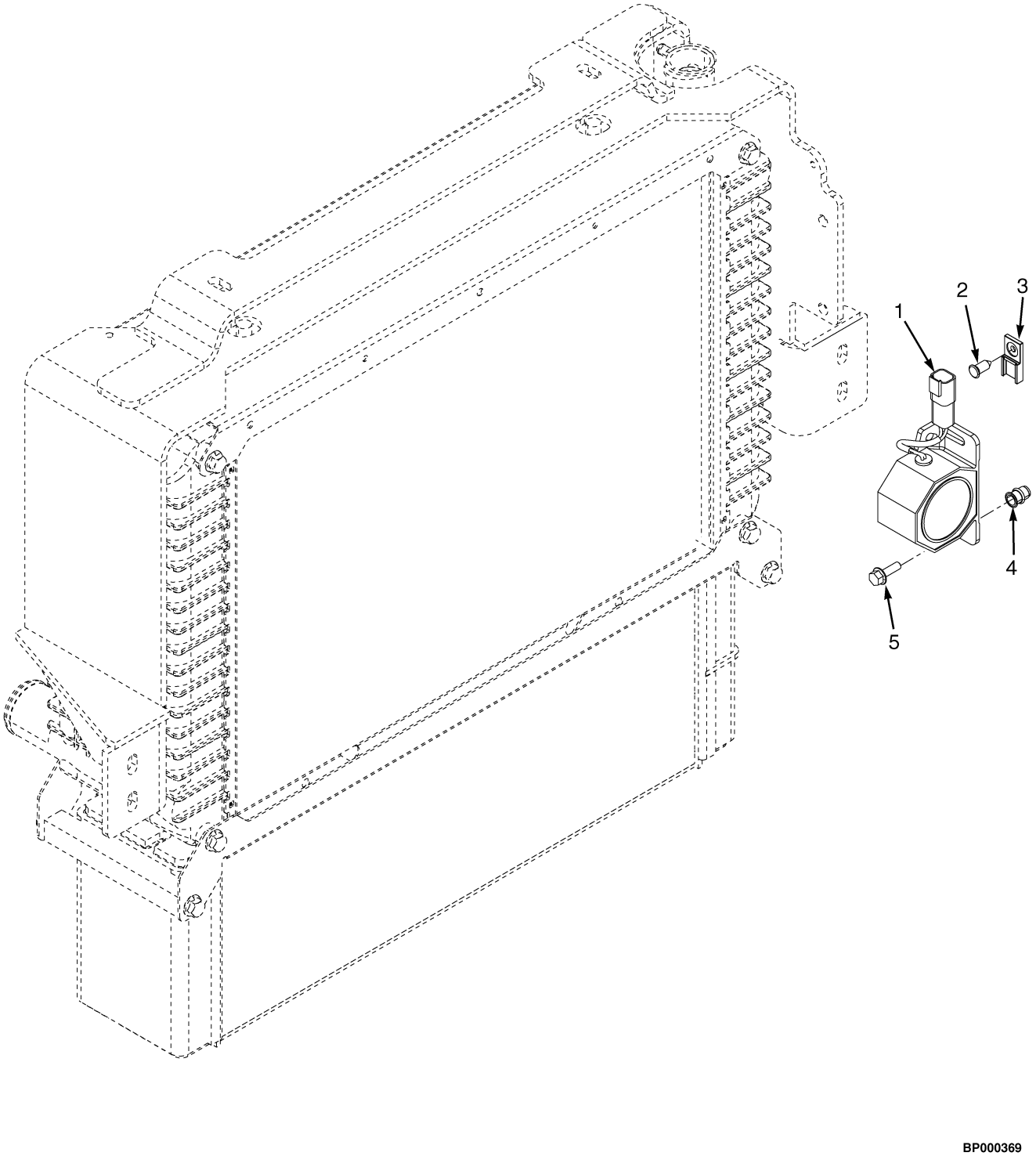

©2014 Yale Materials Handling Corporation

BACK-UP ALARM

ITEM	PART NO.	DESCRIPTION	QTY
1	580045132	Back-Up Alarm (82-102 dbA)	1
2	580056613	Fastener	1
3	580026812	Clip	1
4	580044859	Insert	2
5	580039438	Capscrew	2

©2014 Yale Materials Handling Corporation

DUAL MIRRORS (FIGURE 15-5)
WITH CAB

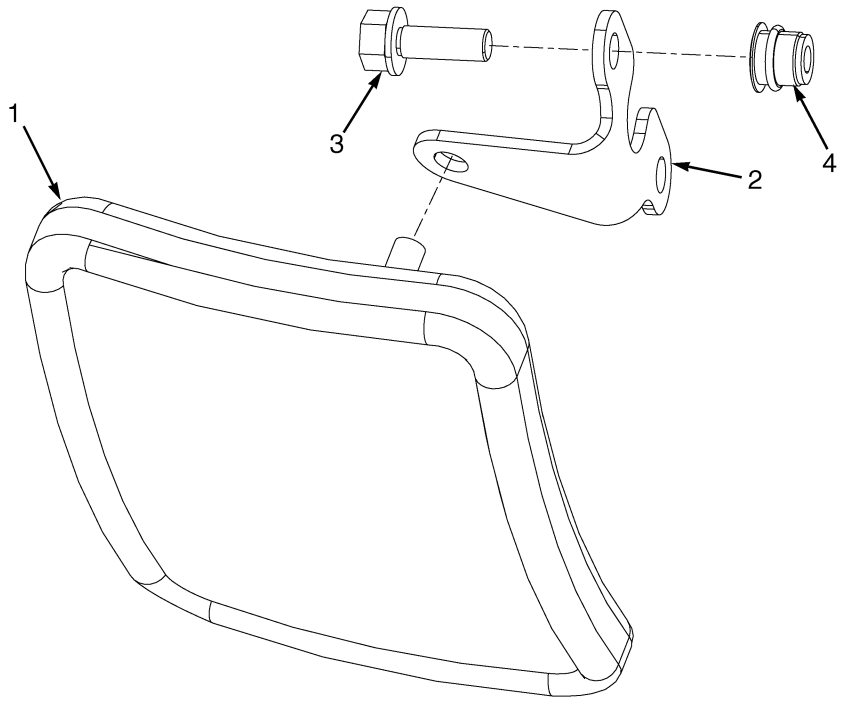

ITEM	PART NO.	DESCRIPTION	QTY
1	582003281	Mirror	2
2	580058808	Bracket	2
3	580056815	Capscrew	4
4	580044861	Insert	4

©2014 Yale Materials Handling Corporation

DUAL MIRRORS (FIGURE 15-6)
WITH OVERHEAD GUARD

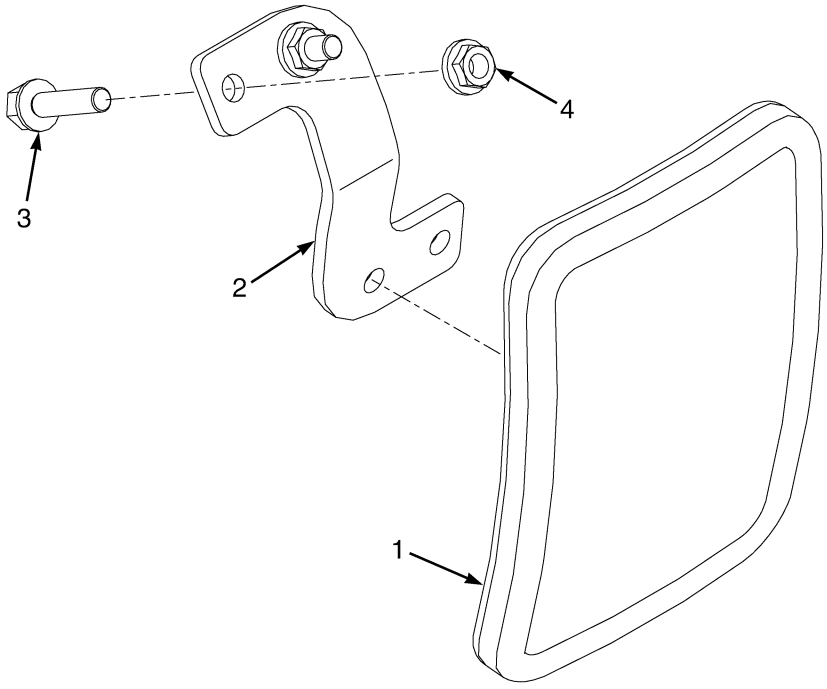

ITEM	PART NO.	DESCRIPTION	QTY
1	582003281	Mirror	2
2	580080919	Bracket (RH)	1
2	580080920	Bracket (LH)	1
3	580056815	Capscrew	4
4	580058190	Nut	4

©2014 Yale Materials Handling Corporation

ACCUMULATOR (FIGURE 15-7)

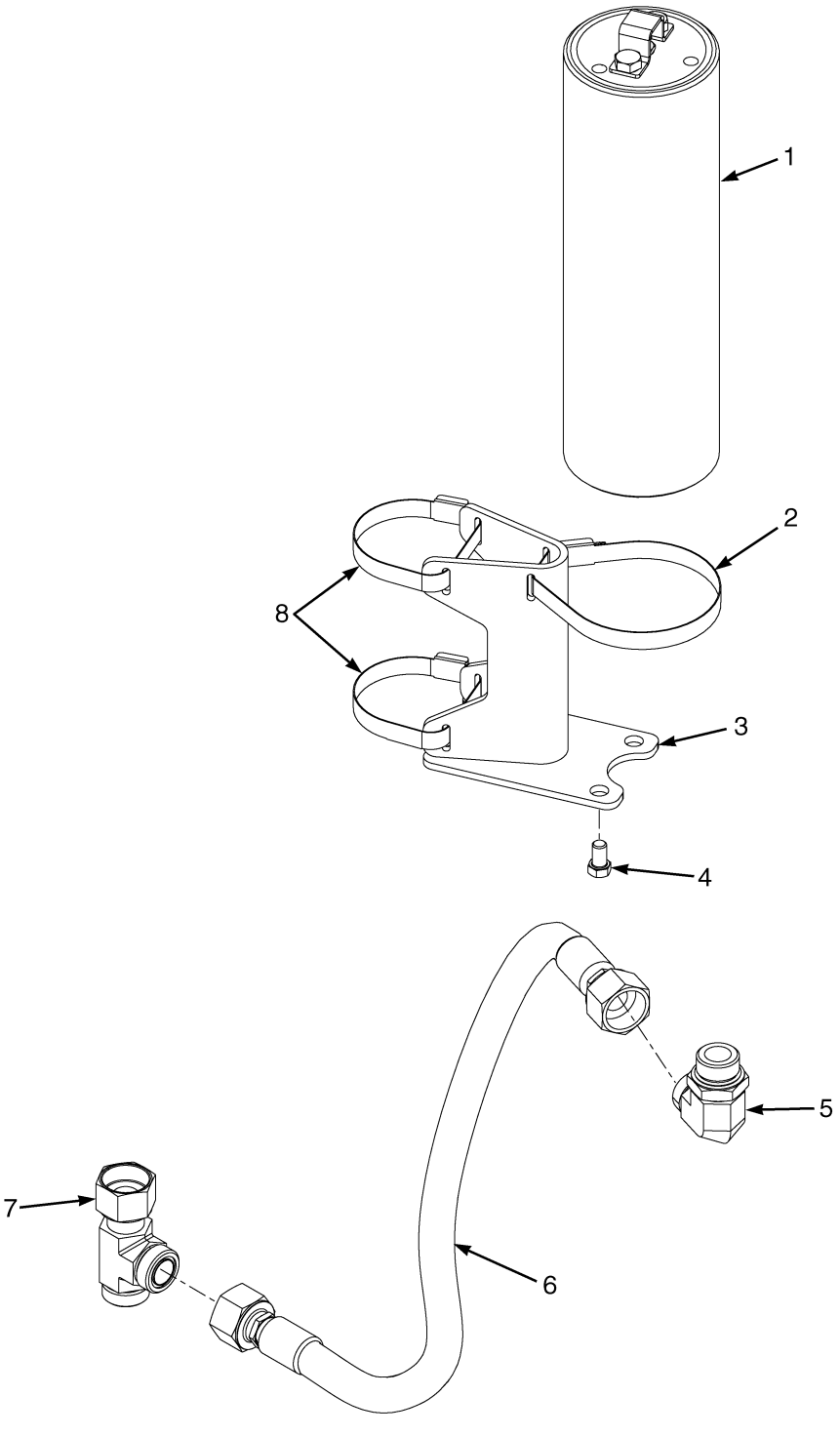

©2014 Yale Materials Handling Corporation

ACCUMULATOR

ITEM	PART NO.	DESCRIPTION	QTY
1	580081340	Accumulator	1
2	580066235	Clamp	1
3	580081339	Bracket	1
3	580097289	Bracket Wldmt (Alternate Part)	1
4	203083100	Capscrew	2
5	580080976	Fitting	1
5	052645700	O-Ring	1
5	580029083	O-Ring	1
6	582031424	Hose Assy	1
7	580019899	Fitting	1
7	580029083	O-Ring	2
8	580083669	Clamp	2

©2014 Yale Materials Handling Corporation

GM LPG REGULATOR DRAIN KIT (FIGURE 15-8)

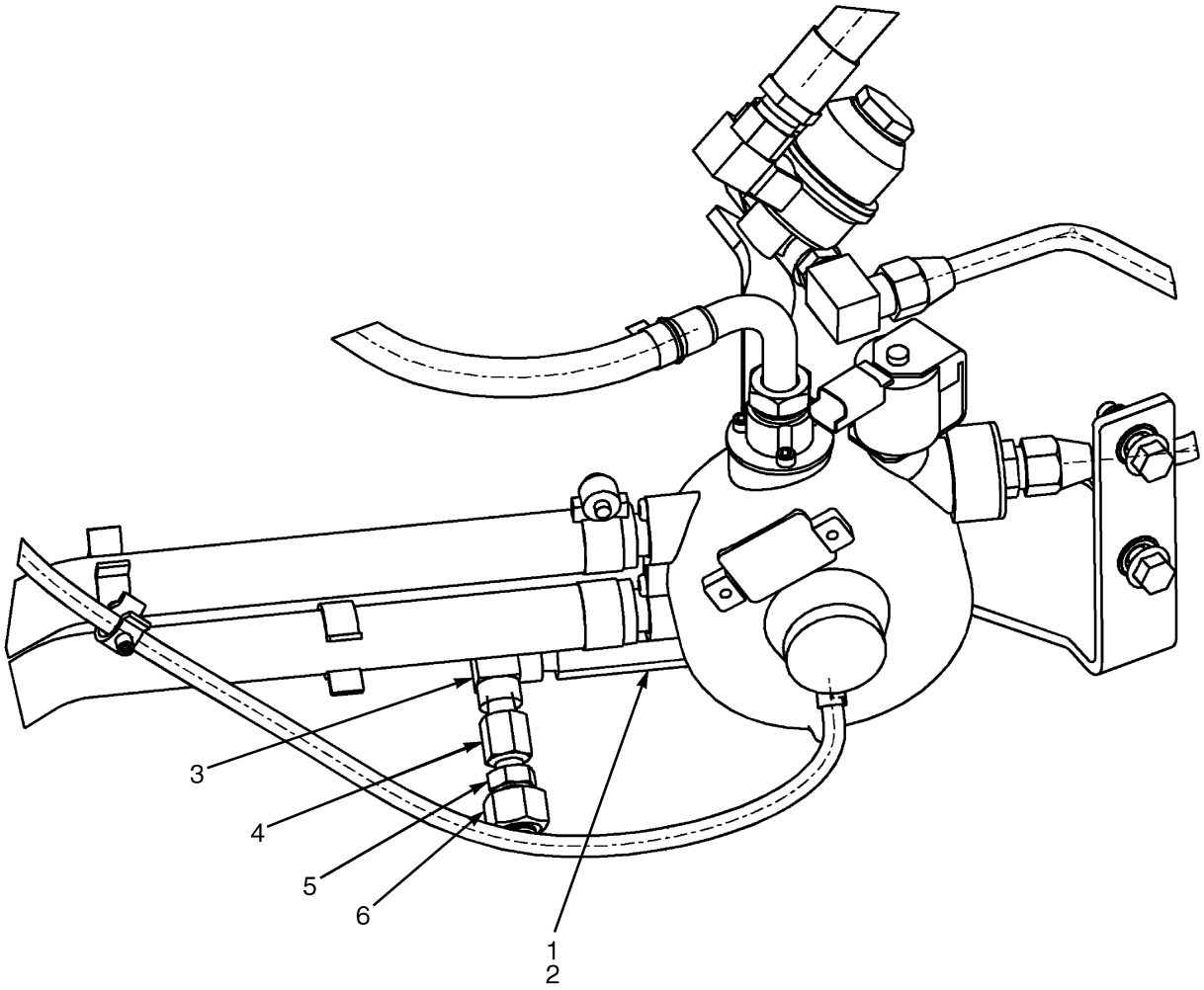

BP000396

©2014 Yale Materials Handling Corporation

GM LPG REGULATOR DRAIN KIT

ITEM	PART NO.	DESCRIPTION	QTY
	524299079	Kit-Service (GM LPG regulator Drain GM2.4L and 4.32)	1
1	580069177	Fitting	1
2	056363300	O-Ring	1
3	1053161DD	Fitting	1
4	900015237	Fitting	1
5	580020445	Fitting	1
6	580039423	Fitting	1

©2014 Yale Materials Handling Corporation

LIFTING EYE (FIGURE 15-9)

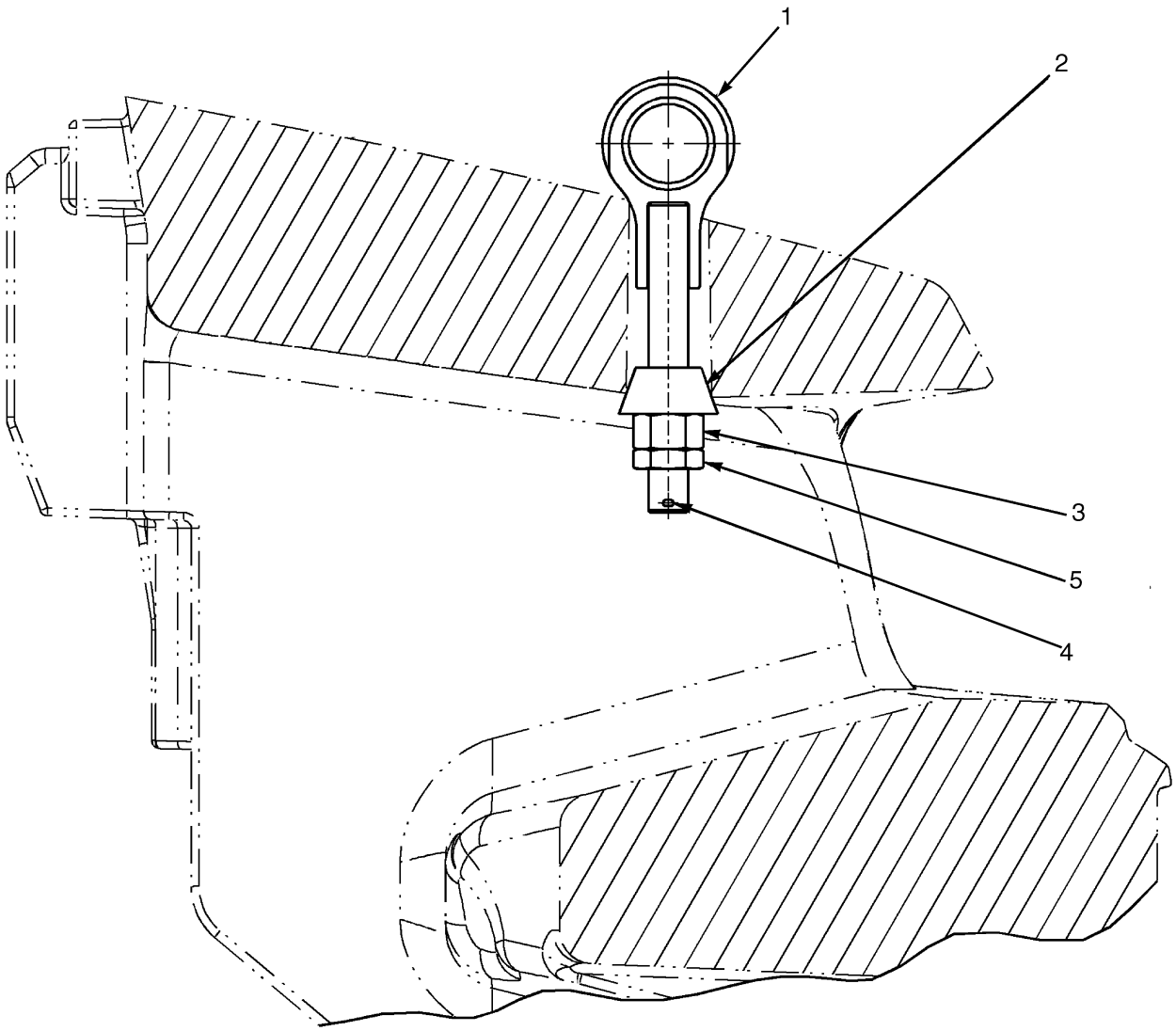

BP000445

©2014 Yale Materials Handling Corporation

LIFTING EYE

ITEM	PART NO.	DESCRIPTION	QTY
1	580078642	Eyebolt	1
2	580015437	Anchor	1
3	937300930	Nut	1
4	015421700	Cotter Pin	1
5	580060025	Nut	1

©2014 Yale Materials Handling Corporation

NOTES

©2014 Yale Materials Handling Corporation

SECTION 16
FIELD CONVERSION KITS

DESCRIPTION	PAGE
ADD-ON OPTION KITS	16-3
ATTACHMENT MOUNTING KITS	16-2
AUXILIARY TUBE EXTENSION KIT	16-7
BRAKE AND INCHING PEDAL CONVERSION	16-2
E-HYDRAULIC CONTROL CONVERSION KITS	
→ S/N D878V01751H	16-4
S/N D878V01752H →	16-5
HEADER HOSE CONVERSION KITS	
THREE STAGE FULL FREE-LIFT	16-7
TWO STAGE LIMITED FREE-LIFT	16-6
HYDRAULIC CONTROL CONVERSIONS	
MANUAL HYDRAULIC	16-5
MISCELLANEOUS CONVERSION KITS	16-3
REPLACEMENT KITS	16-8
SEAT CONVERSION KITS	16-2

©2014 Yale Materials Handling Corporation

ATTACHMENT MOUNTING KITS

DESCRIPTION	PART NUMBER
Kit-Attaching Parts (SS Pulp Bale Clamp, Std Carriage, 2 STG LFL, Class IV)	**b**524299064
Kit-Attaching Parts (SS Pulp Bale Clamp, Std Carriage. 3 Stg FFL, Class IV)	**g**524299065
Kit-Attaching Parts (Rotator, Std Carriage. 2 STG LFL Class IV)	**a**524299088
Kit-Attaching Parts (Rotator, Std Carriage, 3 Stg FFL, Class IV)	**h**524299089
Kit-Attaching Parts (Rotator, Std Carriage. 2 STG LFL Class IV)	**f**524299090
Kit-Attaching Parts (Rotator, Std Carriage, 3 Stg FFL, Class IV)	**l**524299091
Kit-Attaching Parts (Single Block Handler, Std Carriage, 2 STG LFL Class IV)	**c**524299056
Kit-Attaching Parts (Single Block Handler, 3 Stg FFL, Class IV Std Carriage)	**i**524299057
Kit-Attaching Parts (Dual Block Handler, Std Carriage, 2 Stg LFL Class IV)	**e**524299058
Kit-Attaching Parts (Dual Block Handler, 3 Stg FFL, Class IV Std Carriage)	**k**524299059
Kit-Attaching Parts (Dual Block Handler, Std Carriage, 2 Stg LFL Class IV)	**d**524299060
Kit-Attaching Parts (Dual Block Handler, 3 Stg FFL, Class IV Std Carriage)	**j**524299061

FOOTNOTES:

a 80D/100D Roll Clamp
b Used On mast A613, Attachment 100D-PBS, 140D-PBS
c Used On Mast A613, Attachment 100E-BDS
d Used On Mast A613, Attachment 150D-BDS
e Used On Mast A613, Attachment 150D-BSS
f Used On Mast A613, Attachment 150D-RRB
g Used On mast A614, Attachment 100D-PBS, 140D-PBS
h Used On Mast A614, Attachment 100D-RRB, 120D-RRB
i Used On Mast A614, Attachment 100E-BDS
j Used On Mast A614, Attachment 150D-BDS
k Used On Mast A614, Attachment 150D-BSS
l Used On Mast A614, Attachment 150D-RRB

BRAKE AND INCHING PEDAL CONVERSION

DESCRIPTION	PART NUMBER
Kit-Dual Brake Pedal	524290791
Kit-Dual Brake Pedal (Bolt Actuation)	550016523

SEAT CONVERSION KITS

DESCRIPTION	PART NUMBER
Kit-Swivel Seat Full Susp (Vinyl w/o E-Hyd Controls)	524290756
Kit-Swivel Seat Full Susp (Cloth w/o E-Hyd Controls)	524290757
Kit-Swivel Seat Full Susp (Vinyl with E-Hyd Controls)	524290758
Kit-Swivel Seat Full Susp (Cloth with E-Hyd Controls)	524290759
Kit-Seat-Full Susp Non-Swivel (Vinyl w/o E-Hyd Controls) (FLM)	550015448
Kit-Seat-Full Susp Non-Swivel (Cloth w/o E-Hyd Controls) (FLM)	550015449

©2014 Yale Materials Handling Corporation

SEAT CONVERSION KITS (CONTINUED)

DESCRIPTION	PART NUMBER
Kit-Seat-Full Susp Non-Swivel (Vinyl with E-Hyd Controls) (FLM)	550015452
Kit-Seat-Full Susp Non-Swivel (Cloth with E-Hyd Controls) (FLM)	550015453
Kit-Seat-Full Susp Swivel (Vinyl w/o E-Hyd Controls) (FLM)	550015450
Kit-Seat-Full Susp Swivel (Cloth w/o E-Hyd Controls) (FLM)	550015451
Kit-Seat-Full Susp Swivel (Vinyl with E-Hyd Controls) (FLM)	550015454
Kit-Seat-Full Susp Swivel (Cloth with E-Hyd Controls) (FLM)	550015455

MISCELLANEOUS CONVERSION KITS

DESCRIPTION	PART NUMBER
Kit-Keyswitch to Push-Button	**a**524261866
Kit-Return to Set Tilt 3 Way (Mini Lever without Clamp)	**a**524293969
Kit-Return to Set Tilt 4 Way (Mini Lever without Clamp)	**a**524293970
Kit-Return to Set Tilt 3 Way (Mini Lever with Clamp)	**a**524293972
Kit-Return to Set Tilt 4 Way (Mini Lever with Clamp)	**a**524293973
Kit-Fwd/Rev Lever to FDC	**a**524263337
Kit-FDC to Fwd/Rev Lever	**a**524227697
Kit-Seat Belt (Red)	524281279
Kit-Mini Lever Conv 4 Way (w/o clamp to 4 way with clamp Interlock)	524333694
Kit-Service (Head-LPG) (Altered GM 4.3L w/Intake Valve Seat Insert)	582006716
Kit-Gas Spring (And Ball Stud)	550016113
Kit Return to Set Tilt (Tilt Cylinder)	550073225

FOOTNOTES:

a This kit requires software that must be dealer installed. Dealer needs to obtain a new Configuration Data File (CDF) from Aftermarket Services. The CDF should be ordered from the Software Resources page of AXCESS Online. See Service Gram LD00018.

ADD-ON OPTION KITS

DESCRIPTION	PART NUMBER
Kit-Fire Extinguisher (W/o Cab)	524285530
Kit-Fire Extinguisher (With Cab)	524270761
Kit-Mirror (For Overhead Guard)	524226924
Kit-Mirror (Dual Mirrors For Cab)	524242369
Kit-Strobe Light (with harness for Overhead Guard)	524264557
Kit-Strobe Light (Strobe, Flash Tube with Other Lights and Overhead Guard, w/o Harness)	524228197
Kit-Strobe Light (Amber Strobe with Cab)	524263692
Kit-Strobe Light (Amber Strobe LED Light with Cab)	524291318

©2014 Yale Materials Handling Corporation

ADD-ON OPTION KITS (CONTINUED)

DESCRIPTION	PART NUMBER
Kit-Light (LED Strobe w/o Other Lights for Overhead Guard with Harness)	524290669
Kit-Light (LED Strobe with other lights for Overhead Guard, w/o Harness)	524290668
Impact Monitoring Kit (with Immediate Shutdown) (Immediate Shutdown)	**a**524275522
Kit-Impact Monitoring (With 30 Second Shutdown) (30 Second Shutdown)	**a**524275523
Kit-Powertrain Protection	**a**524230083
Kit-Back-Up Alarm (87 dbA)	524292186
Kit-Back-Up Alarm (97 dbA)	524292187
Kit-Back-Up Alarm (102 dbA)	524292188
Kit-Back-Up Alarm (82-102 dbA)	524292190
Kit (Audible Alarm 107 dbA)	524292189
Kit-Accumulator	524293272
Kit-Load Weight on Display (E-Hydraulics)	**a**524275520
Kit-Front Drive/Rear Worklight (w/o Harness, with Overhead Guard, for 2 Stg Mast)	**b**524305277
Kit-Front Drive/Rear Worklight (w/o Harness, use with Overhead Guard)	**b**524308654
Kit-Work Light Extension (Use with 2 Stg LFL Mast and Cab)	524302223
Kit-Front Drive/Rear Worklight (with light harness, with Overhead Guard and 3 Stg Mast or No Mast)	524264556
Kit-Front Drive/Rear Worklight (Halogen with Overhead Guard with other lights, does not include Harness)	524228195
Kit-Front Drive/Rear Worklight (w/o Harness, use with Overhead Guard) (W/Other Lights)(W/O Harness)	524308654
Kit-Front Drive/Rear Worklight (with light harness, with Overhead Guard and 3 Stg Mast or No Mast)	524264556
Kit-Light (Brake/Tail/Back-up Lights with Harness, with Overhead Guard)	524264558
Kit-Brake/Tail/Back-Up Light (w/o Harness, use with Overhead Guard)	524228199
Kit-Sensor (Low LPG Fuel) (Pre-2010 GM Engines)	**a**550014075
Kit-Sensor (Low LPG Fuel) (2010 GM Engines)	**a**550022148

FOOTNOTES:

a This kit requires software that must be dealer installed. Dealer needs to obtain a new Configuration Data File (CDF) from Aftermarket Services. The CDF should be ordered from the Software Resources page of AXCESS Online. See Service Gram LD00018.

b Used with other lights, Overhead Guard, no harness

E-HYDRAULIC CONTROL CONVERSION KITS

(→ S/N D878V01751H)

DESCRIPTION	PART NUMBER
Kit-Mini Lever Conv 3 Way (w/o clamp to 3 way with clamp Interlock)	**a**524229456
Kit-Mini Lever Conv 3 Way (With Clamp to 3 Way Without Clamp Interlock)	**a**524245848
Kit-Mini Lever Conv 4 Way (With Clamp to 4 Way Without Clamp Interlock)	**a**524270047

©2014 Yale Materials Handling Corporation

E-HYDRAULIC CONTROL CONVERSION KITS
(→ S/N D878V01751H)
(CONTINUED)

DESCRIPTION	PART NUMBER
Kit-Mini Lever Conv 3 Way (Without Clamp to 4 Way without Clamp)	**a**524296243
Kit-Mini Lever Conv 3 Way (Without Clamp to 4 Way with Clamp)	**a**524296244
Kit-Mini Lever Conv 4 Way (w/o clamp to 4 way with clamp Interlock)	524333694

FOOTNOTES:

a This kit requires software that must be dealer installed. Dealer needs to obtain a new Configuration Data File (CDF) from Aftermarket Services. The CDF should be ordered from the Software Resources page of AXCESS Online. See Service Gram LD00018.

E-HYDRAULIC CONTROL CONVERSION KITS
(S/N D878V01752H →)

DESCRIPTION	PART NUMBER
Kit-Mini Lever Conv 3 Way (Without Lockout to with Lockout) (without Lockout to with Lockout)	524332188
Kit-Mini Lever Conv 4 Way (With Lockout to without Lockout) (with Lockout to without Lockout)	524332189
Kit-Mini Lever Conv 3 Way (With Lockout to without Lockout) (with Lockout to without Lockout)	524332187
Kit-Mini Lever Conv 3 Way (Without Clamp to 4 Way without Clamp)	550014570
Kit-Mini Lever Conv 3 Way (without Clamp to 4 Way with Clamp)	550014571
Kit-Mini Lever Conv 4 Way (Without Lockout to with Lockout) (without Lockout to with Lockout)	524332190

HYDRAULIC CONTROL CONVERSIONS
MANUAL HYDRAULIC

DESCRIPTION	PART NUMBER
Kit-Manual Lever Conv 3 Way (without Clamp to 3 Way with Clamp)	524311521
Kit-Manual Lever Conv 3 Way (w/o clamp to 4 way with clamp)	524312198
Kit-Manual Lever Conv 3 Way (w/o clamp to 4 way w/o clamp)	524312199

©2014 Yale Materials Handling Corporation

HEADER HOSE CONVERSION KITS
TWO STAGE LIMITED FREE-LIFT

HEADER HOSE CONVERSION KITS TWO STAGE LIMITED FREE-LIFT

DESCRIPTION	LIFT HEIGHT TO BOTTOM OF FORKS				
	2940 mm (115.7 in.)	3340 mm (131.5 in.)	4340 mm (170.9 in.)	5340 mm (210.2 in.)	5940 mm (233.9 in.)
Mast Group Number	**A613 2940**	**A613 3340**	**A613 4340**	**A613 5340**	**A613 5940**
Kit-Hose Group 2 to 3 Way	524294133	524283124	524283128	524294136	524294139

HEADER HOSE CONVERSION KITS TWO STAGE LIMITED FREE-LIFT

DESCRIPTION	LIFT HEIGHT TO BOTTOM OF FORKS				
	2940 mm (115.7 in.)	3340 mm (131.5 in.)	4340 mm (170.9 in.)	5340 mm (210.2 in.)	5940 mm (233.9 in.)
Mast Group Number	**A613 2940**	**A613 3340**	**A613 4340**	**A613 5340**	**A613 5940**
Kit-Hose Group 2 to 4 Way	524294135	524283126	524283130	524294138	524294141

HEADER HOSE CONVERSION KITS TWO STAGE LIMITED FREE-LIFT

DESCRIPTION	LIFT HEIGHT TO BOTTOM OF FORKS				
	2940 mm (115.7 in.)	3340 mm (131.5 in.)	4340 mm (170.9 in.)	5340 mm (210.2 in.)	5940 mm (233.9 in.)
Mast Group Number	**A613 2940**	**A613 3340**	**A613 4340**	**A613 5340**	**A613 5940**
Kit-Hose Group 3 to 4 Way	524294134	524283125	524283129	524294137	524294140

©2014 Yale Materials Handling Corporation

HEADER HOSE CONVERSION KITS
THREE STAGE FULL FREE-LIFT

HEADER HOSE CONVERSION KITS THREE STAGE FULL FREE-LIFT

DESCRIPTION	LIFT HEIGHT TO BOTTOM OF FORKS		
	4640 mm (182.7 in.)	5540 mm (218.1 in.)	6140 mm (241.7 in.)
Mast Group Number	**A614 4640**	**A614 5540**	**A614 6140**
Kit-Hose Group 2 to 3 Way	524283519	524283523	524283527

HEADER HOSE CONVERSION KITS THREE STAGE FULL FREE-LIFT

DESCRIPTION	LIFT HEIGHT TO BOTTOM OF FORKS		
	4640 mm (182.7 in.)	5540 mm (218.1 in.)	6140 mm (241.7 in.)
Mast Group Number	**A614 4640**	**A614 5540**	**A614 6140**
Kit-Hose Group 2 to 4 Way	524283521	524283525	524283529

HEADER HOSE CONVERSION KITS THREE STAGE FULL FREE-LIFT

DESCRIPTION	LIFT HEIGHT TO BOTTOM OF FORKS		
	4640 mm (182.7 in.)	5540 mm (218.1 in.)	6140 mm (241.7 in.)
Mast Group Number	**A614 4640**	**A614 5540**	**A614 6140**
Kit-Hose Group 3 to 4 Way	524283520	524283524	524283528

AUXILIARY TUBE EXTENSION KIT

DESCRIPTION	PART NUMBER
Kit-Quick Disconnect Fitting	524273757
Kit-Aux Tube Extension (Three Function Class IV Std Carriage, 2 LFL)	524293201
Kit-Aux Tube Extension (Four Function Class IV Std Carriage, 2 Stg LFL)	524293202
Kit-Aux Tube Extension (Three Function Class IV, Std Carriage, 3 Stg FFL)	524293203
Kit (Quick Disconnect, 2 Stg LFL, 3rd Function)	550015848
Kit (Quick Disconnect, 2 Stg LFL, 3rd and 4th Function)	550015849
Kit (Quick Disconnect, 3 Stg FFL, 3rd Function)	550015850
Kit (Quick Disconnect, 3 Stg FFL, 3rd and 4th Function)	550015851
Kit (Quick Disconnect Fittings Single Auxiliary E-Hydraulics) (2 Stg LFL, 4th Function)	550024387
Kit (Quick Disconnect Fittings Single Auxiliary E-Hydraulics) (3 Stg FFL, 4th Function)	550024388

©2014 Yale Materials Handling Corporation

REPLACEMENT KITS

DESCRIPTION	PART NUMBER
Kit-Bracket (Exhaust)	550013908

©2014 Yale Materials Handling Corporation

SECTION 17
NUMERICAL INDEX

PART NO.	PAGE	ITEM
012824300	12-3	6
	13-3	8
	13-5	13
012826900	7-11	17
	7-13	10
	7-13	16
	7-15	34
	7-17	4
	7-27	18
	7-29	13
	7-29	19
	7-31	34
	7-33	4
	7-33	7
013378800	1-39	17
013378900	1-39	16
013392500	5-45	18
014711300	2-57	5
014936600	11-34	3
	11-59	4
	11-61	4
014939300	6-67	3
014939700	5-43	4
014979500	10-7	11
014996900	6-67	1
015026200	14-11	8
015026400	5-43	5
	6-67	2
015026600	11-3	31
015035700	6-67	4
015040300	2-30	5
015040600	2-25	12
015417900	12-7	31
	13-7	6
	13-10	34
	13-17	21
	14-5	6
	14-7	8
	14-9	7
	14-11	13
015418400	9-9	40
	9-13	40
015418500	9-9	40
015421700	15-15	4
015483300	13-19	6
015493500	9-15	5
	9-16	5
	12-11	7
	13-13	6
015627900	11-63	7
	14-5	20
	14-7	21
	14-9	22
	14-11	19
015631500	9-9	18
	9-9	26
	9-13	18
	9-13	26
015759100	10-15	29
015915100	9-13	20
	10-7	10
015918200	9-9	20
016103200	2-64	3
	4-7	19
016103500	1-49	21
	1-51	27
016103700	6-35	5
	6-38	2
016110000	11-3	20
019299600	5-43	18
019919600	5-23	21
	5-27	22
	5-29	13
019930000	5-23	27
	5-27	28
	5-29	6
020772200	6-19	9
	6-21	8
020772500	2-9	5
	2-32	3
021197300	1-43	27
022784400	9-10	49
	9-14	49
023021000	1-51	16
	1-63	8
023080200	5-31	7
	5-33	16
030252011	12-7	8
	13-9	4
	14-55	13
	14-61	13
	14-67	8
031202200	12-3	5
	12-5	7
	13-3	5
	13-5	5
	13-7	10
	14-5	5
	14-7	3
	14-9	5
	14-11	5
032643500	5-57	16
	5-61	9
0377631O W	2-30	3
052641400	13-9	12
052643300	14-13	12
	14-17	5
	14-18	23
052645100	7-13	18
	7-29	17
052645200	7-13	24
	7-29	25
	7-33	15
	9-19	1
	10-15	1
	10-15	5
	10-15	6
	10-15	12
	10-15	14
	10-16	37
	10-16	40
	11-67	1
	13-9	4
	14-55	13
	14-61	13
052645300	7-25	13
	7-41	23
	9-19	6
	9-19	7
	10-15	18
	10-15	23
	10-16	39
	11-3	7
	11-4	38
	11-9	7
	11-9	8
	11-67	6
	11-67	10
	11-67	11
	11-67	13
	11-68	1
	14-13	10
	14-13	12
	14-13	14
	14-17	5
	14-17	10
	14-17	21
	14-18	23
	14-18	25
	14-18	27
052645400	7-9	1
	11-3	33
	13-9	2
	13-9	9
	13-9	12
	14-17	17
052645500	7-9	3
	7-9	4
	7-11	38
	7-13	27
	7-15	23
	7-27	36
	7-29	27
	7-31	23
	10-15	8
	10-15	15
	10-15	24
	11-3	1
	11-4	39
	11-9	14
	13-10	27
052645600	11-69	5
052645700	10-3	20
	10-7	23
	11-3	29
	12-7	21
	13-9	16
	15-11	5
052645800	11-3	28
	12-7	20
052645900	11-3	24
053239100	9-9	38
	9-13	38
053349600	13-9	20
054585400	12-5	8
055160000	13-9	2
055746400	11-3	7
	11-9	7
056155000	5-45	20
056260300	5-13	8
	5-19	11
	5-45	16
056363300	10-3	16
	10-3	18
	10-7	20

©2014 Yale Materials Handling Corporation

NUMERICAL INDEX (continued)

PART NO.	PAGE	ITEM
	10-7	25
	10-15	17
	15-13	2
056623800	5-23	25
	5-27	23
	5-29	8
057043500	5-43	14
057090400	10-15	8
057390000	12-7	21
058429300	7-13	17
	7-29	16
059079500	2-13	11
059235200	10-15	28
059726400	10-16	37
059803100	14-37	6
060023600	2-93	5
	5-29	16
060242700	7-13	23
	7-29	24
	7-33	14
060733800	9-10	45
	9-13	45
061278300	14-29	13
061977400	3-3	2
06205330D	6-31	9
062128100	7-25	12
062143700	6-35	4
	6-38	3
062151600	1-63	15
	1-65	23
062159500	1-39	35
	1-41	11
	1-41	11
	2-21	1
	2-21	1
	2-41	16
	5-21	2
	5-23	1
	5-27	13
	11-4	37
062159700	4-3	9
	4-7	11
	5-13	17
	11-3	11
064426800	11-3	15
064570800	7-5	13
	7-7	10
065000900	9-9	15
065001000	9-9	10
	9-13	10
065619300	5-57	11
	5-61	12
066891800	1-39	30
	1-41	30
066965800	13-7	5
	14-7	9
	14-11	11
072387301	9-9	2
	9-13	2
072387302	9-9	1
	9-13	1
080143400	1-5	22
1053161DD	15-13	3
135523102	10-16	35
150121835	6-151	9
	6-153	8
203083100	15-11	4
203142800	1-63	23
	1-65	22
203146400	14-11	9
203756300	6-18	8
253915404	1-77	1
253915405	1-77	1
253915414	1-77	1
258979300	1-15	2
	1-27	20
272478100	6-172	1
278131700	6-172	1
311207098	1-63	4
311323023	7-3	8
312850042	1-63	
	5-13	14
	5-19	4
	10-4	
	10-8	
315976062	11-3	8
	11-3	22
316445008	11-68	1
449001014	1-51	7
449001023	7-3	1
449001040	2-11	10
449001050	5-15	19
449001058	14-5	15
	14-7	16
	14-9	14
	14-11	25
449001120	2-64	6
449001121	1-5	4
449001125	2-23	7
	2-25	13
449001160	6-29	2
449001204	10-11	8
	10-13	6
449001268	6-31	45
449001273	14-55	12
	14-61	12
	14-67	12
449001400	1-27	22
	14-9	20
	14-11	26
449001412	1-49	20
	1-51	26
449001415	5-15	13
	6-69	14
449001418	14-9	23
	14-11	29
449001452	1-23	4
449004063	1-39	23
	1-41	23
449004073	1-51	2
449007005	2-64	4
	4-3	13
	4-7	18
449013047	13-5	7
	13-17	6
449015012	1-27	7
449015014	5-15	14
	10-3	11
	10-7	15
449015087	14-9	8
449015098	1-47	4
	1-49	11
	2-14	38
449015112	6-63	7
	10-3	29
	10-8	35
449015135	10-11	14
	10-13	8
	14-55	4
	14-55	15
	14-61	4
	14-61	15
	14-67	5
	14-67	13
449021001	1-5	11
	2-14	37
	6-22	6
	6-69	14
449021002	15-3	5
	15-4	5
449021003	11-15	4
	11-19	4
449021006	3-5	16
	3-7	16
	9-9	16
	9-13	16
449021010	11-15	13
	11-19	14
449022013	2-11	11
	2-13	10
	7-3	2
	8-3	8
449022017	3-5	24
	3-7	22
	14-5	16
	14-7	17
	14-9	14
	14-11	17
449022018	6-61	2
449022019	1-27	8
449022021	15-3	4
	15-4	4
449022041	9-9	28
	9-13	28
	14-9	19
	14-11	27
449034005	5-61	17
449034011	5-59	2
449034061	1-23	8
500017905	5-13	7
	5-19	8
500154904	11-9	8
500154908	11-4	38
500167906	9-15	2
	9-16	2
500227905	14-18	43
500227908	12-7	1
	13-10	33
500343915	13-17	25
500552902	5-57	17
	5-61	8
500583902	11-15	16
	11-17	12
	11-19	17
	11-21	12
501702901	2-23	9
	5-61	16
	7-5	17
501702902	9-10	
	9-14	
	10-8	
501702904	5-59	11
	5-61	30
501704901	10-15	12

©2014 Yale Materials Handling Corporation

NUMERICAL INDEX (continued)

PART NO.	PAGE	ITEM
501712902	9-15	3
	9-16	3
501737903	5-45	30
501738901	2-59	6
501850904	13-19	13
501862901	7-5	15
	7-7	13
501884905	5-23	27
	5-27	28
	5-29	6
501884906	4-3	5
	4-7	6
	5-43	19
501884908	2-18	
501949902	11-65	5
502056903	4-3	16
	11-3	23
502056905	5-9	7
502056906	5-13	1
	5-15	8
	10-3	14
	10-7	18
502058911	5-15	
502097909	1-49	15
	1-51	15
	1-63	5
502175920	9-10	44
	9-13	44
502175921	9-9	37
	9-13	37
502398908	2-23	6
502400901	10-16	51
502565901	7-3	7
	9-9	27
	9-13	27
502566901	2-13	17
	2-26	3
	2-64	7
502566903	7-3	6
502566904	7-5	10
	7-7	15
	14-9	24
	14-11	30
502634904	5-57	14
	5-61	13
502635907	11-31	19
	11-33	3
502637904	11-65	12
502654912	13-9	8
504057775	5-38	6
504058787	5-5	3
	5-7	3
	5-9	4
504061719	15-3	1
	15-4	1
504062736	14-18	48
504064729	13-9	9
504068737	12-7	13
	13-9	3
504071785	1-65	16
504072717	14-5	4
	14-7	4
	14-9	25
	14-11	4
504148200	13-19	12
504155200	10-15	1
	11-67	1
	11-67	11
504224222	9-9	11
	9-13	11
504224231	9-9	3
	9-13	3
504224232	9-9	12
	9-13	12
504224242	9-9	7
	9-13	7
504224266	9-10	48
	9-14	48
504224292	9-9	13
	9-13	13
504224298	9-9	4
	9-13	4
504225201	5-57	2
	5-61	7
504225236	9-9	9
	9-13	9
504225257	1-11	23
	1-39	32
	1-41	32
504226242	3-3	9
	3-5	10
	3-7	9
504227270	11-15	9
	11-19	9
504227283	9-10	41
	9-13	41
504230204	11-31	8
	11-33	11
504230236	11-31	7
	11-33	10
504230239	11-15	8
	11-19	8
504230271	1-51	18
	1-63	14
	1-65	7
	1-65	21
	10-16	43
504231204	6-153	1
	6-153	2
	6-153	17
504231213	1-43	26
504231215	1-69	20
504231248	1-69	14
504231252	1-69	16
504231265	1-67	9
504231296	1-69	13
504232231	12-11	6
	13-13	5
504232260	6-38	
504232281	6-158	27
504232297	6-55	14
	6-57	14
504233242	13-17	23
504233244	13-9	19
504233271	1-13	3
504233279	13-5	15
504234265	13-5	14
504235239	13-19	10
504235245	1-5	3
504236273	5-13	22
504238289	11-9	3
504240211	9-10	42
	9-13	42
504240712	6-12	7
504288730	6-81	5
	6-81	6
	6-95	11
	6-100	20
	6-101	37
	6-101	38
	6-101	40
	6-106	20
	6-107	41
	6-107	42
	6-107	44
	6-112	20
	6-112	29
	6-113	42
	6-113	43
	6-114	45
	6-118	20
	6-118	29
	6-119	42
	6-119	43
	6-120	45
	6-125	2
	6-127	3
	6-127	7
	6-129	2
	6-129	4
	6-131	4
	6-131	5
	6-133	7
	6-133	10
	6-171	3
	6-171	4
504288731	6-81	5
504288732	6-81	5
504288733	6-81	5
	6-95	10
	6-100	21
	6-101	37
	6-101	38
	6-101	41
	6-106	21
	6-107	41
	6-107	42
	6-108	45
	6-112	21
	6-113	42
	6-113	43
	6-114	46
	6-118	21
	6-119	42
	6-119	43
	6-120	46
	6-172	2
504288740	6-73	13
	6-74	27
	6-77	14
	6-78	30
	6-85	7
	6-85	10
	6-89	9
	6-89	13
504288741	6-73	16
	6-74	27
	6-74	31
	6-77	19
	6-78	30
	6-78	35
	6-85	10
	6-86	25
	6-89	13

©2014 Yale Materials Handling Corporation

NUMERICAL INDEX (continued)

PART NO.	PAGE	ITEM
	6-90	33
	6-114	54
	6-120	54
	6-125	5
	6-125	6
	6-127	8
	6-127	9
	6-161	1
504288749	6-73	14
	6-77	16
	6-86	22
	6-90	30
504305710	11-65	9
504305712	9-15	9
	9-16	9
504323759	1-13	6
504450740	6-153	6
	6-153	7
	6-153	18
	6-154	19
504450741	6-153	6
	6-153	7
504450754	12-11	2
	13-13	8
504450756	12-11	1
	13-13	3
504450757	13-13	9
504450761	6-153	6
	6-153	7
	6-153	18
	6-154	19
504804792	12-11	8
505849503	1-77	1
505849504	1-77	1
505849505	1-77	1
505849507	1-77	1
505965599	14-13	7
	14-17	6
	14-21	2
505966507	5-23	18
	5-27	16
505966562	1-13	4
	5-43	9
505966595	4-3	18
	4-7	8
505967516	5-10	1
505967551	7-41	22
	11-68	1
505967560	10-16	35
505968505	6-81	5
	6-81	7
	6-101	37
	6-101	38
	6-101	40
	6-101	41
	6-107	41
	6-107	42
	6-107	44
	6-108	45
	6-113	42
	6-113	43
	6-114	45
	6-114	46
	6-119	42
	6-119	43
	6-120	45
	6-120	46
	6-125	8
	6-127	3
	6-129	2
	6-131	4
	6-131	8
	6-133	7
	6-171	3
505968514	1-15	11
	6-57	24
	6-57	25
	6-69	7
	6-82	16
	6-95	1
	6-97	1
	6-99	2
	6-105	2
	6-111	2
	6-117	2
	6-123	9
	6-136	17
	6-140	29
	6-144	30
	6-147	13
	6-148	27
	6-151	8
	6-153	9
	6-168	2
505968540	1-15	10
	6-123	9
	6-151	8
	6-153	9
	6-168	2
505968563	6-32	54
	6-83	24
505968566	6-82	16
	6-99	13
	6-99	14
	6-102	43
	6-102	45
	6-105	13
	6-105	14
	6-108	47
	6-108	49
	6-111	13
	6-111	14
	6-112	18
	6-114	47
	6-114	49
	6-117	13
	6-117	14
	6-118	18
	6-120	47
	6-120	49
	6-163	1
505968568	6-65	2
	6-69	10
	6-95	4
	6-95	7
	6-97	3
	6-97	8
	6-99	1
	6-99	3
	6-99	11
	6-100	18
	6-100	22
	6-100	26
	6-100	28
	6-101	36
	6-105	1
	6-105	3
	6-105	11
	6-106	18
	6-106	22
	6-106	26
	6-106	30
	6-107	40
	6-111	1
	6-111	3
	6-111	11
	6-112	22
	6-112	26
	6-112	27
	6-113	31
	6-113	41
	6-117	1
	6-117	3
	6-117	11
	6-118	22
	6-118	26
	6-118	27
	6-119	31
	6-119	41
	6-123	11
	6-135	7
	6-135	10
	6-135	13
	6-135	14
	6-136	18
	6-139	9
	6-139	15
	6-140	19
	6-140	23
	6-140	25
	6-140	27
	6-140	30
	6-143	1
	6-143	6
	6-143	13
	6-143	17
	6-143	18
	6-144	24
	6-144	26
	6-144	28
	6-147	14
	6-148	21
	6-148	23
	6-148	25
	6-148	28
	6-157	3
	6-157	6
	6-157	9
	6-157	16
	6-157	17
	6-158	18
	6-158	19
	6-158	20
	6-158	26
	6-161	4
	6-161	5
	6-161	6
	6-163	1
	6-163	8
	6-163	9
	6-165	1
	6-165	10
	6-165	11
	6-167	1

©2014 Yale Materials Handling Corporation

NUMERICAL INDEX (continued)

PART NO.	PAGE	ITEM
	6-168	1
505968593	6-99	1
	6-105	1
	6-111	1
	6-117	1
	6-167	3
	6-167	6
	6-167	8
505968598	6-74	28
	6-78	28
	6-83	27
	6-83	28
	6-86	27
	6-89	12
505970500	11-15	3
	11-19	3
505970526	6-5	4
	6-7	8
	6-15	8
505970529	6-19	6
505970552	6-83	23
	6-153	1
	6-153	2
	6-153	17
	6-163	4
	6-165	4
505970567	12-7	6
505970580	5-29	12
	5-45	17
505970586	6-99	16
	6-105	16
505970592	2-14	50
	2-17	7
	5-29	
	5-33	
505971515	8-2	4
505971582	2-17	5
505972507	6-82	16
	6-97	1
505972513	4-7	9
505972554	6-69	18
505972563	4-7	2
505972567	6-31	8
505972589	6-136	17
	6-140	29
	6-144	30
	6-148	27
505972593	6-73	2
	6-77	2
	6-86	20
	6-90	28
505974501	12-7	7
505974597	1-69	15
505976530	1-67	3
	5-43	
505976537	6-31	7
	6-35	12
	6-41	13
	6-41	18
505976545	1-69	3
505976550	6-89	16
505976556	1-69	1
505976566	1-69	5
505977565	5-43	23
506304101	11-65	8
511405800	2-18	29
	5-45	5
514214804	5-13	4
	5-15	2
	5-45	14
514835800	12-7	14
	13-9	18
	14-55	10
	14-61	10
	14-67	11
518791646	1-47	8
	1-53	12
	1-55	
518793625	6-31	18
	6-151	10
	6-153	15
518793684	1-53	8
	1-55	8
518796686	1-5	23
518797699	11-15	12
	11-19	12
518802601	14-13	15
	14-18	26
	14-53	2
	14-55	22
	14-59	3
	14-61	22
	14-65	3
	14-67	17
518803619	14-13	13
	14-18	24
	14-53	3
	14-55	21
	14-59	4
	14-61	21
	14-65	2
	14-67	18
518803677	1-63	19
	1-65	26
518806635	5-57	4
	5-61	4
	6-69	6
	6-69	17
	6-99	2
	6-105	2
	6-111	2
	6-117	2
518806641	6-95	1
518806645	1-69	2
519244838	11-3	14
519429615	13-19	7
519429627	13-19	7
519429635	13-19	7
520037811	10-7	7
520037891	1-35	
	1-37	
520038807	6-23	6
520038855	6-99	10
	6-105	10
	6-111	15
	6-112	19
	6-117	15
	6-118	19
	6-119	39
	6-123	6
	6-143	12
	6-151	2
	6-151	7
	6-153	10
	6-157	7
	6-161	7
520038872	6-57	24
	6-57	25
520038875	6-81	7
	6-112	30
	6-118	30
	6-125	3
	6-127	6
	6-129	3
	6-131	6
	6-133	9
	6-171	5
520042832	1-29	10
520042866	2-41	33
	2-45	33
520042867	2-49	15
	2-53	18
520042869	2-59	5
520043812	2-38	
520044834	6-89	6
520044861	6-74	20
	6-78	23
	6-86	28
	6-90	35
520045068	6-95	11
	6-100	20
	6-106	20
	6-112	20
	6-118	20
520045069	6-95	10
	6-95	11
	6-100	20
	6-100	21
	6-106	20
	6-106	21
	6-112	21
	6-118	21
	6-129	6
	6-133	2
	6-172	2
520045073	6-129	6
	6-133	2
520045074	6-100	21
	6-106	21
	6-112	20
	6-112	21
	6-118	20
	6-118	21
	6-129	6
	6-133	2
	6-172	2
520045130	1-67	4
520045150	14-5	23
	14-7	25
	14-9	13
	14-11	20
520045151	12-3	9
	13-3	6
520045153	12-3	4
	12-5	6
	13-3	4
	13-5	4
	13-7	9
	14-5	11
	14-7	6
	14-9	4
	14-11	4
520045154	14-18	42
520045156	12-3	8

©2014 Yale Materials Handling Corporation

NUMERICAL INDEX (continued)

PART NO.	PAGE	ITEM
520045157	12-3	7
	13-3	7
520045159	14-5	18
	14-7	26
	14-9	17
	14-11	21
520045161	12-11	3
	13-19	5
520045165	14-5	21
	14-7	20
	14-9	15
	14-11	24
520045166	14-5	17
	14-7	18
	14-9	16
	14-11	23
520045167	14-5	22
	14-7	19
	14-9	21
	14-11	18
520045169	14-18	41
520045171	14-7	22
	14-11	7
520045177	14-7	15
	14-11	6
520045178	14-7	15
	14-11	6
520045187	14-13	3
520045189	13-17	26
520045197	12-3	2
	12-5	4
	13-3	2
	13-5	2
	14-5	2
	14-7	2
	14-9	2
	14-11	2
520045244	14-13	1
520045263	14-17	13
520045264	14-17	15
520045265	14-17	4
520045330	13-19	4
520045333	14-17	4
520045369	13-5	3
	13-7	8
	14-5	3
	14-7	5
	14-9	12
	14-11	16
520045370	12-3	3
	12-5	5
	13-3	3
	13-5	6
520045395	14-5	19
	14-7	27
	14-9	17
	14-11	22
520045433	10-15	15
520045448	11-65	1
520045462	11-63	9
520045464	12-3	12
	13-3	12
520045589	9-9	8
	9-13	8
520045672	6-99	7
	6-105	7
	6-111	7
	6-117	7
	6-140	21
	6-143	20
	6-148	19
	6-151	5
	6-153	14
	6-157	8
520045804	6-73	12
	6-73	15
	6-74	33
	6-77	13
	6-77	17
	6-78	36
	6-82	13
	6-82	14
	6-82	20
	6-85	6
	6-85	15
	6-86	23
	6-89	8
	6-89	20
	6-90	31
	6-97	11
	6-101	39
	6-107	43
	6-113	31
	6-114	44
	6-119	31
	6-120	44
	6-151	12
	6-167	4
	6-167	7
520045805	6-74	30
	6-78	32
	6-82	14
	6-85	12
	6-89	15
	6-101	39
	6-107	43
	6-114	44
	6-119	44
	6-151	12
	6-167	4
	6-167	7
520045873	6-157	11
	6-157	12
520046832	2-35	4
520046833	2-35	5
520046835	2-35	7
520046836	2-35	8
520046837	2-35	3
520046840	2-41	15
520046841	2-41	28
	2-45	28
	2-59	
520046842	2-59	8
520046844	2-42	38
	2-45	38
520046851	2-41	32
	2-45	32
520046852	2-41	21
	2-45	21
520046854	2-42	40
	2-45	40
520046856	2-49	2
	2-53	2
520046857	2-49	10
	2-53	11
520046858	2-49	12
	2-53	9
	2-55	1
520046860	2-49	
	2-53	13
520046861	2-53	25
520046862	2-49	19
	2-53	24
520046863	2-35	2
	2-49	20
520046864	2-49	21
	2-53	21
520046865	2-35	1
	2-49	22
	2-53	22
520047875	2-37	2
520047876	2-37	2
520047877	2-37	3
520047878	2-37	3
520047880	2-37	7
520047886	2-37	12
520047888	2-37	12
520048843	14-17	4
520053823	2-35	6
520082877	1-49	13
	1-51	14
	1-63	7
520260604	12-11	4
520260606	12-11	4
520260611	12-11	4
520260616	12-11	4
520260619	12-11	4
520261604	13-13	11
520261607	13-13	11
520261609	13-13	11
520261654	13-13	11
520261657	13-13	11
520261659	13-13	11
520262604	13-19	15
520262607	13-19	15
520262609	13-19	15
520416604	12-11	5
520416606	12-11	5
520416611	12-11	5
520416616	12-11	5
520416619	12-11	5
520417604	13-13	7
	13-13	7
520417607	13-13	7
	13-13	7
520417609	13-13	7
	13-13	7
520426863	2-23	3
524136404	1-77	1
524136782	1-79	1
524136784	1-79	1
524136787	1-79	1
524136790	1-79	1
524136794	1-79	1
524136935	1-76	1
524137230	5-57	12
524147749	13-17	4
524155833	2-49	1
	2-53	1
524162256	1-67	10
524169526	12-11	
524169527	13-19	
524198086	14-17	8
524198148	13-5	1

©2014 Yale Materials Handling Corporation

NUMERICAL INDEX (continued)

PART NO.	PAGE	ITEM
524198200	14-7	
524198222	13-5	1
524198240	13-7	1
524198244	13-7	1
524198301	12-3	
	12-5	
	14-13	
524198303	12-3	
	12-5	
	14-13	
524198308	12-3	
	12-5	
	14-13	
524198313	12-3	
	12-5	
	14-13	
524198316	12-3	
	12-5	
	14-13	
524198331	13-3	
	13-5	
	13-7	
524198334	13-3	
	13-5	
	13-7	
524198336	13-3	
	13-5	
	13-7	
524201323	1-15	17
	1-27	2
524208883	1-15	4
524214603	9-15	7
	9-16	7
524240692	1-15	3
	1-27	25
524240806	11-65	6
524240830	11-65	6
524246118	5-57	
524246345	1-11	21
524246346	1-11	26
524246347	1-11	19
524246348	1-11	25
524246838	1-23	1
524246839	1-23	1
524246840	1-23	9
524246841	1-23	2
524248303	7-27	15
524248305	7-11	41
	7-13	19
	7-15	18
	7-17	8
	7-27	39
	7-29	20
	7-31	18
	7-33	10
524251262	1-13	1
524260440	1-9	2
524260530	1-11	15
524260531	1-11	28
524265255	13-13	
524270797	1-69	11
524270798	1-69	19
524270799	1-69	7
	1-69	7
524270800	1-69	7
	1-69	7
524270801	1-69	7
524270802	1-69	7
524274078	1-67	5
524274108	1-67	7
524274136	1-67	6
524274771	1-11	14
524274772	1-11	12
524274773	1-11	12
524274774	1-11	22
524274775	1-11	27
524274776	1-11	14
524274777	1-11	12
524274778	1-11	12
524275588	1-5	28
524275589	1-5	28
524281279	1-47	3
	1-49	10
	1-51	12
	1-53	3
	1-55	3
	1-63	9
524281926	1-29	7
524281927	1-29	17
524282312	1-77	1
524282313	1-77	1
524283124		
524283125		
524283126		
524283128		
524283129		
524283130		
524283519		
524283520		
524283521		
524283523		
524283524		
524283525		
524283527		
524283528		
524283529		
524287262	1-76	1
524291221	1-25	4
	1-35	
524291223	1-25	3
	1-37	
524294133		
524294134		
524294135		
524294136		
524294137		
524294138		
524294139		
524294140		
524294141		
524294779	1-15	1
524298545	1-5	35
524298546	1-5	35
524298574	1-5	2
524298575	1-5	2
524299079	15-13	
524303892	6-69	3
524305879	1-25	1
	1-27	1
	1-29	
	1-33	
524309591	9-21	
524310789	1-69	9
524316721	1-20	1
524320077	1-69	10
524337907	1-13	1
550036790	1-69	21
550037499	14-37	1
	14-39	
550054058	5-61	
550070558	1-69	9
580000242	10-3	17
	10-7	21
580000309	2-37	22
580000316	2-37	17
580000318	2-41	24
	2-45	22
	2-45	22
	2-45	24
580000322	2-59	9
580000338	2-17	20
580000341	2-13	13
580000453	5-23	16
	5-27	21
580000554	6-74	30
	6-78	32
	6-85	12
	6-89	15
580000559	6-73	13
	6-73	14
	6-74	31
	6-77	14
	6-77	16
	6-78	35
	6-85	7
	6-86	22
	6-86	25
	6-89	9
	6-90	30
	6-90	33
580000826	13-19	3
580000864	6-18	4
580000868	1-5	18
	10-3	25
	10-7	30
	10-11	10
	10-13	12
580001007	1-69	8
580001617	2-41	9
	2-45	9
580001619	2-41	10
	2-45	10
580001744	2-37	5
580002014	9-9	36
	9-13	36
580002460	6-27	6
580002638	8-3	10
580002719	3-3	6
580002760	13-19	14
580002762	13-19	9
580002881	4-3	6
580002885	4-7	23
580003427	5-10	5
580003442	1-7	3
	1-17	36
580003482	9-9	34
	9-13	34
580003483	9-9	32
	9-13	32
580003484	9-9	31
	9-13	31
580003485	9-9	30
	9-13	30
580003486	9-9	33

©2014 Yale Materials Handling Corporation

NUMERICAL INDEX (continued)

PART NO.	PAGE	ITEM
	9-13	33
580003602	9-10	46
	9-13	46
580003603	9-9	39
	9-13	39
580003869	1-23	3
580003941	8-3	9
	9-22	4
580004107	7-5	12
580004117	7-13	6
	7-17	7
	7-25	4
	7-29	6
	7-29	28
	7-33	5
580004501	11-45	2
580004502	2-14	35
	6-22	1
580004592	5-59	10
	5-61	29
580005117	2-11	5
580005918	14-7	
	14-11	
580005919	14-9	
580006103	12-5	1
580006104	12-5	1
580006105	12-5	1
580006106	12-5	1
580006113	13-5	1
580006117	13-7	1
580006122	14-9	1
580006125	14-7	1
	14-11	1
580006331	14-18	33
580006333	14-18	40
580006334	14-18	35
580006335	14-17	2
580006526	6-31	23
	6-151	1
	6-151	3
	6-153	12
	6-154	21
580006553	6-15	25
	6-27	3
	6-27	10
	6-31	21
	6-32	49
	6-35	19
	6-41	2
	6-41	5
580006579	6-15	17
580006720	13-13	10
580006721	13-19	8
580006739	11-65	4
580006742	11-65	11
580006743	11-65	7
580006744	11-65	10
580006745	11-65	2
580006764	5-38	7
580006798	8-2	5
580006903	14-13	5
580006976	11-31	17
	11-33	8
	11-47	4
	11-51	5
	11-53	5
	11-55	5
	11-57	5
580006977	11-31	16
	11-33	7
	11-47	3
	11-51	4
	11-53	4
	11-55	4
	11-57	4
580007059	4-3	19
	4-7	5
580007088	12-7	26
580007089	12-7	26
580007090	12-7	26
580007091	12-7	26
580007102	12-11	
580007104	13-10	36
580007158	9-15	1
	9-16	1
580007166	9-9	6
580007181	9-10	43
	9-13	43
580007182	9-9	15
580007183	9-9	15
	9-13	15
580007184	9-13	15
580007258	13-17	22
580007260	13-17	22
580007273	13-13	12
	13-13	12
580007282	13-17	22
580007557	11-68	2
	12-7	9
	13-9	5
580007621	3-5	3
	3-7	4
580007683	2-17	19
580007704	5-43	3
580007719	5-45	19
580008064	1-67	2
580008123	12-7	29
	13-10	31
	13-17	18
	14-5	8
	14-9	10
580008124	12-7	30
	13-7	7
	13-10	35
	13-17	20
	14-5	7
	14-7	7
	14-9	6
	14-11	14
580008125	13-7	3
	14-7	10
	14-11	12
580008220	5-23	22
	5-27	25
	5-29	11
580008235	12-7	10
580008239	13-9	7
580008242	13-9	7
580008249	12-7	10
	12-7	11
580008253	11-68	5
580008277	9-9	23
580008282	13-9	7
580008283	13-9	6
580008286	12-7	10
580008338	1-67	12
580008353	5-23	29
	5-27	5
	5-29	4
580008371	5-15	23
580008413	6-82	20
580008487	2-13	12
	2-30	1
580008575	2-41	14
	2-45	14
580008580	1-9	18
	5-34	17
580008599	2-37	21
580008600	2-37	23
580008601	2-53	15
580008640	5-15	21
580008775	2-35	9
580008777	2-37	8
580008868	12-5	2
580008869	12-5	3
580008870	12-5	9
580008871	12-7	28
	13-10	30
	13-17	19
	14-5	9
	14-9	9
580008875	12-7	25
	13-10	41
	13-17	14
580008876	12-7	24
580008878	14-9	3
	14-11	3
580008879	14-9	11
	14-11	10
580008881	13-5	11
580008882	13-5	9
580008883	13-5	10
580008884	13-5	12
580008885	13-5	8
580008886	13-7	4
580008888	13-10	40
	13-17	13
580008892	13-9	24
	13-17	10
580008893	13-3	9
580008894	13-17	7
580008895	13-17	8
580008896	13-17	24
580008897	13-17	1
580008898	14-7	11
	14-11	15
580008988	5-29	17
	6-11	8
580009266	2-37	11
580009275	2-41	30
	2-45	30
580009276	2-41	30
	2-45	30
580009292	2-93	19
580009453	12-7	10
	12-7	11
580009581	13-7	2
580009778	5-23	20
	5-27	17
580010432	5-57	13
	5-61	10
580010433	5-57	10
580010544	6-125	1
	6-129	1

©2014 Yale Materials Handling Corporation

NUMERICAL INDEX (continued)

PART NO.	PAGE	ITEM
	6-133	8
	6-171	3
580010545	6-125	8
	6-127	3
	6-129	2
	6-131	4
	6-133	7
	6-171	3
580010571	6-143	14
580010739	6-74	25
	6-81	2
	6-85	9
580011167	13-19	11
580011483	12-7	11
580011616	13-9	6
580011846	9-9	5
580011849	9-10	47
580011850	9-9	24
580012179	5-34	18
580012186	2-11	6
580012279	1-63	4
	1-65	19
580012321	6-171	4
580012323	6-81	6
	6-112	29
	6-118	29
	6-125	2
	6-127	7
	6-129	4
	6-131	3
	6-131	5
	6-133	10
580012324	6-81	7
	6-112	30
	6-118	30
	6-125	3
	6-127	6
	6-129	3
	6-131	6
	6-133	9
	6-171	5
580012383	12-7	12
	13-9	26
580012772	14-13	8
	14-18	31
580012858	6-24	8
580012987	1-11	33
	3-3	19
580013394	11-33	6
	11-53	3
	11-57	3
580013419	1-53	
	1-55	
580013420	1-53	
	1-55	
580013421	1-53	
	1-55	
580013422	1-53	
	1-55	
580013423	1-53	
	1-55	
580013425	1-53	
	1-55	
580013937	6-7	11
580014013	1-35	13
580014016	1-37	8
580014092	2-82	3
580014386	6-74	24
	6-85	9
580014462	1-53	1
	1-55	1
580014463	1-53	1
	1-55	1
580014465	1-53	
	1-55	
	1-57	
580014466	1-53	2
	1-55	2
580014467	1-53	2
	1-55	2
580014471	1-53	6
	1-55	6
580014473	1-53	5
	1-55	5
580014763	1-33	10
580014779	1-33	2
580014787	1-29	6
580014800	1-29	16
580014801	1-29	15
580014838	2-35	1
	2-49	24
580014840	2-49	18
580014841	2-42	45
580014869	8-2	1
	9-22	2
580014962	8-2	1
	9-22	2
580014987	8-2	1
	9-22	2
580015022	2-93	11
580015148	2-37	6
580015437	15-15	2
580015529	1-33	12
580015530	1-29	
	1-35	
	1-37	11
	1-37	
580015531	1-29	3
	1-35	
	1-37	
580015673	6-31	30
	6-41	8
	6-41	15
580017101	1-5	5
580018614	1-49	9
580018642	1-59	4
580018643	1-59	6
580018888	1-53	
	1-55	
580019119	6-65	2
	6-97	1
	6-99	3
	6-99	4
	6-99	5
	6-100	18
	6-100	29
	6-100	30
	6-102	46
	6-102	47
	6-102	48
	6-105	3
	6-105	4
	6-105	5
	6-106	18
	6-106	28
	6-106	29
	6-106	33
	6-107	34
	6-107	35
	6-108	50
	6-108	51
	6-108	52
	6-111	3
	6-111	4
	6-111	5
	6-112	17
	6-112	27
	6-113	33
	6-113	34
	6-114	52
	6-114	53
	6-117	3
	6-117	4
	6-117	5
	6-118	17
	6-118	27
	6-119	33
	6-119	34
	6-120	52
	6-120	53
	6-121	56
	6-121	57
	6-121	58
	6-123	1
	6-123	2
	6-123	3
	6-135	1
	6-135	12
	6-135	16
	6-136	17
	6-140	24
	6-140	28
	6-140	29
	6-143	2
	6-144	25
	6-144	29
	6-144	30
	6-147	1
	6-148	22
	6-148	26
	6-148	27
	6-151	8
	6-153	9
	6-157	5
	6-157	6
	6-158	26
	6-161	8
	6-161	9
	6-167	1
580019139	6-135	7
	6-139	15
	6-139	19
	6-143	13
	6-143	17
	6-143	18
	6-147	13
	6-147	14
	6-157	3
580019140	6-135	7
	6-139	15
	6-140	19
	6-143	13
	6-143	17
	6-143	18

©2014 Yale Materials Handling Corporation

NUMERICAL INDEX (continued)

PART NO.	PAGE	ITEM
	6-147	13
	6-147	14
	6-157	3
580019245	6-139	4
	6-139	6
	6-147	4
	6-147	6
	6-167	5
580019246	6-139	4
	6-139	6
	6-147	4
	6-147	6
	6-167	5
580019341	6-57	10
	6-82	17
	6-167	2
580019387	7-9	1
	7-9	3
	11-3	33
	13-10	27
	13-10	38
	14-18	36
580019805	10-15	17
	11-3	18
	14-55	5
	14-61	5
	14-67	6
580019806	10-15	6
580019808	10-15	5
580019810	11-67	11
580019813	10-15	14
580019814	14-17	17
580019817	7-9	1
580019819	13-9	27
580019837	10-15	22
580019860	10-15	1
	11-3	19
580019865	11-67	1
580019866	9-19	1
	10-16	40
580019871	7-9	3
580019895	14-55	1
	14-61	1
	14-67	1
580019899	15-11	7
580020060	3-5	25
	3-7	23
580020189	1-44	8
580020190	1-44	6
580020192	1-44	3
580020430	9-19	6
	10-15	23
	11-67	6
	14-13	10
	14-17	10
	14-17	21
	14-21	7
	14-53	1
	14-55	20
	14-59	2
	14-61	20
	14-65	1
	14-67	16
580020431	11-4	39
580020432	13-9	16
580020445	15-13	5
580020576	11-67	13
	14-21	8
580020577	7-9	4
580020579	11-69	2
580020721	14-45	13
580020760	12-7	20
	13-9	15
580020930	2-35	10
580020942	5-57	5
	5-61	4
	6-69	5
	6-69	16
	6-99	2
	6-105	2
	6-111	2
	6-117	2
580020943	6-69	8
	6-100	22
	6-101	36
	6-106	22
	6-107	40
	6-112	22
	6-113	41
	6-118	22
	6-119	41
	6-135	10
	6-136	18
	6-139	9
	6-140	23
	6-140	30
	6-143	1
	6-143	6
	6-144	24
	6-148	21
	6-148	28
580020944	6-69	9
	6-100	22
	6-101	36
	6-106	22
	6-107	40
	6-112	22
	6-113	41
	6-118	22
	6-119	41
	6-135	10
	6-136	18
	6-139	9
	6-140	23
	6-140	30
	6-143	1
	6-143	6
	6-144	24
	6-148	21
	6-148	28
580020987	14-13	17
	14-17	14
	14-18	36
	14-51	1
	14-57	1
	14-62	1
580021087	6-31	25
	6-95	4
	6-95	7
	6-97	3
	6-97	8
	6-99	11
	6-100	26
	6-105	11
	6-106	26
	6-111	2
	6-112	26
	6-112	27
	6-117	11
	6-118	26
	6-118	27
	6-123	11
	6-135	14
	6-140	27
	6-144	28
	6-148	25
	6-157	16
	6-157	17
	6-157	18
	6-158	19
	6-158	20
	6-161	4
	6-161	5
	6-161	6
	6-163	8
	6-163	9
	6-165	10
	6-165	11
	6-167	3
	6-167	6
	6-167	8
	6-168	1
580021088	6-95	4
	6-95	7
	6-97	3
	6-97	8
	6-99	11
	6-100	26
	6-105	11
	6-106	26
	6-111	11
	6-112	26
	6-112	27
	6-117	11
	6-118	26
	6-118	27
	6-123	11
	6-140	27
	6-144	28
	6-148	25
	6-157	16
	6-157	17
	6-158	18
	6-158	19
	6-158	20
	6-161	4
	6-161	5
	6-161	6
	6-163	8
	6-163	9
	6-165	10
	6-165	11
	6-167	3
	6-167	6
	6-167	8
	6-168	1
580021345	1-35	
	1-37	
580021628	1-29	14
580022493	11-65	3
580022506	13-13	4
580022859	6-99	3
	6-105	3
	6-111	3

©2014 Yale Materials Handling Corporation

NUMERICAL INDEX (continued)

PART NO.	PAGE	ITEM
	6-117	3
580022861	6-100	28
	6-106	30
	6-157	6
	6-158	26
580022866	6-157	1
	6-163	6
	6-163	7
	6-165	8
	6-165	9
580022878	6-165	5
	6-165	6
580022893	1-15	9
	6-31	17
	6-123	9
	6-151	8
	6-153	9
	6-168	2
580022894	6-57	24
	6-57	25
580022962	5-34	16
580022965	11-3	13
580022990	6-73	12
	6-74	33
	6-77	13
	6-78	36
	6-85	6
	6-86	23
	6-89	8
	6-90	31
580022993	6-73	12
	6-74	33
	6-77	13
	6-78	36
	6-85	6
	6-86	23
	6-89	8
	6-90	31
	6-151	12
580023052	6-71	1
580023152	6-127	5
	6-131	10
	6-133	5
580023428	11-65	
580023845	6-95	10
	6-100	21
	6-101	38
	6-106	21
	6-107	42
	6-112	21
	6-112	30
	6-113	43
	6-114	46
	6-118	21
	6-118	30
	6-119	43
	6-120	46
	6-125	3
	6-127	6
	6-129	3
	6-129	6
	6-131	6
	6-133	2
	6-133	9
	6-171	5
	6-172	2
580023854	6-5	17
	6-7	7
580023860	6-81	2
580023865	6-125	7
	6-127	1
	6-129	7
	6-131	1
	6-133	1
	6-171	1
580023866	6-125	7
	6-127	1
	6-129	7
	6-131	1
	6-133	1
	6-171	1
580023869	6-125	7
	6-127	1
	6-129	7
	6-131	1
	6-133	1
580023878	6-125	8
	6-127	3
	6-129	2
	6-131	4
	6-133	7
	6-171	3
580023951	6-95	1
580024366	4-3	11
580025194	2-13	15
	2-26	2
580025509	6-31	3
580025557	6-135	14
580025558	6-74	32
	6-78	34
	6-86	24
	6-90	32
	6-157	1
	6-163	3
	6-163	5
	6-163	6
	6-163	7
	6-165	3
	6-165	5
	6-165	6
	6-165	7
	6-165	8
	6-165	9
580025559	6-31	15
	6-100	27
	6-106	27
	6-113	32
	6-119	32
	6-151	6
	6-153	11
	6-163	2
	6-165	2
580025560	6-115	55
	6-120	55
	6-135	6
	6-139	16
	6-143	11
	6-147	15
	6-153	3
580025567	6-23	4
	6-81	5
	6-113	38
	6-119	38
580025568	6-100	32
	6-101	33
	6-107	37
	6-107	38
	6-113	35
	6-113	37
	6-119	35
	6-119	37
580025569	6-23	3
580025570	1-39	
	1-41	
	6-23	5
580025779	6-114	54
	6-120	54
	6-125	5
	6-127	8
580025799	6-81	9
	6-81	10
	6-127	5
	6-131	10
	6-133	5
580025849	6-125	8
	6-129	2
580026621	1-5	16
	1-11	20
	1-39	12
	2-93	6
	5-15	20
	5-23	17
	5-27	2
	5-29	3
	6-5	12
	6-7	12
	6-7	23
	6-15	6
	6-31	42
	6-35	7
	6-61	9
	7-9	5
	9-19	3
	11-3	3
	11-9	13
	11-67	3
	14-21	11
580026649	6-73	15
	6-77	17
	6-81	9
	6-81	10
	6-82	20
	6-85	15
	6-89	20
	6-97	11
	6-101	39
	6-107	43
	6-114	44
	6-120	44
	6-127	5
	6-131	10
	6-133	5
	6-167	4
	6-167	7
580026712	1-27	3
580026753	1-77	4
580026803	2-37	18
580026808	6-81	2
	6-135	11
	6-140	20
	6-143	19
	6-147	18
580026809	6-78	33
	6-89	18

©2014 Yale Materials Handling Corporation

NUMERICAL INDEX (continued)

PART NO.	PAGE	ITEM
580026810	1-47	7
	1-53	9
	1-55	
	6-78	26
580026812	1-15	12
	1-47	9
	1-53	10
	1-55	
	5-57	15
	5-61	14
	6-5	7
	6-7	2
	6-9	8
	6-11	4
	6-31	11
	6-59	3
	6-61	4
	6-69	2
	6-82	15
	6-82	17
	10-3	31
	10-8	39
	10-11	2
	15-7	3
580026813	6-65	2
	6-99	1
	6-99	3
	6-105	1
	6-105	3
	6-111	1
	6-111	3
	6-117	1
	6-117	3
	6-157	9
	6-163	1
	6-165	1
	6-167	1
580026816	6-136	17
	6-140	29
	6-144	30
	6-148	27
580026863	2-35	4
580026931	2-38	27
580026933	5-43	
580026934	5-43	
580027206	6-100	18
	6-106	18
	6-112	31
	6-118	31
580027207	6-100	18
	6-106	18
	6-112	31
	6-118	31
580027279	1-31	
580027280	1-31	
580027355	14-17	7
	14-21	1
580027512	6-127	3
	6-131	4
	6-133	7
	6-171	3
580027572	1-5	21
	2-13	8
	2-25	11
	2-29	6
	3-5	9
	3-7	25
	6-5	13
	6-7	16
	11-9	5
580027573	1-27	16
	3-3	16
	4-3	3
	4-5	4
	5-39	12
	6-5	2
	6-7	6
	6-7	19
	6-15	14
	6-67	11
	15-3	7
	15-4	7
580027611	6-73	12
	6-74	30
	6-74	33
	6-77	13
	6-78	32
	6-78	36
	6-85	6
	6-85	12
	6-86	23
	6-89	8
	6-89	15
	6-90	31
580027612	6-82	14
	6-151	12
	6-167	4
	6-167	7
580027619	6-74	29
	6-78	31
	6-85	14
	6-89	19
580027620	6-111	10
	6-111	10
	6-117	10
	6-117	10
580027621	15-3	3
	15-4	3
580027945	2-5	6
	2-61	6
580027947	1-31	
580028186	6-73	16
	6-77	19
580029083	11-69	5
	12-7	20
	13-9	16
	15-11	5
	15-11	7
580029125	14-13	2
580030876	6-17	2
	6-89	4
	6-95	9
	6-97	7
	6-127	4
	6-131	9
	6-133	6
	6-135	3
	6-139	8
	6-147	8
	6-161	2
580030877	6-77	15
580030878	6-17	4
	6-95	3
	6-97	12
	6-106	32
	6-121	59
	6-123	4
	6-143	10
580030966	1-5	26
	2-14	51
	3-3	10
	3-3	21
	4-3	4
	5-5	15
	5-7	15
	5-9	10
	5-43	15
	10-16	41
580030967	1-39	9
580030968	3-5	4
	3-7	6
	6-9	11
	6-11	7
	6-31	43
	11-3	5
	11-9	11
580030969	1-41	9
	2-21	8
	2-82	4
580030970	3-3	11
	3-5	28
	3-7	3
580030975	10-3	5
	10-7	5
580031730	11-3	17
580031754	2-63	8
580032011	9-2	1
	9-3	1
580032023	6-15	21
580032038	6-31	16
	6-102	45
	6-108	49
	6-114	49
	6-120	49
	6-151	9
	6-153	8
580032039	6-151	9
	6-153	8
580032269	5-13	11
	5-19	1
580032377	1-65	9
580032617	2-37	19
580032619	2-42	43
	2-45	43
580032621	2-41	36
	2-45	36
580032622	2-41	34
	2-45	34
580032627	2-37	13
580033397	10-15	11
580033515	6-101	39
	6-107	43
	6-114	44
	6-119	44
580033516	6-73	15
	6-77	17
	6-82	13
	6-85	15
	6-89	20
	6-97	11
580033519	6-74	30
	6-78	32
	6-82	14
	6-85	12

©2014 Yale Materials Handling Corporation

NUMERICAL INDEX (continued)

PART NO.	PAGE	ITEM
	6-89	15
580033537	6-73	15
	6-74	30
	6-74	31
	6-77	17
	6-78	32
	6-78	35
	6-82	11
	6-82	13
	6-82	14
	6-85	12
	6-85	15
	6-86	25
	6-89	15
	6-89	20
	6-90	33
	6-97	11
	6-101	39
	6-107	43
	6-114	44
	6-119	44
580033597	6-171	1
580033852	6-125	6
	6-127	9
580033885	5-9	12
580034357	6-32	54
	6-83	27
580034504	6-101	37
	6-107	41
	6-113	42
	6-119	42
580034505	6-101	38
	6-107	42
	6-113	43
	6-119	43
580034506	6-101	41
	6-108	45
	6-114	46
	6-120	46
580034507	6-101	40
	6-107	44
	6-114	45
	6-120	45
580034509	6-101	37
	6-101	38
	6-101	40
	6-101	41
	6-107	41
	6-107	42
	6-107	44
	6-108	45
	6-113	42
	6-113	43
	6-114	45
	6-114	46
	6-119	42
	6-119	43
	6-120	45
	6-120	46
580034616	6-74	26
	6-81	2
	6-85	9
580034658	6-81	5
	6-101	37
	6-101	38
	6-101	40
	6-101	41
	6-107	41
	6-107	42
	6-108	44
	6-108	45
	6-113	42
	6-113	43
	6-114	45
	6-114	46
	6-119	42
	6-119	43
	6-120	45
	6-120	46
580034999	1-77	3
580035001	1-77	2
580035018	1-77	5
580035019	1-77	
580035028	6-31	5
580035034	6-81	8
	6-131	8
	6-171	7
580035200	6-74	24
	6-85	9
580035278	6-83	23
580036023	6-59	4
580036349	6-125	7
	6-129	7
	6-171	1
580036351	6-74	29
	6-85	14
580036358	6-125	7
	6-127	1
	6-129	7
	6-131	1
	6-133	1
	6-171	1
580036575	6-71	3
580036576	6-71	4
580036599	6-71	2
580036662	2-13	26
	6-11	8
	6-22	8
580036666	5-13	
	11-4	
	11-9	
580036687	14-55	9
	14-61	9
	14-67	9
580036688	2-93	2
580036738	5-13	21
	5-46	7
580036751	6-71	5
580036752	6-71	6
580036870	5-13	15
	5-15	4
	5-45	26
580036910	6-101	35
	6-107	39
	6-113	40
	6-119	40
	6-139	12
	6-143	5
580036920	2-31	5
580036940	6-99	1
	6-105	1
	6-111	1
	6-117	1
580036941	6-157	9
	6-163	1
	6-163	1
	6-165	1
580036942	6-65	2
580036943	6-167	1
580036981	6-99	4
	6-100	31
	6-102	46
	6-105	4
	6-107	36
	6-108	50
	6-111	4
	6-113	36
	6-114	51
	6-117	4
	6-119	36
	6-120	51
	6-135	12
	6-140	24
	6-144	25
	6-148	22
580036982	6-102	47
	6-108	51
	6-114	52
	6-120	52
	6-135	1
	6-139	1
	6-143	2
	6-147	1
580036983	6-99	5
	6-105	5
	6-111	5
	6-117	5
580036984	6-102	48
	6-108	52
	6-114	53
	6-120	53
	6-135	16
	6-140	28
	6-144	29
	6-148	26
580036986	6-99	4
	6-99	5
	6-100	31
	6-105	4
	6-105	5
	6-107	36
	6-111	4
	6-111	5
	6-113	36
	6-117	4
	6-117	5
	6-119	36
	6-135	1
	6-135	12
	6-135	16
	6-139	1
	6-140	24
	6-140	28
	6-143	2
	6-144	25
	6-144	26
	6-144	29
	6-147	1
	6-148	22
	6-148	26
580036992	6-100	28
	6-106	30
	6-157	6
	6-158	26

©2014 Yale Materials Handling Corporation

NUMERICAL INDEX (continued)

PART NO.	PAGE	ITEM
580037008	5-23	31
	6-17	6
580037049	5-5	2
	5-7	2
580037160	6-15	1
	6-17	8
580037179	6-31	13
	6-31	26
580037180	2-14	33
	5-15	10
	5-23	10
	5-27	10
	5-46	6
	6-9	4
	6-9	4
	6-9	12
	6-11	2
	6-15	24
	6-35	20
	10-4	34
	10-8	42
	10-11	17
580037205	1-11	7
580037206	1-11	3
580037207	6-55	1
	6-57	1
580037209	6-55	2
	6-57	2
580037325	4-3	2
	4-5	2
580037328	3-5	6
580037329	3-5	5
580037670	6-100	23
	6-106	23
	6-112	23
	6-118	23
	6-135	9
	6-140	22
	6-144	23
	6-148	20
580037687	14-18	
580037688	14-18	
580037700	5-59	9
	5-61	28
580037904	6-12	8
580038033	1-11	30
580038063	5-59	6
	5-61	25
580038186	6-163	3
	6-163	5
	6-165	3
	6-165	7
580038290	5-57	6
	5-61	4
580038312	4-3	5
580038661	6-135	2
	6-139	7
	6-143	7
	6-147	7
580038751	6-9	6
	6-165	
580038826	6-9	5
580039158	6-135	2
	6-139	7
	6-143	7
	6-147	7
	6-157	11
	6-157	12
580039183	12-7	22
580039194	6-135	13
	6-140	25
	6-148	23
580039251	6-55	20
580039254	6-77	8
	6-78	38
580039255	6-77	9
	6-90	24
580039350	9-19	7
	10-15	18
580039356	11-3	34
580039385	10-15	6
	10-15	17
580039389	7-9	4
580039402	14-18	34
580039411	13-10	38
580039423	10-15	16
	15-13	6
580039425	14-13	9
	14-17	20
580039438	1-9	16
	1-27	18
	2-13	2
	2-17	13
	2-21	5
	6-5	1
	6-7	5
	6-15	3
	15-7	5
580039490	6-100	29
	6-106	29
	6-113	33
	6-119	33
	6-161	9
580039491	6-161	9
580039499	6-100	30
	6-106	28
	6-106	33
	6-113	34
	6-119	34
	6-121	58
	6-123	1
580039500	6-100	30
	6-106	28
	6-106	33
	6-113	34
	6-119	34
	6-121	58
	6-123	1
580039502	6-102	46
	6-102	47
	6-102	48
	6-108	50
	6-108	51
	6-108	52
	6-114	51
	6-114	52
	6-114	53
	6-120	51
	6-120	52
	6-120	53
580039513	6-99	4
	6-99	5
	6-99	17
	6-100	30
	6-100	31
	6-101	34
	6-102	46
	6-102	47
	6-102	48
	6-105	4
	6-105	5
	6-105	17
	6-106	28
	6-106	33
	6-107	34
	6-107	36
	6-108	50
	6-108	51
	6-108	52
	6-111	4
	6-111	5
	6-113	34
	6-113	36
	6-113	39
	6-114	51
	6-114	52
	6-114	53
	6-117	4
	6-117	5
	6-119	34
	6-119	36
	6-120	51
	6-120	52
	6-120	53
	6-121	57
	6-121	58
	6-123	1
	6-123	2
	6-135	1
	6-135	12
	6-135	16
	6-139	1
	6-139	4
	6-139	6
	6-140	24
	6-140	28
	6-143	2
	6-144	25
	6-144	29
	6-147	1
	6-147	4
	6-147	6
	6-148	22
	6-148	26
	6-167	5
580039514	6-112	17
	6-118	17
580039566	3-5	22
580039588	6-5	8
	6-82	16
580039602	6-82	19
580039610	3-5	13
	3-7	14
580039672	2-13	31
	6-17	13
	6-22	2
580039764	6-99	9
	6-105	9
	6-111	9
	6-117	9
	6-135	15
	6-139	3
	6-143	4
	6-147	3

©2014 Yale Materials Handling Corporation

NUMERICAL INDEX (continued)

PART NO.	PAGE	ITEM
580039799	1-27	21
	6-100	24
	6-106	24
	6-112	24
	6-118	24
580039846	6-12	6
580039847	6-12	11
580039890	2-93	17
580039900	2-17	11
	2-18	33
	6-29	2
	6-61	6
580039909	2-93	10
580039911	2-93	8
580039913	11-3	9
	11-9	9
580039914	5-5	9
	5-7	9
	10-15	9
580040090	6-9	6
	6-163	
580040120	6-135	5
	6-139	11
	6-143	9
	6-147	16
580040128	10-3	12
	10-7	14
580040177	2-64	2
	4-3	15
	4-7	3
580040374	6-27	11
	6-31	38
	6-41	25
580040456	6-81	8
	6-171	7
	6-172	1
580040737	6-38	9
	6-38	
580040820	6-99	14
	6-100	19
	6-101	42
	6-105	14
	6-106	19
	6-108	46
	6-111	13
	6-112	18
	6-114	48
	6-117	13
	6-118	18
	6-120	48
580040821	6-99	14
	6-100	19
	6-101	42
	6-105	14
	6-106	19
	6-108	46
	6-111	13
	6-112	18
	6-114	48
	6-117	13
	6-118	18
	6-120	48
580040822	6-57	10
	6-73	3
	6-77	3
	6-82	17
	6-86	21
	6-90	29
	6-99	13
	6-102	43
	6-105	13
	6-108	47
	6-111	14
	6-114	47
	6-117	14
	6-120	47
	6-167	2
580040823	6-57	10
	6-82	17
	6-167	2
580040850	1-47	10
	1-53	11
	1-55	
	6-55	23
	6-57	23
580041195	6-82	15
	6-123	7
	6-157	5
	6-161	8
	6-161	9
	15-2	2
580041208	11-69	3
580041257	2-14	48
580041258	2-14	43
580041360	6-57	20
580041369	6-69	19
	11-68	4
580041371	6-69	13
580041373	5-45	9
580041384	5-29	19
580041462	6-167	4
	6-167	7
580041512	6-125	4
	6-127	2
	6-129	5
	6-131	2
	6-133	3
	6-171	2
580041518	6-82	20
580041557	5-7	
	5-29	18
	6-15	11
	6-17	9
580041641	6-99	8
	6-105	8
	6-111	8
	6-117	8
	6-139	2
	6-143	3
	6-147	2
	6-157	13
580041704	1-11	8
	1-11	11
	1-27	17
	1-65	8
	6-55	17
	6-55	22
	6-67	17
580041711	1-11	6
	5-17	1
	5-31	2
	5-33	3
580041768	6-5	22
	6-7	20
	6-67	12
580042194	7-5	11
	7-7	17
580042219	6-73	1
	6-77	1
	6-82	15
	6-85	19
	6-90	27
	6-107	35
	6-120	56
	6-123	3
	6-123	7
580042220	6-82	15
	6-123	7
580042221	6-99	17
	6-101	34
	6-105	17
	6-107	34
	6-113	39
	6-121	57
	6-123	2
580042222	6-99	17
	6-101	34
	6-105	17
	6-107	34
	6-113	39
	6-121	57
	6-123	2
580042328	5-23	4
	5-27	14
580042330	5-23	19
	5-27	18
	6-69	12
	10-15	25
580042331	6-67	14
580042354	2-18	27
	5-15	18
580042392	11-15	10
	11-19	10
580042567	5-23	7
	5-27	7
	6-35	16
	10-15	20
	11-68	3
580042698	6-74	24
	6-81	2
	6-85	9
580042794	5-45	11
	6-67	15
580042842	5-7	
	5-23	8
	5-27	8
	5-45	28
580042867	2-18	32
580042922	2-14	36
	2-29	2
580042947	6-74	21
	6-78	24
	6-85	1
	6-89	1
580042963	6-38	4
580043001	2-13	7
580043031	6-71	7
580043467	6-102	44
	6-108	48
	6-112	28
	6-114	50
	6-118	28
	6-120	50
580043696	2-18	31

©2014 Yale Materials Handling Corporation

NUMERICAL INDEX (continued)

PART NO.	PAGE	ITEM
580043866	5-59	12
	5-61	19
580043895	1-53	
580043915	6-102	44
	6-108	48
	6-112	28
	6-114	50
	6-118	28
	6-120	50
580044081	2-63	7
	5-54	1
580044127	6-83	26
	6-83	29
580044129	11-15	25
	11-17	16
	11-19	26
	11-21	16
580044519	5-15	12
580044785	10-3	28
	10-3	28
	10-7	34
	10-8	34
	10-11	4
580044852	6-65	3
	6-82	11
	6-82	12
	6-83	26
	6-83	29
	6-135	4
	6-139	18
	6-143	15
	6-147	12
	6-158	21
	6-158	22
	6-158	23
	6-158	24
	6-158	25
580044854	6-65	3
	6-82	11
	6-82	12
	6-83	26
	6-83	29
	6-135	4
	6-139	18
	6-143	15
	6-147	12
	6-158	21
	6-158	22
	6-158	23
	6-158	24
	6-158	25
580044859	1-7	5
	1-11	9
	6-57	17
	15-7	4
580044860	1-5	27
	1-9	7
	1-20	2
	3-3	17
	5-5	14
	5-7	14
	5-23	12
	5-27	12
	5-43	16
580044861	1-5	19
	1-9	11
	1-15	16
	1-27	6
	1-39	25
	1-41	25
	5-43	26
	6-55	27
	15-8	4
580044862	6-63	4
580044908	6-95	6
	6-97	6
	6-97	10
	6-99	12
	6-105	12
	6-111	12
	6-117	12
	6-123	10
	6-139	5
	6-139	17
	6-143	16
	6-147	5
	6-147	11
	6-153	5
	6-157	2
	6-157	15
	6-161	3
580045045	6-90	25
	6-90	26
580045059	6-59	6
	6-61	3
580045132	15-7	1
580045338	9-2	3
	9-3	3
580045480	6-167	4
	6-167	7
580045558	6-5	11
	6-7	13
	6-15	20
	6-35	6
	9-19	4
	14-21	10
580046138	1-7	2
580046139	1-7	4
580046263	6-5	16
	6-7	18
	6-67	7
580046304	4-3	7
580046311	5-13	9
	5-19	3
580046349	1-17	3
	1-19	15
580046381	14-5	14
	14-7	14
	14-9	18
	14-11	28
580046391	1-17	5
	1-19	17
580046392	1-17	4
	1-19	18
580046394	5-13	10
	5-19	5
	5-45	15
580046396	1-49	22
	1-51	20
580046399	9-2	3
	9-3	3
580046451	6-5	20
	6-7	17
580046499	2-17	3
	2-49	3
	2-53	3
580046629	2-18	30
	5-13	19
	5-17	5
580046654	2-18	24
580046832	5-13	18
	5-15	15
580046833	4-3	8
580046971	5-5	17
	5-7	17
580047034	6-63	6
	10-3	33
	10-8	37
	10-11	6
580047046	6-12	12
580047047	6-12	4
580047048	6-12	5
580047049	6-12	3
580047182	2-14	34
	6-22	4
580047200	6-9	2
	6-12	10
580047527	5-61	2
580047561	13-17	24
580047714	2-6	7
	2-13	19
	2-29	7
	2-57	6
	5-5	12
	5-7	12
	5-23	15
	5-27	19
	5-29	15
	5-59	8
	5-61	27
	6-5	10
	6-7	14
	6-7	22
	6-12	9
	6-15	15
	6-31	4
	6-31	44
	6-32	52
	6-35	8
	6-61	11
	6-69	14
	7-9	7
	9-19	2
	10-3	1
	10-7	1
	11-15	2
	11-17	2
	11-19	2
	11-21	2
	11-67	14
	14-21	9
580047742	10-3	6
	10-8	41
580047919	2-13	1
	2-17	1
	2-17	15
	2-21	4
	6-17	12
	10-3	3
	10-7	3
580047963	7-11	24
	7-11	33
	7-13	12
	7-15	26

©2014 Yale Materials Handling Corporation

NUMERICAL INDEX (continued)

PART NO.	PAGE	ITEM
	7-17	18
	7-27	25
	7-29	11
	7-29	14
	7-31	26
	7-33	19
580047971	7-11	37
	7-13	26
	7-15	22
	7-27	35
	7-29	26
	7-31	22
580048009	7-19	6
	7-21	12
	7-23	8
	7-35	6
	7-37	8
580048029	7-19	15
	7-19	28
	7-21	1
	7-23	26
	7-35	15
	7-35	28
	7-37	17
580048036	7-11	13
	7-15	10
580048042	7-13	7
	7-17	13
	7-29	7
	7-33	17
580048051	7-17	10
	7-33	12
580048052	7-11	40
	7-15	12
	7-17	11
	7-27	38
	7-31	12
	7-33	13
580048053	7-25	1
	7-41	18
580048219	5-13	6
	5-19	2
	5-19	7
580048273	3-5	30
	3-7	18
	6-15	7
580048274	5-17	3
	5-31	1
	5-33	1
580048278	5-17	2
	5-31	4
	5-33	2
580048287	5-31	9
580048292	5-31	15
	5-33	15
580048293	5-31	3
580048323	7-11	20
	7-15	16
	7-27	21
	7-31	16
580048326	7-11	19
	7-15	15
	7-27	20
	7-31	15
580048327	7-11	18
	7-15	14
	7-27	19
	7-31	14
580048329	7-11	32
	7-27	32
580048330	7-7	5
580048336	7-19	23
	7-21	7
	7-23	14
	7-23	24
	7-35	23
	7-37	14
	7-37	21
580048356	7-11	25
	7-15	17
	7-27	26
	7-31	17
580048379	7-19	8
	7-21	10
	7-23	11
	7-35	8
	7-37	11
580048380	7-19	4
	7-21	16
	7-23	4
	7-35	4
	7-35	32
	7-37	4
	7-37	30
580048397	7-7	
580048409	7-21	6
	7-23	15
	7-23	25
	7-37	15
	7-37	20
580048413	7-5	6
	7-7	6
580048414	7-5	7
	7-7	7
580048444	7-11	22
	7-13	14
	7-15	25
	7-17	15
	7-17	17
	7-27	23
	7-29	9
	7-31	25
	7-33	21
580048458	2-5	4
	2-61	5
580048573	1-11	5
580048720	6-77	7
	6-90	24
580048802	6-55	24
580048804	2-37	11
580048863	2-14	53
580048873	5-17	4
580048875	5-17	4
580048879	2-49	13
	6-19	3
580048882	2-49	12
580048895	6-161	1
580048919	2-49	4
	2-57	2
	6-24	
580048979	6-24	3
580048980	6-24	5
580048981	6-24	6
580048982	6-24	7
580049010	2-93	15
	9-9	17
	9-13	17
580049011	2-9	7
	2-11	1
	2-14	54
	5-31	5
	5-33	8
	5-39	13
	6-5	1
	6-7	5
	6-17	11
	6-19	8
	6-59	5
	6-61	1
	6-67	16
	10-4	36
	10-7	26
580049075	6-32	53
580049105	2-14	52
580049106	2-13	28
580049173	2-14	49
580049224	6-57	21
580049225	6-57	22
580049229	2-93	4
	5-13	3
	5-15	3
	5-23	11
	5-27	1
	5-29	1
	5-45	13
580049231	1-5	14
	1-27	11
	1-39	13
	3-3	20
	4-5	3
	5-15	22
	5-23	24
	5-27	26
	5-29	9
	5-43	25
	6-15	5
	10-3	24
	10-7	29
	10-11	11
	10-13	13
580049294	11-31	18
	11-33	4
580049322	6-153	6
	6-153	7
580049331	1-5	24
580049387	2-13	24
	6-22	7
580049402	6-83	22
580049526	15-3	1
	15-4	1
580049555	1-41	14
	6-69	11
	10-15	26
580049559	6-15	10
	6-17	10
	6-35	17
580049602	11-7	4
580049608	6-11	5
580049609	6-9	7
580049610	6-9	7
580049806	9-5	13
	9-7	21
580049807	9-5	17
	9-7	25

©2014 Yale Materials Handling Corporation

NUMERICAL INDEX (continued)

PART NO.	PAGE	ITEM
580049808	9-5	21
580049810	9-5	4
	9-7	11
580049811	9-5	5
	9-7	13
580049812	9-5	8
	9-7	16
580049814	7-9	6
	9-19	9
580049815	6-74	32
	6-78	34
	6-86	24
	6-90	32
	6-157	1
	6-163	3
	6-163	5
	6-163	6
	6-163	7
	6-165	3
	6-165	5
	6-165	6
	6-165	7
	6-165	8
	6-165	9
580049840	1-39	33
	1-41	33
	11-15	6
	11-19	6
580049879	7-3	13
580049883	1-53	4
	1-55	4
580049884	1-53	
	1-55	
	1-57	
580049886	1-55	
580049887	1-53	
	1-55	
580049891	1-47	1
580049892	1-47	2
	1-49	2
580049893	1-47	2
	1-49	7
580049895	1-47	1
580049906	1-47	1
	1-49	1
580049915	1-5	12
580050042	2-5	8
580050049	8-2	1
	9-22	1
580050050	8-2	1
	8-2	1
	9-22	1
	9-22	1
580050194	6-9	
580050203	9-9	14
	9-13	14
580050293	6-15	25
	6-32	50
	6-35	19
	6-41	3
580050409	2-13	6
	6-18	1
580050410	2-18	28
	6-18	
580050411	6-18	
580050412	6-18	
580050475	5-46	5
580050627	6-99	14
	6-100	19
	6-101	42
	6-102	44
	6-105	14
	6-106	19
	6-108	46
	6-108	48
	6-111	13
	6-112	18
	6-112	28
	6-114	48
	6-114	50
	6-114	51
	6-117	13
	6-118	18
	6-118	28
	6-120	48
	6-120	50
	6-120	51
580050676	10-3	30
	10-8	38
	10-11	3
580050847	6-172	1
580050923	1-41	10
580050924	5-19	12
580050933	6-12	4
580050959	1-15	7
580050978	11-15	11
	11-17	5
	11-19	11
	11-21	5
580051025	6-73	4
	6-73	5
	6-73	6
	6-73	17
	6-73	18
	6-73	19
	6-77	4
	6-77	5
	6-77	6
	6-77	20
	6-77	21
	6-78	22
	6-129	8
	6-171	6
580051026	6-81	1
580051159	6-55	13
	6-57	13
580051168	1-27	9
	6-55	3
	6-57	3
580051383	2-5	5
	2-61	2
	2-61	4
580051384	2-5	7
	2-61	9
	7-3	14
580051432	5-38	9
	6-32	47
580051579	5-23	26
580051703	6-135	13
	6-140	25
	6-144	26
	6-148	23
580051704	6-135	13
	6-140	26
	6-144	27
	6-148	24
580051729	6-147	9
	6-147	10
580051747	1-15	6
580051800	6-15	2
580051805	1-53	4
	1-55	4
580051808	6-24	1
580051809	6-24	2
580051831	8-3	7
580051832	1-9	21
580051890	2-17	10
580051925	11-63	2
580051941	2-5	11
580052019	6-27	9
	6-31	40
	6-35	14
	6-41	11
	6-41	23
	6-78	28
	6-86	27
	6-89	12
580052062	2-14	41
	2-31	2
580052070	6-23	2
580052071	6-23	1
580052097	6-82	21
580052098	6-82	21
580052099	6-82	21
580052128	6-55	9
	6-57	24
580052129	6-55	11
	6-57	25
580052130	6-57	24
	6-57	25
580052203	11-19	23
	11-21	10
580052233	6-23	7
580052264	9-9	25
580052279	10-3	8
580052280	10-7	12
580052281	10-7	8
580052282	9-9	24
580052292	1-7	6
580052297	11-23	3
580052324	11-3	29
580052353	10-7	13
580052359	9-9	22
580052360	9-9	21
580052399	1-41	16
580052409	1-7	11
580052434	5-27	15
580052474	2-49	9
	2-56	
580052511	9-15	4
	9-16	4
580052661	5-59	1
580052672	5-21	6
	5-23	3
580052680	1-41	18
580052685	1-39	4
	1-41	4
	6-11	10
580052711	2-13	29
580052731	11-28	2
580052736	2-93	12
	10-15	13
580052790	2-57	3
580052931	10-3	10

©2014 Yale Materials Handling Corporation

NUMERICAL INDEX (continued)

PART NO.	PAGE	ITEM
580052933	10-7	13
	10-7	16
580052982	6-67	18
580053000	5-43	20
580053098	1-23	5
580053099	2-14	32
580053484	6-65	5
580053784	11-3	28
580053965	2-56	
580053966	2-56	
580053967	2-56	
580053968	2-56	
580053969	2-56	
580053970	2-56	
580054021	3-5	27
	3-7	27
580054023	6-67	5
580054027	11-13	9
580054028	11-13	10
580054029	11-13	6
580054043	11-37	4
	11-41	5
	11-59	1
580054044	11-31	11
	11-33	14
580054045	11-45	13
580054046	11-25	6
	11-27	7
	11-31	2
	11-34	4
	11-59	2
	11-61	2
580054050	11-47	10
	11-51	11
	11-53	11
	11-55	10
	11-57	11
580054052	11-31	15
	11-33	6
	11-47	2
	11-51	2
	11-53	3
	11-55	2
	11-57	3
580054053	11-45	12
	11-51	2
	11-53	2
	11-55	2
	11-57	2
580054054	11-37	
	11-39	
	11-59	4
	11-61	4
580054057	11-51	3
580054063	11-25	4
	11-27	5
	11-31	2
580054118	11-45	7
580054119	11-45	11
580054121	11-47	9
	11-51	10
	11-55	9
580054125	11-47	7
	11-51	8
	11-53	8
	11-55	7
	11-57	8
580054126	11-47	8
	11-51	9
	11-53	9
	11-55	8
	11-57	9
580054128	11-51	3
580054129	11-47	11
580054130	11-45	8
580054131	11-47	6
	11-51	6
	11-53	6
	11-55	6
	11-57	6
580054140	11-45	5
580054141	11-47	5
580054142	11-51	7
	11-53	7
580054143	11-55	3
	11-57	7
580054144	11-41	
	11-43	
	11-45	
	11-47	
	11-51	
	11-55	
580054145	11-37	
	11-39	
	11-45	
	11-47	
	11-51	
580054147	11-28	4
	11-45	6
	11-55	11
	11-57	12
580054232	2-17	17
	2-21	9
580054380	6-153	4
580054462	11-31	14
580054465	11-31	4
580054472	5-13	20
	5-46	1
580054499	5-23	6
	5-27	6
580054569	9-21	
	11-39	9
	11-43	10
580054672	11-31	3
580054683	5-57	3
	5-61	3
580054684	11-34	4
	11-39	8
	11-43	9
	11-59	3
	11-61	3
580054685	11-45	13
580054686	11-28	3
580054687	3-5	17
	3-7	17
580054688	11-28	
	11-33	
580054689	11-33	5
580054692	11-41	
	11-43	
	11-59	4
	11-61	4
580054696	11-34	2
580054715	13-19	2
580054716	3-5	19
580054717	3-5	23
	3-7	21
580054719	3-5	14
	3-7	13
580054869	11-31	10
	11-33	13
580054870	11-51	3
580054933	11-49	2
580054995	11-31	2
580054996	11-31	2
580054997	11-31	2
580054998	11-31	2
580054999	11-31	2
580055166	11-34	2
580055170	1-71	3
580055171	1-71	2
580055172	1-71	6
580055173	1-71	7
580055174	1-71	4
580055175	1-71	8
580055177	1-71	9
580055178	1-71	10
580055179	1-71	11
580055299	10-16	36
580055305	5-23	26
580055312	1-67	8
	1-69	6
580055322	11-45	2
580055633	12-7	17
	13-9	14
580055649	11-63	12
580055650	1-5	6
	14-13	4
580055652	12-7	18
	13-9	13
	14-13	24
580055731	14-13	6
580055740	12-7	16
	13-9	10
580055741	14-55	17
	14-61	17
	14-67	15
580055746	14-13	25
580055861	1-27	15
580055882	5-37	7
580055883	5-37	1
580055884	5-37	2
580055885	5-37	3
580055980	1-76	3
	14-5	12
	14-7	12
580056000	11-63	3
580056001	14-17	1
580056003	10-3	23
	10-7	28
580056004	15-2	2
580056005	1-49	14
	1-51	13
	1-63	6
	11-63	15
580056006	15-2	2
580056007	14-13	26
580056008	1-76	2
	13-17	5
	14-5	13
	14-7	13
580056022	11-31	9
	11-33	12
580056025	11-45	3

©2014 Yale Materials Handling Corporation

NUMERICAL INDEX (continued)

PART NO.	PAGE	ITEM
580056229	15-3	2
580056272	6-59	7
580056336	11-3	4
	11-9	12
580056337	11-3	1
	11-9	14
580056380	6-153	1
	6-153	2
	6-153	17
580056381	3-3	8
	3-5	11
	3-7	10
580056430	1-67	11
580056459	5-59	16
	5-61	32
580056460	5-59	15
	5-61	31
580056465	11-3	33
580056479	8-3	2
580056486	5-13	16
580056514	1-69	12
580056515	1-69	12
580056526	1-9	5
580056527	5-43	22
580056528	2-61	10
	5-43	8
580056530	1-11	13
580056613	1-15	13
	5-57	9
	5-61	15
	6-5	6
	6-7	3
	6-9	9
	6-11	4
	6-31	10
	6-59	2
	6-61	5
	6-69	3
	15-7	2
580056614	6-9	10
	6-11	6
580056624	1-5	17
	10-3	26
	10-7	31
	10-11	9
	10-13	11
580056625	10-3	32
	10-8	36
580056666	11-15	24
	11-17	15
	11-19	25
	11-21	15
580056667	5-43	10
580056679	6-82	19
580056815	1-9	23
	1-20	5
	1-27	4
	1-39	27
	1-41	27
	6-55	26
	10-4	37
	10-8	40
	11-15	7
	11-17	3
	11-19	7
	11-21	3
	15-3	6
	15-4	6
	15-8	3
	15-9	3
580056839	5-59	14
	5-61	21
580056840	6-67	9
	11-15	15
	11-17	13
	11-19	16
	11-21	13
580056877	11-31	12
580056894	6-78	37
580056926	1-49	8
580056992	5-45	23
580057259	1-53	5
	1-55	5
580057260	1-59	9
580057266	1-59	11
580057300	5-57	1
	5-61	1
580057307	1-59	7
	1-59	10
580057316	8-2	6
580057451	1-63	3
580057831	10-3	9
	10-7	6
580057855	5-37	6
580057857	5-37	5
580057860	5-37	4
580058015	11-49	6
580058078	9-2	4
	9-3	4
580058137	1-9	22
	1-9	22
580058138	11-45	9
	11-49	12
580058139	11-45	10
580058188	6-55	16
	6-57	16
580058190	6-63	9
	15-9	4
580058191	1-9	9
580058192	1-11	16
580058194	1-15	15
580058212	1-11	4
	1-15	5
	6-55	18
	6-55	21
	6-57	18
580058268	6-151	15
	6-154	22
580058269	1-9	4
	11-15	23
	11-17	14
	11-19	24
	11-21	14
	11-67	5
580058270	1-20	3
	2-11	9
	6-63	2
580058314	6-55	15
	6-57	15
580058383	1-5	33
580058447	1-15	8
580058669	6-97	5
580058690	6-45	5
580058808	15-8	2
580058821	1-69	17
580058909	1-7	10
580058910	1-7	10
580058930	1-71	1
	1-73	25
580059127	1-27	23
580059253	6-74	31
	6-78	35
	6-82	11
	6-86	25
	6-90	33
580059254	10-3	21
	10-7	22
580059293	6-27	7
580059320	2-17	6
580059327	5-13	12
580059353	2-5	1
580059355	2-5	1
580059371	7-11	9
	7-13	4
	7-15	31
	7-25	16
	7-27	9
	7-29	5
	7-31	31
	7-41	28
	7-42	5
580059471	5-45	24
580059493	5-5	16
	5-7	16
580059607	1-17	2
	1-19	14
580059816	1-47	6
	1-53	7
	1-55	7
580059828	2-5	9
580059919	1-7	6
580059998	10-16	39
580060014	6-5	
	6-7	1
580060018	1-49	23
	1-51	19
580060019	1-5	11
580060025	15-15	5
580060060	1-55	
580060061	1-55	
580060074	1-53	
580060075	1-53	
580060076	14-21	5
580060078	14-21	6
580060203	5-46	4
580060283	2-21	7
580060284	2-21	2
580060394	9-15	6
	9-16	6
580060625	6-12	2
580060626	6-12	2
580060694	4-5	6
580060732	11-63	11
580060862	6-31	35
	6-41	21
580061267	11-4	39
580061352	11-63	1
580061562	14-17	3
580061680	2-81	9
	6-37	2
580061717	14-17	16
580061778	8-3	4
580061850	6-47	
	6-47	

©2014 Yale Materials Handling Corporation

NUMERICAL INDEX (continued)

PART NO.	PAGE	ITEM
	6-47	
	6-49	
	6-49	
	6-49	
580061852	6-47	
	6-47	
	6-47	
	6-47	
	6-49	
	6-49	
	6-49	
	6-49	
580062078	1-47	3
	1-49	10
	1-51	12
	1-53	3
	1-55	3
	1-63	9
580062118	6-81	8
	6-131	8
	6-171	7
580062129	13-17	3
	14-18	32
	14-18	49
580062204	11-69	5
580062216	6-151	14
	6-154	20
580062311	6-9	3
	6-11	3
580062332	14-17	9
580062334	14-17	9
	14-17	9
580062910	6-49	
	6-49	
	6-49	
	6-49	
	6-49	6
580062968	4-3	17
580063044	2-73	15
580063065	6-45	3
580063092	2-73	15
580063282	11-3	10
580063288	3-5	27
	3-7	27
580063366	10-11	13
580063369	2-49	23
580063477	7-3	12
580063478	7-3	5
580063480	7-3	4
580063481	7-3	10
580063482	7-3	3
580063570	6-157	10
580063571	6-100	32
	6-101	33
	6-107	37
	6-107	38
	6-113	35
	6-113	37
	6-113	38
	6-119	35
	6-119	37
	6-119	38
580063572	6-157	11
580063573	6-157	12
580063616	6-27	12
	6-31	37
	6-41	24
580063617	6-27	4
	6-31	34
	6-35	10
	6-41	16
	6-41	19
580063618	6-27	2
	6-31	32
	6-41	6
580063697	6-65	3
	6-82	12
	6-135	4
	6-139	18
	6-143	15
	6-147	12
	6-158	21
	6-158	22
	6-158	23
	6-158	24
	6-158	25
580063751	6-65	3
	6-82	12
	6-135	4
	6-139	18
	6-143	15
	6-147	12
	6-158	21
	6-158	22
	6-158	23
	6-158	24
	6-158	25
580063934	2-13	18
	2-26	4
580063949	9-19	1
	9-19	6
	9-19	7
	10-15	14
	10-15	16
	10-15	18
	10-15	22
	10-15	23
	10-16	39
	10-16	40
	11-67	6
	11-67	13
	14-13	10
	14-13	16
	14-13	17
	14-17	10
	14-17	14
	14-17	17
	14-18	21
	14-18	27
	14-18	34
580063961	2-5	10
	11-9	6
580064046	6-61	7
580064079	8-3	1
	8-5	
	8-7	
	8-9	
580064080	8-3	1
	8-5	
	8-7	
	8-9	
580064139	13-10	37
580064145	12-7	23
580064232	10-3	22
	10-7	27
580064307	14-13	23
580064308	14-13	23
580064316	4-3	12
580064320	12-7	15
580064321	13-9	21
580064483	1-9	8
580064565	6-69	4
580064567	6-69	1
580064598	6-65	1
580064599	5-45	10
	6-57	12
	6-65	4
	10-15	19
580064601	10-7	9
	10-7	32
580064647	11-69	4
580064660	9-9	29
	9-15	
580064733	6-65	6
580064736	9-3	6
580064805	9-3	7
580064825	6-73	4
	6-73	5
	6-73	6
	6-73	17
	6-73	18
	6-73	19
	6-77	4
	6-77	5
	6-77	6
	6-77	20
	6-77	21
	6-78	22
580064839	1-11	29
580064880	6-74	23
	6-78	27
	6-85	8
	6-89	10
580064917	6-69	15
580064923	6-74	32
	6-78	34
	6-86	24
	6-90	32
580064968	1-11	32
580064981	1-9	15
580064982	1-9	17
580064997	5-23	28
	5-27	4
	5-29	5
580065002	9-2	2
	9-3	2
580065022	1-9	13
	1-11	18
	1-39	19
	1-41	19
	6-55	10
	6-57	7
	10-3	27
	10-7	33
580065094	5-13	2
580065096	5-13	5
580065474	6-57	8
580065476	6-57	9
580065477	6-55	8
580065478	6-55	12
580065523	2-17	21
580065858	2-17	23
580065903	1-73	1
580065904	1-73	2

©2014 Yale Materials Handling Corporation

NUMERICAL INDEX (continued)

PART NO.	PAGE	ITEM
580065905	1-73	3
580065906	1-73	4
580065907	1-73	5
580065908	1-73	6
580065909	1-73	7
580065910	1-73	8
580065911	1-73	9
580065912	1-73	10
580065913	1-73	11
580065914	1-73	12
580065915	1-73	13
580065916	1-73	14
580065917	1-73	15
580065918	1-73	16
580065919	1-73	17
580065920	1-73	18
580065921	1-73	19
580065922	1-73	20
580065923	1-73	21
580065924	1-73	22
580065925	1-73	23
580065926	1-73	24
580065933	1-5	29
580065961	1-53	5
	1-55	5
580065976	9-15	10
580065978	9-15	8
	9-16	8
580065981	2-18	34
580065984	12-3	1
580065986	12-3	1
580065991	12-3	1
580065993	13-3	1
580065996	13-3	1
580066199	5-5	4
	5-7	4
580066235	15-11	2
580066240	12-3	11
	13-3	11
580066241	12-3	10
	13-3	10
580066347	3-5	1
	3-7	1
580066348	3-5	20
	3-7	5
580066356	10-16	44
580066358	11-3	27
580066405	11-3	35
580066406	11-3	26
580066556	1-41	15
580066673	11-63	6
580066674	11-63	10
580066676	11-63	13
580066681	1-15	14
580066710	2-21	3
580066764	11-63	4
	11-65	
580066765	11-63	4
	11-65	
580066767	1-27	5
580067062	5-43	12
580067063	5-43	17
580067372	11-7	1
580067377	11-7	3
580067388	11-63	8
580067512	1-5	10
580067529	1-5	34
580067605	1-9	10
580067606	1-9	20
580067615	2-23	5
	2-25	9
580067616	2-23	1
	2-25	5
580067617	2-23	4
	2-25	8
580067641	2-23	2
580067708	6-15	23
	6-27	2
	6-31	32
	6-35	18
	6-41	6
580067860	1-17	10
	1-19	24
580067863	10-15	11
580068007	1-17	7
	1-19	23
580068080	1-17	11
	1-19	20
580068081	1-17	9
	1-19	22
580068097	10-11	16
580068098	10-11	15
580068120	6-129	8
	6-131	7
	6-133	4
	6-171	6
580068208	6-38	7
580068489	1-55	
580068490	1-55	
580068586	12-11	10
	13-13	1
580068631	1-53	
580068633	1-53	
580068717	11-4	
580069061	12-11	9
	13-13	2
580069177	15-13	1
580069270	13-9	17
580069273	13-9	17
580069275	13-9	17
580069314	7-3	9
580069337	5-10	3
580069339	5-10	2
580069342	6-99	15
	6-105	15
	6-111	16
	6-117	16
580069430	2-13	16
580069454	14-13	16
	14-18	27
580069679	14-17	11
	14-62	2
	14-65	6
	14-67	21
580069704	6-157	5
	6-161	8
580069705	6-157	5
	6-161	8
580069753	1-71	12
580069759	1-71	5
580069787	13-19	1
580069791	13-19	
580069794	13-19	
580069796	1-33	11
580069797	1-33	8
580069854	8-5	2
580069855	8-5	3
580069883	8-7	20
580069886	8-5	34
580069903	8-7	8
580069922	8-5	23
580069947	8-9	1
580069949	8-5	8
	8-9	6
580069950	8-9	8
580069951	8-9	9
580069952	8-9	10
580069953	8-9	11
580069954	8-9	26
580069955	8-9	27
580069961	8-9	19
580069965	8-9	2
580069967	8-9	4
580069986	4-3	8
580069988	4-3	8
580070000	2-18	26
580070021	12-11	
580070023	12-11	
580070028	12-11	
580070033	12-11	
580070036	12-11	
580070080	12-7	26
580070085	13-10	36
580070091	13-10	36
580070114	13-10	37
580070118	13-10	37
580070331	7-11	11
	7-27	11
580070332	7-11	12
	7-27	12
580070400	6-77	18
	6-157	14
580070455	2-13	23
	2-25	2
580070456	2-13	21
	2-25	4
580070459	6-125	7
	6-127	1
	6-129	7
	6-131	1
	6-133	1
	6-171	1
580070516	7-45	3
580070555	7-11	8
	7-13	3
	7-27	8
	7-29	4
580070562	11-7	
580070617	11-11	6
580070618	11-11	7
580070619	11-11	8
580070623	11-11	15
580070625	11-11	9
580070627	11-11	10
580070719	14-18	37
580070768	10-16	31
580070814	2-14	56
580070916	13-19	
580071006	9-15	
580071011	11-3	24
580071012	11-3	25
580071039	13-10	29
	13-17	12
580071040	12-7	4

©2014 Yale Materials Handling Corporation

NUMERICAL INDEX (continued)

PART NO.	PAGE	ITEM
580071041	14-13	22
580071043	12-7	5
580071044	12-7	2
	13-10	32
580071048	13-17	2
580071052	13-9	25
	13-17	11
580071053	13-9	23
	13-17	16
580071054	12-7	27
	13-10	28
	13-17	17
580071055	13-17	15
580071066	6-95	5
	6-95	8
	6-97	4
	6-97	9
	6-100	25
	6-106	25
	6-112	25
	6-118	25
	6-123	12
580071068	14-13	11
	14-18	22
580071103	11-3	25
580071200	2-37	2
580071203	2-41	1
	2-45	1
580071204	2-13	9
	2-25	3
580071205	2-42	42
	2-45	42
580071226	2-95	10
	2-101	5
580071281	2-53	12
580071308	2-42	44
580071429	13-13	
580071432	13-13	
580071434	13-13	
580071451	13-13	
580071454	13-13	
580071456	13-13	
580071505	1-55	
580071576	8-9	13
580071603	12-7	19
	13-9	11
580071962	6-82	16
	6-97	1
580072018	2-13	4
	2-17	14
580072019	2-17	16
580072047	2-17	4
	2-17	22
580072090	2-17	2
580072091	1-41	13
	2-21	6
580072127	6-15	16
	6-29	5
580072132	14-13	21
580072134	14-13	21
580072139	14-13	21
580072144	14-13	21
580072145	14-13	21
580072158	14-17	8
580072161	14-17	8
580072178	14-18	47
580072181	14-18	47
580072183	14-18	47
580072197	14-18	29
580072200	14-18	29
580072202	14-18	29
580072218	14-18	46
580072221	14-18	46
580072223	14-18	46
580072338	11-39	7
	11-43	8
580072341	11-49	4
580072342	11-49	11
580072343	11-49	5
580072344	11-49	3
580072345	11-49	9
580072346	11-49	8
580072347	11-49	1
	11-49	7
580072350	11-51	3
580072365	11-37	3
	11-41	3
	11-51	1
580072367	11-37	6
	11-41	7
	11-49	
580072368	11-37	5
	11-41	6
	11-49	
580072370	6-31	29
580072374	11-45	4
580072424	14-18	44
580072477	5-31	6
580072478	5-31	6
580072479	5-31	6
580072480	5-31	8
	5-33	10
580072481	5-31	10
580072482	5-31	11
580072483	5-31	12
580072484	5-31	13
	5-33	5
580072485	5-31	14
	5-33	4
580072486	5-33	15
580072487	5-31	
580072611	14-55	11
	14-61	11
	14-67	10
580072615	2-14	
	6-18	
580072631	6-61	10
580072635	6-63	8
580072751	1-69	4
580072757	11-41	4
	11-55	1
580072801	6-57	10
580072998	12-7	11
580073148	1-39	10
	11-67	4
580073352	2-17	18
580073353	2-17	9
580073519	6-31	33
	6-35	9
580073520	6-31	28
580073538	2-13	25
	2-29	5
580073539	2-13	27
	6-22	3
580073545	11-3	30
580073616	2-11	4
580073617	6-31	20
	6-151	12
580073806	6-37	15
580073821	6-37	10
580073942	2-13	22
580074110	6-5	21
580074249	5-23	9
	5-27	9
580074250	5-23	23
	5-27	24
	5-29	10
580074261	6-5	3
	6-7	4
	6-71	
580074280	11-65	13
580074281	11-65	13
580074282	11-63	5
	11-65	
580074283	11-63	5
	11-65	
580074430	5-23	14
	5-27	20
580074438	3-5	26
580074489	2-63	14
580074512	6-5	19
580074515	10-7	16
580074726	11-37	
580074728	11-41	
580074751	6-15	18
	6-29	3
580074766	11-3	12
580074788	6-15	19
	6-29	4
580074812	5-5	13
	5-7	13
580074844	12-3	1
580074847	12-3	1
580074866	5-45	25
580074877	6-35	15
	6-41	14
580074879	1-20	4
580074904	12-5	1
580074927	13-3	1
580074995	8-5	7
580075007	2-13	5
580075019	2-49	8
580075262	10-15	11
580075263	10-15	27
580075282	6-61	10
580075331	10-16	50
580075368	6-81	5
580075369	6-81	5
580075375	6-81	3
580075376	6-81	3
580075378	6-81	4
580075380	6-81	1
580075397	2-13	20
	2-23	
580075454	2-14	39
580075465	6-32	46
580075468	11-67	12
580075487	11-67	18
580075489	11-67	17
580075490	11-67	16
580075491	11-67	2
580075492	11-67	19
580075506	4-3	21
	4-7	20

©2014 Yale Materials Handling Corporation

NUMERICAL INDEX (continued)

PART NO.	PAGE	ITEM
580075789	6-35	3
580075790	6-31	39
	6-35	13
	6-41	12
	6-41	22
580075791	6-31	19
	6-151	11
	6-153	16
580075792	6-151	11
	6-153	16
580076203	8-7	25
580076204	8-7	23
580076205	8-7	24
580076206	8-7	22
580076207	8-7	21
	8-9	28
580076208	8-7	19
580076210	8-5	32
580076211	8-7	18
580076212	8-7	18
580076213	8-7	18
580076214	8-7	18
580076216	8-7	16
580076217	8-7	15
580076218	8-7	12
580076219	8-7	9
580076220	8-7	10
580076221	8-7	13
580076222	8-7	14
580076223	8-7	1
580076224	8-7	2
580076225	8-7	3
580076226	8-7	6
580076227	8-7	4
580076228	8-7	5
580076229	8-7	
580076230	8-7	7
580076232	8-5	6
580076247	8-5	26
580076248	8-5	27
580076249	8-5	28
580076266	8-9	18
580076302	6-57	11
580076315	6-5	15
	6-7	11
580076339	7-19	26
	7-35	26
580076404	8-7	15
580076407	1-11	34
580076408	1-11	31
580076437	14-21	3
580076438	14-21	4
580076450	6-32	48
580076451	6-35	9
580076478	6-95	
580076487	1-39	34
	1-41	34
580076680	13-10	39
580076752	6-19	1
	6-21	1
580076769	10-3	19
	10-7	24
580076790	10-3	13
	10-7	17
580076806	1-41	16
580076807	1-41	17
580076897	10-3	15
	10-7	19
580076912	14-13	18
	14-18	28
	14-51	2
	14-53	6
	14-55	25
	14-57	2
	14-59	7
	14-61	25
580077069	1-33	7
580077071	1-29	4
580077072	1-33	13
580077087	1-29	11
580077088	1-29	12
	6-55	7
580077095	1-33	
580077099	1-35	3
	1-37	13
580077100	1-35	4
	1-37	12
580077101	1-35	12
	1-37	9
580077141	1-31	6
580077147	7-42	3
580077156	6-17	3
580077236	6-67	13
580077299	10-3	13
	10-7	17
580077308	6-15	25
	6-32	48
	6-35	19
	6-41	1
580077316	10-4	
	10-8	
580077359	6-65	7
580077408	1-11	2
580077409	1-11	1
580077522	1-9	14
580077523	1-9	14
580077543	11-67	15
580077544	11-67	15
580077546	11-67	15
580077555	14-5	
580077564	1-7	7
580077566	1-7	7
580077584	1-7	9
580077585	1-7	8
580077615	10-3	18
	10-7	25
580077616	10-3	16
	10-7	20
580077643	1-29	13
580077674	2-11	
	2-13	
	2-17	
	2-21	
	2-35	
	2-37	
	2-41	
	2-49	
	2-59	
580077675	2-17	8
	6-85	
580077676	2-17	8
	6-73	
580077680	1-39	21
	1-41	21
	1-43	
580077682	1-39	6
	1-41	6
580077683	1-39	7
	1-41	7
580077684	1-39	20
	1-41	20
580077685	1-39	24
	1-41	24
580077688	1-39	26
	1-41	26
580077689	1-39	5
	1-41	5
580077690	1-39	28
	1-41	28
580077708	6-63	3
580077709	6-63	5
580077713	3-5	7
580077730	2-11	
	2-13	
	2-17	
	2-21	
	2-35	
	2-37	
	2-41	
	2-49	
	2-59	
580077738	5-5	10
580077759	3-5	8
	3-7	11
580077770	10-3	7
580077798	10-16	48
580077811	1-9	2
580077812	1-9	2
580077815	14-18	45
	14-57	
	14-59	
	14-61	
	14-62	4
	14-65	8
	14-67	23
580077816	14-18	30
	14-57	
	14-59	
	14-61	
	14-62	3
	14-65	7
	14-67	22
580077841	10-15	7
580077843	10-16	45
580077844	10-15	2
580077845	10-15	21
580077846	10-16	33
580077847	10-16	52
580077848	10-15	10
580077852	1-27	14
580077853	1-27	19
580077864	10-16	47
580077866	10-15	4
580077912	11-37	
580077913	11-41	
580077921	5-23	30
	5-27	3
	5-29	2
580077924	11-67	10
580077936	14-17	18
580077971	14-7	1
580078070	15-4	2
580078075	8-2	2
	8-2	2

©2014 Yale Materials Handling Corporation

NUMERICAL INDEX (continued)

PART NO.	PAGE	ITEM
580078076	9-22	3
580078131	1-9	12
580078132	1-11	24
580078134	1-9	6
580078174	14-5	10
580078175	14-7	24
580078176	14-7	23
580078202	5-43	2
580078203	5-43	1
580078204	5-43	1
580078337	5-23	2
580078338	5-23	5
580078345	5-43	11
580078355	5-43	2
580078361	1-53	
580078489	6-17	14
580078572	6-15	9
	6-125	
580078573	6-15	9
	6-129	
580078576	1-17	6
	1-19	16
580078642	15-15	1
580078647	6-82	18
580078665	6-31	6
	6-32	53
580078666	6-32	54
580078667	6-32	54
580078690	9-5	1
	9-7	8
580078691	9-7	1
580078720	1-5	32
580078722	1-5	7
580078724	1-5	9
580078725	1-5	30
580078726	1-17	1
	1-19	21
580078727	1-17	8
	1-19	19
580078728	1-17	22
	1-19	10
580078729	1-17	23
	1-19	11
580078730	1-19	12
580078731	1-19	9
580078732	1-19	25
580078733	1-17	31
	1-19	13
580078734	1-17	29
	1-19	3
580078735	1-17	27
	1-19	4
580078736	1-17	28
	1-19	2
580078737	1-17	25
	1-19	8
580078738	1-17	26
	1-19	28
580078739	1-17	24
	1-19	6
580078740	1-17	30
	1-19	27
580078811	6-15	4
580078920	15-2	1
580078957	14-14	28
	14-51	5
	14-53	8
	14-55	27
580078958	14-13	27
	14-51	6
	14-53	7
	14-55	28
580078959	14-13	19
	14-51	4
	14-53	9
	14-55	19
580078960	14-13	20
	14-51	3
	14-53	10
	14-55	26
580078961	14-59	8
	14-61	26
580078962	14-17	19
	14-57	3
	14-57	4
	14-59	1
	14-61	19
580079291	12-7	11
	13-9	6
580079294	2-11	3
580079295	2-11	8
580079296	2-11	2
580079375	11-67	9
580079376	7-5	9
580079378	7-5	14
	7-7	12
580079442	5-13	13
	5-19	10
580079539	2-35	2
580079540	2-35	1
	2-49	24
	2-53	20
580079615	6-55	28
	6-57	6
	15-2	
580079671	10-16	42
580079931	10-15	3
580079932	10-15	24
580079933	5-59	7
	5-61	26
580079953	2-41	37
	2-45	17
580079956	2-42	37
	2-45	16
580079983	6-57	10
580080011	10-3	13
	10-7	17
580080018	11-67	7
580080021	5-59	5
	5-61	24
580080022	5-59	3
	5-61	22
580080026	6-81	3
580080030	6-81	9
	6-81	10
	6-127	5
	6-131	10
	6-133	5
580080031	6-81	9
	6-81	10
580080032	6-81	1
580080038	10-16	46
580080121	2-14	52
580080122	2-14	52
580080127	1-53	7
	1-55	7
580080198	6-74	22
	6-78	25
	6-83	25
	6-85	2
	6-89	2
580080199	6-74	22
	6-78	25
	6-83	25
	6-85	2
	6-89	2
580080368	5-59	4
	5-61	23
580080549	7-11	7
	7-27	7
580080550	7-11	6
	7-27	6
580080551	7-11	5
	7-15	5
	7-27	5
	7-31	5
580080552	7-11	4
	7-15	6
	7-27	4
	7-31	6
580080553	7-11	3
	7-15	7
	7-27	3
	7-31	7
580080554	7-11	2
	7-15	8
	7-27	2
	7-31	8
580080555	7-11	14
	7-15	27
580080556	7-11	31
	7-15	30
	7-27	31
	7-31	30
580080557	7-11	30
	7-13	8
	7-15	32
	7-17	12
	7-27	30
	7-29	8
	7-31	32
	7-33	16
580080558	7-11	16
	7-13	9
	7-15	33
	7-17	3
	7-27	17
	7-29	12
	7-31	33
	7-33	6
580080559	7-11	39
	7-15	11
	7-27	37
	7-31	11
580080560	7-11	35
	7-27	33
580080561	7-11	36
	7-27	34
580080562	7-11	10
	7-27	10
580080563	7-11	1
	7-27	1
580080564	7-11	15
580080565	7-11	43

©2014 Yale Materials Handling Corporation

NUMERICAL INDEX (continued)

PART NO.	PAGE	ITEM
	7-15	20
	7-27	41
	7-31	20
580080566	7-11	44
	7-15	21
	7-27	42
	7-31	21
580080567	7-11	23
	7-15	24
	7-27	24
	7-29	10
	7-31	24
	7-33	20
580080568	7-11	34
	7-15	28
580080570	7-27	13
	7-31	10
580080577	7-13	1
580080578	7-13	2
	7-15	2
	7-17	2
	7-29	2
	7-31	2
	7-33	2
580080579	7-13	5
	7-29	3
580080580	7-13	22
	7-17	5
	7-29	23
	7-33	8
580080581	7-13	21
	7-17	6
	7-29	22
	7-33	9
580080582	7-13	25
	7-17	14
580080583	7-13	13
	7-17	16
580080584	7-13	15
	7-29	18
	7-33	3
580080585	7-13	11
	7-17	19
	7-29	15
	7-33	18
580080586	7-29	1
580080590	7-42	1
580080591	7-42	2
580080592	7-42	6
580080593	7-42	4
580080594	7-42	8
580080596	7-45	11
580080597	7-45	10
580080598	7-45	8
580080599	7-45	9
580080601	7-45	6
580080603	7-45	4
580080604	7-45	2
580080605	7-45	5
580080606	7-19	1
	7-35	1
580080607	7-19	2
	7-21	14
	7-23	2
	7-35	2
	7-37	2
580080608	7-19	3
	7-21	15
	7-23	3
	7-35	3
	7-35	31
	7-37	3
	7-37	31
580080609	7-19	5
	7-21	13
	7-23	9
	7-35	5
	7-37	9
580080610	7-19	17
	7-23	21
	7-35	17
	7-37	24
580080611	7-19	27
	7-35	27
580080612	7-35	30
	7-37	29
580080613	7-19	7
	7-21	11
	7-23	10
	7-35	7
	7-37	10
580080615	7-19	20
	7-23	18
	7-35	20
	7-37	27
580080616	7-19	19
	7-23	17
	7-35	19
	7-37	28
580080617	7-19	21
	7-23	7
	7-35	21
	7-37	7
580080618	7-19	10
	7-21	8
	7-35	10
580080619	7-19	9
	7-21	9
	7-35	9
580080620	7-19	25
580080621	7-19	24
	7-35	24
580080622	7-19	11
	7-21	4
	7-23	12
	7-35	11
	7-37	12
	7-37	25
580080623	7-19	12
	7-35	12
580080624	7-19	13
	7-35	13
580080625	7-19	14
	7-35	14
580080626	7-19	16
	7-35	16
580080627	7-19	16
	7-35	16
580080628	7-19	16
	7-35	16
580080629	7-19	22
	7-23	20
	7-35	22
	7-37	25
580080631	14-23	5
580080632	14-23	4
580080633	14-23	5
580080634	7-35	25
580080635	14-23	4
580080636	14-23	2
580080637	7-23	1
	7-37	1
580080638	7-23	5
	7-37	5
580080639	7-19	21
	7-23	19
	7-37	26
580080640	7-23	16
	7-37	18
	7-38	8
580080641	7-23	23
580080642	7-23	13
	7-37	13
580080643	7-23	6
	7-37	6
580080644	7-37	19
580080657	7-21	17
580080658	7-21	3
580080660	7-21	2
580080661	7-21	22
580080664	7-21	21
	7-38	4
580080665	7-21	18
	7-38	1
580080666	7-21	20
	7-38	3
580080667	7-21	19
	7-38	2
580080668	7-38	7
580080669	7-38	5
580080672	7-25	10
580080673	7-25	11
580080674	7-25	9
580080675	7-25	2
580080676	7-25	14
580080677	7-25	15
580080678	7-25	7
580080679	7-25	16
580080680	7-25	8
	7-41	4
580080681	7-25	3
580080683	7-41	2
580080686	7-41	3
580080729	7-5	1
	7-7	1
580080730	7-5	2
	7-7	2
580080731	7-5	3
	7-7	3
580080732	7-7	8
580080734	7-11	
	7-27	
580080735	7-45	13
580080736	7-45	12
580080737	7-11	21
	7-15	9
	7-27	22
	7-31	9
580080738	7-42	7
580080739	7-11	42
	7-13	20
	7-15	19
	7-17	9
	7-27	40

©2014 Yale Materials Handling Corporation

NUMERICAL INDEX (continued)

PART NO.	PAGE	ITEM
	7-29	21
	7-31	19
	7-33	11
580080808	6-74	22
	6-78	25
	6-83	25
	6-85	2
	6-89	2
580080809	1-33	1
580080810	1-33	4
580080812	1-29	8
580080813	1-33	6
580080814	1-29	2
580080815	1-29	5
580080816	1-33	9
580080818	1-33	5
580080819	1-33	3
580080855	1-35	10
580080856	1-35	11
	1-37	10
580080857	1-35	1
580080858	1-35	2
	1-37	14
580080859	1-35	14
580080860	1-29	
	1-35	15
	1-37	7
580080861	1-35	8
580080867	1-37	6
580080868	1-37	15
580080869	1-37	4
580080871	1-31	2
580080872	1-31	3
580080874	1-31	5
580080876	1-31	1
580080918	14-23	
580080919	15-9	2
580080920	15-9	2
580080971	10-11	
580080972	10-11	
580080976	15-11	5
580081172	8-2	1
	9-22	1
580081186	2-61	
580081249	14-18	39
580081252	14-18	38
580081339	15-11	3
580081340	15-11	1
580081484	6-5	9
580081499	10-11	1
580081500	10-11	1
580081558	3-5	26
580081560	3-5	12
	3-7	12
580081561	11-11	4
580081563	11-11	11
580081565	11-11	13
580081566	11-11	16
580081567	11-11	14
580081568	11-11	17
580081569	11-11	18
580081572	11-11	
580081576	11-13	4
580081577	11-13	5
580081579	11-13	
580081635	9-9	
580081663	11-25	
	11-27	
	11-37	
	11-39	7
	11-41	
	11-43	8
580081664	11-25	5
	11-27	6
	11-28	1
	11-37	7
	11-39	2
	11-41	8
	11-43	2
580081666	11-37	1
	11-39	3
	11-41	1
	11-43	3
	11-45	1
580081667	11-37	2
	11-41	2
	11-47	1
580081668	11-37	
	11-41	
580081670	11-25	1
	11-27	1
	11-34	1
580081697	10-11	12
580081710	11-39	7
	11-43	8
580081712	8-5	25
580081713	8-5	1
580081714	8-5	10
580081715	8-5	11
580081716	8-5	12
580081717	8-5	14
580081718	8-5	17
580081719	8-5	21
580081720	8-5	20
580081721	8-5	18
580081722	8-5	24
580081723	8-5	13
580081724	8-5	19
580081725	8-5	15
580081726	8-5	16
580081727	8-5	22
580081728	8-5	31
580081729	8-5	30
580081730	8-5	29
580081731	8-5	4
580081732	8-5	5
580081733	8-5	9
580081734	8-9	3
580081735	8-9	5
580081736	8-9	7
580081737	8-9	21
580081738	8-9	14
580081739	8-9	25
580081740	8-9	16
580081741	8-9	15
580081742	8-9	17
580081743	8-9	20
580081744	8-9	24
580081745	8-9	23
580081746	8-9	22
580081755	11-49	10
580081758	8-7	17
580081762	7-5	8
580081763	7-5	8
580081764	7-7	9
580081786	9-3	5
	9-7	
580081787	9-2	5
	9-5	
580081812	6-47	4
	6-49	4
580081813	11-45	14
580081819	11-45	15
580081898	1-27	19
580082074	5-9	1
580082206	7-41	14
580082216	7-41	5
580082310	9-9	35
	9-13	35
580082318	6-63	1
580082329	6-82	19
580082371	1-11	10
580082372	10-16	38
580082402	11-3	16
580082436	1-9	19
580082437	11-3	32
580082445	1-23	7
580082448	1-13	5
580082458	1-5	15
580082486	6-9	1
	6-143	
580082487	6-9	1
	6-135	
580082531	6-55	6
	6-57	5
580082532	6-55	5
	6-57	4
580082533	6-55	4
580082534	6-55	4
580082535	6-57	4
580082536	6-57	4
580082544	11-4	40
580082554	5-43	13
580082556	1-41	17
580082869	6-67	10
580082870	11-4	40
580082894	11-65	13
580082895	11-65	13
580082896	11-3	2
	11-9	10
580082987	5-43	24
580083001	1-9	1
580083020	1-7	1
580083087	10-16	34
580083106	1-17	32
	1-19	7
580083107	1-17	33
	1-19	26
580083135	5-5	8
	5-7	8
580083152	6-35	11
580083174	1-15	
580083236	10-11	7
	10-13	7
580083258	1-43	1
580083259	1-43	2
580083260	1-43	3
580083261	1-43	4
580083262	1-43	5
580083272	1-43	16
580083273	1-43	17
580083274	1-43	18
580083275	1-43	20
580083276	1-43	21

©2014 Yale Materials Handling Corporation

NUMERICAL INDEX (continued)

PART NO.	PAGE	ITEM
580083277	1-43	11
580083279	1-43	24
580083280	11-3	16
580083281	11-3	16
580083282	11-3	16
580083302	1-65	2
	1-65	11
580083309	3-5	21
580083318	11-3	21
	11-11	
580083324	10-16	32
580083371	6-61	8
580083401	11-3	21
	11-11	
580083446	1-5	25
	5-9	3
580083472	7-45	7
580083473	10-3	2
580083476	11-11	5
580083531	6-15	22
	6-27	5
580083532	6-15	23
	6-27	1
580083553	11-11	1
580083559	2-61	3
580083669	15-11	8
580083670	5-43	
580083674	1-5	31
580083675	1-5	8
580083689	2-61	8
	5-45	29
580083733	4-3	20
	4-7	24
580083823	11-53	10
	11-57	10
580083843	6-5	14
580083845	6-7	15
580083846	6-7	10
580083851	6-67	6
580083871	1-39	1
	1-41	1
	6-29	2
580083872	1-41	12
580083939	10-13	4
580083948	12-7	10
580083958	5-9	9
580083960	5-9	6
580084020	10-16	30
580084024	14-29	1
580084025	14-29	2
580084026	14-29	3
580084027	14-29	5
580084029	14-29	10
580084030	14-29	7
580084031	14-29	6
580084032	14-29	4
	14-30	
580084035	14-29	12
580084036	14-29	9
580084037	14-29	11
580084038	14-29	14
580084039	14-29	8
580084040	14-29	
580084043	14-30	14
580084044	14-30	4
580084045	14-30	3
580084046	14-30	2
580084047	14-30	1
580084050	14-30	13
580084051	14-30	7
580084052	14-30	6
580084053	14-30	5
580084054	14-30	12
580084055	14-30	15
580084056	14-30	11
580084069	14-30	
580084074	14-25	19
580084075	14-25	4
580084076	14-25	27
580084118	14-25	16
580084119	14-25	12
580084120	14-25	20
580084121	14-25	14
580084122	14-25	10
580084123	14-25	17
	14-45	5
580084127	14-25	3
580084128	14-25	11
580084129	14-25	28
580084130	14-25	5
580084131	14-25	31
580084132	14-25	23
	14-26	14
580084133	14-25	8
580084134	14-25	1
580084135	14-25	9
580084136	14-25	7
580084137	14-25	6
580084140	14-25	18
580084143	14-25	2
	14-43	7
580084144	14-25	15
580084147	14-26	11
580084148	14-26	4
580084149	14-26	9
580084159	14-26	
580084160	14-25	8
580084161	14-25	8
580084162	14-25	8
580084163	14-25	8
580084235	6-55	5
580084240	6-55	25
580084241	6-168	
580084247	5-9	5
580084259	14-25	26
580084260	14-25	22
	14-26	
580084261	14-25	21
580084262	14-25	13
580084263	14-25	24
580084264	14-25	25
580084265	14-25	30
580084266	14-25	29
580084267	11-3	6
580084270	14-25	8
580084297	14-23	3
	14-29	
580084298	14-23	1
	14-25	
580084304	2-61	11
580084399	4-7	4
580084401	4-7	10
580084408	11-17	1
580084409	11-21	1
580084410	11-19	1
580084411	11-15	21
	11-17	6
	11-19	22
	11-21	9
580084412	11-15	20
	11-17	7
	11-19	21
	11-21	8
580084413	11-17	8
	11-19	20
	11-21	7
580084414	11-21	6
580084415	11-19	19
580084416	11-15	19
580084470	3-3	13
580084471	3-3	14
580084472	13-10	39
580084515	2-26	1
	2-64	5
580084517	4-7	13
580084518	4-7	16
580084525	4-3	1
580084550	6-31	31
	6-41	7
580084551	6-31	36
	6-41	20
580084557	2-5	2
580084621	3-3	12
580084626	10-11	1
580084646	1-27	12
580084650	2-64	8
580084758	1-27	13
580084772	7-5	16
	7-7	11
580084819	6-31	28
	6-35	18
	6-41	4
580084820	6-31	5
580084821	6-35	9
	6-41	10
580084830	4-5	1
580084835	4-5	5
580084838	1-5	20
580084860	11-11	12
580084861	11-11	19
	11-13	
580084862	11-11	
580084864	11-13	
580084886	11-4	41
580084901	6-31	41
580084956	1-63	2
580084965	11-27	
	11-31	
580085001	11-15	1
580085002	11-15	14
580085003	11-19	13
580085060	5-43	7
580085061	5-43	6
580085072	11-25	
580085074	11-19	18
	11-21	17
	11-27	
580085075	11-25	
580085076	11-27	
580085082	11-17	4
580085083	11-21	4
580085098	4-3	22
580085134	11-23	4
580085142	11-25	

©2014 Yale Materials Handling Corporation

NUMERICAL INDEX (continued)

PART NO.	PAGE	ITEM
	11-31	
580085146	11-31	5
580085163	5-9	8
580085184	11-31	13
580085193	11-27	2
	11-33	2
580085194	11-25	3
	11-27	4
	11-31	1
580085195	11-25	2
	11-27	3
	11-33	1
580085229	3-3	1
580085263	11-15	5
	11-19	5
580085296	9-9	24
580085320	7-9	2
580085322	7-9	8
580085400	1-17	35
	1-19	1
580085401	1-17	34
	1-19	5
580085409	9-9	24
580085418	4-7	17
580085520	2-14	45
	2-49	26
	2-53	26
580085521	2-14	40
580085523	7-7	16
580085547	11-3	13
580085583	9-13	25
580085743	10-3	22
	10-7	27
580085744	10-3	22
	10-7	27
580085746	10-3	22
	10-7	27
580085901	7-3	11
	7-11	
	7-13	
580085902	7-3	11
	7-27	
	7-29	
580086013	8-3	6
580086017	8-3	5
580086018	8-3	4
580086069	11-15	17
	11-19	15
	11-21	11
580086129	2-17	12
580086130	2-17	12
580086159	4-7	1
580086263	9-13	24
580086288	9-13	22
580086289	9-13	21
580086333	8-5	33
	8-7	11
580086384	14-55	14
	14-61	14
580086521	6-167	
580086522	6-57	19
580086539	2-64	1
	4-7	15
580086608	1-39	15
580086609	1-39	14
580086628	1-39	18
580086631	4-7	14
580086769	6-45	6
580086801	1-5	1
580086874	9-2	4
	9-3	4
580086875	9-2	4
	9-3	4
580086876	9-2	4
	9-3	4
580086877	1-47	
580086881	1-47	
580087148	1-31	6
580087257	9-21	
	11-25	7
	11-27	8
	11-37	8
	11-41	9
580087258	11-39	9
	11-43	10
580087338	1-75	1
580087377	11-69	1
	12-7	32
	13-10	39
580087419	5-45	15
580087447	2-14	46
	2-49	27
	2-53	27
580087459	2-93	16
580087460	2-93	1
580087464	2-93	18
580087536	4-7	7
580087538	9-13	
580087546	6-12	1
580087573	5-5	7
580087575	5-5	6
580087627	2-93	13
580087629	5-17	4
580087659	1-47	11
	1-49	12
	1-51	17
	1-63	13
580087718	11-39	
580087720	11-43	
580087725	11-39	1
580087726	11-43	1
580087794	2-93	9
580087797	2-93	3
580087837	6-111	17
	6-117	17
580087838	6-112	17
	6-118	17
580087847	5-17	4
580087861	1-39	2
	1-41	2
	1-44	
580087877	6-31	24
580087914	2-63	
	2-64	
	2-65	
	2-66	
	2-69	
	2-70	
	2-73	
	2-75	
	2-77	
	2-78	
	2-81	
	2-82	
	2-83	
	2-85	
	2-86	
	2-89	
	2-91	
	2-93	
	2-95	
	2-97	
	2-99	
	2-101	
	2-102	
	2-103	
	5-47	
	5-49	
	5-51	
	5-53	
	5-54	
	5-55	
	6-37	
	6-38	
	6-42	
	6-45	
580087935	2-45	15
	6-15	17
	6-29	6
580087948	6-38	
580087977	6-38	6
580087978	1-47	
580087979	1-47	
580087995	6-31	12
580087997	11-4	
	11-61	5
580088013	6-38	5
580088024	11-3	21
	11-11	
580088034	6-151	
580088048	1-5	20
580088049	1-5	15
580088184	1-29	9
580088189	5-45	4
580088190	2-97	10
	5-45	8
	5-51	11
	5-53	6
	5-53	12
580088191	5-45	7
	5-51	5
	5-53	10
580088192	2-97	8
	5-45	6
	5-51	8
	5-53	3
	5-53	11
580088196	5-9	8
580088392	6-35	1
	6-153	
580088471	4-7	12
580088532	6-151	13
580088535	6-31	22
	6-151	4
	6-153	13
580088711	9-19	5
580088712	9-19	8
580088718	11-23	1
580088729	11-23	2
580088767	2-41	3
	2-45	3
580088773	2-41	13
580088774	2-41	12
580088831	2-41	37

©2014 Yale Materials Handling Corporation

NUMERICAL INDEX (continued)

PART NO.	PAGE	ITEM
	2-45	37
580088832	2-42	
580088833	2-42	
	2-45	37
580088845	2-41	31
	2-45	31
580088846	2-41	29
	2-45	29
580088847	2-41	35
	2-45	35
580088849	2-49	3
	2-53	3
580088894	3-5	15
580089116	2-49	12
580089120	2-49	12
580089121	2-49	12
580089178	7-11	26
580089183	7-45	14
580089184	7-45	1
580089185	7-5	4
	7-7	4
580089186	7-5	5
	7-7	5
580089189	7-11	
	7-27	
580089219	7-27	27
580089220	7-31	28
580089221	7-41	
580089222	7-41	6
580089223	7-41	7
580089224	7-41	8
580089225	7-41	9
580089226	7-41	10
580089227	7-41	11
580089228	7-41	12
580089229	7-41	13
580089230	7-41	15
580089231	7-41	16
580089232	7-41	17
580089233	7-41	19
580089234	7-41	20
580089235	7-41	21
580089236	7-41	24
580089237	7-41	25
580089238	7-41	26
580089239	7-41	27
580089240	7-27	14
	7-31	27
580089324	1-53	
580089428	11-4	
	11-61	5
580089441	2-93	7
580089451	6-11	1
	6-139	
580089452	6-11	1
	6-147	
580089522	5-17	4
580089523	5-17	4
580089534	6-11	9
580089562	3-3	15
580089694	2-93	14
580089792	4-7	1
580089793	4-7	1
580089794	4-7	1
580089798	4-7	1
	4-7	1
580089863	11-3	36
580089966	6-49	1
580089967	6-47	1
580089970	6-49	1
580089971	6-47	1
580089972	6-49	1
580089976	6-47	1
580089977	6-49	1
580089978	6-47	1
580090079	4-7	1
580090150	5-10	4
580090151	5-5	5
	5-10	
580090219	1-35	7
	1-37	3
580090220	1-35	
	1-37	
580090240	11-3	36
580090274	6-99	
580090275	6-5	5
	6-7	9
	6-111	
580090276	2-35	8
580090343	5-9	8
580090361	6-47	
	6-47	
	6-47	
	6-47	
	6-49	
	6-49	
	6-49	
	6-49	
580090362	6-47	
	6-47	
	6-47	1
	6-49	
	6-49	
	6-49	
580090364	5-9	2
580090374	5-23	26
	5-27	27
	5-29	7
580090387	5-23	26
580090489	4-7	6
580090494	1-35	
	1-37	
580090506	5-17	4
580090551	1-44	7
580090552	1-44	1
580090553	1-44	2
580090554	1-44	5
580090555	1-44	4
580090589	2-42	41
	2-45	41
580090664	6-61	12
	6-157	
580090665	6-59	1
	6-161	
580090673	14-5	1
580090679	1-47	5
	1-49	3
580090736	1-67	
	6-45	
580090795	6-97	
580090876	6-31	2
580090886	1-27	10
580090917	6-31	1
580090920	2-102	1
580090921	2-101	6
	2-102	2
580090927	2-73	3
580090929	2-73	4
580090930	2-73	5
580090941	2-73	6
580090942	2-73	7
580090943	2-73	8
580090944	2-73	9
580090945	2-73	12
580090946	2-73	13
580090947	2-73	14
580090948	2-91	1
580090949	2-91	2
580090954	2-103	2
580090968	2-103	1
580090969	2-103	3
580090970	2-103	4
580090971	2-103	5
580090972	2-66	1
580090973	2-66	2
580090978	6-37	4
580090979	6-37	5
580090980	6-37	11
580090981	6-37	14
580090982	6-37	8
580090983	6-37	9
580090984	6-37	12
580090985	6-37	6
580090986	6-37	13
580090989	2-101	3
580090991	2-69	14
580090993	5-54	2
580090994	5-54	3
580090995	5-54	4
580090996	5-54	5
580091024	2-82	2
580091025	5-53	2
580091026	5-53	4
580091027	5-53	5
580091028	5-53	7
580091029	5-53	8
580091030	5-53	9
580091031	2-63	1
	5-51	2
580091032	2-63	2
580091033	2-63	3
580091034	2-63	4
580091038	2-63	9
580091039	2-63	10
580091040	5-51	9
580091041	5-51	10
580091046	5-51	12
580091047	5-51	13
580091048	5-51	14
580091050	5-51	15
580091052	5-51	17
580091053	5-51	18
580091054	2-63	15
580091056	2-70	2
580091058	2-63	12
580091060	2-63	13
580091064	2-95	7
	5-47	1
580091065	2-63	16
	5-47	2
580091066	5-47	3
580091067	5-47	4
580091068	5-47	5
580091069	5-47	6

©2014 Yale Materials Handling Corporation

NUMERICAL INDEX (continued)

PART NO.	PAGE	ITEM
580091070	5-47	7
580091071	5-47	8
580091072	5-47	9
580091073	5-55	1
580091074	5-55	2
580091075	5-55	3
580091077	5-55	5
580091078	2-95	8
580091079	2-95	9
580091080	5-51	4
580091081	2-70	1
580091082	5-51	6
580091083	5-51	7
580091084	2-78	7
580091086	2-65	2
	2-81	3
580091087	2-81	4
580091088	2-81	5
580091089	2-81	6
580091090	2-81	7
580091091	2-101	7
580091093	2-78	5
580091094	2-101	4
580091095	2-101	1
580091096	2-69	1
	2-101	2
580091097	2-78	3
580091098	2-78	4
580091099	2-78	6
580091100	2-78	1
580091101	2-78	2
580091102	2-78	8
580091103	2-104	1
580091104	2-104	2
580091105	2-104	3
580091106	2-104	4
580091107	2-104	5
580091108	2-104	6
580091109	2-77	2
	2-81	1
	2-81	8
	5-51	1
	5-53	1
580091111	2-81	12
580091112	2-81	10
580091113	2-81	11
580091114	2-82	5
	2-85	9
580091116	2-77	1
	2-97	2
580091117	6-45	11
580091118	2-77	3
580091120	2-63	5
	2-77	5
580091121	2-77	6
580091122	2-77	7
580091123	2-63	6
	2-77	8
580091124	6-45	12
580091125	2-65	1
	2-81	2
	2-83	1
	6-45	1
580091126	6-45	2
580091127	6-45	4
580091129	6-45	7
580091132	6-45	13
580091133	6-45	14
580091134	6-45	15
580091135	6-45	16
580091136	2-89	6
580091141	2-83	2
	5-49	1
580091142	2-83	3
580091143	2-83	4
580091145	2-89	5
580091147	2-89	
580091148	2-89	4
580091149	2-83	5
580091150	2-83	8
580091151	2-75	1
580091152	2-75	2
580091153	2-75	3
580091154	2-75	4
580091155	2-75	5
580091156	2-75	6
580091157	2-75	7
580091158	2-75	9
580091160	2-97	3
	5-49	13
580091161	5-49	14
580091162	5-49	17
580091163	2-75	
580091164	5-49	
580091257	2-75	8
580091258	5-49	16
580091259	5-49	15
580091260	5-49	2
580091261	5-49	3
580091262	5-49	4
580091263	5-49	5
580091264	5-49	6
580091265	5-49	7
580091266	5-49	8
580091267	5-49	9
580091268	5-49	10
580091269	5-49	11
580091271	2-95	1
580091272	2-95	2
580091273	2-95	3
580091274	2-95	4
580091275	2-95	5
580091276	2-86	1
580091277	2-86	2
580091278	2-86	3
580091279	2-86	4
580091280	2-86	5
580091281	2-86	6
580091282	2-86	7
580091283	2-86	8
580091284	2-86	9
580091285	2-86	10
580091286	2-95	
580091287	2-86	11
580091288	2-86	12
580091289	6-42	2
580091290	6-42	1
580091291	2-99	3
580091292	2-99	1
580091293	2-99	2
580091294	2-97	1
580091296	2-97	4
580091297	2-97	5
580091298	2-97	6
580091299	2-97	7
580091300	2-97	9
580091301	2-97	11
580091302	2-97	12
580091303	2-97	13
580091304	2-97	14
580091305	2-97	15
580091306	2-97	16
580091307	2-97	17
580091308	2-85	1
580091309	2-85	2
580091310	2-85	3
580091311	2-85	4
580091315	2-69	13
580091316	2-69	7
580091317	2-69	
580091318	2-65	3
580091326	6-32	53
580091327	6-32	54
580091329	9-13	23
580091352	5-37	
580091413	1-17	14
580091415	1-17	13
580091416	1-17	20
580091417	1-17	21
580091418	1-17	12
580091419	1-17	15
580091630	1-17	17
580091631	1-17	16
580091787	2-69	2
580091788	2-69	3
580091789	2-69	4
580091790	2-69	5
580091792	2-69	10
580091793	2-69	11
580092020	2-99	4
	5-51	3
580092021	6-45	8
580092022	6-45	10
580092075	2-73	1
580092078	2-69	
580092289	6-55	5
	6-57	4
580092290	6-55	4
	6-57	4
580092291	6-55	4
	6-57	4
580092343	14-33	11
	14-39	3
580092446	14-33	6
	14-39	7
580092451	7-21	23
580092452	7-25	
580092493	7-38	7
580092494	7-38	1
580092554	2-11	
	2-13	
	2-17	
	2-21	
	2-35	
	2-37	
	2-41	
	2-49	
	2-59	
580092555	2-11	
	2-13	
	2-17	
	2-21	
	2-35	
	2-37	

©2014 Yale Materials Handling Corporation

NUMERICAL INDEX (continued)

PART NO.	PAGE	ITEM
	2-41	
	2-49	
	2-59	
580092618	3-3	7
580092730	7-19	26
	7-35	26
580092732	1-49	19
	1-51	25
	1-63	22
580092815	1-65	17
580092833	2-83	6
580092838	6-55	5
580092936	1-11	3
	6-55	1
	6-57	1
580092937	1-11	7
	6-55	1
	6-57	1
580092987	1-49	16
	1-51	22
	1-63	18
580092998	1-39	11
580093037	11-4	
580093066	1-17	18
580093232	1-51	10
580093275	9-9	6
	9-13	6
580093297	6-51	5
580093298	2-61	1
580093299	2-61	1
580093325	1-63	12
580093502	2-70	3
580093608	2-63	
	2-64	
	2-66	
	2-69	
	2-70	
	2-73	
	2-75	
	2-77	
	2-78	
	2-81	
	2-82	
	2-83	
	2-85	
	2-86	
	2-89	
	2-91	
	2-93	
	2-95	
	2-97	
	2-99	
	2-101	
	2-102	
	2-103	
	5-47	
	5-49	
	5-51	
	5-53	
	5-54	
	5-55	
	6-37	
	6-38	
	6-42	
	6-45	
580093612	6-123	8
580093632	3-3	5
580093634	3-3	18
580093700	1-31	2
	1-31	5
580093745	6-51	9
	6-51	20
	6-53	9
	6-53	20
580093812	1-17	
	1-19	
580093813	1-17	19
580093862	6-61	10
580093864	6-61	10
580093868	6-55	19
	6-55	24
580093975	9-13	29
	9-16	
580094090	1-31	4
580094100	5-23	6
580094156	2-69	6
580094158	2-69	9
580094289	11-49	
580094305	11-49	5
580094353	6-106	31
	6-121	60
	6-123	5
580094366	5-45	1
580094367	5-45	2
580094368	5-45	3
580094469	6-93	1
580094500	2-83	7
580094544	6-139	15
	6-140	19
	6-147	13
	6-147	14
580094546	6-139	15
	6-140	19
	6-147	13
	6-147	14
580094607	2-77	4
580094645	6-45	9
580094685	6-29	1
580094854	2-53	29
580095070	2-14	55
580095132	11-17	10
	11-19	15
580095133	11-15	18
	11-17	11
	11-19	27
580095215	6-31	1
	6-42	
580095221	9-9	24
580095288	14-17	16
580095304	8-9	12
580095460	1-59	8
580095461	1-59	1
580095462	1-57	4
	1-61	8
580095463	1-57	5
	1-61	1
580095464	1-61	4
580095465	1-63	
580095466	1-63	
580095467	1-63	
580095471	1-57	2
580095472	1-57	3
580095473	1-57	1
580095474	1-57	2
580095475	1-57	3
580095476	1-57	1
580095477	1-57	6
580095849	6-51	11
	6-51	11
	6-51	11
	6-53	11
	6-53	11
580095850	6-51	13
	6-53	13
580095973	10-8	39
580095974	10-3	31
580096037	1-27	19
580096147	6-51	12
	6-51	12
	6-53	12
	6-53	12
580096179	9-16	10
580096227	6-51	2
	6-51	3
	6-51	4
	6-53	2
	6-53	3
	6-53	4
	6-53	5
580096228	6-51	4
	6-53	5
580096229	6-51	3
	6-53	3
580096260	1-65	3
	1-65	12
580096411	6-51	19
	6-53	19
580096412	6-51	18
	6-53	18
580096443	5-23	14
	5-27	20
580096446	6-31	14
	6-151	
580096449	6-153	
580096451	7-3	11
	7-15	
	7-17	
580096452	7-3	11
	7-31	
	7-33	
580096453	5-23	
	5-27	
580096460	11-7	1
580096474	6-9	3
	6-11	3
580096475	6-9	3
	6-11	3
580096476	6-67	18
580096502	2-102	1
580096575	6-31	33
	6-41	17
580096576	6-41	10
580096855	7-15	1
580096856	7-15	3
	7-31	3
580096857	7-15	4
	7-31	4
580096858	7-15	13
	7-31	13
580096860	7-17	1
580096861	7-45	6
580096862	7-19	1
	7-35	1
580096863	7-19	18

©2014 Yale Materials Handling Corporation

NUMERICAL INDEX (continued)

PART NO.	PAGE	ITEM
	7-19	18
	7-23	22
	7-23	22
	7-35	18
	7-37	23
580096864	7-19	25
580096865	7-19	24
	7-35	24
580096866	7-19	16
	7-35	16
580096867	7-19	22
	7-21	5
	7-23	13
	7-23	23
	7-35	21
	7-35	29
	7-37	16
	7-37	22
580096868	7-23	1
	7-37	1
580096869	7-23	23
580096870	7-21	17
580096871	7-21	5
580096872	7-21	2
580096873	7-21	18
	7-38	1
580096874	7-38	2
580096879	7-31	1
580096880	7-33	1
580096888	10-3	7
580096898	7-35	25
580096899	7-37	19
580096902	7-15	29
	7-31	29
580097007	11-39	8
	11-43	9
580097046	6-42	2
580097122	11-39	4
	11-43	4
	11-47	1
580097123	11-39	6
	11-43	7
	11-61	1
580097124	11-39	5
	11-43	5
	11-53	1
580097125	11-43	6
	11-57	1
580097241	7-23	13
	7-37	13
580097242	9-15	
	9-16	
580097245	1-65	4
	1-65	13
580097250	14-53	5
	14-55	23
	14-59	6
	14-61	23
	14-65	5
	14-67	19
580097289	15-11	3
580097368	14-55	6
	14-61	6
	14-61	6
	14-67	7
580097369	14-55	6
580097388	6-51	7
	6-53	7
580097389	6-51	17
	6-53	17
580097432	6-51	8
	6-53	8
580097446	6-51	6
	6-53	6
580097447	6-51	15
	6-53	15
580097521	7-15	
580097522	7-31	
580097531	1-47	1
	1-49	4
580097537	3-5	6
	3-7	7
582000157	3-5	7
	3-7	8
582000335	6-78	25
	6-83	25
	6-89	2
582000783	5-37	
582000813	1-49	5
582001049	6-51	1
582001050	6-53	1
582001052	6-53	1
582001053	6-51	1
582001054	6-53	1
582001055	6-51	1
582001056	6-53	1
582001057	6-51	1
582001058	6-53	1
582001060	6-51	1
582001061	6-53	1
582001062	6-51	1
582001063	6-53	1
582001064	6-51	1
582001065	6-53	1
582001086	6-51	16
	6-53	16
582001097	3-5	21
582001117	2-17	8
	6-89	
582001122	2-17	8
	6-77	
582001128	6-51	1
582001153	2-13	
	2-17	
	2-21	
	2-35	
	2-37	
	2-41	
	2-49	
	2-59	
582001154	2-13	
	2-17	
	2-21	
	2-35	
	2-37	
	2-41	
	2-49	
	2-59	
582001213	5-23	
	5-27	
	5-29	13
582001375	6-5	
	6-7	
	6-123	
582001417	6-171	
582001869	6-78	31
	6-89	19
582001878	6-127	1
	6-131	1
	6-133	1
582001884	3-5	19
	3-7	19
582001891	1-7	3
582001907	1-31	2
	1-31	5
582001910	2-42	43
582001971	10-7	16
582001972	10-3	32
	10-8	36
582001994	5-23	13
	5-23	13
	5-27	11
	5-27	11
	5-37	
582002415	6-37	15
582002534	1-63	20
	1-65	25
582002535	1-63	17
	1-65	24
582002564	1-63	2
	1-65	
582002565	1-65	5
582002575	6-61	10
582002576	6-61	10
582002619	1-63	3
	1-65	18
582002621	1-49	17
	1-51	23
582002667	6-78	29
	6-89	11
582002731	11-47	10
	11-51	
	11-53	12
582002799	6-78	29
	6-89	11
582002808	2-14	39
582002917	5-53	6
	5-53	12
582002950	11-7	1
582002951	11-7	5
582002989	6-17	7
	6-172	
582003023	9-9	
582003281	15-8	1
	15-9	1
582003453	14-33	3
582003490	6-11	1
	6-139	
582003491	6-11	1
	6-147	
582003501	6-131	7
	6-133	4
582003526	9-13	15
582003574	1-49	
582003582	1-57	
582003583	1-57	
582003584	1-57	
582003585	1-57	
582003593	1-69	
582003626	14-53	4
	14-55	24
	14-59	5
	14-61	24
	14-65	4

©2014 Yale Materials Handling Corporation

NUMERICAL INDEX (continued)

PART NO.	PAGE	ITEM
	14-67	20
582003649	2-17	12
582003650	2-17	12
582003651	2-17	12
582003674	6-51	6
	6-53	6
582003682	1-65	14
582003730	1-65	27
582003731	1-65	29
582003791	7-3	11
	7-15	
	7-17	
582003826	4-3	8
582004102	1-43	6
582004103	1-43	23
582004107	1-43	25
582004108	1-43	29
582004169	10-4	33
	10-8	37
	10-13	2
582004516	1-5	12
582004519	6-61	10
582004523	6-61	10
582004527	6-61	10
582004528	6-61	10
582004529	6-61	10
582004530	6-61	10
582004724	10-13	5
582004787	7-25	9
582004788	7-25	9
582004797	6-15	9
	6-131	
582004802	6-15	9
	6-133	
582004804	6-17	5
582004906	6-15	9
	6-127	
582005028	1-49	6
	1-57	7
582005030	14-55	18
	14-61	18
582005035	14-55	16
	14-61	16
	14-67	14
582005037	14-67	4
582005127	5-33	14
582005129	5-33	11
582005130	5-33	12
582005131	5-33	13
582005132	5-33	15
582005135	3-3	4
582005136	6-12	1
582005156	5-33	9
582005157	5-33	7
582005158	5-33	6
582005256	14-55	7
	14-61	7
582005258	14-55	2
	14-61	2
582005259	14-55	3
	14-55	8
	14-61	3
	14-61	8
	14-67	3
582005368	3-5	29
	3-7	24
582005389	3-3	3
582005391	3-3	22
582005490	14-67	2
582005653	1-5	13
582005810	7-25	
582005811	7-25	10
582005812	7-25	9
582005813	7-25	6
582005814	7-25	6
582005939	6-51	10
	6-53	10
582005940	6-51	14
	6-53	14
582006592	6-7	15
582006686	1-31	2
	1-31	5
582006716	2-35	1
	2-49	24
	2-53	20
582006778	11-9	1
582006868	14-33	11
	14-39	3
582006923	5-51	16
582007018	1-63	11
582007432	2-6	1
	2-9	1
	2-25	1
582007434	5-40	1
582007435	5-40	2
582007436	5-40	3
582007437	2-32	1
582007438	2-32	2
582007450	2-25	6
582007451	2-25	7
582007454	2-25	10
582007462	6-19	4
	6-21	3
582007463	6-19	5
	6-21	5
582007466	6-19	7
	6-21	7
582007468	6-19	11
	6-21	6
582007474	2-57	4
582007477	6-18	2
582007539	2-6	8
	2-9	8
582007543	5-39	2
582007547	2-55	3
	5-34	5
582007549	2-60	1
	5-39	4
582007556	5-34	14
582007560	5-20	1
	5-34	1
582007561	5-34	6
582007562	5-34	8
582007563	5-20	4
	5-34	9
582007564	5-34	12
582007574	5-38	5
582007575	5-38	4
582007576	5-38	2
582007577	5-20	3
	5-34	7
	5-38	1
582007578	5-38	8
582007579	2-29	1
582007581	2-29	3
582007582	2-29	4
582007585	2-53	14
582007608	2-13	
	2-17	
	2-21	
	2-35	
	2-37	
	2-41	
	2-49	
	2-59	
582007740	2-60	2
582007809	2-30	4
582007811	6-22	5
582008137	2-13	
	2-17	
	2-21	
	2-35	
	2-37	
	2-41	
	2-49	
	2-59	
582008322	6-5	5
	6-105	
582008323	6-7	9
	6-117	
582008482	3-5	26
	3-7	26
582010019	4-3	21
582010203	6-81	1
582010289	9-2	5
	9-5	
582010292	9-3	5
	9-7	
582010336	6-37	1
582010337	2-63	11
	6-37	3
582010904	7-25	5
582011406	6-81	1
582011407	6-81	1
582011916	10-11	15
	10-13	9
582011917	10-11	16
	10-13	10
582012046	1-57	
582012579	9-3	5
	9-7	
582012601	9-5	1
	9-7	8
582013127	14-23	5
582013128	14-23	4
582013130	14-23	4
	14-23	5
582013183	14-23	3
	14-33	
582013198	9-14	47
582013199	9-13	5
582013267	10-13	14
582013700	5-10	6
582013838	7-3	11
	7-31	
	7-33	

©2014 Yale Materials Handling Corporation

NUMERICAL INDEX (continued)

PART NO.	PAGE	ITEM
582013862	1-63	1
582013987	7-41	1
582014006	14-33	2
	14-34	1
582014007	14-34	2
	14-40	2
582014008	14-34	3
	14-40	3
582014009	14-34	4
	14-40	4
582014010	14-34	5
	14-40	5
582014011	14-34	8
	14-40	8
582014012	14-33	1
	14-39	5
582014013	14-33	
582014014	14-33	4
582014015	14-33	5
582014016	14-33	7
582014017	14-33	8
582014019	14-33	9
	14-39	6
582014020	14-33	10
582014024	1-51	21
	1-63	10
582014038	5-5	5
	5-7	5
	5-10	
582014045	5-61	18
582014783	2-31	8
	3-5	18
582014835	1-9	21
582015000	2-13	
	2-17	
	2-21	
	2-35	
	2-37	
	2-41	
	2-49	
	2-59	
582015482	2-89	2
582015786	1-57	
	1-61	
582015787	1-57	
	1-61	
582015922	1-29	5
582015924	1-29	
582016074	1-81	1
582016075	1-81	2
582016076	1-81	3
582016077	1-81	4
582016078	1-81	5
582016079	1-81	6
582016080	1-81	7
582016081	1-81	8
582016082	1-81	9
582016083	1-81	10
582016084	1-81	11
582016085	1-81	12
582016086	1-81	13
582016151	2-37	5
582016152	2-37	4
582016189	11-15	22
	11-17	9
	11-19	23
	11-21	10
582016191	4-3	8
582016197	4-3	8
582016199	4-3	8
582016200	4-3	8
582016201	4-3	8
582016202	4-3	8
582016325	9-7	1
582016326	9-7	8
582016327	9-7	11
582016328	9-7	13
582016329	9-7	16
582016330	9-7	21
582016331	9-7	25
582016376	5-47	5
582016623	3-7	20
582016638	5-7	7
582016711	1-31	5
582016712	1-31	2
582016728	5-7	6
582016814	3-7	15
582016831	5-45	27
582016832	11-9	2
582016837	11-9	4
582016845	5-29	14
582016864	2-9	
	2-29	
	2-30	
	2-31	
	2-33	
	2-35	
	2-37	
	2-45	
	2-53	
	2-55	
	2-59	
	2-60	
	5-20	
582016865	2-29	
	2-30	
	2-31	
	2-32	
	2-35	
	2-37	
	2-45	
	2-53	
	2-59	
582016867	2-29	
	2-30	
	2-31	
	2-32	
	2-35	
	2-37	
	2-45	
	2-53	
	2-59	
582016949	5-21	1
582016950	5-21	4
582016951	5-21	5
582016952	5-21	7
582016953	5-21	3
582016958	2-6	2
582016959	6-17	1
	6-18	
	6-19	
	6-81	
582016960	5-34	10
582016961	6-18	3
582016962	2-57	1
582016964	5-39	1
582016965	2-53	8
	5-39	3
582016966	5-39	5
582016967	5-39	6
582016968	5-39	7
582016969	5-39	8
582016970	5-39	9
582016971	5-39	10
582016972	5-39	11
582016973	5-34	2
582016974	5-34	3
582016975	5-34	4
582016976	5-34	11
582016977	5-34	13
582016978	2-53	6
	2-53	32
	2-55	9
	5-34	15
582016979	2-6	6
582016980	5-38	3
582016981	2-32	4
582016982	2-31	3
582016983	2-31	4
582016984	2-31	6
582016986	2-45	12
582016989	2-37	24
	2-37	25
582016991	2-31	6
582016996	6-19	2
582016998	5-39	9
582016999	2-6	3
	2-9	3
582017000	2-6	4
	2-6	5
	2-9	4
582017066	5-61	11
582017110	1-51	8
582017111	1-51	
582017112	1-51	1
582017138	10-13	1
582017139	10-13	1
582017144	10-13	1
582017145	10-13	1
582017579	1-51	4
582017700	5-59	3
	5-61	22
582017707	1-51	9
582017709	1-51	3
582017722	6-19	10
582017941	2-69	12
582018523	5-7	10
582018586	1-27	24
582018837	1-39	31
	1-41	31
582018841	1-57	6
582019367	6-5	
	6-7	
582019837	14-37	2
	14-37	3
	14-37	4
	14-37	5
582019839	14-37	5
582019840	14-37	4
582019841	14-37	2
582019842	14-37	3
582020235	1-57	
	1-61	12
582020336	6-71	

©2014 Yale Materials Handling Corporation

NUMERICAL INDEX (continued)

PART NO.	PAGE	ITEM
582020444	5-15	17
582020445	6-17	
582020446	5-15	11
582020447	5-15	9
582020449	5-15	16
582020540	2-89	1
582020634	5-15	6
582020644	5-15	5
582020645	5-15	7
582020971	1-51	6
582020974	2-89	1
582021051	8-2	3
582021741	2-55	2
582021742	2-55	4
582021743	2-55	5
582021744	2-55	6
582021745	2-55	7
582021746	2-55	8
582021747	2-55	10
582021748	2-33	1
582021749	2-33	2
582021750	2-33	3
582021751	6-21	2
582021752	6-21	4
582021753	6-17	1
	6-18	
	6-21	
582021754	5-20	2
582021755	5-20	5
582021756	5-20	6
582021757	5-20	7
582021758	2-9	6
582021759	2-9	2
582021760	2-60	3
582021761	2-60	4
582021912	6-32	54
582022300	2-37	25
582022306	5-38	5
582022672	6-95	10
582022686	5-59	3
	5-61	22
582023144	7-42	
582024764	1-43	19
582024929	5-49	4
582025061	5-15	1
	5-19	
582026776	2-85	5
582027289	14-39	1
582027293	14-39	8
582027294	14-39	9
582027295	14-39	4
	14-40	1
582027299	14-43	1
582027300	14-43	2
582027301	14-43	3
582027302	14-43	4
582027303	14-43	5
582027304	14-43	6
582027311	14-45	4
582027312	14-45	9
582027313	14-45	10
582027314	14-45	26
582027315	14-45	27
582027316	14-45	7
	14-45	28
582027317	14-45	29
582027318	14-45	11
582027319	14-45	12
582027320	14-45	14
582027321	14-45	15
582027322	14-45	16
582027323	14-45	17
582027324	14-45	18
582027325	14-45	19
582027326	14-45	20
582027327	14-45	21
582027328	14-45	22
582027329	14-45	23
582027330	14-45	24
582027331	14-45	25
582027332	14-45	6
582027334	14-45	8
582027335	14-45	4
582027336	14-45	
582027342	14-47	5
582027343	14-47	4
582027346	14-39	2
	14-47	7
582027350	14-48	2
582027351	14-48	3
582028589	14-45	3
582028591	14-45	
582028592	14-48	
582028593	14-48	1
582028595	1-43	28
582028747	14-47	1
582028748	14-47	2
582028749	14-47	3
582028750	14-47	6
582028993	4-3	10
582028994	1-31	
582029016	10-4	35
	10-7	2
582030665	1-39	3
	1-41	3
582030666	1-39	29
	1-41	29
582030667	2-11	7
582031424	15-11	6
582031914	6-5	18
	6-7	21
582032889	10-3	22
	10-7	27
582035766	1-43	7
582035767	1-43	8
582035768	1-43	9
582035769	1-43	10
582035770	1-43	12
582035771	1-43	13
582035772	1-43	14
582035773	1-43	15
582035898	1-43	22
640046913	2-23	8
640057903	2-82	1
810528500	10-3	20
	10-7	23
900001231	4-3	20
	4-7	22
900003207	5-45	12
	6-31	27
900003231	2-18	25
900003260	4-3	20
	4-7	21
900005237	2-37	4
900005254	2-37	10
900005255	2-37	15
	2-41	25
	2-45	25
900005256	2-37	14
900005257	2-37	16
900005278	2-37	20
900005280	2-37	9
	2-37	19
900005282	2-41	2
	2-45	2
900005286	2-41	6
	2-45	6
900005287	2-41	7
	2-45	7
900005288	2-41	8
	2-45	8
900005292	2-45	13
900005297	2-59	11
900006201	2-59	10
900006204	2-59	1
900006205	2-59	2
900006206	2-59	3
900006207	2-59	4
900006209	2-59	7
900006211	2-41	26
	2-45	26
900006213	2-42	39
	2-45	39
900006218	2-46	44
900006219	2-37	24
900006233	2-41	18
	2-45	18
900006234	2-41	19
	2-45	19
900006236	2-41	23
	2-45	23
900006239	2-41	22
900006240	2-41	20
	2-45	20
	2-53	23
900006247	2-49	3
900006248	2-49	5
	6-24	4
900006250	2-49	6
	2-53	5
	2-53	30
900006251	2-37	26
	2-53	7
900006256	2-49	11
	2-53	10
900006257	2-49	14
	2-53	19
900006259	2-49	17
	2-53	17
900006264	2-56	
900006272	2-49	16
	2-53	16
900006280	2-56	
900006282	2-41	27
	2-45	27
900011212	6-67	8
900011220	5-19	6
900011244	11-67	8
900011247	2-14	44
	2-49	25
	2-53	28
900011248	2-49	7
	2-53	4
	2-53	31

©2014 Yale Materials Handling Corporation

NUMERICAL INDEX (continued)

PART NO.	PAGE	ITEM
	5-5	11
	5-7	11
900011253	2-14	47
	2-31	1
900011268	2-13	14
	2-30	2
900015229	2-14	42
	2-31	7
	2-41	11
	2-45	11
900015237	15-13	4
900015240	2-41	17
900017264	6-35	2
	6-38	1
901466103	8-3	10
903259104	1-39	8
	1-41	8
909267300	5-45	21
909882404	1-65	15
909882405	1-13	2
909904403	1-7	12
910065119	6-95	2
	6-97	2
	6-99	6
	6-105	6
	6-111	6
	6-117	6
	6-139	10
	6-143	8
	6-147	17
	6-157	4
911851100	5-46	3
912207300	5-46	2
912514300	5-43	21
916522400	3-5	2
	3-7	2
919243425	6-83	22
919243445	6-83	22
919243452	6-83	22
919243462	6-83	22
919890404	5-46	1
922627300	10-3	4
	10-7	4
925776402	1-9	3
931011916	1-23	6
931014902	7-7	14
931014904	9-9	19
	9-13	19
931015903	5-9	11
931015915	1-13	7
931017917	2-61	7
931017919	2-5	3
931019914	11-63	14
932201916	10-16	49
932582301	5-5	1
	5-7	1
	5-9	1
932728908	1-7	3
932728910	1-65	28
932731910	1-11	17
934404300	10-3	13
	10-7	17
937100903	1-39	22
	1-41	22
937100904	6-15	12
	6-29	7
	10-3	30
	10-8	38
937300930	15-15	3
940004903	4-3	14
940102912	8-3	3
940400905	1-49	18
	1-51	24
	1-63	21
940400908	1-65	6
	1-65	20
940600906	5-59	13
	5-61	20
	10-11	5
	10-13	3
940600907	1-63	16
940600908	6-15	13
	6-32	51
	6-35	21
952405902	6-135	8
	6-139	13
	6-139	14
	6-144	21
	6-144	22
952408901	6-135	8
	6-139	13
	6-139	14
	6-144	21
	6-144	22
	6-147	9
	6-147	10

©2014 Yale Materials Handling Corporation

NUMERICAL INDEX (continued)

NOTES

©2014 Yale Materials Handling Corporation

18 USER SUPPORT INFORMATION

SECTION 18
USER SUPPORT INFORMATION

DESCRIPTION	PAGE
SERVICE PARTS ORDERING INSTRUCTIONS	18-2
TECHNICAL SERVICE PUBLICATIONS	18-2
OPERATOR TRAINING	18-2
SERVICE TRAINING COURSE	18-2
SERVICE TRAINING MATERIALS	18-2

©2014 Yale Materials Handling Corporation

Your investment in a Yale Industrial Truck is important to you and to your Yale Dealer. You measure the return on that investment through the performance of these trucks and the drivers who operate and the mechanics who service them safely and efficiency. The following information is intended to help you to achieve your investments objectives:

SERVICE PARTS ORDERING INSTRUCTIONS

HOW TO ORDER SERVICE PARTS

In order to prevent delay, too much communication and to have your orders filled correctly, quickly, and at the least possible cost, the following is the correct procedure to use to order replacement parts.

WHEN ORDERING PARTS

Contact your authorized Yale Industrial Truck Dealer giving them the following information:

1. Your Purchase order number.
2. Complete addresses for sending the invoice and parts.
3. Tell us how you want your parts sent. If we do not get this information, we will send the parts using the lowest priced method.
4. Correct part number(s) and description(s). Use your parts manual as a reference.
5. Model and serial number of the truck.

TECHNICAL SERVICE PUBLICATIONS

Technical literature, with detailed information, is available at a nominal fee to assist users to effectively maintain Yale Industrial Trucks in a safe, useful condition. Part Manuals with complete replacement parts identification, Service Maintenance Manuals which provide service and overhaul procedures and additional copies of the Operating Manual can be obtained from your Yale Industrial Truck Dealer.

To provide instructions for safely operating and servicing Yale Industrial Trucks, each truck is equipped with an operators manual. It describes various operating techniques and safety warnings to the operator. It contains a guide to safe maintenance practices and recommended schedules for maintenance. if the operators manual is missing from any Yale Industrial Truck, it should be replaced. Replacement copies are available for a nominal fee from your Yale Dealer.

OPERATOR TRAINING

The Yale "Basic Operator Training" program helps industrial truck users increase their materials handling production and safety through correct lift truck operation, training, and motivation. The Yale program is based upon real life experience – not theoretical concepts. We developed a "complete" program that is totally self-contained – incorporating the most modern instructional techniques including elements of self-study, audio-visual support (both video and slides), and classroom study.

SERVICE TRAINING COURSE

Operators and Yale dealer service technicians can improve their technical ability for maintaining and repairing Yale Industrial Trucks, which decreases repair time and cost, by taking Yale Service Training courses. Different types of mechanical, electric, and electronic subjects are available. Courses can be held at customer or Dealer locations in addition to regularly scheduled courses which are held at Yale Corporate Headquarters in Greenville, NC.

SERVICE TRAINING MATERIALS

Your own service training can be supported through a complete line of Yale Service Training materials. An Index is available from your Yale Dealer which lists textbooks, audio-visual programs and films. These materials will provide your training staff with everything necessary for training your group.

For additional information or assistance in obtaining these user support publications and programs, contact:

Yale Materials Handling Corporation
1400 Sullivan Drive
Caller No. 12011
Greenville, NC 27834-2011

©2014 Yale Materials Handling Corporation

Yale Materials Handling Corporation
1400 Sullivan Drive
Caller No. 12011
Greenville, NC 27834-2011

524329200
©Yale Corp.
01/2014