RUTHZIL TRATOR COMERCIAL DE PEÇAS LTDA 11 97083-6812 ROLANDO

PARTS MANUAL

HYSTER

H13.00XM, H14.00XM, H16.00XM-6, H10.00XM-12EC, H12.00XM-12EC (G019)

CUSTOMER EDITION

HYSTER

1660387
03/2015

©2015 HYSTER COMPANY

SECTIONS

1	FRAME
2	ENGINE ASSEMBLY - DIESEL
3	ENGINE ASSEMBLY - LPG
4	FUEL SYSTEM
5	ELECTRICAL SYSTEM
6	TRANSMISSION
7	DRIVE AXLE
8	STEERING SYSTEM
9	BRAKE SYSTEM
10	HYDRAULIC SYSTEM
11	MAST-TWO STAGE LIMITED FREE-LIFT
12	MAST-THREE STAGE FULL FREE-LIFT
13	ATTACHMENTS
14	OPTIONS
15	NUMERICAL INDEX

This Parts Manual is divided into 15 major sections which are listed above. Quick reference to these sections can be made by placing the right thumb on the tab of the desired section, bending the book back and thumbing the pages to the corresponding tab.

TABLE OF CONTENTS

DESCRIPTION **PAGE**

A

ACCESSORY DRIVE BELT AND TENSIONER 3-6
ACCESSORY HOLE COVER 3-7
ACCUMULATOR CHARGE VALVE 9-38
AIR CLEANER ASSEMBLY 4-14
AIR COMPRESSOR 2-8
AIR COMPRESSOR COOLANT PLUMBING 2-11
AIR COMPRESSOR INLET CONNECTION 3-10
AIR COMPRESSOR MOUNTING 2-10
AIR CONDITIONER
  CLIMATE CONTROL CAB - MCC 1-160
AIR CONDITIONER ASSEMBLY
  WITH TWO-FAN CONDENSER SYSTEM - MCC (S/N G019E02165F →) 1-102
AIR CONDITIONER SYSTEM
  CLIMATE CONTROL CAB - MCC 1-158
  WITH TWO-FAN CONDENSER SYSTEM - MCC (S/N G019E02165F →) 1-100
AIR CONDITIONER SYSTEM ASSEMBLY
  WITH TWO-FAN CONDENSER SYSTEM - MCC (S/N G019E02165F →) 1-94
AIR CONDITIONING COMPRESSOR AND ATTACHING PARTS
  DIESEL ENGINE - MCC 1-74
  LPG ENGINE - MCC 1-76
AIR DRYER ASSEMBLY 9-32
AIR DRYER SYSTEM
  DIESEL ENGINE - DRY BRAKE 9-28
  LPG ENGINE - DRY BRAKE 9-30
AIR DUCT
  LOUVER, CLIMATE CONTROL CAB 1-152
AIR DUCT ASSEMBLY
  AIR CONDITIONING - WITH TWO-FAN CONDENSER SYSTEM, MCC (S/N G019E02165F →) 1-104
  HEATER - WITH TWO-FAN CONDENSER SYSTEM, MCC (S/N G019E02165F →) 1-88
AIR HEATER 2-12
AIR INTAKE CONNECTION 2-14
AIR INTAKE HOSE
  → S/N G019E02271F (DRY BRAKES) → S/N G019E02152F (WET BRAKES) 2-15
AIR INTAKE MANIFOLD 2-16
AIR INTAKE SYSTEM
  DIESEL - DRY BRAKE 4-10
  DIESEL - WET BRAKE 4-12
  LPG 4-8
AIR TRANSFER CONNECTION 2-17
ALARM 14-5
ALTERNATOR AND MOUNTING
  CUMMINS DIESEL (→ S/N G019E02271F (DRY BRAKES)) (→ S/N G019E02152F (WET BRAKES)) 5-36
  CUMMINS DIESEL (S/N G019E02272F → (DRY BRAKES)) (S/N G019E02153F → (WET BRAKES)) 5-38
  CUMMINS LPG 5-39
ALTERNATOR SUPPORT AND WATER INLET
  → S/N G019E02152F (WET BRAKES) → S/N G019E02271F (DRY BRAKES) 2-18

©2015 HYSTER COMPANY

TABLE OF CONTENTS (continued)

DESCRIPTION	PAGE
S/N G019E02153F → (WET BRAKES) S/N G019E02272F → (DRY BRAKES)	2-19
ARMREST ASSEMBLY	1-147
AUXILIARY PUMP DRIVE	6-4
AXLE HOUSING AND ATTACHING PARTS	7-2
B	
BATTERY DISCONNECT	5-12
BELT TENSIONER	2-20
BRAKE ACCUMULATOR	9-36
BRAKE AND INCHING PEDAL LINKAGE	9-40
BRAKE ASSEMBLY	
DRY BRAKE	9-18
WET BRAKE	9-16
BRAKE VALVE	
DRY BRAKE	9-26
WET BRAKE	9-24
C	
CAB AND TILT CYLINDER MOUNTING	1-58
CAB ASSEMBLY	
CLIMATE CONTROL CAB	1-162
CAB ATTACHING PARTS	1-14
CAB DOOR	
LEFT HAND (→ S/N G019E02399G (CLOSED CAB WITH INSULATION)) (→ S/N G019E02401G (CLOSED CAB WITH AIR CONDITIONING AND INSULATION)) (→ S/N G019E02407G (CLOSED CAB WITH HEATER))	1-28
LEFT HAND (S/N G019E02400G → (CLOSED CAB WITH INSULATION)) (S/N G019E02402G → (CLOSED CAB WITH AIR CONDITIONING AND INSULATION)) (S/N G019E02408G → (CLOSED CAB WITH HEATER))	1-32
RIGHT HAND (→ S/N G019E02407G (CLOSED CAB WITH HEATER)) (→ S/N G019E02399G (CLOSED CAB WITH INSULATION)) (→ S/N G019E02401G (CLOSED CAB WITH AIR CONDITIONING AND INSULATION))	1-20
RIGHT HAND (S/N G019E02408G → (CLOSED CAB WITH HEATER)) (S/N G019E02400G → (CLOSED CAB WITH INSULATION)) (S/N G019E02402G → (CLOSED CAB WITH AIR CONDITIONING AND INSULATION))	1-24
CAB DOOR ATTACHING PARTS	1-18
CAB ELECTRONIC CONTROLS AND PANELS	1-54
CAB FLOORMATS	1-35
CAB RECIRCULATING FAN	1-50
CAB SOUND REDUCTION	1-165
CAB SUNSHADES	1-46
CAB TILT PUMP ASSEMBLY	
ELECTRIC	1-65
CAB WINDOWS INSTALLATION	1-38
CAM FOLLOWER COVER	3-13
CAMSHAFT	2-21
CARRIAGE	
FOUR, FIVE, AND SIX FUNCTION	11-24
FOUR, FIVE, AND SIX FUNCTION	12-18

©2015 HYSTER COMPANY

TABLE OF CONTENTS (continued)

DESCRIPTION	PAGE
INDIVIDUAL FORK POSITIONER (FOUR FUNCTION)	11-28
INDIVIDUAL FORK POSITIONER (FOUR FUNCTION)	12-22
SIMULTANEOUS FORK POSITIONER	11-32
SIMULTANEOUS FORK POSITIONER (THREE FUNCTION)	12-24
THREE FUNCTION	11-36
THREE FUNCTION	12-16
CHARGE PUMP AND FILTER ASSEMBLY	6-6
CLIMATE CONTROL SYSTEM	
MCC	1-156
COMPRESSOR ASSEMBLY	
WITH TWO-FAN CONDENSER SYSTEM - MCC (S/N G019E02165F →)	1-78
CONDENSER	
TWO-FAN SYSTEM - MCC (S/N G019E02165F →)	1-98
CONDENSER AND ATTACHING PARTS	
THREE-FAN SYSTEM - AURORA	1-70
CONDENSER ASSEMBLY	
THREE-FAN SYSTEM - AURORA	1-72
CONDENSER SYSTEM	
TWO-FAN SYSTEM - MCC (S/N G019E02165F →)	1-96
CONNECTING RODS AND PISTONS	
→ S/N G019E02152F (WET BRAKES) → S/N G019E02271F (DRY BRAKES)	2-22
S/N G019E02153F → (WET BRAKES) S/N G019E02272F → (DRY BRAKES)	2-24
CONTAINER ATTACHMENT INSTALLATION	14-12
CONTROL PANEL	
AIR CONDITIONER	5-22
HEATER	5-20
CONTROL PANEL ASSEMBLY	
WITH TWO-FAN CONDENSER SYSTEM - MCC (S/N G019E02165F →)	1-106
COOLANT HEATER STARTING AID	2-26
COOLING SYSTEM	2-4
COUNTERWEIGHT AND OPTIONAL LIFTING EYES	1-10
CRANKCASE BREATHER	2-27
CRANKSHAFT AND BEARINGS	
→ S/N G019E02152F (WET BRAKES) → S/N G019E02271F (DRY BRAKES)	2-28
S/N G019E02153F → (WET BRAKES) S/N G019E02272F → (DRY BRAKES)	2-30
CRANKSHAFT AND MAIN BEARINGS	3-18
CYLINDER BLOCK	
→ S/N G019E02152F (WET BRAKES) → S/N G019E02271F (DRY BRAKES)	2-32
S/N G019E02153F → (WET BRAKES) S/N G019E02272F → (DRY BRAKES)	2-34
CYLINDER HEAD	2-36
D	
DASH AND AIR DUCT ASSEMBLY	1-16
DC-DC CONVERTER AND ATTACHING PARTS	5-15
DELUXE SUSPENSION SEAT	1-114
DIFFERENTIAL AND CARRIER	
DRY BRAKE	7-8
WET BRAKE	7-4
DIRECTIONAL CONTROL VALVE	13-2

©2015 HYSTER COMPANY

TABLE OF CONTENTS (continued)

DESCRIPTION	PAGE
DIRECTIONAL MARKER	14-2
DRAIN VALVE	
DRY BRAKE	9-22
DRIVE GEAR	6-12
DRIVE PLATE	6-14
DRIVE TIRES AND WHEELS	
BRIDGESTONE	7-19
MICHELIN	7-20
TRELLEBORG - SOLID TIRE	7-18
TRELLEBORG	7-21
DRY BRAKE SYSTEM	9-12
E	
ELECTRIC HORN	5-133
ELECTRIC PUMP	1-68
ELECTRICAL SYSTEM	
DIESEL ENGINE	5-4
LPG ENGINE	5-8
ELECTRONIC LEVER ASSEMBLY	10-38
WITH CLAMP ATTACHMENT	10-40
END CAP PARTS	
LIFT SECTION	10-24
ENGINE ASSEMBLY	2-38
ENGINE BLOCK HEATER	2-84
ENGINE CONTROL MODULE	2-40
ENGINE CONTROL SYSTEM	
CUMMINS DIESEL (→ S/N G019E02152F (WET BRAKES)) (→ S/N G019E02271F (DRY BRAKES))	5-28
CUMMINS DIESEL (S/N G019E02153F → (WET BRAKES)) (S/N G019E02272F → (DRY BRAKES))	5-30
CUMMINS LPG	5-32
ENGINE COOLANT VENT	2-42
ENGINE IGNITION SYSTEM	
CUMMINS LPG	5-42
ENGINE MOUNT	2-43
ENGINE OIL COOLER	2-44
ETR MODULE WIRING	2-45
EXHAUST GAS SENSOR PLUMBING	3-32
EXHAUST MANIFOLD	2-46
EXHAUST OUTLET CONNECTION	3-34
EXHAUST SYSTEM	2-6
EXTERIOR MIRRORS	1-17
F	
FAN DRIVE	3-35
FAN DRIVE AND MOUNTING	2-48
FLOORPLATES	1-4
FLYWHEEL	3-36
FLYWHEEL AND MOUNTING	2-50

©2015 HYSTER COMPANY

TABLE OF CONTENTS (continued)

DESCRIPTION	PAGE
FLYWHEEL HOUSING	
→ S/N G019E02152F (WET BRAKES) → S/N G019E02271F (DRY BRAKES)	2-51
S/N G019E02153F → (WET BRAKES) S/N G019E02272F → (DRY BRAKES) → S/N 73037048 (ENGINE)	2-52
S/N G019E02153F → (WET BRAKES) S/N G019E02272F → (DRY BRAKES) S/N 73037049 → (ENGINE)	2-54
FORK	11-38
FORK POSITIONING CYLINDER	13-4
FORWARD CLUTCH	
→ S/N G019E02448H	6-16
S/N G019E02449H →	6-18
FREE-LIFT CYLINDER	12-12
FRONT FENDER LIGHTS	14-3
FRONT GEAR COVER	2-56
FRONT GEAR COVER AND HOUSING	3-40
FRONT GEAR TRAIN ACCESSORY DRIVE	3-42
FUEL CONTROL MODULE	
CUMMINS LPG	4-24
FUEL FILTER	
CUMMINS DIESEL	4-34
CUMMINS LPG	4-27
FUEL FILTER PLUMBING	
CUMMINS DIESEL	4-33
FUEL INJECTION PUMP	
CUMMINS DIESEL	4-30
FUEL INJECTOR	
CUMMINS DIESEL	4-32
FUEL INJECTOR PLUMBING	
CUMMINS DIESEL	4-28
FUEL INLET FITTING	
CUMMINS DIESEL	4-35
FUEL RAIL SYSTEM	
CUMMINS DIESEL (→ S/N G019E02152F (WET BRAKES)) (→ S/N G019E02271F (DRY BRAKES))	4-36
CUMMINS DIESEL (S/N G019E02153F → (WET BRAKES)) (S/N G019E02272F → (DRY BRAKES))	4-38
FUEL SYSTEM	
DIESEL	4-6
LPG	4-2
FUEL SYSTEM ACCESSORIES	
CUMMINS LPG	4-20
G	
GEAR CLUTCH INSTALLATION	6-20
H	
HAND PUMP	1-66
HANDHOLD AND UNDERFLOOR COVER	
OPEN CAB	1-36

©2015 HYSTER COMPANY

TABLE OF CONTENTS (continued)

DESCRIPTION	PAGE
HEADER HOSE	
EMPTY CONTAINER HANDLER	14-18
TWO STAGE - LIMITED FREE-LIFT (→ S/N G019E02519H)	11-16
TWO STAGE - LIMITED FREE-LIFT (S/N G019E02520H →)	11-20
HEATED TOP WINDOW	
CLIMATE CONTROL CAB	14-14
HEATER AND AIR CONDITIONER ASSEMBLY	
WITH THREE-FAN CONDENSER SYSTEM - AURORA	1-84
HEATER AND AIR CONDITIONER MOUNTING	
WITH THREE-FAN CONDENSER SYSTEM - MCC	1-80
HEATER AND AIR DUCT	
WITH TWO-FAN CONDENSER SYSTEM - MCC	1-86
HEATER ASSEMBLY	
WITH THREE-FAN CONDENSER SYSTEM	1-82
WITH TWO-FAN CONDENSER SYSTEM - MCC (S/N G019E02165F →)	1-90
HEATER HOSES	
DIESEL ENGINE	1-108
LPG ENGINE	1-110
HEATER SYSTEM	
WITH TWO-FAN CONDENSER SYSTEM - MCC (S/N G019E02165F →)	1-92
HEATING AND AIR CONDITIONING SYSTEM FILTER	1-93
HOODS AND COVERS	
H10.00XM-12EC	1-8
H13.00XM, H14.00XM, H16.00XM-6, H12.00XM-12EC	1-6
HUB AND SHAFT ASSEMBLY	
DRY BRAKE	7-14
WET BRAKE	7-12
HYDRAULIC CONTROL AND TWISTLOCK	
H10.00XM-12EC, H12.00XM-12EC	1-56
HYDRAULIC CONTROL VALVE AND ATTACHING PARTS	
SHEET 1 OF 2	10-18
SHEET 2 OF 2	10-20
HYDRAULIC CONTROL VALVE ASSEMBLY	10-14
HYDRAULIC CONTROLS	
JOYSTICK	10-29
LEVERS	10-26
HYDRAULIC GEAR PUMP	
DIESEL ENGINE - WET BRAKE	9-35
LPG ENGINE - WET BRAKE	9-34
HYDRAULIC PUMP	10-30
HYDRAULIC SUPPLY AND RETURN	
SHEET 1 OF 3	10-2
SHEET 2 OF 3	10-6
SHEET 3 OF 3	10-8
HYDRAULIC TANK AND ATTACHING PARTS	
→ S/N G019E02270F	10-10
S/N G019E02271F →	10-12

©2015 HYSTER COMPANY

TABLE OF CONTENTS (continued)

DESCRIPTION	PAGE
I	
INDICATOR DISPLAY AND CONTROLS	1-52
INNER MAST	11-6
INSULATION MATS AND AIR DUCT	
CLIMATE CONTROL CAB	1-150
INTAKE MANIFOLD	3-44
J	
JOYSTICK ASSEMBLY	
SUSPENSION HOOKS	5-26
TWISTLOCKS	5-24
L	
LABELS	
HYDRAULIC CONTROL - JOYSTICK	1-145
HYDRAULIC CONTROL - LEVERS	1-146
MAIN	1-142
LIFT	11-8
LIFT ACCUMULATOR AND ATTACHING PARTS	10-33
LIFT ACCUMULATOR ASSEMBLY	10-32
LIFT CYLINDER	
EMPTY CONTAINER HANDLER	11-12
NON-EMPTY CONTAINER HANDLER	11-14
LIFTING BRACKET	3-46
LIFTING BRACKETS AND MOUNTING	
→ S/N G019E02271F (DRY BRAKES) → S/N G019E02152F (WET BRAKES)	2-57
S/N G019E02272F → (DRY BRAKES) S/N G019E02153F → (WET BRAKES)	2-58
LIFTING EYES	14-16
LIGHT SWITCHES	5-14
LIGHTS	
WORK - HALOGEN	14-21
WORK - HID	14-22
LOAD BACKREST	1-164
LOW CLUTCH	
→ S/N G019E02448H	6-24
S/N G019E02449H →	6-26
LUBRICATING OIL PUMP	2-60
M	
MAIN LIFT CYLINDER	12-11
MAIN WINDOW ASSEMBLY	1-40
MAST ASSEMBLY	
SHEET 1 OF 3	12-4
SHEET 2 OF 3	12-6
SHEET 3 OF 3	12-8
MAST INSTALLATION	11-2
MAST WORKLIGHTS	
TWO AND THREE STAGE MAST	14-8
MONOTROL PEDAL ASSEMBLY	4-16

©2015 HYSTER COMPANY

TABLE OF CONTENTS (continued)

DESCRIPTION	PAGE
O	
OIL FILLER	2-61
OIL FILTER	2-62
OIL LEVEL GAUGE	2-63
OIL PAN	2-64
OIL PUMP	3-52
OUTER MAST	11-4
OUTPUT FLANGE	6-28
OUTPUT SHAFT	
→ S/N G019E02448H	6-30
S/N G019E02449H →	6-32
OVERHEAD GUARD	
WIRE MESH	1-12
P	
PARK BRAKE	
WET BRAKE	7-16
PARK BRAKE SOLENOID VALVE	9-2
PILOT VALVE ASSEMBLY	10-22
PISTON AND CONNECTING ROD	3-54
PIVOT ARM ASSEMBLY	1-140
R	
RADIATOR ASSEMBLY	
AKG	2-88
AKG	3-80
MODINE	2-86
MODINE	3-78
RADIO CONSOLE AND ATTACHING PARTS	1-166
REAR DUCT AND CONSOLE	1-48
REAR GEAR HOUSING	2-66
REAR WORK LIGHTS	14-10
RELAYS AND FUSES	5-16
REMOTE FUEL FILTER	
CUMMINS DIESEL (→ S/N G019E02152F (WET BRAKES)) (→ S/N G019E02271F (DRY BRAKES))	4-21
CUMMINS DIESEL (S/N G019E02153F → (WET BRAKES)) (S/N G019E02272F → (DRY BRAKES))	4-22
REVERSE AND SECOND CLUTCH	6-34
REVERSE IDLER SHAFT	6-22
ROCKER LEVERS	2-68
S	
SEAT ASSEMBLY	
CLIMATE CONTROL CAB	1-154
WITH FABRIC COVER (→ 3/2010)	1-128
WITH FABRIC COVER (3/2010 →)	1-132
WITH VINYL COVER	1-136
SEAT SUSPENSION ASSEMBLY	
AIR	1-118

©2015 HYSTER COMPANY

TABLE OF CONTENTS (continued)

DESCRIPTION	PAGE
MECHANICAL	1-122
SEAT SUSPENSION MOUNTING	1-125
SECOND 12V SOCKET OPTION	
CLIMATE CONTROL CAB	5-132
SIDE-SHIFT CARRIAGE	
DUAL FUNCTION WITH FORK POSITIONER - TWO STAGE LIMITED FREE-LIFT	13-6
FOUR, FIVE, AND SIX FUNCTION - THREE STAGE FULL FREE-LIFT	13-10
FOUR, FIVE, AND SIX FUNCTION - TWO STAGE LIMITED FREE-LIFT	13-14
INDIVIDUAL FORK POSITIONER (FIVE FUNCTION) - THREE STAGE FULL FREE-LIFT	13-18
INDIVIDUAL FORK POSITIONER (FIVE FUNCTION) - TWO STAGE LIMITED FREE-LIFT	13-22
SIMULTANEOUS FORK POSITIONER (FOUR FUNCTION) - THREE STAGE FULL FREE-LIFT	13-26
SIMULTANEOUS FORK POSITIONER (FOUR FUNCTION) - TWO STAGE LIMITED FREE-LIFT	13-30
THREE FUNCTION - THREE STAGE FULL FREE-LIFT	13-34
THREE FUNCTION - TWO STAGE LIMITED FREE-LIFT	13-36
SIDE-SHIFT CYLINDER	
DUAL FUNCTION WITH FORK POSITIONER	13-38
THREE STAGE FULL FREE-LIFT	13-40
TWO STAGE LIMITED FREE-LIFT	13-42
SOUND REDUCTION	14-11
STANDARD PIN CARRIAGE	
(THREE STAGE) - (FOUR, FIVE, AND SIX FUNCTION)	12-20
STARTER MOTOR	
CUMMINS DIESEL	5-34
CUMMINS LPG	5-35
STEER AXLE	8-2
STEER COLUMN ASSEMBLY	8-12
STEER CYLINDER	8-6
STEER TIRES AND WHEELS	
BRIDGESTONE	8-9
MICHELIN	8-10
TRELLEBORG - SOLID TIRE	8-8
TRELLEBORG	8-11
STEERING COLUMN	8-14
STEERING HAND PUMP ASSEMBLY	8-16
STROBE LIGHT	14-6
SUSPENSION KIT ASSEMBLY	1-116
T	
TAIL LIGHT ASSEMBLY	14-4
THERMOSTAT	2-70
THERMOSTAT HOUSING	3-59
THIRD CLUTCH	6-36
THROTTLE PEDAL LINKAGE	4-18
TILT CYLINDER	
CAB	1-62
TILT CYLINDER AND ATTACHING PARTS	10-36
TILT CYLINDER ASSEMBLY	10-34
TILT PLATFORM ASSEMBLY	1-64
TORQUE CONVERTER ASSEMBLY	6-38

©2015 HYSTER COMPANY

TABLE OF CONTENTS (continued)

DESCRIPTION	PAGE
TORQUE CONVERTER COOLER PLUGS	2-71
TORQUE CONVERTER HOUSING AND ATTACHING PARTS	6-40
TRAINING SEAT	1-112
TRANSMISSION CASE	6-42
TRANSMISSION CONTROL VALVE	6-8
TRANSMISSION MOUNT AND ATTACHING PARTS	
DIESEL ENGINE	6-46
LPG ENGINE	6-44
TURBINE SHAFT AND STATOR SUPPORT	6-48
TURBOCHARGER	2-72
TURBOCHARGER ASSEMBLY	3-66
TURBOCHARGER COMPRESSOR OUTLET CONNECTION	3-62
TURBOCHARGER PLUMBING	
→ S/N G019E02271F (DRY BRAKES) → S/N G019E02152F (WET BRAKES)	2-73
S/N G019E02272F → (DRY BRAKES) S/N G019E02153F → (WET BRAKES)	2-74
U	
UNIVERSAL SHAFT	6-2
V	
VALVE COVER	2-76
VALVE TAPPET	3-70
VALVE TAPPETS	2-77
VIBRATION DAMPER	
→ S/N G019E02152F (WET BRAKES) → S/N G019E02271F (DRY BRAKES)	2-78
S/N G019E02153F → (WET BRAKES) S/N G019E02272F → (DRY BRAKES)	2-79
W	
WATER INLET CONNECTION	3-74
WATER OUTLET CONNECTION	2-80
WATER PUMP	2-81
WATER PUMP DRIVE	2-82
WET BRAKE SYSTEM	
DIESEL ENGINE	9-8
LPG ENGINE	9-4
WINDOW WIPER SYSTEM	
REAR AND ROOF WIPER KITS - AND FRONT WIPER OPTIONS	1-44
WASHER BOTTLE KIT	1-42
WIRE HARNESS	
AIR DRYER	5-111
ARMREST - OPEN CAB	5-116
ARMREST - CLOSED CAB	5-118
BACK-UP ALARM	5-95
BRAKE TEMPERATURE	5-94
CAB LIGHTS	5-98
CAB SIDE CONSOLE - SHEET 1 OF 3	5-78
CAB SIDE CONSOLE - SHEET 2 OF 3	5-82
CAB SIDE CONSOLE - SHEET 3 OF 3	5-86
CAB TILT	5-114
CAB UNDERFLOOR	5-112

©2015 HYSTER COMPANY

TABLE OF CONTENTS (continued)

DESCRIPTION	PAGE
CHASSIS, DIESEL (H10.00XM-12EC, H12.00XM-12EC) - SHEET 1 0F 2	5-70
CHASSIS, DIESEL (H10.00XM-12EC, H12.00XM-12EC) - SHEET 2 0F 2	5-74
CHASSIS, DIESEL (H13.00XM, H16.00XM, H16.00XM-6) - SHEET 1 0F 2	5-62
CHASSIS, DIESEL (H13.00XM, H16.00XM, H16.00XM-6) - SHEET 2 0F 2	5-66
CHASSIS, LPG (H10.00XM-12EC, H12.00XM-12EC) - SHEET 1 0F 2	5-54
CHASSIS, LPG (H10.00XM-12EC, H12.00XM-12EC) - SHEET 2 0F 2	5-58
CHASSIS, LPG (H13.00XM, H14.00XM, H16.00XM-6) - SHEET 1 0F 2	5-44
CHASSIS, LPG (H13.00XM, H14.00XM, H16.00XM-6) - SHEET 2 0F 2	5-48
CLOSED CAB	5-88
EMPTY CONTAINER HANDLER ATTACHMENT	5-125
FRONT END	5-127
FRONT END EQUIPMENT	5-124
FRONT LIGHTS, EC4 - WITH FRONT FENDER LIGHTS	5-102
FRONT LIGHTS, EC4	5-103
FRONT LIGHTS, NON-EC4 - WITH FRONT FENDER AND MAST WORKLIGHTS	5-100
FRONT LIGHTS, NON-EC4	5-104
HYDRAULIC OIL TEMPERATURE	5-126
MAST LIGHT EXTENSION - RIGHT HAND	5-107
MAST LIGHT EXTENSION - LEFT HAND	5-108
MAST WORKLIGHT EXTENSION	5-106
OPEN CAB	5-92
REAR DRIVE LIGHT EXTENSION	5-96
REAR WIPER	5-120
REAR WORK LIGHTS	5-109
SHIFT LEVER	5-130
STEERING COLUMN	5-122
STROBE LIGHT	5-110
TAIL LIGHTS	5-131
TWO STAGE LIMITED FREE-LIFT	5-129
WINDOW WASH PUMPS	5-134

©2015 HYSTER COMPANY

ABBREVIATIONS QUICK REFERENCE SHEET

Listed below are abbreviations used in parts manuals to denote the following expressions:

TERM	DEFINITION
Amp	Amperes
AR	As Required
BDI	Battery Discharge Indicators
BWI	Brush Wear Indicator
CE	Communicator End
CRE	Corrosive Environment
D/B	Date Break
dbA	Decibel "A" Scale
DE	Drive End
ECH	Empty Container Handler
ECH-3	Empty Container Handler - 3 High Stacking
ECH-4	Empty Container Handler - 4 High Stacking
ECH-5	Empty Container Handler - 5 High Stacking
ECH-6	Empty Container Handler - 6 High Stacking
ECH-7	Empty Container Handler - 7 High Stacking
ECM	Electronic Control Module
ECN	Engineering Change Notice
EEPROM	Electrically Erasable Programmable Read Only Memory
EPA	US Environmental Protection Agency
EPROM	Electrically Programmable Read Only Memory

TERM	DEFINITION
FRE	Freezer Environment
in.	inches
LPG	Liquefied Petroleum Gas
MAP	Manifold Absolute Pressure
mm	millimeters
MSTS	Microprocessor Spark Timing System
NPT	National Pipe Threads
O/S	Oversize
PTO	Power Take Off
RPM	Revolutions per Minute
S/N	Serial Number
TMM	Truck Management Module
UL Type D	Diesel-Powered Safety Rating
UL Type DS	Diesel-Powered Safety Rating
UL Type E	Battery-Powered Safety Rating
UL Type EE	Battery-Powered Safety Rating
UL Type ES	Battery-Powered Safety Rating
UL Type G	Gasoline-Powered Safety Rating
UL Type GS	Gasoline-Powered Safety Rating
UL Type LP	Gas-Powered Safety Rating
UL Type LPS	LP Gas-Powered Safety Rating
U/S	Undersize
UL	Underwriters Laboratory
V	Volts

See Service Manual for service procedures.
©2015 HYSTER COMPANY

HOW TO USE THE ILLUSTRATED PARTS MANUAL

This parts manual describes and illustrates assemblies, subassemblies, and detail parts needed for service replacement.

The different constructions are indicated by keys and footnotes. The callouts correspond to descriptions found on the next page.

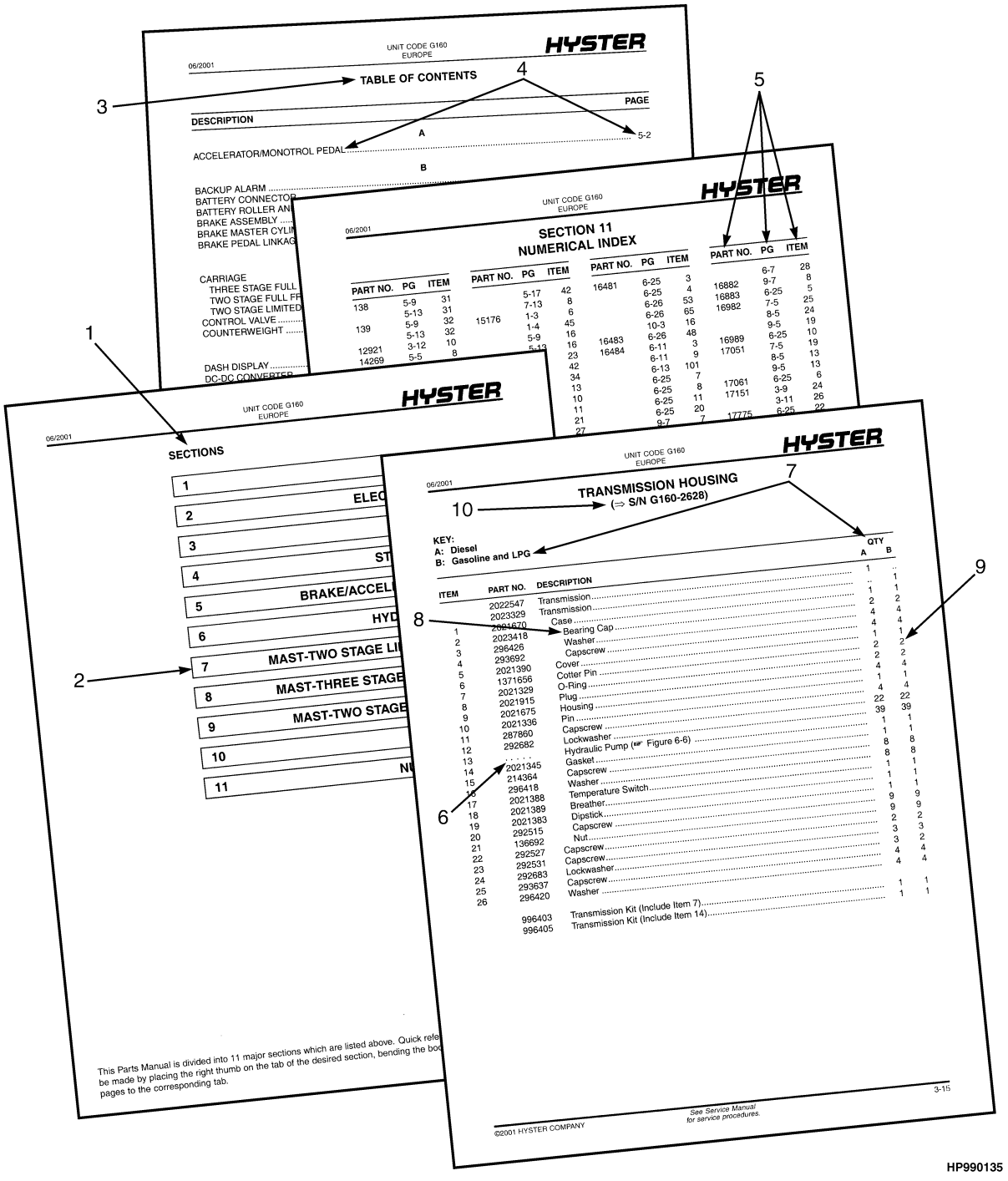

HOW TO FIND THE DESIRED PART NUMBER

WHEN THE PART NUMBER AND THE NEXT HIGHER ASSEMBLY IS NOT KNOWN:

1. Determine the function and application of the part required. Turn to the Sections Page. Choose the general area of reference most likely to include the part.
2. Turn to the section you chose. Use the Section Table of Contents to determine the assembly which would normally contain the part required. Then locate the part on the assembly breakdown page.

WHEN THE PART NUMBER IS NOT KNOWN AND THE NEXT HIGHER ASSEMBLY IS KNOWN:

3. Determine the assembly the required part is used on. Turn to the Table of Contents (Page i).
4. Locate the assembly the required part is used on and turn to the page indicated for that assembly. Then locate the part on the assembly breakdown page.

WHEN THE PART NUMBER IS KNOWN:

5. Use the Numerical Index (Page 15-1) to find the part number. Turn to the page listed and locate the part as indicated by the item number.

GENERAL:

The assembly breakdowns include part numbers, descriptions, quantities required, keys and footnotes to help in selecting correct parts.

6. Parts Supersession Information. Part numbers that have this history will be displayed in the parts list in the order that they were superseded (from oldest to newest). The superseded part numbers will be shown with a line through them.

   Five periods in the PART NO. column (. . . . .) indicate that the part is either *Not Serviced Separately* or there is a reference to another figure. A figure reference is denoted by a pointing hand followed by a figure number in the DESCRIPTION column (☞Figure 10)
7. Keys are used to show two or more similar assemblies, RH and LH assembly parts, etc. Select the appropriate key, "A", "B", "C", "D", or "E" and the corresponding quantity column to find the required parts. Two periods in the QTY column (..) indicate that the part is not used for that assembly.
8. Indented descriptions under the DESCRIPTION column are used to indicate assemblies and subparts of assemblies. In the example on the previous page, *BEARING CAP* (Item 2) is a subpart of the major assembly *CASE*.
9. Quantities shown are for one assembly. The quantities of the subpart *BEARING CAP* are indicated as two and two. This means two per *CASE* assembly.
10. Serial number breaks identify the most current parts information and are shown as follows:
    → S/N D001H2628
    Indicates last serial number affected.
    S/N D001H2629 →
    Indicates the first serial number affected.
    S/N D001H1553 ↔ S/N D001H3291
    Indicates a range of serial numbers affected.

    ECN numbers for pending serial numbers are shown to allow for the inclusion of the most current parts information and are identified as follows:
    → S/N Pending Per ECN 63243
    Indicates a pending serial number for last unit affected.
    S/N Pending Per ECN 63243 →
    Indicates a pending serial number for first unit affected.

    Date breaks are used to indicate when a change occurred but a subsequent serial number break was not recorded. This is an arbitrary date usually based on the ECN release and are identified as follows:
    → D/B 3/00
    Indicates that a change occurred sometime within that month for the item affected.
    D/B 3/00 →
    Indicates that a change occurred sometime within that month for the item affected.
    D/B 3/00 ↔ D/B 4/00
    Indicates a range of production dates of the item affected.

    Contact your local dealer for Hyster lift trucks for serial number information for items with a ECN or a date break.

ORDERING PARTS:

When ordering replacement parts, give the unit serial number, part number, name of part and quantity required.

For any further information on parts, service, or ordering, consult your local dealer for Hyster lift trucks.

See Service Manual for service procedures.
©2015 HYSTER COMPANY

IDENTIFICATION OF TRUCK SERIAL NUMBERS

X OOO X OOOO X

(1) (2) (3) (4) (5)

(1) and (2) The first letter and three numbers indicate the truck unit code.

(3) The second letter indicates the plant of manufacture.

(4) The four or five digit number indicates the production sequence number of the truck.

(5) The final letter indicates the year of manufacture starting with "A" in 1957, 1980, and 2003. The letters "I", "O", and "Q" will not be used.

For pending serial numbers contact your local dealer for Hyster lift trucks.

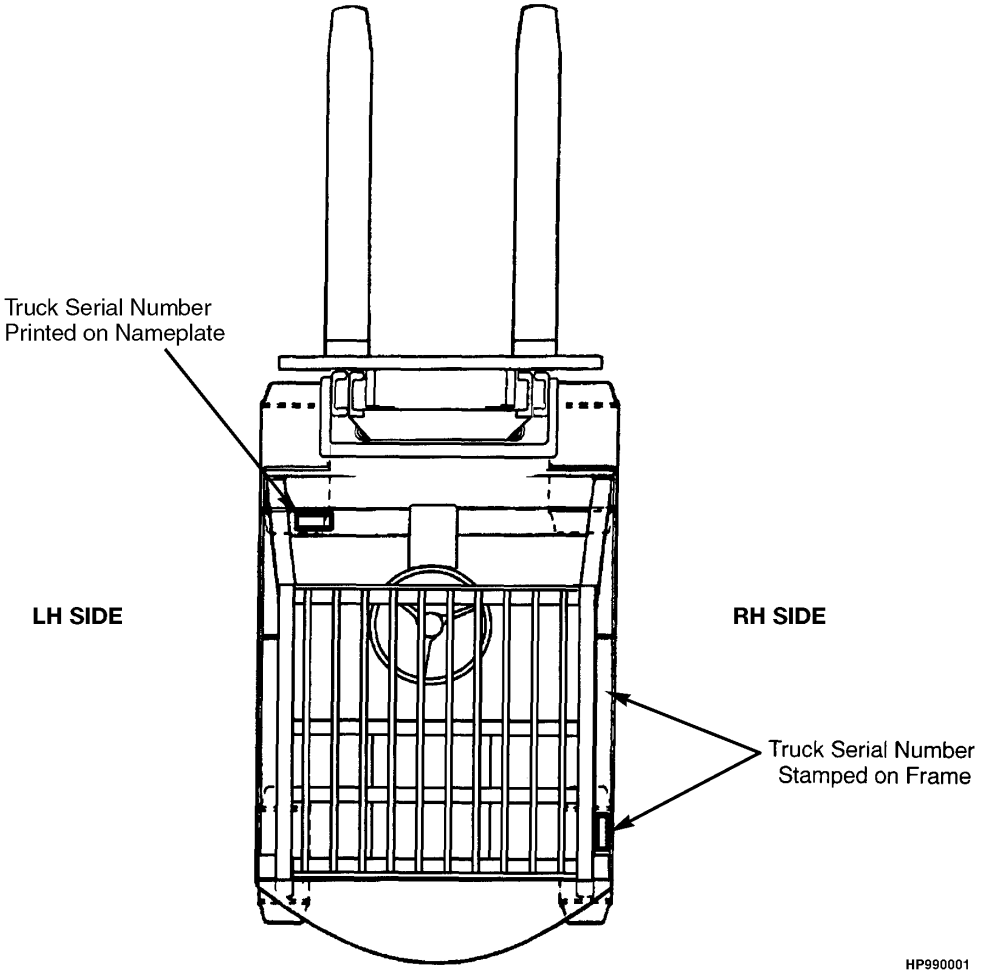

Parts referred to in this book as right or left hand parts are in accordance with the illustration above.

PUBLICATIONS

Every new lift truck is provided with an OPERATING MANUAL. This manual has information that the operator must know for inspection and operation of the lift truck.

SERVICE MAINTENANCE MANUALS, which provide service and overhaul procedures, and PARTS MANUALS with complete replacement part identification, are available at a nominal fee from your Hyster dealer to assist users in effectively maintaining Hyster lift trucks in a safe, useful condition. See the list below for information on ordering specific publications for this model lift truck.

PUBLICATION	HYSTER PART NUMBER
Operating Manual	1659419
Service Manual (Complete)	1660398
Parts Manual	1660387

©2015 HYSTER COMPANY

1 FRAME

SECTION 1
FRAME

DESCRIPTION	PAGE
AIR CONDITIONER	
CLIMATE CONTROL CAB - MCC	1-160
AIR CONDITIONER ASSEMBLY	
WITH TWO-FAN CONDENSER SYSTEM - MCC (S/N G019E02165F →)	1-102
AIR CONDITIONER SYSTEM	
CLIMATE CONTROL CAB - MCC	1-158
WITH TWO-FAN CONDENSER SYSTEM - MCC (S/N G019E02165F →)	1-100
AIR CONDITIONER SYSTEM ASSEMBLY	
WITH TWO-FAN CONDENSER SYSTEM - MCC (S/N G019E02165F →)	1-94
AIR CONDITIONING COMPRESSOR AND ATTACHING PARTS	
DIESEL ENGINE - MCC	1-74
LPG ENGINE - MCC	1-76
AIR DUCT	
LOUVER, CLIMATE CONTROL CAB	1-152
AIR DUCT ASSEMBLY	
AIR CONDITIONING - WITH TWO-FAN CONDENSER SYSTEM, MCC (S/N G019E02165F →)	1-104
HEATER - WITH TWO-FAN CONDENSER SYSTEM, MCC (S/N G019E02165F →)	1-88
ARMREST ASSEMBLY	1-147
CAB AND TILT CYLINDER MOUNTING	1-58
CAB ASSEMBLY	
CLIMATE CONTROL CAB	1-162
CAB ATTACHING PARTS	1-14
CAB DOOR	
LEFT HAND (→ S/N G019E02399G (CLOSED CAB WITH INSULATION)) (→ S/N G019E02401G (CLOSED CAB WITH AIR CONDITIONING AND INSULATION)) (→ S/N G019E02407G (CLOSED CAB WITH HEATER))	1-28
LEFT HAND (S/N G019E02400G → (CLOSED CAB WITH INSULATION)) (S/N G019E02402G → (CLOSED CAB WITH AIR CONDITIONING AND INSULATION)) (S/N G019E02408G → (CLOSED CAB WITH HEATER))	1-32
RIGHT HAND (→ S/N G019E02407G (CLOSED CAB WITH HEATER)) (→ S/N G019E02399G (CLOSED CAB WITH INSULATION)) (→ S/N G019E02401G (CLOSED CAB WITH AIR CONDITIONING AND INSULATION))	1-20
RIGHT HAND (S/N G019E02408G → (CLOSED CAB WITH HEATER)) (S/N G019E02400G → (CLOSED CAB WITH INSULATION)) (S/N G019E02402G → (CLOSED CAB WITH AIR CONDITIONING AND INSULATION))	1-24
CAB DOOR ATTACHING PARTS	1-18
CAB ELECTRONIC CONTROLS AND PANELS	1-54
CAB FLOORMATS	1-35
CAB RECIRCULATING FAN	1-50
CAB SOUND REDUCTION	1-165
CAB SUNSHADES	1-46
CAB TILT PUMP ASSEMBLY	
ELECTRIC	1-65
CAB WINDOWS INSTALLATION	1-38
CLIMATE CONTROL SYSTEM	
MCC	1-156
COMPRESSOR ASSEMBLY	
WITH TWO-FAN CONDENSER SYSTEM - MCC (S/N G019E02165F →)	1-78

©2015 HYSTER COMPANY

SECTION 1
FRAME

DESCRIPTION **PAGE**

CONDENSER
TWO-FAN SYSTEM - MCC (S/N G019E02165F →) 1-98
CONDENSER AND ATTACHING PARTS
THREE-FAN SYSTEM - AURORA 1-70
CONDENSER ASSEMBLY
THREE-FAN SYSTEM - AURORA 1-72
CONDENSER SYSTEM
TWO-FAN SYSTEM - MCC (S/N G019E02165F →) 1-96
CONTROL PANEL ASSEMBLY
WITH TWO-FAN CONDENSER SYSTEM - MCC (S/N G019E02165F →) 1-106
COUNTERWEIGHT AND OPTIONAL LIFTING EYES 1-10
DASH AND AIR DUCT ASSEMBLY 1-16
DELUXE SUSPENSION SEAT 1-114
ELECTRIC PUMP 1-68
EXTERIOR MIRRORS 1-17
FLOORPLATES 1-4
HAND PUMP 1-66
HANDHOLD AND UNDERFLOOR COVER
OPEN CAB 1-36
HEATER AND AIR CONDITIONER ASSEMBLY
WITH THREE-FAN CONDENSER SYSTEM - AURORA 1-84
HEATER AND AIR CONDITIONER MOUNTING
WITH THREE-FAN CONDENSER SYSTEM - MCC 1-80
HEATER AND AIR DUCT
WITH TWO-FAN CONDENSER SYSTEM - MCC 1-86
HEATER ASSEMBLY
WITH THREE-FAN CONDENSER SYSTEM 1-82
WITH TWO-FAN CONDENSER SYSTEM - MCC (S/N G019E02165F →) 1-90
HEATER HOSES
DIESEL ENGINE 1-108
LPG ENGINE 1-110
HEATER SYSTEM
WITH TWO-FAN CONDENSER SYSTEM - MCC (S/N G019E02165F →) 1-92
HEATING AND AIR CONDITIONING SYSTEM FILTER 1-93
HOODS AND COVERS
H10.00XM-12EC 1-8
H13.00XM, H14.00XM, H16.00XM-6, H12.00XM-12EC 1-6
HYDRAULIC CONTROL AND TWISTLOCK
H10.00XM-12EC, H12.00XM-12EC 1-56
INDICATOR DISPLAY AND CONTROLS 1-52
INSULATION MATS AND AIR DUCT
CLIMATE CONTROL CAB 1-150
LABELS
HYDRAULIC CONTROL - JOYSTICK 1-145
HYDRAULIC CONTROL - LEVERS 1-146
MAIN 1-142
LOAD BACKREST 1-164
MAIN WINDOW ASSEMBLY 1-40

©2015 HYSTER COMPANY

SECTION 1
FRAME

DESCRIPTION	PAGE
OVERHEAD GUARD	
WIRE MESH	1-12
PIVOT ARM ASSEMBLY	1-140
RADIO CONSOLE AND ATTACHING PARTS	1-166
REAR DUCT AND CONSOLE	1-48
SEAT ASSEMBLY	
CLIMATE CONTROL CAB	1-154
WITH FABRIC COVER (→ 3/2010)	1-128
WITH FABRIC COVER (3/2010 →)	1-132
WITH VINYL COVER	1-136
SEAT SUSPENSION ASSEMBLY	
AIR	1-118
MECHANICAL	1-122
SEAT SUSPENSION MOUNTING	1-125
SUSPENSION KIT ASSEMBLY	1-116
TILT CYLINDER	
CAB	1-62
TILT PLATFORM ASSEMBLY	1-64
TRAINING SEAT	1-112
WINDOW WIPER SYSTEM	
REAR AND ROOF WIPER KITS - AND FRONT WIPER OPTIONS	1-44
WASHER BOTTLE KIT	1-42

©2015 HYSTER COMPANY

FLOORPLATES (FIGURE 1-1)

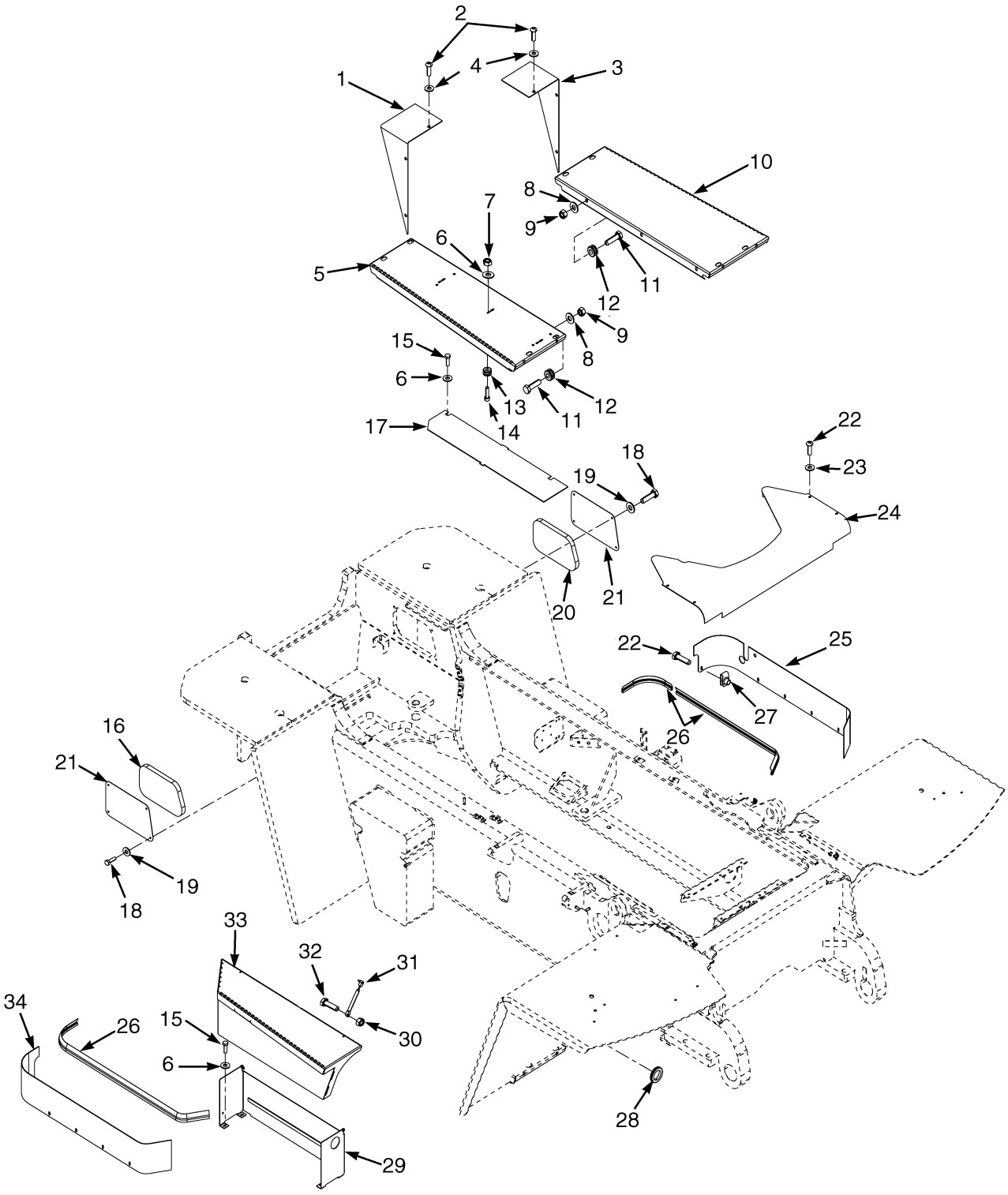

©2015 HYSTER COMPANY

FLOORPLATES

ITEM	PART NO.	DESCRIPTION	QTY
1	**b** 1633071	Plate Wldmt (RH)	1
1	**c** 1678450	Extension (RH)	1
2	1597444	Capscrew	6
3	**b** 1633070	Plate Wldmt (LH)	1
3	**c** 1678448	Extension (LH)	1
4	1581558	Washer	6
5	**b** 1648281	Running Board (RH)	1
5	**c** 1678391	Running Board (RH)	1
6	**b** 320158	Washer	28
6	**c** 320158	Washer	16
7	**b** 302400	Nut	8
8	**b** 302402	Locknut	6
9	**b** 320162	Washer	18
10	**b** 1648280	Running Board (LH)	1
10	**c** 1694653	Running Board (LH)	1
11	**b** 287837	Capscrew	6
12	**b** 216735	Grommet	6
13	**b** 91946	Grommet	8
14	296012	Capscrew	8
15	136749	Screw	4
16	1637322	Sound Liner (RH)	1
17	2093122	Cover	1
18	176640	Bolt	8
19	320157	Washer	8
20	1637312	Sound Liner (LH)	1
21	1637309	Plate	2
22	1597449	Capscrew	14
23	1581851	Washer	14
24	1485265	Cover	1
25	1485263	Panel (LH)	1
26	1491360	Seal-Bulk	AR
27	1480237	Nut	14
28	1347854	Grommet	1
29	1647769	Battery Tray	1
30	329069	Nut	2
31	1532341	Gas Spring	1
32	1529665	Capscrew	2
33	1647772	Cover (Battery Box)	1
33	4011190	Cover (Battery Box) (With Battery Disconnect Switch)	1
34	1485264	Panel (RH)	1
	a 288762	Foam Tape (Counterweight)	AR
	ac 1694496	Damper	12
	ac 292508	Capscrew	4

FOOTNOTES:

a Not Illustrated
b → S/N G019E02270F
c S/N G019E02271F →

©2015 HYSTER COMPANY

HOODS AND COVERS (FIGURE 1-2)

H13.00XM, H14.00XM, H16.00XM-6, H12.00XM-12EC

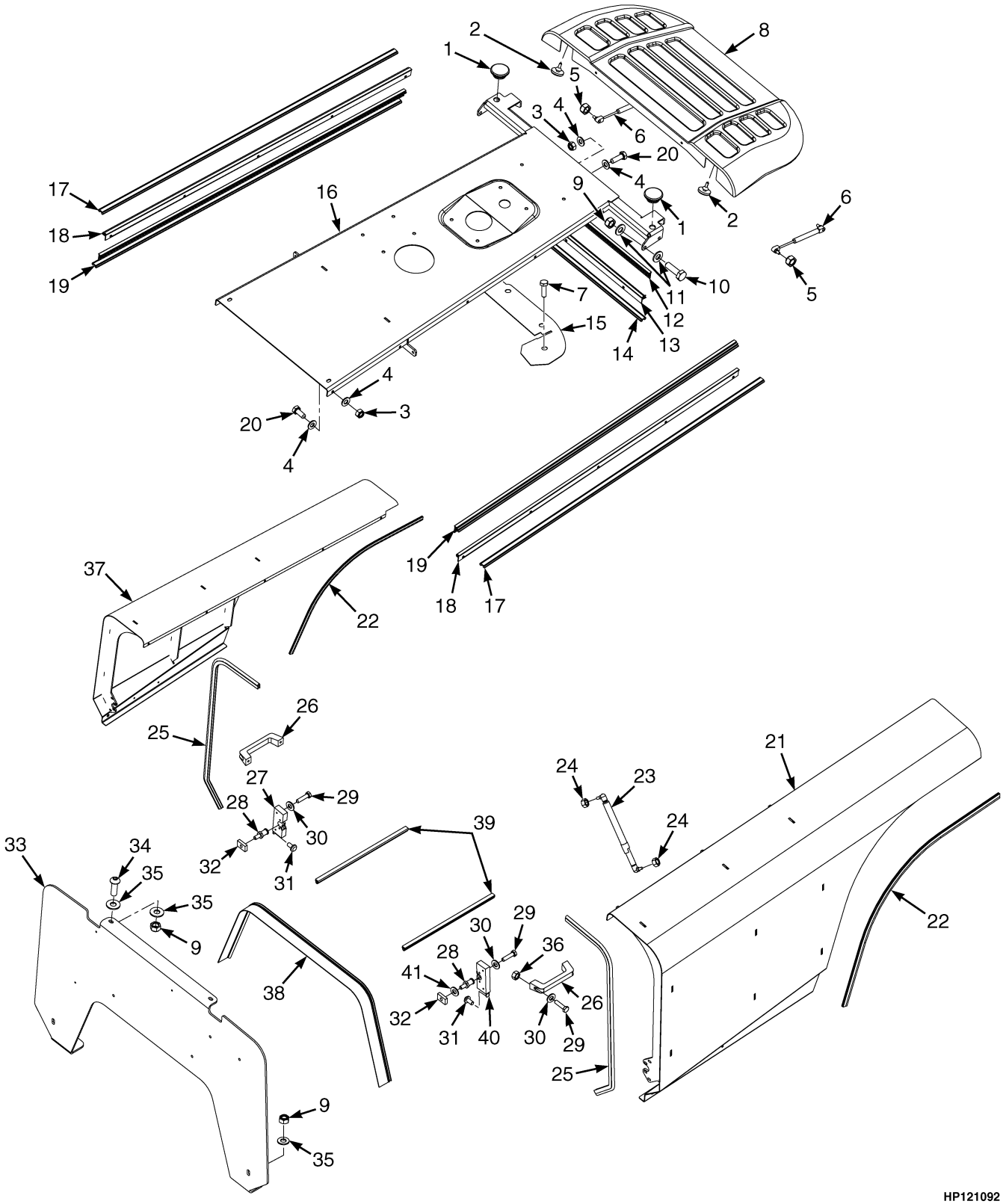

HP121092

©2015 HYSTER COMPANY

HOODS AND COVERS

H13.00XM, H14.00XM, H16.00XM-6, H12.00XM-12EC

ITEM	PART NO.	DESCRIPTION	QTY
1	334639	Plug	2
2	1450759	Button	2
3	302400	Nut	24
4	320157	Washer	24
5	329069	Nut	2
6	1532341	Gas Spring	2
7	1484308	Rivet	9
8	1649573	Cover (Forklift Truck)	1
8	1649572	Cover (H12.00XM-12EC)	1
9	302401	Locknut	6
10	287860	Capscrew	4
11	320159	Washer	8
12	1633369	Hinge	1
13	1633363	Hinge	1
14	1633362	Hinge	1
15	1662544	Seal	1
16	1635845	Support	1
17	1633370	Hinge	2
18	1636056	Hinge	2
19	1636057	Hinge	2
20	1597448	Capscrew	20
21	1636066	Hood (LH)	1
22	1638441	Trim Seal	2
23	1385584	Gas Spring	2
24	239503	Nut	4
25	1634308	Trim Seal (930 mm)	2
26	362030	Handle	2
27	1634172	Latch	1
28	1504955	Bolt	2
29	287816	Capscrew	12
30	~~4093489~~		
	320156	Washer	12
31	1637098	Button (Unlock)	2
32	1504953	Block (Tapped)	2
33	1628090	Plate	1
34	1597444	Capscrew	2
35	1581558	Washer	4
36	~~1512440~~		
	302399	Nut	4
37	1636067	Hood (RH)	1
38	1636500	Trim Seal (1300 mm)	1
39	1636463	Trim Seal	2
40	1634171	Latch	1
41	320161	Washer	2

©2015 HYSTER COMPANY

HOODS AND COVERS (FIGURE 1-3)

H10.00XM-12EC

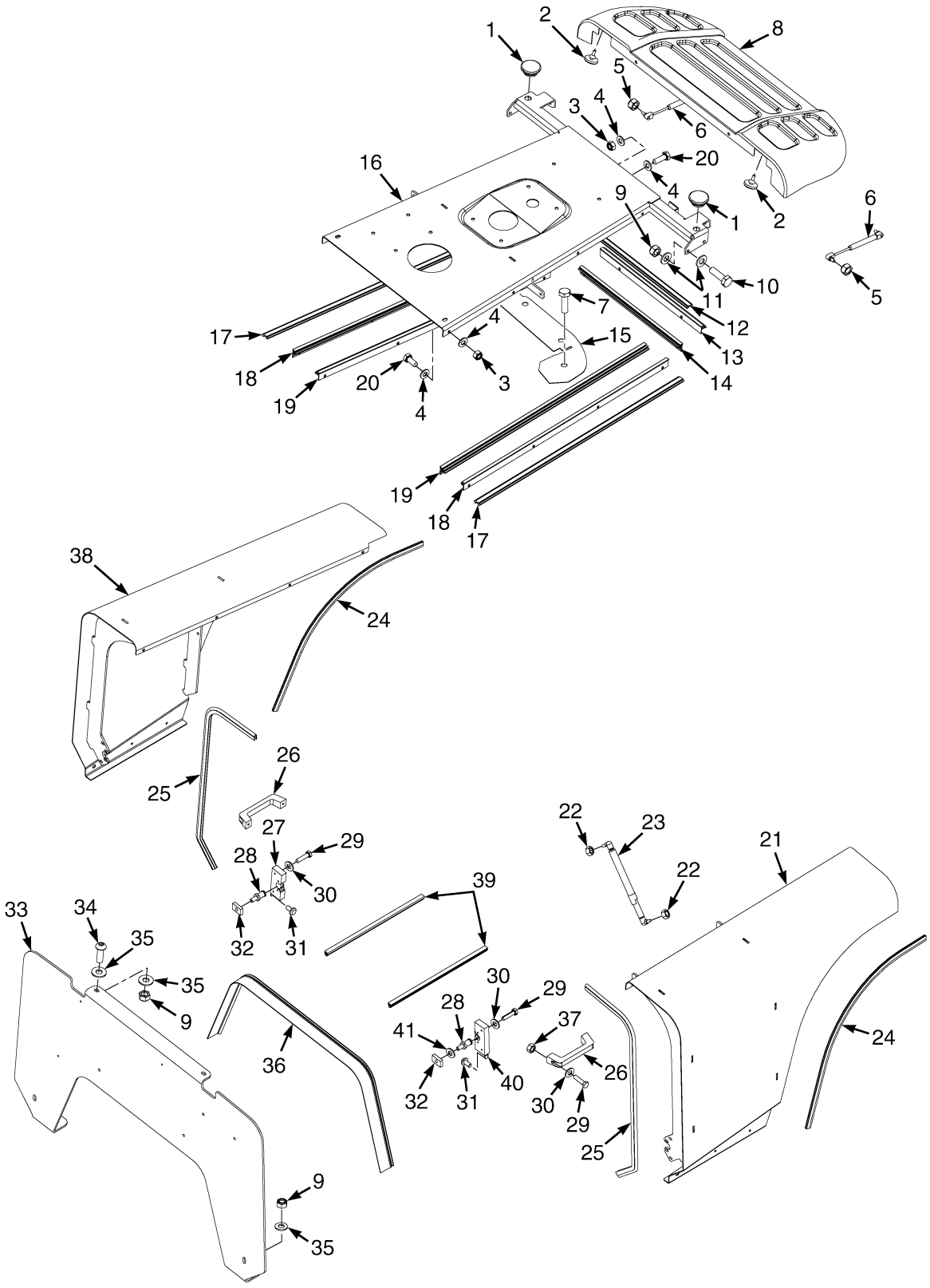

©2015 HYSTER COMPANY

HOODS AND COVERS
H10.00XM-12EC

ITEM	PART NO.	DESCRIPTION	QTY
1	334639	Plug	2
2	1450759	Button	2
3	302400	Nut	20
4	320157	Washer	20
5	329069	Nut	2
6	1455087	Gas Spring	2
7	1484308	Rivet	9
8	1649572	Cover	1
9	302401	Locknut	8
10	287860	Capscrew	4
11	320159	Washer	8
12	1633369	Hinge	1
13	1633363	Hinge	1
14	1633362	Hinge	1
15	1662544	Seal	1
16	1628451	Support	1
17	1633368	Hinge	2
18	1633360	Hinge	2
19	1633361	Hinge	2
20	1597448	Capscrew	20
21	1633896	Hood (LH)	1
22	239503	Nut	4
23	1385584	Gas Spring	2
24	1638440	Trim Seal	2
25	1634308	Trim Seal (930 mm)	2
26	362030	Handle	2
27	1634172	Latch	1
28	1504955	Bolt	2
29	287816	Capscrew	12
30	~~4093489~~		
	320156	Washer	12
31	1637098	Button (Unlock)	2
32	1504953	Block (Tapped)	2
33	1628090	Plate	1
34	1597444	Capscrew	2
35	1581558	Washer	6
36	1636500	Trim Seal (1300 mm)	1
37	~~1512440~~		
	302399	Nut	4
38	1633897	Hood (RH)	1
39	1634504	Trim Seal	2
40	1634171	Latch	1
41	320161	Washer	2

©2015 HYSTER COMPANY

COUNTERWEIGHT AND OPTIONAL LIFTING EYES (FIGURE 1-4)

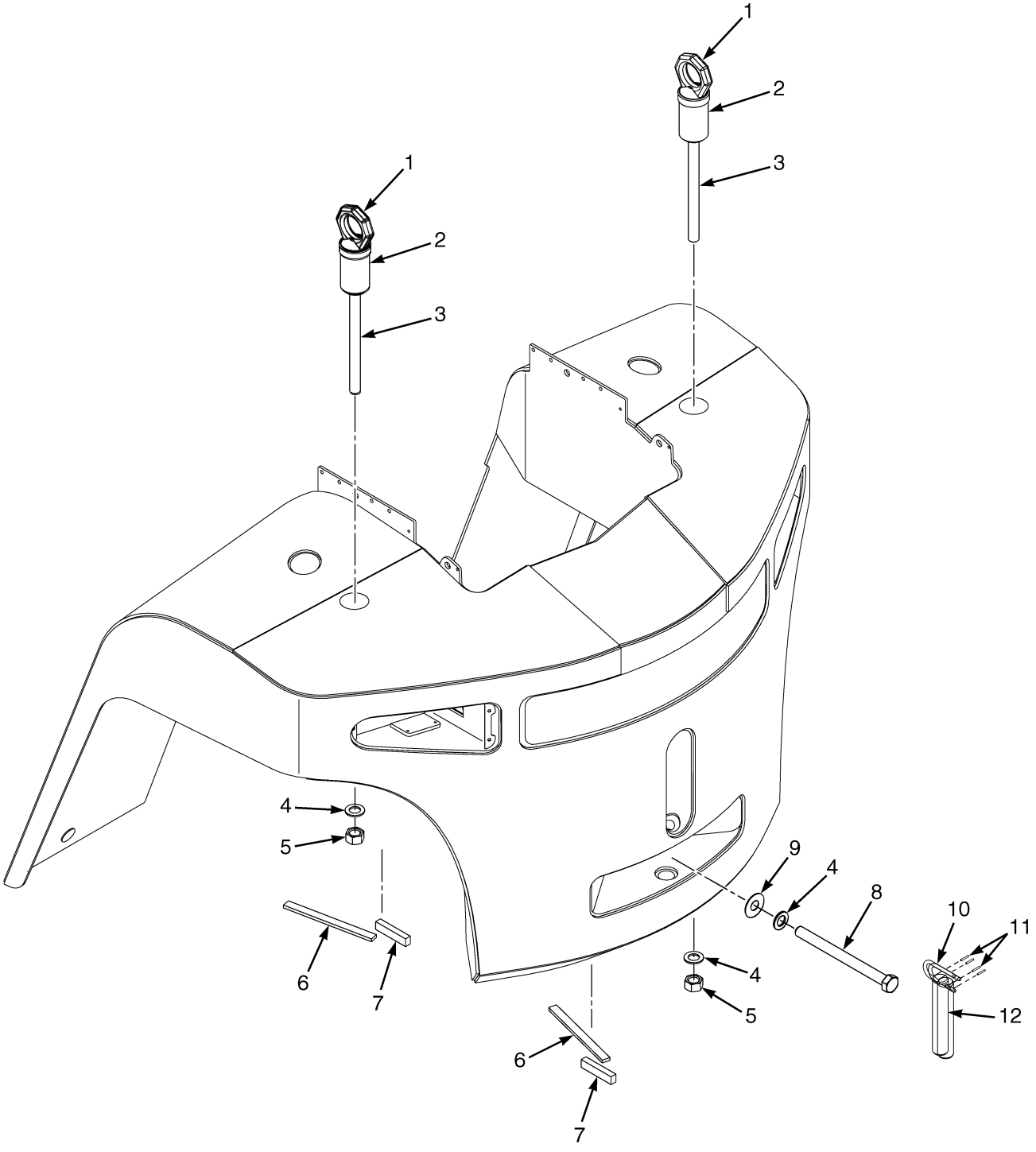

BP000542

©2015 HYSTER COMPANY

COUNTERWEIGHT AND OPTIONAL LIFTING EYES

KEY:
A: With Optional Lifting Eyes (Shown)
B: Without Optional Lifting Eyes

ITEM	PART NO.	DESCRIPTION	QTY A	QTY B
	1632171	Counterweight (H13.00XM)	1	1
	1632172	Counterweight (H14.00XM, H10.00HM-EC)	1	1
	1632173	Counterweight (H16.00XM, H12.00XM-12EC)	1	1
1	1507360	Lifting Eye	2	..
2	1672608	Nut	2	..
3	1672729	Stud	2	..
4	296438	Washer	3	5
5	292661	Nut	2	2
6	212899	Foam Tape	AR	AR
7	1301404	Foam	AR	AR
8	2079027	Capscrew	1	3
9	1672596	Shim	2	2
10	1649266	Grip	1	1
11	302440	Roll Pin	2	2
12	1373760	Tow Pin	1	1
	a 1697363	Nameplate LOGO HYSTER	1	1

FOOTNOTES:

a Not Illustrated

©2015 HYSTER COMPANY

OVERHEAD GUARD (FIGURE 1-5)

WIRE MESH

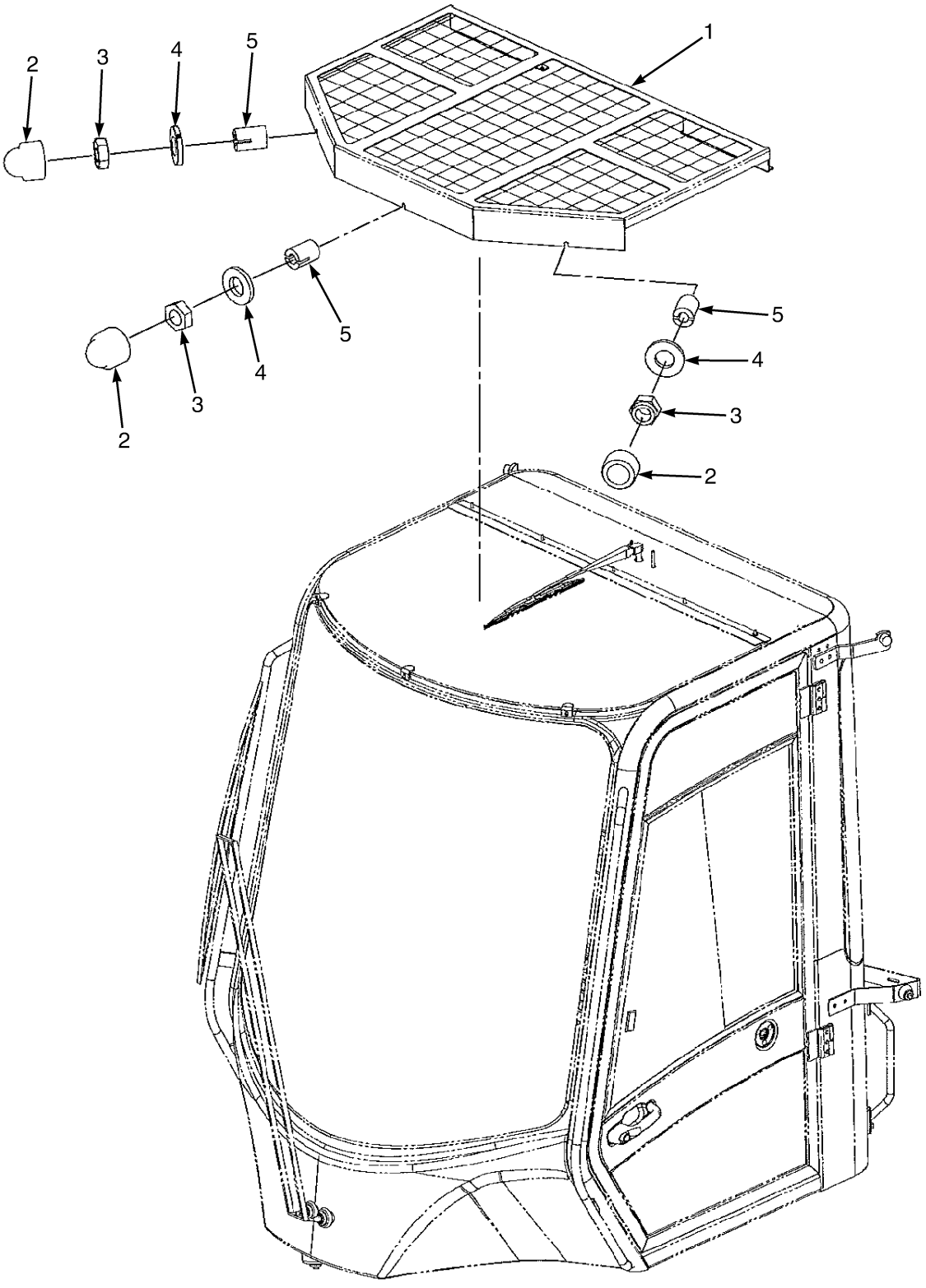

©2015 HYSTER COMPANY

OVERHEAD GUARD
WIRE MESH

ITEM	PART NO.	DESCRIPTION	QTY
1	4006379	Overhead Guard	1
2	1493312	Cap (Capscrew Head)	3
3	4006381	Nut	3
3	1593336	Nut (Alternate Part)	3
4	1498338	Washer	3
5	4006380	Insert (Threaded)	3

©2015 HYSTER COMPANY

CAB ATTACHING PARTS (FIGURE 1-6)

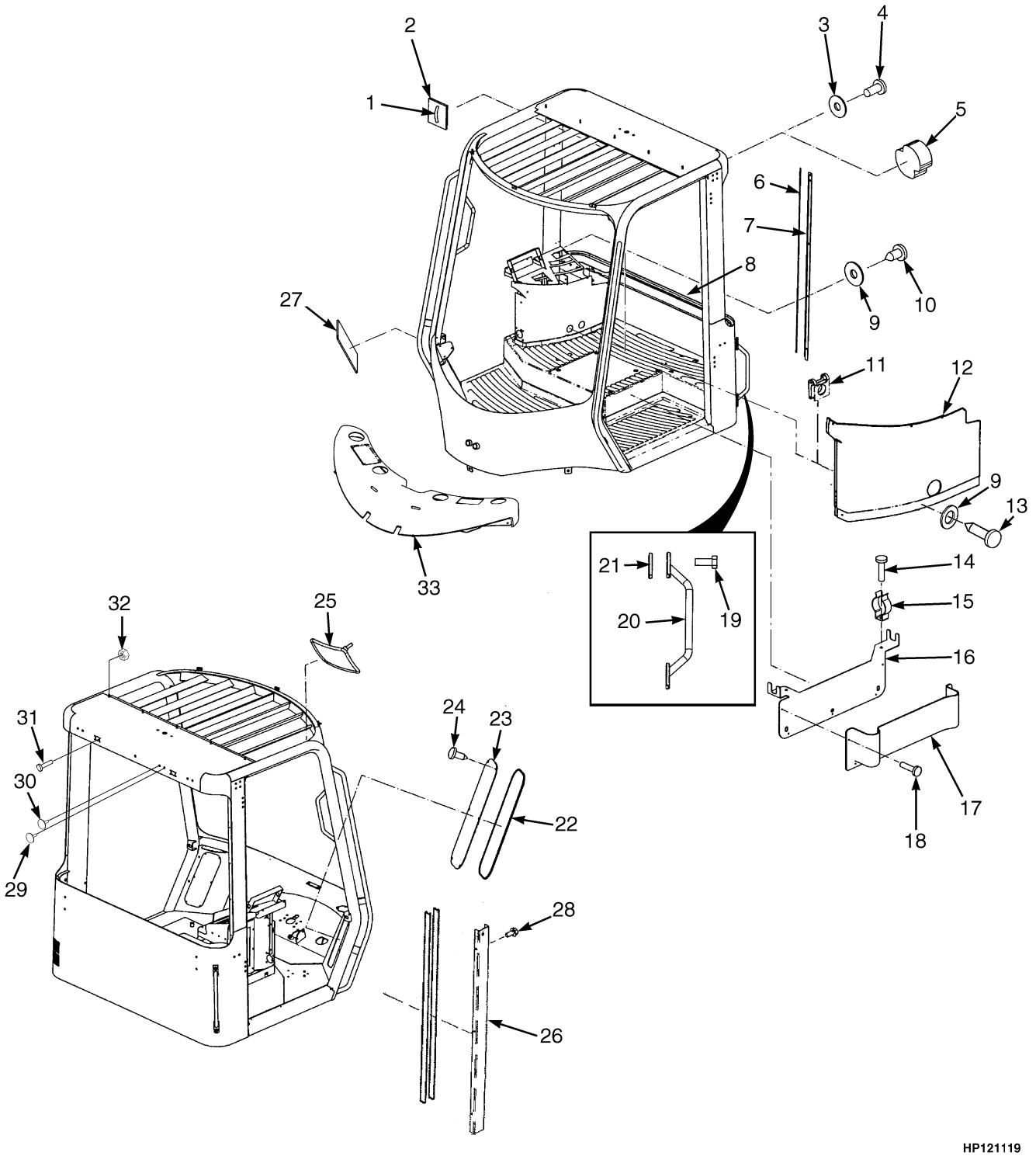

©2015 HYSTER COMPANY

CAB ATTACHING PARTS

ITEM	PART NO.	DESCRIPTION	QTY
1	1393499	Clamp	1
2	1558036	Clip	1
3	1504942	Rubber Seal	8
4	1566044	Bolt	8
5	1558037	Seal	2
6	1492167	Trim-Bulk	1
7	1492166	Cover	1
8	1498336	Edge Protector	AR
9	1492140	Washer	6
10	1468306	Screw	5
11	1492139	Nut	1
12	1491029	Console (RH Internal)	1
12	1498376	Cover (Control Column)	1
13	1468319	Screw	1
14	1498357	Screw	2
15	1498356	Clip	2
16	1498355	Bracket (Cup And Clip Board Holder)	1
17	1492133	Holder (Cup And Clip Board)	1
18	1498354	Rivet	5
19	1566041	Screw	4
20	1498334	Handle Assembly (Rear)	2
20	136681	Capscrew	4
20	320158	Washer	4
20	1476584	Cover (Capscrew Head)	4
21	1498335	Pad	4
22	1498362	Seal	AR
23	1492197	Plate (Air Duct Cover)	2
24	1498363	Screw	12
25	1493278	Mirror (Interior)	2
26	1664405	Cover	1
26	1493373	Foam (RH)	1
27	1493372	Foam (LH)	1
28	1492163	Screw	16
29	1635006	Plug	1
30	1635005	Plug	1
31	1498357	Screw	8
32	292667	Nut	8
33	1498360	Dash Panel Assembly	1
33	1468321	Washer (Plastic)	6
33	292501	Capscrew	6
33	1476584	Cover (Capscrew Head)	6

©2015 HYSTER COMPANY

DASH AND AIR DUCT ASSEMBLY (FIGURE 1-7)

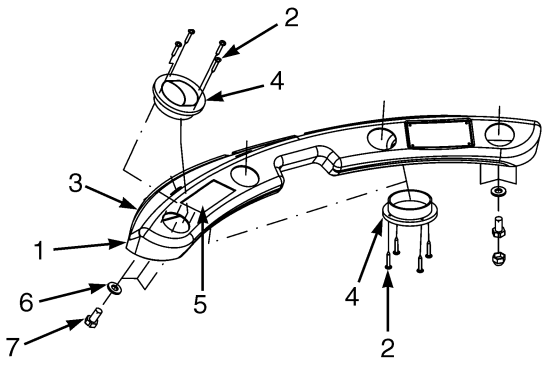

HP121130

ITEM	PART NO.	DESCRIPTION	QTY
	1492200	Cover (Dash and Cap Assembly)	1
1	1492195	Cover	1
2	1654935	Screw	24
3	1512822	Seal	AR
4	1598398	Louver (Air) (Round)	4
5	1492196	Ashtray	1
6	1468321	Washer (Plastic)	6
7	292501	Capscrew	6

©2015 HYSTER COMPANY

EXTERIOR MIRRORS (FIGURE 1-8)

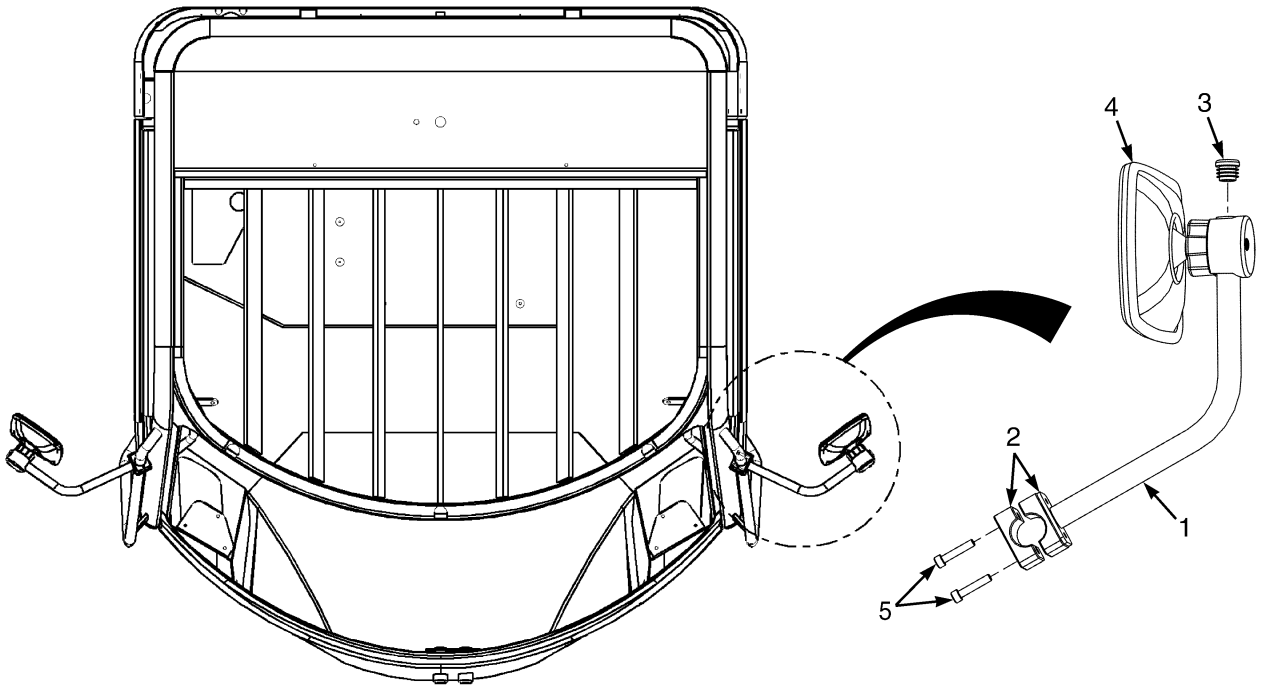

HP000936

ITEM	PART NO.	DESCRIPTION	QTY
1	1678201	Bracket Wldmt	2
2	1678202	Hose Clamp	2
3	1678203	End Plug	2
4	1678204	Mirror	2
5	4018167	Capscrew	4

CAB DOOR ATTACHING PARTS (FIGURE 1-9)

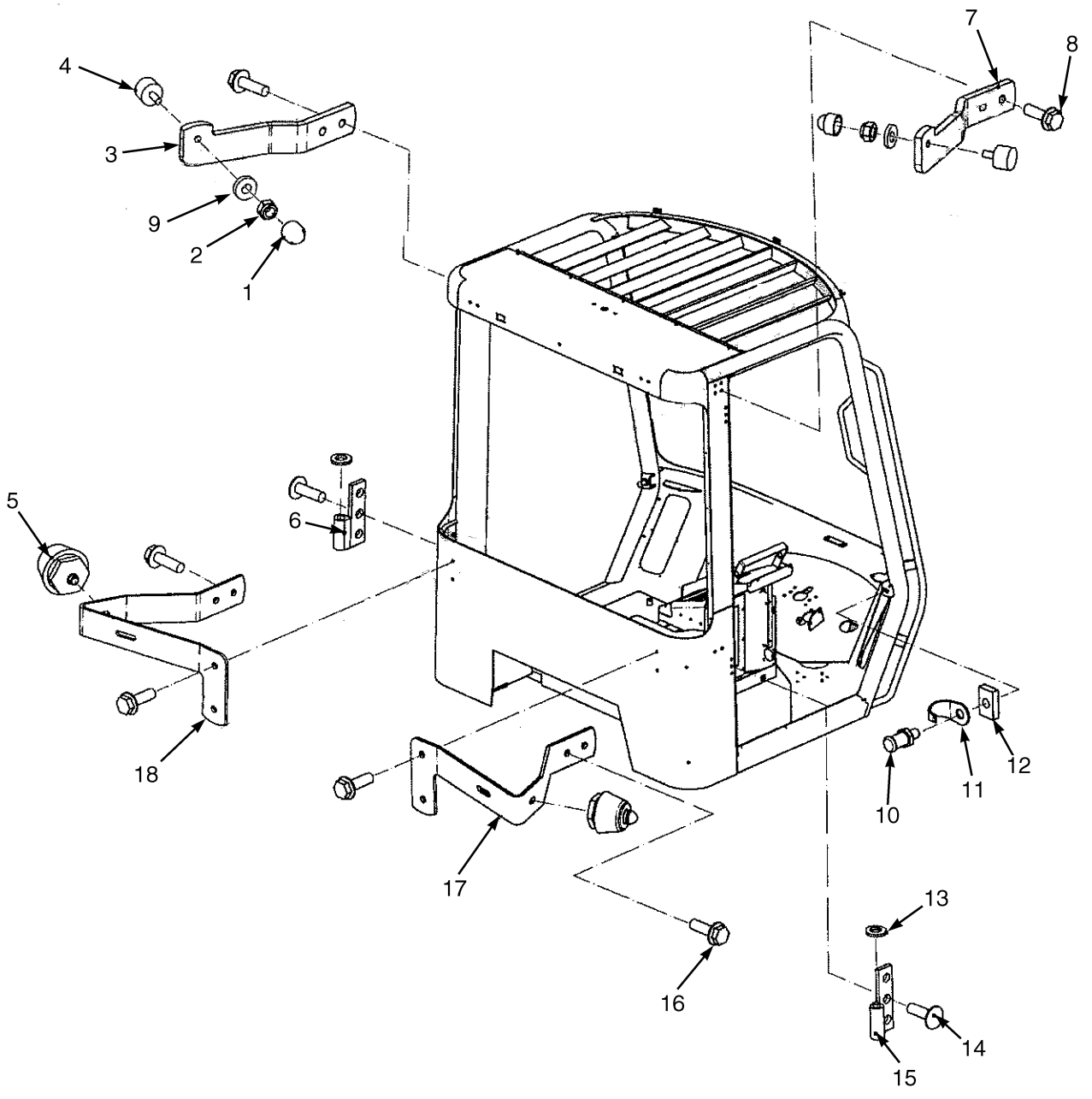

©2015 HYSTER COMPANY

CAB DOOR ATTACHING PARTS

ITEM	PART NO.	DESCRIPTION	QTY
1	1476584	Cover (Capscrew Head)	2
2	316835	Nut	2
3	1558022	Bar (LH) (Upper)	1
4	1493316	Bumper	2
5	1493313	Bumper	2
6	1393473	Hinge (LH)	2
7	1558023	Bar (RH) (Upper)	1
8	1566041	Screw	4
9	320158	Washer	2
10	1493318	Striker Bolt Assembly	2
10	1504955	Bolt	1
11	1504954	Guard	1
12	1504953	Block (Tapped)	1
13	1468312	Washer	4
14	1493308	Bolt	12
15	1393474	Hinge (RH)	2
16	1566041	Screw	8
17	1558021	Bar (RH) (Lower)	1
18	1558020	Bar (LH) (Lower)	1

©2015 HYSTER COMPANY

CAB DOOR (FIGURE 1-10)

RIGHT HAND (→ S/N G019E02407G (CLOSED CAB WITH HEATER))
(→ S/N G019E02399G (CLOSED CAB WITH INSULATION))
(→ S/N G019E02401G (CLOSED CAB WITH AIR CONDITIONING AND INSULATION))

©2015 HYSTER COMPANY

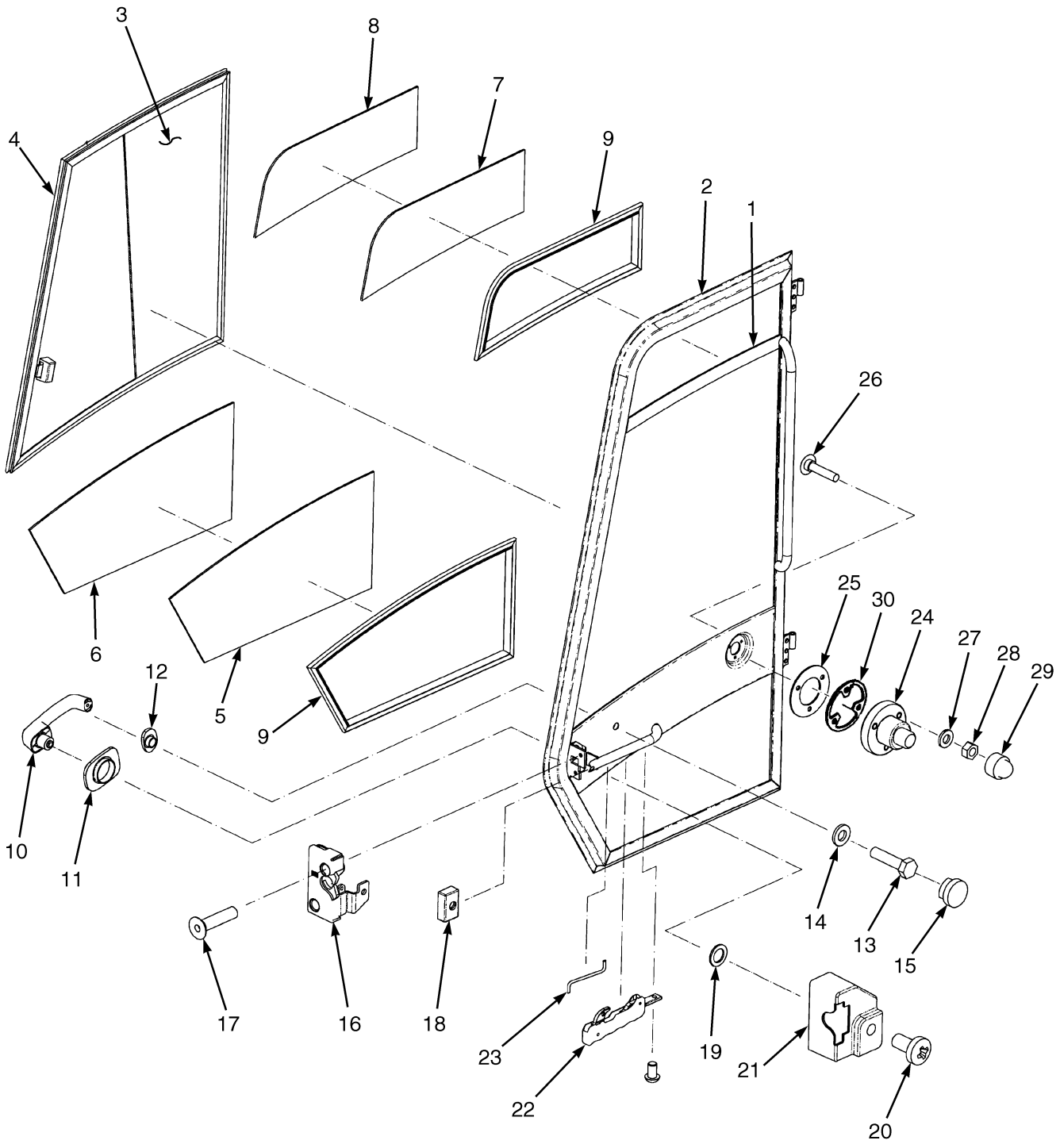
3
8
7
4
9
2
1
26
6
5
9
12
25
30
24
27
28
29
10
11
14
13
15
17
16
18
23
19
21
22
20

HP121106

CAB DOOR

RIGHT HAND (→ S/N G019E02407G (CLOSED CAB WITH HEATER)) (→ S/N G019E02399G (CLOSED CAB WITH INSULATION)) (→ S/N G019E02401G (CLOSED CAB WITH AIR CONDITIONING AND INSULATION))

ITEM	PART NO.	DESCRIPTION	QTY
	1664394	Door (RH)	1
1	1623268	Door	1
2	1515337	Seal	5
3	~~1558293~~		
	1644795	Window (Main) (☞Figure 1-17)	1
4	1558294	Seal	AR
5	1558295	Window (Lower)	1
6	1558296	Frame (Lower RH)	1
7	1558297	Sliding Window (Upper)	1
8	1558298	Frame (Upper RH)	1
9	1558299	Seal	4
10	1495371	Handle (Push Button)	1
11	1495372	Seal	1
12	1495431	Seal	1
13	287816	Capscrew	1
14	1468321	Washer (Plastic)	1
15	1558300	Cap	1
16	1558301	Latch	1
17	296229	Capscrew	2
18	1558302	Plate (Door Handle)	1
19	1558303	Washer	1
20	1493308	Bolt	1
21	1495435	Cover	1
22	1558305	Lock (Door Handle)	1
23	1558306	Piston Rod (Connector)	1
24	1559691	Latch (Door Holder)	1
25	1495454	Seal	1
26	1558307	Screw	3
27	1506738	Washer	3
28	316834	Nut	3
29	1493397	Cover (Capscrew Head)	3
30	1495456	Washer (Special)	1
	~~1623270~~		
	1692918	Kit-Repair Sliding Window (Sliding Window)	1
	1593629	Key (For Cab Door Grip)	1

©2015 HYSTER COMPANY

NOTES

©2015 HYSTER COMPANY

CAB DOOR (FIGURE 1-11)

RIGHT HAND (S/N G019E02408G → (CLOSED CAB WITH HEATER))
(S/N G019E02400G → (CLOSED CAB WITH INSULATION))
(S/N G019E02402G → (CLOSED CAB WITH AIR CONDITIONING AND INSULATION))

©2015 HYSTER COMPANY

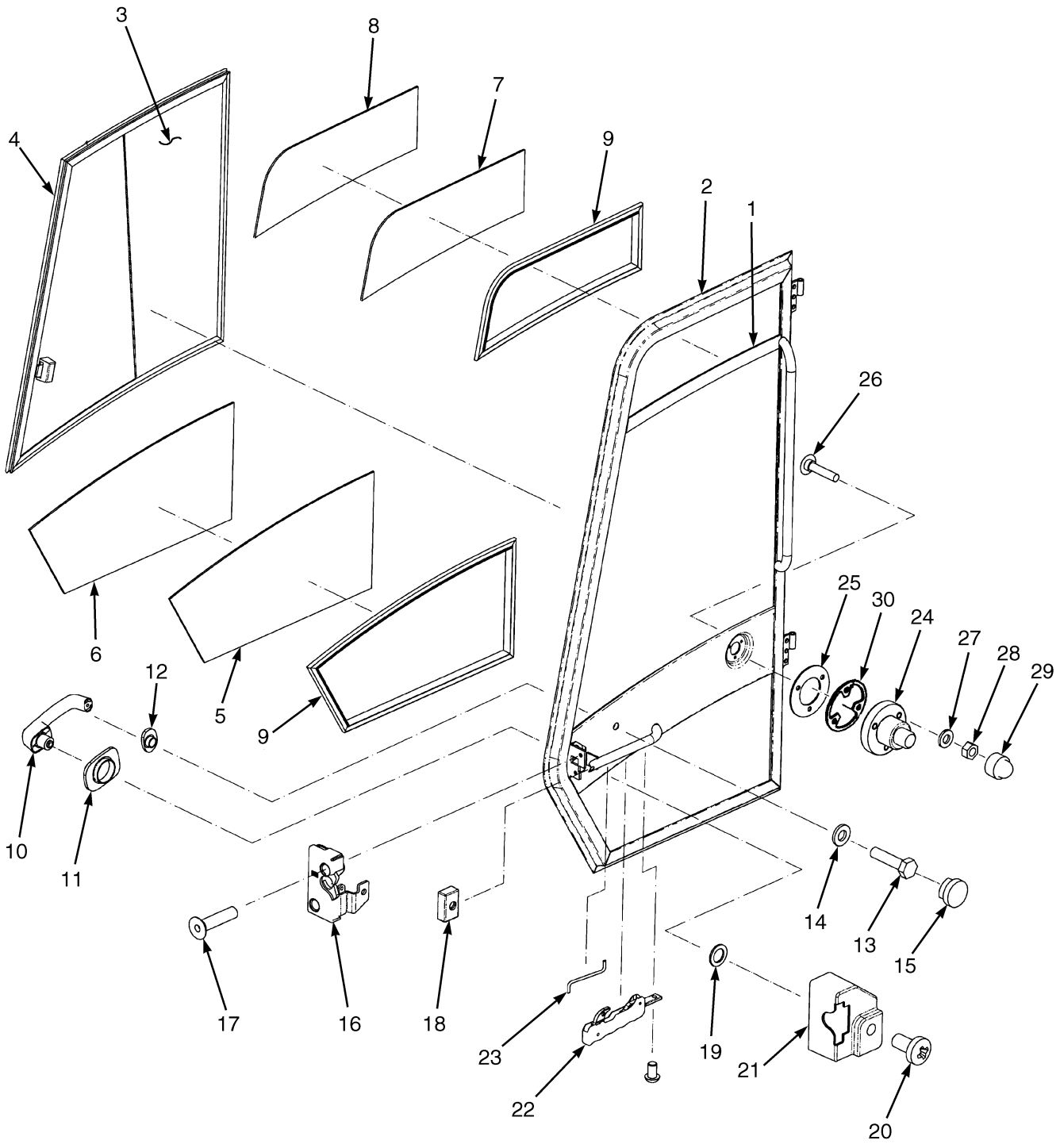
3
8
7
4
9
2
1
26
25
30
24
27
28
29
6
12
5
9
10
11
14
13
15
17
16
18
23
19
21
22
20

HP121106

CAB DOOR

RIGHT HAND (S/N G019E02408G → (CLOSED CAB WITH HEATER))
(S/N G019E02400G → (CLOSED CAB WITH INSULATION))
(S/N G019E02402G → (CLOSED CAB WITH AIR CONDITIONING AND INSULATION))

ITEM	PART NO.	DESCRIPTION	QTY
	~~1553404~~		
	1667218	Kit-Door RH (Cab)	1
1	1558292	Door	1
2	1515337	Seal	5
3	~~1558293~~		
	1644795	Window (Main) (☞Figure 1-17)	1
4	1558294	Seal	AR
5	1558295	Window (Lower)	1
6	1558296	Frame (Lower RH)	1
7	1558297	Sliding Window (Upper)	1
8	1558298	Frame (Upper RH)	1
9	1558299	Seal	4
10	1495371	Handle (Push Button)	1
11	1495372	Seal	1
12	1495431	Seal	1
13	287816	Capscrew	1
14	1468321	Washer (Plastic)	1
15	1558300	Cap	1
16	1558301	Latch	1
17	296229	Capscrew	2
18	1558302	Plate (Door Handle)	1
19	1558303	Washer	1
20	1493308	Bolt	1
21	1495435	Cover	1
22	1558305	Lock (Door Handle)	1
23	1558306	Piston Rod (Connector)	1
24	1559691	Latch (Door Holder)	1
25	1495454	Seal	1
26	1558307	Screw	3
27	1506738	Washer	3
28	316834	Nut	3
29	1493397	Cover (Capscrew Head)	3
30	1495456	Washer (Special)	1

©2015 HYSTER COMPANY

NOTES

©2015 HYSTER COMPANY

CAB DOOR (FIGURE 1-12)

LEFT HAND (→ S/N G019E02399G (CLOSED CAB WITH INSULATION))
(→ S/N G019E02401G (CLOSED CAB WITH AIR CONDITIONING AND INSULATION))
(→ S/N G019E02407G (CLOSED CAB WITH HEATER))

©2015 HYSTER COMPANY

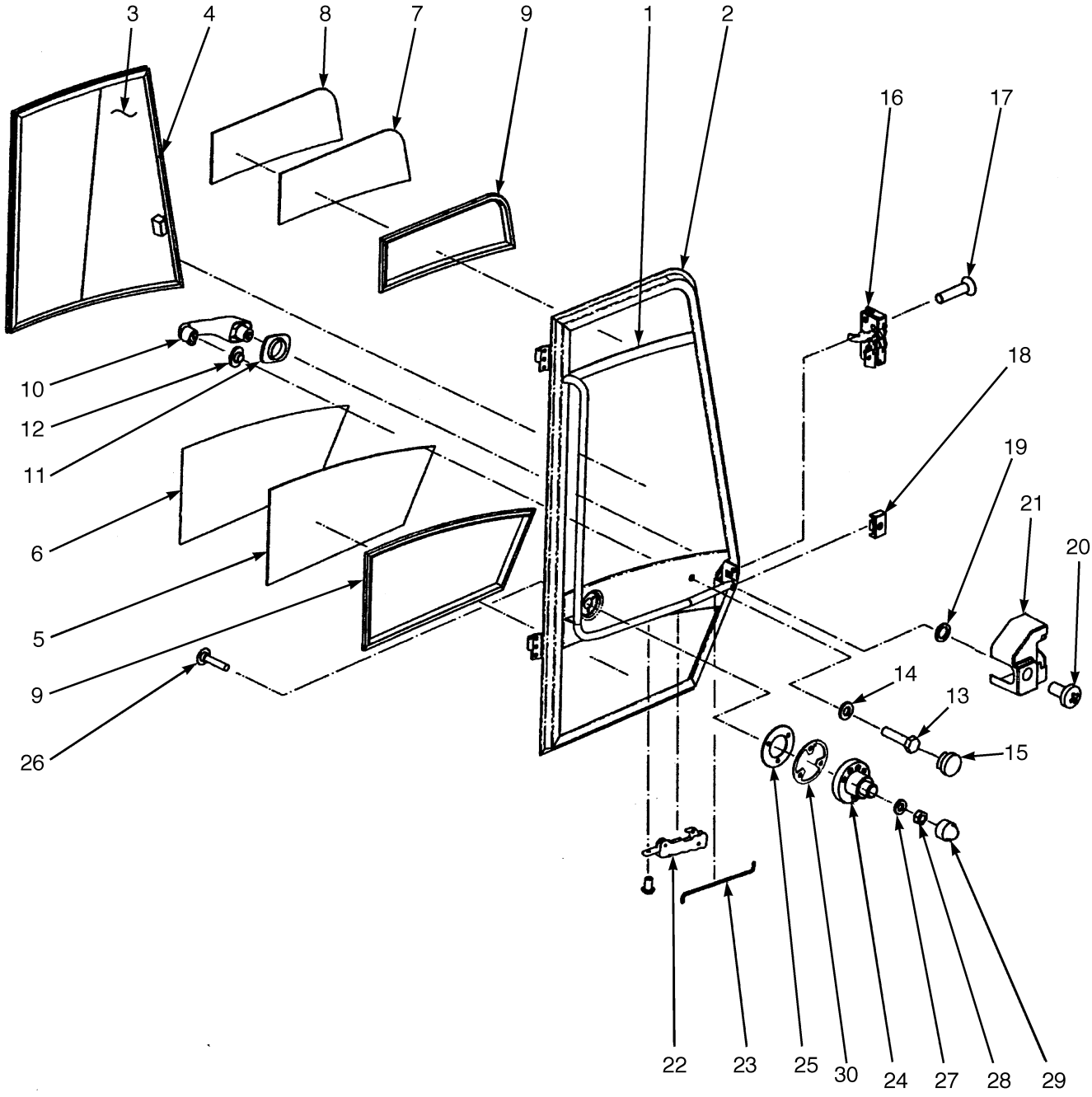
3
4
8
7
9
1
2
16
17
10
12
11
18
19
21
20
6
5
9
26
14
13
15
22
23
25
30
24
27
28
29
HP121107

CAB DOOR

LEFT HAND (→ S/N G019E02399G (CLOSED CAB WITH INSULATION)) (→ S/N G019E02401G (CLOSED CAB WITH AIR CONDITIONING AND INSULATION)) (→ S/N G019E02407G (CLOSED CAB WITH HEATER))

ITEM	PART NO.	DESCRIPTION	QTY
	1664396	Door (LH)	1
1	1623266	Door	1
2	1515337	Seal	5
3	~~1558441~~		
	1644794	Window (Main) (☞Figure 1-17)	1
4	1558294	Seal	AR
5	1558442	Window (Door) (Lower)	1
6	1558443	Seal (Lower LH)	1
7	1558444	Sliding Window (Door) (Upper)	1
8	1558445	Seal (Upper LH)	1
9	1558299	Seal	4
10	1495371	Handle (Push Button)	1
11	1495372	Seal	1
12	1495431	Seal	1
13	287816	Capscrew	1
14	1468321	Washer (Plastic)	1
15	1558300	Cap	1
16	1558446	Latch	1
17	296229	Capscrew	2
18	1558302	Plate	1
19	1558303	Washer	1
20	1493308	Bolt	1
21	1495438	Cover	1
22	1558305	Lock	1
23	1558447	Piston Rod (Connector)	1
24	1559691	Latch (Door Holder)	1
25	1495454	Seal	1
26	1558307	Screw	3
27	1506738	Washer	3
28	316834	Nut	3
29	1493397	Cover (Capscrew Head)	3
30	1495456	Washer (Special)	1
	1593629	Key (For Cab Door Grip)	1
	~~1623270~~		
	1692918	Kit-Repair Sliding Window (Sliding Window)	1

©2015 HYSTER COMPANY

NOTES

©2015 HYSTER COMPANY

CAB DOOR (FIGURE 1-13)

LEFT HAND (S/N G019E02400G → (CLOSED CAB WITH INSULATION)) (S/N G019E02402G → (CLOSED CAB WITH AIR CONDITIONING AND INSULATION)) (S/N G019E02408G → (CLOSED CAB WITH HEATER))

©2015 HYSTER COMPANY

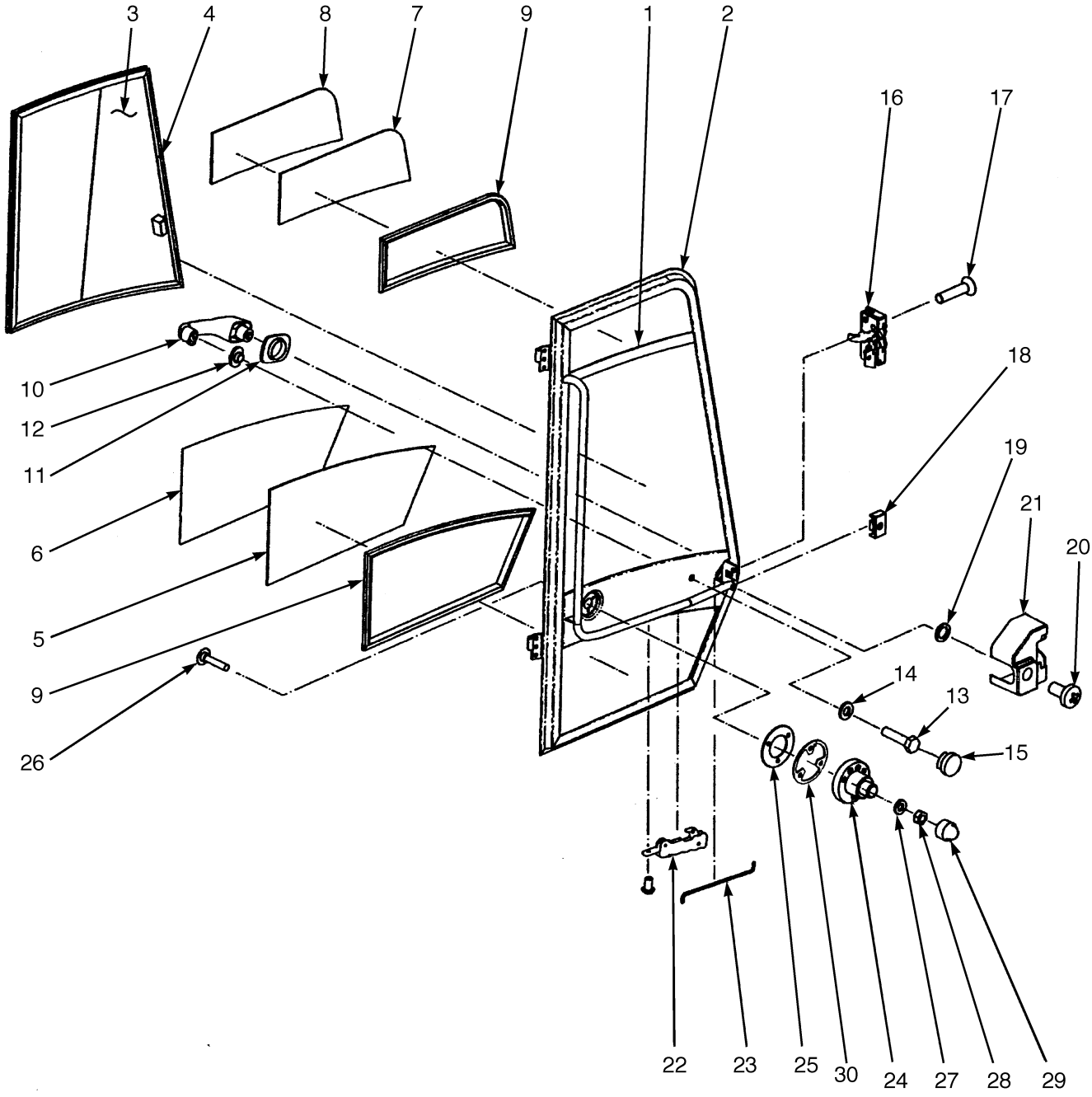
3
4
8
7
9
1
2
16
17
10
12
11
18
19
21
20
6
5
9
26
14
13
15
22
23
25
30
24
27
28
29
HP121107

CAB DOOR

LEFT HAND (S/N G019E02400G → (CLOSED CAB WITH INSULATION)) (S/N G019E02402G → (CLOSED CAB WITH AIR CONDITIONING AND INSULATION)) (S/N G019E02408G → (CLOSED CAB WITH HEATER))

ITEM	PART NO.	DESCRIPTION	QTY
	~~1553405~~		
	1667219	Kit-Door LH (Cab)	1
1	1558440	Door	1
2	1515337	Seal	5
3	~~1558441~~		
	1644794	Window (Main) (☞Figure 1-17)	1
4	1558294	Seal	AR
5	1558442	Window (Door) (Lower)	1
6	1558443	Seal (Lower LH)	1
7	1558444	Sliding Window (Door) (Upper)	1
8	1558445	Seal (Upper LH)	1
9	1558299	Seal	4
10	1495371	Handle (Push Button)	1
11	1495372	Seal	1
12	1495431	Seal	1
13	287816	Capscrew	1
14	1468321	Washer (Plastic)	1
15	1558300	Cap	1
16	1558446	Latch	1
17	296229	Capscrew	2
18	1558302	Plate	1
19	1558303	Washer	1
20	1493308	Bolt	1
21	1495438	Cover	1
22	1558305	Lock	1
23	1558447	Piston Rod (Connector)	1
24	1559691	Latch (Door Holder)	1
25	1495454	Seal	1
26	1558307	Screw	3
27	1506738	Washer	3
28	316834	Nut	3
29	1493397	Cover (Capscrew Head)	3
30	1495456	Washer (Special)	1
	a 1593629	Key (For Cab Door Grip)	1
	~~1623270~~		
	1692918	Kit-Repair Sliding Window (Sliding Window)	1

FOOTNOTES:

a Not Illustrated

©2015 HYSTER COMPANY

CAB FLOORMATS (FIGURE 1-14)

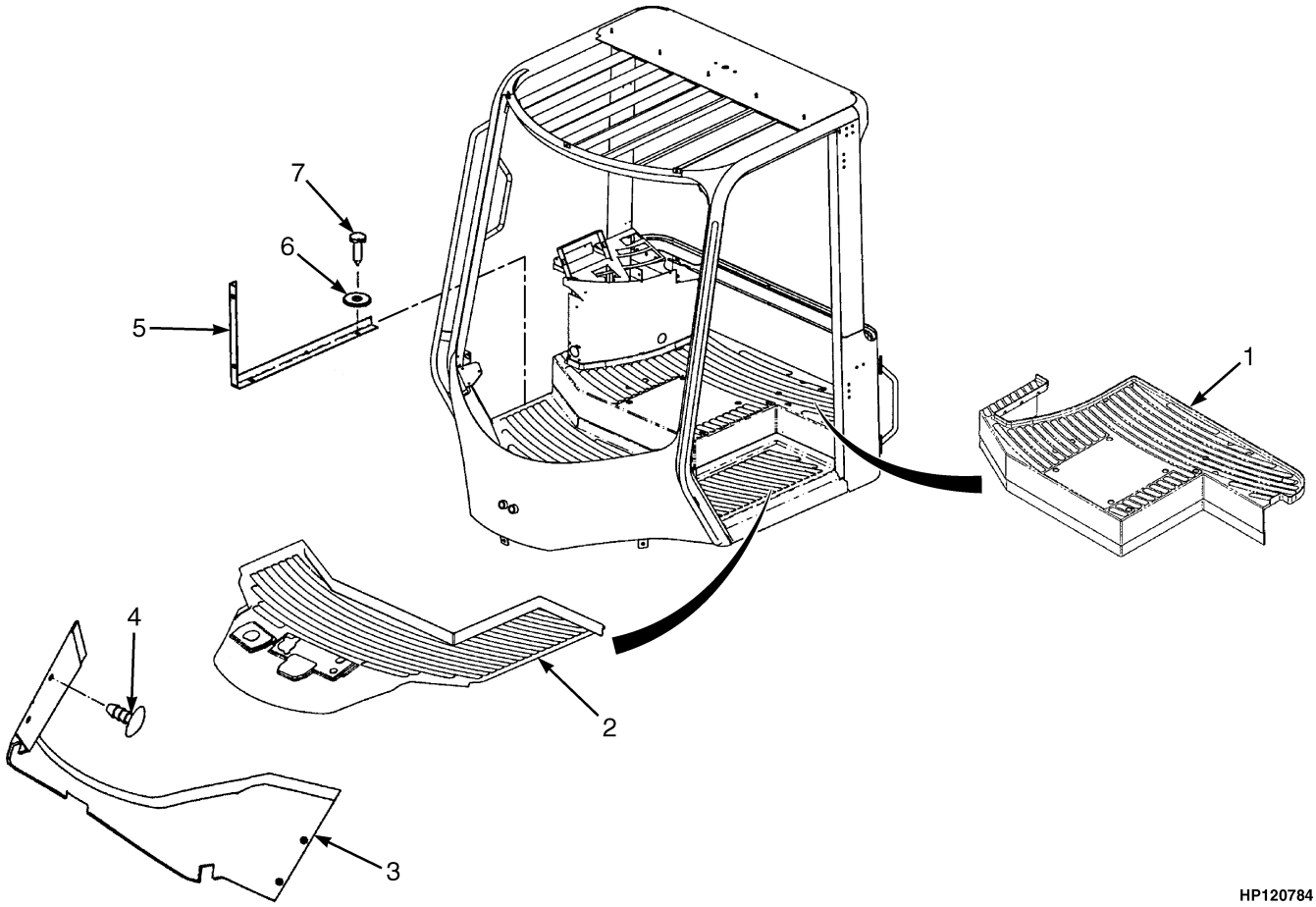

HP120784

ITEM	PART NO.	DESCRIPTION	QTY
1	1493282	Floormat (Seat)	1
2	1493281	Floormat (Main)	1
3	1493283	Floormat (Front Cowl)	1
4	1601929	Plug	4
5	1498365	Strip	1
6	1492140	Washer	4
7	1468318	Screw	4

©2015 HYSTER COMPANY

HANDHOLD AND UNDERFLOOR COVER (FIGURE 1-15)
OPEN CAB

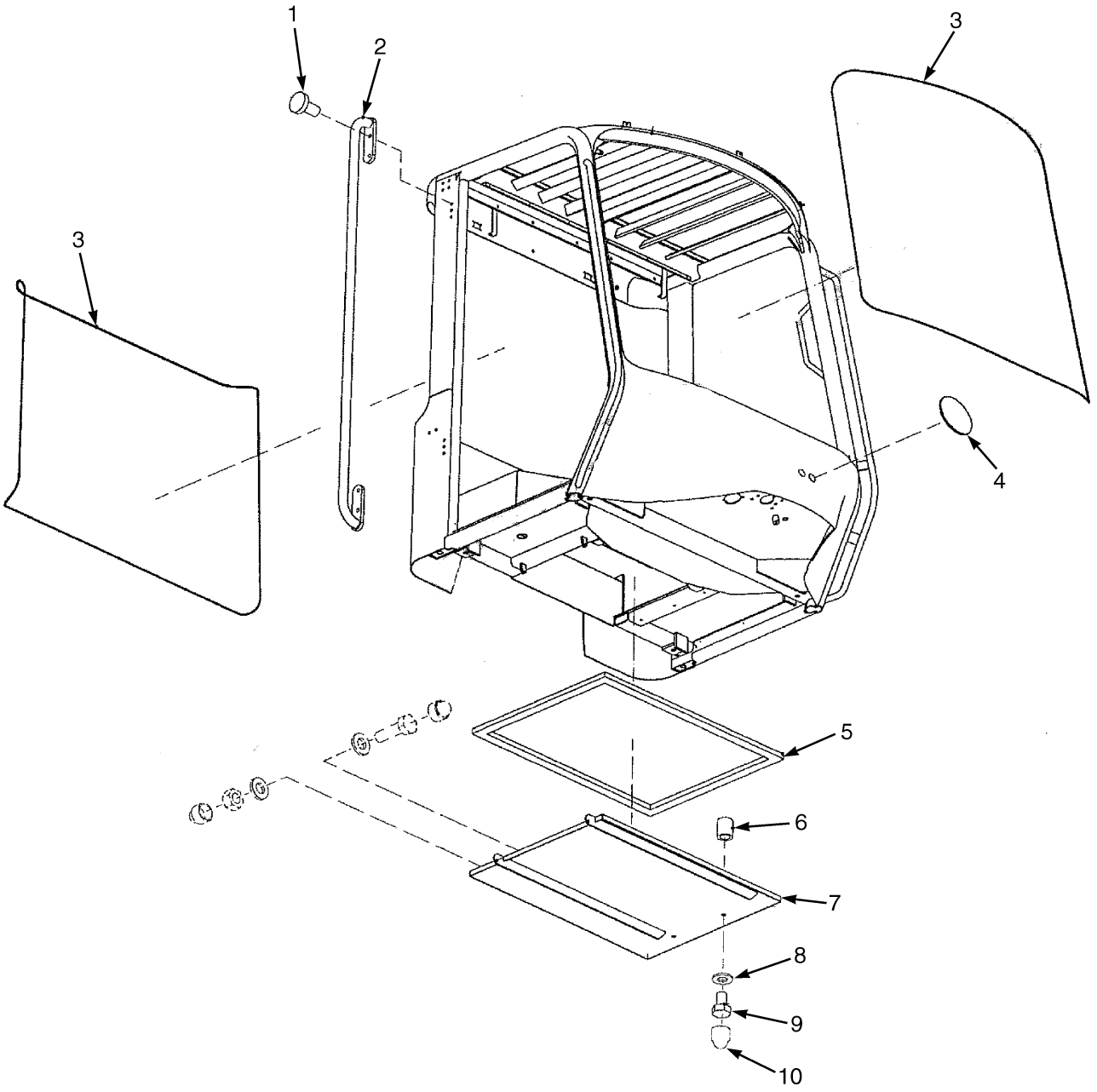

HP121115

©2015 HYSTER COMPANY

HANDHOLD AND UNDERFLOOR COVER
OPEN CAB

ITEM	PART NO.	DESCRIPTION	QTY
1	1468311	Screw	8
2	1558015	Rail	2
3	1498336	Edge Protector	AR
4	1558016	Grommet	2
5	1508229	Seal	15
6	1493491	Bushing	3
7	1558017	Cover (Heater Box)	1
8	320160	Washer	3
9	136985	Capscrew	3
10	1493312	Cap (Capscrew Head)	3

©2015 HYSTER COMPANY

CAB WINDOWS INSTALLATION (FIGURE 1-16)

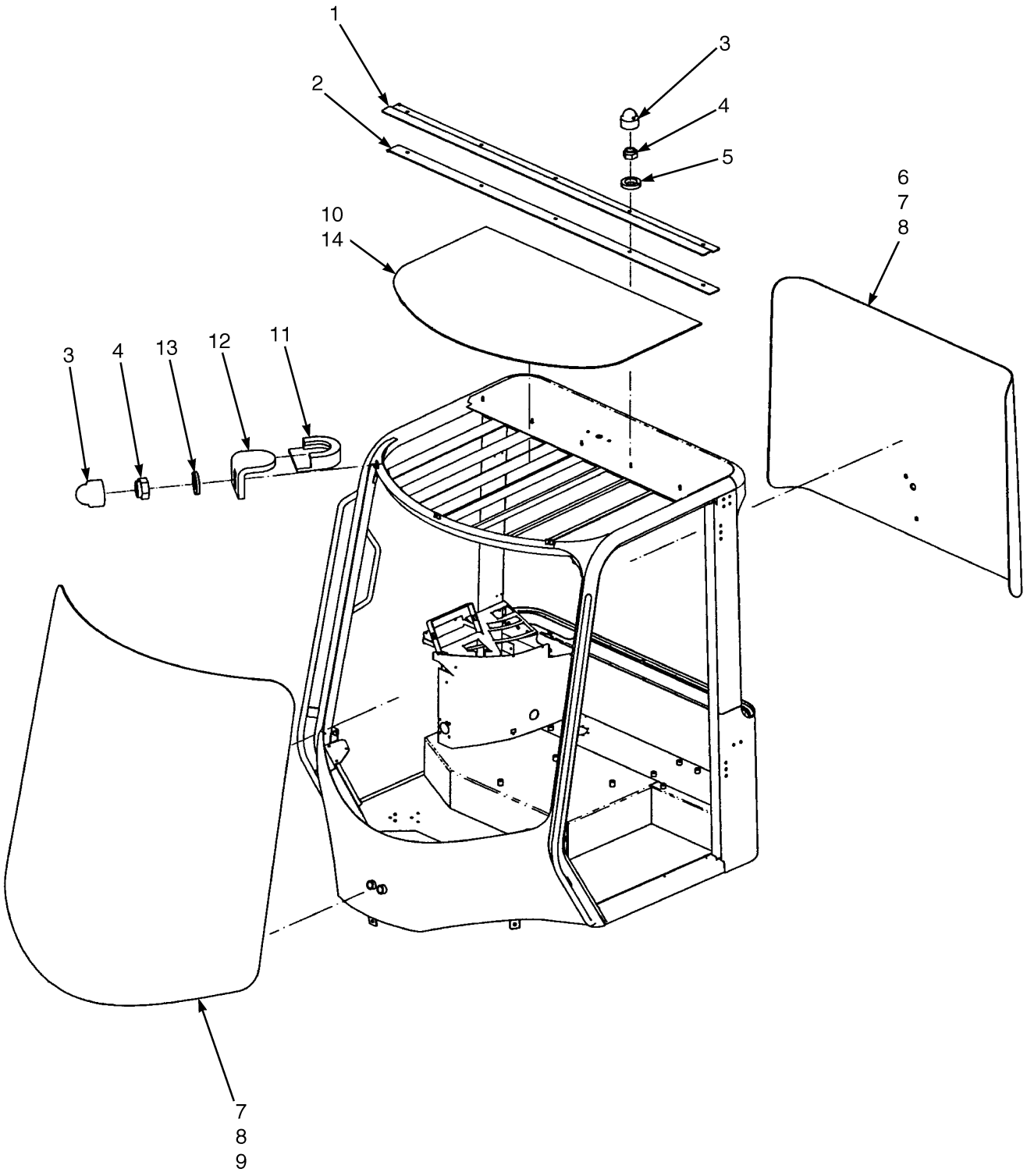

©2015 HYSTER COMPANY

CAB WINDOWS INSTALLATION

ITEM	PART NO.	DESCRIPTION	QTY
1	1493328	Clip , Window	1
2	1498341	Seal	1
3	1493397	Cover (Capscrew Head)	8
4	316834	Nut	8
5	1498342	Washer	5
6	1493324	Window (Rear) (Curved)	1
7	~~1393465~~		
	1493321	Seal (Profile)	AR
8	1393466	Seal (3.55 M)	1
9	1493320	Window (Tempered)	1
9	2046118	Window (Laminated) (Optional)	1
9	2046119	Kit-Flat Glass (Service Option)	1
10	1558024	Window (Skylight) (Top)	1
11	1493329	Cover	3
12	1498343	Clip (Roof)	3
13	1468321	Washer (Plastic)	3
14	1515337	Seal (Top)	AR
	1498750	Kit-Seal	1

©2015 HYSTER COMPANY

MAIN WINDOW ASSEMBLY (FIGURE 1-17)

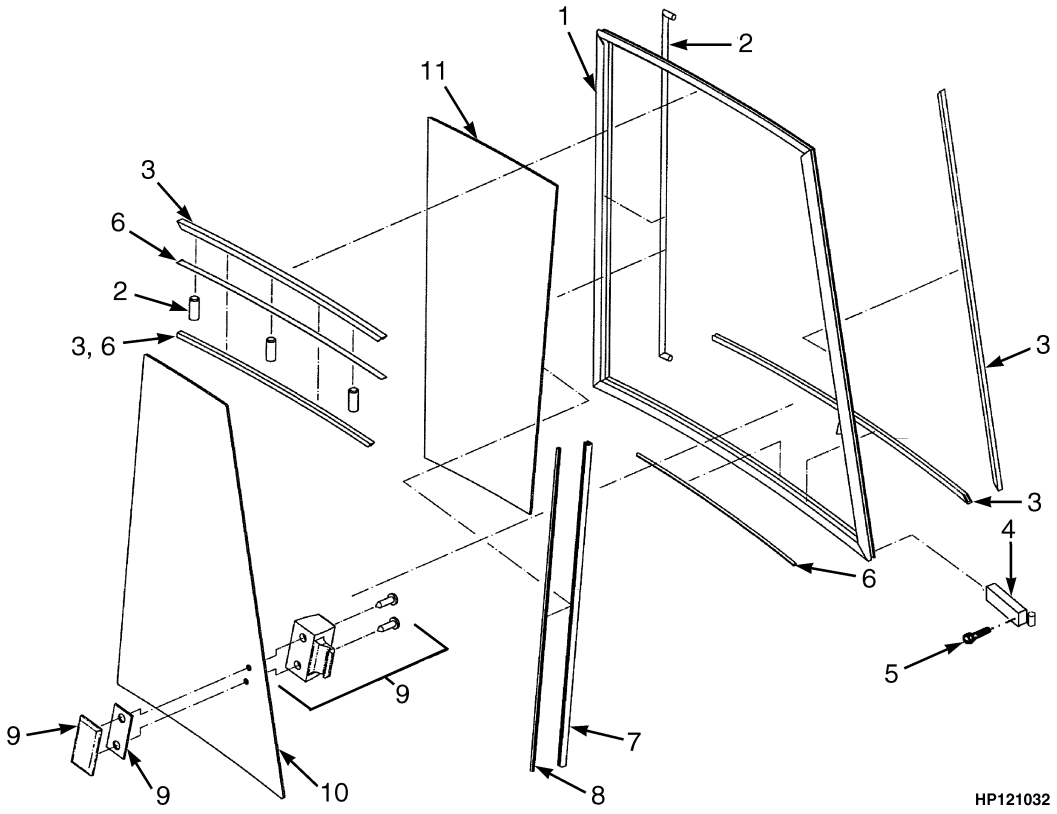

KEY:
A: Left Hand
B: Right Hand

ITEM	PART NO.	DESCRIPTION	QTY A	QTY B
	~~1558293~~			
	1644795	Window (Main)	..	1
	~~1558441~~			
	1644794	Window (Main)	1	..
1	1644803	Frame (Sliding Window)	..	1
1	1644796	Frame (Sliding Window)	1	..
2	1641640	Strip Seal (.108 m)	AR	AR
3	1644804	Seal (2.254 m)	AR	AR
4	~~1644801~~			
	4009782	Guide	4	4
5	1644802	Screw	4	4
6	1641637	Seal (.619 m)	AR	AR
7	1644799	Guard (Window)	1	1
8	1644800	Seal (.786 m)	AR	AR
9	1483226	Latch (Sliding Window)	2	2
10	1644806	Glass	..	1
10	1644797	Glass	1	..
11	1644805	Glass	..	1
11	1644798	Glass	1	..

©2015 HYSTER COMPANY

NOTES

©2015 HYSTER COMPANY

WINDOW WIPER SYSTEM (FIGURE 1-18)
WASHER BOTTLE KIT

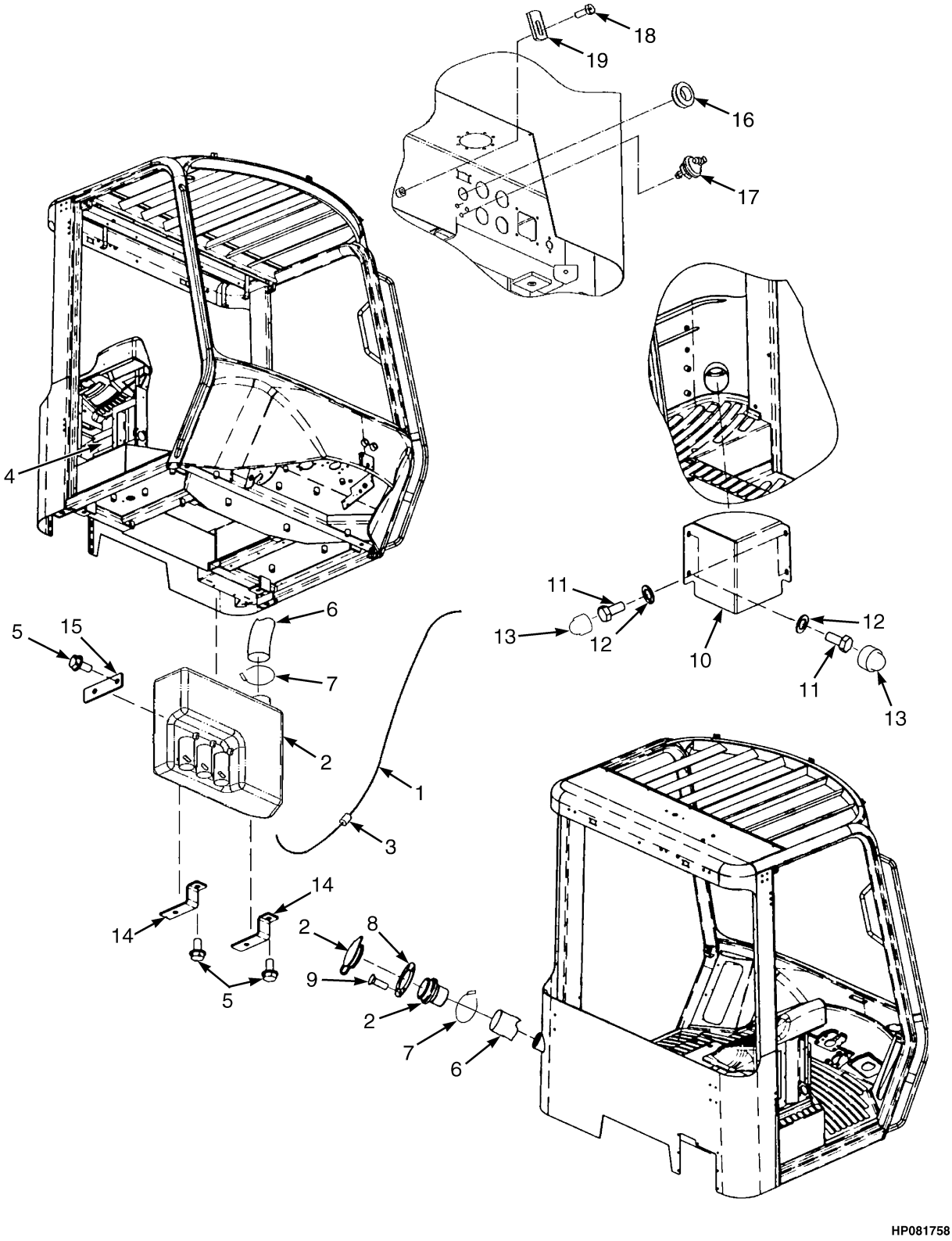

©2015 HYSTER COMPANY

WINDOW WIPER SYSTEM
WASHER BOTTLE KIT

ITEM	PART NO.	DESCRIPTION	QTY
	1702285	Kit-Wiper (Washer Bottle)	1
1	1393509	Hose	AR
2	1626996	Reservoir Assembly (Window Washer)	1
2	1635026	Cap	1
2	1635025	Pump	3
	a ~~1393495~~		
	1301685	Check Valve	1
4	1492156	Relay (Wiper Timer)	1
5	1566044	Bolt	3
6	1635020	Hose	1
7	1704396	Clamp	4
8	1635021	Washer	1
9	1635022	Screw	4
10	1635023	Cover	1
11	292500	Capscrew	4
12	1506738	Washer	4
13	1493397	Cover (Capscrew Head)	4
14	1635018	Bracket	2
15	1635019	Plate	1
16	1515675	Grommet	1
17	1493336	Connector (Spray Nozzle)	2
18	1571632	Screw	6
19	4010862	Bracket	6

FOOTNOTES:

a Not Illustrated

©2015 HYSTER COMPANY

WINDOW WIPER SYSTEM (FIGURE 1-19)
REAR AND ROOF WIPER KITS — AND FRONT WIPER OPTIONS

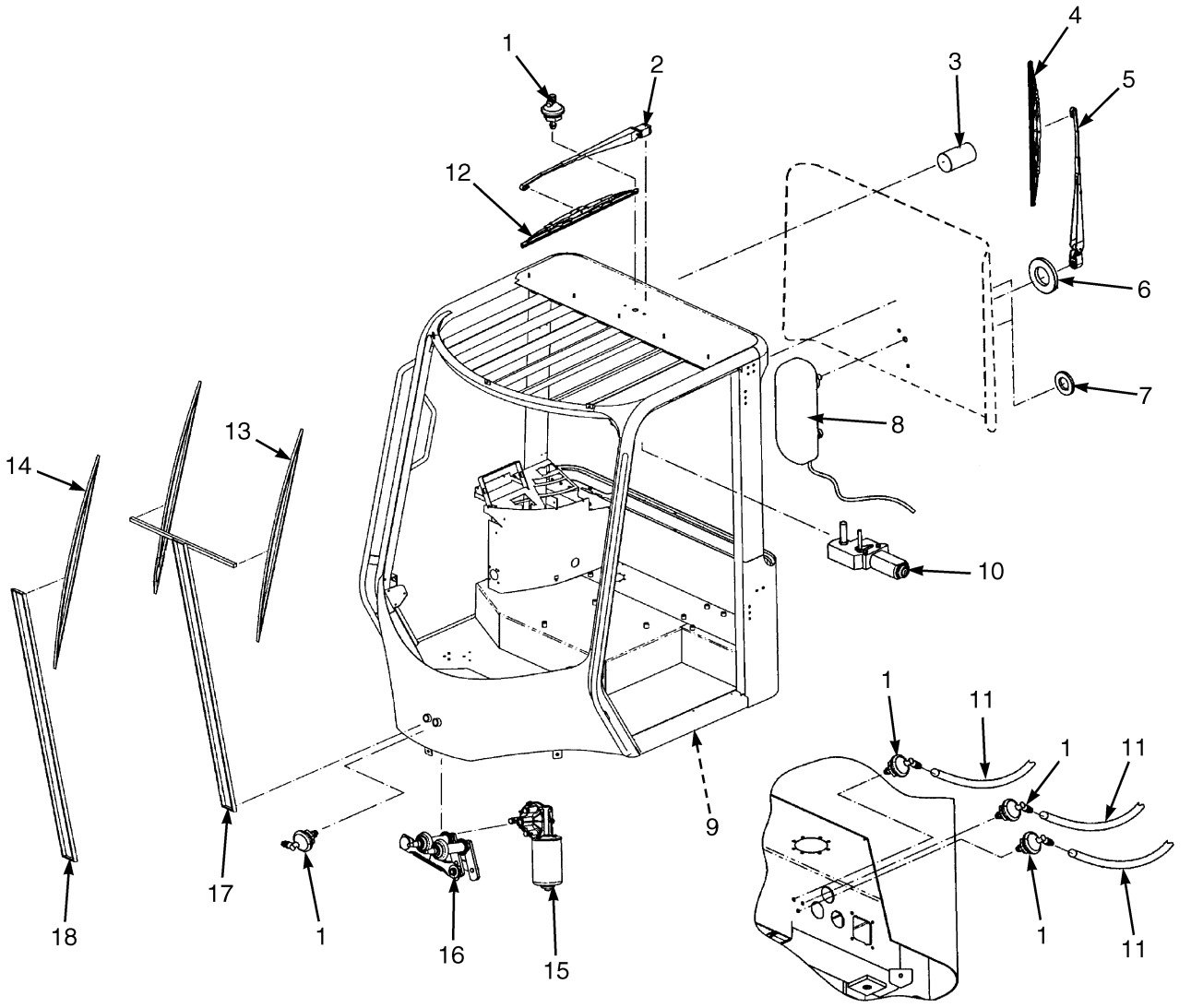

©2015 HYSTER COMPANY

WINDOW WIPER SYSTEM

REAR AND ROOF WIPER KITS – AND FRONT WIPER OPTIONS

ITEM	PART NO.	DESCRIPTION	QTY
1	1493336	Connector (Spray Nozzle)	6
2	1498347	Wiper Arm (Top)	1
3	1498344	Washer (Nozzle) (Dual Wiper)	1
4	~~1493340~~		
	1690934	Wiper Blade	1
5	1493341	Wiper Arm (Rear)	1
6	1558025	Washer	1
7	1554125	Washer	2
8	1493339	Wiper Motor (Rear)	1
8	2043546	Wire Harness (Rear Wiper)	1
9	2097396	Wire Harness (Wash Pumps)	1
10	1493344	Wiper Motor (Top)	1
11	1493337	Hose	AR
12	1498348	Wiper Blade (Top)	1
13	1573574	Wiper Blade (Dual Wiper)	2
14	1493335	Wiper Blade (Single Wiper)	1
15	1493332	Wiper Motor (Front)	1
16	1493333	Linkage (Front, Single Wiper)	1
16	4016648	Linkage (Front, Dual Wiper)	1
17	1573575	Wiper Arm (Dual Wiper)	1
18	1493334	Wiper Arm (Single Wiper)	1
19	~~1393495~~		
	1301685	Check Valve (Not Illustrated)	2
20	1704370	Sleeve (Not Illustrated)	1
	1702283	Kit-Wiper (Rear)	1
	1702284	Kit-Wiper (Roof)	1

©2015 HYSTER COMPANY

CAB SUNSHADES (FIGURE 1-20)

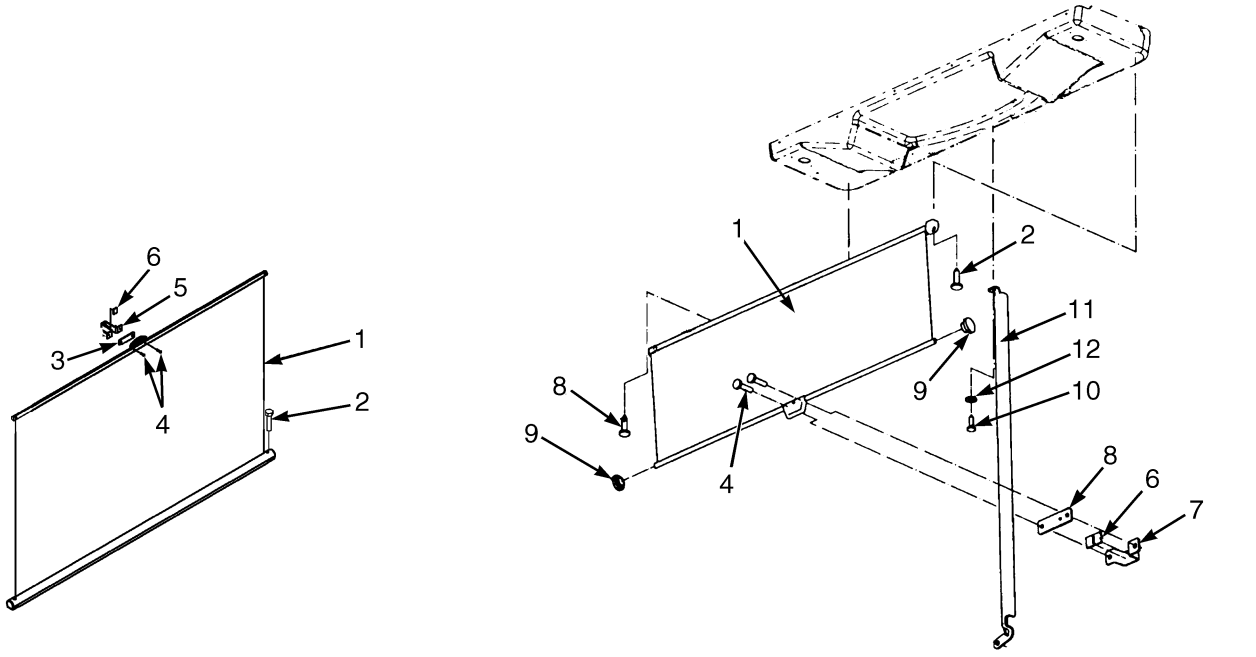

KEY:
A: Top Application
B: Rear Application

ITEM	PART NO.	DESCRIPTION	QTY A	QTY B
1	1506751	Sunshade	1	1
2	1468318	Screw	2	3
3	1506749	Rubber Pad	1	..
4	1655365	Screw	2	2
5	1506750	Clamp	1	..
6	1506748	Rubber Pad	1	2
7	1644792	Bracket	..	1
8	1506749	Rubber Pad	..	1
9	1644793	Plug	..	2
10	1468318	Screw	..	1
11	1644791	Bracket	..	1
12	296415	Washer	..	1

©2015 HYSTER COMPANY

NOTES

©2015 HYSTER COMPANY

REAR DUCT AND CONSOLE (FIGURE 1-21)

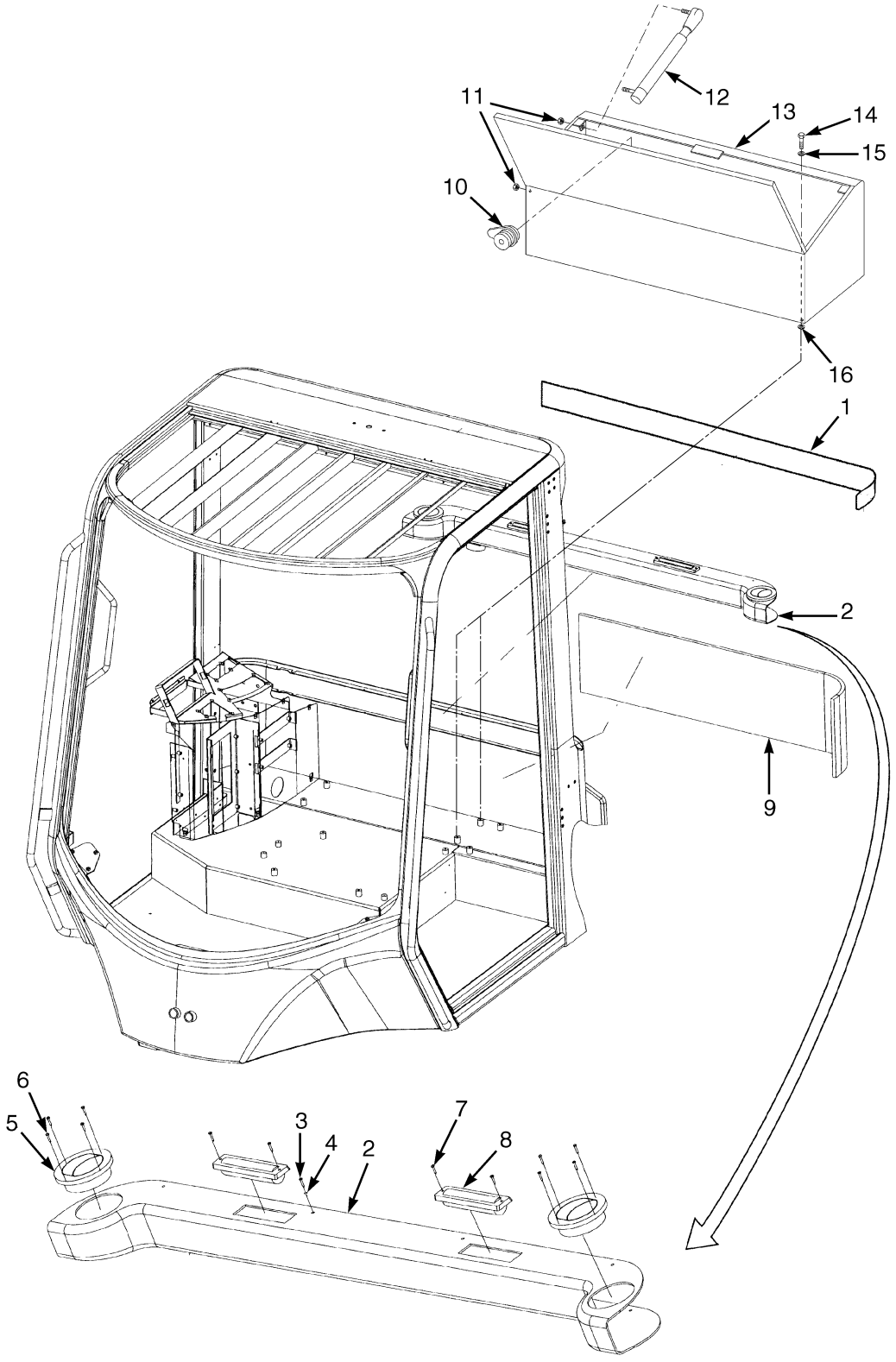

©2015 HYSTER COMPANY

REAR DUCT AND CONSOLE

ITEM	PART NO.	DESCRIPTION	QTY
1	1493370	Foam	1
2	1492175	Duct (Rear)	1
2	1491495	Duct (Front Cover)	1
3	1468318	Screw	8
4	1492140	Washer	8
5	1598398	Louver (Air)	2
6	1598420	Nut	8
7	1468320	Screw	4
8	1492169	Louver	2
9	1492173	Foam (Closed Cab)	1
9	1558031	Foam (Open Cab)	1
10	1506680	Lock	1
11	316835	Nut	2
12	1506679	Gas Spring	1
13	1499932	Storage Box	1
14	136681	Capscrew	4
15	320158	Washer	4
16	1506678	Washer	4

©2015 HYSTER COMPANY

CAB RECIRCULATING FAN (FIGURE 1-22)

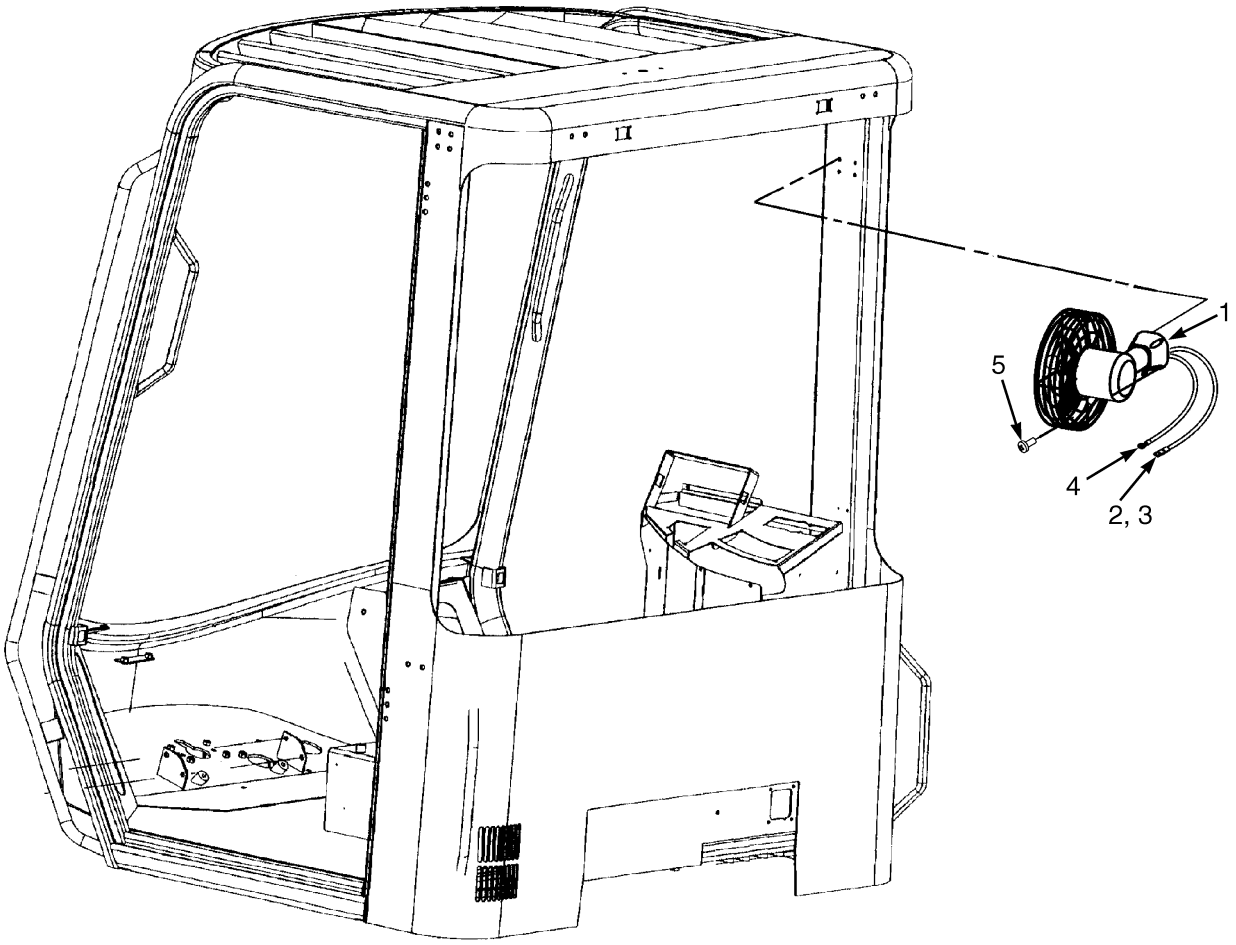

HP000921

ITEM	PART NO.	DESCRIPTION	QTY
1	1312226	Fan Assembly	1
1	1307755	Fan	1
2	181045	Connector Body	1
3	134810	Terminal	1
4	1301783	Ring Terminal	1
5	1468319	Screw	4

©2015 HYSTER COMPANY

NOTES

©2015 HYSTER COMPANY

INDICATOR DISPLAY AND CONTROLS (FIGURE 1-23)

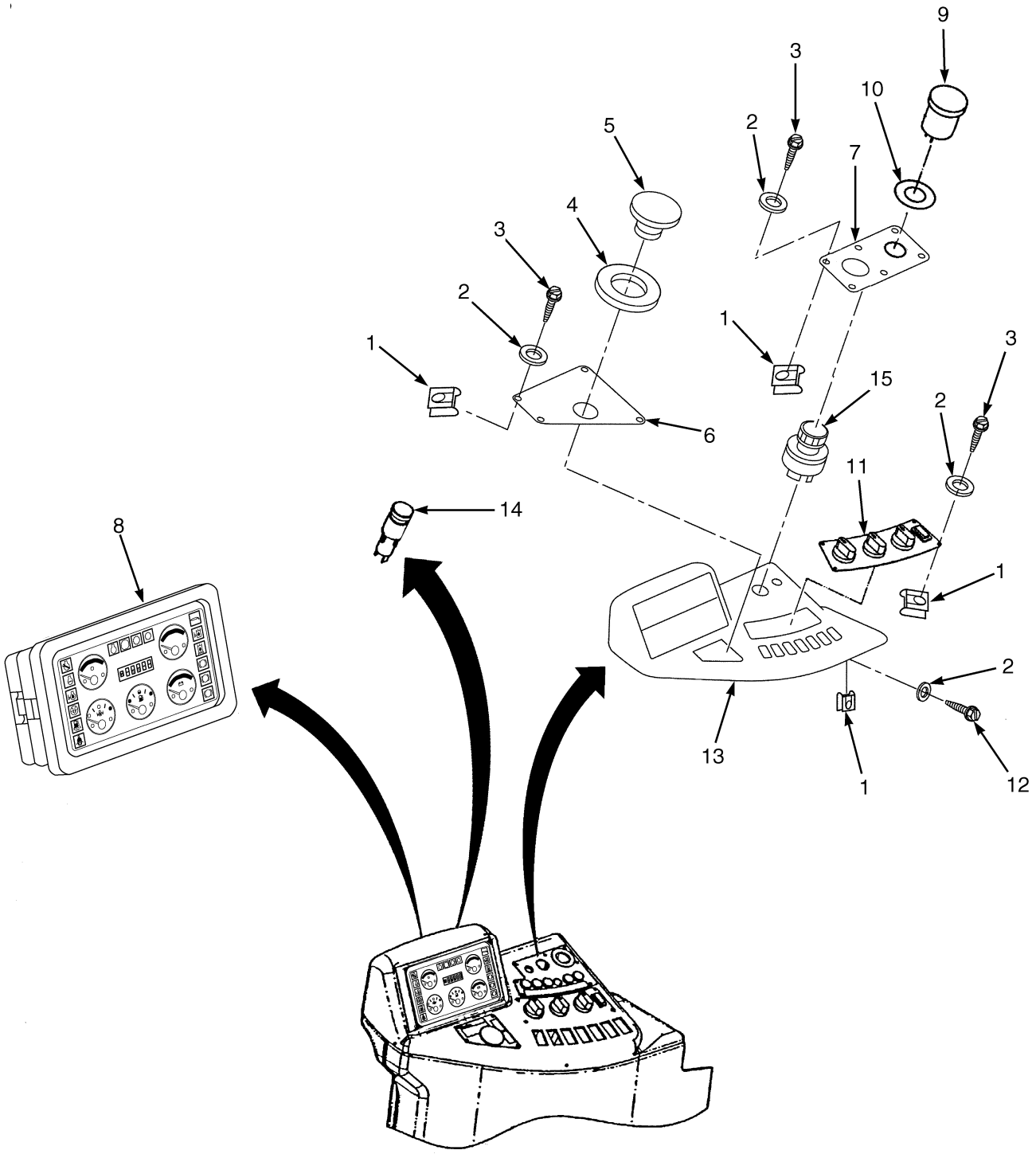

©2015 HYSTER COMPANY

INDICATOR DISPLAY AND CONTROLS

ITEM	PART NO.	DESCRIPTION	QTY
1	1492139	Nut	23
2	1492140	Washer	18
3	1468319	Screw	19
4	1492149	Washer	1
5	1659511	Knob	1
6	1492147	Plate (Park Brake)	1
7	1566771	Plate (Ignition)	1
8	4608028	Instrument Cluster (LPG Engine)	1
8	~~2091418~~		
	4608026	Instrument Cluster	1
9	1601935	Plug (Not Shown, For Use Without 12 Volt Socket Option)	1
9	1566764	Socket (12V) (Optional)	1
10	1558027	Label (12V) (For Use With 12 Volt Socket)	1
11	1558033	Control Panel (Heater)	1
11	1615364	Control Panel (Heater and Air Conditioner)	1
12	1492141	Screw	4
13	1566770	Console (RH Top) (Closed Cab)	1
13	1652020	Cover , Console (Open Cab)	1
14	1561540	Warning Light (Red) (Includes Bulb)	1
15	379902	Ignition Switch	1
15	1337197	Key Set	1
15	186304	Key	2

©2015 HYSTER COMPANY

CAB ELECTRONIC CONTROLS AND PANELS (FIGURE 1-24)

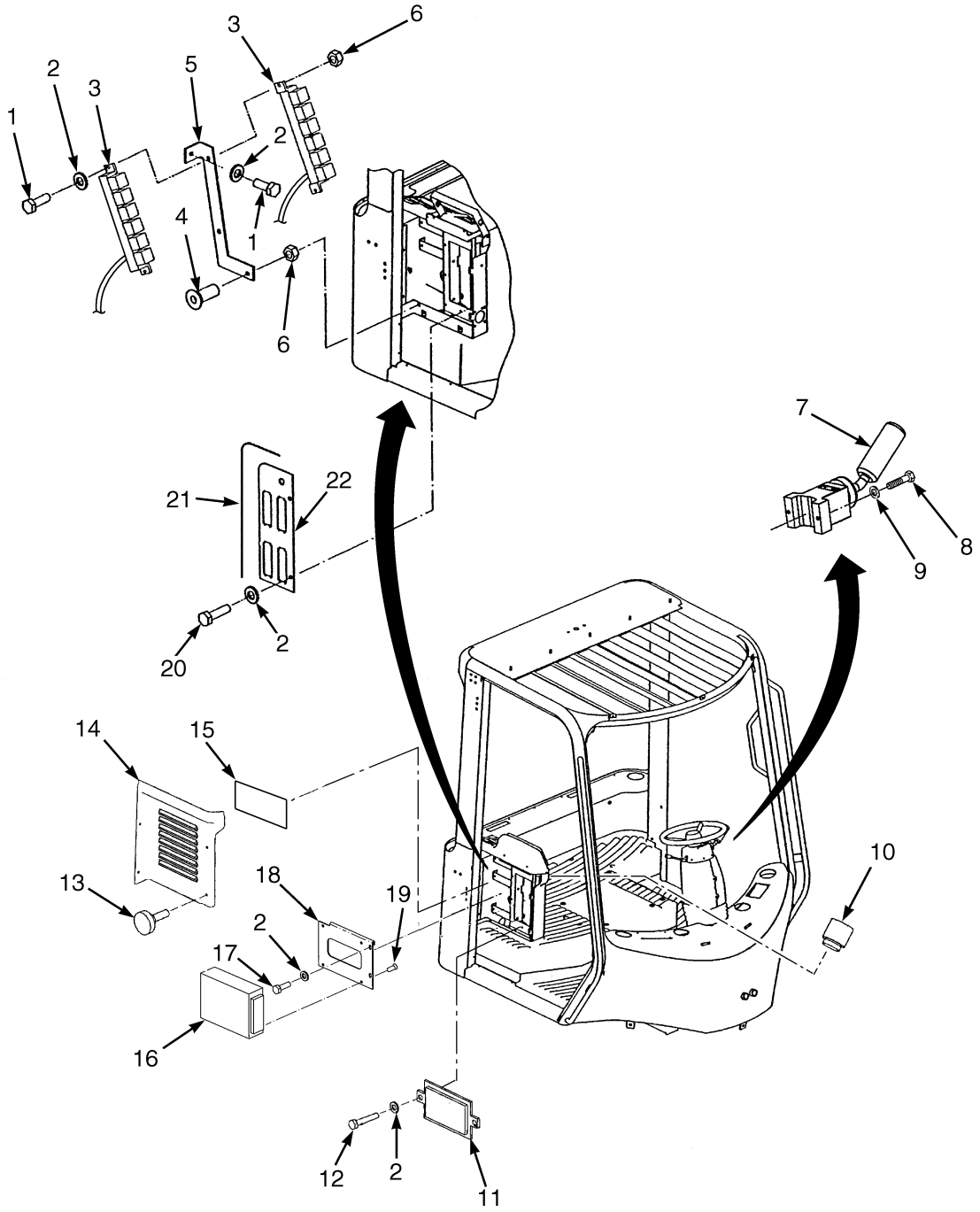

©2015 HYSTER COMPANY

CAB ELECTRONIC CONTROLS AND PANELS

ITEM	PART NO.	DESCRIPTION	QTY
1	292501	Capscrew	3
2	~~4093489~~		
	320156	Washer	9
3	2088901	Wire Harness (Side Console)	1
4	1558041	Screw	1
5	1492146	Bracket Wldmt (Relay)	1
6	316834	Nut	3
7	**a** 1494677	Shifter (Forward And Reverse Lever)	1
7	**c** 1494678	Shifter (Forward And Reverse Lever)	1
7	**a** 1494691	Shifter (Monotrol)	1
7	**c** 1494694	Shifter (Monotrol)	1
8	1623812	Screw	2
9	1558055	Washer	2
10	1393781	Warning Buzzer Slow Pulse (Slow Pulse)	1
11	2056447	Controller (FLT/PWM)	1
12	292502	Capscrew	2
13	1558042	Screw	4
14	1498375	Cover , Control Column (Open Cab)	1
14	1491028	Console Cover (RH External) (Closed Cab)	1
15	2094020	Label (Fuse Panel)	1
16	**b** 2092720	Controller , Transmission (APC 200) (TE-10 LPG)	1
16	**b** 2092719	Controller , Transmission (APC 200) (TE-10 Diesel)	1
16	**d** 2105570	Controller , Transmission (APC 211) (TE-10 LPG)	1
16	**d** 2105569	Controller , Transmission (APC 211) (TE-10 Diesel)	1
17	292500	Capscrew	2
18	1558050	Bracket	1
19	1567941	Screw	4
20	292500	Capscrew	2
21	1492167	Trim-Bulk	AR
22	1571634	Plate	1

FOOTNOTES:

a → S/N G019E01910F INC. 01912-01913, 01915, 01924

b → S/N G019E02164F

c S/N G019E01911F → EXC. 01912-01913, 01915, 01924

d S/N G019E02165F →

©2015 HYSTER COMPANY

HYDRAULIC CONTROL AND TWISTLOCK (FIGURE 1-25)

H10.00XM-12EC, H12.00XM-12EC

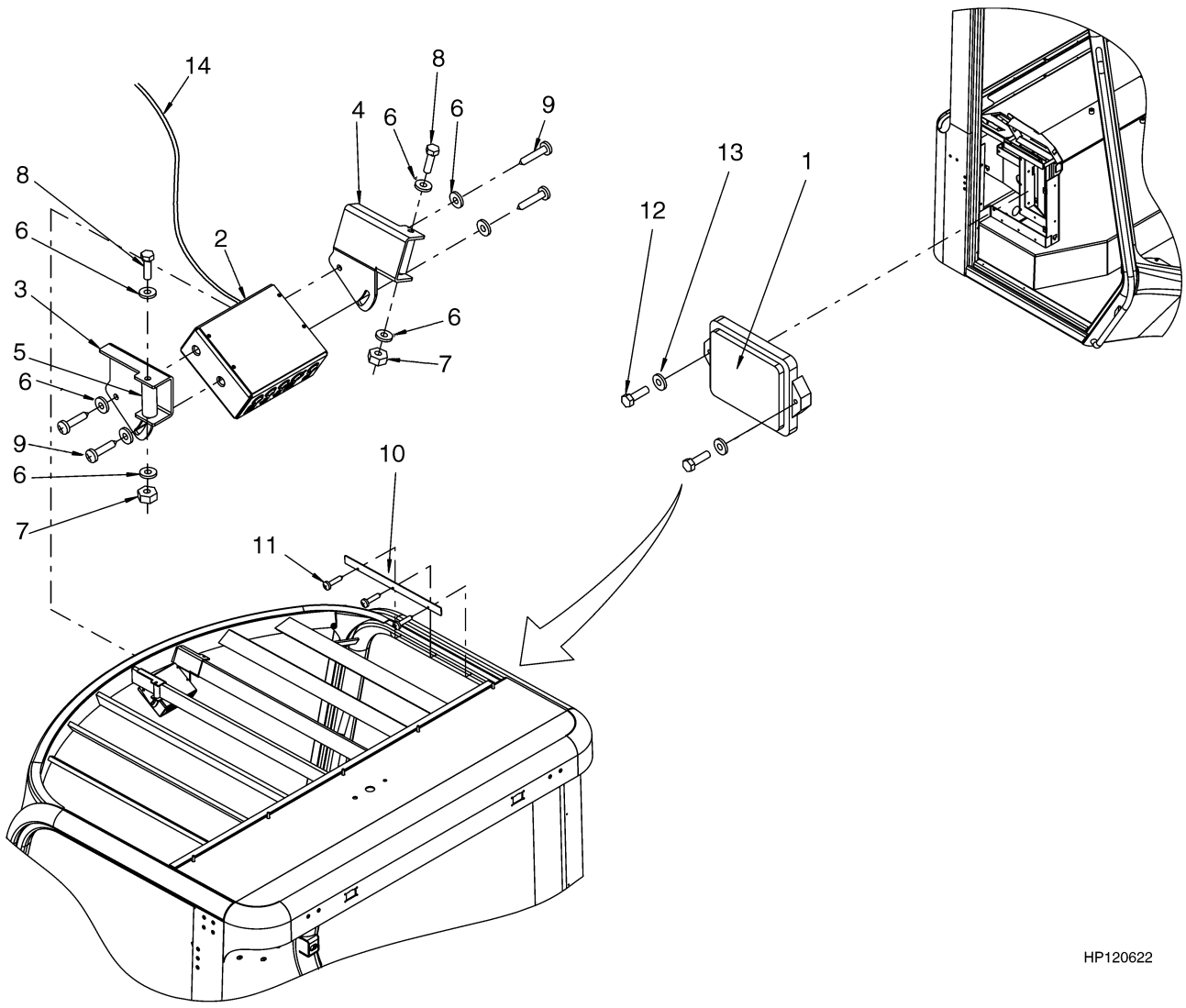

©2015 HYSTER COMPANY

HYDRAULIC CONTROL AND TWISTLOCK

H10.00XM-12EC, H12.00XM-12EC

ITEM	PART NO.	DESCRIPTION	QTY
1	1525429	Controller (Twist Lock)	1
2	1571806	Bar	1
3	1506673	Bracket (LH)	1
4	1506672	Bracket (RH)	1
5	1506671	Plate	2
6	1506738	Washer	8
7	1506670	Nut	2
8	1506669	Screw	2
9	1506668	Screw	4
10	1506667	Plate	1
11	1468319	Screw	3
12	292502	Capscrew	2
13	~~4093489~~		
	320156	Washer	2
14	1520714	Wire Harness (Indicator)	1
	1558051	Fuse (Not Illustrated)	1

©2015 HYSTER COMPANY

CAB AND TILT CYLINDER MOUNTING (FIGURE 1-26)

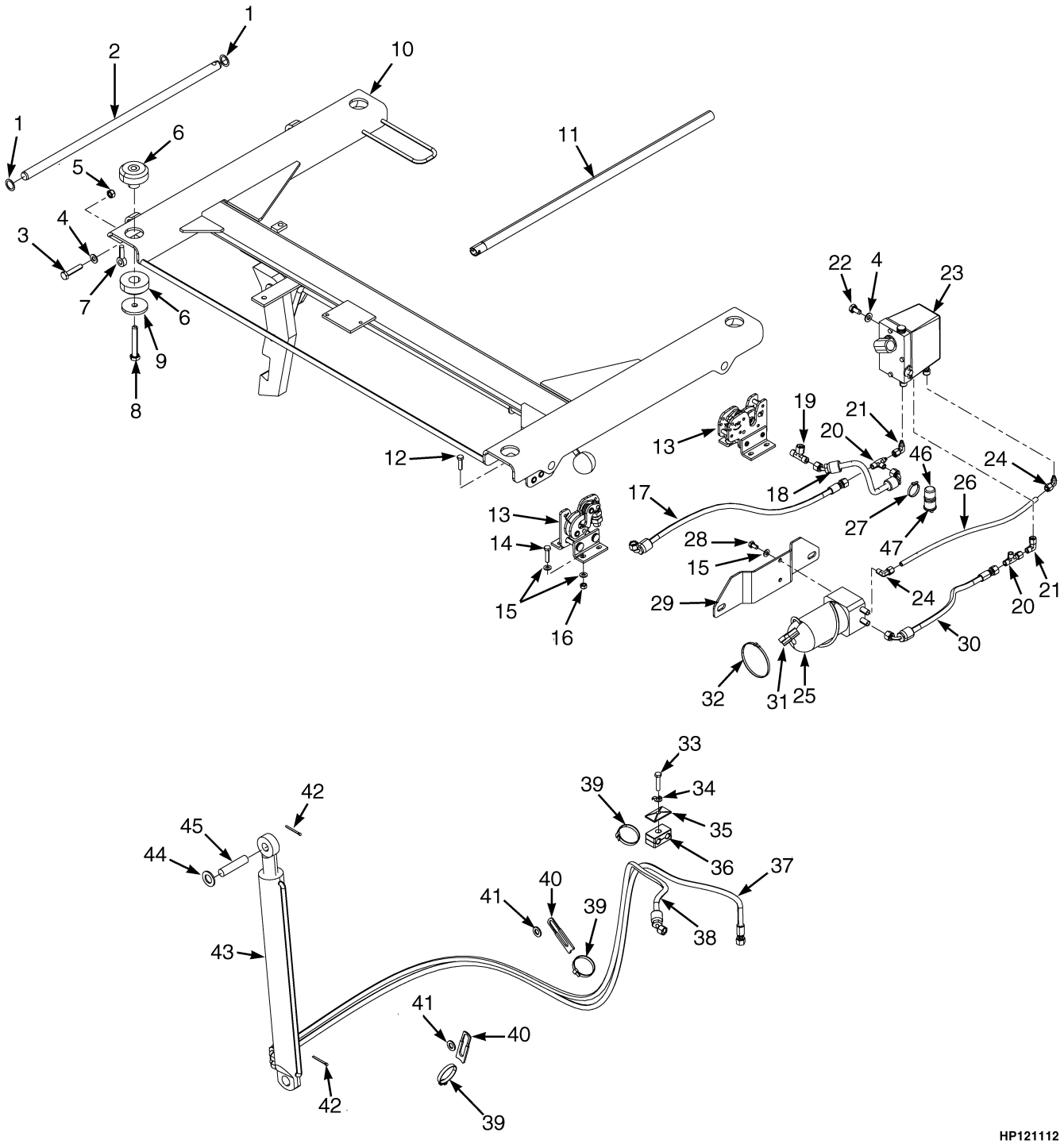

©2015 HYSTER COMPANY

CAB AND TILT CYLINDER MOUNTING

KEY:
A: Manual Tilt
B: Power Tilt

ITEM	PART NO.	DESCRIPTION	QTY A	QTY B
1	1520841	Shim	4	4
2	1474921	Shaft (Tilt)	1	..
3	292517	Capscrew	1	1
4	320159	Washer	3	3
5	302401	Locknut	1	1
6	1486540	Mount (Cab)	4	4
7	195566	Anchor	1	1
8	292535	Capscrew	4	4
9	300939	Washer	4	4
10	1651378	Tilt Platform (☞Figure 1-28)	1	..
11	1487204	Handle (Tilt Pump)	1	..
12	176640	Bolt	1	1
13	1486539	Latch	2	2
14	132861	Capscrew	7	7
15	320157	Washer	15	17
16	302400	Nut	7	7
17	1486067	Hose Assy	1	1
18	1486068	Hose Assy	1	1
19	1488675	Fitting , Swivel Branch Tee	1	1
20	1496296	Fitting , Swivel Run Tee	1	2
21	1488676	Fitting , Swivel Elbow	2	2
22	292514	Capscrew	2	2
23	1486535	Hand Pump (☞Figure 1-30)	1	..
24	1496459	Fitting	..	1
25	1480186	Cab Tilt Pump Assembly (☞Figure 1-31)	..	1
26	~~1488736~~			
	4057161	Hose	..	1
27	137852	Strap Clamp	..	1
28	287851	Capscrew	..	2
29	1485271	Bracket	..	1
30	1496368	Hose Assy	..	1
31	2049849	Wire Harness (Cab Tilt)	..	1
32	2004005	Strap Clamp	..	1
33	292508	Capscrew	1	1
34	1533661	Lockwasher	1	1
35	1533648	Plate (Cover)	1	1
36	1629234	Clamp (Twin)	1	1
37	1486069	Hose Assy (To Hand Pump)	1	1
38	1486070	Hose Assy (To Latch)	1	1
39	397676	Strap Clamp	3	3
40	1350911	Strap	2	2
41	320161	Washer	2	2
42	15235	Cotter Pin	2	2
43	2043194	Tilt Cylinder (Cab) (☞Figure 1-27)	1	..
44	1486630	Pin	1	1
45	~~4020900~~	Washer	1	1

©2015 HYSTER COMPANY

CAB AND TILT CYLINDER MOUNTING

KEY:
A: Manual Tilt
B: Power Tilt

ITEM	PART NO.	DESCRIPTION	QTY A	QTY B
	320169			
46	1672505	Rain Cap	..	1
47	**a** 370776	Switch (Momentary)	..	1
47	**b** 1672504	Push Button Switch	..	1

FOOTNOTES:

a → S/N G019E01837F

b S/N G019E01838F →

©2015 HYSTER COMPANY

NOTES

©2015 HYSTER COMPANY

TILT CYLINDER (FIGURE 1-27)
CAB

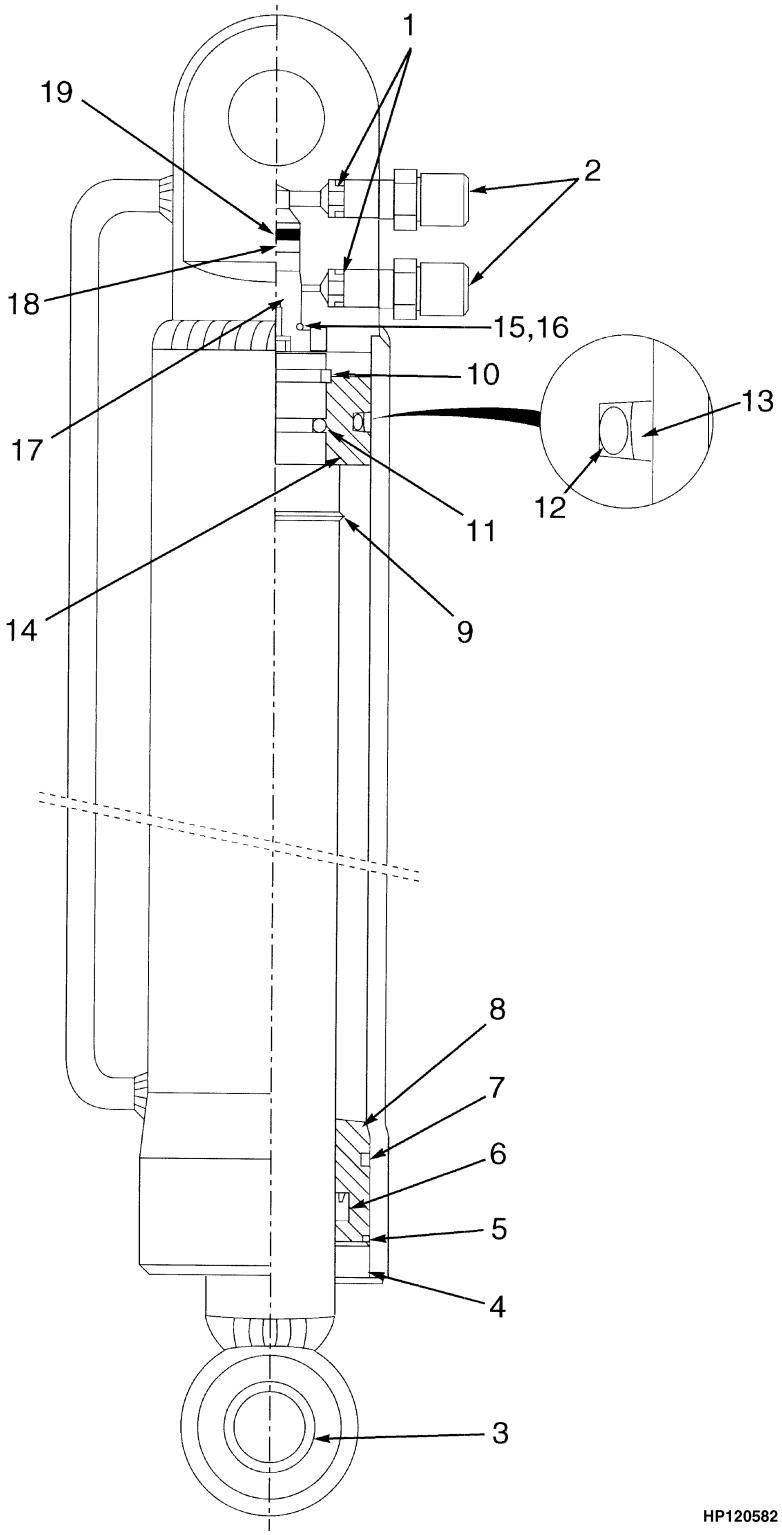

©2015 HYSTER COMPANY

TILT CYLINDER
CAB

ITEM	PART NO.	DESCRIPTION	QTY
	2043194	Tilt Cylinder (Cab)	1
1	1488735	Filter	2
2	1488703	Coupler	2
3	1488751	Spacer	2
4	. . . . .	Wiper	1
5	. . . . .	Retaining Ring (Bore)	1
6	. . . . .	U-Cup	1
7	. . . . .	O-Ring	1
8	. . . . .	Gland	1
9	. . . . .	Retaining Ring (Shaft)	1
10	. . . . .	Retaining Ring (Shaft)	1
11	. . . . .	O-Ring	1
12	. . . . .	O-Ring	1
13	. . . . .	Sleeve	1
14	. . . . .	Piston	1
15	. . . . .	Washer	1
16	. . . . .	O-Ring	1
17	. . . . .	Valve Seat Assembly	1
18	. . . . .	Pilot Piston Assembly	1
19	. . . . .	O-Ring	1
	1488752	Kit-Seal	1
	1665756	Kit-Service	1
	1488762	Kit-Service	1

©2015 HYSTER COMPANY

TILT PLATFORM ASSEMBLY (FIGURE 1-28)

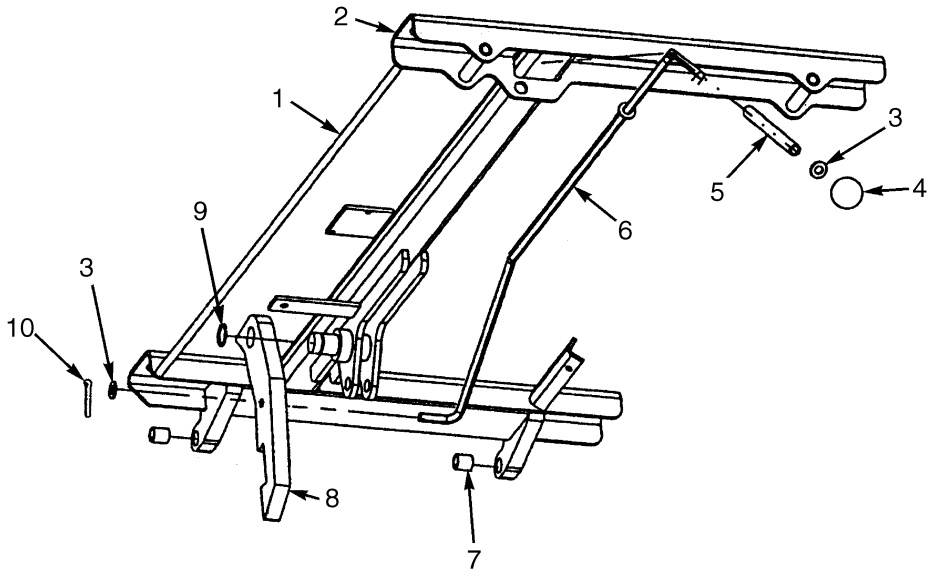

HP121110

ITEM	PART NO.	DESCRIPTION	QTY
1	1651378	Tilt Platform	1
1	. . . . .	Plate	1
2	1658214	Tilt Frame	1
3	1493386	Washer	2
4	1493383	Knob	1
5	1493385	Spring	1
6	1493381	Rod (Release)	1
7	1493380	Bearing	2
8	1493382	Catch (Tilt)	1
9	1493384	Retaining Ring	1
10	1493387	Cotter Pin	1

©2015 HYSTER COMPANY

CAB TILT PUMP ASSEMBLY (FIGURE 1-29)
ELECTRIC

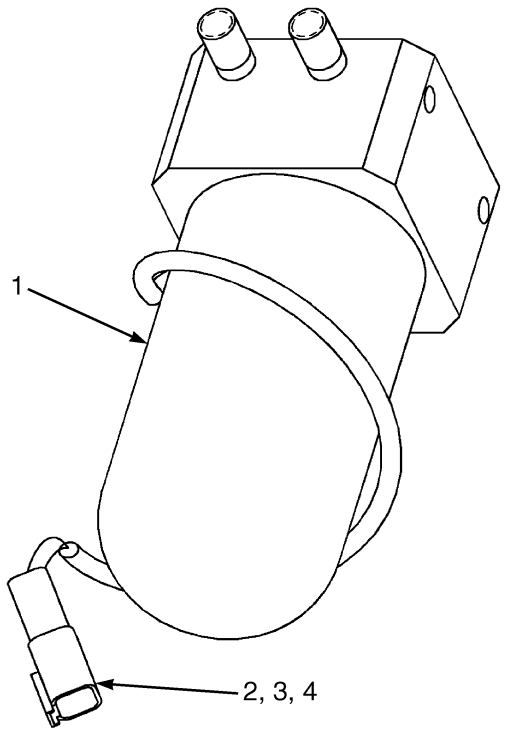

HP121111

ITEM	PART NO.	DESCRIPTION	QTY
	1480186	Cab Tilt Pump Assembly	1
1	1475732	Cab Tilt Pump (Electric) (☞Figure 1-31)	1
2	1480187	Connector	1
3	1480188	Connector	1
4	1484709	Terminal (Pin)	2
4	866401	Terminal (Alternate Part)	2

©2015 HYSTER COMPANY

HAND PUMP (FIGURE 1-30)

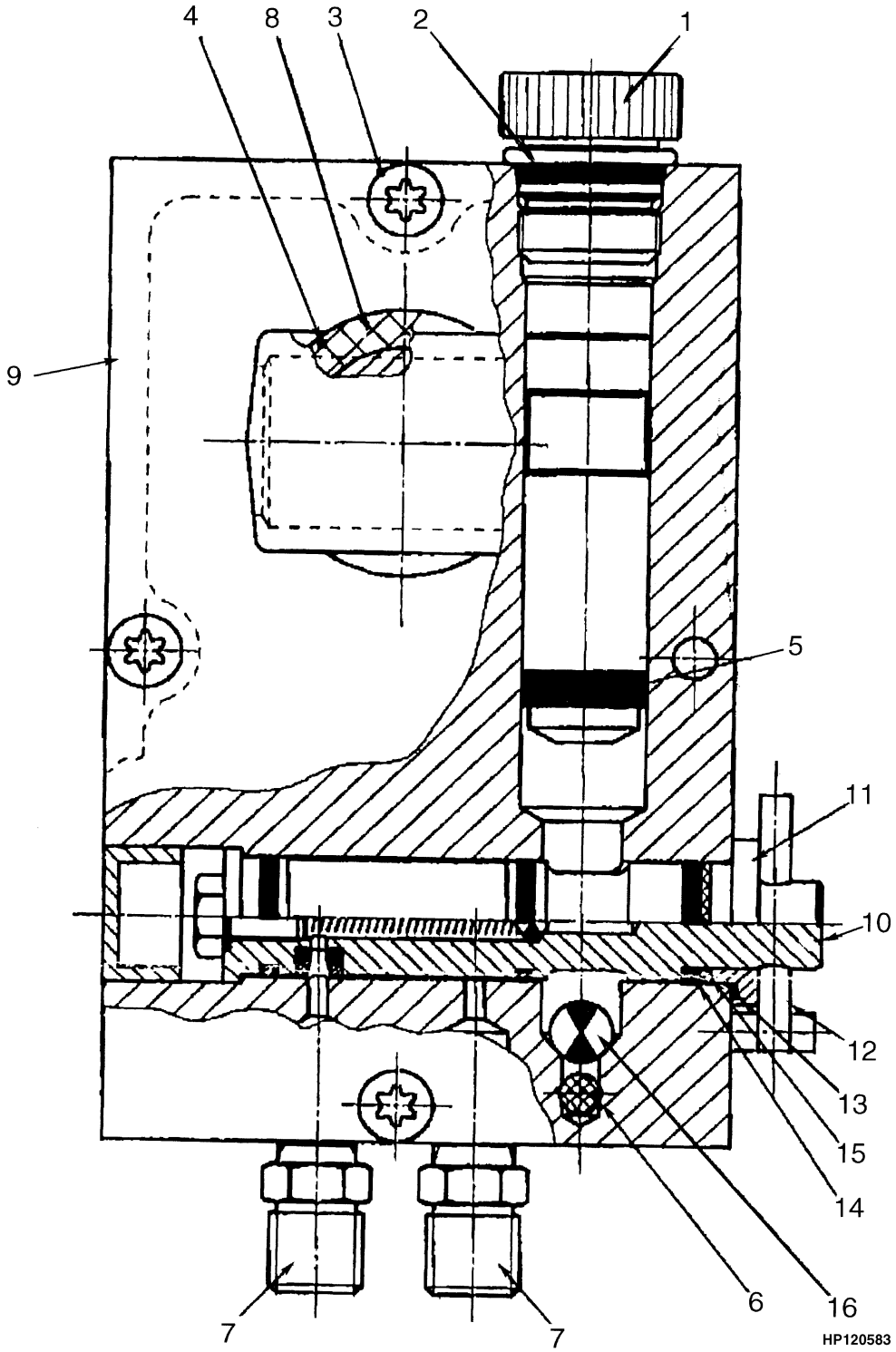

©2015 HYSTER COMPANY

HAND PUMP

ITEM	PART NO.	DESCRIPTION	QTY
	1486535	Hand Pump	1
1	1488689	Plug , Fill (Includes O-Ring)	1
2	. . . . .	O-Ring	1
3	. . . . .	Screw	4
4	. . . . .	Bearing	1
5	. . . . .	Seal	1
6	. . . . .	Filter	1
7	1488703	Coupler	2
8	. . . . .	O-Ring	1
9	. . . . .	Gasket	1
10	. . . . .	Spool	1
11	. . . . .	Washer	1
12	. . . . .	Pin	1
13	. . . . .	O-Ring	1
14	. . . . .	O-Ring	1
15	. . . . .	Back-Up Ring	1
16	. . . . .	Ball	1
	1488704	Kit-Seal	1
	1488705	Kit-Seal	1
	4038507	Kit-Seal	1

©2015 HYSTER COMPANY

ELECTRIC PUMP (FIGURE 1-31)

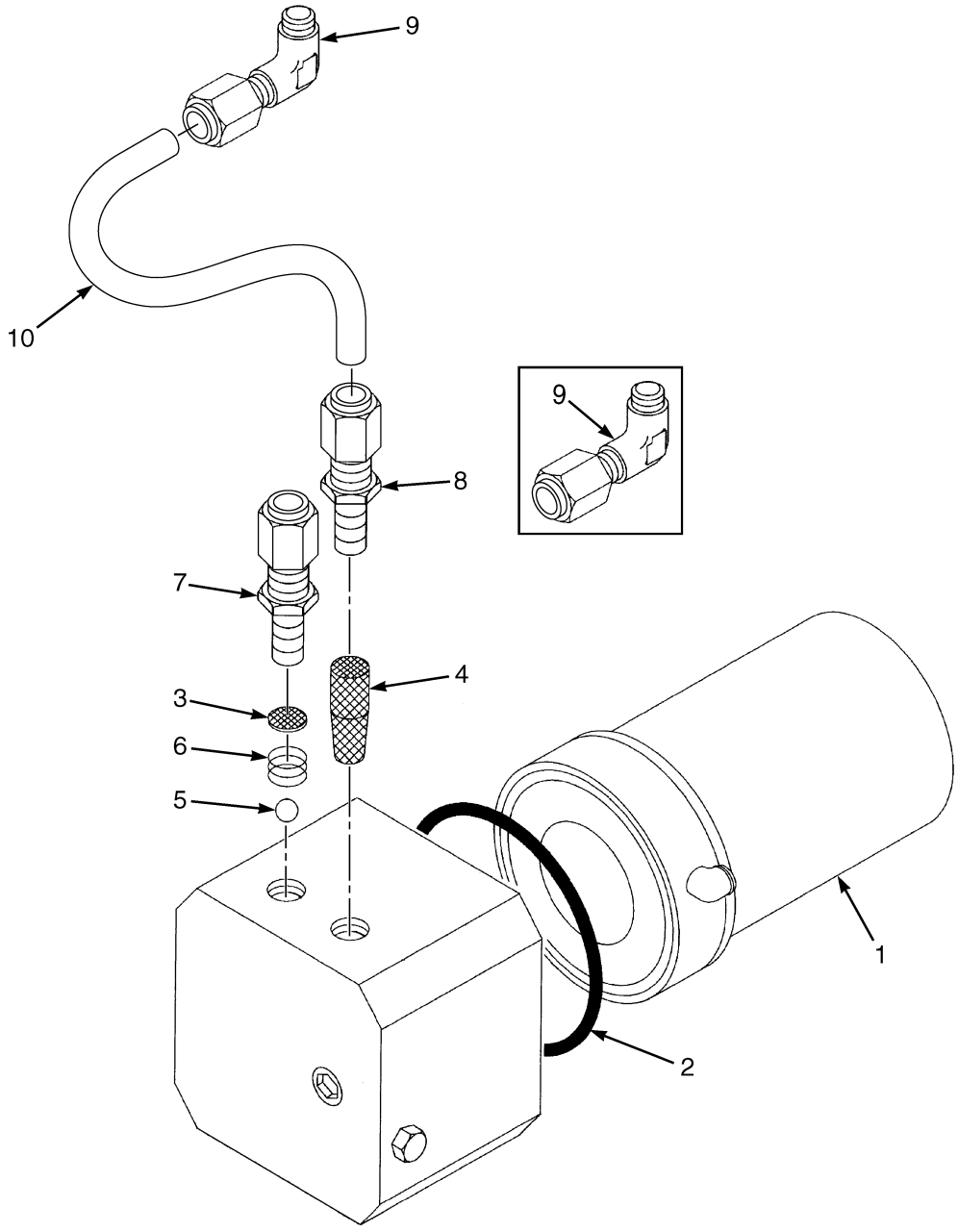

HP120584

©2015 HYSTER COMPANY

ELECTRIC PUMP

ITEM	PART NO.	DESCRIPTION	QTY
	1475732	Cab Tilt Pump (Electric)	1
1	. . . . .	Electric Motor	1
2	. . . . .	O-Ring	1
3	. . . . .	Filter	1
4	. . . . .	Screen	1
5	. . . . .	Ball	1
6	. . . . .	Spring	1
7	. . . . .	Coupler	1
8	**a**	Coupler	1
9	1496459	Fitting	1
10	~~1488736~~		
	4057161	Hose	1
	1488728	Kit-Repair Pump	1
	1488725	Kit-Motor	1

FOOTNOTES:

a If application requires elbow fitting, please order qty (2) of item #9.

©2015 HYSTER COMPANY

CONDENSER AND ATTACHING PARTS (FIGURE 1-32)
THREE-FAN SYSTEM — AURORA

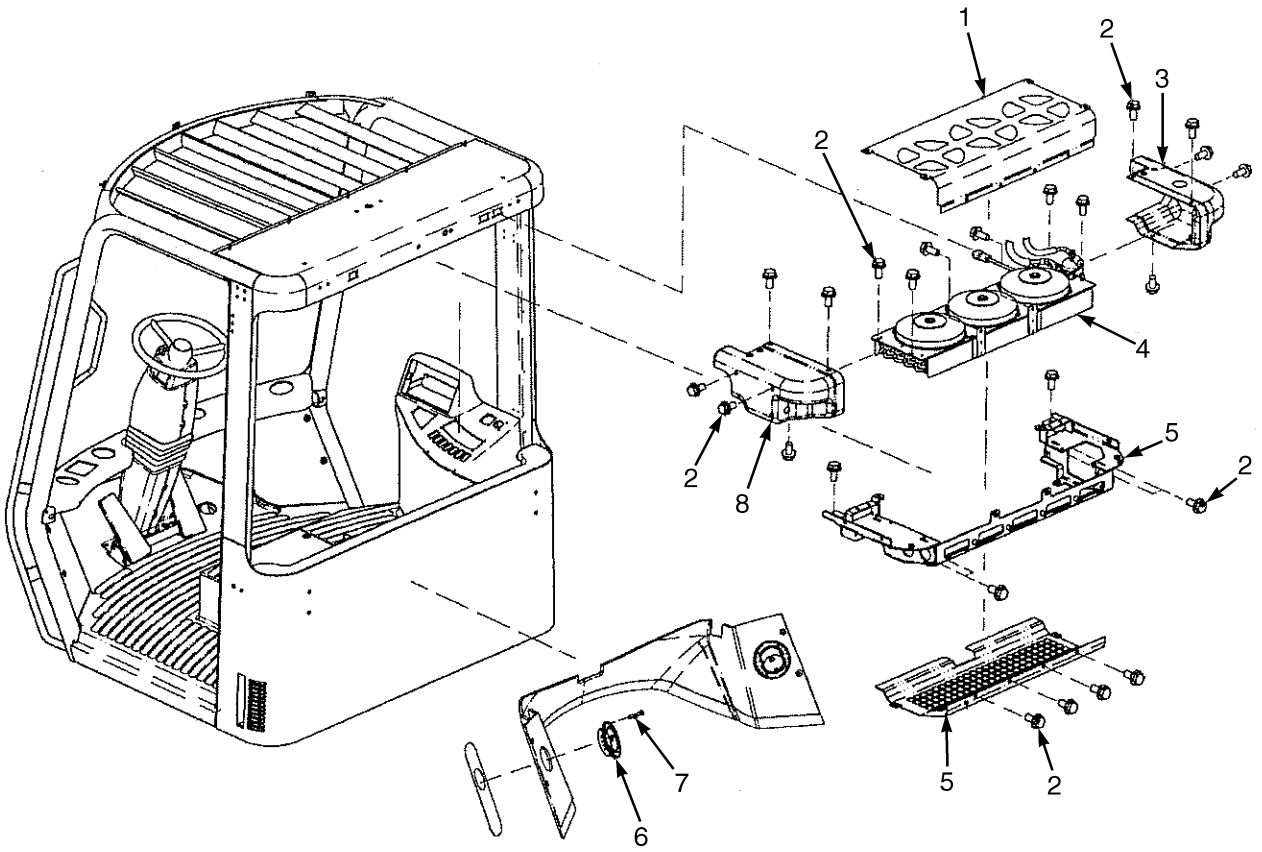

HP121121

©2015 HYSTER COMPANY

CONDENSER AND ATTACHING PARTS
THREE-FAN SYSTEM – AURORA

ITEM	PART NO.	DESCRIPTION	QTY
1	1658125	Cover	1
2	1566044	Bolt	14
3	1658128	Cover , Side (RH)	1
4	~~1658138~~		
	4032843	Condenser (Aurora) (☞Figure 1-33)	1
5	1658126	Cover	1
6	1598398	Louver (Air)	2
7	1492163	Screw	12
8	1658127	Cover , Side (LH)	1
	a 1683160	Frame (Condenser)	1

FOOTNOTES:

a Not Illustrated

©2015 HYSTER COMPANY

CONDENSER ASSEMBLY (FIGURE 1-33)
THREE-FAN SYSTEM — AURORA

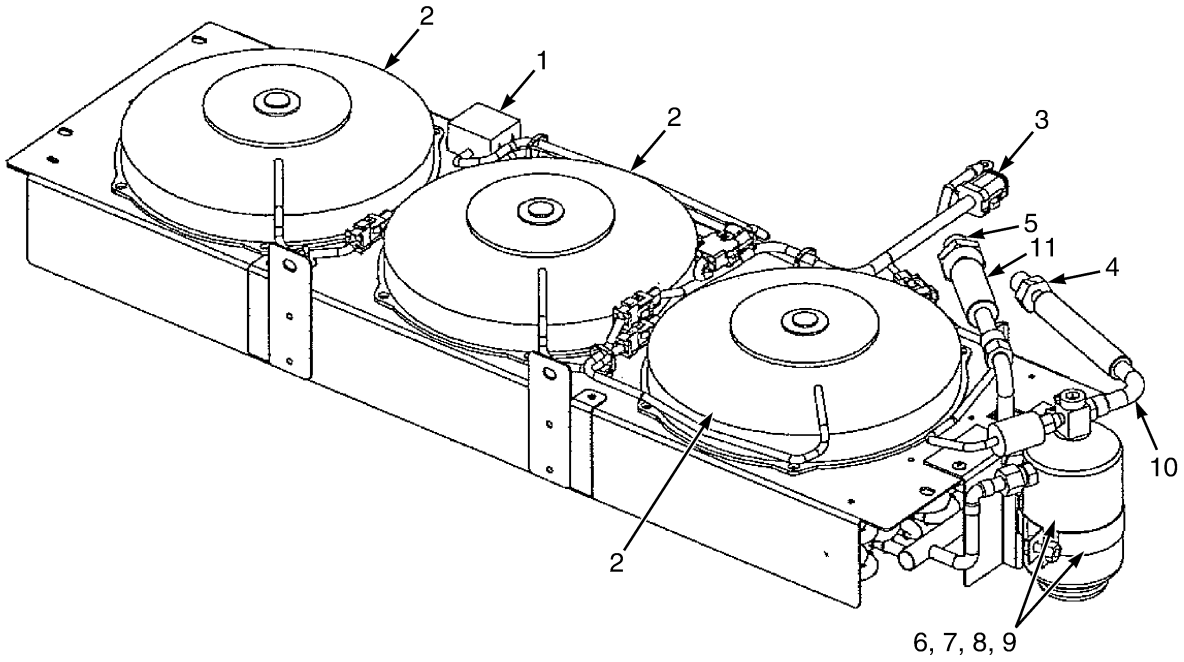

BP120814

ITEM	PART NO.	DESCRIPTION	QTY
	~~1658138~~		
	4032843	Condenser (Aurora)	1
	4032845	Condenser Core	1
1	4032855	Thermostat (24V)	1
2	4032846	Fan	1
3	4032847	Wire Harness	1
4	4032848	Fitting	1
5	4032849	Fitting	1
6	~~4032850~~		
	4032857	Air Dryer With Pressure Switch	1
7	1538217	Air Dryer	1
8	~~4032851~~		
	4032858	Pressure Switch	1
9	4032852	O-Ring	1
10	4032853	Hose (Refrigerant)	1
11	4032854	Hose (Refrigerant)	1
	a 4032856	Bracket	1

FOOTNOTES:

a Not Illustrated

©2015 HYSTER COMPANY

NOTES

©2015 HYSTER COMPANY

AIR CONDITIONING COMPRESSOR AND ATTACHING PARTS (FIGURE 1-34)

DIESEL ENGINE — MCC

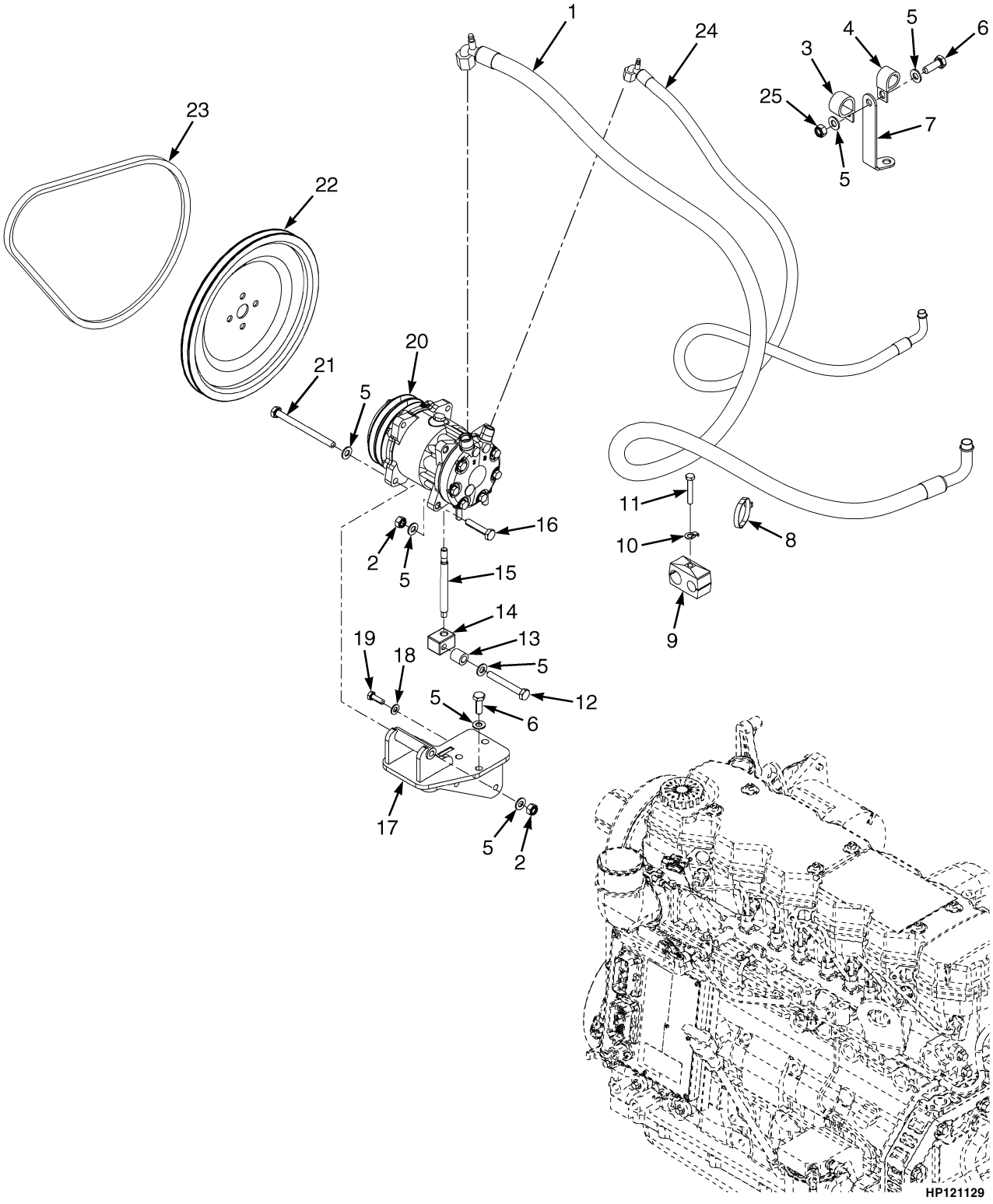

©2015 HYSTER COMPANY

AIR CONDITIONING COMPRESSOR AND ATTACHING PARTS
DIESEL ENGINE – MCC

ITEM	PART NO.	DESCRIPTION	QTY
1	**a** 2100213	Hose Assy	1
1	**c** 2105990	Hose Assy	1
2	302401	Locknut	3
3	178119	Clamp	1
4	144067	Clamp	1
5	**b** 320159	Washer	8
5	**d** 320159	Washer	7
6	136985	Capscrew	3
7	1661388	Bracket	1
8	129563	Strap Clamp	2
9	1663076	Clamp	1
10	1533661	Lockwasher	1
11	292509	Capscrew	1
12	**b** 292522	Capscrew	1
12	**d** 292516	Capscrew	1
13	**b** 1650539	Spacer	1
13	**d** 320160	Washer	2
14	**b** 1532482	Adjuster	1
14	**d** 1686686	Eyebolt	1
15	**b** 1532484	Link	1
15	**d** 136692	Nut	1
16	**b** 292517	Capscrew	1
17	**b** 1650537	Bracket	1
17	**d** 1686670	Bracket Wldmt	1
18	**b** 320157	Washer	4
18	**d** 320157	Washer	2
19	**b** 136749	Screw	3
19	**d** 136749	Screw	1
20	**a** 1650536	Compressor	1
20	**c** 1689914	Compressor Assembly (MCC) (☞Figure 1-36)	1
21	1390281	Capscrew	1
22	1649268	Pulley	1
23	118135	V-Belt	1
24	2100215	Hose Assy	1
25	302400	Nut	1

FOOTNOTES:

a → S/N G019E02164F
b → S/N G019E02331G
c S/N G019E02165F →
d S/N G019E02332G →

©2015 HYSTER COMPANY

AIR CONDITIONING COMPRESSOR AND ATTACHING PARTS (FIGURE 1-35)

LPG ENGINE — MCC

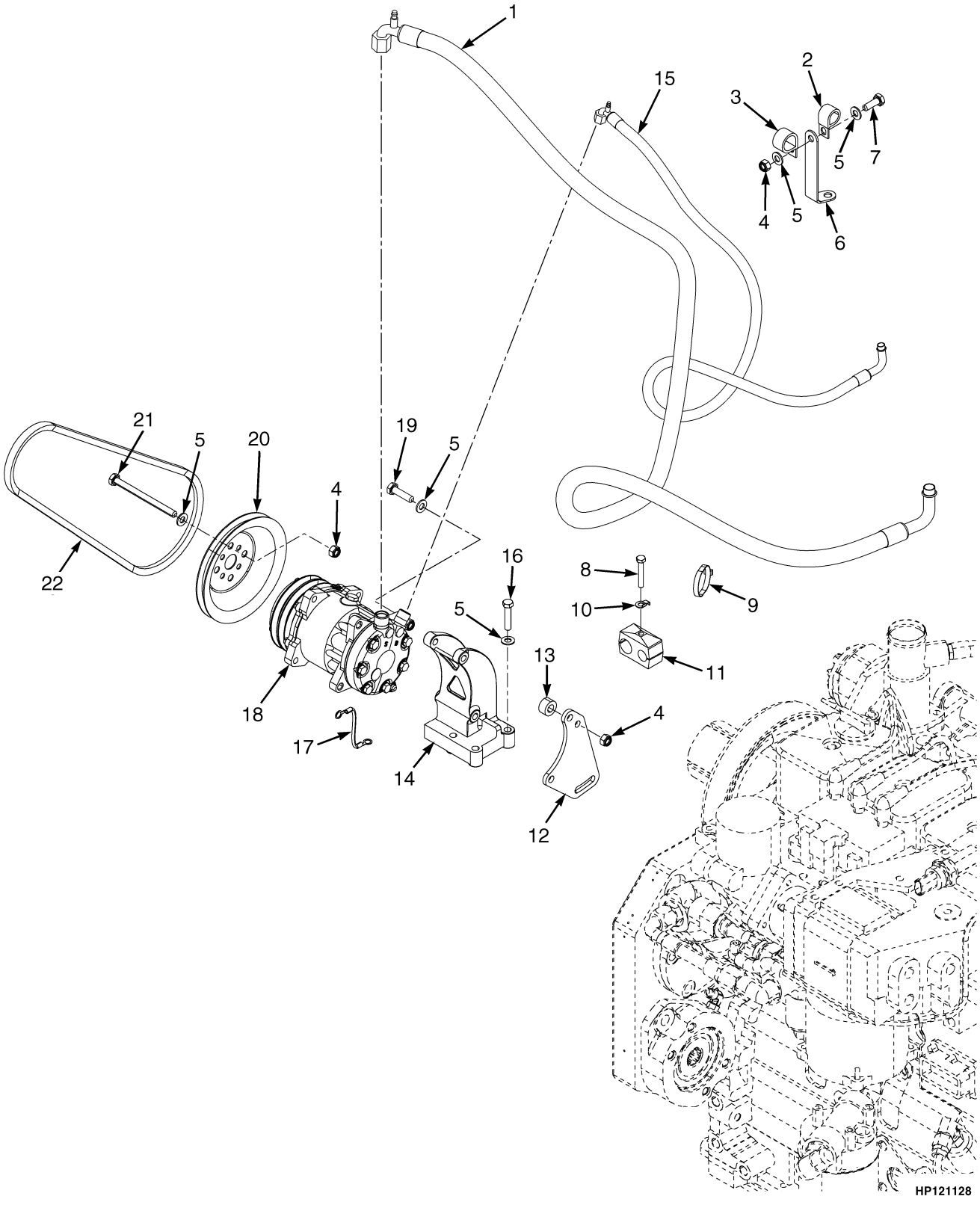

©2015 HYSTER COMPANY

AIR CONDITIONING COMPRESSOR AND ATTACHING PARTS
LPG ENGINE – MCC

ITEM	PART NO.	DESCRIPTION	QTY
1	**a** 2100213	Hose Assy (Compressor to Vaporizer)	1
1	**b** 2105990	Hose (Compressor to Vaporizer)	1
2	173247	Clamp	1
3	178119	Clamp	1
4	302401	Locknut	7
5	320159	Washer	14
6	1661388	Bracket	1
7	136985	Capscrew	1
8	292509	Capscrew	1
9	129563	Strap Clamp	2
10	1533661	Lockwasher	1
11	1663076	Clamp	1
12	1623950	Bracket	2
13	1373791	Spacer	2
14	1500871	Bracket	1
15	2100215	Hose Assy	1
16	**a** 16816	Capscrew	3
16	**b** 292516	Capscrew	3
17	1605597	Wire	1
18	**a** 1650536	Compressor	1
18	**b** 1689914	Compressor Assembly (MCC) (☞Figure 1-36)	1
19	292515	Capscrew	4
20	1500869	Pulley (Belt)	1
21	1390281	Capscrew	2
22	2098997	V-Belt	1

FOOTNOTES:

a → S/N G019E02164F

b S/N G019E02165F →

©2015 HYSTER COMPANY

COMPRESSOR ASSEMBLY (FIGURE 1-36)

WITH TWO-FAN CONDENSER SYSTEM — MCC (S/N G019E02165F →)

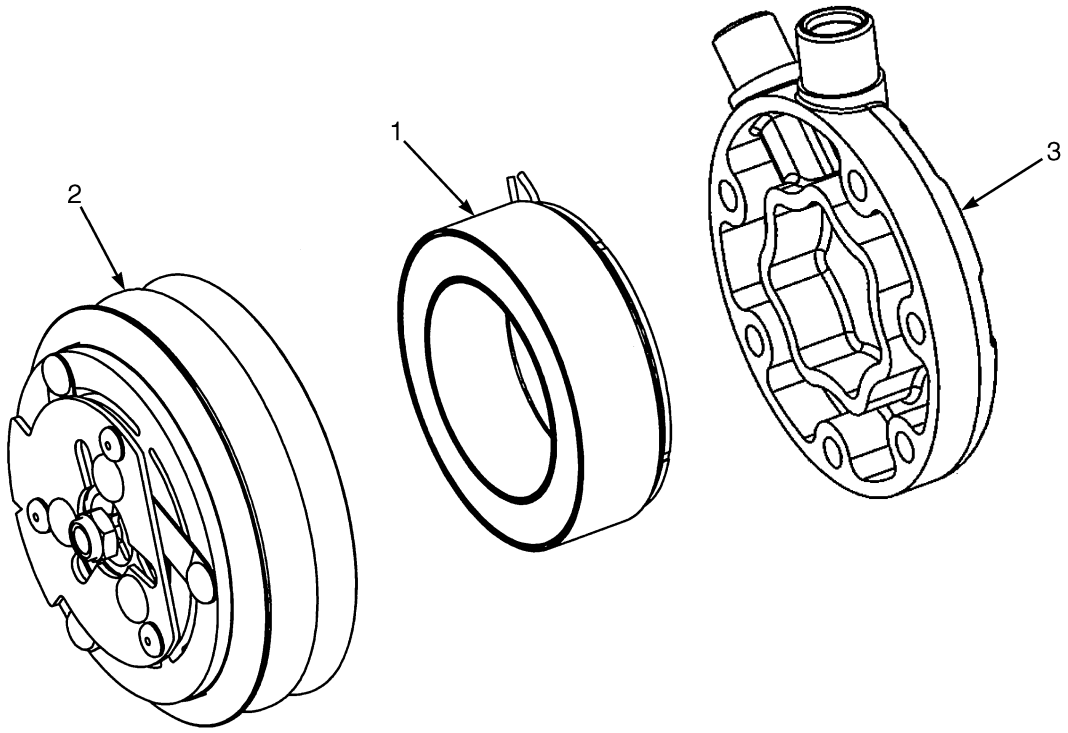

HP121196

ITEM	PART NO.	DESCRIPTION	QTY
	1689914	Compressor Assembly (MCC)	1
1	. . . . .	Coil	1
2	4001308	Clutch Assy	1
3	. . . . .	Mainfold	1

©2015 HYSTER COMPANY

NOTES

©2015 HYSTER COMPANY

HEATER AND AIR CONDITIONER MOUNTING (FIGURE 1-37)
WITH THREE-FAN CONDENSER SYSTEM — MCC

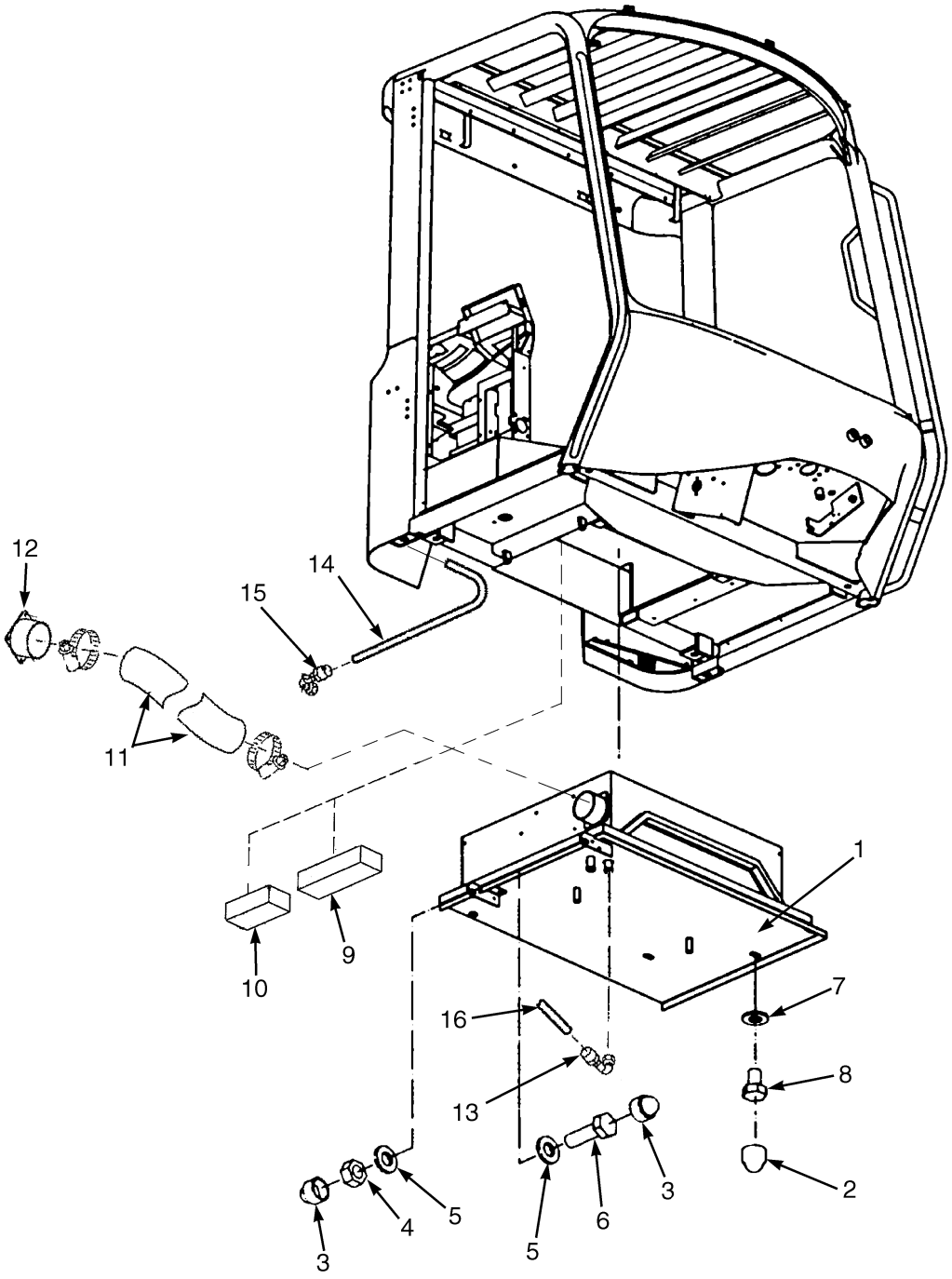

HP121105

©2015 HYSTER COMPANY

HEATER AND AIR CONDITIONER MOUNTING
WITH THREE-FAN CONDENSER SYSTEM – MCC

ITEM	PART NO.	DESCRIPTION	QTY
1	1558032	Heater Assembly (Aurkon) (☞Figure 1-38)	1
1	**a** 1558045	Kit-Heater and Airco (Aurora)	1
1	**b** 1656599	Kit-Heater and Airco (Aurora) (☞Figure 1-39)	1
2	1493312	Cap (Capscrew Head)	3
3	1493397	Cover (Capscrew Head)	4
4	316834	Nut	2
5	~~4093489~~		
	320156	Washer	4
6	292501	Capscrew	2
7	320160	Washer	3
8	292513	Capscrew	3
9	1493394	Foam	1
10	1558029	Foam	1
11	1603503	Hose	1
12	1603502	Flange	1
13	1658140	Connector	1
14	1664403	Hose	1
15	1658139	Connector	1
16	1664404	Hose	1
	2098895	Wire Harness (Heater Adapter)	1

FOOTNOTES:

a → S/N G019E01500E

b S/N G019E01501E →

©2015 HYSTER COMPANY

HEATER ASSEMBLY (FIGURE 1-38)
WITH THREE-FAN CONDENSER SYSTEM

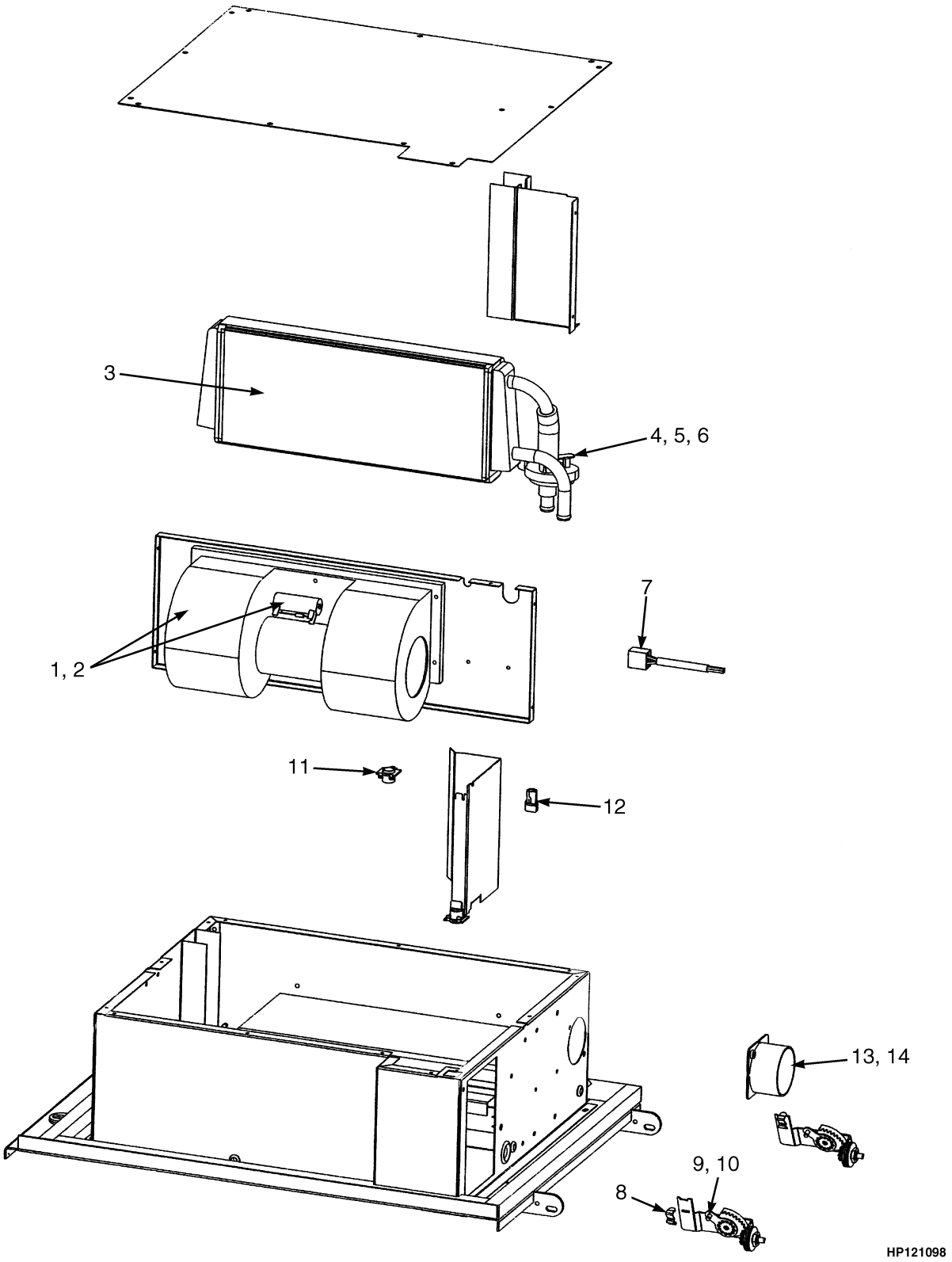

©2015 HYSTER COMPANY

HEATER ASSEMBLY
WITH THREE-FAN CONDENSER SYSTEM

ITEM	PART NO.	DESCRIPTION	QTY
	1558032	Heater Assembly (Aurkon)	1
1	1560537	Blower	1
2	1453031	Resistor	1
3	1560623	Core (Heater)	1
4	1560624	Hose (Water Valve)	1
5	1560625	Drain Valve	1
6	1560554	Push-Pull Cable	1
7	1560627	Wire Harness	1
8	1560556	Clip (Cable)	1
9	1560626	Push-Pull Cable	1
10	1560555	Valve (Control Rotary)	1
11	1560552	Bearing	1
12	1560553	Clip (Door)	1
13	1560547	Adapter (Hose)	1
14	1560548	Rivet	1

©2015 HYSTER COMPANY

HEATER AND AIR CONDITIONER ASSEMBLY (FIGURE 1-39)
WITH THREE-FAN CONDENSER SYSTEM — AURORA

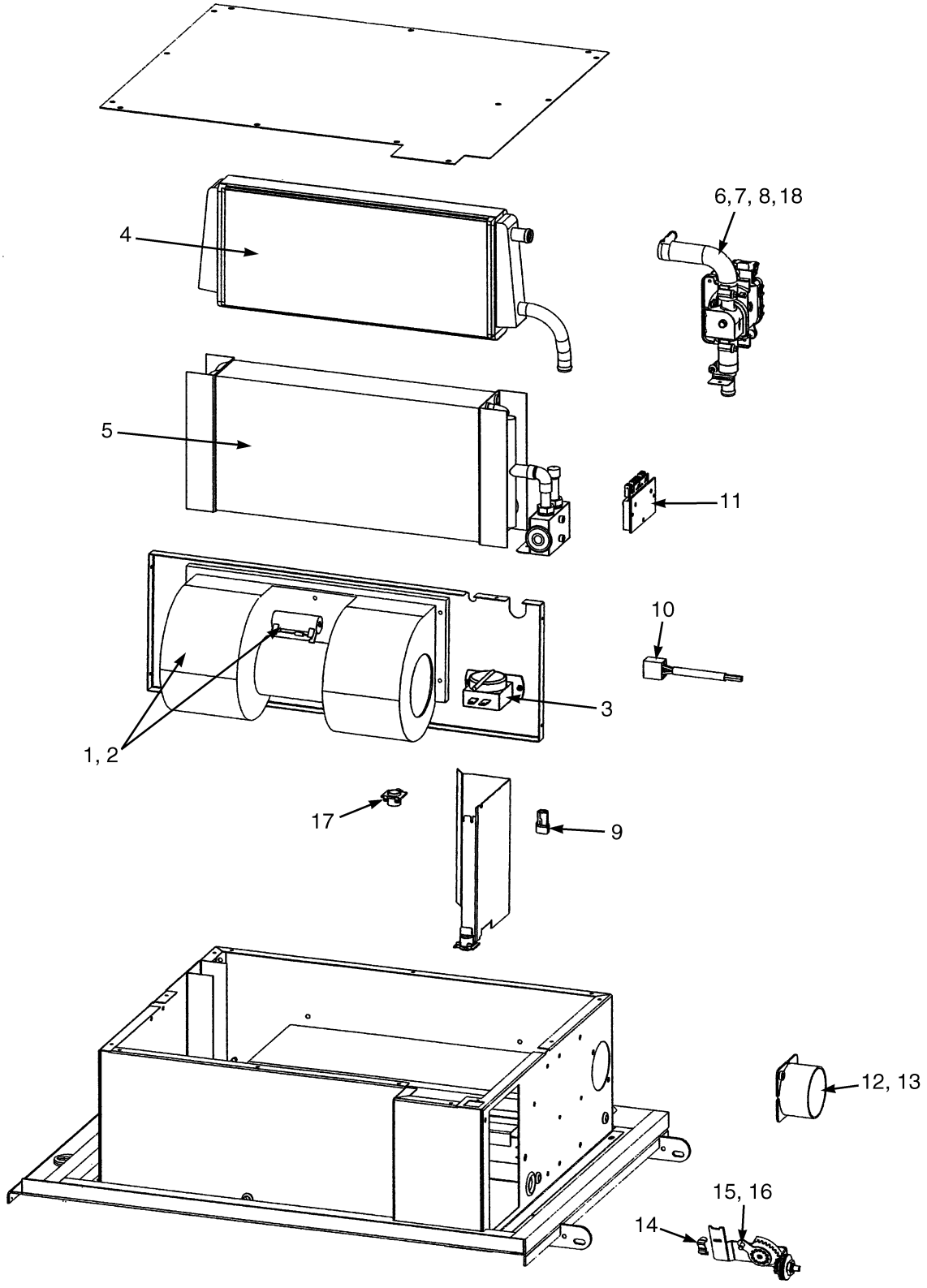

©2015 HYSTER COMPANY

HEATER AND AIR CONDITIONER ASSEMBLY
WITH THREE-FAN CONDENSER SYSTEM – AURORA

ITEM	PART NO.	DESCRIPTION	QTY
	b 1656599	Kit-Heater and Airco (Aurora)	1
	a 1558045	Kit-Heater and Airco (Aurora)	1
1	1560537	Blower	1
2	1453031	Resistor	1
3	1560538	Thermostat	1
4	1560539	Core (Heater)	1
5	**b** 1674584	Evaporator Core	1
5	**a** 1560540	Evaporator Core	1
6	1656600	Water Valve Assy	1
7	1560544	Hose (90 degree)	1
8	1560545	Hose (Straight)	1
9	1560553	Clip (Door)	1
10	1560549	Wire Harness	1
11	**b** 1656603	Controller (Water Valve)	1
11	**a** 1560546	Controller	1
12	1560547	Adapter	1
13	1560548	Rivet	1
14	1560556	Clip (Cable)	1
15	1560554	Push-Pull Cable	1
16	1560555	Valve (Control Rotary)	1
17	1560552	Bearing	1
18	**b** 1656604	Wire Harness	1
18	**a** 1560550	Wire Harness	1
	1560546	Controller	1

FOOTNOTES:

a → S/N G019E01500E

b S/N G019E01501E →

©2015 HYSTER COMPANY

HEATER AND AIR DUCT (FIGURE 1-40)
WITH TWO-FAN CONDENSER SYSTEM — MCC

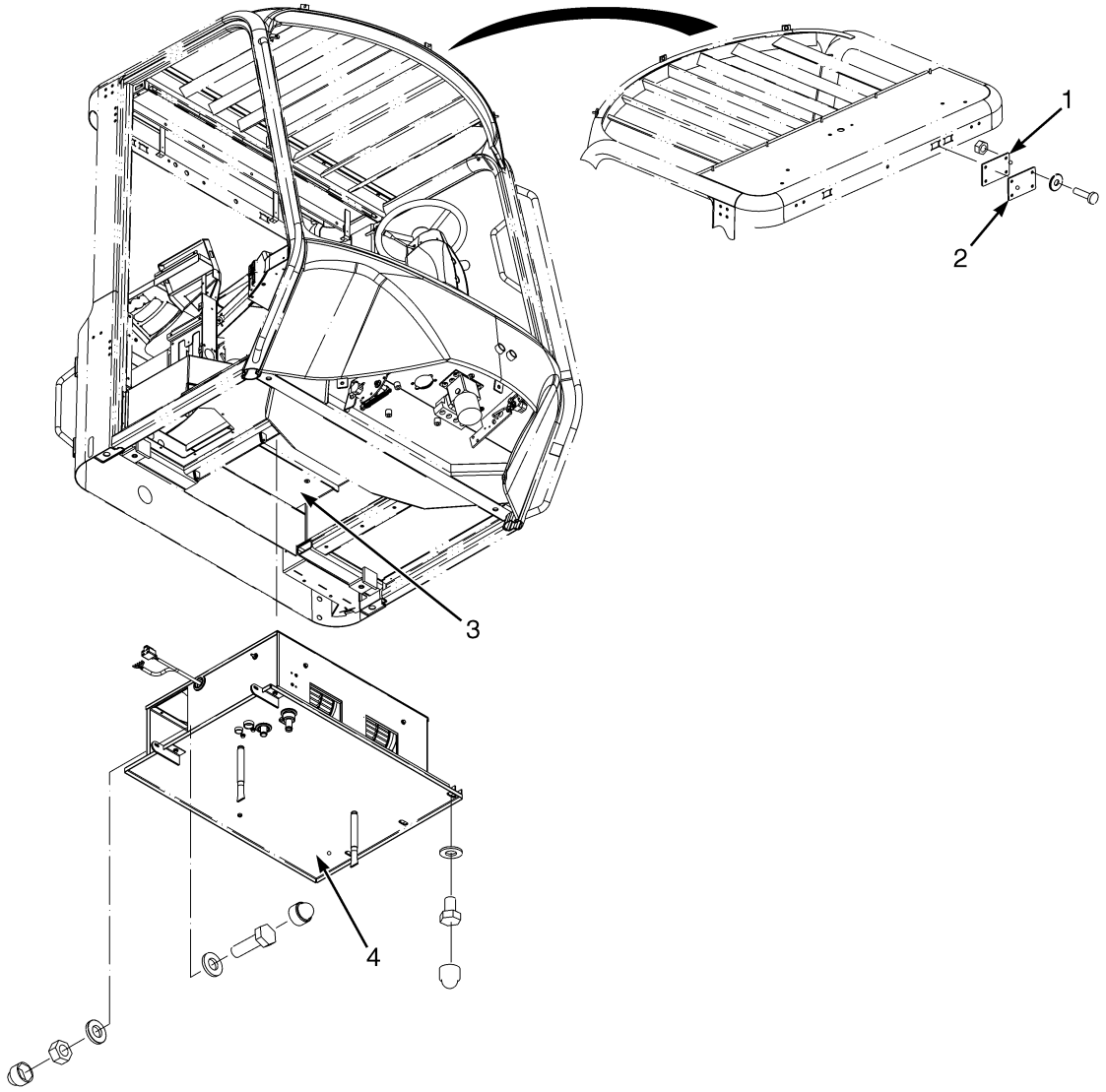

HP200122

ITEM	PART NO.	DESCRIPTION	QTY
1	1635008	Seal	1
2	1635007	Plate	1
3	4000400	Air Duct Assembly (☞Figure 1-41)	1
4	4000399	Heater Assembly (☞Figure 1-43)	1

©2015 HYSTER COMPANY

NOTES

©2015 HYSTER COMPANY

AIR DUCT ASSEMBLY (FIGURE 1-41)

HEATER — WITH TWO-FAN CONDENSER SYSTEM, MCC (S/N G019E02165F →)

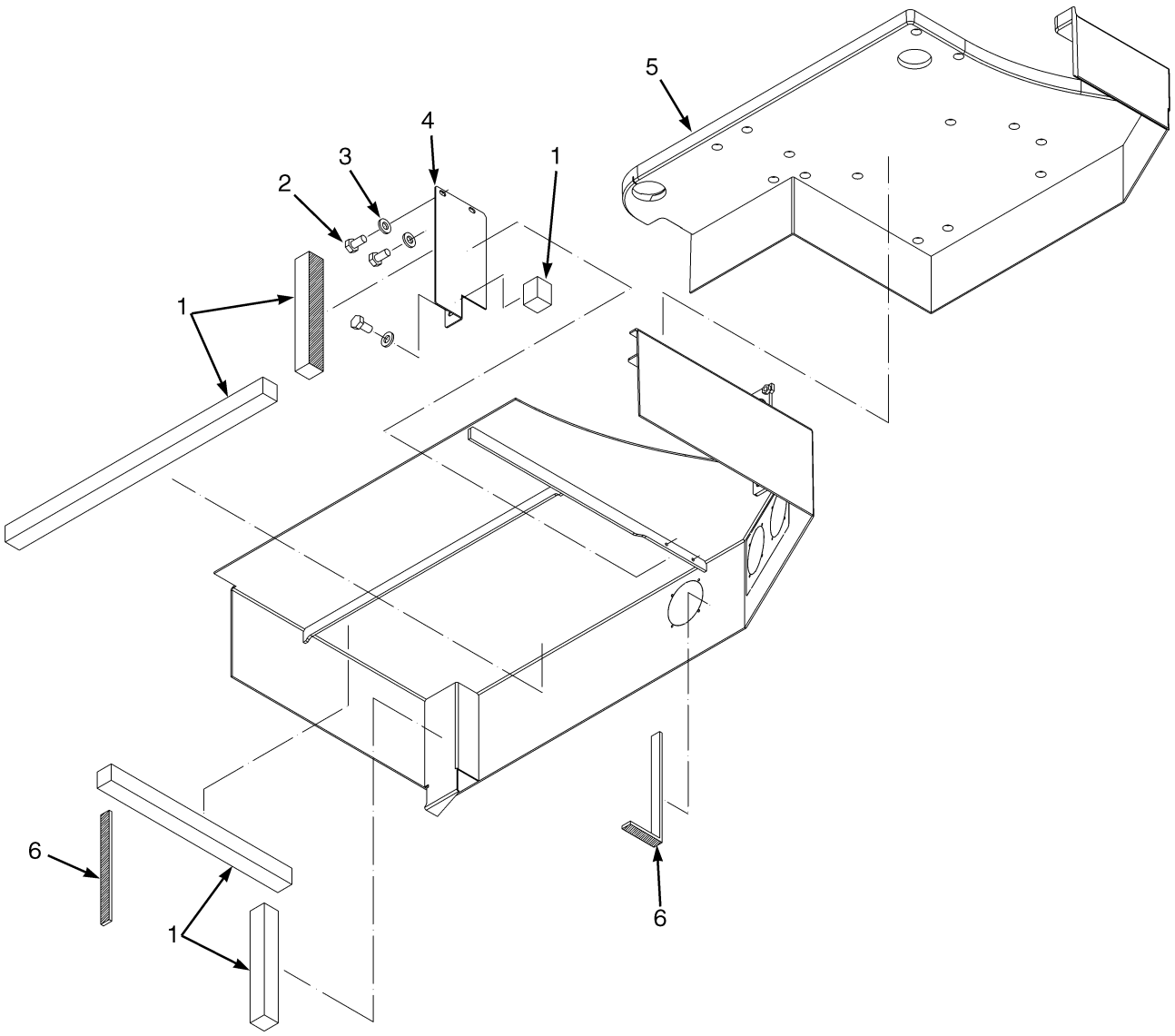

HP200121

©2015 HYSTER COMPANY

AIR DUCT ASSEMBLY

HEATER – WITH TWO-FAN CONDENSER SYSTEM, MCC (S/N G019E02165F →)

ITEM	PART NO.	DESCRIPTION	QTY
	4000400	Air Duct Assembly	1
1	4000919	Foam	AR
2	4000918	Screw	3
3	~~4093489~~		
	320156	Washer	3
4	4000917	Cover Plate (Heater)	1
5	1493282	Floormat (Seat)	1
6	4000920	Foam	AR

©2015 HYSTER COMPANY

HEATER ASSEMBLY (FIGURE 1-42)

WITH TWO-FAN CONDENSER SYSTEM — MCC (S/N G019E02165F →)

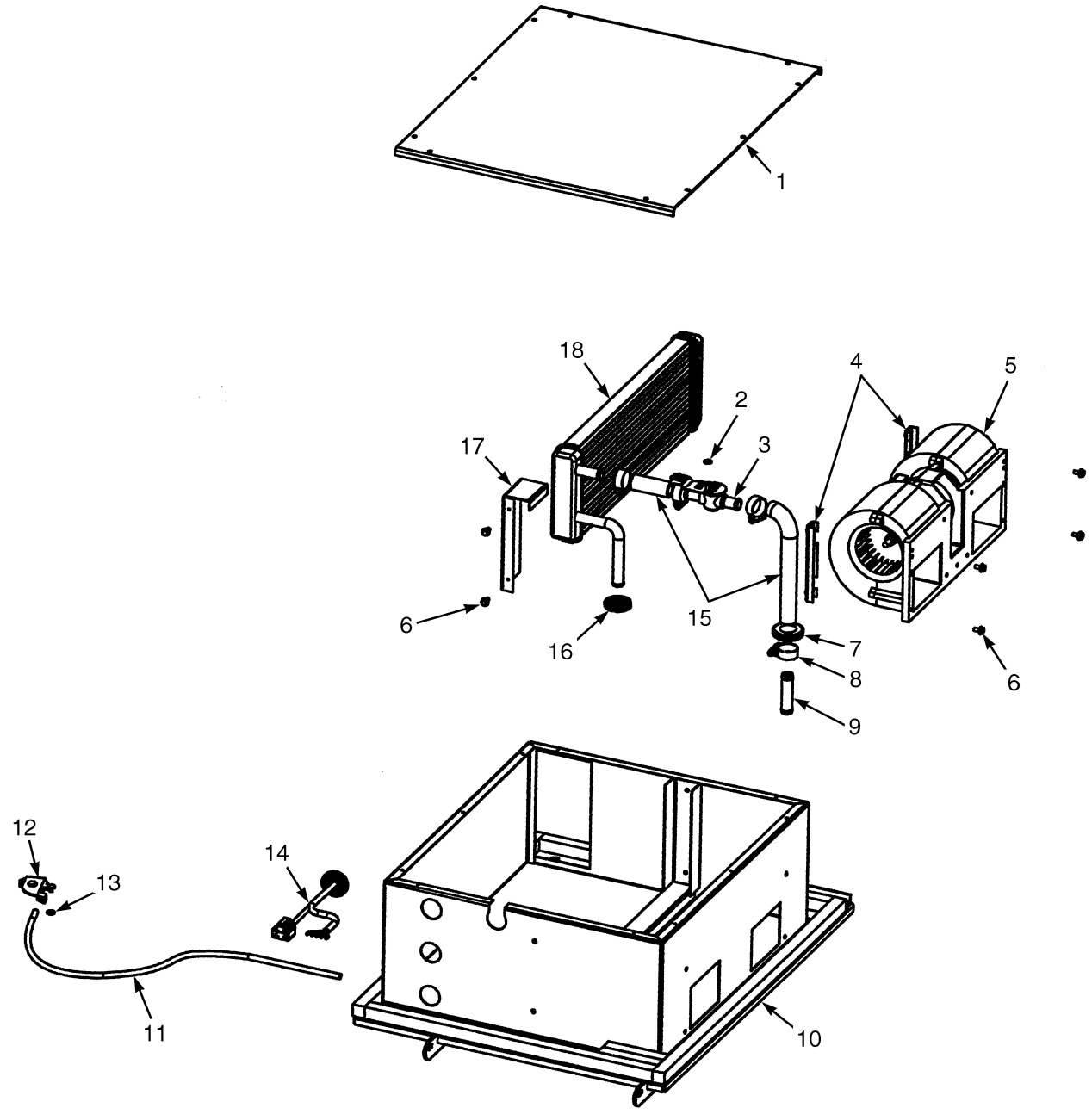

HP121213

©2015 HYSTER COMPANY

HEATER ASSEMBLY

WITH TWO-FAN CONDENSER SYSTEM – MCC (S/N G019E02165F →)

ITEM	PART NO.	DESCRIPTION	QTY
	4000915	Heater Assembly (MCC)	1
1	4004928	Cover	1
2	4004933	Washer	1
3	1487947	Water Valve	1
4	4004930	Bracket (Blower)	2
5	4004929	Blower	1
6	. . . . .	Bolt	6
7	1487953	Grommet	1
8	1487950	Hose Clamp	4
9	1487952	Tube (Copper)	1
10	4004926	Case	1
11	4004931	Wire	1
12	1487959	Switch (180 deg)	1
13	4004932	Washer	1
14	4004934	Wire Harness	1
15	4003089	Hose	1
16	4003088	Grommet	1
17	4004927	Bracket (Heater)	1
18	4003091	Core (Heater Coil)	1

©2015 HYSTER COMPANY

HEATER SYSTEM (FIGURE 1-43)
WITH TWO-FAN CONDENSER SYSTEM — MCC (S/N G019E02165F →)

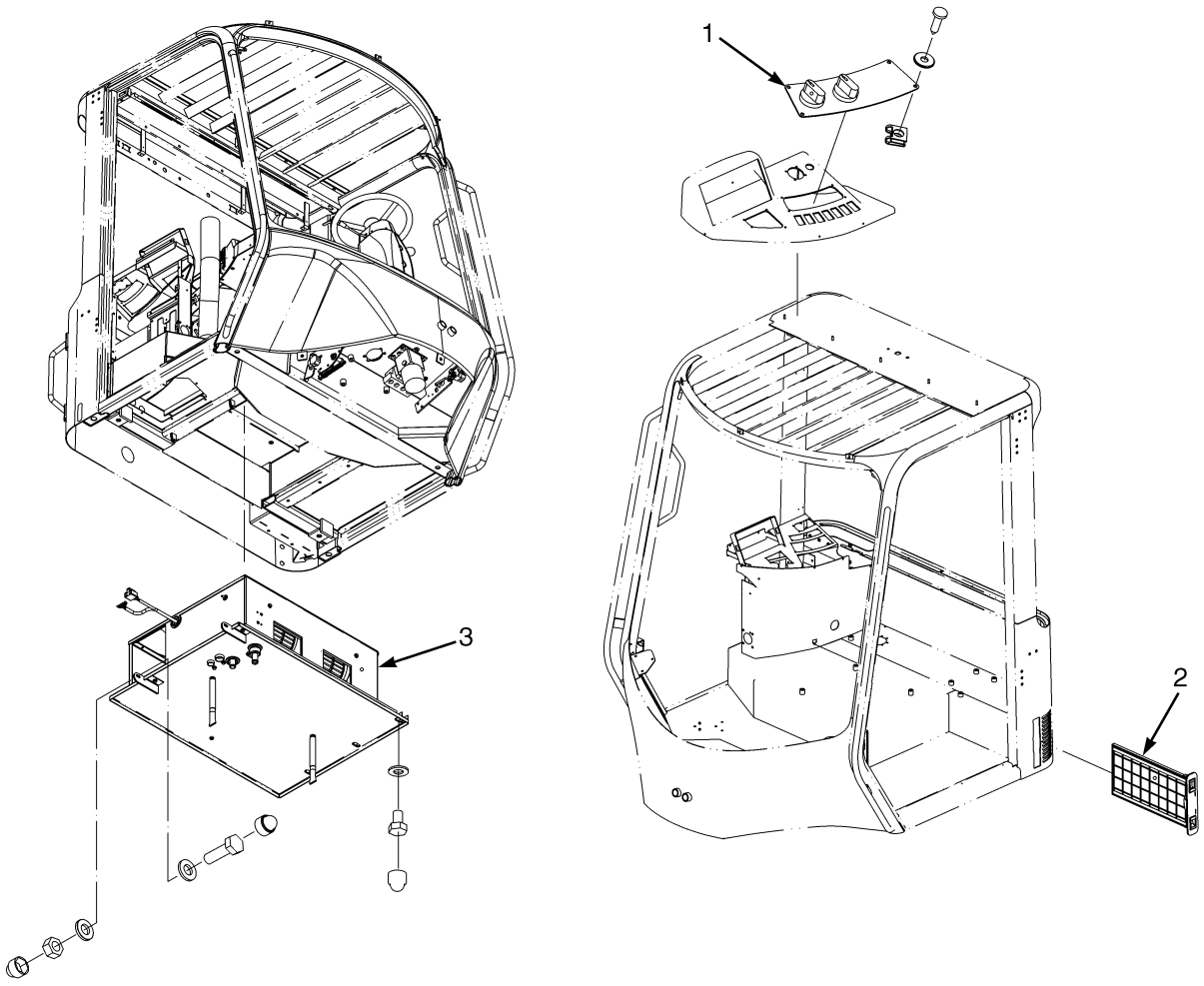

HP200120

ITEM	PART NO.	DESCRIPTION	QTY
	4000399	Heater Assembly	1
1	4000916	Heater Control Panel Assembly (MCC)	1
2	1493276	Air Filter	1
3	4000915	Heater Assembly (MCC) (☞Figure 1-42)	1

©2015 HYSTER COMPANY

HEATING AND AIR CONDITIONING SYSTEM FILTER (FIGURE 1-44)

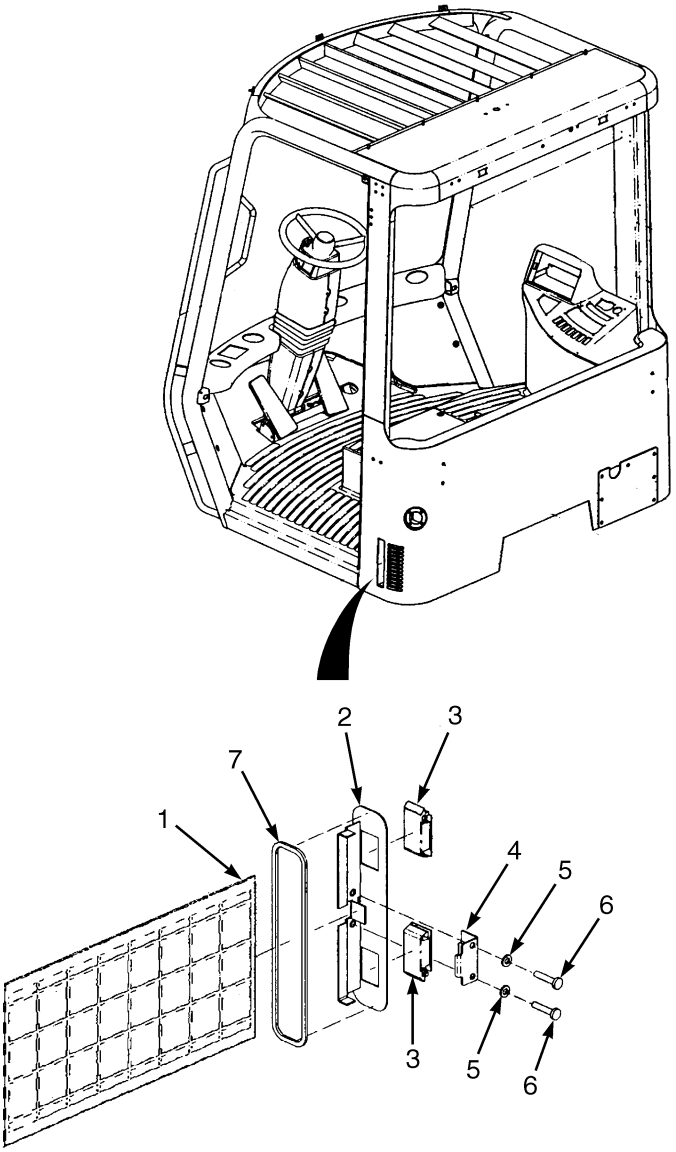

HP121003

ITEM	PART NO.	DESCRIPTION	QTY
1	1558028	Air Filter	1
2	1590815	Cover Assembly, Filter	1
2	1590822	Cover , Filter	1
3	1590821	Catch	2
4	1590820	Bracket	1
5	1492253	Washer	2
6	1492231	Screw	2
7	1558294	Seal	AR

©2015 HYSTER COMPANY

AIR CONDITIONER SYSTEM ASSEMBLY (FIGURE 1-45)

WITH TWO-FAN CONDENSER SYSTEM — MCC (S/N G019E02165F →)

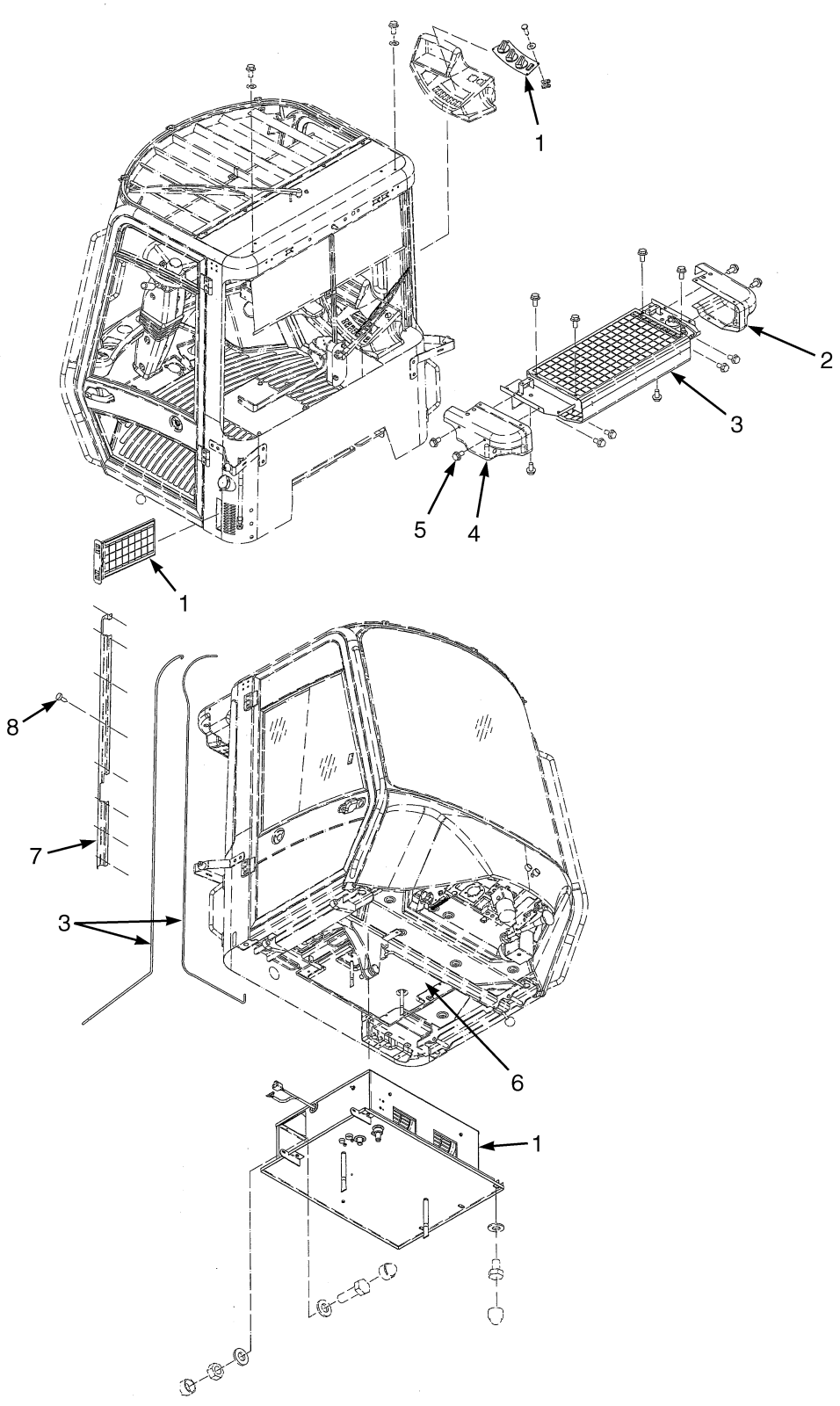

HP121216

©2015 HYSTER COMPANY

AIR CONDITIONER SYSTEM ASSEMBLY

WITH TWO-FAN CONDENSER SYSTEM – MCC (S/N G019E02165F →)

ITEM	PART NO.	DESCRIPTION	QTY
1	1702289	Air Conditioner Assembly (☞Figure 1-48)	1
2	1658128	Cover , Side (RH)	1
3	4004825	Condenser Assembly (☞Figure 1-46)	1
4	1658127	Cover , Side (LH)	1
5	1566041	Screw	10
6	1702293	Air Duct Assembly (☞Figure 1-50)	1
7	4004826	Cover	1
8	1468319	Screw	8

©2015 HYSTER COMPANY

CONDENSER SYSTEM (FIGURE 1-46)

TWO-FAN SYSTEM — MCC (S/N G019E02165F →)

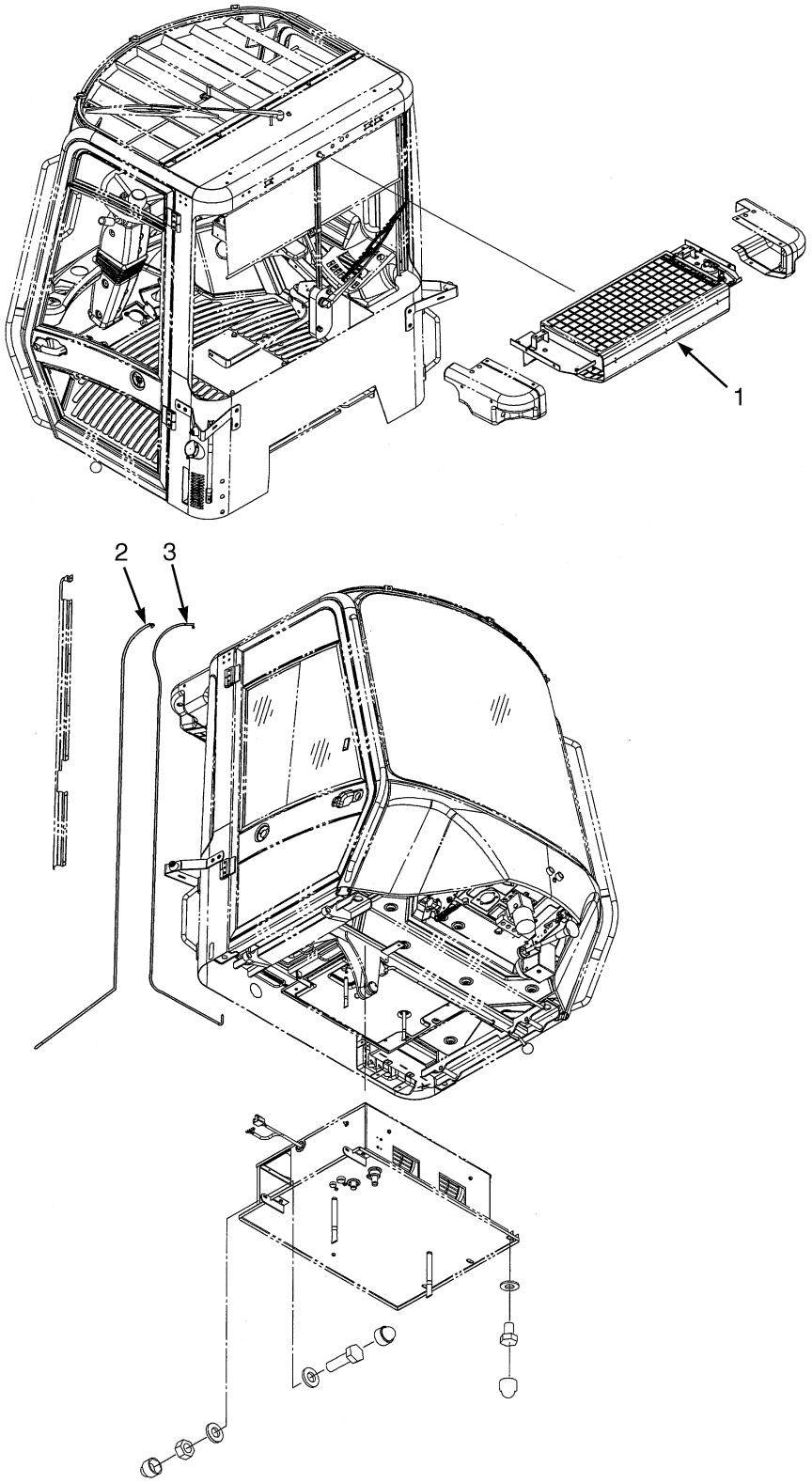

HP121215

©2015 HYSTER COMPANY

CONDENSER SYSTEM

TWO-FAN SYSTEM – MCC (S/N G019E02165F →)

ITEM	PART NO.	DESCRIPTION	QTY
	4004825	Condenser Assembly	1
1	4004830	Condenser Assembly (MCC) (☞Figure 1-47).....	1
2	4004829	Hose	1
3	4004828	Hose	1

©2015 HYSTER COMPANY

CONDENSER (FIGURE 1-47)

TWO-FAN SYSTEM — MCC (S/N G019E02165F →)

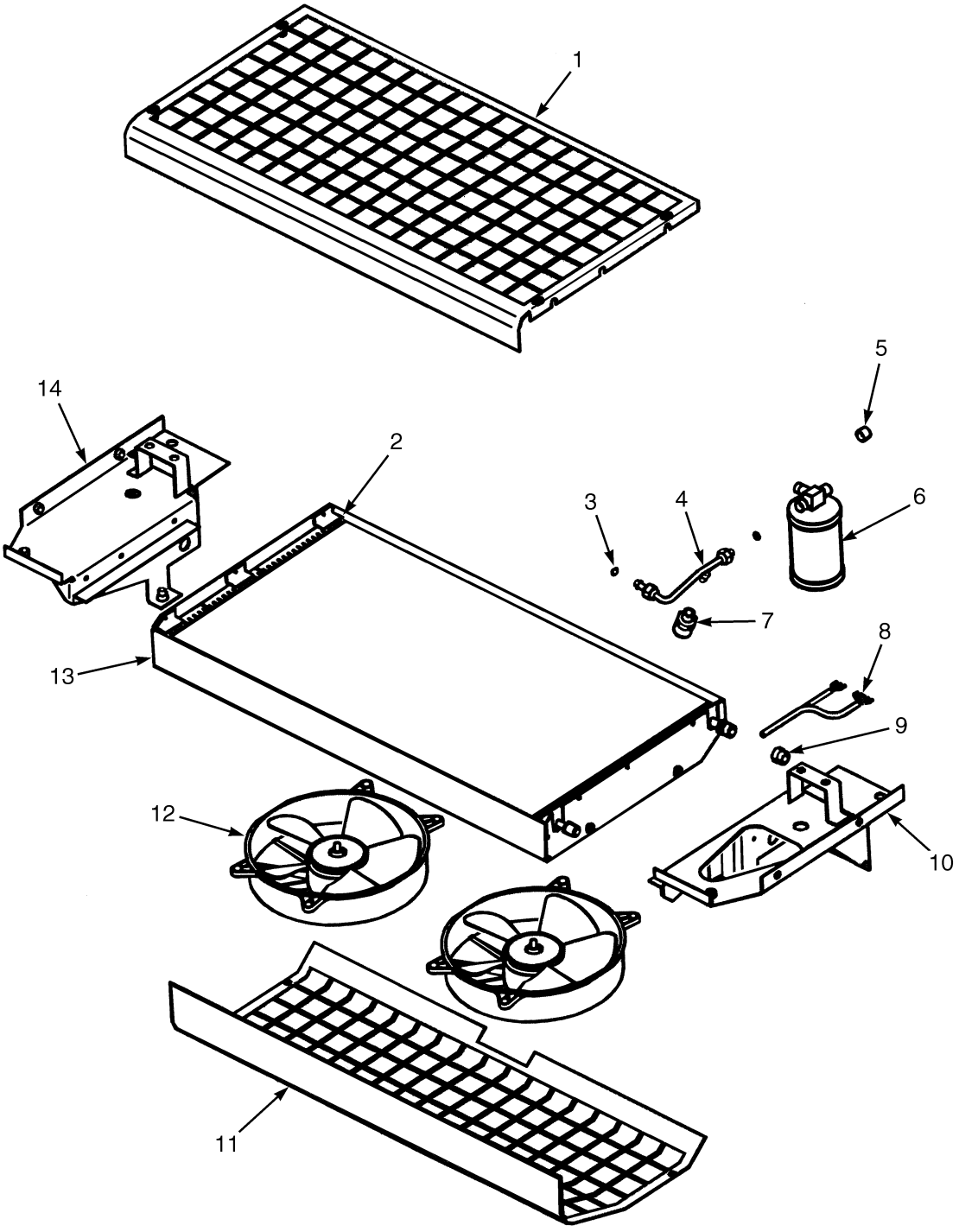

HP121214

©2015 HYSTER COMPANY

CONDENSER

TWO-FAN SYSTEM – MCC (S/N G019E02165F →)

ITEM	PART NO.	DESCRIPTION	QTY
	4004830	Condenser Assembly (MCC)	1
1	4004832	Cover , Mesh	1
2	4003079	Condenser	1
3	1487118	O-Ring	2
4	4004836	Tube Assy	1
5	4004839	Cap	1
6	1693804	Air Dryer	1
6	1695629	Relief Valve	1
7	1514712	Pressure Switch (2-Step)	1
8	~~4004061~~		
	4060157	Wire Harness	1
9	4004838	Cap	1
10	4004835	Bracket (RH)	1
11	4004833	Cover	1
12	1564433	Fan (24 Volt)	2
13	4004831	Case	1
14	4004834	Bracket (LH)	1

©2015 HYSTER COMPANY

AIR CONDITIONER SYSTEM (FIGURE 1-48)
WITH TWO-FAN CONDENSER SYSTEM — MCC (S/N G019E02165F →)

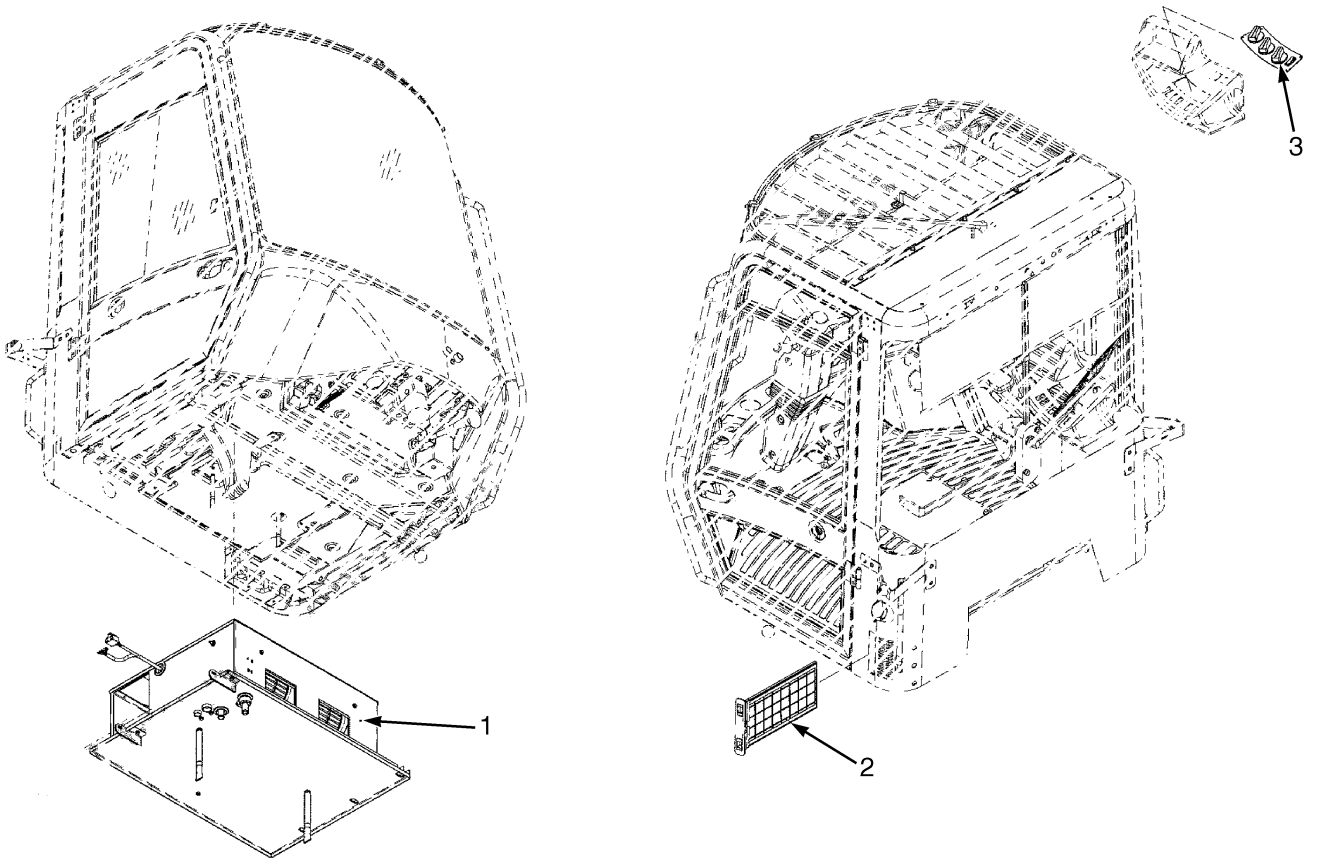

HP121182

ITEM	PART NO.	DESCRIPTION	QTY
	1702289	Air Conditioner Assembly	1
1	1702562	Air Conditioner Assembly (MCC) (☞Figure 1-49).....	1
2	1493276	Air Filter	1
3	1702563	Control Panel Assembly, Air Conditioner (MCC) (☞Figure 1-51).....	1

©2015 HYSTER COMPANY

NOTES

©2015 HYSTER COMPANY

AIR CONDITIONER ASSEMBLY (FIGURE 1-49)

WITH TWO-FAN CONDENSER SYSTEM — MCC (S/N G019E02165F →)

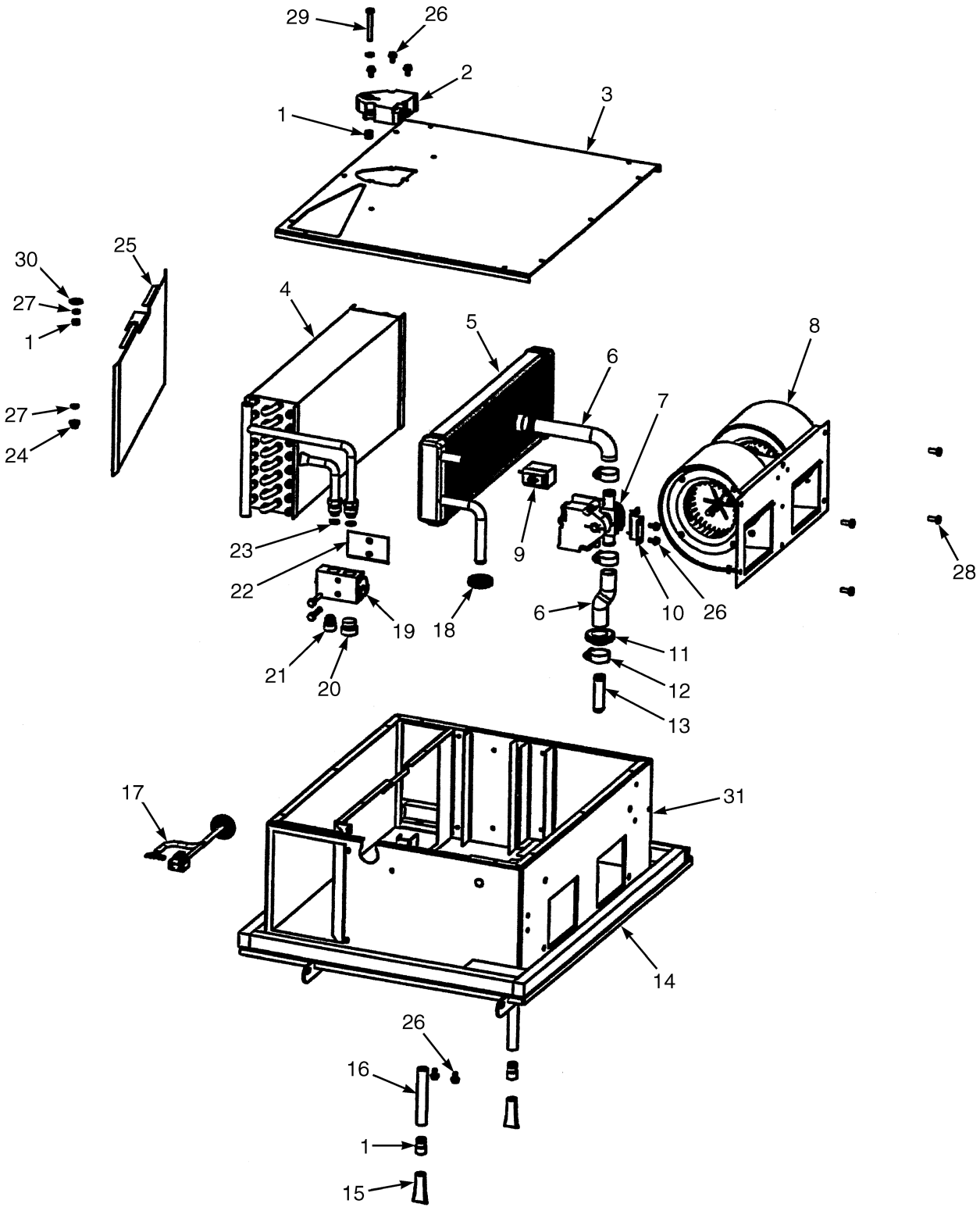

HP121205

©2015 HYSTER COMPANY

AIR CONDITIONER ASSEMBLY

WITH TWO-FAN CONDENSER SYSTEM – MCC (S/N G019E02165F →)

ITEM	PART NO.	DESCRIPTION	QTY
	1702562	Air Conditioner Assembly (MCC)	1
1	4003095	Connector	2
2	4003081	Actuator (Motor)	1
3	4003085	Cover	1
4	4003090	Coil (Evaporator)	1
5	4003091	Core (Heater Coil)	1
6	4003089	Hose	1
7	1510538	Valve (Motorized)	1
8	4003083	Blower	1
8	4095373	Resistor	1
9	4003082	Thermostat	1
10	4003098	Bracket	1
11	1487953	Grommet	1
12	1487950	Hose Clamp	4
13	1487952	Tube (Copper)	1
14	4003084	Case (Bottom Cover)	1
15	~~4003094~~		
	4054237	Drain Valve	2
16	~~4003096~~		
	4058540	Hose-Bulk (M)	AR
17	4003097	Wire Harness (AC)	1
18	4003088	Grommet	1
19	1487945	Valve (Block)	1
20	4003093	Plug	1
21	4003092	Plug	1
22	4003087	Bracket	1
23	1487122	O-Ring	1
24	1487963	Bushing	1
25	4003086	Cover Plate (Flapper)	1
26	. . . . .	Bolt	7
27	. . . . .	Washer	5
28	. . . . .	Bolt	4
29	. . . . .	Bolt	1
30	. . . . .	Lockwasher	1
31	. . . . .	Housing	1
	a 1510542	Wire Harness (24V)	1

FOOTNOTES:

a Not Illustrated

©2015 HYSTER COMPANY

AIR DUCT ASSEMBLY (FIGURE 1-50)

AIR CONDITIONING — WITH TWO-FAN CONDENSER SYSTEM, MCC (S/N G019E02165F →)

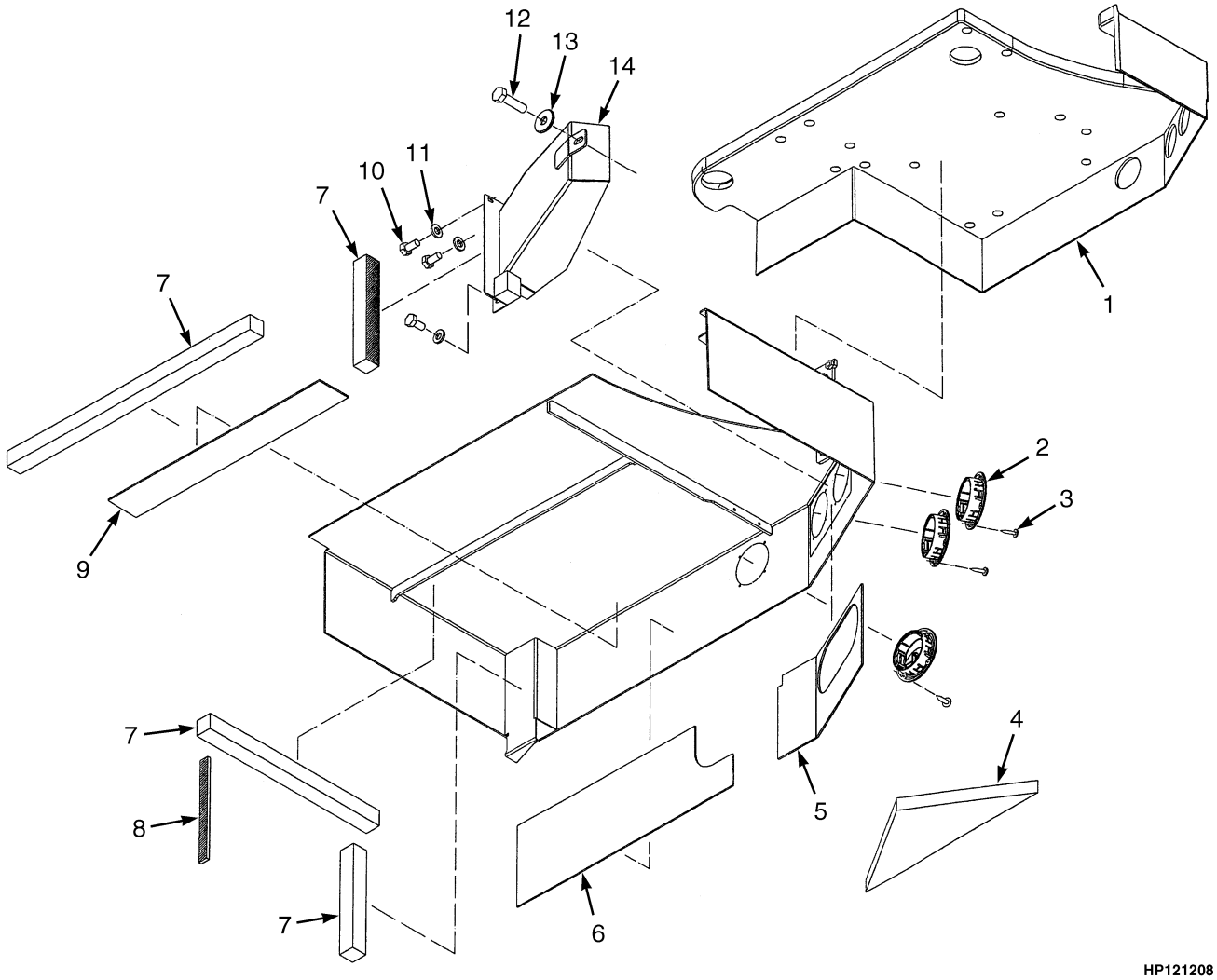

©2015 HYSTER COMPANY

AIR DUCT ASSEMBLY

AIR CONDITIONING – WITH TWO-FAN CONDENSER SYSTEM, MCC (S/N G019E02165F →)

ITEM	PART NO.	DESCRIPTION	QTY
	1702293	Air Duct Assembly	1
1	. . . . .	Floormat	1
2	1598398	Louver (Air)	3
3	1492163	Screw	12
4	. . . . .	Insulation	1
5	. . . . .	Insulation	1
6	. . . . .	Insulation	1
7	4000919	Foam	AR
8	4000920	Foam	AR
9	. . . . .	Insulation	1
10	4000918	Screw	3
11	~~4093489~~		
	320156	Washer	3
12	292501	Capscrew	1
13	1476421	Washer	1
14	. . . . .	Air Duct	1

©2015 HYSTER COMPANY

CONTROL PANEL ASSEMBLY (FIGURE 1-51)

WITH TWO-FAN CONDENSER SYSTEM — MCC (S/N G019E02165F →)

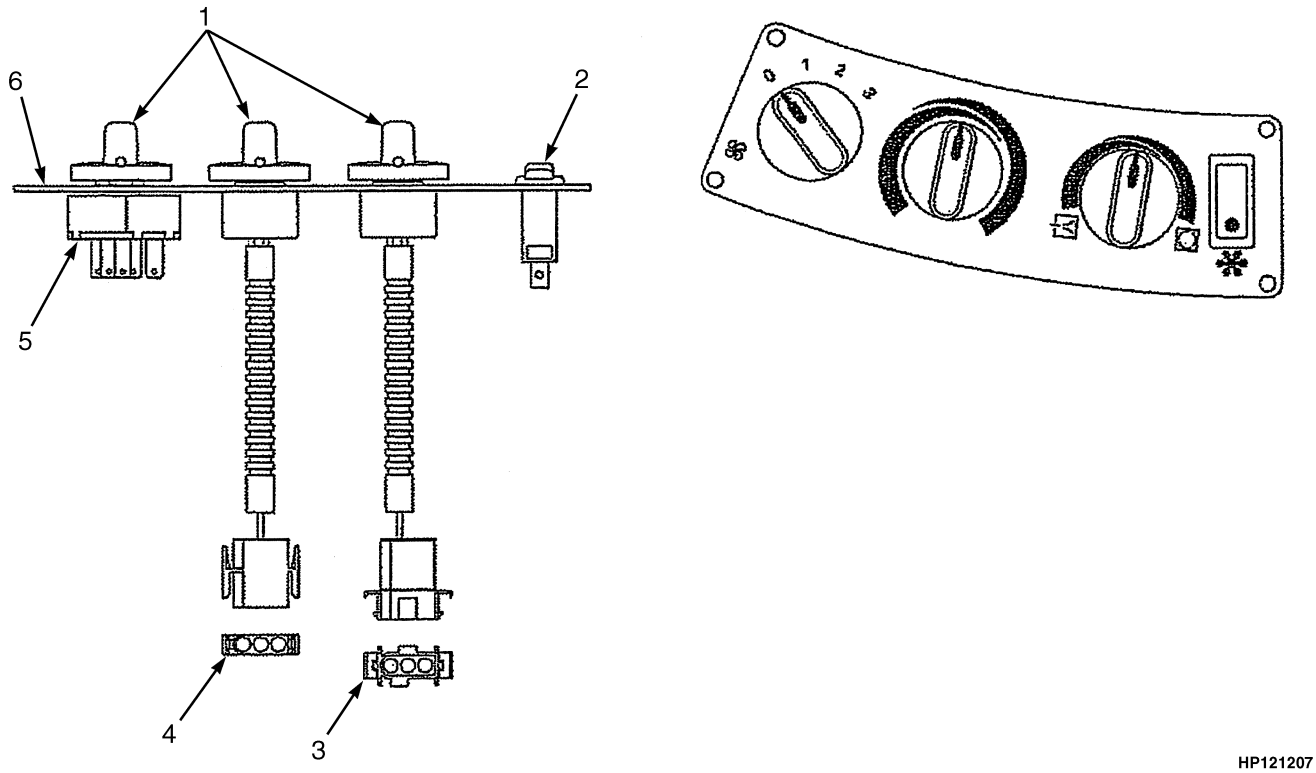

HP121207

ITEM	PART NO.	DESCRIPTION	QTY
	1702563	Control Panel Assembly, Air Conditioner (MCC)	1
1	1487957	Knob	3
2	4004308	Switch (Rocker, 24V)	1
3	4004309	Potentiometer (10K Flapper)	1
4	4004310	Potentiometer (10K Temperature)	1
5	1487956	Switch , Blower (with Nut)	1
6	~~4004307~~		
	4054247	Plate	1

©2015 HYSTER COMPANY

NOTES

©2015 HYSTER COMPANY

HEATER HOSES (FIGURE 1-52)
DIESEL ENGINE

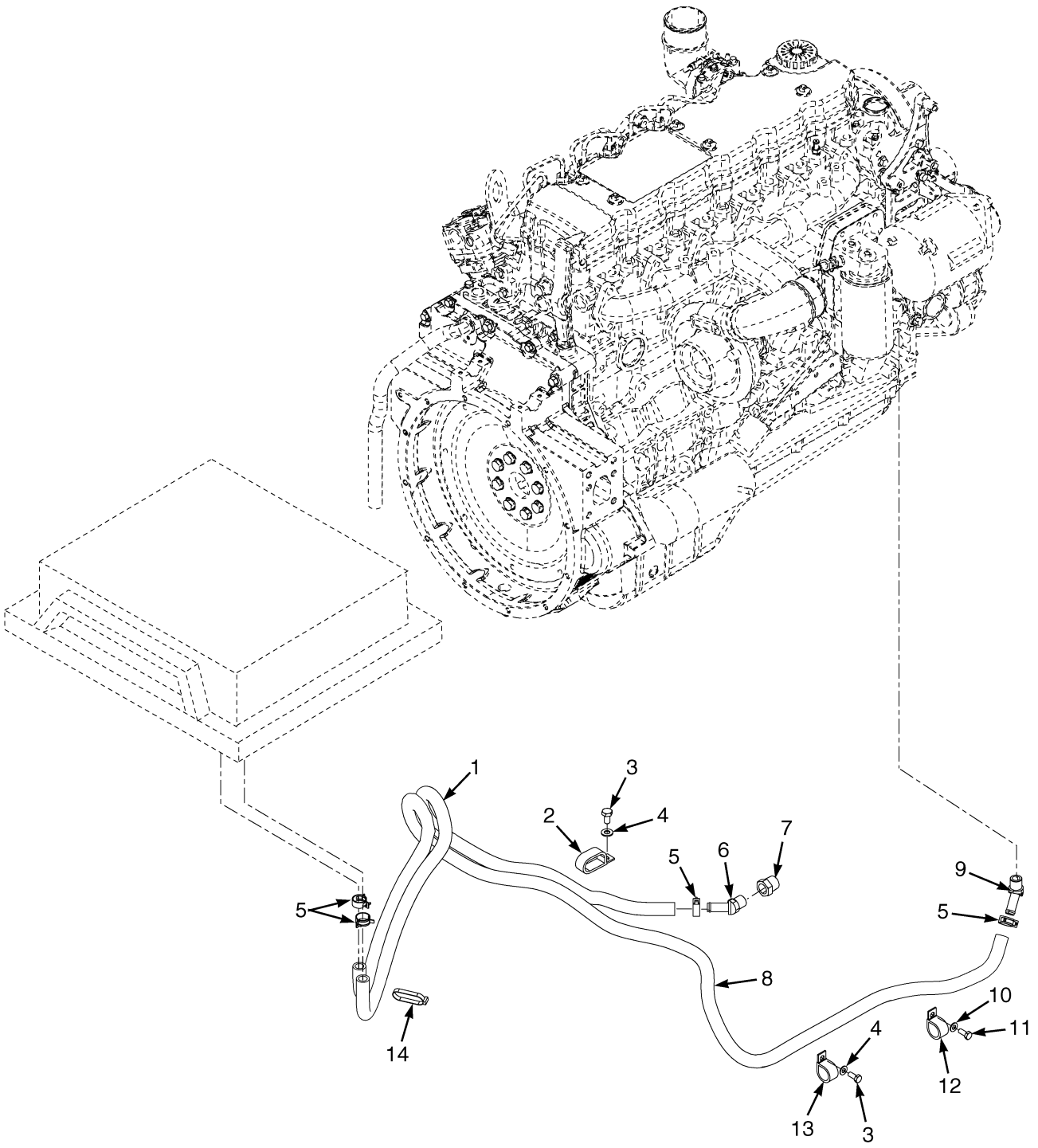

©2015 HYSTER COMPANY

HEATER HOSES
DIESEL ENGINE

ITEM	PART NO.	DESCRIPTION	QTY
1	2102701	Hose	1
2	1350911	Strap	1
3	136681	Capscrew	1
4	320157	Washer	1
5	1502008	Hose Clamp	4
6	127852	Fitting	1
7	12845	Fitting	1
8	2102702	Hose	1
9	17742	Fitting	1
10	320161	Washer	3
11	132860	Capscrew	1
12	321487	Clamp	2
13	198678	Clamp	1
14	129563	Strap Clamp	3

©2015 HYSTER COMPANY

HEATER HOSES (FIGURE 1-53)
LPG ENGINE

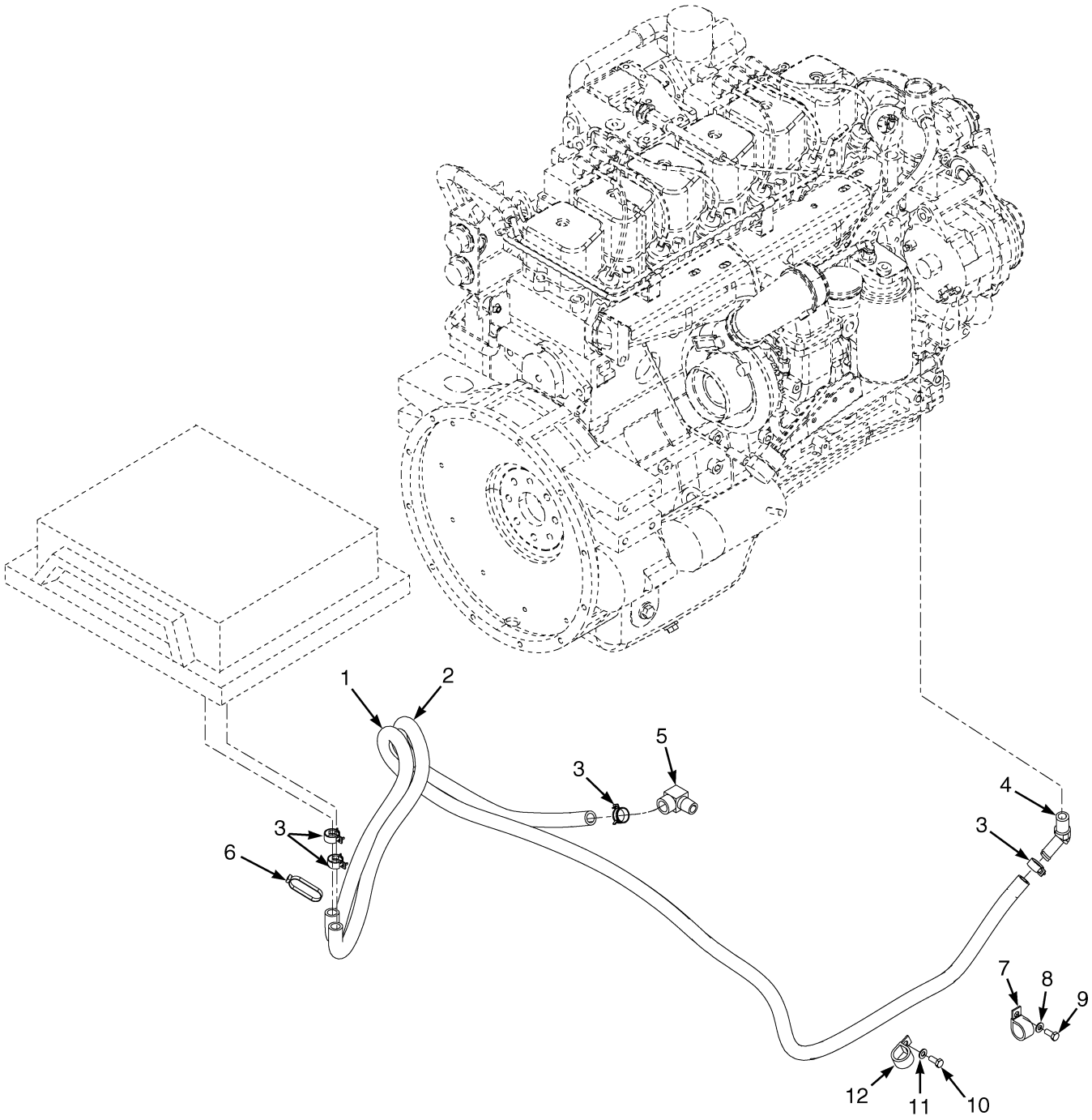

©2015 HYSTER COMPANY

HEATER HOSES
LPG ENGINE

ITEM	PART NO.	DESCRIPTION	QTY
1	2102705	Hose	1
2	2102706	Hose	1
3	1502008	Hose Clamp	4
4	16155	Fitting	1
5	222482	Fitting	1
6	129563	Strap Clamp	2
7	178119	Clamp	3
8	320157	Washer	3
9	136681	Capscrew	3
10	292514	Capscrew	1
11	320159	Washer	1
12	321487	Clamp	1
	a 1350911	Strap	1
	a 239308	Sleeve	4

FOOTNOTES:

a Not Illustrated

©2015 HYSTER COMPANY

TRAINING SEAT (FIGURE 1-54)

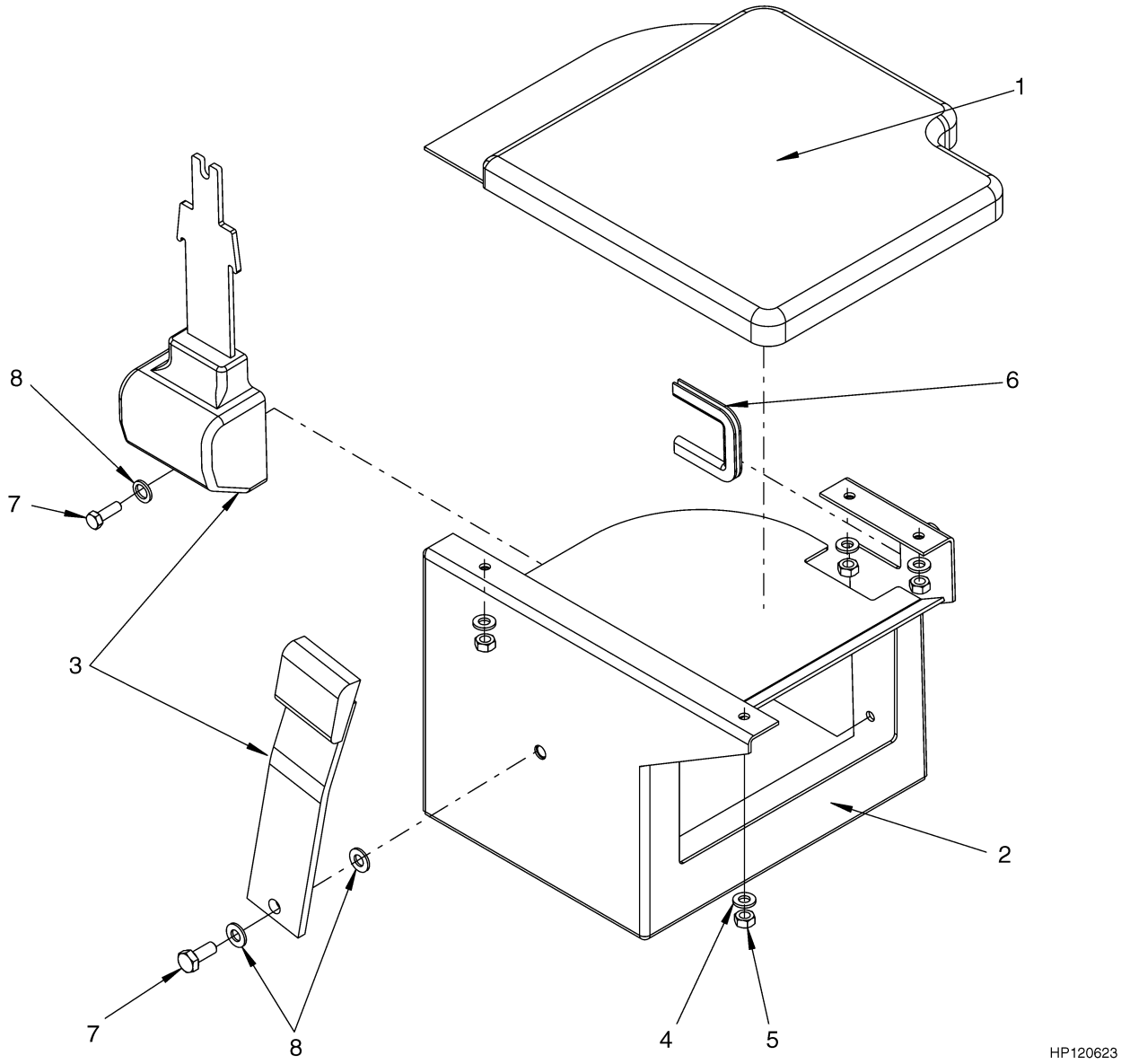

ITEM	PART NO.	DESCRIPTION	QTY
1	1499936	Cover (Top)	1
2	1506677	Seat Assy (Bottom)	1
3	1461081	Kit-Seat Belt	1
4	~~4093489~~		
	320156	Washer	4
5	136687	Nut	4
6	1498336	Edge Protector	AR
7	293628	Capscrew	2
8	1498338	Washer	3

©2015 HYSTER COMPANY

NOTES

©2015 HYSTER COMPANY

DELUXE SUSPENSION SEAT (FIGURE 1-55)

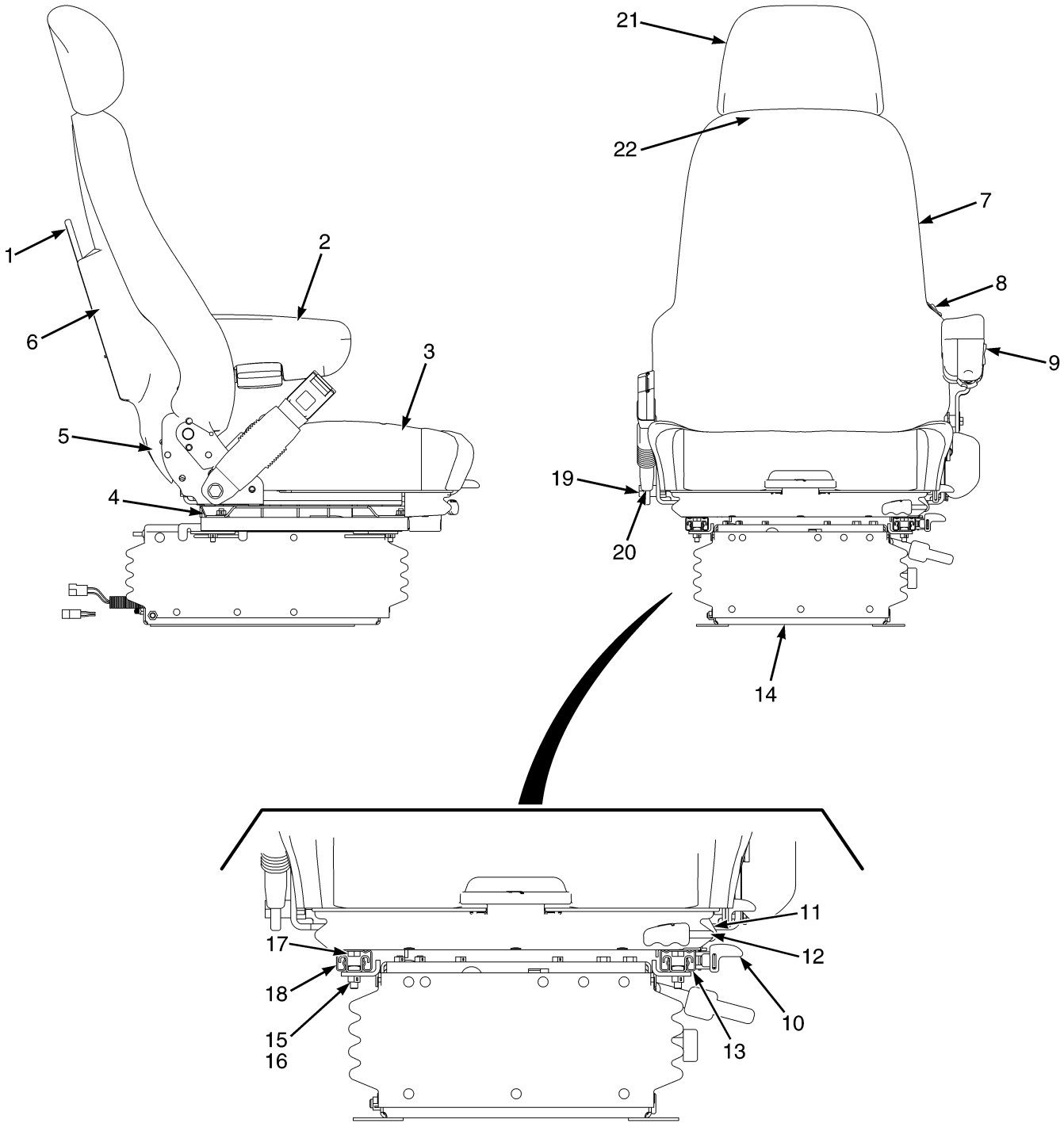

©2015 HYSTER COMPANY

DELUXE SUSPENSION SEAT

ITEM	PART NO.	DESCRIPTION	QTY
	4006338	Seat-Full Suspension Assembly (Deluxe)	1
1	1482948	Box (Book)	1
2	4007739	Kit-Armrest (Left Hand)	1
3	4007748	Seat Cushion	1
4	1482993	Kit-Plate (Adapter)	1
5	4007741	Kit -Seat Top	1
6	1482925	Plate (Book Box)	1
7	4007740	Cushion (Back)	1
8	4007749	Switch (Electric Air Lumbar)	1
8	4007747	Plug (Lumbar)	1
9	4007750	Switch (Valve Seat Height Control)	1
10	4007745	Knob (Slide Lever)	1
10	1482979	Lever (Slide)	1
11	4007746	Rod (Latch, Cushion Extention Control)	1
12	1615125	Roll Pin	1
13	. . . . .	Seat Rail	1
14	4007751	Kit-Suspension	1
15	1482990	Bolt	4
16	1482917	Locknut	13
17	1482951	Bolt	8
18	. . . . .	Seat Rail	1
19	~~4048814~~		
	292528	Capscrew	2
20	1615064	Spacer	1
21	4007742	Headrest	1
22	1615149	Guide Assembly	2
23	**a** 1482981	Locknut	1
24	**a** 1482980	Washer (0.05 mm)	1
	a 1482949	Screw (Pan Head)	4
	a 1584643	Screw (Truss Head)	4
	a 4007743	Knob (Back Tilt)	1
	a 4007744	Knob (Slide)	1
	a 1482997	Bracket (Support)	1
	a 1482995	Washer (0.07 mm)	9
	a 1615063	Washer (0.08 mm)	6
	1482998	Kit-Seat Rail	1

FOOTNOTES:

a Not Illustrated

©2015 HYSTER COMPANY

SUSPENSION KIT ASSEMBLY (FIGURE 1-56)

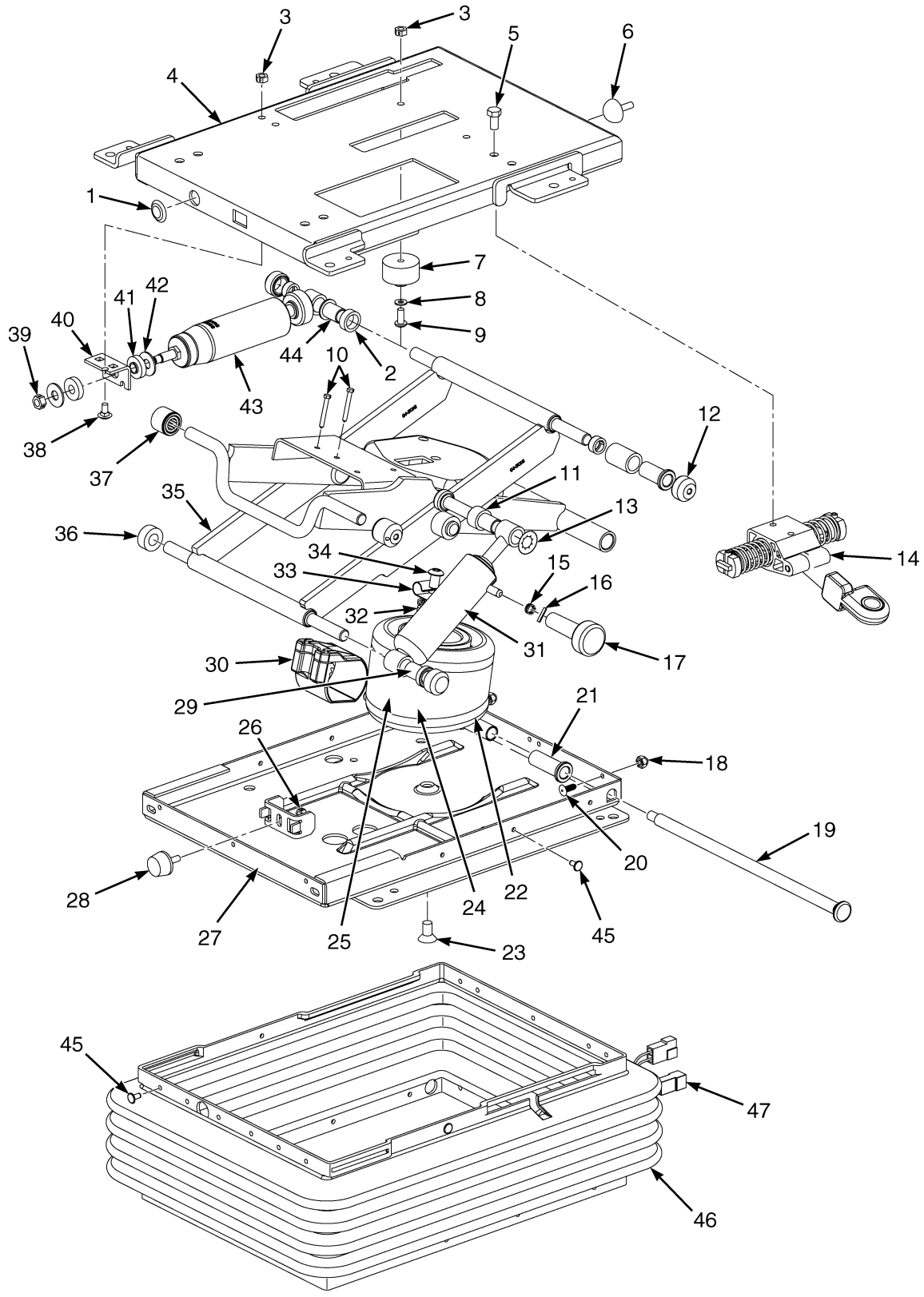

©2015 HYSTER COMPANY

SUSPENSION KIT ASSEMBLY

ITEM	PART NO.	DESCRIPTION	QTY
	4007751	Kit-Suspension	1
1	. . . . .	Hole Plug	1
2	4102147	Spacer	1
3	1483055	Nut	4
4	4102159	Housing (Upper)	1
5	4102145	Bolt	2
6	1615132	Bumper	2
7	1483053	Bumper	2
8	1482980	Washer	4
9	1483054	Screw	2
10	1483067	Screw	2
11	1615126	Bushing , Shock (Upper)	1
12	4102157	Roller Assembly	2
13	275608	Fastener	1
14	4102160	Latch Assembly (Isolator)	1
15	. . . . .	Extension Spring	1
16	1615125	Roll Pin	1
17	4102152	Knob , Flex Shock	1
18	1483004	Nut	3
19	. . . . .	Bearing Shaft	1
20	1483029	Fastener	3
21	1367144	Bearing	2
22	1483057	Spring , Air	1
23	1483058	Screw	1
24	~~4048818~~		
	1483010	Nut	1
25	4102151	Compressor (12V)	1
26	1482981	Locknut	1
27	1483051	Housing (Lower)	1
28	4102148	Bumper	1
29	1615127	Bushing , Shock (Lower)	1
30	1615141	Bracket (Plastic)	1
31	. . . . .	Shock Absorber	1
32	1483060	Fitting	1
33	1615136	Clip	1
34	1615137	Screw	1
35	4102161	Arm , Suspension	1
36	1483031	Roller	2
37	4102158	Bearing and Roller Assembly	2
38	222595	Bolt	2
39	4102144	Nut	1
40	4102156	Bracket , Shock Mounting	1
41	4102154	Bushing	2
42	4102143	Washer	2
43	4102146	Shock Absorber	1
44	4102155	Bushing , Shock Isolator	1
45	1483003	Fastener	21
46	. . . . .	Boot	1
47	4102153	Wire Harness	1
	4131930	Kit-Housing , Upper	1

©2015 HYSTER COMPANY

SEAT SUSPENSION ASSEMBLY (FIGURE 1-57)

AIR

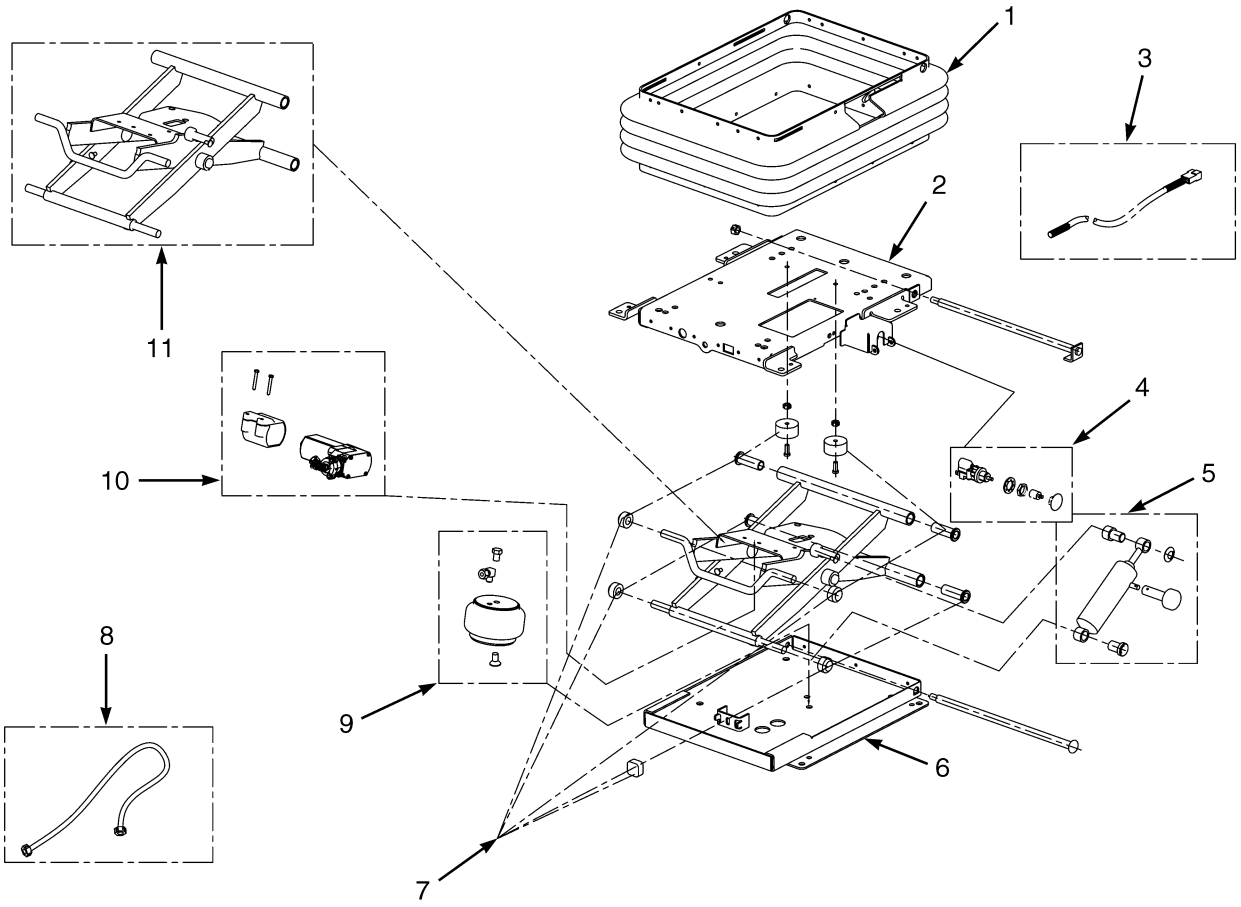

BP120136

©2015 HYSTER COMPANY

SEAT SUSPENSION ASSEMBLY
AIR

ITEM	PART NO.	DESCRIPTION	QTY
	~~1482989~~		
	1482982	Kit-Service Air Susp Seat	1
1	1483005	Kit-Suspension Boot	1
1	1483006	Boot	1
1	1483003	Fastener	22
1	1483004	Nut	3
2	1483042	Kit-Housing (Upper)	1
2	1483043	Housing (Upper)	1
2	1483009	Shaft	1
2	~~4048818~~		
	1483010	Nut	1
2	. . . . .	Plug	1
2	1483047	Roll Pin	1
2	1483003	Fastener	11
2	1482917	Locknut	4
2	1482990	Bolt	4
2	. . . . .	Bearing	2
3	1483040	Wire Harness Service Kit	1
3	1483041	Wire Harness	1
3	1482953	Strap Clamp	1
3	1483003	Fastener	1
3	1483004	Nut	1
4	1615107	Valve (Air)	1
4	. . . . .	Valve Body	1
4	1615109	Lockwasher	1
4	1615110	Nut	1
4	. . . . .	Knob (Air Valve)	1
4	1615111	Connector	1
4	1483047	Roll Pin	2
4	1615105	Handle (Control Valve)	1
4	1615106	Knob (Air Control Valve)	1
5	1483049	Gas Spring Kit	1
5	1615129	Shock Absorber	1
5	. . . . .	Fastener	1
5	1615124	Knob (Adjuster)	1
5	1615125	Roll Pin	1
5	1615126	Bushing , Shock (Upper) (Upper Shock)	1
5	1615127	Bushing , Shock (Lower) (Lower Shock)	1
5	1615128	Spring	1
6	1483050	Kit-Housing (Lower)	1
6	1483051	Housing (Lower)	1
6	1483009	Shaft	1
6	~~4048818~~		
	1483010	Nut	1
6	1483029	Fastener	3
6	1483003	Fastener	9
6	1483004	Nut	3
6	1615131	Bumper (Rubber)	1
6	1483058	Screw	1
7	1483052	Kit-Bearing (Suspension)	1

©2015 HYSTER COMPANY

SEAT SUSPENSION ASSEMBLY
AIR

ITEM	PART NO.	DESCRIPTION	QTY
7	1483031	Roller	4
7	1483053	Bumper	2
7	1483054	Screw	2
7	1483055	Nut	2
7	. . . . .	Bearing	4
7	1482990	Bolt	4
7	~~4048818~~		
	1483010	Nut	2
7	1483003	Fastener	9
7	1483004	Nut	3
7	1482953	Strap Clamp	1
7	1615132	Bumper	2
7	1615126	Bushing , Shock (Upper)	1
7	1615127	Bushing , Shock (Lower)	1
7	. . . . .	Fastener	1
7	1482980	Washer	4
8	1483061	Kit-Air Hose	1
8	1483062	Hose	1
8	1615111	Connector	1
8	1483060	Fitting	1
8	1615138	Cap	1
8	1615139	O-Ring	1
9	1483056	Kit-Spring (Air)	1
9	1483057	Spring , Air	1
9	1483058	Screw	1
9	1483059	Bolt	1
9	1483060	Fitting	1
9	1615136	Clip	1
9	1483062	Hose	1
9	1483003	Fastener	10
9	1483004	Nut	3
9	1615137	Screw	1
10	1528714	Kit-Compressor	1
10	1615140	Compressor (24 Volt)	1
10	1615141	Bracket (Plastic)	1
10	1483067	Screw	2
10	1483062	Hose	1
10	1615111	Connector	1
10	1483060	Fitting	1
11	1615143	Kit-Service Susp Scissors	1
11	1615144	Scissor	1
11	1615126	Bushing , Shock (Upper) (Upper Shock)	1
11	1615127	Bushing , Shock (Lower) (Lower Shock)	1
11	1483031	Roller	4
11	. . . . .	Bearing	4
11	. . . . .	Fastener	1

©2015 HYSTER COMPANY

NOTES

©2015 HYSTER COMPANY

SEAT SUSPENSION ASSEMBLY (FIGURE 1-58)
MECHANICAL

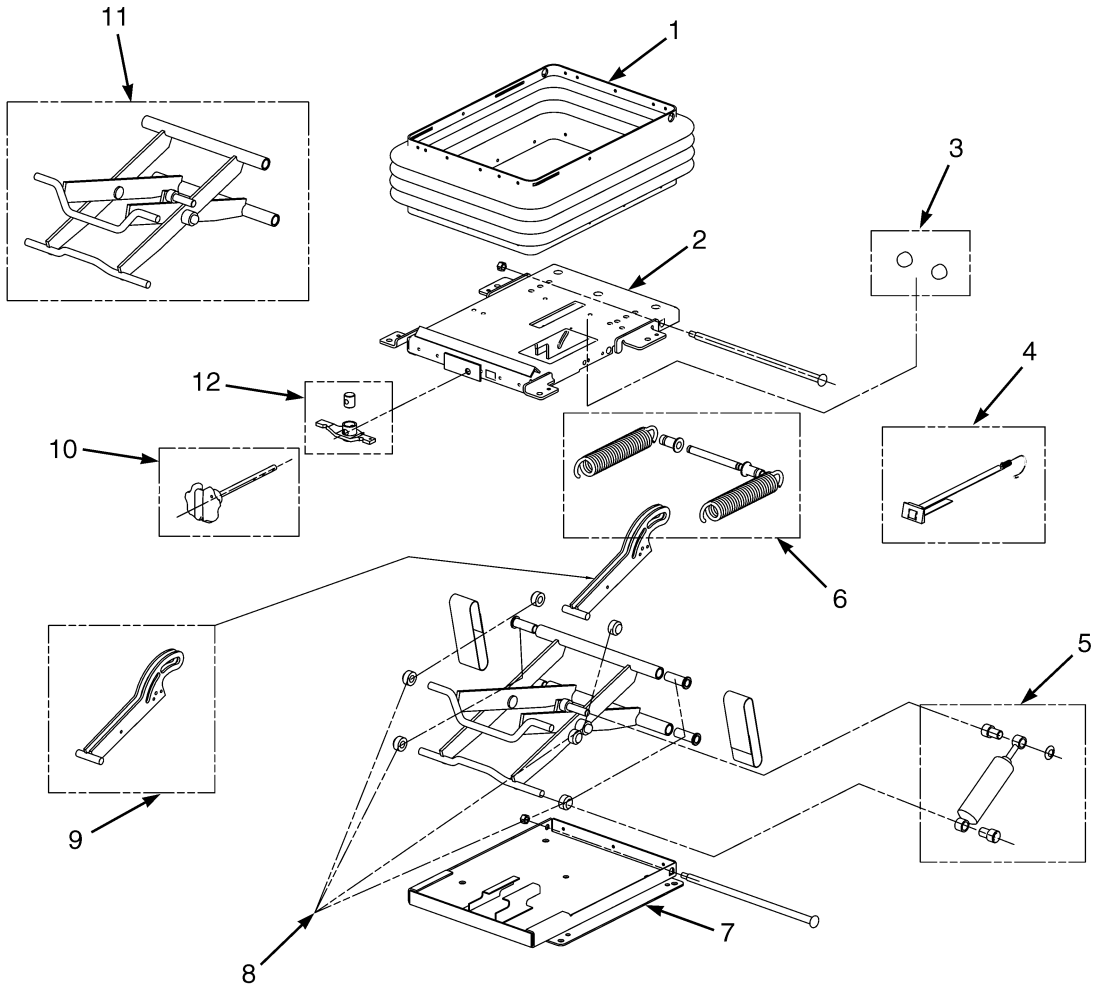

BP120179

©2015 HYSTER COMPANY

SEAT SUSPENSION ASSEMBLY
MECHANICAL

ITEM	PART NO.	DESCRIPTION	QTY
	1482992	Suspension (Mechanical)	1
1	1483001	Kit-Suspension Boot	1
1	1483002	Boot	1
1	1483003	Fastener	18
1	1483004	Nut	3
2	1483007	Kit-Housing (Upper)	1
2	1483008	Housing	1
2	1483009	Shaft	1
2	~~4048818~~		
	1483010	Nut	1
2	1483003	Fastener	9
2	1483011	Roll Pin	1
2	1482917	Locknut	4
2	1482990	Bolt	4
2	1615075	Pin	2
2	1615076	Pin	1
2	1615077	Clip	4
2	1615078	Clip	2
2	1615079	Cam Follower	1
3	1483012	Kit-Bumper	1
3	1483013	Spring	2
3	1483388	Nut	2
4	1483020	Tape	1
4	1483021	Spring	1
4	1483022	Tape	1
4	1483023	Guide	1
4	1483014	Rivet	1
5	1483024	Gas Spring	1
5	1483025	Shock Absorber	1
5	. . . . .	Fastener	1
5	1483026	Bushing	2
5	1615126	Bushing , Shock (Upper) (Alternate Part)	2
6	1483015	Kit-Spring	1
6	1483016	Spring	2
6	. . . . .	Retaining Ring	2
6	1483017	Bushing	2
6	1483018	Spacer	2
6	. . . . .	Spring Shaft	1
7	1483027	Kit-Housing (Lower)	1
7	1483028	Housing	1
7	1483009	Shaft	1
7	~~4048818~~		
	1483010	Nut	1
7	1483029	Fastener	3
7	1483003	Fastener	9
7	1483004	Nut	3
7	1483031	Roller	4
8	1483030	Kit-Bearing	1
8	1483031	Roller	6
8	. . . . .	Bearing	4

©2015 HYSTER COMPANY

SEAT SUSPENSION ASSEMBLY
MECHANICAL

ITEM	PART NO.	DESCRIPTION	QTY
8	1483026	Bushing	2
8	1615126	Bushing , Shock (Upper) (Alternate Part)	2
9	1483032	Arm	1
9	1483033	Arm	1
9	1615075	Pin	2
9	1615076	Pin	1
9	1615077	Clip	4
9	. . . . .	Retaining Ring	2
9	1615078	Clip	2
9	1615079	Cam Follower	1
9	1483018	Spacer	2
9	. . . . .	Bearing	2
9	1483031	Roller	2
10	1483034	Knob	1
10	1483036	Knob	1
10	1483011	Roll Pin	1
11	1483037	Kit-Service Susp Scissors	1
11	1483039	Scissor	1
11	1483031	Roller	4
11	. . . . .	Bearing	4
11	1483026	Bushing	2
11	1615126	Bushing , Shock (Upper) (Alternate Part)	2
11	~~4048818~~		
	1483010	Nut	2
11	. . . . .	Fastener	1
12	1687037	Kit-Weight Adjuster	1

©2015 HYSTER COMPANY

SEAT SUSPENSION MOUNTING (FIGURE 1-59)

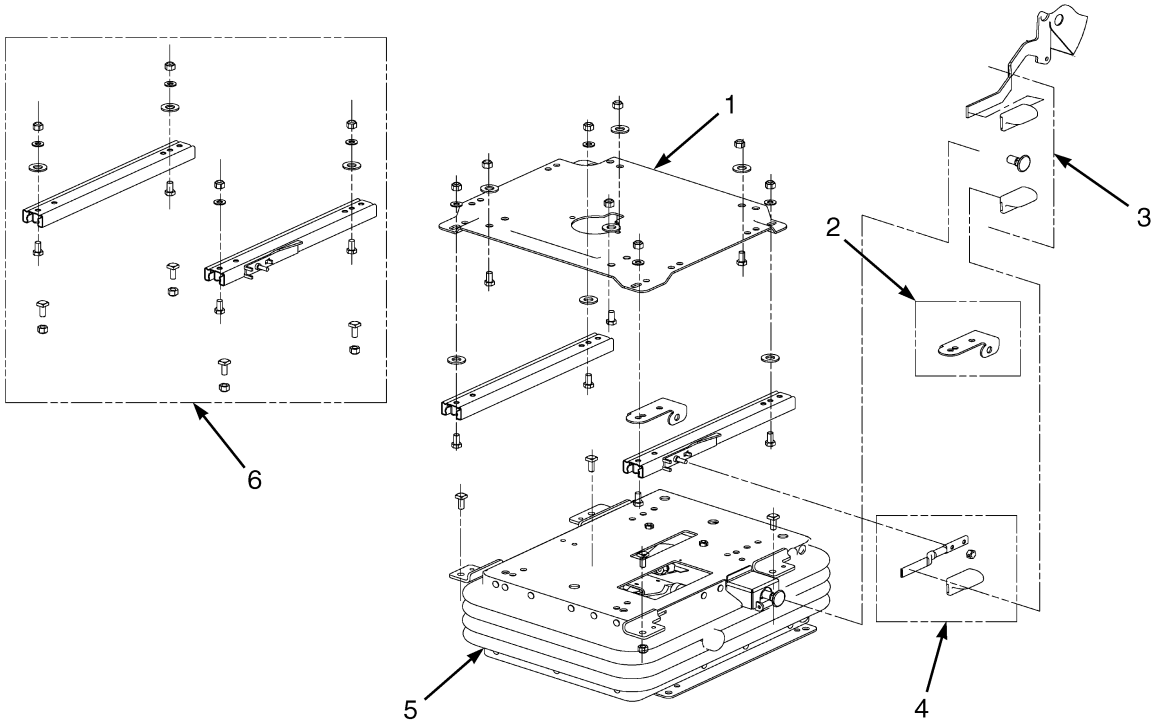

BP120177

KEY:
A: Mechanical Suspension
B: Air Suspension

ITEM	PART NO.	DESCRIPTION	QTY A	QTY B
	a ~~1603522~~			
	1692292	Seat Assy (Mechanical Suspension) (Fabric Cover)	1	..
	1603521	Seat-Full Suspension (Mechanical Suspension) (Vinyl Cover)	1	..
	a ~~1603524~~			
	1692293	Seat Assy (Air Suspension) (Fabric Cover)	..	1
	1603523	Seat-Full Suspension (Air Suspension) (Vinyl Cover)	..	1
1	1482993	Kit-Plate (Adapter)	1	1
1	. . . . .	Adapter	1	1
1	1482917	Locknut	8	8
1	1482951	Bolt	8	8
1	1482952	Clip	2	2
1	1482995	Washer	4	4
1	1482953	Strap Clamp	1	1
2	1482996	Kit-Bracket	1	1
2	1482997	Bracket (Support)	1	1
2	1482917	Locknut	4	4
2	1482951	Bolt	4	4
2	1482995	Washer	4	4
2	1482980	Washer	1	1
2	1482981	Locknut	1	1
3	1482976	Kit-Knob	1	1
3	1467531	Knob (Recliner)	1	1
3	. . . . .	Knob (Slide)	1	1

©2015 HYSTER COMPANY

KEY:
A: Mechanical Suspension
B: Air Suspension

ITEM	PART NO.	DESCRIPTION	QTY A	QTY B
3	1483047	Roll Pin	..	1
3	. . . . .	Knob (Air Valve)	..	1
3	1615105	Handle (Control Valve)	..	1
3	1615106	Knob (Air Control Valve)	..	1
4	1482978	Kit-Lever (Slider)	1	1
4	1482979	Lever (Slide)	1	1
4	. . . . .	Knob	1	1
4	1482980	Washer	1	1
4	1482981	Locknut	1	1
5	1482991	Kit-Service Mech Susp Seat	1	..
5	1482992	Suspension (Mechanical)	1	..
5	1482917	Locknut	4	..
5	1482990	Bolt	4	..
5	1482953	Strap Clamp	1	..
5	~~1482989~~			
	1482982	Kit-Service Air Susp Seat	..	1
5	1482917	Locknut	..	4
5	1482990	Bolt	..	4
5	1482953	Strap Clamp	..	1
6	1482998	Kit-Seat Rail	1	1
6	1482990	Bolt	4	4
6	1482917	Locknut	8	8
6	1482951	Bolt	4	4
6	1482980	Washer	1	1
6	1482981	Locknut	1	1

FOOTNOTES:

a → S/N G019E02346G

©2015 HYSTER COMPANY

NOTES

©2015 HYSTER COMPANY

SEAT ASSEMBLY (FIGURE 1-60)
WITH FABRIC COVER (→ 3/2010)

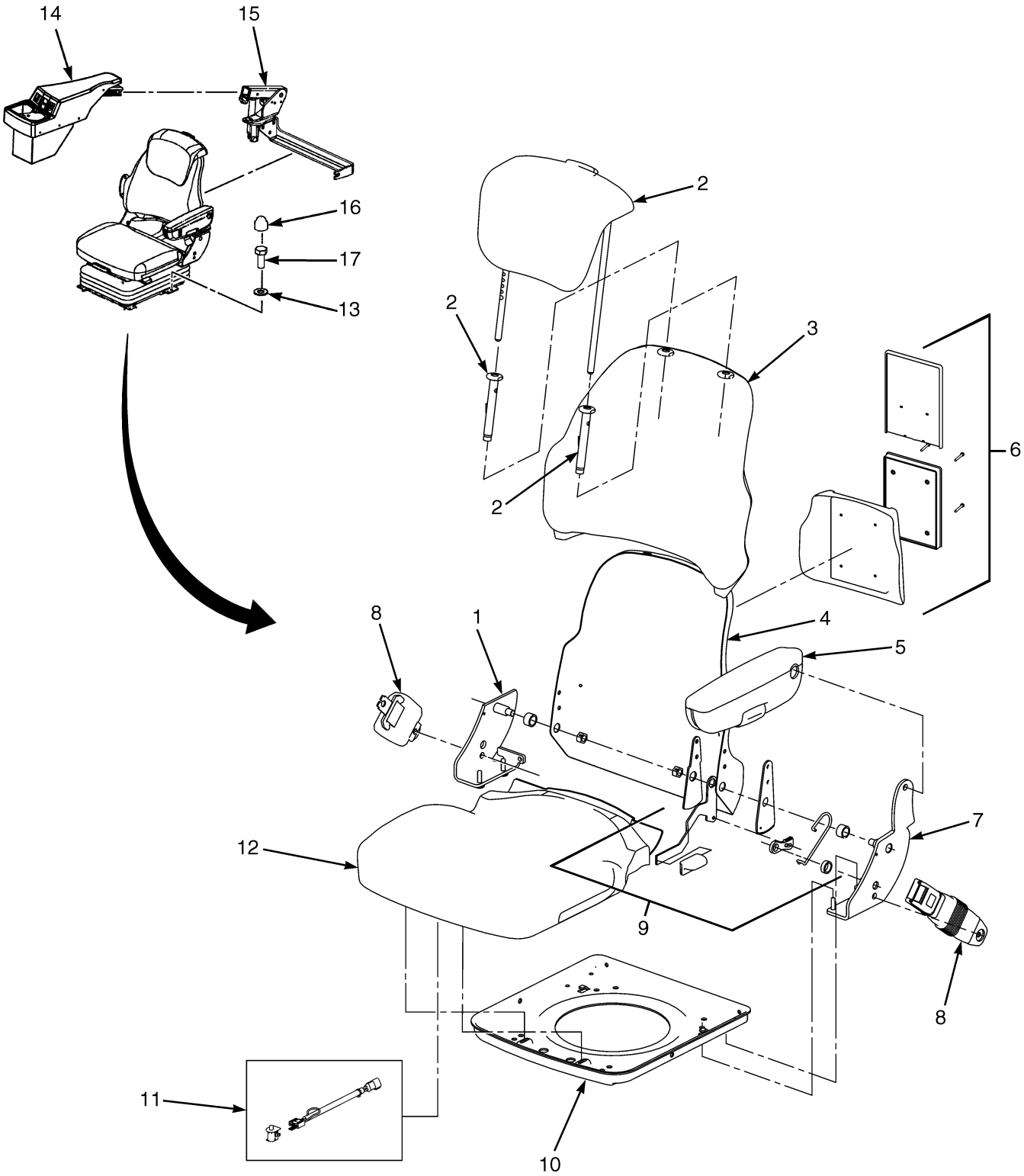

©2015 HYSTER COMPANY

SEAT ASSEMBLY
WITH FABRIC COVER (→ 3/2010)

ITEM	PART NO.	DESCRIPTION	QTY
	b ~~1603522~~		
	1692292	Seat Assy (Mechanical Suspension) (Fabric Cover)	1
	b ~~1603524~~		
	1692293	Seat Assy (Air Suspension) (Fabric Cover)	1
	1482798	Seat-Full Suspension (With Armrest)	1
	a 1482915	Spacer	1
	a ~~4048814~~		
	292528	Capscrew	1
	a 1482917	Locknut	4
	a 1615073	Bolt	4
1	1482974	Kit-Bracket (RH)	1
1	1482806	Bracket	1
1	1482917	Locknut	3
1	1482951	Bolt	1
1	1482919	Locknut	2
1	1482924	Screw	2
1	1482952	Clip	2
1	1482953	Strap Clamp	1
2	1615147	Kit-Back/Headrest Cushion	1
2	**b** 1574082	Headrest	1
2	**c** 1692151	Seat Cushion	1
2	1615149	Guide Assembly	2
3	1482957	Seat Back Cushion Assy, Cloth	1
3	1482802	Cushion	1
3	1482924	Screw	2
4	1482959	Kit-Back Pan	1
4	1615056	Pan	1
4	1482917	Locknut	8
4	1482919	Locknut	2
4	1482924	Screw	2
4	1615057	Bolt	1
4	1482913	Connector	6
5	1482960	Armrest (LH)	1
5	1482804	Armrest	1
5	1482919	Locknut	1
5	~~4048814~~		
	292528	Capscrew	1
5	1482920	Washer	2
5	1482961	Screw	1
6	1467522	Information Case	1
6	1470155	Information Case (Kit) (Alternate Part)	1
6	1482925	Plate (Book Box)	1
6	1482948	Box (Book)	1
6	1482949	Screw	4
6	1482950	Cover	1
7	1482969	Kit-Bracket (LH)	1
7	1482805	Bracket	1
7	1482917	Locknut	3
7	1615057	Bolt	1
7	~~4048814~~	Capscrew	1

©2015 HYSTER COMPANY

SEAT ASSEMBLY
WITH FABRIC COVER (→ 3/2010)

ITEM	PART NO.	DESCRIPTION	QTY
	292528		
7	1482919	Locknut	2
7	1482924	Screw	2
7	1482910	Nut	1
7	1482952	Clip	2
7	1482961	Screw	1
7	1482953	Strap Clamp	1
8	1615062	Kit-Seat Belt	1
8	~~4048814~~		
	292528	Capscrew	1
8	246001	Capscrew	1
8	1615063	Washer	3
8	1615064	Spacer	2
8	1615065	Seat Belt Set	1
9	1482970	Kit-Recliner	1
9	1467531	Knob	1
9	1482904	Lever	1
9	1482905	Plate	1
9	1482906	Latch	1
9	1482907	Cover	1
9	1482908	Spring	1
9	1482909	Spring	1
9	1482919	Locknut	2
9	1615057	Bolt	1
10	1482971	Kit-Seat Pan	1
10	1482801	Seat Pan	1
10	1482917	Locknut	12
10	1482951	Bolt	6
10	1482952	Clip	2
10	1482953	Strap Clamp	1
10	1615057	Bolt	2
10	1482919	Locknut	2
11	1615066	Kit-Operator Presence System	1
11	1615067	Switch (Operator Presence System)	1
11	1615068	Wire Harness (Operator Presence System)	1
11	1482953	Strap Clamp	2
11	1482952	Clip	2
12	1615158	Seat Cushion	1
12	1482803	Seat Cushion	1
12	1482952	Clip	2
12	1482953	Strap Clamp	1
13	1558035	Lockwasher	4
14	1628948	Armrest (Closed Cab)	1
14	1628949	Armrest (Open Cab)	1
14	1636182	Cover (Armrest) (Closed Cab)	1
14	1636183	Cover (Armrest) (Open Cab)	1
14	1643338	Pad - Arm Rest	1
15	. . . . .	Pivot Arm Assembly (☞Figure 1-63)	1
16	1476584	Cover (Capscrew Head)	4
17	136681	Capscrew	4

©2015 HYSTER COMPANY

SEAT ASSEMBLY
WITH FABRIC COVER (→ 3/2010)

ITEM	PART NO.	DESCRIPTION	QTY
	1561530	Kit-Back/Headrest Cushion	1

FOOTNOTES:

a Not Illustrated
b → S/N G019E01346G
c S/N G019E02347G →

SEAT ASSEMBLY (FIGURE 1-61)
WITH FABRIC COVER (3/2010 →)

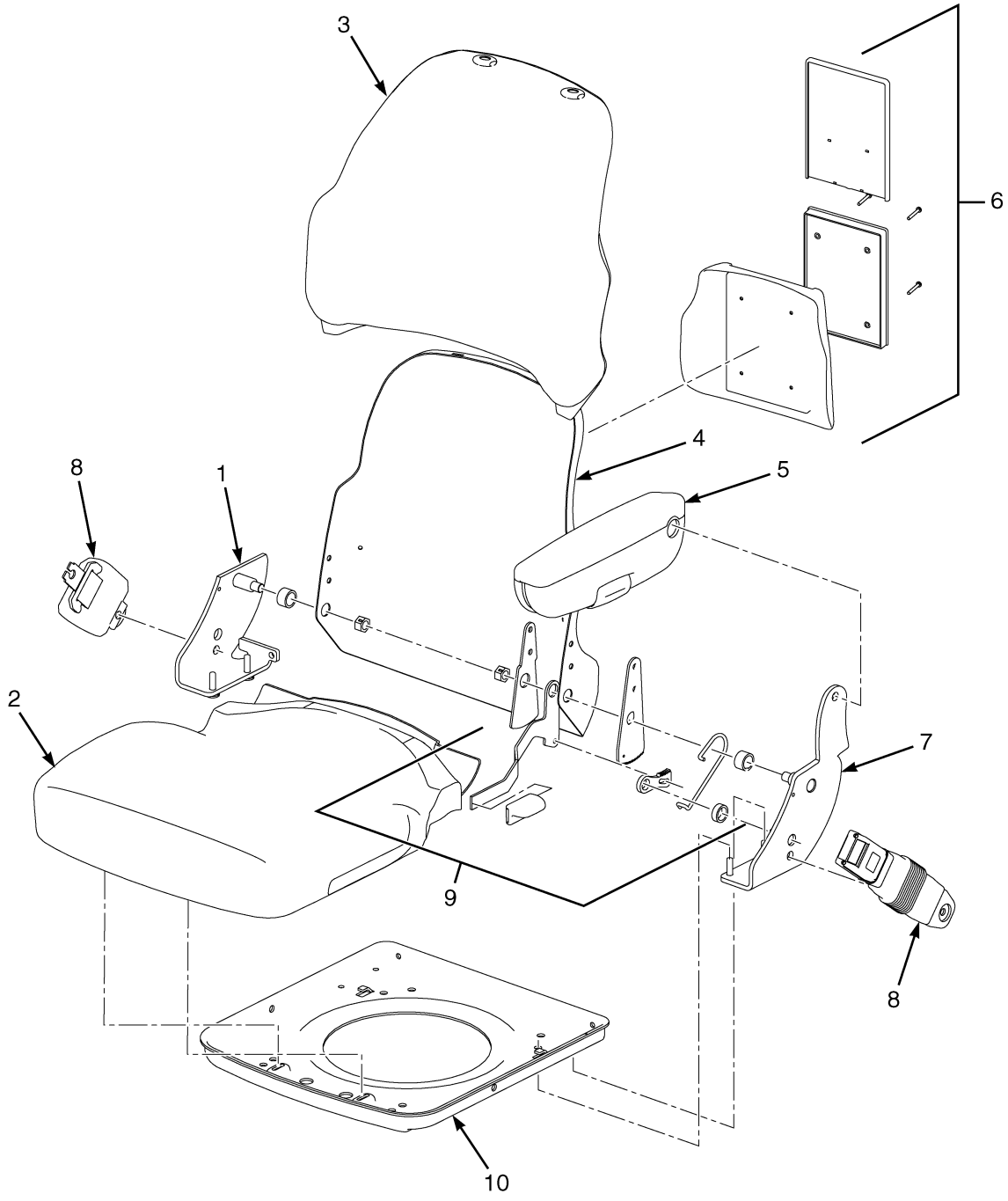

HP121533

©2015 HYSTER COMPANY

SEAT ASSEMBLY
WITH FABRIC COVER (3/2010 →)

ITEM	PART NO.	DESCRIPTION	QTY
	~~1603522~~		
	1692292	Seat Assy (Mechanical Suspension) (Fabric Cover)	1
	~~1603524~~		
	1692293	Seat Assy (Air Suspension) (Fabric Cover)	1
	4104409	Seat Assy -Full Suspension	1
	a ~~4048814~~		
	292528	Capscrew	1
	a 1482917	Locknut	4
	a 1615073	Bolt	4
1	1482974	Kit-Bracket (RH)	1
1	1482806	Bracket	1
1	1482917	Locknut	3
1	1482951	Bolt	1
1	1482919	Locknut	2
1	1482924	Screw	2
1	1482952	Clip	2
1	1482953	Strap Clamp	1
2	4104375	Kit-Seat Cushion (Gray Cloth, Seat)	1
2	1482952	Clip	2
2	1482953	Strap Clamp	1
3	4104373	Kit-Seat Cushion (Gray Cloth, Back)	1
3	1482924	Screw	2
4	1482959	Kit-Back Pan	1
4	1615056	Pan	1
4	1482917	Locknut	8
4	1482919	Locknut	2
4	1482924	Screw	2
4	1615057	Bolt	1
4	1482913	Connector	6
5	1482960	Armrest (LH)	1
5	1482804	Armrest	1
5	1482919	Locknut	1
5	~~4048814~~		
	292528	Capscrew	1
5	1482920	Washer	2
5	1482961	Screw	1
6	1470155	Information Case (Kit)	1
6	1482925	Plate (Book Box)	1
6	1482948	Box (Book)	1
6	1482949	Screw	4
6	1482950	Cover	1
7	1482969	Kit-Bracket (LH)	1
7	1482805	Bracket	1
7	1482917	Locknut	3
7	1615057	Bolt	1
7	~~4048814~~		
	292528	Capscrew	1
7	1482919	Locknut	2
7	1482924	Screw	2
7	1482910	Nut	1

©2015 HYSTER COMPANY

SEAT ASSEMBLY
WITH FABRIC COVER (3/2010 →)

ITEM	PART NO.	DESCRIPTION	QTY
7	1482952	Clip	2
7	1482961	Screw	1
7	1482953	Strap Clamp	1
8	1615062	Kit-Seat Belt	1
8	~~4048814~~		
	292528	Capscrew	1
8	246001	Capscrew	1
8	1615063	Washer	3
8	1615064	Spacer	2
8	1615065	Seat Belt Set	1
9	1482970	Kit-Recliner	1
9	1467531	Knob	1
9	1482904	Lever	1
9	1482905	Plate	1
9	1482906	Latch	1
9	1482907	Cover	1
9	1482908	Spring	1
9	1482909	Spring	1
9	1482919	Locknut	2
9	1615057	Bolt	1
10	1482971	Kit-Seat Pan	1
10	1482801	Seat Pan	1
10	1482917	Locknut	12
10	1482951	Bolt	6
10	1482952	Clip	2
10	1482953	Strap Clamp	1
10	1615057	Bolt	2
10	1482919	Locknut	2
11	1615066	Kit-Operator Presence System	1
11	1615067	Switch (Operator Presence System)	1
11	1615068	Wire Harness (Operator Presence System)	1
11	1482953	Strap Clamp	2
11	1482952	Clip	2
	a 4051407	Wire Harness	1
	a 4104380	Kit-Back/Headrest Cushion (Optional)	1
	4104373	Kit-Seat Cushion (Gray Cloth, Back)	1
	1482924	Screw	2
	4104384	Kit Head Rest	1
	1615149	Guide Assembly	1

FOOTNOTES:

a Not Illustrated

©2015 HYSTER COMPANY

NOTES

©2015 HYSTER COMPANY

SEAT ASSEMBLY (FIGURE 1-62)
WITH VINYL COVER

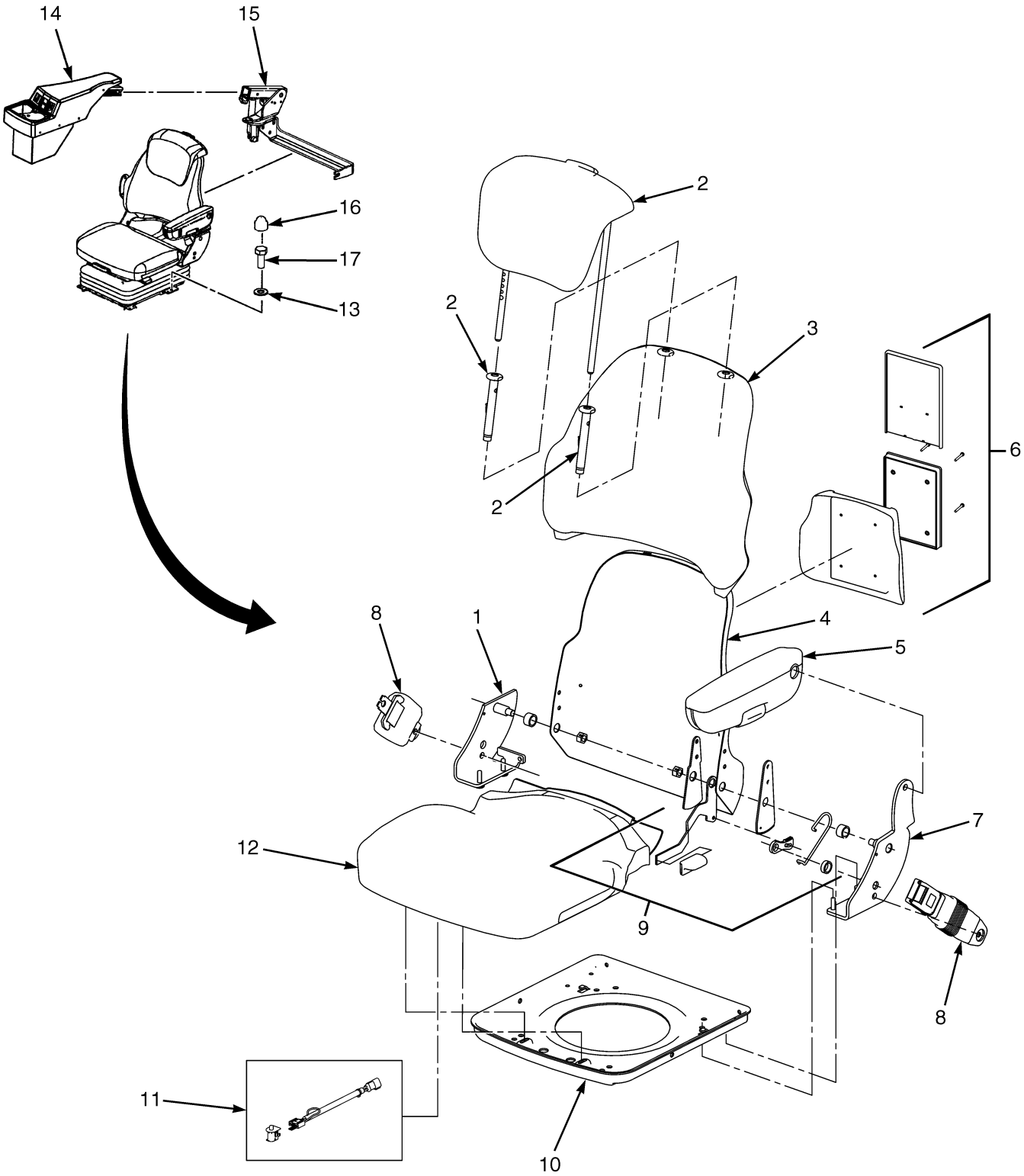

©2015 HYSTER COMPANY

SEAT ASSEMBLY
WITH VINYL COVER

ITEM	PART NO.	DESCRIPTION	QTY
	1603521	Seat-Full Suspension (Mechanical Suspension) (Vinyl Cover)	1
	1603523	Seat-Full Suspension (Air Suspension) (Vinyl Cover)	1
	1482954	Seat Assy-Full Suspension	1
	a 1482915	Spacer	1
	a ~~4048814~~		
	292528	Capscrew	1
	a 1482917	Locknut	4
	a 1615073	Bolt	4
1	1482974	Kit-Bracket (RH)	1
1	1482806	Bracket	1
1	1482917	Locknut	3
1	1482951	Bolt	1
1	1482919	Locknut	2
1	1482924	Screw	2
1	1482952	Clip	2
1	1482953	Strap Clamp	1
2	1615150	Kit-Back/Headrest Cushion	1
2	1574081	Cushion	1
2	1615149	Guide Assembly	2
3	1482958	Seat Back Cushion Assy, Vinyl	1
3	1482955	Seat Cushion	1
3	1482924	Screw	2
4	1482959	Kit-Back Pan	1
4	1615056	Pan	1
4	1482917	Locknut	8
4	1482919	Locknut	2
4	1482924	Screw	2
4	1615057	Bolt	1
4	1482913	Connector	6
5	1482960	Armrest (LH)	1
5	1482804	Armrest	1
5	1482919	Locknut	1
5	~~4048814~~		
	292528	Capscrew	1
5	1482920	Washer	2
5	1482961	Screw	1
6	1467522	Information Case	1
6	1470155	Information Case (Kit) (Alternate Part)	1
6	1482925	Plate (Book Box)	1
6	1482948	Box (Book)	1
6	1482949	Screw	4
6	1482950	Cover	1
7	1482969	Kit-Bracket (LH)	1
7	1482805	Bracket	1
7	1482917	Locknut	3
7	1615057	Bolt	1
7	~~4048814~~		
	292528	Capscrew	1
7	1482919	Locknut	2
7	1482924	Screw	2

©2015 HYSTER COMPANY

SEAT ASSEMBLY
WITH VINYL COVER

ITEM	PART NO.	DESCRIPTION	QTY
7	1482910	Nut	1
7	1482952	Clip	2
7	1482961	Screw	1
7	1482953	Strap Clamp	1
8	1615062	Kit-Seat Belt	1
8	~~4048814~~		
	292528	Capscrew	1
8	246001	Capscrew	1
8	1615063	Washer	3
8	1615064	Spacer	2
8	1615065	Seat Belt Set	1
9	1482970	Kit-Recliner	1
9	1467531	Knob	1
9	1482904	Lever	1
9	1482905	Plate	1
9	1482906	Latch	1
9	1482907	Cover	1
9	1482908	Spring	1
9	1482909	Spring	1
9	1482919	Locknut	2
9	1615057	Bolt	1
10	1482971	Kit-Seat Pan	1
10	1482801	Seat Pan	1
10	1482917	Locknut	12
10	1482951	Bolt	6
10	1482952	Clip	2
10	1482953	Strap Clamp	1
10	1615057	Bolt	2
10	1482919	Locknut	2
11	1615066	Kit-Operator Presence System	1
11	1615067	Switch (Operator Presence System)	1
11	1615068	Wire Harness (Operator Presence System)	1
11	1482953	Strap Clamp	2
11	1482952	Clip	2
12	1615055	Seat Cushion Assembly (Vinyl, Seat)	1
12	1482952	Clip	2
12	1482953	Strap Clamp	1
13	1558035	Lockwasher	4
14	1628948	Armrest (Closed Cab)	1
14	1628949	Armrest (Open Cab)	1
14	1636182	Cover (Armrest) (Closed Cab)	1
14	1636183	Cover (Armrest) (Open Cab)	1
14	1643338	Pad - Arm Rest	1
15	. . . . .	Pivot Arm Assembly (☞Figure 1-63)	1
16	1476584	Cover (Capscrew Head)	4
17	136681	Capscrew	4

FOOTNOTES:

a Not Illustrated

©2015 HYSTER COMPANY

NOTES

©2015 HYSTER COMPANY

PIVOT ARM ASSEMBLY (FIGURE 1-63)

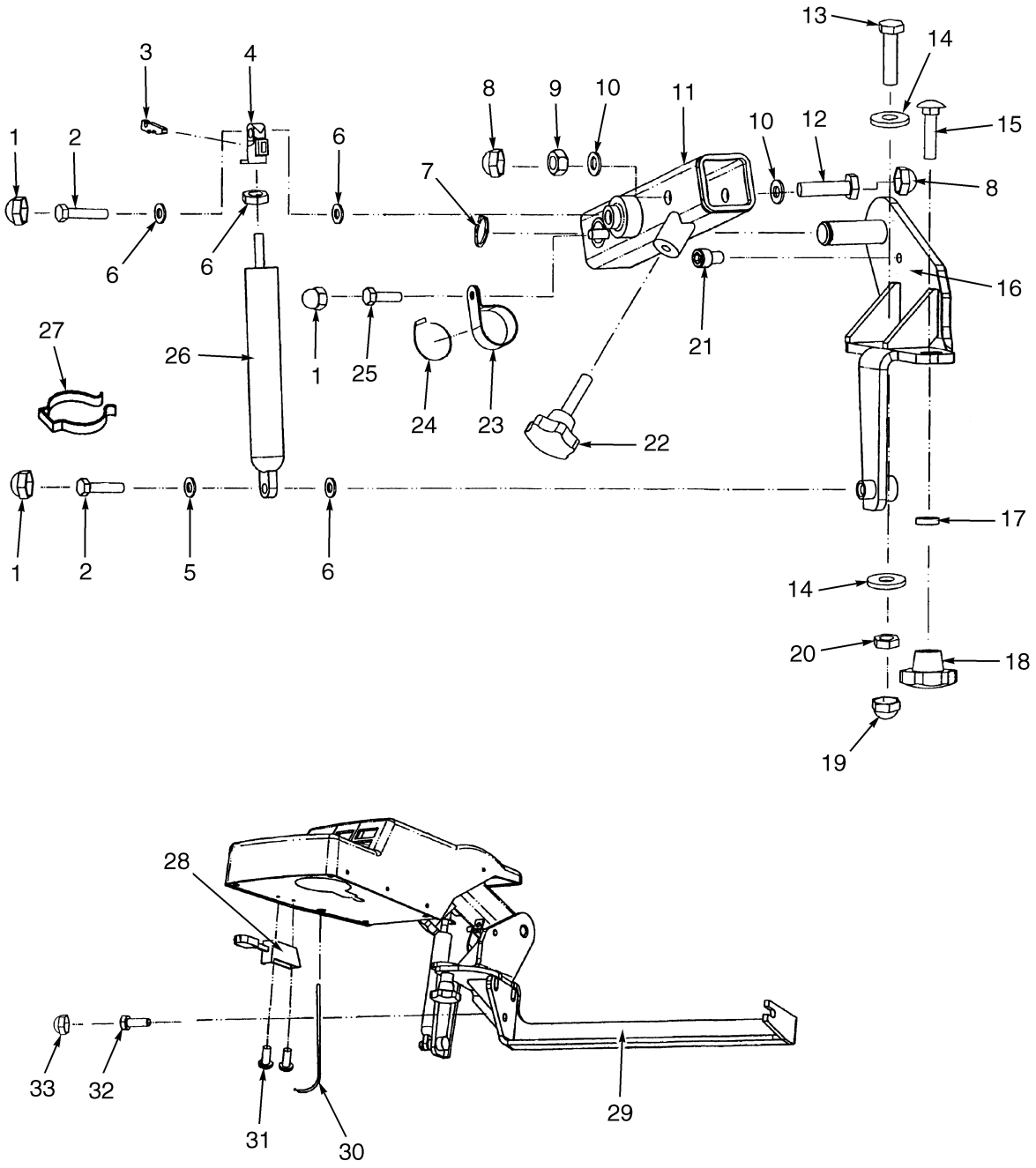

BP120190

©2015 HYSTER COMPANY

PIVOT ARM ASSEMBLY

ITEM	PART NO.	DESCRIPTION	QTY
1	1476584	Cover (Capscrew Head)	3
2	132861	Capscrew	2
3	1534477	Lever (Release)	1
4	1534425	Rod End	1
5	1539034	Nut	1
6	320158	Washer	4
7	1498385	Retaining Ring	1
8	1493397	Cover (Capscrew Head)	2
9	316834	Nut	1
10	1476421	Washer	2
11	1534475	Tube	2
12	1506669	Screw	1
13	287837	Capscrew	1
14	1571029	Washer	3
15	1493499	Screw	1
16	1534474	Console	1
17	1498338	Washer	2
18	1534476	Knob	1
19	1493474	Cover (Capscrew Head)	1
20	1506827	Nut	1
21	296010	Capscrew	1
22	1493494	Knob (Star Grip)	1
23	1493498	Clamp	1
24	1506825	Strap Clamp	1
25	287805	Capscrew	1
26	1530385	Gas Spring	1
27	1498356	Clip	1
28	1571030	Lever Assembly (Armrest Release)	1
28	1623802	Connector Body	1
28	1623801	Trip Lever	1
28	302048	Screw	1
28	1468321	Washer (Plastic)	3
28	1506670	Nut	1
28	302023	Screw	1
28	1623800	Knob	1
29	1534481	Console	1
30	1530386	Cable	1
31	1498357	Screw	1
32	136985	Capscrew	2
33	1493312	Cap (Capscrew Head)	3
	1624002	Kit-Armrest Lever Release	1

©2015 HYSTER COMPANY

LABELS (FIGURE 1-64)
MAIN

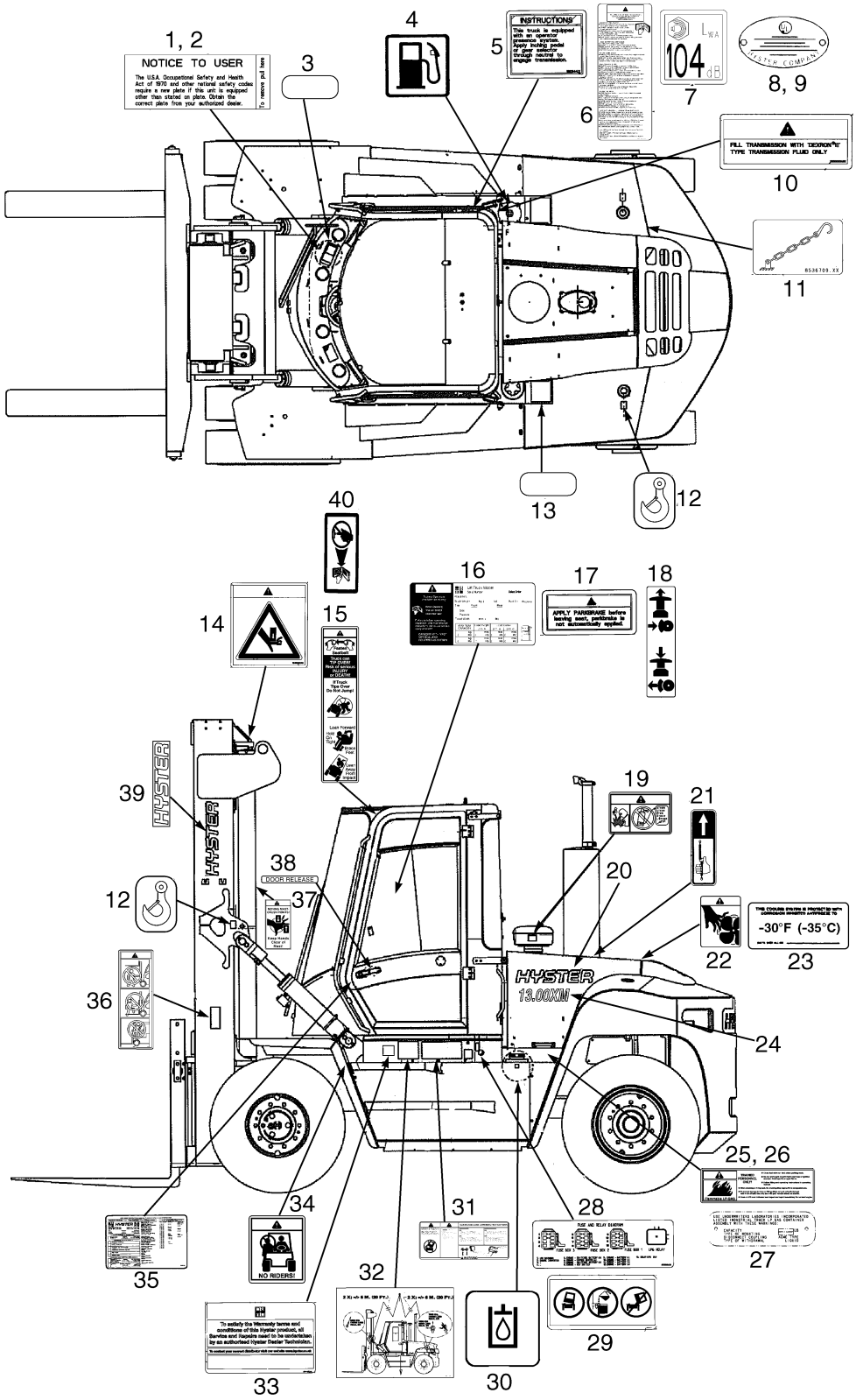

BP120341

©2015 HYSTER COMPANY

LABELS
MAIN

ITEM	PART NO.	DESCRIPTION	QTY
1	1335137	Nameplate (Complete Truck)	1
2	1513947	Rivet (Plastic)	4
3	389688	Nameplate Cover	1
4	1385130	Label (Fuel Fill)	1
5	2084159	Label (Operator Presence)	1
6	2043481	Label (Operator Warning)	1
7	1503886	Label (Noise Level) (H10.00XM-12EC, Diesel)	1
7	1503884	Label (Noise Level) (H10.00XM-12EC, LPG)	1
7	1503882	Label (Noise Level) (H12.00XM-12EC, Diesel)	1
7	1503880	Label (Noise Level) (H12.00XM-12EC, LPG)	1
8	**a**	Label (Inspection Plate)	1
9	166818	Rivet	2
10	2090775	Label (Transmission Fluid Caution)	1
11	2090765	Label (Tie Down)	4
12	316448	Label (Lifting Eye)	4
13	239423	Anti-Slip Tread	2
14	1545063	Label (Pinch Point)	2
15	1359588	Label (Operator Restraint)	2
16	**a**	Label (Capacity Plate)	1
17	1357001	Label (Park Brake Warning)	1
18	2044400	Label (Park Brake)	1
19	2034460	Label (Ether Warning)	2
20	1466008	Label (Hyster)	1
21	1311423	Label (Gas Spring)	2
22	1300094	Label (Fan Warning)	2
23	1354165	Label (Antifreeze)	1
24	1488630	Label (H13.00XM)	2
24	1488631	Label (H14.00XM)	2
24	1488632	Label (H16.00XM-6)	2
24	1488633	Label (H10.00-12EC)	2
24	1488634	Label (H12.00-12EC)	2
25	170658	Rivet	2
26	2081197	Label (Flammable LP Gas)	1
27	**a**	Label (LP Tank Identifier)	1
28	2082622	Label (LPG Fuse Box)	1
29	2050044	Label (Cab Tilt Pump)	1
30	1385099	Label (Hydraulic Oil Fill)	1
31	2043494	Label (Cab Tilt Warning)	1
32	2048063	Label (Lifting)	1
33	**a**	Label (Warranty)	1
34	1339828	Label (No Riders)	2
35	320037	Label (Patent Plate)	1
36	2075657	Label (Mast Warning)	2
37	1346894	Label (Mast Warning)	2
38	1451416	Label (Door Release)	2
39	1490398	Label (Hyster)	2
40	1326805	Label (Override Switch)	1
	bc 4612110	Bracket (Second Nameplate)	1
	b 1393760	Label (Hyster) (H10.00XM-12EC, H12.00XM-12EC)	1

©2015 HYSTER COMPANY

FOOTNOTES:

a Contact Your Local Hyster Dealer
b Not Illustrated
c Optional - Install With Additional Nameplate Cover 389688

©2015 HYSTER COMPANY

LABELS (FIGURE 1-65)
HYDRAULIC CONTROL — JOYSTICK

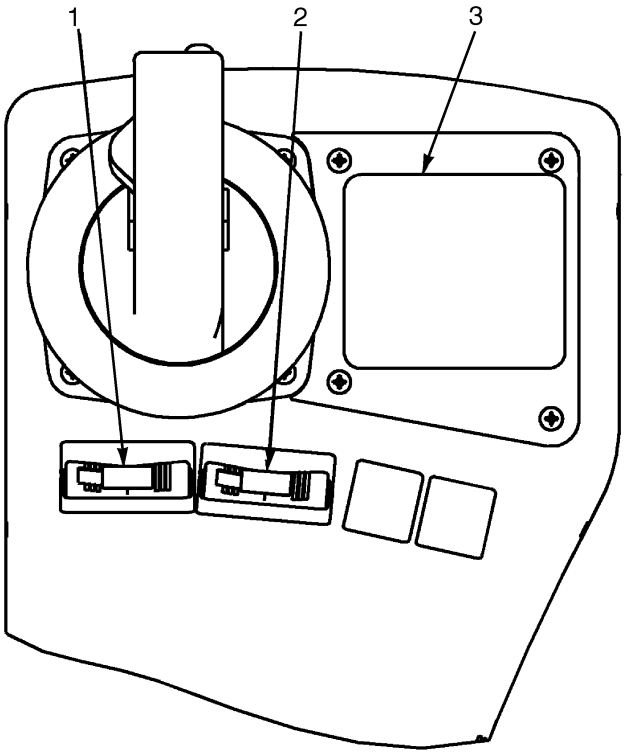

HP121123

KEY:
A: Forklift Truck
B: Container Handler Truck

ITEM	PART NO.	DESCRIPTION	QTY A	QTY B
1	2043469	Label (LH Fork) (With Side-Shift Fork Positioner)	1	..
2	2043471	Label (RH Fork) (With Side-Shift Fork Positioner)	1	..
2	2043472	Label (Auxiliary Function, Fork Spreader) (With Simultaneous Fork Positioner)	1	..
2	2043476	Label (Extend and Retract)	..	1
3	2058930	Label (Joystick Without Side-Shift) (Without Side-Shift)	1	..
3	2043801	Label (Joystick, Fork Lift Truck with Side Shift or ECH With Suspension Hooks) (With Suspension Hooks)	1	1
3	2046438	Label (Empty Container Handler Control) (With Twistlock)	..	1

©2015 HYSTER COMPANY

LABELS (FIGURE 1-66)
HYDRAULIC CONTROL — LEVERS

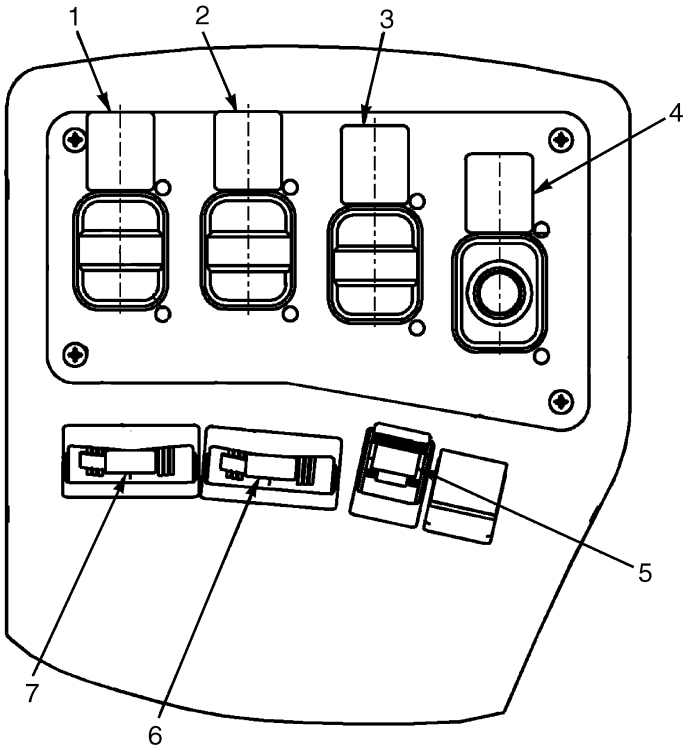

HP121122

KEY:
A: Forklift Truck With Side-Shift Fork Positioner
B: Forklift Truck With Simultaneous Fork Positioner
C: Container Handler Truck

ITEM	PART NO.	DESCRIPTION	QTY A	QTY B	QTY C
1	1301411	Label (Hoist)	1	1	1
2	1301410	Label (Tilt)	1	1	1
3	370258	Label (Auxiliary Function - Side-Shift)	1	..	..
3	370257	Label (Auxiliary Function - Rotate) (Optional Equipment)	1	1	..
4	370256	Label (Auxiliary Function - Clamp)	1	1	..
5	2046600	Label (Twist Lock And Unlock)	..	..	1
6	2043471	Label (RH Fork)	1	..	..
6	2043472	Label (Auxiliary Function, Fork Spreader)	..	1	..
6	2043476	Label (Extend and Retract)	..	..	1
7	2043469	Label (LH Fork)	1	..	..

©2015 HYSTER COMPANY

ARMREST ASSEMBLY (FIGURE 1-67)

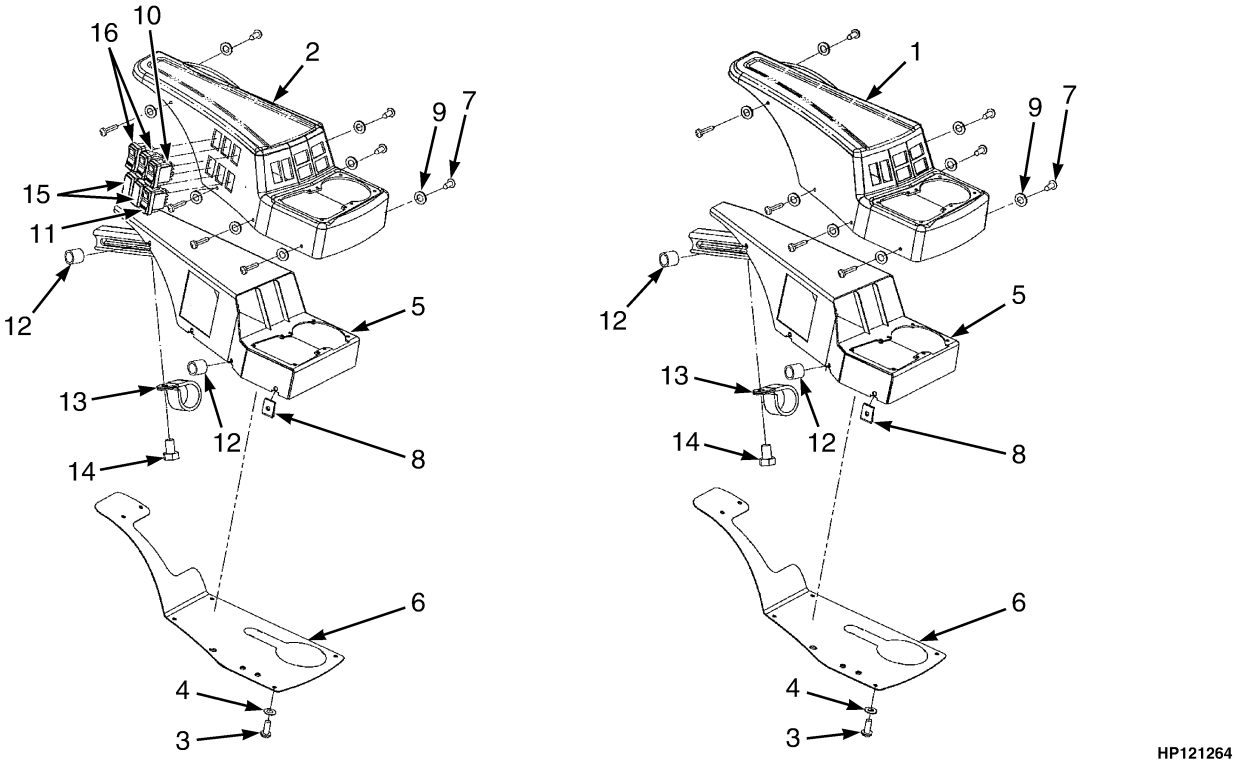

HP121264

KEY:
A: Open Cab
B: Closed Cab

ITEM	PART NO.	DESCRIPTION	QTY A	QTY B
	1506756	Armrest Assembly	1	..
	1493578	Armrest Assembly	..	1
1	1628949	Armrest	1	..
1	1636183	Cover (Armrest)	1	..
1	1643338	Pad - Arm Rest	1	..
2	1628948	Armrest	..	1
2	1636182	Cover (Armrest)	..	1
2	1643338	Pad - Arm Rest	..	1
3	1637393	Screw	6	6
4	1468321	Washer (Plastic)	..	6
4	1493480	Washer	6	..
5	1493476	Frame (Armrest)	1	1
6	1493478	Plate (Bottom)	1	1
7	1468319	Screw	8	8
8	1492139	Nut	8	8
9	1492140	Washer	8	8
10	2043352	Switch (Wipers, Front)	..	1
11	2043354	Switch (Window Washer)	..	1
12	1571776	Washer	2	2
13	1493486	Clamp	1	1
14	1571775	Screw	1	1
15	1498383	Plug (Switch)	..	2

©2015 HYSTER COMPANY

KEY:
A: Open Cab
B: Closed Cab

ITEM	PART NO.	DESCRIPTION	QTY A	QTY B
16	2043353	Switch (Wipers,Top And Rear)	..	2
	a 1492167	Trim-Bulk	1	1

FOOTNOTES:

a Not Illustrated

©2015 HYSTER COMPANY

NOTES

©2015 HYSTER COMPANY

INSULATION MATS AND AIR DUCT (FIGURE 1-68)
CLIMATE CONTROL CAB

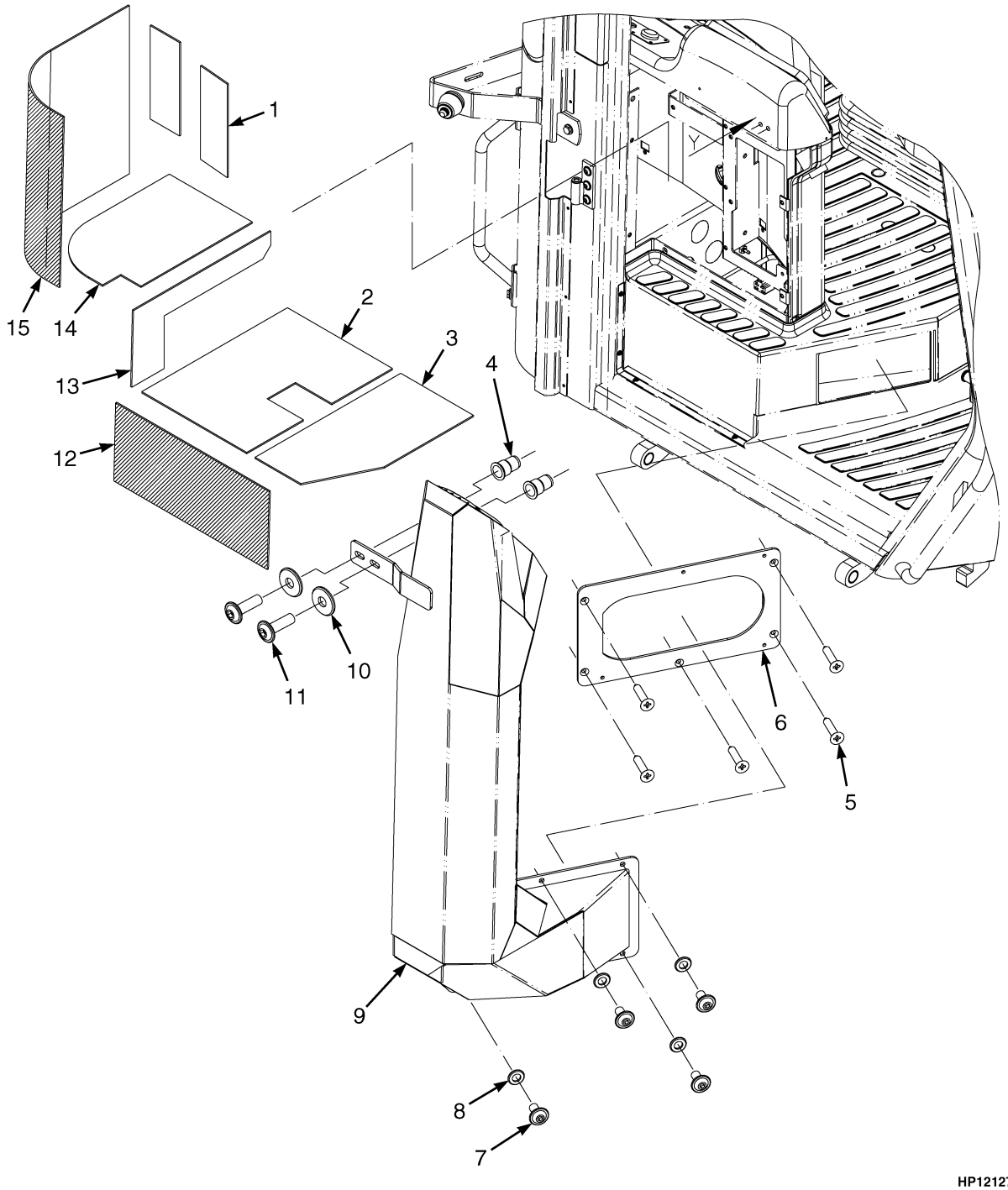

©2015 HYSTER COMPANY

INSULATION MATS AND AIR DUCT
CLIMATE CONTROL CAB

ITEM	PART NO.	DESCRIPTION	QTY
1	4021193	Insulation Mat (Air Duct)	2
2	4021205	Insulation Mat (Rear Floor Plate)	1
3	4021206	Insulation Mat (Front Floor Plate)	1
4	4021199	Nut	2
5	4021197	Screw	5
6	4021207	Adapter	1
7	4021198	Screw	4
8	1508258	Washer	4
9	4021196	Air Duct Assembly (☞Figure 1-69)	1
10	1468321	Washer (Plastic)	2
11	4021200	Screw	2
12	4021204	Insulation Mat (RH Floor Plate)	1
13	4021203	Insulation	1
14	4021202	Insulation Mat (Top Floor Plate)	1
15	4021201	Insulation Mat (Rear Panel)	1

©2015 HYSTER COMPANY

AIR DUCT (FIGURE 1-69)
LOUVER, CLIMATE CONTROL CAB

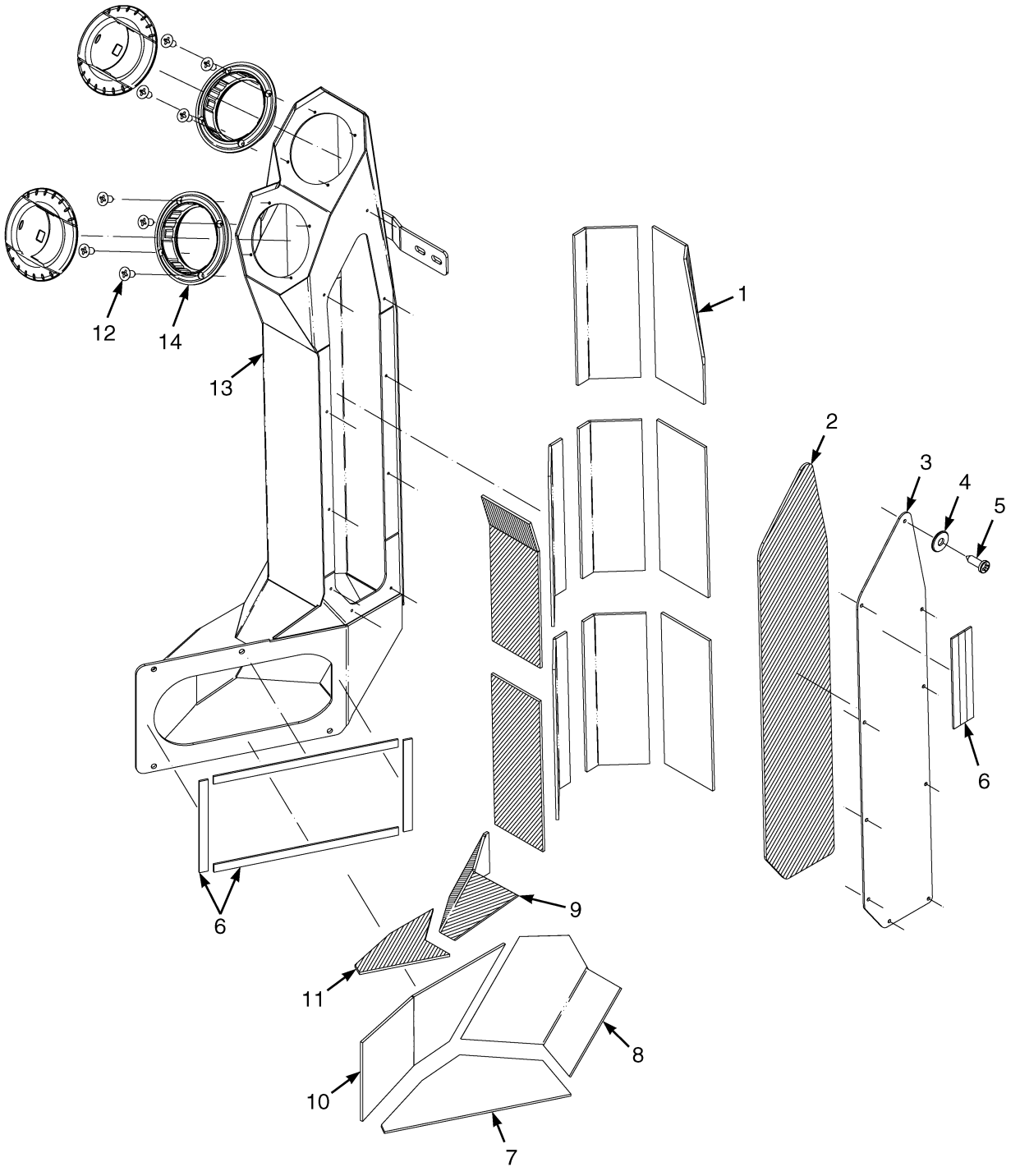

©2015 HYSTER COMPANY

AIR DUCT
LOUVER, CLIMATE CONTROL CAB

ITEM	PART NO.	DESCRIPTION	QTY
	4021196	Air Duct Assembly	1
1	4021193	Insulation Mat (Air Duct)	10
2	4021187	Insulation Mat (Air Duct Cover)	1
3	4021186	Cover Plate	1
4	1492140	Washer	10
5	4021188	Screw	10
6	4021195	Seal	AR
7	4021189	Insulation Mat (Air Cowl, Bottom)	1
8	4021192	Insulation Mat (Air Cowl, RH)	1
9	4021194	Insulation Mat (Air Cowl, Top)	1
10	4021190	Insulation Mat (Air Cowl, LH)	1
11	4021191	Insulation Mat (Air Cowl, Top)	1
12	1498363	Screw	8
13	. . . . .	Air Duct	1
14	1598398	Louver (Air)	2

©2015 HYSTER COMPANY

SEAT ASSEMBLY (FIGURE 1-70)
CLIMATE CONTROL CAB

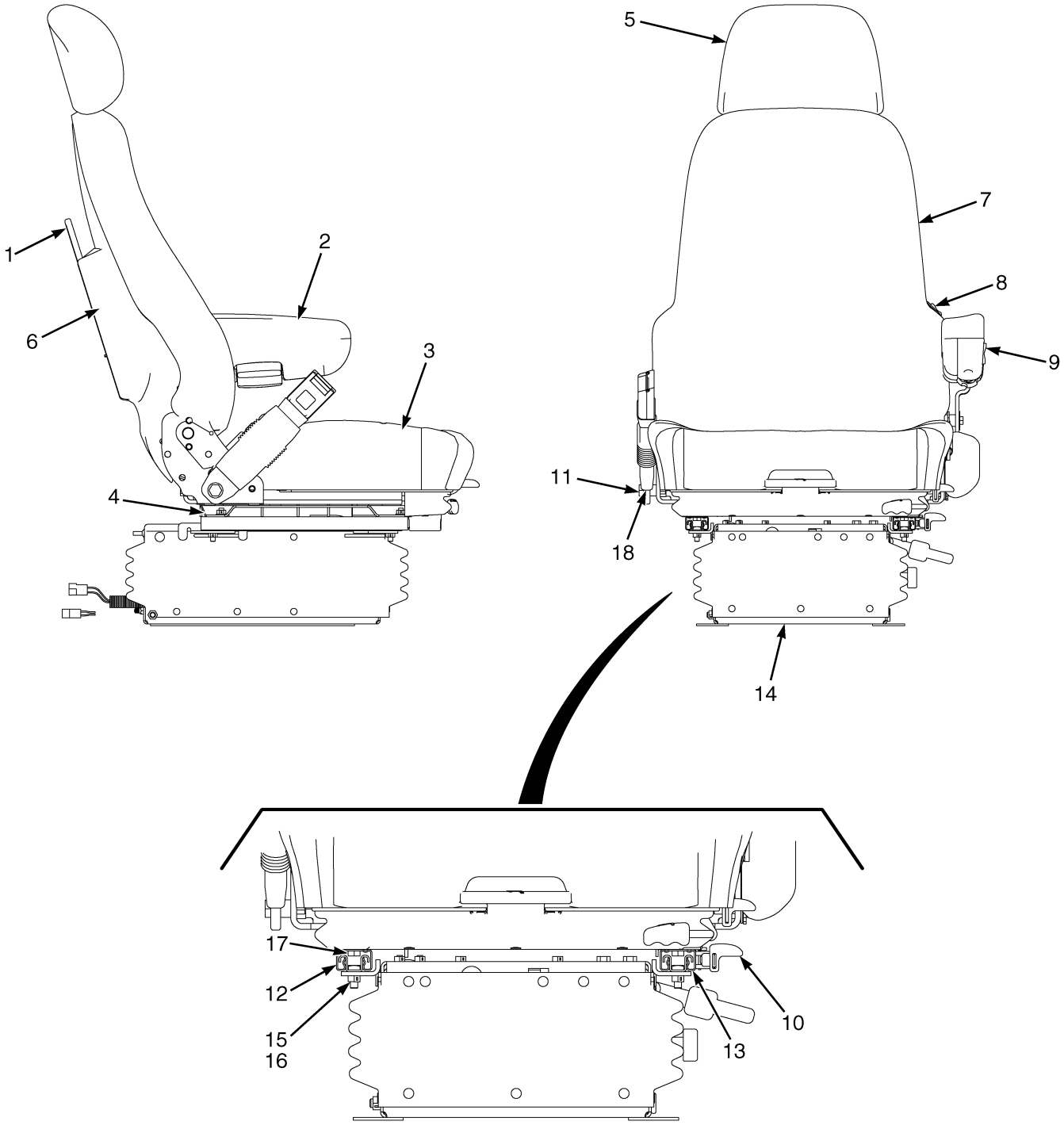

©2015 HYSTER COMPANY

SEAT ASSEMBLY
CLIMATE CONTROL CAB

ITEM	PART NO.	DESCRIPTION	QTY
	4013486	Seat Assy	1
1	1482948	Box (Book)	1
2	4021118	Kit-Armrest	1
2	4021119	Switch (Seat Heater)	1
3	4099565	Seat Cushion	1
4	1482993	Kit-Plate (Adapter)	1
5	4007742	Headrest	1
6	1482925	Plate (Book Box)	1
7	4099566	Seat Cushion (Back)	1
8	4007749	Switch (Electric Air Lumbar)	1
9	4007750	Switch (Valve Seat Height Control)	1
10	4007744	Knob (Slide)	1
10	1482979	Lever (Slide)	1
10	4021125	Washer	3
11	~~4048814~~		
	292528	Capscrew	2
12	. . . . .	Seat Rail	1
13	. . . . .	Seat Rail	1
13	1482981	Locknut	1
13	1482980	Washer (0.05 mm)	1
14	4020678	Kit-Suspension	1
15	1482990	Bolt	4
16	1482917	Locknut	13
17	1482951	Bolt	8
17	1482997	Bracket (Support)	1
17	1482995	Washer (0.07 mm)	9
18	1615064	Spacer	1
	a 1615063	Washer (0.08 mm)	6
	1482998	Kit-Seat Rail	1

FOOTNOTES:

a Not Illustrated

©2015 HYSTER COMPANY

CLIMATE CONTROL SYSTEM (FIGURE 1-71)
MCC

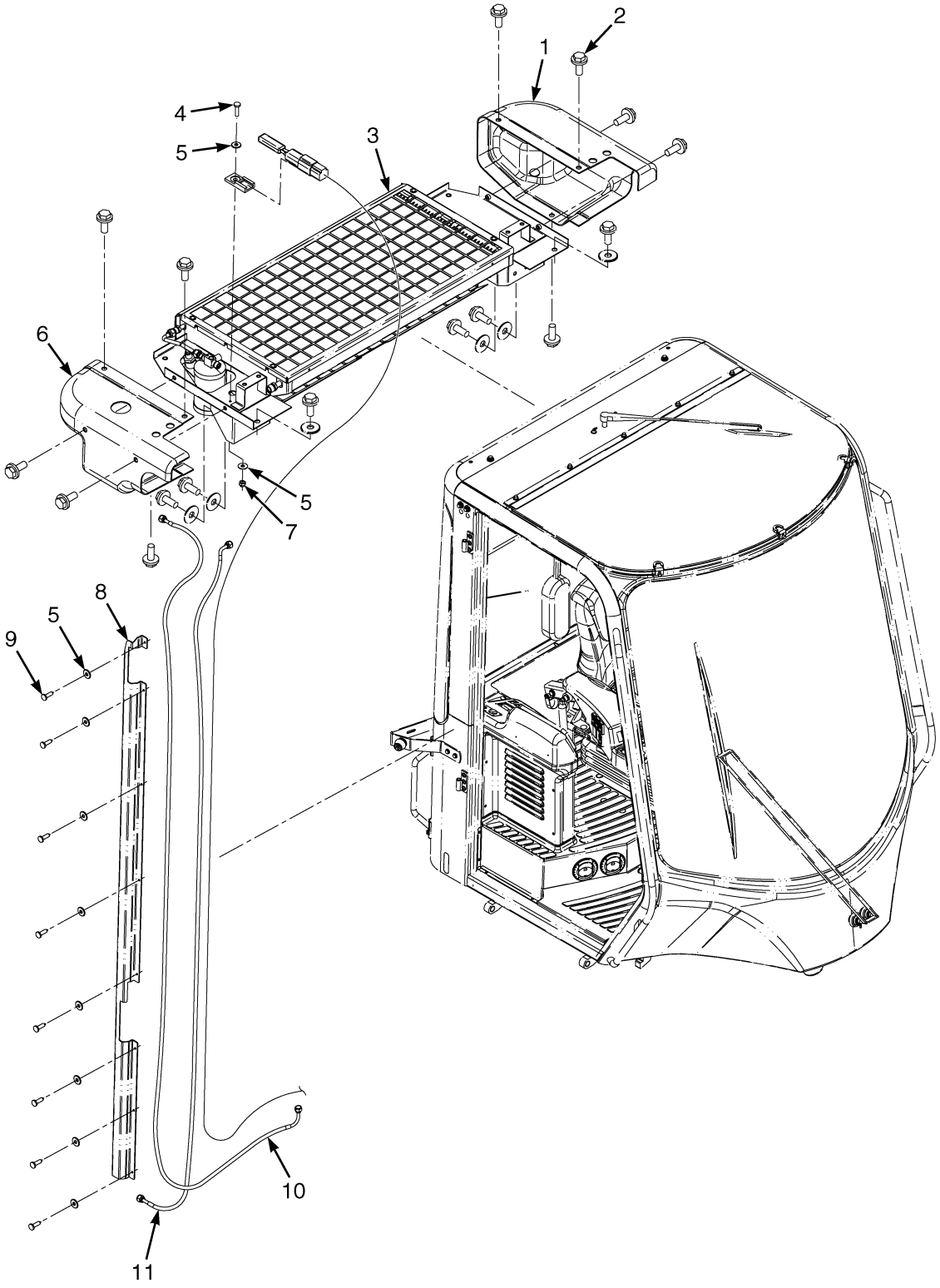

HP121280

©2015 HYSTER COMPANY

CLIMATE CONTROL SYSTEM
MCC

ITEM	PART NO.	DESCRIPTION	QTY
1	1658127	Cover , Side (LH)	1
2	1566041	Screw	10
3	4004825	Condenser Assembly (☞Figure 1-46)	1
4	1498357	Screw	1
5	1492140	Washer	10
6	1658128	Cover , Side (RH)	1
7	1598408	Nut	1
8	4004826	Cover	1
9	1468319	Screw	8
10	4004828	Hose	1
11	4004829	Hose	1
	a 4009593	Air Conditioner System (☞Figure 1-72)	1
	a 1702293	Air Duct Assembly (☞Figure 1-50)	1

FOOTNOTES:

a Not Illustrated

©2015 HYSTER COMPANY

AIR CONDITIONER SYSTEM (FIGURE 1-72)
CLIMATE CONTROL CAB — MCC

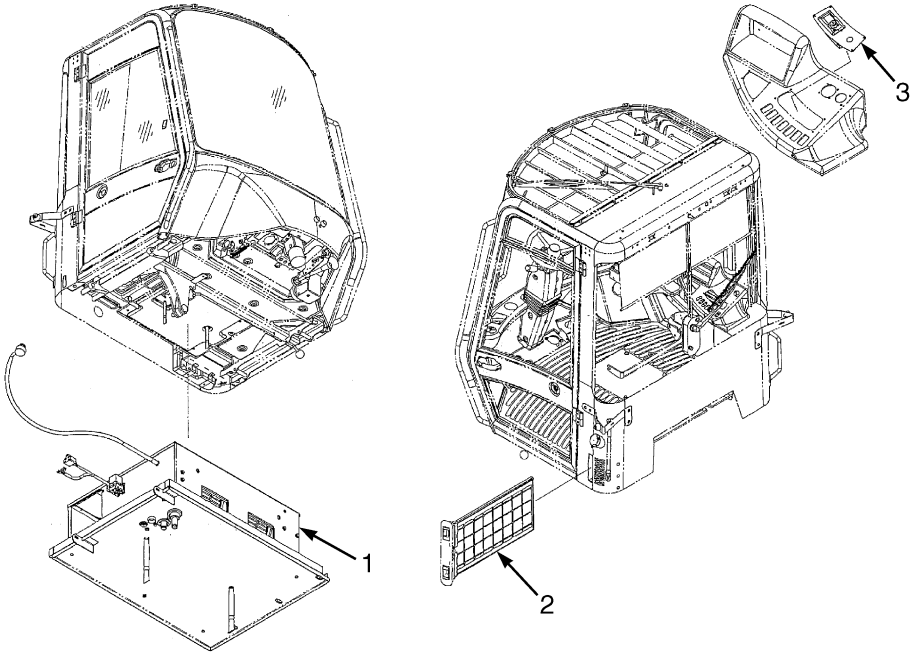

HP121282

ITEM	PART NO.	DESCRIPTION	QTY
	4009593	Air Conditioner System	1
1	4009597	Air Conditioner Assembly (MCC) (☞Figure 1-73)	1
2	1493276	Air Filter	1
3	4009598	Control Panel	1
3	~~4020900~~		
	320169	Washer	1
3	4021342	Control Unit	1
3	4094573	Knob	1
3	4020899	Plate	1

©2015 HYSTER COMPANY

NOTES

©2015 HYSTER COMPANY

AIR CONDITIONER (FIGURE 1-73)
CLIMATE CONTROL CAB — MCC

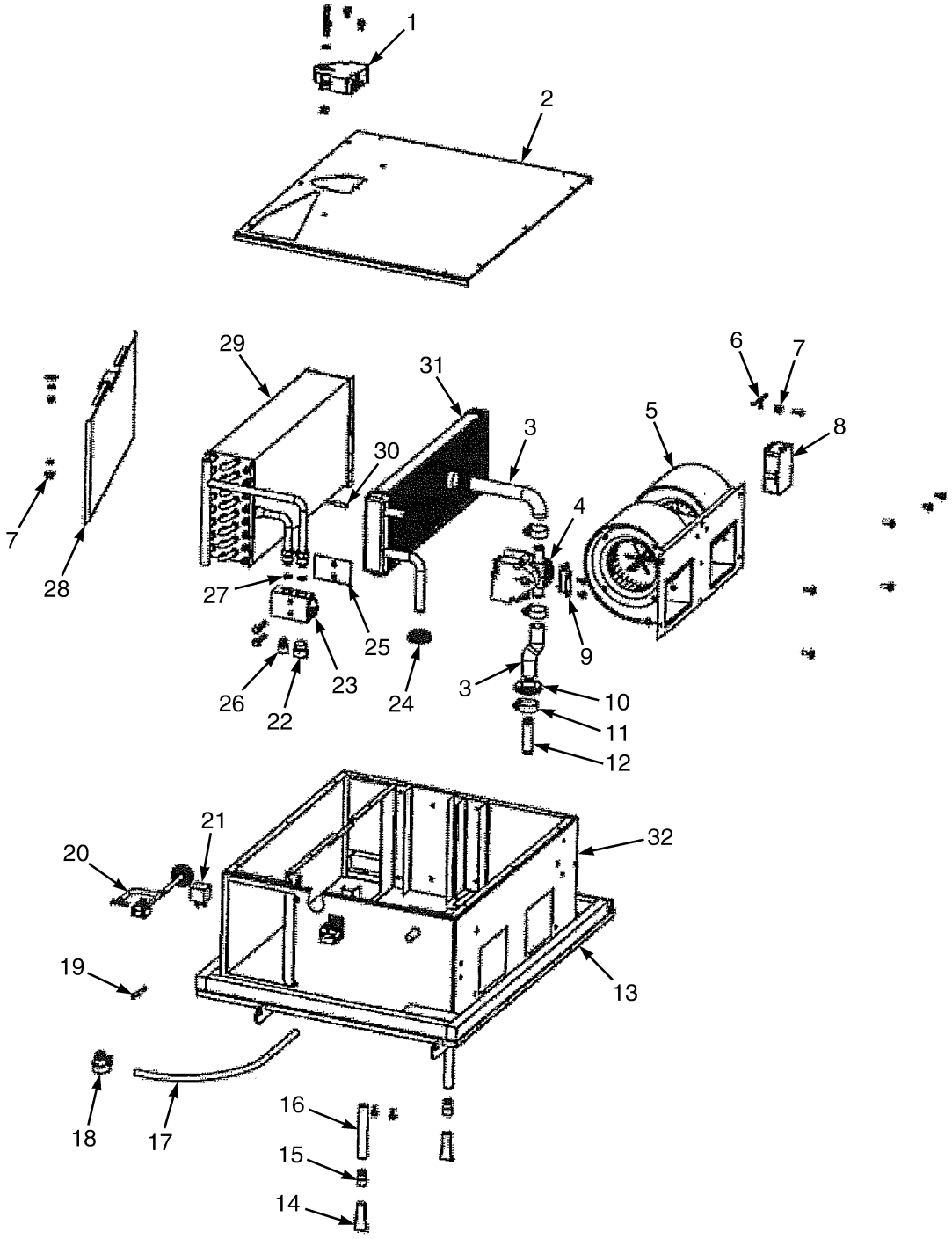

HP121283

©2015 HYSTER COMPANY

AIR CONDITIONER
CLIMATE CONTROL CAB – MCC

ITEM	PART NO.	DESCRIPTION	QTY
	4009597	Air Conditioner Assembly (MCC)	1
1	4003081	Actuator (Motor)	1
2	4003085	Cover	1
3	4003089	Hose	1
4	4020873	Valve (Heater)	1
5	4003083	Blower	1
5	4095373	Resistor	1
6	4020876	Sensor (After Coil)	1
7	1487963	Bushing	2
8	4020875	Motor (Drive Board)	1
9	4003098	Bracket	1
10	1487953	Grommet	1
11	1487950	Hose Clamp	4
12	1487952	Tube (Copper)	1
13	4003084	Case (Bottom Cover)	1
14	~~4003094~~		
	4054237	Drain Valve	2
15	4003095	Connector	2
16	4020874	Hose	2
17	4020881	Hose	1
18	4020879	Sensor (Cab)	1
19	4020878	Sensor (Outside)	1
20	4020877	Wire Harness (ECC)	1
21	1496800	Relay (24 Volt)	1
22	4003093	Plug	1
23	1487945	Valve (Block)	1
24	4003088	Grommet	1
25	4003087	Bracket	1
26	4003092	Plug	1
27	1487122	O-Ring	2
28	4003086	Cover Plate (Flapper)	1
29	4003090	Coil (Evaporator)	1
30	4020880	Sensor (De-Icing)	1
31	4003091	Core (Heater Coil)	1
32	. . . . .	Housing	1

©2015 HYSTER COMPANY

CAB ASSEMBLY (FIGURE 1-74)
CLIMATE CONTROL CAB

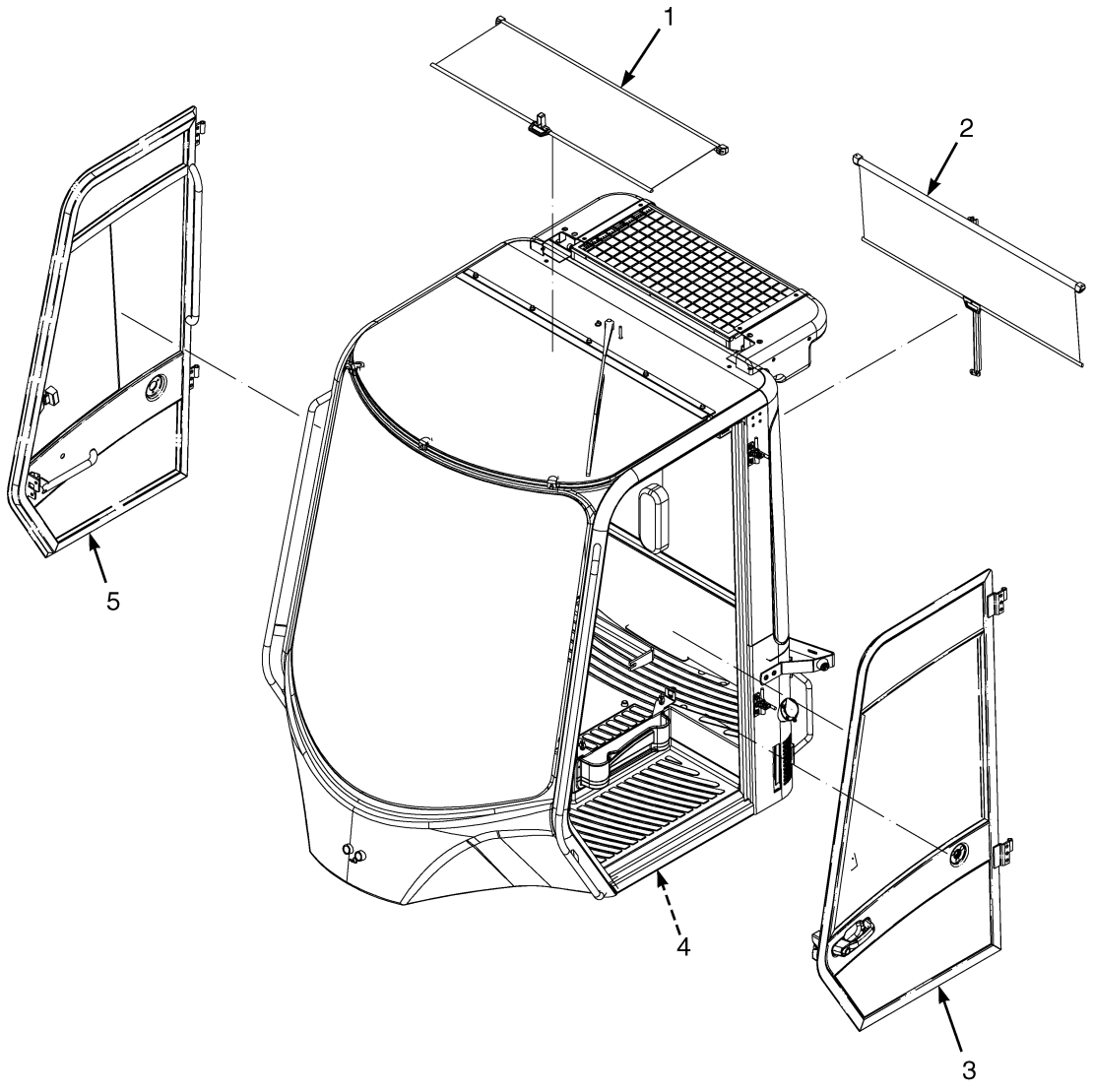

HP121286

©2015 HYSTER COMPANY

CAB ASSEMBLY
CLIMATE CONTROL CAB

ITEM	PART NO.	DESCRIPTION	QTY
1	. . . . .	Top Sunshade (☞Figure 1-20).....	1
2	. . . . .	Rear Sunshade (☞Figure 1-20).....	1
3	~~1553405~~		
	1667219	Kit-Door LH (Cab) (☞Figure 1-13).....	1
4	. . . . .	Climate Control System (☞Figure 1-71).....	1
5	~~1553404~~		
	1667218	Kit-Door RH (Cab) (☞Figure 1-11).....	1

©2015 HYSTER COMPANY

LOAD BACKREST (FIGURE 1-75)

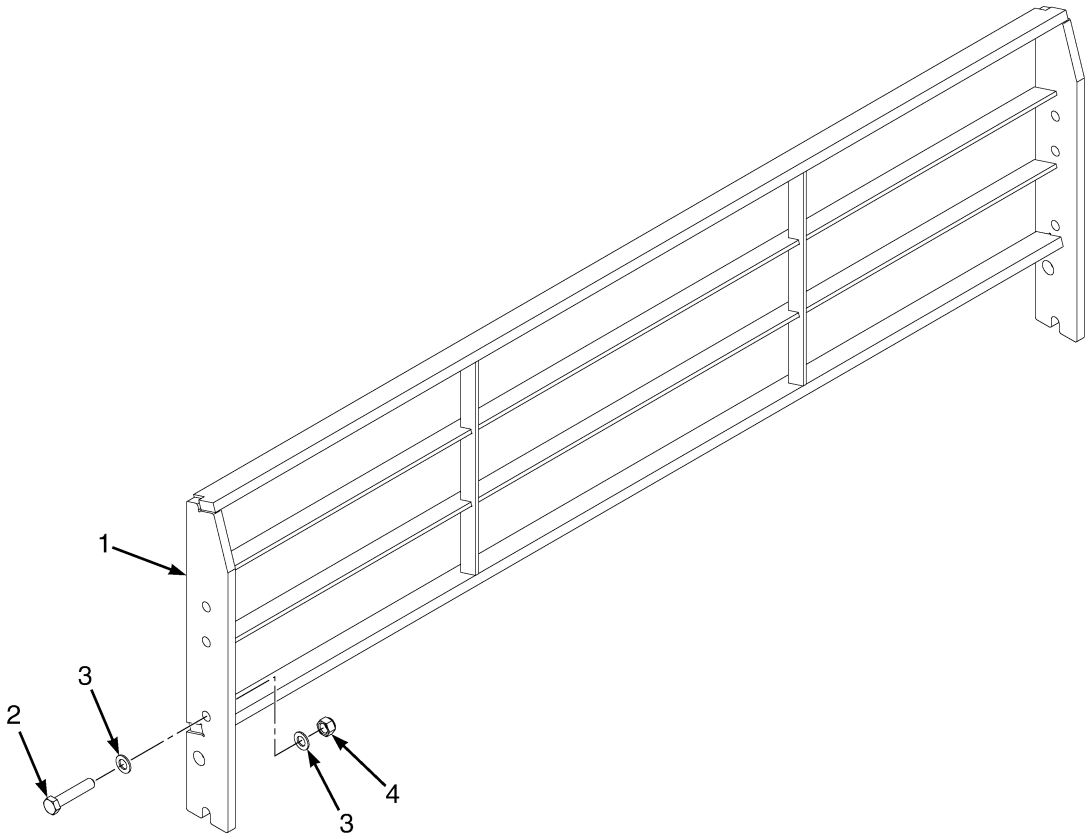

BP120733

ITEM	PART NO.	DESCRIPTION	QTY
1	1693195	Load Backrest	1
2	292590	Capscrew	4
3	~~4020900~~		
	320169	Washer	8
4	302405	Locknut	4

©2015 HYSTER COMPANY

CAB SOUND REDUCTION (FIGURE 1-76)

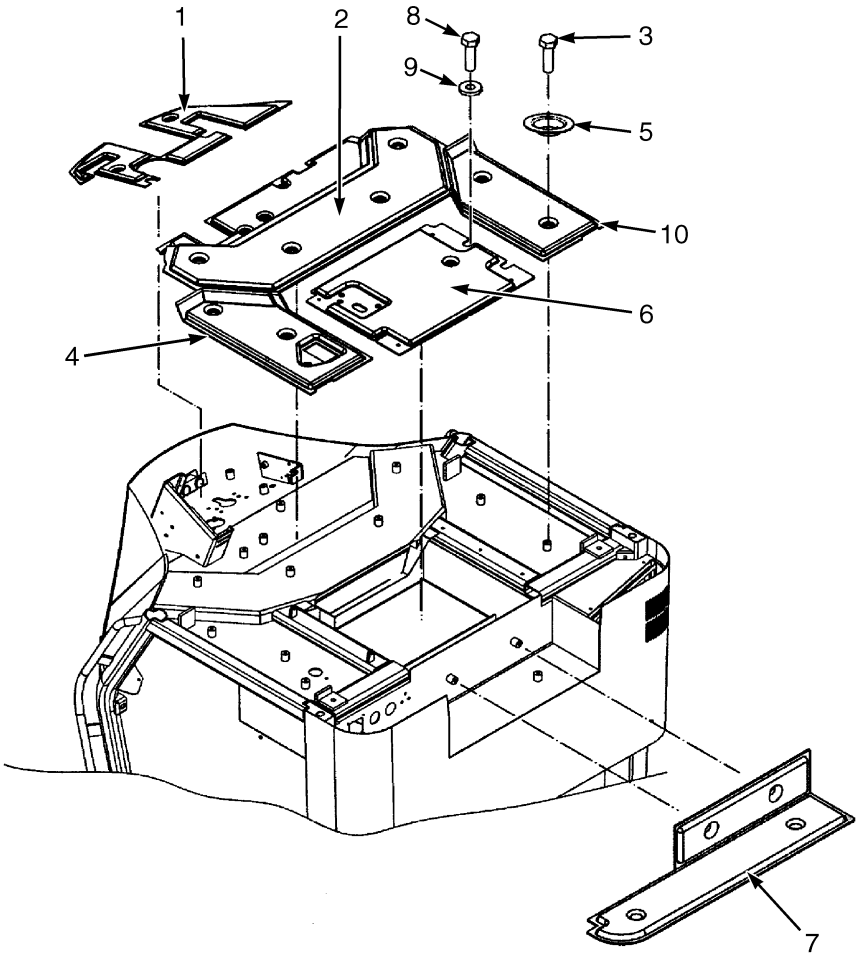

HP120781

ITEM	PART NO.	DESCRIPTION	QTY
1	1567942	Insulation (Front)	1
2	1498370	Insulation (Main)	1
3	292514	Capscrew	5
4	1648560	Insulation (Main)	1
5	1498373	Plate (Fixing)	20
6	1498372	Insulation (Heater)	1
7	1498371	Insulation (Rear)	1
8	1623364	Capscrew	4
9	320158	Washer	4
10	1648561	Insulation (Main)	1

©2015 HYSTER COMPANY

RADIO CONSOLE AND ATTACHING PARTS (FIGURE 1-77)

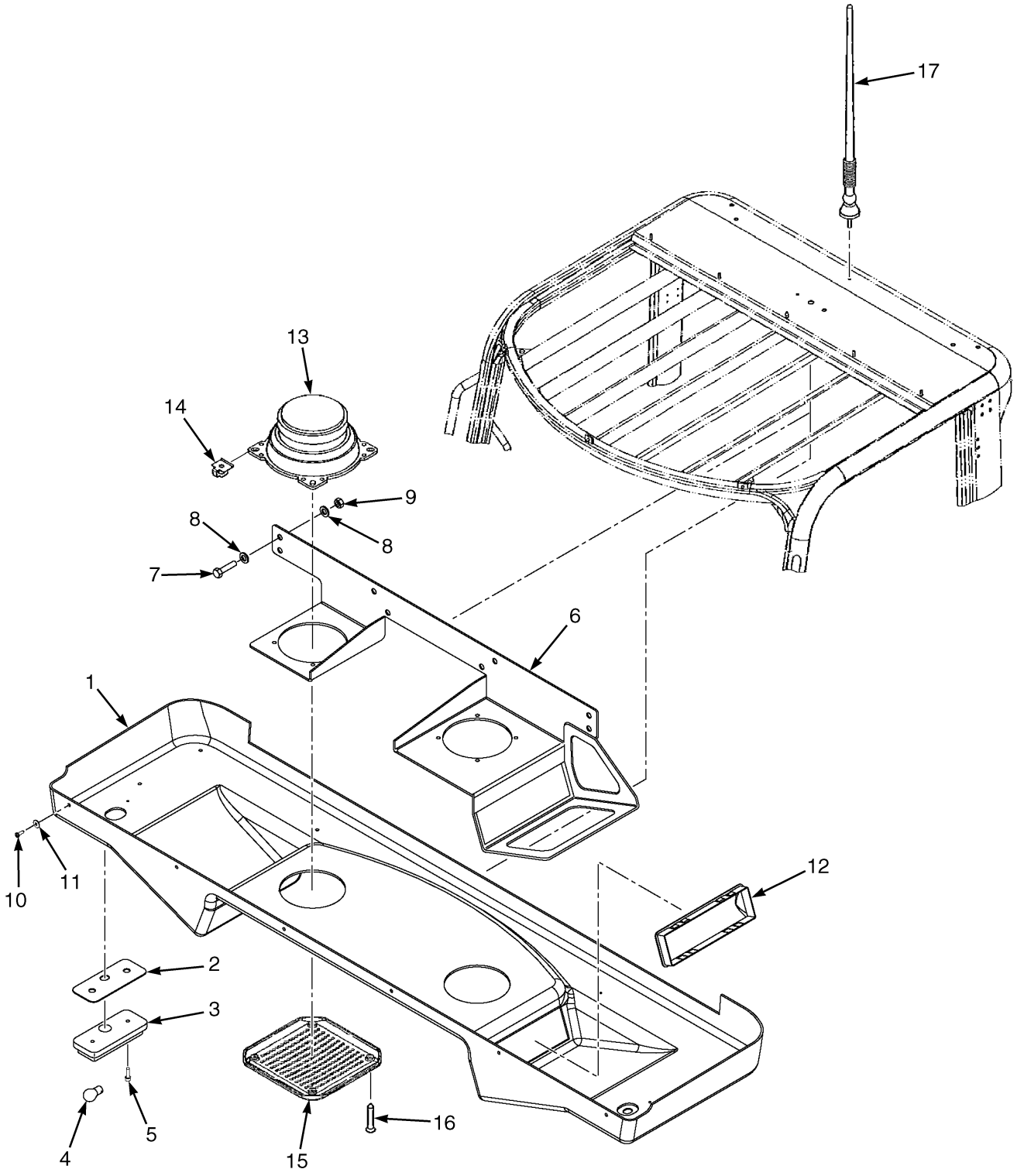

©2015 HYSTER COMPANY

RADIO CONSOLE AND ATTACHING PARTS

ITEM	PART NO.	DESCRIPTION	QTY
	1492176	Console Assembly (Radio)	1
1	1491468	Headliner	1
2	1566767	Bracket	2
3	1393528	Dome Light	2
4	887317	Bulb	2
5	1492163	Screw	4
6	1566762	Bracket (Radio Console)	1
7	287854	Capscrew	4
8	320160	Washer	8
9	136692	Nut	4
10	4028462	Screw	10
11	4028463	Washer	10
12	1571628	Cover	1
13	4009587	Loudspeaker	2
14	1492139	Nut	8
15	1598421	Cover (Speaker)	2
16	1703737	Screw	8
17	4009588	Antenna	1

©2015 HYSTER COMPANY

NOTES

©2015 HYSTER COMPANY

2 ENGINE ASSEMBLY - DIESEL

SECTION 2
ENGINE ASSEMBLY - DIESEL

DESCRIPTION **PAGE**

AIR COMPRESSOR 2-8
AIR COMPRESSOR COOLANT PLUMBING 2-11
AIR COMPRESSOR MOUNTING 2-10
AIR HEATER 2-12
AIR INTAKE CONNECTION 2-14
AIR INTAKE HOSE
→ S/N G019E02271F (DRY BRAKES) → S/N G019E02152F (WET BRAKES) 2-15
AIR INTAKE MANIFOLD 2-16
AIR TRANSFER CONNECTION 2-17
ALTERNATOR SUPPORT AND WATER INLET
→ S/N G019E02152F (WET BRAKES) → S/N G019E02271F (DRY BRAKES) 2-18
S/N G019E02153F → (WET BRAKES) S/N G019E02272F → (DRY BRAKES) 2-19
BELT TENSIONER 2-20
CAMSHAFT 2-21
CONNECTING RODS AND PISTONS
→ S/N G019E02152F (WET BRAKES) → S/N G019E02271F (DRY BRAKES) 2-22
S/N G019E02153F → (WET BRAKES) S/N G019E02272F → (DRY BRAKES) 2-24
COOLANT HEATER STARTING AID 2-26
COOLING SYSTEM 2-4
CRANKCASE BREATHER 2-27
CRANKSHAFT AND BEARINGS
→ S/N G019E02152F (WET BRAKES) → S/N G019E02271F (DRY BRAKES) 2-28
S/N G019E02153F → (WET BRAKES) S/N G019E02272F → (DRY BRAKES) 2-30
CYLINDER BLOCK
→ S/N G019E02152F (WET BRAKES) → S/N G019E02271F (DRY BRAKES) 2-32
S/N G019E02153F → (WET BRAKES) S/N G019E02272F → (DRY BRAKES) 2-34
CYLINDER HEAD 2-36
ENGINE ASSEMBLY 2-38
ENGINE BLOCK HEATER 2-84
ENGINE CONTROL MODULE 2-40
ENGINE COOLANT VENT 2-42
ENGINE MOUNT 2-43
ENGINE OIL COOLER 2-44
ETR MODULE WIRING 2-45
EXHAUST MANIFOLD 2-46
EXHAUST SYSTEM 2-6
FAN DRIVE AND MOUNTING 2-48
FLYWHEEL AND MOUNTING 2-50
FLYWHEEL HOUSING
→ S/N G019E02152F (WET BRAKES) → S/N G019E02271F (DRY BRAKES) 2-51
S/N G019E02153F → (WET BRAKES) S/N G019E02272F → (DRY BRAKES) → S/N 73037048 (ENGINE) 2-52
S/N G019E02153F → (WET BRAKES) S/N G019E02272F → (DRY BRAKES) S/N 73037049 → (ENGINE) 2-54
FRONT GEAR COVER 2-56
LIFTING BRACKETS AND MOUNTING
→ S/N G019E02271F (DRY BRAKES) → S/N G019E02152F (WET BRAKES) 2-57
S/N G019E02272F → (DRY BRAKES) S/N G019E02153F → (WET BRAKES) 2-58
LUBRICATING OIL PUMP 2-60

©2015 HYSTER COMPANY

SECTION 2
ENGINE ASSEMBLY - DIESEL

DESCRIPTION	PAGE
OIL FILLER	2-61
OIL FILTER	2-62
OIL LEVEL GAUGE	2-63
OIL PAN	2-64
RADIATOR ASSEMBLY	
AKG	2-88
MODINE	2-86
REAR GEAR HOUSING	2-66
ROCKER LEVERS	2-68
THERMOSTAT	2-70
TORQUE CONVERTER COOLER PLUGS	2-71
TURBOCHARGER	2-72
TURBOCHARGER PLUMBING	
→ S/N G019E02271F (DRY BRAKES) → S/N G019E02152F (WET BRAKES)	2-73
S/N G019E02272F → (DRY BRAKES) S/N G019E02153F → (WET BRAKES)	2-74
VALVE COVER	2-76
VALVE TAPPETS	2-77
VIBRATION DAMPER	
→ S/N G019E02152F (WET BRAKES) → S/N G019E02271F (DRY BRAKES)	2-78
S/N G019E02153F → (WET BRAKES) S/N G019E02272F → (DRY BRAKES)	2-79
WATER OUTLET CONNECTION	2-80
WATER PUMP	2-81
WATER PUMP DRIVE	2-82

©2015 HYSTER COMPANY

NOTES

©2015 HYSTER COMPANY

COOLING SYSTEM (FIGURE 2-1)

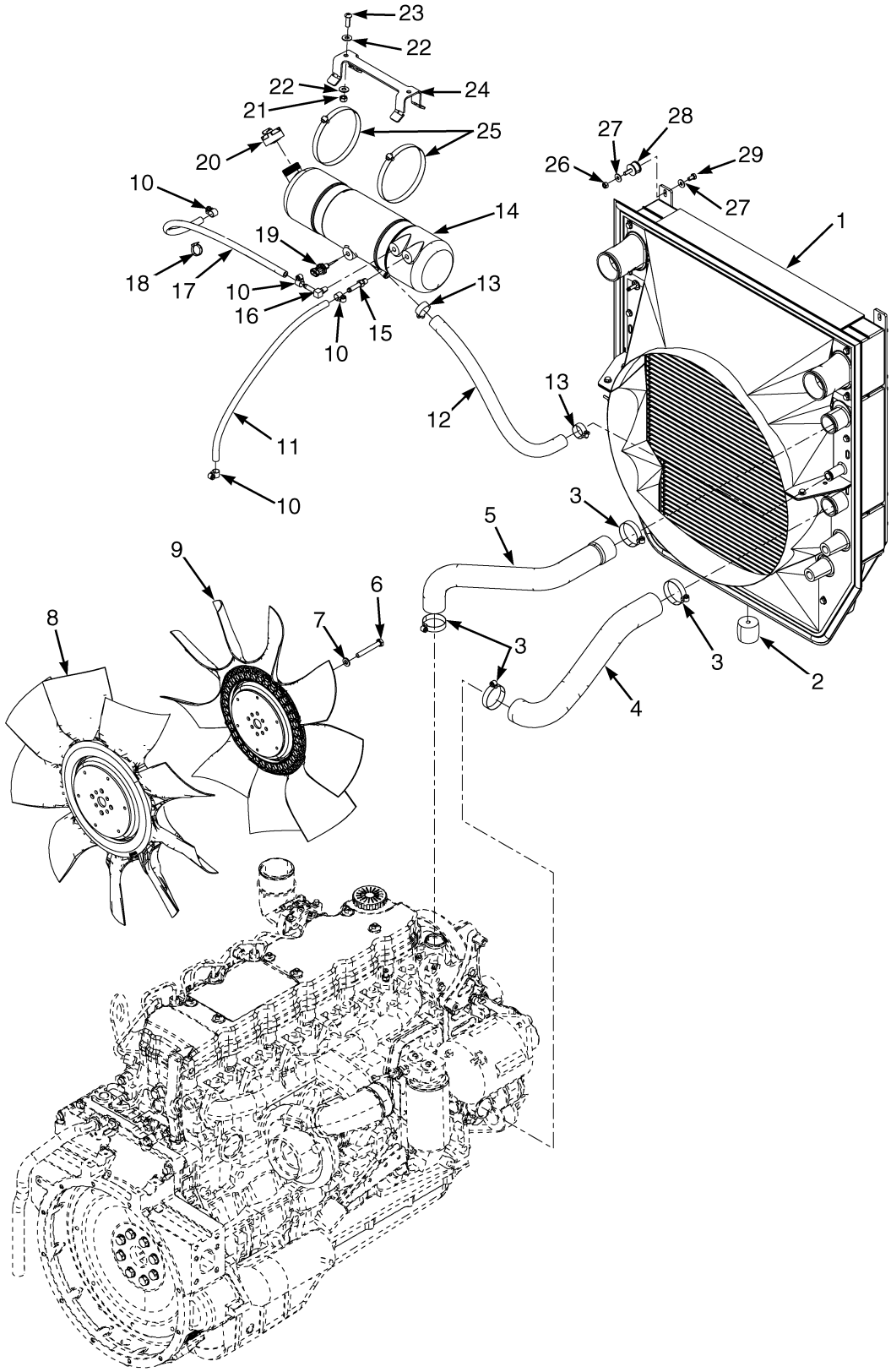

©2015 HYSTER COMPANY

COOLING SYSTEM

ITEM	PART NO.	DESCRIPTION	QTY
1	**a** 2097016	Cooler (☞Figure 2-59)	1
1	**b** 2101590	Radiator Assembly (Modine) (☞Figure 2-59)	1
1	4604793	Radiator Assembly (AKG) (Alternate Part) (☞Figure 2-60)	1
2	376649	Isolator	2
3	119236	Clamp	4
4	1657357	Radiator Hose (Coolant)	1
5	1657358	Radiator Hose (Coolant)	1
6	136718	Capscrew	8
7	320159	Washer	8
8	1649438	Fan (Pusher)	1
9	1629351	Fan (Puller)	1
10	166857	Clamp	4
11	1659020	Hose (Low Pressure)	1
11	4629387	Hose (Alternate Part)	1
12	2099775	Radiator Hose	1
13	127045	Clamp (Hose)	2
14	2088036	Reservoir	1
15	17352	Fitting	1
16	**a** 192306	Fitting	1
16	**b** 17353	Fitting	1
17	**a** 1673562	Hose	1
17	**b** 1659021	Hose (Low Pressure)	1
18	129563	Strap Clamp	1
19	1531404	Sensor (Low Coolant Level)	1
20	1634889	Radiator Cap	1
21	302401	Locknut	2
22	1581558	Washer	4
23	1597444	Capscrew	2
24	1635188	Bracket	1
25	144157	Hose Clamp	2
26	302400	Nut	2
27	320158	Washer	4
28	353453	Mount	2
29	287851	Capscrew	2

FOOTNOTES:

a → S/N G019E01787E

b S/N G019E01788E →

©2015 HYSTER COMPANY

EXHAUST SYSTEM (FIGURE 2-2)

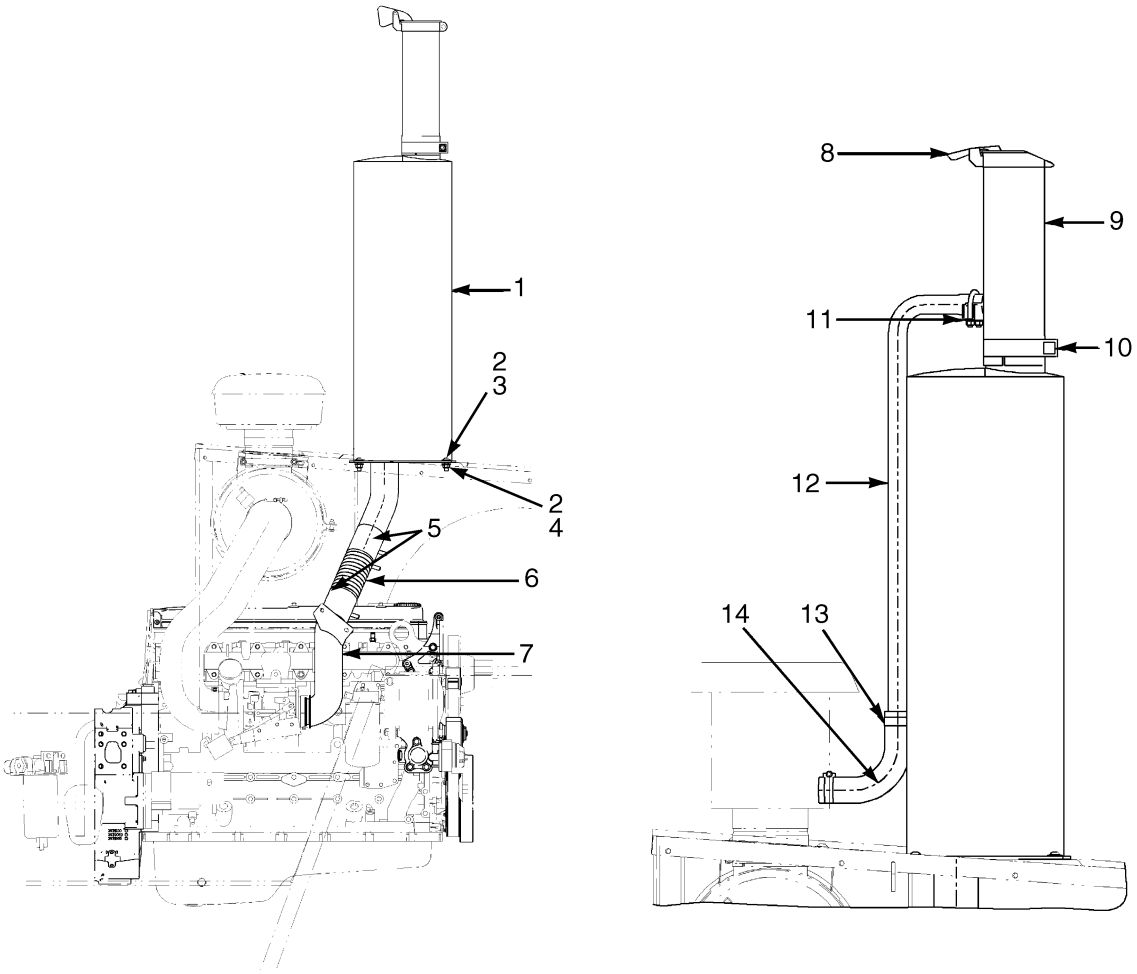

HP091434

©2015 HYSTER COMPANY

EXHAUST SYSTEM

KEY:
A: Standard Configuration
B: Exhaust Extension Option
C: Exhaust Extension Option With Aspirated Pre-Cleaner Option

ITEM	PART NO.	DESCRIPTION	QTY A	QTY B	QTY C
1	2098601	Muffler	1	1	1
2	1581558	Washer	8	8	8
3	1597444	Capscrew	4	4	4
4	302401	Locknut	4	4	4
5	270826	Clamp	2	2	2
6	1544774	Flex Tube	1	1	1
7	1626931	Exhaust Pipe	1	1	1
8	1361200	Rain Cap	..	1	1
9	1544775	Exhaust Pipe	..	1	1
9	1358326	Exhaust Pipe	..	..	1
10	1598359	Clamp	..	1	1
11	69854	Clamp	..	..	1
12	1610665	Tube	..	..	1
13	127045	Clamp (Hose)	..	..	2
14	1610667	Hose	..	..	1

©2015 HYSTER COMPANY

AIR COMPRESSOR (FIGURE 2-3)

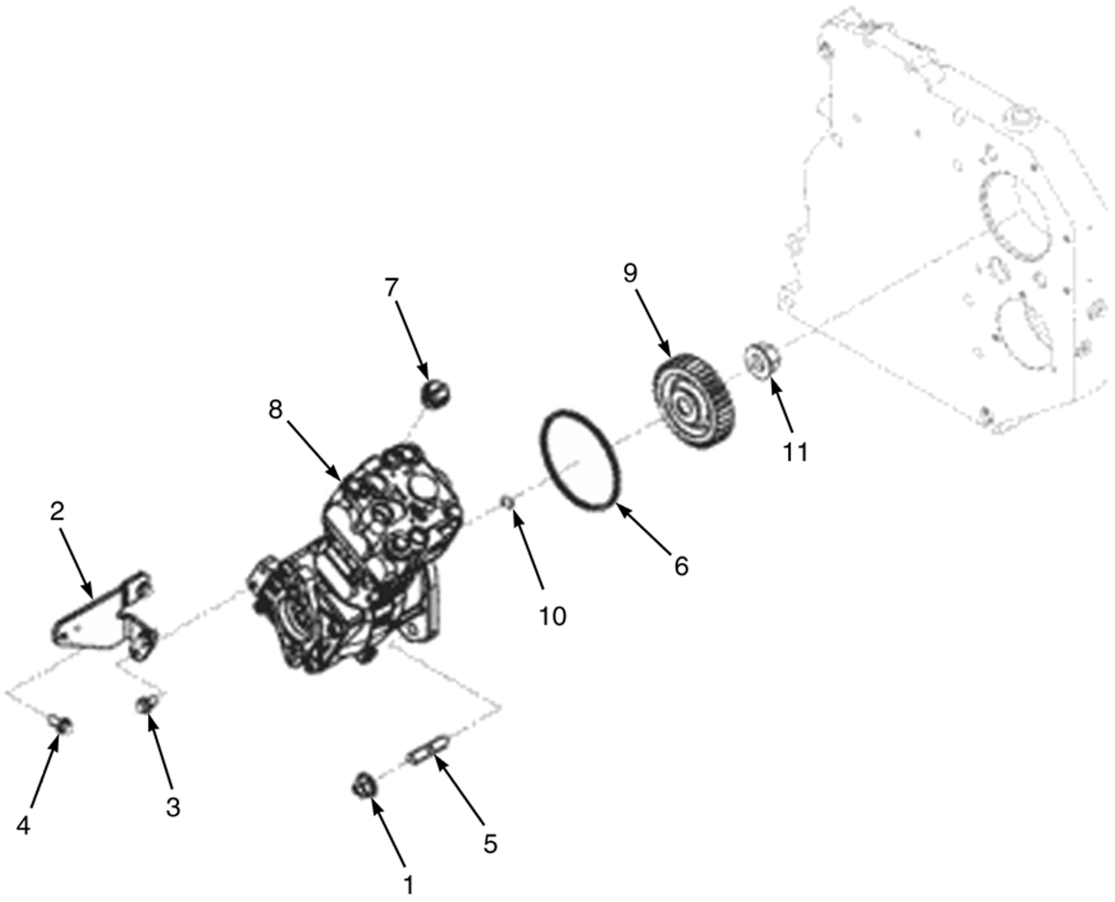

HP091443

©2015 HYSTER COMPANY

AIR COMPRESSOR

ITEM	PART NO.	DESCRIPTION	QTY
	a 2085496	Engine Assy-Diesel (2300 RPM, Dry Brakes)	1
	b 2107121	Engine Assy Diesel (2300 RPM, Dry Brakes)	1
1	1661040	Nut	2
2	1661041	Brace	1
3	1511970	Capscrew	2
4	1512004	Capscrew	2
5	1588934	Stud	2
6	1588097	Seal	1
7	1661042	Plug	1
8	1661043	Compressor	1
9	1661044	Drive Gear	1
10	1661045	O-Ring	1
11	1661046	Nut	1

FOOTNOTES:

a → S/N G019E02271F

b S/N G019E02272F →

©2015 HYSTER COMPANY

AIR COMPRESSOR MOUNTING (FIGURE 2-4)

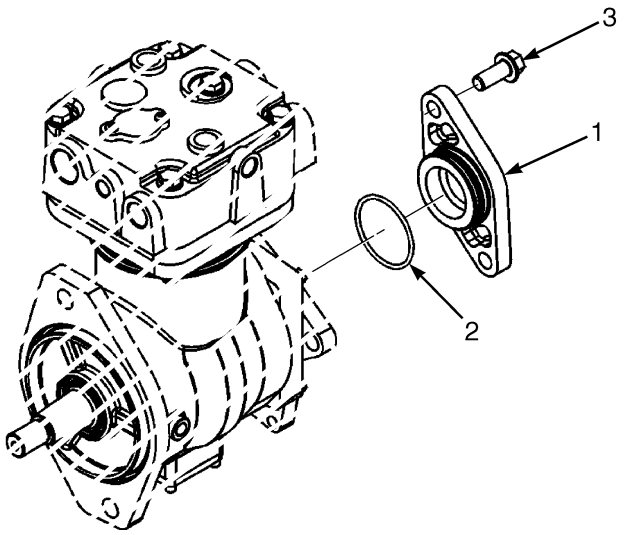

HP091407

ITEM	PART NO.	DESCRIPTION	QTY
	a 2085496	Engine Assy-Diesel (2300 RPM, Dry Brakes)	1
	b 2107121	Engine Assy Diesel (2300 RPM, Dry Brakes)	1
1	1588935	Cover	1
2	1588098	O-Ring	1
3	4009788	Capscrew	2

FOOTNOTES:

a → S/N G019E02271F

b S/N G019E02272F →

©2015 HYSTER COMPANY

AIR COMPRESSOR COOLANT PLUMBING (FIGURE 2-5)

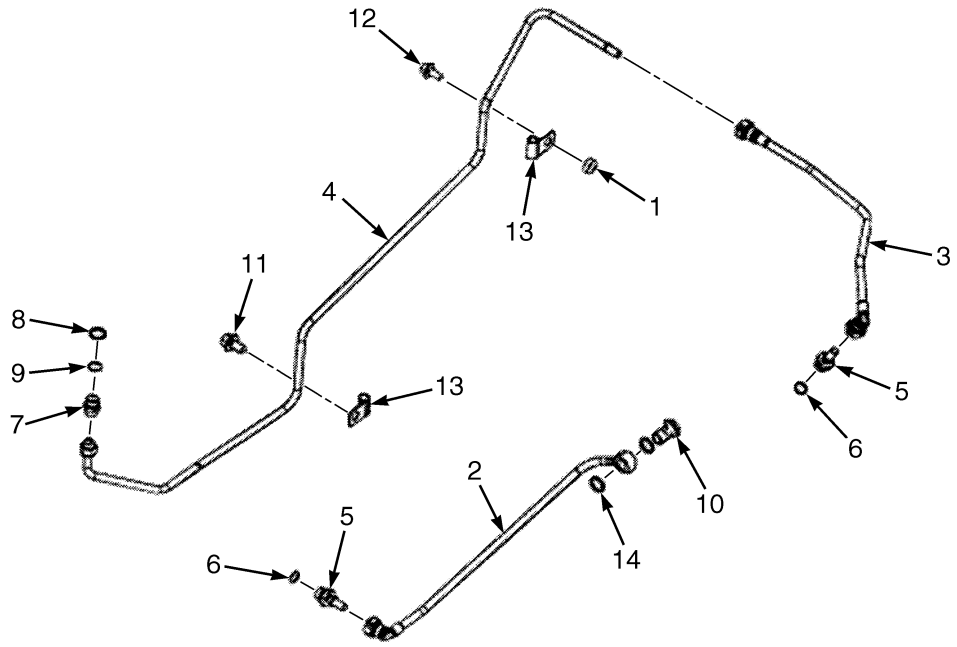

HP091445

ITEM	PART NO.	DESCRIPTION	QTY
	b 2085496	Engine Assy-Diesel (2300 RPM, Dry Brakes)	1
	c 2107121	Engine Assy Diesel (2300 RPM, Dry Brakes)	1
1	1660935	Spacer	1
2	1660936	Tube	1
2	4086279	Tube (Alternate Part)	1
3	1661039	Tube Assy	1
4	1661038	Tube Assy	1
5	1660937	Connector	2
6	1515895	O-Ring	2
7	1661032	Connector	1
8	1515895	O-Ring	1
9	1588920	Retaining Ring	1
10	1661033	Screw	1
11	1661034	Capscrew	1
12	1512328	Capscrew	1
13	1661035	Clip	2
14	1661036	Sealing Ring	2
	a 1512292	Plug	1

FOOTNOTES:

a Not Illustrated
b → S/N G019E02271F
c S/N G019E02272F →

AIR HEATER (FIGURE 2-6)

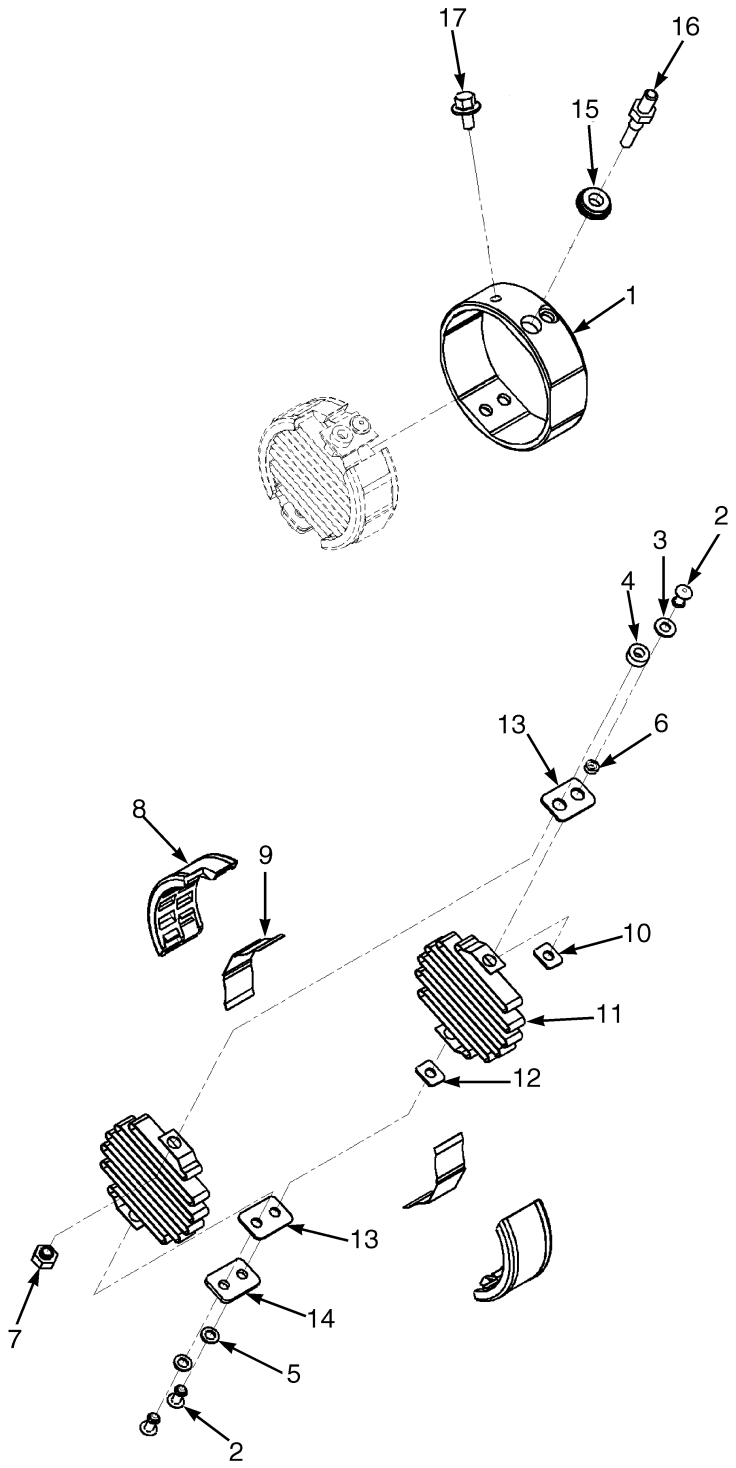

HP091438

©2015 HYSTER COMPANY

AIR HEATER

ITEM	PART NO.	DESCRIPTION	QTY
	a 2085494	Engine Assy-Diesel (2300 RPM, Wet Brakes)	1
	c 2107118	Engine Assy (2300 RPM, Wet Brakes)	1
	b 2085496	Engine Assy-Diesel (2300 RPM, Dry Brakes)	1
	d 2107121	Engine Assy Diesel (2300 RPM, Dry Brakes)	1
	. . . . .	Air Heater Assembly	1
	~~4056507~~		
	1661077	Starting Aid Assembly	1
1	1661078	Housing	1
2	. . . . .	Rivet	3
3	. . . . .	Washer	2
4	1661082	Washer	1
5	. . . . .	Insulating Washer	1
6	. . . . .	Insulating Washer	2
7	. . . . .	Adapter	1
8	. . . . .	Retainer	2
9	. . . . .	Leaf Spring	2
10	1661081	Washer	1
11	. . . . .	Heating Element	2
12	1661080	Retainer	1
13	. . . . .	Washer	2
14	1661079	Washer	1
15	1635363	Retainer	1
16	1661074	Capscrew	1
17	1513836	Screw	1

FOOTNOTES:

a → S/N G019E02152F
b → S/N G019E02271F
c S/N G019E02153F →
d S/N G019E02272F →

©2015 HYSTER COMPANY

AIR INTAKE CONNECTION (FIGURE 2-7)

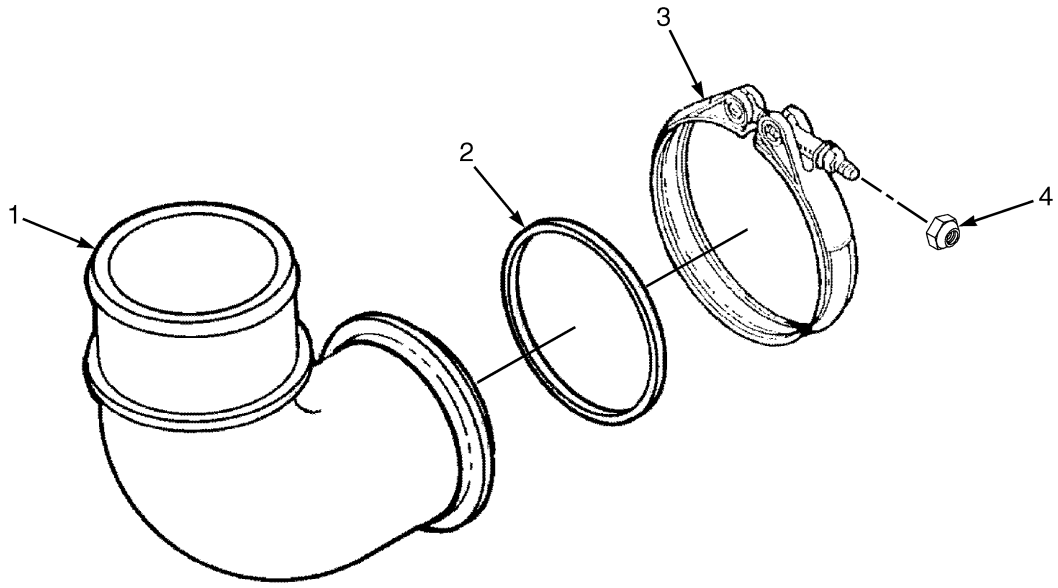

HP091198

ITEM	PART NO.	DESCRIPTION	QTY
	b 2085496	Engine Assy-Diesel (2300 RPM, Dry Brakes)	1
	d 2107121	Engine Assy Diesel (2300 RPM, Dry Brakes)	1
	a 2085494	Engine Assy-Diesel (2300 RPM, Wet Brakes)	1
	c 2107118	Engine Assy (2300 RPM, Wet Brakes)	1
1	1635412	Pipe (Air Transfer)	1
2	1635251	O-Ring	1
3	1635320	Clamp	1
4	1517094	Locknut	1

FOOTNOTES:

a → S/N G019E02152F
b → S/N G019E02271F
c S/N G019E02153F →
d S/N G019E02272F →

©2015 HYSTER COMPANY

AIR INTAKE HOSE (FIGURE 2-8)

(→ S/N G019E02271F (DRY BRAKES)) (→ S/N G019E02152F (WET BRAKES))

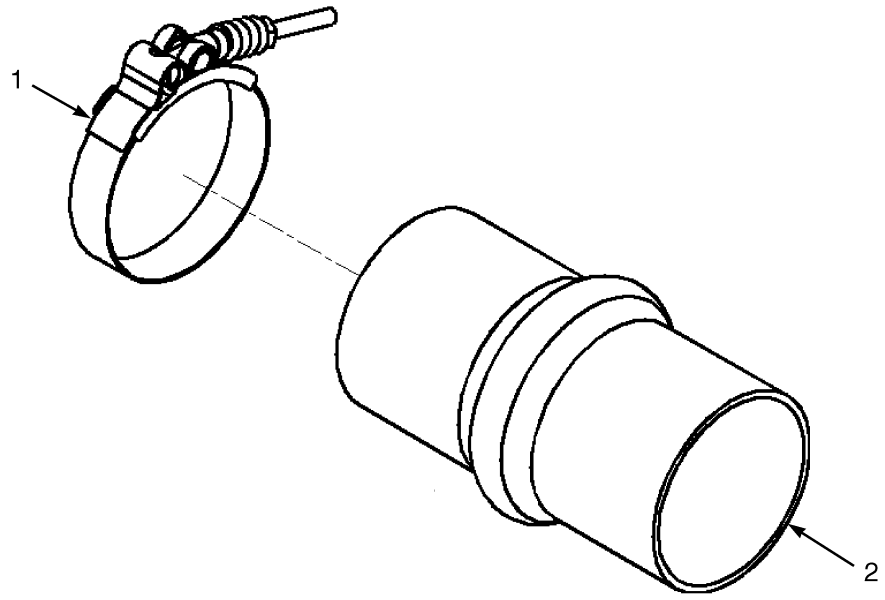

HP091345

ITEM	PART NO.	DESCRIPTION	QTY
	2085496	Engine Assy-Diesel (2300 RPM, Dry Brakes)	1
	2085494	Engine Assy-Diesel (2300 RPM, Wet Brakes)	1
1	1521889	Clamp	8
2	1521888	Hose	4

©2015 HYSTER COMPANY

AIR INTAKE MANIFOLD (FIGURE 2-9)

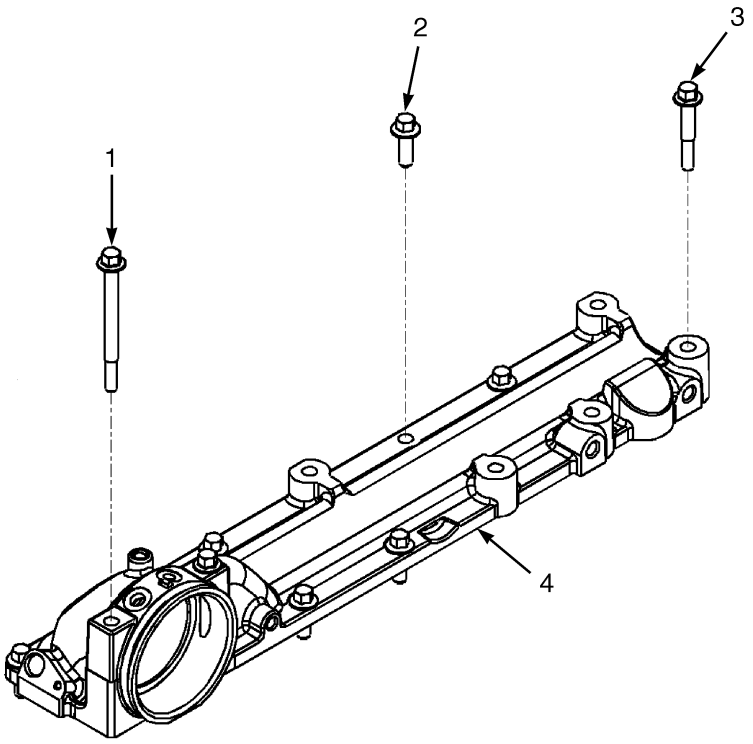

HP091348

ITEM	PART NO.	DESCRIPTION	QTY
	c 2085496	Engine Assy-Diesel (2300 RPM, Dry Brakes)	1
	g 2107121	Engine Assy Diesel (2300 RPM, Dry Brakes)	1
	a 2085494	Engine Assy-Diesel (2300 RPM, Wet Brakes)	1
	e 2107118	Engine Assy (2300 RPM, Wet Brakes)	1
1	1512296	Capscrew	2
2	1512295	Capscrew	7
3	1513725	Capscrew	1
4	**ac** 1635411	Manifold	1
4	**eg** 1707047	Intake Manifold	1

FOOTNOTES:

a → S/N G019E02152F
b → S/N G019E02152F (Wet Brakes)
c → S/N G019E02271F
d → S/N G019E02271F (Dry Brakes)
e S/N G019E02153F →
f S/N G019E02153F → (Wet Brakes)
g S/N G019E02272F →
h S/N G019E02272F → (Dry Brakes)

©2015 HYSTER COMPANY

AIR TRANSFER CONNECTION (FIGURE 2-10)

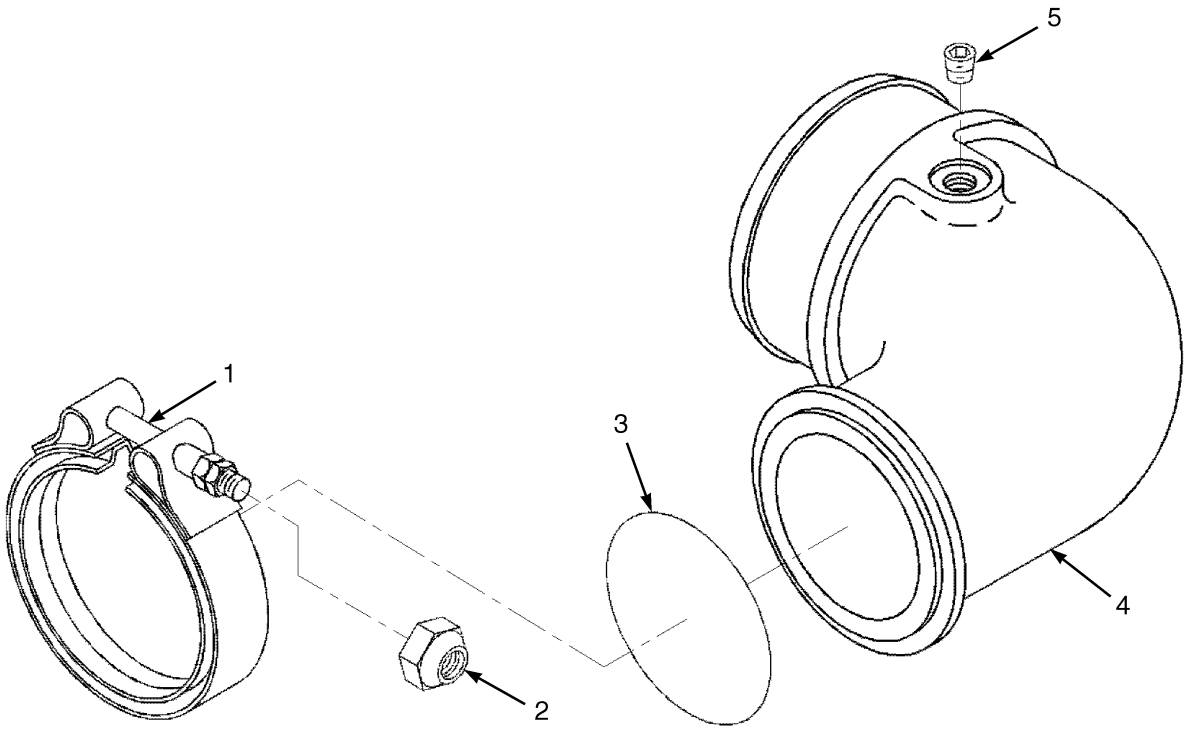

HP091349

ITEM	PART NO.	DESCRIPTION	QTY
	b 2085496	Engine Assy-Diesel (2300 RPM, Dry Brakes)	1
	d 2107121	Engine Assy Diesel (2300 RPM, Dry Brakes)	1
	a 2085494	Engine Assy-Diesel (2300 RPM, Wet Brakes)	1
	c 2107118	Engine Assy (2300 RPM, Wet Brakes)	1
1	1597806	Clamp	1
2	1517094	Locknut	1
3	1515787	O-Ring	1
4	1521891	Pipe	1
5	1513191	Fitting	1

FOOTNOTES:

a → S/N G019E02152F
b → S/N G019E02271F
c S/N G019E02153F →
d S/N G019E02272F →

©2015 HYSTER COMPANY

ALTERNATOR SUPPORT AND WATER INLET (FIGURE 2-11)

(→ S/N G019E02152F (WET BRAKES)) (→ S/N G019E02271F (DRY BRAKES))

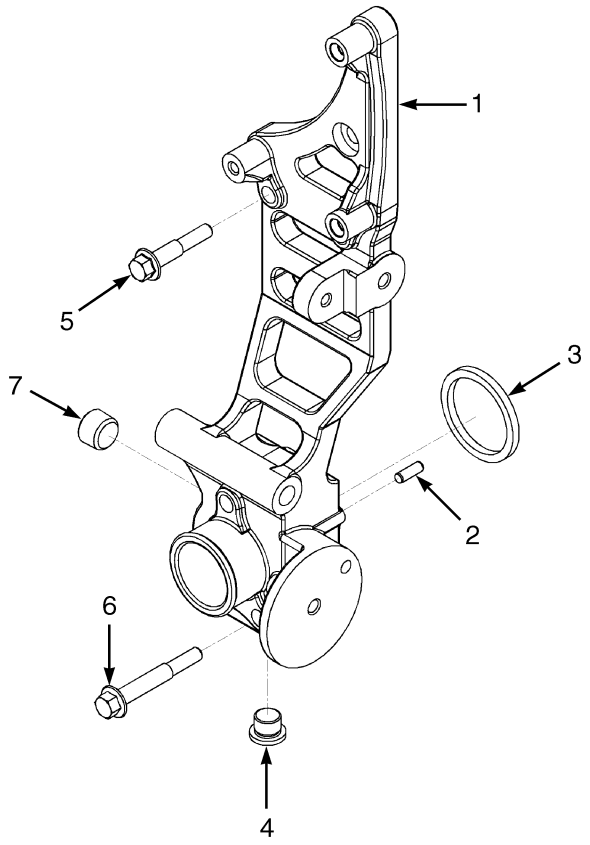

HP091439

ITEM	PART NO.	DESCRIPTION	QTY
	2085494	Engine Assy-Diesel (2300 RPM, Wet Brakes)	1
	2085496	Engine Assy-Diesel (2300 RPM, Dry Brakes)	1
1	~~1635403~~		
	4048000	Water Inlet	1
2	1632983	Dowel	2
3	1512305	O-Ring	1
4	1661398	Plug	1
5	1517003	Capscrew	3
6	1614515	Capscrew	3
7	1512292	Plug	1

©2015 HYSTER COMPANY

ALTERNATOR SUPPORT AND WATER INLET (FIGURE 2-12)

(S/N G019E02153F → (WET BRAKES)) (S/N G019E02272F → (DRY BRAKES))

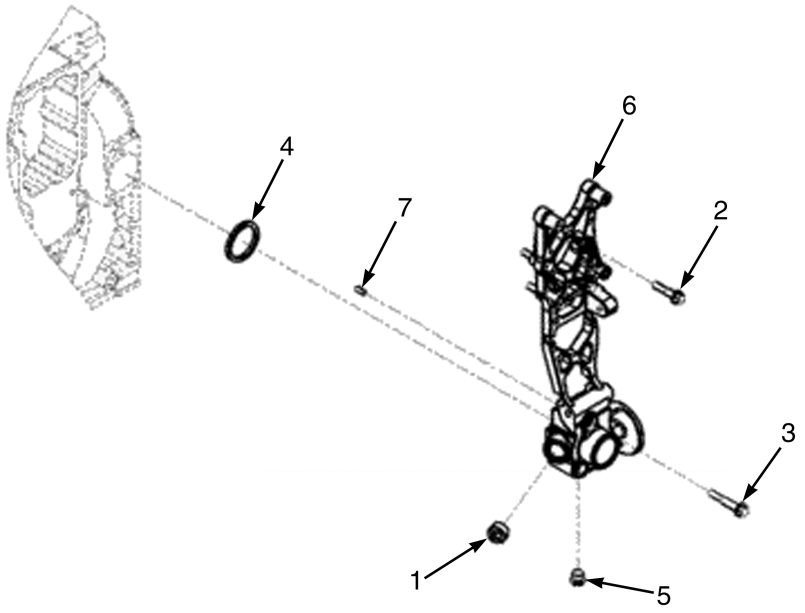

HP091253

ITEM	PART NO.	DESCRIPTION	QTY
	2107121	Engine Assy Diesel (2300 RPM, Dry Brakes)	1
	2107118	Engine Assy (2300 RPM, Wet Brakes)	1
1	1512292	Plug	1
2	1702189	Capscrew	2
3	1515840	Screw	5
4	1512305	O-Ring	1
5	1661398	Plug	1
6	~~1635403~~		
	4048000	Water Inlet	1
7	1632983	Dowel	1

©2015 HYSTER COMPANY

BELT TENSIONER (FIGURE 2-13)

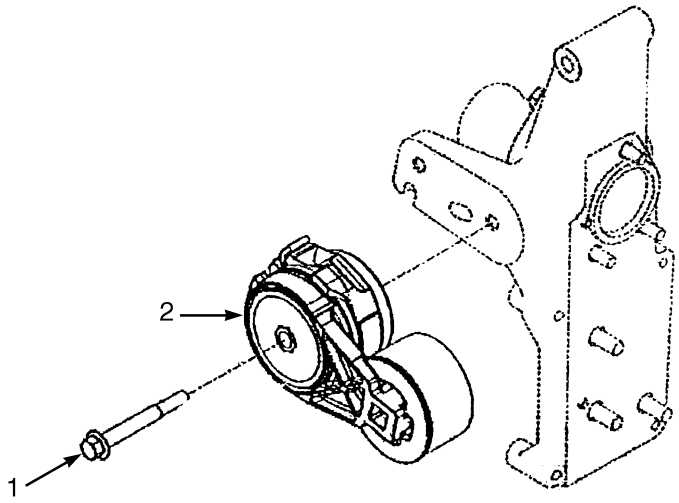

HP091364

ITEM	PART NO.	DESCRIPTION	QTY
	b 2085496	Engine Assy-Diesel (2300 RPM, Dry Brakes)	1
	d 2107121	Engine Assy Diesel (2300 RPM, Dry Brakes)	1
	a 2085494	Engine Assy-Diesel (2300 RPM, Wet Brakes)	1
	c 2107118	Engine Assy (2300 RPM, Wet Brakes)	1
1	1521938	Capscrew	1
2	1635318	Belt Tensioner	1

FOOTNOTES:

a → S/N G019E02152F
b → S/N G019E02271F
c S/N G019E02153F →
d S/N G019E02272F →

©2015 HYSTER COMPANY

CAMSHAFT (FIGURE 2-14)

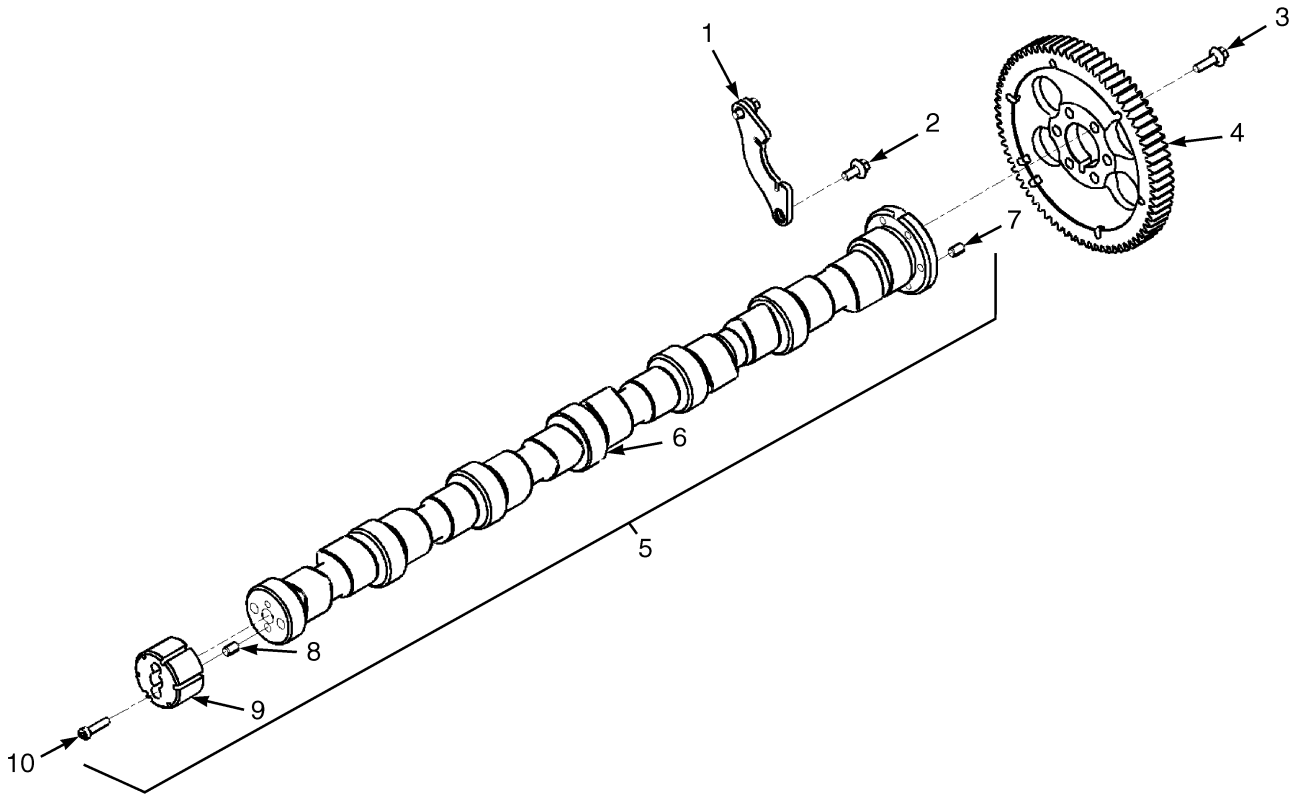

HP091353

ITEM	PART NO.	DESCRIPTION	QTY
	b 2085496	Engine Assy-Diesel (2300 RPM, Dry Brakes)	1
	d 2107121	Engine Assy Diesel (2300 RPM, Dry Brakes)	1
	a 2085494	Engine Assy-Diesel (2300 RPM, Wet Brakes)	1
	c 2107118	Engine Assy (2300 RPM, Wet Brakes)	1
1	1635369	Plate	1
2	1513749	Capscrew	2
3	~~1691854~~		
	1597807	Capscrew (Flange)	6
4	1635275	Gear	1
5	. . . . .	Camshaft Assembly	1
6	1635340	Camshaft	1
7	1514346	Dowel	1
8	1635269	Ring	1
9	1635272	Indicator	1
10	1635362	Capscrew	2

FOOTNOTES:

a → S/N G019E02152F
b → S/N G019E02271F
c S/N G019E02153F →
d S/N G019E02272F →

©2015 HYSTER COMPANY

CONNECTING RODS AND PISTONS (FIGURE 2-15)

(→ S/N G019E02152F (WET BRAKES)) (→ S/N G019E02271F (DRY BRAKES))

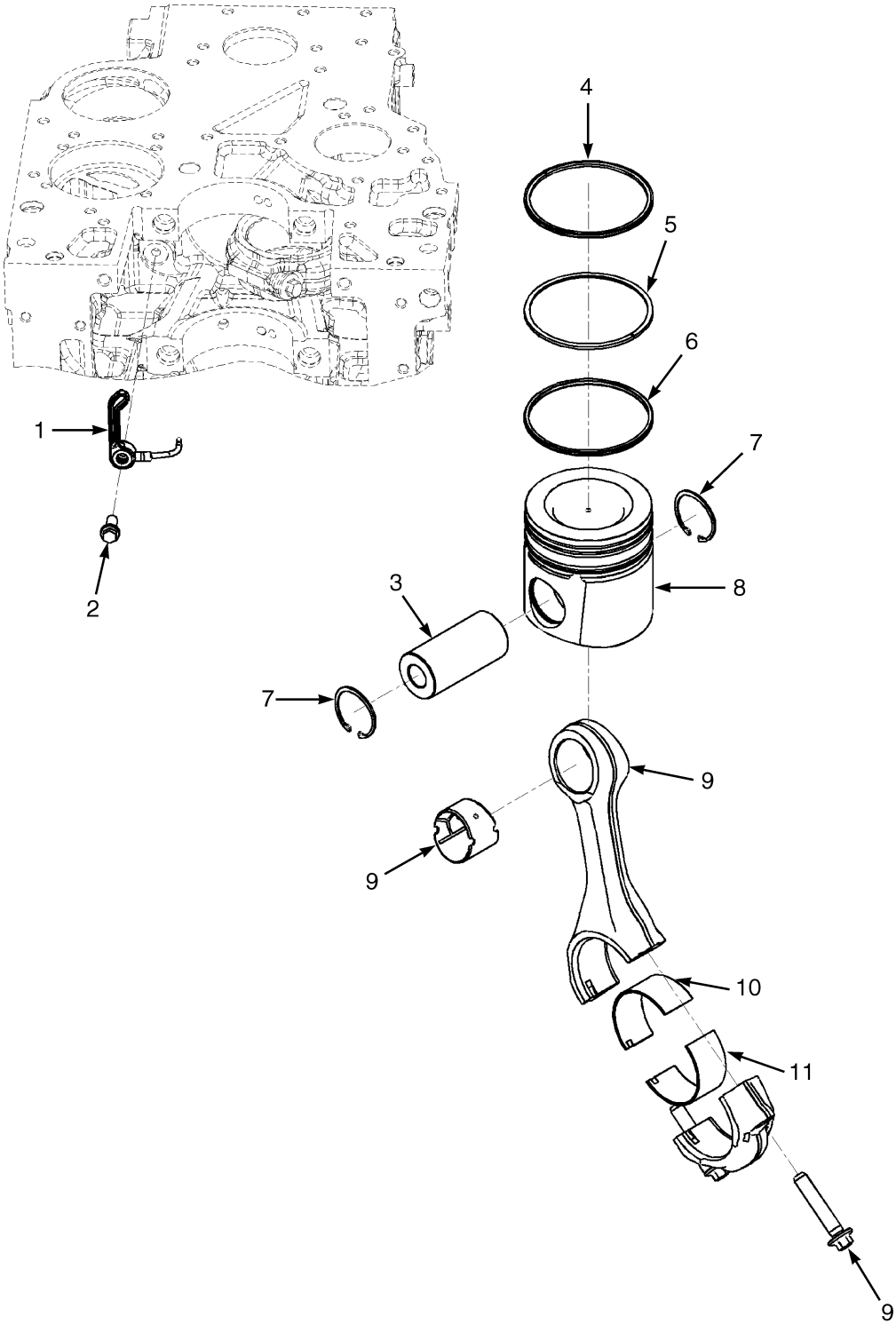

©2015 HYSTER COMPANY

CONNECTING RODS AND PISTONS

(→ S/N G019E02152F (WET BRAKES)) (→ S/N G019E02271F (DRY BRAKES))

ITEM	PART NO.	DESCRIPTION	QTY
	2085496	Engine Assy-Diesel (2300 RPM, Dry Brakes)	1
	2085494	Engine Assy-Diesel (2300 RPM, Wet Brakes)	1
1	1661211	Nozzle (Piston Cooling)	6
2	1635282	Screw (Banjo Connector)	6
3	1635400	Pin	6
4	1635409	Piston Ring	6
5	1635316	Piston Ring	6
6	1638703	Piston Ring	6
7	1512146	Retaining Ring	12
8	1635406	Piston	6
8	1635408	Piston (O/S 0.50 mm)	AR
9	1618590	Piston Rod	6
9	. . . . .	Connecting Rod	1
9	1553261	Capscrew	2
9	1553262	Bushing	1
10	1635295	Bearing (Standard) (Upper)	6
10	1638419	Bearing (0.25 mm) (Upper)	AR
10	1638420	Bearing (0.50 mm) (Upper)	AR
10	1638421	Bearing (0.75 mm) (Upper)	AR
10	1638422	Bearing (1.00 mm) (Upper)	AR
11	1543445	Bearing (Standard) (Lower)	6
11	1584817	Bearing (0.25 mm) (Lower)	AR
11	1584818	Bearing (0.50 mm) (Lower)	AR
11	1584819	Bearing (0.75 mm) (Lower)	AR
11	1584820	Bearing (1.00 mm) (Lower)	AR

©2015 HYSTER COMPANY

CONNECTING RODS AND PISTONS (FIGURE 2-16)

(S/N G019E02153F → (WET BRAKES)) (S/N G019E02272F → (DRY BRAKES))

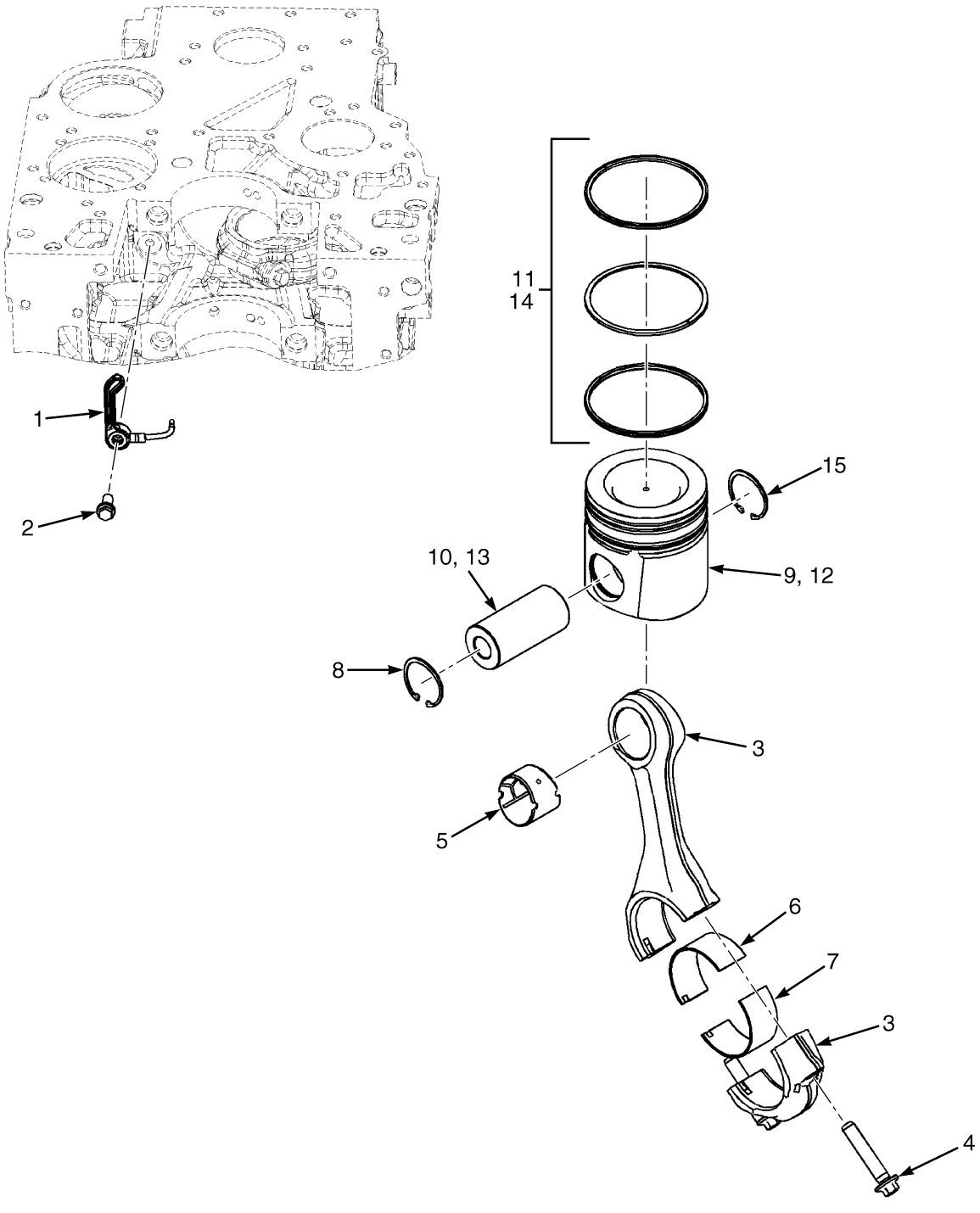

HP091371

©2015 HYSTER COMPANY

CONNECTING RODS AND PISTONS

(S/N G019E02153F → (WET BRAKES)) (S/N G019E02272F → (DRY BRAKES))

ITEM	PART NO.	DESCRIPTION	QTY
	2107121	Engine Assy Diesel (2300 RPM, Dry Brakes)	1
	2107118	Engine Assy (2300 RPM, Wet Brakes)	1
1	1661211	Nozzle (Piston Cooling)	6
2	1635282	Screw (Banjo Connector)	6
3	1696686	Rod (Assembly)	6
4	1553261	Capscrew	2
5	1553262	Bushing	1
6	1635295	Bearing (Standard)	6
6	1638419	Bearing (0.25 mm)	AR
6	1638420	Bearing (0.50 mm)	AR
6	1638421	Bearing (0.75 mm)	AR
6	1638422	Bearing (1.00 mm)	AR
7	1543446	Bearing (Standard)	6
7	1584817	Bearing (0.25 mm)	AR
7	1584818	Bearing (0.50 mm)	AR
7	1584819	Bearing (0.75 mm)	AR
7	1584820	Bearing (1.00 mm)	AR
8	1512146	Retaining Ring	12
9	1661209	Kit-Piston (Standard)	6
9	. . . . .	Piston	1
10	1635400	Pin	1
11	1661210	Kit-Piston Ring	1
12	4009308	Kit-Piston (0.50 mm O/S)	AR
12	. . . . .	Piston	1
13	1635400	Pin	1
14	4009310	Piston Ring	1
15	1512146	Retaining Ring	2

©2015 HYSTER COMPANY

COOLANT HEATER STARTING AID (FIGURE 2-17)

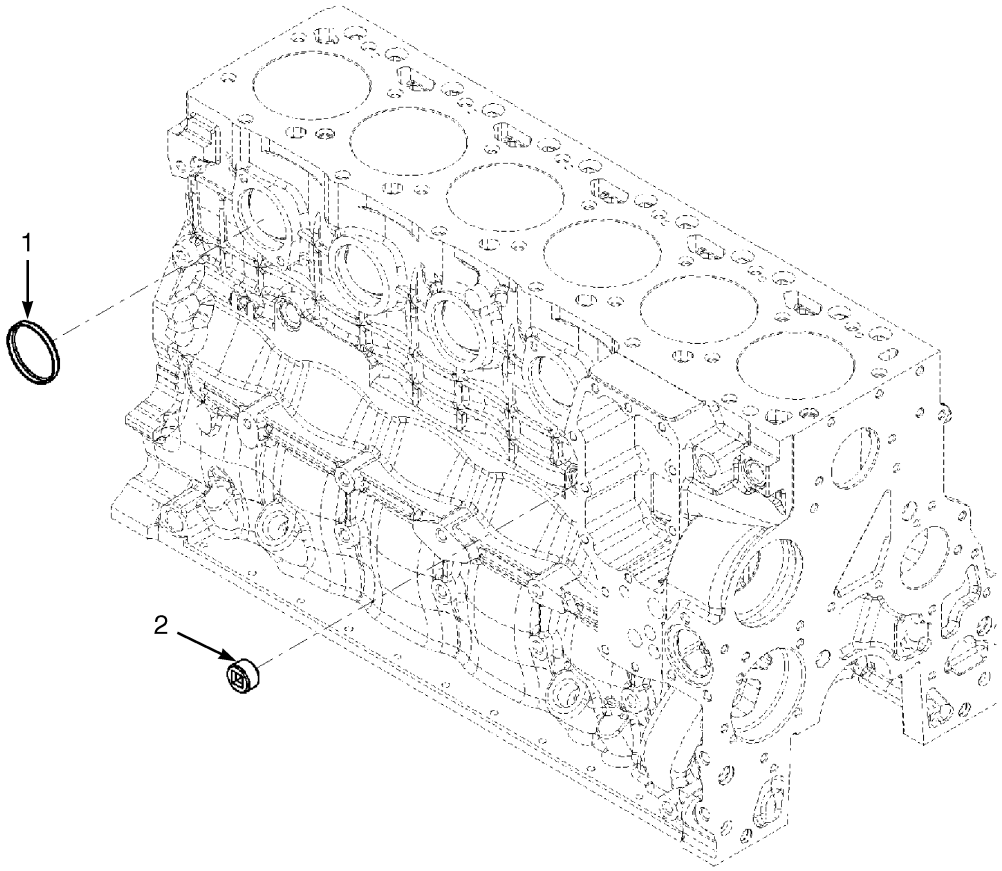

HP091331

ITEM	PART NO.	DESCRIPTION	QTY
	b 2085496	Engine Assy-Diesel (2300 RPM, Dry Brakes)	1
	d 2107121	Engine Assy Diesel (2300 RPM, Dry Brakes)	1
	a 2085494	Engine Assy-Diesel (2300 RPM, Wet Brakes)	1
	c 2107118	Engine Assy (2300 RPM, Wet Brakes)	1
1	~~1618178~~		
	1661086	Plug (Expansion)	1
2	1644095	Fitting	1

FOOTNOTES:

a → S/N G019E02152F
b → S/N G019E02271F
c S/N G019E02153F →
d S/N G019E02272F →

©2015 HYSTER COMPANY

CRANKCASE BREATHER (FIGURE 2-18)

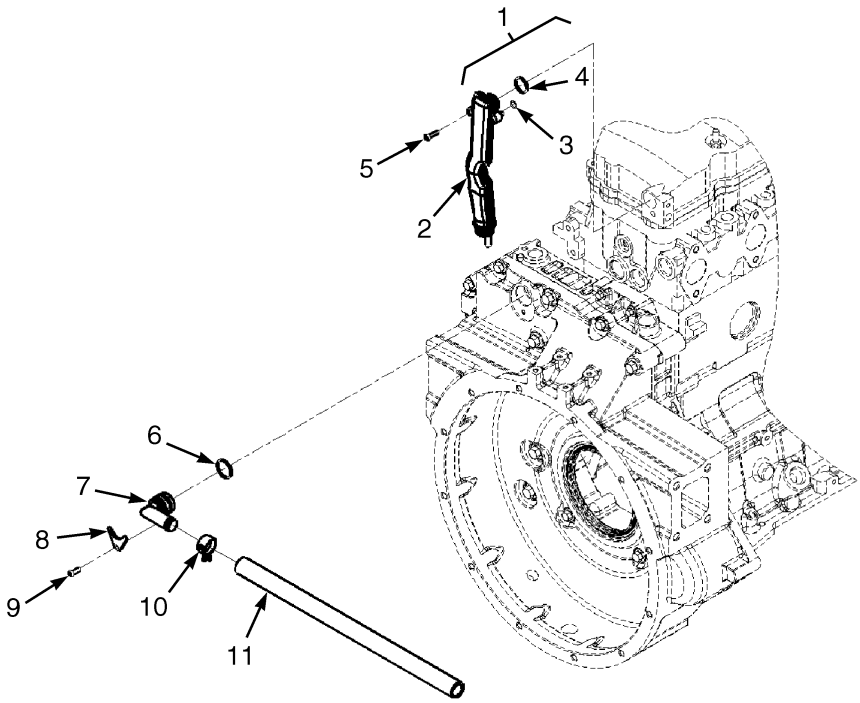

HP091329

ITEM	PART NO.	DESCRIPTION	QTY
	b 2085496	Engine Assy-Diesel (2300 RPM, Dry Brakes)	1
	d 2107121	Engine Assy Diesel (2300 RPM, Dry Brakes)	1
	a 2085494	Engine Assy-Diesel (2300 RPM, Wet Brakes)	1
	c 2107118	Engine Assy (2300 RPM, Wet Brakes)	1
1	1635298	Tube Assy	1
2	1635291	Tube	1
3	1635227	O-Ring	1
4	1635281	O-Ring	2
5	1661085	Capscrew	2
6	1632984	O-Ring	1
7	1635286	Breather	1
8	1635382	Plate	1
9	1661085	Capscrew	1
10	1635259	Hose Clamp	1
11	1511972	Hose	1

FOOTNOTES:

a → S/N G019E02152F
b → S/N G019E02271F
c S/N G019E02153F →
d S/N G019E02272F →

©2015 HYSTER COMPANY

CRANKSHAFT AND BEARINGS (FIGURE 2-19)

(→ S/N G019E02152F (WET BRAKES)) (→ S/N G019E02271F (DRY BRAKES))

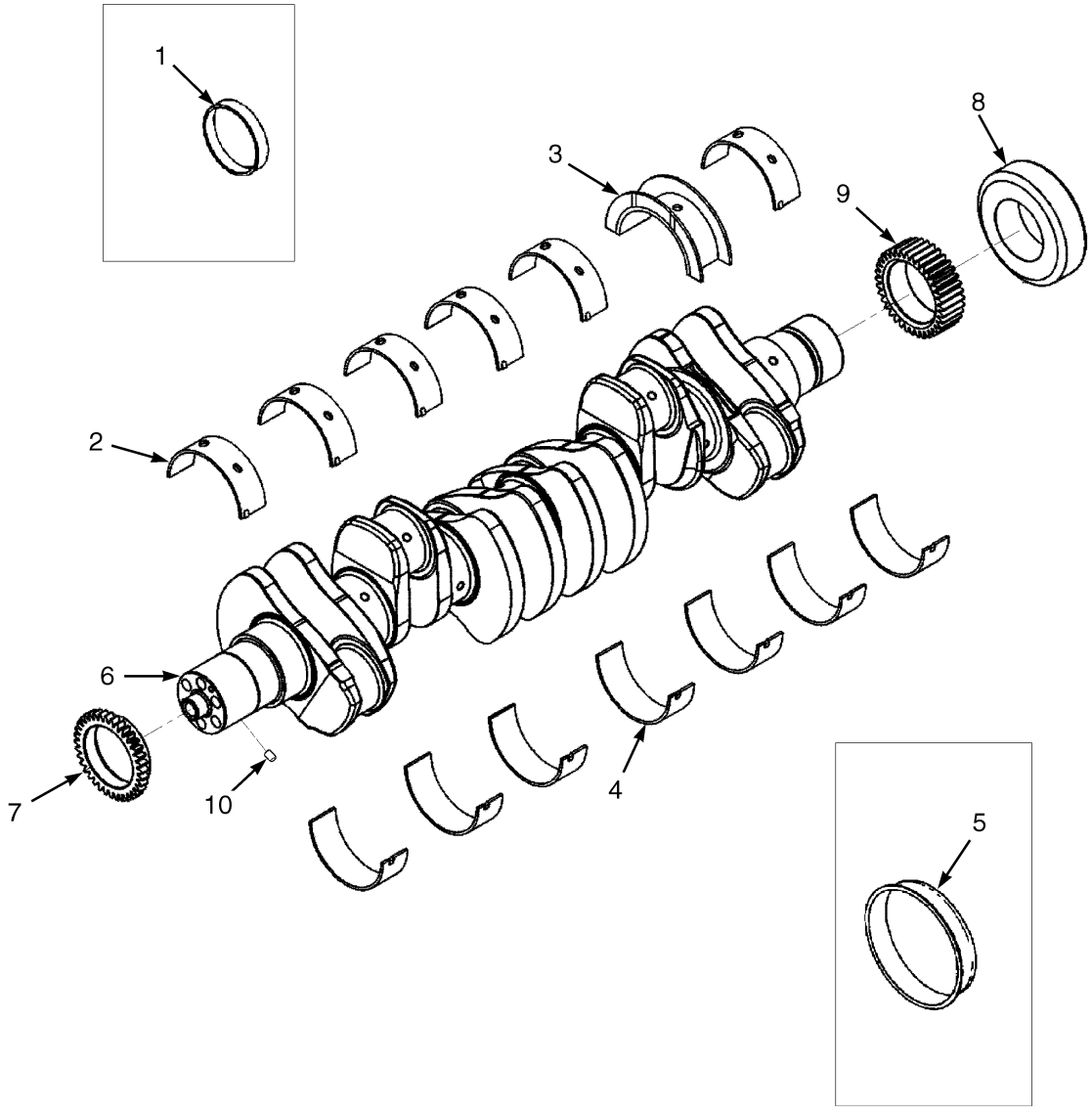

HP091328

©2015 HYSTER COMPANY

CRANKSHAFT AND BEARINGS

(→ S/N G019E02152F (WET BRAKES)) (→ S/N G019E02271F (DRY BRAKES))

ITEM	PART NO.	DESCRIPTION	QTY
	2085494	Engine Assy-Diesel (2300 RPM, Wet Brakes)	1
	2085496	Engine Assy-Diesel (2300 RPM, Dry Brakes)	1
1	1514354	Kit-Wear Sleeve (Rear)	1
2	1543317	Bearing (Standard) (Upper)	6
2	1585002	Bearing (0.25 mm O/S) (Upper)	6
2	1584992	Bearing (0.50 mm) (Upper)	6
2	1584995	Bearing (0.75 mm) (Upper)	6
2	1585000	Bearing (1.00 mm) (Upper)	6
3	1543316	Thrust Bearing (Standard) (Upper)	1
3	1637777	Thrust Bearing (Standard) (Lower)	1
3	1637782	Thrust Bearing (0.25 mm O/S) (Lower)	1
3	1637783	Thrust Bearing (0.50 mm O/S) (Lower)	1
3	1637784	Thrust Bearing (0.75 mm O/S) (Lower)	1
3	1637785	Thrust Bearing (1.00 mm O/S) (Lower)	1
4	1543318	Bearing (Standard) (Lower)	7
5	1554045	Kit-Wear Sleeve (Front)	1
6	~~1635310~~		
	1701994	Crankshaft	1
6	. . . . .	Crankshaft	1
7	1635274	Gear	1
8	. . . . .	Collar	1
9	1635273	Gear	1
10	1514346	Dowel	1

©2015 HYSTER COMPANY

CRANKSHAFT AND BEARINGS (FIGURE 2-20)

(S/N G019E02153F → (WET BRAKES)) (S/N G019E02272F → (DRY BRAKES))

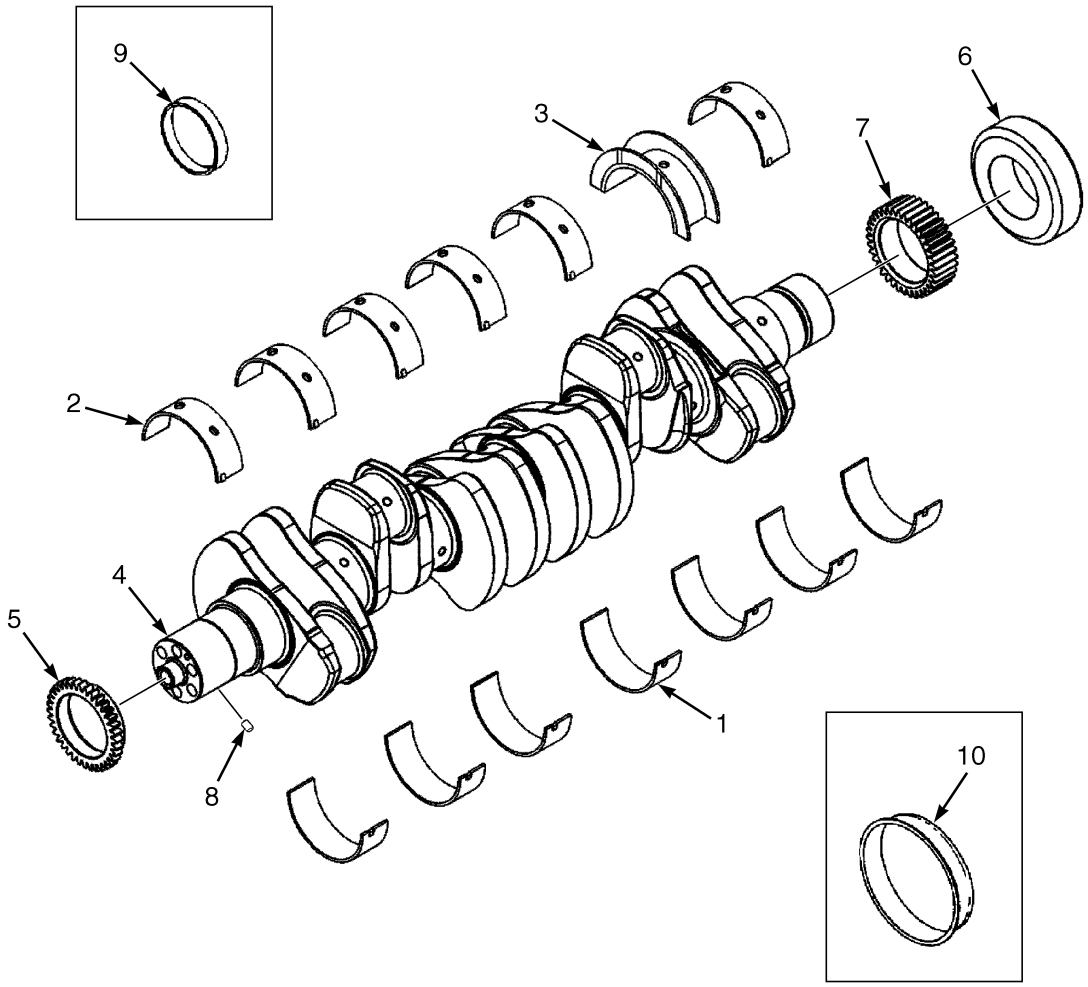

HP091427

©2015 HYSTER COMPANY

CRANKSHAFT AND BEARINGS

(S/N G019E02153F → (WET BRAKES)) (S/N G019E02272F → (DRY BRAKES))

ITEM	PART NO.	DESCRIPTION	QTY
	2107118	Engine Assy (2300 RPM, Wet Brakes)	1
	2107121	Engine Assy Diesel (2300 RPM, Dry Brakes)	1
	4007469	Bearing Set (Standard)	1
	4007075	Bearing Set (0.25 mm O/S)	1
	1707619	Bearing Set (0.50 mm O/S)	1
	4007466	Bearing Set (0.75 mm O/S)	1
	1708510	Bearing Set (1.00 mm O/S)	1
1	1696675	Bearing (Standard) (Lower)	7
1	4007465	Bearing (0.25 mm O/S) (Lower)	7
1	1707622	Bearing (0.50 mm O/S) (Lower)	7
1	4007468	Bearing (0.75 mm O/S) (Lower)	7
1	1708513	Bearing (1.00 mm O/S) (Lower)	7
2	1696674	Bearing (Standard) (Upper)	6
2	1585002	Bearing (0.25 mm O/S) (Upper)	6
2	1707620	Bearing (0.50 mm O/S) (Upper)	6
2	4007946	Bearing (0.75 mm O/S) (Upper)	6
2	1708511	Bearing (1.00 mm O/S) (Upper)	6
3	1707004	Thrust Bearing (Standard)	1
3	4007464	Thrust Bearing (0.25 mm O/S)	1
3	1707621	Thrust Bearing (0.50 mm O/S)	1
3	4007945	Thrust Bearing (0.75 mm O/S)	1
3	1708512	Thrust Bearing (1.00 mm O/S)	1
4	~~1635310~~		
	1701994	Crankshaft	1
5	. . . . .	Gear	1
6	. . . . .	Collar	1
7	. . . . .	Gear	1
8	1661441	Dowel	1
9	1514354	Kit-Wear Sleeve (Rear)	1
10	1554045	Kit-Wear Sleeve (Front)	1

©2015 HYSTER COMPANY

CYLINDER BLOCK (FIGURE 2-21)

(→ S/N G019E02152F (WET BRAKES)) (→ S/N G019E02271F (DRY BRAKES))

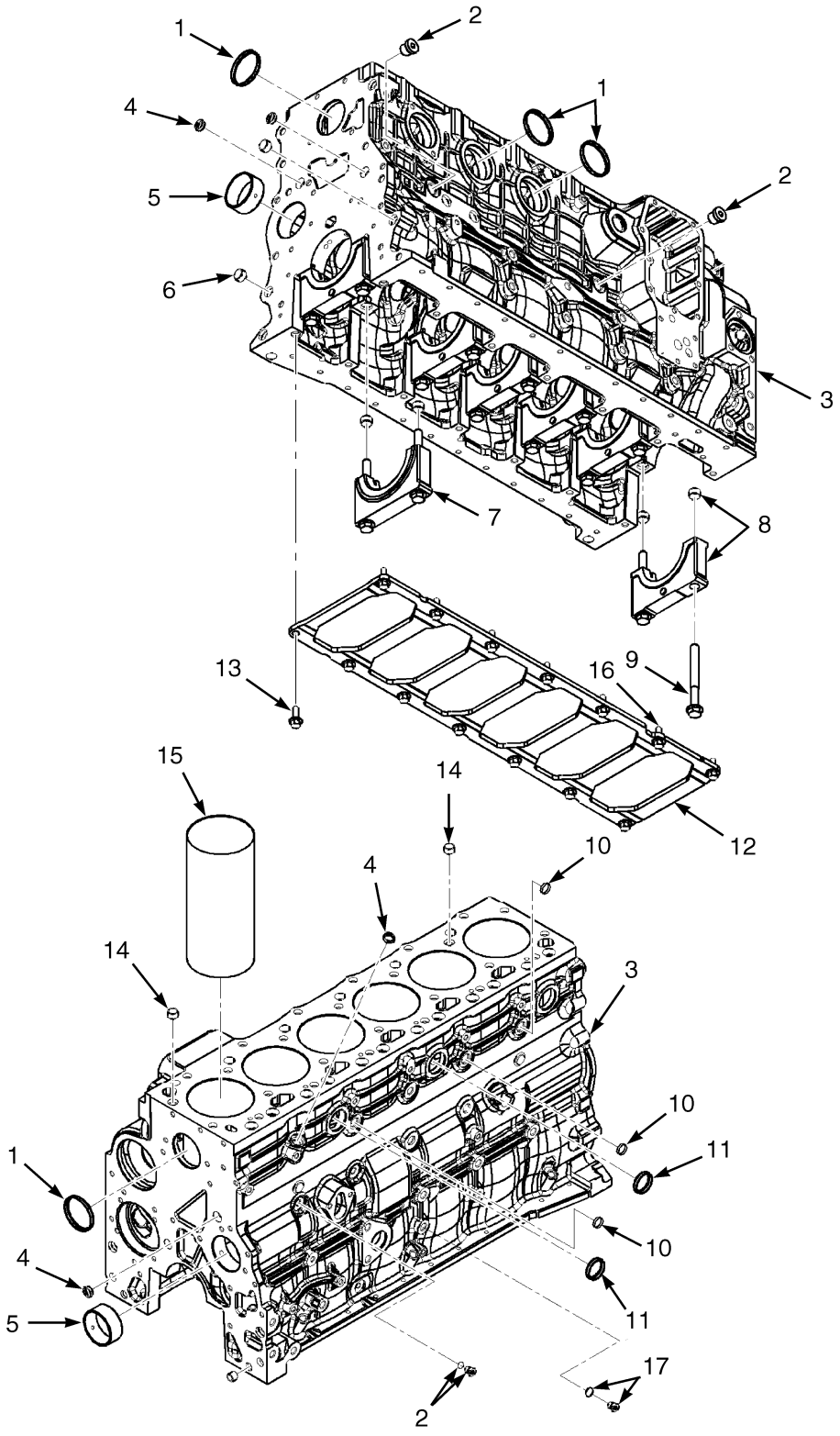

©2015 HYSTER COMPANY

CYLINDER BLOCK

(→ S/N G019E02152F (WET BRAKES)) (→ S/N G019E02271F (DRY BRAKES))

ITEM	PART NO.	DESCRIPTION	QTY
	2085494	Engine Assy-Diesel (2300 RPM, Wet Brakes)	1
	2085496	Engine Assy-Diesel (2300 RPM, Dry Brakes)	1
1	~~1618178~~		
	1661086	Plug	4
2	1635330	Plug	2
3	. . . . .	Cylinder Block	1
4	1512304	Plug	2
5	1521682	Bushing	2
6	1521685	Ring	AR
7	1635308	Cap (Main Bearing)	1
7	1521685	Ring	2
8	1635307	Cap (Main Bearing)	6
8	1521685	Ring	2
9	1521683	Capscrew	14
10	1512585	Plug	3
11	1513788	Plug	3
12	~~1638696~~		
	1635423	Plate (Stiffener)	1
13	1512503	Capscrew	10
14	1521691	Dowel	2
15	1585284	Sleeve	AR
16	1640824	Capscrew	1
17	1643866	Plug	1
	1662315	Kit-Gasket (Lower)	1

©2015 HYSTER COMPANY

CYLINDER BLOCK (FIGURE 2-22)

(S/N G019E02153F → (WET BRAKES)) (S/N G019E02272F → (DRY BRAKES))

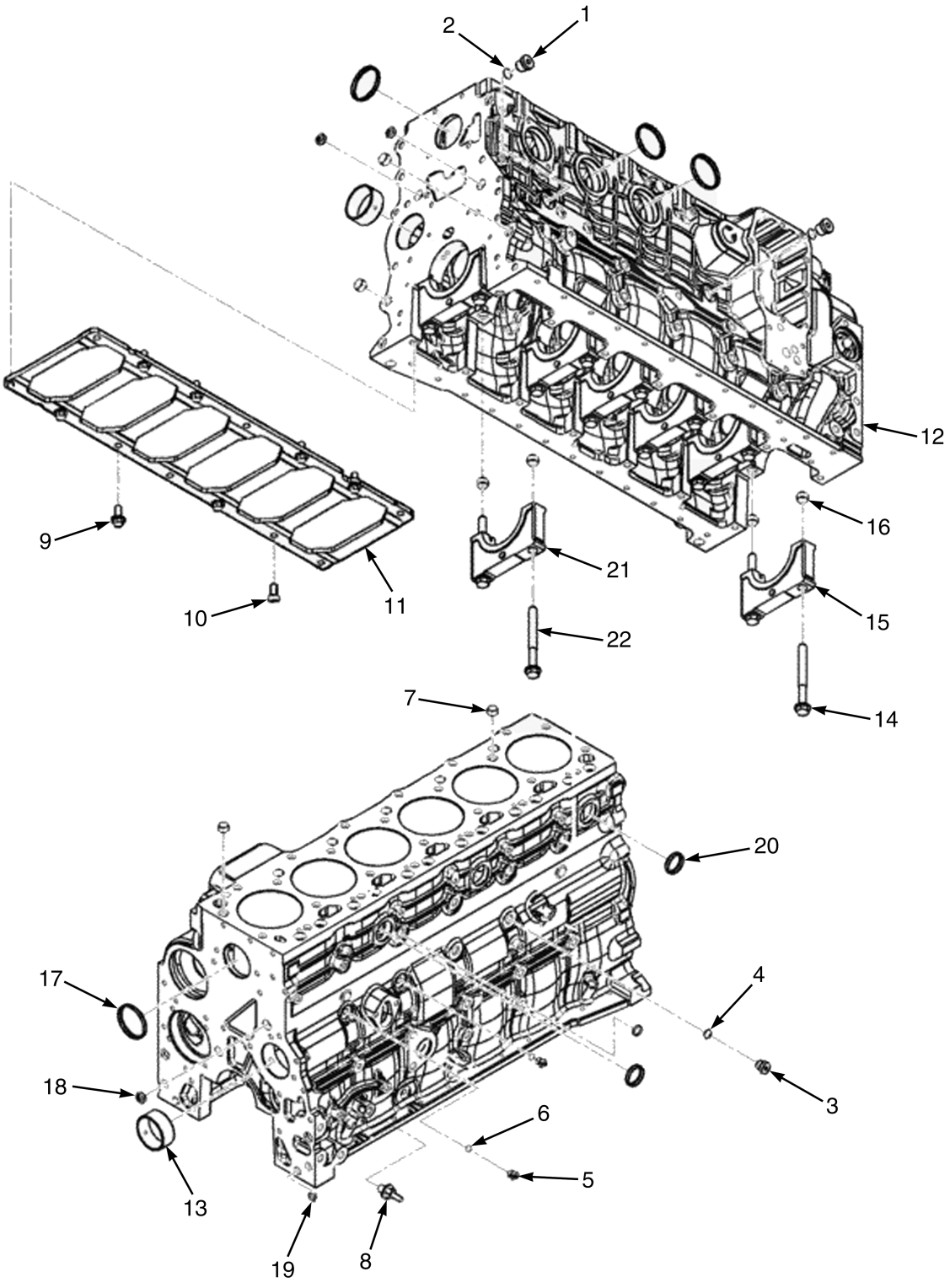

HP091465

©2015 HYSTER COMPANY

CYLINDER BLOCK

(S/N G019E02153F → (WET BRAKES)) (S/N G019E02272F → (DRY BRAKES))

ITEM	PART NO.	DESCRIPTION	QTY
	2107118	Engine Assy (2300 RPM, Wet Brakes)	1
	2107121	Engine Assy Diesel (2300 RPM, Dry Brakes)	1
1	1515897	Plug Assembly	2
2	1515898	O-Ring	1
3	1521695	Plug Assembly	1
4	1517119	O-Ring	1
5	1517010	Plug Assembly	1
6	1517011	O-Ring	1
7	1521691	Dowel	2
8	1661440	Capscrew	2
9	1512503	Capscrew	10
10	1640824	Capscrew	1
11	~~1638696~~		
	1635423	Plate (Stiffener)	1
12	4006371	Cylinder Block	1
12	4036801	Kit-Cylinder Block (Alternate Part)	1
12	4006372	Cylinder Block	1
13	1521682	Bushing	2
14	1521683	Capscrew	14
15	1635307	Cap (Main Bearing)	6
16	1521685	Ring	2
17	~~1618178~~		
	1661086	Plug	4
18	1512585	Plug	3
19	1512304	Plug	2
20	1513788	Plug	3
21	1635308	Cap (Main Bearing)	1
22	1521685	Ring	2

©2015 HYSTER COMPANY

CYLINDER HEAD (FIGURE 2-23)

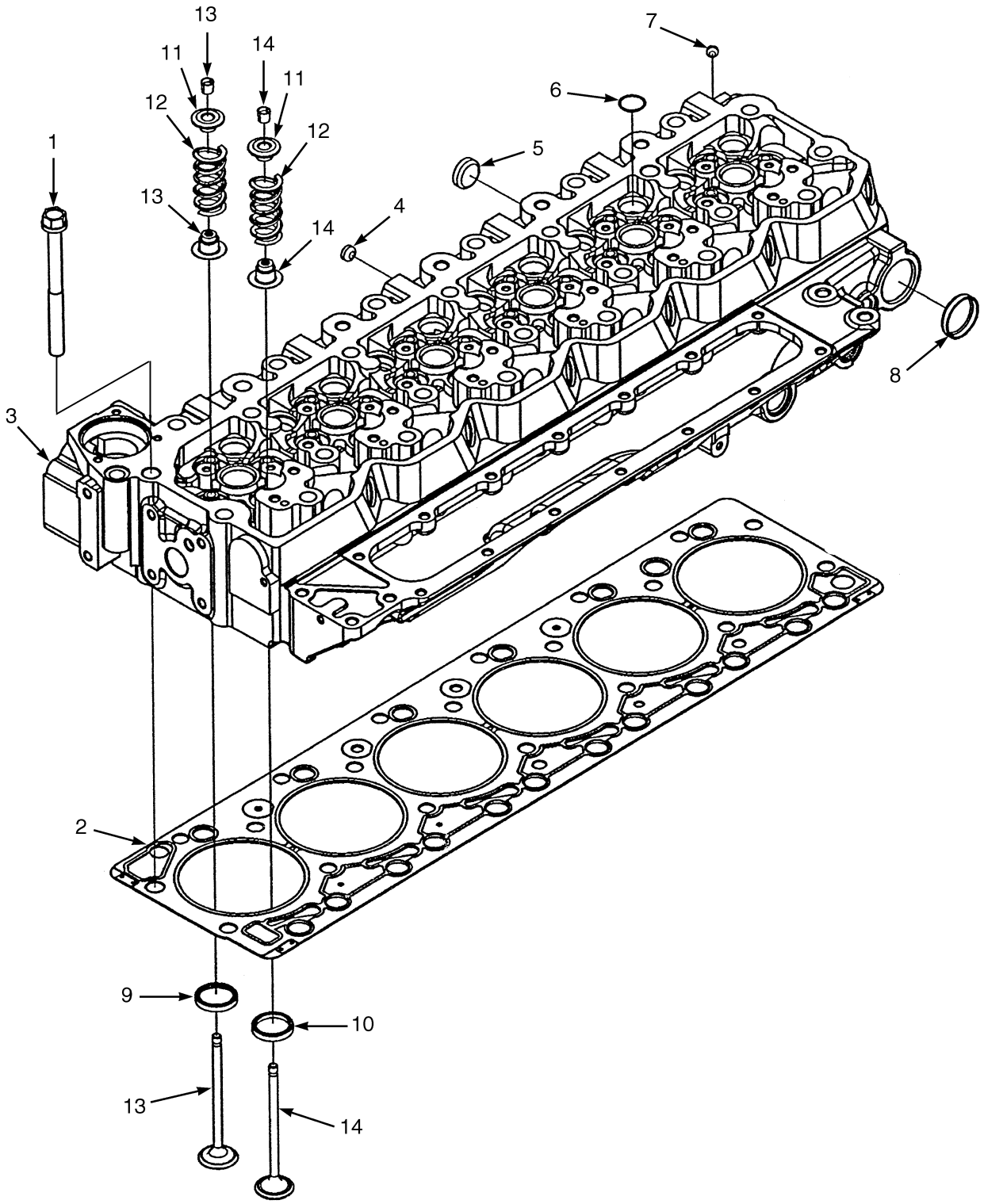

HP131323

©2015 HYSTER COMPANY

CYLINDER HEAD

ITEM	PART NO.	DESCRIPTION	QTY
	c 2085496	Engine Assy-Diesel (2300 RPM, Dry Brakes)	1
	e 2107121	Engine Assy Diesel (2300 RPM, Dry Brakes)	1
	b 2085494	Engine Assy-Diesel (2300 RPM, Wet Brakes)	1
	d 2107118	Engine Assy (2300 RPM, Wet Brakes)	1
1	1521901	Screw	26
2	1635407	Gasket	1
3	**a**	Cylinder Head Assy	1
3	1635321	Cylinder Head	1
4	1521919	Plug	2
5	. . . . .	Plug	13
6	1514339	Plug	11
7	1512586	Plug	7
8	. . . . .	Plug	2
9	. . . . .	Insert (Intake Valve)	12
10	1635464	Insert (Exhaust Valve)	12
11	1521915	Retainer	24
12	1661289	Spring	24
13	1521913	Kit-Valve (Intake)	12
13	1521914	Keeper	24
13	1584922	Seal (Valve Stem)	12
13	. . . . .	Intake Valve	12
14	1635346	Kit-Exhaust Valve	12
14	1521914	Keeper	24
14	1584923	Seal (Valve Stem)	12
14	. . . . .	Exhaust Valve	12
	1662314	Kit-Gasket (Upper)	1

FOOTNOTES:

a Replace with remanufactured Cylinder Head Assy 4025711.
b → S/N G019E02152F
c → S/N G019E02271F
d S/N G019E02153F →
e S/N G019E02272F →

©2015 HYSTER COMPANY

ENGINE ASSEMBLY (FIGURE 2-24)

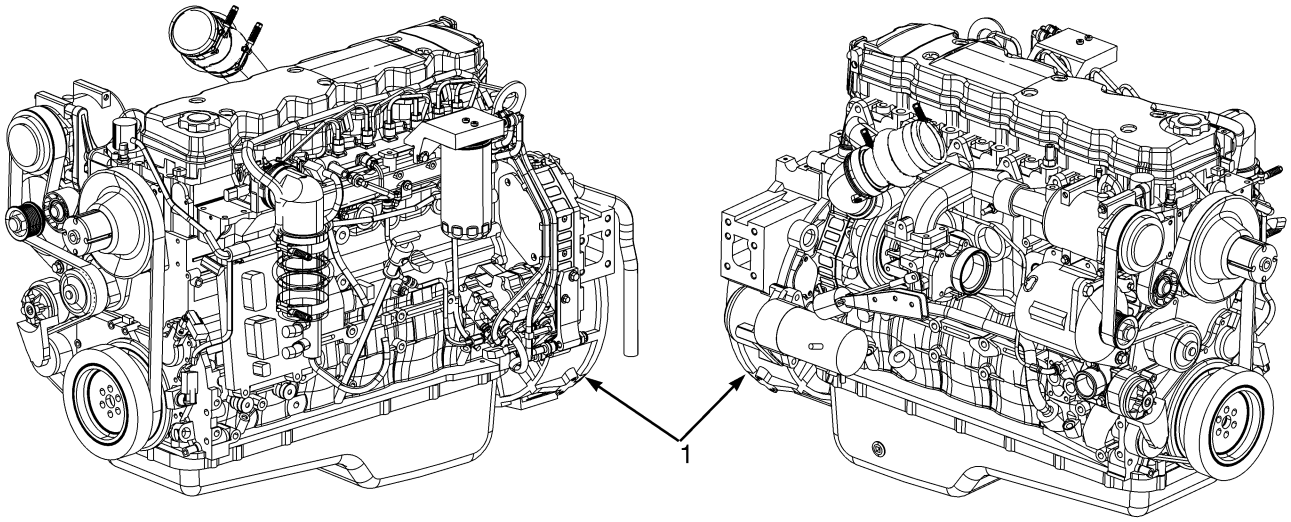

HP091238

ITEM	PART NO.	DESCRIPTION	QTY
1	**b** 2085496	Engine Assy-Diesel (2300 RPM, Dry Brakes)	1
1	**d** 2107121	Engine Assy Diesel (2300 RPM, Dry Brakes)	1
1	**a** 2085494	Engine Assy-Diesel (2300 RPM, Wet Brakes)	1
1	**c** 2107118	Engine Assy (2300 RPM, Wet Brakes)	1

FOOTNOTES:

a → S/N G019E02152F
b → S/N G019E02271F
c S/N G019E02153F →
d S/N G019E02272F →

©2015 HYSTER COMPANY

NOTES

©2015 HYSTER COMPANY

ENGINE CONTROL MODULE (FIGURE 2-25)

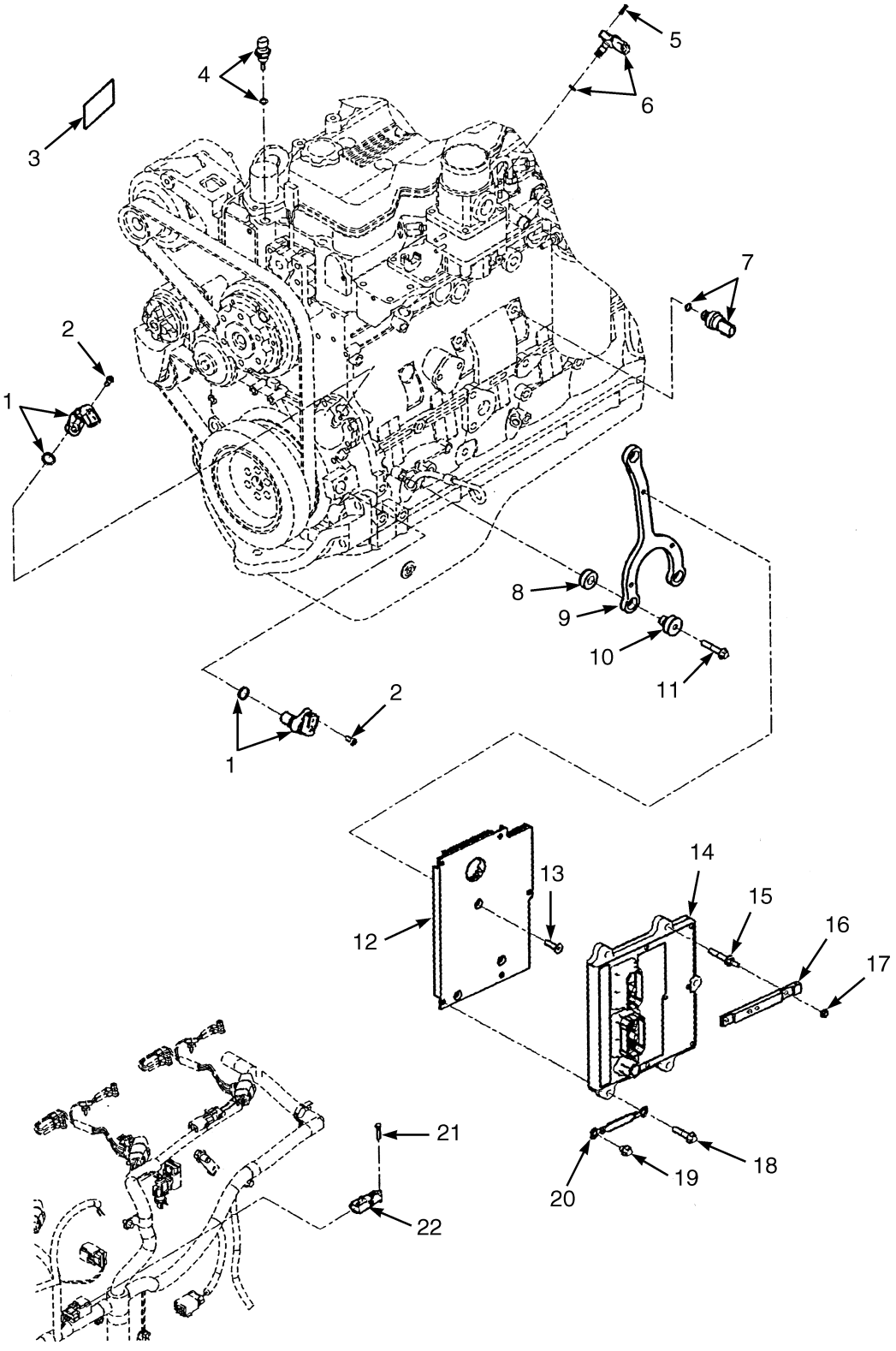

©2015 HYSTER COMPANY

ENGINE CONTROL MODULE

ITEM	PART NO.	DESCRIPTION	QTY
	b 2085496	Engine Assy-Diesel (2300 RPM, Dry Brakes)	1
	d 2107121	Engine Assy Diesel (2300 RPM, Dry Brakes)	1
	a 2085494	Engine Assy-Diesel (2300 RPM, Wet Brakes)	1
	c 2107118	Engine Assy (2300 RPM, Wet Brakes)	1
1	1635457	Sensor Assembly (Camshaft Position)	2
1	. . . . .	Sensor	1
1	1635342	O-Ring	1
2	1543437	Capscrew	2
3	1635359	Data Plate	1
4	~~1565040~~		
	1691873	Sensor Assembly (Temperature)	1
4	1565885	Temperature Sender	1
4	~~1517116~~		
	1543435	O-Ring	1
5	1635280	Capscrew	2
6	~~1661205~~		
	4123350	Sensor (Pressure and Temperature)	1
6	. . . . .	O-Ring	1
7	1543439	Switch, Oil Pressure	1
7	1543440	Pressure Switch	1
7	~~1517116~~		
	1543435	O-Ring	1
8	1635277	Isolator	3
9	1635323	Bracket	1
10	1635278	Isolator	3
11	1512111	Capscrew	3
12	1635324	Support	1
13	1614461	Capscrew (Flat Head)	3
14	1635421	Electronic Control Module	1
15	1635422	Capscrew	3
16	1635315	Bracket (Sensor)	1
17	1513793	Nut	2
18	1565007	Capscrew	2
19	1517266	Capscrew	1
20	1635325	Wire	1
21	1514504	Capscrew	1
22	1635345	Sensor (Pressure)	1

FOOTNOTES:

a → S/N G019E02152F
b → S/N G019E02271F
c S/N G019E02153F →
d S/N G019E02272F →

©2015 HYSTER COMPANY

ENGINE COOLANT VENT (FIGURE 2-26)

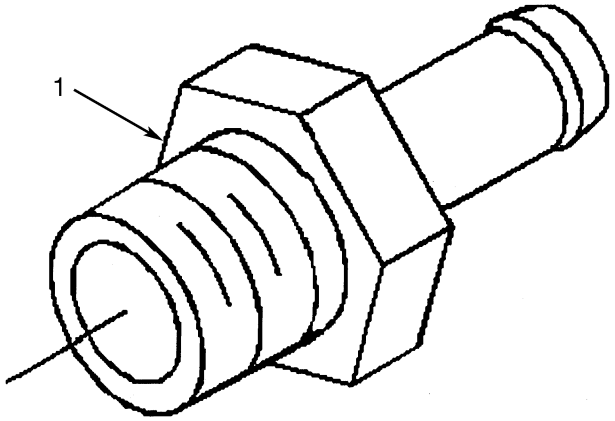

ITEM	PART NO.	DESCRIPTION	QTY
	b 2085496	Engine Assy-Diesel (2300 RPM, Dry Brakes)	1
	d 2107121	Engine Assy Diesel (2300 RPM, Dry Brakes)	1
	a 2085494	Engine Assy-Diesel (2300 RPM, Wet Brakes)	1
	c 2107118	Engine Assy (2300 RPM, Wet Brakes)	1
1	1517250	Fitting	1

FOOTNOTES:

a → S/N G019E02152F
b → S/N G019E02271F
c S/N G019E02153F →
d S/N G019E02272F →

©2015 HYSTER COMPANY

ENGINE MOUNT (FIGURE 2-27)

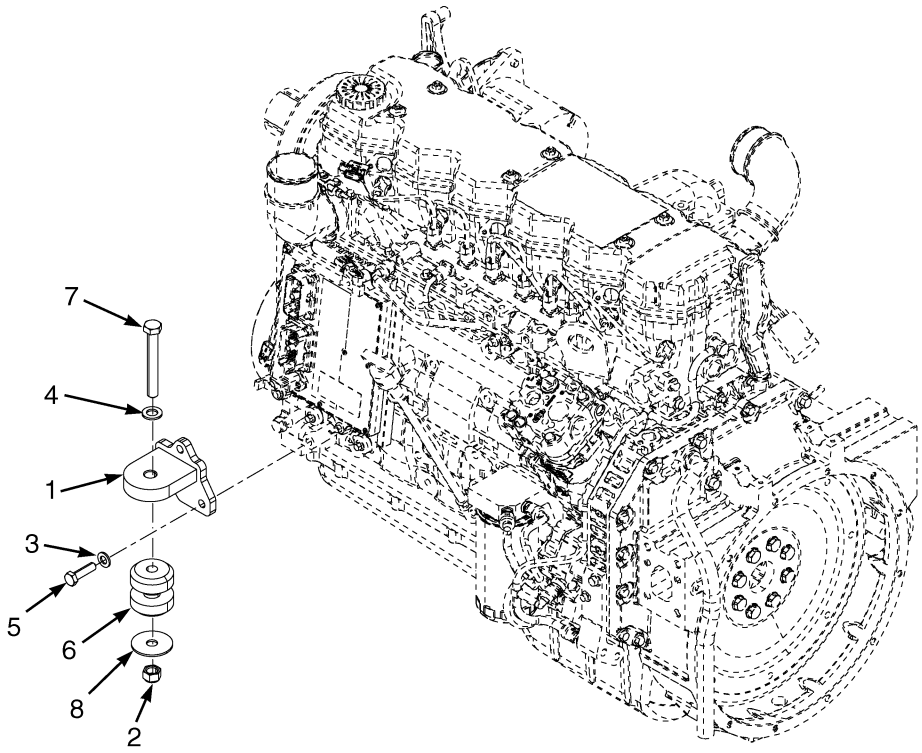

ITEM	PART NO.	DESCRIPTION	QTY
1	1619570	Mount (RH)	1
1	1619572	Mount (LH)	1
2	302404	Locknut	2
3	320161	Washer	6
4	320165	Washer	2
5	296044	Capscrew	6
6	1393708	Isolator	2
7	292573	Capscrew	2
8	1452404	Washer	2

©2015 HYSTER COMPANY

ENGINE OIL COOLER (FIGURE 2-28)

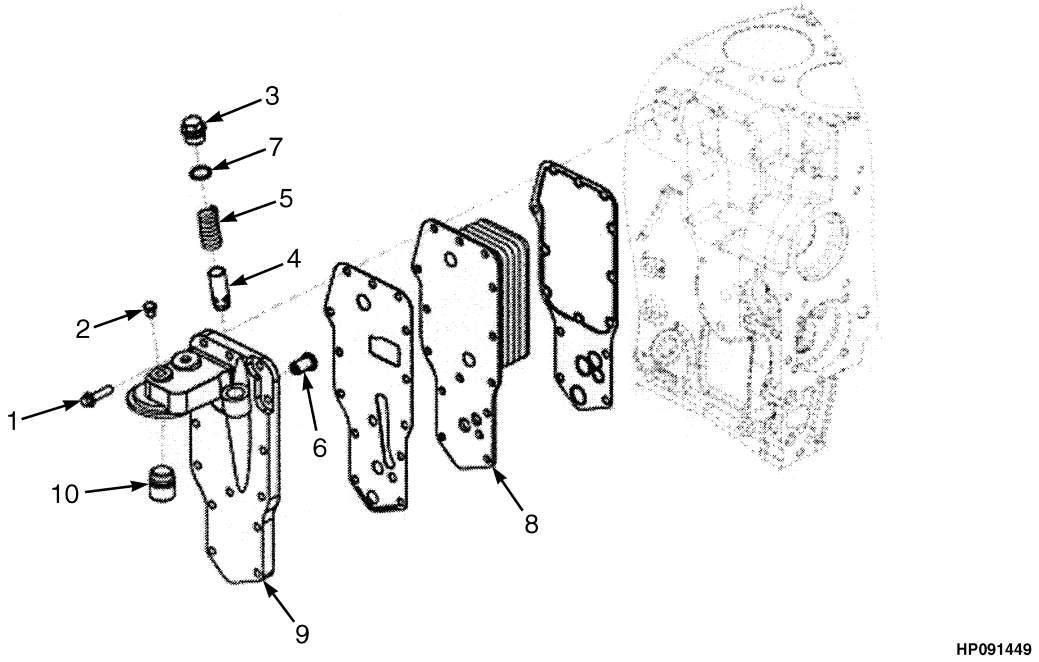

ITEM	PART NO.	DESCRIPTION	QTY
	a 2085494	Engine Assy-Diesel (2300 RPM, Wet Brakes)	1
	c 2107118	Engine Assy (2300 RPM, Wet Brakes)	1
	b 2085496	Engine Assy-Diesel (2300 RPM, Dry Brakes)	1
	d 2107121	Engine Assy Diesel (2300 RPM, Dry Brakes)	1
1	1512111	Capscrew	15
2	1512448	Fitting	2
3	1637850	Plug	1
4	1637851	Plunger	1
5	1512112	Spring , Pressure Regulator	1
6	1513772	Relief Valve (Pressure)	1
7	1512118	O-Ring	1
8	1635314	Oil Cooler Core	1
9	1637852	Filter Head Assembly	1
9	1521897	Filter Head	1
10	. . . . .	Adapter	1

FOOTNOTES:

a → S/N G019E02152F
b → S/N G019E02271F
c S/N G019E02153F →
d S/N G019E02272F →

©2015 HYSTER COMPANY

ETR MODULE WIRING (FIGURE 2-29)

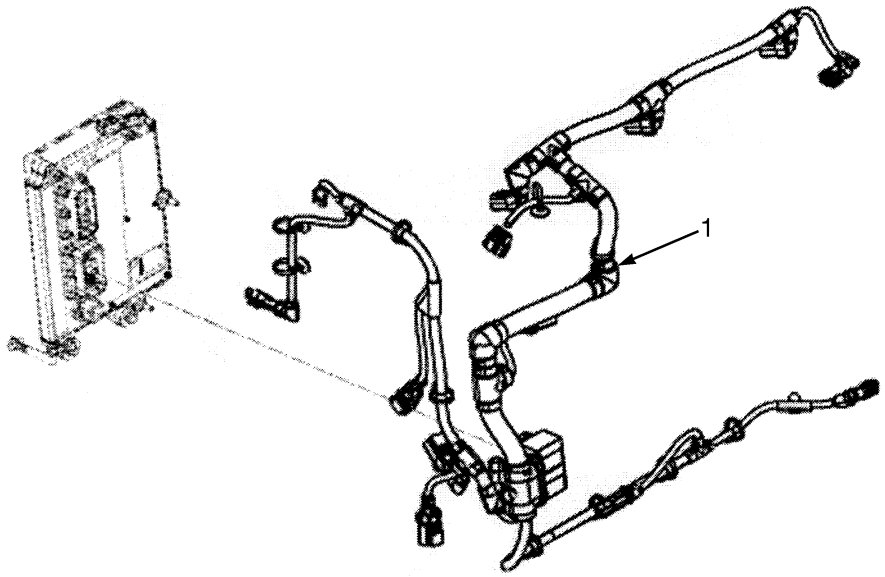

ITEM	PART NO.	DESCRIPTION	QTY
	d 2085496	Engine Assy-Diesel (2300 RPM, Dry Brakes)	1
	h 2107121	Engine Assy Diesel (2300 RPM, Dry Brakes)	1
	b 2085494	Engine Assy-Diesel (2300 RPM, Wet Brakes)	1
	f 2107118	Engine Assy (2300 RPM, Wet Brakes)	1
1	**bd** 1661072	Wire Harness	1
1	**fh** 1702191	Wire Harness	1
	a 1513712	Nut	1

FOOTNOTES:

a Not Illustrated
b → S/N G019E02152F
c → S/N G019E02152F (Wet Brakes)
d → S/N G019E02271F
e → S/N G019E02271F (Dry Brakes)
f S/N G019E02153F →
g S/N G019E02153F → (Wet Brakes)
h S/N G019E02272F →
i S/N G019E02272F → (Dry Brakes)

©2015 HYSTER COMPANY

EXHAUST MANIFOLD (FIGURE 2-30)

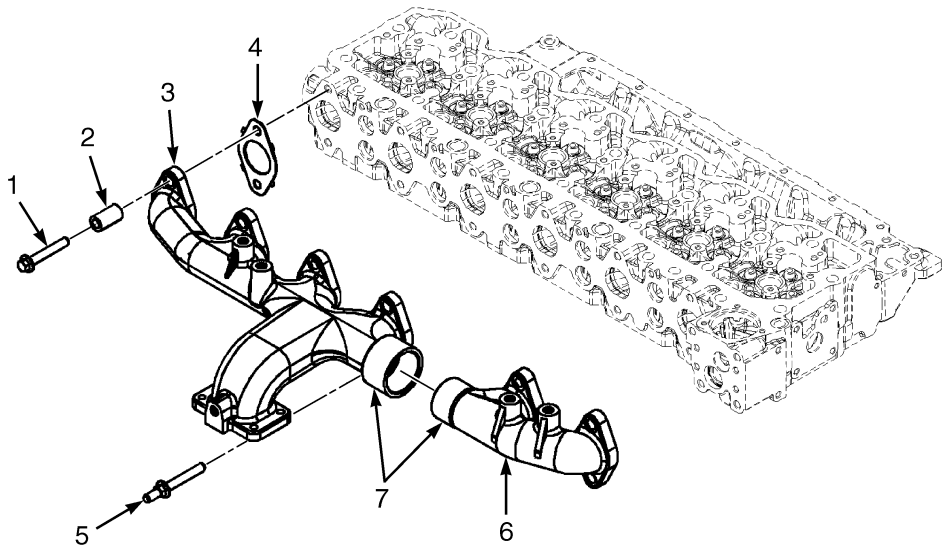

HP091423

©2015 HYSTER COMPANY

EXHAUST MANIFOLD

ITEM	PART NO.	DESCRIPTION	QTY
	c 2085496	Engine Assy-Diesel (2300 RPM, Dry Brakes)	1
	g 2107121	Engine Assy Diesel (2300 RPM, Dry Brakes)	1
	a 2085494	Engine Assy-Diesel (2300 RPM, Wet Brakes)	1
	e 2107118	Engine Assy (2300 RPM, Wet Brakes)	1
1	1517257	Screw	11
2	1517256	Spacer	12
3	**ac** 1635373	Exhaust Manifold	1
4	**ac** 1521952	Gasket	6
4	**eg** 1702186	Gasket	6
5	1565045	Capscrew	1
6	**ac** 1635374	Exhaust Manifold	1
7	**eg** 1702188	Exhaust Manifold	1

FOOTNOTES:

a → S/N G019E02152F
b → S/N G019E02152F (Wet Brakes)
c → S/N G019E02271F
d → S/N G019E02271F (Dry Brakes)
e S/N G019E02153F →
f S/N G019E02153F → (Wet Brakes)
g S/N G019E02272F →
h S/N G019E02272F → (Dry Brakes)

©2015 HYSTER COMPANY

FAN DRIVE AND MOUNTING (FIGURE 2-31)

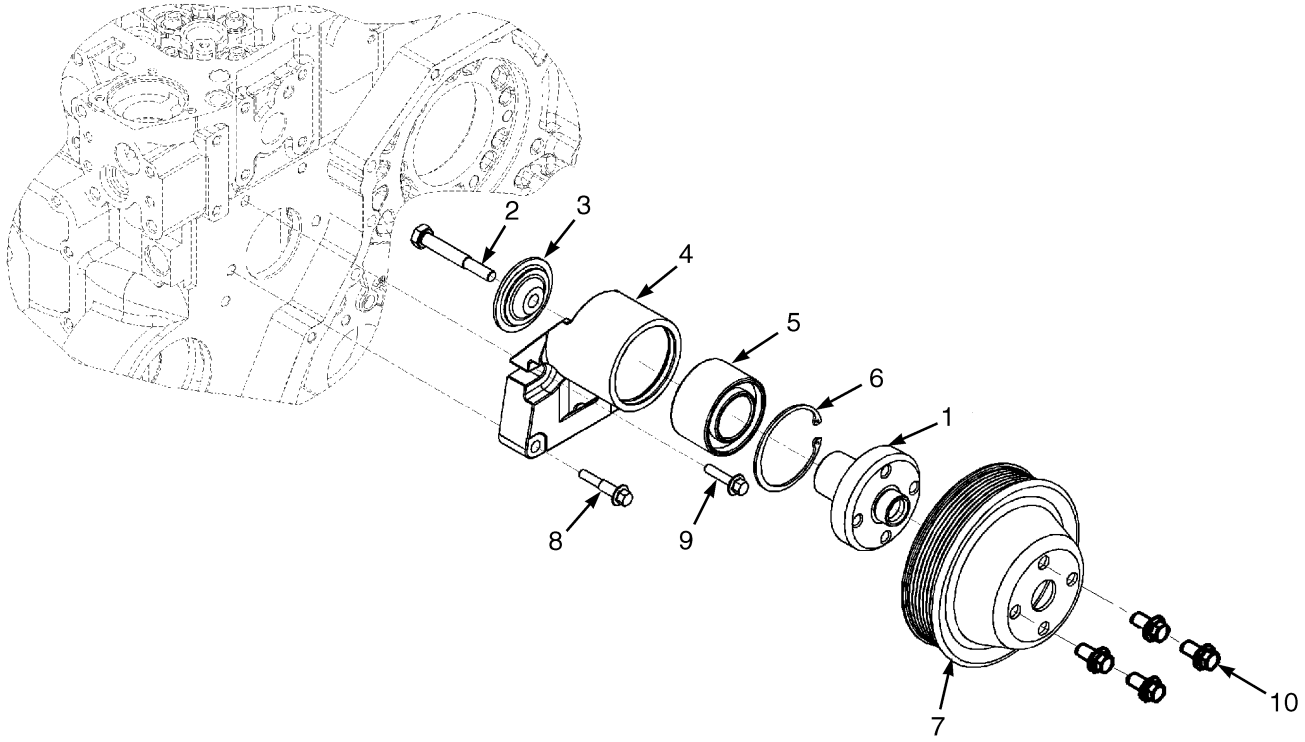

HP091335

ITEM	PART NO.	DESCRIPTION	QTY
	d 2085496	Engine Assy-Diesel (2300 RPM, Dry Brakes)	1
	h 2107121	Engine Assy Diesel (2300 RPM, Dry Brakes)	1
	b 2085494	Engine Assy-Diesel (2300 RPM, Wet Brakes)	1
	f 2107118	Engine Assy (2300 RPM, Wet Brakes)	1
	1512424	Fan Mount Support Assembly	1
	4045106	Support Assembly, Fan Mount (Alternate Part)	1
1	~~1512024~~		
	4045108	Hub (With Support Assy 1512424)	1
1	~~1512024~~		
	4045108	Hub (With Support Assy 4045106)	1
2	1512027	Capscrew	1
3	1512025	Hub Retainer	1
4	. . . . .	Support	1
5	1512015	Ball Bearing (With Support Assy 1512424)	1
5	4045107	Bearing (With Support Assy 4045106)	1
6	1512026	Retaining Ring	2
7	**bd** 1635258	Fan Pulley	1
7	**fh** 4009311	Fan Pulley (Alternate Part)	1
8	1512029	Screw	2
9	1635220	Capscrew	2
10	1512328	Capscrew	4
	a 1512287	Spacer (Fan Pilot) (50.8 mm)	1

©2015 HYSTER COMPANY

FOOTNOTES:

a Not Illustrated
b → S/N G019E02152F
c → S/N G019E02152F (Wet Brakes)
d → S/N G019E02271F
e → S/N G019E02271F (Dry Brakes)
f S/N G019E02153F →
g S/N G019E02153F → (Wet Brakes)
h S/N G019E02272F →
i S/N G019E02272F → (Dry Brakes)

©2015 HYSTER COMPANY

FLYWHEEL AND MOUNTING (FIGURE 2-32)

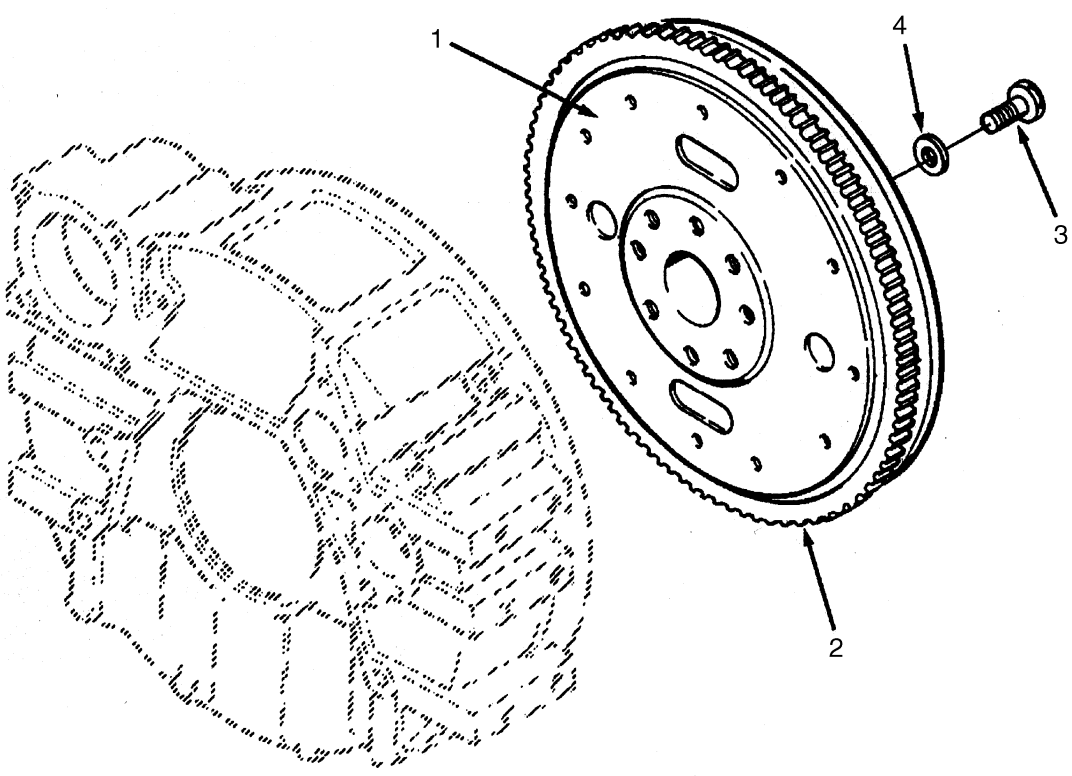

HP090879

ITEM	PART NO.	DESCRIPTION	QTY
	c 2085496	Engine Assy-Diesel (2300 RPM, Dry Brakes)	1
	e 2107121	Engine Assy Diesel (2300 RPM, Dry Brakes)	1
	b 2085494	Engine Assy-Diesel (2300 RPM, Wet Brakes)	1
	d 2107118	Engine Assy (2300 RPM, Wet Brakes)	1
1	1598354	Flywheel Assembly	1
2	1512445	Ring Gear	1
3	1512106	Capscrew	8
4	1512107	Washer	8
	a 1644112	Capscrew (For Mounting)	8

FOOTNOTES:

a Not Illustrated
b → S/N G019E02152F
c → S/N G019E02271F
d S/N G019E02153F →
e S/N G019E02272F →

©2015 HYSTER COMPANY

FLYWHEEL HOUSING (FIGURE 2-33)

(→ S/N G019E02152F (WET BRAKES)) (→ S/N G019E02271F (DRY BRAKES))

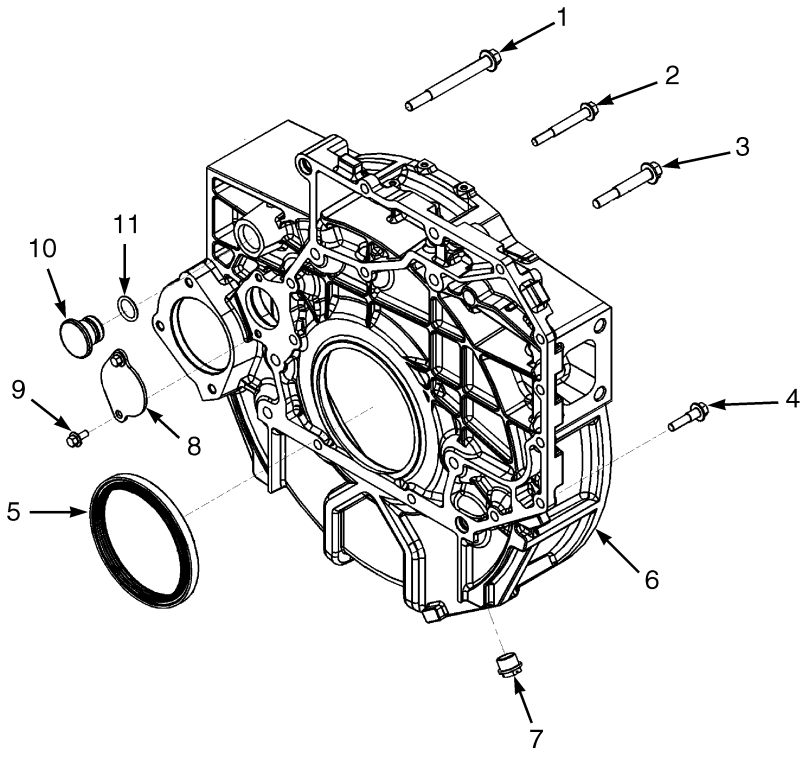

HP091338

ITEM	PART NO.	DESCRIPTION	QTY
	2085496	Engine Assy-Diesel (2300 RPM, Dry Brakes)	1
	2085494	Engine Assy-Diesel (2300 RPM, Wet Brakes)	1
1	1635228	Capscrew	2
2	1521938	Capscrew	2
3	1511981	Capscrew	6
4	1635255	Capscrew	10
5	~~1696745~~		
	4033356	Oil Seal	1
6	1635452	Flywheel Housing Assembly	1
6	1635302	Flywheel Housing	1
7	1512046	Plug	1
8	1635256	Plate	1
9	1511970	Capscrew	2
10	1512047	Fitting	1
11	1512048	O-Ring	1
	a 1603891	Tool (Seal Installation)	1
	~~1564992~~		
	1512049	Seal Kit (Rear Crank)	AR

FOOTNOTES:

a Not Illustrated

©2015 HYSTER COMPANY

FLYWHEEL HOUSING (FIGURE 2-34)

(S/N G019E02153F → (WET BRAKES)) (S/N G019E02272F → (DRY BRAKES)) (→ S/N 73037048 (ENGINE))

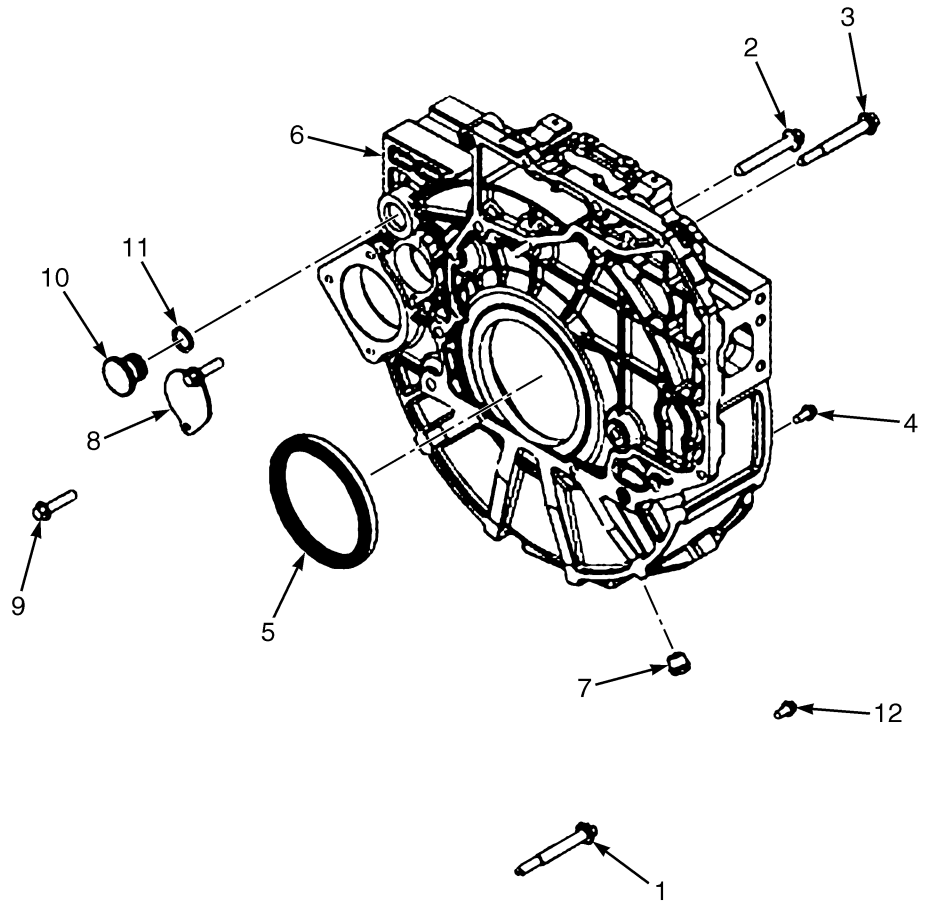

HP091229

©2015 HYSTER COMPANY

FLYWHEEL HOUSING

(S/N G019E02153F → (WET BRAKES)) (S/N G019E02272F → (DRY BRAKES)) (→ S/N 73037048 (ENGINE))

ITEM	PART NO.	DESCRIPTION	QTY
	2107121	Engine Assy Diesel (2300 RPM, Dry Brakes)	1
	2107118	Engine Assy (2300 RPM, Wet Brakes)	1
1	1635228	Capscrew	2
2	1521938	Capscrew	2
3	1511981	Capscrew	6
4	1635255	Capscrew	10
5	1696691	Kit-Seal (Crankshaft)	AR
6	1635452	Flywheel Housing Assembly	1
6	1661089	Flywheel Housing	1
7	1512046	Plug	1
8	1635256	Plate	1
9	1511970	Capscrew	2
10	1512047	Fitting	1
11	1512048	O-Ring	1
12	1513749	Capscrew	2

©2015 HYSTER COMPANY

FLYWHEEL HOUSING (FIGURE 2-35)

(S/N G019E02153F → (WET BRAKES)) (S/N G019E02272F → (DRY BRAKES)) (S/N 73037049 → (ENGINE))

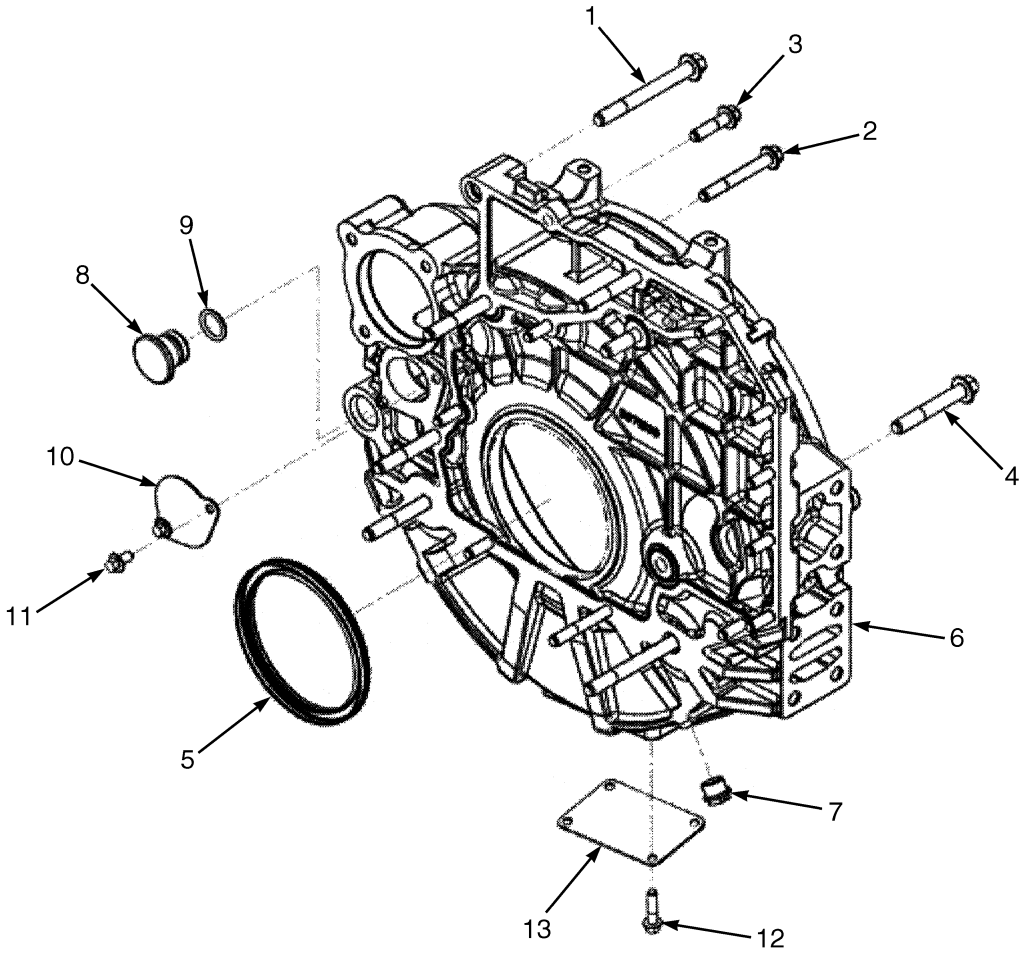

BP090445

©2015 HYSTER COMPANY

FLYWHEEL HOUSING

(S/N G019E02153F → (WET BRAKES)) (S/N G019E02272F → (DRY BRAKES)) (S/N 73037049 → (ENGINE))

ITEM	PART NO.	DESCRIPTION	QTY
	2107121	Engine Assy Diesel (2300 RPM, Dry Brakes)	1
	2107118	Engine Assy (2300 RPM, Wet Brakes)	1
1	1635228	Capscrew	2
2	1512316	Screw	2
3	1635255	Capscrew	9
4	1511981	Capscrew	6
5	~~1696745~~		
	4033356	Oil Seal	1
6	4022317	Flywheel Housing	1
7	1512046	Plug	1
8	1512047	Fitting	1
9	1512048	O-Ring	1
10	1635256	Plate	1
11	1511970	Capscrew	2
12	4022317	Flywheel Housing	1
13	1512054	Cover Plate	1
14	1512433	Screw	4
	~~1564992~~		
	1512049	Seal Kit (Rear Crank) (Includes Seal Installation Tools)	AR

©2015 HYSTER COMPANY

FRONT GEAR COVER (FIGURE 2-36)

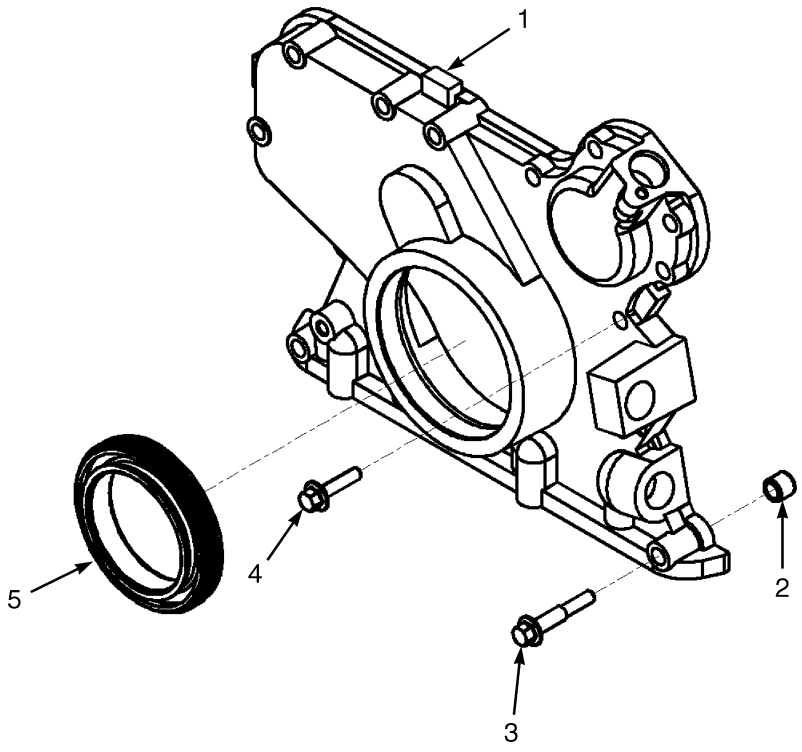

HP091342

ITEM	PART NO.	DESCRIPTION	QTY
	b 2085496	Engine Assy-Diesel (2300 RPM, Dry Brakes)	1
	d 2107121	Engine Assy Diesel (2300 RPM, Dry Brakes)	1
	a 2085494	Engine Assy-Diesel (2300 RPM, Wet Brakes)	1
	c 2107118	Engine Assy (2300 RPM, Wet Brakes)	1
1	1661070	Cover	1
2	1635266	Ring	2
3	1512111	Capscrew	6
4	1512423	Capscrew	7
5	1635350	Oil Seal	1

FOOTNOTES:

a → S/N G019E02152F
b → S/N G019E02271F
c S/N G019E02153F →
d S/N G019E02272F →

©2015 HYSTER COMPANY

LIFTING BRACKETS AND MOUNTING (FIGURE 2-37)

(→ S/N G019E02271F (DRY BRAKES)) (→ S/N G019E02152F (WET BRAKES))

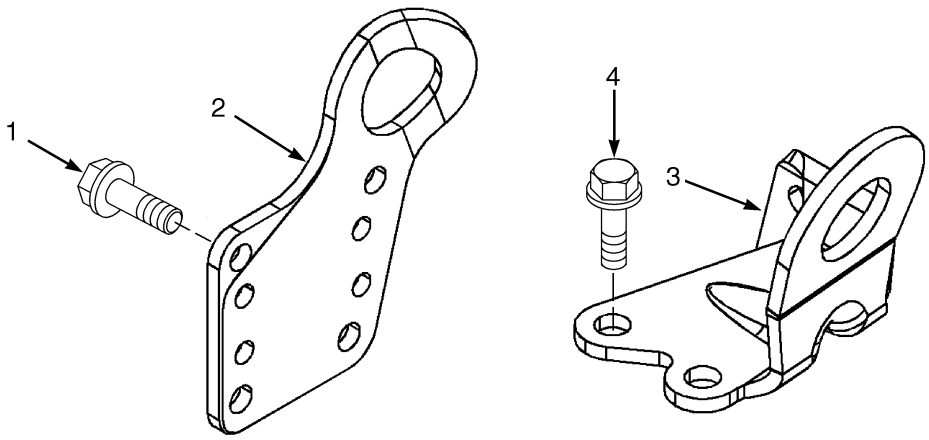

HP091347

ITEM	PART NO.	DESCRIPTION	QTY
	2085496	Engine Assy-Diesel (2300 RPM, Dry Brakes)	1
	2085494	Engine Assy-Diesel (2300 RPM, Wet Brakes)	1
1	1635229	Capscrew	4
2	1635357	Bracket	1
3	1635396	Bracket	1
4	1512418	Capscrew	2

©2015 HYSTER COMPANY

LIFTING BRACKETS AND MOUNTING (FIGURE 2-38)

(S/N G019E02272F → (DRY BRAKES)) (S/N G019E02153F → (WET BRAKES))

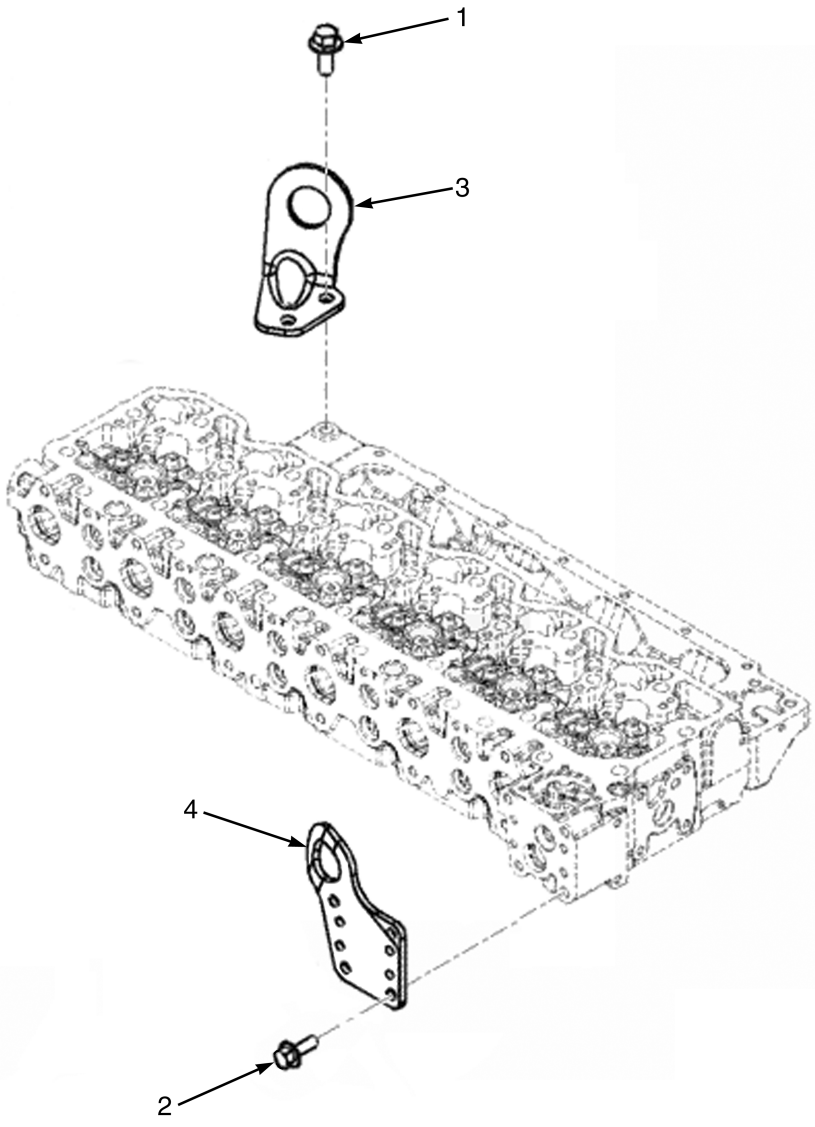

HP091250

©2015 HYSTER COMPANY

LIFTING BRACKETS AND MOUNTING

(S/N G019E02272F → (DRY BRAKES)) (S/N G019E02153F → (WET BRAKES))

ITEM	PART NO.	DESCRIPTION	QTY
	2107121	Engine Assy Diesel (2300 RPM, Dry Brakes)	1
	2107118	Engine Assy (2300 RPM, Wet Brakes)	1
1	1661145	Capscrew	2
2	1635229	Capscrew	4
3	1661444	Bracket	1
4	1635357	Bracket	1

©2015 HYSTER COMPANY

LUBRICATING OIL PUMP (FIGURE 2-39)

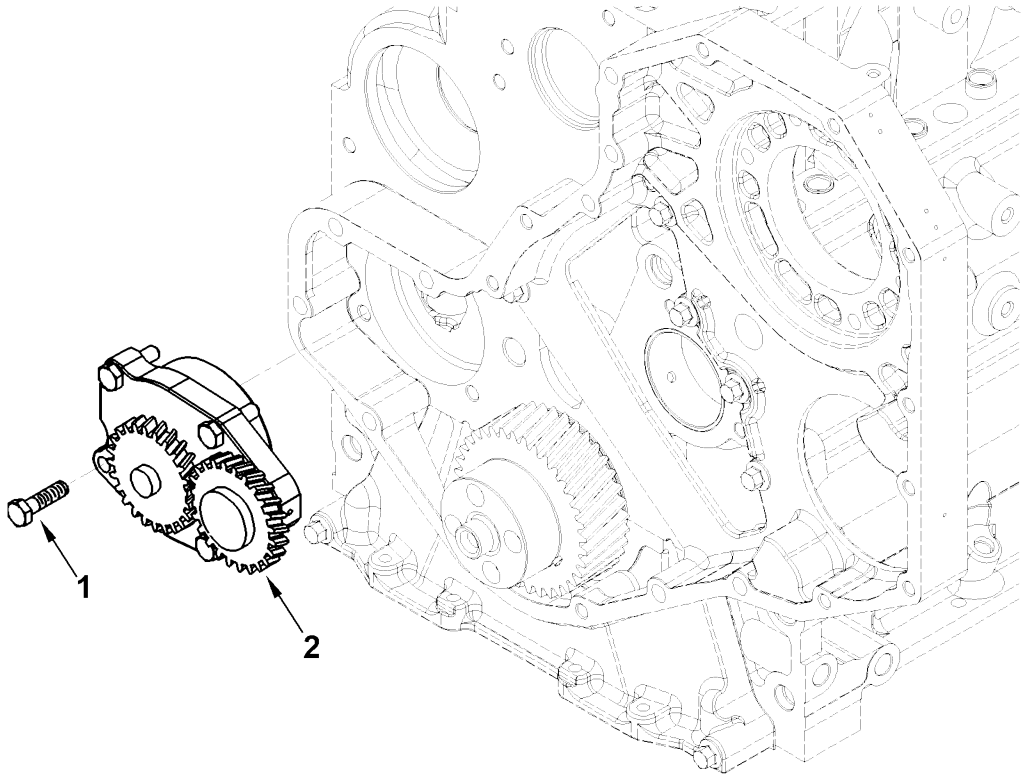

HP091122

ITEM	PART NO.	DESCRIPTION	QTY
	c 2085496	Engine Assy-Diesel (2300 RPM, Dry Brakes)	1
	g 2107121	Engine Assy Diesel (2300 RPM, Dry Brakes)	1
	a 2085494	Engine Assy-Diesel (2300 RPM, Wet Brakes)	1
	e 2107118	Engine Assy (2300 RPM, Wet Brakes)	1
1	1512456	Capscrew	4
2	**ac** 1661076	Oil Pump	1
2	**eg** ~~1635299~~		
	1702103	Oil Pump	1

FOOTNOTES:

a → S/N G019E02152F
b → S/N G019E02152F (Wet Brakes)
c → S/N G019E02271F
d → S/N G019E02271F (Dry Brakes)
e S/N G019E02153F →
f S/N G019E02153F → (Wet Brakes)
g S/N G019E02272F →
h S/N G019E02272F → (Dry Brakes)

©2015 HYSTER COMPANY

OIL FILLER (FIGURE 2-40)

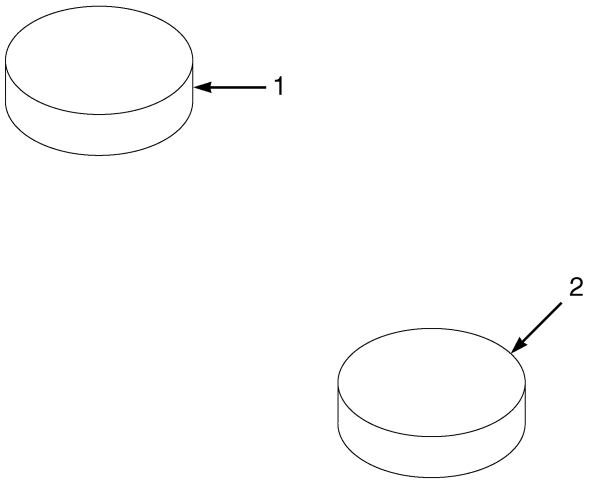

HP091442

ITEM	PART NO.	DESCRIPTION	QTY
	b 2085496	Engine Assy-Diesel (2300 RPM, Dry Brakes)	1
	d 2107121	Engine Assy Diesel (2300 RPM, Dry Brakes)	1
	a 2085494	Engine Assy-Diesel (2300 RPM, Wet Brakes)	1
	c 2107118	Engine Assy (2300 RPM, Wet Brakes)	1
1	1635224	Plug	1
2	1514339	Plug	1

FOOTNOTES:

a → S/N G019E02152F
b → S/N G019E02271F
c S/N G019E02153F →
d S/N G019E02272F →

©2015 HYSTER COMPANY

OIL FILTER (FIGURE 2-41)

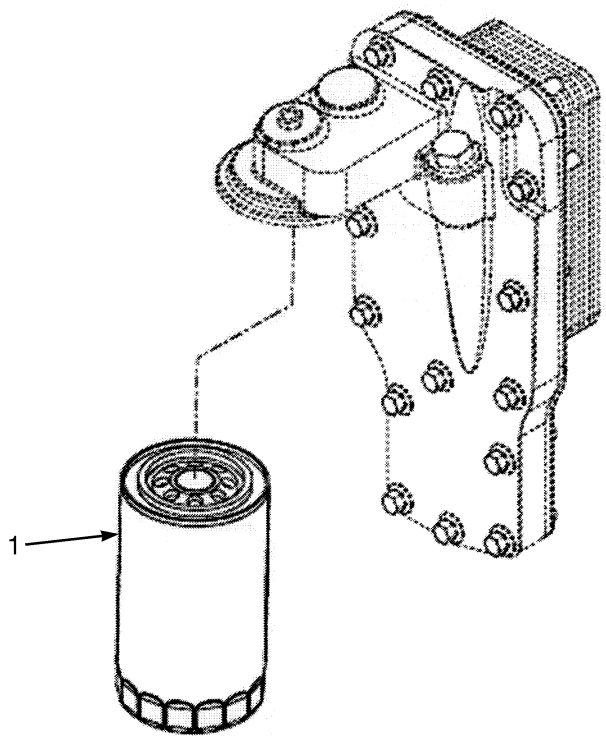

HP091450

ITEM	PART NO.	DESCRIPTION	QTY
	a 2085494	Engine Assy-Diesel (2300 RPM, Wet Brakes)	1
	c 2107118	Engine Assy (2300 RPM, Wet Brakes)	1
	b 2085496	Engine Assy-Diesel (2300 RPM, Dry Brakes)	1
	d 2107121	Engine Assy Diesel (2300 RPM, Dry Brakes)	1
1	1524551	Oil Filter	1

FOOTNOTES:

a → S/N G019E02152F
b → S/N G019E02271F
c S/N G019E02153F →
d S/N G019E02272F →

©2015 HYSTER COMPANY

OIL LEVEL GAUGE (FIGURE 2-42)

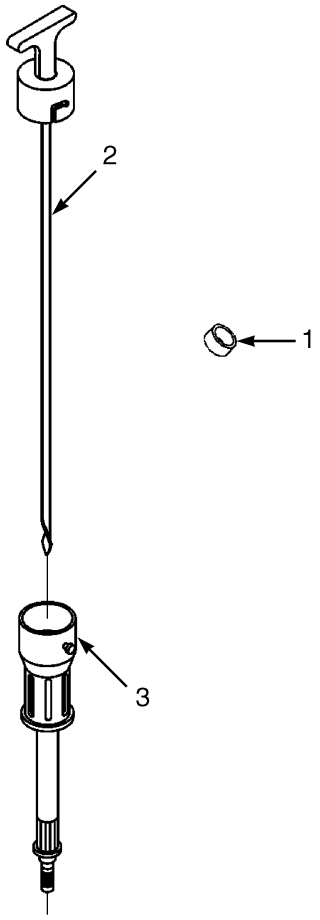

HP091351

ITEM	PART NO.	DESCRIPTION	QTY
	b 2085496	Engine Assy-Diesel (2300 RPM, Dry Brakes)	1
	d 2107121	Engine Assy Diesel (2300 RPM, Dry Brakes)	1
	a 2085494	Engine Assy-Diesel (2300 RPM, Wet Brakes)	1
	c 2107118	Engine Assy (2300 RPM, Wet Brakes)	1
1	1512130	Plug (Expansion)	4
2	1635319	Dipstick	1
3	1635309	Dipstick Tube	1

FOOTNOTES:

a → S/N G019E02152F
b → S/N G019E02271F
c S/N G019E02153F →
d S/N G019E02272F →

©2015 HYSTER COMPANY

OIL PAN (FIGURE 2-43)

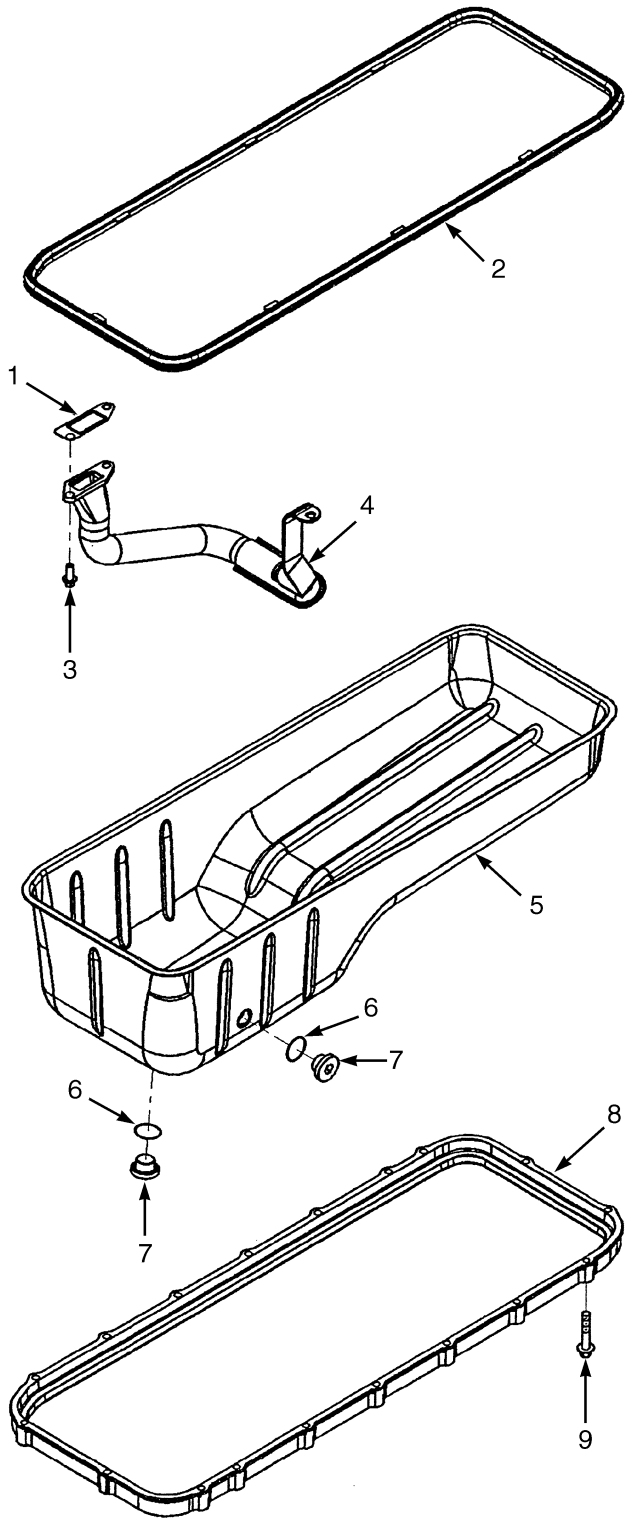

HP091356

©2015 HYSTER COMPANY

OIL PAN

ITEM	PART NO.	DESCRIPTION	QTY
	c 2085496	Engine Assy-Diesel (2300 RPM, Dry Brakes)	1
	g 2107121	Engine Assy Diesel (2300 RPM, Dry Brakes)	1
	a 2085494	Engine Assy-Diesel (2300 RPM, Wet Brakes)	1
	e 2107118	Engine Assy (2300 RPM, Wet Brakes)	1
1	1635375	Gasket	1
2	**ac** ~~1635372~~		
	1702106	Gasket	1
2	**eg** ~~1635372~~		
	1702106	Gasket	1
3	1635225	Capscrew	2
4	**ac** 1635336	Tube (Oil Suction)	1
4	**eg** 1702104	Tube (Oil Suction)	1
5	1635461	Oil Pan Assembly	1
6	1635234	Sealing Ring	2
7	1635233	Plug	2
8	1635371	Adapter	1
9	1512111	Capscrew	18

FOOTNOTES:

a → S/N G019E02152F
b → S/N G019E02152F (Wet Brakes)
c → S/N G019E02271F
d → S/N G019E02271F (Dry Brakes)
e S/N G019E02153F →
f S/N G019E02153F → (Wet Brakes)
g S/N G019E02272F →
h S/N G019E02272F → (Dry Brakes)

©2015 HYSTER COMPANY

REAR GEAR HOUSING (FIGURE 2-44)

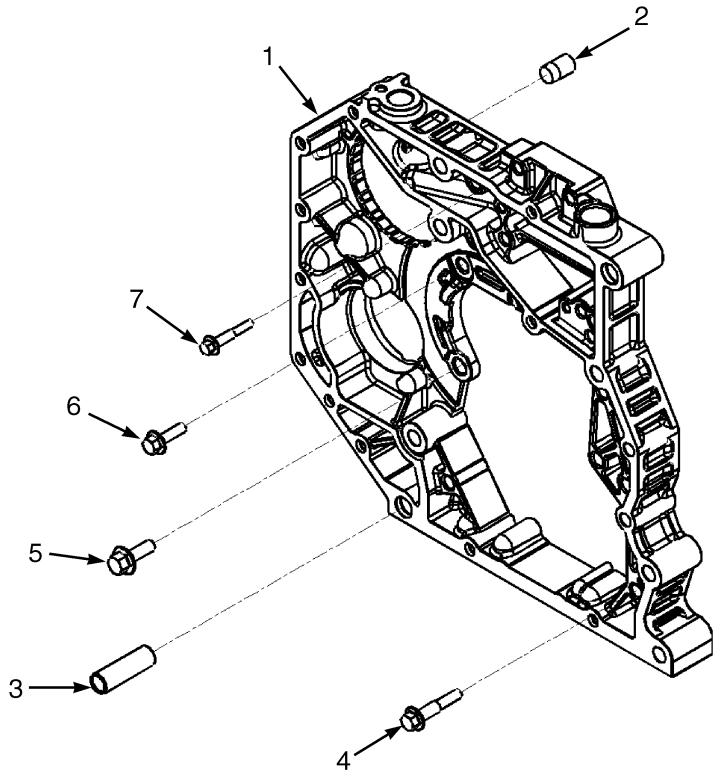

HP091327

ITEM	PART NO.	DESCRIPTION	QTY
	c 2085496	Engine Assy-Diesel (2300 RPM, Dry Brakes)	1
	e 2107121	Engine Assy Diesel (2300 RPM, Dry Brakes)	1
	b 2085494	Engine Assy-Diesel (2300 RPM, Wet Brakes)	1
	d 2107118	Engine Assy (2300 RPM, Wet Brakes)	1
1	~~4103820~~		
	4110429	Housing , Gear	1
2	. . . . .	Insert	2
3	1635270	Ring (Dowel)	2
4	1635260	Capscrew	3
5	1511953	Capscrew	1
6	1511977	Capscrew	2
7	1512111	Capscrew	4
	a 1635384	Clip	1

FOOTNOTES:

a Not Illustrated
b → S/N G019E02152F
c → S/N G019E02271F
d S/N G019E02153F →
e S/N G019E02272F →

©2015 HYSTER COMPANY

NOTES

©2015 HYSTER COMPANY

ROCKER LEVERS (FIGURE 2-45)

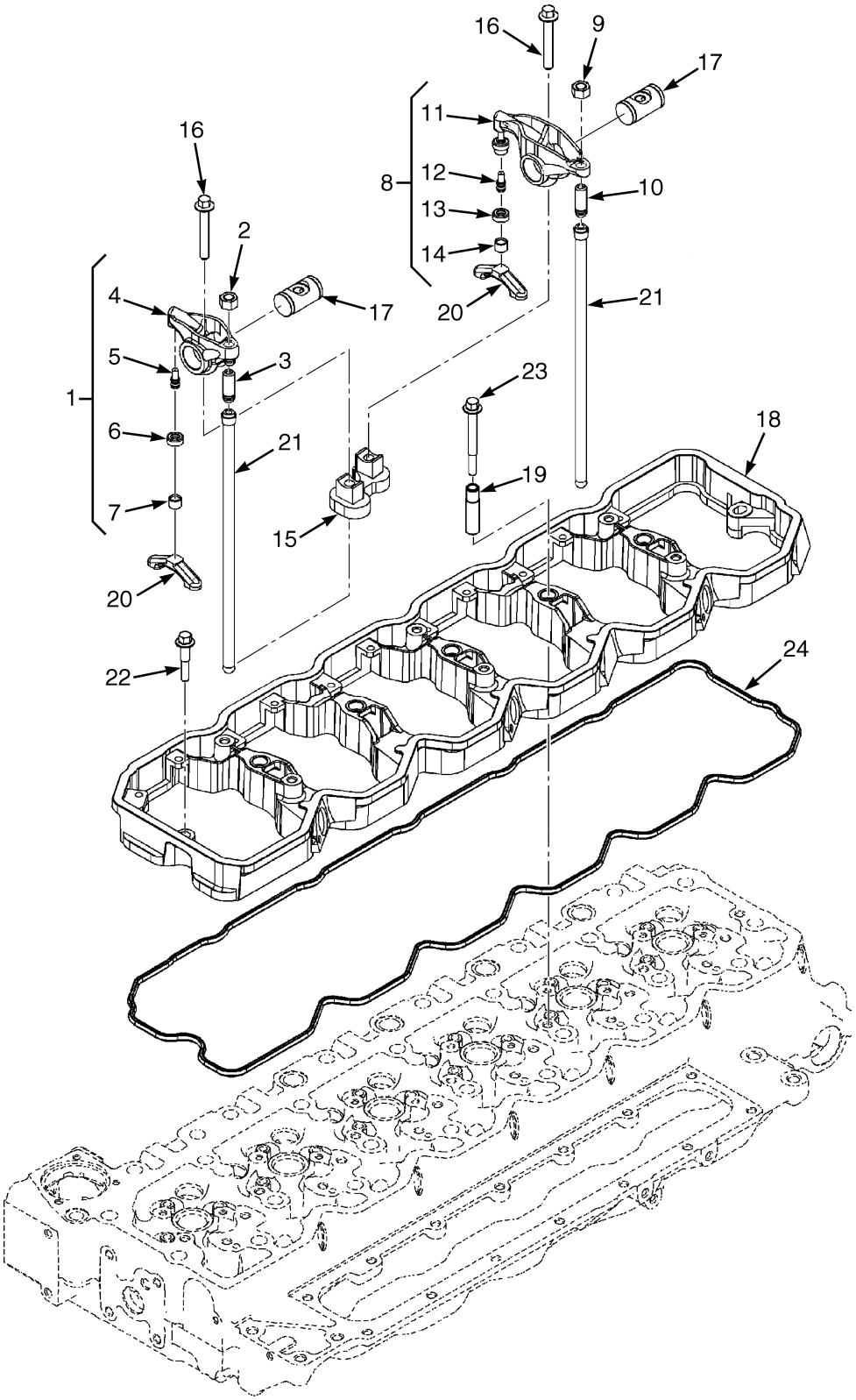

HP091355

©2015 HYSTER COMPANY

ROCKER LEVERS

ITEM	PART NO.	DESCRIPTION	QTY
	. . . . .	Lever Assembly	1
1	1521939	Rocker (Exhaust)	1
1	. . . . .	Rocker Lever	1
2	1517246	Nut	1
3	1553956	Screw	1
4	. . . . .	Lever	1
5	. . . . .	Ball	1
6	. . . . .	Retainer	1
7	. . . . .	Socket	1
8	1521937	Rocker (Intake)	1
8	. . . . .	Rocker Lever	1
9	1517246	Nut	1
10	1553956	Screw	1
11	. . . . .	Lever	1
12	. . . . .	Ball	1
13	. . . . .	Retainer	1
14	. . . . .	Socket	1
15	1584933	Support	2
15	1553952	Capscrew	2
15	1635388	Rocker Shaft	2
16	1553952	Capscrew	2
17	1635388	Rocker Shaft	2
18	4010868	Housing	1
19	. . . . .	Sleeve	5
20	1521944	Valve (Crosshead)	12
21	1521943	Push Rod	12
22	1513725	Capscrew	2
23	1635254	Capscrew	5
24	1635378	Gasket	1

©2015 HYSTER COMPANY

THERMOSTAT (FIGURE 2-46)

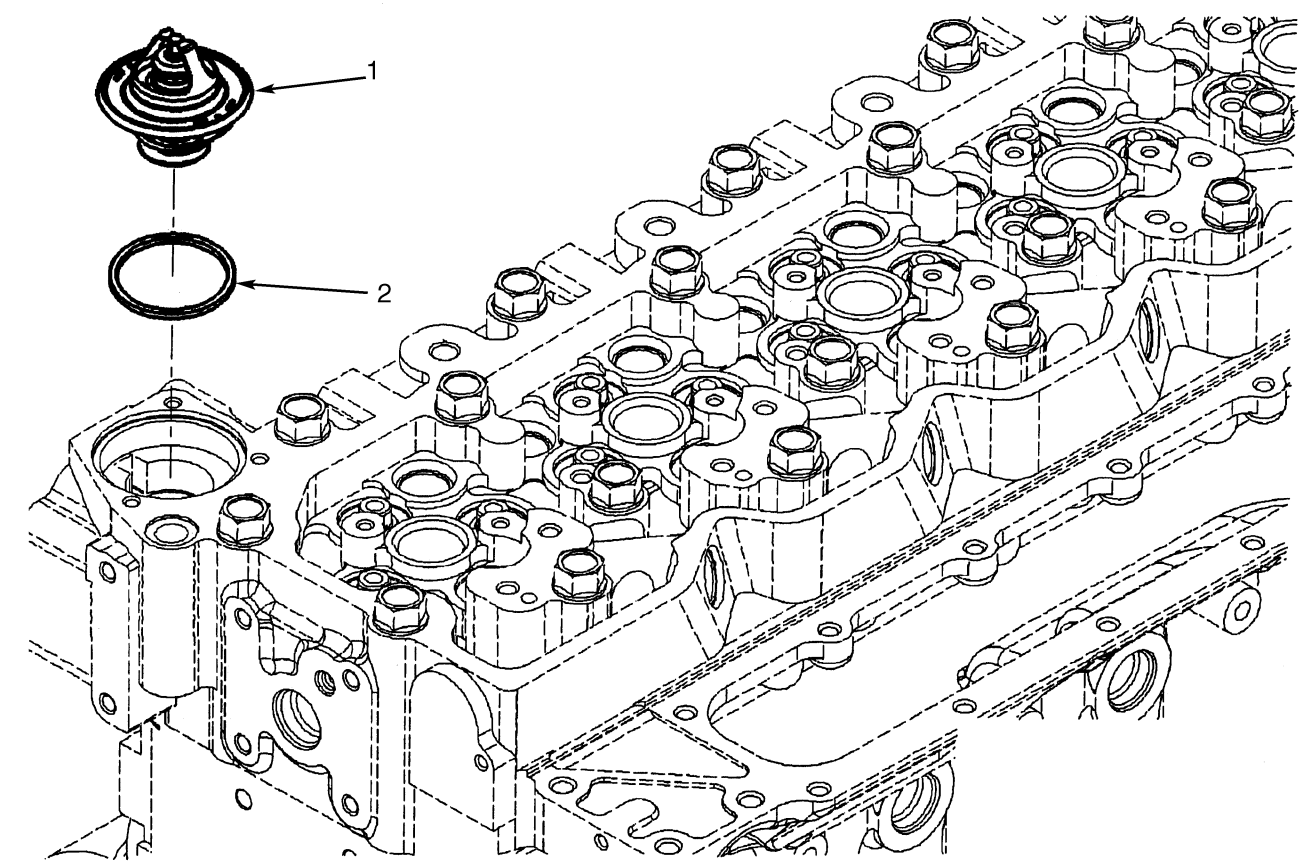

HP090893

ITEM	PART NO.	DESCRIPTION	QTY
	b 2085496	Engine Assy-Diesel (2300 RPM, Dry Brakes)	1
	d 2107121	Engine Assy Diesel (2300 RPM, Dry Brakes)	1
	a 2085494	Engine Assy-Diesel (2300 RPM, Wet Brakes)	1
	c 2107118	Engine Assy (2300 RPM, Wet Brakes)	1
1	1635397	Thermostat Assembly	1
2	1552716	Seal	1

FOOTNOTES:

a → S/N G019E02152F
b → S/N G019E02271F
c S/N G019E02153F →
d S/N G019E02272F →

©2015 HYSTER COMPANY

TORQUE CONVERTER COOLER PLUGS (FIGURE 2-47)

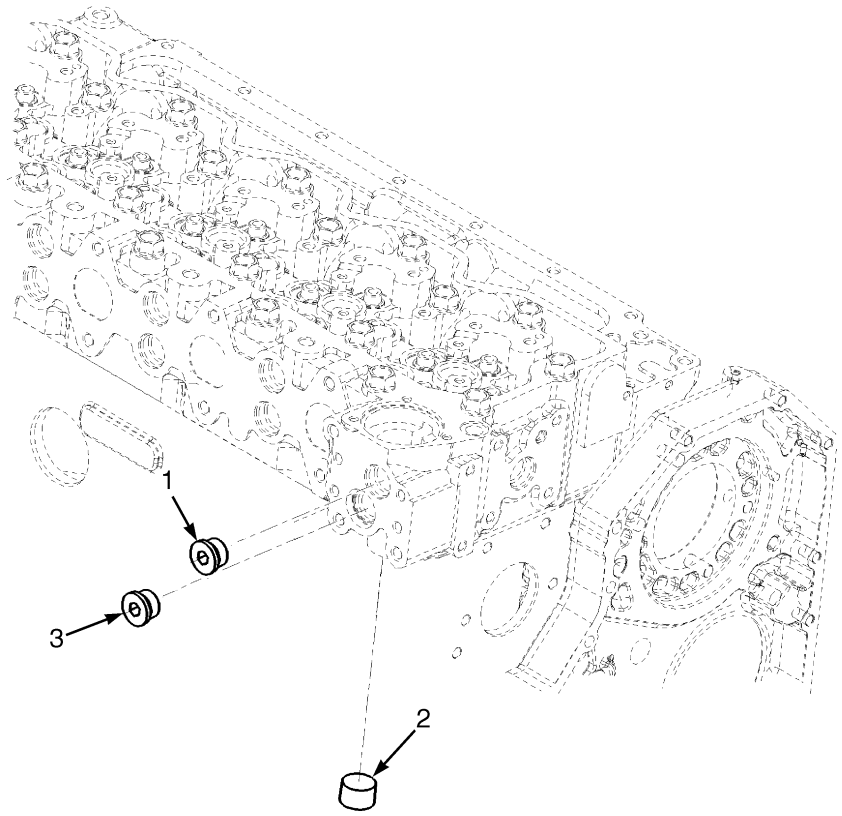

HP091359

ITEM	PART NO.	DESCRIPTION	QTY
	a 2085494	Engine Assy-Diesel (2300 RPM, Wet Brakes)	1
	c 2107118	Engine Assy (2300 RPM, Wet Brakes)	1
	b 2085496	Engine Assy-Diesel (2300 RPM, Dry Brakes)	1
	d 2107121	Engine Assy Diesel (2300 RPM, Dry Brakes)	1
1	1635330	Plug	1
2	1512292	Plug	1
3	1589584	Plug	1

FOOTNOTES:

a → S/N G019E02152F
b → S/N G019E02271F
c S/N G019E02153F →
d S/N G019E02272F →

©2015 HYSTER COMPANY

TURBOCHARGER (FIGURE 2-48)

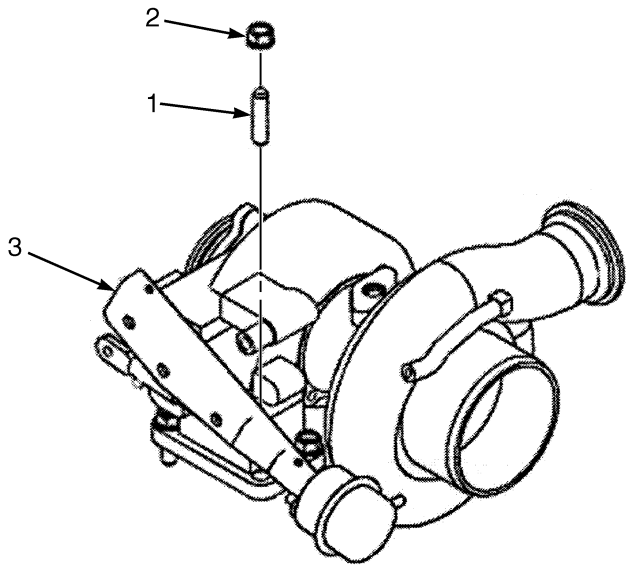

HP091455

ITEM	PART NO.	DESCRIPTION	QTY
	b 2085494	Engine Assy-Diesel (2300 RPM, Wet Brakes)	1
	d 2107118	Engine Assy (2300 RPM, Wet Brakes)	1
	c 2085496	Engine Assy-Diesel (2300 RPM, Dry Brakes)	1
	e 2107121	Engine Assy Diesel (2300 RPM, Dry Brakes)	1
1	1513337	Stud	4
2	1513338	Nut	4
3	1661394	Kit-Turbocharger	1
3	1517069	O-Ring	1
3	1513430	O-Ring	1
3	1654762	Gasket	1
3	. . . . .	Turbocharger	1
3	~~4036234~~		
	1661396	Gasket , Oil Drain	1
	a 4008980	Kit-Repair Turbocharger	1

FOOTNOTES:

a Not Illustrated
b → S/N G019E02152F
c → S/N G019E02271F
d S/N G019E02153F →
e S/N G019E02272F →

©2015 HYSTER COMPANY

TURBOCHARGER PLUMBING (FIGURE 2-49)

(→ S/N G019E02271F (DRY BRAKES)) (→ S/N G019E02152F (WET BRAKES))

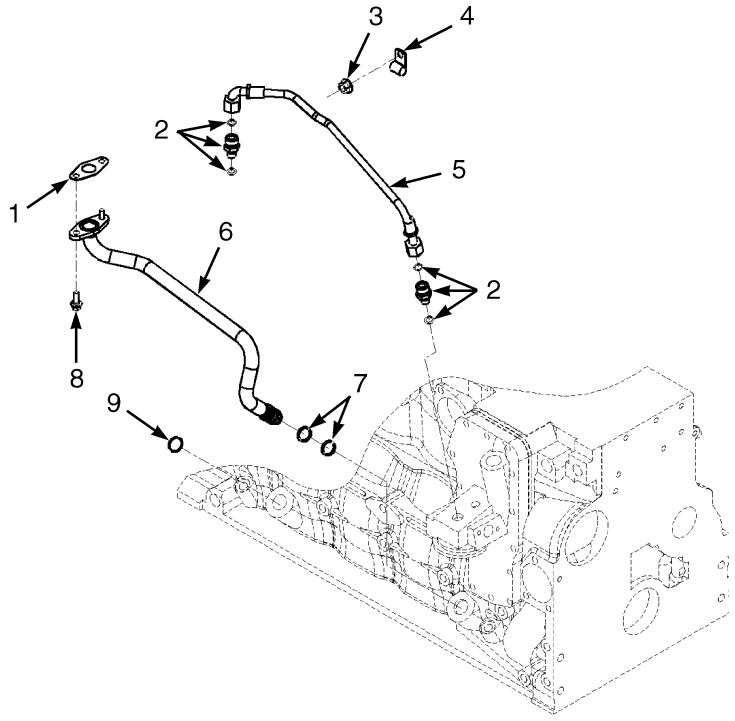

HP091360

ITEM	PART NO.	DESCRIPTION	QTY
	2085496	Engine Assy-Diesel (2300 RPM, Dry Brakes)	1
	2085494	Engine Assy-Diesel (2300 RPM, Wet Brakes)	1
1	1635354	Gasket	1
2	~~1521960~~		
	1702184	Connector Assembly	2
2	. . . . .	Connector	1
2	1517069	O-Ring	1
2	1513430	O-Ring	1
3	1635230	Nut	1
4	1588106	Clamp	1
5	1661071	Hose	1
6	1635235	Tube (Turbo Oil Drain)	1
7	1514571	Seal	2
8	1512004	Capscrew	2
9	1514339	Plug	1

©2015 HYSTER COMPANY

TURBOCHARGER PLUMBING (FIGURE 2-50)

(S/N G019E02272F → (DRY BRAKES)) (S/N G019E02153F → (WET BRAKES))

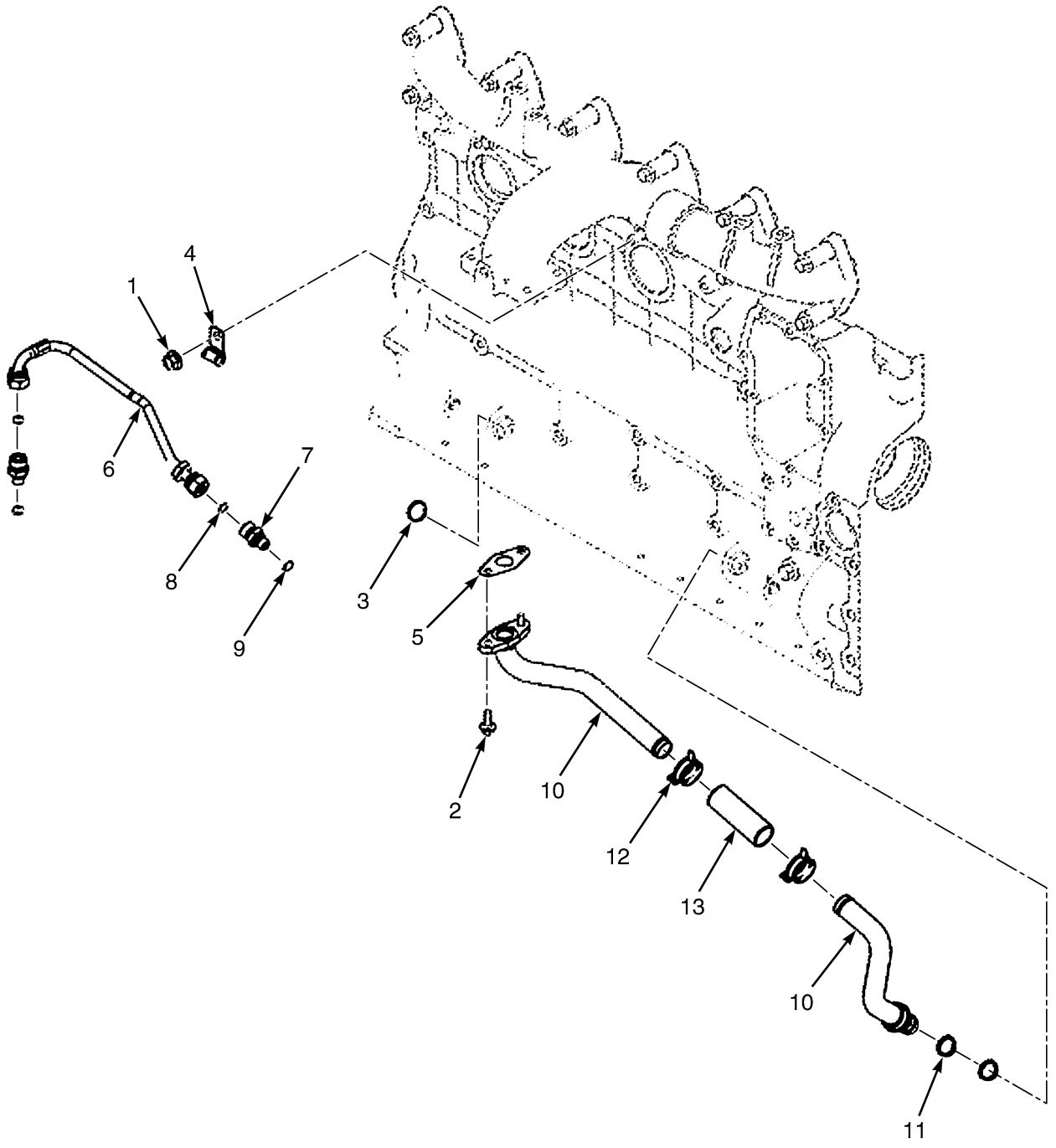

HP091251

©2015 HYSTER COMPANY

TURBOCHARGER PLUMBING

(S/N G019E02272F → (DRY BRAKES)) (S/N G019E02153F → (WET BRAKES))

ITEM	PART NO.	DESCRIPTION	QTY
	2107121	Engine Assy Diesel (2300 RPM, Dry Brakes)	1
	2107118	Engine Assy (2300 RPM, Wet Brakes)	1
1	1635230	Nut	1
2	1512004	Capscrew	2
3	1514339	Plug	1
4	1588106	Clamp	1
5	1635354	Gasket	1
6	1661071	Hose	1
7	~~1521960~~		
	1702184	Connector Assembly	2
7	. . . . .	Connector	1
8	1513430	O-Ring	1
9	1517069	O-Ring	1
10	1707005	Tube Assy	1
10	. . . . .	Connection	2
11	1514571	Seal	2
12	1513701	Hose Clamp	2
13	1517269	Hose	1

©2015 HYSTER COMPANY

VALVE COVER (FIGURE 2-51)

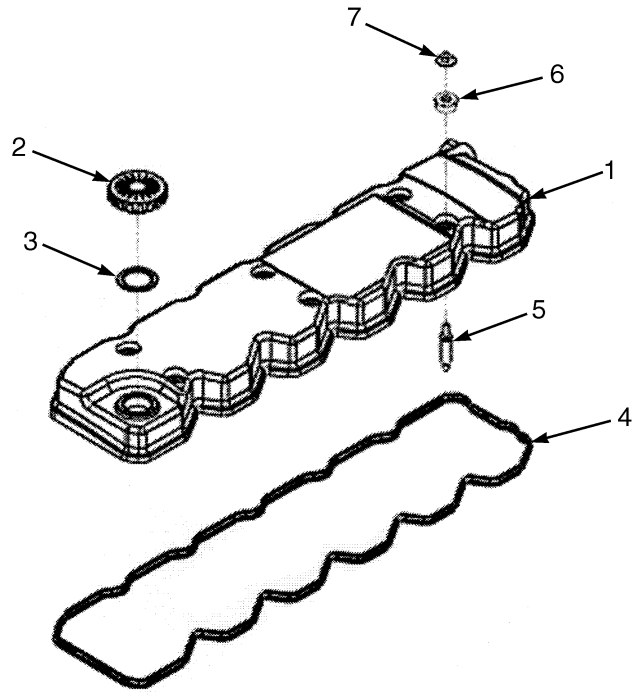

HP091453

ITEM	PART NO.	DESCRIPTION	QTY
	a 2085494	Engine Assy-Diesel (2300 RPM, Wet Brakes)	1
	c 2107118	Engine Assy (2300 RPM, Wet Brakes)	1
	b 2085496	Engine Assy-Diesel (2300 RPM, Dry Brakes)	1
	d 2107121	Engine Assy Diesel (2300 RPM, Dry Brakes)	1
1	~~1636527~~		
	1661437	Cover	1
2	4055702	Cap (Filler)	1
3	. . . . .	Gasket	1
4	~~1635377~~		
	4110641	Gasket	1
5	1635368	Stud	6
6	1635379	Isolator	6
7	1635356	Nut	6

FOOTNOTES:

a → S/N G019E02152F
b → S/N G019E02271F
c S/N G019E02153F →
d S/N G019E02272F →

©2015 HYSTER COMPANY

VALVE TAPPETS (FIGURE 2-52)

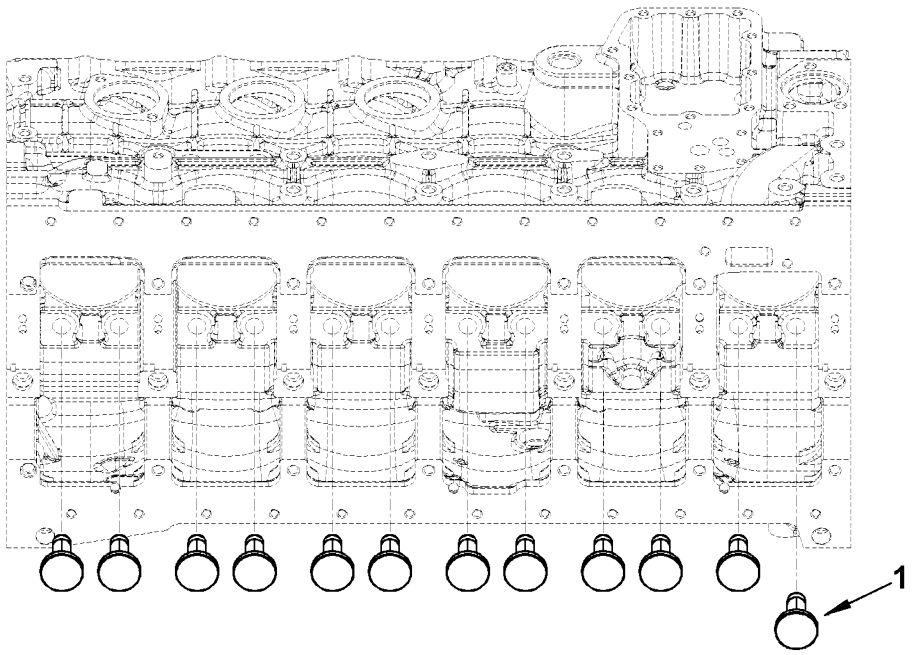

HP091133

ITEM	PART NO.	DESCRIPTION	QTY
	b 2085496	Engine Assy-Diesel (2300 RPM, Dry Brakes)	1
	d 2107121	Engine Assy Diesel (2300 RPM, Dry Brakes)	1
	a 2085494	Engine Assy-Diesel (2300 RPM, Wet Brakes)	1
	c 2107118	Engine Assy (2300 RPM, Wet Brakes)	1
1	1635265	Tappet	12

FOOTNOTES:

a → S/N G019E02152F
b → S/N G019E02271F
c S/N G019E02153F →
d S/N G019E02272F →

©2015 HYSTER COMPANY

VIBRATION DAMPER (FIGURE 2-53)

(→ S/N G019E02152F (WET BRAKES)) (→ S/N G019E02271F (DRY BRAKES))

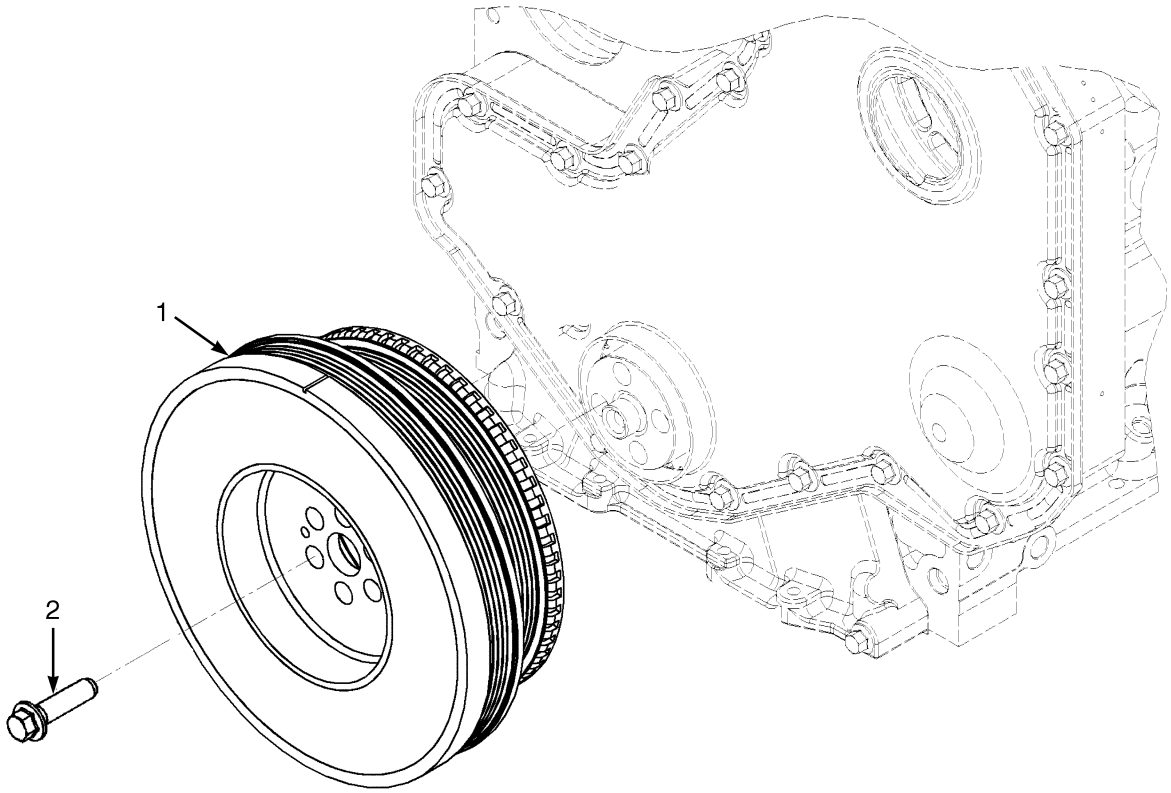

HP091332

ITEM	PART NO.	DESCRIPTION	QTY
	2085496	Engine Assy-Diesel (2300 RPM, Dry Brakes)	1
	2085494	Engine Assy-Diesel (2300 RPM, Wet Brakes)	1
1	1661047	Vibration Damper	1
2	1635366	Capscrew	6

©2015 HYSTER COMPANY

VIBRATION DAMPER (FIGURE 2-54)

(S/N G019E02153F → (WET BRAKES)) (S/N G019E02272F → (DRY BRAKES))

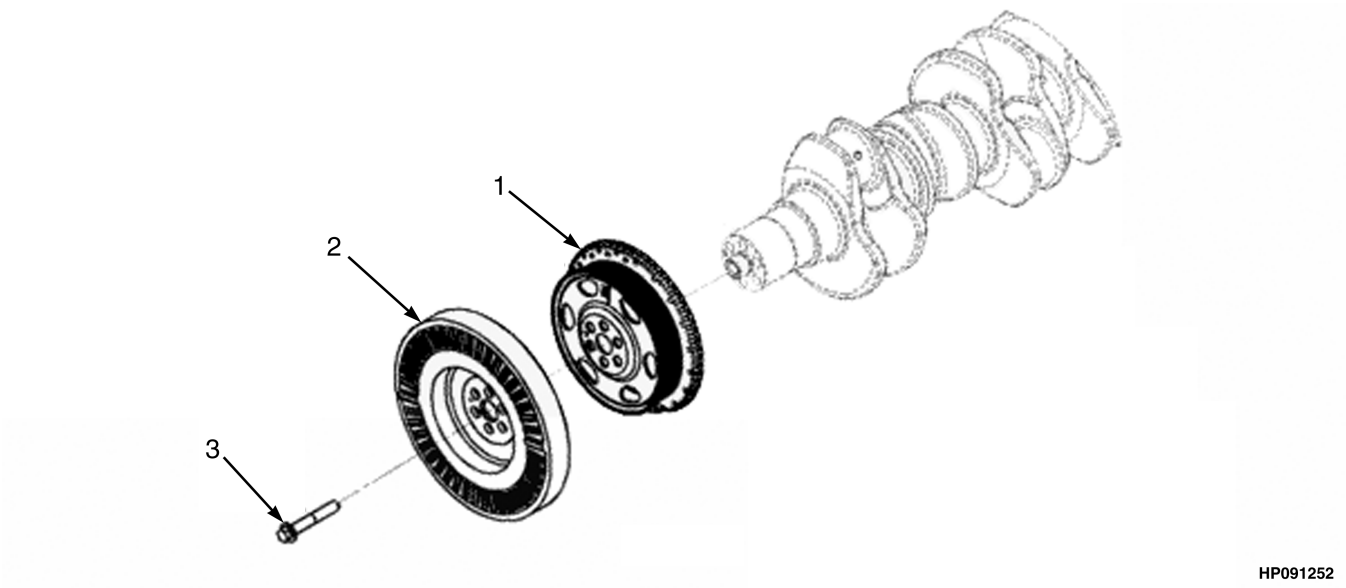

HP091252

ITEM	PART NO.	DESCRIPTION	QTY
	2107118	Engine Assy (2300 RPM, Wet Brakes)	1
	2107121	Engine Assy Diesel (2300 RPM, Dry Brakes)	1
1	1637800	Crankshaft Pulley	1
2	4006462	Vibration Damper	1
3	1637802	Screw	6

©2015 HYSTER COMPANY

WATER OUTLET CONNECTION (FIGURE 2-55)

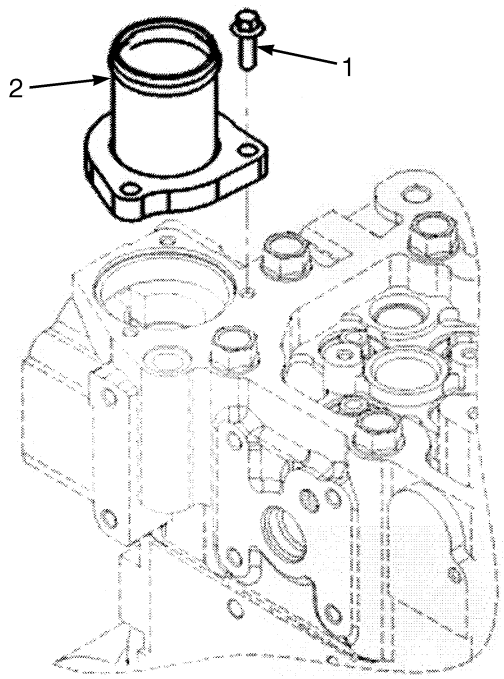

HP091454

ITEM	PART NO.	DESCRIPTION	QTY
	a 2085494	Engine Assy-Diesel (2300 RPM, Wet Brakes)	1
	c 2107118	Engine Assy (2300 RPM, Wet Brakes)	1
	b 2085496	Engine Assy-Diesel (2300 RPM, Dry Brakes)	1
	d 2107121	Engine Assy Diesel (2300 RPM, Dry Brakes)	1
1	1513792	Capscrew	3
2	1521973	Water Outlet	1

FOOTNOTES:

a → S/N G019E02152F
b → S/N G019E02271F
c S/N G019E02153F →
d S/N G019E02272F →

©2015 HYSTER COMPANY

WATER PUMP (FIGURE 2-56)

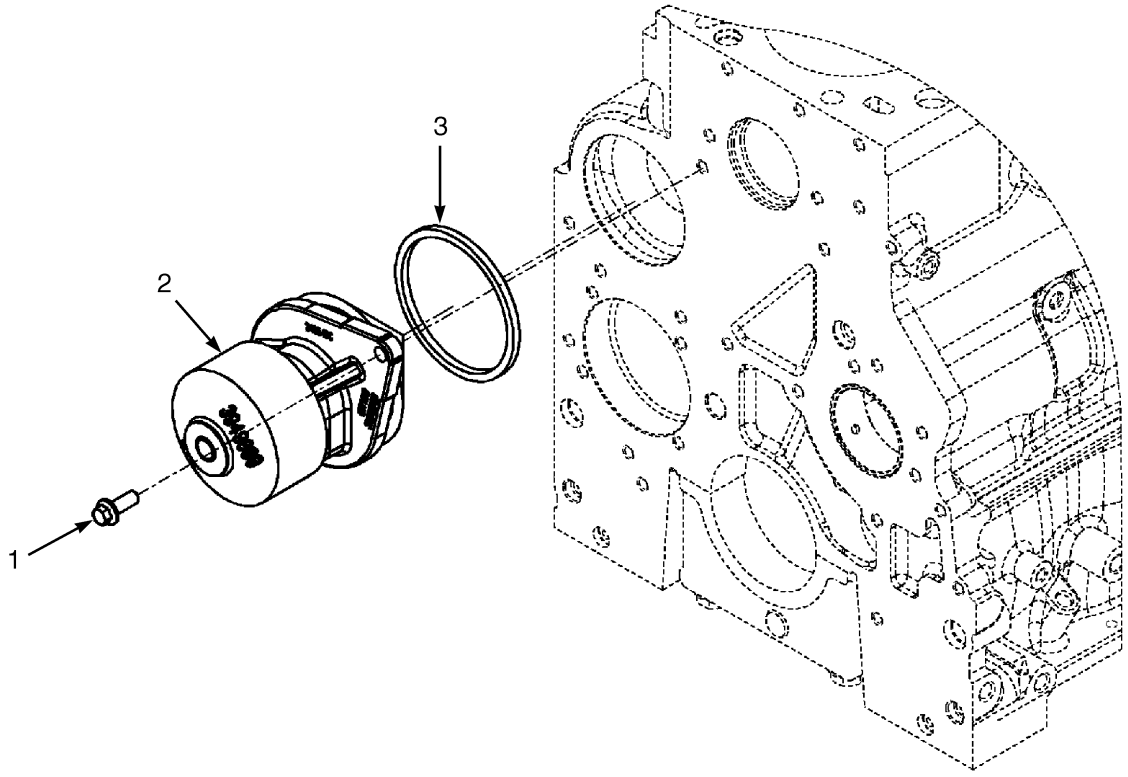

HP091363

ITEM	PART NO.	DESCRIPTION	QTY
	b 2085496	Engine Assy-Diesel (2300 RPM, Dry Brakes)	1
	d 2107121	Engine Assy Diesel (2300 RPM, Dry Brakes)	1
	a 2085494	Engine Assy-Diesel (2300 RPM, Wet Brakes)	1
	c 2107118	Engine Assy (2300 RPM, Wet Brakes)	1
1	~~1691854~~		
	1597807	Capscrew (Flange)	2
2	~~1703491~~		
	1635242	Water Pump	1
3	1512322	Sealing Ring	1

FOOTNOTES:

a → S/N G019E02152F
b → S/N G019E02271F
c S/N G019E02153F →
d S/N G019E02272F →

©2015 HYSTER COMPANY

WATER PUMP DRIVE (FIGURE 2-57)

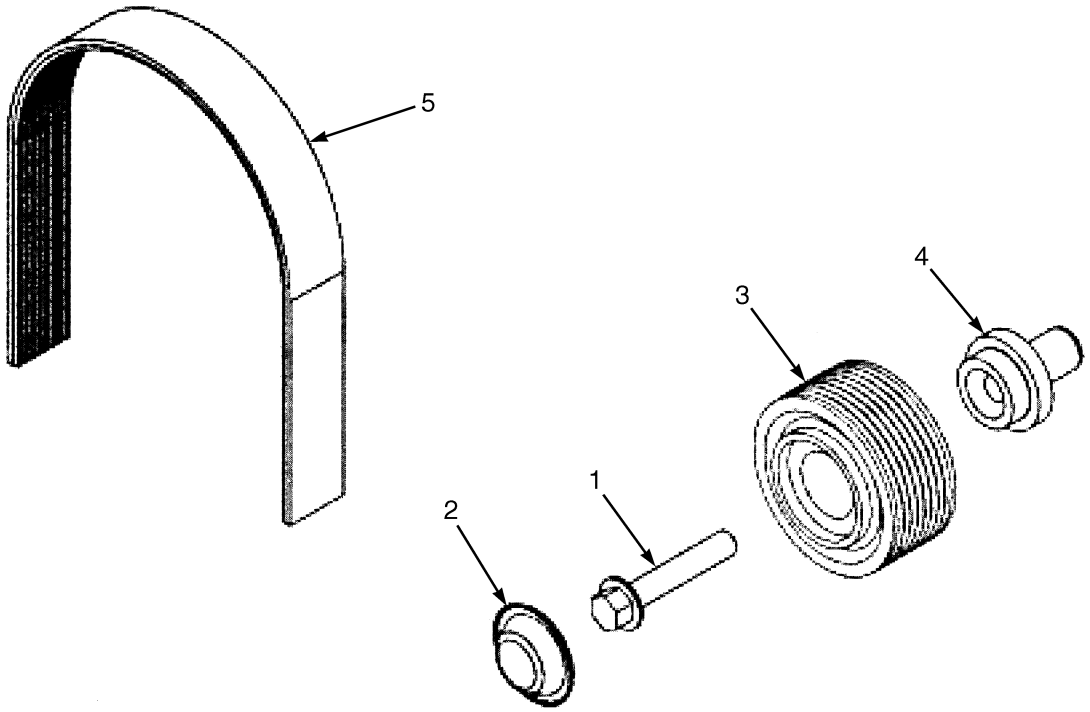

ITEM	PART NO.	DESCRIPTION	QTY
	c 2085496	Engine Assy-Diesel (2300 RPM, Dry Brakes)	1
	g 2107121	Engine Assy Diesel (2300 RPM, Dry Brakes)	1
	a 2085494	Engine Assy-Diesel (2300 RPM, Wet Brakes)	1
	e 2107118	Engine Assy (2300 RPM, Wet Brakes)	1
1	1517257	Screw	1
2	1635261	Dust Shield	1
3	1635337	Idler Pulley	1
4	1635262	Drive Shaft	1
5	**ac** ~~1687622~~		
	4009192	V-Belt Set (Multi-V Flat Belt)	1
5	**eg** ~~1687622~~		
	4009192	V-Belt Set (Multi-V Flat Belt)	1

FOOTNOTES:

a → S/N G019E02152F
b → S/N G019E02152F (Wet Brakes)
c → S/N G019E02271F
d → S/N G019E02271F (Dry Brakes)
e S/N G019E02153F →
f S/N G019E02153F → (Wet Brakes)
g S/N G019E02272F →
h S/N G019E02272F → (Dry Brakes)

©2015 HYSTER COMPANY

NOTES

©2015 HYSTER COMPANY

ENGINE BLOCK HEATER (FIGURE 2-58)

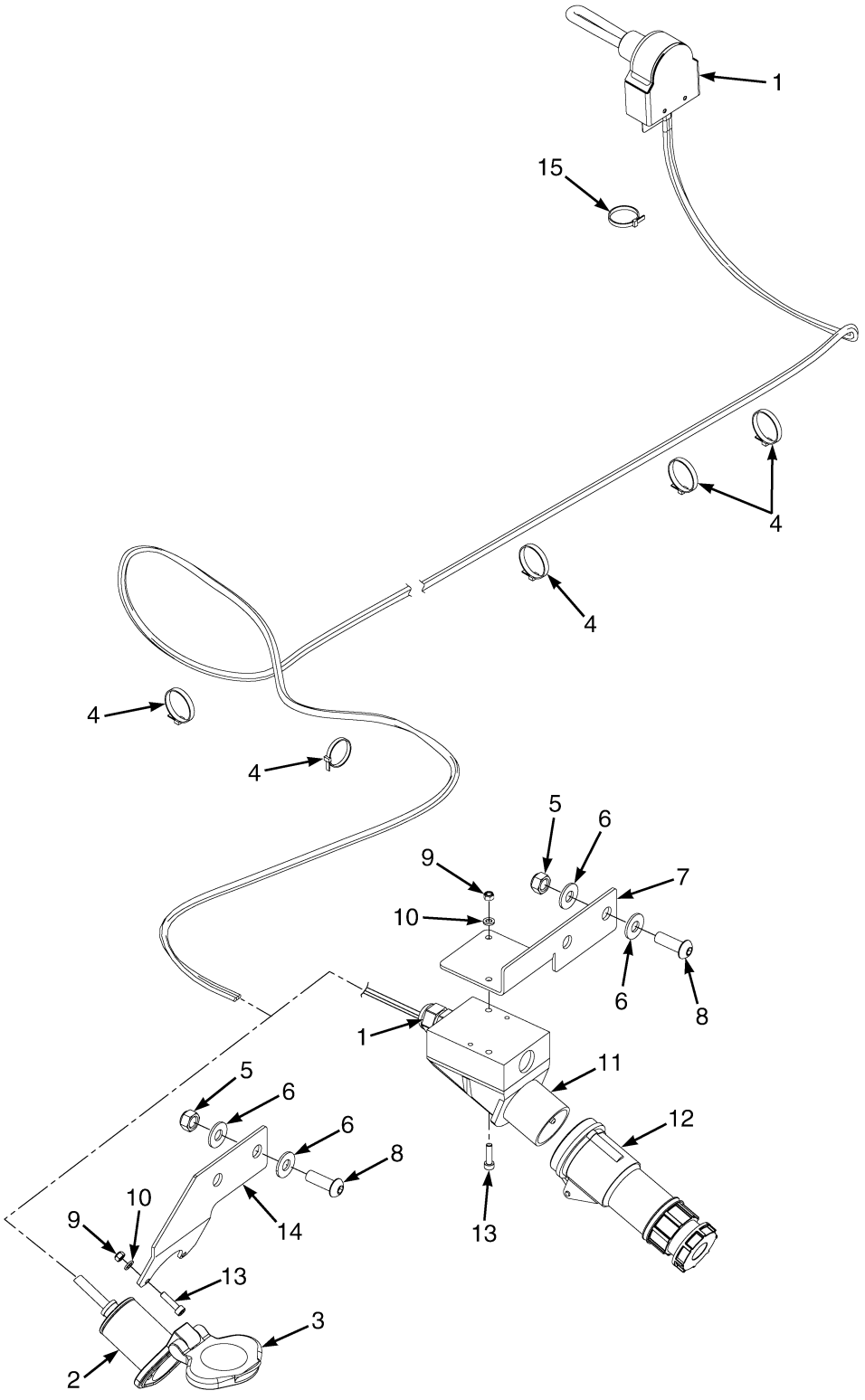

HP091409

©2015 HYSTER COMPANY

ENGINE BLOCK HEATER

KEY:
A: 120 Volt
B: 220 Volt

ITEM	PART NO.	DESCRIPTION	QTY A	QTY B
1	1625540	Engine Heater (120 Volt)	1	..
1	1625944	Engine Heater (240 Volt)	..	1
1	1628959	Heat Shield	1	1
1	1628960	Cable (120V)	1	..
1	1628965	Cable (240V)	..	1
1	1628961	Clamp	1	1
1	1628962	Heater Plug, 120V	1	..
1	1628966	Heater Plug, 240V	..	1
1	1628967	Gland	..	1
2	1628964	Housing , Plug	1	..
3	1628963	Cover , Hinge	1	..
4	137852	Strap Clamp	5	5
5	302401	Locknut	2	2
6	1581558	Washer	4	4
7	1650570	Plate	..	1
8	1597444	Capscrew	2	2
9	302398	Locknut	2	2
10	320155	Washer	2	2
11	1507089	Connector (220 Volt, Male)	..	1
12	1507090	Connector (220 Volt, Female)	..	1
13	293744	Screw	2	2
14	1650569	Plate	1	..
15	114312	Strap Clamp	1	1

©2015 HYSTER COMPANY

RADIATOR ASSEMBLY (FIGURE 2-59)
MODINE

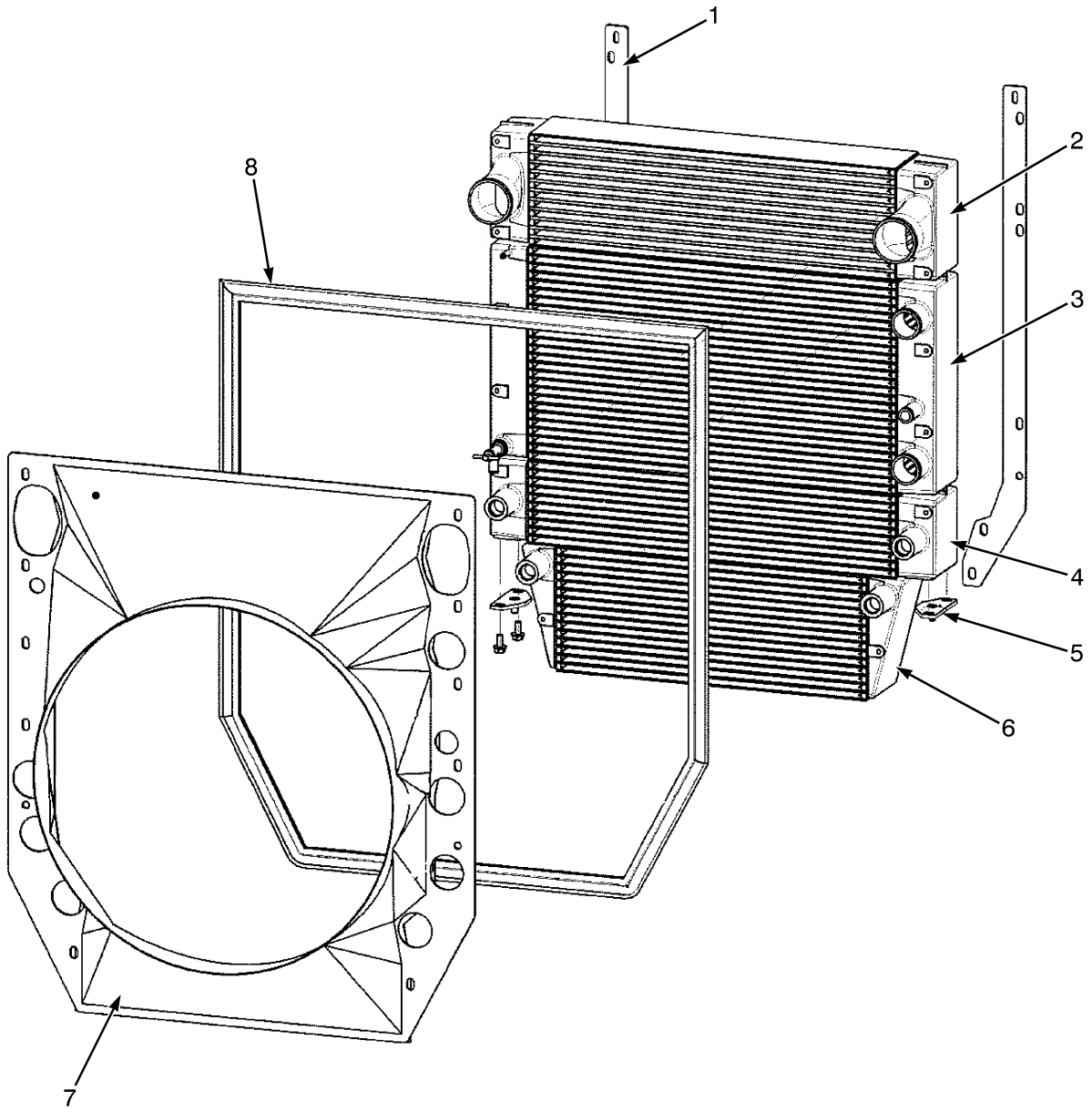

HP060072

©2015 HYSTER COMPANY

RADIATOR ASSEMBLY
MODINE

ITEM	PART NO.	DESCRIPTION	QTY
	b 2101590	Radiator Assembly	1
1	1663786	Plate	2
2	**a** 2097384	Cooler	1
2	**b** 2101592	Air Cooler	1
3	**a** 2097017	Radiator	1
3	**b** 2101591	Cooler	1
3	1677294	Drain Valve	1
4	. . . . .	Hydraulic Oil Cooler	1
5	1663785	Plate	2
6	2097386	Oil Cooler	1
7	1677295	Shroud	1
7	2097387	Shroud	1
7	1677296	Nut	2
7	1677298	Clip	1
8	1677297	Seal	1

FOOTNOTES:

a → S/N G019E01787E

b S/N G019E01788E →

©2015 HYSTER COMPANY

RADIATOR ASSEMBLY (FIGURE 2-60)
AKG

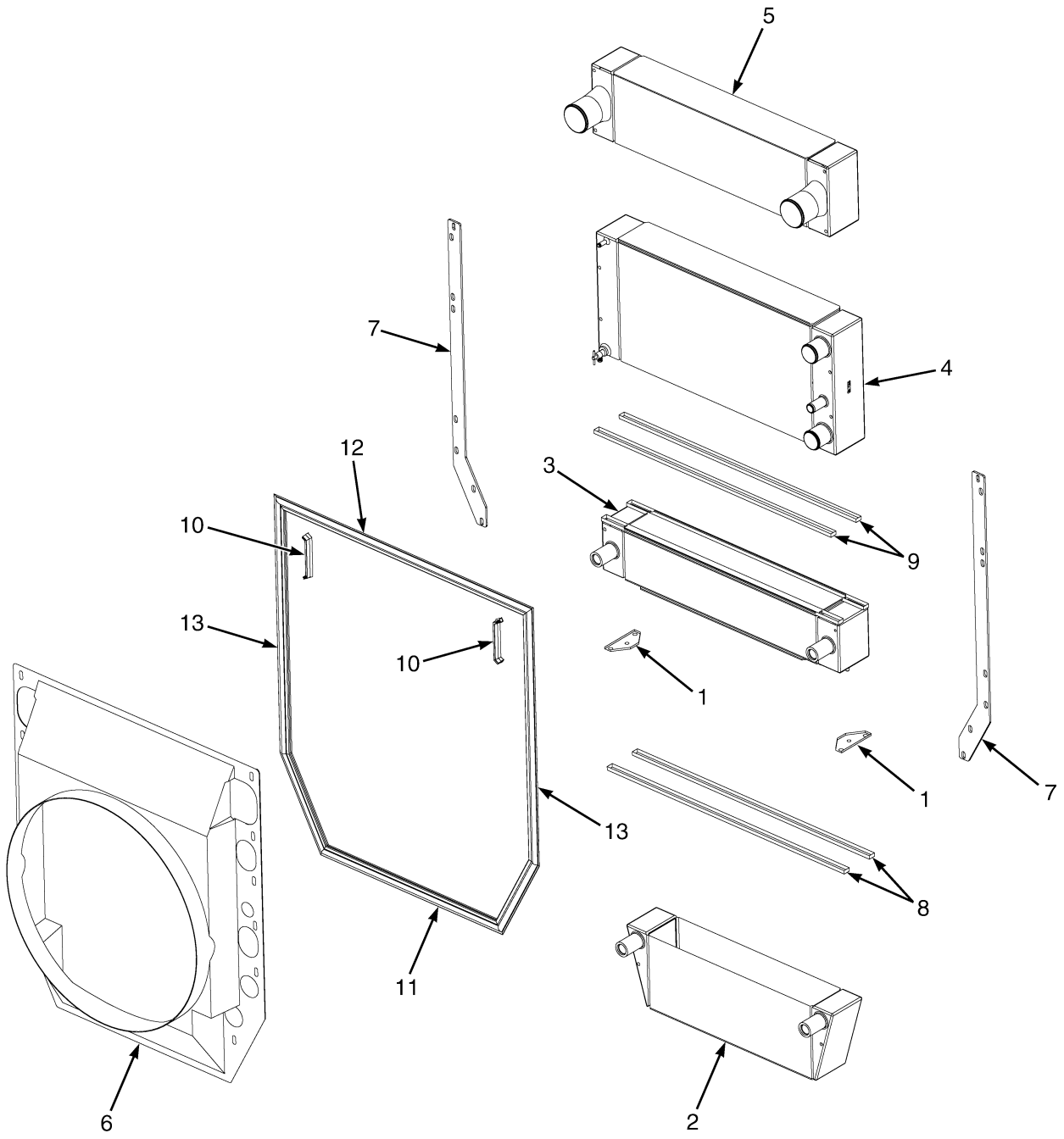

©2015 HYSTER COMPANY

RADIATOR ASSEMBLY
AKG

ITEM	PART NO.	DESCRIPTION	QTY
	4604793	Radiator Assembly	1
1	4024220	Bracket	2
2	4024221	Oil Cooler	1
3	4024222	Oil Cooler	1
4	4024223	Radiator	1
5	4024224	Air Cooler	1
6	4024225	Shroud	1
7	4024226	Side Plate	2
8	4024227	Seal	2
9	4024228	Seal	4
10	4024229	Gasket	2
11	4024230	Gasket	1
12	4024231	Gasket	1
13	4024232	Gasket	2
	a 1660347	Bolt	12
	a 4024233	Washer	12
	a 1636898	Bolt	18
	a 1636897	Washer	18

FOOTNOTES:

a Not Illustrated

©2015 HYSTER COMPANY

NOTES

©2015 HYSTER COMPANY

3 ENGINE ASSEMBLY - LPG

SECTION 3
ENGINE ASSEMBLY - LPG

DESCRIPTION	PAGE
ACCESSORY DRIVE BELT AND TENSIONER	3-6
ACCESSORY HOLE COVER	3-7
AIR COMPRESSOR COOLANT PLUMBING	3-8
AIR COMPRESSOR INLET CONNECTION	3-10
AIR INTAKE CONNECTION	3-12
CAM FOLLOWER COVER	3-13
CAMSHAFT	3-14
COOLING SYSTEM	3-2
CRANKCASE BREATHER	3-16
CRANKSHAFT AND MAIN BEARINGS	3-18
CYLINDER BLOCK	3-22
CYLINDER HEAD	3-24
ENGINE ASSEMBLY	3-26
ENGINE MOUNT	3-28
ENGINE OIL COOLER	3-30
EXHAUST GAS SENSOR PLUMBING	3-32
EXHAUST MANIFOLD	3-33
EXHAUST OUTLET CONNECTION	3-34
EXHAUST SYSTEM	3-4
FAN DRIVE	3-35
FLYWHEEL	3-36
FLYWHEEL HOUSING	3-38
FRONT GEAR COVER AND HOUSING	3-40
FRONT GEAR TRAIN ACCESSORY DRIVE	3-42
INTAKE MANIFOLD	3-44
LIFTING BRACKET	3-46
OIL LEVEL GAUGE	3-48
OIL PAN	3-50
OIL PUMP	3-52
PISTON AND CONNECTING ROD	3-54
RADIATOR ASSEMBLY	
AKG	3-80
MODINE	3-78
ROCKER LEVERS	3-56
THERMOSTAT	3-58
THERMOSTAT HOUSING	3-59
TURBOCHARGER	3-60
TURBOCHARGER ASSEMBLY	3-66
TURBOCHARGER COMPRESSOR OUTLET CONNECTION	3-62
TURBOCHARGER PLUMBING	3-64
VALVE COVER	3-68
VALVE TAPPET	3-70
VIBRATION DAMPER	3-72
WATER INLET CONNECTION	3-74
WATER OUTLET CONNECTION	3-75
WATER PUMP	3-76

©2015 HYSTER COMPANY

COOLING SYSTEM (FIGURE 3-1)

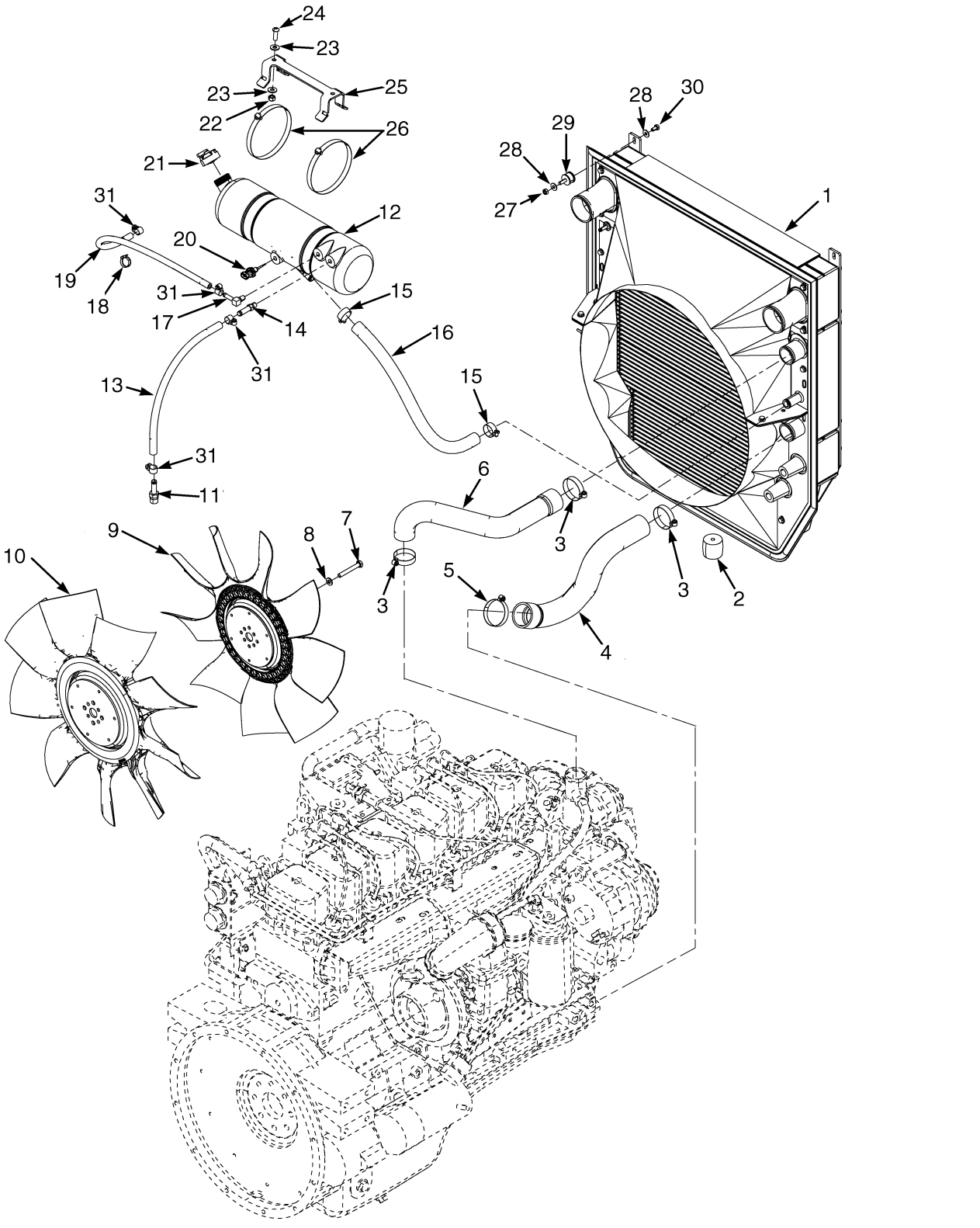

HP091436

©2015 HYSTER COMPANY

COOLING SYSTEM

ITEM	PART NO.	DESCRIPTION	QTY
1	**a** 2097016	Cooler	1
1	**b** 2101590	Radiator Assembly (Modine) (☞Figure 3-44)	1
1	4604793	Radiator Assembly (AKG) (Alternate Part) (☞Figure 3-45)	1
2	376649	Isolator	2
3	119236	Clamp	3
4	1658272	Radiator Hose (Coolant)	1
5	112989	Hose Clamp	1
6	1658271	Radiator Hose (Coolant)	1
7	136718	Capscrew	8
8	320159	Washer	8
9	1629351	Fan (Puller)	1
10	1649438	Fan (Pusher)	1
11	222473	Fitting	1
12	2088036	Reservoir	1
13	78462	Hose	1
14	109417	Fitting	1
15	127045	Clamp (Hose)	2
16	2099775	Radiator Hose	1
17	**a** 192306	Fitting	1
17	**b** 17353	Fitting	1
18	129563	Strap Clamp	1
19	**a** 1673562	Hose	1
19	**b** 1659021	Hose (Low Pressure)	1
20	1531404	Sensor (Low Coolant Level)	1
21	1634889	Radiator Cap	1
22	302401	Locknut	2
23	1581558	Washer	4
24	1597444	Capscrew	2
25	1635188	Bracket	1
26	144157	Hose Clamp	2
27	302400	Nut	2
28	320158	Washer	4
29	353453	Mount	2
30	287851	Capscrew	2
31	166857	Clamp	4

FOOTNOTES:

a → S/N G019E01787E

b S/N G019E01788E →

©2015 HYSTER COMPANY

EXHAUST SYSTEM (FIGURE 3-2)

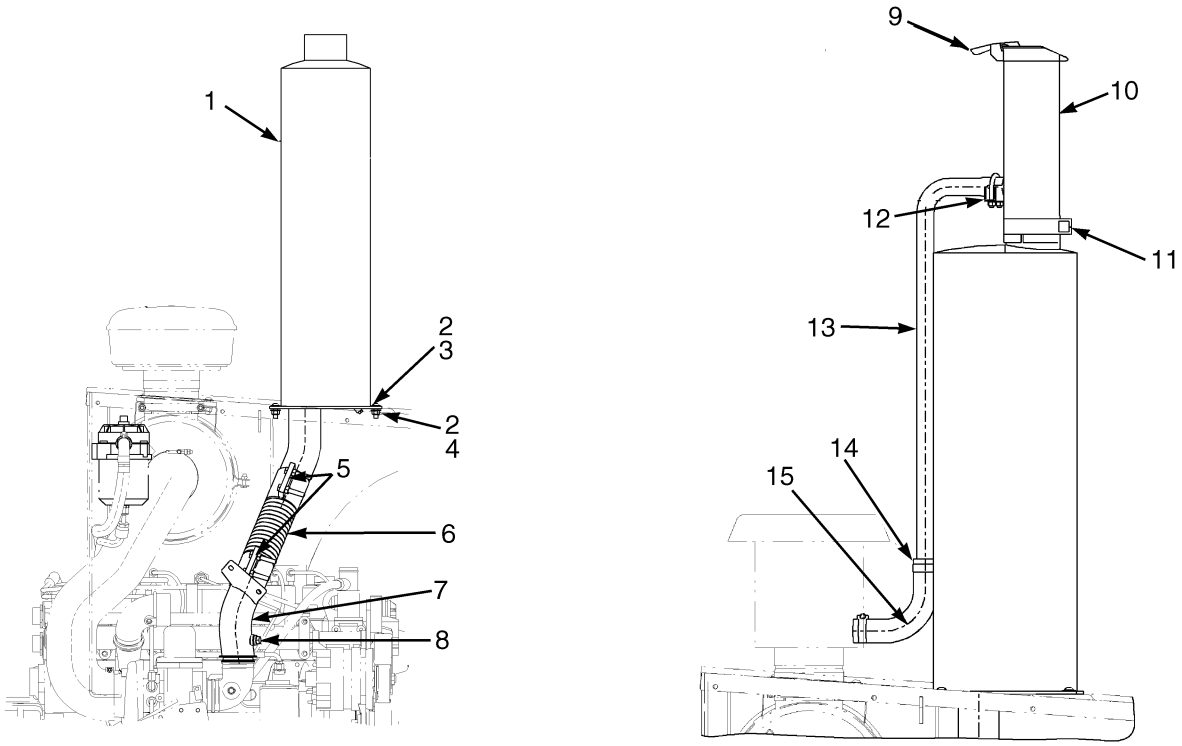

HP091433

©2015 HYSTER COMPANY

EXHAUST SYSTEM

KEY:
A: Standard Configuration
B: Exhaust Extension Option
C: Exhaust Extension Option With Aspirated Pre-Cleaner Option

ITEM	PART NO.	DESCRIPTION	QTY A	QTY B	QTY C
1	2098601	Muffler	1	1	1
2	1581558	Washer	8	8	8
3	1597444	Capscrew	4	4	4
4	302401	Locknut	4	4	4
5	270826	Clamp	2	2	2
6	1544774	Flex Tube	1	1	1
7	1635088	Exhaust Pipe	1	1	1
8	1396518	Plug	1	1	1
8	1509103	Ring (Copper)	1	1	1
8	1509104	Plug	1	1	1
9	1305839	Rain Cap	..	..	1
9	1361200	Rain Cap	..	1	..
10	1544775	Exhaust Pipe	..	1	..
10	1658850	Exhaust Pipe	..	..	1
11	1598359	Clamp	..	1	1
12	69854	Clamp	..	..	1
13	1610665	Tube	..	..	1
14	127045	Clamp (Hose)	..	..	2
15	1610667	Hose	..	..	1

©2015 HYSTER COMPANY

ACCESSORY DRIVE BELT AND TENSIONER (FIGURE 3-3)

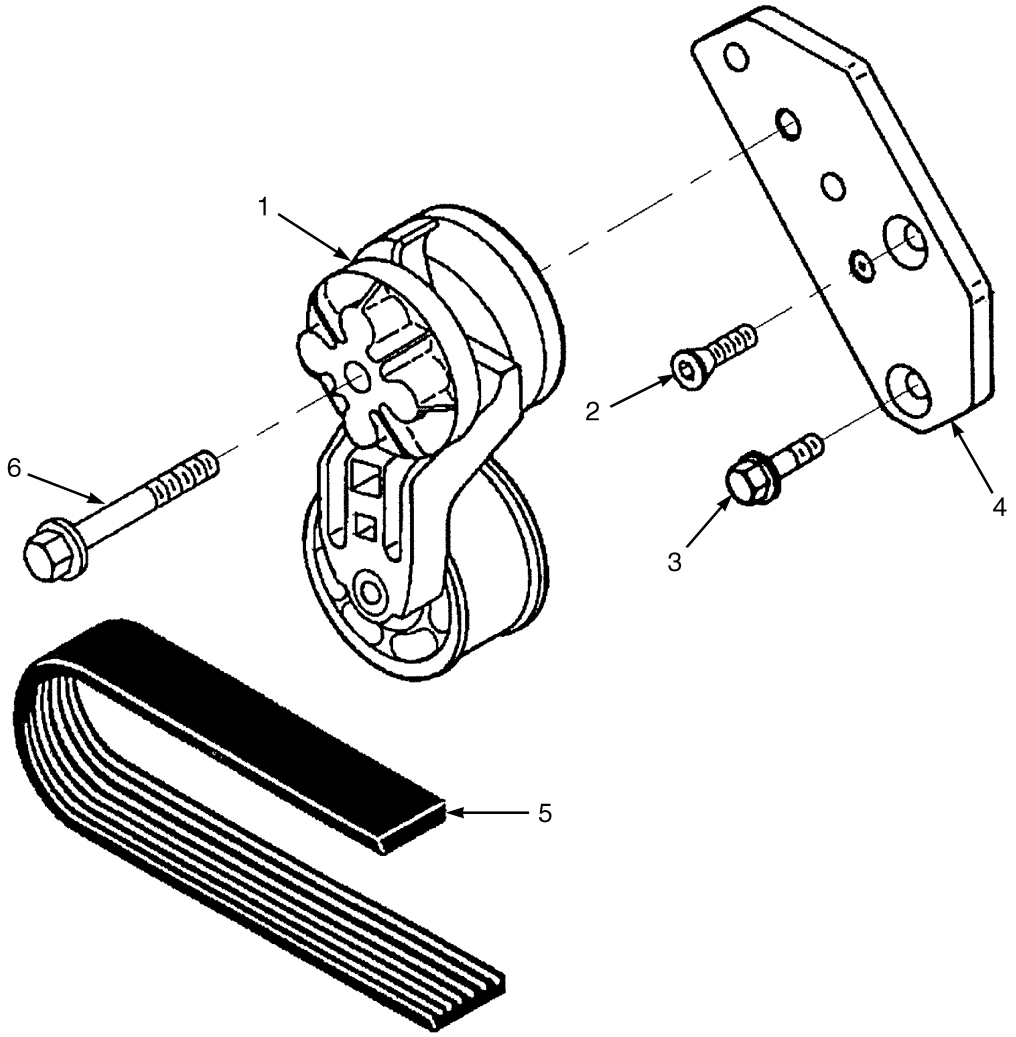

BP080439

ITEM	PART NO.	DESCRIPTION	QTY
	2095555	Engine Assy-Lpg (Dry Brake)	1
	2095554	Engine Assy-Lpg (Wet Brake)	1
1	1614627	Belt Tensioner	1
2	1514359	Screw	1
3	1512005	Capscrew	1
4	1614546	Bracket	1
5	~~1614464~~		
	1693216	V-Belt	1
6	1614515	Capscrew	1

©2015 HYSTER COMPANY

ACCESSORY HOLE COVER (FIGURE 3-4)

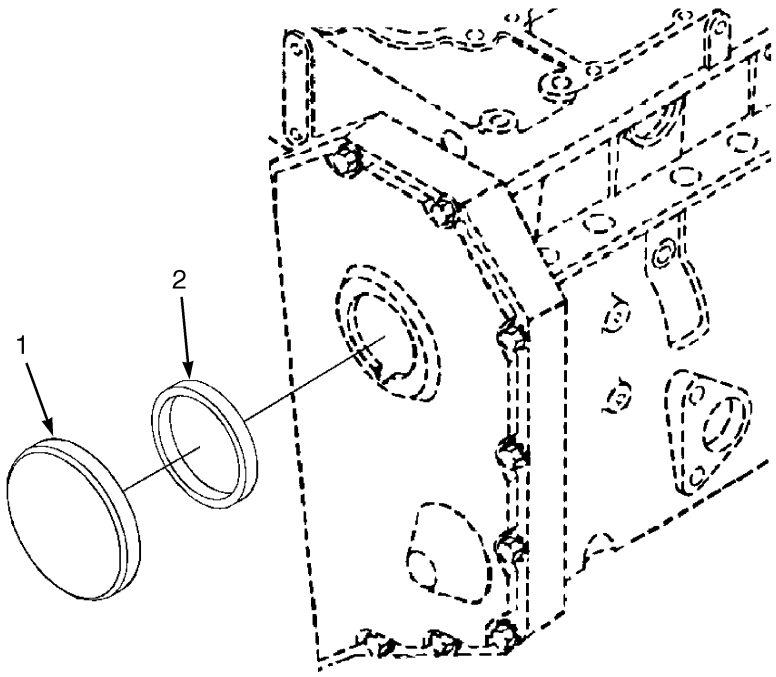

BP090239

ITEM	PART NO.	DESCRIPTION	QTY
	2095555	Engine Assy-Lpg (Dry Brake)	1
	2095554	Engine Assy-Lpg (Wet Brake)	1
1	1512011	Cover	1
2	1512012	Sealing Ring	1

©2015 HYSTER COMPANY

AIR COMPRESSOR COOLANT PLUMBING (FIGURE 3-5)

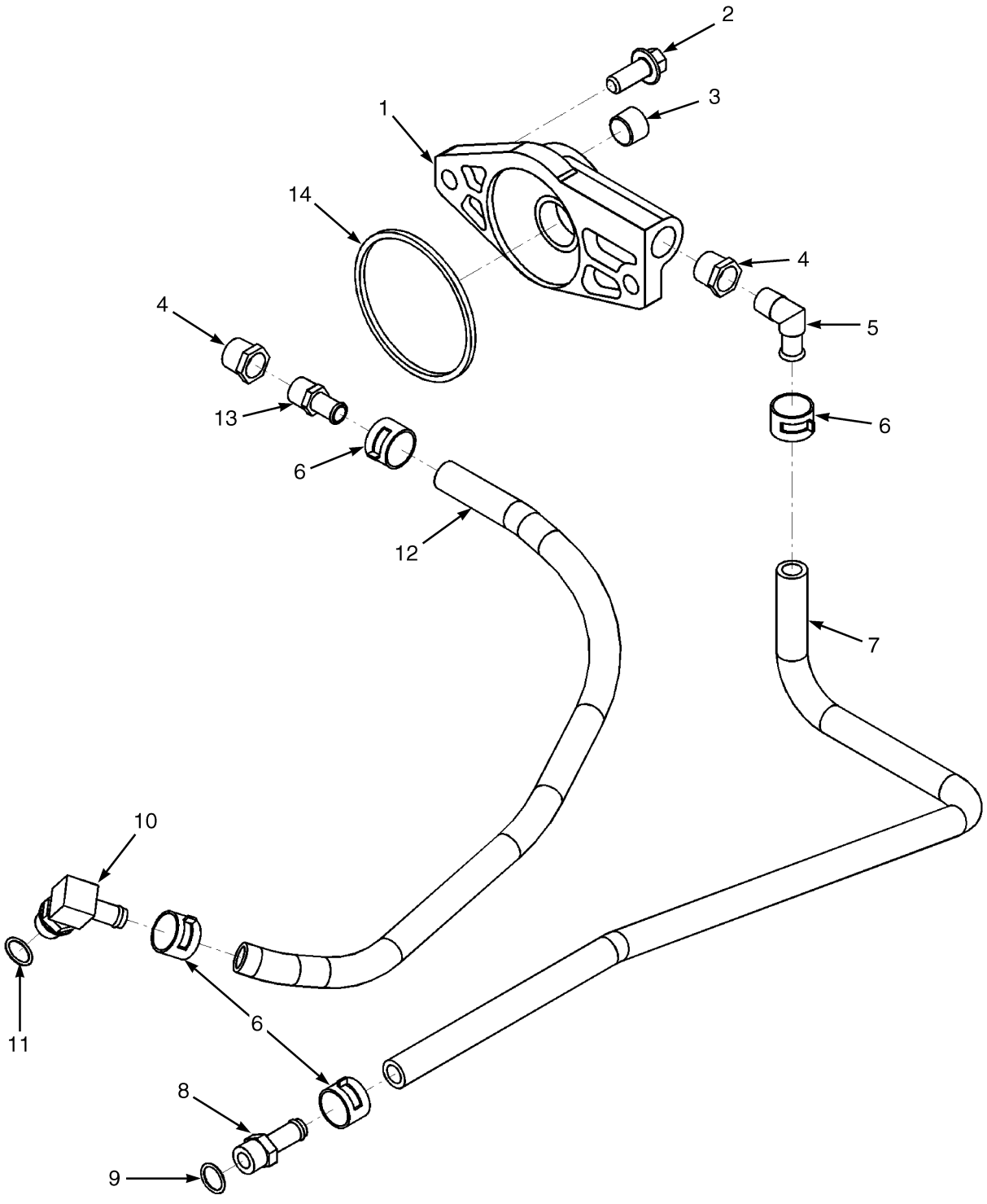

BP090231

©2015 HYSTER COMPANY

AIR COMPRESSOR COOLANT PLUMBING

ITEM	PART NO.	DESCRIPTION	QTY
	2095555	Engine Assy-Lpg (Dry Brake)	1
	2095554	Engine Assy-Lpg (Wet Brake)	1
1	1511959	Connector	1
2	1511953	Capscrew	2
3	1511952	Fitting	1
4	1511956	Bushing	2
5	1511958	Coupling	1
6	1511955	Hose Clamp	4
7	1511963	Hose	1
8	1511962	Coupling	1
9	1511961	O-Ring	1
10	1512443	Coupling	1
11	1511961	O-Ring	1
12	1511960	Hose	1
13	1662038	Coupling	1
14	1511954	Sealing Ring	1

©2015 HYSTER COMPANY

AIR COMPRESSOR INLET CONNECTION (FIGURE 3-6)

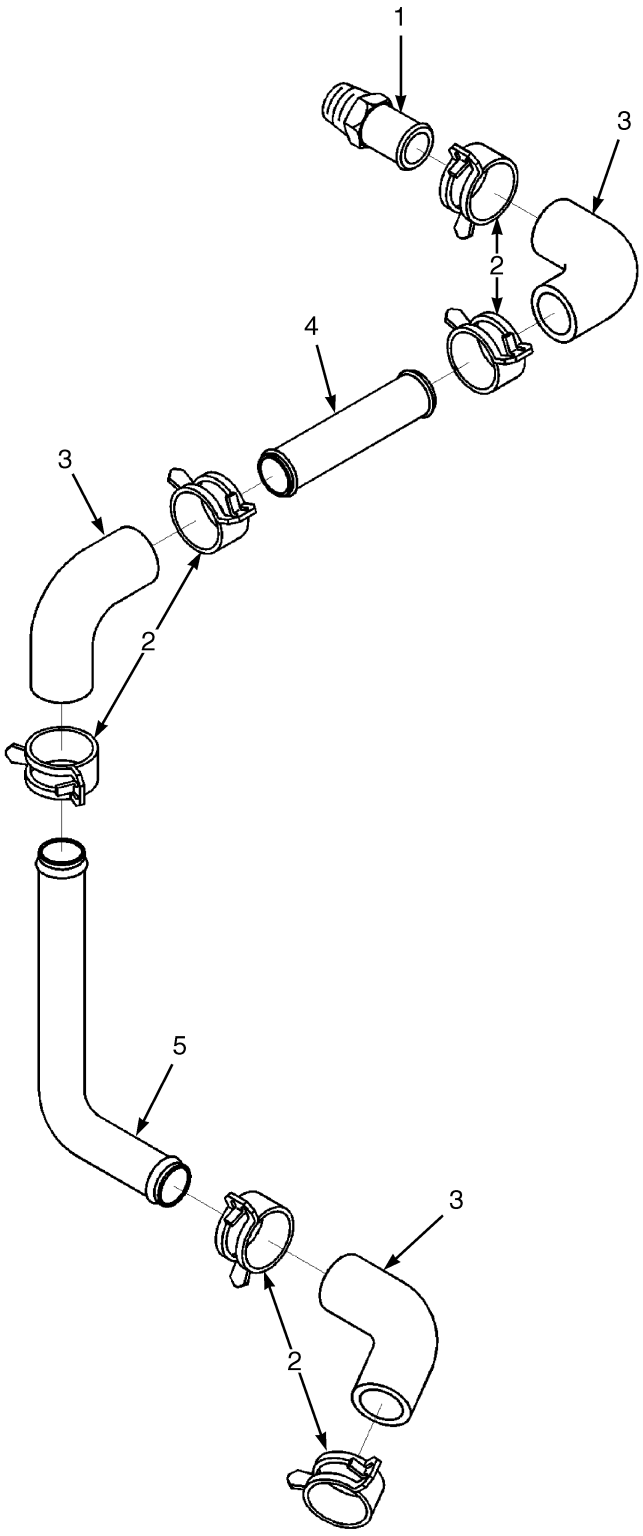

BP090232

©2015 HYSTER COMPANY

AIR COMPRESSOR INLET CONNECTION

ITEM	PART NO.	DESCRIPTION	QTY
	2095555	Engine Assy-Lpg (Dry Brake)	1
	2095554	Engine Assy-Lpg (Wet Brake)	1
1	1511966	Coupling	1
2	1618998	Hose Clamp	6
3	1618997	Hose	3
4	1618999	Tube	1
5	1619000	Tube	1

©2015 HYSTER COMPANY

AIR INTAKE CONNECTION (FIGURE 3-7)

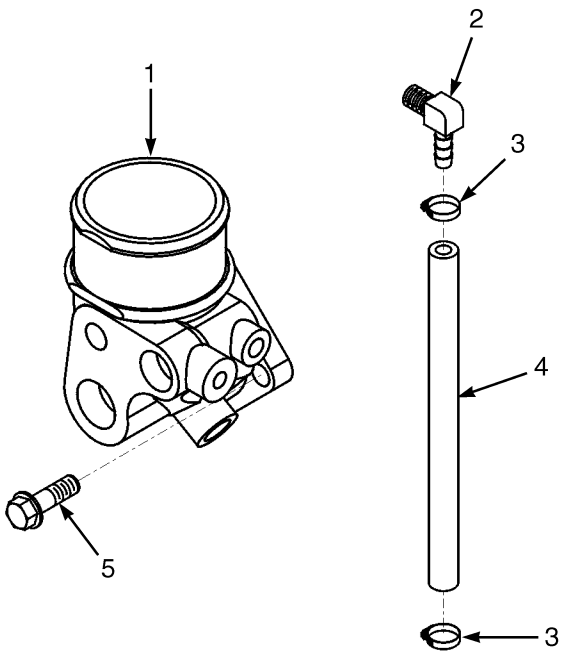

BP090242

ITEM	PART NO.	DESCRIPTION	QTY
	2095555	Engine Assy-Lpg (Dry Brake)	1
	2095554	Engine Assy-Lpg (Wet Brake)	1
1	1614597	Connector	1
2	1614549	Coupling	1
3	1612804	Clamp	2
4	1614631	Hose	1
5	1512005	Capscrew	3

©2015 HYSTER COMPANY

CAM FOLLOWER COVER (FIGURE 3-8)

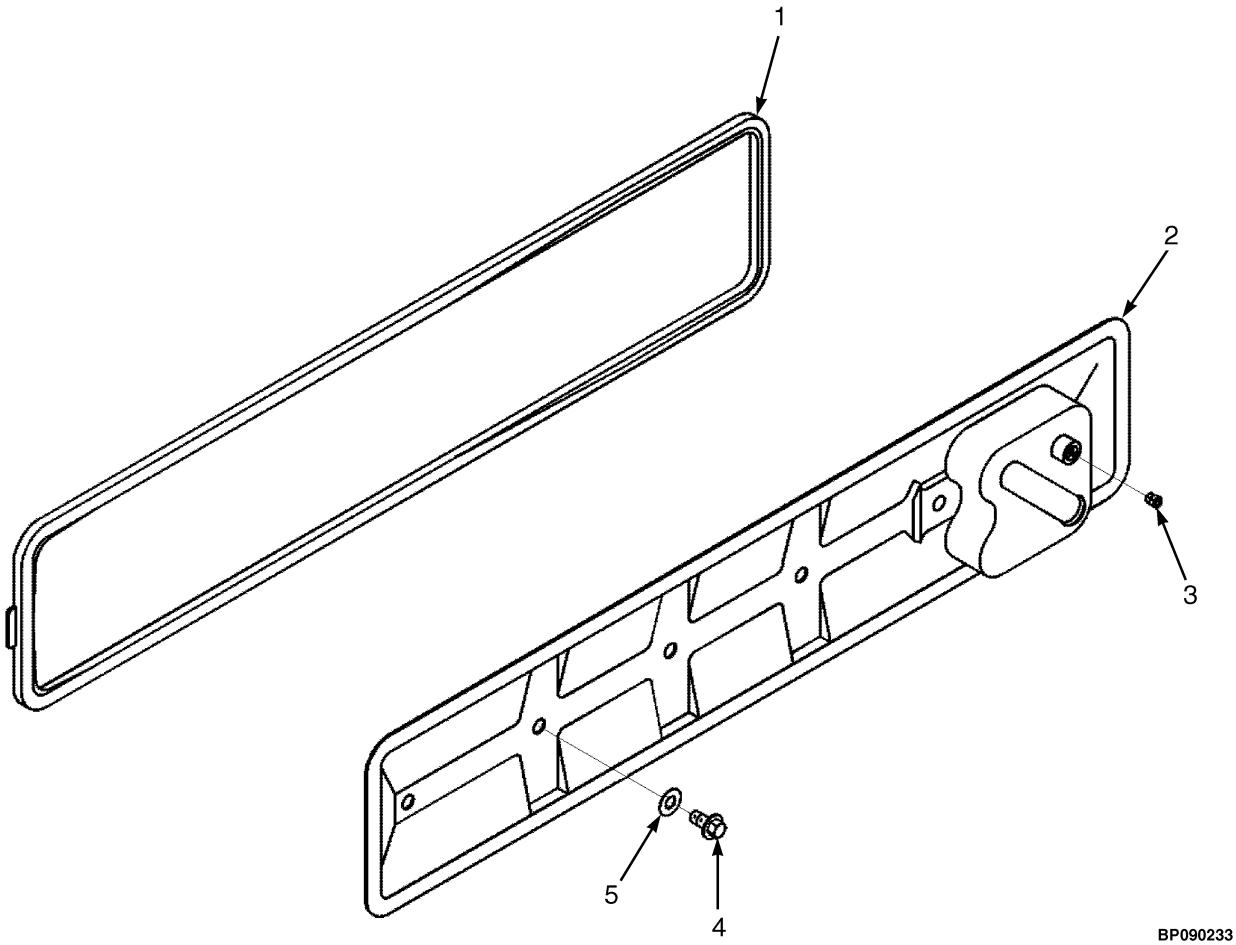

ITEM	PART NO.	DESCRIPTION	QTY
	2095555	Engine Assy-Lpg (Dry Brake)	1
	2095554	Engine Assy-Lpg (Wet Brake)	1
1	1511974	Gasket	1
2	1614628	Cover	1
3	1513191	Fitting	1
4	1511970	Capscrew	6
5	1511969	Seal	6

©2015 HYSTER COMPANY

CAMSHAFT (FIGURE 3-9)

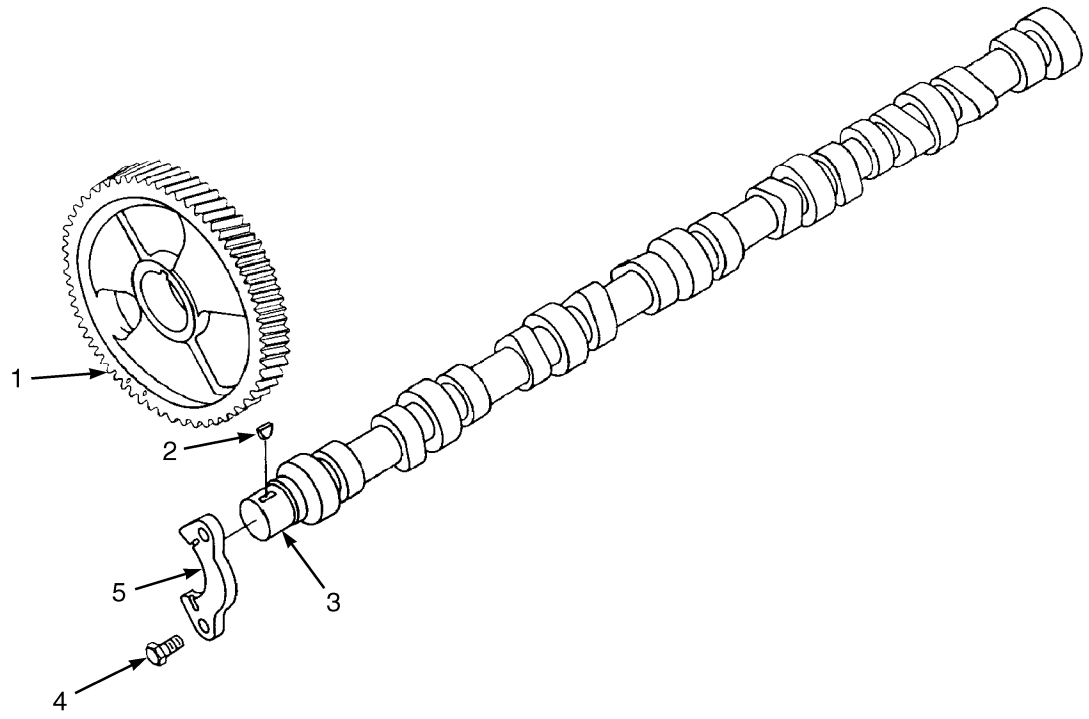

BP090246

ITEM	PART NO.	DESCRIPTION	QTY
	2095555	Engine Assy-Lpg (Dry Brake)	1
	2095554	Engine Assy-Lpg (Wet Brake)	1
1	1614607	Gear	1
2	1512161	Woodruff Key	1
3	1614551	Camshaft	1
4	1512163	Capscrew	2
5	1512164	Support	1

©2015 HYSTER COMPANY

NOTES

©2015 HYSTER COMPANY

CRANKCASE BREATHER (FIGURE 3-10)

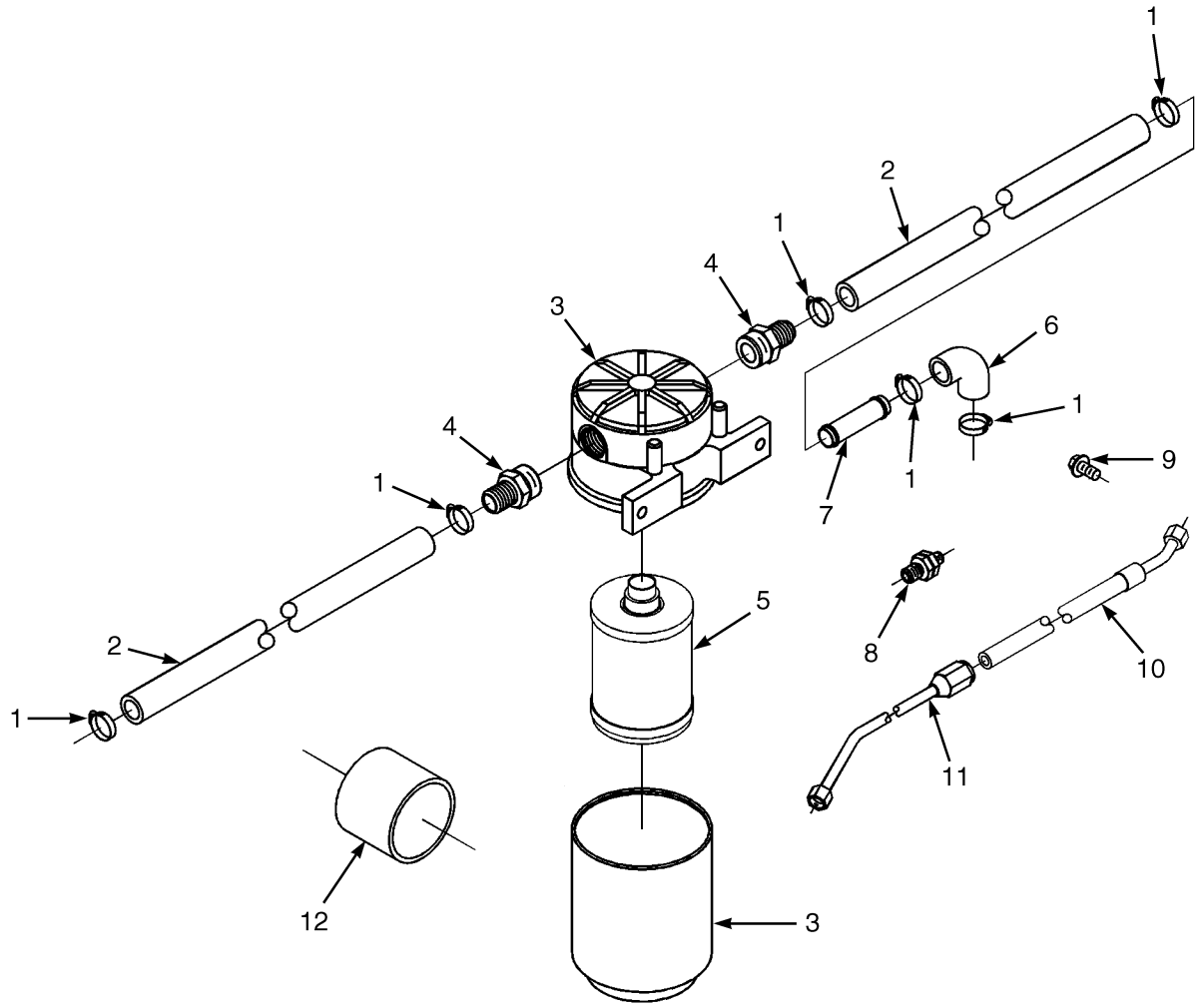

BP090230

©2015 HYSTER COMPANY

CRANKCASE BREATHER

ITEM	PART NO.	DESCRIPTION	QTY
	2095555	Engine Assy-Lpg (Dry Brake)	1
	2095554	Engine Assy-Lpg (Wet Brake)	1
1	1614524	Hose Clamp	10
2	1614572	Hose	2
3	1614568	Breather	1
3	1614489	Breather	1
4	1618220	Adapter	2
5	1614488	Breather	1
6	1614583	Hose (Elbow)	2
7	1614569	Tube (Coupling)	2
8	1614490	Check Valve	1
9	1512328	Capscrew	1
10	1614573	Hose	1
11	1614574	Connector	1
12	1614312	Hose	1

©2015 HYSTER COMPANY

CRANKSHAFT AND MAIN BEARINGS (FIGURE 3-11)

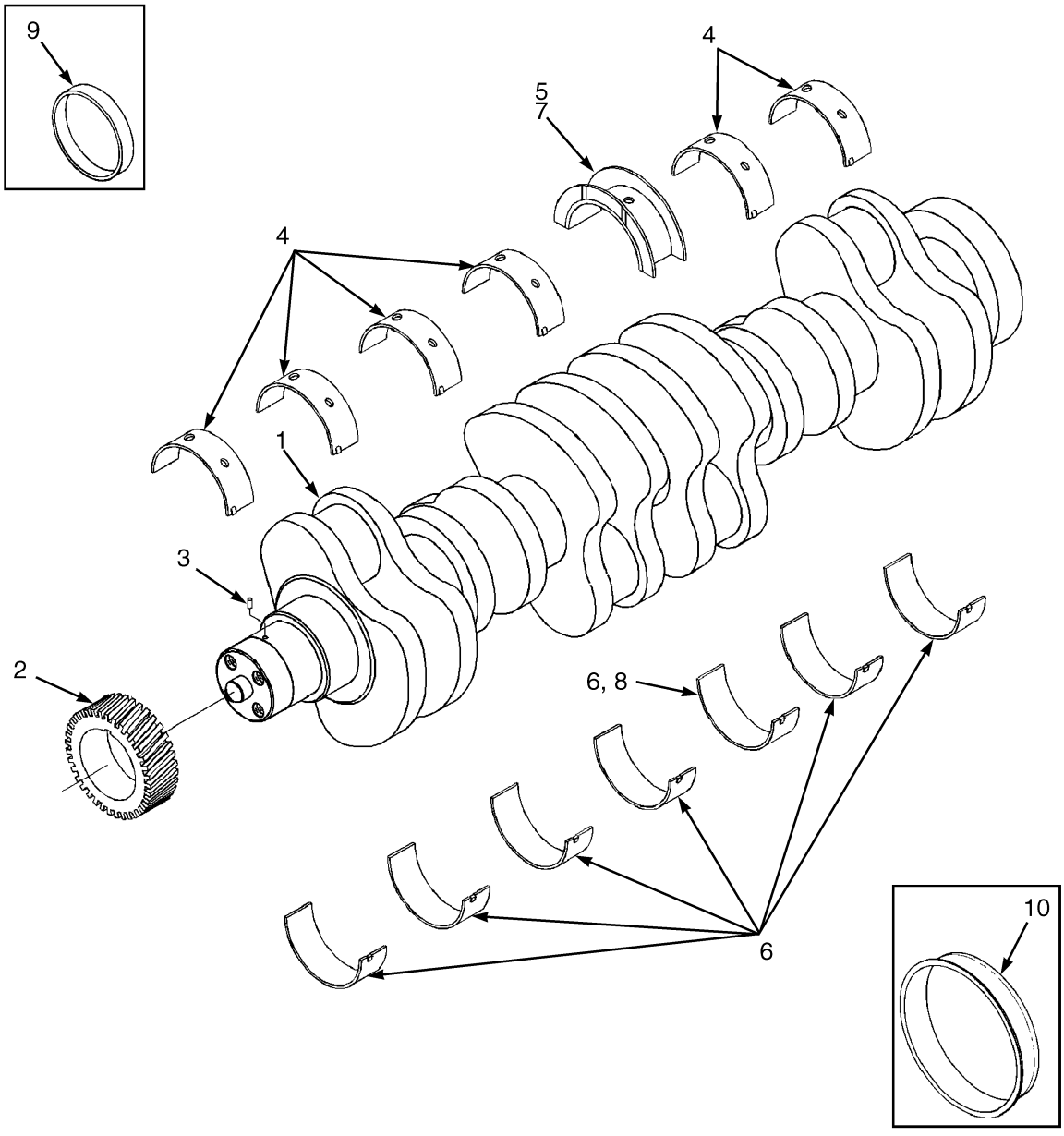

©2015 HYSTER COMPANY

CRANKSHAFT AND MAIN BEARINGS

ITEM	PART NO.	DESCRIPTION	QTY
	2095555	Engine Assy-Lpg (Dry Brake)	1
	2095554	Engine Assy-Lpg (Wet Brake)	1
1	. . . . .	Crankshaft	1
2	1521701	Gear	1
3	1514346	Dowel	1
4	1543317	Bearing (Standard)	6
4	1696674	Bearing (Standard) (Alternate Part)	6
4	1585002	Bearing (0.25 mm O/S)	6
4	1584992	Bearing (0.50 mm)	6
4	1707620	Bearing (0.50 mm O/S) (Alternate Part)	6
4	1584995	Bearing (0.75 mm)	6
4	1585000	Bearing (1.00 mm)	6
4	1708511	Bearing (1.00 mm O/S) (Alternate Part)	6
4	4007946	Bearing (0.75 mm O/S) (Alternate Part)	6
5	1543316	Thrust Bearing (Standard)	1
5	1707004	Thrust Bearing (Standard) (Alternate Part)	1
5	1584990	Crankshaft Bearing (0.25 mm)	1
5	1584993	Thrust Bearing (0.50 mm)	1
5	1707621	Thrust Bearing (0.50 mm O/S) (Alternate Part)	1
5	1584996	Thrust Bearing (0.75 mm)	1
5	1584999	Thrust Bearing (1.00 mm)	1
5	1708512	Thrust Bearing (1.00 mm O/S) (Alternate Part)	1
5	1707004	Thrust Bearing (Standard) (Alternate Part)	1
5	4007945	Thrust Bearing (0.75 mm O/S) (Alternate Part)	1
6	1543318	Bearing (Standard)	7
6	1696675	Bearing (Standard) (Alternate Part)	7
6	1584991	Bearing (0.25 mm)	7
6	1584994	Bearing (0.50 mm)	7
6	1707622	Bearing (0.50 mm O/S) (Alternate Part)	7
6	1584997	Bearing (0.75 mm)	7
6	4007468	Bearing (0.75 mm O/S) (Alternate Part)	7
6	1584998	Bearing (1.00 mm)	7
6	1708513	Bearing (1.00 mm O/S) (Alternate Part)	7
7	1584993	Thrust Bearing (0.50 mm)	1
7	1584999	Thrust Bearing (1.00 mm)	1
8	1584994	Bearing (0.50 mm)	1
8	1584998	Bearing (1.00 mm)	1
9	1554045	Kit-Wear Sleeve (Front)	1
10	1514354	Kit-Wear Sleeve (Rear)	1
	1635239	Kit-Crankshaft Bearing (Standard)	1
	4007469	Bearing Set (Standard) (Alternate Part)	1
	1521705	Bearing Set (0.25 mm)	1
	1708510	Bearing Set (1.00 mm O/S) (Alternate Part)	1
	4007075	Bearing Set (0.25 mm O/S) (Alternate Part)	1
	1521706	Bearing Set (0.50 mm)	1
	1707619	Bearing Set (0.50 mm O/S) (Alternate Part)	1
	1521707	Bearing Set (0.75 mm)	1
	4007466	Bearing Set (0.75 mm O/S) (Alternate Part)	1
	1521708	Bearing Set (1.00 mm)	1
	1708510	Bearing Set (1.00 mm O/S) (Alternate Part)	1

©2015 HYSTER COMPANY

CRANKSHAFT AND MAIN BEARINGS

ITEM	PART NO.	DESCRIPTION	QTY
	1635243	Thrust Bearing (0.50 mm Oversize)	1
	1635244	Thrust Bearing (1.00 mm Oversize)	1

©2015 HYSTER COMPANY

NOTES

©2015 HYSTER COMPANY

CYLINDER BLOCK (FIGURE 3-12)

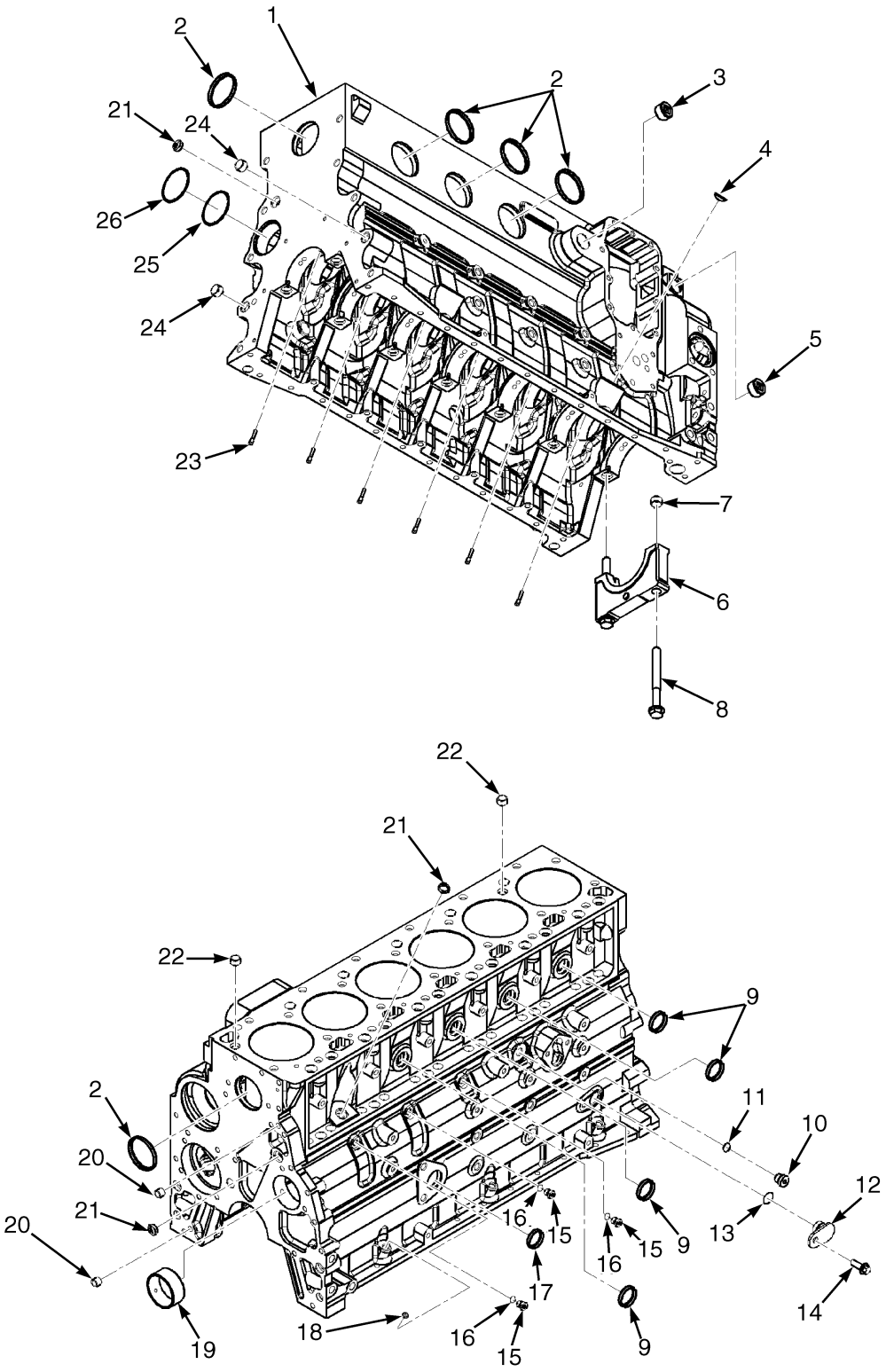

BP090422

©2015 HYSTER COMPANY

CYLINDER BLOCK

ITEM	PART NO.	DESCRIPTION	QTY
	2095555	Engine Assy-Lpg (Dry Brake)	1
	2095554	Engine Assy-Lpg (Wet Brake)	1
1	1589514	Cylinder Block	1
2	1514542	Plug	5
3	1512292	Plug	1
4	1514339	Plug	2
5	1511952	Fitting	1
6	1635307	Cap (Main Bearing)	7
7	1521685	Ring	2
8	1521683	Capscrew	14
9	1512585	Plug	4
10	1521695	Plug Assembly	1
11	1517119	O-Ring	1
12	1521697	Fitting	1
13	1543321	Sealing Ring	1
14	1511970	Capscrew	1
15	1517010	Plug Assembly	3
16	1517011	O-Ring	1
17	1521694	Plug	1
18	1512130	Plug	3
19	1521682	Bushing	1
20	1513878	Dowel	2
21	1512304	Plug	3
22	1521691	Dowel	2
23	1521692	Nozzle	6
24	1521685	Ring	2
25	1521696	O-Ring	1
26	1521693	Plug	1
	1521686	Kit-Cylinder Block	1

©2015 HYSTER COMPANY

CYLINDER HEAD (FIGURE 3-13)

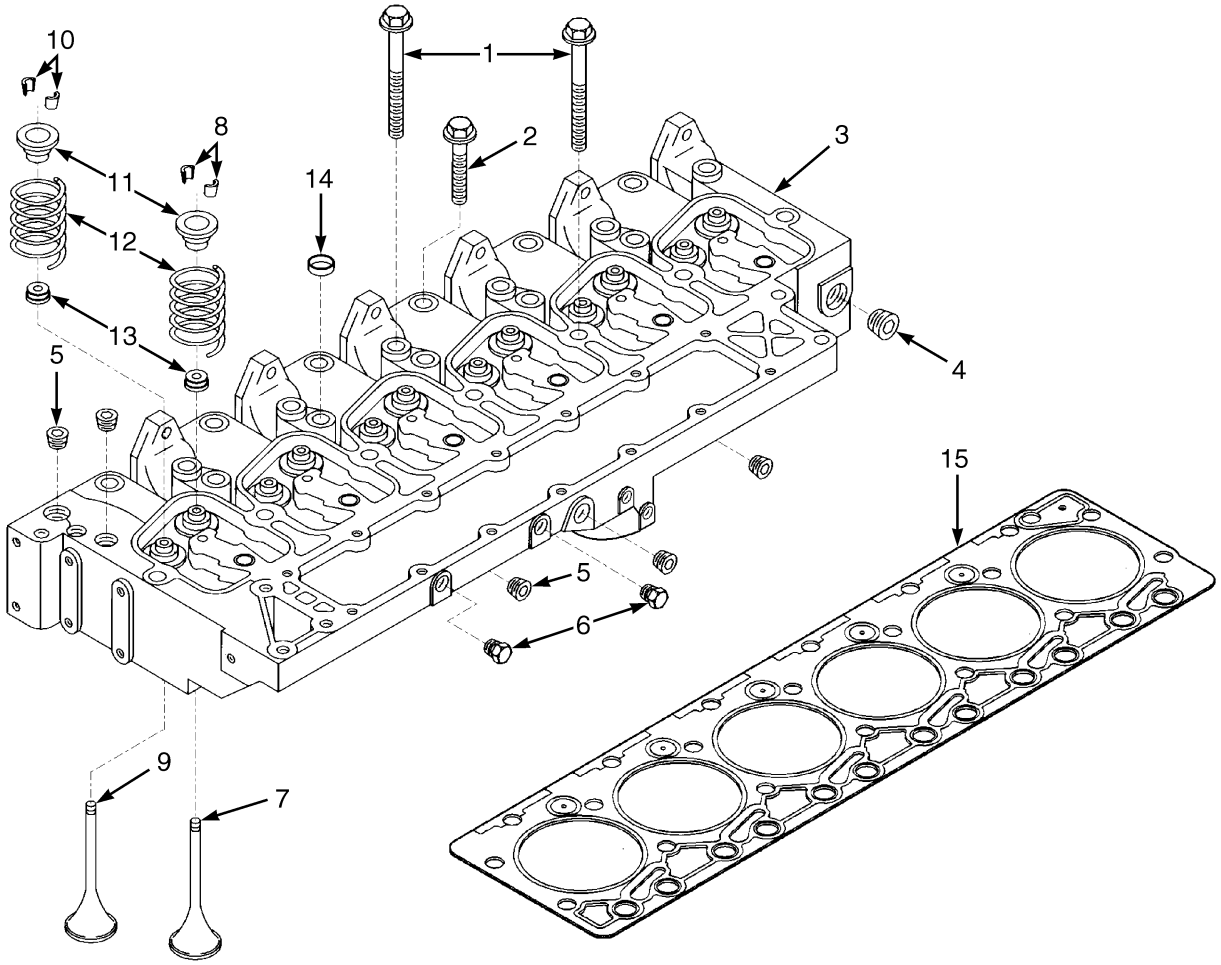

©2015 HYSTER COMPANY

CYLINDER HEAD

ITEM	PART NO.	DESCRIPTION	QTY
	2095555	Engine Assy-Lpg (Dry Brake)	1
	2095554	Engine Assy-Lpg (Wet Brake)	1
1	1543451	Screw	14
2	1543450	Screw	6
3	1615829	Cylinder Head	1
4	1512292	Plug	1
5	1511952	Fitting	2
6	1512448	Fitting	2
7	1614493	Exhaust Valve	6
8	1517185	Keeper	12
9	1614492	Inlet Valve (Intake)	6
10	1517185	Keeper	12
11	1588104	Retainer	12
12	1614504	Spring	12
13	1543455	Seal (Valve Stem)	12
14	1597817	Plug	5
15	1618648	Cylinder Head Gasket (Standard)	1
15	1638854	Cylinder Head Gasket (0.25 mm, OS)	1
15	1638852	Cylinder Head Gasket (0.50 mm, OS)	1
	1511952	Fitting (0.5 NPT)	3
	1512292	Plug (0.75 NPT)	1
	1588087	Kit-Gasket	1

©2015 HYSTER COMPANY

ENGINE ASSEMBLY (FIGURE 3-14)

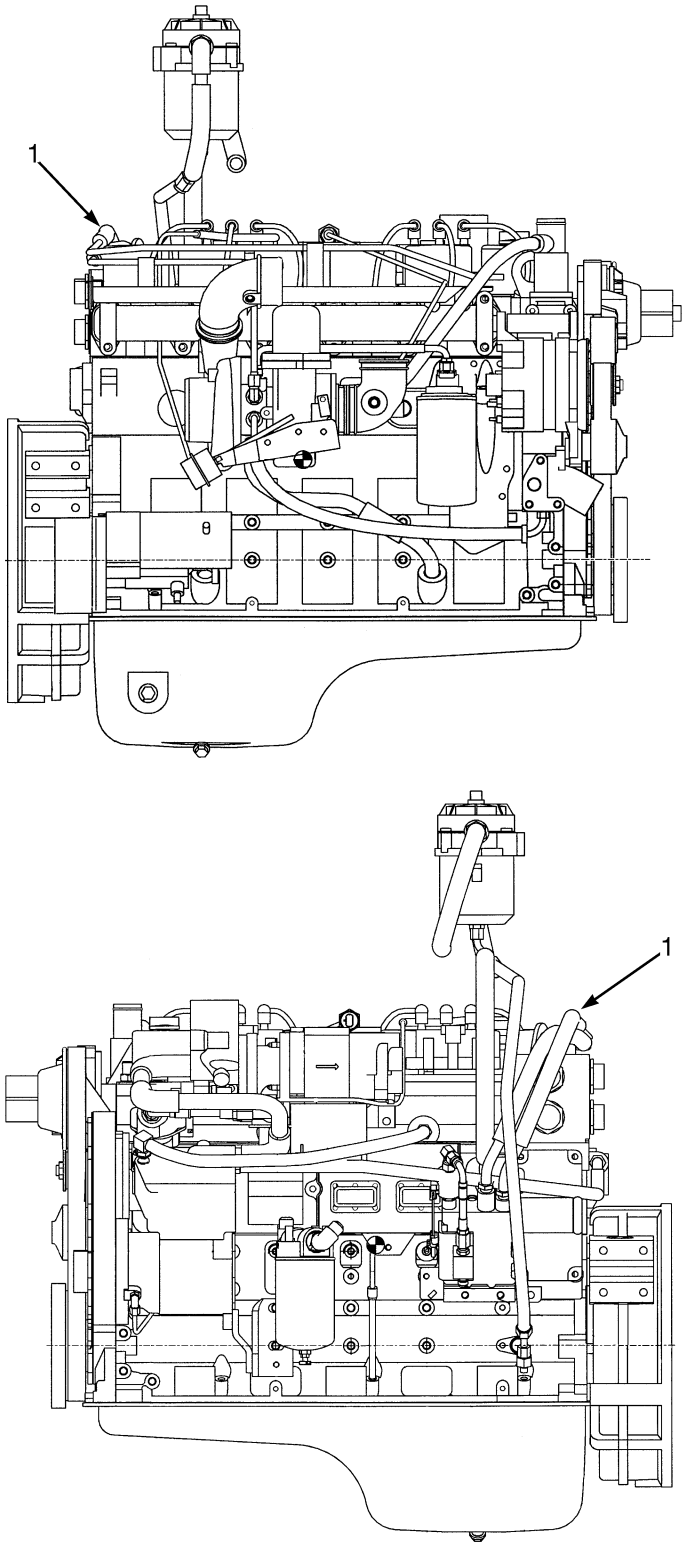

BP090222

©2015 HYSTER COMPANY

ENGINE ASSEMBLY

ITEM	PART NO.	DESCRIPTION	QTY
1	2095555	Engine Assy-Lpg (Dry Brake)	1
1	2095554	Engine Assy-Lpg (Wet Brake)	1

©2015 HYSTER COMPANY

ENGINE MOUNT (FIGURE 3-15)

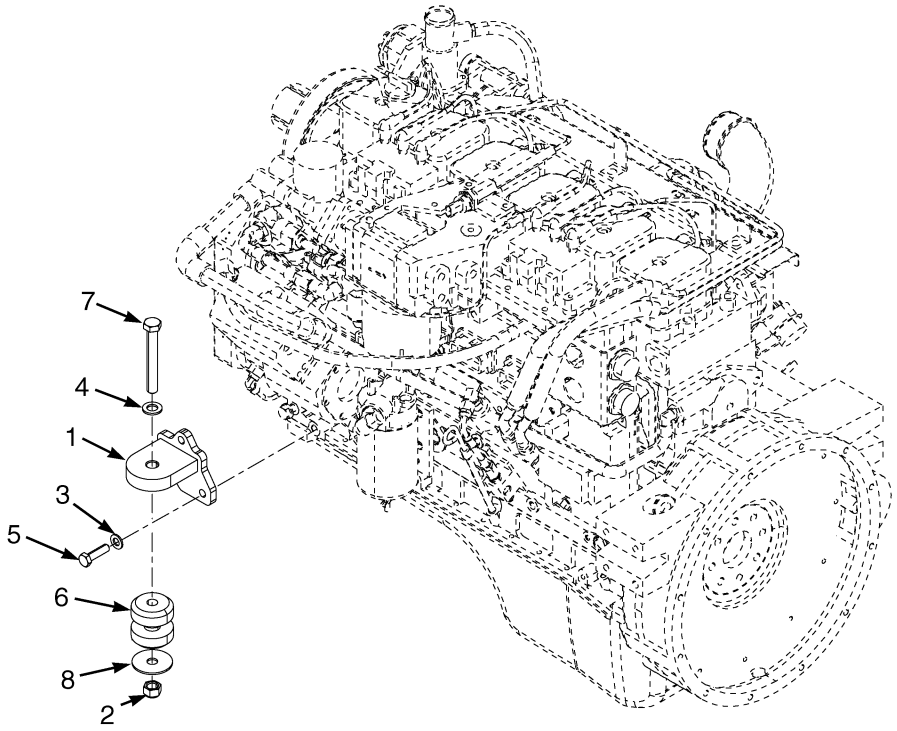

HP091432

ITEM	PART NO.	DESCRIPTION	QTY
1	1619570	Mount (RH)	1
1	1619572	Mount (LH)	1
2	302404	Locknut	2
3	320161	Washer	6
4	320165	Washer	2
5	296044	Capscrew	6
6	1393708	Isolator	2
7	292573	Capscrew	2
8	1452404	Washer	2

©2015 HYSTER COMPANY

NOTES

©2015 HYSTER COMPANY

ENGINE OIL COOLER (FIGURE 3-16)

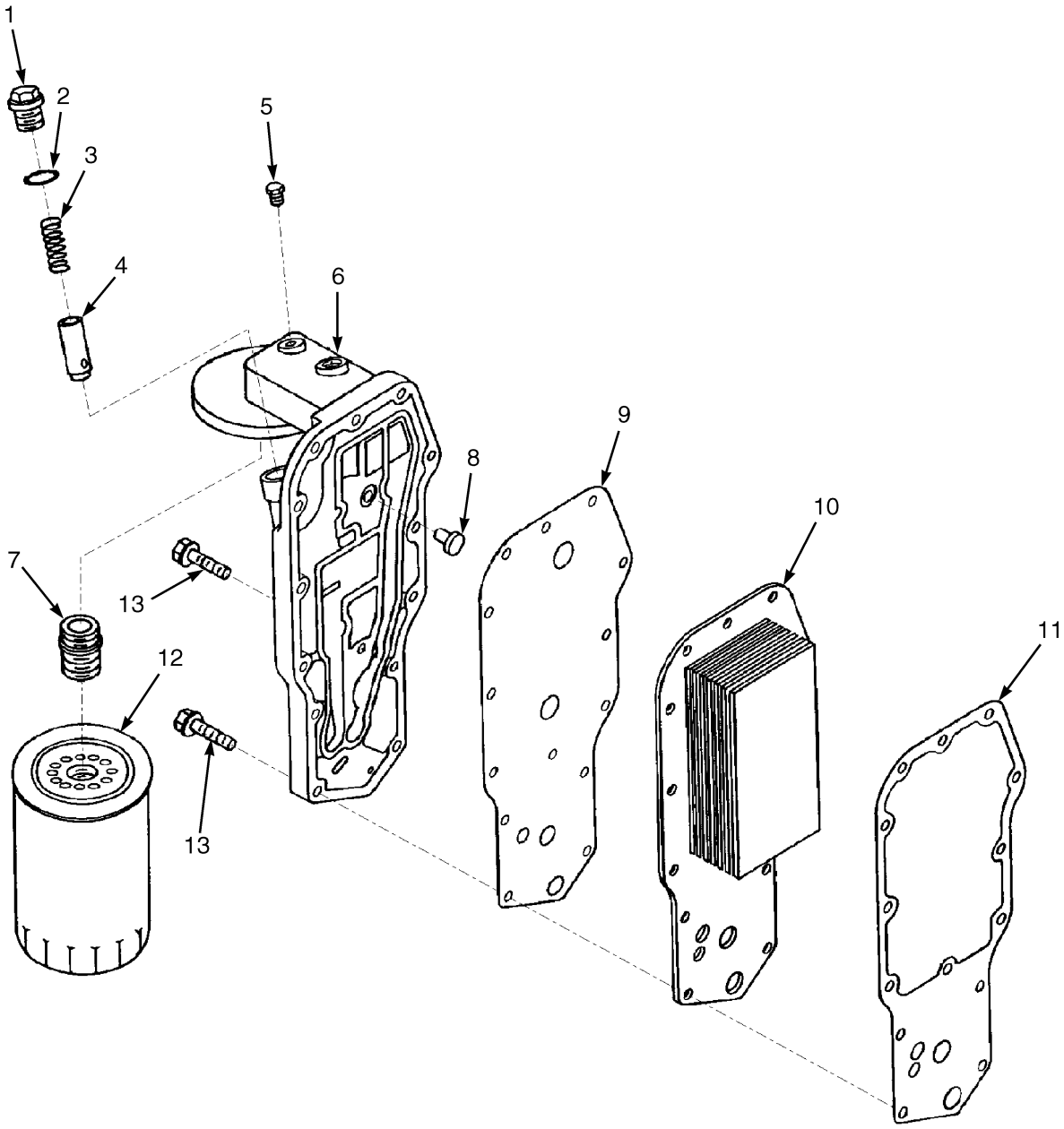

BP090243

©2015 HYSTER COMPANY

ENGINE OIL COOLER

ITEM	PART NO.	DESCRIPTION	QTY
	2095555	Engine Assy-Lpg (Dry Brake)	1
	2095554	Engine Assy-Lpg (Wet Brake)	1
1	1512453	Plug	1
2	1512118	O-Ring	1
3	1512112	Spring , Pressure Regulator	1
4	1512119	Plunger	1
5	1512448	Fitting	1
6	1512449	Filter Head	1
7	1512451	Adapter	1
8	1513772	Relief Valve (Pressure)	1
9	1512452	Gasket	1
10	1552286	Core	1
11	1638856	Gasket	1
12	1512123	Oil Filter (Filter)	1
13	1512033	Capscrew	14

©2015 HYSTER COMPANY

EXHAUST GAS SENSOR PLUMBING (FIGURE 3-17)

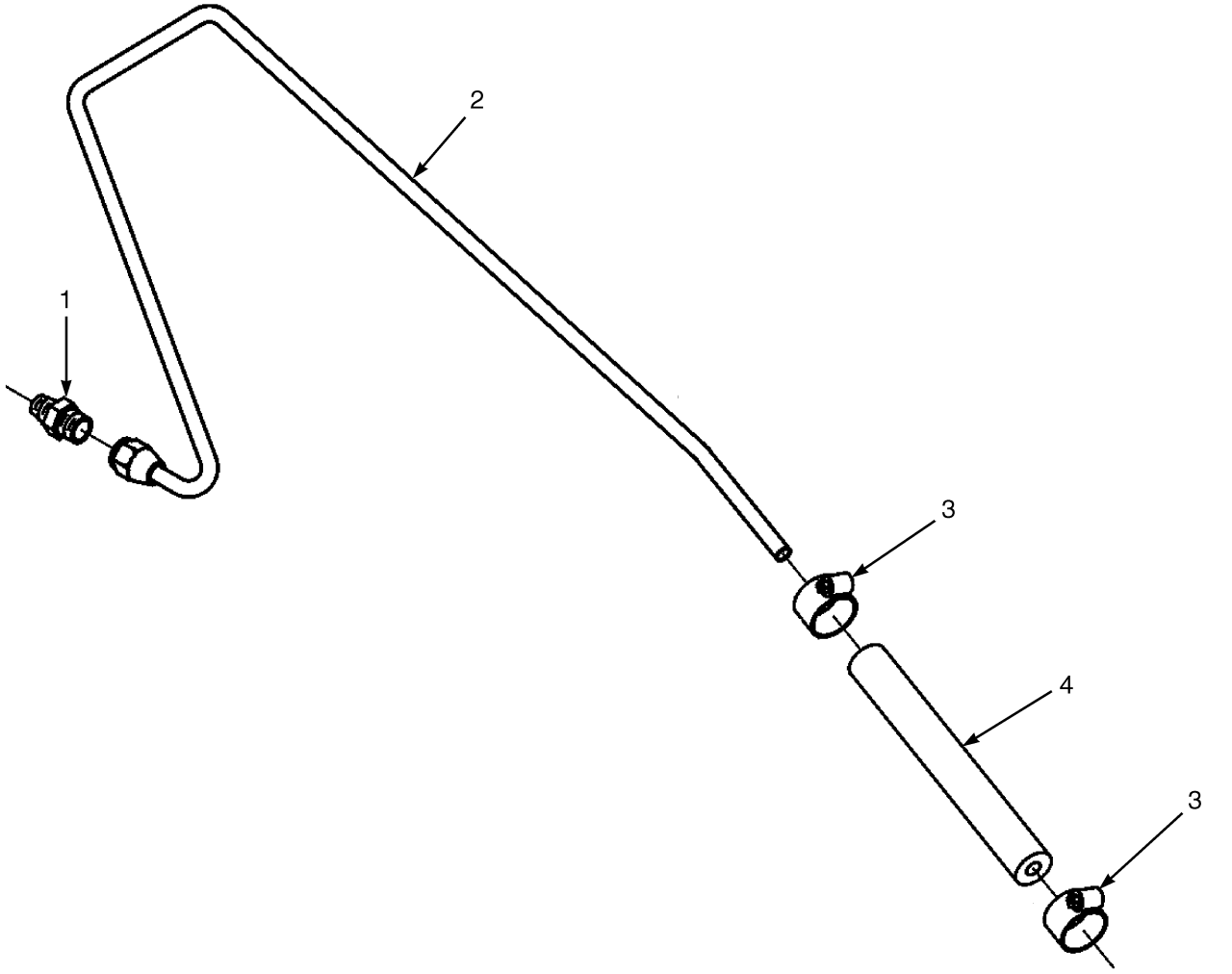

BP090269

ITEM	PART NO.	DESCRIPTION	QTY
	2095555	Engine Assy-Lpg (Dry Brake)	1
	2095554	Engine Assy-Lpg (Wet Brake)	1
1	1512728	Connector (Male)	1
2	1624871	Tube	1
3	1614323	Hose Clamp	2
4	1614615	Hose	1

©2015 HYSTER COMPANY

EXHAUST MANIFOLD (FIGURE 3-18)

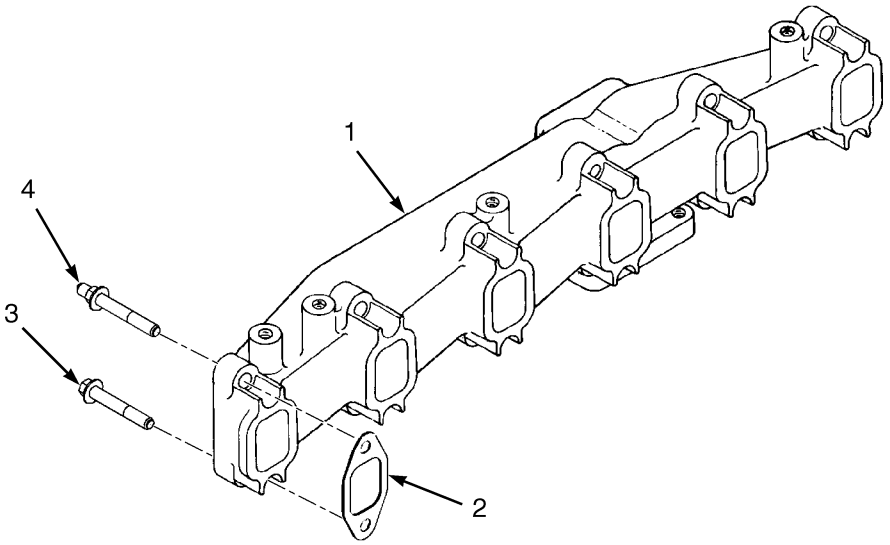

BP090251

ITEM	PART NO.	DESCRIPTION	QTY
	2095555	Engine Assy-Lpg (Dry Brake)	1
	2095554	Engine Assy-Lpg (Wet Brake)	1
1	1662046	Exhaust Manifold	1
2	1614066	Gasket	6
3	1543895	Screw	11
4	1543897	Screw	1
	1588087	Kit-Gasket	1

EXHAUST OUTLET CONNECTION (FIGURE 3-19)

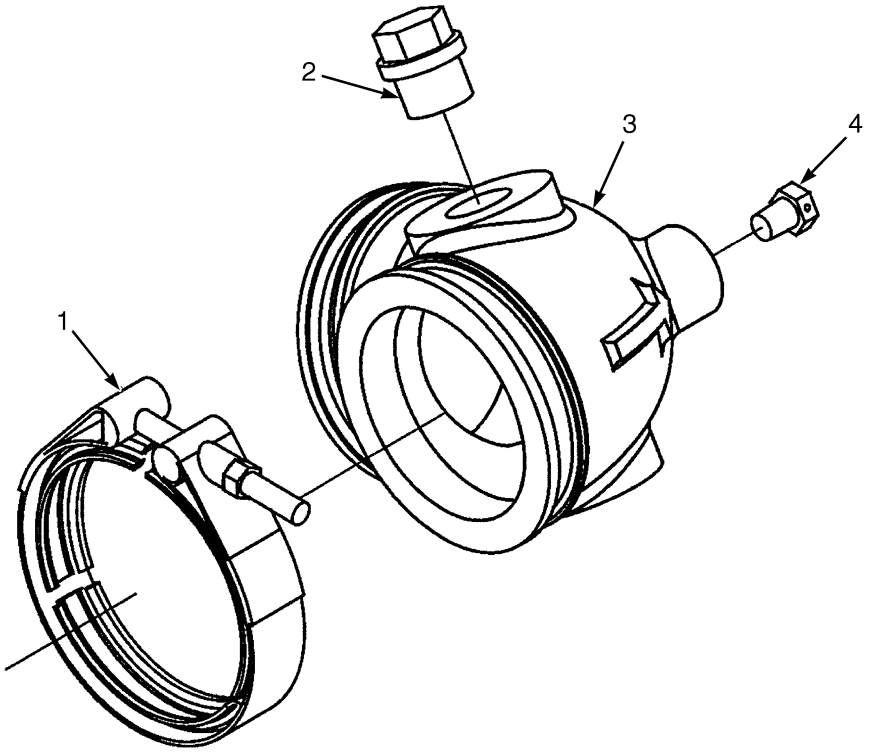

BP090271

ITEM	PART NO.	DESCRIPTION	QTY
	2095555	Engine Assy-Lpg (Dry Brake)	1
	2095554	Engine Assy-Lpg (Wet Brake)	1
1	1373430	Clamp	2
2	~~1614503~~		
	1615772	Plug	1
3	1614635	Adapter	1
4	1614454	Fitting (Pipe)	1

©2015 HYSTER COMPANY

FAN DRIVE (FIGURE 3-20)

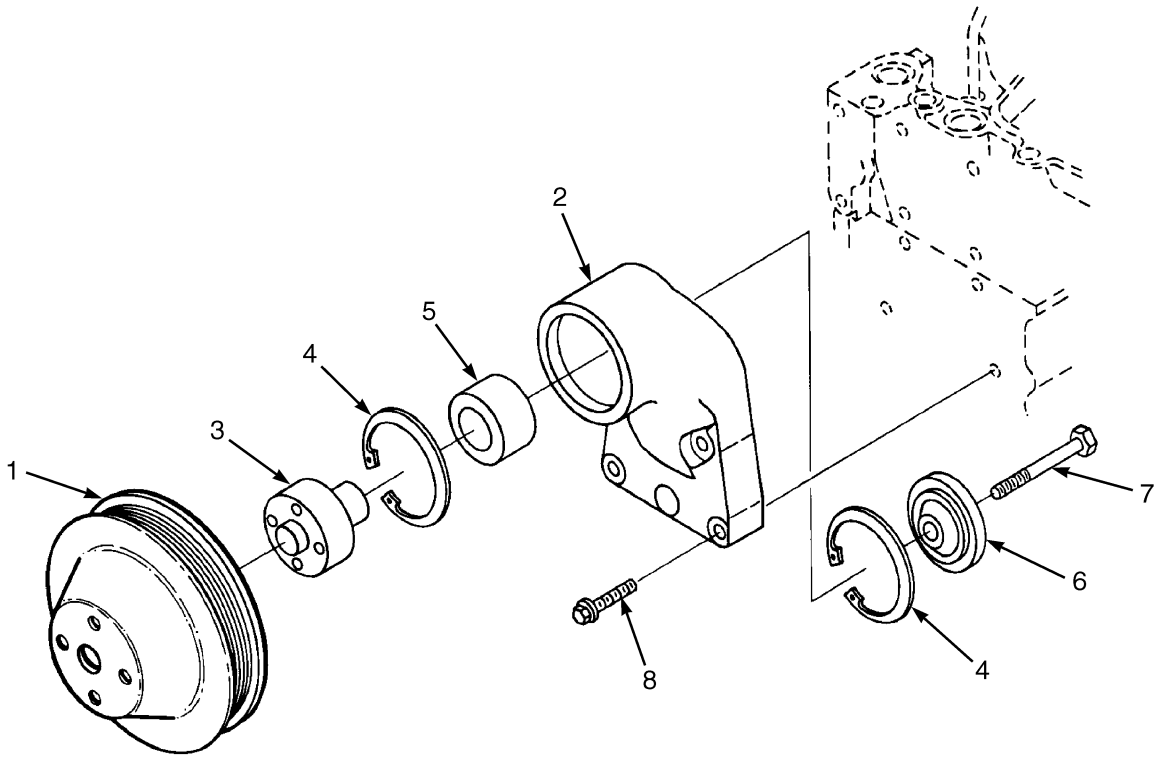

BP090240

ITEM	PART NO.	DESCRIPTION	QTY
	2095555	Engine Assy-Lpg (Dry Brake)	1
	2095554	Engine Assy-Lpg (Wet Brake)	1
1	1635258	Fan Pulley	1
1	4009311	Fan Pulley (Alternate Part)	1
2	1512424	Fan Mount Support Assembly	1
2	4045106	Support Assembly, Fan Mount (Alternate Part)	1
3	~~1512024~~		
	4045108	Hub (With Support Assy 1512424)	1
3	~~1512024~~		
	4045108	Hub (With Support Assy 4045106)	1
4	1512026	Retaining Ring	2
5	1512015	Ball Bearing (With Support Assy 1512424)	1
5	4045107	Bearing (With Support Assy 4045106)	1
6	1512025	Hub Retainer	1
7	1512027	Capscrew	1
8	1512029	Screw	4

©2015 HYSTER COMPANY

FLYWHEEL (FIGURE 3-21)

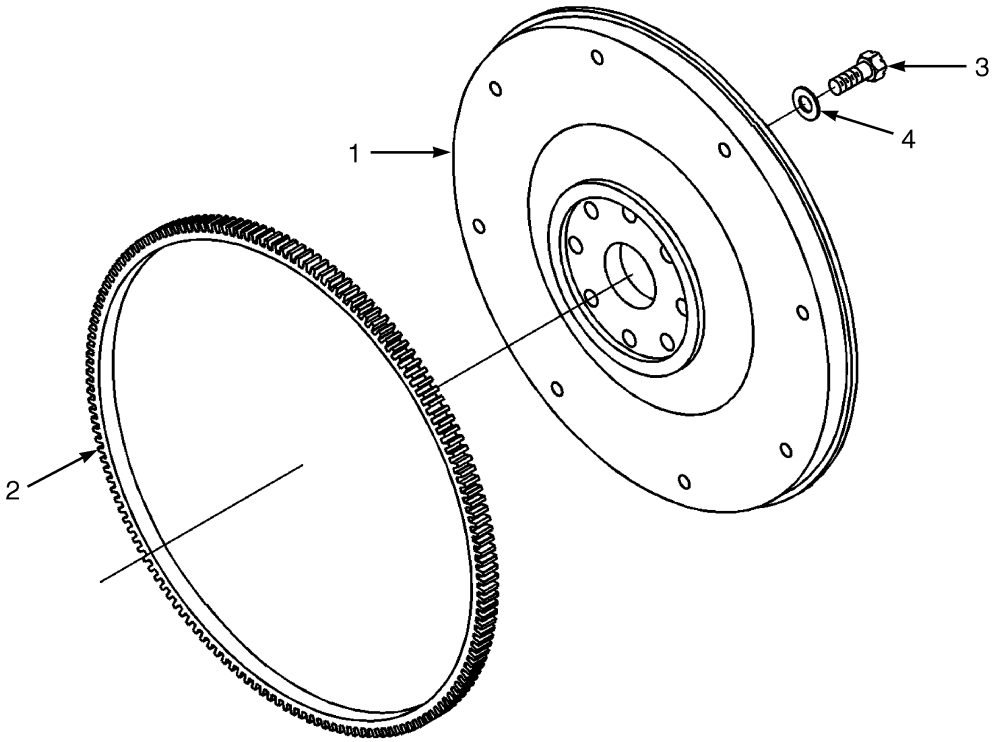

BP090261

ITEM	PART NO.	DESCRIPTION	QTY
	2095555	Engine Assy-Lpg (Dry Brake)	1
	2095554	Engine Assy-Lpg (Wet Brake)	1
1	1598354	Flywheel Assembly	1
1	1600416	Flywheel	1
2	1512445	Ring Gear	1
3	1512106	Capscrew	8
4	1512107	Washer	8

©2015 HYSTER COMPANY

NOTES

©2015 HYSTER COMPANY

FLYWHEEL HOUSING (FIGURE 3-22)

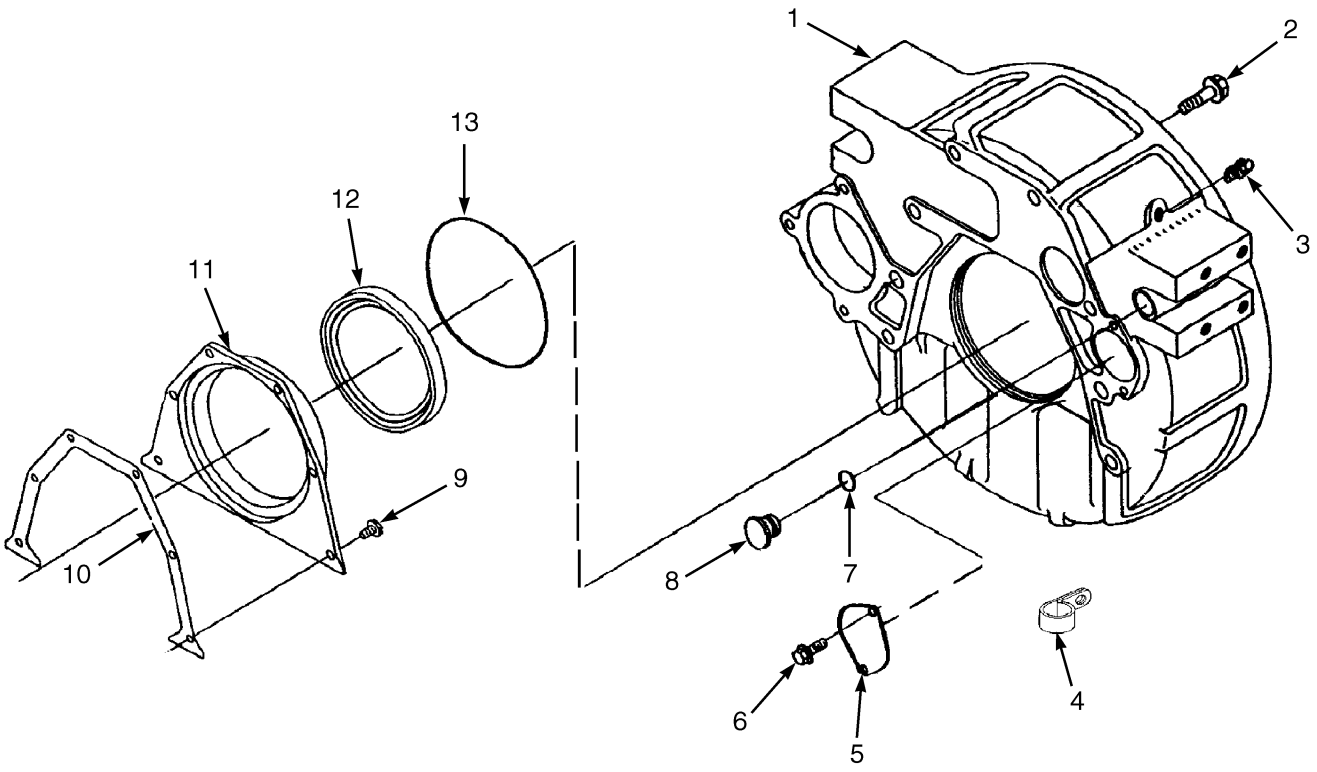

BP090260

©2015 HYSTER COMPANY

FLYWHEEL HOUSING

ITEM	PART NO.	DESCRIPTION	QTY
	2095555	Engine Assy-Lpg (Dry Brake)	1
	2095554	Engine Assy-Lpg (Wet Brake)	1
1	1543361	Flywheel Housing	1
2	1512053	Capscrew	8
3	1512046	Plug	1
4	1512435	Clip	1
5	1512056	Cover Plate	1
6	1512045	Screw	2
7	1512048	O-Ring	1
8	1512047	Fitting	1
9	1543362	Capscrew	6
10	1512052	Gasket	1
11	1543363	Cover	1
12	~~1564992~~		
	1512049	Seal Kit (Rear Crank)	1
13	1512050	O-Ring	1

©2015 HYSTER COMPANY

FRONT GEAR COVER AND HOUSING (FIGURE 3-23)

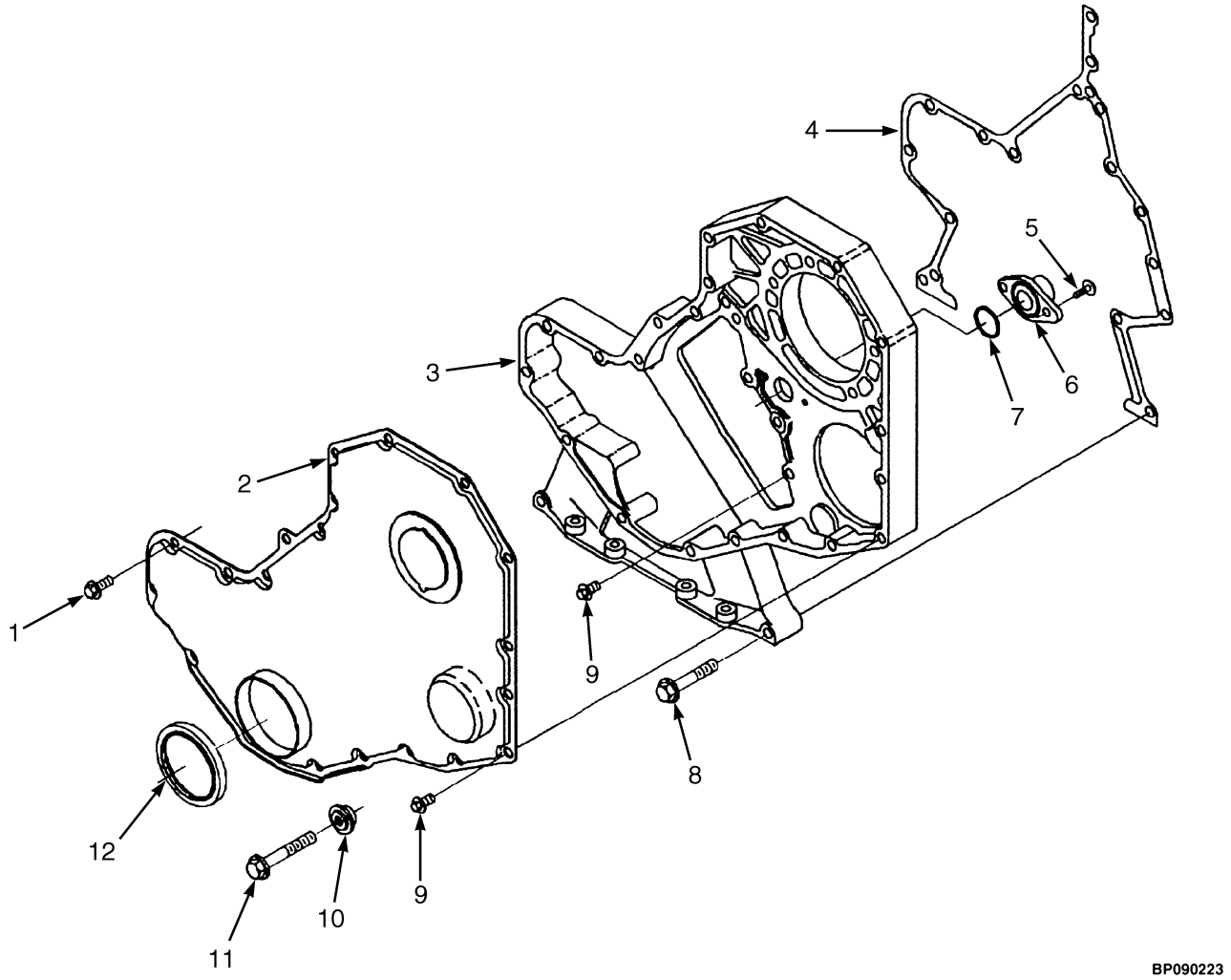

©2015 HYSTER COMPANY

FRONT GEAR COVER AND HOUSING

ITEM	PART NO.	DESCRIPTION	QTY
	2095555	Engine Assy-Lpg (Dry Brake)	1
	2095554	Engine Assy-Lpg (Wet Brake)	1
1	1513751	Screw	5
2	1614579	Cover	1
3	1614580	Clutch Housing	1
4	1521712	Gasket	1
5	1513736	Capscrew	2
6	1614544	Bracket (Sensor)	1
7	1513748	Sealing Ring	1
8	1513725	Capscrew	10
9	1521875	Screw	11
10	1521880	Retainer	1
11	1553781	Capscrew	1
12	. . . . .	Oil Seal	1
	1600388	Kit-Seal	1
	1588086	Kit-Gasket	1

©2015 HYSTER COMPANY

FRONT GEAR TRAIN ACCESSORY DRIVE (FIGURE 3-24)

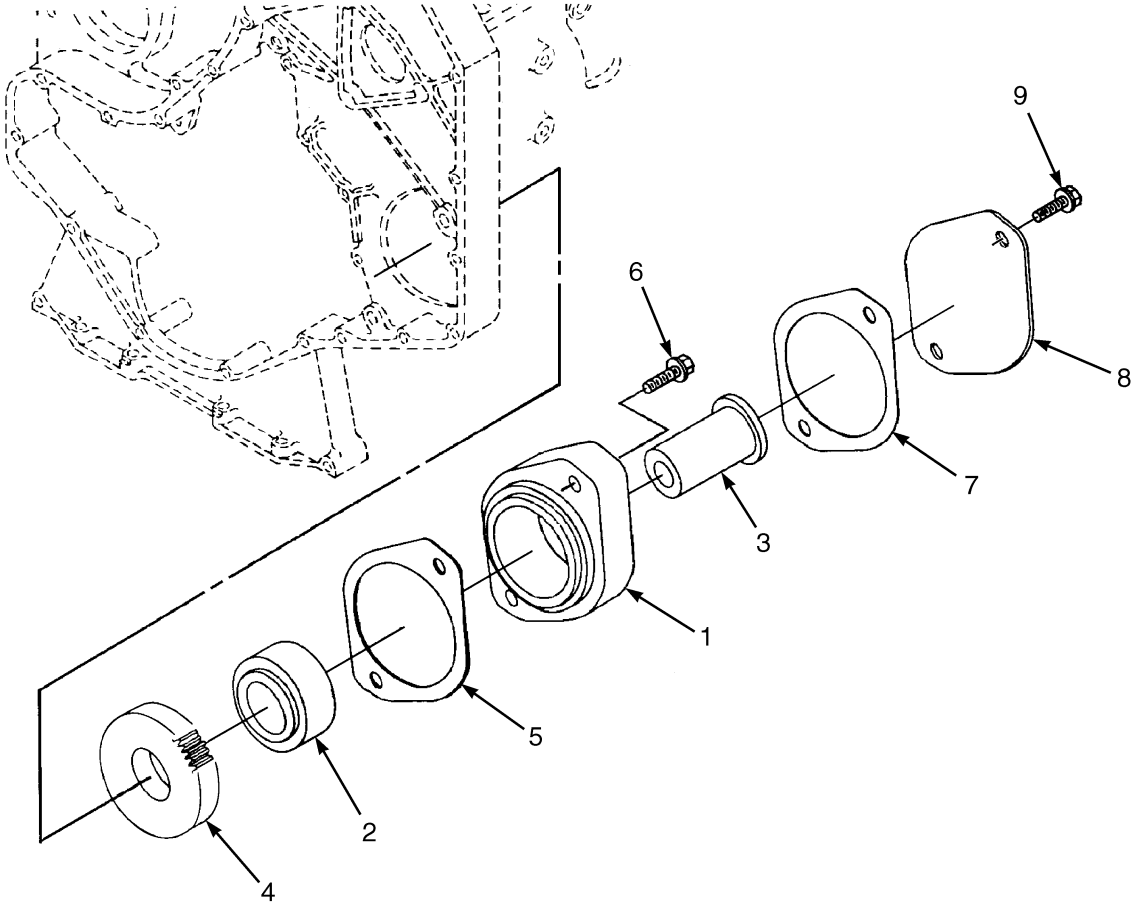

HP091201

©2015 HYSTER COMPANY

FRONT GEAR TRAIN ACCESSORY DRIVE

KEY:
A: Wet Brake
B: Dry Brake

ITEM	PART NO.	DESCRIPTION	QTY A	QTY B
	2095555	Engine Assy-Lpg (Dry Brake)	..	1
	2095554	Engine Assy-Lpg (Wet Brake)	1	..
1	1564978	Adapter	..	1
1	1543347	Adapter	1	..
1	1543348	Elbow	1	1
1	. . . . .	Adapter	1	1
2	1512330	Bearing , Roller	1	1
3	1513709	Drive Shaft	..	1
3	1512331	Drive Shaft , Accessory	1	..
4	1602497	Drive Gear	1	1
5	1588061	Gasket	..	1
5	1512326	Gasket	1	..
6	1511976	Capscrew	2	2
7	1512336	Gasket	1	1
8	1512327	Cover Plate	1	1
9	1512328	Capscrew	2	2

©2015 HYSTER COMPANY

INTAKE MANIFOLD (FIGURE 3-25)

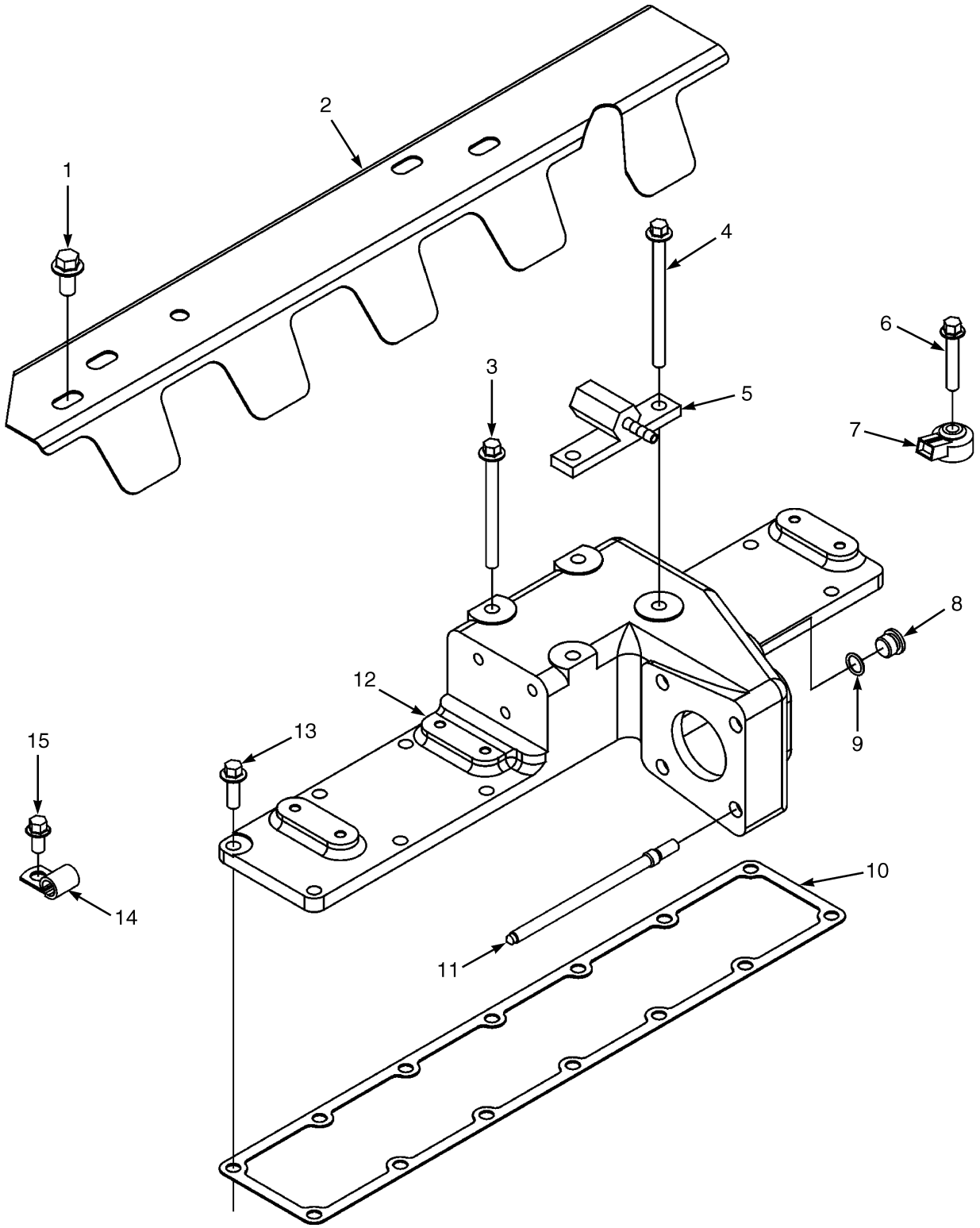

©2015 HYSTER COMPANY

INTAKE MANIFOLD

ITEM	PART NO.	DESCRIPTION	QTY
	2095555	Engine Assy-Lpg (Dry Brake)	1
	2095554	Engine Assy-Lpg (Wet Brake)	1
1	1614576	Capscrew	3
2	1624994	Heat Shield	1
3	1512296	Capscrew	2
4	1614582	Capscrew	1
5	1614591	Bracket	1
6	1512111	Capscrew	1
7	1614491	Sensor (Knock)	3
8	1512587	Plug Assembly	2
9	1512588	O-Ring	1
10	1512300	Gasket	1
11	1614633	Stud	4
12	1614593	Cover (Intake Manifold)	1
13	1512295	Capscrew	9
14	1513776	Clip	1
15	1513749	Capscrew	1
	1588087	Kit-Gasket	1

©2015 HYSTER COMPANY

LIFTING BRACKET (FIGURE 3-26)

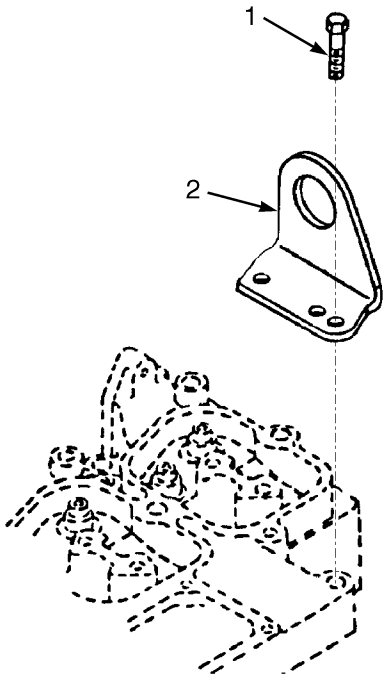

BP090257

ITEM	PART NO.	DESCRIPTION	QTY
	2095555	Engine Assy-Lpg (Dry Brake)	1
	2095554	Engine Assy-Lpg (Wet Brake)	1
1	1511953	Capscrew	2
2	1512109	Bracket	1

©2015 HYSTER COMPANY

NOTES

©2015 HYSTER COMPANY

OIL LEVEL GAUGE (FIGURE 3-27)

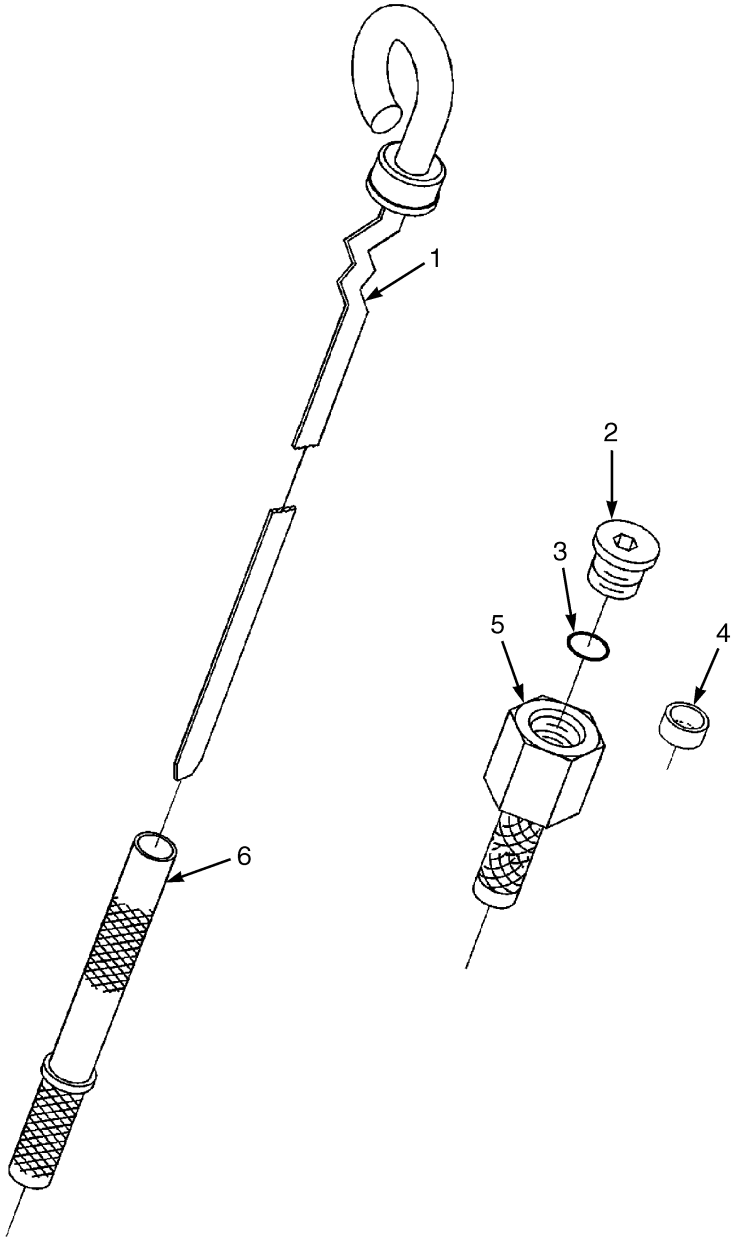

BP090244

©2015 HYSTER COMPANY

OIL LEVEL GAUGE

ITEM	PART NO.	DESCRIPTION	QTY
	2095555	Engine Assy-Lpg (Dry Brake)	1
	2095554	Engine Assy-Lpg (Wet Brake)	1
1	1512132	Dipstick	1
2	1614453	Plug (Threaded)	1
3	1614452	O-Ring	1
4	1512130	Plug	2
5	1614575	Adapter	1
6	1624829	Dipstick Tube	1

©2015 HYSTER COMPANY

OIL PAN (FIGURE 3-28)

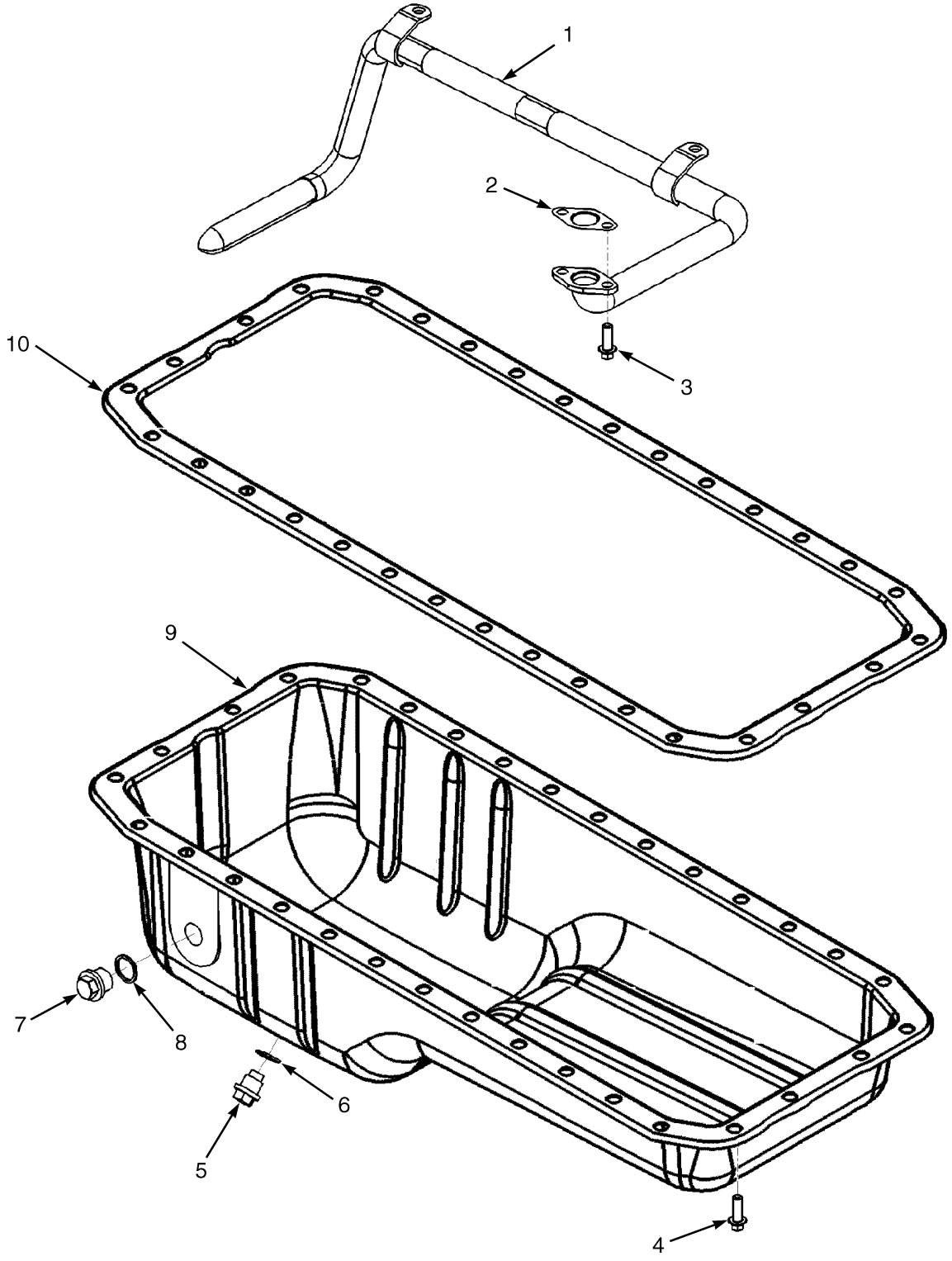

©2015 HYSTER COMPANY

OIL PAN

ITEM	PART NO.	DESCRIPTION	QTY
	2095555	Engine Assy-Lpg (Dry Brake)	1
	2095554	Engine Assy-Lpg (Wet Brake)	1
1	1512136	Adapter (Oil Suction)	1
2	1512139	Gasket	1
3	1512004	Capscrew	2
4	1513794	Capscrew	36
5	1512134	Plug	1
6	1512135	Seal	1
7	1512138	Plug	1
8	1512137	Seal	1
9	1543430	Kit-Service (Oil Pan)	1
9	1543429	Oil Pan	1
10	1543424	Gasket	1
	a 1513769	Capscrew	4
	a 1543432	Clamping Plate	1
	1588086	Kit-Gasket	1
	1588087	Kit-Gasket	1

FOOTNOTES:

a Not Illustrated

©2015 HYSTER COMPANY

OIL PUMP (FIGURE 3-29)

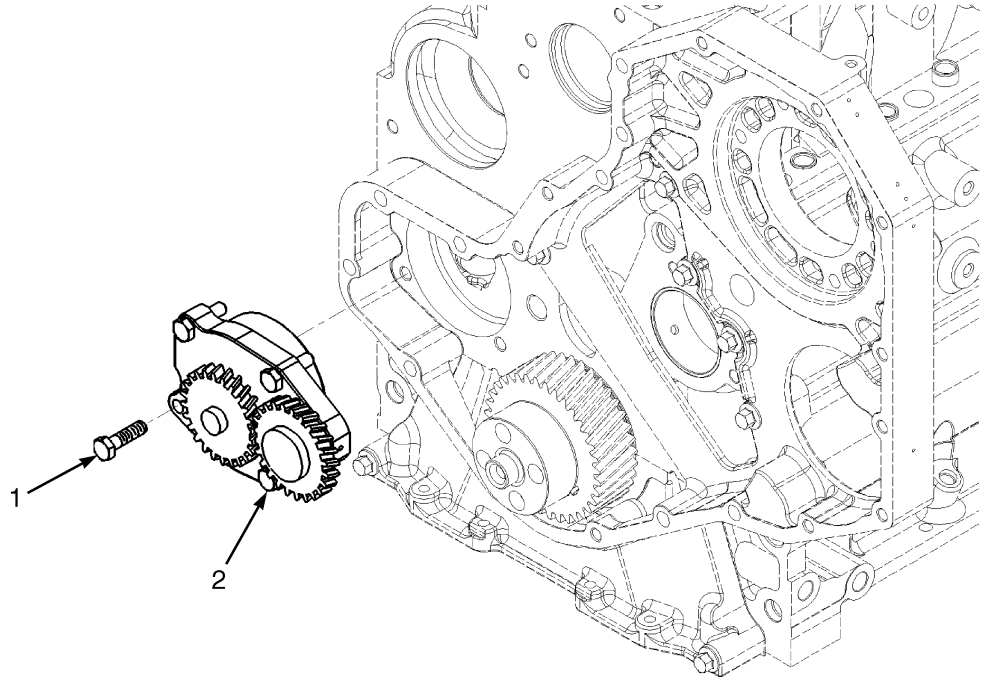

BP090245

ITEM	PART NO.	DESCRIPTION	QTY
	2095555	Engine Assy-Lpg (Dry Brake)	1
	2095554	Engine Assy-Lpg (Wet Brake)	1
1	1512456	Capscrew	4
2	1661076	Oil Pump	1

©2015 HYSTER COMPANY

NOTES

©2015 HYSTER COMPANY

PISTON AND CONNECTING ROD (FIGURE 3-30)

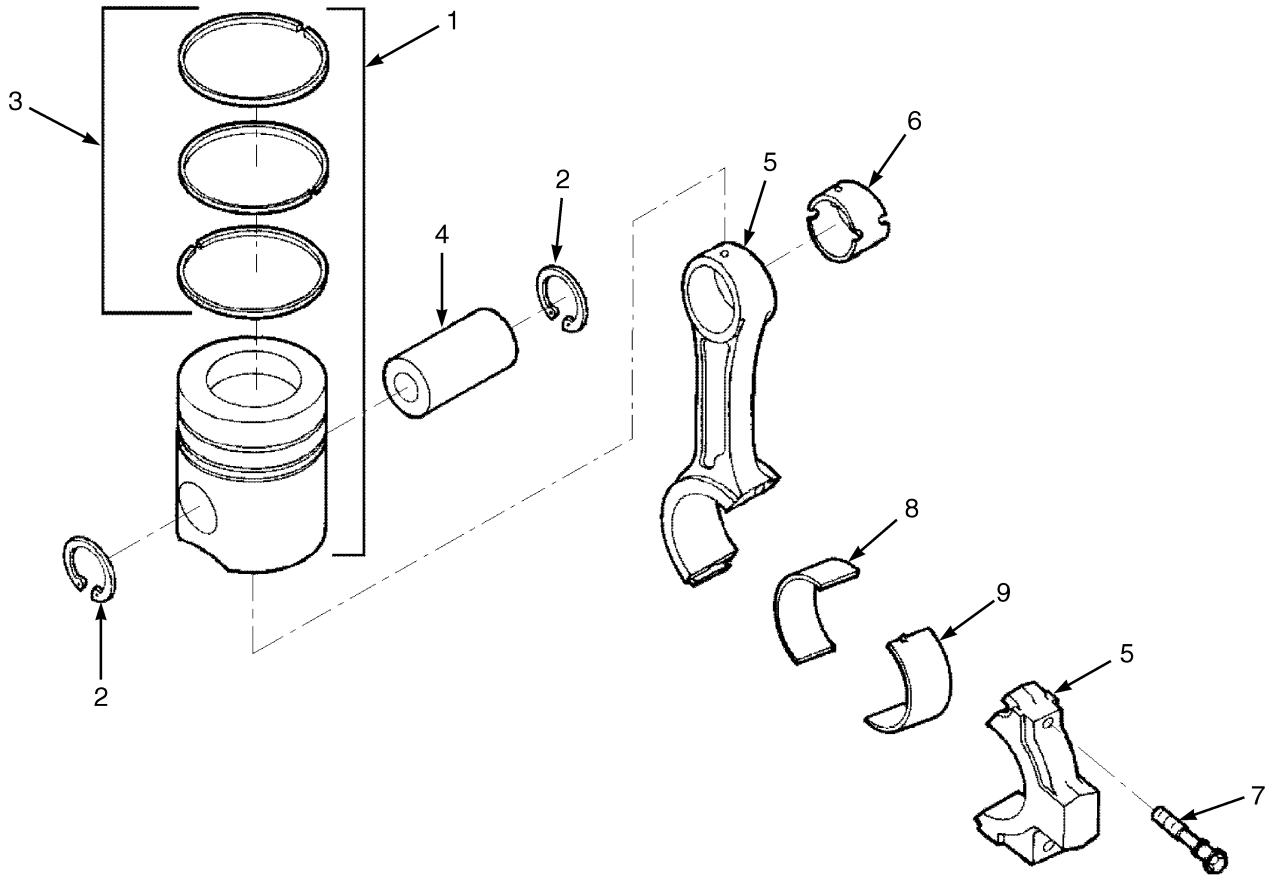

BP090247

©2015 HYSTER COMPANY

PISTON AND CONNECTING ROD

ITEM	PART NO.	DESCRIPTION	QTY
	2095555	Engine Assy-Lpg (Dry Brake)	1
	2095554	Engine Assy-Lpg (Wet Brake)	1
1	1614496	Kit-Piston (Standard)	6
2	1512146	Retaining Ring	2
3	1614495	Kit-Piston Ring (Standard)	1
3	1614499	Kit-Piston Ring (0.50 mm)	1
3	1614500	Kit-Piston Ring (1.00 mm)	1
4	1512149	Pin	6
5	**a**	Piston Rod Assy	6
6	1553262	Bushing	1
7	1553261	Capscrew	2
8	1614511	Bearing (Standard)	6
8	1512150	Bearing (0.25 mm)	AR
8	1512151	Bearing (0.50 mm)	AR
8	1512152	Bearing (0.75 mm)	AR
8	1512153	Bearing (1.00 mm)	AR
9	1543445	Bearing (Standard)	6
9	1584817	Bearing (0.25 mm)	AR
9	1584818	Bearing (0.50 mm)	AR
9	1584819	Bearing (0.75 mm)	AR
9	1584820	Bearing (1.00 mm)	AR

FOOTNOTES:

a Replace with remanufactured Piston Rod Assy 1618590.

©2015 HYSTER COMPANY

ROCKER LEVERS (FIGURE 3-31)

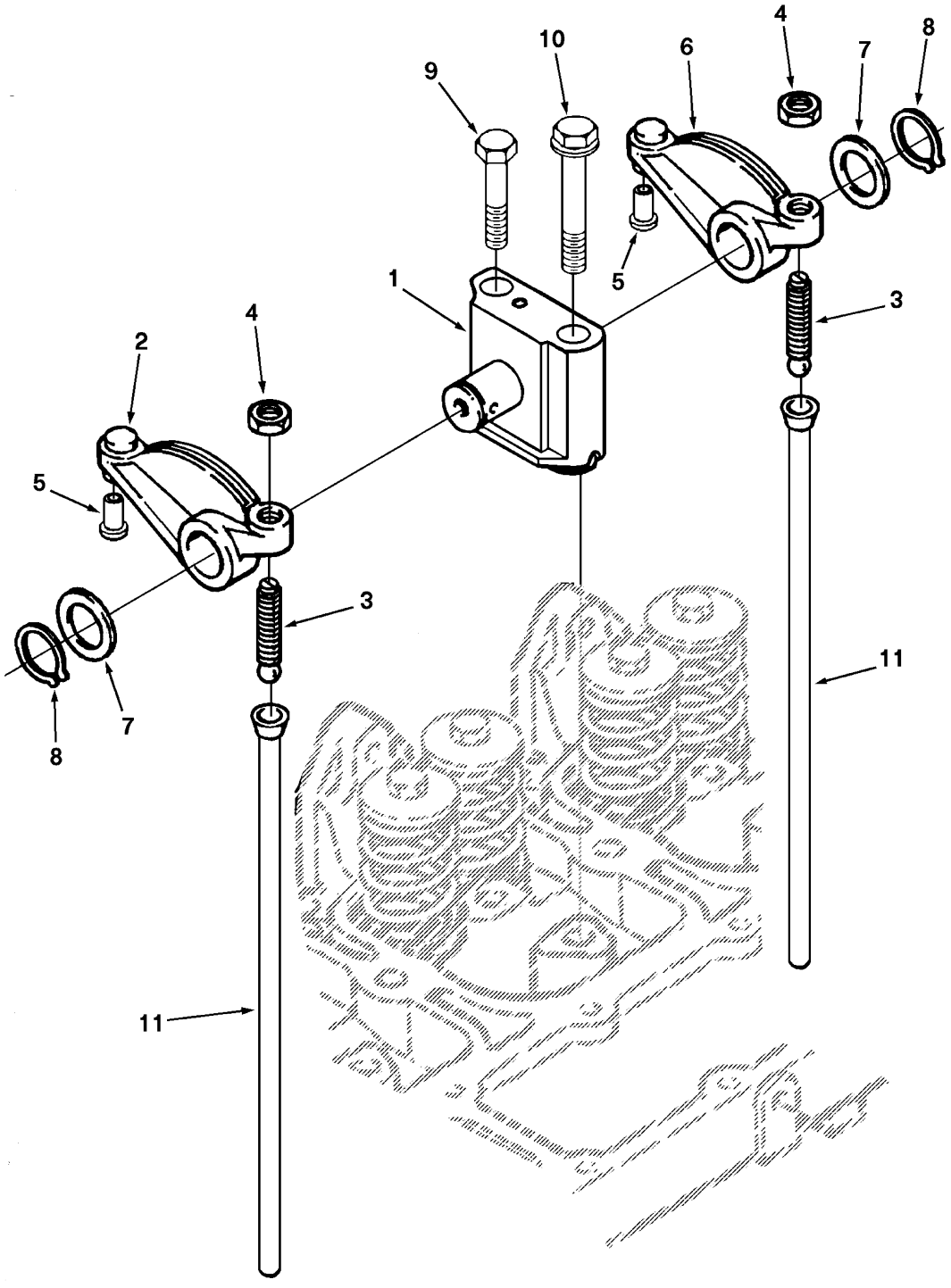

©2015 HYSTER COMPANY

ROCKER LEVERS

ITEM	PART NO.	DESCRIPTION	QTY
	2095555	Engine Assy-Lpg (Dry Brake)	1
	2095554	Engine Assy-Lpg (Wet Brake)	1
1	1543891	Support	6
1	1543892	Support	1
2	1543889	Rocker (Intake)	1
3	1543886	Screw	1
4	1513806	Nut	1
5	1543884	Insert	1
6	1543885	Rocker (Exhaust)	1
7	1543882	Washer	12
8	1543881	Retaining Ring	12
9	1543878	Capscrew	6
10	1543879	Capscrew	6
11	1543877	Rod	12
	1543883	Rocker (Exhaust)	6
	1543887	Rocker (Intake)	6

©2015 HYSTER COMPANY

THERMOSTAT (FIGURE 3-32)

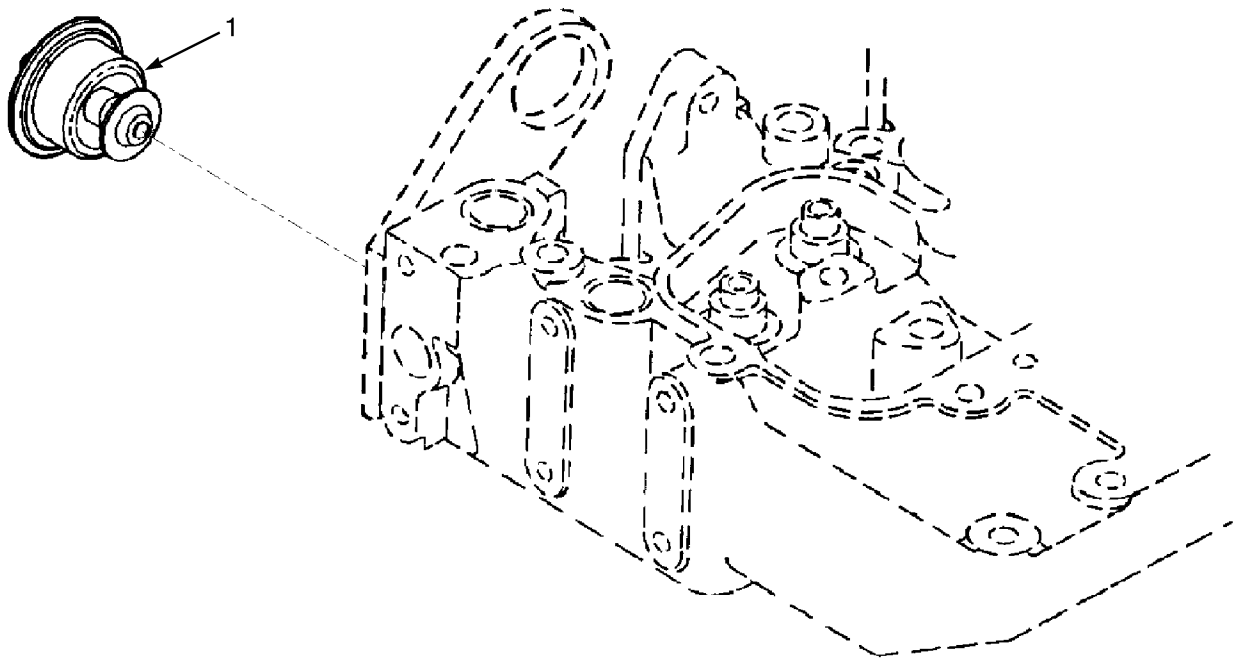

BP090238

ITEM	PART NO.	DESCRIPTION	QTY
	2095555	Engine Assy-Lpg (Dry Brake)	1
	2095554	Engine Assy-Lpg (Wet Brake)	1
1	1603897	Thermostat	1

©2015 HYSTER COMPANY

THERMOSTAT HOUSING (FIGURE 3-33)

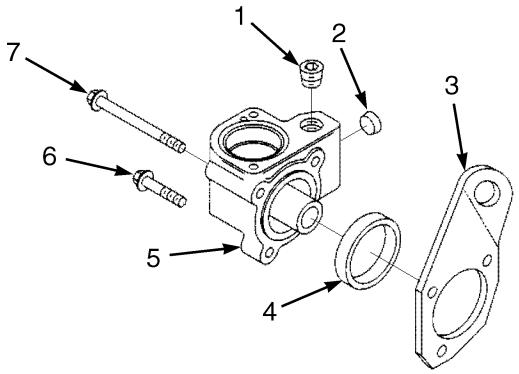

BP090252

ITEM	PART NO.	DESCRIPTION	QTY
	2095555	Engine Assy-Lpg (Dry Brake)	1
	2095554	Engine Assy-Lpg (Wet Brake)	1
1	1512304	Plug	1
2	1511952	Fitting	1
3	1512302	Bracket	1
4	1512305	O-Ring	1
5	1614459	Thermostat Housing	1
6	1512296	Capscrew	2
7	1512029	Screw	1

©2015 HYSTER COMPANY

TURBOCHARGER (FIGURE 3-34)

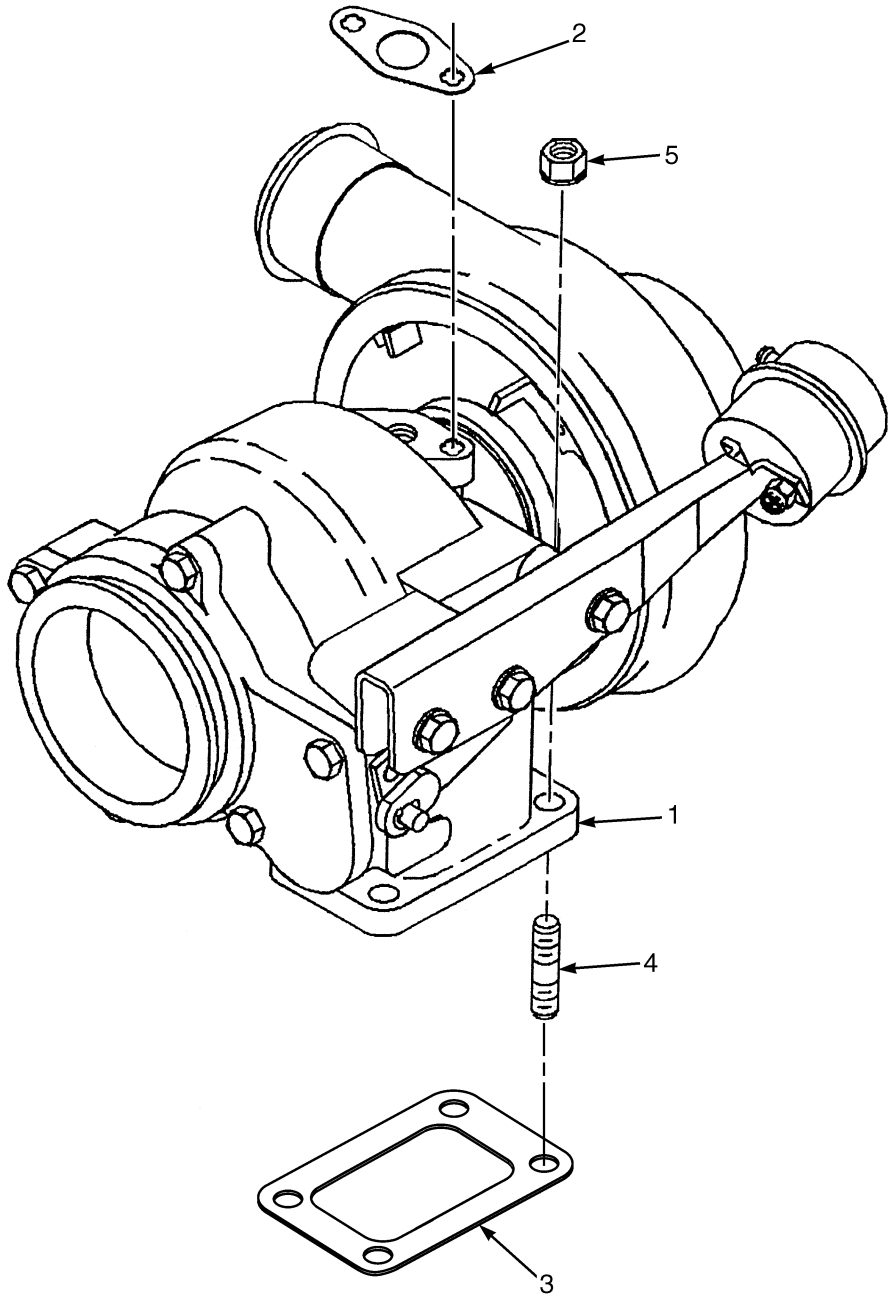

BP090425

©2015 HYSTER COMPANY

TURBOCHARGER

ITEM	PART NO.	DESCRIPTION	QTY
	2095555	Engine Assy-Lpg (Dry Brake)	1
	2095554	Engine Assy-Lpg (Wet Brake)	1
1	. . . . .	Turbocharger Assembly (☞Figure 3-37)	1
2	1586183	Gasket	1
3	1584657	Gasket	1
4	1513337	Stud	4
5	1513338	Nut	4
	4016873	Kit-Repair Turbocharger	1

©2015 HYSTER COMPANY

TURBOCHARGER COMPRESSOR OUTLET CONNECTION (FIGURE 3-35)

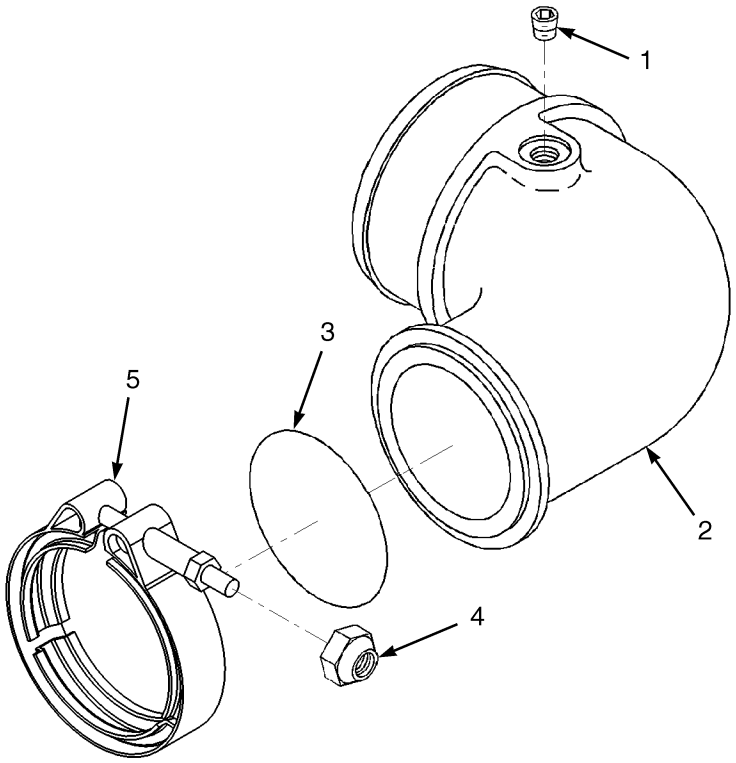

BP090241

ITEM	PART NO.	DESCRIPTION	QTY
	2095555	Engine Assy-Lpg (Dry Brake)	1
	2095554	Engine Assy-Lpg (Wet Brake)	1
1	1614322	Fitting	1
2	1521891	Pipe	1
3	1515787	O-Ring	1
4	1517094	Locknut	1
5	1597806	Clamp	1

©2015 HYSTER COMPANY

NOTES

©2015 HYSTER COMPANY

TURBOCHARGER PLUMBING (FIGURE 3-36)

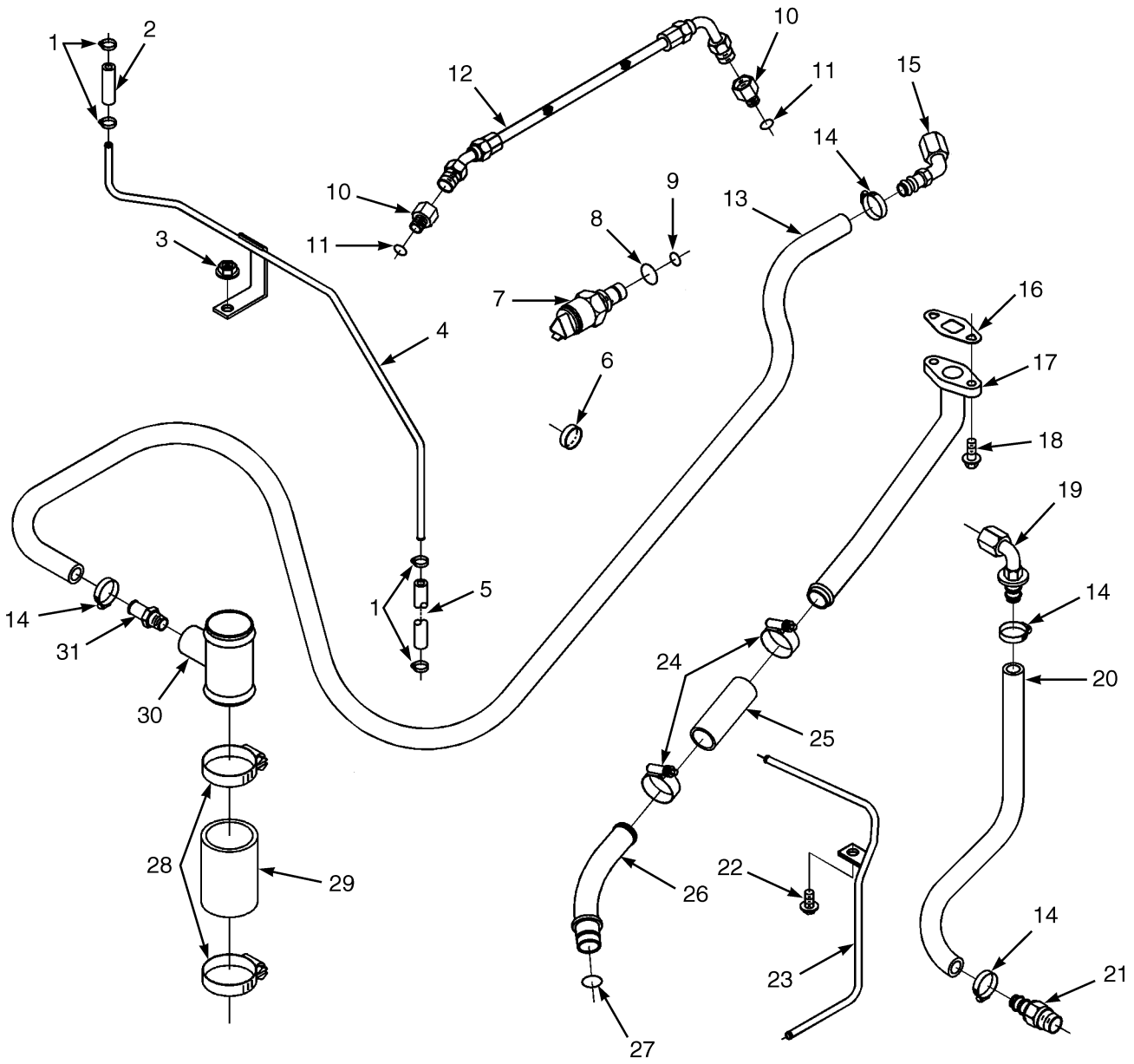

BP090253

©2015 HYSTER COMPANY

TURBOCHARGER PLUMBING

ITEM	PART NO.	DESCRIPTION	QTY
	2095555	Engine Assy-Lpg (Dry Brake)	1
	2095554	Engine Assy-Lpg (Wet Brake)	1
1	1612804	Clamp	4
2	1662047	Hose	1
3	1514483	Nut	1
4	1625567	Tube (Air Fuel Control)	1
5	1662048	Hose	1
6	1514339	Plug	1
7	1614570	Valve (Air Control)	1
8	1614560	O-Ring	1
9	1614561	O-Ring	1
10	1514566	Connector	2
11	1513294	O-Ring	1
12	1625570	Hose (Flexible)	1
13	1625569	Hose (Plain)	1
14	1614501	Hose Clamp	4
15	1625568	Coupling (Hose)	1
16	1514565	Gasket (Oil Drain)	1
17	1588834	Pipe	1
18	1512004	Capscrew	2
19	1614542	Coupling	2
20	1614578	Hose	1
21	1614550	Coupling	1
22	1513749	Capscrew	1
23	1625566	Tube (Air Transfer)	1
24	1517268	Hose Clamp	2
25	1517269	Hose	1
26	1521962	Tube	1
27	1517270	O-Ring	1
28	1513411	Hose Clamp	2
29	1614311	Hose	1
30	1614541	Tube	1
31	1511957	Coupling	1
	1588087	Kit-Gasket	1

©2015 HYSTER COMPANY

TURBOCHARGER ASSEMBLY (FIGURE 3-37)

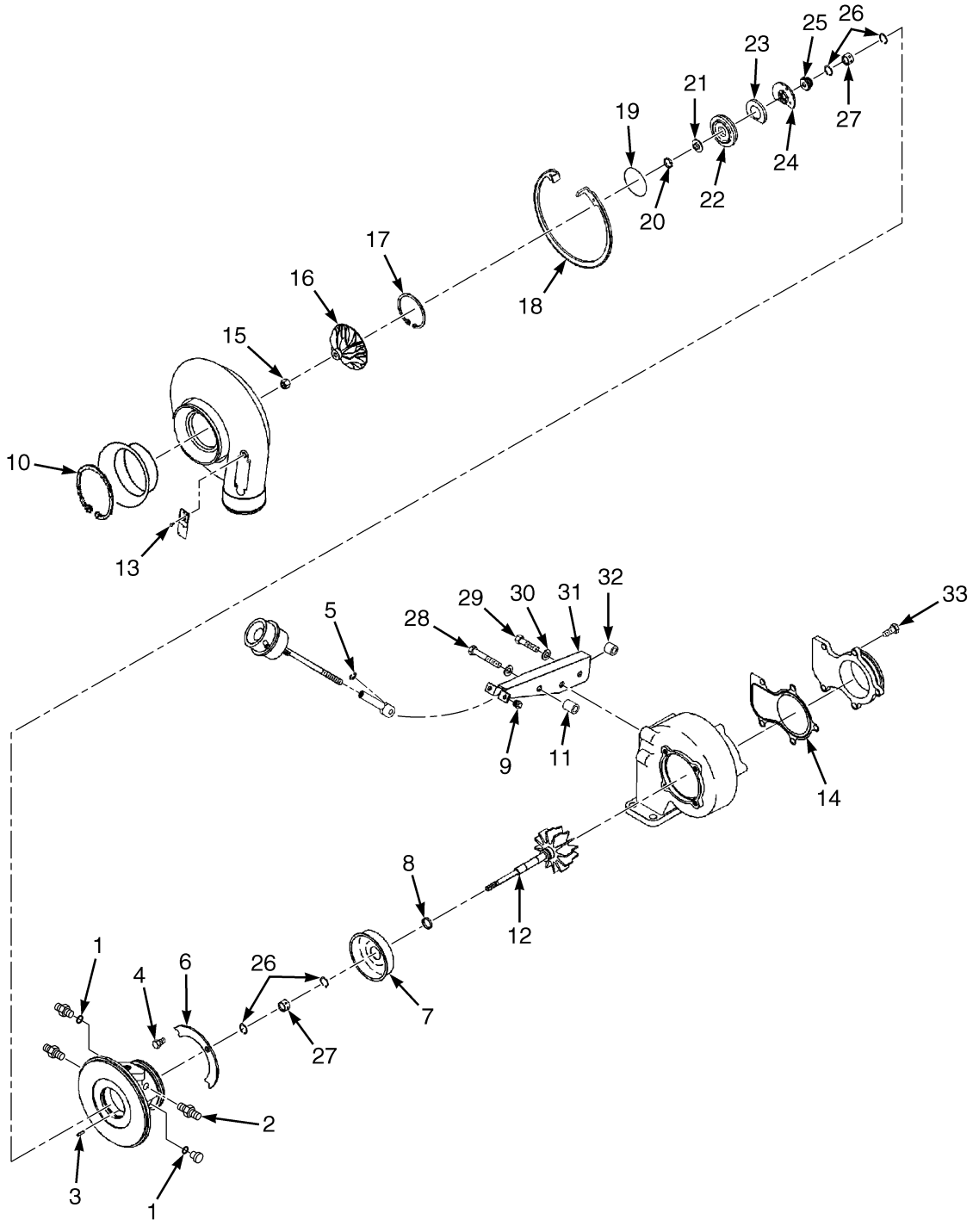

BP090426

©2015 HYSTER COMPANY

TURBOCHARGER ASSEMBLY

ITEM	PART NO.	DESCRIPTION	QTY
	2095555	Engine Assy-Lpg (Dry Brake)	1
	2095554	Engine Assy-Lpg (Wet Brake)	1
1	1614480	O-Ring	4
2	4016909	Connector	1
3	1513328	Roll Pin	1
4	1513334	Capscrew	4
5	1517220	Retaining Ring	1
6	1517232	Plate	2
7	1517214	Heat Shield	1
8	1513332	Sealing Ring	1
9	1543714	Locknut	2
10	1614477	Retaining Ring	1
11	1517226	Spacer	1
12	1543711	Shaft	1
13	1513318	Screw	2
14	1543726	Gasket	1
15	1543734	Locknut	1
16	1616011	Impeller	1
17	1517216	Retaining Ring	1
18	1517230	Retaining Ring	1
19	1517221	O-Ring	1
20	1513333	Sealing Ring	1
21	1614479	Collar	1
22	1517223	Plate (Oil Seal)	1
23	1517217	Baffle	1
24	1543733	Thrust Bearing (Turbine)	1
25	1517224	Oil Seal	1
26	1517237	Retaining Ring	4
27	1517212	Bearing	2
28	1543732	Setscrew	1
29	1517231	Screw	2
30	1517213	Washer	3
31	1543717	Bracket (Actuator)	1
32	1517225	Spacer	3
33	1517222	Setscrew	8

©2015 HYSTER COMPANY

VALVE COVER (FIGURE 3-38)

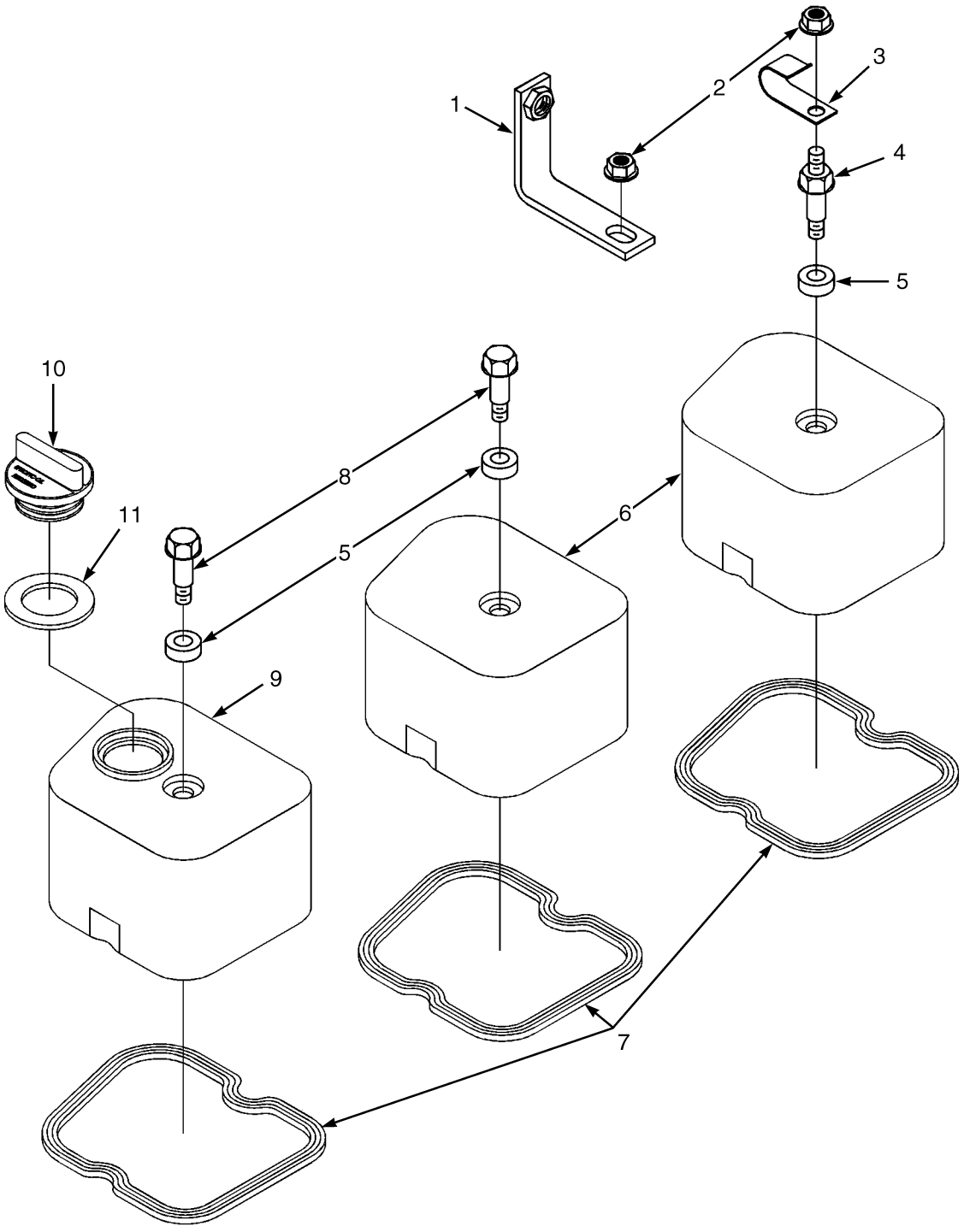

BP090254

©2015 HYSTER COMPANY

VALVE COVER

ITEM	PART NO.	DESCRIPTION	QTY
	2095555	Engine Assy-Lpg (Dry Brake)	1
	2095554	Engine Assy-Lpg (Wet Brake)	1
1	1614577	Brace	1
2	1513712	Nut	2
3	1614532	Clip	1
4	1614531	Capscrew	2
5	1512308	Isolator	6
6	1512310	Cover	5
7	1512307	Gasket	6
8	1512309	Capscrew	4
9	1512311	Cover	1
10	1614548	Cap	1
11	1512312	Sealing Ring	1
	1588087	Kit-Gasket	1

©2015 HYSTER COMPANY

VALVE TAPPET (FIGURE 3-39)

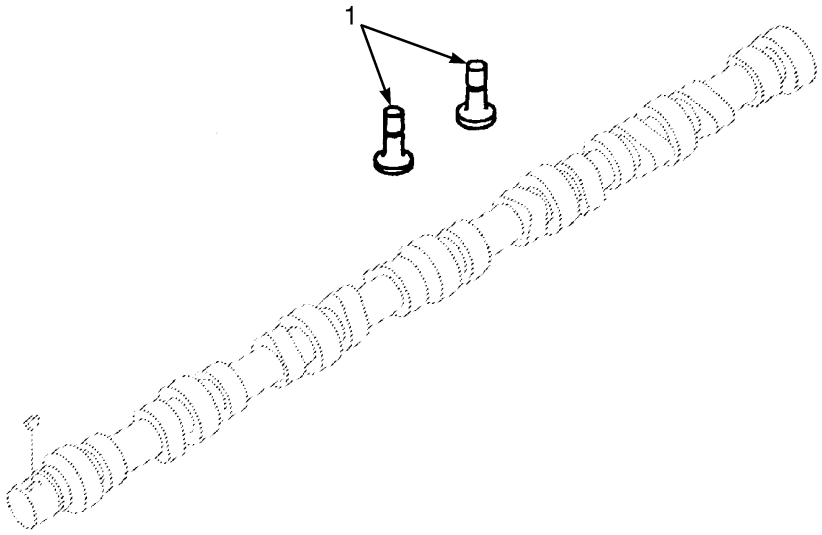

HP091189

ITEM	PART NO.	DESCRIPTION	QTY
	2095555	Engine Assy-Lpg (Dry Brake)	1
	2095554	Engine Assy-Lpg (Wet Brake)	1
1	1513734	Valve (Tappet)	12

©2015 HYSTER COMPANY

NOTES

©2015 HYSTER COMPANY

VIBRATION DAMPER (FIGURE 3-40)

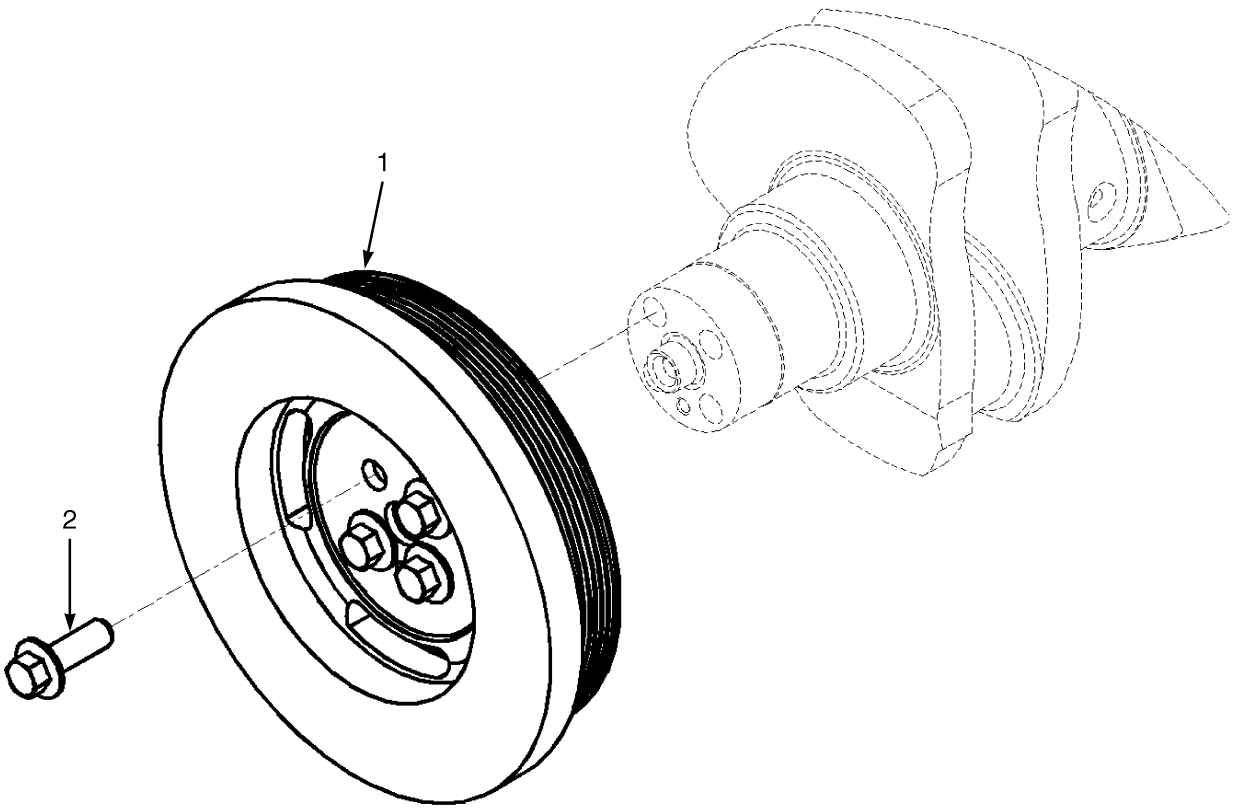

BP090235

©2015 HYSTER COMPANY

VIBRATION DAMPER

ITEM	PART NO.	DESCRIPTION	QTY
	2095555	Engine Assy-Lpg (Dry Brake)	1
	2095554	Engine Assy-Lpg (Wet Brake)	1
1	1614522	Vibration Damper	1
2	1511996	Capscrew	4

©2015 HYSTER COMPANY

WATER INLET CONNECTION (FIGURE 3-41)

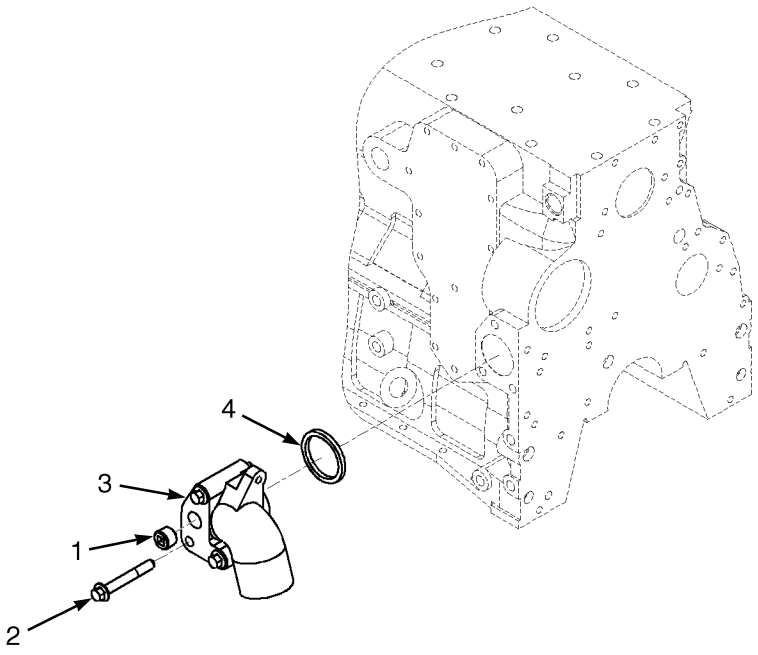

BP090255

ITEM	PART NO.	DESCRIPTION	QTY
	2095555	Engine Assy-Lpg (Dry Brake)	1
	2095554	Engine Assy-Lpg (Wet Brake)	1
1	1511952	Fitting	1
2	1512316	Screw	3
3	1512315	Water Inlet	1
4	1512305	O-Ring	1

©2015 HYSTER COMPANY

WATER OUTLET CONNECTION (FIGURE 3-42)

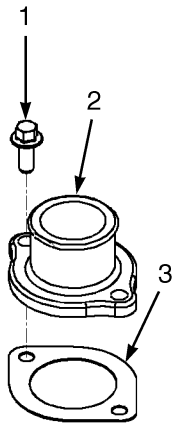

BP090256

ITEM	PART NO.	DESCRIPTION	QTY
	2095555	Engine Assy-Lpg (Dry Brake)	1
	2095554	Engine Assy-Lpg (Wet Brake)	1
1	1512004	Capscrew	2
2	1512318	Connector	1
3	1512319	Gasket	1

©2015 HYSTER COMPANY

WATER PUMP (FIGURE 3-43)

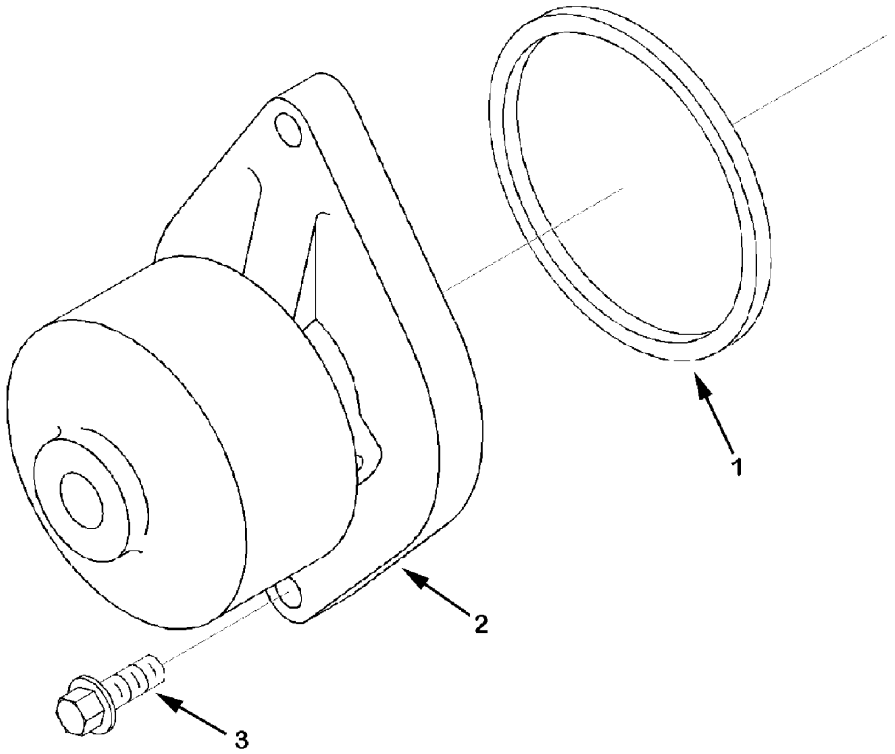

HP091178

ITEM	PART NO.	DESCRIPTION	QTY
	2095555	Engine Assy-Lpg (Dry Brake)	1
	2095554	Engine Assy-Lpg (Wet Brake)	1
1	1614513	O-Ring	1
1	1512322	Sealing Ring	1
2	. . . . .	Water Pump	1
3	~~1691854~~		
	1597807	Capscrew (Flange)	2
	1512321	Kit-Repair Water Pump (Includes Water Pump and Sealing Ring)	1
4	1521975	Kit-Repair Water Pump (Includes Water Pump and Sealing Ring) (Alternate Part)	1

©2015 HYSTER COMPANY

NOTES

©2015 HYSTER COMPANY

RADIATOR ASSEMBLY (FIGURE 3-44)
MODINE

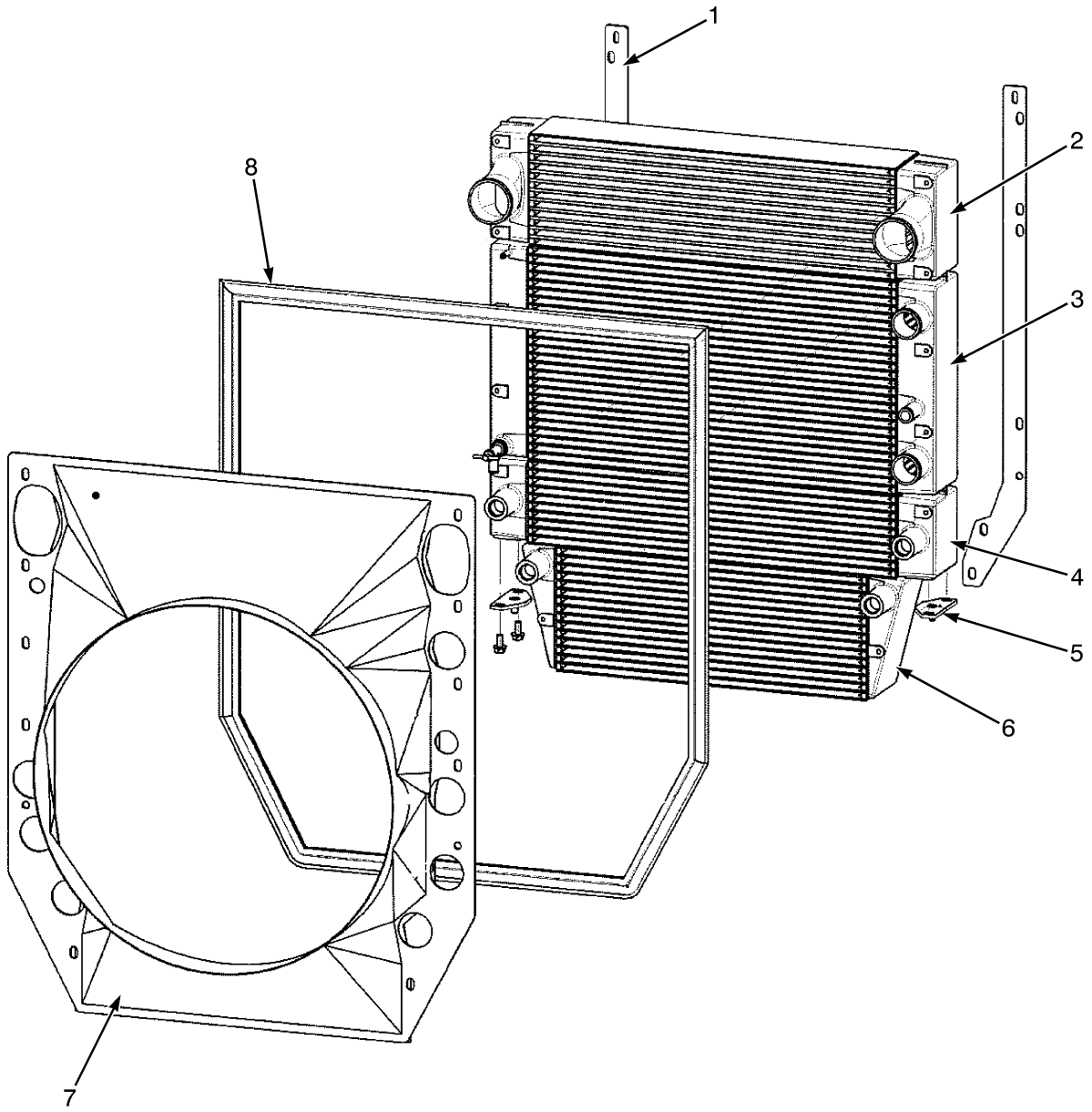

HP060072

©2015 HYSTER COMPANY

RADIATOR ASSEMBLY
MODINE

ITEM	PART NO.	DESCRIPTION	QTY
	b 2101590	Radiator Assembly	1
1	1663786	Plate	2
2	**a** 2097384	Cooler	1
2	**b** 2101592	Air Cooler	1
3	**a** 2097017	Radiator	1
3	**b** 2101591	Cooler	1
3	1677294	Drain Valve	1
4	. . . . .	Hydraulic Oil Cooler	1
5	1663785	Plate	2
6	2097386	Oil Cooler	1
7	1677295	Shroud	1
7	2097387	Shroud	1
7	1677296	Nut	2
7	1677298	Clip	1
8	1677297	Seal	1

FOOTNOTES:

a → S/N G019E01787E

b S/N G019E01788E →

©2015 HYSTER COMPANY

RADIATOR ASSEMBLY (FIGURE 3-45)
AKG

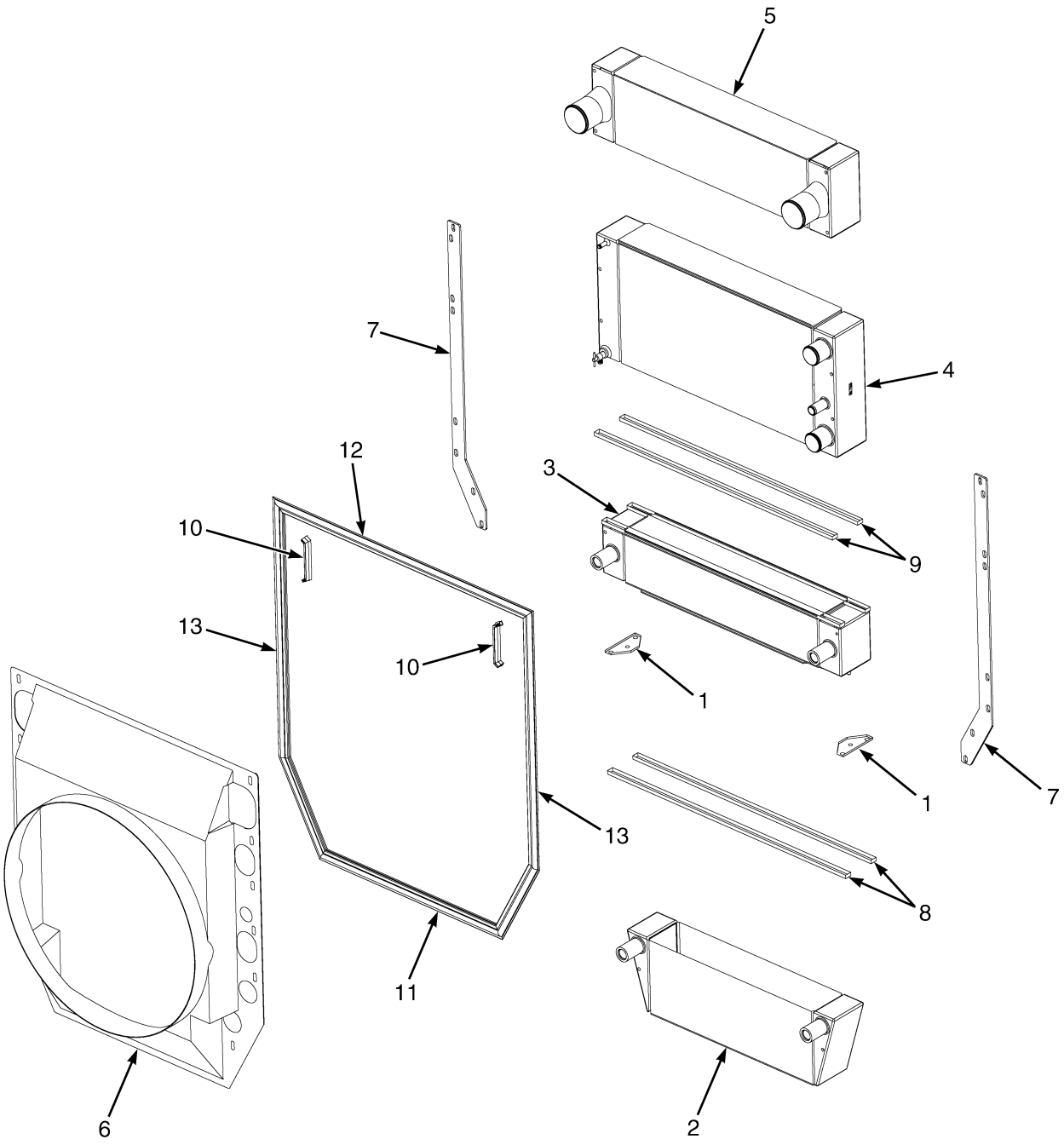

©2015 HYSTER COMPANY

RADIATOR ASSEMBLY
AKG

ITEM	PART NO.	DESCRIPTION	QTY
	4604793	Radiator Assembly	1
1	4024220	Bracket	2
2	4024221	Oil Cooler	1
3	4024222	Oil Cooler	1
4	4024223	Radiator	1
5	4024224	Air Cooler	1
6	4024225	Shroud	1
7	4024226	Side Plate	2
8	4024227	Seal	2
9	4024228	Seal	4
10	4024229	Gasket	2
11	4024230	Gasket	1
12	4024231	Gasket	1
13	4024232	Gasket	2
	a 1660347	Bolt	12
	a 4024233	Washer	12
	a 1636898	Bolt	18
	a 1636897	Washer	18

FOOTNOTES:

a Not Illustrated

©2015 HYSTER COMPANY

NOTES

©2015 HYSTER COMPANY

4 FUEL SYSTEM

SECTION 4
FUEL SYSTEM

DESCRIPTION	PAGE
AIR CLEANER ASSEMBLY	4-14
AIR INTAKE SYSTEM	
DIESEL - DRY BRAKE	4-10
DIESEL - WET BRAKE	4-12
LPG	4-8
FUEL CONTROL MODULE	
CUMMINS LPG	4-24
FUEL FILTER	
CUMMINS DIESEL	4-34
CUMMINS LPG	4-27
FUEL FILTER PLUMBING	
CUMMINS DIESEL	4-33
FUEL INJECTION PUMP	
CUMMINS DIESEL	4-30
FUEL INJECTOR	
CUMMINS DIESEL	4-32
FUEL INJECTOR PLUMBING	
CUMMINS DIESEL	4-28
FUEL INLET FITTING	
CUMMINS DIESEL	4-35
FUEL RAIL SYSTEM	
CUMMINS DIESEL (→ S/N G019E02152F (WET BRAKES)) (→ S/N G019E02271F (DRY BRAKES))	4-36
CUMMINS DIESEL (S/N G019E02153F → (WET BRAKES)) (S/N G019E02272F → (DRY BRAKES))	4-38
FUEL SYSTEM	
DIESEL	4-6
LPG	4-2
FUEL SYSTEM ACCESSORIES	
CUMMINS LPG	4-20
MONOTROL PEDAL ASSEMBLY	4-16
REMOTE FUEL FILTER	
CUMMINS DIESEL (→ S/N G019E02152F (WET BRAKES)) (→ S/N G019E02271F (DRY BRAKES))	4-21
CUMMINS DIESEL (S/N G019E02153F → (WET BRAKES)) (S/N G019E02272F → (DRY BRAKES))	4-22
THROTTLE PEDAL LINKAGE	4-18

©2015 HYSTER COMPANY

FUEL SYSTEM (FIGURE 4-1)
LPG

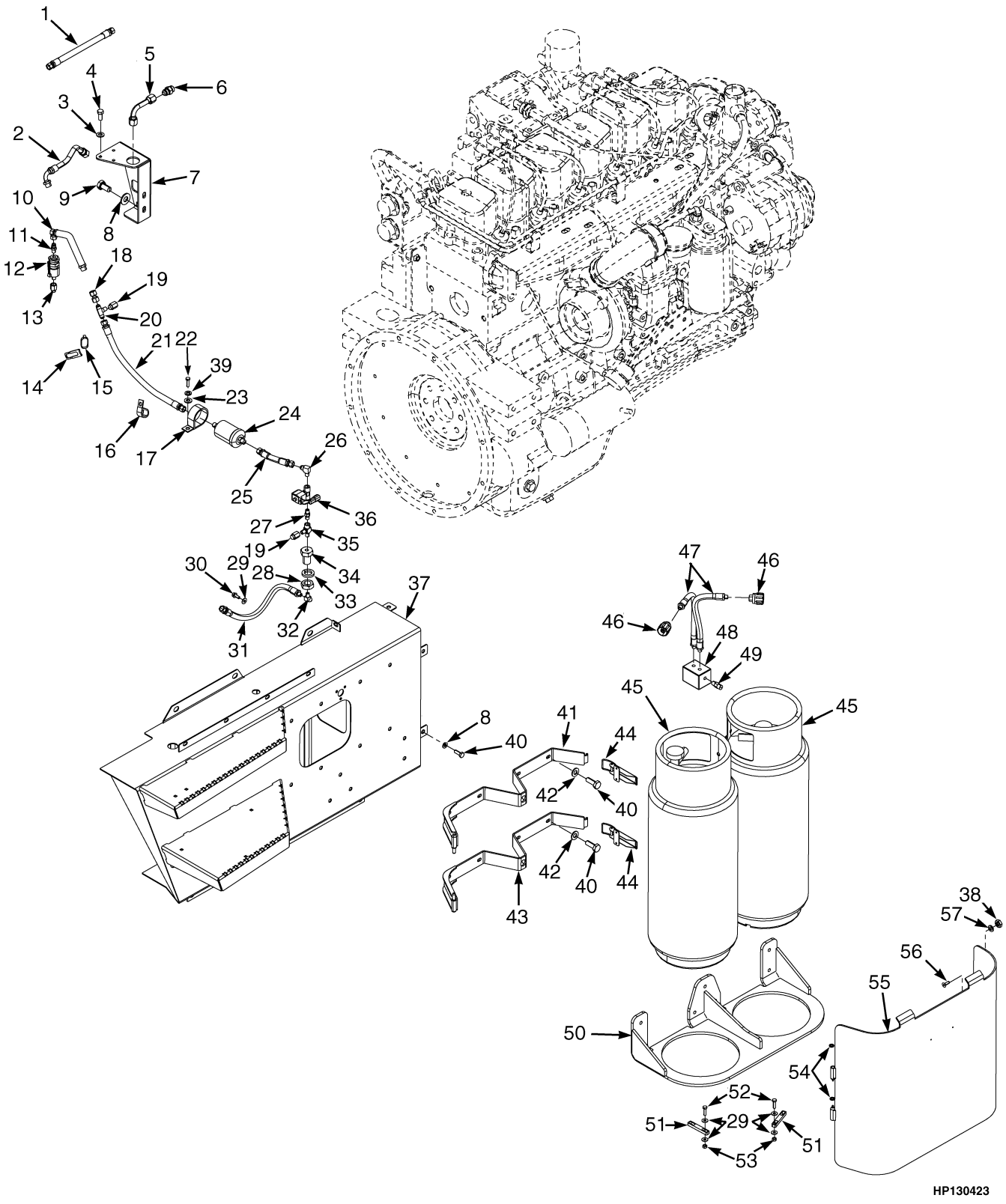

©2015 HYSTER COMPANY

FUEL SYSTEM
LPG

ITEM	PART NO.	DESCRIPTION	QTY
1	1646948	Hose Assy	1
2	2091539	Hose Assy	1
3	18515	Washer	3
4	199567	Capscrew	3
5	1606426	Tube	1
6	16542	Connector	1
6	16485	O-Ring	1
7	1606452	Bracket	1
8	320162	Washer	5
9	132860	Capscrew	2
10	1646947	Hose Assy	1
11	1647994	Fitting	1
12	1646950	Valve	1
12	1646949	Valve	1
12	1465468	Connector	1
12	1323583	Terminal	2
12	1336874	Seal	1
13	1490617	Fitting	1
13	16483	O-Ring	1
14	1350911	Strap	1
15	129563	Strap Clamp	1
16	321487	Clamp	3
17	1384699	Clamp	1
18	1634854	Fitting	1
19	14345	Fitting	2
20	1641021	Fitting	1
21	2079080	Hose Assy Forklift Truck	1
21	2079079	Hose Assy Container Handler Truck	1
22	287805	Capscrew	1
23	320157	Washer	1
24	1608426	Fuel Filter	1
25	2079078	Hose Assy	1
26	1641024	Fitting	1
27	16271	Fitting	1
28	15036	Nut	1
29	320158	Washer	11
30	1527880	Capscrew	3
31	2076168	Hose Assy	1
32	1641022	Fitting	1
33	15166	Lockwasher	1
34	121347	Fitting	1
35	17672	Fitting	1
36	1609865	Valve	1
36	. . . . .	Shut-Off Valve	1
36	1493465	Connector (2 Pin)	1
36	1330414	Connector (Secondary Lock)	1
36	1330437	Terminal (Pin)	2
37	1605573	Cover	1
38	302398	Locknut	4
39	320163	Washer	2

©2015 HYSTER COMPANY

FUEL SYSTEM
LPG

ITEM	PART NO.	DESCRIPTION	QTY
40	136985	Capscrew	15
41	1603778	Bracket Wldmt	1
42	320159	Washer	15
43	1603777	Bracket Wldmt	1
44	1603361	Clamp (Toggle)	2
45	1328896	Kit-Lpg Tank (LPG)	2
46	97999	Fitting	2
47	2091553	Hose Assy	2
48	1641025	Manifold	1
49	101809	Relief Valve	1
50	1603706	Bracket	1
51	1641027	Plate	2
52	176640	Bolt	4
53	302400	Nut	4
54	1301700	Ring (Brass)	2
55	1605568	Door	1
56	296204	Capscrew	4
57	320155	Washer	4

©2015 HYSTER COMPANY

NOTES

©2015 HYSTER COMPANY

FUEL SYSTEM (FIGURE 4-2)
DIESEL

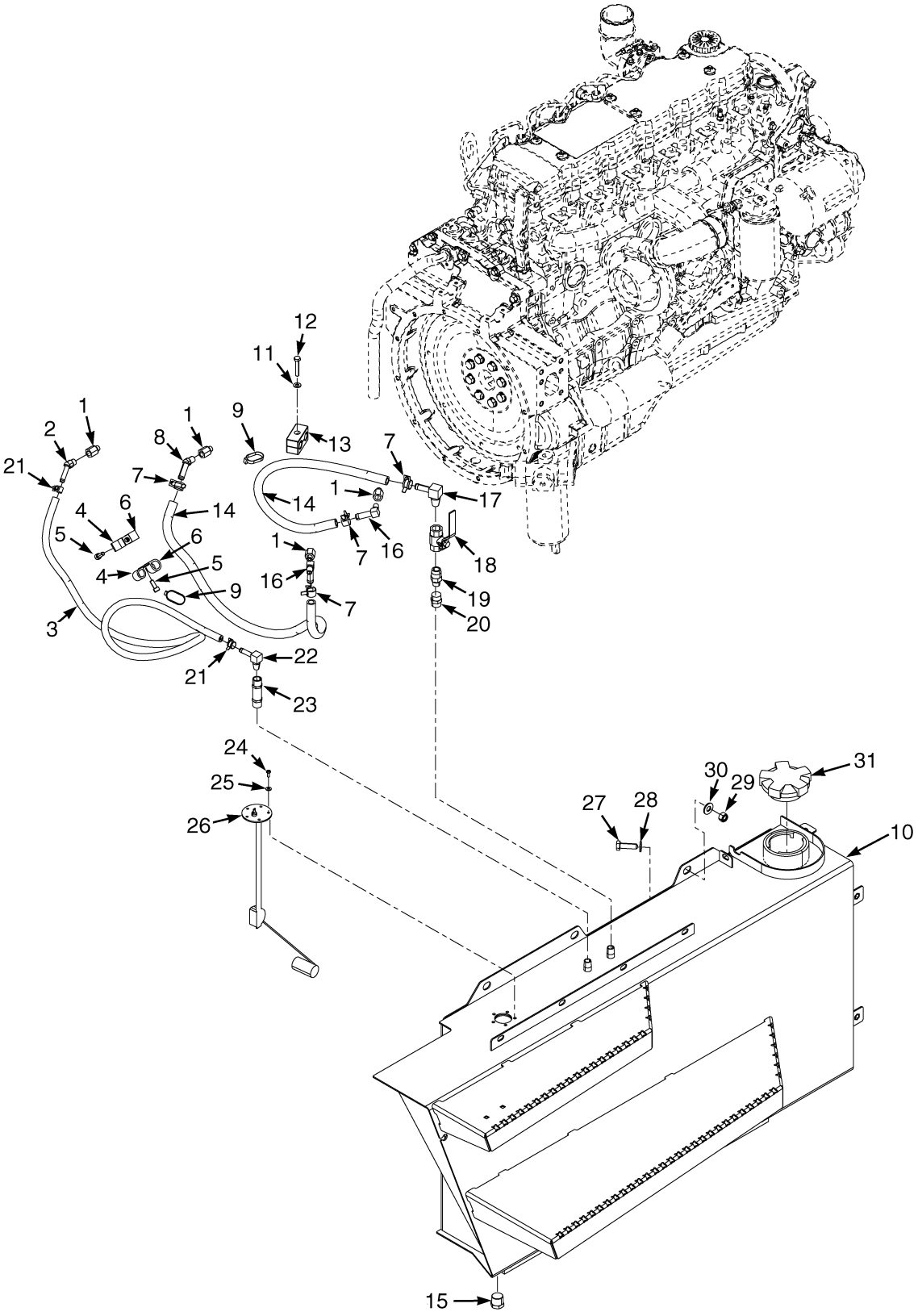

©2015 HYSTER COMPANY

FUEL SYSTEM
DIESEL

ITEM	PART NO.	DESCRIPTION	QTY
1	1547766	Adapter (Male)	4
2	16694	Fitting	1
3	1629274	Hose (Fuel) (Forklift Truck)	1
3	1629271	Hose (Fuel) (Container Handler Truck)	1
4	128408	Clamp	2
5	296010	Capscrew	2
6	173247	Clamp	2
7	130845	Clamp	4
8	17194	Fitting	1
9	129563	Strap Clamp	2
10	**a** 1625683	Fuel Tank Wldmt	1
10	**b** 1677858	Fuel Tank Wldmt	1
11	320157	Washer	3
12	214364	Capscrew	1
13	1569803	Clamp	1
14	1629270	Hose (Fuel) (Forklift Truck)	2
14	1629269	Hose (Fuel) (Container Handler Truck)	1
15	**a** 14388	Fitting	1
15	**b** 1689346	Drain Plug	1
16	16788	Fitting	2
17	17174	Fitting	1
18	1384669	Shutoff Valve	1
19	12837	Fitting	1
20	12827	Fitting	1
21	166857	Clamp	2
22	201808	Fitting	1
23	1628436	Check Valve	1
24	16708	Screw	5
25	197067	Washer	5
26	1480332	Fuel Sender	1
26	111561	Gasket	1
27	246001	Capscrew	2
28	320161	Washer	2
29	302402	Locknut	3
30	320162	Washer	3
31	1569867	Fuel Cap (Non-Locking)	1
31	1569866	Fuel Cap (Locking)	1

FOOTNOTES:

a → S/N G019E02270F EXC. 02266

b S/N G019E02271F → INC. 02266

©2015 HYSTER COMPANY

AIR INTAKE SYSTEM (FIGURE 4-3)
LPG

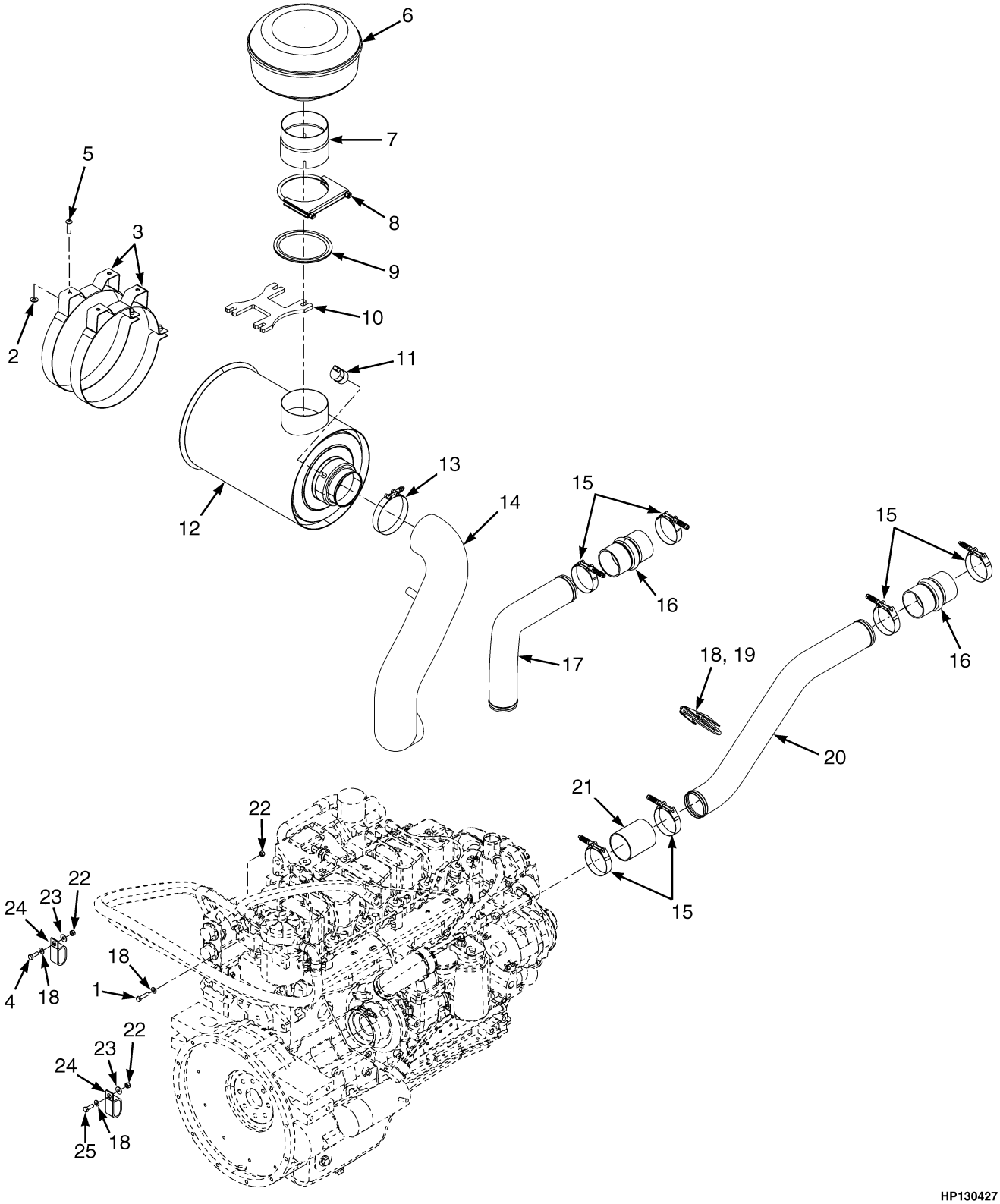

©2015 HYSTER COMPANY

AIR INTAKE SYSTEM
LPG

ITEM	PART NO.	DESCRIPTION	QTY
1	132861	Capscrew	1
2	320159	Washer	1
2	320158	Washer (Alternate Part)	4
3	1561964	Clamp	2
4	136749	Screw	2
5	292513	Capscrew	4
5	287851	Capscrew (Alternate Part)	4
6	196959	Pre-Cleaner (Bowl Type) (Option)	4
6	147983	Cover	1
6	147985	Body	1
6	214336	Sleeve	1
6	227220	Clamp	1
6	1638785	Pre-Cleaner (Sy-Klone Type) (Option, Not Illustrated)	1
6	1656996	Clamp (T-Bolt)	1
6	1656997	Insert (Rubber)	1
6	1524555	Pre-Cleaner (Aspirated Type) (Option, Not Illustrated)	1
7	1628088	Air Duct	1
8	134881	Clamp	1
9	1564243	Trim	1
10	. . . . .	Plate	1
11	1486218	Switch , Vacuum	1
12	2091695	Air Filter (☞Figure 4-6)	1
13	1514903	Clamp	2
13	1507394	Clamp (Alternate Part)	2
14	1601364	Hose (Air Cleaner)	1
14	2099769	Hose (Alternate Part)	1
15	1612634	Clamp	8
16	1524553	Hose (Charge Air Cooler)	2
17	1625961	Tube	1
18	320157	Washer	4
19	30375	Clamp (Includes Hardware)	8
20	1625960	Tube	1
21	1524554	Hose (Charge Air Cooler)	2
22	302400	Nut	2
23	320158	Washer	2
24	176455	Clamp	2

©2015 HYSTER COMPANY

AIR INTAKE SYSTEM (FIGURE 4-4)
DIESEL — DRY BRAKE

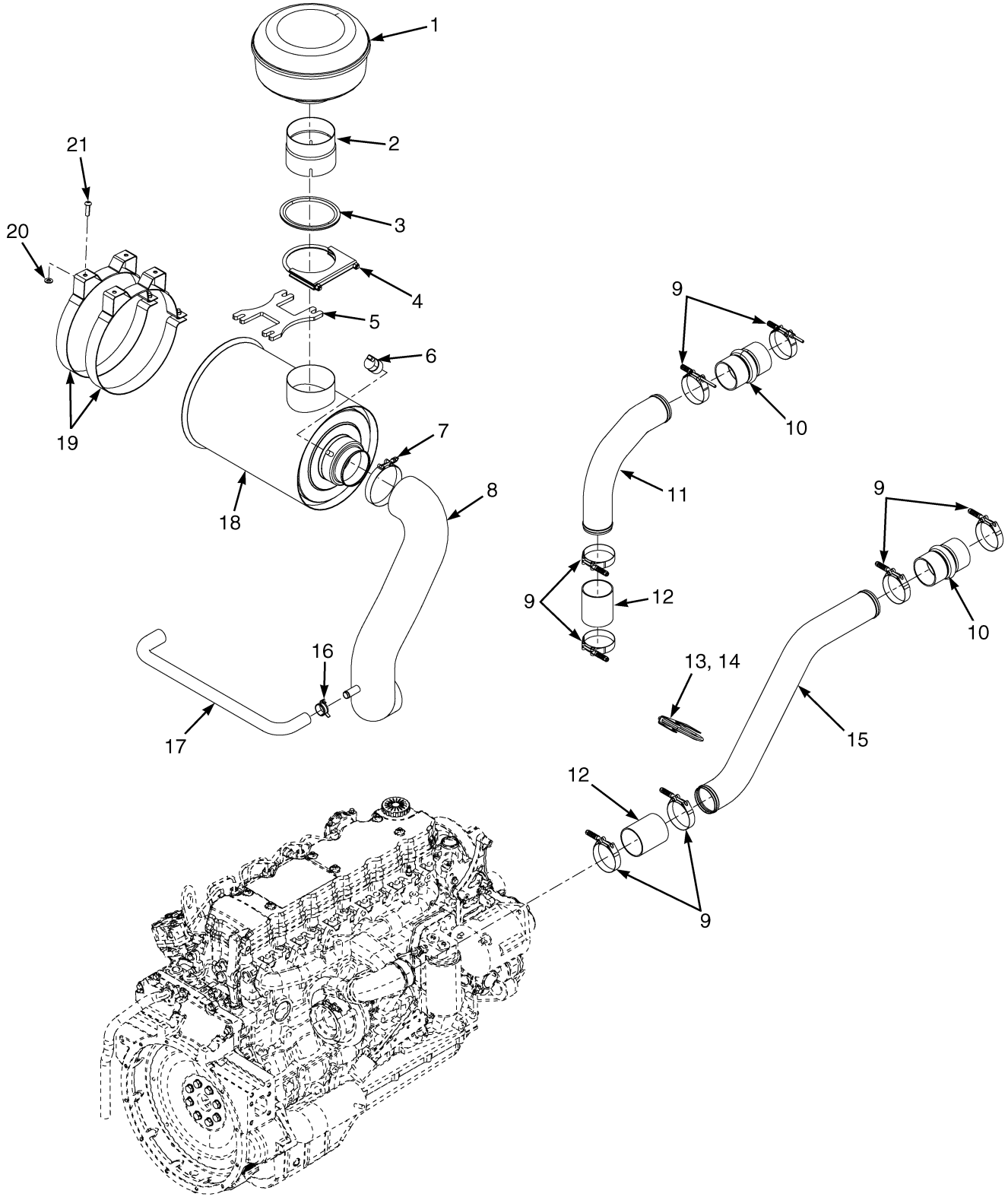

©2015 HYSTER COMPANY

AIR INTAKE SYSTEM
DIESEL – DRY BRAKE

ITEM	PART NO.	DESCRIPTION	QTY
1	196959	Pre-Cleaner (Bowl Type)	1
1	147983	Cover	1
1	147985	Body	1
1	214336	Sleeve	1
1	227220	Clamp	1
1	1638785	Pre-Cleaner (Sy-Klone Type)	1
1	1656996	Clamp (T-Bolt)	1
1	1656997	Insert (Rubber)	1
1	1524555	Pre-Cleaner (Aspirated Type)	1
2	1628088	Air Duct	1
3	1564243	Trim	1
4	134881	Clamp	1
5	1633980	Plate	1
6	1486218	Switch , Vacuum	1
7	1514903	Clamp	2
8	1634291	Hose (Air Cleaner)	1
9	1612634	Clamp	8
10	1524553	Hose (Charge Air Cooler)	2
11	1625639	Tube (Charge Air Cooler)	1
12	1524554	Hose (Charge Air Cooler)	2
13	30375	Clamp (Includes Hardware)	1
14	320157	Washer	2
15	1625638	Tube (Charge Air Cooler)	1
16	1527980	Hose Clamp	1
17	1628086	Hose (Air Compressor)	1
18	2091695	Air Filter (☞Figure 4-6)	1
19	1561964	Clamp	2
20	320159	Washer	4
20	320158	Washer (Alternate Part)	4
21	292513	Capscrew	4
31	287851	Capscrew (Alternate Part)	4

©2015 HYSTER COMPANY

AIR INTAKE SYSTEM (FIGURE 4-5)
DIESEL — WET BRAKE

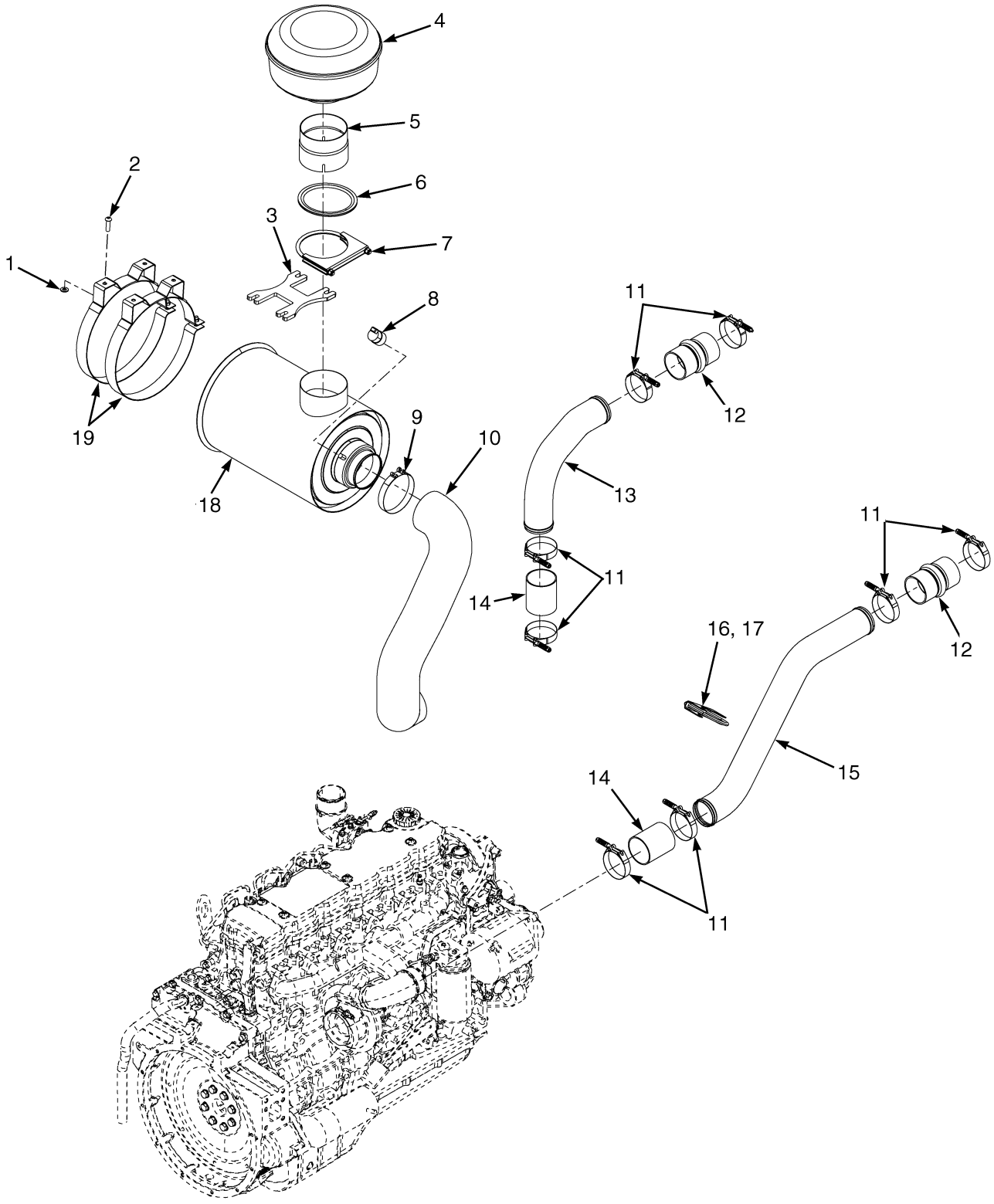

©2015 HYSTER COMPANY

AIR INTAKE SYSTEM
DIESEL – WET BRAKE

ITEM	PART NO.	DESCRIPTION	QTY
1	320159	Washer	4
1	320158	Washer (Alternate Part)	4
2	292513	Capscrew	4
2	287851	Capscrew (Alternate Part)	4
3	1633980	Plate	1
4	196959	Pre-Cleaner (Bowl Type)	1
4	147983	Cover	1
4	147985	Body	1
4	214336	Sleeve	1
4	227220	Clamp	1
4	1638785	Pre-Cleaner (Sy-Klone Type)	1
4	1656996	Clamp (T-Bolt)	1
4	1656997	Insert (Rubber)	1
4	1524555	Pre-Cleaner (Aspirated Type)	1
5	1628088	Air Duct	1
6	1564243	Trim	1
7	134881	Clamp	1
8	1486218	Switch , Vacuum	1
9	1514903	Clamp	2
9	1507394	Clamp (Alternate Part)	2
10	1655427	Hose (Air Cleaner)	1
10	2099768	Hose (Air Cleaner) (Alternate Part)	1
11	1612634	Clamp	8
12	1524553	Hose (Charge Air Cooler)	2
13	1625639	Tube (Charge Air Cooler)	1
14	1524554	Hose (Charge Air Cooler)	2
15	1625638	Tube (Charge Air Cooler)	1
16	30375	Clamp (Includes Hardware)	1
17	320157	Washer	2
18	2091695	Air Filter (☞Figure 4-6)	1
19	1561964	Clamp	2

©2015 HYSTER COMPANY

AIR CLEANER ASSEMBLY (FIGURE 4-6)

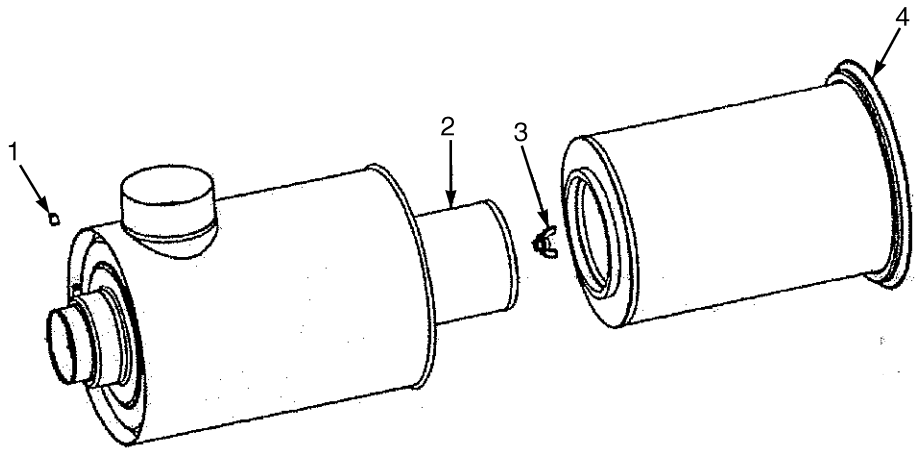

HP130426

ITEM	PART NO.	DESCRIPTION	QTY
	2091695	Air Filter	1
1	. . . . .	Cap	1
2	2091698	Filter Element (Safety)	1
3	1580286	Nut	1
4	2091697	Filter Element (Main)	1

©2015 HYSTER COMPANY

NOTES

©2015 HYSTER COMPANY

MONOTROL PEDAL ASSEMBLY (FIGURE 4-7)

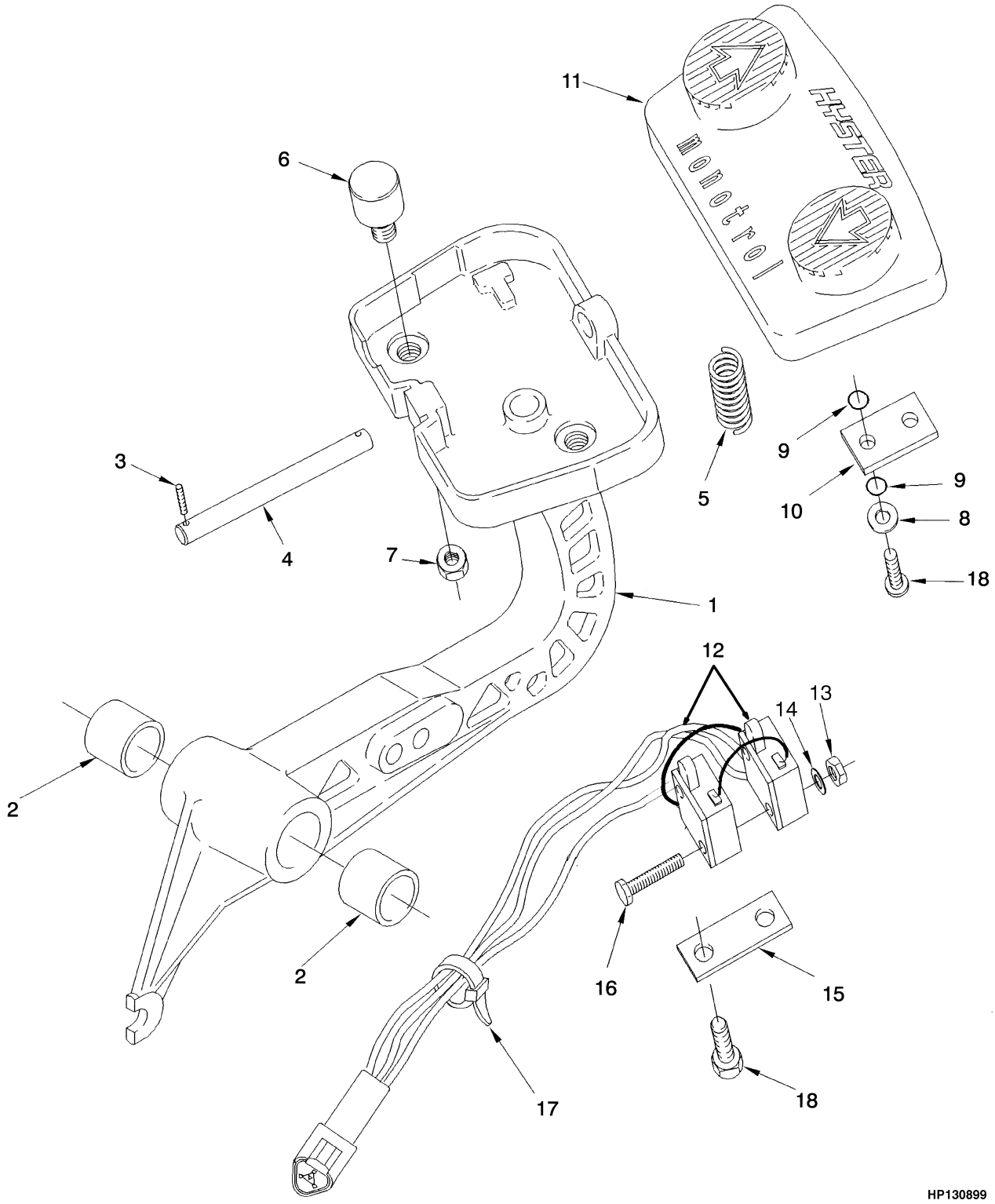

©2015 HYSTER COMPANY

MONOTROL PEDAL ASSEMBLY

ITEM	PART NO.	DESCRIPTION	QTY
	1352575	Monotrol Pedal Assembly	1
1	353397	Pedal	1
2	135685	Bushing	2
3	220932	Setscrew	2
4	353154	Pin	1
5	353168	Spring	1
6	353441	Magnet Assembly	1
6	353422	Magnet	2
7	353432	Nut	2
8	353448	Washer	4
9	57568	O-Ring	8
10	359207	Plate	2
11	353175	Pad Assembly	1
11	353231	Plate	1
11	186493	Screw	1
11	15152	Lockwasher	1
12	1352090	Switch Assembly	1
13	16865	Nut	2
14	53162	Lockwasher	2
15	353165	Retainer	1
16	220434	Screw	2
17	114312	Strap Clamp	3
18	352969	Screw	6

©2015 HYSTER COMPANY

THROTTLE PEDAL LINKAGE (FIGURE 4-8)

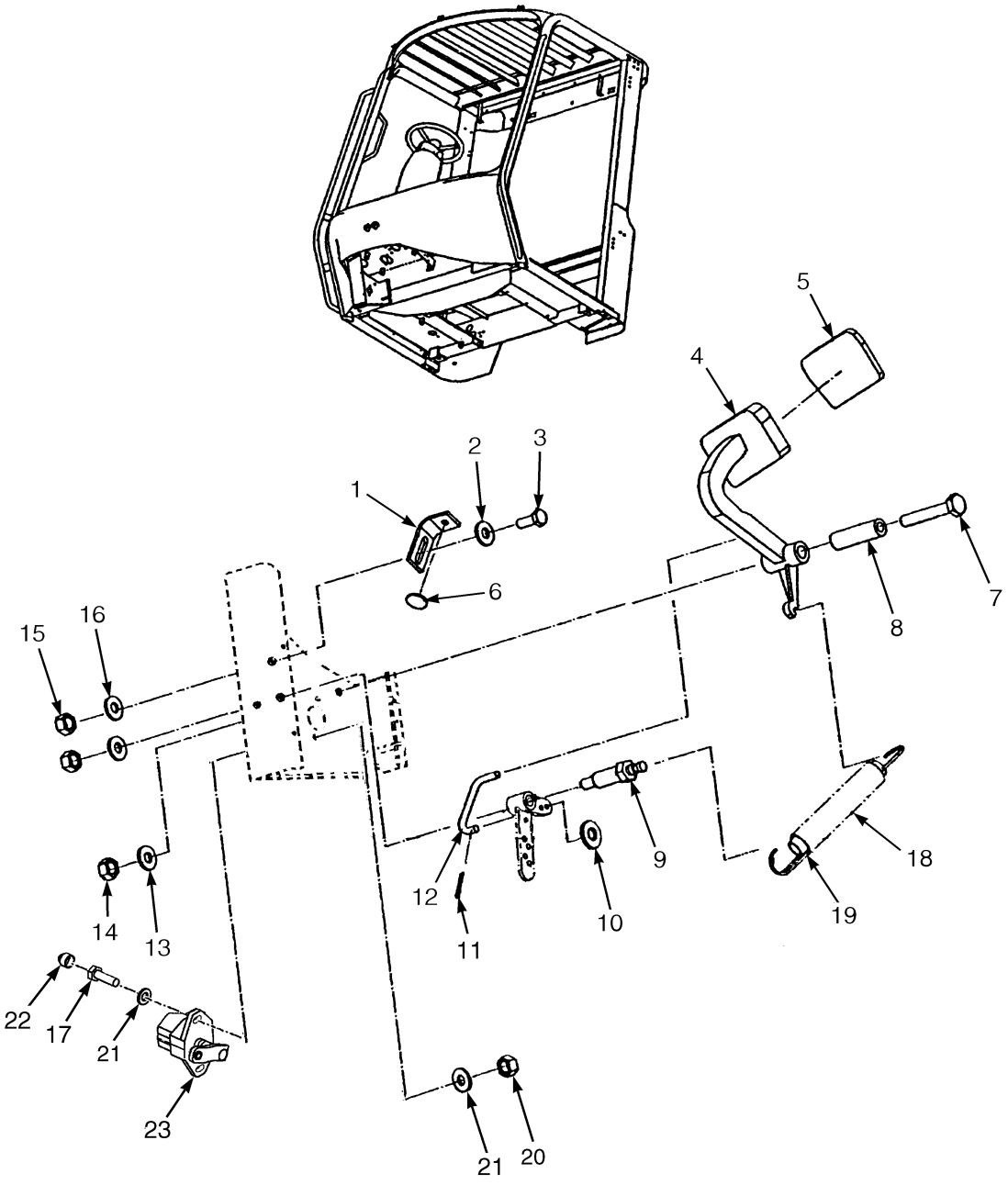

BP120170

©2015 HYSTER COMPANY

THROTTLE PEDAL LINKAGE

KEY:
A: Monotrol
B: Forward And Reverse Lever

ITEM	PART NO.	DESCRIPTION	QTY A	QTY B
1	1494675	Bracket (Pedal Stop)	1	1
2	1468323	Washer	1	1
3	287854	Capscrew	1	1
4	352499	Pedal (Accelerator)	..	1
4	1352575	Monotrol Pedal Assembly (☞Figure 4-7)	1	..
5	352885	Rubber Pad	1	1
6	353195	Bumper	1	1
7	292521	Capscrew	..	1
7	292523	Capscrew	1	..
8	325708	Tube Assy (Pivot)	..	1
8	353141	Tube Assy (Pivot)	1	..
8	320160	Washer	1	..
9	352485	Shaft	1	1
10	~~4093489~~			
	320156	Washer	1	1
11	15200	Cotter Pin	1	1
12	353129	Rod	1	1
13	~~388049~~			
	292682	Lockwasher	3	3
14	302401	Locknut	..	2
14	136692	Nut	2	..
15	316835	Nut	1	1
16	320158	Washer	1	1
17	292501	Capscrew	4	4
18	353142	Spring	1	1
18	1558049	Spring	1	1
19	353143	Spring	1	1
20	316834	Nut	2	2
21	1506738	Washer	4	4
22	1493397	Cover (Capscrew Head)	2	2
23	2076661	Sensor , Throttle and Inching	1	1
	a 296128	Nut	..	1
	a 15212	Cotter Pin	..	1

FOOTNOTES:

a Not Illustrated

©2015 HYSTER COMPANY

FUEL SYSTEM ACCESSORIES (FIGURE 4-9)
CUMMINS LPG

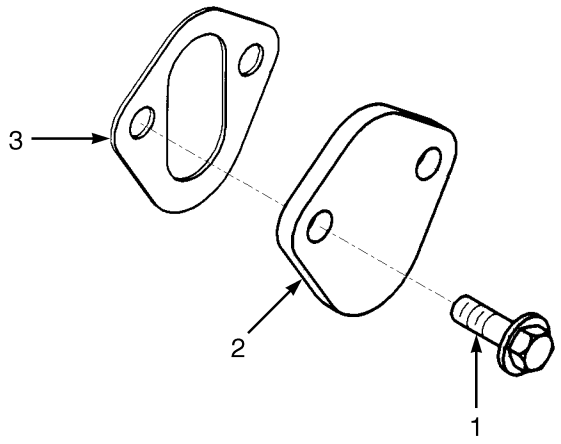

BP130192

ITEM	PART NO.	DESCRIPTION	QTY
	2095554	Engine Assy-Lpg (Wet Brake)	1
	2095555	Engine Assy-Lpg (Dry Brake)	1
1	1512004	Capscrew	2
2	1517110	Cover Plate	1
3	~~1517111~~		
	1513743	Gasket (Cover Plate)	1

©2015 HYSTER COMPANY

REMOTE FUEL FILTER (FIGURE 4-10)

CUMMINS DIESEL (→ S/N G019E02152F (WET BRAKES)) (→ S/N G019E02271F (DRY BRAKES))

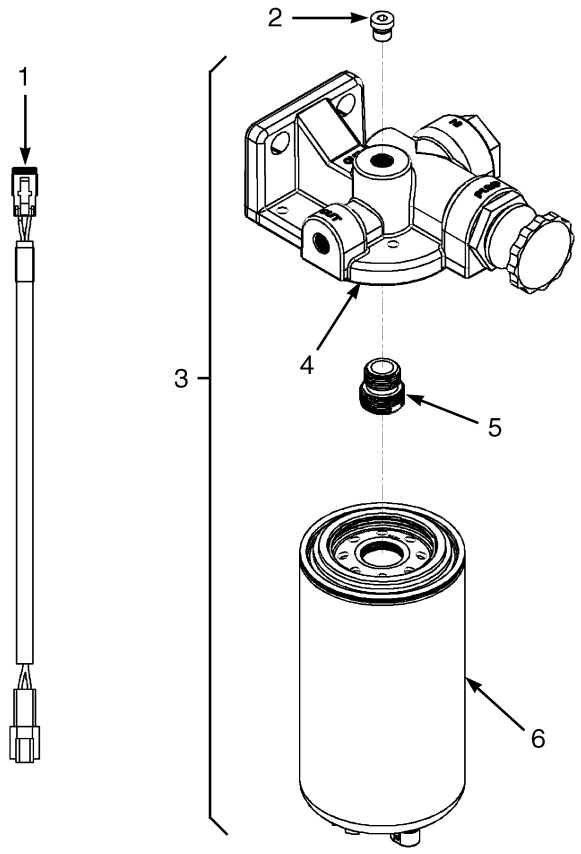

HP091341

ITEM	PART NO.	DESCRIPTION	QTY
	2085494	Engine Assy-Diesel (2300 RPM, Wet Brakes)	1
	2085496	Engine Assy-Diesel (2300 RPM, Dry Brakes)	1
1	1635271	Wire Harness (Fuel System Accessories)	1
2	1661144	Plug	1
2	1644166	Sealing Ring	1
3	1635454	Fuel Filter Assy (Water Separator)	1
4	1635424	Filter Head (With Priming/Lift Pump)	1
5	1635312	Adapter	1
6	1635303	Fuel Filter	1

©2015 HYSTER COMPANY

REMOTE FUEL FILTER (FIGURE 4-11)

CUMMINS DIESEL (S/N G019E02153F → (WET BRAKES)) (S/N G019E02272F → (DRY BRAKES))

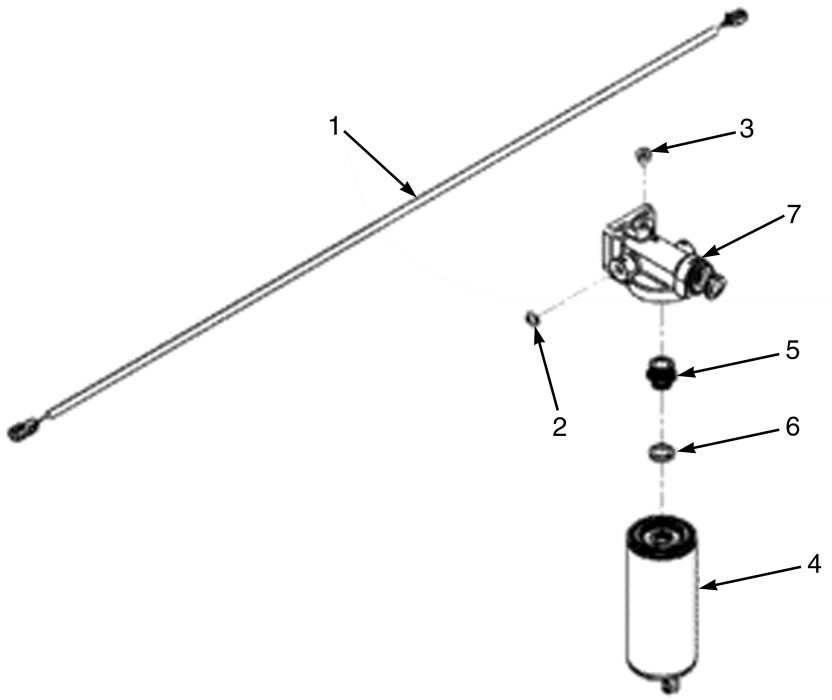

HP091269

ITEM	PART NO.	DESCRIPTION	QTY
	2107118	Engine Assy (2300 RPM, Wet Brakes)	1
	2107121	Engine Assy Diesel (2300 RPM, Dry Brakes)	1
1	1703492	Wire Harness	1
2	1644166	Sealing Ring	1
3	1661144	Plug	1
4	. . . . .	Fuel Filter Assembly	1
4	1635303	Fuel Filter	1
5	1635312	Adapter	1
6	1702095	Gasket	1
7	1635424	Filter Head (With Priming/Lift Pump)	1

©2015 HYSTER COMPANY

NOTES

©2015 HYSTER COMPANY

FUEL CONTROL MODULE (FIGURE 4-12)
CUMMINS LPG

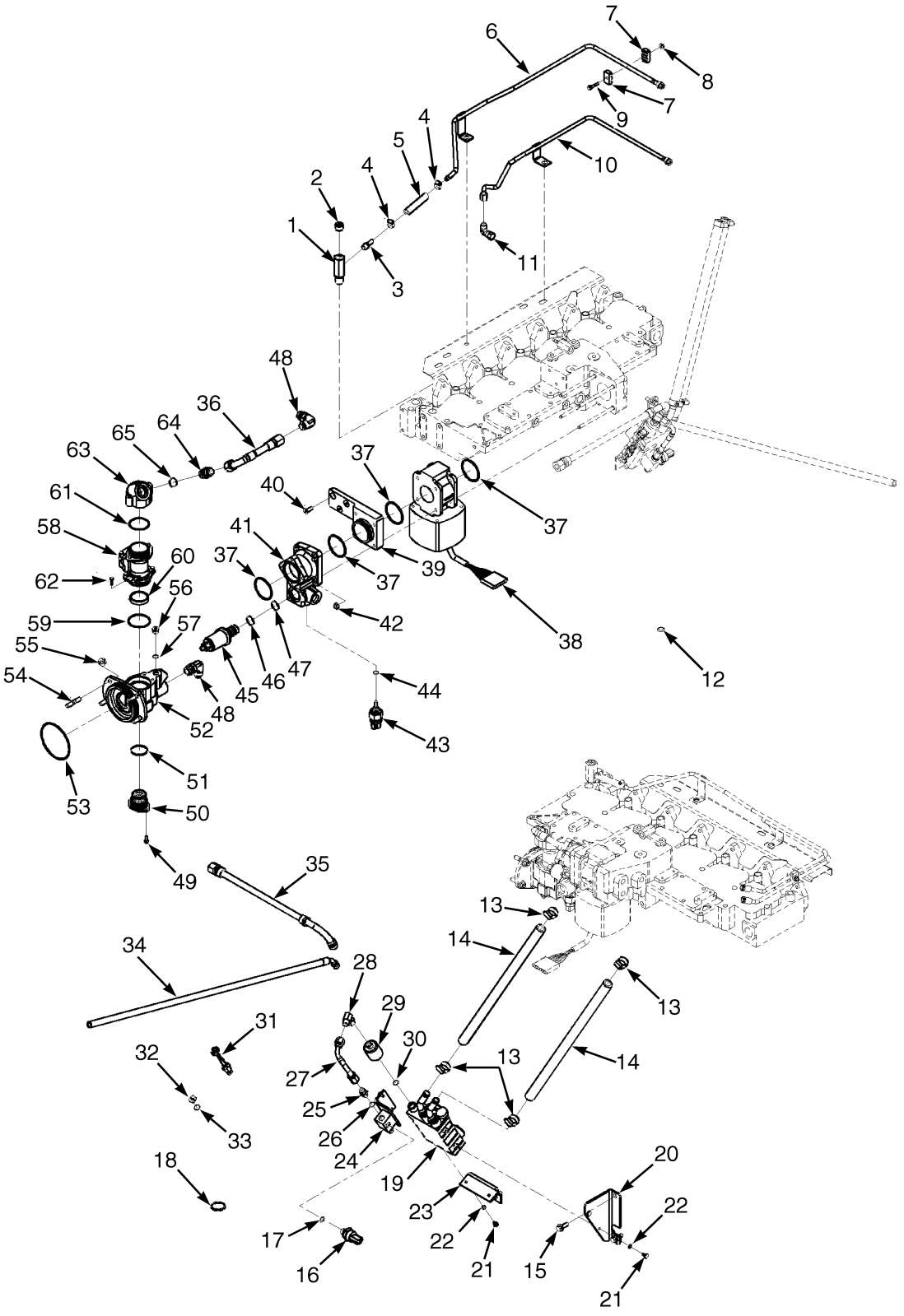

©2015 HYSTER COMPANY

FUEL CONTROL MODULE
CUMMINS LPG

ITEM	PART NO.	DESCRIPTION	QTY
	2095554	Engine Assy-Lpg (Wet Brake)	1
	2095555	Engine Assy-Lpg (Dry Brake)	1
1	1614558	T-Fitting	1
2	1511952	Fitting	1
3	1614502	Coupling (Hose)	1
4	1516981	Hose Clamp	2
5	1614567	Hose	1
6	1624515	Tube	1
7	1512778	Clamp (Tube)	3
8	1513793	Nut	1
9	1513791	Screw	1
10	1624514	Tube	1
11	1624512	Elbow	1
12	1614619	Sealing Ring	1
13	1511965	Clamp (Hose)	4
14	1614319	Hose	2
15	1512503	Capscrew	4
16	1662037	Sensor (Pressure)	1
17	~~1517116~~		
	1543435	O-Ring	1
18	1614552	Screen	1
19	1614620	Kit-Evaporator	1
19	. . . . .	Evaporator	1
20	1614608	Bracket	1
21	1614644	Capscrew	6
22	1513421	Lockwasher	6
23	1614609	Bracket	1
24	1614610	Bracket	1
25	1614315	Fitting	2
26	1512588	O-Ring	1
27	1614603	Hose	1
28	1614604	Elbow	1
29	1614621	Kit-LPG Shutoff Valve	1
30	. . . . .	O-Ring	1
31	. . . . .	Wire Harness	1
32	1614595	Plug (Threaded)	1
33	1614596	O-Ring	1
34	. . . . .	Hose	1
35	1614557	Hose	1
36	1614600	Hose	1
37	1614320	O-Ring	4
38	1614623	Actuator	1
39	1614626	Support	1
40	1614461	Capscrew (Flat Head)	3
41	1614622	Mixer	1
42	1513712	Nut	4
43	1662042	Sensor (Temperature)	1
44	~~1517116~~		
	1543435	O-Ring	1
45	1614586	Flow Valve (Fuel Flow)	1

©2015 HYSTER COMPANY

FUEL CONTROL MODULE
CUMMINS LPG

ITEM	PART NO.	DESCRIPTION	QTY
46	1614564	O-Ring	2
47	1614565	O-Ring	1
48	1512743	Fitting	2
49	1512051	Capscrew	6
50	1614601	Cover	1
51	1614566	O-Ring	2
52	1614590	Housing	1
53	1614618	O-Ring	1
54	1553768	Stud	4
55	1514483	Nut	4
56	1512587	Plug Assembly	2
57	1512588	O-Ring	1
58	1614559	Sensor (Fuel Flow)	1
59	1614467	O-Ring	1
60	. . . . .	Screen	1
61	1614466	O-Ring	1
62	1614458	Capscrew (Hex Head)	4
63	1614547	Adapter	1
64	1512739	Fitting	1
65	1512740	O-Ring	1
	1614620	Kit-Evaporator	1

©2015 HYSTER COMPANY

FUEL FILTER (FIGURE 4-13)
CUMMINS LPG

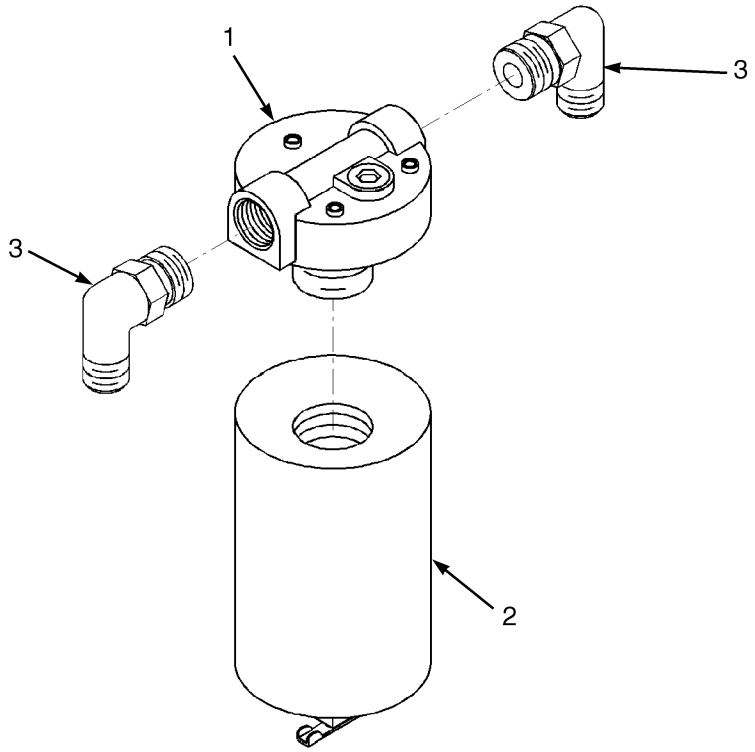

BP130191

ITEM	PART NO.	DESCRIPTION	QTY
	2095554	Engine Assy-Lpg (Wet Brake)	1
	2095555	Engine Assy-Lpg (Dry Brake)	1
1	1614486	Fuel Filter	1
1	1614483	Filter Head	1
2	1614485	Fuel Filter	1
3	1614484	Elbow	2

©2015 HYSTER COMPANY

FUEL INJECTOR PLUMBING (FIGURE 4-14)
CUMMINS DIESEL

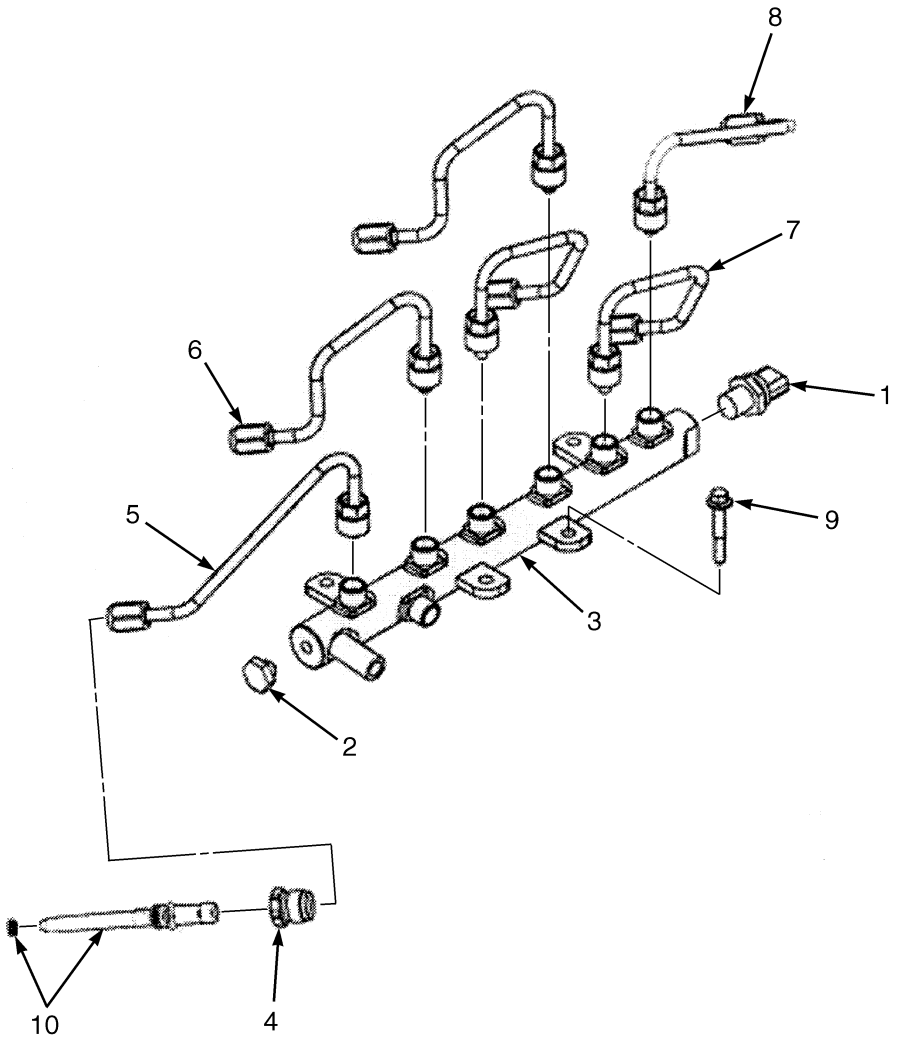

HP091457

©2015 HYSTER COMPANY

FUEL INJECTOR PLUMBING
CUMMINS DIESEL

ITEM	PART NO.	DESCRIPTION	QTY
	a 2085494	Engine Assy-Diesel (2300 RPM, Wet Brakes)	1
	c 2107118	Engine Assy (2300 RPM, Wet Brakes)	1
	b 2085496	Engine Assy-Diesel (2300 RPM, Dry Brakes)	1
	d 2107121	Engine Assy Diesel (2300 RPM, Dry Brakes)	1
	1635327	Manifold Assembly	1
1	1635304	Sensor	1
2	1635305	Relief Valve	1
3	. . . . .	Manifold	1
4	. . . . .	Retainer	6
5	1635332	Tube Assy	1
6	1635333	Tube Assy	2
7	1635334	Tube Assy	2
8	1635335	Tube Assy	1
9	. . . . .	Screw	4
10	~~1661292~~		
	4033233	Connector Assembly	6
10	. . . . .	Connector	1
10	. . . . .	O-Ring	1

FOOTNOTES:

a → S/N G019E02152F
b → S/N G019E02271F
c S/N G019E02153F →
d S/N G019E02272F →

©2015 HYSTER COMPANY

FUEL INJECTION PUMP (FIGURE 4-15)
CUMMINS DIESEL

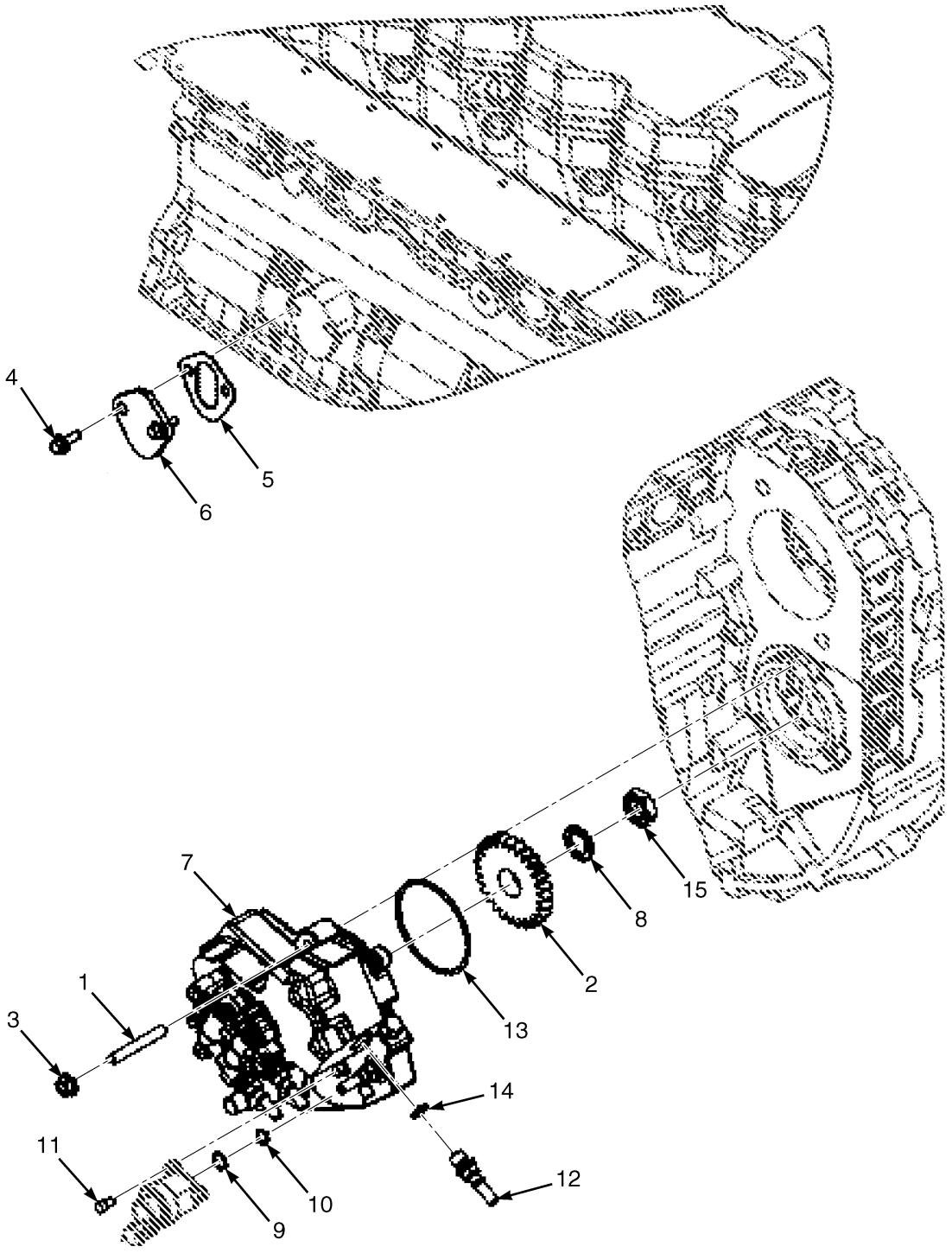

BP090689

©2015 HYSTER COMPANY

FUEL INJECTION PUMP
CUMMINS DIESEL

ITEM	PART NO.	DESCRIPTION	QTY
	a 2085494	Engine Assy-Diesel (2300 RPM, Wet Brakes)	1
	c 2107118	Engine Assy (2300 RPM, Wet Brakes)	1
	b 2085496	Engine Assy-Diesel (2300 RPM, Dry Brakes)	1
	d 2107121	Engine Assy Diesel (2300 RPM, Dry Brakes)	1
1	1635267	Stud	3
2	1635276	Gear	1
3	1513712	Nut	3
4	1512004	Capscrew	2
5	~~1517111~~		
	1513743	Gasket (Cover Plate)	1
6	1517110	Cover Plate	1
7	4027156	Fuel Pump Assembly	1
8	4033332	Spring Washer	1
9	4104353	Seal	1
10	4104354	Seal	1
11	4104355	Capscrew	3
12	1635311	Connector (Quick Disconnect)	4
13	1635222	O-Ring	1
14	1635355	Sealing Ring	4
15	1635348	Nut	1

FOOTNOTES:

a → S/N G019E02152F
b → S/N G019E02271F
c S/N G019E02153F →
d S/N G019E02272F →

©2015 HYSTER COMPANY

FUEL INJECTOR (FIGURE 4-16)
CUMMINS DIESEL

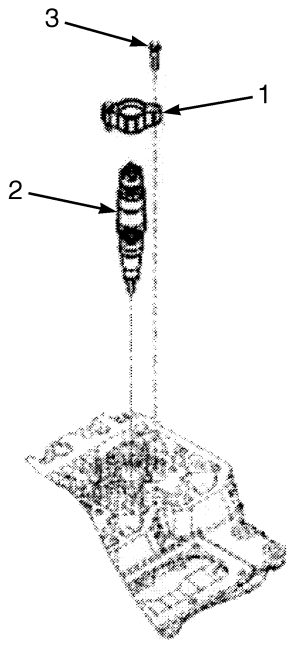

HP091456

ITEM	PART NO.	DESCRIPTION	QTY
	b 2085494	Engine Assy-Diesel (2300 RPM, Wet Brakes)	1
	f 2107118	Engine Assy (2300 RPM, Wet Brakes)	1
	d 2085496	Engine Assy-Diesel (2300 RPM, Dry Brakes)	1
	h 2107121	Engine Assy Diesel (2300 RPM, Dry Brakes)	1
1	1635317	Clamp	6
2	**bd** 1649738	Injector	6
2	**fh** 4018919	Injector	6
3	1513791	Screw	12
	a 1662312	Seal	1
	a 1662311	O-Ring	1

FOOTNOTES:

a Not Illustrated
b → S/N G019E02152F
c → S/N G019E02152F (Wet Brakes)
d → S/N G019E02271F
e → S/N G019E02271F (Dry Brakes)
f S/N G019E02153F →
g S/N G019E02153F → (Wet Brakes)
h S/N G019E02272F →
i S/N G019E02272F → (Dry Brakes)

©2015 HYSTER COMPANY

FUEL FILTER PLUMBING (FIGURE 4-17)
CUMMINS DIESEL

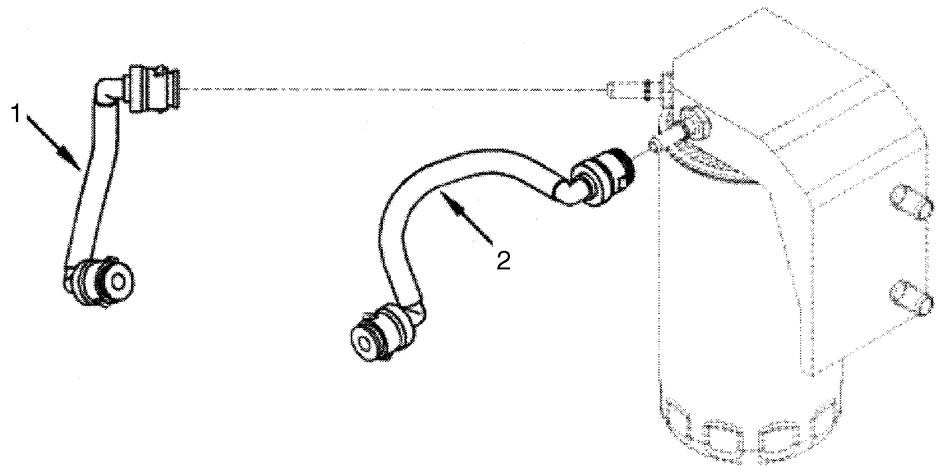

BP090373

ITEM	PART NO.	DESCRIPTION	QTY
	a 2085494	Engine Assy-Diesel (2300 RPM, Wet Brakes)	1
	c 2107118	Engine Assy (2300 RPM, Wet Brakes)	1
	b 2085496	Engine Assy-Diesel (2300 RPM, Dry Brakes)	1
	d 2107121	Engine Assy Diesel (2300 RPM, Dry Brakes)	1
1	1661048	Tube Assy	1
2	1661049	Tube Assy	1

FOOTNOTES:

a → S/N G019E02152F
b → S/N G019E02271F
c S/N G019E02153F →
d S/N G019E02272F →

©2015 HYSTER COMPANY

FUEL FILTER (FIGURE 4-18)

CUMMINS DIESEL

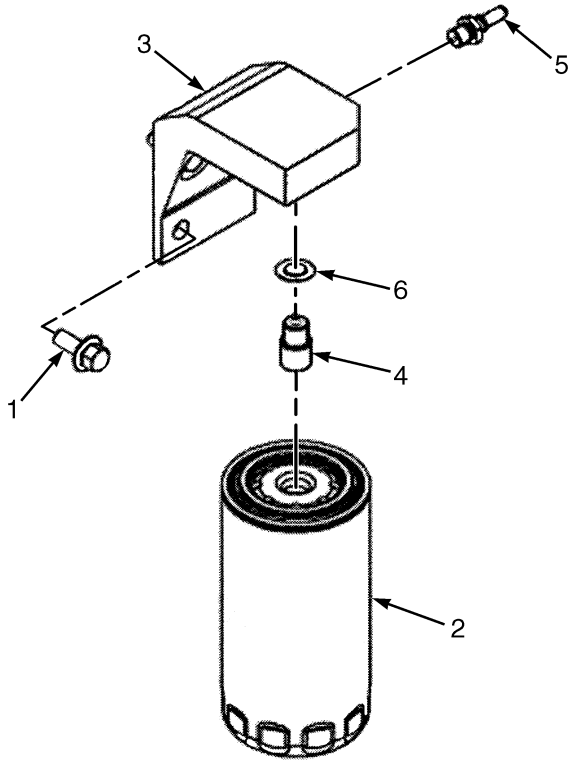

BP090449

ITEM	PART NO.	DESCRIPTION	QTY
	a 2085494	Engine Assy-Diesel (2300 RPM, Wet Brakes)	1
	c 2107118	Engine Assy (2300 RPM, Wet Brakes)	1
	b 2085496	Engine Assy-Diesel (2300 RPM, Dry Brakes)	1
	d 2107121	Engine Assy Diesel (2300 RPM, Dry Brakes)	1
1	1512418	Capscrew	2
2	1635370	Fuel Filter	1
2	2103892	Fuel Filter (Alternate Part)	1
3	1676623	Filter Head	1
4	1635376	Adapter	1
5	1676624	Connector	2
6	1702312	Gasket	1

FOOTNOTES:

a → S/N G019E02152F
b → S/N G019E02271F
c S/N G019E02153F →
d S/N G019E02272F →

©2015 HYSTER COMPANY

FUEL INLET FITTING (FIGURE 4-19)
CUMMINS DIESEL

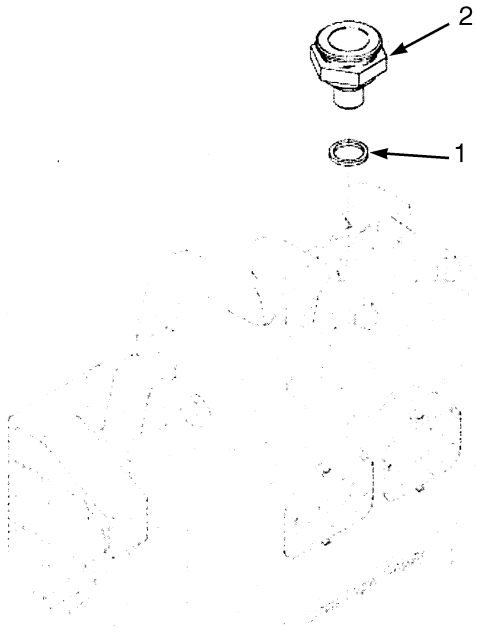

BP130282

ITEM	PART NO.	DESCRIPTION	QTY
	a 2085494	Engine Assy-Diesel (2300 RPM, Wet Brakes)	1
	c 2107118	Engine Assy (2300 RPM, Wet Brakes)	1
	b 2085496	Engine Assy-Diesel (2300 RPM, Dry Brakes)	1
	d 2107121	Engine Assy Diesel (2300 RPM, Dry Brakes)	1
1	1635355	Sealing Ring (Sealing)	1
2	1635364	Connector (Quick Disconnect)	1

FOOTNOTES:

a → S/N G019E02152F
b → S/N G019E02271F
c S/N G019E02153F →
d S/N G019E02272F →

©2015 HYSTER COMPANY

FUEL RAIL SYSTEM (FIGURE 4-20)

CUMMINS DIESEL (→ S/N G019E02152F (WET BRAKES)) (→ S/N G019E02271F (DRY BRAKES))

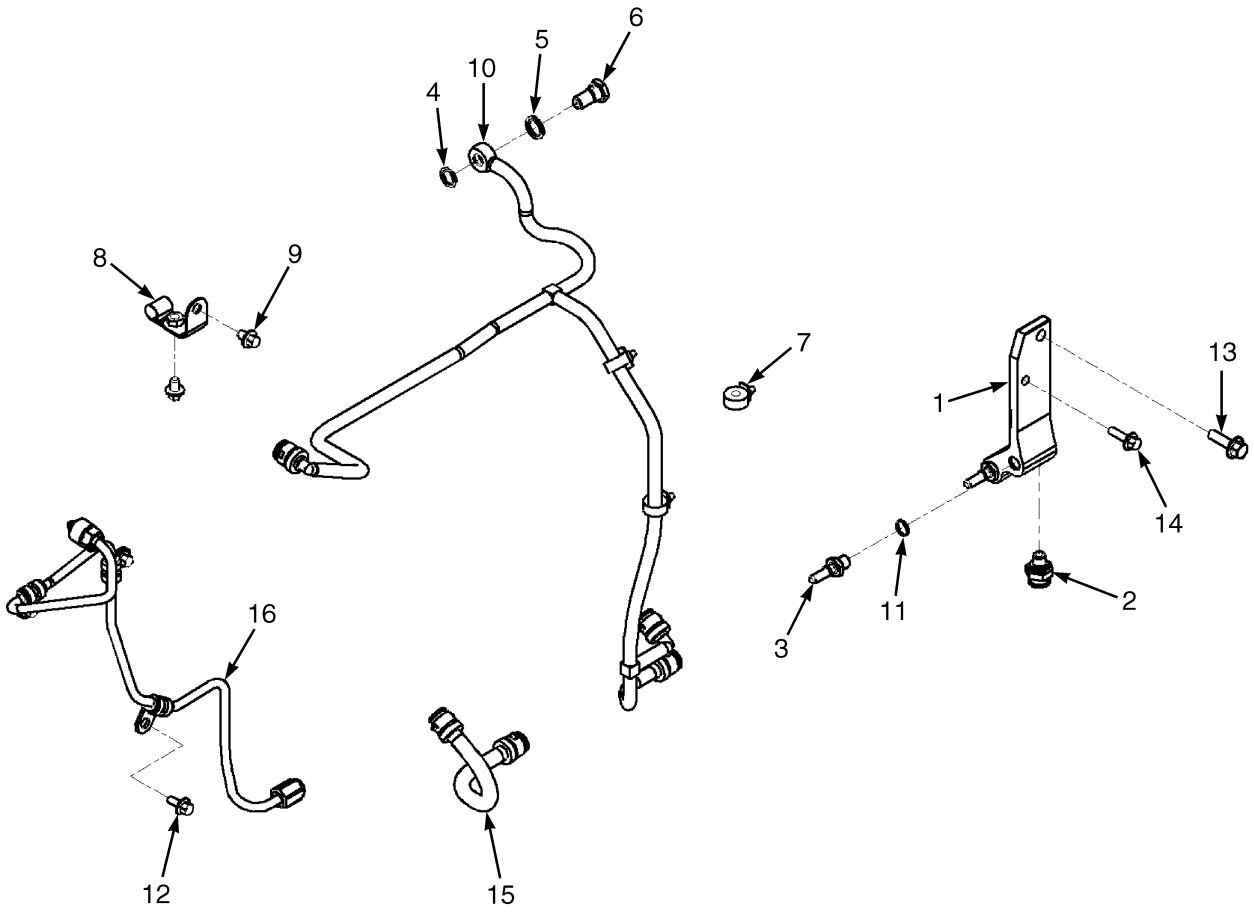

HP091320

©2015 HYSTER COMPANY

FUEL RAIL SYSTEM

CUMMINS DIESEL (→ S/N G019E02152F (WET BRAKES)) (→ S/N G019E02271F (DRY BRAKES))

ITEM	PART NO.	DESCRIPTION	QTY
	2085494	Engine Assy-Diesel (2300 RPM, Wet Brakes)	1
	2085496	Engine Assy-Diesel (2300 RPM, Dry Brakes)	1
	~~1635393~~		
	1702097	Adapter Assembly	1
1	. . . . .	Adapter	1
2	1635365	Connector (Quick Disconnect)	1
3	1635399	Connector (Quick Disconnect)	2
4	1543359	Sealing Ring	1
5	1584546	Sealing Ring	1
6	1635279	Check Valve	1
7	1635384	Clip	3
8	~~1635326~~		
	1702098	Brace Assembly	1
9	1606569	Capscrew	2
10	1635398	Tube Assy (Drain)	1
11	1635355	Sealing Ring (Sealing)	2
12	1511970	Capscrew	3
13	1511977	Capscrew	1
14	1512005	Capscrew	1
15	1635394	Tube Assy (Supply)	1
16	1635410	Tube Assy (Supply)	1

©2015 HYSTER COMPANY

FUEL RAIL SYSTEM (FIGURE 4-21)

CUMMINS DIESEL (S/N G019E02153F → (WET BRAKES)) (S/N G019E02272F → (DRY BRAKES))

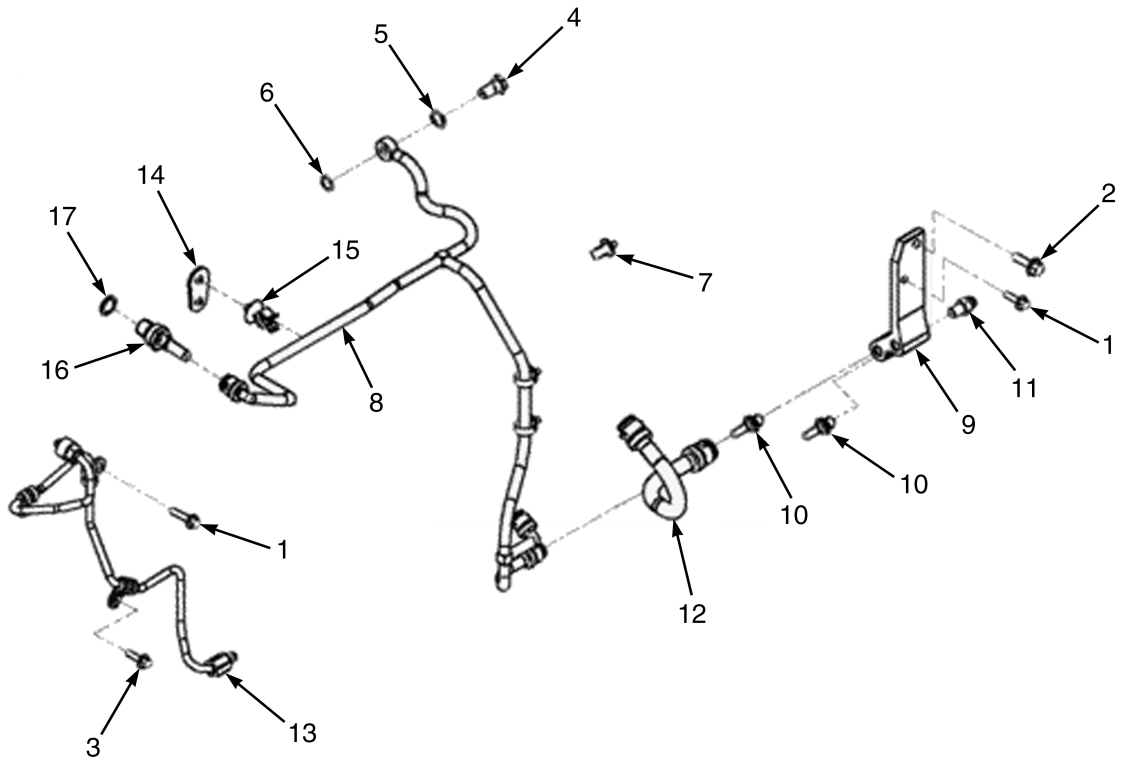

HP091373

©2015 HYSTER COMPANY

FUEL RAIL SYSTEM

CUMMINS DIESEL (S/N G019E02153F → (WET BRAKES)) (S/N G019E02272F → (DRY BRAKES))

ITEM	PART NO.	DESCRIPTION	QTY
	2107118	Engine Assy (2300 RPM, Wet Brakes)	1
	2107121	Engine Assy Diesel (2300 RPM, Dry Brakes)	1
1	1511970	Capscrew	3
2	1512005	Capscrew	1
3	1511977	Capscrew	1
4	1635279	Check Valve	1
5	1543359	Sealing Ring	1
6	1511998	Sealing Ring	1
7	1635384	Clip	4
8	1702096	Tube Assembly (Fuel Drain)	1
9	~~1635393~~		
	1702097	Adapter Assembly	1
9	. . . . .	Adapter	1
10	1635399	Connector (Quick Disconnect)	2
11	1635365	Connector (Quick Disconnect)	1
12	1635394	Tube Assy	1
13	1635410	Tube Assy	1
14	~~1635326~~		
	1702098	Brace Assembly	1
14	. . . . .	Brace	1
15	1702100	Clip	1
16	4009252	Connector	1
17	1635355	Sealing Ring	1

©2015 HYSTER COMPANY

NOTES

©2015 HYSTER COMPANY

5 ELECTRICAL SYSTEM

SECTION 5
ELECTRICAL SYSTEM

DESCRIPTION	PAGE
ALTERNATOR AND MOUNTING	
CUMMINS DIESEL (→ S/N G019E02271F (DRY BRAKES)) (→ S/N G019E02152F (WET BRAKES))	5-36
CUMMINS DIESEL (S/N G019E02272F → (DRY BRAKES)) (S/N G019E02153F → (WET BRAKES))	5-38
CUMMINS LPG	5-39
BATTERY DISCONNECT	5-12
CONTROL PANEL	
AIR CONDITIONER	5-22
HEATER	5-20
DC-DC CONVERTER AND ATTACHING PARTS	5-15
ELECTRIC HORN	5-133
ELECTRICAL SYSTEM	
DIESEL ENGINE	5-4
LPG ENGINE	5-8
ENGINE CONTROL SYSTEM	
CUMMINS DIESEL (→ S/N G019E02152F (WET BRAKES)) (→ S/N G019E02271F (DRY BRAKES))	5-28
CUMMINS DIESEL (S/N G019E02153F → (WET BRAKES)) (S/N G019E02272F → (DRY BRAKES))	5-30
CUMMINS LPG	5-32
ENGINE IGNITION SYSTEM	
CUMMINS LPG	5-42
JOYSTICK ASSEMBLY	
SUSPENSION HOOKS	5-26
TWISTLOCKS	5-24
LIGHT SWITCHES	5-14
RELAYS AND FUSES	5-16
SECOND 12V SOCKET OPTION	
CLIMATE CONTROL CAB	5-132
STARTER MOTOR	
CUMMINS DIESEL	5-34
CUMMINS LPG	5-35
WIRE HARNESS	
AIR DRYER	5-111
ARMREST - OPEN CAB	5-116
ARMREST - CLOSED CAB	5-118
BACK-UP ALARM	5-95
BRAKE TEMPERATURE	5-94
CAB LIGHTS	5-98
CAB SIDE CONSOLE - SHEET 1 OF 3	5-78
CAB SIDE CONSOLE - SHEET 2 OF 3	5-82
CAB SIDE CONSOLE - SHEET 3 OF 3	5-86
CAB TILT	5-114
CAB UNDERFLOOR	5-112
CHASSIS, DIESEL (H10.00XM-12EC, H12.00XM-12EC) - SHEET 1 0F 2	5-70
CHASSIS, DIESEL (H10.00XM-12EC, H12.00XM-12EC) - SHEET 2 0F 2	5-74
CHASSIS, DIESEL (H13.00XM, H16.00XM, H16.00XM-6) - SHEET 1 0F 2	5-62
CHASSIS, DIESEL (H13.00XM, H16.00XM, H16.00XM-6) - SHEET 2 0F 2	5-66

©2015 HYSTER COMPANY

SECTION 5
ELECTRICAL SYSTEM

DESCRIPTION **PAGE**

CHASSIS, LPG (H10.00XM-12EC, H12.00XM-12EC) - SHEET 1 0F 2 5-54
CHASSIS, LPG (H10.00XM-12EC, H12.00XM-12EC) - SHEET 2 0F 2 5-58
CHASSIS, LPG (H13.00XM, H14.00XM, H16.00XM-6) - SHEET 1 0F 2 5-44
CHASSIS, LPG (H13.00XM, H14.00XM, H16.00XM-6) - SHEET 2 0F 2 5-48
CLOSED CAB 5-88
EMPTY CONTAINER HANDLER ATTACHMENT 5-125
FRONT END 5-127
FRONT END EQUIPMENT 5-124
FRONT LIGHTS, EC4 - WITH FRONT FENDER LIGHTS 5-102
FRONT LIGHTS, EC4 5-103
FRONT LIGHTS, NON-EC4 - WITH FRONT FENDER AND MAST WORKLIGHTS 5-100
FRONT LIGHTS, NON-EC4 5-104
HYDRAULIC OIL TEMPERATURE 5-126
MAST LIGHT EXTENSION - RIGHT HAND 5-107
MAST LIGHT EXTENSION - LEFT HAND 5-108
MAST WORKLIGHT EXTENSION 5-106
OPEN CAB 5-92
REAR DRIVE LIGHT EXTENSION 5-96
REAR WIPER 5-120
REAR WORK LIGHTS 5-109
SHIFT LEVER 5-130
STEERING COLUMN 5-122
STROBE LIGHT 5-110
TAIL LIGHTS 5-131
TWO STAGE LIMITED FREE-LIFT 5-129
WINDOW WASH PUMPS 5-134

©2015 HYSTER COMPANY

NOTES

©2015 HYSTER COMPANY

ELECTRICAL SYSTEM (FIGURE 5-1)
DIESEL ENGINE

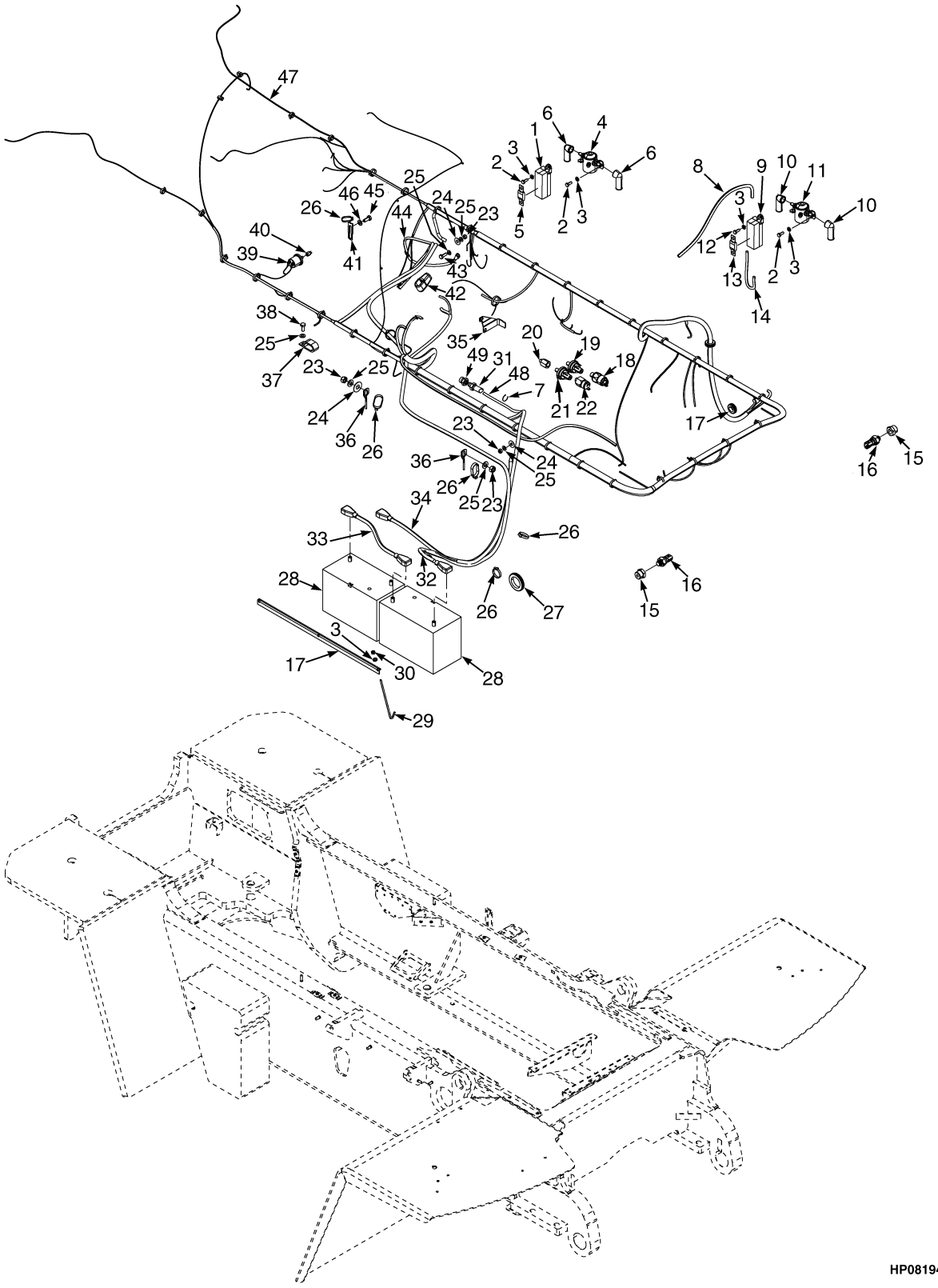

HP081940

©2015 HYSTER COMPANY

ELECTRICAL SYSTEM
DIESEL ENGINE

ITEM	PART NO.	DESCRIPTION	QTY
1	1617615	Fuse Holder	1
2	292500	Capscrew	4
3	~~4093489~~		
	320156	Washer	11
4	1307121	Switch (Magnetic, 24V) (Starter Relay)	1
5	1617618	Fuse (100 Amp)	1
6	204223	Boot	2
7	137852	Strap Clamp	3
8	1665321	Battery Cable	1
8	2109608	Battery Cable (Alternate Part)	1
9	1617615	Fuse Holder	1
10	204223	Boot	2
11	1307121	Switch (Magnetic, 24V) (Grid Heater Relay)	1
12	292500	Capscrew	4
13	1617617	Fuse (125 Amp)	1
14	1665434	Power Cable	1
14	2109609	Battery Cable (Alternate Part)	1
15	222454	Fitting	2
16	1627991	Switch (Brake Temperature)	2
17	1648640	Battery Hold Down	1
18	1558581	Pressure Switch (Wet Brake)	1
19	1301299	Pressure Switch (Low Pressure)	1
20	12856	Fitting	1
21	1484562	Pressure Switch (Dry Brake)	1
22	1332206	Pressure Switch (Brake Light)	1
23	302401	Locknut	4
24	296408	Lockwasher	3
25	320159	Washer	3
26	129563	Strap Clamp	48
27	1347854	Grommet	1
28	1399332	Start Battery Wet	2
29	1658942	Link (Battery Hold Down)	3
30	~~1512440~~		
	302399	Nut	4
31	1660992	Switch	1
32	1665237	Battery Cable	1
32	2109603	Battery Cable (Alternate Part)	1
33	1665052	Battery Cable	1
33	2109604	Battery Cable (Alternate Part)	1
34	1667221	Battery Cable	1
34	2109606	Battery Cable (Alternate Part)	1
35	2080826	Bracket	1
36	1345023	Strap	2
37	110322	Clamp	2
38	136681	Capscrew	2
39	1652018	Pressure Sender (Engine Oil)	1
40	1648135	Adapter	1
41	1350911	Strap	1
42	370009	Boot	1
43	136985	Capscrew	1

©2015 HYSTER COMPANY

ELECTRICAL SYSTEM
DIESEL ENGINE

ITEM	PART NO.	DESCRIPTION	QTY
44	1541841	Battery Cable	1
44	2109607	Battery Cable (Alternate Part)	1
45	292527	Capscrew	1
46	320161	Washer	3
47	**a** 2088714	Wire Harness (Chassis) (☞Figure 5-24, ☞Figure 5-25)	1
47	**b** 2103934	Wire Harness (☞Figure 5-24, ☞Figure 5-25)	1
48	2098413	Wire Harness (Hydraulic Oil Temperature) (☞Figure 5-55)	1
49	1661514	Fitting (Special)	1

FOOTNOTES:

a → 3/2008

b 3/2008 →

©2015 HYSTER COMPANY

NOTES

©2015 HYSTER COMPANY

ELECTRICAL SYSTEM (FIGURE 5-2)
LPG ENGINE

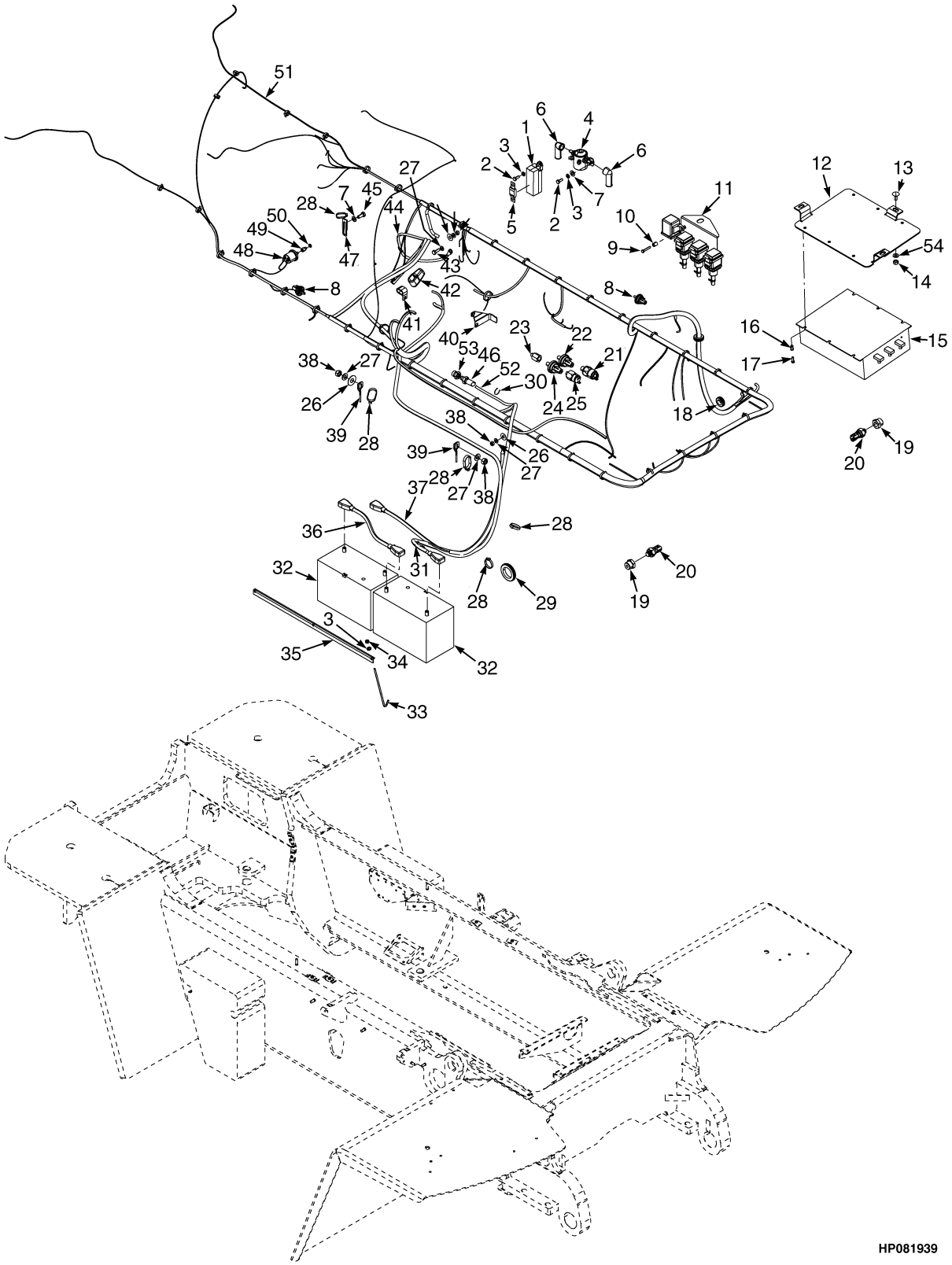

©2015 HYSTER COMPANY

ELECTRICAL SYSTEM
LPG ENGINE

ITEM	PART NO.	DESCRIPTION	QTY
1	1617615	Fuse Holder	1
2	292500	Capscrew	4
3	~~4093489~~		
	320156	Washer	7
4	1307121	Switch (Magnetic, 24V)	1
5	1617618	Fuse (100 Amp)	1
6	204223	Boot	2
7	320157	Washer	5
7	320161	Washer	4
8	1301648	Pressure Switch	2
9	2072353	Capscrew	4
10	1534793	Spacer	4
11	1606764	Bracket	1
12	1606513	Bracket	1
13	1533520	Capscrew	3
14	302400	Nut	3
15	1606515	Converter (DC-DC, 60 Amp)	1
16	320155	Washer	6
17	2044515	Capscrew	6
18	279752	Grommet	2
19	222454	Fitting	2
20	1627991	Switch (Brake Temperature)	2
21	1558581	Pressure Switch (Wet Brake)	1
22	1301299	Pressure Switch (Low Pressure)	1
23	12856	Fitting	1
24	1484562	Pressure Switch (Dry Brake)	1
25	1332206	Pressure Switch (Brake Light)	1
26	296408	Lockwasher	3
27	320159	Washer	7
28	129563	Strap Clamp	48
29	1347854	Grommet	1
30	137852	Strap Clamp	3
31	1665237	Battery Cable	1
31	2109603	Battery Cable (Alternate Part)	1
32	1399332	Start Battery Wet	2
33	1658942	Link (Battery Hold Down)	3
34	~~1512440~~		
	302399	Nut	3
35	1648640	Battery Hold Down	1
36	1665052	Battery Cable	1
36	2109604	Battery Cable (Alternate Part)	1
37	1667221	Battery Cable	1
37	2109606	Battery Cable (Alternate Part)	1
38	302401	Locknut	4
39	1345023	Strap	2
40	2080826	Bracket	1
41	1347314	Clamp	1
42	370009	Boot	1
43	136985	Capscrew	1
44	1541841	Battery Cable	1

©2015 HYSTER COMPANY

ELECTRICAL SYSTEM
LPG ENGINE

ITEM	PART NO.	DESCRIPTION	QTY
44	2109607	Battery Cable (Alternate Part)	1
45	292527	Capscrew	1
46	1660992	Switch	1
47	1350911	Strap	1
48	1652018	Pressure Sender (Engine Oil)	1
49	1475493	Fitting (Adapter)	1
50	1470791	Seal	1
51	**b** 2094176	Wire Harness (Chassis) (H13.00XM, H14.00XM, H16.00XM-6) (☞Figure 5-20, ☞Figure 5-21)	1
51	**c** 4609549	Wire Harness (Chassis) (H13.00XM, H14.00XM, H16.00XM-6) (☞Figure 5-20, ☞Figure 5-21)	1
51	2094175	Wire Harness (Chassis) (H10.00XM-12EC, H12.00XM-12EC) (☞Figure 5-22, ☞Figure 5-23)	1
51	4609548	Wire Harness (Chassis) (H10.00XM-12EC, H12.00XM-12EC) (☞Figure 5-22, ☞Figure 5-23)	1
52	2098413	Wire Harness (Hydraulic Oil Temperature) (☞Figure 5-55)	1
53	1661514	Fitting (Special)	1
54	320157	Washer	3
	a 132860	Capscrew	1
	a 391484	Clamp (Insulated)	1

FOOTNOTES:

a Not Illustrated
b → 10/2010
c 10/2010 →

©2015 HYSTER COMPANY

NOTES

©2015 HYSTER COMPANY

BATTERY DISCONNECT (FIGURE 5-3)

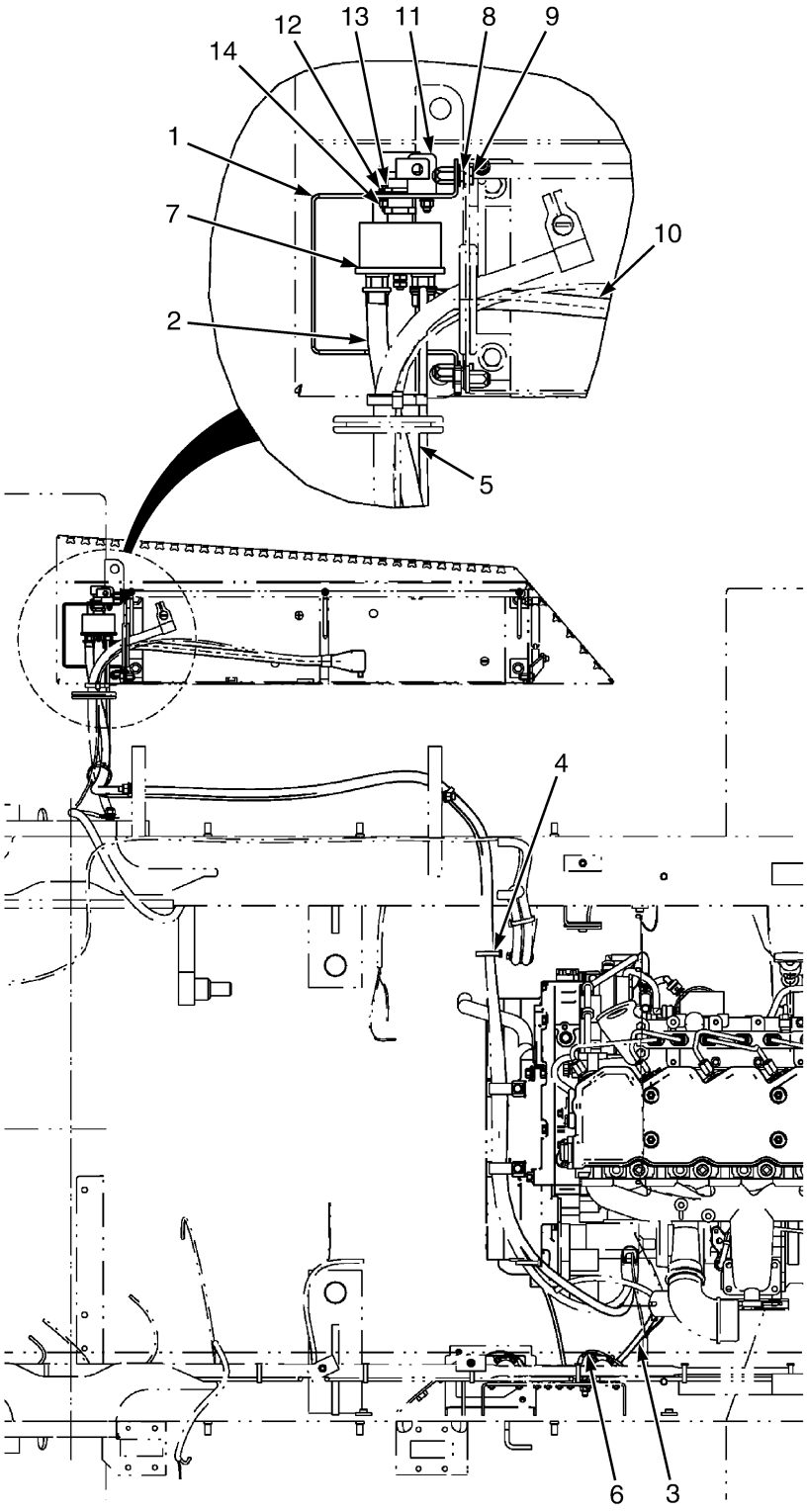

BP080970

©2015 HYSTER COMPANY

BATTERY DISCONNECT

ITEM	PART NO.	DESCRIPTION	QTY
1	4005291	Bracket	1
1	4609793	Bracket (Alternate Part) (Not Shown)	1
2	4606018	Battery Cable	1
3	2109607	Battery Cable	1
4	129563	Strap Clamp	1
5	4606019	Cable	1
6	2109609	Battery Cable	1
7	1324517	Switch (Disconnect)	1
8	**a** 320157	Washer	3
9	**a** 136749	Screw	2
10	4606011	Battery Cable	1
11	1585160	Lever (Lockable Disconnect Switch)	1
12	320155	Washer	4
13	2044515	Capscrew	2
14	302398	Locknut	2

FOOTNOTES:

a Use only qty. 2 for part number 4609793

©2015 HYSTER COMPANY

LIGHT SWITCHES (FIGURE 5-4)

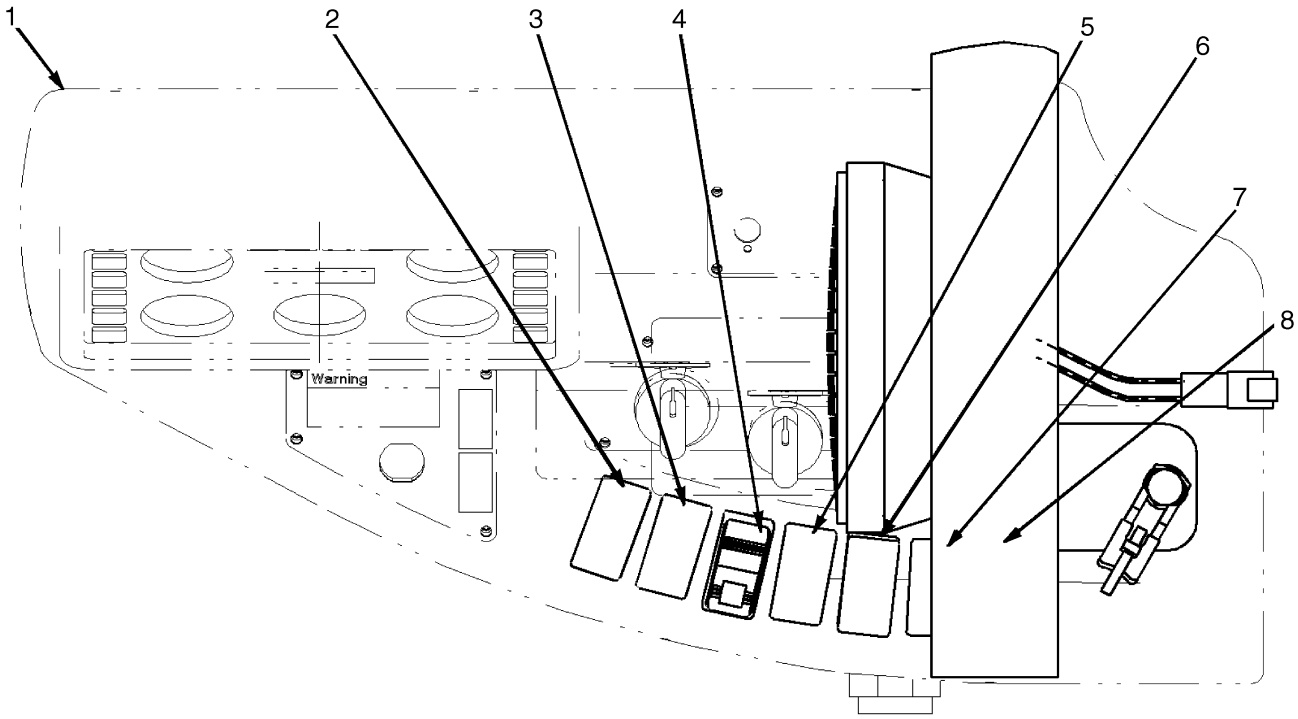

HP081938

ITEM	PART NO.	DESCRIPTION	QTY
1	2082215	Wire Harness (Lights)	1
2	2052773	Switch (Mast And Attachment Worklight) (Mast And Attachment Lights)	1
2	1487428	Plug	1
3	2052774	Switch (Front Drive/Side Lamps) (Master Light Switch)	1
3	1487428	Plug	1
4	2052775	Switch (Cab Mounted Drive Lights) (Cab Mounted Drive Lights)	1
4	1487428	Plug	1
5	2052776	Switch (Rear Work Lights) (Work Lamp)	1
5	1487428	Plug	1
6	2043879	Wire Harness (Strobe Light Adapter)	1
6	1487428	Plug	1
7	2043351	Switch (Hazard Light)	1
7	1487428	Plug	1
8	1487428	Plug	1

©2015 HYSTER COMPANY

DC-DC CONVERTER AND ATTACHING PARTS (FIGURE 5-5)

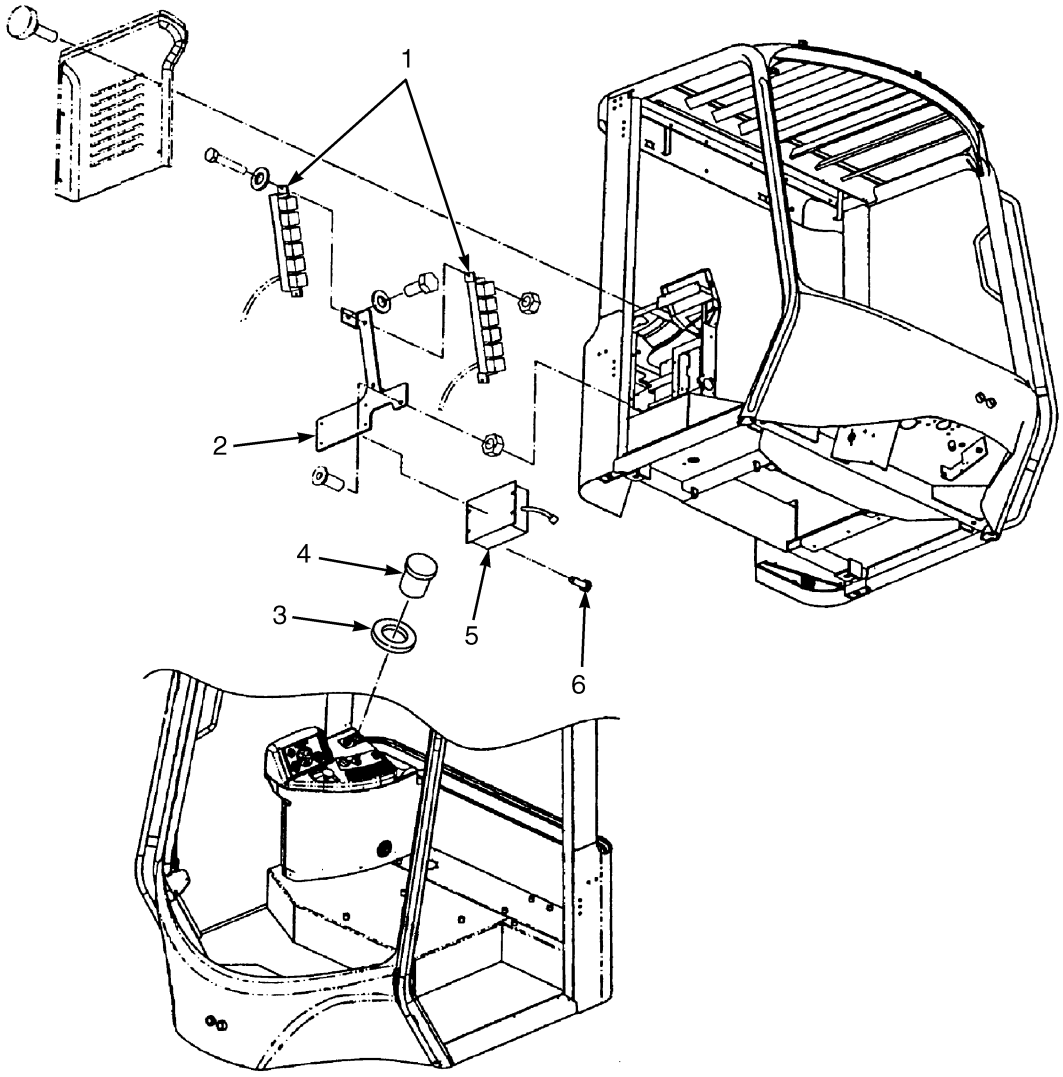

HP200115

ITEM	PART NO.	DESCRIPTION	QTY
1	2088901	Wire Harness (Side Console) (☞Figure 5-28, ☞Figure 5-29, ☞Figure 5-30)....	1
2	1566765	Bracket	1
3	1558027	Label (12V)	1
4	1566764	Socket (12V)	1
5	**a** 2055678	DC-DC Converter	1
5	**b** 2100569	DC-DC Converter	1
6	**a** 1571789	Screw	4
6	**b** 4001205	Screw	4

FOOTNOTES:

a → S/N G019E02164F

b S/N G019E02165F →

©2015 HYSTER COMPANY

RELAYS AND FUSES (FIGURE 5-6)

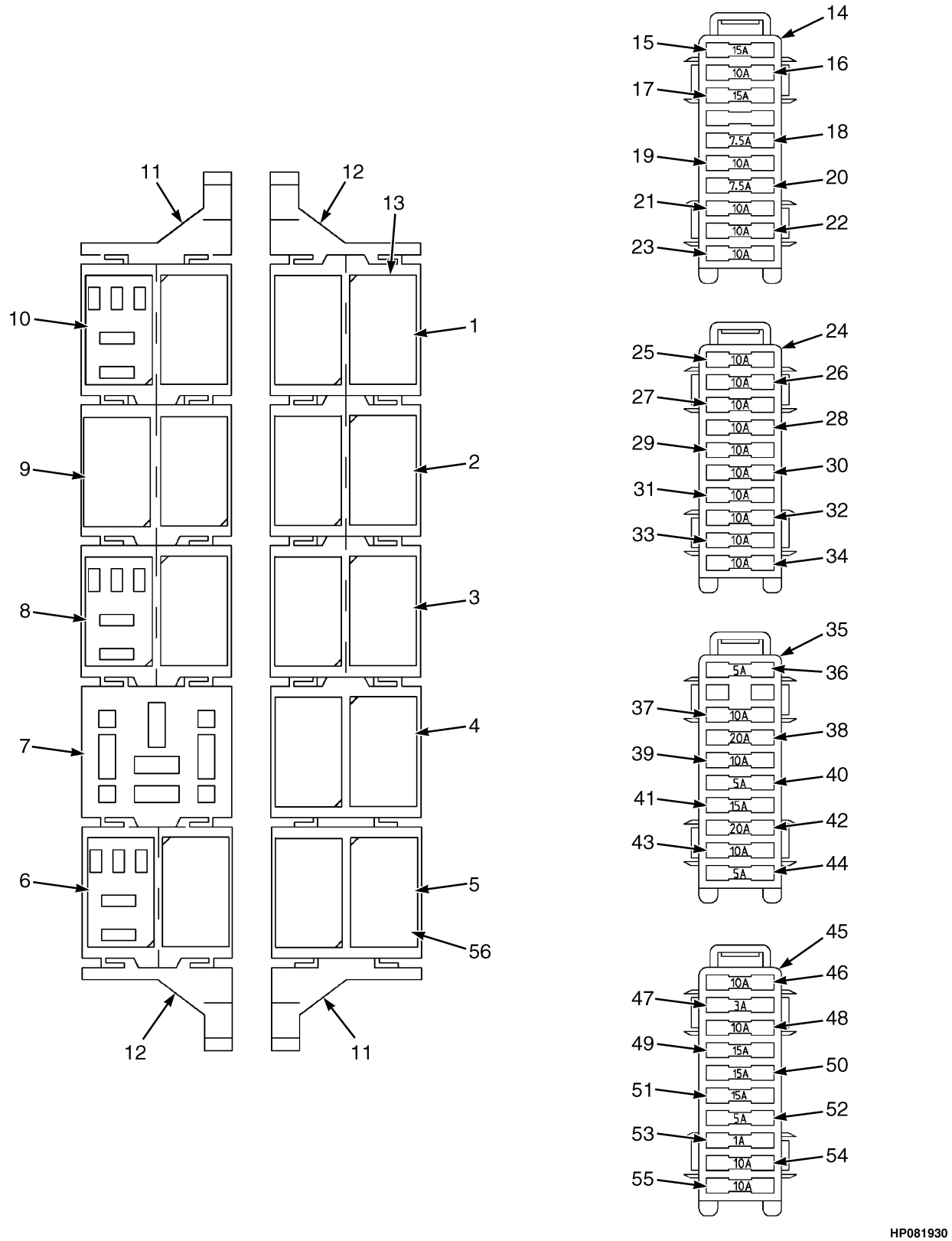

HP081930

©2015 HYSTER COMPANY

RELAYS AND FUSES

ITEM	PART NO.	DESCRIPTION	QTY
	2088901	Wire Harness (Side Console)	1
1	. . . . .	(C460) Flood Lights and Lights Relays	1
1	1484683	Relay (Base)	1
1	1490249	Connector (1-Way)	4
1	1570602	Terminal (Socket)	4
2	. . . . .	(C450) Start Inhibit and Neutral Relays	1
2	1484683	Relay (Base)	1
2	1489957	Connector (1-Way)	4
2	1570602	Terminal (Socket)	4
3	. . . . .	(C440) Lower Interrupt and Reverse Light/Alarm Relay	1
3	1484683	Relay (Base)	1
3	1489957	Connector (1-Way)	4
3	1570602	Terminal (Socket)	4
4	. . . . .	(C430) 12V and Horn Relays	1
4	1484683	Relay (Base)	1
4	1489957	Connector (1-Way)	5
4	1389479	Terminal	1
4	1570602	Terminal (Socket)	2
5	. . . . .	(C580) AC Fan 2 and AC Fan 3 Relays	1
5	1484683	Relay (Base)	1
5	1389479	Terminal	4
5	1570602	Terminal (Socket)	4
6	. . . . .	(C570) AC Fan 1 Relay	1
6	1484683	Relay (Base)	1
6	1389479	Terminal	2
6	1570602	Terminal (Socket)	2
7	. . . . .	(C520) Flasher Relay	1
7	1484684	Single Mini Relay Base	1
7	1489957	Connector (1-Way)	3
8	. . . . .	(C490) Blank	1
9	. . . . .	(C480) Ignition and Seat Switch Relays	1
9	1484683	Relay (Base)	1
9	1490249	Connector (1-Way)	2
9	1570602	Terminal (Socket)	6
10	. . . . .	(C470) Override and Pressure Signal Relays	1
10	1484683	Relay (Base)	1
10	1489957	Connector (1-Way)	4
10	1570602	Terminal (Socket)	4
11	1484715	Clip , Micro Relay Base (Passive Side-Mounting)	2
12	1484714	Clip , Side-Mounting	2
13	1582155	Relay (24 Volt)	1
14	. . . . .	(C380) Fusebox 1 - Hydraulics and Transmission	1
14	1484681	10 Way Fuse Box	1
14	1484682	Secondary Lock	1
14	1490250	Terminal (2-Way)	2
14	1489957	Connector (1-Way)	6
14	1389479	Terminal	6
14	1496884	Terminal (3-Way)	1
15	1310630	Fuse (15 Amp) (Hydraulic Controls)	1
16	370647	Fuse (10 Amp) (Transmission)	1
17	1310630	Fuse (15 Amp) (Attachment Controls)	1

©2015 HYSTER COMPANY

RELAYS AND FUSES

ITEM	PART NO.	DESCRIPTION	QTY
18	1300057	Fuse (7.5 Amp) (Transmission B+)	1
19	370647	Fuse (10 Amp) (Park Brake)	1
20	1300057	Fuse (7.5 Amp) (Transmission B+)	1
21	370647	Fuse (10 Amp) (Front Screen Wash/Wipe)	1
22	370647	Fuse (10 Amp) (Roof Screen Wash/Wipe)	1
23	370647	Fuse (10 Amp) (Rear Screen Wash/Wipe)	1
24	. . . . .	(C390) Fusebox 2 - Lights and HVAC	1
24	1484681	10 Way Fuse Box	1
24	1484682	Secondary Lock	1
24	1490250	Terminal (2-Way)	3
24	1655132	Bridge (2-Way)	1
24	1489957	Connector (1-Way)	8
24	1389479	Terminal	4
25	370647	Fuse (10 Amp) (Front Inner Flood Lights)	1
26	370647	Fuse (10 Amp) (Front Outer Flood Lights)	1
27	370647	Fuse (10 Amp) (Rear Drive Lights)	1
28	370647	Fuse (10 Amp) (Beacon/Strobe)	1
29	370647	Fuse (10 Amp) (Stop Lights)	1
30	370647	Fuse (10 Amp) (Mast Lights)	1
31	370647	Fuse (10 Amp) (Direction Indicators)	1
32	370647	Fuse (10 Amp) (Hazard Lights)	1
33	370647	Fuse (10 Amp) (Side/Tail Lights)	1
34	370647	Fuse (10 Amp) (Front Drive Lights)	1
35	. . . . .	(C400) Fusebox 3 - Engine Control and Display	1
35	1484681	10 Way Fuse Box	1
35	1484682	Secondary Lock	1
35	1489957	Connector (1-Way)	9
35	1496884	Terminal (3-Way)	2
35	1389479	Terminal	2
35	1490249	Connector (1-Way)	1
36	370646	Fuse (5 Amp) (Engine Start)	1
37	370647	Fuse (10 Amp) (Instrumentation)	1
38	370648	Fuse (20 Amp) (Cab Tilt Power Assist)	1
39	370647	Fuse (10 Amp) (Horn)	1
40	370646	Fuse (5 Amp) (Interior Lighting)	1
41	1310630	Fuse (15 Amp) (Seat Suspension Compressor)	1
42	370648	Fuse (20 Amp) (Heater/AC/Ventilation Fan)	1
43	370647	Fuse (10 Amp) (Oil Cooler/Air Dryer)	1
44	370646	Fuse (5 Amp) (Reverse Lights/Alarm)	1
45	. . . . .	(C410) Fusebox 4 - 12V	1
45	1484681	10 Way Fuse Box	1
45	1484682	Secondary Lock	1
45	1490250	Terminal (2-Way)	2
45	1389479	Terminal	6
45	1490249	Connector (1-Way)	4
45	1489957	Connector (1-Way)	7
46	370647	Fuse (10 Amp) (Console Accessory Socket)	1
47	1337828	Fuse (3 Amp) (Radio/CB/Intercom)	1
48	370647	Fuse (10 Amp) (Converter For Accessories)	1
49	1310630	Fuse (15 Amp) (12V Relay and AC Fan 1)	1
50	1310630	Fuse (15 Amp) (Engine Supply)	1

See Service Manual for service procedures.
©2015 HYSTER COMPANY

RELAYS AND FUSES

ITEM	PART NO.	DESCRIPTION	QTY
51	1310630	Fuse (15 Amp) (Engine Supply)	1
52	370646	Fuse (5 Amp) (LPG Relay)	1
53	1378661	Fuse (1 Amp) (Diagnostics Supply)	1
54	370647	Fuse (10 Amp) (AC Fan 2)	1
55	370647	Fuse (10 Amp) (AC Fan 3)	1
56	1489960	Relay (24 Volt)	1

©2015 HYSTER COMPANY

CONTROL PANEL (FIGURE 5-7)
HEATER

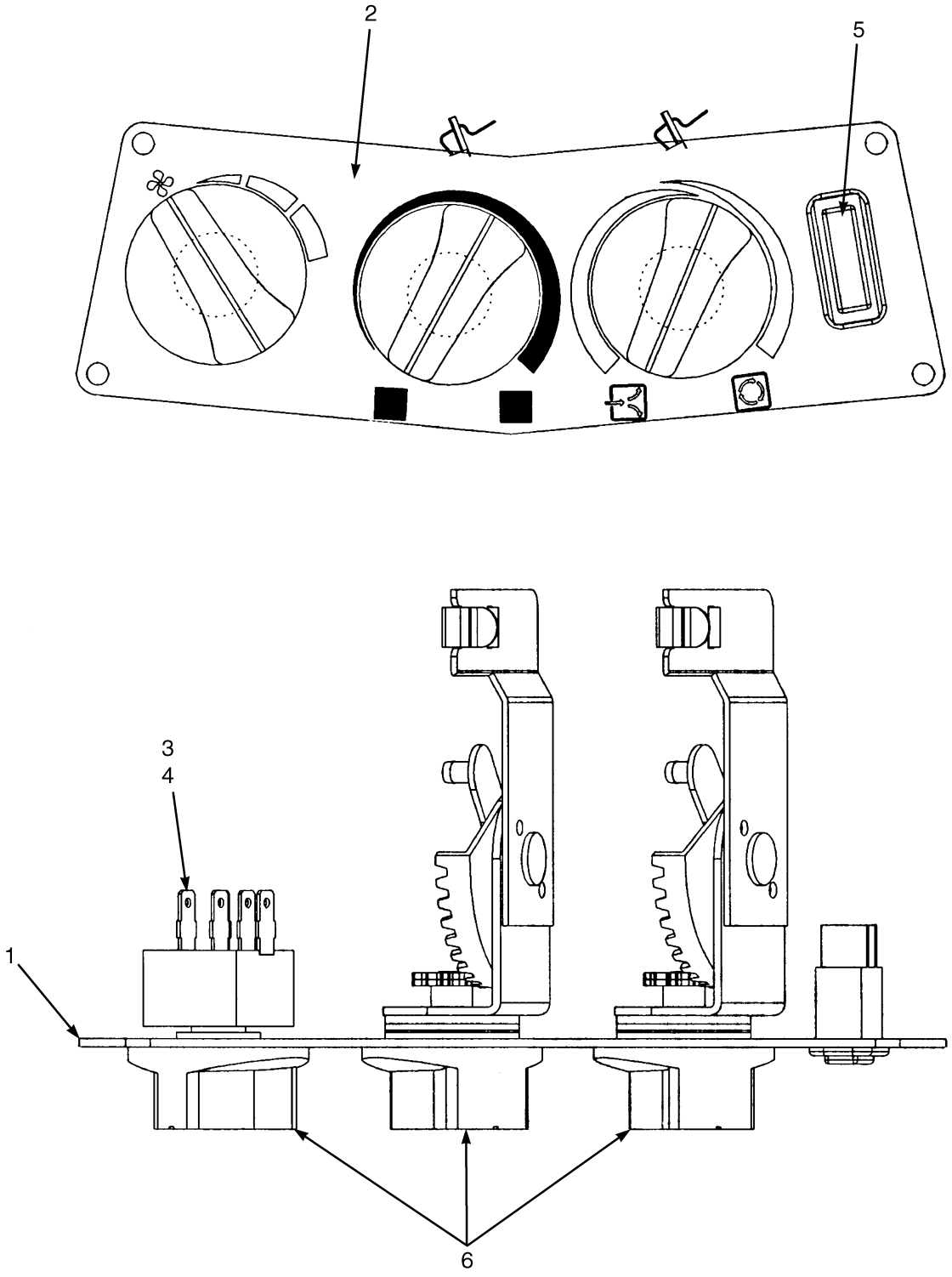

©2015 HYSTER COMPANY

CONTROL PANEL
HEATER

ITEM	PART NO.	DESCRIPTION	QTY
	1558033	Control Panel (Heater)	1
1	. . . . .	Plate (Mounting)	1
2	. . . . .	Decal	1
3	1566205	Switch (Fan Speed)	2
4	1566206	Nut	1
5	1566216	Plug	1
6	~~1640800~~		
	1566210	Knob	3

©2015 HYSTER COMPANY

CONTROL PANEL (FIGURE 5-8)
AIR CONDITIONER

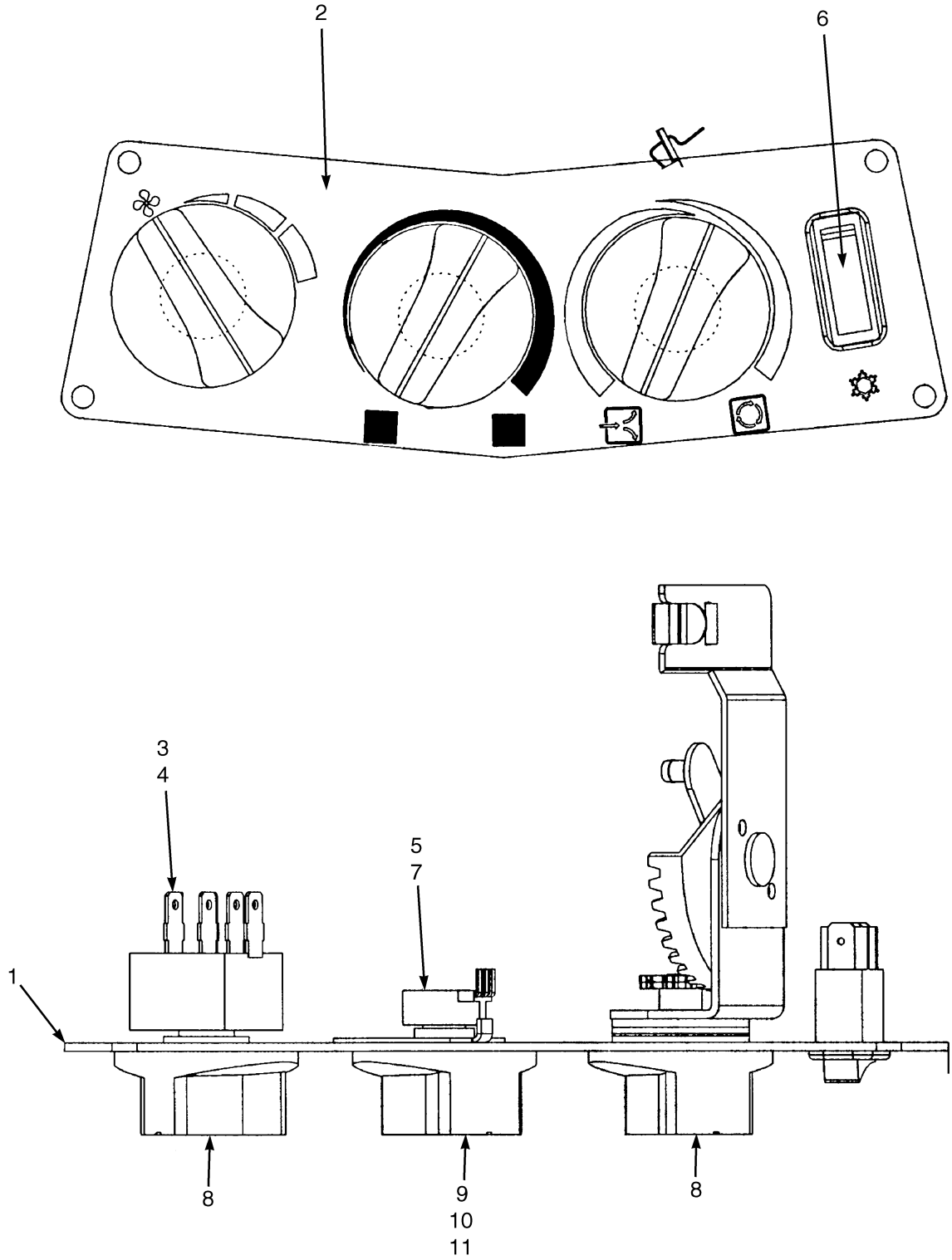

HP081509

©2015 HYSTER COMPANY

CONTROL PANEL
AIR CONDITIONER

ITEM	PART NO.	DESCRIPTION	QTY
	1615364	Control Panel (Heater and Air Conditioner)	1
1	. . . . .	Plate (Mounting)	1
2	. . . . .	Decal	1
3	1566205	Switch (Fan Speed)	1
4	1566206	Nut	1
5	1615363	Potentiometer	1
6	1566208	Switch (Air Conditioner)	1
7	1566209	Wire Harness	1
8	~~1640800~~		
	1566210	Knob (Fan Switch)	2
9	1566211	Knob (Potentiometer)	1
10	1566212	O-Ring	1
11	1566213	Washer	1

©2015 HYSTER COMPANY

JOYSTICK ASSEMBLY (FIGURE 5-9)
TWISTLOCKS

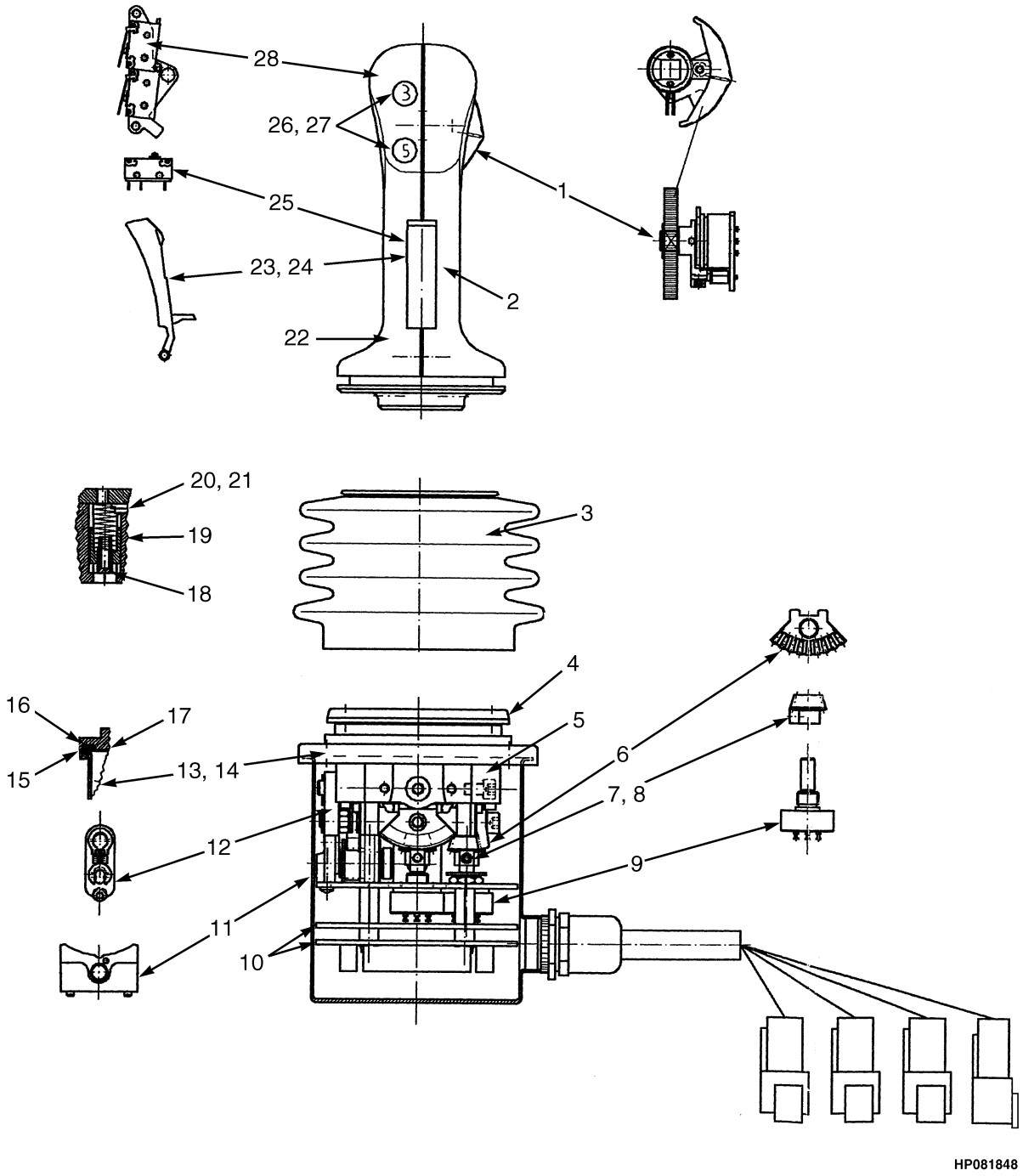

©2015 HYSTER COMPANY

JOYSTICK ASSEMBLY
TWISTLOCKS

ITEM	PART NO.	DESCRIPTION	QTY
	1480436	Joystick	1
1	1584827	Potentiometer	1
1	1584828	Switch (See Saw)	1
2	1584848	Grip (LH)	1
3	1584846	Boot	1
4	1584835	Gate	1
5	1584829	Drive Assy-Upper Mechanical	1
6	1584834	Bevel Gear	1
7	1584838	Bevel Gear	2
8	1504917	Pin	2
9	1584837	Potentiometer	2
10	1584867	Printed Circuit Board	1
11	1584836	Bearing (Detent)	2
12	1584839	Plate (Complete)	2
13	1584843	Housing	1
14	1584844	Screw	4
15	1584845	Gasket	1
16	1584841	Gasket	1
17	1584842	Gasket	1
18	1584833	Screw	4
19	1584830	Plunger	4
20	1584831	Spring	4
21	1584832	Spring	4
22	1584847	Grip (RH)	1
23	1584824	Trigger	1
24	1584825	Spring	1
25	1584826	Microswitch	1
26	1584852	Push Button (Red)	2
27	1584853	Spring	2
28	1584854	Contact	1

©2015 HYSTER COMPANY

JOYSTICK ASSEMBLY (FIGURE 5-10)
SUSPENSION HOOKS

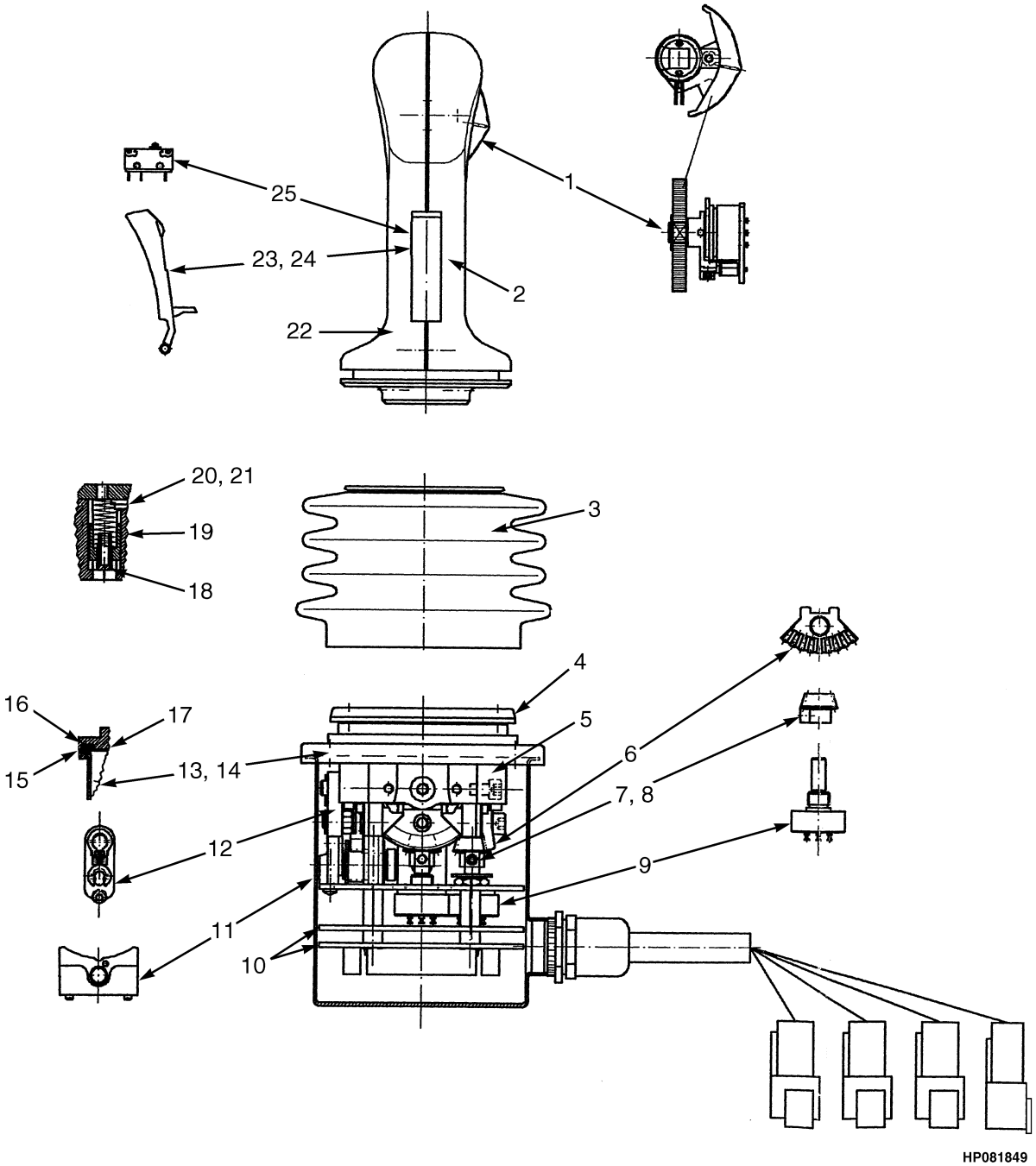

©2015 HYSTER COMPANY

JOYSTICK ASSEMBLY
SUSPENSION HOOKS

ITEM	PART NO.	DESCRIPTION	QTY
	1504059	Joystick	1
1	1584827	Potentiometer	1
1	1584828	Switch (See Saw)	1
2	1584823	Grip (LH)	1
3	1584846	Boot	1
4	1584835	Gate	1
5	1584829	Drive Assy-Upper Mechanical	1
6	1584834	Bevel Gear	1
7	1584838	Bevel Gear	2
8	1504917	Pin	2
9	1584837	Potentiometer	2
10	1584840	Printed Circuit Board	1
11	1584836	Bearing (Detent)	2
12	1584839	Plate (Complete)	2
13	1584843	Housing	1
14	1584844	Screw	4
15	1584845	Gasket	1
16	1584841	Gasket	1
17	1584842	Gasket	1
18	1584833	Screw	4
19	1584830	Plunger	4
20	1584831	Spring	4
21	1584832	Spring	4
22	1584822	Grip (RH)	1
23	1584824	Trigger	1
24	1584825	Spring	1
25	1584826	Microswitch	1

©2015 HYSTER COMPANY

ENGINE CONTROL SYSTEM (FIGURE 5-11)

CUMMINS DIESEL (→ S/N G019E02152F (WET BRAKES)) (→ S/N G019E02271F (DRY BRAKES))

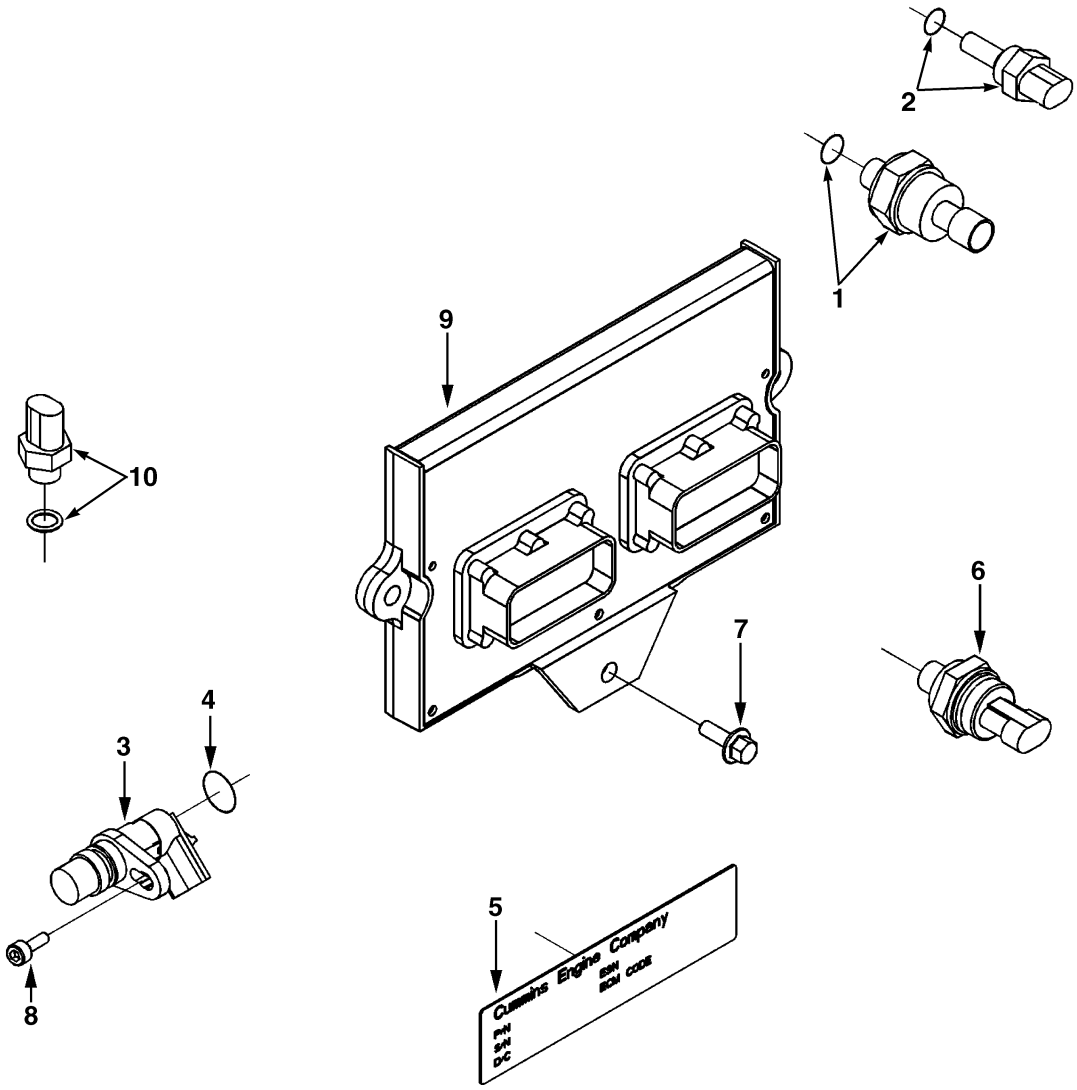

HP091194

©2015 HYSTER COMPANY

ENGINE CONTROL SYSTEM

CUMMINS DIESEL (→ S/N G019E02152F (WET BRAKES)) (→ S/N G019E02271F (DRY BRAKES))

ITEM	PART NO.	DESCRIPTION	QTY
	2085496	Engine Assy-Diesel (2300 RPM, Dry Brakes)	1
	2085494	Engine Assy-Diesel (2300 RPM, Wet Brakes)	1
1	1659572	Sensor (Boost Pressure)	1
2	1517118	Sensor (Air Intake Temperature)	1
3	1619371	Sensor (Camshaft Position)	1
4	1552288	O-Ring	1
5	1517120	Data Plate	1
6	1543436	Sensor (Coolant)	1
7	1512004	Capscrew	3
8	1543437	Capscrew	1
9	1635421	Electronic Control Module	1
10	1543439	Switch, Oil Pressure	1

©2015 HYSTER COMPANY

ENGINE CONTROL SYSTEM (FIGURE 5-12)

CUMMINS DIESEL (S/N G019E02153F → (WET BRAKES)) (S/N G019E02272F → (DRY BRAKES))

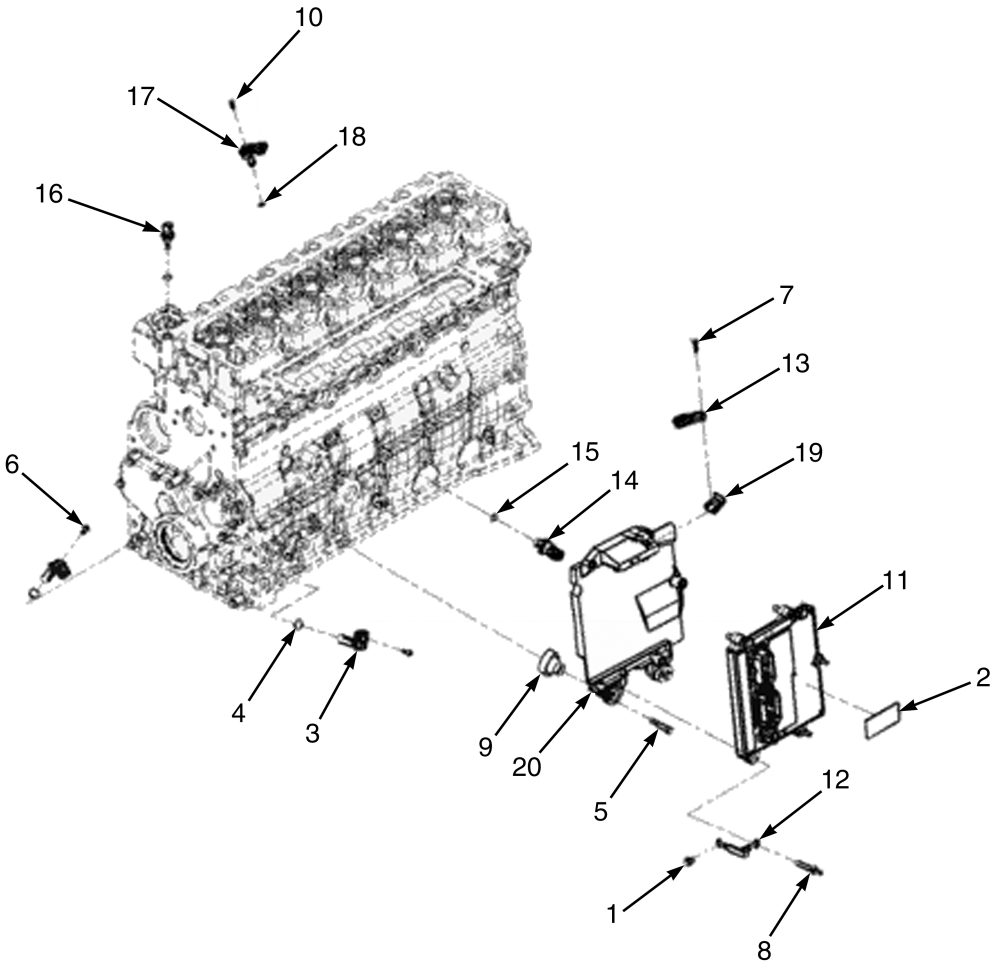

HP091255

©2015 HYSTER COMPANY

ENGINE CONTROL SYSTEM

CUMMINS DIESEL (S/N G019E02153F → (WET BRAKES)) (S/N G019E02272F → (DRY BRAKES))

ITEM	PART NO.	DESCRIPTION	QTY
	2107121	Engine Assy Diesel (2300 RPM, Dry Brakes)	1
	2107118	Engine Assy (2300 RPM, Wet Brakes)	1
1	1517266	Capscrew	1
2	1517120	Data Plate	1
3	1635457	Sensor Assembly (Camshaft Position)	2
3	. . . . .	Sensor	1
4	1635342	O-Ring	1
5	1512111	Capscrew	6
6	1543437	Capscrew	2
7	1514504	Capscrew	1
8	1635422	Capscrew	4
9	4009315	Isolator	3
10	1635280	Capscrew	1
11	1635421	Electronic Control Module	1
12	1635325	Wire	1
13	1635345	Sensor (Pressure)	1
14	1543439	Switch, Oil Pressure	1
14	. . . . .	Pressure Switch	1
15	~~1517116~~		
	1543435	O-Ring	1
16	~~1565040~~		
	1691873	Sensor Assembly (Temperature)	1
16	. . . . .	Temperature Sensor	1
16	~~1517116~~		
	1543435	O-Ring	1
17	~~1661205~~		
	4123350	Sensor (Pressure and Temperature)	1
18	. . . . .	O-Ring	1
19	. . . . .	Clip	1
20	4009316	Bracket (ETR Control Module)	1

©2015 HYSTER COMPANY

ENGINE CONTROL SYSTEM (FIGURE 5-13)
CUMMINS LPG

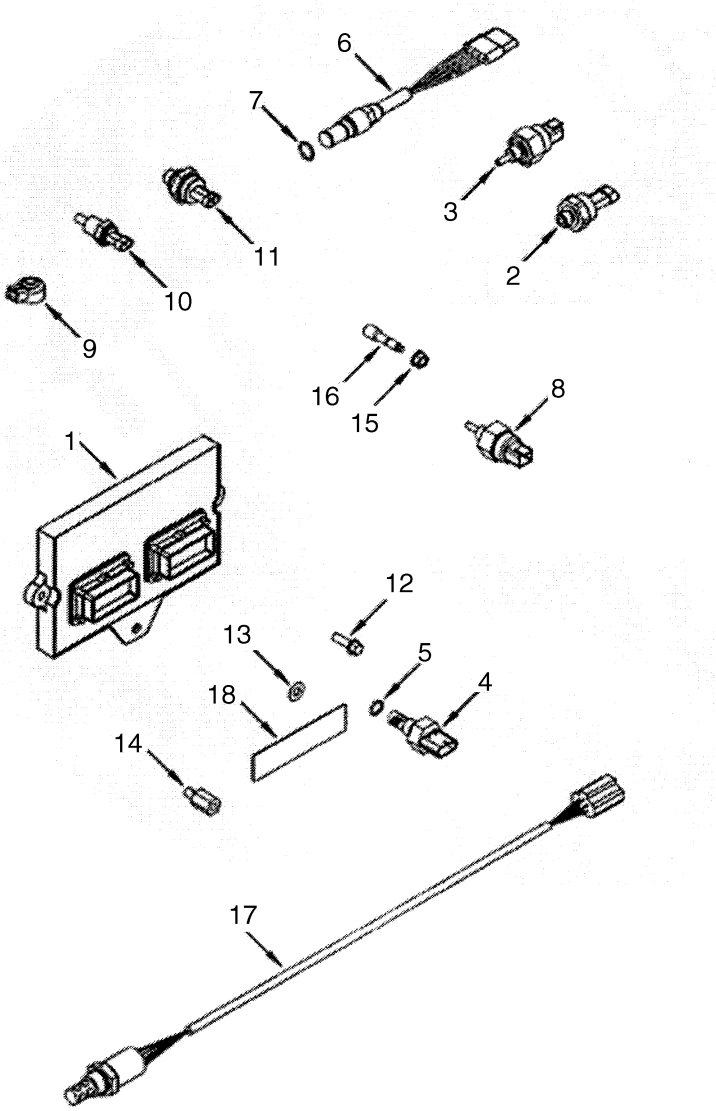

HP091448

©2015 HYSTER COMPANY

ENGINE CONTROL SYSTEM
CUMMINS LPG

ITEM	PART NO.	DESCRIPTION	QTY
	2095554	Engine Assy-Lpg (Wet Brake)	1
	2095555	Engine Assy-Lpg (Dry Brake)	1
1	. . . . .	Control Module (Electronic)	1
2	1662044	Sensor (Pressure)	1
3	1662045	Sensor (Pressure)	1
4	~~1614640~~		
	4033907	Sensor (Humidity)	1
5	1614638	O-Ring	1
6	1568719	Sensor (Camshaft Position)	1
6	1708423	Sensor , Position (Camshaft or Crankshaft) (Alternate Part)	1
7	1511961	O-Ring	1
8	1658984	Sensor (Charge Air Pressure)	1
8	1515836	O-Ring	1
9	1614491	Sensor (Knock)	1
10	1543436	Sensor (Coolant)	1
11	1662042	Sensor (Temperature)	1
11	~~1517116~~		
	1543435	O-Ring	1
12	1512005	Capscrew	2
13	1511969	Seal	2
14	1517122	Spacer	2
15	1513712	Nut	1
16	1614632	Stud	1
17	1614636	Sensor , Lambda (Oxygen)	1
18	1517120	Data Plate	1

©2015 HYSTER COMPANY

STARTER MOTOR (FIGURE 5-14)
CUMMINS DIESEL

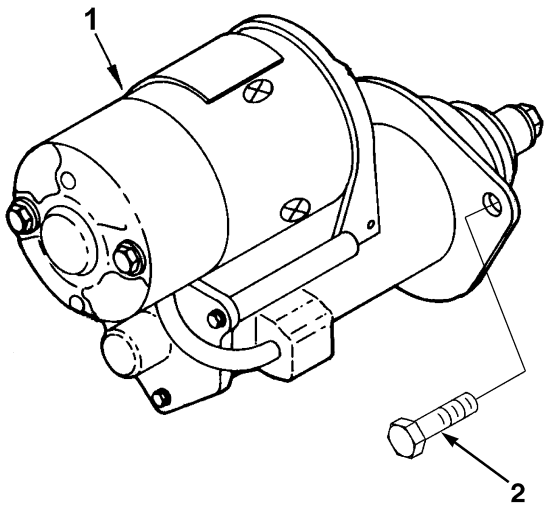

HP091171

ITEM	PART NO.	DESCRIPTION	QTY
	b 2085496	Engine Assy-Diesel (2300 RPM, Dry Brakes)	1
	d 2107121	Engine Assy Diesel (2300 RPM, Dry Brakes)	1
	a 2085494	Engine Assy-Diesel (2300 RPM, Wet Brakes)	1
	c 2107118	Engine Assy (2300 RPM, Wet Brakes)	1
1	1552880	Starter	1
1	1702183	Reman Starter Motor (Alternate Part)	1
2	1588828	Capscrew	2

FOOTNOTES:

a → S/N G019E02152F
b → S/N G019E02271F
c S/N G019E02153F →
d S/N G019E02272F →

©2015 HYSTER COMPANY

STARTER MOTOR (FIGURE 5-15)
CUMMINS LPG

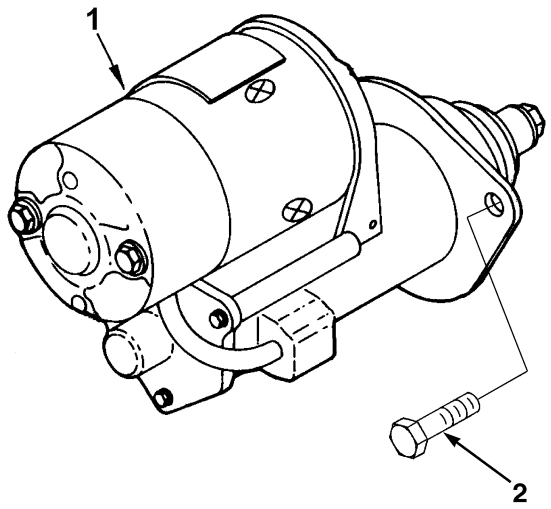

HP091171

ITEM	PART NO.	DESCRIPTION	QTY
	2095555	Engine Assy-Lpg (Dry Brake)	1
	2095554	Engine Assy-Lpg (Wet Brake)	1
1	1552880	Starter	1
2	1588828	Capscrew	2

©2015 HYSTER COMPANY

ALTERNATOR AND MOUNTING (FIGURE 5-16)

CUMMINS DIESEL (→ S/N G019E02271F (DRY BRAKES)) (→ S/N G019E02152F (WET BRAKES))

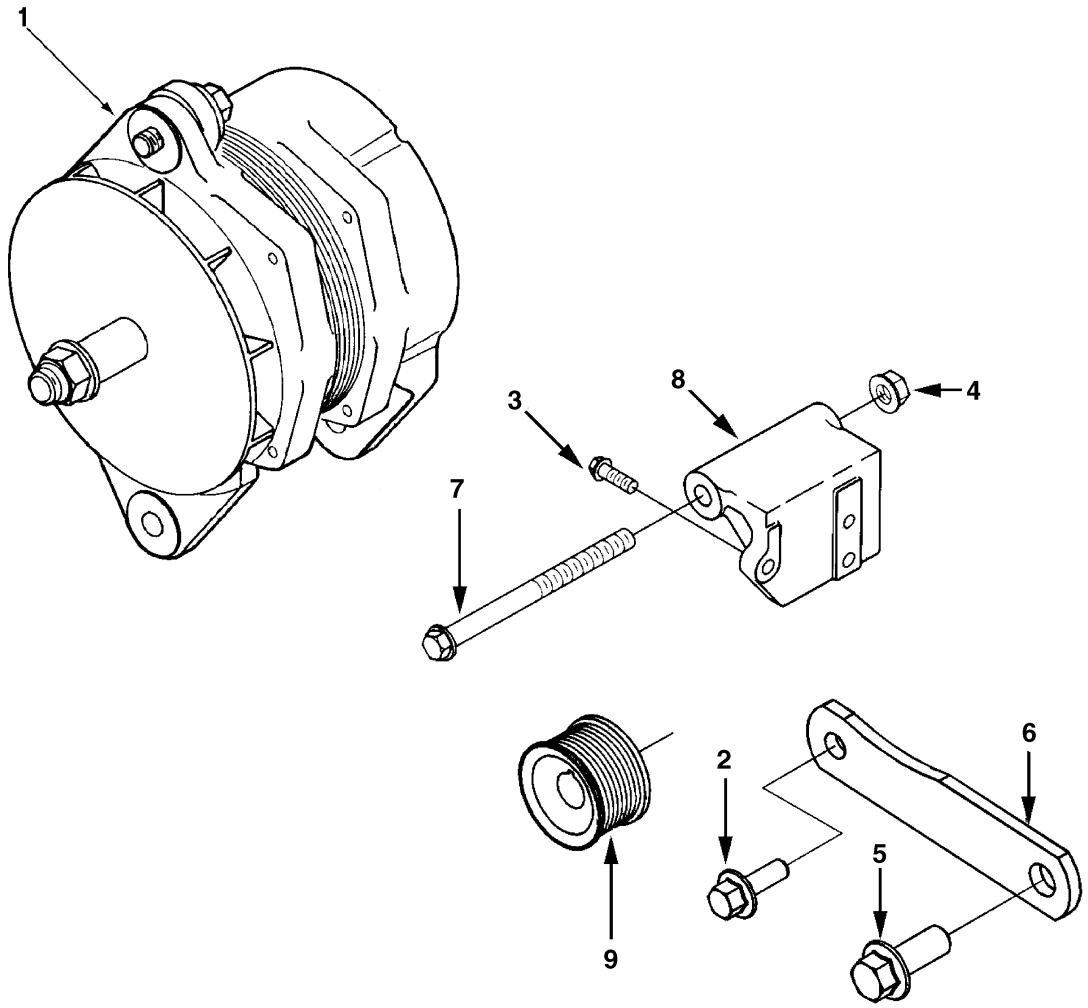

HP091151

©2015 HYSTER COMPANY

ALTERNATOR AND MOUNTING

CUMMINS DIESEL (→ S/N G019E02271F (DRY BRAKES)) (→ S/N G019E02152F (WET BRAKES))

ITEM	PART NO.	DESCRIPTION	QTY
	2085496	Engine Assy-Diesel (2300 RPM, Dry Brakes)	1
	2085494	Engine Assy-Diesel (2300 RPM, Wet Brakes)	1
1	1649349	Alternator	1
1	~~1693006~~		
	4020872	Alternator (Alternate Part)	1
2	1512003	Capscrew	1
3	1512005	Capscrew	3
4	1511978	Nut	1
5	1512503	Capscrew	1
6	1543352	Brace	1
7	1512006	Capscrew	1
8	1543351	Support	1
9	1512009	Pulley	1

©2015 HYSTER COMPANY

ALTERNATOR AND MOUNTING (FIGURE 5-17)

CUMMINS DIESEL (S/N G019E02272F → (DRY BRAKES)) (S/N G019E02153F → (WET BRAKES))

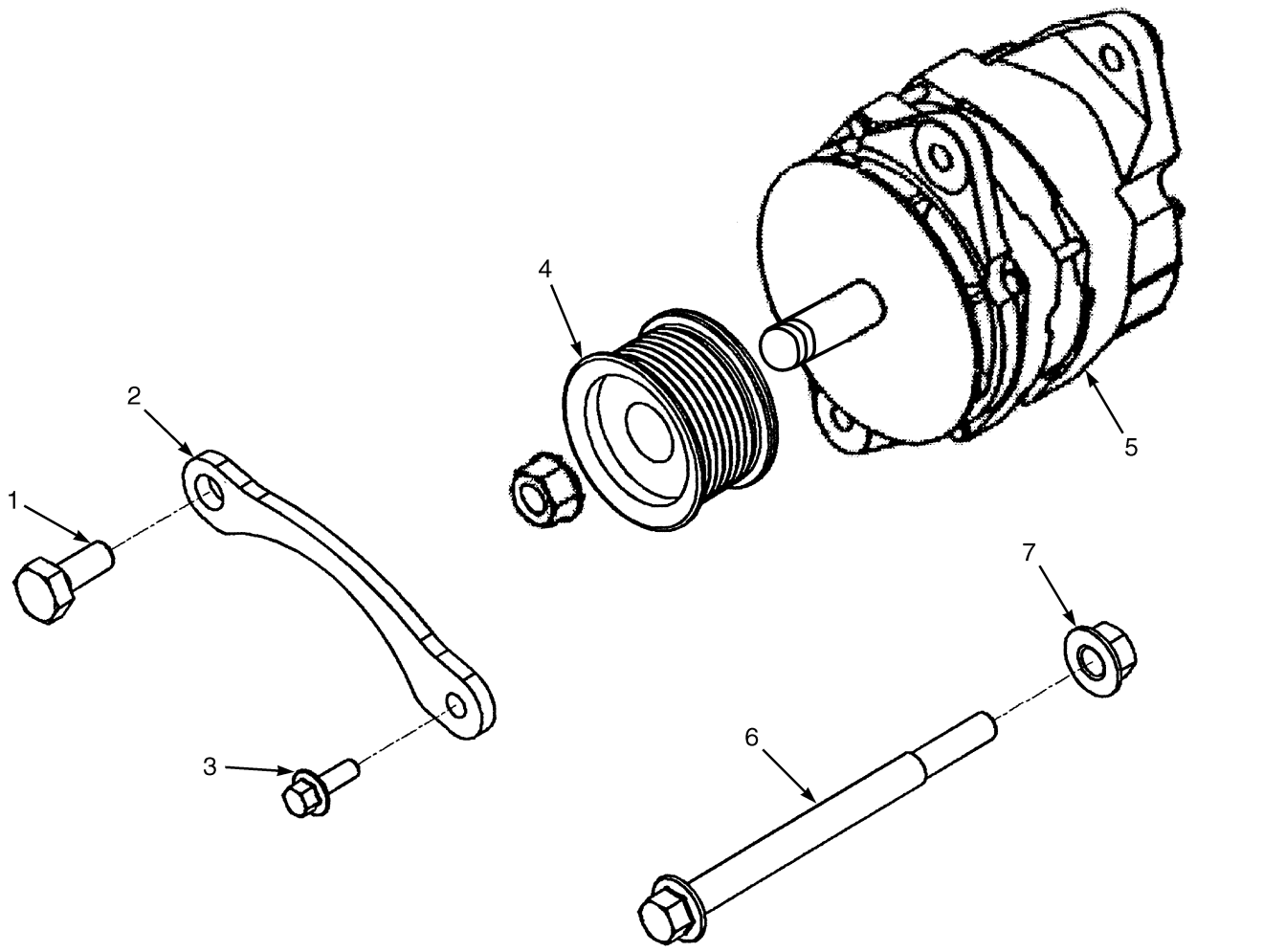

HP091366

ITEM	PART NO.	DESCRIPTION	QTY
	2107121	Engine Assy Diesel (2300 RPM, Dry Brakes)	1
	2107118	Engine Assy (2300 RPM, Wet Brakes)	1
1	1512003	Capscrew	1
2	1635404	Brace	1
3	1512005	Capscrew	1
4	1512009	Pulley	1
5	~~1693006~~		
	4020872	Alternator	1
6	1512006	Capscrew	1
7	1511978	Nut	1

©2015 HYSTER COMPANY

ALTERNATOR AND MOUNTING (FIGURE 5-18)
CUMMINS LPG

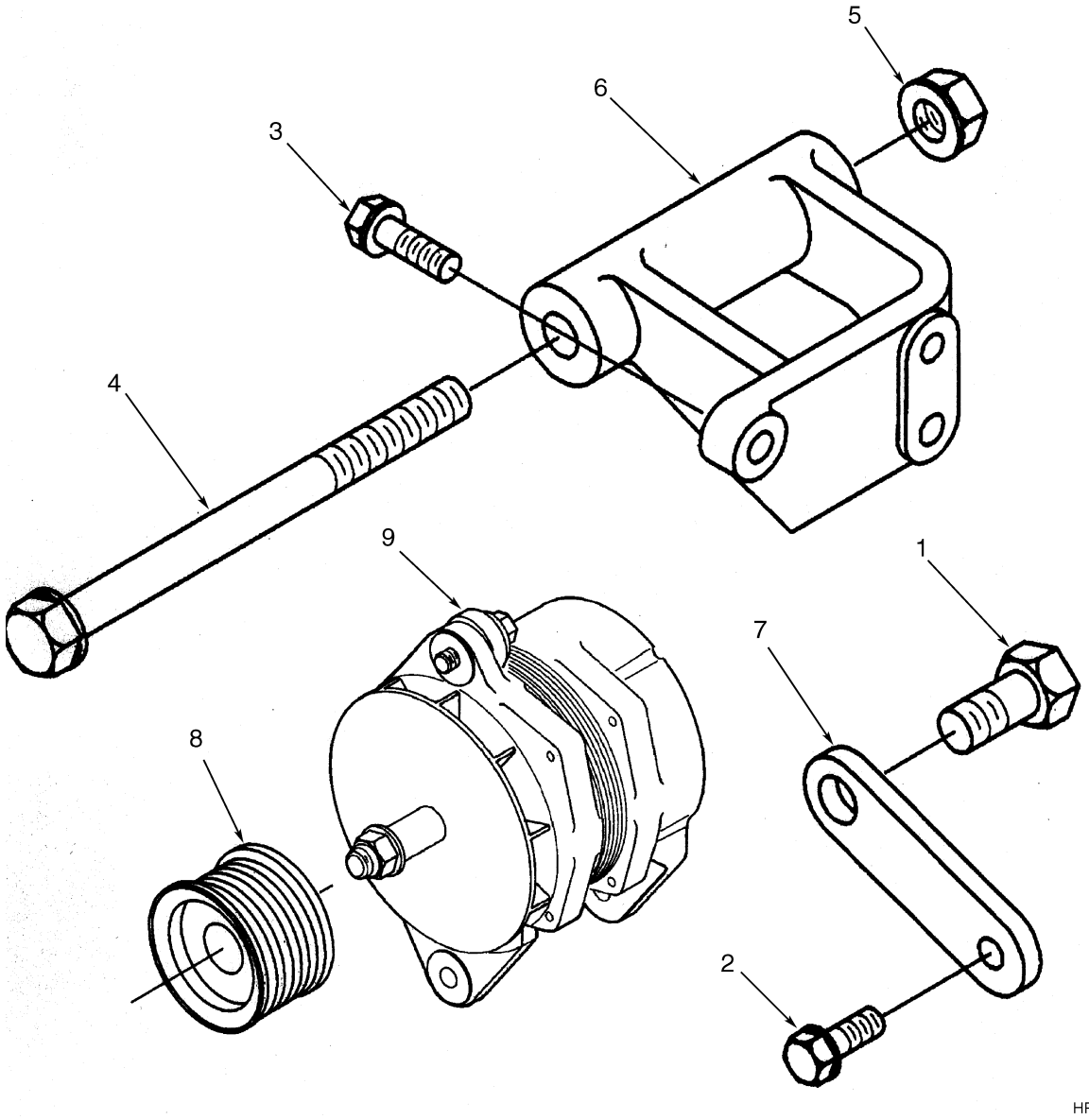

ITEM	PART NO.	DESCRIPTION	QTY
	2095555	Engine Assy-Lpg (Dry Brake)	1
	2095554	Engine Assy-Lpg (Wet Brake)	1
1	1512003	Capscrew	1
2	1512004	Capscrew	1
3	1512005	Capscrew	3
4	1512006	Capscrew	1
5	1661040	Nut	1
6	1662039	Support	1
6	1662040	Roll Pin	2
7	1512008	Brace	1
8	1662041	Pulley	1

©2015 HYSTER COMPANY

ITEM	PART NO.	DESCRIPTION	QTY
9	1649349	Alternator	1
9	~~1693006~~		
	4020872	Alternator (Alternate Part)	1

©2015 HYSTER COMPANY

NOTES

©2015 HYSTER COMPANY

ENGINE IGNITION SYSTEM (FIGURE 5-19)
CUMMINS LPG

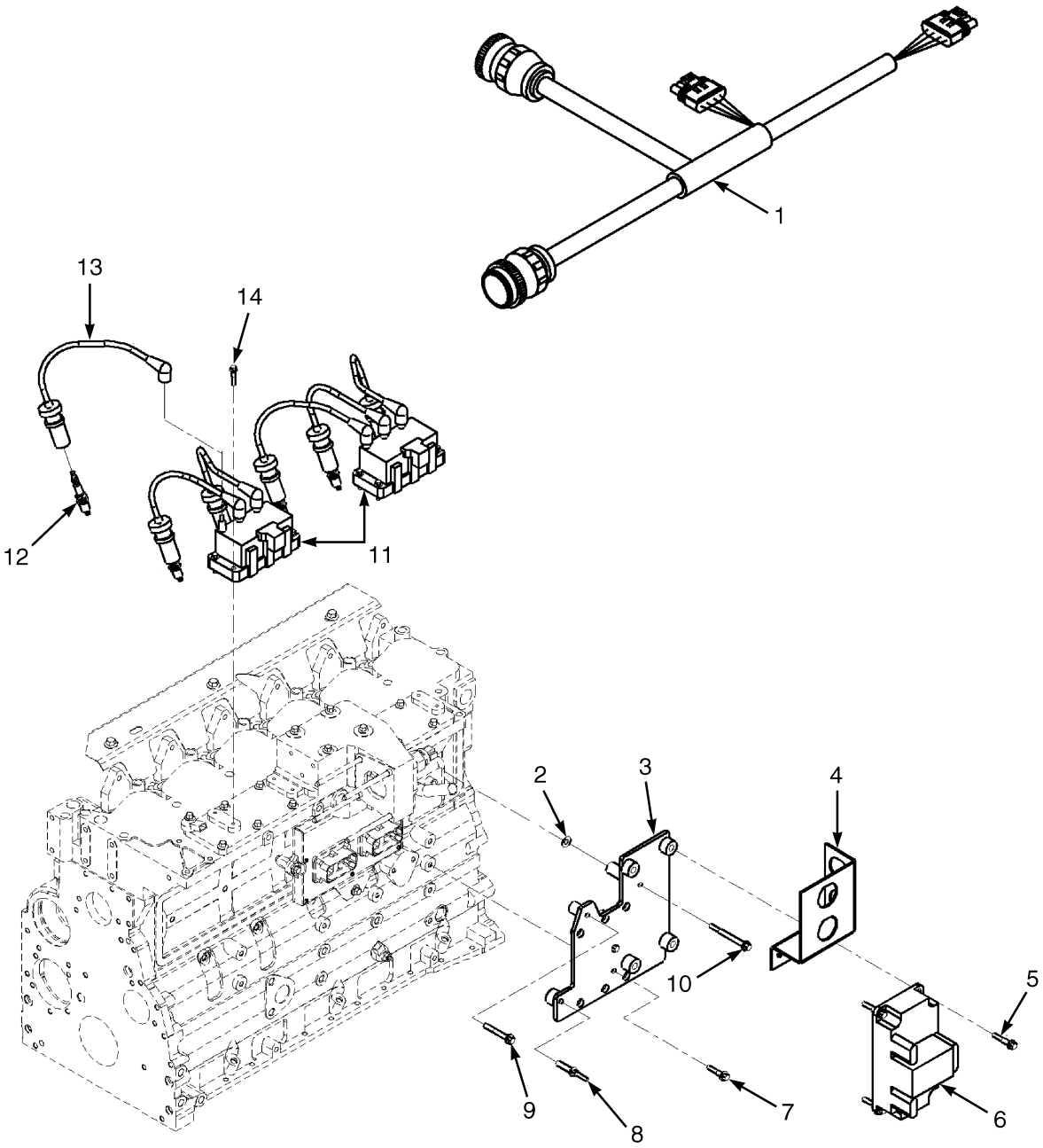

BP080440

©2015 HYSTER COMPANY

ENGINE IGNITION SYSTEM
CUMMINS LPG

ITEM	PART NO.	DESCRIPTION	QTY
	2095555	Engine Assy-Lpg (Dry Brake)	1
	2095554	Engine Assy-Lpg (Wet Brake)	1
1	1614598	Wire Harness	1
2	1511969	Seal	1
3	1614592	Bracket	1
4	1614599	Bracket	1
5	. . . . .	Capscrew	4
6	1614616	Control Module (Ignition)	1
7	. . . . .	Capscrew	1
8	1614545	Capscrew	1
9	1512033	Capscrew	2
10	1514535	Screw	1
11	1614584	Ignition Coil	2
12	1614641	Spark Plug Kit	6
13	1614605	Ignition Cable	6
14	. . . . .	Screw	8

©2015 HYSTER COMPANY

WIRE HARNESS (FIGURE 5-20)

CHASSIS, LPG (H13.00XM, H14.00XM, H16.00XM-6) — SHEET 1 0F 2

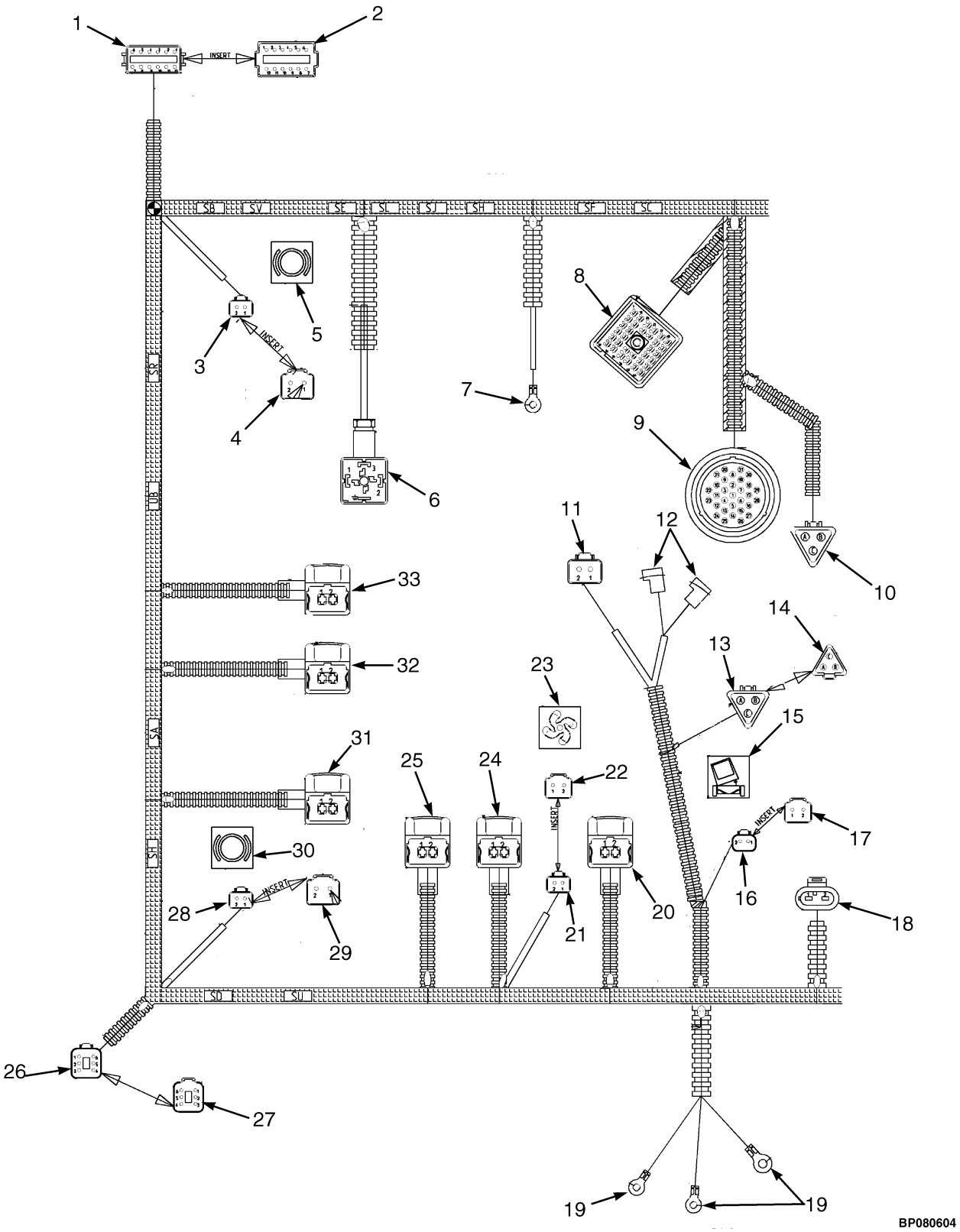

©2015 HYSTER COMPANY

WIRE HARNESS

CHASSIS, LPG (H13.00XM, H14.00XM, H16.00XM-6) – SHEET 1 0F 2

ITEM	PART NO.	DESCRIPTION	QTY
	a 2094176	Wire Harness (Chassis)	1
	b 4609549	Wire Harness (Chassis)	1
1	. . . . .	Connector Assembly (Front End)	1
1	1493428	Connector (12-Way)	1
1	1500913	Connector	1
1	1330438	Terminal (Socket)	9
1	1330439	Plug	1
1	1363886	Terminal (Socket)	2
2	. . . . .	Insert (Front End)	1
2	1352603	Secondary Lock	1
2	1500925	Connector	1
2	1330439	Plug	12
3	. . . . .	Connector Assembly (RH Hub Temperature)	1
3	1490242	Connector (2 Way)	1
3	1490243	Connector	1
3	1330438	Terminal (Socket)	2
4	. . . . .	Insert (RH Hub Temperature)	1
4	1330439	Plug	2
5	1607774	Label (Brake)	1
6	. . . . .	Connector Assembly (Park Brake Solenoid)	1
6	1634443	Housing	1
6	1634444	Wire Seal	1
7	. . . . .	Connector Assembly (Battery Box)	1
7	1493455	Ring	1
8	. . . . .	Connector Assembly (Cab Signals)	1
8	1493431	Housing (Socket)	1
8	1493432	Retainer (Socket)	1
8	1463141	Terminal (Socket)	47
8	1330438	Terminal (Socket)	3
8	1330439	Plug	5
8	1363886	Terminal (Socket)	4
8	1484377	Plug	1
9	. . . . .	Connector Assembly (Cab Supplies)	1
9	1484650	Connector (Socket)	1
9	1518112	Terminal (Socket)	2
9	1363886	Terminal (Socket)	1
9	1330438	Terminal (Socket)	28
10	. . . . .	Connector Assembly (Accelerator Pedal)	1
10	1484397	Connector (3-Way)	1
10	1463194	Connector (Secondary Lock)	1
10	1330438	Terminal (Socket)	3
11	. . . . .	Connector Assembly (LPG Solenoid)	1
11	1490242	Connector (2 Way)	1
11	1490243	Connector	1
11	1330438	Terminal (Socket)	2
12	. . . . .	Connector Assembly (Low Pressure Switch)	1
12	1634450	Indicator	2
13	. . . . .	Connector Assembly (Resistor)	1
13	1484397	Connector (3-Way)	1
13	1463194	Connector (Secondary Lock)	1

©2015 HYSTER COMPANY

WIRE HARNESS

CHASSIS, LPG (H13.00XM, H14.00XM, H16.00XM-6) – SHEET 1 0F 2

ITEM	PART NO.	DESCRIPTION	QTY
13	1518112	Terminal (Socket)	2
13	1330439	Plug	1
14	. . . . .	Insert (Resistor)	1
14	1607772	Connector (Termination)	1
15	1605545	Label (Cab Tilt Switch) (Cab Tilt)	1
16	. . . . .	Connector Assembly (Cab Power Tilt)	1
16	1490242	Connector (2 Way)	1
16	1490243	Connector	1
16	1363886	Terminal (Socket)	2
17	. . . . .	Insert (Cab Power Tilt)	1
17	1493465	Connector (2 Pin)	1
17	1330439	Plug	1
18	. . . . .	Connector Assembly (Output Speed)	1
18	1508206	Connector (2 Way)	1
18	2787349	Terminal	2
18	1516245	Seal	2
19	. . . . .	Connector Assembly (DC/DC Converter)	1
19	1634448	Ring	1
19	1493459	Ring	2
20	. . . . .	Connector Assembly (Low)	1
20	1493447	Connector	1
20	1493436	Terminal (Socket)	2
20	1623890	Seal	2
21	. . . . .	Connector Assembly (Hydraulic Cooler)	1
21	1490242	Connector (2 Way)	1
21	1490243	Connector	1
21	1330438	Terminal (Socket)	2
22	. . . . .	Insert (Hydraulic Cooler)	1
22	1493465	Connector (2 Pin)	1
22	1330439	Plug	2
23	1607775	Label (Heat Fan Switch)	1
24	. . . . .	Connector Assembly (Auxiliary)	1
24	1493446	Connector	1
24	1493436	Terminal (Socket)	2
24	1479109	Seal	2
25	. . . . .	Connector Assembly (Tilt)	1
25	1493435	Connector (2-Way)	1
25	1493436	Terminal (Socket)	2
25	1479109	Seal	2
26	. . . . .	Connector Assembly (Front Lights)	1
26	1493430	Connector (6 Way Housing)	1
26	1529052	Connector	1
26	1363886	Terminal (Socket)	2
26	1330438	Terminal (Socket)	4
27	. . . . .	Insert (Front Lights)	1
27	1330439	Plug	6
27	1500914	Housing	1
28	. . . . .	Connector Assembly (LH Hub Temperature)	1
28	1330438	Terminal (Socket)	2
28	1490242	Connector (2 Way)	1

©2015 HYSTER COMPANY

WIRE HARNESS

CHASSIS, LPG (H13.00XM, H14.00XM, H16.00XM-6) – SHEET 1 0F 2

ITEM	PART NO.	DESCRIPTION	QTY
28	1490243	Connector	1
29	. . . . .	Insert (LH Hub Temperature)	1
29	1493465	Connector (2 Pin)	1
29	1330439	Plug	2
30	1607774	Label (Brake)	1
31	. . . . .	Connector Assembly (Tilt)	1
31	1493435	Connector (2-Way)	1
31	1493436	Terminal (Socket)	2
31	1623890	Seal	2
32	. . . . .	Connector Assembly (Auxiliary)	1
32	1493436	Terminal (Socket)	2
32	1493446	Connector	1
32	1623890	Seal	2
33	. . . . .	Connector Assembly (Lift)	1
33	1493436	Terminal (Socket)	2
33	1493447	Connector	1
33	1623890	Seal	2
33	1502922	Adapter	1

FOOTNOTES:

a → 10/2010

b 10/2010 →

©2015 HYSTER COMPANY

WIRE HARNESS (FIGURE 5-21)

CHASSIS, LPG (H13.00XM, H14.00XM, H16.00XM-6) — SHEET 2 0F 2

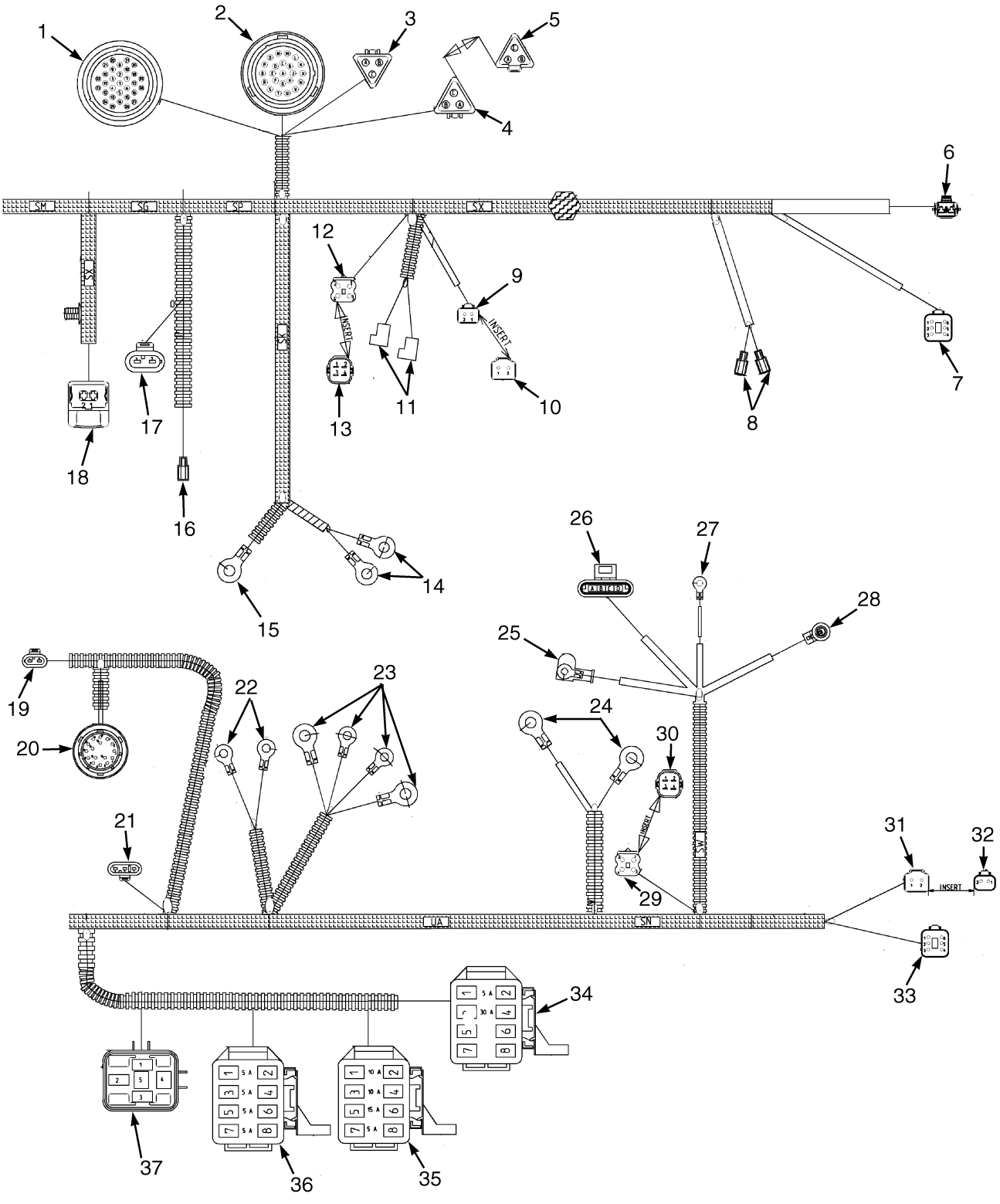

©2015 HYSTER COMPANY

WIRE HARNESS

CHASSIS, LPG (H13.00XM, H14.00XM, H16.00XM-6) – SHEET 2 0F 2

ITEM	PART NO.	DESCRIPTION	QTY
	b 2094176	Wire Harness (Chassis)	1
	c 4609549	Wire Harness (Chassis)	1
1	. . . . .	Connector Assembly (Engine)	1
1	1611032	Socket (Socket)	1
1	1484377	Plug	27
1	1507725	Terminal	4
2	. . . . .	Connector Assembly (Engine)	1
2	1503634	Connector	1
2	1363886	Terminal (Socket)	16
2	1330439	Plug	7
3	. . . . .	Connector Assembly (CAN Connector)	1
3	1484397	Connector (3-Way)	1
3	1463194	Connector (Secondary Lock)	1
3	1518112	Terminal (Socket)	2
3	1330439	Plug	1
4	. . . . .	Connector Assembly (Terminating Resistor)	1
4	1484397	Connector (3-Way)	1
4	1610944	Lock	1
4	1518112	Terminal (Socket)	2
4	1330439	Plug	1
5	. . . . .	Insert (Terminating Resistor)	1
5	1607772	Connector (Termination)	1
6	. . . . .	Connector Assembly (Coolant Level)	1
6	1329152	Plug	1
6	1484395	Housing (Socket)	2
6	1484396	Terminal	2
7	. . . . .	Connector Assembly (RH Rear Lights)	1
7	1493430	Connector (6 Way Housing)	1
7	1529052	Connector	1
7	1330438	Terminal (Socket)	5
7	1330439	Plug	1
8	. . . . .	Connector Assembly (Engine Oil Pressure)	1
8	1610948	Receptacle	2
8	1610947	Receptacle	2
9	. . . . .	Connector Assembly (Air Dryer)	1
9	1490242	Connector (2 Way)	1
9	1490243	Connector	1
9	1330438	Terminal (Socket)	2
10	. . . . .	Insert (Air Dryer)	1
10	1493465	Connector (2 Pin)	1
10	1330439	Plug	2
11	. . . . .	Connector Assembly (Pressure Switch)	1
11	1634450	Indicator	2
12	. . . . .	Connector Assembly (Park Brake And Air Dryer Diode)	1
12	1610950	Housing (Sealed) (4-Way)	1
12	1484656	Terminal (Socket)	4
12	1482659	Seal (Rubber)	4
13	. . . . .	Insert (Park Brake And Air Dryer Diode)	1
13	1610953	Diode	1
14	. . . . .	Connector Assembly (Ground)	1

©2015 HYSTER COMPANY

WIRE HARNESS

CHASSIS, LPG (H13.00XM, H14.00XM, H16.00XM-6) – SHEET 2 0F 2

ITEM	PART NO.	DESCRIPTION	QTY
14	1493455	Ring	2
15	. . . . .	Connector Assembly (24 Volt)	1
15	1493455	Ring	1
16	. . . . .	Connector Assembly (Converter Temperature Sensor)	1
16	1484598	Terminal	1
16	1484651	Cover	1
17	. . . . .	Connector Assembly (Turbine Speed)	1
17	1508206	Connector (2 Way)	1
17	2787349	Terminal	2
17	1516245	Seal	2
18	. . . . .	Connector Assembly (Air Filter)	1
18	1493435	Connector (2-Way)	1
18	1493436	Terminal (Socket)	2
18	1623890	Seal	2
19	. . . . .	Connector Assembly (Drum Speed)	1
19	1508206	Connector (2 Way)	1
19	2787349	Terminal	2
19	2060555	Wire Seal (Yellow)	2
20	. . . . .	Connector Assembly (Valve)	1
20	1607771	Boot	1
20	1598469	Connector (16-Way)	1
20	1598470	Terminal (Pin)	16
21	. . . . .	Connector Assembly (Engine Speed)	1
21	1506762	Housing (4-Way)	1
21	2787349	Terminal	3
21	1516245	Seal	3
22	. . . . .	Connector Assembly (Fuse)	1
22	1607801	Terminal (Ring)	2
23	. . . . .	Connector Assembly (Starter Relay)	1
23	1493459	Ring	2
23	1502921	Ring	1
23	1493448	E-Ring	1
23	1634443	Housing	4
24	. . . . .	Connector Assembly (Starter Solenoid)	1
24	1502921	Ring	1
24	1634443	Housing	1
25	. . . . .	Connector Assembly (Alternator)	1
25	1607801	Terminal (Ring)	1
26	. . . . .	Connector Assembly (Alternator Signals)	1
26	1501919	Connector	1
26	1482663	Connector	1
26	1482668	Plug (Cavity Plug)	3
26	1330355	Terminal	1
26	1330356	Seal	1
27	. . . . .	Connector Assembly (Alternator Ground)	1
27	1496883	Ring	1
27	1634443	Housing	1
28	. . . . .	Connector Assembly (Air Conditioner)	1
28	1330281	Terminal	1
28	1323579	Seal	1

©2015 HYSTER COMPANY

WIRE HARNESS

CHASSIS, LPG (H13.00XM, H14.00XM, H16.00XM-6) – SHEET 2 0F 2

ITEM	PART NO.	DESCRIPTION	QTY
28	1659115	Connector	1
28	1659116	Terminal	1
29	. . . . .	Connector Assembly (Backup Diode)	1
29	1610950	Housing (Sealed) (4-Way)	1
29	1484656	Terminal (Socket)	4
29	1482659	Seal (Rubber)	4
30	. . . . .	Insert (Backup Diode)	1
30	1610953	Diode	1
31	. . . . .	Connector Assembly (Reverse Alarm)	1
31	1493465	Connector (2 Pin)	1
31	1330414	Connector (Secondary Lock)	1
31	1330437	Terminal (Pin)	2
32	. . . . .	Insert (Reverse Alarm)	1
32	1490242	Connector (2 Way)	1
32	1490243	Connector	1
32	1330439	Plug	2
33	. . . . .	Connector Assembly (LH Rear Lights)	1
33	1493430	Connector (6 Way Housing)	1
33	1529052	Connector	1
33	1330438	Terminal (Socket)	5
33	1330439	Plug	1
34	. . . . .	Connector Assembly (Fuse Box 3)	1
34	1573113	Fuse Box	1
34	1573114	Cover	1
34	1573115	Terminal	3
34	1607778	Terminal	1
34	1484715	Clip , Micro Relay Base (Passive Side-Mounting)	1
35	. . . . .	Connector Assembly (Fuse Box 2)	1
35	1573113	Fuse Box	1
35	1573114	Cover	1
35	1573115	Terminal	7
35	1484715	Clip , Micro Relay Base (Passive Side-Mounting)	1
36	. . . . .	Connector Assembly (Fuse Box 1)	1
36	1573113	Fuse Box	1
36	1573114	Cover	1
36	1573115	Terminal	8
36	1484715	Clip , Micro Relay Base (Passive Side-Mounting)	1
37	. . . . .	Connector Assembly (LPG Relay)	1
37	1607524	Socket	1
37	1607527	Cover	1
37	1484714	Clip , Side-Mounting	1
37	1607525	Terminal	2
37	1607529	Terminal	2
37	1607532	Seal	2
37	1655134	Seal	2
37	1607528	Seal	1
37	1655133	Relay (12 Volt)	1
	ac 4609186	Label (Fuse Box) (Fuse Box 1)	1
	ac 4609187	Label (Fuse Box) (Fuse Box 2)	1
	ac 4609794	Label (Fuse Box) (Fuse Box 3)	1

©2015 HYSTER COMPANY

WIRE HARNESS

CHASSIS, LPG (H13.00XM, H14.00XM, H16.00XM-6) – SHEET 2 0F 2

ITEM	PART NO.	DESCRIPTION	QTY

FOOTNOTES:

a Not Illustrated
b → 10/2010
c 10/2010 →

©2015 HYSTER COMPANY

NOTES

©2015 HYSTER COMPANY

WIRE HARNESS (FIGURE 5-22)

CHASSIS, LPG (H10.00XM-12EC, H12.00XM-12EC) — SHEET 1 0F 2

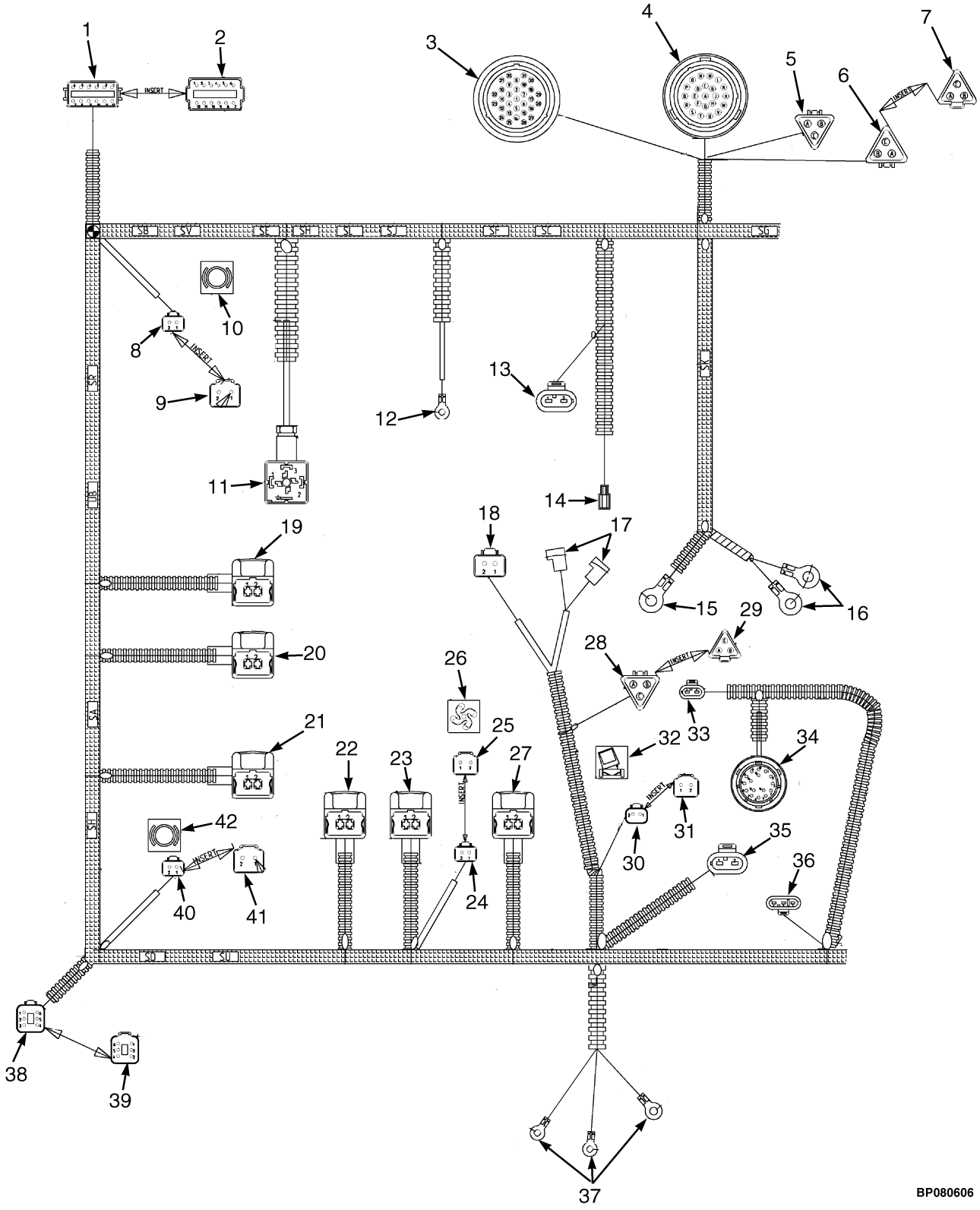

©2015 HYSTER COMPANY

WIRE HARNESS

CHASSIS, LPG (H10.00XM-12EC, H12.00XM-12EC) – SHEET 1 0F 2

ITEM	PART NO.	DESCRIPTION	QTY
	a 2094175	Wire Harness (Chassis)	1
	b 4609548	Wire Harness (Chassis)	1
1	. . . . .	Connector Assembly (Front End)	1
1	1493428	Connector (12-Way)	1
1	1500913	Connector	1
1	1363886	Terminal (Socket)	2
1	1330438	Terminal (Socket)	9
1	1330439	Plug	1
2	. . . . .	Insert (Front End)	1
2	1352603	Secondary Lock	1
2	1500925	Connector	1
2	1330439	Plug	12
3	. . . . .	Connector Assembly (Engine)	1
3	1611032	Socket (Socket)	1
3	1507725	Terminal	4
3	1484377	Plug	27
4	. . . . .	Connector Assembly (Engine)	1
4	1503634	Connector	1
4	1363886	Terminal (Socket)	16
4	1330439	Plug	7
5	. . . . .	Connector Assembly (Can Connector)	1
5	1484397	Connector (3-Way)	1
5	1463194	Connector (Secondary Lock)	1
5	1518112	Terminal (Socket)	2
5	1330439	Plug	1
6	. . . . .	Connector Assembly (Terminating Resistor)	1
6	1330439	Plug	1
6	1484397	Connector (3-Way)	1
6	1518112	Terminal (Socket)	2
6	1610944	Lock	1
7	. . . . .	Insert (Terminating Resistor)	1
7	1607772	Connector (Termination)	1
8	. . . . .	Connector Assembly (RH Hub Temperature)	1
8	1490242	Connector (2 Way)	1
8	1490243	Connector	1
8	1330438	Terminal (Socket)	2
9	. . . . .	Insert (RH Hub Temperature)	1
9	1330439	Plug	2
10	1569972	Label (Brake) (Brake)	1
11	. . . . .	Connector Assembly (Park Brake Solenoid)	1
11	1634443	Housing	1
11	1634444	Wire Seal	1
12	. . . . .	Connector Assembly (Battery Box)	1
12	1493459	Ring	1
13	. . . . .	Connector Assembly (Turbine Speed)	1
13	1508206	Connector (2 Way)	1
13	2787349	Terminal	2
13	2060555	Wire Seal (Yellow)	2
14	. . . . .	Connector Assembly (Converter Temperature Sensor)	1
14	1484598	Terminal	1

©2015 HYSTER COMPANY

WIRE HARNESS

CHASSIS, LPG (H10.00XM-12EC, H12.00XM-12EC) – SHEET 1 0F 2

ITEM	PART NO.	DESCRIPTION	QTY
14	1484651	Cover	1
15	. . . . .	Connector Assembly (24 Volt)	1
15	1493455	Ring	1
16	. . . . .	Connector Assembly (Ground)	1
16	1493455	Ring	2
17	. . . . .	Connector Assembly (Low Pressure Switch)	1
17	1634450	Indicator	2
18	. . . . .	Connector Assembly (LPG Solenoid)	1
18	1490242	Connector (2 Way)	1
18	1490243	Connector	1
18	1330438	Terminal (Socket)	2
19	. . . . .	Connector Assembly (Lift)	1
19	1493447	Connector	1
19	1493436	Terminal (Socket)	2
19	1623890	Seal	2
20	. . . . .	Connector Assembly (Auxiliary)	1
20	1493446	Connector	1
20	1493436	Terminal (Socket)	2
20	1623890	Seal	2
21	. . . . .	Connector Assembly (Tilt)	1
21	1493435	Connector (2-Way)	1
21	1493436	Terminal (Socket)	2
21	1623890	Seal	2
22	. . . . .	Connector Assembly (Tilt)	1
22	1493435	Connector (2-Way)	1
22	1493436	Terminal (Socket)	2
22	1623890	Seal	2
23	. . . . .	Connector Assembly (Auxiliary)	1
23	1493446	Connector	1
23	1493436	Terminal (Socket)	2
23	1623890	Seal	2
24	. . . . .	Connector Assembly (Hydraulic Cooler)	1
24	1490242	Connector (2 Way)	1
24	1490243	Connector	1
24	1330438	Terminal (Socket)	2
25	. . . . .	Insert (Hydraulic Cooler)	1
25	1502920	Connector	1
25	1330439	Plug	2
26	1607775	Label (Fan)	1
27	. . . . .	Connector Assembly (Low)	1
27	1493447	Connector	1
27	1493436	Terminal (Socket)	2
27	1623890	Seal	2
28	. . . . .	Connector Assembly (Resistor)	1
28	1484397	Connector (3-Way)	1
28	1463194	Connector (Secondary Lock)	1
28	1518112	Terminal (Socket)	2
28	1330439	Plug	1
29	. . . . .	Insert (Resistor)	1
29	1607772	Connector (Termination)	1

©2015 HYSTER COMPANY

WIRE HARNESS

CHASSIS, LPG (H10.00XM-12EC, H12.00XM-12EC) – SHEET 1 0F 2

ITEM	PART NO.	DESCRIPTION	QTY
30	. . . . .	Connector Assembly (Cab Power Tilt)	1
30	1490242	Connector (2 Way)	1
30	1490243	Connector	1
30	1363886	Terminal (Socket)	2
31	. . . . .	Insert (Cab Power Tilt)	1
31	1502920	Connector	1
31	1330439	Plug	2
32	1605545	Label (Cab Tilt Switch) (Cab Tilt)	1
33	. . . . .	Connector Assembly (Drum Speed)	1
33	1508206	Connector (2 Way)	1
33	2787349	Terminal	2
33	2060555	Wire Seal (Yellow)	2
34	. . . . .	Connector Assembly (Valve)	1
34	1607771	Boot	1
34	1598469	Connector (16-Way)	1
34	1598470	Terminal (Pin)	16
35	. . . . .	Connector Assembly (Output Speed)	1
35	1508206	Connector (2 Way)	1
35	2787349	Terminal	2
35	2060555	Wire Seal (Yellow)	2
36	. . . . .	Connector Assembly (Engine Speed)	1
36	2787344	Connector (3 Way)	1
36	2787349	Terminal	3
36	2060555	Wire Seal (Yellow)	3
37	. . . . .	Connector Assembly (DC/DC Converter)	1
37	1634448	Ring	1
37	1493459	Ring	2
38	. . . . .	Connector Assembly (Front Lights)	1
38	1493430	Connector (6 Way Housing)	1
38	1529052	Connector	1
38	1363886	Terminal (Socket)	2
38	1330438	Terminal (Socket)	4
39	. . . . .	Insert (Front Lights)	1
39	1500914	Housing	1
39	1330439	Plug	6
40	. . . . .	Connector Assembly (LH Hub Temperature)	1
40	1490242	Connector (2 Way)	1
40	1490243	Connector	1
40	1330438	Terminal (Socket)	2
41	. . . . .	Insert (LH Hub Temperature)	1
41	1502920	Connector	1
42	1569972	Label (Brake) (Brake)	1

FOOTNOTES:

a → 10/2010

b 10/2010 →

©2015 HYSTER COMPANY

WIRE HARNESS (FIGURE 5-23)

CHASSIS, LPG (H10.00XM-12EC, H12.00XM-12EC) — SHEET 2 0F 2

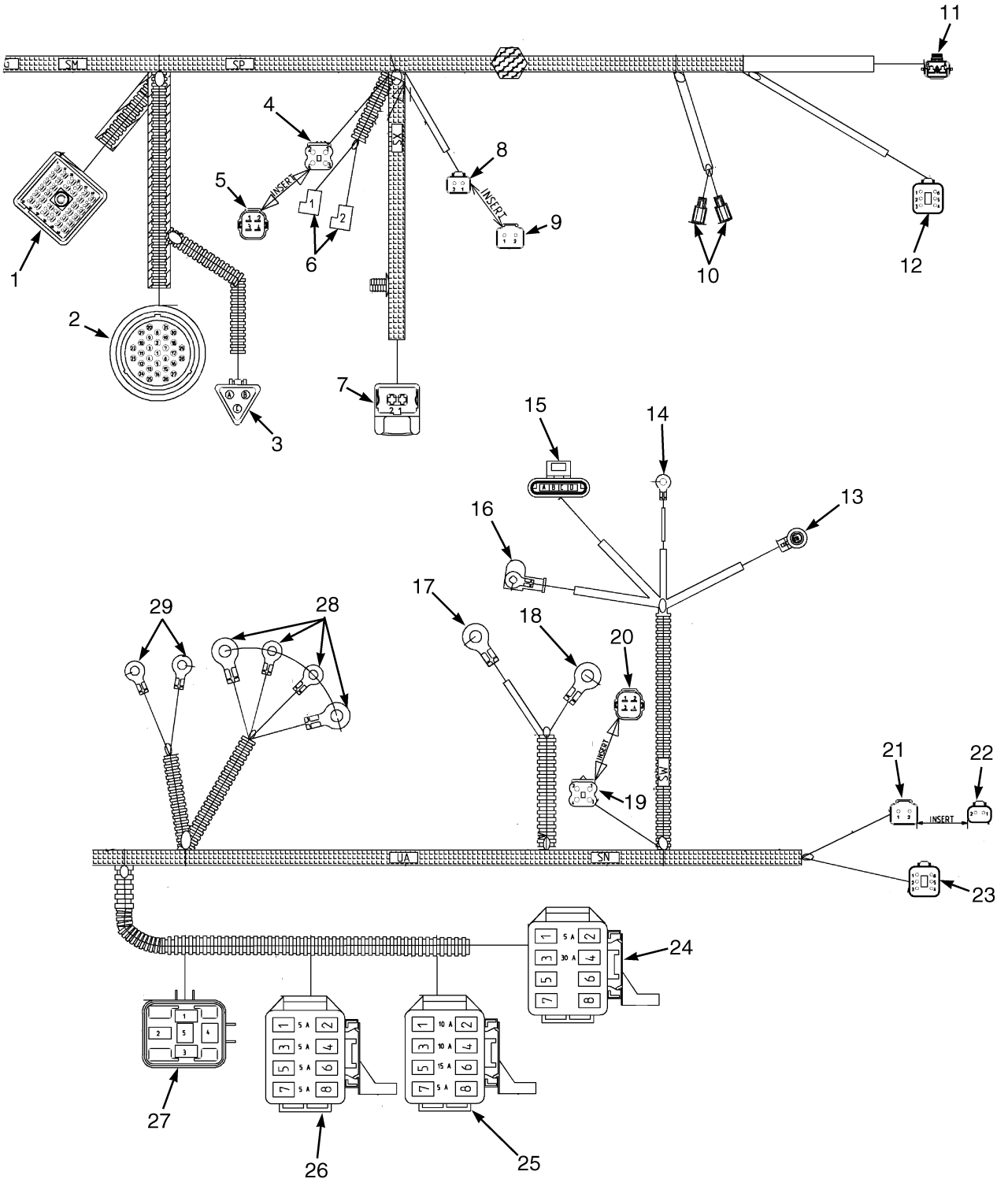

©2015 HYSTER COMPANY

WIRE HARNESS

CHASSIS, LPG (H10.00XM-12EC, H12.00XM-12EC) – SHEET 2 0F 2

ITEM	PART NO.	DESCRIPTION	QTY
	b 2094175	Wire Harness (Chassis)	1
	c 4609548	Wire Harness (Chassis)	1
1	. . . . .	Connector Assembly (Cab Signals)	1
1	1493431	Housing (Socket)	1
1	1493432	Retainer (Socket)	1
1	1463141	Terminal (Socket)	47
1	1484377	Plug	1
1	1330439	Plug	5
1	1330438	Terminal (Socket)	3
1	1363886	Terminal (Socket)	4
2	. . . . .	Connector Assembly (Cab Supplies)	1
2	1484650	Connector (Socket)	1
2	1518112	Terminal (Socket)	2
2	1363886	Terminal (Socket)	1
2	1330438	Terminal (Socket)	28
3	. . . . .	Connector Assembly (Accelerator Pedal)	1
3	1484397	Connector (3-Way)	1
3	1463194	Connector (Secondary Lock)	1
3	1330438	Terminal (Socket)	3
4	. . . . .	Connector Assembly (Park Brake And Air Dryer Diode)	1
4	1610950	Housing (Sealed) (4-Way)	1
4	1484656	Terminal (Socket)	4
4	1482659	Seal (Rubber)	4
5	. . . . .	Insert (Park Brake And Air Dryer Diode)	1
5	1610953	Diode	1
6	. . . . .	Connector Assembly (Pressure Switch)	1
6	1634450	Indicator	2
7	. . . . .	Connector Assembly (Air Filter)	1
7	1493435	Connector (2-Way)	1
7	1493436	Terminal (Socket)	2
7	1623890	Seal	2
8	. . . . .	Connector Assembly (Air Dryer)	1
8	1490242	Connector (2 Way)	1
8	1490243	Connector	1
8	1330438	Terminal (Socket)	2
9	. . . . .	Insert (Air Dryer)	1
9	1502920	Connector	1
9	1330439	Plug	2
10	. . . . .	Connector Assembly (Engine Oil Pressure)	1
10	1484598	Terminal	2
10	1484651	Cover	2
11	. . . . .	Connector Assembly (Coolant Level)	1
11	1329152	Plug	1
11	1484395	Housing (Socket)	2
11	1484396	Terminal	2
12	. . . . .	Connector Assembly (RH Rear Lights)	1
12	1493430	Connector (6 Way Housing)	1
12	1529052	Connector	1
12	1330438	Terminal (Socket)	5
12	1330439	Plug	1

©2015 HYSTER COMPANY

WIRE HARNESS

CHASSIS, LPG (H10.00XM-12EC, H12.00XM-12EC) – SHEET 2 0F 2

ITEM	PART NO.	DESCRIPTION	QTY
13	. . . . .	Connector Assembly (Air Conditioner)	1
13	2787349	Terminal	1
13	2060555	Wire Seal (Yellow)	1
13	1484395	Housing (Socket)	1
13	1484396	Terminal	1
14	. . . . .	Connector Assembly (Alternator Ground)	1
14	1496883	Ring	1
15	. . . . .	Connector Assembly (Alternator Signals)	1
15	1501919	Connector	1
15	1482663	Connector	1
15	1482668	Plug (Cavity Plug)	3
15	1330355	Terminal	1
15	1330356	Seal	1
16	. . . . .	Connector Assembly (Alternator)	1
16	1607801	Terminal (Ring)	1
17	. . . . .	Connector Assembly (Starter Solenoid)	1
17	1502921	Ring	1
18	. . . . .	Connector Assembly (24 Volt)	1
18	1493455	Ring	1
19	. . . . .	Connector Assembly (Backup Diode)	1
19	1610950	Housing (Sealed) (4-Way)	1
19	1484656	Terminal (Socket)	4
19	1482659	Seal (Rubber)	4
20	. . . . .	Insert (Backup Diode)	1
20	1610953	Diode	1
21	. . . . .	Connector Assembly (Reverse Alarm)	1
21	1502920	Connector	1
21	1330414	Connector (Secondary Lock)	1
21	1330437	Terminal (Pin)	2
22	. . . . .	Insert (Reverse Alarm)	1
22	1330439	Plug	2
22	1490242	Connector (2 Way)	1
22	1490243	Connector	1
23	. . . . .	Connector Assembly (LH Rear Lights)	1
23	1493430	Connector (6 Way Housing)	1
23	1529052	Connector	1
23	1330438	Terminal (Socket)	5
23	1330439	Plug	1
24	. . . . .	Connector Assembly (Fuse Box 3)	1
24	1573113	Fuse Box	1
24	1573114	Cover	1
24	1573115	Terminal	3
24	1607778	Terminal	1
24	1484715	Clip , Micro Relay Base (Passive Side-Mounting)	1
25	. . . . .	Connector Assembly (Fuse Box 2)	1
25	1573113	Fuse Box	1
25	1573114	Cover	1
25	1573115	Terminal	8
25	1484715	Clip , Micro Relay Base (Passive Side-Mounting)	1
26	. . . . .	Connector Assembly (Fuse Box 1)	1

©2015 HYSTER COMPANY

WIRE HARNESS

CHASSIS, LPG (H10.00XM-12EC, H12.00XM-12EC) – SHEET 2 0F 2

ITEM	PART NO.	DESCRIPTION	QTY
26	1573113	Fuse Box	1
26	1573114	Cover	1
26	1573115	Terminal	8
26	1484715	Clip , Micro Relay Base (Passive Side-Mounting)	1
27	. . . . .	Connector Assembly (LPG Relay)	1
27	1607524	Socket	1
27	1607527	Cover	1
27	1484714	Clip , Side-Mounting	1
27	1607525	Terminal	2
27	1607529	Terminal	2
27	1607532	Seal	2
27	1655134	Seal	2
27	1607528	Seal	1
28	. . . . .	Connector Assembly (Starter Relay)	1
28	1493459	Ring	2
28	1502921	Ring	1
28	1493448	E-Ring	1
29	. . . . .	Connector Assembly (Fuse)	1
29	1607801	Terminal (Ring)	2
	ac 4609186	Label (Fuse Box) (Fuse Box 1)	1
	ac 4609187	Label (Fuse Box) (Fuse Box 2)	1
	ac 4609794	Label (Fuse Box) (Fuse Box 3)	1

FOOTNOTES:

a Not Illustrated
b → 10/2010
c 10/2010 →

©2015 HYSTER COMPANY

WIRE HARNESS (FIGURE 5-24)

CHASSIS, DIESEL (H13.00XM, H16.00XM, H16.00XM-6) — SHEET 1 0F 2

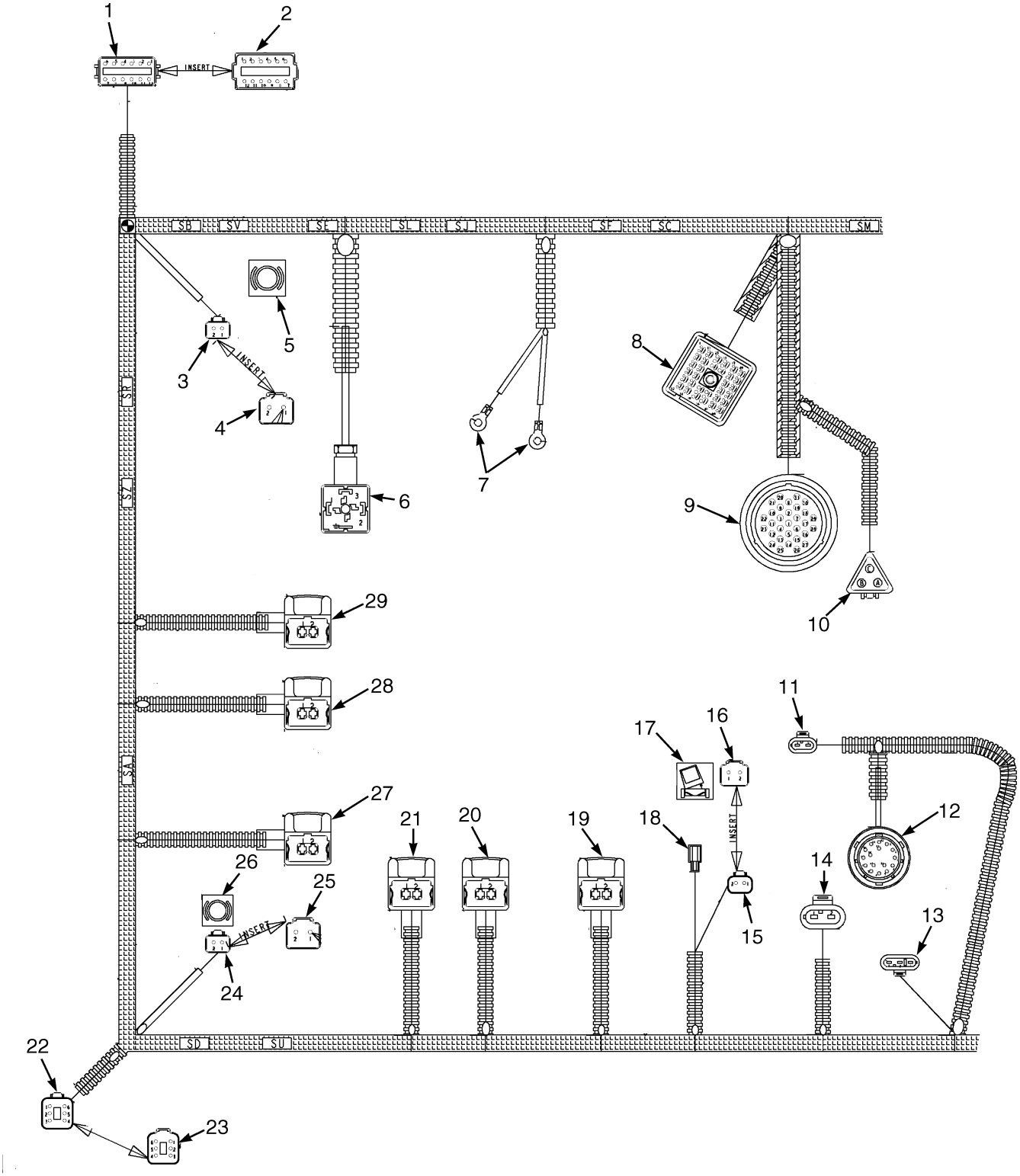

BP080608

©2015 HYSTER COMPANY

WIRE HARNESS

CHASSIS, DIESEL (H13.00XM, H16.00XM, H16.00XM-6) – SHEET 1 0F 2

ITEM	PART NO.	DESCRIPTION	QTY
	a 2088714	Wire Harness (Chassis)	1
	b 2103934	Wire Harness	1
1	. . . . .	Connector Assembly (Front End)	1
1	1493428	Connector (12-Way)	1
1	1500913	Connector	1
1	1330438	Terminal (Socket)	9
1	1330439	Plug	1
1	1363886	Terminal (Socket)	2
2	. . . . .	Insert (Front End)	1
2	1352603	Secondary Lock	1
2	1500925	Connector	1
2	1330439	Plug	12
3	. . . . .	Connector Assembly (RH Hub Temperature)	1
3	1490242	Connector (2 Way)	1
3	1490243	Connector	1
3	1330438	Terminal (Socket)	2
4	. . . . .	Insert (RH Hub Temperature)	1
4	1502920	Connector	1
4	1330439	Plug	2
5	1569972	Label (Brake) (Brake)	1
6	. . . . .	Connector Assembly (Park Brake Solenoid)	1
6	1493449	Connector Body	1
6	1484394	Crimp Ferrule	2
7	. . . . .	Connector Assembly (Battery Box)	1
7	1493459	Ring	1
7	1493455	Ring	1
8	. . . . .	Connector Assembly (Cab Signals)	1
8	1493431	Housing (Socket)	1
8	1493432	Retainer (Socket)	1
8	1463141	Terminal (Socket)	48
8	1363886	Terminal (Socket)	9
8	1330438	Terminal (Socket)	3
9	. . . . .	Connector Assembly (Cab Supplies)	1
9	1484650	Connector (Socket)	1
9	1518112	Terminal (Socket)	2
9	1363886	Terminal (Socket)	3
9	1330438	Terminal (Socket)	26
10	. . . . .	Connector Assembly (Accelerator Pedal)	1
10	1484397	Connector (3-Way)	1
10	1463194	Connector (Secondary Lock)	1
10	1330438	Terminal (Socket)	3
11	. . . . .	Connector Assembly (Drum Speed)	1
11	1508206	Connector (2 Way)	1
11	2787349	Terminal	2
11	2060555	Wire Seal (Yellow)	2
12	. . . . .	Connector Assembly (Valve)	1
12	1598469	Connector (16-Way)	1
12	1607771	Boot	1
12	1598470	Terminal (Pin)	16
13	. . . . .	Connector Assembly (Engine Speed)	1

©2015 HYSTER COMPANY

WIRE HARNESS

CHASSIS, DIESEL (H13.00XM, H16.00XM, H16.00XM-6) – SHEET 1 0F 2

ITEM	PART NO.	DESCRIPTION	QTY
13	2787344	Connector (3 Way)	1
13	2787349	Terminal	3
13	2060555	Wire Seal (Yellow)	3
14	. . . . .	Connector Assembly (Output Sensor)	1
14	1508206	Connector (2 Way)	1
14	2787349	Terminal	2
14	2060555	Wire Seal (Yellow)	2
15	. . . . .	Connector Assembly (Cab Power Tilt)	1
15	1490242	Connector (2 Way)	1
15	1490243	Connector	1
15	1363886	Terminal (Socket)	2
16	. . . . .	Insert (Cab Power Tilt)	1
16	1502920	Connector	1
16	1330439	Plug	2
17	1605545	Label (Cab Tilt Switch) (Cab Tilt)	1
18	. . . . .	Connector Assembly (Fuel Sender)	1
18	1484598	Terminal	1
18	1484651	Cover	1
19	. . . . .	Connector Assembly (Low)	1
19	1493447	Connector	1
19	1493436	Terminal (Socket)	2
19	1479109	Seal	2
20	. . . . .	Connector Assembly (Auxiliary)	1
20	1493446	Connector	1
20	1493436	Terminal (Socket)	2
20	1479109	Seal	2
21	. . . . .	Connector Assembly (Tilt)	1
21	1493435	Connector (2-Way)	1
21	1493436	Terminal (Socket)	2
21	1479109	Seal	2
22	. . . . .	Connector Assembly (Front Lights)	1
22	1493430	Connector (6 Way Housing)	1
22	1529052	Connector	1
22	1363886	Terminal (Socket)	2
22	1330438	Terminal (Socket)	4
23	. . . . .	Insert (Front Lights)	1
23	1500914	Housing	1
23	1330439	Plug	6
24	. . . . .	Connector Assembly (LH Hub Temperature)	1
24	1490242	Connector (2 Way)	1
24	1490243	Connector	1
24	1330438	Terminal (Socket)	2
25	. . . . .	Insert (LH Hub Temperature)	1
25	1502920	Connector	1
25	1330439	Plug	2
26	1569972	Label (Brake) (Brake)	1
27	. . . . .	Connector Assembly (Tilt)	1
27	1493435	Connector (2-Way)	1
27	1493436	Terminal (Socket)	2
27	1479109	Seal	2

©2015 HYSTER COMPANY

WIRE HARNESS

CHASSIS, DIESEL (H13.00XM, H16.00XM, H16.00XM-6) – SHEET 1 0F 2

ITEM	PART NO.	DESCRIPTION	QTY
28	. . . . .	Connector Assembly (Auxiliary)	1
28	1493446	Connector	1
28	1493436	Terminal (Socket)	2
28	1479109	Seal	2
29	. . . . .	Connector Assembly (Lift)	1
29	1493447	Connector	1
29	1493436	Terminal (Socket)	2
29	1479109	Seal	2

FOOTNOTES:

a → 3/2008

b 3/2008 →

WIRE HARNESS (FIGURE 5-25)

CHASSIS, DIESEL (H13.00XM, H16.00XM, H16.00XM-6) — SHEET 2 0F 2

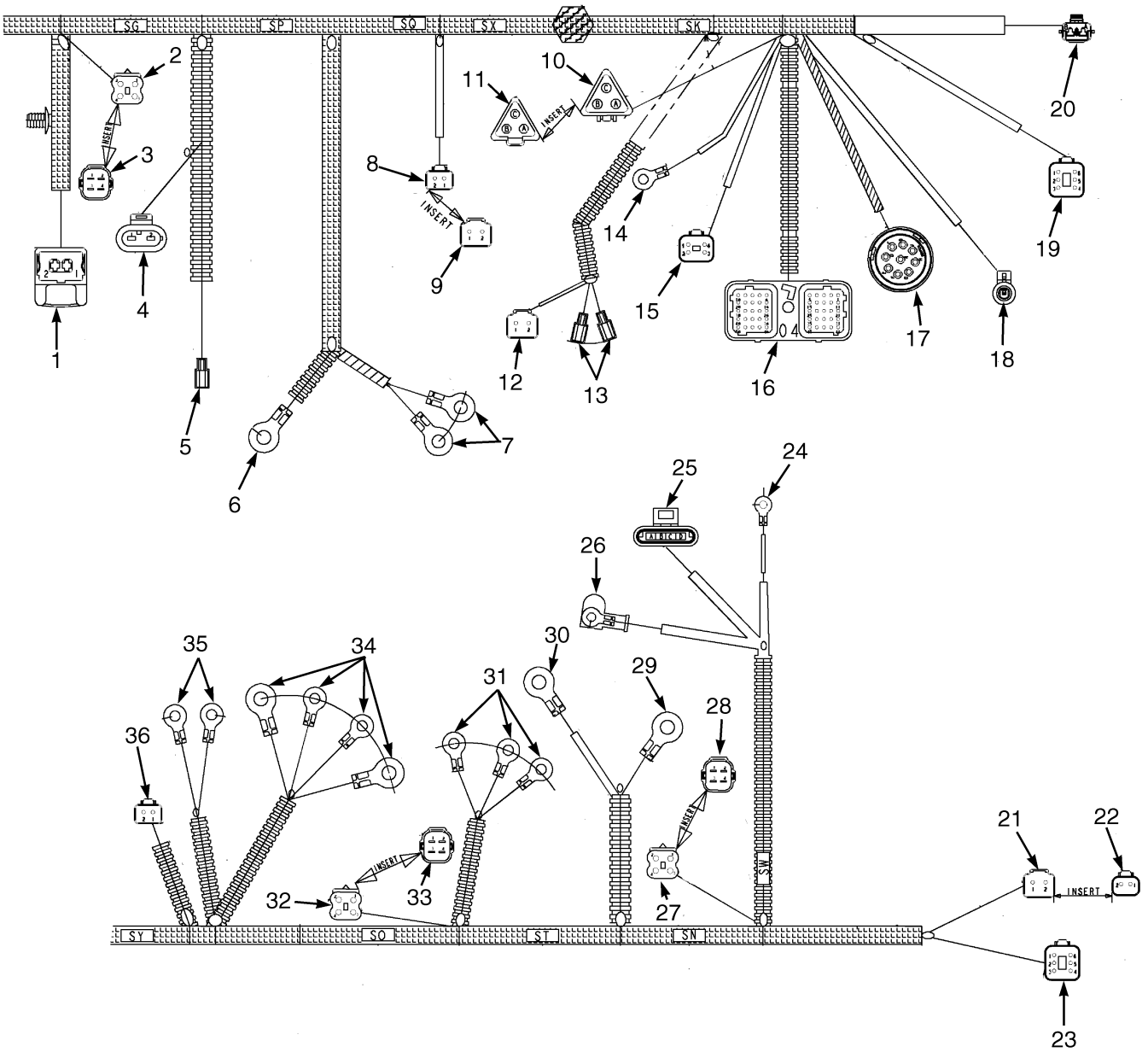

©2015 HYSTER COMPANY

WIRE HARNESS

CHASSIS, DIESEL (H13.00XM, H16.00XM, H16.00XM-6) – SHEET 2 0F 2

ITEM	PART NO.	DESCRIPTION	QTY
	a 2088714	Wire Harness (Chassis)	1
	b 2103934	Wire Harness	1
1	. . . . .	Connector Assembly (Air Filter)	1
1	1493435	Connector (2-Way)	1
1	1493436	Terminal (Socket)	2
1	1479109	Seal	2
2	. . . . .	Connector Assembly (Park Brake And Air Dryer Diode)	1
2	1610950	Housing (Sealed) (4-Way)	1
2	1484656	Terminal (Socket)	4
2	1482659	Seal (Rubber)	4
3	. . . . .	Insert (Park Brake And Air Dryer Diode)	1
3	1610953	Diode	1
4	. . . . .	Connector Assembly (Turbine Speed)	1
4	1508206	Connector (2 Way)	1
4	2787349	Terminal	2
4	2060555	Wire Seal (Yellow)	2
5	. . . . .	Connector Assembly (Converter Temperature Sensor)	1
5	1484598	Terminal	1
5	1484651	Cover	1
6	. . . . .	Connector Assembly (24 Volt)	1
6	1493455	Ring	1
7	. . . . .	Connector Assembly (Ground)	1
7	1493455	Ring	2
8	. . . . .	Connector Assembly (Air Dryer)	1
8	1490242	Connector (2 Way)	1
8	1490243	Connector	1
8	1330438	Terminal (Socket)	2
9	. . . . .	Insert (Air Dryer)	1
9	1502920	Connector	1
9	1330439	Plug	2
10	. . . . .	Connector Assembly (Terminating Resistor)	1
10	1484397	Connector (3-Way)	1
10	1610944	Lock	1
10	1518112	Terminal (Socket)	2
10	1330439	Plug	1
11	. . . . .	Insert (Terminating Resistor)	1
11	1607772	Connector (Termination)	1
12	. . . . .	Connector Assembly (Fuel Filter To Engine)	1
12	1502920	Connector	1
12	1330414	Connector (Secondary Lock)	1
12	1330437	Terminal (Pin)	2
13	. . . . .	Connector Assembly (Engine Oil Pressure)	1
13	1484598	Terminal	2
13	1484651	Cover	2
14	. . . . .	Connector Assembly (Grid Heater)	1
14	1496883	Ring	1
15	. . . . .	Connector Assembly (Engine Power Supply)	1
15	1654795	Housing	1
15	1514603	Connector	1
15	1493434	Terminal (Socket)	2

©2015 HYSTER COMPANY

WIRE HARNESS

CHASSIS, DIESEL (H13.00XM, H16.00XM, H16.00XM-6) – SHEET 2 0F 2

ITEM	PART NO.	DESCRIPTION	QTY
15	1484377	Plug	2
16	. . . . .	Connector Assembly (ECM)	1
16	1632864	Housing	1
16	1484377	Plug	40
16	1507725	Terminal	8
16	1518112	Terminal (Socket)	2
17	. . . . .	Connector Assembly (Diagnostics)	1
17	1632866	Connector	1
17	1632867	Cap	1
17	1502712	Terminal (Pin)	6
17	1363886	Terminal (Socket)	3
18	. . . . .	Connector Assembly (Air Conditioner)	1
18	2787349	Terminal	1
18	2060555	Wire Seal (Yellow)	1
18	1484395	Housing (Socket)	1
18	1484396	Terminal	1
19	. . . . .	Connector Assembly (RH Rear Lights)	1
19	1493430	Connector (6 Way Housing)	1
19	1529052	Connector	1
19	1330438	Terminal (Socket)	5
19	1330439	Plug	1
20	. . . . .	Connector Assembly (Coolant Level)	1
20	1329152	Plug	1
20	1484395	Housing (Socket)	2
20	1484396	Terminal	2
21	. . . . .	Connector Assembly (Reverse Alarm)	1
21	1502920	Connector	1
21	1330414	Connector (Secondary Lock)	1
21	1330437	Terminal (Pin)	2
22	. . . . .	Insert (Reverse Alarm)	1
22	1490242	Connector (2 Way)	1
22	1490243	Connector	1
22	1330439	Plug	2
23	. . . . .	Connector Assembly (LH Rear Lights)	1
23	1493430	Connector (6 Way Housing)	1
23	1529052	Connector	1
23	1330438	Terminal (Socket)	5
23	1330439	Plug	1
24	. . . . .	Connector Assembly (Ground)	1
24	1496883	Ring	1
25	. . . . .	Connector Assembly (Alternator Signals)	1
25	1501919	Connector	1
25	1482663	Connector	1
25	1482668	Plug (Cavity Plug)	3
25	1330355	Terminal	1
25	1330356	Seal	1
26	. . . . .	Connector Assembly (Alternator)	1
26	1607801	Terminal (Ring)	1
27	. . . . .	Connector Assembly (Backup Diode)	1
27	1610950	Housing (Sealed) (4-Way)	1

©2015 HYSTER COMPANY

WIRE HARNESS

CHASSIS, DIESEL (H13.00XM, H16.00XM, H16.00XM-6) – SHEET 2 0F 2

ITEM	PART NO.	DESCRIPTION	QTY
27	1484656	Terminal (Socket)	4
27	1482659	Seal (Rubber)	4
28	. . . . .	Insert (Backup Diode)	1
28	1610953	Diode	1
29	. . . . .	Connector Assembly (24 Volt)	1
29	1493455	Ring	1
30	. . . . .	Connector Assembly (Starter Solenoid)	1
30	1502921	Ring	1
31	. . . . .	Connector Assembly (Grid Heater Relay)	1
31	1493448	E-Ring	2
31	1493459	Ring	1
32	. . . . .	Connector Assembly (Pre-Excitation Diode)	1
32	1610950	Housing (Sealed) (4-Way)	1
32	1484656	Terminal (Socket)	2
32	1482659	Seal (Rubber)	2
32	1610941	Seal (Dummy)	2
33	. . . . .	Insert (Pre-Excitation Diode)	1
33	1610953	Diode	1
34	. . . . .	Connector Assembly (Starter Relay)	1
34	1493459	Ring	2
34	1502921	Ring	1
34	1493448	E-Ring	1
35	. . . . .	Connector Assembly (Fuse)	1
35	1607801	Terminal (Ring)	2
36	. . . . .	Connector Assembly (Fuel Filter To Filter)	1
36	1490242	Connector (2 Way)	1
36	1490243	Connector	1
36	1330438	Terminal (Socket)	2

FOOTNOTES:

a → 3/2008

b 3/2008 →

©2015 HYSTER COMPANY

WIRE HARNESS (FIGURE 5-26)

CHASSIS, DIESEL (H10.00XM-12EC, H12.00XM-12EC) — SHEET 1 0F 2

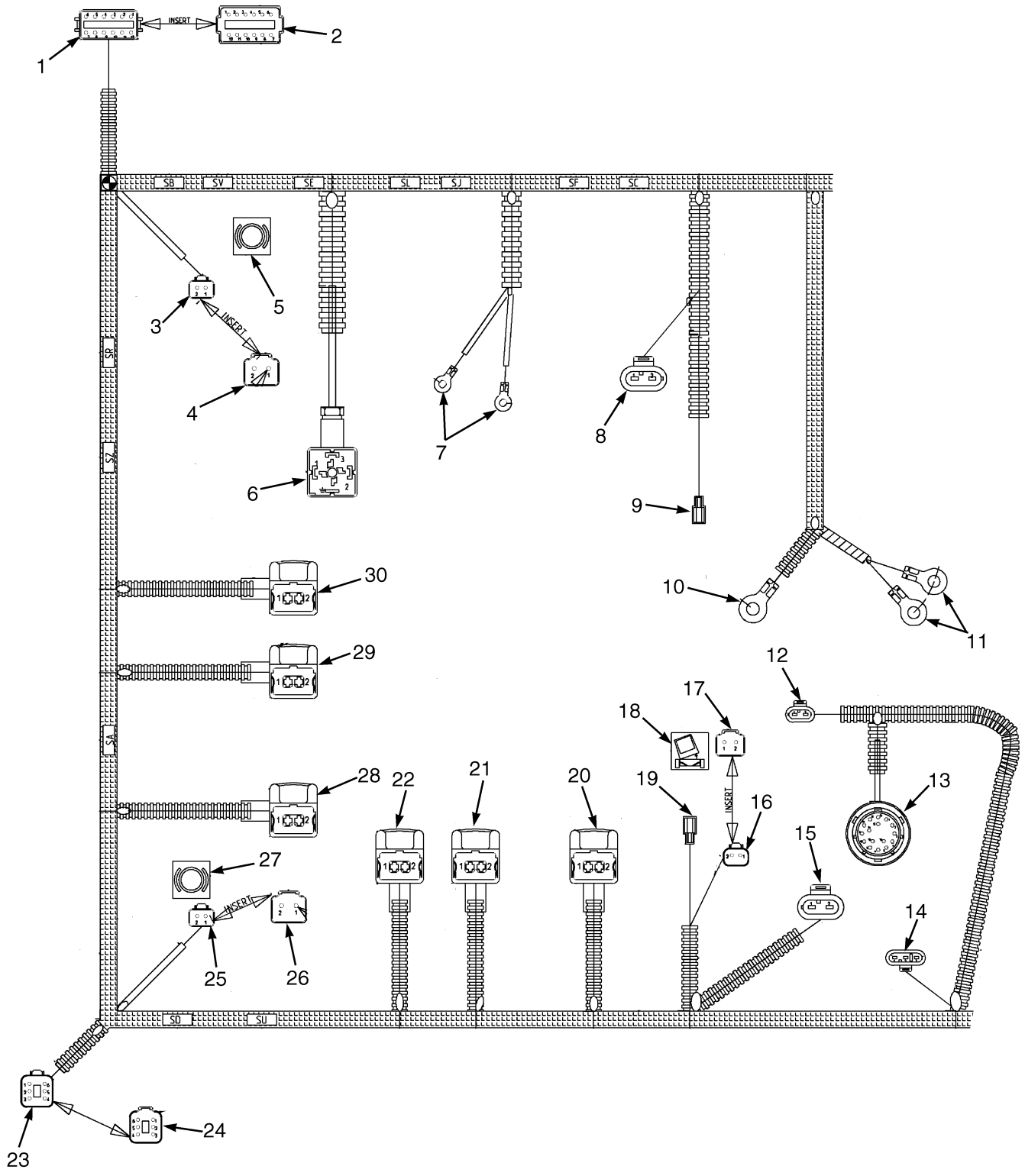

©2015 HYSTER COMPANY

WIRE HARNESS

CHASSIS, DIESEL (H10.00XM-12EC, H12.00XM-12EC) – SHEET 1 0F 2

ITEM	PART NO.	DESCRIPTION	QTY
	2088713	Wire Harness (Chassis)	1
1	. . . . .	Connector Assembly (Front End)	1
1	1493428	Connector (12-Way)	1
1	1500913	Connector	1
1	1330438	Terminal (Socket)	9
1	1330439	Plug	1
1	1363886	Terminal (Socket)	2
2	. . . . .	Insert (Front End)	1
2	1352603	Secondary Lock	1
2	1500925	Connector	1
2	1330439	Plug	12
3	. . . . .	Connector Assembly (RH Hub Temperature)	1
3	1490242	Connector (2 Way)	1
3	1490243	Connector	1
3	1330438	Terminal (Socket)	12
4	. . . . .	Insert (RH Hub Temperature)	1
4	1502920	Connector	1
4	1330439	Plug	12
5	1569972	Label (Brake) (Brake)	1
6	. . . . .	Connector Assembly (Park Brake Solenoid)	1
6	1493449	Connector Body	1
6	1484394	Crimp Ferrule	2
7	. . . . .	Connector Assembly (Battery Box)	1
7	1493455	Ring	1
7	1493459	Ring	1
8	. . . . .	Connector Assembly (Turbine Speed)	1
8	1508206	Connector (2 Way)	1
8	2787349	Terminal	2
8	2060555	Wire Seal (Yellow)	2
9	. . . . .	Connector Assembly (Converter Temperature Sensor)	1
9	1484598	Terminal	1
9	1484651	Cover	1
10	. . . . .	Connector Assembly (24 Volt)	1
10	1493455	Ring	1
11	. . . . .	Connector Assembly (Ground)	1
11	1493455	Ring	1
12	. . . . .	Connector Assembly (Drum Speed)	1
12	1508206	Connector (2 Way)	1
12	2787349	Terminal	2
12	2060555	Wire Seal (Yellow)	2
13	. . . . .	Connector Assembly (Valve)	1
13	1607771	Boot	1
13	1598469	Connector (16-Way)	1
13	1598470	Terminal (Pin)	16
14	. . . . .	Connector Assembly (Engine Speed)	1
14	2787344	Connector (3 Way)	1
14	2787349	Terminal	3
14	2060555	Wire Seal (Yellow)	3
15	. . . . .	Connector Assembly (Output Speed)	1
15	1508206	Connector (2 Way)	1

©2015 HYSTER COMPANY

WIRE HARNESS

CHASSIS, DIESEL (H10.00XM-12EC, H12.00XM-12EC) – SHEET 1 0F 2

ITEM	PART NO.	DESCRIPTION	QTY
15	2787349	Terminal	2
15	2060555	Wire Seal (Yellow)	2
16	. . . . .	Connector Assembly (Cab Power Tilt)	1
16	1490242	Connector (2 Way)	1
16	1490243	Connector	1
16	1363886	Terminal (Socket)	2
17	. . . . .	Insert (Cab Power Tilt)	1
17	1502920	Connector	1
17	1330439	Plug	2
18	1605545	Label (Cab Tilt Switch) (Cab Tilt)	1
19	. . . . .	Connector Assembly (Fuel Sender)	1
19	1484598	Terminal	1
19	1484651	Cover	1
20	. . . . .	Connector Assembly (Low)	1
20	1493447	Connector	1
20	1493436	Terminal (Socket)	2
20	1479109	Seal	2
21	. . . . .	Connector Assembly (Auxiliary)	1
21	1493446	Connector	1
21	1493436	Terminal (Socket)	2
21	1479109	Seal	2
22	. . . . .	Connector Assembly (Tilt)	1
22	1493435	Connector (2-Way)	1
22	1493436	Terminal (Socket)	2
22	1479109	Seal	2
23	. . . . .	Connector Assembly (Front Lights)	1
23	1493430	Connector (6 Way Housing)	1
23	1529052	Connector	1
23	1363886	Terminal (Socket)	2
23	1330439	Plug	4
24	. . . . .	Insert	1
24	1500914	Housing	1
24	1330439	Plug	6
25	. . . . .	Connector Assembly (LH Hub Temperature)	1
25	1490242	Connector (2 Way)	1
25	1490243	Connector	1
25	1330438	Terminal (Socket)	2
26	. . . . .	Insert (LH Hub Temperature)	1
26	1502920	Connector	1
26	1330439	Plug	2
27	1569972	Label (Brake) (Brake)	1
28	. . . . .	Connector Assembly (Tilt)	1
28	1493435	Connector (2-Way)	1
28	1493436	Terminal (Socket)	2
28	1479109	Seal	2
29	. . . . .	Connector Assembly (Auxiliary)	1
29	1493446	Connector	1
29	1493436	Terminal (Socket)	2
29	1479109	Seal	2
30	. . . . .	Connector Assembly (Lift)	1

©2015 HYSTER COMPANY

WIRE HARNESS

CHASSIS, DIESEL (H10.00XM-12EC, H12.00XM-12EC) – SHEET 1 0F 2

ITEM	PART NO.	DESCRIPTION	QTY
30	1493447	Connector	1
30	1493436	Terminal (Socket)	2
30	1479109	Seal	2

©2015 HYSTER COMPANY

WIRE HARNESS (FIGURE 5-27)

CHASSIS, DIESEL (H10.00XM-12EC, H12.00XM-12EC) — SHEET 2 0F 2

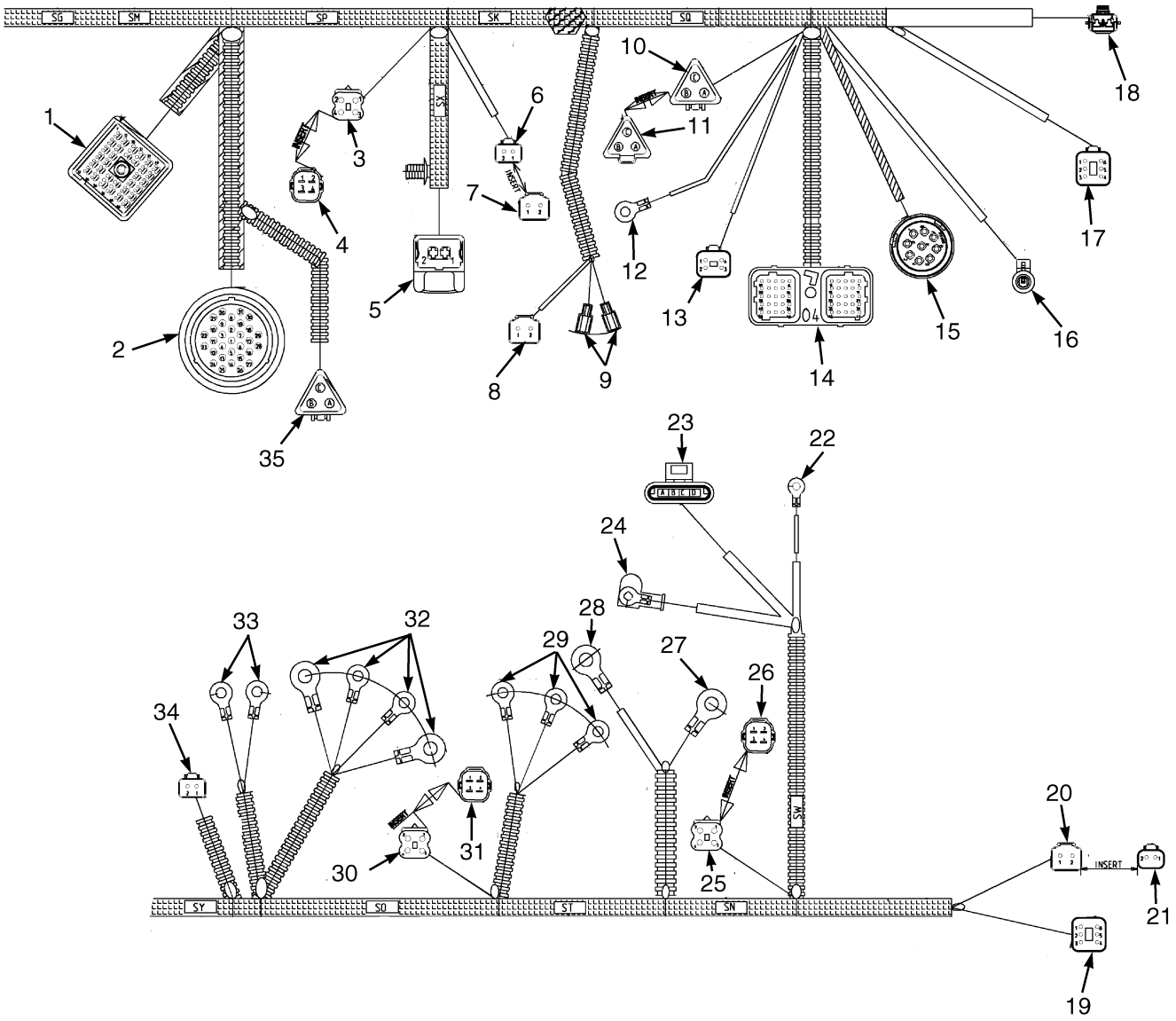

BP08061

©2015 HYSTER COMPANY

WIRE HARNESS

CHASSIS, DIESEL (H10.00XM-12EC, H12.00XM-12EC) – SHEET 2 0F 2

ITEM	PART NO.	DESCRIPTION	QTY
	2088713	Wire Harness (Chassis)	1
1	. . . . .	Connector Assembly (Cab Signals)	1
1	1493431	Housing (Socket)	1
1	1493432	Retainer (Socket)	1
1	1463141	Terminal (Socket)	48
1	1363886	Terminal (Socket)	9
1	1330438	Terminal (Socket)	3
2	. . . . .	Connector Assembly (Cab Supplies)	1
2	1484650	Connector (Socket)	1
2	1518112	Terminal (Socket)	2
2	1363886	Terminal (Socket)	3
2	1330438	Terminal (Socket)	26
3	. . . . .	Connector Assembly (Park Brake And Air Dryer Diode)	1
3	1610950	Housing (Sealed) (4-Way)	1
3	1484656	Terminal (Socket)	4
3	1482659	Seal (Rubber)	4
4	. . . . .	Insert (Park Brake And Air Dryer Diode)	1
4	1610953	Diode	1
5	. . . . .	Connector Assembly (Air Filter)	1
5	1493435	Connector (2-Way)	1
5	1493436	Terminal (Socket)	2
5	1479109	Seal	2
6	. . . . .	Connector Assembly (Air Dryer)	1
6	1490242	Connector (2 Way)	1
6	1490243	Connector	1
6	1330438	Terminal (Socket)	2
7	. . . . .	Insert (Air Dryer)	1
7	1502920	Connector	1
7	1330439	Plug	2
8	. . . . .	Connector Assembly (Fuel Filter To Engine)	1
8	1502920	Connector	1
8	1330414	Connector (Secondary Lock)	1
8	1330437	Terminal (Pin)	2
9	. . . . .	Connector Assembly (Engine Oil Pressure)	1
9	1484598	Terminal	2
9	1484651	Cover	2
10	. . . . .	Connector Assembly (Terminating Resistor)	1
10	1484397	Connector (3-Way)	1
10	1610944	Lock	1
10	1518112	Terminal (Socket)	2
10	1330439	Plug	1
11	. . . . .	Insert (Terminating Resistor)	1
11	1607772	Connector (Termination)	1
12	. . . . .	Connector Assembly (Grid Heater)	1
12	1496883	Ring	1
13	. . . . .	Connector Assembly (Engine Power Supply)	1
13	1654795	Housing	1
13	1514603	Connector	1
13	1493434	Terminal (Socket)	2
13	1330439	Plug	2

©2015 HYSTER COMPANY

WIRE HARNESS

CHASSIS, DIESEL (H10.00XM-12EC, H12.00XM-12EC) – SHEET 2 0F 2

ITEM	PART NO.	DESCRIPTION	QTY
14	. . . . .	Connector Assembly (ECM)	1
14	1632864	Housing	1
14	1484377	Plug	40
14	1507725	Terminal	6
14	1518112	Terminal (Socket)	2
15	. . . . .	Connector Assembly (Diagnostics)	1
15	1632866	Connector	1
15	1632867	Cap	1
15	1502712	Terminal (Pin)	6
15	1363886	Terminal (Socket)	3
16	. . . . .	Connector Assembly (Air Conditioner)	1
16	2787349	Terminal	1
16	2060555	Wire Seal (Yellow)	1
16	1484395	Housing (Socket)	1
16	1484396	Terminal	1
17	. . . . .	Connector Assembly (RH Rear Lights)	1
17	1493430	Connector (6 Way Housing)	1
17	1529052	Connector	1
17	1330438	Terminal (Socket)	5
17	1330439	Plug	1
18	. . . . .	Connector Assembly (Coolant Level)	1
18	1329152	Plug	1
18	1484395	Housing (Socket)	2
18	1484396	Terminal	2
19	. . . . .	Connector Assembly (LH Rear Lights)	1
19	1493430	Connector (6 Way Housing)	1
19	1529052	Connector	1
19	1330438	Terminal (Socket)	5
19	1330439	Plug	1
20	. . . . .	Connector Assembly (Reverse Alarm)	1
20	1502920	Connector	1
20	1330414	Connector (Secondary Lock)	1
20	1330437	Terminal (Pin)	2
21	. . . . .	Insert (Reverse Alarm)	1
21	1490242	Connector (2 Way)	1
21	1490243	Connector	1
21	1330439	Plug	2
22	. . . . .	Connector Assembly (Alternator Ground)	1
22	1496883	Ring	1
23	. . . . .	Connector Assembly (Alternator Signals)	1
23	1501919	Connector	1
23	1482663	Connector	1
23	1482668	Plug (Cavity Plug)	3
23	1330355	Terminal	1
23	1330356	Seal	1
24	. . . . .	Connector Assembly (Alternator)	1
24	1607801	Terminal (Ring)	1
25	. . . . .	Connector Assembly (Backup Diode)	1
25	1610950	Housing (Sealed) (4-Way)	1
25	1484656	Terminal (Socket)	4

©2015 HYSTER COMPANY

WIRE HARNESS

CHASSIS, DIESEL (H10.00XM-12EC, H12.00XM-12EC) – SHEET 2 0F 2

ITEM	PART NO.	DESCRIPTION	QTY
25	1482659	Seal (Rubber)	4
26	. . . . .	Insert (Backup Diode)	1
26	1610953	Diode	1
27	. . . . .	Connector Assembly (24 Volt)	1
27	1493455	Ring	1
28	. . . . .	Connector Assembly (Starter Solenoid)	1
28	1502921	Ring	1
29	. . . . .	Connector Assembly (Grid Heater Relay)	1
29	1493448	E-Ring	2
29	1493459	Ring	1
30	. . . . .	Connector Assembly (Pre-Excitation Diode)	1
30	1610950	Housing (Sealed) (4-Way)	1
30	1484656	Terminal (Socket)	2
30	1482659	Seal (Rubber)	2
30	1610941	Seal (Dummy)	2
31	. . . . .	Insert (Pre-Excitation Diode)	1
31	1610953	Diode	1
32	. . . . .	Connector Assembly (Starter Relay)	1
32	1493459	Ring	2
32	1502921	Ring	2
33	. . . . .	Connector Assembly (Fuse)	1
33	1607801	Terminal (Ring)	2
34	. . . . .	Connector Assembly (Fuel Filter To Filter)	1
34	1490242	Connector (2 Way)	1
34	1490243	Connector	1
34	1330438	Terminal (Socket)	2
35	. . . . .	Connector Assembly (Accelerator Pedal)	1
35	1484397	Connector (3-Way)	1
35	1463194	Connector (Secondary Lock)	1
35	1330438	Terminal (Socket)	3

©2015 HYSTER COMPANY

WIRE HARNESS (FIGURE 5-28)
CAB SIDE CONSOLE — SHEET 1 OF 3

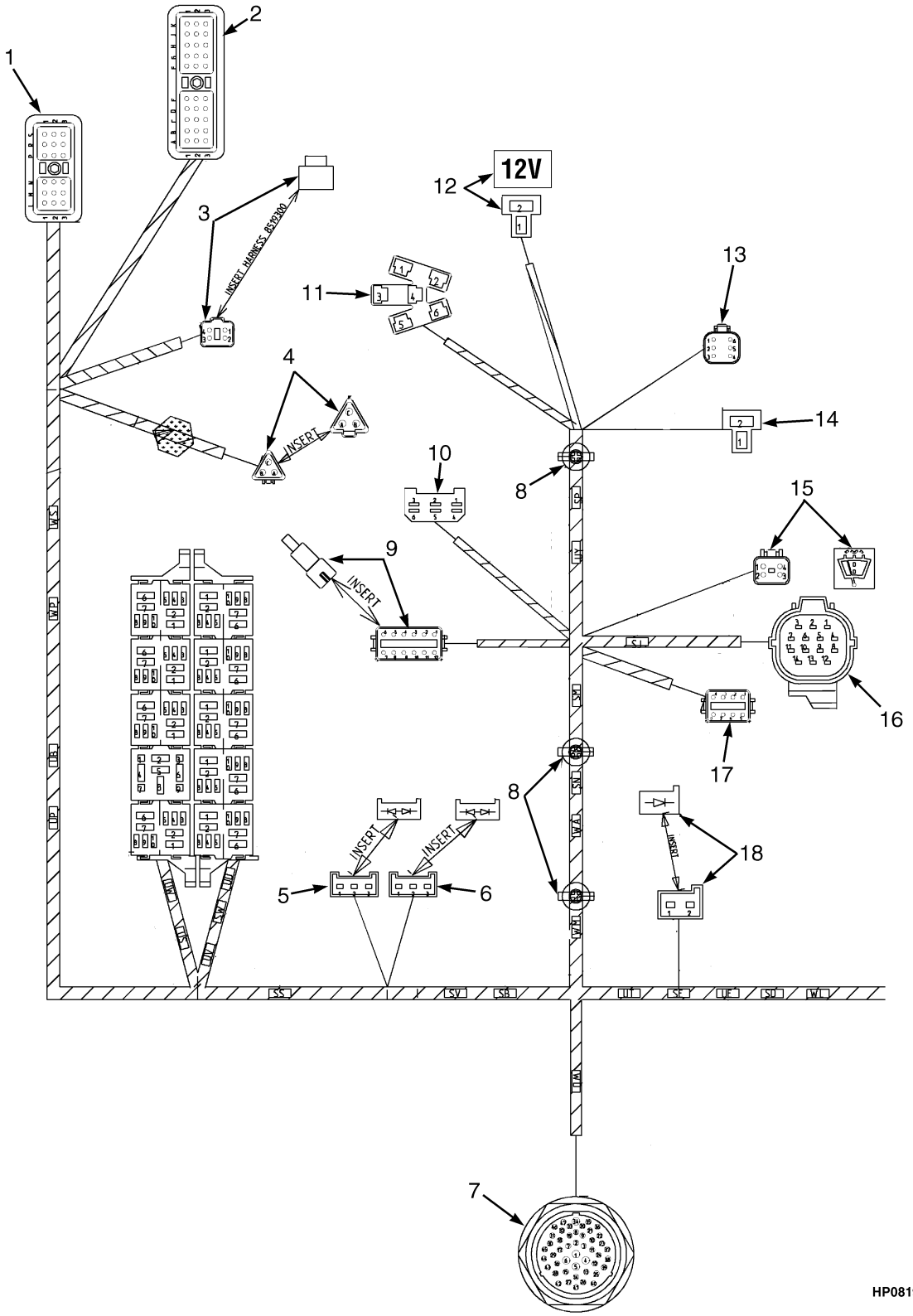

©2015 HYSTER COMPANY

WIRE HARNESS
CAB SIDE CONSOLE – SHEET 1 OF 3

ITEM	PART NO.	DESCRIPTION	QTY
	a 2088901	Wire Harness (Side Console)	1
	b 2104835	Wire Harness	1
1	. . . . .	Connector Assembly (Transmission Controller J1)	1
1	1602433	Connector	1
1	1323581	Plug	5
1	1532571	Terminal	13
2	. . . . .	Connector Assembly (Transmission Controller J2)	1
2	1607842	Connector (30 Way)	1
2	1323581	Plug	2
2	1532571	Terminal	28
3	. . . . .	Connector Assembly (Resistors)	1
3	1489655	Connector (4 Way)	1
3	1330416	Connector	1
3	1330437	Terminal (Pin)	4
3	1582154	Label (Gear)	1
3	2058006	Wire Harness (Resistors)	1
3	1498502	Connector	2
3	1463194	Connector (Secondary Lock)	2
3	1330438	Terminal (Socket)	4
3	1330439	Plug	2
4	. . . . .	Connector Assembly (Terminating Resistor)	1
4	1484397	Connector (3-Way)	1
4	1610944	Lock	1
4	1518112	Terminal (Socket)	2
4	1330439	Plug	1
4	1607772	Connector (Termination)	1
5	. . . . .	Connector Assembly (Flyback Diode)	1
5	2047859	Connector Body	1
5	2054463	Female Terminal	3
5	1484717	Diode	1
6	. . . . .	Connector Assembly (Flyback Diode)	1
6	2047859	Connector Body	1
6	2054463	Female Terminal	3
6	1484717	Diode	1
7	. . . . .	Connector Assembly (Armrest Harness)	1
7	1484664	Housing	1
7	1484685	Locknut	1
7	1484686	Washer (Spring)	1
7	1330437	Terminal (Pin)	5
7	1463140	Terminal (Pin)	31
7	1484377	Plug	11
8	1500927	Clip	3
9	. . . . .	Connector Assembly (Indicator Display)	1
9	1493428	Connector (12-Way)	1
9	1500913	Connector	1
9	1330439	Plug	2
9	1330438	Terminal (Socket)	10
9	2046463	Wire Harness	1
10	. . . . .	Connector Assembly (Front Wiper Timer)	1
10	1484676	Housing (Socket)	1

©2015 HYSTER COMPANY

WIRE HARNESS
CAB SIDE CONSOLE – SHEET 1 OF 3

ITEM	PART NO.	DESCRIPTION	QTY
10	1484556	Terminal	6
11	. . . . .	Connector Assembly (Start Switch)	1
11	370728	Connector Body	1
11	1484375	Terminal	3
11	141462	Terminal	1
12	. . . . .	Connector Assembly (12V Accessory Socket)	1
12	1465378	Connector Body	1
12	1484556	Terminal	2
12	1570645	Label (12 Volt)	1
13	. . . . .	Connector Assembly (Heater)	1
13	1493430	Connector (6 Way Housing)	1
13	1529052	Connector	1
13	1363885	Terminal (Pin)	2
13	1330438	Terminal (Socket)	3
14	. . . . .	Connector Assembly (Map Light)	1
14	1465378	Connector Body	1
14	1484556	Terminal	2
15	. . . . .	Connector Assembly (Rear Wiper)	1
15	1489656	Connector (4-Way)	1
15	1489657	Connector	1
15	1330438	Terminal (Socket)	4
15	1570644	Label (Rear Wash/Wipe Switch)	1
16	. . . . .	Connector Assembly (Cabin Roof)	1
16	1484654	Connector (14-Way)	1
16	1484655	Retainer (Socket)	1
16	1484708	Terminal (Socket)	4
16	1484595	Seal	4
16	1484597	Seal	9
16	1484656	Terminal (Socket)	9
16	1484611	Seal (Blanking)	1
17	. . . . .	Connector Assembly (Air Conditioner Condensor)	1
17	1502625	Connector	1
17	1502626	Connector	1
17	1363886	Terminal (Socket)	1
17	1330438	Terminal (Socket)	7
18	. . . . .	Connector Assembly (Park Brake Diode)	1
18	1582102	Housing	1
18	2054463	Female Terminal	2
18	1582103	Diode	1

FOOTNOTES:

a → 2/2008

b 2/2008 →

©2015 HYSTER COMPANY

NOTES

©2015 HYSTER COMPANY

WIRE HARNESS (FIGURE 5-29)
CAB SIDE CONSOLE — SHEET 2 OF 3

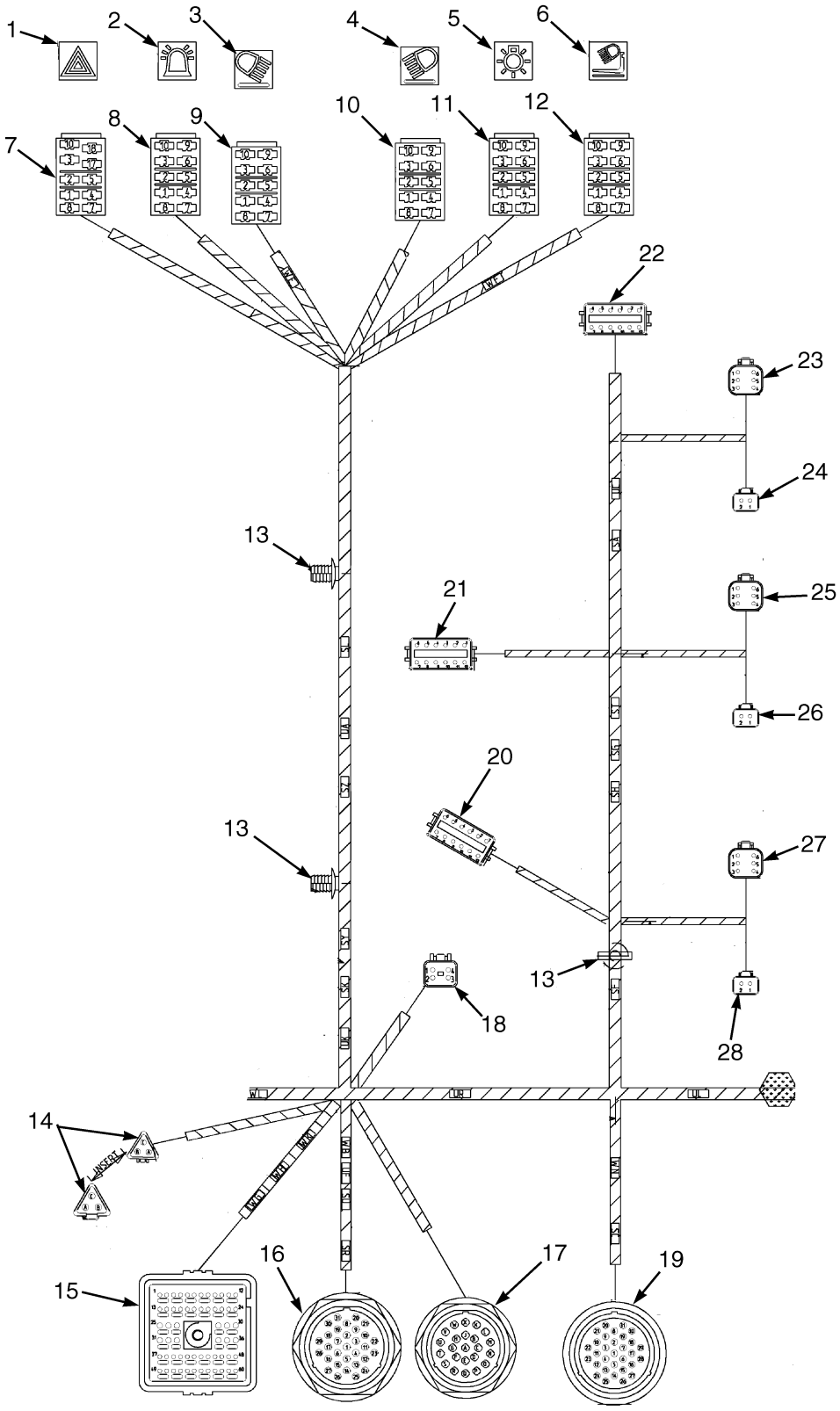

©2015 HYSTER COMPANY

WIRE HARNESS
CAB SIDE CONSOLE – SHEET 2 OF 3

ITEM	PART NO.	DESCRIPTION	QTY
	a 2088901	Wire Harness (Side Console)	1
	b 2104835	Wire Harness	1
1	1570638	Label (Hazard Light)	1
2	1570639	Label (Beacon Switch)	1
3	1497362	Label (Rear Worklight Switch)	1
4	1497361	Label (Front Worklight Switch)	1
5	1570641	Label (Roadlight Switch)	1
6	1570643	Label (Mast And Attachment Worklight)	1
7	. . . . .	Connector Assembly (Hazard Lights Switch)	1
7	1484675	Switch	1
7	233141	Terminal	1
7	1484556	Terminal	7
8	. . . . .	Connector Assembly (Beacon And Strobe Lights Switch)	1
8	1484555	Connector Body (10-Way)	1
8	1484556	Terminal	3
9	. . . . .	Connector Assembly (Rear Drive Lights Switch)	1
9	1484555	Connector Body (10-Way)	1
9	1484556	Terminal	4
10	. . . . .	Connector Assembly (Front Flood Lights Switch)	1
10	1484555	Connector Body (10-Way)	1
10	233141	Terminal	4
11	. . . . .	Connector Assembly (Side Lights And Front Lights Switch)	1
11	1484555	Connector Body (10-Way)	1
11	1484556	Terminal	4
12	. . . . .	Connector Assembly (Mast Lights Switch)	1
12	1484555	Connector Body (10-Way)	1
12	1484556	Terminal	2
12	233141	Terminal	2
13	1500927	Clip	3
14	. . . . .	Connector Assembly (Converter)	1
14	1484397	Connector (3-Way)	1
14	1330426	Connector	1
14	1363885	Terminal (Pin)	1
14	1330438	Terminal (Socket)	2
14	1330439	Plug	3
15	. . . . .	Connector Assembly (Cab Signals)	1
15	1484363	Housing (Socket)	1
15	1484662	Key (Retainer Pin)	1
15	1463140	Terminal (Pin)	48
15	1363885	Terminal (Pin)	9
15	1330437	Terminal (Pin)	3
15	1500929	Flange	1
16	. . . . .	Connector Assembly (Cab Supplies)	1
16	1484666	Housing	1
16	1484685	Locknut	1
16	1484686	Washer (Spring)	1
16	1502712	Terminal (Pin)	2
16	1363885	Terminal (Pin)	3
16	1330437	Terminal (Pin)	26
16	1484686	Washer (Spring)	1

©2015 HYSTER COMPANY

WIRE HARNESS
CAB SIDE CONSOLE – SHEET 2 OF 3

ITEM	PART NO.	DESCRIPTION	QTY
16	1484685	Locknut	1
17	. . . . .	Connector Assembly (ECH Attachment Signals)	1
17	1500919	Connector	1
17	1484686	Washer (Spring)	1
17	1484685	Locknut	1
17	1330439	Plug	16
17	1330437	Terminal (Pin)	7
18	. . . . .	Connector Assembly (Wash Pumps)	1
18	1489656	Connector (4-Way)	1
18	1489657	Connector	1
18	1330438	Terminal (Socket)	4
19	. . . . .	Connector Assembly (Cab Underfloor)	1
19	1484650	Connector (Socket)	1
19	1363885	Terminal (Pin)	1
19	1330438	Terminal (Socket)	25
19	1330439	Plug	5
20	. . . . .	Connector Assembly (Auxiliary 2 Signals)	1
20	1493428	Connector (12-Way)	1
20	1500913	Connector	1
20	1330439	Plug	7
20	1330438	Terminal (Socket)	5
21	. . . . .	Connector Assembly (Auxiliary 1 Signals)	1
21	1493428	Connector (12-Way)	1
21	1500913	Connector	1
21	1330438	Terminal (Socket)	12
22	. . . . .	Connector Assembly (Hydraulic Engine Control Module Signals)	1
22	1493428	Connector (12-Way)	1
22	1500913	Connector	1
22	1330439	Plug	1
22	1330438	Terminal (Socket)	11
23	. . . . .	Connector Assembly (Hydraulic Engine Control Module CAN)	1
23	1493430	Connector (6 Way Housing)	1
23	1529052	Connector	1
23	1330438	Terminal (Socket)	2
23	1330439	Plug	4
24	. . . . .	Connector Assembly (Hydraulic Engine Control Module Power)	1
24	1490242	Connector (2 Way)	1
24	1490243	Connector	1
24	1330438	Terminal (Socket)	2
25	. . . . .	Connector Assembly (Auxiliary 1 CAN)	1
25	1493430	Connector (6 Way Housing)	1
25	1529052	Connector	1
25	1330438	Terminal (Socket)	2
25	1330439	Plug	4
26	. . . . .	Connector Assembly (Auxiliary 1 Engine Control Module Power)	1
26	1490242	Connector (2 Way)	1
26	1490243	Connector	1
26	1330438	Terminal (Socket)	2
27	. . . . .	Connector Assembly (Auxiliary 2 Engine Control Module CAN)	1
27	1493430	Connector (6 Way Housing)	1

©2015 HYSTER COMPANY

WIRE HARNESS
CAB SIDE CONSOLE – SHEET 2 OF 3

ITEM	PART NO.	DESCRIPTION	QTY
27	1529052	Connector	1
27	1330438	Terminal (Socket)	2
27	1330439	Plug	4
28	. . . . .	Connector Assembly (Auxiliary 2 Power)	1
28	1490242	Connector (2 Way)	1
28	1490243	Connector	1
28	1330438	Terminal (Socket)	2

FOOTNOTES:

a → 2/2008

b 2/2008 →

©2015 HYSTER COMPANY

WIRE HARNESS (FIGURE 5-30)
CAB SIDE CONSOLE — SHEET 3 OF 3

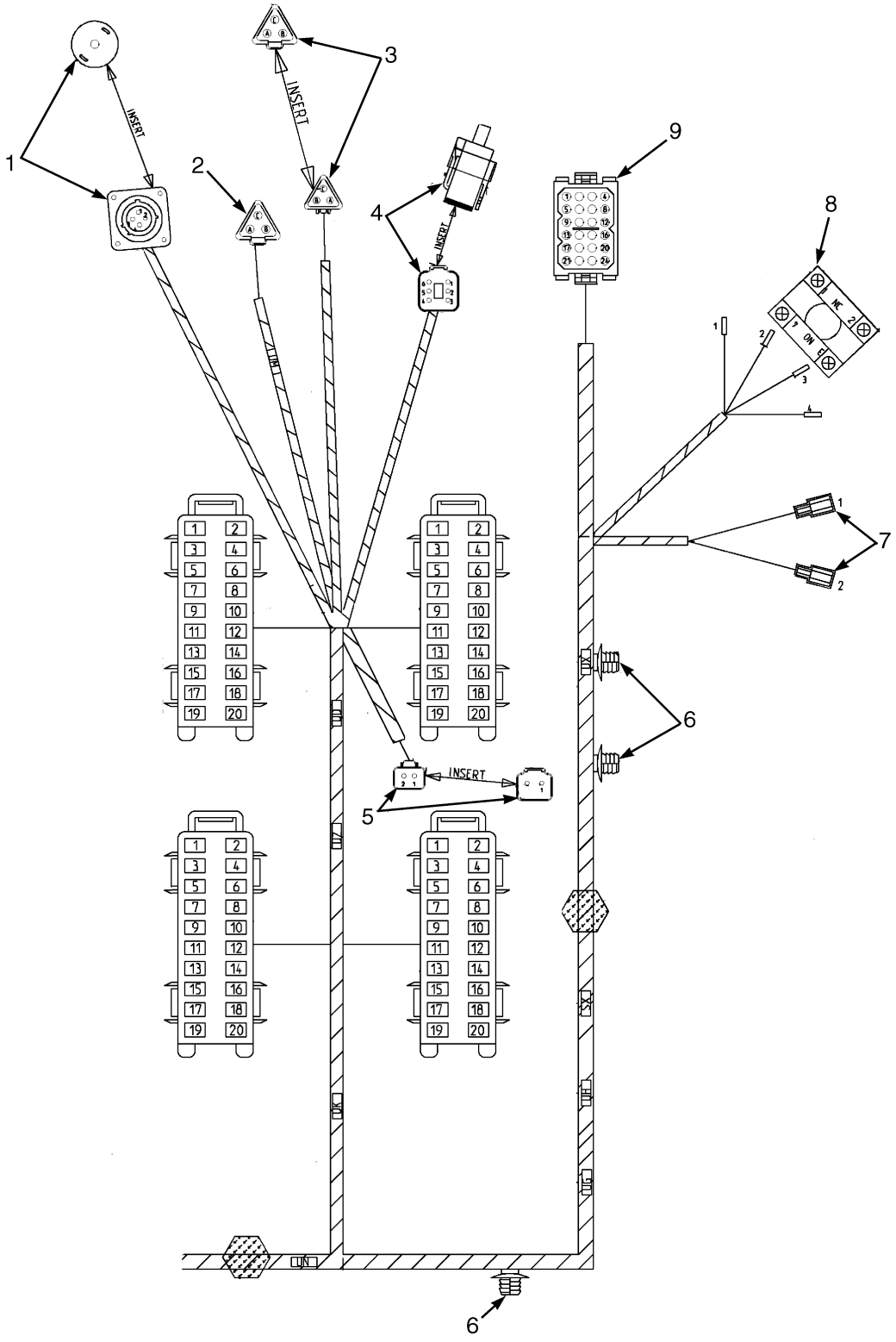

©2015 HYSTER COMPANY

WIRE HARNESS
CAB SIDE CONSOLE – SHEET 3 OF 3

ITEM	PART NO.	DESCRIPTION	QTY
	a 2088901	Wire Harness (Side Console)	1
	b 2104835	Wire Harness	1
1	. . . . .	Connector Assembly (Transmission Diagnostic)	1
1	1506762	Housing (4-Way)	1
1	1490246	Terminal (Socket)	3
1	1607843	Cap	1
2	. . . . .	Connector Assembly (Jumper)	1
2	1493466	Connector	1
2	1330415	Connector	1
2	1330437	Terminal (Pin)	3
3	. . . . .	Connector Assembly (Diagnostic Plug)	1
3	1484397	Connector (3-Way)	1
3	1610944	Lock	1
3	1330439	Plug	1
3	1518112	Terminal (Socket)	2
3	1493466	Connector	1
4	. . . . .	Connector Assembly (Power Transmission)	1
4	1500914	Housing	1
4	1330417	Connector	1
4	1330437	Terminal (Pin)	4
4	1330439	Plug	2
4	1500912	Clip	1
4	1484668	Socket	1
5	. . . . .	Connector Assembly (Service Power)	1
5	1490242	Connector (2 Way)	1
5	1490243	Connector	1
5	1518112	Terminal (Socket)	2
5	1493465	Connector (2 Pin)	1
6	1490245	Clip	3
7	. . . . .	Connector Assembly (Buzzer)	1
7	1610948	Receptacle	2
7	1610947	Receptacle	2
8	. . . . .	Connector Assembly (Park Brake Switch)	1
8	1658852	Two Way Switch Element (Park Brake)	1
8	1484394	Crimp Ferrule	4
8	1561756	Cover (Lower)	1
8	1567676	Cover (Upper)	1
8	1570606	Strap Clamp	1
9	. . . . .	Connector Assembly (Instrument Cluster)	1
9	1484677	Plug (24-Way)	1
9	1484716	Terminal	15

FOOTNOTES:

a → 2/2008

b 2/2008 →

©2015 HYSTER COMPANY

WIRE HARNESS (FIGURE 5-31)
CLOSED CAB

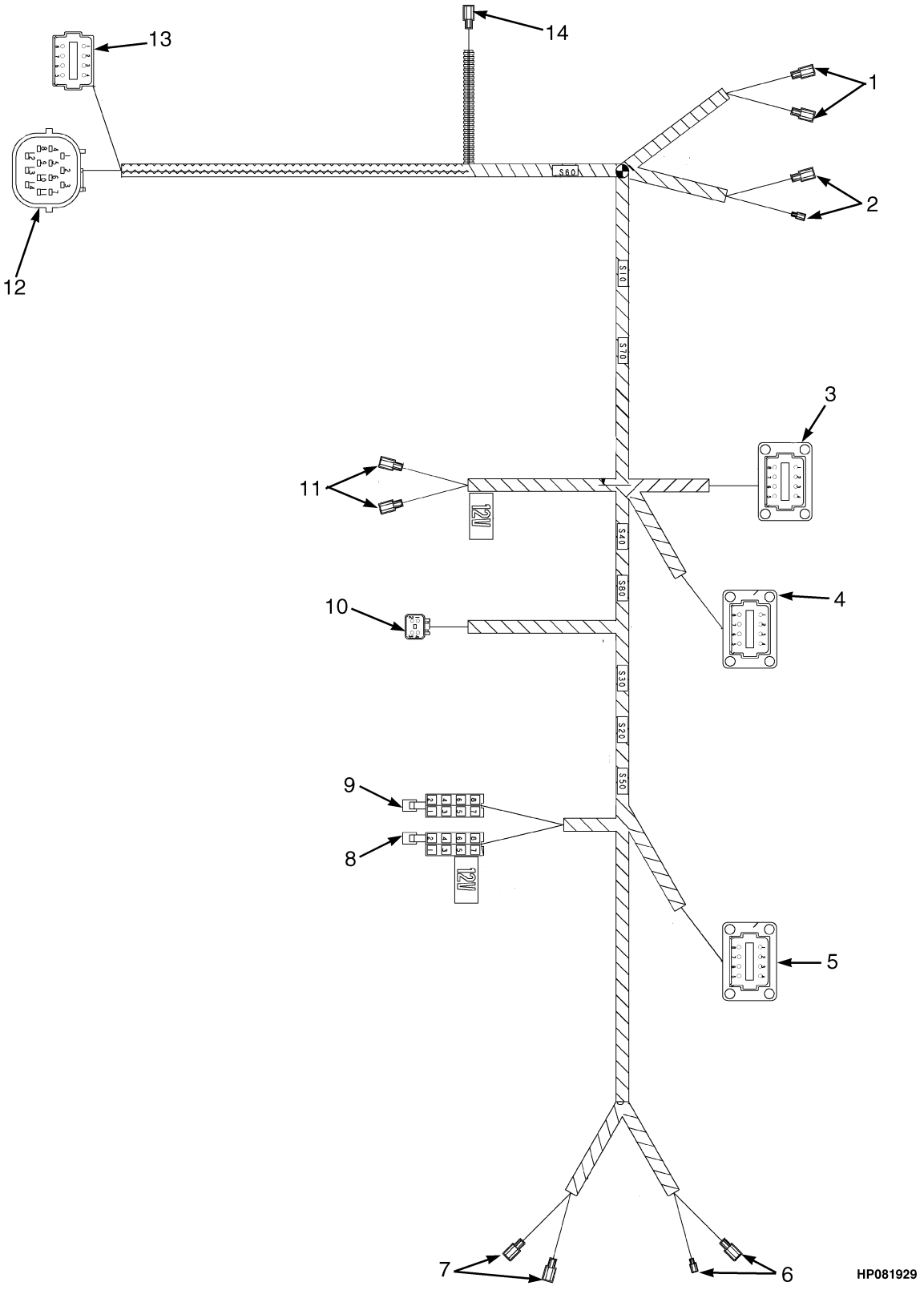

©2015 HYSTER COMPANY

WIRE HARNESS
CLOSED CAB

ITEM	PART NO.	DESCRIPTION	QTY
	2093714	Wire Harness (Closed Cab)	1
1	. . . . .	Connector Assembly (RH Interior Light)	1
1	1484598	Terminal	2
1	1484599	Housing	2
2	. . . . .	Connector Assembly (RH Speaker)	1
2	1484598	Terminal	1
2	1484599	Housing	1
2	1484600	Terminal	1
2	1484383	Heat Shrink	1
3	. . . . .	Connector Assembly (Air Conditioner Condensor)	1
3	1570603	Housing	1
3	1330418	Connector	1
3	1363885	Terminal (Pin)	1
3	1330437	Terminal (Pin)	7
3	1570601	Gasket	1
4	. . . . .	Connector Assembly (RH Cab Lights)	1
4	1570603	Housing	1
4	1330418	Connector	1
4	1363885	Terminal (Pin)	1
4	1330439	Plug	2
4	1330437	Terminal (Pin)	4
4	1570601	Gasket	1
5	. . . . .	Connector Assembly (LH Cab Lights)	1
5	1570603	Housing	1
5	1330418	Connector	1
5	1363885	Terminal (Pin)	1
5	1330439	Plug	3
5	1330437	Terminal (Pin)	4
5	1570601	Gasket	1
6	. . . . .	Connector Assembly (LH Speaker)	1
6	1484598	Terminal	1
6	1484599	Housing	1
6	1484600	Terminal	1
6	1484383	Heat Shrink	1
7	. . . . .	Connector Assembly (LH Interior Light)	1
7	1484598	Terminal	2
7	1484599	Housing	2
8	. . . . .	Connector Assembly (Radio Power)	1
8	1484609	Housing (Socket)	1
8	1484719	Terminal	3
8	1570645	Label (12 Volt)	1
9	. . . . .	Connector Assembly (Radio Speakers)	1
9	1484608	Housing (Socket)	1
9	1484610	Terminal	4
10	. . . . .	Connector Assembly (Roof Wiper)	1
10	1489656	Connector (4-Way)	1
10	1489657	Connector	1
10	1330438	Terminal (Socket)	4
11	. . . . .	Connector Assembly (Radio Comms)	1
11	1484598	Terminal	2

©2015 HYSTER COMPANY

WIRE HARNESS
CLOSED CAB

ITEM	PART NO.	DESCRIPTION	QTY
11	1484599	Housing	2
12	. . . . .	Connector Assembly (Cab Connection)	1
12	1484592	Connector	1
12	1484593	Retainer	1
12	1484594	Terminal (Pin)	4
12	1484595	Seal	4
12	1484596	Terminal (Pin)	9
12	1484597	Seal	9
12	1484611	Seal (Blanking)	1
13	. . . . .	Connector Assembly (Air Conditioner Condensor)	1
13	1623050	Housing	1
13	1330418	Connector	1
13	1363885	Terminal (Pin)	1
13	1330437	Terminal (Pin)	7
14	. . . . .	Connector Assembly (Ventilation Fan)	1
14	1484598	Terminal	1
14	1484599	Housing	1

©2015 HYSTER COMPANY

NOTES

©2015 HYSTER COMPANY

WIRE HARNESS (FIGURE 5-32)
OPEN CAB

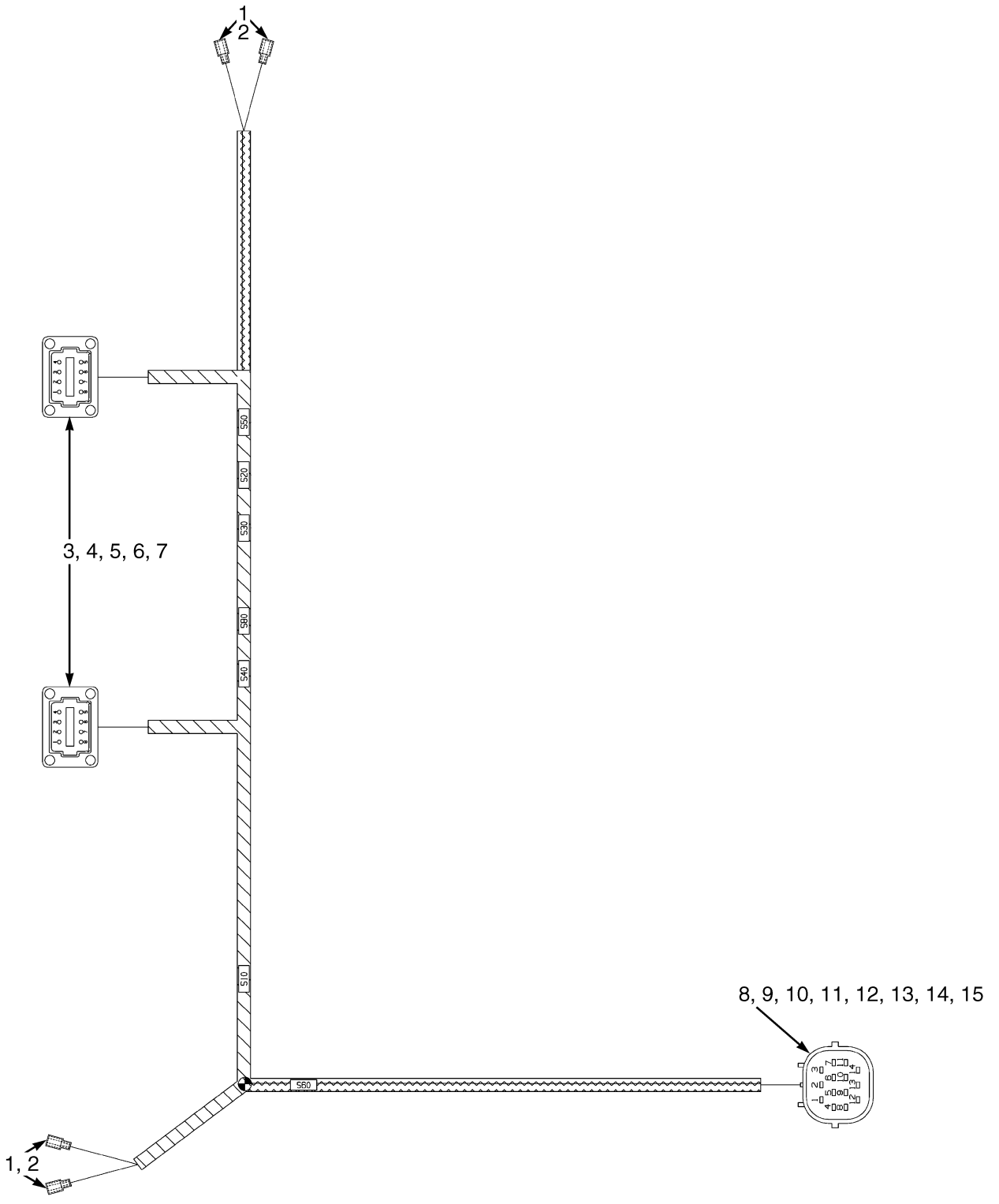

BP080363

©2015 HYSTER COMPANY

WIRE HARNESS
OPEN CAB

ITEM	PART NO.	DESCRIPTION	QTY
	2042507	Wire Harness (Open Cab)	1
1	1484598	Terminal	4
2	1484599	Housing	4
3	1570603	Housing	2
4	1330418	Connector	2
5	1330437	Terminal (Pin)	8
6	1363885	Terminal (Pin)	2
7	1330439	Plug	6
8	1484592	Connector	1
9	1484593	Retainer	1
10	1484594	Terminal (Pin)	4
11	1484595	Seal (Brown)	4
12	1484596	Terminal (Pin)	3
13	1484597	Seal (Blue)	3
14	1484611	Seal (Blanking) (Brown)	1
15	1570601	Gasket	2

©2015 HYSTER COMPANY

WIRE HARNESS (FIGURE 5-33)
BRAKE TEMPERATURE

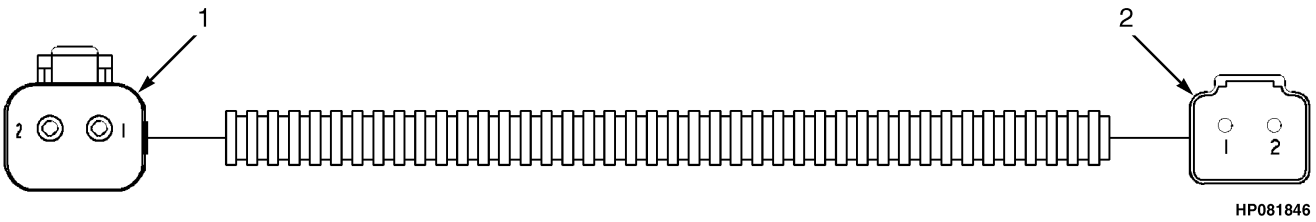

ITEM	PART NO.	DESCRIPTION	QTY
	2089087	Wire Harness (Brake Temperature) (Non-ECH and EC3)	1
	2089088	Wire Harness (Brake Temperature) (EC4)	1
1	. . . . .	Connector Assembly (Sensor)	1
1	1490242	Connector (2 Way)	1
1	1490243	Connector	1
1	1493437	Terminal	2
2	. . . . .	Connector Assembly (Frame Harness)	1
2	1493465	Connector (2 Pin)	1
2	1330414	Connector (Secondary Lock)	1
2	1330437	Terminal (Pin)	2

©2015 HYSTER COMPANY

WIRE HARNESS (FIGURE 5-34)
BACK-UP ALARM

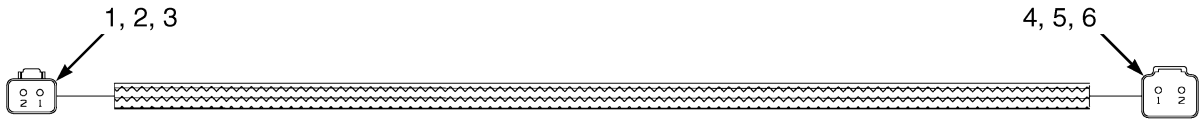

BP080361

ITEM	PART NO.	DESCRIPTION	QTY
	2045885	Wire Harness (Backup Alarm)	1
1	1490242	Connector (2 Way)	1
2	1490243	Connector	1
3	1330438	Terminal (Socket)	2
4	1493465	Connector (2 Pin)	1
5	1330414	Connector (Secondary Lock)	1
6	1330437	Terminal (Pin)	2

©2015 HYSTER COMPANY

WIRE HARNESS (FIGURE 5-35)
REAR DRIVE LIGHT EXTENSION

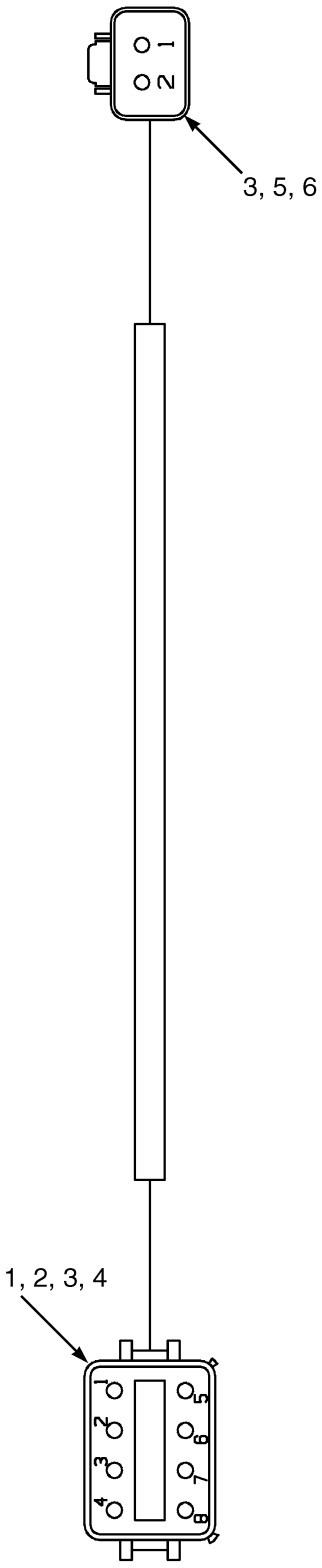

BP080366

©2015 HYSTER COMPANY

WIRE HARNESS
REAR DRIVE LIGHT EXTENSION

ITEM	PART NO.	DESCRIPTION	QTY
	2043678	Wire Harness (Rear Drive Light Extension)	1
1	1502625	Connector	1
2	1502626	Connector	1
3	1330438	Terminal (Socket)	4
4	1330439	Plug	6
5	1490242	Connector (2 Way)	1
6	1490243	Connector	1

©2015 HYSTER COMPANY

WIRE HARNESS (FIGURE 5-36)
CAB LIGHTS

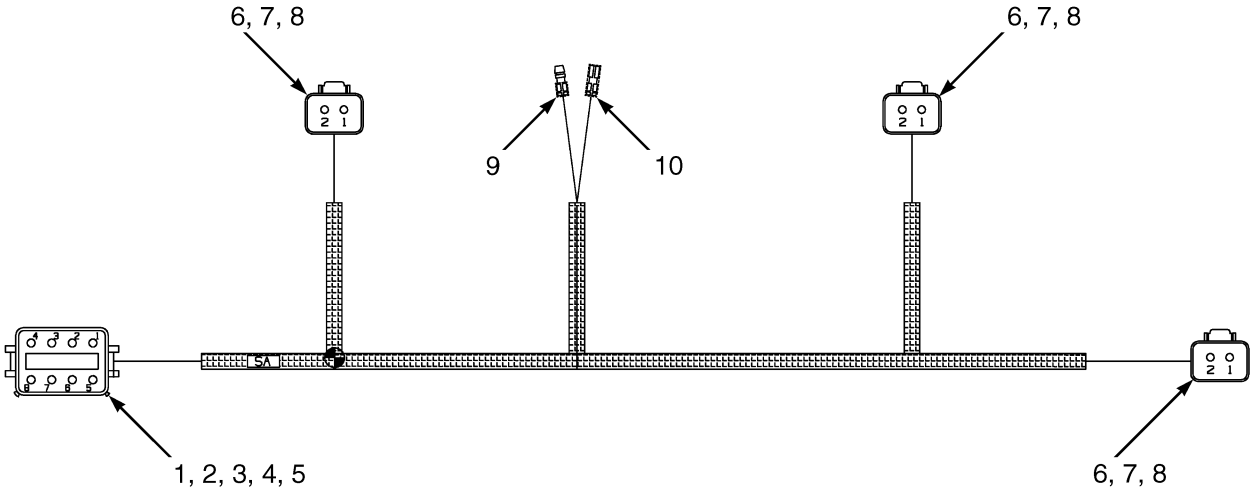

BP080362

ITEM	PART NO.	DESCRIPTION	QTY
	2042724	Wire Harness (Cab Lights)	1
1	1502625	Connector	1
2	1502626	Connector	1
3	1363886	Terminal (Socket)	1
4	1330438	Terminal (Socket)	4
5	1330439	Plug	3
6	1490242	Connector (2 Way)	3
7	1490243	Connector	3
8	1330438	Terminal (Socket)	6
9	1493444	Terminal	1
9	1493445	Cover (Socket Terminal)	1
10	1497358	Terminal	1
10	1497287	Cover	1

©2015 HYSTER COMPANY

NOTES

©2015 HYSTER COMPANY

WIRE HARNESS (FIGURE 5-37)
FRONT LIGHTS, NON-EC4 — WITH FRONT FENDER AND MAST WORKLIGHTS

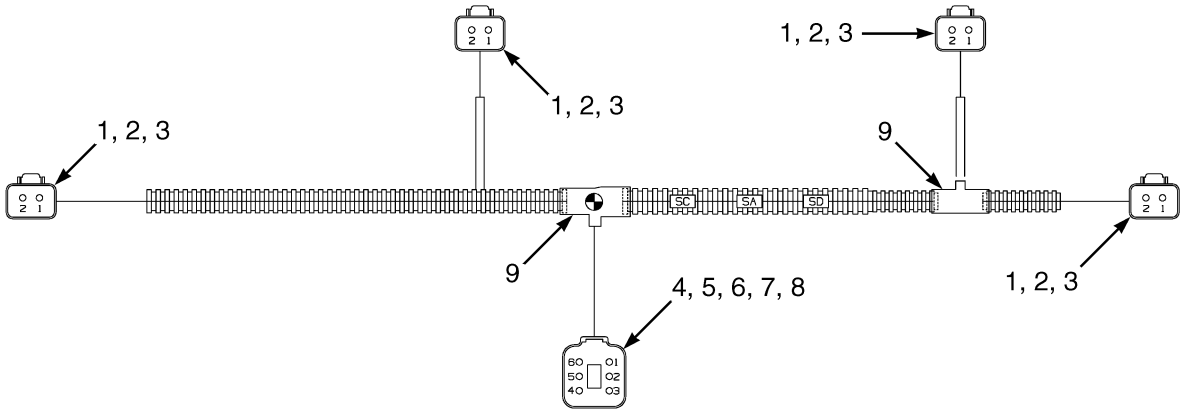

HP081946

©2015 HYSTER COMPANY

WIRE HARNESS

FRONT LIGHTS, NON-EC4 – WITH FRONT FENDER AND MAST WORKLIGHTS

ITEM	PART NO.	DESCRIPTION	QTY
	2043867	Wire Harness (Front Lights) (Front Lights)	1
1	. . . . .	Connector Assembly (Left Hand Mast Light)	1
1	1490242	Connector (2 Way)	1
1	1490243	Connector	1
1	1493434	Terminal (Socket)	2
2	. . . . .	Connector Assembly Left Hand Mast Light	1
2	1490242	Connector (2 Way)	1
2	1490243	Connector	1
2	1493434	Terminal (Socket)	2
	a 1570643	Label (Mast And Attachment Worklight)	1
3	. . . . .	(Connector Assembly) Right Hand Mast Light	1
3	1490242	Connector (2 Way)	1
3	1490243	Connector	1
3	1493434	Terminal (Socket)	2
	a 1570643	Label (Mast And Attachment Worklight)	1
4	. . . . .	Connector Assembly (Right Hand Drive Light)	1
4	1490242	Connector (2 Way)	1
4	1490243	Connector	1
4	1493434	Terminal (Socket)	2
5	. . . . .	Connector Assembly Frame Connector	1
5	1525589	Connector (6-Pin)	1
5	1330417	Connector	1
5	1484712	Terminal (Pin)	2
5	1330437	Terminal (Pin)	1
5	1330439	Plug	3

FOOTNOTES:

a Not Illustrated

©2015 HYSTER COMPANY

WIRE HARNESS (FIGURE 5-38)
FRONT LIGHTS, EC4 — WITH FRONT FENDER LIGHTS

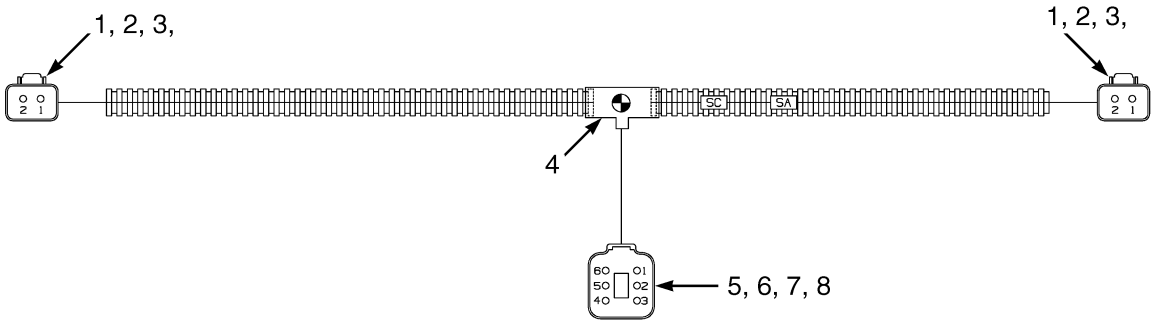

BP080370

ITEM	PART NO.	DESCRIPTION	QTY
	2046250	Wire Harness (Front Lights)	1
1	1490242	Connector (2 Way)	2
2	1490243	Connector	4
3	1330438	Terminal (Socket)	1
4	1502491	Connector (Tee)	1
5	1500914	Housing	1
6	1330417	Connector	1
7	1330439	Plug	4
8	1330437	Terminal (Pin)	2

©2015 HYSTER COMPANY

WIRE HARNESS (FIGURE 5-39)
FRONT LIGHTS, EC4

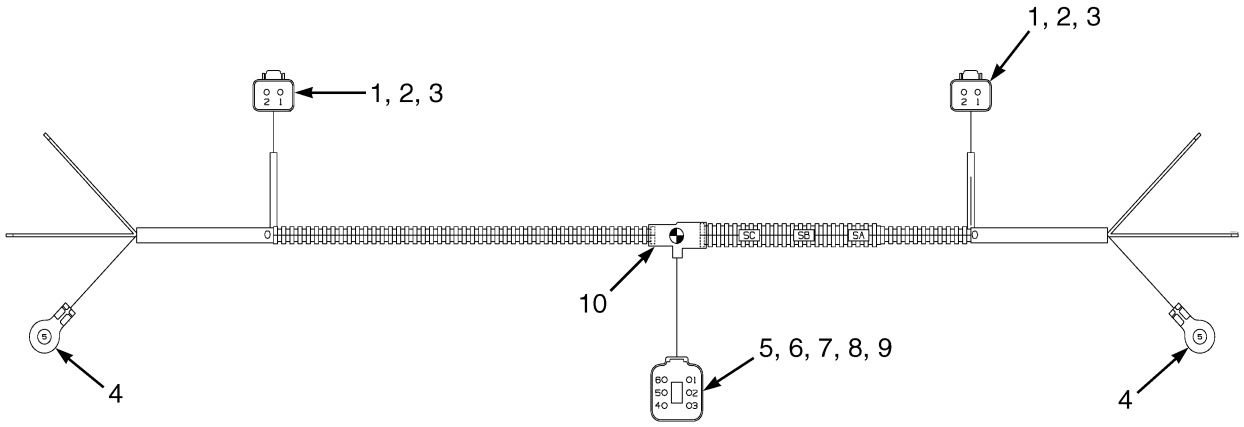

BP080358

ITEM	PART NO.	DESCRIPTION	QTY
	2046249	Wire Harness (Front Lights)	1
1	1490242	Connector (2 Way)	2
2	1490243	Connector	2
3	1330438	Terminal (Socket)	4
4	1484394	Crimp Ferrule	4
5	1525589	Connector (6-Pin)	1
6	1330417	Connector	1
7	1330437	Terminal (Pin)	4
8	1363885	Terminal (Pin)	1
9	1330439	Plug	1
10	1670534	Connector (T-Piece)	1

©2015 HYSTER COMPANY

WIRE HARNESS (FIGURE 5-40)
FRONT LIGHTS, NON-EC4

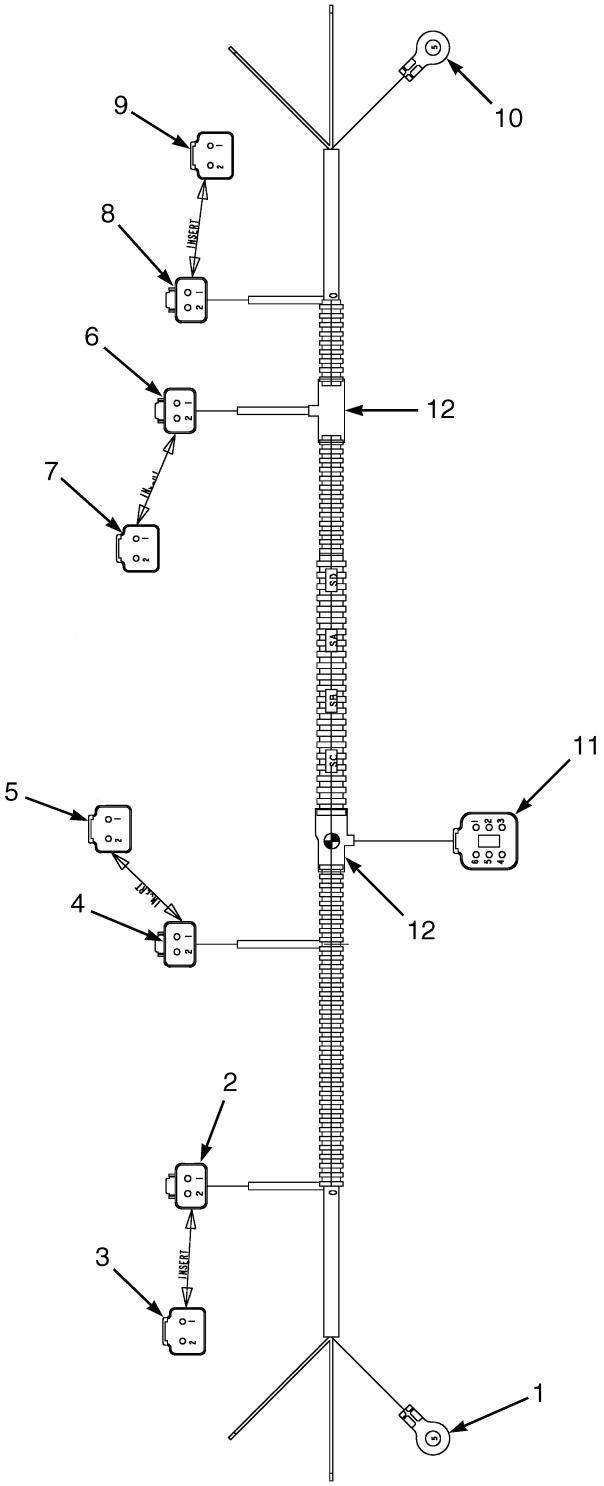

BP080365

©2015 HYSTER COMPANY

WIRE HARNESS
FRONT LIGHTS, NON-EC4

ITEM	PART NO.	DESCRIPTION	QTY
	2042889	Wire Harness (Front Lights) (Front Lights)	1
1	. . . . .	Connector Assembly (Left Hand Indicators)	1
1	1484394	Crimp Ferrule	2
1	1493448	E-Ring	1
1	1484383	Heat Shrink	1
2	. . . . .	Connector Assembly (Left Hand Drive Light)	1
2	1490242	Connector (2 Way)	1
2	1490243	Connector	1
2	1330438	Terminal (Socket)	2
3	. . . . .	Connector Assembly (Insert)	1
3	1493465	Connector (2 Pin)	1
3	1330439	Plug	2
4	. . . . .	Connector Assembly (Left Hand Mast Light)	1
4	1490242	Connector (2 Way)	1
4	1490243	Connector	1
4	1330438	Terminal (Socket)	2
	a 1570643	Label (Mast And Attachment Worklight)	1
5	. . . . .	Connector Assembly (Insert)	1
5	1493465	Connector (2 Pin)	1
5	1330439	Plug	2
6	. . . . .	Connector Assembly (Right Hand Mast Light)	1
6	1490242	Connector (2 Way)	1
6	1490243	Connector	1
6	1330438	Terminal (Socket)	2
	a 1570643	Label (Mast And Attachment Worklight)	1
7	. . . . .	Connector Assembly (Insert)	1
7	1493465	Connector (2 Pin)	1
7	1330439	Plug	2
8	. . . . .	Connector Assembly (Right Hand Drive Light)	1
8	1490242	Connector (2 Way)	1
8	1490243	Connector	1
8	1330438	Terminal (Socket)	2
9	. . . . .	Connector Assembly (Insert)	1
9	1493465	Connector (2 Pin)	1
9	1330439	Plug	2
10	. . . . .	Connector Assembly (Right Side Indicators)	1
10	1484394	Crimp Ferrule	2
10	1493448	E-Ring	1
10	1484383	Heat Shrink	1
11	. . . . .	Connector Assembly (Frame Connector)	1
11	1525589	Connector (6-Pin)	1
11	1330417	Connector	1
11	1484712	Terminal (Pin)	2
11	1330437	Terminal (Pin)	4
12	1670534	Connector (T-Piece)	2

FOOTNOTES:

a Not Illustrated

©2015 HYSTER COMPANY

WIRE HARNESS (FIGURE 5-41)
MAST WORKLIGHT EXTENSION

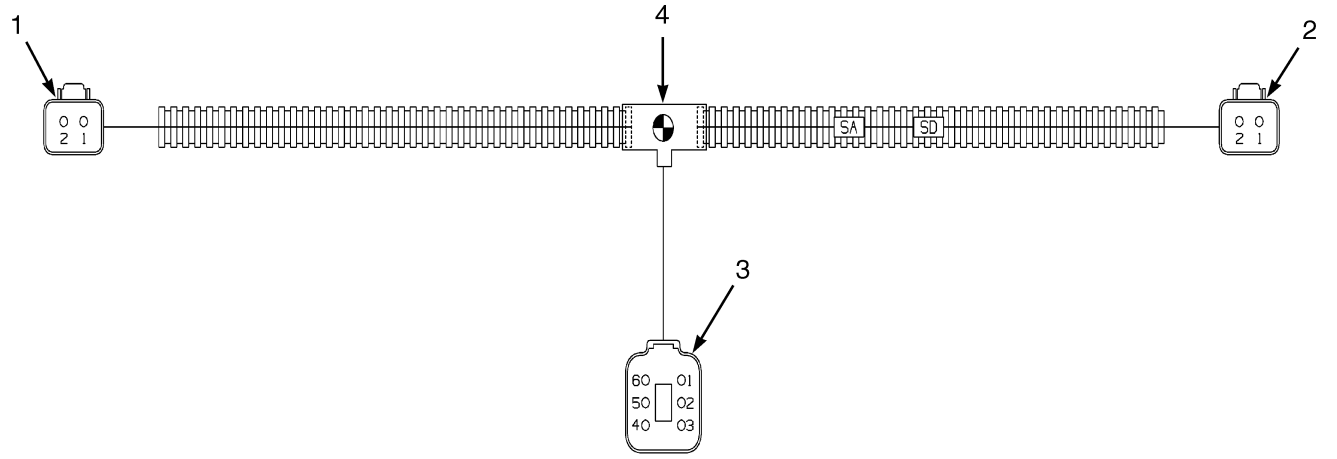

BP080367

ITEM	PART NO.	DESCRIPTION	QTY
	2043677	Wire Harness Mast (Worklight Extension)	1
1	. . . . .	Connector Assembly (Left Hand Mast Light)	1
1	1490242	Connector (2 Way)	1
1	1490243	Connector	1
1	1330438	Terminal (Socket)	1
	a 1570643	Label (Mast And Attachment Worklight)	1
2	. . . . .	Connector Assembly (Right Hand Mast Light)	1
2	1490242	Connector (2 Way)	1
2	1490243	Connector	2
2	1330438	Terminal (Socket)	2
	a 1570643	Label (Mast And Attachment Worklight)	1
3	. . . . .	Connector Assembly (Frame Connection)	1
3	1525589	Connector (6-Pin)	1
3	1330417	Connector	1
3	1330437	Terminal (Pin)	2
3	1330439	Plug	4
4	1502490	Connector (Tee)	1

FOOTNOTES:

a Not Illustrated

©2015 HYSTER COMPANY

WIRE HARNESS (FIGURE 5-42)
MAST LIGHT EXTENSION — RIGHT HAND

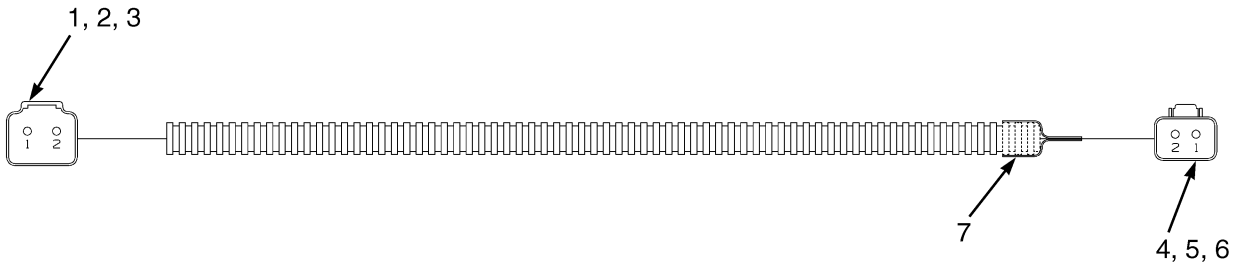

BP080345

ITEM	PART NO.	DESCRIPTION	QTY
	2043478	Wire Harness (Mast Light Extension, RH)	1
1	1493465	Connector (2 Pin)	1
2	1330414	Connector (Secondary Lock)	1
3	1330437	Terminal (Pin)	2
4	1490242	Connector (2 Way)	1
5	1490243	Connector	1
6	1330438	Terminal (Socket)	2
7	1502750	Heat Shrink	AR

©2015 HYSTER COMPANY

WIRE HARNESS (FIGURE 5-43)
MAST LIGHT EXTENSION — LEFT HAND

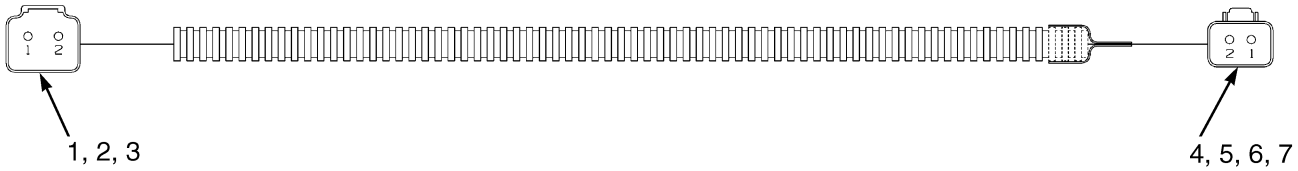

BP080352

ITEM	PART NO.	DESCRIPTION	QTY
	2043480	Wire Harness (Mast Light Extension, LH)	1
1	1493465	Connector (2 Pin)	1
2	1330414	Connector (Secondary Lock)	1
3	1330437	Terminal (Pin)	2
4	1490242	Connector (2 Way)	1
5	1490243	Connector	1
6	1330438	Terminal (Socket)	2
7	1502750	Heat Shrink	1

©2015 HYSTER COMPANY

WIRE HARNESS (FIGURE 5-44)
REAR WORK LIGHTS

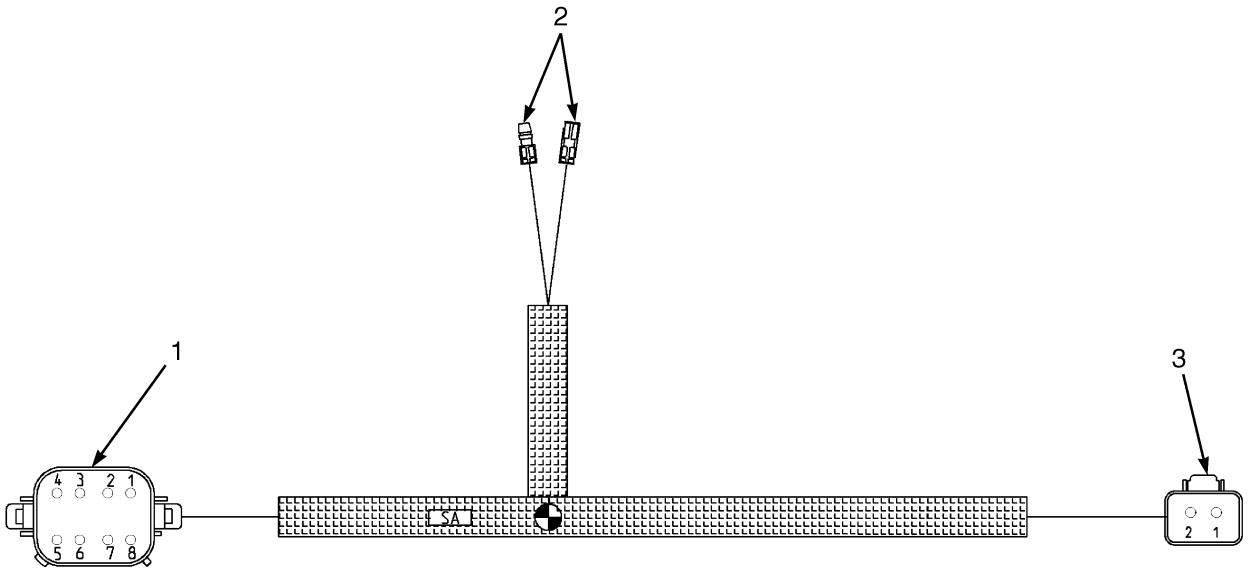

BP080646

ITEM	PART NO.	DESCRIPTION	QTY
	2102536	Wire Harness (Rear Work Lights)	1
1	. . . . .	Connector Assembly (Cab Connector)	1
1	1502625	Connector	1
1	1502626	Connector	1
1	1330439	Plug	5
1	1363886	Terminal (Socket)	1
1	1330438	Terminal (Socket)	2
2	. . . . .	Connector Assembly (Strobe Light)	1
2	1493444	Terminal	1
2	1493445	Cover (Socket Terminal)	1
2	1497358	Terminal	1
2	1497287	Cover	1
3	. . . . .	Connector Assembly (Rear Drive Light)	1
3	1490242	Connector (2 Way)	1
3	1490243	Connector	1
3	1330438	Terminal (Socket)	2

©2015 HYSTER COMPANY

WIRE HARNESS (FIGURE 5-45)
STROBE LIGHT

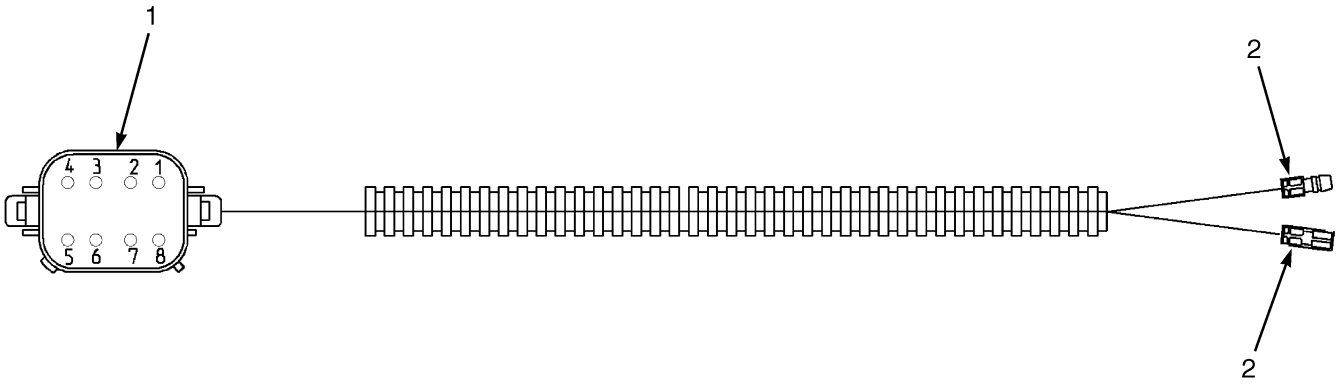

BP000406

ITEM	PART NO.	DESCRIPTION	QTY
	2099164	Wire Harness (Strobe Light)	1
1	. . . . .	Connector Assembly (Cab Connector)	1
1	1502625	Connector	1
1	1502626	Connector	1
1	1330439	Plug	6
1	1363886	Terminal (Socket)	1
1	1330438	Terminal (Socket)	1
2	. . . . .	Connector Assembly Strobe Light	1
2	1493444	Terminal	1
2	1493445	Cover (Socket Terminal)	1
2	1497358	Terminal	1
2	1497287	Cover	1

©2015 HYSTER COMPANY

WIRE HARNESS (FIGURE 5-46)
AIR DRYER

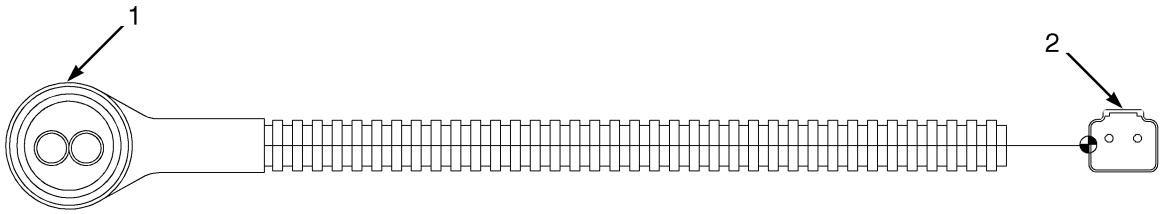

BP080202

ITEM	PART NO.	DESCRIPTION	QTY
	1602329	Wire Harness (Air Dryer)	1
1	. . . . .	Connector Assembly (Air Dryer)	1
1	1569877	Cap	1
1	1493465	Connector (2 Pin)	1
1	1516244	Socket	2
1	1516245	Seal	2
2	. . . . .	Connector Assembly (Frame Harness)	1
2	1607779	Housing	1
2	1330414	Connector (Secondary Lock)	1
2	1330437	Terminal (Pin)	2

©2015 HYSTER COMPANY

WIRE HARNESS (FIGURE 5-47)
CAB UNDERFLOOR

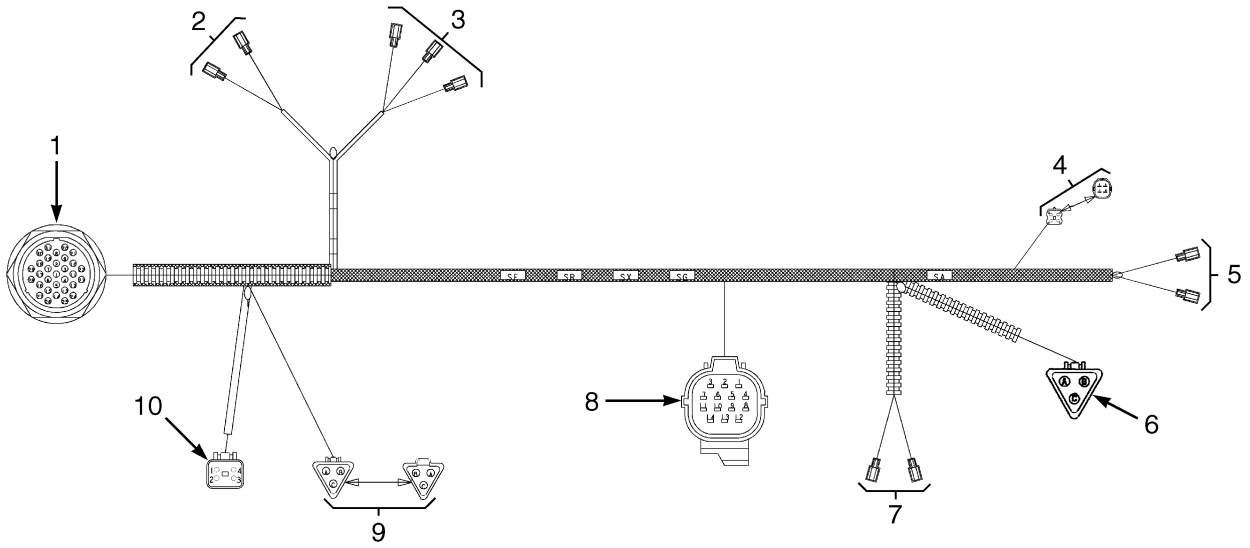

BP080472

ITEM	PART NO.	DESCRIPTION	QTY
	2088035	Wire Harness (Cab Underfloor)	1
1	. . . . .	Connector Assembly (Side Console)	1
1	1484666	Housing	1
1	1484685	Locknut	1
1	1484686	Washer (Spring)	1
1	1330437	Terminal (Pin)	25
1	1330439	Plug	5
1	1363885	Terminal (Pin)	1
2	. . . . .	Connector Assembly (Brake Light Switch)	1
2	1484598	Terminal	2
2	1484651	Cover	2
3	. . . . .	Connector Assembly (Low Air Pressure)	1
3	1484598	Terminal	3
3	1484651	Cover	3
4	. . . . .	Connector Assembly (Horn Diode)	1
4	1611029	Diode (1-Way)	1
4	1610950	Housing (Sealed) (4-Way)	1
4	1610941	Seal (Dummy)	2
4	1484656	Terminal (Socket)	2
4	1482659	Seal (Rubber)	2
5	. . . . .	Connector Assembly (Horn)	1
5	1484598	Terminal	2
5	1484651	Cover	2
6	. . . . .	Connector Assembly (Inching Pedal)	1
6	1484397	Connector (3-Way)	1
6	1463194	Connector (Secondary Lock)	1

©2015 HYSTER COMPANY

ITEM	PART NO.	DESCRIPTION	QTY
6	1330438	Terminal (Socket)	3
7	. . . . .	Connector Assembly (Inching Switch)	1
7	1484598	Terminal	2
7	1484651	Cover	2
8	. . . . .	Connector Assembly (Steering Column)	1
8	1484654	Connector (14-Way)	1
8	1484655	Retainer (Socket)	1
8	1484656	Terminal (Socket)	14
8	1484597	Seal	14
9	. . . . .	Connector Assembly (Monotrol Pedal)	1
9	1484397	Connector (3-Way)	1
9	1463194	Connector (Secondary Lock)	1
9	1330438	Terminal (Socket)	3
9	1493466	Connector	1
9	1330439	Plug	3
10	. . . . .	Connector Assembly (Front Wiper)	1
10	1489656	Connector (4-Way)	1
10	1489657	Connector	1
10	1330438	Terminal (Socket)	4

©2015 HYSTER COMPANY

WIRE HARNESS (FIGURE 5-48)
CAB TILT

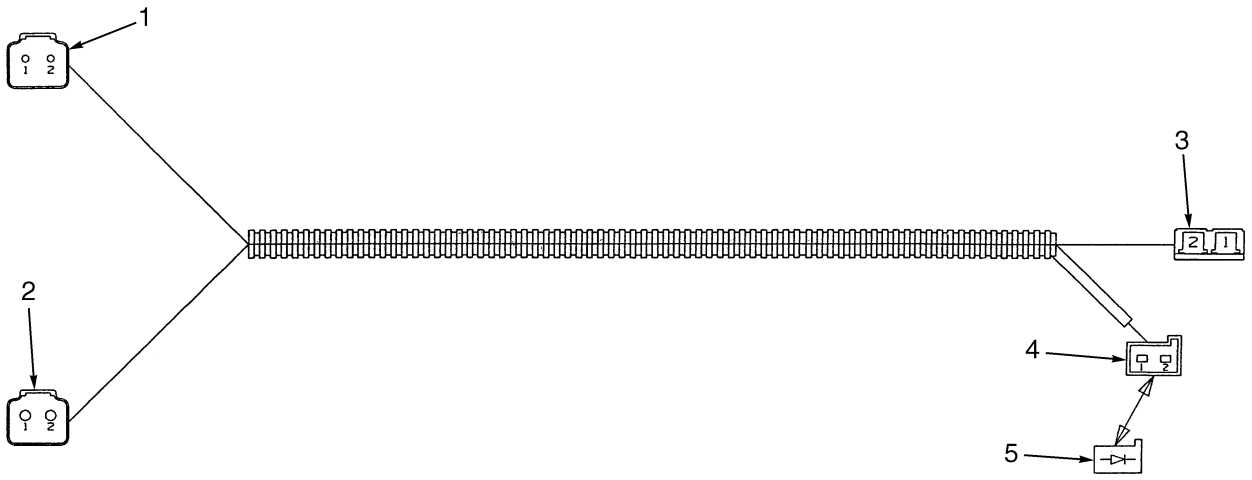

BP080161

ITEM	PART NO.	DESCRIPTION	QTY
	2049849	Wire Harness (Cab Tilt)	1
1	2051270	Connector (Frame Harness)	1
1	1493465	Connector (2 Pin)	1
1	1330414	Connector (Secondary Lock)	1
1	1363885	Terminal (Pin)	2
2	2051279	Connector (Tilt Pump)	1
2	1545202	Connector	1
2	1546697	Connector	1
2	1493434	Terminal (Socket)	2
3	2051205	Connector (Tilt Switch)	1
3	346330	Connector Body	1
3	1484375	Terminal	2
4	2051228	Connector (Pump Diode)	1
4	1484687	Connector (Socket)	1
4	1484718	Terminal (Socket)	2
5	1490252	Diode (Single)	1

©2015 HYSTER COMPANY

NOTES

©2015 HYSTER COMPANY

WIRE HARNESS (FIGURE 5-49)
ARMREST — OPEN CAB

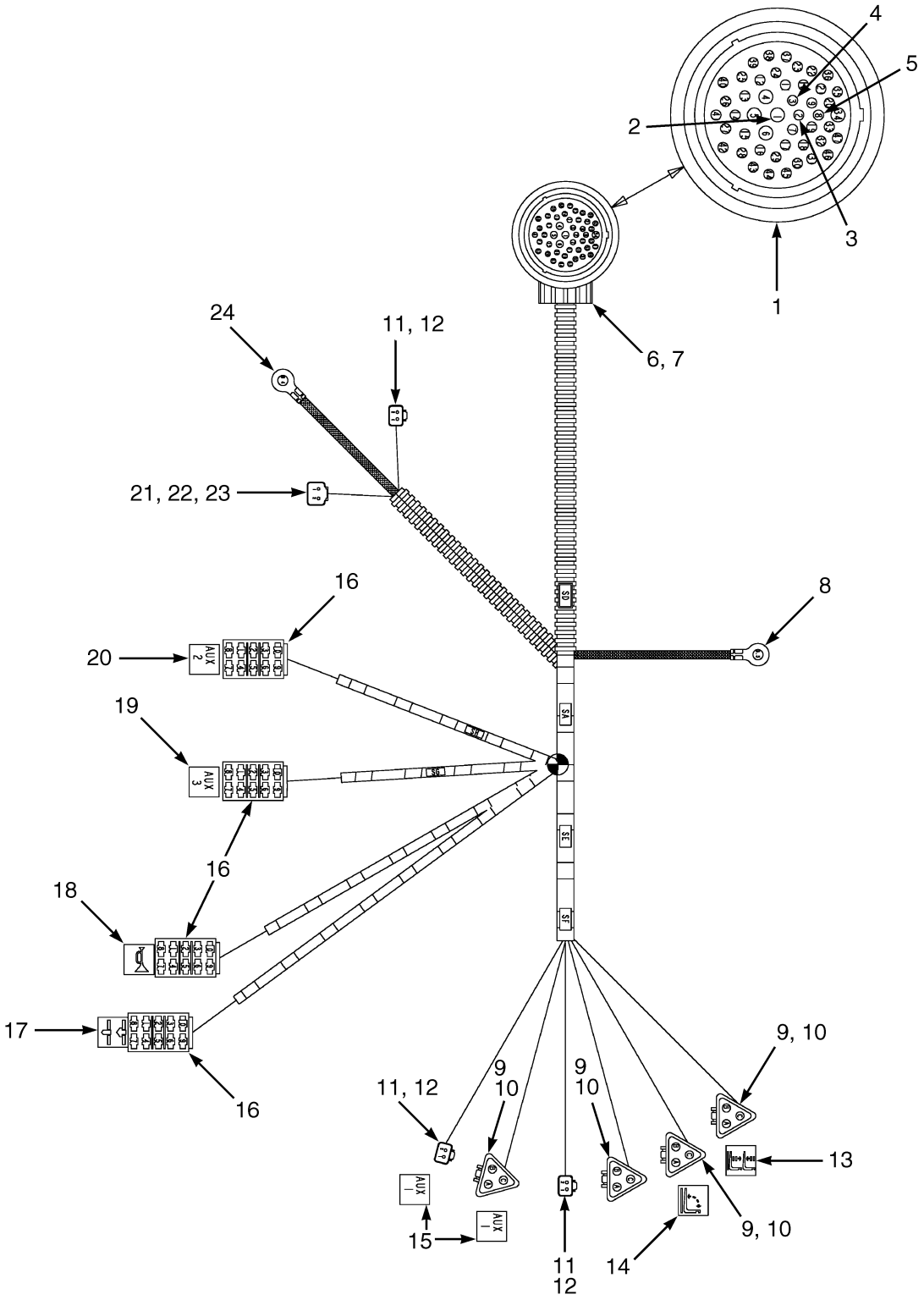

BP080373

©2015 HYSTER COMPANY

WIRE HARNESS
ARMREST – OPEN CAB

ITEM	PART NO.	DESCRIPTION	QTY
	2054224	Wire Harness (Armrest) (Open Cab)	1
1	1484554	Connector (Side Console)	1
2	1330438	Terminal (Socket)	20
3	1463141	Terminal (Socket)	21
4	1484377	Plug	21
5	1330439	Plug	3
6	1506881	Cap	1
7	1506883	Clip	1
8	1506885	Ring	1
9	1484397	Connector (3-Way)	4
10	1463194	Connector (Secondary Lock)	4
11	1490242	Connector (2 Way)	3
12	1490243	Connector	3
13	1497364	Label (Hoist) (Hoist)	1
14	1497365	Label (Tilt) (Tilt)	1
15	1497366	Label (Aux 1) (AUX 1)	2
16	1484555	Connector Body (10-Way)	4
17	1570613	Label (Twist Lock) (Twist Lock)	1
18	1570617	Label (Horn Switch) (Horn)	1
19	1607748	Label (Aux 3) (AUX 3)	1
20	1607747	Label (Aux 2) (AUX 2)	1
21	1493465	Connector (2 Pin) (Operator Presence Switch)	1
22	1330414	Connector (Secondary Lock)	1
23	1330437	Terminal (Pin)	2
24	1493459	Ring	1

©2015 HYSTER COMPANY

WIRE HARNESS (FIGURE 5-50)
ARMREST — CLOSED CAB

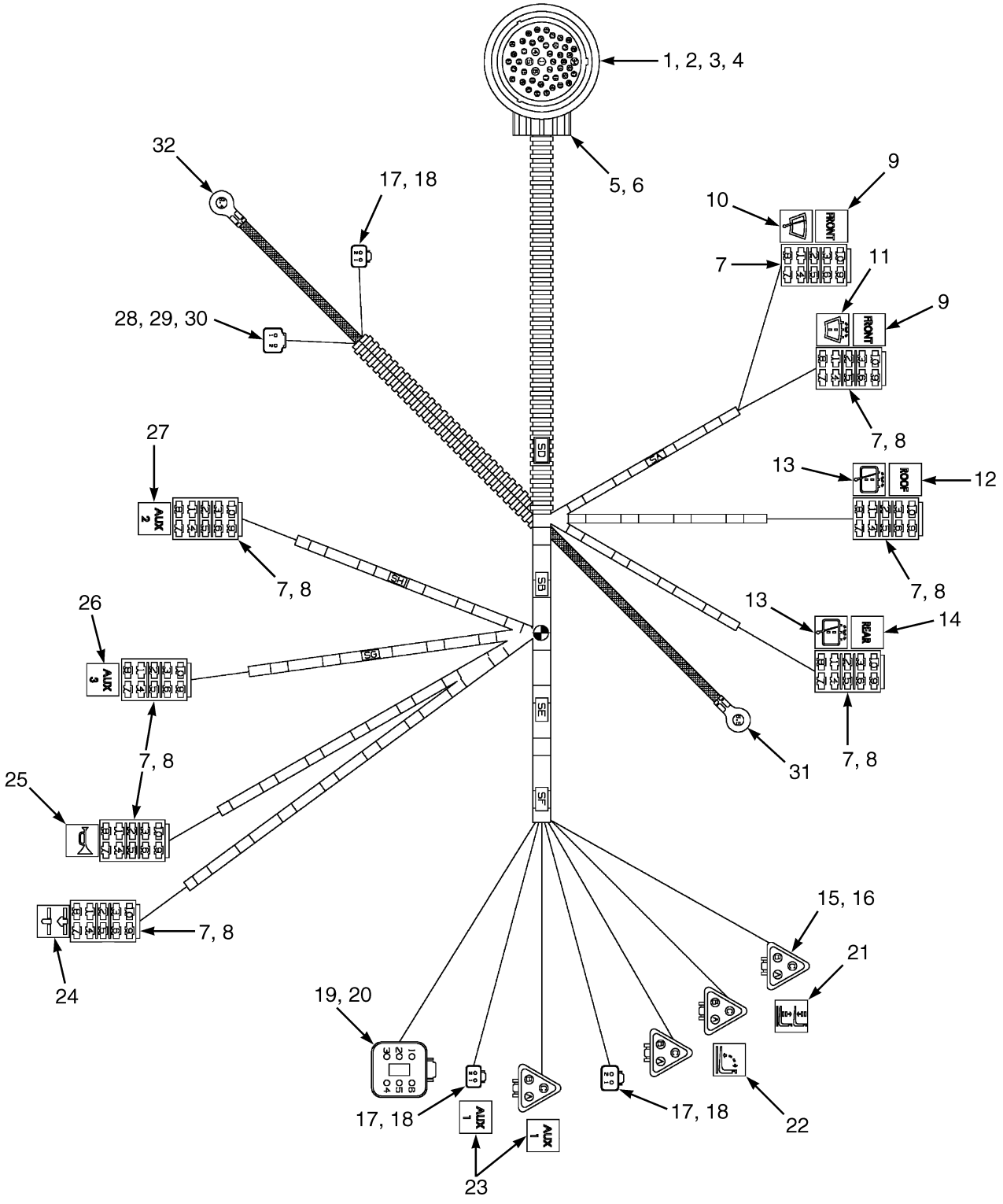

BGP080368

©2015 HYSTER COMPANY

WIRE HARNESS
ARMREST – CLOSED CAB

ITEM	PART NO.	DESCRIPTION	QTY
	2054225	Wire Harness (Armrest) (Closed Cab)	1
1	1484554	Connector	1
2	1330438	Terminal (Socket)	29
3	1463141	Terminal (Socket)	31
4	1484377	Plug	11
5	1506881	Cap	1
6	1506883	Clip	8
7	1484555	Connector Body (10-Way)	8
8	1484556	Terminal	29
9	1570608	Label (Front) (Front)	1
10	1570611	Label (Front Wiper) (Front Wiper Switch)	1
11	1570614	Label (Wash) (Wash)	1
12	1570609	Label (Roof) (Roof)	1
13	1570612	Label (Rear/Roof Wash Wipe) (RR/Roof Wash Wiper Switch)	2
14	1570610	Label (Rear) (Rear)	1
15	1484397	Connector (3-Way)	4
16	1463194	Connector (Secondary Lock)	4
17	1490242	Connector (2 Way)	3
18	1490243	Connector	3
19	1493430	Connector (6 Way Housing)	1
20	1529052	Connector	1
21	1497364	Label (Hoist) (Hoist)	1
22	1497365	Label (Tilt) (Tilt)	1
23	1497366	Label (Aux 1) (AUX 1)	1
24	1570613	Label (Twist Lock) (Twist Lock)	1
25	1570617	Label (Horn Switch) (Horn)	1
26	1607748	Label (Aux 3) (AUX 3)	1
27	1607747	Label (Aux 2) (AUX 2)	1
28	1493465	Connector (2 Pin)	1
29	1330414	Connector (Secondary Lock)	1
30	1330437	Terminal (Pin)	2
31	1493459	Ring	1
32	1506885	Ring	1

©2015 HYSTER COMPANY

WIRE HARNESS (FIGURE 5-51)
REAR WIPER

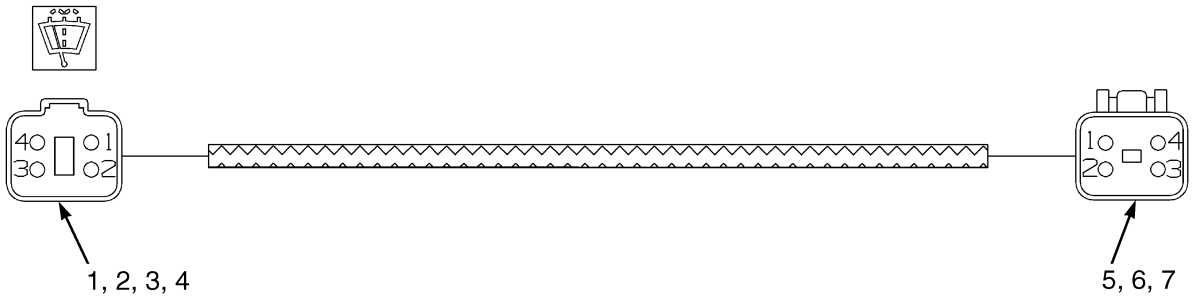

BP080355

ITEM	PART NO.	DESCRIPTION	QTY
	2043546	Wire Harness (Rear Wiper)	1
1	1489655	Connector (4 Way)	1
2	1330416	Connector	1
3	1330437	Terminal (Pin)	4
4	1570644	Label (Rear Wash/Wipe Switch)	1
5	1489656	Connector (4-Way)	1
6	1489657	Connector	1
7	1330438	Terminal (Socket)	4

©2015 HYSTER COMPANY

NOTES

©2015 HYSTER COMPANY

WIRE HARNESS (FIGURE 5-52)
STEERING COLUMN

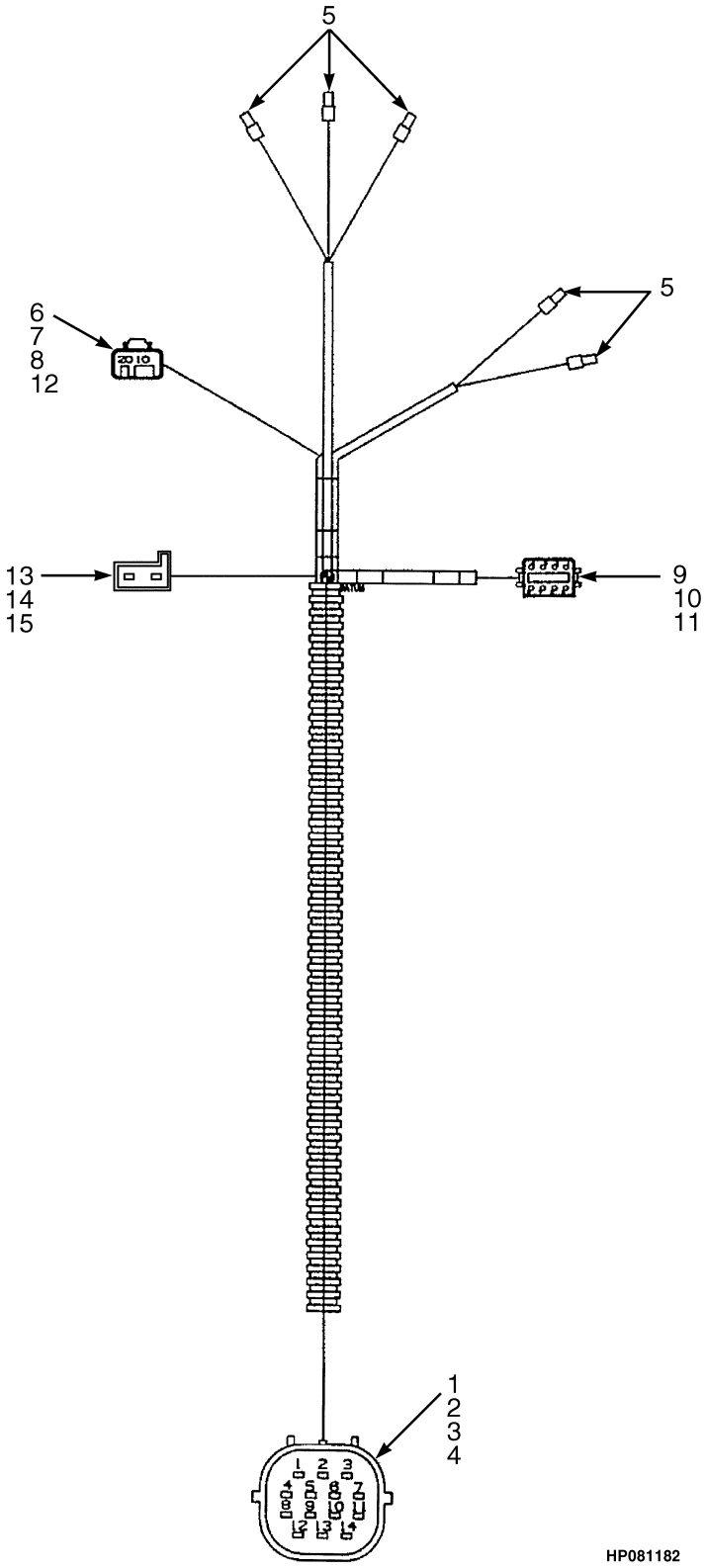

©2015 HYSTER COMPANY

WIRE HARNESS
STEERING COLUMN

ITEM	PART NO.	DESCRIPTION	QTY
	2066204	Wire Harness (Steering Column)	1
1	1484592	Connector	1
2	1484593	Retainer	1
3	1484596	Terminal (Pin)	14
4	1484597	Seal (Blue)	14
5	1484394	Crimp Ferrule	5
6	1484557	Connector (2 Socket)	1
7	1484558	Connector (Secondary Lock)	1
8	1463141	Terminal (Socket)	1
9	1484647	Housing (Socket)	1
10	1330429	Connector	1
11	1330438	Terminal (Socket)	8
12	1484377	Plug	1
13	1582102	Housing	1
14	1582103	Diode	1
15	1484718	Terminal (Socket)	2

©2015 HYSTER COMPANY

WIRE HARNESS (FIGURE 5-53)
FRONT END EQUIPMENT

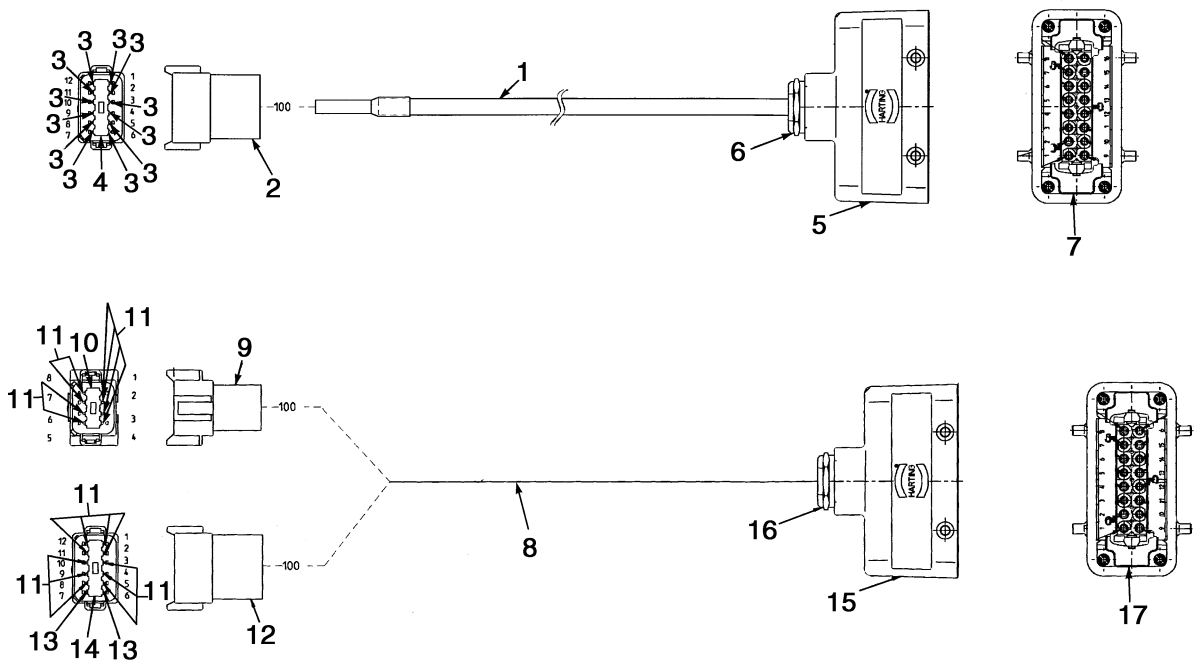

HP081610

ITEM	PART NO.	DESCRIPTION	QTY
1	2046031	Wire Harness (Front End) (ECH-4 Hook Type)	1
1	2046030	Wire Harness (Front End) (ECH-3 Hook Type)	1
2	1352602	Connector	1
3	1363885	Terminal (Pin)	12
4	1352603	Secondary Lock	1
5	1496907	Connector	1
6	1460618	Fitting (Compression)	1
7	885955	Connector (Female Insert)	1
	222524	Heat Shrink	AR
8	1527091	Wire Harness (Front End) (ECH-4 Twist Lock)	1
8	1527090	Wire Harness (Front End) (ECH-3 Twist Lock)	1
9	1330413	Connector (8 Pin)	1
10	1330418	Connector	1
11	1363885	Terminal (Pin)	18
12	1352602	Connector	1
13	1330439	Plug	2
14	1352603	Secondary Lock	1
15	1496907	Connector	1
16	1460618	Fitting (Compression)	2
17	885955	Connector (Female Insert)	1

©2015 HYSTER COMPANY

WIRE HARNESS (FIGURE 5-54)
EMPTY CONTAINER HANDLER ATTACHMENT

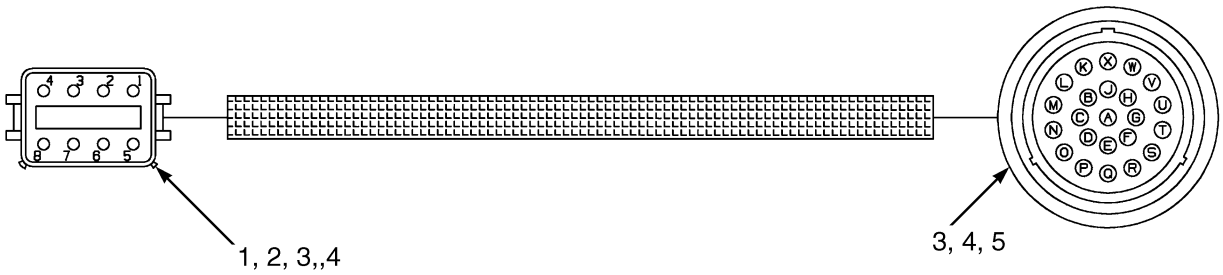

BP080359

ITEM	PART NO.	DESCRIPTION	QTY
	2046001	Wire Harness (Empty Container Handling Attachment)	1
1	1502625	Connector	1
2	1502626	Connector	1
3	1330438	Terminal (Socket)	14
4	1330439	Plug	17
5	1502627	Connector (Socket)	1

©2015 HYSTER COMPANY

WIRE HARNESS (FIGURE 5-55)
HYDRAULIC OIL TEMPERATURE

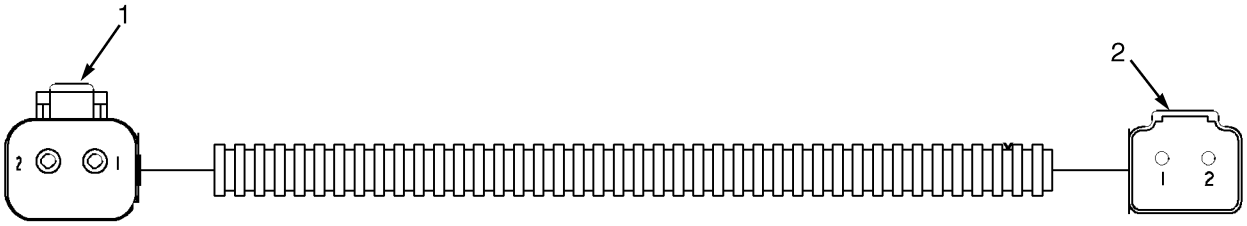

HP081941

ITEM	PART NO.	DESCRIPTION	QTY
	2098413	Wire Harness (Hydraulic Oil Temperature)	1
1	. . . . .	Connector Assembly (Sensor)	1
1	1490242	Connector (2 Way)	1
1	1490243	Connector	1
1	1493437	Terminal	2
2	. . . . .	Connector Assembly (Frame Harness)	1
2	1330414	Connector (Secondary Lock)	1
2	1330437	Terminal (Pin)	2
2	1493465	Connector (2 Pin)	1

©2015 HYSTER COMPANY

WIRE HARNESS (FIGURE 5-56)
FRONT END

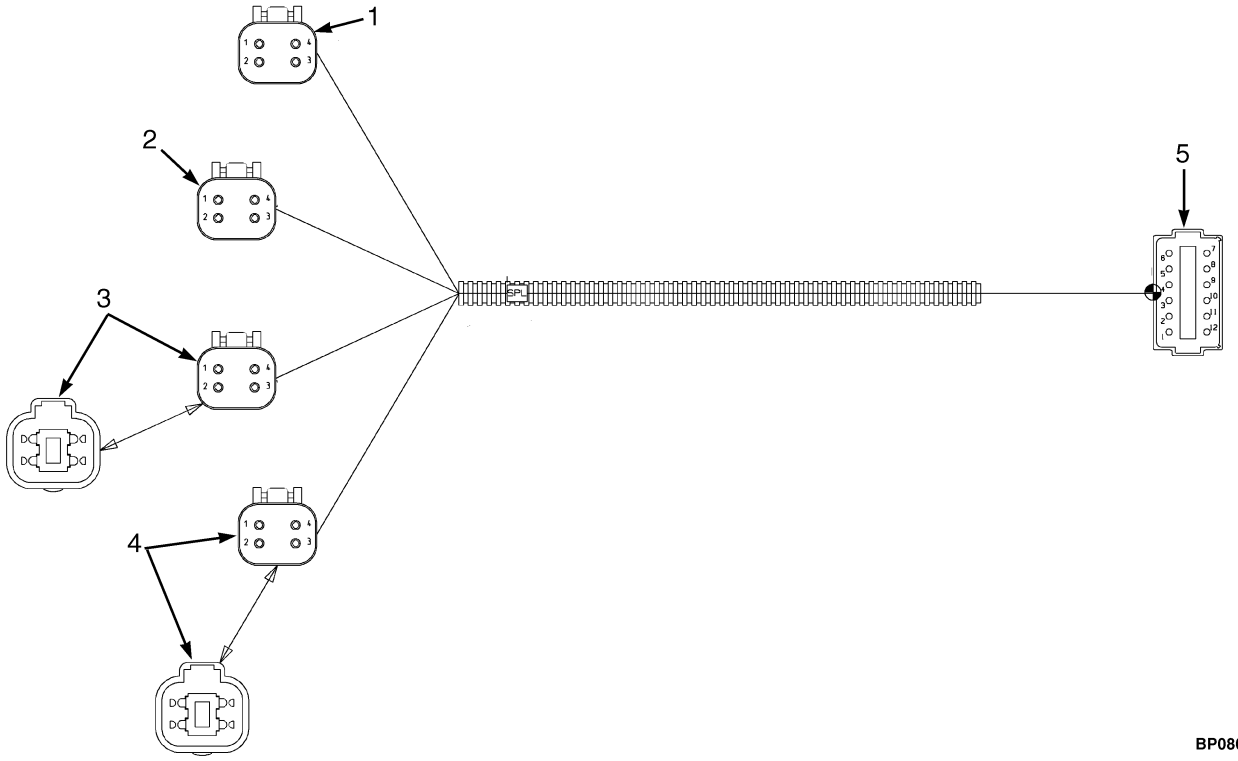

ITEM	PART NO.	DESCRIPTION	QTY
	2092486	Wire Harness (Front End)	1
1	. . . . .	Connector Assembly (Valve Block 1)	1
1	1489656	Connector (4-Way)	1
1	1489657	Connector	1
1	1330438	Terminal (Socket)	3
1	1330439	Plug	1
2	. . . . .	Connector Assembly (Valve Block 2)	1
2	1489656	Connector (4-Way)	1
2	1489657	Connector	1
2	1330438	Terminal (Socket)	3
2	1330439	Plug	1
3	. . . . .	Connector Assembly (Valve Block 3)	1
3	1489656	Connector (4-Way)	1
3	1489657	Connector	1
3	1330438	Terminal (Socket)	3
3	1330439	Plug	1
3	. . . . .	Connector Assembly (End Cap)	1
3	1330439	Plug	5
3	1489655	Connector (4 Way)	1
4	. . . . .	Connector Assembly (Valve Block 4)	1
4	1489656	Connector (4-Way)	1
4	1489657	Connector	1
4	1330438	Terminal (Socket)	3
4	1330439	Plug	1
4	. . . . .	Connector Assembly (End Cap)	1
4	1330439	Plug	5

©2015 HYSTER COMPANY

ITEM	PART NO.	DESCRIPTION	QTY
4	1489655	Connector (4 Way)	1
5	. . . . .	Connector Assembly (Mast)	1
5	1500925	Connector	1
5	1352603	Secondary Lock	1
5	1330439	Plug	3
5	1330437	Terminal (Pin)	9

©2015 HYSTER COMPANY

WIRE HARNESS (FIGURE 5-57)
TWO STAGE LIMITED FREE-LIFT

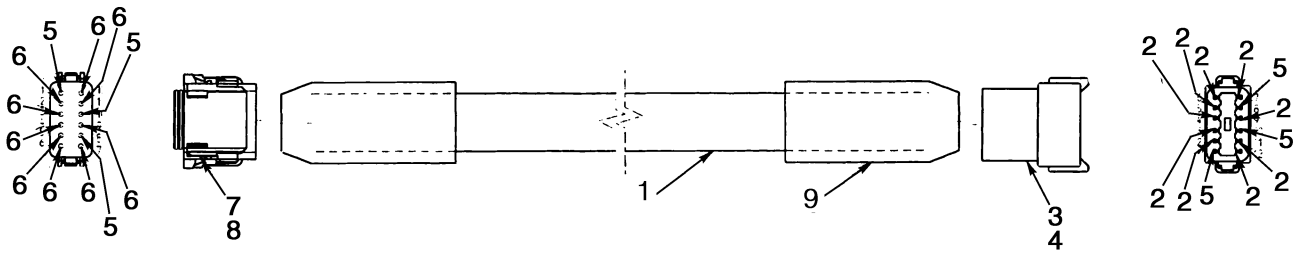

HP081942

ITEM	PART NO.	DESCRIPTION	QTY
	2054259	Wire Harness (3660 mm)	1
	2054260	Wire Harness (4560 mm)	1
	2054261	Wire Harness (5310 mm)	1
	2054262	Wire Harness (6110 mm)	1
	2054263	Wire Harness (6610 mm)	1
1	1569800	Cable	AR
2	1330433	Terminal	9
3	1352602	Connector	1
4	1352603	Secondary Lock	1
5	1330439	Plug	6
6	1330434	Terminal	9
7	1351068	Connector	1
8	1351069	Secondary Lock	1
9	222524	Heat Shrink	AR

©2015 HYSTER COMPANY

WIRE HARNESS (FIGURE 5-58)
SHIFT LEVER

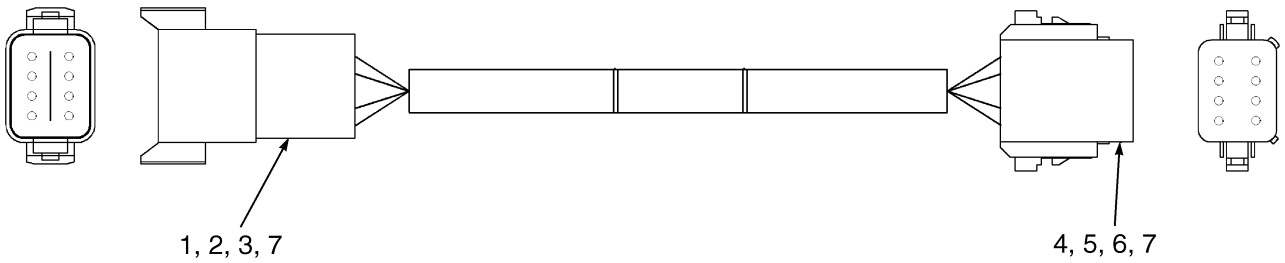

HP081943

ITEM	PART NO.	DESCRIPTION	QTY
	1667169	Wire Harness (Shift Lever)	1
1	1330413	Connector (8 Pin)	1
2	1330418	Connector	1
3	1330433	Terminal	7
4	1330423	Connector (8 Socket)	1
5	1330429	Connector	1
6	1330434	Terminal	7
7	1330439	Plug	2

©2015 HYSTER COMPANY

WIRE HARNESS (FIGURE 5-59)
TAIL LIGHTS

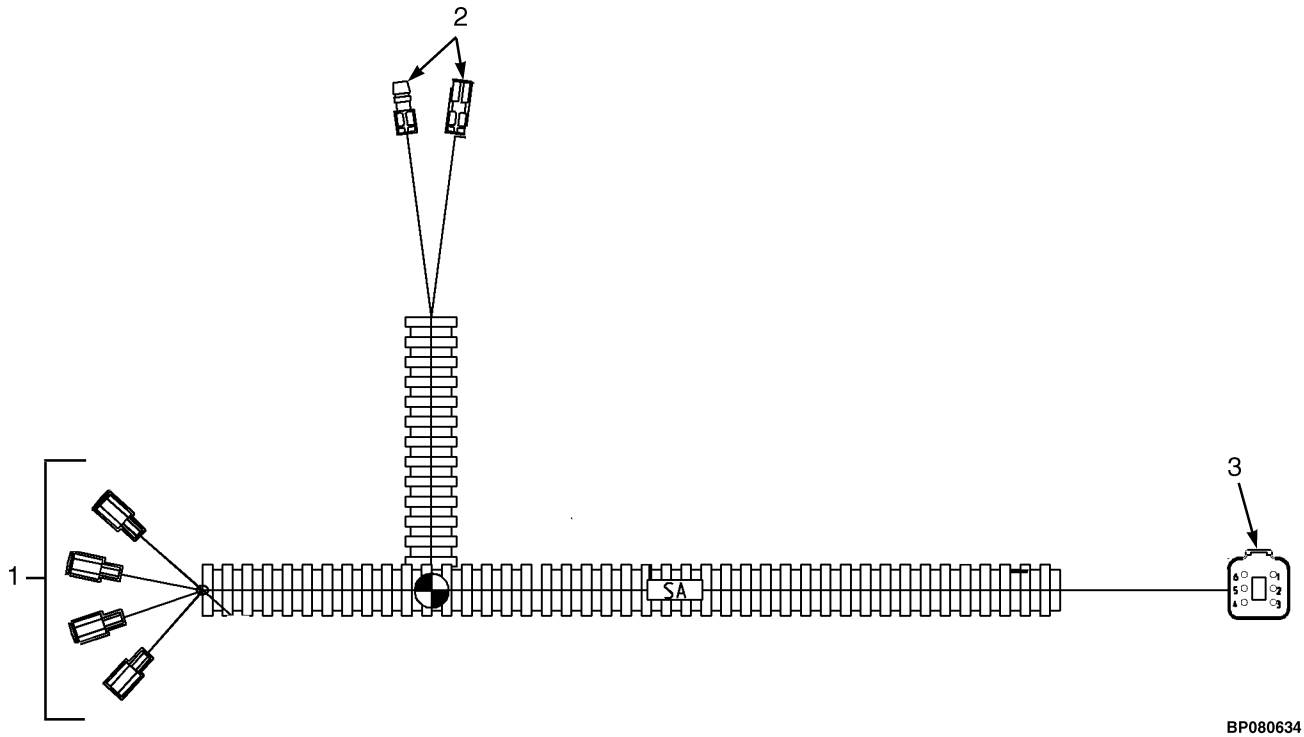

ITEM	PART NO.	DESCRIPTION	QTY
	2099414	Wire Harness (Tail Lights)	1
1	. . . . .	Connector Assembly (Stop and Tail Light Module)	1
1	1610948	Receptacle	4
1	1610947	Receptacle	4
2	. . . . .	Connector Assembly (Reverse Module)	1
2	1497358	Terminal	1
2	1497287	Cover	1
2	1493444	Terminal	1
2	1493445	Cover (Socket Terminal)	1
3	. . . . .	Connector Assembly (Chassis Harness)	1
3	1500914	Housing	1
3	1330417	Connector	1
3	1330437	Terminal (Pin)	5
3	1330439	Plug	1

©2015 HYSTER COMPANY

SECOND 12V SOCKET OPTION (FIGURE 5-60)
CLIMATE CONTROL CAB

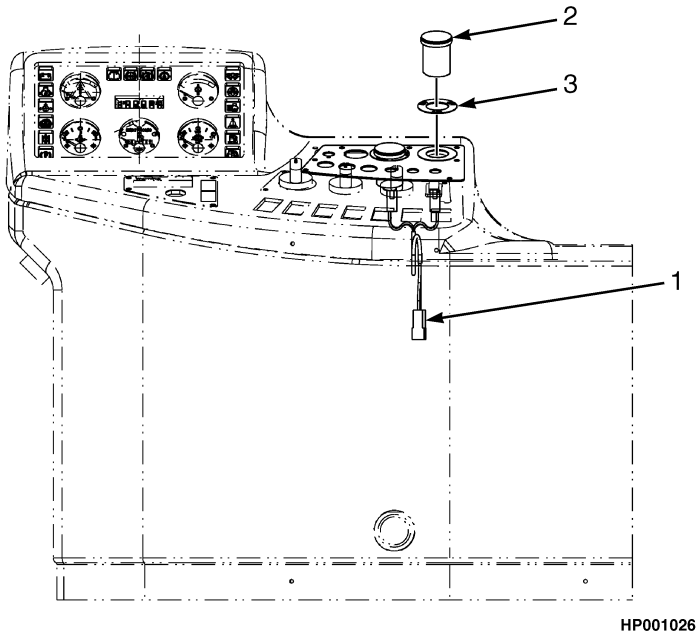

ITEM	PART NO.	DESCRIPTION	QTY
1	4011628	Wire Harness (Second 12V Socket)	1
2	1566764	Socket (12V)	1
3	1558027	Label (12V)	1

©2015 HYSTER COMPANY

ELECTRIC HORN (FIGURE 5-61)

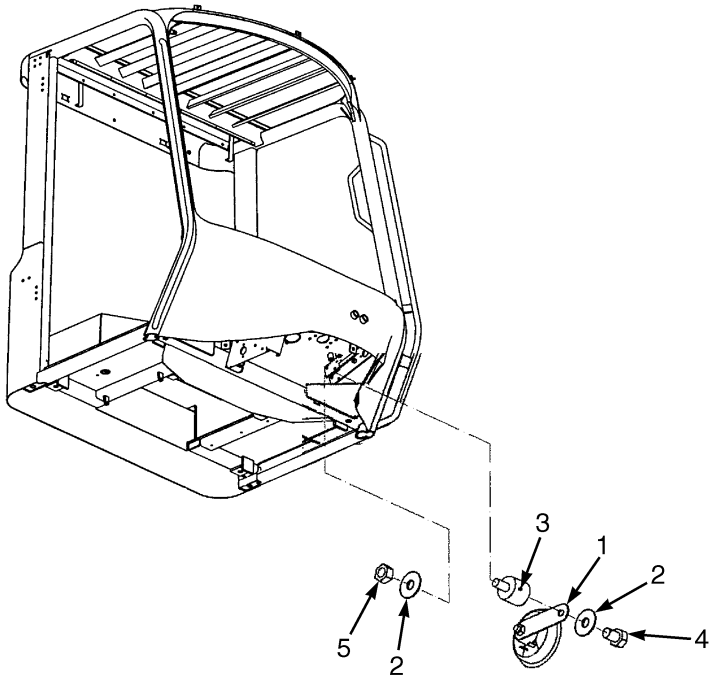

HP082066

ITEM	PART NO.	DESCRIPTION	QTY
1	1483425	Horn (24 Volt)	1
2	320158	Washer	2
3	353453	Mount	1
4	287805	Capscrew	1
5	316835	Nut	1

WIRE HARNESS (FIGURE 5-62)
WINDOW WASH PUMPS

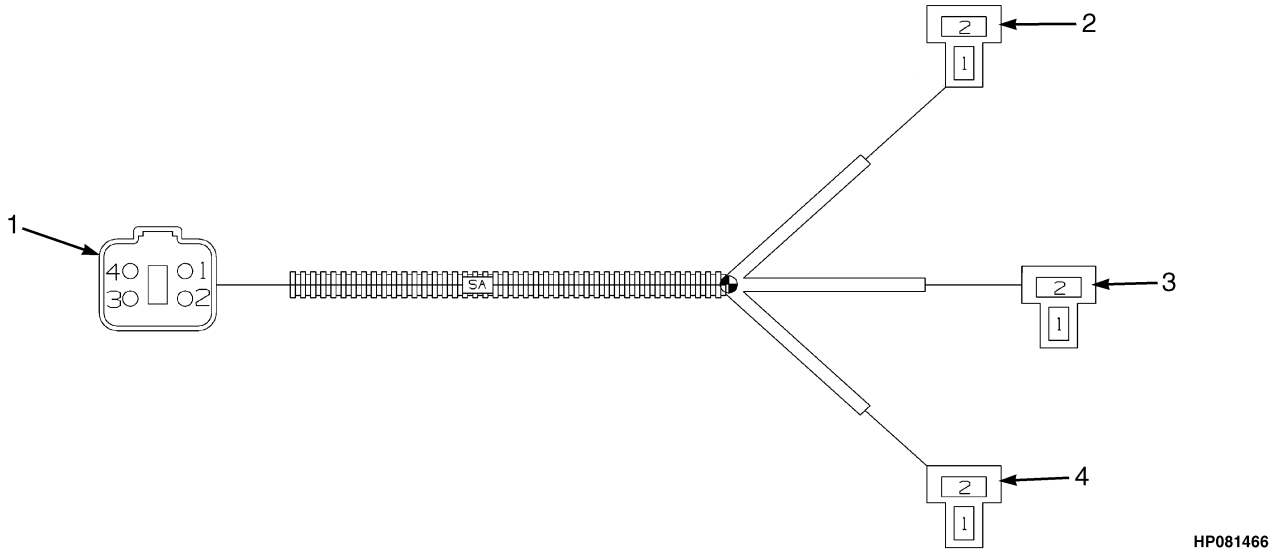

ITEM	PART NO.	DESCRIPTION	QTY
	1547279	Wire Harness (Wash Pumps)	1
1	. . . . .	Connector Assembly (Frame)	1
1	1489655	Connector (4 Way)	1
1	1330416	Connector	1
1	1330437	Terminal (Pin)	4
2	. . . . .	Connector Assembly (Rear Wash Pump)	1
2	1484395	Housing (Socket)	1
2	1484396	Terminal	2
3	. . . . .	Connector Assembly (Roof Wash Pump)	1
3	1484395	Housing (Socket)	1
3	1484396	Terminal	2
4	. . . . .	Connector Assembly (Front Wash Pump)	1
4	1484395	Housing (Socket)	1
4	1484396	Terminal	2

©2015 HYSTER COMPANY

6 TRANSMISSION

SECTION 6
TRANSMISSION

DESCRIPTION	PAGE
AUXILIARY PUMP DRIVE	6-4
CHARGE PUMP AND FILTER ASSEMBLY	6-6
DRIVE GEAR	6-12
DRIVE PLATE	6-14
FORWARD CLUTCH	
→ S/N G019E02448H	6-16
S/N G019E02449H →	6-18
GEAR CLUTCH INSTALLATION	6-20
LOW CLUTCH	
→ S/N G019E02448H	6-24
S/N G019E02449H →	6-26
OUTPUT FLANGE	6-28
OUTPUT SHAFT	
→ S/N G019E02448H	6-30
S/N G019E02449H →	6-32
REVERSE AND SECOND CLUTCH	6-34
REVERSE IDLER SHAFT	6-22
THIRD CLUTCH	6-36
TORQUE CONVERTER ASSEMBLY	6-38
TORQUE CONVERTER HOUSING AND ATTACHING PARTS	6-40
TRANSMISSION CASE	6-42
TRANSMISSION CONTROL VALVE	6-8
TRANSMISSION MOUNT AND ATTACHING PARTS	
DIESEL ENGINE	6-46
LPG ENGINE	6-44
TURBINE SHAFT AND STATOR SUPPORT	6-48
UNIVERSAL SHAFT	6-2

©2015 HYSTER COMPANY

UNIVERSAL SHAFT (FIGURE 6-1)

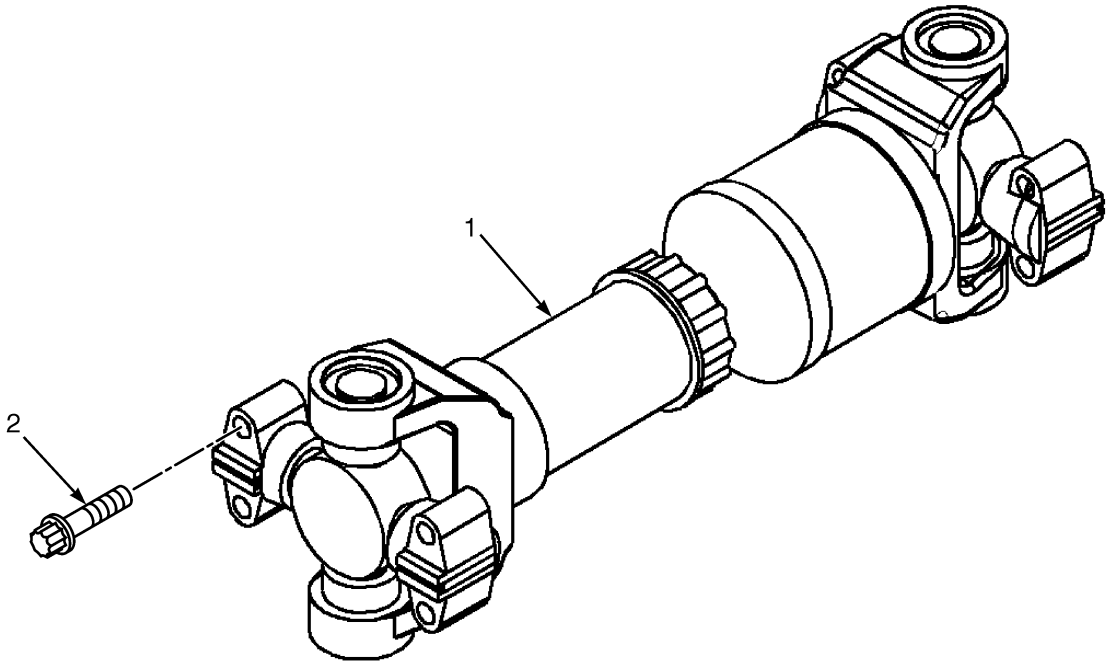

HP240580

ITEM	PART NO.	DESCRIPTION	QTY
1	**a** 1622844	Shaft (Diesel, Forklift Trucks)	1
1	**b** 1532823	Shaft (Diesel, Forklift Trucks)	1
1	1622841	Shaft (Diesel, Container Handler Trucks)	1
1	**a** 1532823	Shaft (LPG, Forklift Trucks)	1
1	**b** 1360967	Shaft (LPG, Forklift Trucks)	1
1	1532822	Shaft (LPG, Container Handler Trucks)	1
1	1312827	Kit-Bearing (Cross And Bearing)	2
1	1312822	Yoke (Assembly)	1
1	1312823	Yoke (Slip)	1
1	1312824	Plug	1
1	1367556	Dust Cap	1
2	1490469	Capscrew (12 point Flange Head)	8

FOOTNOTES:

a → S/N G019E02448H

b S/N G019E02449H →

©2015 HYSTER COMPANY

NOTES

©2015 HYSTER COMPANY

AUXILIARY PUMP DRIVE (FIGURE 6-2)

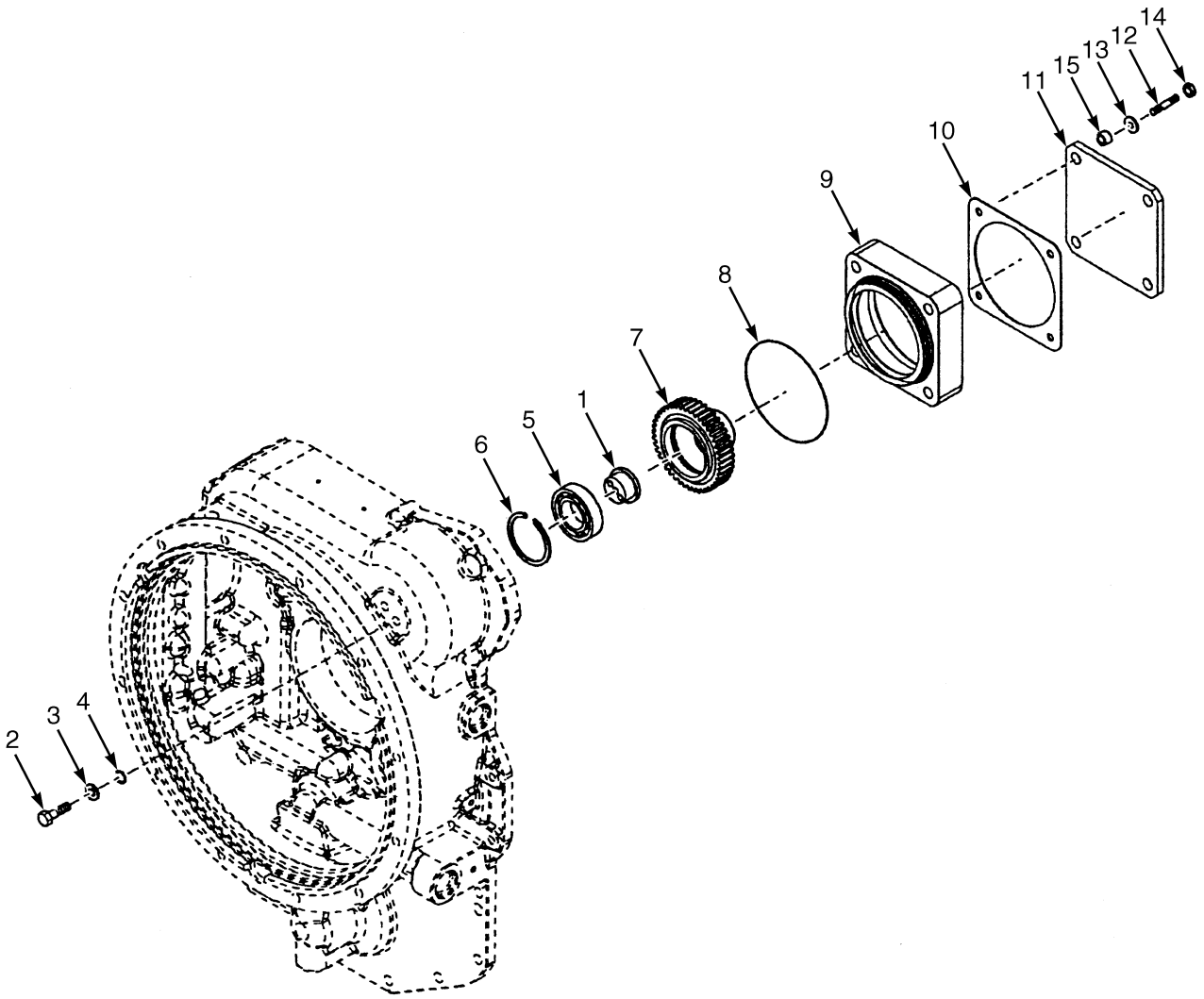

HP240479

©2015 HYSTER COMPANY

AUXILIARY PUMP DRIVE

ITEM	PART NO.	DESCRIPTION	QTY
	b 2071311	Transmission Assy	1
	ac 2104740	Transmission Assy	1
	e 2093555	Transmission Assy	1
1	1556950	Support	1
2	16815	Capscrew	2
3	330552	Washer	2
4	1556951	Washer	2
5	**d** 1583613	Bearing	1
5	**b** 3064974	Bearing	1
6	330591	Ring	1
7	1556952	Gear	1
8	1471371	O-Ring	1
9	1579125	Adapter (Pump)	1
10	1471383	Gasket (Cover)	1
11	330566	Cover	1
12	1579126	Stud	4
13	15158	Washer	4
14	1579127	Nut	4
15	1579128	Spacer	4
	1557263	Kit-Gasket	1
	4012252	Kit-Seal (Alternate Part)	1

FOOTNOTES:

a Remanufactured Transmission-2104742
b → S/N G019E01996F
c S/N G019E01997F ↔ S/N G019E02448H
d S/N G019E01997F →
e S/N G019E02449H →

©2015 HYSTER COMPANY

CHARGE PUMP AND FILTER ASSEMBLY (FIGURE 6-3)

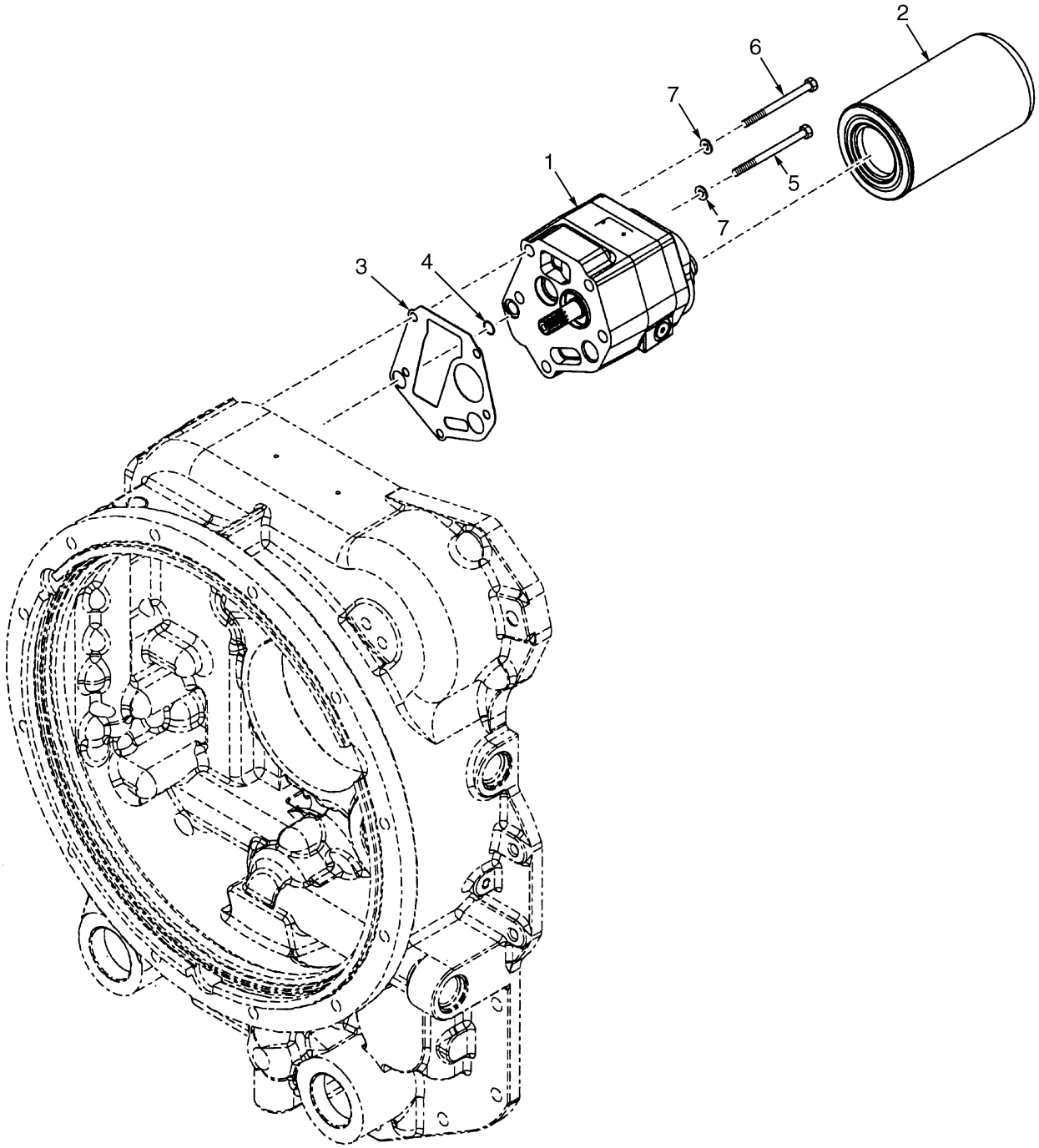

HP240443

©2015 HYSTER COMPANY

CHARGE PUMP AND FILTER ASSEMBLY

ITEM	PART NO.	DESCRIPTION	QTY
	b 2071311	Transmission Assy	1
	ac 2104740	Transmission Assy	1
	d 2093555	Transmission Assy	1
1	1556991	Charge Pump Assembly	1
	4045326	Kit-Seal	1
2	1556992	Transmission Filter	1
3	1311695	Gasket	1
4	87281	O-Ring	1
5	1556993	Screw	4
6	1556994	Screw	1
7	15157	Lockwasher	5
	1557263	Kit-Gasket	1
8	4012252	Kit-Seal (Alternate Part)	1
	1335619	Kit-Charge Pump	1

FOOTNOTES:

a Remanufactured Transmission-2104742
b → S/N G019E01996F
c S/N G019E01997F ↔ S/N G019E02448H
d S/N G019E02449H →

©2015 HYSTER COMPANY

TRANSMISSION CONTROL VALVE (FIGURE 6-4)

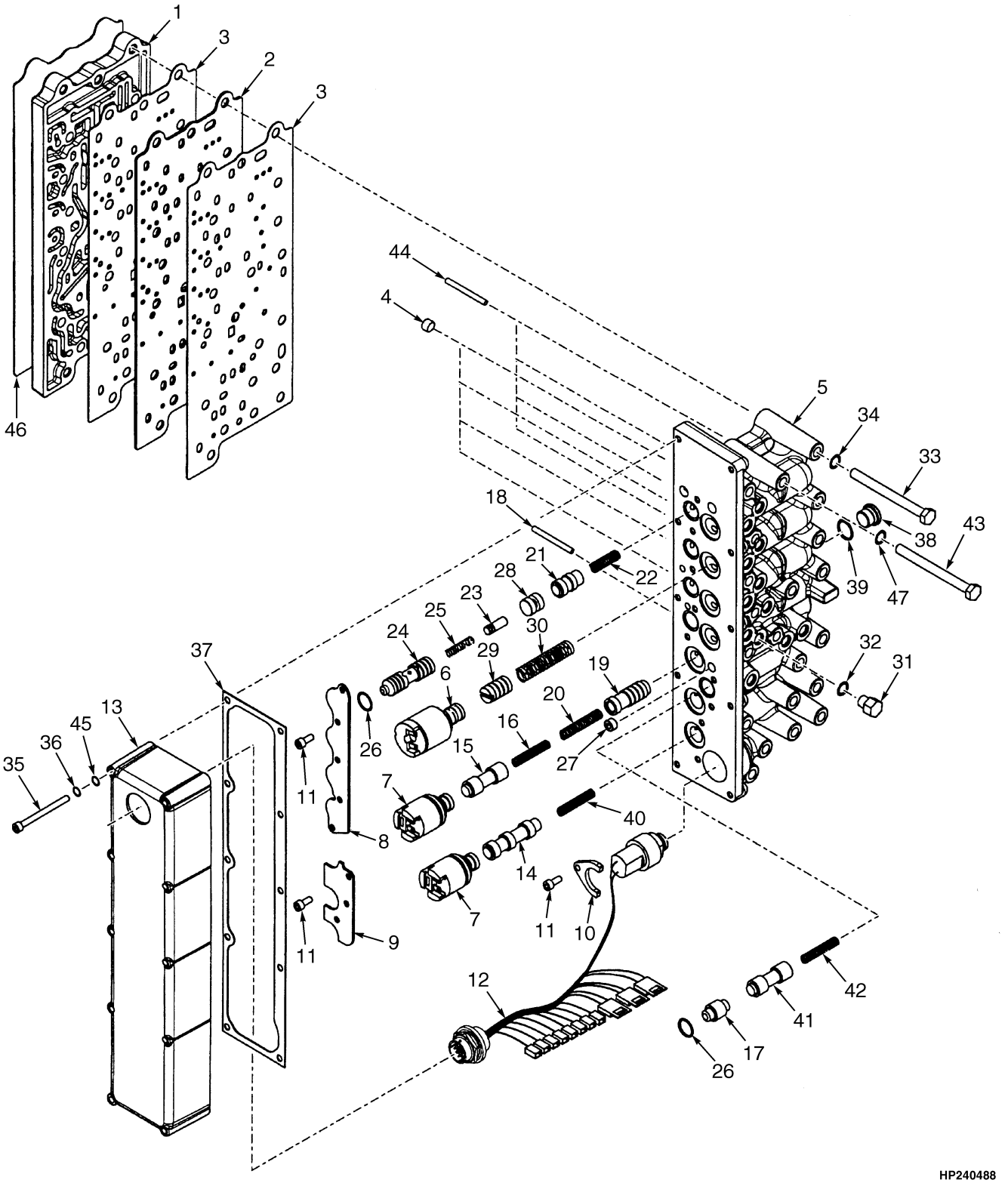

©2015 HYSTER COMPANY

TRANSMISSION CONTROL VALVE

ITEM	PART NO.	DESCRIPTION	QTY
	c 2071311	Transmission Assy	1
	be 2104740	Transmission Assy	1
	g 2093555	Transmission Assy	1
	f 1657710	Hydraulic Control Valve	1
	c 1579138	Hydraulic Control Valve	1
1	1556999	Side Plate (Spacer)	1
2	1557000	Plate (Adapter)	1
3	1557001	Gasket	2
4	**d**	Plug	4
5	. . . . .	Spool Body	1
6	1565474	Solenoid (VFS)	4
7	1579141	Solenoid (12V)	3
8	1585088	Clamp	1
9	1585089	Clamp	1
10	1557002	Clamp	1
11	1557003	Screw	9
12	**f** 1659579	Wire Harness (Includes Pressure Sensor)	1
12	**c** 1557004	Wiring Harness	1
13	1565472	Cover (Solenoid)	1
14	. . . . .	Spool	2
15	. . . . .	Spool	2
16	1641836	Spring (Pilot Valve)	4
17	**d**	Spool (Pilot Switch)	1
18	1585091	Pin (Parallel)	4
19	. . . . .	Spool (Pressure Reducer)	1
20	1641838	Spring (Pressure Reducer)	1
21	. . . . .	Spool (Pressure Check)	4
22	. . . . .	Spring (Pressure Check)	4
23	. . . . .	Pin (Stop)	1
24	. . . . .	Spool (Intensifier)	4
25	1641840	Spring	4
26	**d**	O-Ring	5
27	1565473	Plug	1
28	. . . . .	Spool (Stop)	4
29	. . . . .	Spool (Accumulator)	4
30	1641841	Spring (Accumulator)	4
31	1557007	Plug	13
32	1557008	O-Ring	13
33	1557009	Capscrew	6
34	1556998	Lockwasher	6
35	1557010	Screw	10
36	1557011	Lockwasher	10
37	1557012	Gasket	1
38	**d**	Plug	4
39	**d** 1530732	O-Ring	5
40	. . . . .	Pilot Valve Spring	3
41	**d**	Spool	1
42	**d** 1641836	Spring	1
43	1556997	Screw	15
44	**d** 1641837	Pin	1
44	**g** 1585091	Pin	1

©2015 HYSTER COMPANY

TRANSMISSION CONTROL VALVE

ITEM	PART NO.	DESCRIPTION	QTY
45	1609937	Washer	10
46	1556996	Gasket	1
47	1556998	Lockwasher	15
	a 1557014	Strap	4
	1641835	Kit-Seal	1
	1557263	Kit-Gasket	1
	4012252	Kit-Seal (Alternate Part)	1
	1608583	Kit-Seal (Transmission Cover)	1

FOOTNOTES:

a Not Illustrated
b Remanufactured Transmission-2104742
c → S/N G019E01996F
d → S/N G019E02448H
e S/N G019E01997F ↔ S/N G019E02448H
f S/N G019E01997F →
g S/N G019E02449H →

©2015 HYSTER COMPANY

NOTES

©2015 HYSTER COMPANY

DRIVE GEAR (FIGURE 6-5)

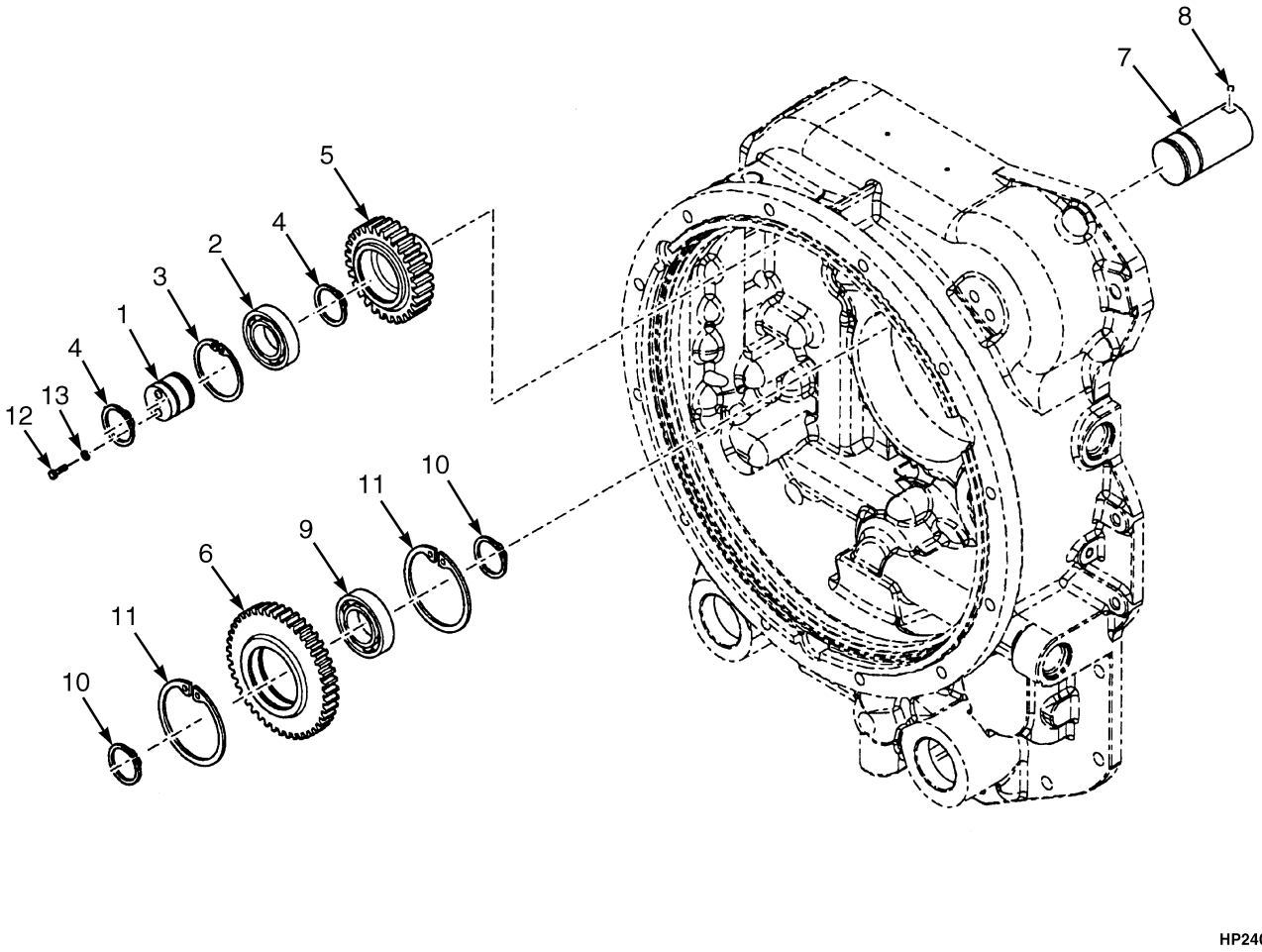

HP240436

©2015 HYSTER COMPANY

DRIVE GEAR

ITEM	PART NO.	DESCRIPTION	QTY
	b 2071311	Transmission Assy	1
	ac 2104740	Transmission Assy	1
	d 2093555	Transmission Assy	1
1	1311567	Support	1
2	1311571	Ball Bearing	1
3	37065	Snap Ring	2
4	1311805	Retaining Ring	1
5	1556957	Gear (Drive Pump)	1
6	1556958	Gear (Idler Pump)	1
7	1556959	Shaft	1
8	61141	Ball	1
9	41308	Bearing	1
10	330570	Retaining Ring	2
11	330612	Ring	2
12	1471366	Screw	2
13	15156	Lockwasher	2

FOOTNOTES:

a Remanufactured Transmission-2104742
b → S/N G019E01996F
c S/N G019E01997F ↔ S/N G019E02448H
d S/N G019E02449H →

©2015 HYSTER COMPANY

DRIVE PLATE (FIGURE 6-6)

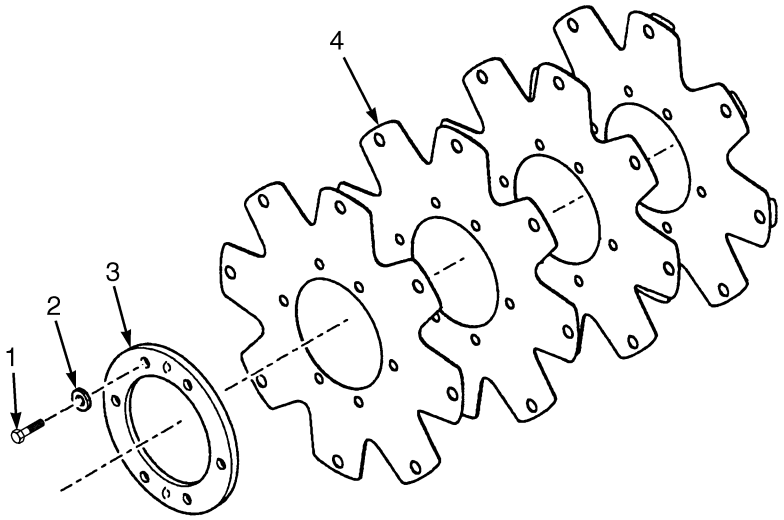

HP240577

ITEM	PART NO.	DESCRIPTION	QTY
	b 2071311	Transmission Assy	1
	ac 2104740	Transmission Assy	1
	d 2093555	Transmission Assy	1
1	18535	Capscrew	10
2	15156	Lockwasher	10
3	1312373	Back-Up Ring	1
4	. . . . .	Drive Plate	4
	1312271	Kit-Drive Plate Torque Conv	1

FOOTNOTES:

a Remanufactured Transmission-2104742
b → S/N G019E01996F
c S/N G019E01997F ↔ S/N G019E02448H
d S/N G019E02449H →

©2015 HYSTER COMPANY

NOTES

©2015 HYSTER COMPANY

FORWARD CLUTCH (FIGURE 6-7)

(→ S/N G019E02448H)

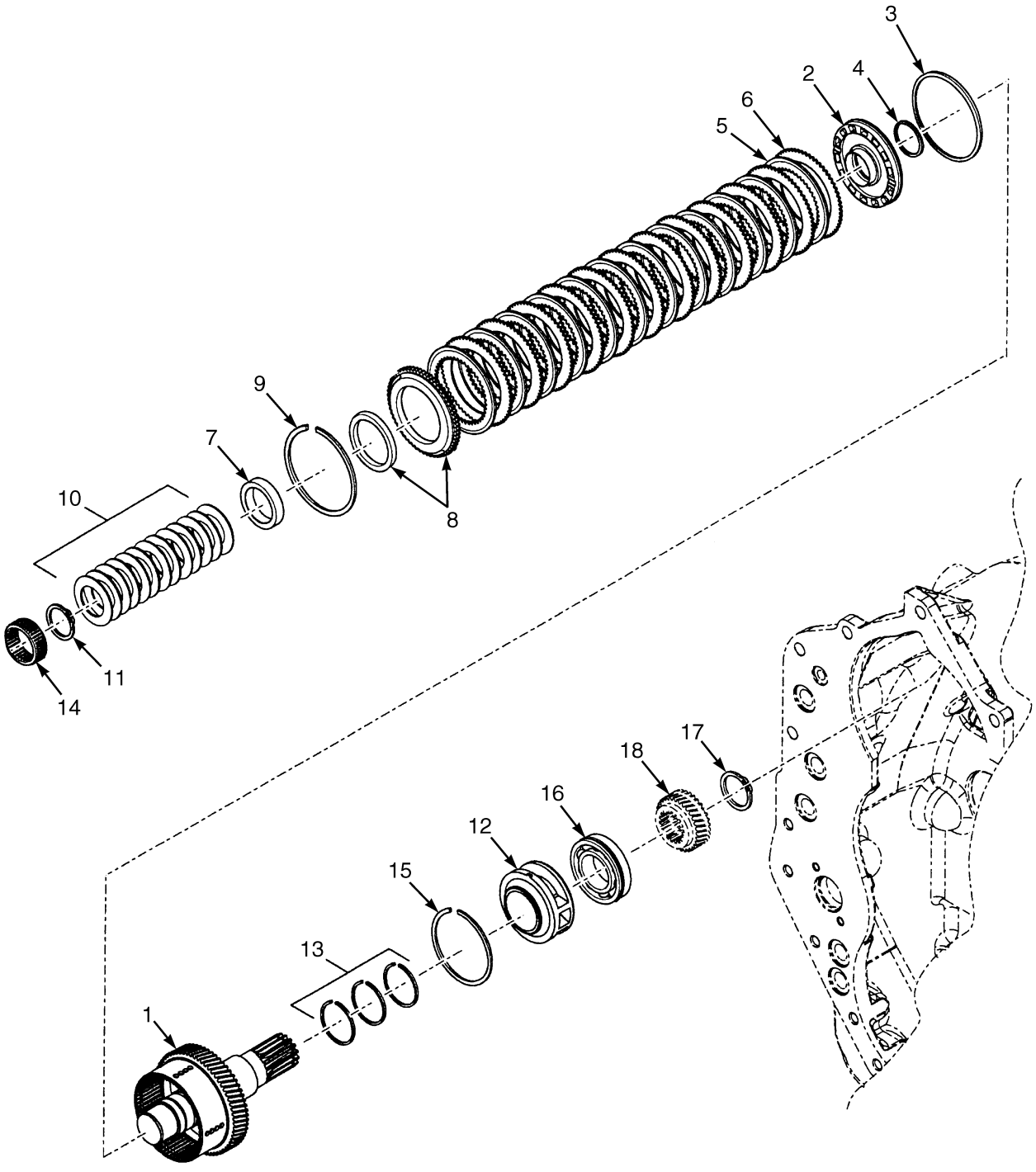

©2015 HYSTER COMPANY

FORWARD CLUTCH
(→ S/N G019E02448H)

ITEM	PART NO.	DESCRIPTION	QTY
	b 2071311	Transmission Assy	1
	ac 2104740	Transmission Assy	1
1	~~1556961~~		
	1691399	Shaft	1
2	1556963	Piston (Piston)	1
3	1311811	Piston Seal	1
4	1311812	Piston Seal	1
5	**d** 1655548	Friction Disk (Inner, High Density)	12
5	**b** 1556964	Friction Disk (Inner)	12
6	1556965	Separator Plate (Outer)	12
7	1556966	Spacer	1
8	1556967	Plate	1
8	1556968	Seal	1
9	1311810	Snap Ring	1
10	1556969	Disk Spring Assembly (Includes 13 Washers)	1
11	**d** 1311808	Snap Ring	1
11	**b** 382269	Snap Ring	1
12	1311668	Sleeve	1
13	1311555	Spring (Expander)	3
13	1311646	Ring (Forward Shaft)	3
14	1311666	Bearing	1
15	1311816	Retaining Ring	1
16	1311817	Bearing (Rear)	1
17	1311825	Retaining Ring	2
18	. . . . .	Gear (Forward Shaft)	1
	1557263	Kit-Gasket	1
	4012252	Kit-Seal (Alternate Part)	1

FOOTNOTES:

a Remanufactured Transmission-2104742
b → S/N G019E01996F
c S/N G019E01997F ↔ S/N G019E02448H
d S/N G019E01997F →

©2015 HYSTER COMPANY

FORWARD CLUTCH (FIGURE 6-8)

(S/N G019E02449H →)

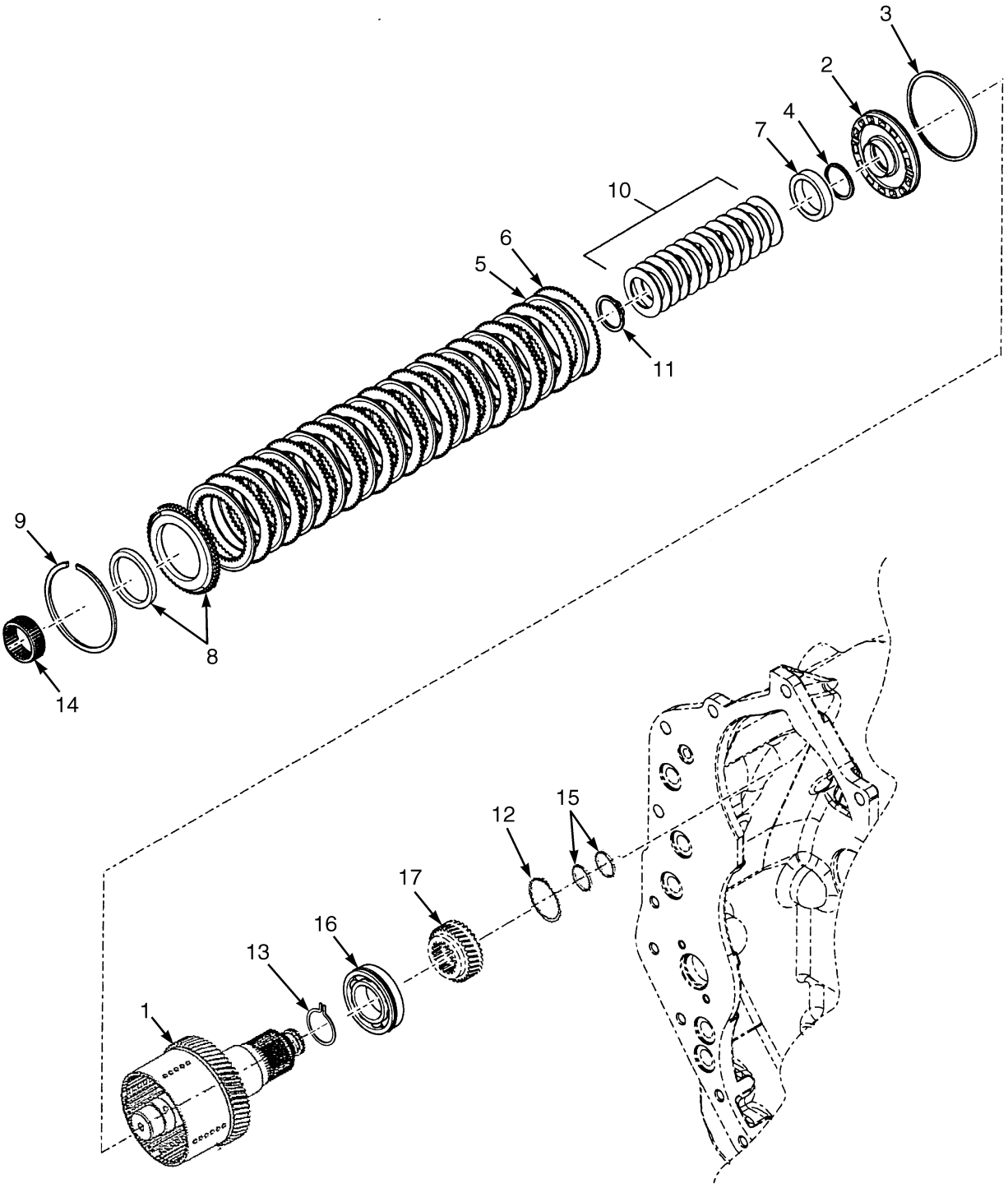

HP240550

©2015 HYSTER COMPANY

FORWARD CLUTCH
(S/N G019E02449H →)

ITEM	PART NO.	DESCRIPTION	QTY
	a 2093555	Transmission Assy	1
1	1705316	Shaft	1
2	1556963	Piston (Piston)	1
3	1311811	Piston Seal	1
4	1311812	Piston Seal	1
5	1655548	Friction Disk (Inner, High Density)	12
6	1556965	Separator Plate (Outer)	12
7	1556966	Spacer	1
8	1556967	Plate	1
8	1556968	Seal	1
9	1311810	Snap Ring	1
10	1705319	Disk Spring Assembly (Includes 13 Washers)	1
11	1311808	Snap Ring	1
12	1311825	Retaining Ring	1
13	1705318	Retaining Ring (Forward Shaft)	3
14	1311666	Bearing	1
15	1556985	Piston Ring	1
16	1705317	Ball Bearing (Rear)	1
17	1556947	Gear (Forward Shaft)	1
	1557263	Kit-Gasket	1
	4012252	Kit-Seal (Alternate Part)	1

FOOTNOTES:

a S/N G019E02449H →

©2015 HYSTER COMPANY

GEAR CLUTCH INSTALLATION (FIGURE 6-9)

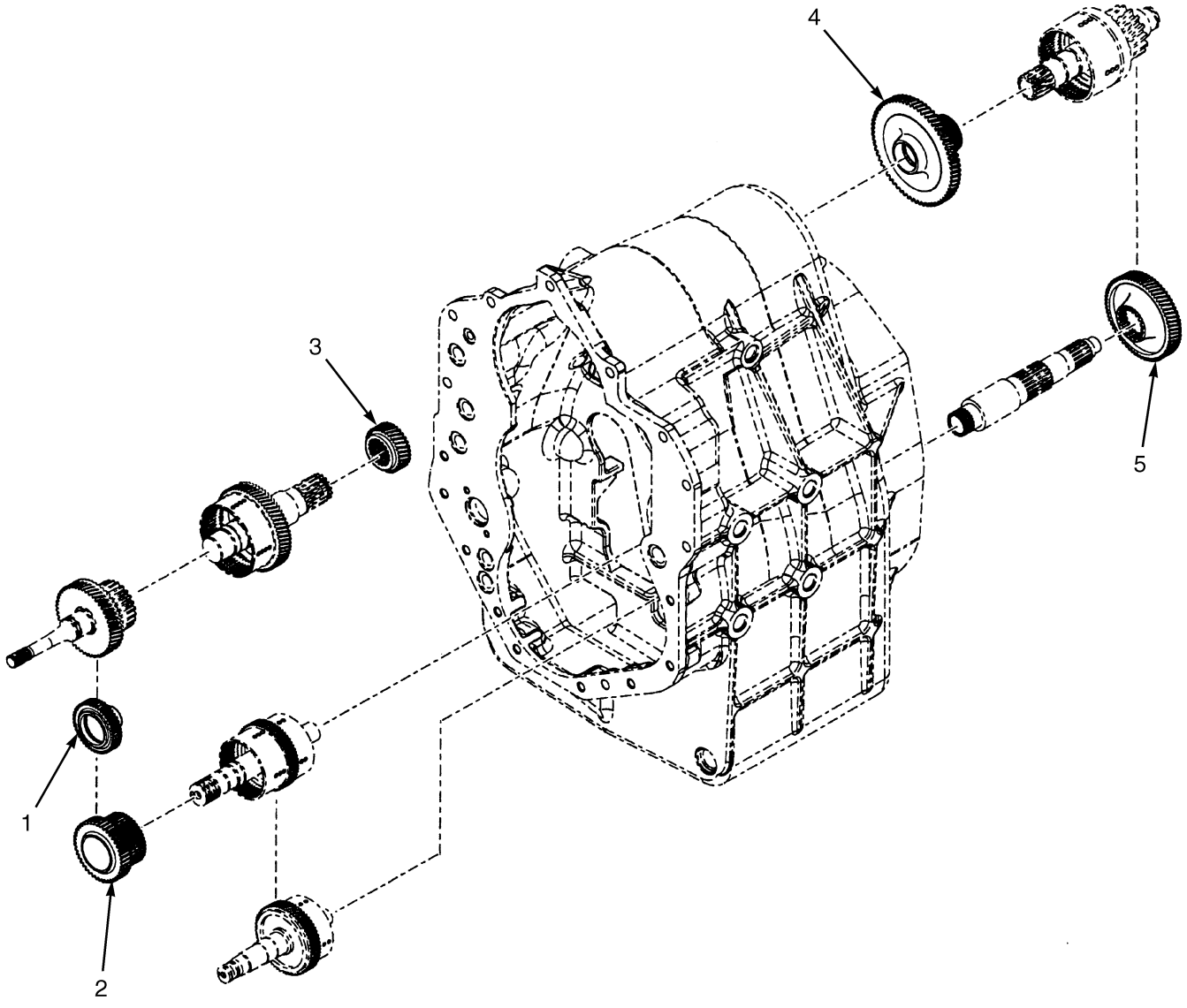

©2015 HYSTER COMPANY

GEAR CLUTCH INSTALLATION

ITEM	PART NO.	DESCRIPTION	QTY
	b 2071311	Transmission Assy	1
	ac 2104740	Transmission Assy	1
	d 2093555	Transmission Assy	1
1	1556945	Gear (Idler)	1
2	1556946	Gear (Reverse Clutch)	1
3	1556947	Gear (Forward Shaft)	1
4	1556948	Gear (Low Clutch)	1
5	1556949	Gear (Output Gear)	1

FOOTNOTES:

a Remanufactured Transmission-2104742
b → S/N G019E01996F
c S/N G019E01997F ↔ S/N G019E02448H
d S/N G019E02449H →

©2015 HYSTER COMPANY

REVERSE IDLER SHAFT (FIGURE 6-10)

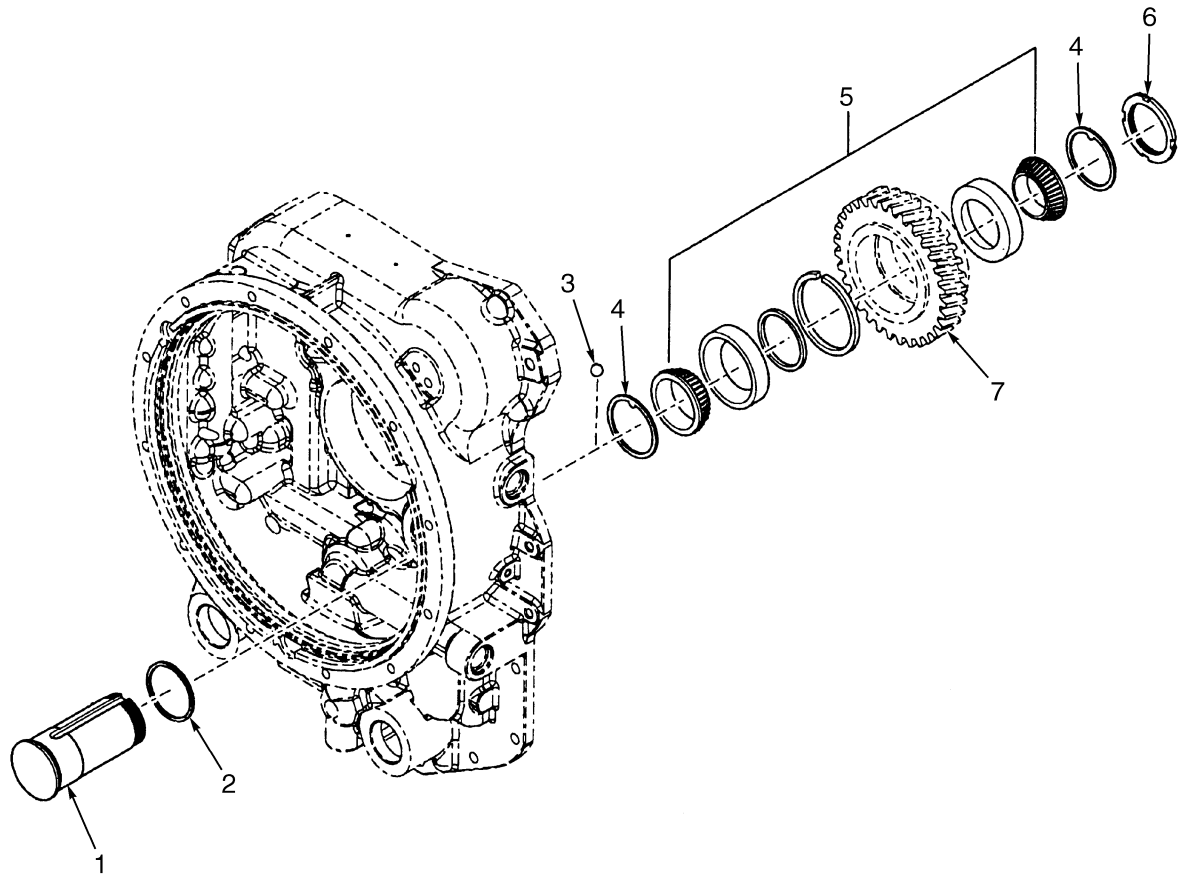

HP240438

©2015 HYSTER COMPANY

REVERSE IDLER SHAFT

ITEM	PART NO.	DESCRIPTION	QTY
	b 2071311	Transmission Assy	1
	ac 2104740	Transmission Assy	1
	d 2093555	Transmission Assy	1
1	1311649	Drive Shaft (Reverse)	1
2	1556970	O-Ring	1
3	55280	Ball	1
4	1311671	Thrust Plate	2
5	1311822	Bearing Set	1
6	1311823	Nut	1
7	1556945	Gear (Reverse Idler)	1
	1557263	Kit-Gasket	1
	4012252	Kit-Seal (Alternate Part)	1

FOOTNOTES:

a Remanufactured Transmission-2104742
b → S/N G019E01996F
c S/N G019E01997F ↔ S/N G019E02448H
d S/N G019E02449H →

©2015 HYSTER COMPANY

LOW CLUTCH (FIGURE 6-11)

(→ S/N G019E02448H)

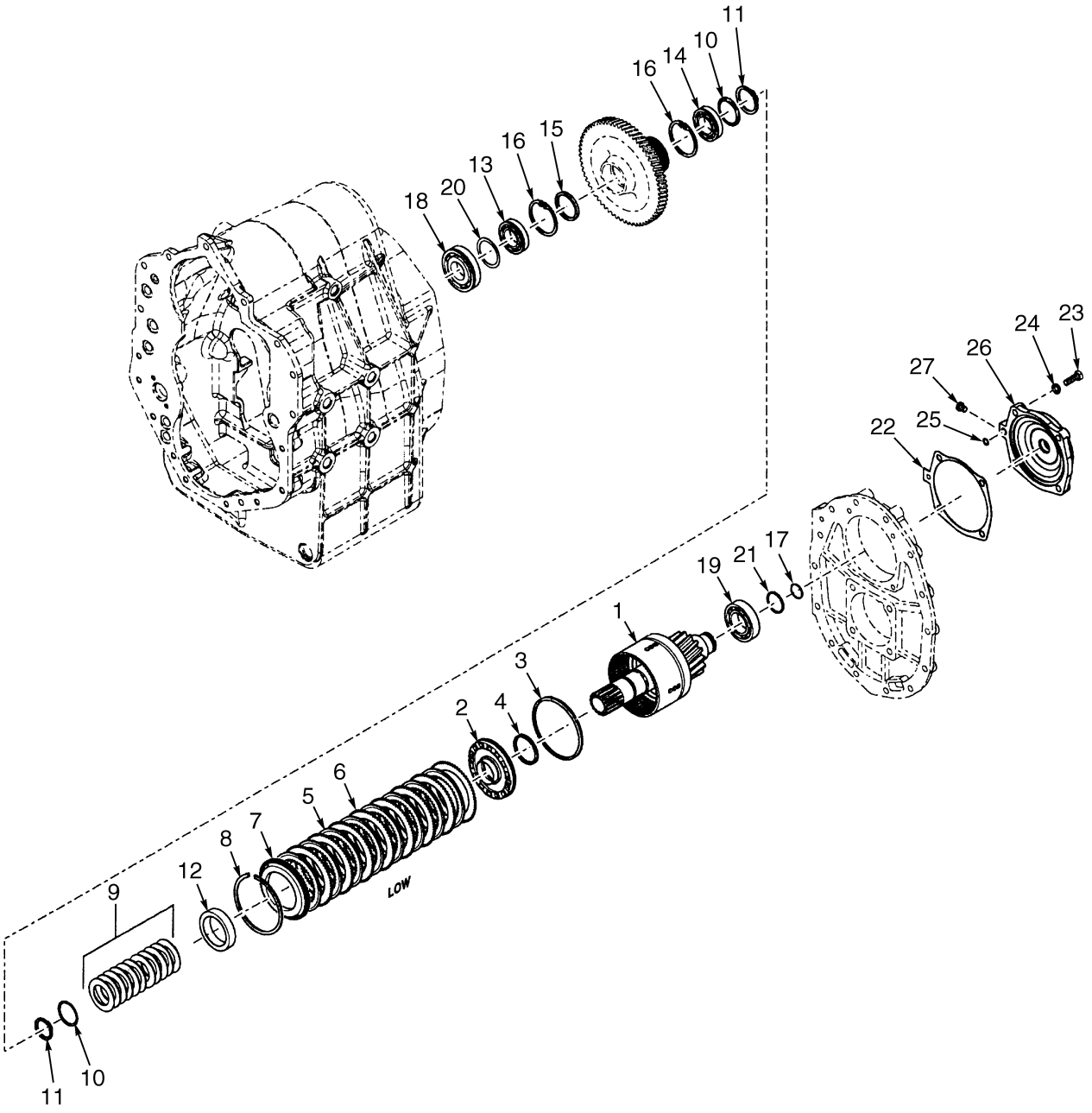

HP240440

©2015 HYSTER COMPANY

LOW CLUTCH
(→ S/N G019E02448H)

ITEM	PART NO.	DESCRIPTION	QTY
	b 2071311	Transmission Assy	1
	ac 2104740	Transmission Assy	1
1	1556972	Housing (Low Shaft, Hub and Drum)	1
2	1556973	Piston (Piston)	1
3	1311811	Piston Seal	1
4	1311812	Piston Seal	1
5	1556965	Separator Plate (Outer)	13
6	1556964	Friction Disk (Inner)	13
7	1556978	Clutch Plate	1
8	1311810	Snap Ring	1
9	1556975	Disk Spring (Disc)	1
10	1556976	Retainer	2
11	382269	Snap Ring	2
12	1556966	Spacer	1
13	1312359	Bearing (Low Speed)	1
14	330590	Bearing	1
15	1312385	Spacer (Low Speed)	1
16	382262	Snap Ring	2
17	1556977	Piston Ring	1
18	382283	Bearing	1
19	330597	Bearing	1
20	1311818	Spacer	1
21	330598	Retaining Ring	1
22	1312362	Gasket	1
23	18557	Capscrew	4
24	15157	Lockwasher	4
25	79970	O-Ring	1
26	1312363	Bearing Cap	1
27	14589	Plug	1
	1557263	Kit-Gasket	1
	4012252	Kit-Seal (Alternate Part)	1

FOOTNOTES:

a Remanufactured Transmission-2104742
b → S/N G019E01996F
c S/N G019E01997F ↔ S/N G019E02448H

©2015 HYSTER COMPANY

LOW CLUTCH (FIGURE 6-12)

(S/N G019E02449H →)

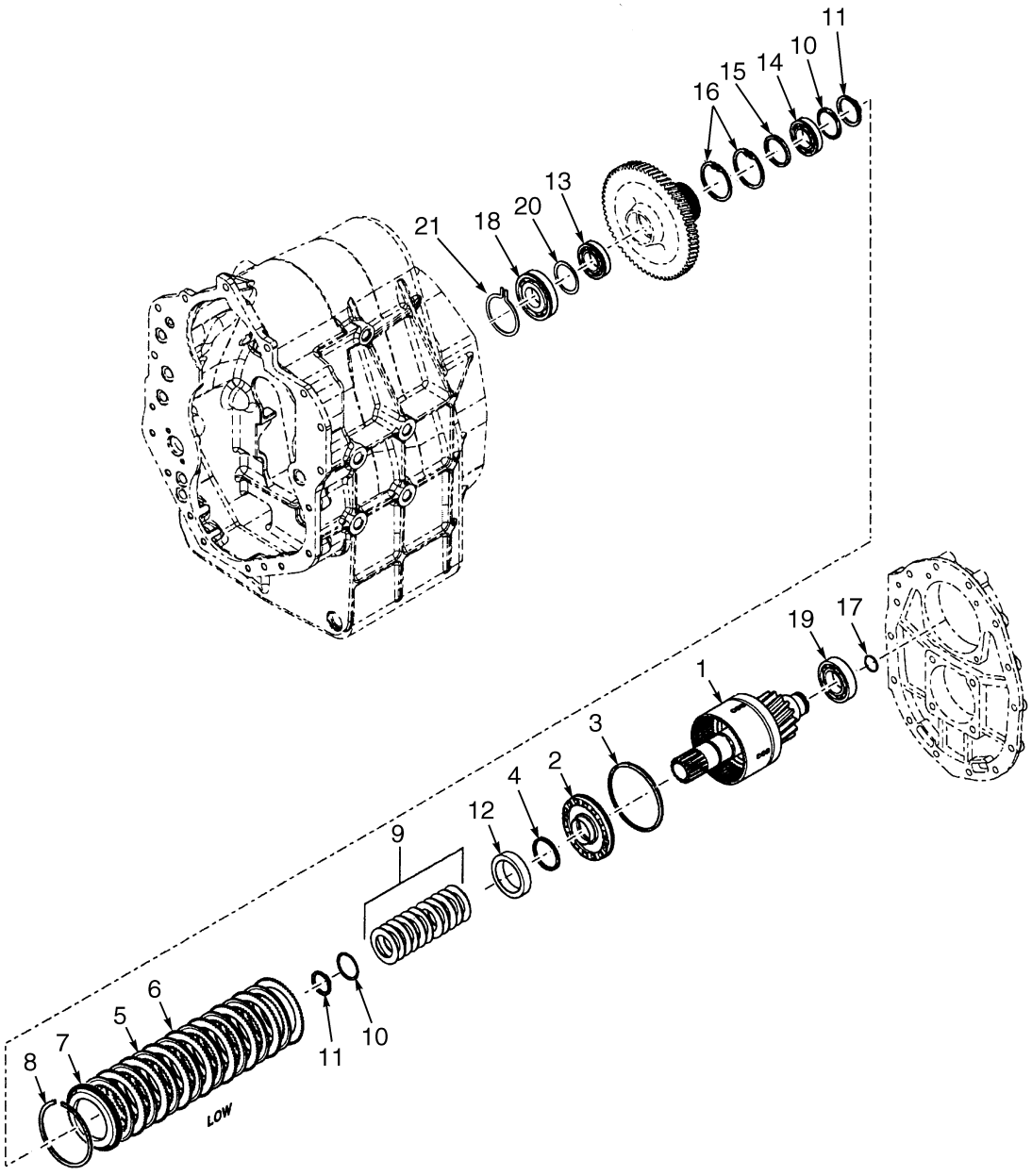

HP240490

©2015 HYSTER COMPANY

LOW CLUTCH
(S/N G019E02449H →)

ITEM	PART NO.	DESCRIPTION	QTY
	a 2093555	Transmission Assy	1
1	1705367	Shaft (Low Shaft, Hub and Drum)	1
2	1556973	Piston	1
3	1311811	Piston Seal	1
4	1311812	Piston Seal	1
5	1556965	Separator Plate (Outer)	13
6	1556964	Friction Disk (Inner)	13
6	1655548	Friction Disk (Inner, High Density) (Alternate Part)	13
7	1556978	Clutch Plate	1
8	1311810	Snap Ring	1
9	1705368	Disk Spring (Disc)	1
10	1556976	Retainer	2
11	382269	Snap Ring	2
12	1556966	Spacer	1
13	1312359	Bearing (Low Speed)	1
14	330590	Bearing	1
15	1312385	Spacer (Low Speed)	1
16	382262	Snap Ring	2
17	1556977	Piston Ring	1
18	1624585	Ball Bearing	1
19	1624423	Bearing	1
20	1311818	Spacer	1
21	1311719	Ring	1
	1557263	Kit-Gasket	1
	4012252	Kit-Seal (Alternate Part)	1

FOOTNOTES:

a S/N G019E02449H →

©2015 HYSTER COMPANY

OUTPUT FLANGE (FIGURE 6-13)

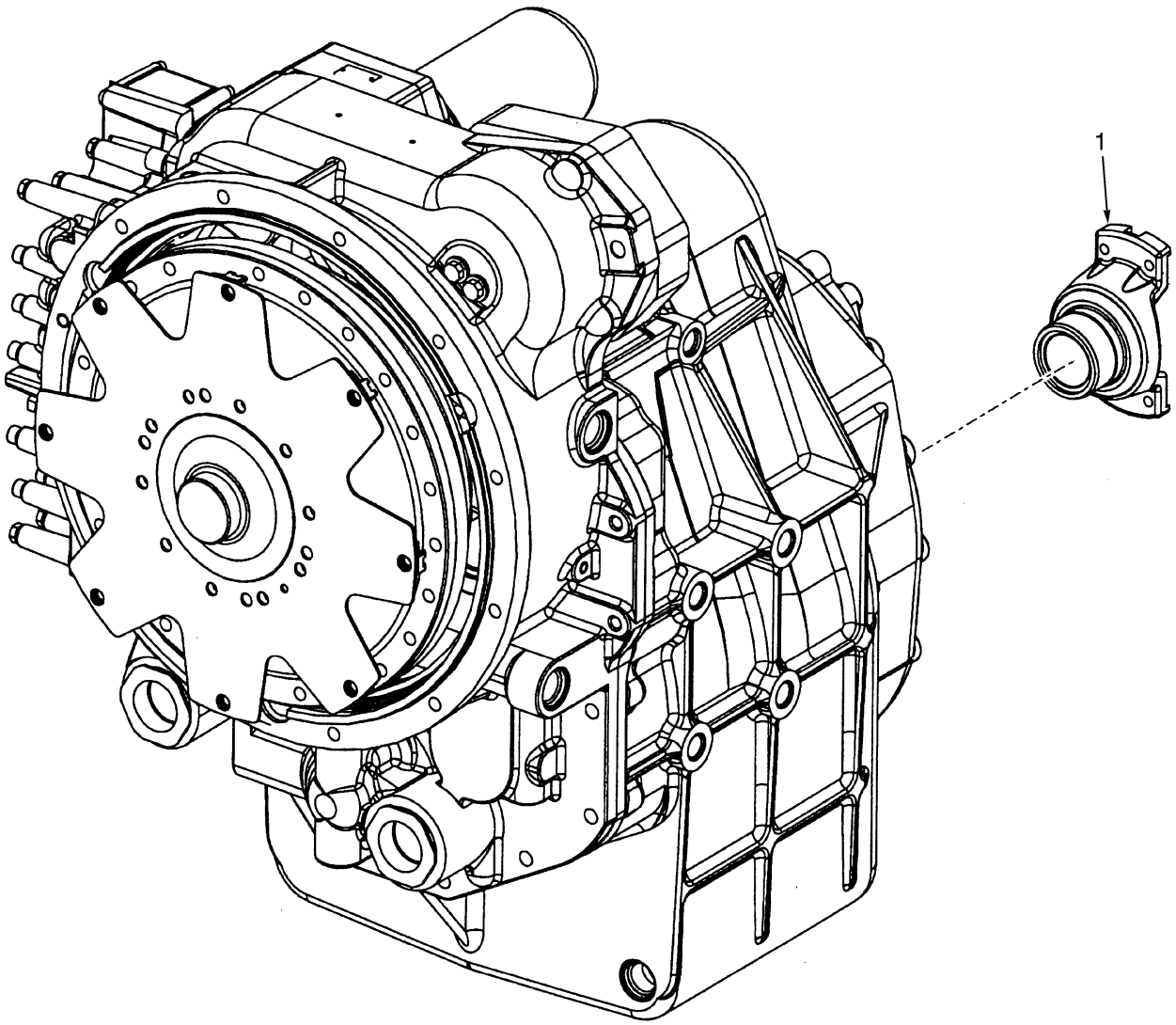

HP240446

©2015 HYSTER COMPANY

OUTPUT FLANGE

ITEM	PART NO.	DESCRIPTION	QTY
	b 2071311	Transmission Assy (Cummins)	1
	ac 2104740	Transmission Assy	1
	d 2093555	Transmission Assy	1
1	1311686	Flange (Output)	1

FOOTNOTES:

a Remanufactured Transmission-2104742
b → S/N G019E01996F
c S/N G019E01997F ↔ S/N G019E02448H
d S/N G019E02449H →

©2015 HYSTER COMPANY

OUTPUT SHAFT (FIGURE 6-14)

(→ S/N G019E02448H)

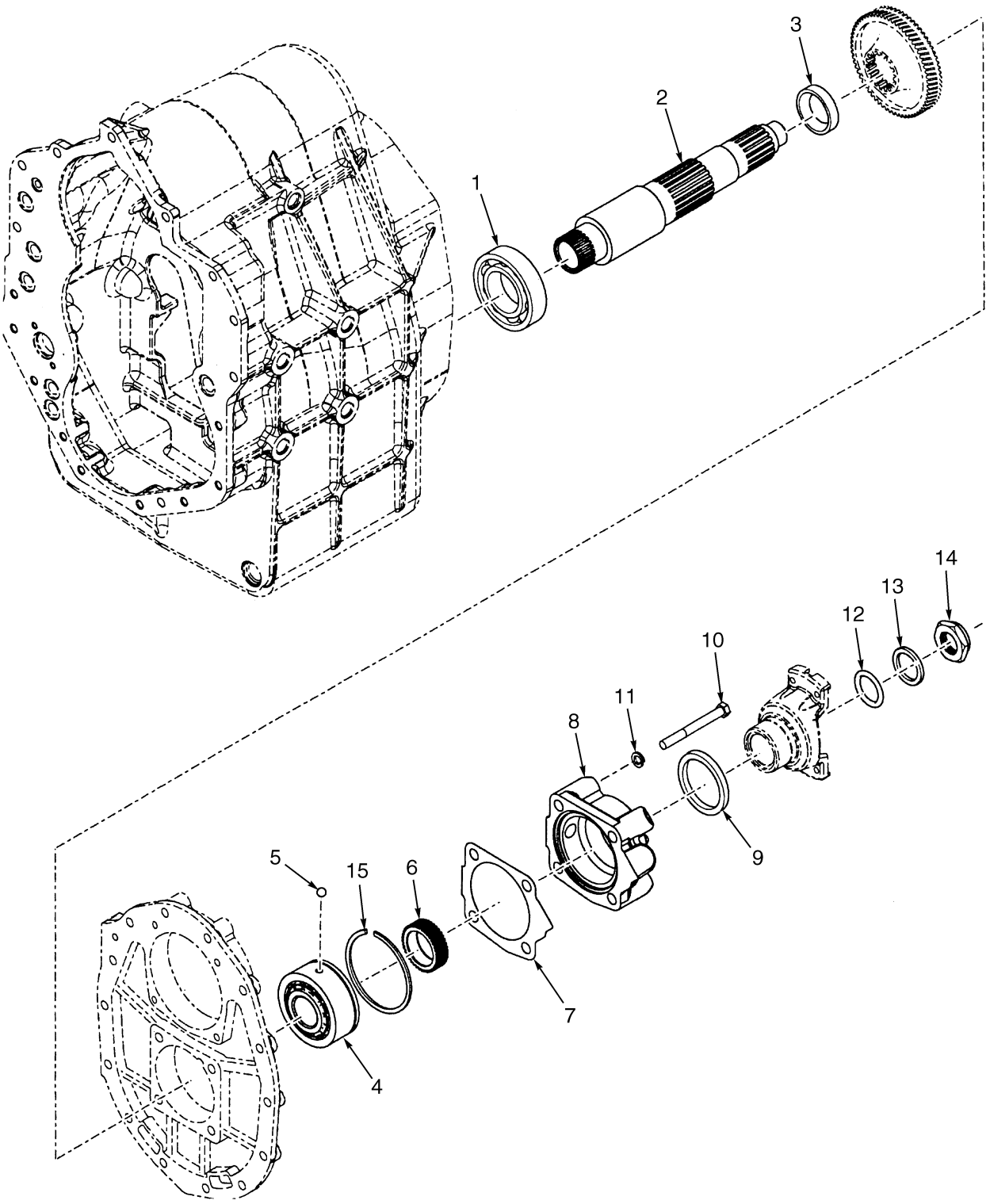

©2015 HYSTER COMPANY

OUTPUT SHAFT
(→ S/N G019E02448H)

ITEM	PART NO.	DESCRIPTION	QTY
	b 2071311	Transmission Assy	1
	ac 2104740	Transmission Assy	1
1	43310	Bearing	1
2	1556982	Shaft (Output)	1
3	1311827	Spacer	1
4	330607	Bearing (Rear)	1
5	330596	Ball	1
6	330605	Spacer	1
7	330604	Gasket	1
8	330603	Cap (Bearing)	1
9	330602	Seal	1
10	1556989	Capscrew	4
11	1556990	Lockwasher	4
12	86553	O-Ring	1
13	330614	Washer	1
14	330615	Nut	1
15	330606	Ring	1
	1557263	Kit-Gasket	1
	4012252	Kit-Seal (Alternate Part)	1

FOOTNOTES:

a Remanufactured Transmission-2104742
b → S/N G019E01996F
c S/N G019E01997F ↔ S/N G019E02448H

©2015 HYSTER COMPANY

OUTPUT SHAFT (FIGURE 6-15)

(S/N G019E02449H →)

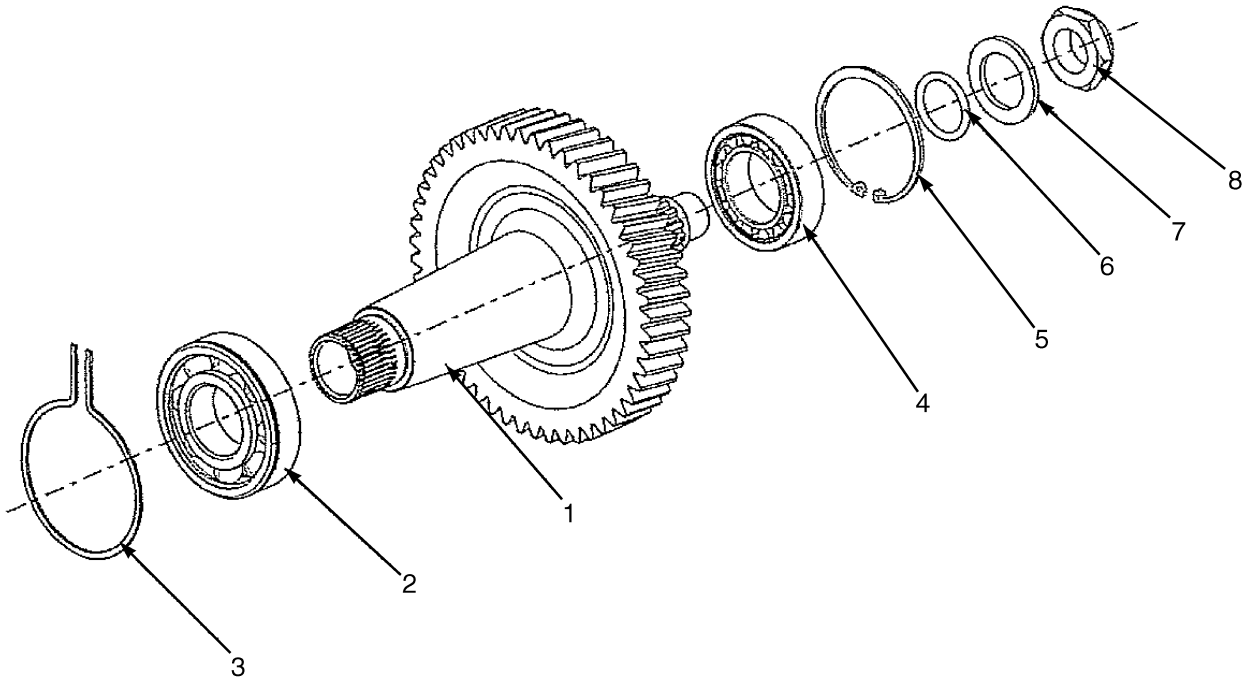

HP240495

©2015 HYSTER COMPANY

OUTPUT SHAFT
(S/N G019E02449H →)

ITEM	PART NO.	DESCRIPTION	QTY
	a 2093555	Transmission Assy	1
1	1705370	Shaft	1
2	1624585	Ball Bearing	1
3	1311719	Ring	1
4	1705371	Bearing	1
5	1612530	Snap Ring	1
6	86553	O-Ring	1
7	330614	Washer	1
8	330615	Nut	1
	1557263	Kit-Gasket	1
	4012252	Kit-Seal (Alternate Part)	1

FOOTNOTES:

a S/N G019E02449H →

©2015 HYSTER COMPANY

REVERSE AND SECOND CLUTCH (FIGURE 6-16)

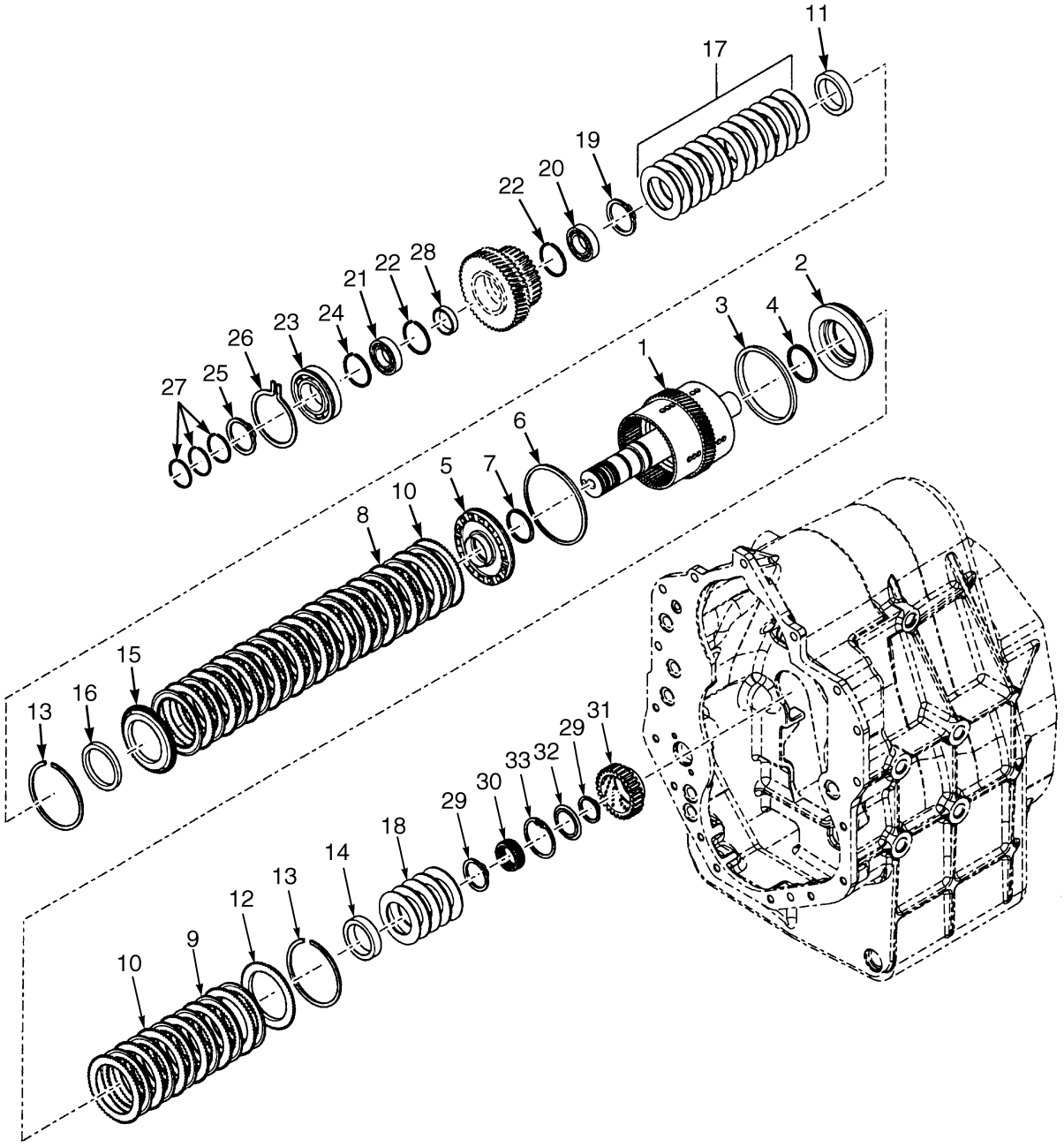

HP240489

©2015 HYSTER COMPANY

REVERSE AND SECOND CLUTCH

ITEM	PART NO.	DESCRIPTION	QTY
	b 2071311	Transmission Assy	1
	ad 2104740	Transmission Assy	1
	f 2093555	Transmission Assy	1
1	**e** 1691404	Shaft (Reverse, Second Shaft, Gear)	1
1	**b** 1556971	Shaft (Reverse, Second Shaft, Gear)	1
2	1556963	Piston	1
3	1311811	Piston Seal	1
4	1311812	Piston Seal	1
5	1556963	Piston	1
6	1311811	Piston Seal	1
7	1311812	Piston Seal	1
8	1556964	Friction Disk (Inner) (Second)	6
8	1655548	Friction Disk (Inner, High Density) (Second) (Alternate Part)	6
9	**c** 1556964	Friction Disk (Inner) (Reverse)	12
9	**f** 1655548	Friction Disk (Inner, High Density) (Reverse) (Alternate Part)	12
10	1556965	Separator Plate (Outer)	18
11	1556966	Spacer	1
12	1556978	Clutch Plate	1
13	1311810	Snap Ring	2
14	1556979	Spacer	1
15	1556967	Plate	1
16	1556968	Seal	1
17	**c** 1556969	Disk Spring Assembly (Includes 13 Washers)	1
17	**f** 1705319	Disk Spring Assembly (Includes 13 Washers)	1
18	~~1556983~~		
	1705320	Disk Spring Assembly (Includes 5 Washers)	1
19	382269	Snap Ring	1
20	44308	Ball Bearing	1
21	1556984	Ball Bearing	1
22	1311806	Retaining Ring	2
23	1312351	Bearing	1
24	330570	Retaining Ring	1
25	304527	Snap Ring	1
26	330586	Ring	1
27	1556985	Piston Ring	3
28	1311807	Spacer	1
29	1311808	Snap Ring	2
30	1311658	Bearing (Rear)	1
31	1484565	Clutch Gear (Second Clutch)	1
32	1312097	Retainer	1
33	1312356	Retaining Ring	1
	1557263	Kit-Gasket	1
	4012252	Kit-Seal (Alternate Part)	1

FOOTNOTES:

a Remanufactured Transmission-2104742
b → S/N G019E01996F
c → S/N G019E02448H
d S/N G019E01997F ↔ S/N G019E02448H
e S/N G019E01997F →
f S/N G019E02449H →

©2015 HYSTER COMPANY

THIRD CLUTCH (FIGURE 6-17)

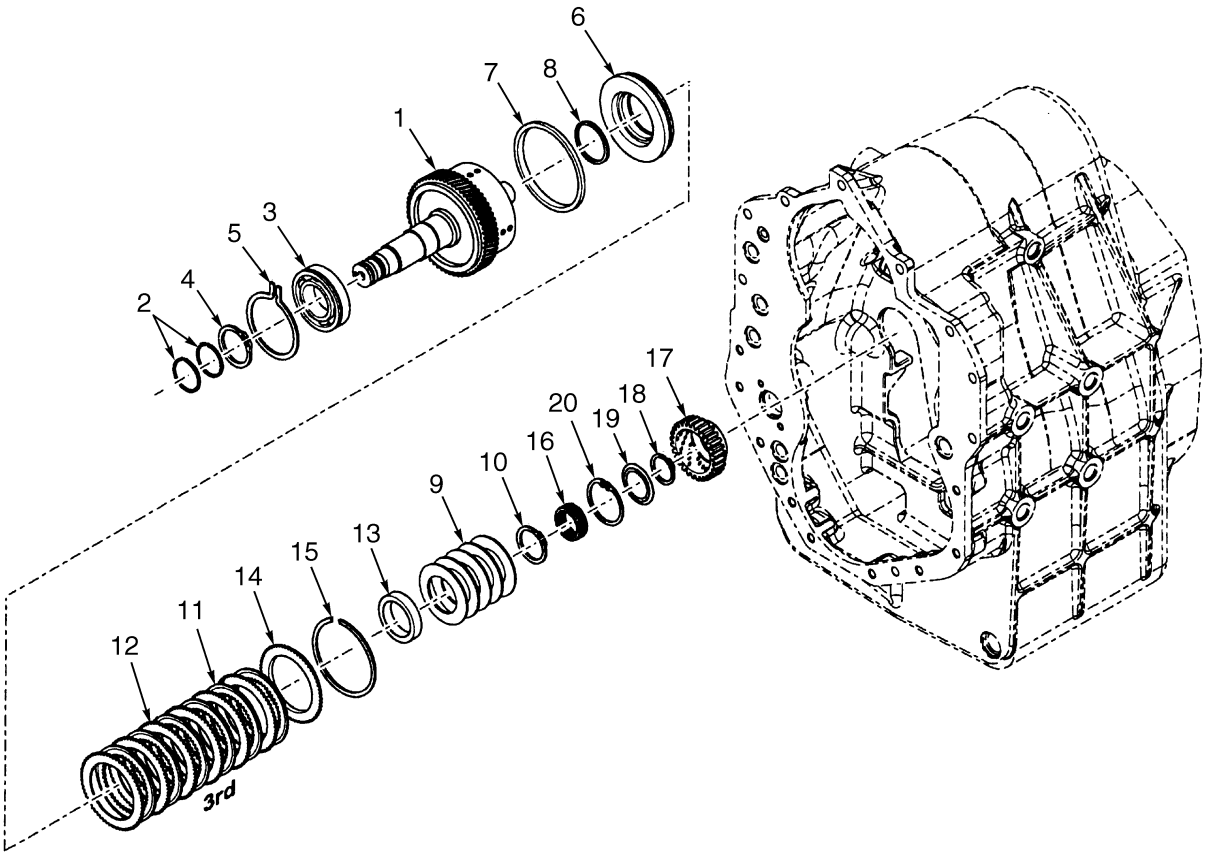

HP240441

©2015 HYSTER COMPANY

THIRD CLUTCH

ITEM	PART NO.	DESCRIPTION	QTY
	b 2071311	Transmission Assy	1
	ac 2104740	Transmission Assy	1
	e 2093555	Transmission Assy	1
1	**d** 1644929	Gear Asm	1
1	**b** ~~1556981~~		
	4047270	Kit-Shaft (Third Shaft, Gear, and Drum)	1
1	4038934	Shaft Assembly, 3rd Speed	1
1	4038935	Disk (Inner)	2
1	1644930	Disk (Inner)	4
1	4015491	Plate (Friction)	2
1	4015492	Plate (Friction)	5
2	1556985	Piston Ring	2
3	1312351	Bearing	1
4	304527	Snap Ring	1
5	330586	Ring	1
6	1556963	Piston	1
7	1311811	Piston Seal	1
8	1311812	Piston Seal	1
9	~~1556983~~		
	1705320	Disk Spring Assembly (Includes 5 Washers)	1
10	**d** 1311808	Snap Ring	1
10	**b** 382269	Snap Ring	2
11	**d** 1644930	Disk (Inner)	6
11	**b** 1556964	Friction Disk (Inner)	6
12	**d** 1510565	Friction Plate (Disk - Outer Half)	2
12	**d** 1510564	Friction Plate (Disk - Outer)	5
12	**b** 1556965	Separator Plate (Outer)	6
13	1556979	Spacer	1
14	1556978	Clutch Plate	1
15	1311810	Snap Ring	1
16	1311658	Bearing	1
17	1484565	Clutch Gear (Third Clutch)	1
18	382269	Snap Ring	1
19	1312097	Retainer	1
20	1312356	Retaining Ring	1
	1557263	Kit-Gasket	1
	4012252	Kit-Seal (Alternate Part)	1

FOOTNOTES:

a Remanufactured Transmission-2104742
b → S/N G019E01996F
c S/N G019E01997F ↔ S/N G019E02448H
d S/N G019E01997F →
e S/N G019E02449H →

©2015 HYSTER COMPANY

TORQUE CONVERTER ASSEMBLY (FIGURE 6-18)

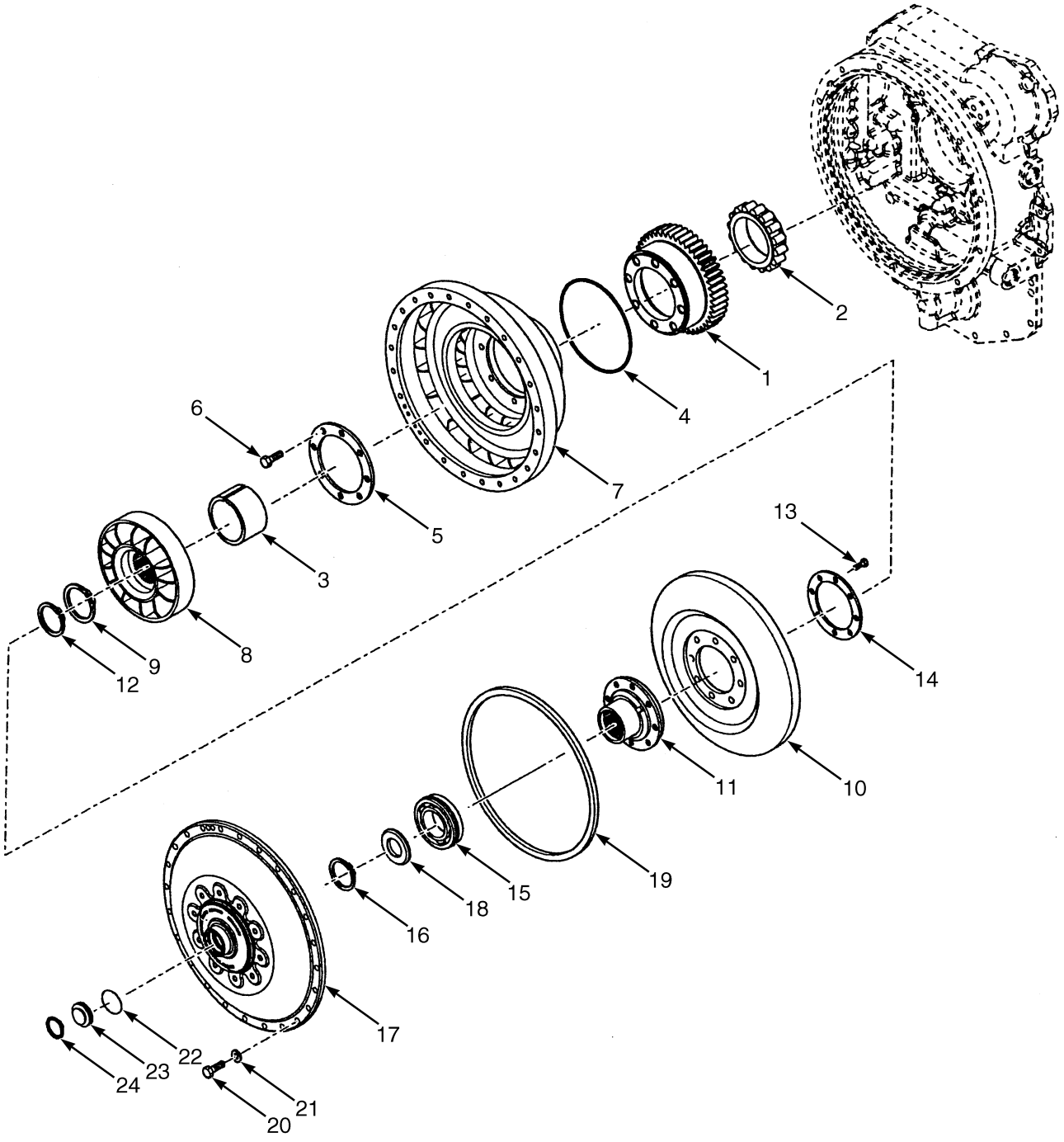

HP240477

©2015 HYSTER COMPANY

TORQUE CONVERTER ASSEMBLY

ITEM	PART NO.	DESCRIPTION	QTY
	b 2071311	Transmission Assy	1
	ac 2104740	Transmission Assy	1
	e 2093555	Transmission Assy	1
1	1556934	Gear (Impeller)	1
2	1312279	Bearing	1
3	1312379	Spacer	1
4	1311721	O-Ring	1
5	1556935	Ring	1
6	1579117	Screw	8
7	**d** 1556937	Impeller	1
7	**b** 1311558	Impeller	1
8	**d** 1556938	Stator	1
8	**b** 1312275	Stator	1
9	1312377	Retaining Ring	1
10	1556941	Turbine	1
11	1579118	Hub (Turbine)	1
12	1312280	Retaining Ring	1
13	1307970	Screw	12
14	1311802	Back-Up Ring	1
15	1312285	Bearing	1
16	213069	Snap Ring	1
17	1579123	Cover (Impeller)	1
18	1579120	Spacer	1
19	1556944	O-Ring	1
20	330593	Screw	24
21	15156	Lockwasher	24
22	1579121	O-Ring	1
23	1311566	Plug	1
24	1311844	Retaining Ring	1
	1557263	Kit-Gasket	1
	4012252	Kit-Seal (Alternate Part)	1

FOOTNOTES:

a Remanufactured Transmission-2104742
b → S/N G019E01996F
c S/N G019E01997F ↔ S/N G019E02448H
d S/N G019E01997F →
e S/N G019E02449H →

©2015 HYSTER COMPANY

TORQUE CONVERTER HOUSING AND ATTACHING PARTS (FIGURE 6-19)

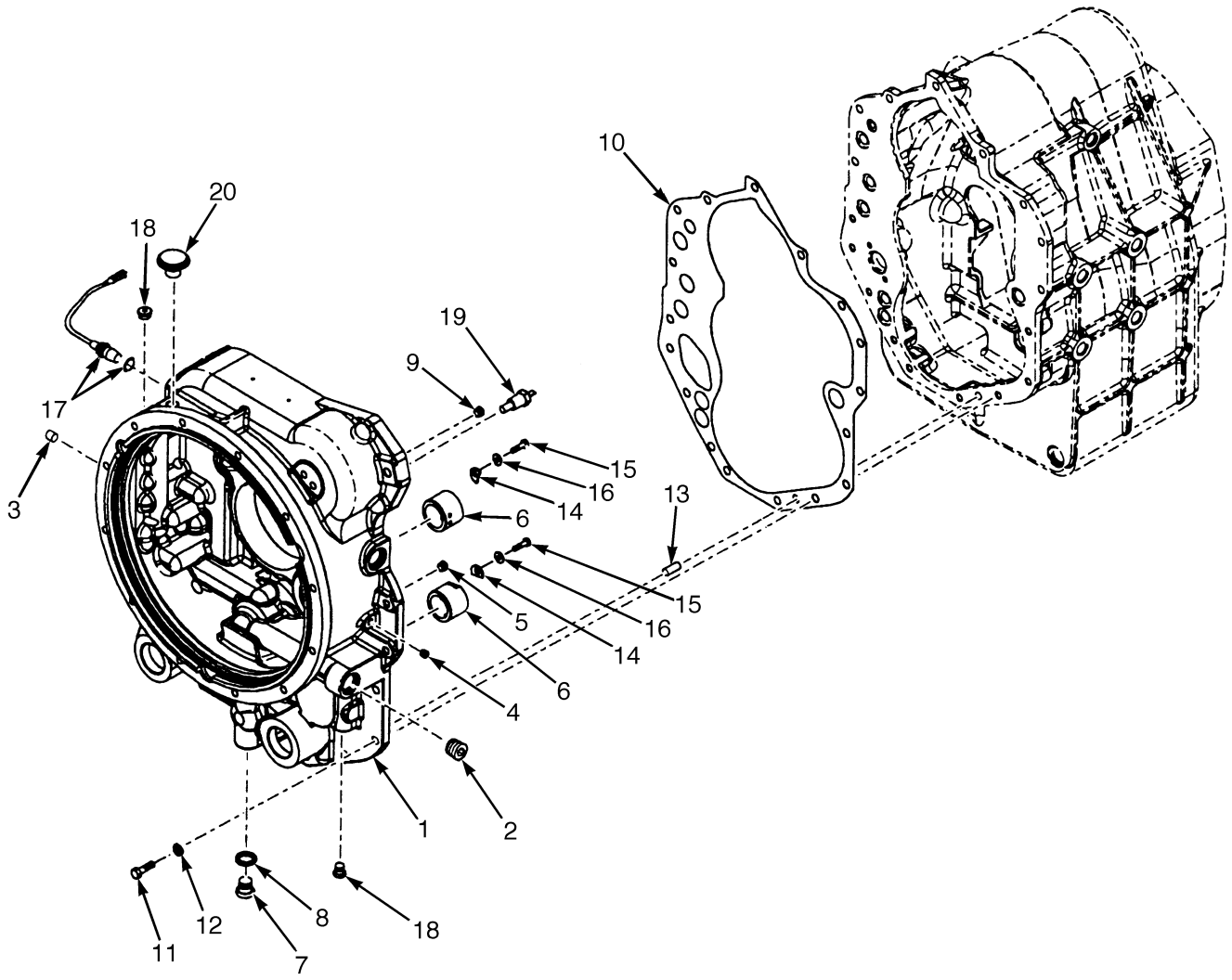

BP240220

©2015 HYSTER COMPANY

TORQUE CONVERTER HOUSING AND ATTACHING PARTS

ITEM	PART NO.	DESCRIPTION	QTY
	b 2071311	Transmission Assy	1
	ad 2104740	Transmission Assy	1
	f 2093555	Transmission Assy	1
1	**c** 1579006	Converter Housing	1
1	**f** 1705304	Converter Housing	1
2	**c** 1531587	Plug (Orifice)	1
3	**c**	Plug (Expansion)	1
4	330666	Plug	1
5	330511	Plug	1
6	1312260	Sleeve	2
7	14595	Plug Assembly	1
8	16484	O-Ring	1
9	**f** 330511	Plug	1
10	1579008	Gasket	1
11	221532	Capscrew	17
12	15157	Lockwasher	17
13	1579009	Pin	1
14	330520	Washer	2
15	16374	Capscrew	2
16	15155	Lockwasher	2
17	1579010	Sensor-Speed (Engine and Temperature)	1
17	1579011	O-Ring (Speed Sensor)	1
18	1389313	Plug	2
18	16483	O-Ring	1
19	~~1556912~~		
	4027241	Switch (Temperature)	1
20	**e** 1676815	Breather	1
20	**b** 330527	Breather	1
	1557263	Kit-Gasket	1
	4012252	Kit-Seal (Alternate Part)	1

FOOTNOTES:

a Remanufactured Transmission-2104742
b → S/N G019E01996F
c → S/N G019E02448H
d S/N G019E01997F ↔ S/N G019E02448H
e S/N G019E01997F →
f S/N G019E02449H →

©2015 HYSTER COMPANY

TRANSMISSION CASE (FIGURE 6-20)

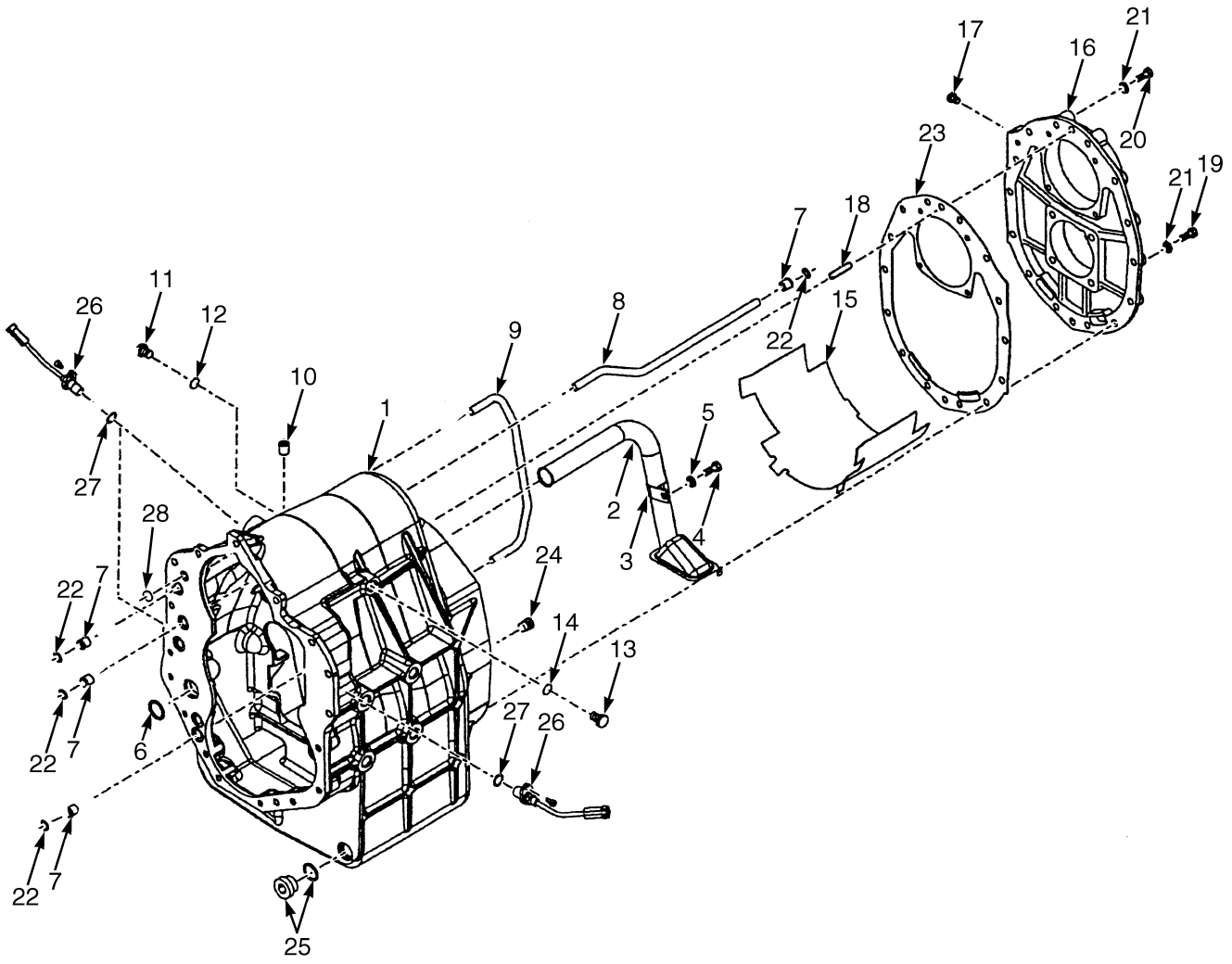

BP240139

©2015 HYSTER COMPANY

TRANSMISSION CASE

ITEM	PART NO.	DESCRIPTION	QTY
	b 2071311	Transmission Assy	1
	ad 2104740	Transmission Assy	1
	f 2093555	Transmission Assy	1
1	**c** 1579015	Transmission Housing	1
1	**f** 1705306	Transmission Housing	1
2	**c** 1579016	Tube Assy (Suction)	1
2	**f** 1705307	Tube Assy	1
3	**c** 1579017	Clip	1
4	**d** 18557	Capscrew	1
4	**bf** 1579018	Capscrew	1
5	15157	Lockwasher	1
6	1579019	O-Ring	1
7	330504	Nut	4
8	1556915	Tube (Low Speed)	1
9	1312266	Tube (Third Clutch)	1
10	15316	Fitting	1
11	**c** 1389313	Plug	1
12	**c** 16483	O-Ring	1
13	~~1589792~~		
	235691	Fitting	1
14	16484	O-Ring	1
15	**e** 1691361	Baffle	1
15	**b** 1579020	Baffle	1
16	**c** 1312268	Cover	1
16	**f** 1705308	Cover	1
17	**c** 330511	Plug	1
17	**f** 14589	Plug	1
18	**c** 330502	Pin	2
18	**f** 1579009	Pin	1
19	**c** 1384794	Screw	12
19	**f** 1384794	Screw	14
20	**c** 1390042	Screw	2
21	15157	Lockwasher	14
22	130625	O-Ring	4
23	**c** 1312269	Gasket	1
23	**f** 1705310	Gasket	1
24	1311544	Drain Plug (Drain)	1
25	1556918	Plug (Dipstick)	1
25	16486	O-Ring	1
26	1579021	Sensor (Engine Speed)	3
27	1579011	O-Ring	3
28	87281	O-Ring	1
	1557263	Kit-Gasket	1
	4012252	Kit-Seal (Alternate Part)	1

FOOTNOTES:

a Remanufactured Transmission-2104742
b → S/N G019E01996F
c → S/N G019E02448H
d S/N G019E01997F ↔ S/N G019E02448H
e S/N G019E01997F →
f S/N G019E02449H →

©2015 HYSTER COMPANY

TRANSMISSION MOUNT AND ATTACHING PARTS (FIGURE 6-21)

LPG ENGINE

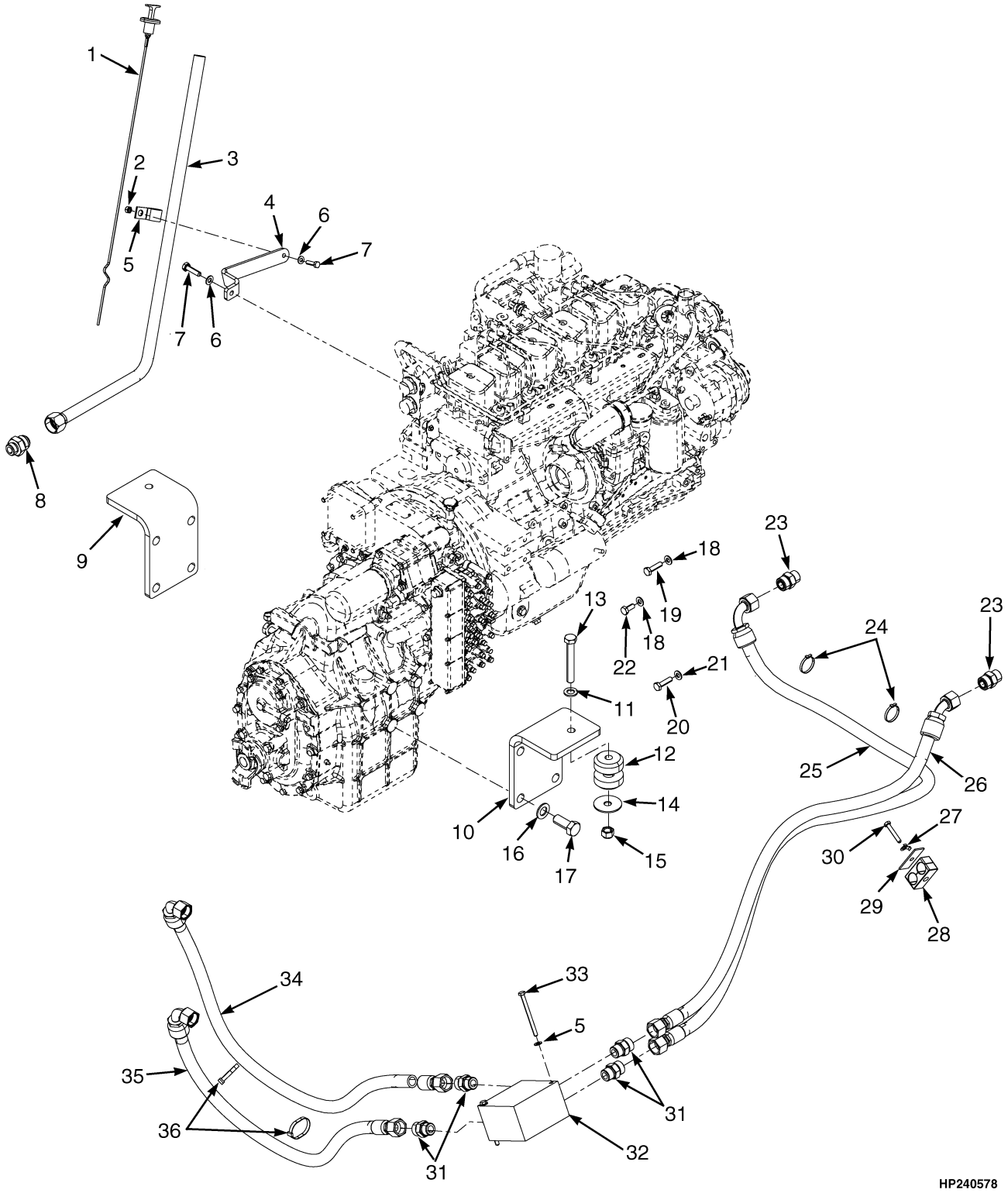

©2015 HYSTER COMPANY

TRANSMISSION MOUNT AND ATTACHING PARTS
LPG ENGINE

ITEM	PART NO.	DESCRIPTION	QTY
1	2056545	Dipstick	1
2	302400	Nut	1
3	2074432	Dipstick Tube	1
4	1584908	Bracket	1
5	88194	Clamp	3
6	320157	Washer	5
7	136681	Capscrew	2
8	142500	Fitting	1
9	1622846	Bracket	1
10	1622845	Bracket	1
11	320165	Washer	2
12	1393707	Isolator	2
13	292572	Capscrew	2
14	1452404	Washer	2
15	302404	Locknut	2
16	~~4020900~~		
	320169	Washer	8
17	292582	Capscrew	8
18	320159	Washer	12
19	292515	Capscrew	10
20	221509	Capscrew	8
21	15156	Lockwasher	8
22	287854	Capscrew	2
23	1486754	Fitting	2
24	137852	Strap Clamp	2
25	2090634	Hose Assy	1
26	2090636	Hose Assy	1
27	1533661	Lockwasher	1
28	1618452	Clamp	1
29	1533649	Cover Plate	1
30	292509	Capscrew	1
30	214364	Capscrew (Alternate Part)	1
31	1473888	Fitting	6
32	2091525	Manifold	1
32	1708450	Regulator Valve	1
33	136750	Capscrew	2
34	2090639	Hose Assy	1
35	2090638	Hose Assy	1
36	129563	Strap Clamp	2

©2015 HYSTER COMPANY

TRANSMISSION MOUNT AND ATTACHING PARTS (FIGURE 6-22)
DIESEL ENGINE

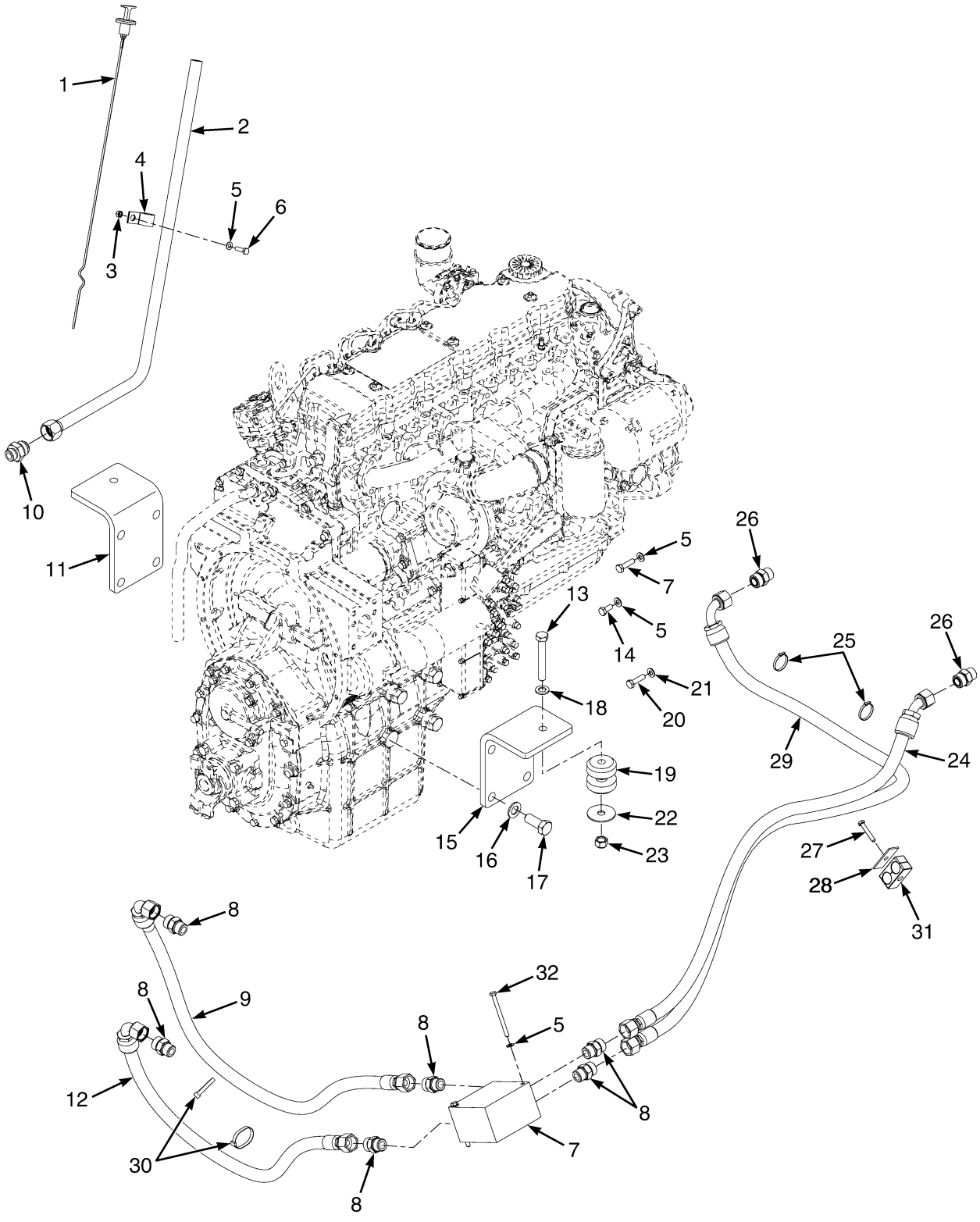

©2015 HYSTER COMPANY

TRANSMISSION MOUNT AND ATTACHING PARTS
DIESEL ENGINE

ITEM	PART NO.	DESCRIPTION	QTY
1	2056545	Dipstick	1
2	2074432	Dipstick Tube	1
3	302400	Nut	1
4	88194	Clamp	1
5	320157	Washer	6
6	136681	Capscrew	1
7	2091525	Manifold	1
7	1708450	Regulator Valve	1
8	1473888	Fitting	6
9	2090638	Hose Assy	1
10	142500	Fitting	1
11	1622846	Bracket	1
12	2090639	Hose Assy	1
13	292572	Capscrew	2
14	287854	Capscrew	2
15	1622845	Bracket	1
16	~~4020900~~		
	320169	Washer	8
17	292582	Capscrew	8
18	320165	Washer	2
19	1393707	Isolator	2
20	221509	Capscrew	8
21	15156	Lockwasher	8
22	1452404	Washer	2
23	302404	Locknut	2
24	2090634	Hose Assy	1
25	137852	Strap Clamp	2
26	1486754	Fitting	2
27	292509	Capscrew	1
27	214364	Capscrew (Alternate Part)	1
28	1533649	Cover Plate	1
29	2090636	Hose Assy	1
30	2033612	Strap Clamp	2
31	1618452	Clamp	1
32	136750	Capscrew	2
	a 1672885	Bracket	1

FOOTNOTES:

a Not Illustrated

©2015 HYSTER COMPANY

TURBINE SHAFT AND STATOR SUPPORT (FIGURE 6-23)

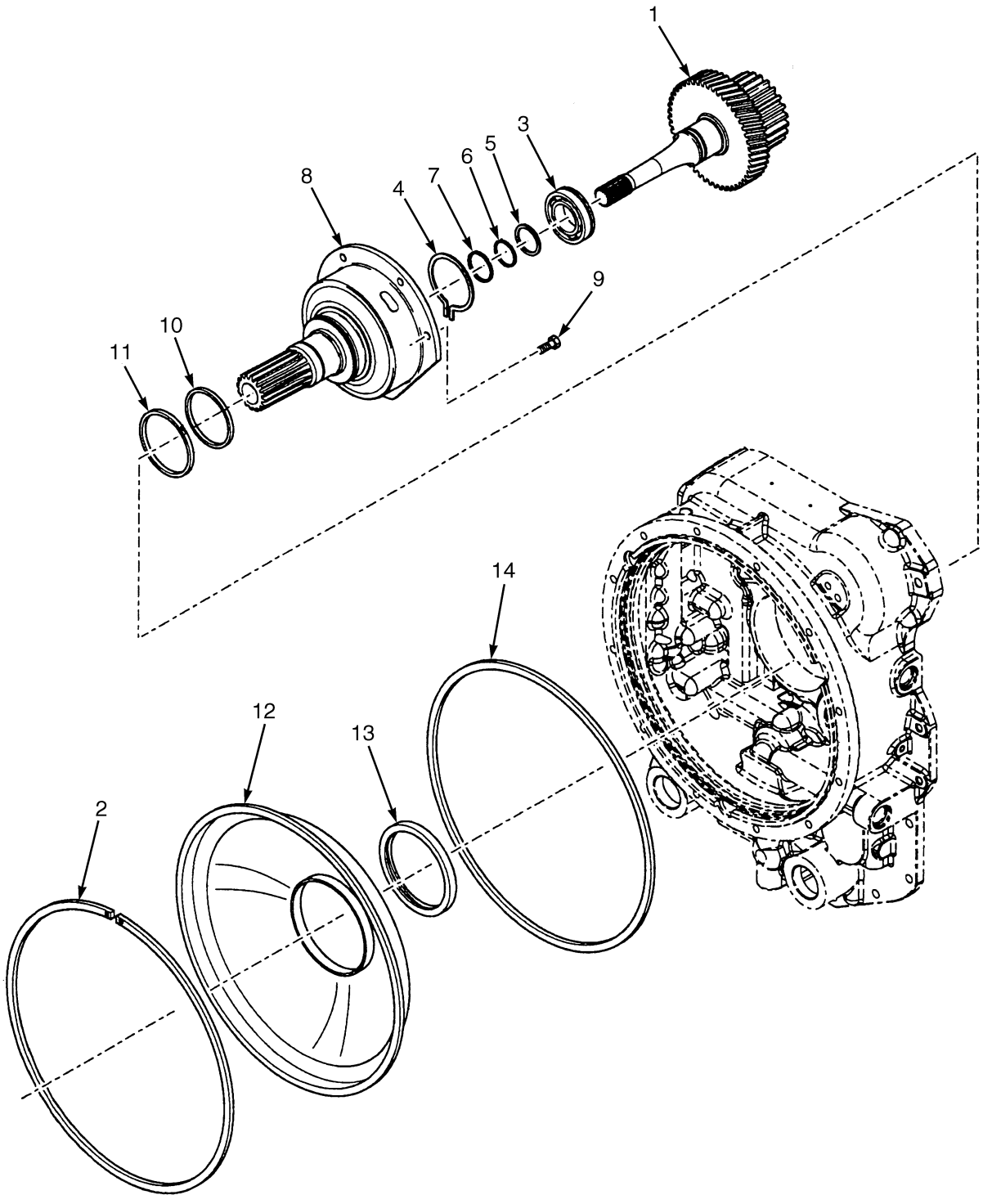

©2015 HYSTER COMPANY

TURBINE SHAFT AND STATOR SUPPORT

ITEM	PART NO.	DESCRIPTION	QTY
	b 2071311	Transmission Assy	1
	ad 2104740	Transmission Assy	1
	f 2093555	Transmission Assy	1
1	**e** 1691360	Shaft	1
1	**b** 1579023	Shaft	1
2	1312376	Retaining Ring	1
3	**c** 382283	Bearing	1
3	**f** 1624585	Ball Bearing	1
4	1311719	Ring	1
5	1311716	Washer	1
6	1311717	Retaining Ring	1
7	1311718	Piston Ring	1
8	1312272	Support (Stator)	1
9	1312378	Screw	1
10	1312374	Piston Ring	1
11	1556922	Spring (Piston)	1
12	1312274	Baffle And Seal Assembly (Oil)	1
13	330532	Seal	1
14	1312375	Seal	1
	1557263	Kit-Gasket	1
	4012252	Kit-Seal (Alternate Part)	1

FOOTNOTES:

a Remanufactured Transmission-2104742
b → S/N G019E01996F
c → S/N G019E02448H
d S/N G019E01997F ↔ S/N G019E02448H
e S/N G019E01997F →
f S/N G019E02449H →

©2015 HYSTER COMPANY

NOTES

©2015 HYSTER COMPANY

7 DRIVE AXLE

SECTION 7
DRIVE AXLE

DESCRIPTION	PAGE
AXLE HOUSING AND ATTACHING PARTS	7-2
DIFFERENTIAL AND CARRIER	
DRY BRAKE	7-8
WET BRAKE	7-4
DRIVE TIRES AND WHEELS	
BRIDGESTONE	7-19
MICHELIN	7-20
TRELLEBORG - SOLID TIRE	7-18
TRELLEBORG	7-21
HUB AND SHAFT ASSEMBLY	
DRY BRAKE	7-14
WET BRAKE	7-12
PARK BRAKE	
WET BRAKE	7-16

©2015 HYSTER COMPANY

AXLE HOUSING AND ATTACHING PARTS (FIGURE 7-1)

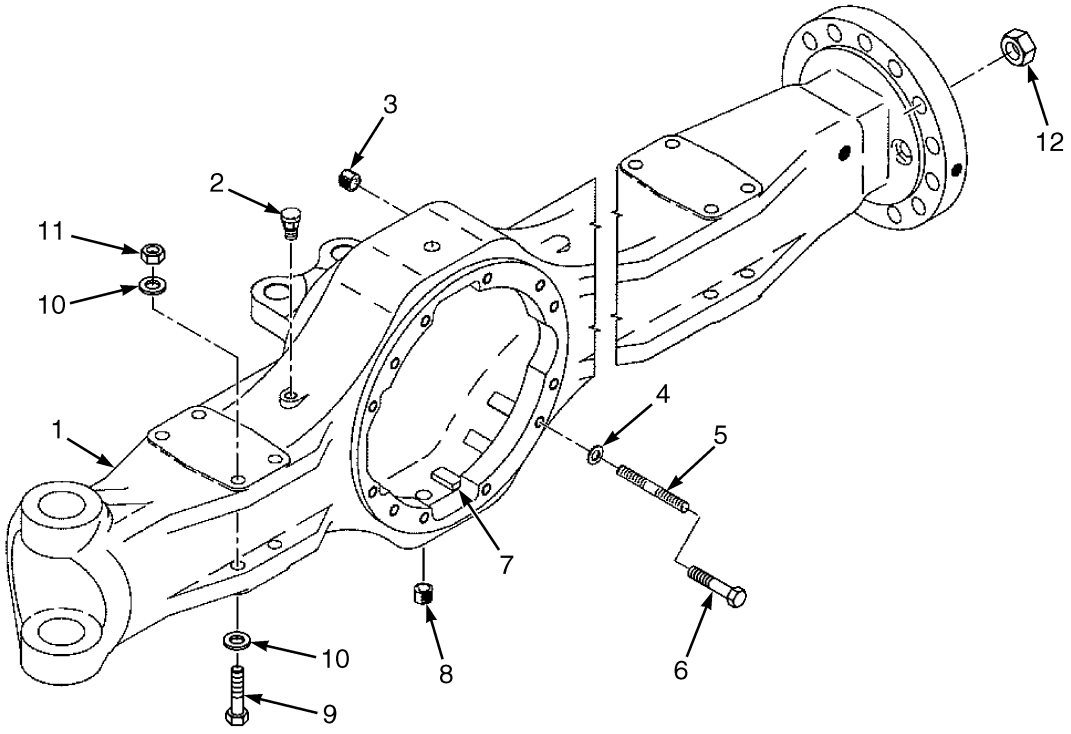

BP070144

©2015 HYSTER COMPANY

AXLE HOUSING AND ATTACHING PARTS

KEY:
A: Dry Brake
B: Wet Brake, Container Handler Trucks
C: Wet Brake, Forklift Trucks

ITEM	PART NO.	DESCRIPTION	QTY A	QTY B	QTY C
	1634397	Drive Axle Assembly	1	..	..
	1634395	Drive Axle Assembly	..	1	..
	1634394	Drive Axle Assembly	..	..	1
1	1643427	Drive Axle Housing	..	1	..
1	1643400	Drive Axle Housing	..	..	1
2	1613651	Breather	1	1	1
3	15316	Fitting	1	1	1
4	125428	Washer	16	16	16
5	1642107	Screw	4	4	4
6	1497903	Screw	12	12	12
7	1473777	Magnet	6	6	6
8	321293	Plug	1	1	1
9	1323889	Capscrew	8	8	8
10	221780	Washer	16	16	16
11	221720	Nut	8	8	8
12	376026	Wheel Nut	20	20	20

©2015 HYSTER COMPANY

DIFFERENTIAL AND CARRIER (FIGURE 7-2)
WET BRAKE

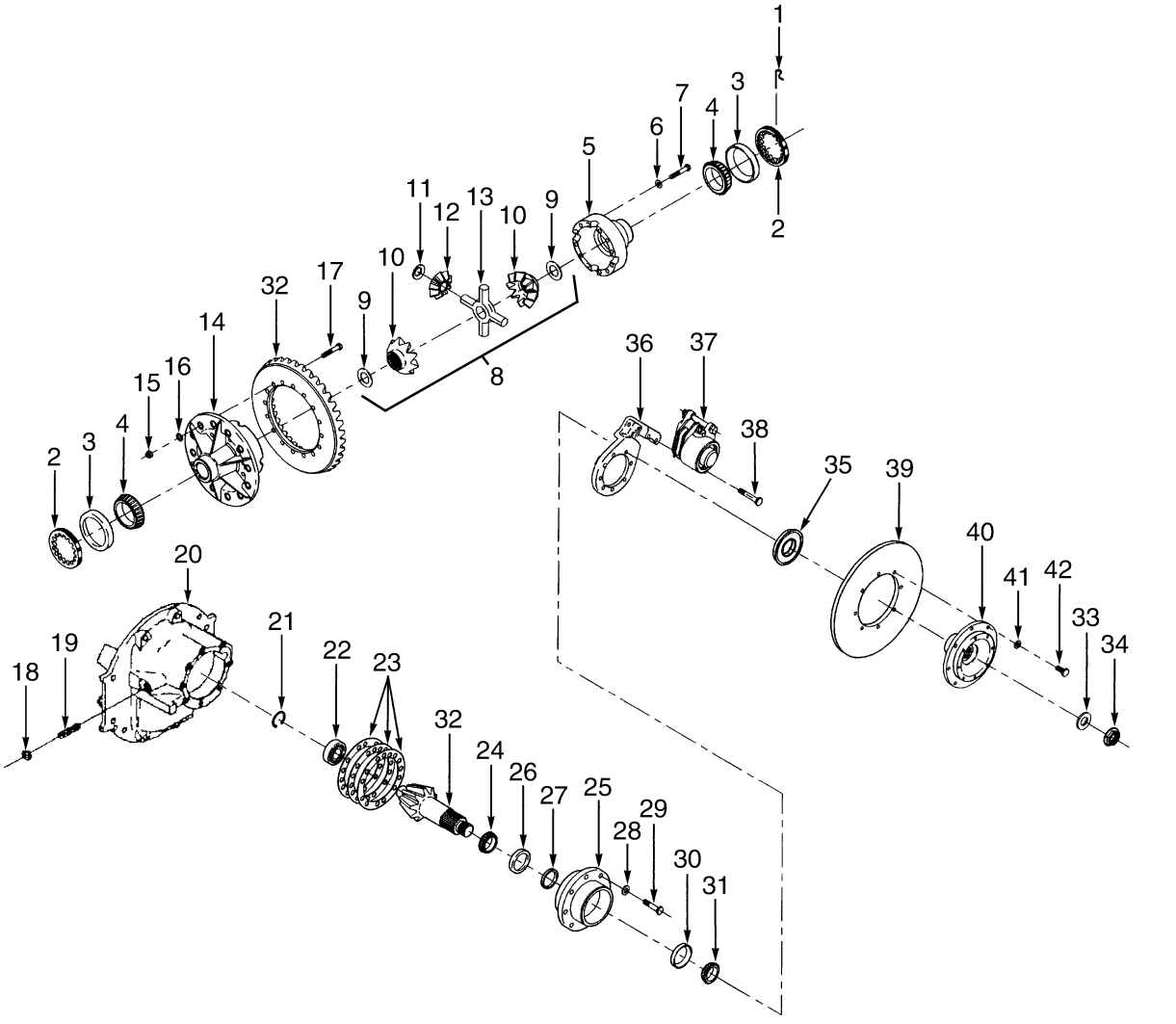

©2015 HYSTER COMPANY

DIFFERENTIAL AND CARRIER
WET BRAKE

ITEM	PART NO.	DESCRIPTION	QTY
	1634394	Drive Axle Assembly (FLT and EC3)	1
	1634395	Drive Axle Assembly (EC4)	1
	1643398	Differential (Assembly)	1
	1643397	Differential Carrier Assembly	1
1	1566126	Cotter Pin	2
2	1347839	Ring Bearing Set	2
3	1475420	Bearing Cup Set	2
4	1475421	Bearing Cone Set	2
5	~~1590043~~		
	1643396	Differential Housing Case Assembly	1
6	1450861	Washer	16
7	1347831	Capscrew	16
8	1642102	Kit-Differential	1
9	**a** 1642103	Thrust Washer	2
10	**a** 1379753	Gear	2
11	**a** 1642104	Thrust Washer	4
12	**a** 1347835	Pinion	4
13	**a** ~~1502130~~		
	1374558	Spider	1
14	. . . . .	Housing	1
15	1374550	Nut	12
16	125428	Washer	12
17	1347822	Bolt and Capscrew	12
18	1312616	Locknut	1
19	1374097	Screw	1
20	1642096	Carrier and Cap Assy	1
20	1380777	Ball	4
20	1347770	Washer	4
20	293716	Capscrew	4
21	240683	Snap Ring	1
22	296844	Bearing	1
23	1642097	Kit-Shim	AR
24	1347774	Bearing Cone	1
25	1347772	Pinion (Cage Assembly)	1
26	200972	Bearing Cup (Tapered)	1
27	1347800	Kit-Spacer	1
28	1450861	Washer	8
29	1566125	Capscrew	8
30	30062	Bearing Cup	1
31	1347812	Bearing Cone	1
32	1489411	Bevel Gear Assembly	1
33	1312083	Washer	1
34	1357734	Locknut	1
35	1642099	Oil Seal	1
36	1489407	Adapter (Brake)	1
37	1561604	Brake Assembly (Park Brake)	1
38	293654	Capscrew	5
39	1382918	Brake Disk	1
40	1489405	Yoke	1
41	221767	Washer	8

©2015 HYSTER COMPANY

DIFFERENTIAL AND CARRIER
WET BRAKE

ITEM	PART NO.	DESCRIPTION	QTY
42	16815	Capscrew	8
	1374099	Kit-Hardware	1

FOOTNOTES:

a Included in Kit 1642102

©2015 HYSTER COMPANY

NOTES

©2015 HYSTER COMPANY

DIFFERENTIAL AND CARRIER (FIGURE 7-3)
DRY BRAKE

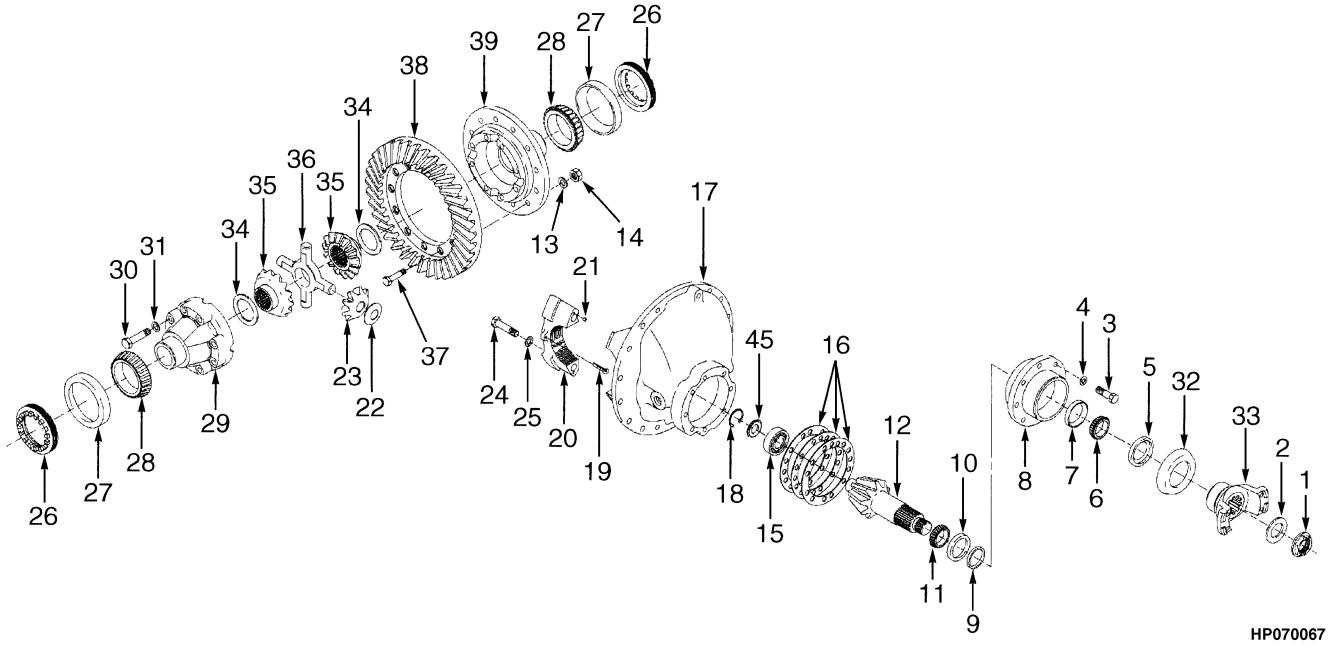

©2015 HYSTER COMPANY

DIFFERENTIAL AND CARRIER
DRY BRAKE

ITEM	PART NO.	DESCRIPTION	QTY
	1634397	Drive Axle Assembly	1
1	1357734	Locknut	1
2	1312083	Washer	1
3	1347819	Capscrew	8
4	1450861	Washer	8
5	1642099	Oil Seal	1
6	1347812	Bearing Cone (Outer)	1
7	200972	Bearing Cup (Tapered) (Outer)	1
8	1374091	Cage	1
9	. . . . .	Spacer (8,75 mm)	2
9	. . . . .	Spacer (8,78 mm)	2
9	. . . . .	Spacer (8,80 mm)	2
9	. . . . .	Spacer (8,83 mm)	2
9	. . . . .	Spacer (8,85 mm)	2
9	. . . . .	Spacer (8,98 mm)	2
9	. . . . .	Spacer (9,10 mm)	2
9	. . . . .	Spacer (9,13 mm)	2
9	. . . . .	Spacer (9,15 mm)	2
9	. . . . .	Spacer (9,18 mm)	2
9	. . . . .	Spacer (9,20 mm)	2
10	30062	Bearing Cup (Inner)	1
11	1347774	Bearing Cone (Inner)	1
12	. . . . .	Pinion Gear	1
13	125428	Washer	12
14	1374550	Nut	12
15	296844	Bearing	1
16	. . . . .	Shim (0.003 in.)	AR
16	. . . . .	Shim (0.005 in.)	AR
16	. . . . .	Shim (0.010 in.)	AR
16	. . . . .	Shim (0.020 in.)	AR
17	1380893	Differential Carrier	1
18	240683	Snap Ring	1
19	86008	Cotter Pin	2
20	. . . . .	Cap	1
21	1380777	Ball	2
22	200982	Washer	4
23	1347835	Pinion	4
24	293716	Capscrew	4
25	1347770	Washer	4
26	1347839	Ring Bearing Set (LH and RH)	1
27	1475420	Bearing Cup Set (LH and RH)	1
28	1475421	Bearing Cone Set (LH and RH)	1
29	. . . . .	Case	1
30	1347831	Capscrew	16
31	1450861	Washer	16
32	1374089	Deflector	1
33	1374088	Yoke Assembly	1
34	~~1379752~~		
	1380797	Thrust Washer	2
35	. . . . .	Side Gear	2

©2015 HYSTER COMPANY

DIFFERENTIAL AND CARRIER
DRY BRAKE

ITEM	PART NO.	DESCRIPTION	QTY
36	~~1318626~~		
	1374588	Differential Spider	1
37	1347822	Bolt and Capscrew	12
38	. . . . .	Gear Assembly	1
39	. . . . .	Case (Flange Half)	1
39	1489290	Differential Housing	1
39	1489291	Case	1
	1347800	Kit-Spacer	1
	1489286	Kit-Differential	1
	1489287	Kit-Hardware	1
	1374552	Kit-Shim	1
	1374559	Gear and Pinion	1

©2015 HYSTER COMPANY

NOTES

©2015 HYSTER COMPANY

HUB AND SHAFT ASSEMBLY (FIGURE 7-4)
WET BRAKE

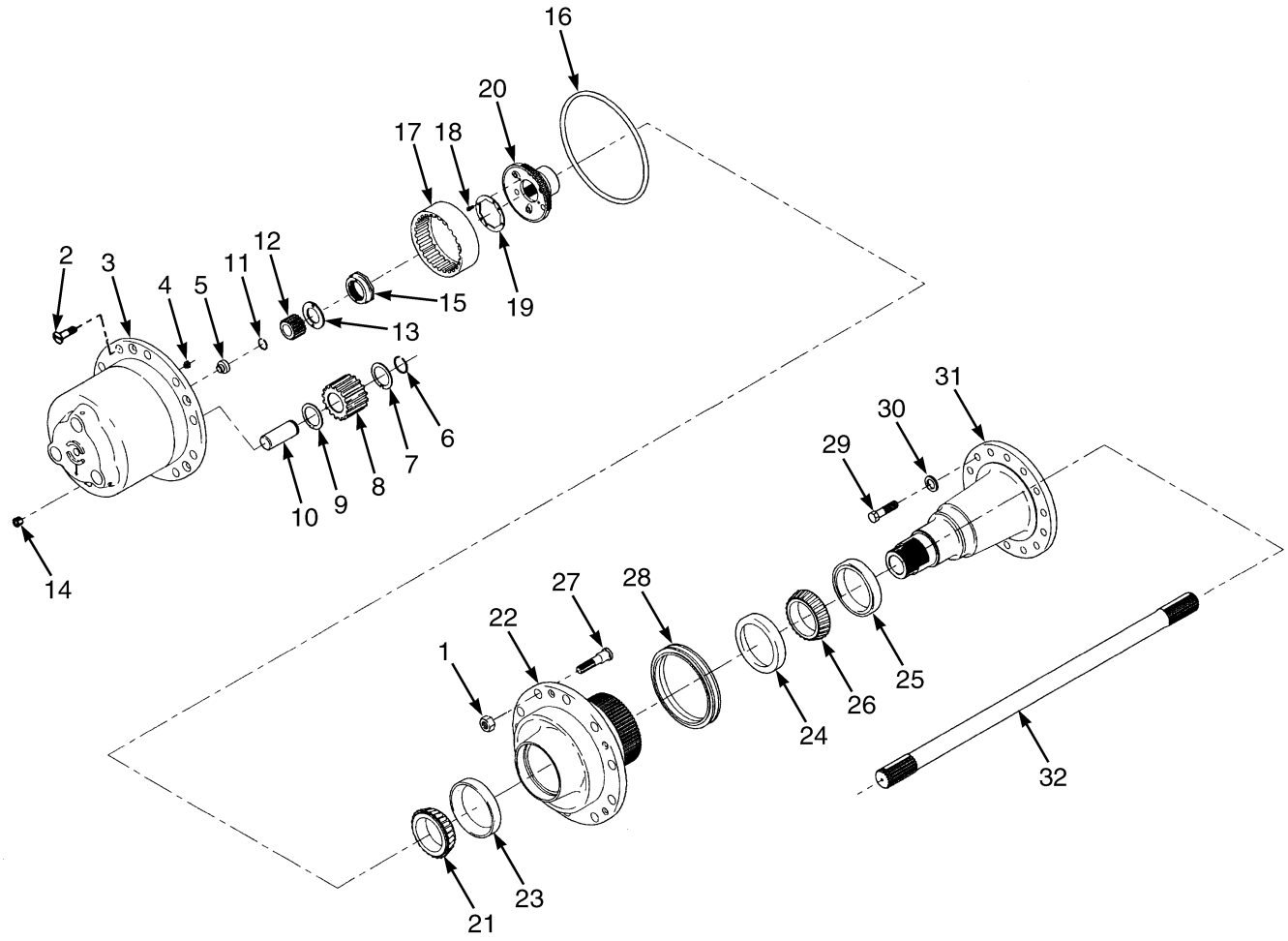

BP070195

©2015 HYSTER COMPANY

HUB AND SHAFT ASSEMBLY
WET BRAKE

ITEM	PART NO.	DESCRIPTION	QTY
	1634394	Drive Axle Assembly (FLT and EC3)	1
	1634395	Drive Axle Assembly (EC4)	1
1	1511548	Wheel Stud	20
2	1385715	Screw	3
3	1489416	Spider Assembly	1
3	1489417	Spider	1
4	**a** 273969	Button (Thrust)	3
5	**a** 1303551	Button (Thrust)	1
6	1489302	Lockring	3
7	1316044	Washer (Inner)	3
8	1489303	Pinion	3
9	1489304	Thrust Washer (Outer)	3
10	1489305	Shaft (Includes O-Ring 1489306)	3
11	1450074	Snap Ring	1
12	1489297	Gear	1
13	1316045	Thrust Washer	1
14	321293	Plug	2
15	1316042	Nut (Bearing)	1
16	1312805	O-Ring	2
17	1489298	Gear	1
18	1489299	Capscrew	2
19	1489300	Lock	1
20	1489301	Hub	1
21	170379	Bearing Cone (Outer)	1
22	1632920	Hub Assembly	1
23	170380	Bearing Cup (Outer)	1
24	1632922	Bearing Cup (Inner)	1
25	1489421	Seal	1
26	1632924	Bearing Cone	1
27	1511548	Wheel Stud	10
28	1489420	Seal	2
29	1489308	Capscrew	26
30	296431	Washer	26
31	1632919	Spindle	2
32	1643403	Axle Shaft (RH)	1
32	1643404	Axle Shaft (LH)	1

FOOTNOTES:

a Included in 1489417 Assembly

©2015 HYSTER COMPANY

HUB AND SHAFT ASSEMBLY (FIGURE 7-5)
DRY BRAKE

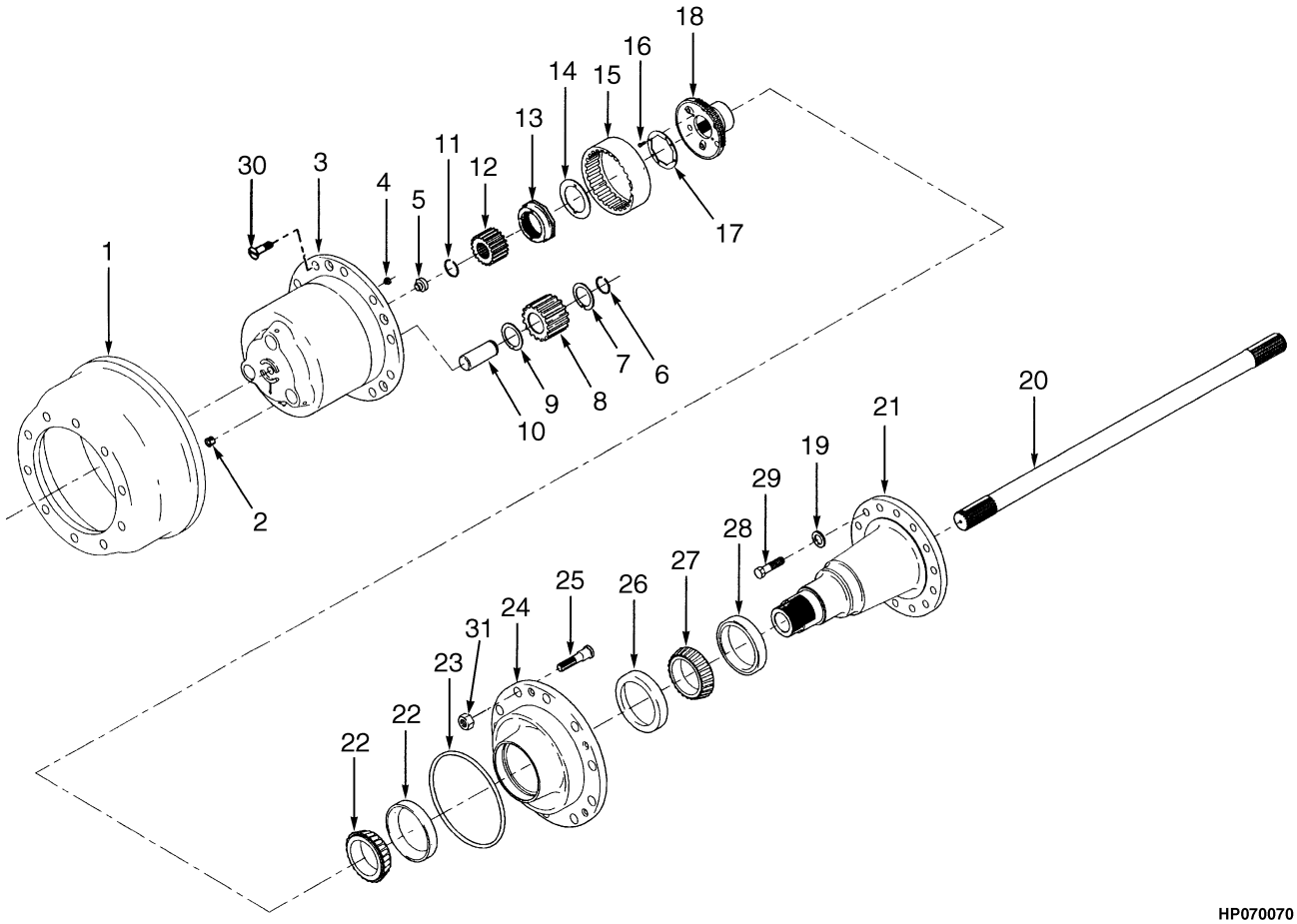

©2015 HYSTER COMPANY

HUB AND SHAFT ASSEMBLY
DRY BRAKE

ITEM	PART NO.	DESCRIPTION	QTY
	1634397	Drive Axle Assembly	1
1	1316306	Brake Drum	2
2	321293	Plug	1
3	1489295	Spider	1
3	1489296	Spider	2
4	273969	Button (Thrust)	3
5	1303551	Button (Thrust)	1
6	1489302	Lockring	3
7	1316044	Washer (Inner)	3
8	1489303	Pinion	3
9	1489304	Thrust Washer (Outer)	3
10	1489305	Shaft (Pinion)	3
10	1489306	O-Ring	1
11	1450074	Snap Ring	2
12	1489297	Gear	2
13	1316042	Nut	2
14	1316045	Thrust Washer	1
15	1489298	Gear	1
16	1489299	Capscrew	4
17	1489300	Lock	1
18	1489301	Hub	1
19	296431	Washer	13
20	1495653	Shaft (RH)	1
20	1495654	Axle Shaft (LH)	1
21	1489309	Spindle	1
22	170379	Bearing Cone (Outer)	1
22	170380	Bearing Cup (Outer)	1
23	1312805	O-Ring	2
24	1489307	Hub	1
25	1511548	Wheel Stud	10
26	132462	Bearing Cup (Inner)	1
27	1316314	Bearing Cone (Inner)	1
28	1312807	Seal	1
29	1489308	Capscrew	13
30	1385715	Screw	3
31	376026	Wheel Nut	20

©2015 HYSTER COMPANY

PARK BRAKE (FIGURE 7-6)
WET BRAKE

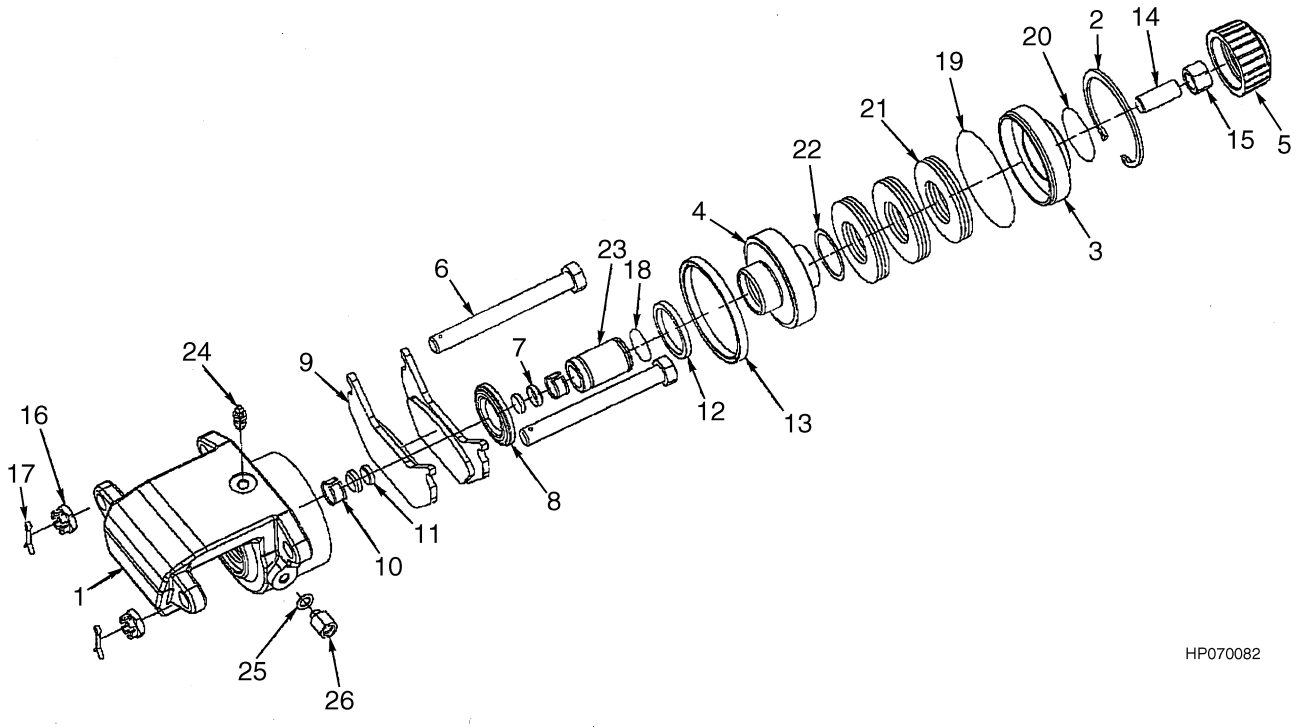

©2015 HYSTER COMPANY

PARK BRAKE
WET BRAKE

ITEM	PART NO.	DESCRIPTION	QTY
	1561604	Brake Assembly (Park Brake)	1
1	1495623	Housing	1
2	1495624	Retaining Ring	1
3	1495625	Piston (Stop)	1
4	1495626	Piston	1
5	1495627	Cap	1
6	1495628	Bolt	2
7	1495629	Cup	2
8	1495630	Boot	1
9	1495631	Brake Lining	2
10	1495632	Sleeve (Friction)	2
11	1495633	Magnet	2
12	1495634	Seal (Cup)	1
13	1495635	Seal (Cup)	1
14	1495636	Setscrew	1
15	1495637	Locknut	1
16	1495638	Nut	2
17	1495639	Cotter Pin	2
18	1495640	O-Ring	1
19	1495641	O-Ring	1
20	1495642	O-Ring	1
21	1495643	Disk Spring	6
22	1495644	Wear Plate	1
23	1495645	Cylinder Rod	1
24	1495646	Bleeder Valve	1
25	1495647	Washer	1
26	1495648	Adapter	1
	1514331	Kit-Repair Parking Brake	1

©2015 HYSTER COMPANY

DRIVE TIRES AND WHEELS (FIGURE 7-7)
TRELLEBORG — SOLID TIRE

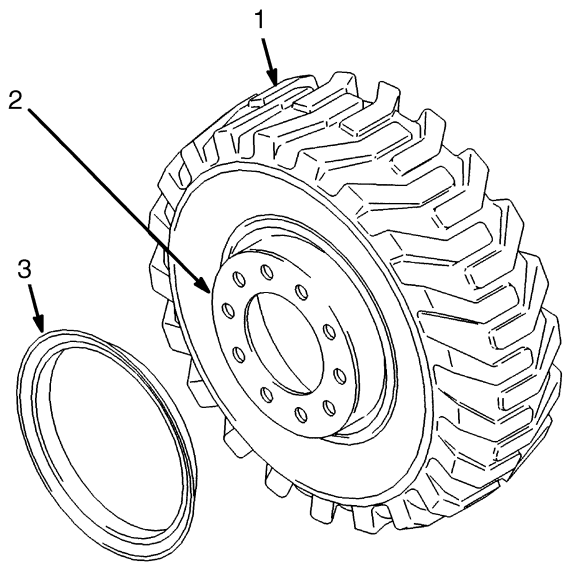

BP000318

ITEM	PART NO.	DESCRIPTION	QTY
1	1313390	Solid Tire (12.00 x 20 Solid)	6
2	1688645	Wheel Assy	1
2	1377130	Ring	1
2	1377131	Bead-Seat Ring	1
3	1377132	Wheel Lock Ring	1

©2015 HYSTER COMPANY

DRIVE TIRES AND WHEELS (FIGURE 7-8)
BRIDGESTONE

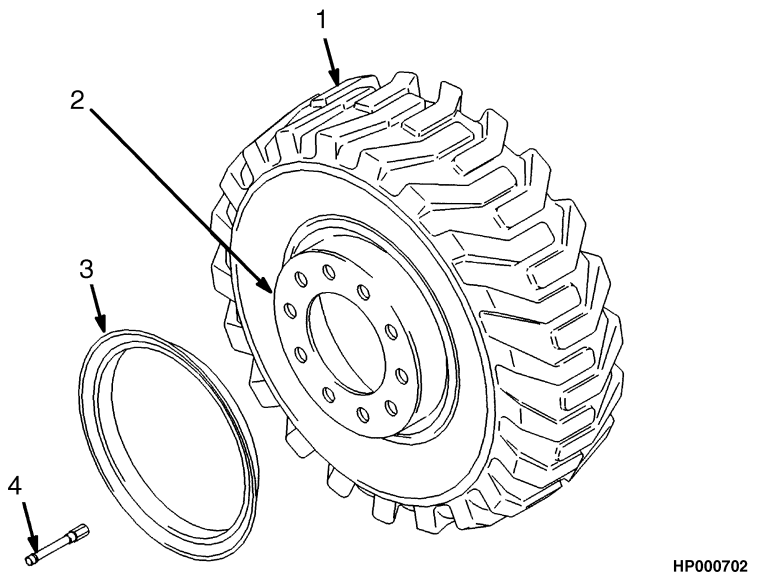

KEY:
A: 11.00 x 20 - 14
B: 12.00 x 20 - 20
C: 12.00 x 20 - 20, Heavy Duty Rim Option

ITEM	PART NO.	DESCRIPTION	QTY A	QTY B	QTY C
	1594932	Pneumatic Tire (Tire and Tube)	1	..	..
	850995	Pneumatic Tire	..	1	1
1	1595478	Pneumatic Tire	1	..	..
1	850996	Pneumatic Tire (With Flap)	..	1	1
1	23026	Pneumatic Tire	1	..	..
1	300294	Pneumatic Tire	..	1	1
1	130587	Tire Flap	1	1	1
2	1688644	Wheel Assy	..	..	1
2	1688643	Wheel Assy	1	1	..
2	2088715	Wheel Assy	..	1	..
2	1391649	Wheel Side Ring	1	1	..
2	1377130	Ring	..	..	1
2	1377131	Bead-Seat Ring	..	..	1
3	1391650	Wheel Lock Ring	1	1	..
3	1377132	Wheel Lock Ring	..	..	1
4	~~1303417~~				
	49189	Extension (Valve Stem)	2	2	2

©2015 HYSTER COMPANY

DRIVE TIRES AND WHEELS (FIGURE 7-9)
MICHELIN

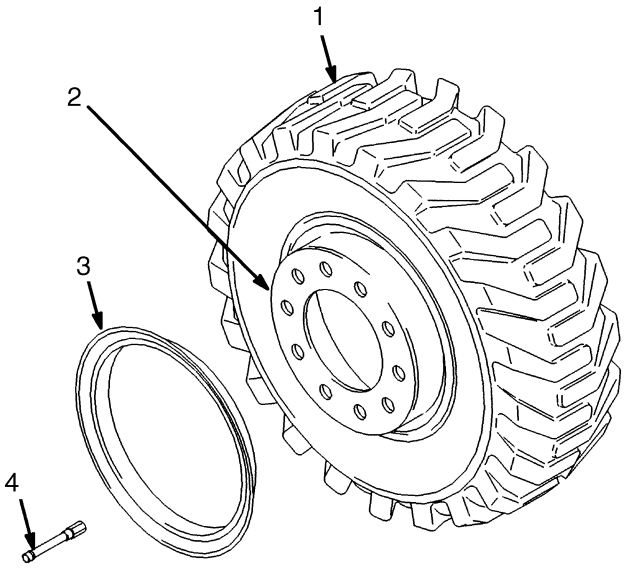

ITEM	PART NO.	DESCRIPTION	QTY
	1471841	Pneumatic Tire Assy, Tubeless (12.00 x 20 Radial, Michelin XZM) (Includes Tire and Tubeless Bead Seal)	6
1	1366719	Pneumatic Tire (Radial) (Michelin)	1
1	1471922	Tubeless Bead Seal Valve	1
1	1471601	Tubeless Bead Seal	1
2	1688644	Wheel Assy	1
2	1377130	Ring	1
2	1377131	Bead-Seat Ring	1
3	1377132	Wheel Lock Ring	1
4	116265	Valve Stem Extension	2

©2015 HYSTER COMPANY

DRIVE TIRES AND WHEELS (FIGURE 7-10)
TRELLEBORG

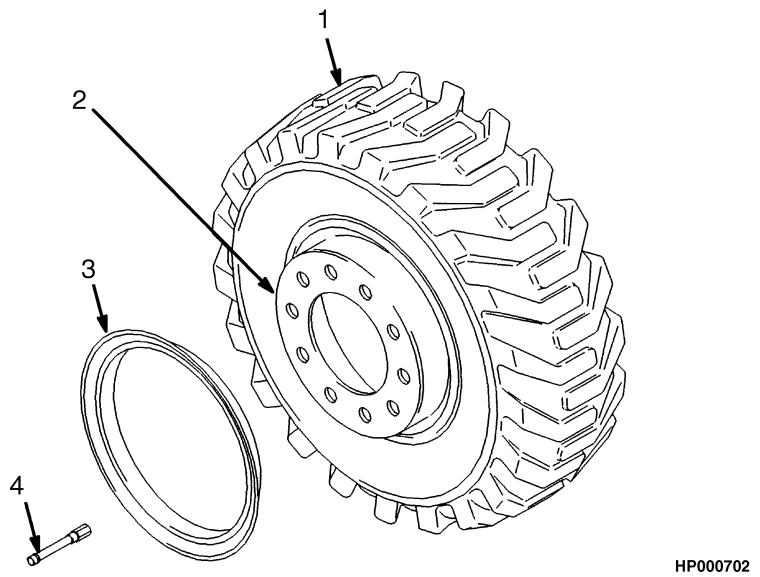

KEY:
A: 12.00 x 20 - 16
B: 11.00 x 20 - 18

ITEM	PART NO.	DESCRIPTION	QTY A	QTY B
	1369102	Pneumatic Tire Assy, Tubed (12.00 x 20 - 20 Bias Ply, Trelleborg T900) (Includes Tire, Tube, and Flap)	1	..
	1594932	Pneumatic Tire (Tire and Tube)	..	1
1	1369103	Pneumatic Tire (Bias) (Trelleborg)	1	..
1	1595478	Pneumatic Tire	..	1
1	1369105	Tube	1	..
1	23026	Pneumatic Tire	..	1
1	130587	Tire Flap	1	1
2	1688643	Wheel Assy	1	1
2	1391649	Wheel Side Ring	1	1
3	1391650	Wheel Lock Ring	1	1
4	~~1303417~~			
	49189	Extension (Valve Stem)	2	2

©2015 HYSTER COMPANY

NOTES

©2015 HYSTER COMPANY

8 STEERING SYSTEM

SECTION 8
STEERING SYSTEM

DESCRIPTION	PAGE
STEER AXLE	8-2
STEER COLUMN ASSEMBLY	8-12
STEER CYLINDER	8-6
STEER TIRES AND WHEELS	
BRIDGESTONE	8-9
MICHELIN	8-10
TRELLEBORG - SOLID TIRE	8-8
TRELLEBORG	8-11
STEERING COLUMN	8-14
STEERING HAND PUMP ASSEMBLY	8-16

©2015 HYSTER COMPANY

STEER AXLE (FIGURE 8-1)

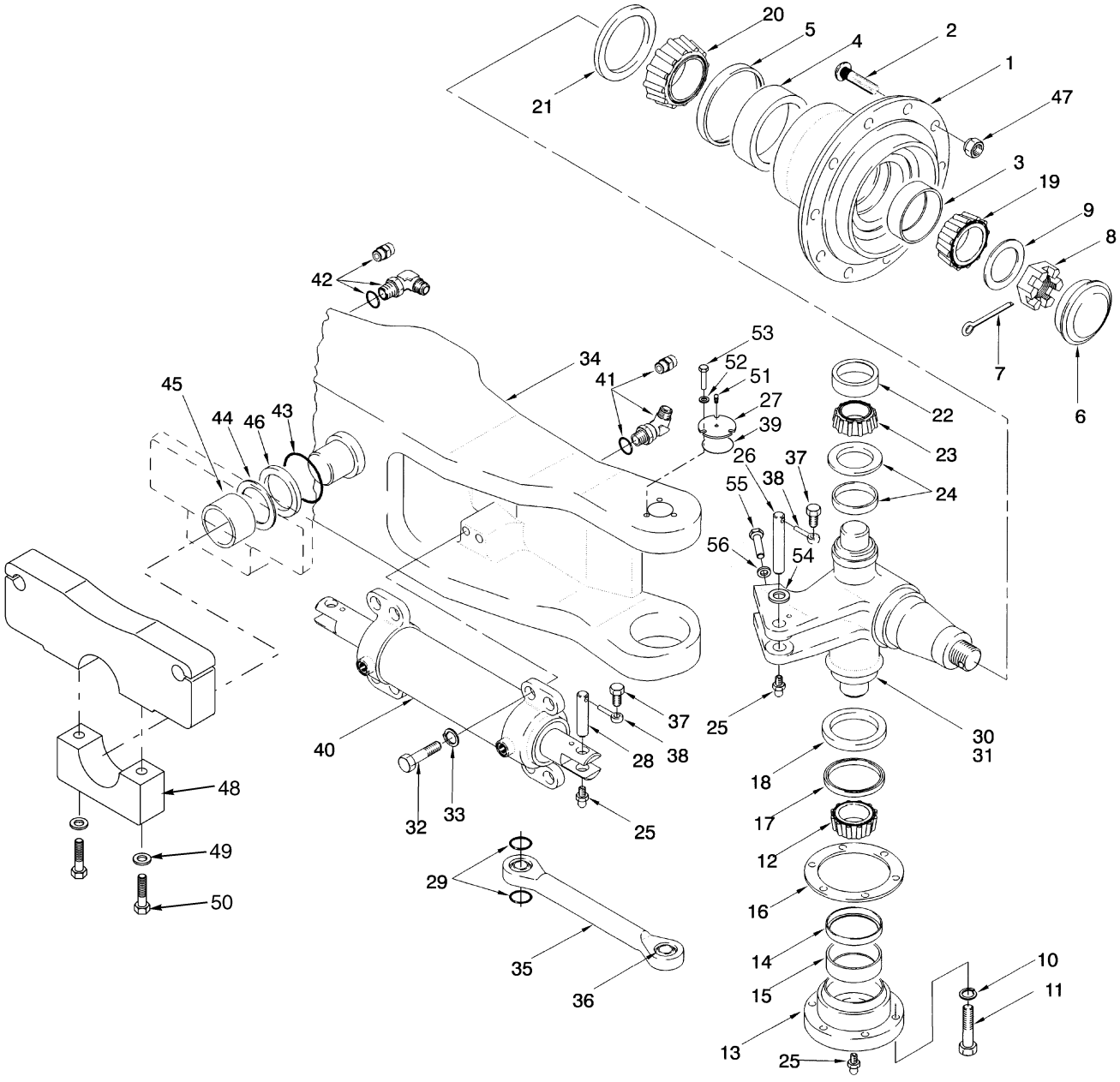

HP220489

©2015 HYSTER COMPANY

STEER AXLE

ITEM	PART NO.	DESCRIPTION	QTY
1	1485302	Hub Assembly (Wheel)	2
2	1311407	Wheel Stud	10
3	186412	Bearing Cup	1
4	30100	Bearing Cup	1
5	387225	Wear Sleeve	2
6	1485292	Cap	2
7	15255	Cotter Pin	2
8	1313375	Nut	2
9	1313374	Washer	2
10	15158	Washer	6
11	246001	Capscrew	6
12	247093	Bearing Cone	2
13	1485294	Bearing Cap Assembly	2
14	164639	Wear Sleeve	1
15	30189	Bearing Cup	1
16	247097	Shim (0,127 mm)	AR
16	247098	Shim (0,178 mm)	AR
16	247099	Shim (0,508 mm)	AR
17	44542	Seal	2
18	247041	Seal	2
19	186415	Bearing Cone	2
20	30107	Bearing Cone	2
21	44547	Seal	2
22	200972	Bearing Cup (Tapered)	2
23	143004	Bearing Cone	2
24	129498	Seal	2
24	129499	Wear Sleeve	2
25	13963	Grease Fitting	6
26	1498274	Pin	2
27	1625196	Plate	2
28	1498273	Pin	2
29	270854	Seal	8
30	1643440	Spindle (LH)	1
31	1643441	Spindle (RH)	1
32	293708	Capscrew	8
33	~~4020900~~		
	320169	Washer	8
34	1637426	Steering Axle	1
34	1591498	Shaft	1
35	1485298	Tie Rod	2
36	192814	Bushing	2
37	183611	Capscrew	4
38	195566	Anchor	4
39	55468	O-Ring	2
40	2083131	Steering Cylinder (☞Figure 8-2)	1
41	1473887	Fitting	1
42	1473897	Fitting	1
43	131193	Sealing Ring	1
44	131190	Shim (2,794 mm)	AR
44	131191	Shim (1,016 mm)	AR
45	1335873	Bushing	2

©2015 HYSTER COMPANY

STEER AXLE

ITEM	PART NO.	DESCRIPTION	QTY
46	1335870	Flange	2
47	376026	Wheel Nut	20
48	376156	Plate	1
49	15162	Lockwasher	2
50	16279	Capscrew	2
51	16041	Grease Fitting	2
52	320159	Washer	6
53	292514	Capscrew	6
54	15134	Washer	4
55	292560	Capscrew	4
56	1593338	Nut	4

©2015 HYSTER COMPANY

NOTES

©2015 HYSTER COMPANY

STEER CYLINDER (FIGURE 8-2)

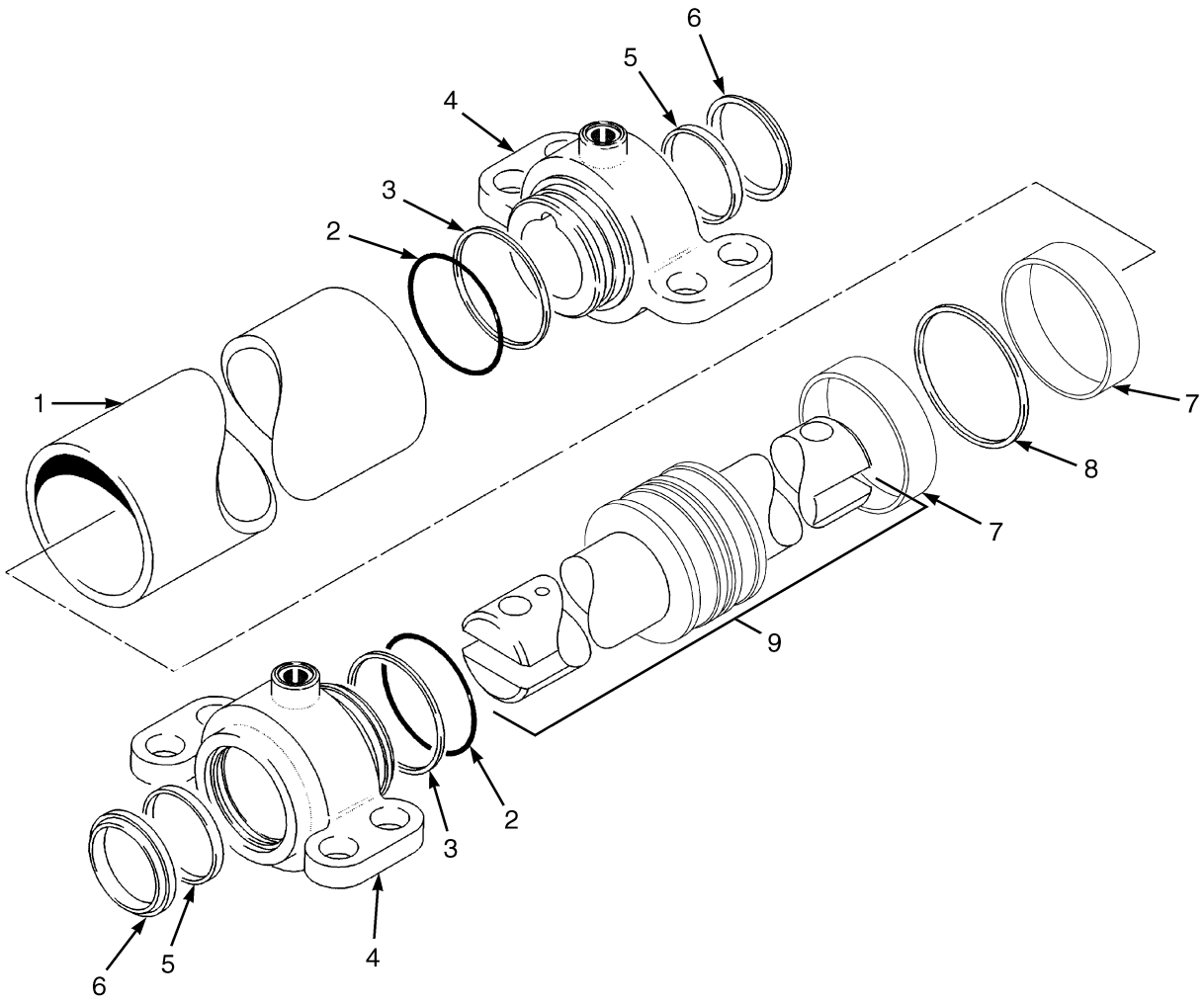

BP220077

©2015 HYSTER COMPANY

STEER CYLINDER

ITEM	PART NO.	DESCRIPTION	QTY
	2083131	Steering Cylinder	1
1	376087	Tube Wldmt-Cylinder	1
2	46629	O-Ring	2
3	270330	Back-Up Ring	2
4	1610992	End Cap	2
5	2032492	Seal	2
6	2079273	Rod Wiper	2
7	636951	Wear Ring	2
8	2044372	Piston Seal	1
9	1612390	Piston Rod Assembly	1
9	1612393	Piston	1
9	376089	Rod	1
	1538811	Kit-Seal (Shell)	1
	1611146	Kit-Seal (Steering Cylinder)	1

©2015 HYSTER COMPANY

STEER TIRES AND WHEELS (FIGURE 8-3)
TRELLEBORG — SOLID TIRE

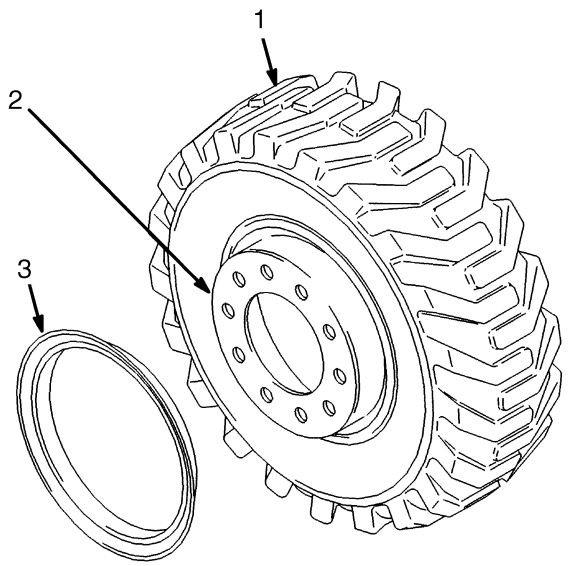

BP000318

ITEM	PART NO.	DESCRIPTION	QTY
1	1313390	Solid Tire (12.00 x 20 Solid)	6
2	1688645	Wheel Assy	1
2	1377130	Ring	1
2	1377131	Bead-Seat Ring	1
3	1377132	Wheel Lock Ring	1

©2015 HYSTER COMPANY

STEER TIRES AND WHEELS (FIGURE 8-4)
BRIDGESTONE

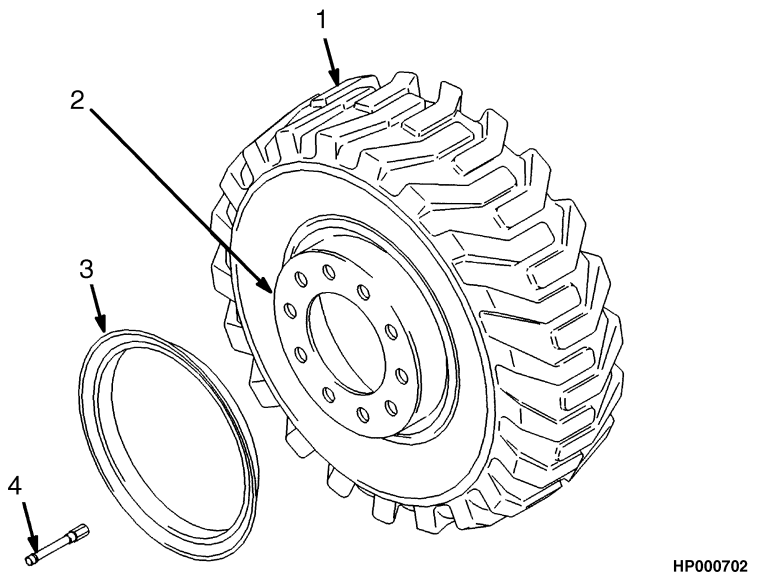

KEY:
A: 11.00 x 20 - 14
B: 12.00 x 20 - 20
C: 12.00 x 20 - 20, Heavy Duty Rim Option

ITEM	PART NO.	DESCRIPTION	QTY A	QTY B	QTY C
	1594932	Pneumatic Tire (Tire and Tube)	1	..	..
	850995	Pneumatic Tire	..	1	1
1	1595478	Pneumatic Tire	1	..	..
1	850996	Pneumatic Tire (With Flap)	..	1	1
1	23026	Pneumatic Tire	1	..	..
1	300294	Pneumatic Tire	..	1	1
1	130587	Tire Flap	1	1	1
2	1688644	Wheel Assy	..	..	1
2	1688643	Wheel Assy	1	1	..
2	2088715	Wheel Assy	..	1	..
2	1391649	Wheel Side Ring	1	1	..
2	1377130	Ring	..	..	1
2	1377131	Bead-Seat Ring	..	..	1
3	1391650	Wheel Lock Ring	1	1	..
3	1377132	Wheel Lock Ring	..	..	1
4	196186	Extension (Valve Stem)	2	2	2

©2015 HYSTER COMPANY

STEER TIRES AND WHEELS (FIGURE 8-5)
MICHELIN

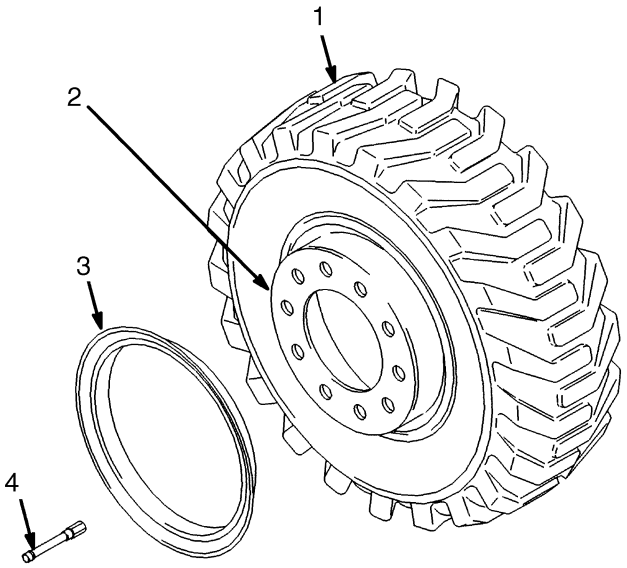

ITEM	PART NO.	DESCRIPTION	QTY
	1471841	Pneumatic Tire Assy, Tubeless (12.00 x 20 Radial, Michelin XZM) (Includes Tire and Tubeless Bead Seal)	1
1	1366719	Pneumatic Tire (Radial) (Michelin)	1
1	1471922	Tubeless Bead Seal Valve	1
1	1471601	Tubeless Bead Seal	1
2	1688644	Wheel Assy	1
2	1377130	Ring	1
2	1377131	Bead-Seat Ring	1
3	1377132	Wheel Lock Ring	1
4	196186	Extension (Valve Stem)	2

©2015 HYSTER COMPANY

STEER TIRES AND WHEELS (FIGURE 8-6)
TRELLEBORG

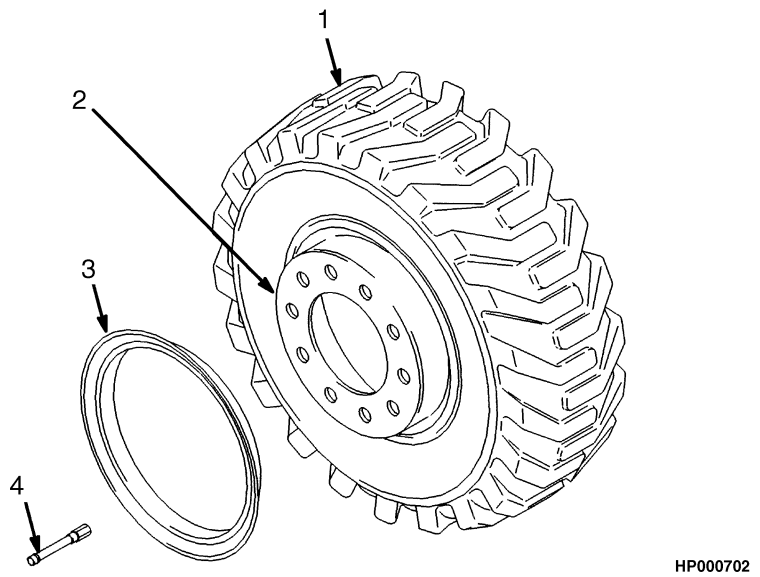

KEY:
A: 12.00 x 20 - 16
B: 11.00 x 20 - 18

ITEM	PART NO.	DESCRIPTION	QTY A	QTY B
	1369102	Pneumatic Tire Assy, Tubed (12.00 x 20 - 20 Bias Ply, Trelleborg T900) (Includes Tire, Tube, and Flap)	1	..
	1594932	Pneumatic Tire (Tire and Tube)	..	1
1	1369103	Pneumatic Tire (Bias) (Trelleborg)	1	..
1	1595478	Pneumatic Tire	..	1
1	1369105	Tube	1	..
1	23026	Pneumatic Tire	..	1
1	130587	Tire Flap	1	1
2	1688643	Wheel Assy	1	1
2	1391649	Wheel Side Ring	1	1
3	1391650	Wheel Lock Ring	1	1
4	196186	Extension (Valve Stem)	2	2

©2015 HYSTER COMPANY

STEER COLUMN ASSEMBLY (FIGURE 8-7)

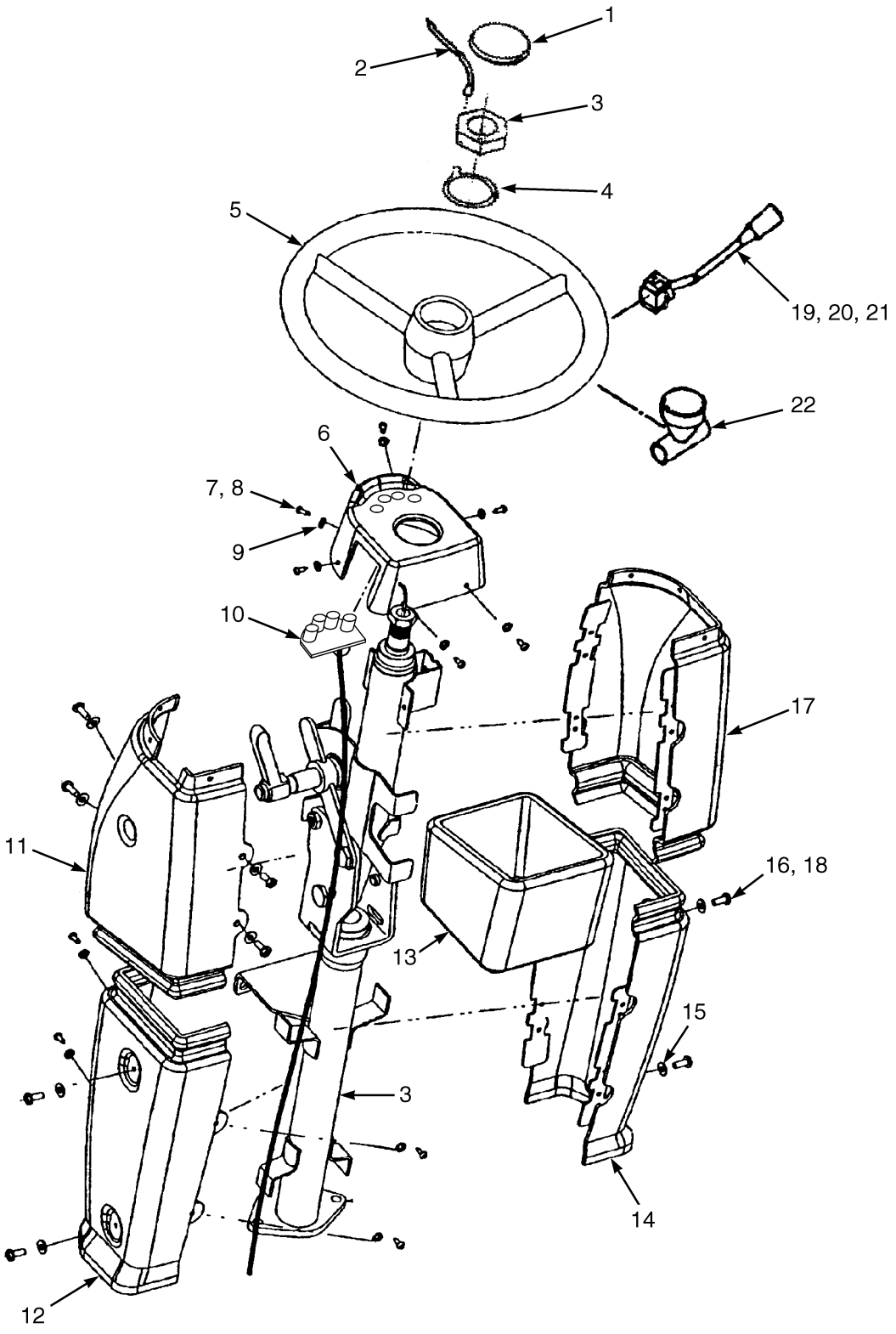

©2015 HYSTER COMPANY

STEER COLUMN ASSEMBLY

ITEM	PART NO.	DESCRIPTION	QTY
	1492260	Steering Column Assembly	1
1	1608622	Horn Button	1
2	1387159	Wire (Horn Button)	1
3	2043287	Steering Column (☞Figure 8-8)	1
4	347126	Terminal	1
5	1700341	Steering Wheel	1
6	1520541	Cover (Upper)	1
7	1468319	Screw	6
8	1492139	Nut	6
9	1647654	Washer	6
10	1520542	Warning Light (With Circuit Board)	1
11	1489845	Cover (Upper LH)	1
12	1489847	Cover (Lower LH)	1
13	1492252	Cover (Boot)	1
14	1489848	Cover (Lower RH)	1
15	1468321	Washer (Plastic)	12
16	302048	Screw	12
17	1489846	Cover (Upper RH)	1
18	1647655	Nut	4
19	2003859	Flasher (Turn Signal)	1
20	1514033	Switch (Turn Signal)	1
21	1566411	Screw (Turn Signal)	1
22	~~4011373~~		
	1700342	Wheelspinner	1

©2015 HYSTER COMPANY

STEERING COLUMN (FIGURE 8-8)

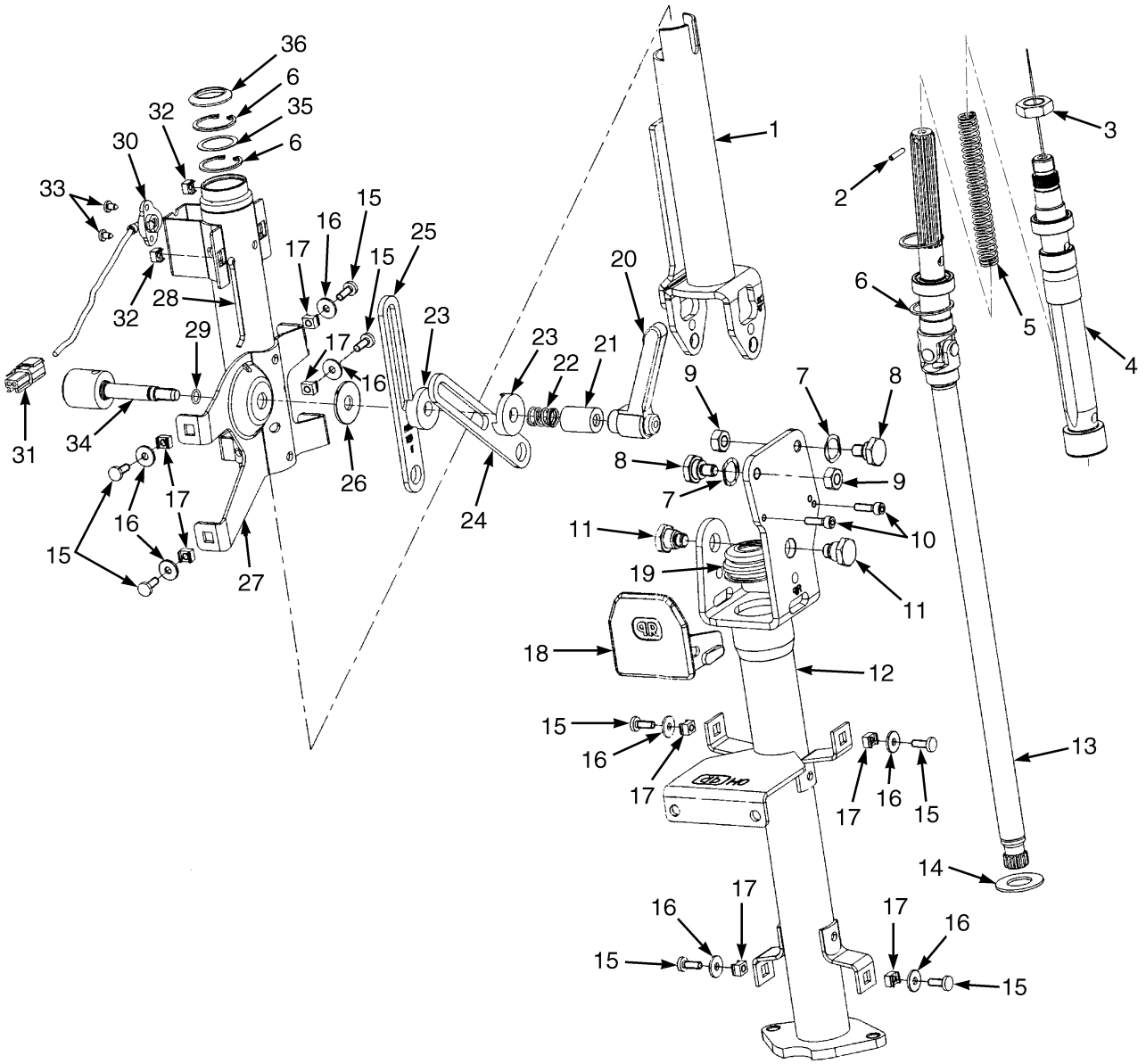

©2015 HYSTER COMPANY

STEERING COLUMN

ITEM	PART NO.	DESCRIPTION	QTY
	2043287	Steering Column	1
1	1487124	Pipe (Upper)	1
2	1479473	Pin	1
3	1388428	Nut	1
4	1487107	Shaft (Upper)	1
5	1487131	Spring	1
6	1388434	Snap Ring	4
7	1504861	O-Ring	2
8	1487111	Screw	2
9	1504862	Nut (Zinc Plated)	2
10	1487132	Screw	2
11	1487108	Screw	2
12	1487103	Pipe (Lower)	1
13	1487126	Shaft (Lower)	1
14	1504865	Support	1
15	1487123	Screw	8
16	1487121	Washer	8
17	1487110	Nut	8
18	1487133	Bracket	1
19	1487109	Boot	1
20	1388438	Handle	1
21	1487114	Spacer	1
22	1487130	Spring	1
23	1487112	Nut (Stop)	2
24	1487105	Lever (Back)	1
25	1487106	Lever (Front)	1
26	1487115	Washer	1
27	1487104	Support	1
28	1487120	Cotter Pin	1
29	1504867	Ring	1
30	1504863	Support (Includes Horn Relay)	1
31	1504868	Connector (Connects to Horn Button)	1
32	1504866	Nut	2
33	1487129	Screw	2
34	1504864	Regulator (Tilt)	1
35	1388435	Ring	1
36	1388436	Boot	1

©2015 HYSTER COMPANY

STEERING HAND PUMP ASSEMBLY (FIGURE 8-9)

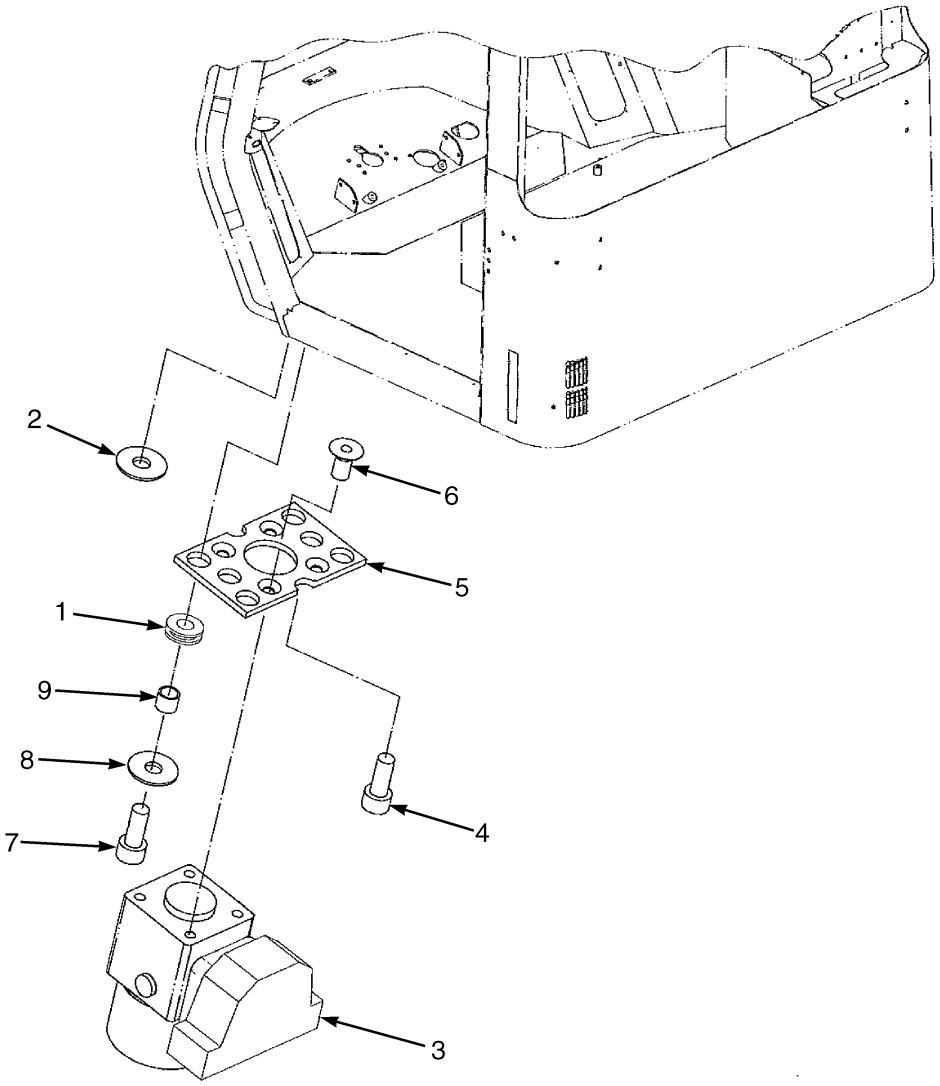

©2015 HYSTER COMPANY

STEERING HAND PUMP ASSEMBLY

ITEM	PART NO.	DESCRIPTION	QTY
1	216735	Grommet	4
2	339969	Grommet	1
3	1558043	Steering Pump	1
4	296025	Capscrew	2
5	1477228	Plate (Steer Pump)	1
6	16080	Capscrew	4
7	296012	Capscrew	4
8	1300117	Washer	4
9	376505	Spacer	4

©2015 HYSTER COMPANY

NOTES

©2015 HYSTER COMPANY

9 BRAKE SYSTEM

SECTION 9
BRAKE SYSTEM

DESCRIPTION	PAGE
ACCUMULATOR CHARGE VALVE	9-38
AIR DRYER ASSEMBLY	9-32
AIR DRYER SYSTEM	
DIESEL ENGINE - DRY BRAKE	9-28
LPG ENGINE - DRY BRAKE	9-30
BRAKE ACCUMULATOR	9-36
BRAKE AND INCHING PEDAL LINKAGE	9-40
BRAKE ASSEMBLY	
DRY BRAKE	9-18
WET BRAKE	9-16
BRAKE VALVE	
DRY BRAKE	9-26
WET BRAKE	9-24
DRAIN VALVE	
DRY BRAKE	9-22
DRY BRAKE SYSTEM	9-12
HYDRAULIC GEAR PUMP	
DIESEL ENGINE - WET BRAKE	9-35
LPG ENGINE - WET BRAKE	9-34
PARK BRAKE SOLENOID VALVE	9-2
WET BRAKE SYSTEM	
DIESEL ENGINE	9-8
LPG ENGINE	9-4

©2015 HYSTER COMPANY

PARK BRAKE SOLENOID VALVE (FIGURE 9-1)

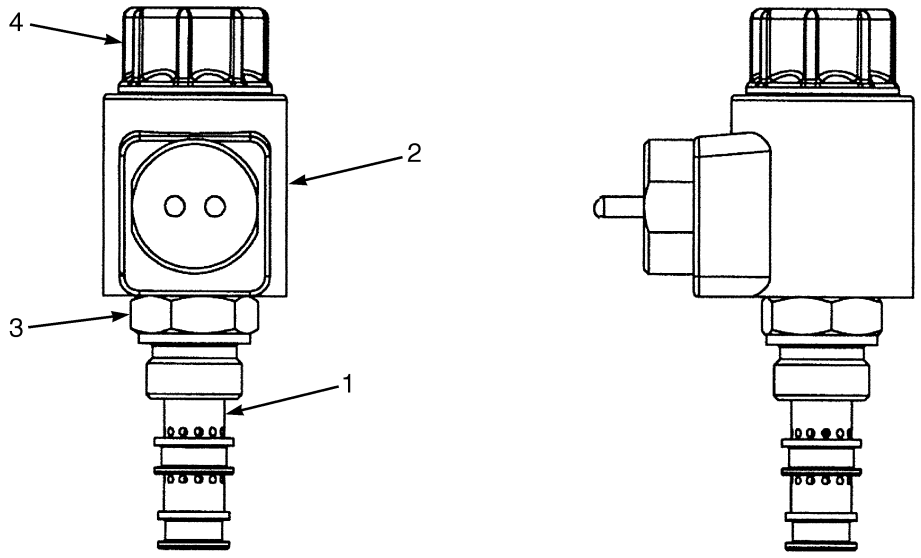

HP040486

ITEM	PART NO.	DESCRIPTION	QTY
	1688689	Cartridge	1
1	4007612	Plunger	1
2	4007613	Coil	1
3	~~4007614~~		
	1655503	Kit-Seal	1
4	4007615	Kit-Nut (Coil)	1

©2015 HYSTER COMPANY

NOTES

©2015 HYSTER COMPANY

WET BRAKE SYSTEM (FIGURE 9-2)
LPG ENGINE

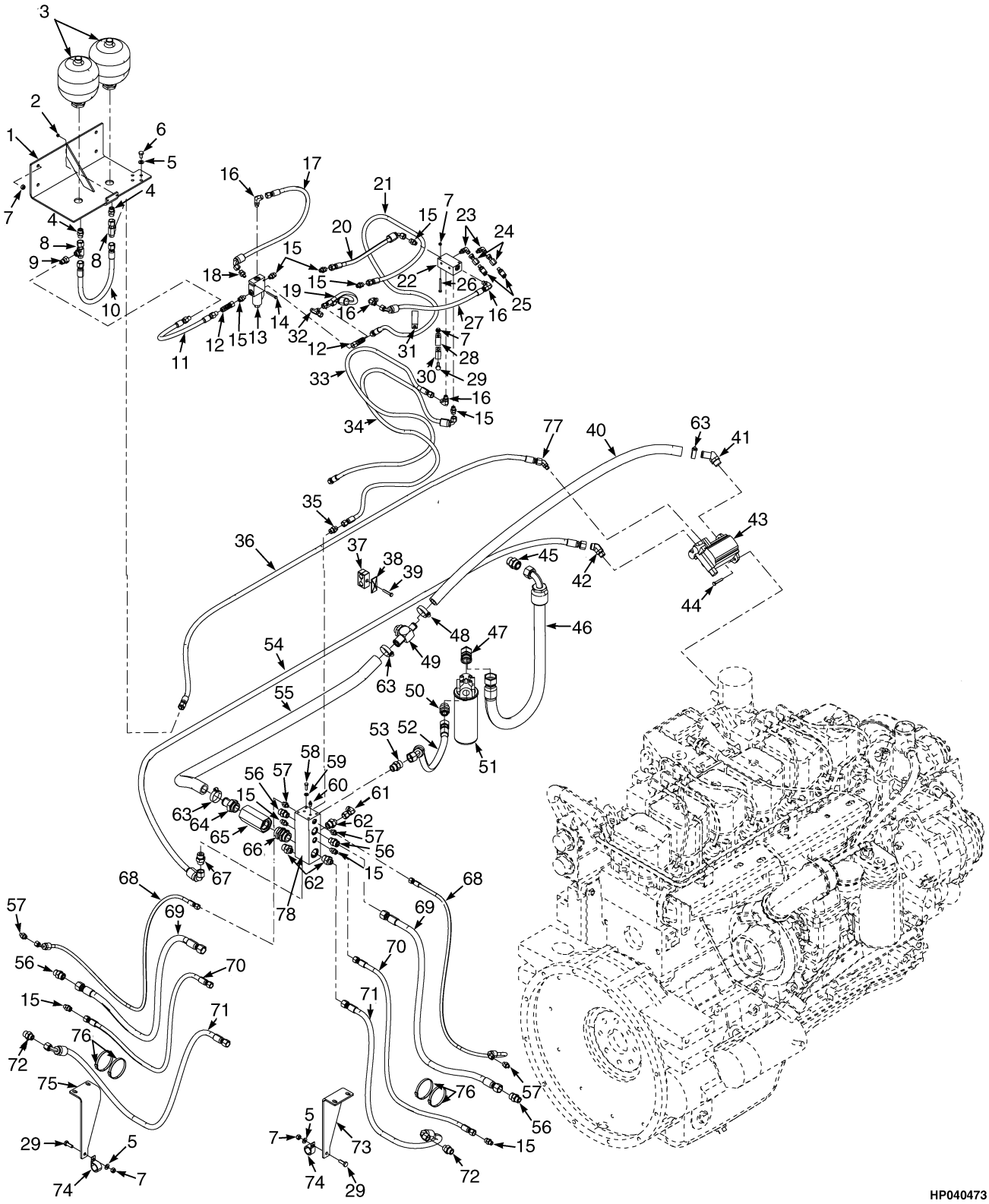

©2015 HYSTER COMPANY

WET BRAKE SYSTEM
LPG ENGINE

KEY:
A: Forklift Truck And EC3
B: EC4

ITEM	PART NO.	DESCRIPTION	QTY A	QTY B
1	1488551	Bracket Wldmt	1	1
2	302401	Locknut	11	11
3	1494147	Accumulator (☞Figure 9-15)	2	2
4	1473887	Fitting	2	2
5	320159	Washer	12	12
6	292514	Capscrew	4	4
7	~~1512440~~			
	302399	Nut	4	4
8	1487095	Fitting	2	2
9	1473949	Fitting	1	1
10	1486081	Hose Assy	1	1
11	1486082	Hose Assy	1	1
12	1487097	Fitting	2	2
13	1655100	Solenoid Valve (Park Brake)	1	1
13	1655098	Manifold	1	1
13	1655099	Cartridge	1	1
14	292505	Capscrew	2	2
15	1486740	Fitting	10	10
16	1487063	Fitting	4	4
17	1486085	Hose Assy	1	1
18	1486741	Fitting	1	1
19	2096932	Hose Assy	1	1
20	1486084	Hose Assy	1	1
21	1486093	Hose Assy	1	1
22	1384517	Manifold	1	1
23	1487058	Fitting	2	2
24	1490813	Fitting	2	2
25	1473927	Quick Disconnect Fitting (For Hydraulic Pressure Test Port)	2	2
26	292507	Capscrew	2	2
27	1486094	Hose Assy	1	1
28	110322	Clamp	1	1
29	136985	Capscrew	3	3
30	173247	Clamp	1	1
31	258590	Clamp	1	1
32	1487094	Fitting	1	1
33	1486083	Hose Assy	1	1
34	1486095	Hose Assy	1	1
35	1486742	Fitting	1	1
36	2099162	Hose Assy	..	1
36	2099161	Hose Assy	1	..
37	1533664	Clamp	4	4
38	1533649	Cover Plate	4	4
39	214364	Capscrew	4	4
40	2089621	Hose	1	1
40	56985	Hose-Bulk (FT)	AR	AR

©2015 HYSTER COMPANY

WET BRAKE SYSTEM
LPG ENGINE

KEY:
A: Forklift Truck And EC3
B: EC4

ITEM	PART NO.	DESCRIPTION	QTY A	QTY B
41	89056	Fitting	1	1
42	1516205	Fitting	1	1
43	1480609	Hydraulic Pump (☞Figure 9-13)	1	1
44	296026	Capscrew	2	2
45	1473889	Fitting	1	1
46	2096071	Hose Assy	1	1
47	1473923	Fitting	1	1
48	127045	Clamp (Hose)	2	2
49	1486246	Fitting	1	1
50	1473919	Fitting	1	1
51	2043084	Hydraulic Filter	1	1
51	2043981	Filter Element (Screw-On Filter)	1	1
52	1486092	Hose Assy	1	1
53	1473888	Fitting	1	1
54	1486080	Hose Assy	1	..
54	2089636	Hose Assy	..	1
55	1486091	Hose	1	1
56	1486749	Fitting	4	4
57	1486737	Fitting	4	4
58	136749	Screw	4	4
59	320157	Washer	4	4
60	267262	Plug	2	2
61	1486772	Fitting	1	1
62	1486747	Fitting	2	2
63	369804	Clamp	2	2
64	78459	Fitting	1	1
64	16983	O-Ring	1	1
65	816232	Check Valve	1	1
66	1459254	Fitting	1	1
67	1486751	Fitting	1	1
68	1490566	Hose Assy	2	..
68	1496049	Hose Assy	..	2
69	1486088	Hose Assy	2	..
69	1496046	Hose Assy	..	2
70	1486089	Hose Assy	2	..
70	1496047	Hose Assy	..	2
71	1486090	Hose Assy	2	..
71	1496048	Hose Assy	..	2
72	1486746	Fitting	2	2
73	1491362	Bracket (LH)	1	..
73	1498250	Bracket (LH)	..	1
74	166112	Clamp	2	..
74	144067	Clamp	..	2
75	1491361	Bracket (RH)	1	..
75	1498251	Bracket (RH)	..	1

©2015 HYSTER COMPANY

WET BRAKE SYSTEM
LPG ENGINE

KEY:
A: Forklift Truck And EC3
B: EC4

ITEM	PART NO.	DESCRIPTION	QTY A	QTY B
76	129563	Strap Clamp	4	..
76	153667	Clamp	..	2
77	1516203	Fitting	1	1
78	1459178	Manifold	1	1

©2015 HYSTER COMPANY

WET BRAKE SYSTEM (FIGURE 9-3)
DIESEL ENGINE

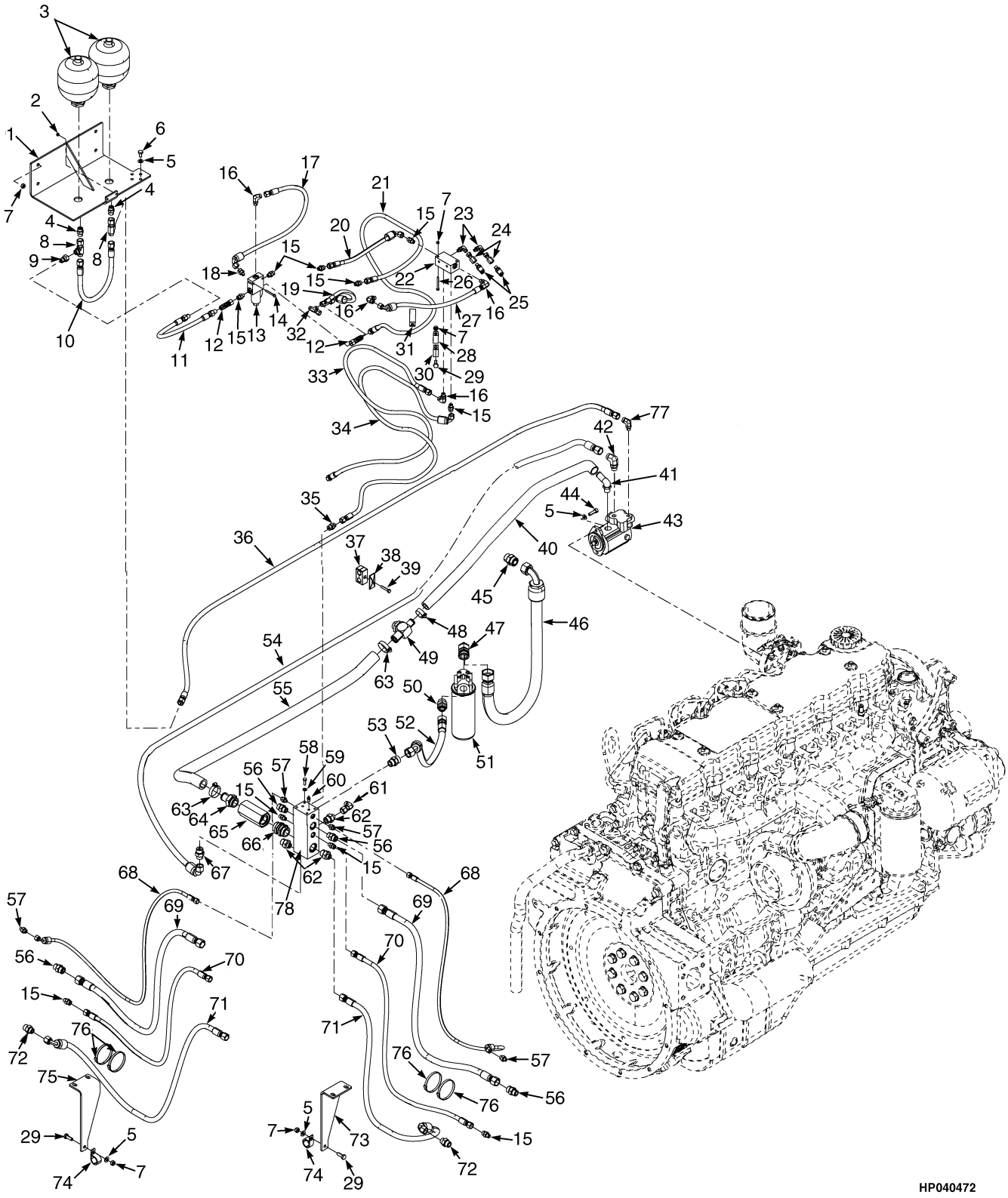

©2015 HYSTER COMPANY

WET BRAKE SYSTEM
DIESEL ENGINE

KEY:
A: Forklift Truck And EC3
B: EC4

ITEM	PART NO.	DESCRIPTION	QTY A	QTY B
1	1488551	Bracket Wldmt	1	1
2	302401	Locknut	11	11
3	1494147	Accumulator (☞Figure 9-15)	2	2
4	1473887	Fitting	2	2
5	320159	Washer	12	12
6	292514	Capscrew	4	4
7	~~1512440~~			
	302399	Nut	4	4
8	1487095	Fitting	2	2
9	1473949	Fitting	1	1
10	1486081	Hose Assy	1	1
11	1486082	Hose Assy	1	1
12	1487097	Fitting	2	2
13	1655100	Solenoid Valve (Park Brake)	1	1
13	1655098	Manifold	1	1
13	1655099	Cartridge	1	1
14	292505	Capscrew	2	2
15	1486740	Fitting	10	10
16	1487063	Fitting	4	4
17	1486085	Hose Assy	1	1
18	1486741	Fitting	1	1
19	2096932	Hose Assy	1	1
20	1486084	Hose Assy	1	1
21	1486093	Hose Assy	1	1
22	1384517	Manifold	1	1
23	1487058	Fitting	2	2
24	1490813	Fitting	2	2
25	1473927	Quick Disconnect Fitting (For Hydraulic Pressure Test Port)	2	2
26	292507	Capscrew	2	2
27	1486094	Hose Assy	1	1
28	110322	Clamp	1	1
29	136985	Capscrew	3	3
30	173247	Clamp	1	1
31	258590	Clamp	1	1
32	1487094	Fitting	1	1
33	1486083	Hose Assy	1	1
34	1486095	Hose Assy	1	1
35	1486742	Fitting	1	1
36	2099151	Hose Assy	1	..
36	2099159	Hose Assy	..	1
37	1533664	Clamp	4	4
38	1533649	Cover Plate	4	4
39	214364	Capscrew	4	4
40	1486091	Hose	1	1
40	56985	Hose-Bulk (FT)	AR	AR

©2015 HYSTER COMPANY

WET BRAKE SYSTEM
DIESEL ENGINE

KEY:
A: Forklift Truck And EC3
B: EC4

ITEM	PART NO.	DESCRIPTION	QTY A	QTY B
41	89056	Fitting	1	1
42	1487064	Fitting	1	1
43	1656022	Hydraulic Pump (☞Figure 9-14)	1	1
44	296026	Capscrew	2	2
45	1473889	Fitting	1	1
46	1486081	Hose Assy	1	1
47	1473923	Fitting	1	1
48	127045	Clamp (Hose)	2	2
49	1486246	Fitting	1	1
50	1473919	Fitting	1	1
51	2043084	Hydraulic Filter	1	1
51	2043981	Filter Element (Screw-On Filter)	1	1
52	1486092	Hose Assy	1	1
53	1473888	Fitting	1	1
54	2099157	Hose Assy	..	1
54	2099148	Hose Assy	1	..
55	2101356	Hose	..	1
55	1669449	Hose	1	..
56	1486749	Fitting	4	4
57	1486737	Fitting	4	4
58	136749	Screw	4	4
59	320157	Washer	4	4
60	267262	Plug	2	2
61	1486772	Fitting	1	1
62	1486747	Fitting	2	2
63	369804	Clamp	2	2
64	78459	Fitting	1	1
64	16983	O-Ring	1	1
65	816232	Check Valve	1	1
66	1459254	Fitting	1	1
67	1486751	Fitting	1	1
68	1490566	Hose Assy	2	..
68	1496049	Hose Assy	..	2
69	1486088	Hose Assy	2	..
69	1496046	Hose Assy	..	2
70	1486089	Hose Assy	2	..
70	1496047	Hose Assy	..	2
71	1486090	Hose Assy	2	..
71	1496048	Hose Assy	..	2
72	1486746	Fitting	2	2
73	1491362	Bracket (LH)	1	..
73	1498250	Bracket (LH)	..	1
74	166112	Clamp	2	..
74	144067	Clamp	..	2
75	1491361	Bracket (RH)	1	..

©2015 HYSTER COMPANY

WET BRAKE SYSTEM
DIESEL ENGINE

KEY:
A: Forklift Truck And EC3
B: EC4

ITEM	PART NO.	DESCRIPTION	QTY A	QTY B
75	1498251	Bracket (RH)	..	1
76	129563	Strap Clamp	4	..
76	153667	Clamp	..	2
77	1487067	Fitting	1	1
78	1459178	Manifold	1	1

©2015 HYSTER COMPANY

DRY BRAKE SYSTEM (FIGURE 9-4)

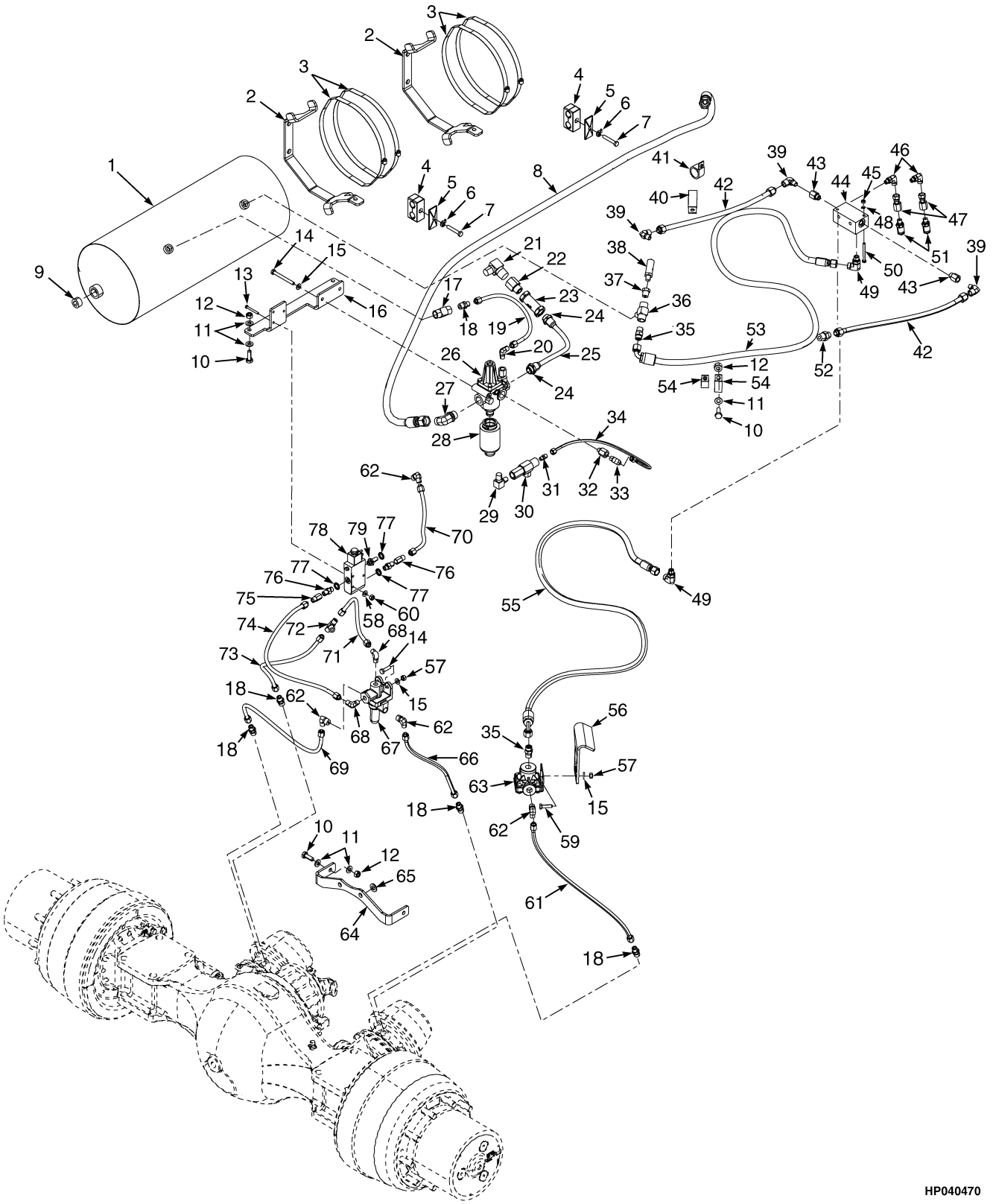

©2015 HYSTER COMPANY

DRY BRAKE SYSTEM

ITEM	PART NO.	DESCRIPTION	QTY
1	295197	Reservoir	1
2	1494476	Bracket	2
3	162562	Hose Clamp	4
4	1533664	Clamp	2
5	1533649	Cover Plate	2
7	214364	Capscrew	2
8	1646897	Hose Assy (Forklift Truck)	1
8	1476542	Hose (Container Handler Truck)	1
9	15963	Fitting	1
10	136985	Capscrew	5
11	320159	Washer	14
12	302401	Locknut	9
13	2043980	Capscrew	3
14	292512	Capscrew	2
15	320157	Washer	8
16	1646837	Plate	1
17	17665	Fitting	1
18	1301539	Fitting	5
19	217979	Hose	1
20	1331034	Fitting	1
21	17745	Fitting	1
22	1614664	Adapter	1
23	1614661	Check Valve	1
24	1603613	Fitting	2
25	1646845	Tube	1
26	1646791	Unloader Valve	1
27	1580823	Fitting	1
28	1498368	Damper	1
29	17144	Fitting	1
30	128398	Drain Valve (☞Figure 9-7)	1
31	1488747	Fitting	1
32	1547766	Adapter (Male)	2
33	1646944	Fitting	1
34	241157	Tube	1
35	1488408	Fitting	2
36	17665	Fitting	1
37	63108	Fitting	1
38	319050	Valve (Safety)	1
39	1332128	Fitting (Elbow)	2
40	144067	Clamp	1
41	166112	Clamp	2
42	1494519	Tube	2
43	1490617	Fitting	2
44	1384517	Manifold	1
45	~~1512440~~		
	302399	Nut	2
46	1487058	Fitting	2
47	1490813	Fitting	2
48	~~4093489~~		
	320156	Washer	2
49	1487063	Fitting	2

©2015 HYSTER COMPANY

DRY BRAKE SYSTEM

ITEM	PART NO.	DESCRIPTION	QTY
50	292507	Capscrew	2
51	1473927	Quick Disconnect Fitting (For Hydraulic Pressure Test Port)	2
52	1332125	Fitting	1
53	1490711	Hose Assy	1
54	173247	Clamp	2
55	1490712	Hose Assy	1
56	1494655	Bracket	1
57	302400	Nut	6
58	320155	Washer	3
59	176640	Bolt	4
60	302398	Locknut	3
61	1490713	Tube	1
62	1309503	Fitting	4
63	1519701	Brake Valve	1
63	1525711	Kit-Seal	1
64	1639100	Bracket	1
65	320161	Washer	2
66	217980	Tube	1
67	1331033	Check Valve	1
67	4035542	Kit-Check Valve	1
68	1331034	Fitting	2
69	217977	Hose	1
70	245521	Tube	1
71	1326041	Tube	1
72	1519702	Fitting	1
73	266535	Hose	1
74	217973	Tube	1
75	1490612	Fitting	2
76	1478838	Fitting	2
77	888329	Seal	3
78	1475075	Brake Valve (Park Brake)	1
78	1492369	Connector	1
78	1492370	Coil	1
79	1658153	Silencer	1
a	14387	Fitting	3
a	14604	Plug	1
a	1533664	Clamp (Forklift Truck)	1
a	1533649	Cover Plate (Forklift Truck)	1
a	292509	Capscrew (Forklift Truck)	1
a	1311356	Fitting	1

FOOTNOTES:

a Not Illustrated

©2015 HYSTER COMPANY

NOTES

©2015 HYSTER COMPANY

BRAKE ASSEMBLY (FIGURE 9-5)
WET BRAKE

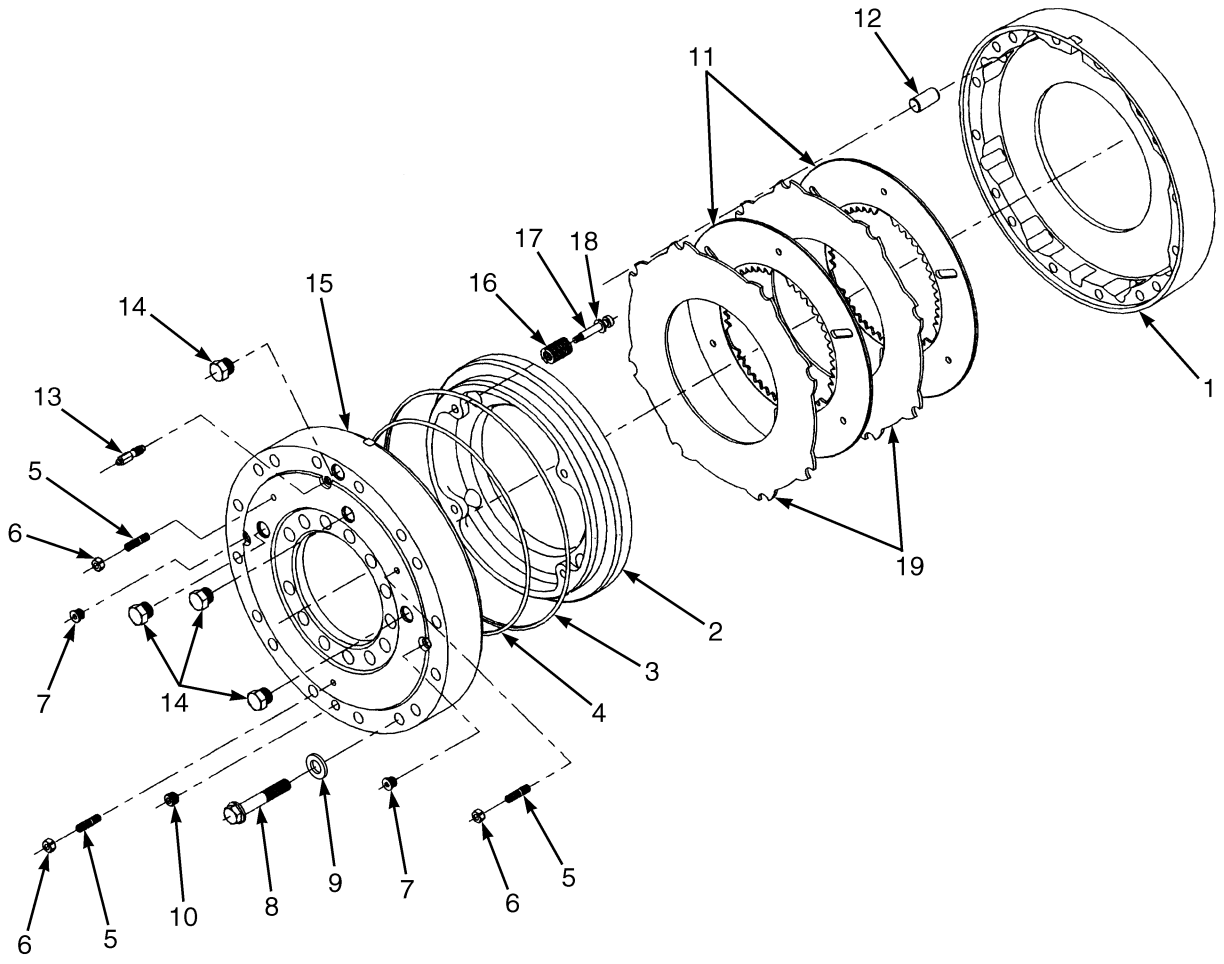

BP040143

©2015 HYSTER COMPANY

BRAKE ASSEMBLY
WET BRAKE

ITEM	PART NO.	DESCRIPTION	QTY
	1489424	Brake Assembly	1
1	1489425	Housing	1
2	1489426	Piston	1
3	1489427	Piston Seal (Outer)	1
4	1489428	Piston Seal (Inner)	1
5	1489429	Screw	3
6	1489430	Nut	3
7	1384859	Plug Assembly	2
7	1382902	O-Ring	1
8	1489431	Capscrew	16
9	1482765	Washer	16
10	1384864	Plug	1
11	1489440	Friction Disk	4
12	1489441	Dowel	8
13	1384861	Bleeder Screw	1
14	1384862	Plug Assembly	4
14	1384863	O-Ring	1
15	1489434	Cover (RH)	1
15	1489435	Cover (LH)	1
16	1489436	Spring	4
17	1489437	Screw	4
18	1489438	Washer	4
19	1489439	Separator Plate (Brake)	4

©2015 HYSTER COMPANY

BRAKE ASSEMBLY (FIGURE 9-6)
DRY BRAKE

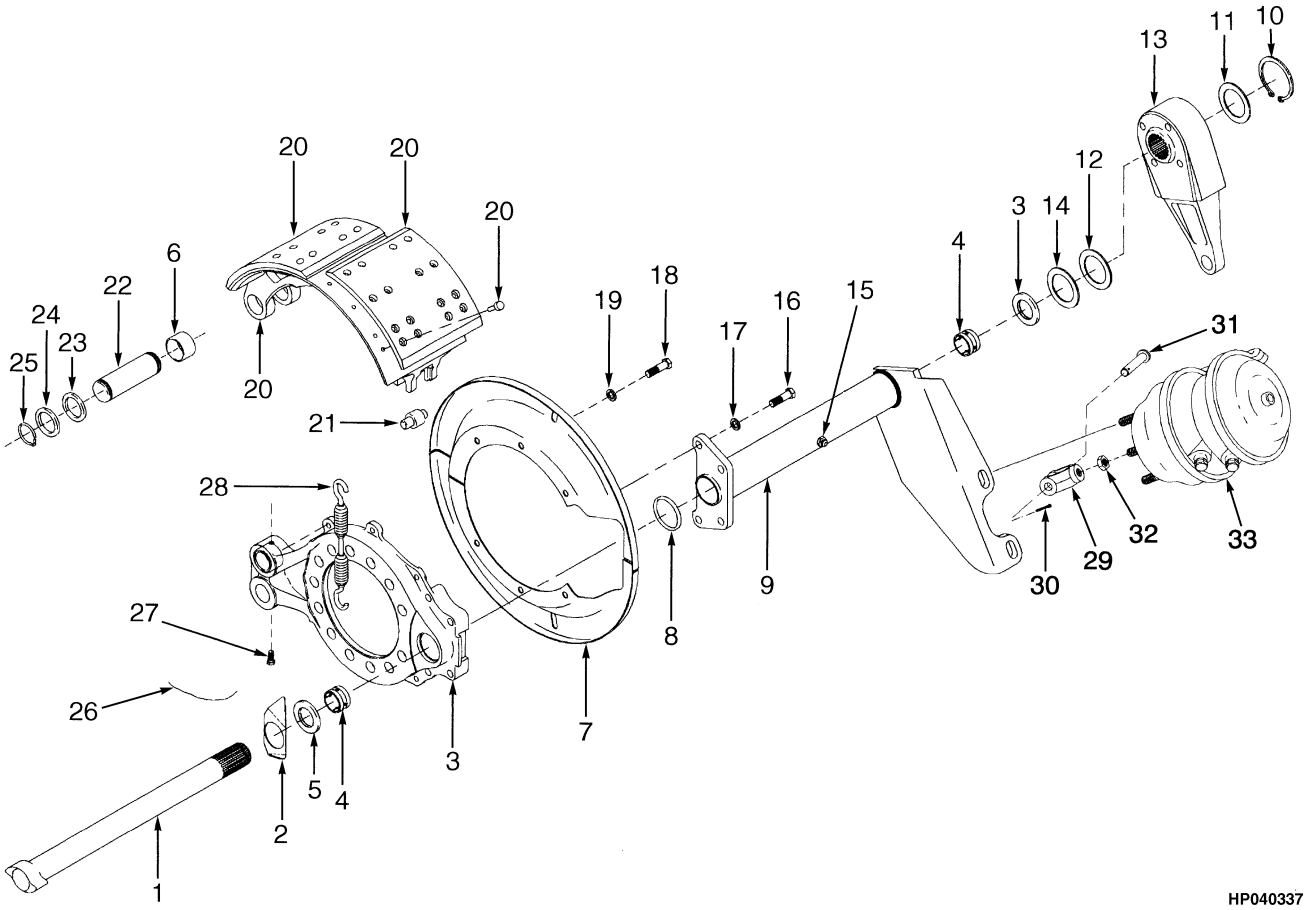

©2015 HYSTER COMPANY

BRAKE ASSEMBLY
DRY BRAKE

ITEM	PART NO.	DESCRIPTION	QTY
1	1489313	Brake Camshaft (LH)	1
1	1489314	Brake Camshaft (RH)	1
2	1455057	Washer	1
3	1498271	Spider Assembly	2
4	97647	Bushing	1
5	301986	Seal	1
6	321703	Bushing	4
7	1346961	Dust Shield (ULH/LRH)	1
7	1346962	Dust Shield (URH/LLH)	1
8	1374086	O-Ring	1
9	1315624	Bracket (LH)	1
9	1312611	Bracket (RH)	1
9	1382967	Kit-Brake Camshaft	1
9	301986	Seal	2
9	97647	Bushing	2
10	1489315	Retainer	2
11	322428	Washer	2
12	1489316	Washer	2
13	1489317	Adjuster	2
14	~~1318626~~		
	1374588	Differential Spider	6
15	16015	Grease Fitting	1
16	1489318	Capscrew	4
17	88587	Washer	4
18	221491	Capscrew	12
19	321717	Lockwasher	12
20	~~1374591~~		
	1489319	Brake Shoe	4
21	1329710	Roller (Brake Shoe)	4
22	1315648	Pin (Brake Anchor)	4
23	97656	Felt	8
24	97657	Retainer	8
25	99037	Snap Ring	8
26	296734	Cable	4
27	1489320	Capscrew	4
28	97859	Spring (Return)	1
29	1384412	Yoke Assembly	1
30	. . . . .	Split Pin	1
31	. . . . .	Yoke Pin	1
32	15030	Nut	1
33	1498303	Brake Chamber	1
33	1498304	Chamber (Pressure)	1
33	1332783	Ring	1
33	1309065	Bolt and Nut Kit	1
33	1332784	Diaphragm	1
33	1498308	Kit-Capscrew	1
33	1498309	Connector	1
33	1497998	Kit-Repair Brake Chamber	1
33	1332787	Return Spring	1
33	1497999	Push Rod	1

©2015 HYSTER COMPANY

BRAKE ASSEMBLY
DRY BRAKE

ITEM	PART NO.	DESCRIPTION	QTY
33	1498305	Chamber (Non-Pressure)	1
33	15030	Nut	1
33	1309427	Kit-Nut and Washer	1
	a 1312614	Clamp (Chamber)	1
	a 1482784	Capscrew	2
	a 221767	Washer	2

FOOTNOTES:

a Not Illustrated

©2015 HYSTER COMPANY

NOTES

©2015 HYSTER COMPANY

DRAIN VALVE (FIGURE 9-7)
DRY BRAKE

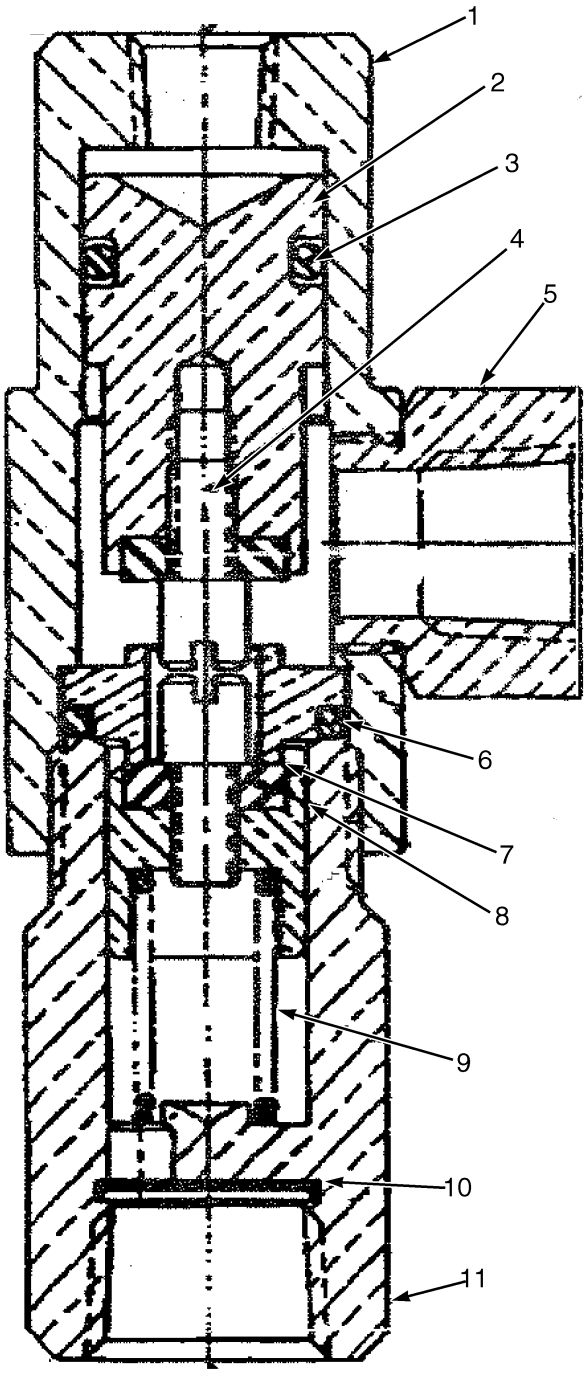

HP040471

©2015 HYSTER COMPANY

DRAIN VALVE
DRY BRAKE

ITEM	PART NO.	DESCRIPTION	QTY
	128398	Drain Valve	1
1	166620	Plunger	1
2	166621	Plunger	1
3	166622	O-Ring (Plunger)	1
4	1368111	Screw	2
5	1368112	Adapter	1
6	166626	O-Ring (Valve Seat)	1
7	166623	Valve (Valve)	2
8	166628	Valve	1
9	166630	Spring	1
10	166631	Screen	1
11	166629	Valve Block	1
	1368113	Kit-Repair	1

©2015 HYSTER COMPANY

BRAKE VALVE (FIGURE 9-8)
WET BRAKE

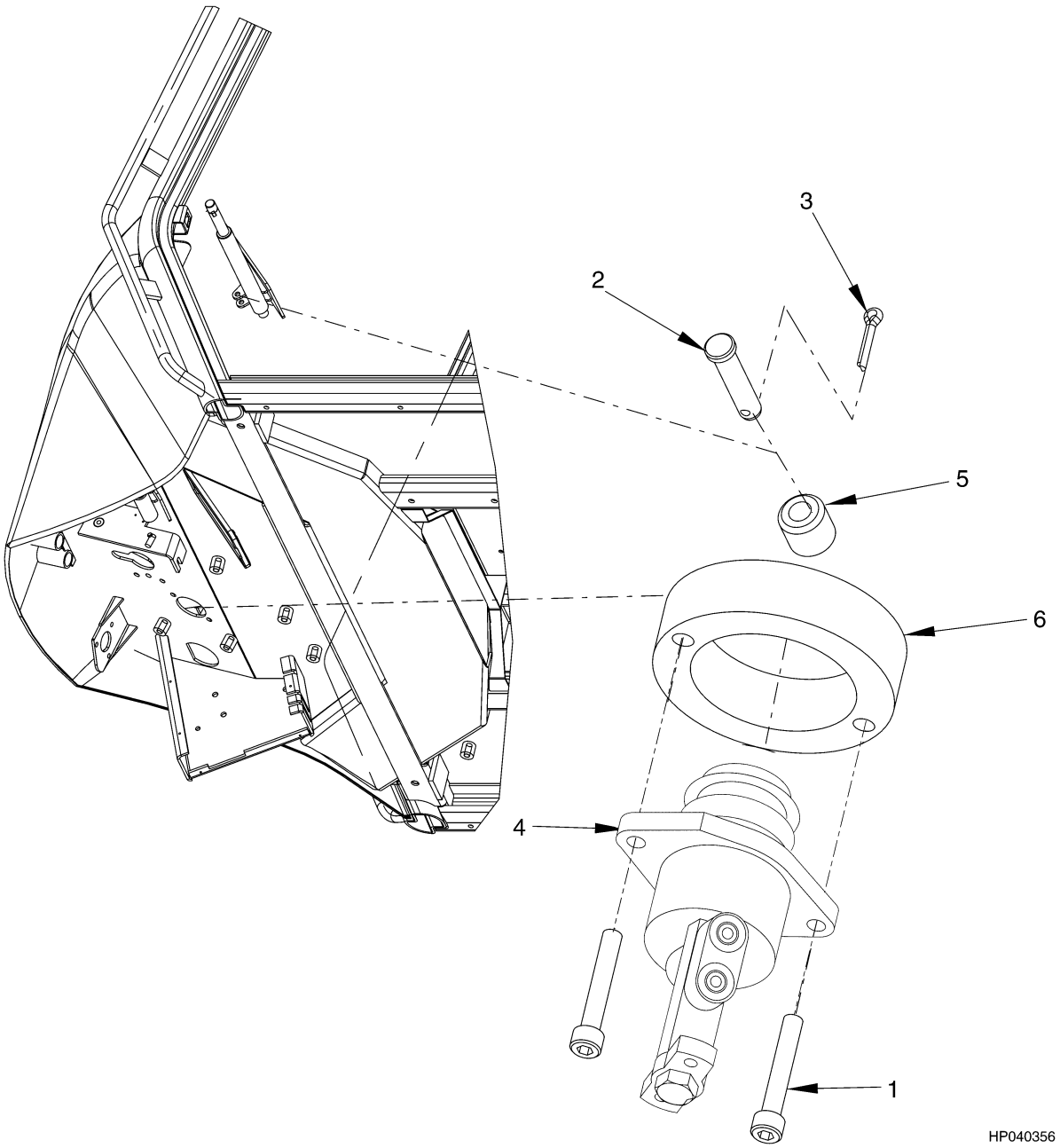

©2015 HYSTER COMPANY

BRAKE VALVE
WET BRAKE

ITEM	PART NO.	DESCRIPTION	QTY
1	296012	Capscrew	2
2	327591	Pin	1
3	15212	Cotter Pin	1
4	1487209	Brake Valve (Wet Brake)	1
4	1391744	Kit-Seal	1
4	1391745	Kit-Hardware	1
4	1450390	Kit-Shim	1
5	1480674	Roller	1
6	1487208	Spacer	1

©2015 HYSTER COMPANY

BRAKE VALVE (FIGURE 9-9)
DRY BRAKE

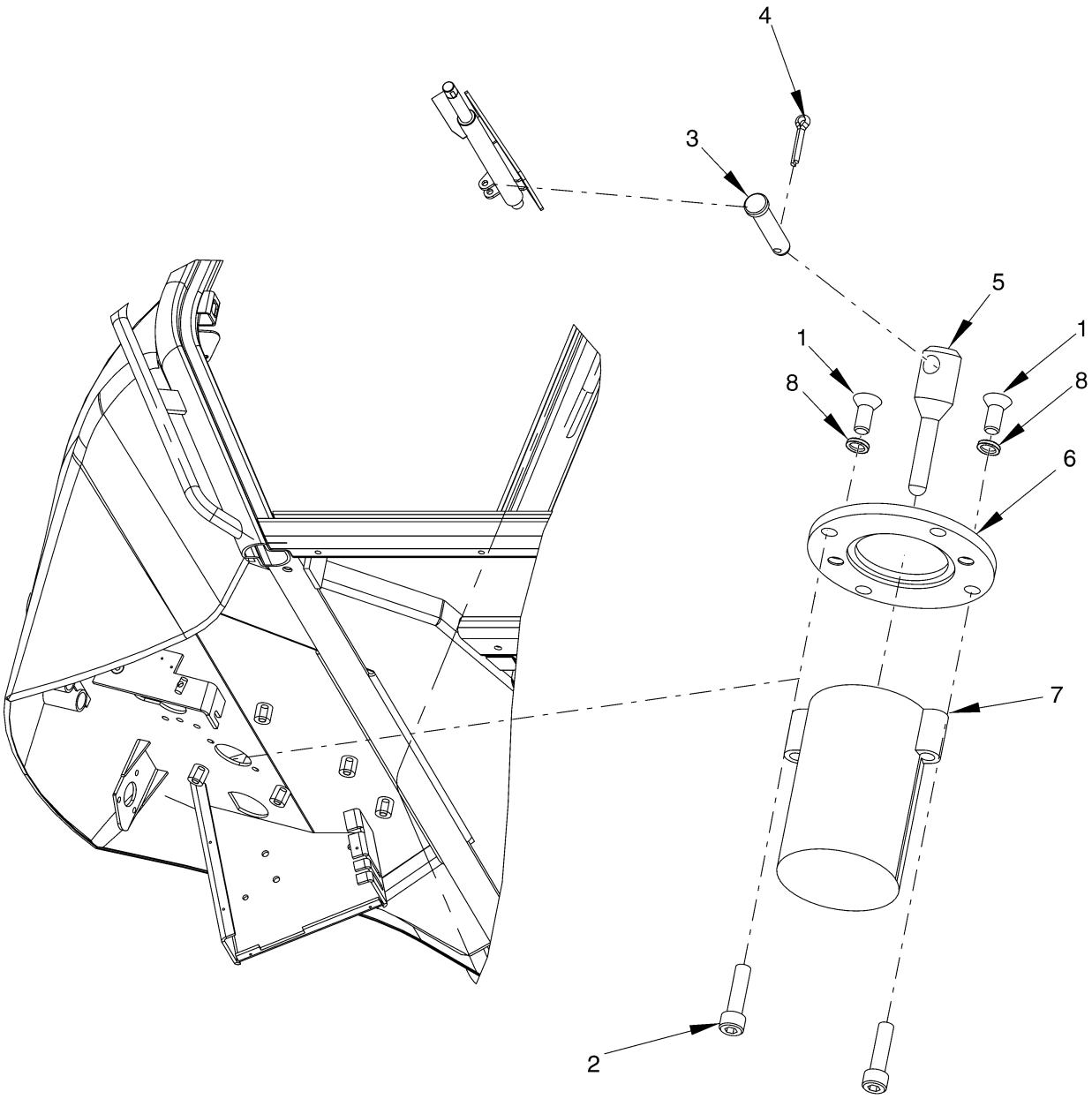

HP040465

©2015 HYSTER COMPANY

BRAKE VALVE
DRY BRAKE

ITEM	PART NO.	DESCRIPTION	QTY
1	1655361	Screw	2
2	296010	Capscrew	2
3	327591	Pin	1
4	15212	Cotter Pin	1
5	1646626	Rod	1
6	1655362	Washer	1
7	1646627	Brake Valve	1
7	1332084	Spring	1
7	357427	Kit-Repair Valve	1
8	320158	Washer	2

©2015 HYSTER COMPANY

AIR DRYER SYSTEM (FIGURE 9-10)

DIESEL ENGINE — DRY BRAKE

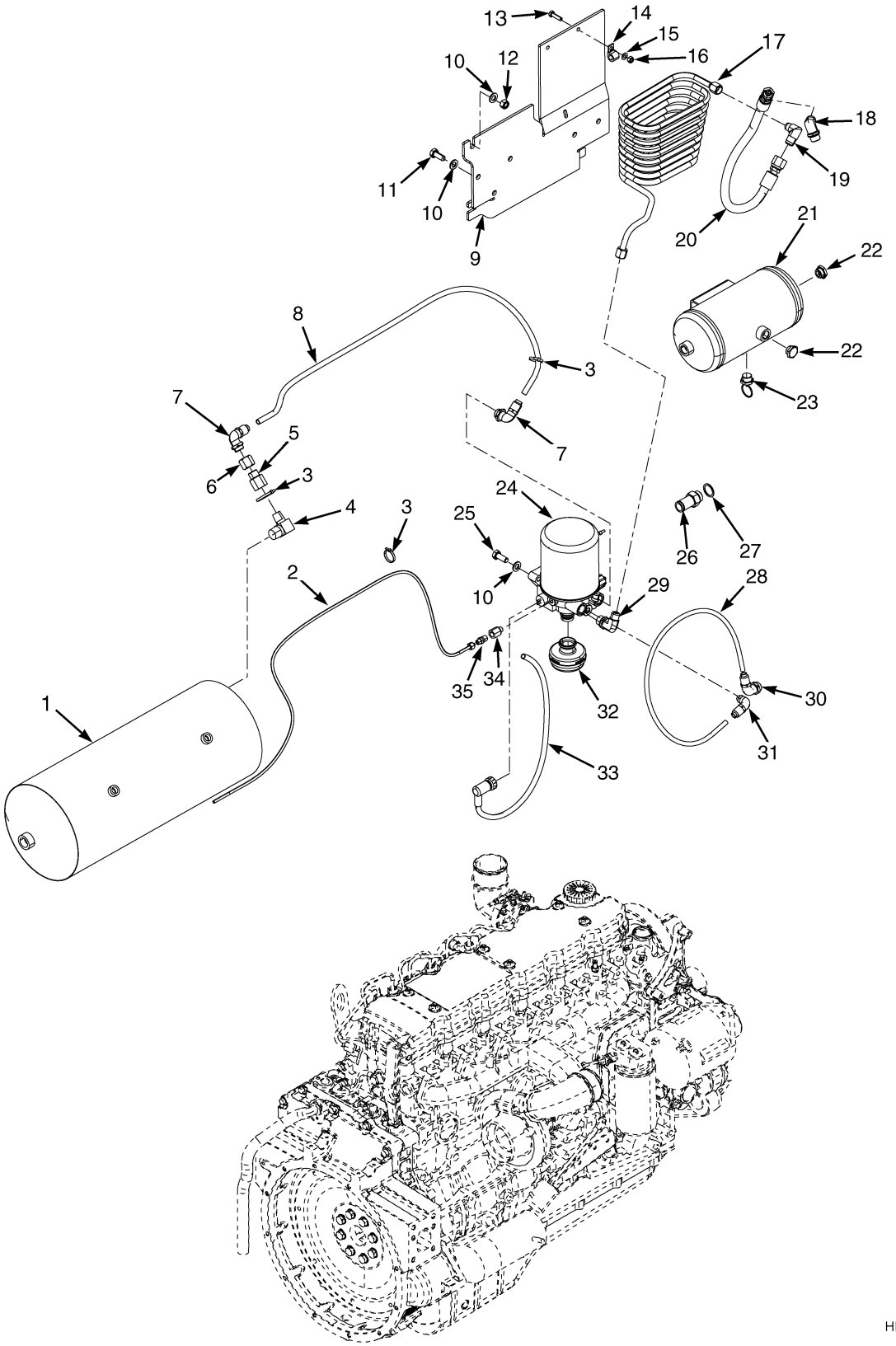

©2015 HYSTER COMPANY

AIR DRYER SYSTEM
DIESEL ENGINE – DRY BRAKE

ITEM	PART NO.	DESCRIPTION	QTY
1	295197	Reservoir	1
2	255115	Tube	1
3	137852	Strap Clamp	4
4	17745	Fitting	1
5	1614664	Adapter	1
6	1651353	Fitting (Air Dryer)	1
7	1613799	Fitting (Quick Disconnect)	2
8	1602285	Tube	1
9	1601267	Plate	1
10	320161	Washer	8
11	1547492	Capscrew	3
12	302402	Locknut	3
13	176640	Bolt	3
14	173246	Clamp	3
15	320157	Washer	6
16	302400	Nut	3
17	1660786	Tube Assy	1
18	1580823	Fitting	1
19	1510811	Fitting	1
20	1624698	Hose Assy (Air)	1
21	1603302	Air Tank	1
22	1603304	Fitting	2
23	1603525	Drain Valve	1
24	1603300	Air Dryer (24 V) (☞Figure 9-12)	1
25	292527	Capscrew	2
26	1352671	Fitting	1
27	992522	Washer	1
28	1647751	Tube	1
29	1580820	Fitting	1
30	1613771	Fitting (Quick Disconnect)	1
31	1613740	Fitting (Quick Connect)	1
32	2066064	Silencer	1
33	1602329	Wire Harness (Air Dryer)	1
34	1547766	Adapter (Male)	1
35	1646944	Fitting	1

©2015 HYSTER COMPANY

AIR DRYER SYSTEM (FIGURE 9-11)
LPG ENGINE — DRY BRAKE

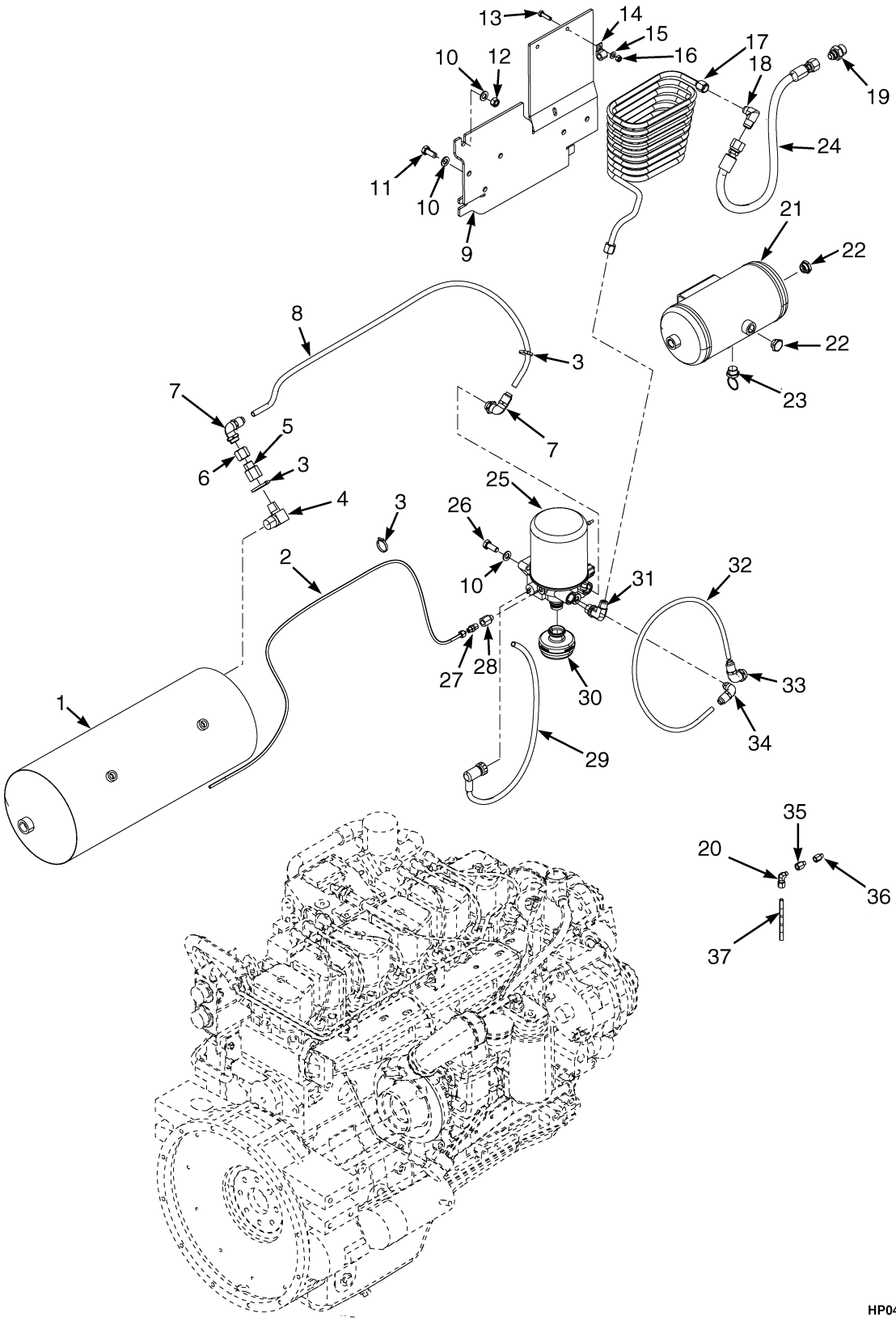

©2015 HYSTER COMPANY

AIR DRYER SYSTEM
LPG ENGINE – DRY BRAKE

ITEM	PART NO.	DESCRIPTION	QTY
1	295197	Reservoir	1
2	255115	Tube	1
3	137852	Strap Clamp	4
4	17745	Fitting	1
5	1614664	Adapter	1
6	1651353	Fitting (Air Dryer)	1
7	1613799	Fitting (Quick Disconnect)	2
8	1602285	Tube	1
9	1601267	Plate	1
10	320161	Washer	8
11	1547492	Capscrew	3
12	302402	Locknut	3
13	176640	Bolt	3
14	173246	Clamp	3
15	320157	Washer	6
16	302400	Nut	3
17	1660786	Tube Assy	1
18	1510811	Fitting	1
19	1511889	Fitting (Adapter)	1
20	1301542	Fitting	1
21	1603302	Air Tank	1
22	1603304	Fitting	2
23	1603525	Drain Valve	1
24	137852	Strap Clamp	1
24	1610669	Hose Assy	1
25	1603300	Air Dryer (24 V) (☞Figure 9-12)	1
26	292527	Capscrew	2
27	1646944	Fitting	1
28	1547766	Adapter (Male)	1
29	1602329	Wire Harness (Air Dryer)	1
30	2066064	Silencer	1
31	1580820	Fitting	1
32	1647751	Tube	1
33	1613771	Fitting (Quick Disconnect)	1
34	1613740	Fitting (Quick Connect)	1
35	28584	Fitting	1
36	1475493	Fitting (Adapter)	1
37	1312214	Tube	1

©2015 HYSTER COMPANY

AIR DRYER ASSEMBLY (FIGURE 9-12)

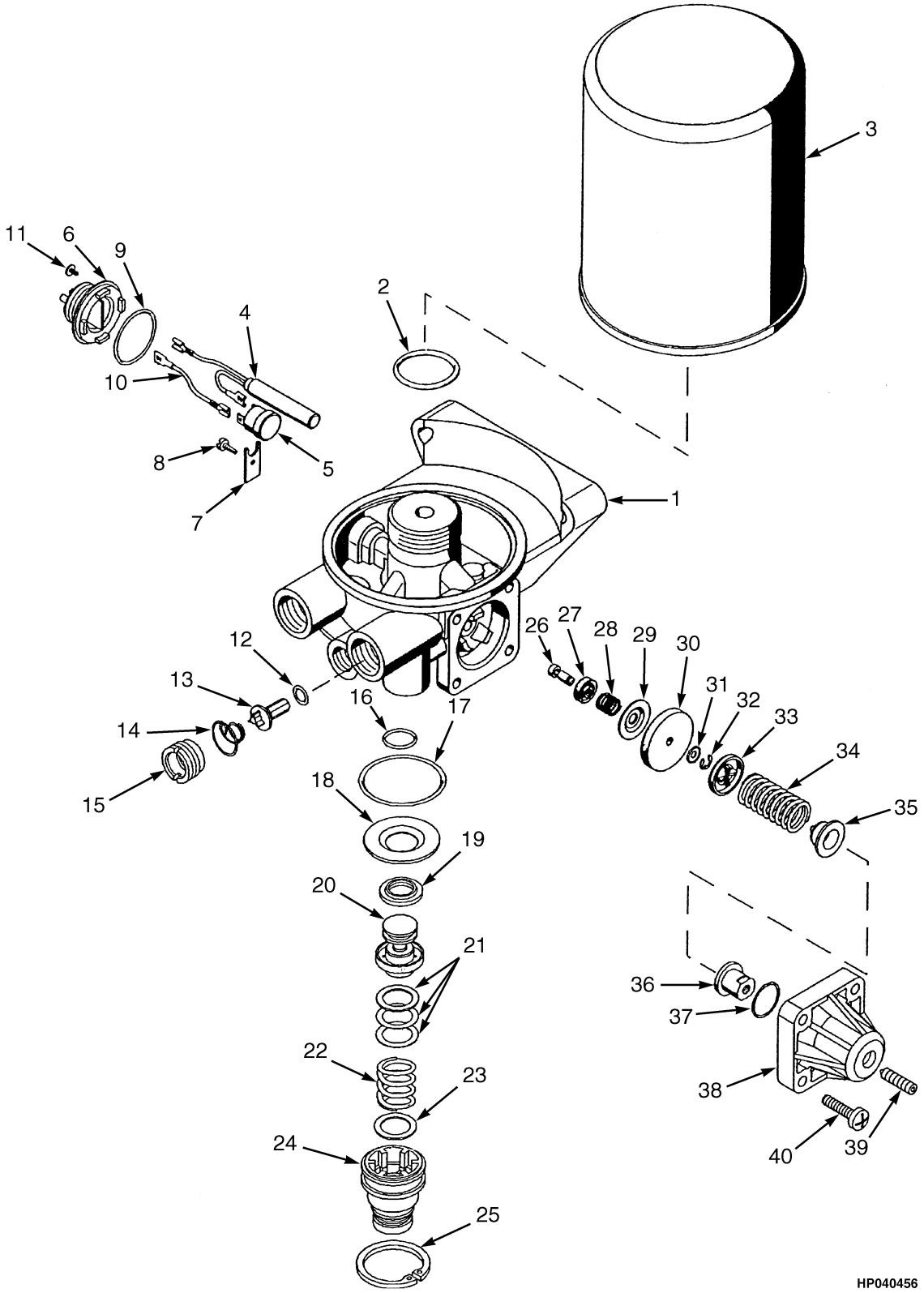

©2015 HYSTER COMPANY

AIR DRYER ASSEMBLY

ITEM	PART NO.	DESCRIPTION	QTY
	1603300	Air Dryer (24 V)	1
1	. . . . .	Body	1
2	. . . . .	O-Ring	1
3	1585138	Cartridge	1
4	1585133	Heater (24 Volt)	1
4	1585134	Heater Element	1
5	1585135	Switch	1
6	1585215	Connector	1
7	. . . . .	Support	1
8	. . . . .	Screw	1
9	. . . . .	O-Ring	1
10	. . . . .	Cable	1
11	. . . . .	Screw	2
12	. . . . .	O-Ring	1
13	. . . . .	Valve Body	1
14	. . . . .	Conical Spring	1
15	. . . . .	Valve Seat	1
16	. . . . .	O-Ring	1
17	. . . . .	O-Ring	2
18	. . . . .	Valve Head	1
19	. . . . .	Valve	1
20	. . . . .	Piston	1
21	. . . . .	Disc	AR
22	. . . . .	Pressure Spring	1
23	1634764	Washer	3
24	. . . . .	Button	1
25	. . . . .	Retaining Ring	1
26	1332113	Piston and Rod	1
26	1332114	Valve	1
26	1332115	Piston (Leather)	1
27	. . . . .	Valve	1
28	. . . . .	Pressure Spring	1
29	. . . . .	Cap	1
30	. . . . .	Piston Cup	1
31	. . . . .	Cap	1
32	. . . . .	Retaining Washer	1
33	. . . . .	Cap	1
34	. . . . .	Pressure Spring	1
35	. . . . .	Cap	1
36	1332116	Nut	1
37	. . . . .	O-Ring	1
38	. . . . .	Cover	1
39	. . . . .	Set Screw	1
40	. . . . .	Oval Head Screw	4
	1634763	Kit-Repair Air Dryer	1

©2015 HYSTER COMPANY

HYDRAULIC GEAR PUMP (FIGURE 9-13)
LPG ENGINE — WET BRAKE

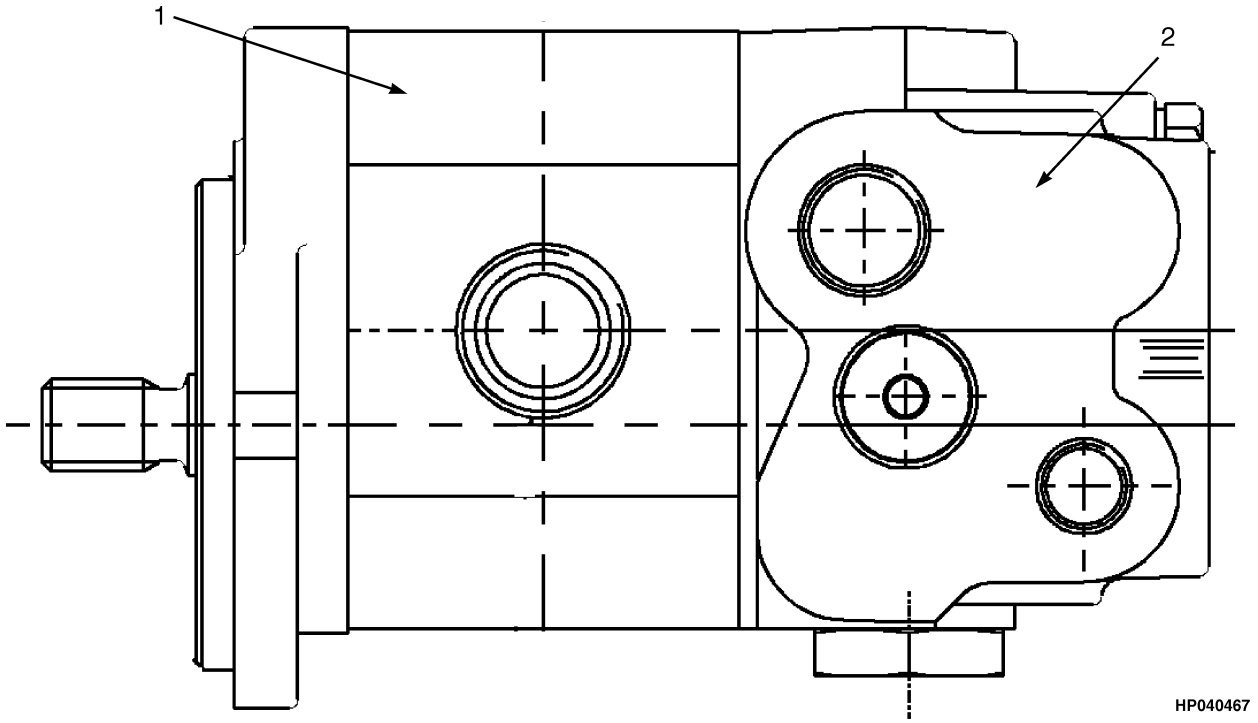

ITEM	PART NO.	DESCRIPTION	QTY
	1480609	Hydraulic Pump	1
1	1492368	Charge Valve (☞Figure 9-16)	1
	1492367	Kit-Seal	1

©2015 HYSTER COMPANY

HYDRAULIC GEAR PUMP (FIGURE 9-14)
DIESEL ENGINE — WET BRAKE

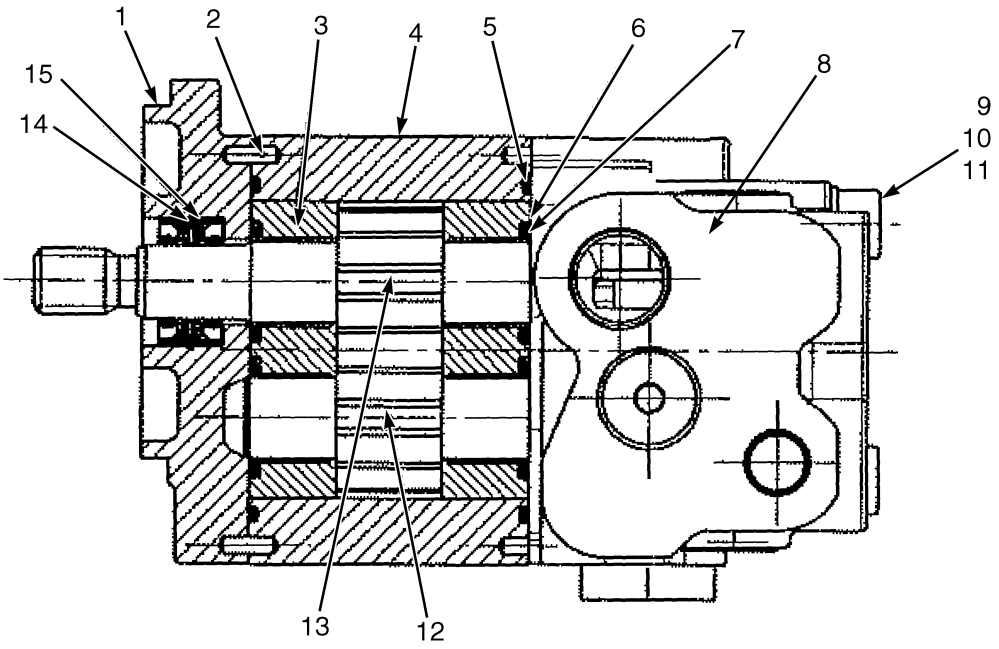

HP040466

ITEM	PART NO.	DESCRIPTION	QTY
	1656022	Hydraulic Pump	1
1	1660034	Housing	1
2	1457466	Dowel	2
3	1660039	Bushing	2
4	1590856	Body	1
5	1590854	O-Ring	2
6	1476378	Seal	2
7	1660041	Seal (Back-Up)	2
8	1492368	Charge Valve (☞Figure 9-16)	1
9	1457459	Washer	4
10	1660037	Screw	3
11	1660038	Screw	1
12	1660036	Gear	1
13	1660035	Drive Gear	1
14	1496282	Clamp	1
15	1590861	Seal (Shaft)	2

©2015 HYSTER COMPANY

BRAKE ACCUMULATOR (FIGURE 9-15)

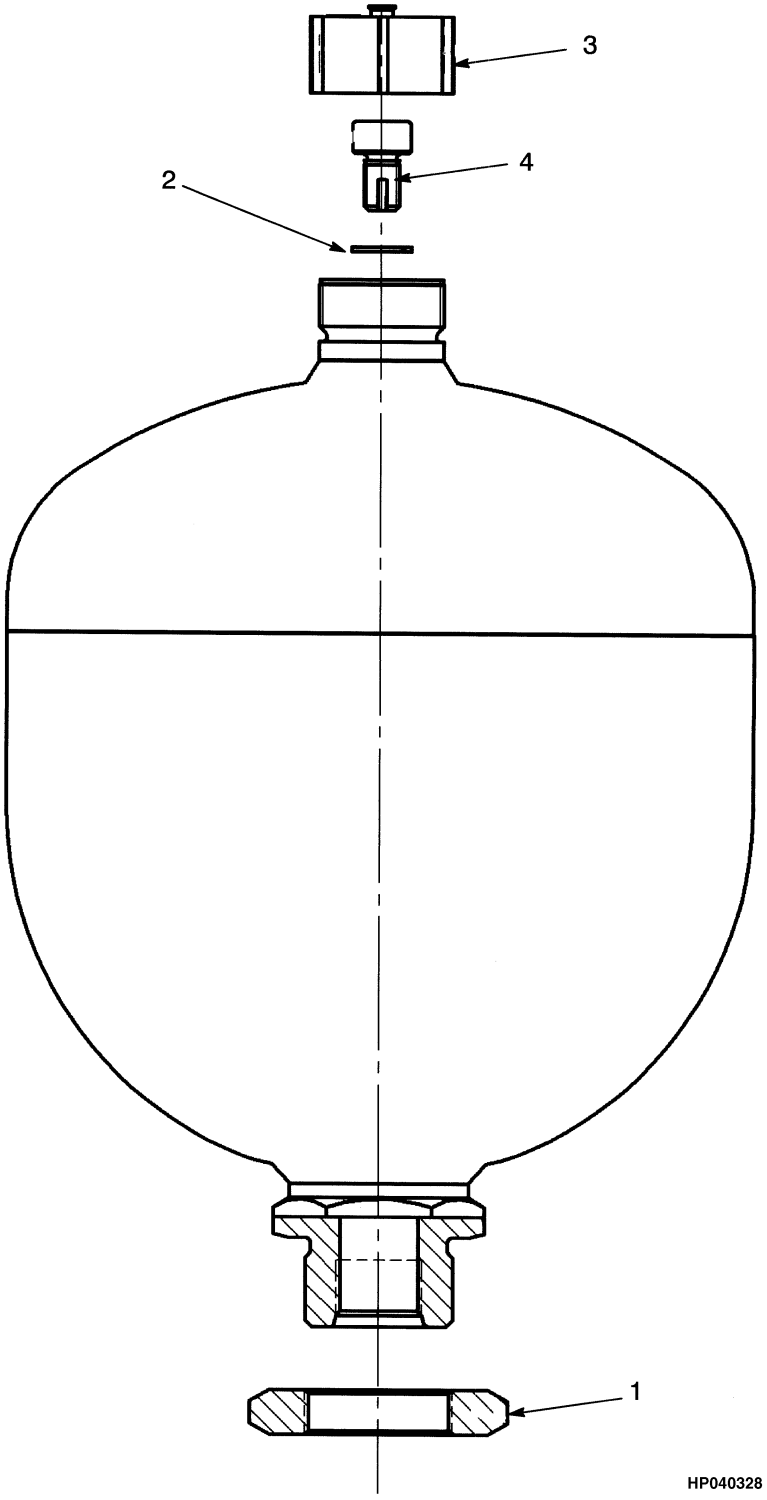

©2015 HYSTER COMPANY

BRAKE ACCUMULATOR

ITEM	PART NO.	DESCRIPTION	QTY
	1494147	Accumulator	1
1	1492358	Nut	1
2	1492359	Seal	1
3	1492360	Cap	1
4	1492361	Bolt	1

©2015 HYSTER COMPANY

ACCUMULATOR CHARGE VALVE (FIGURE 9-16)

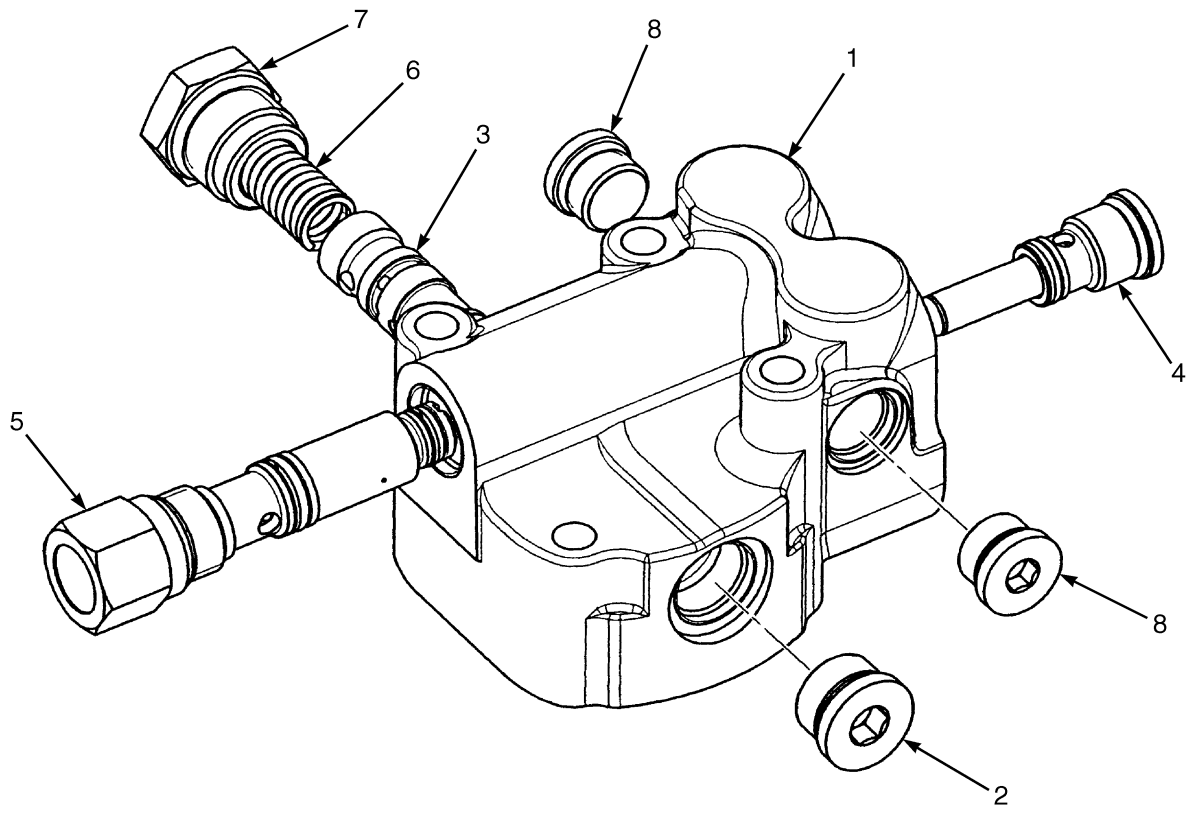

BP040049

ITEM	PART NO.	DESCRIPTION	QTY

©2015 HYSTER COMPANY

ITEM	PART NO.	DESCRIPTION	QTY
	1492368	Charge Valve	1
1	. . . . .	Body	1
2	1591320	Plug	1
3	. . . . .	Spool Assembly	1
4	1591322	Check Valve	1
5	1591323	Valve (Unloader)	1
6	1591324	Spring	1
7	1591325	Spring Seat	1
8	1358860	Plug	2

©2015 HYSTER COMPANY

BRAKE AND INCHING PEDAL LINKAGE (FIGURE 9-17)

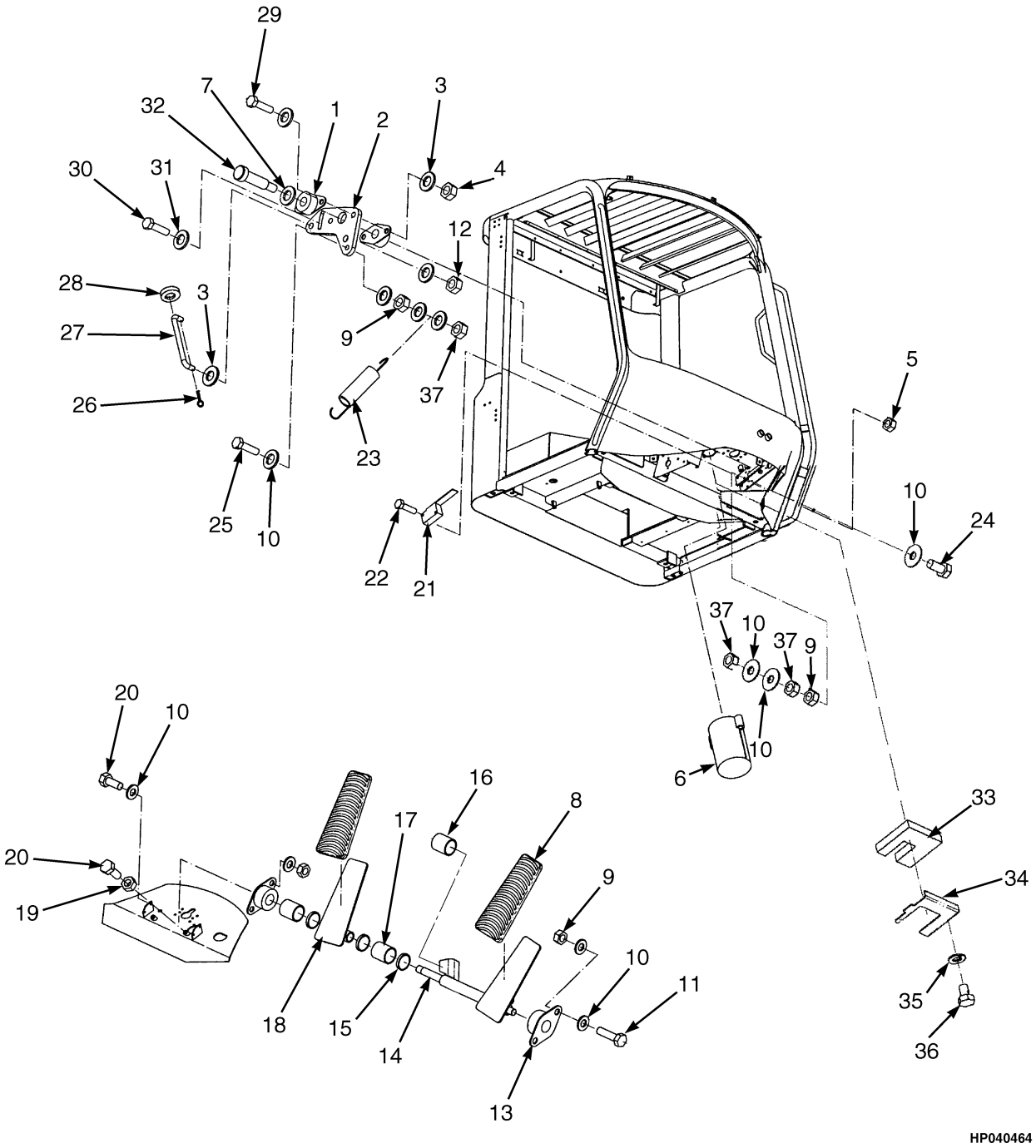

©2015 HYSTER COMPANY

BRAKE AND INCHING PEDAL LINKAGE

ITEM	PART NO.	DESCRIPTION	QTY
1	313860	Flange	2
2	1571631	Plate	1
3	~~4093489~~		
	320156	Washer	4
4	316834	Nut	3
5	1492221	Nut	2
6	1487209	Brake Valve (Wet Brake)	1
7	1493386	Washer	1
8	1520596	Cover (Pedal)	2
9	239503	Nut	5
10	320158	Washer	10
11	287851	Capscrew	4
12	136687	Nut	1
13	1492225	Bearing	2
14	1491015	Shaft (Brake Pedal)	1
15	1520841	Shim	3
16	1634993	Spring	1
17	1493380	Bearing	2
18	1491016	Inching Pedal	1
19	136692	Nut	3
20	287854	Capscrew	2
21	374159	Switch	1
22	302014	Screw	2
23	1498387	Spring	1
23	4001209	Return Spring (Alternate Part)	1
24	1558038	Screw	1
25	1558040	Screw	1
26	15201	Cotter Pin	2
27	1491020	Rod (Inching Pedal)	1
28	1558039	Grommet	1
29	292501	Capscrew	2
30	292502	Capscrew	1
31	1476421	Washer	2
32	340213	Capscrew	1
33	1623197	Foam (Throttle Pedal)	1
34	1623196	Bracket (Holding)	1
35	1506738	Washer	1
36	1623195	Capscrew	2
37	316835	Nut	1

©2015 HYSTER COMPANY

NOTES

©2015 HYSTER COMPANY

10 HYDRAULIC SYSTEM

SECTION 10
HYDRAULIC SYSTEM

DESCRIPTION	PAGE
ELECTRONIC LEVER ASSEMBLY	10-38
WITH CLAMP ATTACHMENT	10-40
END CAP PARTS	
LIFT SECTION	10-24
HYDRAULIC CONTROL VALVE AND ATTACHING PARTS	
SHEET 1 OF 2	10-18
SHEET 2 OF 2	10-20
HYDRAULIC CONTROL VALVE ASSEMBLY	10-14
HYDRAULIC CONTROLS	
JOYSTICK	10-29
LEVERS	10-26
HYDRAULIC PUMP	10-30
HYDRAULIC SUPPLY AND RETURN	
SHEET 1 OF 3	10-2
SHEET 2 OF 3	10-6
SHEET 3 OF 3	10-8
HYDRAULIC TANK AND ATTACHING PARTS	
→ S/N G019E02270F	10-10
S/N G019E02271F →	10-12
LIFT ACCUMULATOR AND ATTACHING PARTS	10-33
LIFT ACCUMULATOR ASSEMBLY	10-32
PILOT VALVE ASSEMBLY	10-22
TILT CYLINDER AND ATTACHING PARTS	10-36
TILT CYLINDER ASSEMBLY	10-34

©2015 HYSTER COMPANY

HYDRAULIC SUPPLY AND RETURN (FIGURE 10-1)
SHEET 1 OF 3

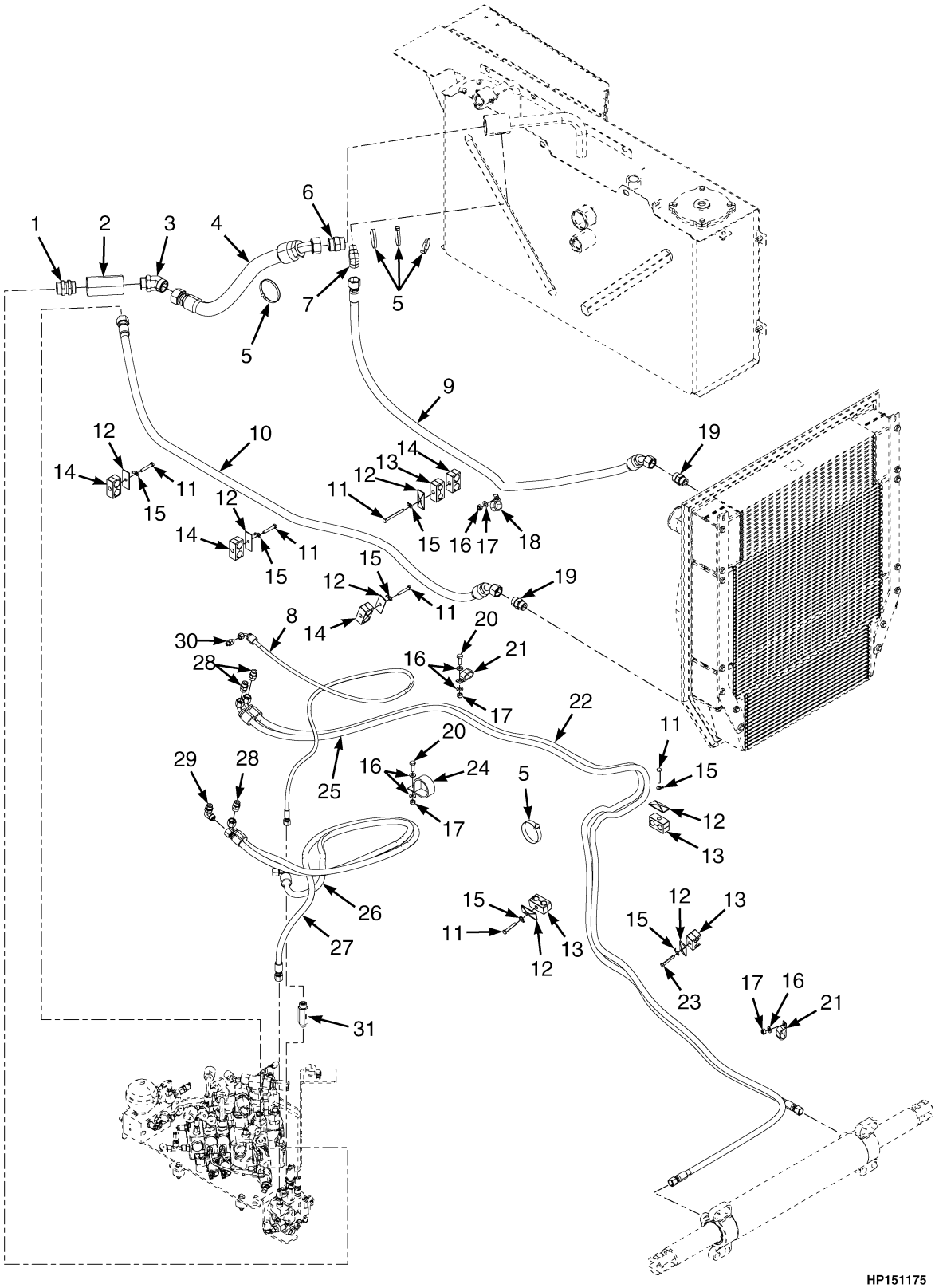

©2015 HYSTER COMPANY

HYDRAULIC SUPPLY AND RETURN
SHEET 1 OF 3

ITEM	PART NO.	DESCRIPTION	QTY
1	1459254	Fitting	1
2	816232	Check Valve	1
3	1516214	Fitting	1
3	16983	O-Ring	1
3	1527821	O-Ring	1
4	2090882	Hose Assy	1
5	129563	Strap Clamp	4
6	1473924	Fitting	1
6	16983	O-Ring	1
6	1527821	O-Ring	1
7	1516209	Fitting	1
7	16982	O-Ring	1
7	16485	O-Ring	1
8	1494372	Hose Assy	1
9	2090886	Hose Assy (H13.00XM, H14.00XM, H16.00XM-6)	1
9	2090885	Hose Assy (H10.00XM-12EC, H12.00XM-12EC)	1
10	2090884	Hose Assy (H13.00XM, H14.00XM, H16.00XM-6)	1
11	**b** 292509	Capscrew	6
11	**c** 214364	Capscrew	4
12	1533649	Cover Plate	7
13	1533664	Clamp	4
14	1618452	Clamp	4
15	1533661	Lockwasher	7
16	320159	Washer	6
17	302401	Locknut	4
18	178119	Clamp	1
19	1473888	Fitting	2
19	16486	O-Ring	1
19	16982	O-Ring	1
20	136985	Capscrew	3
21	110322	Clamp	2
22	2091408	Hose Assy (To Steering Pump) (H13.00XM, H14.00XM, H16.00XM-6)	1
22	2091406	Hose Assy (To Steering Pump) (H10.00XM-12EC, H12.00XM-12EC)	1
23	287750	Capscrew	1
24	1384699	Clamp	1
25	2091407	Hose Assy (To Steering Pump) (H13.00XM, H14.00XM, H16.00XM-6)	1
25	2091405	Hose Assy (To Steering Pump) (H10.00XM-12EC, H12.00XM-12EC)	1
26	1476696	Hose Assy (To Steering Pump)	1
27	1476697	Hose Assy (To Steering Pump)	1
28	1473887	Fitting	3
28	265731	O-Ring	1
28	16484	O-Ring	1
29	1473897	Fitting	1
29	265731	O-Ring	1
29	16484	O-Ring	1
30	1486737	Fitting	1
30	16481	O-Ring	1
30	16483	O-Ring	1
31	1494299	Check Valve	1
	a 1673670	Lockplate	1

©2015 HYSTER COMPANY

HYDRAULIC SUPPLY AND RETURN
SHEET 1 OF 3

ITEM	PART NO.	DESCRIPTION	QTY
	a 1673663	Bolt	1
	a 177303	Clamp	1

FOOTNOTES:

a Not Illustrated
b → S/N G019E02270F
c S/N G019E02271F →

©2015 HYSTER COMPANY

NOTES

©2015 HYSTER COMPANY

HYDRAULIC SUPPLY AND RETURN (FIGURE 10-2)
SHEET 2 OF 3

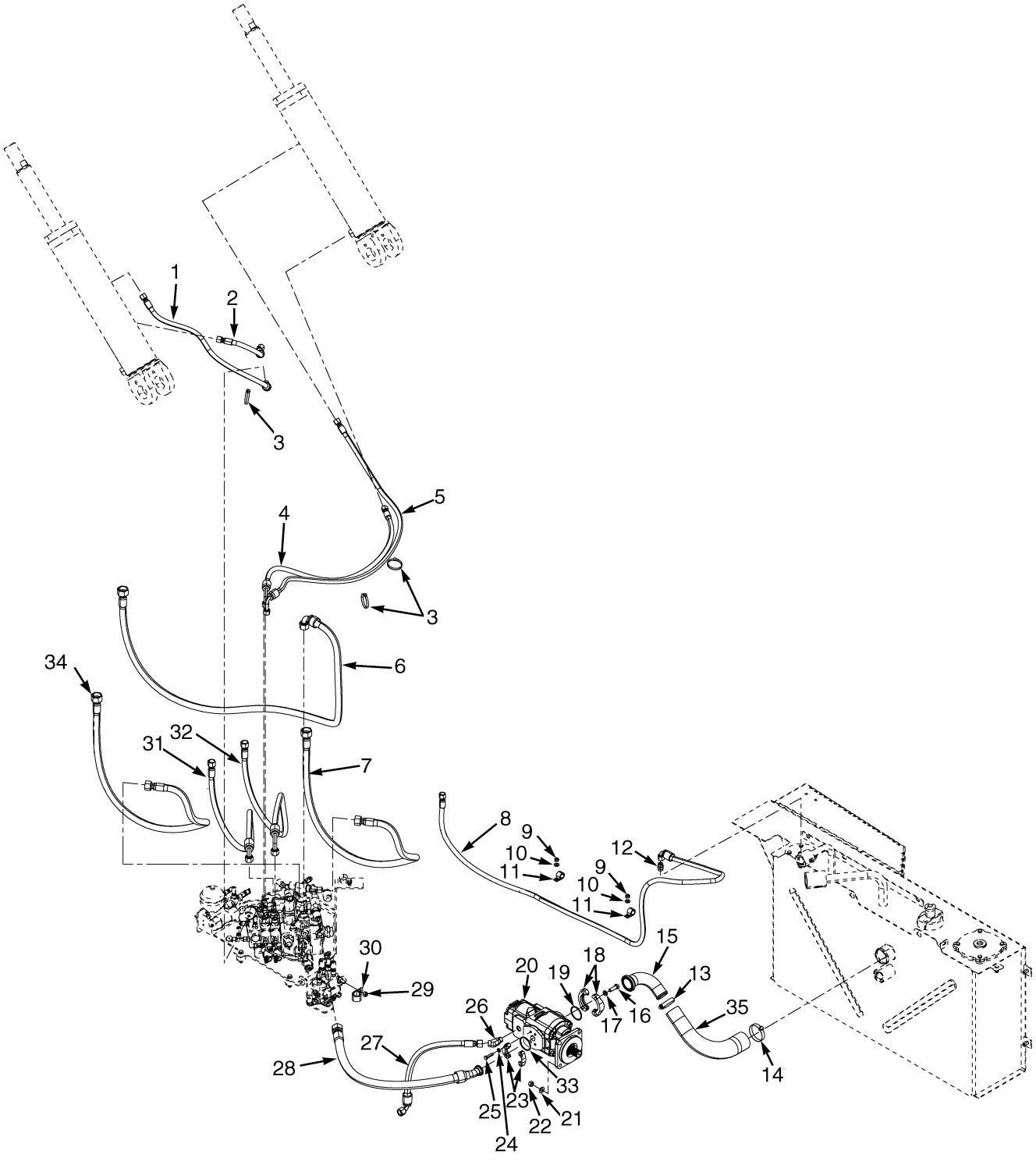

©2015 HYSTER COMPANY

HYDRAULIC SUPPLY AND RETURN
SHEET 2 OF 3

ITEM	PART NO.	DESCRIPTION	QTY
1	1476691	Hose Assy	1
2	1476689	Hose Assy	1
3	129563	Strap Clamp (H13.00XM, H14.00XM, H16.00XM-6)	2
4	1476692	Hose Assy	1
5	1476694	Hose Assy	1
6	1476736	Hose Assy (To Hoist Cylinder)	1
7	1476735	Hose Assy (To Hoist Cylinder)	1
8	**b** 1490266	Hose Assy (H13.00XM, H14.00XM, H16.00XM-6) (To Hoist Cylinder)	1
8	**c** 2107546	Hose Assy (H13.00XM, H14.00XM, H16.00XM-6) (To Hoist Cylinder)	1
9	302401	Locknut (H13.00XM, H14.00XM, H16.00XM-6)	2
10	320159	Washer (H13.00XM, H14.00XM, H16.00XM-6)	2
11	101625	Clamp (H13.00XM, H14.00XM, H16.00XM-6)	2
	a 14595	Plug Assembly (H10.00XM-12EC, H12.00XM-12EC)	1
12	16484	O-Ring	1
12	1473887	Fitting (H13.00XM, H14.00XM, H16.00XM-6)	1
12	16484	O-Ring	1
12	265731	O-Ring	1
13	1673489	Clamp	1
14	1673488	Clamp	1
15	222590	Fitting	1
16	18588	Capscrew	4
17	15158	Washer	4
18	222531	Clamp (Split Half)	2
19	198518	O-Ring	1
20	1625617	Hydraulic Pump (LPG)	1
20	1625615	Hydraulic Pump (Diesel)	1
21	15135	Washer	4
22	221711	Nut	4
23	190757	Clamp (Split Half)	2
24	15156	Lockwasher	4
25	16815	Capscrew	4
26	1516205	Fitting	1
26	252729	O-Ring	1
26	16485	O-Ring	1
27	1486073	Hose Assy	1
28	1486074	Hose Assy	1
29	302402	Locknut	1
30	279033	Clamp	1
31	2056208	Hose Assy (To Header Hose T)	1
32	2056209	Hose Assy (To Header Hose P)	1
33	169787	O-Ring	1
34	2101641	Hose Assy (To Header Hose) (4,5,6 Function Only)	1
35	1625613	Hose (Suction) (LPG)	1
35	1536281	Hose (Suction) (Diesel)	1
	a 1529016	Fitting (3 Function, Dual Side-Shift)	1

FOOTNOTES:

a Not Illustrated
b → S/N G019E02270F
c S/N G019E02271F →

©2015 HYSTER COMPANY

HYDRAULIC SUPPLY AND RETURN (FIGURE 10-3)
SHEET 3 OF 3

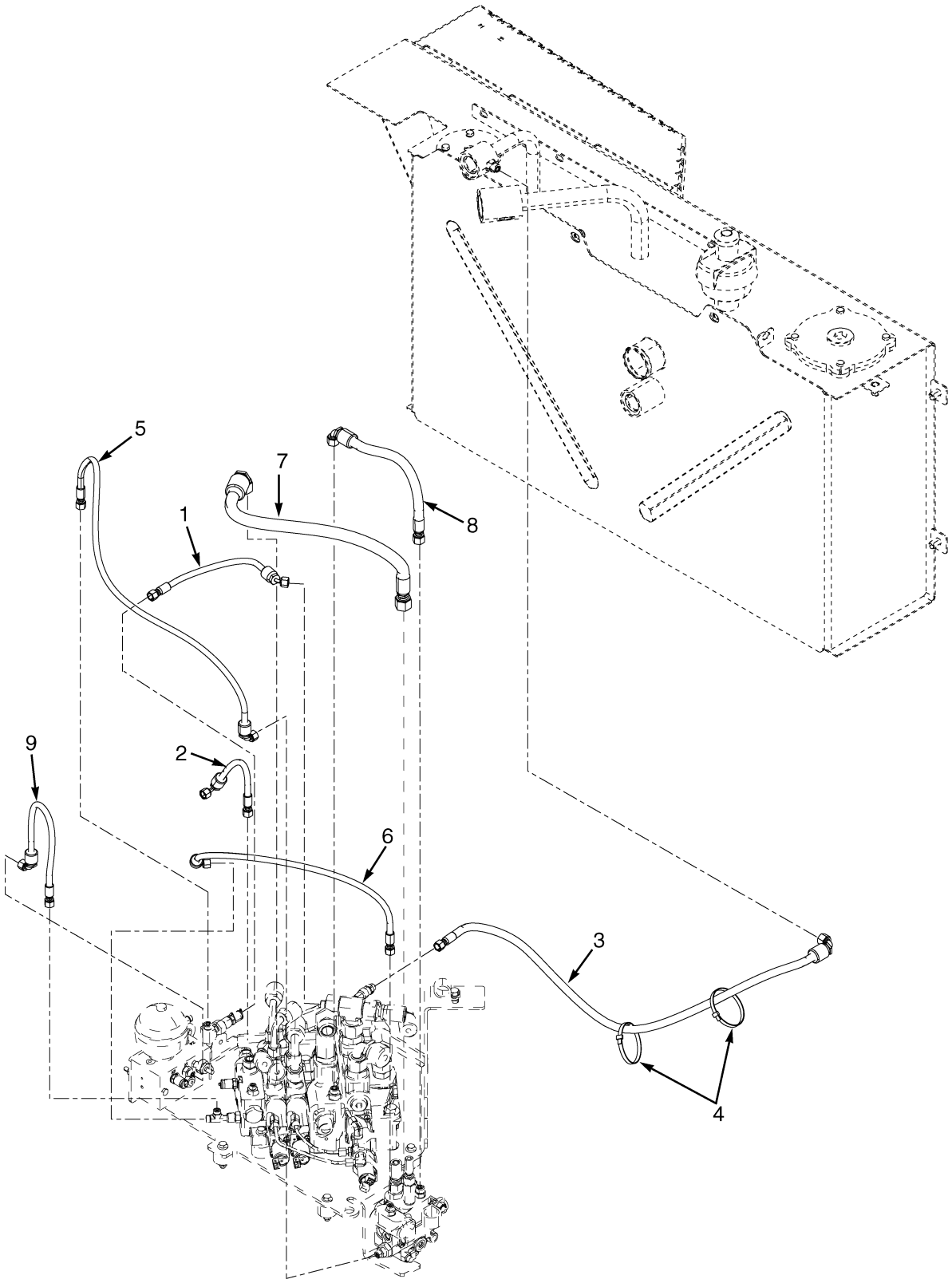

©2015 HYSTER COMPANY

HYDRAULIC SUPPLY AND RETURN
SHEET 3 OF 3

ITEM	PART NO.	DESCRIPTION	QTY
1	1476682	Hose Assy	1
2	1476681	Hose Assy	1
3	1490566	Hose Assy	1
4	129563	Strap Clamp	2
5	2046767	Hose Assy	1
6	1500217	Hose Assy	1
7	1476704	Hose Assy	1
8	1476688	Hose Assy	1
9	1476678	Hose Assy	1

©2015 HYSTER COMPANY

HYDRAULIC TANK AND ATTACHING PARTS (FIGURE 10-4)

(→ S/N G019E02270F)

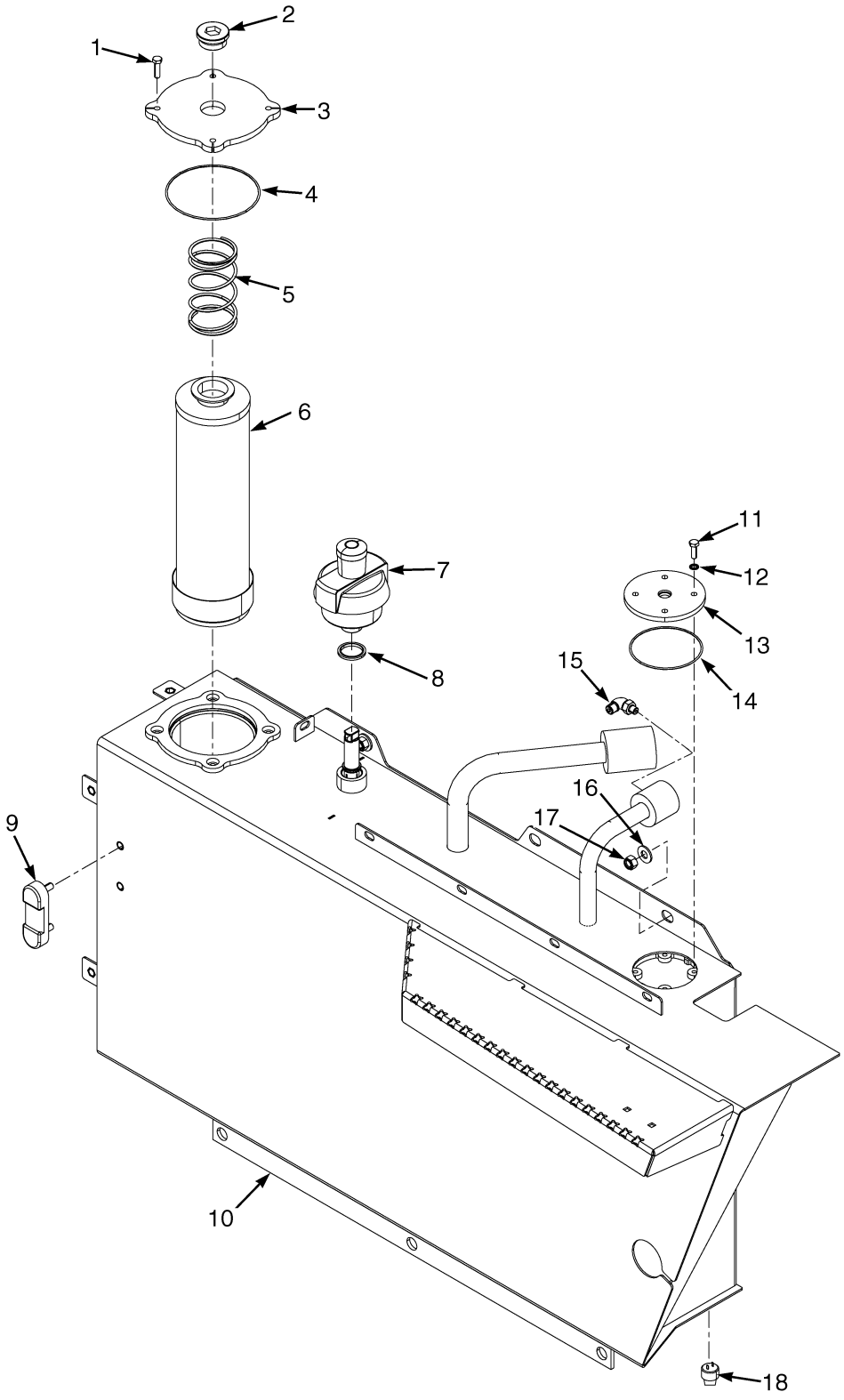

©2015 HYSTER COMPANY

HYDRAULIC TANK AND ATTACHING PARTS

(→ S/N G019E02270F)

ITEM	PART NO.	DESCRIPTION	QTY
1	176640	Bolt	4
2	1538936	Plug	1
3	1528456	Filter Head	1
4	39756	O-Ring	1
5	1533477	Spring	1
6	2059720	Hydraulic Filter	1
7	1564721	Breather (With Indicator and Standpipe)	1
7	1494312	Filter Element	1
7	1563867	Pipe	1
7	39373	O-Ring	1
8	888333	Seal	1
9	~~1528144~~		
	4021960	Indicator (Oil Level)	1
10	1640074	Hydraulic Tank	1
11	136749	Screw	4
12	1536311	Sealing Ring	4
13	1536288	Cover	1
14	39743	O-Ring	1
15	1487058	Fitting	1
15	1527813	O-Ring	1
15	16481	O-Ring	1
16	320162	Washer	3
17	302402	Locknut	3
18	35503	Fitting	1

©2015 HYSTER COMPANY

HYDRAULIC TANK AND ATTACHING PARTS (FIGURE 10-5)

(S/N G019E02271F →)

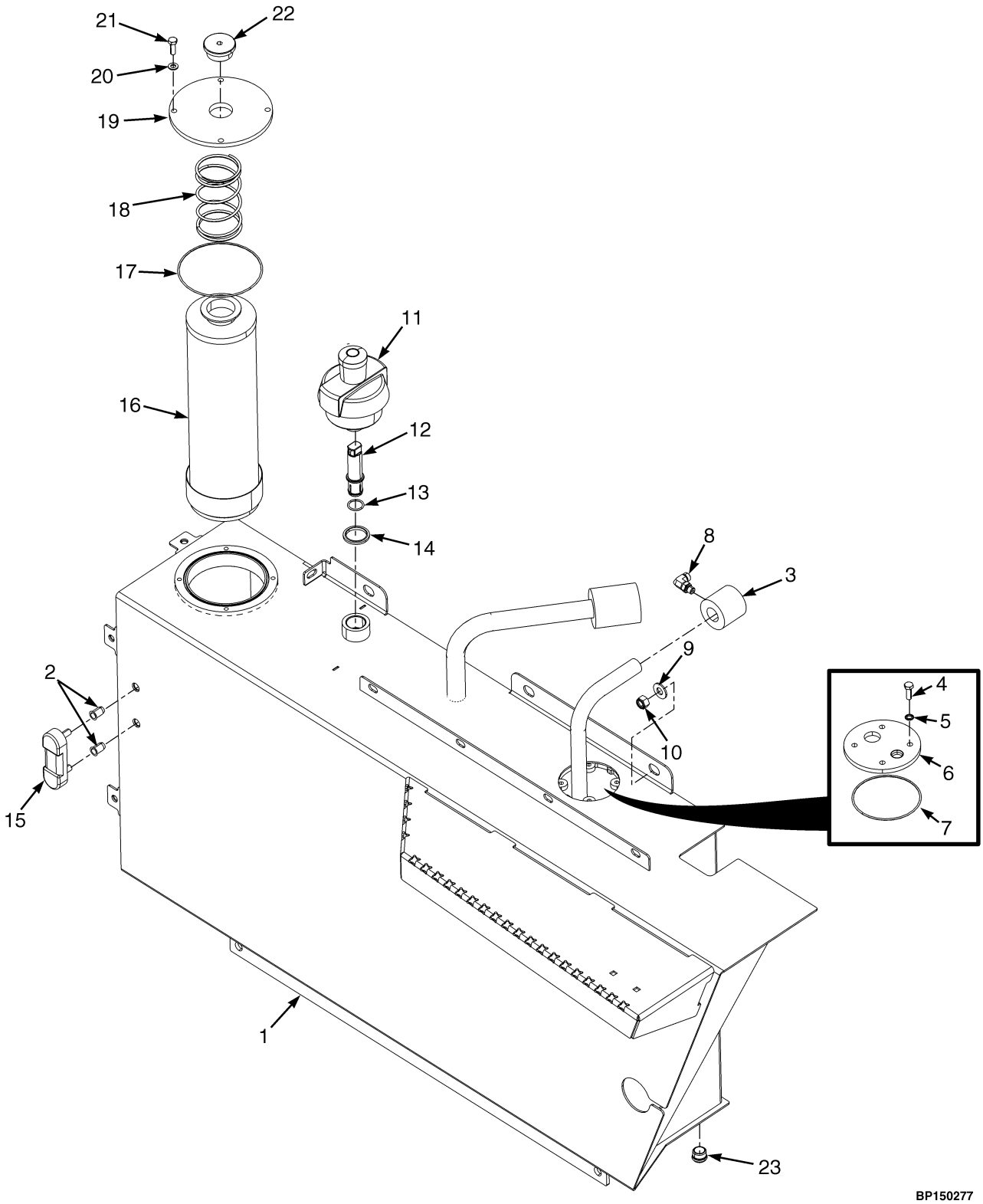

©2015 HYSTER COMPANY

HYDRAULIC TANK AND ATTACHING PARTS

(S/N G019E02271F →)

ITEM	PART NO.	DESCRIPTION	QTY
1	1676971	Hyd Tank Wldmt	1
2	1676814	Rivet	2
3	1677640	Boss (O Ring)	1
4	136749	Screw	4
5	1536311	Sealing Ring	4
6	1694274	Cover	1
7	39743	O-Ring	1
8	1487058	Fitting	1
8	1527813	O-Ring	1
8	16481	O-Ring	1
9	320162	Washer	3
10	302402	Locknut	3
11	1564721	Breather (With Indicator and Standpipe)	1
11	1494312	Filter Element	1
12	1563867	Pipe	1
13	39373	O-Ring	1
14	888333	Seal	1
15	~~1528144~~		
	4021960	Indicator (Oil Level)	1
16	2059720	Hydraulic Filter	1
17	39747	O-Ring	1
18	1533477	Spring	1
19	1676979	Plate	1
20	1581556	Washer	4
21	1581581	Capscrew	4
22	1538936	Plug	1
23	1689346	Drain Plug	1

©2015 HYSTER COMPANY

HYDRAULIC CONTROL VALVE ASSEMBLY (FIGURE 10-6)

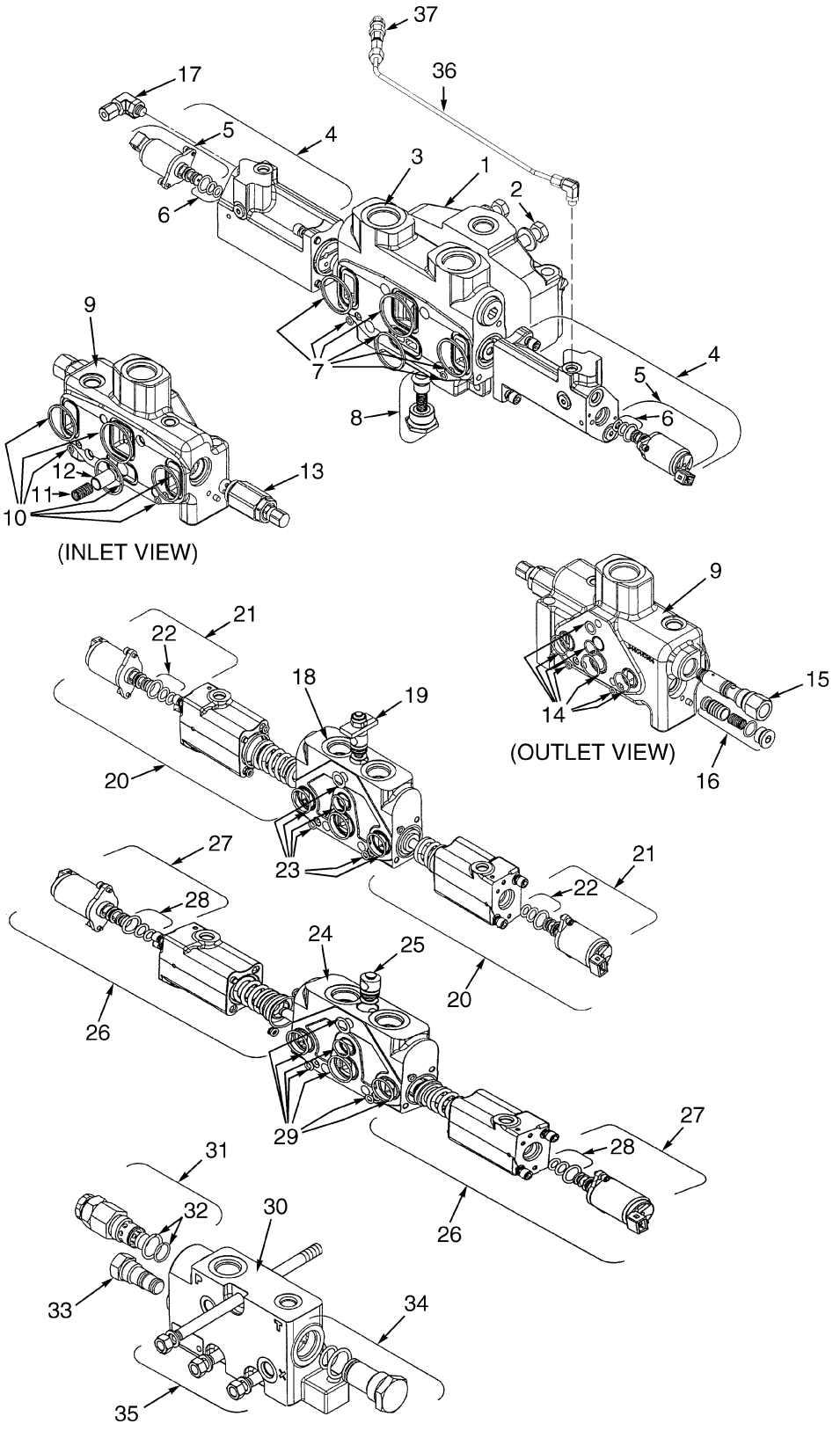

©2015 HYSTER COMPANY

HYDRAULIC CONTROL VALVE ASSEMBLY

ITEM	PART NO.	DESCRIPTION	QTY
	2052832	Hydraulic Control Valve (FLT)	1
	2052833	Hydraulic Control Valve (ECH)	1
1	1502570	Valve Section (Outlet)	1
2	1491779	Kit-Tie Rod (Outlet)	1
2	1636372	Washer	1
2	1636373	Capscrew	1
3	1502571	Valve Section (Lift)	1
4	1491772	Kit-End Cap	1
5	1491773	Solenoid	2
6	1496902	Kit-Seal	2
7	1491765	Kit-Seal	1
7	57568	O-Ring	1
8	1491775	Valve	2
8	16486	O-Ring	1
9	1513597	Valve Section (Center)	1
10	1491765	Kit-Seal (Inlet Side)	1
10	57568	O-Ring	1
11	1521118	Spring	1
12	1521117	Check Valve	1
13	1502582	Relief Valve	1
13	1491767	Kit-Seal	1
14	1491764	Kit-Seal (Outlet Side)	1
14	1494320	O-Ring	1
14	1514865	Shim	1
15	1527128	Cartridge Valve	1
16	1491855	Connector	1
17	1491777	Kit-Check Valve	1
17	1613901	Kit-Piping (Without Check Valve)	1
17	1635557	Fitting	1
17	1613902	Kit-Check Valve	1
18	1520807	Valve Section (FLT)	1
18	1520808	Valve Section (ECH)	1
19	1615156	Kit-Check Valve	1
20	1491771	End Cap (With Spring and Check Valve)	1
21	1491773	Solenoid (Includes Kit-Seal part number 1496902)	1
22	1496902	Kit-Seal	2
23	1491764	Kit-Seal	1
23	1494320	O-Ring	1
23	1514865	Shim	1
24	1502574	Valve Section (Tilt)	1
25	1491774	Check Valve	1
25	1500170	Kit-Seal	1
26	1491771	End Cap (With Spring and Check Valve)	1
27	1491773	Solenoid (Includes Kit-Seal part number 1496902)	2
28	1496902	Kit-Seal	2
29	1491764	Kit-Seal	1
29	1494320	O-Ring	1
29	1514865	Shim	1
30	1502576	Valve Section (Inlet)	1
31	1615157	Relief Valve	1
32	1467948	Kit-Relief Valve	1

©2015 HYSTER COMPANY

HYDRAULIC CONTROL VALVE ASSEMBLY

ITEM	PART NO.	DESCRIPTION	QTY
33	1491768	Plug	1
33	1495263	O-Ring	1
33	1495262	O-Ring	1
34	1496901	Kit-Plug	1
34	16486	O-Ring	1
34	1615154	O-Ring	1
35	1520332	Kit-Tie Rod (Inlet)	1
36	1613901	Kit-Piping (Without Check Valve)	1
37	1613902	Kit-Check Valve	1
	1496900	Kit-Seal (Main Valve)	1

©2015 HYSTER COMPANY

NOTES

©2015 HYSTER COMPANY

HYDRAULIC CONTROL VALVE AND ATTACHING PARTS (FIGURE 10-7)
SHEET 1 OF 2

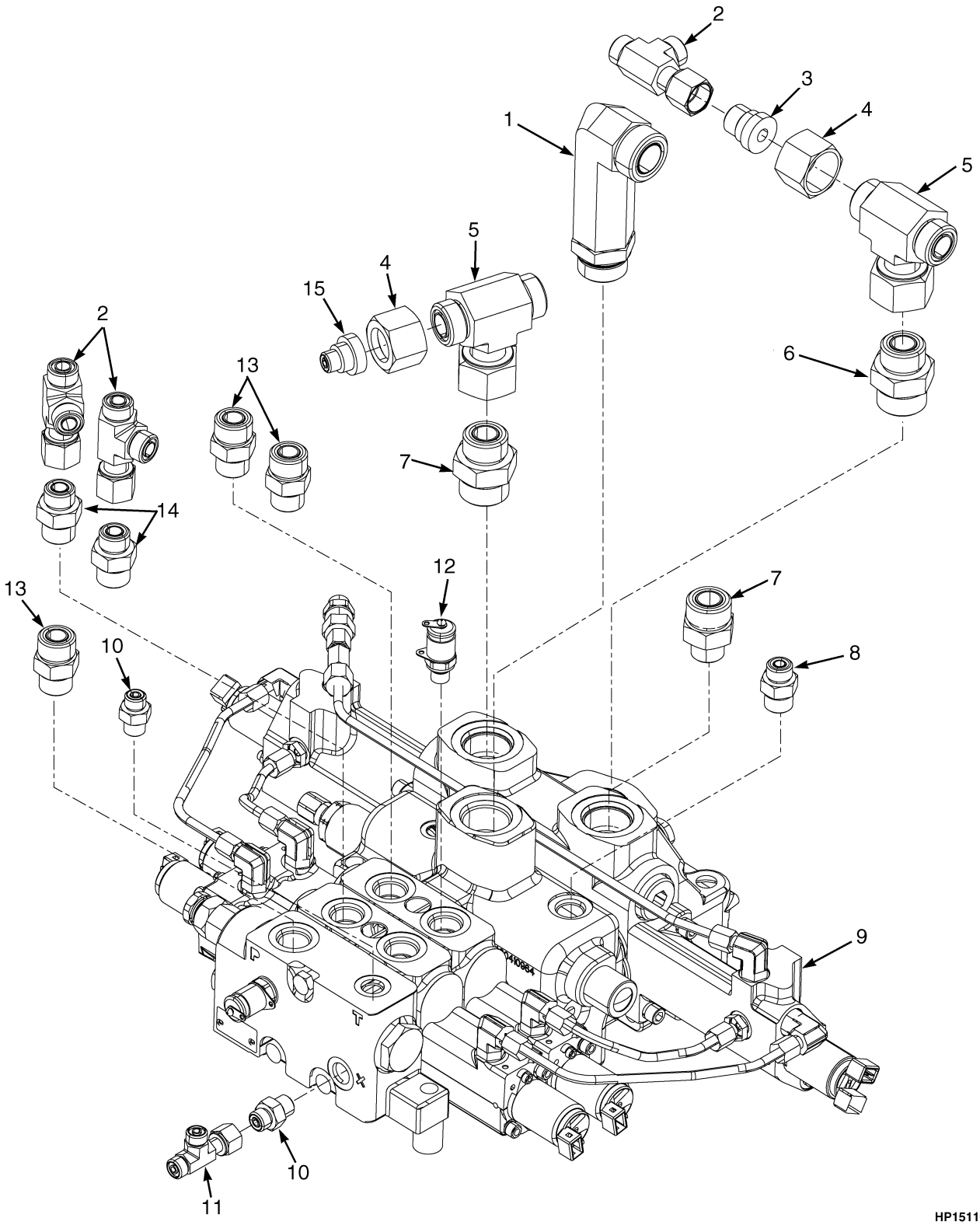

©2015 HYSTER COMPANY

HYDRAULIC CONTROL VALVE AND ATTACHING PARTS

SHEET 1 OF 2

ITEM	PART NO.	DESCRIPTION	QTY
1	1486557	Fitting	1
1	244167	O-Ring	1
1	16487	O-Ring	1
2	1487095	Fitting	3
2	265731	O-Ring	3
3	1487150	Fitting	1
3	265731	O-Ring	1
3	16982	O-Ring	1
3	1487166	Fitting	1
3	280154	O-Ring	1
4	1487166	Fitting	2
4	280154	O-Ring	1
5	1487088	Fitting	2
5	280154	O-Ring	3
6	1486754	Fitting	1
6	280154	O-Ring	1
6	16485	O-Ring	1
7	1473919	Fitting	2
7	280154	O-Ring	1
7	16487	O-Ring	1
8	1486742	Fitting	1
8	265787	O-Ring	1
8	16484	O-Ring	1
9	2052832	Hydraulic Control Valve (H13.00XM, H14.00XM, H16.00XM-6)	1
9	2052833	Hydraulic Control Valve (H10.00XM-12EC, H12.00XM-12EC)	1
10	1486738	Fitting	2
10	16483	O-Ring	1
10	1527813	O-Ring	1
11	1487094	Fitting	1
11	1527813	O-Ring	3
12	1473927	Quick Disconnect Fitting (For Hydraulic Pressure Test Port)	1
13	1486749	Fitting	3
13	16485	O-Ring	1
13	252729	O-Ring	1
14	1486746	Fitting	2
14	265731	O-Ring	1
14	16485	O-Ring	1
15	1487148	Fitting	1
15	16982	O-Ring	1
15	1527813	O-Ring	1
15	1487166	Fitting	1
15	280154	O-Ring	1

©2015 HYSTER COMPANY

HYDRAULIC CONTROL VALVE AND ATTACHING PARTS (FIGURE 10-8)
SHEET 2 OF 2

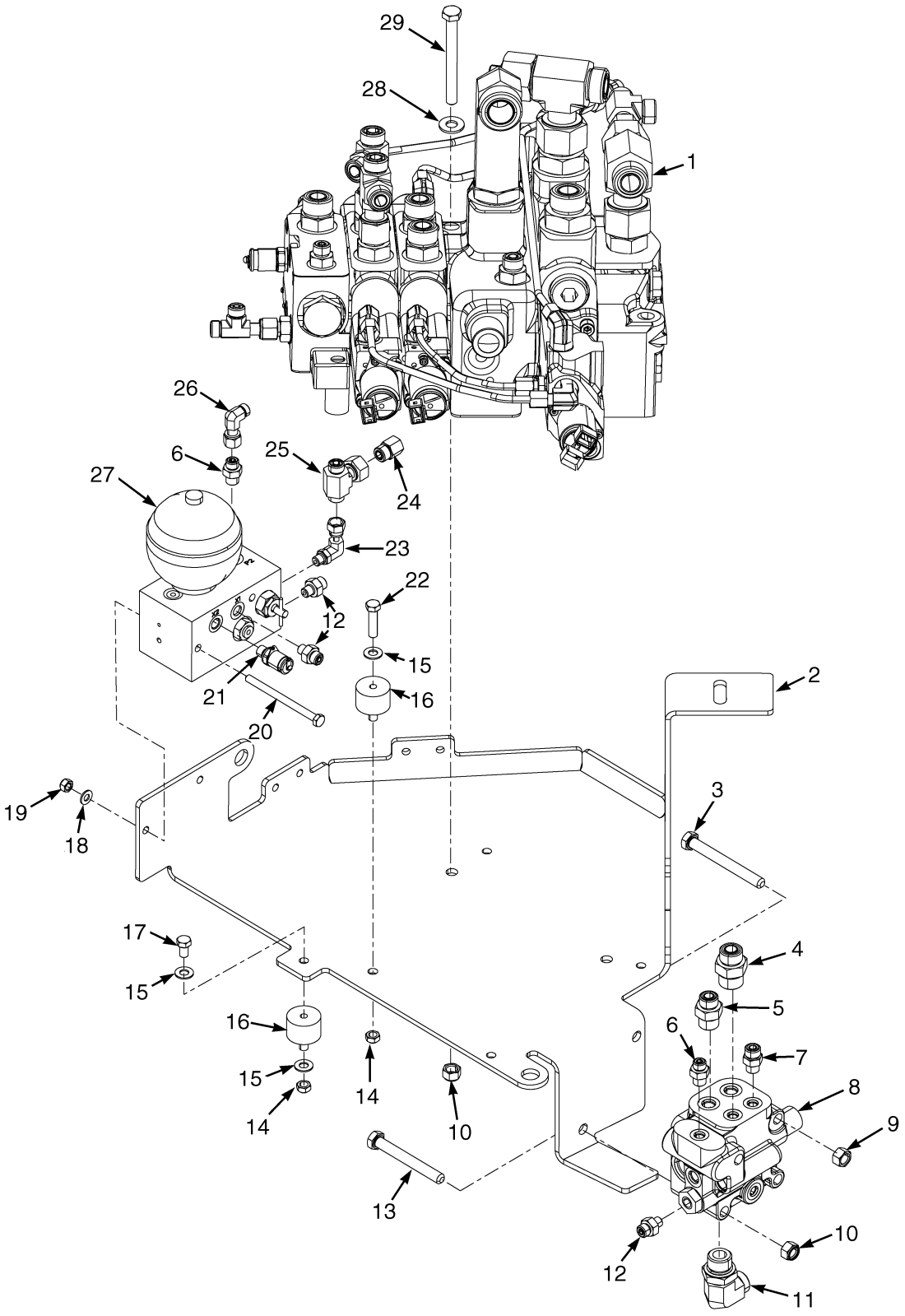

©2015 HYSTER COMPANY

HYDRAULIC CONTROL VALVE AND ATTACHING PARTS
SHEET 2 OF 2

ITEM	PART NO.	DESCRIPTION	QTY
1	2052832	Hydraulic Control Valve (H13.00XM, H14.00XM, H16.00XM-6)	1
1	2052833	Hydraulic Control Valve (H10.00XM-12EC, H12.00XM-12EC)	1
2	1492530	Plate	1
3	292539	Capscrew	1
4	1486751	Fitting	1
4	265787	O-Ring	1
4	1527813	O-Ring	1
5	1486746	Fitting	1
5	265731	O-Ring	1
5	16485	O-Ring	1
6	1486738	Fitting	2
6	16483	O-Ring	1
6	1527813	O-Ring	1
7	1486740	Fitting	1
7	265787	O-Ring	1
7	16483	O-Ring	1
8	1500407	Flow Valve (Steering Priority Valve)	1
8	1613877	Cartridge (Not Shown)	1
9	~~1318914~~		
	216877	Nut	1
10	302402	Locknut	3
11	1487069	Fitting	1
11	252729	O-Ring	1
11	16486	O-Ring	1
12	1486737	Fitting	3
12	16481	O-Ring	1
12	1527813	O-Ring	1
13	292538	Capscrew	1
14	145641	Locknut (Prevailing Torque)	5
15	15134	Washer	10
16	1307730	Mount	5
17	18535	Capscrew	4
18	320157	Washer	2
19	302400	Nut	2
20	1307994	Capscrew	2
21	1473927	Quick Disconnect Fitting (For Hydraulic Pressure Test Port)	3
22	16815	Capscrew	1
23	1486578	Fitting	1
23	265787	O-Ring	1
23	16483	O-Ring	1
24	1502373	Fitting	1
25	1488464	Fitting	1
25	265787	O-Ring	3
26	1486770	Fitting	1
26	1527813	O-Ring	2
27	1494804	Pilot Valve (☞Figure 10-9)	1
28	320162	Washer	2
29	292540	Capscrew	2

©2015 HYSTER COMPANY

PILOT VALVE ASSEMBLY (FIGURE 10-9)

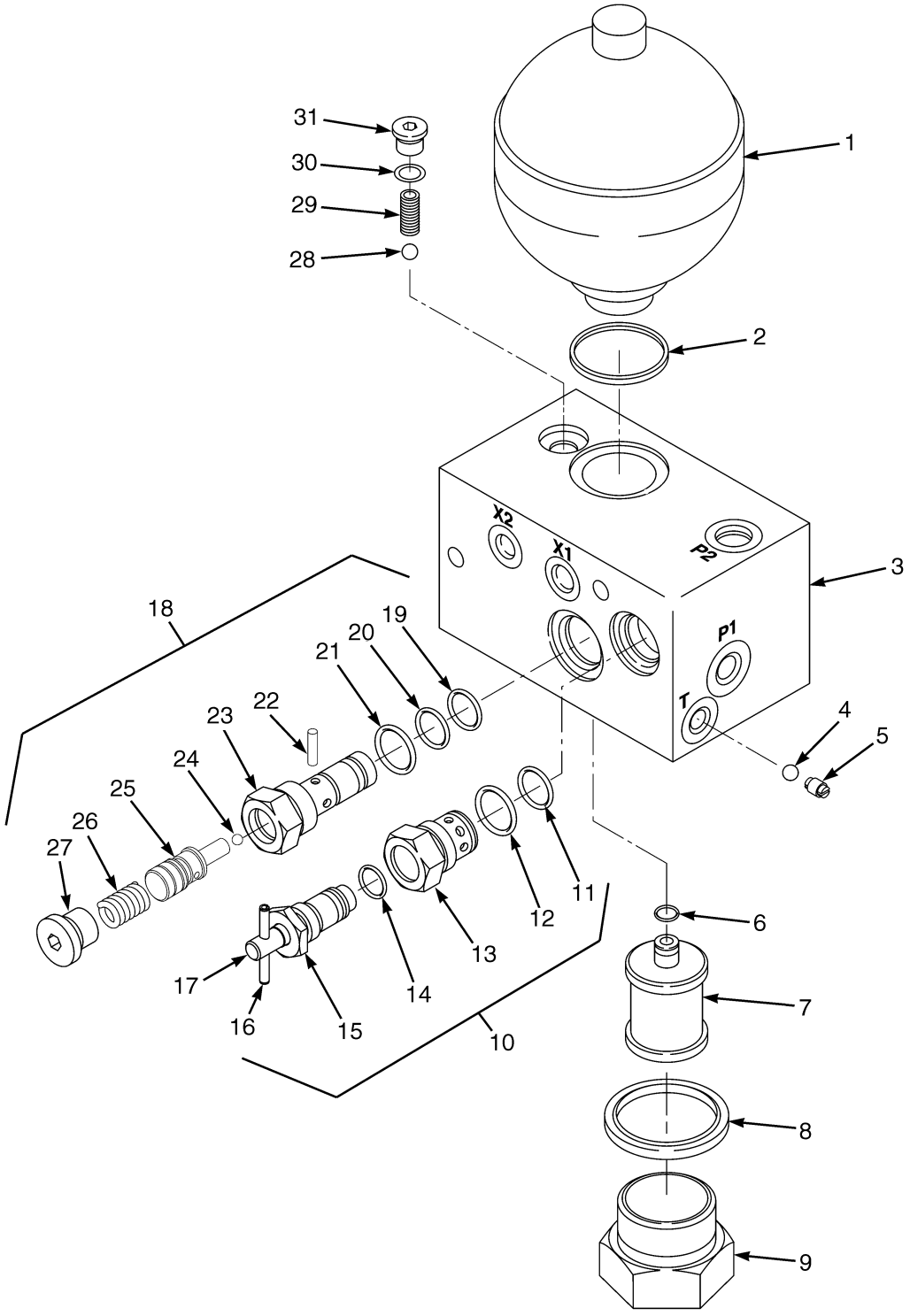

HP151117

©2015 HYSTER COMPANY

PILOT VALVE ASSEMBLY

ITEM	PART NO.	DESCRIPTION	QTY
	1494804	Pilot Valve	1
1	1491782	Accumulator	1
2	1495267	Seal	1
3	. . . . .	Block	1
4	1495289	Ball (5,08 mm)	1
5	1495288	Setscrew	1
6	1495266	O-Ring	1
7	1491783	Hydraulic Filter	1
8	1491786	Seal	1
9	1495258	Plug	1
10	1491784	Converter	1
11	1495259	O-Ring	1
12	1495260	O-Ring	1
13	. . . . .	Cartridge	1
14	1495261	O-Ring	1
15	1636539	Plug	1
16	1636540	Pin	1
17	. . . . .	Spindle	1
18	1495187	Cartridge (Pressure Reducing)	1
19	1495262	O-Ring	1
20	1467940	O-Ring	1
21	1491719	O-Ring	1
22	1636536	Pin	1
23	. . . . .	Cartridge	1
24	1636535	Ball	1
25	. . . . .	Piston	1
26	1636543	Spring	1
27	1636534	Plug	1
28	1495287	Ball (6,35 mm)	1
29	1495286	Spring	1
30	1495265	O-Ring	1
31	1491858	Plug	1
31	1495265	O-Ring	1
	1491787	Kit-Seal	1
	1495188	Kit-Seal (Valve)	1

©2015 HYSTER COMPANY

END CAP PARTS (FIGURE 10-10)
LIFT SECTION

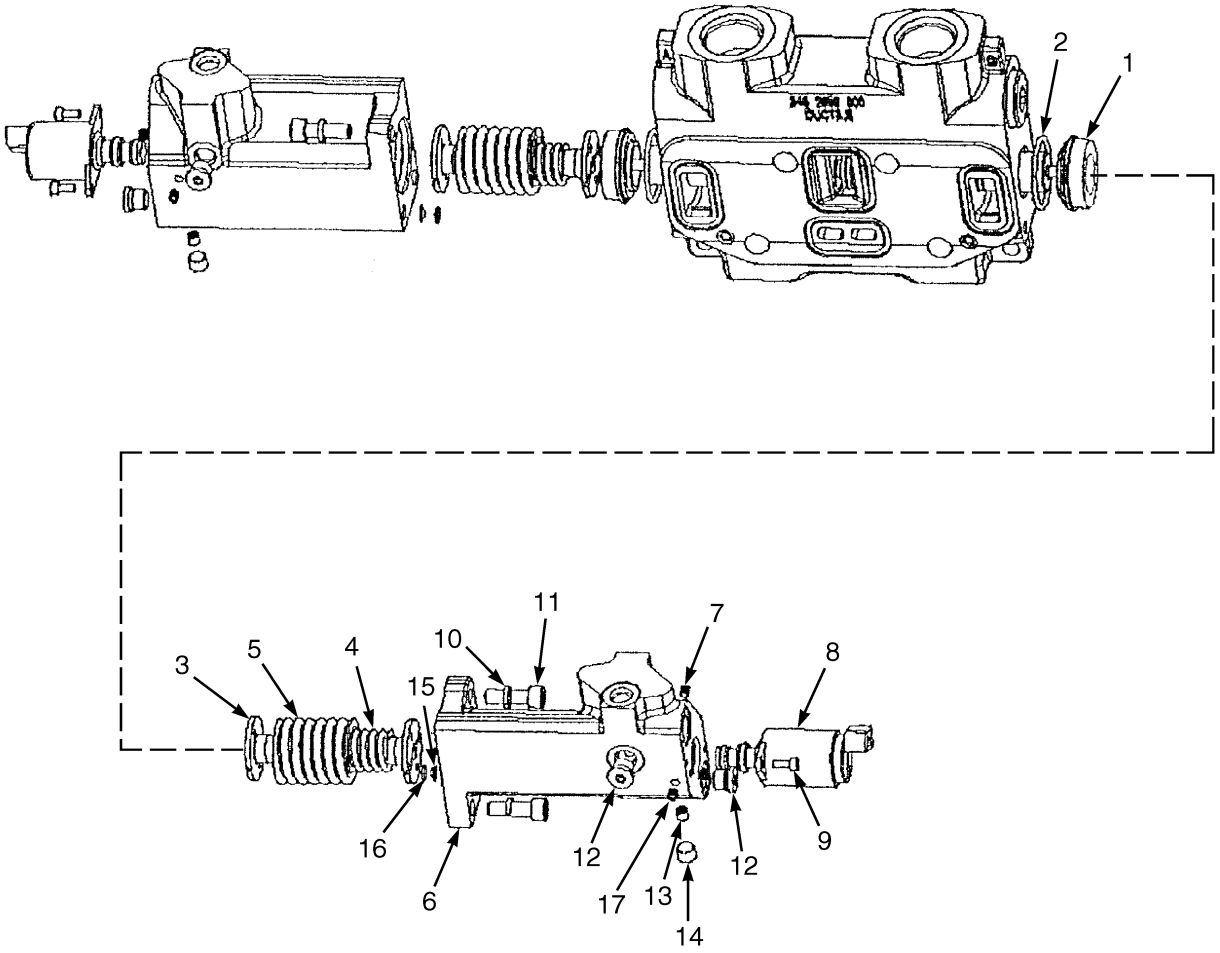

BP140072

©2015 HYSTER COMPANY

END CAP PARTS
LIFT SECTION

ITEM	PART NO.	DESCRIPTION	QTY
	1491772	Kit-End Cap	2
1	1624020	Seal	2
2	1619731	O-Ring	2
3	1624021	Spring Guide	4
4	1624022	Spring	2
5	1624023	Spring	2
6	1624024	End Cap	2
7	1624025	Plug	6
8	1491773	Solenoid	2
8	1496902	Kit-Seal	1
9	1624026	Capscrew	4
10	1624027	Lockwasher	4
11	1624028	Capscrew	4
12	1491858	Plug	4
12	1495265	O-Ring	1
13	1624029	Plug	2
14	1624030	Plug	2
15	1619734	Filter	2
16	1619732	O-Ring	2
17	1672803	Plug	2
	1496900	Kit-Seal (Main Valve)	1

©2015 HYSTER COMPANY

HYDRAULIC CONTROLS (FIGURE 10-11)
LEVERS

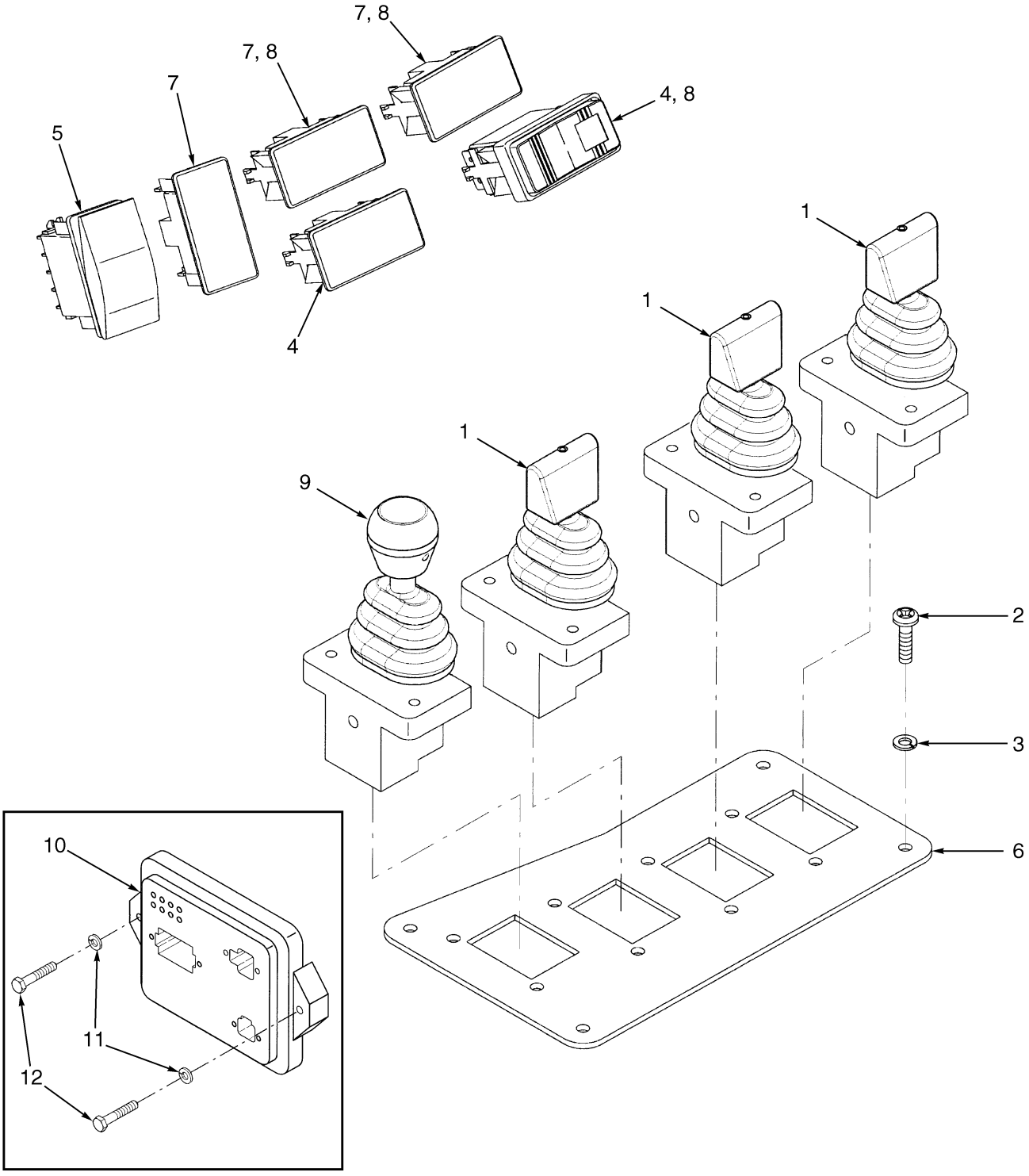

HP150589

©2015 HYSTER COMPANY

HYDRAULIC CONTROLS
LEVERS

KEY:
A: Three Function
B: Four Function
C: Five Function
D: Six Function

ITEM	PART NO.	DESCRIPTION	QTY A	QTY B	QTY C	QTY D
1	1518879	Mini-Lever (Electronic) (☞Figure 10-18)	3	4	4	4
2	1494516	Screw	4	4	4	4
3	1494518	Washer	4	4	4	4
4	1487428	Plug	2	2	2	2
5	2043344	Switch (Horn)	1	1	1	1
6	**k** 1524147	Plate (Cover)	1	..	..	..
6	**h** 1524147	Plate (Cover)	..	1	..	..
6	**g** 1524147	Plate (Cover)	..	..	1	..
6	**n** 1524147	Plate (Cover)	..	..	1	..
6	**m** 1524147	Plate (Cover)	..	1	..	..
6	**i** 1524148	Plate (Cover)	1	..	..	..
6	**e** 1524148	Plate (Cover)	..	1	..	..
6	**c** 1524146	Plate (Cover)	..	1	..	..
6	**d** 1524146	Plate (Cover)	..	1	..	..
6	**a** 1524146	Plate (Cover)	..	..	1	..
6	**b** 1524146	Plate (Cover)	..	..	1	..
6	**j** 1524146	Plate (Cover)	..	..	..	1
7	**k** 1487428	Plug	3	..	..	..
7	**i** 1487428	Plug	2	..	..	..
7	**c** 1487428	Plug	..	3	..	..
7	**h** 1487428	Plug	..	2	..	..
7	**e** 1487428	Plug	..	1	..	..
7	**d** 1487428	Plug	..	3	..	..
7	**m** 1487428	Plug	..	2	..	..
7	**a** 1487428	Plug	..	..	2	..
7	**g** 1487428	Plug	..	..	1	..
7	**b** 1487428	Plug	..	..	2	..
7	**n** 1487428	Plug	..	..	1	..
7	**j** 1487428	Plug	..	..	..	1
8	**i** 2054005	Switch	1	..	..	..
8	**h** 2054005	Switch	..	1	..	..
8	**e** 2054005	Switch	..	2	..	..
8	**a** 2054005	Switch	..	..	1	..
8	**g** 2054005	Switch	..	..	2	..
8	**b** 2054005	Switch	..	..	1	..
8	**n** 2054005	Switch	..	..	2	..
8	**m** 2054005	Switch	..	1	..	..
8	**j** 2054005	Switch	..	..	..	2
9	**l** 1518880	Mini-Lever (Electronic) (☞Figure 10-19)	..	1	1	..
9	1583721	Boot	..	1	1	..
10	**f** 2041923	Controller (I/O)	1	1	1	1
11	292680	Washer	2	2	2	2
12	292503	Capscrew	2	2	2	2

©2015 HYSTER COMPANY

HYDRAULIC CONTROLS
LEVERS

KEY:
A: Three Function
B: Four Function
C: Five Function
D: Six Function

ITEM	PART NO.	DESCRIPTION	QTY A	B	C	D
	1706731	Kit -I/O Board Protection	1	1	1	1

FOOTNOTES:

a Five Function Control Lever
b Five Function Control lever With Clamp Attachment
c Four Function Control Lever
d Four Function Control Lever Wiith Clamp Attachment
e Individual Fork Positioner
f NOT USED ON A STANDARD THREE FUNCTION, THREE LEVER OPTION
g Side-Shift, And Individual Fork Positioner
h Side-Shift, And Simultaneous Fork Positioner
i Simultaneous Fork Positioner
j Six Function Control lever
k Three Function Control Lever
l With Clamp Attachment
m With ECH And Suspension Hooks
n With ECH And Twistlocks

©2015 HYSTER COMPANY

HYDRAULIC CONTROLS (FIGURE 10-12)
JOYSTICK

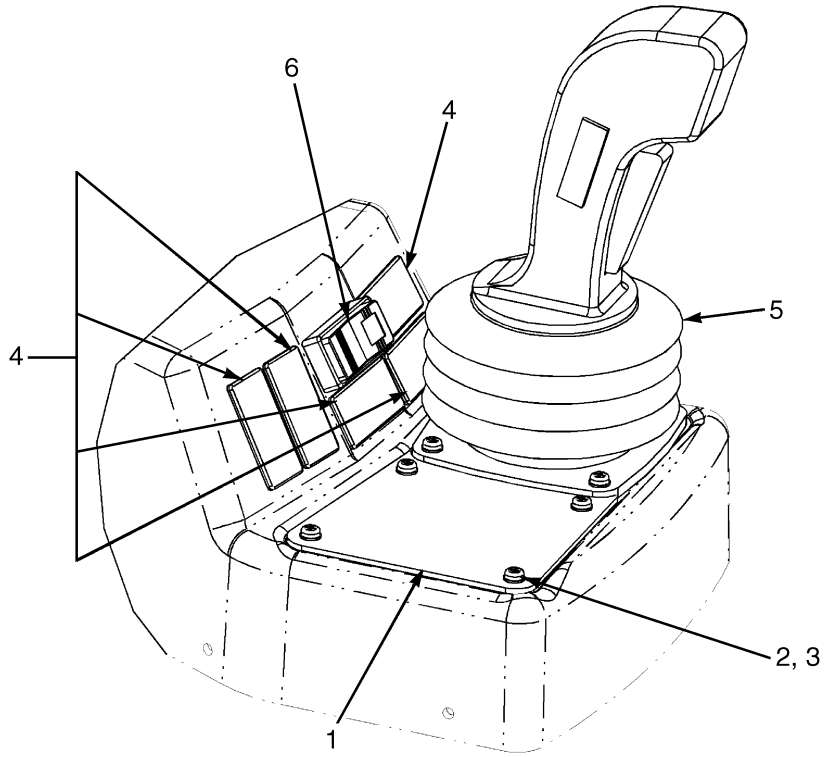

KEY:
A: Three Function
B: Three Function (With Simultaneous Fork Positioner)
C: Four Function
D: Five Function
E: Five Function (Empty Container Handler)

ITEM	PART NO.	DESCRIPTION	QTY A	B	C	D	E
1	1487427	Plate , Cover	1	1	1	1	1
2	1494516	Screw	8	8	8	8	8
3	1494518	Washer	8	8	8	8	8
4	1487428	Plug	6	5	5	4	5
5	**b** 1504059	Joystick	1	1	1	1	..
5	**a** 1480436	Joystick	..	..	..	..	1
6	2054005	Switch	..	1	1	2	1
	c 2041923	Controller (I/O)	1	1	1	1	1
	292680	Washer (For I/O Module Mounting)	2	2	2	2	2
	292503	Capscrew (For I/O Module Mounting)	2	2	2	2	2

FOOTNOTES:

a Empty Container Handler With Twist Locks
b Forklift Truck And Empty Container Handler With Suspension Hooks
c Not Illustrated

©2015 HYSTER COMPANY

HYDRAULIC PUMP (FIGURE 10-13)

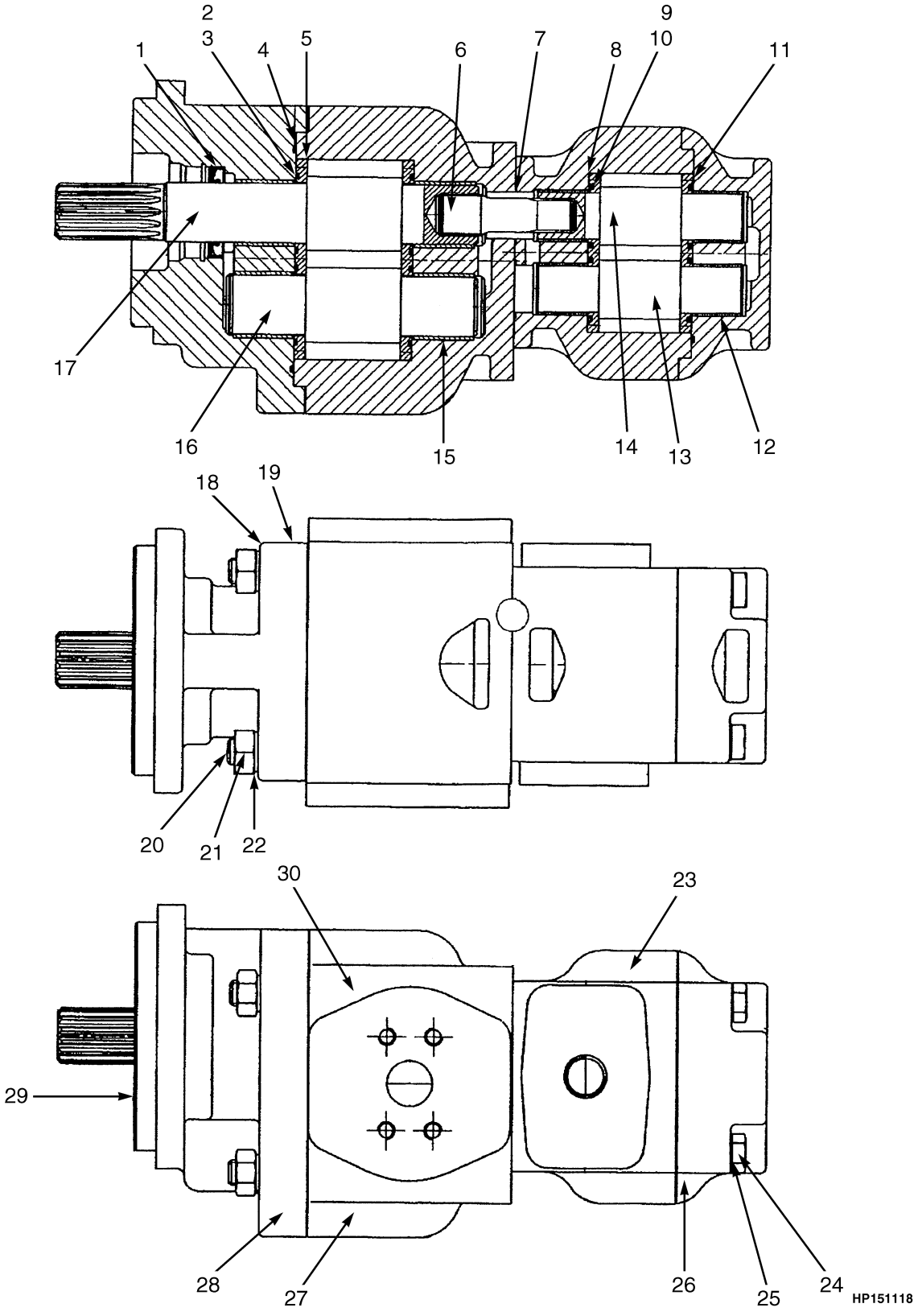

©2015 HYSTER COMPANY

HYDRAULIC PUMP

KEY:
A: Diesel
B: LPG

ITEM	PART NO.	DESCRIPTION	QTY A	QTY B
	1625615	Hydraulic Pump	1	..
	1625617	Hydraulic Pump	..	1
1	189996	Seal (Lip)	1	1
2	1638375	Seal (Channel)	2	2
3	1638376	Seal (Back-Up)	2	2
4	1638377	Seal (Section)	1	1
5	1638374	Thrust Plate	2	2
6	1638381	Shaft	1	..
6	1638509	Shaft	..	1
7	1638379	O-Ring	3	3
8	1638371	Thrust Plate	2	2
9	1638372	Seal (Energizer)	2	2
10	1638373	Seal (Element)	2	2
11	1638380	Seal	1	1
12	1638370	Bushing	4	4
13	. . . . .	Driven Gear	1	1
14	. . . . .	Drive Gear	1	1
15	1638356	Bushing	4	4
16	. . . . .	Driven Gear	1	1
17	. . . . .	Drive Gear	1	1
18	. . . . .	Nameplate	1	1
19	1311790	Screw (For Nameplate)	2	2
20	1638366	Screw	4	4
21	1638367	Nut	4	4
22	1638365	Washer	4	4
23	. . . . .	Body	1	1
24	313850	Capscrew	4	..
24	1638803	Screw	..	4
25	1638368	Washer	4	4
26	1638351	Cover	1	1
27	. . . . .	Body	1	1
28	1638350	Flange	1	1
29	176159	Plug	1	1
30	1638378	Sleeve	2	2

©2015 HYSTER COMPANY

LIFT ACCUMULATOR ASSEMBLY (FIGURE 10-14)

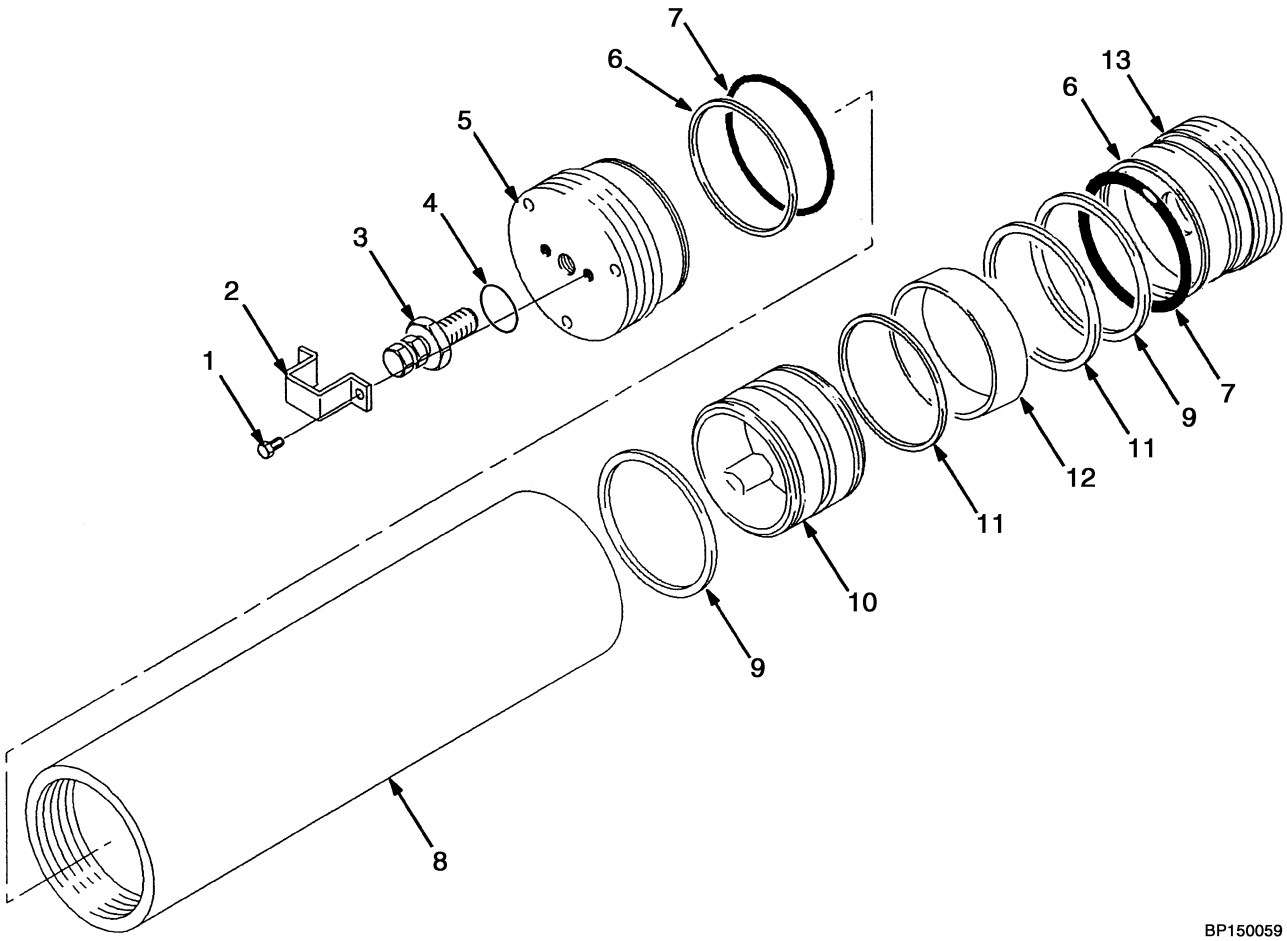

ITEM	PART NO.	DESCRIPTION	QTY
	1500717	Accumulator	1
1	1502888	Screw	2
2	1503082	Protector	1
3	. . . . .	Gas Valve	1
4	1502887	O-Ring	1
5	. . . . .	Gasoline End Cap	1
6	. . . . .	Back-Up Washer	2
7	. . . . .	O-Ring	2
8	. . . . .	Shell	1
9	1503078	Washer	2
10	1503083	Piston	1
11	1503079	Wear Strip	2
12	. . . . .	O-Ring	1
13	. . . . .	Hydraulic End Cap	1
	1503076	Kit-Accumulator	1

©2015 HYSTER COMPANY

LIFT ACCUMULATOR AND ATTACHING PARTS (FIGURE 10-15)

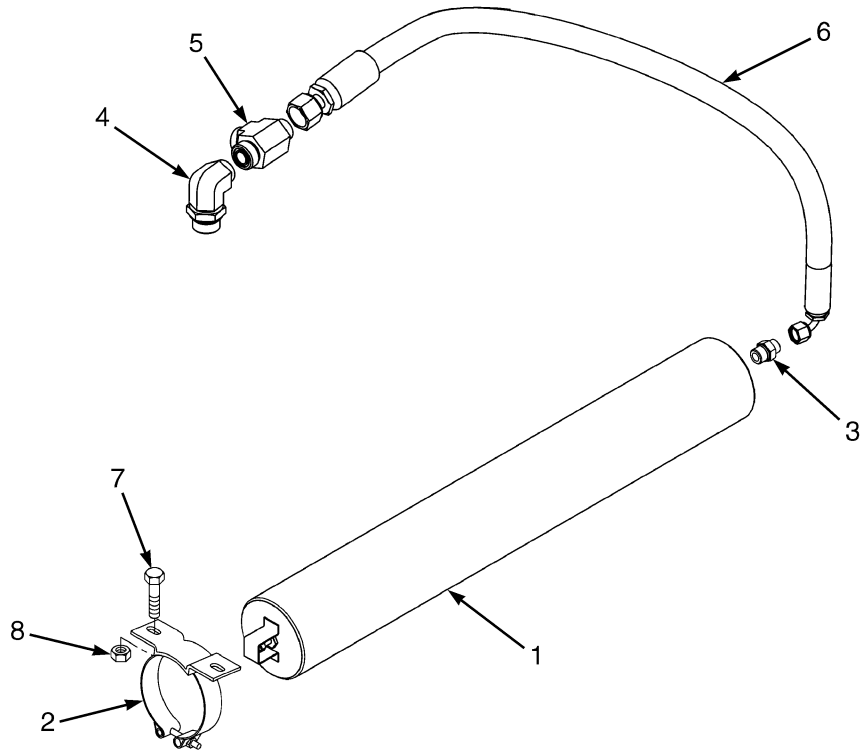

HP150860

ITEM	PART NO.	DESCRIPTION	QTY
1	1500717	Accumulator (☞Figure 10-14)	1
2	1500718	Clamp	2
3	1486746	Fitting	1
4	1487073	Fitting	1
5	1473892	Fitting	1
6	2046552	Hose Assy	1
7	136749	Screw	4
8	302400	Nut	4

©2015 HYSTER COMPANY

TILT CYLINDER ASSEMBLY (FIGURE 10-16)

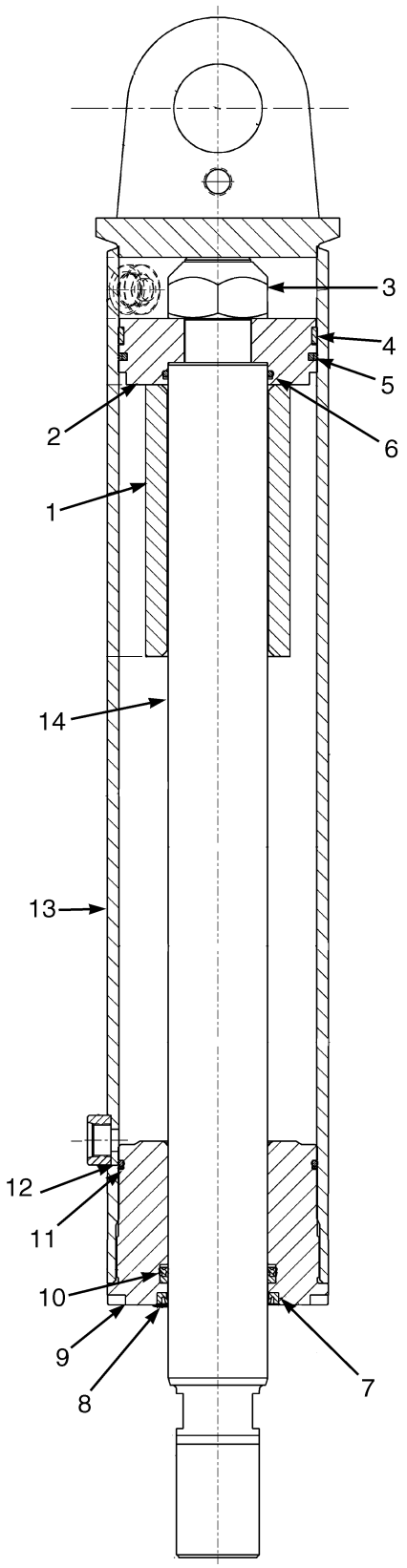

©2015 HYSTER COMPANY

TILT CYLINDER ASSEMBLY

KEY:
A: 15° Forward/12° Back, 20.5° Forward/7° Back (Non-ECH)
B: 15° Forward/10° Back (Non-ECH)
C: 5° Forward/6° Back (Non-ECH)
D: 5° Forward/12° Back (Non-ECH)
E: 5° Forward/5° Back (EC3), 5° Forward/5° Back (EC4)

			QTY				
ITEM	**PART NO.**	**DESCRIPTION**	**A**	**B**	**C**	**D**	**E**
	2037398	Tilt Cylinder	2	..	..	..	..
	2067340	Tilt Cylinder	..	2	..	..	..
	1454508	Tilt Cylinder	..	..	2	..	..
	2032001	Tilt Cylinder	..	..	..	2	..
	2015363	Tilt Cylinder (EC3)	..	..	..	..	2
	2015364	Tilt Cylinder (EC4)	..	..	..	..	2
1	1475136	Spacer	..	1	..	..	..
1	1392601	Spacer	..	..	1	..	..
1	1303443	Spacer	..	..	..	1	..
1	2015381	Spacer	..	..	..	..	1
2	387248	Piston	1	1	1	1	1
3	221377	Locknut	1	1	1	1	1
4	387247	Wear Ring	1	1	1	1	1
5	15890	O-Ring (Use with 1380890)	1	1	1	1	1
5	1380890	Piston Seal	1	1	1	1	1
5	2049288	Seal (Alternate Part)	1	1	1	1	1
6	198518	O-Ring	1	1	1	1	1
7	816578	Rod Wiper	1	1	1	1	1
8	1599242	Plug	2	2	2	2	2
9	2013361	End Plug	1	1	1	1	1
10	816580	Rod Seal	1	1	1	1	1
11	1476882	Back-Up Ring	1	1	1	1	1
12	55289	O-Ring	1	1	1	1	1
13	2013366	Tube Wldmt-Cylinder	1	1	1	1	1
14	2015375	Rod (Piston)	1	..	..	1	..
14	1557421	Rod (Piston)	..	1	..	..	..
14	1455623	Rod (Piston)	..	..	1	..	..
14	2015376	Rod (Piston) (EC3)	..	..	..	..	1
14	2015377	Rod (Piston) (EC4)	..	..	..	..	1
	1476917	Kit-Seal	1	1	1	1	1

©2015 HYSTER COMPANY

TILT CYLINDER AND ATTACHING PARTS (FIGURE 10-17)

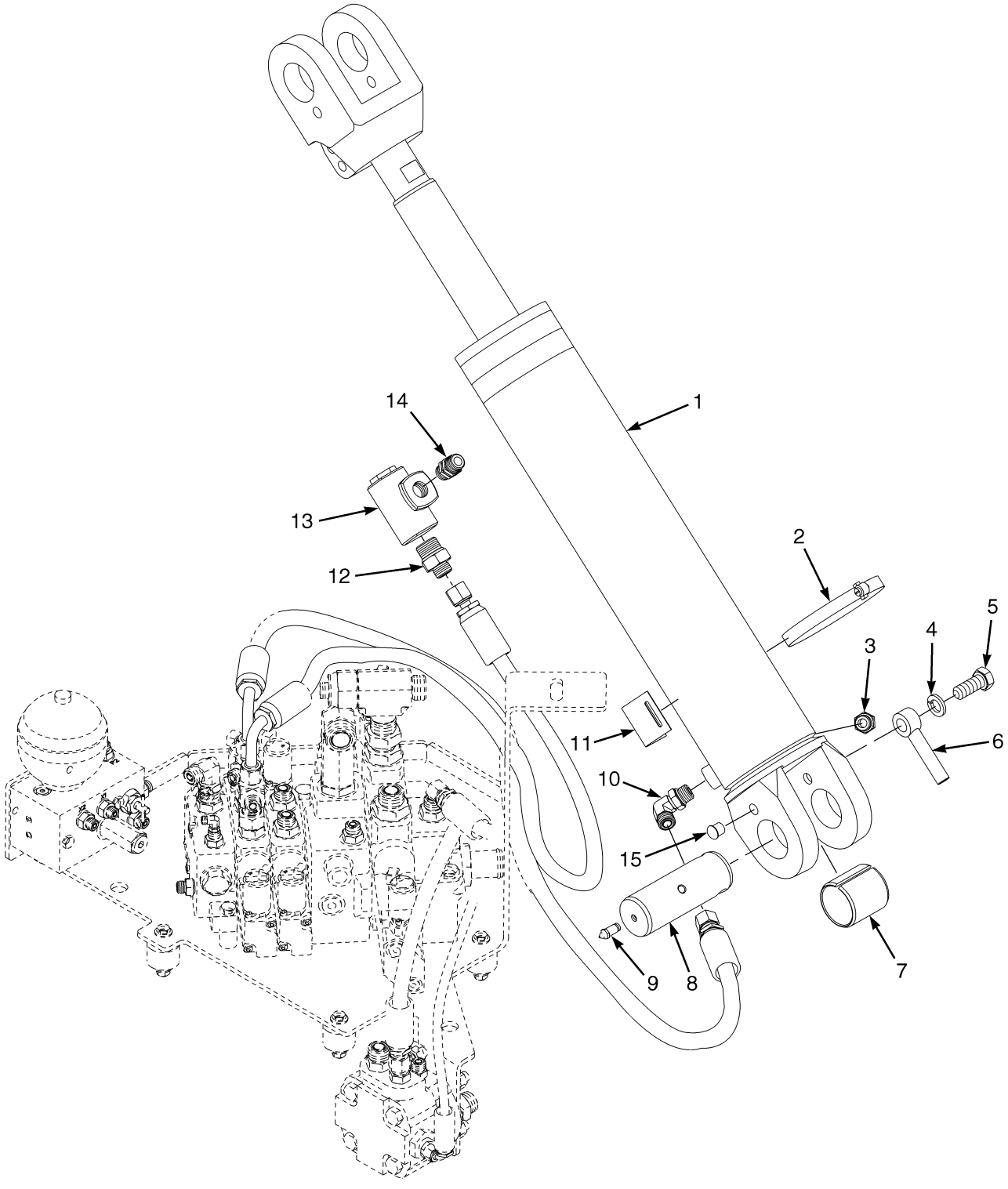

©2015 HYSTER COMPANY

TILT CYLINDER AND ATTACHING PARTS

ITEM	PART NO.	DESCRIPTION	QTY
1	2037398	Tilt Cylinder (15° Forward/12° Back, 20.5° Forward/7° Back) (Non-ECH)	2
1	2067340	Tilt Cylinder (15° Forward/10° Back) (Non-ECH)	2
1	1454508	Tilt Cylinder (5° Forward/6° Back) (Non-ECH)	2
1	2032001	Tilt Cylinder (5° Forward/12° Back) (Non-ECH)	2
1	2015363	Tilt Cylinder (5° Forward/5° Back) (EC3)	2
1	2015364	Tilt Cylinder (5° Forward/5° Back) (EC4)	2
2	144157	Hose Clamp	2
3	14595	Plug Assembly	2
4	292685	Lockwasher	2
5	292560	Capscrew	2
6	1347861	Anchor	2
7	376051	Bushing	2
8	1347862	Pin	2
9	16001	Grease Fitting	2
10	1473897	Fitting	2
11	87911	Clamp	2
12	1473887	Fitting	2
13	1564349	Relief Valve	2
13	1580023	Cartridge	1
14	1336112	Fitting (O-Ring To O-Ring Adapter)	2
15	1662578	Plug	2

©2015 HYSTER COMPANY

ELECTRONIC LEVER ASSEMBLY (FIGURE 10-18)

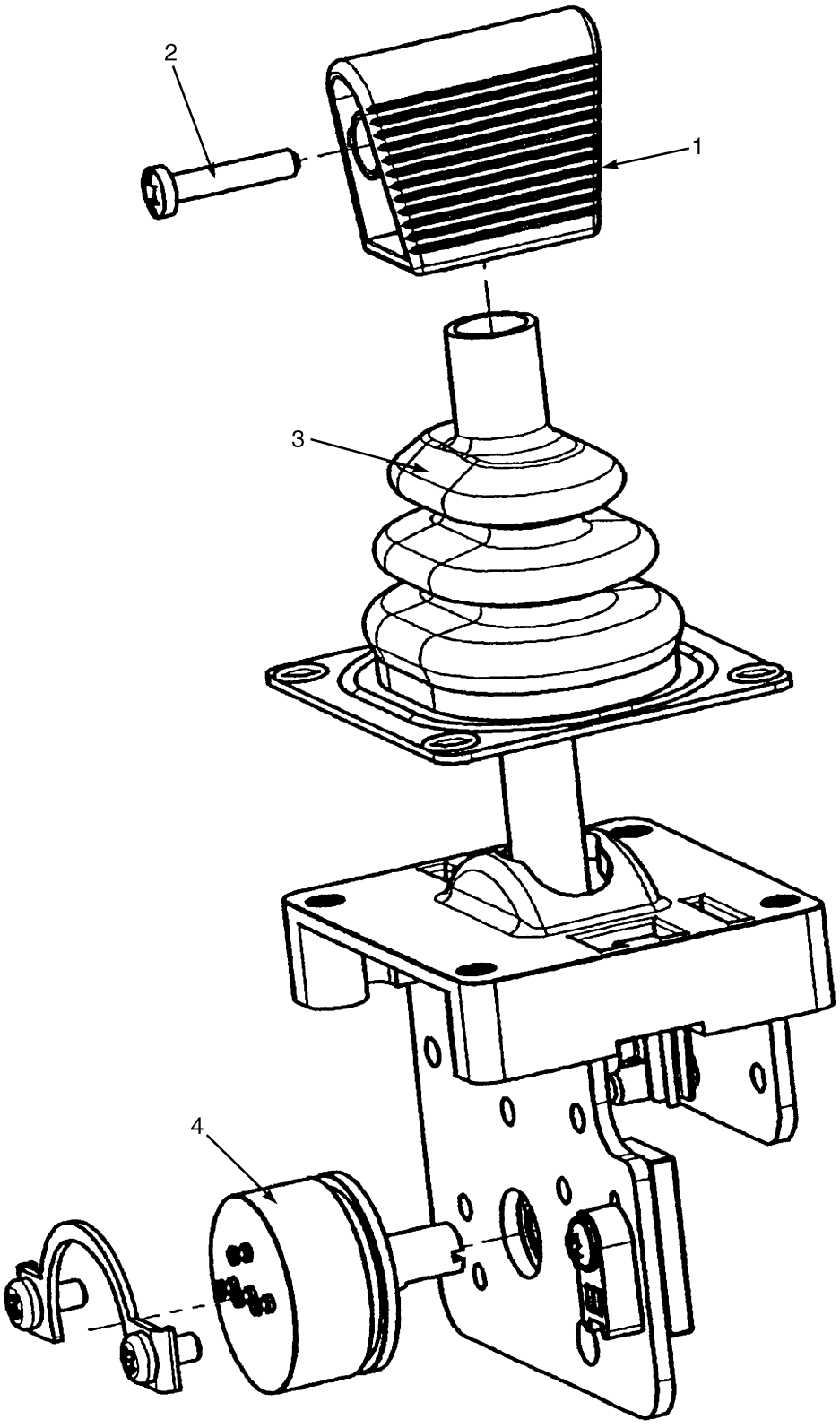

©2015 HYSTER COMPANY

ELECTRONIC LEVER ASSEMBLY

ITEM	PART NO.	DESCRIPTION	QTY
	1518879	Mini-Lever (Electronic)	1
1	1592671	Knob	1
2	1592672	Screw	1
3	1583721	Boot	1
4	1592673	Potentiometer	1

©2015 HYSTER COMPANY

ELECTRONIC LEVER ASSEMBLY (FIGURE 10-19)
WITH CLAMP ATTACHMENT

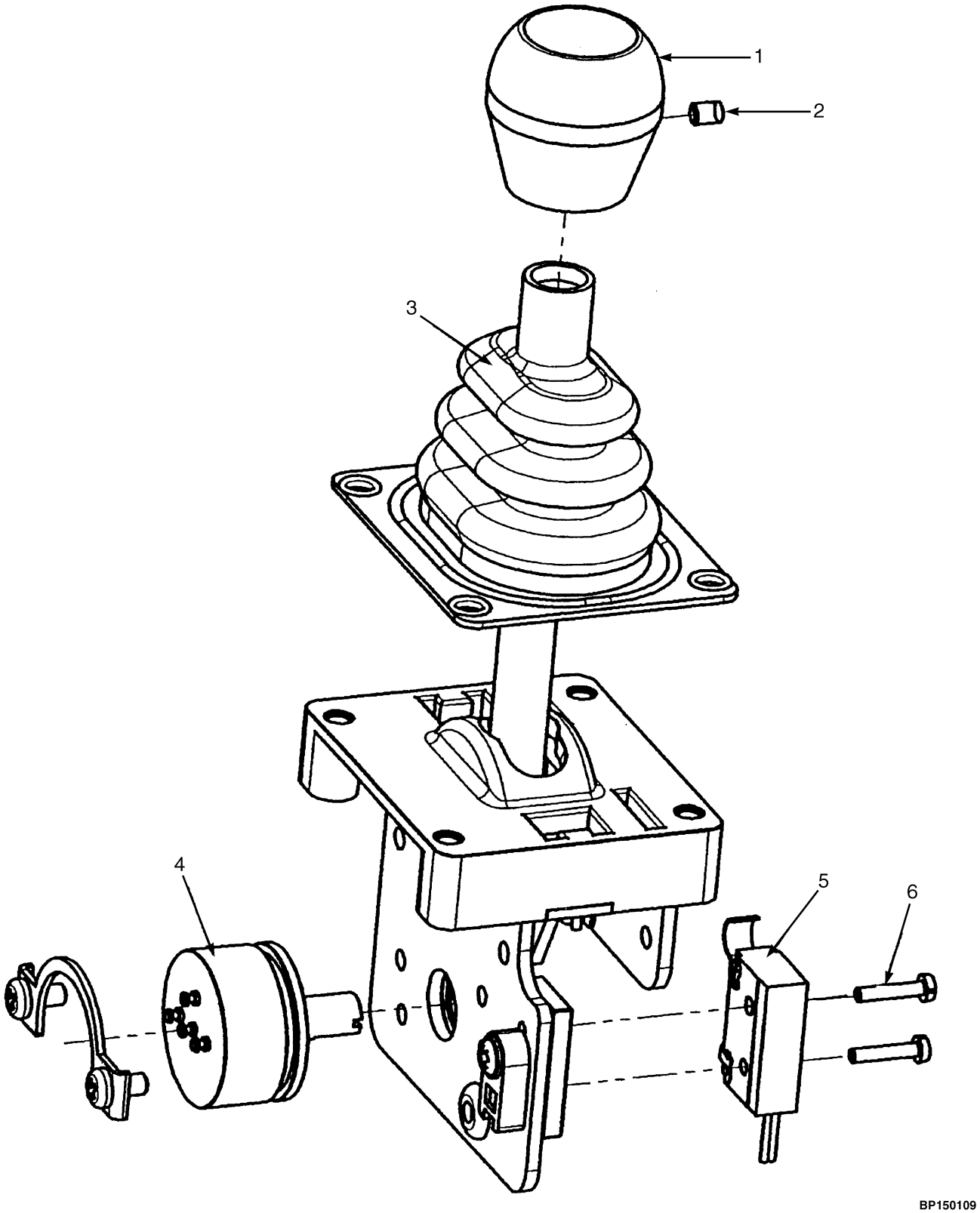

©2015 HYSTER COMPANY

ELECTRONIC LEVER ASSEMBLY
WITH CLAMP ATTACHMENT

ITEM	PART NO.	DESCRIPTION	QTY
	1638188	Mini-Lever	1
1	1639761	Knob (Round)	1
2	1592675	Setscrew	1
3	1583721	Boot	1
4	1592673	Potentiometer	1
5	1592676	Microswitch	1
6	1592677	Screw	2

©2015 HYSTER COMPANY

NOTES

©2015 HYSTER COMPANY

11 MAST-TWO STAGE LIMITED FREE-LIFT

SECTION 11
MAST-TWO STAGE LIMITED FREE-LIFT

DESCRIPTION	PAGE
CARRIAGE	
FOUR, FIVE, AND SIX FUNCTION	11-24
INDIVIDUAL FORK POSITIONER (FOUR FUNCTION)	11-28
SIMULTANEOUS FORK POSITIONER	11-32
THREE FUNCTION	11-36
FORK	11-38
HEADER HOSE	
TWO STAGE - LIMITED FREE-LIFT (→ S/N G019E02519H)	11-16
TWO STAGE - LIMITED FREE-LIFT (S/N G019E02520H →)	11-20
INNER MAST	11-6
LIFT	11-8
LIFT CYLINDER	
EMPTY CONTAINER HANDLER	11-12
NON-EMPTY CONTAINER HANDLER	11-14
MAST INSTALLATION	11-2
OUTER MAST	11-4

©2015 HYSTER COMPANY

MAST INSTALLATION (FIGURE 11-1)

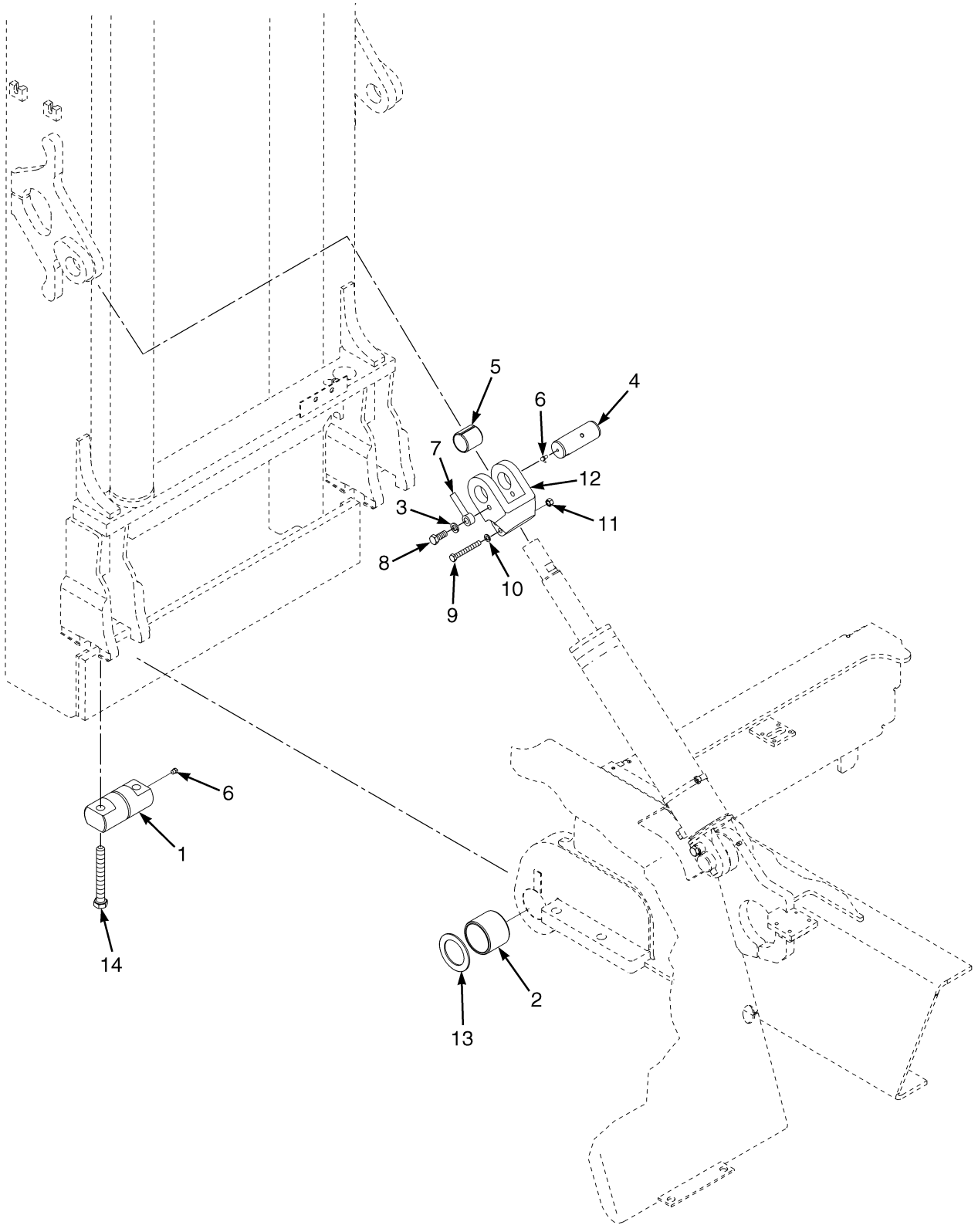

©2015 HYSTER COMPANY

MAST INSTALLATION

ITEM	PART NO.	DESCRIPTION	QTY
1	1385549	Pin (Mast Mounting)	2
2	376038	Bushing (Mast Mounting)	2
3	292685	Lockwasher	2
4	1347862	Pin (Mast Tilt)	2
5	376051	Bushing (Mast Tilt)	2
6	16001	Grease Fitting	4
7	1347861	Anchor	2
8	292560	Capscrew	2
9	292538	Capscrew	4
9	292539	Capscrew (Alternate Part)	4
10	292683	Lockwasher	4
11	~~1318914~~		
	216877	Nut	4
12	**acef** 1382936	Rod End	2
12	**bcd** 1382937	Rod End	2
13	1359101	Shim	AR
14	1326777	Capscrew	4

FOOTNOTES:

a 15° Forward Tilt/12° Back Tilt
b 20.5° Forward Tilt/7° Back tilt
c 5° Forward Tilt/5° Back Tilt
d 5° Forward Tilt/6° Back Tilt
e 5° Forward/12° Back
f EC3 And EC4

©2015 HYSTER COMPANY

OUTER MAST (FIGURE 11-2)

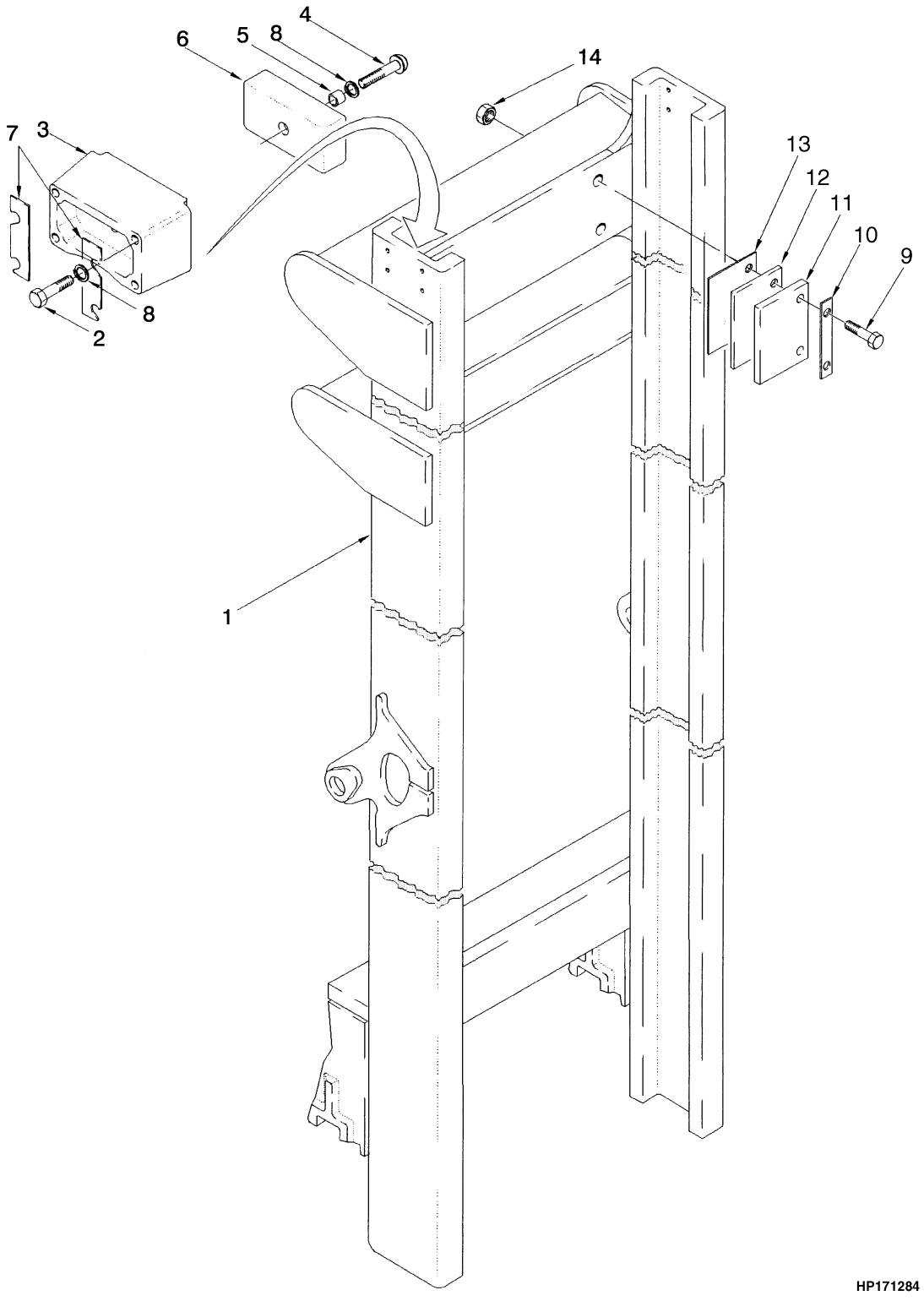

©2015 HYSTER COMPANY

OUTER MAST

H13.00XM-H16.00XM-6

ITEM	DESCRIPTION 1 2 3 4	LIFT HEIGHT TO BOTTOM OF FORKS				
		3660 mm (144.1 in.)	4560 mm (179.5 in.)	5310 mm (209.1 in.)	6110 mm (240.6 in.)	6610 mm (260.2 in.)
	Mast Group Number	-	-	-	-	-
	Mast Assy	2071682	2071683	2071684	2071685	2071686
1	Outer Mast	1488203	1488204	1488205	1488206	1488207

H10.00XM-H12.00XM-12ECH

ITEM	DESCRIPTION 1 2 3 4	LIFT HEIGHT TO BOTTOM OF FORKS	
		6920 mm (272.4 in.)	9910 mm (390.2 in.)
	Mast Group Number	-	-
	Mast Assy	**a**1489140	**b**1489141
1	Outer Mast	**a**1487776	**b**1487777

ITEM	PART NO.	DESCRIPTION	QTY
	c	Mast Assy	1
1	**c**	Outer Mast	1
2	221506	Capscrew	8
3	1301018	Bracket	2
4	376203	Capscrew	2
5	1301016	Spacer	2
6	1335179	Bearing	2
7	1310592	Shim (.76 mm)	..
8	15156	Lockwasher	10
9	292529	Capscrew	4
10	1347851	Plate	2
11	1346892	Wear Plate	2
12	1346973	Shim (1,50 mm)	AR
13	1346974	Shim (3,00 mm)	AR
14	300937	Nut	4

FOOTNOTES:

a ECH-3
b ECH-4
c Refer to Table

©2015 HYSTER COMPANY

INNER MAST (FIGURE 11-3)

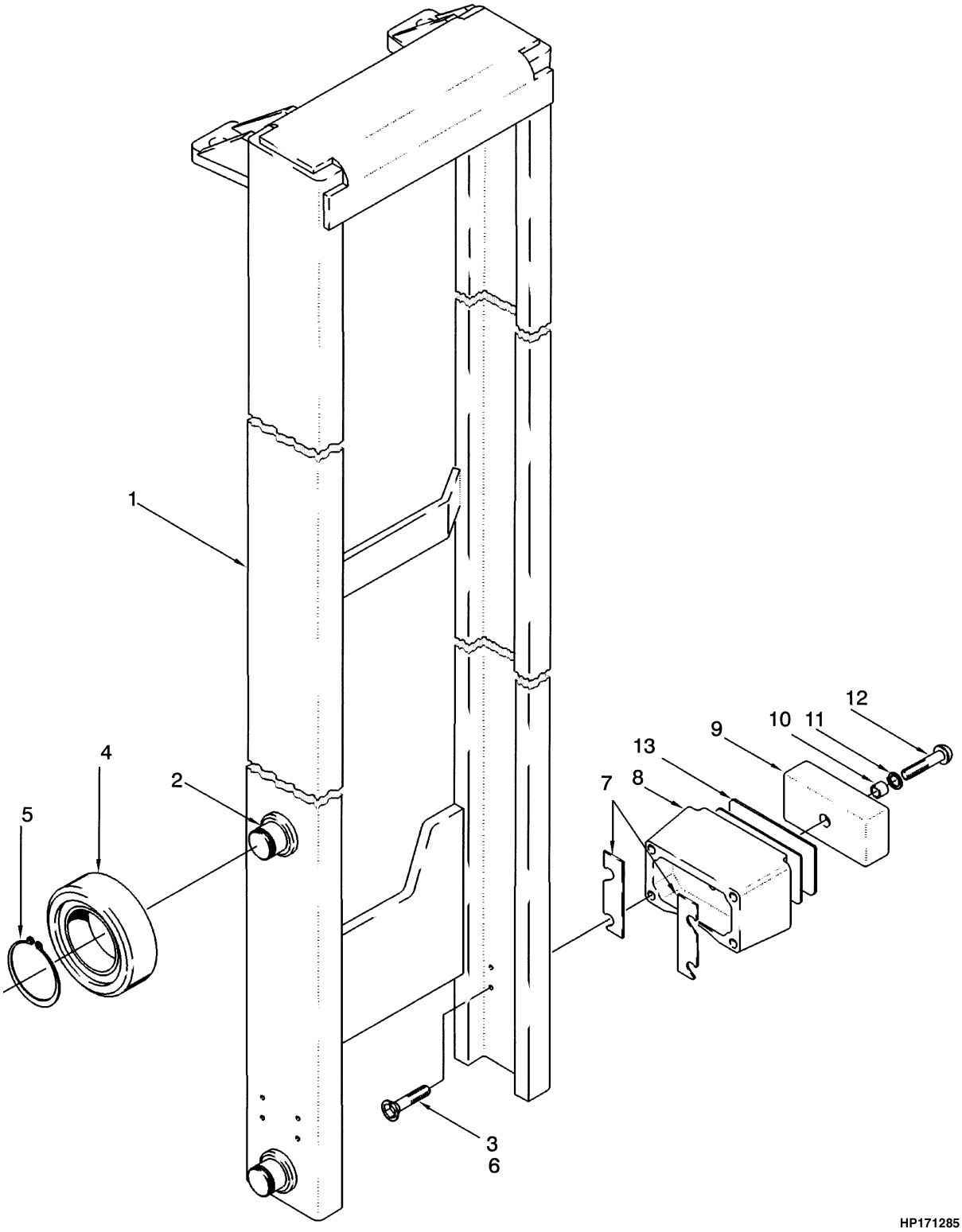

©2015 HYSTER COMPANY

INNER MASS

INNER MAST

H13.00XM-H16.00XM-6

ITEM	DESCRIPTION 1 2 3 4	LIFT HEIGHT TO BOTTOM OF FORKS				
		3660 mm (144.1 in.)	4560 mm (179.5 in.)	5310 mm (209.1 in.)	6110 mm (240.6 in.)	6610 mm (260.2 in.)
	Mast Group Number	-	-	-	-	-
	Mast Assy	2071682	2071683	2071684	2071685	2071686
1	Inner Mast	1487992	1487993	1487994	1487995	1487996

H10.00XM-H12.00XM-12ECH

ITEM	DESCRIPTION 1 2 3 4	LIFT HEIGHT TO BOTTOM OF FORKS	
		6920 mm (272.4 in.)	9910 mm (390.2 in.)
	Mast Group Number	-	-
	Mast Assy	**a**1489140	**b**1489141
1	Inner Mast	**a**1487750	**b**1487751

ITEM	PART NO.	DESCRIPTION	QTY
	c	Mast Assy	1
1	**c**	Inner Mast	1
2	1313357	Stubshaft	4
3	220159	Capscrew	8
4	**d** 1313358	Load Roller	4
4	**e** 1691114	Load Roller	4
5	58918	Snap Ring	4
6	321197	Loctite	AR
7	1310592	Shim (.76 mm)	AR
8	1301018	Bracket	2
9	1335179	Bearing	2
10	1301016	Spacer	2
11	15156	Lockwasher	2
12	376203	Capscrew	2
13	1301014	Shim (1,27 mm)	AR

FOOTNOTES:

a ECH-3
b ECH-4
c Refer to Table
d → S/N G019E02245F
e S/N G019E02246F →

©2015 HYSTER COMPANY

LIFT (FIGURE 11-4)

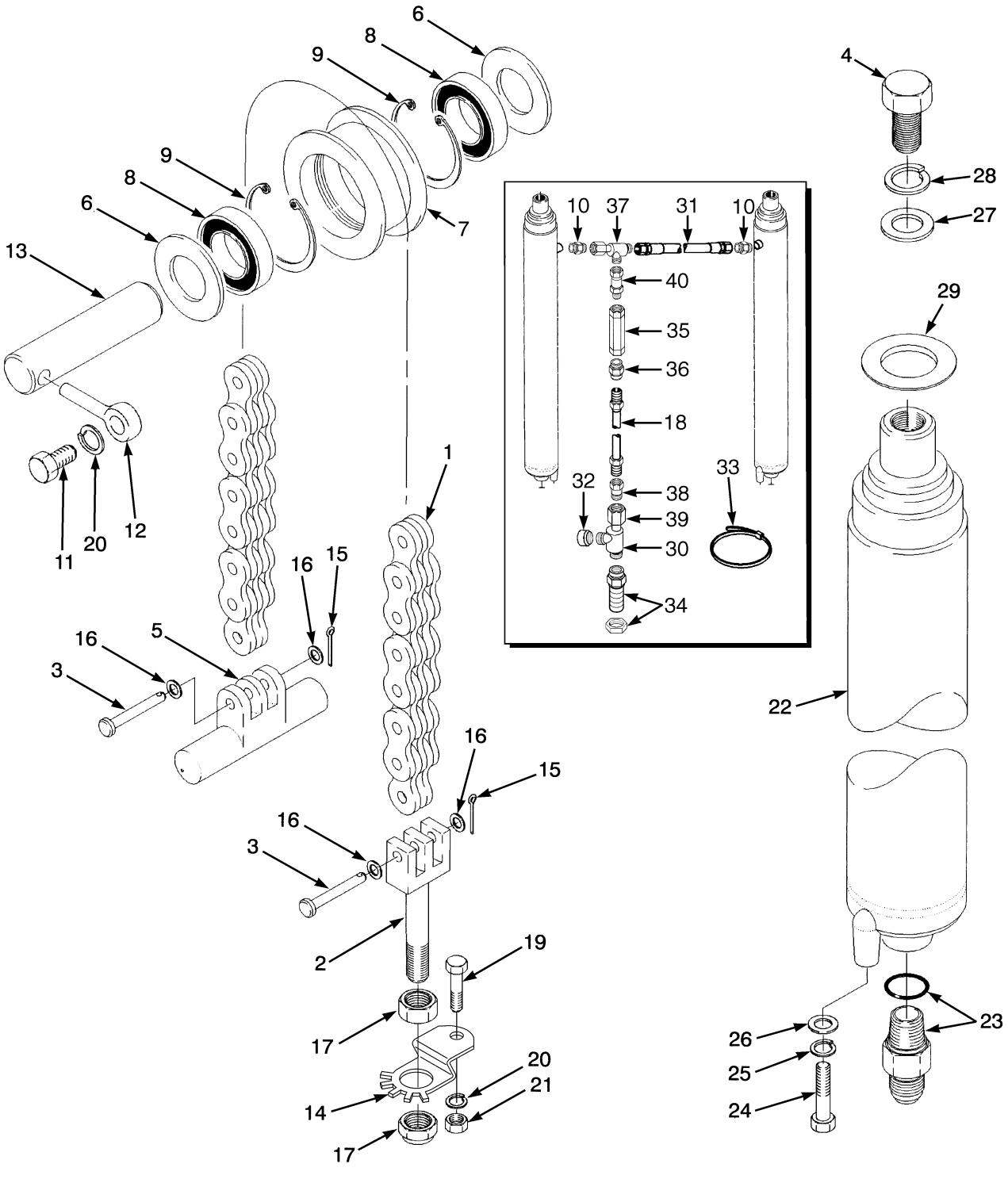

©2015 HYSTER COMPANY

LIFT

H13.00XM-H16.00XM-6

ITEM	DESCRIPTION 1 2 3 4	LIFT HEIGHT TO BOTTOM OF FORKS				
		3660 mm (144.1 in.)	4560 mm (179.5 in.)	5310 mm (209.1 in.)	6110 mm (240.6 in.)	6610 mm (260.2 in.)
	Mast Group Number	-	-	-	-	-
	Mast Assy	2071682	2071683	2071684	2071685	2071686
1	Chain	1303366	1303367	1303368	1303369	1303370
18	Hose Assy	2071797	2071798	2071799	2071800	2071801

H10.00XM-H12.00XM-12ECH

ITEM	DESCRIPTION 1 2 3 4	LIFT HEIGHT TO BOTTOM OF FORKS	
		6920 mm (272.4 in.)	9910 mm (390.2 in.)
	Mast Group Number	-	-
	Mast Assy	1489140	1489141
1	Chain	1358714	1460134

ITEM	PART NO.	DESCRIPTION	QTY
	b	Mast Assy	1
1	**b**	Chain	2
2	1373349	Chain Anchor	2
3	1303383	Pin	4
4	292580	Capscrew	2
5	267829	Chain Anchor	2
6	267837	Washer	4
7	**c** 1328695	Chain Sheave	2
7	**d** 1691166	Chain Sheave	2
8	267830	Ball Bearing	4
9	46692	Snap Ring	2
10	1486738	Fitting	2
10	1527817	O-Ring	2
11	**a** ~~4048814~~		
	292528	Capscrew	6
11	292529	Capscrew	4
12	82270	Eyebolt	2
13	1303372	Pin	2
14	1563927	Lockplate	2
15	15244	Cotter Pin	4
16	15146	Washer	4
17	221725	Nut	4
18	**b**	Hose Assy	1
19	292531	Capscrew	2
20	292683	Lockwasher	4
20	**a** 292683	Lockwasher	8
21	~~1318914~~	Nut	2

©2015 HYSTER COMPANY

LIFT

ITEM	PART NO.	DESCRIPTION	QTY
	216877		
22	. . . . .	Lift Cylinder	2
23	2043538	Lowering Control Valve	1
23	**a** 2043536	Lowering Control Valve	1
23	16983	O-Ring	1
23	244167	O-Ring	1
24	136985	Capscrew	2
25	~~388049~~		
	292682	Lockwasher	2
26	1303391	Washer	2
27	15181	Washer	2
28	292687	Lockwasher	2
29	192830	Shim (1,524 mm)	AR
30	1487095	Fitting	2
31	2071664	Hose Assy	1
32	1529016	Fitting	1
33	273775	Strap Clamp	2
34	816591	Fitting	1
35	1572993	Check Valve	1
36	1486737	Fitting	1
36	1527817	O-Ring	1
37	1487094	Fitting	1
38	1487144	Fitting	1
39	1487164	Fitting	1
40	1573001	Fitting (Swivel)	1

FOOTNOTES:

a Empty Container Handler
b Refer to Table
c → S/N G019E02301G
d S/N G019E02302G →

©2015 HYSTER COMPANY

NOTES

©2015 HYSTER COMPANY

LIFT CYLINDER (FIGURE 11-5)
EMPTY CONTAINER HANDLER

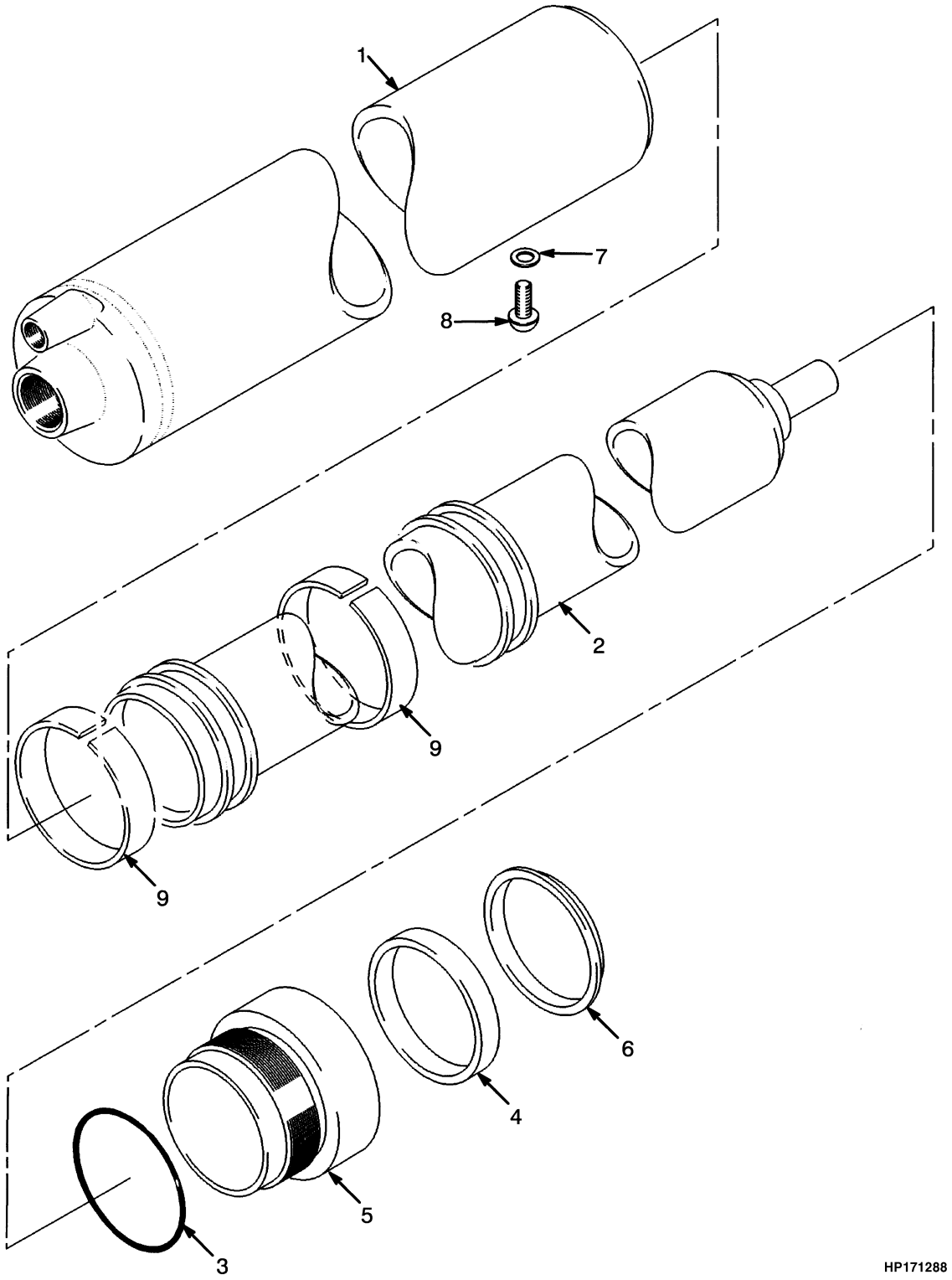

©2015 HYSTER COMPANY

LIFT CYLINDER
EMPTY CONTAINER HANDLER

A021

ITEM	DESCRIPTION 1 2 3 4	LIFT HEIGHT TO BOTTOM OF FORKS	
		6920 mm (272.4 in.)	9910 mm (390.2 in.)
	Mast Group Number	**-**	**-**
	Cylinder Group Number	**1460133**	**1460132**
	Cylinder Assy	1460133	1460132
1	Tube Wldmt-Cylinder	1460180	1460179
2	Cylinder Rod	1460184	1460183

ITEM	PART NO.	DESCRIPTION	QTY
	a	Cylinder Assy	2
1	**a**	Tube Wldmt-Cylinder	1
2	**a**	Cylinder Rod	1
3	362102	O-Ring	1
4	1323844	Rod Seal	1
5	1323845	Gland	1
6	1313386	Rod Wiper	1
7	190887	Sealing Ring	1
8	18701	Capscrew	1
9	636954	Wear Ring	2
	1335188	Kit-Seal	1

FOOTNOTES:

a Refer to Table

©2015 HYSTER COMPANY

LIFT CYLINDER (FIGURE 11-6)
NON-EMPTY CONTAINER HANDLER

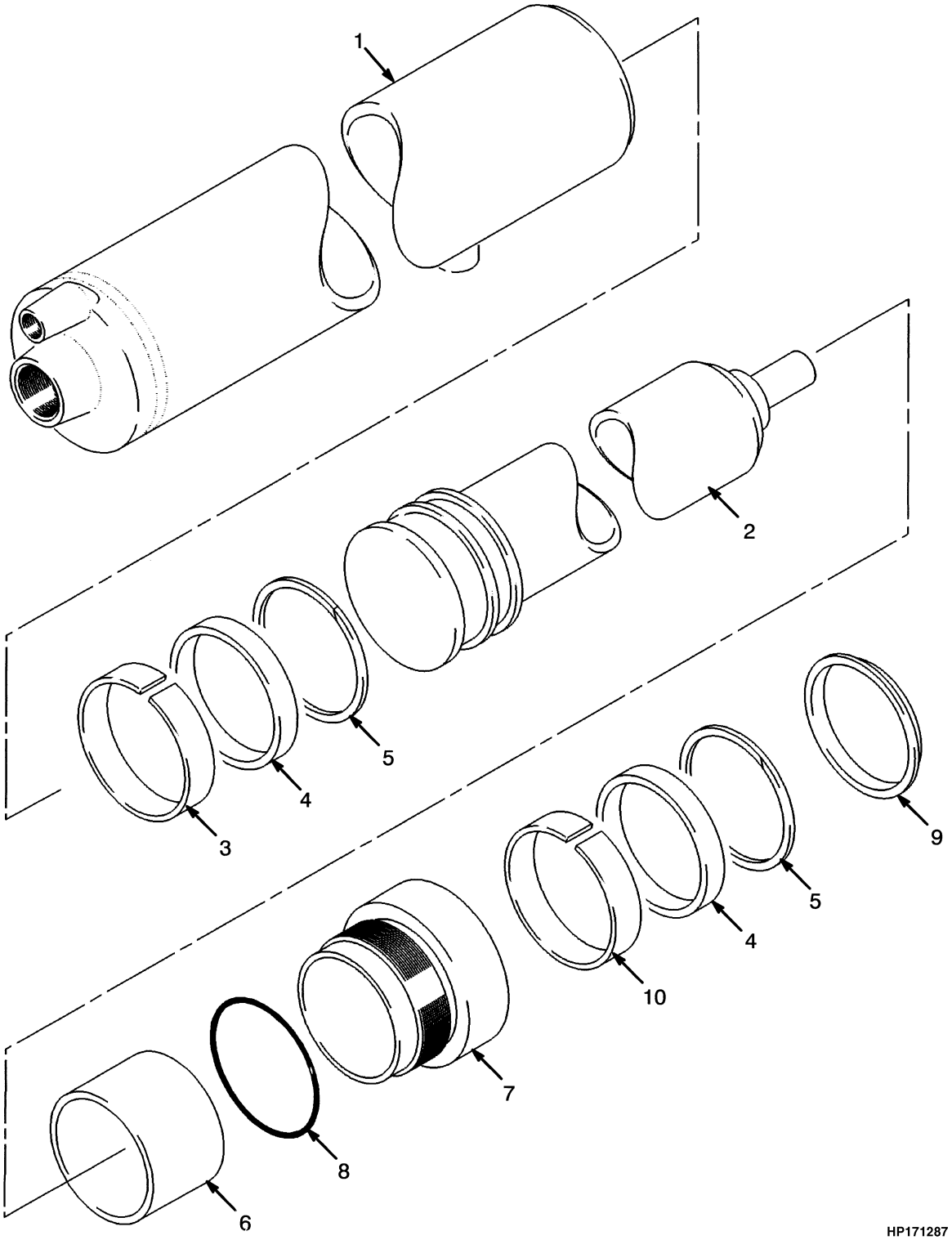

©2015 HYSTER COMPANY

LIFT CYLINDER
NON-EMPTY CONTAINER HANDLER

H13.00XM-H16.00XM-6

ITEM	DESCRIPTION 1 2 3 4	LIFT HEIGHT TO BOTTOM OF FORKS				
		3660 mm (144.1 in.)	4560 mm (179.5 in.)	5310 mm (209.1 in.)	6110 mm (240.6 in.)	6610 mm (260.2 in.)
	Mast Group Number	-	-	-	-	-
	Cylinder Group Number	**8526393**	**8526394**	**8526395**	**8526396**	**8526397**
	Cylinder Assy	2071043	2071044	2071045	2071046	2071047
1	Tube Wldmt-Cylinder	1385934	1385935	1385936	1385937	1385938
2	Cylinder Rod	1568388	1568389	1568390	1568391	1568392

ITEM	PART NO.	DESCRIPTION	QTY
	a	Cylinder Assy	2
1	**a**	Tube Wldmt-Cylinder	1
2	**a**	Cylinder Rod	1
3	636954	Wear Ring	1
4	637166	Rod Seal	2
5	638224	Back-Up Ring	2
6	387286	Spacer	1
7	1328946	Retainer	1
8	362102	O-Ring	1
9	815620	Rod Wiper	1
10	318067	Wear Ring	1
	1385958	Kit-Seal	1

FOOTNOTES:

a Refer to Table

©2015 HYSTER COMPANY

HEADER HOSE (FIGURE 11-7)

TWO STAGE — LIMITED FREE-LIFT (→ S/N G019E02519H)

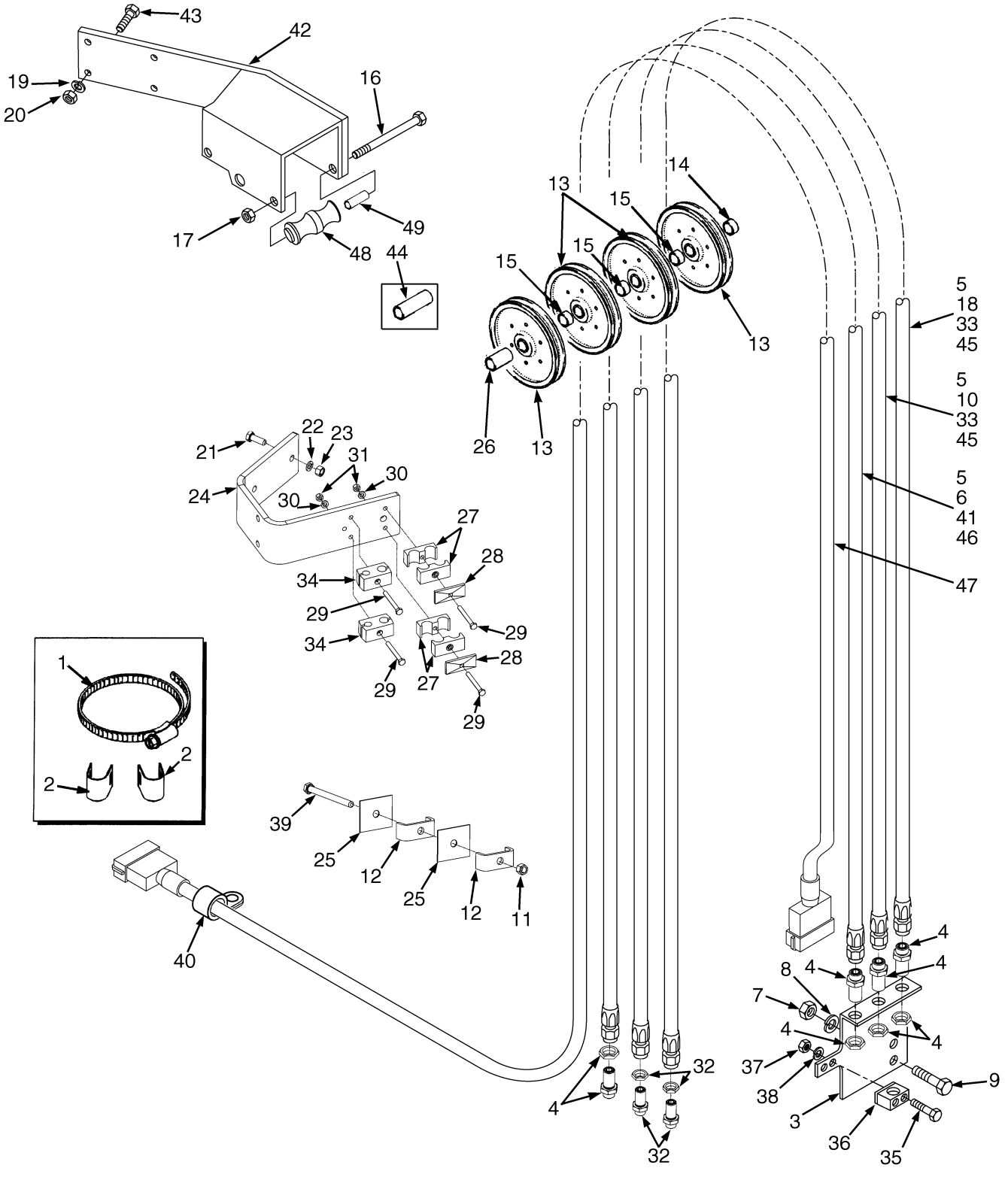

BP170121

©2015 HYSTER COMPANY

HEADER HOSE

TWO STAGE – LIMITED FREE-LIFT (→ S/N G019E02519H)

H13.00XM-H16.00XM-6

ITEM	DESCRIPTION 1 2 3 4	LIFT HEIGHT TO BOTTOM OF FORKS				
		3660 mm (144.1 in.)	4560 mm (179.5 in.)	5310 mm (209.1 in.)	6110 mm (240.6 in.)	6610 mm (260.2 in.)
	Mast Group Number	-	-	-	-	-
45	Hose Assy	2058174	2058175	2058176	2058177	2058178
46	Hose Assy	2058188	2058189	2058190	2058191	2058192
47	Wire Harness	2054259	2054260	2054261	2054262	2054263

KEY:
A: Three Function
B: Four, Five, And Six Function

ITEM	PART NO.	DESCRIPTION	QTY A	QTY B
1	144157	Hose Clamp	2	4
2	87911	Clamp	4	8
3	1529355	Bracket	1	1
4	816591	Fitting	2	4
5	1564897	Strap Clamp (Yellow) (Yellow)	2	6
6	1564902	Strap Clamp (Transparent) (White)	..	2
7	136692	Nut	2	2
8	~~388049~~			
	292682	Lockwasher	2	2
9	136985	Capscrew	2	2
10	342675	Identification Band	2	2
11	300937	Nut	1	1
12	254950	Clamp	1	2
13	189451	Hose Sheave	2	4
14	1301650	Spacer	1	1
15	280610	Spacer	1	3
16	221155	Capscrew	3	3
17	221357	Locknut	3	3
18	342676	Identification Band	2	2
19	292685	Lockwasher	4	4
20	292600	Nut	4	4
21	~~4048814~~			
	292528	Capscrew	2	2
22	292683	Lockwasher	2	2
23	~~1318914~~			
	216877	Nut	2	2
24	1491107	Bracket	1	1
25	138929	Plate	1	2
26	356237	Spacer	..	1
27	1533665	Clamp (Twin)	4	4
28	1530668	Cover Plate	2	2
29	136703	Capscrew	2	4
30	292681	Lockwasher	2	4

©2015 HYSTER COMPANY

HEADER HOSE

TWO STAGE – LIMITED FREE-LIFT (→ S/N G019E02519H)

KEY:
A: Three Function
B: Four, Five, And Six Function

ITEM	PART NO.	DESCRIPTION	QTY A	QTY B
31	239503	Nut	2	4
32	1498506	Fitting (Includes Nut)	2	2
33	1564900	Strap Clamp (Green) (Green)	6	8
34	1569803	Clamp	..	2
35	18475	Capscrew	..	2
36	1569747	Clamp	..	1
37	221703	Nut	..	2
38	15127	Washer	..	2
39	292533	Capscrew	1	..
39	292538	Capscrew	..	1
40	101625	Clamp	..	1
41	342677	Identification Band	..	2
42	1496482	Bracket Wldmt	1	1
43	292565	Capscrew	4	4
44	1510841	Spacer	1	..
45	**a**	Hose Assy	2	2
46	**a**	Hose Assy	..	1
47	**a**	Wire Harness	..	1
48	1574072	Roller	..	2
49	1574093	Spacer	..	2

FOOTNOTES:

a Refer to Table

©2015 HYSTER COMPANY

NOTES

©2015 HYSTER COMPANY

HEADER HOSE (FIGURE 11-8)

TWO STAGE — LIMITED FREE-LIFT (S/N G019E02520H →)

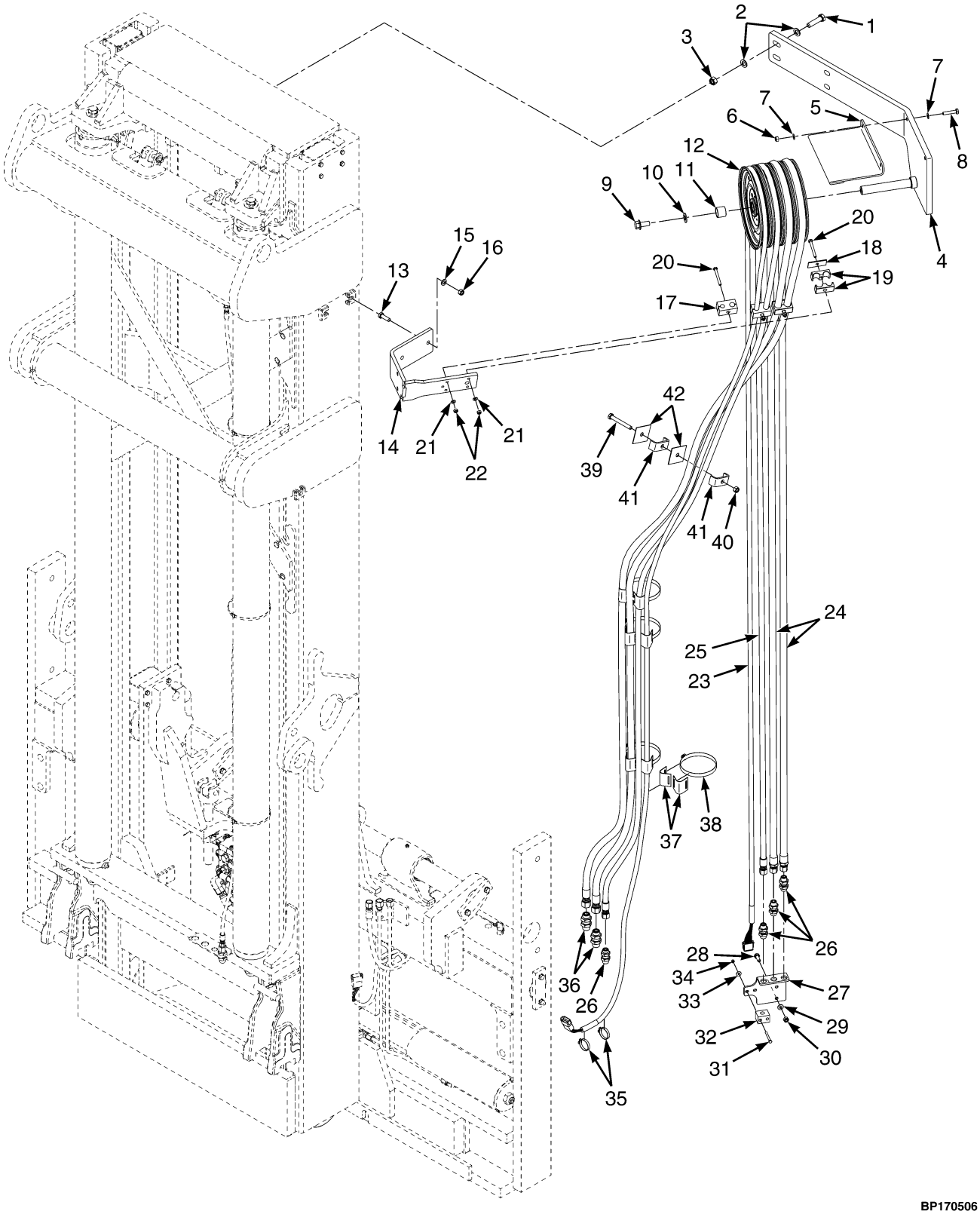

©2015 HYSTER COMPANY

HEADER HOSE

TWO STAGE – LIMITED FREE-LIFT (S/N G019E02520H →)

H13.00XM-H16.00XM-6

ITEM	DESCRIPTION 1 2 3 4	LIFT HEIGHT TO BOTTOM OF FORKS				
		3660 mm (144.1 in.)	4560 mm (179.5 in.)	5310 mm (209.1 in.)	6110 mm (240.6 in.)	6610 mm (260.2 in.)
	Mast Group Number	-	-	-	-	-
23	Wire Harness	2054259	2054260	2054261	2054262	2054263
24	Hose Assy	2058174	2058175	2058176	2058177	2058178
25	Hose Assy	2058188	2058189	2058190	2058191	2058192

KEY:
A: Three Function
B: Four, Five, And Six Function
C: Dual Side-Shift Fork Positioner

ITEM	PART NO.	DESCRIPTION	QTY A	QTY B	QTY C
1	292565	Capscrew	4	4	4
2	320165	Washer	4	4	4
3	302404	Locknut	4	4	4
4	1677533	Bracket Wldmt	1	1	1
5	1677603	Plate	1	1	1
6	302401	Locknut	2	2	2
7	320159	Washer	4	4	4
8	292517	Capscrew	2	2	2
9	1527890	Capscrew	2	2	2
10	320166	Washer	1	1	1
11	1651884	Spacer	2	4	1
12	1651882	Hose Sheave	2	4	1
12	222036	Rivet	16	16	16
13	~~4048814~~				
	292528	Capscrew	2	2	2
14	1677534	Bracket Wldmt	1	1	1
15	320161	Washer	2	2	2
16	302402	Locknut	2	2	2
17	1569803	Clamp	..	2	2
18	1533649	Cover Plate	2	2	2
19	1533665	Clamp (Twin)	2	2	2
20	136703	Capscrew	2	4	2
21	320157	Washer	2	4	2
22	302400	Nut	2	4	2
23	**b**	Wire Harness	..	1	1
24	**b**	Hose Assy	2	2	2
25	**b**	Hose Assy	..	1	..
26	816591	Fitting	2	6	2
27	1529355	Bracket	1	1	1
28	136985	Capscrew	2	2	2
29	320159	Washer	2	2	2
30	302401	Locknut	2	2	2

©2015 HYSTER COMPANY

HEADER HOSE

TWO STAGE – LIMITED FREE-LIFT (S/N G019E02520H →)

KEY:
A: Three Function
B: Four, Five, And Six Function
C: Dual Side-Shift Fork Positioner

ITEM	PART NO.	DESCRIPTION	QTY A	QTY B	QTY C
31	292507	Capscrew	..	2	2
32	1569747	Clamp	..	1	1
33	1476421	Washer	..	2	2
34	~~1512440~~				
	302399	Nut	..	2	2
35	129563	Strap Clamp	..	2	2
36	1498506	Fitting (Includes Nut)	2	2	2
37	87911	Clamp	4	4	8
38	144157	Hose Clamp	2	2	4
39	292533	Capscrew (209-260.3 in.)	1	..	..
39	292538	Capscrew (209-260.3 in.)	..	1	1
40	302402	Locknut (209-260.3 in.)	..	1	1
41	254950	Clamp (209-260.3 in.)	2	2	2
42	138929	Plate (209-260.3 in.)	2	2	2
	a 1677604	Spacer	2	1	..
	a 1564900	Strap Clamp (Green)	6	6	8
	a 1564897	Strap Clamp (Yellow)	2	2	6
	a 1564902	Strap Clamp (Transparent)	..	..	2

FOOTNOTES:

a Not Illustrated

b Refer to Table

©2015 HYSTER COMPANY

NOTES

©2015 HYSTER COMPANY

CARRIAGE (FIGURE 11-9)
FOUR, FIVE, AND SIX FUNCTION

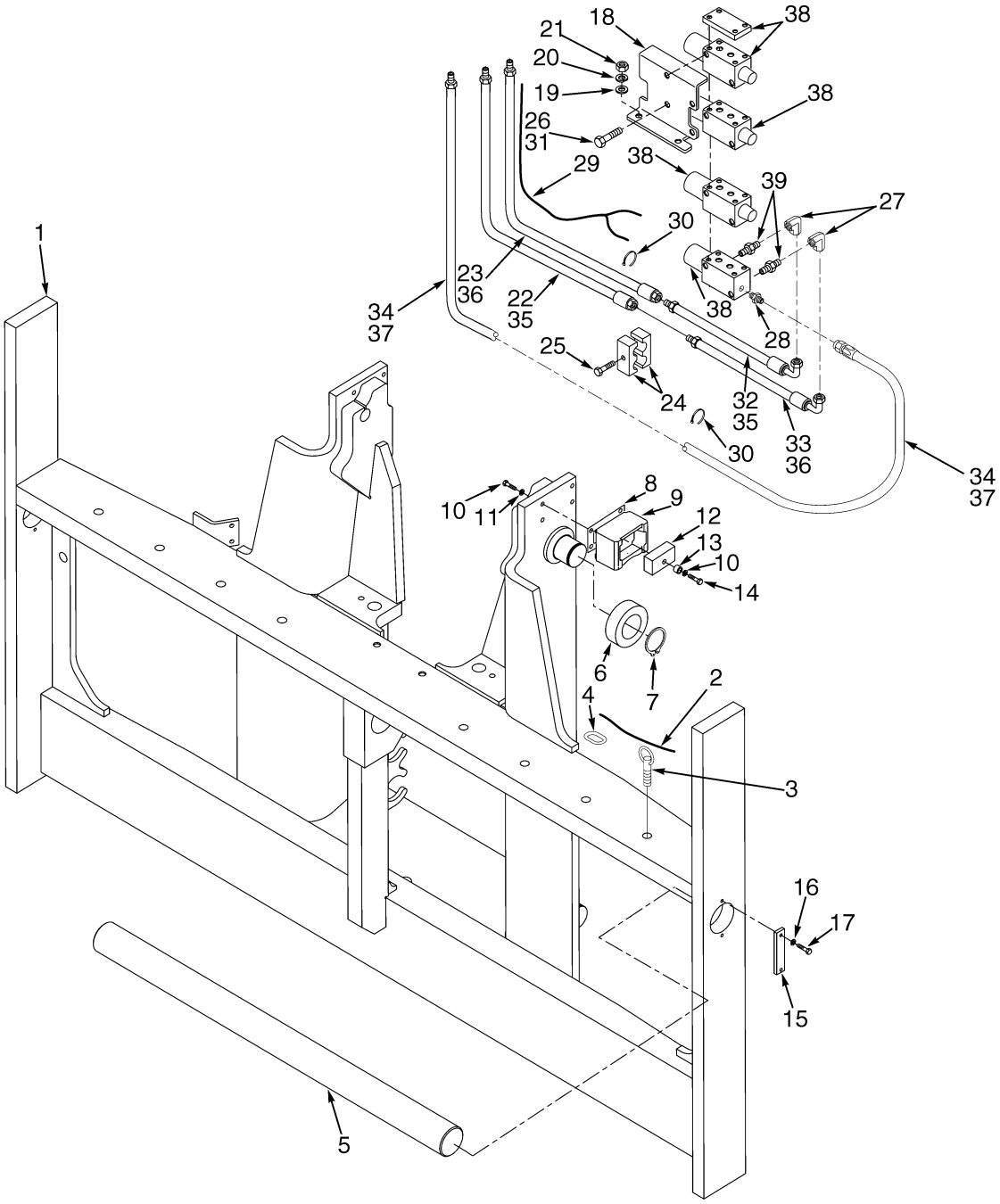

BP170057

©2015 HYSTER COMPANY

CARRIAGE
FOUR, FIVE, AND SIX FUNCTION

KEY:
A: Four Function
B: Five Function
C: Six Function

ITEM	PART NO.	DESCRIPTION	QTY A	QTY B	QTY C
	2057806	Carriage	1	..	..
	2057807	Carriage	..	1	..
	2057808	Carriage	..	..	1
1	1502865	Frame	1	1	1
2	1456622	Cable	2	2	2
3	1334581	Pin (Fork Locking)	4	4	4
3	2092486	Wire Harness (Front End)	1	1	1
4	815848	Shackle	2	2	2
5	1502918	Pin (Load Arm)	2	2	2
6	**a** 1313358	Load Roller	4	4	4
6	**b** 1691114	Load Roller	4	4	4
7	58918	Snap Ring	4	4	4
8	1310592	Shim (.76 mm)	AR	AR	AR
9	1301018	Bracket	4	4	4
10	15156	Lockwasher	20	20	20
11	221510	Capscrew (50.8 mm)	16	16	16
12	1335179	Bearing	4	4	4
13	1301016	Spacer	4	4	4
14	376203	Capscrew	4	4	4
15	376776	Plate	2	2	2
16	292683	Lockwasher	4	4	4
17	293647	Capscrew	4	4	4
18	1527372	Bracket Wldmt	1	1	1
19	320162	Washer	2	2	2
20	292683	Lockwasher	2	2	2
21	302402	Locknut	2	2	2
22	2047737	Tube Assy	1	1	1
23	2047738	Tube Assy	1	1	1
24	1393802	Clamp	2	2	2
25	221463	Capscrew	1	1	1
26	16836	Capscrew	4	4	4
27	1487069	Fitting	2	2	2
28	1486740	Fitting	1	1	1
30	273775	Strap Clamp	16	16	16
31	3066037	Loctite	AR	AR	AR
32	2057981	Hose Assy	1	1	1
33	2057982	Hose Assy	1	1	1
34	2057864	Hose Assy	1	1	1
35	342675	Identification Band	4	4	4
36	342676	Identification Band	4	4	4
37	342677	Identification Band	2	2	2
38	2092483	Directional Control Valve, Two-Section (Deutsch) (☞Figure 13-1)	1	..	..

©2015 HYSTER COMPANY

CARRIAGE
FOUR, FIVE, AND SIX FUNCTION

KEY:
A: Four Function
B: Five Function
C: Six Function

ITEM	PART NO.	DESCRIPTION	QTY A	QTY B	QTY C
38	2092484	Directional Control Valve, Three-Section (Deutsch) (☞Figure 13-1).....	..	1	..
38	2092485	Directional Control Valve, Four-Section (Deutsch) (☞Figure 13-1).....	..	..	1
38	2055960	Directional Control Valve, Two-Section (AMP) (☞Figure 13-1)....	1	..	..
38	2055961	Directional Control Valve, Three-Section (AMP) (☞Figure 13-1).....	..	1	..
38	2055962	Directional Control Valve, Four-Section (AMP) (☞Figure 13-1).....	..	..	1
39	216590	Fitting	4	6	8

FOOTNOTES:

a → S/N G019E02245F

b S/N G019E02246F →

©2015 HYSTER COMPANY

NOTES

©2015 HYSTER COMPANY

CARRIAGE (FIGURE 11-10)
INDIVIDUAL FORK POSITIONER (FOUR FUNCTION)

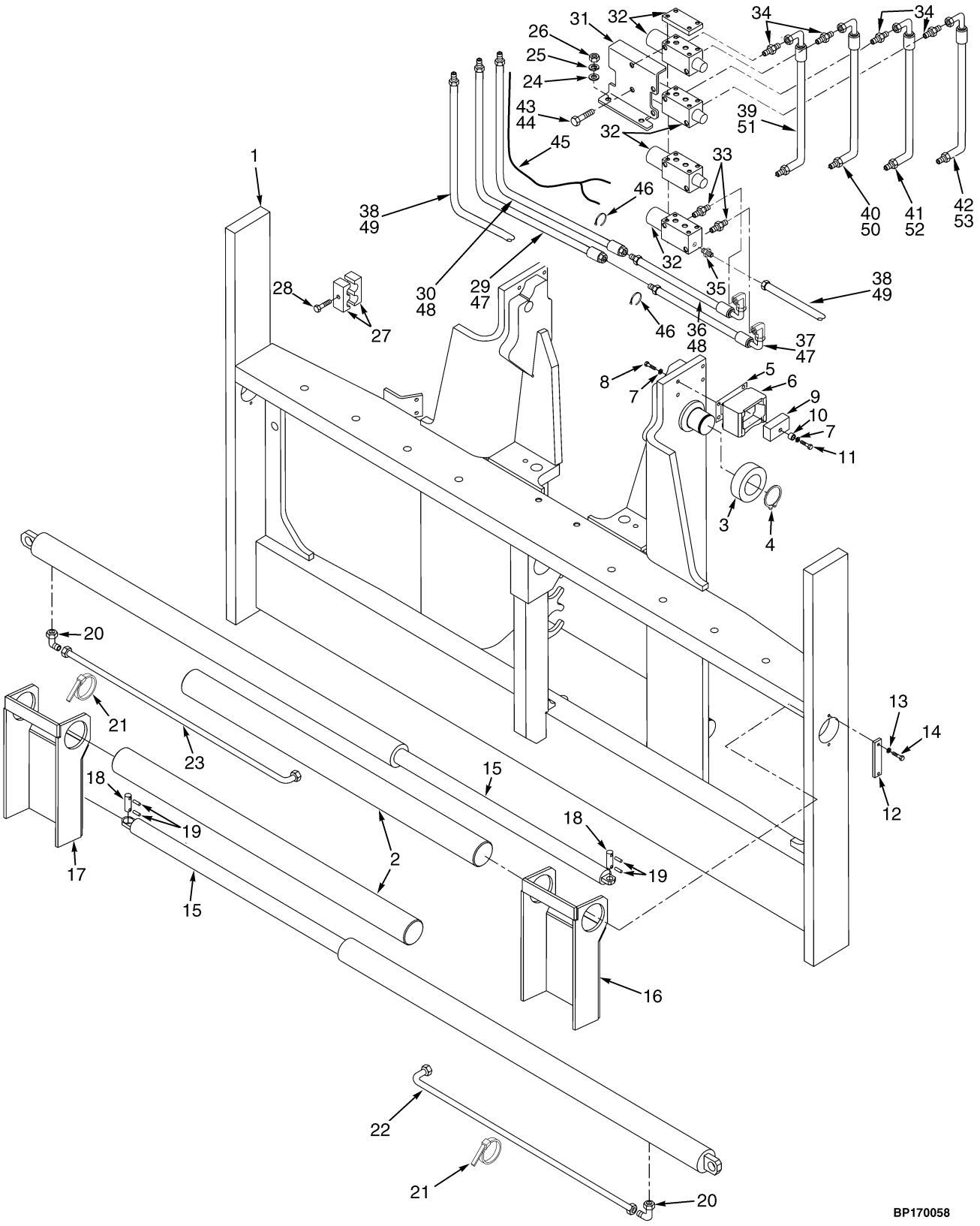

©2015 HYSTER COMPANY

CARRIAGE
INDIVIDUAL FORK POSITIONER (FOUR FUNCTION)

ITEM	PART NO.	DESCRIPTION	QTY
	2057809	Carriage	1
1	1502865	Frame	1
2	1502918	Pin (Load Arm)	2
3	**a** 1313358	Load Roller	4
3	**b** 1691114	Load Roller	4
4	58918	Snap Ring	4
5	1310592	Shim (.76 mm)	AR
6	1301018	Bracket	4
7	15156	Lockwasher	20
8	221506	Capscrew	16
9	1335179	Bearing	4
10	1301016	Spacer	4
11	376203	Capscrew	4
12	376776	Plate	2
13	292683	Lockwasher	4
14	293647	Capscrew	4
15	2046894	Cylinder Assy (Fork Positioner) (☞Figure 13-2)	2
16	1502904	Guide (LH)	1
17	1502905	Guide (RH)	1
18	1502390	Pin	4
19	15236	Cotter Pin	8
20	1487064	Fitting	4
21	112989	Hose Clamp	4
22	2046986	Tube Assy	1
23	2046987	Tube Assy	1
24	292683	Lockwasher	2
25	320162	Washer	2
26	302402	Locknut	2
27	1393802	Clamp	1
28	221463	Capscrew	1
29	2047737	Tube Assy	1
30	2047738	Tube Assy	1
31	1527372	Bracket Wldmt	1
32	2092483	Directional Control Valve, Two-Section (Deutsch) (☞Figure 13-1)	1
32	2055960	Directional Control Valve, Two-Section (AMP) (☞Figure 13-1)	1
33	1487069	Fitting	2
34	1486743	Fitting	4
35	1486740	Fitting	1
36	2057981	Hose Assy	1
37	2057982	Hose Assy	1
38	2057864	Hose Assy	1
39	2057983	Hose Assy	1
40	2057984	Hose Assy	1
41	2057985	Hose Assy	1
42	2057986	Hose Assy	1
43	16836	Capscrew	4
44	3066037	Loctite	AR
45	2092486	Wire Harness (Front End)	1
46	273775	Strap Clamp	16
47	342675	Identification Band	4

©2015 HYSTER COMPANY

CARRIAGE

INDIVIDUAL FORK POSITIONER (FOUR FUNCTION)

ITEM	PART NO.	DESCRIPTION	QTY
48	342676	Identification Band	4
49	342677	Identification Band	2
50	1332234	Identification Band	2
51	1332234	Identification Band	2
52	1332235	Identification Band	2
53	1332236	Identification Band	2

FOOTNOTES:

a → S/N G019E02245F

b S/N G019E02246F →

©2015 HYSTER COMPANY

NOTES

©2015 HYSTER COMPANY

CARRIAGE (FIGURE 11-11)
SIMULTANEOUS FORK POSITIONER

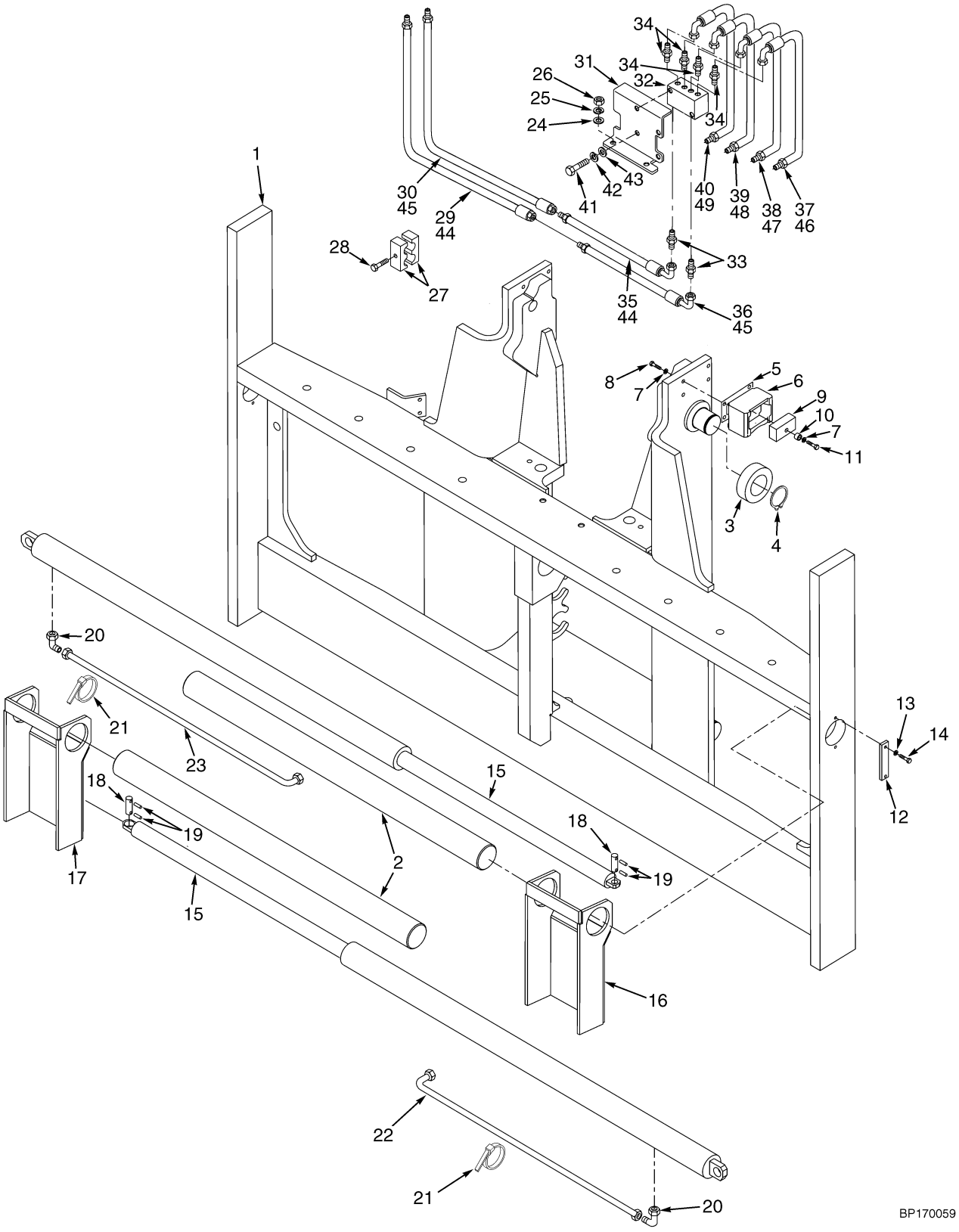

©2015 HYSTER COMPANY

CARRIAGE
SIMULTANEOUS FORK POSITIONER

ITEM	PART NO.	DESCRIPTION	QTY
	2047719	Carriage	1
1	1502865	Frame	1
2	1502918	Pin (Load Arm)	2
3	**a** 1313358	Load Roller	4
3	**b** 1691114	Load Roller	4
4	58918	Snap Ring	4
5	1310592	Shim (.76 mm)	AR
6	1301018	Bracket	4
7	15156	Lockwasher	20
8	221506	Capscrew	16
9	1335179	Bearing	4
10	1301016	Spacer	4
11	376203	Capscrew	4
12	376776	Plate	2
13	292683	Lockwasher	4
14	293647	Capscrew	4
15	2046894	Cylinder Assy (Fork Positioner) (☞Figure 13-2)	2
16	1502904	Guide (LH)	1
17	1502905	Guide (RH)	1
18	1502390	Pin	4
19	15236	Cotter Pin	8
20	1487064	Fitting	4
21	112989	Hose Clamp	4
22	2046986	Tube Assy	1
23	2046987	Tube Assy	1
24	292683	Lockwasher	2
25	320162	Washer	2
26	302402	Locknut	2
27	1393802	Clamp	1
28	221463	Capscrew	1
29	2047737	Tube Assy	1
30	2047738	Tube Assy	1
31	1503084	Bracket Wldmt	1
32	1600818	Manifold Assembly (Flow Divider)	1
32	1560246	Manifold	1
32	1600819	Valve	1
32	1560248	Relief Valve	2
33	1486745	Fitting	2
34	1486740	Fitting	4
35	2049945	Hose Assy	1
36	2046072	Hose Assy	1
37	2050421	Hose Assy	1
38	2050422	Hose Assy	1
39	2050423	Hose Assy	1
40	2050424	Hose Assy	1
41	136749	Screw	4
42	292681	Lockwasher	1
43	320157	Washer	1
44	342675	Identification Band	AR
45	342676	Identification Band	1

©2015 HYSTER COMPANY

CARRIAGE
SIMULTANEOUS FORK POSITIONER

ITEM	PART NO.	DESCRIPTION	QTY
46	1332234	Identification Band	16
47	1332234	Identification Band	4
48	1332235	Identification Band	4
49	1332236	Identification Band	2

FOOTNOTES:

a → S/N G019E02245F

b S/N G019E02246F →

©2015 HYSTER COMPANY

NOTES

©2015 HYSTER COMPANY

CARRIAGE (FIGURE 11-12)
THREE FUNCTION

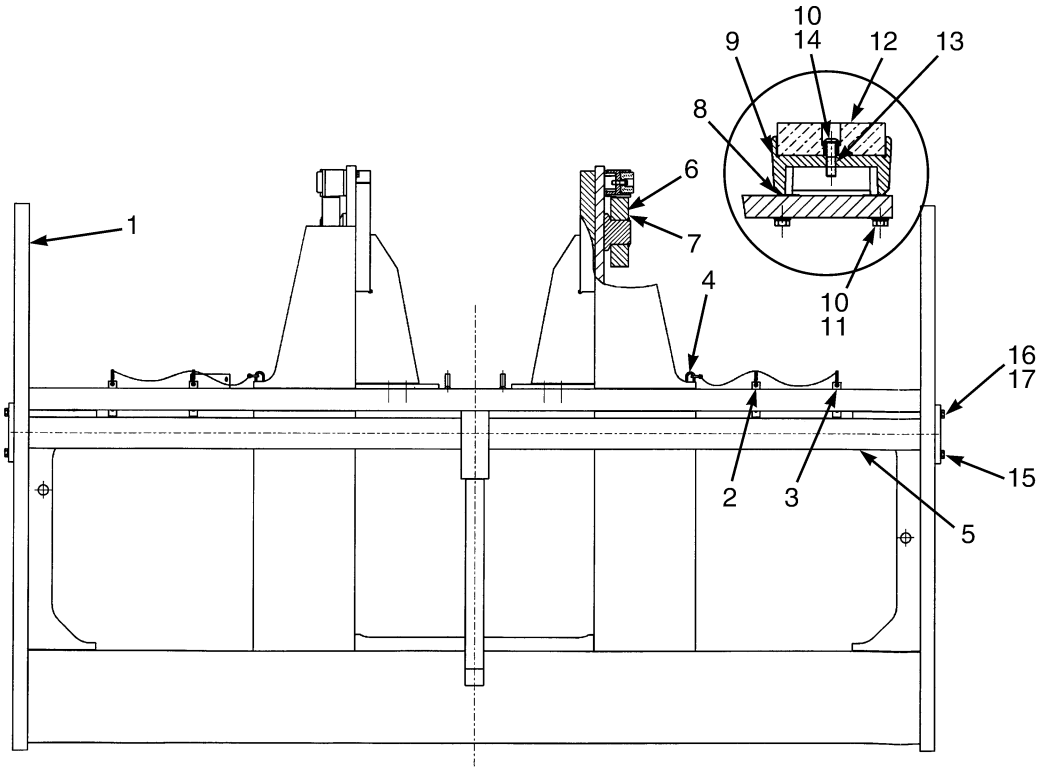

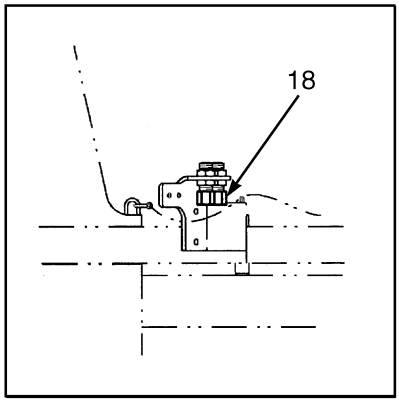

HP170356

©2015 HYSTER COMPANY

CARRIAGE
THREE FUNCTION

ITEM	PART NO.	DESCRIPTION	QTY
	2048337	Carriage	1
	2048338	Carriage	1
1	1502865	Frame	1
2	1456622	Cable	2
3	1334581	Pin (Fork Locking)	4
4	815848	Shackle	2
5	1502918	Pin (Load Arm)	2
6	**a** 1313358	Load Roller	4
6	**b** 1691114	Load Roller	4
7	58918	Snap Ring	4
8	1310592	Shim (.76 mm)	AR
9	1301018	Bracket	4
10	15156	Lockwasher	20
11	221506	Capscrew	16
12	1335179	Bearing	4
13	1301016	Spacer	4
14	376203	Capscrew	4
15	376776	Plate	2
16	292683	Lockwasher	4
17	293647	Capscrew	4
18	. . . . .	Cap (Without Side-Shift)	2

FOOTNOTES:

a → S/N G019E02245F

b S/N G019E02246F →

©2015 HYSTER COMPANY

FORK (FIGURE 11-13)

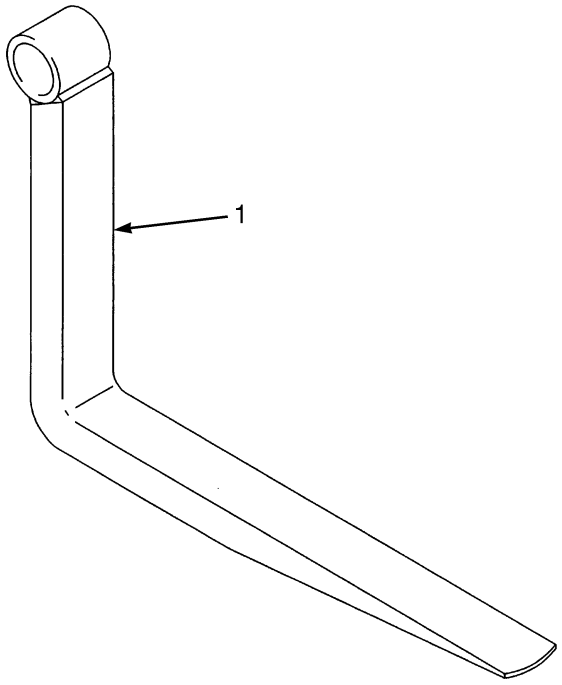

HP171290

ITEM	PART NO.	DESCRIPTION	QTY
1	~~1506114~~		
	1506809	Fork (1372 mm) (85 mm Pin)	2
1	~~1506115~~		
	1506810	Fork (1524 mm) (85 mm Pin)	2
1	~~1506116~~		
	1506811	Fork (1829 mm) (85 mm Pin)	2
1	~~1506117~~		
	1506812	Fork (2134 mm) (85 mm Pin)	2
1	~~1506118~~		
	1506813	Fork (2438 mm) (85 mm Pin)	2

©2015 HYSTER COMPANY

12 MAST-THREE STAGE FULL FREE-LIFT

SECTION 12
MAST-THREE STAGE FULL FREE-LIFT

DESCRIPTION	PAGE
CARRIAGE	
FOUR, FIVE, AND SIX FUNCTION	12-18
INDIVIDUAL FORK POSITIONER (FOUR FUNCTION)	12-22
SIMULTANEOUS FORK POSITIONER (THREE FUNCTION)	12-24
THREE FUNCTION	12-16
FREE-LIFT CYLINDER	12-12
HEADER HOSE	12-14
MAIN LIFT CYLINDER	12-11
MAST ASSEMBLY	
SHEET 1 OF 3	12-4
SHEET 2 OF 3	12-6
SHEET 3 OF 3	12-8
MAST INSTALLATION	12-2
STANDARD PIN CARRIAGE	
(THREE STAGE) - (FOUR, FIVE, AND SIX FUNCTION)	12-20

©2015 HYSTER COMPANY

MAST INSTALLATION (FIGURE 12-1)

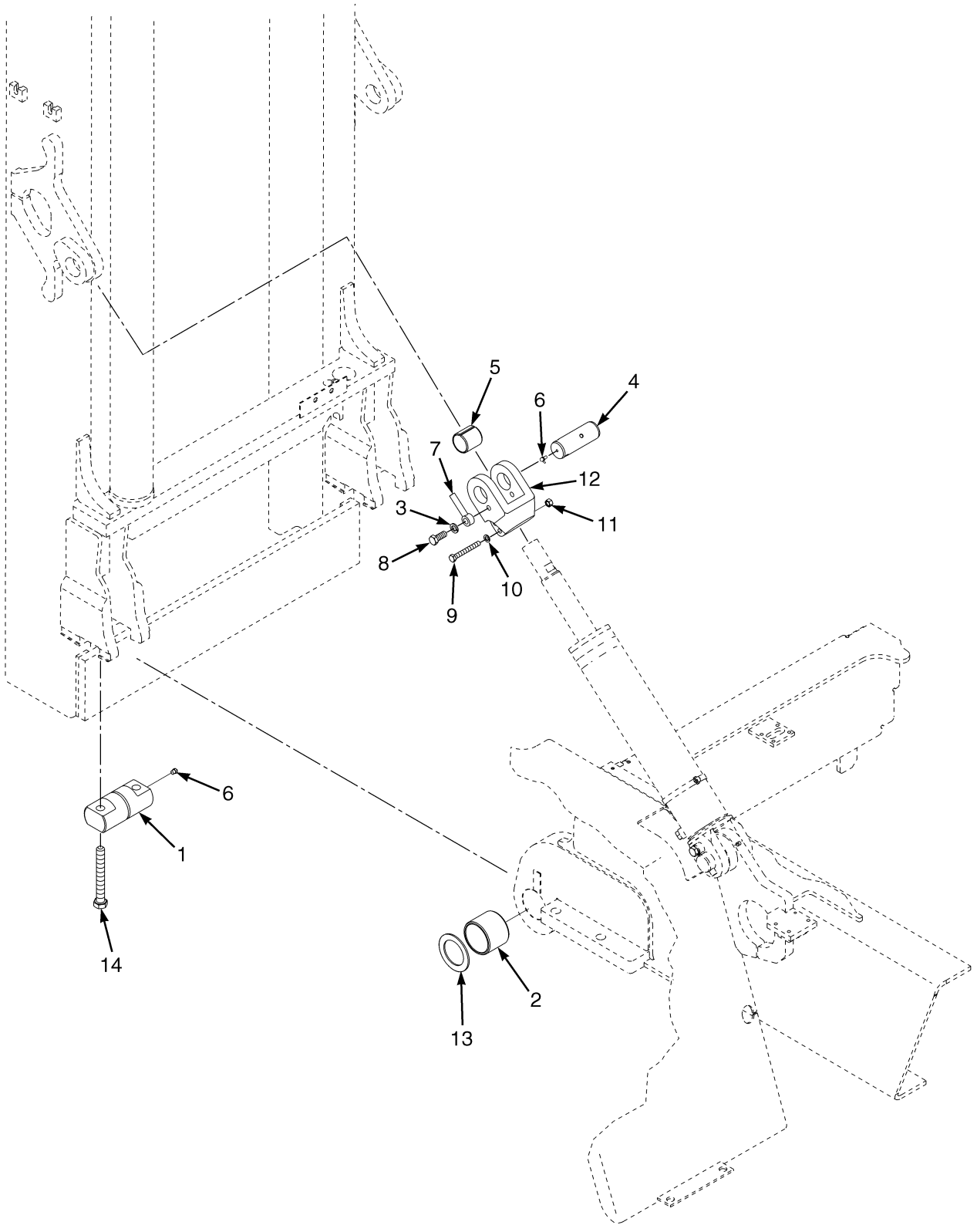

©2015 HYSTER COMPANY

MAST INSTALLATION

ITEM	PART NO.	DESCRIPTION	QTY
1	1385549	Pin (Mast Mounting)	2
2	376038	Bushing (Mast Mounting)	2
3	292685	Lockwasher	2
4	1347862	Pin (Mast Tilt)	2
5	376051	Bushing (Mast Tilt)	2
6	16001	Grease Fitting	4
7	1347861	Anchor	2
8	292560	Capscrew	2
9	292538	Capscrew	4
9	292539	Capscrew (Alternate Part)	4
10	292683	Lockwasher	4
11	~~1318914~~		
	216877	Nut	4
12	**acef** 1382936	Rod End	2
12	**bd** 1382937	Rod End	2
13	1359101	Shim	AR
14	1326777	Capscrew	4

FOOTNOTES:

a 15° Forward Tilt/12° Back Tilt
b 20.5° Forward Tilt/7° Back tilt
c 5° Forward Tilt/5° Back Tilt
d 5° Forward Tilt/6° Back Tilt
e 5° Forward/12° Back
f EC3 And EC4

©2015 HYSTER COMPANY

MAST ASSEMBLY (FIGURE 12-2)
SHEET 1 OF 3

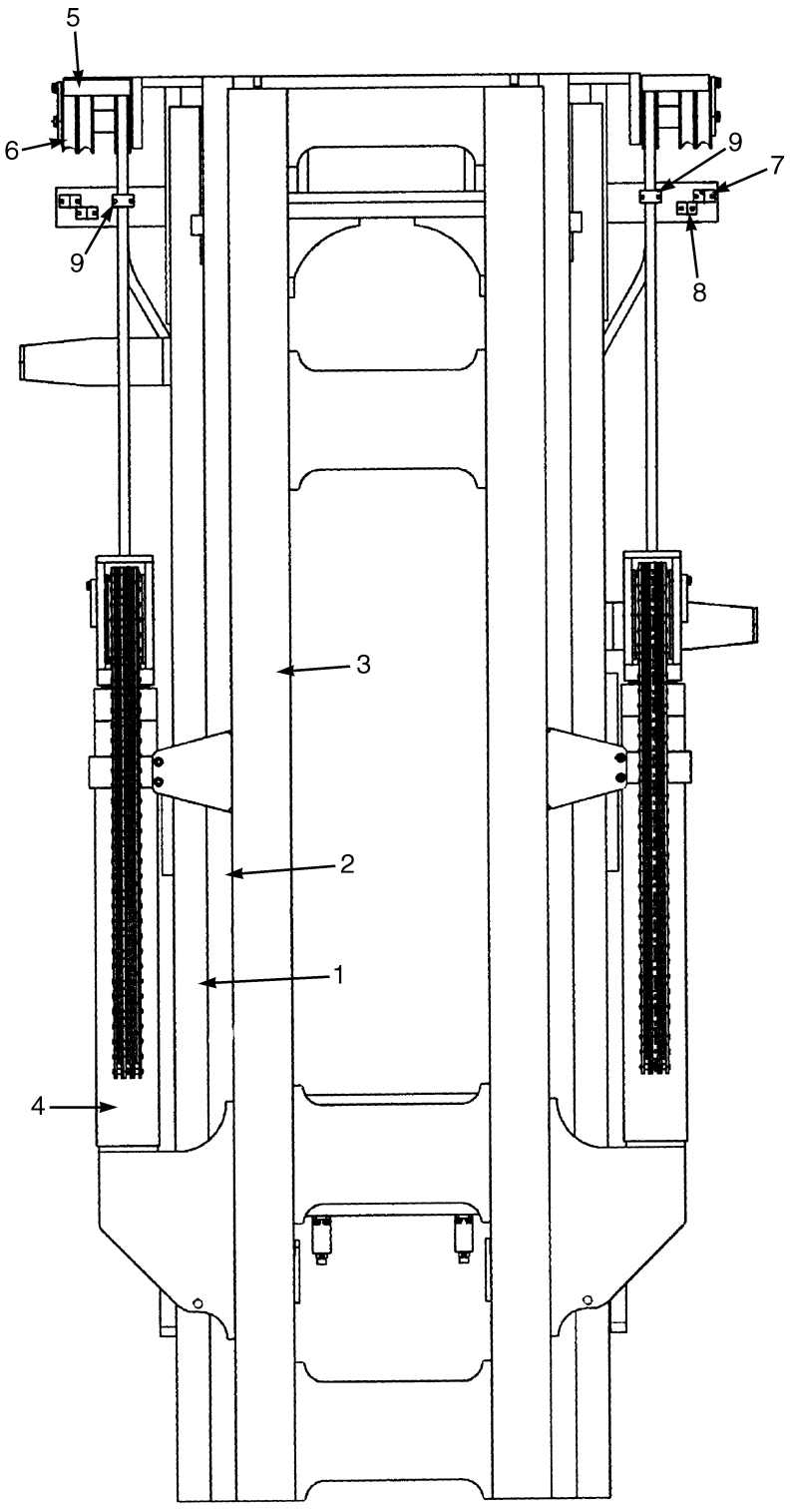

BP170084

©2015 HYSTER COMPANY

MAST ASSEMBLY
SHEET 1 OF 3

A026

ITEM	DESCRIPTION 1 2 3 4	LIFT HEIGHT TO BOTTOM OF FORKS			
		4310 mm (169.7 in.)	4910 mm (193.3 in.)	5910 mm (232.7 in.)	6910 mm (272.0 in.)
	Mast Group Number	-	-	-	-
	Mast Assy	2060301	2060302	2060303	2060304
1	Outer Mast	1565232	1565233	1565234	1565235
2	Intermediate Mast	1565236	1565237	1565238	1565239
3	Inner Mast	1565240	1565241	1565242	1565243
4	Cylinder Assy	1565244	1565245	1565246	1565247

ITEM	PART NO.	DESCRIPTION	QTY
	a	Mast Assy	1
1	**a**	Outer Mast	1
2	**a**	Intermediate Mast	1
3	**a**	Inner Mast	1
4	**a**	Cylinder Assy (☞Figure 12-6)	1
5	1538899	Roller (Hose)	4
6	1529210	Hose Reel	6
7	1565344	Clamp	3
8	1538177	Clamp	1
9	1547154	Clamp	2

FOOTNOTES:

a Refer to Table

©2015 HYSTER COMPANY

MAST ASSEMBLY (FIGURE 12-3)
SHEET 2 OF 3

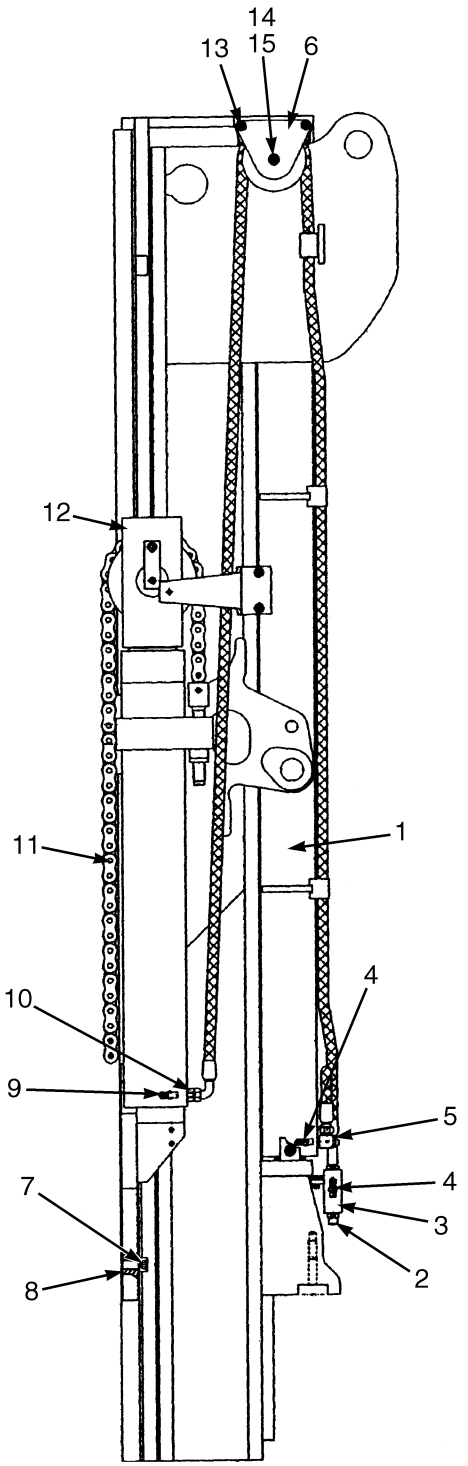

BP170085

©2015 HYSTER COMPANY

MAST ASSEMBLY
SHEET 2 OF 3

A026

ITEM	DESCRIPTION 1 2 3 4	LIFT HEIGHT TO BOTTOM OF FORKS			
		4310 mm (169.7 in.)	4910 mm (193.3 in.)	5910 mm (232.7 in.)	6910 mm (272.0 in.)
	Mast Group Number	-	-	-	-
	Mast Assy	2060301	2060302	2060303	2060304
1	Cylinder Assy	1565248	1565249	1565250	1565251
11	Chain	1565256	1565257	1565258	1565259

ITEM	PART NO.	DESCRIPTION	QTY
	a	Mast Assy	1
1	**a**	Cylinder Assy (☞Figure 12-5)	2
2	1529217	Fitting	2
3	1529218	Block	2
4	1529219	Valve	4
5	1529228	Fitting	2
6	1529226	Flange	2
7	1565286	Washer	2
8	1565285	Screw	2
9	1565340	Valve	2
10	1565339	Fitting	2
11	**a**	Chain	2
12	1565276	Support (Pulley)	2
13	1529212	Nut	4
14	1529209	Screw	2
15	1529211	Washer	2

FOOTNOTES:

a Refer to Table

©2015 HYSTER COMPANY

MAST ASSEMBLY (FIGURE 12-4)
SHEET 3 OF 3

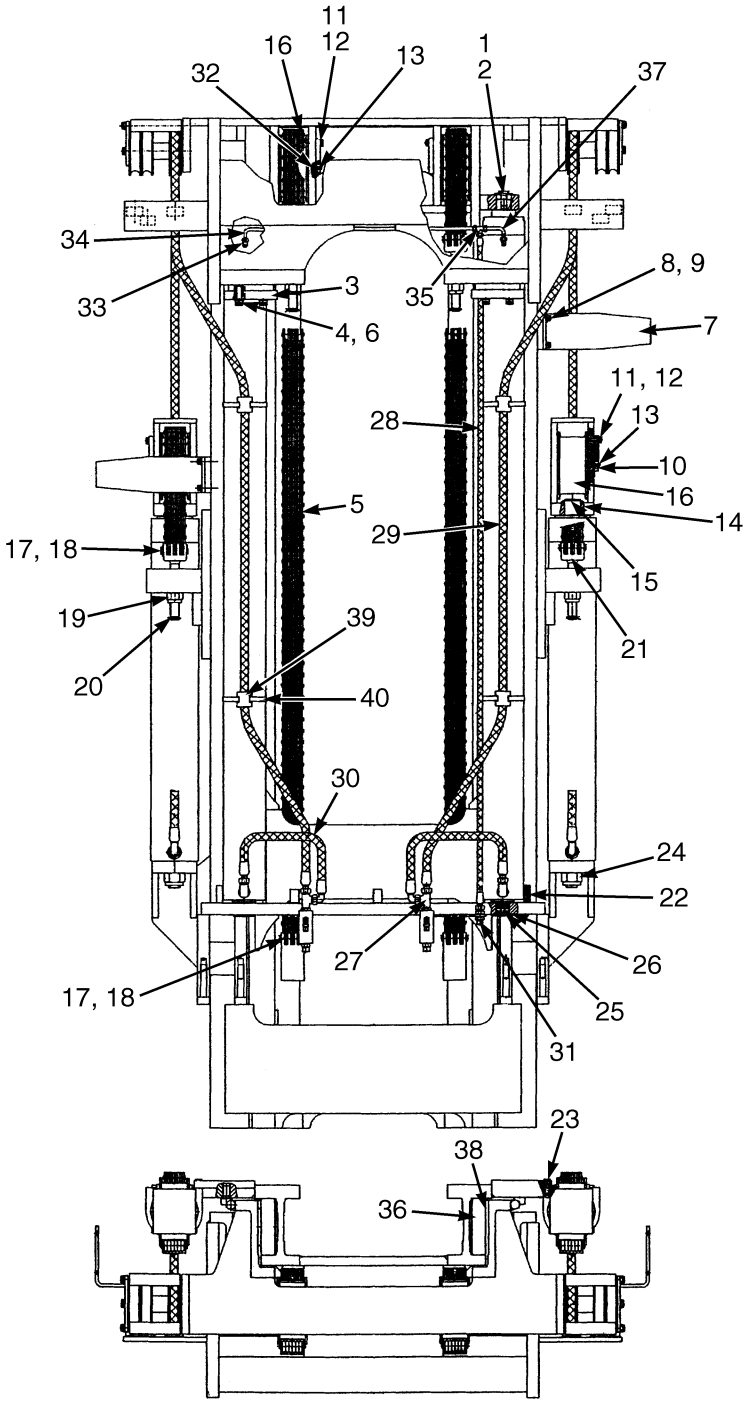

BP170086

©2015 HYSTER COMPANY

MAST ASSEMBLY
SHEET 3 OF 3

A026

ITEM	DESCRIPTION 1 2 3 4	LIFT HEIGHT TO BOTTOM OF FORKS			
		4310 mm (169.7 in.)	4910 mm (193.3 in.)	5910 mm (232.7 in.)	6910 mm (272.0 in.)
	Mast Group Number	-	-	-	-
	Mast Assy	2060301	2060302	2060303	2060304
5	Chain	1565252	1565253	1565254	1565255
28	Hose Assy (Drainage)	1565260	1565261	1565262	1565263 1565263
29	Hose Assy	1565264	1565265	1565266	1565267

ITEM	PART NO.	DESCRIPTION	QTY
	a	Mast Assy	1
1	1565270	Screw	2
2	1565271	Washer	2
3	1565272	Support (Cylinder)	2
4	1565273	Screw	4
5	**a**	Chain	2
6	1565274	Washer	4
7	1565275	Bracket (Light)	2
8	1536906	Bolt	4
9	1529191	Washer	4
10	1565277	Pin (Pulley)	2
11	1536906	Bolt	2
12	1529191	Washer	2
13	1536982	Grease Fitting	2
14	1529199	Ring	2
15	1529198	Snap Ring	2
16	1565278	Pulley	4
17	1565279	Pin (Chain)	8
18	~~1565280~~		
	15233	Cotter Pin	16
19	1565281	Locknut	4
20	1529204	Cotter Pin	4
21	1565282	Chain Anchor	4
22	1565283	Screw	2
23	1565284	Screw	4
24	1529205	Locknut	2
25	1565337	Screw	2
26	1565338	Ring	2
27	1529229	Fitting	2
28	**a**	Hose Assy (Drainage)	1
29	**a**	Hose Assy	2
30	1565348	Hose	2
31	1529221	Fitting	1
32	1565341	Pin	2
33	1529233	Fitting	2

©2015 HYSTER COMPANY

MAST ASSEMBLY
SHEET 3 OF 3

ITEM	PART NO.	DESCRIPTION	QTY
34	1565342	Hose	1
35	1565343	Fitting	1
36	1565345	Load Roller	8
37	1565346	Hose (Drainage)	1
38	1565347	Shim	24
39	87911	Clamp	4
40	144157	Hose Clamp	4

FOOTNOTES:

a Refer to Table

©2015 HYSTER COMPANY

MAIN LIFT CYLINDER (FIGURE 12-5)

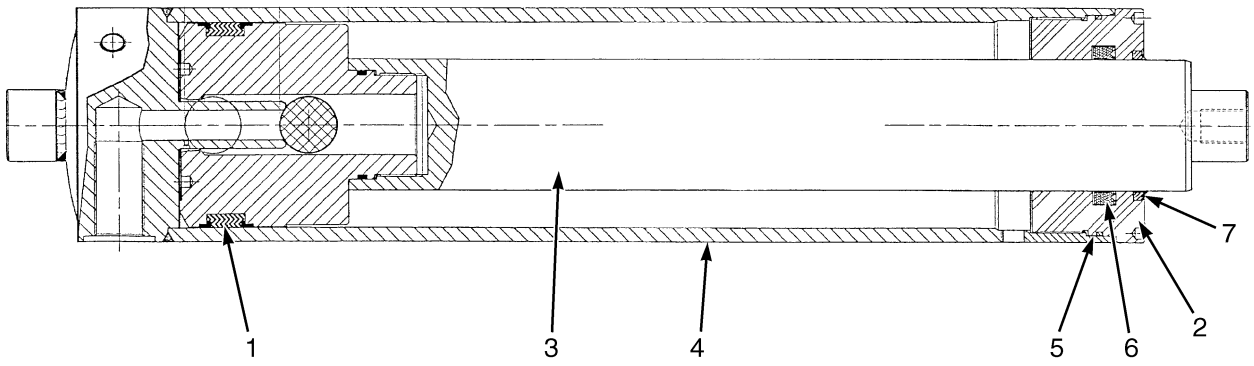

HP170444

ITEM	PART NO.	DESCRIPTION	QTY
	a 1565248	Cylinder Assy	2
	b 1565249	Cylinder Assy	2
	c 1565250	Cylinder Assy	2
	d 1565251	Cylinder Assy	2
1	. . . . .	Wear Ring	1
2	. . . . .	Slide Ring	1
3	. . . . .	Piston Rod	1
4	. . . . .	Tube	1
5	. . . . .	O-Ring	1
6	. . . . .	Seal	1
7	. . . . .	Wiper Ring	1
8	. . . . .	Plug	1
	1565269	Kit-Seal	1

FOOTNOTES:

a 2060301-Mast Assembly
b 2060302-Mast Assembly
c 2060303-Mast Assembly
d 2060304-Mast Assembly

©2015 HYSTER COMPANY

FREE-LIFT CYLINDER (FIGURE 12-6)

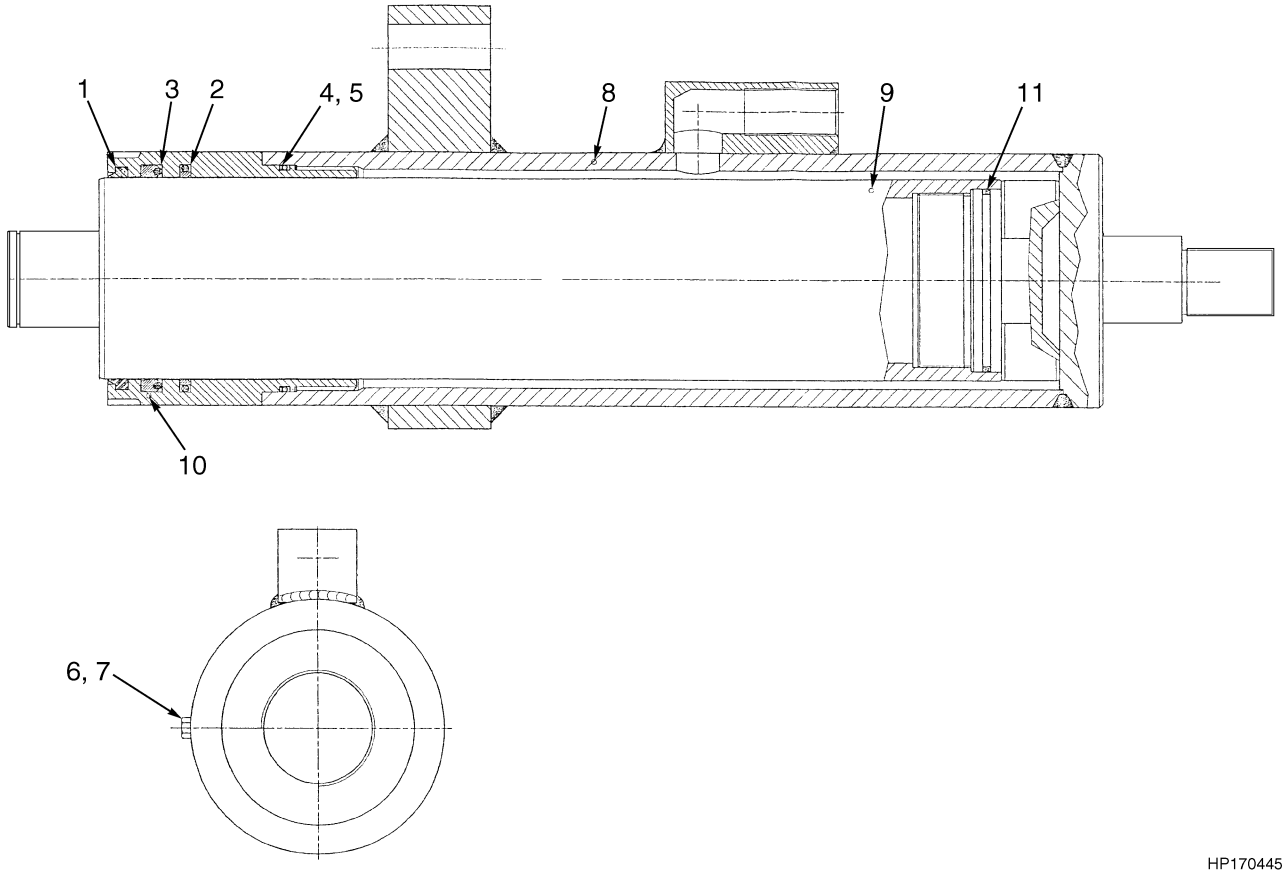

ITEM	PART NO.	DESCRIPTION	QTY
	a 1565244	Cylinder Assy	1
	b 1565245	Cylinder Assy	1
	c 1565246	Cylinder Assy	1
	d 1565247	Cylinder Assy	1
1	. . . . .	Wiper Ring	1
2	. . . . .	Gasket	2
3	. . . . .	Gasket	1
4	. . . . .	O-Ring	1
5	. . . . .	Retaining Ring	1
6	. . . . .	Washer	1
7	. . . . .	Screw	1
8	. . . . .	Tube	1
9	. . . . .	Piston Rod	1
10	. . . . .	Plug	1
11	. . . . .	O-Ring	1
	1565268	Kit-Seal	1

FOOTNOTES:

a 2060301-Mast Assembly
b 2060302-Mast Assembly
c 2060303-Mast Assembly
d 2060304-Mast Assembly

©2015 HYSTER COMPANY

NOTES

©2015 HYSTER COMPANY

HEADER HOSE (FIGURE 12-7)

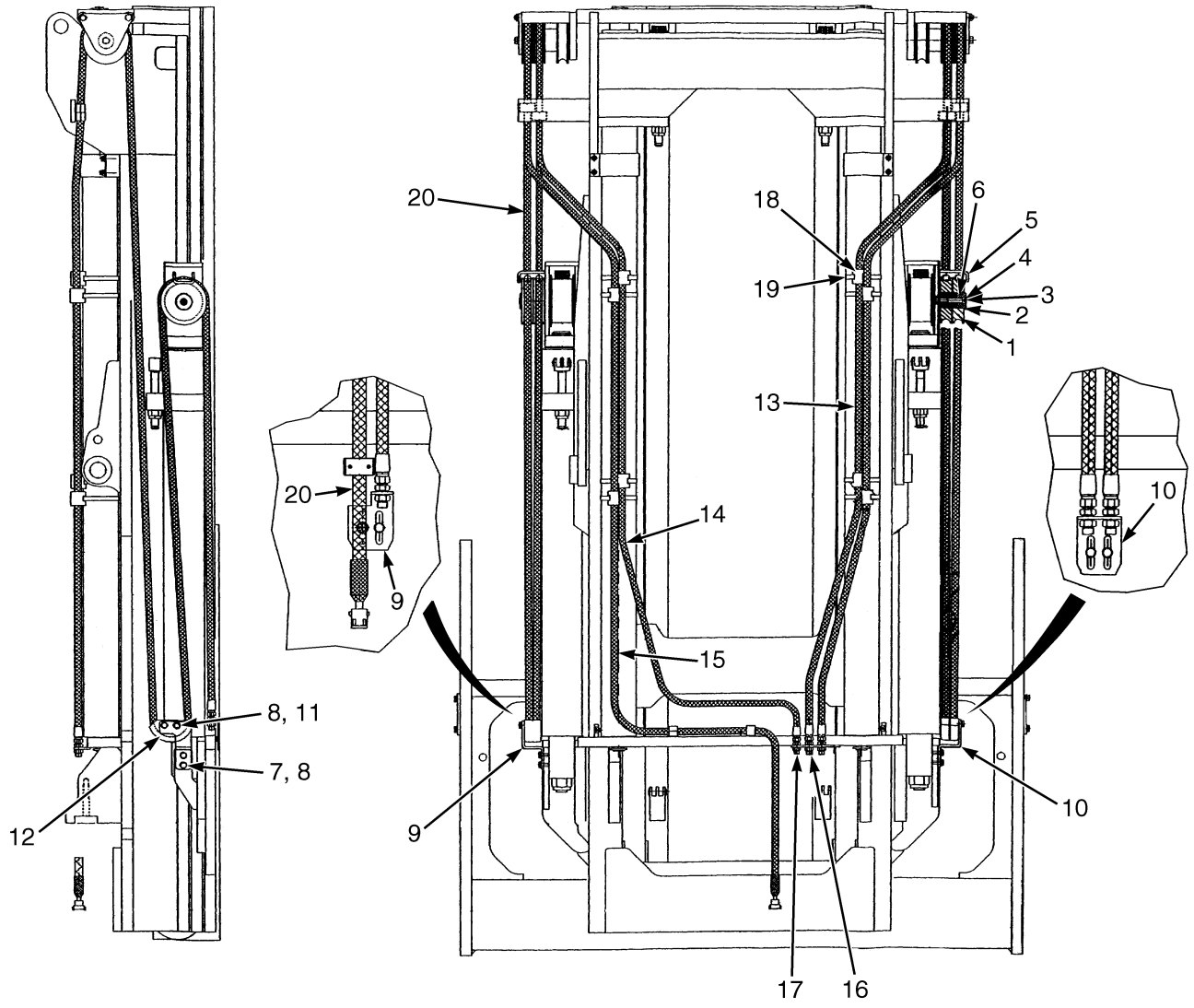

©2015 HYSTER COMPANY

HEADER HOSE

A026

ITEM	DESCRIPTION 1 2 3 4	LIFT HEIGHT TO BOTTOM OF FORKS			
		4310 mm (169.7 in.)	4910 mm (193.3 in.)	5910 mm (232.7 in.)	6910 mm (272.0 in.)
	Mast Group Number	-	-	-	-
	Mast Assy	2060301	2060302	2060303	2060304
13	Hose Assy	1565228	1565229	1565230	1565231
14	Hose Assy	1565224	1565225	1565226	1565227
15	Wire Harness	**b**1565220	**b**1565221	**b**1565222	**b**1565223

KEY:
A: Three Function
B: Four, Five, And Six Function

ITEM	PART NO.	DESCRIPTION	QTY A	QTY B
	a	Mast Assy	1	1
1	1529210	Hose Reel	2	4
2	1529198	Snap Ring	1	2
3	1534505	Screw	1	2
4	1529211	Washer	1	2
5	1534506	Bracket	1	2
6	1534507	Pulley (Shaft)	1	2
7	1534511	Screw	2	4
8	1529191	Washer	4	8
9	1534543	Plate (LH)	..	1
10	1534545	Plate (RH)	1	1
11	1534546	Screw	2	4
12	1534547	Pulley	2	2
13	**a**	Hose Assy	2	2
14	**a**	Hose Assy	..	1
15	**a**	Wire Harness	..	1
16	1534551	Fitting	2	2
17	1529221	Fitting	..	1
18	87911	Clamp	4	8
19	144157	Hose Clamp	4	8
20	2092486	Wire Harness (Front End)	..	1

FOOTNOTES:

a Refer to Table

b With Electrical Cable

©2015 HYSTER COMPANY

CARRIAGE (FIGURE 12-8)
THREE FUNCTION

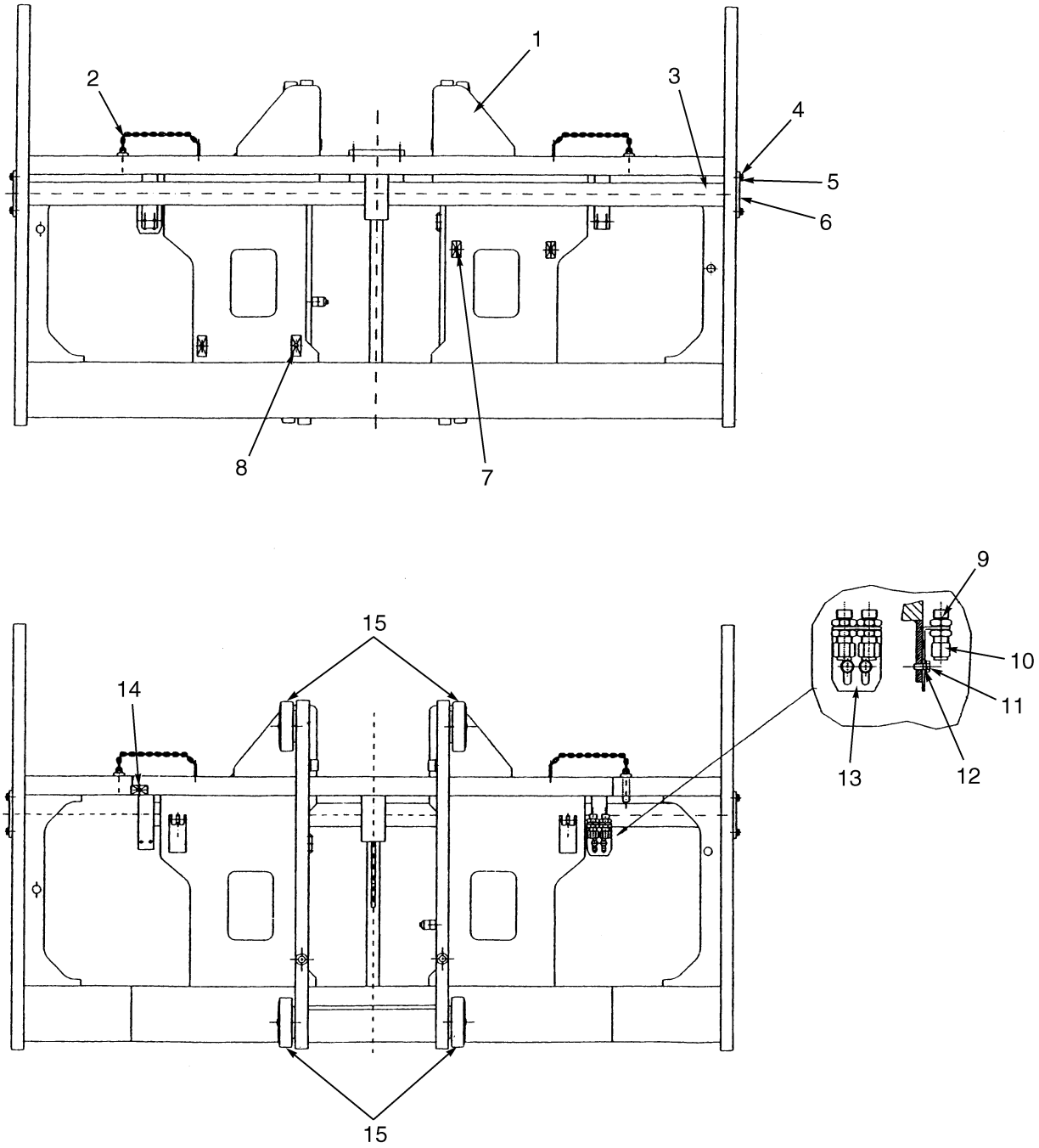

BP000111

©2015 HYSTER COMPANY

CARRIAGE
THREE FUNCTION

ITEM	PART NO.	DESCRIPTION	QTY
	2067307	Carriage	1
1	. . . . .	Frame	1
2	1334581	Pin (Fork Locking)	2
3	1565412	Pivot (Pivot)	2
4	1529191	Washer	4
5	1529190	Screw	4
6	1536892	Support (Shaft)	2
7	1536890	Clamp	2
8	1536891	Clamp	3
9	1534551	Fitting	2
10	1536887	Fitting	2
11	1536888	Bolt	2
12	1534510	Washer	2
13	1536889	Support	1
14	1529227	Clamp	1
15	1565345	Load Roller	4
15	1581980	Kit-Load Roller	1
15	1581981	Kit-Side Roller	1

©2015 HYSTER COMPANY

CARRIAGE (FIGURE 12-9)
FOUR, FIVE, AND SIX FUNCTION

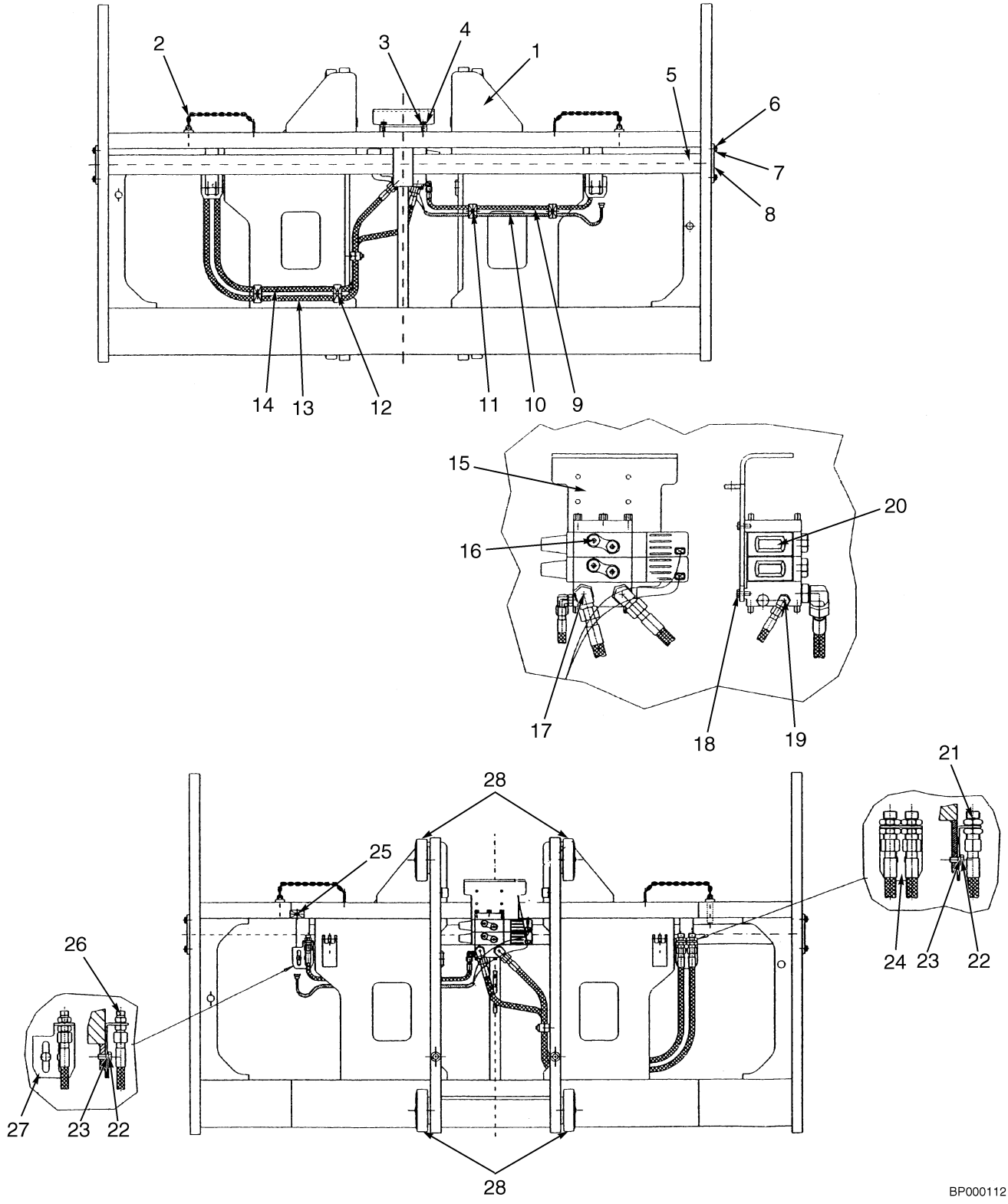

©2015 HYSTER COMPANY

CARRIAGE
FOUR, FIVE, AND SIX FUNCTION

KEY:
A: Four Function
B: Five Function
C: Six Function

ITEM	PART NO.	DESCRIPTION	QTY A	QTY B	QTY C
	2067308	Carriage	1	..	..
	2067309	Carriage	..	1	..
	2067310	Carriage	..	..	1
1	. . . . .	Frame	1	1	1
2	1334581	Pin (Fork Locking)	2	2	2
3	1529191	Washer	2	2	2
4	1536906	Bolt	2	2	2
5	1565412	Pivot (Pivot)	1	1	1
6	1529191	Washer	4	4	4
7	1529190	Screw	4	4	4
8	1536892	Support (Shaft)	2	2	2
9	1565427	Hose	1	1	1
10	2092486	Wire Harness (Front End)	1	1	1
11	1536890	Clamp	2	2	2
12	1536891	Clamp	3	3	3
13	1565425	Hose	1	1	1
14	1565426	Hose	1	1	1
15	1536901	Support	1	1	1
16	1536897	Fitting	4	6	8
17	1536899	Fitting	2	2	2
18	1536898	Bolt	4	4	4
19	1536900	Fitting	1	1	1
20	2092483	Directional Control Valve, Two-Section (Deutsch) (☞Figure 13-1)	1	..	..
20	2092484	Directional Control Valve, Three-Section (Deutsch) (☞Figure 13-1)	..	1	..
20	2092485	Directional Control Valve, Four-Section (Deutsch) (☞Figure 13-1)	..	..	1
20	2055960	Directional Control Valve, Two-Section (AMP) (☞Figure 13-1)	1	..	..
20	2055961	Directional Control Valve, Three-Section (AMP) (☞Figure 13-1)	..	1	..
20	2055962	Directional Control Valve, Four-Section (AMP) (☞Figure 13-1)	..	..	1
21	1534551	Fitting	2	2	2
22	1536888	Bolt	4	4	4
23	1534510	Washer	4	4	4
24	1536889	Support	1	1	1
25	1529227	Clamp	1	1	1
26	1529221	Fitting	1	1	1
27	1534508	Support	1	1	1
28	1565345	Load Roller	4	4	4
28	1581980	Kit-Load Roller	1	1	1
28	1581981	Kit-Side Roller	1	1	1

©2015 HYSTER COMPANY

STANDARD PIN CARRIAGE (FIGURE 12-10)
(THREE STAGE) — (FOUR, FIVE, AND SIX FUNCTION)

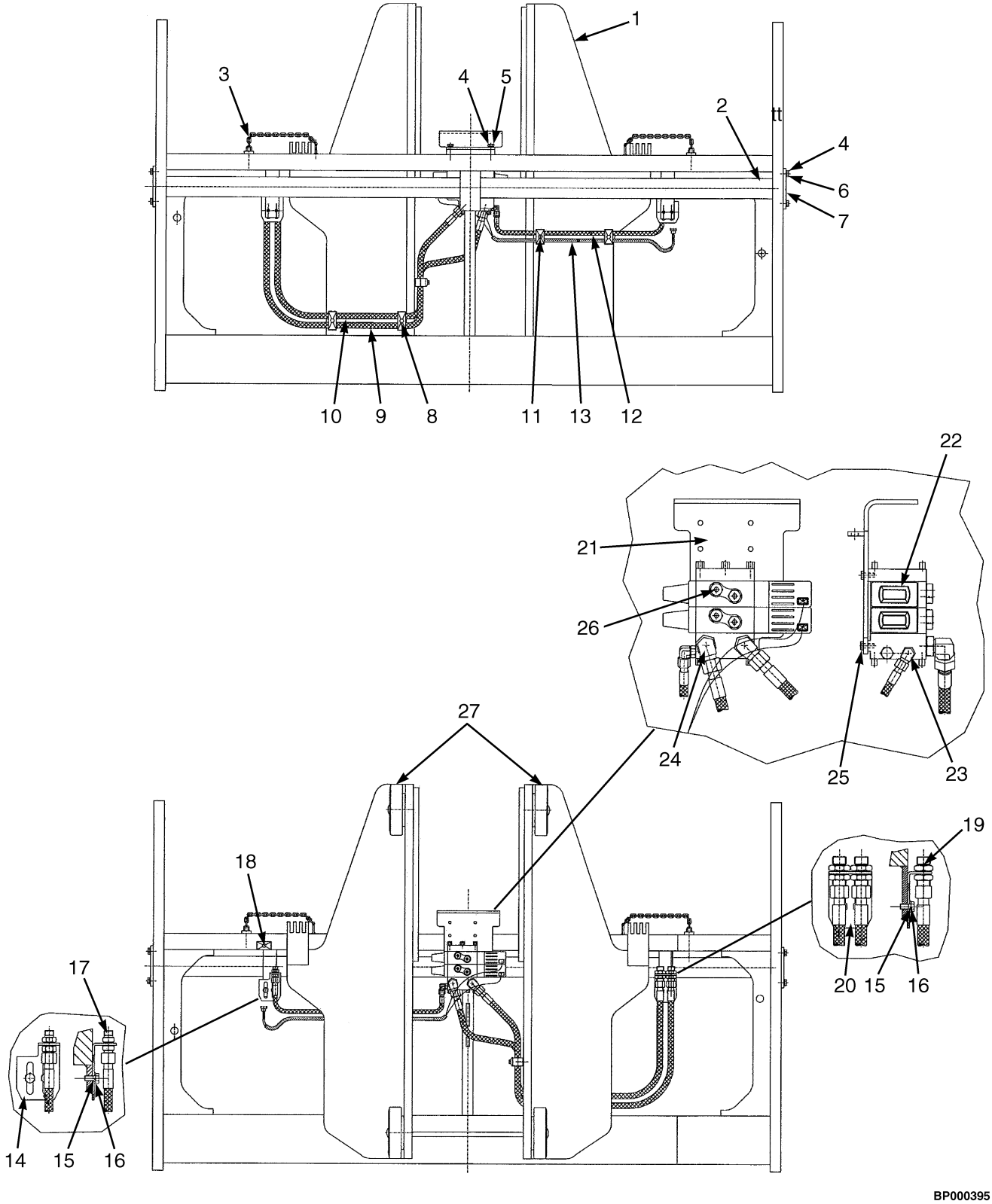

©2015 HYSTER COMPANY

STANDARD PIN CARRIAGE
(THREE STAGE) – (FOUR, FIVE, AND SIX FUNCTION)

KEY:
A: Four Function
B: Five Function
C: Six Function

ITEM	PART NO.	DESCRIPTION	QTY A	QTY B	QTY C
	2097290	Carriage (Three Stage)	1	..	..
	2097291	Carriage (Three Stage)	..	1	..
	2097292	Carriage (Three Stage)	..	..	1
1	1565411	Bracket	1	1	1
2	1565412	Pivot (Pivot)	2	2	2
3	1334581	Pin (Fork Locking)	2	2	2
4	1529191	Washer	6	6	6
5	1536906	Bolt	2	2	2
6	1529190	Screw	4	4	4
7	1536892	Support (Shaft)	1	1	1
8	1536891	Clamp	3	3	3
9	1565425	Hose	1	1	1
10	1565426	Hose	1	1	1
11	1536890	Clamp	2	2	2
12	1565427	Hose	1	1	1
13	2092486	Wire Harness (Front End)	1	1	1
14	1534508	Support	1	1	1
15	1536888	Bolt	4	4	4
16	1534510	Washer	4	4	4
17	1529221	Fitting	1	1	1
18	1529227	Clamp	1	1	1
19	1534551	Fitting	2	2	2
20	1536889	Support	1	1	1
21	1536901	Support	1	1	1
22	2092483	Directional Control Valve, Two-Section (Deutsch) (☞Figure 13-1)	1	..	..
22	2092484	Directional Control Valve, Three-Section (Deutsch) (☞Figure 13-1)	..	1	..
22	2092485	Directional Control Valve, Four-Section (Deutsch) (☞Figure 13-1)	..	..	1
22	2055960	Directional Control Valve, Two-Section (AMP) (☞Figure 13-1)	1	..	..
22	2055961	Directional Control Valve, Three-Section (AMP) (☞Figure 13-1)	..	1	..
22	2055962	Directional Control Valve, Four-Section (AMP) (☞Figure 13-1)	..	..	1
23	1536900	Fitting	1	1	1
24	1536899	Fitting	2	2	2
25	1536898	Bolt	4	4	4
26	1536897	Fitting	4	4	4
27	1565345	Load Roller	4	4	4
	1581980	Kit-Load Roller	1	1	1
	1581981	Kit-Side Roller	1	1	1

©2015 HYSTER COMPANY

CARRIAGE (FIGURE 12-11)
INDIVIDUAL FORK POSITIONER (FOUR FUNCTION)

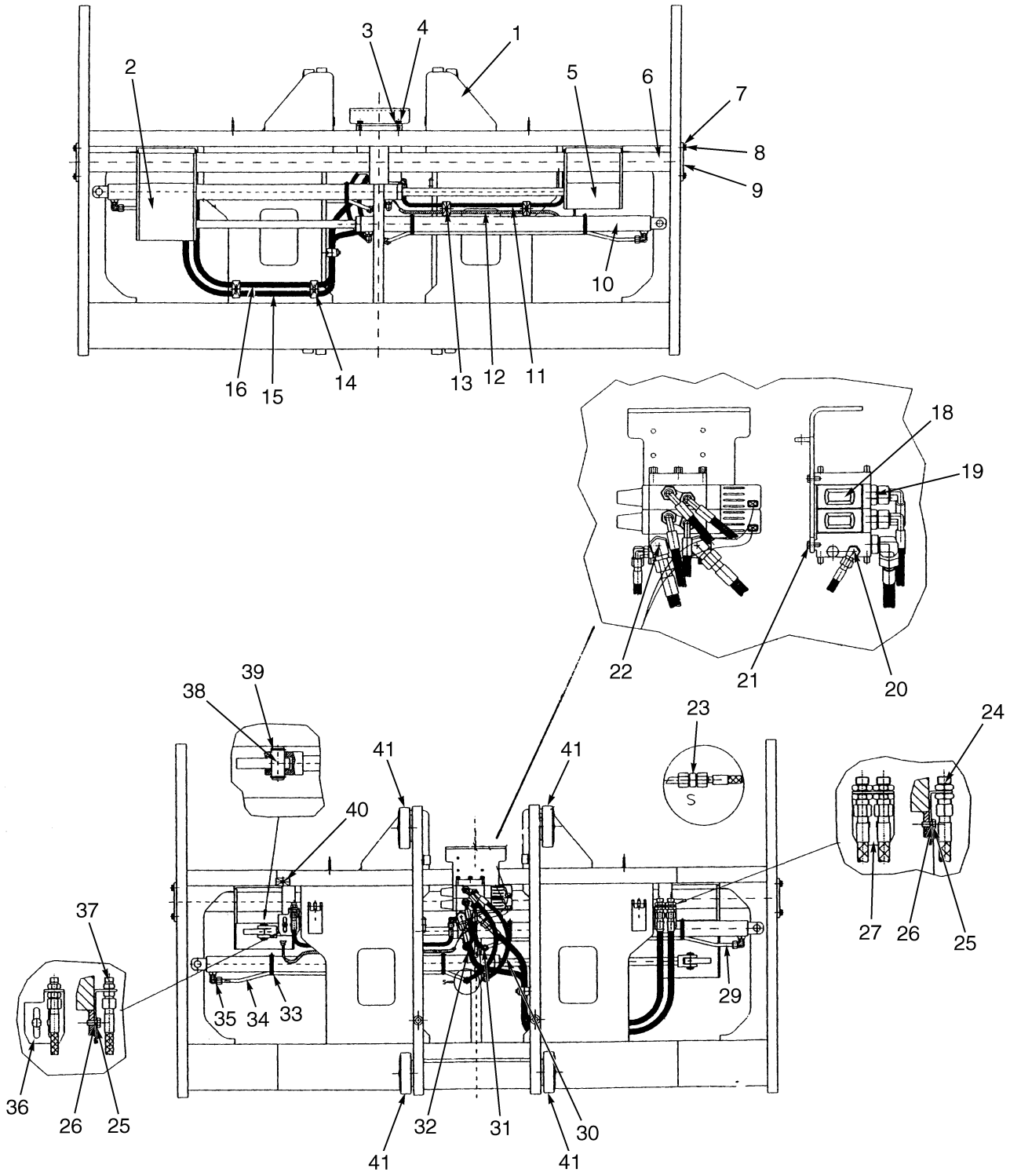

BP000109

©2015 HYSTER COMPANY

CARRIAGE

INDIVIDUAL FORK POSITIONER (FOUR FUNCTION)

ITEM	PART NO.	DESCRIPTION	QTY
	2067311	Plate	1
1	. . . . .	Frame	1
2	1565414	Bracket (RH)	1
3	1529191	Washer	2
4	1536906	Bolt	2
5	1565413	Bracket (LH)	1
6	1565412	Pivot (Pivot)	1
7	1529191	Washer	4
8	1529190	Screw	4
9	1536892	Support (Shaft)	2
10	2046894	Cylinder Assy (Fork Positioner) (☞Figure 13-2)	2
11	1565427	Hose	1
12	2092486	Wire Harness (Front End)	1
13	1536890	Clamp	2
14	1536891	Clamp	3
15	1565425	Hose	1
16	1565426	Hose	1
17	1536901	Support	1
18	2092483	Directional Control Valve, Two-Section (Deutsch) (☞Figure 13-1)	1
18	2055960	Directional Control Valve, Two-Section (AMP) (☞Figure 13-1)	1
19	1536972	Fitting	4
20	1536900	Fitting	1
21	1536898	Bolt	4
22	1536899	Fitting	2
23	1536902	Fitting	2
24	1534551	Fitting	2
25	1536888	Bolt	3
26	1534510	Washer	4
27	1536889	Support	1
28	1565422	Hose	1
29	1565415	Tube	1
30	1565421	Hose	1
31	1670448	Hose	1
32	1565424	Hose	1
33	1537017	Clamp	4
34	1565416	Tube	1
35	1536900	Fitting	4
36	1534508	Support	1
37	1529221	Fitting	1
38	1537023	Pin (Fork Position Cylinder)	4
39	1537022	Snap Ring	8
40	1529227	Clamp	1
41	1565345	Load Roller	4
41	1581980	Kit-Load Roller	1
41	1581981	Kit-Side Roller	1

©2015 HYSTER COMPANY

CARRIAGE (FIGURE 12-12)
SIMULTANEOUS FORK POSITIONER (THREE FUNCTION)

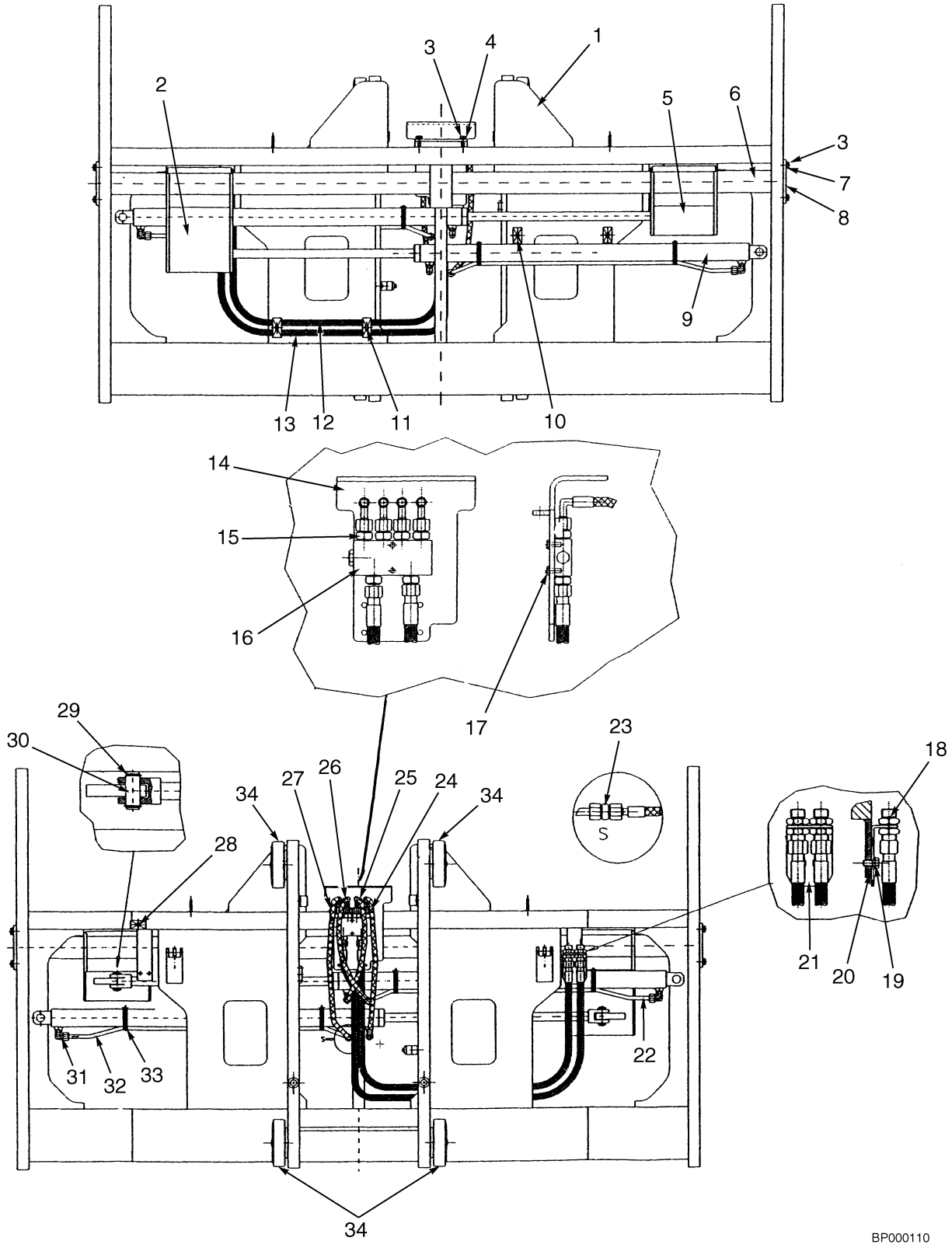

©2015 HYSTER COMPANY

CARRIAGE

SIMULTANEOUS FORK POSITIONER (THREE FUNCTION)

ITEM	PART NO.	DESCRIPTION	QTY
	2067312	Carriage	1
1	. . . . .	Frame	1
2	1565414	Bracket (RH)	1
3	1529191	Washer	6
4	1536906	Bolt	2
5	1565413	Bracket (LH)	1
6	1565412	Pivot (Pivot)	1
7	1529190	Screw	4
8	1536892	Support (Shaft)	2
9	2046894	Cylinder Assy (Fork Positioner) (☞Figure 13-2)	2
10	1536890	Clamp	2
11	1536891	Clamp	3
12	1565419	Hose	1
13	1565418	Hose	1
14	1536901	Support	1
15	1537033	Connector	6
16	1565417	Flow Valve	1
17	1537032	Bolt	2
18	1534551	Fitting	2
19	1536888	Bolt	2
20	1534510	Washer	2
21	1536889	Support	1
22	1565415	Tube	1
23	1536902	Fitting	2
24	1565420	Hose	1
25	1565421	Hose	1
26	1565422	Hose	1
27	1565423	Hose	1
28	1529227	Clamp	1
29	1537022	Snap Ring	8
30	1537023	Pin (Fork Position Cylinder)	4
31	1536900	Fitting	4
32	1565416	Tube	1
33	1537017	Clamp	4
34	1565345	Load Roller	4
34	1581980	Kit-Load Roller	1
34	1581981	Kit-Side Roller	1

©2015 HYSTER COMPANY

NOTES

©2015 HYSTER COMPANY

13 ATTACHMENTS

SECTION 13
ATTACHMENTS

DESCRIPTION	PAGE
DIRECTIONAL CONTROL VALVE	13-2
FORK POSITIONING CYLINDER	13-4
SIDE-SHIFT CARRIAGE	
DUAL FUNCTION WITH FORK POSITIONER - TWO STAGE LIMITED FREE-LIFT	13-6
FOUR, FIVE, AND SIX FUNCTION - THREE STAGE FULL FREE-LIFT	13-10
FOUR, FIVE, AND SIX FUNCTION - TWO STAGE LIMITED FREE-LIFT	13-14
INDIVIDUAL FORK POSITIONER (FIVE FUNCTION) - THREE STAGE FULL FREE-LIFT	13-18
INDIVIDUAL FORK POSITIONER (FIVE FUNCTION) - TWO STAGE LIMITED FREE-LIFT	13-22
SIMULTANEOUS FORK POSITIONER (FOUR FUNCTION) - THREE STAGE FULL FREE-LIFT	13-26
SIMULTANEOUS FORK POSITIONER (FOUR FUNCTION) - TWO STAGE LIMITED FREE-LIFT	13-30
THREE FUNCTION - THREE STAGE FULL FREE-LIFT	13-34
THREE FUNCTION - TWO STAGE LIMITED FREE-LIFT	13-36
SIDE-SHIFT CYLINDER	
DUAL FUNCTION WITH FORK POSITIONER	13-38
THREE STAGE FULL FREE-LIFT	13-40
TWO STAGE LIMITED FREE-LIFT	13-42

©2015 HYSTER COMPANY

DIRECTIONAL CONTROL VALVE (FIGURE 13-1)

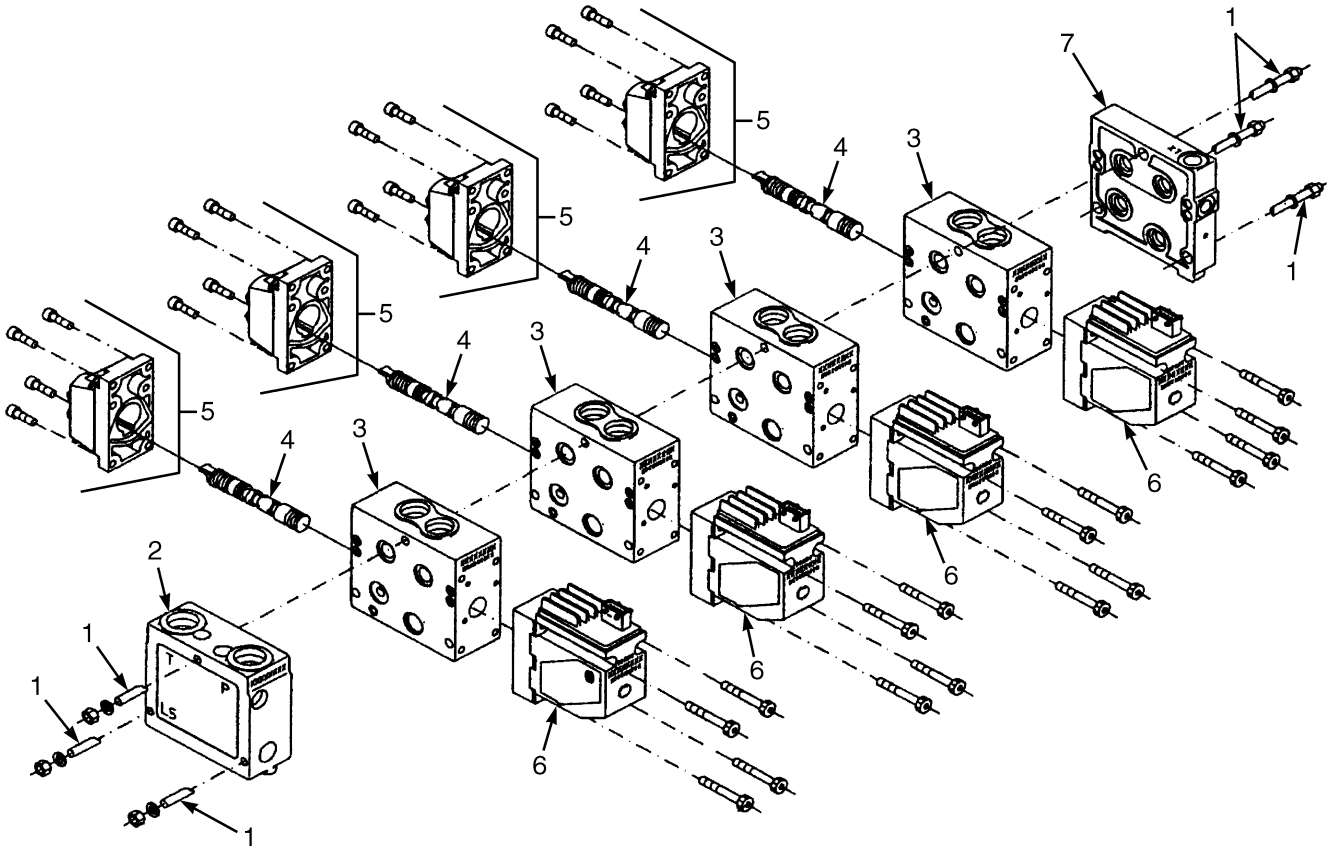

©2015 HYSTER COMPANY

DIRECTIONAL CONTROL VALVE

KEY:
A: Four Function
B: Five Function
C: Six Function

ITEM	PART NO.	DESCRIPTION	QTY A	QTY B	QTY C
	d 2092483	Directional Control Valve, Two-Section	1	..	..
	d 2092484	Directional Control Valve, Three-Section	..	1	..
	d 2092485	Directional Control Valve, Four-Section	..	..	1
	c 2055960	Directional Control Valve, Two-Section	1	..	..
	c 2055961	Directional Control Valve, Three-Section	..	1	..
	c 2055962	Directional Control Valve, Four-Section	..	..	1
1	**b** 1539231	Kit-Valve (Tie Rod)	1	..	..
1	**b** 1539232	Kit-Valve (Tie Rods) (Includes Qty 3 Rods)	..	1	..
1	**b** 1539233	Kit-Valve (Tie Rod)	..	..	1
2	1539225	Module (Inlet)	1	1	1
3	1539226	Valve	2	3	4
4	**a** 1539227	Spool	2	3	4
5	1539228	Manifold (End Cap)	2	3	4
5	1539234	Kit-Seal (Mechanical Module)	1	1	1
5	4010438	Screw	4	4	4
6	**d** 1662992	Module (Electrical)	2	3	4
6	**c** 1539229	Module (Electrical)	2	3	4
6	1539235	Kit-Seal (Electrical Module)	1	1	1
7	1539230	Module (End)	1	1	1

FOOTNOTES:

a Includes Centering Spring(s).
b Includes O-rings for 1539226.
c → S/N G019E01501E
d S/N G019E01502E →

©2015 HYSTER COMPANY

FORK POSITIONING CYLINDER (FIGURE 13-2)

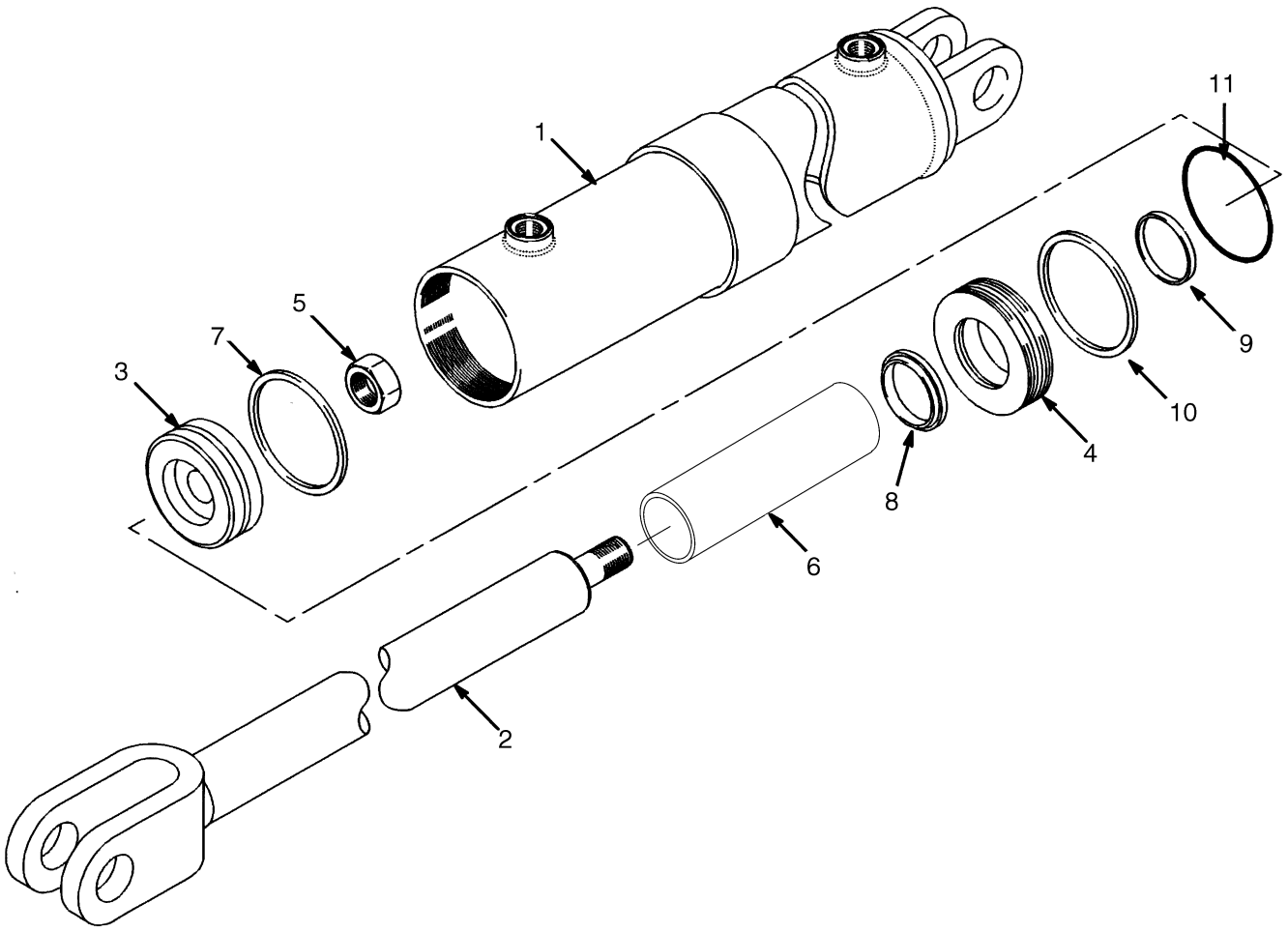

©2015 HYSTER COMPANY

FORK POSITIONING CYLINDER

ITEM	PART NO.	DESCRIPTION	QTY
	2046894	Cylinder Assy (Fork Positioner)	1
1	1507736	Tube Wldmt-Cylinder	1
2	1507737	Cylinder Rod	1
3	1504623	Piston	1
4	1504624	Retainer	1
5	1504625	Nut	1
6	1504635	Spacer	1
7	1504628	Piston Seal (Piston)	1
8	1504629	Rod Seal (Rod)	1
9	1504632	Wiper	1
10	1504633	Back-Up Ring	1
11	1504634	O-Ring	1
	1504626	Kit-Seal	1

©2015 HYSTER COMPANY

SIDE-SHIFT CARRIAGE (FIGURE 13-3)

DUAL FUNCTION WITH FORK POSITIONER — TWO STAGE LIMITED FREE-LIFT

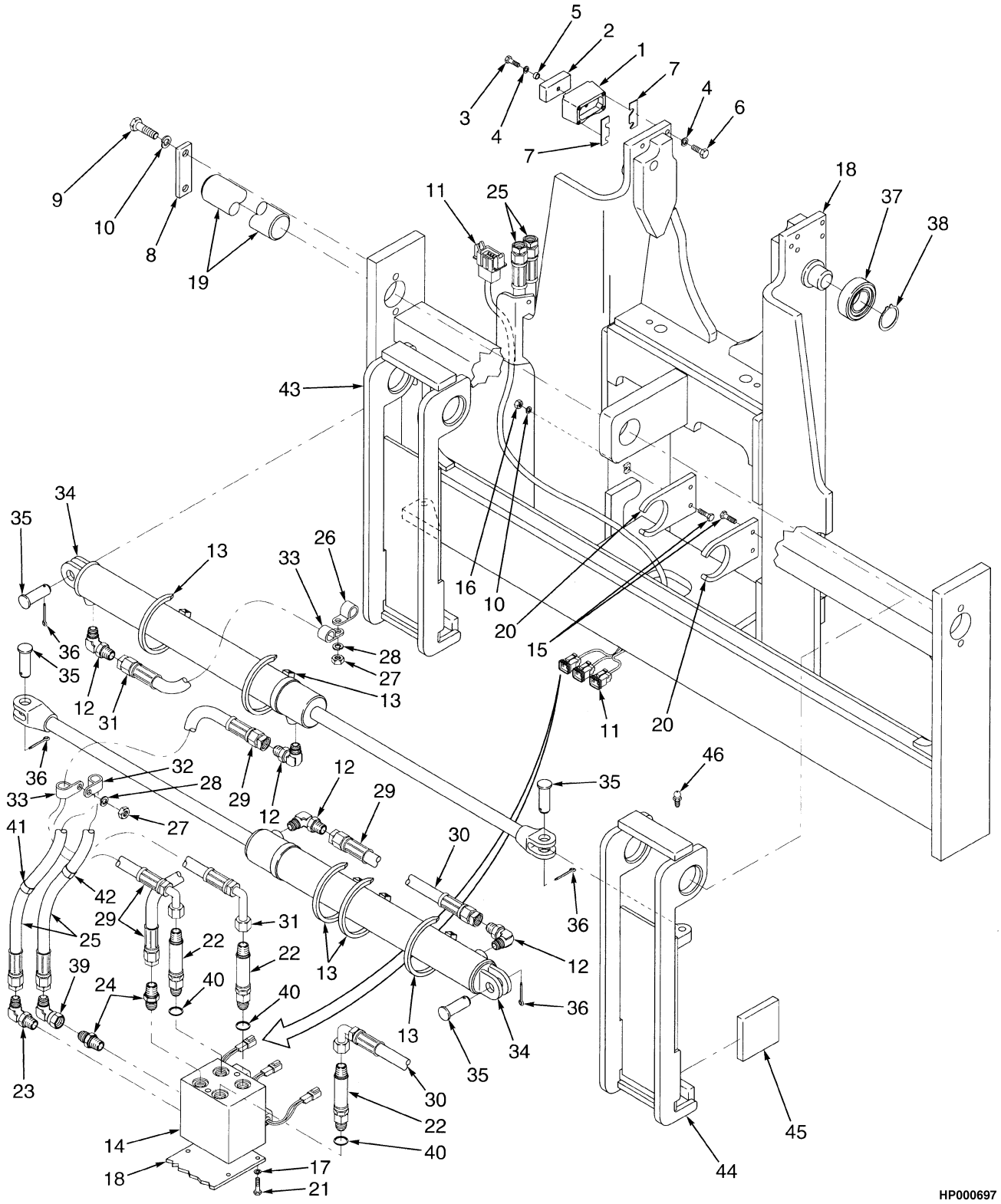

©2015 HYSTER COMPANY

SIDE-SHIFT CARRIAGE

DUAL FUNCTION WITH FORK POSITIONER – TWO STAGE LIMITED FREE-LIFT

ITEM	PART NO.	DESCRIPTION	QTY
	a 2043331	Carriage	1
	2043332	Carriage	1
1	1301018	Bracket	4
2	1335179	Bearing	4
3	376203	Capscrew	4
4	15156	Lockwasher	20
5	1301016	Spacer	4
6	221506	Capscrew	16
7	1310592	Shim (.76 mm)	AR
8	1453728	Plate (Keeper)	2
9	293647	Capscrew	4
10	292683	Lockwasher	8
11	2054264	Wire Harness (Selector Valve)	1
12	1473897	Fitting	4
13	323864	Strap Clamp	5
14	1372994	Selector Valve	1
14	1452130	Cartridge (Includes Solenoid)	3
14	1452131	Kit-Seal	1
14	1452132	Plug	3
14	1452138	Bolt	4
14	1452134	Cover Plate	1
14	1452135	Washer	4
15	292529	Capscrew	4
16	~~1318914~~		
	216877	Nut	4
17	~~388049~~		
	292682	Lockwasher	2
18	1451110	Carriage Wldmt (Side-Shift Fork Positioner)	1
19	1528880	Pin	1
20	1451155	Bracket (Cylinder)	2
21	287854	Capscrew	2
22	1490533	Fitting	3
23	1487065	Fitting	1
24	1486746	Fitting	2
25	1490618	Hose Assy	2
26	198678	Clamp	1
27	239503	Nut	2
28	292681	Lockwasher	2
29	1490490	Hose Assy	2
30	1490626	Hose Assy	1
31	1490627	Hose Assy	1
32	129684	Clamp	1
33	251994	Clamp	2
34	1451130	Cylinder Assy (☞Figure 13-12)	2
35	1373216	Pin	4
36	15237	Cotter Pin	8
37	**b** 1313358	Load Roller	4
37	**c** 1691114	Load Roller	4
38	58918	Snap Ring	4
39	1486772	Fitting	1

©2015 HYSTER COMPANY

SIDE-SHIFT CARRIAGE

DUAL FUNCTION WITH FORK POSITIONER – TWO STAGE LIMITED FREE-LIFT

ITEM	PART NO.	DESCRIPTION	QTY
40	239222	Connector	3
40	16485	O-Ring	1
41	342675	Identification Band (B)	2
42	342676	Identification Band (C)	2
43	1451777	Carrier (RH)	1
44	1451778	Carrier (LH)	1
45	1451833	Block	2
46	16001	Grease Fitting	2

FOOTNOTES:

a With Pin Fork Carrier
b → S/N G019E02245F
c S/N G019E02246F →

©2015 HYSTER COMPANY

NOTES

©2015 HYSTER COMPANY

SIDE-SHIFT CARRIAGE (FIGURE 13-4)

FOUR, FIVE, AND SIX FUNCTION — THREE STAGE FULL FREE-LIFT

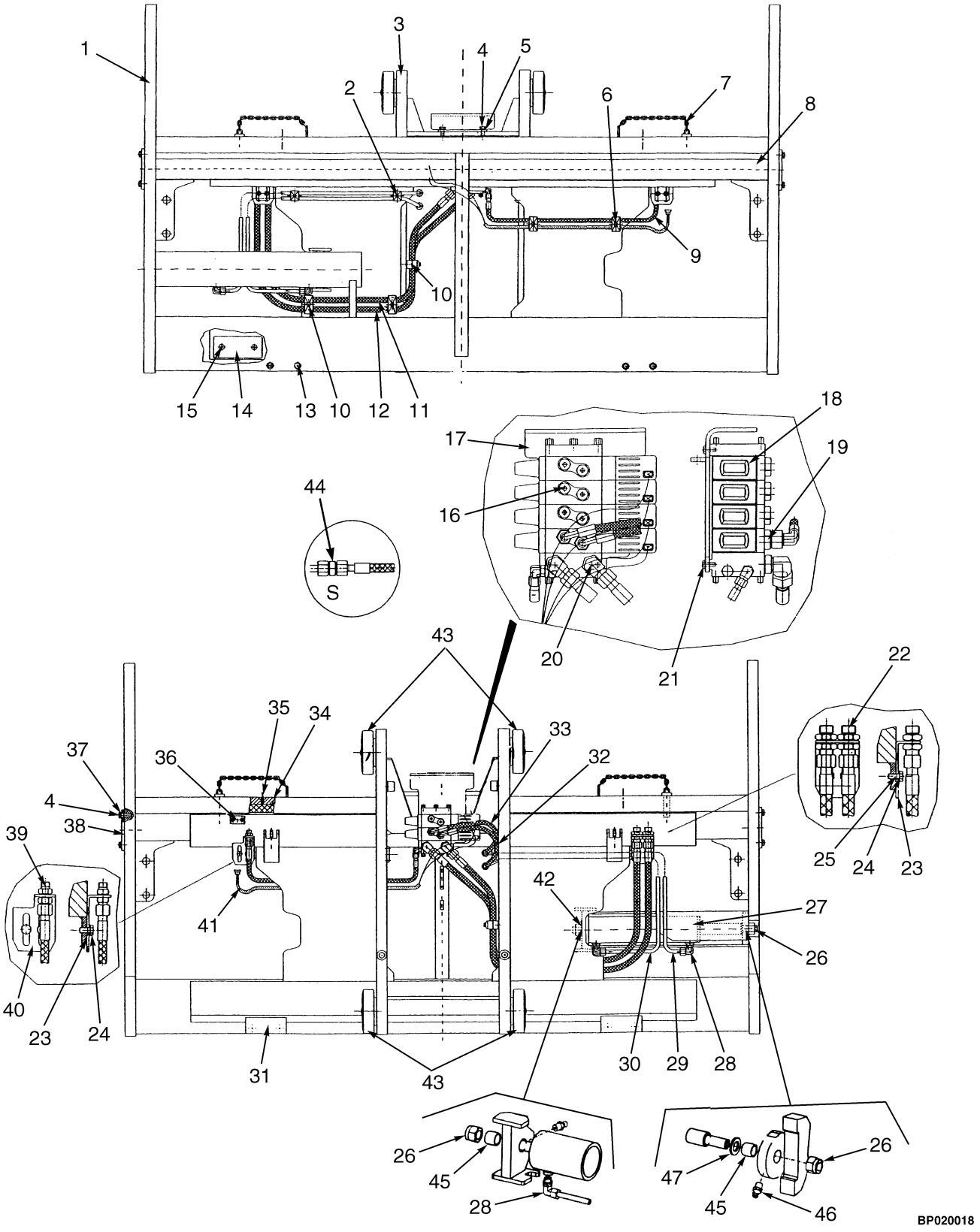

©2015 HYSTER COMPANY

SIDE-SHIFT CARRIAGE

FOUR, FIVE, AND SIX FUNCTION – THREE STAGE FULL FREE-LIFT

KEY:
A: Four Function
B: Five Function
C: Six Function

ITEM	PART NO.	DESCRIPTION	QTY A	QTY B	QTY C
	2092521	Side-Shift Carriage	1	..	..
	2092522	Side-Shift Carriage	..	1	..
	a 2092523	Side-Shift Carriage	..	..	1
1	. . . . .	Frame	1	1	1
2	1536973	Clamp	2	2	2
3	. . . . .	Frame (Mobile)	1	1	1
4	1529191	Washer	6	6	6
5	1536906	Bolt	2	2	2
6	1536890	Clamp	2	2	2
7	1334581	Pin (Fork Locking)	2	2	2
8	1565412	Pivot (Pivot)	1	1	1
9	1565427	Hose	1	1	1
10	1536891	Clamp	3	3	3
11	1565426	Hose	1	1	1
12	1565425	Hose	1	1	1
13	1565482	Bolt	4	4	4
14	1565479	Bearing (Lower)	3	3	3
15	1565480	Bolt	9	9	9
15	1565483	Washer	4	4	4
16	1536897	Fitting	2	4	6
17	1536901	Support	1	..	..
18	2092483	Directional Control Valve, Two-Section (Deutsch) (☞Figure 13-1)	1	..	..
18	2092484	Directional Control Valve, Three-Section (Deutsch) (☞Figure 13-1)	..	1	..
18	2092485	Directional Control Valve, Four-Section (Deutsch) (☞Figure 13-1)	..	..	1
18	2055960	Directional Control Valve, Two-Section (AMP) (☞Figure 13-1)	1	..	..
18	2055961	Directional Control Valve, Three-Section (AMP) (☞Figure 13-1)	..	1	..
18	2055962	Directional Control Valve, Four-Section (AMP) (☞Figure 13-1)	..	..	1
19	1536972	Fitting	2	2	2
20	1536899	Fitting	2	2	2
21	1536898	Bolt	4	4	4
22	1534551	Fitting	2	2	2
23	1536889	Support	1	1	1
24	1534510	Washer	1	1	1
25	1536888	Bolt	4	4	4
26	1536979	Nut	2	2	2
27	376770	Sideshift Cylinder (☞Figure 13-13)	1	1	1
28	1536900	Fitting	2	2	2
29	1565488	Tube Assy	1	1	1
30	1565489	Tube Assy	1	1	1

©2015 HYSTER COMPANY

SIDE-SHIFT CARRIAGE

FOUR, FIVE, AND SIX FUNCTION – THREE STAGE FULL FREE-LIFT

KEY:
A: Four Function
B: Five Function
C: Six Function

ITEM	PART NO.	DESCRIPTION	QTY A	QTY B	QTY C
31	1565484	Hook	2	2	2
32	1565487	Hose	1	1	1
33	1565486	Hose	1	1	1
34	1565481	Bearing (Upper)	3	3	3
35	1536982	Grease Fitting	3	3	3
36	1529227	Clamp	1	1	1
37	1529190	Screw	4	4	4
38	1536892	Support (Shaft)	2	2	2
39	1529221	Fitting	1	1	1
40	1534508	Support	1	1	1
41	2092486	Wire Harness (Front End)	1	1	1
42	1536978	Pin	1	1	1
43	1529236	Load Roller	4	4	4
43	1532830	Kit-Load Roller	1	1	1
43	1532831	Kit-Side Roller	1	1	1
b	1536902	Fitting	2	2	2
b	15133	Washer	1	1	1
b	1624055	Bushing (Spherical)	2	2	2
b	1671705	Grease Fitting	2	2	2

FOOTNOTES:

a Illustrated

b Not Illustrated

©2015 HYSTER COMPANY

NOTES

©2015 HYSTER COMPANY

SIDE-SHIFT CARRIAGE (FIGURE 13-5)

FOUR, FIVE, AND SIX FUNCTION — TWO STAGE LIMITED FREE-LIFT

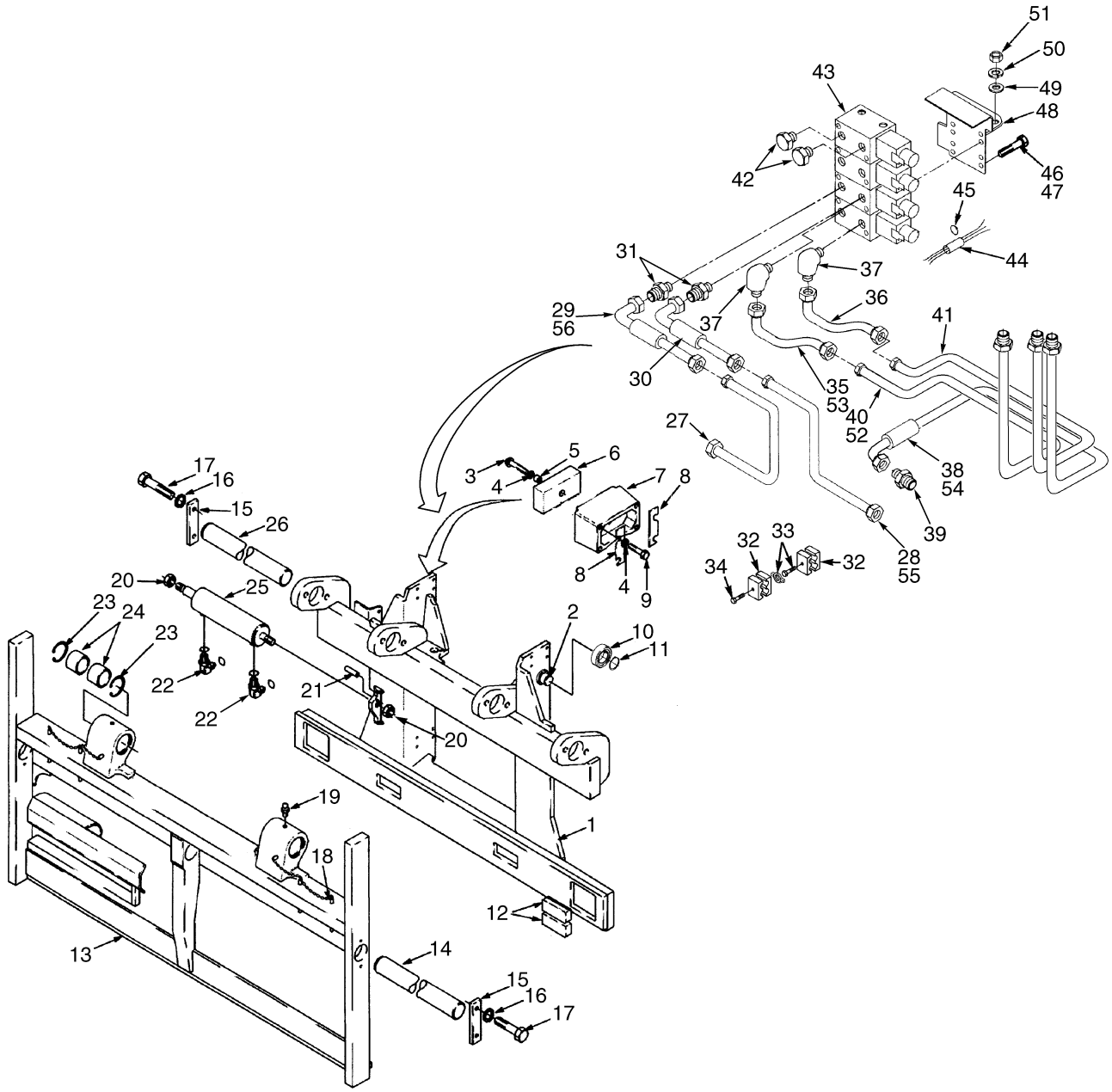

BP000121

©2015 HYSTER COMPANY

SIDE-SHIFT CARRIAGE

FOUR, FIVE, AND SIX FUNCTION – TWO STAGE LIMITED FREE-LIFT

KEY:
A: Four Function
B: Five Function
C: Six Function

ITEM	PART NO.	DESCRIPTION	QTY A	QTY B	QTY C
	2086314	Side-Shift Carriage	1	..	..
	2086315	Side-Shift Carriage	..	1	..
	2086316	Side-Shift Carriage	..	..	1
1	1507291	Frame	1	1	1
2	1313357	Stubshaft	4	4	4
3	376203	Capscrew	4	4	4
4	15156	Lockwasher	20	20	20
5	1301016	Spacer	4	4	4
6	1335179	Bearing	4	4	4
7	1301018	Bracket	4	4	4
8	1310592	Shim (.76 mm)	AR	AR	AR
9	221506	Capscrew	16	16	16
10	**b** 1313358	Load Roller	4	4	4
10	**c** 1691114	Load Roller	4	4	4
11	58918	Snap Ring	4	4	4
12	351458	Bearing	6	6	6
13	1507483	Apron	1	1	1
14	1502918	Pin (Load Arm)	2	2	2
15	376776	Plate	2	2	2
16	292683	Lockwasher	4	4	4
17	293647	Capscrew	4	4	4
18	1456622	Cable	2	2	2
18	1334581	Pin (Fork Locking)	4	4	4
18	815848	Shackle	2	2	2
19	16001	Grease Fitting	2	2	2
20	53157	Locknut	2	2	2
21	68551	Roll Pin	1	1	1
22	1487064	Fitting	2	2	2
22	16483	O-Ring	1	1	1
22	1527817	O-Ring	1	1	1
23	183609	Snap Ring	4	4	4
24	376773	Bushing	4	4	4
25	387090	Sideshift Cylinder (☞Figure 13-14)	1	1	1
26	1303371	Bar	2	2	2
27	2057990	Tube Assy (F)	1	1	1
27	1491350	Fitting	2	2	2
27	1487164	Fitting	2	2	2
28	2057989	Tube Assy (EE)	1	1	1
28	1491350	Fitting	2	2	2
28	1487164	Fitting	2	2	2
29	2056066	Hose Assy	1	1	1
30	2056067	Hose Assy	1	1	1
31	1486743	Fitting	2	2	2
31	16485	O-Ring	1	1	1

©2015 HYSTER COMPANY

SIDE-SHIFT CARRIAGE

FOUR, FIVE, AND SIX FUNCTION – TWO STAGE LIMITED FREE-LIFT

KEY:
A: Four Function
B: Five Function
C: Six Function

ITEM	PART NO.	DESCRIPTION	QTY A	QTY B	QTY C
31	1527816	O-Ring	1	1	1
32	1393802	Clamp	2	2	2
33	1496449	Clamp	1	1	1
34	221463	Capscrew	1	1	1
35	2058162	Hose Assy (C)	1	1	1
36	2058161	Hose Assy (B)	1	1	1
37	1487069	Fitting	2	2	2
37	16486	O-Ring	1	1	1
37	1527818	O-Ring	1	1	1
38	2056776	Hose Assy (D)	1	1	1
39	1486740	Fitting	1	1	1
39	16483	O-Ring	1	1	1
39	1527816	O-Ring	1	1	1
40	2057987	Tube	1	1	1
40	1491350	Fitting	2	2	2
40	1487164	Fitting	2	2	2
41	2057988	Tube	1	1	1
41	1491350	Fitting	2	2	2
41	1487164	Fitting	2	2	2
42	216590	Fitting	2	4	6
42	16485	O-Ring	1	1	1
43	2092483	Directional Control Valve, Two-Section (Deutsch) (☞Figure 13-1)	1	..	..
43	2092484	Directional Control Valve, Three-Section (Deutsch) (☞Figure 13-1)	..	1	..
43	2092485	Directional Control Valve, Four-Section (Deutsch) (☞Figure 13-1)	..	..	1
43	2055960	Directional Control Valve, Two-Section (AMP) (☞Figure 13-1)	1	..	..
43	2055961	Directional Control Valve, Three-Section (AMP) (☞Figure 13-1)	..	1	..
43	2055962	Directional Control Valve, Four-Section (AMP) (☞Figure 13-1)	..	..	1
44	2092486	Wire Harness (Front End)	1	1	1
45	137852	Strap Clamp	16	16	16
46	16836	Capscrew	4	4	4
47	3066037	Loctite	AR	AR	AR
48	1527372	Bracket Wldmt	1	1	1
49	320162	Washer	2	2	2
50	292683	Lockwasher	2	2	2
51	302402	Locknut	2	2	2
52	342675	Identification Band (B)	4	4	4
53	342676	Identification Band (C)	4	4	4
54	342677	Identification Band (D)	2	2	2
55	1332237	Identification Band (EE)	4	4	2

©2015 HYSTER COMPANY

SIDE-SHIFT CARRIAGE

FOUR, FIVE, AND SIX FUNCTION – TWO STAGE LIMITED FREE-LIFT

KEY:
A: Four Function
B: Five Function
C: Six Function

ITEM	PART NO.	DESCRIPTION	QTY A	QTY B	QTY C
56	1350854	Identification Band (FF)	4	4	2
	a 15133	Washer	1	1	1
	a 16041	Grease Fitting	1	1	1
	a 16046	Grease Fitting	1	1	1
	a 1624055	Bushing (Spherical)	2	2	2

FOOTNOTES:

a Not Illustrated
b → S/N G019E02245F
c S/N G019E02246F →

©2015 HYSTER COMPANY

SIDE-SHIFT CARRIAGE (FIGURE 13-6)

INDIVIDUAL FORK POSITIONER (FIVE FUNCTION) — THREE STAGE FULL FREE-LIFT

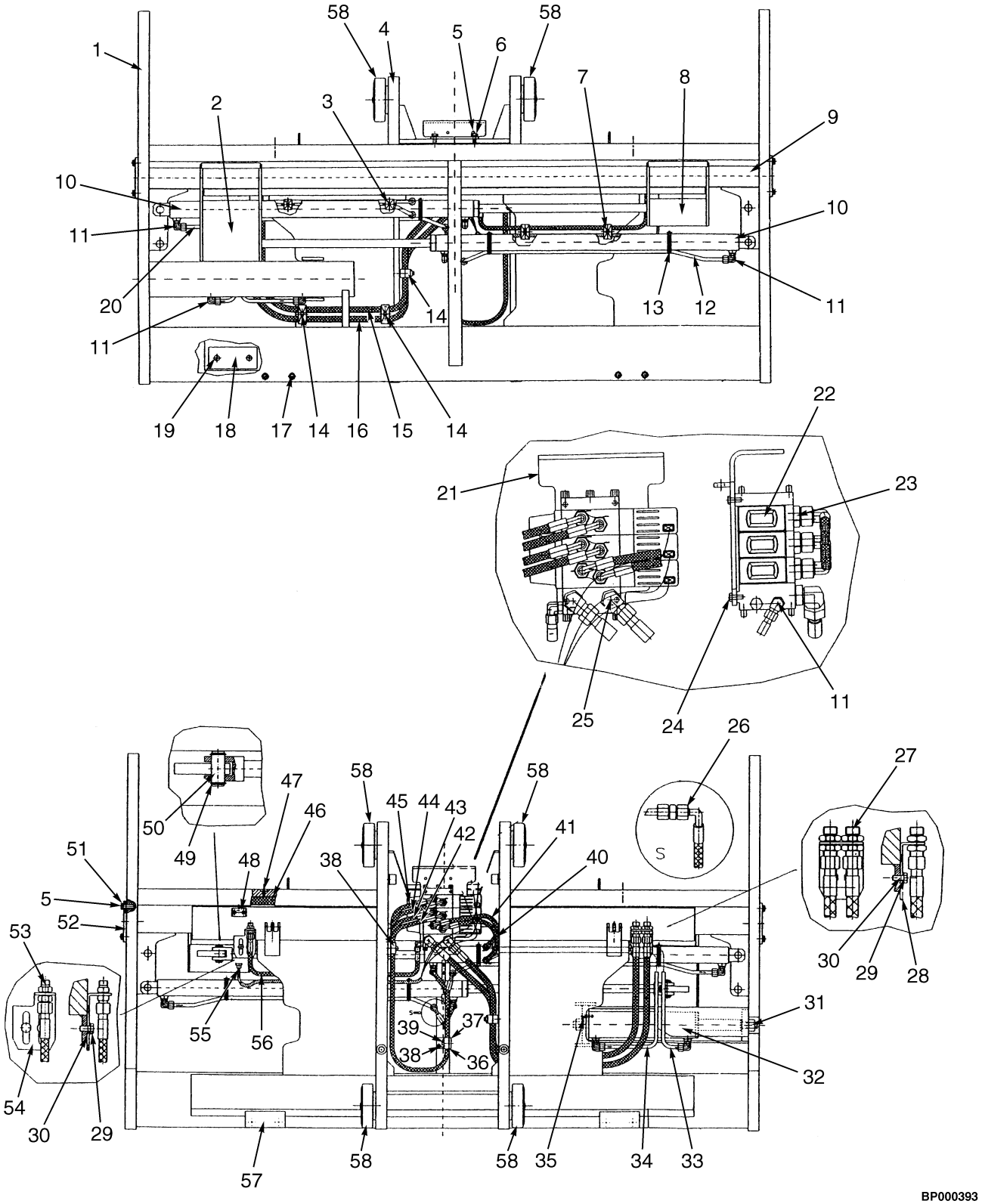

©2015 HYSTER COMPANY

SIDE-SHIFT CARRIAGE

INDIVIDUAL FORK POSITIONER (FIVE FUNCTION) – THREE STAGE FULL FREE-LIFT

ITEM	PART NO.	DESCRIPTION	QTY
	2092524	Side-Shift Carriage	1
1	. . . . .	Frame	1
2	1565414	Bracket (RH)	1
3	1536973	Clamp	2
4	. . . . .	Frame (Mobile)	1
5	1529191	Washer	6
6	1536906	Bolt	2
7	1536890	Clamp	2
8	1565413	Bracket (LH)	1
9	1565412	Pivot (Pivot)	1
10	2046894	Cylinder Assy (Fork Positioner) (☞Figure 13-2)	2
11	1536900	Fitting	7
12	1565416	Tube	1
13	1537017	Clamp	4
14	1536891	Clamp	3
15	1565426	Hose	1
16	1565425	Hose	1
17	1565482	Bolt	4
17	1565483	Washer	4
18	1565479	Bearing	3
19	1565480	Bolt	6
20	1565415	Tube	1
21	1536901	Support	1
22	2092484	Directional Control Valve, Three-Section (Deutsch) (☞Figure 13-1)	1
22	2055961	Directional Control Valve, Three-Section (AMP) (☞Figure 13-1)	1
23	1536972	Fitting	6
24	1536898	Bolt	4
25	1536899	Fitting	2
26	1536902	Fitting	2
27	1534551	Fitting	1
28	1534510	Washer	4
29	1536889	Support	2
30	1536888	Bolt	4
31	1536979	Nut	2
32	376770	Sideshift Cylinder (☞Figure 13-13)	1
33	1565488	Tube Assy	1
34	1565489	Tube Assy	1
35	1536978	Pin	1
36	1537011	Nut	2
37	1537010	Support	1
38	1537014	Support	2
39	1537012	Bolt	2
40	1565487	Hose	1
41	1565486	Hose	1
42	1565502	Hose	1
43	1565501	Hose	1
44	1565500	Hose	1
45	1565499	Hose	1
46	1565481	Bearing	3
47	1536982	Grease Fitting	3

©2015 HYSTER COMPANY

SIDE-SHIFT CARRIAGE

INDIVIDUAL FORK POSITIONER (FIVE FUNCTION) – THREE STAGE FULL FREE-LIFT

ITEM	PART NO.	DESCRIPTION	QTY
48	1529227	Clamp	1
49	1537022	Snap Ring	8
50	1537023	Pin (Fork Position Cylinder)	4
51	1529190	Screw	4
52	1536892	Support (Shaft)	2
53	1529221	Fitting	1
54	1534508	Support	1
55	2092486	Wire Harness (Front End)	1
56	1565427	Hose	1
57	1565484	Hook	2
58	1529236	Load Roller	4
	1532830	Kit-Load Roller	1
	1532831	Kit-Side Roller	1
	a 1671705	Grease Fitting	2

FOOTNOTES:

a Not Illustrated

©2015 HYSTER COMPANY

NOTES

©2015 HYSTER COMPANY

SIDE-SHIFT CARRIAGE (FIGURE 13-7)

INDIVIDUAL FORK POSITIONER (FIVE FUNCTION) — TWO STAGE LIMITED FREE-LIFT

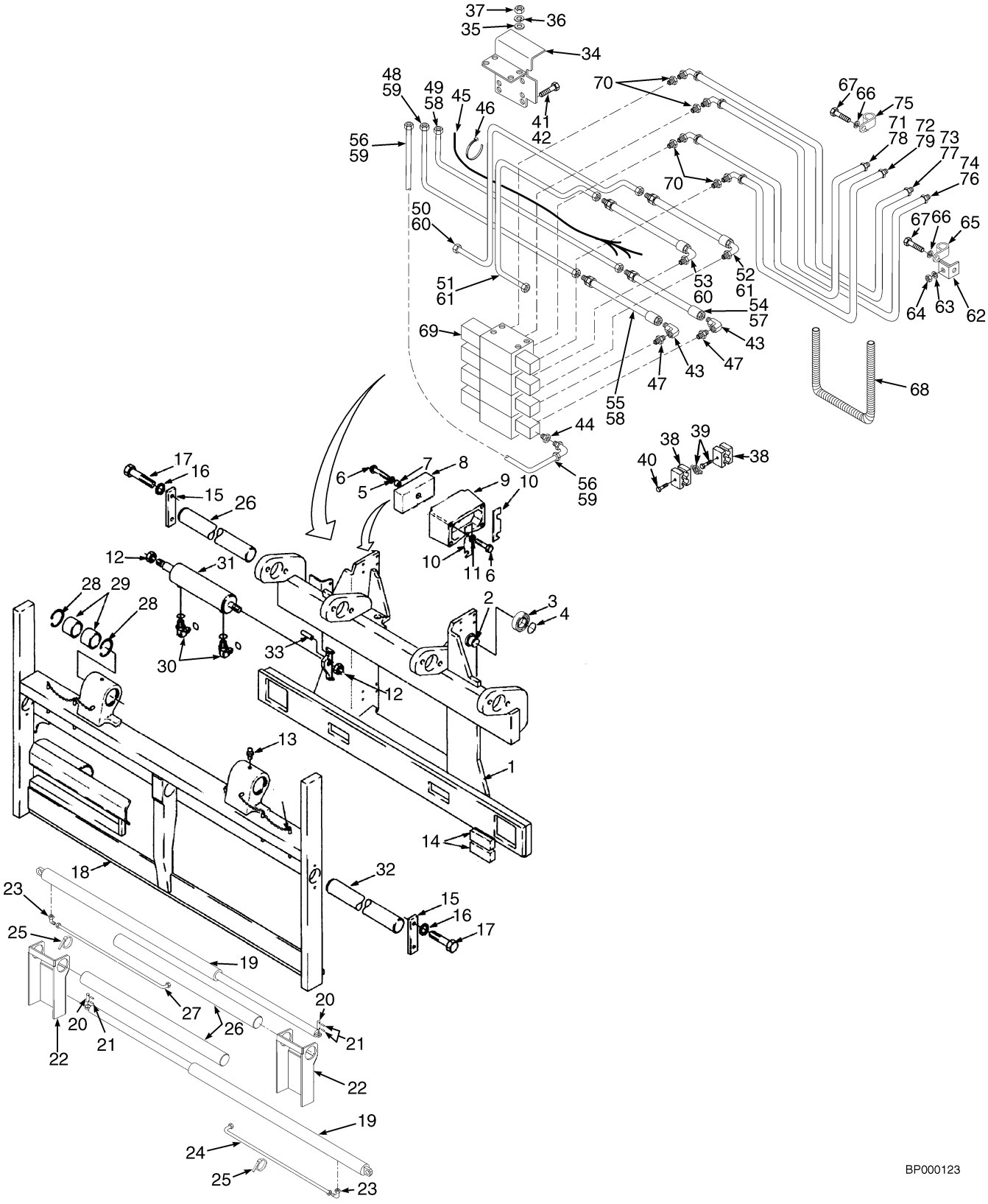

©2015 HYSTER COMPANY

SIDE-SHIFT CARRIAGE

INDIVIDUAL FORK POSITIONER (FIVE FUNCTION) – TWO STAGE LIMITED FREE-LIFT

ITEM	PART NO.	DESCRIPTION	QTY
	2086317	Side-Shift Carriage (Individual Fork Positioner)	1
1	1507291	Frame	1
2	1313357	Stubshaft	4
3	**b** 1313358	Load Roller	4
3	**c** 1691114	Load Roller	4
4	58918	Snap Ring	4
5	376203	Capscrew	4
6	15156	Lockwasher	20
7	1301016	Spacer	4
8	1335179	Bearing	4
9	1301018	Bracket	4
10	1310592	Shim (.76 mm)	AR
11	221506	Capscrew	16
12	53157	Locknut	2
13	16001	Grease Fitting	2
14	351458	Bearing	6
15	376776	Plate	6
16	292683	Lockwasher	12
17	293647	Capscrew	12
18	1507483	Apron	1
19	2046894	Cylinder Assy (Fork Positioner) (☞Figure 13-2)	2
20	1502390	Pin	4
21	15236	Cotter Pin	8
22	1507557	Guide (LH)	1
22	1507558	Guide (RH)	1
23	1487064	Fitting	4
23	16483	O-Ring	1
23	1527817	O-Ring	1
24	2046986	Tube Assy	1
24	1491350	Fitting	2
24	1487164	Fitting	2
25	112989	Hose Clamp	4
26	1303371	Bar	2
27	2046987	Tube Assy	1
27	1491350	Fitting	2
27	1487164	Fitting	2
28	183609	Snap Ring	4
29	376773	Bushing	4
30	1487064	Fitting	2
30	16483	O-Ring	1
30	1527817	O-Ring	1
31	387090	Sideshift Cylinder (☞Figure 13-14)	1
32	1502918	Pin (Load Arm)	2
33	68551	Roll Pin	1
34	1527372	Bracket Wldmt	1
35	320162	Washer	2
36	292683	Lockwasher	2
37	302402	Locknut	2
38	1393802	Clamp	2
39	1496449	Clamp	1

©2015 HYSTER COMPANY

SIDE-SHIFT CARRIAGE

INDIVIDUAL FORK POSITIONER (FIVE FUNCTION) – TWO STAGE LIMITED FREE-LIFT

ITEM	PART NO.	DESCRIPTION	QTY
40	221463	Capscrew	1
41	16836	Capscrew	4
42	3066037	Loctite	AR
43	1487069	Fitting	2
43	16486	O-Ring	1
43	1527818	O-Ring	1
44	1486740	Fitting	1
44	16483	O-Ring	1
44	1527816	O-Ring	1
45	2092486	Wire Harness (Front End)	1
46	273775	Strap Clamp	16
47	1486743	Fitting	2
47	16485	O-Ring	1
47	1527816	O-Ring	1
48	2057987	Tube (B)	1
48	1491350	Fitting	2
48	1487164	Fitting	2
49	2057988	Tube (C)	1
49	1491350	Fitting	2
49	1487164	Fitting	2
50	2057989	Tube Assy (EE)	1
50	1491350	Fitting	2
50	1487164	Fitting	2
51	2057990	Tube Assy (FF)	1
51	1491350	Fitting	2
51	1487164	Fitting	2
52	2056066	Hose Assy	1
53	2056067	Hose Assy	1
54	2058161	Hose Assy	1
55	2058162	Hose Assy	1
56	2056776	Hose Assy (D)	1
57	342675	Identification Band (B)	4
58	342676	Identification Band (C)	4
59	342677	Identification Band (D)	2
60	1332237	Identification Band (EE)	4
61	1350854	Identification Band (FF)	4
62	1506110	Bracket	1
63	320157	Washer	2
64	302400	Nut	2
65	1506109	Hose Clamp	2
66	292681	Lockwasher	1
67	293615	Capscrew	1
68	239308	Sleeve	2
69	2092484	Directional Control Valve, Three-Section (Deutsch) (☞Figure 13-1)	1
69	2055961	Directional Control Valve, Three-Section (AMP)	1
70	1486743	Fitting	4
70	16485	O-Ring	1
70	1527816	O-Ring	1
71	2058163	Hose Assy	1
72	2058164	Hose Assy (KK)	1

©2015 HYSTER COMPANY

SIDE-SHIFT CARRIAGE

INDIVIDUAL FORK POSITIONER (FIVE FUNCTION) – TWO STAGE LIMITED FREE-LIFT

ITEM	PART NO.	DESCRIPTION	QTY
73	2058165	Hose Assy (MM)	1
74	2058166	Hose Assy (HH)	1
75	1506109	Hose Clamp	1
76	1350855	Identification Band (HH)	2
77	1350856	Identification Band (JJ)	2
78	1350857	Identification Band (KK)	2
79	1350858	Identification Band (MM)	2
	a 15133	Washer	1
	a 1624055	Bushing (Spherical)	2
	a 16041	Grease Fitting	1
	a 16046	Grease Fitting	1

FOOTNOTES:

a Not Illustrated
b → S/N G019E02245F
c S/N G019E02246F →

SIDE-SHIFT CARRIAGE (FIGURE 13-8)

SIMULTANEOUS FORK POSITIONER (FOUR FUNCTION) — THREE STAGE FULL FREE-LIFT

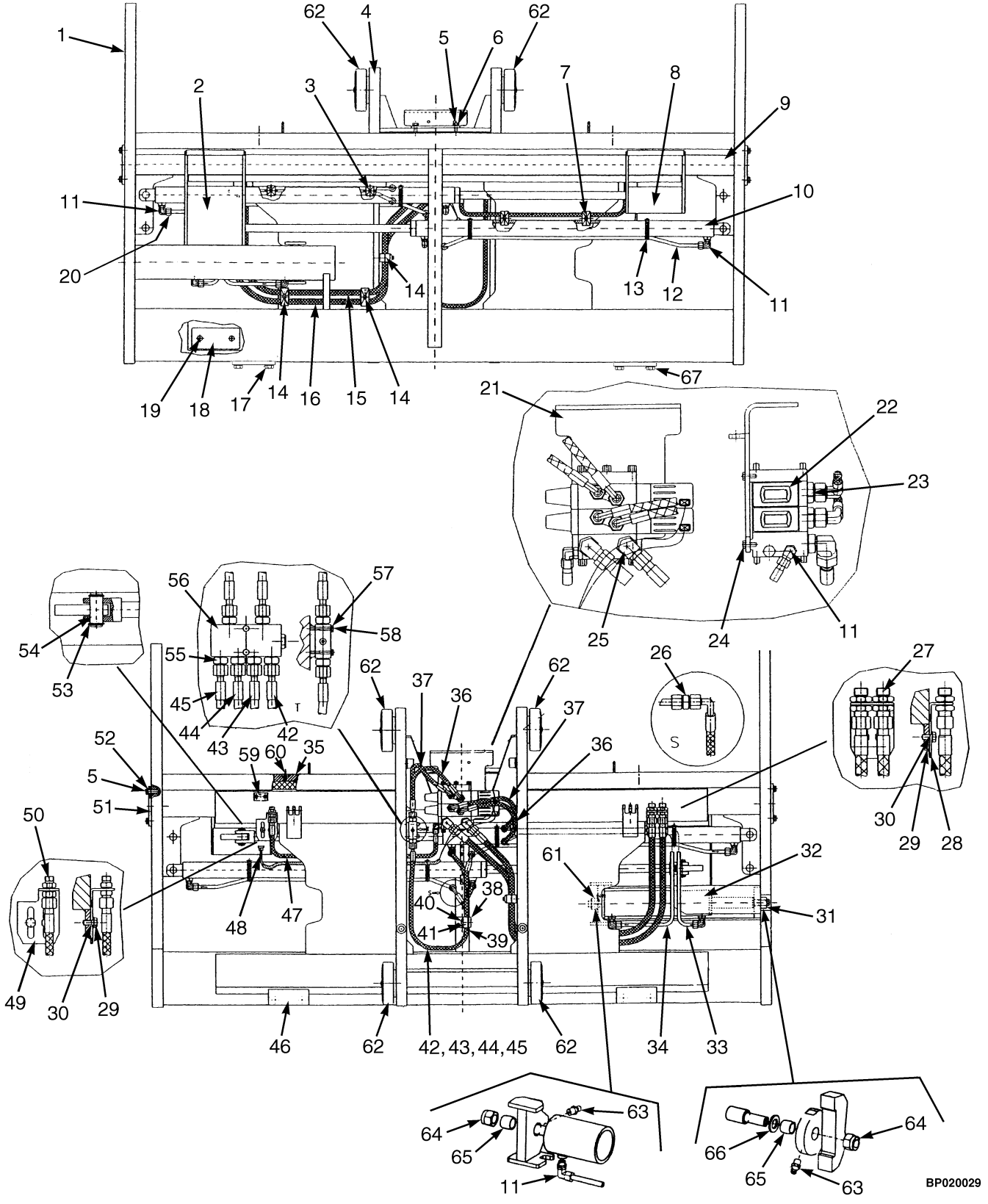

©2015 HYSTER COMPANY

SIDE-SHIFT CARRIAGE

SIMULTANEOUS FORK POSITIONER (FOUR FUNCTION) – THREE STAGE FULL FREE-LIFT

ITEM	PART NO.	DESCRIPTION	QTY
	2092525	Side-Shift Carriage	1
1	. . . . .	Frame	1
2	1565414	Bracket (RH)	1
3	1536973	Clamp	2
4	. . . . .	Frame (Mobile)	1
5	1529191	Washer	6
6	1536906	Bolt	2
7	1536890	Clamp	2
8	1565413	Bracket (LH)	1
9	1565412	Pivot (Pivot)	1
10	2046894	Cylinder Assy (Fork Positioner) (☞Figure 13-2)	2
11	1536900	Fitting	7
12	1565416	Tube	1
12	1565483	Washer	4
13	1537017	Clamp	4
14	1536891	Clamp	3
15	1565426	Hose	1
16	1565425	Hose	1
17	1565482	Bolt	4
18	1565479	Bearing	3
19	1565480	Bolt	6
20	1565415	Tube	1
21	1536901	Support	1
22	2092483	Directional Control Valve, Two-Section (Deutsch) (☞Figure 13-1)	1
22	2055960	Directional Control Valve, Two-Section (AMP) (☞Figure 13-1)	1
23	1536972	Fitting	6
24	1536898	Bolt	4
25	1536899	Fitting	2
26	1536902	Fitting	2
27	1534551	Fitting	2
28	1536889	Support	1
29	1534510	Washer	4
30	1536888	Bolt	4
31	1536979	Nut	2
32	376770	Sideshift Cylinder (☞Figure 13-13)	1
33	1565488	Tube Assy	1
34	1565489	Tube Assy	1
35	1536983	Pad (Upper)	3
36	1565487	Hose	2
37	1565486	Hose	2
38	1537010	Support	1
39	1537011	Nut	2
40	1537012	Bolt	2
41	1537014	Support	2
42	1565496	Hose	1
43	1565495	Hose	1
44	1565494	Hose	1
45	1565493	Hose	1
46	1565484	Hook	2
47	1565427	Hose	1

©2015 HYSTER COMPANY

SIDE-SHIFT CARRIAGE

SIMULTANEOUS FORK POSITIONER (FOUR FUNCTION) – THREE STAGE FULL FREE-LIFT

ITEM	PART NO.	DESCRIPTION	QTY
48	2092486	Wire Harness (Front End)	1
49	1534508	Support	1
50	1529221	Fitting	1
51	1536892	Support (Shaft)	2
52	1529190	Screw	4
53	1537022	Snap Ring	8
54	1537023	Pin (Fork Position Cylinder)	4
55	1537033	Connector	6
56	1565417	Flow Valve	1
57	1565492	Bolt	2
58	1537031	Washer	2
59	1529227	Clamp	1
60	1536982	Grease Fitting	3
61	1536978	Pin	1
62	1529236	Load Roller	4
	1532830	Kit-Load Roller	1
	1532831	Kit-Side Roller	1
63	1671705	Grease Fitting	2
64	1536979	Nut	2
65	1624055	Bushing (Spherical)	2
66	15133	Washer	1
67	1565483	Washer	4

©2015 HYSTER COMPANY

NOTES

©2015 HYSTER COMPANY

SIDE-SHIFT CARRIAGE (FIGURE 13-9)

SIMULTANEOUS FORK POSITIONER (FOUR FUNCTION) — TWO STAGE LIMITED FREE-LIFT

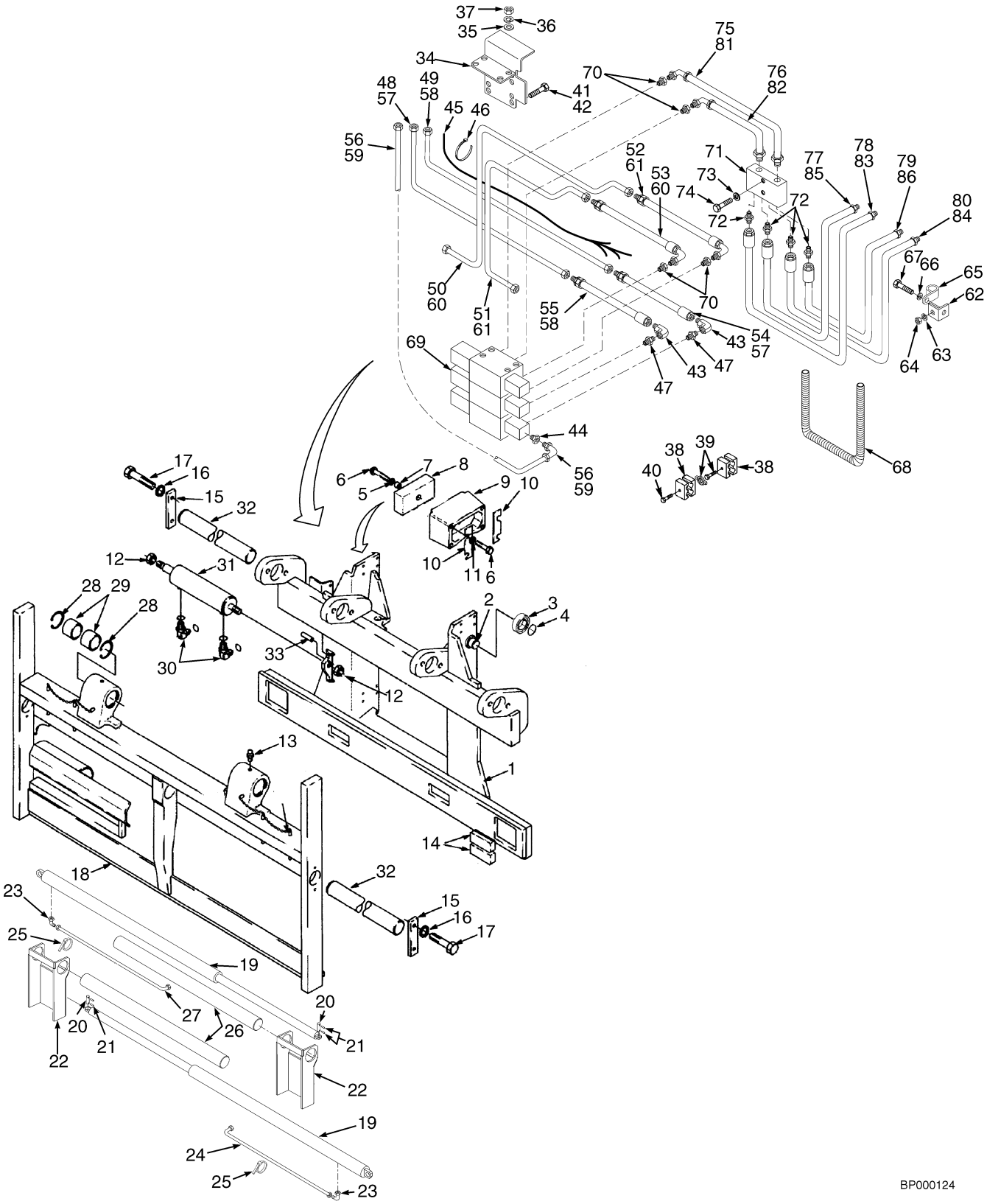

BP000124

©2015 HYSTER COMPANY

SIDE-SHIFT CARRIAGE

SIMULTANEOUS FORK POSITIONER (FOUR FUNCTION) – TWO STAGE LIMITED FREE-LIFT

ITEM	PART NO.	DESCRIPTION	QTY
	2057814	Side-Shift Carriage	1
	2086318	Side-Shift Carriage	1
1	1507291	Frame	1
2	1313357	Stubshaft	4
3	**b** 1313358	Load Roller	4
3	**c** 1691114	Load Roller	4
4	58918	Snap Ring	4
5	376203	Capscrew	4
6	15156	Lockwasher	20
7	1301016	Spacer	4
8	1335179	Bearing	4
9	1301018	Bracket	4
10	1310592	Shim (.76 mm)	AR
11	221506	Capscrew	16
12	53157	Locknut	2
13	16001	Grease Fitting	2
14	351458	Bearing	6
15	376776	Plate	6
16	292683	Lockwasher	12
17	293647	Capscrew	12
18	1507483	Apron	1
19	2046894	Cylinder Assy (Fork Positioner) (☞Figure 13-2)	2
20	1502390	Pin	4
21	15236	Cotter Pin	8
22	1507557	Guide (LH)	1
22	1507558	Guide (RH)	1
23	1487064	Fitting	4
23	16483	O-Ring	1
23	1527817	O-Ring	1
24	2046986	Tube Assy	1
24	1491350	Fitting	2
24	1487164	Fitting	2
25	112989	Hose Clamp	4
26	1303371	Bar	2
27	2046987	Tube Assy	1
27	1491350	Fitting	2
27	1487164	Fitting	2
28	183609	Snap Ring	4
29	376773	Bushing	4
30	1487064	Fitting	2
30	16483	O-Ring	1
30	1527817	O-Ring	1
31	387090	Sideshift Cylinder (☞Figure 13-14)	1
32	1502918	Pin (Load Arm)	2
33	68551	Roll Pin	1
34	1527372	Bracket Wldmt	1
35	320162	Washer	2
36	292683	Lockwasher	2
37	302402	Locknut	2
38	1393802	Clamp	2

©2015 HYSTER COMPANY

SIDE-SHIFT CARRIAGE

SIMULTANEOUS FORK POSITIONER (FOUR FUNCTION) – TWO STAGE LIMITED FREE-LIFT

ITEM	PART NO.	DESCRIPTION	QTY
39	1496449	Clamp	1
40	221463	Capscrew	1
41	16836	Capscrew	4
42	3066037	Loctite	AR
43	1487069	Fitting	2
43	16486	O-Ring	1
43	1527818	O-Ring	1
44	1486740	Fitting	1
44	16483	O-Ring	1
44	1527816	O-Ring	1
45	2092486	Wire Harness (Front End)	1
46	137852	Strap Clamp	16
47	1486743	Fitting	2
47	16485	O-Ring	1
47	1527816	O-Ring	1
48	2057987	Tube (B)	1
48	1491350	Fitting	2
48	1487164	Fitting	2
49	2057988	Tube (C)	1
49	1491350	Fitting	2
49	1487164	Fitting	2
50	2057989	Tube Assy (EE)	1
50	1491350	Fitting	2
50	1487164	Fitting	2
51	2057990	Tube Assy (FF)	1
51	1491350	Fitting	2
51	1487164	Fitting	2
52	2056066	Hose Assy	1
53	2056067	Hose Assy	1
54	2058161	Hose Assy	1
55	2058162	Hose Assy	1
56	2056776	Hose Assy (D)	1
57	342675	Identification Band (B)	4
58	342676	Identification Band (C)	4
59	342677	Identification Band (D)	2
60	1332237	Identification Band (EE)	4
61	1350854	Identification Band (FF)	4
62	1506110	Bracket	1
63	320157	Washer	2
64	302400	Nut	2
65	1506109	Hose Clamp	2
66	292681	Lockwasher	1
67	293615	Capscrew	1
68	239308	Sleeve	2
69	2092483	Directional Control Valve, Two-Section (Deutsch) (☞Figure 13-1)	1
69	2055960	Directional Control Valve, Two-Section (AMP) (☞Figure 13-1)	1
70	1486743	Fitting	4
70	16485	O-Ring	1
70	1527816	O-Ring	1
71	1600818	Manifold Assembly (Flow Divider)	1

©2015 HYSTER COMPANY

SIDE-SHIFT CARRIAGE

SIMULTANEOUS FORK POSITIONER (FOUR FUNCTION) – TWO STAGE LIMITED FREE-LIFT

ITEM	PART NO.	DESCRIPTION	QTY
71	1560246	Manifold	1
71	1600819	Valve	1
71	1560248	Relief Valve	2
72	1486740	Fitting	6
72	16483	O-Ring	1
72	1527816	O-Ring	1
73	~~4093489~~		
	320156	Washer	2
74	293606	Capscrew	2
75	2056074	Hose Assy (AA)	1
76	2056075	Hose Assy (BB)	1
77	2048533	Hose Assy (KK)	1
78	2048534	Hose Assy (HH)	1
79	2048535	Hose Assy (MM)	1
80	2048536	Hose Assy (JJ)	1
81	1332234	Identification Band (AA)	2
82	1332234	Identification Band (BB)	2
83	1350855	Identification Band (HH)	2
84	1350856	Identification Band (JJ)	2
85	1350857	Identification Band (KK)	2
86	1350858	Identification Band (MM)	2
	a 15133	Washer	1
	a 16041	Grease Fitting	1
	a 16046	Grease Fitting	1
	a 1624055	Bushing (Spherical)	2

FOOTNOTES:

a Not Illustrated
b → S/N G019E02245F
c S/N G019E02246F →

SIDE-SHIFT CARRIAGE (FIGURE 13-10)
THREE FUNCTION — THREE STAGE FULL FREE-LIFT

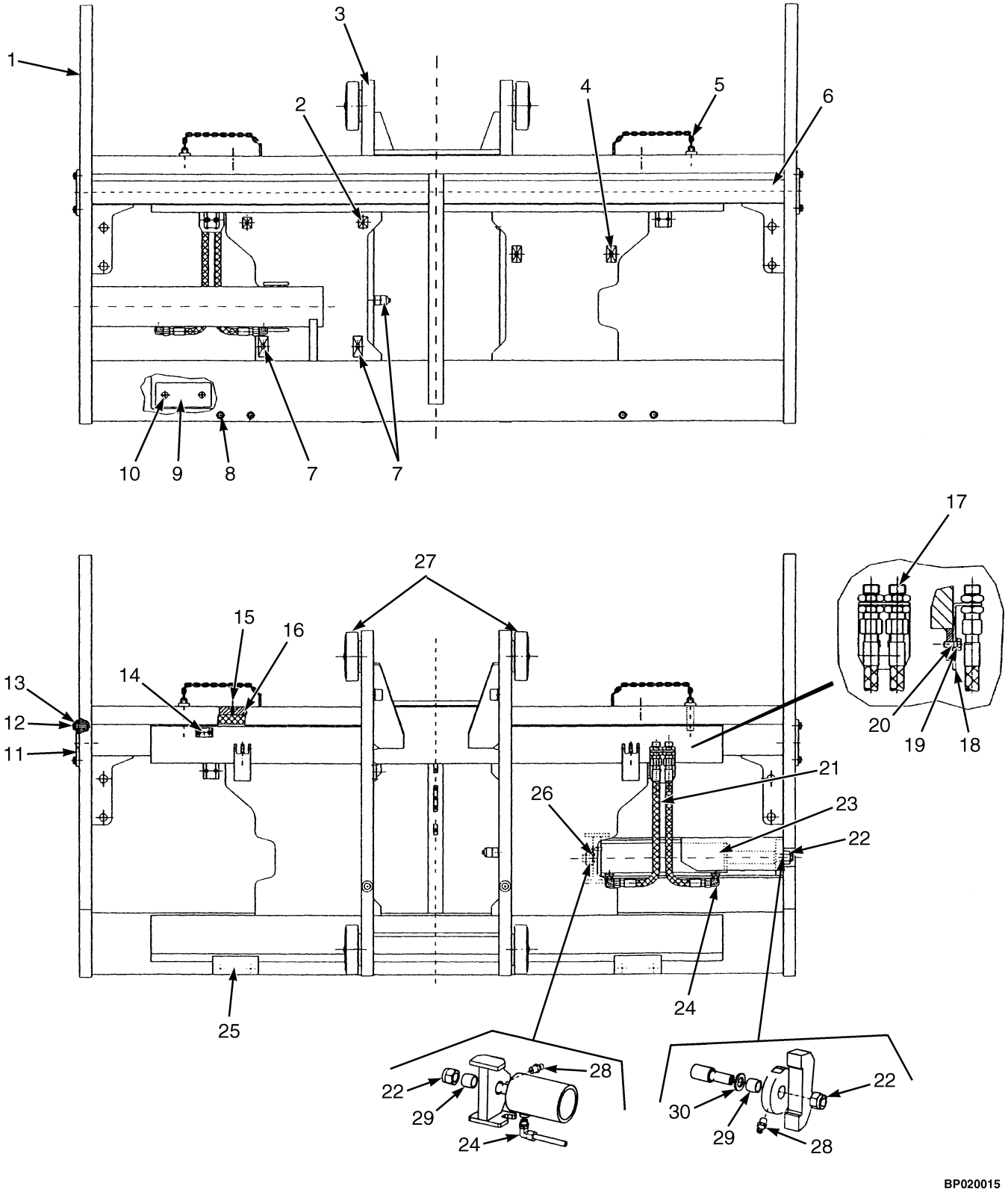

©2015 HYSTER COMPANY

SIDE-SHIFT CARRIAGE
THREE FUNCTION – THREE STAGE FULL FREE-LIFT

ITEM	PART NO.	DESCRIPTION	QTY
	2092520	Side-Shift Carriage (Three Function)	1
1	. . . . .	Frame	1
2	1536973	Clamp	2
3	. . . . .	Frame (Mobile)	1
4	1536890	Clamp	2
5	1334581	Pin (Fork Locking)	1
6	1565412	Pivot (Pivot)	1
7	1536891	Clamp	3
8	1565482	Bolt	4
8	1565483	Washer	4
9	1565479	Bearing (Lower)	3
10	1565480	Bolt	6
11	1536892	Support (Shaft)	2
12	1529191	Washer	6
13	1529190	Screw	4
14	1529227	Clamp	1
15	1536982	Grease Fitting	3
16	1565481	Bearing (Upper)	3
17	1534551	Fitting	2
18	1536889	Support	1
19	1536888	Bolt	4
20	1534510	Washer	4
21	1565485	Hose	2
22	1536979	Nut	2
23	376770	Sideshift Cylinder (☞Figure 13-13)	1
24	1536900	Fitting	2
25	1565484	Hook (Lower)	1
26	1536978	Pin	1
27	1529236	Load Roller	4
27	1532830	Kit-Load Roller	1
27	1532831	Kit-Side Roller	1
28	1671705	Grease Fitting	2
29	1624055	Bushing (Spherical)	2
30	15133	Washer	1

©2015 HYSTER COMPANY

SIDE-SHIFT CARRIAGE (FIGURE 13-11)
THREE FUNCTION — TWO STAGE LIMITED FREE-LIFT

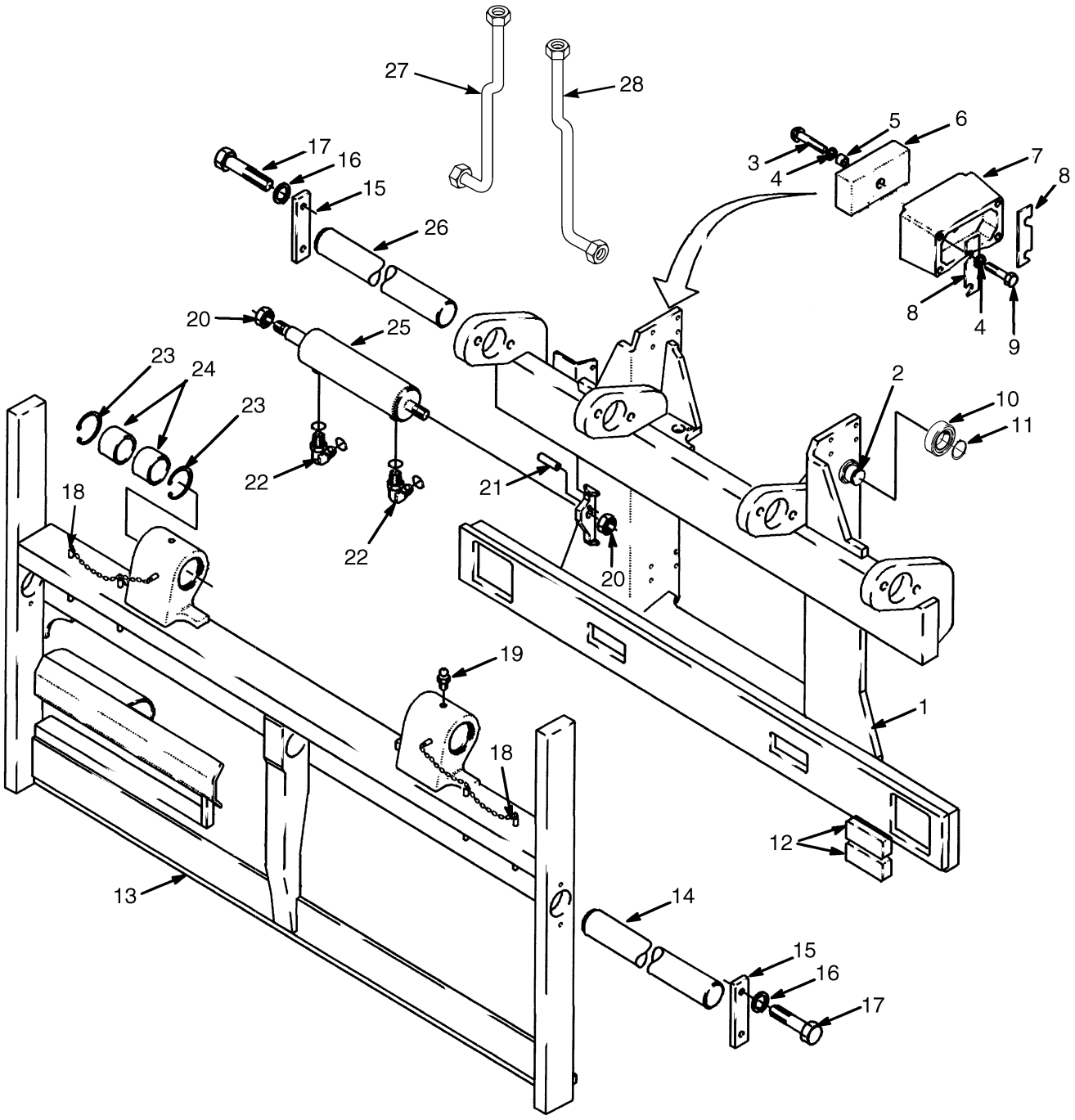

BP000120

©2015 HYSTER COMPANY

SIDE-SHIFT CARRIAGE
THREE FUNCTION – TWO STAGE LIMITED FREE-LIFT

ITEM	PART NO.	DESCRIPTION	QTY
	2086313	Side-Shift Carriage	1
1	1507291	Frame	1
2	1313357	Stubshaft	4
3	376203	Capscrew	4
4	15156	Lockwasher	20
5	1301016	Spacer	4
6	1335179	Bearing	4
7	1301018	Bracket	4
8	1310592	Shim (.76 mm)	AR
9	221506	Capscrew	16
10	**b** 1313358	Load Roller	4
10	**c** 1691114	Load Roller	4
11	58918	Snap Ring	4
12	351458	Bearing	6
13	1507483	Apron	1
14	1502918	Pin (Load Arm)	2
15	376776	Plate	2
16	292683	Lockwasher	4
17	293647	Capscrew	4
18	1456622	Cable	2
18	1334581	Pin (Fork Locking)	4
18	815848	Shackle	2
19	16001	Grease Fitting	2
20	53157	Locknut	2
21	68551	Roll Pin	1
22	1487064	Fitting	2
22	16483	O-Ring	1
22	1527817	O-Ring	1
23	183609	Snap Ring	4
24	376773	Bushing	4
25	387090	Sideshift Cylinder (☞Figure 13-14)	1
26	1303371	Bar	2
27	2048780	Tube Assy	1
27	1491350	Fitting	2
27	1487164	Fitting	2
28	2048781	Tube Assy	1
28	1491350	Fitting	2
28	1487164	Fitting	2
	a 15133	Washer	1
	a 16041	Grease Fitting	1
	a 16046	Grease Fitting	1
	a 1624055	Bushing (Spherical)	2

FOOTNOTES:

a Not Illustrated
b → S/N G019E02245F
c S/N G019E02246F →

©2015 HYSTER COMPANY

SIDE-SHIFT CYLINDER (FIGURE 13-12)
DUAL FUNCTION WITH FORK POSITIONER

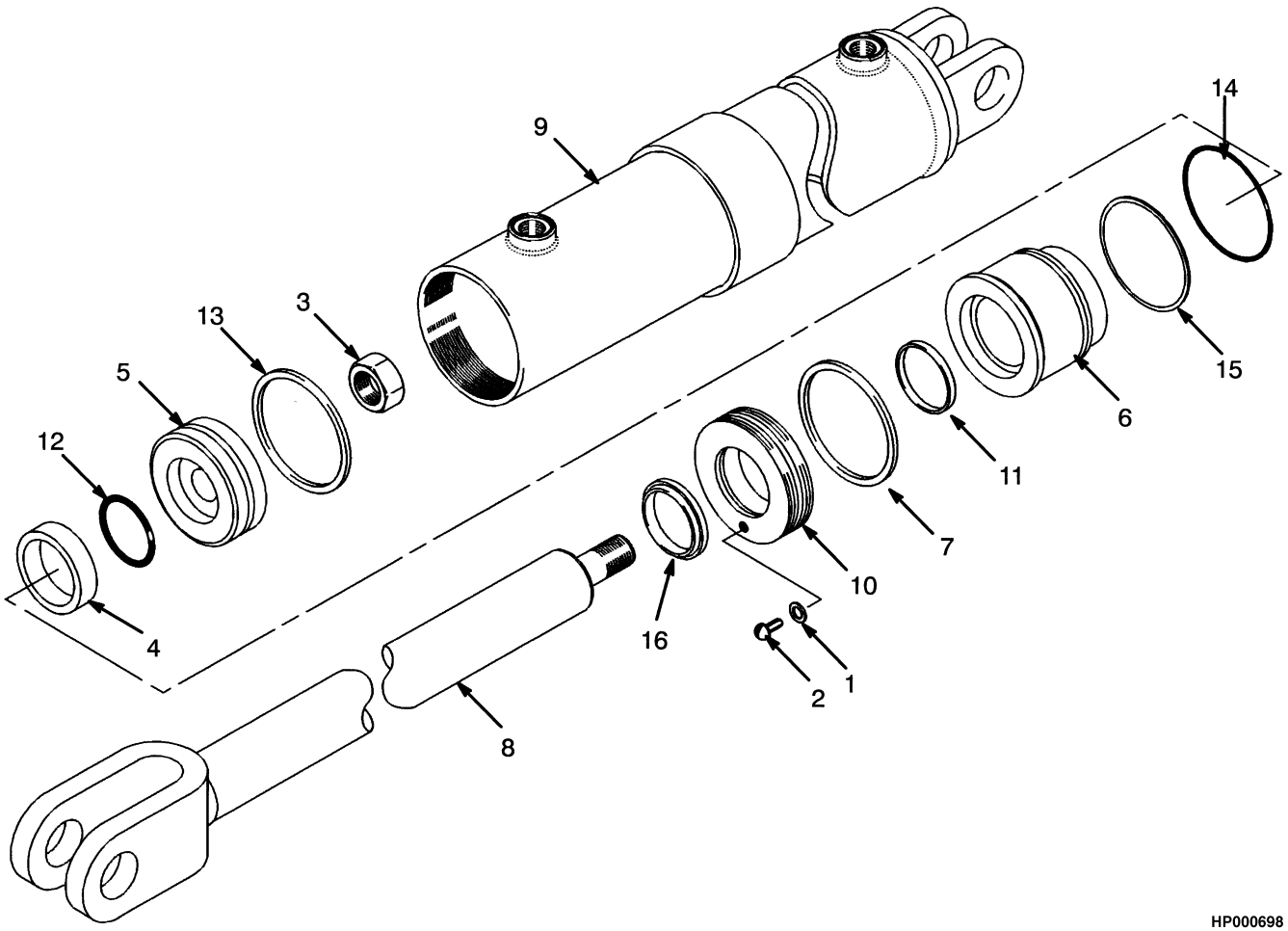

©2015 HYSTER COMPANY

SIDE-SHIFT CYLINDER
DUAL FUNCTION WITH FORK POSITIONER

ITEM	PART NO.	DESCRIPTION	QTY
	1451130	Cylinder Assy	1
1	1347405	Lockwasher	1
2	18704	Capscrew	1
3	1455367	Nut	1
4	1455368	Spacer	1
5	1455369	Piston	1
6	1455363	Bearing	1
7	1455364	Retainer	1
8	1455471	Rod Assy	1
9	1455472	Tube Assy	1
10	1455370	Rod Wiper	1
11	1455371	Ring	1
12	1455373	O-Ring	1
13	1455372	Seal	1
14	15880	O-Ring	1
15	154358	Back-Up Ring	1
16	361000	Plug	1
	1455362	Kit-Seal	1

©2015 HYSTER COMPANY

SIDE-SHIFT CYLINDER (FIGURE 13-13)
THREE STAGE FULL FREE-LIFT

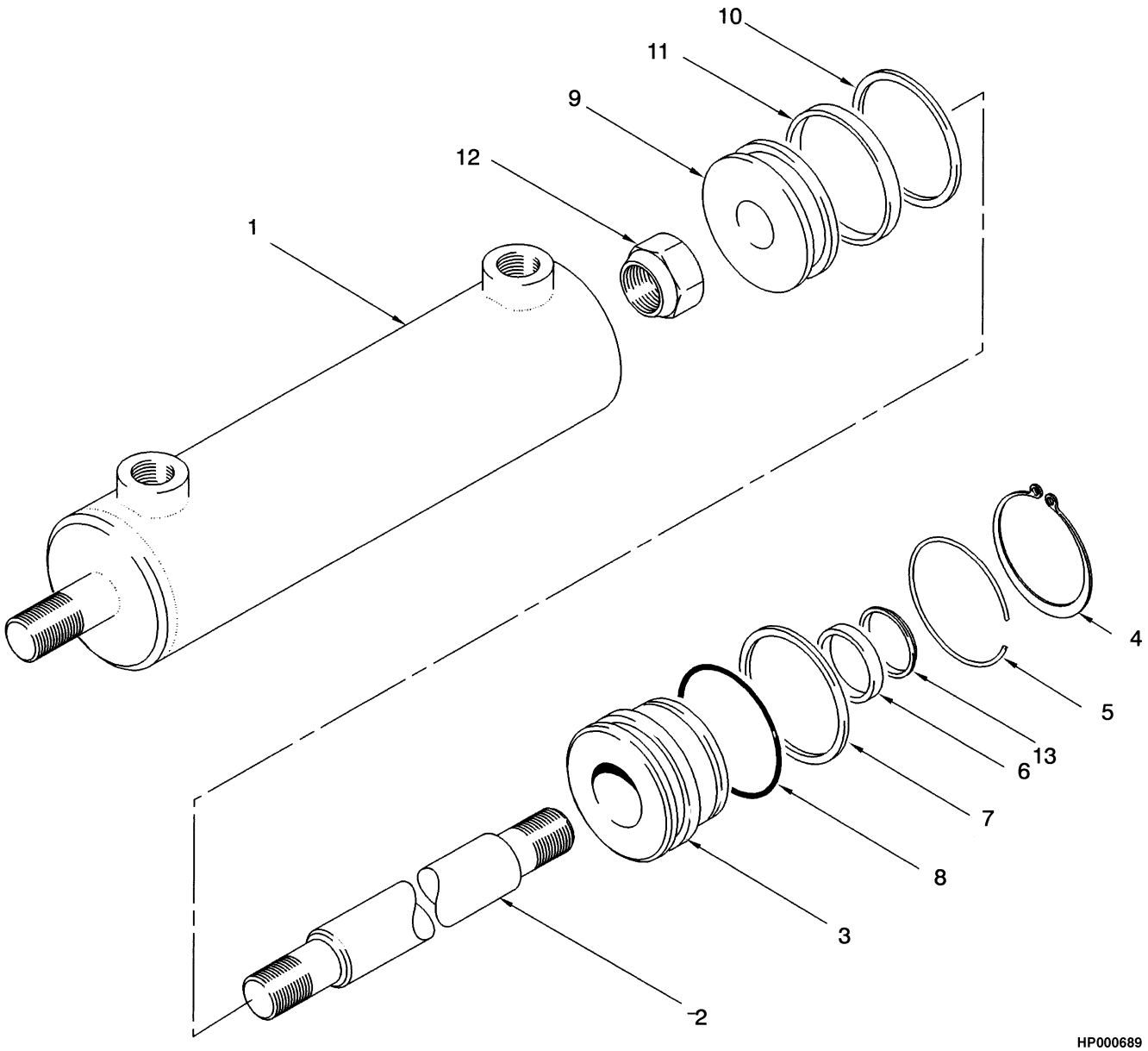

©2015 HYSTER COMPANY

SIDE-SHIFT CYLINDER
THREE STAGE FULL FREE-LIFT

ITEM	PART NO.	DESCRIPTION	QTY
	376770	Sideshift Cylinder	1
1	376817	Tube Wldmt-Cylinder	1
2	376813	Cylinder Rod	1
3	376815	Retainer	1
4	307275	Snap Ring	1
5	376839	Retaining Ring	1
6	330692	Rod Seal	1
7	154358	Back-Up Ring	1
8	15880	O-Ring	1
9	376814	Piston	1
10	638292	Back-Up Ring	1
11	637161	Rod Seal	1
12	53157	Locknut	1
13	203367	Wiper	1
	376883	Kit-Seal	1

©2015 HYSTER COMPANY

SIDE-SHIFT CYLINDER (FIGURE 13-14)
TWO STAGE LIMITED FREE-LIFT

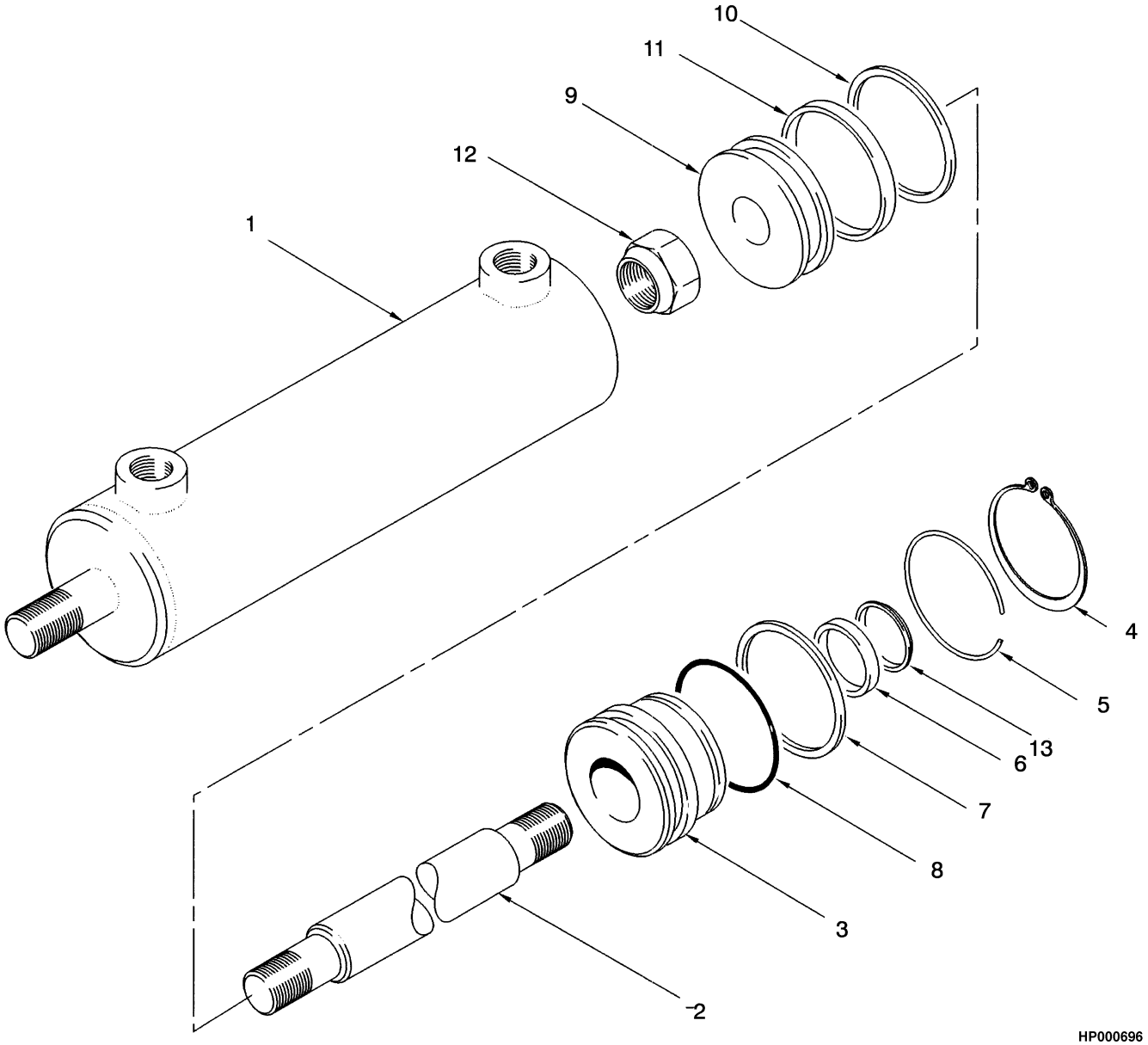

©2015 HYSTER COMPANY

SIDE-SHIFT CYLINDER
TWO STAGE LIMITED FREE-LIFT

ITEM	PART NO.	DESCRIPTION	QTY
	387090	Sideshift Cylinder	1
1	387085	Tube Wldmt-Cylinder	1
2	387087	Cylinder Rod	1
3	376815	Retainer	1
4	307275	Snap Ring	1
5	376839	Retaining Ring	1
6	330692	Rod Seal	1
7	154358	Back-Up Ring	1
8	15880	O-Ring	1
9	376814	Piston	1
10	638292	Back-Up Ring	1
11	637161	Rod Seal	1
12	53157	Locknut	1
13	203367	Wiper	1
	376883	Kit-Seal	1

©2015 HYSTER COMPANY

NOTES

©2015 HYSTER COMPANY

14 OPTIONS

SECTION 14
OPTIONS

DESCRIPTION	PAGE
ALARM	14-5
CONTAINER ATTACHMENT INSTALLATION	14-12
DIRECTIONAL MARKER	14-2
FRONT FENDER LIGHTS	14-3
HEADER HOSE	
EMPTY CONTAINER HANDLER	14-18
HEATED TOP WINDOW	
CLIMATE CONTROL CAB	14-14
LIFTING EYES	14-16
LIGHTS	
WORK - HALOGEN	14-21
WORK - HID	14-22
MAST WORKLIGHTS	
TWO AND THREE STAGE MAST	14-8
REAR WORK LIGHTS	14-10
SOUND REDUCTION	14-11
STROBE LIGHT	14-6
TAIL LIGHT ASSEMBLY	14-4

©2015 HYSTER COMPANY

DIRECTIONAL MARKER (FIGURE 14-1)

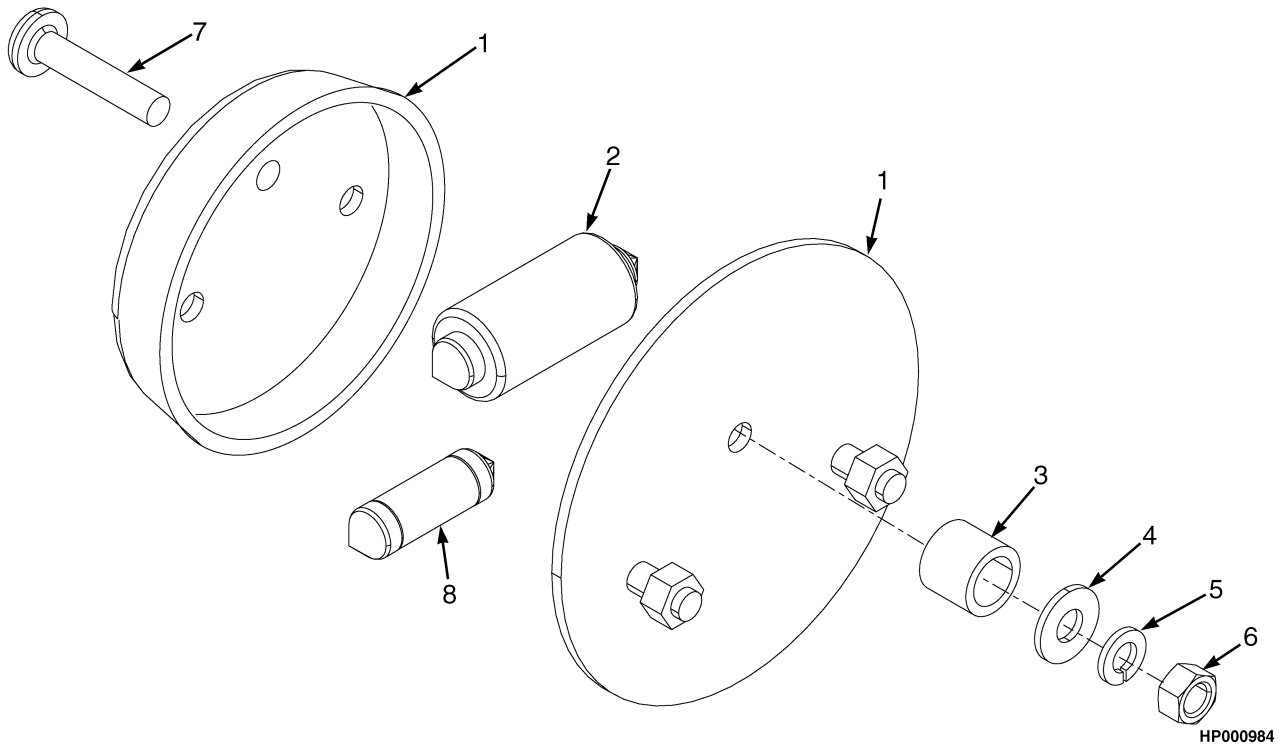

ITEM	PART NO.	DESCRIPTION	QTY
1	373091	Turn Signal Light	2
2	1310638	Bulb	2
3	376505	Spacer	4
4	197067	Washer	4
4	320155	Washer (Alternate Part, Use Without P/N 292679)	1
5	292679	Washer	4
6	292668	Nut	4
6	302398	Locknut (Alternate Part)	1
7	302037	Screw	4
8	384014	Bulb	2

©2015 HYSTER COMPANY

FRONT FENDER LIGHTS (FIGURE 14-2)

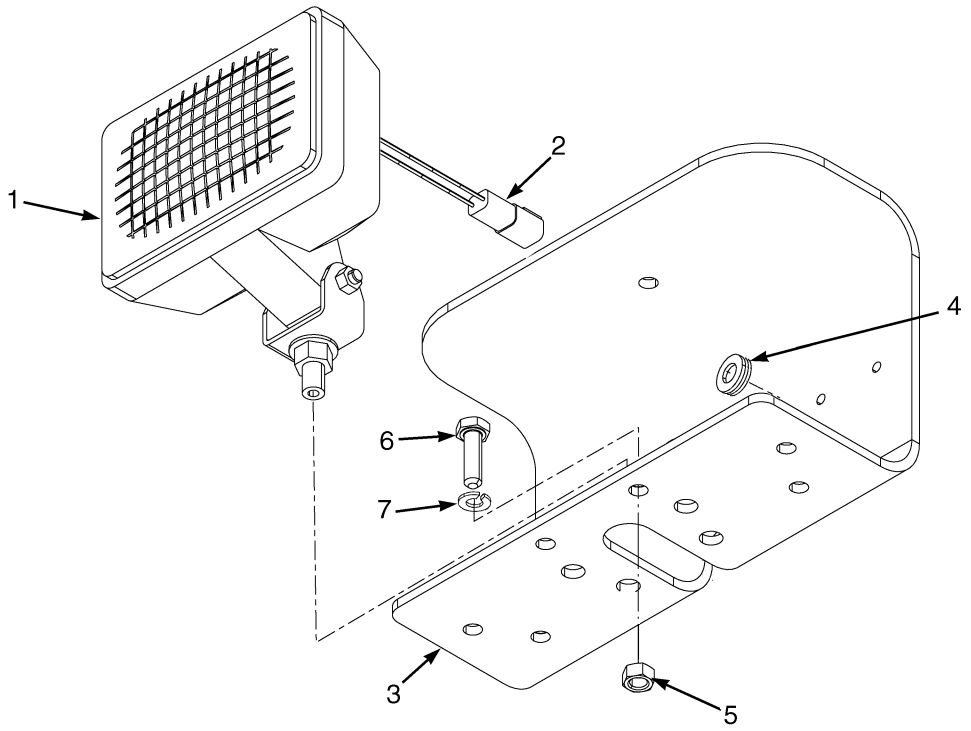

HP000983

ITEM	PART NO.	DESCRIPTION	QTY
1	1382867	Head/Work Light (Halogen, sealed beam type)	2
1	1476614	Work Light (24 Volt)	1
1	1383998	Head/Work Light (Sealed Beam)	1
1	1330409	Connector	1
1	1330414	Connector (Secondary Lock)	1
1	1363885	Terminal (Pin)	2
1	1664559	Work Light (Halogen) (Alternate Part)	2
1	1310668	Bulb (Halogen)	1
2	1330409	Connector	1
2	1330414	Connector (Secondary Lock)	1
2	1363885	Terminal (Pin)	2
3	1545532	Bracket	2
3	1670701	Plate (Alternate Part)	2
4	339969	Grommet	6
5	136692	Nut	4
5	302401	Locknut (Alternate Part)	4
6	287860	Capscrew	4
7	~~388049~~		
	292682	Lockwasher	4
7	320160	Washer (Alternate Part)	8

©2015 HYSTER COMPANY

TAIL LIGHT ASSEMBLY (FIGURE 14-3)

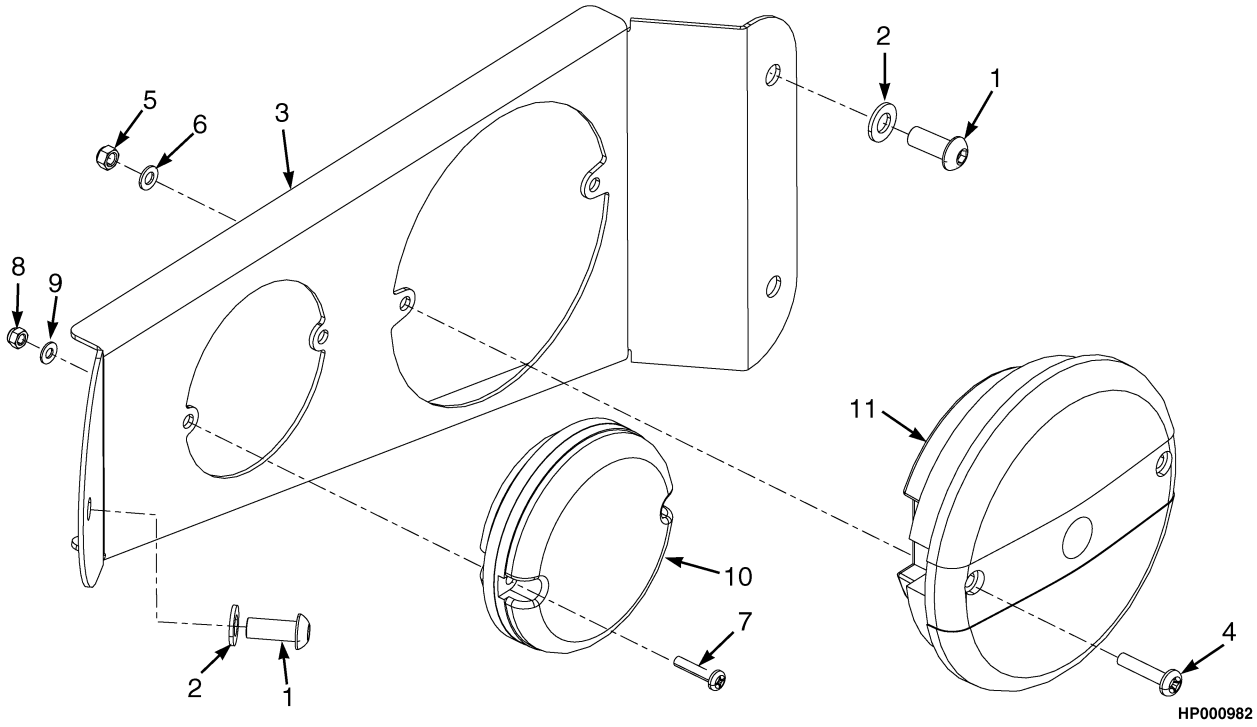

ITEM	PART NO.	DESCRIPTION	QTY
1	1597448	Capscrew	6
2	1581556	Washer	6
3	1647825	Rear Light (RH)	1
3	1647826	Rear Light (LH)	1
3	1646704	Bracket (RH)	1
3	1646705	Bracket (LH)	1
4	302037	Screw	2
5	302398	Locknut	2
6	320155	Washer	2
7	302024	Screw	2
8	815597	Nut	2
9	320154	Washer	2
10	1643621	Module (Reverse Light)	1
11	1643562	Module (Stop And Tail Light)	1
	a 2099414	Wire Harness (Tail Lights)	1

FOOTNOTES:

a Not Illustrated

©2015 HYSTER COMPANY

ALARM (FIGURE 14-4)

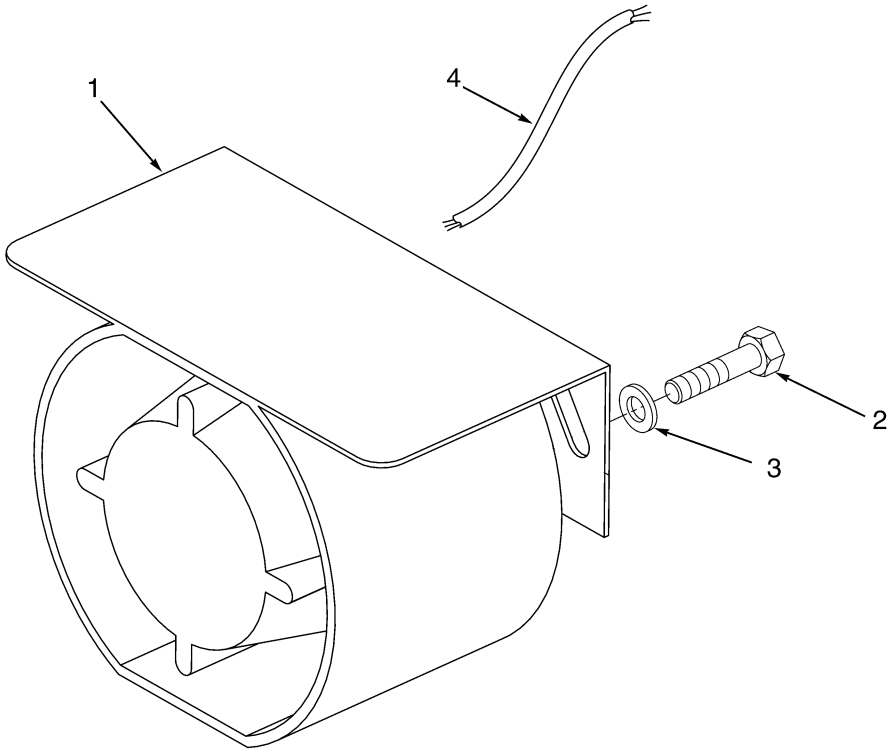

HP000981

ITEM	PART NO.	DESCRIPTION	QTY
1	1646834	Back-Up Alarm Assembly	1
1	1646833	Alarm	1
1	1330419	Connector	1
1	1330424	Connector (Secondary Lock)	1
1	1330438	Terminal (Socket)	2
2	283149	Capscrew	2
3	320157	Washer	2
4	2045885	Wire Harness (Backup Alarm)	1

©2015 HYSTER COMPANY

STROBE LIGHT (FIGURE 14-5)

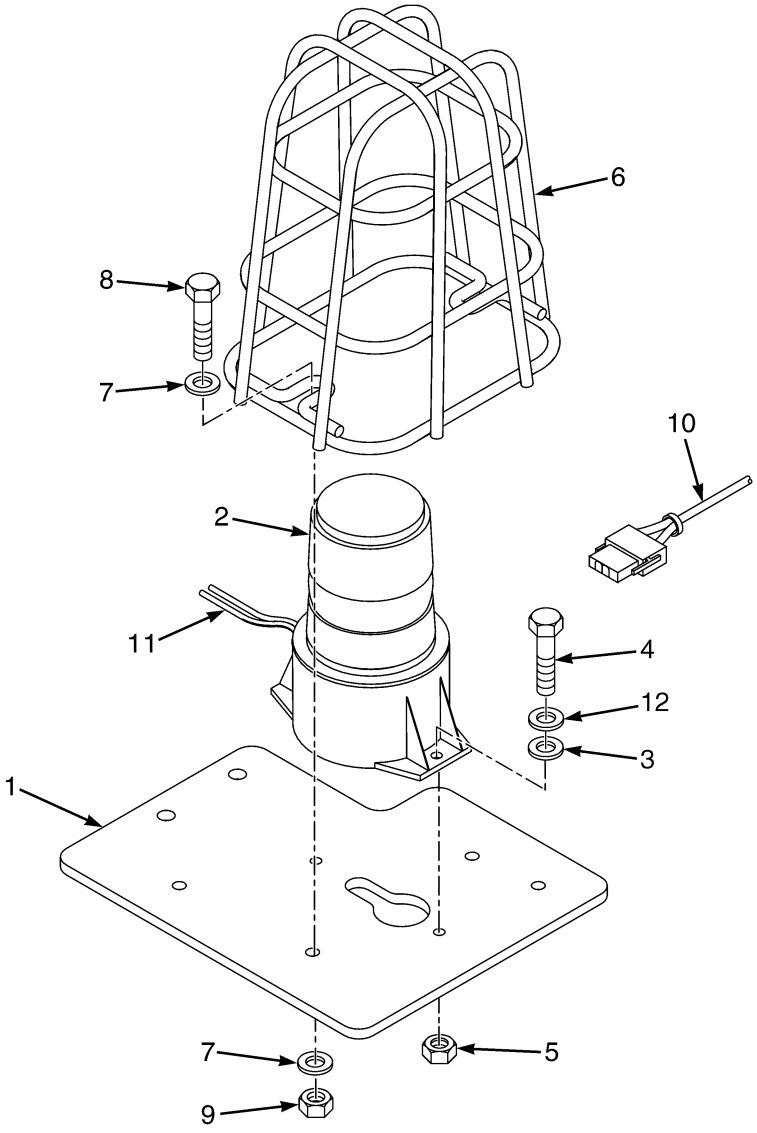

HP000985

©2015 HYSTER COMPANY

STROBE LIGHT

KEY:
A: With Condensor
B: Without Condensor

ITEM	PART NO.	DESCRIPTION	QTY A	QTY B
1	1480236	Bracket	1	1
2	1616202	Strobe Light Assembly	1	1
2	1616213	Strobe Light	1	1
2	1636383	Lens (Amber)	1	1
2	1636384	Bulb (12 to 80 Volts DC)	1	1
2	1324308	Terminal	1	1
2	1324307	Sleeve	1	1
2	1324310	Terminal	1	1
2	1324309	Sleeve	1	1
3	320157	Washer	2	2
4	136749	Screw	..	2
4	136704	Capscrew	2	..
5	302400	Nut	..	2
6	1302024	Guard (Strobe Light)	1	1
7	320155	Washer	4	4
8	2072353	Capscrew	2	2
8	2064919	Capscrew (Alternate Part)	2	2
9	302398	Locknut	2	2
10	1497230	Terminal	2	2
11	2099164	Wire Harness (Strobe Light)	1	1
12	1645064	Spacer	2	..
	a 2043879	Wire Harness (Strobe Light Adapter) (Without Switch)	1	1
	a 1497230	Terminal	2	2
	a 1484383	Heat Shrink	2	2
	a 1492329	Plug Assembly (For Use With Strobe Light Adapter)	1	1
	a 1330423	Connector (8 Socket)	1	1
	a 1330429	Connector	1	1
	a 1330439	Plug	8	8

FOOTNOTES:

a Not Illustrated

©2015 HYSTER COMPANY

MAST WORKLIGHTS (FIGURE 14-6)
TWO AND THREE STAGE MAST

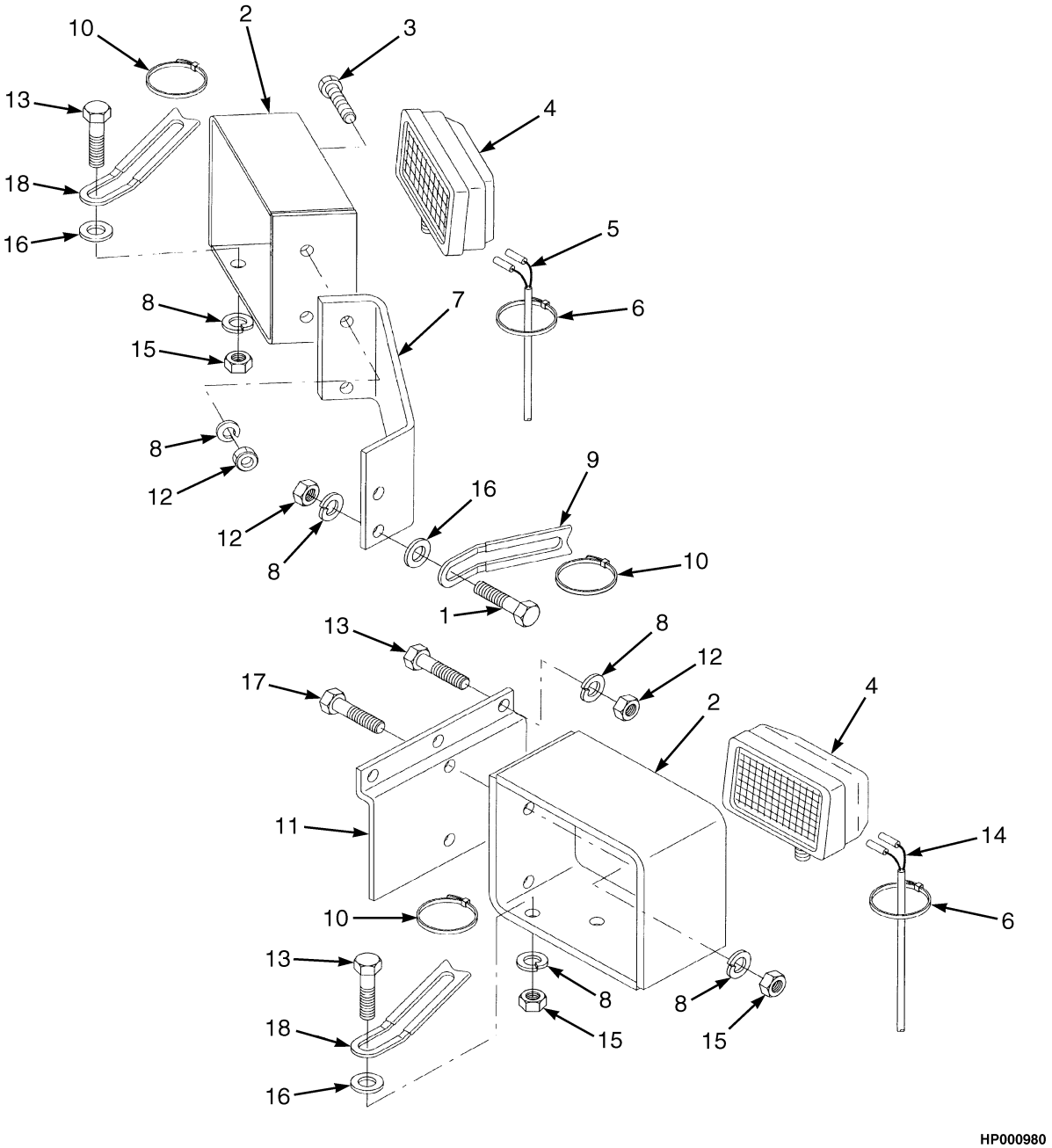

HP000980

©2015 HYSTER COMPANY

MAST WORKLIGHTS
TWO AND THREE STAGE MAST

ITEM	PART NO.	DESCRIPTION	QTY
1	287837	Capscrew	2
2	816442	Bracket Wldmt	2
3	136985	Capscrew	2
4	1382867	Head/Work Light (Halogen, sealed beam type)	2
4	1476614	Work Light (24 Volt)	1
4	1383998	Head/Work Light (Sealed Beam)	1
4	1330409	Connector	1
4	1330414	Connector (Secondary Lock)	1
4	1363885	Terminal (Pin)	1
4	1664559	Work Light (Halogen) (Halogen) (Alternate Part)	2
4	1310668	Bulb (Halogen)	1
4	1610936	Work Light (HID)	2
4	1635114	Bulb (HID)	1
4	1330409	Connector	1
4	1330414	Connector (Secondary Lock)	1
4	1363885	Terminal (Pin)	2
5	2043478	Wire Harness (Mast Light Extension, RH)	1
6	323864	Strap Clamp	6
7	1311209	Bracket (Mast)	1
8	292683	Lockwasher	6
8	320161	Washer (Alternate Part)	6
9	1350911	Strap	1
10	137852	Strap Clamp	3
11	1460312	Bracket	1
12	~~1318914~~		
	216877	Nut	4
12	302402	Locknut (Alternate Part)	4
13	287854	Capscrew	6
14	2043480	Wire Harness (Mast Light Extension, LH)	1
15	136692	Nut	6
15	302401	Locknut (Alternate Part)	6
16	~~388049~~		
	292682	Lockwasher	12
16	320159	Washer (Alternate Part)	12
17	~~4048814~~		
	292528	Capscrew	2
18	1356947	Strap	2
	a 2043677	Wire Harness	1

FOOTNOTES:

a Not Illustrated

©2015 HYSTER COMPANY

REAR WORK LIGHTS (FIGURE 14-7)

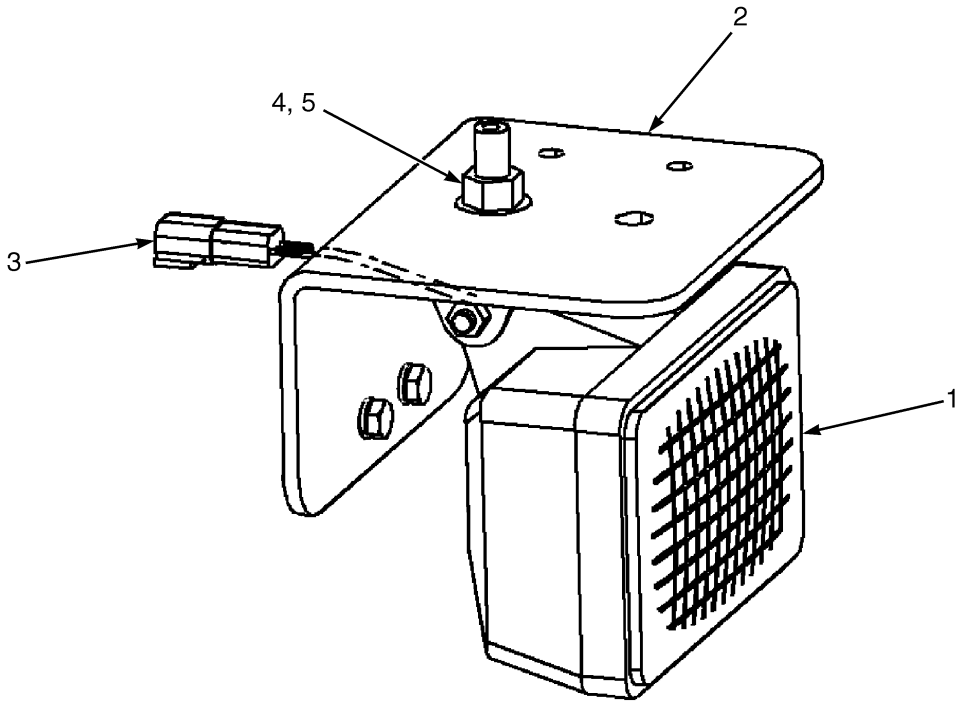

HP000389

KEY:
A: With Condensor
B: Without Condensor

ITEM	PART NO.	DESCRIPTION	QTY A	QTY B
1	1646407	Light	2	2
1	1664559	Work Light (Halogen) (Alternate Part)	2	2
1	1310668	Bulb (Halogen)	1	1
2	1480201	Plate	..	2
3	2102536	Wire Harness (Rear Work Lights)	1	1
4	1661095	Spacer	2	..
5	296026	Capscrew	2	..

©2015 HYSTER COMPANY

SOUND REDUCTION (FIGURE 14-8)

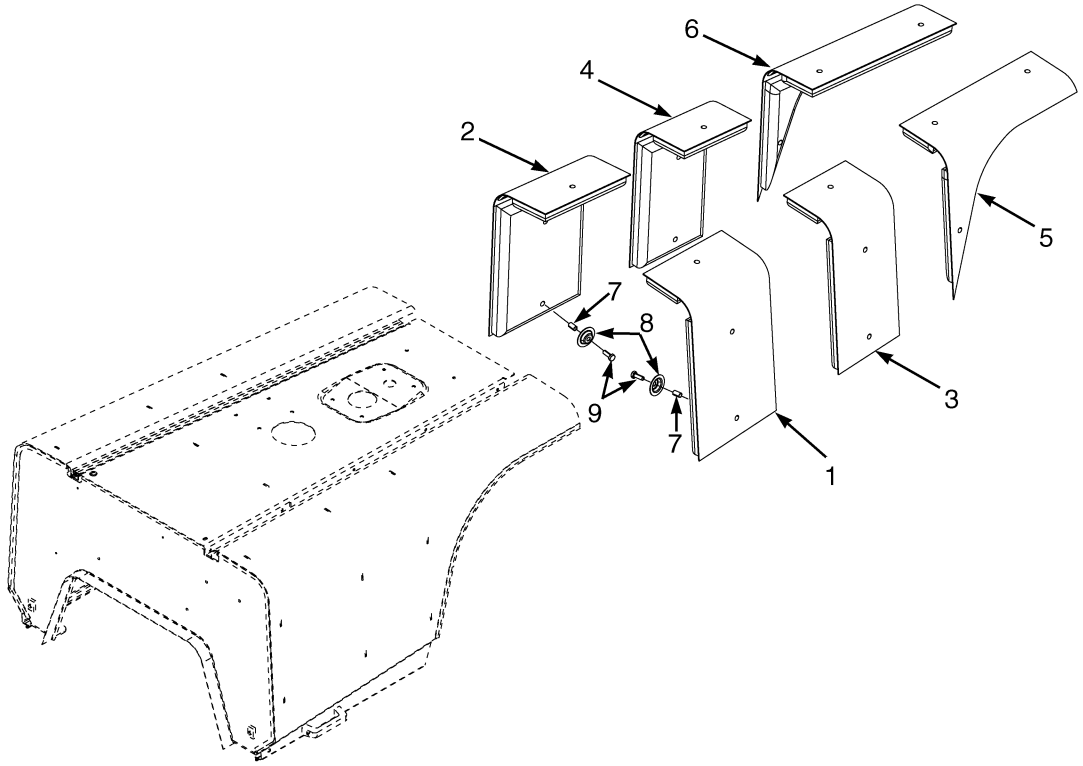

HP121094

ITEM	PART NO.	DESCRIPTION	QTY
1	1636491	Sound Liner (LH)	1
2	1636492	Sound Liner (RH)	1
3	1636495	Sound Liner (LH)	1
4	1636496	Sound Liner (RH)	1
5	1636497	Sound Liner (LH)	1
6	1636498	Sound Liner (RH)	1
7	1593327	Spacer	18
8	1498373	Plate (Fixing)	18
9	136985	Capscrew	18

©2015 HYSTER COMPANY

CONTAINER ATTACHMENT INSTALLATION (FIGURE 14-9)

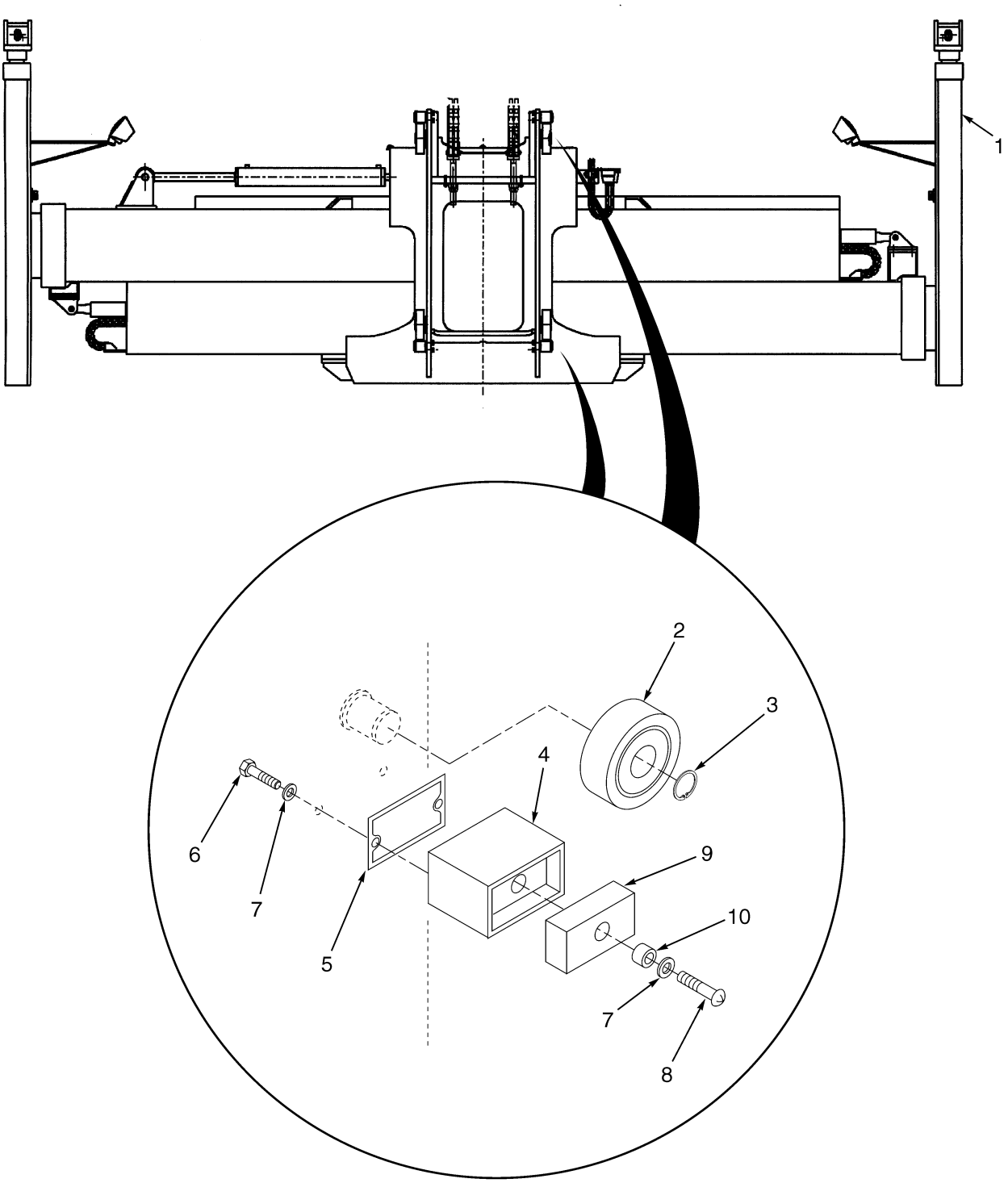

HP000770

©2015 HYSTER COMPANY

CONTAINER ATTACHMENT INSTALLATION

ITEM	PART NO.	DESCRIPTION	QTY
1	1520537	Empty Container Attachment (Horizontal Twist Locks) (Series 553)	1
1	1516865	Empty Container Attachment (Horizontal Twist Locks) (Series 553)	1
1	1494901	Empty Container Attachment (Suspended Hooks) (Series 555)	1
1	1516867	Empty Container Attachment (Suspended Hooks) (Series 555)	1
1	1560638	Empty Container Attachment (Suspended Hooks) (Series 555)	1
1	1560636	Empty Container Attachment (Suspended Hooks) (Series 555)	1
1	1520539	Empty Container Attachment (Vertical Twist Locks) (Series 558)	1
1	1516869	Empty Container Attachment (Vertical Twist Locks) (Series 558)	1
2	**a** 1313358	Load Roller	4
2	**b** 1691114	Load Roller	4
3	58918	Snap Ring	4
4	1301018	Bracket	4
5	1310592	Shim (.76 mm)	AR
6	221510	Capscrew (50.8 mm)	16
7	15156	Lockwasher	20
8	376203	Capscrew	4
9	1335179	Bearing	4
10	1301016	Spacer	4

FOOTNOTES:

a → S/N G019E02245F

b S/N G019E02246F →

©2015 HYSTER COMPANY

HEATED TOP WINDOW (FIGURE 14-10)
CLIMATE CONTROL CAB

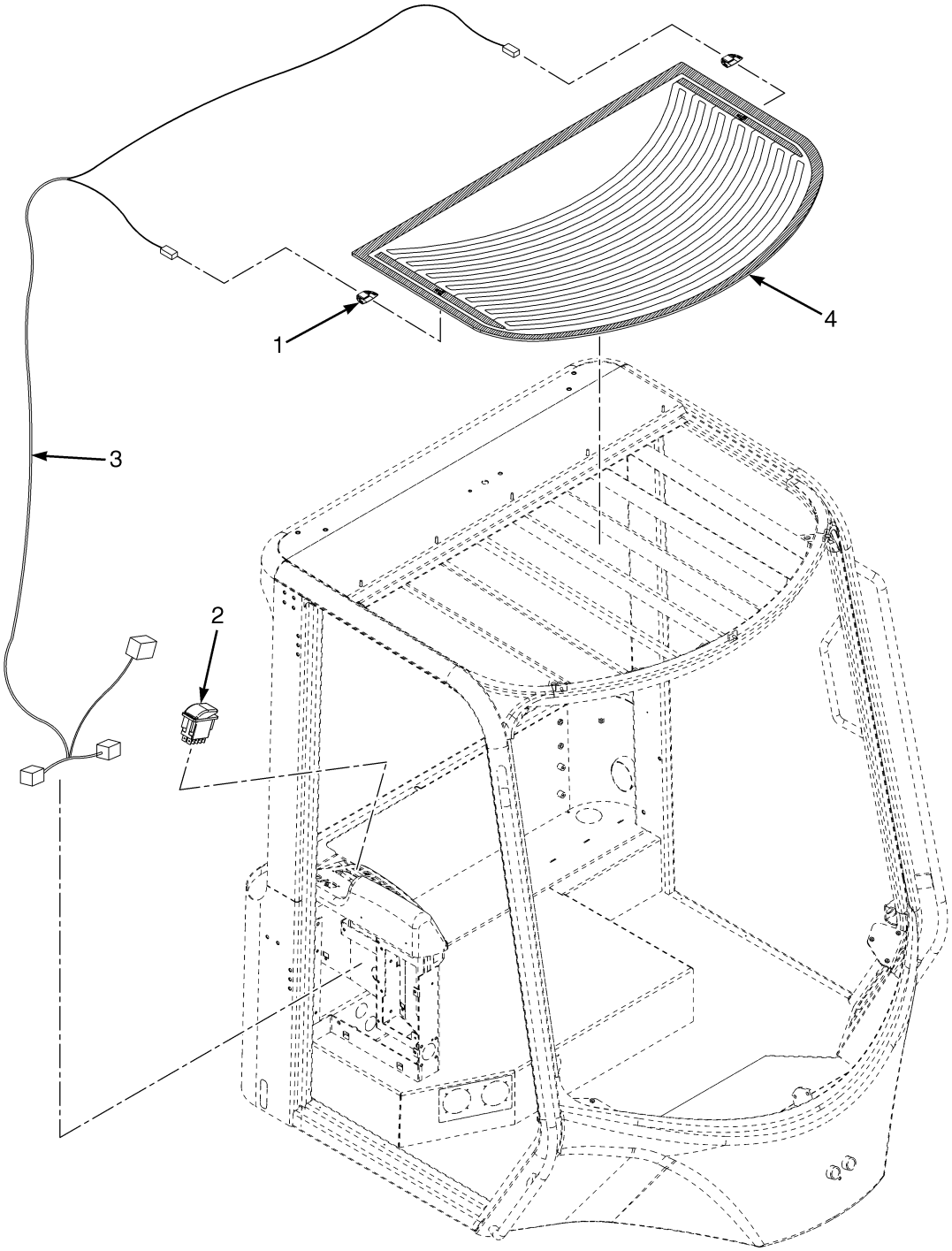

HP000993

ITEM	PART NO.	DESCRIPTION	QTY
1	4016098	Clip	2
2	4013895	Switch (Window Heating)	1
3	4016097	Wire Harness (Heated Roof Window)	1
4	4016096	Window	1

©2015 HYSTER COMPANY

NOTES

©2015 HYSTER COMPANY

LIFTING EYES (FIGURE 14-11)

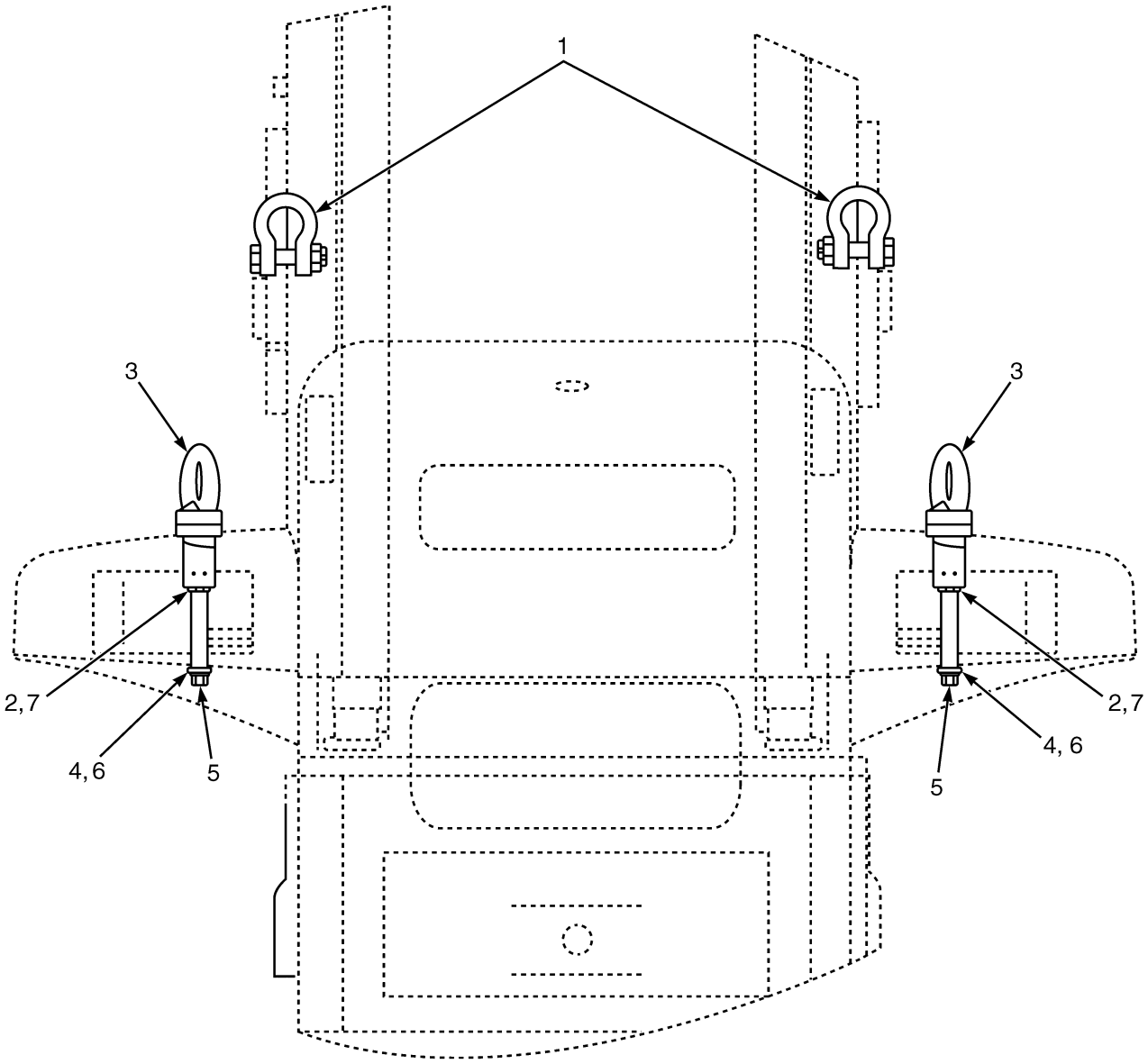

©2015 HYSTER COMPANY

LIFTING EYES

ITEM	PART NO.	DESCRIPTION	QTY
1	1616697	Shackle	2
2	1672608	Nut	2
3	1507360	Lifting Eye	2
4	292661	Nut	2
5	1672729	Stud	2
6	296438	Washer	2
7	239536	Compound	AR

©2015 HYSTER COMPANY

HEADER HOSE (FIGURE 14-12)
EMPTY CONTAINER HANDLER

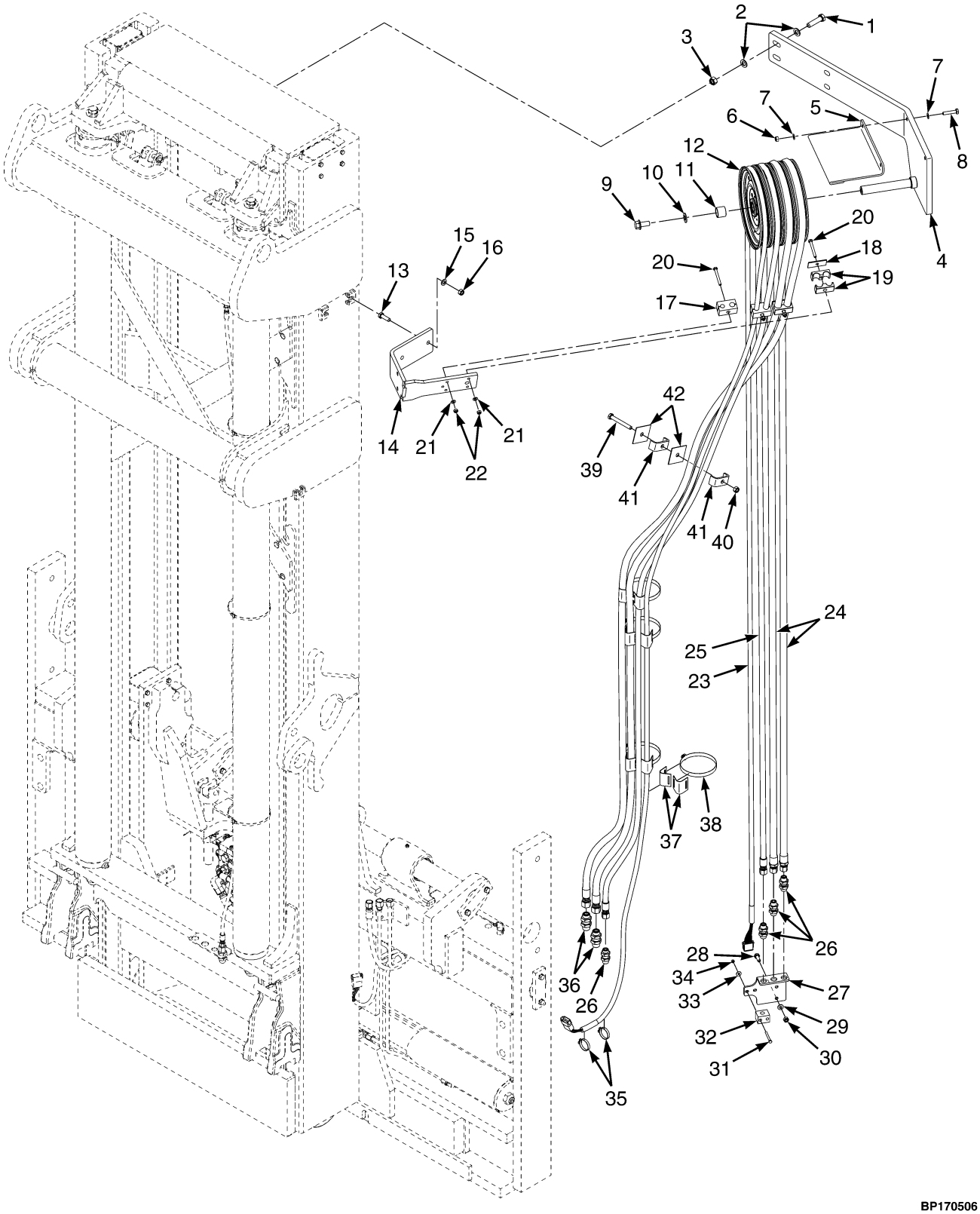

©2015 HYSTER COMPANY

HEADER HOSE
EMPTY CONTAINER HANDLER

KEY:
A: Three Function
B: Four, Five, And Six Function
C: Dual Side-Shift Fork Positioner

ITEM	PART NO.	DESCRIPTION	QTY A	QTY B	QTY C
1	292565	Capscrew	4	4	4
2	320165	Washer	4	4	4
3	302404	Locknut	4	4	4
4	1677533	Bracket Wldmt	1	1	1
5	1677603	Plate	1	1	1
6	302401	Locknut	2	2	2
7	320159	Washer	4	4	4
8	292517	Capscrew	2	2	2
9	1527890	Capscrew	2	2	2
10	320166	Washer	1	1	1
11	1651884	Spacer	2	4	1
12	1651882	Hose Sheave	2	4	1
12	222036	Rivet	16	16	16
13	~~4048814~~				
	292528	Capscrew	2	2	2
14	1677534	Bracket Wldmt	1	1	1
15	320161	Washer	2	2	2
16	302402	Locknut	2	2	2
17	1569803	Clamp	..	2	2
18	1533649	Cover Plate	2	2	2
19	1533665	Clamp (Twin)	2	2	2
20	136703	Capscrew	2	4	2
21	320157	Washer	2	4	2
22	302400	Nut	2	4	2
23	**b** 2046031	Wire Harness (Front End)	1	1	1
23	**d** 1527091	Wire Harness (Front End)	1	1	1
24	**a** 2046088	Hose Assy	1	1	1
25	**a** 2046088	Hose Assy	1	1	1
26	816591	Fitting	2	6	2
27	1529355	Bracket	1	1	1
28	136985	Capscrew	2	2	2
29	320159	Washer	2	2	2
30	302401	Locknut	2	2	2
31	292507	Capscrew	..	2	2
32	1569747	Clamp	..	1	1
33	1476421	Washer	..	2	2
34	~~1512440~~				
	302399	Nut	..	2	2
35	129563	Strap Clamp	..	2	2
36	1498506	Fitting (Includes Nut)	2	2	2
37	87911	Clamp	4	4	8
38	144157	Hose Clamp	2	2	4
39	292533	Capscrew (209-260.3 in.)	1	..	..
39	292538	Capscrew (209-260.3 in.)	..	1	1

©2015 HYSTER COMPANY

HEADER HOSE
EMPTY CONTAINER HANDLER

KEY:
A: Three Function
B: Four, Five, And Six Function
C: Dual Side-Shift Fork Positioner

ITEM	PART NO.	DESCRIPTION	QTY A	QTY B	QTY C
40	302402	Locknut (209-260.3 in.)	..	1	1
41	254950	Clamp (209-260.3 in.)	2	2	2
42	138929	Plate (209-260.3 in.)	2	2	2
98	**c** 1677604	Spacer	2	1	..
99	**c** 1564900	Strap Clamp (Green)	6	6	8
99	**c** 1564897	Strap Clamp (Yellow)	2	2	6
99	**c** 1564902	Strap Clamp (Transparent)	..	..	2

FOOTNOTES:

a ECH-4
b Hook Type Spreader (ECH-4)
c Not Illustrated
d Twist Lock Spreader (ECH-4)

©2015 HYSTER COMPANY

LIGHTS (FIGURE 14-13)
WORK — HALOGEN

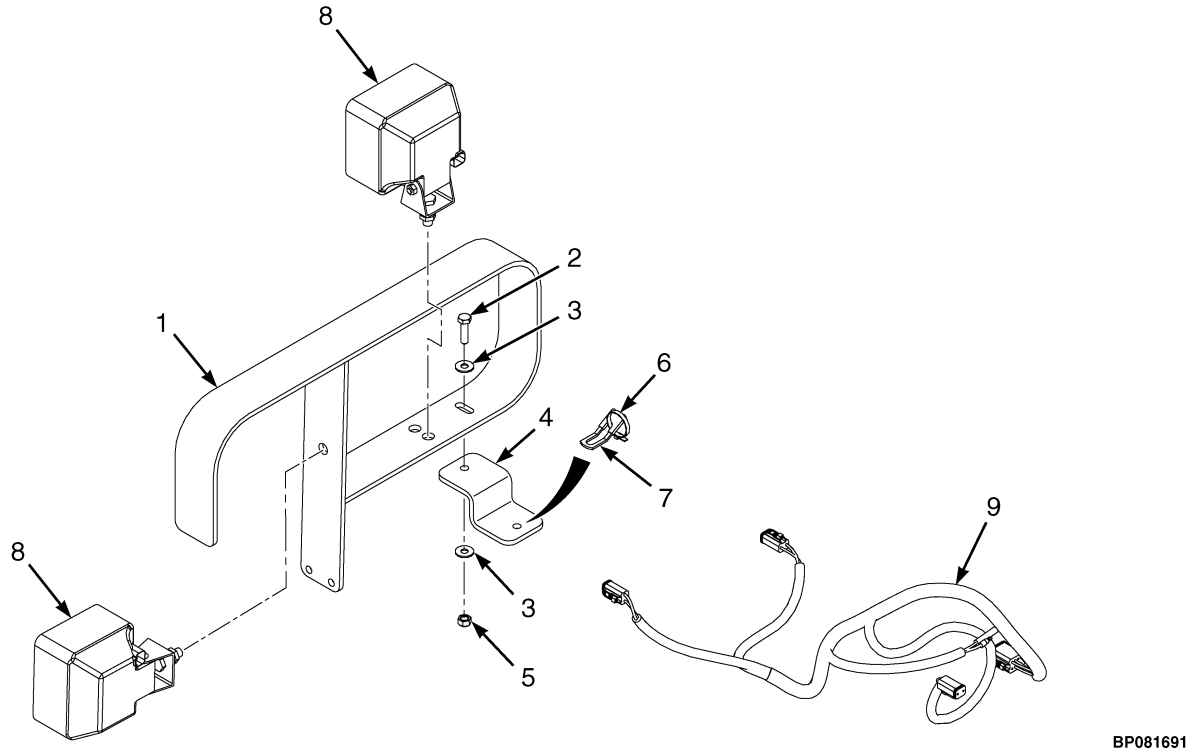

BP081691

ITEM	PART NO.	DESCRIPTION	QTY
1	4032883	Bracket	2
2	176640	Bolt	2
3	320158	Washer	4
4	4032882	Plate	2
5	302400	Nut	2
6	137852	Strap Clamp	2
7	1356947	Strap	2
8	1664559	Work Light (Halogen)	4
8	1310668	Bulb (Halogen)	1
9	2042724	Wire Harness (Cab Lights)	2

NOTE: LH Worklights Shown.

©2015 HYSTER COMPANY

LIGHTS (FIGURE 14-14)

WORK — HID

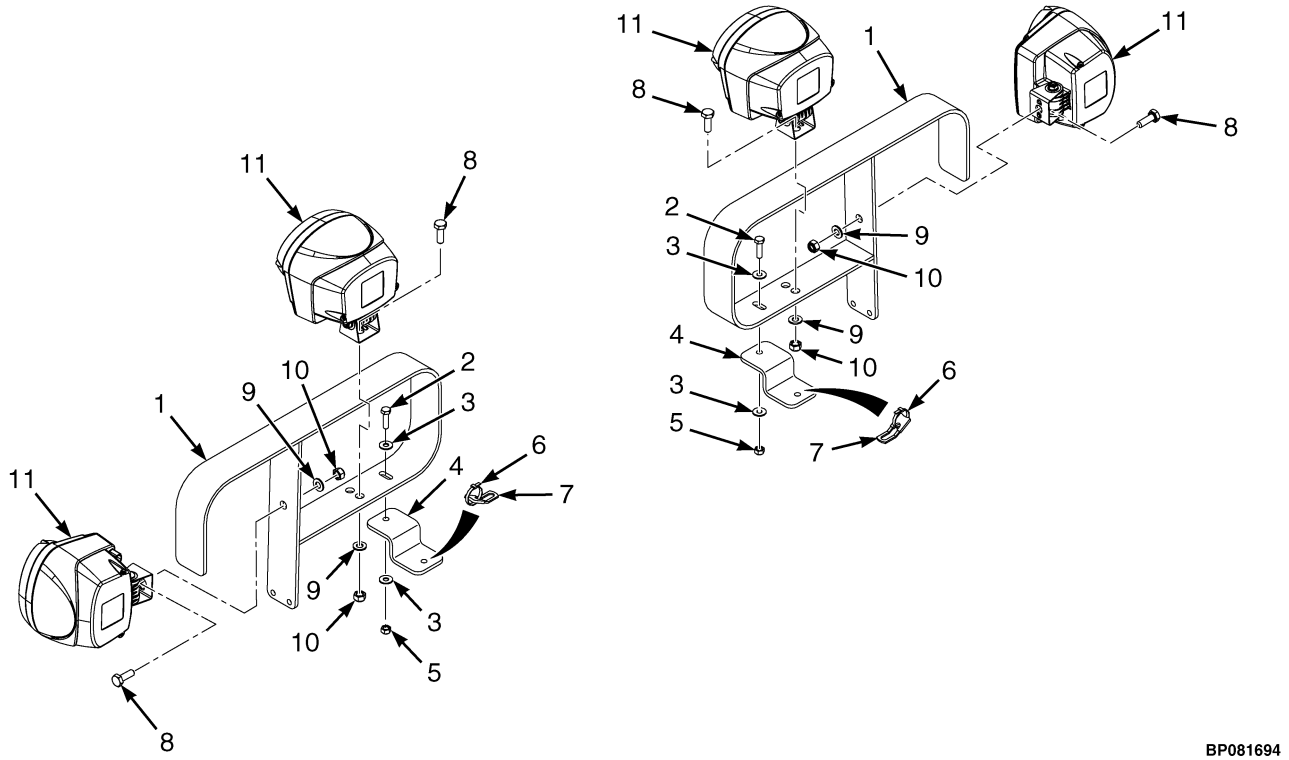

BP081694

ITEM	PART NO.	DESCRIPTION	QTY
1	4032883	Bracket	2
2	176640	Bolt	2
3	320158	Washer	4
4	4032882	Plate	2
5	302400	Nut	2
6	137852	Strap Clamp	2
7	1356947	Strap	2
8	136985	Capscrew	4
9	320159	Washer	4
10	302401	Locknut	4
11	1610936	Work Light (HID)	4
11	1635114	Bulb (HID)	1
	a 2042724	Wire Harness (Cab Lights)	2

FOOTNOTES:

a Not Illustrated

©2015 HYSTER COMPANY

15 NUMERICAL INDEX

SECTION 15
NUMERICAL INDEX

PART NO.	PAGE	ITEM
12827	4-7	20
12837	4-7	19
12845	1-109	7
12856	5-5	20
	5-9	23
13963	8-3	25
14345	4-3	19
14387	9-14	
14388	4-7	15
14589	6-25	27
	6-43	17
14595	6-41	7
	10-7	
	10-37	3
14604	9-14	
15030	9-19	32
	9-20	33
15036	4-3	28
15127	11-18	38
15133	13-12	
	13-17	
	13-25	
	13-28	66
	13-33	
	13-35	30
	13-37	
15134	8-4	54
	10-21	15
15135	10-7	21
15146	11-9	16
15152	4-17	11
15155	6-41	16
15156	6-13	13
	6-14	2
	6-39	21
	6-45	21
	6-47	21
	10-7	24
	11-5	8
	11-7	11
	11-25	10
	11-29	7
	11-33	7
	11-37	10
	13-7	4
	13-15	4
	13-23	6
	13-31	6
	13-37	4
	14-13	7
15157	6-7	7
	6-25	24
	6-41	12
	6-43	5
	6-43	21
15158	6-5	13
	8-3	10
	10-7	17
15162	8-4	49
15166	4-3	33
15181	11-10	27
15200	4-19	11
15201	9-41	26
15212	4-19	
	9-25	3
	9-27	4
15233	12-9	18
15235	1-59	42
15236	11-29	19
	11-33	19
	13-23	21
	13-31	21
15237	13-7	36
15244	11-9	15
15255	8-3	7
15316	6-43	10
	7-3	3
15880	13-39	14
	13-41	8
	13-43	8
15890	10-35	5
15963	9-13	9
16001	10-37	9
	11-3	6
	12-3	6
	13-8	46
	13-15	19
	13-23	13
	13-31	13
	13-37	19
16015	9-19	15
16041	8-4	51
	13-17	
	13-25	
	13-33	
	13-37	
16046	13-17	
	13-25	
	13-33	
	13-37	
16080	8-17	6
16155	1-111	4
16271	4-3	27
16279	8-4	50
16374	6-41	15
16481	10-3	30
	10-11	15
	10-13	8
	10-21	12
16483	4-3	13
	6-41	18
	6-43	12
	10-3	30
	10-19	10
	10-21	6
	10-21	7
	10-21	23
	13-15	22
	13-16	39
	13-23	23
	13-23	30
	13-24	44
	13-31	23
	13-31	30
	13-32	44
	13-33	72
	13-37	22
16484	6-41	8
	6-43	14
	10-3	28
	10-3	29
	10-7	12
	10-7	12
	10-19	8
16485	4-3	6
	10-3	7
	10-7	26
	10-19	6
	10-19	13
	10-19	14
	10-21	5
	13-8	40
	13-15	31
	13-16	42
	13-24	47
	13-24	70
	13-32	47
	13-32	70
16486	6-43	25
	10-3	19
	10-15	8
	10-16	34
	10-21	11
	13-16	37
	13-24	43
	13-32	43
16487	10-19	1
	10-19	7
16542	4-3	6
16694	4-7	2
16708	4-7	24
16788	4-7	16
16815	6-5	2
	7-6	42
	10-7	25
	10-21	22
16816	1-77	16
16836	11-25	26
	11-29	43
	13-16	46
	13-24	41
	13-32	41
16865	4-17	13
16982	10-3	7
	10-3	19
	10-19	3
	10-19	15
16983	9-6	64
	9-10	64
	10-3	3
	10-3	6
	11-10	23
17144	9-13	29
17174	4-7	17
17194	4-7	8
17352	2-5	15
17353	2-5	16
	3-3	17
17665	9-13	17
	9-13	36
17672	4-3	35
17742	1-109	9
17745	9-13	21
	9-29	4
	9-31	4
18475	11-18	35

©2015 HYSTER COMPANY

See Service Manual for service procedures.

NUMERICAL INDEX (continued)

PART NO.	PAGE	ITEM
18515	4-3	3
18535	6-14	1
	10-21	17
18557	6-25	23
	6-43	4
18588	10-7	16
18701	11-13	8
18704	13-39	2
23026	7-19	1
	7-21	1
	8-9	1
	8-11	1
28584	9-31	35
30062	7-5	30
	7-9	10
30100	8-3	4
30107	8-3	20
30189	8-3	15
30375	4-9	19
	4-11	13
	4-13	16
35503	10-11	18
37065	6-13	3
39373	10-11	7
	10-13	13
39743	10-11	14
	10-13	7
39747	10-13	17
39756	10-11	4
41308	6-13	9
43310	6-31	1
44308	6-35	20
44542	8-3	17
44547	8-3	21
46629	8-7	2
46692	11-9	9
49189	7-19	4
	7-21	4
53157	13-15	20
	13-23	12
	13-31	12
	13-37	20
	13-41	12
	13-43	12
53162	4-17	14
55280	6-23	3
55289	10-35	12
55468	8-3	39
56985	9-5	40
	9-9	40
57568	4-17	9
	10-15	7
	10-15	10
58918	11-7	5
	11-25	7
	11-29	4
	11-33	4
	11-37	7
	13-7	38
	13-15	11
	13-23	4
	13-31	4
	13-37	11
	14-13	3
61141	6-13	8
63108	9-13	37
68551	13-15	21
	13-23	33
	13-31	33
	13-37	21
69854	2-7	11
	3-5	12
78459	9-6	64
	9-10	64
78462	3-3	13
79970	6-25	25
82270	11-9	12
86008	7-9	19
86553	6-31	12
	6-33	6
87281	6-7	4
	6-43	28
87911	10-37	11
	11-17	2
	11-22	37
	12-10	39
	12-15	18
	14-19	37
88194	6-45	5
	6-47	4
88587	9-19	17
89056	9-6	41
	9-10	41
91946	1-5	13
97647	9-19	4
	9-19	9
97656	9-19	23
97657	9-19	24
97859	9-19	28
97999	4-4	46
99037	9-19	25
101625	10-7	11
	11-18	40
101809	4-4	49
109417	3-3	14
110322	5-5	37
	9-5	28
	9-9	28
	10-3	21
111561	4-7	26
112989	3-3	5
	11-29	21
	11-33	21
	13-23	25
	13-31	25
114312	2-85	15
	4-17	17
116265	7-20	4
118135	1-75	23
119236	2-5	3
	3-3	3
121347	4-3	34
125428	7-3	4
	7-5	16
	7-9	13
127045	2-5	13
	2-7	13
	3-3	15
	3-5	14
	9-6	48
	9-10	48
127852	1-109	6
128398	9-13	30
	9-23	
128408	4-7	4
129498	8-3	24
129499	8-3	24
129563	1-75	8
	1-77	9
	1-109	14
	1-111	6
	2-5	18
	3-3	18
	4-3	15
	4-7	9
	5-5	26
	5-9	28
	5-13	4
	6-45	36
	9-7	76
	9-11	76
	10-3	5
	10-7	3
	10-9	4
	11-22	35
	14-19	35
129684	13-7	32
130587	7-19	1
	7-21	1
	8-9	1
	8-11	1
130625	6-43	22
130845	4-7	7
131190	8-3	44
131191	8-3	44
131193	8-3	43
132462	7-15	26
132860	1-109	11
	4-3	9
	5-10	
132861	1-59	14
	1-141	2
	4-9	1
134810	1-50	3
134881	4-9	8
	4-11	4
	4-13	7
135685	4-17	2
136681	1-15	20
	1-49	14
	1-109	3
	1-111	9
	1-130	17
	1-138	17
	5-5	38
	6-45	7
	6-47	6
136687	1-112	5
	9-41	12
136692	1-75	15
	1-167	9
	4-19	14
	9-41	19
	11-17	7
	14-3	5
	14-9	15
136703	11-17	29
	11-21	20
	14-19	20
136704	14-7	4
136718	2-5	6
	3-3	7
136749	1-5	15
	1-75	19
	1-75	19
	4-9	4
	5-13	9
	9-6	58

See Service Manual for service procedures.
©2015 HYSTER COMPANY

NUMERICAL INDEX (continued)

PART NO.	PAGE	ITEM
	9-10	58
	10-11	11
	10-13	4
	10-33	7
	11-33	41
	14-7	4
136750	6-45	33
	6-47	32
136985	1-37	9
	1-75	6
	1-77	7
	1-141	32
	4-4	40
	5-5	43
	5-9	43
	9-5	29
	9-9	29
	9-13	10
	10-3	20
	11-10	24
	11-17	9
	11-21	28
	14-9	3
	14-11	9
	14-19	28
	14-22	8
137852	1-59	27
	2-85	4
	5-5	7
	5-9	30
	6-45	24
	6-47	25
	9-29	3
	9-31	3
	9-31	24
	13-16	45
	13-32	46
	14-9	10
	14-21	6
	14-22	6
138929	11-17	25
	11-22	42
	14-20	42
141462	5-80	11
142500	6-45	8
	6-47	10
143004	8-3	23
144067	1-75	4
	9-6	74
	9-10	74
	9-13	40
144157	2-5	25
	3-3	26
	10-37	2
	11-17	1
	11-22	38
	12-10	40
	12-15	19
	14-19	38
145641	10-21	14
147983	4-9	6
	4-11	1
	4-13	4
147985	4-9	6
	4-11	1
	4-13	4
153667	9-7	76
	9-11	76
154358	13-39	15
	13-41	7
	13-43	7
162562	9-13	3
164639	8-3	14
166112	9-6	74
	9-10	74
	9-13	41
166620	9-23	1
166621	9-23	2
166622	9-23	3
166623	9-23	7
166626	9-23	6
166628	9-23	8
166629	9-23	11
166630	9-23	9
166631	9-23	10
166818	1-143	9
166857	2-5	10
	3-3	31
	4-7	21
169787	10-7	33
170379	7-13	21
	7-15	22
170380	7-13	23
	7-15	22
170658	1-143	25
173246	9-29	14
	9-31	14
173247	1-77	2
	4-7	6
	9-5	30
	9-9	30
	9-14	54
176159	10-31	29
176455	4-9	24
176640	1-5	18
	1-59	12
	4-4	52
	9-14	59
	9-29	13
	9-31	13
	10-11	1
	14-21	2
	14-22	2
177303	10-4	
178119	1-75	3
	1-77	3
	1-111	7
	10-3	18
181045	1-50	2
183609	13-15	23
	13-23	28
	13-31	28
	13-37	23
183611	8-3	37
186304	1-53	15
186412	8-3	3
186415	8-3	19
186493	4-17	11
189451	11-17	13
189996	10-31	1
190757	10-7	23
190887	11-13	7
192306	2-5	16
	3-3	17
192814	8-3	36
192830	11-10	29
195566	1-59	7
	8-3	38
196186	8-9	4
	8-10	4
	8-11	4
196959	4-9	6
	4-11	1
	4-13	4
197067	4-7	25
	14-2	4
198518	10-7	19
	10-35	6
198678	1-109	13
	13-7	26
199567	4-3	4
200972	7-5	26
	7-9	7
	8-3	22
200982	7-9	22
201808	4-7	22
203367	13-41	13
	13-43	13
204223	5-5	6
	5-5	10
	5-9	6
212899	1-11	6
213069	6-39	16
214336	4-9	6
	4-11	1
	4-13	4
214364	4-7	12
	6-45	30
	6-47	27
	9-5	39
	9-9	39
	9-13	7
	10-3	11
216590	11-26	39
	13-16	42
216735	1-5	12
	8-17	1
216877	10-21	9
	11-3	11
	11-9	21
	11-17	23
	12-3	11
	13-7	16
	14-9	12
217973	9-14	74
217977	9-14	69
217979	9-13	19
217980	9-14	66
220159	11-7	3
220434	4-17	16
220932	4-17	3
221155	11-17	16
221357	11-17	17
221377	10-35	3
221463	11-25	25
	11-29	28
	11-33	28
	13-16	34
	13-24	40
	13-32	40
221491	9-19	18
221506	11-5	2
	11-29	8
	11-33	8
	11-37	11
	13-7	6
	13-15	9
	13-23	11

©2015 HYSTER COMPANY

NUMERICAL INDEX (continued)

PART NO.	PAGE	ITEM
	13-31	11
	13-37	9
221509	6-45	20
	6-47	20
221510	11-25	11
	14-13	6
221532	6-41	11
221703	11-18	37
221711	10-7	22
221720	7-3	11
221725	11-9	17
221767	7-5	41
	9-20	
221780	7-3	10
222036	11-21	12
	14-19	12
222454	5-5	15
	5-9	19
222473	3-3	11
222482	1-111	5
222524	5-124	
	5-129	9
222531	10-7	18
222590	10-7	15
222595	1-117	38
227220	4-9	6
	4-11	1
	4-13	4
233141	5-83	7
	5-83	10
	5-83	12
235691	6-43	13
239222	13-8	40
239308	1-111	
	13-24	68
	13-32	68
239423	1-143	13
239503	1-7	24
	1-9	22
	9-41	9
	11-18	31
	13-7	27
239536	14-17	7
240683	7-5	21
	7-9	18
241157	9-13	34
244167	10-19	1
	11-10	23
245521	9-14	70
246001	1-130	8
	1-134	8
	1-138	8
	4-7	27
	8-3	11
247041	8-3	18
247093	8-3	12
247097	8-3	16
247098	8-3	16
247099	8-3	16
251994	13-7	33
252729	10-7	26
	10-19	13
	10-21	11
254950	11-17	12
	11-22	41
	14-20	41
255115	9-29	2
	9-31	2
258590	9-5	31
	9-9	31
265731	10-3	28
	10-3	29
	10-7	12
	10-19	2
	10-19	3
	10-19	14
	10-21	5
265787	10-19	8
	10-21	4
	10-21	7
	10-21	23
	10-21	25
266535	9-14	73
267262	9-6	60
	9-10	60
267829	11-9	5
267830	11-9	8
267837	11-9	6
270330	8-7	3
270826	2-7	5
	3-5	5
270854	8-3	29
273775	11-10	33
	11-25	30
	11-29	46
	13-24	46
273969	7-13	4
	7-15	4
275608	1-117	13
279033	10-7	30
279752	5-9	18
280154	10-19	3
	10-19	4
	10-19	5
	10-19	6
	10-19	7
	10-19	15
280610	11-17	15
283149	14-5	2
287750	10-3	23
287805	1-141	25
	4-3	22
	5-133	4
287816	1-7	29
	1-9	29
	1-22	13
	1-26	13
	1-30	13
	1-34	13
287837	1-5	11
	1-141	13
	14-9	1
287851	1-59	28
	2-5	29
	3-3	30
	4-9	5
	4-11	31
	4-13	2
	9-41	11
287854	1-167	7
	4-19	3
	6-45	22
	6-47	14
	9-41	20
	13-7	21
	14-9	13
287860	1-7	10
	1-9	10
	14-3	6
288762	1-5	
292500	1-43	11
	1-55	17
	1-55	20
	5-5	2
	5-5	12
	5-9	2
292501	1-15	33
	1-16	7
	1-55	1
	1-81	6
	1-105	12
	4-19	17
	9-41	29
292502	1-55	12
	1-57	12
	9-41	30
292503	10-27	12
	10-29	
292505	9-5	14
	9-9	14
292507	9-5	26
	9-9	26
	9-14	50
	11-22	31
	14-19	31
292508	1-5	
	1-59	33
292509	1-75	11
	1-77	8
	6-45	30
	6-47	27
	9-14	
	10-3	11
292512	9-13	14
292513	1-81	8
	4-9	5
	4-11	21
	4-13	2
292514	1-59	22
	1-111	10
	1-165	3
	8-4	53
	9-5	6
	9-9	6
292515	1-77	19
	6-45	19
292516	1-75	12
	1-77	16
292517	1-59	3
	1-75	16
	11-21	8
	14-19	8
292521	4-19	7
292522	1-75	12
292523	4-19	7
292527	5-6	45
	5-10	45
	9-29	25
	9-31	26
292528	1-115	19
	1-129	
	1-129	5
	1-129	7
	1-130	8
	1-133	
	1-133	5
	1-133	7
	1-134	8

©2015 HYSTER COMPANY

NUMERICAL INDEX (continued)

PART NO.	PAGE	ITEM
	1-137	
	1-137	5
	1-137	7
	1-138	8
	1-155	11
	11-9	11
	11-17	21
	11-21	13
	14-9	17
	14-19	13
292529	11-5	9
	11-9	11
	13-7	15
292531	11-9	19
292533	11-18	39
	11-22	39
	14-19	39
292535	1-59	8
292538	10-21	13
	11-3	9
	11-18	39
	11-22	39
	12-3	9
	14-19	39
292539	10-21	3
	11-3	9
	12-3	9
292540	10-21	29
292560	8-4	55
	10-37	5
	11-3	8
	12-3	8
292565	11-18	43
	11-21	1
	14-19	1
292572	6-45	13
	6-47	13
292573	2-43	7
	3-28	7
292580	11-9	4
292582	6-45	17
	6-47	17
292590	1-164	2
292600	11-17	20
292661	1-11	5
	14-17	4
292667	1-15	32
292668	14-2	6
292679	14-2	5
292680	10-27	11
	10-29	
292681	11-17	30
	11-33	42
	13-7	28
	13-24	66
	13-32	66
292682	4-19	13
	11-10	25
	11-17	8
	13-7	17
	14-3	7
	14-9	16
292683	11-3	10
	11-9	20
	11-9	20
	11-17	22
	11-25	16
	11-25	20
	11-29	13
	11-29	24
	11-33	13
	11-33	24
	11-37	16
	12-3	10
	13-7	10
	13-15	16
	13-16	50
	13-23	16
	13-23	36
	13-31	16
	13-31	36
	13-37	16
	14-9	8
292685	10-37	4
	11-3	3
	11-17	19
	12-3	3
292687	11-10	28
293606	13-33	74
293615	13-24	67
	13-32	67
293628	1-112	7
293647	11-25	17
	11-29	14
	11-33	14
	11-37	17
	13-7	9
	13-15	17
	13-23	17
	13-31	17
	13-37	17
293654	7-5	38
293708	8-3	32
293716	7-5	20
	7-9	24
293744	2-85	13
295197	9-13	1
	9-29	1
	9-31	1
296010	1-141	21
	4-7	5
	9-27	2
296012	1-5	14
	8-17	7
	9-25	1
296025	8-17	4
296026	9-6	44
	9-10	44
	14-10	5
296044	2-43	5
	3-28	5
296128	4-19	
296204	4-4	56
296229	1-22	17
	1-26	17
	1-30	17
	1-34	17
296408	5-5	24
	5-9	26
296415	1-46	12
296431	7-13	30
	7-15	19
296438	1-11	4
	14-17	6
296734	9-19	26
296844	7-5	22
	7-9	15
300294	7-19	1
	8-9	1
300937	11-5	14
	11-17	11
300939	1-59	9
301986	9-19	5
	9-19	9
302014	9-41	22
302023	1-141	28
302024	14-4	7
302037	14-2	7
	14-4	4
302048	1-141	28
	8-13	16
302398	2-85	9
	4-3	38
	5-13	14
	9-14	60
	14-2	6
	14-4	5
	14-7	9
302399	1-7	36
	1-9	37
	5-5	30
	5-9	34
	9-5	7
	9-9	7
	9-13	45
	11-22	34
	14-19	34
302400	1-5	7
	1-7	3
	1-9	3
	1-59	16
	1-75	25
	2-5	26
	3-3	27
	4-4	53
	4-9	22
	5-9	14
	6-45	2
	6-47	3
	9-14	57
	9-29	16
	9-31	16
	10-21	19
	10-33	8
	11-21	22
	13-24	64
	13-32	64
	14-7	5
	14-19	22
	14-21	5
	14-22	5
302401	1-7	9
	1-9	9
	1-59	5
	1-75	2
	1-77	4
	2-5	21
	2-7	4
	2-85	5
	3-3	22
	3-5	4
	4-19	14
	5-5	23
	5-9	38
	9-5	2
	9-9	2
	9-13	12
	10-3	17

©2015 HYSTER COMPANY

NUMERICAL INDEX (continued)

PART NO.	PAGE	ITEM
	10-7	9
	11-21	6
	11-21	30
	14-3	5
	14-9	15
	14-19	6
	14-19	30
	14-22	10
302402	1-5	8
	4-7	29
	9-29	12
	9-31	12
	10-7	29
	10-11	17
	10-13	10
	10-21	10
	11-21	16
	11-22	40
	11-25	21
	11-29	26
	11-33	26
	13-16	51
	13-23	37
	13-31	37
	14-9	12
	14-19	16
	14-20	40
302404	2-43	2
	3-28	2
	6-45	15
	6-47	23
	11-21	3
	14-19	3
302405	1-164	4
302440	1-11	11
304527	6-35	25
	6-37	4
307275	13-41	4
	13-43	4
313850	10-31	24
313860	9-41	1
316448	1-143	12
316834	1-22	28
	1-26	28
	1-30	28
	1-34	28
	1-39	4
	1-55	6
	1-81	4
	1-141	9
	4-19	20
	9-41	4
316835	1-19	2
	1-49	11
	4-19	15
	5-133	5
	9-41	37
318067	11-15	10
319050	9-13	38
320037	1-143	35
320154	14-4	9
320155	2-85	10
	4-4	57
	5-9	16
	5-13	12
	9-14	58
	14-2	4
	14-4	6
	14-7	7
320156	1-7	30
	1-9	30
	1-55	2
	1-57	13
	1-81	5
	1-89	3
	1-105	11
	1-112	4
	4-19	10
	5-5	3
	5-9	3
	9-13	48
	9-41	3
	13-33	73
320157	1-5	19
	1-7	4
	1-9	4
	1-59	15
	1-75	18
	1-75	18
	1-109	4
	1-111	8
	4-3	23
	4-7	11
	4-9	18
	4-11	14
	4-13	17
	5-9	7
	5-10	54
	5-13	8
	6-45	6
	6-47	5
	9-6	59
	9-10	59
	9-13	15
	9-29	15
	9-31	15
	10-21	18
	11-21	21
	11-33	43
	13-24	63
	13-32	63
	14-5	3
	14-7	3
	14-19	21
320158	1-5	6
	1-5	6
	1-15	20
	1-19	9
	1-49	15
	1-141	6
	1-165	9
	2-5	27
	3-3	28
	4-3	29
	4-9	2
	4-9	23
	4-11	20
	4-13	1
	4-19	16
	5-133	2
	9-27	8
	9-41	10
	14-21	3
	14-22	3
320159	1-7	11
	1-9	11
	1-59	4
	1-75	5
	1-75	5
	1-77	5
	1-111	11
	2-5	7
	3-3	8
	4-4	42
	4-9	2
	4-11	20
	4-13	1
	5-5	25
	5-9	27
	6-45	18
	8-4	52
	9-5	5
	9-9	5
	9-13	11
	10-3	16
	10-7	10
	11-21	7
	11-21	29
	14-9	16
	14-19	7
	14-19	29
	14-22	9
320160	1-37	8
	1-75	13
	1-81	7
	1-167	8
	4-19	8
	14-3	7
320161	1-7	41
	1-9	41
	1-59	41
	1-109	10
	2-43	3
	3-28	3
	4-7	28
	5-6	46
	5-9	7
	9-14	65
	9-29	10
	9-31	10
	11-21	15
	14-9	8
	14-19	15
320162	1-5	9
	4-3	8
	4-7	30
	10-11	16
	10-13	9
	10-21	28
	11-25	19
	11-29	25
	11-33	25
	13-16	49
	13-23	35
	13-31	35
320163	4-3	39
320165	2-43	4
	3-28	4
	6-45	11
	6-47	18
	11-21	2
	14-19	2
320166	11-21	10
	14-19	10
320169	1-59	45
	1-158	3
	1-164	3
	6-45	16

©2015 HYSTER COMPANY

NUMERICAL INDEX (continued)

PART NO.	PAGE	ITEM
	6-47	16
	8-3	33
321197	11-7	6
321293	7-3	8
	7-13	14
	7-15	2
321487	1-109	12
	1-111	12
	4-3	16
321703	9-19	6
321717	9-19	19
322428	9-19	11
323864	13-7	13
	14-9	6
325708	4-19	8
327591	9-25	2
	9-27	3
329069	1-5	30
	1-7	5
	1-9	5
330502	6-43	18
330504	6-43	7
330511	6-41	5
	6-41	9
	6-43	17
330520	6-41	14
330527	6-41	20
330532	6-49	13
330552	6-5	3
330566	6-5	11
330570	6-13	10
	6-35	24
330586	6-35	26
	6-37	5
330590	6-25	14
	6-27	14
330591	6-5	6
330593	6-39	20
330596	6-31	5
330597	6-25	19
330598	6-25	21
330602	6-31	9
330603	6-31	8
330604	6-31	7
330605	6-31	6
330606	6-31	15
330607	6-31	4
330612	6-13	11
330614	6-31	13
	6-33	7
330615	6-31	14
	6-33	8
330666	6-41	4
330692	13-41	6
	13-43	6
334639	1-7	1
	1-9	1
339969	8-17	2
	14-3	4
340213	9-41	32
342675	11-17	10
	11-25	35
	11-29	47
	11-33	44
	13-8	41
	13-16	52
	13-24	57
	13-32	57
342676	11-17	18
	11-25	36
	11-30	48
	11-33	45
	13-8	42
	13-16	53
	13-24	58
	13-32	58
342677	11-18	41
	11-25	37
	11-30	49
	13-16	54
	13-24	59
	13-32	59
346330	5-114	3
347126	8-13	4
351458	13-15	12
	13-23	14
	13-31	14
	13-37	12
352485	4-19	9
352499	4-19	4
352885	4-19	5
352969	4-17	18
353129	4-19	12
353141	4-19	8
353142	4-19	18
353143	4-19	19
353154	4-17	4
353165	4-17	15
353168	4-17	5
353175	4-17	11
353195	4-19	6
353231	4-17	11
353397	4-17	1
353422	4-17	6
353432	4-17	7
353441	4-17	6
353448	4-17	8
353453	2-5	28
	3-3	29
	5-133	3
356237	11-17	26
357427	9-27	7
359207	4-17	10
361000	13-39	16
362030	1-7	26
	1-9	26
362102	11-13	3
	11-15	8
369804	9-6	63
	9-10	63
370009	5-5	42
	5-9	42
370256	1-146	4
370257	1-146	3
370258	1-146	3
370646	5-18	36
	5-18	40
	5-18	44
	5-19	52
370647	5-17	16
	5-18	19
	5-18	21
	5-18	22
	5-18	23
	5-18	25
	5-18	26
	5-18	27
	5-18	28
	5-18	29
	5-18	30
	5-18	31
	5-18	32
	5-18	33
	5-18	34
	5-18	37
	5-18	39
	5-18	43
	5-18	46
	5-18	48
	5-19	54
	5-19	55
370648	5-18	38
	5-18	42
370728	5-80	11
370776	1-60	47
373091	14-2	1
374159	9-41	21
376026	7-3	12
	7-15	31
	8-4	47
376038	11-3	2
	12-3	2
376051	10-37	7
	11-3	5
	12-3	5
376087	8-7	1
376089	8-7	9
376156	8-4	48
376203	11-5	4
	11-7	12
	11-25	14
	11-29	11
	11-33	11
	11-37	14
	13-7	3
	13-15	3
	13-23	5
	13-31	5
	13-37	3
	14-13	8
376505	8-17	9
	14-2	3
376649	2-5	2
	3-3	2
376770	13-11	27
	13-19	32
	13-27	32
	13-35	23
	13-41	
376773	13-15	24
	13-23	29
	13-31	29
	13-37	24
376776	11-25	15
	11-29	12
	11-33	12
	11-37	15
	13-15	15
	13-23	15
	13-31	15
	13-37	15
376813	13-41	2
376814	13-41	9
	13-43	9
376815	13-41	3
	13-43	3
376817	13-41	1
376839	13-41	5

©2015 HYSTER COMPANY

NUMERICAL INDEX (continued)

PART NO.	PAGE	ITEM
	13-43	5
376883	13-41	
	13-43	
379902	1-53	15
382262	6-25	16
	6-27	16
382269	6-17	11
	6-25	11
	6-27	11
	6-35	19
	6-37	10
	6-37	18
382283	6-25	18
	6-49	3
384014	14-2	8
387085	13-43	1
387087	13-43	2
387090	13-15	25
	13-23	31
	13-31	31
	13-37	25
	13-43	
387225	8-3	5
387247	10-35	4
387248	10-35	2
387286	11-15	6
389688	1-143	3
391484	5-10	
397676	1-59	39
636951	8-7	7
636954	11-13	9
	11-15	3
637161	13-41	11
	13-43	11
637166	11-15	4
638224	11-15	5
638292	13-41	10
	13-43	10
815597	14-4	8
815620	11-15	9
815848	11-25	4
	11-37	4
	13-15	18
	13-37	18
816232	9-6	65
	9-10	65
	10-3	2
816442	14-9	2
816578	10-35	7
816580	10-35	10
816591	11-10	34
	11-17	4
	11-21	26
	14-19	26
850995	7-19	
	8-9	
850996	7-19	1
	8-9	1
866401	1-65	4
885955	5-124	7
	5-124	17
887317	1-167	4
888329	9-14	77
888333	10-11	8
	10-13	14
992522	9-29	27
1300057	5-18	18
	5-18	20
1300094	1-143	22
1300117	8-17	8
1301014	11-7	13
1301016	11-5	5
	11-7	10
	11-25	13
	11-29	10
	11-33	10
	11-37	13
	13-7	5
	13-15	5
	13-23	7
	13-31	7
	13-37	5
	14-13	10
1301018	11-5	3
	11-7	8
	11-25	9
	11-29	6
	11-33	6
	11-37	9
	13-7	1
	13-15	7
	13-23	9
	13-31	9
	13-37	7
	14-13	4
1301299	5-5	19
	5-9	22
1301404	1-11	7
1301410	1-146	2
1301411	1-146	1
1301539	9-13	18
1301542	9-31	20
1301648	5-9	8
1301650	11-17	14
1301685	1-43	
	1-45	19
1301700	4-4	54
1301783	1-50	4
1302024	14-7	6
1303366	11-9	1
1303367	11-9	1
1303368	11-9	1
1303369	11-9	1
1303370	11-9	1
1303371	13-15	26
	13-23	26
	13-31	26
	13-37	26
1303372	11-9	13
1303383	11-9	3
1303391	11-10	26
1303443	10-35	1
1303551	7-13	5
	7-15	5
1305839	3-5	9
1307121	5-5	4
	5-5	11
	5-9	4
1307730	10-21	16
1307755	1-50	1
1307970	6-39	13
1307994	10-21	20
1309065	9-19	33
1309427	9-20	33
1309503	9-14	62
1310592	11-5	7
	11-7	7
	11-25	8
	11-29	5
	11-33	5
	11-37	8
	13-7	7
	13-15	8
	13-23	10
	13-31	10
	13-37	8
	14-13	5
1310630	5-17	15
	5-17	17
	5-18	41
	5-18	49
	5-18	50
	5-19	51
1310638	14-2	2
1310668	14-3	1
	14-9	4
	14-10	1
	14-21	8
1311209	14-9	7
1311356	9-14	
1311407	8-3	2
1311423	1-143	21
1311544	6-43	24
1311555	6-17	13
1311558	6-39	7
1311566	6-39	23
1311567	6-13	1
1311571	6-13	2
1311646	6-17	13
1311649	6-23	1
1311658	6-35	30
	6-37	16
1311666	6-17	14
	6-19	14
1311668	6-17	12
1311671	6-23	4
1311686	6-29	1
1311695	6-7	3
1311716	6-49	5
1311717	6-49	6
1311718	6-49	7
1311719	6-27	21
	6-33	3
	6-49	4
1311721	6-39	4
1311790	10-31	19
1311802	6-39	14
1311805	6-13	4
1311806	6-35	22
1311807	6-35	28
1311808	6-17	11
	6-19	11
	6-35	29
	6-37	10
1311810	6-17	9
	6-19	9
	6-25	8
	6-27	8
	6-35	13
	6-37	15
1311811	6-17	3
	6-19	3
	6-25	3
	6-27	3
	6-35	3
	6-35	6
	6-37	7
1311812	6-17	4

See Service Manual for service procedures.
©2015 HYSTER COMPANY

NUMERICAL INDEX (continued)

PART NO.	PAGE	ITEM
	6-19	4
	6-25	4
	6-27	4
	6-35	4
	6-35	7
	6-37	8
1311816	6-17	15
1311817	6-17	16
1311818	6-25	20
	6-27	20
1311822	6-23	5
1311823	6-23	6
1311825	6-17	17
	6-19	12
1311827	6-31	3
1311844	6-39	24
1312083	7-5	33
	7-9	2
1312097	6-35	32
	6-37	19
1312214	9-31	37
1312226	1-50	1
1312260	6-41	6
1312266	6-43	9
1312268	6-43	16
1312269	6-43	23
1312271	6-14	
1312272	6-49	8
1312274	6-49	12
1312275	6-39	8
1312279	6-39	2
1312280	6-39	12
1312285	6-39	15
1312351	6-35	23
	6-37	3
1312356	6-35	33
	6-37	20
1312359	6-25	13
	6-27	13
1312362	6-25	22
1312363	6-25	26
1312373	6-14	3
1312374	6-49	10
1312375	6-49	14
1312376	6-49	2
1312377	6-39	9
1312378	6-49	9
1312379	6-39	3
1312385	6-25	15
	6-27	15
1312611	9-19	9
1312614	9-20	
1312616	7-5	18
1312805	7-13	16
	7-15	23
1312807	7-15	28
1312822	6-2	1
1312823	6-2	1
1312824	6-2	1
1312827	6-2	1
1313357	11-7	2
	13-15	2
	13-23	2
	13-31	2
	13-37	2
1313358	11-7	4
	11-25	6
	11-29	3
	11-33	3
	11-37	6
	13-7	37
	13-15	10
	13-23	3
	13-31	3
	13-37	10
	14-13	2
1313374	8-3	9
1313375	8-3	8
1313386	11-13	6
1313390	7-18	1
	8-8	1
1315624	9-19	9
1315648	9-19	22
1316042	7-13	15
	7-15	13
1316044	7-13	7
	7-15	7
1316045	7-13	13
	7-15	14
1316306	7-15	1
1316314	7-15	27
1323579	5-50	28
1323581	5-79	1
	5-79	2
1323583	4-3	12
1323844	11-13	4
1323845	11-13	5
1323889	7-3	9
1324307	14-7	2
1324308	14-7	2
1324309	14-7	2
1324310	14-7	2
1324517	5-13	7
1326041	9-14	71
1326777	11-3	14
	12-3	14
1326805	1-143	40
1328695	11-9	7
1328896	4-4	45
1328946	11-15	7
1329152	5-49	6
	5-59	11
	5-68	20
	5-76	18
1329710	9-19	21
1330281	5-50	28
1330355	5-50	26
	5-60	15
	5-68	25
	5-76	23
1330356	5-50	26
	5-60	15
	5-68	25
	5-76	23
1330409	14-3	1
	14-3	2
	14-9	4
	14-9	4
1330413	5-124	9
	5-130	1
1330414	4-3	36
	5-51	31
	5-60	21
	5-67	12
	5-68	21
	5-75	8
	5-76	20
	5-79	3
	5-79	7
	5-83	15
	5-83	16
	5-84	17
	5-87	2
	5-87	4
	5-89	3
	5-89	4
	5-89	5
	5-90	13
	5-93	4
	5-94	2
	5-95	6
	5-101	5
1330415	5-87	2
1330416	5-79	3
	5-120	2
	5-134	1
1330417	5-87	4
	5-101	5
	5-102	6
	5-103	6
	5-105	11
	5-106	3
	5-131	3
1330418	5-89	3
	5-89	4
	5-89	5
	5-90	13
	5-93	4
	5-124	10
	5-130	2
1330419	14-5	1
1330423	5-130	4
	14-7	
1330424	14-5	1
1330426	5-83	14
1330429	5-123	10
	5-130	5
	14-7	
1330433	5-129	2
	5-130	3
1330434	5-129	6
	5-130	6
1330437	4-3	36
	5-51	31
	5-60	21
	5-67	12
	5-68	21
	5-75	8
	5-76	20
	5-79	3
	5-79	7
	5-83	15
	5-83	16
	5-84	17
	5-87	2
	5-87	4
	5-89	3
	5-89	4
	5-89	5
	5-90	13
	5-93	5
	5-94	2
	5-95	6
	5-101	5
	5-102	8
	5-103	7
	5-105	11
	5-106	3
	5-107	3
	5-108	3

©2015 HYSTER COMPANY

NUMERICAL INDEX (continued)

PART NO.	PAGE	ITEM
	5-111	2
	5-112	1
	5-117	23
	5-119	30
	5-120	3
	5-126	2
	5-128	5
	5-131	3
	5-134	1
1330438	5-45	1
	5-45	3
	5-45	8
	5-45	9
	5-45	10
	5-45	11
	5-46	21
	5-46	26
	5-46	28
	5-49	7
	5-49	9
	5-51	33
	5-55	1
	5-55	8
	5-56	18
	5-56	24
	5-57	38
	5-57	40
	5-59	1
	5-59	2
	5-59	3
	5-59	8
	5-59	12
	5-60	23
	5-63	1
	5-63	3
	5-63	8
	5-63	9
	5-63	10
	5-64	22
	5-64	24
	5-67	8
	5-68	19
	5-68	23
	5-69	36
	5-71	1
	5-71	3
	5-72	25
	5-75	1
	5-75	2
	5-75	6
	5-76	17
	5-76	19

PART NO.	PAGE	ITEM
	5-77	34
	5-77	35
	5-79	3
	5-79	9
	5-80	13
	5-80	15
	5-80	17
	5-83	14
	5-84	18
	5-84	19
	5-84	20
	5-84	21
	5-84	22
	5-84	23
	5-84	24
	5-84	25
	5-84	26
	5-85	27
	5-85	28
	5-89	10
	5-95	3
	5-97	3
	5-98	4
	5-98	8
	5-102	3
	5-103	3
	5-105	2
	5-105	4
	5-105	6
	5-105	8
	5-106	1
	5-106	2
	5-107	6
	5-108	6
	5-109	1
	5-109	3
	5-110	1
	5-113	6
	5-113	9
	5-113	10
	5-117	2
	5-119	2
	5-120	7
	5-123	11
	5-125	3
	5-127	1
	5-127	2
	5-127	3
	5-127	4
	14-5	1
1330439	5-45	1
	5-45	2

PART NO.	PAGE	ITEM
	5-45	4
	5-45	8
	5-46	13
	5-46	17
	5-46	22
	5-46	27
	5-47	29
	5-49	2
	5-49	3
	5-49	4
	5-49	7
	5-49	10
	5-51	32
	5-51	33
	5-55	1
	5-55	2
	5-55	4
	5-55	5
	5-55	6
	5-55	9
	5-56	25
	5-56	28
	5-57	31
	5-57	39
	5-59	1
	5-59	9
	5-59	12
	5-60	22
	5-60	23
	5-63	1
	5-63	2
	5-63	4
	5-64	16
	5-64	23
	5-64	25
	5-67	9
	5-67	10
	5-68	19
	5-68	22
	5-68	23
	5-71	1
	5-71	2
	5-71	4
	5-72	17
	5-72	23
	5-72	24
	5-72	26
	5-75	7
	5-75	10
	5-75	13
	5-76	17
	5-76	19

PART NO.	PAGE	ITEM
	5-76	21
	5-79	3
	5-79	4
	5-79	9
	5-83	14
	5-84	17
	5-84	19
	5-84	20
	5-84	22
	5-84	23
	5-84	25
	5-85	27
	5-87	3
	5-87	4
	5-89	4
	5-89	5
	5-93	7
	5-97	4
	5-98	5
	5-101	5
	5-102	7
	5-103	9
	5-105	3
	5-105	5
	5-105	7
	5-105	9
	5-106	3
	5-109	1
	5-110	1
	5-112	1
	5-113	9
	5-117	5
	5-124	13
	5-125	4
	5-127	1
	5-127	2
	5-127	3
	5-127	3
	5-127	4
	5-127	4
	5-128	5
	5-129	5
	5-130	7
	5-131	3
	14-7	
1331033	9-14	67
1331034	9-13	20
	9-14	68
1332084	9-27	7
1332113	9-33	26
1332114	9-33	26
1332115	9-33	26

See Service Manual for service procedures.
©2015 HYSTER COMPANY

NUMERICAL INDEX (continued)

PART NO.	PAGE	ITEM
1332116	9-33	36
1332125	9-14	52
1332128	9-13	39
1332206	5-5	22
	5-9	25
1332234	11-30	50
	11-30	51
	11-34	46
	11-34	47
	13-33	81
	13-33	82
1332235	11-30	52
	11-34	48
1332236	11-30	53
	11-34	49
1332237	13-16	55
	13-24	60
	13-32	60
1332783	9-19	33
1332784	9-19	33
1332787	9-19	33
1334581	11-25	3
	11-37	3
	12-17	2
	12-19	2
	12-21	3
	13-11	7
	13-15	18
	13-35	5
	13-37	18
1335137	1-143	1
1335179	11-5	6
	11-7	9
	11-25	12
	11-29	9
	11-33	9
	11-37	12
	13-7	2
	13-15	6
	13-23	8
	13-31	8
	13-37	6
	14-13	9
1335188	11-13	
1335619	6-7	
1335870	8-4	46
1335873	8-3	45
1336112	10-37	14
1336874	4-3	12
1337197	1-53	15
1337828	5-18	47
1339828	1-143	34
1345023	5-5	36
	5-9	39
1346892	11-5	11
1346894	1-143	37
1346961	9-19	7
1346962	9-19	7
1346973	11-5	12
1346974	11-5	13
1347314	5-9	41
1347405	13-39	1
1347770	7-5	20
	7-9	25
1347772	7-5	25
1347774	7-5	24
	7-9	11
1347800	7-5	27
	7-10	
1347812	7-5	31
	7-9	6
1347819	7-9	3
1347822	7-5	17
	7-10	37
1347831	7-5	7
	7-9	30
1347835	7-5	12
	7-9	23
1347839	7-5	2
	7-9	26
1347851	11-5	10
1347854	1-5	28
	5-5	27
	5-9	29
1347861	10-37	6
	11-3	7
	12-3	7
1347862	10-37	8
	11-3	4
	12-3	4
1350854	13-17	56
	13-24	61
	13-32	61
1350855	13-25	76
	13-33	83
1350856	13-25	77
	13-33	84
1350857	13-25	78
	13-33	85
1350858	13-25	79
	13-33	86
1350911	1-59	40
	1-109	2
	1-111	
	4-3	14
	5-5	41
	5-10	47
	14-9	9
1351068	5-129	7
1351069	5-129	8
1352090	4-17	12
1352575	4-17	
	4-19	4
1352602	5-124	2
	5-124	12
	5-129	3
1352603	5-45	2
	5-55	2
	5-63	2
	5-71	2
	5-124	4
	5-124	14
	5-128	5
	5-129	4
1352671	9-29	26
1354165	1-143	23
1356947	14-9	18
	14-21	7
	14-22	7
1357001	1-143	17
1357734	7-5	34
	7-9	1
1358326	2-7	9
1358714	11-9	1
1358860	9-39	8
1359101	11-3	13
	12-3	13
1359588	1-143	15
1360967	6-2	1
1361200	2-7	8
	3-5	9
1363885	5-80	13
	5-83	14
	5-83	15
	5-83	16
	5-84	19
	5-89	3
	5-89	4
	5-89	5
	5-90	13
	5-93	6
	5-103	8
	5-112	1
	5-114	1
	5-124	3
	5-124	11
1363886	5-45	1
	5-45	8
	5-45	9
	5-46	16
	5-46	26
	5-49	2
	5-55	1
	5-55	4
	5-57	30
	5-57	38
	5-59	1
	5-59	2
	5-63	1
	5-63	8
	5-63	9
	5-64	15
	5-64	22
	5-68	17
	5-71	1
	5-72	16
	5-72	23
	5-75	1
	5-75	2
	5-76	15
	5-80	17
	5-98	3
	5-109	1
	5-110	1
1366719	7-20	1
	8-10	1
1367144	1-117	21
1367556	6-2	1
1368111	9-23	4
1368112	9-23	5
1368113	9-23	
1369102	7-21	
	8-11	
1369103	7-21	1
	8-11	1
1369105	7-21	1
	8-11	1
1372994	13-7	14
1373216	13-7	35
1373349	11-9	2
1373430	3-34	1
1373760	1-11	12
1373791	1-77	13
1374086	9-19	8

©2015 HYSTER COMPANY

NUMERICAL INDEX (continued)

PART NO.	PAGE	ITEM
1374088	7-9	33
1374089	7-9	32
1374091	7-9	8
1374097	7-5	19
1374099	7-6	
1374550	7-5	15
	7-9	14
1374552	7-10	
1374558	7-5	13
1374559	7-10	
1374588	7-10	36
	9-19	14
1377130	7-18	2
	7-19	2
	7-20	2
	8-8	2
	8-9	2
	8-10	2
1377131	7-18	2
	7-19	2
	7-20	2
	8-8	2
	8-9	2
	8-10	2
1377132	7-18	3
	7-19	3
	7-20	3
	8-8	3
	8-9	3
	8-10	3
1378661	5-19	53
1379753	7-5	10
1380777	7-5	20
	7-9	21
1380797	7-9	34
1380890	10-35	5
1380893	7-9	17
1382867	14-3	1
	14-9	4
1382902	9-17	7
1382918	7-5	39
1382936	11-3	12
	12-3	12
1382937	11-3	12
	12-3	12
1382967	9-19	9
1383998	14-3	1
	14-9	4
1384412	9-19	29
1384517	9-5	22
	9-9	22
	9-13	44
1384669	4-7	18
1384699	4-3	17
	10-3	24
1384794	6-43	19
	6-43	19
1384859	9-17	7
1384861	9-17	13
1384862	9-17	14
1384863	9-17	14
1384864	9-17	10
1385099	1-143	30
1385130	1-143	4
1385549	11-3	1
	12-3	1
1385584	1-7	23
	1-9	23
1385715	7-13	2
	7-15	30
1385934	11-15	1
1385935	11-15	1
1385936	11-15	1
1385937	11-15	1
1385938	11-15	1
1385958	11-15	
1387159	8-13	2
1388428	8-15	3
1388434	8-15	6
1388435	8-15	35
1388436	8-15	36
1388438	8-15	20
1389313	6-41	18
	6-43	11
1389479	5-17	4
	5-17	5
	5-17	6
	5-17	14
	5-18	24
	5-18	35
	5-18	45
1390042	6-43	20
1390281	1-75	21
	1-77	21
1391649	7-19	2
	7-21	2
	8-9	2
	8-11	2
1391650	7-19	3
	7-21	3
	8-9	3
	8-11	3
1391744	9-25	4
1391745	9-25	4
1392601	10-35	1
1393466	1-39	8
1393473	1-19	6
1393474	1-19	15
1393499	1-15	1
1393509	1-43	1
1393528	1-167	3
1393707	6-45	12
	6-47	19
1393708	2-43	6
	3-28	6
1393760	1-143	
1393781	1-55	10
1393802	11-25	24
	11-29	27
	11-33	27
	13-16	32
	13-23	38
	13-31	38
1396518	3-5	8
1399332	5-5	28
	5-9	32
1450074	7-13	11
	7-15	11
1450390	9-25	4
1450759	1-7	2
	1-9	2
1450861	7-5	6
	7-5	28
	7-9	4
	7-9	31
1451110	13-7	18
1451130	13-7	34
	13-39	
1451155	13-7	20
1451416	1-143	38
1451777	13-8	43
1451778	13-8	44
1451833	13-8	45
1452130	13-7	14
1452131	13-7	14
1452132	13-7	14
1452134	13-7	14
1452135	13-7	14
1452138	13-7	14
1452404	2-43	8
	3-28	8
	6-45	14
	6-47	22
1453031	1-83	2
	1-85	2
1453728	13-7	8
1454508	10-35	
	10-37	1
1455057	9-19	2
1455087	1-9	6
1455362	13-39	
1455363	13-39	6
1455364	13-39	7
1455367	13-39	3
1455368	13-39	4
1455369	13-39	5
1455370	13-39	10
1455371	13-39	11
1455372	13-39	13
1455373	13-39	12
1455471	13-39	8
1455472	13-39	9
1455623	10-35	14
1456622	11-25	2
	11-37	2
	13-15	18
	13-37	18
1457459	9-35	9
1457466	9-35	2
1459178	9-7	78
	9-11	78
1459254	9-6	66
	9-10	66
	10-3	1
1460132	11-13	
1460133	11-13	
1460134	11-9	1
1460179	11-13	1
1460180	11-13	1
1460183	11-13	2
1460184	11-13	2
1460312	14-9	11
1460618	5-124	6
	5-124	16
1461081	1-112	3
1463140	5-79	7
	5-83	15
1463141	5-45	8
	5-59	1
	5-63	8
	5-75	1
	5-117	3
	5-119	3
	5-123	8
1463194	5-45	10
	5-45	13
	5-49	3
	5-55	5

See Service Manual for service procedures.
©2015 HYSTER COMPANY

NUMERICAL INDEX (continued)

PART NO.	PAGE	ITEM
	5-56	28
	5-59	3
	5-63	10
	5-77	35
	5-79	3
	5-112	6
	5-113	9
	5-117	10
	5-119	16
1465378	5-80	12
	5-80	14
1465468	4-3	12
1466008	1-143	20
1467522	1-129	6
	1-137	6
1467531	1-125	3
	1-130	9
	1-134	9
	1-138	9
1467940	10-23	20
1467948	10-15	32
1468306	1-15	10
1468311	1-37	1
1468312	1-19	13
1468318	1-35	7
	1-46	2
	1-46	10
	1-49	3
1468319	1-15	13
	1-50	5
	1-53	3
	1-57	11
	1-95	8
	1-147	7
	1-157	9
	8-13	7
1468320	1-49	7
1468321	1-15	33
	1-16	6
	1-22	14
	1-26	14
	1-30	14
	1-34	14
	1-39	13
	1-141	28
	1-147	4
	1-151	10
	8-13	15
1468323	4-19	2
1470155	1-129	6
	1-133	6
	1-137	6
1470791	5-10	50
1471366	6-13	12
1471371	6-5	8
1471383	6-5	10
1471601	7-20	1
	8-10	1
1471841	7-20	
	8-10	
1471922	7-20	1
	8-10	1
1473777	7-3	7
1473887	8-3	41
	9-5	4
	9-9	4
	10-3	28
	10-7	12
	10-37	12
1473888	6-45	31
	6-47	8
	9-6	53
	9-10	53
	10-3	19
1473889	9-6	45
	9-10	45
1473892	10-33	5
1473897	8-3	42
	10-3	29
	10-37	10
	13-7	12
1473919	9-6	50
	9-10	50
	10-19	7
1473923	9-6	47
	9-10	47
1473924	10-3	6
1473927	9-5	25
	9-9	25
	9-14	51
	10-19	12
	10-21	21
1473949	9-5	9
	9-9	9
1474921	1-59	2
1475075	9-14	78
1475136	10-35	1
1475420	7-5	3
	7-9	27
1475421	7-5	4
	7-9	28
1475493	5-10	49
	9-31	36
1475732	1-65	1
	1-69	
1476378	9-35	6
1476421	1-105	13
	1-141	10
	9-41	31
	11-22	33
	14-19	33
1476542	9-13	8
1476584	1-15	20
	1-15	33
	1-19	1
	1-130	16
	1-138	16
	1-141	1
1476614	14-3	1
	14-9	4
1476678	10-9	9
1476681	10-9	2
1476682	10-9	1
1476688	10-9	8
1476689	10-7	2
1476691	10-7	1
1476692	10-7	4
1476694	10-7	5
1476696	10-3	26
1476697	10-3	27
1476704	10-9	7
1476735	10-7	7
1476736	10-7	6
1476882	10-35	11
1476917	10-35	
1477228	8-17	5
1478838	9-14	76
1479109	5-46	24
	5-46	25
	5-64	19
	5-64	20
	5-64	21
	5-64	27
	5-65	28
	5-65	29
	5-67	1
	5-72	20
	5-72	21
	5-72	22
	5-72	28
	5-72	29
	5-73	30
	5-75	5
1479473	8-15	2
1480186	1-59	25
	1-65	
1480187	1-65	2
1480188	1-65	3
1480201	14-10	2
1480236	14-7	1
1480237	1-5	27
1480332	4-7	26
1480436	5-25	
	10-29	5
1480609	9-6	43
	9-34	
1480674	9-25	5
1482659	5-49	12
	5-51	29
	5-59	4
	5-60	19
	5-67	2
	5-69	27
	5-69	32
	5-75	3
	5-77	25
	5-77	30
	5-112	4
1482663	5-50	26
	5-60	15
	5-68	25
	5-76	23
1482668	5-50	26
	5-60	15
	5-68	25
	5-76	23
1482765	9-17	9
1482784	9-20	
1482798	1-129	
1482801	1-130	10
	1-134	10
	1-138	10
1482802	1-129	3
1482803	1-130	12
1482804	1-129	5
	1-133	5
	1-137	5
1482805	1-129	7
	1-133	7
	1-137	7
1482806	1-129	1
	1-133	1
	1-137	1
1482904	1-130	9
	1-134	9
	1-138	9
1482905	1-130	9
	1-134	9

©2015 HYSTER COMPANY

NUMERICAL INDEX (continued)

PART NO.	PAGE	ITEM
	1-138	9
1482906	1-130	9
	1-134	9
	1-138	9
1482907	1-130	9
	1-134	9
	1-138	9
1482908	1-130	9
	1-134	9
	1-138	9
1482909	1-130	9
	1-134	9
	1-138	9
1482910	1-130	7
	1-133	7
	1-138	7
1482913	1-129	4
	1-133	4
	1-137	4
1482915	1-129	
	1-137	
1482917	1-115	16
	1-119	2
	1-123	2
	1-125	1
	1-125	2
	1-126	5
	1-126	5
	1-126	6
	1-129	
	1-129	1
	1-129	4
	1-129	7
	1-130	10
	1-133	
	1-133	1
	1-133	4
	1-133	7
	1-134	10
	1-137	
	1-137	1
	1-137	4
	1-137	7
	1-138	10
	1-155	16
1482919	1-129	1
	1-129	4
	1-129	5
	1-130	7
	1-130	9
	1-130	10
	1-133	1

PART NO.	PAGE	ITEM
	1-133	4
	1-133	5
	1-133	7
	1-134	9
	1-134	10
	1-137	1
	1-137	4
	1-137	5
	1-137	7
	1-138	9
	1-138	10
1482920	1-129	5
	1-133	5
	1-137	5
1482924	1-129	1
	1-129	3
	1-129	4
	1-130	7
	1-133	1
	1-133	3
	1-133	4
	1-133	7
	1-134	
	1-137	1
	1-137	3
	1-137	4
	1-137	7
1482925	1-115	6
	1-129	6
	1-133	6
	1-137	6
	1-155	6
1482948	1-115	1
	1-129	6
	1-133	6
	1-137	6
	1-155	1
1482949	1-115	
	1-129	6
	1-133	6
	1-137	6
1482950	1-129	6
	1-133	6
	1-137	6
1482951	1-115	17
	1-125	1
	1-125	2
	1-126	6
	1-129	1
	1-130	10
	1-133	1
	1-134	10

PART NO.	PAGE	ITEM
	1-137	1
	1-138	10
	1-155	17
1482952	1-125	1
	1-129	1
	1-130	7
	1-130	10
	1-130	11
	1-130	12
	1-133	1
	1-133	2
	1-134	7
	1-134	10
	1-134	11
	1-137	1
	1-138	7
	1-138	10
	1-138	11
	1-138	12
1482953	1-119	3
	1-120	7
	1-125	1
	1-126	5
	1-126	5
	1-129	1
	1-130	7
	1-130	10
	1-130	11
	1-130	12
	1-133	1
	1-133	2
	1-134	7
	1-134	10
	1-134	11
	1-137	1
	1-138	7
	1-138	10
	1-138	11
	1-138	12
1482954	1-137	
1482955	1-137	3
1482957	1-129	3
1482958	1-137	3
1482959	1-129	4
	1-133	4
	1-137	4
1482960	1-129	5
	1-133	5
	1-137	5
1482961	1-129	5
	1-130	7
	1-133	5

PART NO.	PAGE	ITEM
	1-134	7
	1-137	5
	1-138	7
1482969	1-129	7
	1-133	7
	1-137	7
1482970	1-130	9
	1-134	9
	1-138	9
1482971	1-130	10
	1-134	10
	1-138	10
1482974	1-129	1
	1-133	1
	1-137	1
1482976	1-125	3
1482978	1-126	4
1482979	1-115	10
	1-126	4
	1-155	10
1482980	1-115	24
	1-117	8
	1-120	7
	1-125	2
	1-126	4
	1-126	6
	1-155	13
1482981	1-115	23
	1-117	26
	1-125	2
	1-126	4
	1-126	6
	1-155	13
1482982	1-119	
	1-126	5
1482990	1-115	15
	1-119	2
	1-120	7
	1-123	2
	1-126	5
	1-126	5
	1-126	6
	1-155	15
1482991	1-126	5
1482992	1-123	
	1-126	5
1482993	1-115	4
	1-125	1
	1-155	4
1482995	1-115	
	1-125	1
	1-125	2

©2015 HYSTER COMPANY

NUMERICAL INDEX (continued)

PART NO.	PAGE	ITEM
	1-155	17
1482996	1-125	2
1482997	1-115	
	1-125	2
	1-155	17
1482998	1-115	
	1-126	6
	1-155	
1483001	1-123	1
1483002	1-123	1
1483003	1-117	45
	1-119	1
	1-119	2
	1-119	3
	1-119	6
	1-120	7
	1-120	9
	1-123	1
	1-123	2
	1-123	7
1483004	1-117	18
	1-119	1
	1-119	3
	1-119	6
	1-120	7
	1-120	9
	1-123	1
	1-123	7
1483005	1-119	1
1483006	1-119	1
1483007	1-123	2
1483008	1-123	2
1483009	1-119	2
	1-119	6
	1-123	2
	1-123	7
1483010	1-117	24
	1-119	2
	1-119	6
	1-120	7
	1-123	2
	1-123	7
	1-124	11
1483011	1-123	2
	1-124	10
1483012	1-123	3
1483013	1-123	3
1483014	1-123	4
1483015	1-123	6
1483016	1-123	6
1483017	1-123	6
1483018	1-123	6
	1-124	9
1483020	1-123	4
1483021	1-123	4
1483022	1-123	4
1483023	1-123	4
1483024	1-123	5
1483025	1-123	5
1483026	1-123	5
	1-124	8
	1-124	11
1483027	1-123	7
1483028	1-123	7
1483029	1-117	20
	1-119	6
	1-123	7
1483030	1-123	8
1483031	1-117	36
	1-120	7
	1-120	11
	1-123	7
	1-123	8
	1-124	9
	1-124	11
1483032	1-124	9
1483033	1-124	9
1483034	1-124	10
1483036	1-124	10
1483037	1-124	11
1483039	1-124	11
1483040	1-119	3
1483041	1-119	3
1483042	1-119	2
1483043	1-119	2
1483047	1-119	2
	1-119	4
	1-126	3
1483049	1-119	5
1483050	1-119	6
1483051	1-117	27
	1-119	6
1483052	1-119	7
1483053	1-117	7
	1-120	7
1483054	1-117	9
	1-120	7
1483055	1-117	3
	1-120	7
1483056	1-120	9
1483057	1-117	22
	1-120	9
1483058	1-117	23
	1-119	6
	1-120	9
1483059	1-120	9
1483060	1-117	32
	1-120	8
	1-120	9
	1-120	10
1483061	1-120	8
1483062	1-120	8
	1-120	9
	1-120	10
1483067	1-117	10
	1-120	10
1483226	1-40	9
1483388	1-123	3
1483425	5-133	1
1484308	1-7	7
	1-9	7
1484363	5-83	15
1484375	5-80	11
	5-114	3
1484377	5-45	8
	5-49	1
	5-55	3
	5-59	1
	5-68	15
	5-68	16
	5-76	14
	5-79	7
	5-117	4
	5-119	4
	5-123	12
1484383	5-89	2
	5-89	6
	5-105	1
	5-105	10
	14-7	
1484394	5-63	6
	5-71	6
	5-87	8
	5-103	4
	5-105	1
	5-105	10
	5-123	5
1484395	5-49	6
	5-59	11
	5-60	13
	5-68	18
	5-68	20
	5-76	16
	5-76	18
	5-134	2
	5-134	3
	5-134	4
1484396	5-49	6
	5-59	11
	5-60	13
	5-68	18
	5-68	20
	5-76	16
	5-76	18
	5-134	2
	5-134	3
	5-134	4
1484397	5-45	10
	5-45	13
	5-49	3
	5-49	4
	5-55	5
	5-55	6
	5-56	28
	5-59	3
	5-63	10
	5-67	10
	5-75	10
	5-77	35
	5-79	4
	5-83	14
	5-87	3
	5-112	6
	5-113	9
	5-117	9
	5-119	15
1484554	5-117	1
	5-119	1
1484555	5-83	8
	5-83	9
	5-83	10
	5-83	11
	5-83	12
	5-117	16
	5-119	7
1484556	5-80	10
	5-80	12
	5-80	14
	5-83	7
	5-83	8
	5-83	9
	5-83	11
	5-83	12
	5-119	8
1484557	5-123	6
1484558	5-123	7
1484562	5-5	21
	5-9	24

©2015 HYSTER COMPANY

NUMERICAL INDEX (continued)

PART NO.	PAGE	ITEM
1484565	6-35	31
	6-37	17
1484592	5-90	12
	5-93	8
	5-123	1
1484593	5-90	12
	5-93	9
	5-123	2
1484594	5-90	12
	5-93	10
1484595	5-80	16
	5-90	12
	5-93	11
1484596	5-90	12
	5-93	12
	5-123	3
1484597	5-80	16
	5-90	12
	5-93	13
	5-113	8
	5-123	4
1484598	5-50	16
	5-55	14
	5-59	10
	5-64	18
	5-67	5
	5-67	13
	5-71	9
	5-72	19
	5-75	9
	5-89	1
	5-89	2
	5-89	6
	5-89	7
	5-89	11
	5-90	14
	5-93	1
	5-112	2
	5-112	3
	5-112	5
	5-113	7
1484599	5-89	1
	5-89	2
	5-89	6
	5-89	7
	5-90	11
	5-90	14
	5-93	2
1484600	5-89	2
	5-89	6
1484608	5-89	9
1484609	5-89	8
1484610	5-89	9
1484611	5-80	16
	5-90	12
	5-93	14
1484647	5-123	9
1484650	5-45	9
	5-59	2
	5-63	9
	5-75	2
	5-84	19
1484651	5-50	16
	5-56	14
	5-59	10
	5-64	18
	5-67	5
	5-67	13
	5-71	9
	5-72	19
	5-75	9
	5-112	2
	5-112	3
	5-112	4
	5-112	5
	5-113	7
1484654	5-80	16
	5-113	8
1484655	5-80	16
	5-113	8
1484656	5-49	12
	5-51	29
	5-59	4
	5-60	19
	5-67	2
	5-69	27
	5-69	32
	5-75	3
	5-76	25
	5-77	30
	5-80	16
	5-112	4
	5-113	8
1484662	5-83	15
1484664	5-79	7
1484666	5-83	16
	5-112	1
1484668	5-87	4
1484675	5-83	7
1484676	5-79	10
1484677	5-87	9
1484681	5-17	14
	5-18	24
	5-18	35
	5-18	45
1484682	5-17	14
	5-18	24
	5-18	35
	5-18	45
1484683	5-17	1
	5-17	2
	5-17	3
	5-17	4
	5-17	5
	5-17	6
	5-17	9
	5-17	10
1484684	5-17	7
1484685	5-79	7
	5-83	16
	5-84	16
	5-84	17
	5-112	1
1484686	5-79	7
	5-83	16
	5-83	16
	5-84	17
	5-112	1
1484687	5-114	4
1484708	5-80	16
1484709	1-65	4
1484712	5-101	5
	5-105	11
1484714	5-17	12
	5-51	37
	5-61	27
1484715	5-17	11
	5-51	34
	5-51	35
	5-51	36
	5-60	24
	5-60	25
	5-61	26
1484716	5-87	9
1484717	5-79	5
	5-79	6
1484718	5-114	4
	5-123	15
1484719	5-89	8
1485263	1-5	25
1485264	1-5	34
1485265	1-5	24
1485271	1-59	29
1485292	8-3	6
1485294	8-3	13
1485298	8-3	35
1485302	8-3	1
1486067	1-59	17
1486068	1-59	18
1486069	1-59	37
1486070	1-59	38
1486073	10-7	27
1486074	10-7	28
1486080	9-6	54
1486081	9-5	10
	9-9	10
	9-10	46
1486082	9-5	11
	9-9	11
1486083	9-5	33
	9-9	33
1486084	9-5	20
	9-9	20
1486085	9-5	17
	9-9	17
1486088	9-6	69
	9-10	69
1486089	9-6	70
	9-10	70
1486090	9-6	71
	9-10	71
1486091	9-6	55
	9-9	40
1486092	9-6	52
	9-10	52
1486093	9-5	21
	9-9	21
1486094	9-5	27
	9-9	27
1486095	9-5	34
	9-9	34
1486218	4-9	11
	4-11	6
	4-13	8
1486246	9-6	49
	9-10	49
1486535	1-59	23
	1-67	
1486539	1-59	13
1486540	1-59	6
1486557	10-19	1
1486578	10-21	23
1486630	1-59	44
1486737	9-6	57
	9-10	57
1486738	10-19	10

See Service Manual for service procedures.
©2015 HYSTER COMPANY

NUMERICAL INDEX (continued)

PART NO.	PAGE	ITEM
	10-21	6
	11-9	10
1486740	9-5	15
	9-9	15
	10-21	7
	11-25	28
	11-29	35
	11-33	34
	13-16	39
	13-24	44
	13-32	44
	13-33	72
1486741	9-5	18
	9-9	18
1486742	9-5	35
	9-9	35
	10-19	8
1486743	11-29	34
	13-15	31
	13-24	47
	13-24	70
	13-32	47
	13-32	70
1486745	11-33	33
1486746	9-6	72
	9-10	72
	10-19	14
	10-21	5
	10-33	3
	13-7	24
1486747	9-6	62
	9-10	62
1486749	9-6	56
	9-10	56
	10-19	13
1486751	9-6	67
	9-10	67
	10-21	4
1486754	6-45	23
	6-47	26
	10-19	6
1486770	10-21	26
1486772	9-6	61
	9-10	61
	13-7	39
1487058	9-5	23
	9-9	23
	9-13	46
	10-11	15
	10-13	8
1487063	9-5	16
	9-9	16
	9-13	49
1487064	9-10	42
	11-29	20
	11-33	20
	13-15	22
	13-23	23
	13-23	30
	13-31	23
	13-31	30
	13-37	22
1487065	13-7	23
1487067	9-11	77
1487069	10-21	11
	11-25	27
	11-29	33
	13-16	37
	13-24	43
	13-32	43
1487073	10-33	4
1487088	10-19	5
1487094	9-5	32
	9-9	32
	10-19	11
	11-10	37
1487095	9-5	8
	9-9	8
	10-19	2
	11-10	30
1487097	9-5	12
	9-9	12
1487103	8-15	12
1487104	8-15	27
1487105	8-15	24
1487106	8-15	25
1487107	8-15	4
1487108	8-15	11
1487109	8-15	19
1487110	8-15	17
1487111	8-15	8
1487112	8-15	23
1487114	8-15	21
1487115	8-15	26
1487118	1-99	3
1487120	8-15	28
1487121	8-15	16
1487122	1-103	23
	1-161	27
1487123	8-15	15
1487124	8-15	1
1487126	8-15	13
1487129	8-15	33
1487130	8-15	22
1487131	8-15	5
1487132	8-15	10
1487133	8-15	18
1487144	11-10	38
1487148	10-19	15
1487150	10-19	3
1487164	11-10	39
	13-15	27
	13-15	28
	13-16	40
	13-16	41
	13-23	24
	13-23	27
	13-24	48
	13-24	49
	13-24	50
	13-24	51
	13-31	24
	13-31	27
	13-32	48
	13-32	49
	13-32	50
	13-32	51
	13-37	27
	13-37	28
1487166	10-19	3
	10-19	4
	10-19	15
1487204	1-59	11
1487208	9-25	6
1487209	9-25	4
	9-41	6
1487427	10-29	1
1487428	5-14	2
	5-14	3
	5-14	4
	5-14	5
	5-14	6
	5-14	7
	5-14	8
	10-27	4
	10-27	7
	10-27	7
	10-27	7

NUMERICAL INDEX (continued)

PART NO.	PAGE	ITEM
1488747	9-13	31
1488751	1-63	3
1488752	1-63	
1488762	1-63	
1489140	11-5	
	11-7	
	11-9	
1489141	11-5	
	11-7	
	11-9	
1489286	7-10	
1489287	7-10	
1489290	7-10	39
1489291	7-10	39
1489295	7-15	3
1489296	7-15	3
1489297	7-13	12
	7-15	12
1489298	7-13	17
	7-15	15
1489299	7-13	18
	7-15	16
1489300	7-13	19
	7-15	17
1489301	7-13	20
	7-15	18
1489302	7-13	6
	7-15	6
1489303	7-13	8
	7-15	8
1489304	7-13	9
	7-15	9
1489305	7-13	10
	7-15	10
1489306	7-15	10
1489307	7-15	24
1489308	7-13	29
	7-15	29
1489309	7-15	21
1489313	9-19	1
1489314	9-19	1
1489315	9-19	10
1489316	9-19	12
1489317	9-19	13
1489318	9-19	16
1489319	9-19	20
1489320	9-19	27
1489405	7-5	40
1489407	7-5	36
1489411	7-5	32
1489416	7-13	3
1489417	7-13	3
1489420	7-13	28
1489421	7-13	25
1489424	9-17	
1489425	9-17	1
1489426	9-17	2
1489427	9-17	3
1489428	9-17	4
1489429	9-17	5
1489430	9-17	6
1489431	9-17	8
1489434	9-17	15
1489435	9-17	15
1489436	9-17	16
1489437	9-17	17
1489438	9-17	18
1489439	9-17	19
1489440	9-17	11
1489441	9-17	12
1489655	5-79	3
	5-120	1
	5-127	3
	5-128	4
	5-134	1
1489656	5-80	15
	5-84	18
	5-89	10
	5-113	10
	5-120	5
	5-127	1
	5-127	2
	5-127	3
	5-127	4
1489657	5-80	15
	5-84	18
	5-89	10
	5-113	10
	5-120	6
	5-127	1
	5-127	2
	5-127	3
	5-127	4
1489845	8-13	11
1489846	8-13	17
1489847	8-13	12
1489848	8-13	14
1489957	5-17	2
	5-17	3
	5-17	4
	5-17	7
	5-17	10
	5-17	14
	5-18	24
	5-18	35
	5-18	45
1489960	5-19	56
1490242	5-45	3
	5-45	11
	5-46	16
	5-46	21
	5-46	28
	5-49	9
	5-51	32
	5-55	8
	5-56	18
	5-56	24
	5-57	30
	5-57	40
	5-59	8
	5-60	22
	5-63	3
	5-64	15
	5-64	24
	5-67	8
	5-68	22
	5-69	36
	5-71	3
	5-72	16
	5-72	25
	5-75	6
	5-76	21
	5-77	34
	5-84	24
	5-84	26
	5-85	28
	5-87	5
	5-94	1
	5-95	1
	5-97	5
	5-98	6
	5-101	1
	5-101	2
	5-101	3
	5-101	4
	5-102	1
	5-103	1
	5-105	2
	5-105	4
	5-105	6
	5-105	8
	5-106	1
	5-106	2
	5-107	4
	5-108	4
	5-109	3
	5-117	11
	5-119	17
	5-126	1
1490243	5-45	3
	5-45	11
	5-46	16
	5-46	21
	5-47	28
	5-49	9
	5-51	32
	5-55	8
	5-56	18
	5-56	24
	5-57	30
	5-57	40
	5-59	8
	5-60	22
	5-63	3
	5-64	15
	5-64	24
	5-67	8
	5-68	22
	5-69	36
	5-71	3
	5-72	16
	5-72	25
	5-75	6
	5-76	21
	5-77	34
	5-84	24
	5-84	26
	5-85	28
	5-87	5
	5-94	1
	5-95	2
	5-97	6
	5-98	7
	5-101	1
	5-101	2
	5-101	3
	5-101	4
	5-102	2
	5-103	2
	5-105	2
	5-105	4
	5-105	6
	5-105	8
	5-106	1
	5-106	2
	5-107	5
	5-108	5
	5-109	3

See Service Manual for service procedures.
©2015 HYSTER COMPANY

NUMERICAL INDEX (continued)

PART NO.	PAGE	ITEM
	5-117	12
	5-119	18
	5-126	1
1490245	5-87	6
1490246	5-87	1
1490249	5-17	1
	5-17	9
	5-18	35
	5-18	45
1490250	5-17	14
	5-18	24
	5-18	45
1490252	5-114	5
1490266	10-7	8
1490398	1-143	39
1490469	6-2	2
1490490	13-7	29
1490533	13-7	22
1490566	9-6	68
	9-10	68
	10-9	3
1490612	9-14	75
1490617	4-3	13
	9-13	43
1490618	13-7	25
1490626	13-7	30
1490627	13-7	31
1490711	9-14	53
1490712	9-14	55
1490713	9-14	61
1490813	9-5	24
	9-9	24
	9-13	47
1491015	9-41	14
1491016	9-41	18
1491020	9-41	27
1491028	1-55	14
1491029	1-15	12
1491107	11-17	24
1491350	13-15	27
	13-15	28
	13-16	40
	13-16	41
	13-23	24
	13-23	27
	13-24	48
	13-24	49
	13-24	50
	13-24	51
	13-31	24
	13-31	27
	13-32	48
	13-32	49
	13-32	50
	13-32	51
	13-37	27
	13-37	28
1491360	1-5	26
1491361	9-6	75
	9-10	75
1491362	9-6	73
	9-10	73
1491468	1-167	1
1491495	1-49	2
1491719	10-23	21
1491764	10-15	14
	10-15	23
	10-15	29
1491765	10-15	7
	10-15	10
1491767	10-15	13
1491768	10-16	33
1491771	10-15	20
	10-15	26
1491772	10-15	4
	10-25	
1491773	10-15	5
	10-15	21
	10-15	27
	10-25	8
1491774	10-15	25
1491775	10-15	8
1491777	10-15	17
1491779	10-15	2
1491782	10-23	1
1491783	10-23	7
1491784	10-23	10
1491786	10-23	8
1491787	10-23	
1491855	10-15	16
1491858	10-23	31
	10-25	12
1492133	1-15	17
1492139	1-15	11
	1-53	1
	1-147	8
	1-167	14
	8-13	8
1492140	1-15	9
	1-35	6
	1-49	4
	1-53	2
	1-147	9
	1-153	4
	1-157	5
1492141	1-53	12
1492146	1-55	5
1492147	1-53	6
1492149	1-53	4
1492156	1-43	4
1492163	1-15	28
	1-71	7
	1-105	3
	1-167	5
1492166	1-15	7
1492167	1-15	6
	1-55	21
	1-148	
1492169	1-49	8
1492173	1-49	9
1492175	1-49	2
1492176	1-167	
1492195	1-16	1
1492196	1-16	5
1492197	1-15	23
1492200	1-16	
1492221	9-41	5
1492225	9-41	13
1492231	1-93	6
1492252	8-13	13
1492253	1-93	5
1492260	8-13	
1492329	14-7	
1492358	9-37	1
1492359	9-37	2
1492360	9-37	3
1492361	9-37	4
1492367	9-34	
1492368	9-34	1
	9-35	8
	9-39	
1492369	9-14	78
1492370	9-14	78
1492530	10-21	2
1493276	1-92	2
	1-100	2
	1-158	2
1493278	1-15	25
1493281	1-35	2
1493282	1-35	1
	1-89	5
1493283	1-35	3
1493308	1-19	14
	1-22	20
	1-26	20
	1-30	20
	1-34	20
1493312	1-13	2
	1-37	10
	1-81	2
	1-141	33
1493313	1-19	5
1493316	1-19	4
1493318	1-19	10
1493320	1-39	9
1493321	1-39	7
1493324	1-39	6
1493328	1-39	1
1493329	1-39	11
1493332	1-45	15
1493333	1-45	16
1493334	1-45	18
1493335	1-45	14
1493336	1-43	17
	1-45	1
1493337	1-45	11
1493339	1-45	8
1493341	1-45	5
1493344	1-45	10
1493370	1-49	1
1493372	1-15	27
1493373	1-15	26
1493380	1-64	7
	9-41	17
1493381	1-64	6
1493382	1-64	8
1493383	1-64	4
1493384	1-64	9
1493385	1-64	5
1493386	1-64	3
	9-41	7
1493387	1-64	10
1493394	1-81	9
1493397	1-22	29
	1-26	29
	1-30	29
	1-34	29
	1-39	3
	1-43	13
	1-81	3
	1-141	8
	4-19	22
1493428	5-45	1
	5-55	1
	5-63	1
	5-71	1
	5-79	9
	5-84	20

©2015 HYSTER COMPANY

NUMERICAL INDEX (continued)

PART NO.	PAGE	ITEM
	5-84	21
	5-84	22
1493430	5-46	26
	5-49	7
	5-51	33
	5-57	38
	5-59	12
	5-60	23
	5-64	22
	5-68	19
	5-68	23
	5-72	23
	5-76	17
	5-76	19
	5-80	13
	5-84	23
	5-84	25
	5-84	27
	5-119	19
1493431	5-45	8
	5-59	1
	5-63	8
	5-75	1
1493432	5-45	8
	5-59	1
	5-63	8
	5-75	1
1493434	5-67	15
	5-75	13
	5-101	1
	5-101	2
	5-101	3
	5-101	4
	5-114	2
1493435	5-46	25
	5-47	31
	5-50	18
	5-56	21
	5-56	22
	5-59	7
	5-64	21
	5-64	27
	5-67	1
	5-72	22
	5-72	28
	5-75	5
1493436	5-46	20
	5-46	24
	5-46	25
	5-47	31
	5-47	32
	5-47	33
	5-50	18
	5-56	19
	5-56	20
	5-56	21
	5-56	22
	5-56	23
	5-56	27
	5-59	7
	5-64	19
	5-64	20
	5-64	21
	5-64	27
	5-65	28
	5-65	29
	5-67	1
	5-72	20
	5-72	21
	5-72	22
	5-72	28
	5-72	29
	5-73	30
	5-75	5
1493437	5-94	1
	5-126	1
1493444	5-98	9
	5-109	2
	5-110	2
	5-131	2
1493445	5-98	9
	5-109	2
	5-110	2
	5-131	2
1493446	5-46	24
	5-47	32
	5-56	20
	5-56	23
	5-64	20
	5-65	28
	5-72	21
	5-72	29
1493447	5-46	20
	5-47	33
	5-56	19
	5-56	27
	5-64	19
	5-65	29
	5-72	20
	5-73	30
1493448	5-50	23
	5-61	28
	5-69	31
	5-69	34
	5-77	29
	5-105	1
	5-105	10
1493449	5-63	6
	5-71	6
1493455	5-45	7
	5-50	14
	5-50	15
	5-56	15
	5-56	16
	5-60	18
	5-63	7
	5-67	6
	5-67	7
	5-69	29
	5-71	7
	5-71	10
	5-71	11
	5-77	27
1493459	5-46	19
	5-50	23
	5-55	12
	5-57	37
	5-61	28
	5-63	7
	5-69	31
	5-69	34
	5-71	7
	5-77	29
	5-77	32
	5-117	24
	5-119	31
1493465	4-3	36
	5-46	17
	5-46	22
	5-47	29
	5-49	10
	5-51	31
	5-87	5
	5-94	2
	5-95	4
	5-105	3
	5-105	5
	5-105	7
	5-105	9
	5-107	1
	5-108	1
	5-111	1
	5-114	1
	5-117	21
	5-119	28
	5-126	2
1493466	5-87	2
	5-87	3
	5-113	9
1493474	1-141	19
1493476	1-147	5
1493478	1-147	6
1493480	1-147	4
1493486	1-147	13
1493491	1-37	6
1493494	1-141	22
1493498	1-141	23
1493499	1-141	15
1493578	1-147	
1494147	9-5	3
	9-9	3
	9-37	
1494299	10-3	31
1494312	10-11	7
	10-13	11
1494320	10-15	14
	10-15	23
	10-15	29
1494372	10-3	8
1494476	9-13	2
1494516	10-27	2
	10-29	2
1494518	10-27	3
	10-29	3
1494519	9-13	42
1494655	9-14	56
1494675	4-19	1
1494677	1-55	7
1494678	1-55	7
1494691	1-55	7
1494694	1-55	7
1494804	10-21	27
	10-23	
1494901	14-13	1
1495187	10-23	18
1495188	10-23	
1495258	10-23	9
1495259	10-23	11
1495260	10-23	12
1495261	10-23	14
1495262	10-16	33
	10-23	19
1495263	10-16	33
1495265	10-23	30
	10-23	31
	10-25	12
1495266	10-23	6
1495267	10-23	2

See Service Manual for service procedures.
©2015 HYSTER COMPANY

NUMERICAL INDEX (continued)

PART NO.	PAGE	ITEM
1495286	10-23	29
1495287	10-23	28
1495288	10-23	5
1495289	10-23	4
1495371	1-22	10
	1-26	10
	1-30	10
	1-34	10
1495372	1-22	11
	1-26	11
	1-30	11
	1-34	11
1495431	1-22	12
	1-26	12
	1-30	12
	1-34	12
1495435	1-22	21
	1-26	21
1495438	1-30	21
	1-34	21
1495454	1-22	25
	1-26	25
	1-30	25
	1-34	25
1495456	1-22	30
	1-26	30
	1-30	30
	1-34	30
1495623	7-17	1
1495624	7-17	2
1495625	7-17	3
1495626	7-17	4
1495627	7-17	5
1495628	7-17	6
1495629	7-17	7
1495630	7-17	8
1495631	7-17	9
1495632	7-17	10
1495633	7-17	11
1495634	7-17	12
1495635	7-17	13
1495636	7-17	14
1495637	7-17	15
1495638	7-17	16
1495639	7-17	17
1495640	7-17	18
1495641	7-17	19
1495642	7-17	20
1495643	7-17	21
1495644	7-17	22
1495645	7-17	23
1495646	7-17	24
1495647	7-17	25
1495648	7-17	26
1495653	7-15	20
1495654	7-15	20
1496046	9-6	69
	9-10	69
1496047	9-6	70
	9-10	70
1496048	9-6	71
	9-10	71
1496049	9-6	68
	9-10	68
1496282	9-35	14
1496296	1-59	20
1496368	1-59	30
1496449	13-16	33
	13-23	39
	13-32	39
1496459	1-59	24
	1-69	9
1496482	11-18	42
1496800	1-161	21
1496883	5-50	27
	5-60	14
	5-67	14
	5-68	24
	5-75	12
	5-76	22
1496884	5-17	14
	5-18	35
1496900	10-16	
	10-25	
1496901	10-16	34
1496902	10-15	6
	10-15	22
	10-15	28
	10-25	8
1496907	5-124	5
	5-124	15
1497230	14-7	10
	14-7	
1497287	5-98	10
	5-109	2
	5-110	2
	5-131	2
1497358	5-98	10
	5-109	2
	5-110	2
	5-131	2
1497361	5-83	4
1497362	5-83	3
1497364	5-117	13
	5-119	21
1497365	5-117	14
	5-119	22
1497366	5-117	15
	5-119	23
1497903	7-3	6
1497998	9-19	33
1497999	9-19	33
1498250	9-6	73
	9-10	73
1498251	9-6	75
	9-11	75
1498271	9-19	3
1498273	8-3	28
1498274	8-3	26
1498303	9-19	33
1498304	9-19	33
1498305	9-20	33
1498308	9-19	33
1498309	9-19	33
1498334	1-15	20
1498335	1-15	21
1498336	1-15	8
	1-37	3
	1-112	6
1498338	1-13	4
	1-112	8
	1-141	17
1498341	1-39	2
1498342	1-39	5
1498343	1-39	12
1498344	1-45	3
1498347	1-45	2
1498348	1-45	12
1498354	1-15	18
1498355	1-15	16
1498356	1-15	15
	1-141	27
1498357	1-15	14
	1-15	31
	1-141	31
	1-157	4
1498360	1-15	33
1498362	1-15	22
1498363	1-15	24
	1-153	12
1498365	1-35	5
1498368	9-13	28
1498370	1-165	2
1498371	1-165	7
1498372	1-165	6
1498373	1-165	5
	14-11	8
1498375	1-55	14
1498376	1-15	12
1498383	1-147	15
1498385	1-141	7
1498387	9-41	23
1498502	5-79	3
1498506	11-18	32
	11-22	36
	14-19	36
1498750	1-39	
1499932	1-49	13
1499936	1-112	1
1500170	10-15	25
1500217	10-9	6
1500407	10-21	8
1500717	10-32	
	10-33	1
1500718	10-33	2
1500869	1-77	20
1500871	1-77	14
1500912	5-87	4
1500913	5-45	1
	5-55	1
	5-63	1
	5-71	1
	5-79	9
	5-84	20
	5-84	21
	5-84	22
1500914	5-46	27
	5-57	39
	5-64	23
	5-72	24
	5-87	4
	5-102	5
	5-131	3
1500919	5-84	17
1500925	5-45	2
	5-55	2
	5-63	2
	5-71	2
	5-128	5
1500927	5-79	8
	5-83	13
1500929	5-83	15
1501919	5-50	26
	5-60	15
	5-68	25
	5-76	23
1502008	1-109	5
	1-111	3

©2015 HYSTER COMPANY

NUMERICAL INDEX (continued)

PART NO.	PAGE	ITEM
1502373	10-21	24
1502390	11-29	18
	11-33	18
	13-23	20
	13-31	20
1502490	5-106	4
1502491	5-102	4
1502570	10-15	1
1502571	10-15	3
1502574	10-15	24
1502576	10-15	30
1502582	10-15	13
1502625	5-80	17
	5-97	1
	5-98	1
	5-109	1
	5-110	1
	5-125	1
1502626	5-80	17
	5-97	2
	5-98	2
	5-109	1
	5-110	1
	5-125	2
1502627	5-125	5
1502712	5-68	17
	5-76	15
	5-83	16
1502750	5-107	7
	5-108	7
1502865	11-25	1
	11-29	1
	11-33	1
	11-37	1
1502887	10-32	4
1502888	10-32	1
1502904	11-29	16
	11-33	16
1502905	11-29	17
	11-33	17
1502918	11-25	5
	11-29	2
	11-33	2
	11-37	5
	13-15	14
	13-23	32
	13-31	32
	13-37	14
1502920	5-56	25
	5-57	31
	5-57	41
	5-59	9
	5-60	21
	5-63	4
	5-64	16
	5-64	25
	5-67	9
	5-67	12
	5-68	21
	5-71	4
	5-72	17
	5-72	26
	5-75	7
	5-75	8
	5-76	20
1502921	5-50	23
	5-50	24
	5-60	17
	5-61	28
	5-69	30
	5-69	34
	5-77	28
	5-77	32
1502922	5-47	33
1503076	10-32	
1503078	10-32	9
1503079	10-32	11
1503082	10-32	2
1503083	10-32	10
1503084	11-33	31
1503634	5-49	2
	5-55	4
1503880	1-143	7
1503882	1-143	7
1503884	1-143	7
1503886	1-143	7
1504059	5-27	
	10-29	5
1504623	13-5	3
1504624	13-5	4
1504625	13-5	5
1504626	13-5	
1504628	13-5	7
1504629	13-5	8
1504632	13-5	9
1504633	13-5	10
1504634	13-5	11
1504635	13-5	6
1504861	8-15	7
1504862	8-15	9
1504863	8-15	30
1504864	8-15	34
1504865	8-15	14
1504866	8-15	32
1504867	8-15	29
1504868	8-15	31
1504917	5-25	8
	5-27	8
1504942	1-15	3
1504953	1-7	32
	1-9	32
	1-19	12
1504954	1-19	11
1504955	1-7	28
	1-9	28
	1-19	10
1506109	13-24	65
	13-25	75
	13-32	65
1506110	13-24	62
	13-32	62
1506667	1-57	10
1506668	1-57	9
1506669	1-57	8
	1-141	12
1506670	1-57	7
	1-141	28
1506671	1-57	5
1506672	1-57	4
1506673	1-57	3
1506677	1-112	2
1506678	1-49	16
1506679	1-49	12
1506680	1-49	10
1506738	1-22	27
	1-26	27
	1-30	27
	1-34	27
	1-43	12
	1-57	6
	4-19	21
	9-41	35
1506748	1-46	6
1506749	1-46	3
	1-46	8
1506750	1-46	5
1506751	1-46	1
1506756	1-147	
1506762	5-50	21
	5-87	1
1506809	11-38	1
1506810	11-38	1
1506811	11-38	1
1506812	11-38	1
1506813	11-38	1
1506825	1-141	24
1506827	1-141	20
1506881	5-117	6
	5-119	5
1506883	5-117	7
	5-119	6
1506885	5-117	8
	5-119	32
1507089	2-85	11
1507090	2-85	12
1507291	13-15	1
	13-23	1
	13-31	1
	13-37	1
1507360	1-11	1
	14-17	3
1507394	4-9	13
	4-13	9
1507483	13-15	13
	13-23	18
	13-31	18
	13-37	13
1507557	13-23	22
	13-31	22
1507558	13-23	22
	13-31	22
1507725	5-49	1
	5-55	3
	5-68	16
	5-76	14
1507736	13-5	1
1507737	13-5	2
1508206	5-46	18
	5-50	17
	5-50	19
	5-55	13
	5-57	33
	5-57	35
	5-63	11
	5-64	14
	5-67	4
	5-71	8
	5-71	12
	5-71	15
1508229	1-37	5
1508258	1-151	8
1509103	3-5	8
1509104	3-5	8
1510538	1-103	7
1510542	1-103	
1510564	6-37	12
1510565	6-37	12
1510811	9-29	19

See Service Manual for service procedures.
©2015 HYSTER COMPANY

NUMERICAL INDEX (continued)

PART NO.	PAGE	ITEM
	9-31	18
1510841	11-18	44
1511548	7-13	1
	7-13	27
	7-15	25
1511889	9-31	19
1511952	3-9	3
	3-23	5
	3-25	5
	3-25	
	3-59	2
	3-74	1
	4-25	2
1511953	2-66	5
	3-9	2
	3-46	1
1511954	3-9	14
1511955	3-9	6
1511956	3-9	4
1511957	3-65	31
1511958	3-9	5
1511959	3-9	1
1511960	3-9	12
1511961	3-9	9
	3-9	11
	5-33	7
1511962	3-9	8
1511963	3-9	7
1511965	4-25	13
1511966	3-11	1
1511969	3-13	5
	5-33	13
	5-43	2
1511970	2-9	3
	2-51	9
	2-53	9
	2-55	11
	3-13	4
	3-23	14
	4-37	12
	4-39	1
1511972	2-27	11
1511974	3-13	1
1511976	3-43	6
1511977	2-66	6
	4-37	13
	4-39	3
1511978	5-37	4
	5-38	7
1511981	2-51	3
	2-53	3
	2-55	4
1511996	3-73	2
1511998	4-39	6
1512003	5-37	2
	5-38	1
	5-39	1
1512004	2-9	4
	2-73	8
	2-75	2
	3-51	3
	3-65	18
	3-75	1
	4-20	1
	4-31	4
	5-29	7
	5-39	2
1512005	3-6	3
	3-12	5
	4-37	14
	4-39	2
	5-33	12
	5-37	3
	5-38	3
	5-39	3
1512006	5-37	7
	5-38	6
	5-39	4
1512008	5-39	7
1512009	5-37	9
	5-38	4
1512011	3-7	1
1512012	3-7	2
1512015	2-48	5
	3-35	5
1512025	2-48	3
	3-35	6
1512026	2-48	6
	3-35	4
1512027	2-48	2
	3-35	7
1512029	2-48	8
	3-35	8
	3-59	7
1512033	3-31	13
	5-43	9
1512045	3-39	6
1512046	2-51	7
	2-53	7
	2-55	7
	3-39	3
1512047	2-51	10
	2-53	10
	2-55	8
	3-39	8
1512048	2-51	11
	2-53	11
	2-55	9
	3-39	7
1512049	2-51	
	2-55	
	3-39	12
1512050	3-39	13
1512051	4-26	49
1512052	3-39	10
1512053	3-39	2
1512054	2-55	13
1512056	3-39	5
1512106	2-50	3
	3-36	3
1512107	2-50	4
	3-36	4
1512109	3-46	2
1512111	2-41	11
	2-44	1
	2-56	3
	2-65	9
	2-66	7
	3-45	6
	5-31	5
1512112	2-44	5
	3-31	3
1512118	2-44	7
	3-31	2
1512119	3-31	4
1512123	3-31	12
1512130	2-63	1
	3-23	18
	3-49	4
1512132	3-49	1
1512134	3-51	5
1512135	3-51	6
1512136	3-51	1
1512137	3-51	8
1512138	3-51	7
1512139	3-51	2
1512146	2-23	7
	2-25	8
	2-25	15
	3-55	2
1512149	3-55	4
1512150	3-55	8
1512151	3-55	8
1512152	3-55	8
1512153	3-55	8
1512161	3-14	2
1512163	3-14	4
1512164	3-14	5
1512287	2-48	
1512292	2-11	
	2-18	7
	2-19	1
	2-71	2
	3-23	3
	3-25	4
	3-25	
1512295	2-16	2
	3-45	13
1512296	2-16	1
	3-45	3
	3-59	6
1512300	3-45	10
1512302	3-59	3
1512304	2-33	4
	2-35	19
	3-23	21
	3-59	1
1512305	2-18	3
	2-19	4
	3-59	4
	3-74	4
1512307	3-69	7
1512308	3-69	5
1512309	3-69	8
1512310	3-69	6
1512311	3-69	9
1512312	3-69	11
1512315	3-74	3
1512316	2-55	2
	3-74	2
1512318	3-75	2
1512319	3-75	3
1512321	3-76	
1512322	2-81	3
	3-76	1
1512326	3-43	5
1512327	3-43	8
1512328	2-11	12
	2-48	10
	3-17	9
	3-43	9
1512330	3-43	2
1512331	3-43	3
1512336	3-43	7
1512418	2-57	4
	4-34	1
1512423	2-56	4
1512424	2-48	

©2015 HYSTER COMPANY

NUMERICAL INDEX (continued)

PART NO.	PAGE	ITEM
	3-35	2
1512433	2-55	14
1512435	3-39	4
1512443	3-9	10
1512445	2-50	2
	3-36	2
1512448	2-44	2
	3-25	6
	3-31	5
1512449	3-31	6
1512451	3-31	7
1512452	3-31	9
1512453	3-31	1
1512456	2-60	1
	3-52	1
1512503	2-33	13
	2-35	9
	4-25	15
	5-37	5
1512585	2-33	10
	2-35	18
	3-23	9
1512586	2-37	7
1512587	3-45	8
	4-26	56
1512588	3-45	9
	4-25	26
	4-26	57
1512728	3-32	1
1512739	4-26	64
1512740	4-26	65
1512743	4-26	48
1512778	4-25	7
1512822	1-16	3
1513191	2-17	5
	3-13	3
1513294	3-65	11
1513318	3-67	13
1513328	3-67	3
1513332	3-67	8
1513333	3-67	20
1513334	3-67	4
1513337	2-72	1
	3-61	4
1513338	2-72	2
	3-61	5
1513411	3-65	28
1513421	4-25	22
1513430	2-72	3
	2-73	2
	2-75	8
1513597	10-15	9
1513701	2-75	12
1513709	3-43	3
1513712	2-45	
	3-69	2
	4-25	42
	4-31	3
	5-33	15
1513725	2-16	3
	2-69	22
	3-41	8
1513734	3-70	1
1513736	3-41	5
1513743	4-20	3
	4-31	5
1513748	3-41	7
1513749	2-21	2
	2-53	12
	3-45	15
	3-65	22
1513751	3-41	1
1513769	3-51	
1513772	2-44	6
	3-31	8
1513776	3-45	14
1513788	2-33	11
	2-35	20
1513791	4-25	9
	4-32	3
1513792	2-80	1
1513793	2-41	17
	4-25	8
1513794	3-51	4
1513806	3-57	4
1513836	2-13	17
1513878	3-23	20
1513947	1-143	2
1514033	8-13	20
1514331	7-17	
1514339	2-37	6
	2-61	2
	2-73	9
	2-75	3
	3-23	4
	3-65	6
1514346	2-21	7
	2-29	10
	3-19	3
1514354	2-29	1
	2-31	9
	3-19	10
1514359	3-6	2
1514483	3-65	3
	4-26	55
1514504	2-41	21
	5-31	7
1514535	5-43	10
1514542	3-23	2
1514565	3-65	16
1514566	3-65	10
1514571	2-73	7
	2-75	11
1514603	5-67	15
	5-75	13
1514712	1-99	7
1514865	10-15	14
	10-15	23
	10-15	29
1514903	4-9	13
	4-11	7
	4-13	9
1515337	1-22	2
	1-26	2
	1-30	2
	1-34	2
	1-39	14
1515675	1-43	16
1515787	2-17	3
	3-62	3
1515836	5-33	8
1515840	2-19	3
1515895	2-11	6
	2-11	8
1515897	2-35	1
1515898	2-35	2
1516203	9-7	77
1516205	9-6	42
	10-7	26
1516209	10-3	7
1516214	10-3	3
1516244	5-111	1
1516245	5-46	18
	5-50	17
	5-50	21
	5-111	1
1516865	14-13	1
1516867	14-13	1
1516869	14-13	1
1516981	4-25	4
1517003	2-18	5
1517010	2-35	5
	3-23	15
1517011	2-35	6
	3-23	16
1517069	2-72	3
	2-73	2
	2-75	9
1517094	2-14	4
	2-17	2
	3-62	4
1517110	4-20	2
	4-31	6
1517118	5-29	2
1517119	2-35	4
	3-23	11
1517120	5-29	5
	5-31	2
	5-33	18
1517122	5-33	14
1517185	3-25	8
	3-25	10
1517212	3-67	27
1517213	3-67	30
1517214	3-67	7
1517216	3-67	17
1517217	3-67	23
1517220	3-67	5
1517221	3-67	19
1517222	3-67	33
1517223	3-67	22
1517224	3-67	25
1517225	3-67	32
1517226	3-67	11
1517230	3-67	18
1517231	3-67	29
1517232	3-67	6
1517237	3-67	26
1517246	2-69	2
	2-69	9
1517250	2-42	1
1517256	2-47	2
1517257	2-47	1
	2-82	1
1517266	2-41	19
	5-31	1
1517268	3-65	24
1517269	2-75	13
	3-65	25
1517270	3-65	27
1518112	5-45	9
	5-46	13
	5-49	3
	5-49	4
	5-55	5
	5-55	6
	5-56	28
	5-59	2

See Service Manual for service procedures.
©2015 HYSTER COMPANY

NUMERICAL INDEX (continued)

PART NO.	PAGE	ITEM
	5-63	9
	5-67	10
	5-68	16
	5-75	2
	5-75	10
	5-76	14
	5-79	4
	5-87	3
	5-87	5
1518879	10-27	1
	10-39	
1518880	10-27	9
1519701	9-14	63
1519702	9-14	72
1520332	10-16	35
1520537	14-13	1
1520539	14-13	1
1520541	8-13	6
1520542	8-13	10
1520596	9-41	8
1520714	1-57	14
1520807	10-15	18
1520808	10-15	18
1520841	1-59	1
	9-41	15
1521117	10-15	12
1521118	10-15	11
1521682	2-33	5
	2-35	13
	3-23	19
1521683	2-33	9
	2-35	14
	3-23	8
1521685	2-33	6
	2-33	7
	2-33	8
	2-35	16
	2-35	22
	3-23	7
	3-23	24
1521686	3-23	
1521691	2-33	14
	2-35	7
	3-23	22
1521692	3-23	23
1521693	3-23	26
1521694	3-23	17
1521695	2-35	3
	3-23	10
1521696	3-23	25
1521697	3-23	12
1521701	3-19	2
1521705	3-19	
1521706	3-19	
1521707	3-19	
1521708	3-19	
1521712	3-41	4
1521875	3-41	9
1521880	3-41	10
1521888	2-15	2
1521889	2-15	1
1521891	2-17	4
	3-62	2
1521897	2-44	9
1521901	2-37	1
1521913	2-37	13
1521914	2-37	13
	2-37	14
1521915	2-37	11
1521919	2-37	4
1521937	2-69	8
1521938	2-20	1
	2-51	2
	2-53	2
1521939	2-69	1
1521943	2-69	21
1521944	2-69	20
1521952	2-47	4
1521962	3-65	26
1521973	2-80	2
1521975	3-76	4
1524146	10-27	6
	10-27	6
	10-27	6
	10-27	6
	10-27	6
1524147	10-27	6
	10-27	6
	10-27	6
	10-27	6
	10-27	6
1524148	10-27	6
	10-27	6
1524551	2-62	1
1524553	4-9	16
	4-11	10
	4-13	12
1524554	4-9	21
	4-11	12
	4-13	14
1524555	4-9	6
	4-11	1
	4-13	4
1525429	1-57	1
1525589	5-101	5
	5-103	5
	5-105	11
	5-106	3
1525711	9-14	63
1527090	5-124	8
1527091	5-124	8
	14-19	23
1527128	10-15	15
1527372	11-25	18
	11-29	31
	13-16	48
	13-23	34
	13-31	34
1527813	10-11	15
	10-13	8
	10-19	10
	10-19	11
	10-19	15
	10-21	4
	10-21	6
	10-21	12
	10-21	26
1527816	13-16	31
	13-16	39
	13-24	44
	13-24	47
	13-24	70
	13-32	44
	13-32	47
	13-32	70
	13-33	72
1527817	11-9	10
	11-10	36
	13-15	22
	13-23	23
	13-23	30
	13-31	23
	13-31	30
	13-37	22
1527818	13-16	37
	13-24	43
	13-32	43
1527821	10-3	3
	10-3	6
1527880	4-3	30
1527890	11-21	9
	14-19	9
1527980	4-11	16
1528456	10-11	3
1528714	1-120	10
1528880	13-7	19
1529016	10-7	
	11-10	32
1529052	5-46	26
	5-49	7
	5-51	33
	5-57	38
	5-59	12
	5-60	23
	5-64	22
	5-68	19
	5-68	23
	5-72	23
	5-76	17
	5-76	19
	5-80	13
	5-84	23
	5-84	25
	5-85	27
	5-119	20
1529190	12-17	5
	12-19	7
	12-21	6
	12-23	8
	12-25	7
	13-12	37
	13-20	51
	13-28	52
	13-35	13
1529191	12-9	9
	12-9	12
	12-15	8
	12-17	4
	12-19	3
	12-19	6
	12-21	4
	12-23	3
	12-23	7
	12-25	3
	13-11	4
	13-19	5
	13-27	5
	13-35	12
1529198	12-9	15
	12-15	2
1529199	12-9	14
1529204	12-9	20
1529205	12-9	24
1529209	12-7	14
1529210	12-5	6
	12-15	1
1529211	12-7	15
	12-15	4

©2015 HYSTER COMPANY

NUMERICAL INDEX (continued)

PART NO.	PAGE	ITEM
1529212	12-7	13
1529217	12-7	2
1529218	12-7	3
1529219	12-7	4
1529221	12-9	31
	12-15	17
	12-19	26
	12-21	17
	12-23	37
	13-12	39
	13-20	53
	13-28	50
1529226	12-7	6
1529227	12-17	14
	12-19	25
	12-21	18
	12-23	40
	12-25	28
	13-12	36
	13-20	48
	13-28	59
	13-35	14
1529228	12-7	5
1529229	12-9	27
1529233	12-9	33
1529236	13-12	43
	13-20	58
	13-28	62
	13-35	27
1529355	11-17	3
	11-21	27
	14-19	27
1529665	1-5	32
1530385	1-141	26
1530386	1-141	30
1530668	11-17	28
1530732	6-9	39
1531404	2-5	19
	3-3	20
1531587	6-41	2
1532341	1-5	31
	1-7	6
1532482	1-75	14
1532484	1-75	15
1532571	5-79	1
	5-79	2
1532822	6-2	1
1532823	6-2	1
	6-2	1
1532830	13-12	43
	13-20	
	13-28	
	13-35	27
1532831	13-12	43
	13-20	
	13-28	
	13-35	27
1533477	10-11	5
	10-13	18
1533520	5-9	13
1533648	1-59	35
1533649	6-45	29
	6-47	28
	9-5	38
	9-9	38
	9-13	5
	9-14	
	10-3	12
	11-21	18
	14-19	18
1533661	1-59	34
	1-75	10
	1-77	10
	6-45	27
	10-3	15
1533664	9-5	37
	9-9	37
	9-13	4
	9-14	
	10-3	13
1533665	11-17	27
	11-21	19
	14-19	19
1534425	1-141	4
1534474	1-141	16
1534475	1-141	11
1534476	1-141	18
1534477	1-141	3
1534481	1-141	29
1534505	12-15	3
1534506	12-15	5
1534507	12-15	6
1534508	12-19	27
	12-21	14
	12-23	36
	13-12	40
	13-20	54
	13-28	49
1534510	12-17	12
	12-19	23
	12-21	16
	12-23	26
	12-25	20
	13-11	24
	13-19	28
	13-27	29
	13-35	20
1534511	12-15	7
1534543	12-15	9
1534545	12-15	10
1534546	12-15	11
1534547	12-15	12
1534551	12-15	16
	12-17	9
	12-19	21
	12-21	19
	12-23	24
	12-25	18
	13-11	22
	13-19	27
	13-27	27
	13-35	17
1534793	5-9	10
1536281	10-7	35
1536288	10-11	13
1536311	10-11	12
	10-13	5
1536887	12-17	10
1536888	12-17	11
	12-19	22
	12-21	15
	12-23	25
	12-25	19
	13-11	25
	13-19	30
	13-27	30
	13-35	19
1536889	12-17	13
	12-19	24
	12-21	20
	12-23	27
	12-25	21
	13-11	23
	13-19	29
	13-27	28
	13-35	18
1536890	12-17	7
	12-19	11
	12-21	11
	12-23	13
	12-25	10
	13-11	6
	13-19	7
	13-27	7
	13-35	4
1536891	12-17	8
	12-19	12
	12-21	8
	12-23	14
	12-25	11
	13-11	10
	13-19	14
	13-27	14
	13-35	7
1536892	12-17	6
	12-19	8
	12-21	7
	12-23	9
	12-25	8
	13-12	38
	13-20	52
	13-28	51
	13-35	11
1536897	12-19	16
	12-21	26
	13-11	16
1536898	12-19	18
	12-21	25
	12-23	21
	13-11	21
	13-19	24
	13-27	24
1536899	12-19	17
	12-21	24
	12-23	22
	13-11	20
	13-19	25
	13-27	25
1536900	12-19	19
	12-21	23
	12-23	20
	12-23	35
	12-25	31
	13-11	28
	13-19	11
	13-27	11
	13-35	24
1536901	12-19	15
	12-21	21
	12-23	17
	12-25	14
	13-11	17
	13-19	21
	13-27	21
1536902	12-23	23
	12-25	23
	13-12	
	13-19	26

See Service Manual for service procedures.
©2015 HYSTER COMPANY

NUMERICAL INDEX (continued)

PART NO.	PAGE	ITEM
	13-27	26
1536906	12-9	8
	12-9	11
	12-19	4
	12-21	5
	12-23	4
	12-25	4
	13-11	5
	13-19	6
	13-27	6
1536972	12-23	19
	13-11	19
	13-19	23
	13-27	23
1536973	13-11	2
	13-19	3
	13-27	3
	13-35	2
1536978	13-12	42
	13-19	35
	13-28	61
	13-35	26
1536979	13-11	26
	13-19	31
	13-27	31
	13-28	64
	13-35	22
1536982	12-9	13
	13-12	35
	13-19	47
	13-28	60
	13-35	15
1536983	13-27	35
1537010	13-19	37
	13-27	38
1537011	13-19	36
	13-27	39
1537012	13-19	39
	13-27	40
1537014	13-19	38
	13-27	41
1537017	12-23	33
	12-25	33
	13-19	13
	13-27	13
1537022	12-23	39
	12-25	29
	13-20	49
	13-28	53
1537023	12-23	38
	12-25	30
	13-20	50
	13-28	54
1537031	13-28	58
1537032	12-25	17
1537033	12-25	15
	13-28	55
1538177	12-5	8
1538217	1-72	7
1538811	8-7	
1538899	12-5	5
1538936	10-11	2
	10-13	22
1539034	1-141	5
1539225	13-3	2
1539226	13-3	3
1539227	13-3	4
1539228	13-3	5
1539229	13-3	6
1539230	13-3	7
1539231	13-3	1
1539232	13-3	1
1539233	13-3	1
1539234	13-3	5
1539235	13-3	6
1541841	5-6	44
	5-9	44
1543316	2-29	3
	3-19	5
1543317	2-29	2
	3-19	4
1543318	2-29	4
	3-19	6
1543321	3-23	13
1543347	3-43	1
1543348	3-43	1
1543351	5-37	8
1543352	5-37	6
1543359	4-37	4
	4-39	5
1543361	3-39	1
1543362	3-39	9
1543363	3-39	11
1543424	3-51	10
1543429	3-51	9
1543430	3-51	9
1543432	3-51	
1543435	2-41	4
	2-41	7
	4-25	17
	4-25	44
	5-31	15
	5-31	16
	5-33	11
1543436	5-29	6
	5-33	10
1543437	2-41	2
	5-29	8
	5-31	6
1543439	2-41	7
	5-29	10
	5-31	14
1543440	2-41	7
1543445	2-23	11
	3-55	9
1543446	2-25	7
1543450	3-25	2
1543451	3-25	1
1543455	3-25	13
1543711	3-67	12
1543714	3-67	9
1543717	3-67	31
1543726	3-67	14
1543732	3-67	28
1543733	3-67	24
1543734	3-67	15
1543877	3-57	11
1543878	3-57	9
1543879	3-57	10
1543881	3-57	8
1543882	3-57	7
1543883	3-57	
1543884	3-57	5
1543885	3-57	6
1543886	3-57	3
1543887	3-57	
1543889	3-57	2
1543891	3-57	1
1543892	3-57	1
1543895	3-33	3
1543897	3-33	4
1544774	2-7	6
	3-5	6
1544775	2-7	9
	3-5	10
1545063	1-143	14
1545202	5-114	2
1545532	14-3	3
1546697	5-114	2
1547154	12-5	9
1547279	5-134	
1547492	9-29	11
	9-31	11
1547766	4-7	1
	9-13	32
	9-29	34
	9-31	28
1552286	3-31	10
1552288	5-29	4
1552716	2-70	2
1552880	5-34	1
	5-35	1
1553261	2-23	9
	2-25	4
	3-55	7
1553262	2-23	9
	2-25	5
	3-55	6
1553768	4-26	54
1553781	3-41	11
1553952	2-69	15
	2-69	16
1553956	2-69	3
	2-69	10
1554045	2-29	5
	2-31	10
	3-19	9
1554125	1-45	7
1556915	6-43	8
1556918	6-43	25
1556922	6-49	11
1556934	6-39	1
1556935	6-39	5
1556937	6-39	7
1556938	6-39	8
1556941	6-39	10
1556944	6-39	19
1556945	6-21	1
	6-23	7
1556946	6-21	2
1556947	6-19	17
	6-21	3
1556948	6-21	4
1556949	6-21	5
1556950	6-5	1
1556951	6-5	4
1556952	6-5	7
1556957	6-13	5
1556958	6-13	6
1556959	6-13	7
1556963	6-17	2
	6-19	2
	6-35	2
	6-35	5
	6-37	6
1556964	6-17	5
	6-25	6
	6-27	6

©2015 HYSTER COMPANY

NUMERICAL INDEX (continued)

PART NO.	PAGE	ITEM
	6-35	8
	6-35	9
	6-37	11
1556965	6-17	6
	6-19	6
	6-25	5
	6-27	5
	6-35	10
	6-37	12
1556966	6-17	7
	6-19	7
	6-25	12
	6-27	12
	6-35	11
1556967	6-17	8
	6-19	8
	6-35	15
1556968	6-17	8
	6-19	8
	6-35	16
1556969	6-17	10
	6-35	17
1556970	6-23	2
1556971	6-35	1
1556972	6-25	1
1556973	6-25	2
	6-27	2
1556975	6-25	9
1556976	6-25	10
	6-27	10
1556977	6-25	17
	6-27	17
1556978	6-25	7
	6-27	7
	6-35	12
	6-37	14
1556979	6-35	14
	6-37	13
1556982	6-31	2
1556984	6-35	21
1556985	6-19	15
	6-35	27
	6-37	2
1556989	6-31	10
1556990	6-31	11
1556991	6-7	1
1556992	6-7	2
1556993	6-7	5
1556994	6-7	6
1556996	6-10	46
1556997	6-9	43
1556998	6-9	34
	6-10	47
1556999	6-9	1
1557000	6-9	2
1557001	6-9	3
1557002	6-9	10
1557003	6-9	11
1557004	6-9	12
1557007	6-9	31
1557008	6-9	32
1557009	6-9	33
1557010	6-9	35
1557011	6-9	36
1557012	6-9	37
1557014	6-10	
1557263	6-5	
	6-7	
	6-10	
	6-17	
	6-19	
	6-23	
	6-25	
	6-27	
	6-31	
	6-33	
	6-35	
	6-37	
	6-39	
	6-41	
	6-43	
	6-49	
1557421	10-35	14
1558015	1-37	2
1558016	1-37	4
1558017	1-37	7
1558020	1-19	18
1558021	1-19	17
1558022	1-19	3
1558023	1-19	7
1558024	1-39	10
1558025	1-45	6
1558027	1-53	10
	5-15	3
	5-132	3
1558028	1-93	1
1558029	1-81	10
1558031	1-49	9
1558032	1-81	1
	1-83	
1558033	1-53	11
	5-21	
1558035	1-130	13
	1-138	13
1558036	1-15	2
1558037	1-15	5
1558038	9-41	24
1558039	9-41	28
1558040	9-41	25
1558041	1-55	4
1558042	1-55	13
1558043	8-17	3
1558045	1-81	1
	1-85	
1558049	4-19	18
1558050	1-55	18
1558051	1-57	
1558055	1-55	9
1558292	1-26	1
1558294	1-22	4
	1-26	4
	1-30	4
	1-34	4
	1-93	7
1558295	1-22	5
	1-26	5
1558296	1-22	6
	1-26	6
1558297	1-22	7
	1-26	7
1558298	1-22	8
	1-26	8
1558299	1-22	9
	1-26	9
	1-30	9
	1-34	9
1558300	1-22	15
	1-26	15
	1-30	15
	1-34	15
1558301	1-22	16
	1-26	16
1558302	1-22	18
	1-26	18
	1-30	18
	1-34	18
1558303	1-22	19
	1-26	19
	1-30	19
	1-34	19
1558305	1-22	22
	1-26	22
	1-30	22
	1-34	22
1558306	1-22	23
	1-26	23
1558307	1-22	26
	1-26	26
	1-30	26
	1-34	26
1558440	1-34	1
1558442	1-30	5
	1-34	5
1558443	1-30	6
	1-34	6
1558444	1-30	7
	1-34	7
1558445	1-30	8
	1-34	8
1558446	1-30	16
	1-34	16
1558447	1-30	23
	1-34	23
1558581	5-5	18
	5-9	21
1559691	1-22	24
	1-26	24
	1-30	24
	1-34	24
1560246	11-33	32
	13-33	71
1560248	11-33	32
	13-33	71
1560537	1-83	1
	1-85	1
1560538	1-85	3
1560539	1-85	4
1560540	1-85	5
1560544	1-85	7
1560545	1-85	8
1560546	1-85	11
	1-85	
1560547	1-83	13
	1-85	12
1560548	1-83	14
	1-85	13
1560549	1-85	10
1560550	1-85	18
1560552	1-83	11
	1-85	17
1560553	1-83	12
	1-85	9
1560554	1-83	6
	1-85	15
1560555	1-83	10
	1-85	16
1560556	1-83	8
	1-85	14

See Service Manual for service procedures.
©2015 HYSTER COMPANY

NUMERICAL INDEX (continued)

PART NO.	PAGE	ITEM
1560623	1-83	3
1560624	1-83	4
1560625	1-83	5
1560626	1-83	9
1560627	1-83	7
1560636	14-13	1
1560638	14-13	1
1561530	1-131	
1561540	1-53	14
1561604	7-5	37
	7-17	
1561756	5-87	8
1561964	4-9	3
	4-11	19
	4-13	19
1563867	10-11	7
	10-13	12
1563927	11-9	14
1564243	4-9	9
	4-11	3
	4-13	6
1564349	10-37	13
1564433	1-99	12
1564721	10-11	7
	10-13	11
1564897	11-17	5
	11-22	
	14-20	99
1564900	11-18	33
	11-22	
	14-20	99
1564902	11-17	6
	11-22	
	14-20	99
1564978	3-43	1
1565007	2-41	18
1565045	2-47	5
1565220	12-15	15
1565221	12-15	15
1565222	12-15	15
1565223	12-15	15
1565224	12-15	14
1565225	12-15	14
1565226	12-15	14
1565227	12-15	14
1565228	12-15	13
1565229	12-15	13
1565230	12-15	13
1565231	12-15	13
1565232	12-5	1
1565233	12-5	1
1565234	12-5	1
1565235	12-5	1
1565236	12-5	2
1565237	12-5	2
1565238	12-5	2
1565239	12-5	2
1565240	12-5	3
1565241	12-5	3
1565242	12-5	3
1565243	12-5	3
1565244	12-5	4
	12-12	
1565245	12-5	4
	12-12	
1565246	12-5	4
	12-12	
1565247	12-5	4
	12-12	
1565248	12-7	1
	12-11	
1565249	12-7	1
	12-11	
1565250	12-7	1
	12-11	
1565251	12-7	1
	12-11	
1565252	12-9	5
1565253	12-9	5
1565254	12-9	5
1565255	12-9	5
1565256	12-7	11
1565257	12-7	11
1565258	12-7	11
1565259	12-7	11
1565260	12-9	28
1565261	12-9	28
1565262	12-9	28
1565263	12-9	28
	12-9	28
1565264	12-9	29
1565265	12-9	29
1565266	12-9	29
1565267	12-9	29
1565268	12-12	
1565269	12-11	
1565270	12-9	1
1565271	12-9	2
1565272	12-9	3
1565273	12-9	4
1565274	12-9	6
1565275	12-9	7
1565276	12-7	12
1565277	12-9	10
1565278	12-9	16
1565279	12-9	17
1565281	12-9	19
1565282	12-9	21
1565283	12-9	22
1565284	12-9	23
1565285	12-7	8
1565286	12-7	7
1565337	12-9	25
1565338	12-9	26
1565339	12-7	10
1565340	12-7	9
1565341	12-9	32
1565342	12-10	34
1565343	12-10	35
1565344	12-5	7
1565345	12-10	36
	12-17	15
	12-19	28
	12-21	27
	12-23	41
	12-25	34
1565346	12-10	37
1565347	12-10	38
1565348	12-9	30
1565411	12-21	1
1565412	12-17	3
	12-19	5
	12-21	2
	12-23	6
	12-25	6
	13-11	8
	13-19	9
	13-27	9
	13-35	6
1565413	12-23	5
	12-25	5
	13-19	8
	13-27	8
1565414	12-23	2
	12-25	2
	13-19	2
	13-27	2
1565415	12-23	29
	12-25	22
	13-19	20
	13-27	20
1565416	12-23	34
	12-25	32
	13-19	12
	13-27	12
1565417	12-25	16
	13-28	56
1565418	12-25	13
1565419	12-25	12
1565420	12-25	24
1565421	12-23	30
	12-25	25
1565422	12-23	28
	12-25	26
1565423	12-25	27
1565424	12-23	32
1565425	12-19	13
	12-21	9
	12-23	15
	13-11	12
	13-19	16
	13-27	16
1565426	12-19	14
	12-21	10
	12-23	16
	13-11	11
	13-19	15
	13-27	15
1565427	12-19	9
	12-21	12
	12-23	11
	13-11	9
	13-20	56
	13-27	47
1565472	6-9	13
1565473	6-9	27
1565474	6-9	6
1565479	13-11	14
	13-19	18
	13-27	18
	13-35	9
1565480	13-11	15
	13-19	19
	13-27	19
	13-35	10
1565481	13-12	34
	13-19	46
	13-35	16
1565482	13-11	13
	13-19	17
	13-27	17
	13-35	8
1565483	13-11	15
	13-19	17
	13-27	12
	13-28	67
	13-35	8
1565484	13-12	31

©2015 HYSTER COMPANY

NUMERICAL INDEX (continued)

PART NO.	PAGE	ITEM
	13-20	57
	13-27	46
	13-35	25
1565485	13-35	21
1565486	13-12	33
	13-19	41
	13-27	37
1565487	13-12	32
	13-19	40
	13-27	36
1565488	13-11	29
	13-19	33
	13-27	33
1565489	13-11	30
	13-19	34
	13-27	34
1565492	13-28	57
1565493	13-27	45
1565494	13-27	44
1565495	13-27	43
1565496	13-27	42
1565499	13-19	45
1565500	13-19	44
1565501	13-19	43
1565502	13-19	42
1565885	2-41	4
1566041	1-15	19
	1-19	8
	1-19	16
	1-95	5
	1-157	2
1566044	1-15	4
	1-43	5
	1-71	2
1566125	7-5	29
1566126	7-5	1
1566205	5-21	3
	5-23	3
1566206	5-21	4
	5-23	4
1566208	5-23	6
1566209	5-23	7
1566210	5-21	6
	5-23	8
1566211	5-23	9
1566212	5-23	10
1566213	5-23	11
1566216	5-21	5
1566411	8-13	21
1566762	1-167	6
1566764	1-53	9
	5-15	4
	5-132	2
1566765	5-15	2
1566767	1-167	2
1566770	1-53	13
1566771	1-53	7
1567676	5-87	8
1567941	1-55	19
1567942	1-165	1
1568388	11-15	2
1568389	11-15	2
1568390	11-15	2
1568391	11-15	2
1568392	11-15	2
1568719	5-33	6
1569747	11-18	36
	11-22	32
	14-19	32
1569800	5-129	1
1569803	4-7	13
	11-18	34
	11-21	17
	14-19	17
1569866	4-7	31
1569867	4-7	31
1569877	5-111	1
1569972	5-55	10
	5-57	42
	5-63	5
	5-64	26
	5-71	5
	5-72	27
1570601	5-89	3
	5-89	4
	5-89	5
	5-93	15
1570602	5-17	1
	5-17	2
	5-17	3
	5-17	4
	5-17	5
	5-17	6
	5-17	9
	5-17	10
1570603	5-89	3
	5-89	4
	5-89	5
	5-93	3
1570606	5-87	8
1570608	5-119	9
1570609	5-119	12
1570610	5-119	14
1570611	5-119	10
1570612	5-119	13
1570613	5-117	17
	5-119	24
1570614	5-119	11
1570617	5-117	18
	5-119	25
1570638	5-83	1
1570639	5-83	2
1570641	5-83	5
1570643	5-83	6
	5-101	
	5-101	
	5-105	
	5-105	
	5-106	
	5-106	
1570644	5-80	15
	5-120	4
1570645	5-80	12
	5-89	8
1571029	1-141	14
1571030	1-141	28
1571628	1-167	12
1571631	9-41	2
1571632	1-43	18
1571634	1-55	22
1571775	1-147	14
1571776	1-147	12
1571789	5-15	6
1571806	1-57	2
1572993	11-10	35
1573001	11-10	40
1573113	5-51	34
	5-51	35
	5-51	36
	5-60	24
	5-60	25
	5-61	26
1573114	5-51	34
	5-51	35
	5-51	36
	5-60	24
	5-60	25
	5-61	26
1573115	5-51	34
	5-51	35
	5-51	36
	5-60	24
	5-60	25
	5-61	26
1573574	1-45	13
1573575	1-45	17
1574072	11-18	48
1574081	1-137	2
1574082	1-129	2
1574093	11-18	49
1579006	6-41	1
1579008	6-41	10
1579009	6-41	13
	6-43	18
1579010	6-41	17
1579011	6-41	17
	6-43	27
1579015	6-43	1
1579016	6-43	2
1579017	6-43	3
1579018	6-43	4
1579019	6-43	6
1579020	6-43	15
1579021	6-43	26
1579023	6-49	1
1579117	6-39	6
1579118	6-39	11
1579120	6-39	18
1579121	6-39	22
1579123	6-39	17
1579125	6-5	9
1579126	6-5	12
1579127	6-5	14
1579128	6-5	15
1579138	6-9	
1579141	6-9	7
1580023	10-37	13
1580286	4-14	3
1580820	9-29	29
	9-31	31
1580823	9-13	27
	9-29	18
1581556	10-13	20
	14-4	2
1581558	1-5	4
	1-7	35
	1-9	35
	2-5	22
	2-7	2
	2-85	6
	3-3	23
	3-5	2
1581581	10-13	21
1581851	1-5	23
1581980	12-17	15
	12-19	28
	12-21	
	12-23	41

©2015 HYSTER COMPANY

NUMERICAL INDEX (continued)

PART NO.	PAGE	ITEM
	12-25	34
1581981	12-17	15
	12-19	28
	12-21	
	12-23	41
	12-25	34
1582102	5-80	18
	5-123	13
1582103	5-80	18
	5-123	14
1582154	5-79	3
1582155	5-17	13
1583613	6-5	5
1583721	10-27	9
	10-39	3
	10-41	3
1584546	4-37	5
1584643	1-115	
1584657	3-61	3
1584817	2-23	11
	2-25	7
	3-55	9
1584818	2-23	11
	2-25	7
	3-55	9
1584819	2-23	11
	2-25	7
	3-55	9
1584820	2-23	11
	2-25	7
	3-55	9
1584822	5-27	22
1584823	5-27	2
1584824	5-25	23
	5-27	23
1584825	5-25	24
	5-27	24
1584826	5-25	25
	5-27	25
1584827	5-25	1
	5-27	1
1584828	5-25	1
	5-27	1
1584829	5-25	5
	5-27	5
1584830	5-25	19
	5-27	19
1584831	5-25	20
	5-27	20
1584832	5-25	21
	5-27	21
1584833	5-25	18
	5-27	18
1584834	5-25	6
	5-27	6
1584835	5-25	4
	5-27	4
1584836	5-25	11
	5-27	11
1584837	5-25	9
	5-27	9
1584838	5-25	7
	5-27	7
1584839	5-25	12
	5-27	12
1584840	5-27	10
1584841	5-25	16
	5-27	16
1584842	5-25	17
	5-27	17
1584843	5-25	13
	5-27	13
1584844	5-25	14
	5-27	14
1584845	5-25	15
	5-27	15
1584846	5-25	3
	5-27	3
1584847	5-25	22
1584848	5-25	2
1584852	5-25	26
1584853	5-25	27
1584854	5-25	28
1584867	5-25	10
1584908	6-45	4
1584922	2-37	13
1584923	2-37	14
1584933	2-69	15
1584990	3-19	5
1584991	3-19	6
1584992	2-29	2
	3-19	4
1584993	3-19	5
	3-19	7
1584994	3-19	6
	3-19	8
1584995	2-29	2
	3-19	4
1584996	3-19	5
1584997	3-19	6
1584998	3-19	6
	3-19	8
1584999	3-19	5
	3-19	7
1585000	2-29	2
	3-19	4
1585002	2-29	2
	2-31	2
	3-19	4
1585088	6-9	8
1585089	6-9	9
1585091	6-9	18
	6-9	44
1585133	9-33	4
1585134	9-33	4
1585135	9-33	5
1585138	9-33	3
1585160	5-13	11
1585215	9-33	6
1585284	2-33	15
1586183	3-61	2
1588061	3-43	5
1588086	3-41	
	3-51	
1588087	3-25	
	3-33	
	3-45	
	3-51	
	3-65	
	3-69	
1588097	2-9	6
1588098	2-10	2
1588104	3-25	11
1588106	2-73	4
	2-75	4
1588828	5-34	2
	5-35	2
1588834	3-65	17
1588920	2-11	9
1588934	2-9	5
1588935	2-10	1
1589514	3-23	1
1589584	2-71	3
1590815	1-93	2
1590820	1-93	4
1590821	1-93	3
1590822	1-93	2
1590854	9-35	5
1590856	9-35	4
1590861	9-35	15
1591320	9-39	2
1591322	9-39	4
1591323	9-39	5
1591324	9-39	6
1591325	9-39	7
1591498	8-3	34
1592671	10-39	1
1592672	10-39	2
1592673	10-39	4
	10-41	4
1592675	10-41	2
1592676	10-41	5
1592677	10-41	6
1593327	14-11	7
1593336	1-13	3
1593338	8-4	56
1593629	1-22	
	1-30	
	1-34	
1594932	7-19	
	7-21	
	8-9	
	8-11	
1595478	7-19	1
	7-21	1
	8-9	1
	8-11	1
1597444	1-5	2
	1-7	34
	1-9	34
	2-5	23
	2-7	3
	2-85	8
	3-3	24
	3-5	3
1597448	1-7	20
	1-9	20
	14-4	1
1597449	1-5	22
1597806	2-17	1
	3-62	5
1597807	2-21	3
	2-81	1
	3-76	3
1597817	3-25	14
1598354	2-50	1
	3-36	1
1598359	2-7	10
	3-5	11
1598398	1-16	4
	1-49	5
	1-71	6
	1-105	2
	1-153	14
1598408	1-157	7
1598420	1-49	6
1598421	1-167	15
1598469	5-50	20

©2015 HYSTER COMPANY

NUMERICAL INDEX (continued)

PART NO.	PAGE	ITEM
	5-57	34
	5-63	12
	5-71	13
1598470	5-50	20
	5-57	34
	5-63	12
	5-71	13
1599242	10-35	8
1600388	3-41	
1600416	3-36	1
1600818	11-33	32
	13-32	71
1600819	11-33	32
	13-33	71
1601267	9-29	9
	9-31	9
1601364	4-9	14
1601929	1-35	4
1601935	1-53	9
1602285	9-29	8
	9-31	8
1602329	5-111	
	9-29	33
	9-31	29
1602433	5-79	1
1602497	3-43	4
1603300	9-29	24
	9-31	25
	9-33	
1603302	9-29	21
	9-31	21
1603304	9-29	22
	9-31	22
1603361	4-4	44
1603502	1-81	12
1603503	1-81	11
1603521	1-125	
	1-137	
1603523	1-125	
	1-137	
1603525	9-29	23
	9-31	23
1603613	9-13	24
1603706	4-4	50
1603777	4-4	43
1603778	4-4	41
1603891	2-51	
1603897	3-58	1
1605545	5-46	15
	5-57	32
	5-64	17
	5-72	18
1605568	4-4	55
1605573	4-3	37
1605597	1-77	17
1606426	4-3	5
1606452	4-3	7
1606513	5-9	12
1606515	5-9	15
1606569	4-37	9
1606764	5-9	11
1607524	5-51	37
	5-61	27
1607525	5-51	37
	5-61	27
1607527	5-51	37
	5-61	27
1607528	5-51	37
	5-61	27
1607529	5-51	37
	5-61	27
1607532	5-51	37
	5-61	27
1607747	5-117	20
	5-119	27
1607748	5-117	19
	5-119	26
1607771	5-50	20
	5-57	34
	5-63	12
	5-71	13
1607772	5-46	14
	5-49	5
	5-55	7
	5-56	29
	5-67	11
	5-75	11
	5-79	4
1607774	5-45	5
	5-47	30
1607775	5-46	23
	5-56	26
1607778	5-51	34
	5-60	24
1607779	5-111	2
1607801	5-50	22
	5-50	25
	5-60	16
	5-61	29
	5-68	26
	5-69	35
	5-76	24
	5-77	33
1607842	5-79	2
1607843	5-87	1
1608426	4-3	24
1608583	6-10	
1608622	8-13	1
1609865	4-3	36
1609937	6-10	45
1610665	2-7	12
	3-5	13
1610667	2-7	14
	3-5	15
1610669	9-31	24
1610936	14-9	4
	14-22	11
1610941	5-69	32
	5-77	30
	5-112	4
1610944	5-49	4
	5-55	6
	5-67	10
	5-75	10
	5-79	4
	5-87	3
1610947	5-49	8
	5-87	7
	5-131	1
1610948	5-49	8
	5-87	7
	5-131	1
1610950	5-49	12
	5-51	29
	5-59	4
	5-60	19
	5-67	2
	5-68	27
	5-69	32
	5-75	3
	5-76	25
	5-77	30
	5-112	4
1610953	5-49	13
	5-51	30
	5-59	5
	5-60	20
	5-67	3
	5-69	28
	5-69	33
	5-75	4
	5-77	26
	5-77	31
1610992	8-7	4
1611029	5-112	4
1611032	5-49	1
	5-55	3
1611146	8-7	
1612390	8-7	9
1612393	8-7	9
1612530	6-33	5
1612634	4-9	15
	4-11	9
	4-13	11
1612804	3-12	3
	3-65	1
1613651	7-3	2
1613740	9-29	31
	9-31	34
1613771	9-29	30
	9-31	33
1613799	9-29	7
	9-31	7
1613877	10-21	8
1613901	10-15	17
	10-16	36
1613902	10-15	17
	10-16	37
1614066	3-33	2
1614311	3-65	29
1614312	3-17	12
1614315	4-25	25
1614319	4-25	14
1614320	4-25	37
1614322	3-62	1
1614323	3-32	3
1614452	3-49	3
1614453	3-49	2
1614454	3-34	4
1614458	4-26	62
1614459	3-59	5
1614461	2-41	13
	4-25	40
1614466	4-26	61
1614467	4-26	59
1614477	3-67	10
1614479	3-67	21
1614480	3-67	1
1614483	4-27	1
1614484	4-27	3
1614485	4-27	2
1614486	4-27	1
1614488	3-17	5
1614489	3-17	3
1614490	3-17	8
1614491	3-45	7
	5-33	9
1614492	3-25	9

See Service Manual for service procedures.
©2015 HYSTER COMPANY

NUMERICAL INDEX (continued)

PART NO.	PAGE	ITEM
1614493	3-25	7
1614495	3-55	3
1614496	3-55	1
1614499	3-55	3
1614500	3-55	3
1614501	3-65	14
1614502	4-25	3
1614504	3-25	12
1614511	3-55	8
1614513	3-76	1
1614515	2-18	6
	3-6	6
1614522	3-73	1
1614524	3-17	1
1614531	3-69	4
1614532	3-69	3
1614541	3-65	30
1614542	3-65	19
1614544	3-41	6
1614545	5-43	8
1614546	3-6	4
1614547	4-26	63
1614548	3-69	10
1614549	3-12	2
1614550	3-65	21
1614551	3-14	3
1614552	4-25	18
1614557	4-25	35
1614558	4-25	1
1614559	4-26	58
1614560	3-65	8
1614561	3-65	9
1614564	4-26	46
1614565	4-26	47
1614566	4-26	51
1614567	4-25	5
1614568	3-17	3
1614569	3-17	7
1614570	3-65	7
1614572	3-17	2
1614573	3-17	10
1614574	3-17	11
1614575	3-49	5
1614576	3-45	1
1614577	3-69	1
1614578	3-65	20
1614579	3-41	2
1614580	3-41	3
1614582	3-45	4
1614583	3-17	6
1614584	5-43	11
1614586	4-25	45
1614590	4-26	52
1614591	3-45	5
1614592	5-43	3
1614593	3-45	12
1614595	4-25	32
1614596	4-25	33
1614597	3-12	1
1614598	5-43	1
1614599	5-43	4
1614600	4-25	36
1614601	4-26	50
1614603	4-25	27
1614604	4-25	28
1614605	5-43	13
1614607	3-14	1
1614608	4-25	20
1614609	4-25	23
1614610	4-25	24
1614615	3-32	4
1614616	5-43	6
1614618	4-26	53
1614619	4-25	12
1614620	4-25	19
	4-26	
1614621	4-25	29
1614622	4-25	41
1614623	4-25	38
1614626	4-25	39
1614627	3-6	1
1614628	3-13	2
1614631	3-12	4
1614632	5-33	16
1614633	3-45	11
1614635	3-34	3
1614636	5-33	17
1614638	5-33	5
1614641	5-43	12
1614644	4-25	21
1614661	9-13	23
1614664	9-13	22
	9-29	5
	9-31	5
1615055	1-138	12
1615056	1-129	4
	1-133	4
	1-137	4
1615057	1-129	4
	1-129	7
	1-130	9
	1-130	10
	1-133	4
	1-133	7
	1-134	9
	1-134	10
	1-137	4
	1-137	7
	1-138	9
	1-138	10
1615062	1-130	8
	1-134	8
	1-138	8
1615063	1-115	
	1-130	8
	1-134	8
	1-138	8
	1-155	
1615064	1-115	20
	1-130	8
	1-134	8
	1-138	8
	1-155	18
1615065	1-130	8
	1-134	8
	1-138	8
1615066	1-130	11
	1-134	11
	1-138	11
1615067	1-130	11
	1-134	11
	1-138	11
1615068	1-130	11
	1-134	11
	1-138	11
1615073	1-129	
	1-133	
	1-137	
1615075	1-123	2
	1-124	9
1615076	1-123	2
	1-124	9
1615077	1-123	2
	1-124	9
1615078	1-123	2
	1-124	9
1615079	1-123	2
	1-124	9
1615105	1-119	4
	1-126	3
1615106	1-119	4
	1-126	3
1615107	1-119	4
1615109	1-119	4
1615110	1-119	4
1615111	1-119	4
	1-120	8
	1-120	10
1615124	1-119	5
1615125	1-115	12
	1-117	16
	1-119	5
1615126	1-117	11
	1-119	5
	1-120	7
	1-120	11
	1-123	5
	1-124	8
	1-124	11
1615127	1-117	29
	1-119	5
	1-120	7
	1-120	11
1615128	1-119	5
1615129	1-119	5
1615131	1-119	6
1615132	1-117	6
	1-120	7
1615136	1-117	33
	1-120	9
1615137	1-117	34
	1-120	9
1615138	1-120	8
1615139	1-120	8
1615140	1-120	10
1615141	1-117	30
	1-120	10
1615143	1-120	11
1615144	1-120	11
1615147	1-129	2
1615149	1-115	22
	1-129	2
	1-134	
	1-137	2
1615150	1-137	2
1615154	10-16	34
1615156	10-15	19
1615157	10-15	31
1615158	1-130	12
1615363	5-23	5
1615364	1-53	11
	5-23	
1615772	3-34	2
1615829	3-25	3
1616011	3-67	16
1616202	14-7	2
1616213	14-7	2
1616697	14-17	1

©2015 HYSTER COMPANY

NUMERICAL INDEX (continued)

PART NO.	PAGE	ITEM
1617615	5-5	1
	5-5	9
	5-9	1
1617617	5-5	13
1617618	5-5	5
	5-9	5
1618220	3-17	4
1618452	6-45	28
	6-47	31
	10-3	14
1618590	2-23	9
1618648	3-25	15
1618997	3-11	3
1618998	3-11	2
1618999	3-11	4
1619000	3-11	5
1619371	5-29	3
1619570	2-43	1
	3-28	1
1619572	2-43	1
	3-28	1
1619731	10-25	2
1619732	10-25	16
1619734	10-25	15
1622841	6-2	1
1622844	6-2	1
1622845	6-45	10
	6-47	15
1622846	6-45	9
	6-47	11
1623050	5-90	13
1623195	9-41	36
1623196	9-41	34
1623197	9-41	33
1623266	1-30	1
1623268	1-22	1
1623364	1-165	8
1623800	1-141	28
1623801	1-141	28
1623802	1-141	28
1623812	1-55	8
1623890	5-46	20
	5-47	31
	5-47	32
	5-47	33
	5-50	18
	5-56	19
	5-56	20
	5-56	21
	5-56	22
	5-56	23
	5-56	27
	5-59	7
1623950	1-77	12
1624002	1-141	
1624020	10-25	1
1624021	10-25	3
1624022	10-25	4
1624023	10-25	5
1624024	10-25	6
1624025	10-25	7
1624026	10-25	9
1624027	10-25	10
1624028	10-25	11
1624029	10-25	13
1624030	10-25	14
1624055	13-12	
	13-17	
	13-25	
	13-28	65
	13-33	
	13-35	29
	13-37	
1624423	6-27	19
1624512	4-25	11
1624514	4-25	10
1624515	4-25	6
1624585	6-27	18
	6-33	2
	6-49	3
1624698	9-29	20
1624829	3-49	6
1624871	3-32	2
1624994	3-45	2
1625196	8-3	27
1625540	2-85	1
1625566	3-65	23
1625567	3-65	4
1625568	3-65	15
1625569	3-65	13
1625570	3-65	12
1625613	10-7	35
1625615	10-7	20
	10-31	
1625617	10-7	20
	10-31	
1625638	4-11	15
	4-13	15
1625639	4-11	11
	4-13	13
1625683	4-7	10
1625944	2-85	1
1625960	4-9	20
1625961	4-9	17
1626931	2-7	7
1626996	1-43	2
1627991	5-5	16
	5-9	20
1628086	4-11	17
1628088	4-9	7
	4-11	2
	4-13	5
1628090	1-7	33
	1-9	33
1628436	4-7	23
1628451	1-9	16
1628948	1-130	14
	1-138	14
	1-147	2
1628949	1-130	14
	1-138	14
	1-147	1
1628959	2-85	1
1628960	2-85	1
1628961	2-85	1
1628962	2-85	1
1628963	2-85	3
1628964	2-85	2
1628965	2-85	1
1628966	2-85	1
1628967	2-85	1
1629234	1-59	36
1629269	4-7	14
1629270	4-7	14
1629271	4-7	3
1629274	4-7	3
1629351	2-5	9
	3-3	9
1632171	1-11	
1632172	1-11	
1632173	1-11	
1632864	5-68	16
	5-76	14
1632866	5-68	17
	5-76	15
1632867	5-68	17
	5-76	15
1632919	7-13	31
1632920	7-13	22
1632922	7-13	24
1632924	7-13	26
1632983	2-18	2
	2-19	7
1632984	2-27	6
1633070	1-5	3
1633071	1-5	1
1633360	1-9	18
1633361	1-9	19
1633362	1-7	14
	1-9	14
1633363	1-7	13
	1-9	13
1633368	1-9	17
1633369	1-7	12
	1-9	12
1633370	1-7	17
1633896	1-9	21
1633897	1-9	38
1633980	4-11	5
	4-13	3
1634171	1-7	40
	1-9	40
1634172	1-7	27
	1-9	27
1634291	4-11	8
1634308	1-7	25
	1-9	25
1634394	7-3	
	7-5	
	7-13	
1634395	7-3	
	7-5	
	7-13	
1634397	7-3	
	7-9	
	7-15	
1634443	5-45	6
	5-50	23
	5-50	24
	5-50	27
	5-55	11
1634444	5-45	6
	5-55	11
1634448	5-46	19
	5-57	37
1634450	5-45	12
	5-49	11
	5-56	17
	5-59	6
1634504	1-9	39
1634763	9-33	
1634764	9-33	23
1634854	4-3	18
1634889	2-5	20
	3-3	21
1634993	9-41	16
1635005	1-15	30
1635006	1-15	29

See Service Manual for service procedures.
©2015 HYSTER COMPANY

NUMERICAL INDEX (continued)

PART NO.	PAGE	ITEM
1635007	1-86	2
1635008	1-86	1
1635018	1-43	14
1635019	1-43	15
1635020	1-43	6
1635021	1-43	8
1635022	1-43	9
1635023	1-43	10
1635025	1-43	2
1635026	1-43	2
1635088	3-5	7
1635114	14-9	4
	14-22	11
1635188	2-5	24
	3-3	25
1635220	2-48	9
1635222	4-31	13
1635224	2-61	1
1635225	2-65	3
1635227	2-27	3
1635228	2-51	1
	2-53	1
	2-55	1
1635229	2-57	1
	2-59	2
1635230	2-73	3
	2-75	1
1635233	2-65	7
1635234	2-65	6
1635235	2-73	6
1635239	3-19	
1635242	2-81	2
1635243	3-20	
1635244	3-20	
1635251	2-14	2
1635254	2-69	23
1635255	2-51	4
	2-53	4
	2-55	3
1635256	2-51	8
	2-53	8
	2-55	10
1635258	2-48	7
	3-35	1
1635259	2-27	10
1635260	2-66	4
1635261	2-82	2
1635262	2-82	4
1635265	2-77	1
1635266	2-56	2
1635267	4-31	1
1635269	2-21	8
1635270	2-66	3
1635271	4-21	1
1635272	2-21	9
1635273	2-29	9
1635274	2-29	7
1635275	2-21	4
1635276	4-31	2
1635277	2-41	8
1635278	2-41	10
1635279	4-37	6
	4-39	4
1635280	2-41	5
	5-31	10
1635281	2-27	4
1635282	2-23	2
	2-25	2
1635286	2-27	7
1635291	2-27	2
1635295	2-23	10
	2-25	6
1635298	2-27	1
1635302	2-51	6
1635303	4-21	6
	4-22	4
1635304	4-29	1
1635305	4-29	2
1635307	2-33	8
	2-35	15
	3-23	6
1635308	2-33	7
	2-35	21
1635309	2-63	3
1635311	4-31	12
1635312	4-21	5
	4-22	5
1635314	2-44	8
1635315	2-41	16
1635316	2-23	5
1635317	4-32	1
1635318	2-20	2
1635319	2-63	2
1635320	2-14	3
1635321	2-37	3
1635323	2-41	9
1635324	2-41	12
1635325	2-41	20
	5-31	12
1635327	4-29	
1635330	2-33	2
	2-71	1
1635332	4-29	5
1635333	4-29	6
1635334	4-29	7
1635335	4-29	8
1635336	2-65	4
1635337	2-82	3
1635340	2-21	6
1635342	2-41	1
	5-31	4
1635345	2-41	22
	5-31	13
1635346	2-37	14
1635348	4-31	15
1635350	2-56	5
1635354	2-73	1
	2-75	5
1635355	4-31	14
	4-35	1
	4-37	11
	4-39	17
1635356	2-76	7
1635357	2-57	2
	2-59	4
1635359	2-41	3
1635362	2-21	10
1635363	2-13	15
1635364	4-35	2
1635365	4-37	2
	4-39	11
1635366	2-78	2
1635368	2-76	5
1635369	2-21	1
1635370	4-34	2
1635371	2-65	8
1635373	2-47	3
1635374	2-47	6
1635375	2-65	1
1635376	4-34	4
1635378	2-69	24
1635379	2-76	6
1635382	2-27	8
1635384	2-66	
	4-37	7
	4-39	7
1635388	2-69	15
	2-69	17
1635394	4-37	15
	4-39	12
1635396	2-57	3
1635397	2-70	1
1635398	4-37	10
1635399	4-37	3
	4-39	10
1635400	2-23	3
	2-25	10
	2-25	13
1635404	5-38	2
1635406	2-23	8
1635407	2-37	2
1635408	2-23	8
1635409	2-23	4
1635410	4-37	16
	4-39	13
1635411	2-16	4
1635412	2-14	1
1635421	2-41	14
	5-29	9
	5-31	11
1635422	2-41	15
	5-31	8
1635423	2-33	12
	2-35	11
1635424	4-21	4
	4-22	7
1635452	2-51	6
	2-53	6
1635454	4-21	3
1635457	2-41	1
	5-31	3
1635461	2-65	5
1635464	2-37	10
1635557	10-15	17
1635845	1-7	16
1636056	1-7	18
1636057	1-7	19
1636066	1-7	21
1636067	1-7	37
1636182	1-130	14
	1-138	14
	1-147	2
1636183	1-130	14
	1-138	14
	1-147	1
1636372	10-15	2
1636373	10-15	2
1636383	14-7	2
1636384	14-7	2
1636463	1-7	39
1636491	14-11	1
1636492	14-11	2
1636495	14-11	3
1636496	14-11	4
1636497	14-11	5
1636498	14-11	6
1636500	1-7	38
	1-9	36

©2015 HYSTER COMPANY

NUMERICAL INDEX (continued)

PART NO.	PAGE	ITEM
1636534	10-23	27
1636535	10-23	24
1636536	10-23	22
1636539	10-23	15
1636540	10-23	16
1636543	10-23	26
1636897	2-89	
	3-81	
1636898	2-89	
	3-81	
1637098	1-7	31
	1-9	31
1637309	1-5	21
1637312	1-5	20
1637322	1-5	16
1637393	1-147	3
1637426	8-3	34
1637777	2-29	3
1637782	2-29	3
1637783	2-29	3
1637784	2-29	3
1637785	2-29	3
1637800	2-79	1
1637802	2-79	3
1637850	2-44	3
1637851	2-44	4
1637852	2-44	9
1638188	10-41	
1638350	10-31	28
1638351	10-31	26
1638356	10-31	15
1638365	10-31	22
1638366	10-31	20
1638367	10-31	21
1638368	10-31	25
1638370	10-31	12
1638371	10-31	8
1638372	10-31	9
1638373	10-31	10
1638374	10-31	5
1638375	10-31	2
1638376	10-31	3
1638377	10-31	4
1638378	10-31	30
1638379	10-31	7
1638380	10-31	11
1638381	10-31	6
1638419	2-23	10
	2-25	6
1638420	2-23	10
	2-25	6
1638421	2-23	10
	2-25	6
1638422	2-23	10
	2-25	6
1638440	1-9	24
1638441	1-7	22
1638509	10-31	6
1638703	2-23	6
1638785	4-9	6
	4-11	1
	4-13	4
1638803	10-31	24
1638852	3-25	15
1638854	3-25	15
1638856	3-31	11
1639100	9-14	64
1639761	10-41	1
1640074	10-11	10
1640824	2-33	16
	2-35	10
1641021	4-3	20
1641022	4-3	32
1641024	4-3	26
1641025	4-4	48
1641027	4-4	51
1641637	1-40	6
1641640	1-40	2
1641835	6-10	
1641836	6-9	16
	6-9	42
1641837	6-9	44
1641838	6-9	20
1641840	6-9	25
1641841	6-9	30
1642096	7-5	20
1642097	7-5	23
1642099	7-5	35
	7-9	5
1642102	7-5	8
1642103	7-5	9
1642104	7-5	11
1642107	7-3	5
1643338	1-130	14
	1-138	14
	1-147	1
	1-147	2
1643396	7-5	5
1643397	7-5	
1643398	7-5	
1643400	7-3	1
1643403	7-13	32
1643404	7-13	32
1643427	7-3	1
1643440	8-3	30
1643441	8-3	31
1643562	14-4	11
1643621	14-4	10
1643866	2-33	17
1644095	2-26	2
1644112	2-50	
1644166	4-21	2
	4-22	2
1644791	1-46	11
1644792	1-46	7
1644793	1-46	9
1644794	1-30	3
	1-34	3
	1-40	
1644795	1-22	3
	1-26	3
	1-40	
1644796	1-40	1
1644797	1-40	10
1644798	1-40	11
1644799	1-40	7
1644800	1-40	8
1644802	1-40	5
1644803	1-40	1
1644804	1-40	3
1644805	1-40	11
1644806	1-40	10
1644929	6-37	1
1644930	6-37	1
	6-37	11
1645064	14-7	12
1646407	14-10	1
1646626	9-27	5
1646627	9-27	7
1646704	14-4	3
1646705	14-4	3
1646791	9-13	26
1646833	14-5	1
1646834	14-5	1
1646837	9-13	16
1646845	9-13	25
1646897	9-13	8
1646944	9-13	33
	9-29	35
	9-31	27
1646947	4-3	10
1646948	4-3	1
1646949	4-3	12
1646950	4-3	12
1647654	8-13	9
1647655	8-13	18
1647751	9-29	28
	9-31	32
1647769	1-5	29
1647772	1-5	33
1647825	14-4	3
1647826	14-4	3
1647994	4-3	11
1648135	5-5	40
1648280	1-5	10
1648281	1-5	5
1648560	1-165	4
1648561	1-165	10
1648640	5-5	17
	5-9	35
1649266	1-11	10
1649268	1-75	22
1649349	5-37	1
	5-40	9
1649438	2-5	8
	3-3	10
1649572	1-7	8
	1-9	8
1649573	1-7	8
1649738	4-32	2
1650536	1-75	20
	1-77	18
1650537	1-75	17
1650539	1-75	13
1650569	2-85	14
1650570	2-85	7
1651353	9-29	6
	9-31	6
1651378	1-59	10
	1-64	1
1651882	11-21	12
	14-19	12
1651884	11-21	11
	14-19	11
1652018	5-5	39
	5-10	48
1652020	1-53	13
1654762	2-72	3
1654795	5-67	15
	5-75	13
1654935	1-16	2
1655098	9-5	13
	9-9	13
1655099	9-5	13
	9-9	13
1655100	9-5	13
	9-9	13
1655132	5-18	24

See Service Manual for service procedures.
©2015 HYSTER COMPANY

NUMERICAL INDEX (continued)

PART NO.	PAGE	ITEM
1655133	5-51	37
1655134	5-51	37
	5-61	27
1655361	9-27	1
1655362	9-27	6
1655365	1-46	4
1655427	4-13	10
1655503	9-2	3
1655548	6-17	5
	6-19	5
	6-27	6
	6-35	8
	6-35	9
1656022	9-10	43
	9-35	
1656599	1-81	1
	1-85	
1656600	1-85	6
1656603	1-85	11
1656604	1-85	18
1656996	4-9	6
	4-11	1
	4-13	4
1656997	4-9	6
	4-11	1
	4-13	4
1657357	2-5	4
1657358	2-5	5
1657710	6-9	
1658125	1-71	1
1658126	1-71	5
1658127	1-71	8
	1-95	4
	1-157	1
1658128	1-71	3
	1-95	2
	1-157	6
1658139	1-81	15
1658140	1-81	13
1658153	9-14	79
1658214	1-64	2
1658271	3-3	6
1658272	3-3	4
1658850	3-5	10
1658852	5-87	8
1658942	5-5	29
	5-9	33
1658984	5-33	8
1659020	2-5	11
1659021	2-5	17
	3-3	19
1659115	5-51	28
1659116	5-51	28
1659511	1-53	5
1659572	5-29	1
1659579	6-9	12
1660034	9-35	1
1660035	9-35	13
1660036	9-35	12
1660037	9-35	10
1660038	9-35	11
1660039	9-35	3
1660041	9-35	7
1660347	2-89	
	3-81	
1660786	9-29	17
	9-31	17
1660935	2-11	1
1660936	2-11	2
1660937	2-11	5
1660992	5-5	31
	5-10	46
1661032	2-11	7
1661033	2-11	10
1661034	2-11	11
1661035	2-11	13
1661036	2-11	14
1661038	2-11	4
1661039	2-11	3
1661040	2-9	1
	5-39	5
1661041	2-9	2
1661042	2-9	7
1661043	2-9	8
1661044	2-9	9
1661045	2-9	10
1661046	2-9	11
1661047	2-78	1
1661048	4-33	1
1661049	4-33	2
1661070	2-56	1
1661071	2-73	5
	2-75	6
1661072	2-45	1
1661074	2-13	16
1661076	2-60	2
	3-52	2
1661077	2-13	
1661078	2-13	1
1661079	2-13	14
1661080	2-13	12
1661081	2-13	10
1661082	2-13	4
1661085	2-27	5
	2-27	9
1661086	2-26	1
	2-33	1
	2-35	17
1661089	2-53	6
1661095	14-10	4
1661144	4-21	2
	4-22	3
1661145	2-59	1
1661209	2-25	9
1661210	2-25	11
1661211	2-23	1
	2-25	1
1661289	2-37	12
1661388	1-75	7
	1-77	6
1661394	2-72	3
1661396	2-72	3
1661398	2-18	4
	2-19	5
1661437	2-76	1
1661440	2-35	8
1661441	2-31	8
1661444	2-59	3
1661514	5-6	49
	5-10	53
1662037	4-25	16
1662038	3-9	13
1662039	5-39	6
1662040	5-39	6
1662041	5-39	8
1662042	4-25	43
	5-33	11
1662044	5-33	2
1662045	5-33	3
1662046	3-33	1
1662047	3-65	2
1662048	3-65	5
1662311	4-32	
1662312	4-32	
1662314	2-37	
1662315	2-33	
1662544	1-7	15
	1-9	15
1662578	10-37	15
1662992	13-3	6
1663076	1-75	9
	1-77	11
1663785	2-87	5
	3-79	5
1663786	2-87	1
	3-79	1
1664394	1-22	
1664396	1-30	
1664403	1-81	14
1664404	1-81	16
1664405	1-15	26
1664559	14-3	1
	14-9	4
	14-10	1
	14-21	8
1665052	5-5	33
	5-9	36
1665237	5-5	32
	5-9	31
1665321	5-5	8
1665434	5-5	14
1665756	1-63	
1667169	5-130	
1667218	1-26	
	1-163	5
1667219	1-34	
	1-163	3
1667221	5-5	34
	5-9	37
1669449	9-10	55
1670448	12-23	31
1670534	5-103	10
	5-105	12
1670701	14-3	3
1671705	13-12	
	13-20	
	13-28	63
	13-35	28
1672504	1-60	47
1672505	1-60	46
1672596	1-11	9
1672608	1-11	2
	14-17	2
1672729	1-11	3
	14-17	5
1672803	10-25	17
1672885	6-47	
1673488	10-7	14
1673489	10-7	13
1673562	2-5	17
	3-3	19
1673663	10-4	
1673670	10-3	
1674584	1-85	5
1676623	4-34	3
1676624	4-34	5
1676814	10-13	2
1676815	6-41	20

©2015 HYSTER COMPANY

NUMERICAL INDEX (continued)

PART NO.	PAGE	ITEM
1676971	10-13	1
1676979	10-13	19
1677294	2-87	3
	3-79	3
1677295	2-87	7
	3-79	7
1677296	2-87	7
	3-79	7
1677297	2-87	8
	3-79	8
1677298	2-87	7
	3-79	7
1677533	11-21	4
	14-19	4
1677534	11-21	14
	14-19	14
1677603	11-21	5
	14-19	5
1677604	11-22	
	14-20	98
1677640	10-13	3
1677858	4-7	10
1678201	1-17	1
1678202	1-17	2
1678203	1-17	3
1678204	1-17	4
1678391	1-5	5
1678448	1-5	3
1678450	1-5	1
1683160	1-71	
1686670	1-75	17
1686686	1-75	14
1687037	1-124	12
1688643	7-19	2
	7-21	2
	8-9	2
	8-11	2
1688644	7-19	2
	7-20	2
	8-9	2
	8-10	2
1688645	7-18	2
	8-8	2
1688689	9-2	
1689346	4-7	15
	10-13	23
1689914	1-75	20
	1-77	18
	1-78	
1690934	1-45	4
1691114	11-7	4
	11-25	6
	11-29	3
	11-33	3
	11-37	6
	13-7	37
	13-15	10
	13-23	3
	13-31	3
	13-37	10
	14-13	2
1691166	11-9	7
1691360	6-49	1
1691361	6-43	15
1691399	6-17	1
1691404	6-35	1
1691873	2-41	4
	5-31	16
1692151	1-129	2
1692292	1-125	
	1-129	
	1-133	
1692293	1-125	
	1-129	
	1-133	
1692918	1-22	
	1-30	
	1-34	
1693195	1-164	1
1693216	3-6	5
1693804	1-99	6
1694274	10-13	6
1694496	1-5	
1694653	1-5	10
1695629	1-99	6
1696674	2-31	2
	3-19	4
1696675	2-31	1
	3-19	6
1696686	2-25	3
1696691	2-53	5
1697363	1-11	
1700341	8-13	5
1700342	8-13	22
1701994	2-29	6
	2-31	4
1702095	4-22	6
1702096	4-39	8
1702097	4-37	
	4-39	9
1702098	4-37	8
	4-39	14
1702100	4-39	15
1702103	2-60	2
1702104	2-65	4
1702106	2-65	2
	2-65	2
1702183	5-34	1
1702184	2-73	2
	2-75	7
1702186	2-47	4
1702188	2-47	7
1702189	2-19	2
1702191	2-45	1
1702283	1-45	
1702284	1-45	
1702285	1-43	
1702289	1-95	1
	1-100	
1702293	1-95	6
	1-105	
	1-157	
1702312	4-34	6
1702562	1-100	1
	1-103	
1702563	1-100	3
	1-106	
1703492	4-22	1
1703737	1-167	16
1704370	1-45	20
1704396	1-43	7
1705304	6-41	1
1705306	6-43	1
1705307	6-43	2
1705308	6-43	16
1705310	6-43	23
1705316	6-19	1
1705317	6-19	16
1705318	6-19	13
1705319	6-19	10
	6-35	17
1705320	6-35	18
	6-37	9
1705367	6-27	1
1705368	6-27	9
1705370	6-33	1
1705371	6-33	4
1706731	10-28	
1707004	2-31	3
	3-19	5
	3-19	5
1707005	2-75	10
1707047	2-16	4
1707619	2-31	
	3-19	
1707620	2-31	2
	3-19	4
1707621	2-31	3
	3-19	5
1707622	2-31	1
	3-19	6
1708423	5-33	6
1708450	6-45	32
	6-47	7
1708510	2-31	
	3-19	
	3-19	
1708511	2-31	2
	3-19	4
1708512	2-31	3
	3-19	5
1708513	2-31	1
	3-19	6
2003859	8-13	19
2004005	1-59	32
2013361	10-35	9
2013366	10-35	13
2015363	10-35	
	10-37	1
2015364	10-35	
	10-37	1
2015375	10-35	14
2015376	10-35	14
2015377	10-35	14
2015381	10-35	1
2032001	10-35	
	10-37	1
2032492	8-7	5
2033612	6-47	30
2034460	1-143	19
2037398	10-35	
	10-37	1
2041923	10-27	10
	10-29	
2042507	5-93	
2042724	5-98	
	14-21	9
	14-22	
2042889	5-105	
2043084	9-6	51
	9-10	51
2043194	1-59	43
	1-63	
2043287	8-13	3
	8-15	
2043331	13-7	
2043332	13-7	
2043344	10-27	5

See Service Manual for service procedures.
©2015 HYSTER COMPANY

NUMERICAL INDEX (continued)

PART NO.	PAGE	ITEM
2043351	5-14	7
2043352	1-147	10
2043353	1-148	16
2043354	1-147	11
2043469	1-145	1
	1-146	7
2043471	1-145	2
	1-146	6
2043472	1-145	2
	1-146	6
2043476	1-145	2
	1-146	6
2043478	5-107	
	14-9	5
2043480	5-108	
	14-9	14
2043481	1-143	6
2043494	1-143	31
2043536	11-10	23
2043538	11-10	23
2043546	1-45	8
	5-120	
2043677	5-106	
	14-9	
2043678	5-97	
2043801	1-145	3
2043867	5-101	
2043879	5-14	6
	14-7	
2043980	9-13	13
2043981	9-6	51
	9-10	51
2044372	8-7	8
2044400	1-143	18
2044515	5-9	17
	5-13	13
2045885	5-95	
	14-5	4
2046001	5-125	
2046030	5-124	1
2046031	5-124	1
	14-19	23
2046072	11-33	36
2046088	14-19	24
	14-19	25
2046118	1-39	9
2046119	1-39	9
2046249	5-103	
2046250	5-102	
2046438	1-145	3
2046463	5-79	9
2046552	10-33	6
2046600	1-146	5
2046767	10-9	5
2046894	11-29	15
	11-33	15
	12-23	10
	12-25	9
	13-5	
	13-19	10
	13-23	19
	13-27	10
	13-31	19
2046986	11-29	22
	11-33	22
	13-23	24
	13-31	24
2046987	11-29	23
	11-33	23
	13-23	27
	13-31	27
2047719	11-33	
2047737	11-25	22
	11-29	29
	11-33	29
2047738	11-25	23
	11-29	30
	11-33	30
2047859	5-79	5
	5-79	6
2048063	1-143	32
2048337	11-37	
2048338	11-37	
2048533	13-33	77
2048534	13-33	78
2048535	13-33	79
2048536	13-33	80
2048780	13-37	27
2048781	13-37	28
2049288	10-35	5
2049849	1-59	31
	5-114	
2049945	11-33	35
2050044	1-143	29
2050421	11-33	37
2050422	11-33	38
2050423	11-33	39
2050424	11-33	40
2051205	5-114	3
2051228	5-114	4
2051270	5-114	1
2051279	5-114	2
2052773	5-14	2
2052774	5-14	3
2052775	5-14	4
2052776	5-14	5
2052832	10-15	
	10-19	9
	10-21	1
2052833	10-15	
	10-19	9
	10-21	1
2054005	10-27	8
	10-27	8
	10-27	8
	10-27	8
	10-27	8
	10-27	8
	10-27	8
	10-27	8
	10-29	6
2054224	5-117	
2054225	5-119	
2054259	5-129	
	11-18	47
	11-21	23
2054260	5-129	
	11-18	47
	11-21	23
2054261	5-129	
	11-18	47
	11-21	23
2054262	5-129	
	11-18	47
	11-21	23
2054263	5-129	
	11-18	47
	11-21	23
2054264	13-7	11
2054463	5-79	5
	5-79	6
	5-80	18
2055678	5-15	5
2055960	11-26	38
	11-29	32
	12-19	20
	12-21	22
	12-23	18
	13-3	
	13-11	18
	13-16	43
	13-27	22
	13-32	69
2055961	11-26	38
	12-19	20
	12-21	22
	13-3	
	13-11	18
	13-16	43
	13-19	22
	13-24	69
2055962	11-26	38
	12-19	20
	12-21	22
	13-3	
	13-11	18
	13-16	43
2056066	13-15	29
	13-24	52
	13-32	52
2056067	13-15	30
	13-24	53
	13-32	53
2056074	13-33	75
2056075	13-33	76
2056208	10-7	31
2056209	10-7	32
2056447	1-55	11
2056545	6-45	1
	6-47	1
2056776	13-16	38
	13-24	56
	13-32	56
2057806	11-25	
2057807	11-25	
2057808	11-25	
2057809	11-29	
2057814	13-31	
2057864	11-25	34
	11-29	38
2057981	11-25	32
	11-29	36
2057982	11-25	33
	11-29	37
2057983	11-29	39
2057984	11-29	40
2057985	11-29	41
2057986	11-29	42
2057987	13-16	40
	13-24	48
	13-32	48
2057988	13-16	41
	13-24	49
	13-32	49
2057989	13-15	28
	13-24	50
	13-32	50

©2015 HYSTER COMPANY

NUMERICAL INDEX (continued)

PART NO.	PAGE	ITEM
2057990	13-15	27
	13-24	51
	13-32	51
2058006	5-79	3
2058161	13-16	36
	13-24	54
	13-32	54
2058162	13-16	35
	13-24	55
	13-32	55
2058163	13-24	71
2058164	13-24	72
2058165	13-25	73
2058166	13-25	74
2058174	11-18	45
	11-21	24
2058175	11-18	45
	11-21	24
2058176	11-18	45
	11-21	24
2058177	11-18	45
	11-21	24
2058178	11-18	45
	11-21	24
2058188	11-18	46
	11-21	25
2058189	11-18	46
	11-21	25
2058190	11-18	46
	11-21	25
2058191	11-18	46
	11-21	25
2058192	11-18	46
	11-21	25
2058930	1-145	3
2059720	10-11	6
	10-13	16
2060301	12-5	
	12-7	
	12-9	
	12-15	
2060302	12-5	
	12-7	
	12-9	
	12-15	
2060303	12-5	
	12-7	
	12-9	
	12-15	
2060304	12-5	
	12-7	
	12-9	
	12-15	
2060555	5-50	19
	5-55	13
	5-57	33
	5-57	35
	5-57	36
	5-60	13
	5-63	11
	5-64	13
	5-64	14
	5-67	4
	5-68	18
	5-71	8
	5-71	12
	5-71	14
	5-72	15
	5-76	16
2064919	14-7	8
2066064	9-29	32
	9-31	30
2066204	5-123	
2067307	12-17	
2067308	12-19	
2067309	12-19	
2067310	12-19	
2067311	12-23	
2067312	12-25	
2067340	10-35	
	10-37	1
2071043	11-15	
2071044	11-15	
2071045	11-15	
2071046	11-15	
2071047	11-15	
2071311	6-5	
	6-7	
	6-9	
	6-13	
	6-14	
	6-17	
	6-21	
	6-23	
	6-25	
	6-29	
	6-31	
	6-35	
	6-37	
	6-39	
	6-41	
	6-43	
	6-49	
2071664	11-10	31
2071682	11-5	
	11-7	
	11-9	
2071683	11-5	
	11-7	
	11-9	
2071684	11-5	
	11-7	
	11-9	
2071685	11-5	
	11-7	
	11-9	
2071686	11-5	
	11-7	
	11-9	
2071797	11-9	18
2071798	11-9	18
2071799	11-9	18
2071800	11-9	18
2071801	11-9	18
2072353	5-9	9
	14-7	8
2074432	6-45	3
	6-47	2
2075657	1-143	36
2076168	4-3	31
2076661	4-19	23
2079027	1-11	8
2079078	4-3	25
2079079	4-3	21
2079080	4-3	21
2079273	8-7	6
2080826	5-5	35
	5-9	40
2081197	1-143	26
2082215	5-14	1
2082622	1-143	28
2083131	8-3	40
	8-7	
2084159	1-143	5
2085494	2-13	
	2-14	
	2-15	
	2-16	
	2-17	
	2-18	
	2-20	
	2-21	
	2-23	
	2-29	
	2-33	
	2-37	
	2-38	1
	2-41	
	2-42	
	2-44	
	2-45	
	2-47	
	2-48	
	2-50	
	2-51	
	2-56	
	2-57	
	2-60	
	2-61	
	2-62	
	2-63	
	2-65	
	2-66	
	2-70	
	2-71	
	2-72	
	2-73	
	2-76	
	2-77	
	2-78	
	2-80	
	2-81	
	2-82	
	4-21	
	4-29	
	4-31	
	4-32	
	4-33	
	4-34	
	4-35	
	4-37	
	5-29	
	5-34	
	5-37	
2085496	2-9	
	2-10	
	2-11	
	2-13	
	2-14	
	2-15	
	2-16	
	2-17	
	2-18	
	2-20	
	2-21	
	2-23	

See Service Manual for service procedures.
©2015 HYSTER COMPANY

NUMERICAL INDEX (continued)

PART NO.	PAGE	ITEM
	2-26	
	2-27	
	2-29	
	2-33	
	2-37	
	2-38	1
	2-41	
	2-42	
	2-44	
	2-45	
	2-47	
	2-48	
	2-50	
	2-51	
	2-56	
	2-57	
	2-60	
	2-61	
	2-62	
	2-63	
	2-65	
	2-66	
	2-70	
	2-71	
	2-72	
	2-73	
	2-76	
	2-77	
	2-78	
	2-80	
	2-81	
	2-82	
	4-21	
	4-29	
	4-31	
	4-32	
	4-33	
	4-34	
	4-35	
	4-37	
	5-29	
	5-34	
	5-37	
2086313	13-37	
2086314	13-15	
2086315	13-15	
2086316	13-15	
2086317	13-23	
2086318	13-31	
2088035	5-112	
2088036	2-5	14
	3-3	12
2088713	5-71	
	5-75	
2088714	5-6	47
	5-63	
	5-67	
2088715	7-19	2
	8-9	2
2088901	1-55	3
	5-15	1
	5-17	
	5-79	
	5-83	
	5-87	
2089087	5-94	
2089088	5-94	
2089621	9-5	40
2089636	9-6	54
2090634	6-45	25
	6-47	24
2090636	6-45	26
	6-47	29
2090638	6-45	35
	6-47	9
2090639	6-45	34
	6-47	12
2090765	1-143	11
2090775	1-143	10
2090882	10-3	4
2090884	10-3	10
2090885	10-3	9
2090886	10-3	9
2091405	10-3	25
2091406	10-3	22
2091407	10-3	25
2091408	10-3	22
2091525	6-45	32
	6-47	7
2091539	4-3	2
2091553	4-4	47
2091695	4-9	12
	4-11	18
	4-13	18
	4-14	
2091697	4-14	4
2091698	4-14	2
2092483	11-25	38
	11-29	32
	12-19	20
	12-21	22
	12-23	18
	13-3	
	13-11	18
	13-16	43
	13-27	22
	13-32	69
2092484	11-26	38
	12-19	20
	12-21	22
	13-3	
	13-11	18
	13-16	43
	13-19	22
	13-24	69
2092485	11-26	38
	12-19	20
	12-21	22
	13-3	
	13-11	18
	13-16	43
2092486	5-127	
	11-25	3
	11-29	45
	12-15	20
	12-19	10
	12-21	13
	12-23	12
	13-12	41
	13-16	44
	13-20	55
	13-24	45
	13-28	48
	13-32	45
2092520	13-35	
2092521	13-11	
2092522	13-11	
2092523	13-11	
2092524	13-19	
2092525	13-27	
2092719	1-55	16
2092720	1-55	16
2093122	1-5	17
2093555	6-5	
	6-7	
	6-9	
	6-13	
	6-14	
	6-19	
	6-21	
	6-23	
	6-27	
	6-29	
	6-33	
	6-35	
	6-37	
	6-39	
	6-41	
	6-43	
	6-49	
2093714	5-89	
2094020	1-55	15
2094175	5-10	51
	5-55	
	5-59	
2094176	5-10	51
	5-45	
	5-49	
2095554	3-6	
	3-7	
	3-9	
	3-11	
	3-12	
	3-13	
	3-14	
	3-17	
	3-19	
	3-23	
	3-25	
	3-27	1
	3-31	
	3-32	
	3-33	
	3-34	
	3-35	
	3-36	
	3-39	
	3-41	
	3-43	
	3-45	
	3-46	
	3-49	
	3-51	
	3-52	
	3-55	
	3-57	
	3-58	
	3-59	
	3-61	
	3-62	
	3-65	
	3-67	
	3-69	
	3-70	
	3-73	
	3-74	
	3-75	
	3-76	

©2015 HYSTER COMPANY

NUMERICAL INDEX (continued)

PART NO.	PAGE	ITEM
	4-20	
	4-25	
	4-27	
	5-33	
	5-35	
	5-39	
	5-43	
2095555	3-6	
	3-7	
	3-9	
	3-11	
	3-12	
	3-13	
	3-14	
	3-17	
	3-19	
	3-23	
	3-25	
	3-27	1
	3-31	
	3-32	
	3-33	
	3-34	
	3-35	
	3-36	
	3-39	
	3-41	
	3-43	
	3-45	
	3-46	
	3-49	
	3-51	
	3-52	
	3-55	
	3-57	
	3-58	
	3-59	
	3-61	
	3-62	
	3-65	
	3-67	
	3-69	
	3-70	
	3-73	
	3-74	
	3-75	
	3-76	
	4-20	
	4-25	
	4-27	
	5-33	
	5-35	
	5-39	
	5-43	
2096071	9-6	46
2096932	9-5	19
	9-9	19
2097016	2-5	1
	3-3	1
2097017	2-87	3
	3-79	3
2097290	12-21	
2097291	12-21	
2097292	12-21	
2097384	2-87	2
	3-79	2
2097386	2-87	6
	3-79	6
2097387	2-87	7
	3-79	7
2097396	1-45	9
2098413	5-6	48
	5-10	52
	5-126	
2098601	2-7	1
	3-5	1
2098895	1-81	
2098997	1-77	22
2099148	9-10	54
2099151	9-9	36
2099157	9-10	54
2099159	9-9	36
2099161	9-5	36
2099162	9-5	36
2099164	5-110	
	14-7	11
2099414	5-131	
	14-4	
2099768	4-13	10
2099769	4-9	14
2099775	2-5	12
	3-3	16
2100213	1-75	1
	1-77	1
2100215	1-75	24
	1-77	15
2100569	5-15	5
2101356	9-10	55
2101590	2-5	1
	2-87	
	3-3	1
	3-79	
2101591	2-87	3
	3-79	3
2101592	2-87	2
	3-79	2
2101641	10-7	34
2102536	5-109	
	14-10	3
2102701	1-109	1
2102702	1-109	8
2102705	1-111	1
2102706	1-111	2
2103892	4-34	2
2103934	5-6	47
	5-63	
	5-67	
2104740	6-5	
	6-7	
	6-9	
	6-13	
	6-14	
	6-17	
	6-21	
	6-23	
	6-25	
	6-29	
	6-31	
	6-35	
	6-37	
	6-39	
	6-41	
	6-43	
	6-49	
2104835	5-79	
	5-83	
	5-87	
2105569	1-55	16
2105570	1-55	16
2105990	1-75	1
	1-77	1
2107118	2-13	
	2-14	
	2-16	
	2-17	
	2-19	
	2-20	
	2-21	
	2-25	
	2-26	
	2-27	
	2-31	
	2-35	
	2-37	
	2-38	1
	2-41	
2107121	2-9	
	2-10	
	2-11	
	2-13	
	2-14	
	2-16	
	2-17	
	2-19	
	2-20	
	2-21	
	2-25	
	2-26	
	2-27	
	2-31	
	2-35	
	2-42	
	2-44	
	2-45	
	2-47	
	2-48	
	2-50	
	2-53	
	2-55	
	2-56	
	2-59	
	2-60	
	2-61	
	2-62	
	2-63	
	2-65	
	2-66	
	2-70	
	2-71	
	2-72	
	2-75	
	2-76	
	2-77	
	2-79	
	2-80	
	2-81	
	2-82	
	4-22	
	4-29	
	4-31	
	4-32	
	4-33	
	4-34	
	4-35	
	4-39	
	5-31	
	5-34	
	5-38	

See Service Manual for service procedures.
©2015 HYSTER COMPANY

NUMERICAL INDEX (continued)

PART NO.	PAGE	ITEM
	2-37	
	2-38	1
	2-41	
	2-42	
	2-44	
	2-45	
	2-47	
	2-48	
	2-50	
	2-53	
	2-55	
	2-56	
	2-59	
	2-60	
	2-61	
	2-62	
	2-63	
	2-65	
	2-66	
	2-70	
	2-71	
	2-72	
	2-75	
	2-76	
	2-77	
	2-79	
	2-80	
	2-81	
	2-82	
	4-22	
	4-29	
	4-31	
	4-32	
	4-33	
	4-34	
	4-35	
	4-39	
	5-31	
	5-34	
	5-38	
2107546	10-7	8
2109603	5-5	32
	5-9	31
2109604	5-5	33
	5-9	36
2109606	5-5	34
	5-9	37
2109607	5-6	44
	5-10	44
	5-13	3
2109608	5-5	8
2109609	5-5	14
	5-13	6
2787344	5-57	36
	5-64	13
	5-71	14
2787349	5-46	18
	5-50	17
	5-50	19
	5-50	21
	5-55	13
	5-57	33
	5-57	35
	5-57	36
	5-60	13
	5-63	11
	5-64	13
	5-64	14
	5-67	4
	5-68	18
	5-71	8
	5-71	12
	5-71	14
	5-72	15
	5-76	16
3064974	6-5	5
3066037	11-25	31
	11-29	44
	13-16	47
	13-24	42
	13-32	42
4000399	1-86	4
	1-92	
4000400	1-86	3
	1-89	
4000915	1-91	
	1-92	3
4000916	1-92	1
4000917	1-89	4
4000918	1-89	2
	1-105	10
4000919	1-89	1
	1-105	7
4000920	1-89	6
	1-105	8
4001205	5-15	6
4001209	9-41	23
4001308	1-78	2
4003079	1-99	2
4003081	1-103	2
	1-161	1
4003082	1-103	9
4003083	1-103	8
	1-161	5
4003084	1-103	14
	1-161	13
4003085	1-103	3
	1-161	2
4003086	1-103	25
	1-161	28
4003087	1-103	22
	1-161	25
4003088	1-91	16
	1-103	18
	1-161	24
4003089	1-91	15
	1-103	6
	1-161	3
4003090	1-103	4
	1-161	29
4003091	1-91	18
	1-103	5
	1-161	31
4003092	1-103	21
	1-161	26
4003093	1-103	20
	1-161	22
4003095	1-103	1
	1-161	15
4003097	1-103	17
4003098	1-103	10
	1-161	9
4004308	1-106	2
4004309	1-106	3
4004310	1-106	4
4004825	1-95	3
	1-97	
	1-157	3
4004826	1-95	7
	1-157	8
4004828	1-97	3
	1-157	10
4004829	1-97	2
	1-157	11
4004830	1-97	1
	1-99	
4004831	1-99	13
4004832	1-99	1
4004833	1-99	11
4004834	1-99	14
4004835	1-99	10
4004836	1-99	4
4004838	1-99	9
4004839	1-99	5
4004926	1-91	10
4004927	1-91	17
4004928	1-91	1
4004929	1-91	5
4004930	1-91	4
4004931	1-91	11
4004932	1-91	13
4004933	1-91	2
4004934	1-91	14
4005291	5-13	1
4006338	1-115	
4006371	2-35	12
4006372	2-35	12
4006379	1-13	1
4006380	1-13	5
4006381	1-13	3
4006462	2-79	2
4007075	2-31	
	3-19	
4007464	2-31	3
4007465	2-31	1
4007466	2-31	
	3-19	
4007468	2-31	1
	3-19	6
4007469	2-31	
	3-19	
4007612	9-2	1
4007613	9-2	2
4007615	9-2	4
4007739	1-115	2
4007740	1-115	7
4007741	1-115	5
4007742	1-115	21
	1-155	5
4007743	1-115	
4007744	1-115	
	1-155	10
4007745	1-115	10
4007746	1-115	11
4007747	1-115	8
4007748	1-115	3
4007749	1-115	8
	1-155	8
4007750	1-115	9
	1-155	9
4007751	1-115	14
	1-117	
4007945	2-31	3
	3-19	5
4007946	2-31	2
	3-19	4
4008980	2-72	
4009192	2-82	5

©2015 HYSTER COMPANY

NUMERICAL INDEX (continued)

PART NO.	PAGE	ITEM
	2-82	5
4009252	4-39	16
4009308	2-25	12
4009310	2-25	14
4009311	2-48	7
	3-35	1
4009315	5-31	9
4009316	5-31	20
4009587	1-167	13
4009588	1-167	17
4009593	1-157	
	1-158	
4009597	1-158	1
	1-161	
4009598	1-158	3
4009782	1-40	4
4009788	2-10	3
4010438	13-3	5
4010862	1-43	19
4010868	2-69	18
4011190	1-5	33
4011628	5-132	1
4012252	6-5	
	6-7	8
	6-10	
	6-17	
	6-19	
	6-23	
	6-25	
	6-27	
	6-31	
	6-33	
	6-35	
	6-37	
	6-39	
	6-41	
	6-43	
	6-49	
4013486	1-155	
4013895	14-14	2
4015491	6-37	1
4015492	6-37	1
4016096	14-14	4
4016097	14-14	3
4016098	14-14	1
4016648	1-45	16
4016873	3-61	
4016909	3-67	2
4018167	1-17	5
4018919	4-32	2
4020678	1-155	14
4020872	5-37	1
	5-38	5
	5-40	9
4020873	1-161	4
4020874	1-161	16
4020875	1-161	8
4020876	1-161	6
4020877	1-161	20
4020878	1-161	19
4020879	1-161	18
4020880	1-161	30
4020881	1-161	17
4020899	1-158	3
4021118	1-155	2
4021119	1-155	2
4021125	1-155	10
4021186	1-153	3
4021187	1-153	2
4021188	1-153	5
4021189	1-153	7
4021190	1-153	10
4021191	1-153	11
4021192	1-153	8
4021193	1-151	1
	1-153	1
4021194	1-153	9
4021195	1-153	6
4021196	1-151	9
	1-153	
4021197	1-151	5
4021198	1-151	7
4021199	1-151	4
4021200	1-151	11
4021201	1-151	15
4021202	1-151	14
4021203	1-151	13
4021204	1-151	12
4021205	1-151	2
4021206	1-151	3
4021207	1-151	6
4021342	1-158	3
4021960	10-11	9
	10-13	15
4022317	2-55	6
	2-55	12
4024220	2-89	1
	3-81	1
4024221	2-89	2
	3-81	2
4024222	2-89	3
	3-81	3
4024223	2-89	4
	3-81	4
4024224	2-89	5
	3-81	5
4024225	2-89	6
	3-81	6
4024226	2-89	7
	3-81	7
4024227	2-89	8
	3-81	8
4024228	2-89	9
	3-81	9
4024229	2-89	10
	3-81	10
4024230	2-89	11
	3-81	11
4024231	2-89	12
	3-81	12
4024232	2-89	13
	3-81	13
4024233	2-89	
	3-81	
4027156	4-31	7
4027241	6-41	19
4028462	1-167	10
4028463	1-167	11
4032843	1-71	4
	1-72	
4032845	1-72	
4032846	1-72	2
4032847	1-72	3
4032848	1-72	4
4032849	1-72	5
4032852	1-72	9
4032853	1-72	10
4032854	1-72	11
4032855	1-72	1
4032856	1-72	
4032857	1-72	6
4032858	1-72	8
4032882	14-21	4
	14-22	4
4032883	14-21	1
	14-22	1
4033233	4-29	10
4033332	4-31	8
4033356	2-51	5
	2-55	5
4033907	5-33	4
4035542	9-14	67
4036801	2-35	12
4038507	1-67	
4038934	6-37	1
4038935	6-37	1
4045106	2-48	
	3-35	2
4045107	2-48	5
	3-35	5
4045108	2-48	1
	2-48	1
	3-35	3
	3-35	3
4045326	6-7	
4047270	6-37	1
4048000	2-18	1
	2-19	6
4051407	1-134	
4054237	1-103	15
	1-161	14
4054247	1-106	6
4055702	2-76	2
4057161	1-59	26
	1-69	10
4058540	1-103	16
4060157	1-99	8
4086279	2-11	2
4094573	1-158	3
4095373	1-103	8
	1-161	5
4099565	1-155	3
4099566	1-155	7
4102143	1-117	42
4102144	1-117	39
4102145	1-117	5
4102146	1-117	43
4102147	1-117	2
4102148	1-117	28
4102151	1-117	25
4102152	1-117	17
4102153	1-117	47
4102154	1-117	41
4102155	1-117	44
4102156	1-117	40
4102157	1-117	12
4102158	1-117	37
4102159	1-117	4
4102160	1-117	14
4102161	1-117	35
4104353	4-31	9
4104354	4-31	10
4104355	4-31	11
4104373	1-133	3
	1-134	
4104375	1-133	2
4104380	1-134	
4104384	1-134	

See Service Manual for service procedures.
©2015 HYSTER COMPANY

NUMERICAL INDEX (continued)

PART NO.	PAGE	ITEM
4104409	1-133	
4110429	2-66	1
4110641	2-76	4
4123350	2-41	6
	5-31	17
4131930	1-117	
4604793	2-5	1
	2-89	
	3-3	1
	3-81	
4606011	5-13	10
4606018	5-13	2
4606019	5-13	5
4608026	1-53	8
4608028	1-53	8
4609186	5-51	
	5-61	
4609187	5-51	
	5-61	
4609548	5-10	51
	5-55	
	5-59	
4609549	5-10	51
	5-61	
	5-45	
	5-49	
4609793	5-13	1
4609794	5-51	
	5-61	
4612110	1-143	
4629387	2-5	11

©2015 HYSTER COMPANY

NUMERICAL INDEX (continued)

NOTES

©2015 HYSTER COMPANY


HYSTER