RUTHZIL TRATOR COMERCIAL DE PEÇAS LTDA 11 97083-6812 ROLANDO CITRANGULO

PARTS MANUAL

HYSTER

FORTIS®
H135FT, H155FT
(J006)

AGOSTO 2011

CUSTOMER EDITION

HYSTER

1698731
08/2011

©2011 HYSTER COMPANY

SECTIONS

1	FRAME
2	ENGINE ASSEMBLY
3	FUEL SYSTEM
4	ELECTRICAL SYSTEM
5	TRANSMISSION
6	DRIVE AXLE
7	STEERING SYSTEM
8	BRAKE SYSTEM
9	HYDRAULIC SYSTEM
10	MAST-TWO STAGE LIMITED FREE-LIFT
11	MAST-THREE STAGE FULL FREE-LIFT
12	OPTIONS
13	FIELD CONVERSION KITS
14	NUMERICAL INDEX

This Parts Manual is divided into 14 major sections which are listed above. Quick reference to these sections can be made by placing the right thumb on the tab of the desired section, bending the book back and thumbing the pages to the corresponding tab.

TABLE OF CONTENTS

DESCRIPTION **PAGE**

A

ACCUMULATOR 12-10
ADD-ON OPTION KITS 13-3
AIR FILTER 3-8
AIR INTAKE
CUMMINS QSB 3.3L DIESEL 3-6
GM 4.3L LPG - PSI OPTION (PENDING PER ECN 152361 →) 3-4
GM 4.3L GASOLINE AND LPG - GFI OPTION 3-2
AIR INTAKE MANIFOLD
CUMMINS QSB 3.3L DIESEL 2-102
ALTERNATOR AND MOUNTING
CUMMINS QSB 3.3L DIESEL 4-30
GM 4.3L LPG - PSI OPTION (PENDING PER ECN 152361 →) 4-25
ARMREST ASSEMBLY
MINI-LEVER MODULES 1-58
ASSEMBLED ENGINE
GM 4.3L GASOLINE AND LPG (GFI OPTION) - SHEET 1 OF 3 2-22
GM 4.3L GASOLINE AND LPG (GFI OPTION) - SHEET 2 OF 3 2-26
GM 4.3L GASOLINE AND LPG (GFI OPTION) - SHEET 3 OF 3 2-30
ATTACHMENT MOUNTING KITS 13-2
AUXILIARY FUNCTION HOSES 10-26
AUXILIARY ONE AND TWO SECTIONS
MANUAL CONTROL VALVE - THREE AND FOUR FUNCTION 9-30
AUXILIARY ONE SECTION
ELECTRONIC CONTROL VALVE - THREE AND FOUR FUNCTION (→ 6/2009) 9-48
ELECTRONIC CONTROLLER - THREE AND FOUR FUNCTION (6/2009 →) 9-50
AUXILIARY TUBE EXTENSION KITS 13-5
AUXILIARY TUBE EXTENSIONS
THREE STAGE FULL FREE-LIFT - WITHOUT QUICK DISCONNECT FITTINGS (S/N A614V02262H →) 11-28
THREE STAGE FULL FREE-LIFT - MANUAL HYDRAULICS WITH QUICK DISCONNECT FITTINGS (S/N A614V02262H →) 11-30
THREE STAGE FULL FREE-LIFT - E-HYDRAULICS WITH QUICK DISCONNECT FITTINGS (S/N A614V02262H →) 11-32
THREE STAGE FULL FREE LIFT WITH SIDE SHIFT FORK POSITIONER CARRIAGE - WITHOUT QUICK DISCONNECT FITTINGS (S/N A614V02262H →) 11-34
THREE STAGE FULL FREE LIFT WITH SIDE SHIFT FORK POSITIONER CARRIAGE - MANUAL HYDRAULICS WITH QUICK DISCONNECT FITTINGS (S/N A614V02262H →) 11-36
THREE STAGE FULL FREE LIFT WITH SIDE SHIFT FORK POSITIONER CARRIAGE - E-HYDRAULICS WITH QUICK DISCONNECT FITTINGS (S/N A614V02262H →) 11-38
TWO STAGE LIMITED FREE-LIFT - WITHOUT QUICK DISCONNECT FITTINGS (S/N A613V03307H →) 10-20
TWO STAGE LIMITED FREE-LIFT - MANUAL HYDRAULICS WITH QUICK DISCONNECT FITTINGS (S/N A613V03307H →) 10-22
TWO STAGE LIMITED FREE-LIFT - E-HYDRAULICS WITH QUICK DISCONNECT FITTINGS (S/N A613V03307H →) 10-24
AUXILIARY TWO SECTION
ELECTRONIC CONTROL VALVE - FOUR FUNCTION (→ 6/2009) 9-52
ELECTRONIC CONTROL VALVE - FOUR FUNCTION (6/2009 →) 9-54

©2011 HYSTER COMPANY

TABLE OF CONTENTS (continued)

DESCRIPTION	PAGE
B	
BACK-UP ALARM	12-6
BATTERY AND CONTROL CABLE DISCONNECT SWITCH	4-16
BATTERY CABLES	
CUMMINS QSB 3.3L DIESEL	4-12
GM 4.3L GASOLINE AND LPG	4-14
BRAKE AND INCHING PEDAL CONVERSION	13-2
BRAKE COOLING SYSTEM	
SINGLE AND DUAL PEDAL	8-12
BRAKE PEDAL LINKAGE AND MASTER CYLINDER	
DUAL PEDAL	8-6
SINGLE PEDAL	8-2
C	
CAB	
ATTACHING PARTS - SHEET 1 OF 2	1-24
ATTACHING PARTS - SHEET 2 OF 2	1-26
HEATER AND HOSES - CUMMINS QSB 3.3L DIESEL	1-36
HEATER AND HOSES - GM 4.3L GASOLINE AND LPG	1-38
LEFT HAND DOOR ASSEMBLY	1-32
MAIN ASSEMBLY	1-22
RIGHT HAND DOOR ASSEMBLY	1-34
WINDOW WIPER SYSTEM	1-30
WINDOWS	1-28
CAMSHAFT	
CUMMINS QSB 3.3L DIESEL	2-85
CAMSHAFT AND OIL PAN	
GM 4.3L LPG - PSI OPTION (PENDING PER ECN 152361 →)	2-52
GM 4.3L GASOLINE AND LPG - GFI OPTION	2-48
CARRIAGE	
THREE STAGE FULL FREE-LIFT - HOOK TYPE	11-20
THREE STAGE FULL FREE-LIFT - PIN TYPE	11-22
TWO STAGE LIMITED FREE-LIFT - HOOK TYPE	10-12
TWO STAGE LIMITED FREE-LIFT - PIN TYPE	10-14
CHARGE PUMP	5-42
COIL ASSEMBLY	
GM 4.3L GASOLINE AND LPG	2-62
COMPARTMENT PLATFORM	1-14
CONTROL LEVER LABELS	
MANUAL HYDRAULICS	1-66
CONTROL VALVE	
THREE SPEED TRANSMISSION	5-24
TWO SPEED TRANSMISSION	5-40
CONTROL VALVE AND STEERING UNIT ASSEMBLY	
ELECTRO-HYDRAULIC - THREE FUNCTION (6/2009 →)	9-36
ELECTRO-HYDRAULIC - FOUR FUNCTION (6/2009 →)	9-40
ELECTRONIC CONTROL - THREE FUNCTION (→ 6/2009)	9-34
ELECTRONIC CONTROL - FOUR FUNCTION (→ 6/2009)	9-38
MANUAL CONTROL - THREE FUNCTION	9-22

©2011 HYSTER COMPANY

TABLE OF CONTENTS (continued)

DESCRIPTION	PAGE
MANUAL CONTROL - FOUR FUNCTION	9-24
CONTROL VALVE LOCKOUT GROUP	
MANUAL CONTROL VALVE	9-20
COOLING	
CUMMINS QSB 3.3L	2-14
COOLING SYSTEM	
GM 4.3L GASOLINE AND LPG	2-10
COUNTERWEIGHTS AND FENDERS	1-20
COWL ELECTRICAL	
ELECTRIC HYDRAULIC	4-8
MANUAL HYDRAULIC	4-10
COWL MOUNT	1-16
CRANKCASE BREATHER	
CUMMINS QSB 3.3L DIESEL	2-94
CRANKSHAFT	
CUMMINS QSB 3.3L DIESEL	2-92
CRANKSHAFT PULLEY	
GM 4.3L LPG - PSI OPTION (PENDING PER ECN 152361 →)	2-40
CYLINDER BLOCK	
CUMMINS QSB 3.3L DIESEL	2-68
GM 4.3L GASOLINE AND LPG	2-46
CYLINDER HEAD	
CUMMINS QSB 3.3L DIESEL	2-70
GM 4.3L GASOLINE AND LPG	2-44
D	
DIFFERENTIAL	6-8
DISTRIBUTER AND COIL	
GM 4.3L LPG - PSI OPTION	2-63
DISTRIBUTOR ASSEMBLY	
GM 4.3L GASOLINE AND LPG	4-24
DRIVE AXLE AND ATTACHING PARTS	
WET BRAKE	6-4
DRIVE AXLE HOUSING AND HUB	6-6
DRIVE TIRE AND WHEEL	6-2
DUAL MIRRORS	
WITH CAB	12-8
WITH OVERHEAD GUARD	12-9
E	
E-HYDRAULIC CONTROL CONVERSION KITS	
ELECTRICAL MOUNTING PLATE	
GM 4.3L LPG - PSI OPTION (PENDING PER ECN 152361 →)	2-18
ELECTRICAL SYSTEM	
RIGHT HAND CHASSIS - CUMMINS QSB 3.3L DIESEL	4-4
RIGHT HAND CHASSIS - GM 4.3L GASOLINE AND LPG	4-6
ELECTRO HYDRAULIC POPPET VALVE	
ELECTRONIC CONTROL VALVE - THREE AND FOUR FUNCTION	9-46

©2011 HYSTER COMPANY

TABLE OF CONTENTS (continued)

DESCRIPTION	PAGE
ELECTRONIC CONTROL LEVERS	
MINI-LEVER MODULE (FOUR FUNCTION) (→ S/N J006V02753H EXC. 02721)	4-54
MINI-LEVER MODULES (THREE FUNCTION) (→ S/N J006V02753H EXC. 02721)	4-52
ELECTRONIC CONTROL MODULE AND SENSORS	
CUMMINS QSB 3.3L DIESEL	4-46
ELECTRONIC MINI LEVER LABELS	
DUAL FUNCTION	1-70
SINGLE FUNCTION	1-68
ENGINE CONTROL MODULE AND SENSORS	
GM 4.3L LPG - PSI OPTION (PENDING PER ECN 152361 →)	4-23
ENGINE ELECTRICAL SYSTEM	
CUMMINS QSB 3.3L DIESEL - UL TYPE DS	4-34
CUMMINS QSB 3.3L DIESEL	4-36
GM 4.3L, GASOLINE AND LPG	4-20
ENGINE MOUNTING	
CUMMINS QSB 3.3L DIESEL	2-64
GM 4.3L GASOLINE AND LPG	2-16
EXHAUST MANIFOLD	
CUMMINS QSB 3.3L DIESEL	2-100
EXHAUST MANIFOLDS	
GM 4.3L LPG - PSI OPTION (PENDING PER ECN 152361 →)	2-41
EXHAUST SYSTEM	
CUMMINS QSB 3.3L	2-4
GM 4.3L LPG - PSI OPTION (PENDING PER ECN 152361 →)	2-8
GM 4.3L GASOLINE AND LPG - GFI OPTION	2-6
F	
FAN ASSEMBLY	
CUMMINS QSB 3.3L DIESEL	2-65
GM 4.3L LPG - PSI OPTION (PENDING PER ECN 152361 →)	2-36
FAN MOUNT ASSEMBLY	
GM 4.3L GASOLINE AND LPG - GFI OPTION	2-32
GM 4.3L LPG - PSI OPTION (PENDING PER ECN 152361 →)	2-34
FIRE EXTINGUISHER	
WITH CAB	12-3
WITH OVERHEAD GUARD	12-4
FLOORPLATES AND COVERS	1-12
FLYWHEEL AND HOUSING	
CUMMINS QSB 3.3L DIESEL	2-74
GM 4.3L GASOLINE AND LPG	2-20
FORK POSITIONER ASSEMBLY	12-14
FORK POSITIONER CYLINDER	12-16
FORKS	
PIN TYPE	1-74
STANDARD TAPER - CLASS IV	1-72
FORWARD CLUTCH HIGH AND OUTPUT SHAFT	
THREE SPEED TRANSMISSION - FWD2	5-20
FORWARD CLUTCH LOW	
TWO SPEED TRANSMISSION	5-38

©2011 HYSTER COMPANY

TABLE OF CONTENTS (continued)

DESCRIPTION	PAGE
FORWARD CLUTCH LOW AND SECOND SHAFT	
THREE SPEED TRANSMISSION - FWD1, RANGE2	5-18
FREE-LIFT	
THREE STAGE FULL FREE-LIFT	11-16
FREE-LIFT CYLINDER	
THREE STAGE FULL FREE-LIFT	11-18
FUEL CAP	
DIESEL	3-38
FUEL FILTER	
CUMMINS QSB 3.3L DIESEL	3-46
FUEL FILTER PLUMBING	
CUMMINS QSB 3.3L DIESEL	3-44
FUEL INJECTION PUMP	
CUMMINS QSB 3.3L DIESEL	3-39
FUEL INJECTOR AND INJECTOR PLUMBING	
CUMMINS QSB 3.3L DIESEL	3-40
FUEL PUMP PLUMBING	
CUMMINS QSB 3.3L DIESEL	3-42
FUEL SUPPLY SYSTEM	
GM 4.3L GASOLINE	3-10
GM 4.3L LPG - PSI OPTION (PENDING PER ECN 152361 →)	3-18
GM 4.3L LPG WITH OVERHEAD GUARD OR PCV DOOR CAB - GFI OPTION (→ PENDING PER ECN 152361)	3-16
GM 4.3L LPG WITH STEEL DOOR CAB - GFI OPTION (PENDING PER ECN 152361 →)	3-12
FUEL SYSTEM	
CUMMINS QSB 3.3L DIESEL	3-36
FULL SUSPENSION SEAT	
MANUAL AND ELECTRO-HYDRAULIC - SWIVEL AND NON-SWIVEL (S/N J006V02754H → INC. 02721)	1-52
SHEET 2 OF 2 (S/N J006V02754H → INC. 02721)	1-56
WITH AND WITHOUT ELECTRONIC CONTROLS (→ S/N J006V02753H EXC. 02721)	1-48
FULL SUSPENSION SWIVEL SEAT	
WITH AND WITHOUT ELECTRONIC CONTROLS (→ S/N J006V02753H EXC. 02721)	1-50
FUSE BOX	
GM 4.3L LPG - PSI OPTION (PENDING PER ECN 152361 →)	4-28
G	
GEAR PUMP	9-10
GEAR PUMP ASSEMBLY	9-8
GM LPG REGULATOR DRAIN KIT	12-26
H	
HAND LEVERS	
FOUR FUNCTION - WITH DETENTED LEVERS	9-16
FOUR FUNCTION - WITHOUT DETENTED LEVERS	9-18
THREE FUNCTION - WITH DETENTED LEVERS	9-12
THREE FUNCTION - WITHOUT DETENTED LEVERS	9-14
HANG-ON SIDE-SHIFT CARRIAGE	
WITH FORK POSITIONER AND BACKREST	12-12

©2011 HYSTER COMPANY

TABLE OF CONTENTS (continued)

DESCRIPTION	PAGE
HEADER HOSE CONVERSION KITS	
HEADER HOSES AND AUXILIARY TUBE	
THREE STAGE FULL FREE-LIFT	11-24
TWO STAGE LIMITED FREE-LIFT	10-16
HEATER	1-40
HEATER CONTROL	1-42
HOIST HOSE AND ATTACHING PARTS	9-67
HOOD ASSEMBLY	1-2
HYDRAULIC CONTROL CONVERSIONS	
HYDRAULIC FILTER	9-6
HYDRAULIC SUPPLY AND RETURN	9-2
I	
IMPACT SENSOR	4-64
INNER MAST	
THREE STAGE FULL FREE-LIFT	11-6
TWO STAGE LIMITED FREE-LIFT	10-4
INSTRUMENT CLUSTER	4-18
INTERIOR PANELS AND COVERS	1-4
INTERMEDIATE MAST	
THREE STAGE FULL FREE-LIFT	11-4
L	
LABELS	
EXTERIOR	1-62
INTERIOR	1-64
LIFTING BRACKET	
CUMMINS QSB 3.3L DIESEL	2-66
LIFTING EYE	12-28
LIGHT CONVERSION KITS	13-7
LIGHTS	
BRAKE, TAIL, BACKUP, SIDE, TURN SIGNALS, WORK, STROBE - WITH CAB	4-40
BRAKE, TAIL, BACKUP, SIDE, TURN SIGNALS, WORK, STROBE - WITH OVERHEAD GUARD	4-42
LOAD BACKREST EXTENSION	1-76
LOAD WEIGH ELECTRICAL	4-62
LPG CONVERTER	
GM 4.3L LPG - PSI OPTION (PENDING PER ECN 152361 →)	3-31
LPG LOCK OFF	
GM 4.3L - PSI OPTION (PENDING PER ECN 152361 →)	3-32
LPG REGULATOR	
GM 4.3L LPG - GFI OPTION (→ PENDING PER ECN 152361)	3-28
LPG REGULATOR AND MIXER	
GM 4.3L - PSI OPTION (PENDING PER ECN 152361 →)	3-30
M	
MAIN LIFT	
THREE STAGE FULL FREE-LIFT	11-8
TWO STAGE LIMITED FREE-LIFT	10-6
MAIN LIFT CYLINDER	
TWO STAGE LIMITED FREE-LIFT	10-10

©2011 HYSTER COMPANY

TABLE OF CONTENTS (continued)

DESCRIPTION	PAGE
MAIN LIFT CYLINDERS	
THREE STAGE FULL FREE-LIFT	11-12
MAST ELECTRICAL	4-60
MID INLET SECTION	
MANUAL AND ELECTRONIC CONTROL VALVE - THREE AND FOUR FUNCTION	9-26
MINI LEVER MODULE LABELS	
HYDRAULIC CONTROL FUNCTIONS	1-60
MINI-LEVER CONTROLS	
WITH ARMREST - THREE FUNCTION (S/N J006V02754H → INC. 02721)	4-56
WITH ARMREST - FOUR FUNCTION (S/N J006V02754H → INC. 02721)	4-58
MISCELLANEOUS CONVERSION KITS	13-4
MONOTROL PEDAL ASSEMBLY	3-50
N	
NON SUSPENSION SEAT	
WITH HIP RESTRAINT (→ S/N J006V02753H EXC. 02721)	1-44
WITHOUT ELECTRONIC CONTROLS (S/N J006V02754H → INC. 02721)	1-46
O	
OIL FILLER ARRANGEMENT	
CUMMINS QSB 3.3L DIESEL	2-84
OIL FILTER AND COOLER	
CUMMINS QSB 3.3L DIESEL	2-80
OIL LEVEL GAUGE	
CUMMINS QSB 3.3L DIESEL	2-106
OIL PAN	
CUMMINS QSB 3.3L DIESEL	2-78
OIL PUMP	
GM 4.3L GASOLINE AND LPG	2-60
OIL PUMP AND FRONT GEAR COVER	
CUMMINS QSB 3.3L DIESEL	2-82
OUTER MAST	
THREE STAGE FULL FREE-LIFT	11-2
TWO STAGE LIMITED FREE-LIFT	10-2
OUTLET SECTION	
ELECTRONIC CONTROL VALVE - THREE AND FOUR FUNCTION WITHOUT ANTI-STALL SOLENOID (→ 6/2009)	9-56
ELECTRONIC CONTROL VALVE - THREE AND FOUR FUNCTION WITH ANTI-STALL SOLENOID (6/2009 →)	9-58
MANUAL CONTROL VALVE - THREE AND FOUR FUNCTION	9-32
OUTPUT SHAFT	
TWO SPEED TRANSMISSION	5-36
OVERHEAD GUARD	1-18
P	
PARK BRAKE ASSEMBLY	8-10
PISTON AND CONNECTING ROD	
CUMMINS QSB 3.3L DIESEL	2-90
POWER DISTRIBUTION MODULE	4-66

©2011 HYSTER COMPANY

TABLE OF CONTENTS (continued)

DESCRIPTION	PAGE
PULLEY AND TENSIONER	
GM 4.3L LPG - PSI OPTION (PENDING PER ECN 152361 →)	2-38
PUMP DRIVE	5-44
R	
RADIATOR MOUNTING	
CUMMINS QSB 3.3L DIESEL	2-12
REPLACEMENT KITS	13-8
REVERSE CLUTCH	
TWO SPEED TRANSMISSION	5-34
REVERSE CLUTCH AND FIRST SHAFT	
THREE SPEED TRANSMISSION - REV1, RANGE 1	5-22
ROCKER ARM SHAFT	
CUMMINS QSB 3.3L DIESEL	2-88
S	
SEALED ALTERNATOR AND MOUNTING	
CUMMINS QSB 3.3L DIESEL	4-32
SEAT CONVERSION KITS	13-3
SEAT PAN AND COVERS	1-6
SIDE-SHIFT ASSEMBLY	12-18
WITHOUT FORK POSITIONER (S/N A613V03724J →) (S/N A613V03724J →)	12-22
SIDE-SHIFT CYLINDER	12-20
WITHOUT FORK POSITIONER (PENDING PER ECN 106964 →)	12-24
SINGLE AND DUAL LPG TANK BRACKETS	3-34
SOUND ABATEMENT	
DIESEL	1-10
GASOLINE AND LPG	1-8
SPARK PLUGS AND WIRES	
GM 4.3L LPG - PSI OPTION (PENDING PER ECN 152361 →)	4-22
STARTER	
GM 4.3L	4-26
STARTER MOTOR	
CUMMINS QSB 3.3L DIESEL	4-44
STARTING AID	
CUMMINS QSB 3.3L DIESEL	2-104
STEER AXLE	
→ 7/2009	7-10
7/2009 →	7-14
STEER COLUMN AND ATTACHING PARTS	
DIESEL	7-2
GASOLINE AND LPG	7-3
STEER CYLINDER	
→ 7/2009	7-17
7/2009 →	7-18
STEER TIRE AND WHEEL	7-19
STEERING COLUMN ASSEMBLY	7-4
STEERING CONTROL UNIT	7-6
STEERING LINES	7-8

©2011 HYSTER COMPANY

TABLE OF CONTENTS (continued)

DESCRIPTION	PAGE
STROBE LIGHT	
LED	12-2
T	
THERMOSTAT	
CUMMINS QSB 3.3L DIESEL	2-72
THERMOSTAT AND WATER OUTLET HOUSING	
GM 4.3L LPG - PSI OPTION (PENDING PER ECN 152361 →)	2-42
THROTTLE BODY	
GM 4.3L LPG - PSI OPTION (PENDING PER ECN 152361 →)	3-26
THROTTLE BODY ASSEMBLY	
GM 4.3L LPG (→ S/N J006V02542H)	3-22
GM 4.3L LPG (S/N J006V02543H ↔ PENDING PER ECN 152361)	3-24
THROTTLE BODY ASSEMBLY AND FUEL RAIL	
GM 4.3L GASOLINE	3-20
THROTTLE PEDAL AND ATTACHING PARTS	3-48
TILT CYLINDER AND MAST INSTALLATION	9-60
TILT CYLINDERS	9-62
TILT HYDRAULICS	9-64
TILT SECTION	
ELECTRONIC CONTROL VALVE - THREE AND FOUR FUNCTION	9-44
TORQUE CONVERTER	
CUMMINS QSB 3.3L DIESEL	5-6
GM 4.3L GASOLINE AND LPG	5-4
TRANSMISSION ASSEMBLY	
THREE SPEED - SHEET 1 0F 2 (→ S/N J006V02222G)	5-10
THREE SPEED - SHEET 2 OF 2 (→ S/N J006V02222G)	5-12
THREE SPEED - SHEET 1 OF 2 (S/N J006V02223G →)	5-14
THREE SPEED - SHEET 2 OF 2 (S/N J006V02223G →)	5-16
TWO SPEED - SHEET 1 OF 2 (→ S/N J006V02109G)	5-26
TWO SPEED - SHEET 2 0F 2 (→ S/N J006V02109G)	5-28
TWO SPEED - SHEET 1 OF 2 (S/N J006V02110G →)	5-30
TWO SPEED - SHEET 2 OF 2 (S/N J006V02110G →)	5-32
TRANSMISSION COOLING	
WITH EXTERNAL OIL COOLER	5-8
TRANSMISSION ELECTRICAL SYSTEM	
THREE SPEED TRANSMISSION	4-50
TWO SPEED TRANSMISSION	4-48
TRANSMISSION MOUNT	5-2
TURBOCHARGER	
CUMMINS QSB 3.3L DIESEL	2-96
TURBOCHARGER PLUMBING	
CUMMINS QSB 3.3L DIESEL	2-98
V	
VALVE ASSEMBLY, LIFT AND LOWER	
ELECTRONIC CONTROL VALVE - THREE AND FOUR FUNCTION	9-42
VALVE ASSEMBLY, LIFT AND TILT	
MANUAL CONTROL VALVE - THREE AND FOUR FUNCTION	9-28

©2011 HYSTER COMPANY

TABLE OF CONTENTS (continued)

DESCRIPTION	PAGE
VALVE COVER	
CUMMINS QSB 3.3L DIESEL	2-86
VALVE COVER AND INLET MANIFOLD	
GM 4.3L LPG - PSI OPTION (PENDING PER ECN 152361 →)	2-58
GM 4.3L GASOLINE AND LPG - GFI OPTION	2-54
VENT LINES	9-66
VIBRATION DAMPER	
CUMMINS QSB 3.3L DIESEL	2-105
W	
WATER OUTLET CONNECTION	
CUMMINS QSB 3.3L DIESEL	2-107
WATER PUMP AND PULLEY	
CUMMINS QSB 3.3L DIESEL	2-76
WATER SEPARATOR	
CUMMINS QSB 3.3L DIESEL	3-47
WET BRAKE ASSEMBLY	6-10
WIRE HARNESS	
ALTERNATOR - CUMMINS QSB 3.3L DIESEL	4-146
COWL WITH MONOTROL PEDAL - WITH HYDRAULIC PUMP SOLENOID	4-130
COWL WITH MONOTROL PEDAL - WITH RETURN TO SET TILT / WITH HYDRAULIC PUMP SOLENOID	4-142
ELECTRONIC CONTROL VALVE - THREE FUNCTION	4-158
ELECTRONIC CONTROL VALVE - FOUR FUNCTION	4-160
ENGINE - GM 4.3L LPG (→ S/N J006V02542H)	4-68
ENGINE - GM 4.3L GASOLINE (→ S/N J006V02542H)	4-80
ENGINE - CUMMINS QSB 3.3L DIESEL	4-88
LEFT HAND CHASSIS - GM 4.3L GASOLINE (→ S/N J006V02542H)	4-120
LEFT HAND CHASSIS - GM 4.3L GASOLINE (SERIES 2010) (S/N J006V02543H →)	4-122
LEFT HAND CHASSIS - GM 4.3L LPG (→ S/N J006V02542H)	4-124
LEFT HAND CHASSIS - GM 4.3L LPG (2010 SERIES)(WITH PREMIUM LOW FUEL SENSOR) (S/N J006V02543H →)	4-126
LEFT HAND CHASSIS - GM 4.3L LPG (2010 SERIES)(WITHOUT PREMIUM LOW FUEL SENSOR) (S/N J006V02543H →)	4-128
LIGHTS WITH OVERHEAD GUARD	4-162
LOW FUEL SENSOR	4-166
REAR - GM 4.3L GASOLINE AND LPG	4-116
REAR - CUMMINS QSB 3.3L DIESEL	4-118
RIGHT HAND CHASSIS - GM 4.3L GASOLINE AND LPG (→ S/N J006V03418H)	4-90
RIGHT HAND CHASSIS - GM 4.3L GASOLINE AND LPG (S/N J006V03419H →)	4-96
RIGHT HAND CHASSIS - CUMMINS QSB 3.3L DIESEL (→ S/N J006V03362H)	4-102
RIGHT HAND CHASSIS - CUMMINS QSB 3.3L DIESEL (S/N J006V03363H →)	4-108
SEALED ALTERNATOR - CUMMINS QSB 3.3L DIESEL	4-148
SEAT JUMPER (→ S/N J006V03362H)	4-114
TRANSMISSION - THREE SPEED	4-152
TRANSMISSION - TWO SPEED	4-156
WORK LIGHT JUMPER - WITH TWO STAGE MASTS	4-164

©2011 HYSTER COMPANY

TABLE OF CONTENTS (continued)

DESCRIPTION	PAGE
WIRE HARNESS (COWL)	
WITH FORWARD AND REVERSE LEVER - WITH HYDRAULIC PUMP SOLENOID, WITHOUT LOCKOUT	4-134
WITH FORWARD AND REVERSE LEVER - WITH HYDRAULIC PUMP SOLENOID, WITH LOCKOUT	4-138
WIRE HARNESS (ENGINE)	
GM 4.3L GASOLINE (GFI OPTION) - WITH CATALYTIC CONVERTER (S/N J006V02543H →)	4-84
GM 4.3L LPG (GFI OPTION) - 2010 SERIES (S/N J006V02543H ↔ PENDING PER ECN 152361)	4-72
GM 4.3L, LPG - PSI OPTION (PENDING PER ECN 152361 →)	4-76

©2011 HYSTER COMPANY

ABBREVIATIONS QUICK REFERENCE SHEET

Listed below are abbreviations used in parts manuals to denote the following expressions:

TERM	DEFINITION
Amp	Amperes
AR	As Required
BDI	Battery Discharge Indicators
BWI	Brush Wear Indicator
CE	Communicator End
CRE	Corrosive Environment
D/B	Date Break
dbA	Decibel "A" Scale
DE	Drive End
ECH	Empty Container Handler
ECH-3	Empty Container Handler - 3 High Stacking
ECH-4	Empty Container Handler - 4 High Stacking
ECH-5	Empty Container Handler - 5 High Stacking
ECH-6	Empty Container Handler - 6 High Stacking
ECH-7	Empty Container Handler - 7 High Stacking
ECM	Electronic Control Module
ECN	Engineering Change Notice
EEPROM	Electrically Erasable Programmable Read Only Memory
EPA	US Environmental Protection Agency
EPROM	Electrically Programmable Read Only Memory

TERM	DEFINITION
FRE	Freezer Environment
in.	inches
LPG	Liquefied Petroleum Gas
MAP	Manifold Absolute Pressure
mm	millimeters
MSTS	Microprocessor Spark Timing System
NPT	National Pipe Threads
O/S	Oversize
PTO	Power Take Off
RPM	Revolutions per Minute
S/N	Serial Number
TMM	Truck Management Module
UL Type D	Diesel-Powered Safety Rating
UL Type DS	Diesel-Powered Safety Rating
UL Type E	Battery-Powered Safety Rating
UL Type EE	Battery-Powered Safety Rating
UL Type ES	Battery-Powered Safety Rating
UL Type G	Gasoline-Powered Safety Rating
UL Type GS	Gasoline-Powered Safety Rating
UL Type LP	Gas-Powered Safety Rating
UL Type LPS	LP Gas-Powered Safety Rating
U/S	Undersize
UL	Underwriters Laboratory
V	Volts

©2011 HYSTER COMPANY

HOW TO USE THE ILLUSTRATED PARTS MANUAL

This parts manual describes and illustrates assemblies, subassemblies, and detail parts needed for service replacement.

The different constructions are indicated by keys and footnotes. The callouts correspond to descriptions found on the next page.

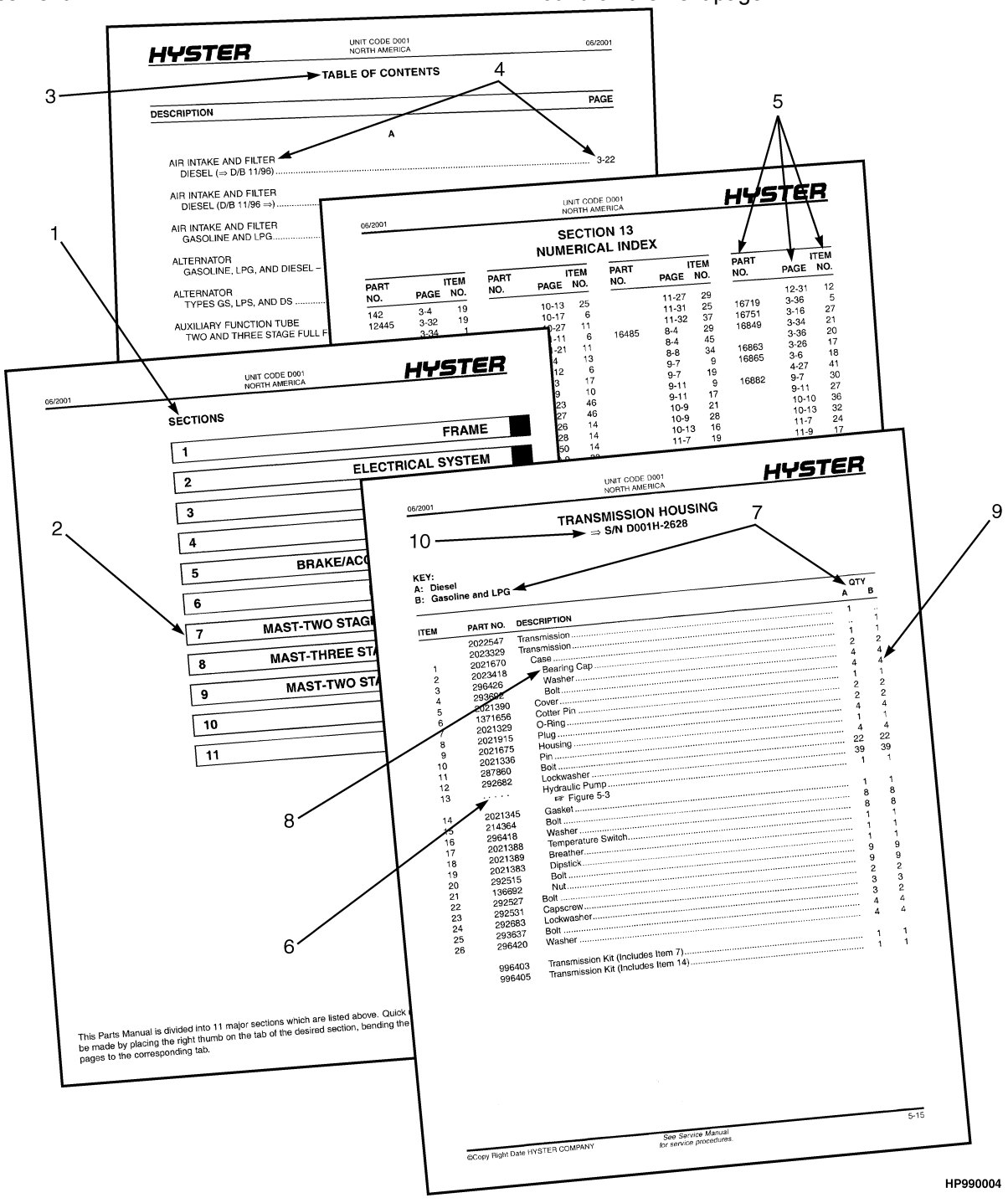

HOW TO FIND THE DESIRED PART NUMBER

WHEN THE PART NUMBER AND THE NEXT HIGHER ASSEMBLY IS NOT KNOWN:

1. Determine the function and application of the part required. Turn to the Sections Page. Choose the general area of reference most likely to include the part.
2. Turn to the section you chose. Use the Section Table of Contents to determine the assembly which would normally contain the part required. Then locate the part on the assembly breakdown page.

WHEN THE PART NUMBER IS NOT KNOWN AND THE NEXT HIGHER ASSEMBLY IS KNOWN:

3. Determine the assembly the required part is used on. Turn to the Table of Contents (Page i).
4. Locate the assembly the required part is used on and turn to the page indicated for that assembly. Then locate the part on the assembly breakdown page.

WHEN THE PART NUMBER IS KNOWN:

5. Use the Numerical Index (Page 14-1) to find the part number. Turn to the page listed and locate the part as indicated by the item number.

GENERAL:

The assembly breakdowns include part numbers, descriptions, quantities required, keys and footnotes to help in selecting correct parts.

6. Parts Supersession Information. Part numbers that have this history will be displayed in the parts list in the order that they were superseded (from oldest to newest). The superseded part numbers will be shown with a line through them.

   Five periods in the PART NO. column (. . . . .) indicate that the part is either *Not Serviced Separately* or there is a reference to another figure. A figure reference is denoted by a pointing hand followed by a figure number in the DESCRIPTION column (☞Figure 10)
7. Keys are used to show two or more similar assemblies, RH and LH assembly parts, etc. Select the appropriate key, "A", "B", "C", "D", or "E" and the corresponding quantity column to find the required parts. Two periods in the QTY column (..) indicate that the part is not used for that assembly.
8. Indented descriptions under the DESCRIPTION column are used to indicate assemblies and subparts of assemblies. In the example on the previous page, *BEARING CAP* (Item 2) is a subpart of the major assembly *CASE*.
9. Quantities shown are for one assembly. The quantities of the subpart *BEARING CAP* are indicated as two and two. This means two per *CASE* assembly.
10. Serial number breaks identify the most current parts information and are shown as follows:
    → S/N D001H2628
    Indicates last serial number affected.
    S/N D001H2629 →
    Indicates the first serial number affected.
    S/N D001H1553 ↔ S/N D001H3291
    Indicates a range of serial numbers affected.

    ECN numbers for pending serial numbers are shown to allow for the inclusion of the most current parts information and are identified as follows:
    → S/N Pending Per ECN 63243
    Indicates a pending serial number for last unit affected.
    S/N Pending Per ECN 63243 →
    Indicates a pending serial number for first unit affected.

    Date breaks are used to indicate when a change occurred but a subsequent serial number break was not recorded. This is an arbitrary date usually based on the ECN release and are identified as follows:
    → D/B 3/00
    Indicates that a change occurred sometime within that month for the item affected.
    D/B 3/00 →
    Indicates that a change occurred sometime within that month for the item affected.
    D/B 3/00 ↔ D/B 4/00
    Indicates a range of production dates of the item affected.

    Contact your local dealer for Hyster lift trucks for serial number information for items with a ECN or a date break.

ORDERING PARTS:

When ordering replacement parts, give the unit serial number, part number, name of part and quantity required.

For any further information on parts, service, or ordering, consult your local dealer for Hyster lift trucks.

©2011 HYSTER COMPANY

IDENTIFICATION OF TRUCK SERIAL NUMBERS

X	OOO	X	OOOO	X
(1)	(2)	(3)	(4)	(5)

(1) and (2) The first letter and three numbers indicate the truck unit code.

(3) The second letter indicates the plant of manufacture.

(4) The four or five digit number indicates the production sequence number of the truck.

(5) The final letter indicates the year of manufacture starting with "A" in 1957, 1980, and 2003. The letters "I", "O", and "Q" will not be used.

For pending serial numbers contact your local dealer for Hyster lift trucks.

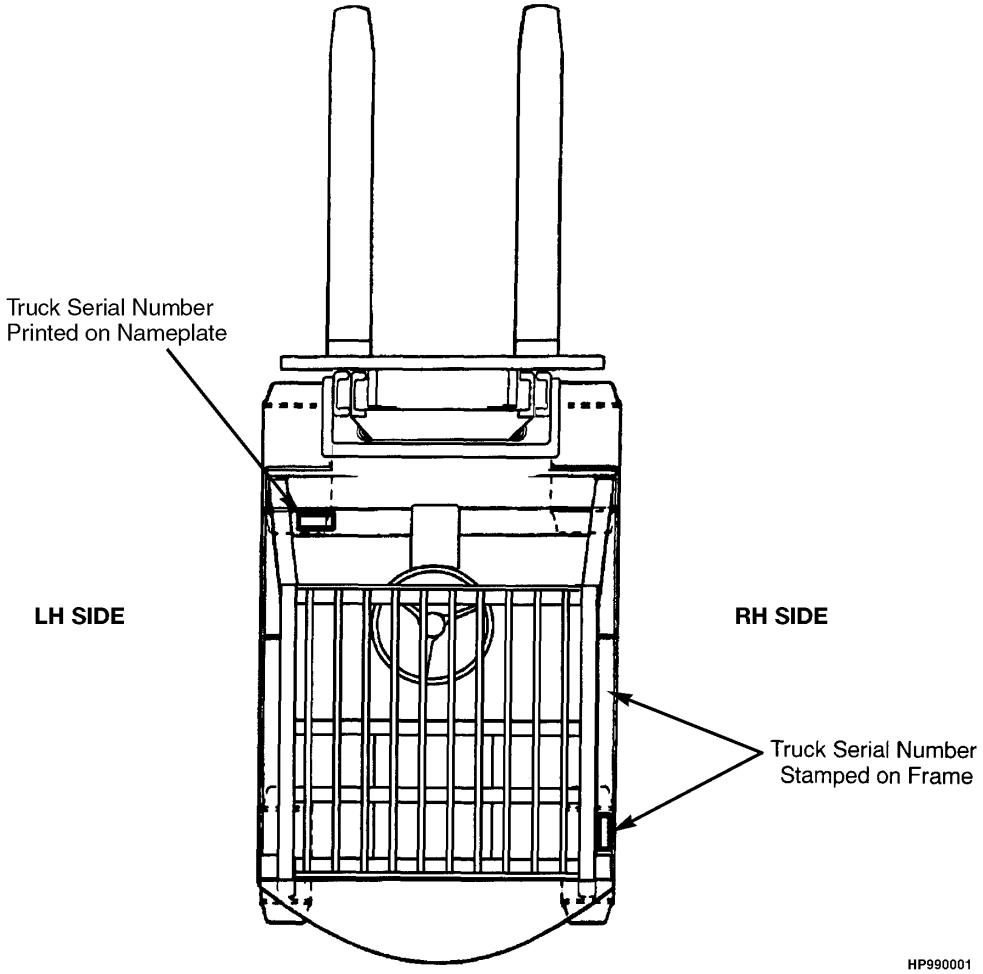

Parts referred to in this book as right or left hand parts are in accordance with the illustration above.

IDENTIFICATION OF MAST SERIAL NUMBERS

X OOO X OOOO OOOO

(1) (2) (3) (4) (5)

(1) and (2) The first letter and number indicates the mast unit code.

(3) The second letter indicates the plant of manufacture.

(4) The four or five digit number indicates the production sequence number of the mast.

(5) Carriage travel in millimeters stamped just below the serial number.

Mast Group identification consists of mast unit code (1) and (2) plus carriage travel (5).

For pending production sequence numbers contact your local dealer for Hyster lift trucks.

LIFT EQUIPMENT IDENTIFICATION

1. Fork part number, capacity rating, plant code letter, and date of manufacture are stamped approximately six inches below the top of most forks.
2. The carriage group number is stamped on the right hand side of the top crossmember (pin type) or on the back of the right hand end of the bottom crossmember (hook type). A date code has two letters in line with or below the carriage group number.
3. The mast identification number has a unit code, a letter indicating the plant of manufacture, and a serial number. Underneath the production sequence number is a four digit number that indicates the carriage travel in millimeters.
4. Tilt and lift cylinder group numbers are stamped on the cylinder shell.

   Always refer to the group, serial, or part number when ordering service parts.

   Modification of masts and carriages by SPED (Special Products Engineering Department) are identified by a model prefix code beginning with the letter "S". contact your dealer for Hyster lift trucks for information on these assemblies.

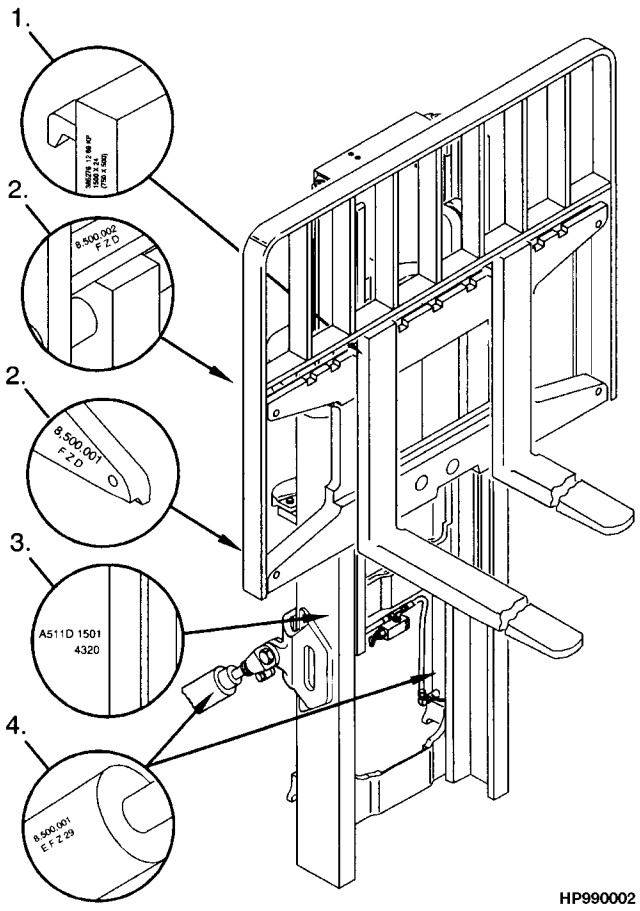

©2011 HYSTER COMPANY

IDENTIFICATION OF ATTACHMENT AND SIDE-SHIFT CARRIAGE SERIAL NUMBERS

X OOO X OOOO

(1) (2) (3) (4)

(1) and (2) The first letter and three numbers indicate the attachment unit code.

(3) The second letter indicates the plant of manufacture.

(4) The four or five digit number indicates the production sequence number.

For pending production sequence numbers contact your local dealer for Hyster lift trucks.

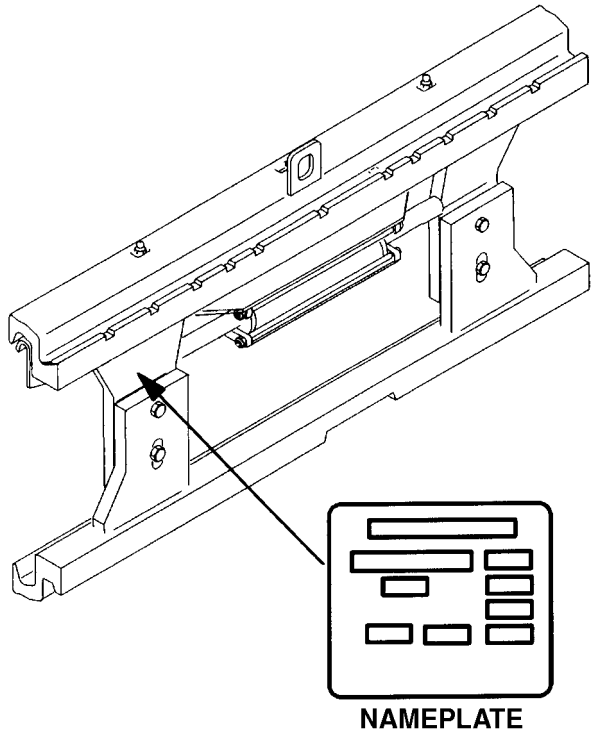

Side-shift carriages and attachments have nameplates. Use the serial number found on the nameplate to identify the attachment.

Always refer to the group, serial, or part number when ordering service parts.

Modifications of attachments and side-shift carriages by SPED (Special Products Engineering Department) are identified by a model prefix code beginning with the letter "S". Contact your dealer for Hyster lift trucks for information on these assemblies.

©2011 HYSTER COMPANY

PUBLICATIONS

Every new lift truck is provided with an OPERATING MANUAL. This manual has information that the operator must know for inspection and operation of the lift truck.

SERVICE MAINTENANCE MANUALS, which provide service and overhaul procedures, and PARTS MANUALS with complete replacement part identification, are available at a nominal fee from your Hyster dealer to assist users in effectively maintaining Hyster lift trucks in a safe, useful condition. See the list below for information on ordering specific publications for this model lift truck.

PUBLICATION	HYSTER PART NUMBER
Operating Manual	1653165
Service Manual (Complete)	1698723
Parts Manual	1698731

©2011 HYSTER COMPANY

1 FRAME

SECTION 1
FRAME

DESCRIPTION	PAGE
ARMREST ASSEMBLY	
MINI-LEVER MODULES	1-58
CAB	
ATTACHING PARTS - SHEET 1 OF 2	1-24
ATTACHING PARTS - SHEET 2 OF 2	1-26
HEATER AND HOSES - CUMMINS QSB 3.3L DIESEL	1-36
HEATER AND HOSES - GM 4.3L GASOLINE AND LPG	1-38
LEFT HAND DOOR ASSEMBLY	1-32
MAIN ASSEMBLY	1-22
RIGHT HAND DOOR ASSEMBLY	1-34
WINDOW WIPER SYSTEM	1-30
WINDOWS	1-28
COMPARTMENT PLATFORM	1-14
CONTROL LEVER LABELS	
MANUAL HYDRAULICS	1-66
COUNTERWEIGHTS AND FENDERS	1-20
COWL MOUNT	1-16
ELECTRONIC MINI LEVER LABELS	
DUAL FUNCTION	1-70
SINGLE FUNCTION	1-68
FLOORPLATES AND COVERS	1-12
FORKS	
PIN TYPE	1-74
STANDARD TAPER - CLASS IV	1-72
FULL SUSPENSION SEAT	
MANUAL AND ELECTRO-HYDRAULIC - SWIVEL AND NON-SWIVEL (S/N J006V02754H → INC. 02721)	1-52
SHEET 2 OF 2 (S/N J006V02754H → INC. 02721)	1-56
WITH AND WITHOUT ELECTRONIC CONTROLS (→ S/N J006V02753H EXC. 02721)	1-48
FULL SUSPENSION SWIVEL SEAT	
WITH AND WITHOUT ELECTRONIC CONTROLS (→ S/N J006V02753H EXC. 02721)	1-50
HEATER	1-40
HEATER CONTROL	1-42
HOOD ASSEMBLY	1-2
INTERIOR PANELS AND COVERS	1-4
LABELS	
EXTERIOR	1-62
INTERIOR	1-64
LOAD BACKREST EXTENSION	1-76
MINI LEVER MODULE LABELS	
HYDRAULIC CONTROL FUNCTIONS	1-60
NON SUSPENSION SEAT	
WITH HIP RESTRAINT (→ S/N J006V02753H EXC. 02721)	1-44
WITHOUT ELECTRONIC CONTROLS (S/N J006V02754H → INC. 02721)	1-46
OVERHEAD GUARD	1-18
SEAT PAN AND COVERS	1-6
SOUND ABATEMENT	
DIESEL	1-10
GASOLINE AND LPG	1-8

©2011 HYSTER COMPANY

HOOD ASSEMBLY (FIGURE 1-1)

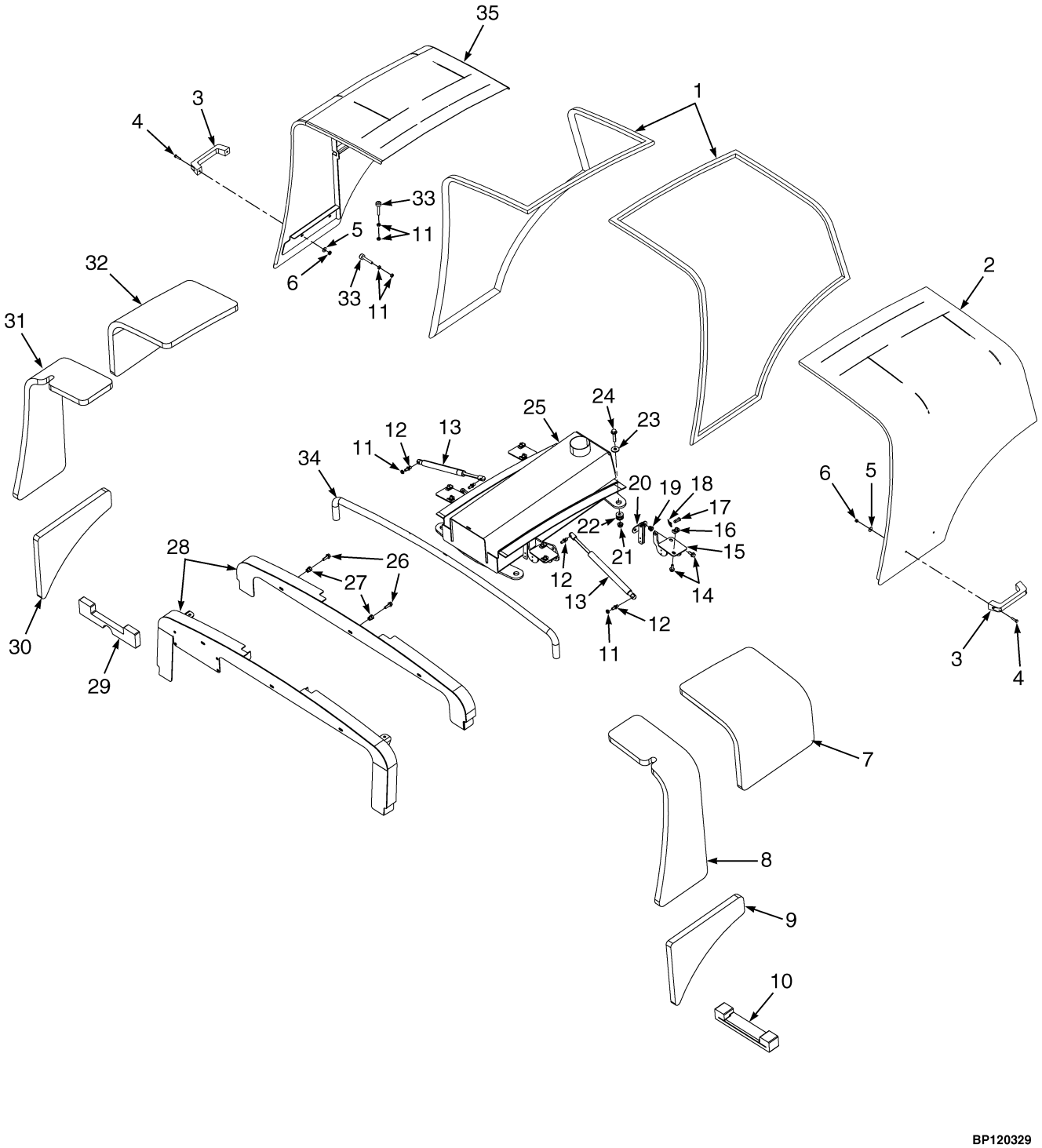

©2011 HYSTER COMPANY

HOOD ASSEMBLY

ITEM	PART NO.	DESCRIPTION	QTY
1	1675474	Seal	2
2	1664290	Hood (LH) (With Overhead Guard)	1
2	1664289	Hood (LH) (With Cab)	1
3	362030	Handle	2
4	287816	Capscrew	4
5	1476421	Washer	4
6	1581565	Nut	4
7	1650477	Sound Liner (LH)	1
8	1663631	Sound Liner (LH)	1
9	1650479	Sound Liner (LH)	1
10	1615395	Seal	1
11	1593335	Nut	12
11	320157	Washer (Not Illustrated)	8
12	4011397	Ball Stud	4
12	1563369	Ball Stud (Alternate Part)	4
13	4014557	Gas Spring	2
14	1527880	Capscrew	16
15	1639723	Hinge	2
15	1678274	Hinge (Alternate Part)	2
16	1480237	Nut	8
17	1375391	Pin (Rod End)	4
18	1351689	Lockring	4
19	1531557	Insert	8
20	1669446	Hinge (Base)	2
20	1678273	Hinge (Base) (Alternate Part)	2
21	1460477	Nut	4
22	317594	Motor Mount	4
23	1356113	Washer	4
24	1527886	Capscrew	4
25	1638510	Hood Support	1
26	1510113	Capscrew	3
27	1530243	Insert	3
28	1641590	Crossmember (With Overhead Guard)	1
28	1641591	Crossmember (With Cab)	1
29	1610906	Seal	1
30	1650480	Sound Liner (RH)	1
31	1663630	Sound Liner (RH)	1
32	1650473	Sound Liner (RH)	1
33	1585581	Bumper (Hood)	4
34	1615638	Seal	1
35	1664273	Hood (RH) (With Overhead Guard)	1
35	1664272	Hood (RH) (With Cab)	1

©2011 HYSTER COMPANY

INTERIOR PANELS AND COVERS (FIGURE 1-2)

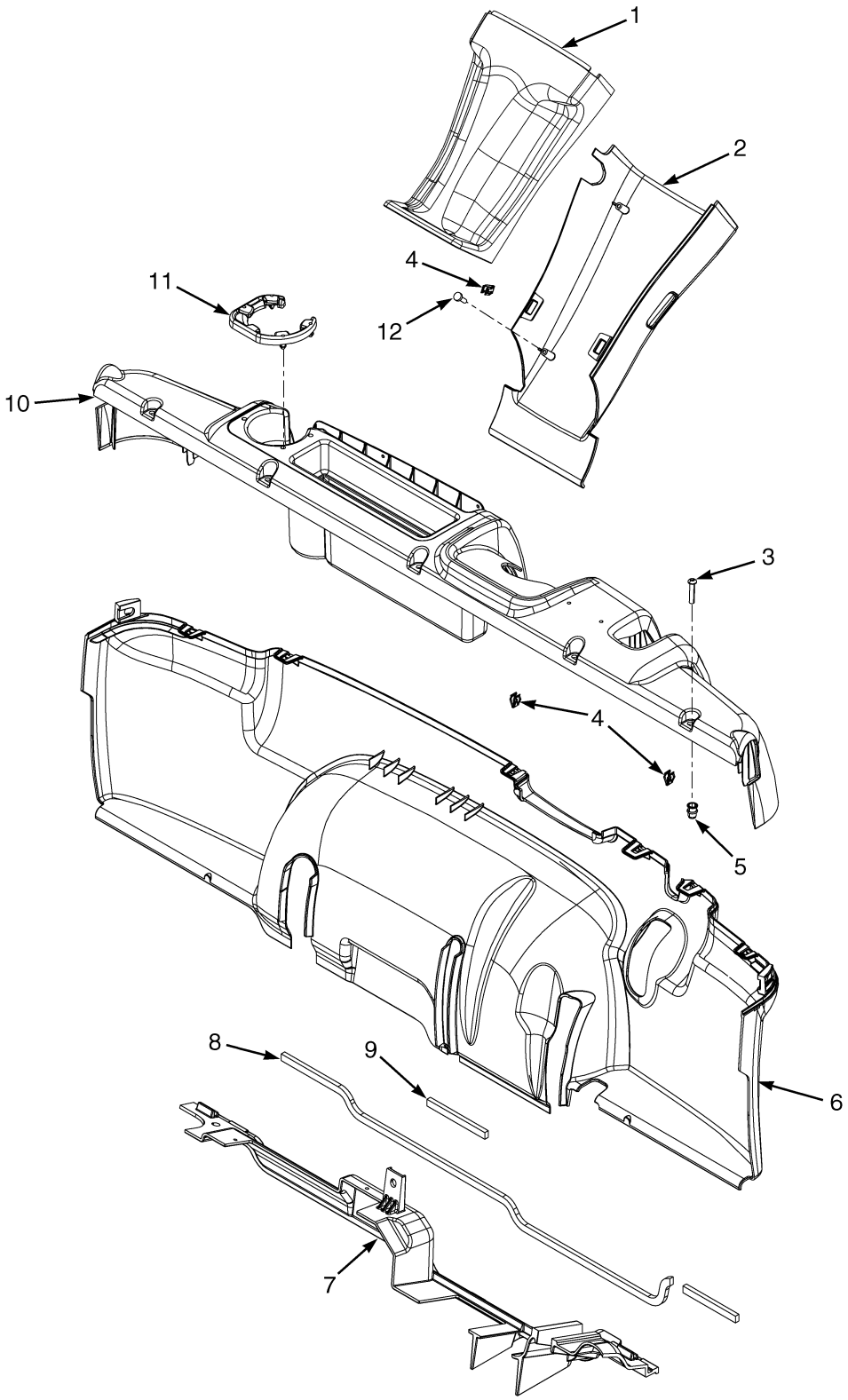

©2011 HYSTER COMPANY

INTERIOR PANELS AND COVERS

KEY:
A: Manual Hydraulics
B: Electronic Hydraulics

ITEM	PART NO.	DESCRIPTION	QTY A	QTY B
1	2098330	Cover (Steering Column Upper)	1	1
2	2065666	Cover (Steering Column Lower)	1	1
3	2071261	Capscrew	5	5
3	**a** 1710007	Capscrew	4	4
3	**a** 1307737	Fastener	1	1
4	2065667	Clip	8	8
5	1531001	Insert	5	5
6	2070726	Panel (Single Pedal)	1	1
6	2076204	Panel (Dual Pedal)	1	1
7	1641656	Cover Plate	1	..
7	1641657	Cover Plate	..	1
8	1641658	Seal	1	1
9	1646609	Seal	1	1
10	1573597	Dash Panel	1	..
10	1573598	Dash Panel	..	1
11	2070975	Cup Holder	1	1
12	2027655	Screw	2	2

FOOTNOTES:

a With Alternate Fastener

©2011 HYSTER COMPANY

SEAT PAN AND COVERS (FIGURE 1-3)

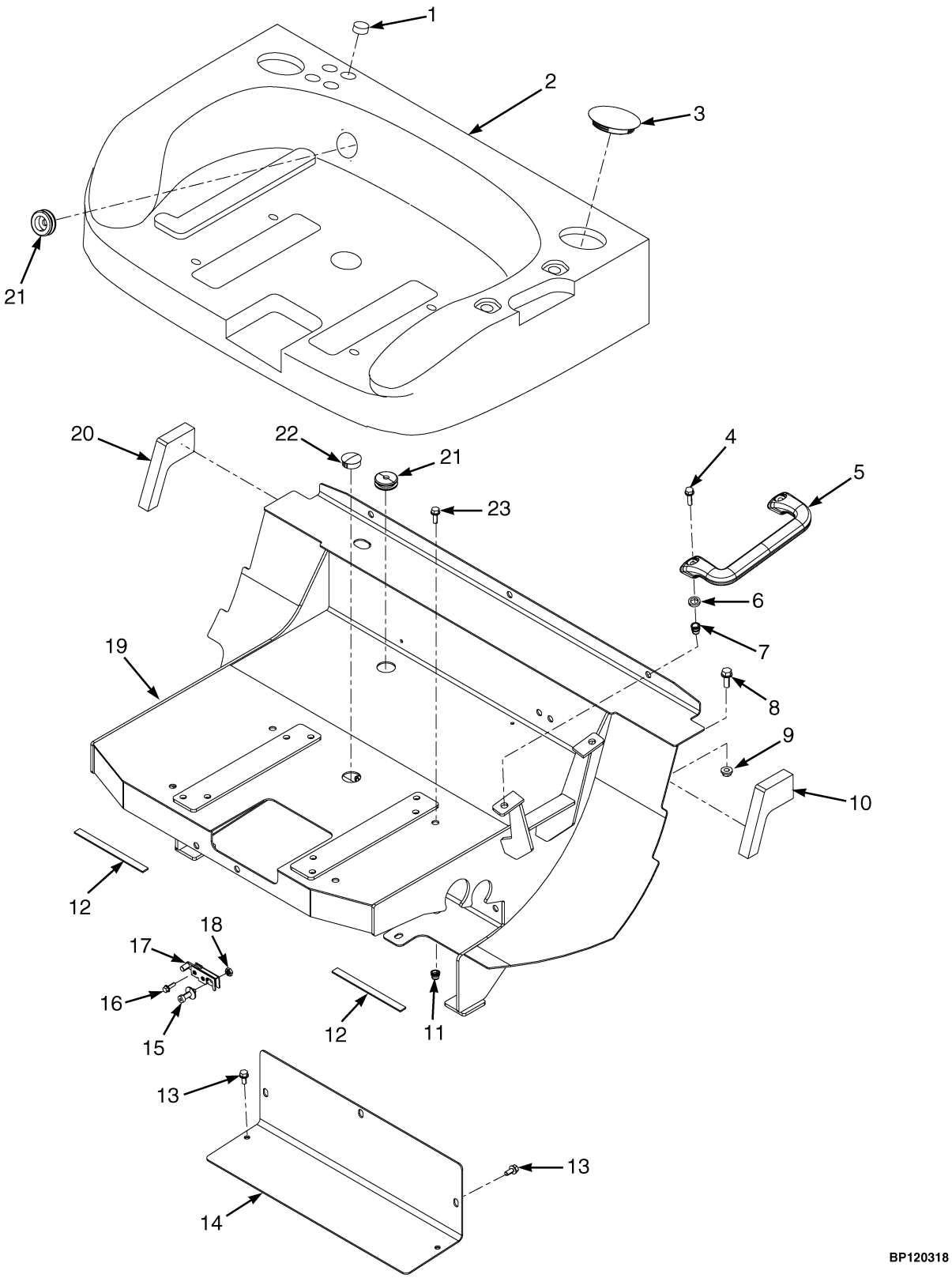

©2011 HYSTER COMPANY

SEAT PAN AND COVERS

KEY:
A: With Cab
B: Without Cab

ITEM	PART NO.	DESCRIPTION	QTY A	QTY B
1	1660750	Insert	4	..
2	**a** 1649639	Cover (Seat Surround)	1	..
2	**b** 1649640	Cover (Seat Surround)	..	1
2	2098220	Plug	1	1
3	2021395	Cap	1	1
4	1586627	Capscrew	2	2
5	1536813	Handle (Grab)	1	1
6	1646509	Spacer	2	2
7	1530243	Insert	2	2
8	1605990	Capscrew	4	4
9	1586431	Nut	4	4
10	1615757	Seal (LH)	1	1
11	1531557	Insert	9	9
12	1597959	Seal	2	2
13	1608654	Capscrew	3	5
14	1646593	Cover	1	..
14	1647413	Cover	..	1
15	1608413	Striker Bolt	1	1
16	1527877	Capscrew	2	2
17	1608414	Latch	1	1
18	191534	Nut	1	1
19	1650191	Seat Pan	1	1
20	1615758	Seal (RH)	1	1
21	1561015	Grommet	2	2
21	4031944	Grommet (Alternate Part)	2	2
22	**c** 1585592	Plug	2	2
22	**d** 1585592	Plug	1	1
23	1583611	Capscrew	20	20

FOOTNOTES:

a With Cab
b With Overhead Guard
c With Swivel Seat
d Without Swivel Seat

©2011 HYSTER COMPANY

SOUND ABATEMENT (FIGURE 1-4)
GASOLINE AND LPG

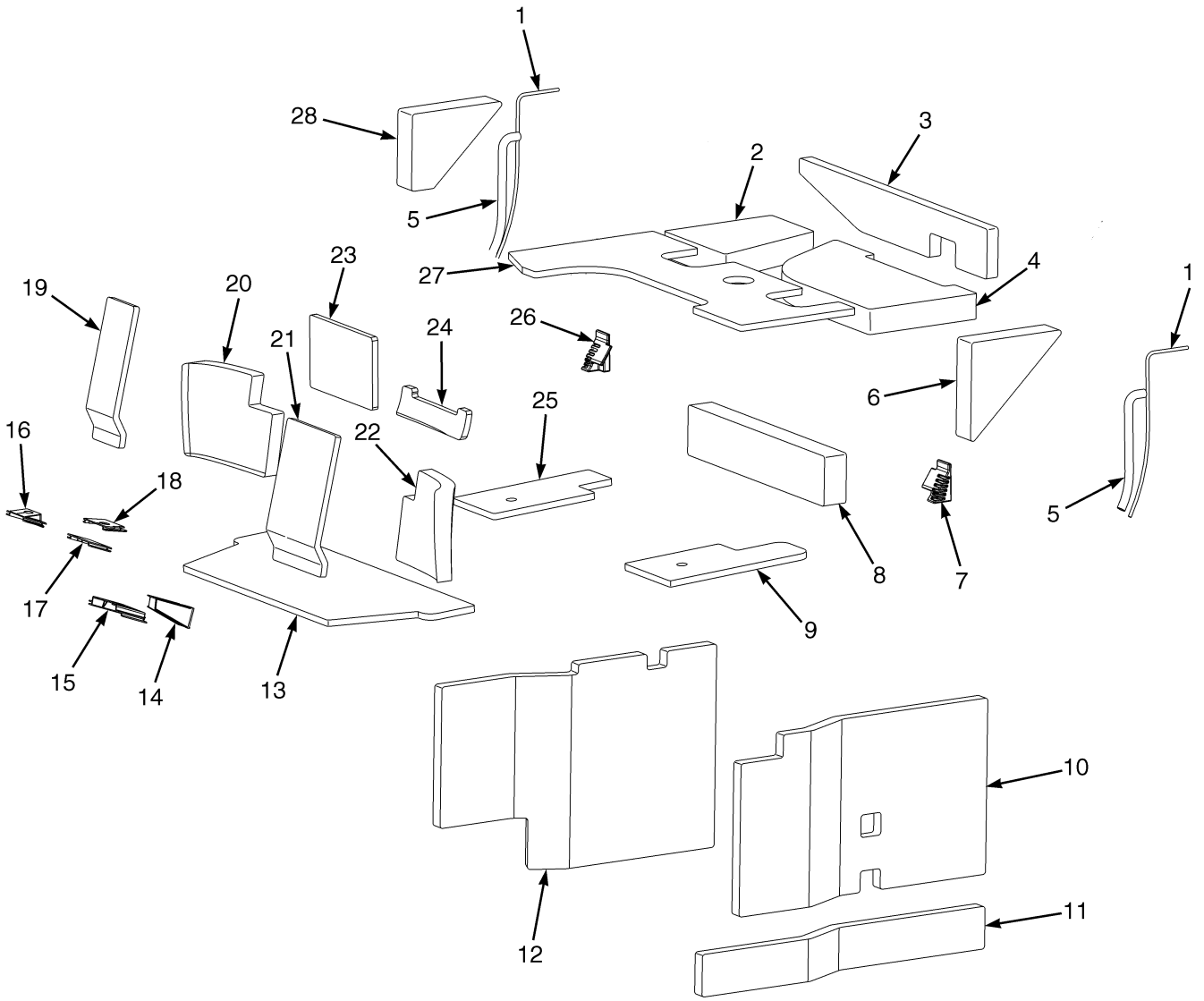

©2011 HYSTER COMPANY

SOUND ABATEMENT
GASOLINE AND LPG

ITEM	PART NO.	DESCRIPTION	QTY
1	1670592	Seal	2
2	1651112	Sound Liner (Seat Support)	1
3	1651110	Sound Liner (Seat Support)	1
4	1651111	Sound Liner (Seat Support)	1
5	1670593	Seal	2
6	1651115	Sound Liner (Seat Support LH) (Seat Support LH)	1
7	2098416	Plug (LH)	1
8	1651113	Sound Liner	1
9	1651107	Sound Liner (Rear Floorplate)	1
10	1651104	Sound Liner (LH) (Frame)	1
11	1651105	Sound Liner (LH) (Frame)	1
12	1651106	Sound Liner (RH) (Frame)	1
13	1651109	Sound Liner (Front Floor Plate) (Front Floorplate)	1
14	2076134	Seal	1
15	2065797	Seal	1
16	**c** 2094680	Seal	1
17	**c** 2065826	Seal	1
18	**c** 2065827	Seal	1
19	1651405	Sound Liner (Cowl Plate) (Cowl Plate)	1
20	1617081	Sound Liner (Foam) (RH) (Dash)	1
21	1651404	Sound Liner (Cowl Plate) (Cowl Plate)	1
22	1617082	Sound Liner (Dash) (LH) (Dash)	1
23	1616484	Sound Liner	1
24	1616483	Sound Liner	1
25	1651108	Sound Liner (Rear Floorplate)	1
26	2098417	Plug (RH)	1
27	1651116	Sound Liner (Seat Pan)	1
28	1651114	Sound Liner (Seat Support RH) (Seat Support RH)	1
	ab 1698474	Sound Liner	2

FOOTNOTES:

a Inside Top of Module Plate
b Not Illustrated
c With Electronic Hydraulics

©2011 HYSTER COMPANY

SOUND ABATEMENT (FIGURE 1-5)
DIESEL

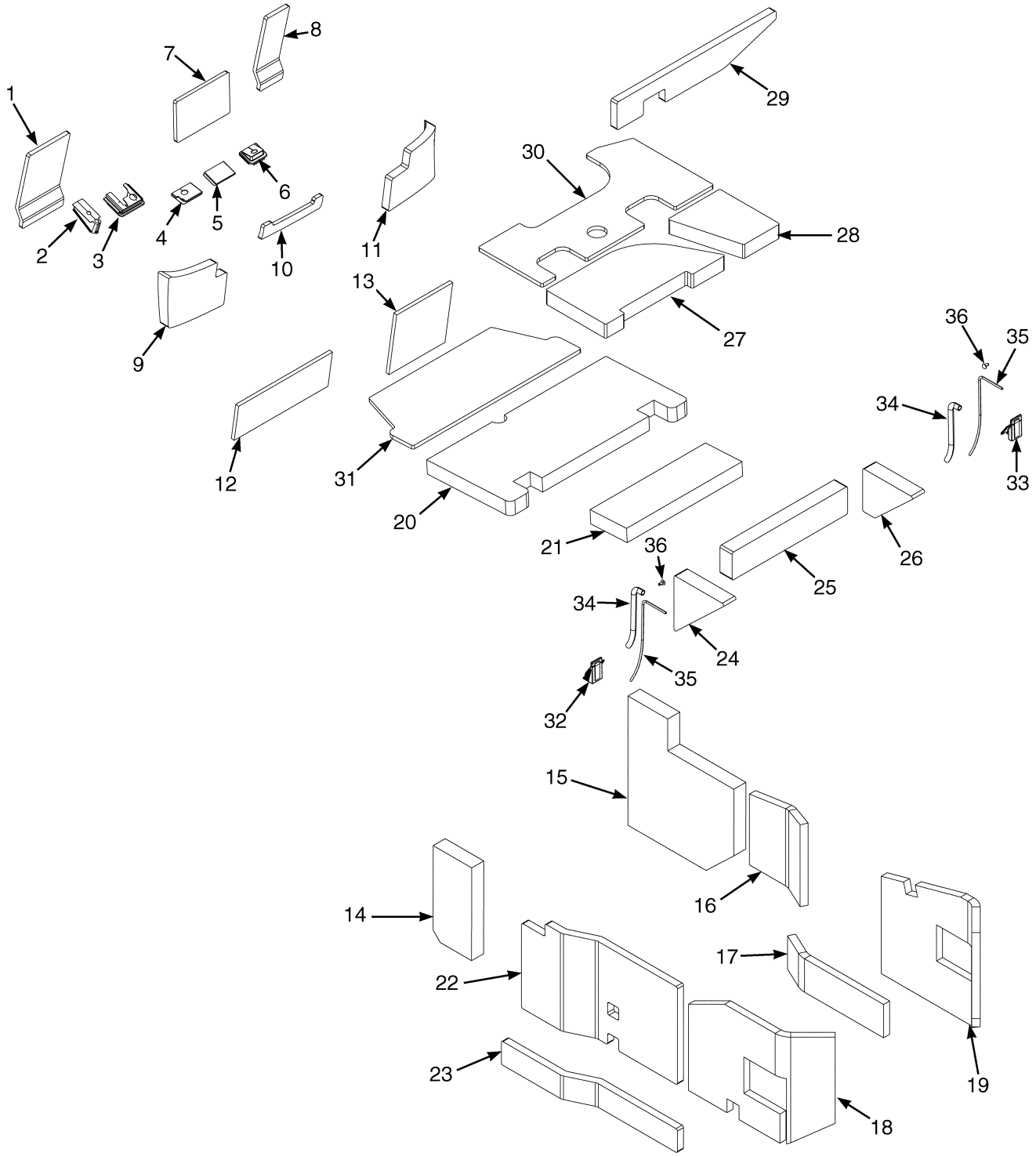

©2011 HYSTER COMPANY

SOUND ABATEMENT
DIESEL

KEY:
A: Cab
B: Overhead Guard

ITEM	PART NO.	DESCRIPTION	QTY A	QTY B
1	1651404	Sound Liner (Cowl Plate)	1	1
2	**cd** 2076134	Seal	1	..
3	**cd** 2065797	Seal	1	..
4	**c** 2065827	Seal	1	..
5	**c** 2065826	Seal	1	..
6	**c** 2094680	Seal	1	..
7	1616484	Sound Liner	1	1
8	1651405	Sound Liner (Cowl Plate)	1	1
9	1617082	Sound Liner (Dash) (LH)	1	1
10	1616483	Sound Liner	1	1
11	1617081	Sound Liner (Foam) (RH)	1	1
12	1692279	Sound Liner (Frame Cowl)	1	1
13	1692265	Sound Liner (Frame Cowl)	1	1
14	1692263	Sound Liner (LH)	..	1
15	1692261	Sound Liner (RH)	..	1
16	1692431	Sound Liner (RH)	..	1
17	1692430	Sound Liner (RH)	..	1
18	1695810	Sound Liner (LH)	..	1
19	1698475	Sound Liner (RH)	..	1
20	1692277	Sound Liner (Rear Floor Plate)	..	1
21	1692278	Sound Liner (Cover Plate)	..	1
22	1651104	Sound Liner (LH) (Frame)	1	1
23	1651105	Sound Liner (LH) (Frame)	1	1
24	1651115	Sound Liner (Seat Support LH)	1	1
25	1651113	Sound Liner	1	1
26	1651114	Sound Liner (Seat Support RH)	1	1
27	1651111	Sound Liner	1	1
28	1651112	Sound Liner	1	1
29	1651110	Sound Liner	1	1
30	1651116	Sound Liner (Seat Pan)	1	1
31	1651109	Sound Liner (Front Floor Plate)	1	1
32	2098416	Plug (LH)	1	..
33	2098417	Plug (RH)	1	..
34	1670593	Seal	2	..
35	1670592	Seal	2	..
36	1307737	Fastener	2	..
	ab 1698474	Sound Liner	2	2

FOOTNOTES:

a Inside Top of Module Plate
b Not Illustrated
c With Electronic Hydraulics
d With Manual Hydraulics

©2011 HYSTER COMPANY

FLOORPLATES AND COVERS (FIGURE 1-6)

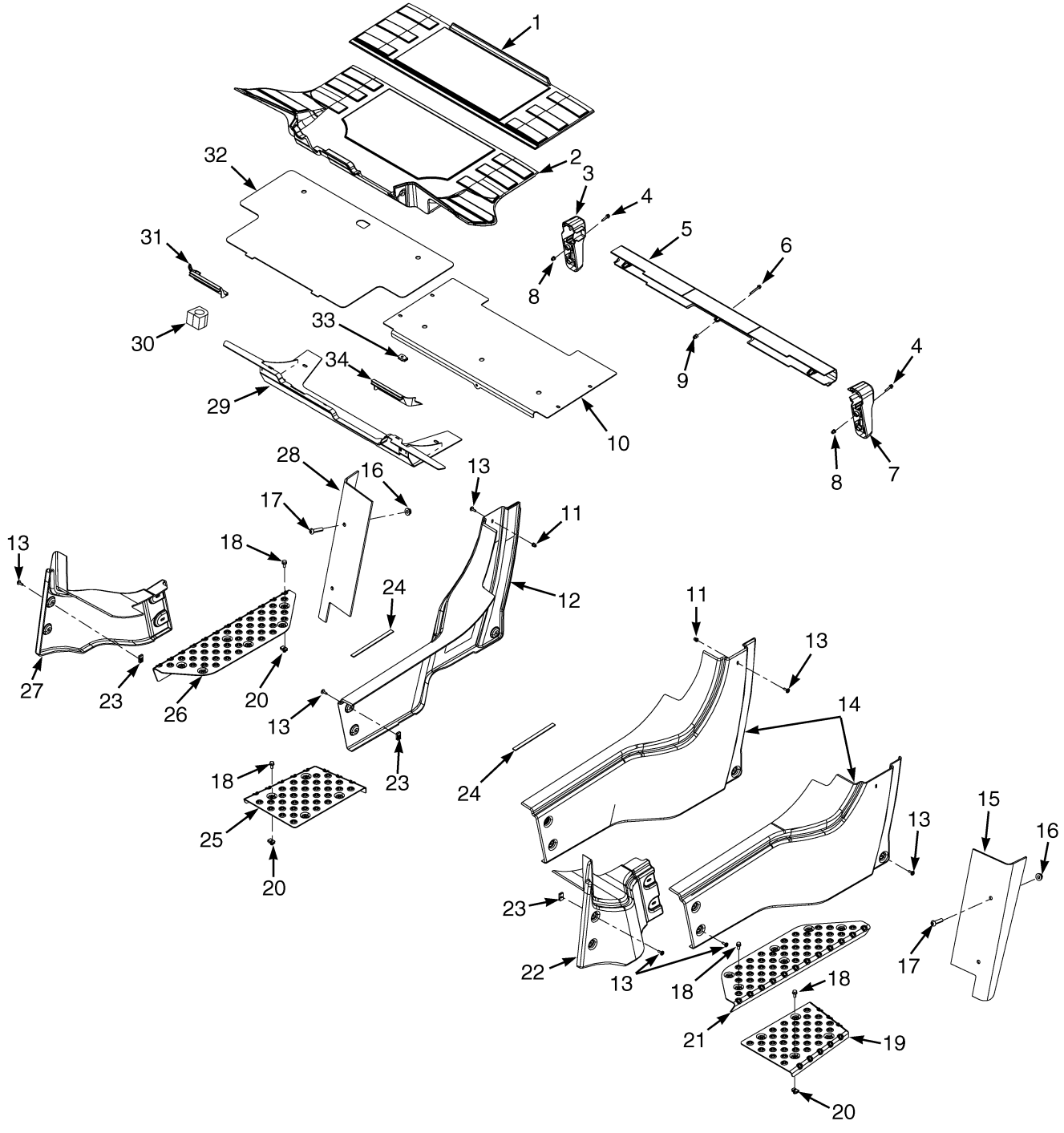

©2011 HYSTER COMPANY

FLOORPLATES AND COVERS

KEY:
A: Without Cab
B: With Cab

ITEM	PART NO.	DESCRIPTION	QTY A	QTY B
1	2093343	Floormat (Rear)	1	1
2	2093342	Floormat (Front)	1	1
3	**d** 2056823	Tail Light Base (RH)	1	1
3	**e** 2107957	Tail Light Base (RH)	1	1
4	1586495	Capscrew	4	4
5	2067475	Cover (Rear Crossmember)	1	1
6	1540643	Capscrew	3	3
7	**d** 2056822	Tail Light Base (LH)	1	1
7	**e** 2107958	Tail Light Base (LH)	1	1
8	1531558	Insert	4	4
9	1531001	Insert	3	3
10	1659938	Floorplate (Rear)	1	1
11	1531558	Insert	2	2
12	**a** 1640867	Cover (RH) (Rear)	1	..
12	**b** 1640868	Cover (RH) (Rear)	1	..
12	**a** 1640877	Cover (RH) (Rear)	..	1
12	**b** 1640876	Cover (RH) (RH) (Rear)	..	1
13	1530019	Screw	12	12
14	1640874	Cover (LH) (Rear)	..	1
14	1640865	Cover (LH) (Rear)	1	1
15	**c** 1622865	Plate (LH)	1	1
16	**c** 1586432	Nut	4	4
17	**c** 2090693	Capscrew	4	4
18	1608654	Capscrew	10	10
19	1608671	Plate (Lower LH Tread)	1	1
20	1480237	Nut	23	33
21	1608667	Plate (Upper LH Tread)	1	1
22	1640870	Cover (Front LH)	..	1
23	325182	Nut	10	10
24	1597960	Seal	2	2
25	1608673	Plate (RH)	1	1
26	1608669	Plate (Upper RH Tread)	1	1
27	1640872	Cover (RH)	..	1
28	1622867	Plate (RH)	..	..
29	1607634	Floorplate	1	1
30	1530135	Grommet	1	1
31	2092324	Seal (RH)	1	1
32	1608204	Floorplate	1	1
33	1393879	Nut	8	8
34	2092323	Seal (LH)	1	1

FOOTNOTES:

a GM 4.3L Gasoline and Cummins 3.3L Diesel
b GM 4.3L LPG
c → S/N J006V02047G
d → S/N J006V02094G
e S/N J006V02095G →

©2011 HYSTER COMPANY

COMPARTMENT PLATFORM (FIGURE 1-7)

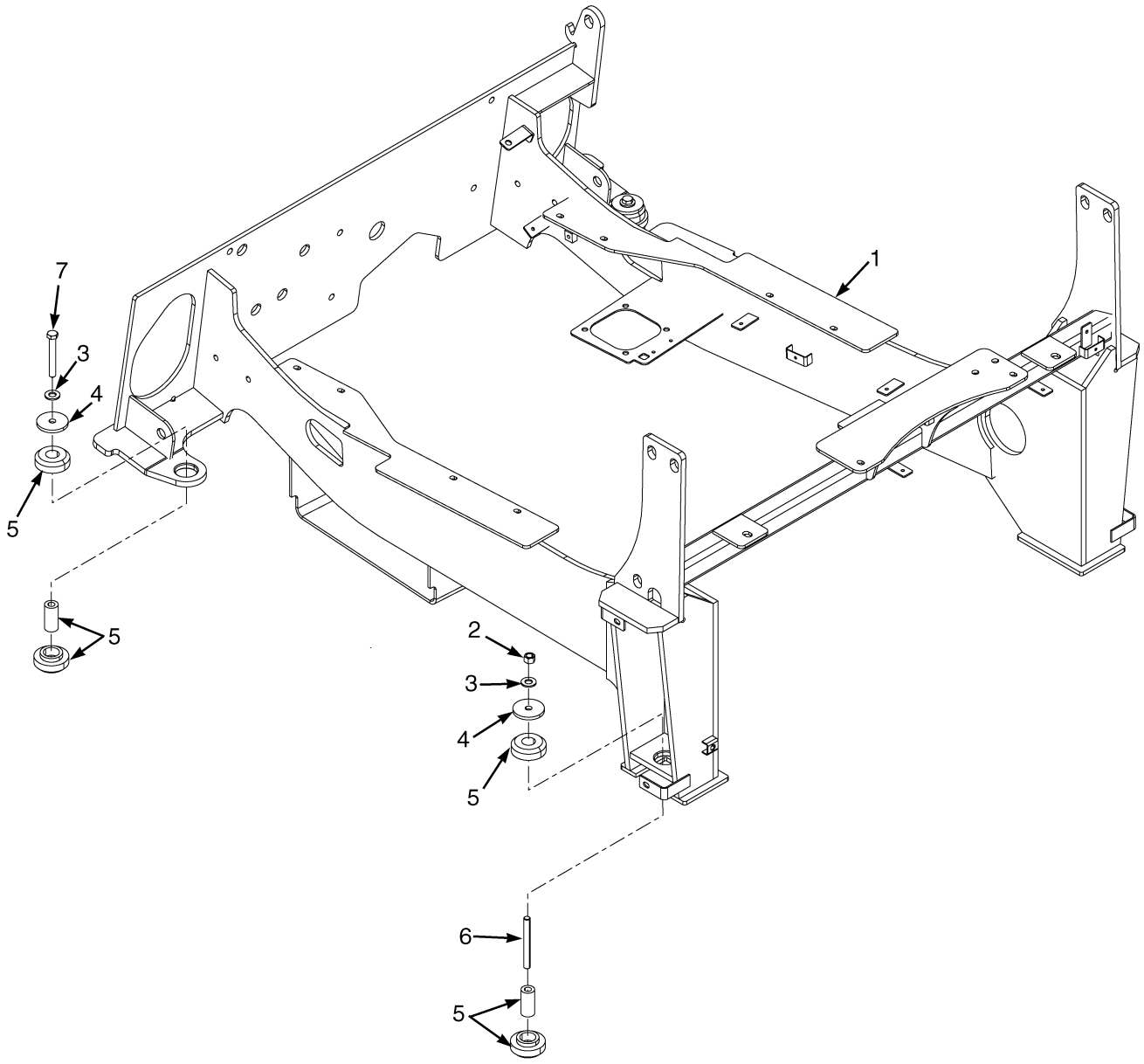

©2011 HYSTER COMPANY

COMPARTMENT PLATFORM

ITEM	PART NO.	DESCRIPTION	QTY
1	**a** 1614903	Module	1
1	**b** 1708799	Operator Module	1
2	300937	Nut	2
3	296423	Washer	4
4	300939	Washer	4
5	1660337	Isolator	4
6	2037998	Stud	2
7	293657	Capscrew	2

FOOTNOTES:

a → PENDING PER ECN 105594

b PENDING PER ECN 105594 →

©2011 HYSTER COMPANY

COWL MOUNT (FIGURE 1-8)

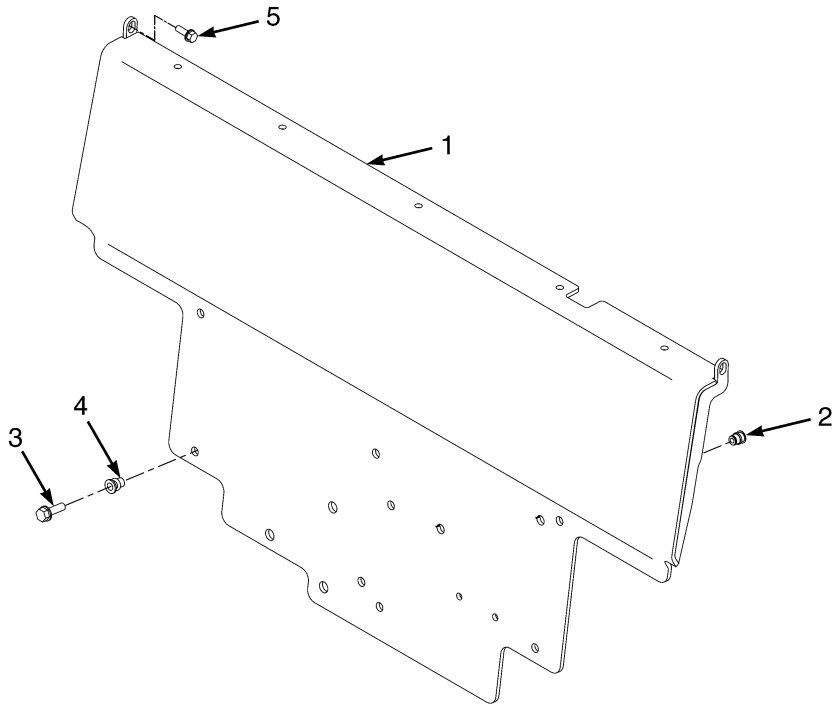

BP120323

©2011 HYSTER COMPANY

COWL MOUNT

ITEM	PART NO.	DESCRIPTION	QTY
1	1686718	Cowl	1
2	1530243	Insert	2
3	1586629	Capscrew	6
4	1640776	Insert	6
5	1583611	Capscrew	2

©2011 HYSTER COMPANY

OVERHEAD GUARD (FIGURE 1-9)

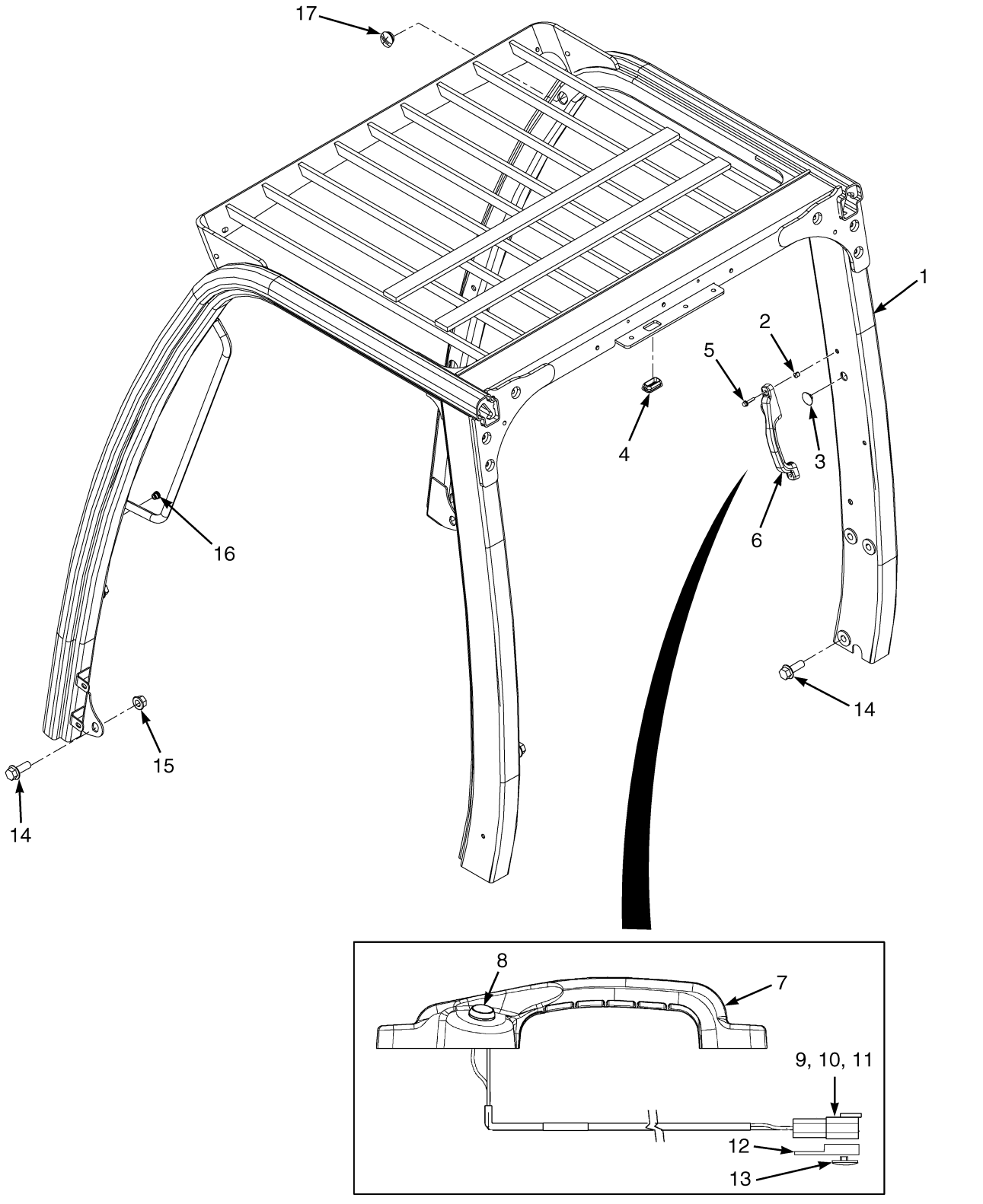

BP120357

©2011 HYSTER COMPANY

OVERHEAD GUARD

ITEM	PART NO.	DESCRIPTION	QTY
1	1659541	Overhead Guard	1
2	1494888	Plug	4
3	1599415	Plug	1
4	1560671	Grommet	1
5	**b** 1586495	Capscrew	2
6	**b** 2070223	Handle Assembly (Alternate Horn Button)	1
7	2069454	Handle	1
8	1566726	Push Button Switch	1
9	1493465	Connector	1
10	1330414	Connector (Secondary Lock)	1
11	1330437	Terminal (Pin)	2
12	**b** 1500912	Clip	1
13	**b** 1582464	Fastener	1
14	1597479	Capscrew	10
15	1586436	Nut	2
16	1531557	Insert	2
17	1558219	Grommet	2
	a 1661321	Grommet	1

FOOTNOTES:

a Not Illustrated

b Optional

©2011 HYSTER COMPANY

COUNTERWEIGHTS AND FENDERS (FIGURE 1-10)

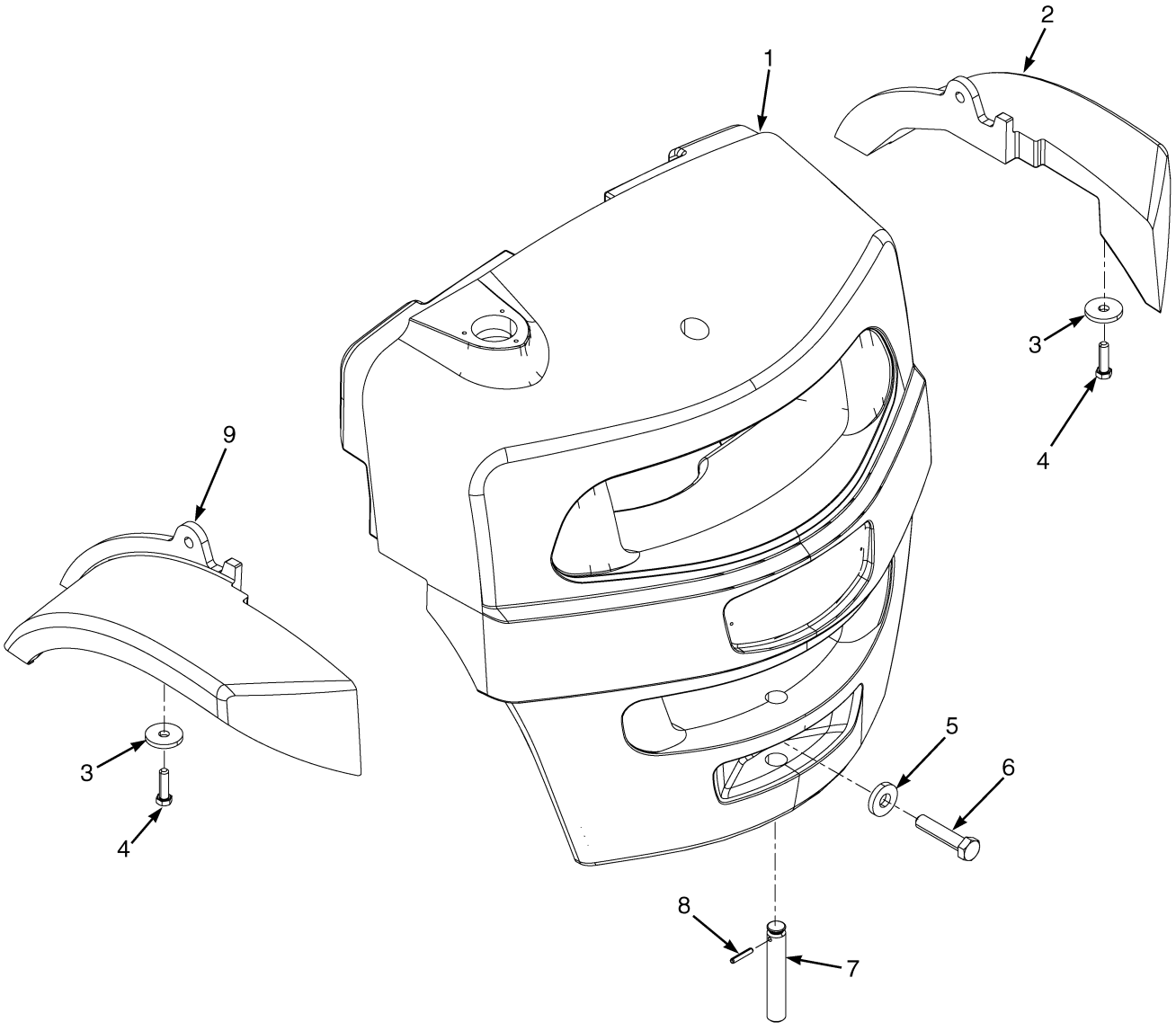

©2011 HYSTER COMPANY

COUNTERWEIGHTS AND FENDERS

ITEM	PART NO.	DESCRIPTION	QTY
1	1609046	Counterweight (H135FT)	1
1	1609047	Counterweight (H155FT)	1
2	1609049	Fender (RH)	1
3	1301086	Washer	4
4	292586	Capscrew	4
5	1571610	Washer	1
6	292629	Capscrew	1
7	1637881	Tow Pin	1
8	302492	Roll Pin	1
9	1609048	Fender (LH)	1

©2011 HYSTER COMPANY

CAB (FIGURE 1-11)
MAIN ASSEMBLY

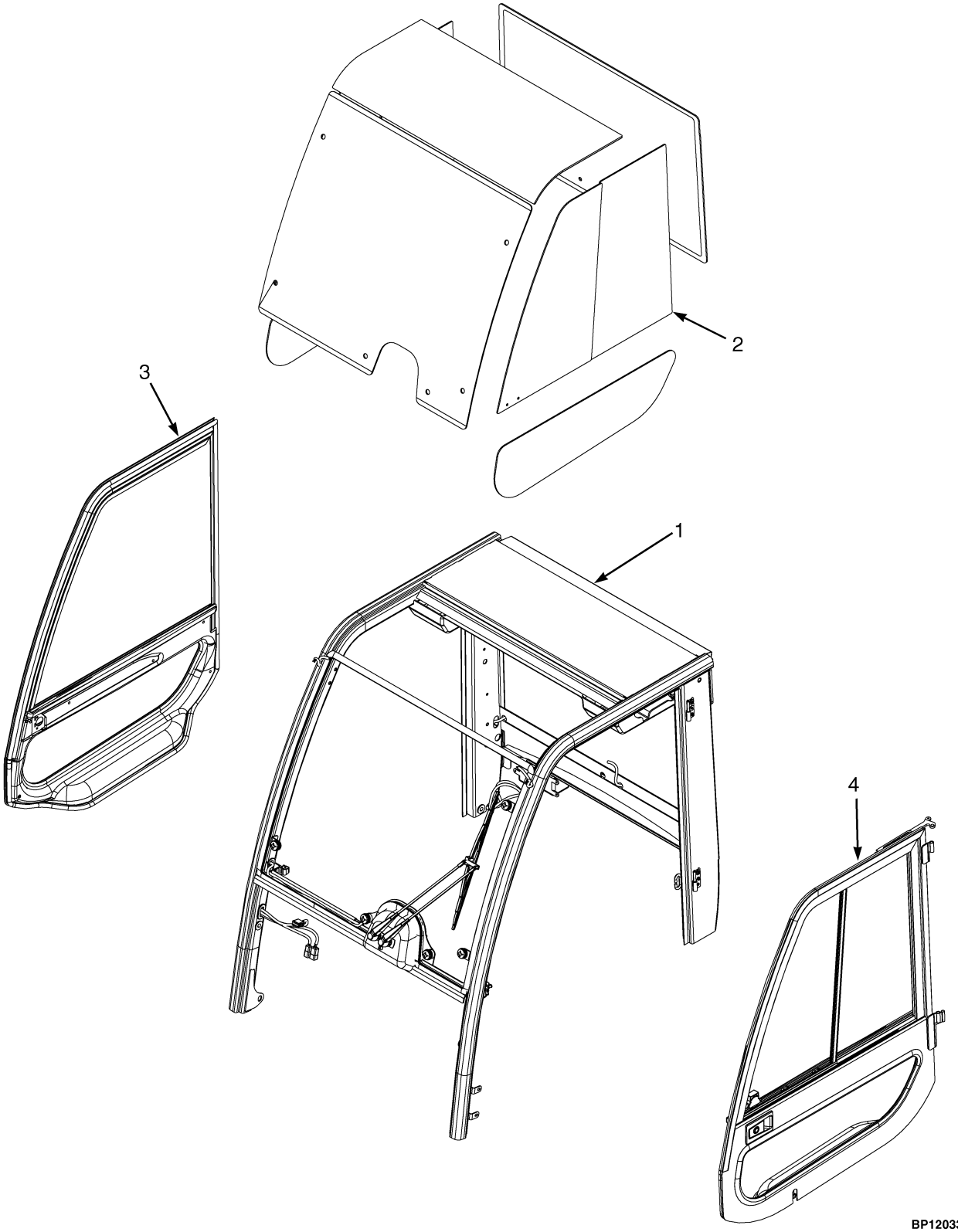

©2011 HYSTER COMPANY

CAB
MAIN ASSEMBLY

ITEM	PART NO.	DESCRIPTION	QTY
1	1673586	Cab (☞Figure 1-12, ☞Figure 1-13, ☞Figure 1-15).....	1
2	. . . . .	Cab Glass	1
3	1656067	Door (LH) (☞Figure 1-16).....	1
4	1656081	Door (RH) (☞Figure 1-17).....	1

©2011 HYSTER COMPANY

CAB (FIGURE 1-12)
ATTACHING PARTS — SHEET 1 OF 2

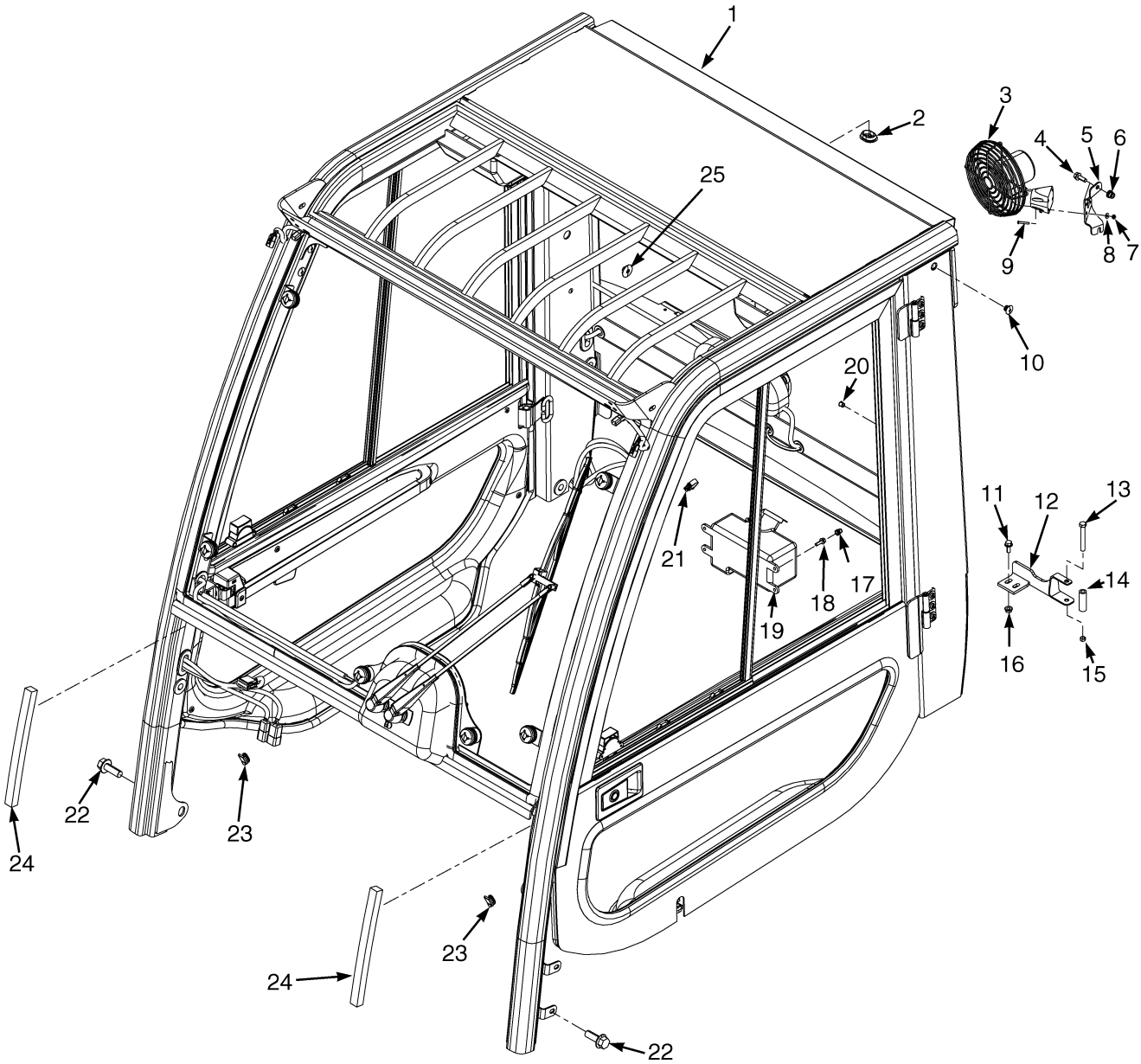

©2011 HYSTER COMPANY

CAB

ATTACHING PARTS – SHEET 1 OF 2

ITEM	PART NO.	DESCRIPTION	QTY
1	1673586	Cab (With Steel Doors)	1
2	2070996	Grommet	1
3	1359562	Fan Assembly	1
4	1583611	Capscrew	2
5	1613734	Bracket	1
6	1531557	Insert	2
7	1463912	Nut	1
8	292678	Lockwasher	4
9	1565125	Screw	4
10	1574301	Plug	8
11	1527880	Capscrew	4
12	1668633	Striker	2
13	1669114	Bolt	2
14	1650145	Hose Assy	2
15	1581739	Nut	2
16	1502543	Nut (Flange)	4
17	1531558	Insert	4
18	1527877	Capscrew	4
19	1646922	Reservoir (Window Washer Assembly)	1
19	1635026	Cap	1
19	1705156	Pump (Windshield Washer, 12V)	1
20	1494888	Plug	4
21	1534329	Clip	1
22	226458	Capscrew	10
23	1589787	Seal	2
24	1650568	Seal	2
25	1599415	Plug	1

©2011 HYSTER COMPANY

CAB (FIGURE 1-13)
ATTACHING PARTS — SHEET 2 OF 2

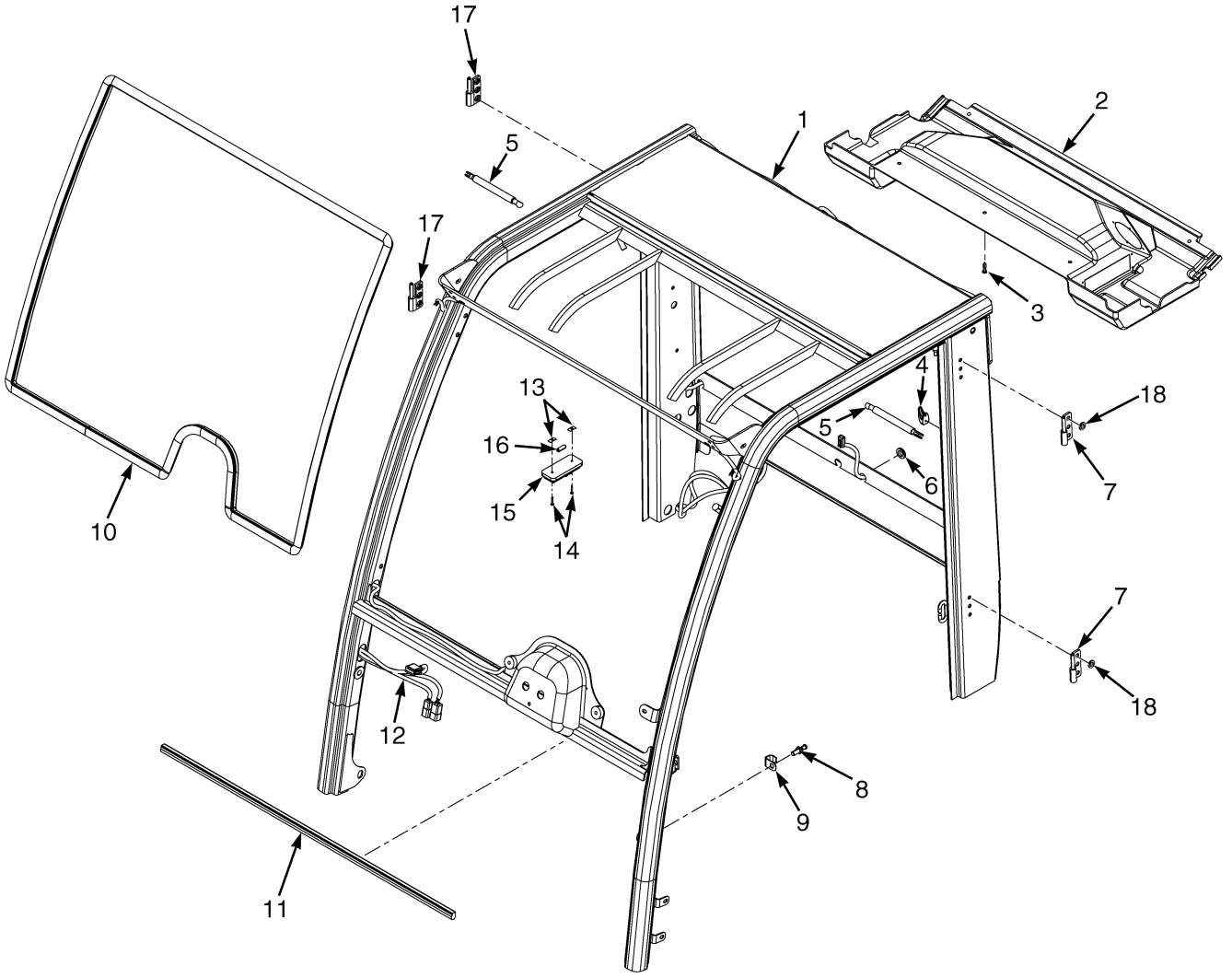

©2011 HYSTER COMPANY

CAB

ATTACHING PARTS – SHEET 2 OF 2

ITEM	PART NO.	DESCRIPTION	QTY
	1673586	Cab	1
1	. . . . .	Cab Frame	1
2	1656012	Headliner	1
3	1474710	Insert	5
4	1647423	Coat Hook	1
5	1656013	Gas Spring	2
6	1393511	Grommet	3
7	1474953	Hinge (RH)	2
8	1656010	Bolt	2
9	1678405	Striker	2
10	1656015	Seal	1
11	1647439	Seal (Front Cowl)	1
12	1647440	Wire Harness (Cab)	1
13	1491466	Fastener	2
14	1491220	Screw	2
15	1393528	Dome Light	1
16	1393527	Bulb	1
17	1474952	Hinge (LH)	2
18	296419	Washer	12
	a 1474709	Block	1

FOOTNOTES:

a Not Illustrated

©2011 HYSTER COMPANY

CAB (FIGURE 1-14)
WINDOWS

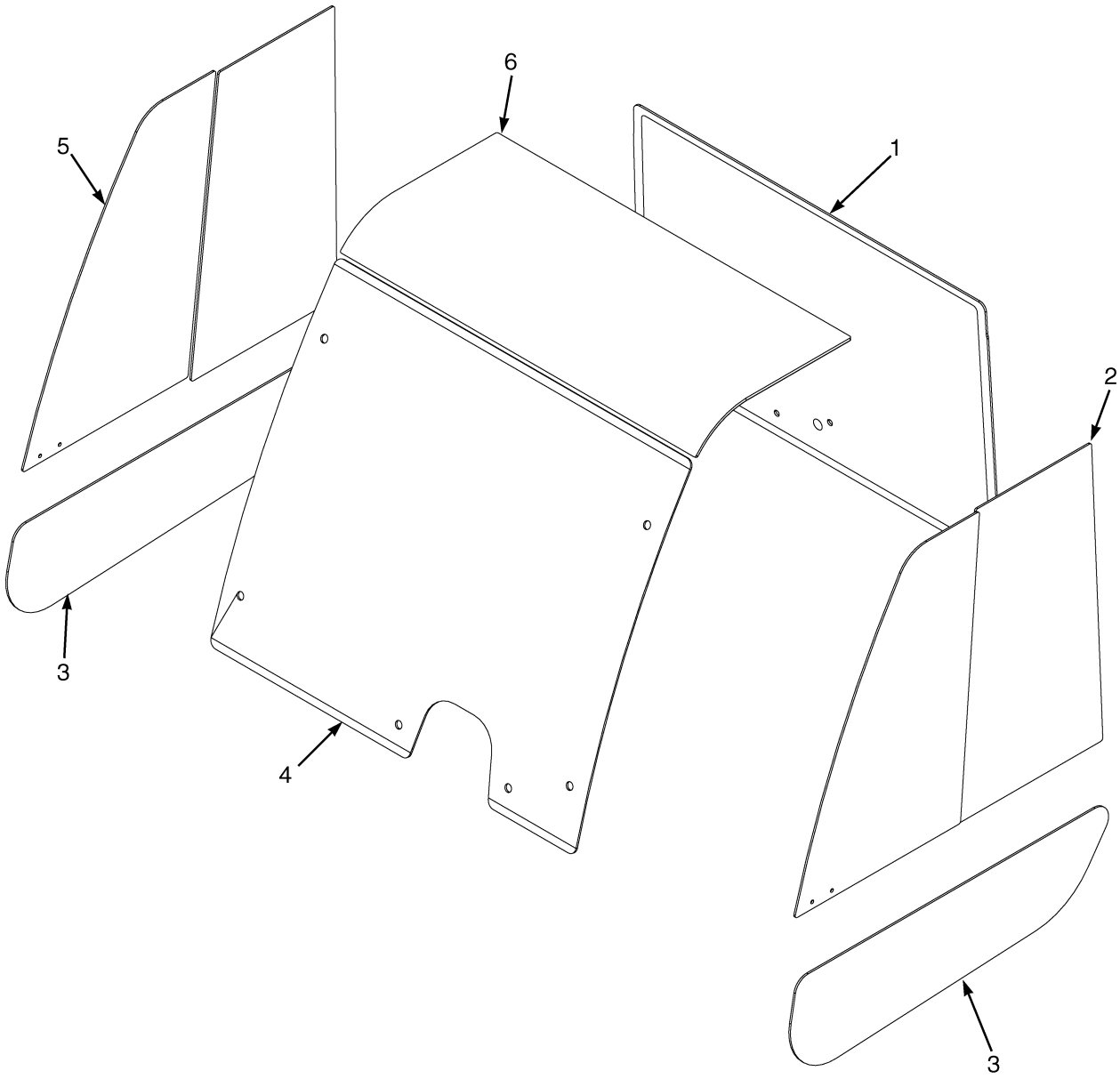

BP120333

©2011 HYSTER COMPANY

CAB
WINDOWS

ITEM	PART NO.	DESCRIPTION	QTY
1	1656093	Window (Rear)	1
2	1656089	Sliding Window (LH Slider)	1
2	~~1697680~~		
	1697679	Latch	1
2	4001171	Strip (Aluminum) (Slider) (Aluminum)	1
2	4001172	Screw	2
2	4017129	Strip (Plastic) (Slider) (Plastic)	1
3	1656090	Window (Lower Door)	2
4	1698685	Front Window	1
5	1656091	Sliding Window (RH Slider)	1
5	~~1697680~~		
	1697679	Latch	1
5	4001171	Strip (Aluminum) (Slider) (Aluminum)	1
5	4001172	Screw	2
5	4017129	Strip (Plastic) (Slider) (Plastic)	1
6	1647522	Window (Top)	1
6	1676205	Foam Lining (Top Window)	1
	1504083	Kit-Glue	1
	1502771	Activator	1
	1502772	Adhesive	1

©2011 HYSTER COMPANY

CAB (FIGURE 1-15)
WINDOW WIPER SYSTEM

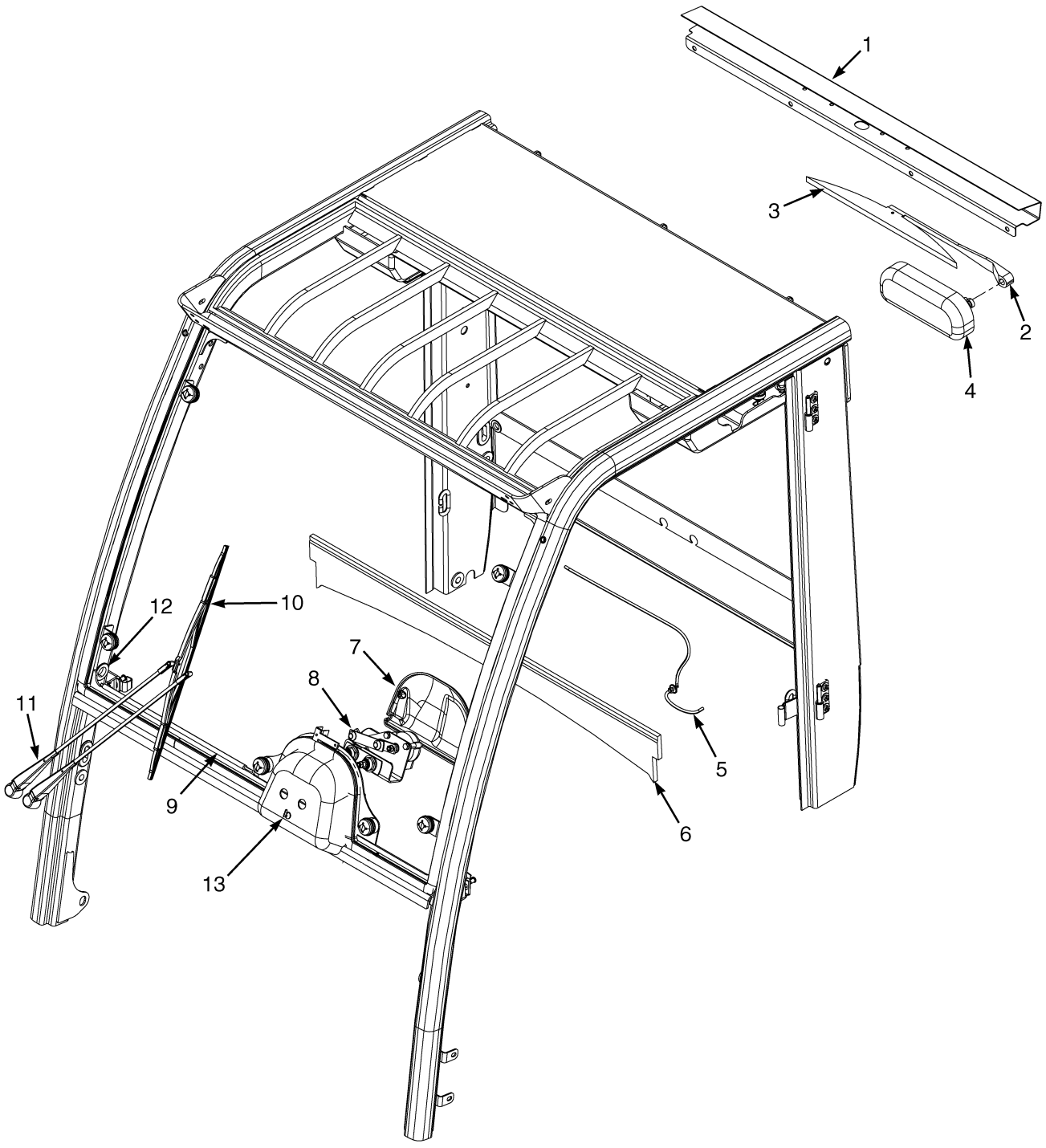

©2011 HYSTER COMPANY

CAB
WINDOW WIPER SYSTEM

ITEM	PART NO.	DESCRIPTION	QTY
	1673586	Cab	1
1	1656007	Cover (Tail Light)	1
2	1393505	Wiper Arm (Rear)	1
3	1656017	Wiper Blade (Rear)	1
4	1656008	Wiper Motor (Rear)	1
5	1656016	Hose	1
6	1656011	Trim (Rear)	1
7	1647422	Cover (Front Wiper)	1
8	1623368	Wiper Motor (Front)	1
9	1656014	Trim (Front Window)	1
10	1393494	Wiper Blade (Front)	1
11	1623369	Wiper Arm (Front)	1
12	1474704	Grommet	1
13	1647424	Connector	2
	a 1647446	Connector (washer hose)	1

FOOTNOTES:

a Not Illustrated

©2011 HYSTER COMPANY

CAB (FIGURE 1-16)
LEFT HAND DOOR ASSEMBLY

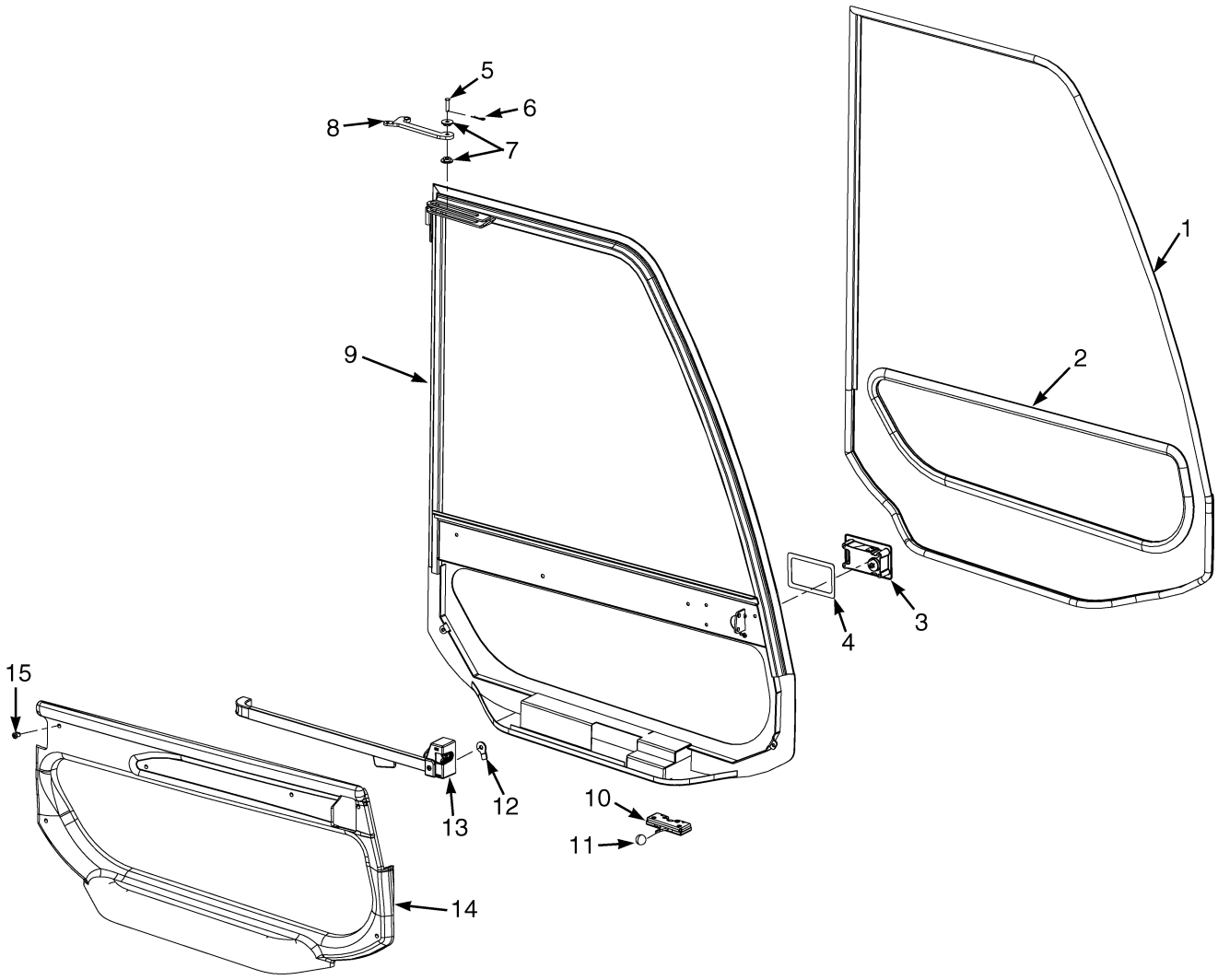

BP120336

©2011 HYSTER COMPANY

CAB
LEFT HAND DOOR ASSEMBLY

ITEM	PART NO.	DESCRIPTION	QTY
	1656067	Door (LH)	1
1	1656070	Seal	1
2	1656071	Seal	1
3	1647451	Latch (Door)	1
4	1647452	Seal (Door Latch)	1
5	. . . . .	Pin	1
6	. . . . .	Cotter Pin	1
7	1688654	Bushing	1
8	1656074	Link	1
9	. . . . .	Door (LH)	1
10	1656068	Latch Door Stop	1
11	1656069	Knob	1
12	1647453	Lever (LH Door)	1
13	1393479	Door Handle	1
14	1656072	Panel	1
15	1656073	Plug	5
	a 1474710	Insert	1
	a 296229	Capscrew	2
	a 1688655	Strap (Door Restraint)	1
	a 1474709	Block	1
	a 1490966	Screw	1
	a 1689908	Door Key	1

FOOTNOTES:

a Not Illustrated

©2011 HYSTER COMPANY

CAB (FIGURE 1-17)
RIGHT HAND DOOR ASSEMBLY

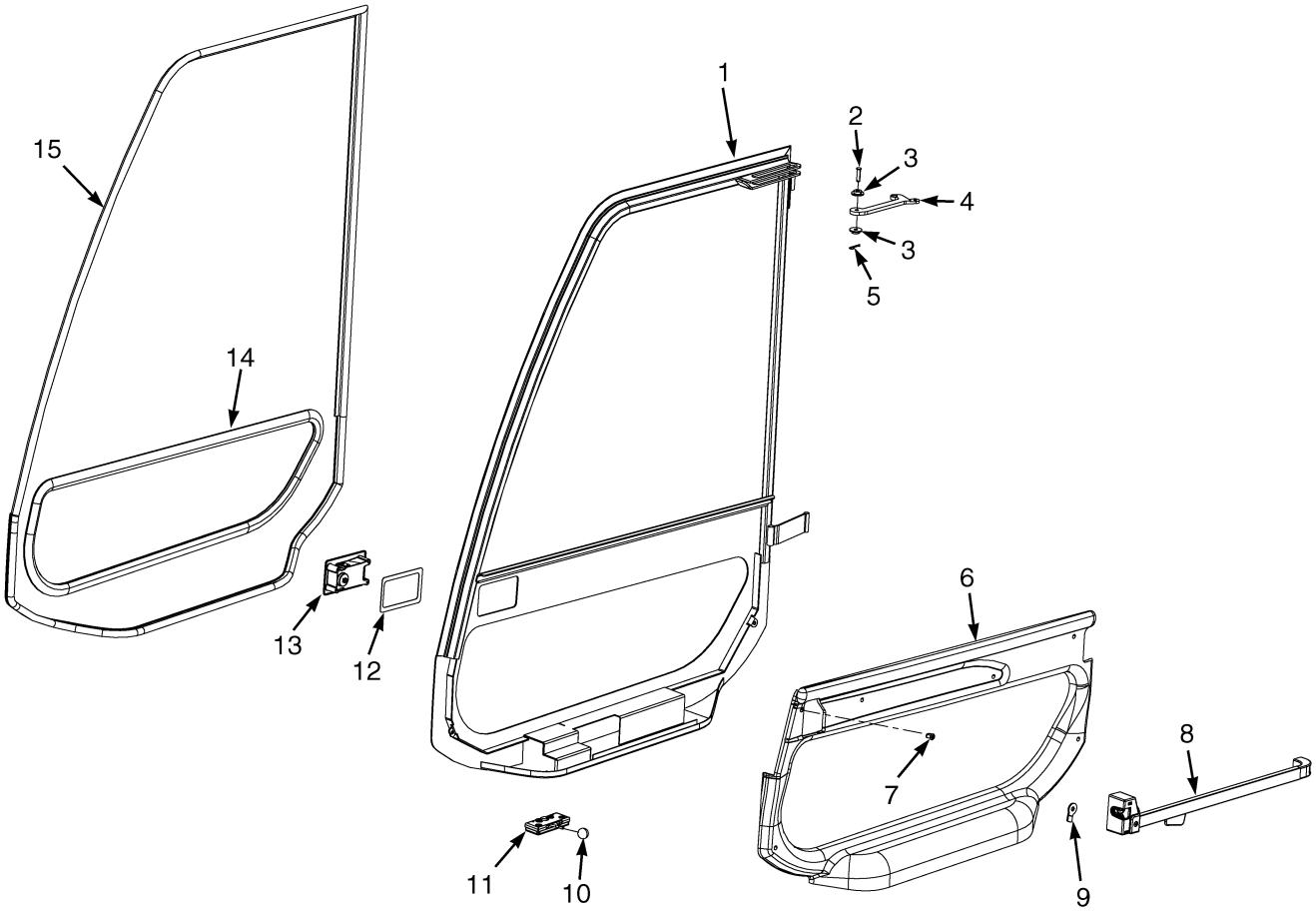

BP120337

©2011 HYSTER COMPANY

CAB
RIGHT HAND DOOR ASSEMBLY

ITEM	PART NO.	DESCRIPTION	QTY
	1656081	Door (RH)	1
1	. . . . .	Door (RH)	1
2	. . . . .	Pin	1
3	1688654	Bushing	1
4	1656085	Link	1
5	. . . . .	Cotter Pin	1
6	1656083	Panel (RH)	1
7	1656073	Plug	5
8	1393482	Door Handle	1
9	1647453	Lever (LH Door)	1
10	1656069	Knob	1
11	1474709	Block	2
12	1647452	Seal (Door Latch)	1
13	1647451	Latch (Door)	1
14	1656071	Seal	1
15	1656084	Seal	1
	a 1474710	Insert	1
	a 296229	Capscrew	2
	a 1490966	Screw	1
	a 1688655	Strap (Door Restraint)	1
	a 1474709	Block	2
	a 1689908	Door Key	1

FOOTNOTES:

a Not Illustrated

©2011 HYSTER COMPANY

CAB (FIGURE 1-18)
HEATER AND HOSES — CUMMINS QSB 3.3L DIESEL

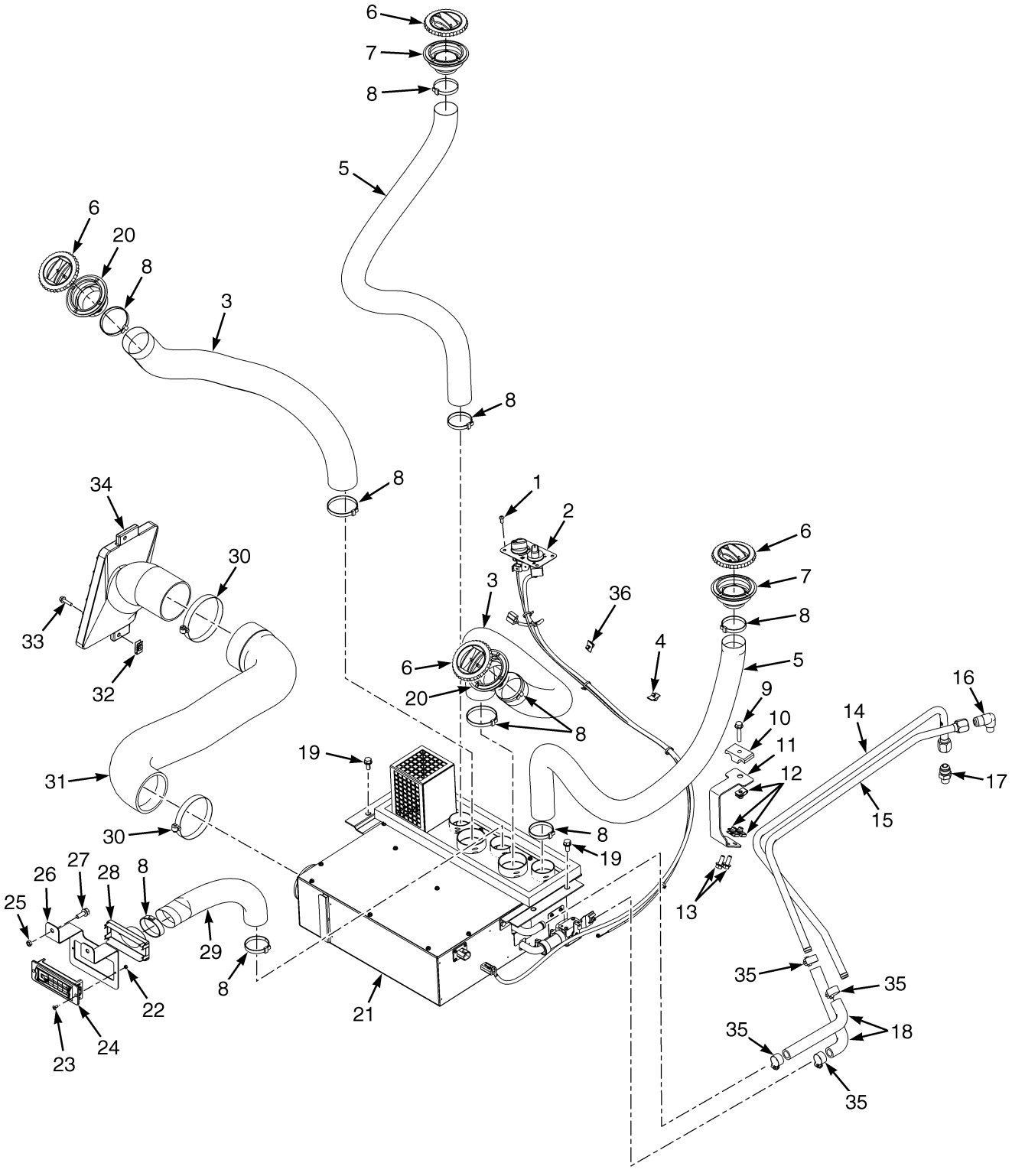

HP121217

©2011 HYSTER COMPANY

CAB

HEATER AND HOSES – CUMMINS QSB 3.3L DIESEL

ITEM	PART NO.	DESCRIPTION	QTY
1	1463910	Capscrew	4
2	1677808	Heater Control (☞Figure 1-21)	1
3	1640513	Hose	2
4	1562088	Clip	2
5	1640778	Hose	2
6	1636241	Louver	4
7	1636242	Adapter	2
8	397676	Strap Clamp	10
9	1510114	Capscrew	1
10	1605479	Hose Clamp (Dual Hose)	1
11	1678514	Bracket	1
12	1480237	Nut	3
13	1527880	Capscrew	2
14	2101948	Tube Assy (Heater Out)	1
15	2101947	Tube Assy (Heater In)	1
16	17536	Fitting	1
17	16396	Fitting	1
18	2101971	Hose	2
19	1608654	Capscrew	4
20	1636243	Adapter	2
21	1629280	Heater (12V) (☞Figure 1-20)	1
22	292667	Nut	2
23	296452	Screw	2
24	1636244	Vent	1
25	1531557	Insert	2
26	1640770	Bracket	1
27	1583611	Capscrew	2
28	1641103	Adapter (Rectangular)	1
29	1636510	Hose Assy	1
30	78286	Clamp	2
31	2092448	Hose	1
32	325182	Nut	2
33	1527878	Capscrew	2
34	1644840	Vent	1
35	130845	Clamp	4

©2011 HYSTER COMPANY

CAB (FIGURE 1-19)
HEATER AND HOSES — GM 4.3L GASOLINE AND LPG

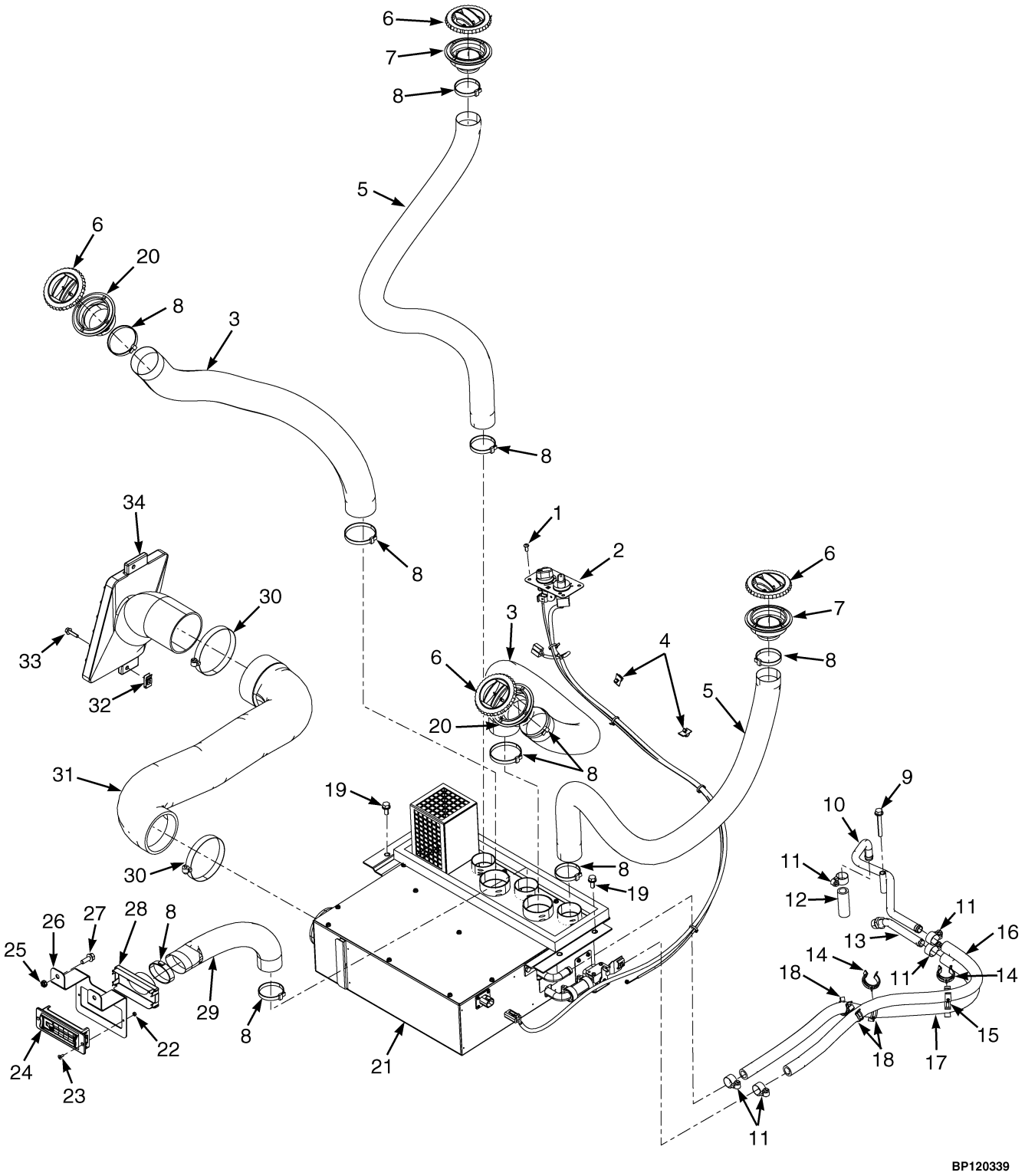

©2011 HYSTER COMPANY

CAB

HEATER AND HOSES – GM 4.3L GASOLINE AND LPG

ITEM	PART NO.	DESCRIPTION	QTY
1	1463910	Capscrew	4
2	1677808	Heater Control (☞Figure 1-21)	1
3	1640513	Hose (Front)	2
4	1562088	Clip	2
5	1640778	Hose (Rear)	2
6	1636241	Louver	4
7	1636242	Adapter	2
8	397676	Strap Clamp	10
9	**a** 1510116	Capscrew	1
10	**a** 1564804	Tube	1
11	**a** 130845	Clamp	5
11	**b** 130845	Clamp	4
12	**a** 158269	Hose	1
13	**a** 1570597	Tube	1
14	1561759	Clamp (Swivel)	2
15	1612617	Clamp (GFI Series)	1
16	2092717	Hose (GFI Series)	1
16	2070783	Hose (PSI Series)	1
17	2092718	Hose (GFI Series)	1
17	2098119	Hose (PSI Series)	1
18	1569465	Clamp	4
19	1608654	Capscrew	4
20	1636243	Adapter	2
21	1629280	Heater (12V) (☞Figure 1-20)	1
22	292667	Nut	2
23	296452	Screw	2
24	1636244	Vent	1
25	1531557	Insert	2
26	1640770	Bracket	1
27	1583611	Capscrew	2
28	1641103	Adapter (Rectangular)	1
29	1636510	Hose Assy	1
30	78286	Clamp	2
31	2092448	Hose	1
32	325182	Nut	2
33	1527878	Capscrew	2
34	1644840	Vent	1

FOOTNOTES:

a GM 4.3L Gasoline

b GM 4.3L LPG

©2011 HYSTER COMPANY

HEATER (FIGURE 1-20)

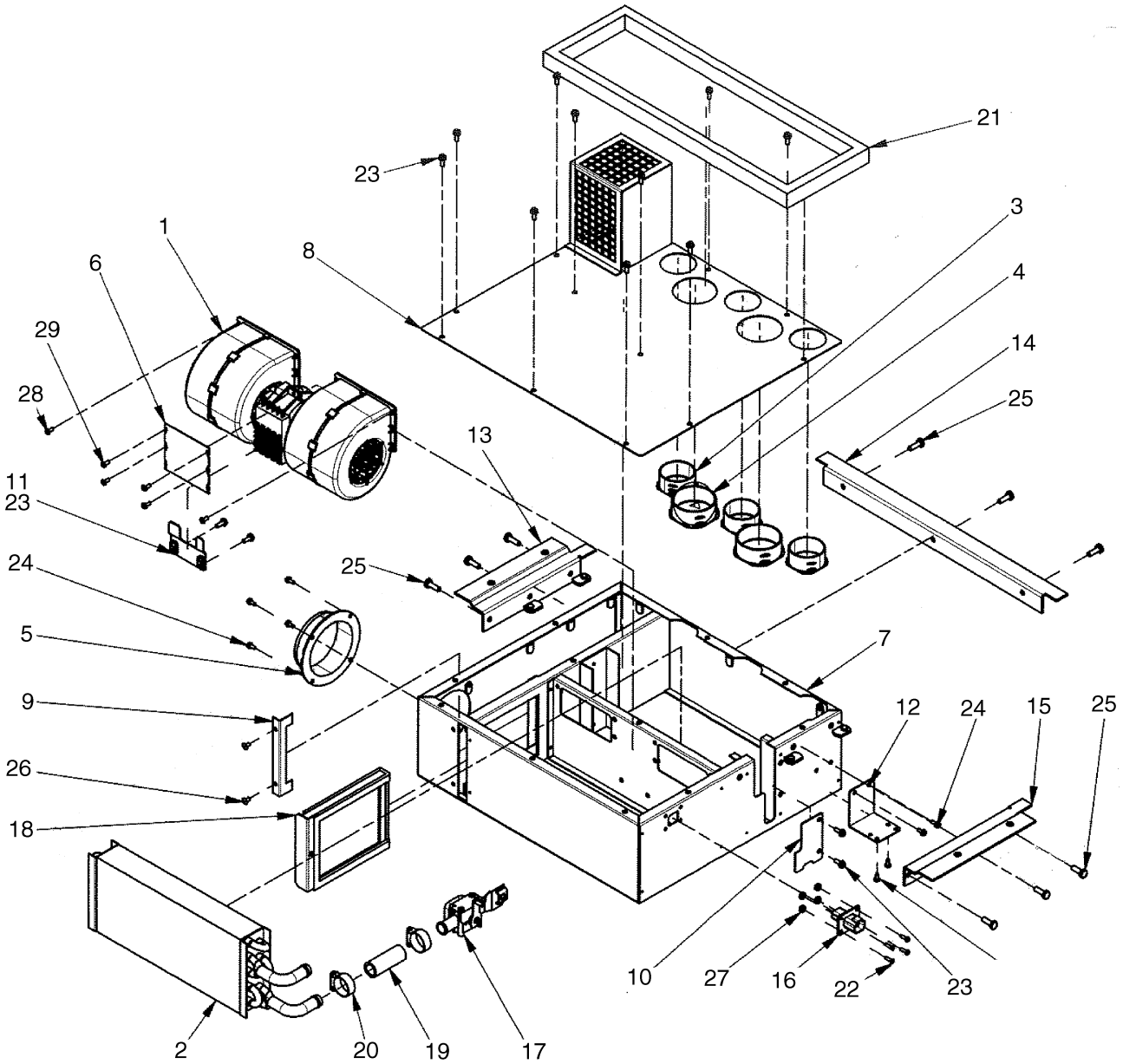

BP120551

©2011 HYSTER COMPANY

HEATER

ITEM	PART NO.	DESCRIPTION	QTY
	1629280	Heater	1
1	1661971	Heater (Blower)	1
2	1661972	Heater (Coil)	1
3	1661973	Adapter (2.0 inch)	1
4	1661974	Adapter (2.5 inch)	1
5	1661975	Adapter (3.5 inch)	1
6	1661976	Heater (Blower Plate)	1
7	. . . . .	Casing	1
8	1661978	Cover	1
9	1661979	Bracket	1
10	1661980	Cover	1
11	1661981	Bracket	1
12	1661982	Bracket	1
13	1661983	Flange	1
14	1661984	Flange	1
15	1661985	Flange	1
16	1661986	Wire Harness	1
17	1661987	Valve	1
18	1661988	Filter	1
19	1487951	Hose (Heater)	1
20	1661989	Clamp	1
21	1661990	Gasket	1
22	220289	Screw	4
23	1662007	Screw	15
24	1662008	Screw	6
25	221420	Capscrew	9
26	187727	Rivet	2
27	15049	Nut	4
28	1661991	Screw (Plastic)	2
29	227096	Screw	6

©2011 HYSTER COMPANY

HEATER CONTROL (FIGURE 1-21)

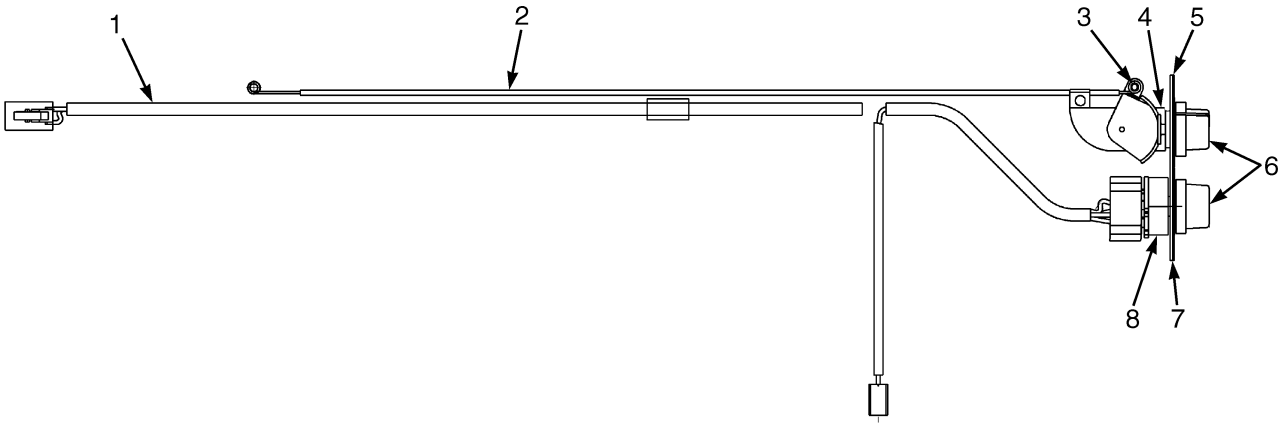

BP120564

ITEM	PART NO.	DESCRIPTION	QTY
	1677808	Heater Control	1
1	1690067	Wire Harness (Heater Control)	1
2	1690068	Push-Pull Cable	1
3	1487959	Switch (180 deg)	1
4	1690070	Shim	2
5	1690069	Label	1
6	1487957	Knob	2
7	1690066	Mounting Plate	1
8	1487956	Switch , Blower (with Nut)	1

©2011 HYSTER COMPANY

NOTES

©2011 HYSTER COMPANY

NON SUSPENSION SEAT (FIGURE 1-22)
WITH HIP RESTRAINT (→ S/N J006V02753H EXC. 02721)

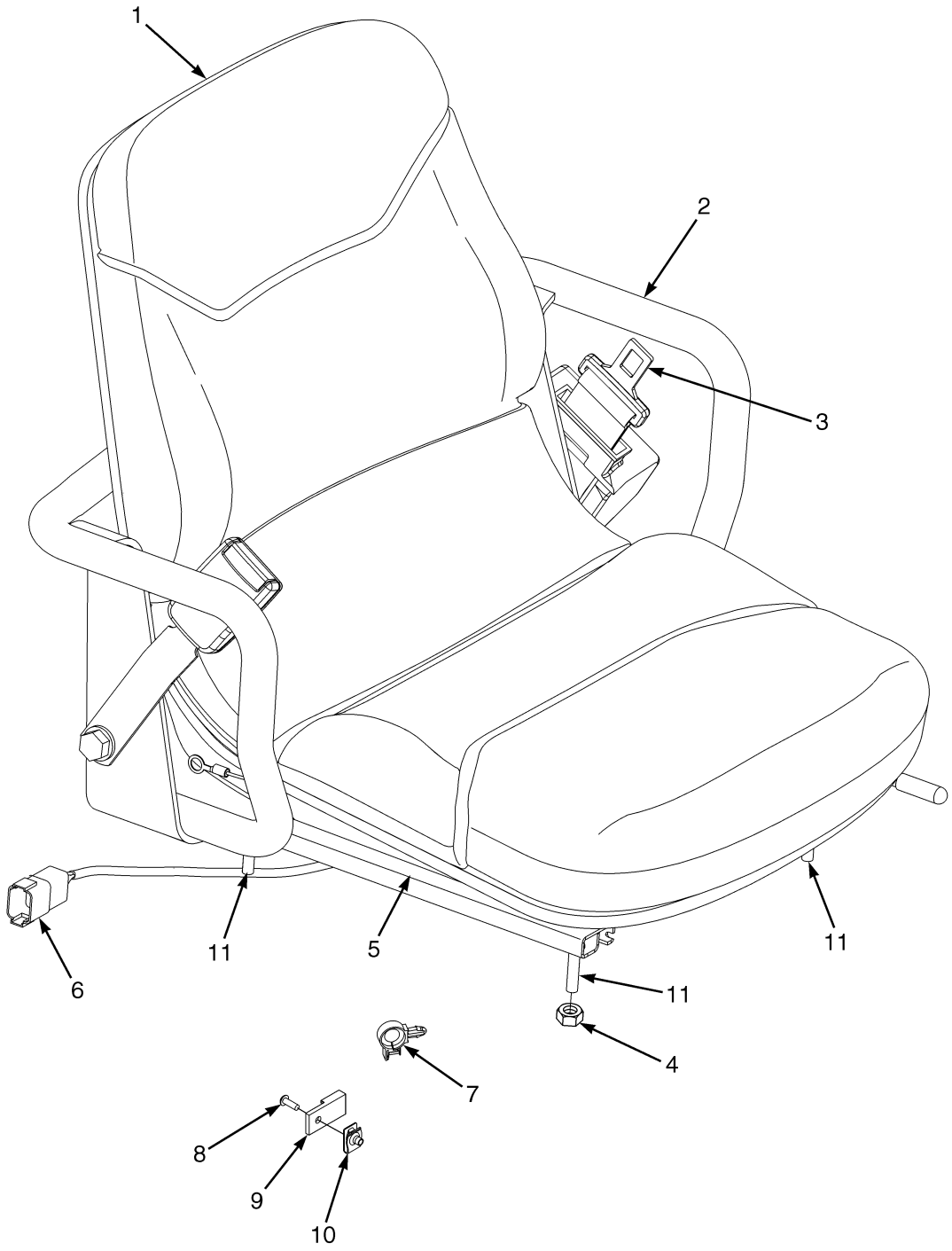

BP120292

©2011 HYSTER COMPANY

NON SUSPENSION SEAT

WITH HIP RESTRAINT (→ S/N J006V02753H EXC. 02721)

ITEM	PART NO.	DESCRIPTION	QTY
	b 2102122	Seat-Non Suspension Assembly (Vinyl) (Vinyl)	1
	c 2103360	Seat-Non Suspension (Vinyl)	1
	b 2102125	Seat-Non Suspension (Cloth)	1
	c 2103361	Seat-Non Suspension (Cloth)	1
1	1563351	Kit-Seat Cushion (Vinyl)	1
1	1563222	Kit-Seat Cushion (Cloth)	1
1	**ab** 1563215	Sensor (Operator Presence)	1
1	**ac** 1709876	Sensor (Operator Presence)	1
2	1563217	Hip Restraint (RH)	1
2	1563216	Hip Restraint (LH)	1
3	1598504	Kit-Seat Belt (Black)	1
3	1636120	Kit-Red Seat Belt	1
4	302400	Nut	4
5	1690996	Kit-Seat Rail	1
6	1591652	Wire Harness	1
7	1500901	Clip	1
8	296149	Capscrew	1
9	1500912	Clip	1
10	1537551	Nut	1
11	1677286	Stud	4

FOOTNOTES:

a Not Illustrated
b → PENDING PER ECN 104987
c PENDING PER ECN 104987 →

©2011 HYSTER COMPANY

NON SUSPENSION SEAT (FIGURE 1-23)

WITHOUT ELECTRONIC CONTROLS (S/N J006V02754H → INC. 02721)

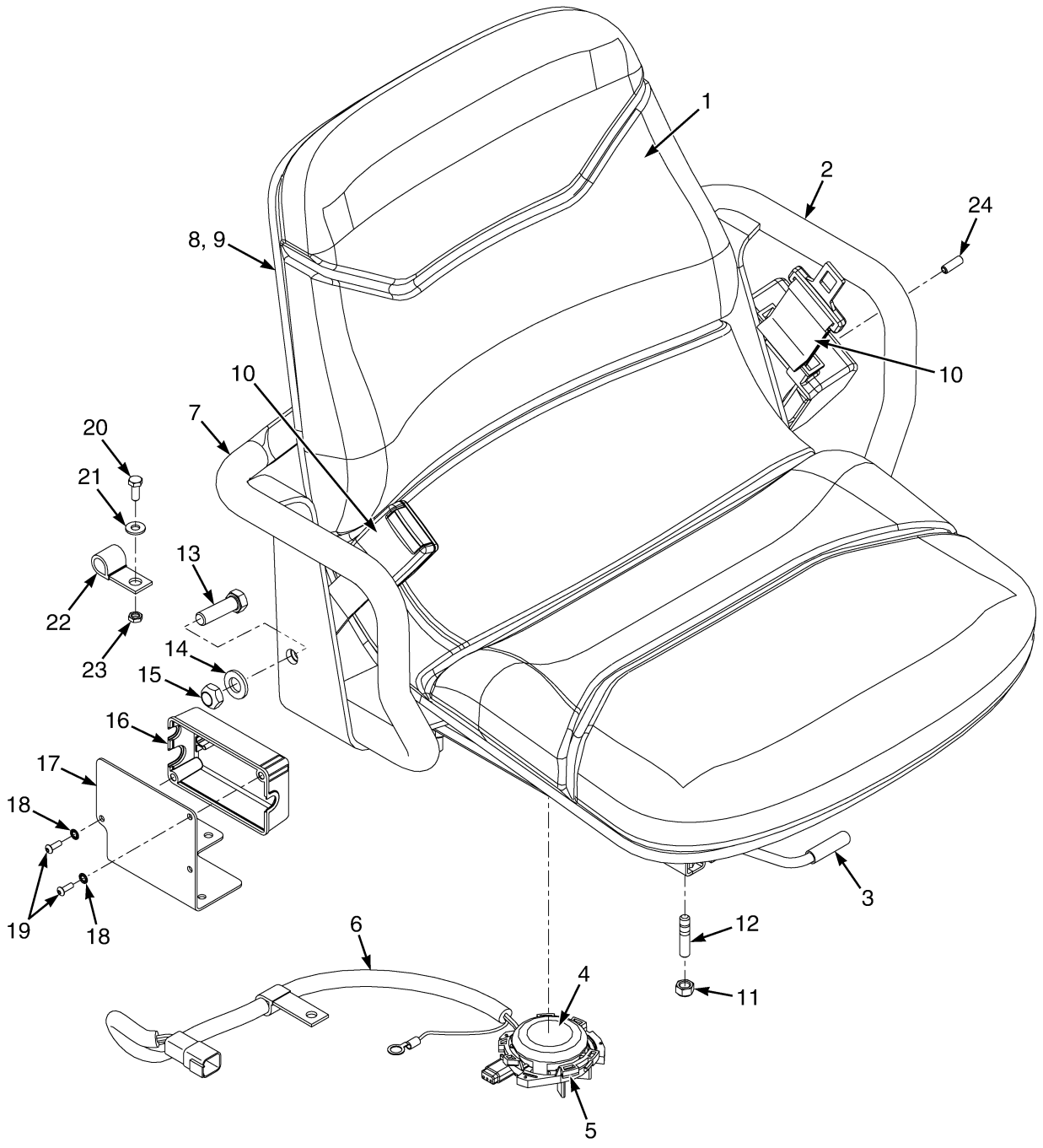

©2011 HYSTER COMPANY

NON SUSPENSION SEAT

WITHOUT ELECTRONIC CONTROLS (S/N J006V02754H → INC. 02721)

ITEM	PART NO.	DESCRIPTION	QTY
	4603376	Seat-Non Suspension (Vinyl)	1
1	1563351	Kit-Seat Cushion (Vinyl)	1
2	1563216	Hip Restraint (LH)	1
3	1690996	Kit-Seat Rail	1
4	1709876	Sensor (Operator Presence)	1
5	4002682	Bracket (Operator Presence Sensor)	1
6	4013095	Wire Harness	1
7	1563217	Hip Restraint (RH)	1
8	1584060	Storage Box	1
9	1482950	Cover	1
10	1603701	Seat Belt	1
10	1598504	Kit-Seat Belt (Black)	1
10	1636120	Kit-Red Seat Belt	1
11	313828	Nut	4
12	1677286	Stud	4
13	221536	Capscrew	2
14	1581852	Washer	6
15	221353	Locknut	2
16	2107969	Cover (Seat Side Electrical)	1
17	4007891	Cover Plate	1
18	296357	Washer	2
19	1694830	Capscrew	2
20	292500	Capscrew	2
21	15127	Washer	1
22	272133	Clamp	1
23	1593334	Nut	2

©2011 HYSTER COMPANY

FULL SUSPENSION SEAT (FIGURE 1-24)

WITH AND WITHOUT ELECTRONIC CONTROLS (→ S/N J006V02753H EXC. 02721)

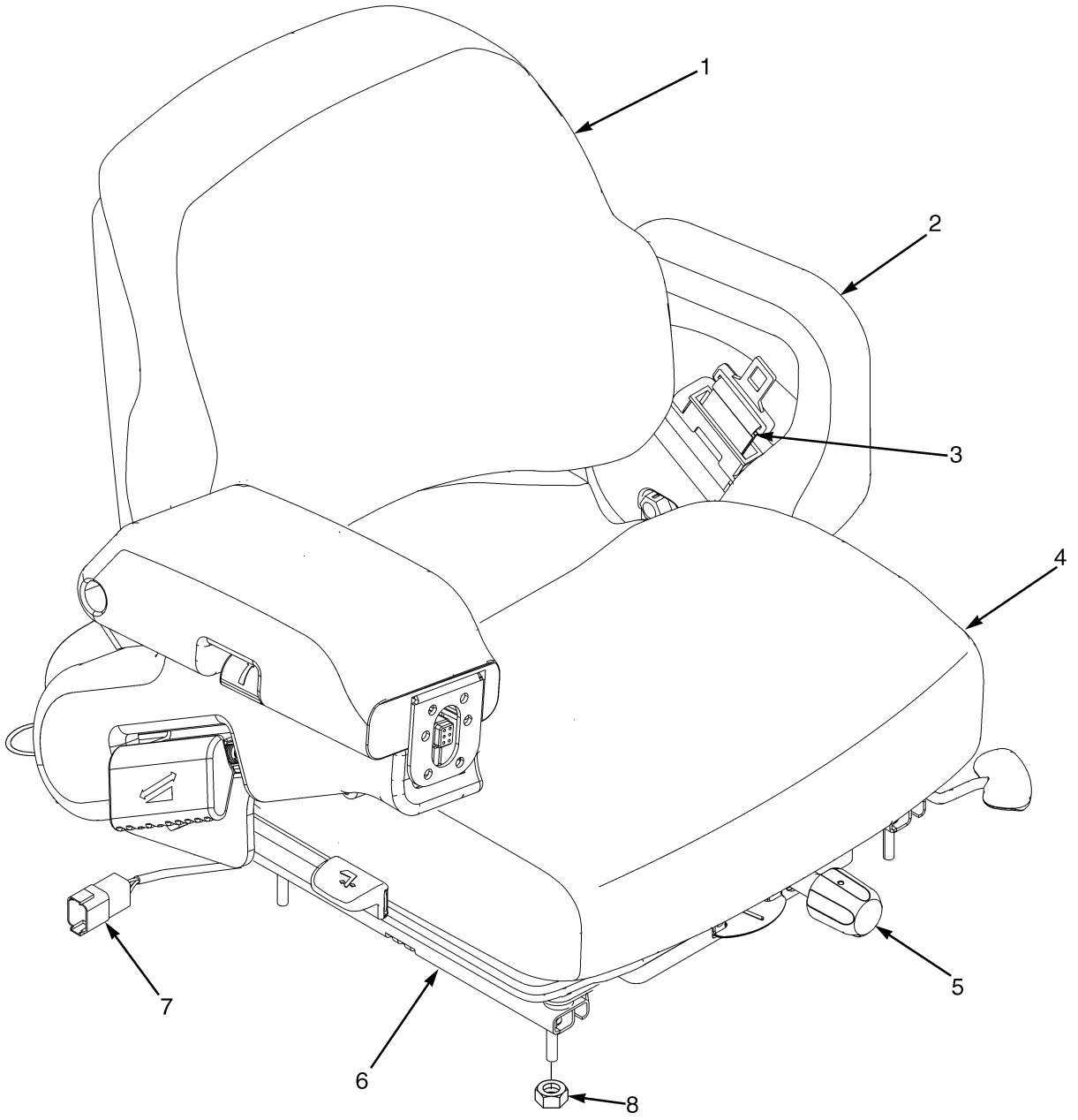

BP120127

©2011 HYSTER COMPANY

FULL SUSPENSION SEAT

WITH AND WITHOUT ELECTRONIC CONTROLS (→ S/N J006V02753H EXC. 02721)

KEY:

A: Full Suspension (Vinyl)
B: Full Suspension (Cloth)
C: Full Suspension (Vinyl with Electronic Control Arm)
D: Full Suspension (Cloth with Electronic Control Arm)

ITEM	PART NO.	DESCRIPTION	QTY A	B	C	D
	1593425	Seat-Full Suspension (Vinyl)	1	..	..	..
	1593426	Seat-Full Suspension (Cloth)	..	1	..	..
	2084981	Seat-Full Suspension (Vinyl)	..	..	1	..
	2084982	Seat-Full Suspension (Cloth)	..	..	..	1
1	1470152	Seat Cushion (Back Cushion) (Vinyl)	1	..	1	..
1	1470153	Seat Cushion (Back Cushion) (Cloth)	..	1	..	1
2	1470157	Hip Restraint (LH)	1	1	1	1
2	1470156	Hip Restraint (RH)	1	1	..	..
3	1598504	Kit-Seat Belt (Black)	1	1	1	1
3	1636120	Kit-Red Seat Belt	1	1	1	1
4	1563207	Seat Cushion (Vinyl)	1	..	1	..
4	1566453	Seat Cushion (Cloth)	..	1	..	1
5	1470163	Kit-Weight Adjuster	1	1	1	1
5	1584631	Knob	1	1	1	1
5	1600126	Handle	1	1	1	1
6	1470161	Kit-Seat Rail	1	1	1	1
7	1591652	Wire Harness	1	1	..	..
7	1654891	Wire Harness	..	..	1	1
8	191941	Nut	4	4	4	4
	a 1500901	Clip	..	..	1	1
	a 1500912	Clip	..	..	1	1
	a 1537551	Nut	..	..	1	1
	a 296149	Capscrew	..	..	1	1
	a 1483828	Kit-Gas Spring (Mounted to the rear of the seat)	1	1	..	..
	a 1563210	Cap (Electronic Control Arm)	..	..	1	1
	a 1563211	Knob (Electronic Control Arm)	..	..	1	1
	a 1470155	Information Case (Kit)	1	1	1	1
	a 1467529	Kit-Spring	1	1	1	1
	a 1627639	Weight Adjust Rack	1	1	1	1
	a 1467525	Kit-Bumper	1	1	1	1
	a 1467523	Kit-Boot	1	1	1	1
	a 1467526	Kit-Shaft and Bearing	1	1	1	1
	a 1467524	Kit-Bearing	1	1	1	1
	a 1467527	Kit-Weight Adjuster Indicator	1	1	1	1
	a 1563208	Sensor (Operator Presence)	1	1	1	1

FOOTNOTES:

a Not Illustrated

©2011 HYSTER COMPANY

FULL SUSPENSION SWIVEL SEAT (FIGURE 1-25)

WITH AND WITHOUT ELECTRONIC CONTROLS (→ S/N J006V02753H EXC. 02721)

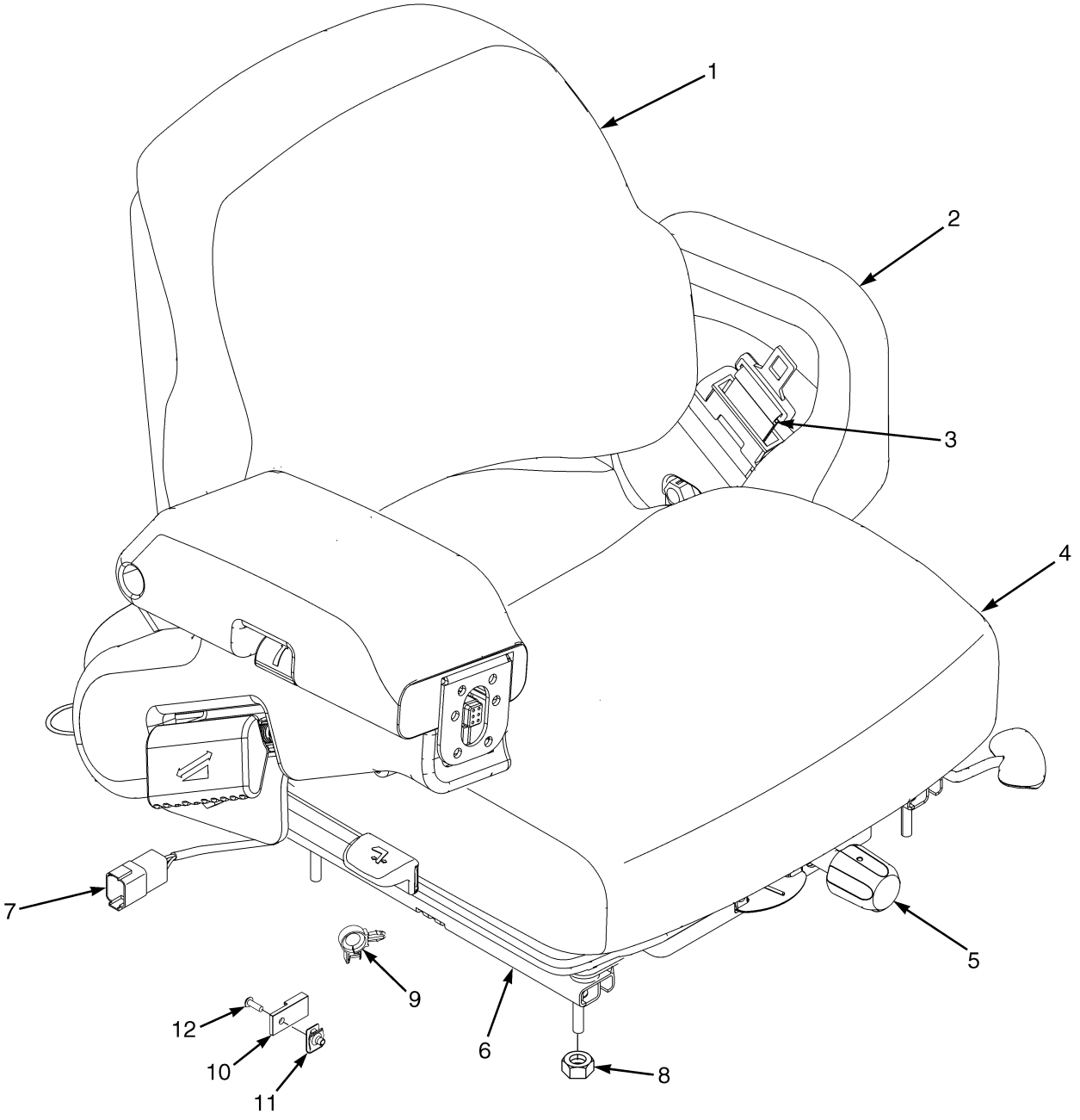

©2011 HYSTER COMPANY

FULL SUSPENSION SWIVEL SEAT

WITH AND WITHOUT ELECTRONIC CONTROLS (→ S/N J006V02753H EXC. 02721)

KEY:
A: Full Suspension with Hip Restraints
B: Full Suspension with Electronic Control Arm

ITEM	PART NO.	DESCRIPTION	QTY A	QTY B
	1593437	Seat-Full Suspension (Vinyl)	1	..
	1593438	Seat-Full Suspension (Cloth)	1	..
	2085188	Seat-Full Suspension (Vinyl)	..	1
	2085190	Seat Assy -Full Suspension (Cloth)	..	1
1	1470152	Seat Cushion (Back Cushion) (Vinyl)	1	1
1	1470153	Seat Cushion (Back Cushion) (Cloth)	1	1
2	1470157	Hip Restraint (LH)	1	1
2	1470156	Hip Restraint (RH)	1	..
3	1598504	Kit-Seat Belt (Black)	1	1
3	1636120	Kit-Red Seat Belt	1	1
4	1563207	Seat Cushion (Vinyl)	1	1
4	1566453	Seat Cushion (Cloth)	1	1
5	1470163	Kit-Weight Adjuster	1	1
5	1584631	Knob	1	1
5	1600126	Handle	1	1
6	1470161	Kit-Seat Rail	1	1
7	1591652	Wire Harness	1	..
7	1654891	Wire Harness	..	1
8	191941	Nut	4	4
9	1500901	Clip	..	1
10	1500912	Clip	..	1
11	1537551	Nut	..	1
12	296149	Capscrew	..	1
	a 1483828	Kit-Gas Spring (Mounted to the rear of the seat)	1	1
	a 1647532	Foam (Cap Electronic Control Arm)	..	1
	a 1563211	Knob (Electronic Control Arm)	..	1
	a 1470155	Information Case (Kit)	1	1
	a 1467529	Kit-Spring	1	1
	a 1684395	Kit-Swivel Seat Full Susp	1	1
	a 1467525	Kit-Bumper	1	1
	a 1467523	Kit-Boot	1	1
	a 1467526	Kit-Shaft and Bearing	1	1
	a 1467524	Kit-Bearing	1	1
	a 1467527	Kit-Weight Adjuster Indicator	1	1
	1563208	Sensor (Operator Presence)	1	1
	1546689	Lever (Swivel Release)	1	1

FOOTNOTES:

a Not Illustrated

©2011 HYSTER COMPANY

FULL SUSPENSION SEAT (FIGURE 1-26)

MANUAL AND ELECTRO-HYDRAULIC — SWIVEL AND NON-SWIVEL (S/N J006V02754H → INC. 02721)

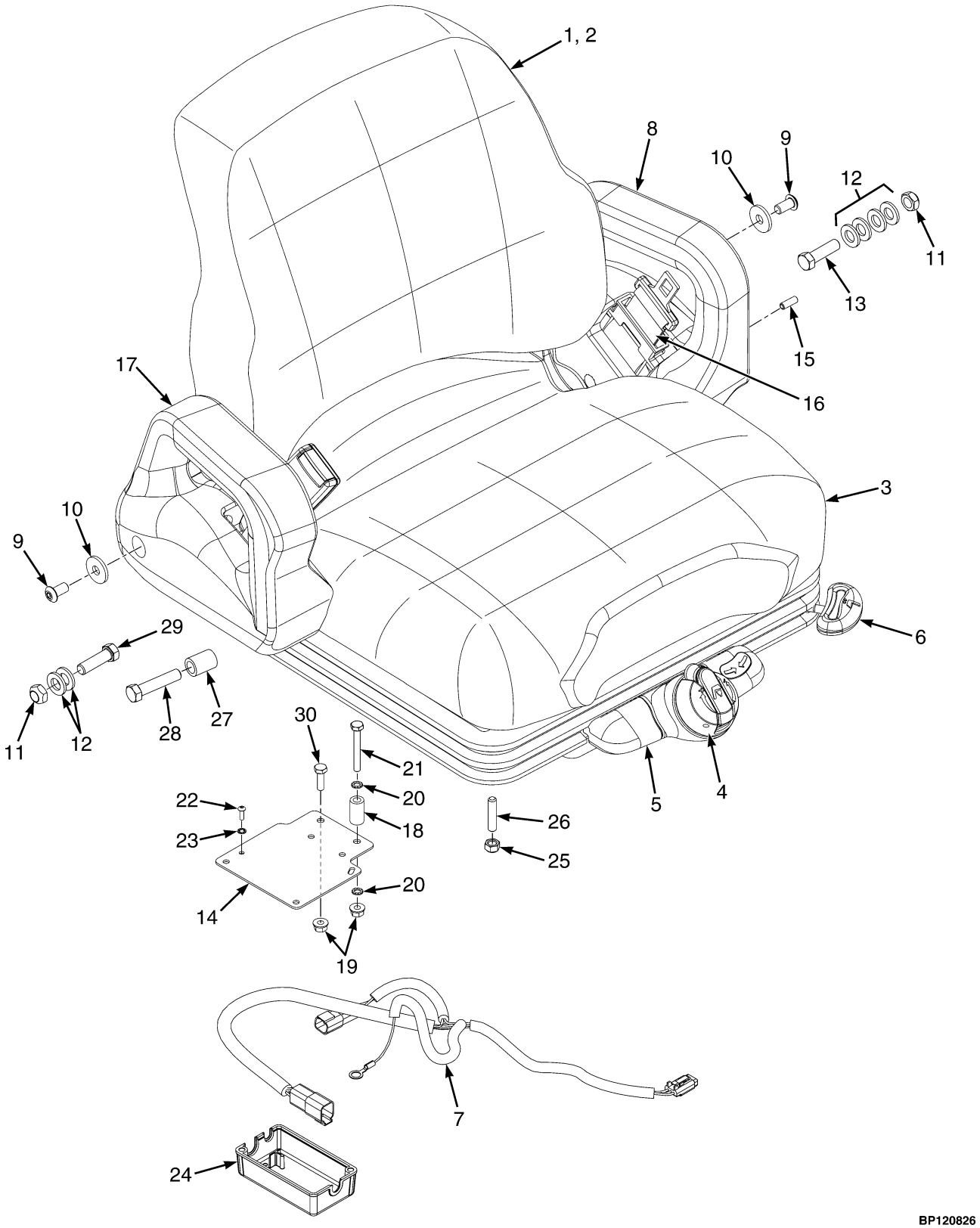

©2011 HYSTER COMPANY

FULL SUSPENSION SEAT

MANUAL AND ELECTRO-HYDRAULIC – SWIVEL AND NON-SWIVEL (S/N J006V02754H → INC. 02721)

KEY:
A: w/o Electronic Control Arm
B: w/ Electronic Control Arm

ITEM	PART NO.	DESCRIPTION	QTY A	QTY B
	4603382	Seat-Full Suspension (Vinyl) (Non-Swivel)	1	1
	4603383	Seat-Full Suspension (Cloth) (Non-Swivel)	1	1
	4603384	Seat-Full Suspension (Vinyl) (Swivel)	1	1
	4603385	Seat-Full Suspension (Cloth) (Swivel)	1	1
1	1703900	Kit-Cushion (Seat and Back, Cloth)	1	1
1	1703903	Kit-Cushion (Seat and Back, Vinyl)	1	1
2	1703901	Kit-Cushion (Back Cushion, Vinyl)	1	1
2	1703898	Kit-Cushion (Back Cushion, Cloth)	1	1
2	. . . . .	Back Cushion	1	1
2	. . . . .	Screw	2	2
3	1703902	Kit-Seat Cushion (Vinyl)	1	1
3	1703899	Kit-Seat Cushion (Cloth)	1	1
3	. . . . .	Seat Cushion	1	1
3	. . . . .	Spring	2	2
3	. . . . .	Cotter Pin	2	2
4	1703892	Kit-Weight Adjuster	1	1
4	. . . . .	Knob	1	1
4	. . . . .	Bushing	1	1
4	. . . . .	Washer	1	1
4	. . . . .	Pin	1	1
5	1703893	Kit-Service (Front Panel) (Non Swivel)	1	1
5	. . . . .	Front Panel	1	1
5	. . . . .	Socket Head Capscrew	2	2
5	. . . . .	Roll Pin	1	1
5	1703894	Kit-Service (Front Panel) (With Swivel)	1	1
5	. . . . .	Front Panel	1	1
5	. . . . .	Knob	1	1
5	. . . . .	Socket Head Capscrew	1	1
5	. . . . .	Roll Pin	2	2
6	1703904	Kit-Seat Rail	1	1
6	. . . . .	Locking Rail	1	1
6	. . . . .	Slave Rail	1	1
6	. . . . .	Bolt	4	4
6	. . . . .	Nut	4	4
7	4013095	Wire Harness	1	1
7	1563208	Sensor (Operator Presence)	1	1
8	4009620	Armrest (Left-Hand Side)	1	1
8	4612911	Armrest (Left-Hand Side) (Alternate Part)	1	1
9	18735	Screw	2	1
9	18738	Capscrew	..	1
10	1512536	Washer	2	1
10	4007319	Spacer	..	1
11	221353	Locknut	2	2
12	1581852	Washer	6	6
13	221536	Capscrew	2	1

©2011 HYSTER COMPANY

FULL SUSPENSION SEAT

MANUAL AND ELECTRO-HYDRAULIC – SWIVEL AND NON-SWIVEL (S/N J006V02754H → INC. 02721)

KEY:
A: w/o Electronic Control Arm
B: w/ Electronic Control Arm

ITEM	PART NO.	DESCRIPTION	QTY A	QTY B
14	4004776	Cover Plate	1	1
15	19901	Roll Pin	1	1
16	1598504	Kit-Seat Belt (Black)	1	1
16	1636120	Kit-Red Seat Belt	1	1
17	2099951	Armrest (Right-Hand Side)	1	..
17	. . . . .	Armrest (Electro-Hydraulic)	..	1
17	4005010	Armrest (Slider with Mini Lever) (☞Figure 1-28)	..	1
17	. . . . .	Mini-Lever Modules	..	1
18	4007318	Spacer	2	2
19	169874	Nut	4	4
20	296379	Washer	2	2
21	18471	Capscrew	2	2
22	1694830	Capscrew	2	2
23	296357	Washer	2	2
24	2107969	Cover (Seat Side Electrical)	1	1
25	313828	Nut	4	4
26	1677286	Stud	4	4
27	1694700	Spacer	..	1
28	221542	Capscrew	..	1
29	221530	Capscrew	1	..
30	18462	Capscrew	2	2
	a 114312	Strap Clamp	1	1
	a 1470155	Information Case (Kit)	1	1
	a 4601499	Wire Harness (Seat Jumper)	1	1
	a 4027341	Bracket (Angle Controller)	1	1
	1703895	Kit-Service Internal Tether-80 MM Travel	1	1
	1703896	Kit-Service Internal Tether-56 MM Travel	1	1
	1703897	Kit-Service Internal Tether-40 MM Travel	1	1

FOOTNOTES:

a Not Illustrated

©2011 HYSTER COMPANY

NOTES

©2011 HYSTER COMPANY

FULL SUSPENSION SEAT (FIGURE 1-27)

SHEET 2 OF 2 (S/N J006V02754H → INC. 02721)

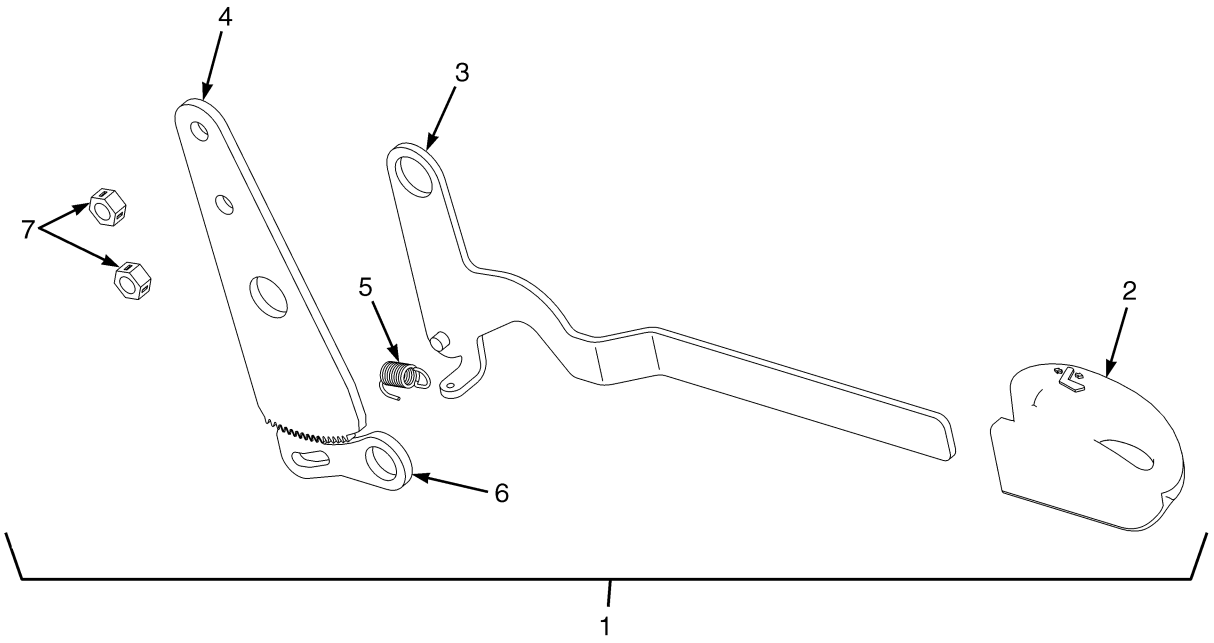

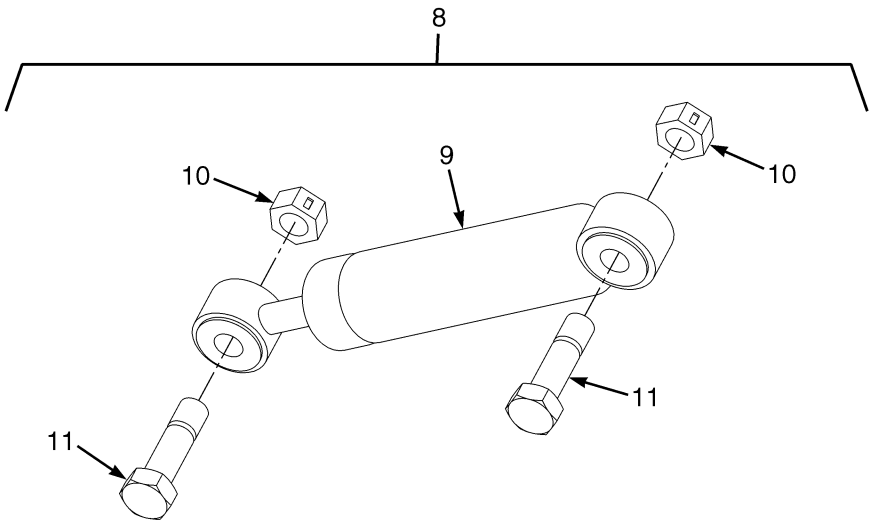

BP120646

©2011 HYSTER COMPANY

FULL SUSPENSION SEAT

SHEET 2 OF 2 (S/N J006V02754H → INC. 02721)

ITEM	PART NO.	DESCRIPTION	QTY
1	1703891	Kit-Recliner (Back Seat Adjustment)	1
2	. . . . .	Knob	1
3	. . . . .	Lever	1
4	1482905	Plate	1
5	. . . . .	Spring	1
6	1482906	Latch	1
7	1367150	Nut	2
8	1703890	Kit-Damper Service	1
9	1584632	Damper	1
10	1367150	Nut	2
11	1584638	Bolt	2

©2011 HYSTER COMPANY

ARMREST ASSEMBLY (FIGURE 1-28)
MINI-LEVER MODULES

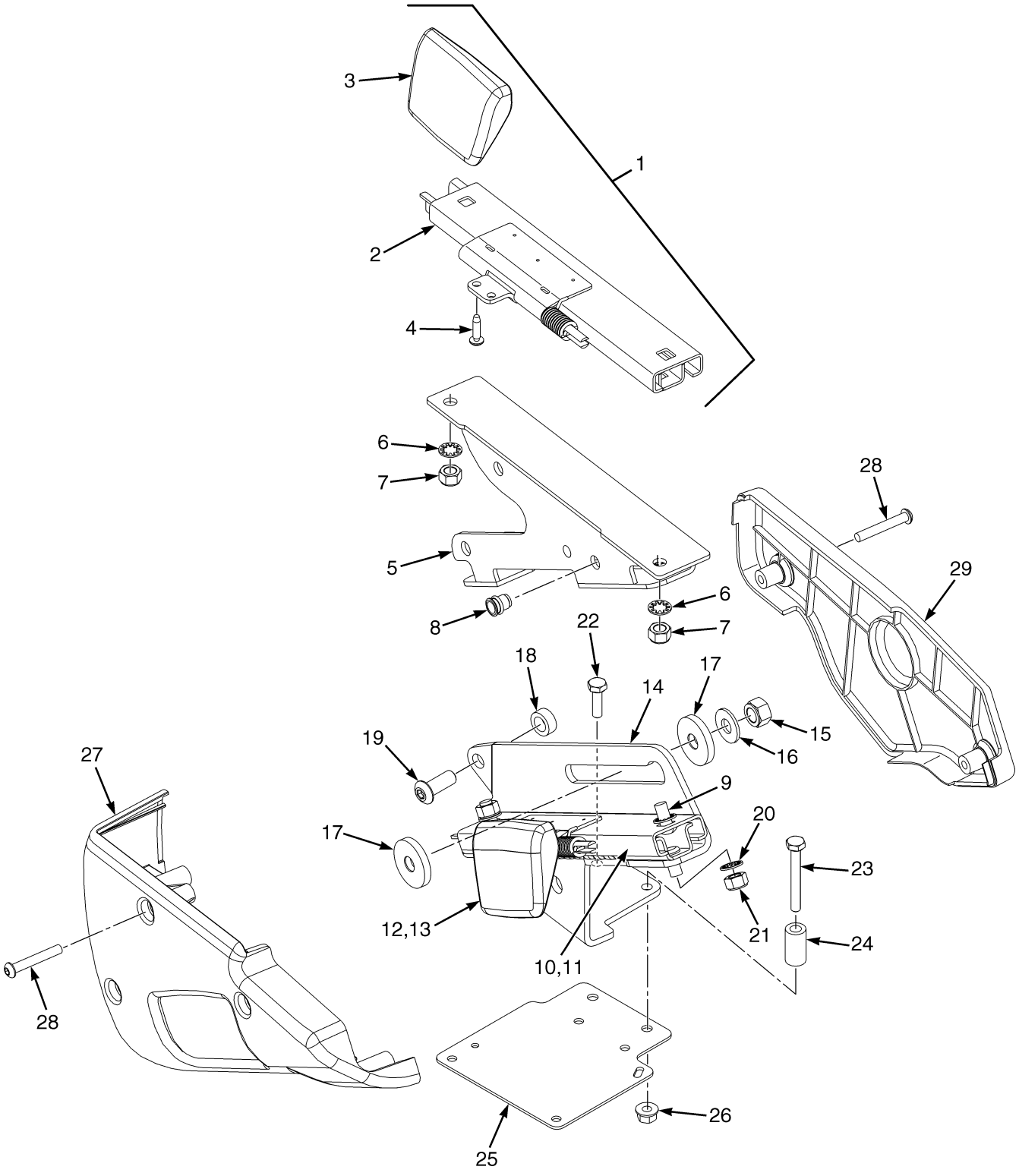

BP120701

©2011 HYSTER COMPANY

ARMREST ASSEMBLY
MINI-LEVER MODULES

ITEM	PART NO.	DESCRIPTION	QTY
	4005010	Armrest (Slider with Mini Lever)	1
1	. . . . .	Slider Assembly	1
2	1661511	Armrest (Slider)	1
3	1655865	Handle (Slider)	1
4	227157	Screw	2
5	4007052	Bracket Wldmt	1
6	296360	Washer	4
7	313828	Nut	4
8	1531558	Insert	3
9	296165	Capscrew	2
10	. . . . .	Slider Assembly	1
11	1661511	Armrest (Slider)	1
12	1655865	Handle (Slider)	1
13	227157	Screw	2
14	4004775	Bracket	1
15	316826	Nut	1
16	320160	Washer	1
17	1650640	Washer	2
18	4007319	Spacer	1
19	18738	Capscrew	1
20	296360	Washer	2
21	313828	Nut	2
22	18462	Capscrew	1
23	18471	Capscrew	1
24	4007318	Spacer	1
25	4004776	Cover Plate	1
26	169874	Nut	2
27	4603492	Cover	1
28	2062875	Capscrew	5
29	4603493	Cover	1

©2011 HYSTER COMPANY

MINI LEVER MODULE LABELS (FIGURE 1-29)
HYDRAULIC CONTROL FUNCTIONS

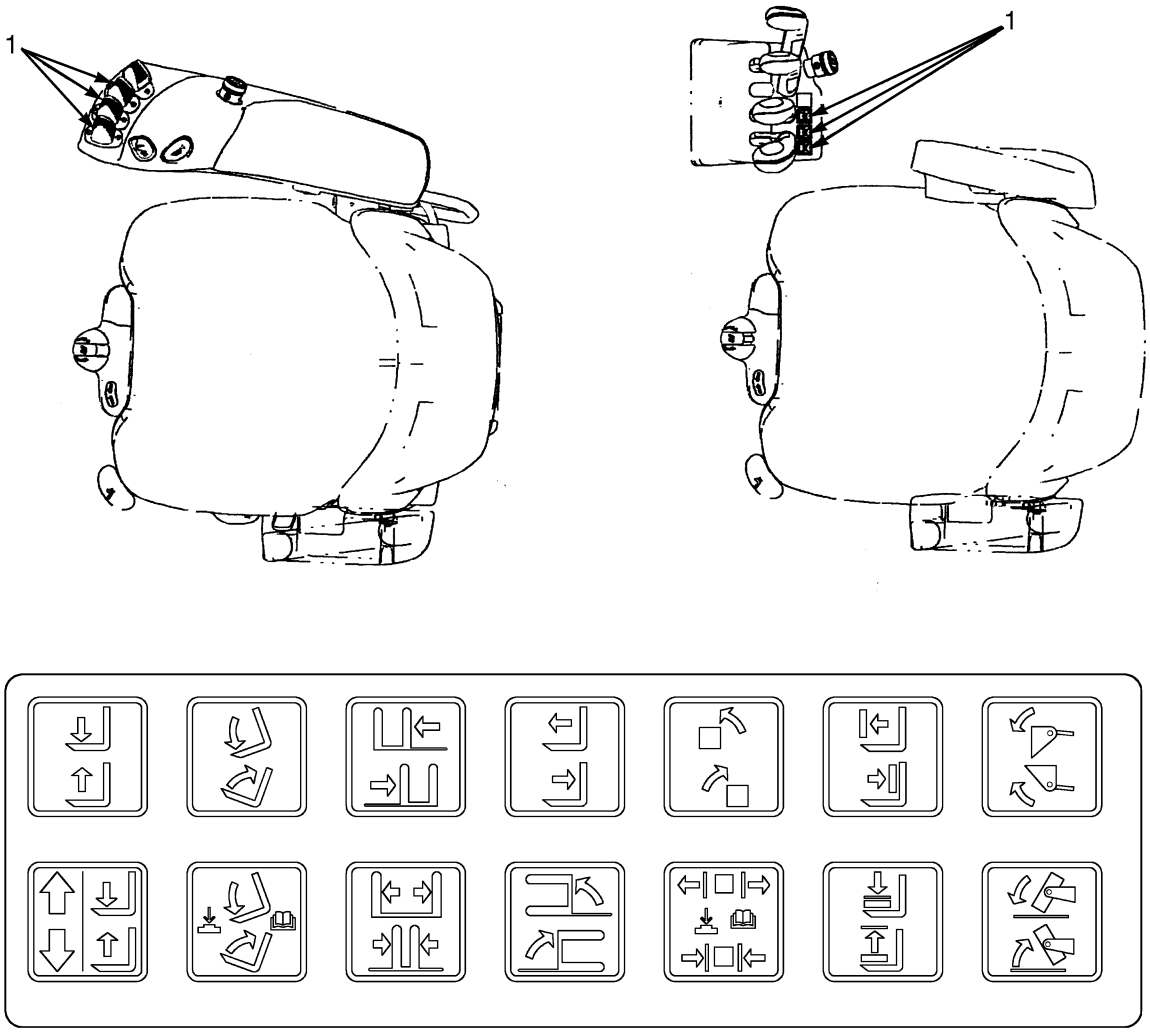

BP120427

©2011 HYSTER COMPANY

MINI LEVER MODULE LABELS
HYDRAULIC CONTROL FUNCTIONS

ITEM	PART NO.	DESCRIPTION	QTY
1	2102640	Label	1

©2011 HYSTER COMPANY

LABELS (FIGURE 1-30)
EXTERIOR

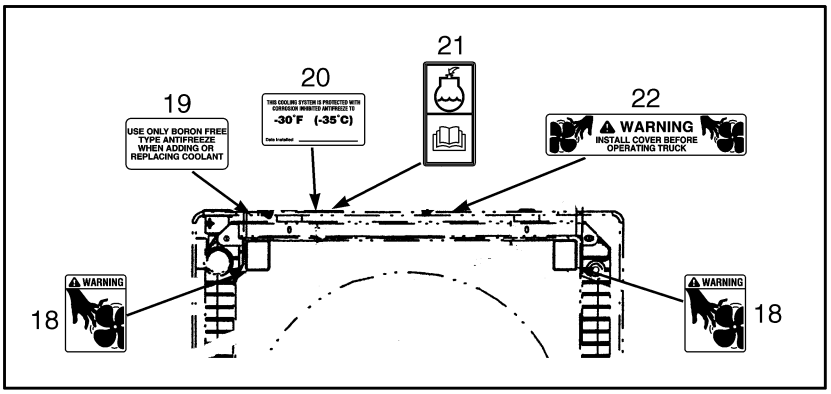

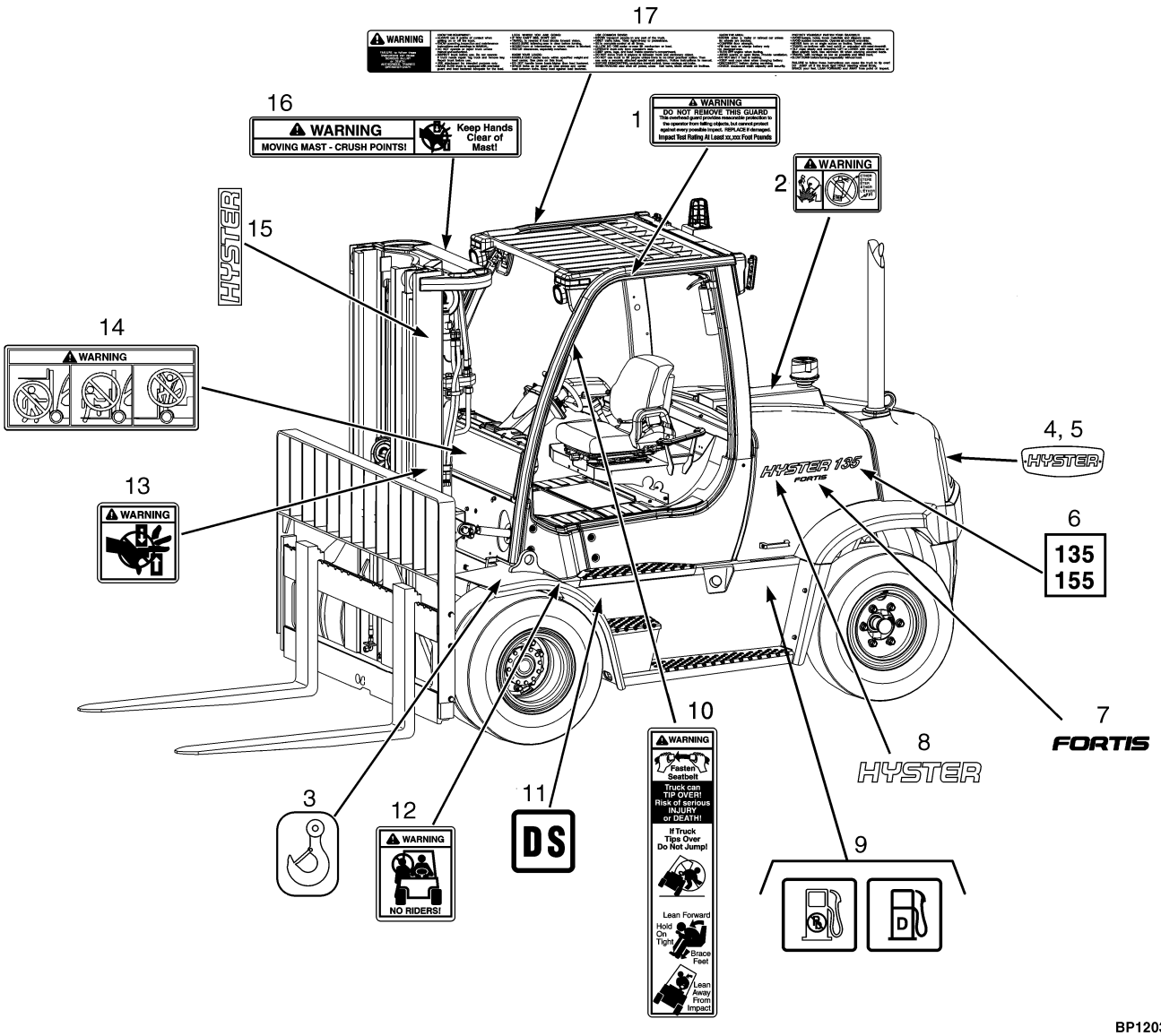

BP120322

©2011 HYSTER COMPANY

LABELS
EXTERIOR

ITEM	PART NO.	DESCRIPTION	QTY
1	**a**	Label (Impact Rating)	1
2	**b** 2034459	Label (Ether Warning)	1
3	316448	Label (Lifting Eye)	3
4	1677428	Label (Hyster Logo)	1
5	**d** 2073197	Label (Operator Warning)	1
6	1639478	Label (Model 135)	2
6	1639479	Label (Model 155)	2
7	1586439	Label (Fortis)	2
8	1636393	Label (Hyster)	2
9	2074255	Label (Unleaded Fuel Only)	1
9	2074256	Label (Fuel Fill)	1
10	1330917	Label (Operator Restraint)	2
11	**b** 154067	Label (Type DS)	2
12	1330920	Label (No Riders)	2
13	1335129	Label (Pinch Point)	2
14	2075656	Label (Mast Warning)	2
15	1562353	Label (Hyster)	2
16	1330919	Label (Mast Warning)	1
17	2073197	Label (Operator Warning)	1
18	1345939	Label (Fan Warning)	2
19	1375676	Label (Boron-Free Antifreeze)	1
20	1354165	Label (Antifreeze)	1
21	2089112	Label (Coolant Fill)	1
22	1325271	Label (Fan Warning)	1
	ce 4603386	Label (Hydraulic Quick Disconnect)	1

FOOTNOTES:

a Contact Your Local Hyster Dealer
b Diesel
c Not Illustrated
d Without Cab
e 5/2010 →

©2011 HYSTER COMPANY

LABELS (FIGURE 1-31)
INTERIOR

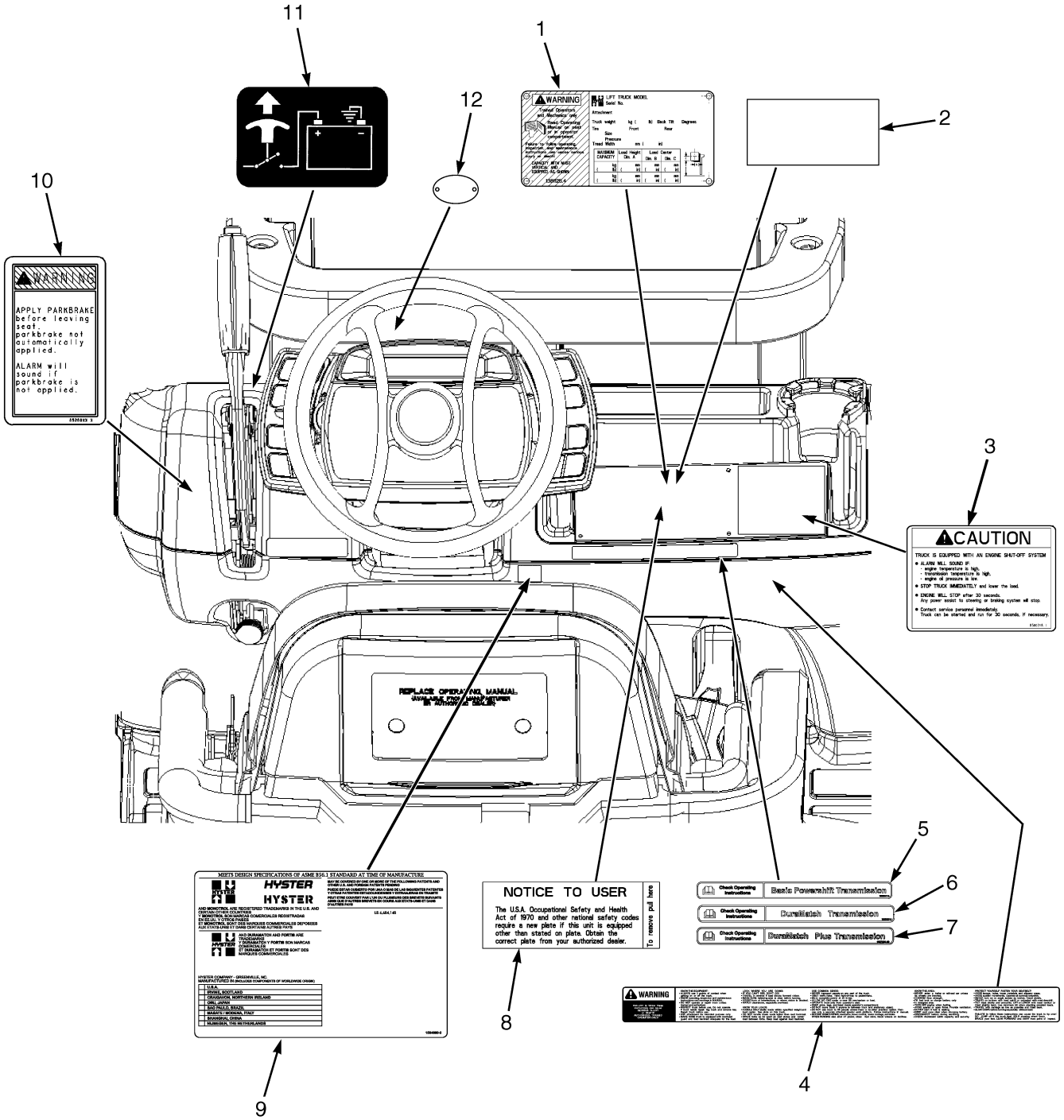

BP120328

©2011 HYSTER COMPANY

LABELS
INTERIOR

ITEM	PART NO.	DESCRIPTION	QTY
1	**a**	Nameplate	1
1	170658	Rivet	4
2	389688	Nameplate Cover	1
3	1385102	Label (Drive Train Protection)	1
4	2073197	Label (Operator Warning)	1
5	1589377	Label (Basic Powershift Transmission)	1
6	**b** 1589397	Label (DuraMatch Transmission)	1
7	**b** 1589417	Label (DuraMatch Plus Transmission)	1
8	1335137	Label (Nameplate Tag)	1
9	1534660	Label (Patents and Trademarks)	1
10	2074209	Label (Parking Brake Warning)	1
11	**d** 1324480	Label (Battery Switch)	1
12	**a**	UL Inspection Plate	1
	c 2106332	Label (ECM Code) (Standard Transmission Only)	1

FOOTNOTES:

a Contact Your Local Hyster Dealer
b Electronic Transmission
c Not Illustrated
d UL Type DS

©2011 HYSTER COMPANY

CONTROL LEVER LABELS (FIGURE 1-32)
MANUAL HYDRAULICS

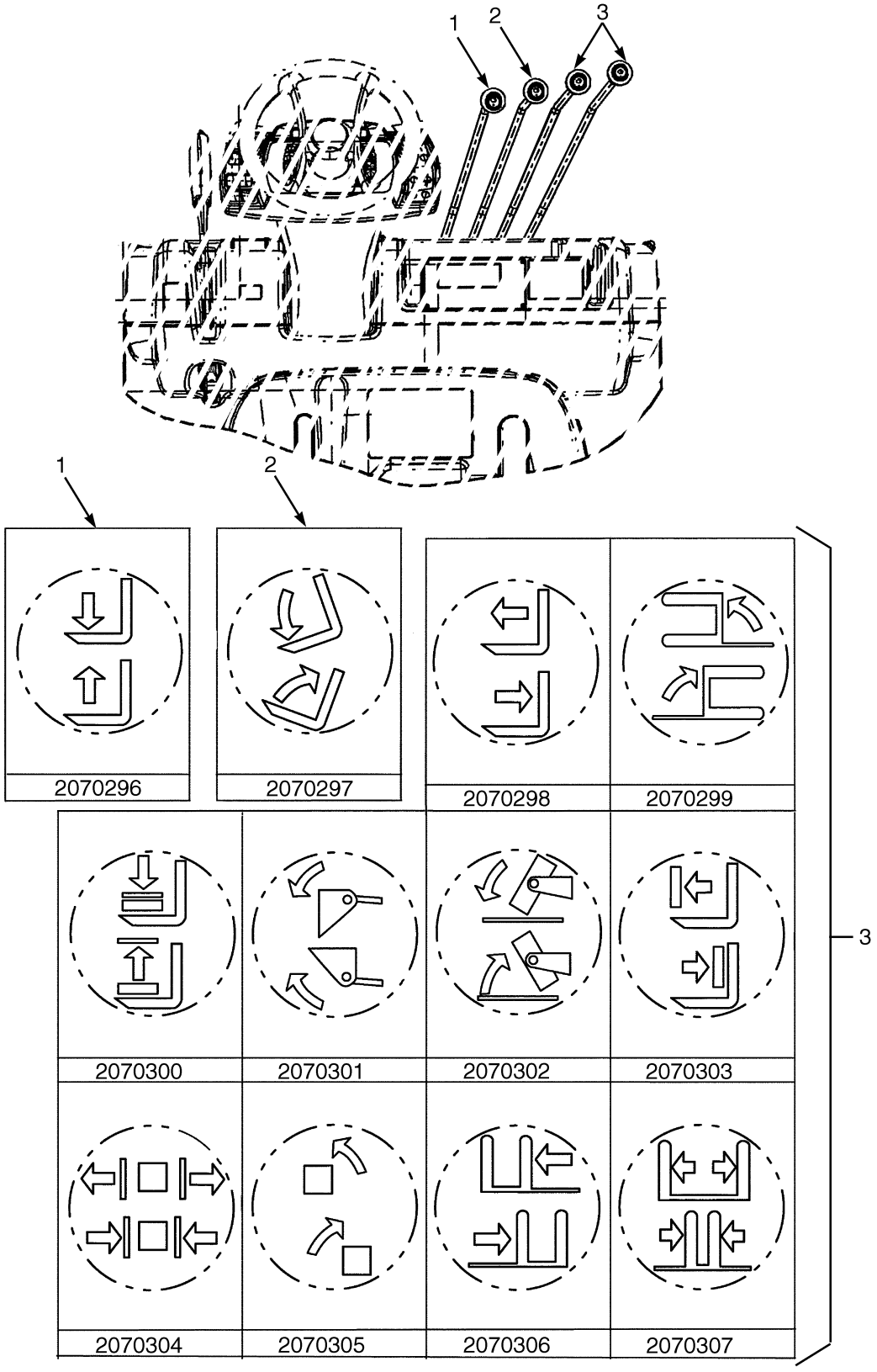

©2011 HYSTER COMPANY

CONTROL LEVER LABELS
MANUAL HYDRAULICS

ITEM	PART NO.	DESCRIPTION	QTY
1	2070296	Lens (Lift)	1
2	2070297	Lens (Tilt)	1
3	2070298	Lens (Reach)	1
3	2070299	Lens (Swing)	1
3	2070300	Lens (Load Stabilizer)	1
3	2070301	Lens (Scoop)	1
3	2070302	Lens (Upender)	1
3	2070303	Lens (Push/Pull)	1
3	2070304	Lens (Clamp)	1
3	2070305	Lens (Rotate)	1
3	2070306	Lens (Side-Shift)	1
3	2070307	Lens (Fork Spread)	1
	a 2070655	Lens (Blank)	1

FOOTNOTES:

a Not Illustrated

©2011 HYSTER COMPANY

ELECTRONIC MINI LEVER LABELS (FIGURE 1-33)

SINGLE FUNCTION

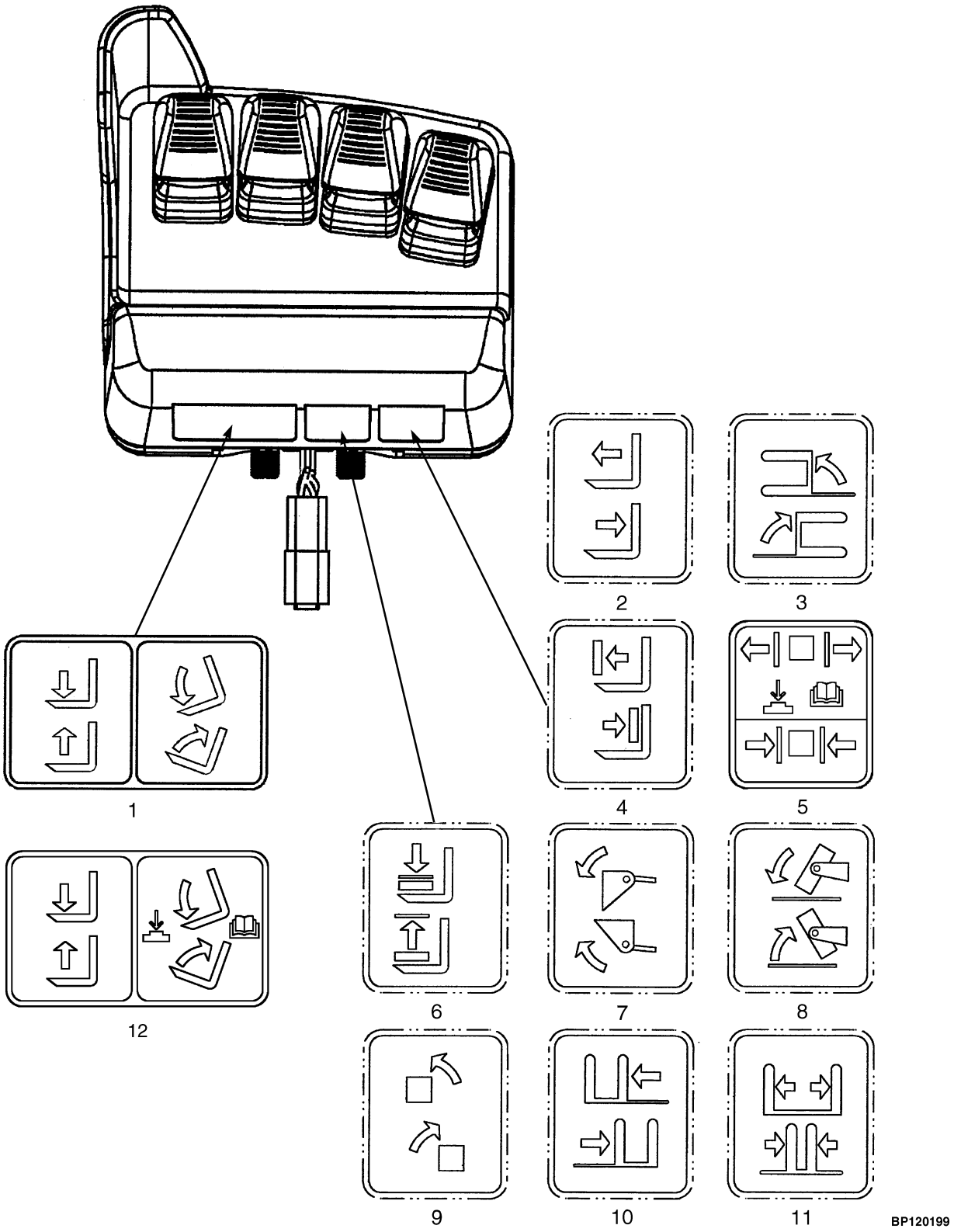

©2011 HYSTER COMPANY

ELECTRONIC MINI LEVER LABELS

SINGLE FUNCTION

ITEM	PART NO.	DESCRIPTION	QTY
1	1581055	Label (Hoist and Tilt)	1
2	2073115	Label (Reach)	1
3	2073114	Label (Swing)	1
4	2073118	Label (Push/Pull)	1
5	2085877	Label (Clamp)	1
6	2073116	Label (Load Stabilizer)	1
7	2073117	Label (Scoop)	1
8	2073119	Label (Upender)	1
9	2073121	Label (Rotate)	1
10	2073122	Label (Side-Shift)	1
11	2073123	Label (Fork Spread)	1
12	2085875	Label (Hoist and Tilt with Return to Set Tilt)	1

©2011 HYSTER COMPANY

ELECTRONIC MINI LEVER LABELS (FIGURE 1-34)

DUAL FUNCTION

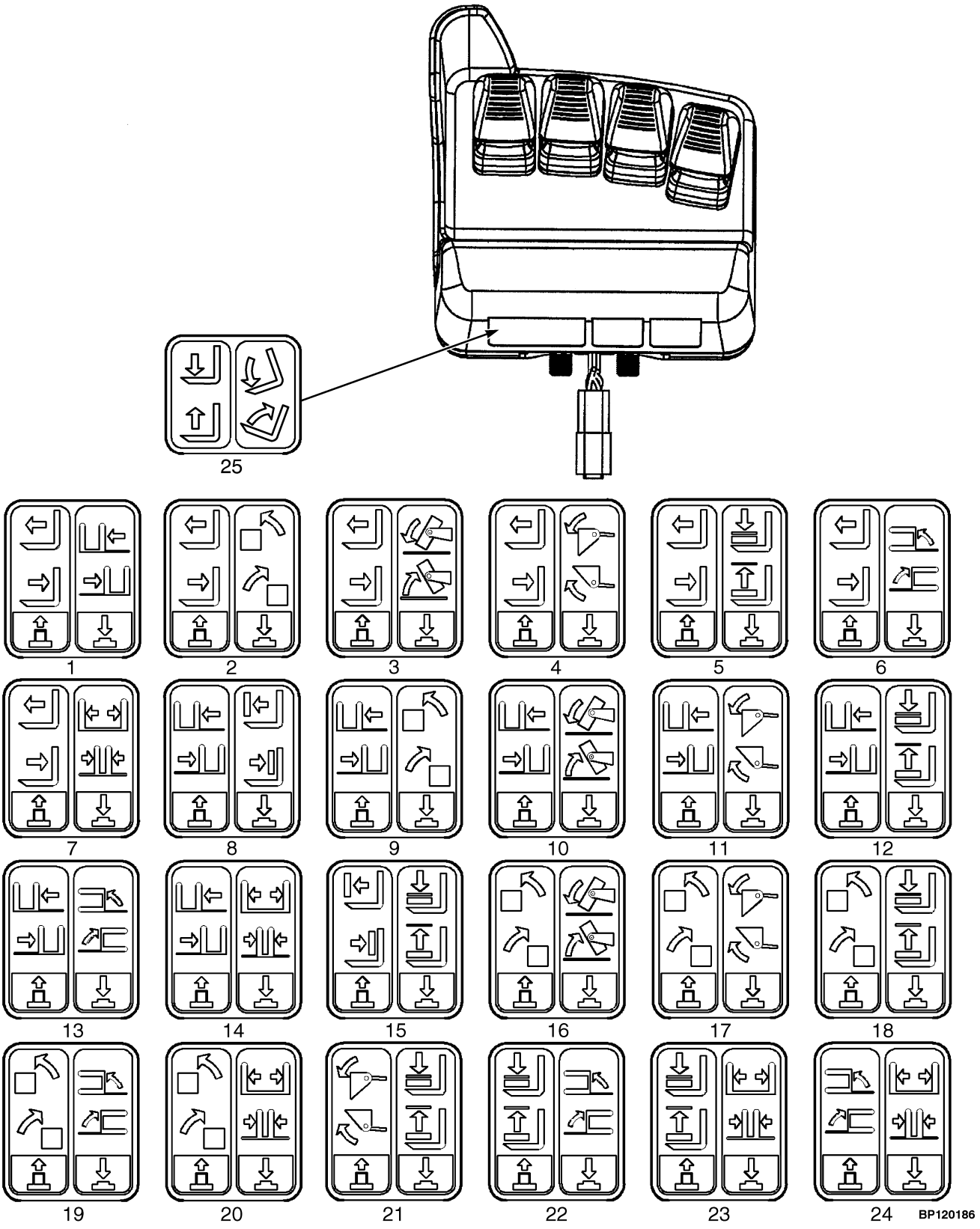

©2011 HYSTER COMPANY

ELECTRONIC MINI LEVER LABELS
DUAL FUNCTION

ITEM	PART NO.	DESCRIPTION	QTY
1	2081229	Label (Reach/Side-Shift)	1
2	2081230	Label (Reach/Rotate)	1
3	2081231	Label (Reach/Upender)	1
4	2081232	Label (Reach/Scoop)	1
5	2081233	Label (Reach/Load Stabilizer)	1
6	2081234	Label (Reach/Swing)	1
7	2081235	Label (Reach/Fork Spread)	1
8	2081236	Label (Side-Shift/Push or Pull)	1
9	2081237	Label (Side-Shift/Rotate)	1
10	2081238	Label (Side-Shift/Upender)	1
11	2081239	Label (Side-Shift/Scoop)	1
12	2081240	Label (Side-Shift/Load)	1
13	2081241	Label (Side-Shift/Swing)	1
14	2081242	Label (Side-Shift/Fork Spread)	1
15	2081243	Label (Push or Pull/Load)	1
16	2081244	Label (Rotate/Upender)	1
17	2081245	Label (Rotate/Scoop)	1
18	2081246	Label (Rotate/Load Stabilizer)	1
19	2081247	Label (Rotate/Swing)	1
20	2081248	Label (Rotate/Fork Spreader)	1
21	2081249	Label (Scoop/Load Stabilizer)	1
22	2081250	Label (Load Stabilizer/Swing)	1
23	2081251	Label (Load Stabilizer/Fork Spread)	1
24	2081252	Label (Swing/Fork Spread)	1
25	1581055	Label (Hoist and Tilt)	1

©2011 HYSTER COMPANY

FORKS (FIGURE 1-35)
STANDARD TAPER — CLASS IV

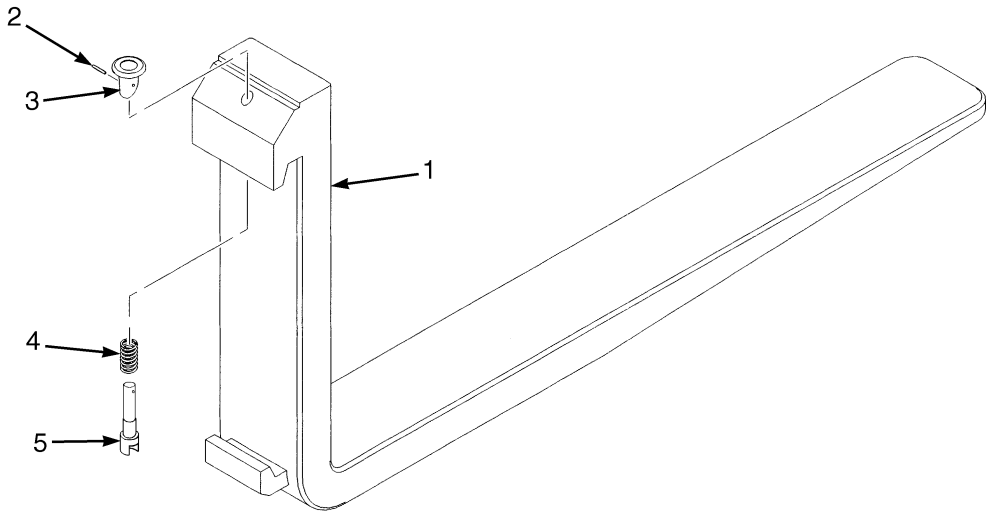

BP000187

©2011 HYSTER COMPANY

FORKS

STANDARD TAPER – CLASS IV

ITEM	PART NO.	DESCRIPTION	QTY
1	1333001	Fork (48 in.)	2
1	1333002	Fork (54 in.)	2
1	1333003	Fork (60 in.)	2
1	1333004	Fork (72 in.)	2
1	1647909	Fork (96 in.)	2
2	1523734	Pin	1
3	1523732	Knob	1
4	1500786	Spring	1
5	1523741	Pin	1
	1523742	Kit-Latch (Class IV)	2

©2011 HYSTER COMPANY

FORKS (FIGURE 1-36)
PIN TYPE

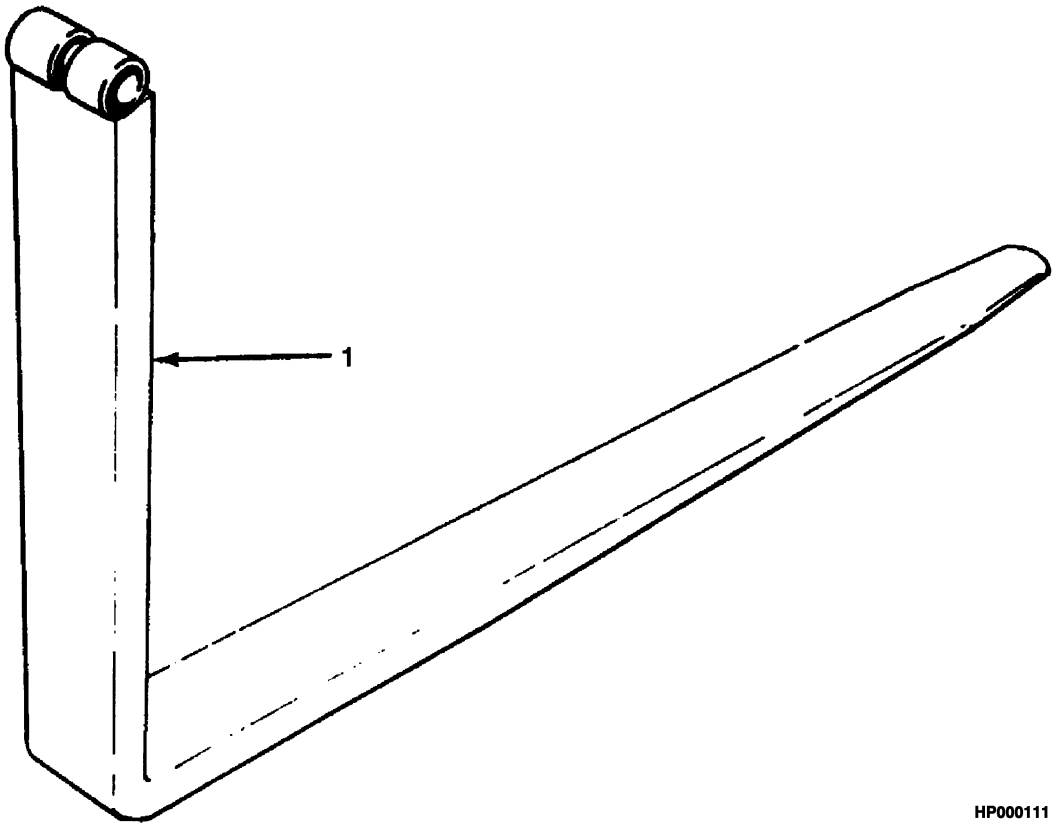

©2011 HYSTER COMPANY

FORKS
PIN TYPE

ITEM	PART NO.	DESCRIPTION	QTY
1	1330787	Fork (48 in.)	2
1	1330791	Fork (54 in.)	2
1	1330792	Fork (60 in.)	2
1	1330793	Fork (72 in.)	2
1	1330794	Fork (96 in.)	2

©2011 HYSTER COMPANY

LOAD BACKREST EXTENSION (FIGURE 1-37)

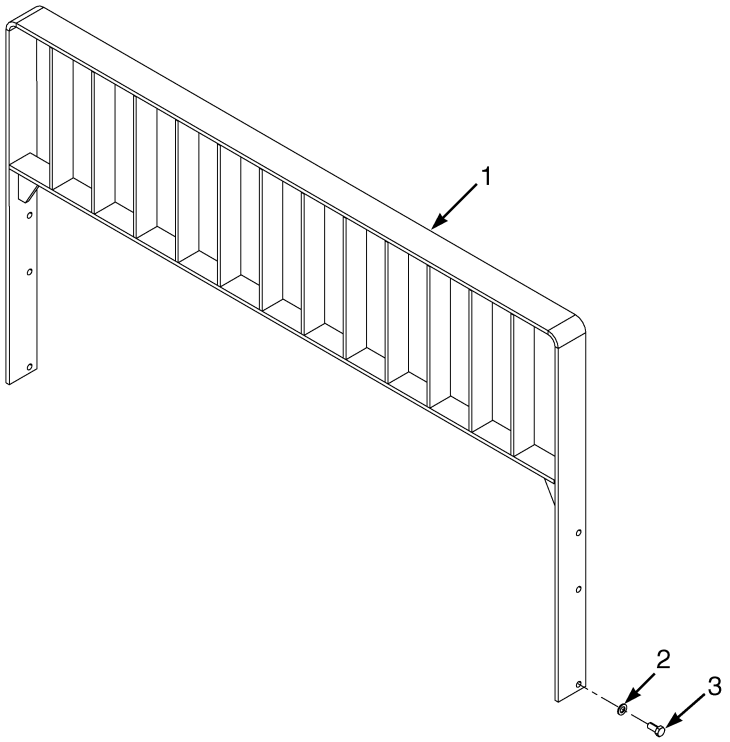

ITEM	PART NO.	DESCRIPTION	QTY
1	115112W	Load Backrest (78 in.) (Pin Type)	1
1	1652028	Load Backrest (78 in.) (Hook Type)	1
2	1581854	Washer	6
3	1581833	Capscrew	6

©2011 HYSTER COMPANY

2 ENGINE ASSEMBLY

SECTION 2
ENGINE ASSEMBLY

DESCRIPTION	PAGE
AIR INTAKE MANIFOLD	
CUMMINS QSB 3.3L DIESEL	2-102
ASSEMBLED ENGINE	
GM 4.3L GASOLINE AND LPG (GFI OPTION) - SHEET 1 OF 3	2-22
GM 4.3L GASOLINE AND LPG (GFI OPTION) - SHEET 2 OF 3	2-26
GM 4.3L GASOLINE AND LPG (GFI OPTION) - SHEET 3 OF 3	2-30
CAMSHAFT	
CUMMINS QSB 3.3L DIESEL	2-85
CAMSHAFT AND OIL PAN	
GM 4.3L LPG - PSI OPTION (PENDING PER ECN 152361 →)	2-52
GM 4.3L GASOLINE AND LPG - GFI OPTION	2-48
COIL ASSEMBLY	
GM 4.3L GASOLINE AND LPG	2-62
COOLING	
CUMMINS QSB 3.3L	2-14
COOLING SYSTEM	
GM 4.3L GASOLINE AND LPG	2-10
CRANKCASE BREATHER	
CUMMINS QSB 3.3L DIESEL	2-94
CRANKSHAFT	
CUMMINS QSB 3.3L DIESEL	2-92
CRANKSHAFT PULLEY	
GM 4.3L LPG - PSI OPTION (PENDING PER ECN 152361 →)	2-40
CYLINDER BLOCK	
CUMMINS QSB 3.3L DIESEL	2-68
GM 4.3L GASOLINE AND LPG	2-46
CYLINDER HEAD	
CUMMINS QSB 3.3L DIESEL	2-70
GM 4.3L GASOLINE AND LPG	2-44
DISTRIBUTER AND COIL	
GM 4.3L LPG - PSI OPTION	2-63
ELECTRICAL MOUNTING PLATE	
GM 4.3L LPG - PSI OPTION (PENDING PER ECN 152361 →)	2-18
ENGINE MOUNTING	
CUMMINS QSB 3.3L DIESEL	2-64
GM 4.3L GASOLINE AND LPG	2-16
EXHAUST MANIFOLD	
CUMMINS QSB 3.3L DIESEL	2-100
EXHAUST MANIFOLDS	
GM 4.3L LPG - PSI OPTION (PENDING PER ECN 152361 →)	2-41
EXHAUST SYSTEM	
CUMMINS QSB 3.3L	2-4
GM 4.3L LPG - PSI OPTION (PENDING PER ECN 152361 →)	2-8
GM 4.3L GASOLINE AND LPG - GFI OPTION	2-6
FAN ASSEMBLY	
CUMMINS QSB 3.3L DIESEL	2-65
GM 4.3L LPG - PSI OPTION (PENDING PER ECN 152361 →)	2-36
FAN MOUNT ASSEMBLY	
GM 4.3L GASOLINE AND LPG - GFI OPTION	2-32

©2011 HYSTER COMPANY

SECTION 2
ENGINE ASSEMBLY

DESCRIPTION **PAGE**

GM 4.3L LPG - PSI OPTION (PENDING PER ECN 152361 →) 2-34
FLYWHEEL AND HOUSING
CUMMINS QSB 3.3L DIESEL 2-74
GM 4.3L GASOLINE AND LPG 2-20
LIFTING BRACKET
CUMMINS QSB 3.3L DIESEL 2-66
OIL FILLER ARRANGEMENT
CUMMINS QSB 3.3L DIESEL 2-84
OIL FILTER AND COOLER
CUMMINS QSB 3.3L DIESEL 2-80
OIL LEVEL GAUGE
CUMMINS QSB 3.3L DIESEL 2-106
OIL PAN
CUMMINS QSB 3.3L DIESEL 2-78
OIL PUMP
GM 4.3L GASOLINE AND LPG 2-60
OIL PUMP AND FRONT GEAR COVER
CUMMINS QSB 3.3L DIESEL 2-82
PISTON AND CONNECTING ROD
CUMMINS QSB 3.3L DIESEL 2-90
PULLEY AND TENSIONER
GM 4.3L LPG - PSI OPTION (PENDING PER ECN 152361 →) 2-38
RADIATOR MOUNTING
CUMMINS QSB 3.3L DIESEL 2-12
ROCKER ARM SHAFT
CUMMINS QSB 3.3L DIESEL 2-88
STARTING AID
CUMMINS QSB 3.3L DIESEL 2-104
THERMOSTAT
CUMMINS QSB 3.3L DIESEL 2-72
THERMOSTAT AND WATER OUTLET HOUSING
GM 4.3L LPG - PSI OPTION (PENDING PER ECN 152361 →) 2-42
TURBOCHARGER
CUMMINS QSB 3.3L DIESEL 2-96
TURBOCHARGER PLUMBING
CUMMINS QSB 3.3L DIESEL 2-98
VALVE COVER
CUMMINS QSB 3.3L DIESEL 2-86
VALVE COVER AND INLET MANIFOLD
GM 4.3L LPG - PSI OPTION (PENDING PER ECN 152361 →) 2-58
GM 4.3L GASOLINE AND LPG - GFI OPTION 2-54
VIBRATION DAMPER
CUMMINS QSB 3.3L DIESEL 2-105
WATER OUTLET CONNECTION
CUMMINS QSB 3.3L DIESEL 2-107
WATER PUMP AND PULLEY
CUMMINS QSB 3.3L DIESEL 2-76

©2011 HYSTER COMPANY

NOTES

©2011 HYSTER COMPANY

EXHAUST SYSTEM (FIGURE 2-1)
CUMMINS QSB 3.3L

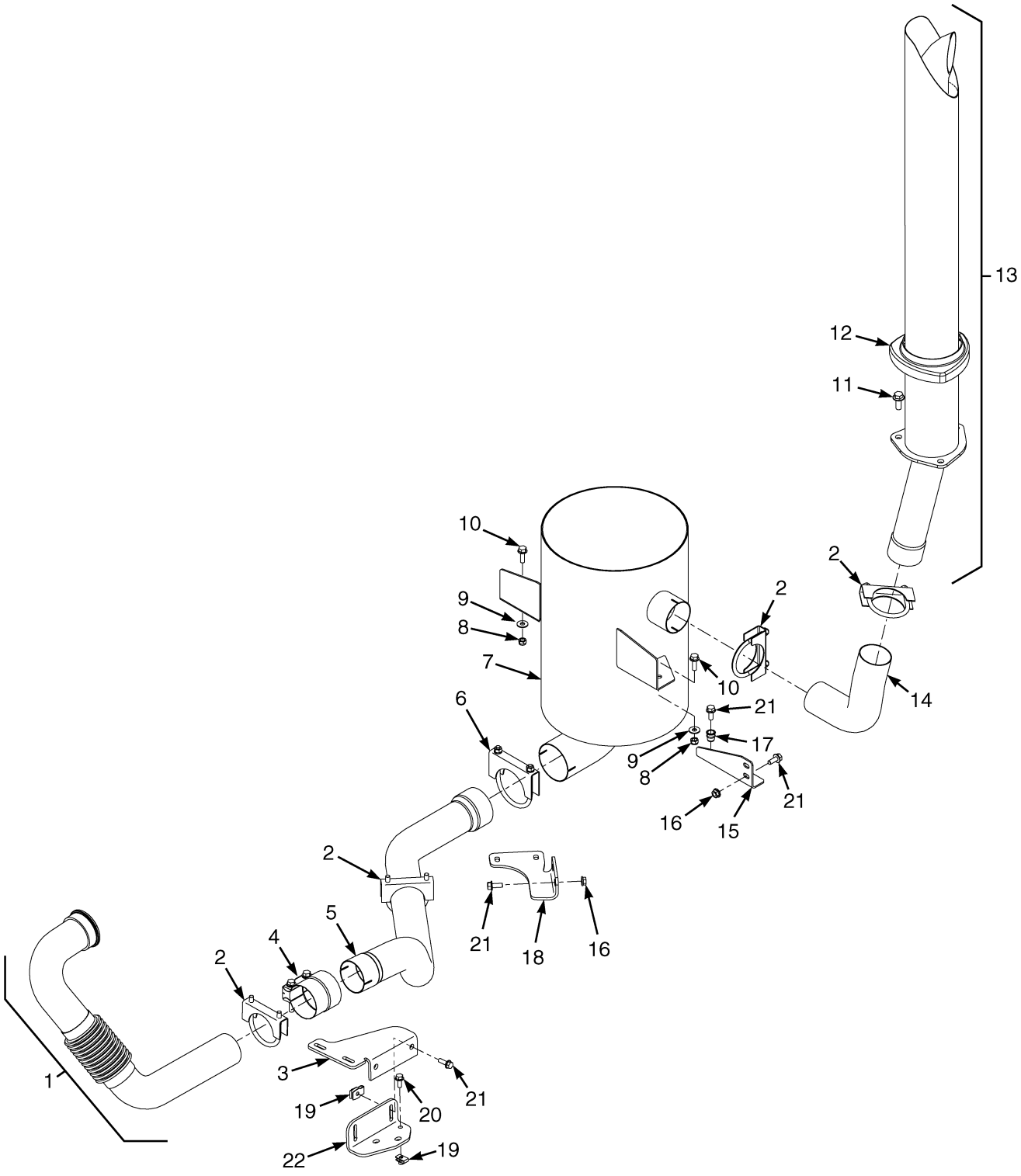

BP090412

©2011 HYSTER COMPANY

EXHAUST SYSTEM
CUMMINS QSB 3.3L

ITEM	PART NO.	DESCRIPTION	QTY
1	1670604	Exhaust Pipe	1
2	30372	Clamp	4
3	4010347	Bracket (Exhaust)	1
4	4010345	Clamp	1
5	1697342	Exhaust Pipe	1
6	30375	Clamp	1
7	2107736	Muffler	1
8	1582222	Locknut	2
9	320158	Washer	2
10	1510113	Capscrew	2
11	1510117	Capscrew	3
12	1668428	Cover	1
13	1666569	Overhead Exhaust	1
14	1666570	Exhaust Pipe	1
15	1687082	Bracket	1
16	1502543	Nut (Flange)	4
17	1530243	Insert	2
18	1697344	Bracket	1
19	1393879	Nut	2
20	1527880	Capscrew	5
21	1510113	Capscrew	2
22	4010355	Bracket (Exhaust)	1

©2011 HYSTER COMPANY

EXHAUST SYSTEM (FIGURE 2-2)
GM 4.3L GASOLINE AND LPG — GFI OPTION

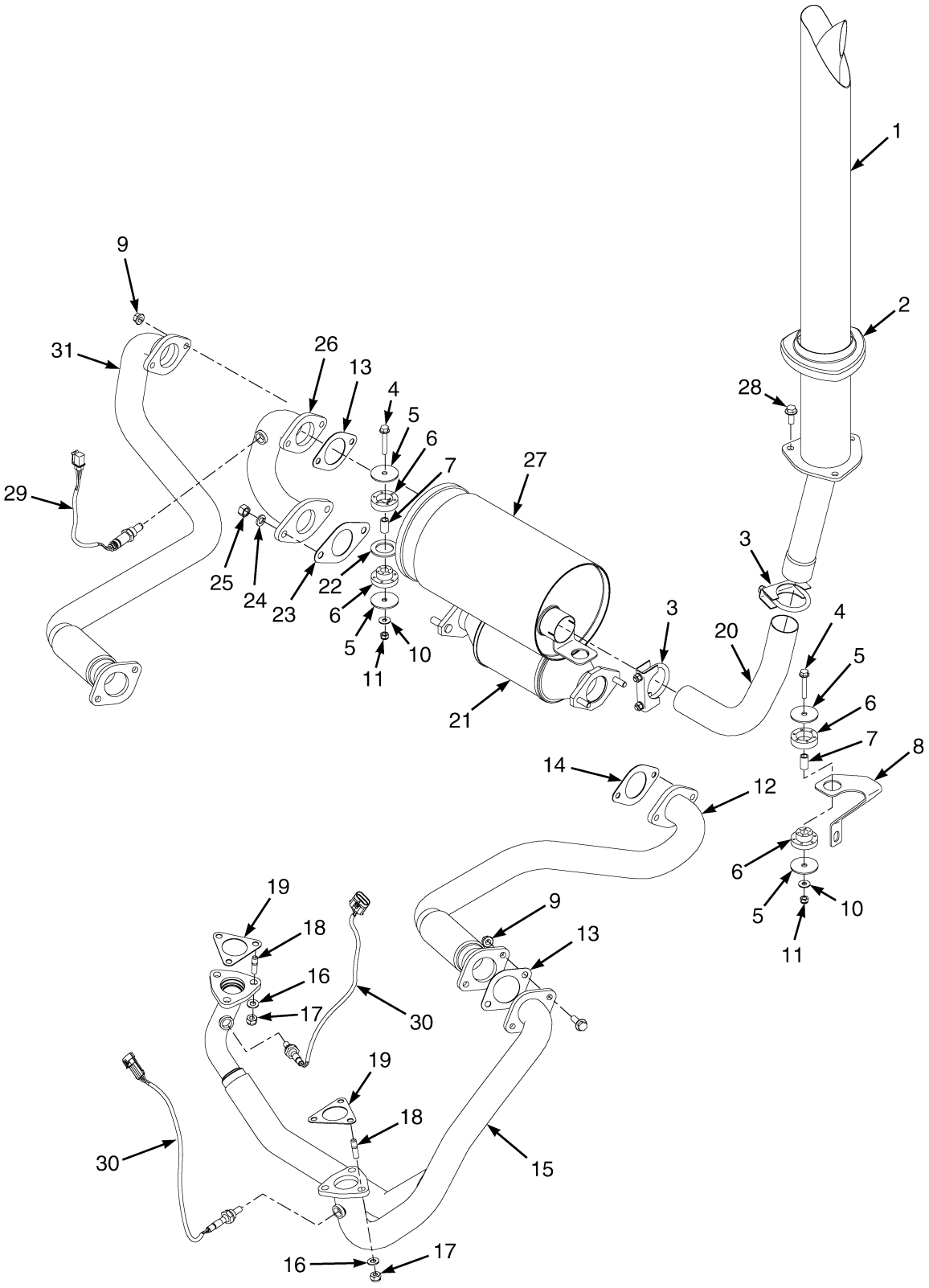

©2011 HYSTER COMPANY

EXHAUST SYSTEM
GM 4.3L GASOLINE AND LPG – GFI OPTION

KEY:
A: With Catalytic Converter
B: Without Catalytic Converter

ITEM	PART NO.	DESCRIPTION	QTY A	QTY B
1	1611882	Tail Pipe	1	1
2	1351178	Cover	1	1
3	30370	Clamp	2	2
4	1510115	Capscrew	2	2
5	**c** 1528938	Washer	4	4
6	**c** 1528930	Mount	2	2
6	**e** 1709996	Isolator	4	4
7	**c** 1649471	Spacer	2	2
7	**e** 1708371	Spacer	2	2
8	1616249	Bracket	1	..
9	1460477	Nut	6	4
10	320158	Washer	2	2
11	1582222	Locknut	2	2
12	1657458	Exhaust Pipe	1	..
13	1402189	Gasket	2	2
14	1580027	Gasket	1	..
15	**b** 1683840	Exhaust Pipe	1	1
15	**d** 4039968	Exhaust Pipe	1	1
16	320159	Washer	6	6
17	1580136	Locknut	6	6
18	1580092	Stud	6	6
19	1580029	Gasket	2	2
19	4006052	Gasket (Alternate Part, Multi Layer)	2	2
20	1611885	Exhaust Pipe	1	1
21	2098586	Catalytic Converter	1	..
21	4601152	Catalytic Converter (2010 Series)	1	..
22	1532585	Washer	1	2
23	1580028	Gasket	1	..
24	292683	Lockwasher	2	..
25	1469405	Nut	2	..
26	1639679	Exhaust Pipe	1	..
26	~~4006456~~			
	4020857	Exhaust Pipe (2010 Series)	1	..
27	2078353	Muffler (Crimped)	1	1
27	**a** 2072202	Muffler (Welded)	1	1
28	1510117	Capscrew	3	3
29	4006802	Sensor (Oxygen) (2010 Series)	1	..
30	1557546	Oxygen Sensor (With Wire Harness) (2010 Series)	2	2
31	1657455	Exhaust Pipe	..	1

FOOTNOTES:

a Optional
b → PENDING PER ECN 152361
c → S/N J006V02472G INC. 02485
d PENDING PER ECN 152361 →
e S/N J006V02473G → EXC. 02485

©2011 HYSTER COMPANY

EXHAUST SYSTEM (FIGURE 2-3)

GM 4.3L LPG — PSI OPTION (PENDING PER ECN 152361 →)

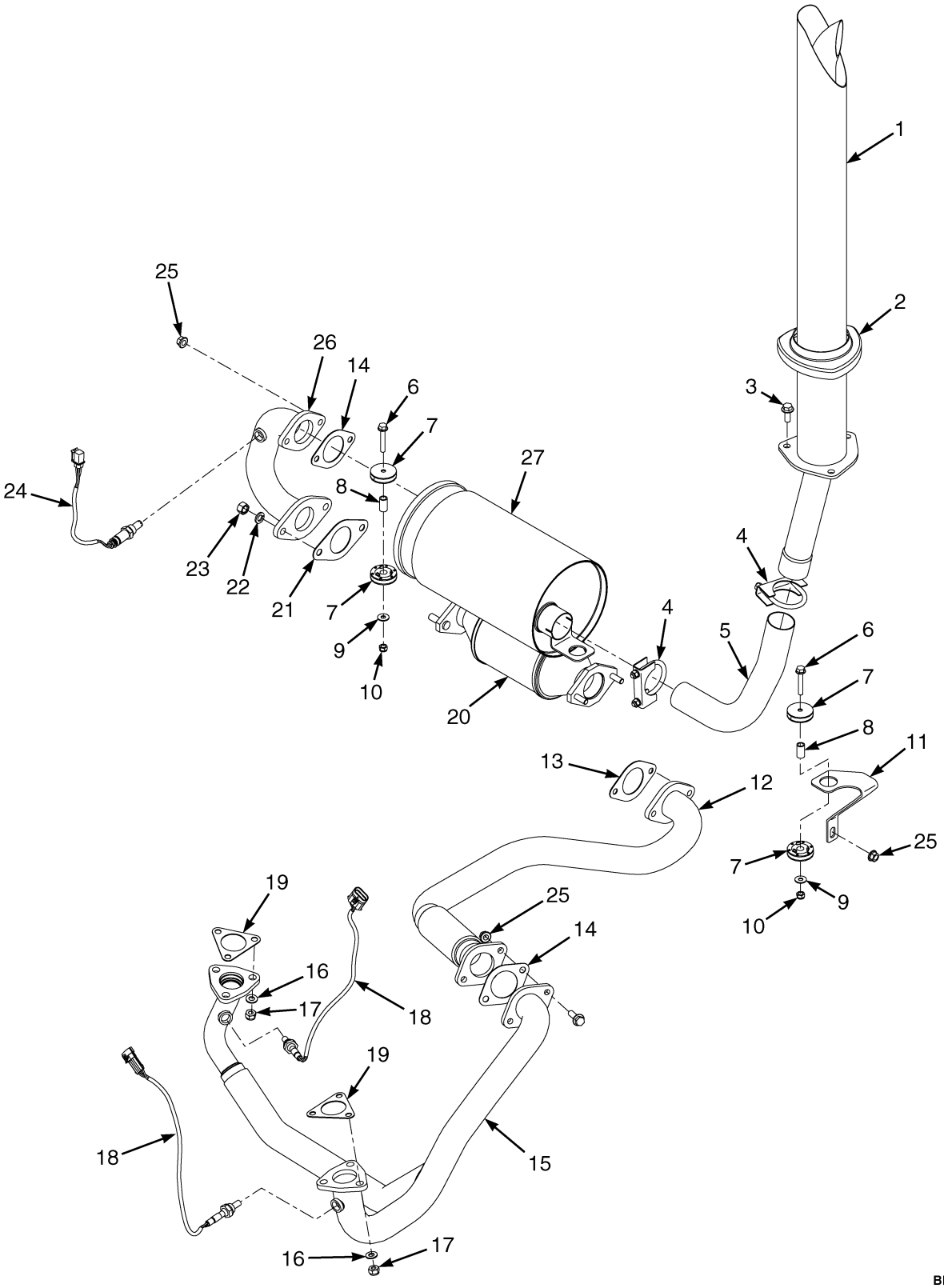

©2011 HYSTER COMPANY

EXHAUST SYSTEM

GM 4.3L LPG – PSI OPTION (PENDING PER ECN 152361 →)

ITEM	PART NO.	DESCRIPTION	QTY
1	1611882	Tail Pipe	1
2	1351178	Cover	1
3	1510117	Capscrew	3
4	30370	Clamp	2
5	1611885	Exhaust Pipe	1
6	1510115	Capscrew	2
7	1709996	Isolator	4
8	1708371	Spacer	2
9	320158	Washer	2
10	1582222	Locknut	2
11	1616249	Bracket	1
12	1657458	Exhaust Pipe	1
13	1580027	Gasket	1
14	1402189	Gasket	2
15	4039968	Exhaust Pipe	1
16	320159	Washer	6
17	1580136	Locknut	6
18	1557546	Oxygen Sensor (With Wire Harness)	2
19	4006052	Gasket (Multi Layer)	2
20	4615342	Catalytic Converter	1
21	1580028	Gasket	1
22	292683	Lockwasher	2
23	1469405	Nut	2
24	4006802	Sensor (Oxygen)	1
25	1460477	Nut	6
26	~~4006456~~		
	4020857	Exhaust Pipe	1
27	**a** 2072202	Muffler (Welded)	1
27	2078353	Muffler (Crimped)	1

FOOTNOTES:

a Optional

©2011 HYSTER COMPANY

COOLING SYSTEM (FIGURE 2-4)
GM 4.3L GASOLINE AND LPG

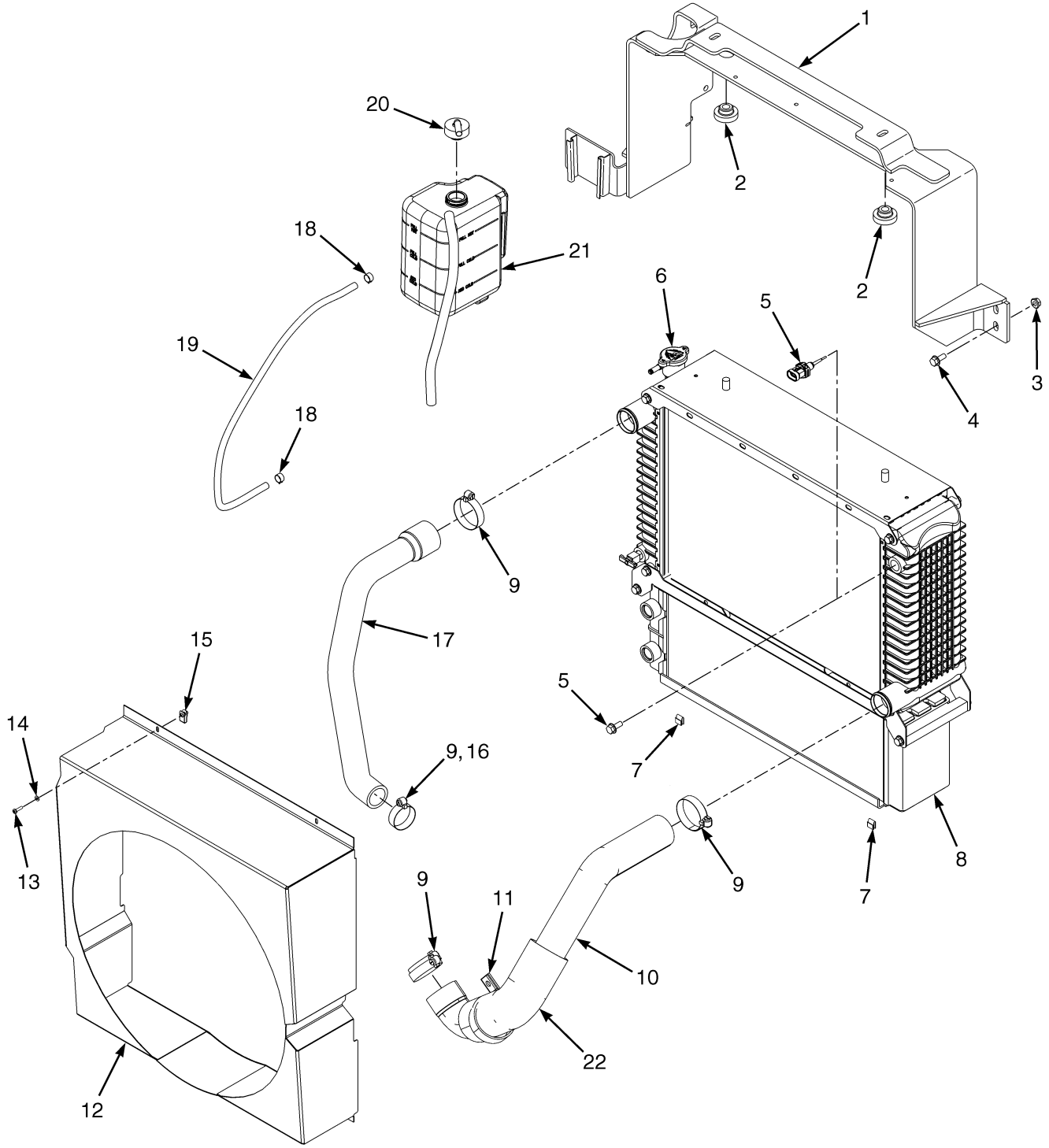

BP060058

©2011 HYSTER COMPANY

COOLING SYSTEM
GM 4.3L GASOLINE AND LPG

ITEM	PART NO.	DESCRIPTION	QTY
1	1668856	Support	1
2	1529787	Isolator	4
3	1502543	Nut (Flange)	4
4	1510113	Capscrew	4
5	1531404	Sensor (Low Coolant Level)	1
5	**a** 14385	Fitting	1
6	178899	Radiator Cap	1
7	1551663	Clip	2
8	**b** 2066322	Radiator (Assembly)	1
8	**b** 1623821	Radiator	1
8	**b** 1623819	Oil Cooler	1
8	**c** 4603551	Radiator (Assembly)	1
8	**c** 4038262	Oil Cooler	1
8	**c** 4038256	Radiator	1
8	**c** 4038264	Drain Valve	1
8	**c** 4038265	Nut	2
8	**c** 4038266	Bolt	8
8	**c** 4038267	Bolt	4
9	119236	Clamp	3
10	2096559	Radiator Hose (Lower)	1
11	385107	Clamp (Insulated)	1
12	1600414	Shroud	1
13	302023	Screw	2
14	320154	Washer	2
15	1535257	Nut	2
16	369804	Clamp	1
17	2078103	Radiator Hose (Upper)	1
18	369815	Clamp	2
19	1302955	Hose	1
20	. . . . .	Outlet Assembly	1
20	336550	Bushing	1
20	345454	Cap	1
20	339735	Hose	1
21	1643342	Reservoir	1
21	4022937	Seal (Not Illustrated)	1
22	2100090	Cover	1

FOOTNOTES:

a Without Low Coolant Sensor
b → PENDING PER ECN 134242
c PENDING PER ECN 134242 →

©2011 HYSTER COMPANY

RADIATOR MOUNTING (FIGURE 2-5)
CUMMINS QSB 3.3L DIESEL

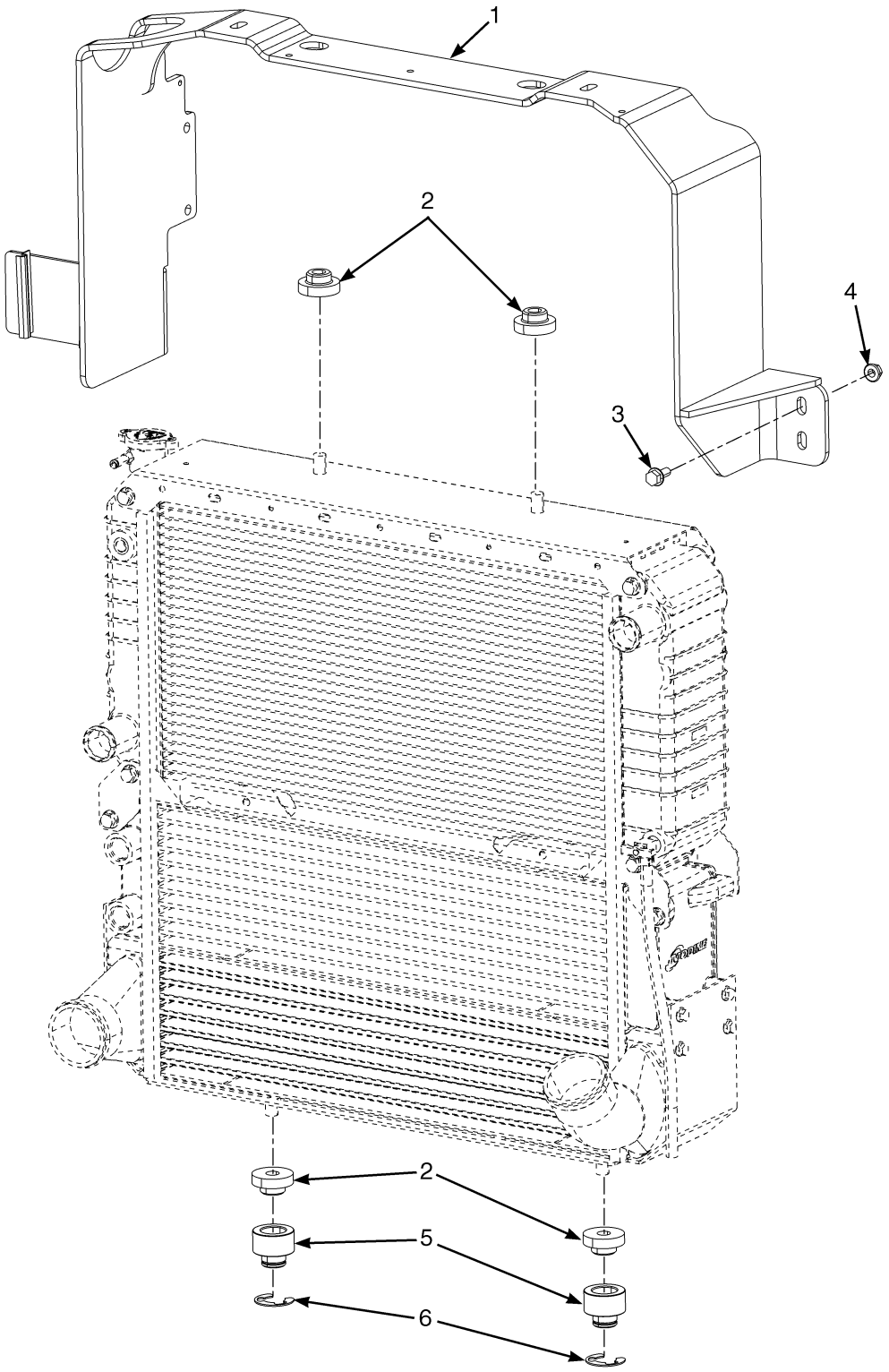

BP060060

©2011 HYSTER COMPANY

RADIATOR MOUNTING
CUMMINS QSB 3.3L DIESEL

ITEM	PART NO.	DESCRIPTION	QTY
1	1669428	Bracket Wldmt	1
2	1529787	Isolator	4
3	1527880	Capscrew	4
4	1502543	Nut (Flange)	4
5	1669439	Spacer	2
6	2076760	Retainer	2

©2011 HYSTER COMPANY

COOLING (FIGURE 2-6)
CUMMINS QSB 3.3L

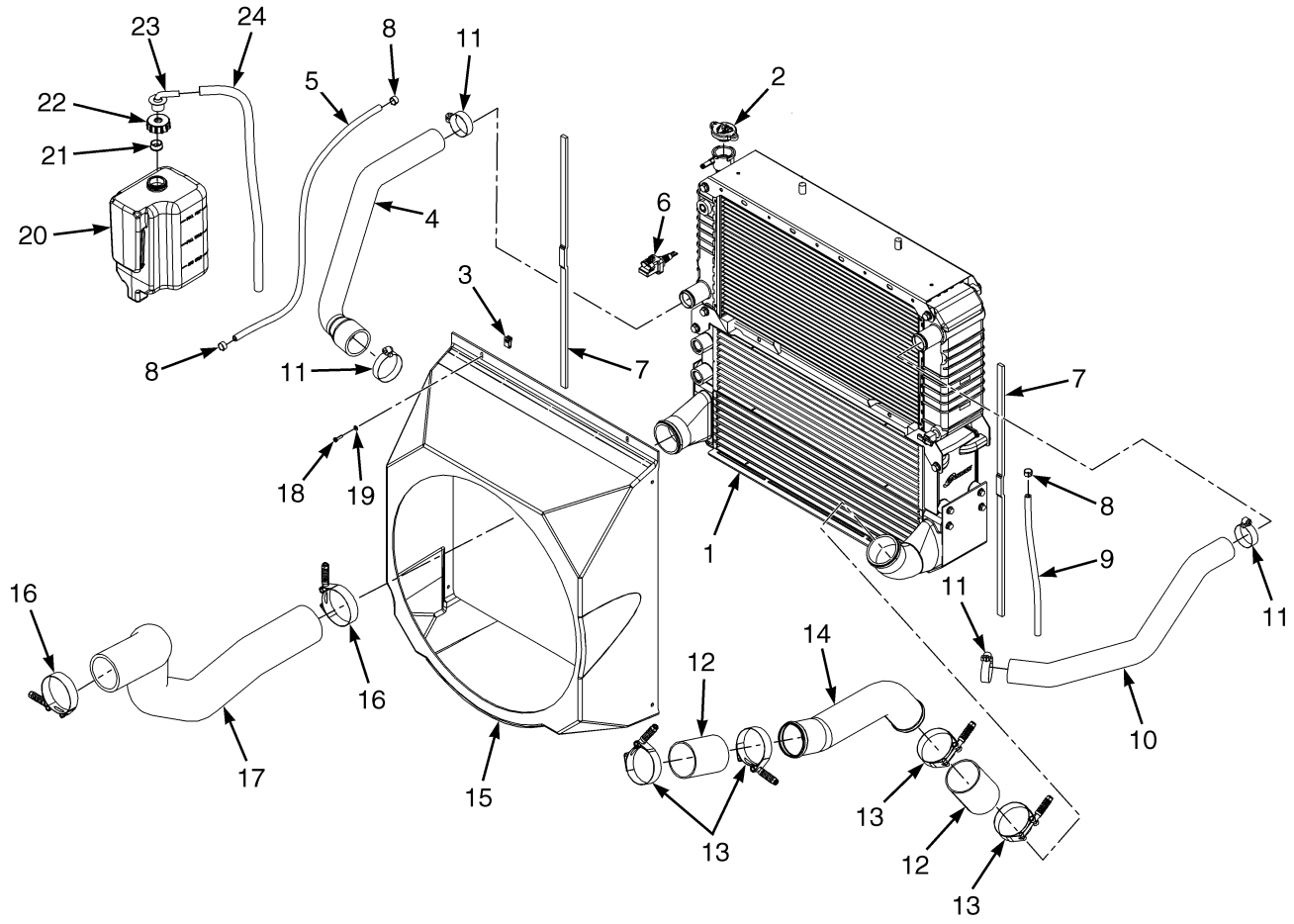

©2011 HYSTER COMPANY

COOLING
CUMMINS QSB 3.3L

ITEM	PART NO.	DESCRIPTION	QTY
1	2101482	Radiator Assembly	1
2	1352140	Radiator Cap	1
3	1535257	Nut	2
4	2099388	Radiator Hose (Lower)	..
5	1302955	Hose	1
6	1689881	Sensor (Coolant Level)	1
6	**a** 14385	Fitting (Without Coolant Sensor)	1
7	1677231	Seal	2
8	369815	Clamp	3
9	1359580	Hose	1
10	2099389	Radiator Hose (Upper)	1
11	119236	Clamp	4
12	1665700	Hose	2
13	1665556	Clamp	4
14	2101973	Tube	1
15	2101871	Shroud	1
16	1666557	Clamp	2
17	2100401	Hose	1
18	302023	Screw	2
19	197066	Washer	2
20	1643342	Reservoir	1
21	336550	Bushing	1
22	345454	Cap	1
23	345455	Outlet Assembly	1
24	1663877	Hose	1

FOOTNOTES:

a Not Illustrated

©2011 HYSTER COMPANY

ENGINE MOUNTING (FIGURE 2-7)
GM 4.3L GASOLINE AND LPG

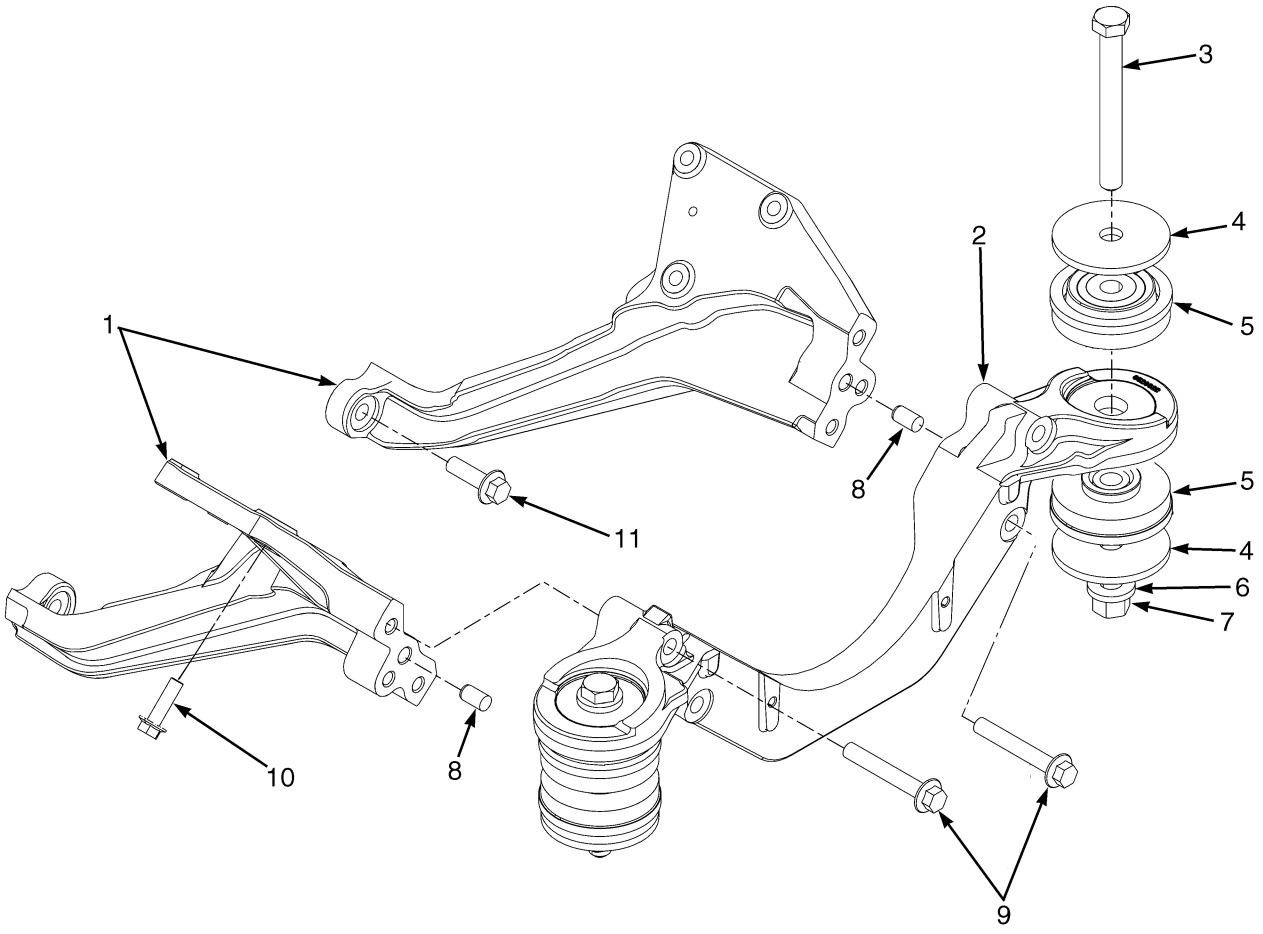

BP090325

©2011 HYSTER COMPANY

ENGINE MOUNTING
GM 4.3L GASOLINE AND LPG

ITEM	PART NO.	DESCRIPTION	QTY
1	1590397	Mount (LH)	1
1	1590399	Mount (RH)	1
2	1667636	Rubber Mount (Crossmember)	1
3	293699	Capscrew	2
4	1557737	Washer	4
5	2069951	Isolator	4
6	1504075	Washer	2
7	1565453	Nut (Flange)	2
8	303150	Dowel	2
9	1591666	Capscrew	6
10	1565195	Capscrew	6
11	1566853	Capscrew	2

©2011 HYSTER COMPANY

ELECTRICAL MOUNTING PLATE (FIGURE 2-8)

GM 4.3L LPG — PSI OPTION (PENDING PER ECN 152361 →)

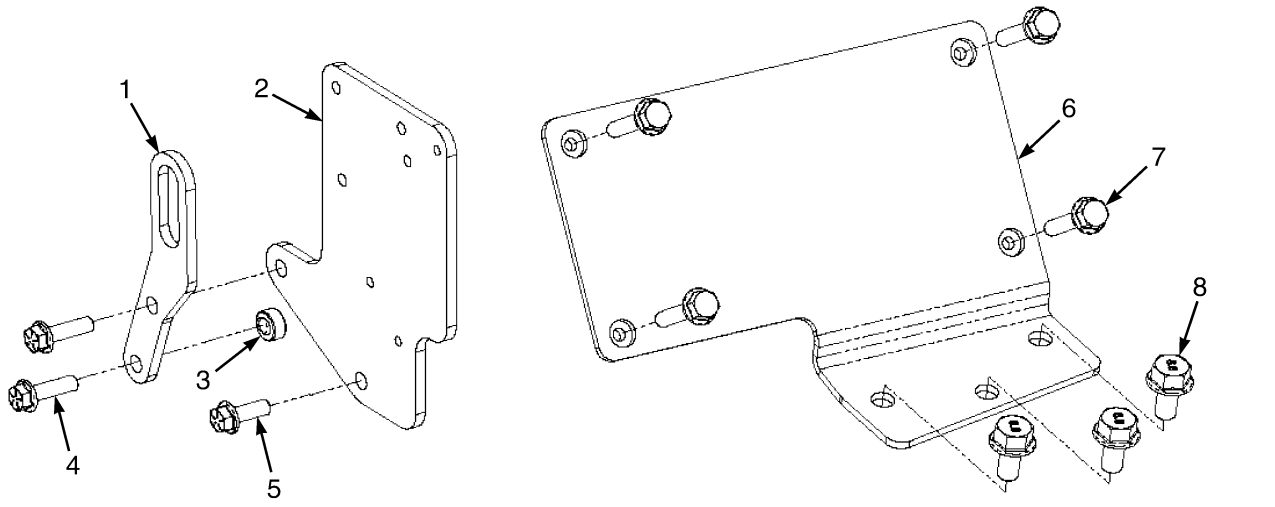

ITEM	PART NO.	DESCRIPTION	QTY
1	4019016	Bracket (LIfting Eye)	1
2	4040248	Bracket (Electrical)	1
3	4040289	Spacer	1
4	4040290	Bolt	2
5	4040290	Bolt	1
6	4040269	Bracket (ECU)	1
7	1527879	Capscrew	3
8	4019082	Bolt	4

©2011 HYSTER COMPANY

NOTES

©2011 HYSTER COMPANY

FLYWHEEL AND HOUSING (FIGURE 2-9)

GM 4.3L GASOLINE AND LPG

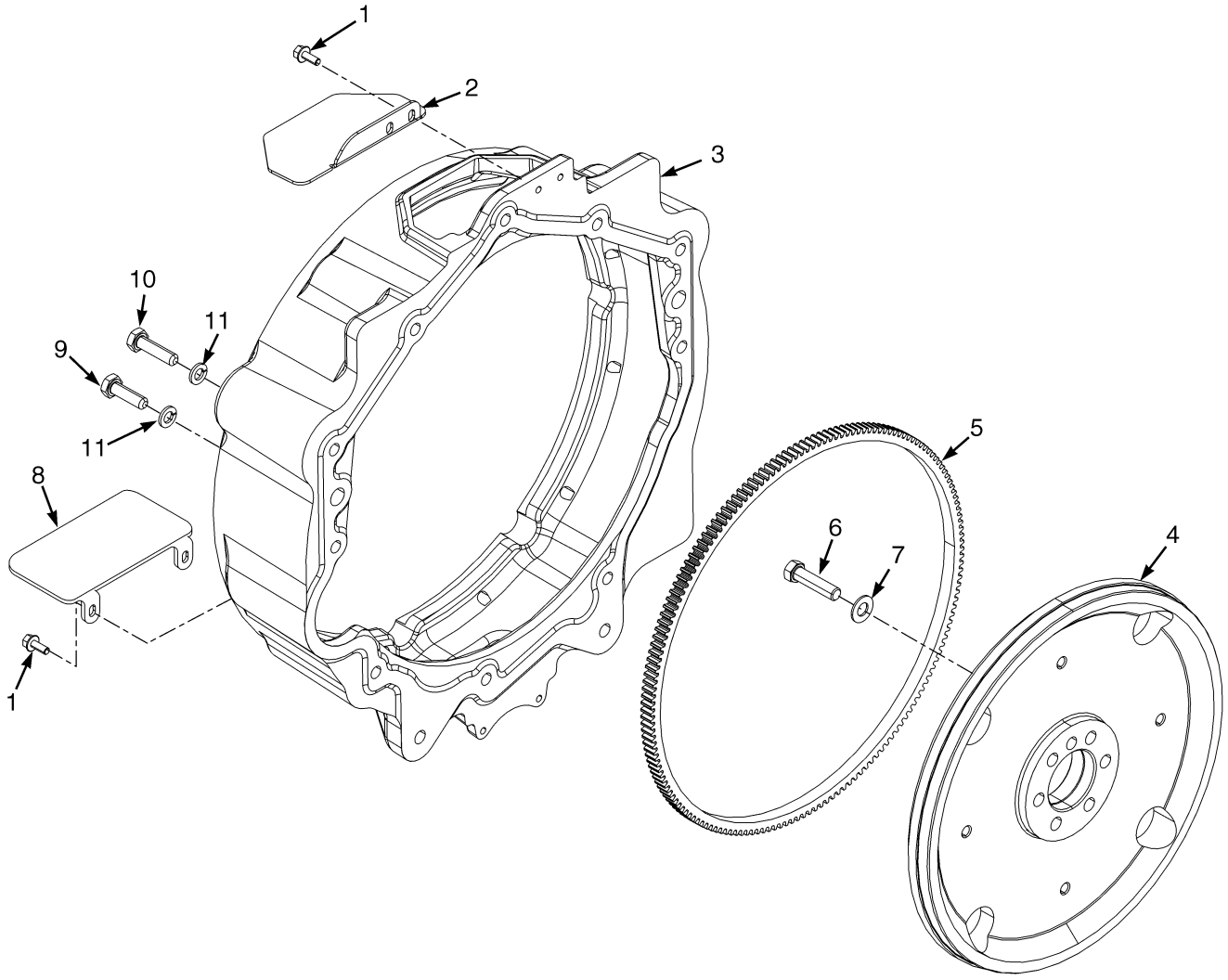

BP090324

©2011 HYSTER COMPANY

FLYWHEEL AND HOUSING
GM 4.3L GASOLINE AND LPG

ITEM	PART NO.	DESCRIPTION	QTY
	1649504	Engine Assy-Gas (2008 Series)	1
	1694587	Engine Assy-Gas (2009 Series)	1
	4004339	Engine Assy -Gas (2010 Series)	1
	1649334	Engine Assy-LPG (2008 Series)	1
	1694586	Engine Assy-LPG (2009 Series)	1
	4004338	Engine Assy -LPG (2010 Series)	1
1	1527876	Capscrew	4
2	1602835	Cover	1
3	1594029	Housing	1
4	1636867	Flywheel	1
5	264749	Ring Gear	1
6	221539	Capscrew	6
7	221769	Washer	6
8	1602836	Cover Plate	1
9	1586629	Capscrew	12
10	292515	Capscrew	9
11	~~388049~~		
	292682	Lockwasher	9

©2011 HYSTER COMPANY

ASSEMBLED ENGINE (FIGURE 2-10)

GM 4.3L GASOLINE AND LPG (GFI OPTION) — SHEET 1 OF 3

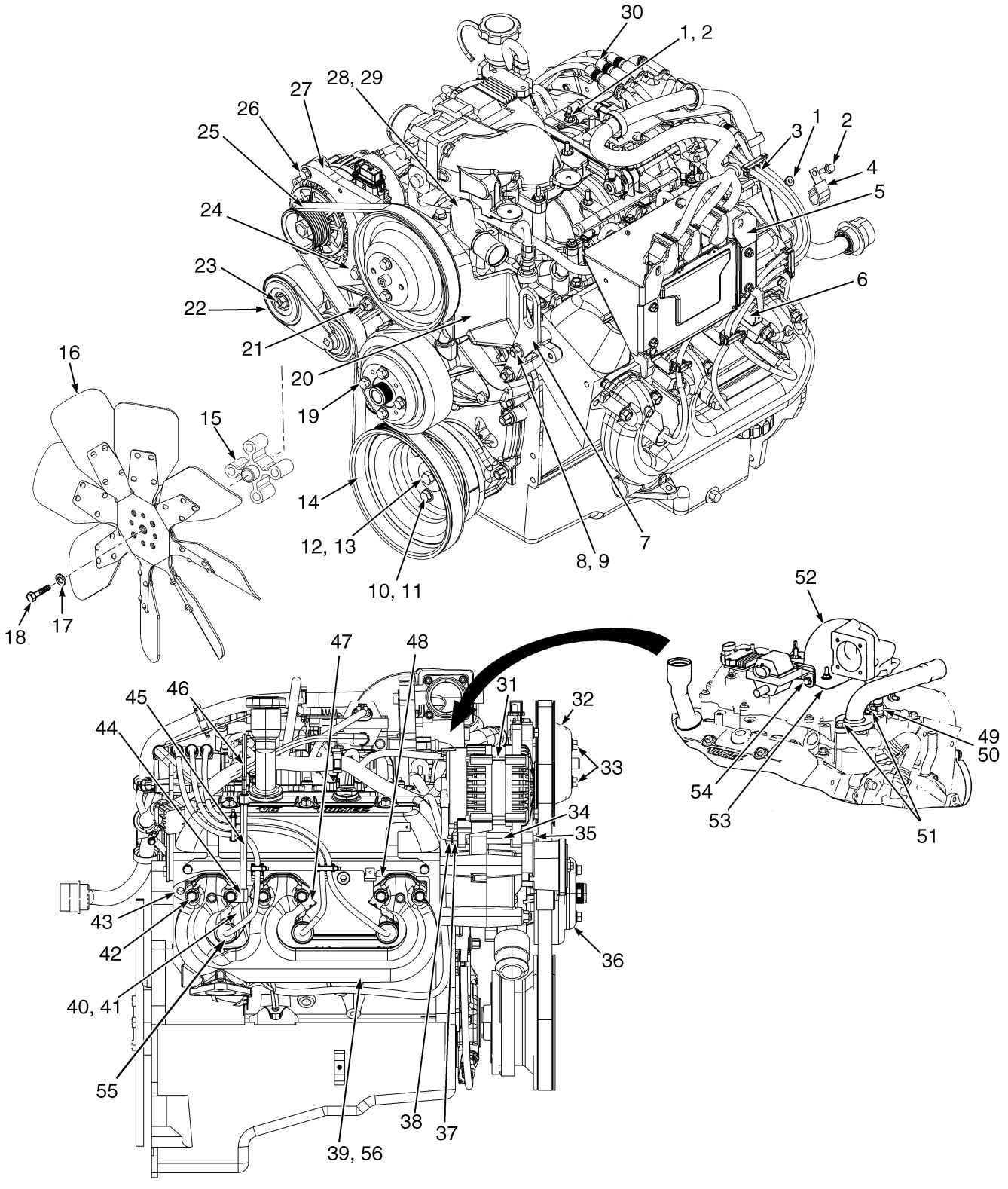

©2011 HYSTER COMPANY

ASSEMBLED ENGINE

GM 4.3L GASOLINE AND LPG (GFI OPTION) – SHEET 1 OF 3

ITEM	PART NO.	DESCRIPTION	QTY
	1649504	Engine Assy-Gas (2008 Series)	1
	1694587	Engine Assy-Gas (2009 Series)	1
	4004339	Engine Assy -Gas (2010 Series)	1
	4020186	Engine Assy (Gas) (2011 Series)	1
	1649334	Engine Assy-LPG (2008 Series)	1
	1694586	Engine Assy-LPG (2009 Series)	1
	4004338	Engine Assy -LPG (2010 Series)	1
	4019146	Engine Assy (LPG)(2010) (Heavy Duty, Optional)	1
	4020187	Engine Assy (LPG) (2011 Series)	1
1	1514429	Nut	6
2	1527877	Capscrew	6
3	. . . . .	Spark Plug Wires (LH)	1
4	1628117	Clamp	2
5	1641371	Bracket (2007-2011 Series)	1
6	1564035	Bracket	2
7	1544212	Bracket	1
8	1460477	Nut	5
9	1578620	Stud	2
10	~~388049~~		
	292682	Lockwasher	3
11	16634	Capscrew	3
12	1305165	Washer	1
13	221544	Capscrew	1
14	1377750	Pulley	1
15	1453247	Spacer (2007 Series)	1
16	2085641	Fan (2006-2007 Series)	1
17	296418	Washer	4
18	1566505	Capscrew	4
19	1527879	Capscrew	4
20	1583769	Fan Mount Assembly (☞Figure 2-13)	1
21	1578617	Stud	2
22	2090303	Belt Tensioner	1
23	1578619	Stud	1
24	1527885	Capscrew	1
25	2090051	V-Belt (Serpentine 6 Rib Micro)	1
26	1528482	Capscrew	1
27	1636803	Bracket (Alternator)	1
28	1560200	Thermostat Housing	1
29	1569540	Thermostat (Bypass Type 197 Degree With Seal)	1
30	. . . . .	Spark Plug Wires (RH)	1
31	1534017	Alternator	1
32	2071579	Fan Pulley (Fan)	1
33	1529366	Capscrew	2
34	1554814	Spacer	1
35	1327647	Capscrew	1
36	2063017	Pulley (Water Pump)	1
37	320157	Washer	1
38	302400	Nut	1
39	1623917	Manifold (Exhaust)	2
39	4008610	Exhaust Manifold (Heavy Duty)	2

©2011 HYSTER COMPANY

ASSEMBLED ENGINE

GM 4.3L GASOLINE AND LPG (GFI OPTION) – SHEET 1 OF 3

ITEM	PART NO.	DESCRIPTION	QTY
40	1671273	Exhaust Shield	2
41	1316487	Shield	1
42	1383257	Bolt	12
43	1539274	Gasket (Exhaust)	2
44	133696	Clamp	1
45	1671271	Dipstick Tube (2011 Series)	1
46	1676923	Dipstick	1
47	1316488	Shield	2
48	1539273	Gasket	2
49	1560255	Sensor (Coolant Temperature)	1
50	246108	Sealant	AR
51	1510113	Capscrew	2
52	1654872	Adapter (Gasoline) (2008-2011 Series)	1
52	1654871	Adapter (LPG)	1
52	1560193	Sleeve	2
53	2067592	Gasket	1
54	1527876	Capscrew	2
55	1702713	Heat Shield (Spark Plug)	6
56	2087117	Wrap (Manifold)	2
	2088997	Kit-Ignition Cable (Spark Plug Wires and Coil Wire)	1

©2011 HYSTER COMPANY

NOTES

©2011 HYSTER COMPANY

ASSEMBLED ENGINE (FIGURE 2-11)

GM 4.3L GASOLINE AND LPG (GFI OPTION) — SHEET 2 OF 3

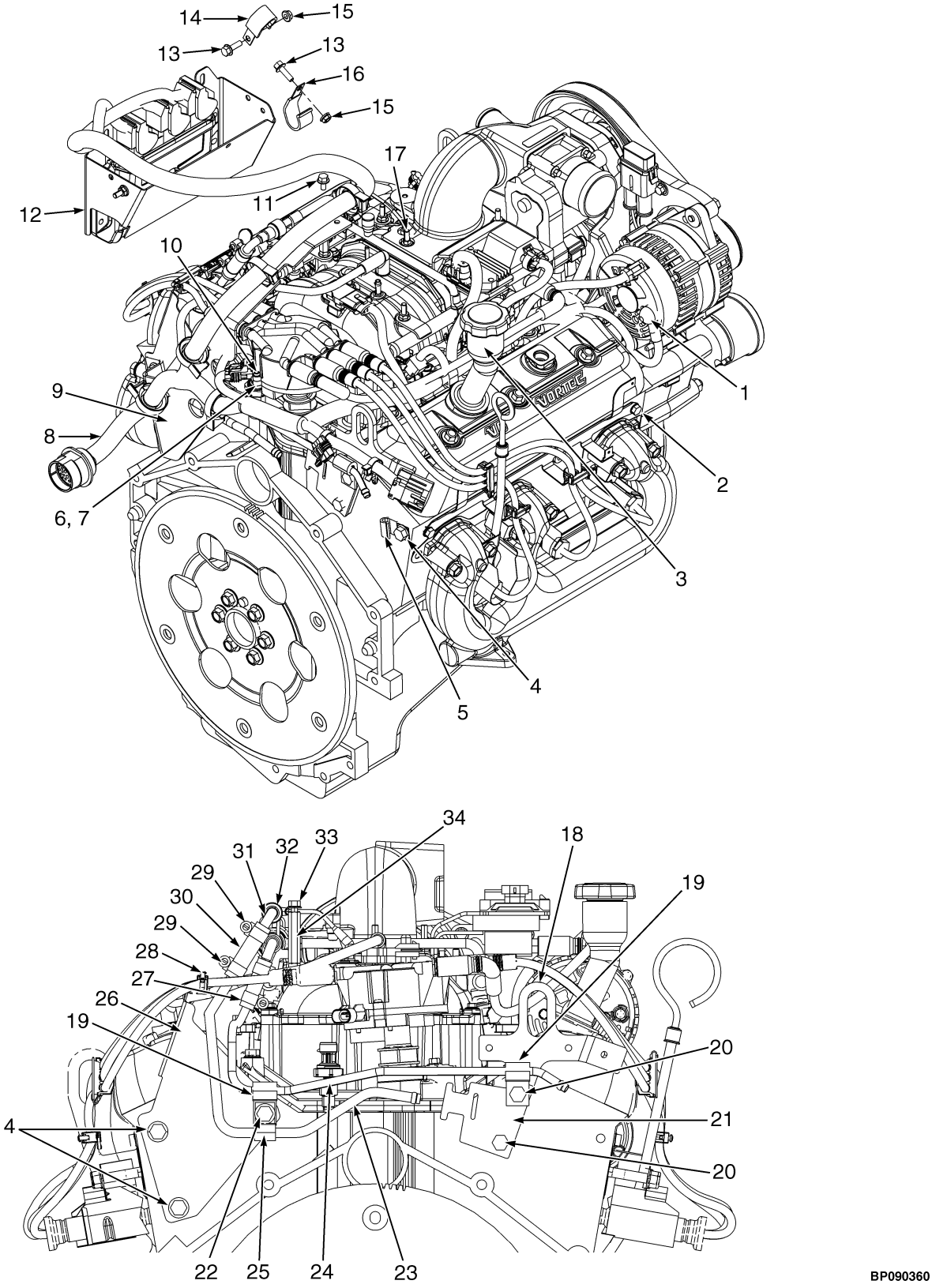

©2011 HYSTER COMPANY

ASSEMBLED ENGINE

GM 4.3L GASOLINE AND LPG (GFI OPTION) – SHEET 2 OF 3

KEY:
A: Gasoline
B: LPG

ITEM	PART NO.	DESCRIPTION	QTY A	QTY B
	1649504	Engine Assy-Gas (2008 Series)	1	..
	1694587	Engine Assy-Gas (2009 Series)	1	..
	4004339	Engine Assy -Gas (2010 Series)	1	..
	4020186	Engine Assy (Gas) (2011 Series)	1	..
	1649334	Engine Assy-LPG (2008 Series)	..	1
	1694586	Engine Assy-LPG (2009 Series)	..	1
	4004338	Engine Assy -LPG (2010 Series)	..	1
	4019146	Engine Assy (LPG)(2010) (Heavy Duty, Optional)	..	1
	4020187	Engine Assy (LPG) (2011 Series)	..	1
1	1514429	Nut	1	1
2	392620	Screw	4	4
3	1552141	Filler Neck	1	1
4	1309993	Screw	4	4
5	385670	Clamp	2	2
6	1590201	Fitting	1	1
7	246108	Sealant	AR	AR
8	2093681	Wire Harness (Engine) (2008 - 2009 Series)	1	..
8	2093682	Wire Harness (Engine) (2008 - 2009 Series)	..	1
8	4601159	Wire Harness (Engine) (2010 - 2011 Series)	1	..
8	4601160	Wire Harness (Engine) (2010 - 2011 Series)	..	1
9	1636048	Bracket	1	1
10	1566654	Pressure Transducer Sensor (Oil Pressure)	1	1
11	1534417	Capscrew	3	3
12	2101429	Engine Control Module (2008-2009 Engine ECU)	..	1
12	2101430	Engine Control Module (2008-2009 Engine ECU)	1	..
12	4603426	Engine Control Module (2010 - 2011 Series) (LPG with Catalytic Converter)	..	1
12	4603425	Engine Control Module (2010 - 2011 Series) (Gas)	1	..
12	4603427	Engine Control Module (2010 Series) (LPG without Catalytic Converter)	..	1
13	1527877	Capscrew	6	6
14	1628117	Clamp	1	1
15	1514429	Nut	6	6
16	1628118	Clamp	2	2
17	1579136	Fitting	1	1
18	1636047	Bracket	1	1
19	198675	Clamp	2	..
20	174413	Screw	2	2
21	2080791	Bracket	1	..
22	1309993	Screw	1	1
23	2081136	Tube	1	..
24	1552840	Tube	1	..
25	164488	Clamp	1	..
26	1623860	Bracket	1	..
27	2062587	Hose	1	..

©2011 HYSTER COMPANY

ASSEMBLED ENGINE

GM 4.3L GASOLINE AND LPG (GFI OPTION) – SHEET 2 OF 3

KEY:
A: Gasoline
B: LPG

ITEM	PART NO.	DESCRIPTION	QTY A	QTY B
28	1564036	Retainer (Three Wire Clip)	1	1
29	168718	Clamp	4	..
30	2066137	Hose	1	..
31	1546285	Elbow (3/8 90 degree Elbow)	1	..
32	1543933	Fitting	1	..
33	1534417	Capscrew	5	5
34	2081315	Adapter	1	1
	a 14387	Fitting	1	1

FOOTNOTES:

a Not Illustrated

©2011 HYSTER COMPANY

NOTES

©2011 HYSTER COMPANY

ASSEMBLED ENGINE (FIGURE 2-12)
GM 4.3L GASOLINE AND LPG (GFI OPTION) — SHEET 3 OF 3

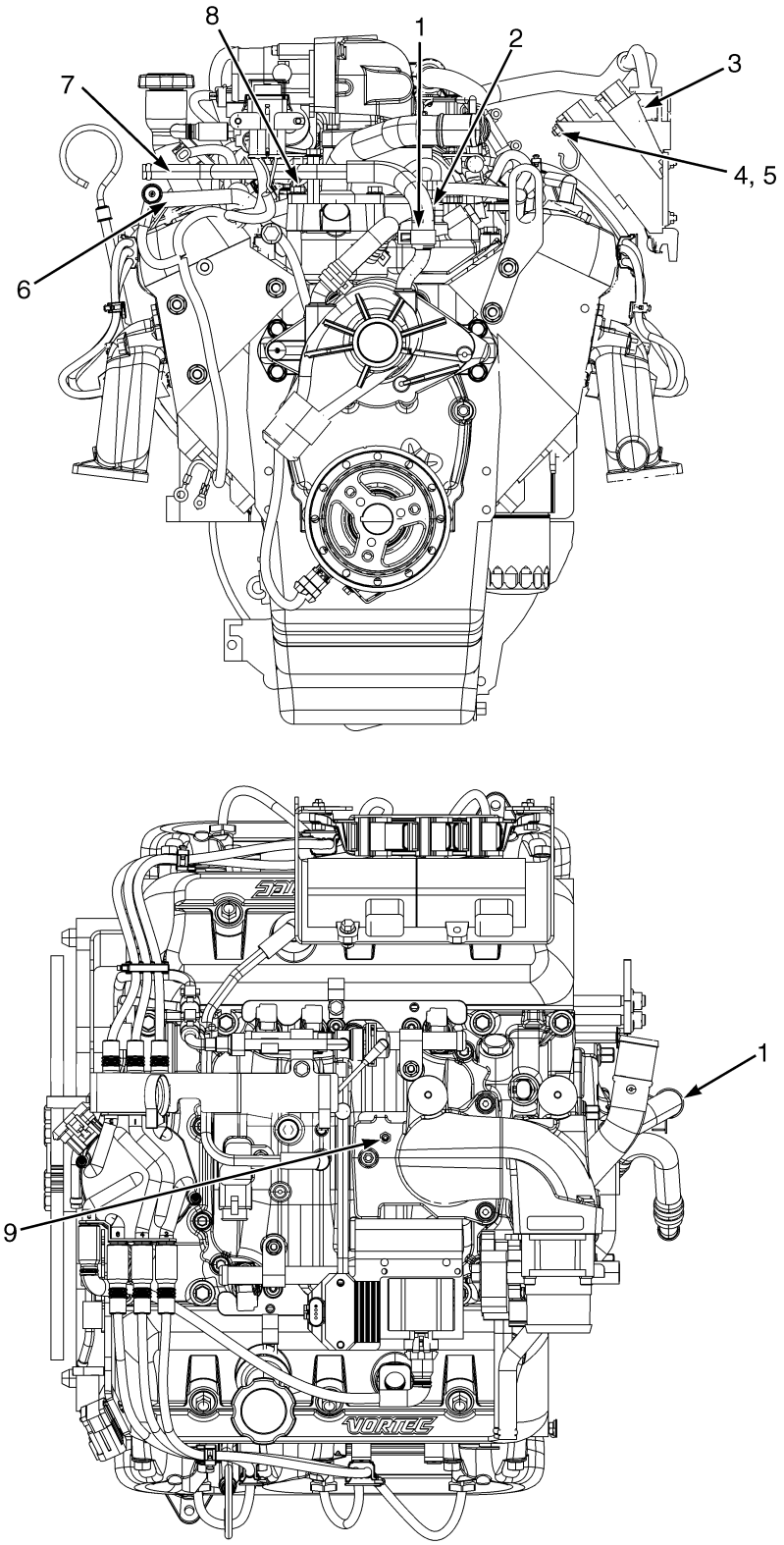

©2011 HYSTER COMPANY

ASSEMBLED ENGINE

GM 4.3L GASOLINE AND LPG (GFI OPTION) – SHEET 3 OF 3

ITEM	PART NO.	DESCRIPTION	QTY
	1649504	Engine Assy-Gas (2008 Series)	1
	1694587	Engine Assy-Gas (2009 Series)	1
	4004339	Engine Assy -Gas (2010 Series)	1
	4020186	Engine Assy (Gas) (2011 Series)	1
	1649334	Engine Assy-LPG (2008 Series)	1
	1694586	Engine Assy-LPG (2009 Series)	1
	4004338	Engine Assy -LPG (2010 Series)	1
	4019146	Engine Assy (LPG)(2010) (Heavy Duty, Optional)	1
	4020187	Engine Assy (LPG) (2011 Series)	1
1	130845	Clamp	2
1	**a** 130845	Clamp	1
2	**b** 2076429	Hose	1
3	**bc** 2082657	Module (Injector Driver)	2
4	1514429	Nut	6
5	1527877	Capscrew	6
6	**b** 1570597	Tube	1
7	**b** 1593913	Tube	1
8	**b** 1510116	Capscrew	1
9	**b** 1579136	Fitting	1

FOOTNOTES:

a Gasoline Engine
b LPG Engine
c Up through 2009 series

©2011 HYSTER COMPANY

FAN MOUNT ASSEMBLY (FIGURE 2-13)

GM 4.3L GASOLINE AND LPG — GFI OPTION

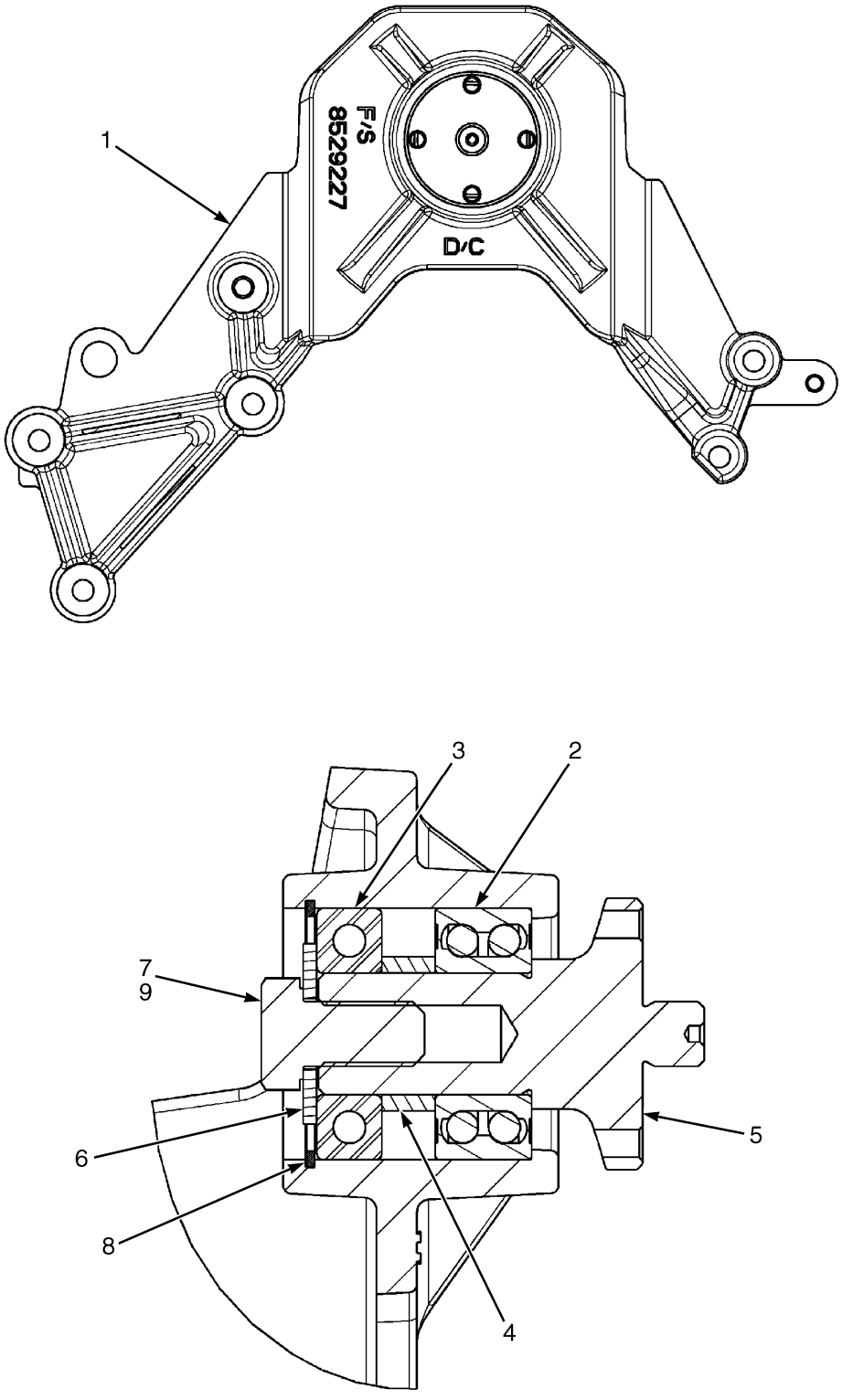

©2011 HYSTER COMPANY

FAN MOUNT ASSEMBLY

GM 4.3L GASOLINE AND LPG – GFI OPTION

ITEM	PART NO.	DESCRIPTION	QTY
	1583769	Fan Mount Assembly	1
1	1615817	Bracket	1
2	1615920	Ball Bearing	1
3	2014670	Bearing	1
4	1615818	Spacer	1
5	2083634	Shaft	1
6	15180	Washer	1
7	292559	Capscrew	1
8	~~1502093~~		
	12921	Snap Ring	1
9	360387	Loctite	AR

©2011 HYSTER COMPANY

FAN MOUNT ASSEMBLY (FIGURE 2-14)

GM 4.3L LPG — PSI OPTION (PENDING PER ECN 152361 →)

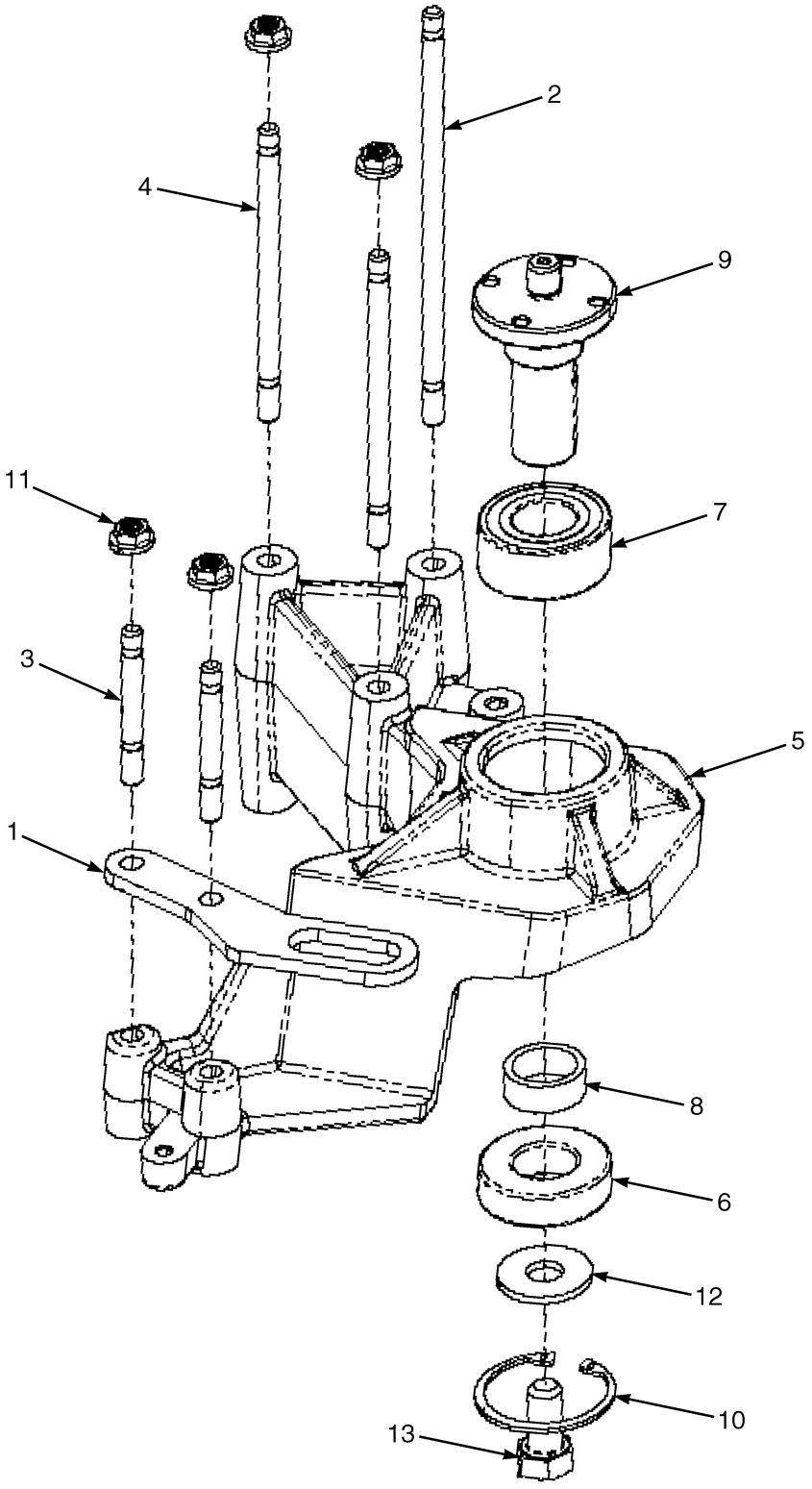

BP090457

©2011 HYSTER COMPANY

FAN MOUNT ASSEMBLY

GM 4.3L LPG – PSI OPTION (PENDING PER ECN 152361 →)

ITEM	PART NO.	DESCRIPTION	QTY
1	4019016	Bracket	1
2	1578619	Stud	1
3	1578620	Stud	2
4	1578617	Stud	2
5	4019033	Bracket	1
6	4019034	Ball Bearing	1
7	4019035	Ball Bearing	1
8	4019036	Spacer	1
9	2083634	Shaft	1
10	4019038	Snap Ring	1
11	1460477	Nut	4
12	15906	Lockwasher	1
13	292559	Capscrew	1

©2011 HYSTER COMPANY

FAN ASSEMBLY (FIGURE 2-15)

GM 4.3L LPG — PSI OPTION (PENDING PER ECN 152361 →)

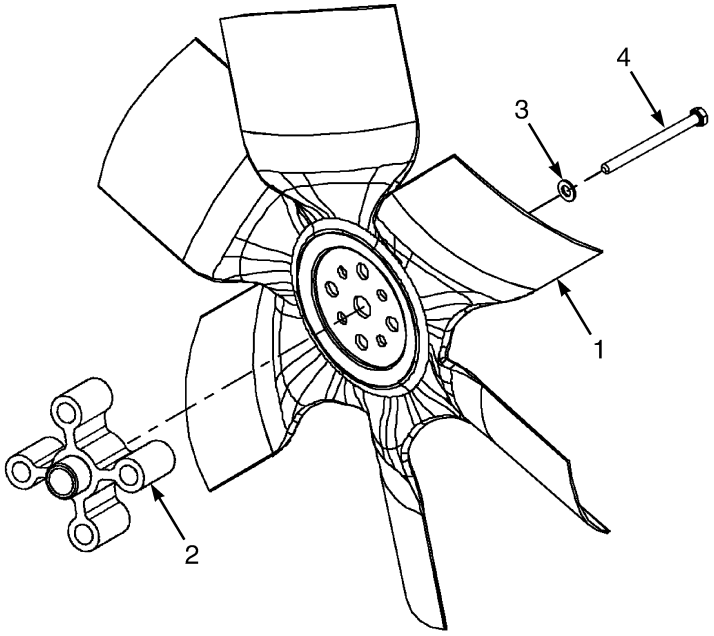

BP090468

ITEM	PART NO.	DESCRIPTION	QTY
1	2099479	Fan	1
2	1453247	Spacer	1
3	296418	Washer	4
4	1566505	Capscrew	4

©2011 HYSTER COMPANY

NOTES

©2011 HYSTER COMPANY

PULLEY AND TENSIONER (FIGURE 2-16)

GM 4.3L LPG — PSI OPTION (PENDING PER ECN 152361 →)

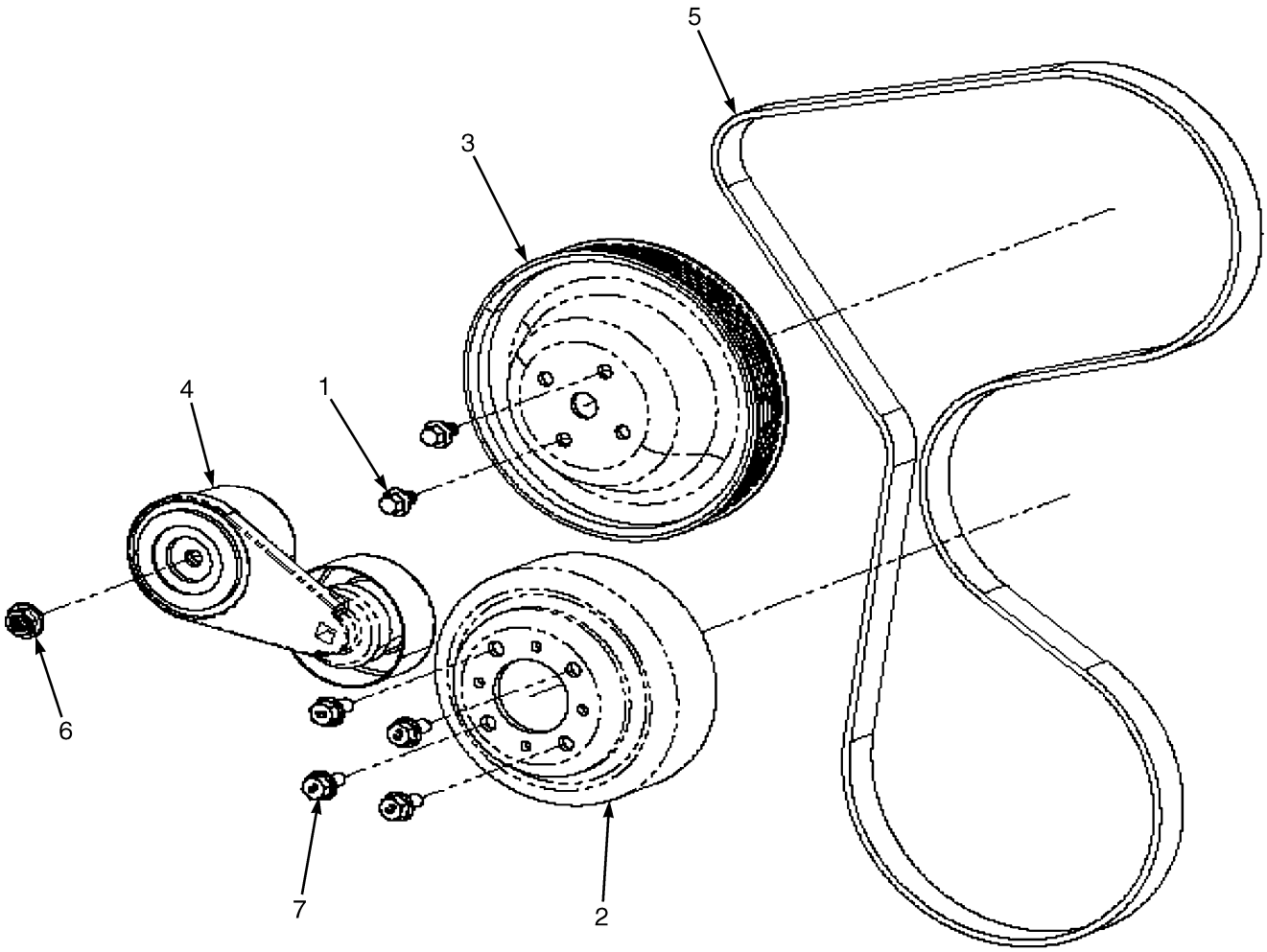

BP090458

©2011 HYSTER COMPANY

PULLEY AND TENSIONER

GM 4.3L LPG – PSI OPTION (PENDING PER ECN 152361 →)

ITEM	PART NO.	DESCRIPTION	QTY
	4615531	Engine Assy-LPG	1
	4615533	Engine Assy-LPG (Heavy Duty)	1
1	4019122	Bolt	2
2	2063017	Pulley (Water Pump)	1
3	4019124	Fan Pulley	1
4	4019125	Tensioner	1
5	2090051	V-Belt (Serpentine 6 Rib Micro)	1
6	1460477	Nut	1
7	1527879	Capscrew	4

©2011 HYSTER COMPANY

CRANKSHAFT PULLEY (FIGURE 2-17)

GM 4.3L LPG — PSI OPTION (PENDING PER ECN 152361 →)

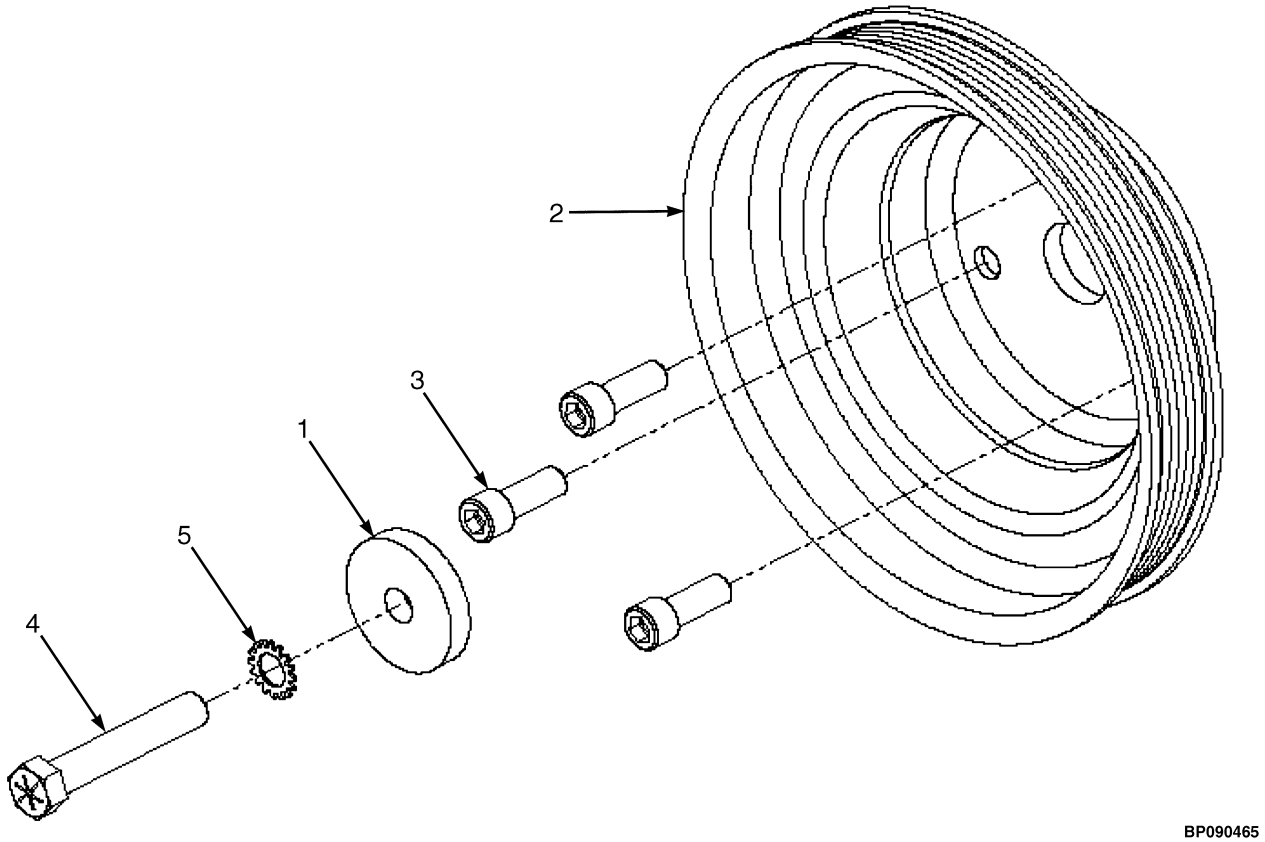

BP090465

ITEM	PART NO.	DESCRIPTION	QTY
	4615531	Engine Assy-LPG	1
	4615533	Engine Assy-LPG (Heavy Duty)	1
1	1305165	Washer	1
2	1377750	Pulley	1
3	34811	Screw	3
4	221545	Capscrew	1
5	15917	Lockwasher	1

©2011 HYSTER COMPANY

EXHAUST MANIFOLDS (FIGURE 2-18)

GM 4.3L LPG — PSI OPTION (PENDING PER ECN 152361 →)

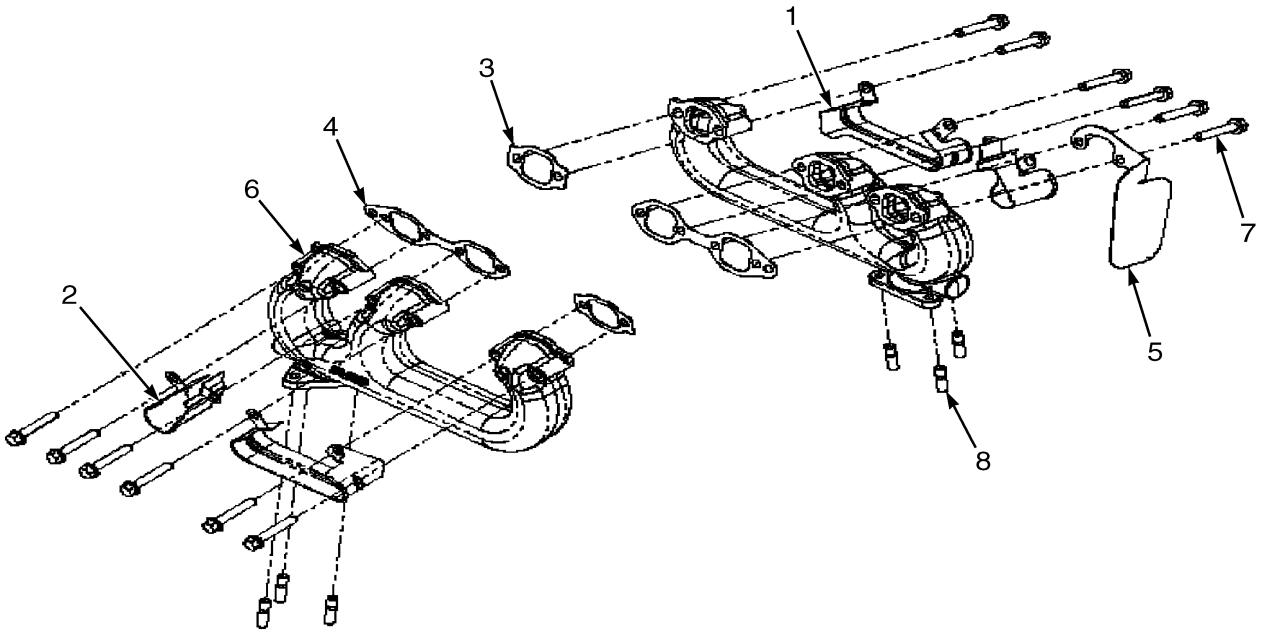

BP090459

ITEM	PART NO.	DESCRIPTION	QTY
	4615531	Engine Assy-LPG	1
	4615533	Engine Assy-LPG (Heavy Duty)	1
1	1316488	Shield	2
2	1316487	Shield	1
3	4040272	Gasket	2
4	4040273	Gasket	2
5	1529010	Heat Shield	1
6	4040274	Exhaust Manifold (Standard)	2
6	4040281	Exhaust Manifold (Heavy Duty)	2
7	1383257	Bolt	12
8	4033440	Stud	6

©2011 HYSTER COMPANY

THERMOSTAT AND WATER OUTLET HOUSING (FIGURE 2-19)

GM 4.3L LPG — PSI OPTION (PENDING PER ECN 152361 →)

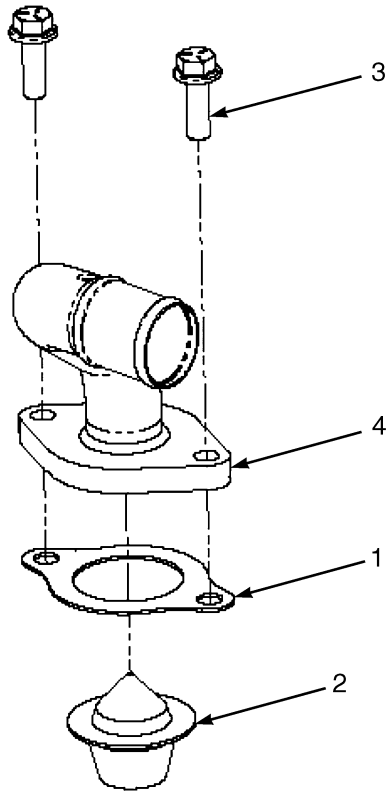

BP090461

ITEM	PART NO.	DESCRIPTION	QTY
	4615531	Engine Assy-LPG	1
	4615533	Engine Assy-LPG (Heavy Duty)	1
1	4019021	Gasket	1
2	4019022	Thermostat	1
3	159708	Capscrew	2
4	4040271	Thermostat Housing	1

©2011 HYSTER COMPANY

NOTES

©2011 HYSTER COMPANY

CYLINDER HEAD (FIGURE 2-20)
GM 4.3L GASOLINE AND LPG

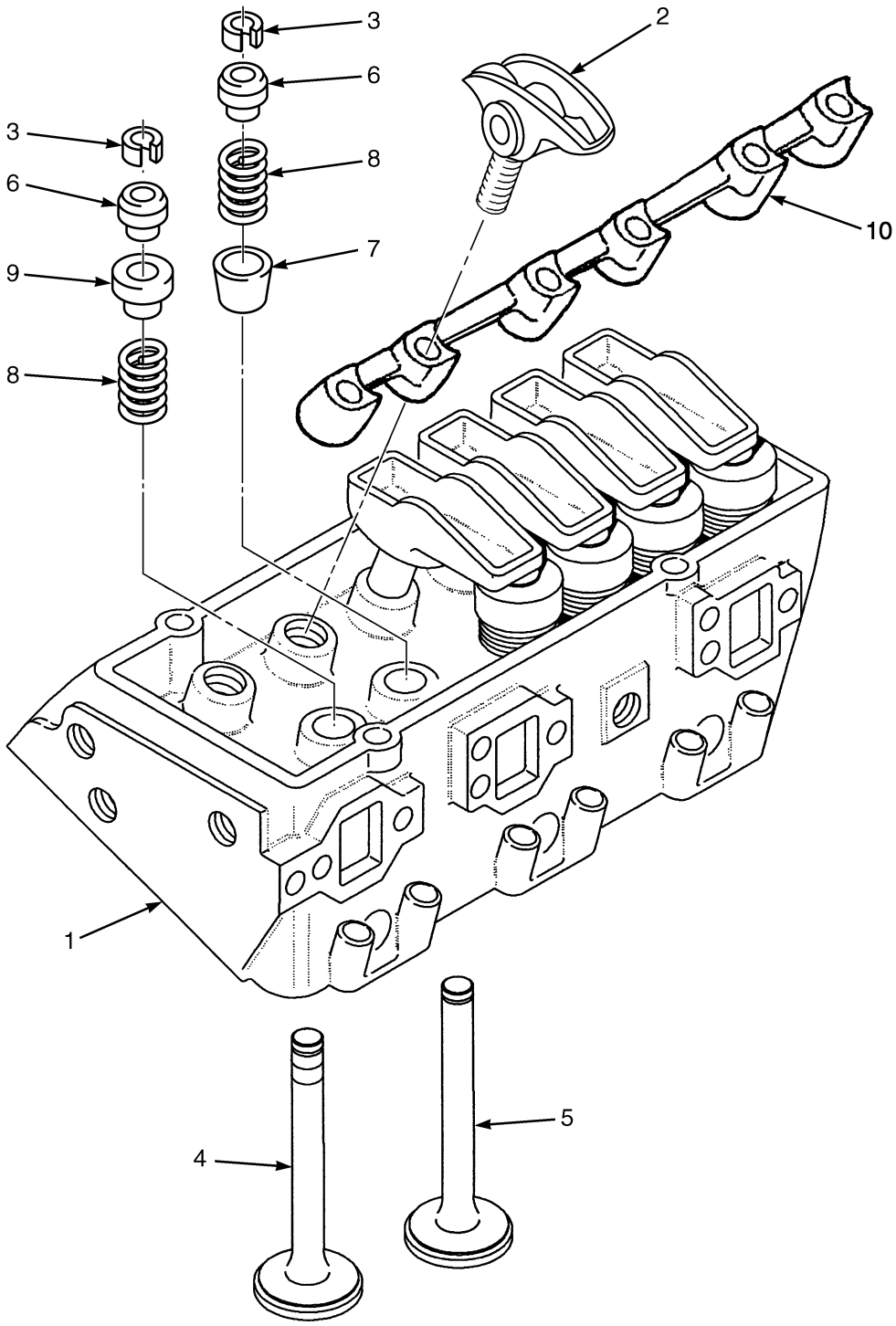

HP090254

©2011 HYSTER COMPANY

CYLINDER HEAD
GM 4.3L GASOLINE AND LPG

ITEM	PART NO.	DESCRIPTION	QTY
	1649504	Engine Assy-Gas (2008 Series)	1
	1694587	Engine Assy-Gas (2009 Series)	1
	4004339	Engine Assy -Gas (2010 Series)	1
	4020186	Engine Assy (Gas) (2011 Series)	1
	1649334	Engine Assy-LPG (2008 Series)	1
	1694586	Engine Assy-LPG (2009 Series)	1
	4004338	Engine Assy -LPG (2010 Series)	1
	4019146	Engine Assy (LPG)(2010) (Heavy Duty, Optional)	1
	a 4020187	Engine Assy (LPG) (2011 GFI Series)	1
	b 4615531	Engine Assy-LPG (PSI Series)	1
	b 4615533	Engine Assy-LPG (Heavy Duty) (PSI Series)	1
1	1471557	Cylinder Head (Gasoline)	2
1	1653888	Cylinder Head (LPG)(2007-2011 Series)	2
1	1386190	Cylinder Head Gasket	1
1	4017128	Kit-Service (Head-LPG) (Heavy Duty with Intake Seat Insert)	1
2	1653887	Rocker Arm (2007-2011 Series)	12
2	1389051	Bolt	4
3	1377110	Valve Stop	24
4	1386194	Exhaust Valve (Gasoline)	6
4	1482701	Exhaust Valve (LPG)	6
5	1386195	Inlet Valve	6
6	1393127	Cap	12
7	1386197	Seal (Black) (Intake)	6
8	1386198	Spring (Gasoline)	12
8	1689026	Spring (LPG)	1
9	1460384	Seal (Orange) (Exhaust)	6
10	1489643	Support (Rocker Arm)	2

FOOTNOTES:

a → PENDING PER ECN 152361

b PENDING PER ECN 152361 →

©2011 HYSTER COMPANY

CYLINDER BLOCK (FIGURE 2-21)

GM 4.3L GASOLINE AND LPG

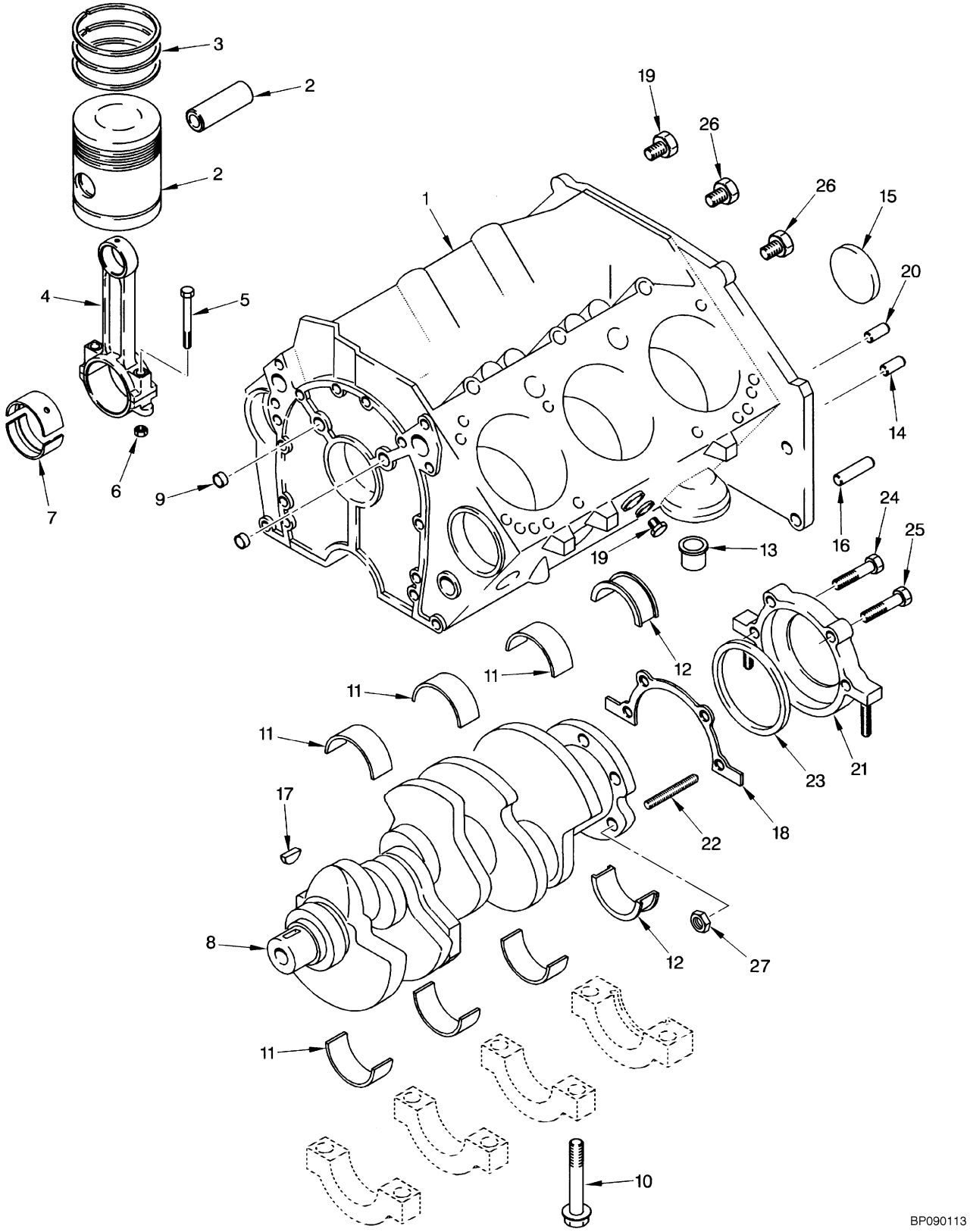

©2011 HYSTER COMPANY

CYLINDER BLOCK
GM 4.3L GASOLINE AND LPG

ITEM	PART NO.	DESCRIPTION	QTY
	1649504	Engine Assy-Gas (2008 Series)	1
	1694587	Engine Assy-Gas (2009 Series)	1
	4004339	Engine Assy -Gas (2010 Series)	1
	4020186	Engine Assy (Gas) (2011 Series)	1
	1649334	Engine Assy-LPG (2008 Series)	1
	1694586	Engine Assy-LPG (2009 Series)	1
	4004338	Engine Assy -LPG (2010 Series)	1
	4019146	Engine Assy (LPG)(2010) (Heavy Duty, Optional)	1
	a 4020187	Engine Assy (LPG) (2011 GFI Series)	1
	b 4615531	Engine Assy-LPG (PSI Series)	1
	b 4615533	Engine Assy-LPG (Heavy Duty) (PSI Series)	1
1	. . . . .	Short Block Assembly	1
2	1390759	Kit-Piston (Standard)	6
2	1390760	Kit-Piston (0.020 O/S)	6
2	1627183	Kit-Piston (0.005 in O/S)	6
3	1390761	Kit-Piston Ring (Standard)	6
3	1390765	Kit-Piston Ring (0.020 O/S)	6
4	**a** 1360179	Piston Rod (GFI Series)	6
4	**b** 4038242	Rod Assy (Piston) (PSI Series)	6
5	1360182	Bolt (GFI Series)	2
5	4038241	Bolt (PSI Series)	2
6	1330450	Nut	2
7	1390770	Piston Rod Bearing (Connecting Rod)	6
8	1460386	Crankshaft	1
9	388302	Plug (RH)	3
10	263842	Bolt	10
11	1558807	Kit-Crankshaft Bearing (Standard)	3
11	1460738	Kit-Crankshaft Bearing (0.020 in. O/S)	3
12	**a** 1309839	Bearing Set (0.010 in. O/S) (GFI Series)	1
12	**b** 1390773	Kit-Crankshaft Bearing (0.001 in.) (PSI Series)	1
13	1514968	Valve	1
14	159977	Pin	4
15	1374313	Plug	1
16	1335499	Pin	2
17	1451319	Key	1
18	1500884	Gasket	1
19	1514267	Plug (2007-2011 Series)	2
20	375601	Pin (CR/SHF RR Seal Retainer)	1
21	1460330	Retainer	1
22	1450555	Stud	2
23	1460331	Seal	1
24	375575	Bolt	1
25	375602	Bolt	1
26	1331341	Plug	4
27	388313	Nut	1

FOOTNOTES:

a → PENDING PER ECN 152361

b PENDING PER ECN 152361 →

©2011 HYSTER COMPANY

CAMSHAFT AND OIL PAN (FIGURE 2-22)

GM 4.3L GASOLINE AND LPG — GFI OPTION

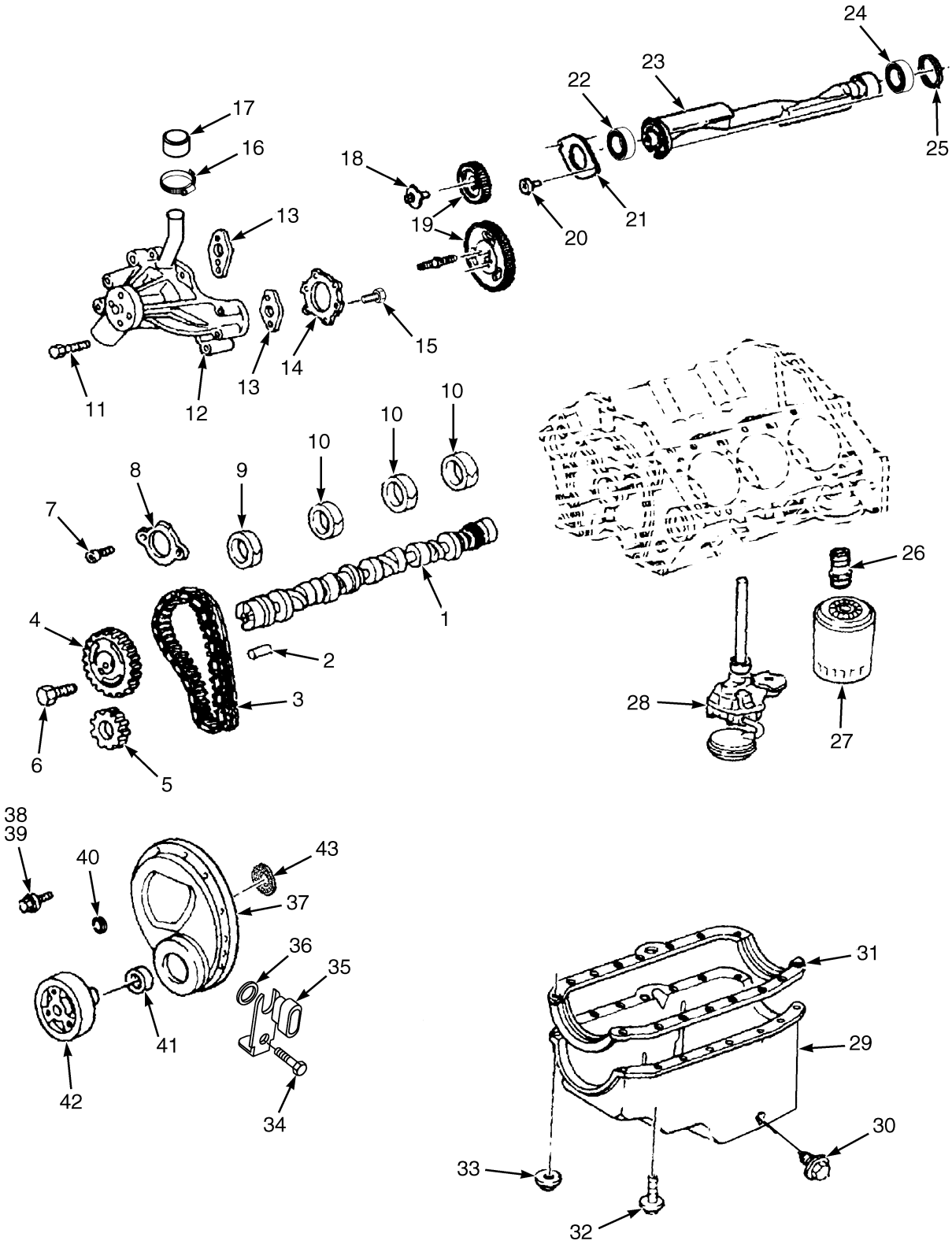

BP090277

©2011 HYSTER COMPANY

CAMSHAFT AND OIL PAN

GM 4.3L GASOLINE AND LPG – GFI OPTION

ITEM	PART NO.	DESCRIPTION	QTY
	1649504	Engine Assy-Gas (2008 Series)	1
	1694587	Engine Assy-Gas (2009 Series)	1
	4004339	Engine Assy -Gas (2010 Series)	1
	4020186	Engine Assy (Gas) (2011 Series)	1
	1649334	Engine Assy-LPG (2008 Series)	1
	1694586	Engine Assy-LPG (2009 Series)	1
	4004338	Engine Assy -LPG (2010 Series)	1
	4019146	Engine Assy (LPG)(2010) (Heavy Duty, Optional)	1
	4020187	Engine Assy (LPG) (2011 Series)	1
1	1627196	Camshaft	1
2	1374297	Pin	1
3	1683675	Kit-Repair Cable Chain (Timing Chain)	1
3	. . . . .	Timing Chain	1
4	. . . . .	Sprocket	1
5	. . . . .	Sprocket	1
6	1374301	Bolt	3
7	1374299	Bolt	2
8	1374298	Retainer	1
9	1454955	Bearing	2
10	1454957	Bearing	1
11	1383257	Bolt	4
12	1683678	Water Pump (2008-2011 Series)	1
13	1683677	Gasket	1
14	1460322	Gasket	1
15	1374108	Bolt	10
16	130845	Clamp	1
17	1383263	Cap	1
18	1374317	Bolt	6
19	1374315	Kit-Gear (Balancer)	1
20	1339963	Bolt	2
21	1374326	Retainer	1
22	1374314	Bearing	1
23	1377107	Shaft	1
24	1451321	Bearing	1
25	1374313	Plug	2
26	375587	Fitting	1
27	1320000	Oil Filter	1
28	1386176	Engine Oil Pump	1
29	1683746	Oil Pan	1
30	1460757	Screw	1
30	1460758	Gasket	1
31	1683744	Gasket	1
32	1386183	Bolt	10
33	1360178	Nut	1
34	1514965	Bolt	1
35	1683747	Sensor (Crankshaft Position)	1
36	1514964	O-Ring	1
37	1683720	Engine Cover (Front Cover)	1
37	1654480	Bracket	1
37	1654481	Shoe (Tensioner)	1

©2011 HYSTER COMPANY

CAMSHAFT AND OIL PAN

GM 4.3L GASOLINE AND LPG – GFI OPTION

ITEM	PART NO.	DESCRIPTION	QTY
38	1386179	Bolt	4
39	1377103	Bolt	2
40	1389092	Grommet	6
41	1690267	Oil Seal	1
42	1627199	Damper	1
43	1514962	Ring (Crankshaft Position Sensor)	1
43	4004594	Ring (Crankshaft Position Sensor) (Alternate Part)	1
	a 1683721	Pin	2
	a 1683722	Gasket (Engine Front Cover)	1

FOOTNOTES:

a Not Illustrated

©2011 HYSTER COMPANY

NOTES

©2011 HYSTER COMPANY

CAMSHAFT AND OIL PAN (FIGURE 2-23)

GM 4.3L LPG — PSI OPTION (PENDING PER ECN 152361 →)

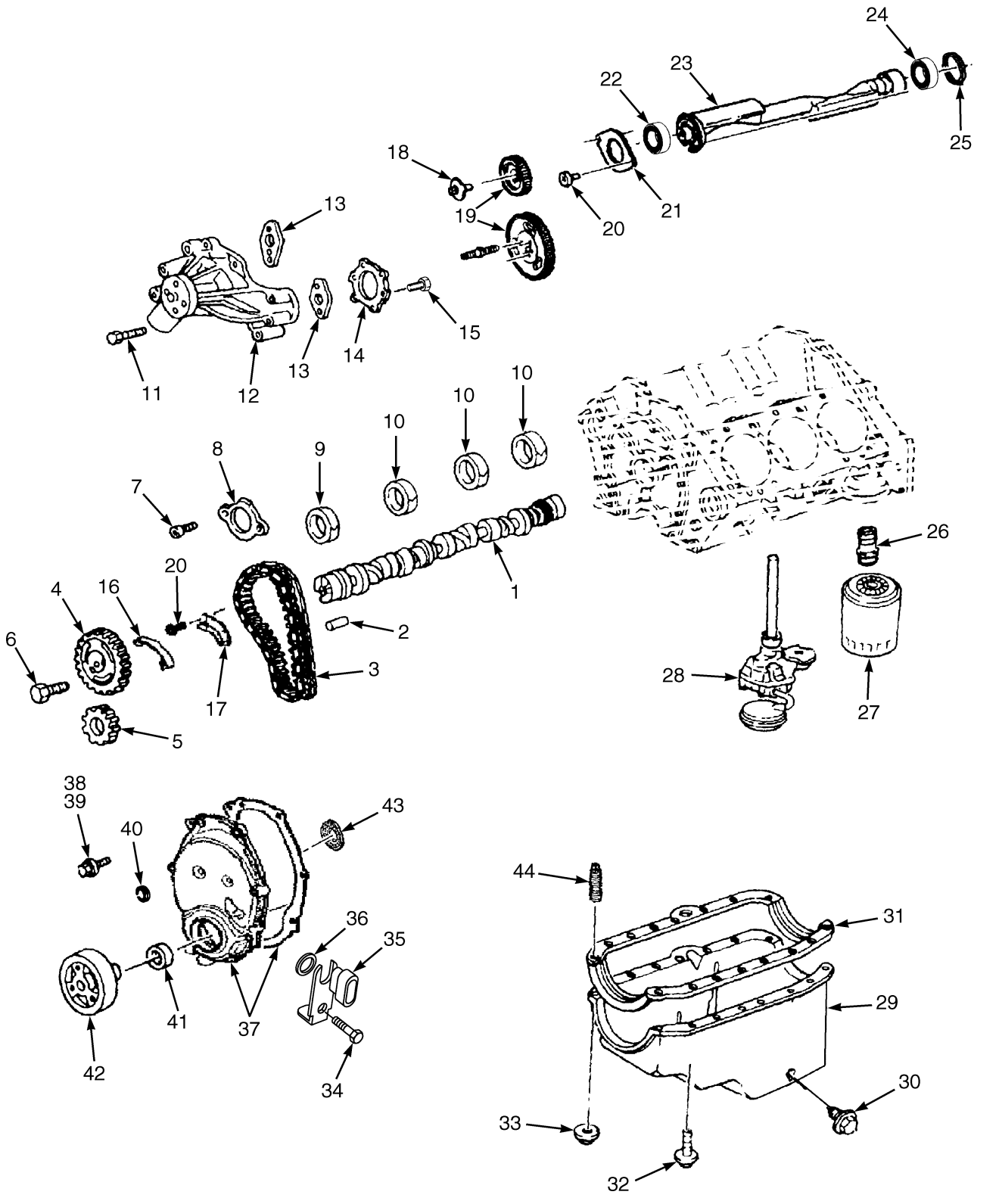

©2011 HYSTER COMPANY

CAMSHAFT AND OIL PAN

GM 4.3L LPG – PSI OPTION (PENDING PER ECN 152361 →)

ITEM	PART NO.	DESCRIPTION	QTY
	4615531	Engine Assy-LPG	1
	4615533	Engine Assy-LPG (Heavy Duty)	1
1	1627196	Camshaft	1
2	1374297	Pin	1
3	1683675	Kit-Repair Cable Chain	1
3	. . . . .	Timing Chain	1
4	. . . . .	Sprocket	1
5	. . . . .	Sprocket	1
6	1374301	Bolt	3
7	1374299	Bolt	2
8	1374298	Retainer	1
9	1454955	Bearing	2
10	1454957	Bearing	1
11	1383257	Bolt	4
12	4040276	Water Pump	1
13	263828	Gasket	1
14	1460322	Gasket	1
15	1677876	Bolt	10
16	1654481	Shoe (Tensioner)	1
17	1654480	Bracket	1
18	1374317	Bolt	6
19	1374315	Kit-Gear	1
20	1339963	Bolt	3
21	1374326	Retainer	1
22	1451321	Bearing	1
23	1377107	Shaft	1
24	1451321	Bearing	1
25	1374313	Plug	2
26	375587	Fitting	1
27	1320000	Oil Filter	1
28	1386176	Engine Oil Pump (☞Figure 2-26)	1
29	1683746	Oil Pan	1
30	1460757	Screw	1
30	1460758	Gasket	1
31	1683744	Gasket	1
32	1386183	Bolt	10
33	1360178	Nut	1
34	1514965	Bolt	1
35	1683747	Sensor (Crankshaft Position)	1
36	1514964	O-Ring	1
37	1683720	Engine Cover (Front Cover)	1
37	1683722	Gasket (Engine Front Cover)	1
38	1386179	Bolt	4
39	1377103	Bolt	2
40	1389092	Grommet	6
41	1690267	Oil Seal	1
42	1627199	Damper	1
43	1514962	Ring (Crankshaft Position Sensor)	1
44	388364	Stud (Oil Pan)	1

©2011 HYSTER COMPANY

VALVE COVER AND INLET MANIFOLD (FIGURE 2-24)

GM 4.3L GASOLINE AND LPG — GFI OPTION

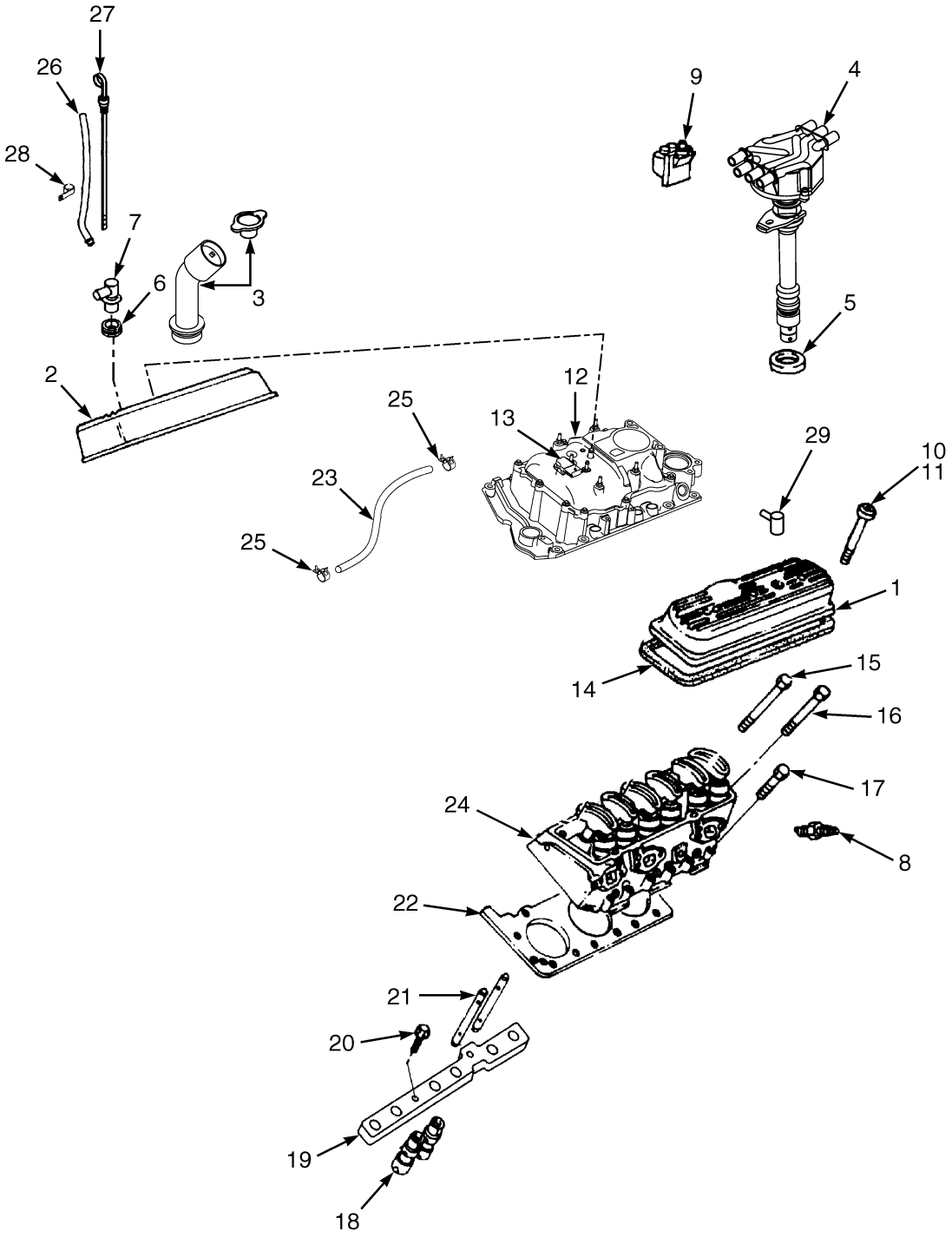

©2011 HYSTER COMPANY

VALVE COVER AND INLET MANIFOLD
GM 4.3L GASOLINE AND LPG – GFI OPTION

ITEM	PART NO.	DESCRIPTION	QTY
	1649504	Engine Assy-Gas (2008 Series)	1
	1694587	Engine Assy-Gas (2009 Series)	1
	4004339	Engine Assy -Gas (2010 Series)	1
	4020186	Engine Assy (Gas) (2011 Series)	1
	1649334	Engine Assy-LPG (2008 Series)	1
	1694586	Engine Assy-LPG (2009 Series)	1
	4004338	Engine Assy -LPG (2010 Series)	1
	4019146	Engine Assy (LPG)(2010) (Heavy Duty, Optional)	1
	4020187	Engine Assy (LPG) (2011 Series)	1
1	1597705	Cover (LH)	1
2	1389102	Cover (RH)	1
3	1552141	Filler Neck	1
3	1374290	Cap	1
3	1683749	Cap	1
4	1559695	Distributor Assembly	1
5	1334423	Gasket	1
6	1374288	Grommet	3
7	379407	Fitting	1
8	1641492	Spark Plug	6
9	1564670	Ignition Coil Assembly	1
10	1383904	Grommet	6
11	1374289	Bolt	6
12	1684098	Manifold Assy (2008-2011 Series)	1
12	1684085	Intake Manifold (Lower)	1
12	1684099	Intake Manifold (Upper)	1
12	1389093	Bolt	8
12	1559570	Gasket	1
13	1559567	Sensor (Temperature manifold absolute pressure)	1
14	1374293	Gasket	2
15	**a** 1377792	Bolt (Long)	10
16	**a** 1377793	Bolt (Medium)	4
17	**a** 1377794	Bolt (Short)	12
18	1471559	Valve Lifter	12
19	1389050	Guide	2
20	1389051	Bolt	2
21	1386189	Push Rod	12
22	1386190	Cylinder Head Gasket	1
23	1627354	Hose Assy	1
24	1471557	Cylinder Head (Gasoline)	1
24	1653888	Cylinder Head (LPG)(2007-2011 Series)	1
24	4017128	Kit-Service (Head-LPG) (Heavy Duty with Intake Seat Insert)	1
25	1471560	Clamp	2
26	1671271	Dipstick Tube (2008-2011 Series)	1
27	1676923	Dipstick (2008-2011 Series)	1
28	133696	Clamp	1
29	1600925	Fitting (90 Degree)	1
	1386187	Kit-Gasket (The kit includes two intake manifold gaskets) (Intake Manifold)	1

©2011 HYSTER COMPANY

FOOTNOTES:

a Quantity is listed for both heads

©2011 HYSTER COMPANY

NOTES

©2011 HYSTER COMPANY

VALVE COVER AND INLET MANIFOLD (FIGURE 2-25)

GM 4.3L LPG — PSI OPTION (PENDING PER ECN 152361 →)

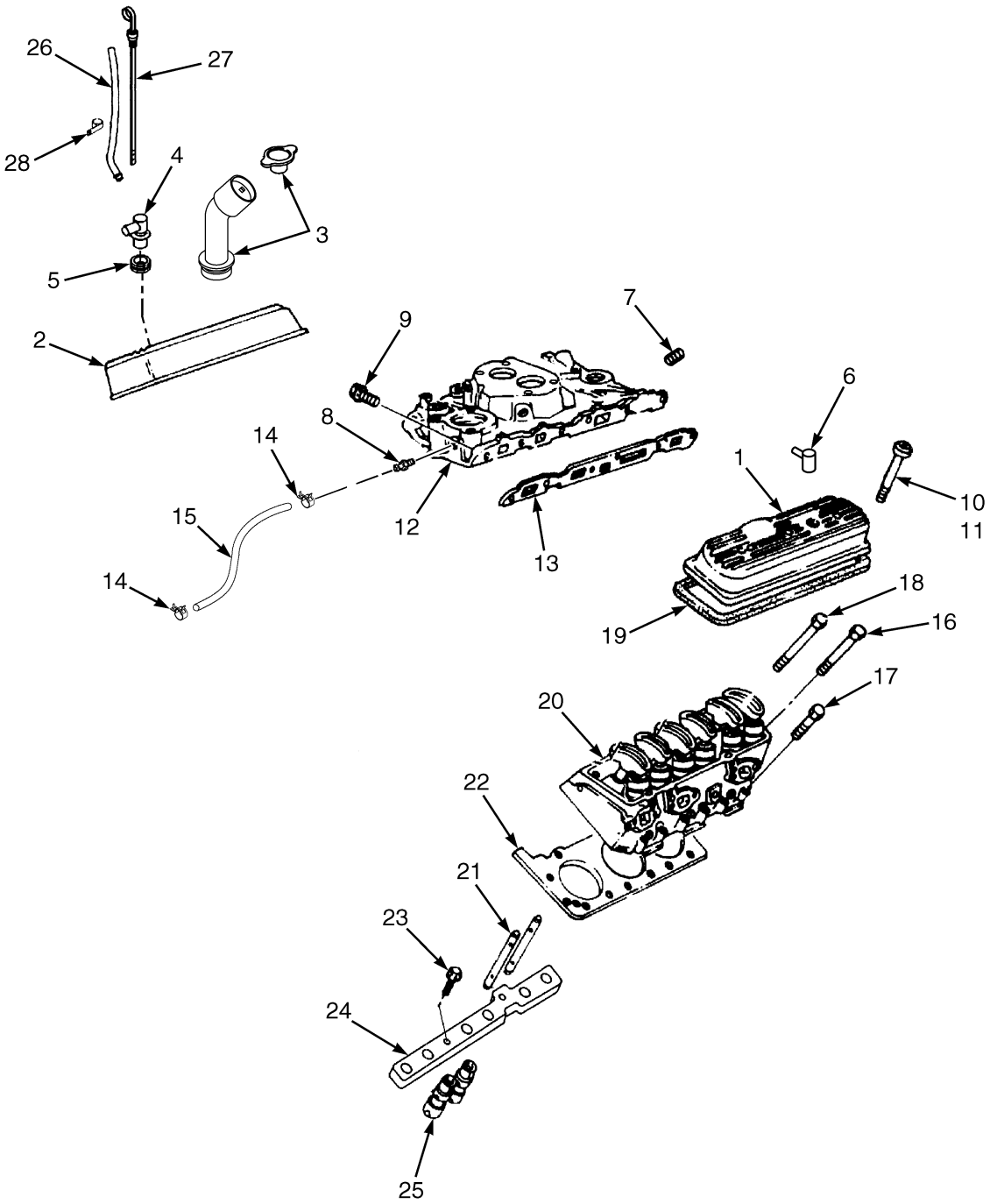

BP090466

©2011 HYSTER COMPANY

VALVE COVER AND INLET MANIFOLD

GM 4.3L LPG – PSI OPTION (PENDING PER ECN 152361 →)

ITEM	PART NO.	DESCRIPTION	QTY
	4615531	Engine Assy-LPG	1
	4615533	Engine Assy-LPG (Heavy Duty)	1
1	1597705	Cover (LH)	1
2	1389102	Cover (RH)	1
3	1552141	Filler Neck	1
3	1683749	Cap	1
4	379407	Fitting	1
5	1374288	Grommet	3
6	4040268	Fitting	1
7	1331341	Plug	1
8	4040255	Fitting	1
9	1389093	Bolt	8
10	1374289	Bolt	6
11	1383904	Grommet	6
12	1627349	Intake Manifold	1
13	1386187	Kit-Gasket (The kit includes two intake manifold gaskets)	1
14	4019128	Clamp	2
15	1460332	Hose Assy	1
16	1377793	Bolt (Medium)	4
17	1377794	Bolt (Short)	12
18	1377792	Bolt (Long)	10
19	1374293	Gasket	2
20	1653888	Cylinder Head (Standard) (☞Figure 2-20)	1
20	4017128	Kit-Service (Head-LPG) (Heavy Duty)	1
21	1386189	Push Rod	12
22	1386190	Cylinder Head Gasket	2
23	1339963	Bolt	2
24	1389050	Guide	2
25	1386188	Valve Lifter	12
26	1671271	Dipstick Tube	1
27	1676923	Dipstick	1
28	133696	Clamp	1

©2011 HYSTER COMPANY

OIL PUMP (FIGURE 2-26)
GM 4.3L GASOLINE AND LPG

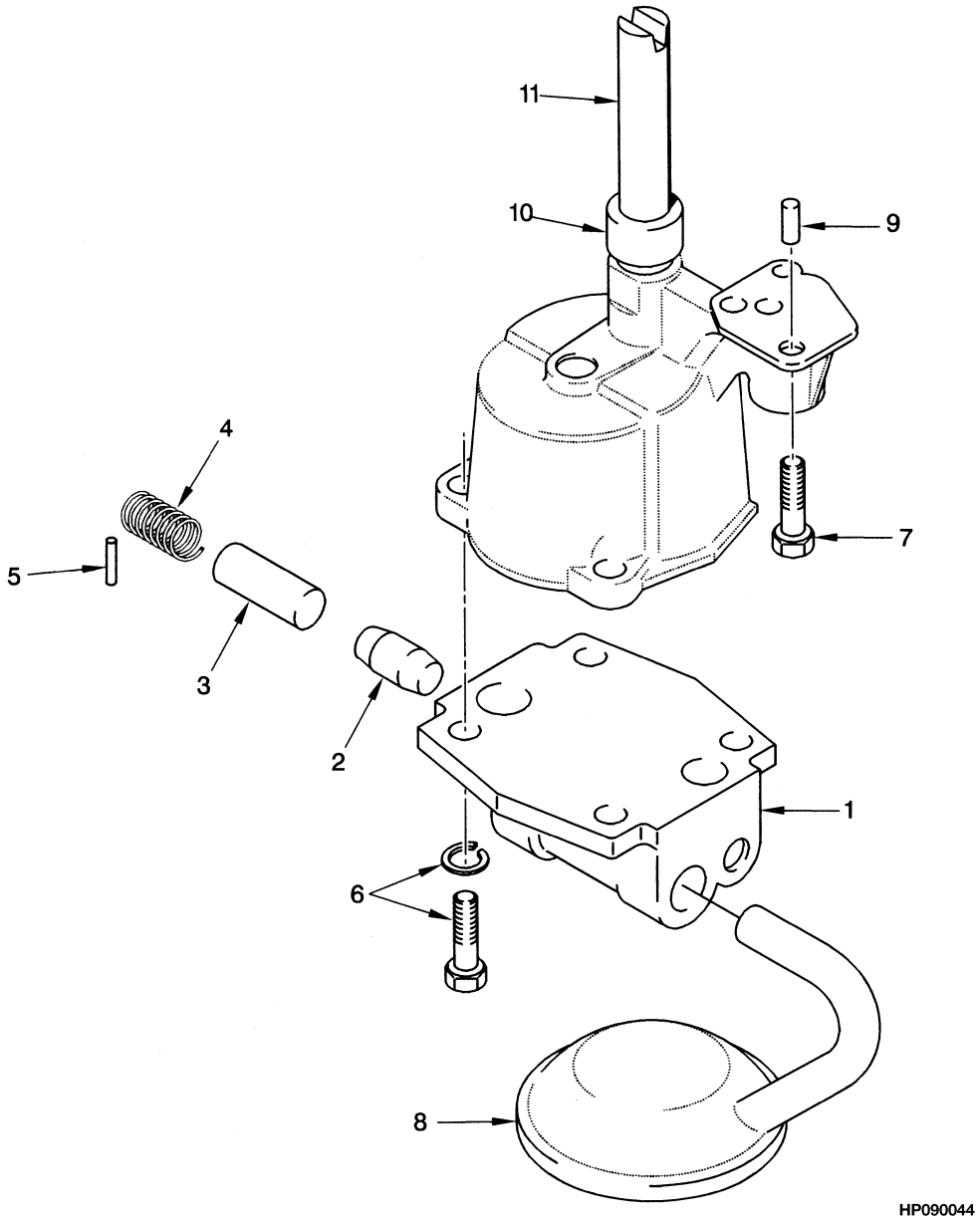

©2011 HYSTER COMPANY

OIL PUMP

GM 4.3L GASOLINE AND LPG

ITEM	PART NO.	DESCRIPTION	QTY
	1649504	Engine Assy-Gas (2008 Series)	1
	1694587	Engine Assy-Gas (2009 Series)	1
	4004339	Engine Assy -Gas (2010 Series)	1
	4020186	Engine Assy (Gas) (2011 Series)	1
	1649334	Engine Assy-LPG (2008 Series)	1
	1694586	Engine Assy-LPG (2009 Series)	1
	4004338	Engine Assy -LPG (2010 Series)	1
	4019146	Engine Assy (LPG)(2010) (Heavy Duty, Optional)	1
	1386176	Engine Oil Pump	1
	4020187	Engine Assy (LPG)	1
1	1374319	Cover	1
2	1338223	Stop	1
3	268573	Regulator Valve	1
4	1374320	Spring	1
5	1330453	Pin	1
6	1333541	Kit-Screw	2
7	388306	Bolt	1
8	1386177	Screen	1
9	1450941	Pin	2
10	263795	Retainer	1
11	263794	Shaft	1

©2011 HYSTER COMPANY

COIL ASSEMBLY (FIGURE 2-27)
GM 4.3L GASOLINE AND LPG

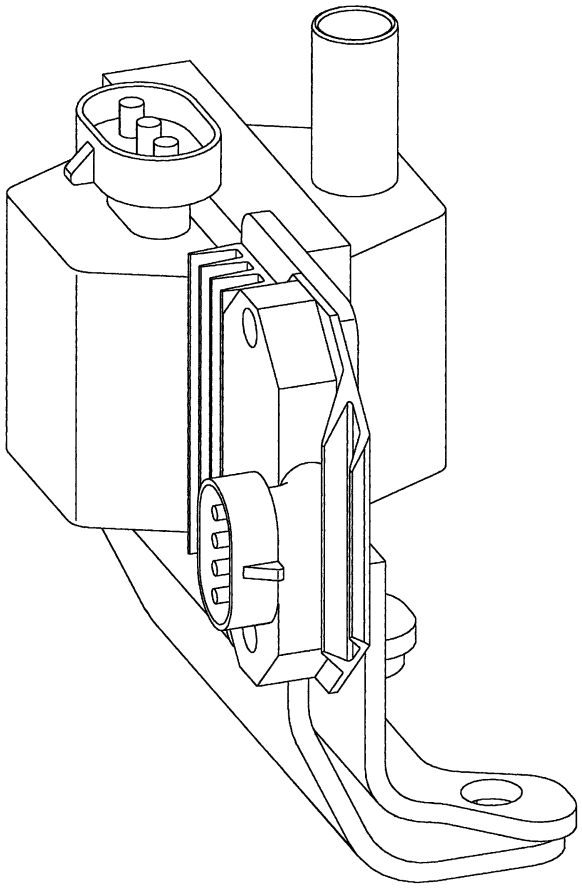

BP090140

ITEM	PART NO.	DESCRIPTION	QTY
	1564670	Ignition Coil Assembly	1
	1578517	Bracket	1
	1371237	Bolt	4
	1578518	Module	1
	1578519	Heatsink	1
	1578520	Screw	2
	1578521	Ignition Coil	1
	1374323	Nut	1
	1578522	Bracket	1

©2011 HYSTER COMPANY

DISTRIBUTER AND COIL (FIGURE 2-28)

GM 4.3L LPG — PSI OPTION

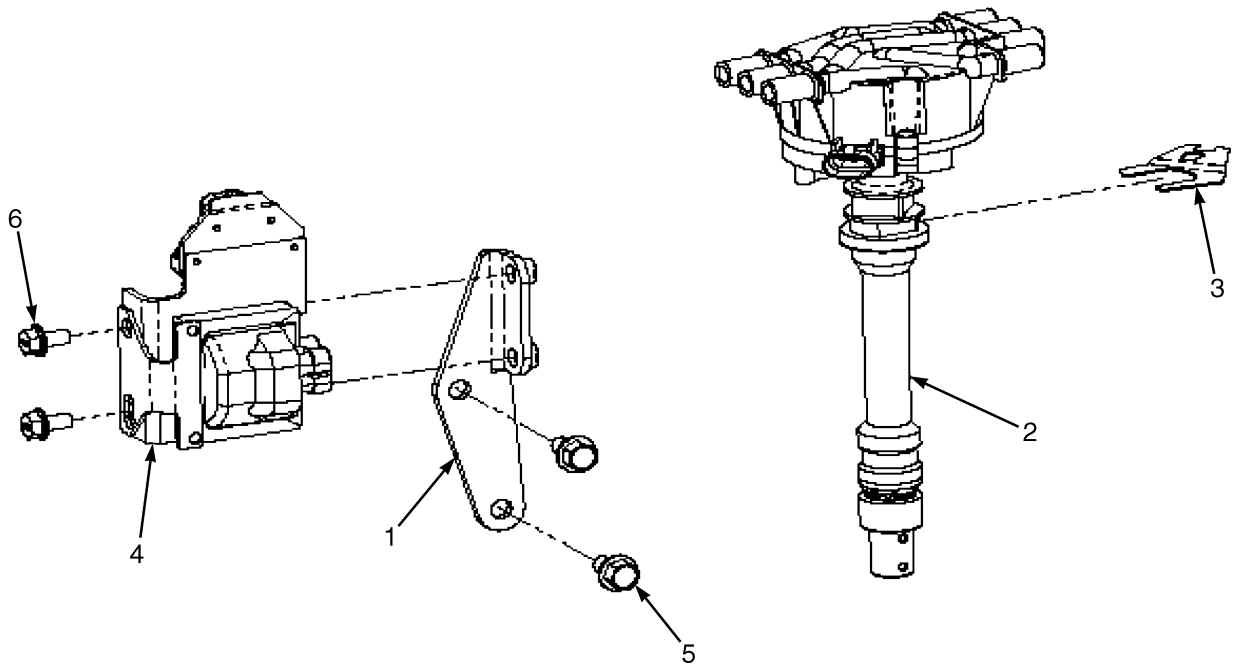

BP090462

ITEM	PART NO.	DESCRIPTION	QTY
1	4040252	Bracket	1
2	1559695	Distributor Assembly	1
3	~~4019057~~		
	1569750	Yoke (Distributor)	1
4	4019058	Ignition Coil	1
5	162572	Capscrew	2
6	1527879	Capscrew	2

ENGINE MOUNTING (FIGURE 2-29)

CUMMINS QSB 3.3L DIESEL

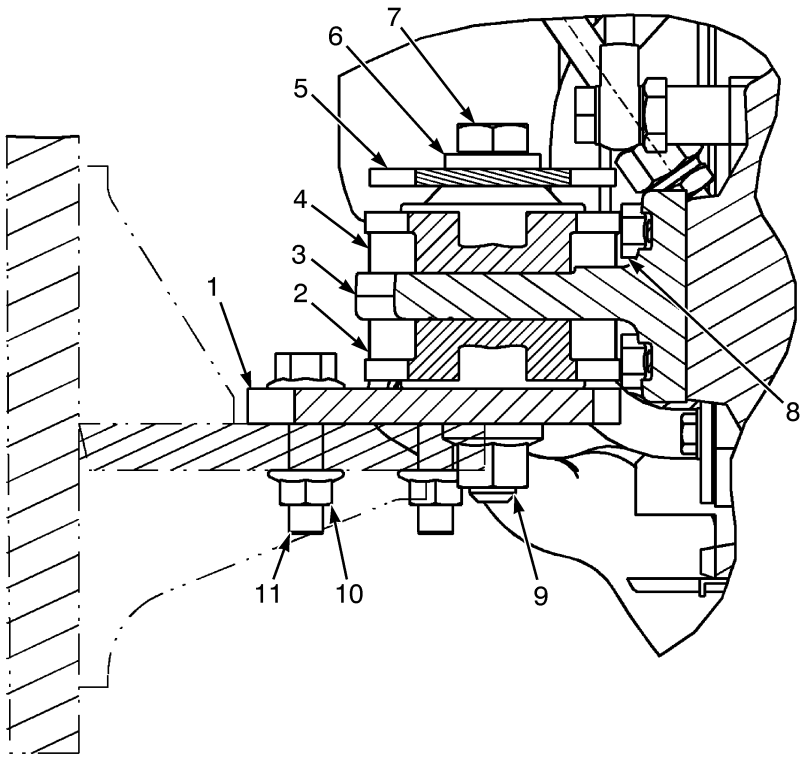

BP090391

ITEM	PART NO.	DESCRIPTION	QTY
	2096896	Engine Assy-Diesel	1
1	1696332	Mounting Plate (LH)	1
1	1696333	Mounting Plate (RH)	1
2	2069951	Isolator	2
3	1663183	Motor Mount	2
4	2069951	Isolator	2
5	1557737	Washer	2
6	1504075	Washer	2
7	293697	Capscrew	2
8	1663739	Bolt	8
9	1565453	Nut (Flange)	2
10	1528888	Nut (Shoulder)	6
11	1665557	Capscrew	6

©2011 HYSTER COMPANY

FAN ASSEMBLY (FIGURE 2-30)
CUMMINS QSB 3.3L DIESEL

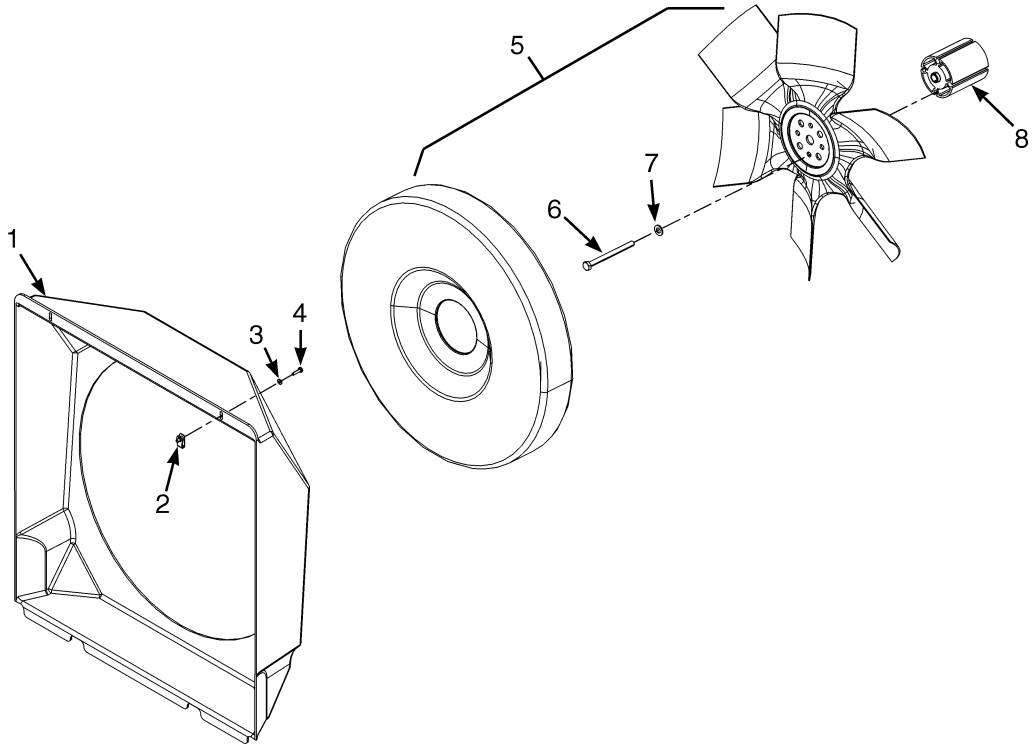

BP060057

ITEM	PART NO.	DESCRIPTION	QTY
	2103244	Engine Assy-Diesel	1
	2108566	Engine Assy-Diesel (99 Horsepower)	1
1	2101871	Shroud	1
2	1535257	Nut	2
3	197066	Washer	2
4	302023	Screw	2
5	2099479	Fan	1
6	136750	Capscrew	4
7	296418	Washer	4
8	1668639	Spacer	1

©2011 HYSTER COMPANY

LIFTING BRACKET (FIGURE 2-31)

CUMMINS QSB 3.3L DIESEL

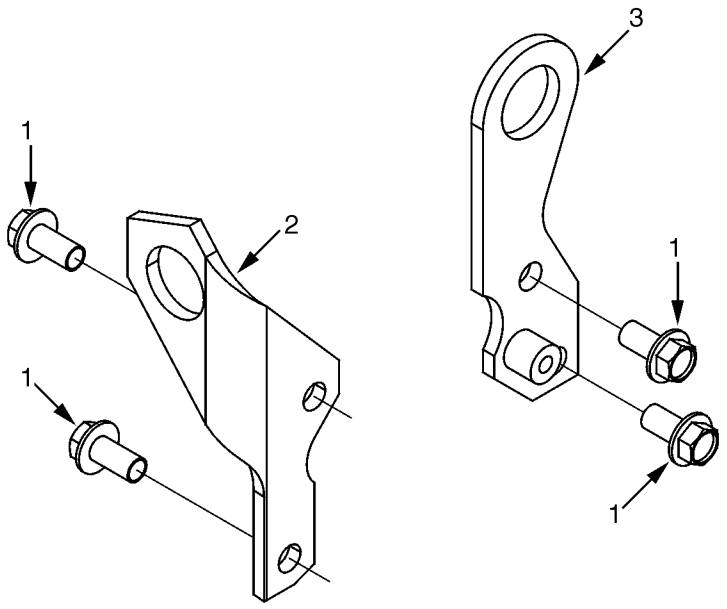

BP090402

ITEM	PART NO.	DESCRIPTION	QTY
	2103244	Engine Assy-Diesel	1
	2108566	Engine Assy-Diesel (99 Horsepower)	1
1	1691825	Capscrew	4
2	1691679	Bracket	1
3	1696967	Bracket	1

©2011 HYSTER COMPANY

NOTES

©2011 HYSTER COMPANY

CYLINDER BLOCK (FIGURE 2-32)
CUMMINS QSB 3.3L DIESEL

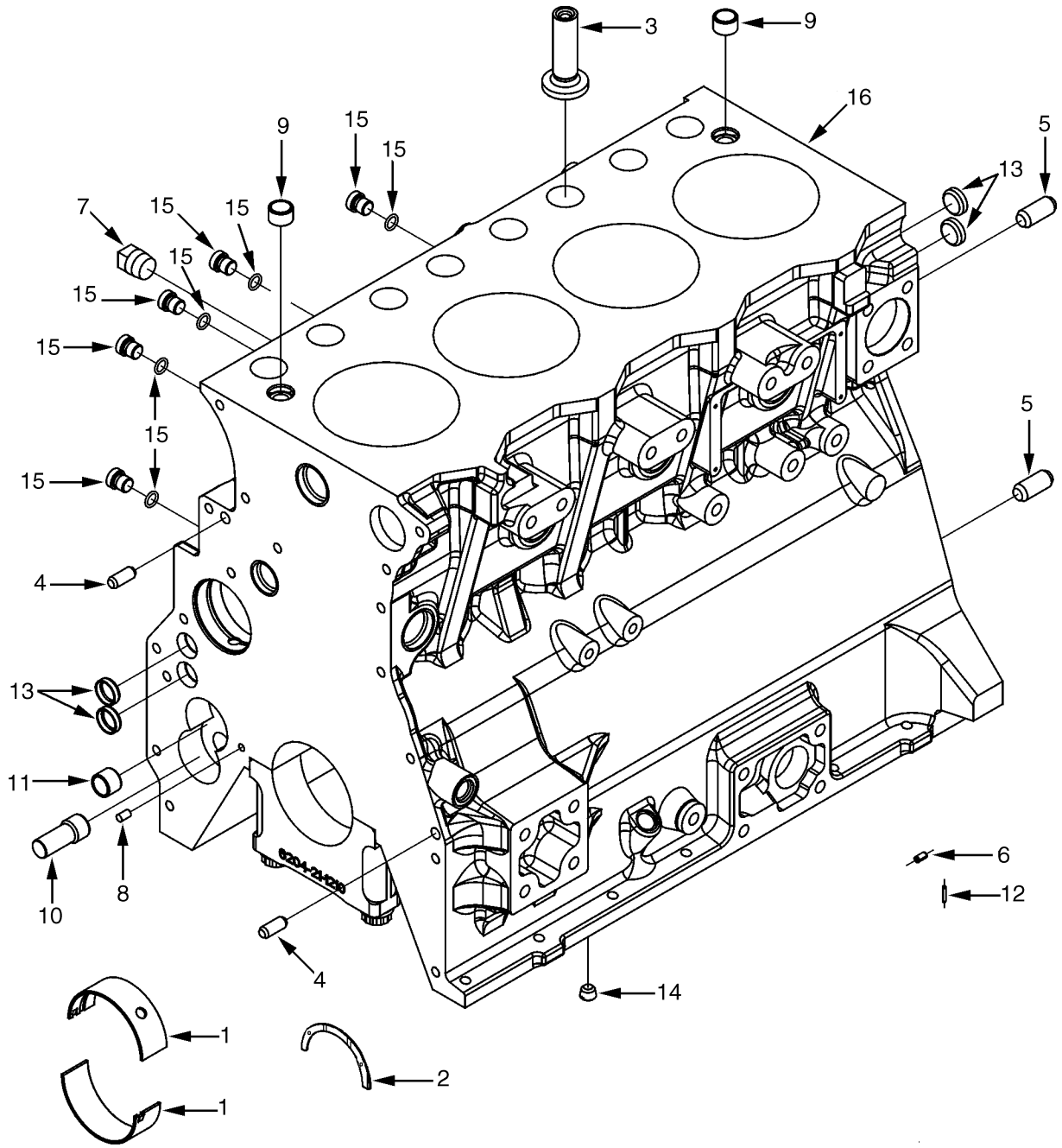

BP090292

©2011 HYSTER COMPANY

CYLINDER BLOCK
CUMMINS QSB 3.3L DIESEL

ITEM	PART NO.	DESCRIPTION	QTY
	2103244	Engine Assy-Diesel	1
	2108566	Engine Assy-Diesel (99 Horsepower)	1
1	1693601	Kit-Bearing	1
2	. . . . .	Thrust Bearing	3
3	1691581	Valve Tappet	8
4	1691583	Dowel Pin	2
5	1691584	Dowel Pin	2
6	1691586	Dowel Pin	6
7	1691587	Plug	1
8	1691588	Dowel	1
9	1691589	Dowel	2
10	. . . . .	Shaft (Lube Oil Pump)	1
11	. . . . .	Bushing	1
12	1691592	Dowel	4
13	1691593	Plug	4
14	1691594	Plug	1
15	1517010	Plug Assembly	5
15	1517011	O-Ring	1
16	. . . . .	Cylinder Block	1

©2011 HYSTER COMPANY

CYLINDER HEAD (FIGURE 2-33)
CUMMINS QSB 3.3L DIESEL

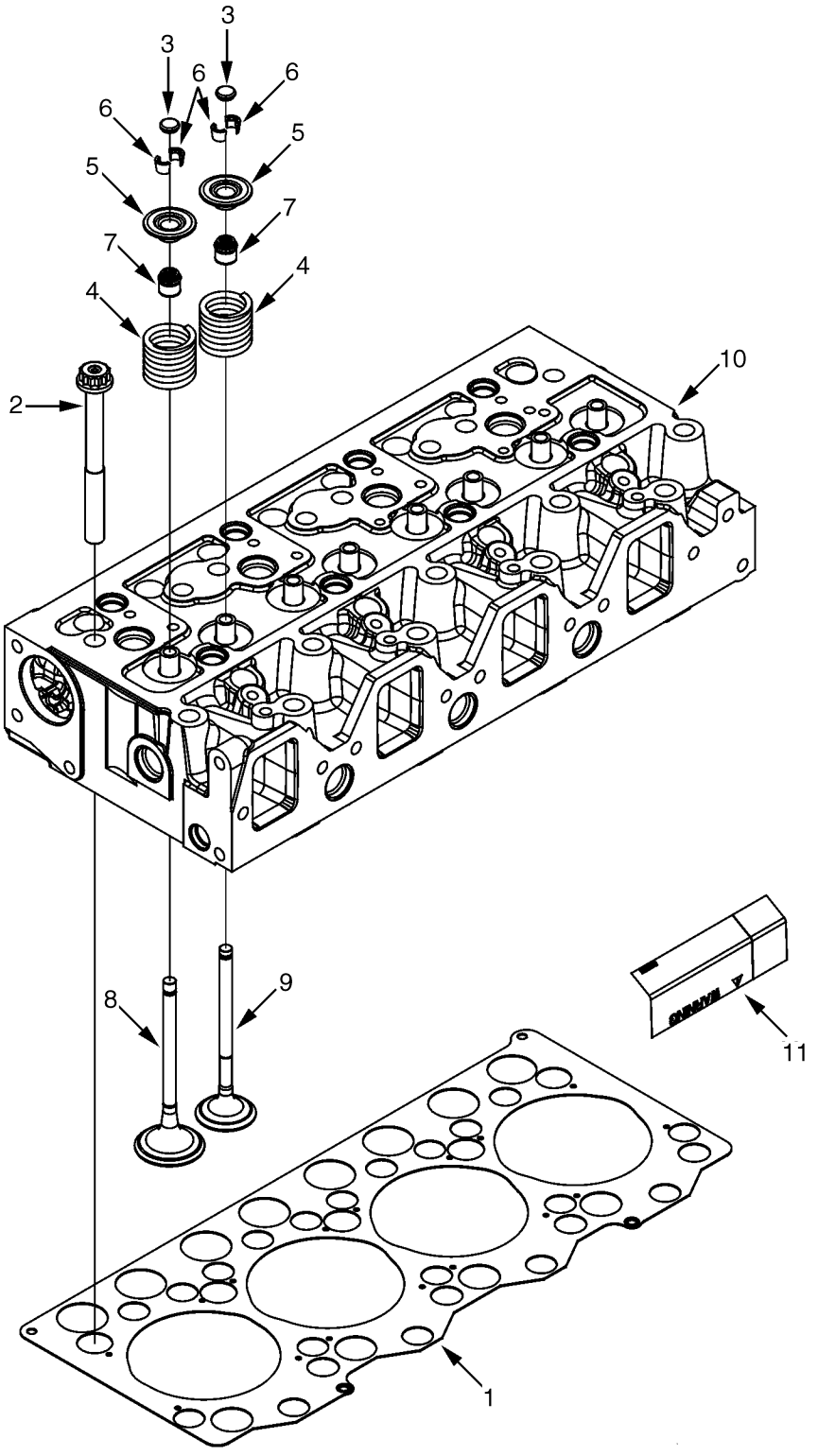

©2011 HYSTER COMPANY

CYLINDER HEAD
CUMMINS QSB 3.3L DIESEL

ITEM	PART NO.	DESCRIPTION	QTY
	2103244	Engine Assy-Diesel	1
	2108566	Engine Assy-Diesel (99 Horsepower)	1
1	1691897	Cylinder Head Gasket	1
2	1691898	Capscrew	17
3	1691899	Cap	8
4	1691901	Spring	8
5	1691902	Retainer	8
6	1691903	Valve (Collet)	16
7	1691904	Seal (Valve Stem)	8
8	1691905	Inlet Valve	4
9	1691906	Exhaust Valve	4
10	. . . . .	Cylinder Head	1
11	1707215	Label	2
	1691913	Kit-Cylinder Head	1

©2011 HYSTER COMPANY

THERMOSTAT (FIGURE 2-34)
CUMMINS QSB 3.3L DIESEL

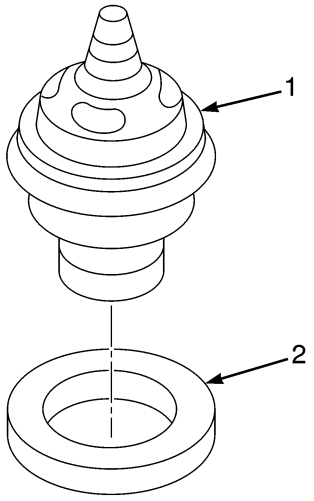

BP090406

ITEM	PART NO.	DESCRIPTION	QTY
	2103244	Engine Assy-Diesel	1
	2108566	Engine Assy-Diesel (99 Horsepower)	1
1	1691627	Kit-Thermostat	1
2	1691629	Gasket	1

©2011 HYSTER COMPANY

NOTES

©2011 HYSTER COMPANY

FLYWHEEL AND HOUSING (FIGURE 2-35)
CUMMINS QSB 3.3L DIESEL

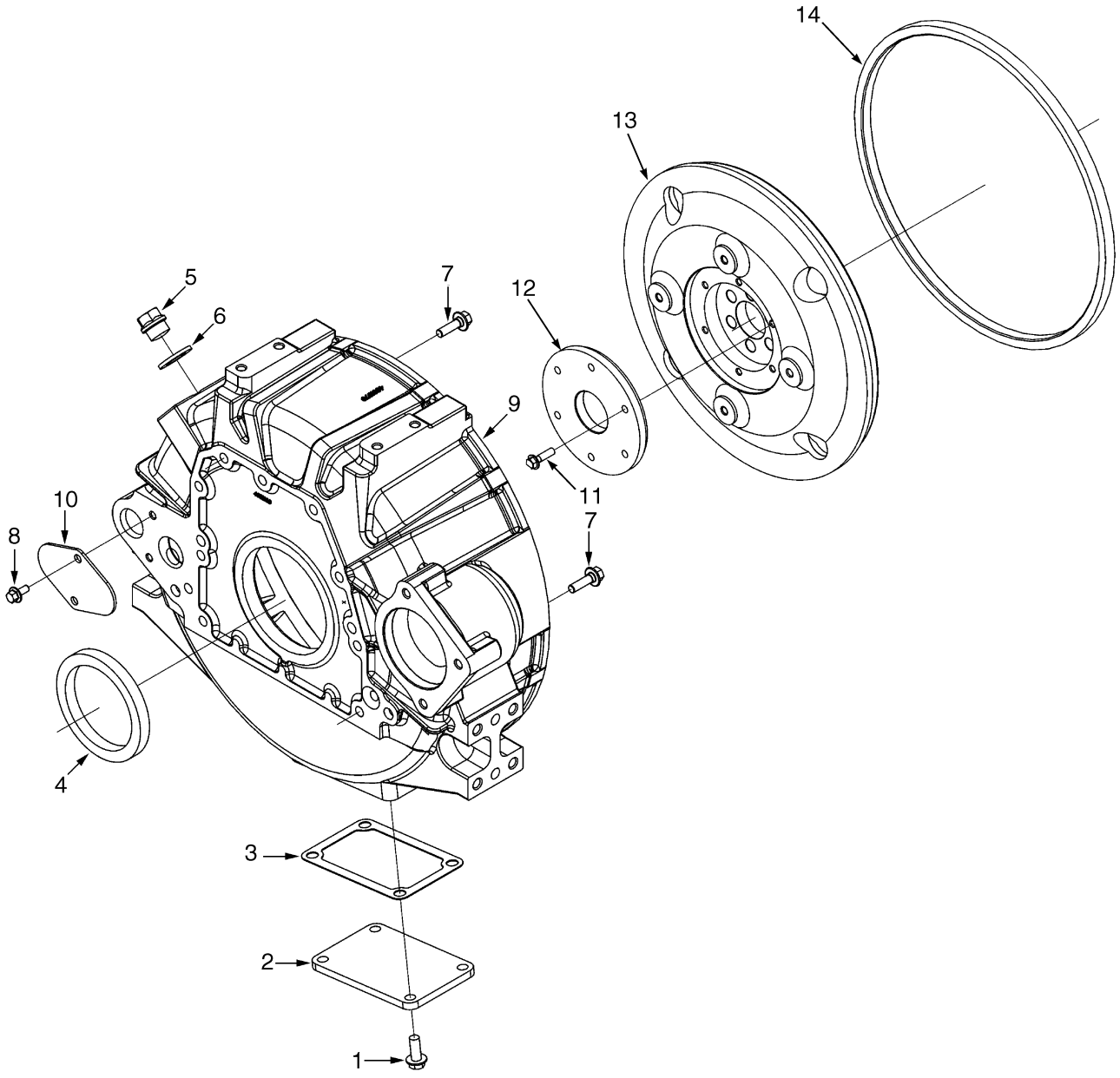

BP090157

©2011 HYSTER COMPANY

FLYWHEEL AND HOUSING

CUMMINS QSB 3.3L DIESEL

ITEM	PART NO.	DESCRIPTION	QTY
	2103244	Engine Assy-Diesel	1
	2108566	Engine Assy-Diesel (99 Horsepower)	1
1	1691660	Capscrew	4
2	1691661	Cover Plate	1
3	1691662	Gasket	1
4	1691663	Oil Seal	1
5	1691864	Plug	1
6	1691867	Washer	1
7	1543337	Capscrew	11
8	1511970	Capscrew	2
9	1691667	Flywheel Housing	1
10	1691668	Cover Plate	1
11	~~1691633~~		
	4023568	Capscrew	6
12	1691681	Adapter	1
13	1691682	Flywheel	1
14	1639725	Ring Gear	1
15	1691678	Capscrew	6
16	1691807	Washer	6

©2011 HYSTER COMPANY

WATER PUMP AND PULLEY (FIGURE 2-36)

CUMMINS QSB 3.3L DIESEL

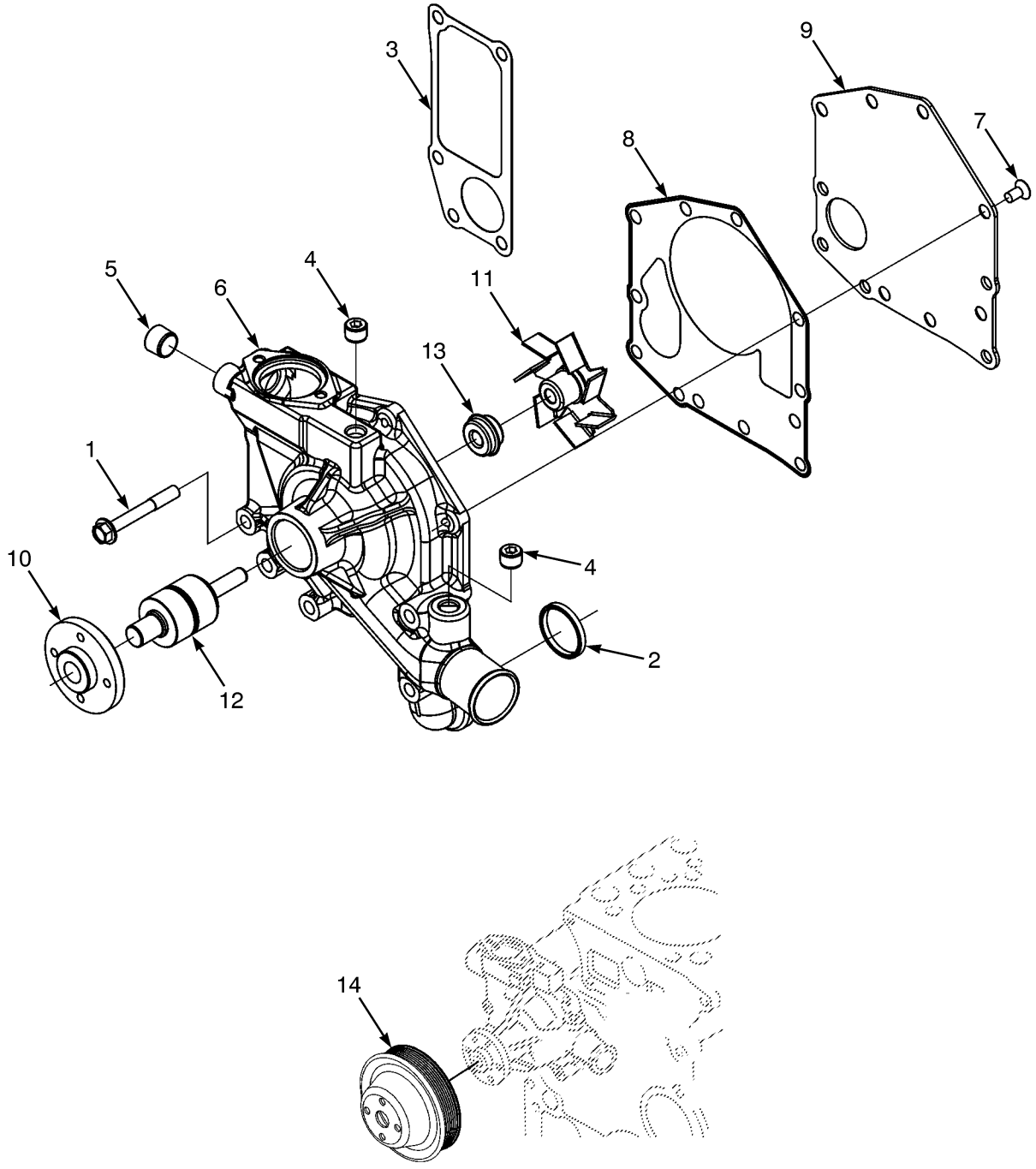

BP090405

©2011 HYSTER COMPANY

WATER PUMP AND PULLEY
CUMMINS QSB 3.3L DIESEL

ITEM	PART NO.	DESCRIPTION	QTY
	2103244	Engine Assy-Diesel	1
	2108566	Engine Assy-Diesel (99 Horsepower)	1
1	1691840	Capscrew	4
2	1692048	Seal	1
3	1692049	Gasket	1
4	1692050	Plug	2
5	1692051	Plug	1
6	1692052	Water Pump	1
6	1705954	Water Pump (Alternate Part)	1
6	1692058	Body	1
7	1692057	Capscrew	7
8	1692059	Gasket	1
9	1692060	Cover Plate	1
10	1692053	Boss	1
11	1692054	Impeller	1
12	1692055	Shaft	1
13	1692056	Seal	1
14	1691647	Water Pump Pulley	1
	a 1692061	V-Belt	1

FOOTNOTES:

a Not Illustrated

©2011 HYSTER COMPANY

OIL PAN (FIGURE 2-37)
CUMMINS QSB 3.3L DIESEL

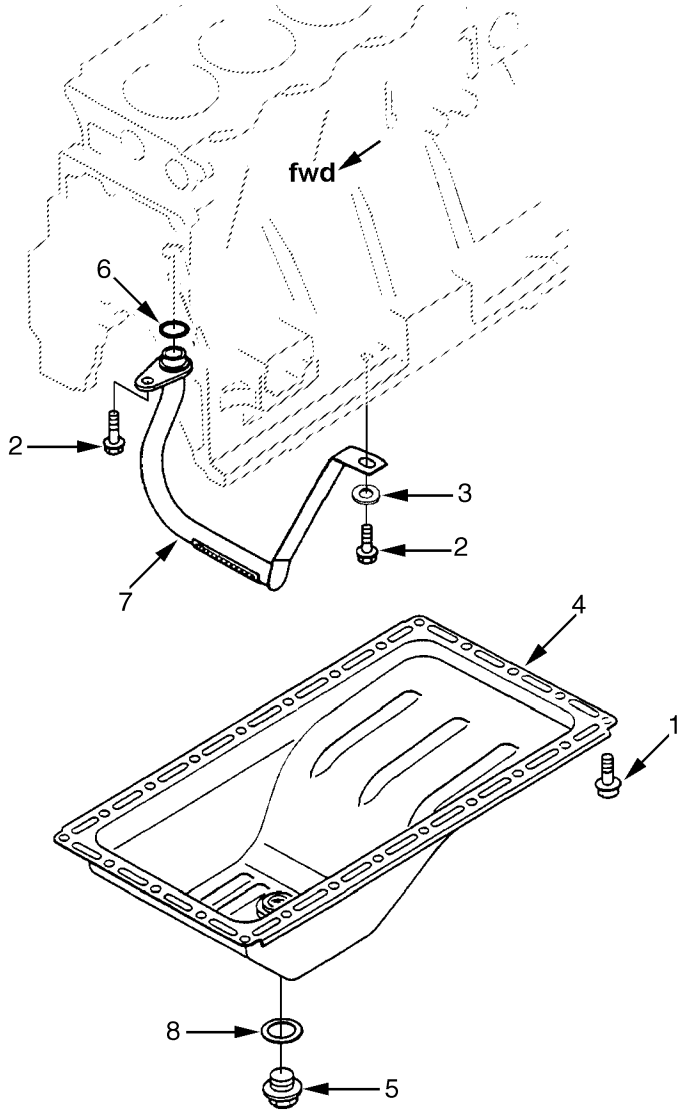

BP090395

©2011 HYSTER COMPANY

OIL PAN

CUMMINS QSB 3.3L DIESEL

ITEM	PART NO.	DESCRIPTION	QTY
	2103244	Engine Assy-Diesel	1
	2108566	Engine Assy-Diesel (99 Horsepower)	1
1	1691860	Capscrew	24
2	1691853	Capscrew	2
3	1691862	Washer	1
4	2109562	Oil Pan	1
5	1691864	Plug	1
6	1691865	Seal	1
7	1691866	Tube	1
8	1691867	Washer	1

©2011 HYSTER COMPANY

OIL FILTER AND COOLER (FIGURE 2-38)
CUMMINS QSB 3.3L DIESEL

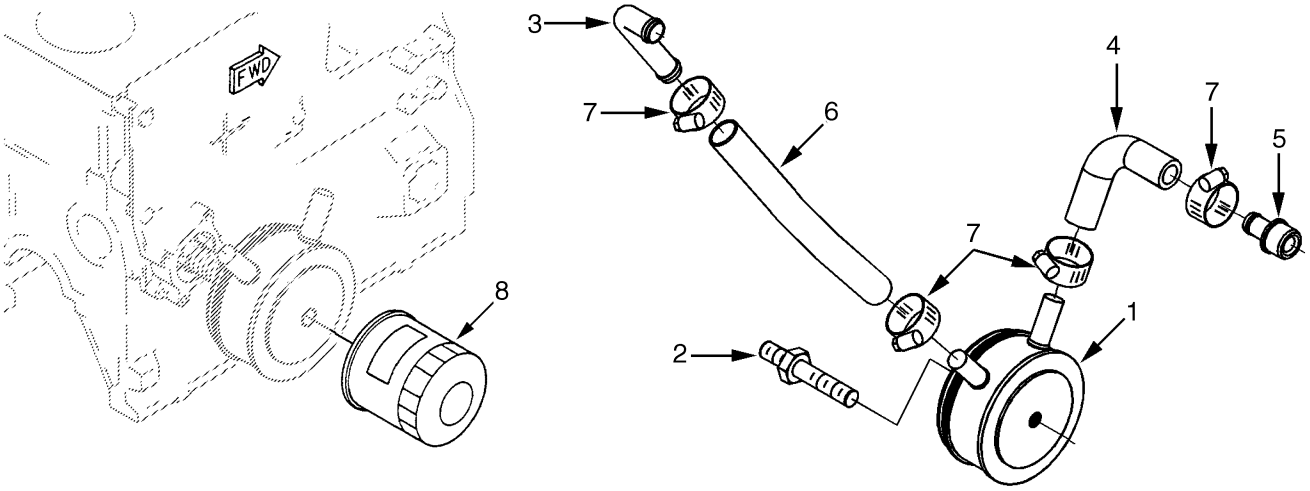

BP090403

ITEM	PART NO.	DESCRIPTION	QTY
	2103244	Engine Assy-Diesel	1
	2108566	Engine Assy-Diesel (99 Horsepower)	1
1	1691844	Oil Cooler	1
2	1691845	Coupling	1
3	1691841	Coupling	1
4	1691842	Hose	1
5	1691837	Coupling	1
6	1691843	Hose	1
7	1691828	Hose Clamp	4
8	1691846	Oil Filter	1

©2011 HYSTER COMPANY

NOTES

©2011 HYSTER COMPANY

OIL PUMP AND FRONT GEAR COVER (FIGURE 2-39)

CUMMINS QSB 3.3L DIESEL

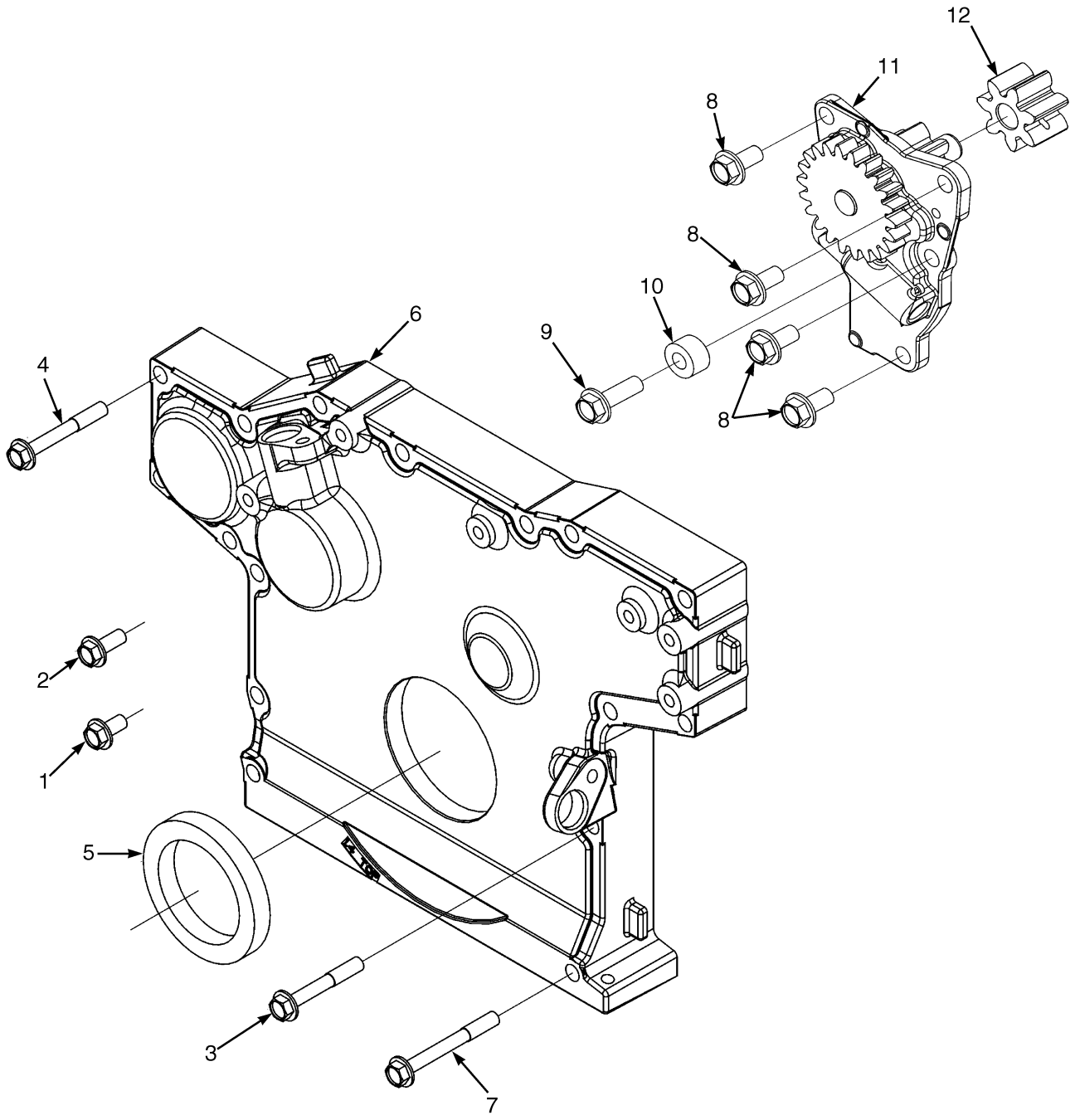

BP090143

©2011 HYSTER COMPANY

OIL PUMP AND FRONT GEAR COVER

CUMMINS QSB 3.3L DIESEL

ITEM	PART NO.	DESCRIPTION	QTY
	2103244	Engine Assy-Diesel	1
	2108566	Engine Assy-Diesel (99 Horsepower)	1
1	1691853	Capscrew	2
2	1691869	Capscrew	2
3	1691830	Capscrew	6
4	1691831	Capscrew	8
5	1691832	Oil Seal	1
6	1691833	Cover	1
7	1691834	Capscrew	2
8	1691853	Capscrew	4
9	~~1691854~~		
	1597807	Capscrew (Flange)	1
10	1691856	Spacer	1
11	1691857	Oil Pump	1
12	1691855	Gear	1

©2011 HYSTER COMPANY

OIL FILLER ARRANGEMENT (FIGURE 2-40)
CUMMINS QSB 3.3L DIESEL

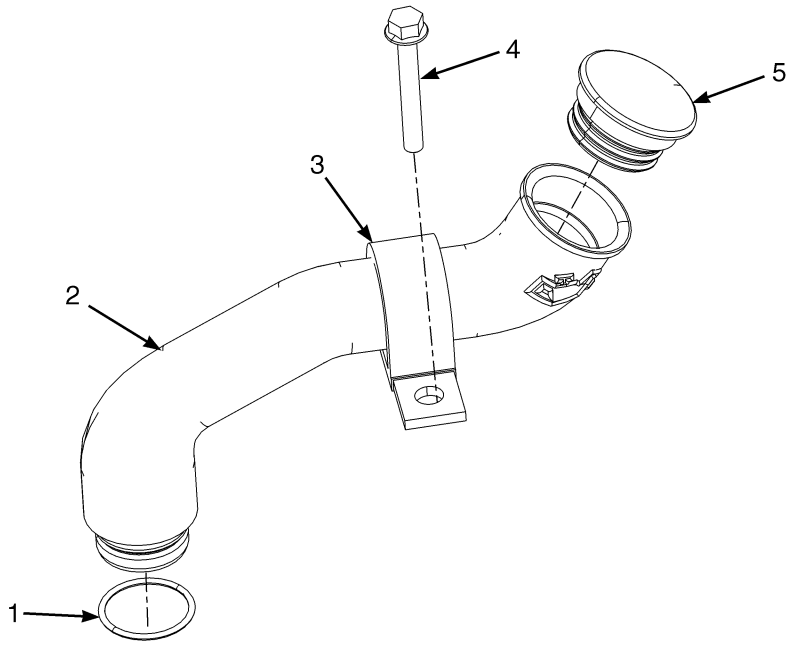

BP090413

ITEM	PART NO.	DESCRIPTION	QTY
	2103244	Engine Assy-Diesel	1
	2108566	Engine Assy-Diesel (99 Horsepower)	1
1	39378	O-Ring	2
2	1691792	Tube	1
3	258590	Clamp	1
4	1510116	Capscrew	1
5	1691858	Cap	1

©2011 HYSTER COMPANY

CAMSHAFT (FIGURE 2-41)
CUMMINS QSB 3.3L DIESEL

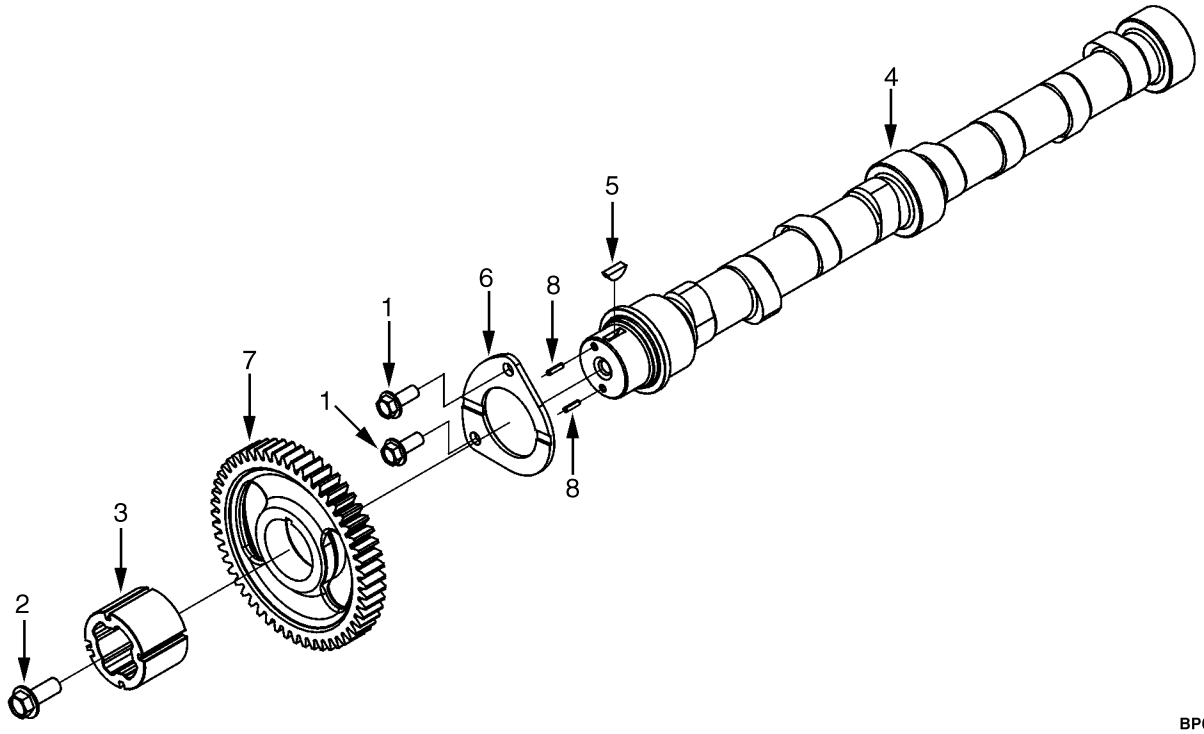

BP090393

ITEM	PART NO.	DESCRIPTION	QTY
	2103244	Engine Assy-Diesel	1
	2108566	Engine Assy-Diesel (99 Horsepower)	1
1	1691869	Capscrew	2
2	1691886	Capscrew	1
3	1691887	Adapter (Position Sensor)	1
4	1691888	Camshaft	1
5	1691894	Key	1
6	1693081	Plate (Clamping)	1
7	1691885	Gear	1
8	1691896	Cotter Pin	2

©2011 HYSTER COMPANY

VALVE COVER (FIGURE 2-42)
CUMMINS QSB 3.3L DIESEL

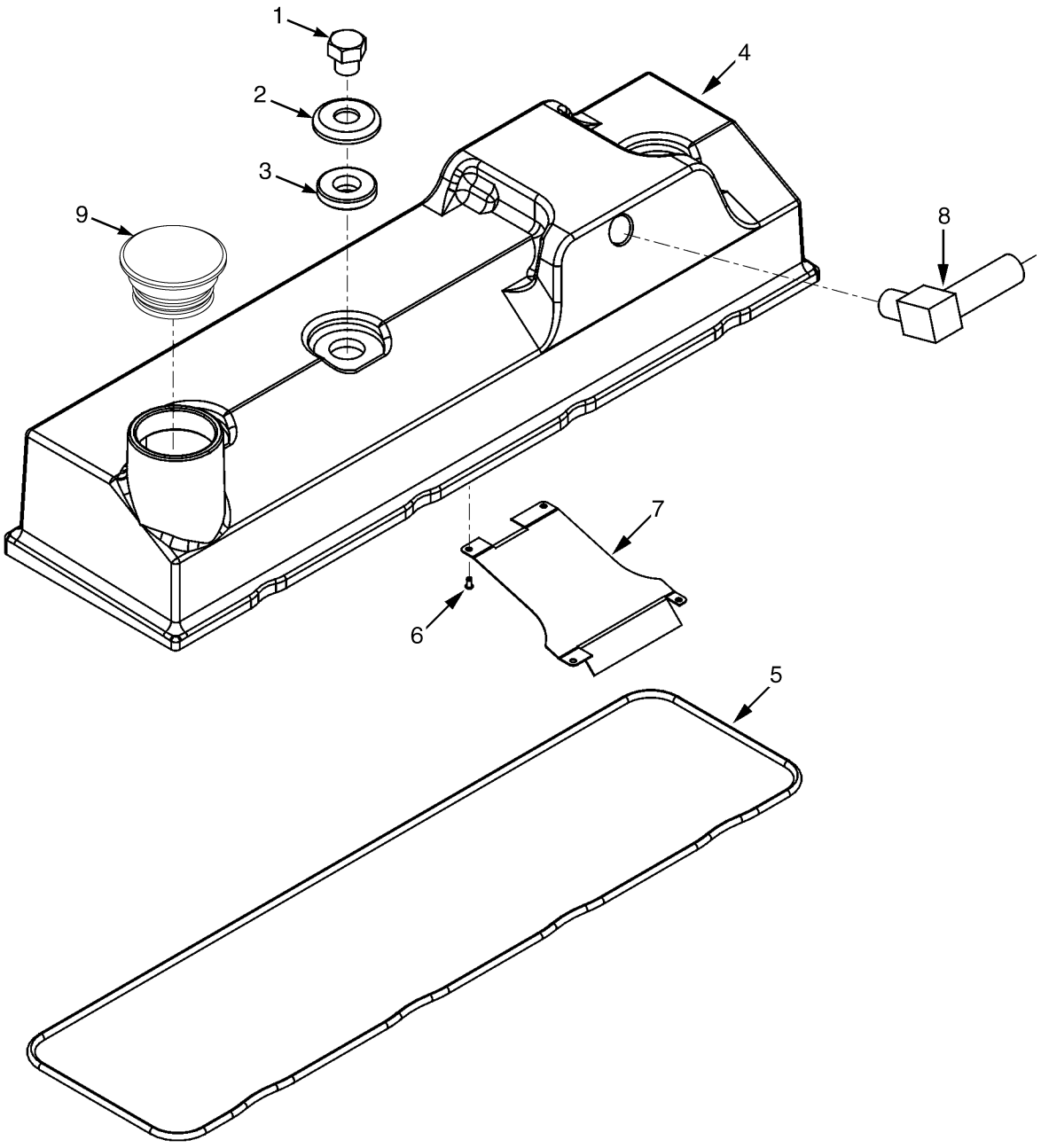

©2011 HYSTER COMPANY

VALVE COVER
CUMMINS QSB 3.3L DIESEL

ITEM	PART NO.	DESCRIPTION	QTY
	2103244	Engine Assy-Diesel	1
	2108566	Engine Assy-Diesel (99 Horsepower)	1
1	1692035	Locknut	3
2	1692036	Washer	3
3	1692037	Gasket	3
4	1692038	Cover	1
5	1692040	Gasket	1
6	. . . . .	Rivet	4
7	. . . . .	Cover Plate	1
8	. . . . .	Tube	1
9	1691858	Cap	1

©2011 HYSTER COMPANY

ROCKER ARM SHAFT (FIGURE 2-43)

CUMMINS QSB 3.3L DIESEL

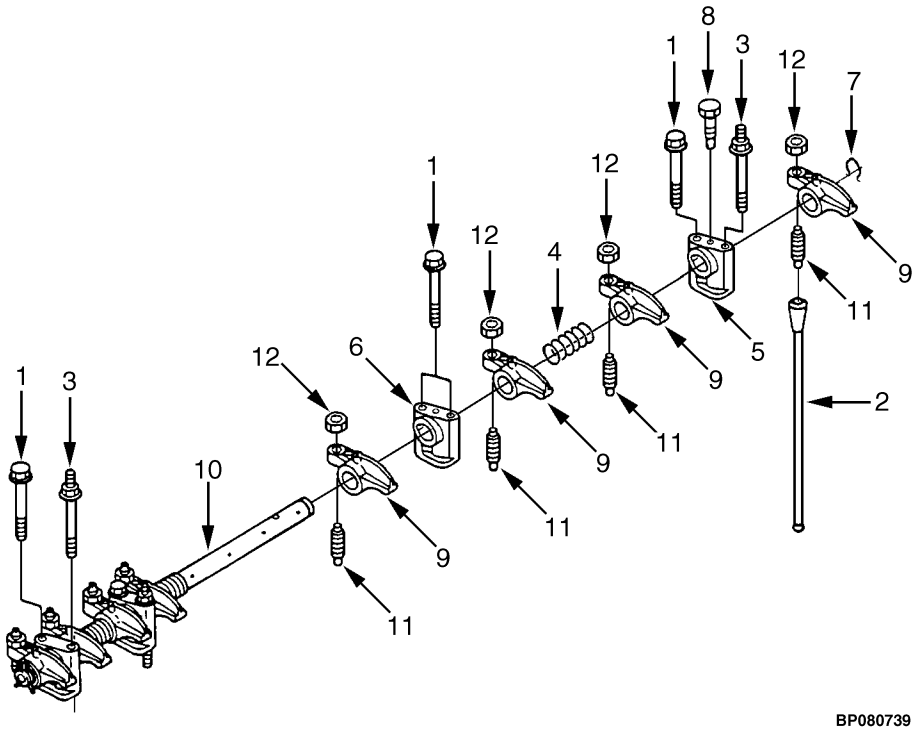

BP080739

ITEM	PART NO.	DESCRIPTION	QTY
	2103244	Engine Assy-Diesel	1
	2108566	Engine Assy-Diesel (99 Horsepower)	1
1	1691992	Capscrew	5
2	1691993	Push Rod	8
3	1691994	Capscrew	3
4	1691996	Spring	3
5	1691997	Support	1
6	1691998	Support	3
7	1691999	Clip	2
8	1692000	Capscrew	1
9	1692001	Lever	8
10	1692002	Shaft	1
11	1692004	Screw	8
12	1692005	Locknut	8

©2011 HYSTER COMPANY

NOTES

©2011 HYSTER COMPANY

PISTON AND CONNECTING ROD (FIGURE 2-44)
CUMMINS QSB 3.3L DIESEL

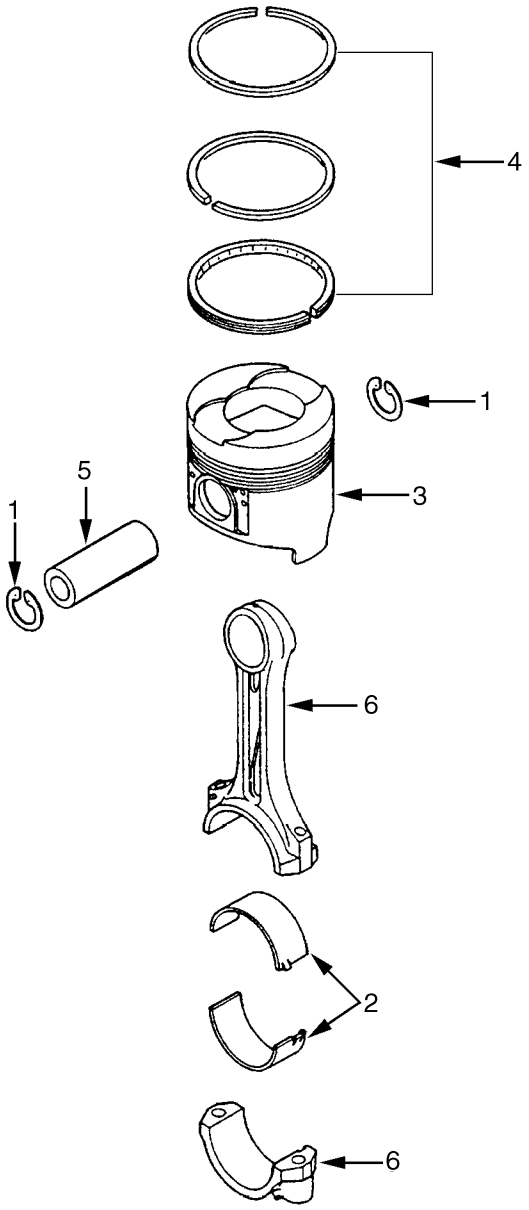

BP090228

©2011 HYSTER COMPANY

PISTON AND CONNECTING ROD

CUMMINS QSB 3.3L DIESEL

ITEM	PART NO.	DESCRIPTION	QTY
	2103244	Engine Assy-Diesel	1
	2108566	Engine Assy-Diesel (99 Horsepower)	1
1	1691890	Retaining Ring	8
2	4035760	Bearing	4
3	. . . . .	Piston	4
4	1691893	Piston Ring Set	1
5	1691881	Pin	4
6	1691882	Piston Rod	4
	1691892	Kit-Piston	4

©2011 HYSTER COMPANY

CRANKSHAFT (FIGURE 2-45)
CUMMINS QSB 3.3L DIESEL

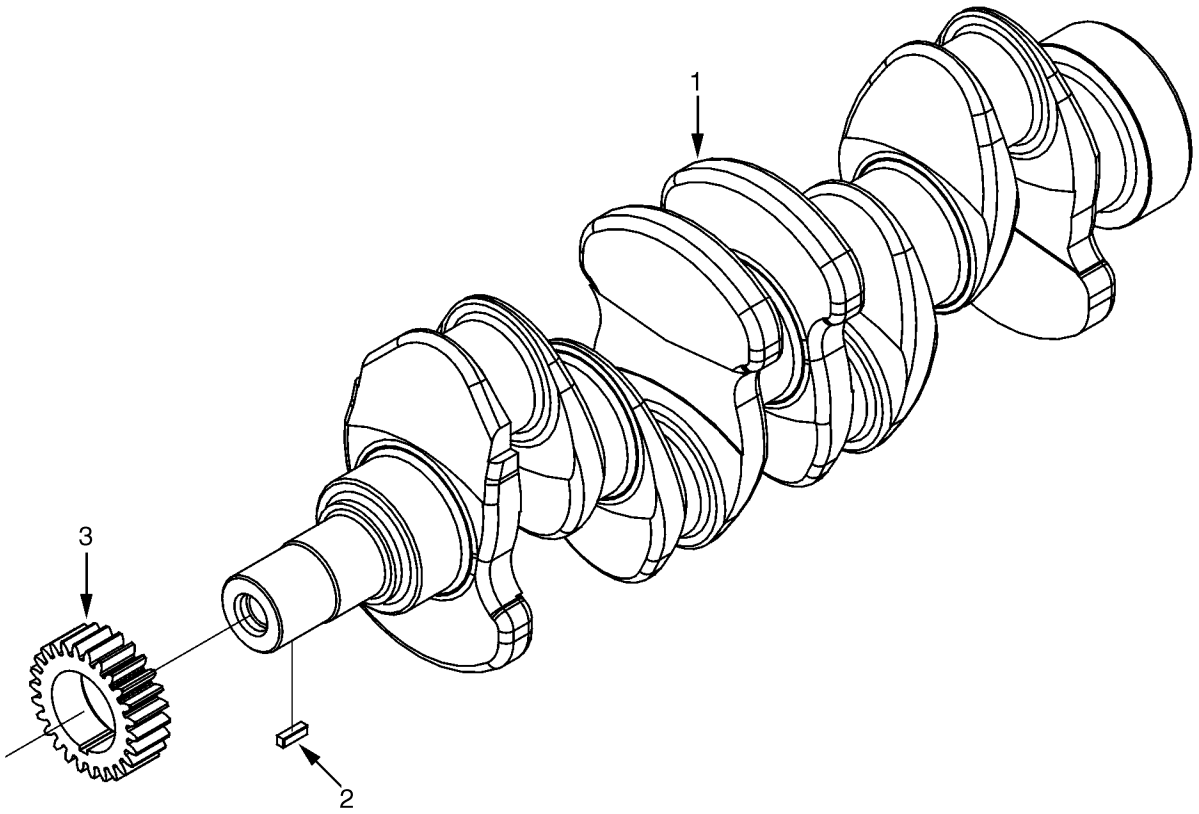

BP090178

©2011 HYSTER COMPANY

CRANKSHAFT

CUMMINS QSB 3.3L DIESEL

ITEM	PART NO.	DESCRIPTION	QTY
	2103244	Engine Assy-Diesel	1
	2108566	Engine Assy-Diesel (99 Horsepower)	1
1	1691597	Crankshaft	1
2	1691598	Woodruff Key	1
3	. . . . .	Crankshaft Gear	1

©2011 HYSTER COMPANY

CRANKCASE BREATHER (FIGURE 2-46)
CUMMINS QSB 3.3L DIESEL

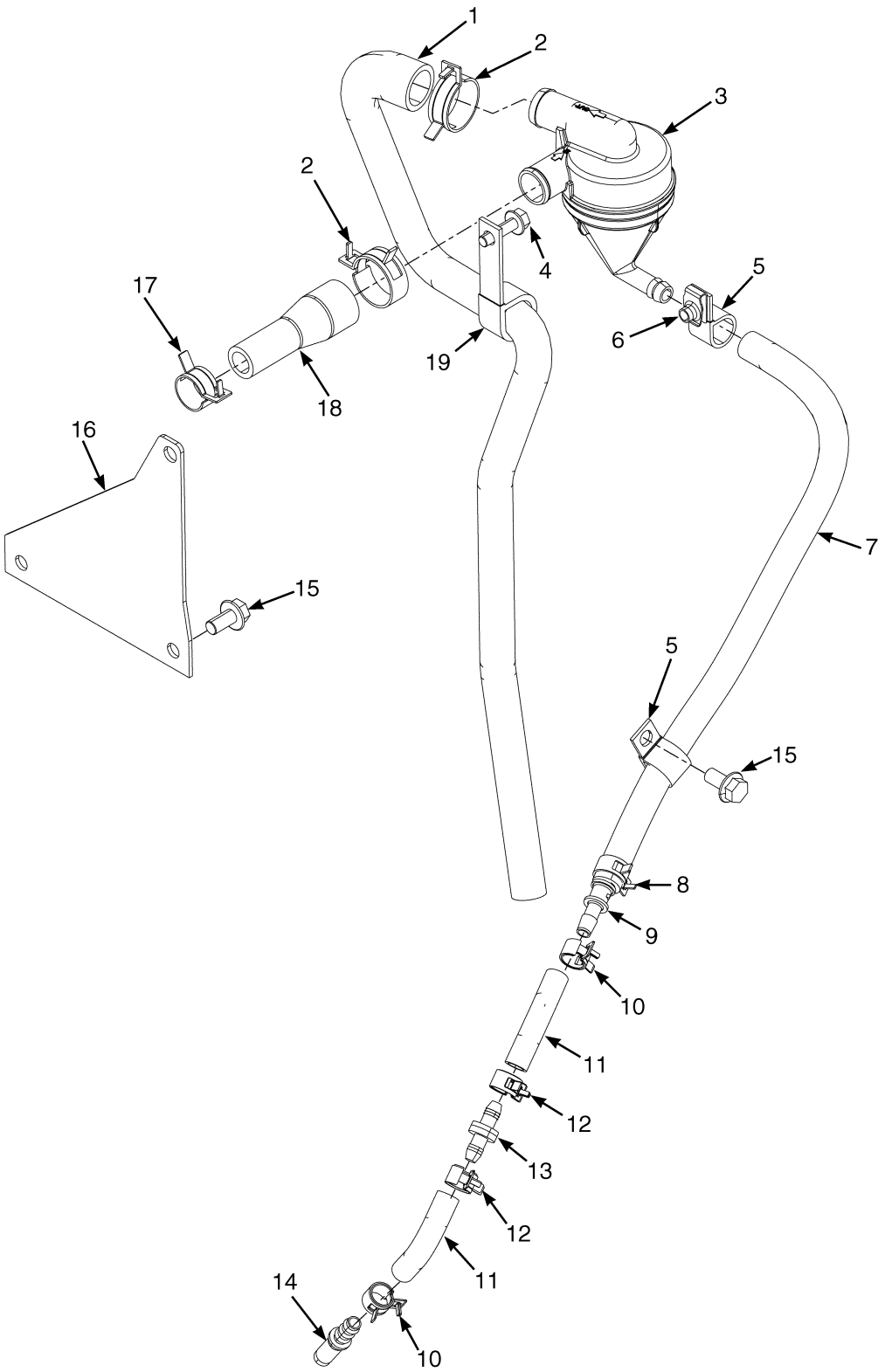

BP090398

©2011 HYSTER COMPANY

CRANKCASE BREATHER
CUMMINS QSB 3.3L DIESEL

ITEM	PART NO.	DESCRIPTION	QTY
	2103244	Engine Assy-Diesel	1
	2108566	Engine Assy-Diesel (99 Horsepower)	1
1	2102765	Hose	1
2	1527980	Hose Clamp	2
3	1676948	Separator	1
4	1527881	Capscrew	1
5	173247	Clamp	2
6	1480237	Nut	1
7	1686731	Hose	1
8	1502006	Hose Clamp	1
9	1677717	Reducer	1
10	1502004	Hose Clamp	1
11	1473099	Hose	2
12	1569616	Hose Clamp	4
13	1677426	Check Valve	1
14	1687413	Fitting	1
15	1527883	Capscrew	3
16	1676949	Bracket	1
17	1501994	Hose Clamp	1
18	2102767	Hose	1
19	1399400	Clamp	1

©2011 HYSTER COMPANY

TURBOCHARGER (FIGURE 2-47)
CUMMINS QSB 3.3L DIESEL

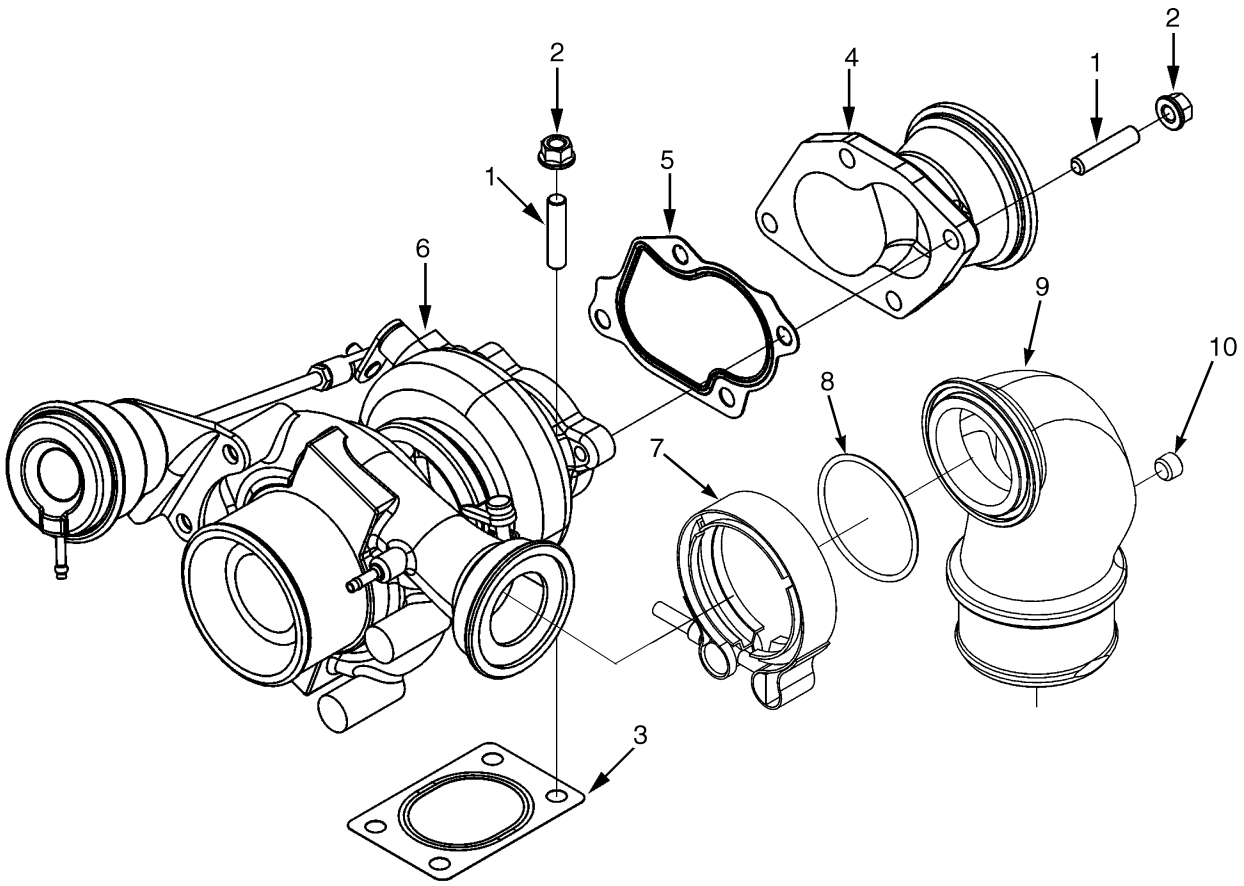

BP090396

©2011 HYSTER COMPANY

TURBOCHARGER
CUMMINS QSB 3.3L DIESEL

ITEM	PART NO.	DESCRIPTION	QTY
	2103244	Engine Assy-Diesel	1
	2108566	Engine Assy-Diesel (99 Horsepower)	1
1	1691986	Stud	4
2	1691987	Nut	4
3	1691988	Gasket	1
4	1691989	Connector	1
5	1691990	Gasket	1
6	. . . . .	Turbocharger	1
7	1691806	Clamp	1
8	1691822	Seal	1
9	1691823	Pipe	1
10	1513191	Fitting	1
	1692003	Kit-Turbocharger and Gasket	1

©2011 HYSTER COMPANY

TURBOCHARGER PLUMBING (FIGURE 2-48)
CUMMINS QSB 3.3L DIESEL

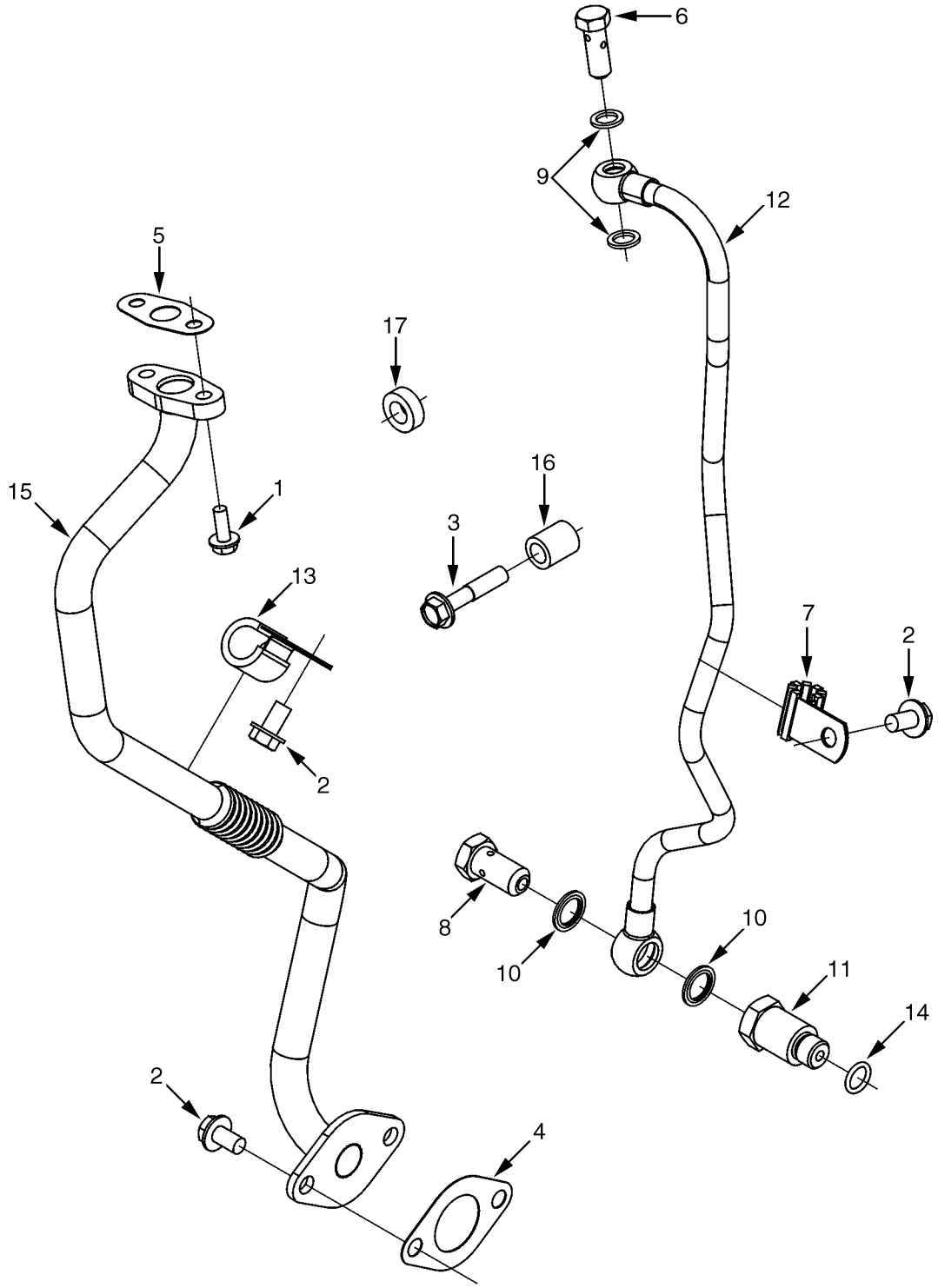

BP090397

©2011 HYSTER COMPANY

TURBOCHARGER PLUMBING

CUMMINS QSB 3.3L DIESEL

ITEM	PART NO.	DESCRIPTION	QTY
	2103244	Engine Assy-Diesel	1
	2108566	Engine Assy-Diesel (99 Horsepower)	1
1	1692011	Capscrew	2
2	1691860	Capscrew	2
3	1691909	Capscrew	2
4	1692023	Gasket (Oil Drain)	1
5	1692024	Gasket (Oil Drain)	1
6	1692025	Screw (Banjo Connector)	1
7	1692026	Clip	1
8	1673878	Screw (Banjo Connector)	1
9	1692027	Washer	2
10	1513714	Sealing Ring	2
11	1692028	Boot	1
12	1692029	Tube (Oil Supply)	1
13	1692030	Clip	1
14	1692031	Seal	1
15	1692032	Tube (Oil Drain)	1
16	1692033	Spacer	1
17	1692034	Spacer	1

©2011 HYSTER COMPANY

EXHAUST MANIFOLD (FIGURE 2-49)
CUMMINS QSB 3.3L DIESEL

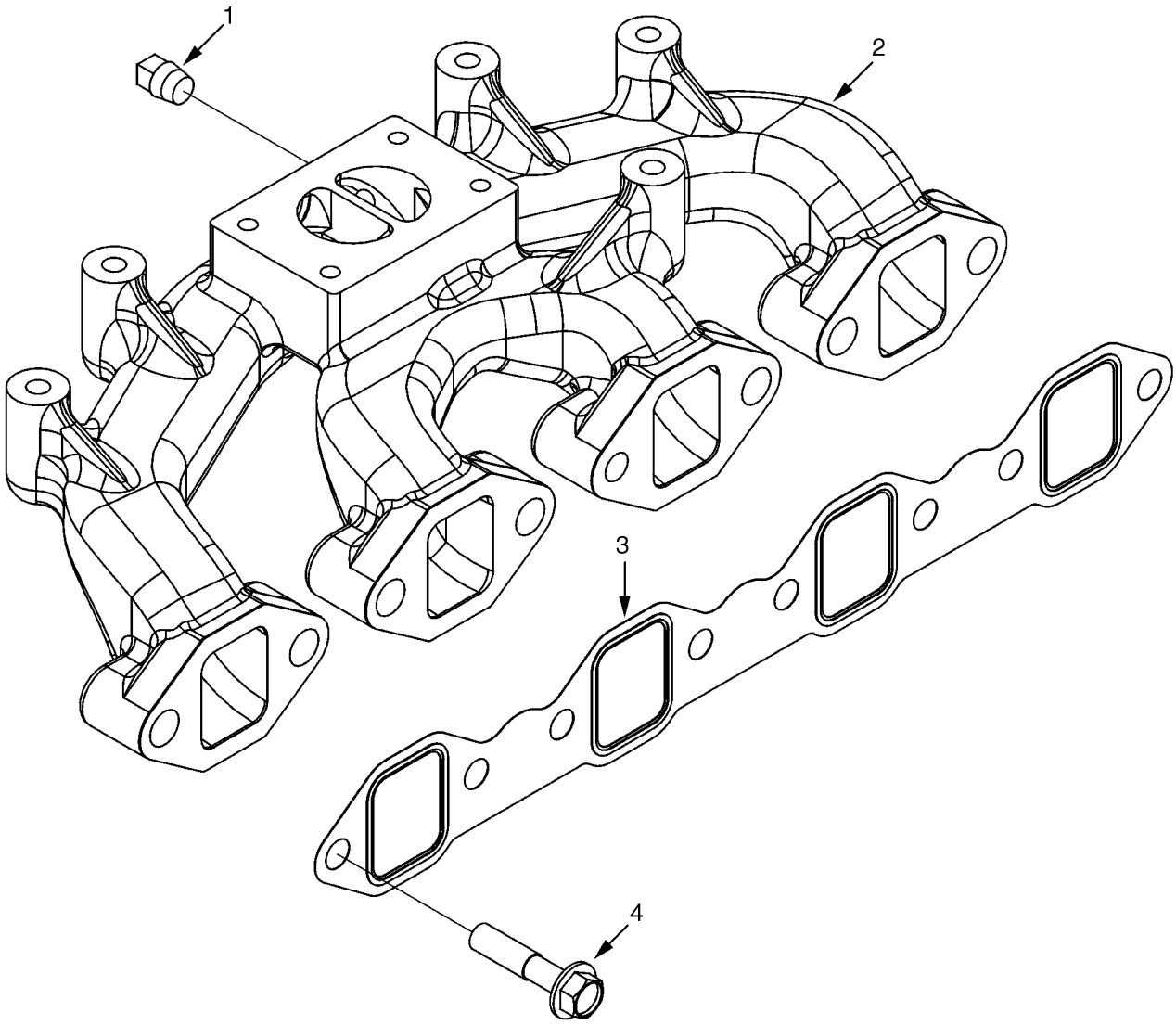

BP090259

©2011 HYSTER COMPANY

EXHAUST MANIFOLD
CUMMINS QSB 3.3L DIESEL

ITEM	PART NO.	DESCRIPTION	QTY
	2103244	Engine Assy-Diesel	1
	2108566	Engine Assy-Diesel (99 Horsepower)	1
1	1692009	Plug	1
2	1692010	Exhaust Manifold	1
3	1692008	Gasket	1
4	1644113	Capscrew	7

©2011 HYSTER COMPANY

AIR INTAKE MANIFOLD (FIGURE 2-50)
CUMMINS QSB 3.3L DIESEL

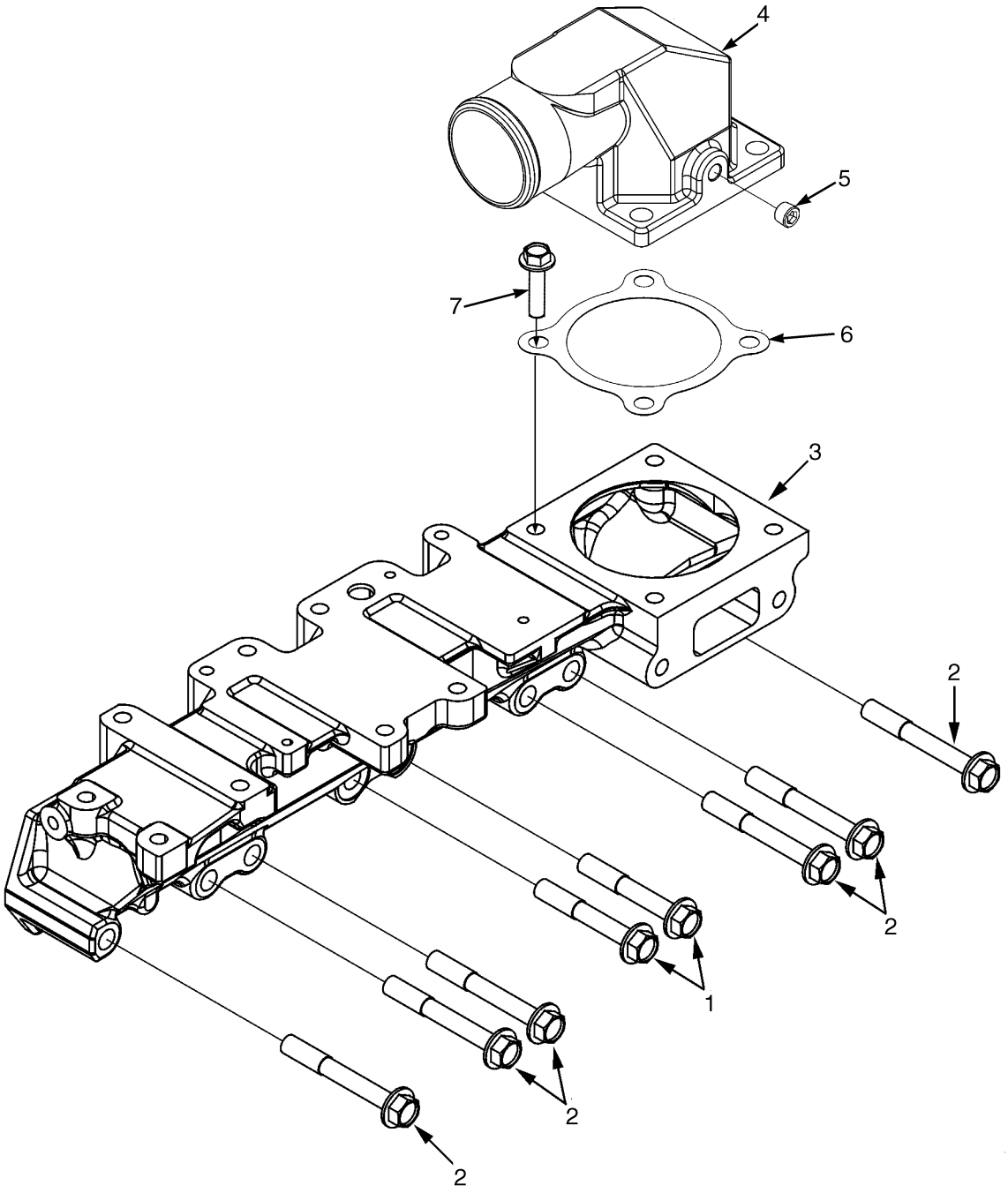

BP090258

©2011 HYSTER COMPANY

AIR INTAKE MANIFOLD
CUMMINS QSB 3.3L DIESEL

ITEM	PART NO.	DESCRIPTION	QTY
	2103244	Engine Assy-Diesel	1
	2108566	Engine Assy-Diesel (99 Horsepower)	1
1	1691839	Capscrew	2
2	1691840	Capscrew	6
3	1691645	Intake Manifold	1
4	1691838	Connector (Air Intake)	1
5	1513191	Fitting	1
6	1691577	Gasket	1
7	1691835	Capscrew	4

©2011 HYSTER COMPANY

STARTING AID (FIGURE 2-51)
CUMMINS QSB 3.3L DIESEL

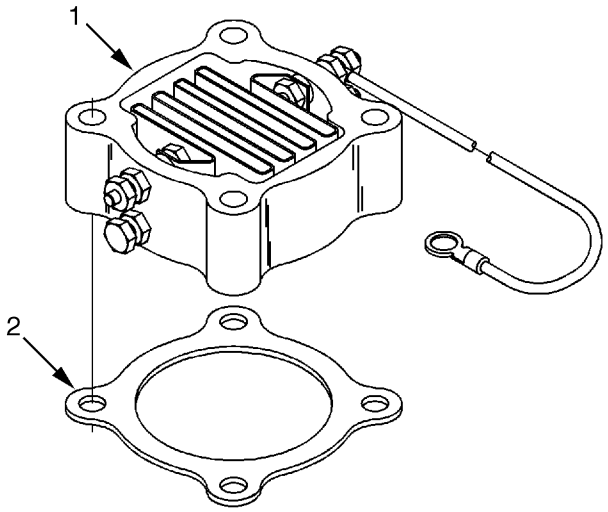

BP090404

ITEM	PART NO.	DESCRIPTION	QTY
	2103244	Engine Assy-Diesel	1
	2108566	Engine Assy-Diesel (99 Horsepower)	1
1	1691576	Heater	1
1	1705956	Heater (Alternate Part)	1
2	1691577	Gasket	1
	ab 1691613	Plug	1

FOOTNOTES:

a Not Illustrated

b When heater is not used

©2011 HYSTER COMPANY

VIBRATION DAMPER (FIGURE 2-52)

CUMMINS QSB 3.3L DIESEL

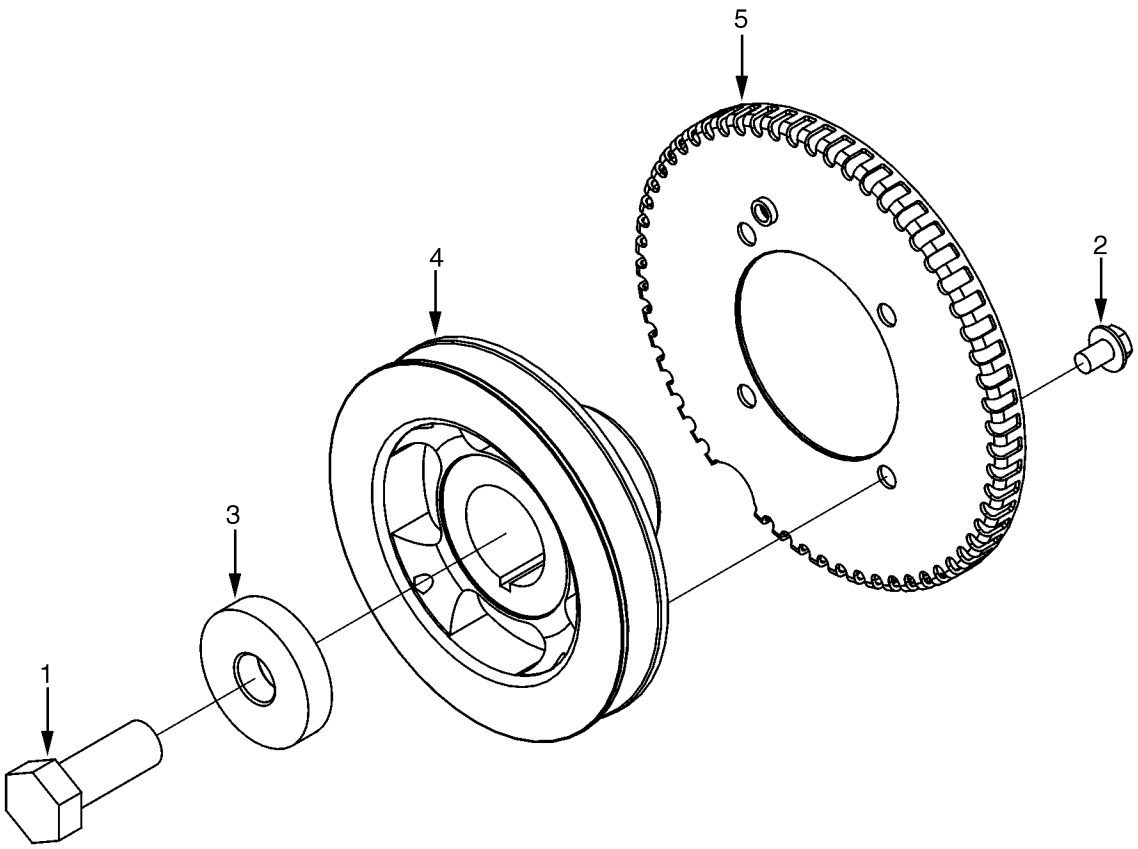

BP090400

ITEM	PART NO.	DESCRIPTION	QTY
	2103244	Engine Assy-Diesel	1
	2108566	Engine Assy-Diesel (99 Horsepower)	1
1	1691614	Capscrew	1
2	1691615	Capscrew	4
3	1691624	Plate	1
4	1691625	Crankshaft Pulley	1
5	1691626	Ring (Speed Indicator)	1

©2011 HYSTER COMPANY

OIL LEVEL GAUGE (FIGURE 2-53)

CUMMINS QSB 3.3L DIESEL

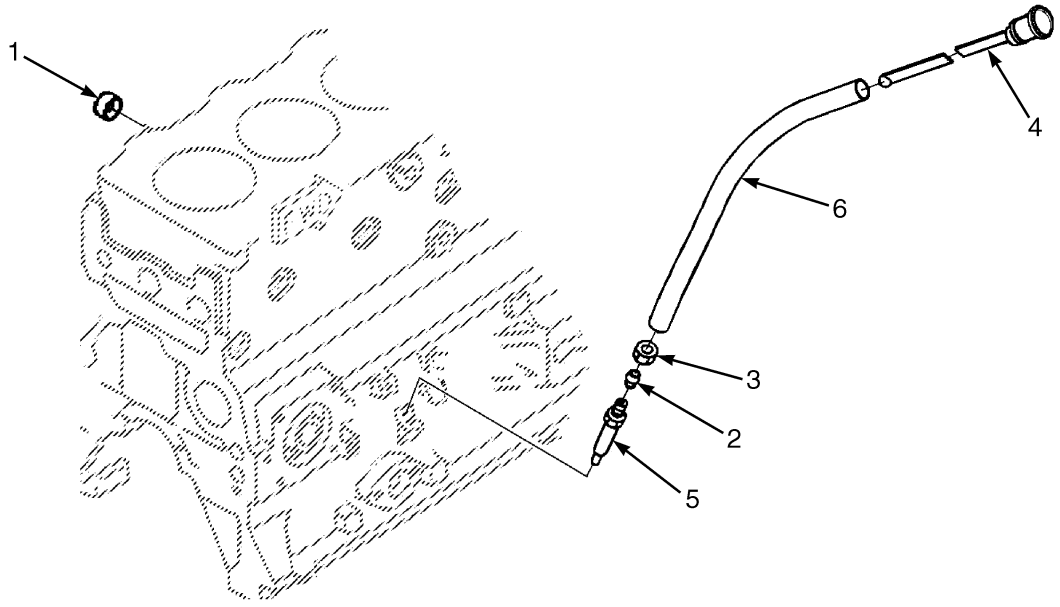

BP090409

ITEM	PART NO.	DESCRIPTION	QTY
1	1691847	Plug	1
2	1691848	Collar	1
3	1691849	Nut	1
4	1691850	Dipstick	1
5	1691851	Dipstick Tube (Lower)	1
6	1691852	Dipstick Tube (Upper)	1

©2011 HYSTER COMPANY

WATER OUTLET CONNECTION (FIGURE 2-54)

CUMMINS QSB 3.3L DIESEL

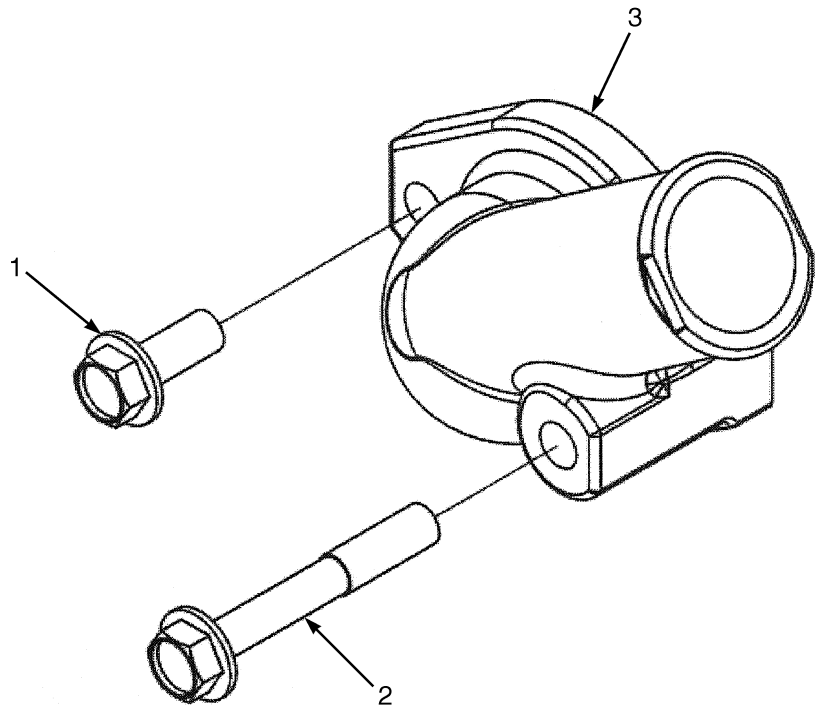

BP090455

ITEM	PART NO.	DESCRIPTION	QTY
	2108566	Engine Assy-Diesel (99 Horsepower)	1
	2103244	Engine Assy-Diesel	1
1	1691869	Capscrew	1
2	1691830	Capscrew	1
3	1692046	Connector (Water Outlet)	1

NOTES

©2011 HYSTER COMPANY

3 FUEL SYSTEM

SECTION 3
FUEL SYSTEM

DESCRIPTION	PAGE
AIR FILTER	3-8
AIR INTAKE	
CUMMINS QSB 3.3L DIESEL	3-6
GM 4.3L LPG - PSI OPTION (PENDING PER ECN 152361 →)	3-4
GM 4.3L GASOLINE AND LPG - GFI OPTION	3-2
FUEL CAP	
DIESEL	3-38
FUEL FILTER	
CUMMINS QSB 3.3L DIESEL	3-46
FUEL FILTER PLUMBING	
CUMMINS QSB 3.3L DIESEL	3-44
FUEL INJECTION PUMP	
CUMMINS QSB 3.3L DIESEL	3-39
FUEL INJECTOR AND INJECTOR PLUMBING	
CUMMINS QSB 3.3L DIESEL	3-40
FUEL PUMP PLUMBING	
CUMMINS QSB 3.3L DIESEL	3-42
FUEL SUPPLY SYSTEM	
GM 4.3L GASOLINE	3-10
GM 4.3L LPG - PSI OPTION (PENDING PER ECN 152361 →)	3-18
GM 4.3L LPG WITH OVERHEAD GUARD OR PCV DOOR CAB - GFI OPTION (→ PENDING PER ECN 152361)	3-16
GM 4.3L LPG WITH STEEL DOOR CAB - GFI OPTION (PENDING PER ECN 152361 →)	3-12
FUEL SYSTEM	
CUMMINS QSB 3.3L DIESEL	3-36
LPG CONVERTER	
GM 4.3L LPG - PSI OPTION (PENDING PER ECN 152361 →)	3-31
LPG LOCK OFF	
GM 4.3L - PSI OPTION (PENDING PER ECN 152361 →)	3-32
LPG REGULATOR	
GM 4.3L LPG - GFI OPTION (→ PENDING PER ECN 152361)	3-28
LPG REGULATOR AND MIXER	
GM 4.3L - PSI OPTION (PENDING PER ECN 152361 →)	3-30
MONOTROL PEDAL ASSEMBLY	3-50
SINGLE AND DUAL LPG TANK BRACKETS	3-34
THROTTLE BODY	
GM 4.3L LPG - PSI OPTION (PENDING PER ECN 152361 →)	3-26
THROTTLE BODY ASSEMBLY	
GM 4.3L LPG (→ S/N J006V02542H)	3-22
GM 4.3L LPG (S/N J006V02543H ↔ PENDING PER ECN 152361)	3-24
THROTTLE BODY ASSEMBLY AND FUEL RAIL	
GM 4.3L GASOLINE	3-20
THROTTLE PEDAL AND ATTACHING PARTS	3-48
WATER SEPARATOR	
CUMMINS QSB 3.3L DIESEL	3-47

©2011 HYSTER COMPANY

AIR INTAKE (FIGURE 3-1)
GM 4.3L GASOLINE AND LPG — GFI OPTION

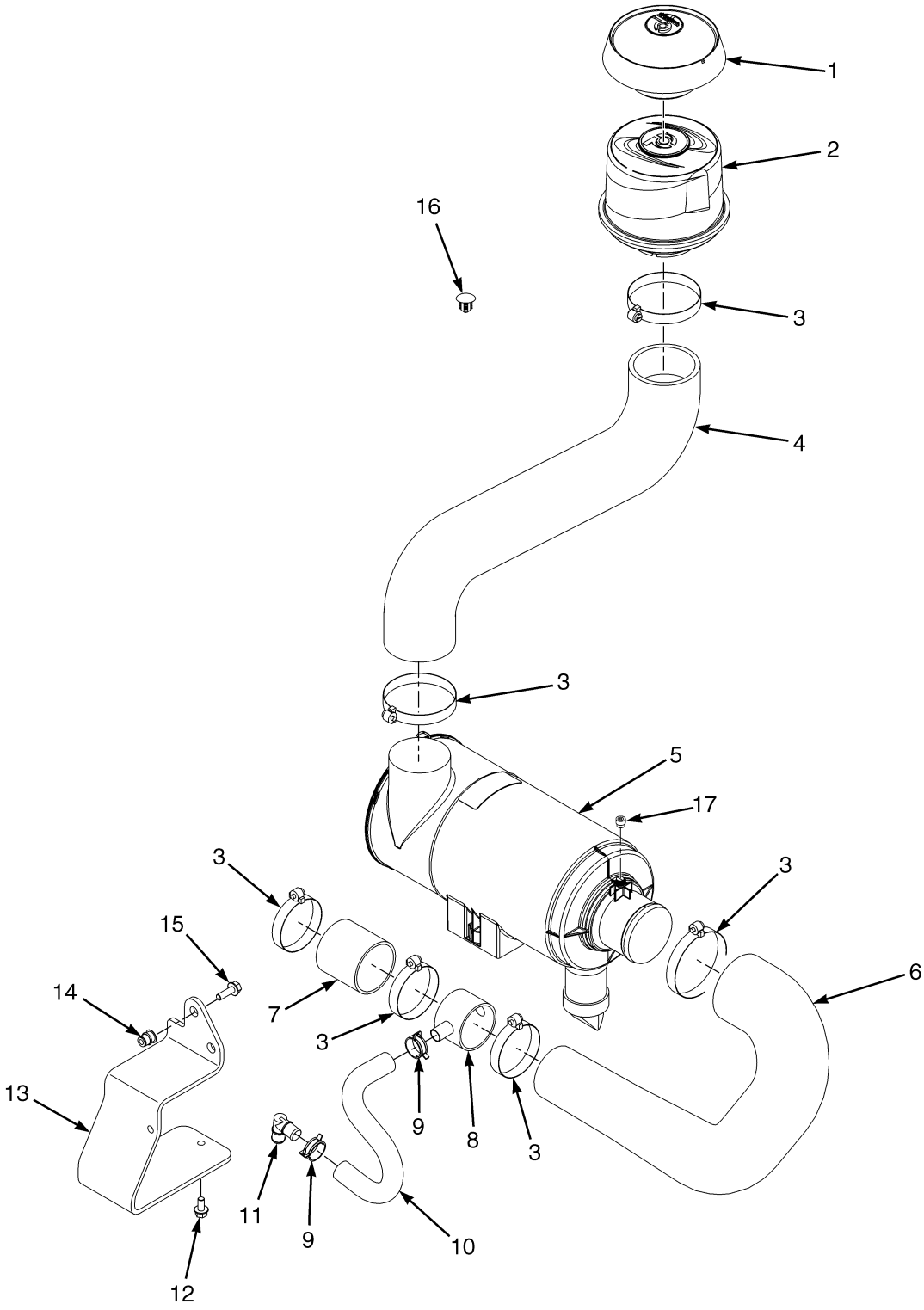

©2011 HYSTER COMPANY

AIR INTAKE

GM 4.3L GASOLINE AND LPG – GFI OPTION

ITEM	PART NO.	DESCRIPTION	QTY
1	154821	Cap	1
2	1501888	Pre-Cleaner	1
3	115696	Hose Clamp	6
4	2081788	Hose (Dirty Air)	1
5	**a** 2105571	Air Filter Assembly (☞Figure 3-4)	1
5	**b** 4613024	Air Filter Assembly (☞Figure 3-4)	1
6	2102917	Hose (Clean Air)	1
7	2102916	Hose (Air Intake)	1
8	1661665	Coupler (PCV)	1
9	1502009	Hose Clamp	2
10	2093738	Hose	1
11	379407	Fitting	1
12	1527879	Capscrew	2
13	1640863	Bracket	1
14	1530243	Insert	2
15	1510113	Capscrew	2
16	1561847	Plug	2
17	165991	Indicator (Restriction)	1

FOOTNOTES:

a → 8/2011

b 8/2011 →

©2011 HYSTER COMPANY

AIR INTAKE (FIGURE 3-2)

GM 4.3L LPG — PSI OPTION (PENDING PER ECN 152361 →)

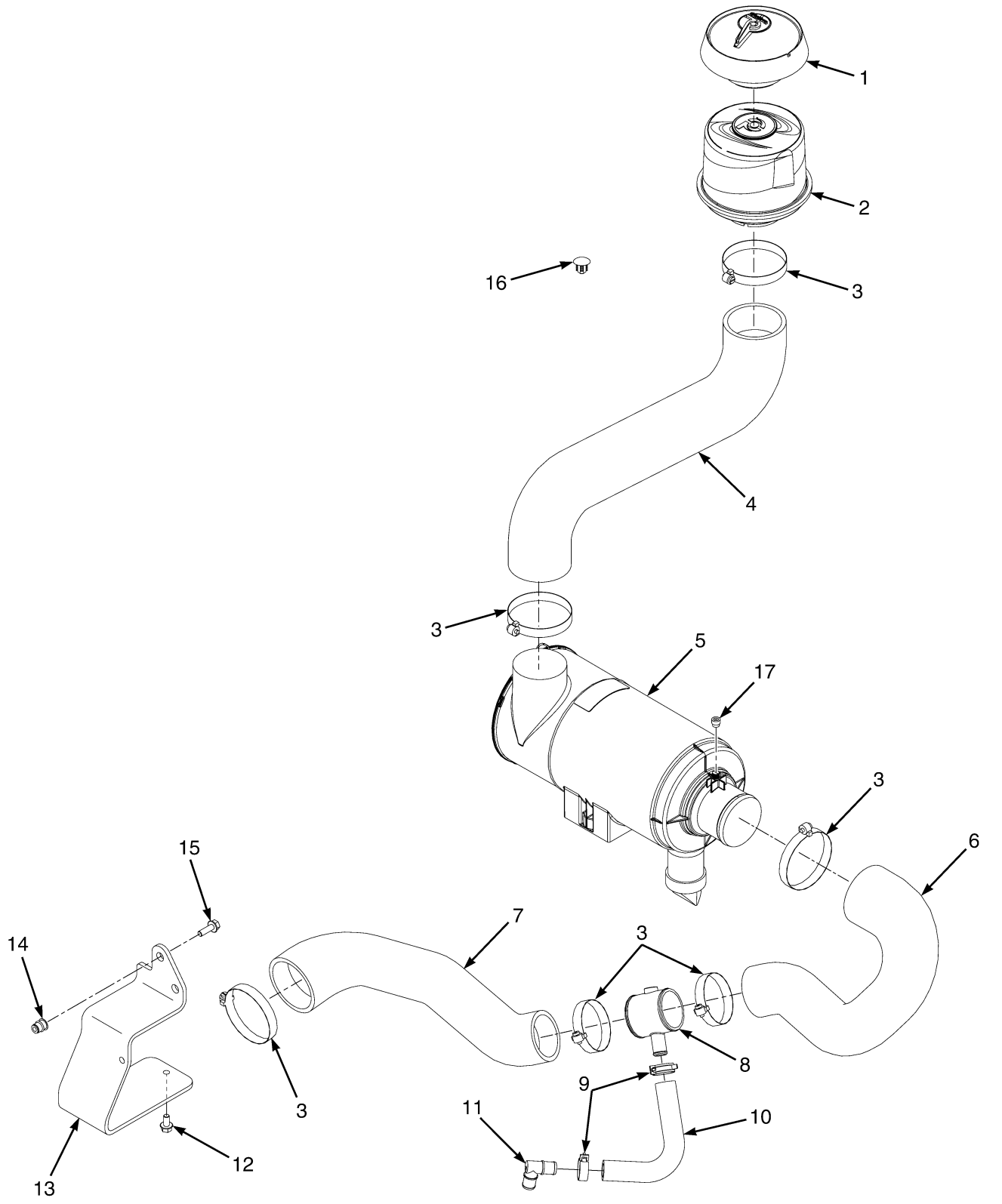

©2011 HYSTER COMPANY

AIR INTAKE

GM 4.3L LPG – PSI OPTION (PENDING PER ECN 152361 →)

ITEM	PART NO.	DESCRIPTION	QTY
1	154821	Cap	1
2	1501888	Pre-Cleaner	1
3	115696	Hose Clamp	6
4	2081788	Hose (Dirty Air)	1
5	4613024	Air Filter Assembly (☞Figure 3-4)	1
6	4615426	Hose (Clean Air)	1
7	4615352	Hose (Clean Air)	1
8	1661665	Coupler (PCV)	1
9	1502009	Hose Clamp	2
10	4615235	Hose (PCV Vent)	1
11	379407	Fitting	1
12	1527879	Capscrew	2
13	1640863	Bracket	1
14	1530243	Insert	2
15	1510113	Capscrew	2
16	1561847	Plug	2
17	165991	Indicator (Restriction)	1
	a 1543842	Clamp	1
	a 1502061	Clamp	1

FOOTNOTES:

a Not Illustrated

©2011 HYSTER COMPANY

AIR INTAKE (FIGURE 3-3)
CUMMINS QSB 3.3L DIESEL

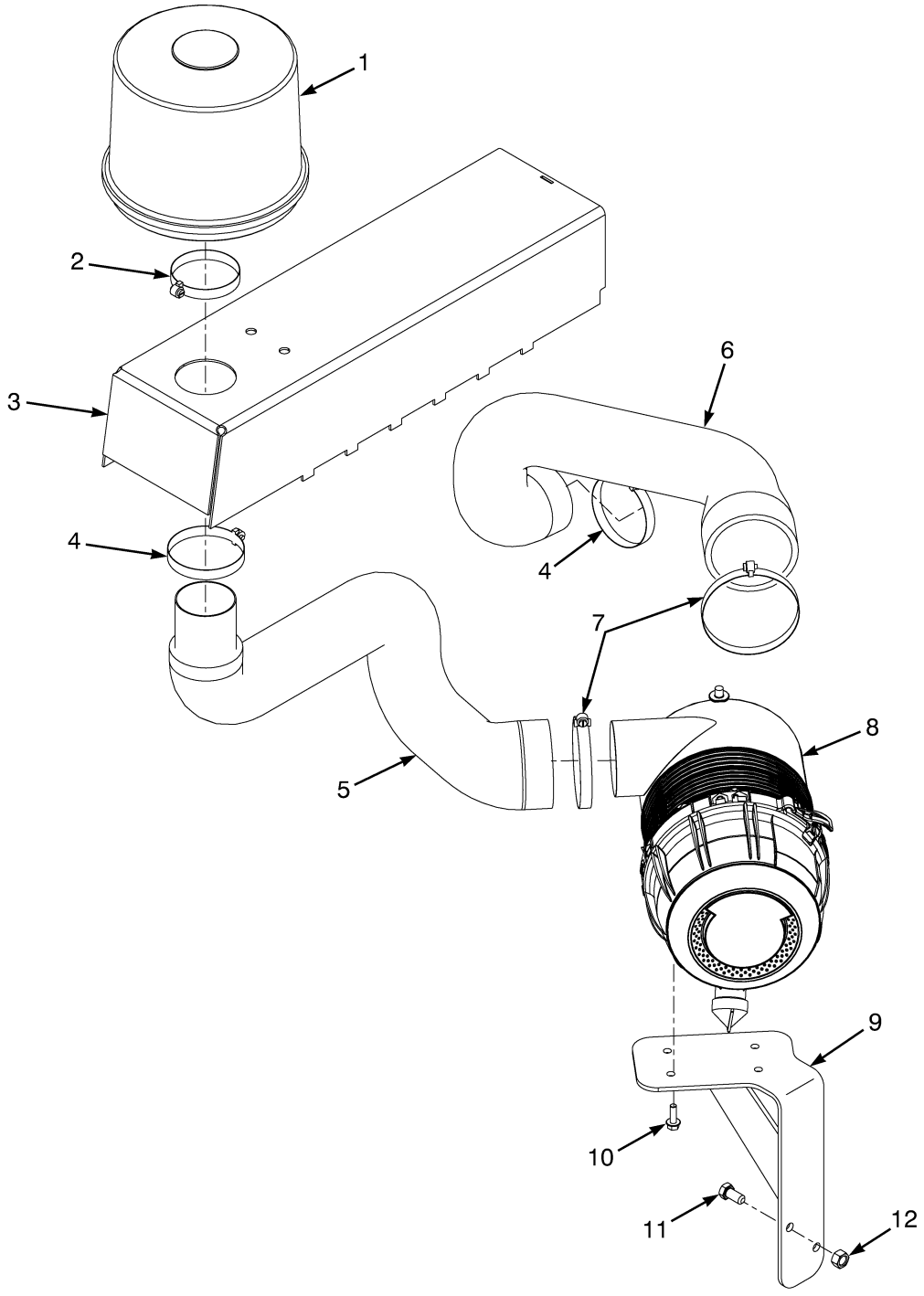

BP130170

©2011 HYSTER COMPANY

AIR INTAKE

CUMMINS QSB 3.3L DIESEL

ITEM	PART NO.	DESCRIPTION	QTY
1	154821	Cap	1
1	2097624	Pre-Cleaner	1
2	1689464	Clamp	1
3	1638510	Hood Support	1
4	115696	Hose Clamp	2
5	2099265	Hose (Dirty Air)	1
6	2099080	Hose (Clean Air)	1
7	227220	Clamp	2
8	2100119	Air Filter	1
8	2103627	Filter Element	1
8	1689296	Kit-Cover	1
9	1664618	Bracket Wldmt	1
10	1510113	Capscrew	4
11	293645	Capscrew	2
12	292656	Nut	2

©2011 HYSTER COMPANY

AIR FILTER (FIGURE 3-4)

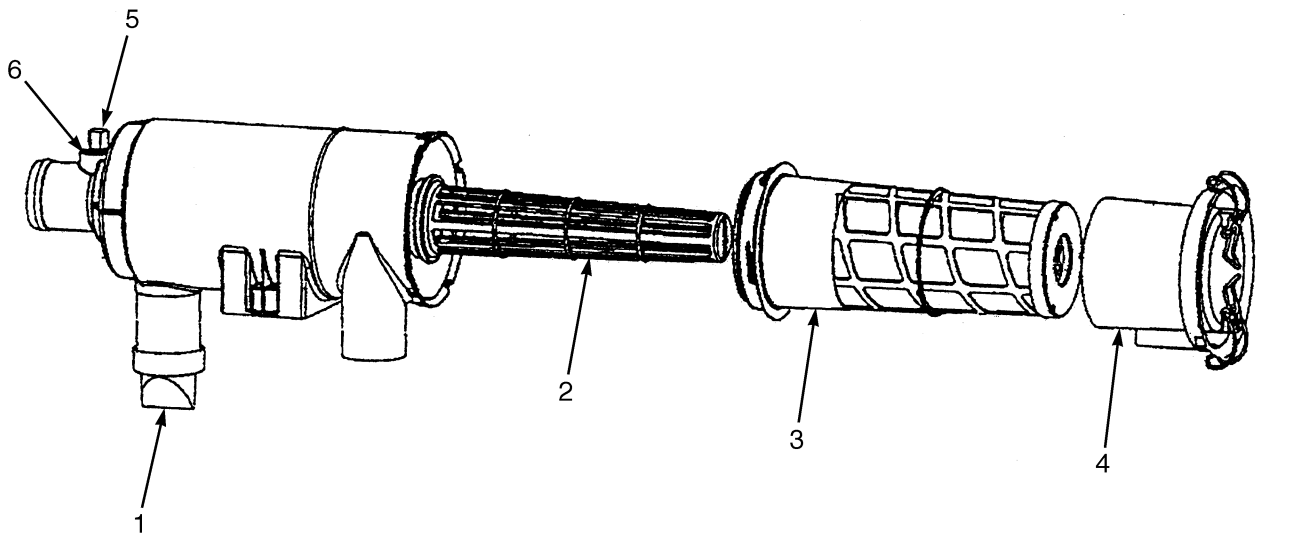

BP070054

ITEM	PART NO.	DESCRIPTION	QTY
	a 2105571	Air Filter Assembly	1
	b 4613024	Air Filter Assembly	1
1	374923	Valve	1
2	1620145	Inner Liner Assy (Gasket)	1
3	1620142	Filter Element	1
4	1688547	Cover	1
5	141331	Cap	1
6	**b** 4030497	Connector (Pipe Nipple)	1

FOOTNOTES:

a → 8/2011

b 8/2011 →

©2011 HYSTER COMPANY

NOTES

©2011 HYSTER COMPANY

FUEL SUPPLY SYSTEM (FIGURE 3-5)

GM 4.3L GASOLINE

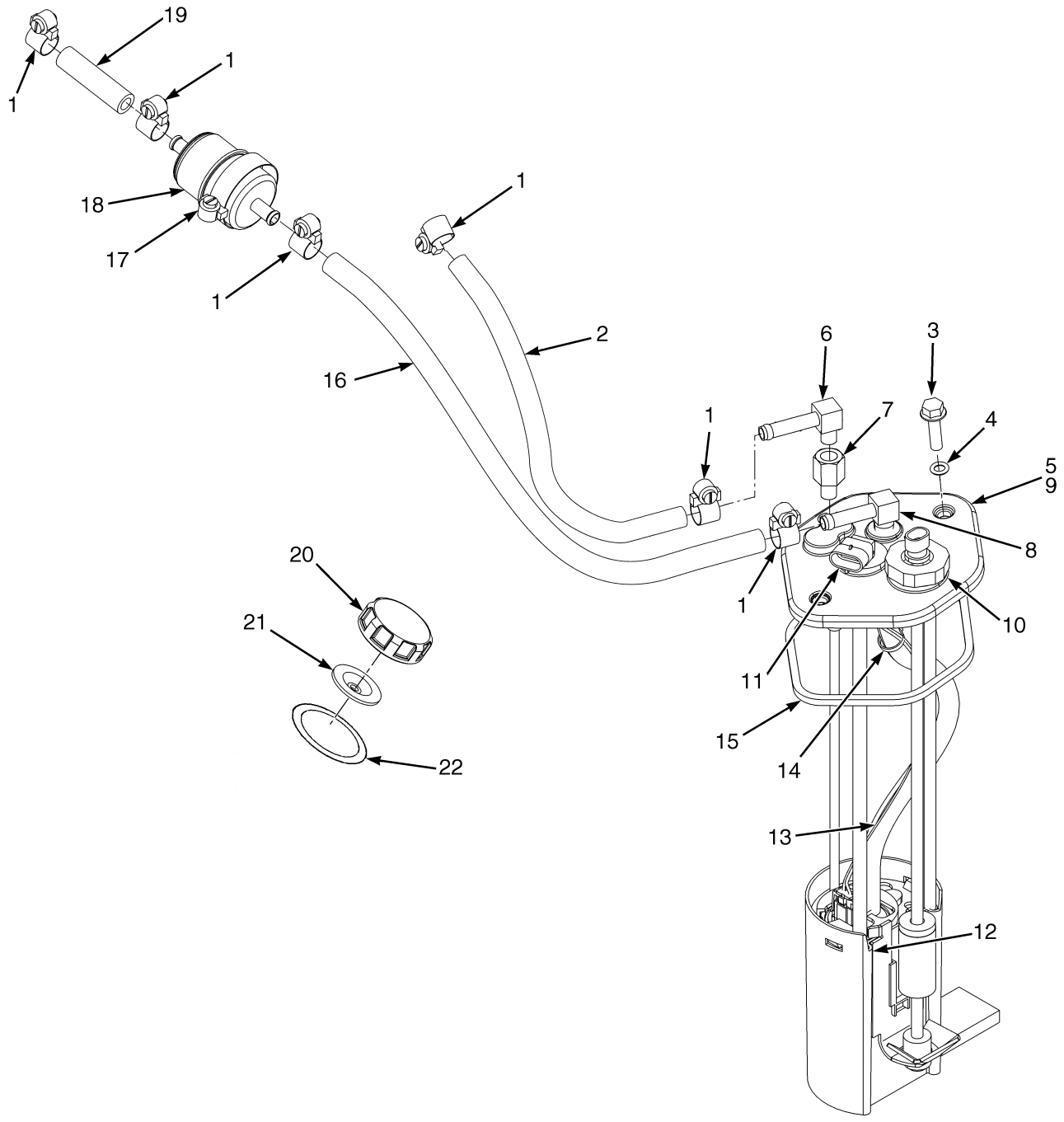

©2011 HYSTER COMPANY

FUEL SUPPLY SYSTEM
GM 4.3L GASOLINE

ITEM	PART NO.	DESCRIPTION	QTY
1	166857	Clamp	6
2	2080130	Hose	1
3	1527881	Capscrew	2
4	353000	O-Ring	1
5	1608872	Fuel Sender	1
6	192306	Fitting	1
7	12856	Fitting	1
8	17353	Fitting	1
9	1551665	Cover	1
10	1551828	Fuel Sender	1
11	1371149	Connector	1
12	1590211	Bracket	1
13	1511729	Wire Harness	1
14	114312	Strap Clamp	1
15	1528893	Quad Ring	1
16	2074231	Hose	1
17	119236	Clamp	1
18	1553541	Fuel Filter	1
19	2066137	Hose	1
20	1579677	Fuel Cap	1
21	1528608	Grommet	1
22	325549	Shim (0.020 in.)	1
	a 1528481	Plug (With O-Ring) (Fuel Tank Drain)	1

FOOTNOTES:

a Not Illustrated

©2011 HYSTER COMPANY

FUEL SUPPLY SYSTEM (FIGURE 3-6)

GM 4.3L LPG WITH STEEL DOOR CAB — GFI OPTION (PENDING PER ECN 152361 →)

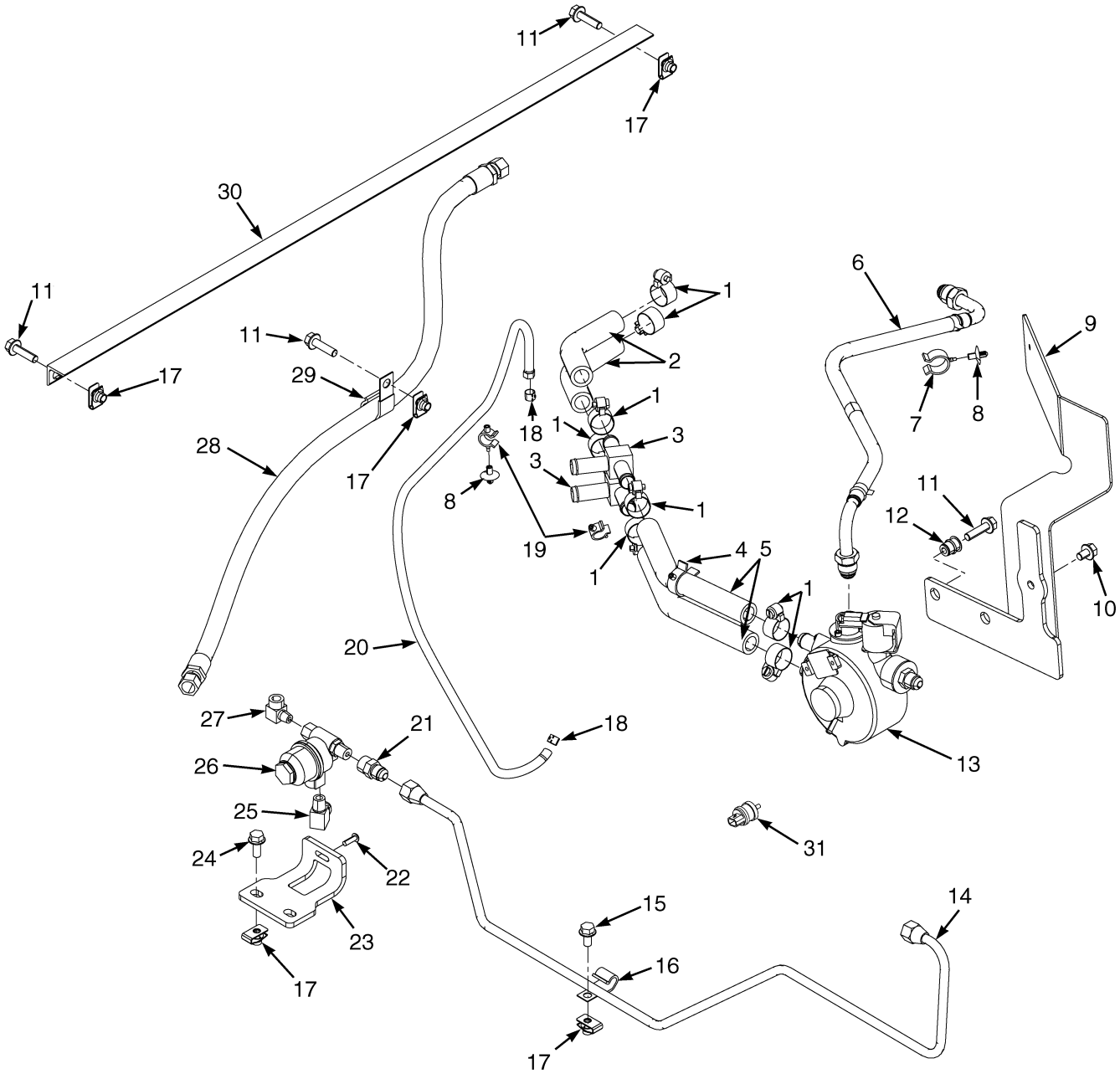

©2011 HYSTER COMPANY

FUEL SUPPLY SYSTEM

GM 4.3L LPG WITH STEEL DOOR CAB – GFI OPTION (PENDING PER ECN 152361 →)

ITEM	PART NO.	DESCRIPTION	QTY
1	130845	Clamp	8
2	2094425	Coolant Hose	2
3	366000	Fitting	2
4	1542436	Clamp	1
5	2094426	Coolant Hose	2
6	2072631	Hose (Vapor)	1
6	1698684	Kit-O-Ring	1
7	1502066	Clamp	1
8	1543842	Clamp	2
9	1639118	Bracket	1
10	1529366	Capscrew	2
11	1527881	Capscrew	5
12	1530243	Insert	2
13	**e** ~~2056762~~		
	4602051	LPG Converter (☞Figure 3-13)	1
13	**g** ~~2056762~~		
	4602051	LPG Converter (☞Figure 3-13)	1
14	**b** 1639673	Tube	1
14	**a** 2110983	Tube Assy	1
15	1527879	Capscrew	1
16	1376782	Clamp	1
17	1480237	Nut	6
18	366473	Clamp	2
19	1542439	Clamp (Swivel)	2
20	1399437	Hose	1
21	14330	Fitting	1
22	296152	Capscrew	2
23	1639119	Bracket	1
24	1527880	Capscrew	2
25	14358	Fitting	1
26	**d** 2070100	Fuel Filter (LPG)	1
26	**f** 2105803	Fuel Filter (LPG)	1
26	**d** 1581302	Kit-Filter Element	1
26	**f** 1689544	Kit-Filter Element	1
26	. . . . .	O-Ring	1
26	. . . . .	Filter Element	1
26	. . . . .	O-Ring	1
26	. . . . .	Seal	1
27	**b** 16151	Fitting	1
27	**a** 14349	Fitting (Pipe Plug) (Not Shown)	1
28	2079983	Hose Assy	1
29	1339452	Clamp	1
30	1650217	Bracket	1
31	1501970	Pressure Switch (Low Fuel)	1
	ac 1662253	Sensor (Vapor)	1
	ac 1705818	Fitting (Vapor Sensor)	1

©2011 HYSTER COMPANY

FOOTNOTES:

a For use only with premium low fuel sensor.
b For use only without premium low fuel sensor.
c Not Illustrated
d → S/N J006V01684F
e → S/N J006V02294G
f S/N J006V01685F →
g S/N J006V02295G →

©2011 HYSTER COMPANY

NOTES

©2011 HYSTER COMPANY

FUEL SUPPLY SYSTEM (FIGURE 3-7)

GM 4.3L LPG WITH OVERHEAD GUARD OR PCV DOOR CAB — GFI OPTION

(→ PENDING PER ECN 152361)

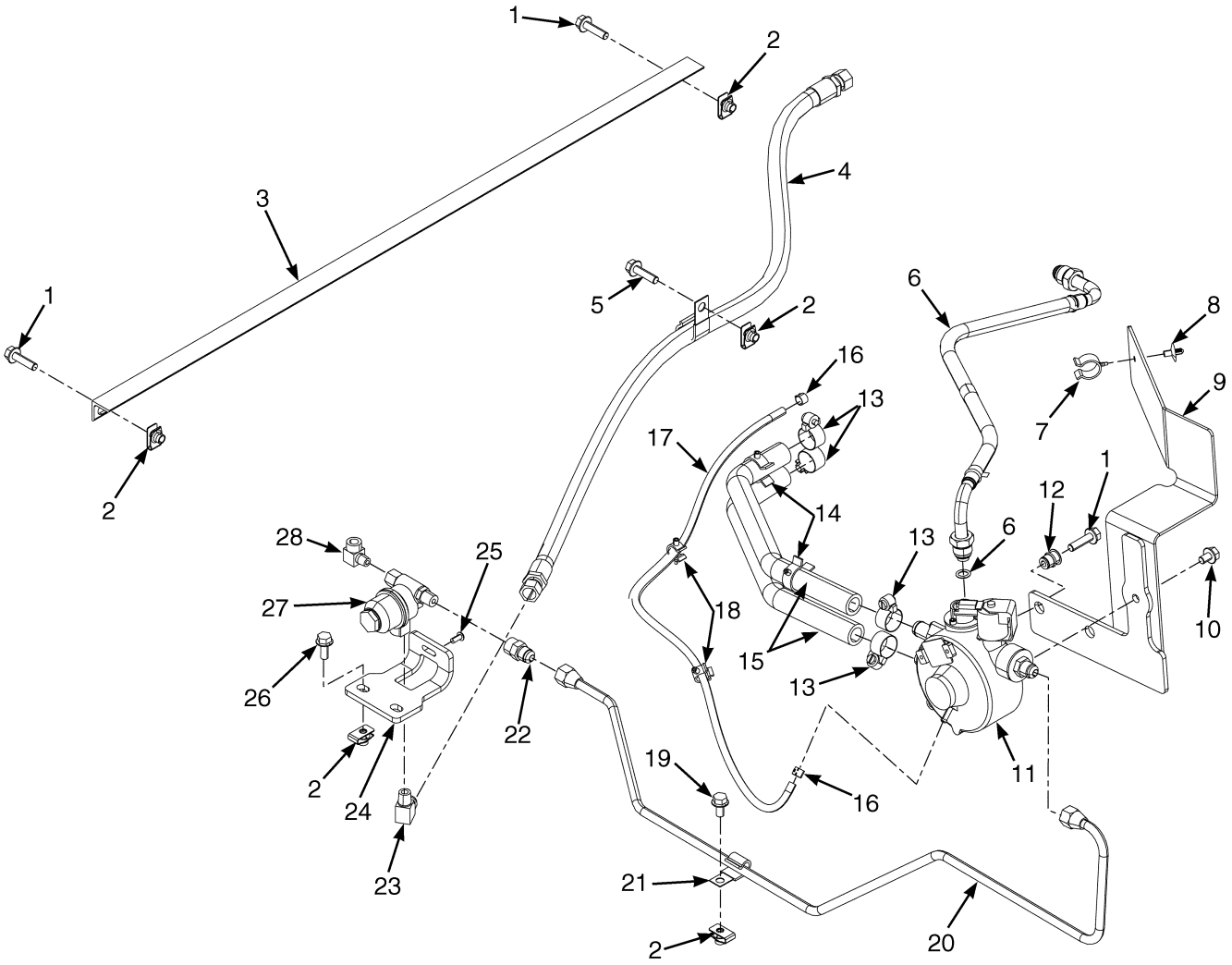

BP130210

©2011 HYSTER COMPANY

FUEL SUPPLY SYSTEM

GM 4.3L LPG WITH OVERHEAD GUARD OR PCV DOOR CAB – GFI OPTION

(→ PENDING PER ECN 152361)

ITEM	PART NO.	DESCRIPTION	QTY
1	1527881	Capscrew	5
2	1480237	Nut	6
3	1650217	Bracket	1
4	2079983	Hose Assy	1
5	1339452	Clamp	1
6	2072631	Hose	1
6	. . . . .	O-Ring	2
7	1502066	Clamp	1
8	1543842	Clamp	1
9	1639118	Bracket	1
10	1529366	Capscrew	1
11	**d** ~~2056762~~		
	4602051	LPG Converter (☞Figure 3-13)	1
11	**e** ~~2056762~~		
	4602051	LPG Converter (☞Figure 3-13)	1
12	1530243	Insert	2
13	130845	Clamp	4
14	1542436	Clamp	2
15	2071009	Coolant Hose	2
16	366473	Clamp	2
17	1399437	Hose	1
18	1542439	Clamp (Swivel)	2
19	1527879	Capscrew	1
20	**b** 1639673	Tube	1
20	**a** 2110983	Tube Assy	1
21	1376782	Clamp	1
22	14330	Fitting	1
23	14358	Fitting	1
24	1639119	Bracket	1
25	296152	Capscrew	2
26	1527880	Capscrew	2
27	2105803	Fuel Filter (LPG)	1
28	**b** 16151	Fitting	1
28	**a** 14349	Fitting (Pipe Plug) (Not Shown)	1
	ac 1662253	Sensor (Vapor)	1
	ac 1705818	Fitting (Vapor Sensor)	1

FOOTNOTES:

a For use only with premium low fuel sensor.
b For use only without premium low fuel sensor.
c Not Illustrated
d → S/N J006V02294G
e S/N J006V02295G →

©2011 HYSTER COMPANY

FUEL SUPPLY SYSTEM (FIGURE 3-8)

GM 4.3L LPG — PSI OPTION (PENDING PER ECN 152361 →)

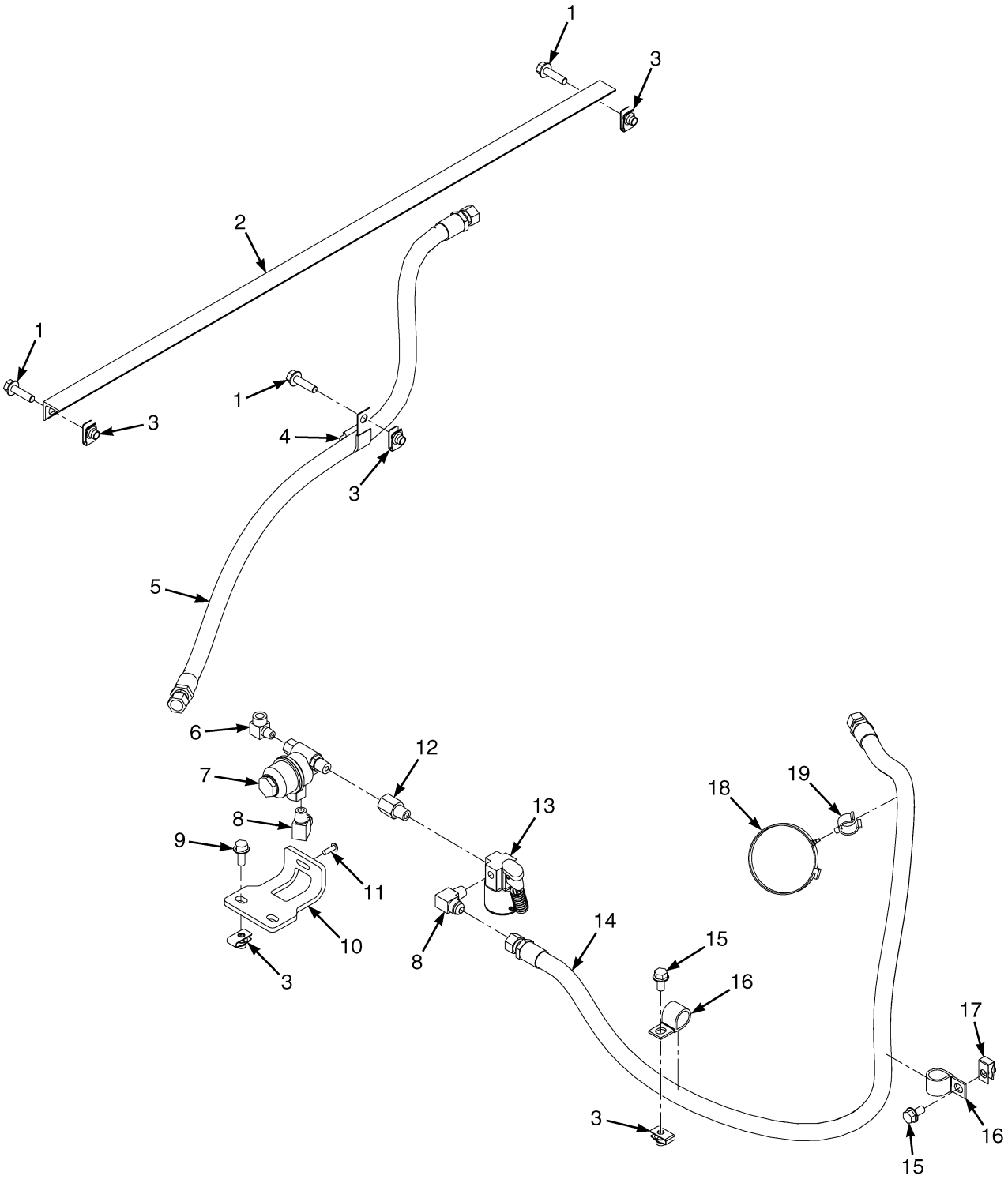

©2011 HYSTER COMPANY

FUEL SUPPLY SYSTEM

GM 4.3L LPG – PSI OPTION (PENDING PER ECN 152361 →)

KEY:
A: With Premium Low-Fuel System
B: Without Premium Low-Fuel System

ITEM	PART NO.	DESCRIPTION	QTY A	QTY B
1	1527881	Capscrew	3	3
2	1650217	Bracket	1	1
3	1480237	Nut	6	6
4	1339452	Clamp	1	1
5	2079983	Hose Assy	1	1
6	14349	Fitting (Pipe Plug)	1	..
6	16151	Fitting	..	1
7	2105803	Fuel Filter (LPG)	1	1
8	14358	Fitting	2	1
9	1527880	Capscrew	2	2
10	1639119	Bracket	1	1
11	296152	Capscrew	2	2
12	12855	Fitting	1	1
13	1662253	Sensor	1	..
13	14330	Fitting	..	1
14	4615506	Hose Assy	1	1
15	1527879	Capscrew	2	2
16	173247	Clamp	2	2
17	1398062	Nut	1	1
18	1502061	Clamp	1	1
19	1502059	Clamp	1	1
	a 246108	Sealant	AR	AR

FOOTNOTES:

a Not Illustrated

©2011 HYSTER COMPANY

THROTTLE BODY ASSEMBLY AND FUEL RAIL (FIGURE 3-9)

GM 4.3L GASOLINE

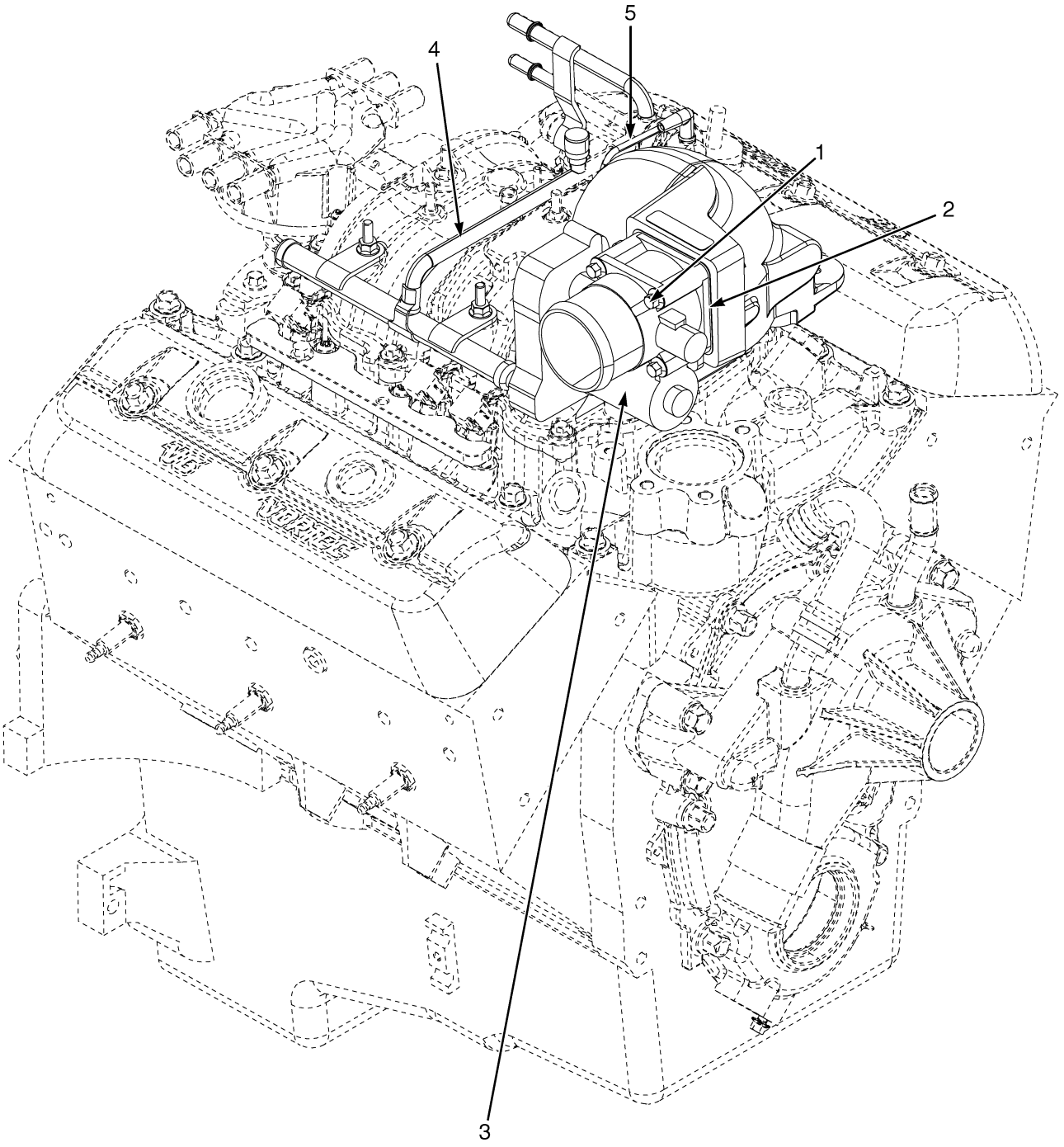

BP130267

©2011 HYSTER COMPANY

THROTTLE BODY ASSEMBLY AND FUEL RAIL
GM 4.3L GASOLINE

ITEM	PART NO.	DESCRIPTION	QTY
1	1540643	Capscrew	4
2	1557551	Gasket (Throttle Body)	1
3	1557547	Throttle Body	1
4	1677787	Tube Assy (Fuel Rail Assembly)	1
4	1559563	Injector	6
4	1677429	Retainer	6
4	1559557	Clip	1
4	1689940	Clip (Alternate Part)	1
4	1559561	Regulator	1
4	1686965	Fuel Rail	1
4	1686966	Pressure Valve	1
5	2066137	Hose	1

©2011 HYSTER COMPANY

THROTTLE BODY ASSEMBLY (FIGURE 3-10)

GM 4.3L LPG (→ S/N J006V02542H)

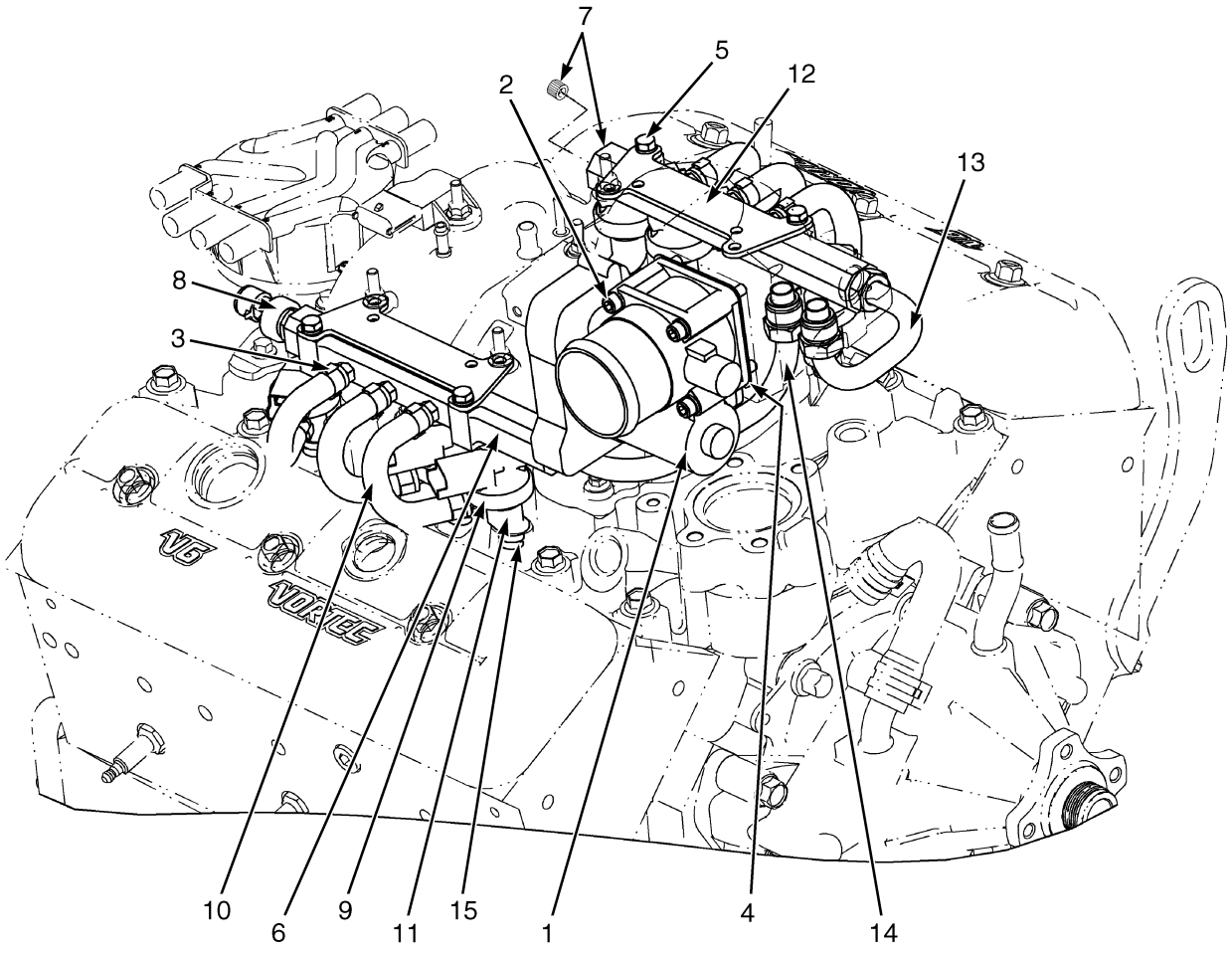

BP090275

©2011 HYSTER COMPANY

THROTTLE BODY ASSEMBLY

GM 4.3L LPG (→ S/N J006V02542H)

ITEM	PART NO.	DESCRIPTION	QTY
1	1557547	Throttle Body	1
2	1540643	Capscrew	4
3	1557566	Hose Clamp	12
4	1557551	Gasket (Throttle Body)	1
5	1527876	Capscrew	4
6	1632297	Fuel Rail	1
6	1632298	Fuel Rail	1
6	1632299	Fuel Rail	1
7	**c** 15347	Fitting	1
8	**a** 1632300	Sensor (Fuel Pressure)	1
9	1557560	Injector (LPG)	6
10	1632301	Hose	6
11	1632302	Adapter	6
12	1632303	Bracket	2
13	1632304	Tube Assy	1
14	1632305	Tube Assy	1
15	1557565	O-Ring	6
	b 1632307	Bracket	2

FOOTNOTES:

a Left Rail Only
b Not Illustrated
c Right Rail Only

©2011 HYSTER COMPANY

THROTTLE BODY ASSEMBLY (FIGURE 3-11)

GM 4.3L LPG (S/N J006V02543H ↔ PENDING PER ECN 152361)

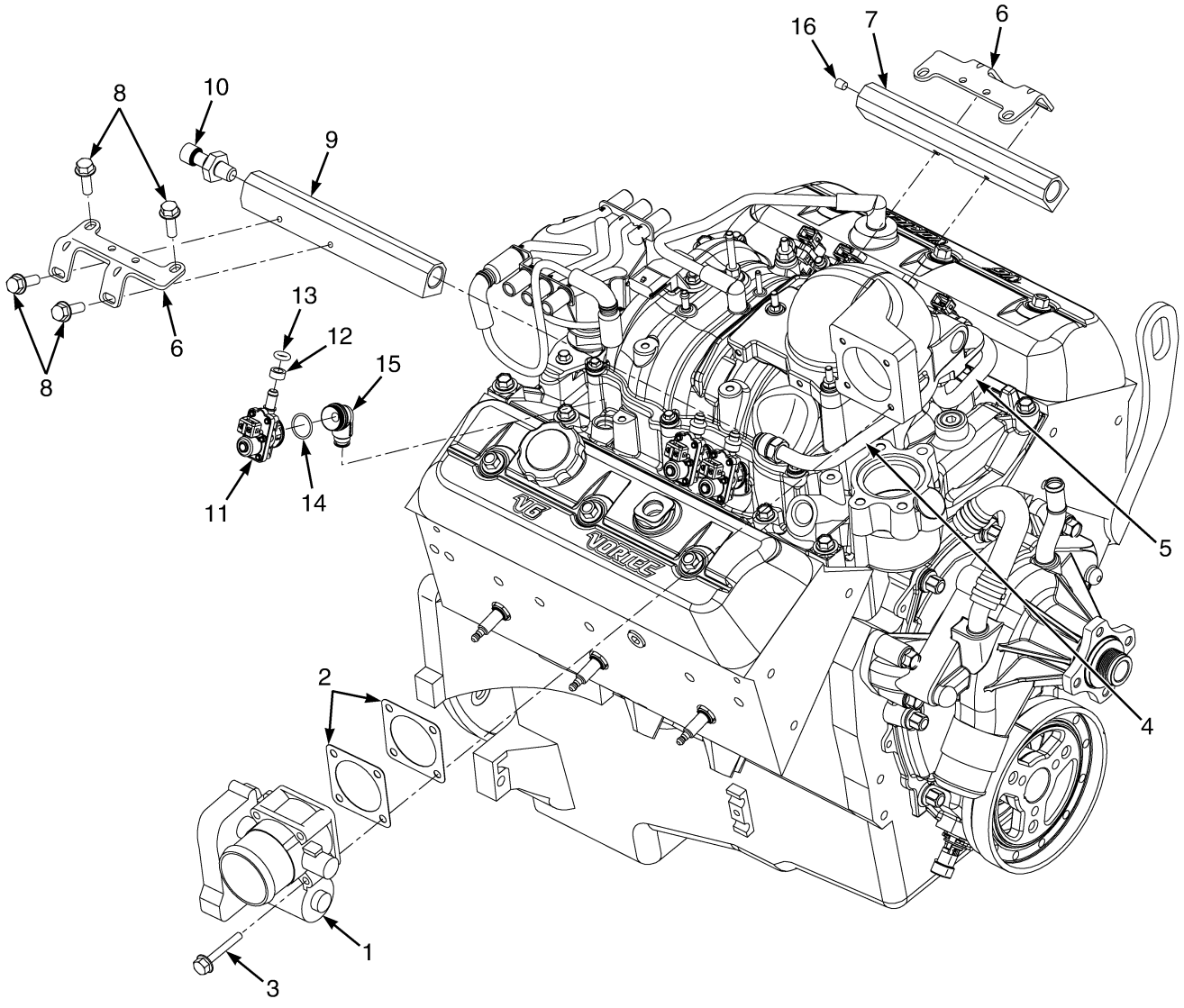

©2011 HYSTER COMPANY

THROTTLE BODY ASSEMBLY

GM 4.3L LPG (S/N J006V02543H ↔ PENDING PER ECN 152361)

ITEM	PART NO.	DESCRIPTION	QTY
1	1557547	Throttle Body	1
2	1557551	Gasket (Throttle Body)	1
3	1540643	Capscrew	4
4	1632305	Tube Assy	1
5	1632304	Tube Assy	1
6	4013329	Bracket	2
7	4013328	Fuel Rail (LH)	1
8	1527876	Capscrew	8
9	4013327	Fuel Rail (RH)	1
10	1632300	Sensor (Fuel Pressure)	1
11	4013301	Injector	6
12	4013302	O-Ring	6
13	4013303	O-Ring	6
14	4013299	O-Ring	6
15	4013304	Adapter	6
15	1557565	O-Ring	6
15	1632306	Lubricant	AR
16	15347	Fitting	1
	246108	Sealant	AR

©2011 HYSTER COMPANY

THROTTLE BODY (FIGURE 3-12)

GM 4.3L LPG — PSI OPTION (PENDING PER ECN 152361 →)

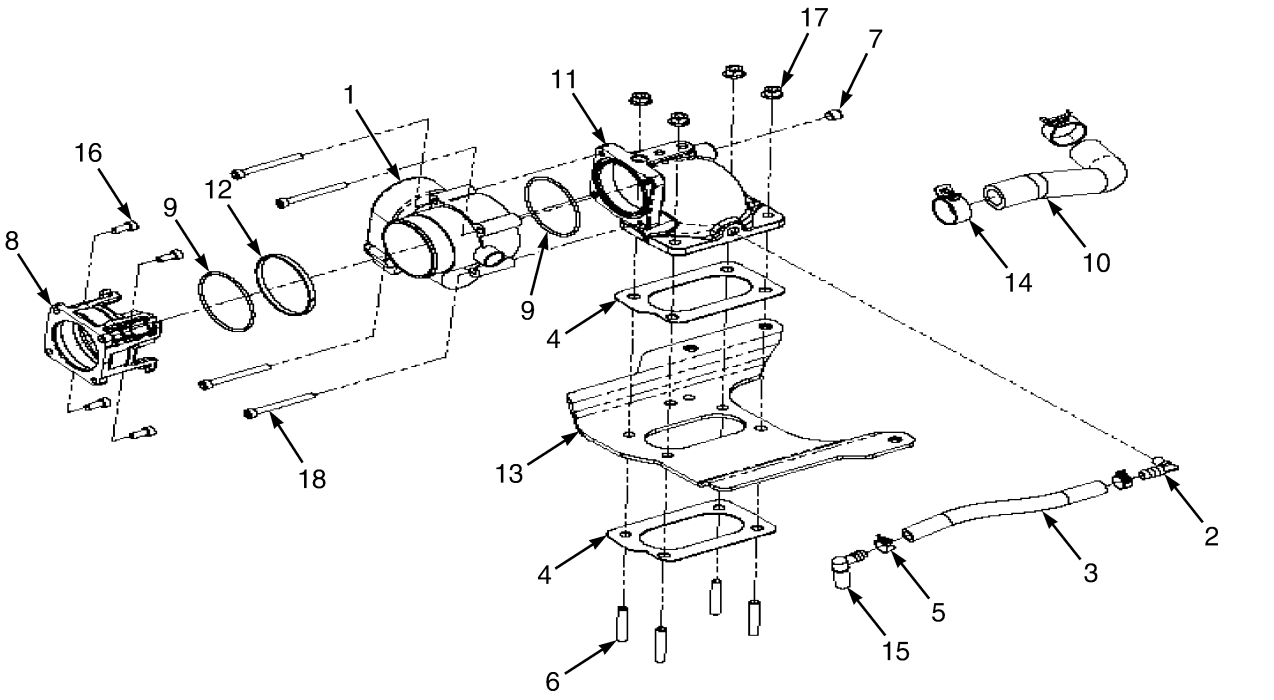

BP130338

ITEM	PART NO.	DESCRIPTION	QTY
1	4019103	Throttle Body	1
2	4040263	Fitting	1
3	4040264	Hose (8 in.)	1
4	4040265	Gasket	2
5	4019090	Clamp	2
6	4019104	Stud	4
7	4019120	Plug	1
8	4019105	Adapter	1
9	4019106	O-Ring	2
10	4040250	Hose	1
11	4040266	Adapter	1
12	4019107	Spacer	1
13	4040267	Bracket	1
14	4019099	Clamp	2
15	4040268	Fitting	1
16	293774	Capscrew	4
17	191534	Nut	4
18	296003	Screw	4

©2011 HYSTER COMPANY

NOTES

©2011 HYSTER COMPANY

LPG REGULATOR (FIGURE 3-13)

GM 4.3L LPG — GFI OPTION (→ PENDING PER ECN 152361)

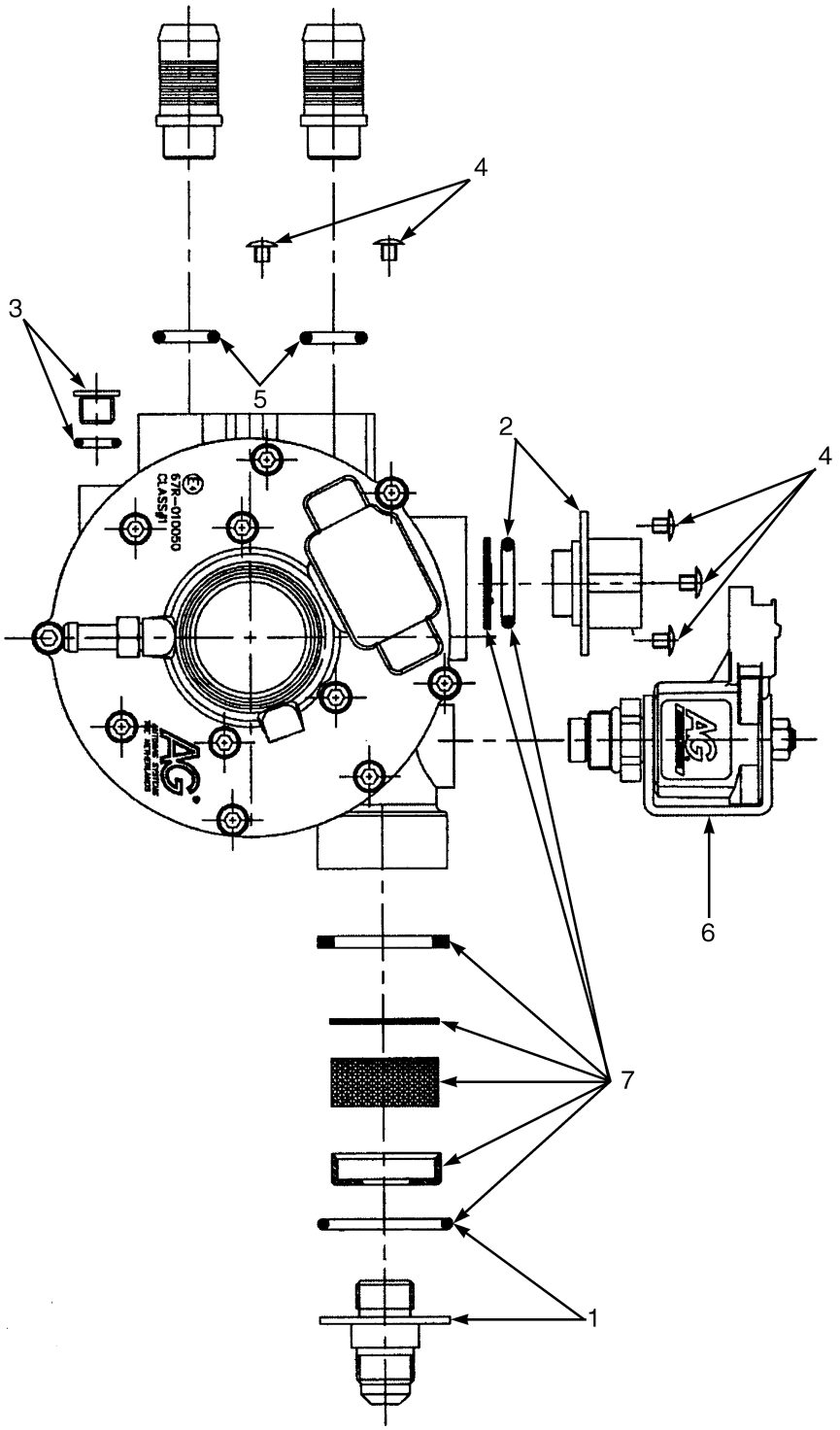

HP130352

©2011 HYSTER COMPANY

LPG REGULATOR

GM 4.3L LPG – GFI OPTION (→ PENDING PER ECN 152361)

ITEM	PART NO.	DESCRIPTION	QTY
	~~2056762~~		
	4602051	LPG Converter	1
1	1581762	Fitting (Inlet Fitting With O-Ring)	1
2	1581763	Fitting (Outlet Fitting With O-Ring)	1
3	1581764	Drain Plug (With O-Ring)	1
4	1585751	Kit-Screw (With Connector Screw)	1
5	1585748	Kit-O-Ring (With Coolant Fitting O-Ring)	1
6	1585747	LPG Lock-Off	1
7	1581761	Kit-Filter	1
7	. . . . .	O-Ring	1
7	. . . . .	Plastic Cap	1
7	. . . . .	Foam Filter	1
7	. . . . .	Paper Filter	1
7	. . . . .	Rubber Washer	1
7	. . . . .	Screen	1
	1692176	Kit-Repair LPG Converter	1
	. . . . .	Diaphragm	1
	. . . . .	Barrier, Lower	1
	. . . . .	Barrier, Upper	1
	. . . . .	Rubber Seal, High Pressure	1
	. . . . .	Support (For Rubber Seal)	1
	. . . . .	Pivot Pin	1
	. . . . .	Screw (For Pivot Pin)	1
	. . . . .	Washer	1
	. . . . .	Washer, Anti-Friction	1
	4600754	Fitting	1

©2011 HYSTER COMPANY

LPG REGULATOR AND MIXER (FIGURE 3-14)

GM 4.3L — PSI OPTION (PENDING PER ECN 152361 →)

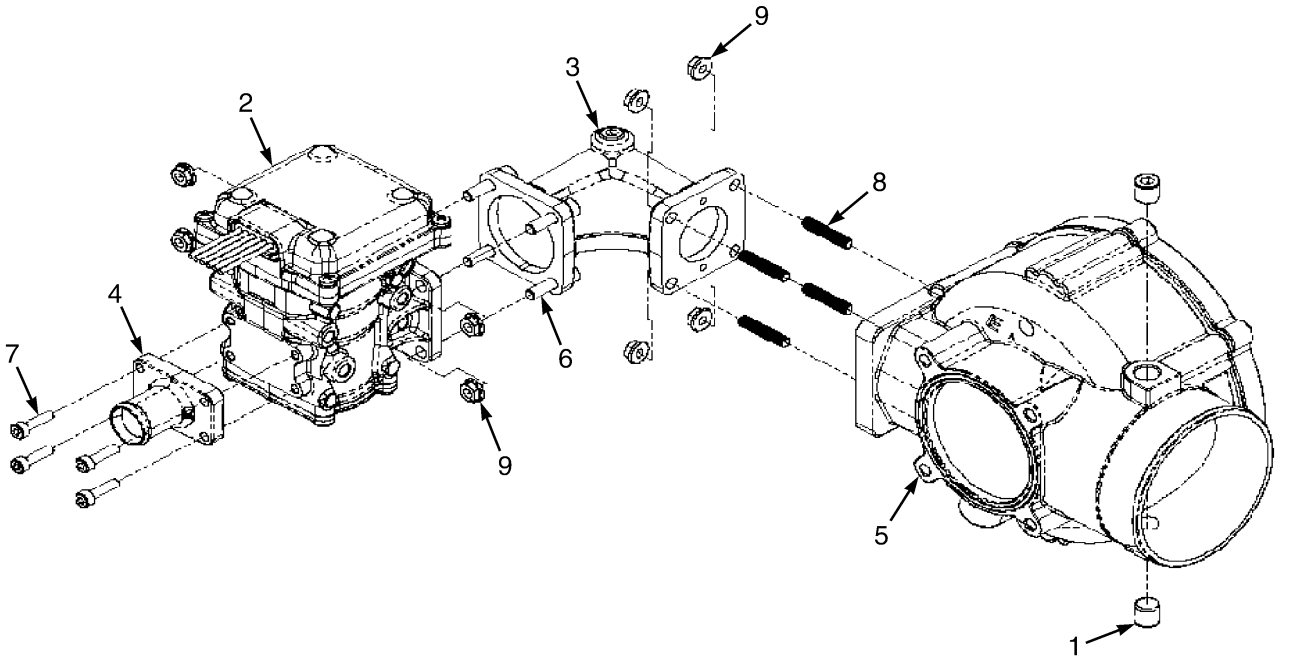

ITEM	PART NO.	DESCRIPTION	QTY
1	4019120	Plug	2
2	4019119	Regulator	1
3	4040270	Adapter	1
4	4019118	Fitting	1
5	4019117	Carburetor (Mixer)	1
6	293744	Screw	4
7	292672	Capscrew	4
8	4019121	Stud	4
9	1565407	Nut	8

©2011 HYSTER COMPANY

LPG CONVERTER (FIGURE 3-15)

GM 4.3L LPG — PSI OPTION (PENDING PER ECN 152361 →)

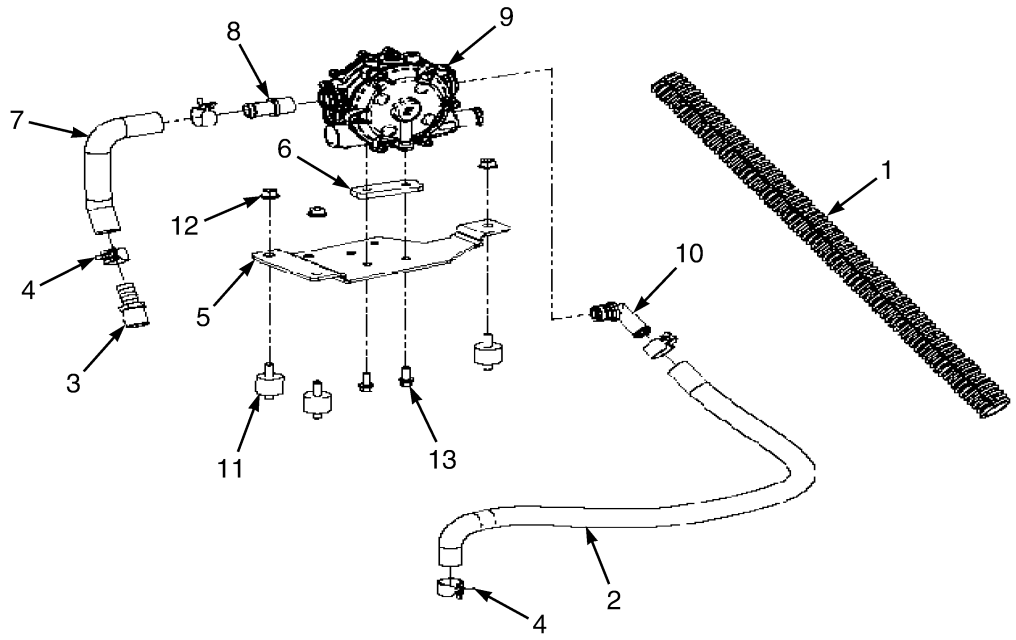

ITEM	PART NO.	DESCRIPTION	QTY
1	4040254	Conduit (20 in.)	AR
2	4019086	Hose	1
3	4040255	Fitting	1
4	4019092	Clamp	4
5	4040256	Bracket	1
6	4040257	Spacer	1
7	4040258	Hose	1
8	4040259	Fitting	1
9	4040260	Regulator	1
9	4040288	Kit-Regulator Repair	1
10	4040261	Fitting	1
11	4040262	Isolator	3
12	1502543	Nut (Flange)	3
13	1527876	Capscrew	2

LPG LOCK OFF (FIGURE 3-16)

GM 4.3L — PSI OPTION (PENDING PER ECN 152361 →)

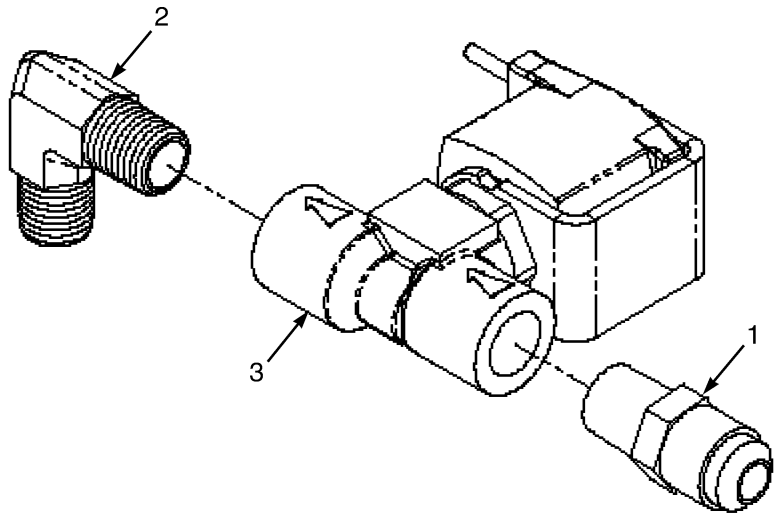

ITEM	PART NO.	DESCRIPTION	QTY
1	4019018	Fitting	1
2	4019019	Fitting	1
3	4019020	Valve (Lock-Off)	1

©2011 HYSTER COMPANY

NOTES

©2011 HYSTER COMPANY

SINGLE AND DUAL LPG TANK BRACKETS (FIGURE 3-17)

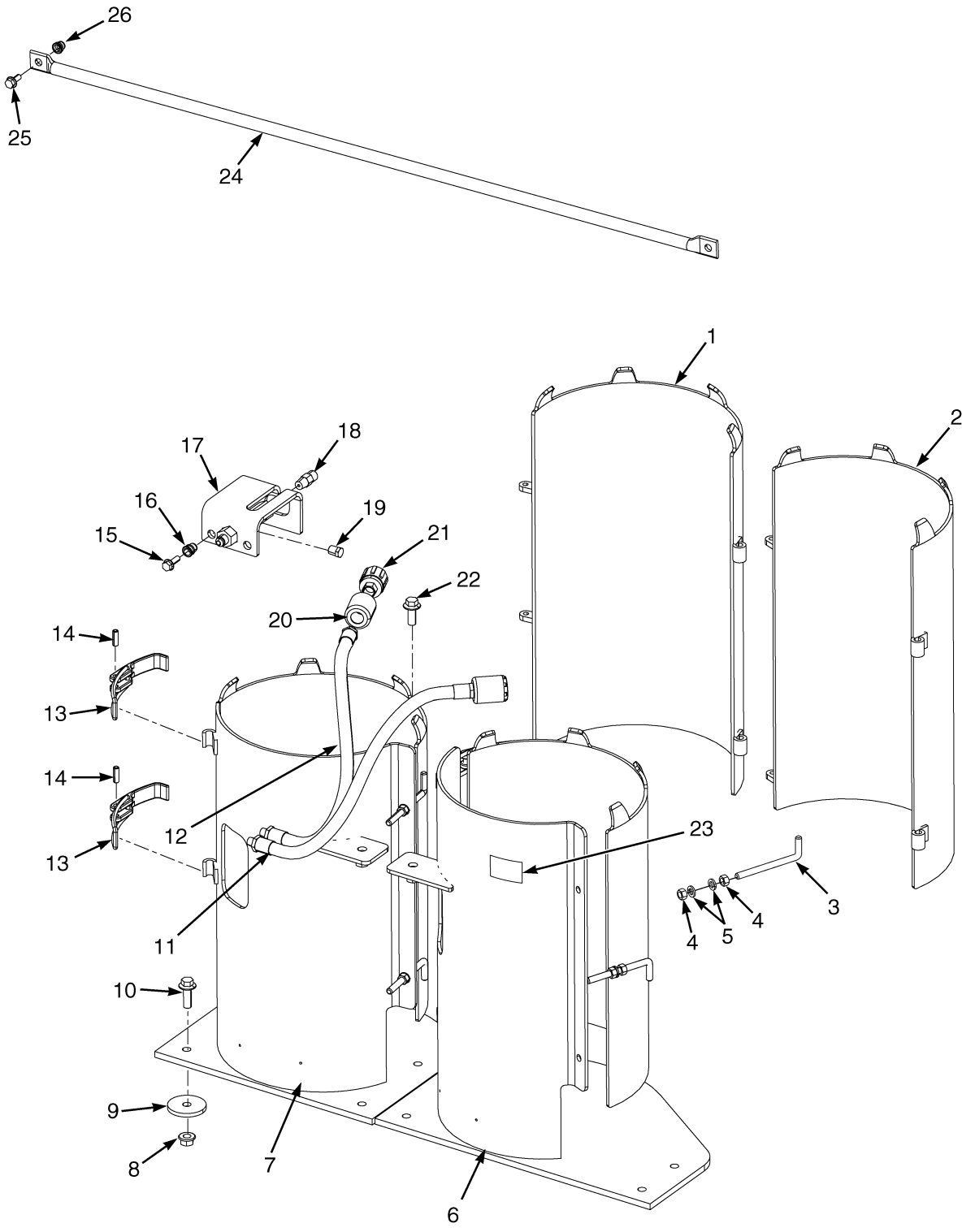

©2011 HYSTER COMPANY

SINGLE AND DUAL LPG TANK BRACKETS

KEY:
A: Single
B: Dual

ITEM	PART NO.	DESCRIPTION	QTY A	QTY B
1	1649891	Cover (43.5 lb Front)	1	..
1	1649890	Cover (33.5 lb Front)	..	1
2	1651063	Cover (43.5 lb Rear)	..	1
2	1649889	Cover (33.5 lb Rear)	..	1
3	98334	Pin	2	4
4	15006	Nut	4	8
5	15156	Lockwasher	4	8
6	1657439	LPG Tank Bracket (33.5, 43.5 lb Rear)	..	1
7	1657438	LPG Tank Bracket (33.5, 43.5 lb Front)	1	1
8	1528888	Nut (Shoulder)	5	10
9	300939	Washer	4	8
10	1527888	Capscrew	4	8
11	2094438	Hose Assy (43.5 lb)	1	2
12	2083136	Hose Assy (33.5 lb)	1	2
13	1650496	Latch	2	4
14	19923	Roll Pin	2	4
15	1510113	Capscrew	2	2
16	1530243	Insert	2	2
17	1614156	Bracket Wldmt	1	1
18	101809	Relief Valve	1	1
19	14385	Fitting	1	..
20	2071517	Sleeve	1	2
21	97999	Fitting	1	2
22	1528889	Capscrew	1	2
23	1354171	Label (Flammable LPG)	1	1
24	1661150	Barrier	1	1
25	1527880	Capscrew	2	2
26	1531557	Insert	2	2
	a 1501259	Nameplate (LP Tank)	1	2
	a 1501258	Nameplate (LP Tank)	..	2
	a 170658	Rivet	4	6
	a 2098848	Label (LPG Tank Quantity)	..	1

FOOTNOTES:

a Not Illustrated

©2011 HYSTER COMPANY

FUEL SYSTEM (FIGURE 3-18)
CUMMINS QSB 3.3L DIESEL

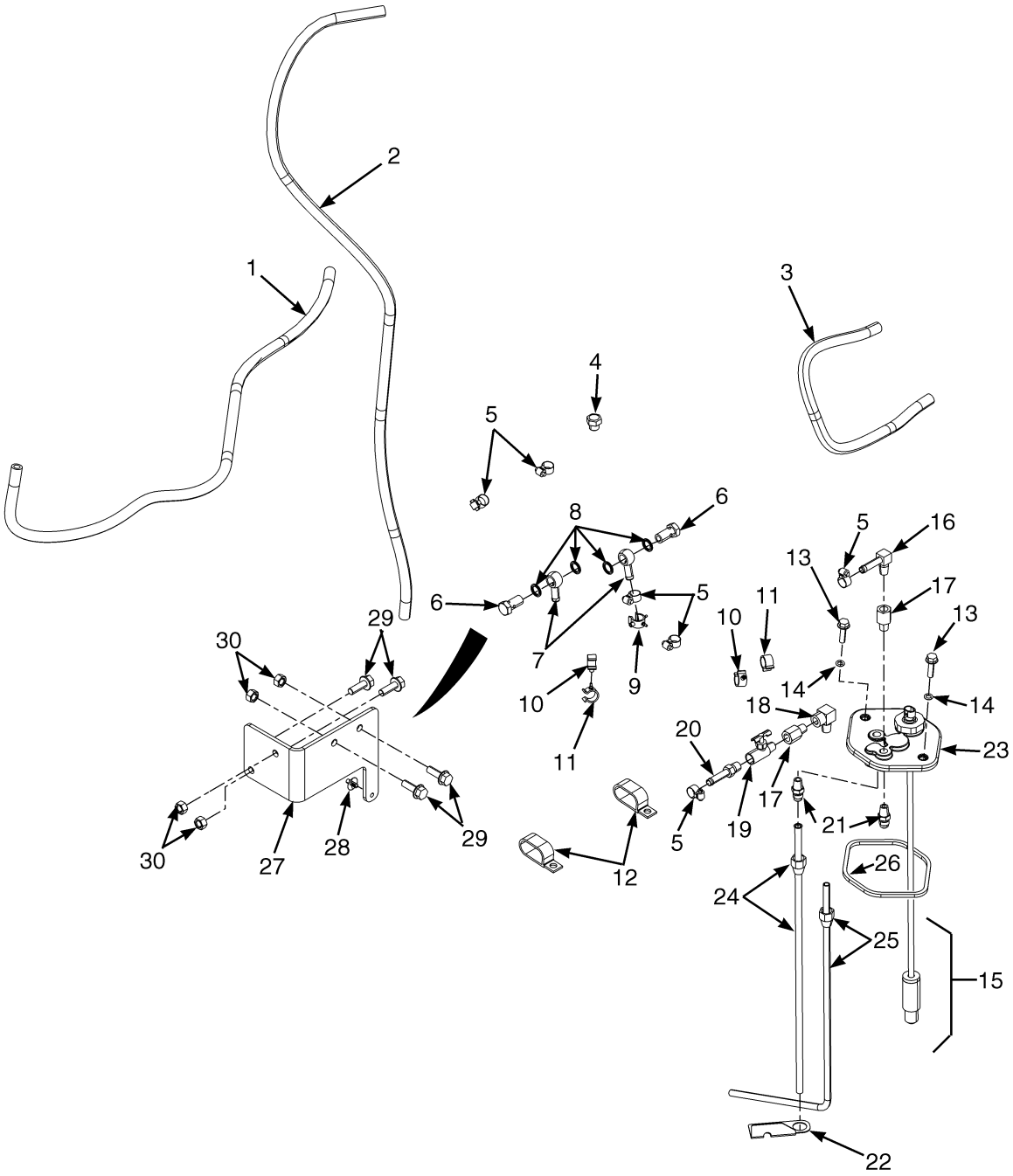

BP130177

©2011 HYSTER COMPANY

FUEL SYSTEM
CUMMINS QSB 3.3L DIESEL

ITEM	PART NO.	DESCRIPTION	QTY
1	1665636	Hose	1
2	1665637	Hose	1
3	1665638	Hose	1
4	1668425	Plug	1
5	168718	Clamp	6
6	1673878	Screw	2
7	1673877	Fitting	2
8	1513714	Sealing Ring	4
9	1502057	Clamp	1
10	1606544	Clamp	4
11	1543698	Clamp (Swivel)	2
12	176454	Clamp	2
13	1527881	Capscrew	2
14	353000	O-Ring	2
15	1676919	Fuel Sender Assembly	1
15	1551828	Fuel Sender	1
16	17353	Fitting	1
17	12855	Fitting	1
18	17314	Fitting	1
19	16190	Drain Valve (Shutoff)	1
20	17352	Fitting	1
21	16134	Fitting	2
22	. . . . .	Bracket	1
23	1584171	Cover	1
24	1590977	Tube-Wldmt	1
24	16121	Fitting	1
25	1640901	Tube	1
25	16121	Fitting	1
26	1528893	Quad Ring	1
27	1676918	Bracket	1
28	1543842	Clamp	1
29	1663739	Bolt	4
30	292655	Nut	4

©2011 HYSTER COMPANY

FUEL CAP (FIGURE 3-19)

DIESEL

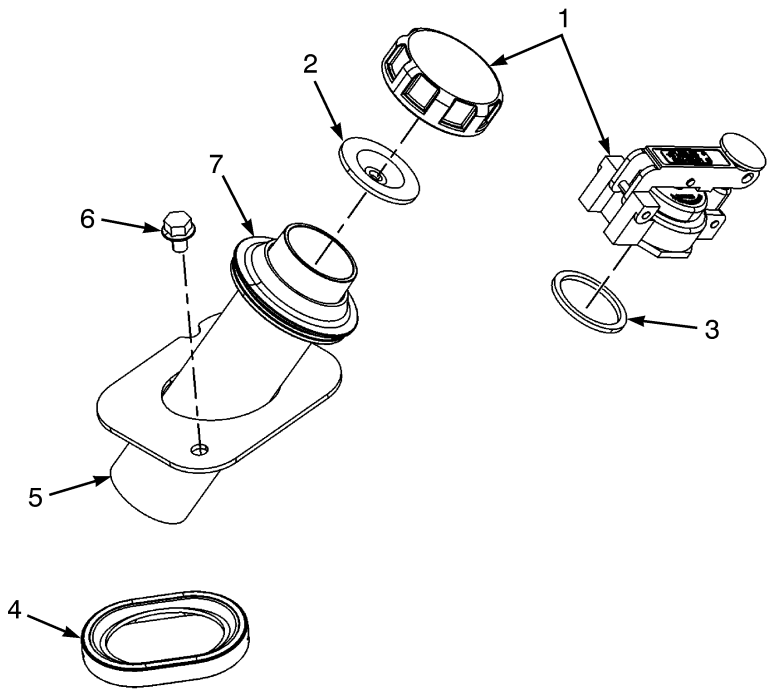

BP130296

ITEM	PART NO.	DESCRIPTION	QTY
1	2081840	Fuel Cap	1
1	**a** 1579677	Fuel Cap	1
2	2021683	Gasket	1
3	**a** 2021685	Gasket	1
4	~~1528314~~		
	1593391	Seal	1
5	1564392	Pipe (Fill)	1
6	1529366	Capscrew	2
7	1528608	Grommet	1

FOOTNOTES:

a Safety Option

©2011 HYSTER COMPANY

FUEL INJECTION PUMP (FIGURE 3-20)

CUMMINS QSB 3.3L DIESEL

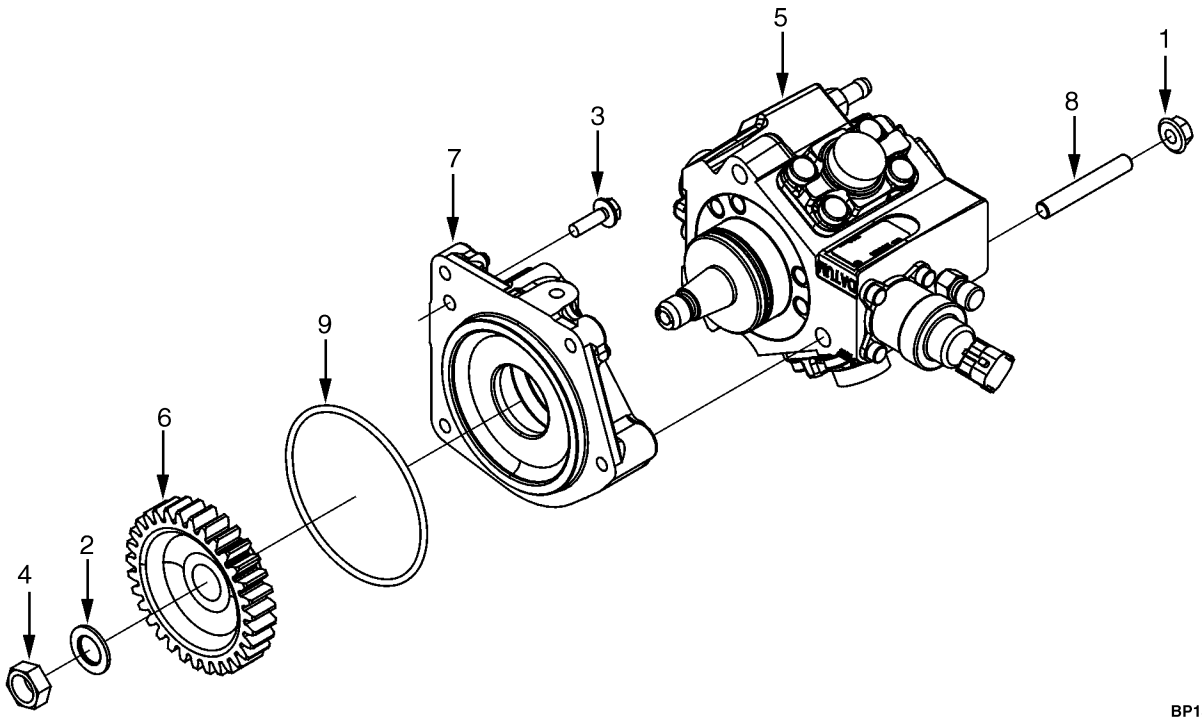

BP130035

ITEM	PART NO.	DESCRIPTION	QTY
	2103244	Engine Assy-Diesel	1
	2108566	Engine Assy-Diesel (99 Horsepower)	1
1	1691806	Clamp	3
2	1691807	Washer	1
3	1691808	Capscrew	1
4	1691809	Nut	1
5	1691810	Fuel Pump	1
6	1691811	Gear	1
7	1691812	Support	1
8	1691813	Stud	3
9	1691816	Seal	1

©2011 HYSTER COMPANY

FUEL INJECTOR AND INJECTOR PLUMBING (FIGURE 3-21)

CUMMINS QSB 3.3L DIESEL

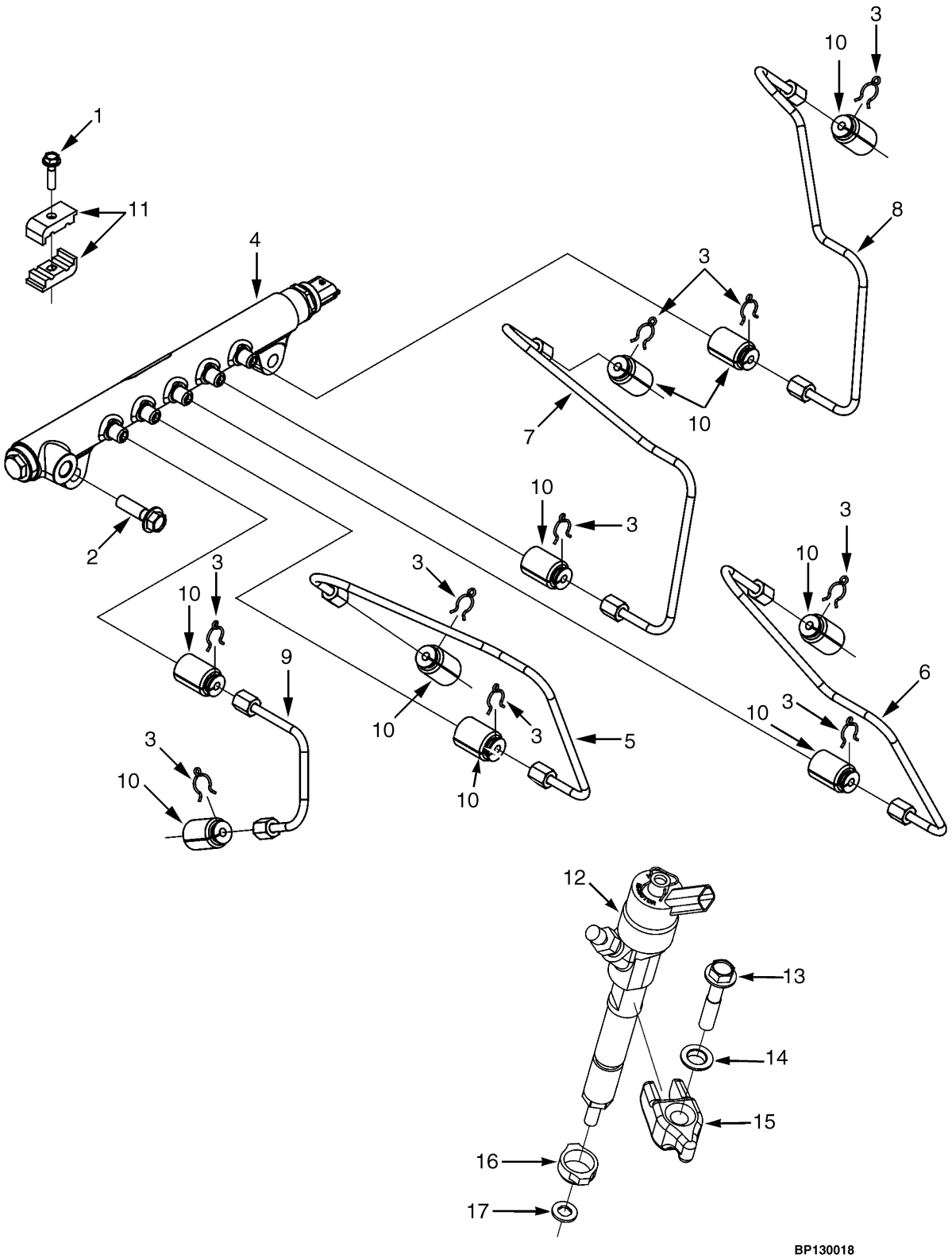

©2011 HYSTER COMPANY

FUEL INJECTOR AND INJECTOR PLUMBING

CUMMINS QSB 3.3L DIESEL

ITEM	PART NO.	DESCRIPTION	QTY
	2103244	Engine Assy-Diesel	1
	2108566	Engine Assy-Diesel (99 Horsepower)	1
1	1691886	Capscrew	2
2	1691653	Capscrew	2
3	1691664	Clip	10
4	1691665	Manifold (Fuel Rail)	1
5	1691836	Tube (Injector Fuel Supply)	1
6	1691872	Tube (Injector Fuel Supply)	1
7	1691874	Tube (Injector Fuel Supply)	1
8	1691884	Tube (Injector Fuel Supply)	1
9	1691982	Tube (Injector Fuel Supply)	1
10	1691983	Cover	10
11	1691984	Clamp	4
12	. . . . .	Injector	4
13	1691909	Capscrew	4
14	1691911	Washer	4
15	1691632	Capscrew	4
16	1691608	Dust Seal	4
17	1691912	Gasket	4
	1691914	Kit-Injector	4

©2011 HYSTER COMPANY

FUEL PUMP PLUMBING (FIGURE 3-22)
CUMMINS QSB 3.3L DIESEL

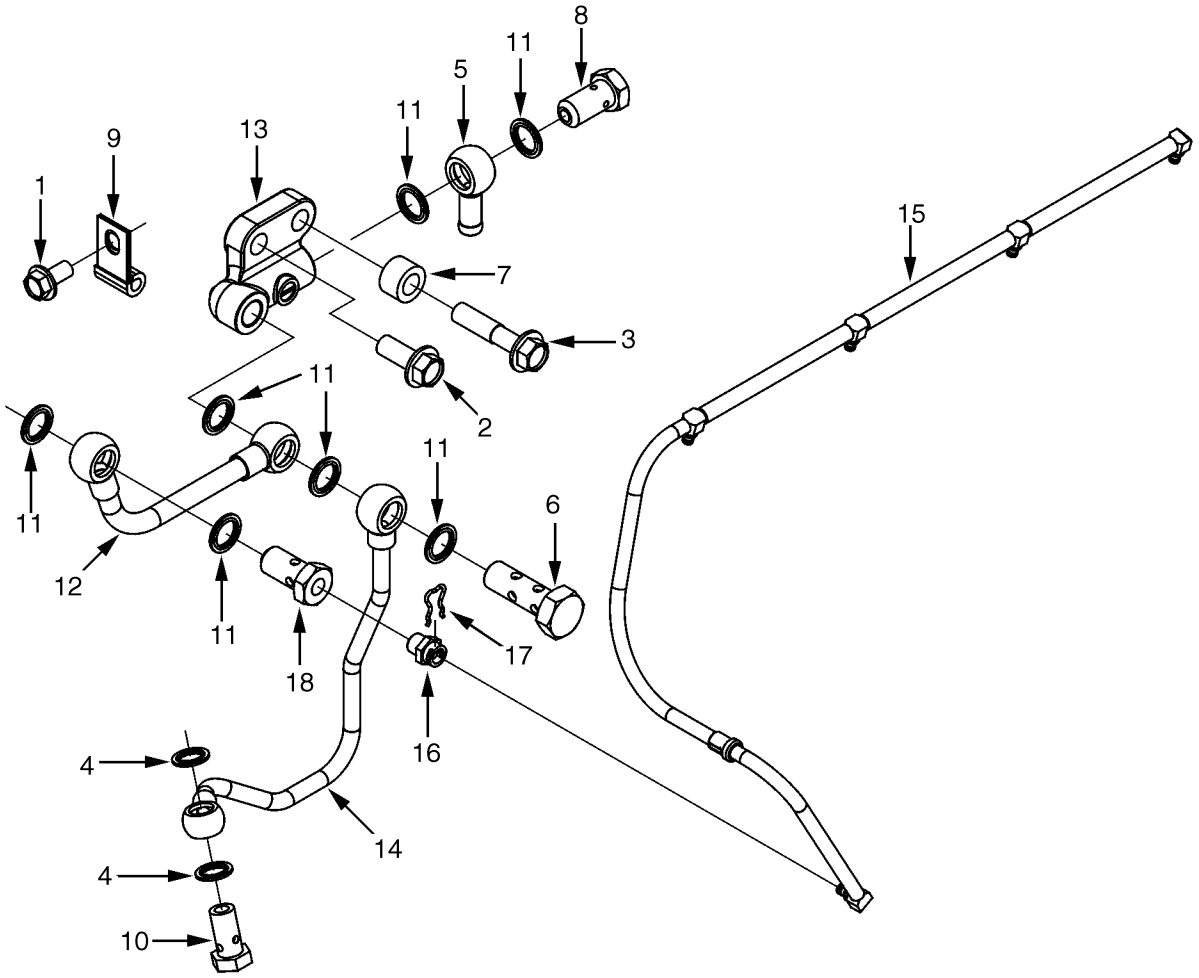

BP130020

©2011 HYSTER COMPANY

FUEL PUMP PLUMBING
CUMMINS QSB 3.3L DIESEL

ITEM	PART NO.	DESCRIPTION	QTY
	2103244	Engine Assy-Diesel	1
	2108566	Engine Assy-Diesel (99 Horsepower)	1
1	1691853	Capscrew	1
2	1691660	Capscrew	1
3	1644113	Capscrew	1
4	1691824	Gasket	2
5	1673877	Fitting (Banjo Connector)	1
6	1691826	Screw (Banjo Connector)	1
7	1691827	Spacer	1
8	1673878	Screw (Banjo Connector)	1
9	1691669	Clip	1
10	1691670	Screw (Banjo Connector)	1
11	1513714	Sealing Ring	7
12	1691671	Tube (Fuel Supply)	1
13	1691672	Adapter (Fuel Connector)	1
14	1691673	Tube (Fuel Supply)	1
15	1691674	Hose	1
16	~~1691675~~		
	4017851	Connector (Banjo)	1
17	1691676	Roll Pin	1
18	1691677	Screw (Banjo Connector)	1

©2011 HYSTER COMPANY

FUEL FILTER PLUMBING (FIGURE 3-23)
CUMMINS QSB 3.3L DIESEL

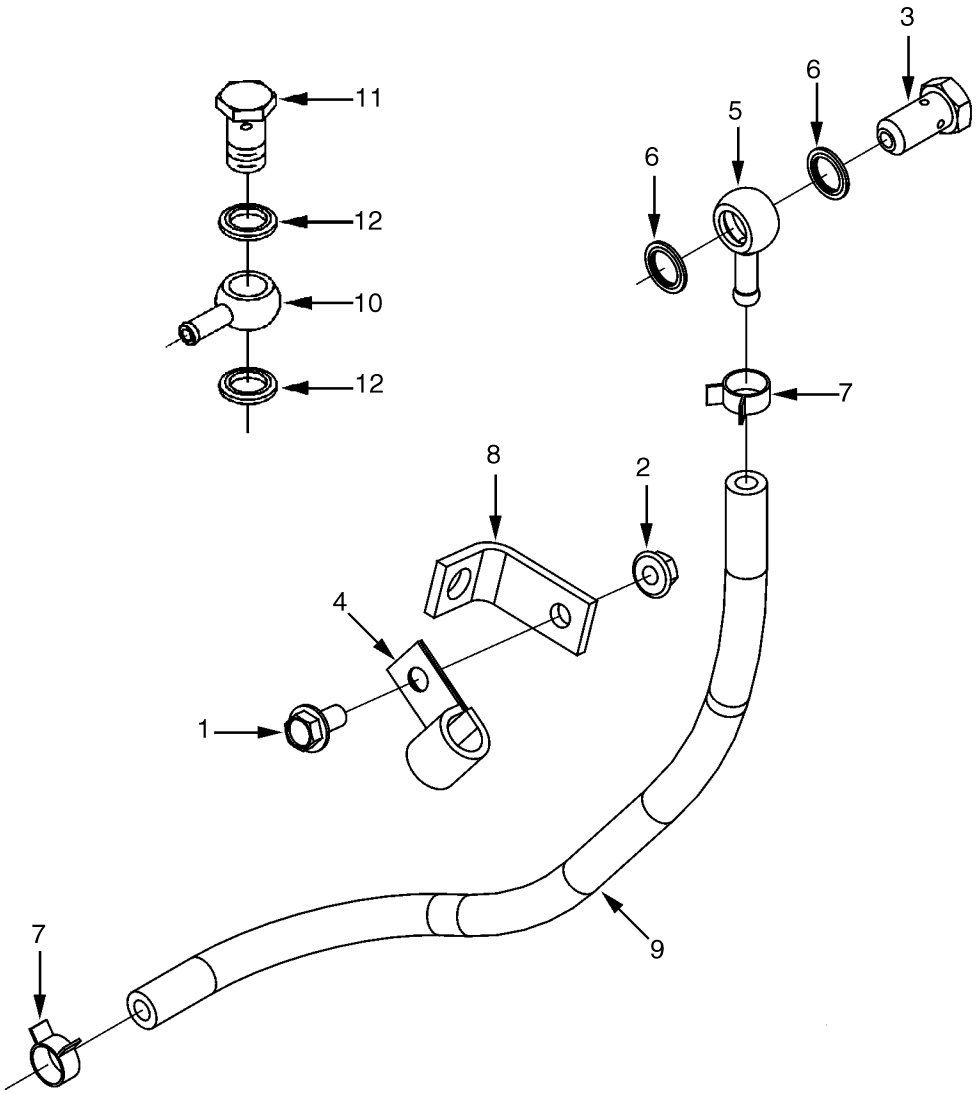

BP130042

©2011 HYSTER COMPANY

FUEL FILTER PLUMBING
CUMMINS QSB 3.3L DIESEL

ITEM	PART NO.	DESCRIPTION	QTY
	2103244	Engine Assy-Diesel	1
	2108566	Engine Assy-Diesel (99 Horsepower)	1
1	**b** 1691853	Capscrew	1
2	**b** 1691654	Nut	1
3	**b** 1673878	Screw (Banjo Connector)	1
4	**b** 1691655	Clip	1
5	**b** 1691656	Coupling	1
6	**b** 1513714	Sealing Ring	2
6	4004645	Washer (Copper) (Alternate Part)	2
7	**b** 1691657	Clip	2
8	**b** 1691658	Plate (Clamping)	1
9	**b** 1691659	Hose	1
10	**a** 1673877	Fitting (Banjo Connector)	1
11	**a** 1673878	Screw	1
12	**a** 1513714	Sealing Ring	2
12	4004645	Washer (Copper) (Alternate Part)	2

FOOTNOTES:

a Fuel Inlet

b Mounting Location: Fuel Pump Side Middle Mount

©2011 HYSTER COMPANY

FUEL FILTER (FIGURE 3-24)
CUMMINS QSB 3.3L DIESEL

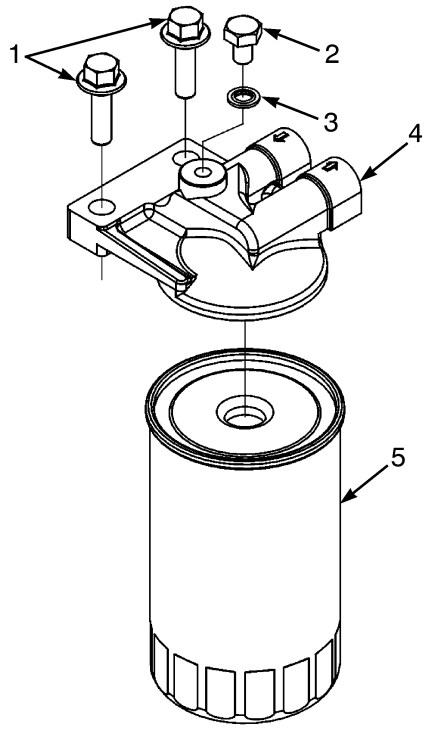

BP130150

ITEM	PART NO.	DESCRIPTION	QTY
	2103244	Engine Assy-Diesel	1
	2108566	Engine Assy-Diesel (99 Horsepower)	1
1	1543337	Capscrew	1
2	1691649	Plug	1
3	1691650	Washer	1
4	1691651	Filter Head	1
5	1691652	Fuel Filter	1

©2011 HYSTER COMPANY

WATER SEPARATOR (FIGURE 3-25)
CUMMINS QSB 3.3L DIESEL

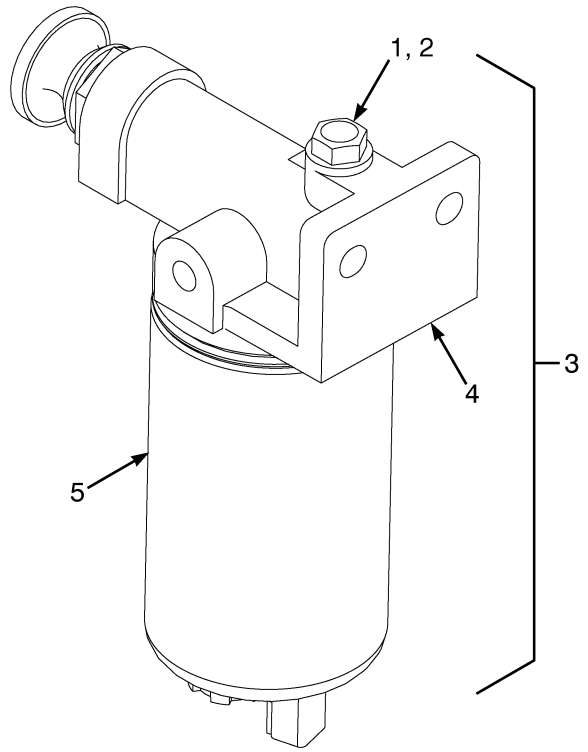

BP130138

ITEM	PART NO.	DESCRIPTION	QTY
	2103244	Engine Assy-Diesel	1
	2108566	Engine Assy-Diesel (99 Horsepower)	1
1	1691817	Plug	1
2	1691818	Seal	1
3	1691819	Fuel Filter	1
4	. . . . .	Filter Head	1
5	1691821	Cartridge (Includes Sensor)	1

THROTTLE PEDAL AND ATTACHING PARTS (FIGURE 3-26)

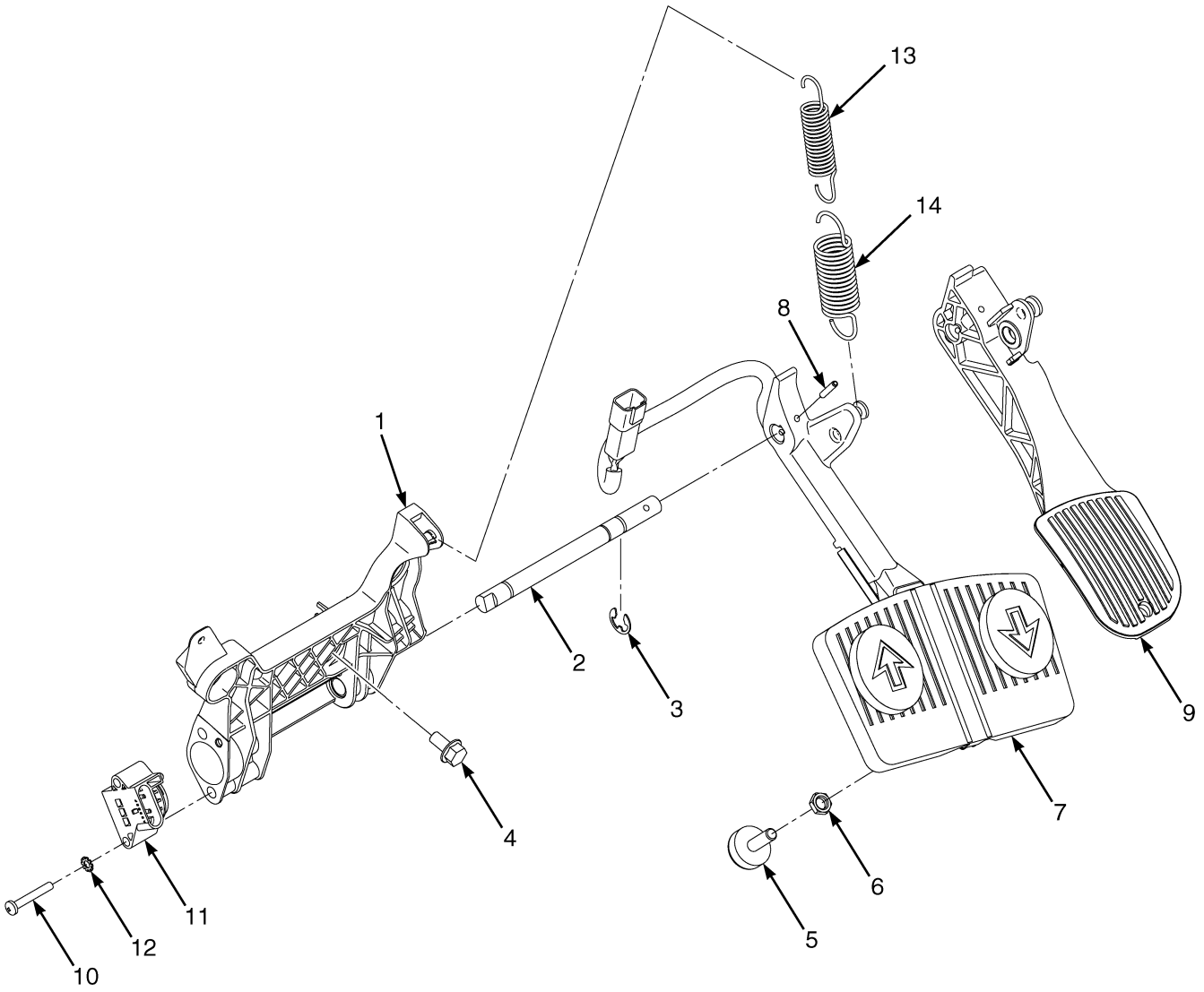

HP130383

©2011 HYSTER COMPANY

THROTTLE PEDAL AND ATTACHING PARTS

ITEM	PART NO.	DESCRIPTION	QTY
1	1654411	Throttle Plate	1
1	1524267	Bushing	1
2	1654754	Shaft	1
3	1530971	E-Ring	1
4	1527879	Capscrew	3
5	1530311	Screw (Stop)	1
6	329069	Nut	1
7	1608412	Monotrol Pedal Assembly (☞Figure 3-27)	1
8	**a** 302437	Roll Pin	1
8	**b** 302443	Roll Pin	1
9	2071181	Pedal (Standard)	1
10	1564752	Capscrew	2
11	2063842	Sensor (Half Throttle Position)	1
12	296378	Washer	2
13	1582301	Spring (Inner)	1
14	1582300	Spring (Outer)	1
	c 1654156	Shim	AR

FOOTNOTES:

a For Use With Monotrol Pedal Only
b For Use With Standard Pedal Only
c Not Illustrated

MONOTROL PEDAL ASSEMBLY (FIGURE 3-27)

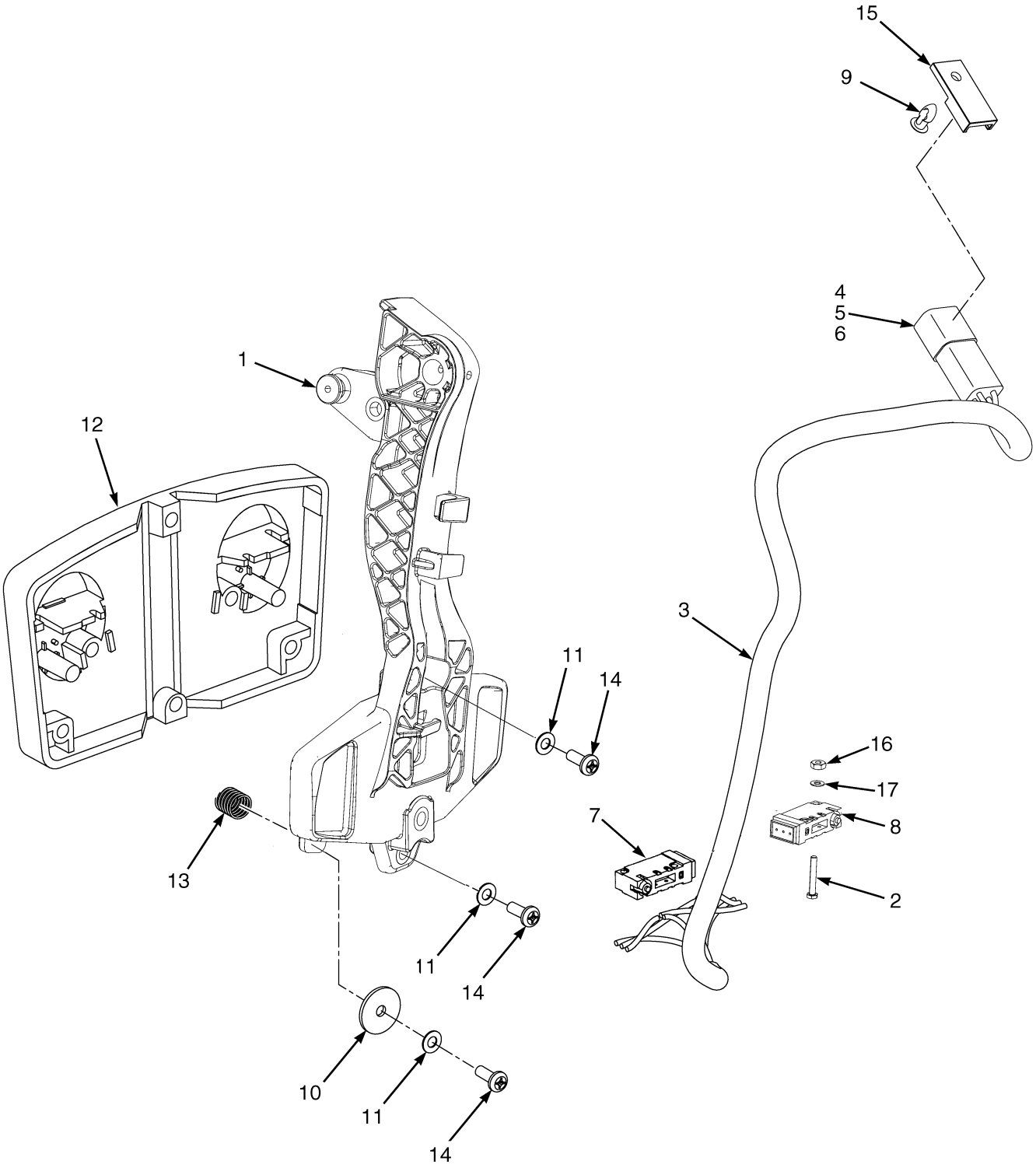

©2011 HYSTER COMPANY

MONOTROL PEDAL ASSEMBLY

ITEM	PART NO.	DESCRIPTION	QTY
	1608412	Monotrol Pedal Assembly	1
1	2074702	Pedal	1
2	220428	Screw	4
3	2072782	Wire Harness	1
4	1330416	Connector	1
5	1489655	Connector (4 Way)	1
6	1531312	Terminal	4
7	. . . . .	Switch	1
8	. . . . .	Switch	1
9	1582464	Fastener	1
10	362036	Washer	2
11	15931	Lockwasher	4
12	1340470	Pad	1
13	325699	Spring	2
14	16708	Screw	4
15	1500912	Clip	1
16	16865	Nut	4
17	53162	Lockwasher	4

©2011 HYSTER COMPANY

NOTES

©2011 HYSTER COMPANY

4 ELECTRICAL SYSTEM

SECTION 4
ELECTRICAL SYSTEM

DESCRIPTION **PAGE**

ALTERNATOR AND MOUNTING
CUMMINS QSB 3.3L DIESEL 4-30
GM 4.3L LPG - PSI OPTION (PENDING PER ECN 152361 →) 4-25
BATTERY AND CONTROL CABLE DISCONNECT SWITCH 4-16
BATTERY CABLES
CUMMINS QSB 3.3L DIESEL 4-12
GM 4.3L GASOLINE AND LPG 4-14
COWL ELECTRICAL
ELECTRIC HYDRAULIC 4-8
MANUAL HYDRAULIC 4-10
DISTRIBUTOR ASSEMBLY
GM 4.3L GASOLINE AND LPG 4-24
ELECTRICAL SYSTEM
RIGHT HAND CHASSIS - CUMMINS QSB 3.3L DIESEL 4-4
RIGHT HAND CHASSIS - GM 4.3L GASOLINE AND LPG 4-6
ELECTRONIC CONTROL LEVERS
MINI-LEVER MODULE (FOUR FUNCTION) (→ S/N J006V02753H EXC. 02721) 4-54
MINI-LEVER MODULES (THREE FUNCTION) (→ S/N J006V02753H EXC. 02721) 4-52
ELECTRONIC CONTROL MODULE AND SENSORS
CUMMINS QSB 3.3L DIESEL 4-46
ENGINE CONTROL MODULE AND SENSORS
GM 4.3L LPG - PSI OPTION (PENDING PER ECN 152361 →) 4-23
ENGINE ELECTRICAL SYSTEM
CUMMINS QSB 3.3L DIESEL - UL TYPE DS 4-34
CUMMINS QSB 3.3L DIESEL 4-36
GM 4.3L, GASOLINE AND LPG 4-20
FUSE BOX
GM 4.3L LPG - PSI OPTION (PENDING PER ECN 152361 →) 4-28
IMPACT SENSOR 4-64
INSTRUMENT CLUSTER 4-18
LIGHTS
BRAKE, TAIL, BACKUP, SIDE, TURN SIGNALS, WORK, STROBE - WITH CAB 4-40
BRAKE, TAIL, BACKUP, SIDE, TURN SIGNALS, WORK, STROBE - WITH OVERHEAD GUARD 4-42
LOAD WEIGH ELECTRICAL 4-62
MAST ELECTRICAL 4-60
MINI-LEVER CONTROLS
WITH ARMREST - THREE FUNCTION (S/N J006V02754H → INC. 02721) 4-56
WITH ARMREST - FOUR FUNCTION (S/N J006V02754H → INC. 02721) 4-58
POWER DISTRIBUTION MODULE 4-66
SEALED ALTERNATOR AND MOUNTING
CUMMINS QSB 3.3L DIESEL 4-32
SPARK PLUGS AND WIRES
GM 4.3L LPG - PSI OPTION (PENDING PER ECN 152361 →) 4-22
STARTER
GM 4.3L 4-26
STARTER MOTOR
CUMMINS QSB 3.3L DIESEL 4-44
TRANSMISSION ELECTRICAL SYSTEM
THREE SPEED TRANSMISSION 4-50

©2011 HYSTER COMPANY

SECTION 4
ELECTRICAL SYSTEM

DESCRIPTION **PAGE**

TWO SPEED TRANSMISSION 4-48
WIRE HARNESS
ALTERNATOR - CUMMINS QSB 3.3L DIESEL 4-146
COWL WITH MONOTROL PEDAL - WITH HYDRAULIC PUMP SOLENOID 4-130
COWL WITH MONOTROL PEDAL - WITH RETURN TO SET TILT / WITH HYDRAULIC PUMP SOLENOID 4-142
ELECTRONIC CONTROL VALVE - THREE FUNCTION 4-158
ELECTRONIC CONTROL VALVE - FOUR FUNCTION 4-160
ENGINE - GM 4.3L LPG (→ S/N J006V02542H) 4-68
ENGINE - GM 4.3L GASOLINE (→ S/N J006V02542H) 4-80
ENGINE - CUMMINS QSB 3.3L DIESEL 4-88
LEFT HAND CHASSIS - GM 4.3L GASOLINE (→ S/N J006V02542H) 4-120
LEFT HAND CHASSIS - GM 4.3L GASOLINE (SERIES 2010) (S/N J006V02543H →) 4-122
LEFT HAND CHASSIS - GM 4.3L LPG (→ S/N J006V02542H) 4-124
LEFT HAND CHASSIS - GM 4.3L LPG (2010 SERIES)(WITH PREMIUM LOW FUEL SENSOR) (S/N J006V02543H →) 4-126
LEFT HAND CHASSIS - GM 4.3L LPG (2010 SERIES)(WITHOUT PREMIUM LOW FUEL SENSOR) (S/N J006V02543H →) 4-128
LIGHTS WITH OVERHEAD GUARD 4-162
LOW FUEL SENSOR 4-166
REAR - GM 4.3L GASOLINE AND LPG 4-116
REAR - CUMMINS QSB 3.3L DIESEL 4-118
RIGHT HAND CHASSIS - GM 4.3L GASOLINE AND LPG (→ S/N J006V03418H) 4-90
RIGHT HAND CHASSIS - GM 4.3L GASOLINE AND LPG (S/N J006V03419H →) 4-96
RIGHT HAND CHASSIS - CUMMINS QSB 3.3L DIESEL (→ S/N J006V03362H) 4-102
RIGHT HAND CHASSIS - CUMMINS QSB 3.3L DIESEL (S/N J006V03363H →) 4-108
SEALED ALTERNATOR - CUMMINS QSB 3.3L DIESEL 4-148
SEAT JUMPER (→ S/N J006V03362H) 4-114
TRANSMISSION - THREE SPEED 4-152
TRANSMISSION - TWO SPEED 4-156
WORK LIGHT JUMPER - WITH TWO STAGE MASTS 4-164
WIRE HARNESS (COWL)
WITH FORWARD AND REVERSE LEVER - WITH HYDRAULIC PUMP SOLENOID, WITHOUT LOCKOUT 4-134
WITH FORWARD AND REVERSE LEVER - WITH HYDRAULIC PUMP SOLENOID, WITH LOCKOUT 4-138
WIRE HARNESS (ENGINE)
GM 4.3L GASOLINE (GFI OPTION) - WITH CATALYTIC CONVERTER (S/N J006V02543H →) 4-84
GM 4.3L LPG (GFI OPTION) - 2010 SERIES (S/N J006V02543H ↔ PENDING PER ECN 152361) 4-72
GM 4.3L, LPG - PSI OPTION (PENDING PER ECN 152361 →) 4-76

©2011 HYSTER COMPANY

NOTES

©2011 HYSTER COMPANY

ELECTRICAL SYSTEM (FIGURE 4-1)
RIGHT HAND CHASSIS — CUMMINS QSB 3.3L DIESEL

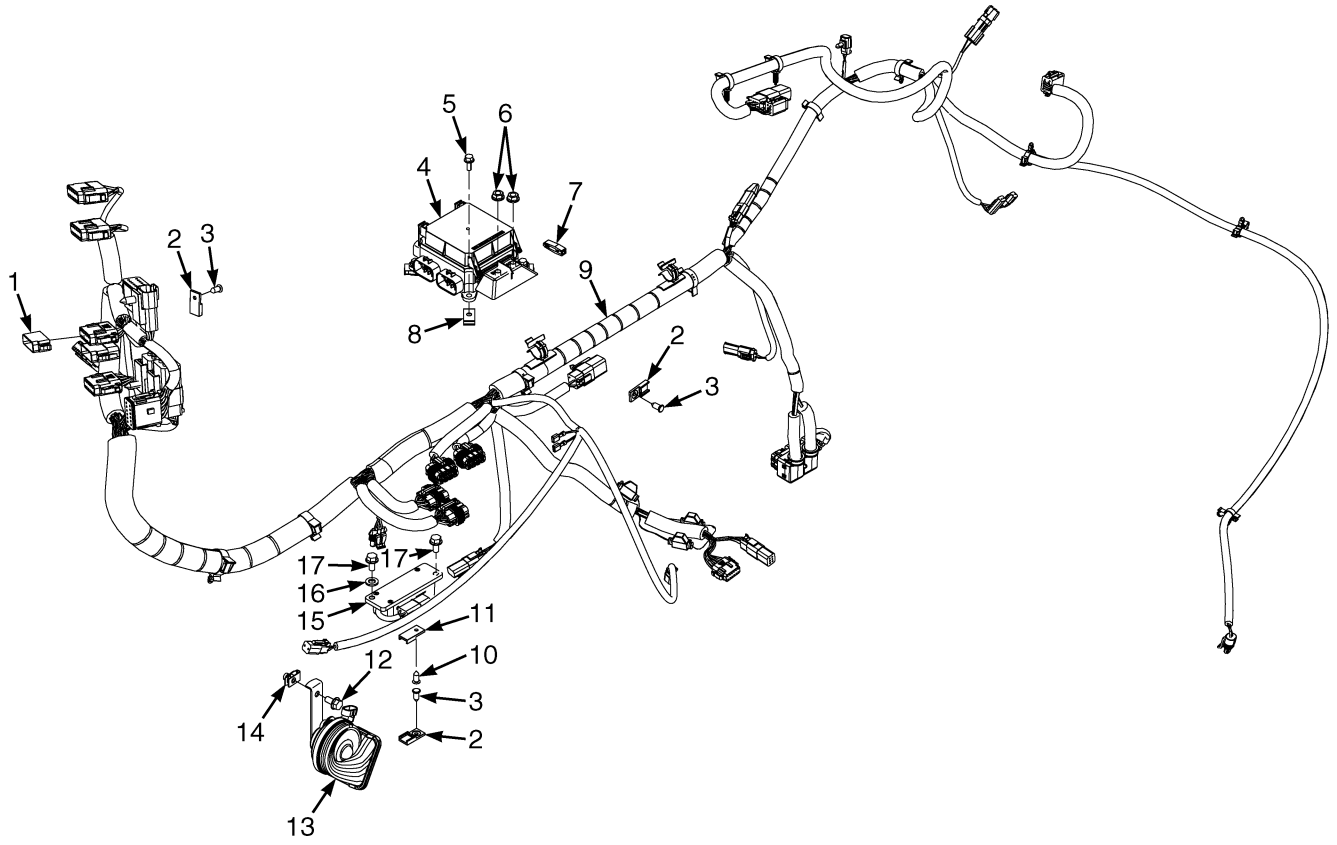

BP080864

©2011 HYSTER COMPANY

ELECTRICAL SYSTEM

RIGHT HAND CHASSIS – CUMMINS QSB 3.3L DIESEL

ITEM	PART NO.	DESCRIPTION	QTY
1	1593331	Connector	1
2	1500912	Clip	5
3	1582464	Fastener	6
4	2090613	Module (☞Figure 4-33)	1
5	1527876	Capscrew	4
5	1527877	Capscrew (Alternate Part)	4
6	1502543	Nut (Flange)	2
7	1402883	Fuse Puller	1
8	1350215	Nut	4
9	**b** 2105725	Wire Harness (Right Hand Chassis) (☞Figure 4-42)	1
9	**c** 4607742	Wire Harness (Right Hand Chassis) (☞Figure 4-43)	1
10	2100710	Fastener	1
11	1500912	Clip	1
12	1527879	Capscrew	1
13	1618978	Horn	1
14	1480237	Nut	1
15	2079843	Sensor (Impact)	1
16	320157	Washer	2
17	287851	Capscrew	2
	a 4601499	Wire Harness (Seat Jumper) (☞Figure 4-44)	1

FOOTNOTES:

a Not Illustrated
b → PENDING PER ECN 106620
c PENDING PER ECN 106620 →

ELECTRICAL SYSTEM (FIGURE 4-2)
RIGHT HAND CHASSIS — GM 4.3L GASOLINE AND LPG



BP080989

©2011 HYSTER COMPANY

ELECTRICAL SYSTEM

RIGHT HAND CHASSIS – GM 4.3L GASOLINE AND LPG

ITEM	PART NO.	DESCRIPTION	QTY
1	1527877	Capscrew	4
2	1502543	Nut (Flange)	3
3	2090613	Module (☞Figure 4-33)	1
4	1350215	Nut	4
5	**b** 2105724	Wire Harness (RH Chassis)	1
5	**c** 4607741	Wire Harness (RH Chassis) (☞Figure 4-41)	1
6	1582464	Fastener	9
7	1500912	Clip	7
8	1531480	Clip	1
9	1657411	Bracket	1
10	1527879	Capscrew	3
11	1480237	Nut	3
12	1618978	Horn	1
13	1638987	Shield	1
14	1402883	Fuse Puller	1
15	1593331	Connector	1
	a 4601499	Wire Harness (Seat Jumper) (☞Figure 4-44)	1

FOOTNOTES:

a Not Illustrated
b → PENDING PER ECN 106620
c PENDING PER ECN 106620 →

COWL ELECTRICAL (FIGURE 4-3)
ELECTRIC HYDRAULIC

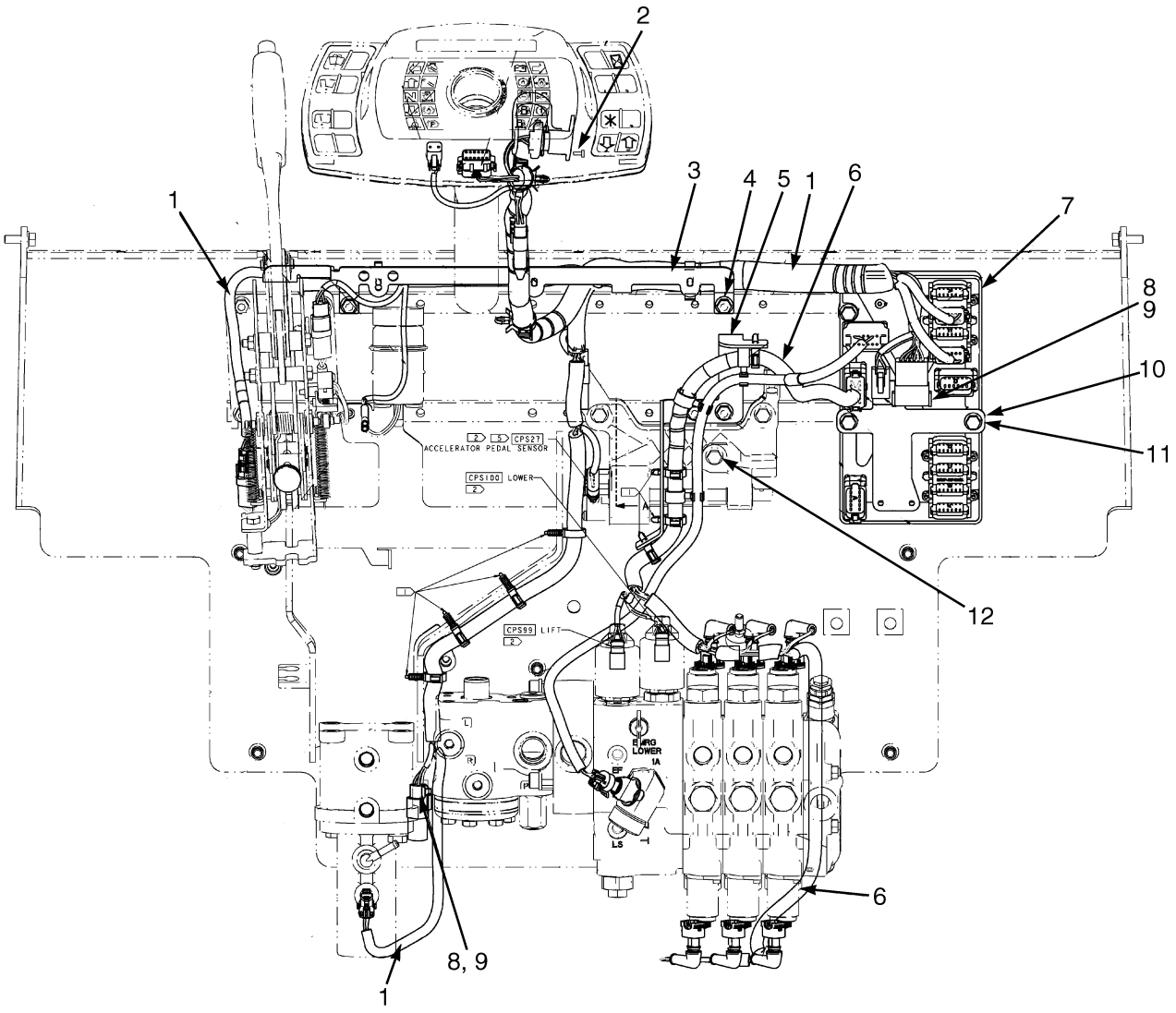

BP080588

©2011 HYSTER COMPANY

COWL ELECTRICAL
ELECTRIC HYDRAULIC

KEY:
A: With Return to Set Tilt
B: Without Return to Set Tilt

ITEM	PART NO.	DESCRIPTION	QTY A	QTY B
1	**f** 2098011	Wire Harness (Cowl with Monotrol Pedal) (Gasoline and LPG)	1	..
1	**f** 2098012	Wire Harness (Cowl with Forward/Reverse Lever) (Gasoline and LPG)	..	1
2	1554902	Screw	2	2
3	1600190	Bracket	1	1
3	2111004	Bracket (Left Hand) (Alternate Part)	1	1
3	2111005	Bracket (Right Hand) (Alternate Part)	1	1
4	1529366	Capscrew	2	2
4	1529366	Capscrew (Alternate Part)	2	2
5	1531975	Bracket	1	1
6	**a** 2058909	Wire Harness (Electronic Control Valve) (☞Figure 4-61)	1	1
6	**c** 2060198	Wire Harness (Electronic Control Valve) (☞Figure 4-60)	1	1
7	**e** 2068343	Vehicle System Manager (VSM) -8525420	1	1
7	**d** 2068344	Vehicle System Manager (VSM) -8525421	1	1
8	1500912	Clip	3	1
9	1582464	Fastener	3	1
10	1582465	Bracket	1	1
11	1510115	Capscrew	3	3
12	1529366	Capscrew	2	2
	b 1563841	Dust Cap	1	1

FOOTNOTES:

a Four Function
b Not Illustrated
c Three Function
d With Electronic Hydraulics and Cab
e With Electronic Hydraulics and Overhead Guard
f With Hydraulic Pump Solenoid

©2011 HYSTER COMPANY

COWL ELECTRICAL (FIGURE 4-4)
MANUAL HYDRAULIC

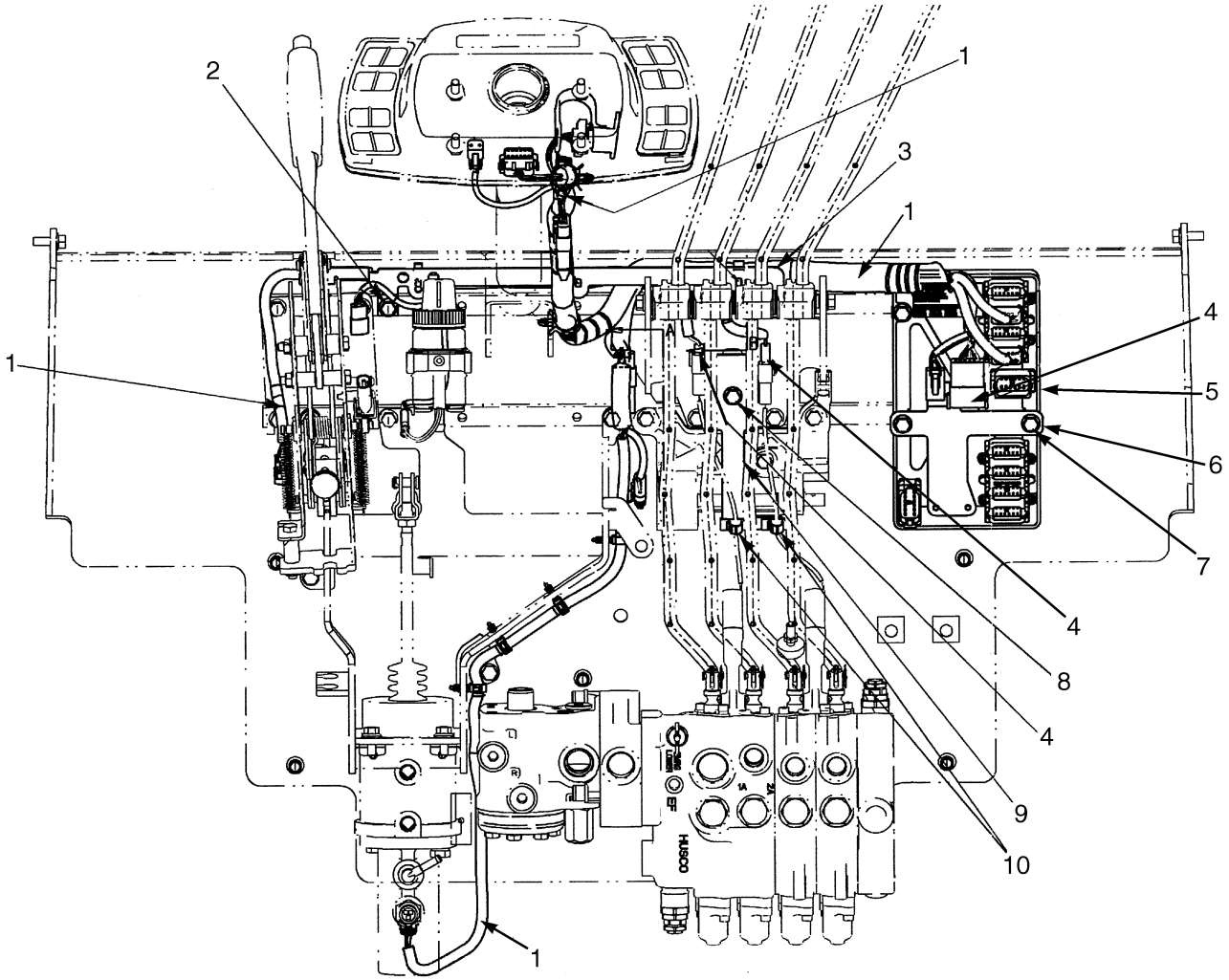

BP080709

©2011 HYSTER COMPANY

COWL ELECTRICAL
MANUAL HYDRAULIC

ITEM	PART NO.	DESCRIPTION	QTY
1	2104701	Wire Harness	1
1	2104702	Wire Harness (Forward/Reverse Lever)	1
1	4603281	Wire Harness (With Monotrol)(Alternate Part) (☞Figure 4-52)	1
1	4603282	Wire Harness (With Forward/Reverse Lever)(Alternate Part) (☞Figure 4-54)	1
2	1529366	Capscrew	2
3	1600190	Bracket	1
3	2111004	Bracket (Left Hand) (Alternate Part)	1
3	2111005	Bracket (Right Hand) (Alternate Part)	1
4	1500912	Clip	4
4	1582464	Fastener	4
5	**a** 2068342	Vehicle System Manager (VSM) -8525419	1
6	1582465	Bracket	1
7	1510115	Capscrew	3
8	1528482	Capscrew	1
8	1398062	Nut	1
9	1686719	Bracket	1
10	1562088	Clip	2

FOOTNOTES:

a Without Electronic Hydraulics

©2011 HYSTER COMPANY

BATTERY CABLES (FIGURE 4-5)
CUMMINS QSB 3.3L DIESEL

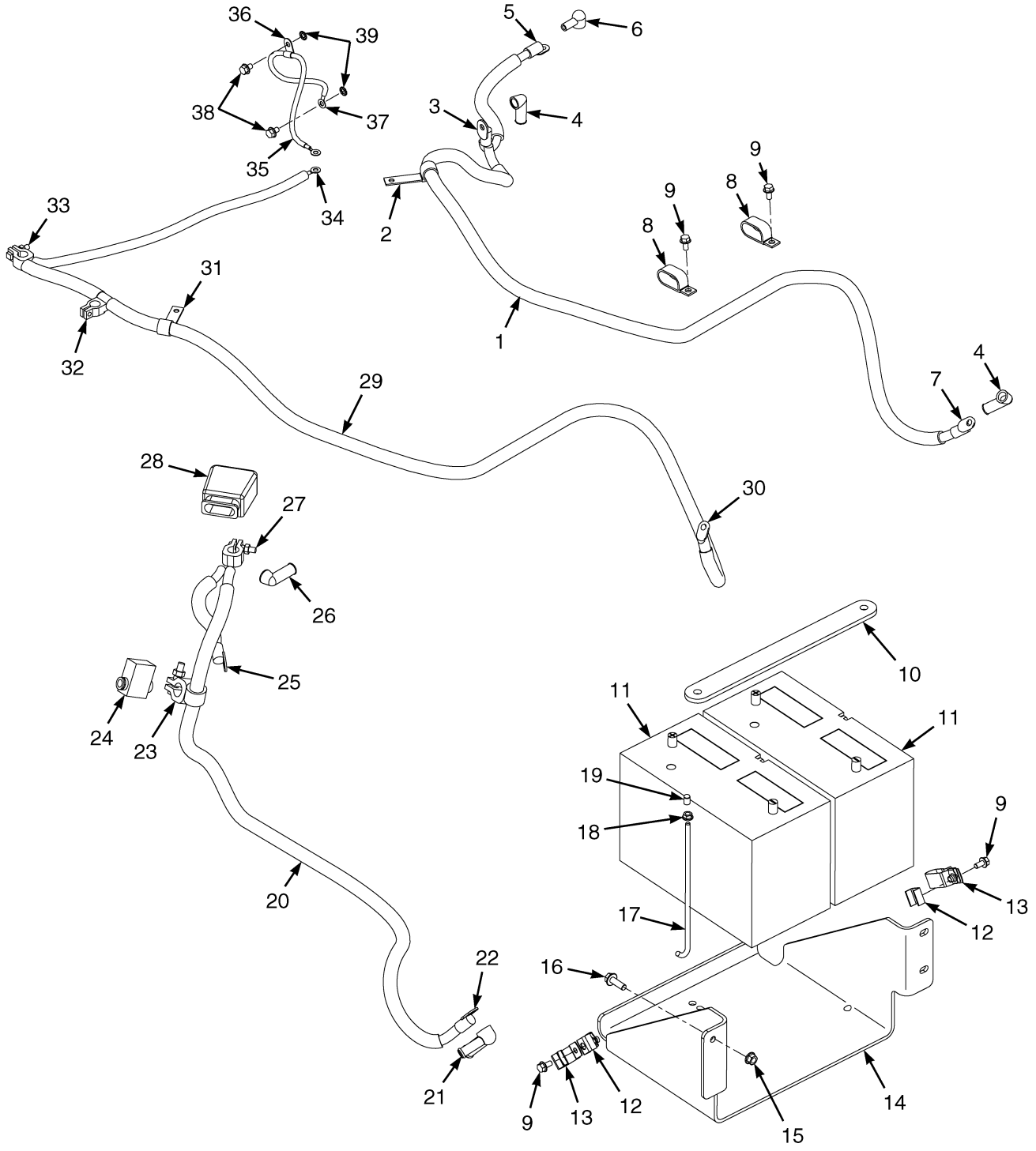

BP080992

©2011 HYSTER COMPANY

BATTERY CABLES
CUMMINS QSB 3.3L DIESEL

ITEM	PART NO.	DESCRIPTION	QTY
1	2111099	Battery Cable (Positive) (Diesel Safety)	1
2	1474893	Clamp	1
3	148795	Terminal	1
4	204223	Boot	2
5	148798	Terminal	1
6	1566146	Boot	1
7	16079	Terminal	1
8	176454	Clamp	2
9	1527879	Capscrew	3
10	1663747	Bracket	1
11	1643937	Start Battery Wet	2
11	1399332	Start Battery Wet	2
12	1480237	Nut	1
13	1544157	Clip	1
14	4015631	Battery (Tray)	1
15	1460477	Nut	3
16	1527884	Capscrew	3
17	2065745	Link (Battery Hold Down)	2
18	1502543	Nut (Flange)	2
19	1540805	Cap	2
20	2111098	Battery Cable (Positive) (Standard Diesel)	1
21	204223	Boot	1
22	16079	Terminal	1
23	148786	Terminal	1
24	1595774	Boot	1
25	148798	Terminal	1
26	1566146	Boot	1
27	148792	Terminal	1
28	1536304	Boot	1
29	2099799	Battery Cable (Negative)	1
30	. . . . .	Terminal	1
31	1474893	Clamp	1
32	148783	Terminal	1
33	148789	Terminal	1
34	806426	E-Ring	1
35	2093220	Battery Cable (Negative)	1
36	1564044	E-Ring	1
37	806426	E-Ring	2
38	1529366	Capscrew	2
39	296380	Washer	2

©2011 HYSTER COMPANY

BATTERY CABLES (FIGURE 4-6)

GM 4.3L GASOLINE AND LPG

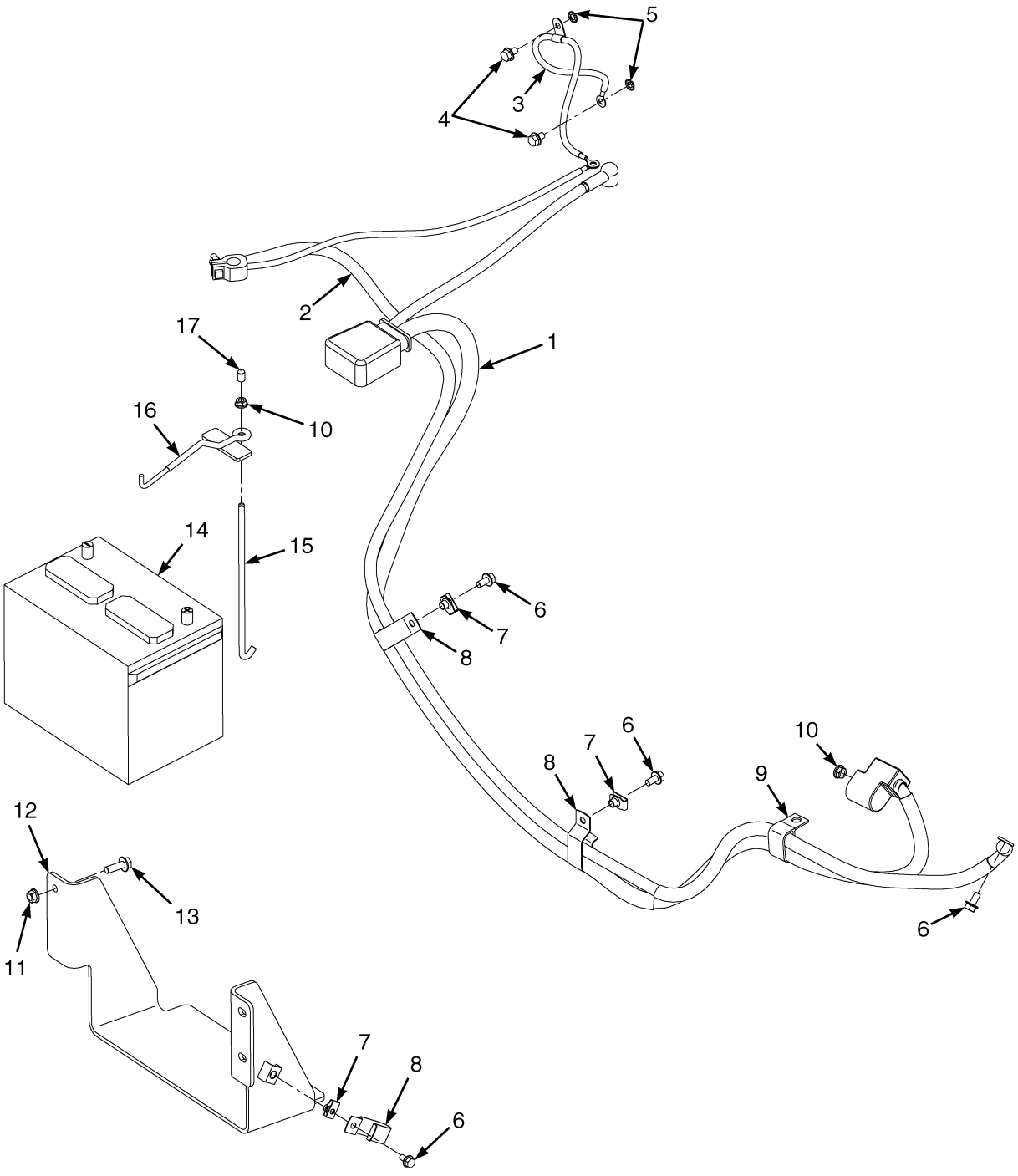

BP080990

©2011 HYSTER COMPANY

BATTERY CABLES
GM 4.3L GASOLINE AND LPG

ITEM	PART NO.	DESCRIPTION	QTY
1	2098768	Battery Cable	1
2	2098769	Battery Cable	1
3	2093220	Battery Cable	1
4	1529366	Capscrew	2
5	296380	Washer	2
6	1527879	Capscrew	5
7	1480237	Nut	4
8	1544157	Clip	4
9	1326653	Clamp	1
10	1502543	Nut (Flange)	2
11	1460477	Nut	3
12	1663948	Battery Tray	1
13	1527884	Capscrew	3
14	1643937	Start Battery Wet	1
14	1399332	Start Battery Wet (Optional)	1
15	2065745	Link (Battery Hold Down)	1
16	1638706	Link (Battery Hold Down)	1
17	1540805	Cap	1

©2011 HYSTER COMPANY

BATTERY AND CONTROL CABLE DISCONNECT SWITCH (FIGURE 4-7)

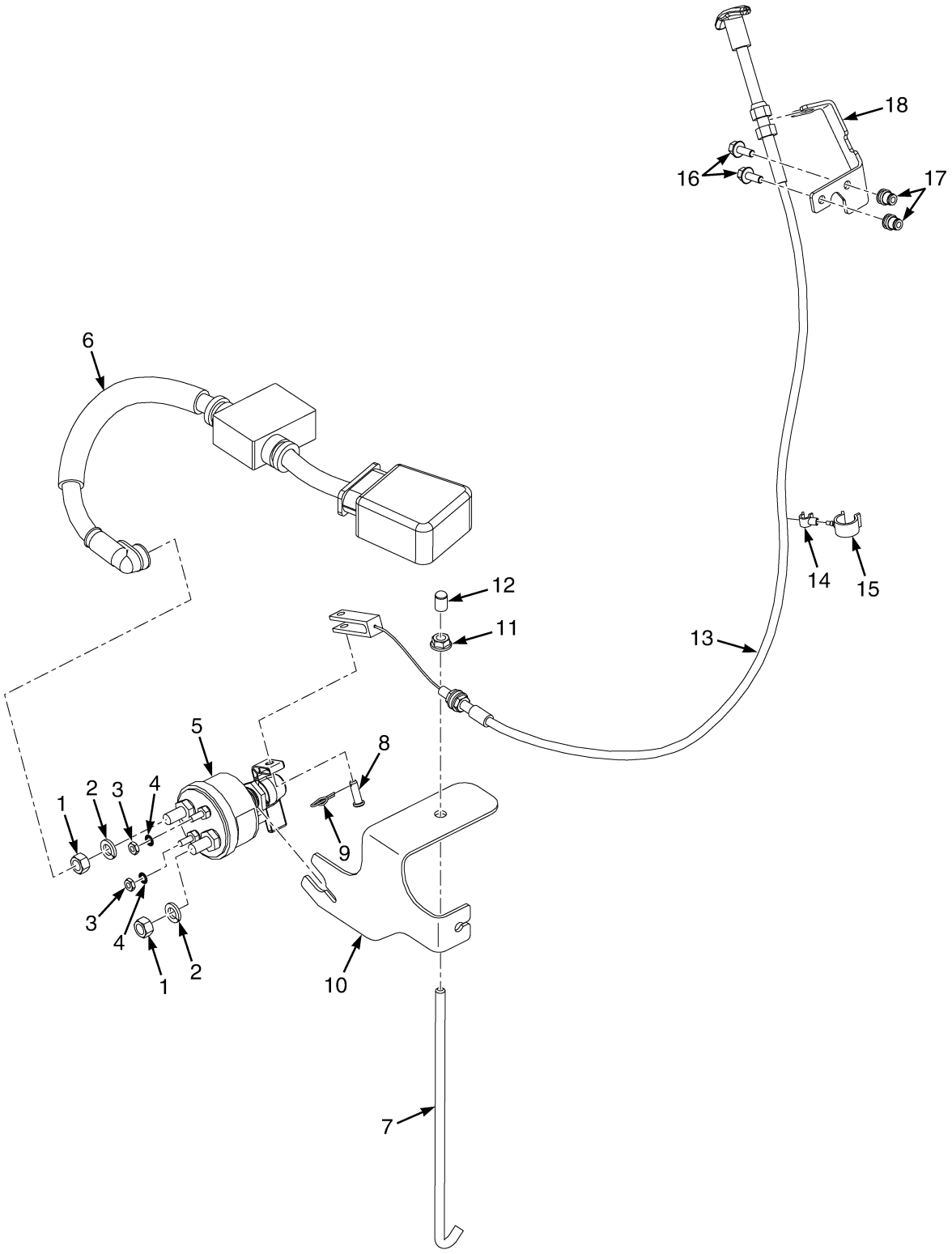

©2011 HYSTER COMPANY

BATTERY AND CONTROL CABLE DISCONNECT SWITCH

ITEM	PART NO.	DESCRIPTION	QTY
1	17407	Nut	2
2	15156	Lockwasher	2
3	15002	Nut	2
4	15916	Lockwasher	2
5	1578660	Switch	1
6	2098994	Battery Cable	1
6	1590368	Terminal	1
7	2065745	Link (Battery Hold Down)	1
8	126	Pin	1
9	1517361	Locking Ring Cotter Pin	1
10	1660295	Formed Bracket	1
11	1502543	Nut (Flange)	1
12	1540805	Cap	1
13	2093121	Cable Assy	1
14	1542440	Clamp (Swivel)	1
15	1543698	Clamp (Swivel)	1
16	1527876	Capscrew	2
17	1531558	Insert	2
18	1565382	Bracket	1
18	1703868	Bracket (Alternate Part)	1

©2011 HYSTER COMPANY

INSTRUMENT CLUSTER (FIGURE 4-8)

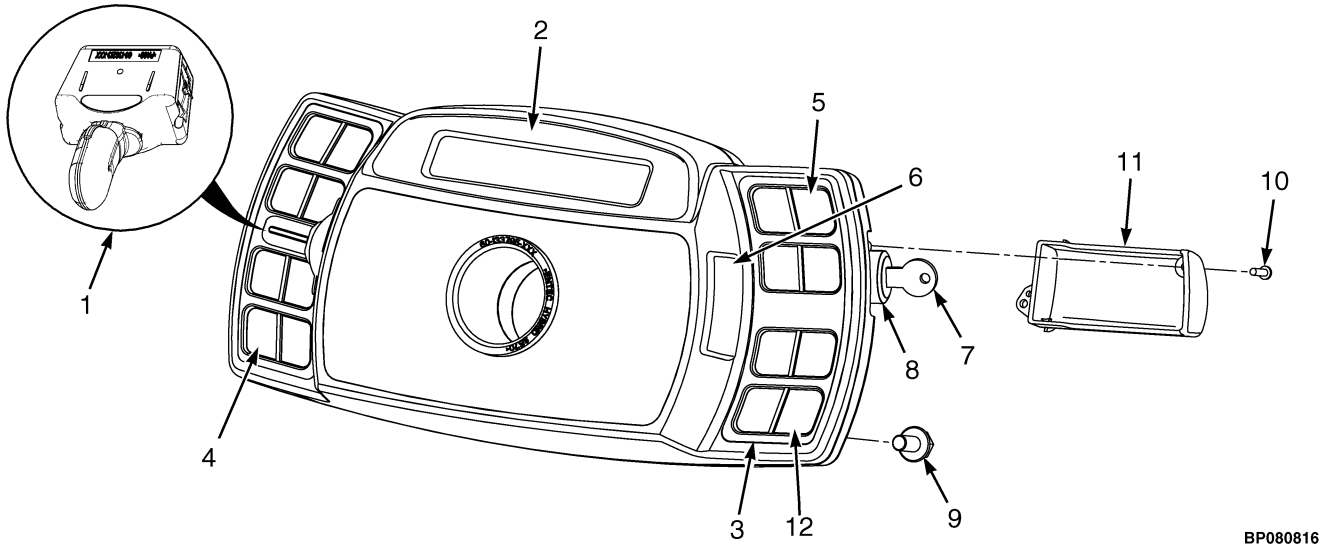

ITEM	PART NO.	DESCRIPTION	QTY
1	**b** 2102904	Lever (Detent Forward and Reverse)	1
1	**c** 4604594	Lever	1
2	2076696	Display (With Cab)	1
2	2076695	Display (With Overhead Guard)	1
3	2066485	Bezel (Display Cluster)	2
4	2069431	Label (Blank) (LH Display with Overhead Guard)	1
4	2066483	Label (LH Display with Cab)	1
5	2066484	Label (RH Display, All Options)	1
6	2060032	Cover (Display Lever)	1
7	1337197	Key Set	1
8	2057948	Ignition Switch (Without Keys)	1
9	1527879	Capscrew	4
10	1554902	Screw	5
11	2060033	Cover (Keyswitch)	1
12	**a** 2066482	Label (RH Display)	1

FOOTNOTES:

a Remove Panels From Overlay as Required For Truck Configuration.

b → S/N J006V02611H

c S/N J006V02612H →

©2011 HYSTER COMPANY

NOTES

©2011 HYSTER COMPANY

ENGINE ELECTRICAL SYSTEM (FIGURE 4-9)

GM 4.3L, GASOLINE AND LPG

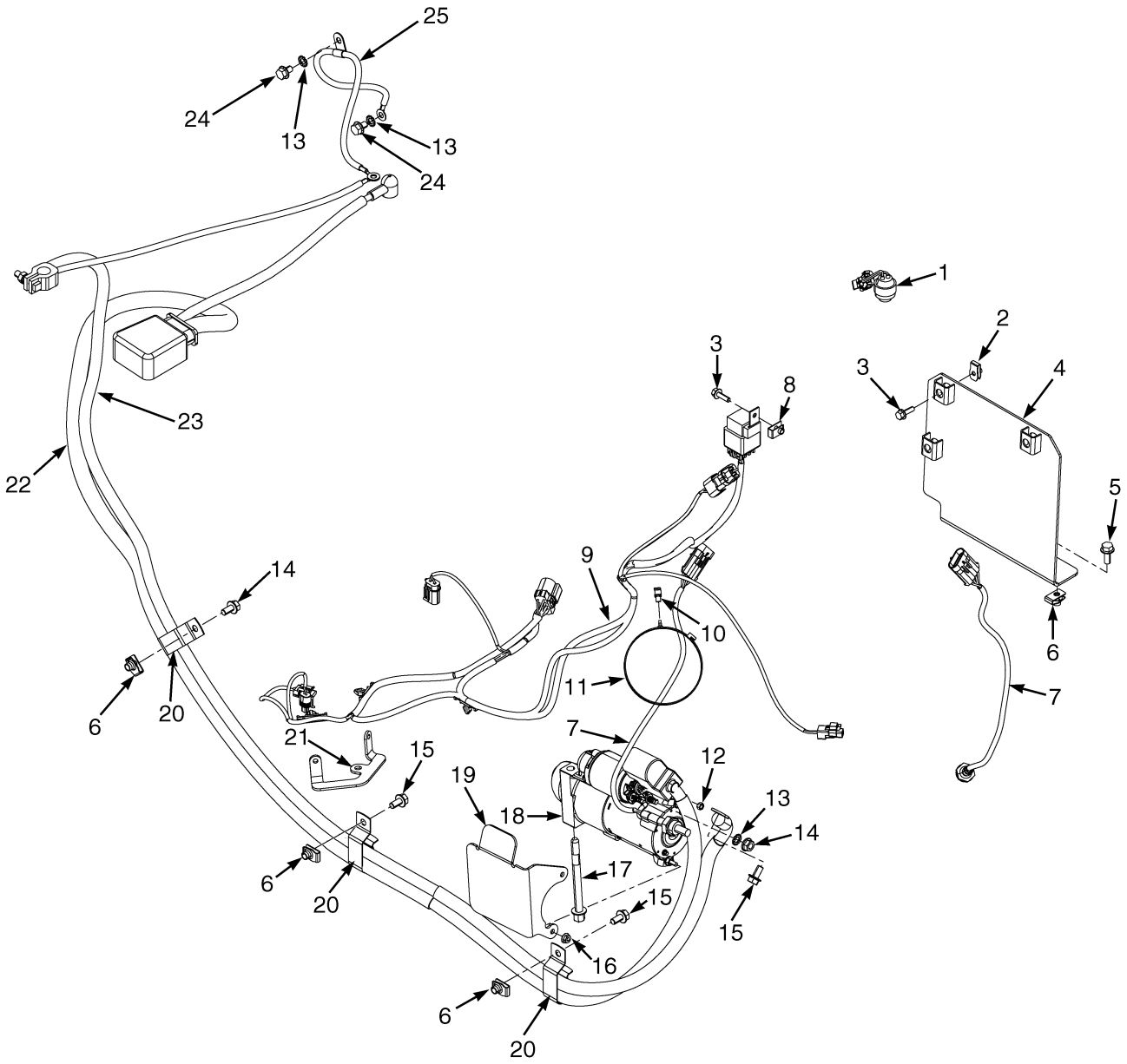

BP080590

©2011 HYSTER COMPANY

ENGINE ELECTRICAL SYSTEM
GM 4.3L, GASOLINE AND LPG

KEY:
A: Gasoline
B: LPG

ITEM	PART NO.	DESCRIPTION	QTY A	QTY B
1	1529257	Sensor (Air Flow Restriction)	1	1
2	1566420	Nut	3	3
3	1527877	Capscrew	4	4
4	1652220	Bracket Wldmt	1	1
5	1527880	Capscrew	3	3
6	1480237	Nut	6	6
7	1557546	Oxygen Sensor (With Wire Harness)	2	2
8	1350215	Nut	1	1
9	**a** 2094677	Wire Harness (LH Chassis) (2008-2009 Series) (☞Figure 4-47)	1	..
9	**a** 2094678	Wire Harness (LH Chassis) (2008-2009 Series) (☞Figure 4-49)	..	1
9	**b** 4604430	Wire Harness (LH Chassis) (2010 Series) (☞Figure 4-48)	1	..
9	**b** 4604389	Wire Harness (LH Chassis) (2010 Series) (☞Figure 4-50)	..	1
9	**b** 4604394	Wire Harness (LH Chassis) (2010 Series) (☞Figure 4-51)	..	1
10	1561871	Clamp (Swivel)	1	1
11	1502061	Clamp	1	1
12	292668	Nut	1	1
13	296380	Washer	3	3
14	1502543	Nut (Flange)	1	1
15	1527879	Capscrew	4	4
16	264148	Nut	2	2
17	1397716	Bolt	2	2
17	1677876	Bolt (Alternate Part)	2	2
18	1640531	Starter	1	1
19	1640818	Bracket	1	1
20	1544157	Clip	3	3
21	1402629	Bracket	1	..
22	2098768	Battery Cable (Positive)	1	1
22	1590368	Terminal	1	1
23	2098769	Battery Cable (Negative)	1	1
23	1616122	Terminal	1	1
24	1529366	Capscrew	2	2
25	2093220	Battery Cable (Negative)	1	1
25	806426	E-Ring	2	2
25	1564044	E-Ring	1	1

FOOTNOTES:

a → S/N J006V02542H

b S/N J006V02543H →

©2011 HYSTER COMPANY

SPARK PLUGS AND WIRES (FIGURE 4-10)

GM 4.3L LPG — PSI OPTION (PENDING PER ECN 152361 →)

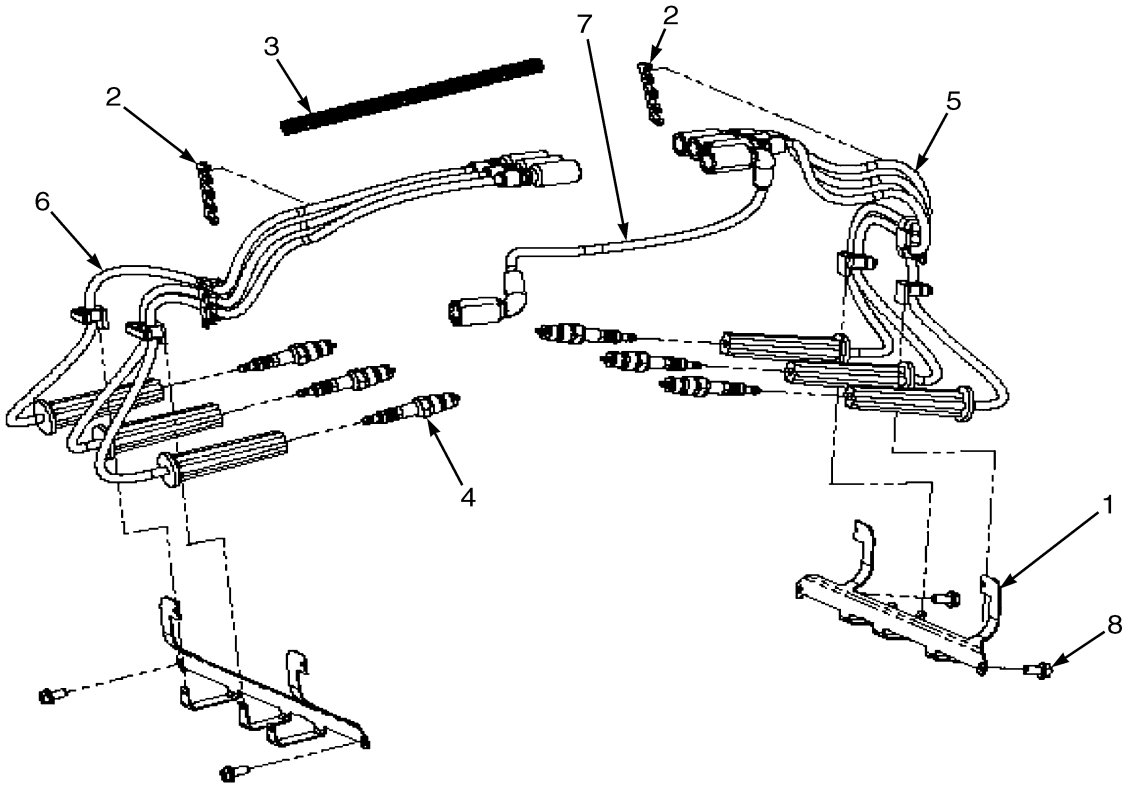

BP090464

ITEM	PART NO.	DESCRIPTION	QTY
1	1564035	Bracket	2
2	4019061	Separator	2
3	4040251	Conduit (46 in.)	AR
4	1452376	Spark Plug	6
5	. . . . .	Spark Plug Harness (RH)	1
6	. . . . .	Spark Plug Harness (LH)	1
7	. . . . .	Coil Wire	1
8	221416	Capscrew	4
	2088997	Kit-Ignition Cable (Spark Plug Wires and Coil Wire)	1
	a 4040249	Wire Harness (Engine) (☞Figure 4-36)	1

FOOTNOTES:

a Not Illustrated

©2011 HYSTER COMPANY

ENGINE CONTROL MODULE AND SENSORS (FIGURE 4-11)

GM 4.3L LPG — PSI OPTION (PENDING PER ECN 152361 →)

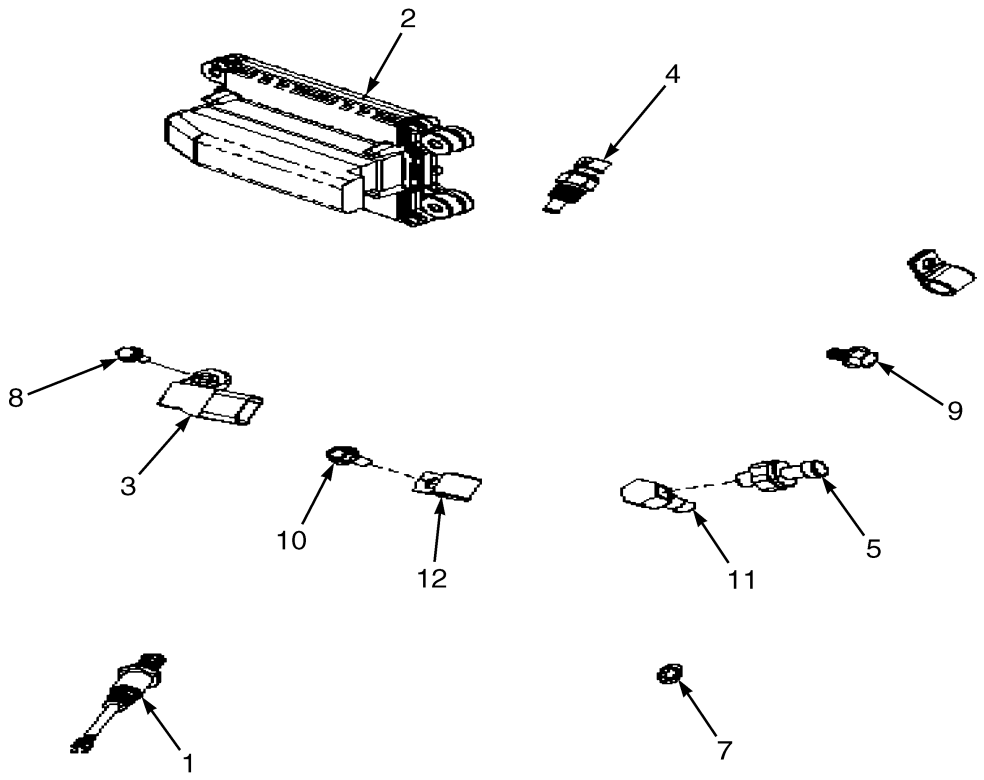

BP090463

ITEM	PART NO.	DESCRIPTION	QTY
1	1646456	Sensor (Oxygen)	2
2	4040286	Electronic Control Module	1
3	4019045	Sensor (T-Map)	1
4	4019046	Sensor (Coolant)	1
5	4019047	Pressure Sender (Oil)	1
6	4019050	Washer	1
7	1527876	Capscrew	1
8	221493	Capscrew	2
9	148818	Capscrew	1
10	4019052	Fitting	1
11	128408	Clamp	2
	a 4040249	Wire Harness	1

FOOTNOTES:

a Not Illustrated

©2011 HYSTER COMPANY

DISTRIBUTOR ASSEMBLY (FIGURE 4-12)

GM 4.3L GASOLINE AND LPG

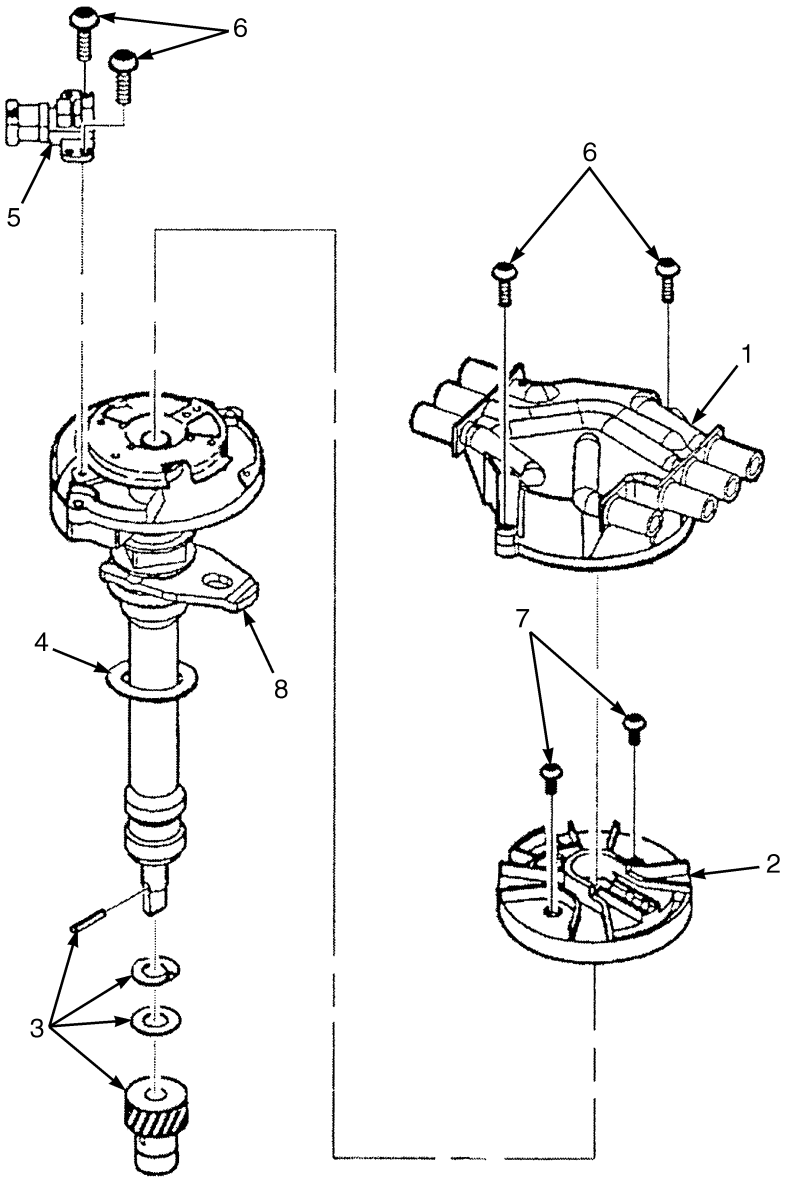

BP080184

ITEM	PART NO.	DESCRIPTION	QTY
	1559695	Distributor Assembly	1
1	1566458	Distributor Cap	1
2	1566459	Rotor	1
3	1559922	Kit-Gear	1
4	1334423	Gasket	1
5	1559923	Sensor (Cam)	1
6	1559924	Screw	4
7	1559925	Screw	2
8	1335497	Clamp	1

©2011 HYSTER COMPANY

ALTERNATOR AND MOUNTING (FIGURE 4-13)

GM 4.3L LPG — PSI OPTION (PENDING PER ECN 152361 →)

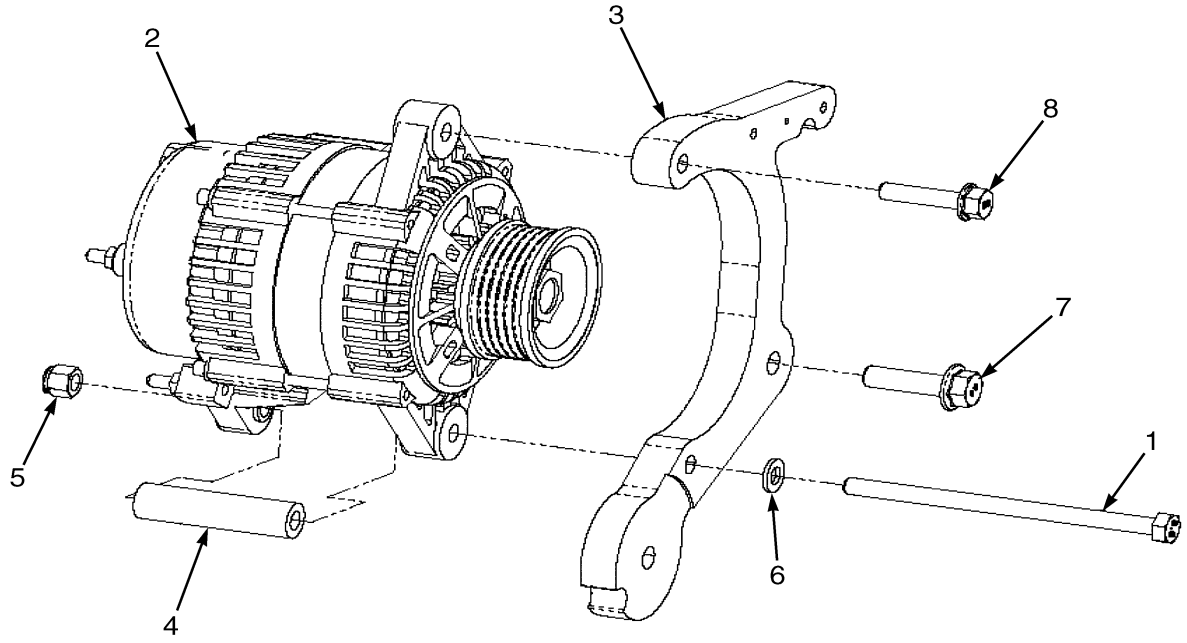

BP090460

ITEM	PART NO.	DESCRIPTION	QTY
1	1327647	Capscrew	1
2	4019177	Alternator	1
3	1636803	Bracket (Alternator)	1
4	1554814	Spacer	1
5	302326	Nut	1
6	320157	Washer	1
7	1527885	Capscrew	1
8	1528482	Capscrew	1

©2011 HYSTER COMPANY

STARTER (FIGURE 4-14)
GM 4.3L

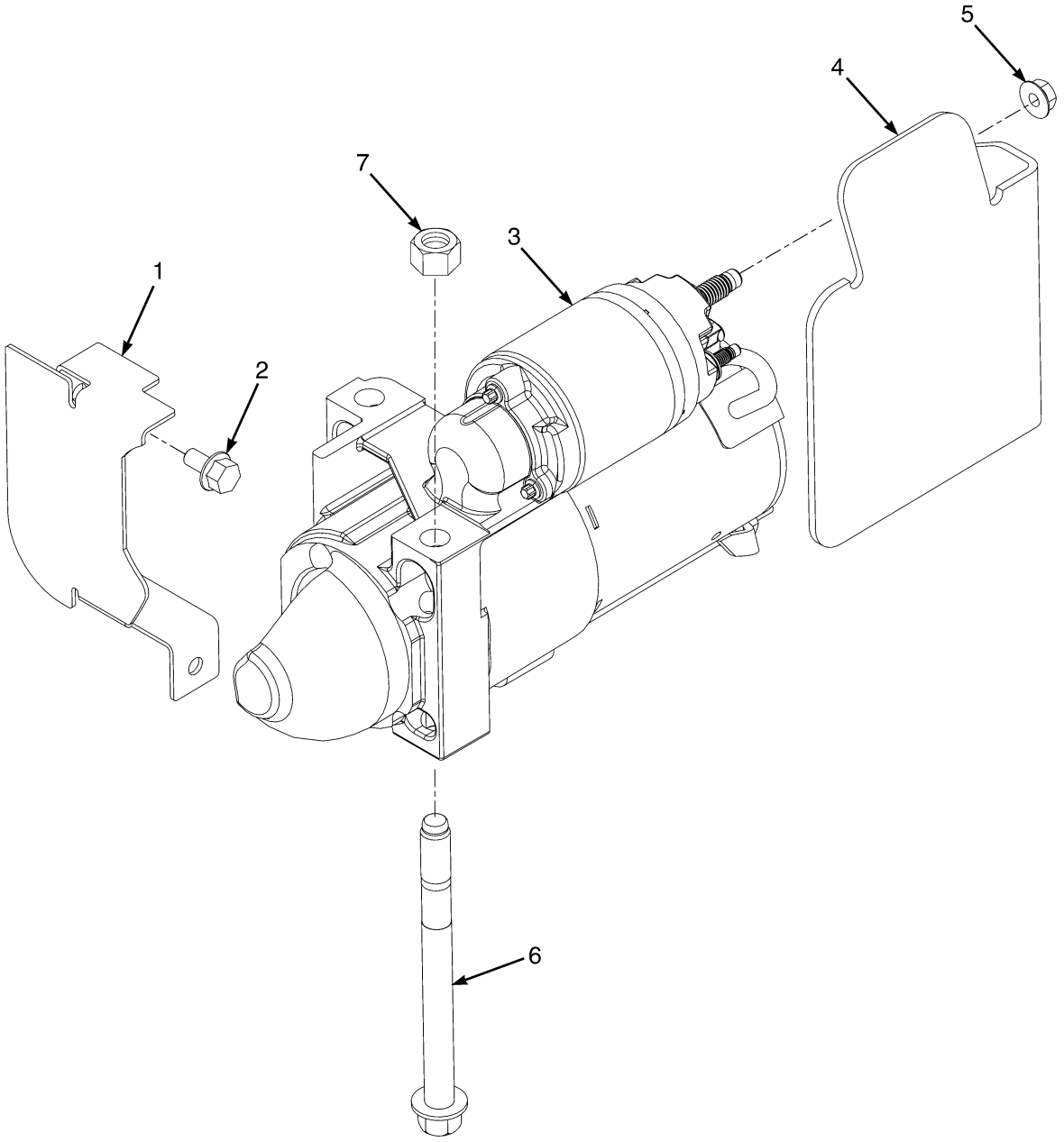

©2011 HYSTER COMPANY

STARTER
GM 4.3L

ITEM	PART NO.	DESCRIPTION	QTY
1	2109666	Dust Shield	1
2	1534417	Capscrew	2
2	**a** 148962	Capscrew (Alternate Part)	2
2	**b** 1463910	Capscrew	2
3	1640531	Starter	1
4	1640818	Bracket (Heat Shield)	1
5	264148	Nut	2
6	1677876	Bolt	2
7	**b** 292668	Nut	1

FOOTNOTES:

a GFI Option

b PSI Option

©2011 HYSTER COMPANY

FUSE BOX (FIGURE 4-15)

GM 4.3L LPG — PSI OPTION (PENDING PER ECN 152361 →)

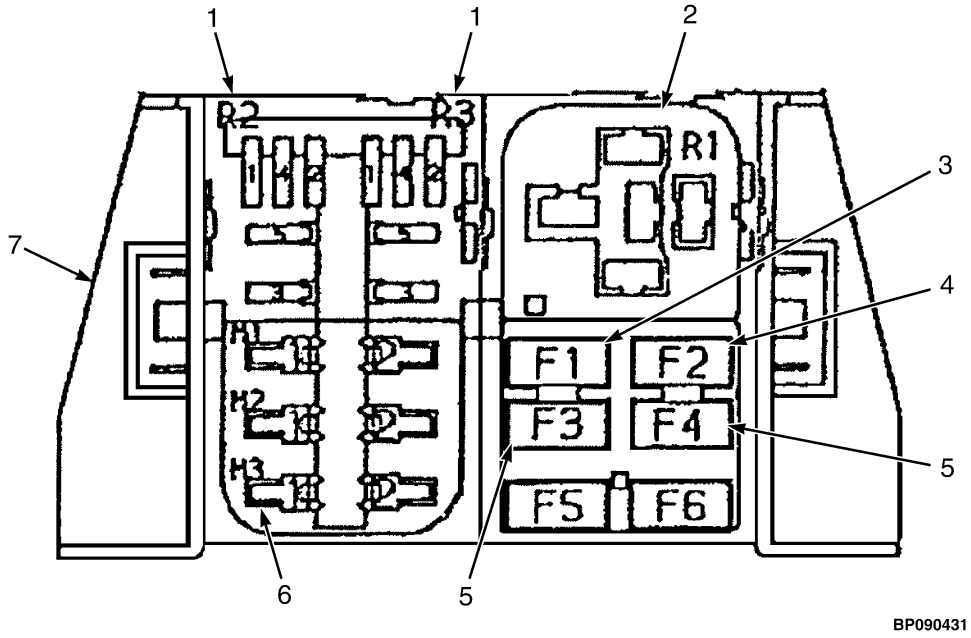

ITEM	PART NO.	DESCRIPTION	QTY
1	1567317	Relay (Power and Fuel Pump)	2
2	1567316	Relay (Starter)	1
3	1498046	Fuse (10 Amp)	1
4	1498044	Fuse (5 Amp)	1
5	1498047	Fuse (15 Amp)	2
6	1378418	Fuse (50 Amp)	1
7	1567835	Cover (Bottom-Fuse Box)	1

©2011 HYSTER COMPANY

NOTES

©2011 HYSTER COMPANY

ALTERNATOR AND MOUNTING (FIGURE 4-16)
CUMMINS QSB 3.3L DIESEL

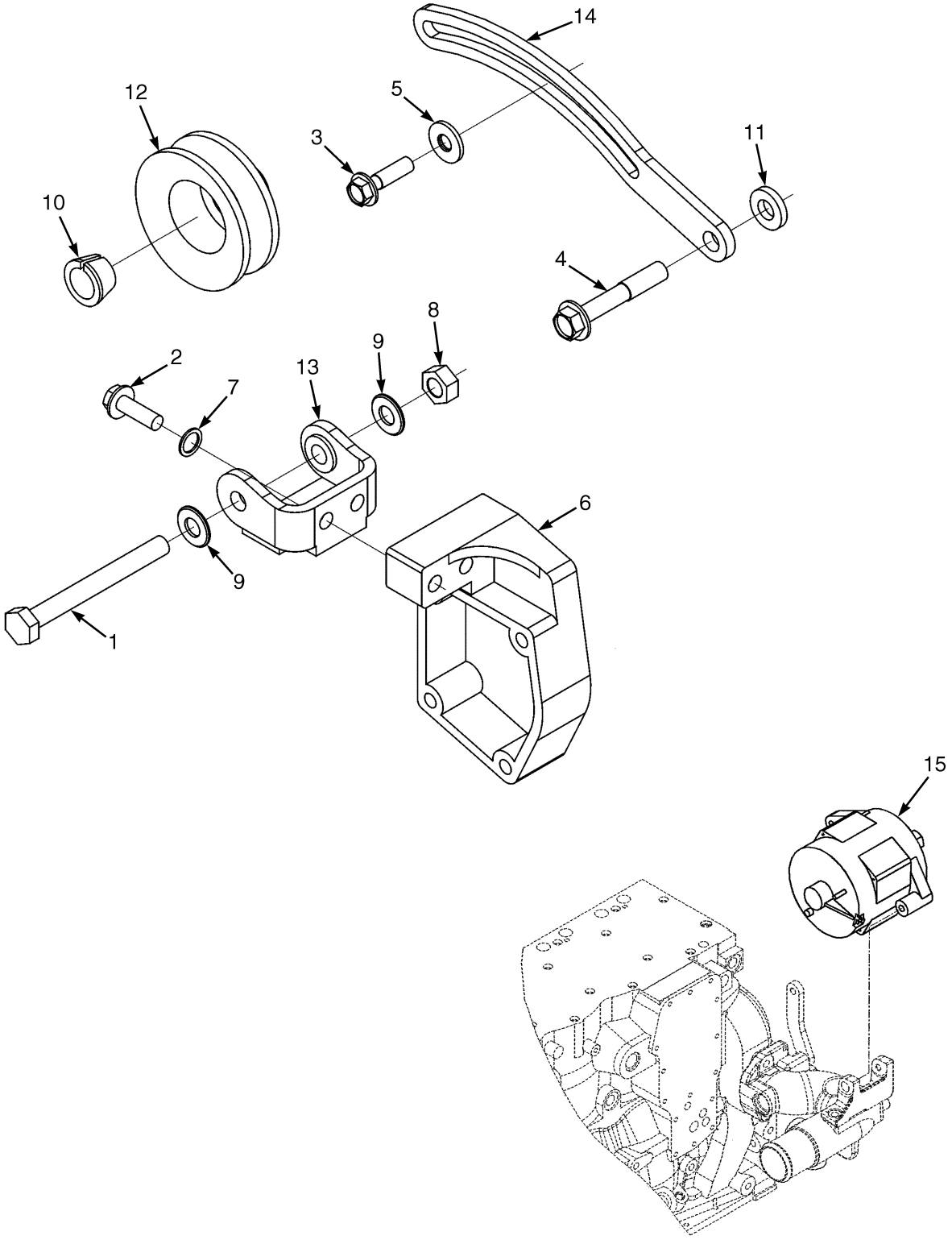

BP090401

©2011 HYSTER COMPANY

ALTERNATOR AND MOUNTING

CUMMINS QSB 3.3L DIESEL

ITEM	PART NO.	DESCRIPTION	QTY
	2103244	Engine Assy-Diesel	1
	2108566	Engine Assy-Diesel (99 Horsepower)	1
1	~~1691631~~		
	4023567	Capscrew	1
2	~~1691854~~		
	1597807	Capscrew (Flange)	2
3	~~1691633~~		
	4023568	Capscrew	1
4	1691634	Capscrew	1
5	1691635	Spacer	1
6	1691641	Support	1
7	. . . . .	Washer	2
8	1691638	Nut	1
9	1691639	Washer	2
10	1637812	Retainer	1
11	1691636	Spacer	1
12	1691640	Pulley	1
13	1691642	Bracket	1
13	. . . . .	Bushing	1
14	1691637	Plate (Pivot)	1
15	1637805	Alternator	1
15	4007486	Alternator (Alternate Part)	1

©2011 HYSTER COMPANY

SEALED ALTERNATOR AND MOUNTING (FIGURE 4-17)

CUMMINS QSB 3.3L DIESEL

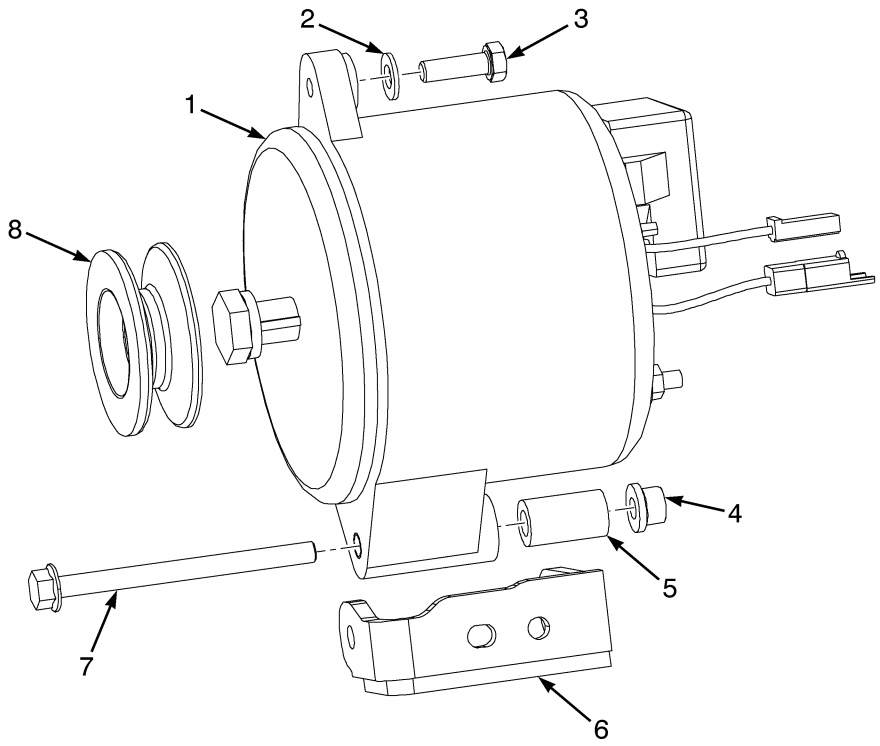

BP080748

ITEM	PART NO.	DESCRIPTION	QTY
	2103244	Engine Assy-Diesel	1
	2108566	Engine Assy-Diesel (99 Horsepower)	1
1	1394001	Alternator (Sealed)	1
2	18515	Washer	1
3	18497	Capscrew	1
4	1544153	Locknut	1
5	1678178	Spacer	1
6	1678069	Bracket Wldmt	1
7	1617601	Bolt	1
8	1537422	Spacer	1
8	1677952	Pulley (Alternator)	1

©2011 HYSTER COMPANY

NOTES

©2011 HYSTER COMPANY

ENGINE ELECTRICAL SYSTEM (FIGURE 4-18)

CUMMINS QSB 3.3L DIESEL — UL TYPE DS

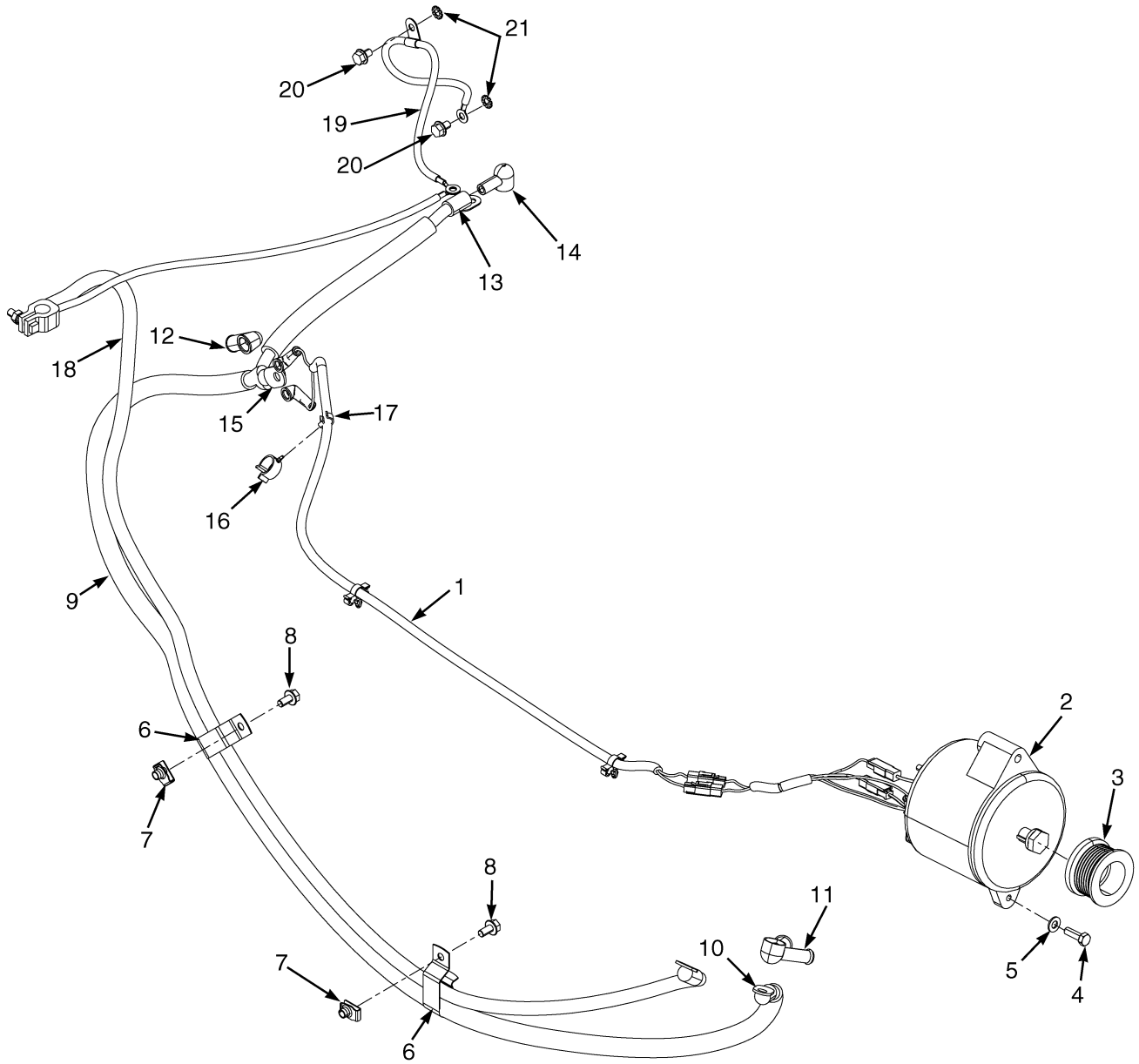

BP080601

©2011 HYSTER COMPANY

ENGINE ELECTRICAL SYSTEM

CUMMINS QSB 3.3L DIESEL – UL TYPE DS

ITEM	PART NO.	DESCRIPTION	QTY
1	2103830	Wire Harness (Sealed Alternator) (☞Figure 4-57)	1
2	1394001	Alternator (Sealed) (☞Figure 4-17)	1
3	1501948	Pulley	1
4	18497	Capscrew	1
5	18515	Washer	1
6	1544157	Clip	2
7	1480237	Nut	2
8	1527879	Capscrew	2
9	2099801	Battery Cable (Positive)	1
9	1357268	Battery Cable (Red)	AR
9	1357266	Battery Cable (Red)	AR
9	2111099	Battery Cable (Alternate Part)	1
10	16079	Terminal	1
11	1661688	Boot	1
12	204223	Boot	1
13	148798	Terminal	1
14	1566146	Boot	1
15	148795	Terminal	1
16	1502066	Clamp	1
17	1561871	Clamp (Swivel)	1
18	2099799	Battery Cable (Negative)	1
18	1616122	Terminal	1
19	2093220	Battery Cable	1
19	806426	E-Ring	2
19	1564044	E-Ring	1
20	1529366	Capscrew	2
21	296380	Washer	2

©2011 HYSTER COMPANY

ENGINE ELECTRICAL SYSTEM (FIGURE 4-19)
CUMMINS QSB 3.3L DIESEL

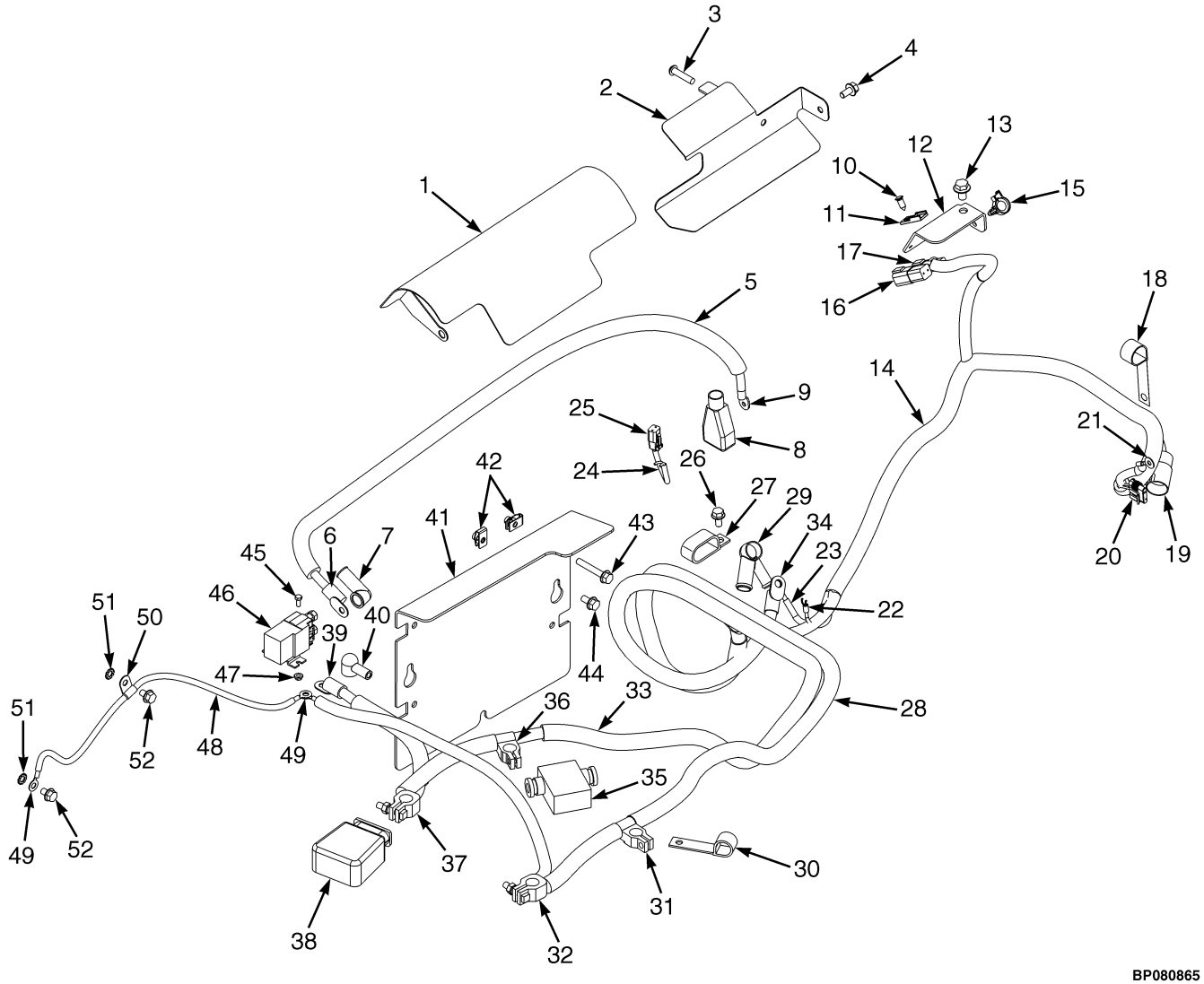

BP080865

©2011 HYSTER COMPANY

ENGINE ELECTRICAL SYSTEM
CUMMINS QSB 3.3L DIESEL

ITEM	PART NO.	DESCRIPTION	QTY
1	1703318	Shield (Starter)	1
1	**a** 1691544	Foam (Seal)	1
2	1691441	Bracket Wldmt (Fuel Pump Shield)	1
3	296169	Capscrew	1
4	1527879	Capscrew	1
5	2099800	Battery Cable (Positive)	1
5	1357265	Battery Cable (Red)	AR
6	148800	Terminal (Battery)	1
7	204223	Boot	1
8	321158	Boot	1
9	203689	E-Ring	1
10	1582464	Fastener	2
11	1500912	Clip	2
12	1678123	Bracket (Wire Harness)	1
13	1528778	Capscrew	1
14	2110986	Wire Harness (Alternator) (☞Figure 4-16)	1
15	1402815	Clip	1
16	1480187	Connector	1
17	1493465	Connector	1
18	1364263	Clamp	1
19	1544731	Receptacle	1
20	1501919	Connector	1
21	806426	E-Ring	1
22	148638	E Ftg Spade Term #10	1
23	806427	E-Ring	2
24	2103224	Wire Harness (2 Pin Extension)	1
25	1490242	Connector	1
26	1527879	Capscrew	2
27	176454	Clamp	2
28	2099799	Battery Cable (Negative)	1
28	16078	Battery Cable	AR
29	1629204	Boot	1
30	1474893	Clamp	2
31	148783	Terminal	1
32	148789	Terminal	1
32	1616122	Terminal (Alternate Part)	1
33	2111098	Battery Cable (Positive) (Positive)	1
33	1357268	Battery Cable (Red)	AR
34	16079	Terminal	1
35	1595774	Boot	1
36	148786	Terminal	1
36	1590368	Terminal (Alternate Part)	1
37	148792	Terminal	1
38	1536304	Boot	1
39	148798	Terminal	1
40	1566146	Boot	1
41	1669570	Bracket (Engine Control Module)	1
42	1480237	Nut (Foldover)	7
43	1510115	Capscrew	4
44	1527879	Capscrew	3

©2011 HYSTER COMPANY

ENGINE ELECTRICAL SYSTEM
CUMMINS QSB 3.3L DIESEL

ITEM	PART NO.	DESCRIPTION	QTY
45	2046866	Capscrew	2
46	1501896	Contactor	1
47	1565407	Nut	2
48	2093220	Battery Cable (Negative)	1
48	1357533	Wire-Bulk	AR
49	806426	E-Ring	2
50	1564044	E-Ring	1
51	296380	Washer	2
52	1527879	Capscrew	2

FOOTNOTES:

a Not Illustrated

©2011 HYSTER COMPANY

NOTES

©2011 HYSTER COMPANY

LIGHTS (FIGURE 4-20)

BRAKE, TAIL, BACKUP, SIDE, TURN SIGNALS, WORK, STROBE — WITH CAB

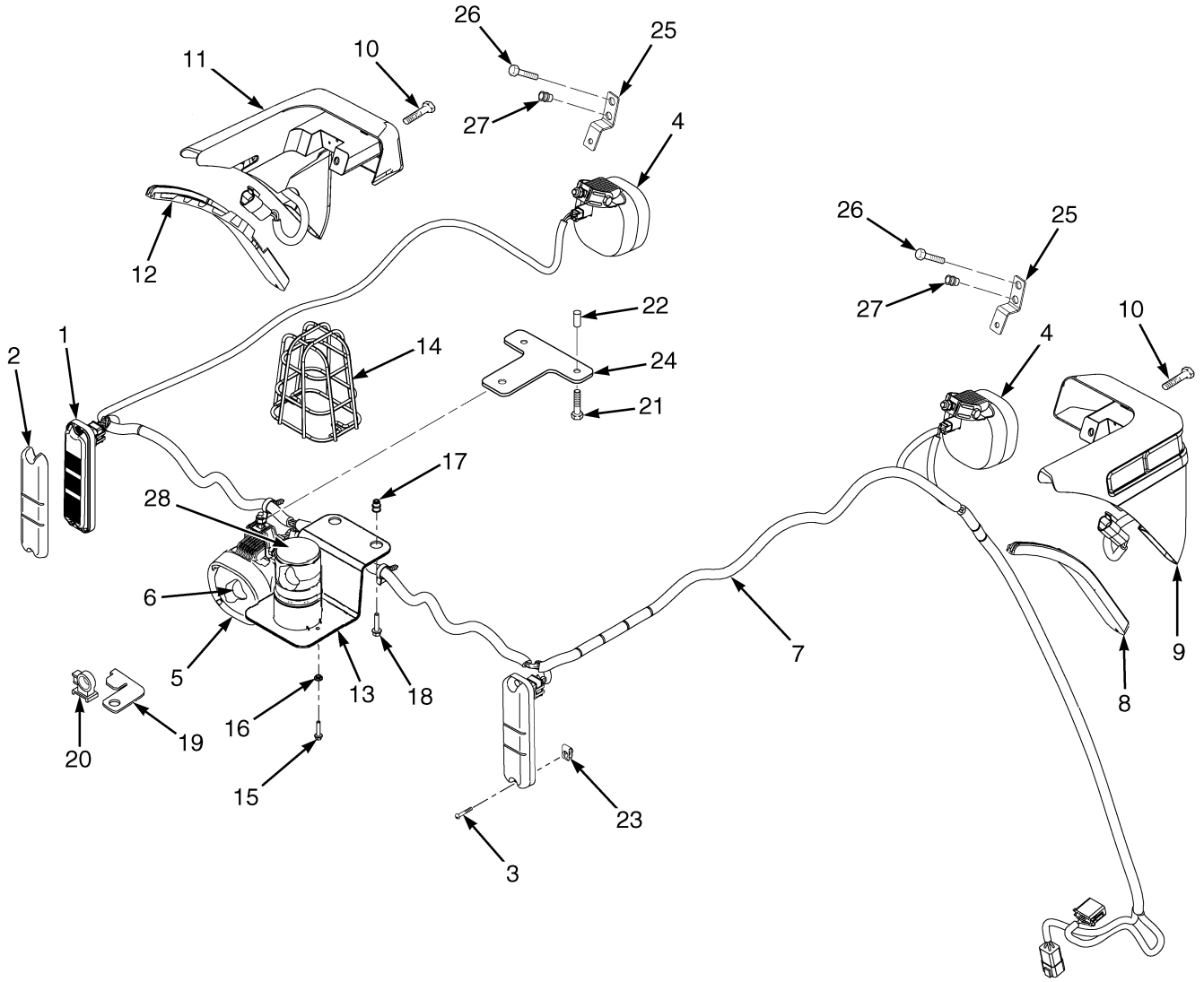

BP080386

©2011 HYSTER COMPANY

LIGHTS

BRAKE, TAIL, BACKUP, SIDE, TURN SIGNALS, WORK, STROBE – WITH CAB

ITEM	PART NO.	DESCRIPTION	QTY
1	2056824	Brake/Backup Light (Stop,Turn,Tail, And Back-Up)	2
1	2107957	Tail Light Base (RH) (Not Shown)	1
1	2107958	Tail Light Base (LH) (Not Shown)	1
2	2056826	Reflector (Tail)	2
3	1565125	Screw	4
4	2098084	Work Light (RH Front) (Halogen)	1
4	2107383	Head/Work Light (Front RH) (LED)	1
4	2098085	Work Light (LH Front) (Halogen)	1
4	2107384	Head/Work Light (Front LH) (LED)	1
5	2098083	Work Light (Rear) (Halogen)	1
5	2107382	Head/Work Light (Rear) (LED)	1
5	1664626	Bracket (Without Cab)	1
5	1698541	Bracket (Use with LED Lights)	1
6	2098082	Bulb (Halogen)	1
7	1647440	Wire Harness (Cab)	1
8	1608591	Trim (RH)	1
9	2070561	Turn Signal Light (RH Front)	1
10	1608654	Capscrew	4
11	2070562	Turn Signal Light (LH Front)	1
12	1608592	Trim (LH)	1
13	1565076	Bracket Wldmt	1
14	1302024	Guard	1
15	1586759	Capscrew	2
16	1586428	Nut	2
17	1531558	Insert	2
18	1586495	Capscrew	2
19	1698543	Bracket	1
20	1532775	Clip	1
21	1586495	Capscrew	2
22	1531558	Insert	2
23	1537551	Nut	4
24	1558771	Bracket	1
24	1698541	Bracket (Alternate Part)	1
25	1664656	Bracket (With Cab)	2
26	1583611	Capscrew	4
27	1531557	Insert	4
28	1654013	Strobe Light Assembly	1

©2011 HYSTER COMPANY

LIGHTS (FIGURE 4-21)

BRAKE, TAIL, BACKUP, SIDE, TURN SIGNALS, WORK, STROBE — WITH OVERHEAD GUARD

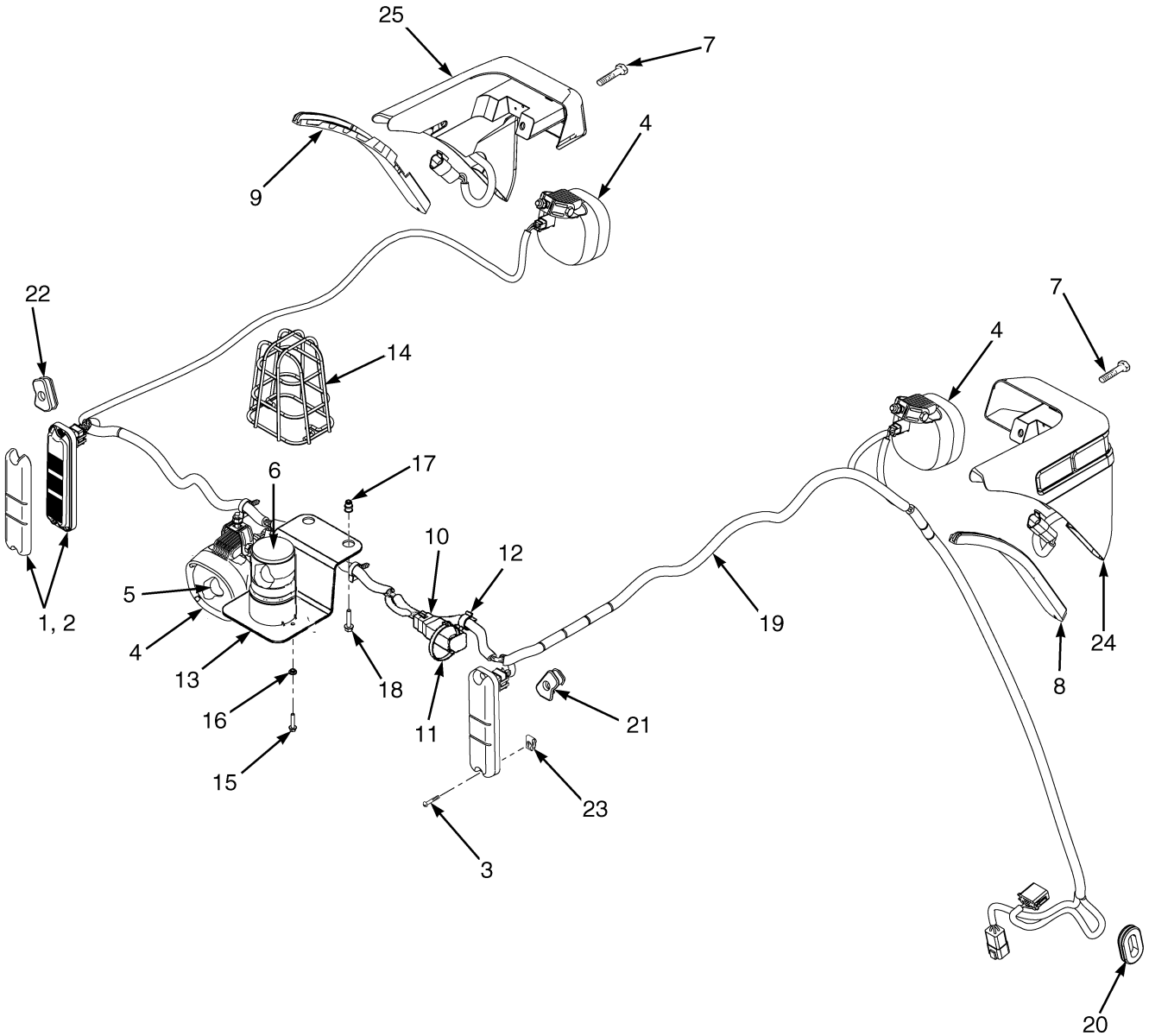

©2011 HYSTER COMPANY

LIGHTS

BRAKE, TAIL, BACKUP, SIDE, TURN SIGNALS, WORK, STROBE – WITH OVERHEAD GUARD

ITEM	PART NO.	DESCRIPTION	QTY
1	2056824	Brake/Backup Light (Stop,Turn,Tail, And Back-Up)	2
1	2107957	Tail Light Base (RH)	1
1	2107958	Tail Light Base (LH)	1
2	2056826	Reflector (Tail)	2
3	1565125	Screw	4
4	2098083	Work Light (Rear) (Halogen)	1
4	2107382	Head/Work Light (Rear) (LED)	1
4	2098086	Work Light (RH Front) (Halogen)	1
4	2107383	Head/Work Light (Front RH) (LED)	1
4	2098087	Work Light (LH Front) (Halogen)	1
4	2107384	Head/Work Light (Front LH) (LED)	1
5	2098082	Bulb (Halogen)	1
6	1654013	Strobe Light Assembly	1
7	1608654	Capscrew	4
8	1608589	Trim (RH)	1
9	1608590	Trim (LH)	1
10	2095895	Wire Harness	1
10	1514597	Connector	1
10	1514598	Connector	1
10	1484709	Terminal (Pin)	4
10	1634047	Resistor	3
11	1644398	Clamp	1
12	1606544	Clamp	1
13	1565076	Bracket Wldmt	1
14	1302024	Guard	1
15	1586759	Capscrew	2
16	1586428	Nut	2
17	1531001	Insert	2
18	1586495	Capscrew	2
19	2101862	Wire Harness (Lights) (☞Figure 4-62)	1
20	1539584	Grommet (Vehicle System Manager)	1
21	1560447	Grommet (RH Tail Light)	1
22	1560448	Grommet (LH Tail Light)	1
23	1537551	Nut	4
24	2070561	Turn Signal Light (RH Front)	1
24	2070563	Cap (Black Plastic)	2
24	1493466	Connector	1
24	1330415	Connector	1
24	1330437	Terminal (Pin)	3
25	2070562	Turn Signal Light (LH Front)	1
25	2070563	Cap (Black Plastic)	2
25	1493466	Connector	1
25	1330415	Connector	1
25	1330437	Terminal (Pin)	3

©2011 HYSTER COMPANY

STARTER MOTOR (FIGURE 4-22)
CUMMINS QSB 3.3L DIESEL

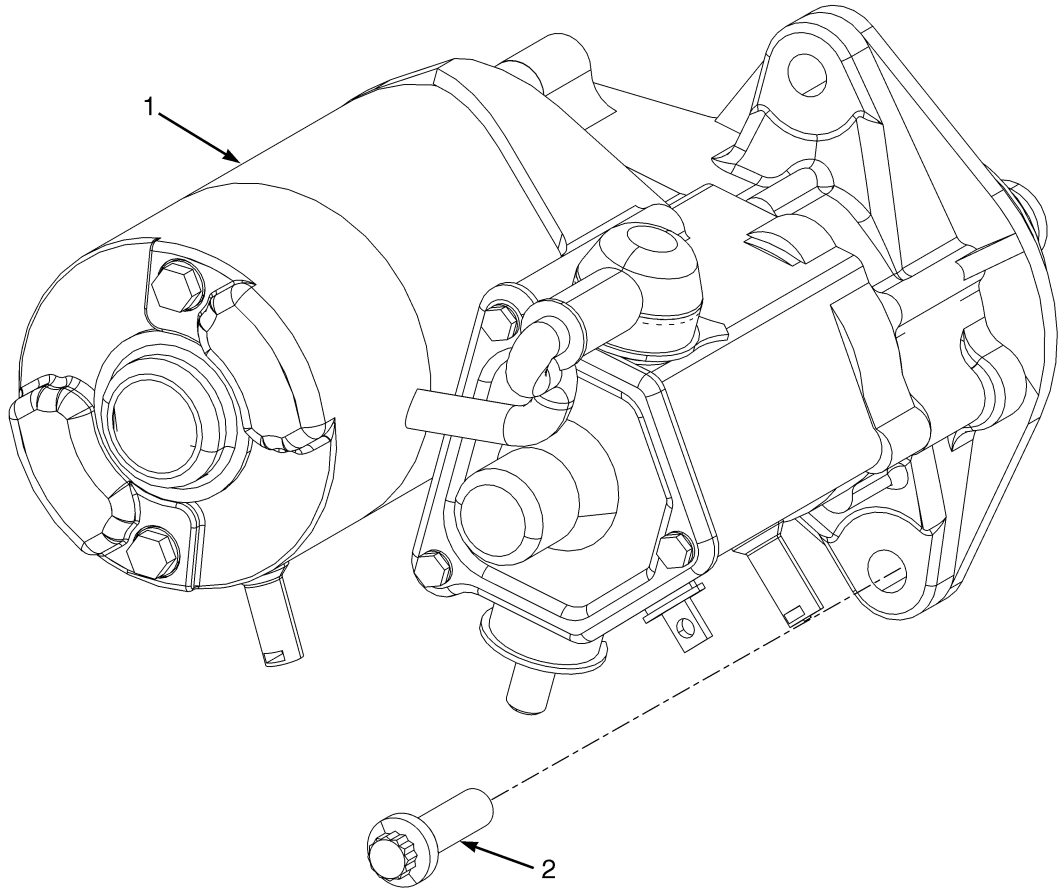

BP090305

ITEM	PART NO.	DESCRIPTION	QTY
	2103244	Engine Assy-Diesel	1
	2108566	Engine Assy-Diesel (99 Horsepower)	1
1	1692007	Motor (Starter)	1
2	1692006	Capscrew	3
2	1707217	Capscrew (Alternate Part)	3
	a 1703318	Shield	1

FOOTNOTES:

a Not Illustrated

©2011 HYSTER COMPANY

NOTES

©2011 HYSTER COMPANY

ELECTRONIC CONTROL MODULE AND SENSORS (FIGURE 4-23)

CUMMINS QSB 3.3L DIESEL

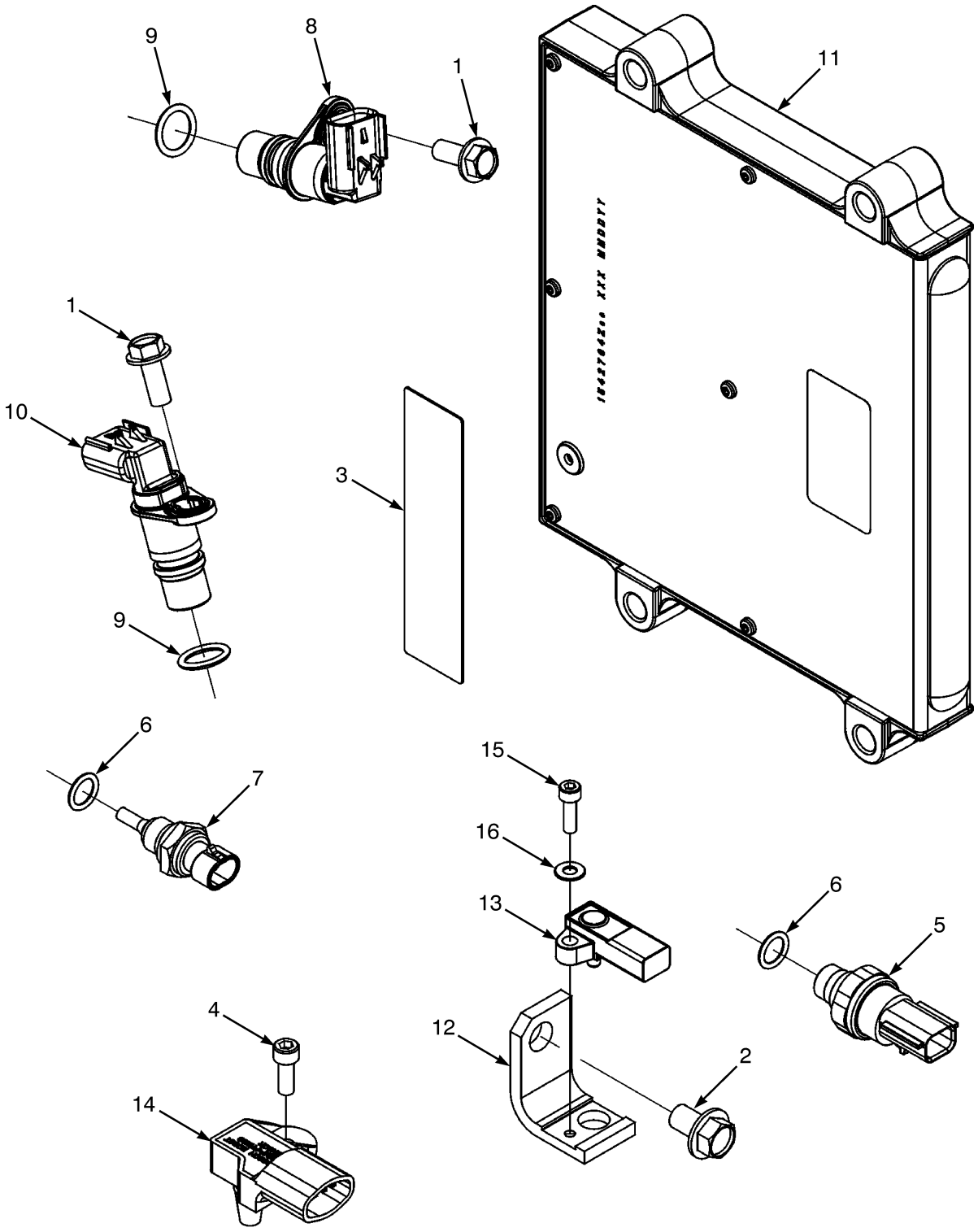

BP090407

©2011 HYSTER COMPANY

ELECTRONIC CONTROL MODULE AND SENSORS
CUMMINS QSB 3.3L DIESEL

ITEM	PART NO.	DESCRIPTION	QTY
	2103244	Engine Assy-Diesel	1
	2108566	Engine Assy-Diesel (99 Horsepower)	1
1	1691869	Capscrew	2
2	1691870	Capscrew	1
3	1517120	Data Plate	1
4	1691871	Capscrew	1
5	1543439	Switch, Oil Pressure	1
6	1543435	O-Ring	2
7	1565040	Temperature Sensor	1
8	1644129	Crank Position Sensor	1
9	1644128	O-Ring	2
10	1644131	Cam Position Sensor (Crank Position)	1
11	1691861	Electronic Control Module	1
12	1691868	Support	1
13	1691877	Sensor (Ambient Air Pressure)	1
14	1691878	Sensor (Intake Manifold Temperature)	1
15	1691879	Capscrew	1
16	1691880	Washer	1
	a 2106332	Label (ECM Code) (Standard Transmission) (☞Figure 1-31)	1

FOOTNOTES:

a Not Illustrated

©2011 HYSTER COMPANY

TRANSMISSION ELECTRICAL SYSTEM (FIGURE 4-24)
TWO SPEED TRANSMISSION

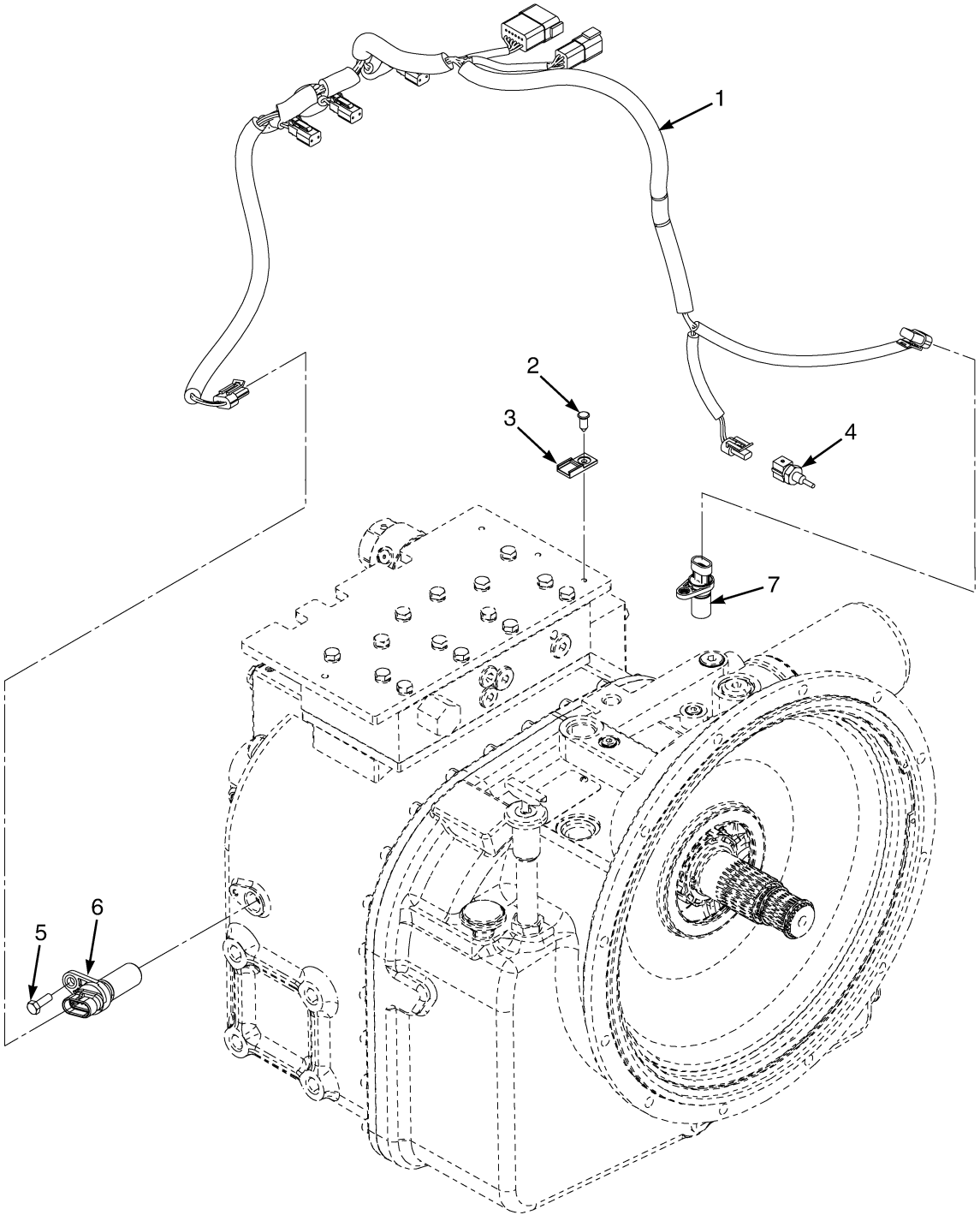

BP080573

©2011 HYSTER COMPANY

TRANSMISSION ELECTRICAL SYSTEM
TWO SPEED TRANSMISSION

ITEM	PART NO.	DESCRIPTION	QTY
1	2106249	Wire Harness (Transmission) (☞Figure 4-59)	1
2	1582464	Fastener	2
3	1500912	Clip	2
4	1515654	Temperature Sensor	1
5	1527876	Capscrew	1
6	1541231	Sensor (Input Speed, TISS)	1
7	1541232	Sensor (Output Speed, TOSS)	1

©2011 HYSTER COMPANY

TRANSMISSION ELECTRICAL SYSTEM (FIGURE 4-25)
THREE SPEED TRANSMISSION

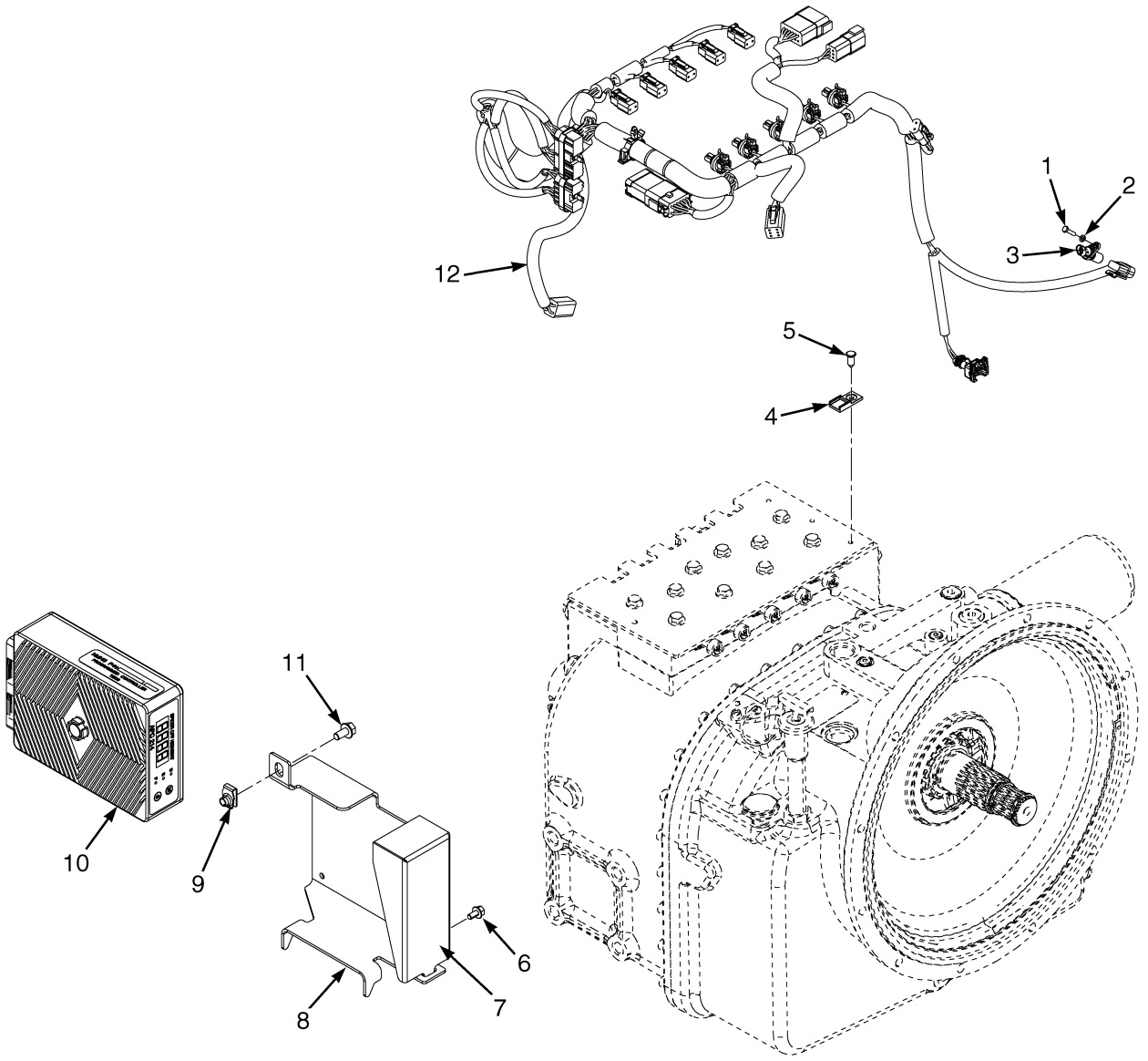

©2011 HYSTER COMPANY

TRANSMISSION ELECTRICAL SYSTEM
THREE SPEED TRANSMISSION

ITEM	PART NO.	DESCRIPTION	QTY
1	1527876	Capscrew	1
2	292680	Washer	1
3	1541231	Sensor (Input Speed, TISS)	1
4	1500912	Clip	4
5	1582464	Fastener	4
6	1534417	Capscrew	4
7	1603367	Cover	1
8	1662302	Bracket	1
9	1480237	Nut	1
10	**ad** 2108841	Controller	1
10	**ae** 4604103	Controller	1
10	**bd** 2108843	Controller	1
10	**be** 4604105	Controller	1
10	**cd** 2089017	Controller	1
10	**ce** 4604095	Controller	1
10	**cd** 2091460	Controller (Extended Function)	1
10	**ce** 4604099	Controller (Extended Function)	1
11	1527879	Capscrew	1
12	2106248	Wire Harness (Transmission, Three Speed) (☞Figure 4-58)	1

FOOTNOTES:

a Cummins QSB 3.3L 80 Horsepower
b Cummins QSB 3.3L 99 Horsepower
c GM 4.3L Gasoline and LPG
d → S/N J006V02546H
e S/N J006V02547H →

©2011 HYSTER COMPANY

ELECTRONIC CONTROL LEVERS (FIGURE 4-26)

MINI-LEVER MODULES (THREE FUNCTION) (→ S/N J006V02753H EXC. 02721)

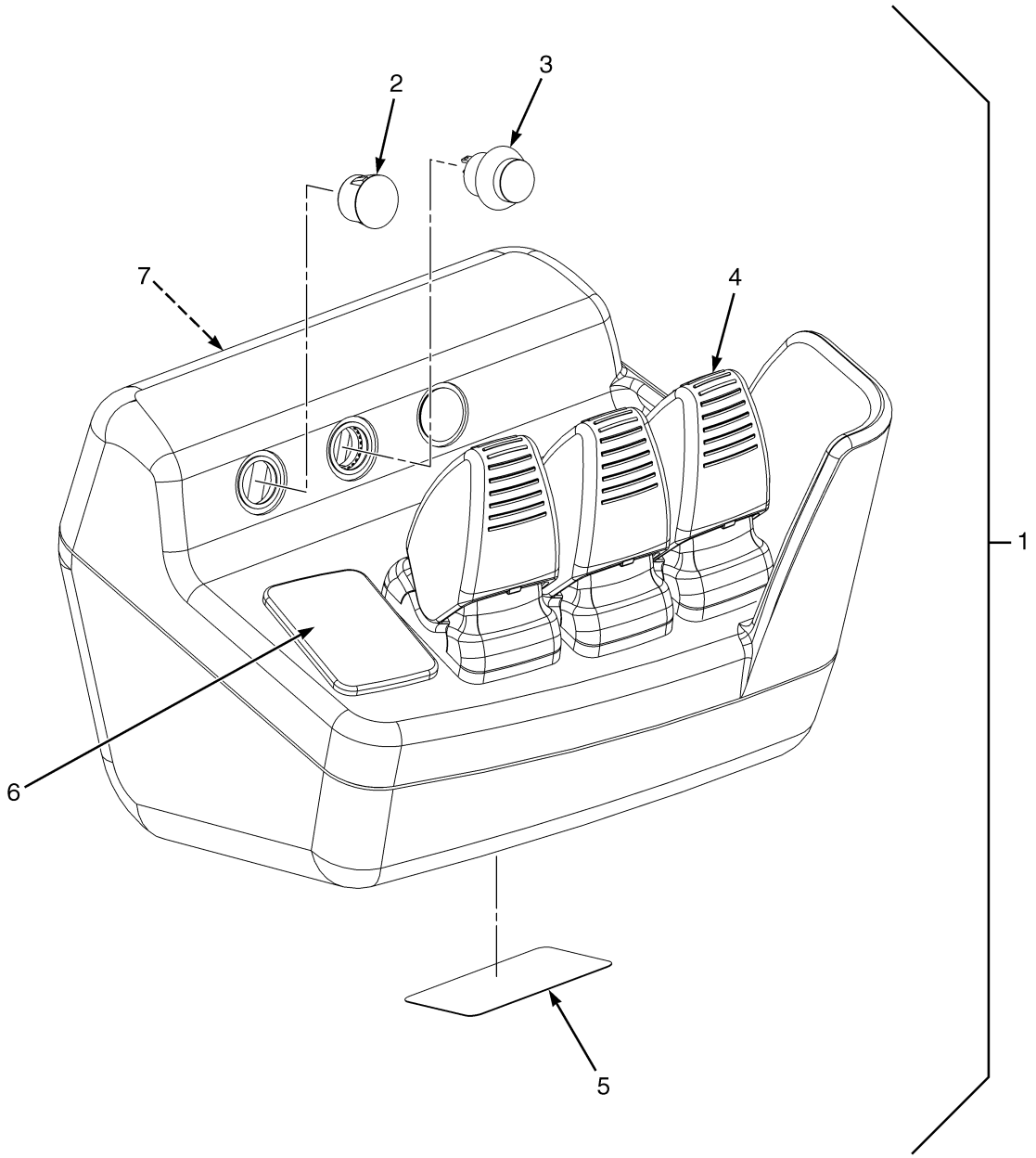

©2011 HYSTER COMPANY

ELECTRONIC CONTROL LEVERS

MINI-LEVER MODULES (THREE FUNCTION) (→ S/N J006V02753H EXC. 02721)

ITEM	PART NO.	DESCRIPTION	QTY
1	2105372	Mini-Lever (8544613)	1
	1689455	Kit-Mini-Lever (Non-Clamping)	3
	b 1598224	Plug	1
	c 1598223	Kit-Plug (Interlock Switch Plug)	3
1	2105376	Mini-Lever (8544617) (With Clamping)	1
	a 1598223	Kit-Plug (Interlock Switch Plug)	1
	d 1598221	Kit-Switch (Interlock Switch)	1
	b 1598224	Plug	1
	c 1689455	Kit-Mini-Lever (Non-Clamping)	2
	1689460	Kit-Mini-Lever (Clamping)	1
1	2105378	Mini-Lever (8544619) (With Return To Set Tilt)	1
	a 1598223	Kit-Plug (Interlock Switch Plug)	2
	d 1598221	Kit-Switch (Interlock Switch)	1
	b 1598224	Plug	1
	c 1689455	Kit-Mini-Lever (Non-Clamping)	2
	1689460	Kit-Mini-Lever (Clamping)	1
1	2105380	Mini-Lever (8544621) (With Clamping and Return to set Tilt)	1
	d 1598221	Kit-Switch (Interlock Switch)	2
	b 1598224	Plug	2
	c 1598223	Kit-Plug (Interlock Switch Plug)	1
	1689455	Kit-Mini-Lever (Non-Clamping)	1
	1689460	Kit-Mini-Lever (Clamping)	2
2	. . . . .	Plug (Momentary Switch)	AR
3	1591181	Switch-Momentary	AR
4	. . . . .	Mini-Lever	AR
4	1658063	Handle (Mini-Lever)	1
5	. . . . .	Label (Shows Production Part Number)	1
6	1598224	Plug (Mini-Lever)	1
7	. . . . .	Control Labels (☞Figure 1-33, ☞Figure 1-34)	1

FOOTNOTES:

a Kit Includes: 1 Interlock Rocker (must be used in combination with a Momentary Interlock Switch), 1 Gasket, 4 Screws (parts are NSS)

b Kit Includes: 1 Mini-Lever Plug, 1 Gasket (parts are NSS)

c Kit Includes: 1 Momentary Interlock Switch Plug, 1 Gasket (parts are NSS)

d Kit Includes: 1 Momentary Switch, 1 Lockwasher, 1 Gasket, 1 Nut (parts are NSS)

©2011 HYSTER COMPANY

ELECTRONIC CONTROL LEVERS (FIGURE 4-27)

MINI-LEVER MODULE (FOUR FUNCTION) (→ S/N J006V02753H EXC. 02721)

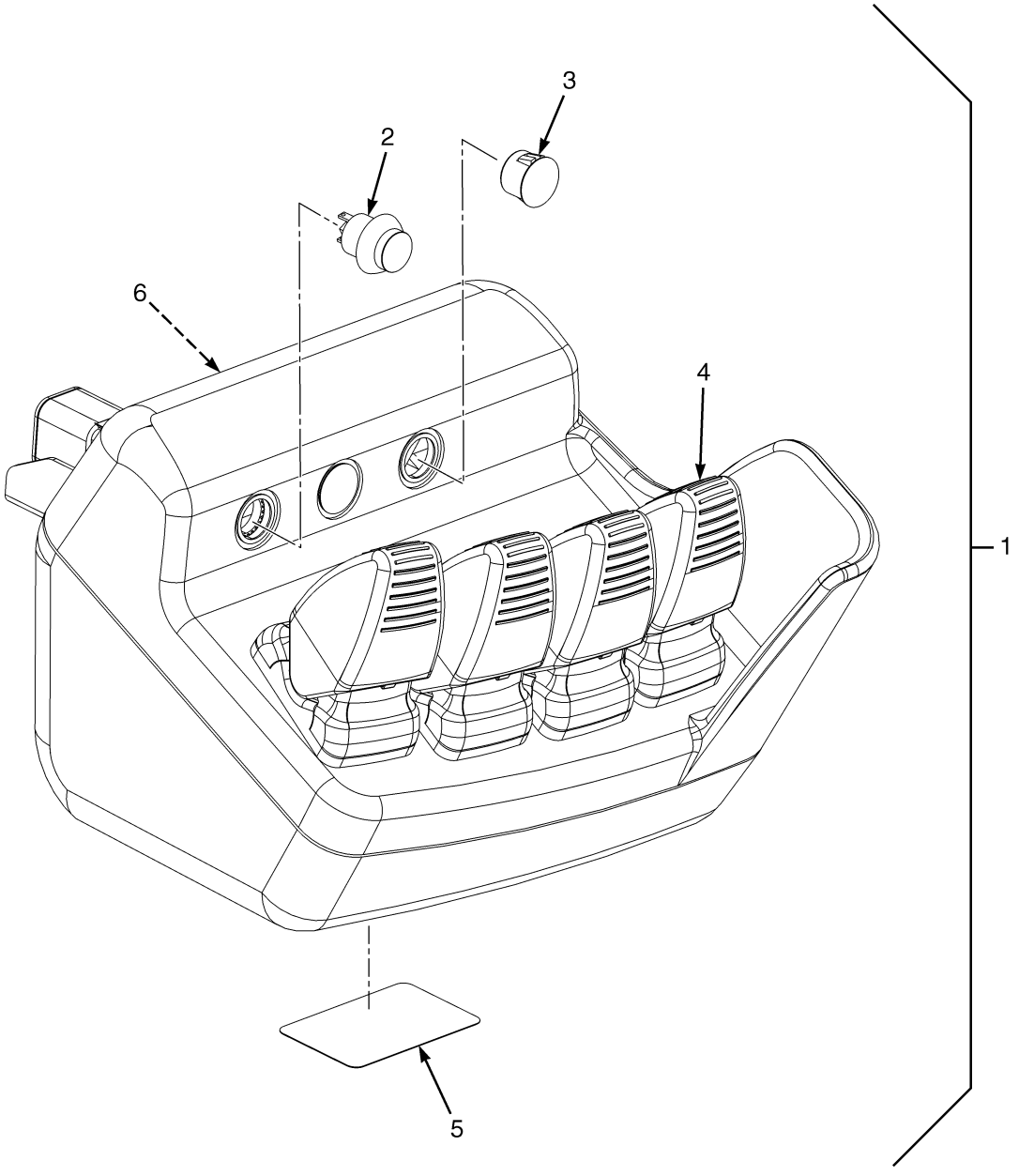

BP150258

©2011 HYSTER COMPANY

ELECTRONIC CONTROL LEVERS

MINI-LEVER MODULE (FOUR FUNCTION) (→ S/N J006V02753H EXC. 02721)

ITEM	PART NO.	DESCRIPTION	QTY
1	2105373	Mini-Lever (8544614)	1
	1689455	Kit-Mini-Lever (Non-Clamping)	4
	b 1598223	Kit-Plug (Interlock Switch Plug)	3
1	2105377	Mini-Lever (8544618) (With Clamping)	1
	1689455	Kit-Mini-Lever (Non-Clamping)	3
	1689460	Kit-Mini-Lever (Clamping)	1
	c 1598221	Kit-Switch (Interlock Switch)	1
	b 1598223	Kit-Plug (Interlock Switch Plug)	1
1	2105379	Mini-Lever (8544620) (With Return to Set Tilt)	1
	1689455	Kit-Mini-Lever (Non-Clamping)	3
	a 1689460	Kit-Mini-Lever (Clamping)	1
	c 1598221	Kit-Switch (Interlock Switch)	1
	b 1598223	Kit-Plug (Interlock Switch Plug)	2
1	2105381	Mini-Lever (8544622) (Clamping and Return to Set Tilt)	1
	1689455	Kit-Mini-Lever (Non-Clamping)	2
	c 1598221	Kit-Switch (Interlock Switch)	2
	b 1598223	Kit-Plug (Interlock Switch Plug)	1
1	1689460	Kit-Mini-Lever (Clamping)	2
2	1591181	Switch-Momentary	AR
3	. . . . .	Plug (Momentary Switch)	AR
4	. . . . .	Mini-Lever	AR
4	1658063	Handle (Mini-Lever)	1
5	. . . . .	Label	1
6	. . . . .	Control Labels (☞Figure 1-33, ☞Figure 1-34)	1

FOOTNOTES:

a Kit Includes: 1 Interlock Mini-Lever (must be used in combination with a Momentary Interlock Switch), 1 Gasket, 4 Screws (parts are NSS)

b Kit Includes: 1 Momentary Switch Hole Plug, 1 Gasket (parts are NSS)

c Kit Includes: 1 Momentary Switch, 1 Lockwasher, 1 Gasket, 1 Nut (parts are NSS)

©2011 HYSTER COMPANY

MINI-LEVER CONTROLS (FIGURE 4-28)

WITH ARMREST — THREE FUNCTION (S/N J006V02754H → INC. 02721)

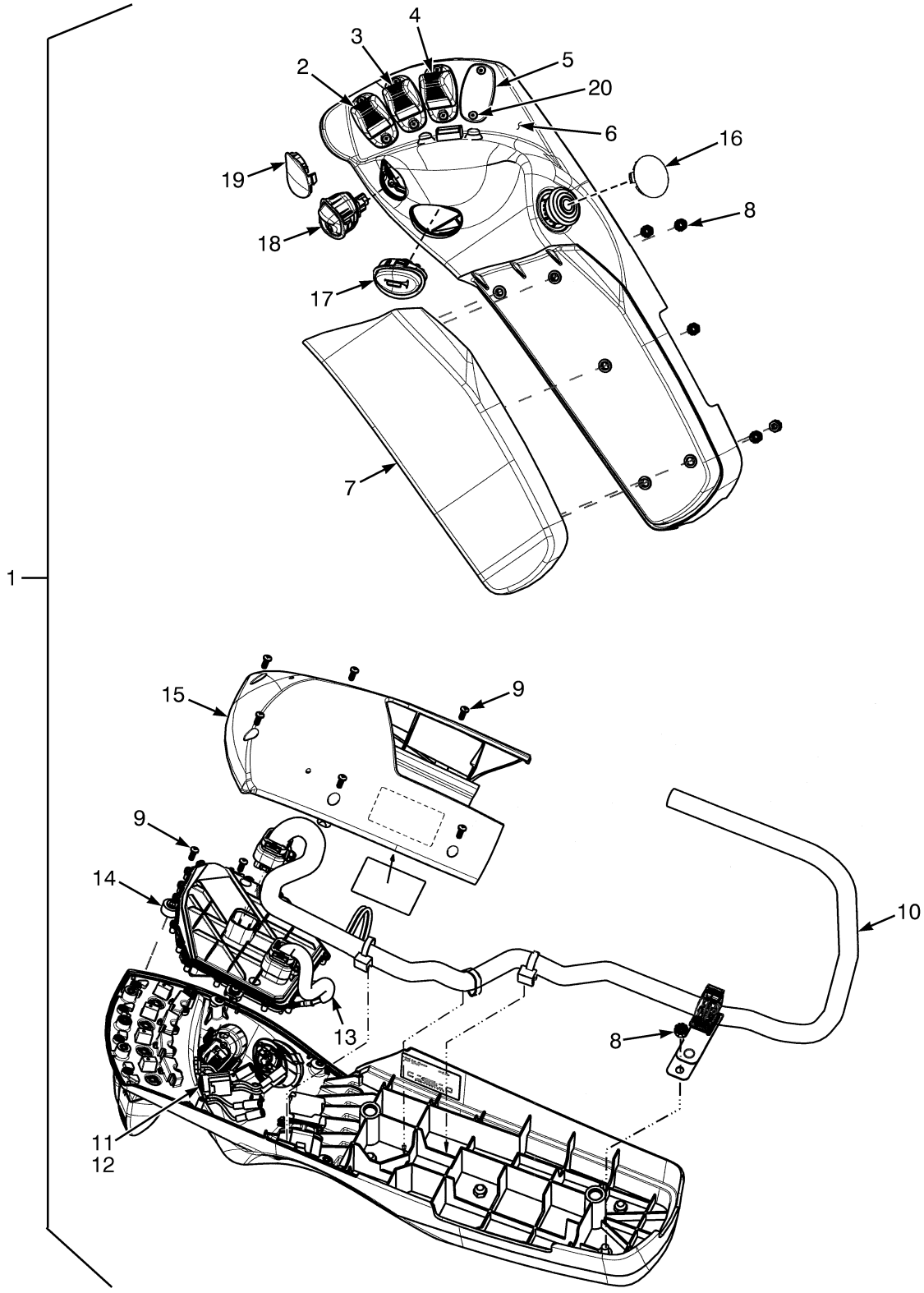

©2011 HYSTER COMPANY

MINI-LEVER CONTROLS

WITH ARMREST – THREE FUNCTION (S/N J006V02754H → INC. 02721)

KEY:
A: Without Directional Control Switch
B: With Directional Control Switch

ITEM	PART NO.	DESCRIPTION	QTY A	QTY B
1	4601093	Mini-Lever Assembly	1	..
1	**c** 4601265	Mini-Lever Assembly	1	..
1	**a** 4601097	Mini-Lever Assembly	1	..
1	**b** 4601099	Mini-Lever Assembly	1	..
1	4601101	Mini-Lever Assembly	..	1
1	**c** 4601103	Mini-Lever Assembly	..	1
1	**a** 4601105	Mini-Lever Assembly	..	1
1	**b** 4601107	Mini-Lever Assembly	..	1
2	. . . . .	Lever Position 1	1	1
2	2110791	Lever (Single Function)	1	1
3	. . . . .	Lever Position 2	1	1
3	2110791	Lever (Single Function)	1	1
3	**a** 2110793	Lever (With Override)	1	1
4	. . . . .	Lever Position 3	1	1
4	2110791	Lever (Single Function)	1	1
4	**c** 2110792	Lever (Clamping)	1	1
5	2108249	Plug	1	1
6	2111799	Armrest (Without Holes)	1	1
6	**ac** 4603439	Armrest (With Holes)	1	1
7	2111769	Cushion (Armrest)	1	1
8	1709587	Nut	5	5
9	1698449	Capscrew	6	6
10	4605336	Wire Harness	1	1
11	**c** 1591181	Switch-Momentary	1	1
11	**b** 1591181	Switch-Momentary	2	2
12	**c** 1598225	Hole Plug	2	2
12	**b** 1598225	Hole Plug	1	1
13	1704529	Wire Harness (Push Buttons)	1	1
14	~~2111802~~			
	4605337	Printed Circuit Board	1	1
15	2111800	Cover (Bottom Armrest)	1	1
16	4601120	Plug	1	1
17	2111770	Horn Button	1	1
18	2110943	Switch (Directional Control)	..	1
19	2110942	Plug (Directional Control Switch)	1	..
20	1698449	Capscrew	8	8

FOOTNOTES:

a Return to Set Tilt
b Three Function Clamp with Return to Set Tilt
c With Clamping

©2011 HYSTER COMPANY

MINI-LEVER CONTROLS (FIGURE 4-29)

WITH ARMREST — FOUR FUNCTION (S/N J006V02754H → INC. 02721)

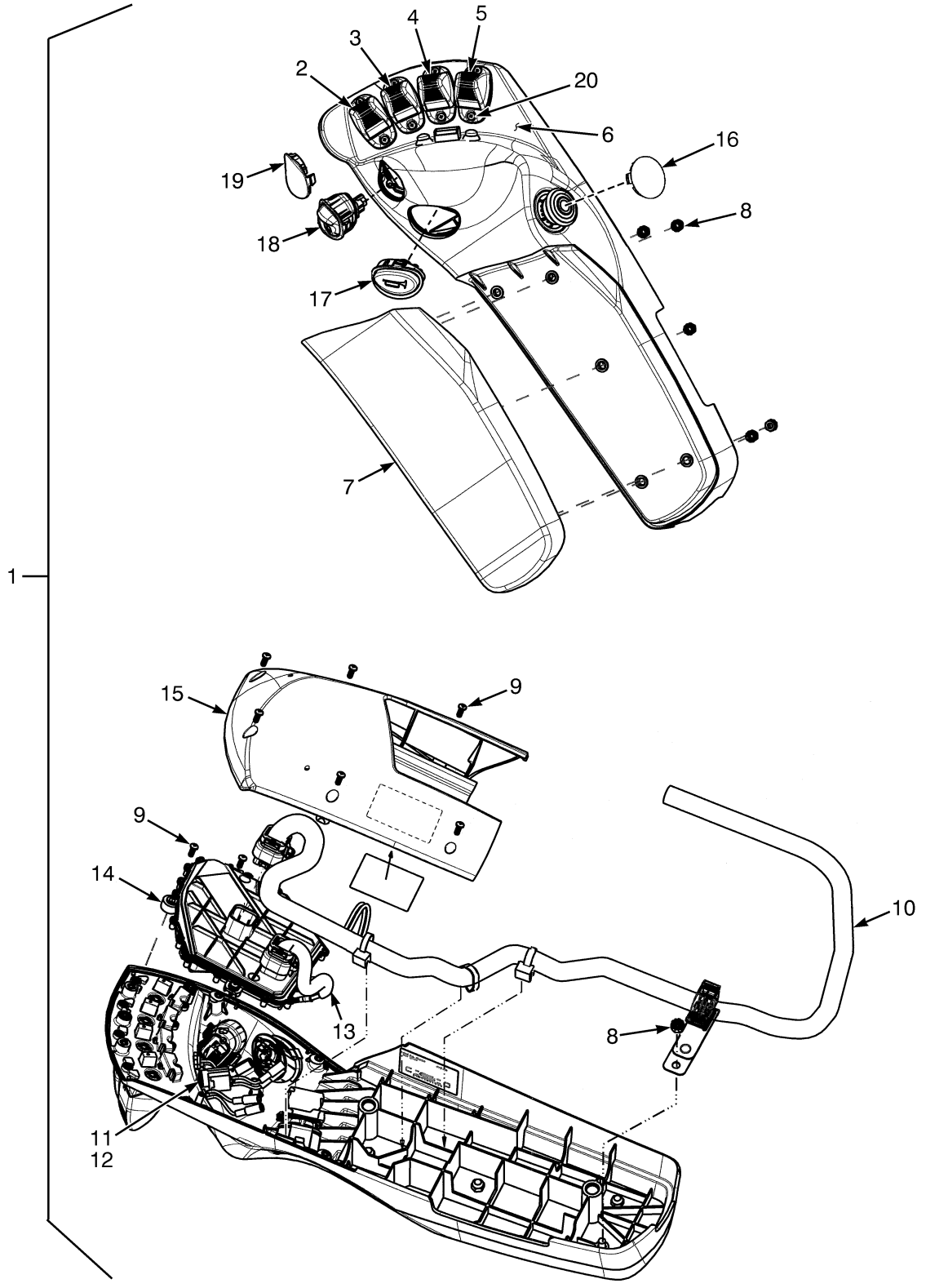

©2011 HYSTER COMPANY

MINI-LEVER CONTROLS

WITH ARMREST – FOUR FUNCTION (S/N J006V02754H → INC. 02721)

KEY:
A: Without Directional Control Switch
B: With Directional Control Switch

ITEM	PART NO.	DESCRIPTION	QTY A	QTY B
1	4601094	Mini-Lever Assembly	1	..
1	**a** 4601096	Mini-Lever Assembly	1	..
1	**c** 4601098	Mini-Lever Assembly	1	..
1	**b** 4601100	Mini-Lever Assembly	1	..
1	4601102	Mini-Lever Assembly	..	1
1	**a** 4601104	Mini-Lever Assembly	..	1
1	**c** 4601106	Mini-Lever Assembly	..	1
1	**b** 4601108	Mini-Lever Assembly	..	1
2	. . . . .	Lever Position 1	1	1
2	2110791	Lever (Single Function)	1	1
3	. . . . .	Lever Position 2	1	1
3	2110791	Lever (Single Function)	1	1
3	**b** 2110793	Lever (With Override)	1	1
4	. . . . .	Lever Position 3	1	1
4	2110791	Lever (Single Function)	1	1
5	. . . . .	Lever Position 4	1	1
5	2110791	Lever (Single Function)	1	1
5	**ab** 2110792	Lever (Clamping)	1	1
6	2111799	Armrest (Without Holes)	1	1
6	**abc** 4603439	Armrest (With Holes)	1	1
7	2111769	Cushion (Armrest)	1	1
8	1709587	Nut	5	5
9	1698449	Capscrew	6	6
10	4605336	Wire Harness	1	1
11	**a** 1591181	Switch-Momentary	1	1
11	**b** 1591181	Switch-Momentary	2	2
12	**a** 1598225	Hole Plug	2	2
12	**b** 1598225	Hole Plug	1	1
13	1704529	Wire Harness (Push Buttons)	1	1
14	~~2111802~~ 4605337	Printed Circuit Board	1	1
15	2111800	Cover (Bottom Armrest)	1	1
16	4601120	Plug	1	1
17	2111770	Horn Button	1	1
18	2110943	Switch (Directional Control)	..	1
19	2110942	Plug (Directional Control Switch)	1	..
20	1698449	Capscrew	8	8

FOOTNOTES:

a With Clamping
b With Clamping and Return to Set Tilt
c With Return to Set Tilt

©2011 HYSTER COMPANY

MAST ELECTRICAL (FIGURE 4-30)

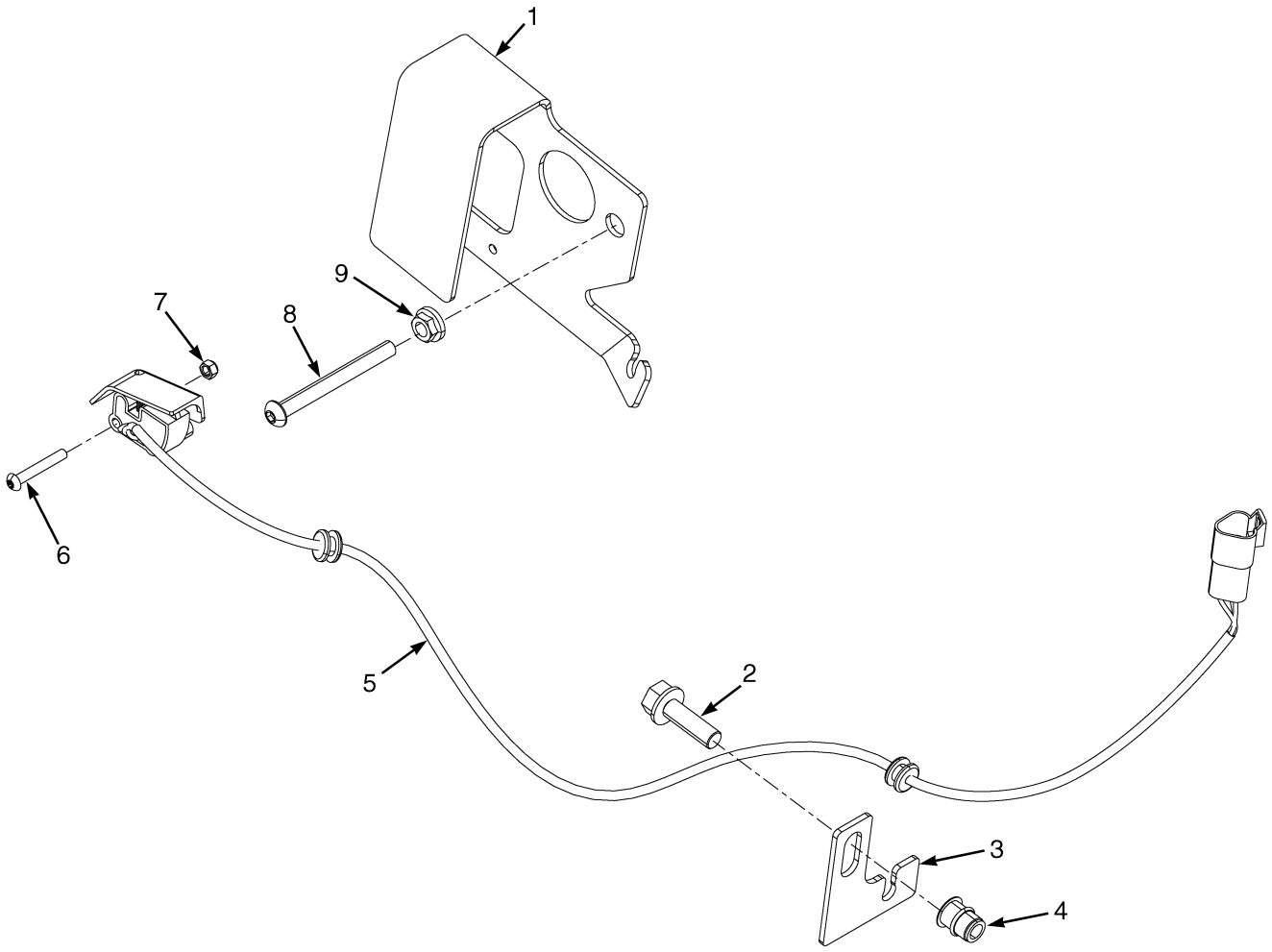

BP080602

©2011 HYSTER COMPANY

MAST ELECTRICAL

ITEM	PART NO.	DESCRIPTION	QTY
1	1659573	Bracket	1
2	1586629	Capscrew	1
3	1649408	Bracket	1
4	1530244	Insert	1
5	1649407	Sensor (Mast Position)	1
6	1553897	Capscrew	2
7	302398	Locknut	2
8	1597451	Capscrew	1
9	1586430	Nut	1

©2011 HYSTER COMPANY

LOAD WEIGH ELECTRICAL (FIGURE 4-31)

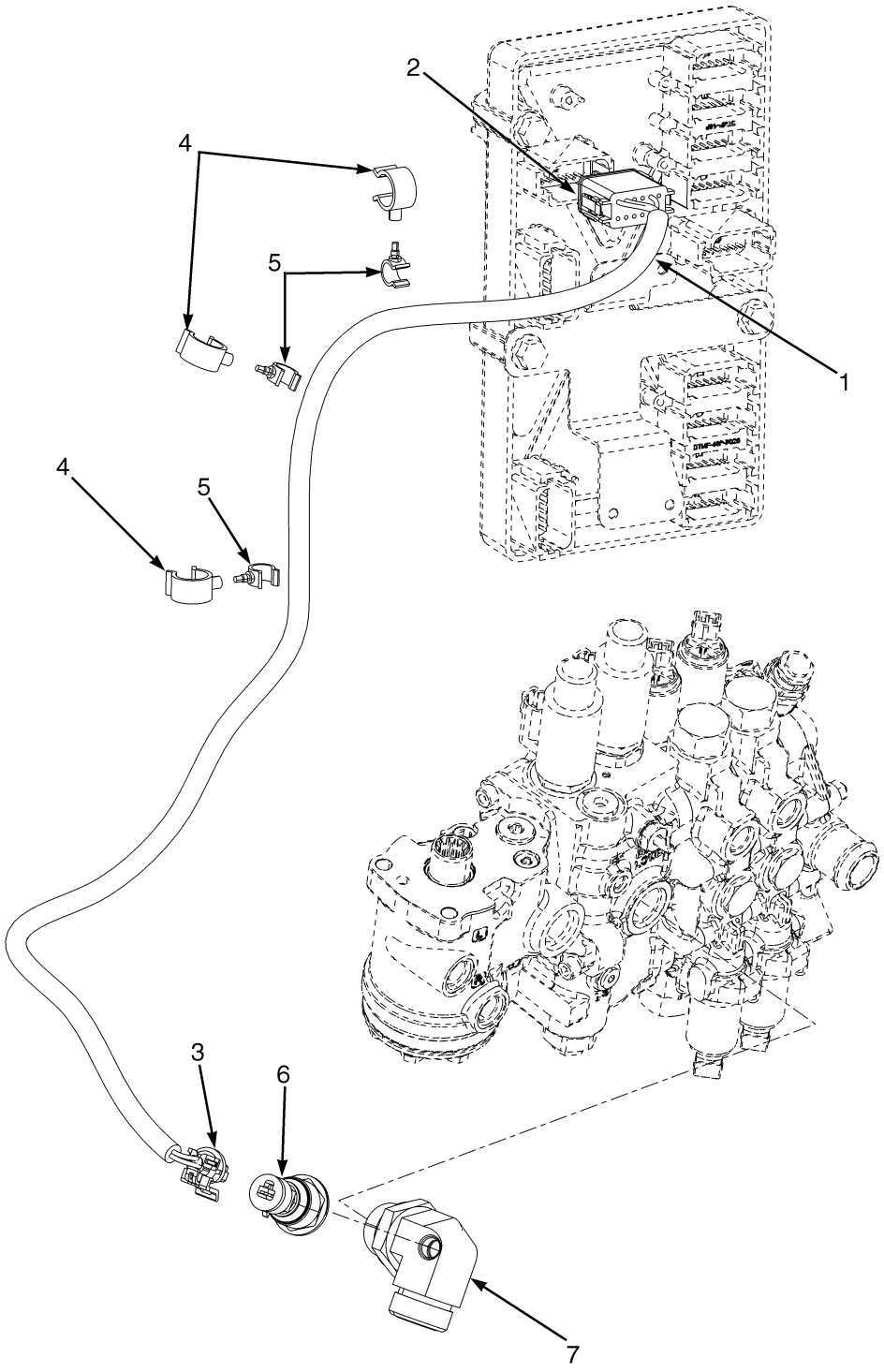

©2011 HYSTER COMPANY

LOAD WEIGH ELECTRICAL

ITEM	PART NO.	DESCRIPTION	QTY
1	2079326	Wire Harness (Load Weigh)	1
2	1525565	Connector	1
2	1500913	Connector	1
2	1330438	Terminal (Socket)	3
2	1484377	Plug	9
3	1603021	Connector	1
3	1603236	Connector (Secondary Lock)	1
3	1548517	Terminal (Socket)	3
3	1548519	Seal	3
4	1606544	Clamp	3
5	1573549	Clamp	3
6	1606735	Sensor (Load Sensing)	1
7	1648259	Fitting	1

©2011 HYSTER COMPANY

IMPACT SENSOR (FIGURE 4-32)

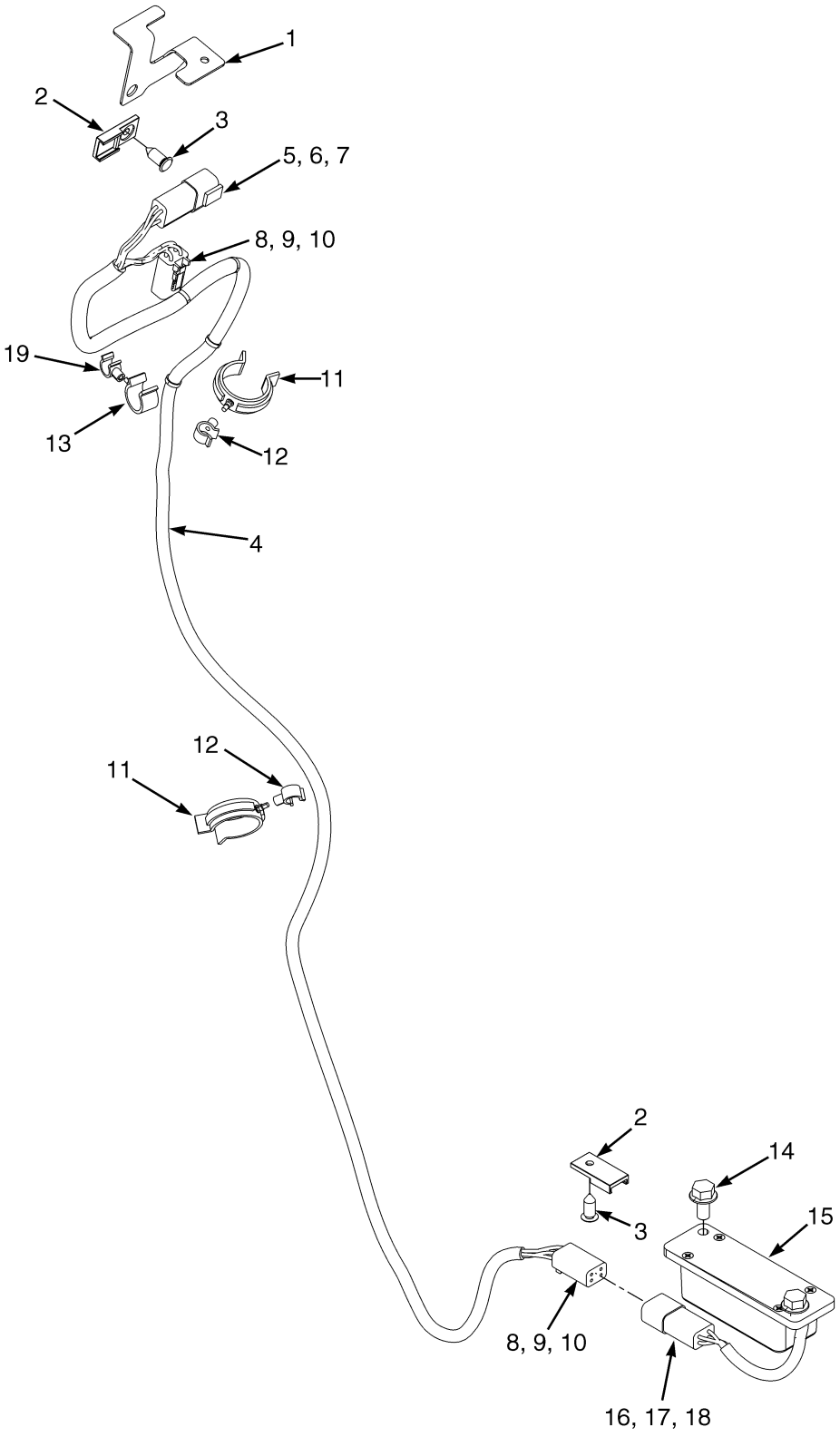

©2011 HYSTER COMPANY

IMPACT SENSOR

ITEM	PART NO.	DESCRIPTION	QTY
1	1535166	Bracket	1
2	1500912	Clip	2
3	1582464	Fastener	2
3	2100710	Fastener (Alternate Part)	1
4	2079281	Wire Harness (Impact Sensor)	1
5	1489655	Connector (4 Way)	1
6	1330416	Connector	1
7	1330437	Terminal (Pin)	4
8	1489656	Connector (4-Way)	2
9	1489657	Connector	2
10	1330438	Terminal (Socket)	8
11	1561759	Clamp (Swivel)	2
12	1542439	Clamp (Swivel)	2
13	1502055	Clamp (Swivel)	1
14	1527879	Capscrew	2
14	287851	Capscrew (Alternate Part)	2
14	320157	Washer (Alternate Part)	2
15	2079843	Sensor (Impact)	1
16	1489655	Connector (4 Way)	1
17	1330416	Connector	1
18	1330433	Terminal	4
19	1502053	Clamp (Swivel)	1

©2011 HYSTER COMPANY

POWER DISTRIBUTION MODULE (FIGURE 4-33)

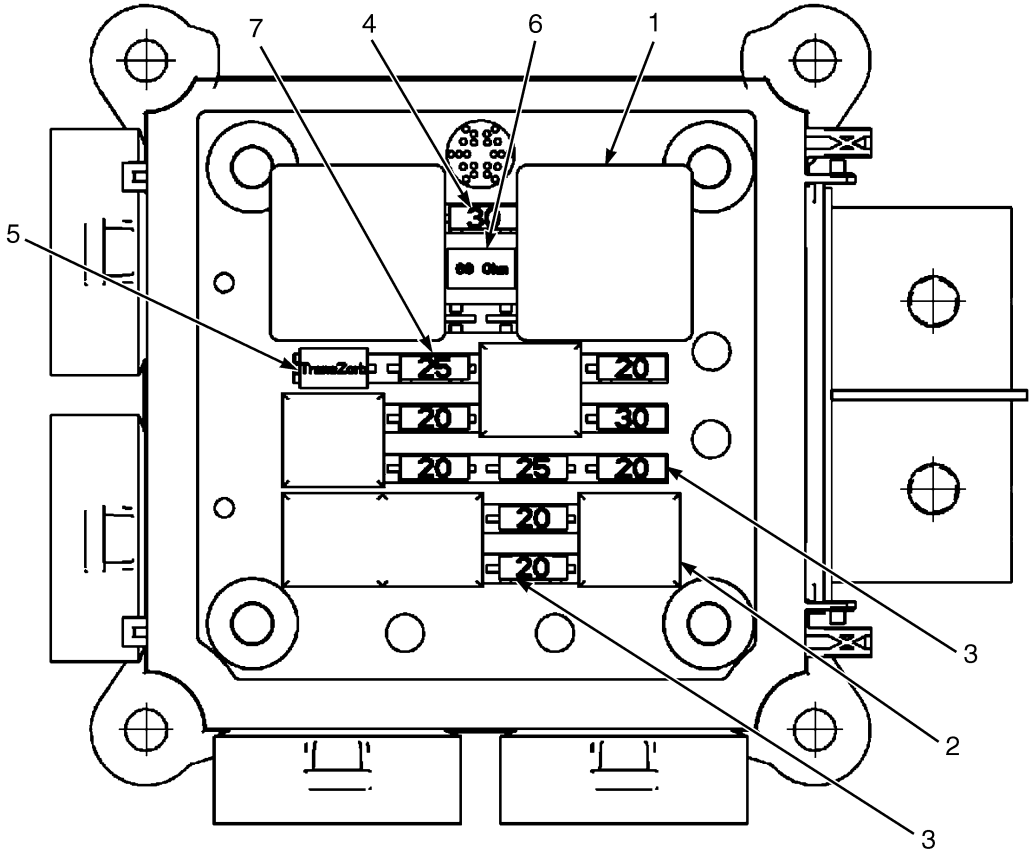

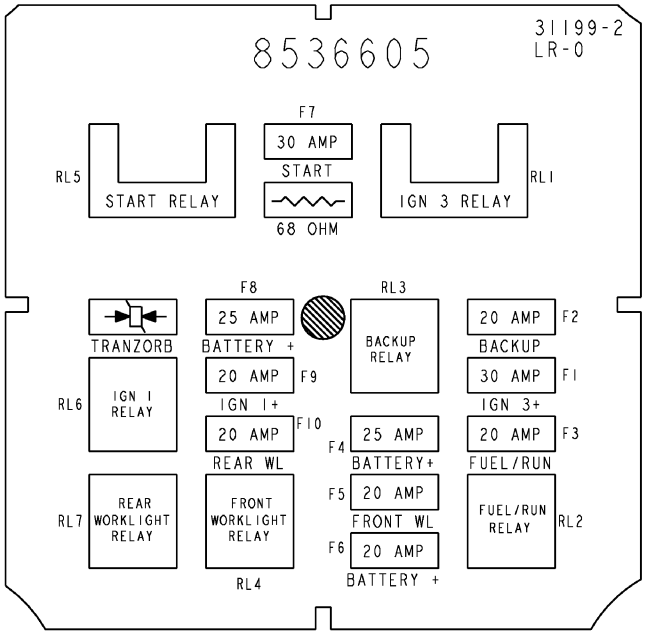

BP080485

©2011 HYSTER COMPANY

POWER DISTRIBUTION MODULE

ITEM	PART NO.	DESCRIPTION	QTY
	2090613	Module	1
1	2044712	Relay (30 Amp)	2
2	1528315	Relay (20 Amp)	5
3	1528132	Fuse (20 Amp)	6
4	1528133	Fuse (30 Amp)	2
5	1528630	Semiconductor	1
6	1528631	Resistor (68 Ohm, 5 Watt)	1
7	1544255	Fuse (25 Amp)	2

©2011 HYSTER COMPANY

WIRE HARNESS (FIGURE 4-34)

ENGINE — GM 4.3L LPG (→ S/N J006V02542H)

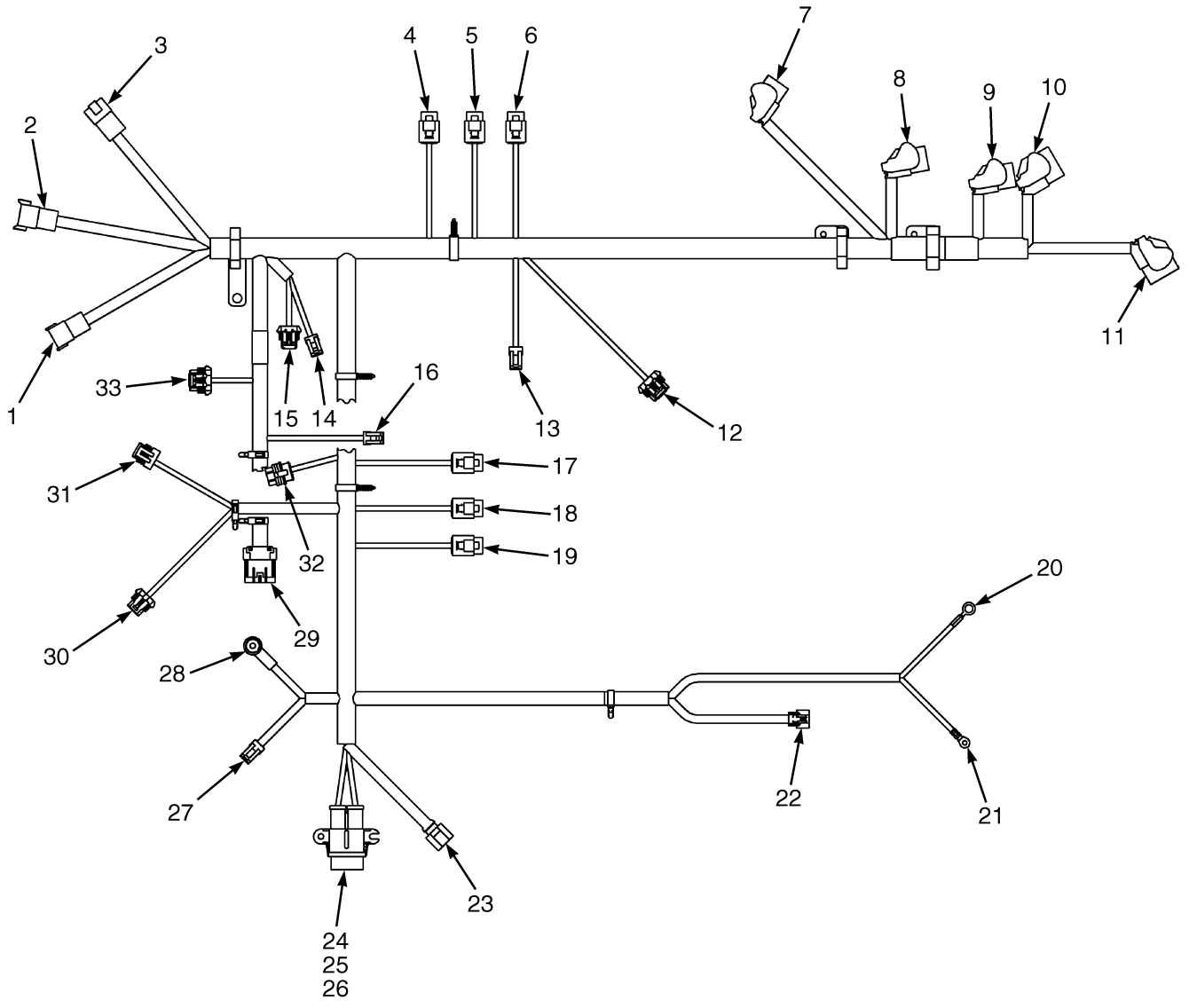

©2011 HYSTER COMPANY

WIRE HARNESS

ENGINE – GM 4.3L LPG (→ S/N J006V02542H)

ITEM	PART NO.	DESCRIPTION	QTY
	2093682	Wire Harness (Engine) (2008 - 2009 Series)	1
1	. . . . .	Connector Assembly (Chassis Harness)	1
1	1541988	Connector	1
2	. . . . .	Connector Assembly (Chassis Harness)	1
2	1330413	Connector	1
3	. . . . .	Connector Assembly (Chassis Harness)	1
3	1514597	Connector	1
4	. . . . .	Connector Assembly (Injector #5)	1
4	1561146	Terminal	2
4	1607548	Connector	1
5	. . . . .	Connector Assembly (Injector #3)	1
5	1561146	Terminal	2
5	1607548	Connector	1
6	. . . . .	Connector Assembly (Injector #1)	1
6	1561146	Terminal	2
6	1607548	Connector	1
7	. . . . .	Connector Assembly	1
8	. . . . .	Connector Assembly	1
9	. . . . .	Connector Assembly	1
10	. . . . .	Connector Assembly	1
11	. . . . .	Connector Assembly	1
12	. . . . .	Connector Assembly (RH Oxygen Sensor)	1
12	1482667	Connector Body	1
12	1402877	Electrical Terminal	4
12	1330355	Terminal	4
12	1482663	Connector	1
13	. . . . .	Connector Assembly	1
13	1323586	Connector	1
13	1354237	Terminal	2
14	. . . . .	Connector Assembly (Oil Pressure)	1
14	1327957	Connector	1
14	1354237	Terminal	3
15	. . . . .	Connector Assembly (Cam Sensor)	1
15	1476067	Connector	1
15	1476109	Connector Lock	1
15	1330355	Terminal	3
15	1476108	Wire Seal	3
16	. . . . .	Connector Assembly (Fuel Pressure)	1
16	1402613	Connector	1
16	1323576	Terminal	3
17	. . . . .	Connector Assembly (Injector #6)	1
17	1561146	Terminal	2
17	1607548	Connector	1
18	. . . . .	Connector Assembly (Injector #4)	1
18	1561146	Terminal	2
18	1607548	Connector	1
19	. . . . .	Connector Assembly (Injector #2)	1
19	1561146	Terminal	2
19	1607548	Connector	1
20	. . . . .	Connector Assembly (Battery)	1

©2011 HYSTER COMPANY

WIRE HARNESS

ENGINE – GM 4.3L LPG (→ S/N J006V02542H)

ITEM	PART NO.	DESCRIPTION	QTY
20	129886	E-Ring	1
21	. . . . .	Connector Assembly (Starter)	1
21	1519025	Ring Terminal	1
22	. . . . .	Connector Assembly (Crank Position Sensor)	1
22	1655119	Electrical Connector	1
22	1655120	Electrical Terminal	3
22	1655121	Seal	3
23	. . . . .	Connector Assembly	1
23	1607743	Connector	1
24	. . . . .	Connector Assembly	1
24	1543553	Fuse Holder	1
24	1454829	Fuse (60 Amp)	1
24	1520543	Terminal	2
25	. . . . .	Connector Assembly (Cover)	1
25	1454862	Cover (With Seal)	1
26	. . . . .	Connector Assembly	1
26	1454827	Seal	1
27	. . . . .	Connector Assembly (Alternator)	1
27	1323576	Terminal	2
27	1323586	Connector	1
28	. . . . .	Connector Assembly (Alternator)	1
28	148614	E-Ring	1
29	. . . . .	Connector Assembly (LH Chassis Harness)	1
29	1402809	Clip	1
29	1527275	Connector	1
30	. . . . .	Connector Assembly (Coil)	1
30	1476071	Connector	1
30	1402877	Electrical Terminal	2
30	1476109	Connector Lock	1
30	1330356	Seal	3
30	1351139	Seal	1
31	. . . . .	Connector Assembly (Ignition)	1
31	1547483	Connector	1
31	1354237	Terminal	1
31	1323576	Terminal	3
31	1476109	Connector Lock	1
32	. . . . .	Connector Assembly (Map Sensor)	1
32	1607839	Connector	1
32	1402814	Terminal	4
32	1562649	Seal	4
33	. . . . .	Connector Assembly (LH Oxygen Sensor)	1
33	1482663	Connector	1
33	1330355	Terminal	4
33	1402877	Electrical Terminal	4
33	1482667	Connector Body	1

©2011 HYSTER COMPANY

NOTES

©2011 HYSTER COMPANY

WIRE HARNESS (ENGINE) (FIGURE 4-35)

GM 4.3L LPG (GFI OPTION) — 2010 SERIES (S/N J006V02543H ↔ PENDING PER ECN 152361)

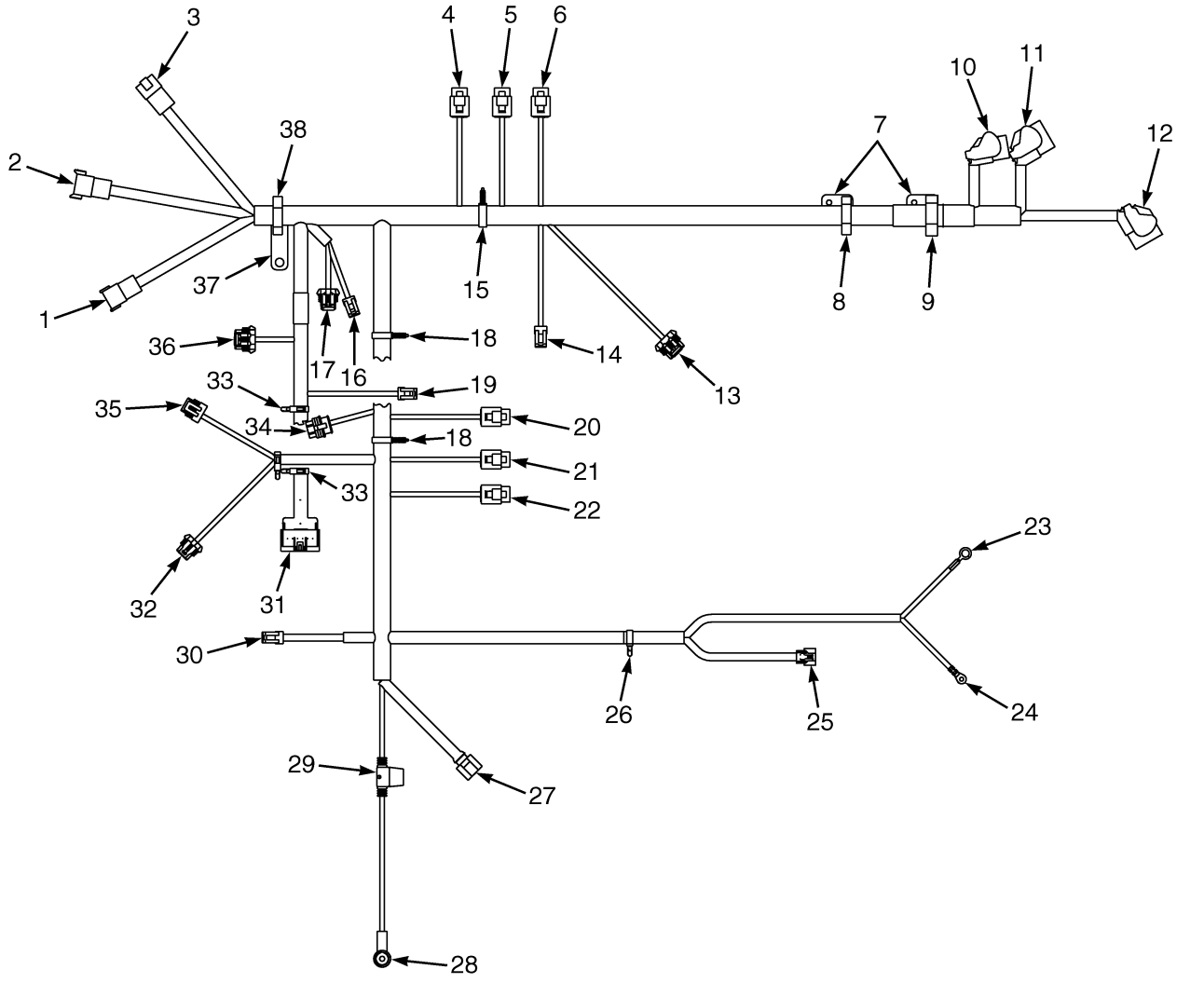

©2011 HYSTER COMPANY

WIRE HARNESS (ENGINE)

GM 4.3L LPG (GFI OPTION) – 2010 SERIES (S/N J006V02543H ↔ PENDING PER ECN 152361)

ITEM	PART NO.	DESCRIPTION	QTY
	4601160	Wire Harness (Engine) (2010 - 2011 Series)	1
1	. . . . .	Connector Assembly (Chassis Harness)	1
1	1541988	Connector	1
2	. . . . .	Connector Assembly (Chassis Harness)	1
2	1330413	Connector	1
3	. . . . .	Connector Assembly (Chassis Harness)	1
3	1514597	Connector	1
4	. . . . .	Connector Assembly (Injector #5)	1
4	1561146	Terminal	2
4	1607548	Connector	1
5	. . . . .	Connector Assembly (Injector #3)	1
5	1561146	Terminal	2
5	1607548	Connector	1
6	. . . . .	Connector Assembly (Injector #1)	1
6	1561146	Terminal	2
6	1607548	Connector	1
7	1558227	Clip	2
8	1532778	Clip	2
9	1532779	Clip	1
10	. . . . .	Connector Assembly (CP 203)	1
11	. . . . .	Connector Assembly (CP 204)	1
12	. . . . .	Connector Assembly (CP 205)	1
13	. . . . .	Connector Assembly (Right Hand Oxygen Sensor)	1
13	1482667	Connector Body	1
13	1402877	Electrical Terminal	4
13	1330355	Terminal	4
13	1482663	Connector	1
14	. . . . .	Connector Assembly (CTS)	1
14	1323586	Connector	1
14	1354237	Terminal	2
15	1509889	Clip	1
16	. . . . .	Connector Assembly (Oil Pressure)	1
16	1327957	Connector	1
16	1354237	Terminal	3
17	. . . . .	Connector Assembly (Cam Sensor)	1
17	1476067	Connector	1
17	1476109	Connector Lock	1
17	1330355	Terminal	3
17	1476108	Wire Seal	3
18	1608857	Clip	2
19	. . . . .	Connector Assembly (Fuel ABS Pressure)	1
19	1402613	Connector	1
19	1323576	Terminal	3
20	. . . . .	Connector Assembly (Injector #6)	1
20	1607548	Connector	1
20	1561146	Terminal	2
21	. . . . .	Connector Assembly (Injector #4)	1
21	1607548	Connector	1
21	1561146	Terminal	2
22	. . . . .	Connector Assembly (Injector #2)	1

©2011 HYSTER COMPANY

WIRE HARNESS (ENGINE)

GM 4.3L LPG (GFI OPTION) – 2010 SERIES (S/N J006V02543H ↔ PENDING PER ECN 152361)

ITEM	PART NO.	DESCRIPTION	QTY
22	1607548	Connector	1
22	1561146	Terminal	2
23	. . . . .	Connector Assembly (Battery, Positive)	1
23	129886	E-Ring	1
24	. . . . .	Connector Assembly (Starter)	1
24	1519025	Ring Terminal	1
25	. . . . .	Connector Assembly (Crank Position)	1
25	1655119	Electrical Connector	1
25	1655120	Electrical Terminal	3
25	1655121	Seal	3
25	4001358	Retainer	1
26	1500901	Clip	1
27	. . . . .	Connector Assembly (Electronic Throttle Body)	1
27	1607743	Connector	1
28	. . . . .	Connector Assembly (Alternator Positive)	1
28	148614	E-Ring	1
28	1566146	Boot	1
29	. . . . .	Connector Assembly (Alternator Inline Fuse)	1
29	4008604	Fuse	1
29	4007984	Connector (Fuse Holder)	1
30	. . . . .	Connector Assembly (Alternator)	1
30	1323576	Terminal	2
30	1323586	Connector	1
31	. . . . .	Connector Assembly (Left Hand Chassis Harness)	1
31	1402809	Clip	1
31	4006329	Connector	1
32	. . . . .	Connector Assembly (Coil)	1
32	1476071	Connector	1
32	1402877	Electrical Terminal	2
32	1476109	Connector Lock	1
32	1330356	Seal	3
32	1351139	Seal	1
33	1500900	Clip	3
34	. . . . .	Connector Assembly (MAP/MAT)	1
34	1607839	Connector	1
34	1402814	Terminal	4
34	1562649	Seal	4
35	. . . . .	Connector Assembly (Ignition)	1
35	1547483	Connector	1
35	1354237	Terminal	1
35	1323576	Terminal	3
35	1476109	Connector Lock	1
36	. . . . .	Connector Assembly (Left Hand Oxygen Sensor)	1
36	1482663	Connector	1
36	1330355	Terminal	4
36	1402877	Electrical Terminal	4
36	1482667	Connector Body	1
37	1570327	Bracket	1
38	1532778	Clip	2

©2011 HYSTER COMPANY

NOTES

©2011 HYSTER COMPANY

WIRE HARNESS (ENGINE) (FIGURE 4-36)

GM 4.3L, LPG — PSI OPTION (PENDING PER ECN 152361 →)

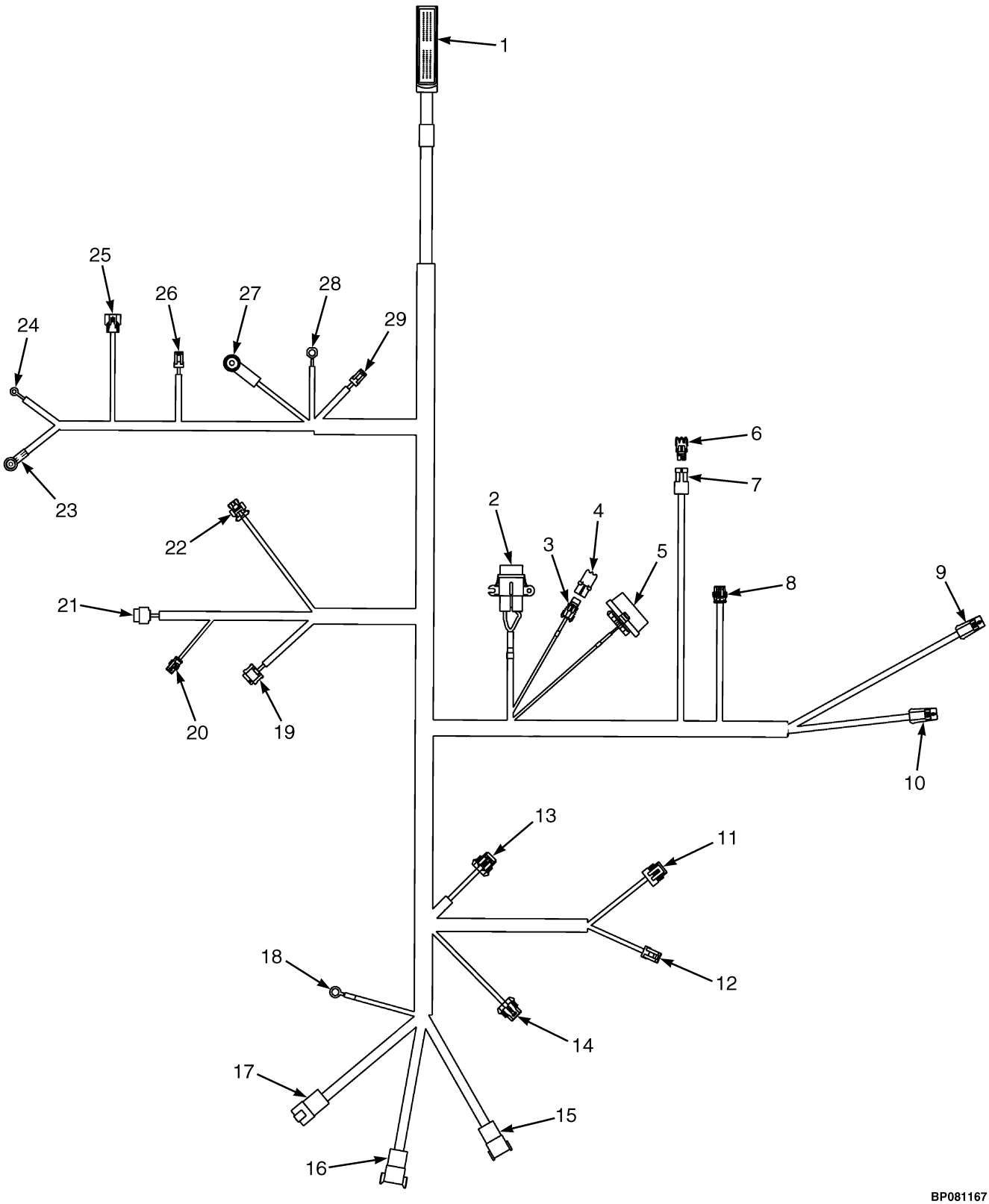

©2011 HYSTER COMPANY

WIRE HARNESS (ENGINE)

GM 4.3L, LPG – PSI OPTION (PENDING PER ECN 152361 →)

ITEM	PART NO.	DESCRIPTION	QTY
	4040249	Wire Harness	1
1	. . . . .	Connector Assembly (Engine Control Unit)	1
1	1641949	Connector	1
1	1653510	Terminal (Gold)	32
1	1561147	Plug	54
1	4025683	Connector Lock	1
1	4025684	Strain Relief (Cover)	1
1	4023295	Terminal	4
2	. . . . .	Connector Assembly (Alternate Fuse)	1
2	1543553	Fuse Holder	1
2	1454862	Cover (With Seal)	1
2	1402889	Terminal	2
2	1454827	Seal	2
2	1500899	Clip	1
3	. . . . .	Connector Assembly (ECU Diagnostic Connector)	1
3	1641944	Connector	1
3	1650522	Terminal	8
3	1641945	Spacer	1
4	1641947	Cap	1
5	. . . . .	Connector Assembly (Mini Fuses)	1
5	1327959	Connector	1
5	1330281	Terminal	3
5	1521989	Terminal	1
5	1327164	Seal	2
5	1323579	Seal	6
5	1330297	Lock	1
5	1641937	Cap	1
5	1641938	Clip	1
5	1498044	Fuse (5 Amp)	2
6	. . . . .	Connector Assembly (Air Filter Restriction)	1
6	1465468	Connector	1
6	1327164	Seal	2
7	1323579	Seal	6
7	1323578	Terminal	2
7	1465469	Connector	1
8	. . . . .	Connector Assembly (Low Fuel)	1
8	1547629	Connector	1
8	1508232	Terminal	3
8	2060555	Wire Seal	3
9	. . . . .	Connector Assembly (Pre-Catalyst 02 Sensor)	1
9	1498424	Housing	1
9	1653508	Terminal (Gold)	4
9	1476108	Wire Seal	5
9	1650797	Lock	1
10	. . . . .	Connector Assembly (Pre-Catalyst 02 Sensor)	1
10	1498424	Housing	1
10	1653508	Terminal (Gold)	4
10	1476108	Wire Seal	5
10	1650797	Lock	1
11	. . . . .	Connector Assembly (Ignition Module)	1

©2011 HYSTER COMPANY

WIRE HARNESS (ENGINE)

GM 4.3L, LPG – PSI OPTION (PENDING PER ECN 152361 →)

ITEM	PART NO.	DESCRIPTION	QTY
11	1548517	Terminal (Socket)	4
11	1548519	Seal	4
11	1547483	Connector	1
11	1476109	Connector Lock	1
12	. . . . .	Connector Assembly (Oil Pressure)	1
12	1548517	Terminal (Socket)	3
12	1603236	Connector (Secondary Lock)	1
12	1548519	Seal	3
12	1603021	Connector	1
13	. . . . .	Connector Asembly (Cam Sensor)	1
13	1330355	Terminal	3
13	1476109	Connector Lock	1
13	1476067	Connector	1
14	. . . . .	Connector Assembly (Ignition Coil)	1
14	1476071	Connector	1
14	1330355	Terminal	3
14	1476109	Connector Lock	1
14	1330356	Seal	5
14	1482668	Plug	1
15	. . . . .	Connector Assembly (Vehicle Interface Connector)	1
15	1500912	Clip	1
15	1541988	Connector	1
15	1463138	Terminal Pin	8
15	1541989	Connector (Lock)	1
16	. . . . .	Connector Assembly (Vehicle Interface Connector)	1
16	1623050	Housing	1
16	1330418	Connector (Lock)	1
16	1330437	Terminal (Pin)	7
16	1330439	Plug	1
16	1531480	Clip	1
17	. . . . .	Connector Assembly (Vehicle Interface Connector)	1
17	1514597	Connector	1
17	1484709	Terminal (Pin)	4
17	1500912	Clip	1
17	1514598	Connector (Lock)	1
18	1651850	E-Ring (Engine Ground)	1
19	. . . . .	Connector Assembly (Throttle)	1
19	1569973	Connector Body	1
19	1610975	Terminal	6
19	1533810	Seal	6
20	. . . . .	Connector Assembly (LPG Lockoff)	1
20	1330355	Terminal	1
20	1476108	Wire Seal	1
20	1539872	Connector	1
20	1345690	Terminal (E FTG SEC LOCK)	1
21	. . . . .	Connector Assembly (TMAP)	1
21	1567469	Plug	1
21	1567471	Terminal	4
21	1567470	Wire Seal	4
22	. . . . .	Connector Assembly CPS269)	1

©2011 HYSTER COMPANY

WIRE HARNESS (ENGINE)

GM 4.3L, LPG – PSI OPTION (PENDING PER ECN 152361 →)

ITEM	PART NO.	DESCRIPTION	QTY
22	2314771	Plug	1
22	4612836	Connector	1
22	1561027	Terminal	5
22	2314768	Wire Seal	1
22	4612844	Connector Lock	1
23	1524397	E-Ring (Starter Solenoid)	1
23	190383	Boot	1
24	148615	E-Ring (Starter B+)	1
25	. . . . .	Connector Assembly (Crank Position Sensor)	1
25	1655119	Electrical Connector	1
25	1655120	Electrical Terminal	3
25	1655121	Seal	3
25	4001358	Retainer	1
26	. . . . .	Connector Assembly (Alternator)	1
26	1547480	Connector (2 Way)	1
26	1548517	Terminal (Socket)	2
26	1548519	Seal	2
27	148614	E-Ring (Alternator Positive)	1
27	1520864	Boot	1
28	148614	E-Ring (Alternator Ground)	1
29	. . . . .	Connector Assembly (Engine Coolant Temp)	1
29	1547480	Connector (2 Way)	1
29	1548517	Terminal (Socket)	2
29	1548519	Seal	2

©2011 HYSTER COMPANY

WIRE HARNESS (FIGURE 4-37)
ENGINE — GM 4.3L GASOLINE (→ S/N J006V02542H)

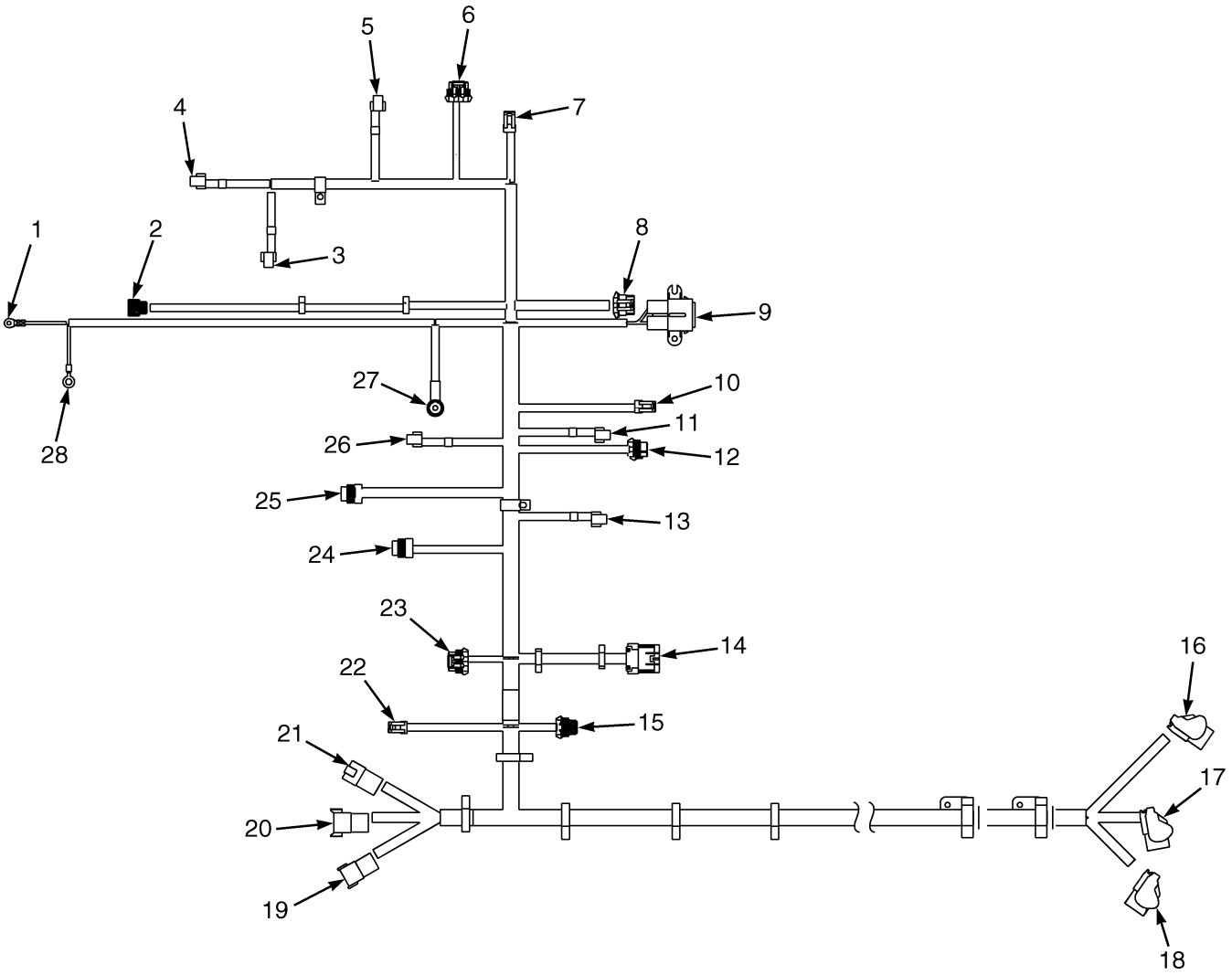

BP080685

©2011 HYSTER COMPANY

WIRE HARNESS

ENGINE – GM 4.3L GASOLINE (→ S/N J006V02542H)

ITEM	PART NO.	DESCRIPTION	QTY
	2093681	Wire Harness (Engine) (2008 - 2009 Series)	1
1	. . . . .	Connector Assembly (Starter)	1
1	1519025	Ring Terminal	1
2	. . . . .	Connector Assembly (Crank Position)	1
2	1655119	Electrical Connector	1
2	1655120	Electrical Terminal	3
2	1655121	Seal	3
3	. . . . .	Connector Assembly (Injector 3)	1
4	. . . . .	Connector Assembly (Injector 5)	1
5	. . . . .	Connector Assembly (Injector 1)	1
6	. . . . .	Connector Assembly (Right Oxygen Sensor)	1
6	1482667	Connector Body	1
6	1330355	Terminal	4
6	1402877	Electrical Terminal	4
6	1482663	Connector	1
7	. . . . .	Connector Assembly (Temperature Sensor)	1
7	1323586	Connector	1
7	1354237	Terminal	2
8	. . . . .	Connector Assembly (Connector)	1
8	1607743	Connector	1
9	. . . . .	Connector Assembly (Connector)	1
9	1543553	Fuse Holder	1
9	1454829	Fuse (60 Amp)	1
9	1454862	Cover (With Seal)	1
9	1454827	Seal	2
9	1520543	Terminal	2
10	. . . . .	Connector Assembly (Alternator)	1
10	1323586	Connector	1
10	1323576	Terminal	2
11	. . . . .	Connector Assembly (Injector 2)	1
12	. . . . .	Connector Assembly (Coil)	1
12	1476071	Connector	1
12	1402877	Electrical Terminal	2
12	1330356	Seal	3
12	1351139	Seal	1
12	1476109	Connector Lock	1
13	. . . . .	Connector Assembly (Injector 6)	1
14	. . . . .	Connector Assembly (LH Chassis)	1
14	1527275	Connector	1
14	1402809	Clip	1
15	. . . . .	Connector Assembly (Cam Positioner Sensor)	1
15	1476067	Connector	1
15	1476109	Connector Lock	1
15	1330355	Terminal	3
15	1476108	Wire Seal	3
16	. . . . .	Connector Assembly (Connector)	1
17	. . . . .	Connector Assembly (Connector)	1
18	. . . . .	Connector Assembly (Connector)	1
19	. . . . .	Connector Assembly (Chassis Harness)	1
19	1541988	Connector	1

©2011 HYSTER COMPANY

WIRE HARNESS

ENGINE – GM 4.3L GASOLINE (→ S/N J006V02542H)

ITEM	PART NO.	DESCRIPTION	QTY
20	. . . . .	Connector Assembly (Chassis Harness)	1
20	1330413	Connector	1
21	. . . . .	Connector Assembly (Chassis Harness)	1
21	1514597	Connector	1
22	. . . . .	Connector Assembly (Oil Pressure)	1
22	1327957	Connector	1
22	1354237	Terminal	3
23	. . . . .	Connector Assembly (Left Oxygen Sensor)	1
23	1482667	Connector Body	1
23	1330355	Terminal	4
23	1402877	Electrical Terminal	4
23	1482663	Connector	1
24	. . . . .	Connector Assembly (Map Sensor)	1
24	1607839	Connector	1
24	1402814	Terminal	4
24	1562649	Seal	4
25	. . . . .	Connector Assembly (Ignition)	1
25	1547483	Connector	1
25	1354237	Terminal	1
25	1476109	Connector Lock	1
25	1323576	Terminal	3
26	. . . . .	Connector Assembly (Injector 4)	1
27	. . . . .	Connector Assembly (Alternator)	1
27	148614	E-Ring	1
27	1566146	Boot	1
28	. . . . .	Connector Assembly (Battery)	1
28	129886	E-Ring	1

©2011 HYSTER COMPANY

NOTES

©2011 HYSTER COMPANY

WIRE HARNESS (ENGINE) (FIGURE 4-38)

GM 4.3L GASOLINE (GFI OPTION) — WITH CATALYTIC CONVERTER (S/N J006V02543H →)

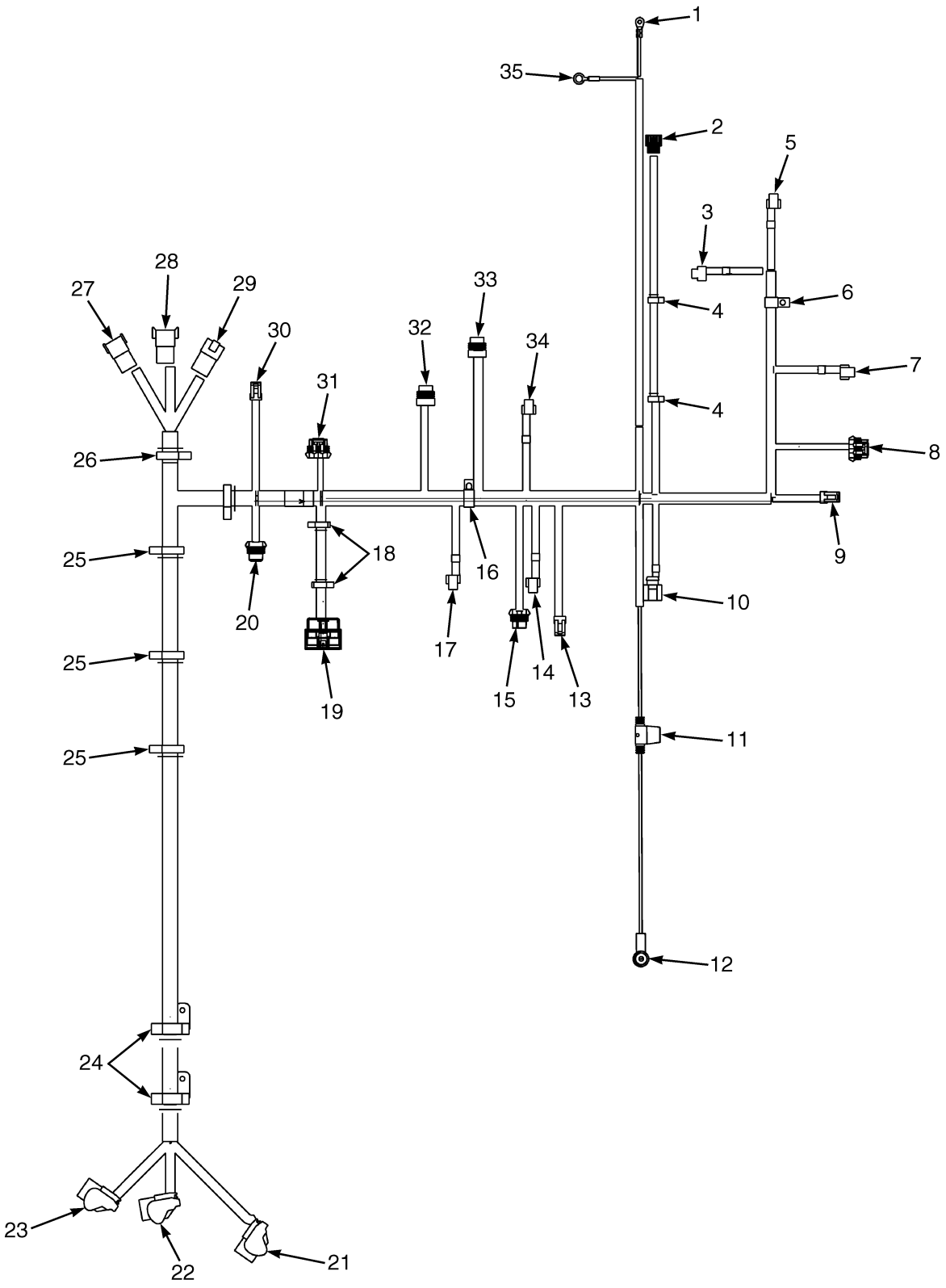

©2011 HYSTER COMPANY

WIRE HARNESS (ENGINE)

GM 4.3L GASOLINE (GFI OPTION) – WITH CATALYTIC CONVERTER (S/N J006V02543H →)

ITEM	PART NO.	DESCRIPTION	QTY
	4601159	Wire Harness (Engine) (2010 - 2011 Series)	1
1	. . . . .	Connector Assembly (Starter)	1
1	1519025	Ring Terminal	1
2	. . . . .	Connector Assembly (Crank Position)	1
2	1655119	Electrical Connector	1
2	1655120	Electrical Terminal	3
2	1655121	Seal	3
2	4001358	Retainer	1
3	. . . . .	Connector Assembly (Injector #3)	1
4	1509888	Clip	2
5	. . . . .	Connector Assembly (Injector #5)	1
6	132972	Clamp	1
7	. . . . .	Connector Assembly (Injector #1)	1
8	. . . . .	Connector Assembly (Right Oxygen Sensor)	1
8	1482667	Connector Body	1
8	1330355	Terminal	4
8	1402877	Electrical Terminal	4
8	1482663	Connector	1
9	. . . . .	Connector Assembly (Coolant Temperature Sensor)	1
9	1323586	Connector	1
9	1354237	Terminal	2
10	. . . . .	Connector Assembly (Electronic Throttle Body)	1
10	1607743	Connector	1
11	. . . . .	Connector Assembly	1
11	4008604	Fuse	1
11	4007984	Connector (Fuse Holder)	1
12	. . . . .	Connector Assembly (Alternator, Positive)	1
12	148614	E-Ring	1
12	1566146	Boot	1
13	. . . . .	Connector Assembly (Alternator)	1
13	1323586	Connector	1
13	1323576	Terminal	1
14	. . . . .	Connector Assembly (Injector #4)	1
15	. . . . .	Connector Assembly (Coil)	1
15	1476071	Connector	1
15	1402877	Electrical Terminal	2
15	1330356	Seal	3
15	1351139	Seal	1
15	1476109	Connector Lock	1
16	181089	Clamp	1
17	. . . . .	Connector Assembly (Injector #6)	1
18	1500900	Clip	2
19	. . . . .	Connector Assembly (To Left Hand Chassis Harness)	1
19	4006329	Connector	1
19	1402809	Clip	1
20	. . . . .	Connector Assembly (Cam Position Sensor)	1
20	1476067	Connector	1
20	1476109	Connector Lock	1
20	1330355	Terminal	3
20	1476108	Wire Seal	3

©2011 HYSTER COMPANY

WIRE HARNESS (ENGINE)

GM 4.3L GASOLINE (GFI OPTION) – WITH CATALYTIC CONVERTER (S/N J006V02543H →)

ITEM	PART NO.	DESCRIPTION	QTY
21	. . . . .	Connector Assembly	1
22	. . . . .	Connector Assembly	1
23	. . . . .	Connector Assembly	1
24	1558227	Clip	2
24	1532779	Clip	2
25	1540944	Clip	4
26	1540944	Clip	1
27	. . . . .	Connector Assembly	1
27	1541988	Connector	1
28	. . . . .	Connector Assembly	1
28	1330413	Connector	1
29	. . . . .	Connector Assembly	1
29	1514597	Connector	1
30	. . . . .	Connector Assembly (Oil Pressure)	1
30	1327957	Connector	1
30	1354237	Terminal	3
31	. . . . .	Connector Assembly (Left Oxygen Sensor)	1
31	1482667	Connector Body	1
31	1330355	Terminal	4
31	1402877	Electrical Terminal	4
31	1482663	Connector	1
32	. . . . .	Connector Assembly (MAP/MAT Sensor)	1
32	1607839	Connector	1
32	1402814	Terminal	4
32	1562649	Seal	4
33	. . . . .	Connector Assembly (Ignition)	1
33	1547483	Connector	1
33	1354237	Terminal	1
33	1476109	Connector Lock	1
33	1323576	Terminal	3
34	. . . . .	Connector Assembly (Injector #4)	1
35	. . . . .	Connector Assembly (Battery, Positive)	1
35	129886	E-Ring	1

©2011 HYSTER COMPANY

NOTES

©2011 HYSTER COMPANY

WIRE HARNESS (FIGURE 4-39)
ENGINE — CUMMINS QSB 3.3L DIESEL

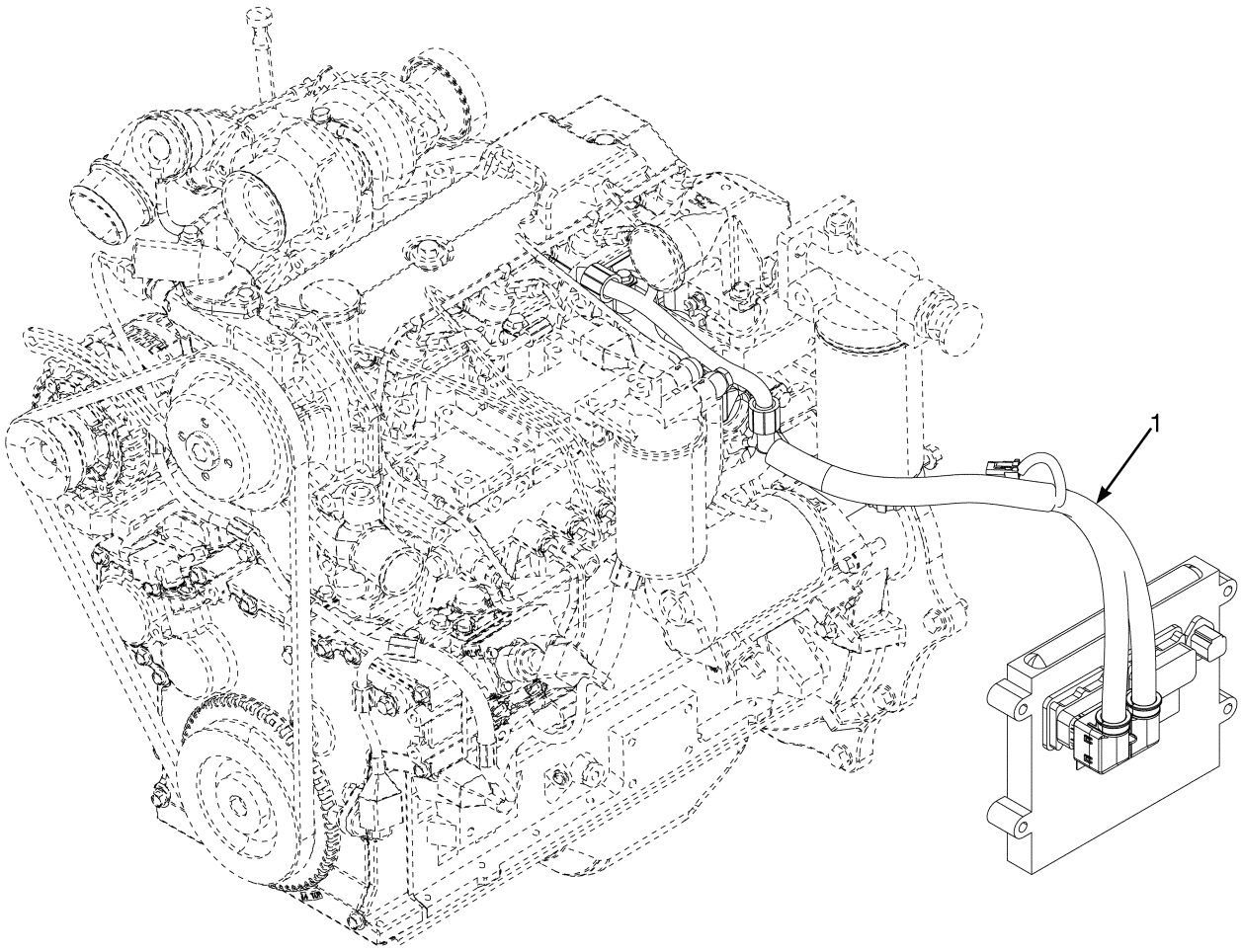

BP090411

©2011 HYSTER COMPANY

WIRE HARNESS

ENGINE – CUMMINS QSB 3.3L DIESEL

ITEM	PART NO.	DESCRIPTION	QTY
1	1700243	Wire Harness (Engine)	1

©2011 HYSTER COMPANY

WIRE HARNESS (FIGURE 4-40)

RIGHT HAND CHASSIS — GM 4.3L GASOLINE AND LPG (→ S/N J006V03418H)

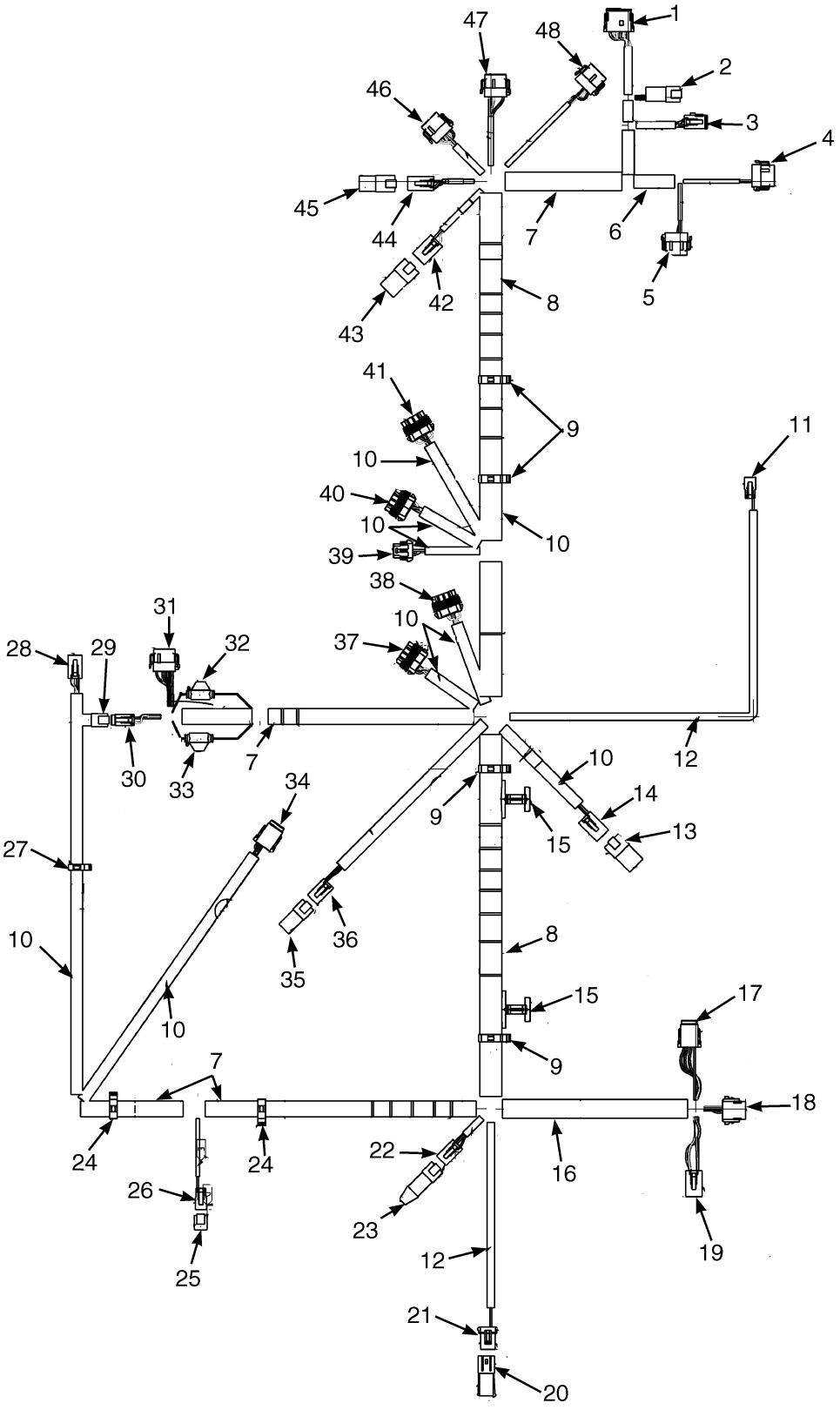

©2011 HYSTER COMPANY

WIRE HARNESS

RIGHT HAND CHASSIS – GM 4.3L GASOLINE AND LPG (→ S/N J006V03418H)

ITEM	PART NO.	DESCRIPTION	QTY
	2105724	Wire Harness (Right Hand Chassis Harness)	1
1	. . . . .	Connector Assembly (Vehicle System Manager)	1
1	1525563	Connector	1
1	1500913	Connector	1
1	1330438	Terminal (Socket)	8
1	1363886	Terminal (Socket)	1
2	. . . . .	Connector Assembly (To Cowl Harness)	1
2	1489655	Connector (4 Way)	1
2	1330416	Connector	1
2	1330437	Terminal (Pin)	4
3	. . . . .	Connector Assembly (To Cowl Harness)	1
3	1493428	Connector (12-Way)	1
3	1500913	Connector	1
3	1330438	Terminal (Socket)	10
3	1484377	Plug	2
4	. . . . .	Connector Assembly (Vehicle System Manager)	1
4	1525567	Connector	1
4	1529046	Connector	1
4	1463139	Terminal	3
4	1484377	Plug	9
5	. . . . .	Connector Assembly (Vehicle System Manager)	1
5	1525569	Connector	1
5	1529046	Connector	1
5	1463139	Terminal	3
5	1484377	Plug	9
6	275496	Conduit	AR
7	275497	Conduit	AR
8	1540388	Conduit	AR
9	1534282	Clip	4
10	275495	Conduit	AR
11	. . . . .	Connector Assembly (Hydraulic Solenoid)	1
11	1490242	Connector	1
11	1490243	Connector	1
11	1330438	Terminal (Socket)	2
12	275493	Conduit	AR
13	. . . . .	Connector Assembly (Endcap)	1
13	1514597	Connector	1
13	1330439	Plug	4
14	. . . . .	Connector Assembly (Accessory Two)	1
14	1514602	Connector	1
14	1514603	Connector	1
14	1330439	Plug	1
14	1554359	Terminal	3
15	1620149	Clip	2
16	275498	Conduit	2
17	. . . . .	Connector Assembly (To Engine Harness)	1
17	1541991	Connector	1
17	1541992	Connector	1
17	1463139	Terminal	8
18	. . . . .	Connector Assembly (To Engine Harness)	1

©2011 HYSTER COMPANY

WIRE HARNESS

RIGHT HAND CHASSIS – GM 4.3L GASOLINE AND LPG (→ S/N J006V03418H)

ITEM	PART NO.	DESCRIPTION	QTY
18	1502625	Connector	1
18	1502626	Connector	1
18	1330438	Terminal (Socket)	7
18	1484377	Plug	1
19	. . . . .	Connector Assembly (To Engine Harness)	1
19	1514602	Connector	1
19	1514603	Connector	1
19	1554359	Terminal	4
20	. . . . .	Connector Assembly (Endcap)	1
20	1329150	Connector	1
20	1329151	Terminal	1
20	1327164	Seal	2
21	. . . . .	Connector Assembly (Hydraulic Filter)	1
21	1329152	Plug	1
21	1329151	Terminal	1
21	1330281	Terminal	2
21	1402888	Seal	2
22	. . . . .	Connector Assembly (Bus Terminal Two)	1
22	1489656	Connector (4-Way)	1
22	1489657	Connector	1
22	1330438	Terminal (Socket)	4
23	. . . . .	Connector Assembly (Endcap)	1
23	1525577	Connector (With Resistor)	1
24	1534329	Clip	2
25	. . . . .	Connector Assembly (Endcap)	1
25	1626727	Connector	1
26	. . . . .	Connector Assembly (Alternate Horn Button)	1
26	1490242	Connector	1
26	1490243	Connector	1
26	1330438	Terminal (Socket)	2
27	1402815	Clip	1
28	. . . . .	Connector Assembly (To Rear Harness)	1
28	1493430	Connector	1
28	1529052	Connector	1
28	1330438	Terminal (Socket)	6
29	. . . . .	Connector Assembly (Endcap)	1
29	1530960	Connector	1
29	1484377	Plug	6
30	. . . . .	Connector Assembly (To Transmission Harness)	1
30	1531973	Connector	1
30	1531974	Connector	1
30	1463139	Terminal	5
30	1484377	Plug	1
31	. . . . .	Connector Assembly (To Transmission Harness)	1
31	1525567	Connector	1
31	1529046	Connector	1
31	1463139	Terminal	12
32	. . . . .	Connector Assembly (Ignition Fuse)	1
32	1602431	Fuse Holder	1
32	1498045	Fuse (7.5 Amp)	1

©2011 HYSTER COMPANY

WIRE HARNESS

RIGHT HAND CHASSIS – GM 4.3L GASOLINE AND LPG (→ S/N J006V03418H)

ITEM	PART NO.	DESCRIPTION	QTY
33	. . . . .	Connector Assembly (Battery Fuse)	1
33	1602431	Fuse Holder	1
33	1498045	Fuse (7.5 Amp)	1
34	. . . . .	Connector Assembly (To Seat Harness)	1
34	1541991	Connector	1
34	1541992	Connector	1
34	1463139	Terminal	8
35	. . . . .	Connector Assembly (Endcap)	1
35	1525573	Connector	1
36	. . . . .	Connector Assembly (Impact Sensor)	1
36	1489656	Connector (4-Way)	1
36	1489657	Connector	1
36	1330438	Terminal (Socket)	4
37	. . . . .	Connector Assembly (Power Distribution Module)	1
37	1521183	Connector	1
37	1521188	Lock	1
37	1323579	Seal	7
37	1327164	Seal	1
37	1330281	Terminal	4
37	1521989	Terminal	3
38	. . . . .	Connector Assembly (Power Distribution Module)	1
38	1521184	Connector	1
38	1521188	Lock	1
38	1323579	Seal	5
38	1327164	Seal	1
38	1330281	Terminal	6
38	1521989	Terminal	1
38	1402888	Seal	2
39	. . . . .	Connector Assembly (Horn)	1
39	1476064	Connector	1
39	1476109	Connector Lock	1
39	1330356	Seal	2
39	1330355	Terminal	3
39	1476108	Wire Seal	1
40	. . . . .	Connector Assembly (Power Distribution Module)	1
40	1521186	Connector	1
40	1521188	Lock	1
40	1327164	Seal	1
40	1323579	Seal	7
40	1521989	Terminal	7
41	. . . . .	Connector Assembly (Power Distribution Module)	1
41	1521185	Connector	1
41	1521188	Lock	1
41	1323579	Seal	8
41	1330281	Terminal	5
41	1521989	Terminal	3
42	. . . . .	Connector Assembly (To Lights/Cab Harness)	1
42	1514602	Connector	1
42	1514603	Connector	1
42	1554359	Terminal	4

©2011 HYSTER COMPANY

WIRE HARNESS

RIGHT HAND CHASSIS – GM 4.3L GASOLINE AND LPG (→ S/N J006V03418H)

ITEM	PART NO.	DESCRIPTION	QTY
43	. . . . .	Connector Assembly (Endcap)	1
43	1514597	Connector	1
43	1330439	Plug	4
44	. . . . .	Connector Assembly (Accessory One)	1
44	1545202	Connector	1
44	1546697	Connector	1
44	1554359	Terminal	1
45	. . . . .	Connector Assembly (Endcap)	1
45	1480187	Connector	1
45	1330439	Plug	2
46	. . . . .	Connector Assembly (Vehicle System Manager)	1
46	1525567	Connector	1
46	1530037	Connector	1
46	1463139	Terminal	6
46	1484377	Plug	6
47	. . . . .	Connector Assembly (Vehicle System Manager)	1
47	1525568	Connector	1
47	1530037	Connector	1
47	1463139	Terminal	6
47	1484377	Plug	6
48	. . . . .	Connector Assembly (Vehicle System Manager)	1
48	1525570	Connector	1
48	1530037	Connector	1
48	1463139	Terminal	4
48	1484377	Plug	8

©2011 HYSTER COMPANY

NOTES

©2011 HYSTER COMPANY

WIRE HARNESS (FIGURE 4-41)

RIGHT HAND CHASSIS — GM 4.3L GASOLINE AND LPG (S/N J006V03419H →)

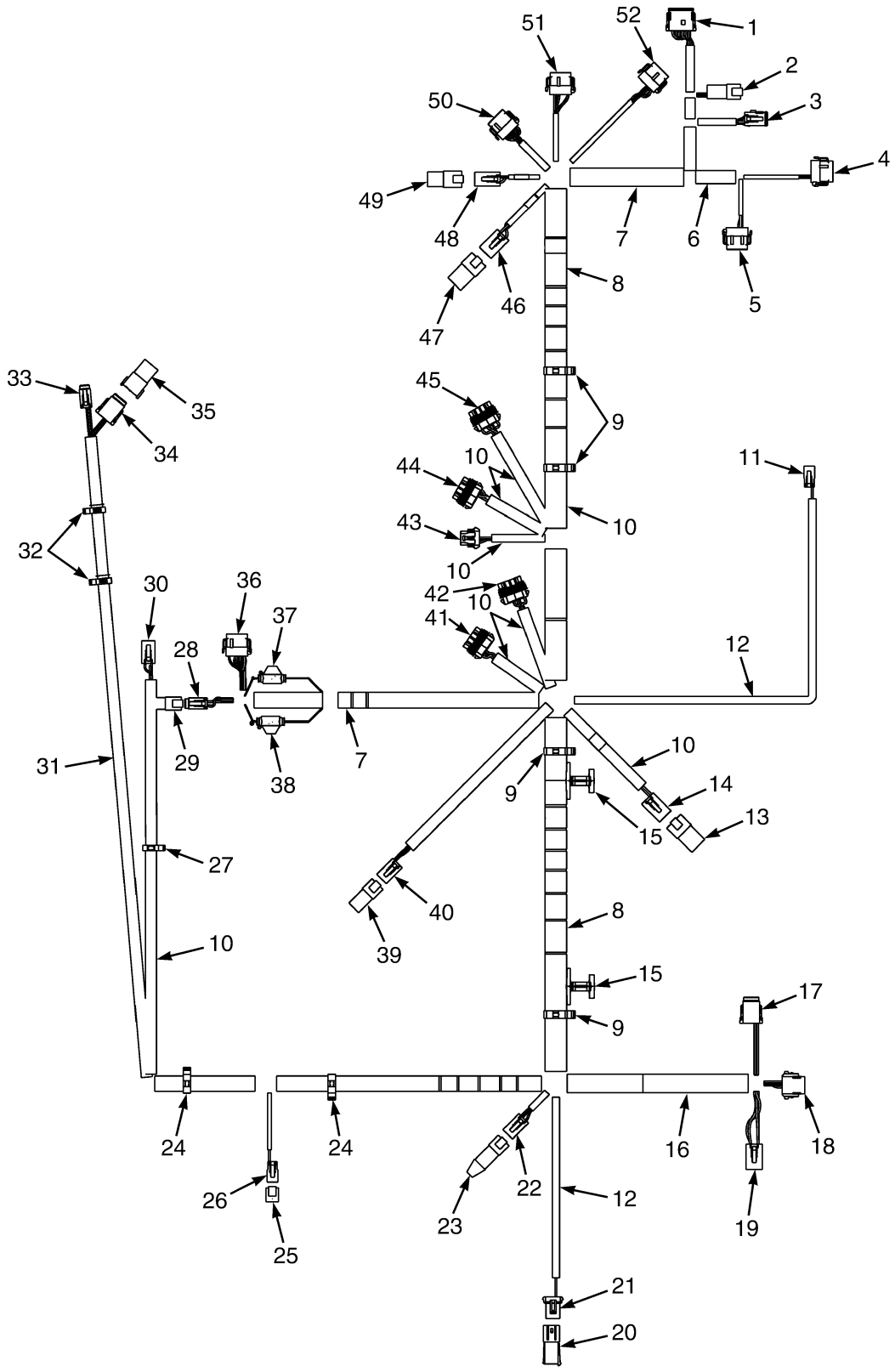

BP080988

©2011 HYSTER COMPANY

WIRE HARNESS

RIGHT HAND CHASSIS – GM 4.3L GASOLINE AND LPG (S/N J006V03419H →)

ITEM	PART NO.	DESCRIPTION	QTY
	4607741	Wire Harness (Right Hand Chassis Harness)	1
1	. . . . .	Connector Assembly (Vehicle System Manager)	1
1	1525563	Connector	1
1	1500913	Connector (Secondary Lock)	1
1	1330438	Terminal (Socket)	8
1	1363886	Terminal (Socket)	1
2	. . . . .	Connector Assembly (To Cowl Harness)	1
2	1489655	Connector (4 Way)	1
2	1330416	Connector	1
2	1330437	Terminal (Pin)	4
3	. . . . .	Connector Assembly (To Cowl Harness)	1
3	1493428	Connector (12-Way)	1
3	1500913	Connector (Secondary Lock)	1
3	1330438	Terminal (Socket)	10
3	1484377	Plug	2
4	. . . . .	Connector Assembly (Vehicle System Manager)	1
4	1525567	Connector	1
4	1529046	Connector (Secondary Lock)	1
4	1463139	Terminal	3
4	1484377	Plug	9
5	. . . . .	Connector Assembly (Vehicle System Manager)	1
5	1525569	Connector	1
5	1529046	Connector (Secondary Lock)	1
5	1463139	Terminal	3
5	1484377	Plug	9
6	275496	Conduit	AR
7	275497	Conduit	AR
8	1540388	Conduit	AR
9	1534282	Clip	4
10	275495	Conduit	AR
11	. . . . .	Connector Assembly (Hydraulic Solenoid)	1
11	1490242	Connector	1
11	1490243	Connector (Secondary Lock)	1
11	1330438	Terminal (Socket)	2
12	275493	Conduit	AR
13	. . . . .	Connector Assembly (Endcap)	1
13	1514597	Connector	1
13	1330439	Plug	4
14	. . . . .	Connector Assembly (Accessory Two)	1
14	1514602	Connector	1
14	1514603	Connector (Secondary Lock)	1
14	1330439	Plug	1
14	1554359	Terminal	3
15	1620149	Clip	2
16	275498	Conduit	2
17	. . . . .	Connector Assembly (To Engine Harness)	1
17	1541991	Connector	1
17	1541992	Connector (Secondary Lock)	1
17	1463139	Terminal	8
18	. . . . .	Connector Assembly (To Engine Harness)	1

©2011 HYSTER COMPANY

WIRE HARNESS

RIGHT HAND CHASSIS – GM 4.3L GASOLINE AND LPG (S/N J006V03419H →)

ITEM	PART NO.	DESCRIPTION	QTY
18	1502625	Connector	1
18	1502626	Connector (Secondary Lock)	1
18	1330438	Terminal (Socket)	7
18	1484377	Plug	1
19	. . . . .	Connector Assembly (To Engine Harness)	1
19	1514602	Connector	1
19	1514603	Connector (Secondary Lock)	1
19	1554359	Terminal	4
20	. . . . .	Connector Assembly (Endcap)	1
20	1329150	Connector	1
20	1329151	Terminal (Secondary Lock)	1
20	1327164	Seal	2
21	. . . . .	Connector Assembly (Hydraulic Filter)	1
21	1329152	Plug	1
21	1329151	Terminal (Secondary Lock)	1
21	1330281	Terminal	2
21	1402888	Seal	2
22	. . . . .	Connector Assembly (Bus Terminal Two)	1
22	1489656	Connector (4-Way)	1
22	1489657	Connector	1
22	1330438	Terminal (Socket)	4
23	. . . . .	Connector Assembly (Endcap)	1
23	1525577	Connector (With Resistor)	1
24	1534329	Clip	2
25	. . . . .	Connector Assembly (Endcap)	1
25	1626727	Connector	1
26	. . . . .	Connector Assembly (Alternate Horn Button)	1
26	1490242	Connector	1
26	1490243	Connector (Secondary Lock)	1
26	1330438	Terminal (Socket)	2
27	1402815	Clip	1
28	. . . . .	Connector Assembly (To Transmission Harness)	1
28	1531973	Connector	1
28	1531974	Connector (Secondary Lock)	1
28	1463139	Terminal	5
28	1484377	Plug	1
29	. . . . .	Connector Assembly (Endcap)	1
29	1530960	Connector	1
29	1484377	Plug	6
30	. . . . .	Connector Assembly (To Rear Harness)	1
30	1493430	Connector	1
30	1529052	Connector	1
30	1330438	Terminal (Socket)	6
31	1699754	Conduit	1
32	1509890	Clip	2
33	. . . . .	Connector Assembly (To Seat Harness)	1
33	1531973	Connector	1
33	1531974	Connector (Secondary Lock)	1
33	1463139	Terminal	4
33	1484377	Plug	2

©2011 HYSTER COMPANY

WIRE HARNESS

RIGHT HAND CHASSIS – GM 4.3L GASOLINE AND LPG (S/N J006V03419H →)

ITEM	PART NO.	DESCRIPTION	QTY
34	. . . . .	Connector Assembly (To MLM Harness)	1
34	1541991	Connector	1
34	1541992	Connector (Secondary Lock)	1
34	1463139	Terminal	5
34	1484377	Plug	3
35	. . . . .	Connector Assembly (Endcap)	1
35	1541988	Connector	1
35	1484377	Plug	2
36	. . . . .	Connector Assembly (To Transmission Harness)	1
36	1525567	Connector	1
36	1529046	Connector (Secondary Lock)	1
36	1463139	Terminal	12
37	. . . . .	Connector Assembly (Ignition Fuse)	1
37	1602431	Fuse Holder	1
37	1498045	Fuse (7.5 Amp)	1
38	. . . . .	Connector Assembly (Battery Fuse)	1
38	1602431	Fuse Holder	1
38	1498045	Fuse (7.5 Amp)	1
39	. . . . .	Connector Assembly (Endcap)	1
39	1525573	Connector	1
40	. . . . .	Connector Assembly (Impact Sensor)	1
40	1489656	Connector (4-Way)	1
40	1489657	Connector	1
40	1330438	Terminal (Socket)	4
41	. . . . .	Connector Assembly (Power Distribution Module)	1
41	1521183	Connector	1
41	1521188	Lock	1
41	1323579	Seal	7
41	1327164	Seal	1
41	1330281	Terminal	4
41	1521989	Terminal	3
42	. . . . .	Connector Assembly (Power Distribution Module)	1
42	1521184	Connector	1
42	1521188	Lock	1
42	1323579	Seal	5
42	1327164	Seal	1
42	1330281	Terminal	6
42	1521989	Terminal	1
42	1402888	Seal	2
43	. . . . .	Connector Assembly (Horn)	1
43	1476064	Connector	1
43	1476109	Connector Lock	1
43	1330356	Seal	2
43	1330355	Terminal	3
43	1476108	Wire Seal	1
44	. . . . .	Connector Assembly (Power Distribution Module)	1
44	1521186	Connector	1
44	1521188	Lock	1
44	1327164	Seal	1
44	1323579	Seal	7

©2011 HYSTER COMPANY

WIRE HARNESS

RIGHT HAND CHASSIS – GM 4.3L GASOLINE AND LPG (S/N J006V03419H →)

ITEM	PART NO.	DESCRIPTION	QTY
44	1521989	Terminal	7
45	. . . . .	Connector Assembly (Power Distribution Module)	1
45	1521185	Connector	1
45	1521188	Lock	1
45	1323579	Seal	8
45	1330281	Terminal	5
45	1521989	Terminal	3
46	. . . . .	Connector Assembly (To Lights/Cab Harness)	1
46	1514602	Connector	1
46	1514603	Connector (Secondary Lock)	1
46	1554359	Terminal	4
47	. . . . .	Connector Assembly (Endcap)	1
47	1514597	Connector	1
47	1330439	Plug	4
48	. . . . .	Connector Assembly (Accessory One)	1
48	1546697	Connector	1
48	1545202	Connector	1
48	1554359	Terminal	1
49	. . . . .	Connector Assembly (Endcap)	1
49	1480187	Connector	1
49	1330439	Plug	2
50	. . . . .	Connector Assembly (Vehicle System Manager)	1
50	1525567	Connector	1
50	1530037	Connector (Secondary Lock)	1
50	1463139	Terminal	6
50	1484377	Plug	6
51	. . . . .	Connector Assembly (Vehicle System Manager)	1
51	1525568	Connector	1
51	1530037	Connector (Secondary Lock)	1
51	1463139	Terminal	6
51	1484377	Plug	6
52	. . . . .	Connector Assembly (Vehicle System Manager)	1
52	1525570	Connector	1
52	1530037	Connector (Secondary Lock)	1
52	1463139	Terminal	4
52	1484377	Plug	8

©2011 HYSTER COMPANY

NOTES

©2011 HYSTER COMPANY

WIRE HARNESS (FIGURE 4-42)

RIGHT HAND CHASSIS — CUMMINS QSB 3.3L DIESEL (→ S/N J006V03362H)

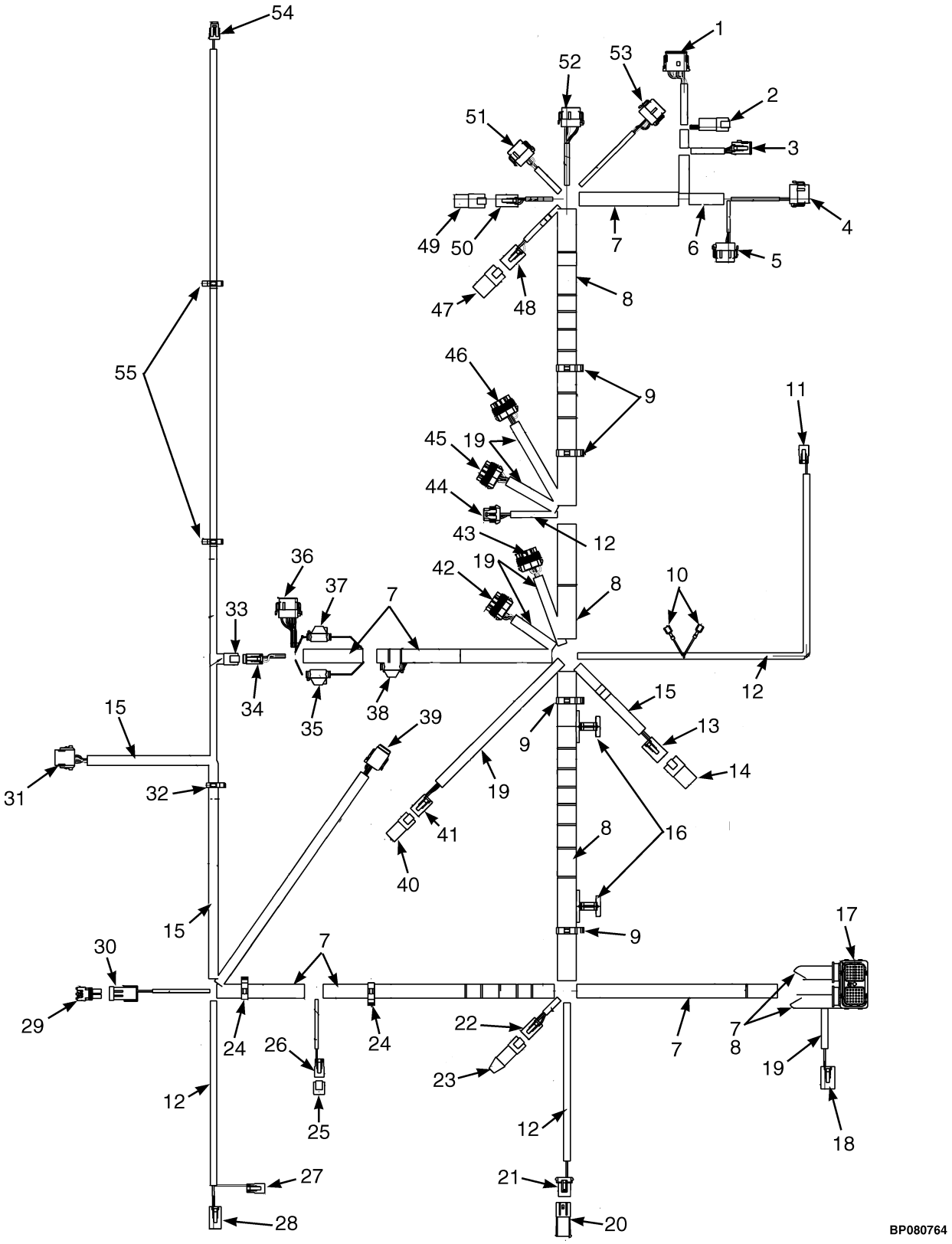

©2011 HYSTER COMPANY

WIRE HARNESS

RIGHT HAND CHASSIS – CUMMINS QSB 3.3L DIESEL (→ S/N J006V03362H)

ITEM	PART NO.	DESCRIPTION	QTY
	2105725	Wire Harness (Right Hand Chassis)	1
1	. . . . .	Connector Assembly (Vehicle System Manager)	1
1	1525563	Connector	1
1	1500913	Connector	1
1	1330438	Terminal (Socket)	8
1	1363886	Terminal (Socket)	4
2	. . . . .	Connector Assembly (To Cowl Harness)	1
2	1489655	Connector (4 Way)	1
2	1330416	Connector	1
2	1330437	Terminal (Pin)	4
3	. . . . .	Connector Assembly (To Cowl Harness)	1
3	1493428	Connector (12-Way)	1
3	1500913	Connector	1
3	1330438	Terminal (Socket)	10
3	1484377	Plug	2
4	. . . . .	Connector Assembly (Vehicle System Manager)	1
4	1525567	Connector	1
4	1529046	Connector	1
4	1463139	Terminal	3
4	1484377	Plug	9
5	. . . . .	Connector Assembly (Vehicle System Manager)	1
5	1525569	Connector	1
5	1529046	Connector	1
5	1463139	Terminal	3
5	1484377	Plug	9
6	275496	Conduit	AR
7	275497	Conduit	AR
8	1540388	Conduit	AR
9	1534282	Clip	4
10	. . . . .	Connector Assembly (Contactor Ground)	1
10	1402849	Connector Body	1
10	. . . . .	Connector Assembly (Contactor Signal)	1
10	1402849	Connector Body	1
11	. . . . .	Connector Assembly (Hydraulic Solenoid)	1
11	1490242	Connector	1
11	1490243	Connector	1
11	1330438	Terminal (Socket)	2
12	275493	Conduit	1
13	. . . . .	Connector Assembly (Accessory 2)	1
13	1514602	Connector	1
13	1514603	Connector	1
13	1330439	Plug	1
13	1554359	Terminal	3
14	. . . . .	Connector Assembly (Endcap)	1
14	1514597	Connector	1
14	1330439	Plug	6
15	275495	Conduit	AR
16	1620149	Clip	2
17	. . . . .	Connector Assembly (Engine Control Module)	1
17	1664870	Connector	1

©2011 HYSTER COMPANY

WIRE HARNESS

RIGHT HAND CHASSIS – CUMMINS QSB 3.3L DIESEL (→ S/N J006V03362H)

ITEM	PART NO.	DESCRIPTION	QTY
17	1664886	Strain Relief	1
17	1484377	Plug	46
17	1507725	Terminal	14
18	. . . . .	Connector Assembly (Engine Control Module)	1
18	1514602	Connector	1
18	1514603	Connector	1
18	1330439	Plug	2
18	1554359	Terminal	2
19	275495	Conduit	AR
20	. . . . .	Connector Assembly (Endcap)	1
20	1329150	Connector	1
20	1329152	Plug	1
20	1327164	Seal	2
21	. . . . .	Connector Assembly (Hydraulic Filter)	1
21	1329152	Plug	1
21	1329151	Terminal	1
21	1330281	Terminal	1
21	1402888	Seal	2
22	. . . . .	Connector Assembly (Bus Terminal 2)	1
22	1489656	Connector (4-Way)	1
22	1489657	Connector	1
22	1330438	Terminal (Socket)	4
23	. . . . .	Connector Assembly (Endcap with Resistor)	1
23	1525577	Connector (With Resistor)	1
24	1534329	Clip	2
25	. . . . .	Connector Assembly (Endcap)	1
25	1626727	Connector	1
26	. . . . .	Connector Assembly (Alternate Horn Button)	1
26	1490242	Connector	1
26	1490243	Connector	1
26	1330438	Terminal (Socket)	2
27	. . . . .	Connector Assembly (To Alternator Harness)	1
27	1490242	Connector	1
27	1490243	Connector	1
27	1330438	Terminal (Socket)	1
27	1484377	Plug	1
28	. . . . .	Connector Assembly (To Alternator Harness)	1
28	1545202	Connector	1
28	1546697	Connector	1
28	1554359	Terminal	2
29	. . . . .	Connector Assembly (Endcap)	1
29	1465468	Connector	1
29	1327164	Seal	2
30	. . . . .	Connector Assembly (Air Restriction Sensor)	1
30	1465469	Connector	1
30	1323578	Terminal	2
30	1402888	Seal	2
31	. . . . .	Connector Assembly (To Rear Harness)	1
31	1502625	Connector	1
31	1502626	Connector	1

©2011 HYSTER COMPANY

WIRE HARNESS

RIGHT HAND CHASSIS – CUMMINS QSB 3.3L DIESEL (→ S/N J006V03362H)

ITEM	PART NO.	DESCRIPTION	QTY
31	1330438	Terminal (Socket)	7
31	1330355	Terminal	1
32	1402815	Clip	1
33	. . . . .	Connector Assembly (Endcap)	1
33	1530960	Connector	1
33	1484377	Plug	6
34	. . . . .	Connector Assembly (To Transmission Harness)	1
34	1531973	Connector	1
34	1531974	Connector	1
34	1463139	Terminal	5
34	1484377	Plug	1
35	. . . . .	Connector Assembly (Battery Fuse)	1
35	1602431	Fuse Holder	1
35	1498045	Fuse (7.5 Amp)	1
36	. . . . .	Connector Assembly (To Transmission Harness)	1
36	1525567	Connector	1
36	1529046	Connector	1
36	1463139	Terminal	12
37	. . . . .	Connector Assembly (Ignition Fuse)	1
37	1602431	Fuse Holder	1
37	1498045	Fuse (7.5 Amp)	1
38	. . . . .	Connector Assembly (Ignition Fuse)	1
38	1602431	Fuse Holder	1
38	1498044	Fuse (5 Amp)	1
39	. . . . .	Connector Assembly (To Seat Harness)	1
39	1541991	Connector	1
39	1541992	Connector	1
39	1463139	Terminal	8
40	. . . . .	Connector Assembly (Endcap)	1
40	1525573	Connector	1
41	. . . . .	Connector Assembly (Impact Sensor)	1
41	1489656	Connector (4-Way)	1
41	1489657	Connector	1
41	1330438	Terminal (Socket)	4
42	. . . . .	Connector Assembly (Power Distribution Module)	1
42	1521183	Connector	1
42	1521188	Lock	1
42	1323579	Seal	7
42	1327164	Seal	1
42	1330281	Terminal	4
42	1521989	Terminal	3
43	. . . . .	Connector Assembly (Power Distribution Module)	1
43	1521184	Connector	1
43	1521188	Lock	1
43	1323579	Seal	5
43	1327164	Seal	2
43	1330281	Terminal	5
43	1521989	Terminal	1
43	1402888	Seal	1
44	. . . . .	Connector Assembly (Horn)	1

©2011 HYSTER COMPANY

WIRE HARNESS

RIGHT HAND CHASSIS – CUMMINS QSB 3.3L DIESEL (→ S/N J006V03362H)

ITEM	PART NO.	DESCRIPTION	QTY
44	1476064	Connector	1
44	1476109	Connector Lock	1
44	1330356	Seal	2
44	1330355	Terminal	3
44	1476108	Wire Seal	1
45	. . . . .	Connector Assembly (Power Distribution Module)	1
45	1521186	Connector	1
45	1521188	Lock	1
45	1323579	Seal	7
45	1327164	Seal	1
45	1521989	Terminal	7
46	. . . . .	Connector Assembly (Power Distribution Module)	1
46	1521185	Connector	1
46	1521188	Lock	4
46	1323579	Seal	7
46	1402888	Seal	1
46	1330281	Terminal	5
46	1521989	Terminal	3
47	. . . . .	Connector Assembly (Endcap)	1
47	1514597	Connector	1
47	1330439	Plug	4
48	. . . . .	Connector Assembly (To Lights/Cab Harness)	1
48	1514602	Connector	1
48	1514603	Connector	1
48	1554359	Terminal	4
49	. . . . .	Connector Assembly (Endcap)	1
49	1480187	Connector	1
49	1330439	Plug	2
50	. . . . .	Connector Assembly (Accessory 1)	1
50	1545202	Connector	1
50	1546697	Connector	1
50	1554359	Terminal	2
51	. . . . .	Connector Assembly (Vehicle System Manager)	1
51	1525567	Connector	1
51	1530037	Connector	1
51	1463139	Terminal	8
51	1554359	Terminal	4
52	. . . . .	Connector Assembly (Vehicle System Manager)	1
52	1525568	Connector	1
52	1530037	Connector	1
52	1463139	Terminal	6
52	1484377	Plug	6
53	. . . . .	Connector Assembly (Vehicle System Manager)	1
53	1525570	Connector	1
53	1530037	Connector	1
53	1463139	Terminal	4
53	1484377	Plug	8
54	. . . . .	Connector Assembly (Fuel Level)	1
54	1476077	Connector	1
54	1323576	Terminal	2

©2011 HYSTER COMPANY

WIRE HARNESS

RIGHT HAND CHASSIS – CUMMINS QSB 3.3L DIESEL (→ S/N J006V03362H)

ITEM	PART NO.	DESCRIPTION	QTY
55	1402816	Clip	2

©2011 HYSTER COMPANY

WIRE HARNESS (FIGURE 4-43)

RIGHT HAND CHASSIS — CUMMINS QSB 3.3L DIESEL (S/N J006V03363H →)

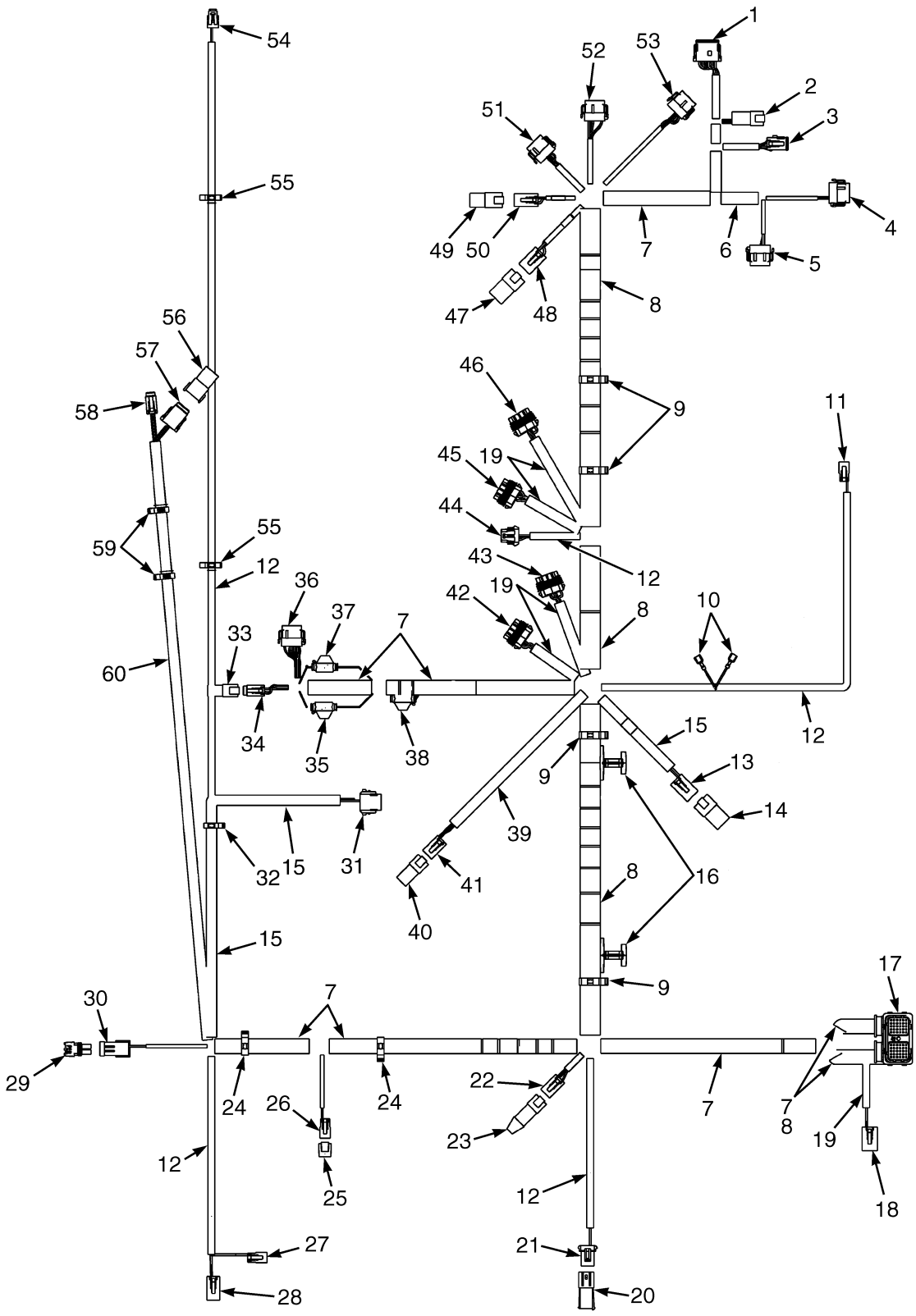

©2011 HYSTER COMPANY

WIRE HARNESS

RIGHT HAND CHASSIS – CUMMINS QSB 3.3L DIESEL (S/N J006V03363H →)

ITEM	PART NO.	DESCRIPTION	QTY
	4607742	Wire Harness (RH Chassis)	1
1	. . . . .	Connector Assembly (Vehicle System Manager)	1
1	1525563	Connector	1
1	1500913	Connector (Secondary Lock)	1
1	1330438	Terminal (Socket)	8
1	1363886	Terminal (Socket)	4
2	. . . . .	Connector Assembly (To Cowl Harness)	1
2	1489655	Connector (4 Way)	1
2	1330416	Connector (Secondary Lock)	1
2	1330437	Terminal (Pin)	4
3	. . . . .	Connector Assembly (To Cowl Harness)	1
3	1493428	Connector (12-Way)	1
3	1500913	Connector (Secondary Lock)	1
3	1330438	Terminal (Socket)	10
3	1484377	Plug	2
4	. . . . .	Connector Assembly (Vehicle System Manager)	1
4	1525567	Connector	1
4	1529046	Connector (Secondary Lock)	1
4	1463139	Terminal	3
4	1484377	Plug	9
5	. . . . .	Connector Assembly (Vehicle System Manager)	1
5	1525569	Connector	1
5	1529046	Connector (Secondary Lock)	1
5	1463139	Terminal	3
5	1484377	Plug	9
6	275496	Conduit	AR
7	275497	Conduit	AR
8	1540388	Conduit	AR
9	1534282	Clip	4
10	. . . . .	Connector Assembly (Contactor Ground)	1
10	1402849	Connector Body	1
10	. . . . .	Connector Assembly (Contactor Signal)	1
10	1402849	Connector Body	1
11	. . . . .	Connector Assembly (Hydraulic Solenoid)	1
11	1490242	Connector	1
11	1490243	Connector (Secondary Lock)	1
11	1330438	Terminal (Socket)	2
12	275493	Conduit	1
13	. . . . .	Connector Assembly (Accessory 2)	1
13	1514602	Connector	1
13	1514603	Connector (Secondary Lock)	1
13	1330439	Plug	1
13	1554359	Terminal	3
14	. . . . .	Connector Assembly (Endcap)	1
14	1514597	Connector	1
14	1330439	Plug	6
15	275495	Conduit	AR
16	1620149	Clip	2
17	. . . . .	Connector Assembly (Engine Control Module)	1
17	1664870	Connector	1

©2011 HYSTER COMPANY

WIRE HARNESS

RIGHT HAND CHASSIS – CUMMINS QSB 3.3L DIESEL (S/N J006V03363H →)

ITEM	PART NO.	DESCRIPTION	QTY
17	1664886	Strain Relief	1
17	1484377	Plug	46
17	1507725	Terminal	14
18	. . . . .	Connector Assembly (Engine Control Module)	1
18	1514602	Connector	1
18	1514603	Connector (Secondary Lock)	1
18	1330439	Plug	2
18	1554359	Terminal	2
19	275495	Conduit	AR
20	. . . . .	Connector Assembly (Endcap)	1
20	1329150	Connector	1
20	1329152	Plug	1
20	1327164	Seal	2
21	. . . . .	Connector Assembly (Hydraulic Filter)	1
21	1329152	Plug	1
21	1329151	Terminal (Secondary Lock)	1
21	1330281	Terminal	1
21	1402888	Seal	2
22	. . . . .	Connector Assembly (Bus Terminal 2)	1
22	1489656	Connector (4-Way)	1
22	1489657	Connector (Secondary Lock)	1
22	1330438	Terminal (Socket)	4
23	. . . . .	Connector Assembly (Endcap with Resistor)	1
23	1525577	Connector (With Resistor)	1
24	1534329	Clip	2
25	. . . . .	Connector Assembly (Endcap)	1
25	1626727	Connector	1
26	. . . . .	Connector Assembly (Alternate Horn Button)	1
26	1490242	Connector	1
26	1490243	Connector (Secondary Lock)	1
26	1330438	Terminal (Socket)	2
27	. . . . .	Connector Assembly (To Alternator Harness)	1
27	1490242	Connector	1
27	1490243	Connector (Secondary Lock)	1
27	1330438	Terminal (Socket)	1
27	1484377	Plug	1
28	. . . . .	Connector Assembly (To Alternator Harness)	1
28	1545202	Connector	1
28	1546697	Connector (Secondary Lock)	1
28	1554359	Terminal	2
29	. . . . .	Connector Assembly (Endcap)	1
29	1465468	Connector	1
29	1327164	Seal	2
30	. . . . .	Connector Assembly (Air Restriction Sensor)	1
30	1465469	Connector	1
30	1323578	Terminal	2
30	1402888	Seal	2
31	. . . . .	Connector Assembly (To Rear Harness)	1
31	1502625	Connector	1
31	1502626	Connector (Secondary Lock)	1

©2011 HYSTER COMPANY

WIRE HARNESS

RIGHT HAND CHASSIS – CUMMINS QSB 3.3L DIESEL (S/N J006V03363H →)

ITEM	PART NO.	DESCRIPTION	QTY
31	1330438	Terminal (Socket)	7
31	1330355	Terminal	1
32	1402815	Clip	1
33	. . . . .	Connector Assembly (Endcap)	1
33	1530960	Connector	1
33	1484377	Plug	6
34	. . . . .	Connector Assembly (To Transmission Harness)	1
34	1531973	Connector	1
34	1531974	Connector (Secondary Lock)	1
34	1463139	Terminal	5
34	1484377	Plug	1
35	. . . . .	Connector Assembly (Battery Fuse)	1
35	1602431	Fuse Holder	1
35	1498045	Fuse (7.5 Amp)	1
36	. . . . .	Connector Assembly (To Transmission Harness)	1
36	1525567	Connector	1
36	1529046	Connector (Secondary Lock)	1
36	1463139	Terminal	12
37	. . . . .	Connector Assembly (Ignition Fuse)	1
37	1602431	Fuse Holder	1
37	1498045	Fuse (7.5 Amp)	1
38	. . . . .	Connector Assembly (Ignition Fuse)	1
38	1602431	Fuse Holder	1
38	1498044	Fuse (5 Amp)	1
39	275495	Conduit	AR
40	. . . . .	Connector Assembly (Endcap)	1
40	1525573	Connector	1
41	. . . . .	Connector Assembly (Impact Sensor)	1
41	1489656	Connector (4-Way)	1
41	1489657	Connector (Secondary Lock)	1
41	1330438	Terminal (Socket)	4
42	. . . . .	Connector Assembly (Power Distribution Module)	1
42	1521183	Connector	1
42	1521188	Lock (Secondary Lock)	1
42	1323579	Seal	7
42	1327164	Seal	1
42	1330281	Terminal	4
42	1521989	Terminal	3
43	. . . . .	Connector Assembly (Power Distribution Module)	1
43	1521184	Connector	1
43	1521188	Lock (Secondary Lock)	1
43	1323579	Seal	5
43	1327164	Seal	2
43	1330281	Terminal	5
43	1521989	Terminal	1
43	1402888	Seal	1
44	. . . . .	Connector Assembly (Horn)	1
44	1476064	Connector	1
44	1476109	Connector Lock (Secondary Lock)	1
44	1330356	Seal	2

©2011 HYSTER COMPANY

WIRE HARNESS

RIGHT HAND CHASSIS – CUMMINS QSB 3.3L DIESEL (S/N J006V03363H →)

ITEM	PART NO.	DESCRIPTION	QTY
44	1330355	Terminal	3
44	1476108	Wire Seal	1
45	. . . . .	Connector Assembly (Power Distribution Module)	1
45	1521186	Connector	1
45	1521188	Lock (Secondary Lock)	1
45	1323579	Seal	7
45	1327164	Seal	1
45	1521989	Terminal	7
46	. . . . .	Connector Assembly (Power Distribution Module)	1
46	1521185	Connector	1
46	1521188	Lock	4
46	1323579	Seal	7
46	1402888	Seal	1
46	1330281	Terminal	5
46	1521989	Terminal	3
47	. . . . .	Connector Assembly (Endcap)	1
47	1514597	Connector	1
47	1330439	Plug	4
48	. . . . .	Connector Assembly (To Lights/Cab Harness)	1
48	1514602	Connector	1
48	1514603	Connector (Secondary Lock)	1
48	1554359	Terminal	4
49	. . . . .	Connector Assembly (Endcap)	1
49	1480187	Connector	1
49	1330439	Plug	2
50	. . . . .	Connector Assembly (Accessory 1)	1
50	1545202	Connector	1
50	1546697	Connector (Secondary Lock)	1
50	1554359	Terminal	2
51	. . . . .	Connector Assembly (Vehicle System Manager)	1
51	1525567	Connector	1
51	1530037	Connector (Secondary Lock)	1
51	1463139	Terminal	8
51	1554359	Terminal	4
52	. . . . .	Connector Assembly (Vehicle System Manager)	1
52	1525568	Connector	1
52	1530037	Connector (Secondary Lock)	1
52	1463139	Terminal	6
52	1484377	Plug	6
53	. . . . .	Connector Assembly (Vehicle System Manager)	1
53	1525570	Connector	1
53	1530037	Connector (Secondary Lock)	1
53	1463139	Terminal	4
53	1484377	Plug	8
54	. . . . .	Connector Assembly (Fuel Level)	1
54	1476077	Connector	1
54	1323576	Terminal	2
55	1402816	Clip	2
56	. . . . .	Connector Assembly (Endcap)	1
56	1541988	Connector	1

©2011 HYSTER COMPANY

WIRE HARNESS

RIGHT HAND CHASSIS – CUMMINS QSB 3.3L DIESEL (S/N J006V03363H →)

ITEM	PART NO.	DESCRIPTION	QTY
56	1484377	Plug	8
57	. . . . .	Connector Assembly (MLM Harness)	1
57	1541991	Connector	1
57	1541992	Connector (Secondary Lock)	1
57	1463139	Terminal	5
57	1484377	Plug	3
58	. . . . .	Connector Assembly (Seat Harness)	1
58	1531973	Connector	1
58	1531974	Connector (Secondary Lock)	1
58	1463139	Terminal	4
58	1484377	Plug	2
59	1509890	Clip	2
60	1699754	Conduit	AR

©2011 HYSTER COMPANY

WIRE HARNESS (FIGURE 4-44)
SEAT JUMPER (→ S/N J006V03362H)

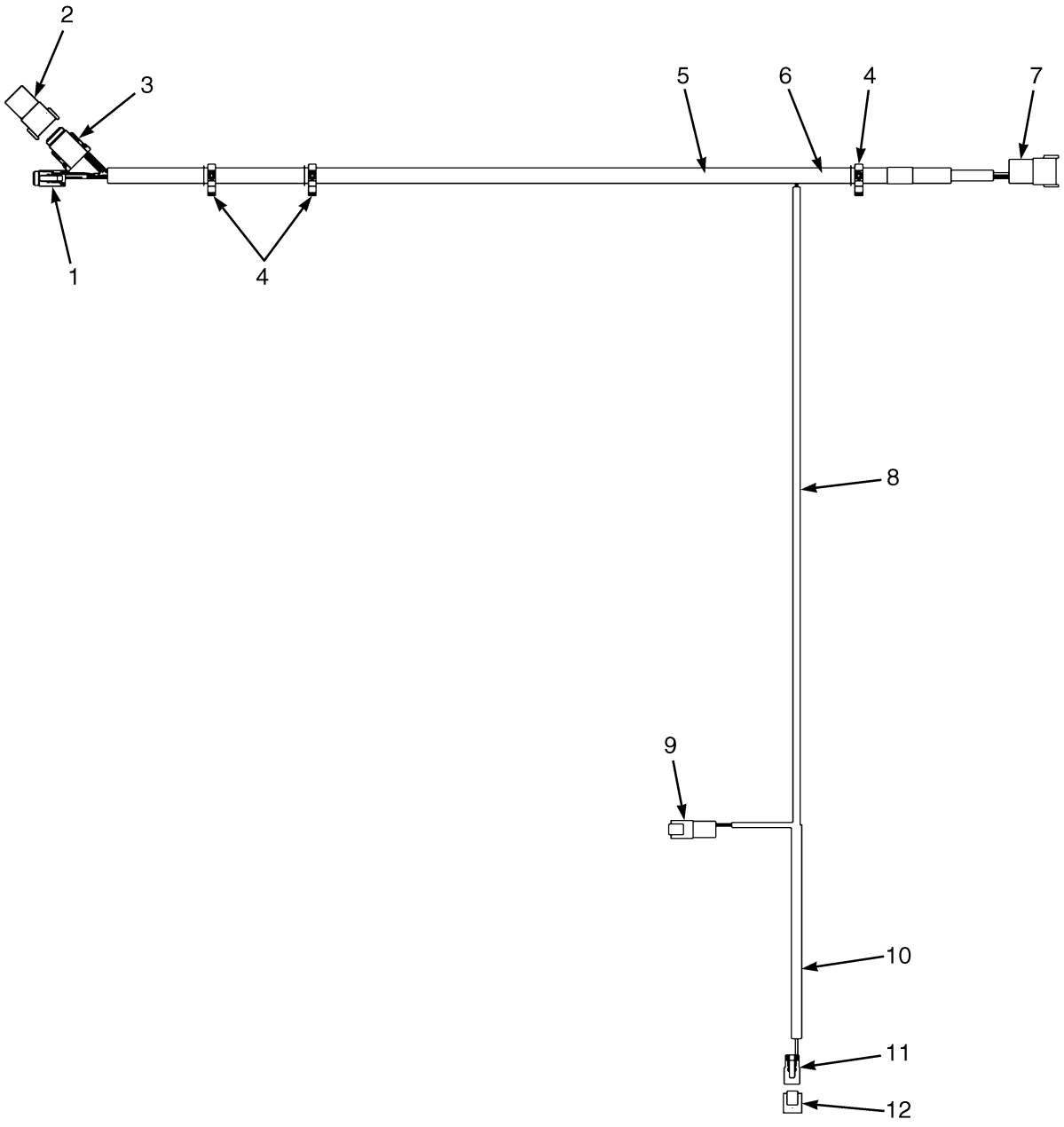

BP081007

©2011 HYSTER COMPANY

WIRE HARNESS

SEAT JUMPER (→ S/N J006V03362H)

ITEM	PART NO.	DESCRIPTION	QTY
	4601499	Wire Harness	1
1	. . . . .	Connector Assembly (Seat Harness)	1
1	1531973	Connector	1
1	1531974	Connector (Lock)	1
1	1463139	Terminal (Pin)	4
1	1484377	Plug	2
2	. . . . .	Connector Assembly (MLM Harness)	1
2	1541991	Connector	1
2	1541992	Connector (Lock)	1
2	1463139	Terminal (Pin)	5
2	1484377	Plug	3
3	. . . . .	End Cap	1
3	1541988	Connector	1
3	1484377	Plug	8
4	1509890	Clip	2
5	1699754	Conduit	AR
6	275495	Conduit	AR
7	. . . . .	Connector Assembly (RH Chassis Harness)	1
7	1541988	Connector	1
7	1541989	Connector (Lock)	1
7	1463138	Terminal Pin (Pin)	8
8	1697181	Conduit	AR
9	. . . . .	Connector Assembly (RH Chassis Harness)	1
9	1493465	Connector	1
9	1330414	Connector (Secondary Lock)	1
9	1330437	Terminal (Pin)	2
10	275493	Conduit	AR
11	. . . . .	Connector Assembly (Alternate Horn Button)	1
11	1490242	Connector	1
11	1490243	Connector (Lock)	1
11	1330438	Terminal (Socket)	2
12	1626727	Connector (End Cap)	1

©2011 HYSTER COMPANY

WIRE HARNESS (FIGURE 4-45)
REAR — GM 4.3L GASOLINE AND LPG

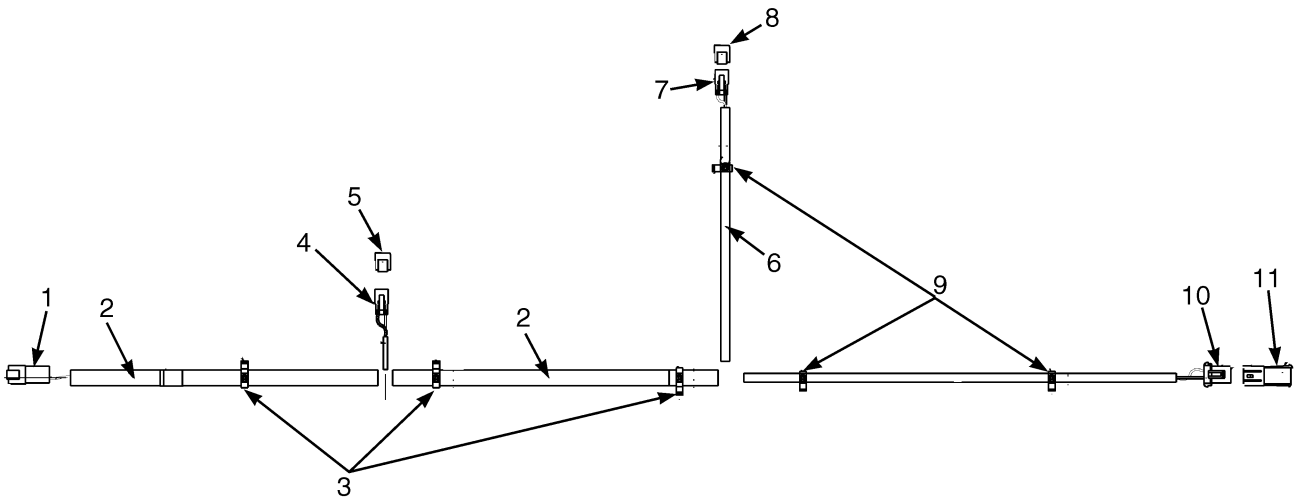

BP080753

©2011 HYSTER COMPANY

WIRE HARNESS
REAR – GM 4.3L GASOLINE AND LPG

ITEM	PART NO.	DESCRIPTION	QTY
	2092437	Wire Harness (Rear)	1
1	. . . . .	Connector Assembly (To RH Chassis Harness)	1
1	1402923	Connector	1
1	1330417	Connector	1
1	1330437	Terminal (Pin)	6
2	275496	Conduit	AR
3	1509890	Clip	3
4	. . . . .	Connector Assembly (To Keyswitch Harness)	1
4	1490242	Connector	1
4	1490243	Connector	1
4	1330438	Terminal (Socket)	2
5	. . . . .	Connector Assembly (Endcap)	1
5	1626727	Connector	1
6	275493	Conduit	AR
7	. . . . .	Connector Assembly (Backup Alarm)	1
7	1490242	Connector	1
7	1490243	Connector	1
7	1330438	Terminal (Socket)	2
8	. . . . .	Connector Assembly (Endcap)	1
8	1626727	Connector	1
9	1509888	Clip	3
10	. . . . .	Connector Assembly (Coolant Level)	1
10	1329152	Plug	1
10	1329151	Terminal	1
10	1330281	Terminal	2
10	1402888	Seal	2
11	. . . . .	Connector Assembly (Endcap)	1
11	1329150	Connector	1
11	1329151	Terminal	1
11	1327164	Seal	2

©2011 HYSTER COMPANY

WIRE HARNESS (FIGURE 4-46)
REAR — CUMMINS QSB 3.3L DIESEL

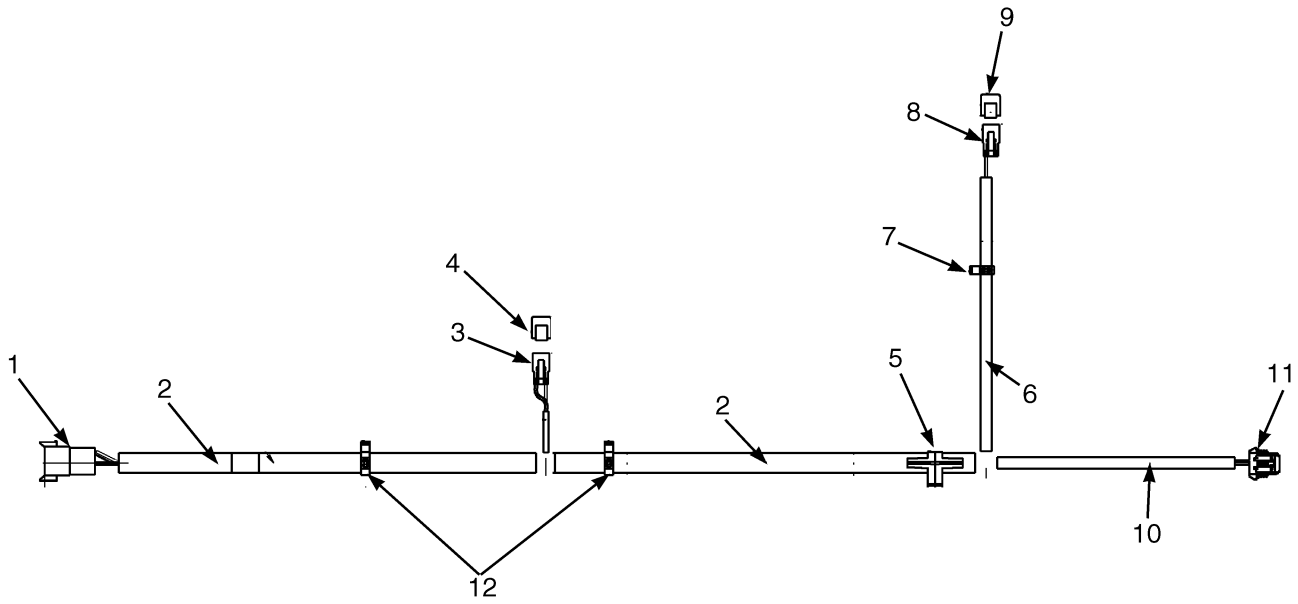

©2011 HYSTER COMPANY

WIRE HARNESS
REAR – CUMMINS QSB 3.3L DIESEL

ITEM	PART NO.	DESCRIPTION	QTY
	2106387	Wire Harness (Rear)	1
1	. . . . .	Connector Assembly (To RH Chassis Harness)	1
1	1623050	Housing	1
1	1330418	Connector	1
1	1330437	Terminal (Pin)	7
1	1484377	Plug	1
2	275496	Conduit	AR
3	. . . . .	Connector Assembly (To Keyswitch Harness)	1
3	1490242	Connector	1
3	1490243	Connector	1
3	1330438	Terminal (Socket)	2
4	. . . . .	Connector Assembly (Endcap)	1
4	1626727	Connector	1
5	1587778	Clip	1
6	275493	Conduit	AR
7	1509888	Clip	1
8	. . . . .	Connector Assembly (Backup Alarm)	1
8	1490242	Connector	1
8	1490243	Connector	1
8	1330438	Terminal (Socket)	2
9	. . . . .	Connector Assembly (Endcap)	1
9	1626727	Connector	1
10	275493	Conduit	AR
11	. . . . .	Connector Assembly (Coolant Level)	1
11	1476067	Connector	1
11	1476109	Connector Lock	1
11	1330355	Terminal	3
11	1476108	Wire Seal	3
12	1509890	Clip	3

©2011 HYSTER COMPANY

WIRE HARNESS (FIGURE 4-47)

LEFT HAND CHASSIS — GM 4.3L GASOLINE (→ S/N J006V02542H)

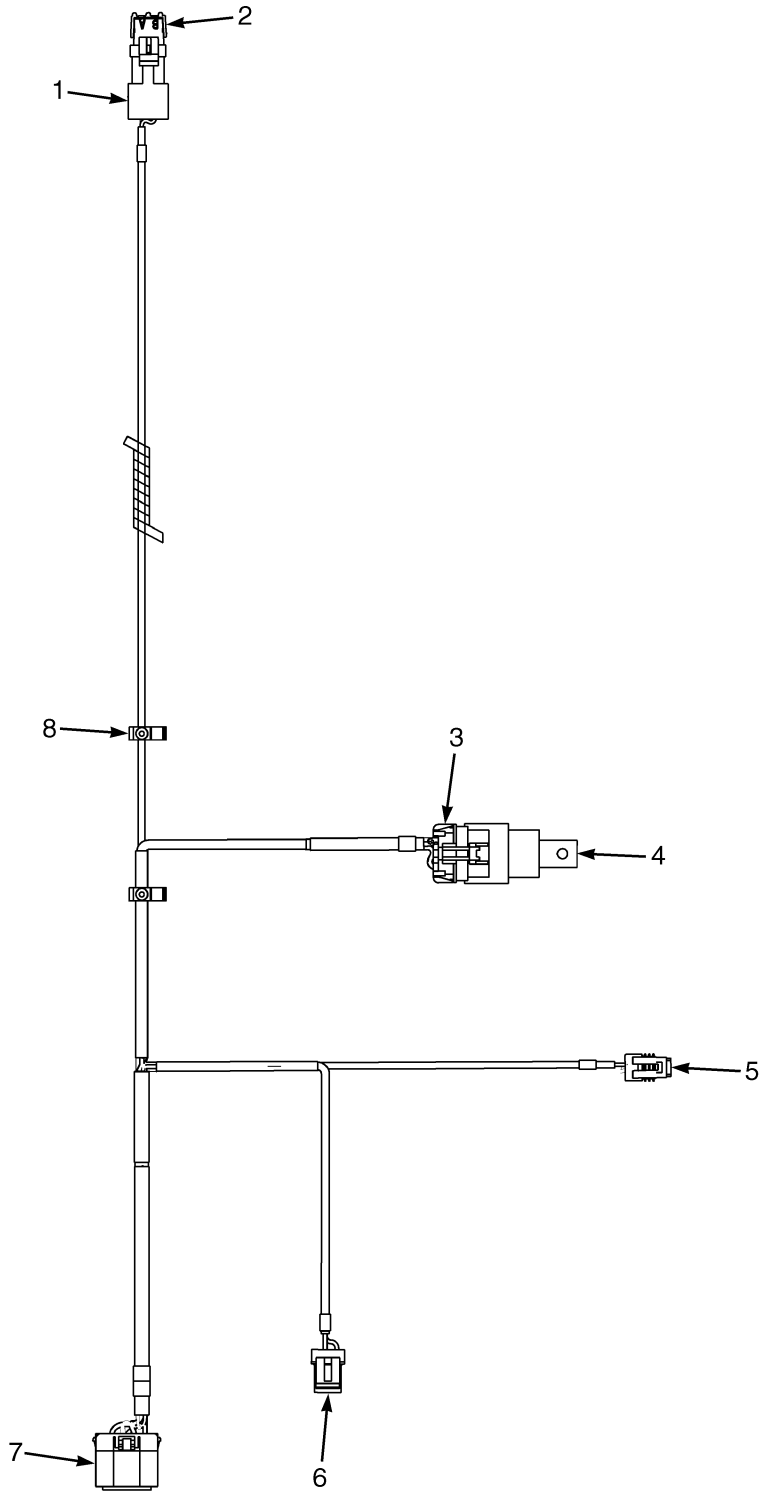

©2011 HYSTER COMPANY

WIRE HARNESS

LEFT HAND CHASSIS – GM 4.3L GASOLINE (→ S/N J006V02542H)

ITEM	PART NO.	DESCRIPTION	QTY
	2094677	Wire Harness (LH Chassis)	1
1	. . . . .	End Cap	1
1	1461743	Relay	1
2	. . . . .	Connector Assembly (Air Restriction Cap)	1
2	1465468	Connector	1
2	1327164	Seal	2
3	. . . . .	Connector Assembly (Air Restriction)	1
3	1402888	Seal	2
3	1465469	Connector	1
3	1323578	Terminal	2
4	1539859	Clip	1
5	. . . . .	Connector Assembly (Fuel Level)	1
5	1476077	Connector	1
5	1323576	Terminal	2
6	. . . . .	Connector Assembly (Fuel Pump)	1
6	1519611	Connector	1
6	1323576	Terminal	2
7	. . . . .	Connector Assembly (To Engine Harness)	1
7	1527273	Connector	1
7	1402926	Terminal	3
7	1402927	Terminal	5
7	1507571	Seal	5
7	1402929	Wire Seal	3
7	1527305	Connector Lock	1
8	. . . . .	Connector Assembly (Latch Relay)	1
8	1461744	Connector Body	1
8	1323579	Seal	4
8	1402912	Terminal	4
8	1498483	Sealant	1

©2011 HYSTER COMPANY

WIRE HARNESS (FIGURE 4-48)

LEFT HAND CHASSIS — GM 4.3L GASOLINE (SERIES 2010) (S/N J006V02543H →)

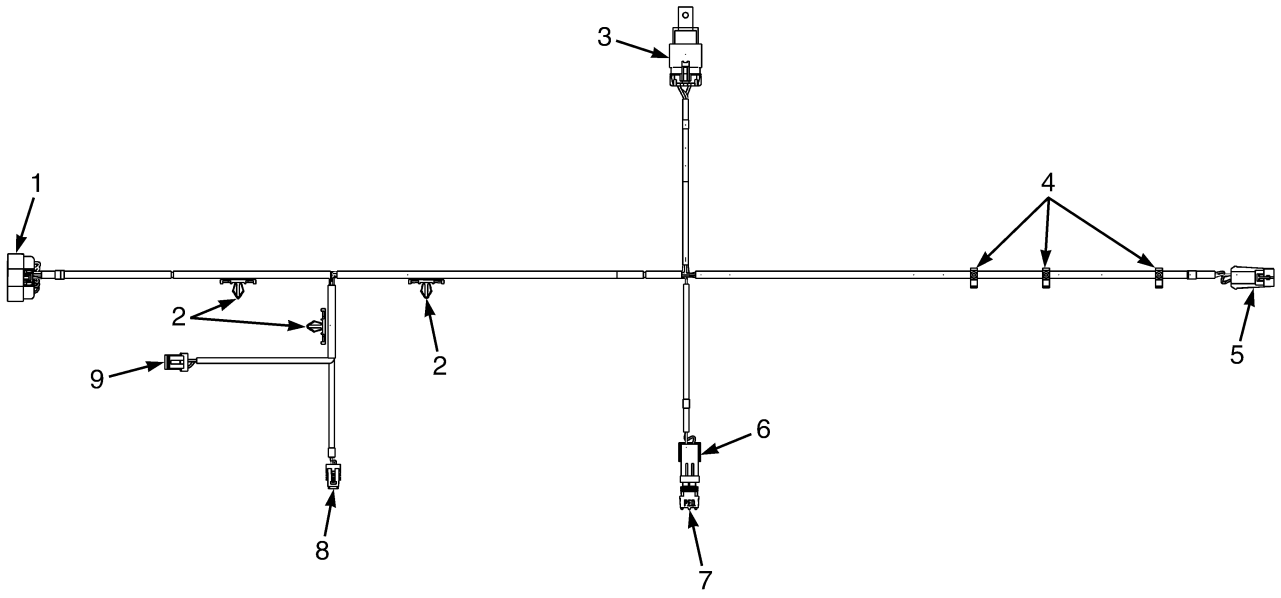

©2011 HYSTER COMPANY

WIRE HARNESS

LEFT HAND CHASSIS – GM 4.3L GASOLINE (SERIES 2010) (S/N J006V02543H →)

ITEM	PART NO.	DESCRIPTION	QTY
	4604430	Wire Harness (LH Chassis) (Left Hand Chassis)	1
1	. . . . .	Connector Assembly (To Engine Harness)	1
1	4006330	Connector	1
1	1527305	Connector Lock	1
1	1402926	Terminal	3
1	1402927	Terminal	9
1	1402929	Wire Seal	3
1	1507571	Seal	9
2	1539859	Clip	3
3	. . . . .	Connector Assembly (Latch Relay)	1
3	1461744	Connector Body	1
3	1503088	Lock	1
3	1327164	Seal	1
3	1402912	Terminal	4
3	1323579	Seal	4
4	1509888	Clip	3
5	. . . . .	Connector Assembly (Rear Oxygen Sensor)	1
5	1498424	Housing	1
5	1650797	Lock	1
5	1482666	Connector Body (Male)	4
5	1476108	Wire Seal	4
6	. . . . .	Connector Assembly (Air Restriction Sensor)	1
6	1465469	Connector	1
6	1323578	Terminal	2
6	1402888	Seal	2
7	. . . . .	Connector Assembly (Air Restriction Sensor Cap)	1
7	1465468	Connector	1
7	1327164	Seal	2
8	. . . . .	Connector Assembly (Fuel Level)	1
8	1476077	Connector	1
8	1323576	Terminal	2
9	. . . . .	Connector Assembly (Fuel Pump)	1
9	1519611	Connector	1
9	1323576	Terminal	2

©2011 HYSTER COMPANY

WIRE HARNESS (FIGURE 4-49)

LEFT HAND CHASSIS — GM 4.3L LPG (→ S/N J006V02542H)

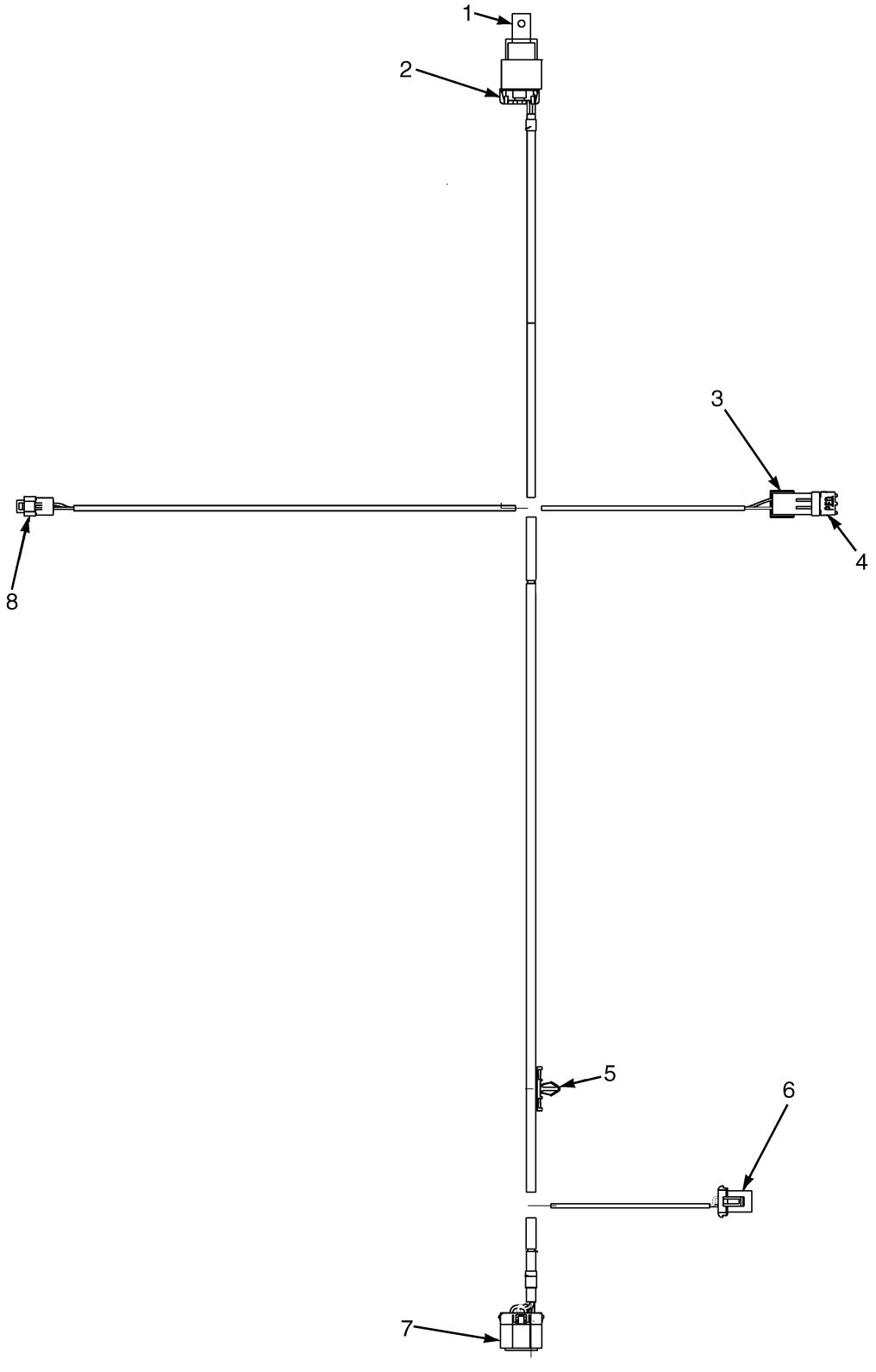

©2011 HYSTER COMPANY

WIRE HARNESS

LEFT HAND CHASSIS – GM 4.3L LPG (→ S/N J006V02542H)

ITEM	PART NO.	DESCRIPTION	QTY
	2094678	Wire Harness (LH Chassis)	1
1	1461743	Relay	1
2	. . . . .	Connector Assembly (Latch Relay)	1
2	1461744	Connector Body	1
2	1323579	Seal	4
2	1327164	Seal	1
2	1402912	Terminal	4
2	1498483	Sealant	1
3	. . . . .	Connector Assembly (Air Restriction)	1
3	1465469	Connector	1
3	1323578	Terminal	2
3	1402888	Seal	2
4	. . . . .	Connector Assembly (Air Restriction Cap)	1
4	1327164	Seal	2
4	1465468	Connector	1
5	1539859	Clip	1
6	. . . . .	Connector Assembly (Low LPG Switch)	1
6	1329152	Plug	1
6	1329148	Terminal	2
6	1402888	Seal	2
6	1329151	Terminal	1
7	. . . . .	Connector Assembly (To Engine Wire Harness)	1
7	1527273	Connector	1
7	1402926	Terminal	3
7	1402927	Terminal	5
7	1402929	Wire Seal	3
7	1507571	Seal	5
7	1527305	Connector Lock	1
8	. . . . .	Connector Assembly (LPG Lockoff)	1
8	1599337	Connector	1
8	1561146	Terminal	2

©2011 HYSTER COMPANY

WIRE HARNESS (FIGURE 4-50)

LEFT HAND CHASSIS — GM 4.3L LPG (2010 SERIES)(WITH PREMIUM LOW FUEL SENSOR) (S/N J006V02543H →)

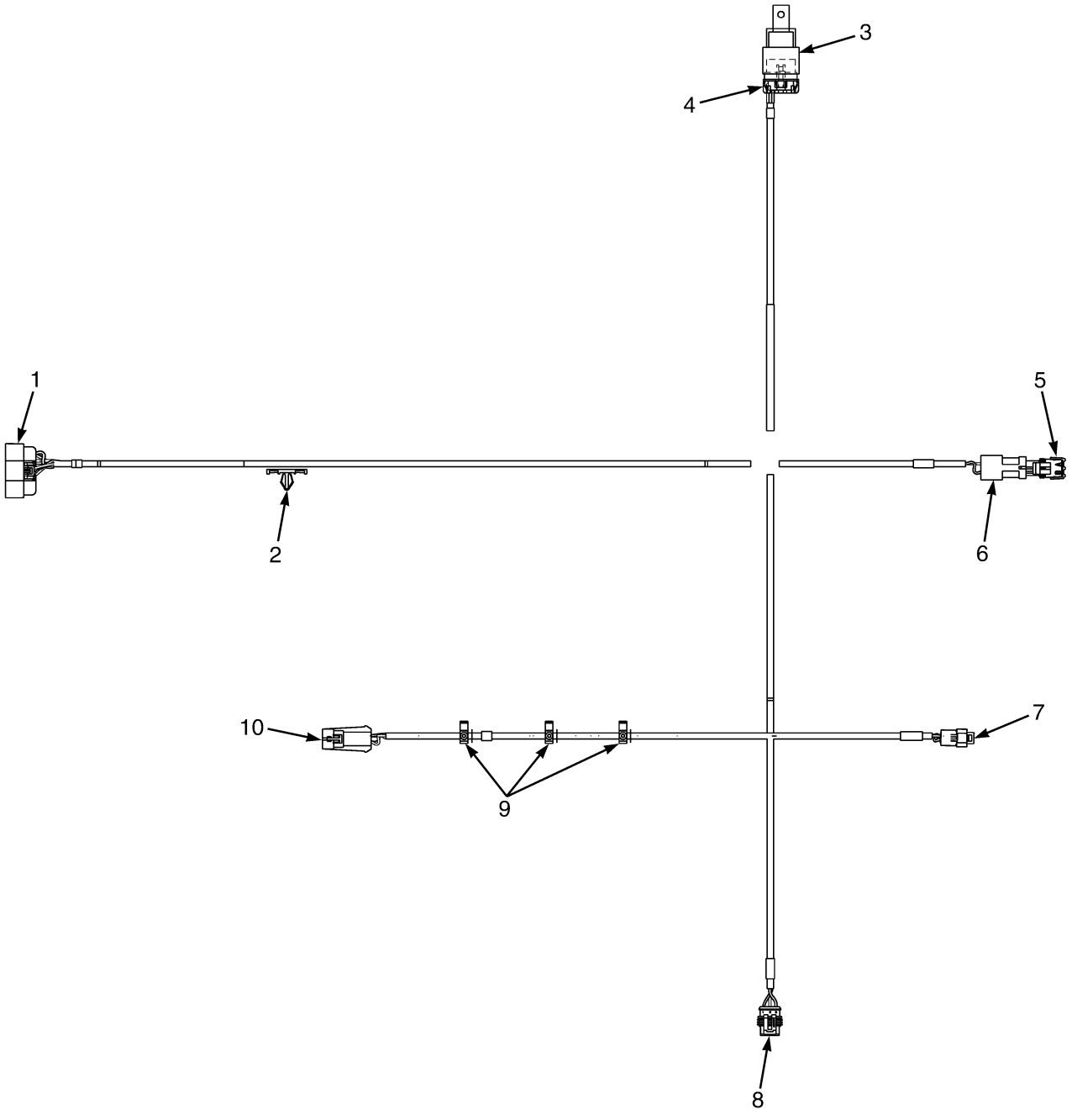

©2011 HYSTER COMPANY

WIRE HARNESS

LEFT HAND CHASSIS – GM 4.3L LPG (2010 SERIES)(WITH PREMIUM LOW FUEL SENSOR) (S/N J006V02543H →)

ITEM	PART NO.	DESCRIPTION	QTY
	4604389	Wire Harness (LH Chassis) (Left Hand Chassis)	1
1	. . . . .	Connector Assembly (To Engine Harness)	1
1	4006330	Connector	1
1	1527305	Connector Lock	1
1	1402926	Terminal	3
1	1402927	Terminal	9
1	1402929	Wire Seal	3
1	1507571	Seal	9
2	1539859	Clip	1
3	. . . . .	Connector Assembly (Relay)	1
3	1465468	Connector	1
4	. . . . .	Connector Assembly (Latching Relay)	1
4	1461744	Connector Body	1
4	1503088	Lock	1
4	1327164	Seal	1
4	1402912	Terminal	4
4	1323579	Seal	4
5	. . . . .	Connector Assembly (Air Restriction Sensor Cap)	1
5	1465468	Connector	1
5	1327164	Seal	2
6	. . . . .	Connector Assembly (Air Restriction Sensor)	1
6	1465469	Connector	1
6	1323578	Terminal	2
6	1402888	Seal	2
7	. . . . .	Connector Assembly (LPG Lockoff)	1
7	1599337	Connector	1
7	1623057	Terminal	2
8	. . . . .	Connector Assembly (Low LPG Sensor)	1
8	1547629	Connector	1
8	1508232	Terminal	3
8	1323579	Seal	3
9	1509888	Clip	3
10	. . . . .	Connector Assembly (Rear Oxygen Sensor)	1
10	1498424	Housing	1
10	1650797	Lock	1
10	1482666	Connector Body (Male)	4
10	1476108	Wire Seal	4

©2011 HYSTER COMPANY

WIRE HARNESS (FIGURE 4-51)

LEFT HAND CHASSIS — GM 4.3L LPG (2010 SERIES)(WITHOUT PREMIUM LOW FUEL SENSOR) (S/N J006V02543H →)

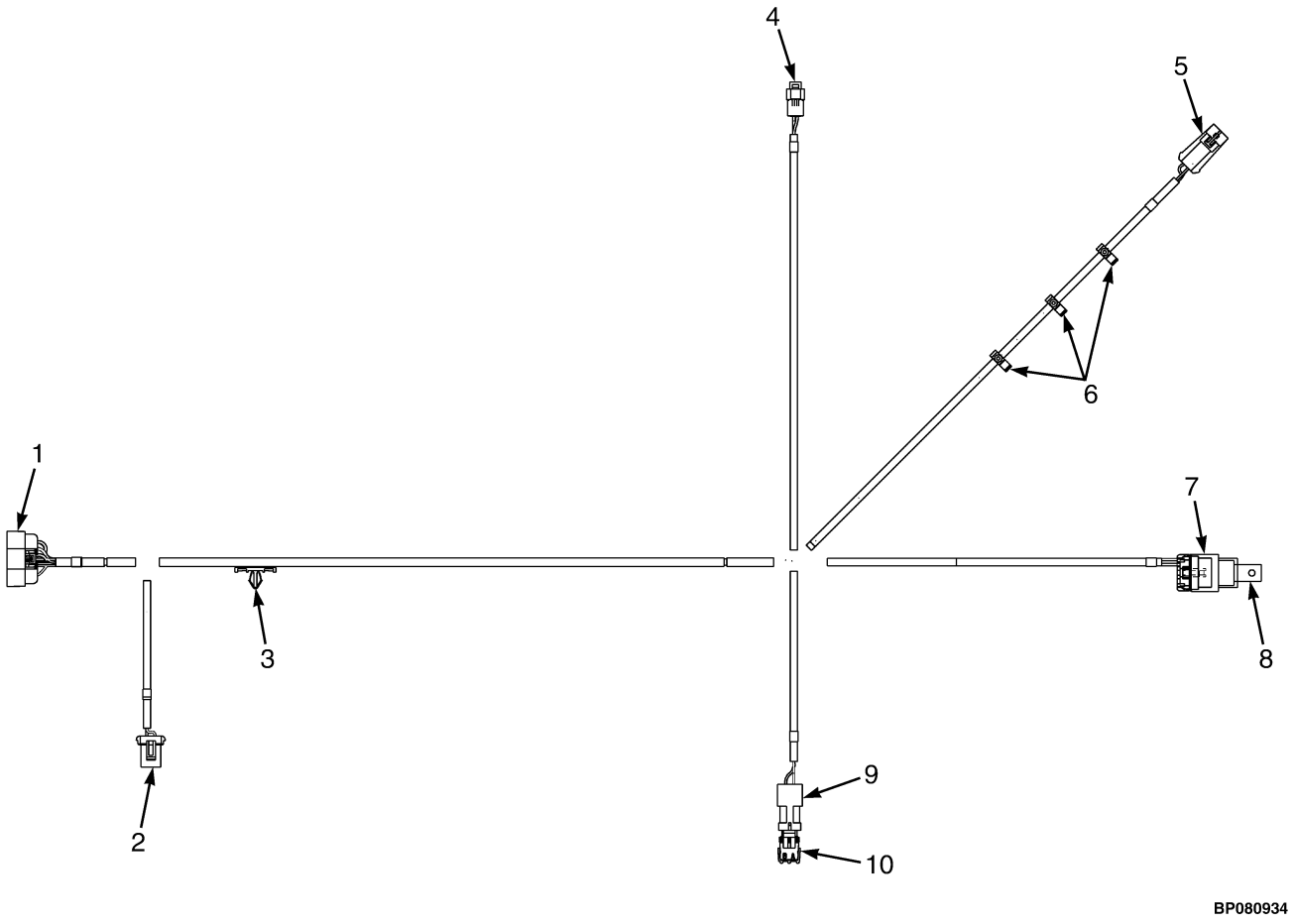

©2011 HYSTER COMPANY

WIRE HARNESS

LEFT HAND CHASSIS – GM 4.3L LPG (2010 SERIES)(WITHOUT PREMIUM LOW FUEL SENSOR) (S/N J006V02543H →)

ITEM	PART NO.	DESCRIPTION	QTY
	4604394	Wire Harness (LH Chassis) (Left Hand Chassis)	1
1	. . . . .	Connector Assembly (To Engine Harness)	1
1	4006330	Connector	1
1	1527305	Connector Lock	1
1	1402926	Terminal	3
1	1402927	Terminal	9
1	1402929	Wire Seal	3
1	1507571	Seal	9
2	. . . . .	Connector Assembly (Low LPG Switch)	1
2	1329152	Plug	1
2	1329151	Terminal	1
2	1329148	Terminal	2
2	1402888	Seal	2
3	1539859	Clip	1
4	. . . . .	Connector Assembly (LPG Lockoff)	1
4	1599337	Connector	1
4	1623057	Terminal	2
5	. . . . .	Connector Assembly (Rear Oxygen Sensor)	1
5	1498424	Housing	1
5	1650797	Lock	1
5	1482666	Connector Body (Male)	4
5	1476108	Wire Seal	4
6	1509888	Clip	3
7	. . . . .	Connector Assembly (Latch Relay)	1
7	1461744	Connector Body	1
7	1503088	Lock	1
7	1327164	Seal	1
7	1402912	Terminal	4
7	1323579	Seal	4
8	. . . . .	Connector Assembly (Relay)	1
8	1461743	Relay	1
9	. . . . .	Connector Assembly (Air Restriction Sensor)	1
9	1465469	Connector	1
9	1323578	Terminal	2
9	1402888	Seal	2
10	. . . . .	Connector Assembly (Air Restriction Sensor Cap)	1
10	1465468	Connector	1
10	1327164	Seal	2

©2011 HYSTER COMPANY

WIRE HARNESS (FIGURE 4-52)
COWL WITH MONOTROL PEDAL — WITH HYDRAULIC PUMP SOLENOID

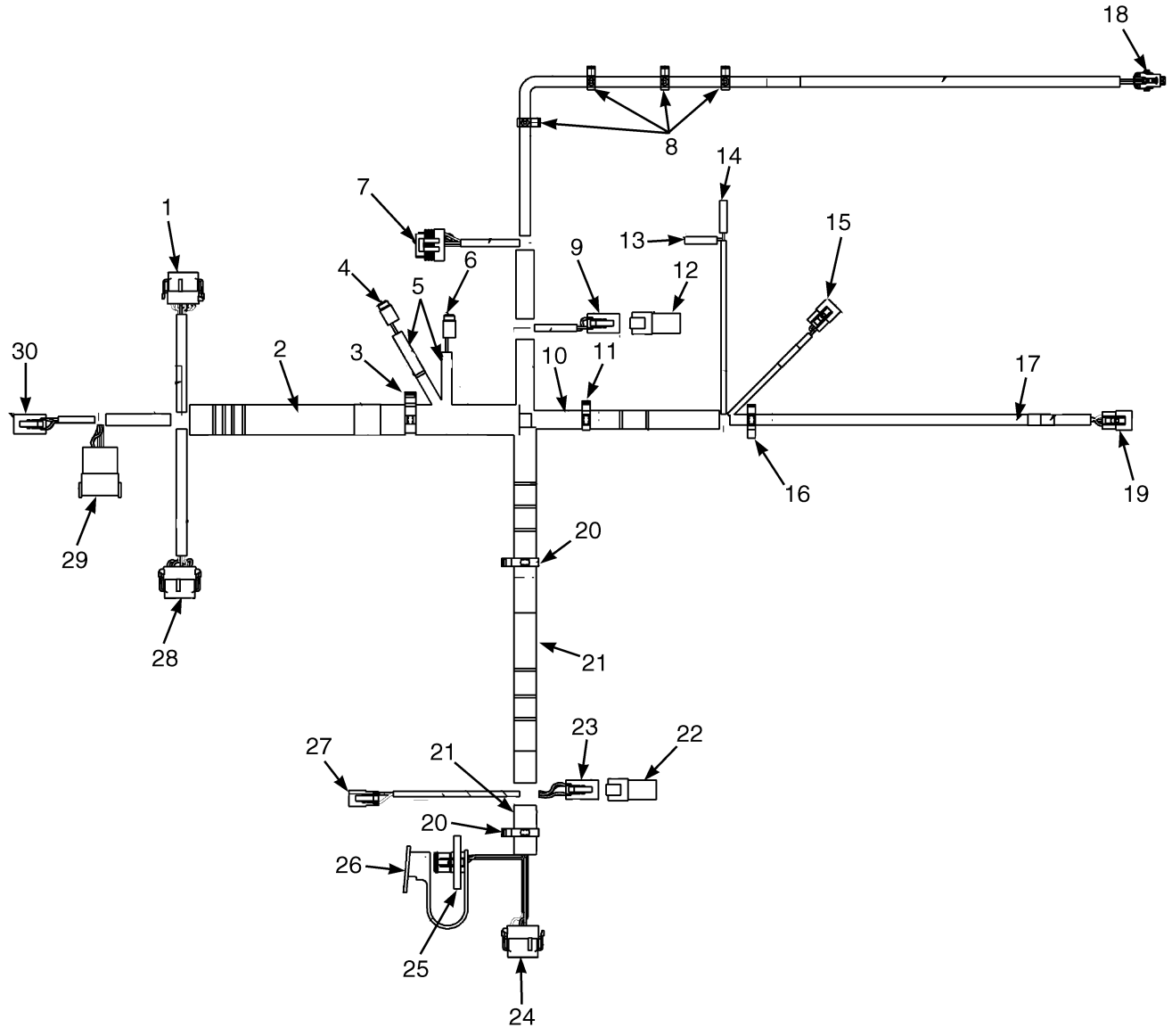

BP080757

©2011 HYSTER COMPANY

WIRE HARNESS

COWL WITH MONOTROL PEDAL – WITH HYDRAULIC PUMP SOLENOID

ITEM	PART NO.	DESCRIPTION	QTY
	2104701	Wire Harness	1
	4603281	Wire Harness (Alternate Part)	1
1	. . . . .	Connector Assembly (Vehicle System Manager)	1
1	1525568	Connector	1
1	1529046	Connector	1
1	1463139	Terminal	12
2	1540388	Conduit	AR
3	1534282	Clip	1
4	. . . . .	Connector Assembly (Hydraulic Lockout Solenoid 2)	1
4	1484557	Connector	1
4	1484558	Connector	1
4	1463139	Terminal	2
5	275493	Conduit	AR
6	. . . . .	Connector Assembly	1
6	1484557	Connector	1
6	1484558	Connector	1
6	1463139	Terminal	2
7	. . . . .	Connector Assembly	1
7	1525584	Connector	1
7	1532571	Terminal	6
8	1509888	Clip	4
9	. . . . .	Connector Assembly (To Monotrol Harness)	1
9	1489656	Connector (4-Way)	1
9	1489657	Connector	1
9	1330438	Terminal (Socket)	4
10	275496	Conduit	AR
11	1534828	Clip	1
12	. . . . .	Connector Assembly (Endcap)	1
12	1525573	Connector	1
13	. . . . .	Connector Assembly (Brake Fluid)	1
13	1324310	Terminal	1
13	1324309	Sleeve	1
14	. . . . .	Connector Assembly (Brake Fluid)	1
14	1324310	Terminal	1
14	1324309	Sleeve	1
15	. . . . .	Connector Assembly (Park Brake)	1
15	1484397	Connector (3-Way)	1
15	1463194	Connector	1
15	1330438	Terminal (Socket)	3
15	1700460	Connector (Alternate Part)	1
15	1700461	Terminal (Alternate Part)	3
16	1402816	Clip	1
17	275493	Conduit	AR
18	. . . . .	Connector Assembly (Brake Pressure)	1
18	1603021	Connector	1
18	1603236	Connector (Secondary Lock)	1
18	1548517	Terminal (Socket)	3
18	1548519	Seal	3
19	. . . . .	Connector Assembly (Brake Pressure)	1
19	1484397	Connector (3-Way)	1

©2011 HYSTER COMPANY

WIRE HARNESS

COWL WITH MONOTROL PEDAL – WITH HYDRAULIC PUMP SOLENOID

ITEM	PART NO.	DESCRIPTION	QTY
19	1463194	Connector	1
19	1330438	Terminal (Socket)	3
19	1700460	Connector (Alternate Part)	1
19	1700461	Terminal (Alternate Part)	3
20	1500899	Clip	2
21	275497	Conduit	AR
22	. . . . .	Connector Assembly (Endcap with Resistor)	1
22	1525577	Connector (With Resistor)	1
23	. . . . .	Connector Assembly (Bus Terminal 1)	1
23	1489656	Connector (4-Way)	1
23	1489657	Connector	1
23	1330438	Terminal (Socket)	4
24	. . . . .	Connector Assembly (Display)	1
24	1525567	Connector	1
24	1529046	Connector	1
24	1463139	Terminal	5
24	1484377	Plug	7
25	. . . . .	Connector Assembly (J1939 Diagnostic)	1
25	1566116	Connector	1
25	1532664	Connector (Secondary Lock)	1
25	1330438	Terminal (Socket)	3
26	1566117	Dust Cap	1
27	. . . . .	Connector Assembly (Horn Button)	1
27	1490242	Connector	1
27	1490243	Connector	1
27	1330438	Terminal (Socket)	2
28	. . . . .	Connector Assembly (Vehicle System Manager)	1
28	1525570	Connector	1
28	1529046	Connector	1
28	1463139	Terminal	7
28	1484377	Plug	5
29	. . . . .	Connector Assembly (To RH Chassis Harness)	1
29	1500925	Connector	1
29	1352603	Connector	1
29	1330437	Terminal (Pin)	7
29	1484377	Plug	5
30	. . . . .	Connector Assembly (To RH Chassis Harness)	1
30	1489656	Connector (4-Way)	1
30	1489657	Connector	1
30	1330438	Terminal (Socket)	4

©2011 HYSTER COMPANY

NOTES

©2011 HYSTER COMPANY

WIRE HARNESS (COWL) (FIGURE 4-53)

WITH FORWARD AND REVERSE LEVER — WITH HYDRAULIC PUMP SOLENOID, WITHOUT LOCKOUT

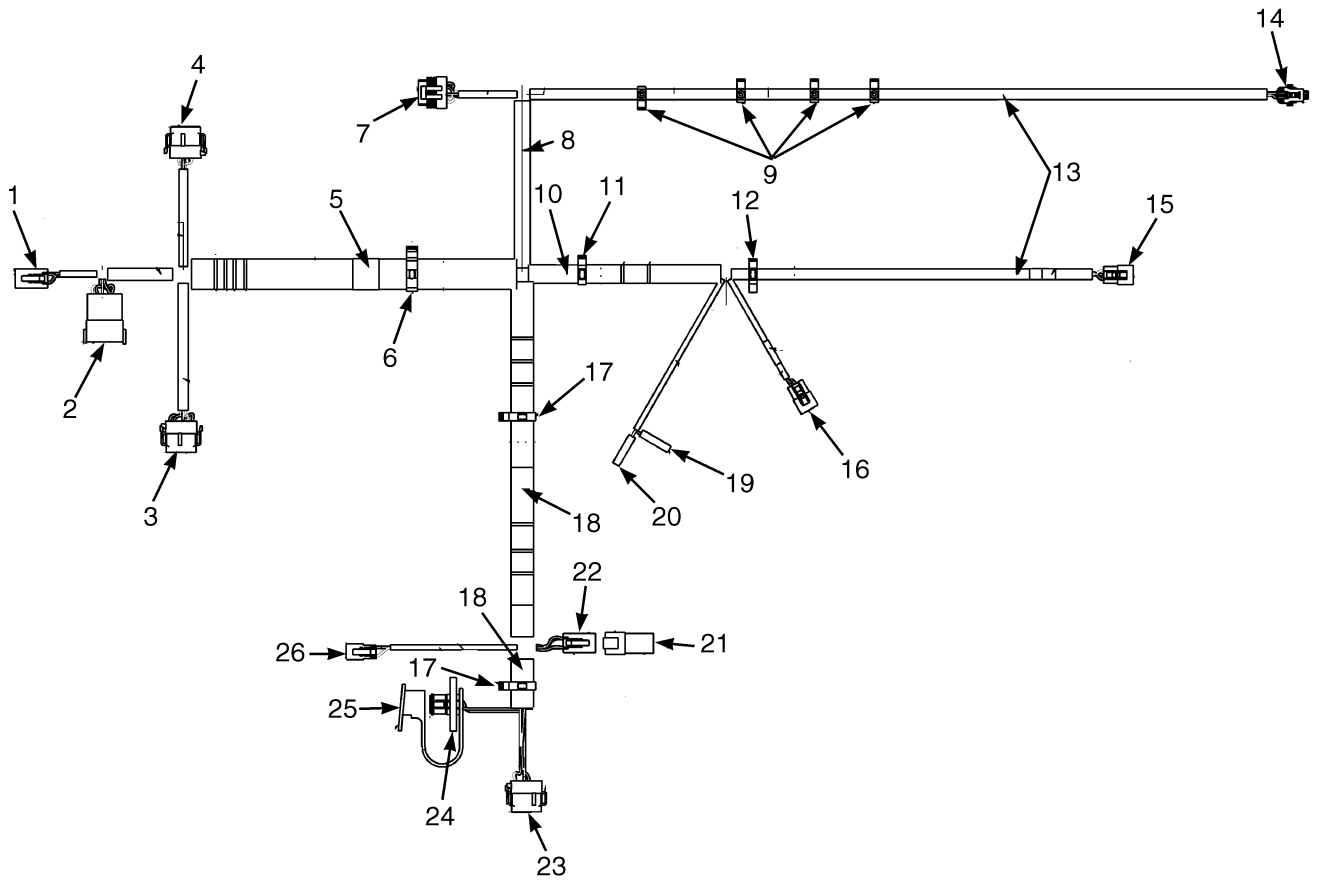

BP080759

©2011 HYSTER COMPANY

WIRE HARNESS (COWL)

WITH FORWARD AND REVERSE LEVER – WITH HYDRAULIC PUMP SOLENOID, WITHOUT LOCKOUT

ITEM	PART NO.	DESCRIPTION	QTY
	2098012	Wire Harness (Cowl with Forward/Reverse Lever)	1
1	. . . . .	Connector Assembly (To RH Chassis Harness)	1
1	1489656	Connector (4-Way)	1
1	1489657	Connector	1
1	1330438	Terminal (Socket)	4
2	. . . . .	Connector Assembly (To RH Chassis Harness)	1
2	1500925	Connector	1
2	1352603	Connector	1
2	1330437	Terminal (Pin)	7
2	1484377	Plug	5
3	. . . . .	Connector Assembly (Vehicle System Manager)	1
3	1525570	Connector	1
3	1529046	Connector	1
3	1463139	Terminal	7
3	1484377	Plug	5
4	. . . . .	Connector Assembly (Vehicle System Manager)	1
4	1525568	Connector	1
4	1529046	Connector	1
4	1463139	Terminal	7
4	1484377	Plug	5
5	1540388	Conduit	AR
6	1534282	Clip	1
7	. . . . .	Connector Assembly (Accelerator Pedal Sensor)	1
7	1525584	Connector	1
7	1532571	Terminal	6
8	275495	Conduit	AR
9	1509888	Clip	4
10	275496	Conduit	AR
11	1534828	Clip	1
12	1402816	Clip	1
13	275493	Conduit	AR
14	. . . . .	Connector Assembly (Brake Pressure)	1
14	1603021	Connector	1
14	1603236	Connector (Secondary Lock)	1
14	1548517	Terminal (Socket)	3
14	1548519	Seal	3
15	. . . . .	Connector Assembly (Brake Pedal)	1
15	1484397	Connector (3-Way)	1
15	1463194	Connector	1
15	1330438	Terminal (Socket)	3
16	. . . . .	Connector Assembly (Park Brake)	1
16	1484397	Connector (3-Way)	1
16	1463194	Connector	1
16	1330438	Terminal (Socket)	3
17	1500899	Clip	2
18	275497	Conduit	AR
19	. . . . .	Connector Assembly (Brake Fluid)	1
19	1324309	Sleeve	1
19	1324310	Terminal	1
20	. . . . .	Connector Assembly (Brake Fluid)	1

©2011 HYSTER COMPANY

WIRE HARNESS (COWL)

WITH FORWARD AND REVERSE LEVER – WITH HYDRAULIC PUMP SOLENOID, WITHOUT LOCKOUT

ITEM	PART NO.	DESCRIPTION	QTY
20	1324309	Sleeve	1
20	1324310	Terminal	1
21	. . . . .	Connector Assembly (Endcap With Resistor)	1
21	1525577	Connector (With Resistor)	1
22	. . . . .	Connector Assembly (Connector)	1
22	1489656	Connector (4-Way)	1
22	1489657	Connector	1
22	1330438	Terminal (Socket)	4
23	. . . . .	Connector Assembly (Display)	1
23	1525567	Connector	1
23	1529046	Connector	1
23	1463139	Terminal	5
23	1484377	Plug	7
24	. . . . .	Connector Assembly (J1939 Diagnostic)	1
24	1566116	Connector	1
24	1532664	Connector (Secondary Lock)	1
24	1330438	Terminal (Socket)	3
25	1566117	Dust Cap	1
26	. . . . .	Connector Assembly (Horn Button)	1
26	1490242	Connector	1
26	1490243	Connector	1
26	1330438	Terminal (Socket)	2

©2011 HYSTER COMPANY

NOTES

©2011 HYSTER COMPANY

WIRE HARNESS (COWL) (FIGURE 4-54)

WITH FORWARD AND REVERSE LEVER — WITH HYDRAULIC PUMP SOLENOID, WITH LOCKOUT

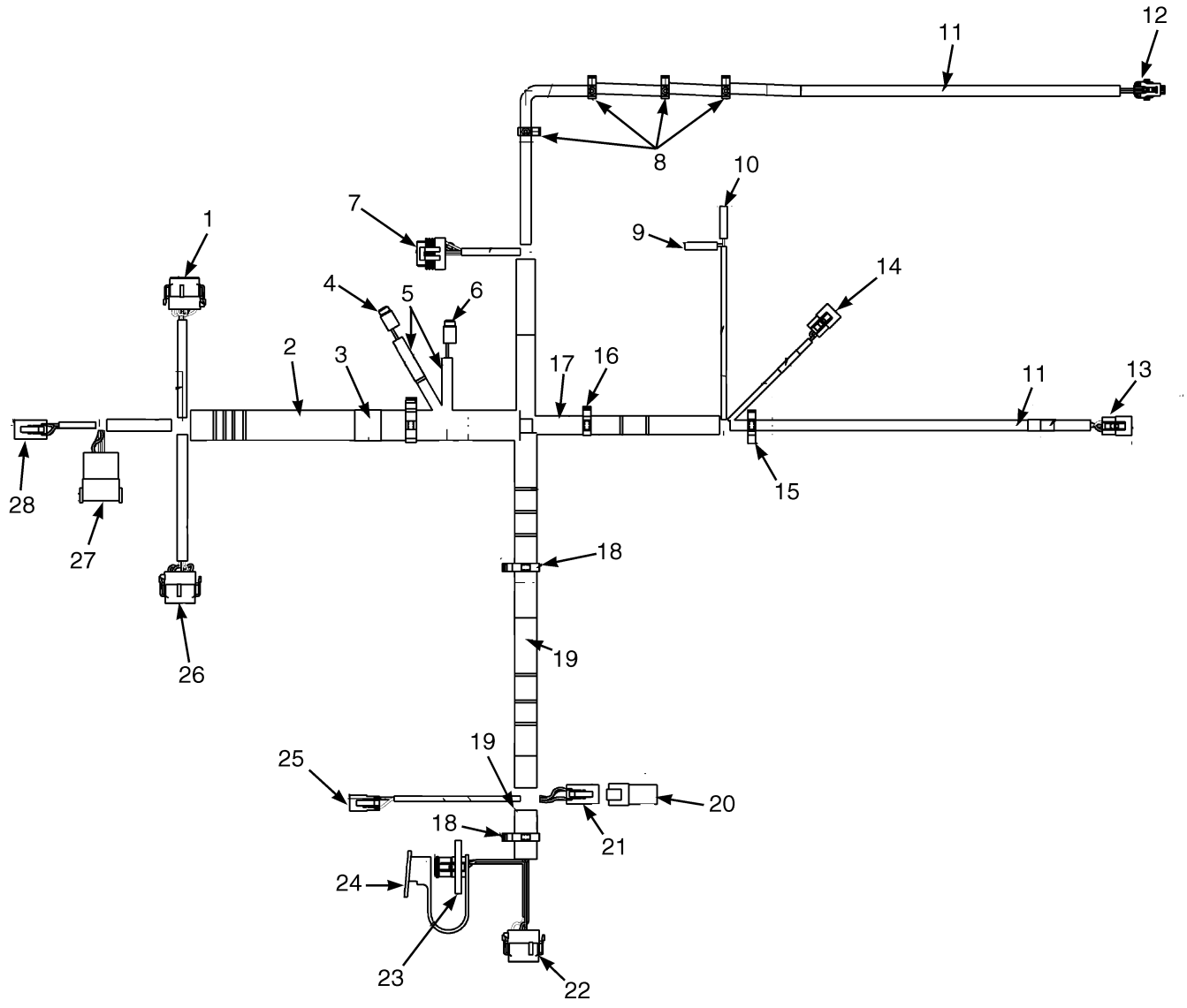

BP080755

©2011 HYSTER COMPANY

WIRE HARNESS (COWL)

WITH FORWARD AND REVERSE LEVER – WITH HYDRAULIC PUMP SOLENOID, WITH LOCKOUT

ITEM	PART NO.	DESCRIPTION	QTY
	2104702	Wire Harness	1
	4603282	Wire Harness (Alternate Part)	1
1	. . . . .	Connector Assembly (Vehicle System Manager)	1
1	1525568	Connector	1
1	1529046	Connector	1
1	1463139	Terminal	8
1	1484377	Plug	4
2	1540388	Conduit	AR
3	1534282	Clip	1
4	. . . . .	Connector Assembly (Hydraulic Lockout Solenoid 2)	1
4	1484557	Connector	1
4	1484558	Connector	1
4	1463139	Terminal	2
5	275493	Conduit	AR
6	. . . . .	Connector Assembly (Hydraulic Lockout Solenoid 1)	1
6	1484557	Connector	1
6	1484558	Connector	1
6	1463139	Terminal	2
7	. . . . .	Connector Assembly (Accelerator Pedal)	1
7	1525584	Connector	1
7	1532571	Terminal	6
8	1509888	Clip	4
9	. . . . .	Connector Assembly (Brake Fluid)	1
9	1566227	Terminal	1
9	1324309	Sleeve	1
10	. . . . .	Connector Assembly (Brake Fluid)	1
10	1566227	Terminal	1
10	1324309	Sleeve	1
11	275493	Conduit	AR
12	. . . . .	Connector Assembly (Brake Pressure)	1
12	1603021	Connector	1
12	1603236	Connector (Secondary Lock)	1
12	1548517	Terminal (Socket)	3
12	1548519	Seal	3
13	. . . . .	Connector Assembly (Brake Pedal)	1
13	1484397	Connector (3-Way)	1
13	1463194	Connector	1
13	1330437	Terminal (Pin)	3
13	1700460	Connector (Alternate Part)	1
13	1700461	Terminal (Alternate Part)	3
14	. . . . .	Connector Assembly (Park Brake)	1
14	1484397	Connector (3-Way)	1
14	1463194	Connector	1
14	1330438	Terminal (Socket)	3
14	1700460	Connector (Alternate Part)	1
14	1700461	Terminal (Alternate Part)	3
15	1402816	Clip	1
16	1534828	Clip	1
17	275496	Conduit	AR
18	1500899	Clip	2

©2011 HYSTER COMPANY

WIRE HARNESS (COWL)

WITH FORWARD AND REVERSE LEVER – WITH HYDRAULIC PUMP SOLENOID, WITH LOCKOUT

ITEM	PART NO.	DESCRIPTION	QTY
19	275497	Conduit	AR
20	. . . . .	Connector Assembly (Endcap With Resistor)	1
20	1525577	Connector (With Resistor)	1
21	. . . . .	Connector Assembly (Bus Terminal 1)	1
21	1489656	Connector (4-Way)	1
21	1489657	Connector	1
21	1330438	Terminal (Socket)	4
22	. . . . .	Connector Assembly (Display)	1
22	1525567	Connector	1
22	1529046	Connector	1
22	1463139	Terminal	5
22	1484377	Plug	7
23	. . . . .	Connector Assembly (J1939 Diagnostic)	1
23	1566116	Connector	1
23	1532664	Connector (Secondary Lock)	1
23	1330438	Terminal (Socket)	3
24	1566117	Dust Cap	1
25	. . . . .	Connector Assembly (Horn Button)	1
25	1490242	Connector	1
25	1490243	Connector	1
25	1330438	Terminal (Socket)	2
26	. . . . .	Connector Assembly (Vehicle System Manager)	1
26	1525570	Connector	1
26	1529046	Connector	1
26	1463139	Terminal	7
26	1484377	Plug	5
27	. . . . .	Connector Assembly (To RH Chassis Harness)	1
27	1500925	Connector	1
27	1352603	Connector	1
27	1330437	Terminal (Pin)	7
27	1484377	Plug	5
28	. . . . .	Connector Assembly (To RH Chassis Harness)	1
28	1489656	Connector (4-Way)	1
28	1489657	Connector	1
28	1330438	Terminal (Socket)	4

©2011 HYSTER COMPANY

NOTES

©2011 HYSTER COMPANY

WIRE HARNESS (FIGURE 4-55)

COWL WITH MONOTROL PEDAL — WITH RETURN TO SET TILT / WITH HYDRAULIC PUMP SOLENOID

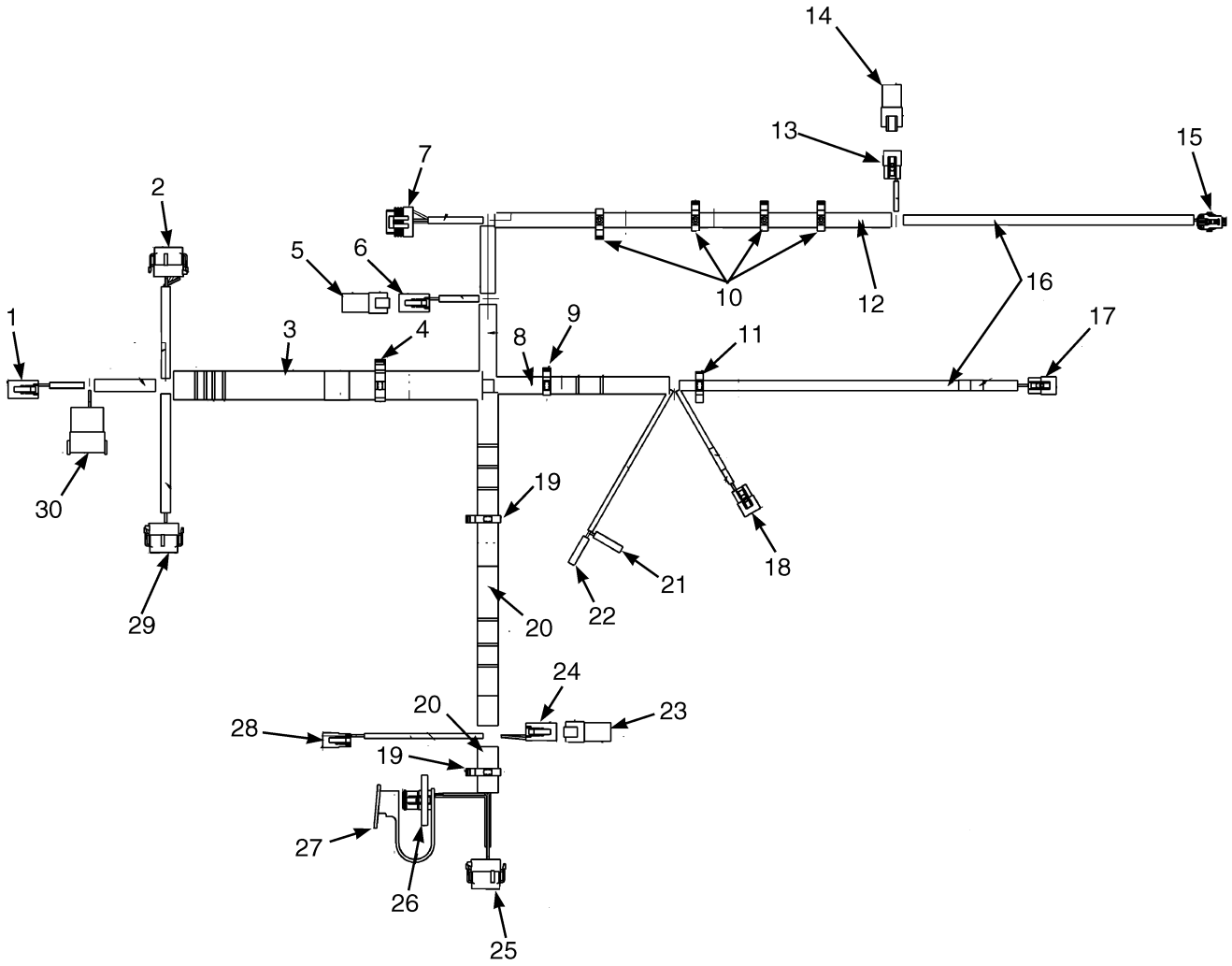

BP080758

©2011 HYSTER COMPANY

WIRE HARNESS

COWL WITH MONOTROL PEDAL – WITH RETURN TO SET TILT / WITH HYDRAULIC PUMP SOLENOID

ITEM	PART NO.	DESCRIPTION	QTY
	2098011	Wire Harness	1
1	. . . . .	Connector Assembly (To RH Chassis Harness)	1
1	1489656	Connector (4-Way)	1
1	1489657	Connector	1
1	1330438	Terminal (Socket)	4
2	. . . . .	Connector Assembly (Vehicle System Manager)	1
2	1525568	Connector	1
2	1529046	Connector	1
2	1463139	Terminal	11
2	1484377	Plug	1
3	1540388	Conduit	AR
4	1534282	Clip	1
5	. . . . .	Connector Assembly (Endcap)	1
5	1525573	Connector	1
6	. . . . .	Connector Assembly (To Monotrol Harness)	1
6	1489656	Connector (4-Way)	1
6	1489657	Connector	1
6	1330438	Terminal (Socket)	4
7	. . . . .	Connector Assembly (Accelerator Pedal Sensor)	1
7	1525584	Connector	1
7	1532571	Terminal	6
8	275496	Conduit	AR
9	1534828	Clip	1
10	1509890	Clip	4
11	1402816	Clip	1
12	275495	Conduit	AR
13	. . . . .	Connector Assembly (To Mast Harness)	1
13	1484397	Connector (3-Way)	1
13	1463194	Connector	1
13	1330438	Terminal (Socket)	3
14	. . . . .	Connector Assembly (Endcap)	1
14	1351682	Connector (End Cap)	1
15	. . . . .	Connector Assembly (Brake Pressure)	1
15	1603021	Connector	1
15	1603236	Connector (Secondary Lock)	1
15	1548517	Terminal (Socket)	3
15	1548519	Seal	3
16	275493	Conduit	AR
17	. . . . .	Connector Assembly (Brake Pedal)	1
17	1484397	Connector (3-Way)	1
17	1463194	Connector	1
17	1330438	Terminal (Socket)	1
18	. . . . .	Connector Assembly (Park Brake)	1
18	1484397	Connector (3-Way)	1
18	1463194	Connector	1
18	1330438	Terminal (Socket)	3
19	1500899	Clip	2
20	275497	Conduit	AR
21	. . . . .	Connector Assembly (Brake Fluid)	1
21	1324309	Sleeve	1

©2011 HYSTER COMPANY

WIRE HARNESS

COWL WITH MONOTROL PEDAL – WITH RETURN TO SET TILT / WITH HYDRAULIC PUMP SOLENOID

ITEM	PART NO.	DESCRIPTION	QTY
21	1324310	Terminal	1
22	. . . . .	Connector Assembly (Brake Fluid)	1
22	1324309	Sleeve	1
22	1324310	Terminal	1
23	. . . . .	Connector Assembly (Endcap With Resistor)	1
23	1525577	Connector (With Resistor)	1
24	. . . . .	Connector Assembly (Bus Terminal 1)	1
24	1489656	Connector (4-Way)	1
24	1489657	Connector	1
24	1330438	Terminal (Socket)	4
25	. . . . .	Connector Assembly (Display)	1
25	1525567	Connector	1
25	1529046	Connector	1
25	1463139	Terminal	5
25	1484377	Plug	7
26	. . . . .	Connector Assembly (J1939 Diagnostic)	1
26	1566116	Connector	1
26	1529046	Connector	1
26	1330438	Terminal (Socket)	1
27	1566117	Dust Cap	1
28	. . . . .	Connector Assembly (Horn Button)	1
28	1490242	Connector	1
28	1490243	Connector	1
28	1330438	Terminal (Socket)	2
29	. . . . .	Connector Assembly (Vehicle System Manager)	1
29	1525570	Connector	1
29	1529046	Connector	1
29	1463139	Terminal	7
29	1484377	Plug	5
30	. . . . .	Connector Assembly (To RH Chassis Harness)	1
30	1500925	Connector	1
30	1352603	Connector	1
30	1330437	Terminal (Pin)	10
30	1484377	Plug	2

©2011 HYSTER COMPANY

NOTES

©2011 HYSTER COMPANY

WIRE HARNESS (FIGURE 4-56)
ALTERNATOR — CUMMINS QSB 3.3L DIESEL

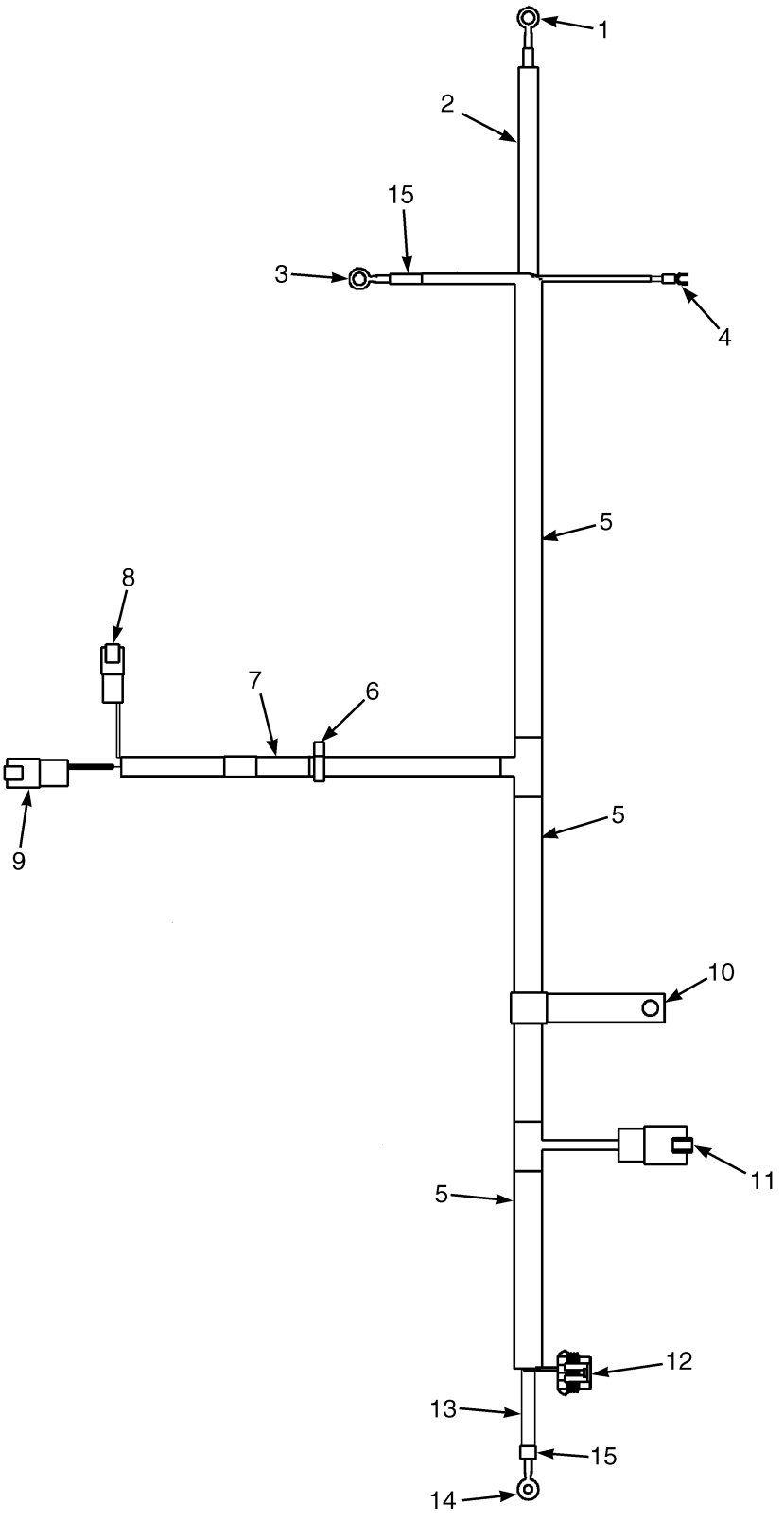

©2011 HYSTER COMPANY

WIRE HARNESS
ALTERNATOR – CUMMINS QSB 3.3L DIESEL

ITEM	PART NO.	DESCRIPTION	QTY
	2103459	Wire Harness (Alternator)	1
	2110986	Wire Harness (Alternate Part)	1
1	. . . . .	Connector Assembly (Starter Negative Stud)	1
1	806427	E-Ring	1
2	275495	Conduit	AR
3	. . . . .	Connector Assembly (Starter Positive Stud)	1
3	806427	E-Ring	1
4	. . . . .	Connector Assembly (Starter Solenoid)	1
4	148638	E Ftg Spade Term #10	1
5	275497	Conduit	AR
6	1402815	Clip	1
7	275495	Conduit	1
8	. . . . .	Connector Assembly (To Right Hand Chassis Harness)	1
8	1493465	Connector	1
8	1330414	Connector (Secondary Lock)	1
8	1330437	Terminal (Pin)	1
8	1484377	Plug	1
9	. . . . .	Connector Assembly (To Right Hand Chassis Harness)	1
9	1480187	Connector	1
9	1480188	Connector	1
9	866401	Terminal	2
10	1364263	Clamp	1
11	. . . . .	Connector Assembly (Alternator Fuse)	1
11	1544731	Receptacle	1
11	1544733	Pin	1
12	. . . . .	Connector Assembly (Alternator)	1
12	1501919	Connector	1
12	1482663	Connector	1
12	1330355	Terminal	2
12	1482668	Plug	2
12	1330356	Seal	2
13	1673486	Sleeve	AR
14	. . . . .	Connector Assembly (Alternator Ground)	1
14	806425	E-Ring	1
15	133483	Heat Shrink	AR

©2011 HYSTER COMPANY

WIRE HARNESS (FIGURE 4-57)
SEALED ALTERNATOR — CUMMINS QSB 3.3L DIESEL

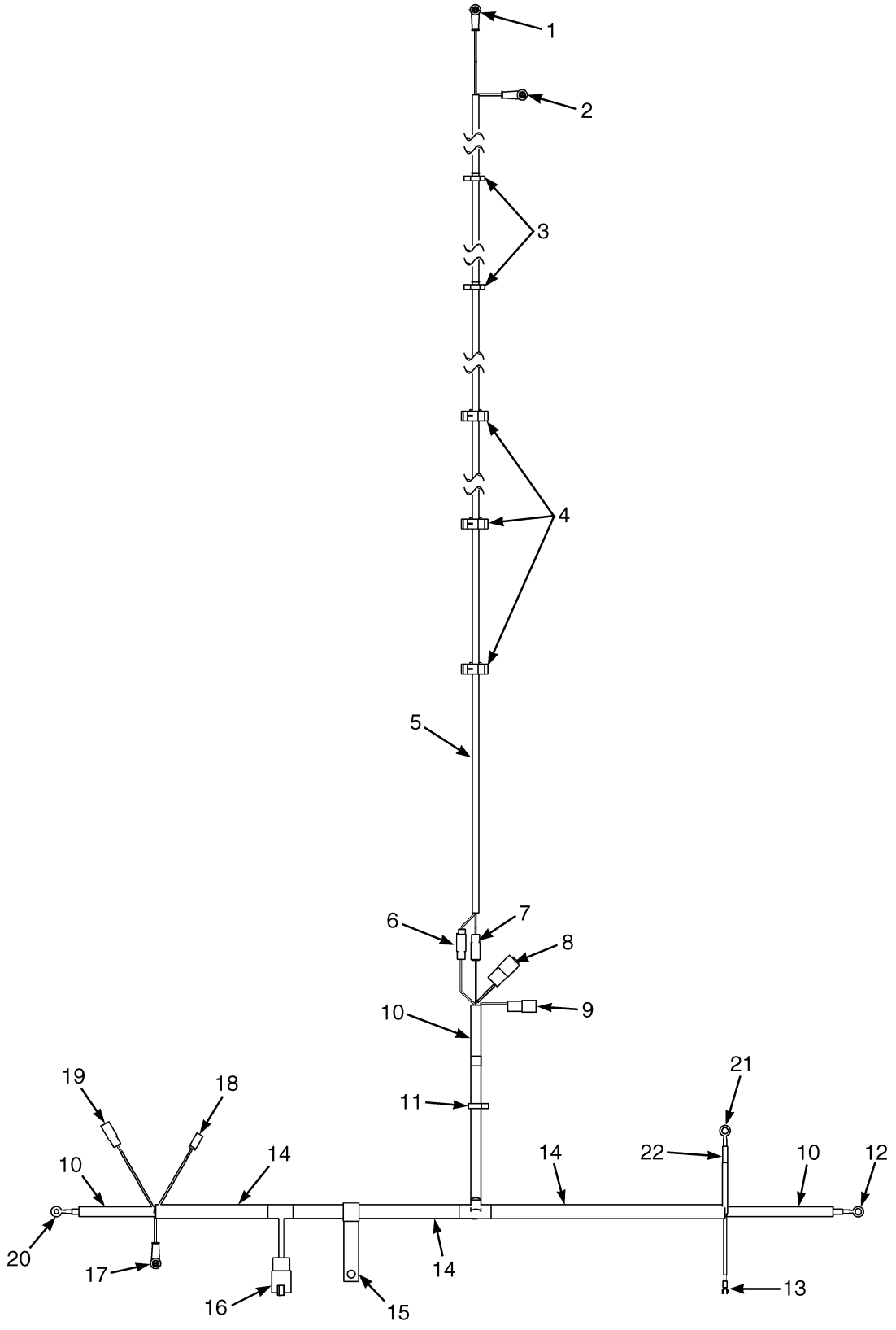

©2011 HYSTER COMPANY

WIRE HARNESS
SEALED ALTERNATOR – CUMMINS QSB 3.3L DIESEL

ITEM	PART NO.	DESCRIPTION	QTY
	2103830	Wire Harness (Sealed Alternator)	1
	2110989	Wire Harness (Alternate Part)	1
1	. . . . .	Connector Assembly (Disconnect Switch)	1
1	1582218	E-Ring	1
1	190383	Boot	1
1	175944	Heat Shrink	AR
2	. . . . .	Connector Assembly (Disconnect Switch)	1
2	1582218	E-Ring	1
2	190383	Boot	1
2	175944	Heat Shrink	AR
3	1402816	Clip	2
4	1579403	Clip	3
5	275493	Conduit	AR
6	. . . . .	Connector Assembly (Disconnect Switch Link)	1
6	181046	Connector Body	1
6	181045	Connector Body	1
6	1561117	Terminal	1
6	134810	Terminal	1
7	. . . . .	Connector Assembly (Disconnect Switch Link)	1
7	181045	Connector Body	1
7	181046	Connector Body	1
7	1561117	Terminal	1
7	134810	Terminal	1
8	. . . . .	Connector Assembly (To Right Hand Chassis Harness)	1
8	1480187	Connector	1
8	1480188	Connector	1
8	866401	Terminal	2
9	. . . . .	Connector Assembly (To Right Hand Chassis Harness)	1
9	1493465	Connector	1
9	1330414	Connector (Secondary Lock)	1
9	1330437	Terminal (Pin)	1
9	1484377	Plug	1
10	275495	Conduit	AR
11	1402815	Clip	1
12	. . . . .	Connector Assembly (Starter Negative Stud)	1
12	806427	E-Ring	1
13	. . . . .	Connector Assembly (Starter Solenoid)	1
13	148638	E Ftg Spade Term #10	1
14	275497	Conduit	AR
15	1364263	Clamp	1
16	. . . . .	Connector Assembly (Alternator Fuse)	1
16	1544731	Receptacle	1
16	1544733	Pin	1
17	. . . . .	Connector Assembly (Alternator D +)	1
17	1582218	E-Ring	1
17	190383	Boot	1
17	175944	Heat Shrink	AR
18	. . . . .	Connector Assembly (Alternator Excite)	1
18	181045	Connector Body	1
18	134810	Terminal	1

©2011 HYSTER COMPANY

WIRE HARNESS

SEALED ALTERNATOR – CUMMINS QSB 3.3L DIESEL

ITEM	PART NO.	DESCRIPTION	QTY
19	. . . . .	Connector Assembly (Alternator Field)	1
19	181045	Connector Body	1
19	134810	Terminal	1
20	. . . . .	Connector Assembly (Alternator Ground)	1
20	806425	E-Ring	1
21	. . . . .	Connector Assembly (Starter Positive Stud)	1
21	806427	E-Ring	1
22	133483	Heat Shrink	AR

©2011 HYSTER COMPANY

NOTES

©2011 HYSTER COMPANY

WIRE HARNESS (FIGURE 4-58)
TRANSMISSION — THREE SPEED

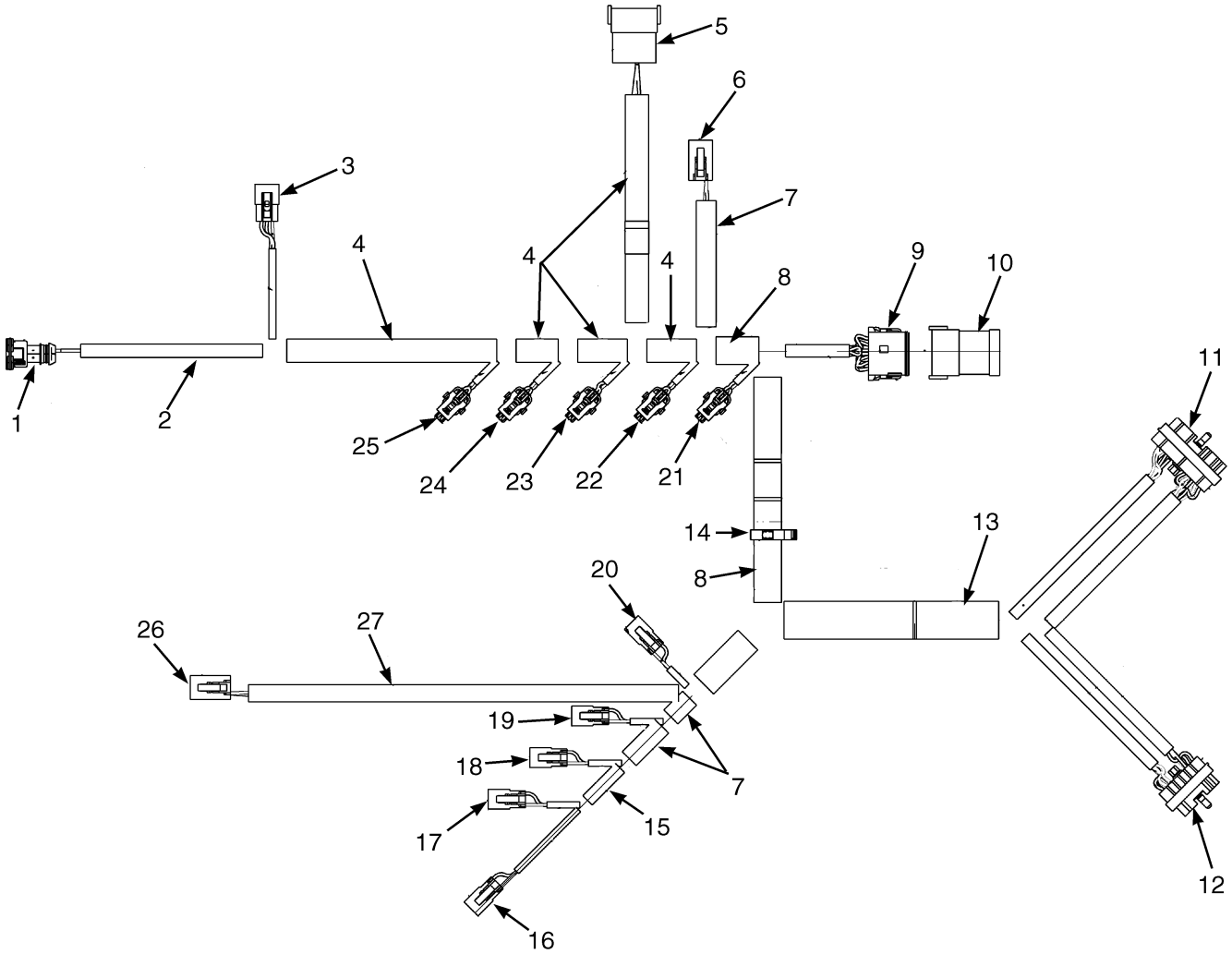

BP080766

©2011 HYSTER COMPANY

WIRE HARNESS
TRANSMISSION – THREE SPEED

ITEM	PART NO.	DESCRIPTION	QTY
	2106248	Wire Harness (Transmission, Three Speed)	1
1	. . . . .	Connector Assembly (Sump Temperature)	1
1	1493435	Connector (2-Way)	1
1	1402814	Terminal	2
1	1562649	Seal	2
2	275493	Conduit	AR
3	. . . . .	Connector Assembly (Intermediate Speed)	1
3	1484397	Connector (3-Way)	1
3	1463194	Connector	1
3	1330438	Terminal (Socket)	3
4	275496	Conduit	AR
5	. . . . .	Connector Assembly (To Right Hand Chassis Harness)	1
5	1623280	Connector	1
5	1623281	Connector	1
5	1484377	Plug	6
5	1463138	Terminal Pin	6
6	. . . . .	Connector Assembly (Turbine Shaft RPM)	1
6	1493430	Connector	1
6	1529052	Connector	1
6	1330438	Terminal (Socket)	5
6	1484377	Plug	1
7	275495	Conduit	AR
8	275497	Conduit	AR
9	. . . . .	Connector Assembly (Bus Bar)	1
9	1525564	Connector	1
9	1500913	Connector	1
9	1330438	Terminal (Socket)	12
10	. . . . .	Connector Assembly (Bus Bar)	1
10	1602430	Connector	1
11	. . . . .	Connector Assembly (APC214-CRP129)	1
11	1602432	Connector	1
11	1323581	Plug	10
11	1532571	Terminal	20
12	. . . . .	Connector Assembly (APC-CRP129)	1
12	1602433	Connector	1
12	1323581	Plug	4
12	1532571	Terminal	14
13	1540388	Conduit	AR
14	1500899	Clip	1
15	275493	Conduit	AR
16	. . . . .	Connector Assembly (Forward One Solenoid)	1
16	1490242	Connector	1
16	1490243	Connector	1
16	1330438	Terminal (Socket)	2
17	. . . . .	Connector Assembly (Range Two Solenoid)	1
17	1490242	Connector	1
17	1490243	Connector	1
17	1330438	Terminal (Socket)	2
18	. . . . .	Connector Assembly (Forward Two Solenoid)	1
18	1490242	Connector	1

©2011 HYSTER COMPANY

WIRE HARNESS
TRANSMISSION – THREE SPEED

ITEM	PART NO.	DESCRIPTION	QTY
18	1490243	Connector	1
18	1330438	Terminal (Socket)	2
19	. . . . .	Connector Assembly (Range One Solenoid)	1
19	1490242	Connector	1
19	1490243	Connector	1
19	1330438	Terminal (Socket)	1
20	. . . . .	Connector Assembly (Reverse One Solenoid)	1
20	1490242	Connector	1
20	1490243	Connector	1
20	1330438	Terminal (Socket)	1
21	. . . . .	Connector Assembly (Reverse One Pressure)	1
21	1603021	Connector	1
21	1603236	Connector (Secondary Lock)	1
21	1548517	Terminal (Socket)	3
21	1548519	Seal	3
22	. . . . .	Connector Assembly (Range One Pressure)	1
22	1603021	Connector	1
22	1603236	Connector (Secondary Lock)	1
22	1548517	Terminal (Socket)	3
22	1548519	Seal	3
23	. . . . .	Connector Assembly (Forward Two Pressure)	1
23	1603021	Connector	1
23	1603236	Connector (Secondary Lock)	1
23	1548517	Terminal (Socket)	3
23	1548519	Seal	3
24	. . . . .	Connector Assembly (Range Two Pressure)	1
24	1603021	Connector	1
24	1603236	Connector (Secondary Lock)	1
24	1548517	Terminal (Socket)	3
24	1548519	Seal	3
25	. . . . .	Connector Assembly (Forward One Pressure)	1
25	1603021	Connector	1
25	1603236	Connector (Secondary Lock)	1
25	1548517	Terminal (Socket)	3
25	1548519	Seal	3
26	. . . . .	Connector Assembly (Tail Shaft RPM)	1
26	1493430	Connector	1
26	1529052	Connector	1
26	1330438	Terminal (Socket)	5
26	1484377	Plug	1
27	275494	Conduit	AR

©2011 HYSTER COMPANY

NOTES

©2011 HYSTER COMPANY

WIRE HARNESS (FIGURE 4-59)
TRANSMISSION — TWO SPEED

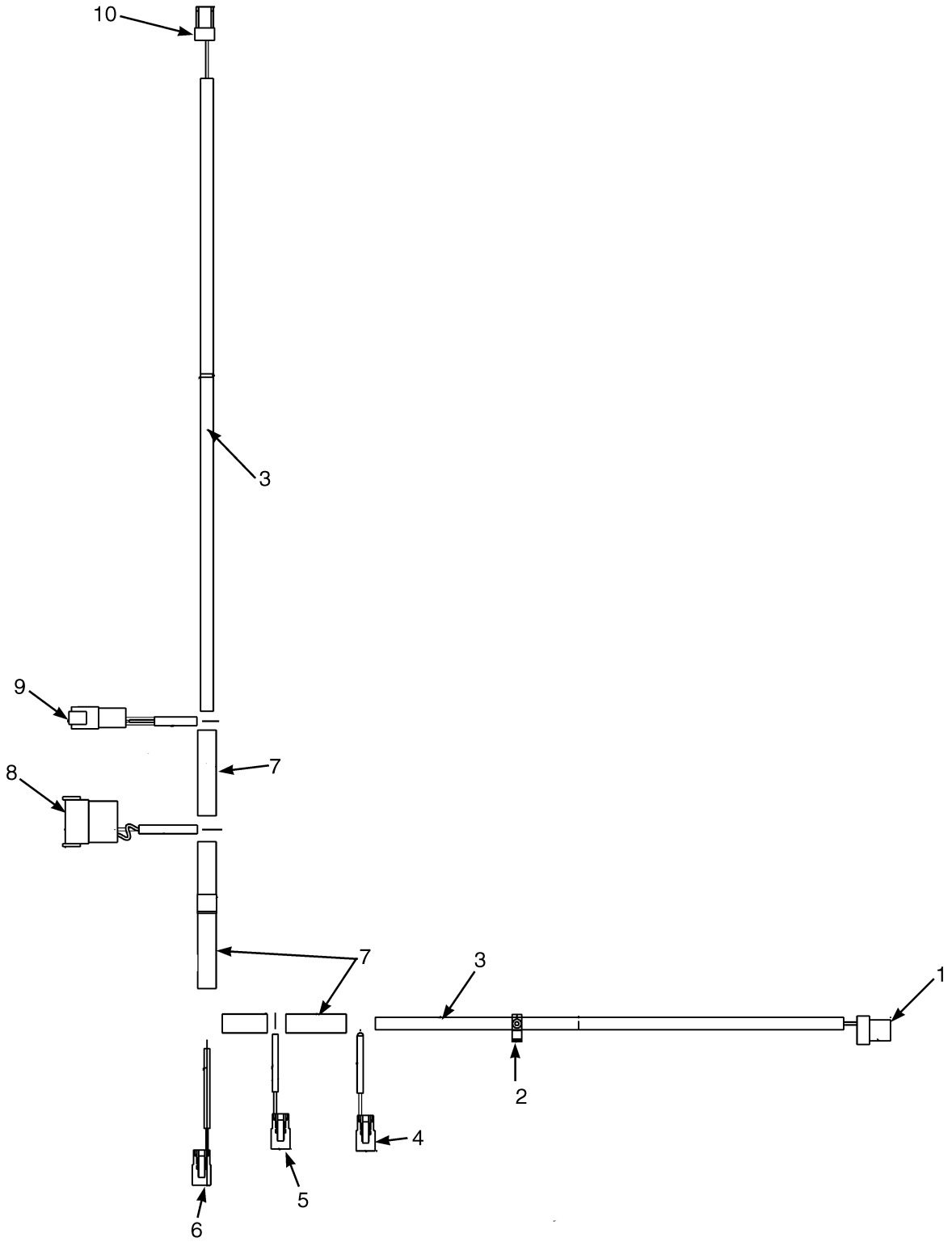

BP080765

©2011 HYSTER COMPANY

WIRE HARNESS
TRANSMISSION – TWO SPEED

ITEM	PART NO.	DESCRIPTION	QTY
	2106249	Wire Harness (Transmission)	1
1	. . . . .	Connector Assembly (Output Speed)	1
1	1558156	Connector	1
1	1323576	Terminal	1
2	1509888	Clip	1
3	275493	Conduit	AR
4	. . . . .	Connector Assembly (Reverse 1 Solenoid)	1
4	1490242	Connector	1
4	1490243	Connector	1
4	1330438	Terminal (Socket)	2
5	. . . . .	Connector Assembly (Range 1 Solenoid)	1
5	1490242	Connector	1
5	1490243	Connector	1
5	1330438	Terminal (Socket)	2
6	. . . . .	Connector Assembly (Forward 1 Solenoid)	1
6	1490242	Connector	1
6	1490243	Connector	1
6	1330438	Terminal (Socket)	2
7	275495	Conduit	AR
8	. . . . .	Connector Assembly (To Right Hand Chassis Harness)	1
8	1623280	Connector	1
8	1623281	Connector	1
8	1463138	Terminal Pin	6
8	1484377	Plug	6
9	. . . . .	Connector Assembly (To Right Hand Chassis Harness)	1
9	1530960	Connector	1
9	1530961	Connector (Secondary Lock)	1
9	1463138	Terminal Pin	5
9	1484377	Plug	1

©2011 HYSTER COMPANY

WIRE HARNESS (FIGURE 4-60)
ELECTRONIC CONTROL VALVE — THREE FUNCTION

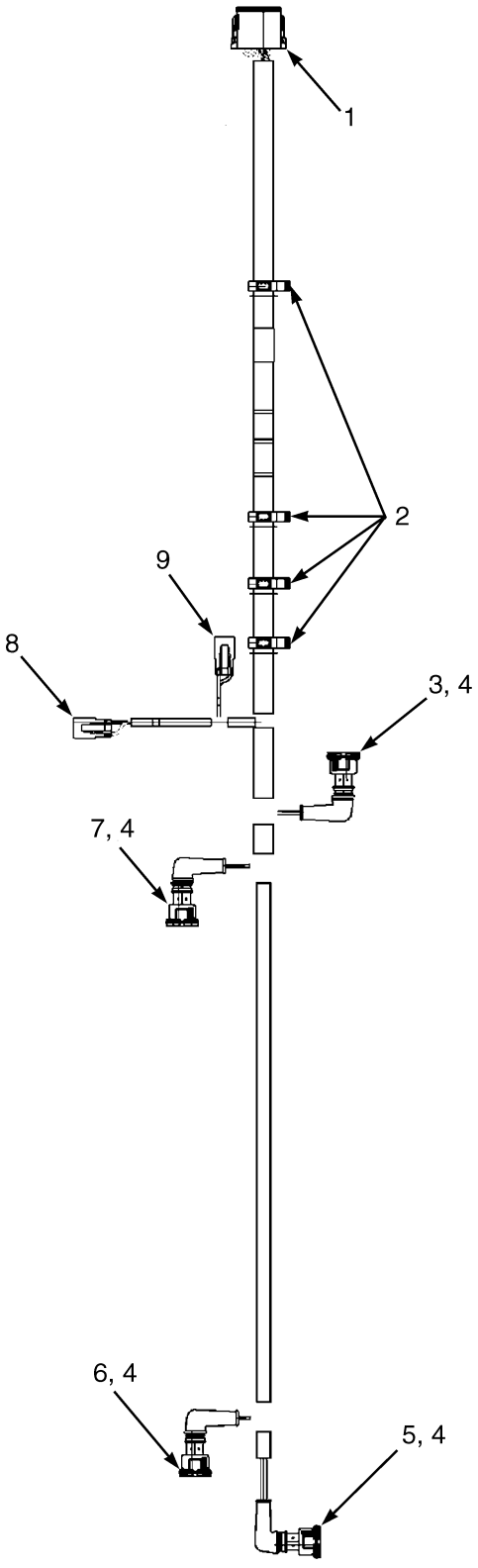

HP081569

©2011 HYSTER COMPANY

WIRE HARNESS
ELECTRONIC CONTROL VALVE – THREE FUNCTION

ITEM	PART NO.	DESCRIPTION	QTY
	2060198	Wire Harness (Electronic Control Valve)	1
1	. . . . .	Connector Assembly (Vehicle System Manager)	1
1	1525564	Connector	1
1	1330438	Terminal (Socket)	9
1	1330439	Plug	3
1	1525564	Connector	1
1	1500913	Connector	1
2	1402815	Clip	4
3	. . . . .	Connector Assembly (2A Tilt)	1
3	1531162	Connector	1
3	1562649	Seal	2
3	1402814	Terminal	2
4	190383	Boot	4
5	. . . . .	Connector Assembly (2B Tilt)	1
5	1531162	Connector	1
5	1562649	Seal	2
5	1402814	Terminal	2
6	. . . . .	Connector Assembly (3B Auxiliary 1)	1
6	1493435	Connector (2-Way)	1
6	1562649	Seal	2
6	1402814	Terminal	2
7	. . . . .	Connector Assembly (3A Auxiliary 1)	1
7	1493435	Connector (2-Way)	1
7	1562649	Seal	2
7	1402814	Terminal	2
8	. . . . .	Connector Assembly (Lift)	1
8	1490242	Connector	1
8	1330438	Terminal (Socket)	2
8	1490243	Connector	1
9	. . . . .	Connector Assembly (Lower)	1
9	1490242	Connector	1
9	1330438	Terminal (Socket)	2
9	1490243	Connector	1

©2011 HYSTER COMPANY

WIRE HARNESS (FIGURE 4-61)
ELECTRONIC CONTROL VALVE — FOUR FUNCTION

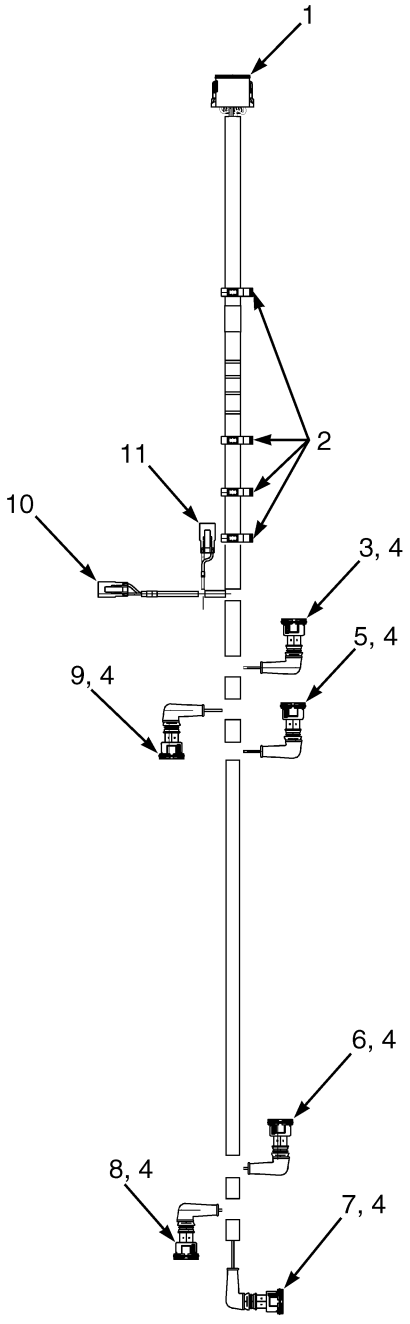

HP081568

©2011 HYSTER COMPANY

WIRE HARNESS
ELECTRONIC CONTROL VALVE – FOUR FUNCTION

ITEM	PART NO.	DESCRIPTION	QTY
	2058909	Wire Harness (Electronic Control Valve)	1
1	. . . . .	Connector Assembly (Vehicle System Manager)	1
1	1525564	Connector	1
1	1330438	Terminal (Socket)	12
1	1500913	Connector	1
2	1402815	Clip	4
3	. . . . .	Connector Assembly (2A Tilt)	1
3	1531162	Connector	1
3	1562649	Seal	2
3	1402814	Terminal	2
4	190383	Boot	6
5	1493447	Connector (4A Auxiliary 2)	1
5	1562649	Seal	2
5	1402814	Terminal	2
6	1493447	Connector (4B Auxiliary 2)	1
6	1562649	Seal	2
6	1402814	Terminal	2
7	. . . . .	Connector Assembly (2B Tilt)	1
7	1531162	Connector	1
7	1562649	Seal	2
7	1402814	Terminal	2
8	. . . . .	Connector Assembly (3B Auxiliary 1)	1
8	1493435	Connector (2-Way)	1
8	1562649	Seal	2
8	1402814	Terminal	2
9	. . . . .	Connector Assembly (3A Auxiliary 1)	1
9	1493435	Connector (2-Way)	1
9	1562649	Seal	2
9	1402814	Terminal	2
10	. . . . .	Connector Assembly (Lift)	1
10	1490242	Connector	1
10	1330438	Terminal (Socket)	2
10	1490243	Connector	1
11	. . . . .	Connector Assembly (Lower)	1
11	1490242	Connector	1
11	1330438	Terminal (Socket)	2
11	1490243	Connector	1

©2011 HYSTER COMPANY

WIRE HARNESS (FIGURE 4-62)
LIGHTS WITH OVERHEAD GUARD

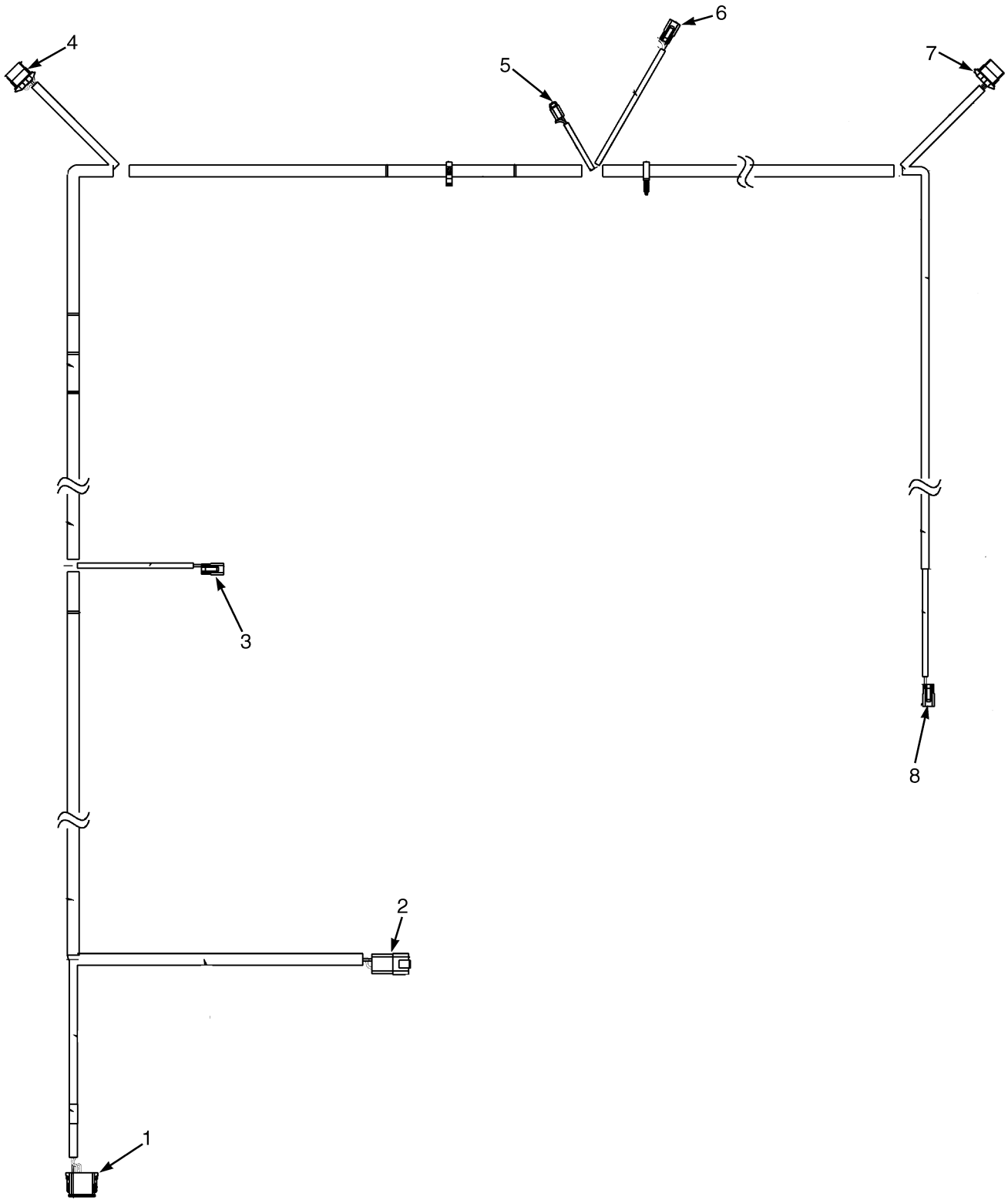

©2011 HYSTER COMPANY

WIRE HARNESS
LIGHTS WITH OVERHEAD GUARD

ITEM	PART NO.	DESCRIPTION	QTY
	2101861	Wire Harness (Lights)	1
1	. . . . .	Connector Assembly (Harness Attachment)	1
1	1525566	Connector	1
1	1500913	Connector	1
1	1330438	Terminal (Socket)	3
1	1484377	Plug	9
2	. . . . .	Connector Assembly (RH Chassis)	1
2	1514597	Connector	1
2	1514598	Connector	1
2	1484709	Terminal (Pin)	4
3	. . . . .	Connector Assembly (RH Front Work Light)	1
3	1490242	Connector	1
3	1490243	Connector	1
3	1363886	Terminal (Socket)	2
4	. . . . .	Connector Assembly (RH Rear Signal)	1
4	1531486	Connector	1
4	930591	Connector	1
4	1330355	Terminal	4
4	1330356	Seal	1
4	1482668	Plug	2
4	1476108	Wire Seal	3
5	. . . . .	Connector Assembly (Strobe)	1
5	1484557	Connector	1
5	1484558	Connector	1
5	1463139	Terminal	2
6	. . . . .	Connector Assembly (Rear Work Light)	1
6	1490242	Connector	1
6	1490243	Connector	1
6	1363886	Terminal (Socket)	2
7	. . . . .	Connector Assembly (RH Rear Signal)	1
7	1531486	Connector	1
7	930591	Connector	1
7	1330355	Terminal	4
7	1330356	Seal	1
7	1482668	Plug	2
7	1476108	Wire Seal	3
8	. . . . .	Connector Assembly (LH Front Work Light)	1
8	1490242	Connector	1
8	1490243	Connector	1
8	1363886	Terminal (Socket)	2

©2011 HYSTER COMPANY

WIRE HARNESS (FIGURE 4-63)
WORK LIGHT JUMPER — WITH TWO STAGE MASTS

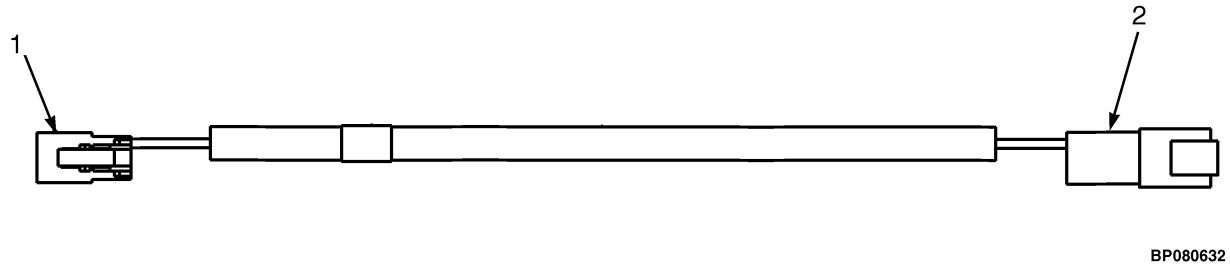

ITEM	PART NO.	DESCRIPTION	QTY
	2099263	Wire Harness (Work Light Jumper)	1
1	. . . . .	Connector Assembly (To Work Light)	1
1	1490242	Connector	1
1	1490243	Connector	1
1	1330438	Terminal (Socket)	2
2	. . . . .	Connector Assembly (To Harness)	1
2	1493465	Connector	1
2	1330414	Connector (Secondary Lock)	1
2	1330437	Terminal (Pin)	2

©2011 HYSTER COMPANY

NOTES

©2011 HYSTER COMPANY

WIRE HARNESS (FIGURE 4-64)
LOW FUEL SENSOR

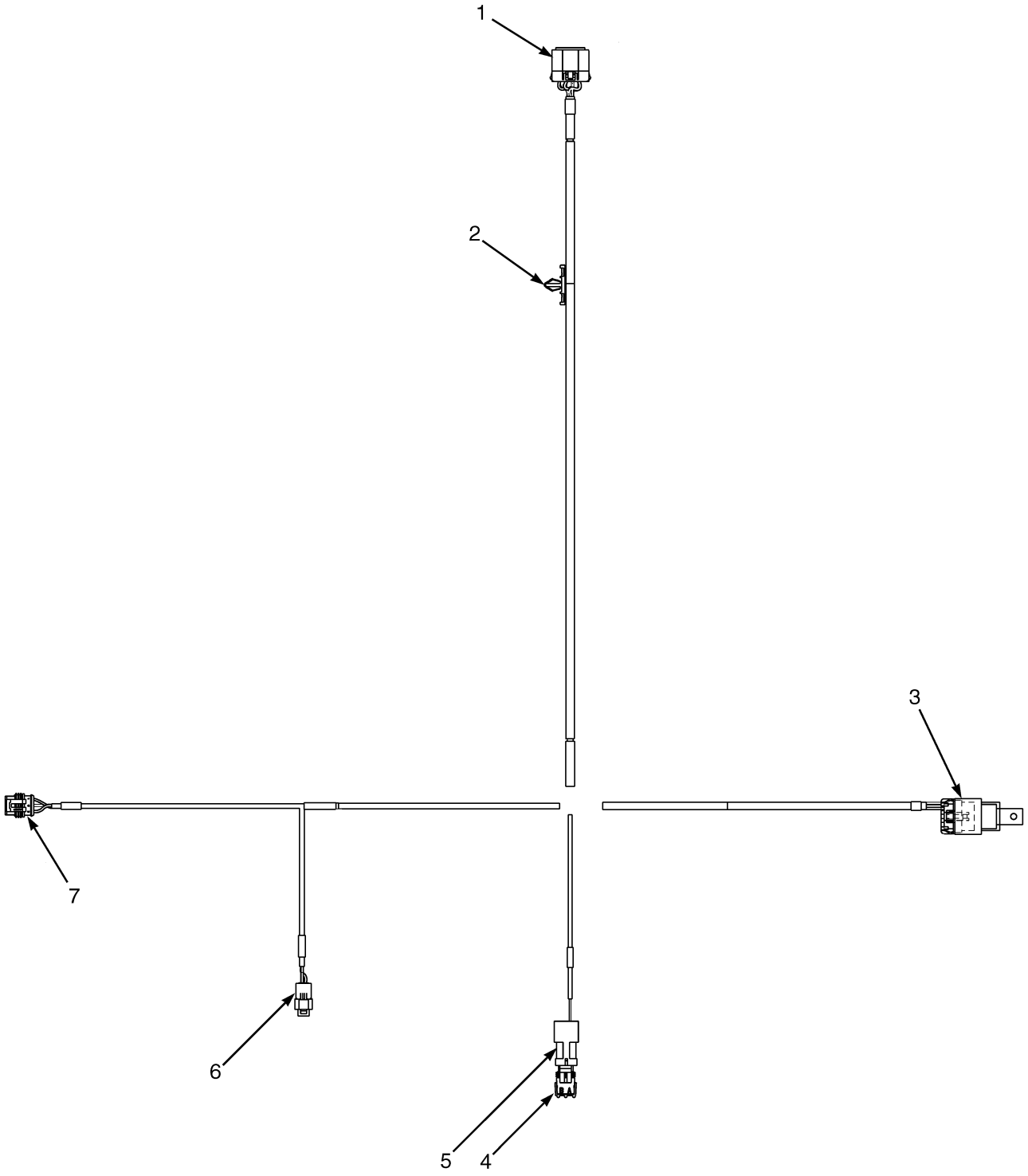

HP082024

©2011 HYSTER COMPANY

WIRE HARNESS
LOW FUEL SENSOR

ITEM	PART NO.	DESCRIPTION	QTY
	4601526	Wire Harness (Low Fuel Sensor)	1
1	. . . . .	Connector Assembly (To Engine Harness)	1
1	1527273	Connector	1
1	1527305	Connector Lock	1
1	1402926	Terminal	3
1	1402927	Terminal	5
1	1503334	Seal	3
1	1507571	Seal	5
2	1539859	Clip	1
3	. . . . .	Connector Assembly (Latching Relay)	1
3	1461743	Relay	1
3	1461744	Connector Body	1
3	1503088	Lock	1
3	1327164	Seal	1
3	1402912	Terminal	4
3	1323579	Seal	4
4	. . . . .	Connector Assembly (Air Restriction Sensor Cap)	1
4	1465466	Diode	1
4	1327164	Seal	2
5	. . . . .	Connector Assembly (Air Restriction Sensor)	1
5	1465469	Connector	1
5	1323578	Terminal	2
5	1402888	Seal	2
6	. . . . .	Connector Assembly (LPG Lockoff)	1
6	1599337	Connector	1
6	1623057	Terminal	2
7	. . . . .	Connector Assembly (Low LPG Sensor)	1
7	1547629	Connector	1
7	1508232	Terminal	3
7	2060555	Wire Seal	3

©2011 HYSTER COMPANY

NOTES

©2011 HYSTER COMPANY

5 TRANSMISSION

SECTION 5
TRANSMISSION

DESCRIPTION	PAGE
CHARGE PUMP	5-42
CONTROL VALVE	
THREE SPEED TRANSMISSION	5-24
TWO SPEED TRANSMISSION	5-40
FORWARD CLUTCH HIGH AND OUTPUT SHAFT	
THREE SPEED TRANSMISSION - FWD2	5-20
FORWARD CLUTCH LOW	
TWO SPEED TRANSMISSION	5-38
FORWARD CLUTCH LOW AND SECOND SHAFT	
THREE SPEED TRANSMISSION - FWD1, RANGE2	5-18
OUTPUT SHAFT	
TWO SPEED TRANSMISSION	5-36
PUMP DRIVE	5-44
REVERSE CLUTCH	
TWO SPEED TRANSMISSION	5-34
REVERSE CLUTCH AND FIRST SHAFT	
THREE SPEED TRANSMISSION - REV1, RANGE 1	5-22
TORQUE CONVERTER	
CUMMINS QSB 3.3L DIESEL	5-6
GM 4.3L GASOLINE AND LPG	5-4
TRANSMISSION ASSEMBLY	
THREE SPEED - SHEET 1 0F 2 (→ S/N J006V02222G)	5-10
THREE SPEED - SHEET 2 OF 2 (→ S/N J006V02222G)	5-12
THREE SPEED - SHEET 1 OF 2 (S/N J006V02223G →)	5-14
THREE SPEED - SHEET 2 OF 2 (S/N J006V02223G →)	5-16
TWO SPEED - SHEET 1 OF 2 (→ S/N J006V02109G)	5-26
TWO SPEED - SHEET 2 0F 2 (→ S/N J006V02109G)	5-28
TWO SPEED - SHEET 1 OF 2 (S/N J006V02110G →)	5-30
TWO SPEED - SHEET 2 OF 2 (S/N J006V02110G →)	5-32
TRANSMISSION COOLING	
WITH EXTERNAL OIL COOLER	5-8
TRANSMISSION MOUNT	5-2

©2011 HYSTER COMPANY

TRANSMISSION MOUNT (FIGURE 5-1)

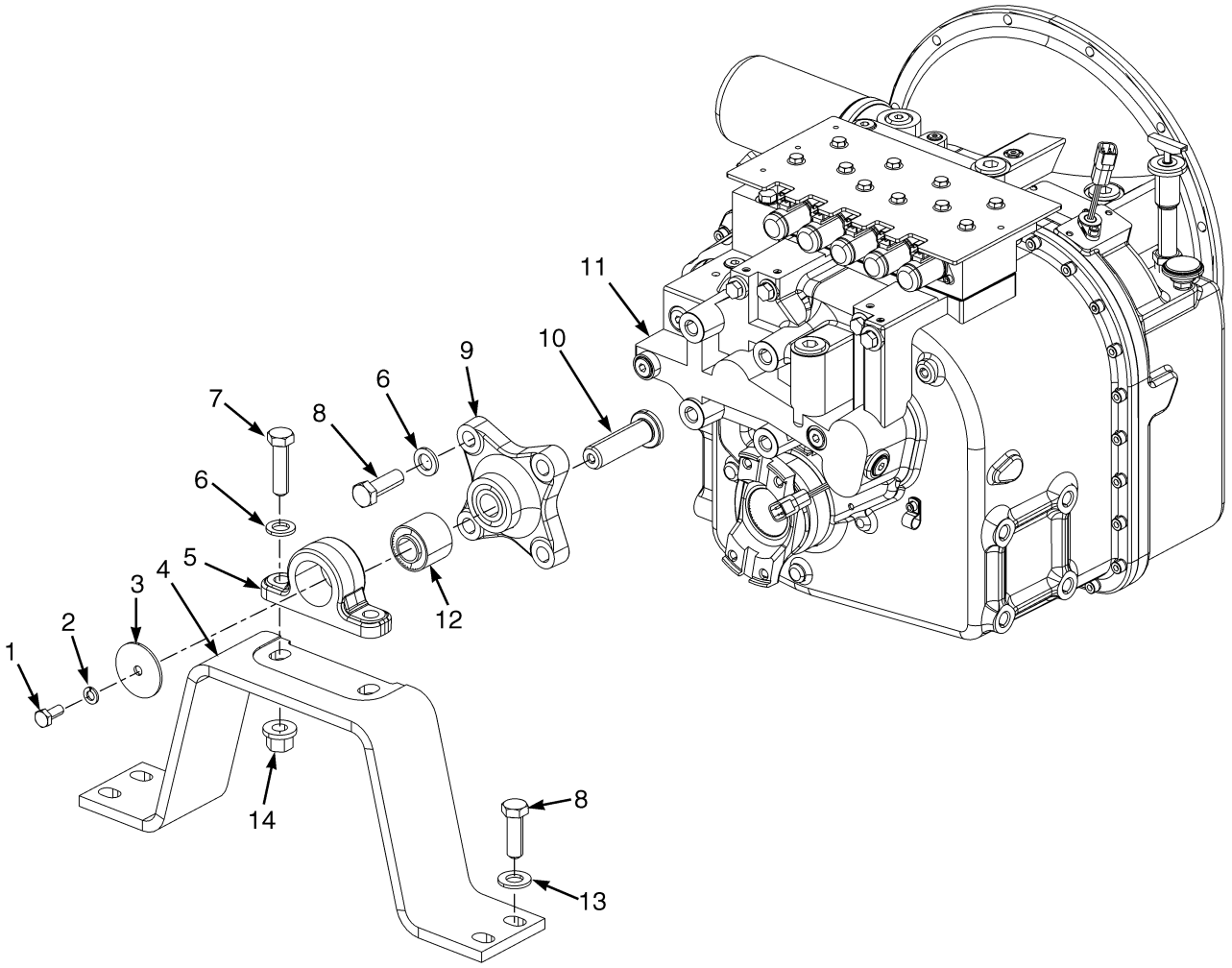

BP240128

©2011 HYSTER COMPANY

TRANSMISSION MOUNT

ITEM	PART NO.	DESCRIPTION	QTY
1	287854	Capscrew	1
2	~~388049~~		
	292682	Lockwasher	1
3	1591721	Washer	1
4	1591719	Crossmember	1
5	1591717	Housing (Bushing)	1
6	296426	Washer	6
7	293688	Capscrew	2
8	293686	Capscrew	8
9	1617487	Bracket (Isolator)	1
10	1591720	Pin	1
11	**a** 1672300	Transmission Assy (Two Speed)	1
11	**d** 1699927	Transmission Assy (Two Speed) (☞Figure 5-15, ☞Figure 5-16)	1
11	**e** 1672299	Transmission Assy (Three Speed)	1
11	**b** 1699926	Transmission Assy (Three Speed) (☞Figure 5-7, ☞Figure 5-8)	1
11	**c** 4010141	Transmission Assy	1
12	1591716	Bushing	1
13	296427	Washer	4
14	1565453	Nut (Flange)	2

FOOTNOTES:

a → S/N J006V01679G
b S/N J006V02223G ↔ S/N J006V02483G
c S/N J006V02484G →
d S/N J006V02110G →
e S/N J006V02222G →

©2011 HYSTER COMPANY

TORQUE CONVERTER (FIGURE 5-2)
GM 4.3L GASOLINE AND LPG

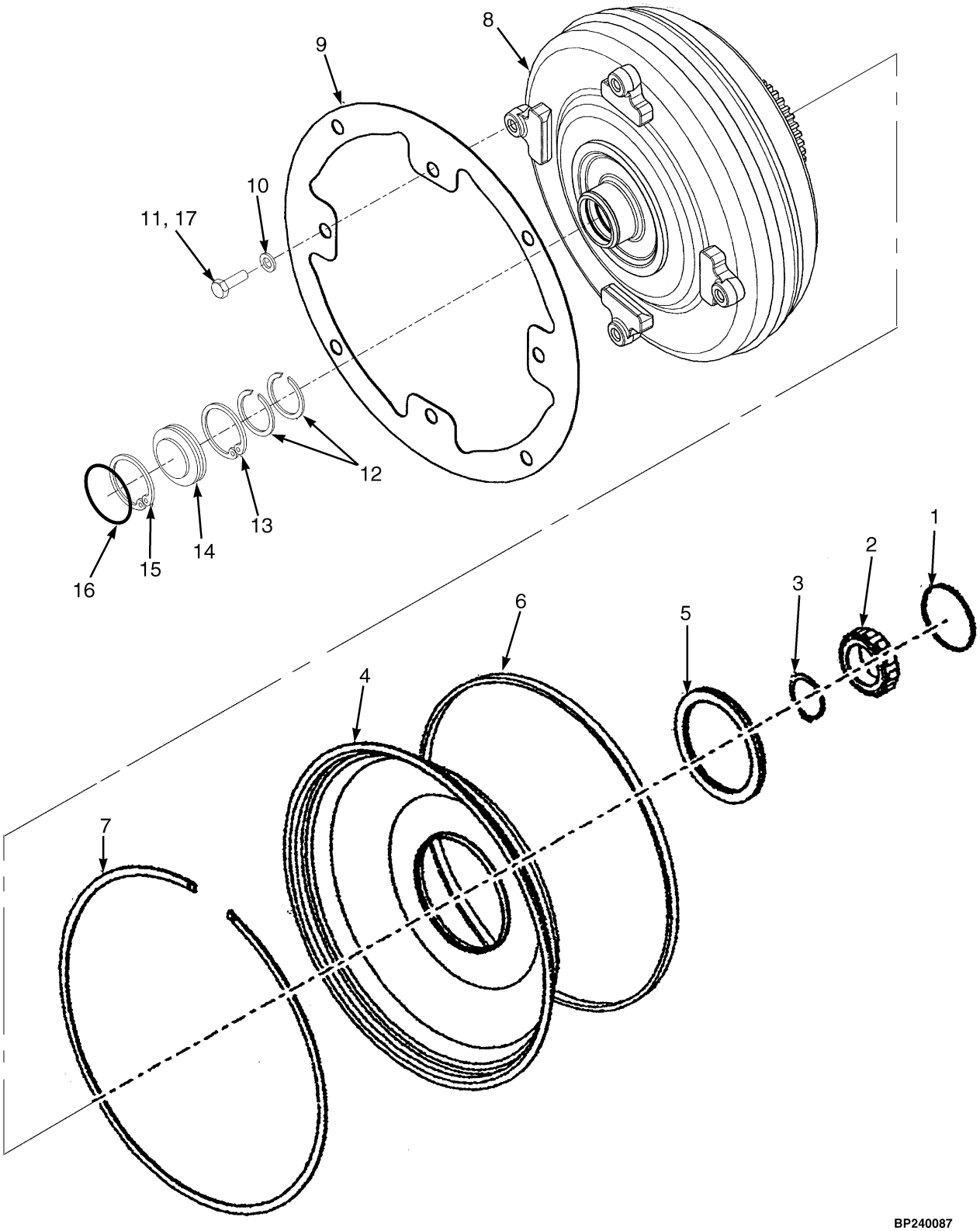

©2011 HYSTER COMPANY

TORQUE CONVERTER
GM 4.3L GASOLINE AND LPG

ITEM	PART NO.	DESCRIPTION	QTY
1	1655812	Piston Ring	1
2	1655813	Bearing	1
3	1655814	Snap Ring	1
4	1684271	Baffle And Oil Seal	1
5	1684272	Oil Seal	1
6	1312375	Seal	1
7	1312376	Retaining Ring	1
8	1657918	Torque Converter (2.61 Stall Ratio) (2.61 Stall Ratio)	1
8	1657917	Torque Converter (3.17 Stall Ratio) (3.17 Stall Ratio)	1
9	1636958	Mounting Plate	3
10	296420	Washer	8
11	1541921	Capscrew	8
12	37065	Snap Ring	2
13	1194254	Snap Ring	1
14	1603286	Plug	1
15	205222	Snap Ring	1
16	1311840	O-Ring	1
17	360387	Loctite	AR

©2011 HYSTER COMPANY

TORQUE CONVERTER (FIGURE 5-3)
CUMMINS QSB 3.3L DIESEL

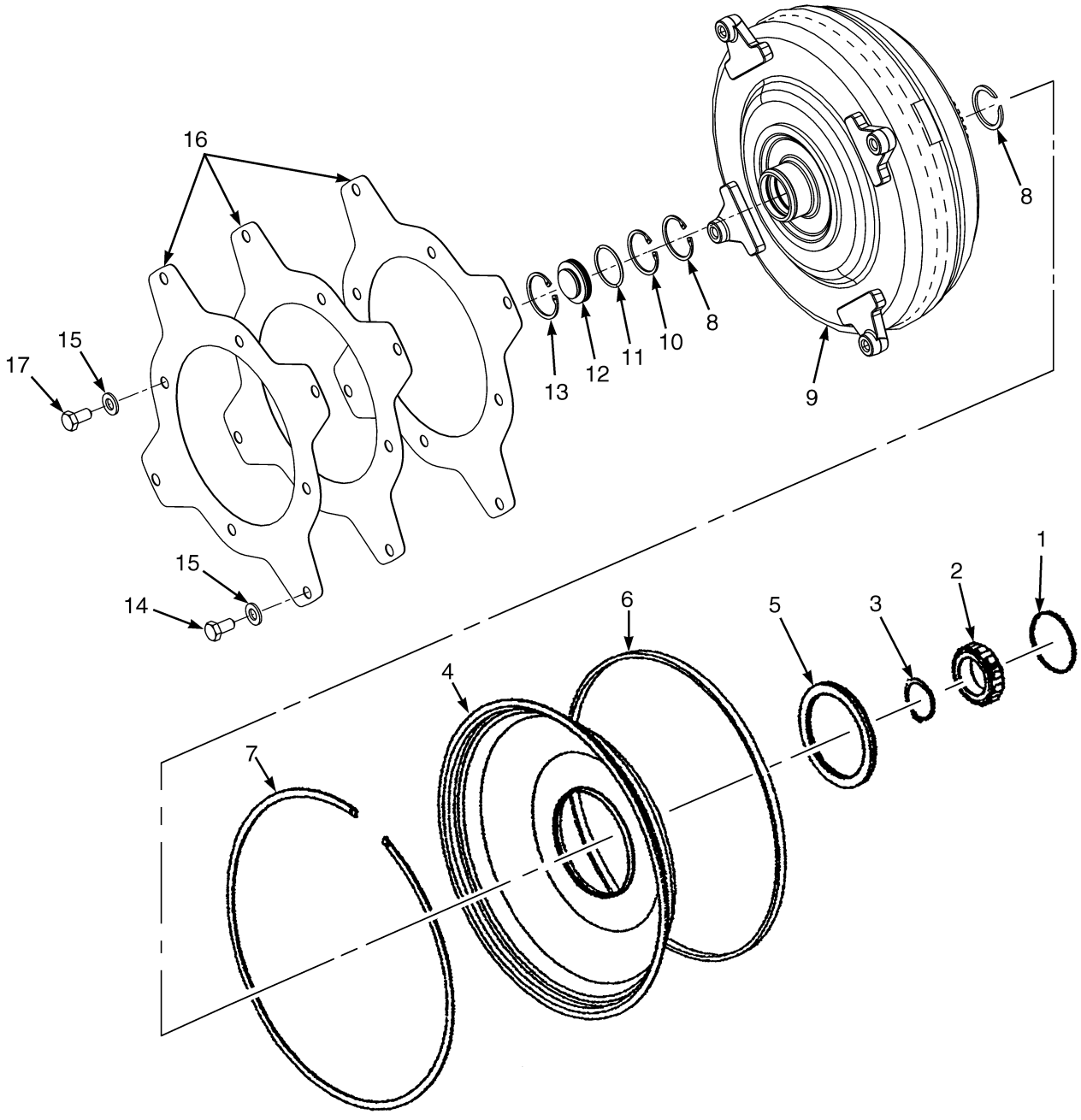

©2011 HYSTER COMPANY

TORQUE CONVERTER
CUMMINS QSB 3.3L DIESEL

ITEM	PART NO.	DESCRIPTION	QTY
1	1655812	Piston Ring	1
2	1655813	Bearing	1
3	1655814	Snap Ring	1
	1312274	Baffle And Seal Assembly	1
4	1684271	Baffle And Oil Seal	1
5	330532	Seal	1
5	1684272	Oil Seal	1
6	1312375	Seal	1
7	1312376	Retaining Ring	1
8	1655815	Snap Ring	2
9	1657919	Torque Converter (3.17 Stall Ratio)	1
10	1194254	Snap Ring	1
11	1311840	O-Ring	1
12	1603286	Plug	1
13	205222	Snap Ring	1
14	293626	Capscrew	4
15	296420	Washer	8
16	1671304	Flex Plate	3
17	1541921	Capscrew	4

©2011 HYSTER COMPANY

TRANSMISSION COOLING (FIGURE 5-4)
WITH EXTERNAL OIL COOLER

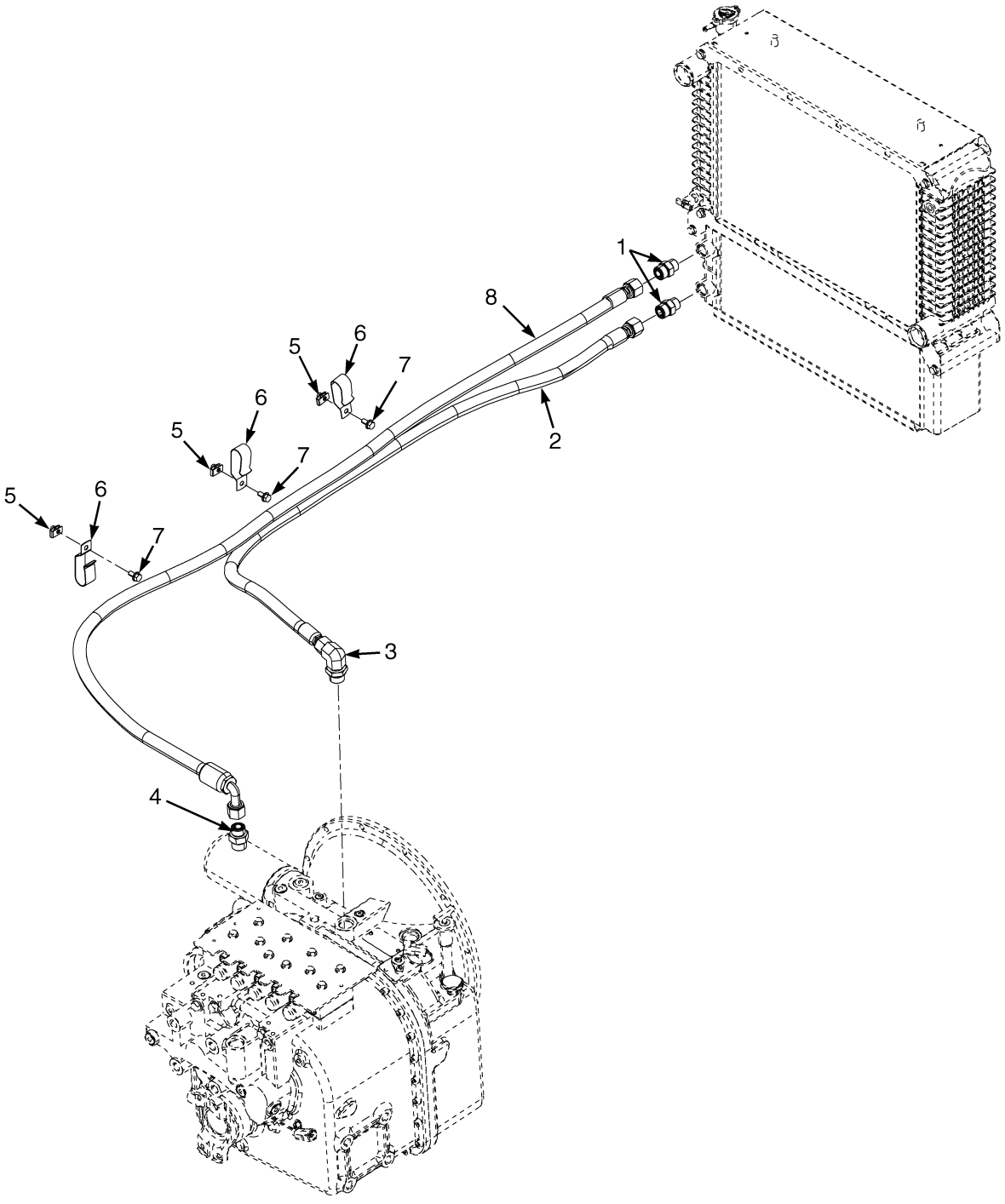

BP240125

©2011 HYSTER COMPANY

TRANSMISSION COOLING
WITH EXTERNAL OIL COOLER

ITEM	PART NO.	DESCRIPTION	QTY
1	1486749	Fitting	2
1	252729	O-Ring	1
1	16485	O-Ring	1
2	2100258	Hose Assy	1
3	1487069	Fitting	1
3	252729	O-Ring	1
3	16486	O-Ring	1
4	1473898	Fitting	1
4	16486	O-Ring	1
4	1527819	O-Ring	1
5	1480237	Nut	3
6	1562648	Clip	3
7	1527879	Capscrew	3
8	2100260	Hose Assy	1

©2011 HYSTER COMPANY

TRANSMISSION ASSEMBLY (FIGURE 5-5)

THREE SPEED — SHEET 1 0F 2 (→ S/N J006V02222G)

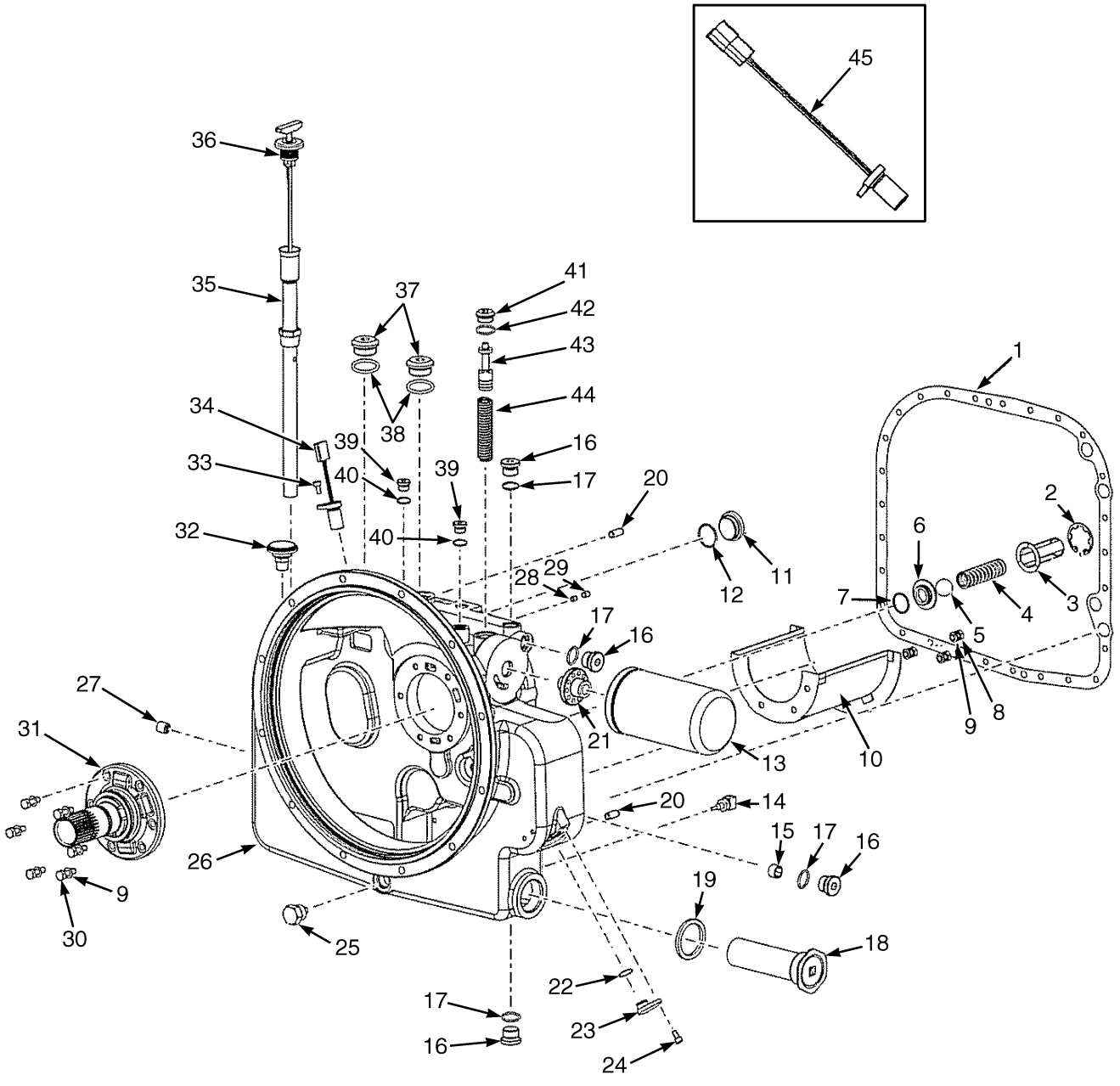

BP240145

©2011 HYSTER COMPANY

TRANSMISSION ASSEMBLY

THREE SPEED – SHEET 1 0F 2 (→ S/N J006V02222G)

ITEM	PART NO.	DESCRIPTION	QTY
	1672299	Transmission Assy (Three Speed)	1
1	1655464	Gasket	1
2	1655455	Snap Ring	1
3	1655454	Retainer	1
4	1655453	Spring	1
5	1655452	Ball	1
6	1655451	Spacer	1
7	1655450	O-Ring	1
8	1624641	Screw	3
9	1590532	Lockwasher	9
10	1655463	Baffle	1
11	1624371	Plug	1
12	1624372	O-Ring	1
13	1556992	Transmission Filter	1
14	1655456	Sensor (Temperature)	1
15	1655465	Plug	1
16	1655459	Plug	4
17	60653	O-Ring	4
18	330514	Screen	1
19	330513	Gasket	1
20	330502	Pin	2
21	1612863	Adapter	1
22	1530732	O-Ring	1
23	1655468	Plug	1
24	1556910	Capscrew	2
25	1311544	Drain Plug	1
26	1684259	Converter Housing	1
27	. . . . .	Plug	1
28	. . . . .	Plug	1
29	. . . . .	Plug	1
30	1655458	Screw	6
31	1655457	Support	1
32	330527	Breather	1
33	1556910	Capscrew	2
34	1655469	Sensor (TISS)	1
35	1655461	Dipstick Tube	1
36	1655462	Dipstick	1
37	1556918	Plug	2
38	16486	O-Ring	1
39	1655460	Plug	2
40	1557008	O-Ring	1
41	1624368	Plug	1
42	1612905	O-Ring	1
43	1655466	Spool	1
44	1655467	Spring	1
45	. . . . .	Intermediate Shaft Speed Sensor (Behind Filter) (☞Figure 5-6)	1
	1655826	Kit-Gasket	1
	1684274	Kit-Gasket	1

©2011 HYSTER COMPANY

TRANSMISSION ASSEMBLY (FIGURE 5-6)

THREE SPEED — SHEET 2 OF 2 (→ S/N J006V02222G)

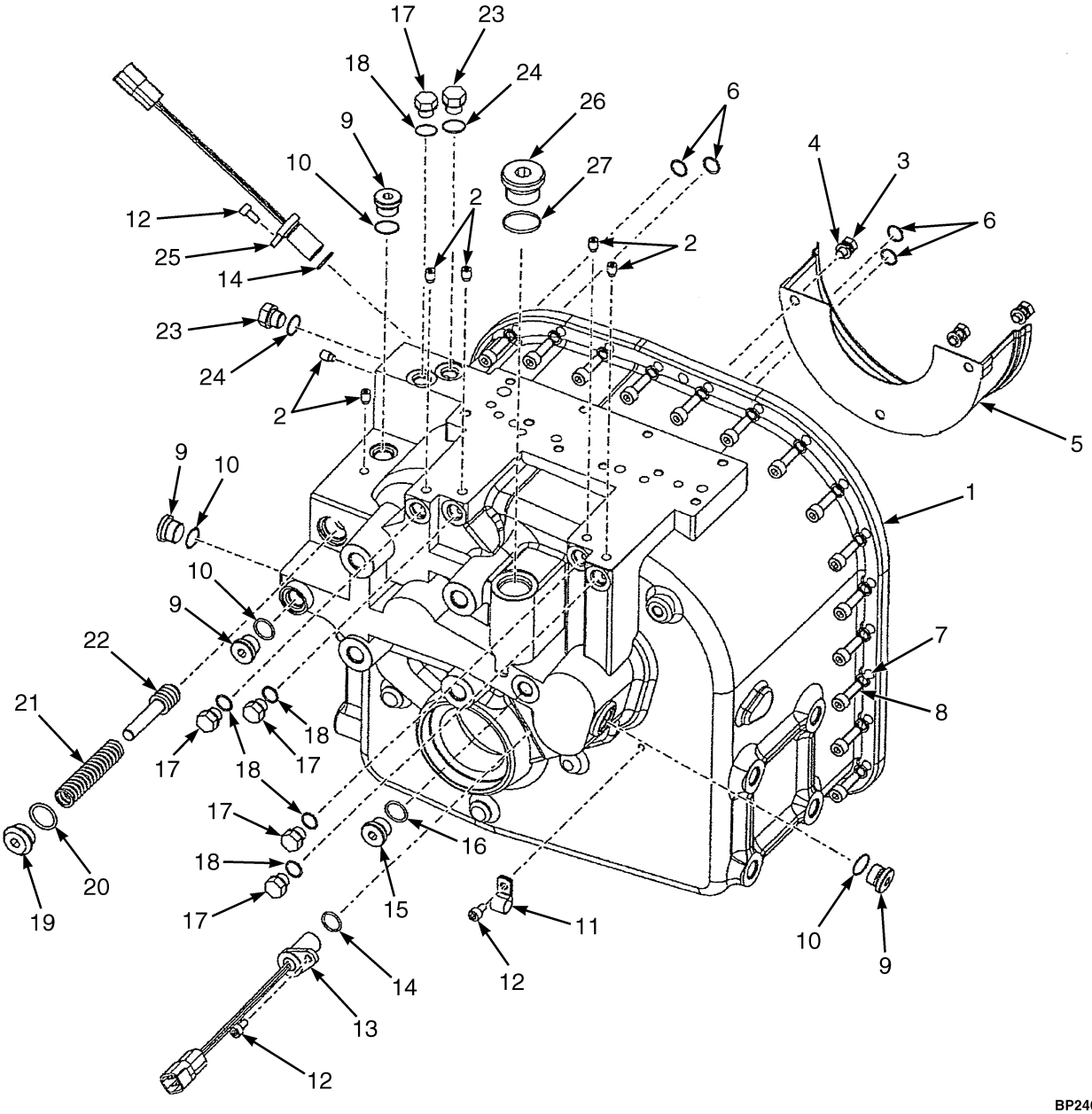

©2011 HYSTER COMPANY

TRANSMISSION ASSEMBLY

THREE SPEED – SHEET 2 OF 2 (→ S/N J006V02222G)

ITEM	PART NO.	DESCRIPTION	QTY
	1672299	Transmission Assy (Three Speed)	1
1	1655514	Transmission Housing	1
2	1655515	Plug	6
3	1624641	Screw	3
4	1590532	Lockwasher	3
5	1655516	Baffle	1
6	87281	O-Ring	4
7	1556998	Lockwasher	27
8	1655458	Screw	27
9	1655459	Plug	4
10	60653	O-Ring	4
11	1655522	Clip	1
12	1556910	Capscrew	3
13	1655520	Sensor (Output Speed, TOSS)	1
14	1530732	O-Ring	2
15	1655521	Plug	1
16	60653	O-Ring	1
17	14592	Plug	5
18	16482	O-Ring	5
19	1624368	Plug	1
20	1612905	O-Ring	1
21	1655518	Spring	1
22	1655517	Spool	1
23	14594	Plug	2
24	16483	O-Ring	2
25	1655519	Sensor (Intermediate Speed Sensor)	1
26	1556918	Plug	1
27	16486	O-Ring	1

©2011 HYSTER COMPANY

TRANSMISSION ASSEMBLY (FIGURE 5-7)

THREE SPEED — SHEET 1 OF 2 (S/N J006V02223G →)

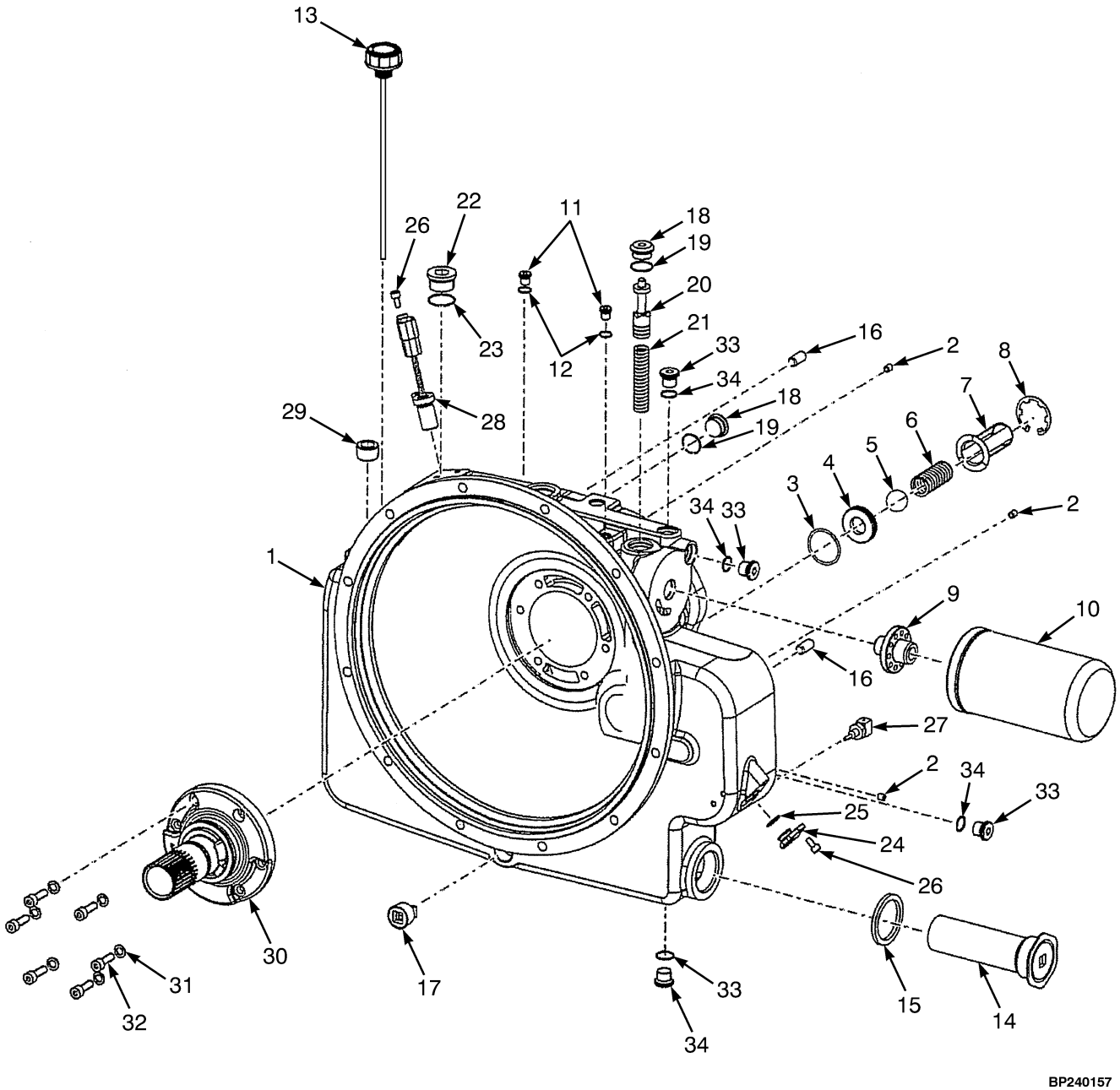

©2011 HYSTER COMPANY

TRANSMISSION ASSEMBLY

THREE SPEED – SHEET 1 OF 2 (S/N J006V02223G →)

ITEM	PART NO.	DESCRIPTION	QTY
	a 1699926	Transmission Assy (Three Speed)	1
	b 4010141	Transmission Assy	1
1	1707735	Converter Housing	1
2	1655515	Plug	3
3	1707736	O-Ring	1
4	1707737	Spacer	1
5	1655452	Ball	1
6	1655453	Spring	1
7	1655454	Retainer	1
8	1655455	Snap Ring	1
9	1612863	Adapter	1
10	1556992	Transmission Filter	1
11	1655460	Plug	2
12	1557008	O-Ring	2
13	1707738	Dipstick And Breather	1
14	330514	Screen	1
15	330513	Gasket	1
16	330502	Pin	2
17	1311544	Drain Plug	1
18	1624368	Plug	2
19	1612905	O-Ring	1
20	1655466	Spool	1
21	1655467	Spring	1
22	1556918	Plug	1
23	16486	O-Ring	1
24	1655468	Plug	1
25	1530732	O-Ring	1
26	1556910	Capscrew	2
27	1655456	Sensor (Temperature)	1
28	1655469	Sensor (TISS)	1
29	1311552	Plug	1
30	1655457	Support	1
31	1590532	Lockwasher	6
32	1655458	Screw	6
33	1655459	Plug	2
34	60653	O-Ring	2
	1709808	Kit-Gasket	1

FOOTNOTES:

a → S/N J006V02483G

b S/N J006V02484G →

©2011 HYSTER COMPANY

TRANSMISSION ASSEMBLY (FIGURE 5-8)

THREE SPEED — SHEET 2 OF 2 (S/N J006V02223G →)

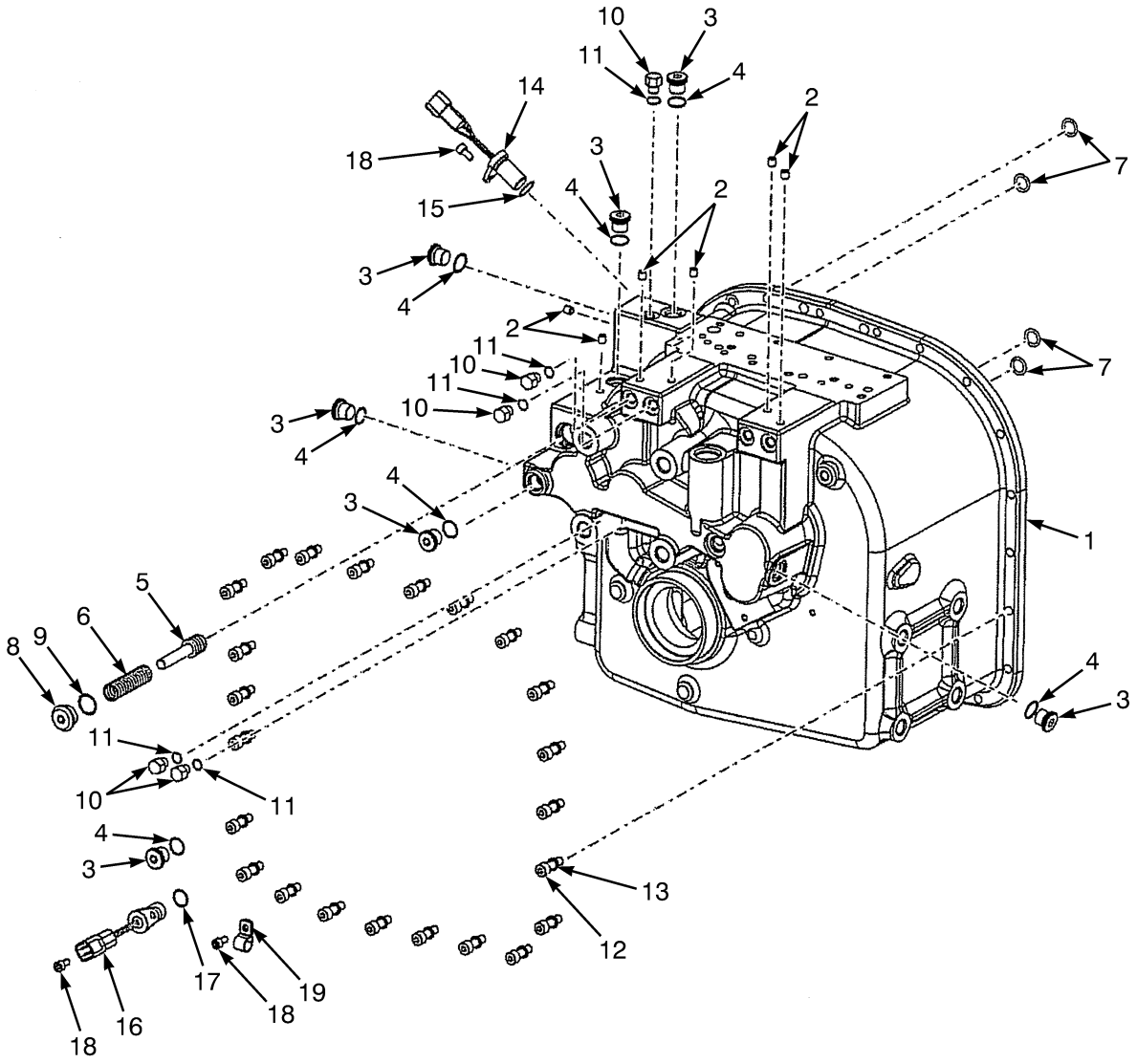

BP240158

©2011 HYSTER COMPANY

TRANSMISSION ASSEMBLY

THREE SPEED – SHEET 2 OF 2 (S/N J006V02223G →)

ITEM	PART NO.	DESCRIPTION	QTY
	a 1699926	Transmission Assy (Three Speed)	1
	b 4010141	Transmission Assy	1
1	1707741	Transmission Housing	1
2	1655515	Plug	6
3	1655459	Plug	7
4	60653	O-Ring	7
5	1655517	Spool	1
6	1655518	Spring	1
7	87281	O-Ring	4
8	1624368	Plug	1
9	1612905	O-Ring	1
10	1557007	Plug	5
11	1557008	O-Ring	5
12	1655458	Screw	23
13	1556998	Lockwasher	23
14	1655519	Sensor (Intermediate Speed Sensor)	1
15	1530732	O-Ring	1
16	1655520	Sensor (Output Speed, TOSS)	1
17	1530732	O-Ring	1
18	1556910	Capscrew	3
19	1655522	Clip	1

FOOTNOTES:

a → S/N J006V02483G

b S/N J006V02484G →

©2011 HYSTER COMPANY

FORWARD CLUTCH LOW AND SECOND SHAFT (FIGURE 5-9)

THREE SPEED TRANSMISSION — FWD1, RANGE2

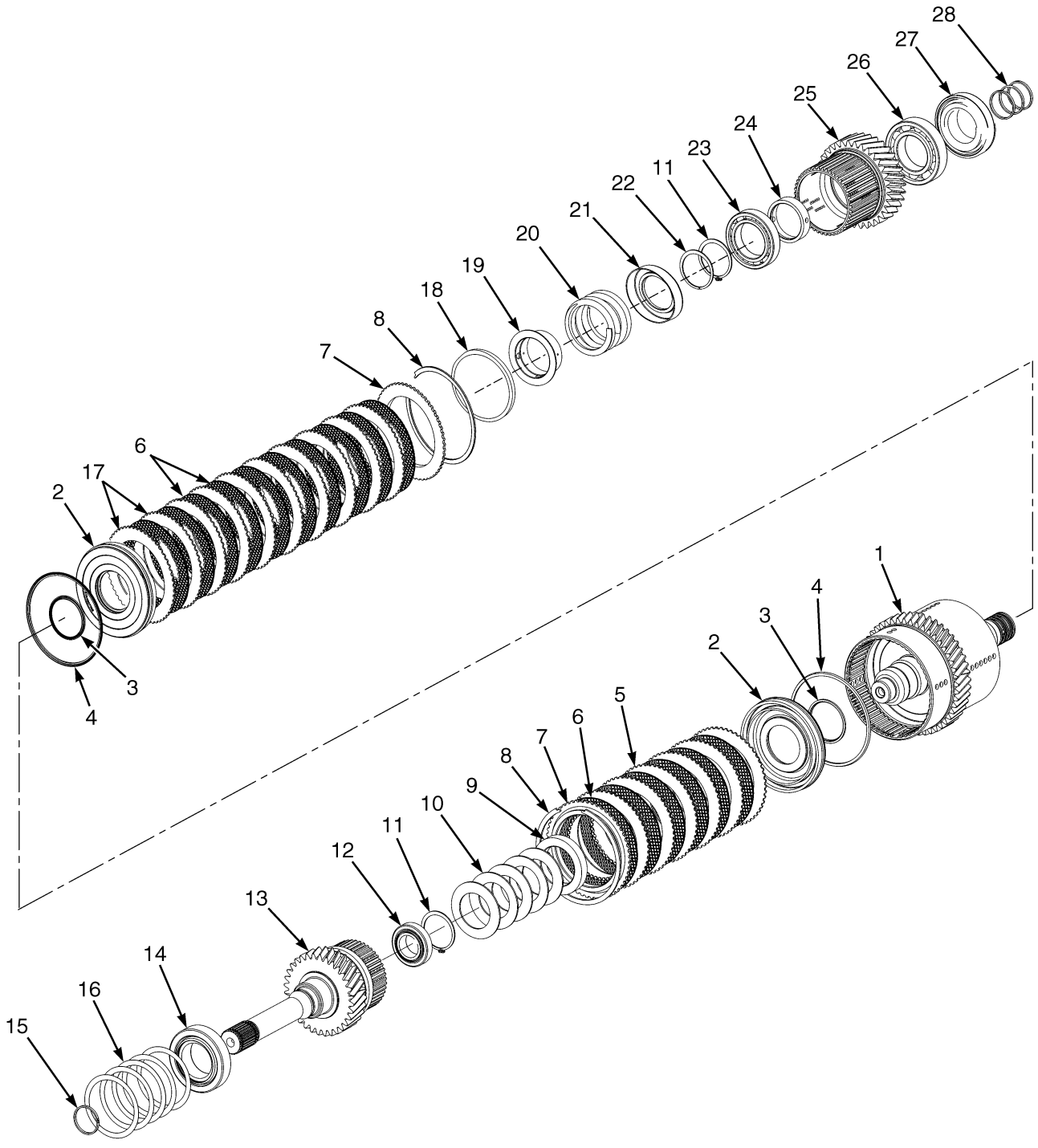

BP240114

©2011 HYSTER COMPANY

FORWARD CLUTCH LOW AND SECOND SHAFT

THREE SPEED TRANSMISSION – FWD1, RANGE2

ITEM	PART NO.	DESCRIPTION	QTY
1	**a** 1655545	Shaft (RANGE2)	1
1	**b** 1707745	Shaft	1
2	1655546	Clutch Piston	2
3	1655547	Seal	1
4	1311811	Piston Seal	1
5	1655548	Friction Disk (Inner, High Density)	17
6	1556965	Separator Plate (Outer)	6
7	1655552	Plate	2
8	1311810	Snap Ring	2
9	1655558	Spacer	1
10	1655557	Disk Spring	1
11	1655561	Snap Ring	2
12	1655562	Bearing	1
13	1655596	Shaft (Forward)	1
14	1655597	Bearing	1
15	1556985	Piston Ring	1
16	1655598	Shim	AR
16	1655599	Shim	AR
16	1655600	Shim	AR
16	**b** 1707749	Shim	AR
17	1655549	Separator Plate (Outer)	11
18	**a** 1655553	Seal	1
18	**b** 1707746	Sealing Ring	1
19	1655555	Retainer	1
20	1655554	Spring	1
21	**a** 1655556	Retainer	1
21	**b** 1655606	Retainer	1
22	**a** 1655601	Snap Ring	1
22	**b** 1707750	Retaining Ring	1
23	330590	Bearing	1
24	**a** 1655560	Spacer	1
24	**b** 1707748	Spacer	1
25	**a** 1655559	Gear	1
25	**b** 1707747	Clutch Gear	1
26	**a** 1612529	Bearing	1
26	**b** 1389220	Bearing	1
27	1655550	Bearing	1
28	1556985	Piston Ring	3

FOOTNOTES:

a → S/N J006V02222G

b S/N J006V02223G →

©2011 HYSTER COMPANY

FORWARD CLUTCH HIGH AND OUTPUT SHAFT (FIGURE 5-10)

THREE SPEED TRANSMISSION — FWD2

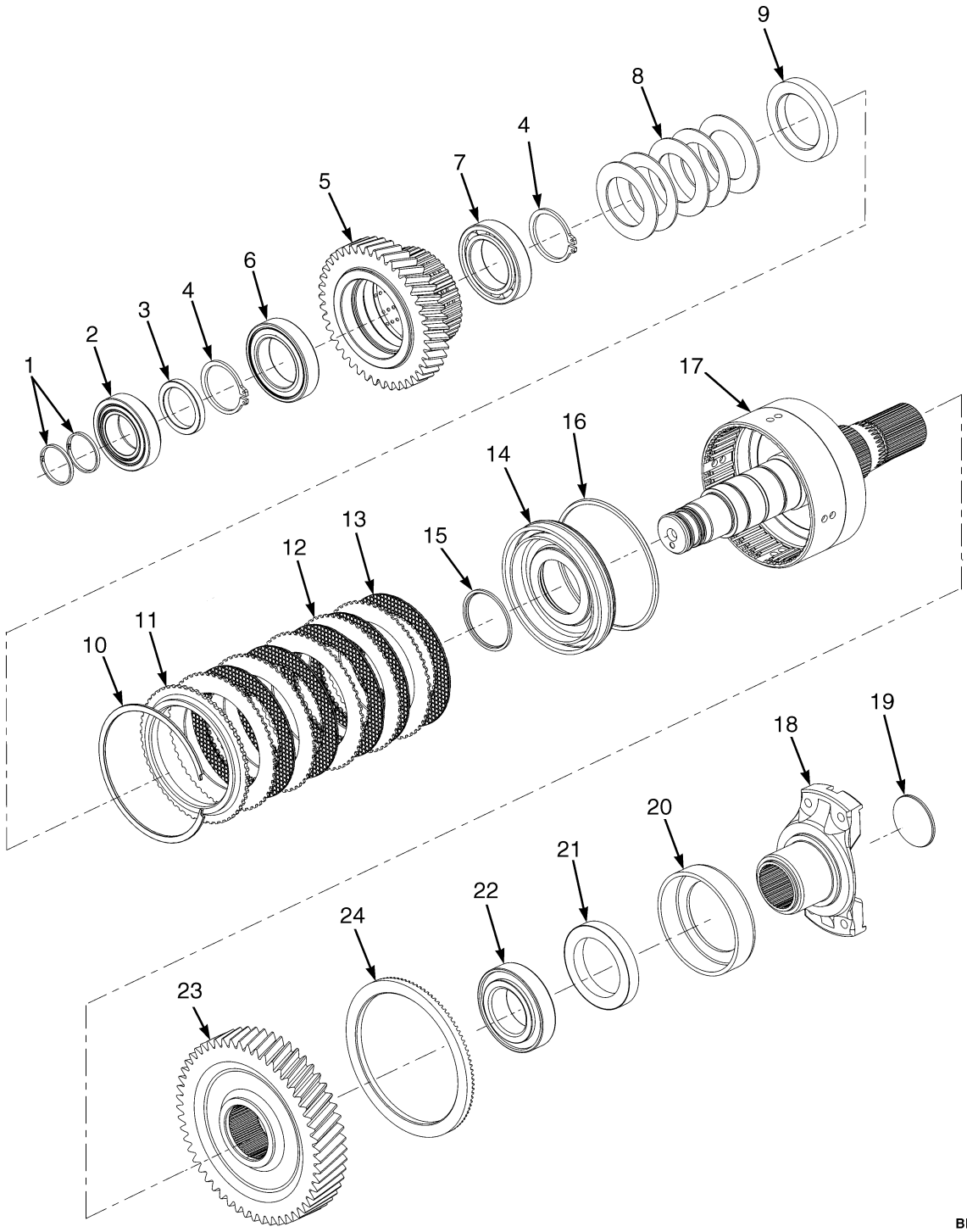

©2011 HYSTER COMPANY

FORWARD CLUTCH HIGH AND OUTPUT SHAFT
THREE SPEED TRANSMISSION – FWD2

ITEM	PART NO.	DESCRIPTION	QTY
1	1556985	Piston Ring	2
2	**c** 1655617	Bearing	1
2	**d** 1707768	Bearing	1
3	**b** 1655615	Spacer	1
4	1655561	Snap Ring	2
5	**c** 1655616	Gear (FWD2)	1
5	**d** 1707767	Gear	1
5	**ad** 1707750	Retaining Ring	1
6	1312359	Bearing	1
7	330590	Bearing	1
8	1655557	Disk Spring	1
9	1655558	Spacer	1
10	1311810	Snap Ring	1
11	1655552	Plate	1
12	1556965	Separator Plate (Outer)	5
13	1655548	Friction Disk (Inner, High Density)	5
14	1655546	Clutch Piston	1
15	1655547	Seal	1
16	1311811	Piston Seal	1
17	**c** 1655614	Shaft (Output and FWD2)	1
17	**d** 1707766	Shaft	1
18	**c** 1655622	Flange	1
18	**d** 1707769	Flange	1
19	**c** 1655624	Plug	1
19	**d** 1707770	Plug	1
20	1655623	Cover	1
21	1655621	Oil Seal	1
22	1655618	Bearing	1
23	1694403	Transmission Gear (Output with Tone Ring)	1
24	. . . . .	Ring	1

FOOTNOTES:

a Not Illustrated
b Not used with this application
c → S/N J006V02222G
d S/N J006V02223G →

©2011 HYSTER COMPANY

REVERSE CLUTCH AND FIRST SHAFT (FIGURE 5-11)

THREE SPEED TRANSMISSION — REV1, RANGE 1

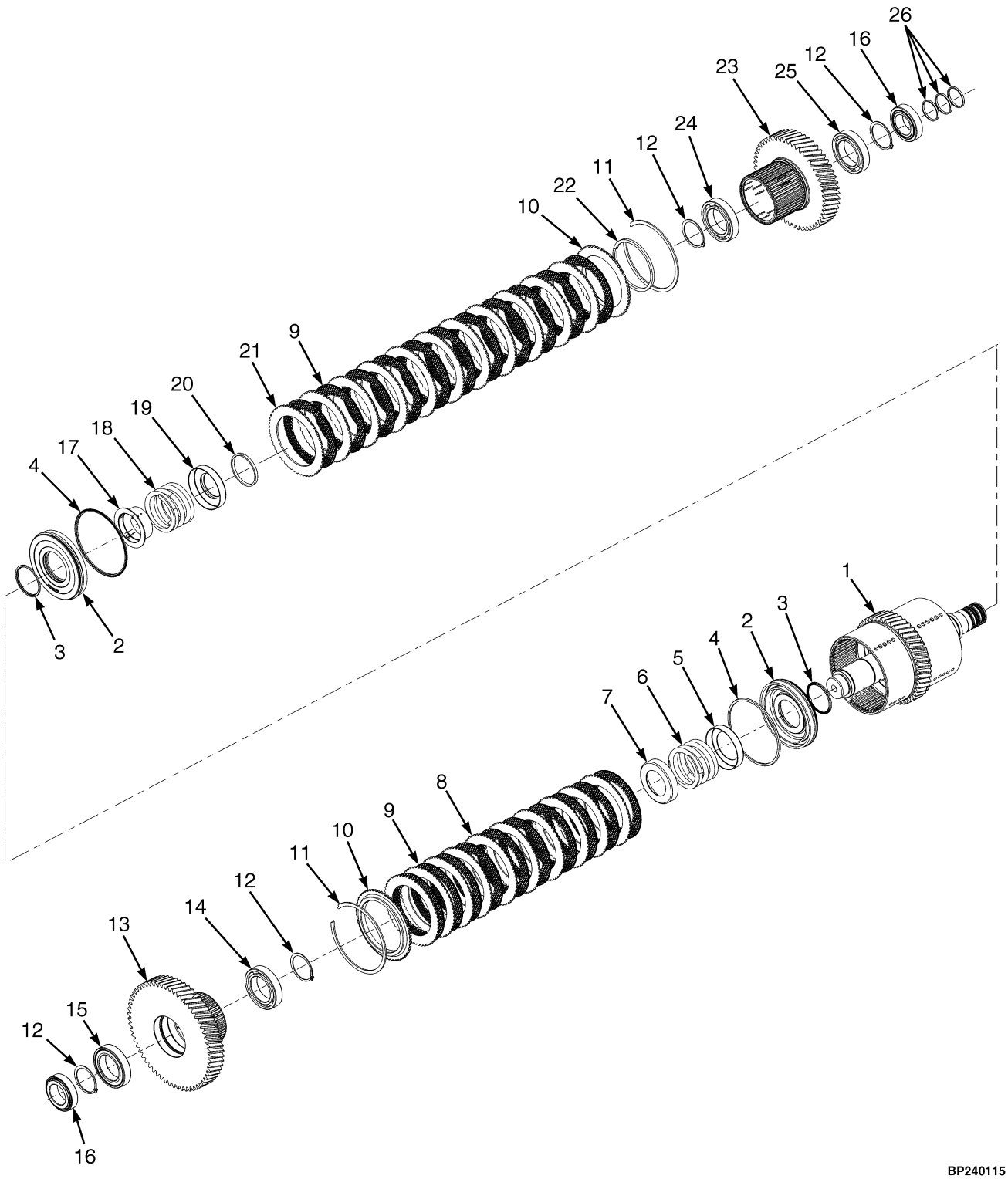

BP240115

©2011 HYSTER COMPANY

REVERSE CLUTCH AND FIRST SHAFT

THREE SPEED TRANSMISSION – REV1, RANGE 1

ITEM	PART NO.	DESCRIPTION	QTY
1	**a** 1655604	Shaft	1
1	**b** 1707762	Shaft	1
2	1655546	Clutch Piston	2
3	1655547	Seal	2
4	1311811	Piston Seal	2
5	1655605	Retainer	1
6	1655610	Spring	1
7	1655556	Retainer	1
7	1707750	Retaining Ring	1
8	1556965	Separator Plate (Outer)	10
9	1655548	Friction Disk (Inner, High Density)	21
10	1655552	Plate	2
11	1311810	Snap Ring	2
12	1655561	Snap Ring	4
13	**a** 1655609	Gear (1st Clutch) (RANGE1)	1
13	**b** 1707764	Gear (1st Clutch)	1
13	**b** 1707750	Retaining Ring	1
14	330590	Bearing	1
15	1312359	Bearing	1
16	1655607	Bearing	2
17	1655555	Retainer	1
18	1655554	Spring	1
19	1655606	Retainer	1
20	1655601	Snap Ring	1
21	1655549	Separator Plate (Outer)	11
22	**a** 1655553	Seal	1
22	**b** 1707746	Sealing Ring	1
23	**a** 1655608	Gear (REV1)	1
23	**b** 1707763	Gear	1
23	**b** 1707750	Retaining Ring	1
24	330590	Bearing	1
25	1312359	Bearing	1
26	1556985	Piston Ring	3

FOOTNOTES:

a → S/N J006V02222G

b S/N J006V02223G →

©2011 HYSTER COMPANY

CONTROL VALVE (FIGURE 5-12)
THREE SPEED TRANSMISSION

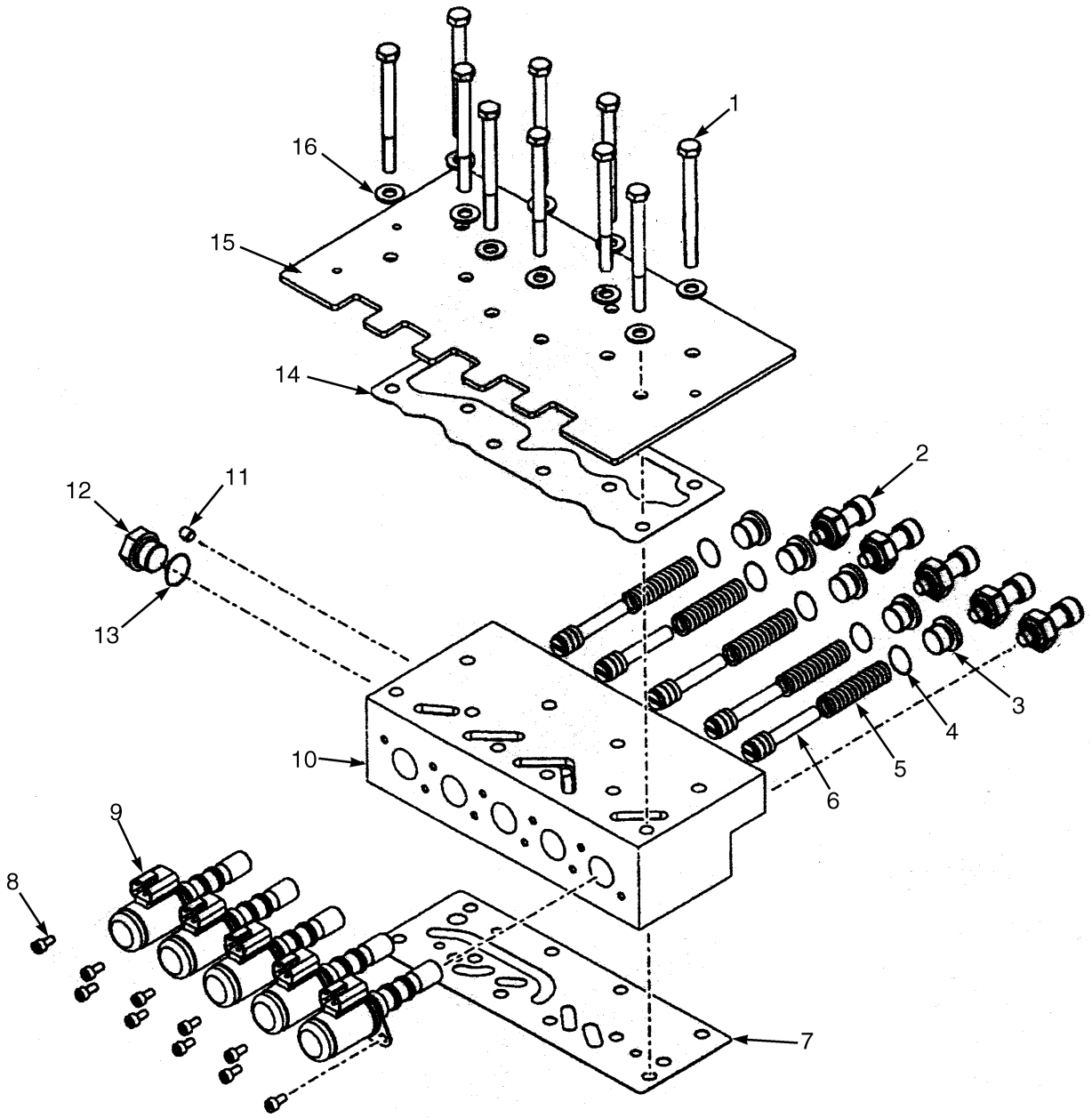

BP240117

©2011 HYSTER COMPANY

CONTROL VALVE
THREE SPEED TRANSMISSION

ITEM	PART NO.	DESCRIPTION	QTY
	a 1694405	Valve Assembly	1
	b 4015130	Valve Assembly	1
1	1557009	Capscrew	10
2	1655633	Sensor (Valve Pressure)	5
3	1655639	Plug	5
4	87281	O-Ring	1
5	**b** 4024031	Spring	5
6	**a**	Spool	5
6	**b** 4015133	Spool	5
6	**b** 4015134	Pin	5
7	1655636	Gasket	1
8	1655638	Capscrew	10
9	**a** 1655632	Solenoid Valve	5
9	1324792	O-Ring	1
9	1324790	Retainer	2
9	**b** 4015132	Solenoid	5
9	1324792	O-Ring	1
9	1324790	Retainer	2
10	**a** 1655630	Body	1
10	**b** 4015131	Valve	1
11	1655631	Plug	1
12	14589	Plug	1
13	16484	O-Ring	1
14	1655634	Gasket	1
15	1655635	Cover (Control Valve)	1
16	**a** 1655637	Washer	10
16	**b** 1590532	Lockwasher	10

FOOTNOTES:

a → S/N J006V02483G

b S/N J006V02484G →

©2011 HYSTER COMPANY

TRANSMISSION ASSEMBLY (FIGURE 5-13)

TWO SPEED — SHEET 1 OF 2 (→ S/N J006V02109G)

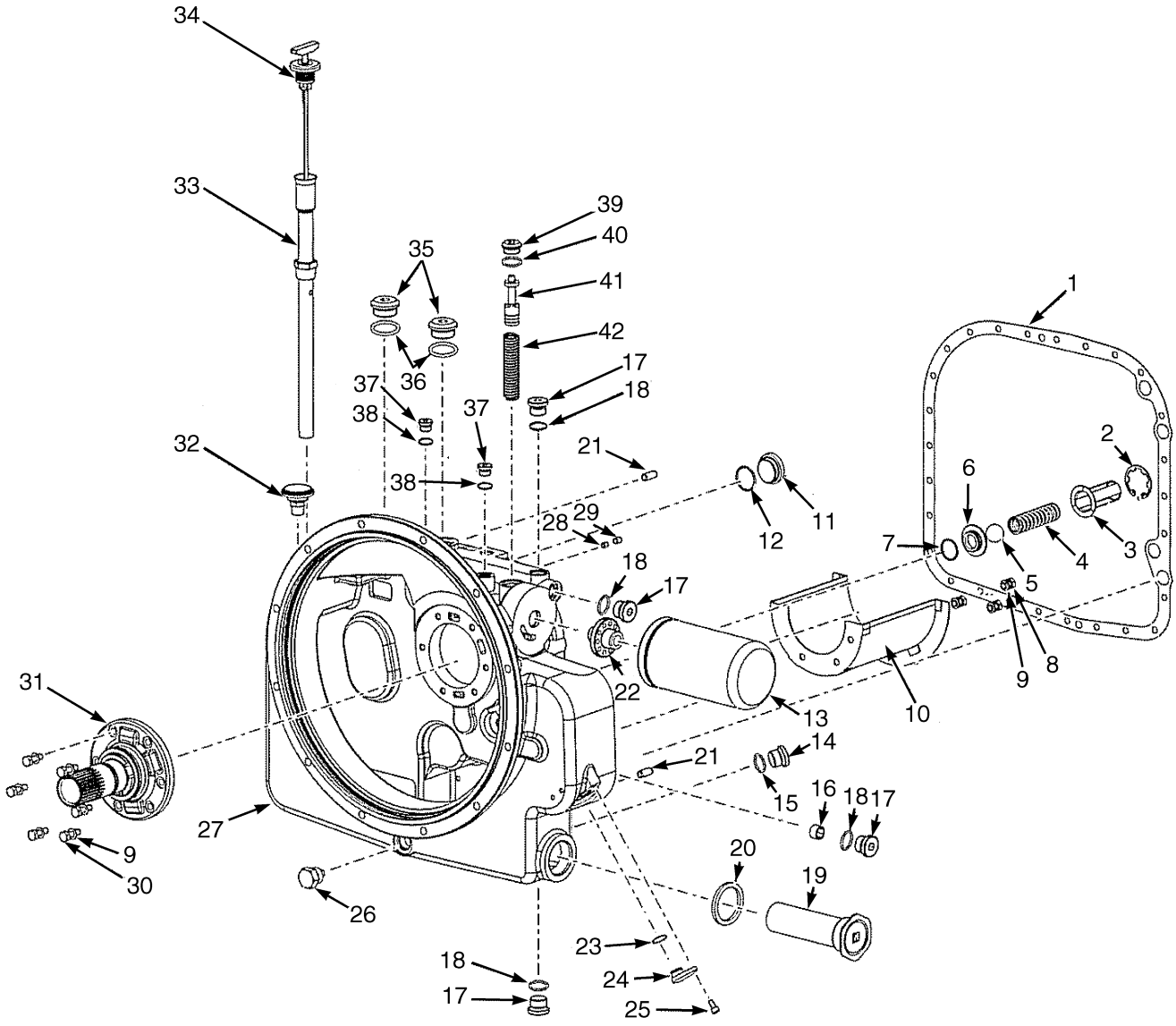

BP240120

©2011 HYSTER COMPANY

TRANSMISSION ASSEMBLY

TWO SPEED – SHEET 1 OF 2 (→ S/N J006V02109G)

ITEM	PART NO.	DESCRIPTION	QTY
	1672300	Transmission Assy (Two Speed)	1
1	1655464	Gasket	1
2	1655455	Snap Ring	1
3	1655454	Retainer	1
4	1655453	Spring	1
5	1655452	Ball	1
6	1655451	Spacer	1
7	1655450	O-Ring	1
8	1624641	Screw	3
9	1590532	Lockwasher	9
10	1655463	Baffle	1
11	1624371	Plug	1
12	1624372	O-Ring	1
13	1655472	Transmission Filter	1
14	1612305	Plug	1
15	1624370	O-Ring	1
16	. . . . .	Plug	1
17	1655459	Plug	4
18	60653	O-Ring	4
19	330514	Screen	1
20	330513	Gasket	1
21	330502	Pin	2
22	1612863	Adapter	1
23	1530732	O-Ring	1
24	1655468	Plug	1
25	1556910	Capscrew	1
26	1311544	Drain Plug	1
27	1684327	Converter Housing	1
28	. . . . .	Plug	1
29	. . . . .	Plug	1
30	1655458	Screw	6
31	1655457	Support	6
32	330527	Breather	1
33	1655461	Dipstick Tube	1
34	1655462	Dipstick	1
35	1556918	Plug	2
36	16486	O-Ring	1
37	1655460	Plug	2
38	1557008	O-Ring	2
39	1624368	Plug	2
40	1612905	O-Ring	1
41	1655466	Spool	1
42	1655467	Spring	1
	1655826	Kit-Gasket	1
	1684274	Kit-Gasket	1

©2011 HYSTER COMPANY

TRANSMISSION ASSEMBLY (FIGURE 5-14)

TWO SPEED — SHEET 2 0F 2 (→ S/N J006V02109G)

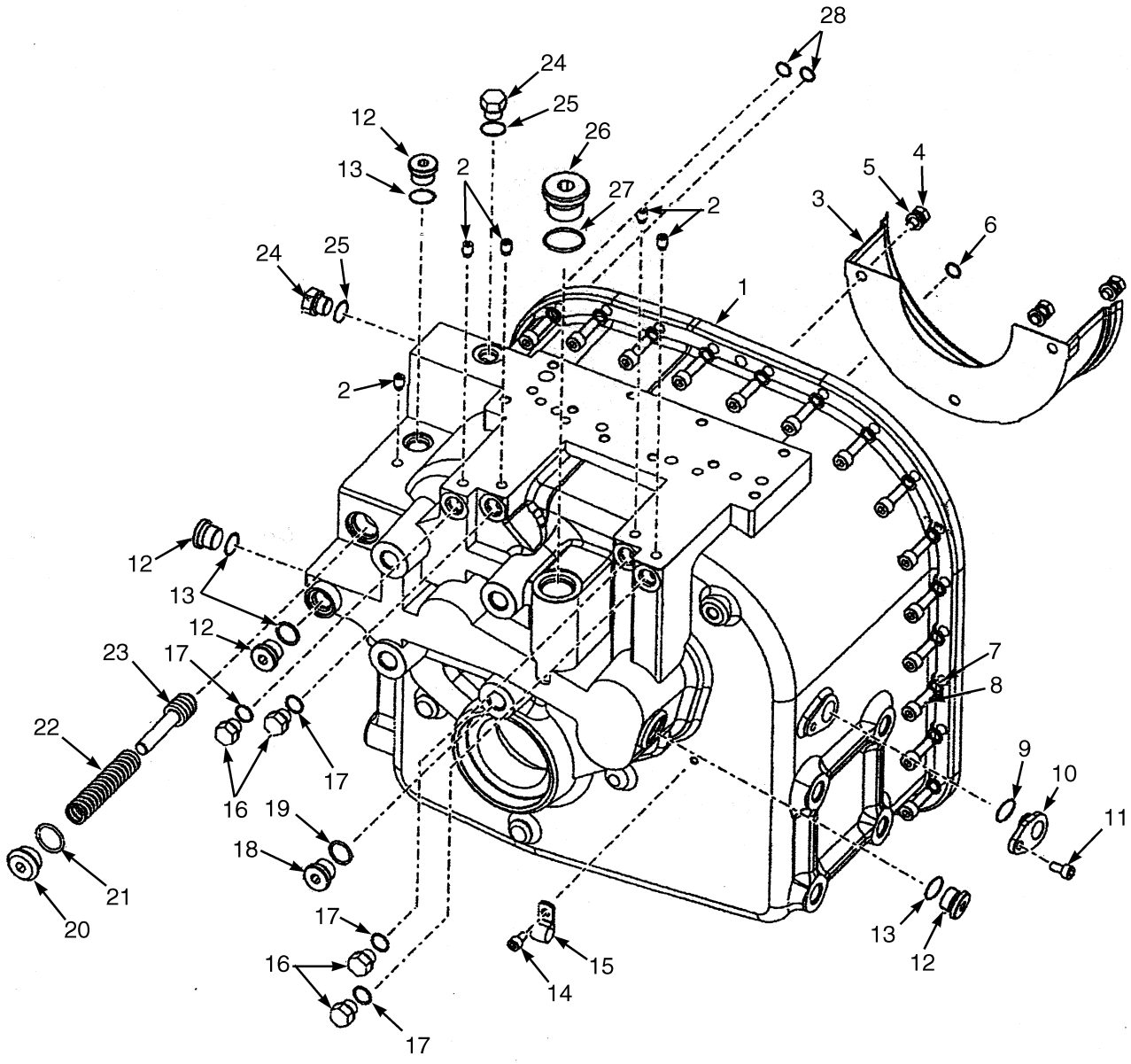

BP240118

©2011 HYSTER COMPANY

TRANSMISSION ASSEMBLY

TWO SPEED – SHEET 2 0F 2 (→ S/N J006V02109G)

ITEM	PART NO.	DESCRIPTION	QTY
	1672300	Transmission Assy (Two Speed)	1
1	1655524	Case	1
2	1655515	Plug	5
3	1655516	Baffle	1
4	1624641	Screw	3
5	1590532	Lockwasher	3
6	87281	O-Ring	3
7	1556998	Lockwasher	27
8	1655458	Screw	27
9	1530732	O-Ring	1
10	1655468	Plug	1
11	1556910	Capscrew	2
12	1655459	Plug	4
13	60653	O-Ring	4
14	1556910	Capscrew	2
15	1655522	Clip	1
16	14592	Plug	4
17	16482	O-Ring	4
18	1655521	Plug	1
19	60653	O-Ring	1
20	1624368	Plug	1
21	1612905	O-Ring	1
22	1655518	Spring	1
23	1655517	Spool	1
24	14594	Plug	2
25	16483	O-Ring	2
26	1556918	Plug	1
27	16486	O-Ring	1
28	87281	O-Ring	3

©2011 HYSTER COMPANY

TRANSMISSION ASSEMBLY (FIGURE 5-15)

TWO SPEED — SHEET 1 OF 2 (S/N J006V02110G →)

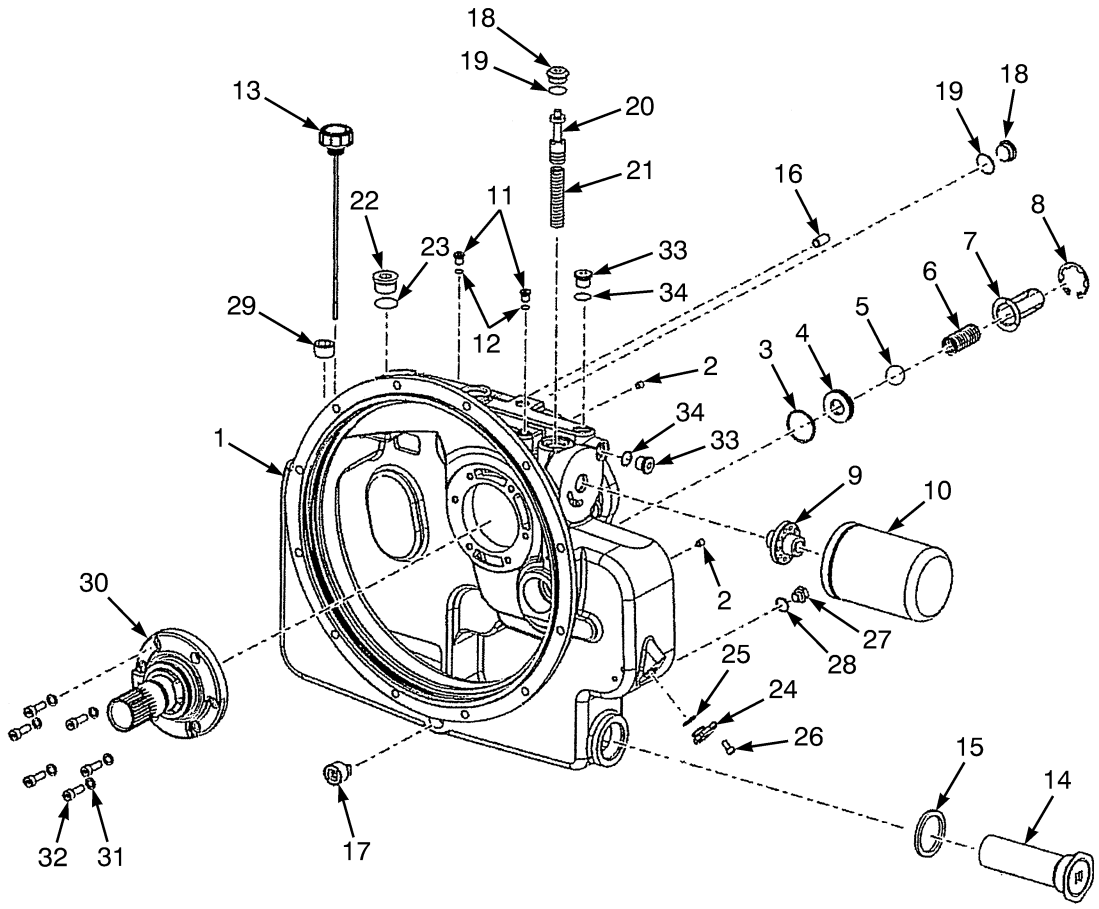

BP080830

©2011 HYSTER COMPANY

TRANSMISSION ASSEMBLY

TWO SPEED – SHEET 1 OF 2 (S/N J006V02110G →)

ITEM	PART NO.	DESCRIPTION	QTY
	1699927	Transmission Assy (Two Speed)	1
1	1707796	Converter Housing	1
2	1655515	Plug	1
3	1707736	O-Ring	1
4	1707737	Spacer	1
5	1655452	Ball	1
6	1655453	Spring	1
7	1655454	Retainer	1
8	1655455	Snap Ring	1
9	1612863	Adapter	1
10	1655472	Transmission Filter	1
11	1655460	Plug	2
12	1557008	O-Ring	2
13	1707738	Dipstick And Breather	1
14	330514	Screen	1
15	330513	Gasket	1
16	330502	Pin	2
17	1311544	Drain Plug	1
18	1624368	Plug	2
19	1612905	O-Ring	2
20	1655466	Spool	1
21	1655467	Spring	1
22	1556918	Plug	1
23	16486	O-Ring	1
24	1655468	Plug	1
25	1530732	O-Ring	1
26	1556910	Capscrew	1
27	1612305	Plug	1
28	1684329	Washer	1
29	1311552	Plug	1
30	1655457	Support	1
31	1590532	Lockwasher	6
32	1655458	Screw	6
33	1655459	Plug	2
34	60653	O-Ring	2
	1709809	Kit-Gasket	1

©2011 HYSTER COMPANY

TRANSMISSION ASSEMBLY (FIGURE 5-16)

TWO SPEED — SHEET 2 OF 2 (S/N J006V02110G →)

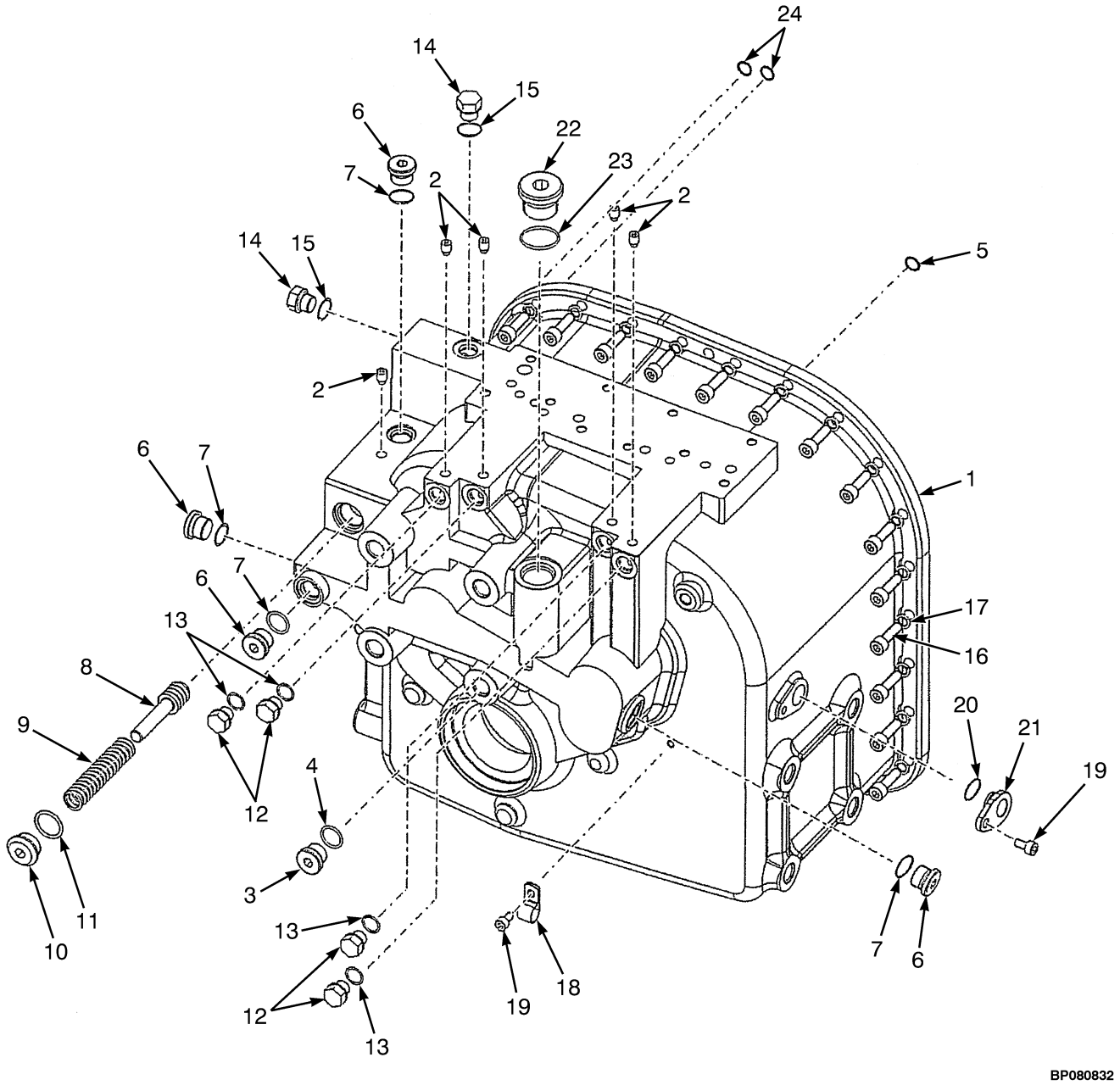

©2011 HYSTER COMPANY

TRANSMISSION ASSEMBLY

TWO SPEED – SHEET 2 OF 2 (S/N J006V02110G →)

ITEM	PART NO.	DESCRIPTION	QTY
	1699927	Transmission Assy (Two Speed)	1
1	1707798	Transmission Housing	1
2	1655515	Plug	5
3	1655521	Plug	1
4	60653	O-Ring	1
5	87281	O-Ring	3
6	1655459	Plug	4
7	60653	O-Ring	4
8	1655517	Spool	1
9	1655518	Spring	1
10	1624368	Plug	1
11	1612905	O-Ring	1
12	1557007	Plug	4
13	1557008	O-Ring	4
14	14594	Plug	2
15	16483	O-Ring	2
16	1655458	Screw	23
17	1556998	Lockwasher	23
18	1655522	Clip	1
19	1556910	Capscrew	2
20	1655468	Plug	1
21	1530732	O-Ring	1

©2011 HYSTER COMPANY

REVERSE CLUTCH (FIGURE 5-17)
TWO SPEED TRANSMISSION

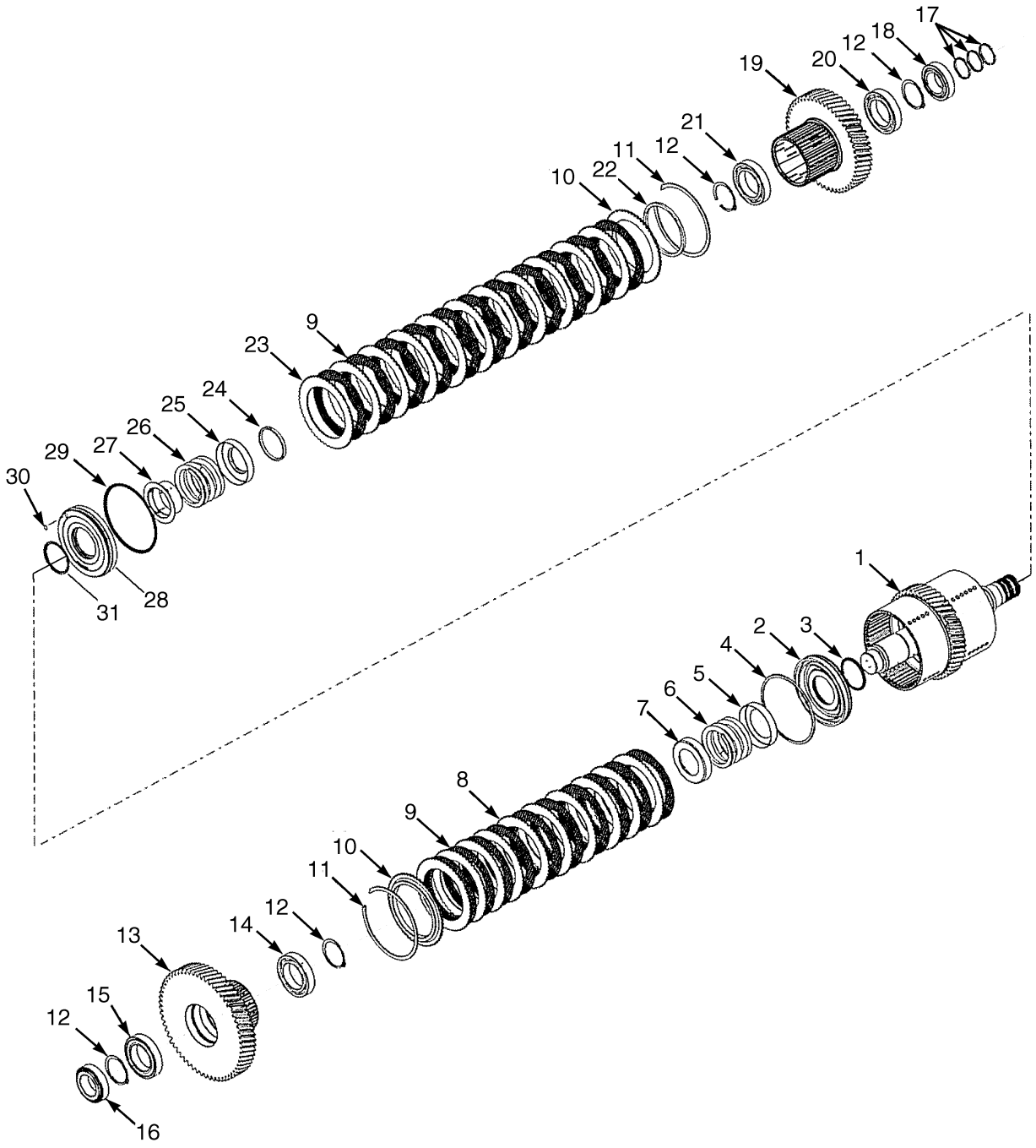

BP240121

©2011 HYSTER COMPANY

REVERSE CLUTCH
TWO SPEED TRANSMISSION

ITEM	PART NO.	DESCRIPTION	QTY
1	**a** 1655604	Shaft	1
1	**b** 1707762	Shaft	1
2	1655546	Clutch Piston	1
3	1655547	Seal	1
4	1311811	Piston Seal	1
5	1655605	Retainer	1
6	1655610	Spring	1
7	1655556	Retainer	1
8	1556965	Separator Plate (Outer)	10
9	1655548	Friction Disk (Inner, High Density)	21
10	1655552	Plate	2
11	1311810	Snap Ring	2
12	1655561	Snap Ring	4
13	1655609	Gear (1st Clutch)	1
14	330590	Bearing	1
15	1312359	Bearing	1
16	**b** 1707750	Retaining Ring	1
17	1556985	Piston Ring	3
18	1655607	Bearing	2
19	**a** 1655612	Gear (Reverse Clutch)	1
19	**b** 1707838	Gear	1
20	1312359	Bearing	1
21	330590	Bearing	1
22	**a** 1707750	Retaining Ring	1
23	**a** 1655553	Seal	1
23	**b** 1707746	Sealing Ring	1
24	1655549	Separator Plate (Outer)	11
25	**a** 1655601	Snap Ring	1
25	**b** 1655561	Snap Ring	1
26	1655606	Retainer	1
27	1655554	Spring	1
28	1655555	Retainer	1
29	1655551	Clutch Pack	1
30	1311811	Piston Seal	1
31	1655547	Seal	1
32	. . . . .	Screen	1

FOOTNOTES:

a → S/N J006V02109G

b S/N J006V02110G →

©2011 HYSTER COMPANY

OUTPUT SHAFT (FIGURE 5-18)
TWO SPEED TRANSMISSION

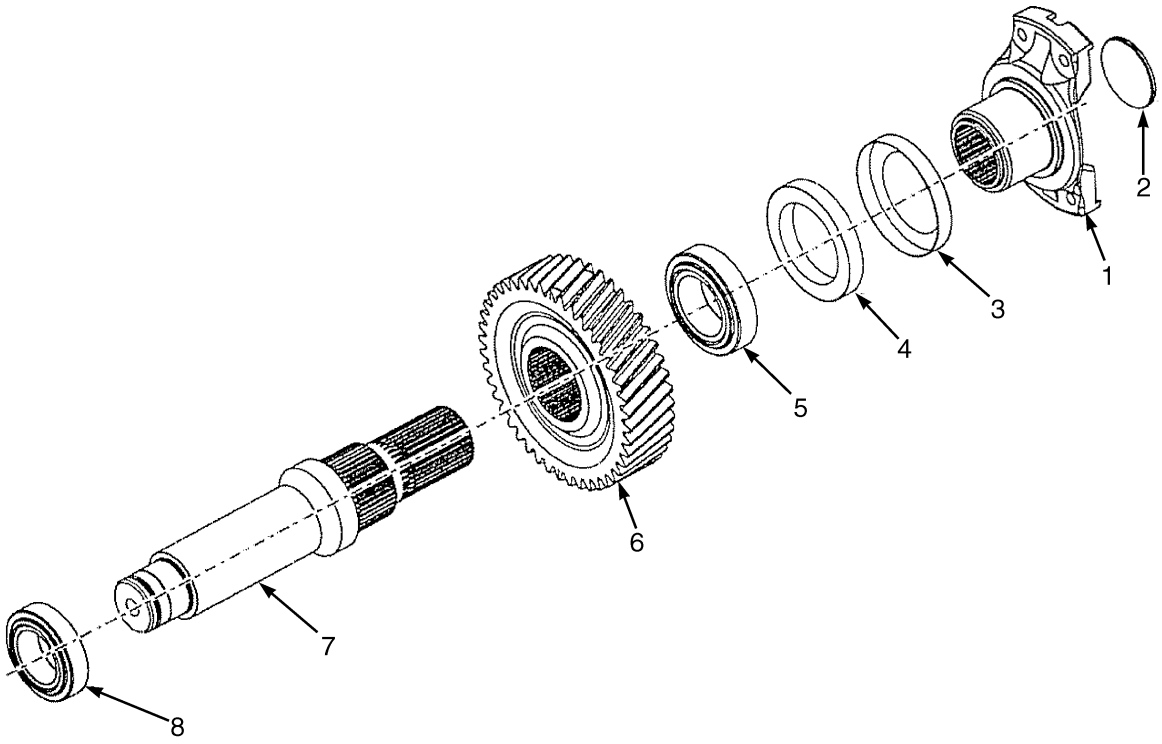

BP240122

ITEM	PART NO.	DESCRIPTION	QTY
1	**a** 1694477	Flange	1
1	**b** 1707769	Flange	1
2	**a** 1655624	Plug	1
2	**b** 1707770	Plug	1
3	1655623	Cover	1
4	1655621	Oil Seal	1
5	1655627	Bearing	1
6	. . . . .	Gear	1
7	1694476	Shaft	1
8	1655607	Bearing	1

FOOTNOTES:

a → S/N J006V02109G

b S/N J006V02110G →

©2011 HYSTER COMPANY

NOTES

©2011 HYSTER COMPANY

FORWARD CLUTCH LOW (FIGURE 5-19)
TWO SPEED TRANSMISSION

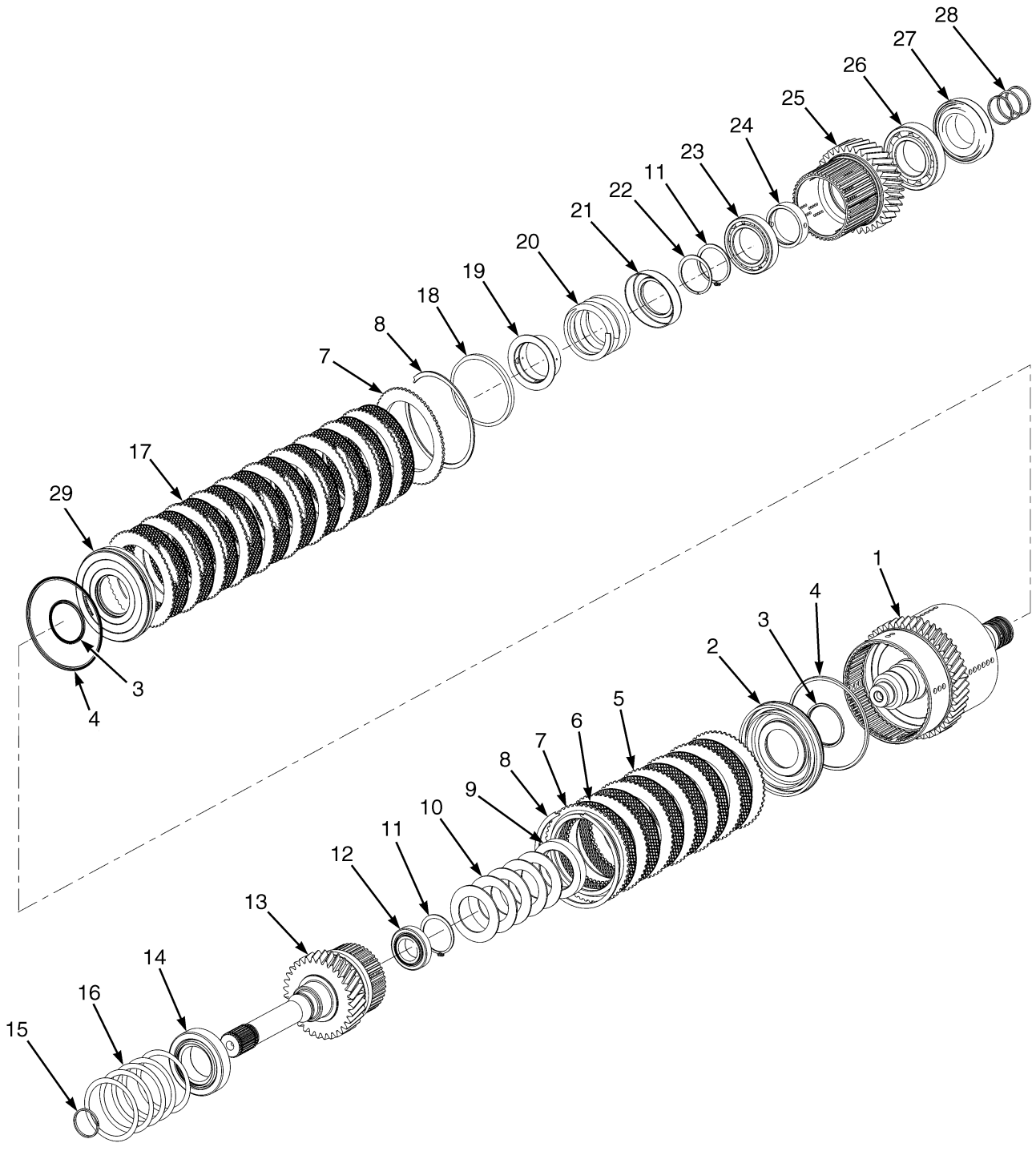

BP240143

©2011 HYSTER COMPANY

FORWARD CLUTCH LOW
TWO SPEED TRANSMISSION

ITEM	PART NO.	DESCRIPTION	QTY
1	**a** 1655545	Shaft	1
1	**b** 1707745	Shaft	1
2	1655546	Clutch Piston	1
3	1655547	Seal	1
4	1311811	Piston Seal	1
5	1655548	Friction Disk (Inner, High Density)	17
6	1556965	Separator Plate (Outer)	6
7	1655552	Plate	2
8	1311810	Snap Ring	2
9	1655558	Spacer	1
10	1655557	Disk Spring	1
11	1655561	Snap Ring	2
12	1655562	Bearing	1
13	1655596	Shaft (Forward)	1
14	1655597	Bearing	1
15	1556985	Piston Ring	1
16	1655598	Shim	AR
16	1655599	Shim	AR
16	1655600	Shim	AR
16	**b** 1707750	Retaining Ring	AR
17	1655549	Separator Plate (Outer)	11
18	**a** 1655553	Seal	1
18	**b** 1707746	Sealing Ring	1
19	1655555	Retainer	1
20	1655554	Spring	1
21	1655556	Retainer	1
22	1655601	Snap Ring	1
23	330590	Bearing	1
24	**a** 1655560	Spacer	1
24	**b** 1707748	Spacer	1
25	**a** 1655602	Gear (Forward Clutch)	1
25	**b** 1707836	Clutch Gear	1
26	**a** 1612529	Bearing	1
26	**b** 1389220	Bearing	1
27	1655550	Bearing	1
28	1556985	Piston Ring	3
29	1707750	Retaining Ring	1
30	1655551	Clutch Pack	1
31	1655547	Seal	1
32	1311811	Piston Seal	1
33	. . . . .	Screen	1

FOOTNOTES:

a → S/N J006V02109G

b S/N J006V02110G →

©2011 HYSTER COMPANY

CONTROL VALVE (FIGURE 5-20)
TWO SPEED TRANSMISSION

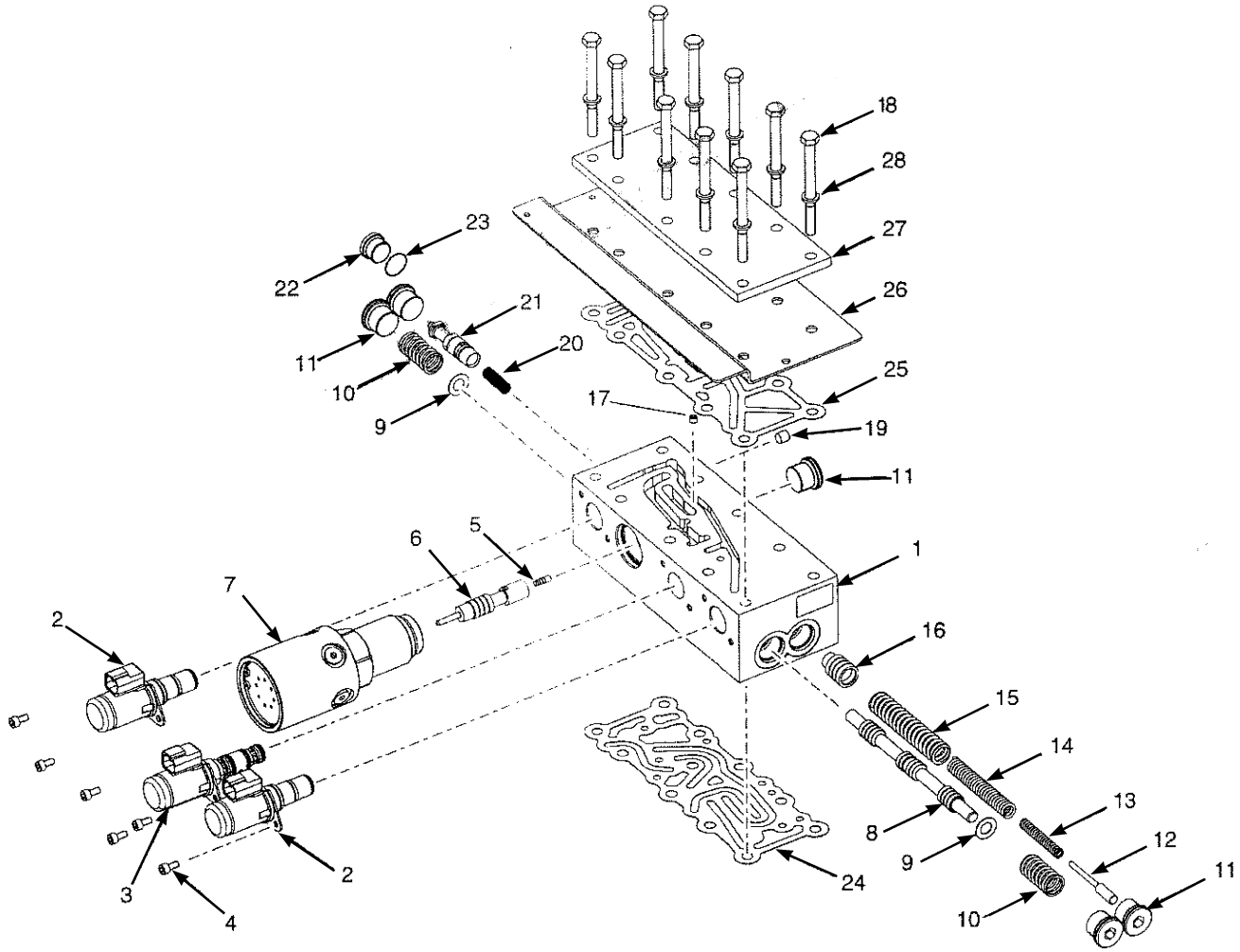

BP240144

©2011 HYSTER COMPANY

CONTROL VALVE
TWO SPEED TRANSMISSION

ITEM	PART NO.	DESCRIPTION	QTY
	1684331	Hydraulic Control Valve	1
2	1655642	Solenoid	2
3	1655645	Solenoid	1
4	1655638	Capscrew	6
5	1659220	Piston (Inching)	1
6	1684332	Spool	1
7	~~1655644~~		
	1684333	Inching Valve	1
8	1684334	Spool	1
9	1684335	Spacer	2
10	1684336	Spring	2
11	1684337	Plug	5
12	1684338	Pin	1
13	1684339	Spring	1
14	1659210	Spring	1
15	1684340	Spring	1
16	1684341	Spool	1
17	1684342	Plug	1
18	1557009	Capscrew	10
19	1684343	Plug	1
20	1684344	Spring	1
21	1684345	Spool	1
22	235691	Fitting	1
23	16484	O-Ring	1
24	1684346	Gasket (Body To Transmission Case)	1
25	1684347	Gasket (Cover to Body)	1
26	1684348	Plate (Solenoid Protection)	1
27	1684349	Cover (Control Valve)	1
28	1590532	Lockwasher	10

©2011 HYSTER COMPANY

CHARGE PUMP (FIGURE 5-21)

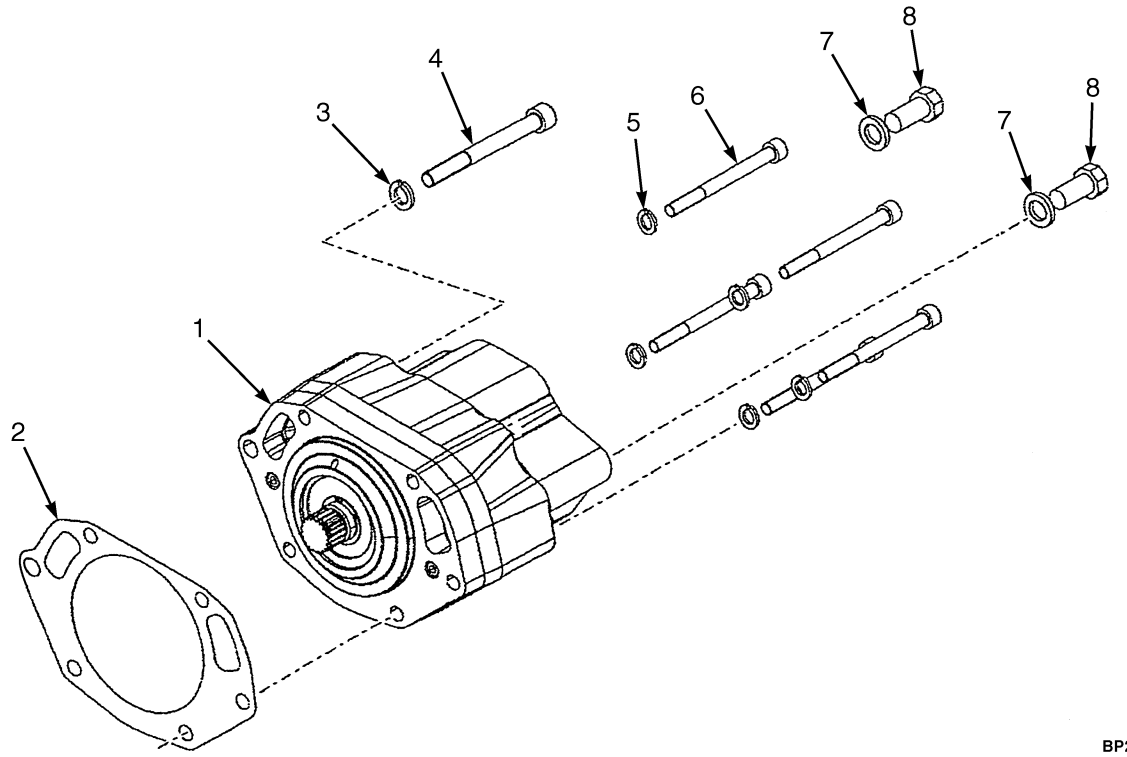

ITEM	PART NO.	DESCRIPTION	QTY
1	1655527	Charge Pump	1
2	1655528	Gasket	1
3	1612314	Lockwasher	1
4	1655530	Capscrew	1
5	1590532	Lockwasher	5
6	1655529	Capscrew	5
7	1612870	Lockwasher	2
8	1655531	Capscrew	2

©2011 HYSTER COMPANY

NOTES

©2011 HYSTER COMPANY

PUMP DRIVE (FIGURE 5-22)

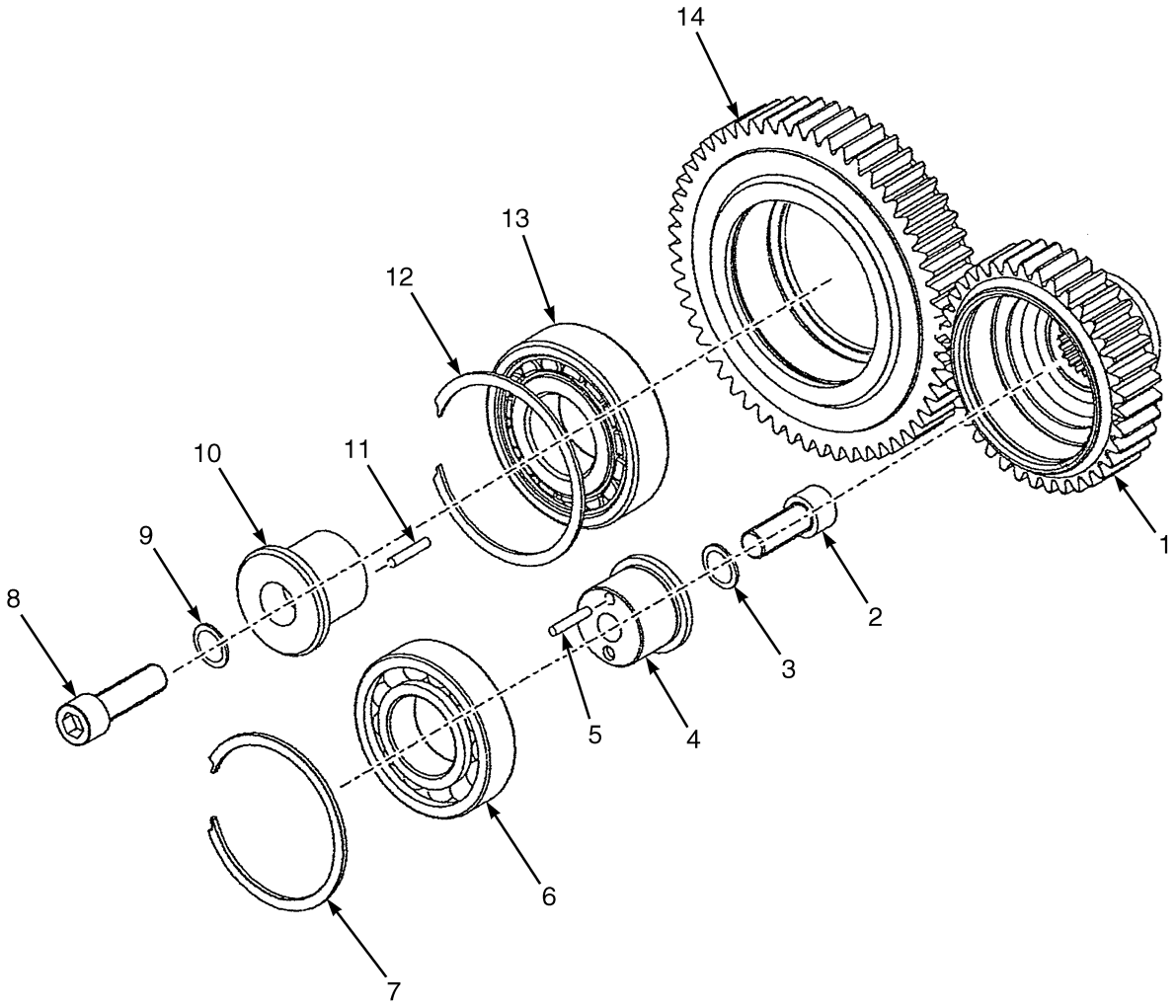

©2011 HYSTER COMPANY

PUMP DRIVE

ITEM	PART NO.	DESCRIPTION	QTY
1	1684268	Drive Gear	1
2	1655542	Capscrew	1
3	1624602	Lockwasher	1
4	1655541	Support	1
5	1655543	Pin	1
6	**ab** 1655539	Ball Bearing	1
6	**cd** 1707743	Ball Bearing	1
7	1311803	Retaining Ring	1
8	1655536	Screw	1
9	1655537	Lockwasher	1
10	1655535	Support	1
11	1655534	Pin	1
12	1612711	Snap Ring	1
13	1612710	Bearing	1
14	1684266	Idler Gear (Pump Drive)	1

FOOTNOTES:

a → S/N J006V02109G (Two Speed)
b → S/N J006V02222G (Three Speed)
c S/N J006V02110G → (Two Speed)
d S/N J006V02223G →

©2011 HYSTER COMPANY

NOTES

©2011 HYSTER COMPANY

6 DRIVE AXLE

SECTION 6
DRIVE AXLE

DESCRIPTION	PAGE
DIFFERENTIAL	6-8
DRIVE AXLE AND ATTACHING PARTS	
WET BRAKE	6-4
DRIVE AXLE HOUSING AND HUB	6-6
DRIVE TIRE AND WHEEL	6-2
WET BRAKE ASSEMBLY	6-10

©2011 HYSTER COMPANY

DRIVE TIRE AND WHEEL (FIGURE 6-1)

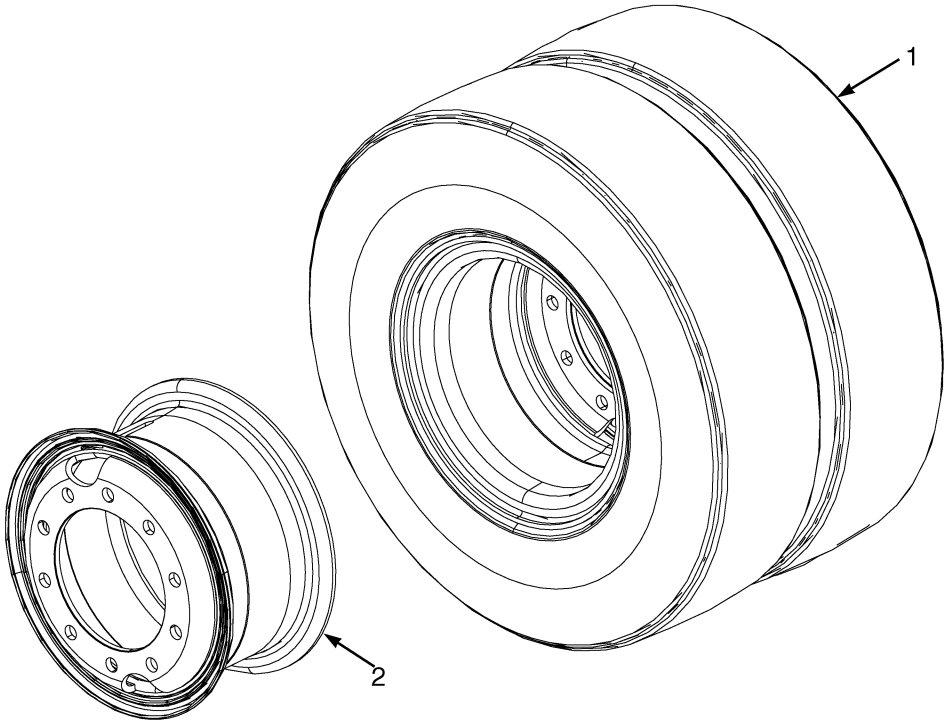

BP070060

KEY:
A: 8.25 x 15 Pneumatic
B: 8.25 x 15 Solid Pneumatic

ITEM	PART NO.	DESCRIPTION	QTY A	QTY B
1	1656755	Tire (Monarch)	..	4
1	1547352	Tire (Monarch) (Alternate Part)	..	4
1	1547351	Tire (Trell)	4	..
1	1358182	Tire (Radial)	4	..
1	**a** 1471598	Tubeless Bead Seal	1	1
1	**a** 1471922	Tubeless Bead Seal Valve	1	1
2	2094200	Wheel Assy	4	4

FOOTNOTES:

a Radial Tires Only

©2011 HYSTER COMPANY

NOTES

©2011 HYSTER COMPANY

DRIVE AXLE AND ATTACHING PARTS (FIGURE 6-2)
WET BRAKE

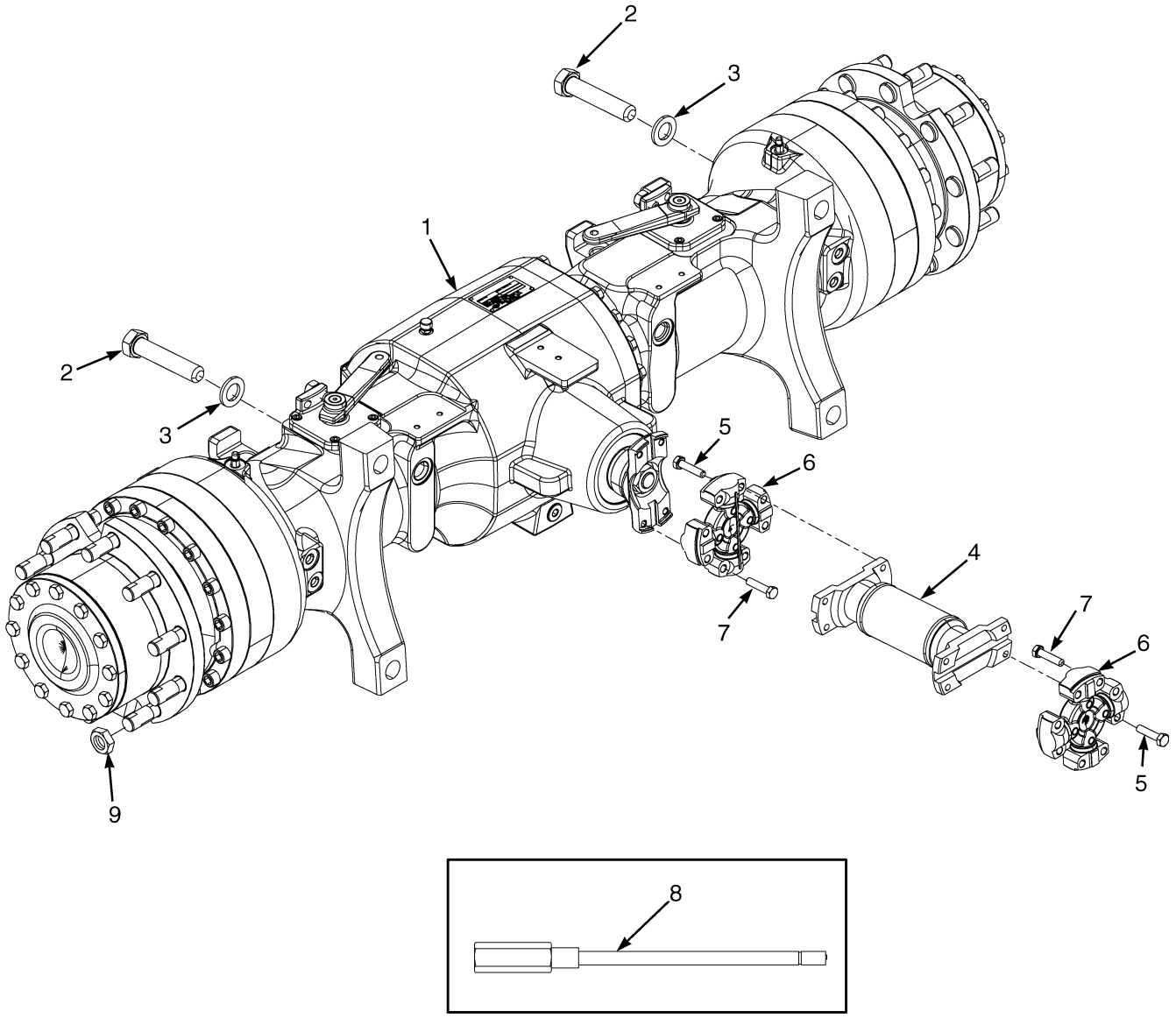

BP070056

©2011 HYSTER COMPANY

DRIVE AXLE AND ATTACHING PARTS
WET BRAKE

KEY:
A: S135FT
B: S155FT

ITEM	PART NO.	DESCRIPTION	QTY A	QTY B
1	**ae** 2078968	Drive Axle (14.8 Overall Ratio)	1	..
1	**d** 2078969	Drive Axle (15.4 Overall Ratio)	..	1
2	226430	Capscrew	4	4
3	296434	Washer	4	4
4	1598063	Drive Shaft	1	1
4	1672700	Yoke	1	1
5	1672699	Capscrew	8	8
6	1672695	Gasket	2	2
7	1566514	Capscrew	8	8
8	**b** ~~1303417~~ 49189	Extension (Valve Stem)	2	2
8	**c** 2028341	Extension	2	2
9	376026	Wheel Nut	20	20

FOOTNOTES:

a Cummins 3.3L Diesel
b Used with Bias Ply Tires
c Used with Radial Tires
d Used with Two and Three Speed Transmissions
e Used with Two Speed Transmissions

©2011 HYSTER COMPANY

DRIVE AXLE HOUSING AND HUB (FIGURE 6-3)

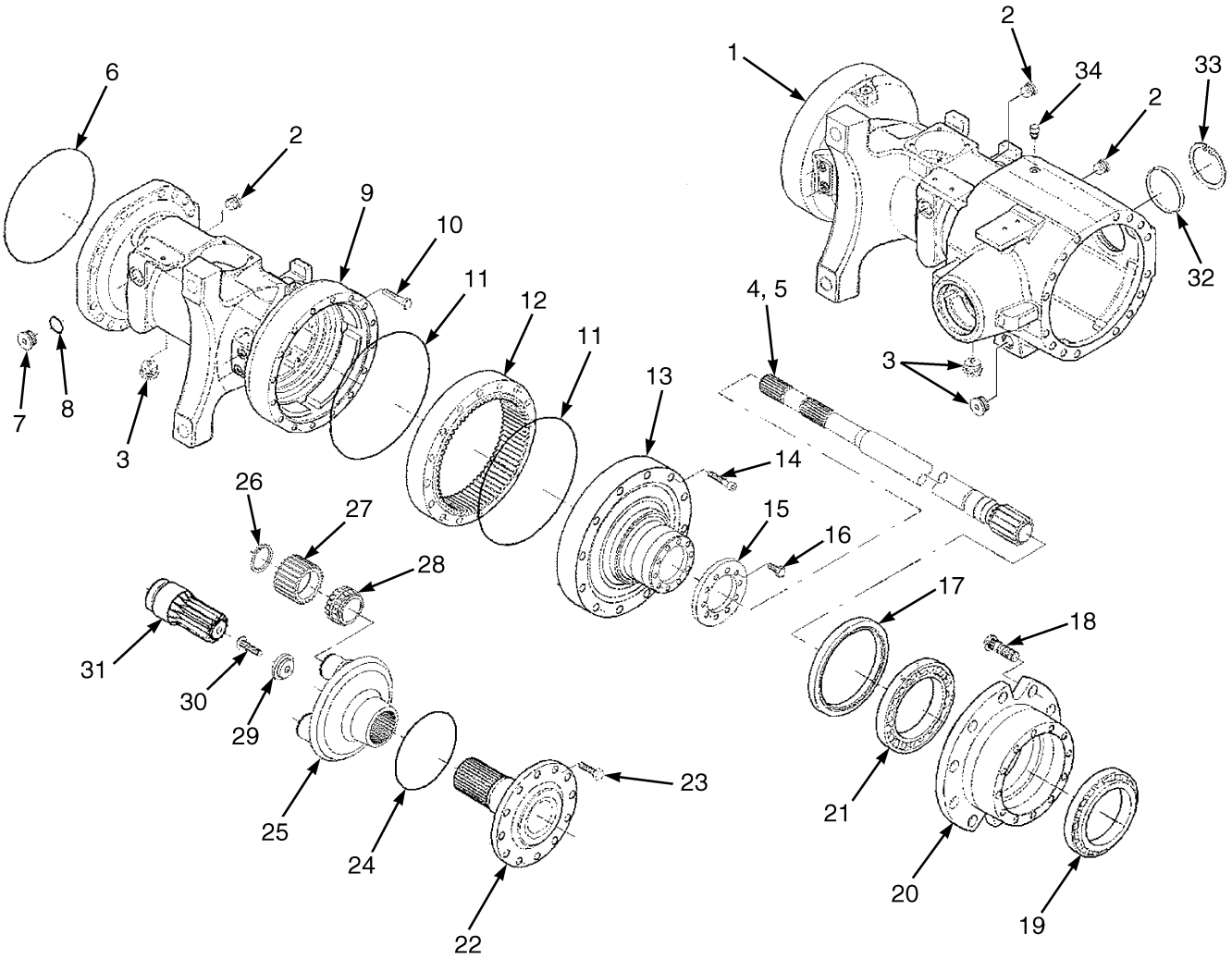

BP070057

©2011 HYSTER COMPANY

DRIVE AXLE HOUSING AND HUB

ITEM	PART NO.	DESCRIPTION	QTY
	2078968	Drive Axle (14.8 Overall Ratio)	1
	2078969	Drive Axle (15.4 Overall Ratio)	1
1	1657746	Drive Axle Housing (RH)	1
2	1623544	Plug	3
3	1623545	Drain Plug	3
4	1657765	Shaft (Short)	1
5	1657766	Shaft (Long)	1
6	1644260	O-Ring	1
7	1641352	Plug	2
8	1623671	O-Ring	2
9	1657767	Drive Axle Housing (LH)	1
10	1657747	Bolt	16
11	1657748	O-Ring	4
12	1657749	Ring Gear	2
13	1657756	Flange	2
14	1657750	Bolt	32
15	1657758	Washer	2
16	1657759	Bolt	20
17	1657751	Ring	2
18	1657754	Stud	20
19	1657757	Bearing	2
20	1657753	Wheel Hub	2
21	1657752	Bearing	2
22	1657760	Shaft (Half)	2
23	1623643	Bolt	24
24	1657755	O-Ring	2
25	1657768	Carrier	2
25	. . . . .	Planetary Gear Carrier	2
26	1644275	Snap Ring	6
27	1644276	Gear	6
28	1644277	Bearing	6
29	1657763	Spacer	2
30	1657762	Bolt	2
31	1657761	Pinion	2
32	1644229	Plug	1
33	1612530	Snap Ring	1
34	1623576	Plug (Ventilation)	1

©2011 HYSTER COMPANY

DIFFERENTIAL (FIGURE 6-4)

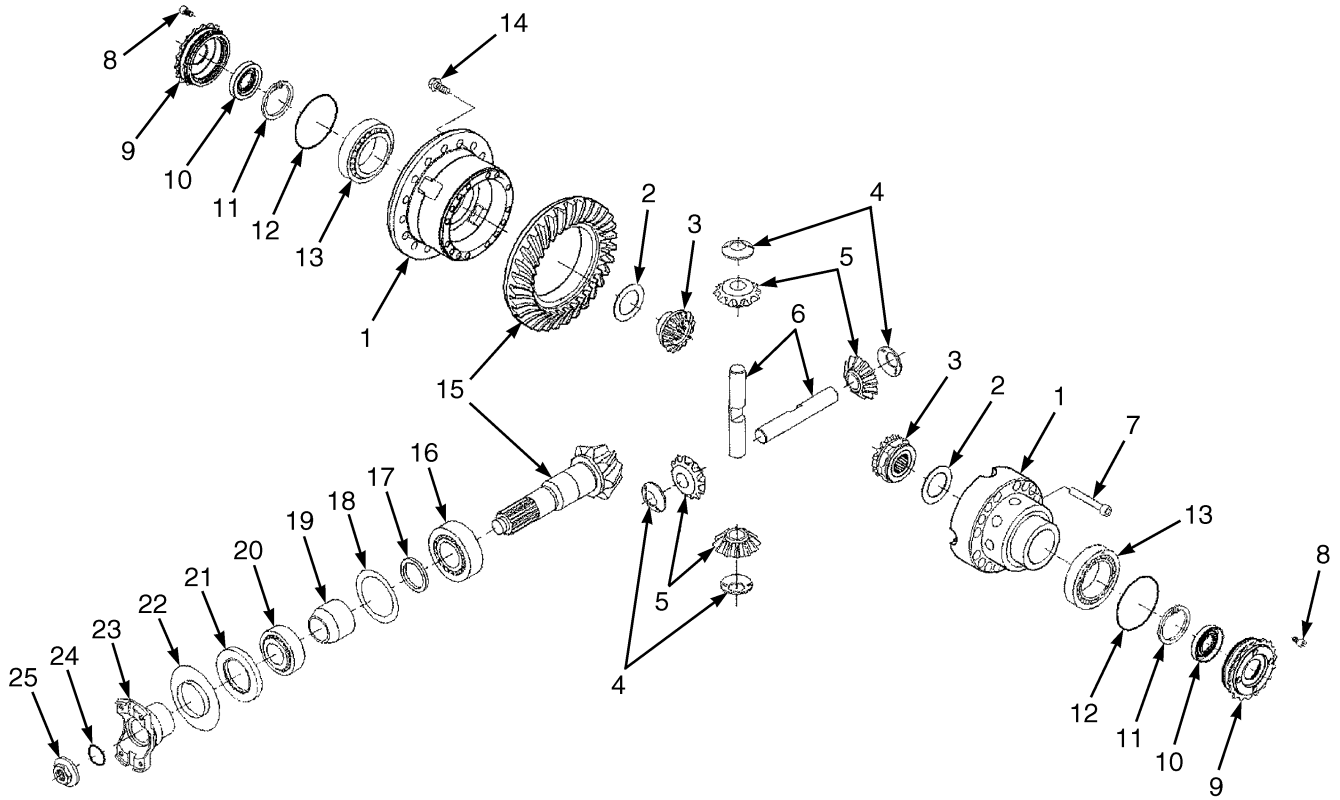

©2011 HYSTER COMPANY

DIFFERENTIAL

ITEM	PART NO.	DESCRIPTION	QTY
	2078968	Drive Axle (14.8 Overall Ratio)	1
	2078969	Drive Axle (15.4 Overall Ratio)	1
	1644256	Differential	1
1	1644250	Differential Carrier	1
2	1644251	Washer	2
3	1644252	Gear	2
4	1644254	Washer	4
5	1644255	Pinion	4
6	1644253	Pin	2
7	1644257	Bolt	15
8	1623593	Bolt	2
9	1644246	Nut	2
10	1644247	Seal	2
11	1612530	Snap Ring	2
12	1644245	O-Ring	2
13	1644248	Bearing	2
14	1644249	Bolt	2
15	1644244	Gear and Pinion (14.8 Overall Ratio)	1
15	1644673	Gear and Pinion (15.4 Overall Ratio)	1
16	1644243	Bearing	1
17	1657852	Kit-Shim	1
18	1644238	Shim (0.1 mm)	1
18	1644239	Shim (0.2 mm)	1
18	1644240	Shim (0.5 mm)	1
18	1644241	Shim (0.15 mm)	1
19	1644237	Spacer	1
20	1623573	Bearing	1
21	1644236	Seal	1
22	1644235	Cover Plate	1
23	1644233	Flange	1
24	1644234	O-Ring	1
25	1644232	Nut	1

©2011 HYSTER COMPANY

WET BRAKE ASSEMBLY (FIGURE 6-5)

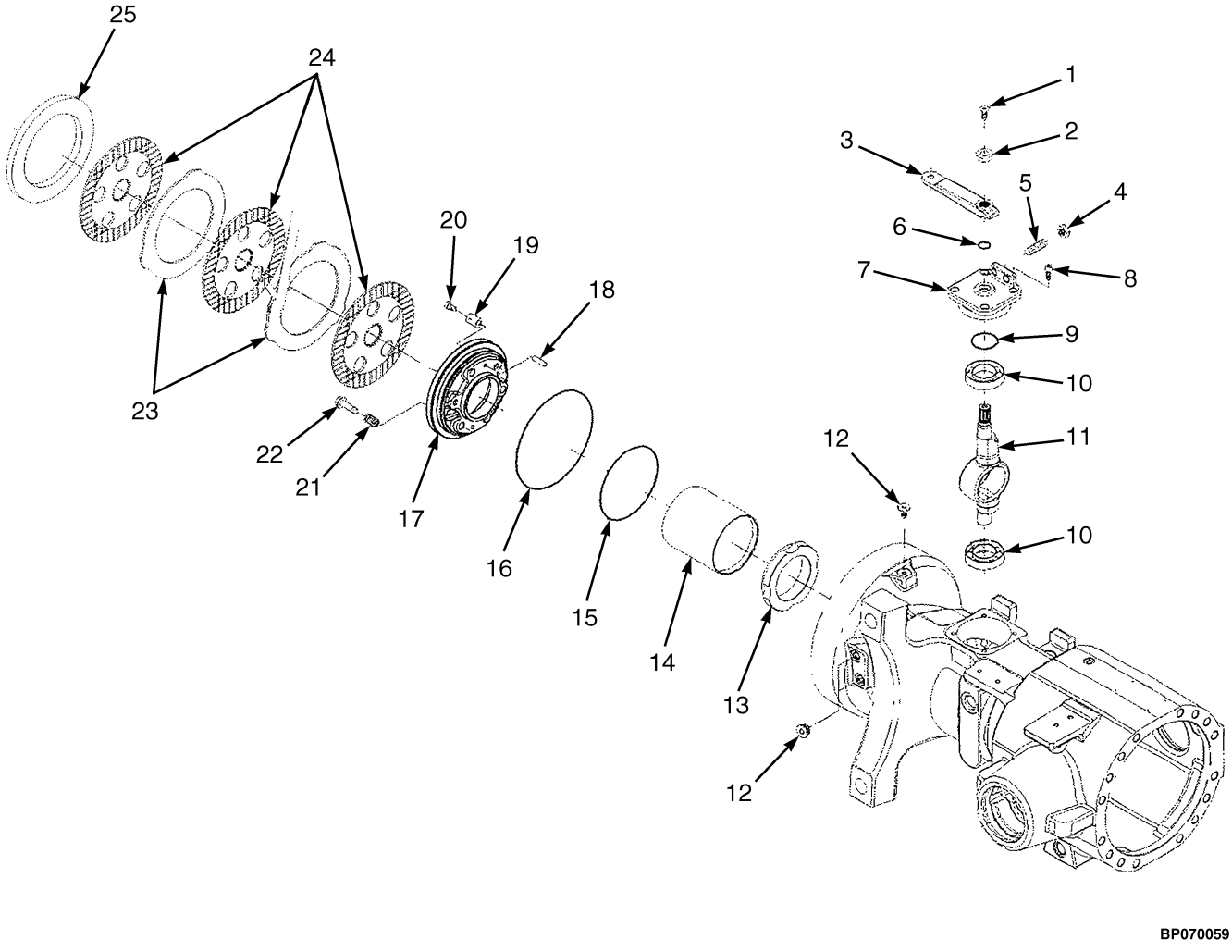

©2011 HYSTER COMPANY

WET BRAKE ASSEMBLY

ITEM	PART NO.	DESCRIPTION	QTY
	2078968	Drive Axle (14.8 Overall Ratio)	1
	2078969	Drive Axle (15.4 Overall Ratio)	1
1	1623669	Bolt	2
2	1623694	Spacer	2
3	1657770	Lever	2
4	1623696	Nut	2
5	1657771	Bolt	2
6	1623671	O-Ring	2
7	1657772	Bushing	2
8	1623672	Bolt	8
9	1623673	O-Ring	2
10	1623674	Bearing	4
11	1623675	Lever	2
12	1644305	Bolt	6
13	1627823	Disk	2
14	1657774	Spacer	2
15	1657777	Seal	2
16	1657776	O-Ring	2
17	1657778	Piston	2
18	1644294	Dowel	4
19	1623690	Spring	6
20	1657779	Bolt	6
21	1657773	Spring	6
22	1657782	Bolt	6
23	1657781	Disk (Intermediate)	8
24	1657780	Disk (Friction)	6
25	1657775	Disk	2

©2011 HYSTER COMPANY

NOTES

©2011 HYSTER COMPANY

7 STEERING SYSTEM

SECTION 7
STEERING SYSTEM

DESCRIPTION	PAGE
STEER AXLE	
→ 7/2009	7-10
7/2009 →	7-14
STEER COLUMN AND ATTACHING PARTS	
DIESEL	7-2
GASOLINE AND LPG	7-3
STEER CYLINDER	
→ 7/2009	7-17
7/2009 →	7-18
STEER TIRE AND WHEEL	7-19
STEERING COLUMN ASSEMBLY	7-4
STEERING CONTROL UNIT	7-6
STEERING LINES	7-8

©2011 HYSTER COMPANY

STEER COLUMN AND ATTACHING PARTS (FIGURE 7-1)

DIESEL

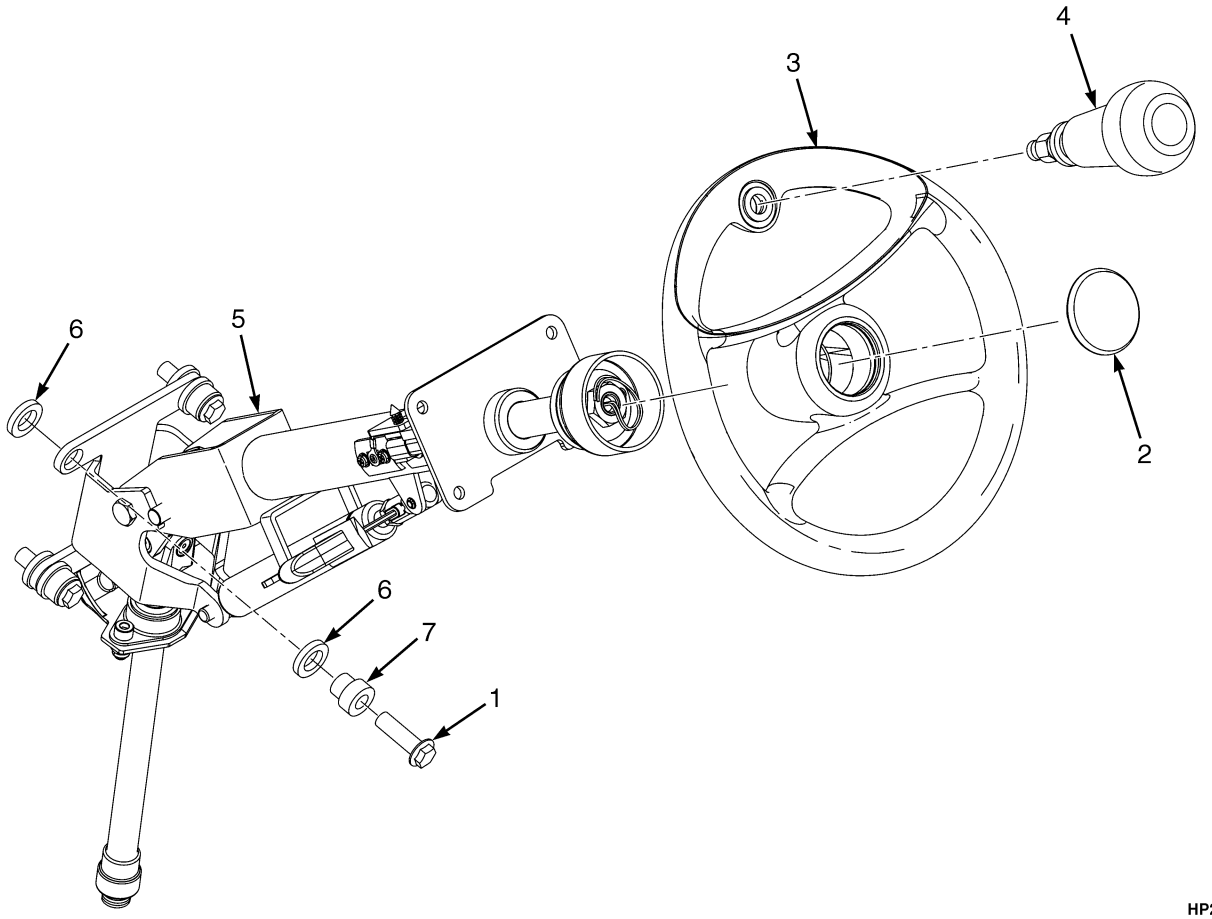

HP220499

ITEM	PART NO.	DESCRIPTION	QTY
1	1512403	Capscrew	4
2	1608622	Horn Button	1
3	1551839	Steering Wheel (Without Spinner Knob)	1
3	1531563	Steering Wheel (With Spinner)	1
4	1586109	Knob Assembly	1
5	**a** 1657959	Steering Column (☞Figure 7-3)	1
5	**b** 4023451	Steering Column (☞Figure 7-3)	1
6	2079369	Isolator	8
7	1606750	Spacer	4

FOOTNOTES:

a → 1/2011

b 1/2011 →

©2011 HYSTER COMPANY

STEER COLUMN AND ATTACHING PARTS (FIGURE 7-2)
GASOLINE AND LPG

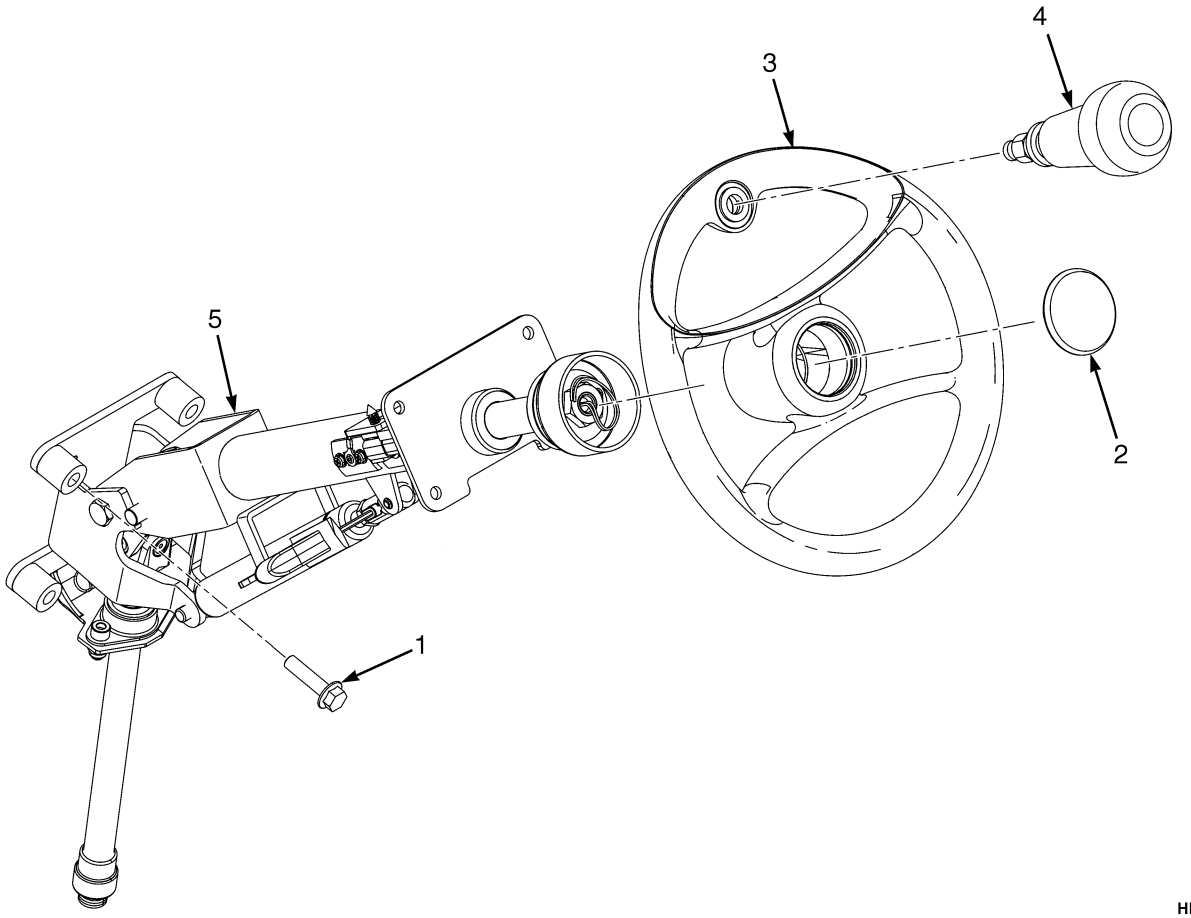

HP220500

ITEM	PART NO.	DESCRIPTION	QTY
1	1512403	Capscrew	4
2	1608622	Horn Button	1
3	1551839	Steering Wheel (Without Spinner Knob)	1
3	1531563	Steering Wheel (With Spinner)	1
4	1586109	Knob Assembly	1
5	**a** 1657962	Steering Column (☞Figure 7-3)	1
5	**b** 4023450	Steering Column (☞Figure 7-3)	1

FOOTNOTES:

a → 1/2011

b 1/2011 →

STEERING COLUMN ASSEMBLY (FIGURE 7-3)

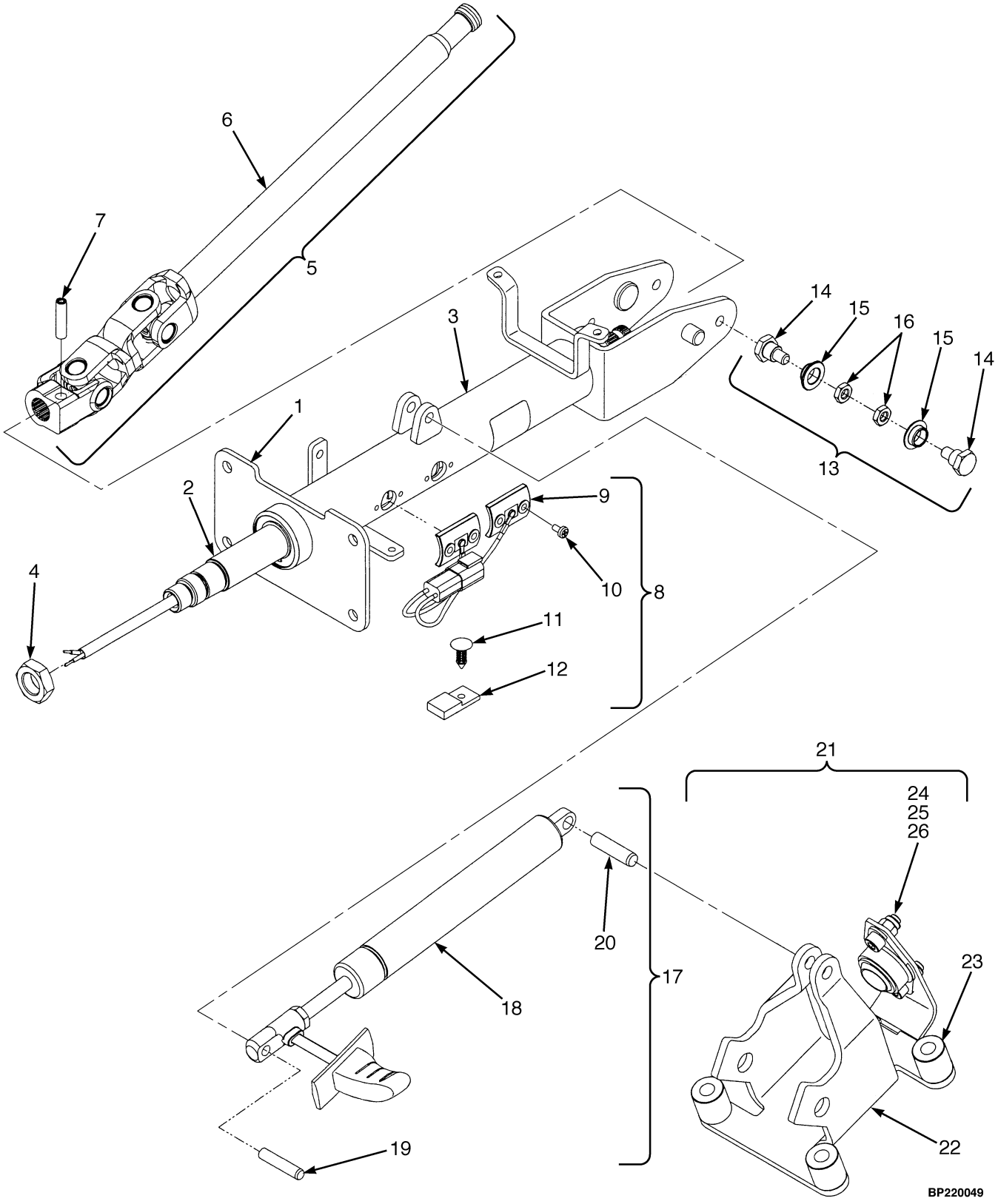

©2011 HYSTER COMPANY

STEERING COLUMN ASSEMBLY

ITEM	PART NO.	DESCRIPTION	QTY
	a 1657962	Steering Column (Gasoline and LPG)	1
	b 4023450	Steering Column (Gasoline and LPG)	1
	a 1657959	Steering Column (Diesel)	1
	b 4023451	Steering Column (Diesel)	1
1	1562489	Kit-Shaft (Upper)	1
1	**a** 1647528	Kit-Shaft (Upper)	1
1	**b** 4028642	Kit (Shaft Upper)	1
2	. . . . .	Shaft Assembly (Upper)	1
3	. . . . .	Housing	1
4	1562492	Kit-Nut	1
4	. . . . .	Nut	2
5	1562493	Kit-Shaft (Lower)	1
6	. . . . .	Shaft Assembly (Lower)	1
7	. . . . .	Pin	1
8	1562496	Kit-Contact	1
9	. . . . .	Contact Assembly (Horn)	1
10	. . . . .	Screw	4
11	. . . . .	Fastener	1
12	. . . . .	Connector	1
13	1562501	Kit-Pivot (Lower)	1
14	. . . . .	Bolt (Pivot)	2
15	. . . . .	Bushing	2
16	. . . . .	Nut	2
17	1562505	Kit-Gas Spring	1
18	. . . . .	Gas Spring	1
19	. . . . .	Pin	1
20	. . . . .	Pin	1
21	1647530	Kit-Support (Diesel)	1
21	1562509	Kit-Support (Gasoline and LPG)	1
21	. . . . .	Joint	1
22	. . . . .	Support	1
23	. . . . .	Spacer (Gasoline and LPG Only)	4
24	. . . . .	Nut	2
25	. . . . .	Washer	2
26	. . . . .	Screw	2

FOOTNOTES:

a → 1/2011

b 1/2011 →

©2011 HYSTER COMPANY

STEERING CONTROL UNIT (FIGURE 7-4)

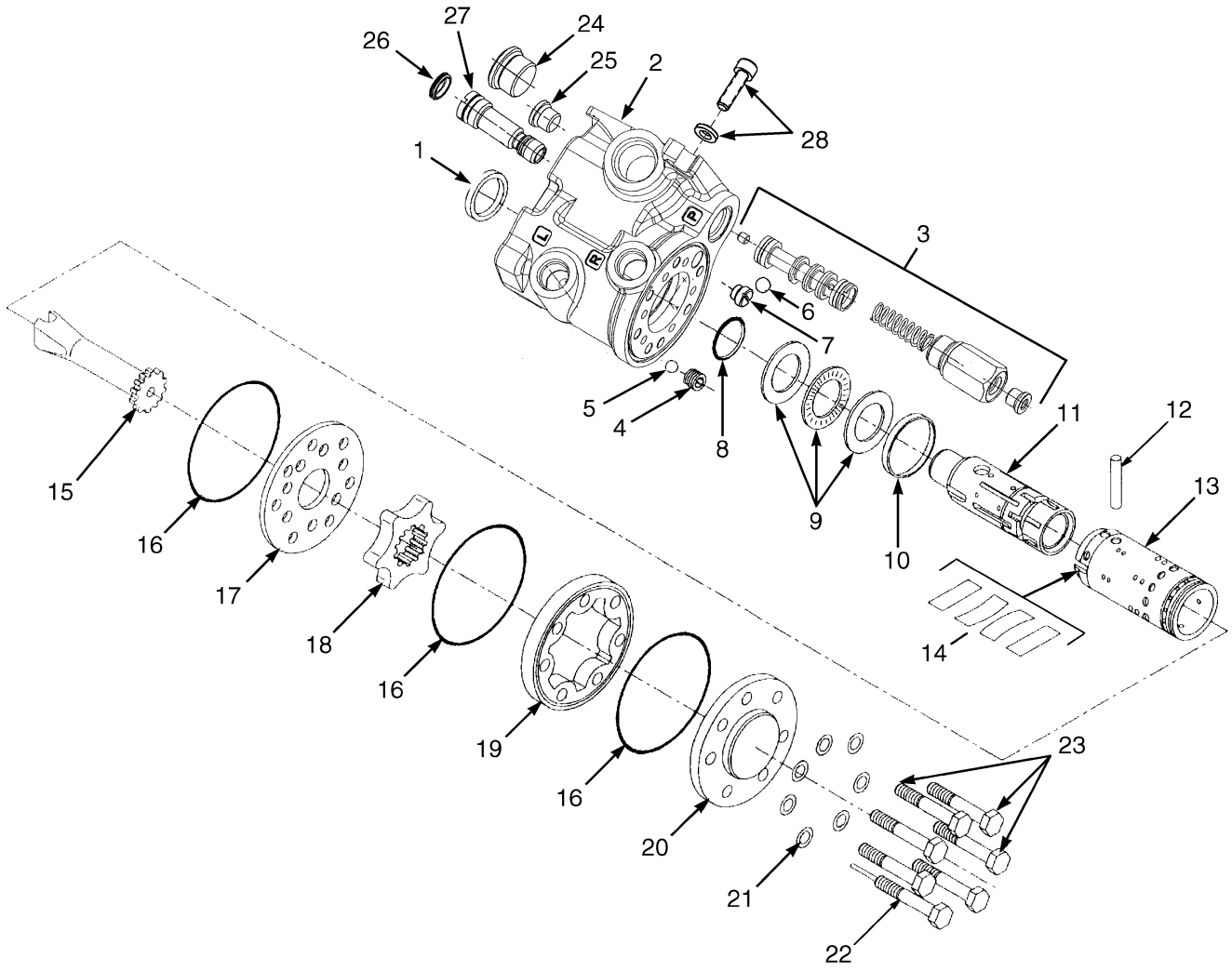

BP220103

©2011 HYSTER COMPANY

STEERING CONTROL UNIT

ITEM	PART NO.	DESCRIPTION	QTY
	2102566	Steering Control Unit (200cc)	1
1	. . . . .	Dust Seal	1
2	. . . . .	Housing	1
3	. . . . .	Relief Valve	1
4	. . . . .	Bushing	1
5	. . . . .	Check Ball	1
6	. . . . .	Check Ball	1
7	. . . . .	Seat	1
8	. . . . .	O-Ring	1
9	. . . . .	Bearing Set	1
10	. . . . .	Ring	1
11	. . . . .	Spool	1
12	. . . . .	Pin	1
13	. . . . .	Sleeve	1
14	. . . . .	Spring Set	1
15	. . . . .	Shaft	1
16	. . . . .	O-Ring	3
17	. . . . .	Plate	1
18	. . . . .	Gear Set	1
19	. . . . .	Gear Ring	1
20	. . . . .	Cover	1
21	. . . . .	Washer	7
22	. . . . .	Special Screw	2
23	. . . . .	Capscrew	5
24	. . . . .	Priority Valve Plug	1
25	. . . . .	Diagnostic Plug (Supply Pressure)	1
26	. . . . .	Cap	1
27	. . . . .	System Relief Valve	1
28	. . . . .	Mounting Bolts	1
	1579908	Kit-Seal	1
	1676606	Kit (Load Sense Alteration Kit)	1

©2011 HYSTER COMPANY

STEERING LINES (FIGURE 7-5)

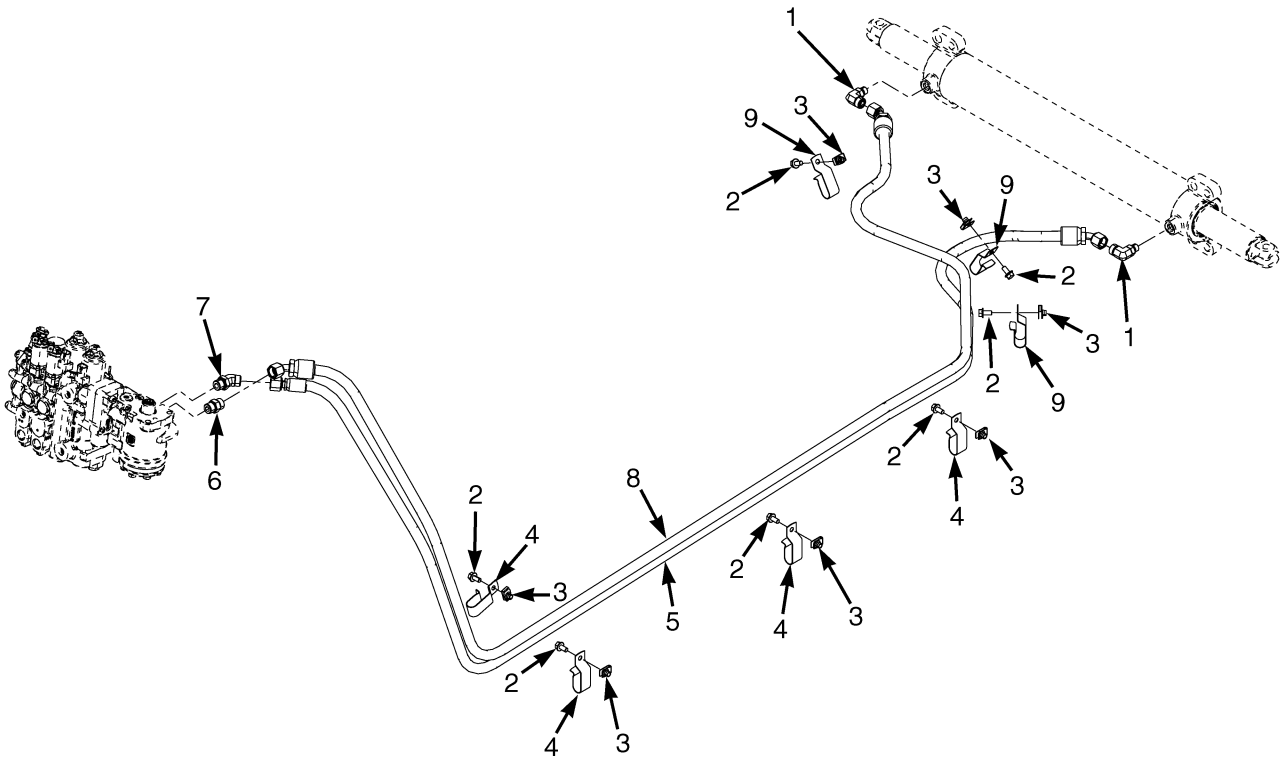

BP220107

©2011 HYSTER COMPANY

STEERING LINES

ITEM	PART NO.	DESCRIPTION	QTY
1	1487064	Fitting	2
1	265731	O-Ring	1
1	16483	O-Ring	1
2	1527879	Capscrew	7
3	1480237	Nut	7
4	1544157	Clip	4
5	2104080	Hose Assy	1
6	1473887	Fitting	1
6	265731	O-Ring	1
6	16484	O-Ring	1
7	4022959	Fitting	1
8	2104081	Hose Assy	1
9	1562648	Clip	3

©2011 HYSTER COMPANY

STEER AXLE (FIGURE 7-6)
(→ 7/2009)

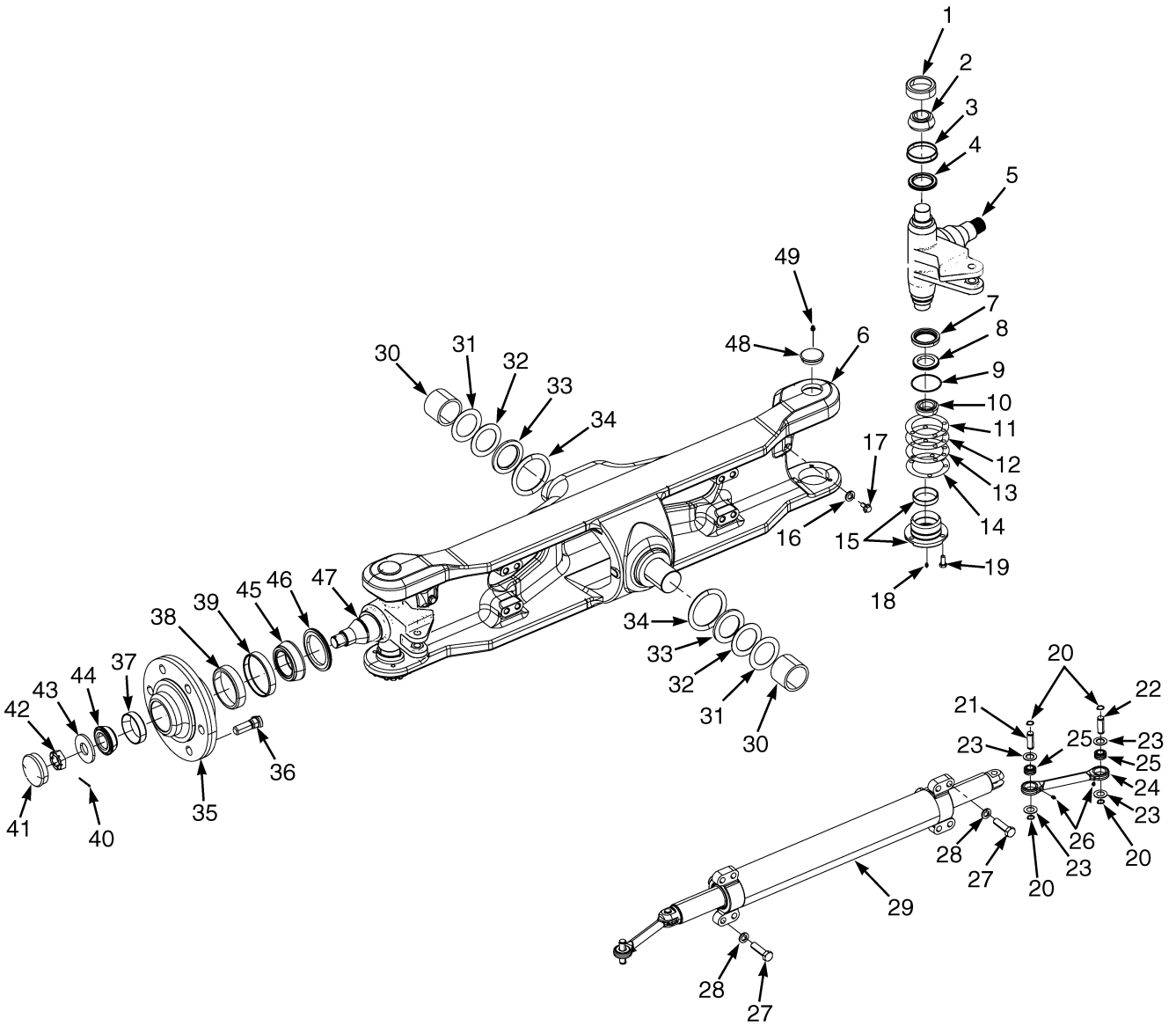

BP220104

©2011 HYSTER COMPANY

STEER AXLE
(→ 7/2009)

ITEM	PART NO.	DESCRIPTION	QTY
	a 1594958	Steering Axle Assy	1
	b 1677244	Steering Axle	1
1	230421	Bearing Cup	2
2	153715	Bearing Cone	2
3	153717	Wear Sleeve	2
4	153716	Seal	2
5	1383795	Spindle (RH)	1
6	**a** 346299	Steering Axle (Frame)	1
6	**b** 1696278	Steering Axle (Frame)	1
7	266733	Seal	2
8	266728	Seal	2
9	39678	O-Ring	2
10	135657	Bearing Cone	2
11	185856	Shim (0.005 in.)	3
12	185857	Shim (0.007 in.)	3
13	185858	Shim (0.020 in.)	2
14	1563858	Shim (0.002 in.)	2
15	266612	Bearing Cap (Assembly)	2
15	266735	Bearing Cap	1
15	135658	Bearing Cup	1
16	320159	Washer	2
17	1527883	Capscrew	2
18	13957	Grease Fitting	2
19	293628	Capscrew	6
20	58903	Snap Ring	8
21	1568271	Pin	2
22	1568270	Pin	2
23	1345684	Seal	8
24	**a** 1568078	Tie Rod (Assembly)	1
24	**a** 1392255	Tie Rod	1
24	**b** 1671218	Tie Rod Assembly	1
24	**b** 1670786	Tie Rod (Fabricated)	1
24	1703337	Tie Rod (Cast, Optional)	1
25	1568039	Spherical Roller Bearing	1
26	13957	Grease Fitting	2
27	293688	Capscrew	8
28	292685	Lockwasher	8
29	2079365	Steering Cylinder (☞Figure 7-8)	1
30	1335873	Bushing	2
31	131191	Shim (0.040 in.)	AR
32	131190	Shim (0.110 in.)	AR
33	1335870	Flange	2
34	131193	Sealing Ring	2
35	1603898	Wheel Hub	2
36	1393348	Wheel Stud	12
37	153834	Bearing Cup	2
38	230324	Bearing Cup	2
39	129499	Wear Sleeve	2
40	15225	Cotter Pin (1-1/2 in.)	2
40	15226	Cotter Pin (Optional 1-3/4 in.)	1

©2011 HYSTER COMPANY

STEER AXLE
(→ 7/2009)

ITEM	PART NO.	DESCRIPTION	QTY
41	69029	Cap	2
42	53641	Wheel Nut (Spindle)	2
43	1383775	Washer	2
44	153835	Bearing Cone	2
45	230325	Bearing Cone	2
46	129498	Seal	2
47	1383797	Spindle (LH)	1
48	185860	Plug	2
49	13963	Grease Fitting	2
	2064554	Loctite	AR

FOOTNOTES:

a → S/N J006V02208G

b S/N J006V02209G →

©2011 HYSTER COMPANY

NOTES

©2011 HYSTER COMPANY

STEER AXLE (FIGURE 7-7)
(7/2009 →)

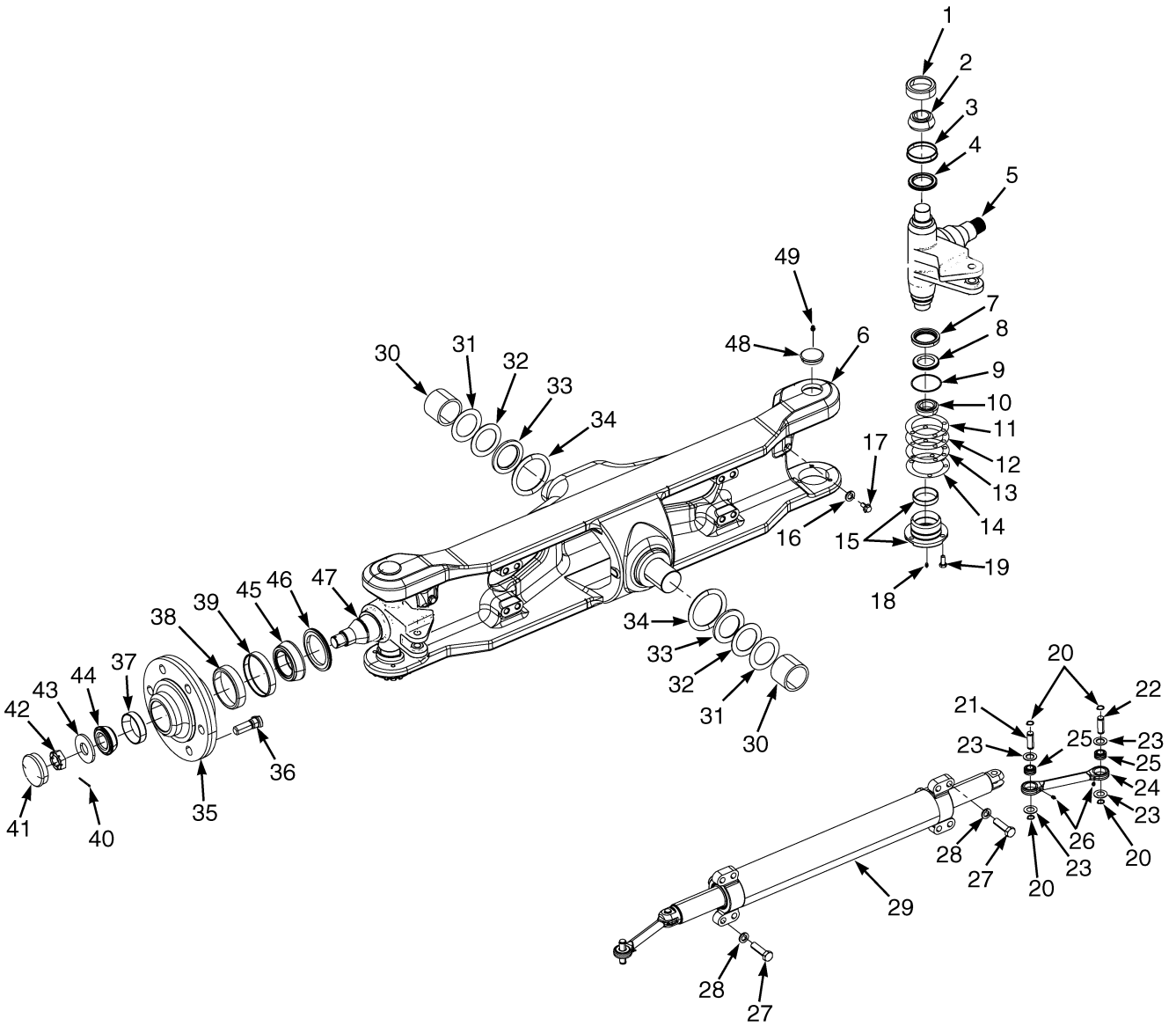

BP220104

©2011 HYSTER COMPANY

STEER AXLE
(7/2009 →)

ITEM	PART NO.	DESCRIPTION	QTY
	1677244	Steering Axle	1
1	230421	Bearing Cup	2
2	153715	Bearing Cone	2
3	153717	Wear Sleeve	2
4	153716	Seal	2
5	1676424	Spindle (RH)	1
6	1696278	Steering Axle (Frame)	1
7	266733	Seal	2
8	266728	Seal	2
9	39678	O-Ring	2
10	135657	Bearing Cone	2
11	185856	Shim (0.005 in.)	3
12	185857	Shim (0.007 in.)	3
13	185858	Shim (0.020 in.)	2
14	1563858	Shim (0.002 in.)	2
15	266612	Bearing Cap (Assembly)	2
15	266735	Bearing Cap	1
15	135658	Bearing Cup	1
16	320159	Washer	2
17	1527883	Capscrew	2
18	13957	Grease Fitting	2
19	293628	Capscrew	6
20	12929	Snap Ring	8
21	1673482	Pin	2
22	1673481	Pin	2
23	1345684	Seal	8
24	1673444	Tie Rod	2
25	1671760	Bushing	2
26	13957	Grease Fitting	2
27	293688	Capscrew	8
28	292685	Lockwasher	8
29	2108963	Steering Cylinder (☞Figure 7-9)	1
30	1335873	Bushing	2
31	131191	Shim (0.040 in.)	AR
32	131190	Shim (0.110 in.)	AR
33	1335870	Flange	2
34	131193	Sealing Ring	2
35	1603898	Wheel Hub	2
36	1393348	Wheel Stud	12
37	153834	Bearing Cup	2
38	230324	Bearing Cup	2
39	129499	Wear Sleeve	2
40	15225	Cotter Pin	2
41	69029	Cap	2
42	53641	Wheel Nut (Spindle)	2
43	1383775	Washer	2
44	153835	Bearing Cone	2
45	230325	Bearing Cone	2
46	129498	Seal	2
47	1676423	Spindle (LH)	1

©2011 HYSTER COMPANY

STEER AXLE

(7/2009 →)

ITEM	PART NO.	DESCRIPTION	QTY
48	185860	Plug	2
49	13963	Grease Fitting	2
	2064554	Loctite	AR

©2011 HYSTER COMPANY

STEER CYLINDER (FIGURE 7-8)

(→ 7/2009)

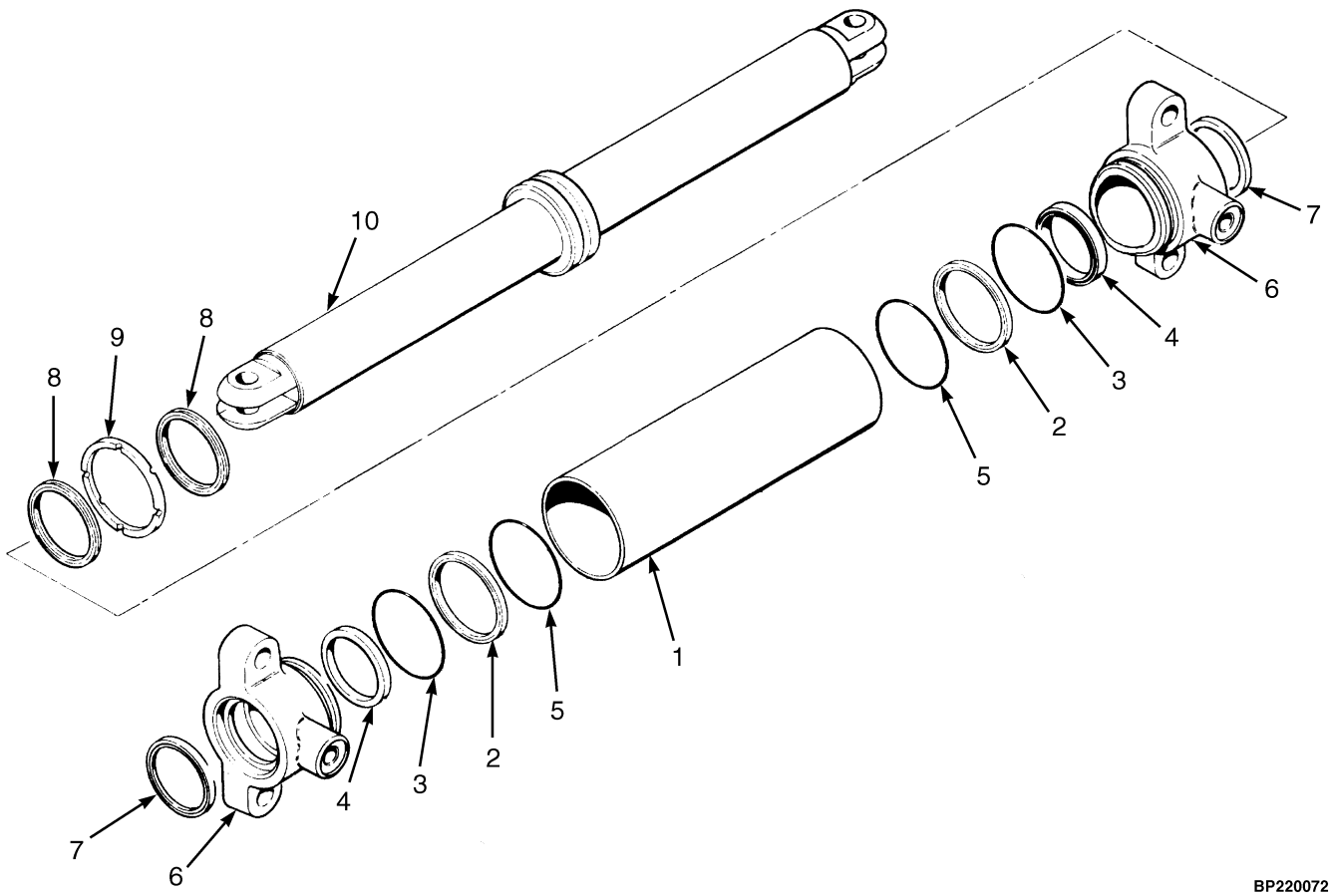

BP220072

ITEM	PART NO.	DESCRIPTION	QTY
	2079365	Steering Cylinder	1
1	344391	Tube Wldmt-Cylinder	1
2	154358	Back-Up Ring	2
3	39679	O-Ring	2
4	1380092	Rod Seal	2
5	15880	O-Ring	2
6	1594137	End Cap	2
7	2071094	Rod Wiper	2
8	1611065	Wear Ring	2
9	2046765	Seal	2
10	1611062	Piston Rod	1
	1626361	Kit-Seal	1
	1708573	Kit-Seal (Alternate Part)	1

©2011 HYSTER COMPANY

STEER CYLINDER (FIGURE 7-9)
(7/2009 →)

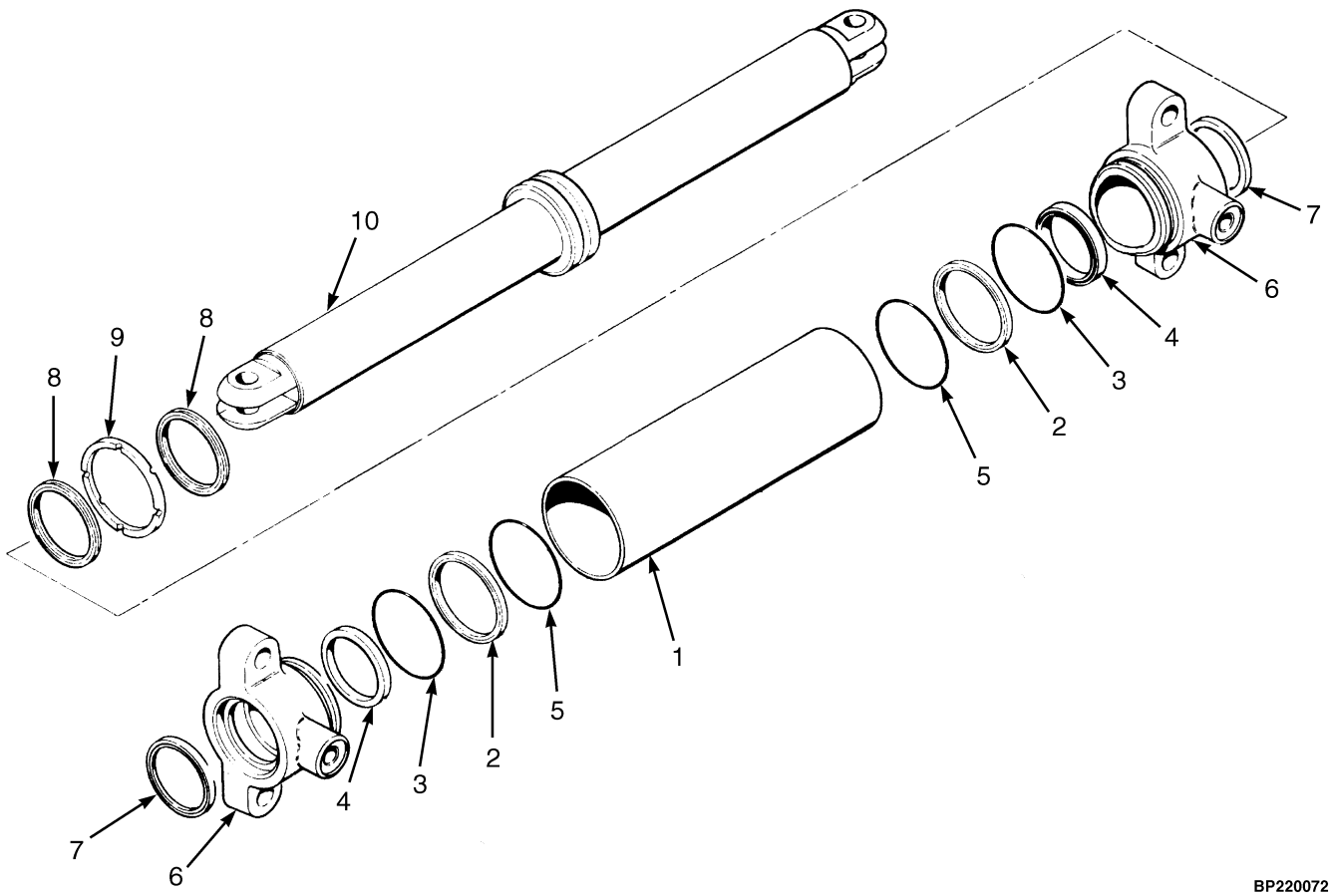

BP220072

ITEM	PART NO.	DESCRIPTION	QTY
	2108963	Steering Cylinder	1
1	344391	Tube Wldmt-Cylinder	1
2	154358	Back-Up Ring	2
3	39679	O-Ring	2
4	1380092	Rod Seal	2
5	15880	O-Ring	2
6	1594137	End Cap	2
7	2071094	Rod Wiper	2
8	1611065	Wear Ring	2
9	2046765	Seal	2
10	1683373	Cylinder Rod	1
	1708573	Kit-Seal	1

©2011 HYSTER COMPANY

STEER TIRE AND WHEEL (FIGURE 7-10)

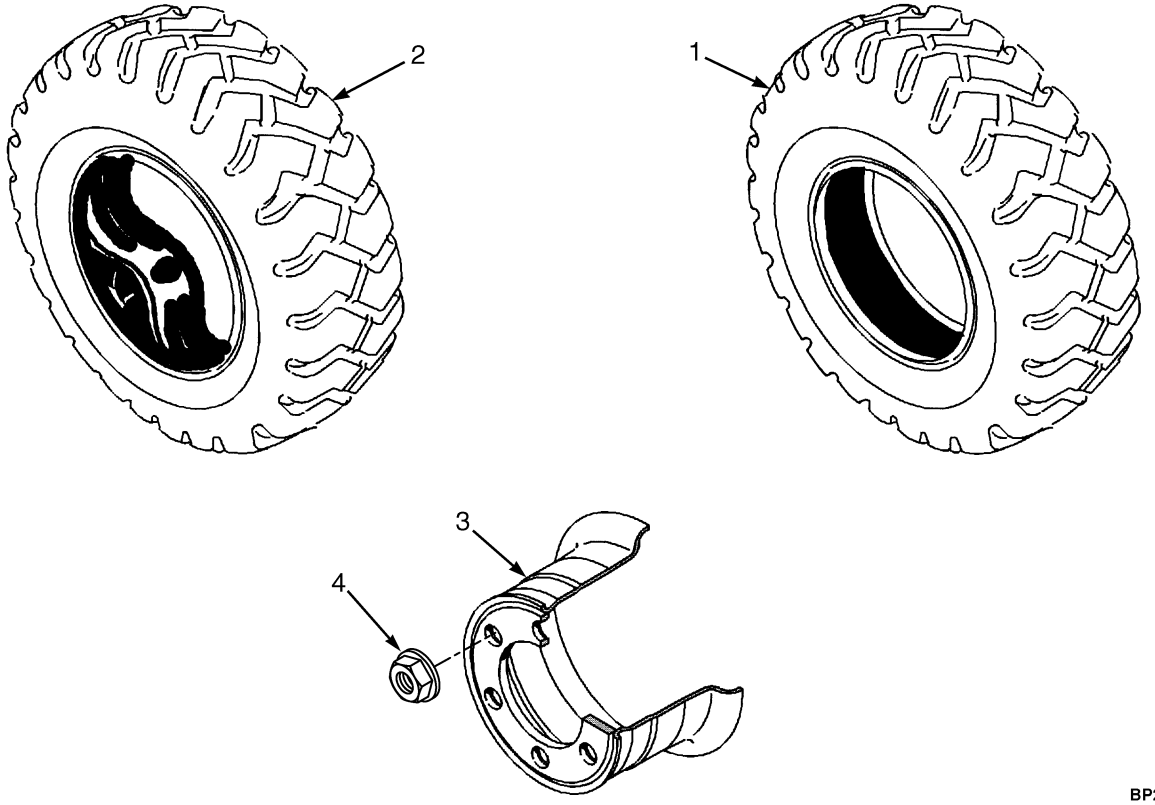

KEY:
A: 8.25 x 15-14 PR
B: 8.25 x 15 Solid Pneumatic
C: 8.25 R15 Radial

ITEM	PART NO.	DESCRIPTION	QTY A	QTY B	QTY C
	1606272	Wheel And Tire (Monarch)	..	2	..
	1606271	Wheel And Tire (Trell)	1	..	..
	1606274	Wheel And Tire (Radial)	..	..	1
1	**b** 1656755	Tire (Monarch)	..	1	..
1	**a** 1547352	Tire (Monarch) (Alternate Part)	..	1	..
1	1547351	Tire (Trell)	1	..	..
1	1471838	Pneumatic Tire (Radial)	..	..	2
2	1471598	Tubeless Bead Seal	..	..	1
2	1471922	Tubeless Bead Seal Valve	..	..	1
3	2094201	Wheel Assy	2	2	2
4	376026	Wheel Nut	12	12	12

FOOTNOTES:

a Soft Ride

b Standard Hardness

©2011 HYSTER COMPANY

NOTES

©2011 HYSTER COMPANY

8 BRAKE SYSTEM

SECTION 8
BRAKE SYSTEM

DESCRIPTION	PAGE
BRAKE COOLING SYSTEM	
SINGLE AND DUAL PEDAL	8-12
BRAKE PEDAL LINKAGE AND MASTER CYLINDER	
DUAL PEDAL	8-6
SINGLE PEDAL	8-2
PARK BRAKE ASSEMBLY	8-10

©2011 HYSTER COMPANY

BRAKE PEDAL LINKAGE AND MASTER CYLINDER (FIGURE 8-1)

SINGLE PEDAL

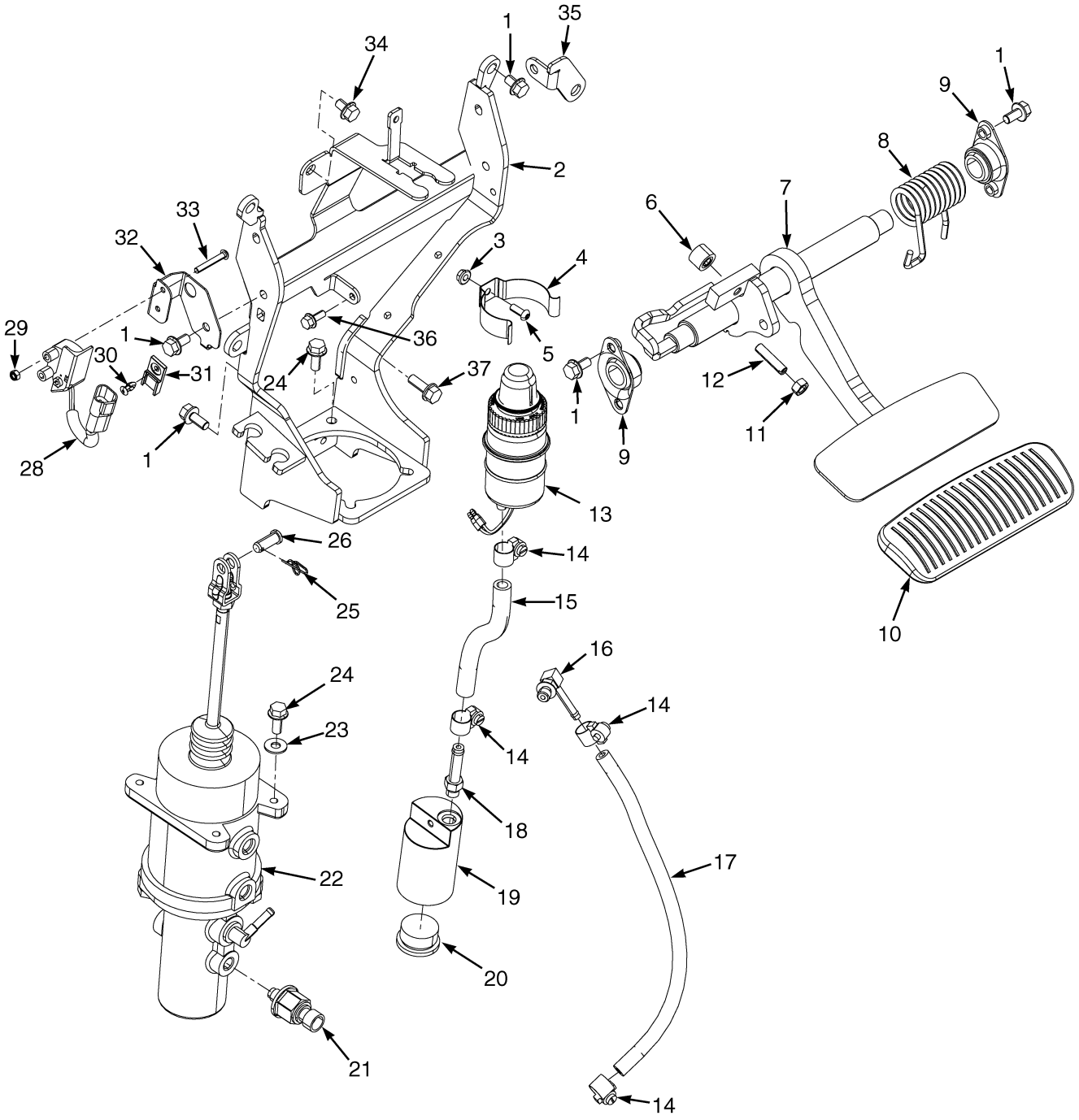

©2011 HYSTER COMPANY

BRAKE PEDAL LINKAGE AND MASTER CYLINDER
SINGLE PEDAL

ITEM	PART NO.	DESCRIPTION	QTY
1	1527879	Capscrew	6
2	1661156	Bracket	1
3	1514429	Nut	1
4	2021353	Holder	1
5	1510126	Screw (Button Head)	1
6	1556475	Bumper	1
7	1649656	Pedal	1
7	1707012	Brake Pedal (Alternate Part)	1
8	1568075	Spring (RH)	1
9	1585575	Bushing	2
10	1570298	Rubber Pad	1
11	239503	Nut	1
12	1534871	Bolt	1
13	1646439	Reservoir	1
13	2077604	Tank	1
13	1645381	Diaphragm	1
13	1646397	Cap	1
14	166857	Clamp	4
15	2092888	Hose	1
16	222509	Fitting	1
16	16481	O-Ring	1
17	117989	Hose (Brake Feed)	1
18	222491	Fitting	1
18	16481	O-Ring	1
19	2092613	Cylinder Block	1
20	233683	Fitting	1
20	16487	O-Ring	1
21	1590033	Transducer	1
22	1605266	Master Cylinder	1
22	1672003	Brake Booster	1
22	1672004	Master Cylinder	1
22	1672005	Kit-Repair Master Cylinder (Major)	1
22	1672006	Kit-Repair Master Cylinder (Minor)	1
23	1581851	Washer	2
24	1527880	Capscrew	4
25	1351689	Lockring	1
26	1375391	Pin (Rod End)	1
27	1608654	Capscrew	2
28	1547849	Sensor (Brake Position) (Inching)	1
28	1547849	Sensor (Brake Position) (Alternate Part)	1
29	302398	Locknut	2
30	1564526	Clip (Key Hole)	1
30	292668	Nut (Alternate Part)	2
31	1500912	Clip	1
31	1704902	Capscrew (Alternate Part)	1
32	1531567	Bracket (Inching Sensor)	1
32	1688503	Mount (Inching Sensor)(Alternate Part)	1
33	1553897	Capscrew	2
33	1701768	Screw (Button Head) (Alternate Part)	2
34	1529366	Capscrew	1

©2011 HYSTER COMPANY

BRAKE PEDAL LINKAGE AND MASTER CYLINDER
SINGLE PEDAL

ITEM	PART NO.	DESCRIPTION	QTY
35	1594950	Bracket	1
36	1527876	Capscrew	1
37	1583611	Capscrew	2
	a 2093224	Label (Brake Fluid Warning)	1
	a 114312	Strap Clamp	1

FOOTNOTES:

a Not Illustrated

©2011 HYSTER COMPANY

NOTES

©2011 HYSTER COMPANY

BRAKE PEDAL LINKAGE AND MASTER CYLINDER (FIGURE 8-2)

DUAL PEDAL

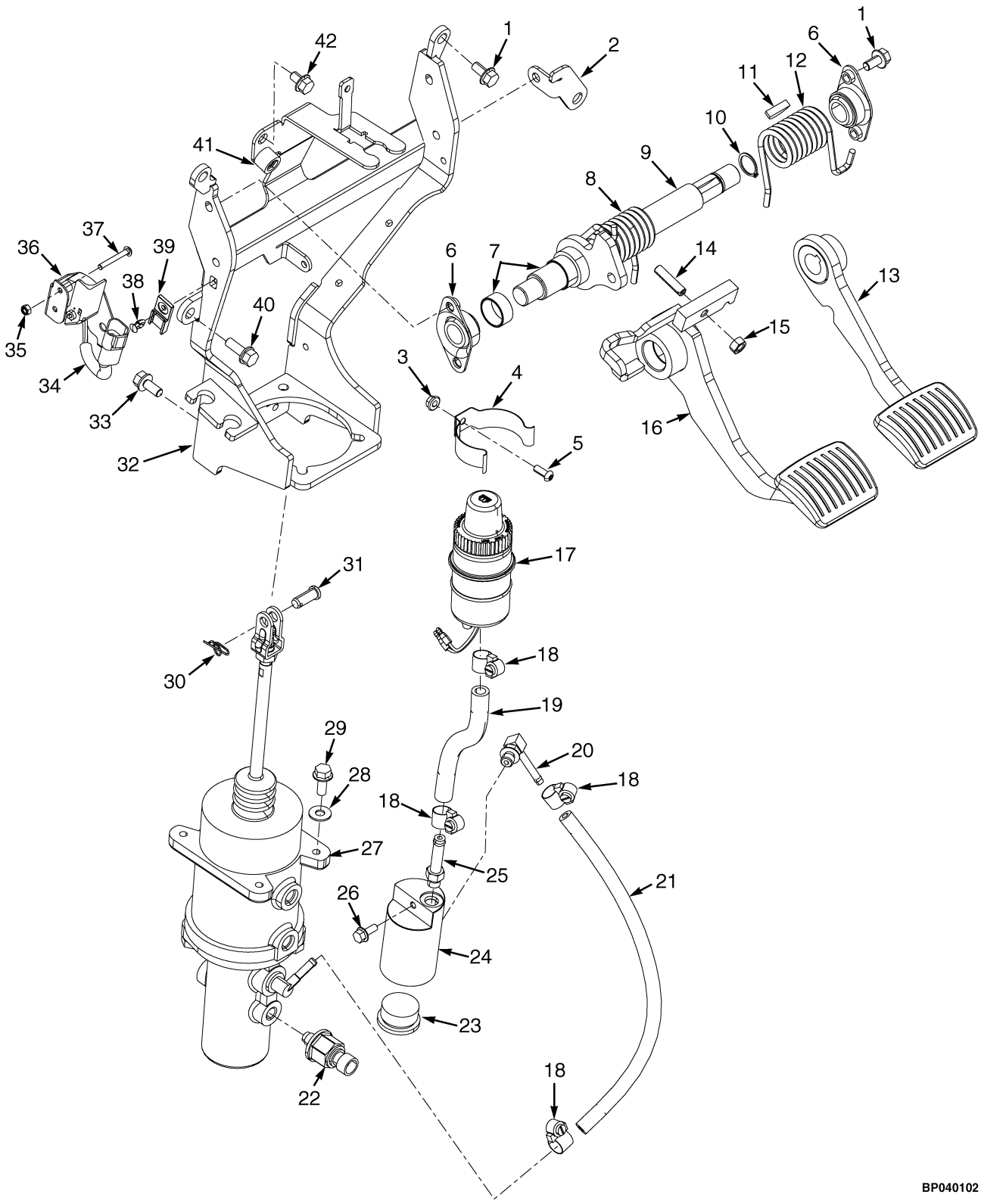

©2011 HYSTER COMPANY

BRAKE PEDAL LINKAGE AND MASTER CYLINDER
DUAL PEDAL

ITEM	PART NO.	DESCRIPTION	QTY
1	1527879	Capscrew	6
2	1594950	Bracket	1
3	1514429	Nut	1
4	2021353	Holder	1
5	1510126	Screw (Button Head)	1
6	1585575	Bushing	2
7	244540	Bushing	2
8	1568077	Spring (LH)	1
9	1606547	Crank	1
10	12929	Snap Ring	1
11	206	Woodruff Key	1
12	1568076	Spring (RH)	1
13	1568256	Brake Pedal (RH)	1
13	1570300	Pad	2
14	1534871	Bolt	1
15	239503	Nut	1
16	1639801	Brake Pedal (LH)	1
16	1701771	Inching Pedal (Left Hand) (Alternate Part)	1
16	1570300	Pad	1
17	1646439	Reservoir	1
17	2077604	Tank	1
17	1645381	Diaphragm	1
17	1646397	Cap	1
18	166857	Clamp	4
19	2092888	Hose	1
20	222509	Fitting	1
20	16481	O-Ring	1
21	117989	Hose (Brake Feed)	1
22	1590033	Transducer	1
23	233683	Fitting	1
23	16487	O-Ring	1
24	2092613	Cylinder Block	1
25	222491	Fitting	1
25	16481	O-Ring	1
26	1527876	Capscrew	1
27	1605266	Master Cylinder	1
27	1672003	Brake Booster	1
27	1672004	Master Cylinder	1
27	1672005	Kit-Repair Master Cylinder (Major)	1
27	1672006	Kit-Repair Master Cylinder (Minor)	1
28	1581851	Washer	2
29	1527880	Capscrew	4
30	1351689	Lockring	1
31	1375391	Pin (Rod End)	1
32	1606547	Crank	1
33	1608654	Capscrew	2
34	1547849	Sensor (Brake Position) (Inching)	1
34	1547849	Sensor (Brake Position) (Alternate Part)	1
35	302398	Locknut	2
36	1531567	Bracket (Inching Sensor)	1

©2011 HYSTER COMPANY

BRAKE PEDAL LINKAGE AND MASTER CYLINDER
DUAL PEDAL

ITEM	PART NO.	DESCRIPTION	QTY
36	1688503	Mount (Inching Sensor)(Alternate Part)	1
37	1553897	Capscrew	2
37	1701768	Screw (Button Head)(Alternate Part)	1
38	1564526	Clip (Key Hole)	1
38	292668	Nut (Alternate Part)	2
39	1500912	Clip (Connector)	1
39	1704901	Capscrew (Alternate Part)	1
40	1583611	Capscrew	2
41	1556475	Bumper	1
42	1529366	Capscrew	1
	a 2093224	Label (Brake Fluid Warning)	1
	a 114312	Strap Clamp	1
	2064554	Loctite	AR

FOOTNOTES:

a Not Illustrated

©2011 HYSTER COMPANY

NOTES

©2011 HYSTER COMPANY

PARK BRAKE ASSEMBLY (FIGURE 8-3)

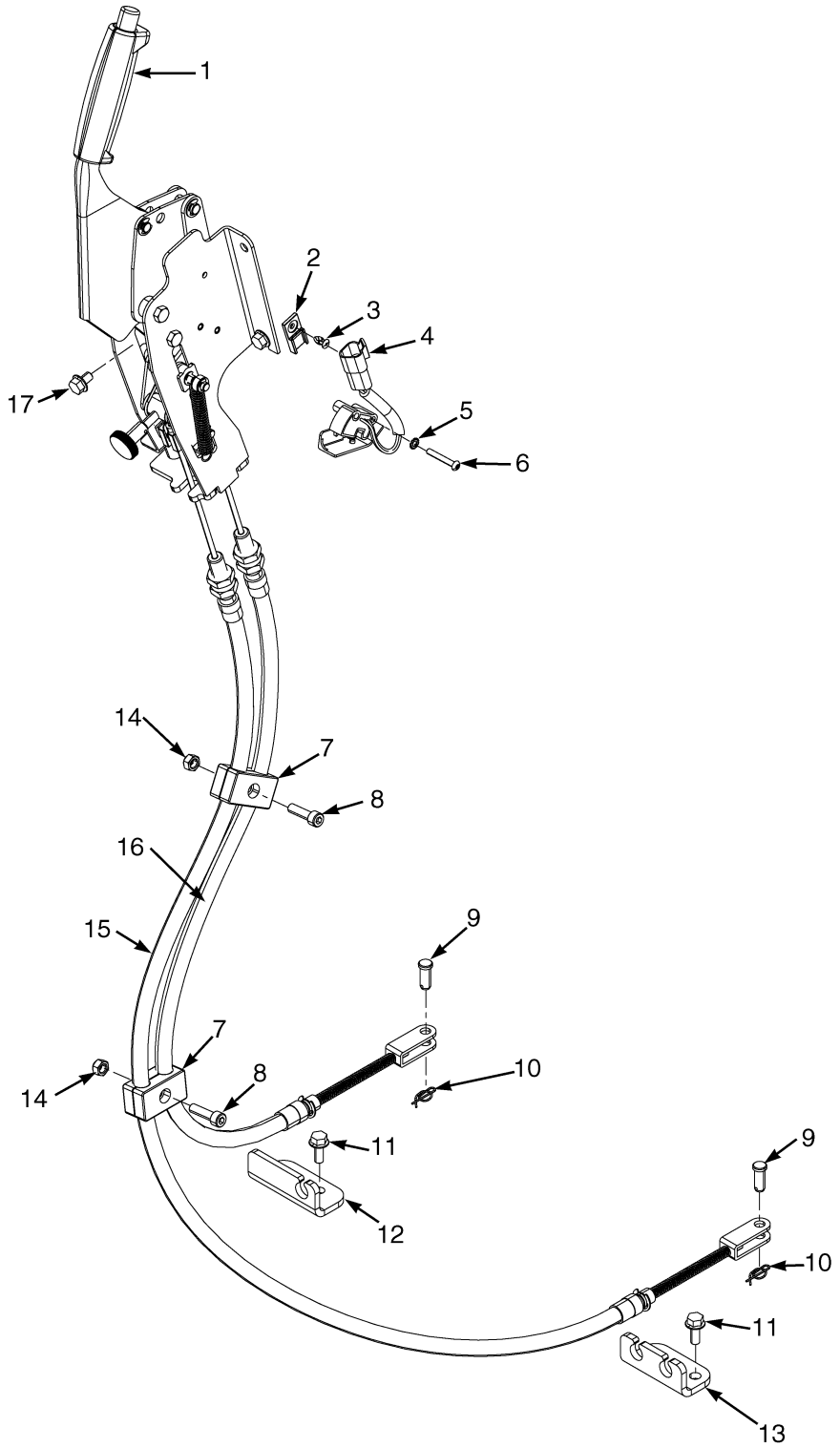

BP040103

©2011 HYSTER COMPANY

PARK BRAKE ASSEMBLY

ITEM	PART NO.	DESCRIPTION	QTY
	1654321	Parking Brake Assy	1
	1654319	Parking Brake Assy (Cab)	1
1	1654322	Parking Brake Lever Assy	1
1	1654320	Parking Brake Lever (Cab)	1
1	1583915	Grip	1
2	1500912	Clip	1
3	1564526	Clip (Key Hole)	1
4	1547849	Sensor (Brake Position)	1
4	1547849	Sensor (Brake Position) (Cab)	1
5	296378	Washer	2
6	1553897	Capscrew	2
7	2098527	Clamp	2
8	287844	Capscrew	2
9	1375391	Pin (Rod End)	2
10	1351689	Lockring	2
11	1527880	Capscrew	4
12	1657719	Bracket	1
13	1600923	Bracket	1
14	302399	Nut	2
15	2084247	Parking Brake Cable (RH)	1
15	4611038	Parking Brake Cable (RH) (Alternate Part)	1
16	2084246	Parking Brake Cable (LH)	1
16	4611039	Parking Brake Cable (LH) (Alternate Part)	1
17	1529366	Capscrew	4

©2011 HYSTER COMPANY

BRAKE COOLING SYSTEM (FIGURE 8-4)
SINGLE AND DUAL PEDAL

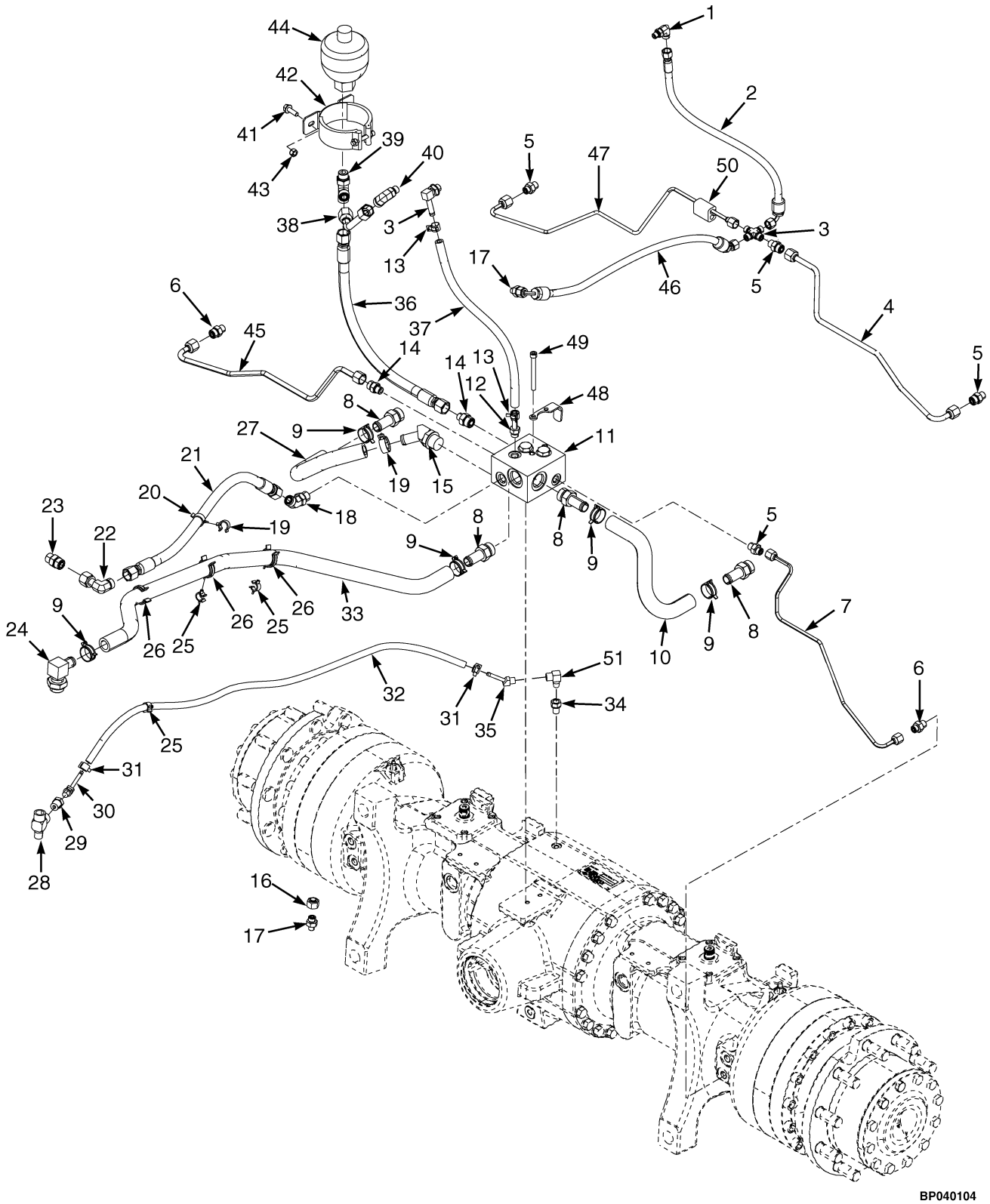

©2011 HYSTER COMPANY

BRAKE COOLING SYSTEM
SINGLE AND DUAL PEDAL

ITEM	PART NO.	DESCRIPTION	QTY
1	1487058	Fitting	1
1	265787	O-Ring	1
1	16483	O-Ring	1
2	2093938	Hose Assy	1
2	2093938	Hose Assy	4
3	1654373	Fitting (Tee)	1
4	2093989	Tube	1
5	1486740	Fitting	4
5	16483	O-Ring	1
6	1486738	Fitting	2
6	1527813	O-Ring	1
6	16483	O-Ring	1
7	2093936	Tube	1
8	17758	Fitting	4
8	16486	O-Ring	1
9	1502009	Hose Clamp	6
10	2093942	Hose	1
11	2091441	Manifold	1
11	1616054	Check Valve	2
11	1517906	Kit-Seal	1
12	222492	Fitting	1
12	16483	O-Ring	1
13	1569616	Hose Clamp	2
14	1486745	Fitting	1
14	265731	O-Ring	1
14	16483	O-Ring	1
15	222505	Fitting	1
15	16486	O-Ring	1
16	1529014	Fitting	1
16	265731	O-Ring	1
17	1486737	Fitting	2
17	1527813	O-Ring	1
17	16481	O-Ring	1
18	1516202	Fitting	1
18	265731	O-Ring	1
18	16484	O-Ring	1
19	1606544	Clamp	1
20	1502066	Clamp	1
21	2093939	Hose Assy	1
22	1486772	Fitting	1
22	265731	O-Ring	1
23	1473887	Fitting	1
23	16484	O-Ring	1
23	265731	O-Ring	1
24	1654374	Fitting	1
24	16486	O-Ring	1
25	1542439	Clamp (Swivel)	3
26	1561759	Clamp (Swivel)	3
27	2091442	Hose	1
28	154452	Fitting	1

©2011 HYSTER COMPANY

BRAKE COOLING SYSTEM
SINGLE AND DUAL PEDAL

ITEM	PART NO.	DESCRIPTION	QTY
29	63108	Fitting	1
30	222498	Fitting	1
31	1625338	Hose Clamp	2
32	2098603	Hose	1
33	2093940	Hose (High Temperature)	1
34	1661488	Adapter	1
35	17343	Fitting	1
35	1316809	Fitting (Hose) (Alternate Part)	1
36	2073192	Hose Assy	1
37	17221	Fitting	1
37	16483	O-Ring	1
38	2097900	Tube Assy	1
39	1592852	Fitting	1
39	265731	O-Ring	2
39	16484	O-Ring	1
40	1487064	Fitting	1
40	265731	O-Ring	1
40	16483	O-Ring	1
41	1510113	Capscrew	2
42	1614250	Clamp	1
43	313828	Nut	2
44	1611999	Accumulator	1
45	2093937	Tube	1
46	2095922	Hose Assy	1
47	2093987	Tube	1
48	1649689	Bracket	1
49	296022	Capscrew	2
50	2091513	Block	1
51	17737	Fitting (Pipe) (Alternate Part)	1

©2011 HYSTER COMPANY

9 HYDRAULIC SYSTEM

SECTION 9
HYDRAULIC SYSTEM

DESCRIPTION	PAGE
AUXILIARY ONE AND TWO SECTIONS	
MANUAL CONTROL VALVE - THREE AND FOUR FUNCTION	9-30
AUXILIARY ONE SECTION	
ELECTRONIC CONTROL VALVE - THREE AND FOUR FUNCTION (→ 6/2009)	9-48
ELECTRONIC CONTROLLER - THREE AND FOUR FUNCTION (6/2009 →)	9-50
AUXILIARY TWO SECTION	
ELECTRONIC CONTROL VALVE - FOUR FUNCTION (→ 6/2009)	9-52
ELECTRONIC CONTROL VALVE - FOUR FUNCTION (6/2009 →)	9-54
CONTROL VALVE AND STEERING UNIT ASSEMBLY	
ELECTRO-HYDRAULIC - THREE FUNCTION (6/2009 →)	9-36
ELECTRO-HYDRAULIC - FOUR FUNCTION (6/2009 →)	9-40
ELECTRONIC CONTROL - THREE FUNCTION (→ 6/2009)	9-34
ELECTRONIC CONTROL - FOUR FUNCTION (→ 6/2009)	9-38
MANUAL CONTROL - THREE FUNCTION	9-22
MANUAL CONTROL - FOUR FUNCTION	9-24
CONTROL VALVE LOCKOUT GROUP	
MANUAL CONTROL VALVE	9-20
ELECTRO HYDRAULIC POPPET VALVE	
ELECTRONIC CONTROL VALVE - THREE AND FOUR FUNCTION	9-46
GEAR PUMP	9-10
GEAR PUMP ASSEMBLY	9-8
HAND LEVERS	
FOUR FUNCTION - WITH DETENTED LEVERS	9-16
FOUR FUNCTION - WITHOUT DETENTED LEVERS	9-18
THREE FUNCTION - WITH DETENTED LEVERS	9-12
THREE FUNCTION - WITHOUT DETENTED LEVERS	9-14
HOIST HOSE AND ATTACHING PARTS	9-67
HYDRAULIC FILTER	9-6
HYDRAULIC SUPPLY AND RETURN	9-2
MID INLET SECTION	
MANUAL AND ELECTRONIC CONTROL VALVE - THREE AND FOUR FUNCTION	9-26
OUTLET SECTION	
ELECTRONIC CONTROL VALVE - THREE AND FOUR FUNCTION WITHOUT ANTI-STALL SOLENOID (→ 6/2009)	9-56
ELECTRONIC CONTROL VALVE - THREE AND FOUR FUNCTION WITH ANTI-STALL SOLENOID (6/2009 →)	9-58
MANUAL CONTROL VALVE - THREE AND FOUR FUNCTION	9-32
TILT CYLINDER AND MAST INSTALLATION	9-60
TILT CYLINDERS	9-62
TILT HYDRAULICS	9-64
TILT SECTION	
ELECTRONIC CONTROL VALVE - THREE AND FOUR FUNCTION	9-44
VALVE ASSEMBLY, LIFT AND LOWER	
ELECTRONIC CONTROL VALVE - THREE AND FOUR FUNCTION	9-42
VALVE ASSEMBLY, LIFT AND TILT	
MANUAL CONTROL VALVE - THREE AND FOUR FUNCTION	9-28
VENT LINES	9-66

©2011 HYSTER COMPANY

HYDRAULIC SUPPLY AND RETURN (FIGURE 9-1)

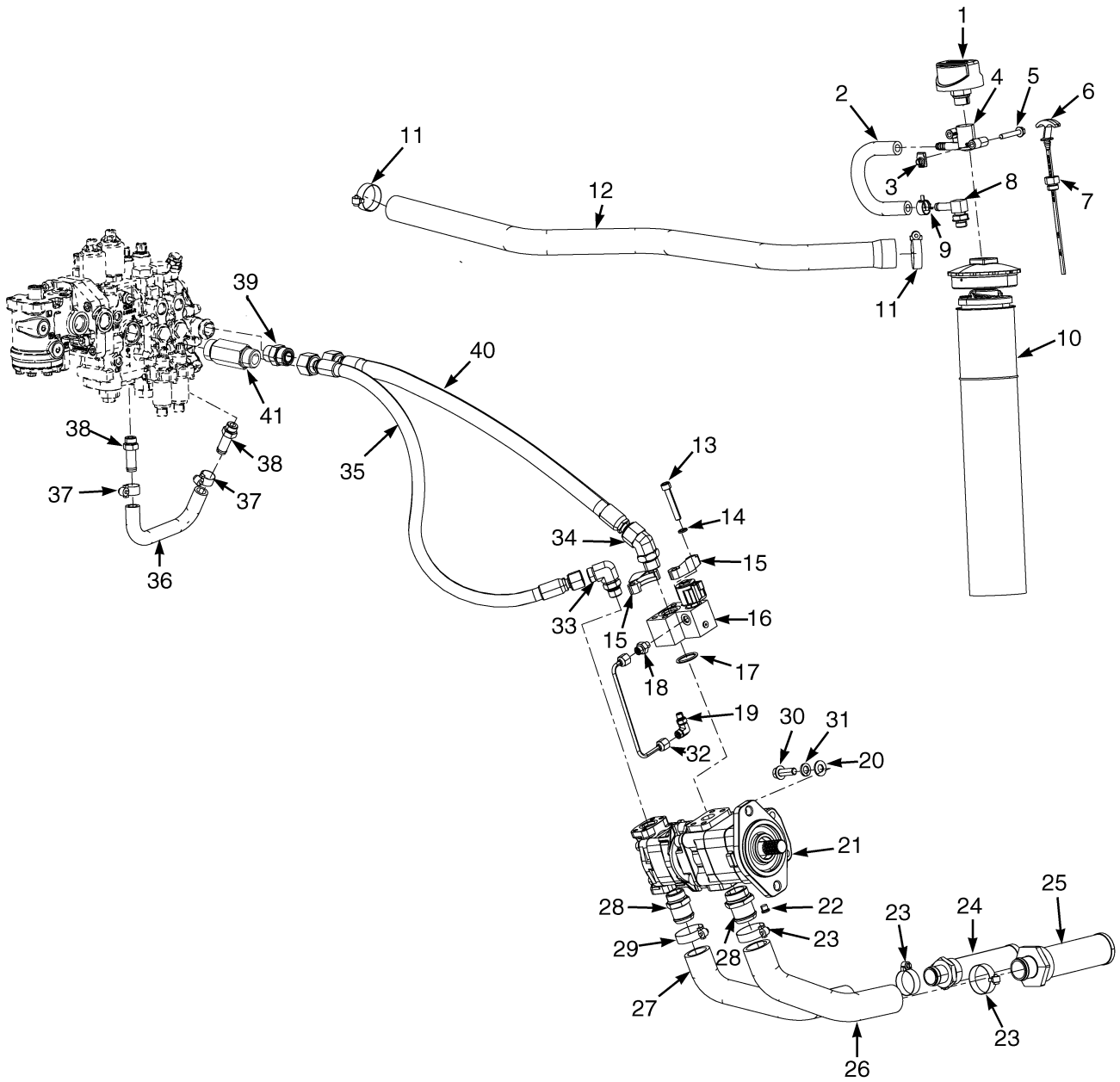

©2011 HYSTER COMPANY

HYDRAULIC SUPPLY AND RETURN

ITEM	PART NO.	DESCRIPTION	QTY
1	1582161	Breather	1
1	16486	O-Ring	1
2	2098246	Hose	1
3	1480237	Nut	2
4	1582160	Adapter (Breather)	1
5	1510115	Capscrew	2
6	2099266	Dipstick	1
7	16745	Fitting	1
7	16484	O-Ring	1
8	222442	Fitting	1
9	1502008	Hose Clamp	1
10	1600676	Hydraulic Filter (☞Figure 9-2)	1
11	119236	Clamp	2
12	2091014	Hose Assy	1
13	**b** 1670904	Capscrew	4
13	**a** 296026	Capscrew	4
14	**a** 293781	Lockwasher	4
15	**a** 190757	Clamp (Split Half)	2
16	**b** 2097933	Solenoid Valve	1
16	1662012	Plug	1
16	1662013	Fitting (Orifice Disc)	1
16	1662014	Solenoid Valve	1
17	**ab** 169787	O-Ring	1
18	**b** 1486737	Fitting	1
19	**b** 1487058	Fitting	1
20	15135	Washer	2
21	**d** 2103458	Gear Pump (41.3 cc) (Electronic Hydraulics) (☞Figure 9-3)	1
21	**d** 2098592	Gear Pump (41.3 cc) (Manual Hydraulics) (☞Figure 9-3)	1
22	**e** 222442	Fitting	1
23	369804	Clamp	4
24	1624904	Strainer	1
24	16984	O-Ring	1
25	1624905	Strainer	1
25	18909	O-Ring	1
26	2082241	Hose	1
27	2082194	Hose	1
28	1566890	Adapter	1
28	16983	O-Ring	1
29	1568199	Adapter (Suction)	1
29	16487	O-Ring	1
30	1636808	Capscrew	2
31	15158	Washer	2
32	**b** 2097983	Tube	1
33	1487067	Fitting	1
33	16485	O-Ring	1
33	252729	O-Ring	1
34	**b** 1516208	Fitting	1
35	2082240	Hose Assy	1
36	2105640	Hose (Three Function)	1
36	2105284	Hose (Four Function)	1
37	130845	Clamp	2

©2011 HYSTER COMPANY

HYDRAULIC SUPPLY AND RETURN

ITEM	PART NO.	DESCRIPTION	QTY
38	222493	Fitting	2
38	16484	O-Ring	1
39	1473888	Fitting	2
39	280154	O-Ring	1
39	16486	O-Ring	1
40	**b** 2098221	Hose Assy	1
40	**a** 2098095	Hose Assy	1
41	1669664	Fitting	1
	c 1618482	Kit-Valve	1
	c 1528481	Plug (With O-Ring) (Hydraulic Tank Drain)	1
	ac 1678165	Solenoid Valve	1
	c 1684487	Kit-Seal	1
	ac 1695755	Disk	1

FOOTNOTES:

a Anti-Stall Option with E-Hydraulics Up to 6/30/09
b Anti-Stall with Manual Hydraulics
c Not Illustrated
d S135-155FT Gasoline and LPG and S155FT Diesel
e S135FT Diesel

©2011 HYSTER COMPANY

NOTES

©2011 HYSTER COMPANY

HYDRAULIC FILTER (FIGURE 9-2)

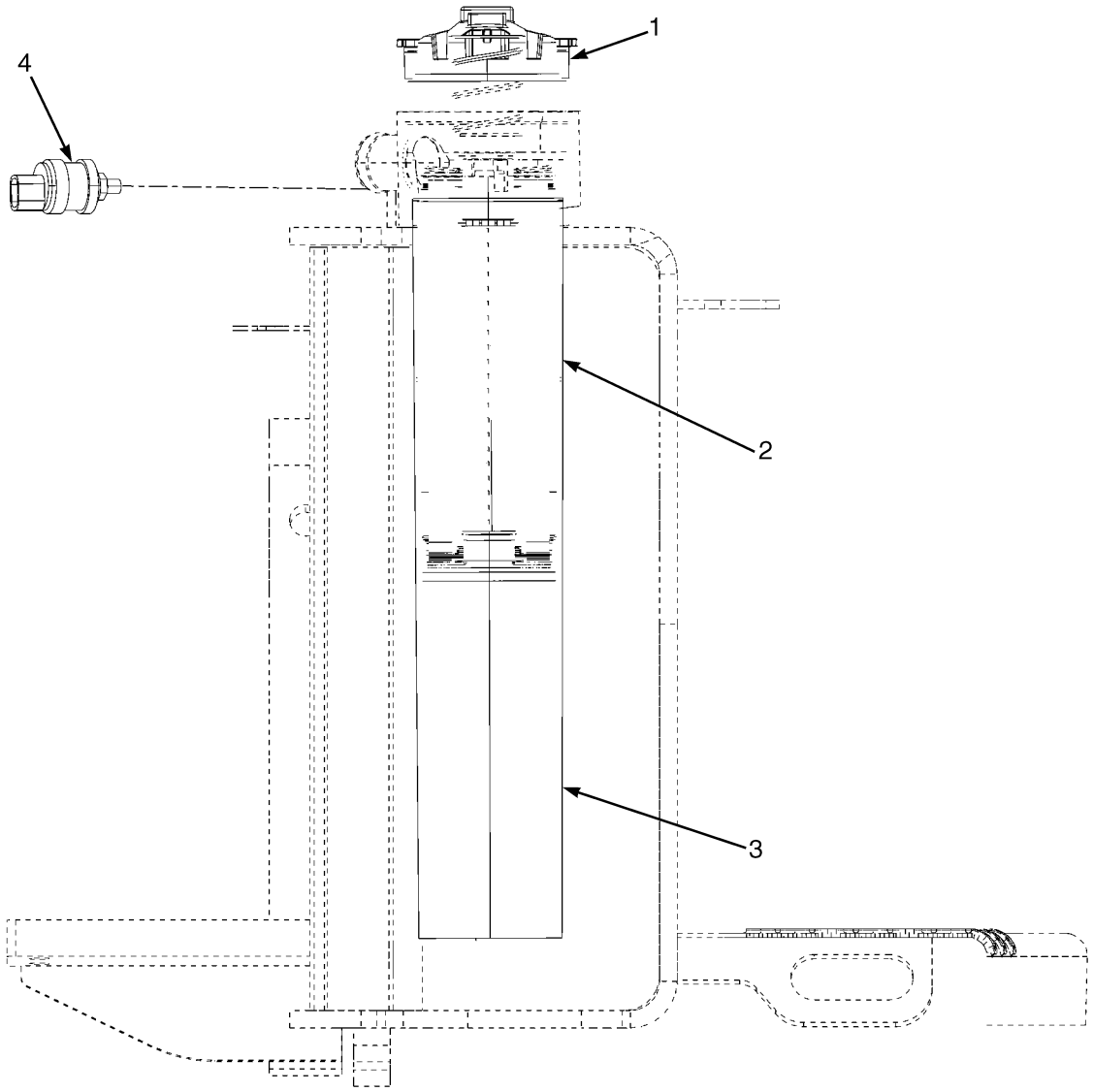

BP150331

©2011 HYSTER COMPANY

HYDRAULIC FILTER

ITEM	PART NO.	DESCRIPTION	QTY
1	1705821	Cap	1
1	1708697	Cap (Alternate Part)	1
1	1705549	O-Ring	1
1	. . . . .	Spring	1
2	. . . . .	Bowl Assembly	1
3	1615172	Hydraulic Filter	1
4	**a** 2068337	Pressure Switch	1
	1705728	Kit-Seal	1
	1705722	Kit-Filter Element	1
5	1708691	Kit-O-Ring (Alternate Part)	1

FOOTNOTES:

a With Electronic Monitoring Package

©2011 HYSTER COMPANY

GEAR PUMP ASSEMBLY (FIGURE 9-3)

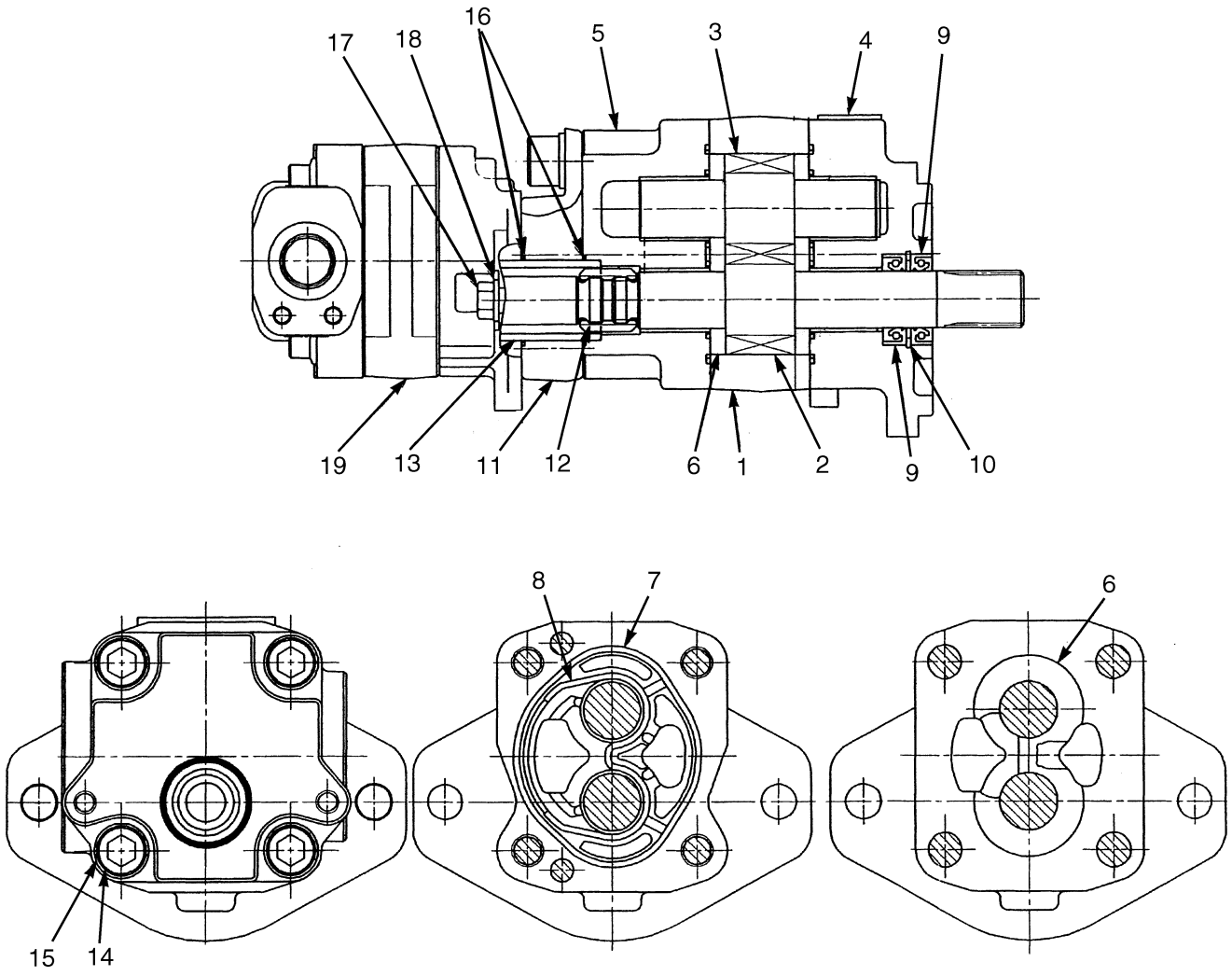

BP150211

©2011 HYSTER COMPANY

GEAR PUMP ASSEMBLY

KEY:
A: Manual Hydraulics
B: Electronic Hydraulics

ITEM	PART NO.	DESCRIPTION	QTY A	QTY B
	2098592	Gear Pump	1	..
	2103458	Gear Pump	..	1
1	1662565	Housing	1	..
1	. . . . .	Housing	..	1
2	. . . . .	Drive Gear	1	1
3	. . . . .	Driven Gear	1	1
4	1657460	Flange	1	1
5	1662566	Cover Plate	1	1
6	1624861	Pressure Plate	2	2
7	1624862	Plate (Seal)	2	2
8	1624863	Back-Up Ring	2	2
9	1624866	Oil Seal	2	2
10	1624867	Snap Ring	1	1
11	1657462	Plate (Adapter)	1	1
12	1669541	Coupling	1	1
13	1657464	Dowel	1	1
14	1657466	Bolt	4	4
15	1624865	Washer	4	4
16	1657465	O-Ring	2	2
17	1657467	Bolt	2	2
18	1657468	Washer	2	2
19	1669542	Gear Pump (Steering) (☞Figure 9-4)	1	1
	1669543	Gear Set	1	1
	1657471	Kit-Seal	1	1

GEAR PUMP (FIGURE 9-4)

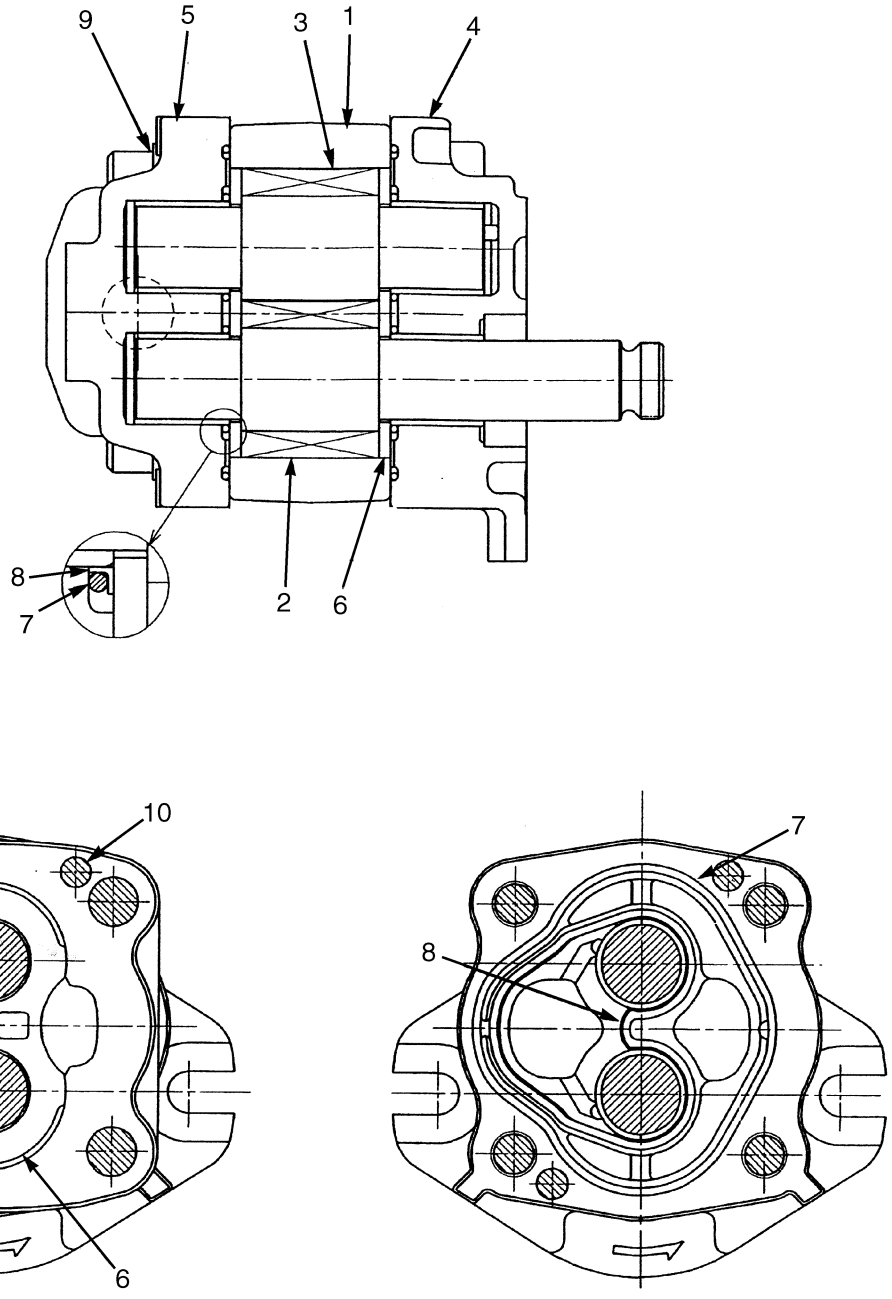

©2011 HYSTER COMPANY

GEAR PUMP

ITEM	PART NO.	DESCRIPTION	QTY
	1669542	Gear Pump (Steering)	1
1	. . . . .	Gear Housing	1
2	. . . . .	Drive Gear	1
3	. . . . .	Driven Gear	1
4	1657479	Flange	1
5	1657480	Cover	1
6	1578673	Side Plate	2
7	. . . . .	Seal Plate	2
8	. . . . .	Back-Up Ring	2
9	1578671	Screw	4
10	1578672	Dowel	4
	1669547	Gear Set	1
	1657482	Kit-Repair	1

©2011 HYSTER COMPANY

HAND LEVERS (FIGURE 9-5)
THREE FUNCTION — WITH DETENTED LEVERS

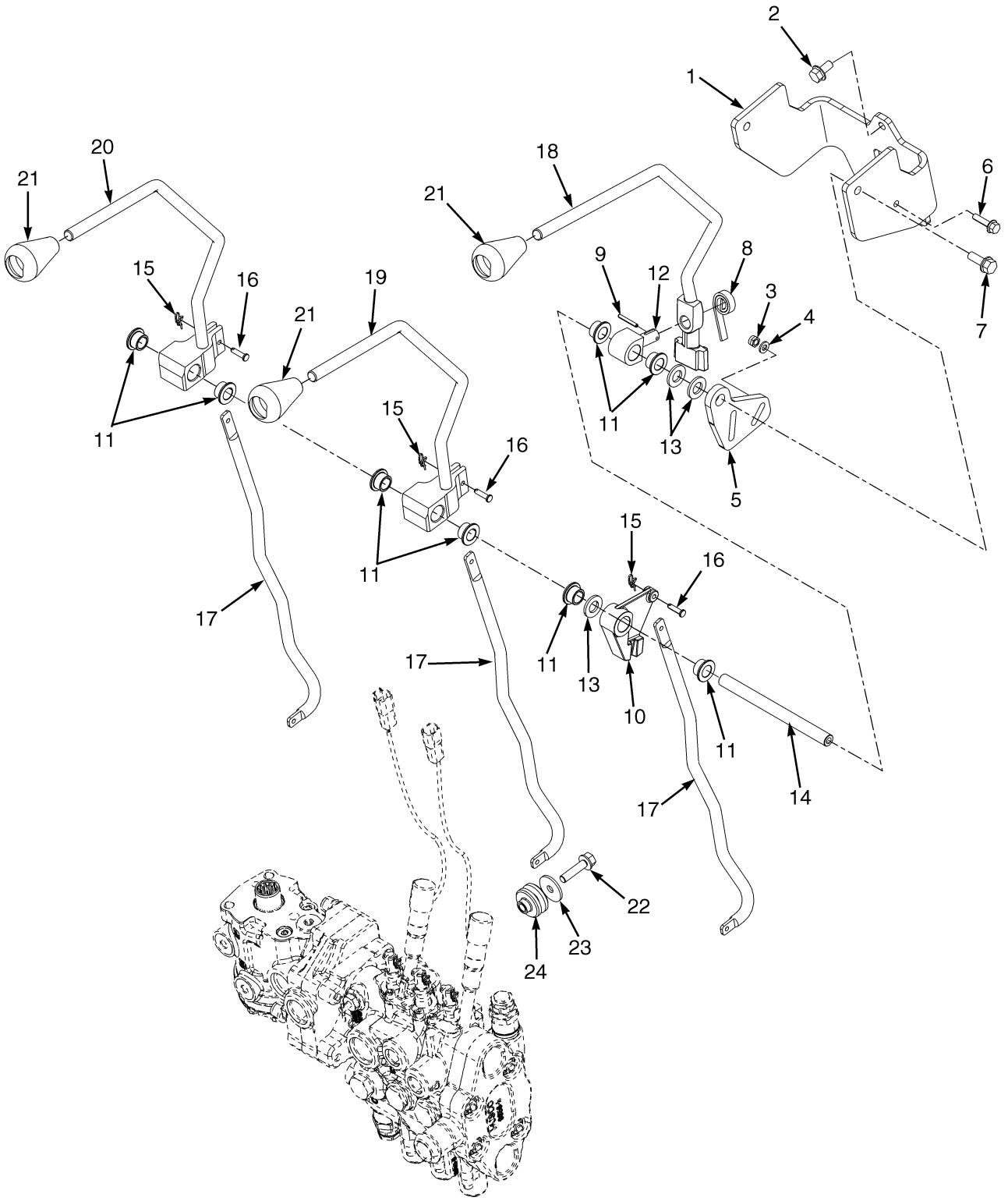

©2011 HYSTER COMPANY

HAND LEVERS

THREE FUNCTION – WITH DETENTED LEVERS

ITEM	PART NO.	DESCRIPTION	QTY
1	1670194	Bracket	1
2	1527879	Capscrew	3
3	316834	Nut	1
4	320156	Washer	1
5	1670677	Plate	1
6	1527878	Capscrew	1
7	1583611	Capscrew	2
8	175861	Spring	1
9	302428	Roll Pin	1
10	1542546	Lever	1
11	1564747	Bushing	8
12	306113	Pin (Selector)	1
13	320161	Washer	3
14	1670195	Shaft (Pivot)	1
15	1517361	Locking Ring Cotter Pin	6
16	309109	Pin	6
17	1672798	Link	3
17	1702855	Link	2
17	1702856	Link	1
18	2099398	Lever (Auxiliary One and Two) (Alternate Part)	1
19	2099394	Lever (Tilt)	1
20	2099393	Lever (Lift)	1
21	1517395	Knob	3
22	1586627	Capscrew	3
23	1346752	Washer	3
24	2063991	Isolator	3
	. . . . .	Hydraulic Control Valve (☞Figure 9-10)	1

©2011 HYSTER COMPANY

HAND LEVERS (FIGURE 9-6)
THREE FUNCTION — WITHOUT DETENTED LEVERS

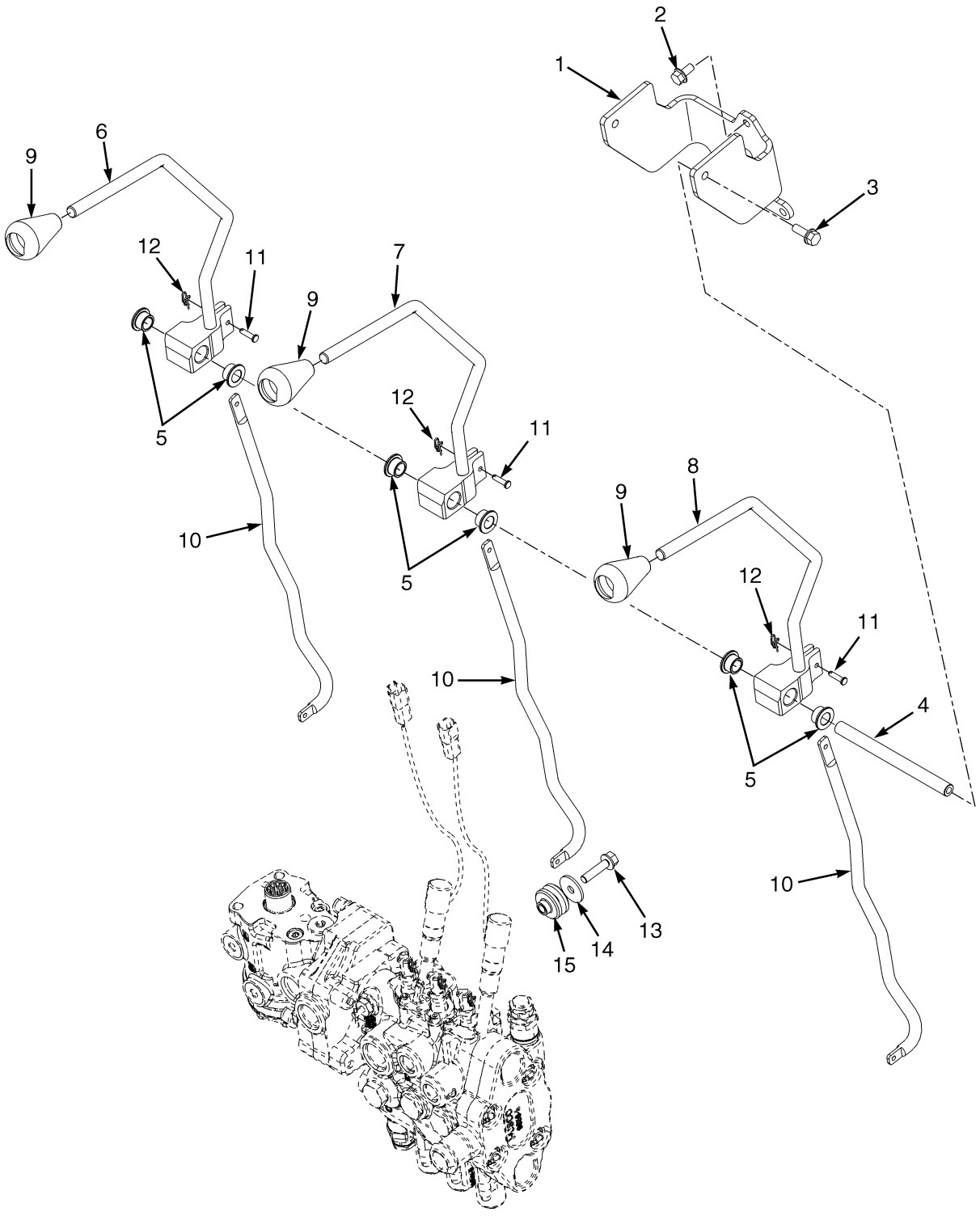

BP150139

©2011 HYSTER COMPANY

HAND LEVERS

THREE FUNCTION – WITHOUT DETENTED LEVERS

ITEM	PART NO.	DESCRIPTION	QTY
1	1665746	Bracket	1
2	1527879	Capscrew	3
3	1583611	Capscrew	2
4	1670292	Shaft	1
5	1564747	Bushing	6
6	2099393	Lever (Lift)	1
7	2099394	Lever (Tilt)	1
8	2099395	Lever (Auxiliary One)	1
9	1517395	Knob	3
10	1672798	Link	3
11	309109	Pin	6
12	1517361	Locking Ring Cotter Pin	6
13	1586627	Capscrew	3
14	1346752	Washer	3
15	2063991	Isolator	3
	. . . . .	Hydraulic Control Valve (☞Figure 9-10)	1

©2011 HYSTER COMPANY

HAND LEVERS (FIGURE 9-7)
FOUR FUNCTION — WITH DETENTED LEVERS

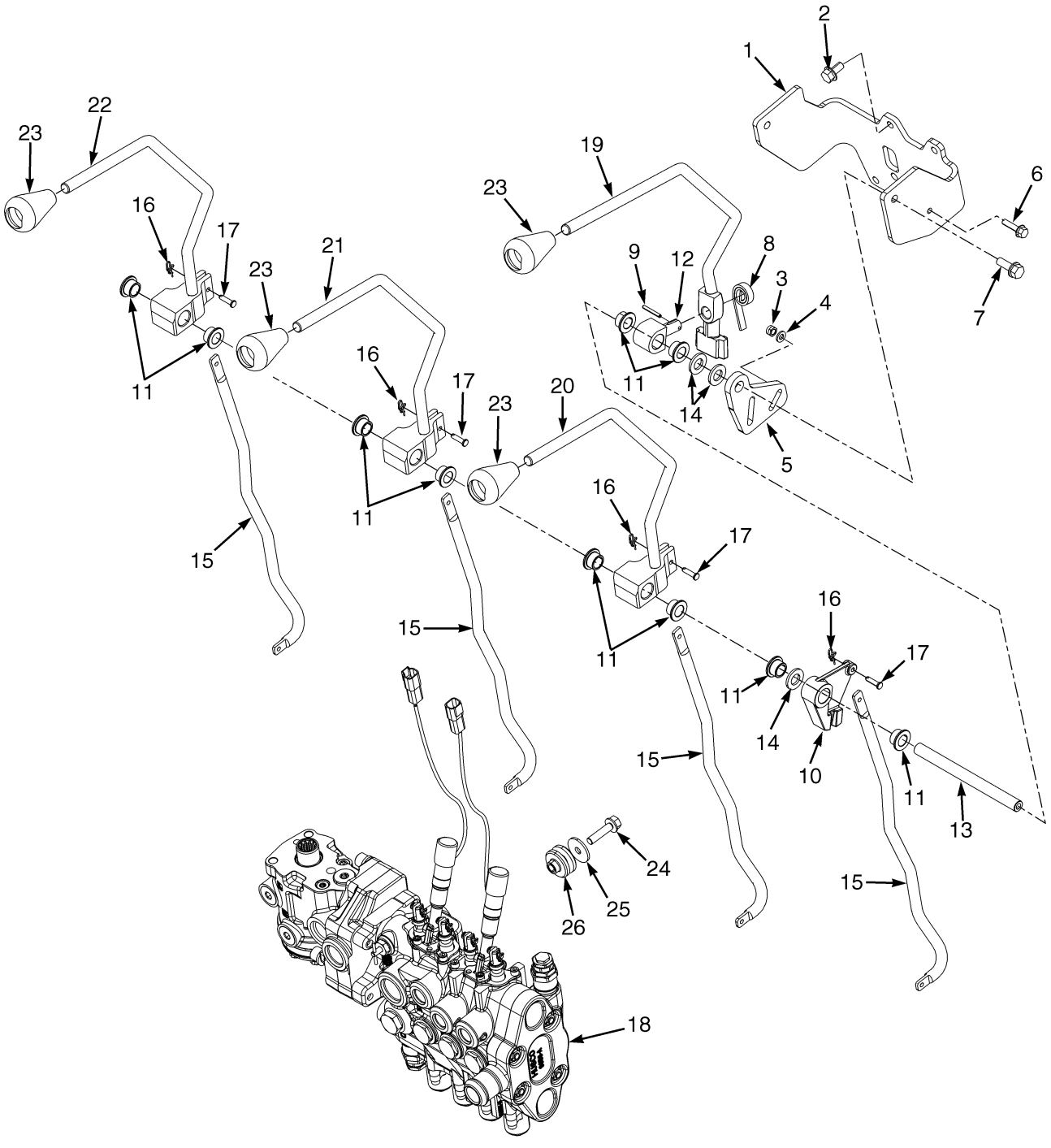

©2011 HYSTER COMPANY

HAND LEVERS

FOUR FUNCTION – WITH DETENTED LEVERS

ITEM	PART NO.	DESCRIPTION	QTY
1	1665748	Bracket	1
2	1527879	Capscrew	4
3	316834	Nut	1
4	320156	Washer	1
5	1670677	Plate	1
6	1527878	Capscrew	1
7	1583611	Capscrew	2
8	175861	Spring	1
9	302428	Roll Pin	1
10	1542546	Lever	1
11	1564747	Bushing	10
12	306113	Pin (Selector)	1
13	1670196	Shaft	1
14	320161	Washer	3
15	1672798	Link	4
16	1517361	Locking Ring Cotter Pin	8
17	309109	Pin	8
18	2100073	Hydraulic Control Valve (☞Figure 9-11)	1
19	2099397	Lever (Auxiliary Two and Three)	1
20	2099395	Lever (Auxiliary One)	1
21	2099394	Lever (Tilt)	1
22	2099393	Lever (Lift)	1
23	1517395	Knob	4
23	2070655	Lens (Blank)	1
24	1586627	Capscrew	3
25	1346752	Washer	3
26	2063991	Isolator	3

©2011 HYSTER COMPANY

HAND LEVERS (FIGURE 9-8)
FOUR FUNCTION — WITHOUT DETENTED LEVERS

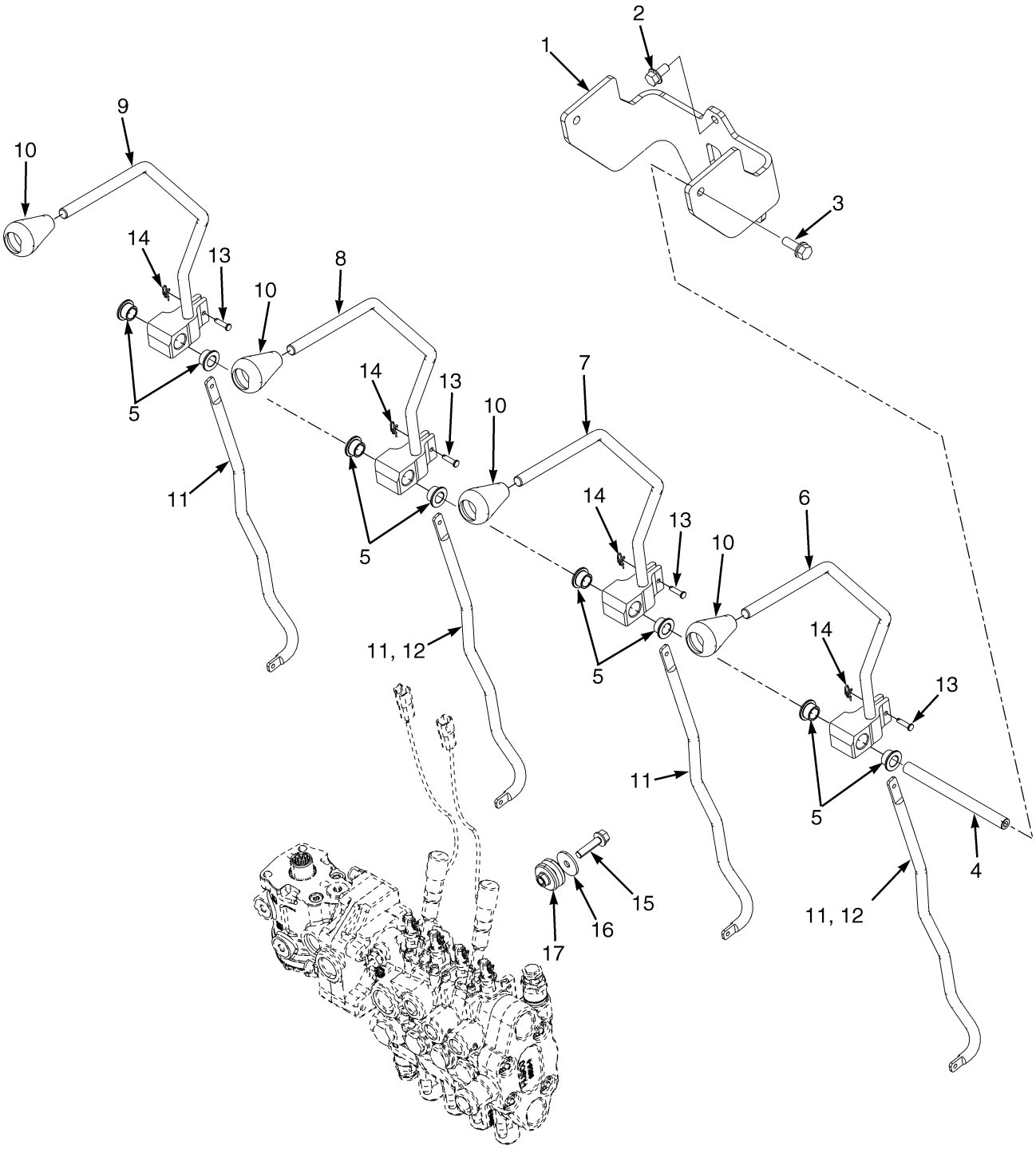

BP150200

©2011 HYSTER COMPANY

HAND LEVERS

FOUR FUNCTION – WITHOUT DETENTED LEVERS

ITEM	PART NO.	DESCRIPTION	QTY
1	1665747	Bracket	1
2	1527879	Capscrew	3
3	1583611	Capscrew	2
4	1670293	Shaft	1
5	1564747	Bushing	8
6	2099396	Lever (Auxiliary Two)	1
7	2099395	Lever (Auxiliary One)	1
8	2099394	Lever (Tilt)	1
9	2099393	Lever (Lift)	1
10	1517395	Knob	4
10	2070655	Lens (Blank)	1
11	1672798	Link	4
12	309109	Pin	8
13	1517361	Locking Ring Cotter Pin	8
14	1586627	Capscrew	3
15	1346752	Washer	3
16	2063991	Isolator	3
17	2100073	Hydraulic Control Valve (☞Figure 9-11)	1

©2011 HYSTER COMPANY

CONTROL VALVE LOCKOUT GROUP (FIGURE 9-9)
MANUAL CONTROL VALVE

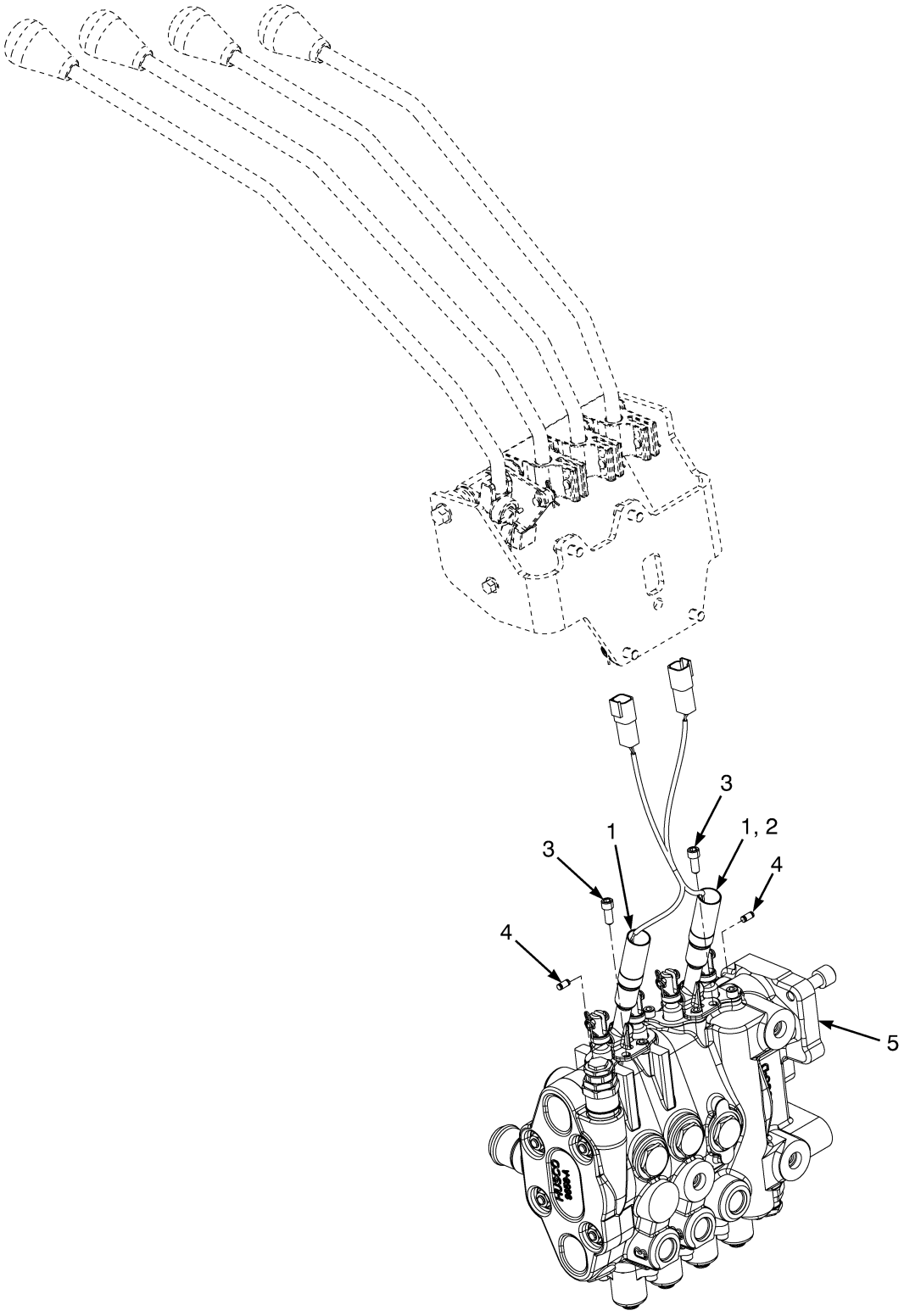

©2011 HYSTER COMPANY

CONTROL VALVE LOCKOUT GROUP
MANUAL CONTROL VALVE

KEY:
A: 3 Function
B: 4 Function

ITEM	PART NO.	DESCRIPTION	QTY A	QTY B
1	1683529	Solenoid Assembly (Double Function)	1	2
2	1683621	Solenoid Assembly (Single Function)	1	..
3	18748	Capscrew	4	4
4	1670413	Needle Roller	3	4
5	. . . . .	Manual Control Valve (☞Figure 9-10, ☞Figure 9-11)	1	1

©2011 HYSTER COMPANY

CONTROL VALVE AND STEERING UNIT ASSEMBLY (FIGURE 9-10)

MANUAL CONTROL — THREE FUNCTION

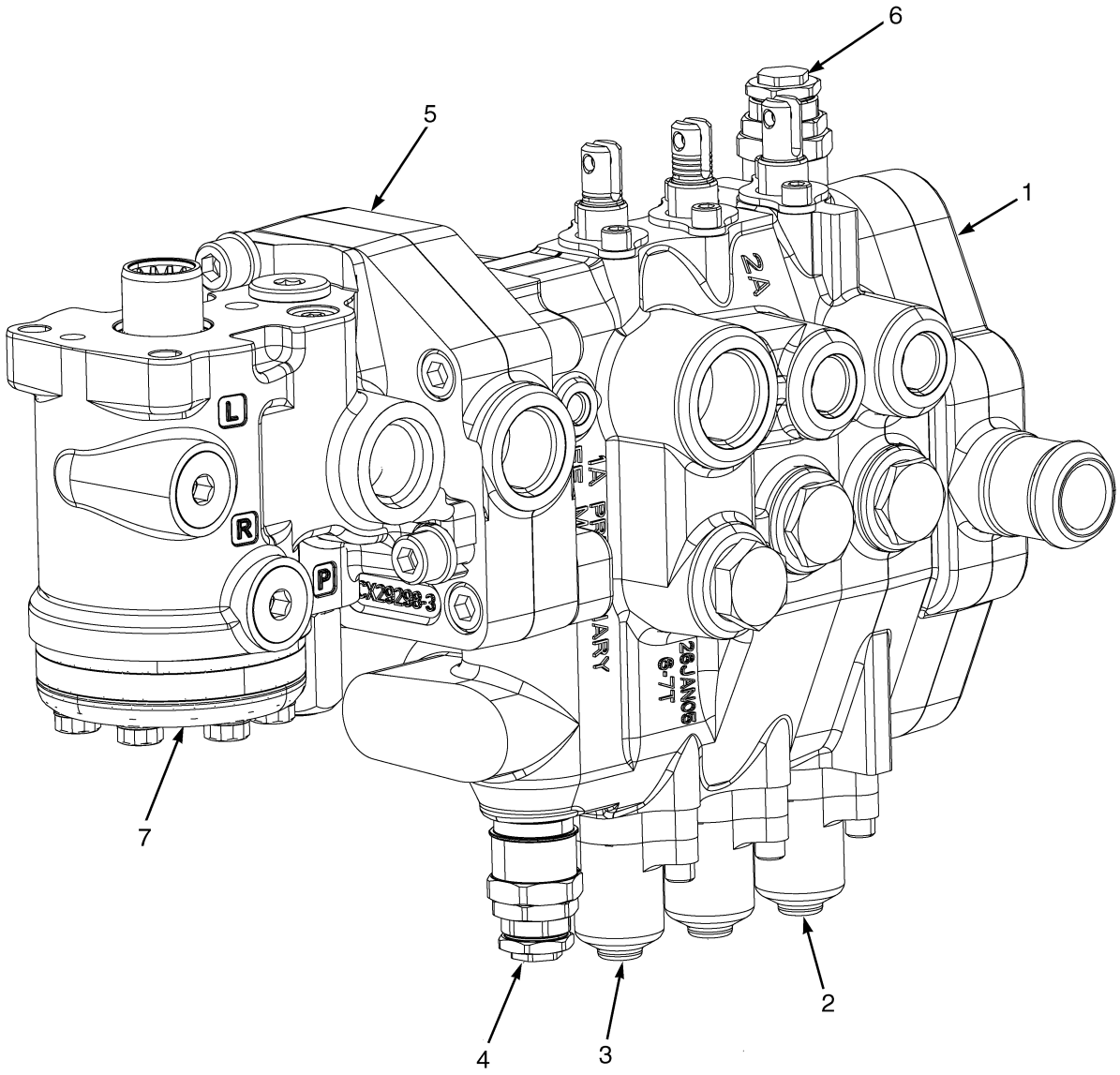

©2011 HYSTER COMPANY

CONTROL VALVE AND STEERING UNIT ASSEMBLY

MANUAL CONTROL – THREE FUNCTION

ITEM	PART NO.	DESCRIPTION	QTY
	2100071	Hydraulic Control Valve	1
	2100074	Hydraulic Control Valve	1
	1670434	Kit-Seal (Three Function)	1
1	1657638	Valve Section (Outlet) (☞Figure 9-15)	1
2	1670531	Valve Section (Aux 1) (☞Figure 9-13)	1
3	1670532	Valve Section (Lift and Tilt) (☞Figure 9-14)	1
4	1578747	Relief Valve (3100 PSI) (Main Relief)	1
5	1657632	Valve Section (Inlet) (☞Figure 9-12)	1
6	1578707	Relief Valve (2250 PSI) (Secondary)	1
7	2102566	Steering Control Unit (☞Figure 7-4)	1
	1657631	Kit-Capscrew	1

©2011 HYSTER COMPANY

CONTROL VALVE AND STEERING UNIT ASSEMBLY (FIGURE 9-11)

MANUAL CONTROL — FOUR FUNCTION

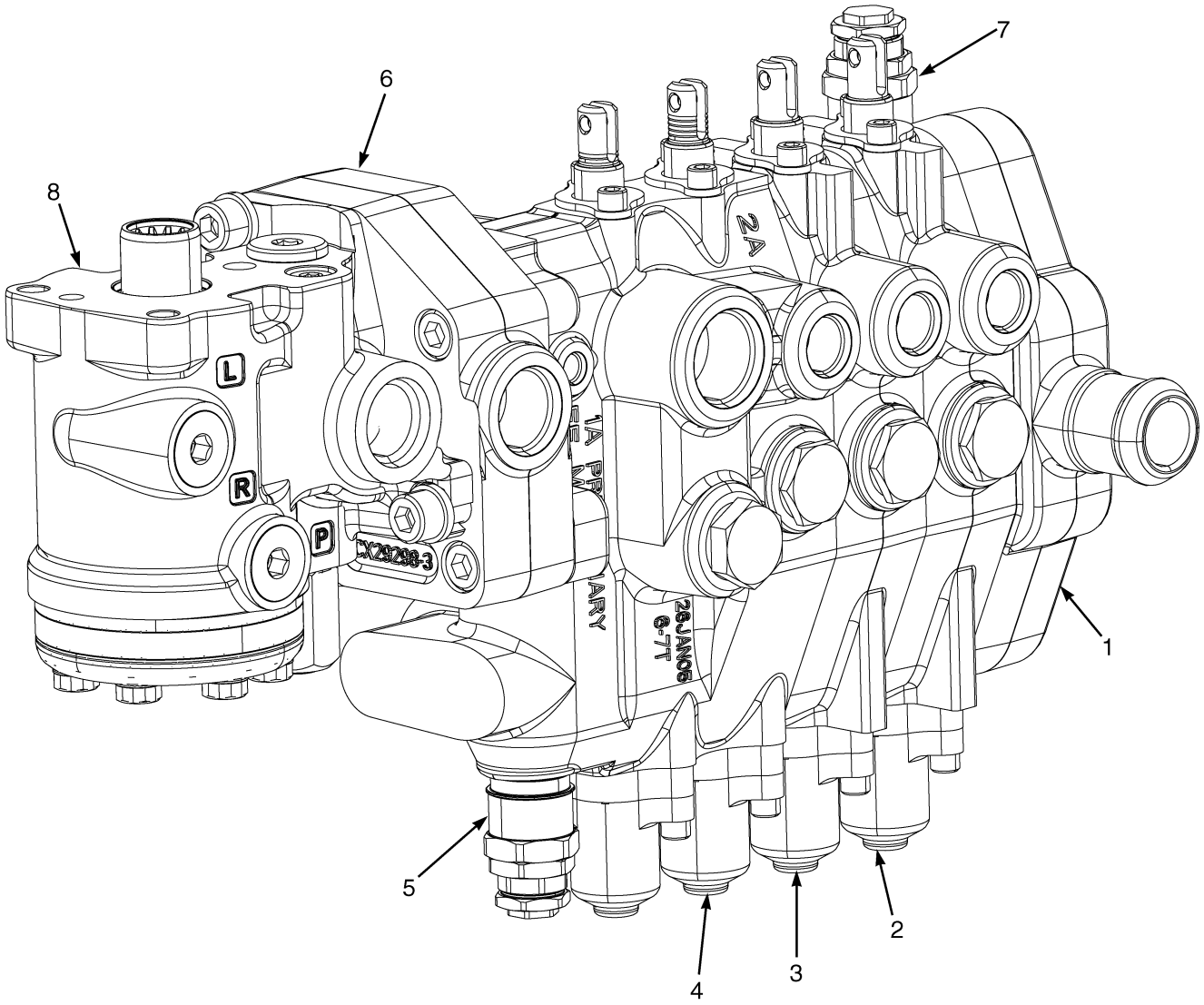

BP140094

©2011 HYSTER COMPANY

CONTROL VALVE AND STEERING UNIT ASSEMBLY

MANUAL CONTROL – FOUR FUNCTION

ITEM	PART NO.	DESCRIPTION	QTY
	2100073	Hydraulic Control Valve	1
	2100075	Hydraulic Control Valve	1
	1670054	Kit-Seal (Four Function)	1
1	1657638	Valve Section (Outlet) (☞Figure 9-15)	1
2	1670530	Valve Section (Aux 2) (☞Figure 9-14)	1
3	1670531	Valve Section (Aux 1) (☞Figure 9-13)	1
4	1670532	Valve Section (Lift and Tilt) (☞Figure 9-14)	1
5	1578747	Relief Valve (3100 PSI) (Main Relief)	1
6	1657632	Valve Section (Inlet) (☞Figure 9-12)	1
7	1578707	Relief Valve (2250 PSI) (Secondary)	1
8	2102566	Steering Control Unit (☞Figure 7-4)	1
	1657631	Kit-Capscrew	1

©2011 HYSTER COMPANY

MID INLET SECTION (FIGURE 9-12)
MANUAL AND ELECTRONIC CONTROL VALVE — THREE AND FOUR FUNCTION

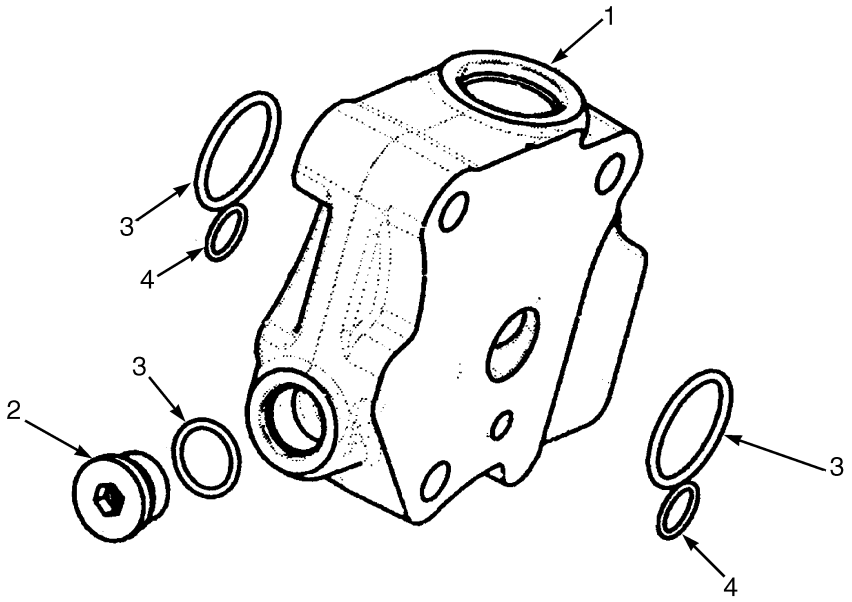

BP140091

ITEM	PART NO.	DESCRIPTION	QTY
1	1657632	Valve Section (Inlet)	1
2	1569602	Plug	1
3	1580133	Kit-Seal (Inlet/Tilt Section)	1
4	1578911	Kit-Seal (Steering Control Unit Interface)	1
	1580146	Kit-Seal (Three Function)	1

©2011 HYSTER COMPANY

NOTES

©2011 HYSTER COMPANY

VALVE ASSEMBLY, LIFT AND TILT (FIGURE 9-13)
MANUAL CONTROL VALVE — THREE AND FOUR FUNCTION

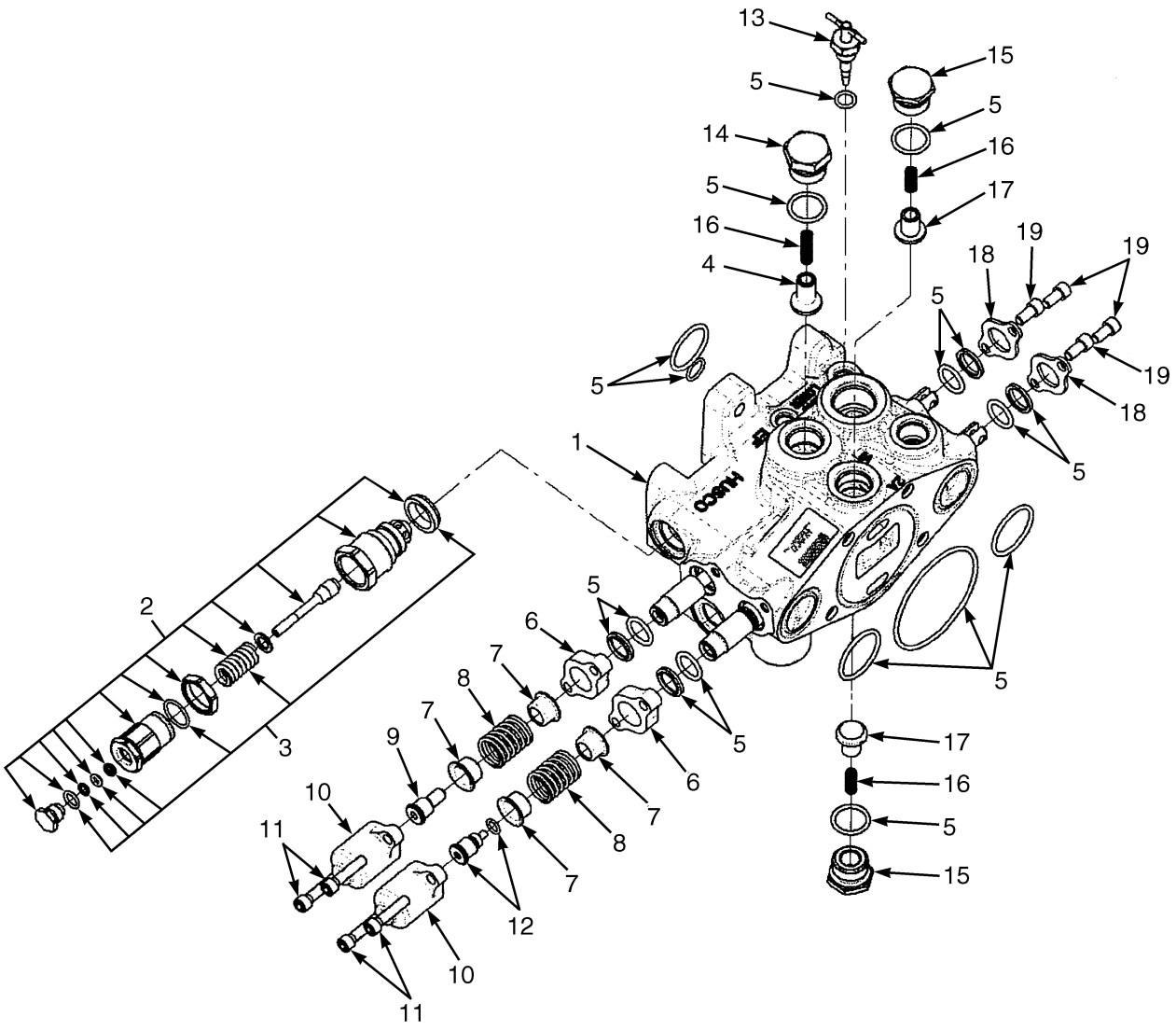

BP140118

©2011 HYSTER COMPANY

VALVE ASSEMBLY, LIFT AND TILT
MANUAL CONTROL VALVE – THREE AND FOUR FUNCTION

KEY:
A: Three Function
B: Four Function

ITEM	PART NO.	DESCRIPTION	QTY A	QTY B
1	1670531	Valve Section	1	1
2	1578707	Relief Valve (2250 PSI) (Secondary)	1	1
2	1578747	Relief Valve (3100 PSI) (Main Relief)	1	1
2	1580694	Plug	1	1
2	1580697	Screw	1	1
2	1580698	Nut	1	1
2	1580695	Washer	1	1
2	1580696	Poppet	1	1
3	1580097	Kit-Seal	1	1
4	1578943	Poppet	1	1
5	1670445	Kit-Seal (Lift and Tilt)	1	1
6	. . . . .	Seal Plate	2	2
7	320289	Spring Seat	4	4
8	188517	Spring	2	2
9	1581859	Spool End	1	1
10	1560681	Cap	2	2
11	1578705	Capscrew	4	4
12	386015	Spool End	1	1
13	1670522	Kit-Valve (Manual Lower Assembly)	1	1
14	1578940	Plug	1	1
15	1578713	Plug	1	1
16	77442	Spring	3	3
17	77443	Poppet	2	2
18	188515	Plate	2	2
19	16706	Screw	4	4
	1670054	Kit-Seal (Four Function)	..	1
	1670434	Kit-Seal (Three Function)	1	..

©2011 HYSTER COMPANY

AUXILIARY ONE AND TWO SECTIONS (FIGURE 9-14)
MANUAL CONTROL VALVE — THREE AND FOUR FUNCTION

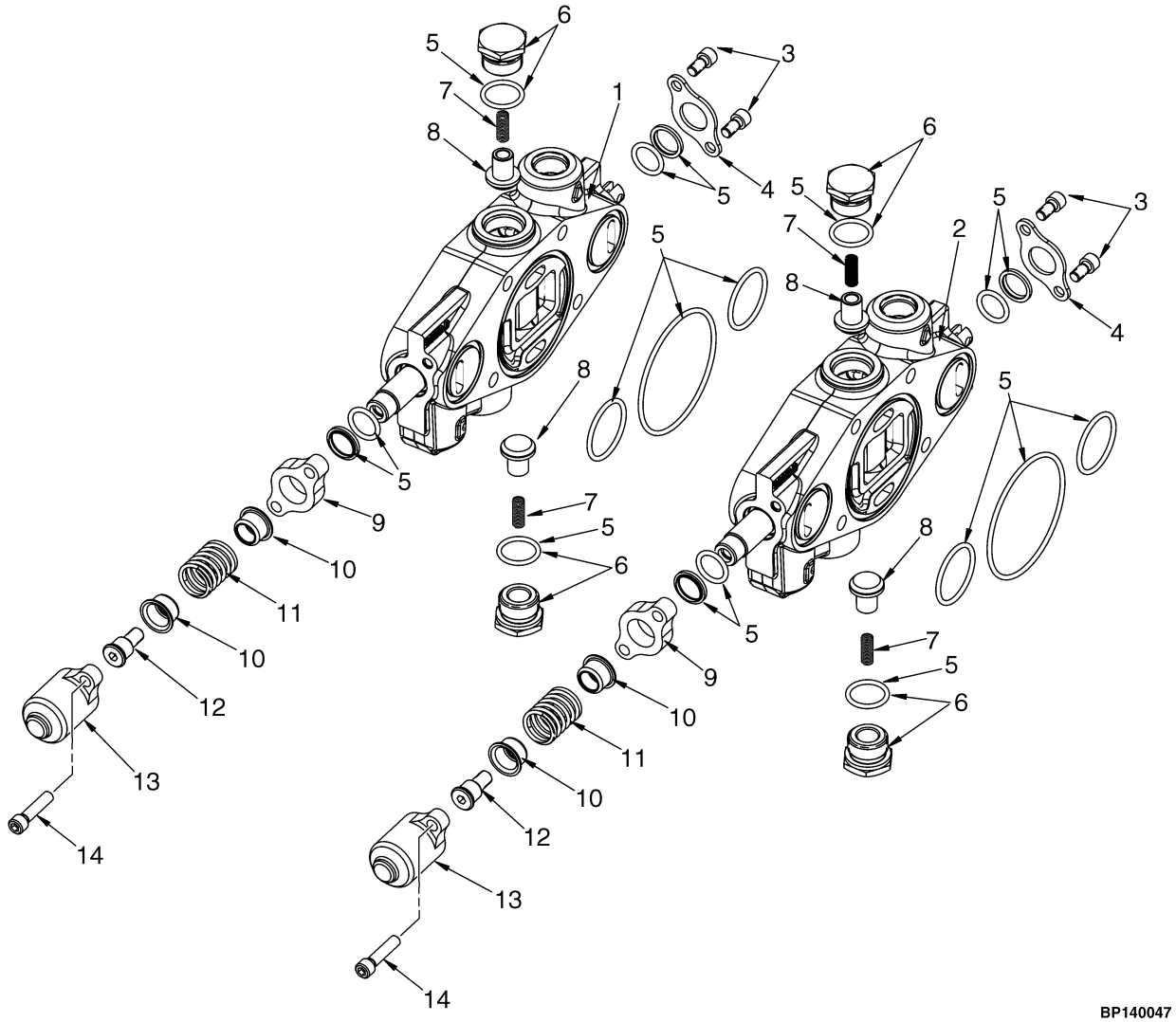

©2011 HYSTER COMPANY

AUXILIARY ONE AND TWO SECTIONS
MANUAL CONTROL VALVE – THREE AND FOUR FUNCTION

KEY:
A: Three Function
B: Four Function

ITEM	PART NO.	DESCRIPTION	QTY A	QTY B
1	1670532	Valve Section	1	1
2	1670530	Valve Section	..	1
3	16706	Screw	2	2
4	188515	Plate	1	1
5	1580147	Kit-Seal (Auxiliary Functions)	1	1
6	1578713	Plug	2	2
6	77441	Plug	2	2
7	77442	Spring	2	2
8	77443	Poppet	2	2
9	. . . . .	Seal Plate	1	1
10	320289	Spring Seat	2	2
11	188517	Spring	1	1
12	1581859	Spool End	1	1
13	1560681	Cap	1	1
14	1628746	Capscrew	2	2
	1580146	Kit-Seal (Three Function)	1	1

©2011 HYSTER COMPANY

OUTLET SECTION (FIGURE 9-15)
MANUAL CONTROL VALVE — THREE AND FOUR FUNCTION

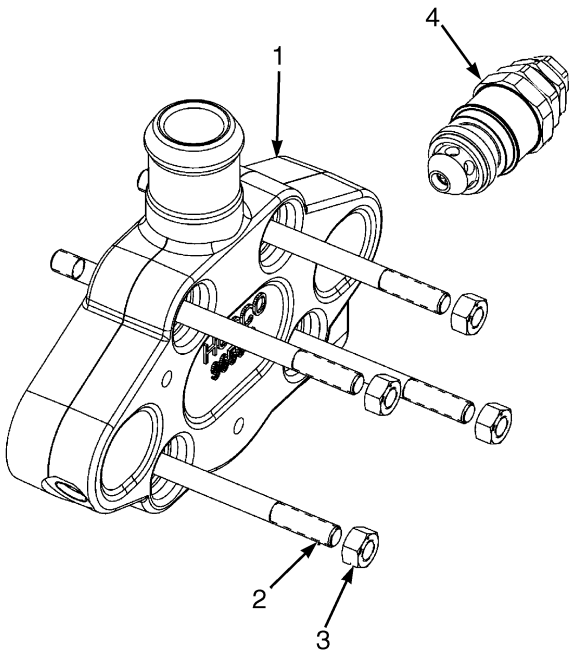

BP140090

ITEM	PART NO.	DESCRIPTION	QTY
1	1657638	Valve Section	1
2	1580155	Kit-Tie Rod (Three Function)	1
2	1580156	Kit-Tie Rod (Four Function)	1
3	15055	Nut	4
4	1578707	Relief Valve (2250 PSI) (Secondary)	1
4	1580131	Kit-Seal	1

©2011 HYSTER COMPANY

NOTES

©2011 HYSTER COMPANY

CONTROL VALVE AND STEERING UNIT ASSEMBLY (FIGURE 9-16)

ELECTRONIC CONTROL — THREE FUNCTION (→ 6/2009)

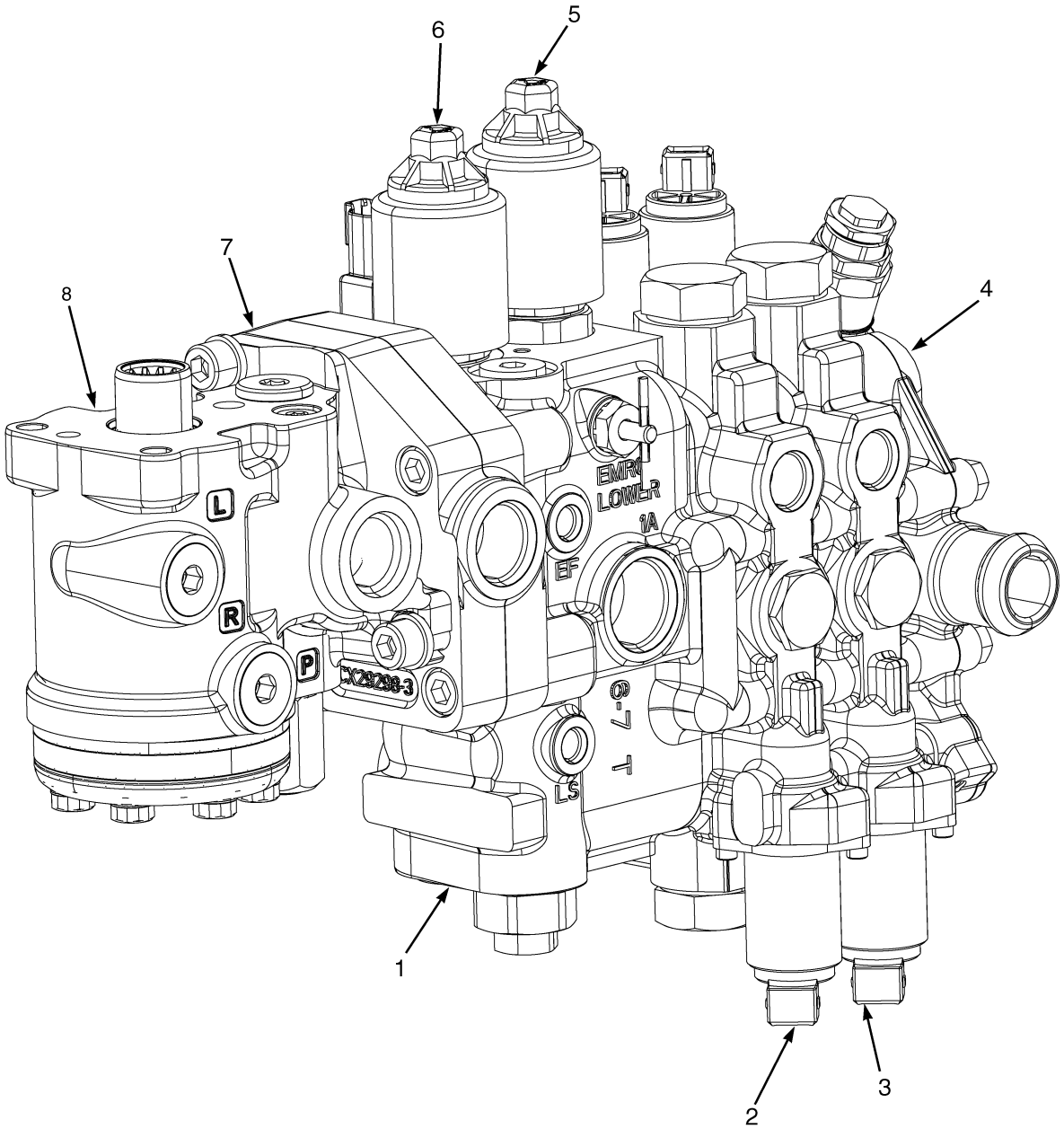

BP140092

©2011 HYSTER COMPANY

CONTROL VALVE AND STEERING UNIT ASSEMBLY

ELECTRONIC CONTROL – THREE FUNCTION (→ 6/2009)

ITEM	PART NO.	DESCRIPTION	QTY
	2094021	Hydraulic Control Valve (Assembly with Steering Control Unit)	1
	2090917	Hydraulic Control Valve Assembly	1
1	1657634	Body (☞Figure 9-20)	1
2	1657635	Valve Section (☞Figure 9-21)	1
3	1629198	Valve Section (Auxiliary One) (☞Figure 9-23)	1
4	1578704	Valve Section (Outlet) (☞Figure 9-27)	1
5	1629201	Kit-Valve (Lower) (☞Figure 9-22)	1
6	1629200	Kit-Valve (Lift) (☞Figure 9-22)	1
7	1657632	Valve Section (Inlet) (☞Figure 9-12)	1
8	2102566	Steering Control Unit (☞Figure 7-4)	1
	a 1657636	Kit-Valve (Anti Stall)	1
	a 1657631	Kit-Capscrew	1
	a 1578715	Kit-Tie Rod	1

FOOTNOTES:

a Not Illustrated

©2011 HYSTER COMPANY

CONTROL VALVE AND STEERING UNIT ASSEMBLY (FIGURE 9-17)

ELECTRO-HYDRAULIC — THREE FUNCTION (6/2009 →)

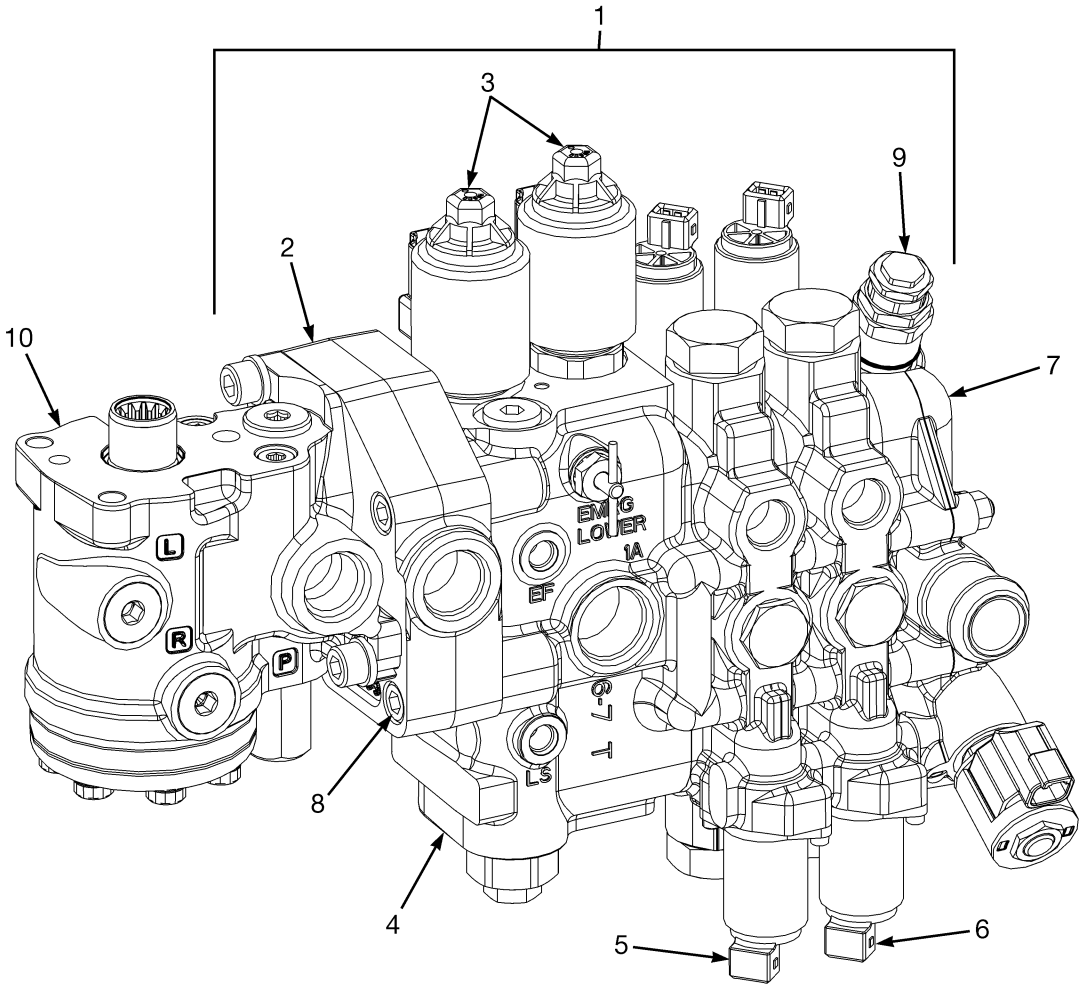

BP140166

©2011 HYSTER COMPANY

CONTROL VALVE AND STEERING UNIT ASSEMBLY

ELECTRO-HYDRAULIC – THREE FUNCTION (6/2009 →)

ITEM	PART NO.	DESCRIPTION	QTY
	2103051	Hydraulic Control Valve (Assembly with Steering Control Unit)	1
1	2103058	Hydraulic Control Valve Assembly	1
2	1657632	Valve Section (Inlet) (☞Figure 9-12)	1
3	. . . . .	Poppet Valve (☞Figure 9-22)	1
4	1657634	Body (EHPV Section Assembly) (☞Figure 9-20)	1
5	1708296	Valve Section (Tilt) (☞Figure 9-21)	1
6	1708298	Valve Section (Aux. 1) (☞Figure 9-24)	1
7	1708297	Valve Section (Outlet) (☞Figure 9-28)	1
8	1657631	Kit-Capscrew	1
8	1629155	Washer	5
8	1657743	Capscrew	3
9	1708054	Relief Valve (Secondary)	1
9	1580131	Kit-Seal	1
10	2102567	Steering Control Unit (☞Figure 7-4)	1
10	1579908	Kit-Seal	1
	1578715	Kit-Tie Rod	1
	1578909	Kit-Seal	1

©2011 HYSTER COMPANY

CONTROL VALVE AND STEERING UNIT ASSEMBLY (FIGURE 9-18)

ELECTRONIC CONTROL — FOUR FUNCTION (→ 6/2009)

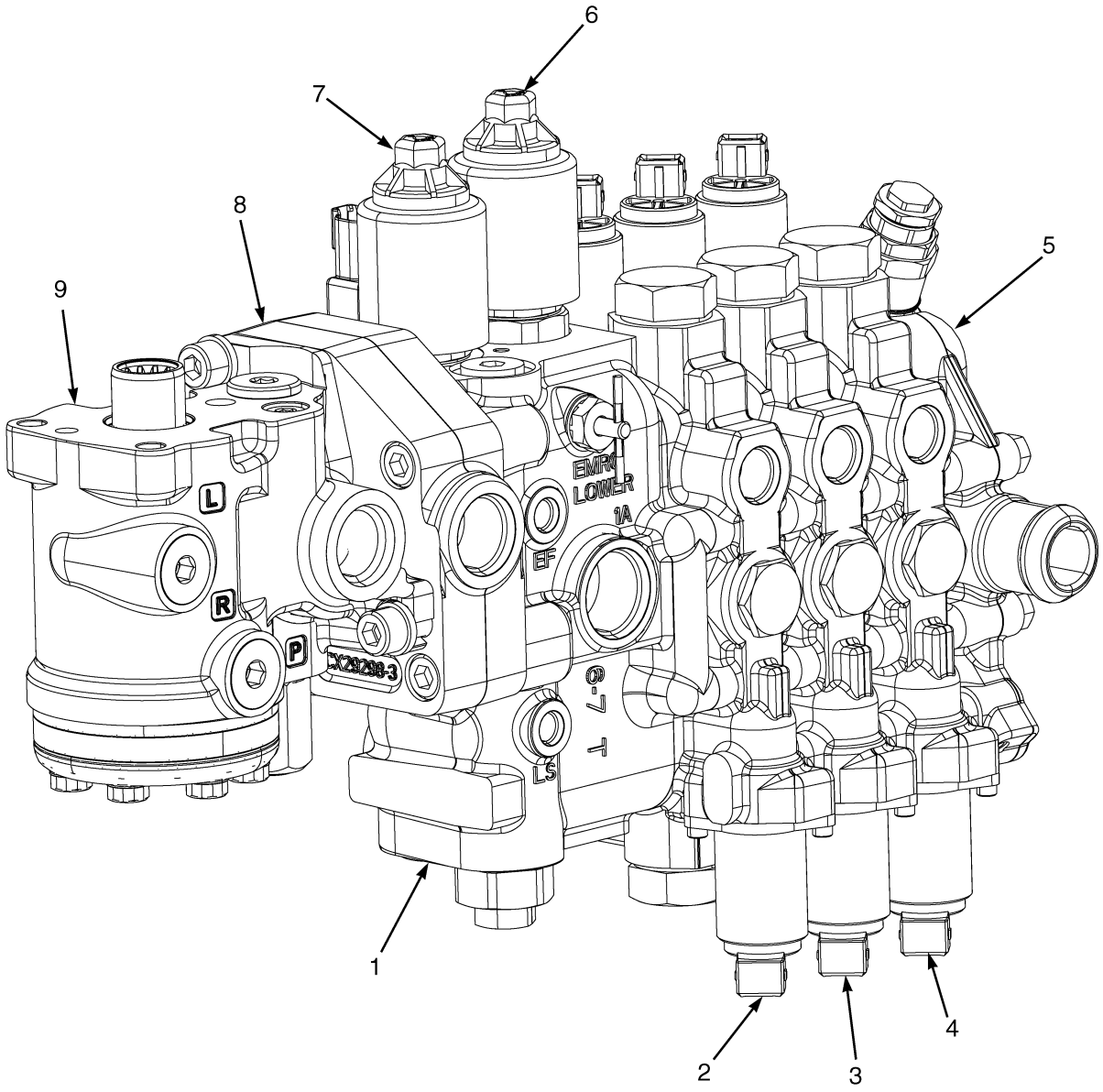

BP140093

©2011 HYSTER COMPANY

CONTROL VALVE AND STEERING UNIT ASSEMBLY

ELECTRONIC CONTROL – FOUR FUNCTION (→ 6/2009)

ITEM	PART NO.	DESCRIPTION	QTY
	2094022	Hydraulic Control Valve (Assembly with Steering Control Unit)	1
	2090919	Hydraulic Control Valve Assembly	1
1	1657634	Body (☞Figure 9-20)	1
2	1657635	Valve Section (☞Figure 9-21)	1
3	1629198	Valve Section (Auxiliary One) (☞Figure 9-23)	1
4	1633693	Valve Section (Auxiliary Two and Three) (☞Figure 9-25)	1
5	1578704	Valve Section (Outlet) (☞Figure 9-27)	1
6	1629201	Kit-Valve (Lower) (☞Figure 9-22)	1
7	1629200	Kit-Valve (Lift) (☞Figure 9-22)	1
8	1657632	Valve Section (Inlet) (☞Figure 9-12)	1
9	2102566	Steering Control Unit (☞Figure 7-4)	1
	1657636	Kit-Valve (Anti Stall)	1
	1580151	Kit-Tie Rod	1
	1657631	Kit-Capscrew	1

©2011 HYSTER COMPANY

CONTROL VALVE AND STEERING UNIT ASSEMBLY (FIGURE 9-19)

ELECTRO-HYDRAULIC — FOUR FUNCTION (6/2009 →)

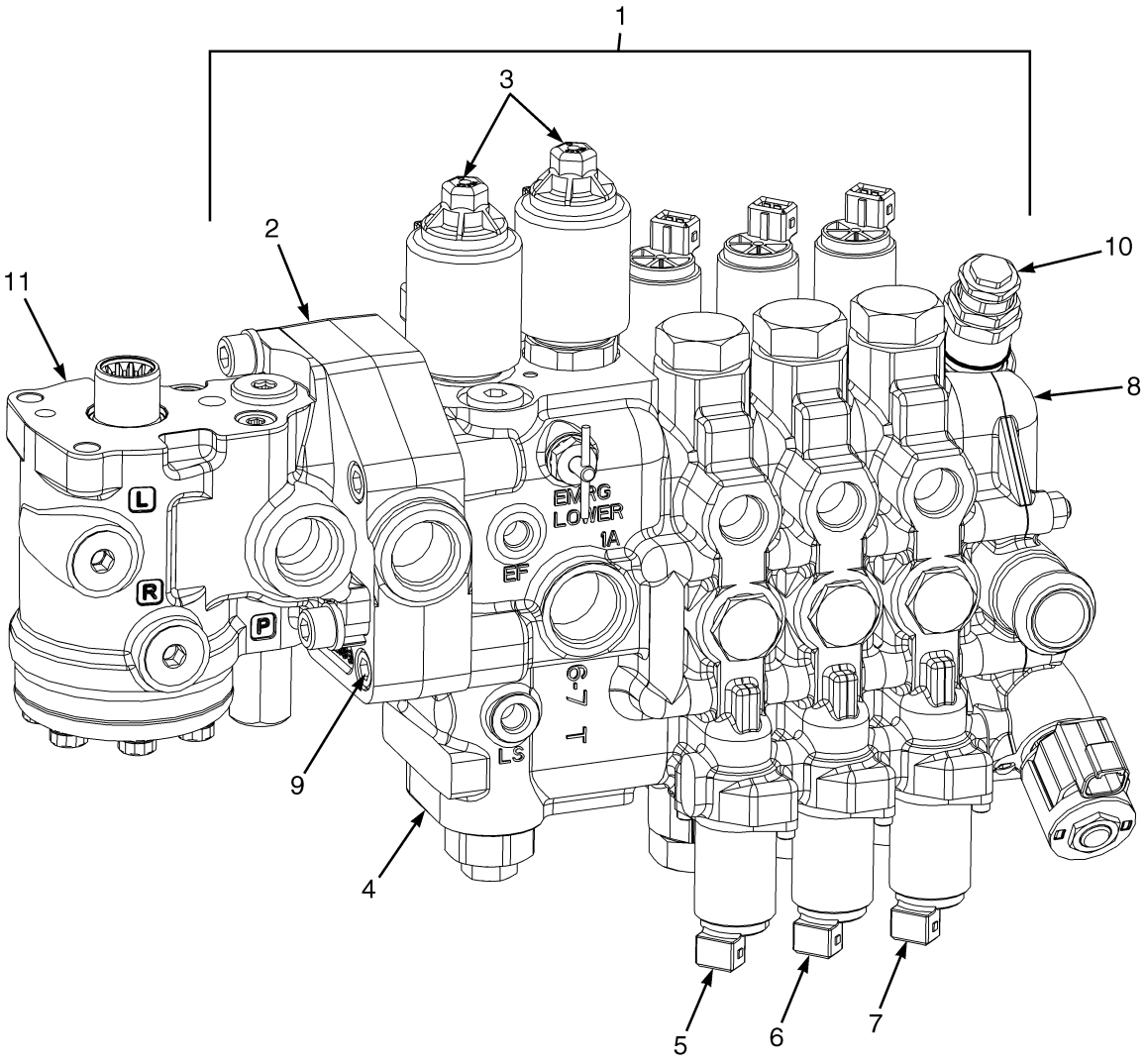

BP140168

©2011 HYSTER COMPANY

CONTROL VALVE AND STEERING UNIT ASSEMBLY

ELECTRO-HYDRAULIC – FOUR FUNCTION (6/2009 →)

ITEM	PART NO.	DESCRIPTION	QTY
	2103053	Hydraulic Control Valve (Assembly with Steering Control Unit)	1
1	2103059	Hydraulic Control Valve Assembly	1
2	1657632	Valve Section (Inlet) (☞Figure 9-12)	1
3	1657634	Body (EHPV Section Assembly) (☞Figure 9-20)	1
4	1708296	Valve Section (Tilt) (☞Figure 9-21)	1
5	1708298	Valve Section (Aux. 1) (☞Figure 9-23)	1
6	1708299	Valve Section (Auxiliary Two) (☞Figure 9-26)	1
7	1708297	Valve Section (Outlet) (☞Figure 9-28)	1
8	1657631	Kit-Capscrew	1
8	1629155	Washer	5
8	1657743	Capscrew	3
9	1708054	Relief Valve (Secondary)	1
9	1580131	Kit-Seal	1
10	2102567	Steering Control Unit (☞Figure 7-4)	1
10	1579908	Kit-Seal	1
	1580151	Kit-Tie Rod	1
	1578908	Kit-Seal	1

©2011 HYSTER COMPANY

VALVE ASSEMBLY, LIFT AND LOWER (FIGURE 9-20)
ELECTRONIC CONTROL VALVE — THREE AND FOUR FUNCTION

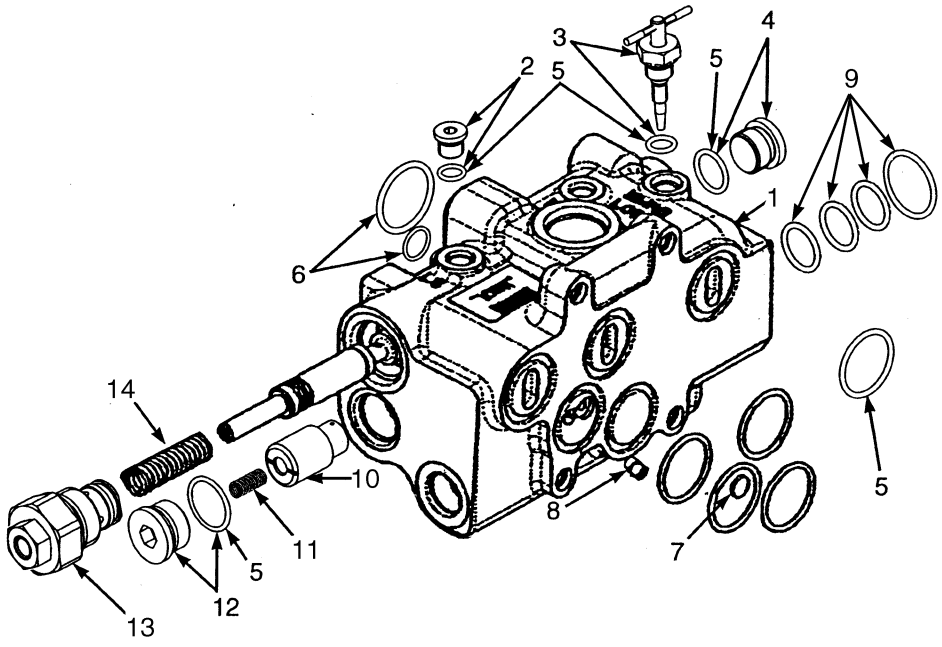

BP140095

©2011 HYSTER COMPANY

VALVE ASSEMBLY, LIFT AND LOWER
ELECTRONIC CONTROL VALVE – THREE AND FOUR FUNCTION

ITEM	PART NO.	DESCRIPTION	QTY
1	1657634	Body	1
2	1578712	Plug	1
2	204128	Plug	1
3	1581862	Kit-Valve (Manual Lowering)	1
4	1629210	Plug	1
5	1578904	Kit-Seal (Inlet)	1
6	1578911	Kit-Seal (Steering Control Unit Interface)	1
7	1578875	Shuttle Valve	1
8	1578888	Setscrew	1
9	1586279	Kit-Seal (Electro Hydraulic Poppet Valve)	AR
10	1586280	Poppet	1
11	1578876	Spring	1
12	1578714	Plug	1
13	1578706	Relief Valve (Main)	1
13	1580132	Kit-Relief Valve	1
14	1658065	Spring	1
	b 1578909	Kit-Seal	1
	a 1578908	Kit-Seal	1

FOOTNOTES:

a Four Function Only

b Three Function Only

©2011 HYSTER COMPANY

TILT SECTION (FIGURE 9-21)
ELECTRONIC CONTROL VALVE — THREE AND FOUR FUNCTION

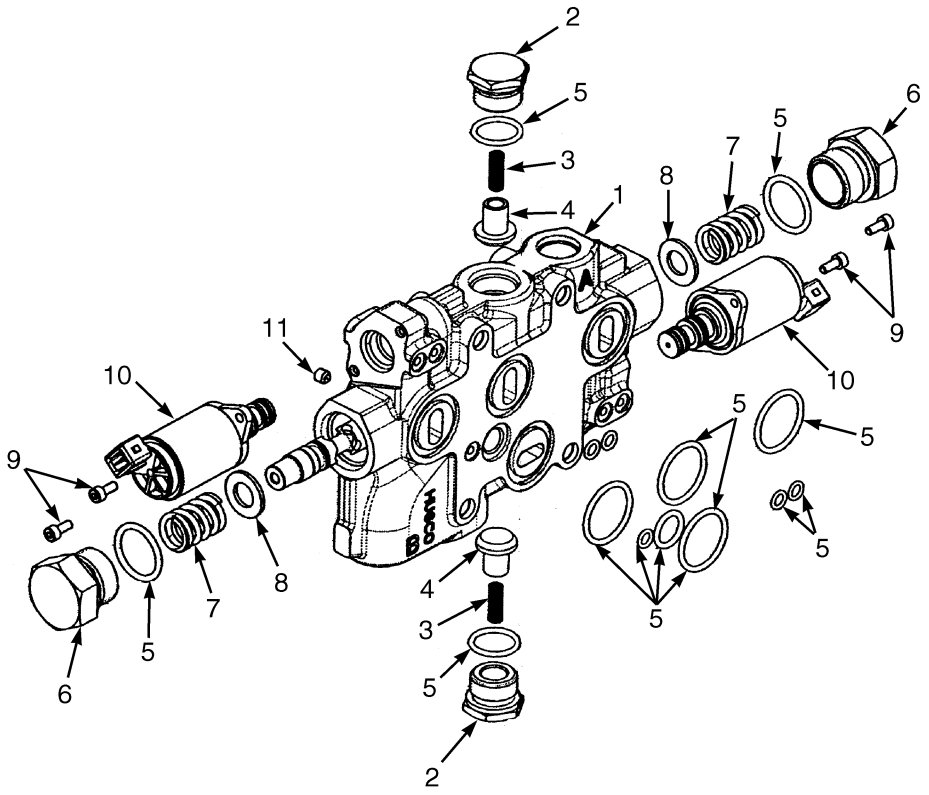

BP140096

©2011 HYSTER COMPANY

TILT SECTION

ELECTRONIC CONTROL VALVE – THREE AND FOUR FUNCTION

ITEM	PART NO.	DESCRIPTION	QTY
1	**c** 1657635	Valve Section (Tilt)	1
1	**d** 1708296	Valve Section (Tilt)	1
2	1578713	Plug	2
3	77442	Spring	2
4	77443	Poppet	2
5	1578905	Kit-Seal (Tilt)	1
6	1578889	Plug	2
7	1578882	Spring	2
8	1578883	Washer	2
9	1578878	Capscrew	4
10	1578711	Valve (Pressure Reducing)	2
10	1578912	Kit-Seal (Pressure Reducing Valve)	1
11	1578887	Setscrew	1
	b 1578909	Kit-Seal	1
	a 1578908	Kit-Seal	1

FOOTNOTES:

a Four Function Only
b Three Function Only
c → 6/2009
d 6/2009 →

ELECTRO HYDRAULIC POPPET VALVE (FIGURE 9-22)
ELECTRONIC CONTROL VALVE — THREE AND FOUR FUNCTION

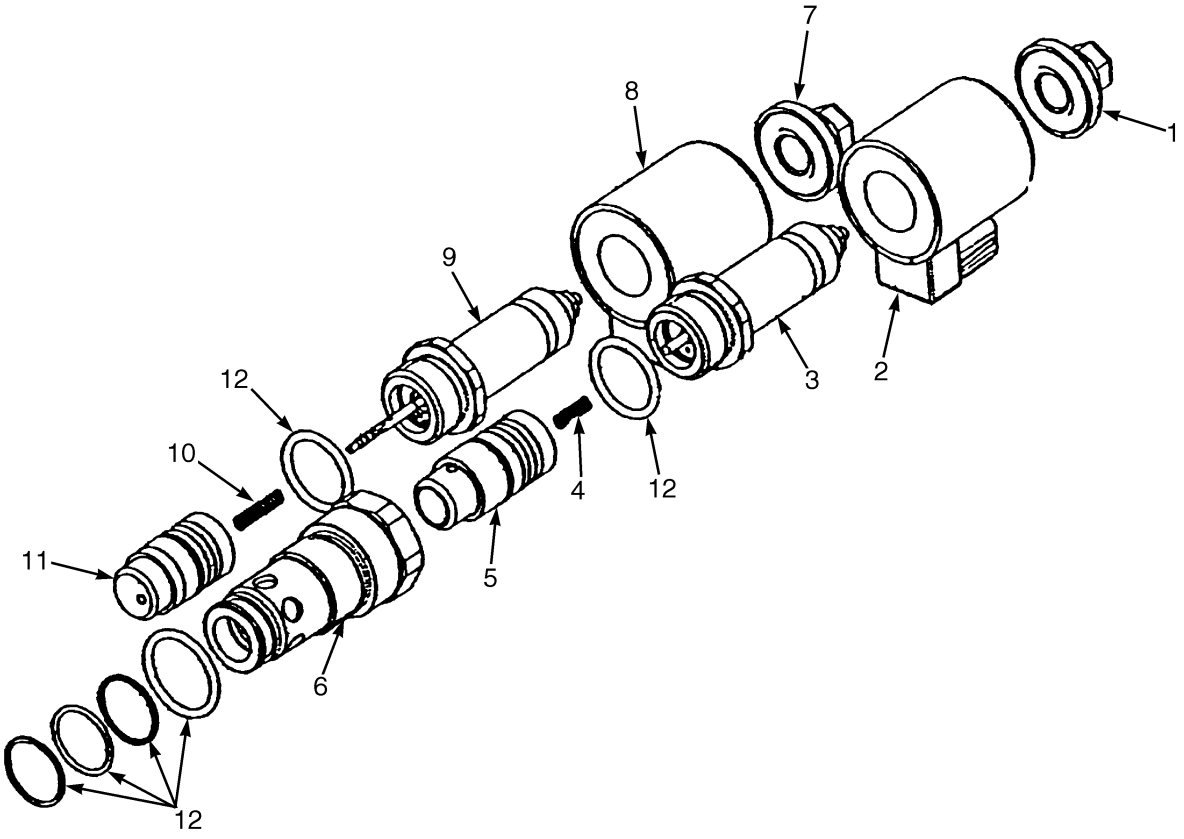

BP140098

©2011 HYSTER COMPANY

ELECTRO HYDRAULIC POPPET VALVE

ELECTRONIC CONTROL VALVE – THREE AND FOUR FUNCTION

ITEM	PART NO.	DESCRIPTION	QTY
	a 1629201	Kit-Valve (Lower)	1
	b 1699590	Poppet Valve	1
1	1629163	Nut	1
2	1578710	Coil	1
3	1629160	Tube (Solenoid)	1
4	1629165	Spring	1
5	**a** 1629159	Poppet Valve	1
5	**b** 1699591	Poppet Valve	1
6	1586020	Sleeve	1
	1629200	Kit-Valve (Lift)	1
7	1629163	Nut	1
8	1629162	Coil	1
9	1629161	Tube Assy (Solenoid)	1
10	1629164	Spring	1
11	1629158	Poppet Valve	1
12	1586279	Kit-Seal (Electro Hydraulic Poppet Valve)	1

FOOTNOTES:

a → 6/2009

b 6/2009 →

©2011 HYSTER COMPANY

AUXILIARY ONE SECTION (FIGURE 9-23)

ELECTRONIC CONTROL VALVE — THREE AND FOUR FUNCTION (→ 6/2009)

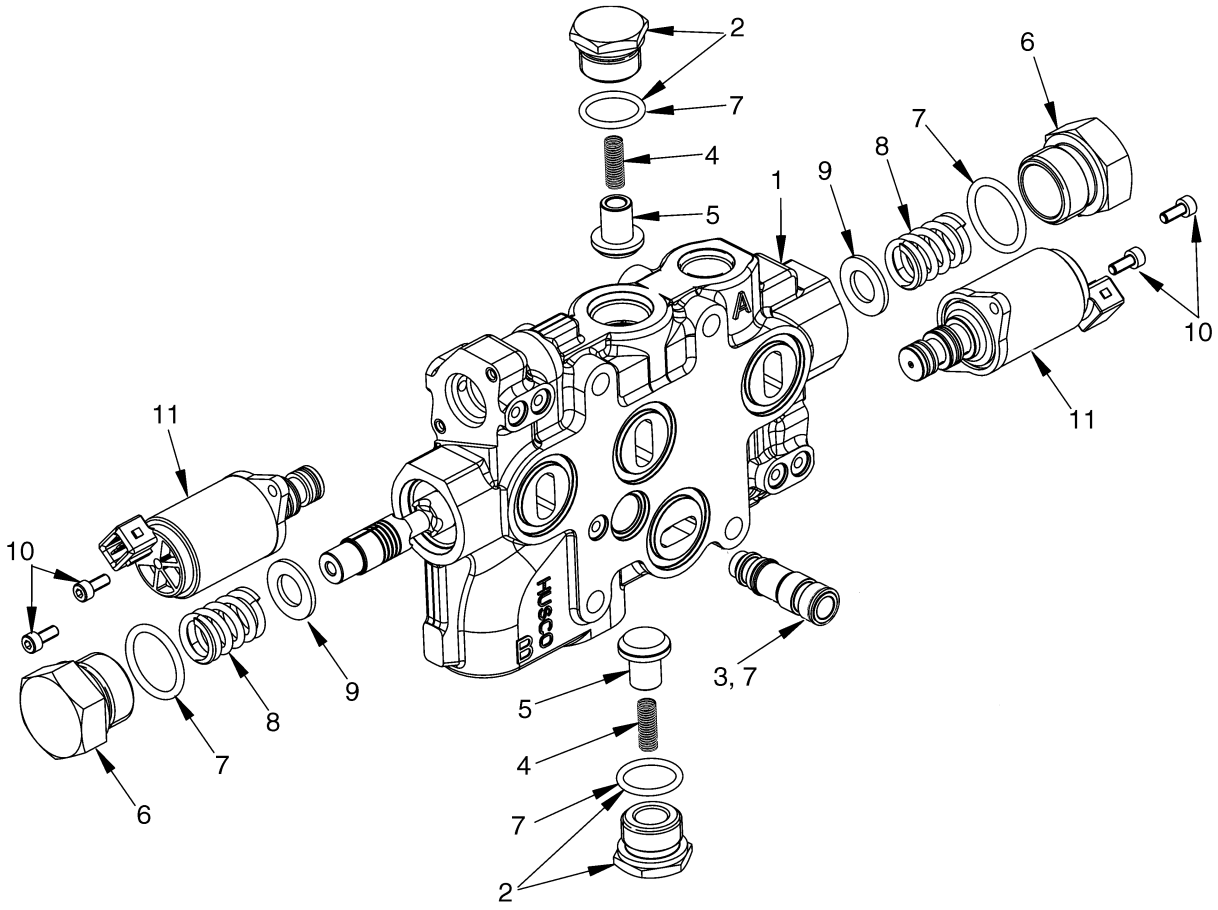

BP140099

©2011 HYSTER COMPANY

AUXILIARY ONE SECTION

ELECTRONIC CONTROL VALVE – THREE AND FOUR FUNCTION (→ 6/2009)

ITEM	PART NO.	DESCRIPTION	QTY
1	1629198	Valve Section (Auxiliary One)	1
2	1578713	Plug (Tilt/Auxiliary)	1
2	1578714	Plug (Lift)	1
3	1578718	Cartridge Valve	1
3	1578886	Spring	1
3	1629166	Sleeve	1
3	266519	O-Ring	2
4	77442	Spring	1
5	77443	Poppet	1
6	1578889	Plug	2
7	1578906	Kit-Seal (Auxiliary Section)	1
8	1578882	Spring	2
9	1578883	Washer	2
10	1578878	Capscrew	4
11	1578711	Valve (Pressure Reducing)	2
	1578912	Kit-Seal (Pressure Reducing Valve)	1
	b 1578909	Kit-Seal	1
	a 1578908	Kit-Seal	1

FOOTNOTES:

a Four Function Only

b Three Function Only

©2011 HYSTER COMPANY

AUXILIARY ONE SECTION (FIGURE 9-24)
ELECTRONIC CONTROLLER — THREE AND FOUR FUNCTION (6/2009 →)

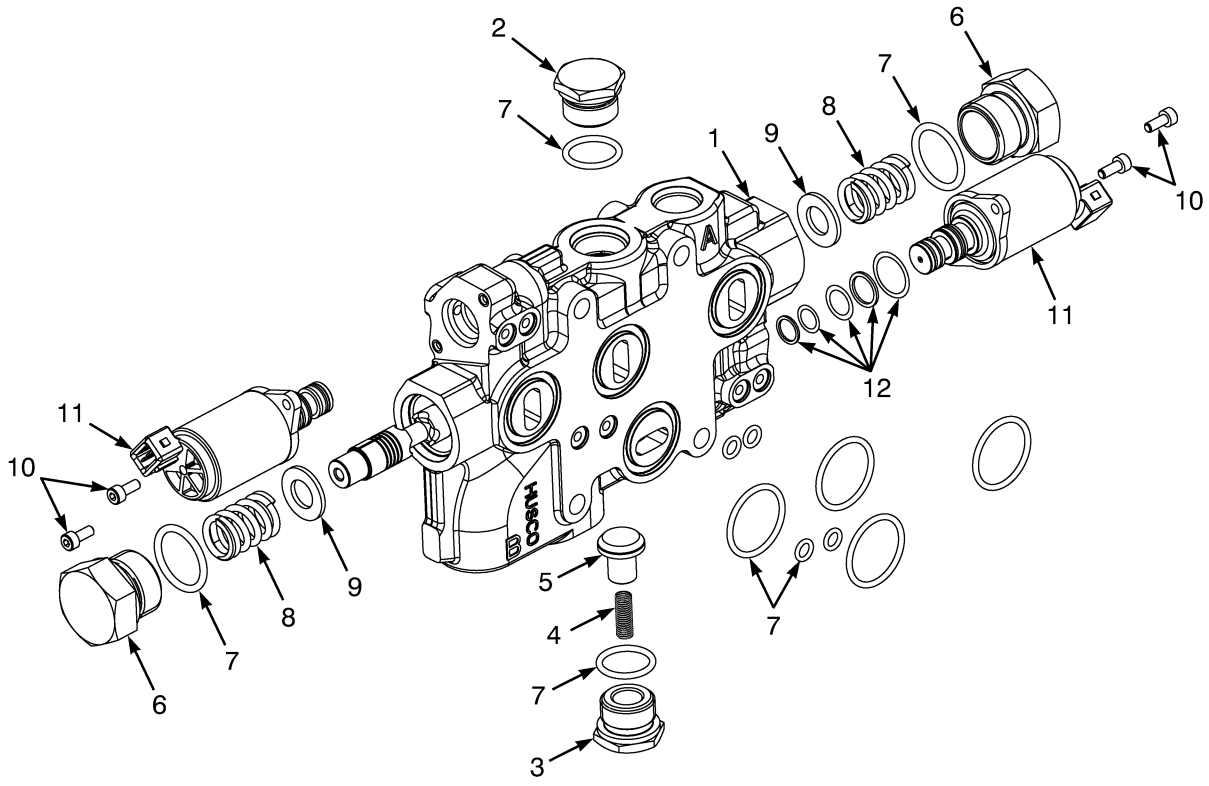

BP140153

©2011 HYSTER COMPANY

AUXILIARY ONE SECTION

ELECTRONIC CONTROLLER – THREE AND FOUR FUNCTION (6/2009 →)

ITEM	PART NO.	DESCRIPTION	QTY
1	1708298	Valve Section (Aux. 1)	1
2	1578714	Plug	1
3	1578713	Plug	1
3	77441	Plug	1
4	77442	Spring	2
5	77443	Poppet	2
6	1578889	Plug	1
7	1578906	Kit-Seal (Auxiliary Section)	1
8	1578882	Spring	2
9	1578883	Washer	2
10	1664395	Capscrew	4
11	1578711	Valve (Pressure Reducing)	2
12	1578912	Kit-Seal (Pressure Reducing Valve)	2

©2011 HYSTER COMPANY

AUXILIARY TWO SECTION (FIGURE 9-25)
ELECTRONIC CONTROL VALVE — FOUR FUNCTION (→ 6/2009)

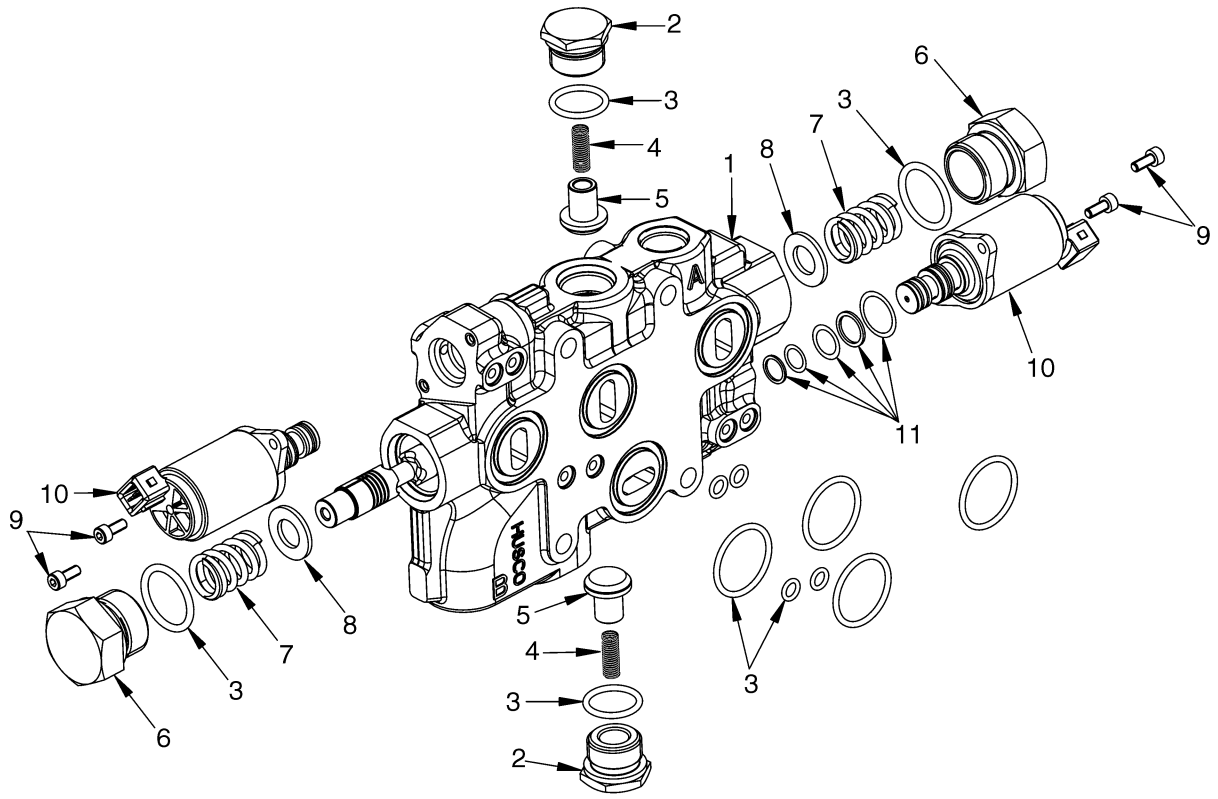

©2011 HYSTER COMPANY

AUXILIARY TWO SECTION

ELECTRONIC CONTROL VALVE – FOUR FUNCTION (→ 6/2009)

ITEM	PART NO.	DESCRIPTION	QTY
1	1633693	Valve Section	1
2	1578713	Plug (Tilt/Auxiliary)	1
2	1578714	Plug (Lift)	1
3	1578907	Kit-Seal (Auxiliary Section)	1
4	77442	Spring	2
5	77443	Poppet	2
6	1578889	Plug	2
7	1578882	Spring	2
8	1578883	Washer	2
9	1578878	Capscrew	4
10	1578711	Valve (Pressure Reducing)	2
11	1578911	Kit-Seal (Steering Control Unit Interface)	1
	1578908	Kit-Seal	1

©2011 HYSTER COMPANY

AUXILIARY TWO SECTION (FIGURE 9-26)
ELECTRONIC CONTROL VALVE — FOUR FUNCTION (6/2009 →)

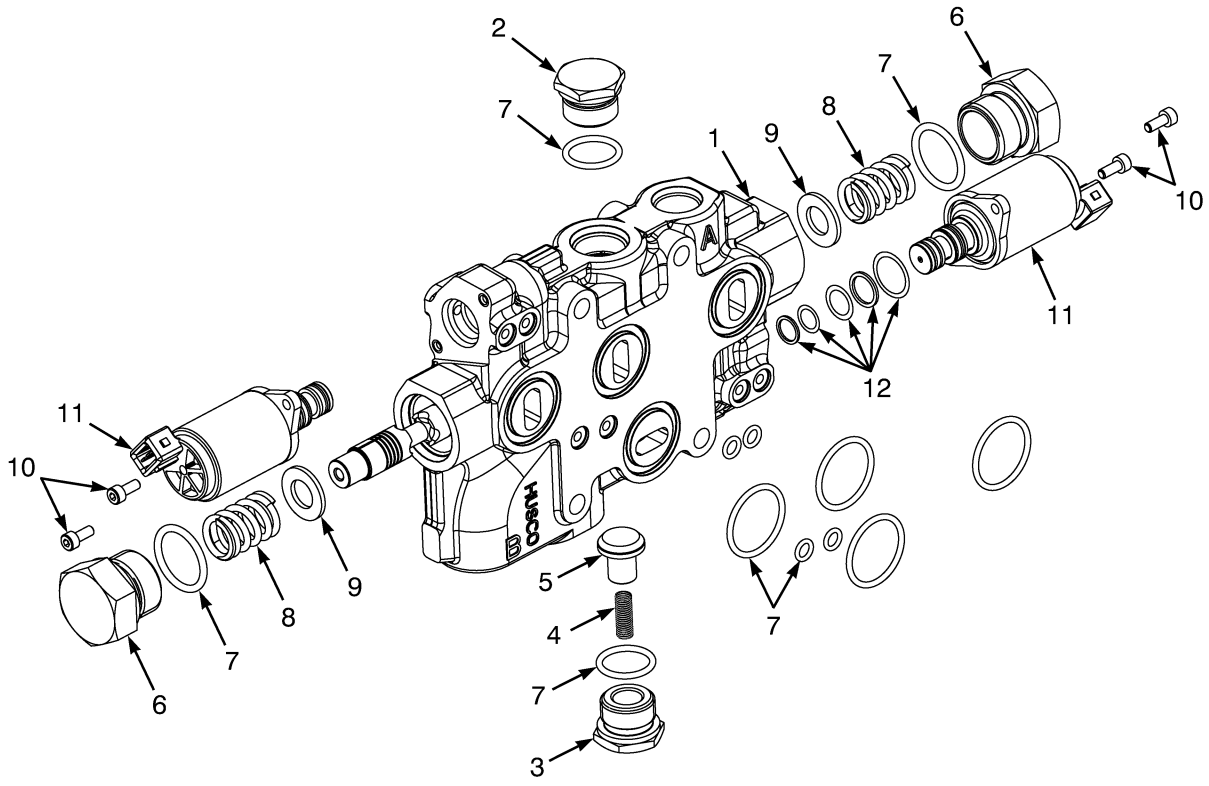

BP140153

©2011 HYSTER COMPANY

AUXILIARY TWO SECTION

ELECTRONIC CONTROL VALVE – FOUR FUNCTION (6/2009 →)

ITEM	PART NO.	DESCRIPTION	QTY
1	1708299	Valve Section (Auxiliary Two)	1
2	1578714	Plug	1
3	1578713	Plug	1
3	77441	Plug	1
4	77442	Spring	2
5	77443	Poppet	2
6	1578889	Plug	1
7	1578907	Kit-Seal (Auxiliary Section)	1
8	1578882	Spring	2
9	1578883	Washer	2
10	1664395	Capscrew	4
11	1578711	Valve (Pressure Reducing)	2
12	1578911	Kit-Seal (Steering Control Unit Interface)	2

©2011 HYSTER COMPANY

OUTLET SECTION (FIGURE 9-27)

ELECTRONIC CONTROL VALVE — THREE AND FOUR FUNCTION WITHOUT ANTI-STALL SOLENOID (→ 6/2009)

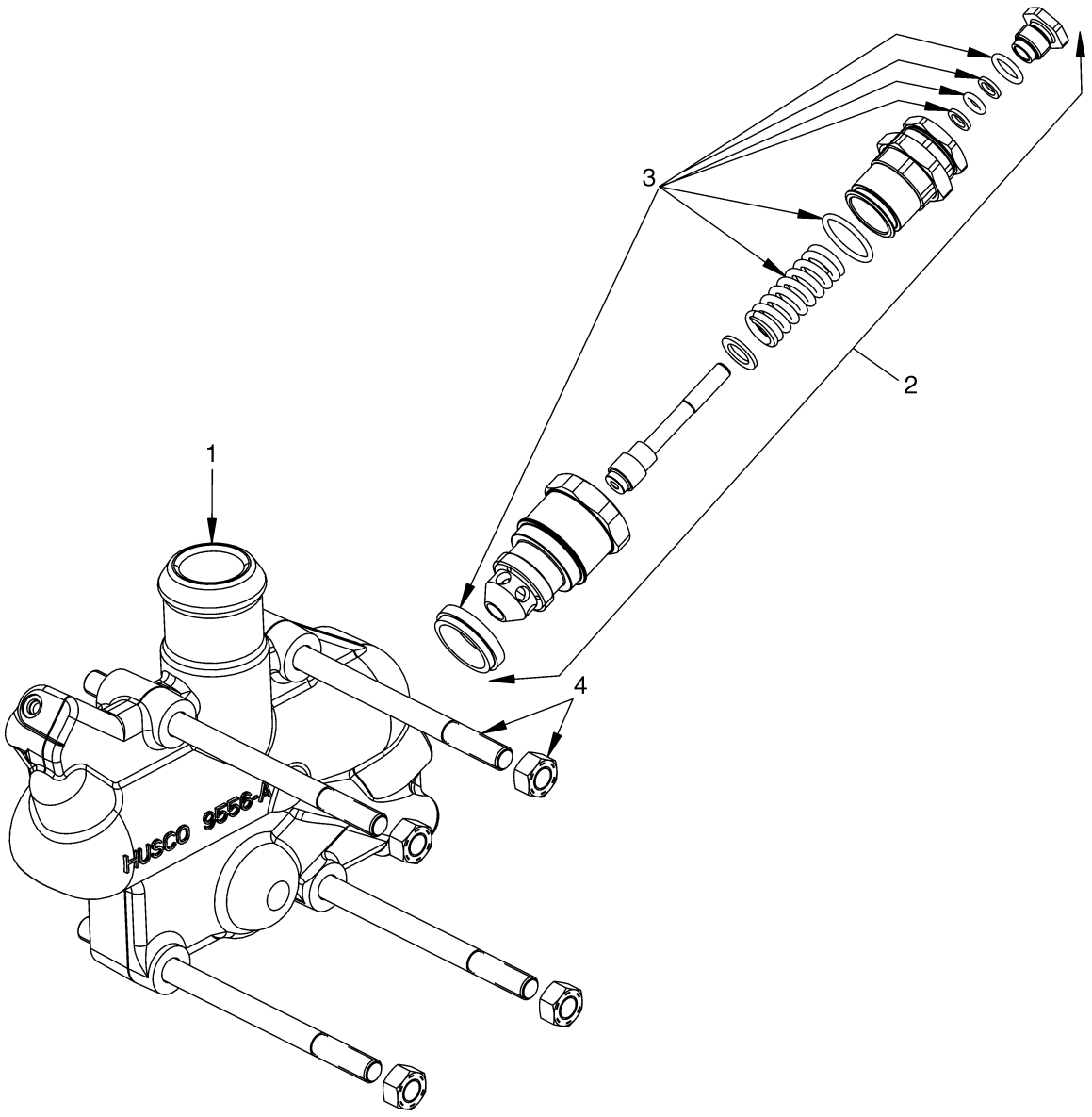

BP140075

©2011 HYSTER COMPANY

OUTLET SECTION

ELECTRONIC CONTROL VALVE – THREE AND FOUR FUNCTION WITHOUT ANTI-STALL SOLENOID (→ 6/2009)

ITEM	PART NO.	DESCRIPTION	QTY
1	1578704	Valve Section (Outlet)	1
2	1578707	Relief Valve (2250 PSI) (Secondary)	1
3	1580131	Kit-Seal	1
4	1578715	Kit-Tie Rod (Three Function)	1
4	1580151	Kit-Tie Rod (Four Function)	1
4	15055	Nut	4

©2011 HYSTER COMPANY

OUTLET SECTION (FIGURE 9-28)

ELECTRONIC CONTROL VALVE — THREE AND FOUR FUNCTION WITH ANTI-STALL SOLENOID (6/2009 →)

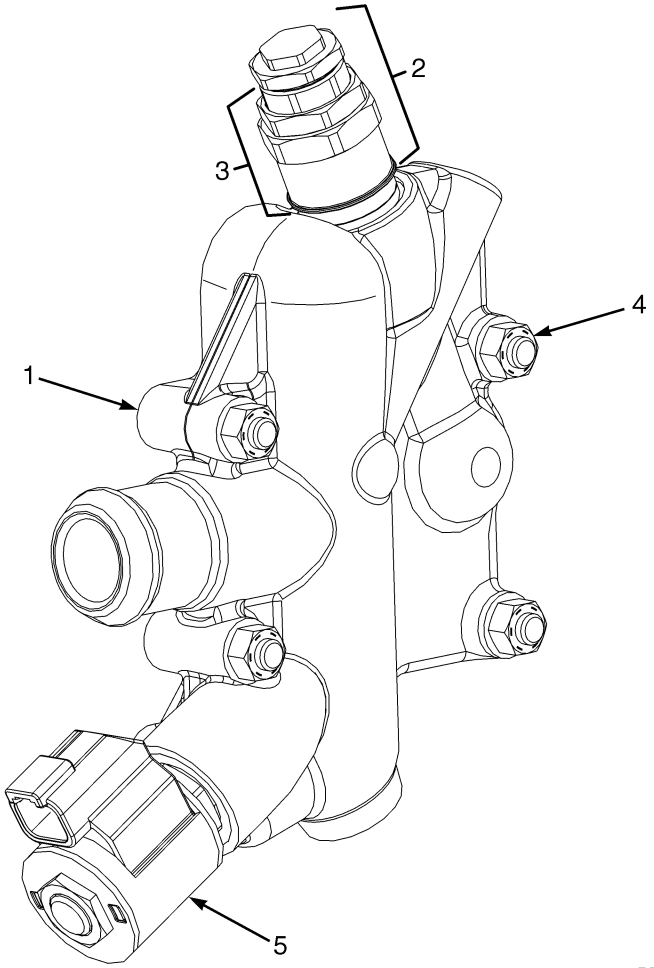

©2011 HYSTER COMPANY

OUTLET SECTION

ELECTRONIC CONTROL VALVE – THREE AND FOUR FUNCTION WITH ANTI-STALL SOLENOID (6/2009 →)

ITEM	PART NO.	DESCRIPTION	QTY
1	1708297	Valve Section (Outlet)	1
2	1578707	Relief Valve (2250 PSI) (Secondary)	1
3	1580131	Kit-Seal	1
4	1578715	Kit-Tie Rod (Three Function)	1
4	1580151	Kit-Tie Rod (Four Function)	1
4	15055	Nut	4
5	1678165	Solenoid Valve	1
5	1684487	Kit-Seal	1

©2011 HYSTER COMPANY

TILT CYLINDER AND MAST INSTALLATION (FIGURE 9-29)

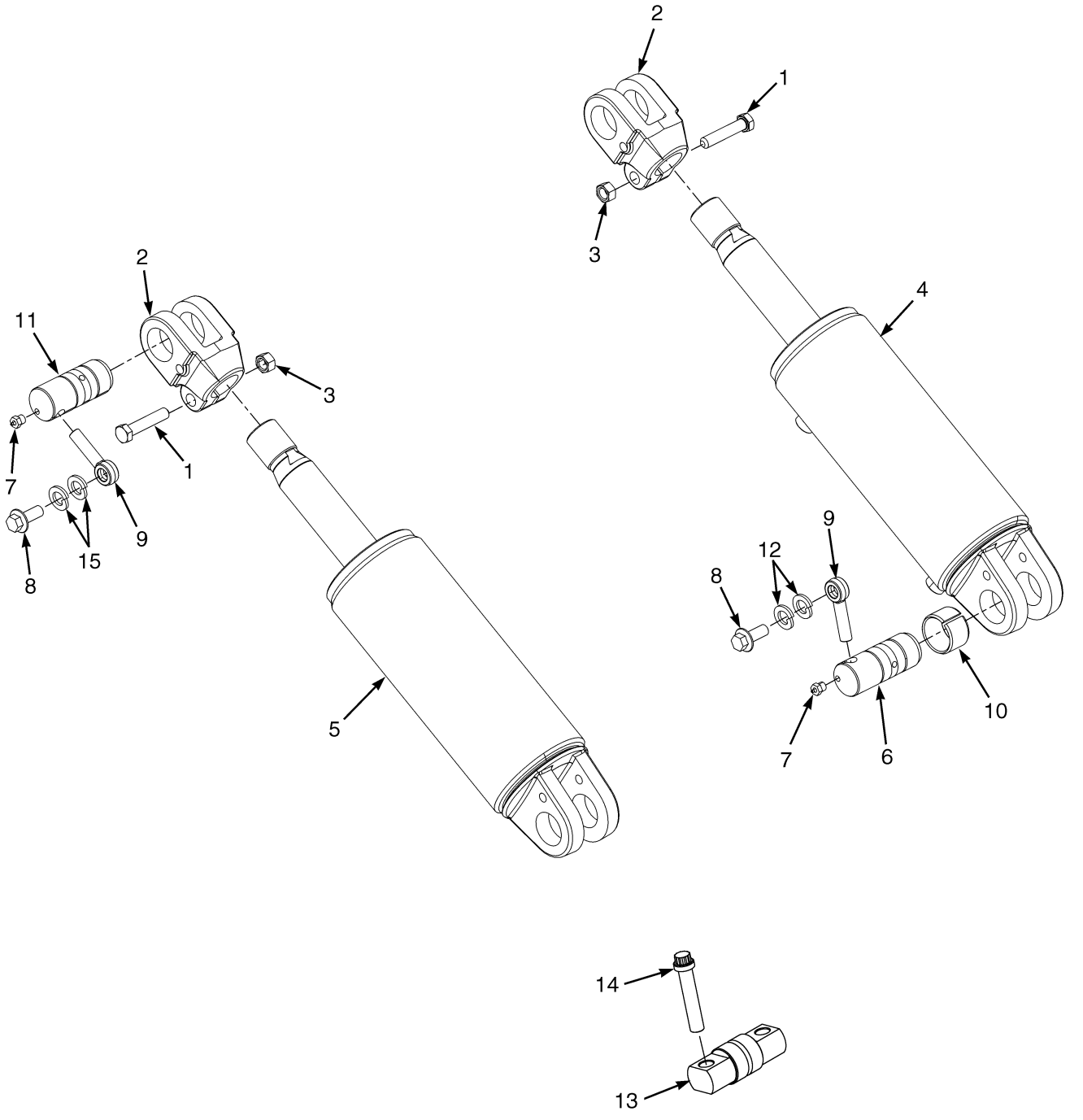

©2011 HYSTER COMPANY

TILT CYLINDER AND MAST INSTALLATION

ITEM	PART NO.	DESCRIPTION	QTY
1	1597381	Capscrew	2
2	1566792	Rod End (Three Stage)	2
3	1581848	Nut	2
4	**b** 2082826	Tilt Cylinder (RH) (☞Figure 9-30)	1
4	**a** 2082827	Tilt Cylinder (RH) (☞Figure 9-30)	1
5	**b** 2090626	Tilt Cylinder (LH) (☞Figure 9-30)	1
5	**a** 2090627	Tilt Cylinder (LH) (☞Figure 9-30)	1
6	1611572	Pin	2
7	16001	Grease Fitting	4
8	1615240	Capscrew	4
9	241079	Anchor	2
10	1611728	Bushing	2
11	1570303	Pin	2
12	1581564	Lockwasher	2
13	1611571	Pin	2
14	293730	Capscrew	4
15	1581852	Washer	2

FOOTNOTES:

a 5° Forward/10° Back

b 5° Forward/6° Back

©2011 HYSTER COMPANY

TILT CYLINDERS (FIGURE 9-30)

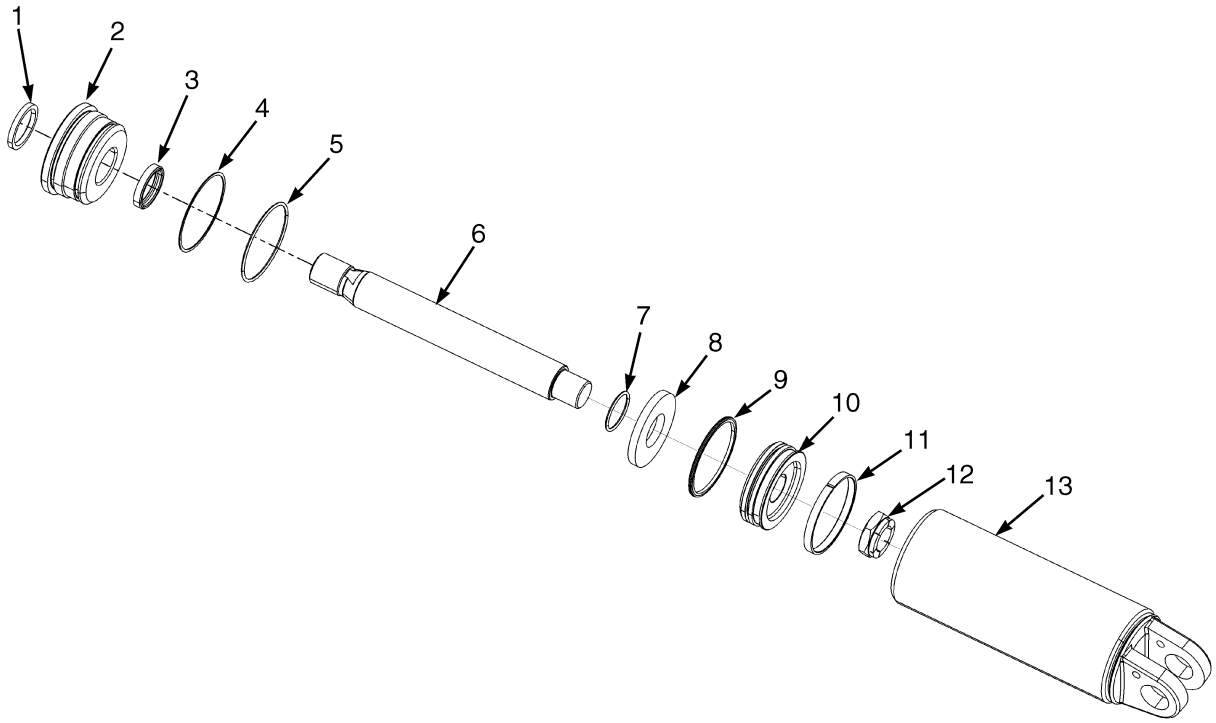

BP150197

©2011 HYSTER COMPANY

TILT CYLINDERS

KEY:
A: 5 Degrees Forward/6 Degrees Back
B: 5 Degrees Forward/10 Degrees Back

ITEM	PART NO.	DESCRIPTION	QTY A	QTY B
	2090626	Tilt Cylinder (LH)	1	..
	2090627	Tilt Cylinder (LH)	..	1
	2082826	Tilt Cylinder (RH)	1	..
	2082827	Tilt Cylinder (RH)	..	1
1	193554	Rod Wiper	1	1
2	289969	End Plug	1	1
2	1706804	Gland (Alternate Part)	1	1
3	1381085	Rod Seal	1	1
4	1329756	Back-Up Ring	1	1
5	92482	O-Ring	1	1
5	92482	O-Ring (Alternate Part)	2	2
6	2098244	Cylinder Rod	1	..
6	2098245	Cylinder Rod	..	1
7	199082	O-Ring	1	1
8	2095852	Spacer	1	..
9	2044821	Piston Seal	1	1
10	239182	Wear Ring	1	1
11	289968	Piston	1	1
12	2036547	Locknut	1	1
13	1612451	Tube Wldmt-Cylinder (RH)	1	..
13	1612453	Tube Wldmt-Cylinder (LH)	1	..
13	1612452	Tube Wldmt-Cylinder (RH)	..	1
13	1612454	Tube Wldmt-Cylinder (LH)	..	1
	1494726	Kit-Seal	1	1

©2011 HYSTER COMPANY

TILT HYDRAULICS (FIGURE 9-31)

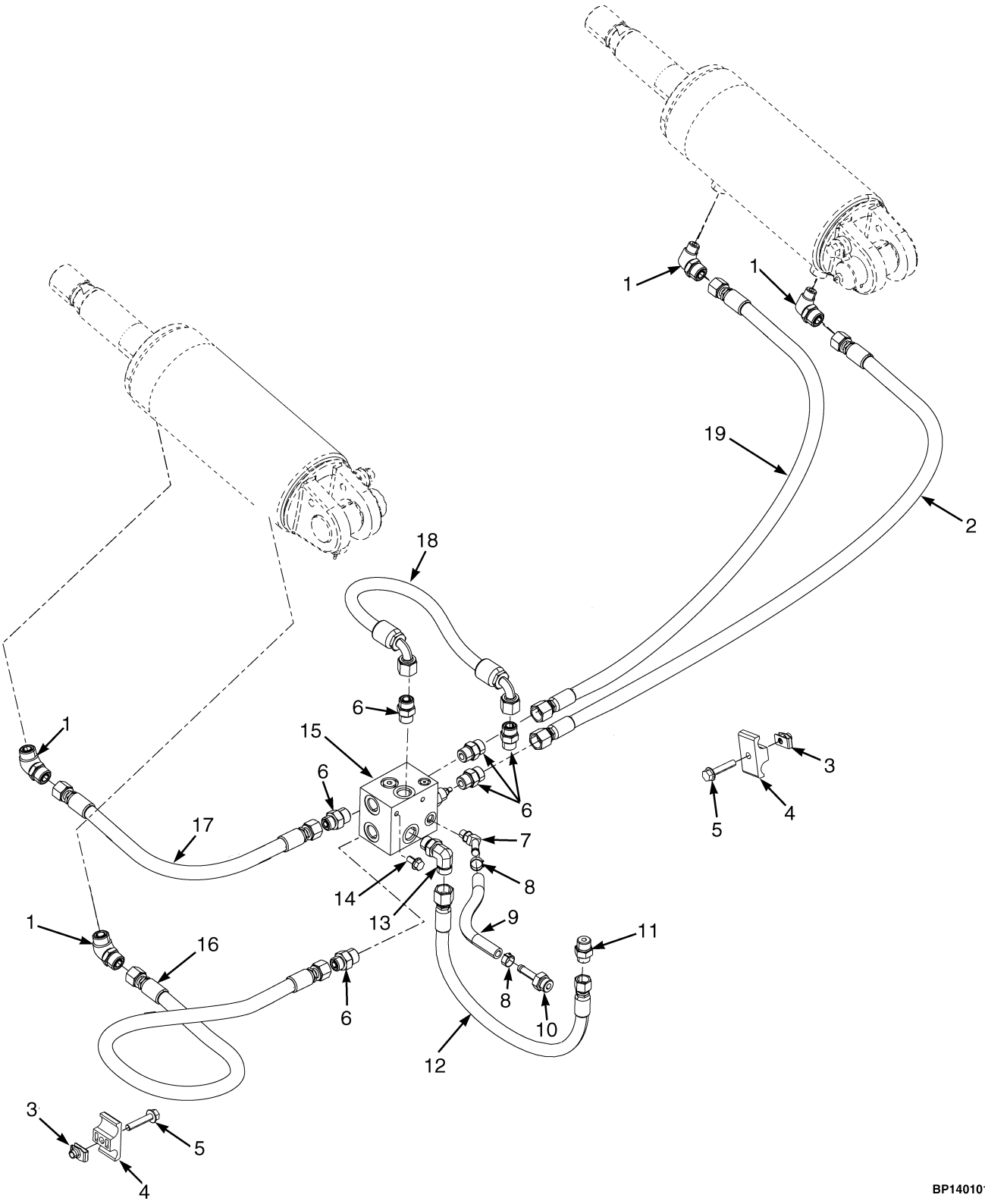

©2011 HYSTER COMPANY

TILT HYDRAULICS

ITEM	PART NO.	DESCRIPTION	QTY
1	1487063	Fitting	4
1	265787	O-Ring	1
1	16483	O-Ring	1
2	2091584	Hose Assy	1
3	1480237	Nut	2
4	1605479	Hose Clamp (Dual Hose)	2
5	1586627	Capscrew	2
6	1473887	Fitting	6
6	265731	O-Ring	1
6	16484	O-Ring	1
7	222500	Fitting	1
8	353198	Clamp	2
9	2095409	Hose	1
10	1650229	Fitting	1
10	16484	O-Ring	1
11	1486742	Fitting	1
11	265787	O-Ring	1
11	16484	O-Ring	1
12	2091573	Hose Assy	1
13	1473897	Fitting	1
13	265731	O-Ring	1
13	16484	O-Ring	1
14	1527879	Capscrew	2
15	1648772	Valve Block	1
15	2093476	Valve Block	1
15	1648771	Valve-Counterbalance	1
16	2091583	Hose Assy	1
17	2091582	Hose Assy	1
18	2091581	Hose Assy	1
19	2091585	Hose Assy	1

©2011 HYSTER COMPANY

VENT LINES (FIGURE 9-32)

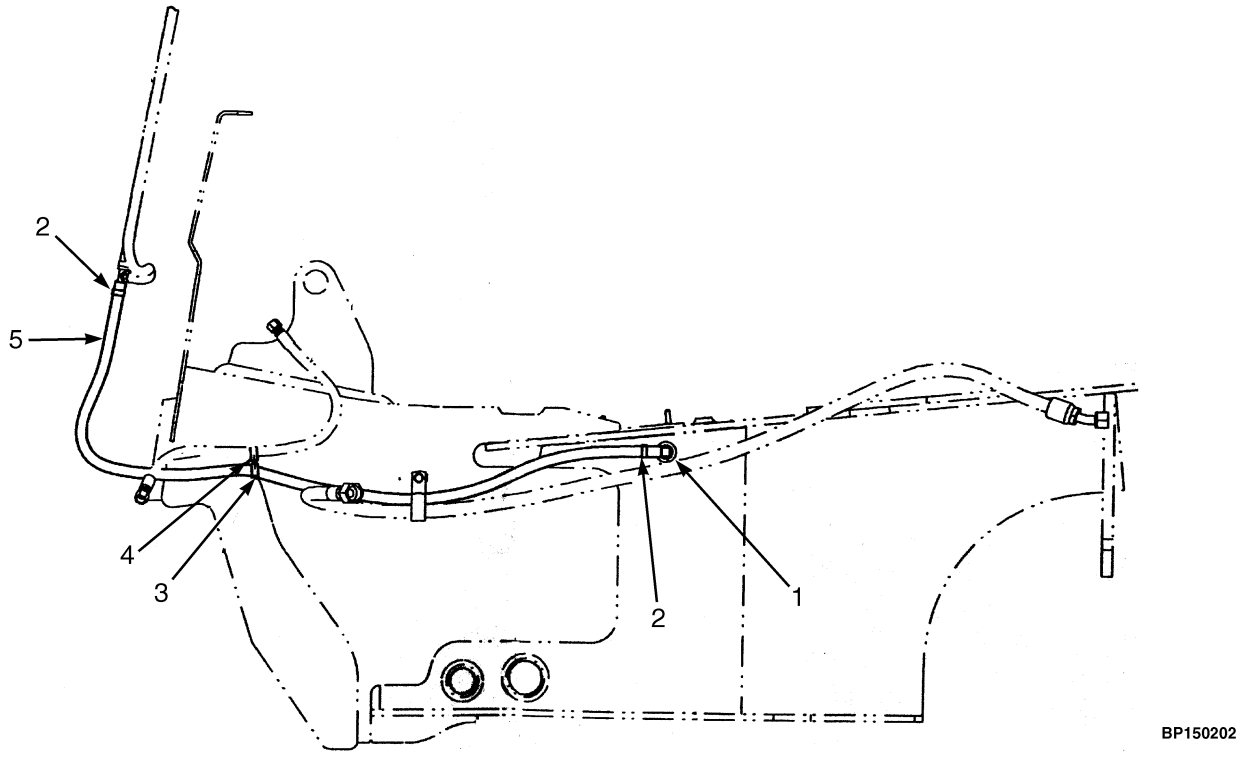

ITEM	PART NO.	DESCRIPTION	QTY
1	222502	Fitting	1
1	**a** 235691	Fitting	1
1	16484	O-Ring	1
2	379405	Clamp	2
3	1502066	Clamp	1
4	1502053	Clamp (Swivel)	1
5	1399083	Hose Assy	1

FOOTNOTES:

a Used for mast removal

©2011 HYSTER COMPANY

HOIST HOSE AND ATTACHING PARTS (FIGURE 9-33)

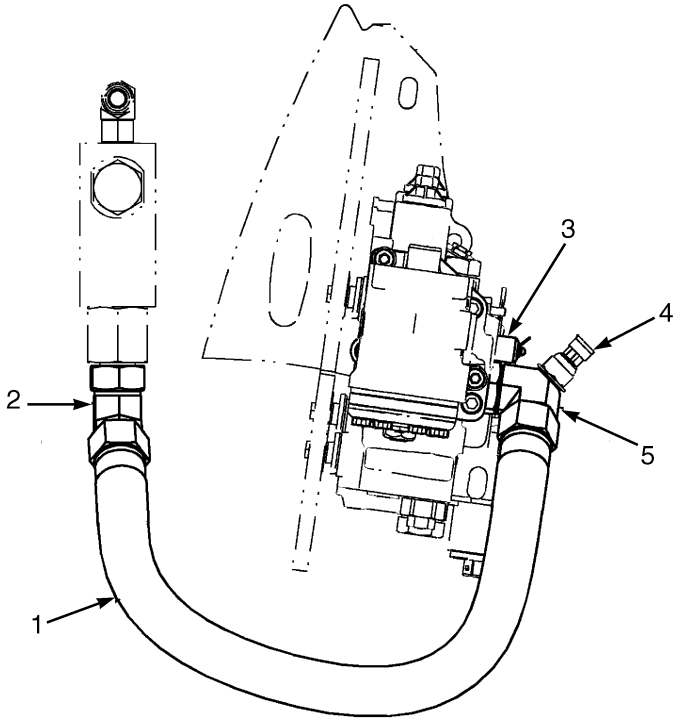

BP150216

ITEM	PART NO.	DESCRIPTION	QTY
1	2102655	Hose Assy	1
2	1473936	Fitting	1
3	2061646	Fitting (Diagnostic)	1
4	1605770	Fitting	1
5	1594869	Fitting	1
5	244167	O-Ring	1
5	16982	O-Ring	1

©2011 HYSTER COMPANY

NOTES

©2011 HYSTER COMPANY

10 MAST-TWO STAGE LIMITED FREE-LIFT

SECTION 10
MAST-TWO STAGE LIMITED FREE-LIFT

DESCRIPTION	PAGE
AUXILIARY FUNCTION HOSES	10-26
AUXILIARY TUBE EXTENSIONS	
TWO STAGE LIMITED FREE-LIFT - WITHOUT QUICK DISCONNECT FITTINGS (S/N A613V03307H →)	10-20
TWO STAGE LIMITED FREE-LIFT - MANUAL HYDRAULICS WITH QUICK DISCONNECT FITTINGS (S/N A613V03307H →)	10-22
TWO STAGE LIMITED FREE-LIFT - E-HYDRAULICS WITH QUICK DISCONNECT FITTINGS (S/N A613V03307H →)	10-24
CARRIAGE	
TWO STAGE LIMITED FREE-LIFT - HOOK TYPE	10-12
TWO STAGE LIMITED FREE-LIFT - PIN TYPE	10-14
HEADER HOSES AND AUXILIARY TUBE	
TWO STAGE LIMITED FREE-LIFT	10-16
INNER MAST	
TWO STAGE LIMITED FREE-LIFT	10-4
MAIN LIFT	
TWO STAGE LIMITED FREE-LIFT	10-6
MAIN LIFT CYLINDER	
TWO STAGE LIMITED FREE-LIFT	10-10
OUTER MAST	
TWO STAGE LIMITED FREE-LIFT	10-2

©2011 HYSTER COMPANY

OUTER MAST (FIGURE 10-1)
TWO STAGE LIMITED FREE-LIFT

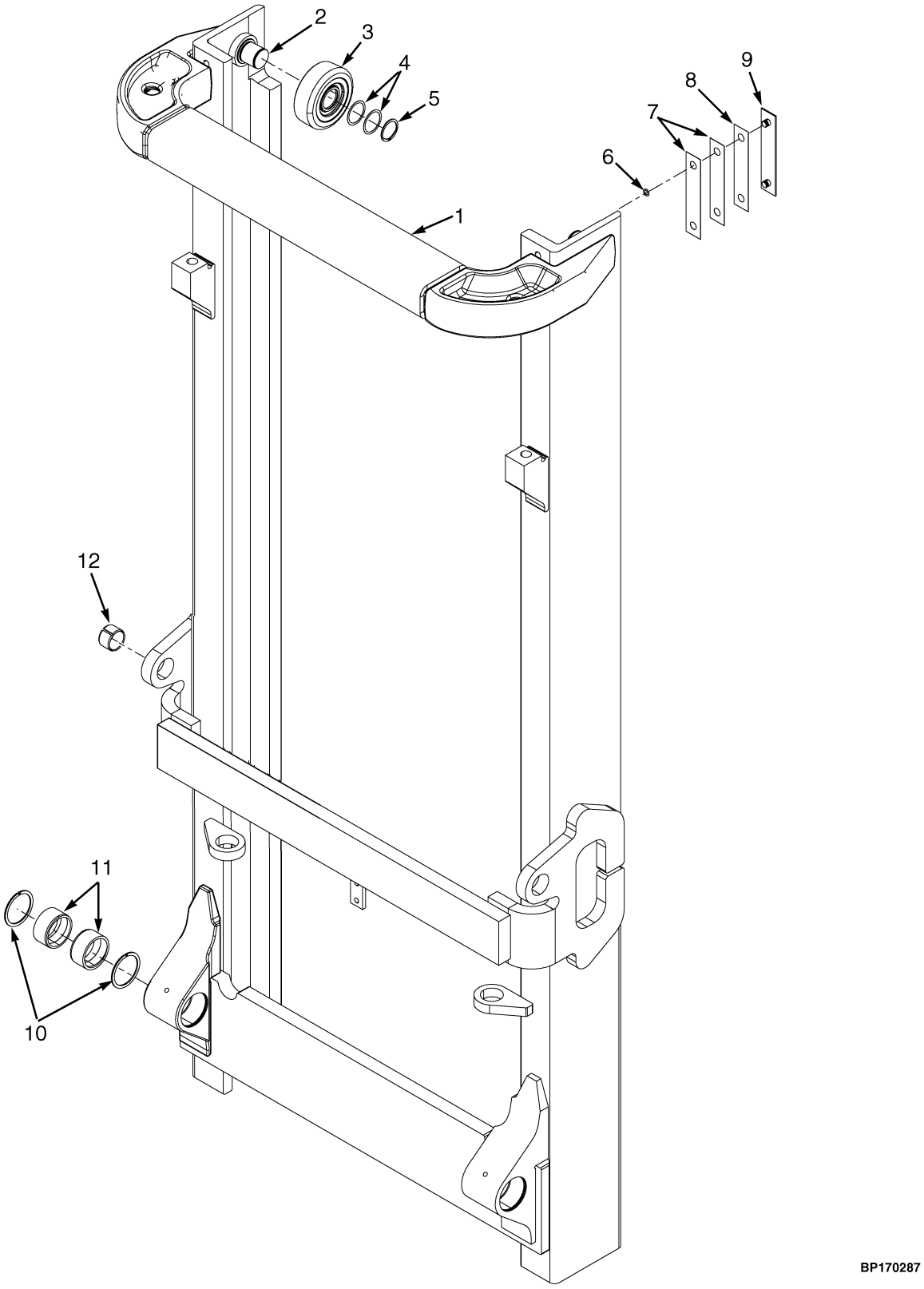

©2011 HYSTER COMPANY

OUTER MAST
TWO STAGE LIMITED FREE-LIFT

A613

ITEM	DESCRIPTION 1 2 3 4	LIFT HEIGHT TO BOTTOM OF FORKS				
		2940 mm (115.7 in.)	3340 mm (131.5 in.)	4340 mm (170.9 in.)	5340 mm (210.2 in.)	5940 mm (233.9 in.)
	Mast Group Number	A613 2940	A613 3340	A613 4340	A613 5340	A613 5940
	Mast Assy	2092345	2092347	2092352	2092357	2092360
1	Outer Mast	1608931	1608933	1608938	1608943	1608946

ITEM	PART NO.	DESCRIPTION	QTY
	a	Mast Assy	1
1	**a**	Outer Mast	1
2	341144	Stubshaft	2
3	1333649	Load Roller ("A") (126.75/126.49)	2
3	1343002	Load Roller ("B") (127.51/127.25)	2
3	1343003	Load Roller ("C") (128.27/128.01)	2
4	126765	Shim	AR
5	187489	Snap Ring	2
6	104506	O-Ring	4
7	161273	Shim (0.020 in.)	4
8	161272	Shim (0.007 in.)	AR
9	104264	Wear Strip	2
10	1611580	Snap Ring	4
11	1611579	Bushing	4
12	192429	Bushing	2

FOOTNOTES:

a Refer to Table

©2011 HYSTER COMPANY

INNER MAST (FIGURE 10-2)
TWO STAGE LIMITED FREE-LIFT

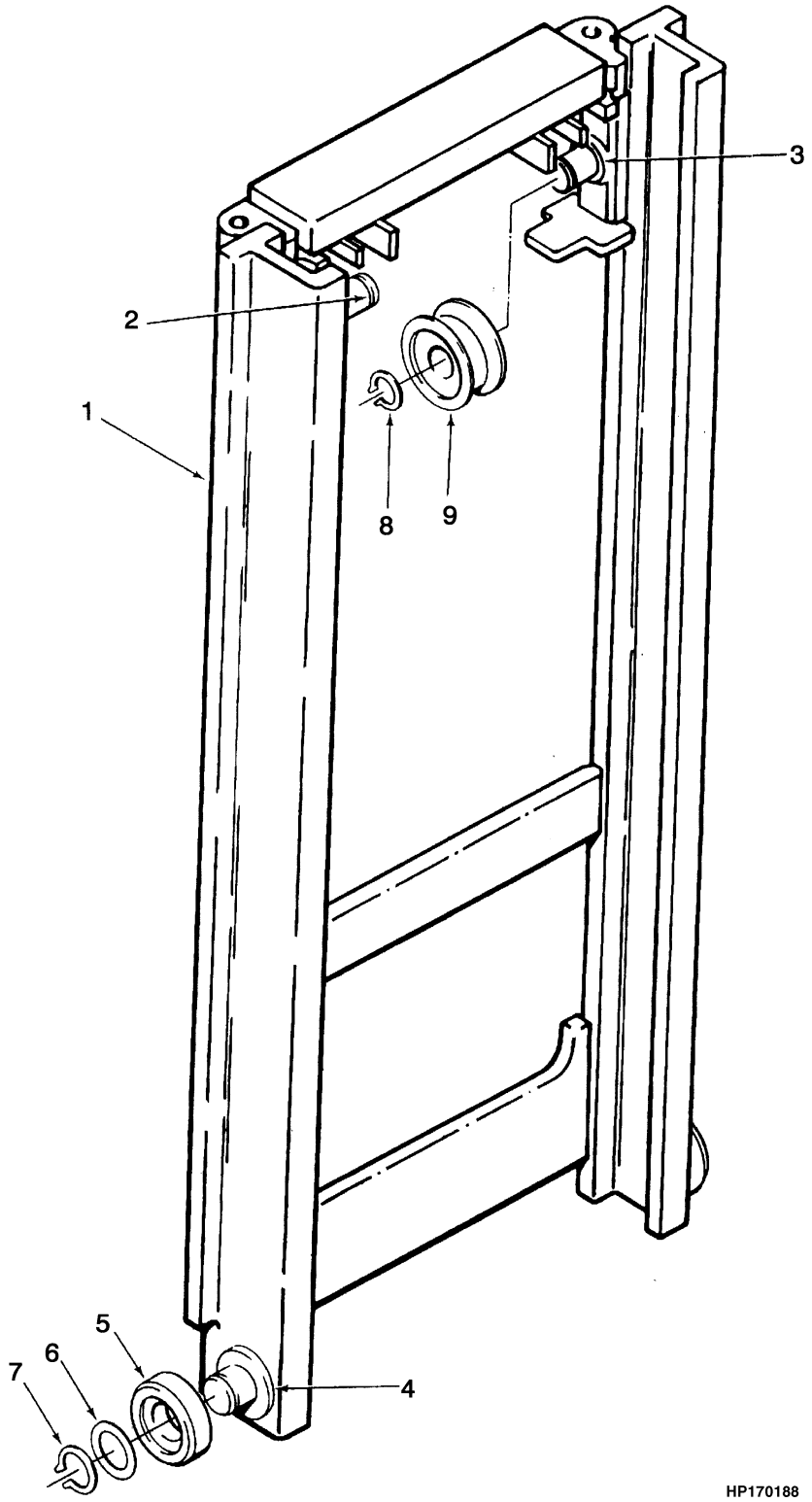

©2011 HYSTER COMPANY

INNER MAST
TWO STAGE LIMITED FREE-LIFT

A613

ITEM	DESCRIPTION 1 2 3 4	LIFT HEIGHT TO BOTTOM OF FORKS				
		2940 mm (115.7 in.)	3340 mm (131.5 in.)	4340 mm (170.9 in.)	5340 mm (210.2 in.)	5940 mm (233.9 in.)
	Mast Group Number	A613 2940	A613 3340	A613 4340	A613 5340	A613 5940
	Mast Assy	2092345	2092347	2092352	2092357	2092360
1	Inner Mast	1641126	341117	341118	346961	356582

ITEM	PART NO.	DESCRIPTION	QTY
	b	Mast Assy	1
1	**b**	Inner Mast	1
2	369431	Stubshaft	1
3	369432	Stubshaft	1
4	341144	Stubshaft	2
5	**a** 1333649	Load Roller ("A") (126.75/126.49)	2
5	1343002	Load Roller ("B") (127.51/127.25)	2
5	1343003	Load Roller ("C") (128.27/128.01)	2
6	126765	Shim	AR
7	187489	Snap Ring	2
8	58939	Snap Ring	2
9	346906	Chain Sheave	2

FOOTNOTES:

a Letter on Inside Face

b Refer to Table

©2011 HYSTER COMPANY

MAIN LIFT (FIGURE 10-3)
TWO STAGE LIMITED FREE-LIFT

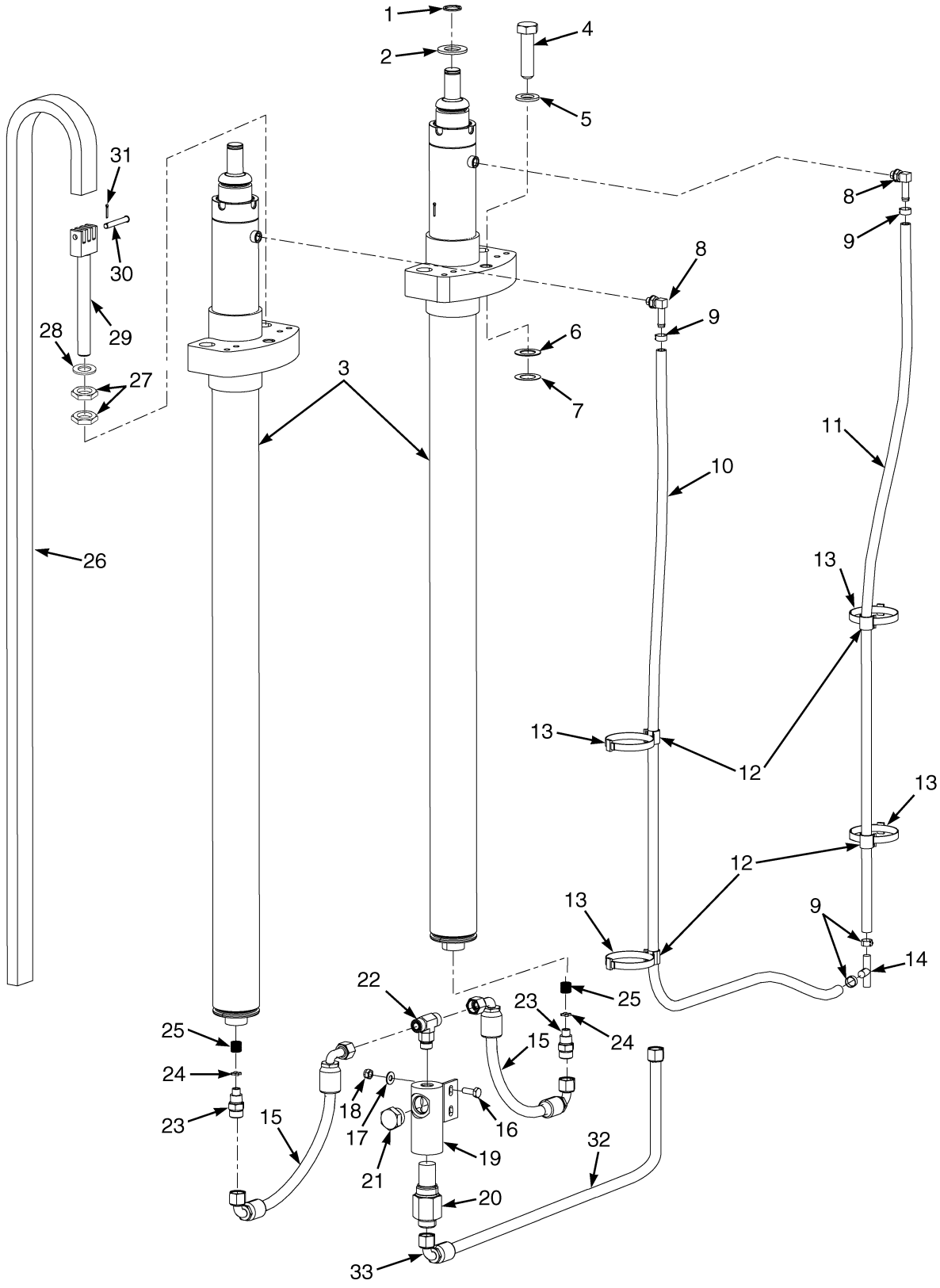

©2011 HYSTER COMPANY

MAIN LIFT
TWO STAGE LIMITED FREE-LIFT

A613

ITEM	DESCRIPTION 1 2 3 4	LIFT HEIGHT TO BOTTOM OF FORKS				
		2940 mm (115.7 in.)	3340 mm (131.5 in.)	4340 mm (170.9 in.)	5340 mm (210.2 in.)	5940 mm (233.9 in.)
	Mast Group Number	A613 2940	A613 3340	A613 4340	A613 5340	A613 5940
10	Hose Assy	1399109	1399117	1399137	1399157	1399174
11	Hose Assy	1399089	1399097	1399117	1399137	1399154
26	Chain	1619425	341123	341124	341053	356593

ITEM	PART NO.	DESCRIPTION	QTY
1	304523	Snap Ring	2
2	1626463	Washer	2
3	. . . . .	Main Cylinder (☞Figure 10-4)	2
4	1626460	Capscrew	2
5	1626462	Lockwasher	2
6	134675	Shim	AR
7	1325119	Shim	AR
8	110178	Fitting	2
9	379405	Clamp	4
10	**a**	Hose Assy	1
11	**a**	Hose Assy	1
12	1465585	Hose Clamp	4
13	1360529	Clamp	6
14	2046871	Fitting	1
15	2079065	Hose Assy	2
16	1581587	Capscrew	2
17	1581558	Washer	2
18	1581567	Nut	2
19	1603961	Housing	1
20	2043538	Lowering Control Valve	1
20	16983	O-Ring	1
20	244167	O-Ring	1
21	14604	Plug	1
21	16487	O-Ring	1
22	1532650	Fitting	1
23	1605087	Fitting	4
24	356598	Washer	2
25	388186	Spring	2
26	**a**	Chain	1
27	1626521	Nut	4
28	343946	Kit-Washer	2
29	1331992	Chain Anchor	2
30	1307395	Pin	2
31	15222	Cotter Pin	2
32	2102655	Hose Assy	1
33	1473936	Fitting	1

©2011 HYSTER COMPANY

FOOTNOTES:

a Refer to Table

©2011 HYSTER COMPANY

NOTES

©2011 HYSTER COMPANY

MAIN LIFT CYLINDER (FIGURE 10-4)
TWO STAGE LIMITED FREE-LIFT

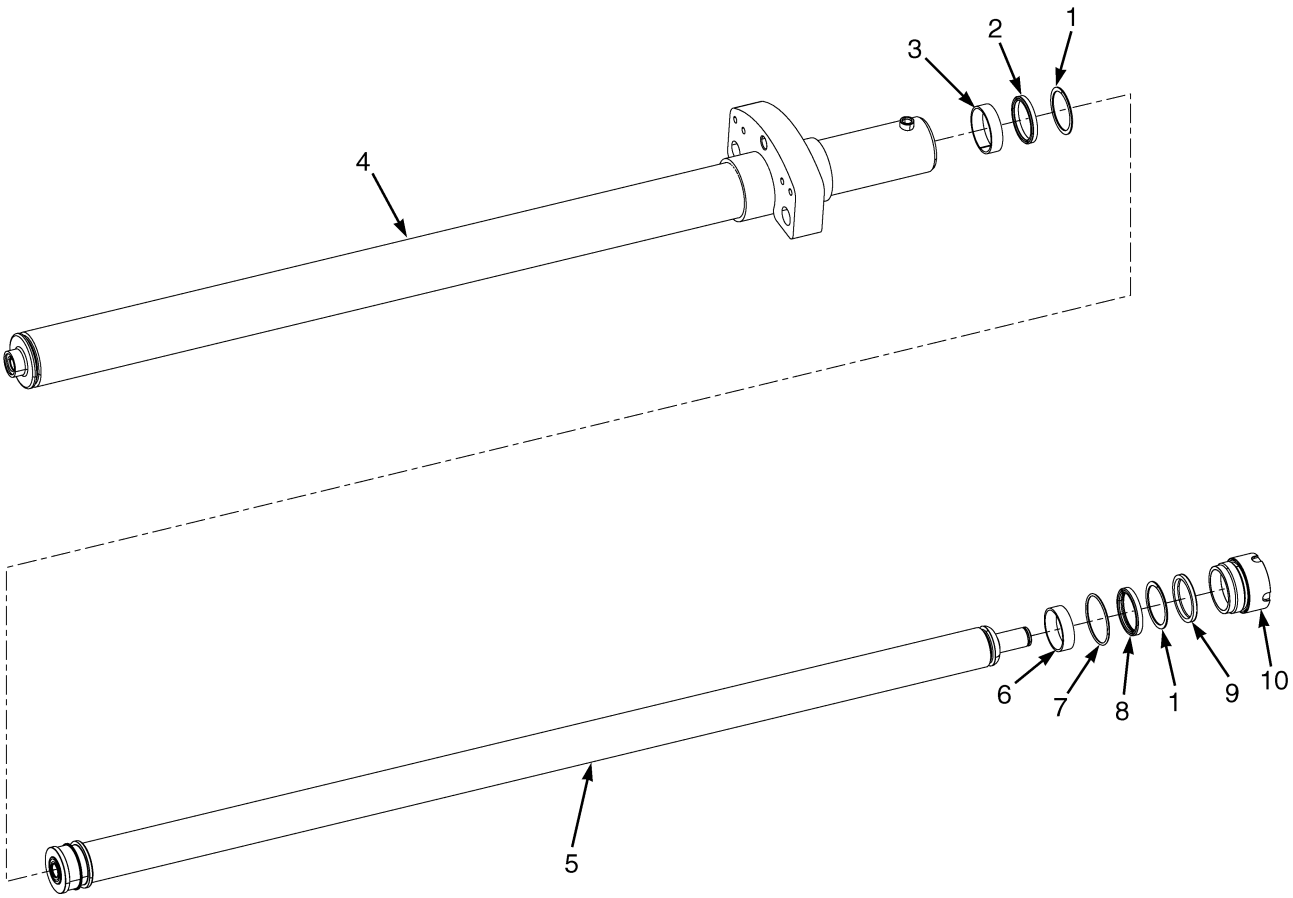

BP170274

©2011 HYSTER COMPANY

MAIN LIFT CYLINDER
TWO STAGE LIMITED FREE-LIFT

A613

ITEM	DESCRIPTION 1 2 3 4	LIFT HEIGHT TO BOTTOM OF FORKS				
		2940 mm (115.7 in.)	3340 mm (131.5 in.)	4340 mm (170.9 in.)	5340 mm (210.2 in.)	5940 mm (233.9 in.)
	Mast Group Number	**A613 2940**	**A613 3340**	**A613 4340**	**A613 5340**	**A613 5940**
	Cylinder Group Number	**8609104**	**8609106**	**8609111**	**8609116**	**8609119**
	Cylinder Assy	2086035	2086037	2086042	2086047	2086050
4	Tube Wldmt-Cylinder	2086006	2086008	2086031	2086017	2086020
5	Cylinder Rod	2085967	2085969	2085974	2085979	2085982

ITEM	PART NO.	DESCRIPTION	QTY
	b	Cylinder Assy	2
1	637565	Back-Up Ring	2
2	309062	Rod Seal	2
3	215345	Wear Ring	1
4	**b**	Tube Wldmt-Cylinder	1
5	**b**	Cylinder Rod	1
6	316513	Wear Ring	1
7	15880	O-Ring	1
8	2032492	Seal	1
9	1383071	Rod Wiper	1
10	1618463	Gland	1
	ac 332569	Spacer	1
	2096469	Kit-Seal	1

FOOTNOTES:

a Not Illustrated
b Refer to Table
c Used with 5940 mm Lift Height

CARRIAGE (FIGURE 10-5)
TWO STAGE LIMITED FREE-LIFT — HOOK TYPE

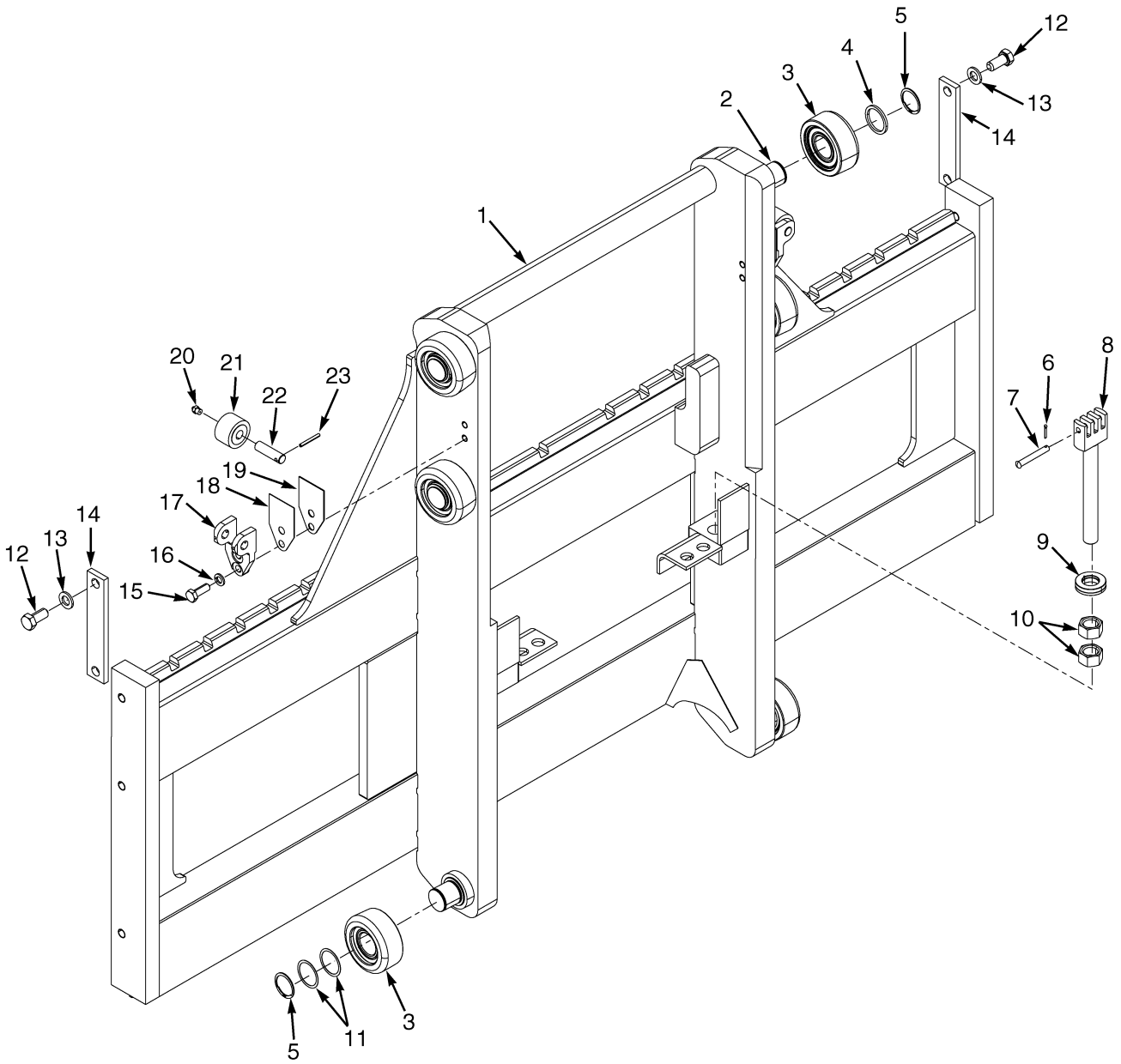

©2011 HYSTER COMPANY

CARRIAGE

TWO STAGE LIMITED FREE-LIFT – HOOK TYPE

ITEM	PART NO.	DESCRIPTION	QTY
	2093493	Carriage	1
1	1639785	Carriage (Alternate Part)	1
2	341144	Stubshaft	6
3	**a** 1333648	Load Roller ("A") (103.68/103.42)	6
4	366116	Spacer	2
5	187489	Snap Ring	6
6	15222	Cotter Pin	2
7	1307395	Pin	2
8	1331992	Chain Anchor	2
9	343946	Kit-Washer	2
10	1650840	Nut	4
11	126765	Shim	AR
12	1581833	Capscrew	4
13	1581854	Washer	4
14	66468	Plate	2
15	**b** 292528	Capscrew	4
16	**b** 292683	Lockwasher	4
17	**b** 244008	Bracket	2
18	**b** 192424	Shim (0.030 in.)	AR
19	**b** 192425	Shim (0.062 in.)	AR
20	**b** 16001	Grease Fitting	2
21	**b** 244005	Side Roller	2
22	**b** 244009	Pin	2
23	**b** 66333	Roll Pin	2

FOOTNOTES:

a Letter on Inside Face

b With Attachments

©2011 HYSTER COMPANY

CARRIAGE (FIGURE 10-6)
TWO STAGE LIMITED FREE-LIFT — PIN TYPE

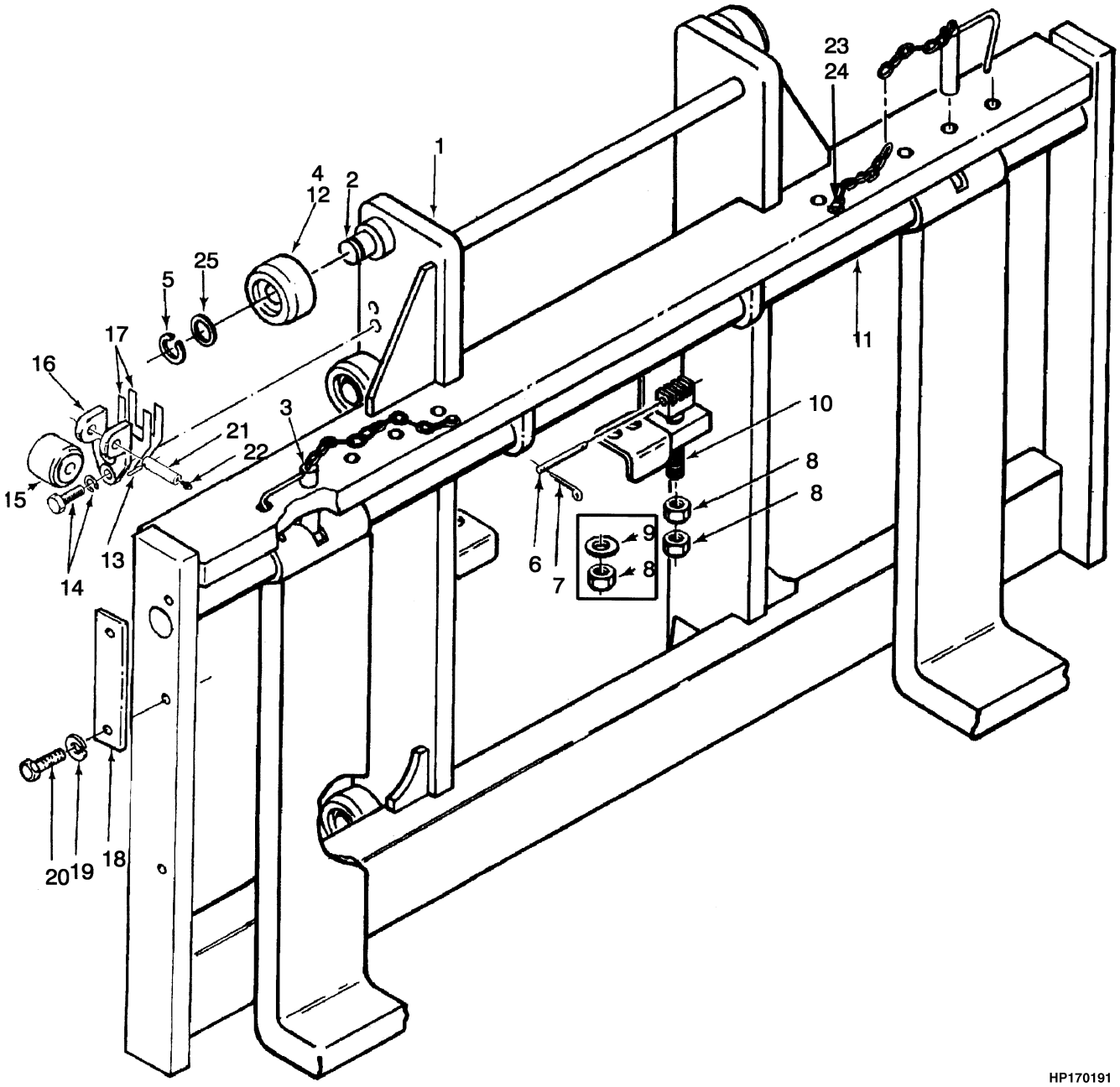

©2011 HYSTER COMPANY

CARRIAGE

TWO STAGE LIMITED FREE-LIFT – PIN TYPE

ITEM	PART NO.	DESCRIPTION	QTY
	1318162	Carriage (78 in.)	1
1	1318167	Carriage Wldmt	1
2	341144	Stubshaft	6
3	1331269	Pin	2
4	126765	Shim	AR
5	187489	Snap Ring	6
6	1307395	Pin	2
7	15222	Cotter Pin	2
8	293723	Nut	4
9	343946	Kit-Washer	2
10	1331992	Chain Anchor	2
11	1330064	Pin	2
12	**a** 1333648	Load Roller ("A") (103.68/103.42) (0.060 in.)	AR
13	**b** 66333	Roll Pin	2
14	**b** 292528	Capscrew	4
14	**b** 292683	Lockwasher	4
15	**b** 244005	Side Roller	2
16	**b** 244008	Bracket	2
17	**b** 192424	Shim (0.030 in.)	AR
17	**b** 192425	Shim (0.062 in.)	AR
18	66468	Plate	2
19	292685	Lockwasher	4
20	226458	Capscrew	4
21	**b** 244009	Pin	2
22	**b** 16001	Grease Fitting	2
23	292513	Capscrew	2
24	296420	Washer	2
25	366116	Spacer	2

FOOTNOTES:

a Letter on Inside Face

b Optional

©2011 HYSTER COMPANY

HEADER HOSES AND AUXILIARY TUBE (FIGURE 10-7)

TWO STAGE LIMITED FREE-LIFT

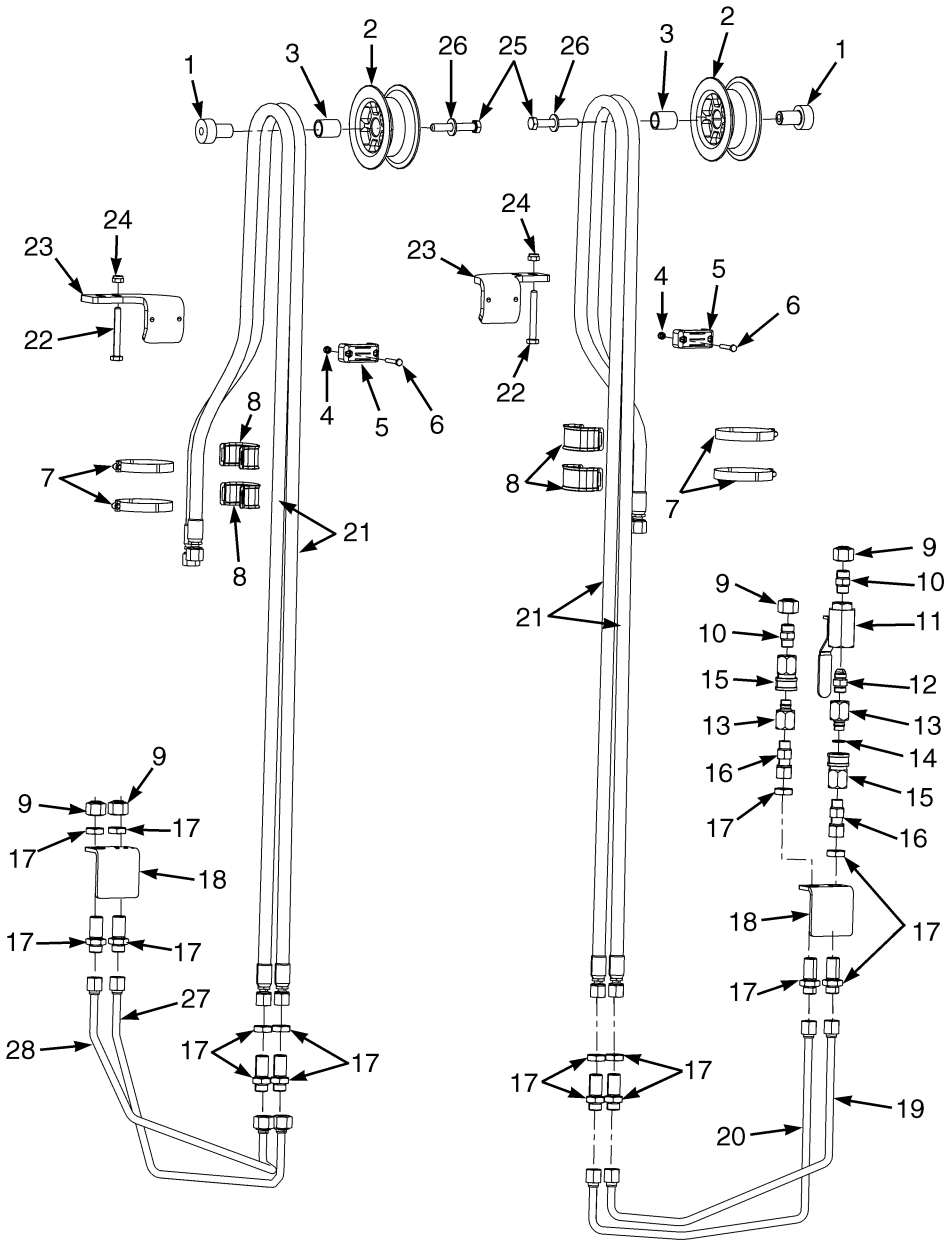

BP170291

©2011 HYSTER COMPANY

HEADER HOSES AND AUXILIARY TUBE
TWO STAGE LIMITED FREE-LIFT

A613

ITEM	DESCRIPTION 1 2 3 4	LIFT HEIGHT TO BOTTOM OF FORKS				
		2940 mm (115.7 in.)	3340 mm (131.5 in.)	4340 mm (170.9 in.)	5340 mm (210.2 in.)	5940 mm (233.9 in.)
	Mast Group Number	A613 2940	A613 3340	A613 4340	A613 5340	A613 5940
	Mast Assy	2092345	2092347	2092352	2092357	2092360
21	Hose Assy	2088538	2088540	2088545	2088550	2088551

KEY:
A: Three Function
B: Four Function

ITEM	PART NO.	DESCRIPTION	QTY A	QTY B
	a	Mast Assy	1	1
1	357529	Stubshaft	1	2
2	1495279	Hose Sheave	1	2
3	332057	Bushing	1	2
4	1581565	Nut	2	4
5	2035791	Hose Clamp	1	2
6	1581578	Capscrew	2	4
7	1360508	Clamp	2	4
8	1465489	Hose Clamp	2	4
9	1529016	Fitting	2	4
10	**b** 1473887	Fitting	2	2
10	16484	O-Ring	1	1
10	265731	O-Ring	1	1
11	**bc** 2087565	Drain Valve	1	1
12	**bc** 16541	Fitting	1	1
12	**c** 16484	O-Ring	1	1
13	**b** 1377954	Fitting	2	2
14	**b** 16484	O-Ring	1	1
15	**b** 1377953	Quick Disconnect Fitting	2	2
16	**c** 1622610	Fitting	2	2
16	**c** 265731	O-Ring	1	1
17	816591	Fitting (Includes Nut)	4	6
17	265731	O-Ring	1	1
18	1646850	Bracket	1	2
19	2095000	Tube Assy	..	1
20	2095001	Tube Assy	..	1
21	**a**	Hose Assy	2	4
22	1626461	Capscrew	2	4
23	1605444	Bracket (RH)	1	1
23	1605443	Bracket (LH)	..	1
24	1581567	Nut	2	4
25	1581593	Capscrew	1	2
26	1581853	Washer	1	2
27	2094999	Tube Assy	1	..

©2011 HYSTER COMPANY

HEADER HOSES AND AUXILIARY TUBE
TWO STAGE LIMITED FREE-LIFT

KEY:
A: Three Function
B: Four Function

ITEM	PART NO.	DESCRIPTION	QTY A	QTY B
28	2094998	Tube Assy	1	..

FOOTNOTES:

a Refer to Table
b With Quick Disconnect Fittings
c → PENDING PER ECN 10594308

©2011 HYSTER COMPANY

NOTES

©2011 HYSTER COMPANY

AUXILIARY TUBE EXTENSIONS (FIGURE 10-8)

TWO STAGE LIMITED FREE-LIFT — WITHOUT QUICK DISCONNECT FITTINGS (S/N A613V03307H →)

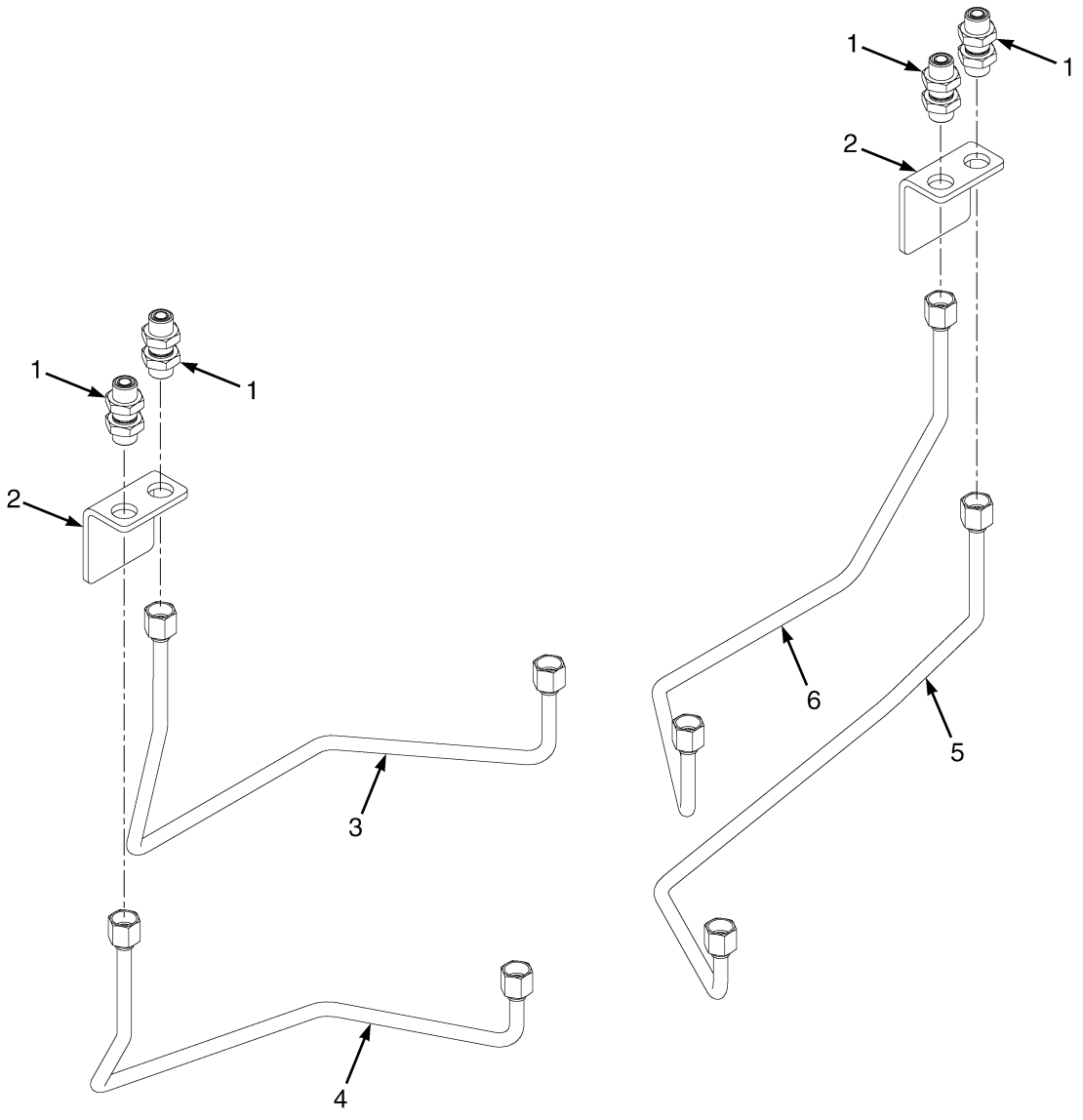

©2011 HYSTER COMPANY

AUXILIARY TUBE EXTENSIONS

TWO STAGE LIMITED FREE-LIFT – WITHOUT QUICK DISCONNECT FITTINGS (S/N A613V03307H →)

KEY:
A: A613 Three Function
B: A613 Four Function

ITEM	PART NO.	DESCRIPTION	QTY A	QTY B
1	816591	Fitting (Includes Nut)	2	4
2	1646850	Bracket	1	2
3	2095001	Tube Assy	..	1
4	2095000	Tube Assy	..	1
5	2094998	Tube Assy	1	1
6	2094999	Tube Assy	1	1

©2011 HYSTER COMPANY

AUXILIARY TUBE EXTENSIONS (FIGURE 10-9)

TWO STAGE LIMITED FREE-LIFT — MANUAL HYDRAULICS WITH QUICK DISCONNECT FITTINGS (S/N A613V03307H →)

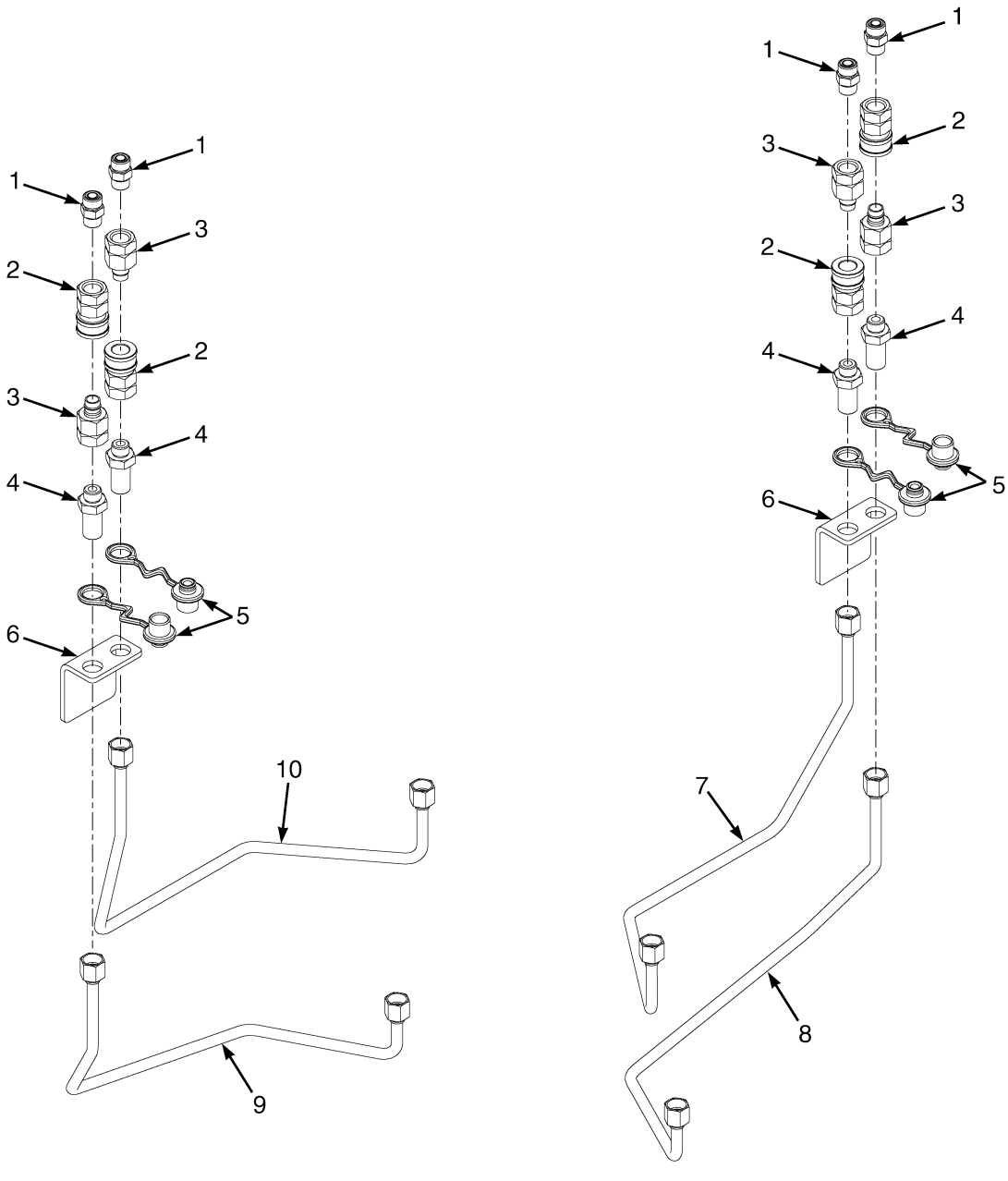

©2011 HYSTER COMPANY

AUXILIARY TUBE EXTENSIONS

TWO STAGE LIMITED FREE-LIFT – MANUAL HYDRAULICS WITH QUICK DISCONNECT FITTINGS (S/N A613V03307H →)

KEY:
A: A613 Three Function
B: A613 Four Function

ITEM	PART NO.	DESCRIPTION	QTY A	QTY B
1	1473887	Fitting	2	4
2	1377953	Quick Disconnect Fitting	2	4
3	1377954	Fitting (Quick Disconnect)	2	4
4	1708365	Bulkhead (Fitting)	2	4
5	1708368	Dust Cover	2	4
6	1646850	Bracket	1	2
7	2094999	Tube Assy	1	1
8	2094998	Tube Assy	1	1
9	2095000	Tube Assy	..	1
10	2095001	Tube Assy	..	1

©2011 HYSTER COMPANY

AUXILIARY TUBE EXTENSIONS (FIGURE 10-10)

TWO STAGE LIMITED FREE-LIFT — E-HYDRAULICS WITH QUICK DISCONNECT FITTINGS (S/N A613V03307H →)

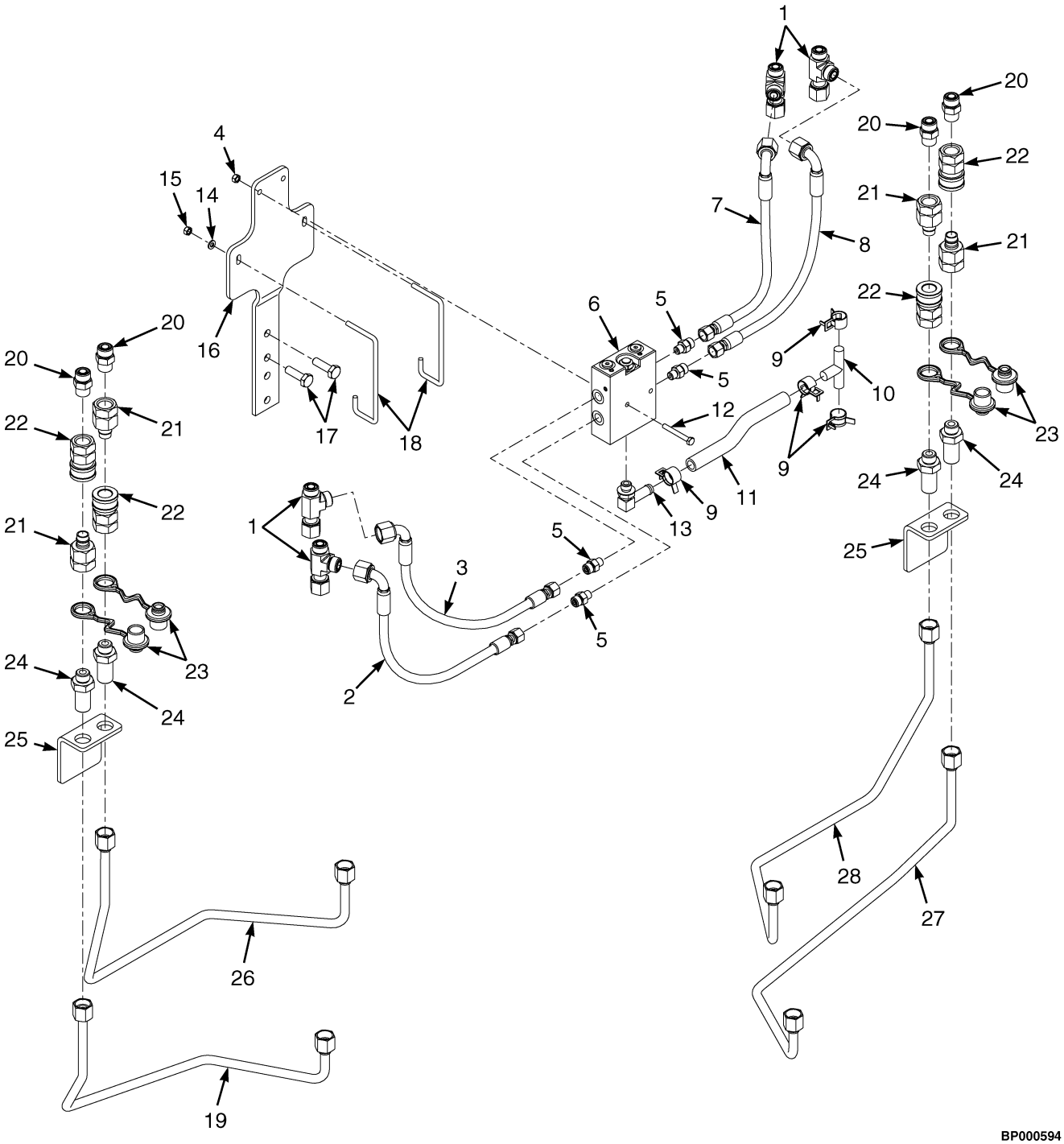

©2011 HYSTER COMPANY

AUXILIARY TUBE EXTENSIONS

TWO STAGE LIMITED FREE-LIFT – E-HYDRAULICS WITH QUICK DISCONNECT FITTINGS (S/N A613V03307H →)

KEY:
A: A613 Three Function
B: A613 Four Function

ITEM	PART NO.	DESCRIPTION	QTY A	QTY B
1	1487095	Fitting	2	4
2	4604682	Hose Assy	..	1
3	4604683	Hose Assy	..	1
4	302399	Nut	2	2
5	1486737	Fitting	2	4
6	2111754	Valve (Single Aux)	1	..
6	2111755	Valve (Dual Aux)	..	1
7	4604680	Hose Assy	1	1
8	4604683	Hose Assy	1	1
9	1527979	Hose Clamp	4	4
10	2046871	Fitting	1	1
11	1614069	Hose	1	1
12	292505	Capscrew	2	2
13	110178	Fitting	1	1
13	16483	O-Ring	1	1
14	1673754	Washer	2	2
15	302399	Nut	2	2
16	4013102	Bracket	1	1
17	1581588	Capscrew	2	2
18	4013097	Hook	2	2
19	2095000	Tube Assy	..	1
20	1473887	Fitting	2	4
21	1377954	Fitting (Quick Disconnect)	2	4
22	1377953	Quick Disconnect Fitting	2	4
23	1708368	Dust Cover	2	4
24	1708365	Bulkhead (Fitting)	2	4
25	1646850	Bracket	1	2
26	2095001	Tube Assy	..	1
27	2094998	Tube Assy	1	1
28	2094999	Tube Assy	1	1

©2011 HYSTER COMPANY

AUXILIARY FUNCTION HOSES (FIGURE 10-11)

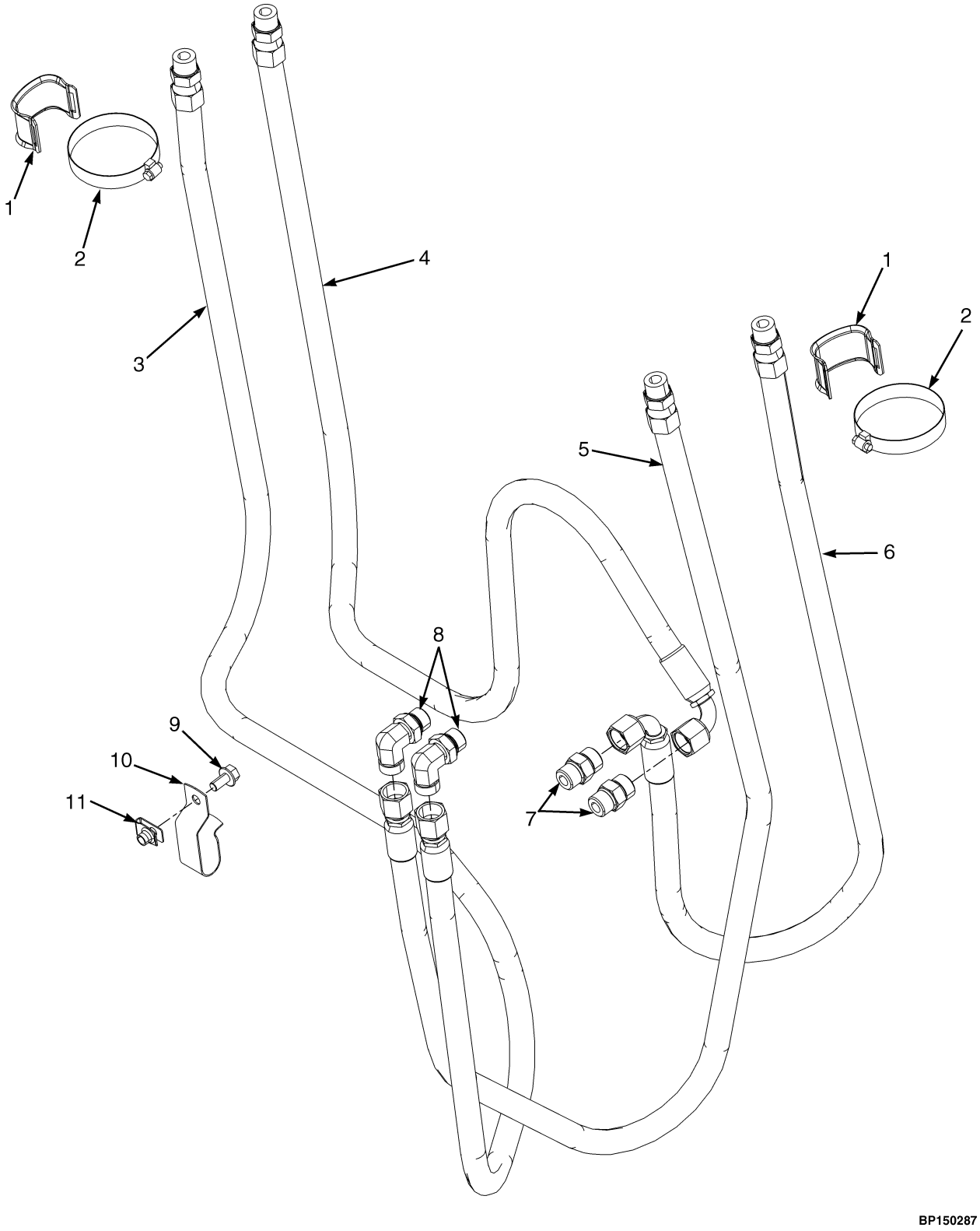

©2011 HYSTER COMPANY

AUXILIARY FUNCTION HOSES

KEY:
A: Three Function
B: Four Function

ITEM	PART NO.	DESCRIPTION	QTY A	QTY B
1	1502809	Hose Clamp	1	1
2	1360508	Clamp	1	1
3	2092396	Hydraulic Hose Asm	..	1
4	2092397	Hydraulic Hose Asm	..	1
5	2076301	Hydraulic Hose Asm (3rd Function)	1	..
6	2076302	Hydraulic Hose Asm (3rd Function)	1	..
7	1473887	Fitting	1	1
8	1473897	Fitting	1	1
9	1527879	Capscrew	..	1
10	1544157	Clip	..	1
11	1480237	Nut	..	1

©2011 HYSTER COMPANY

NOTES

©2011 HYSTER COMPANY

11 MAST-THREE STAGE FULL FREE-LIFT

SECTION 11
MAST-THREE STAGE FULL FREE-LIFT

DESCRIPTION **PAGE**

AUXILIARY TUBE EXTENSIONS
THREE STAGE FULL FREE-LIFT - WITHOUT QUICK DISCONNECT FITTINGS (S/N A614V02262H →) 11-28
THREE STAGE FULL FREE-LIFT - MANUAL HYDRAULICS WITH QUICK DISCONNECT FITTINGS (S/N A614V02262H →) 11-30
THREE STAGE FULL FREE-LIFT - E-HYDRAULICS WITH QUICK DISCONNECT FITTINGS (S/N A614V02262H →) 11-32
THREE STAGE FULL FREE LIFT WITH SIDE SHIFT FORK POSITIONER CARRIAGE - WITHOUT QUICK DISCONNECT FITTINGS (S/N A614V02262H →) 11-34
THREE STAGE FULL FREE LIFT WITH SIDE SHIFT FORK POSITIONER CARRIAGE - MANUAL HYDRAULICS WITH QUICK DISCONNECT FITTINGS (S/N A614V02262H →) 11-36
THREE STAGE FULL FREE LIFT WITH SIDE SHIFT FORK POSITIONER CARRIAGE - E-HYDRAULICS WITH QUICK DISCONNECT FITTINGS (S/N A614V02262H →) 11-38
CARRIAGE
THREE STAGE FULL FREE-LIFT - HOOK TYPE 11-20
THREE STAGE FULL FREE-LIFT - PIN TYPE 11-22
FREE-LIFT
THREE STAGE FULL FREE-LIFT 11-16
FREE-LIFT CYLINDER
THREE STAGE FULL FREE-LIFT 11-18
HEADER HOSES AND AUXILIARY TUBE
THREE STAGE FULL FREE-LIFT 11-24
INNER MAST
THREE STAGE FULL FREE-LIFT 11-6
INTERMEDIATE MAST
THREE STAGE FULL FREE-LIFT 11-4
MAIN LIFT
THREE STAGE FULL FREE-LIFT 11-8
MAIN LIFT CYLINDERS
THREE STAGE FULL FREE-LIFT 11-12
OUTER MAST
THREE STAGE FULL FREE-LIFT 11-2

©2011 HYSTER COMPANY

OUTER MAST (FIGURE 11-1)
THREE STAGE FULL FREE-LIFT

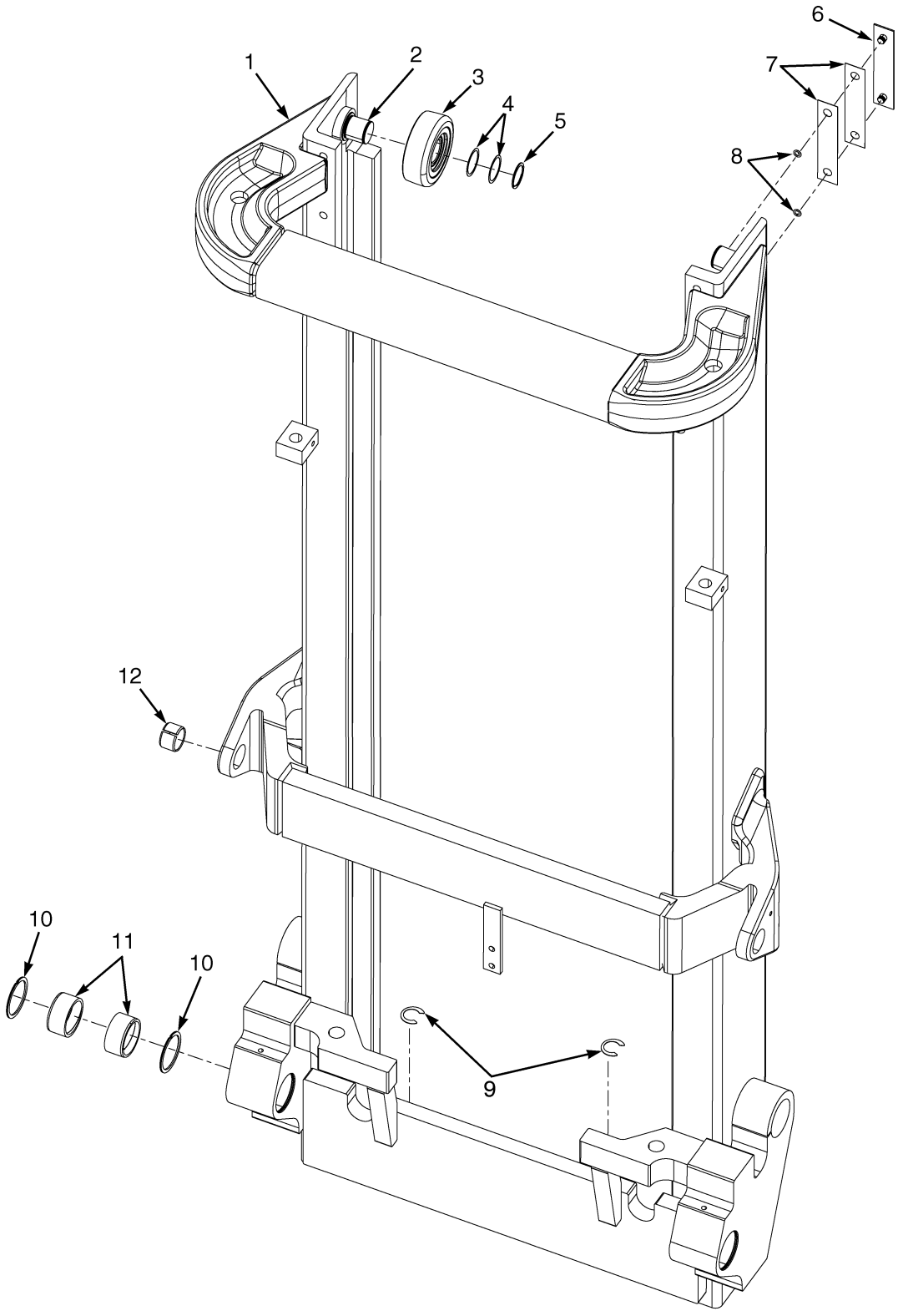

©2011 HYSTER COMPANY

OUTER MAST
THREE STAGE FULL FREE-LIFT

A614

ITEM	DESCRIPTION 1 2 3 4	LIFT HEIGHT TO BOTTOM OF FORKS		
		4640 mm (182.7 in.)	5540 mm (218.1 in.)	6140 mm (241.7 in.)
	Mast Group Number	A614 4640	A614 5540	A614 6140
	Mast Assy	2092372	2092375	2092377
1	Outer Mast	1608961	1608964	1608966

ITEM	PART NO.	DESCRIPTION	QTY
	a	Mast Assy	1
1	**a**	Outer Mast	1
2	341144	Stubshaft	2
3	1333649	Load Roller ("A") (126.75/126.49)	2
3	1343002	Load Roller ("B") (127.51/127.25)	2
3	1343003	Load Roller ("C") (128.27/128.01)	1
4	126765	Shim	AR
5	187489	Snap Ring	2
6	104264	Wear Strip	2
7	161273	Shim (0.020 in.)	AR
8	104506	O-Ring	2
9	1344753	Shim	AR
10	1611580	Snap Ring	4
11	1611579	Bushing	4
12	192429	Bushing	2

FOOTNOTES:

a Refer to Table

©2011 HYSTER COMPANY

INTERMEDIATE MAST (FIGURE 11-2)
THREE STAGE FULL FREE-LIFT

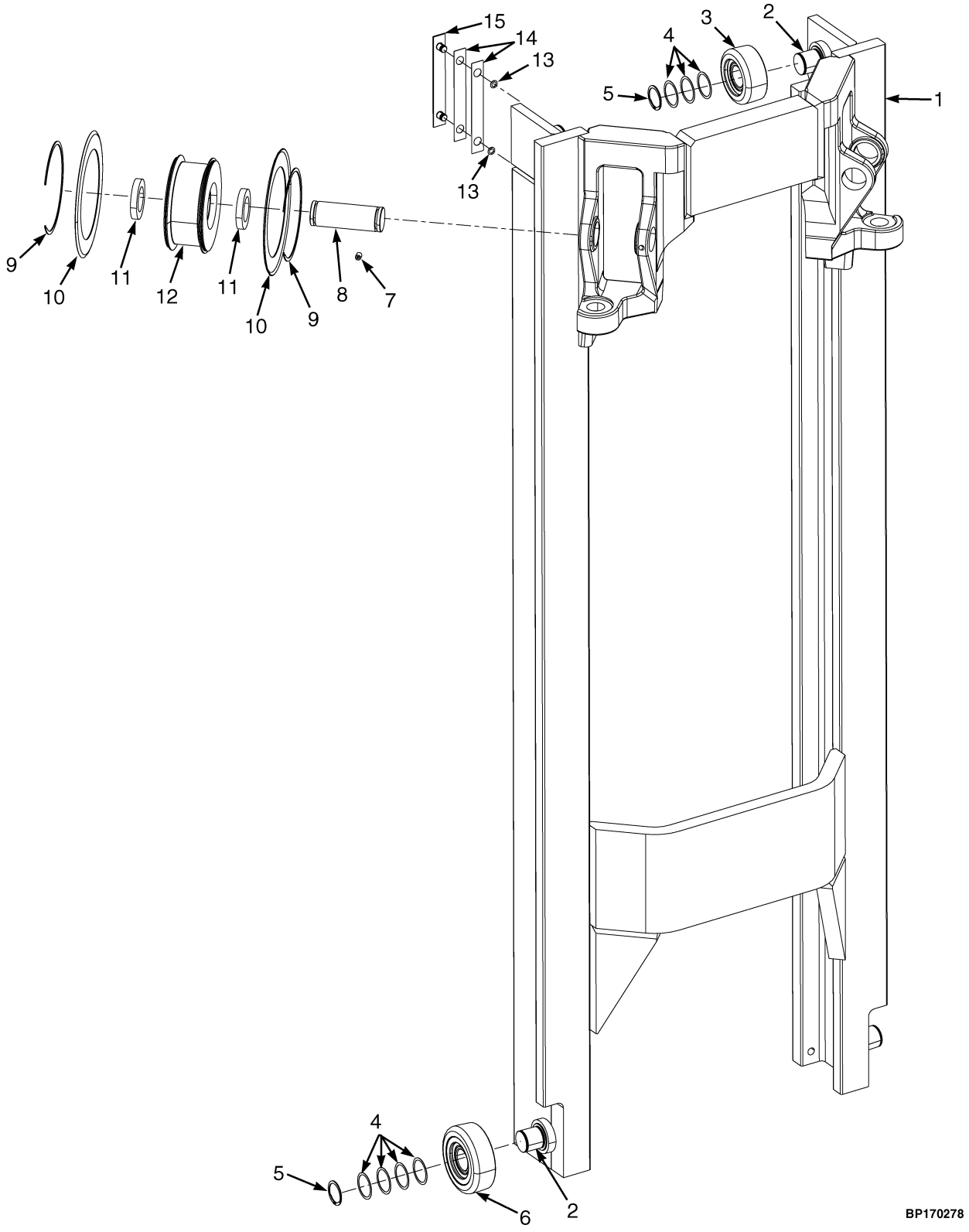

©2011 HYSTER COMPANY

INTERMEDIATE MAST
THREE STAGE FULL FREE-LIFT

A614

ITEM	DESCRIPTION 1 2 3 4	LIFT HEIGHT TO BOTTOM OF FORKS		
		4640 mm (182.7 in.)	5540 mm (218.1 in.)	6140 mm (241.7 in.)
	Mast Group Number	A614 4640	A614 5540	A614 6140
	Mast Assy	2092372	2092375	2092377
1	Intermediate Mast	1619178	364204	1619182

ITEM	PART NO.	DESCRIPTION	QTY
	a	Mast Assy	1
1	**a**	Intermediate Mast	1
2	341144	Stubshaft	4
3	1333648	Load Roller ("A") (103.68/103.42)	2
3	1343010	Load Roller ("B") (104.44/104.18)	2
3	1343011	Load Roller ("C") (105.20/104.94)	2
4	126765	Shim	AR
5	187489	Snap Ring	4
6	1333649	Load Roller ("A") (126.75/126.49)	2
6	1343002	Load Roller ("B") (127.51/127.25)	2
6	1343003	Load Roller ("C") (128.27/128.01)	2
7	302105	Setscrew	2
8	366496	Pin	2
9	362953	Snap Ring	4
10	362950	Plate	4
11	362356	Spacer	4
12	362352	Chain Sheave	2
13	104506	O-Ring	4
14	131716	Shim (0.020 in.)	AR
15	215211	Wear Strip	2

FOOTNOTES:

a Refer to Table

©2011 HYSTER COMPANY

INNER MAST (FIGURE 11-3)
THREE STAGE FULL FREE-LIFT

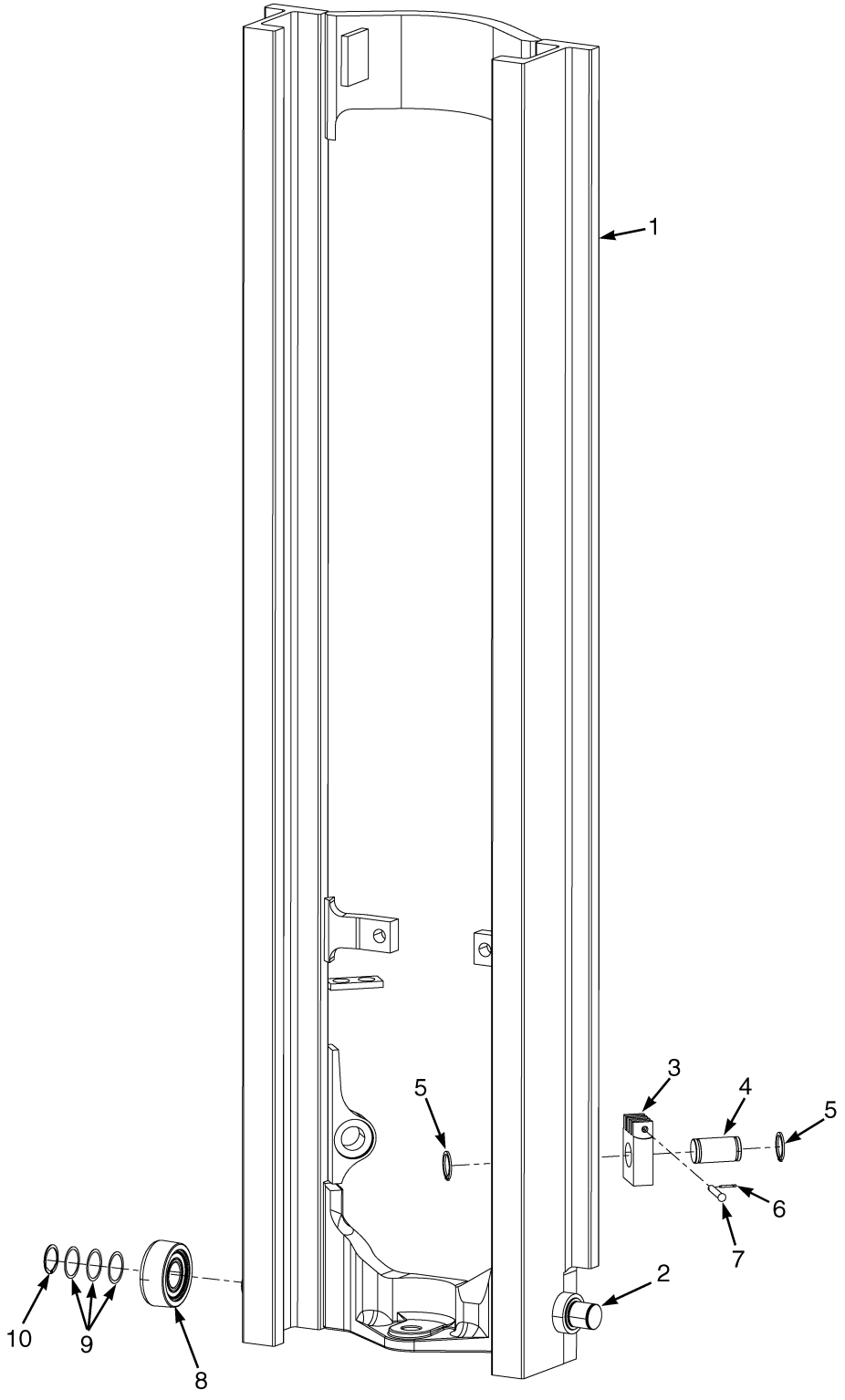

©2011 HYSTER COMPANY

INNER MAST
THREE STAGE FULL FREE-LIFT

A614

ITEM	DESCRIPTION 1 2 3 4	LIFT HEIGHT TO BOTTOM OF FORKS		
		4640 mm (182.7 in.)	5540 mm (218.1 in.)	6140 mm (241.7 in.)
	Mast Group Number	A614 4640	A614 5540	A614 6140
	Mast Assy	2092372	2092375	2092377
1	Inner Mast	1619230	1313811	1619234

ITEM	PART NO.	DESCRIPTION	QTY
	a	Mast Assy	1
1	**a**	Inner Mast	1
2	381389	Stubshaft	2
3	358305	Chain Anchor	2
4	349320	Pin	2
5	122400	Snap Ring	4
6	15222	Cotter Pin	4
7	1307395	Pin	2
8	1333648	Load Roller ("A") (103.68/103.42)	2
8	1343010	Load Roller ("B") (104.44/104.18)	2
8	1343011	Load Roller ("C") (105.20/104.94)	2
9	126765	Shim	AR
10	187489	Snap Ring	2

FOOTNOTES:

a Refer to Table

©2011 HYSTER COMPANY

MAIN LIFT (FIGURE 11-4)
THREE STAGE FULL FREE-LIFT

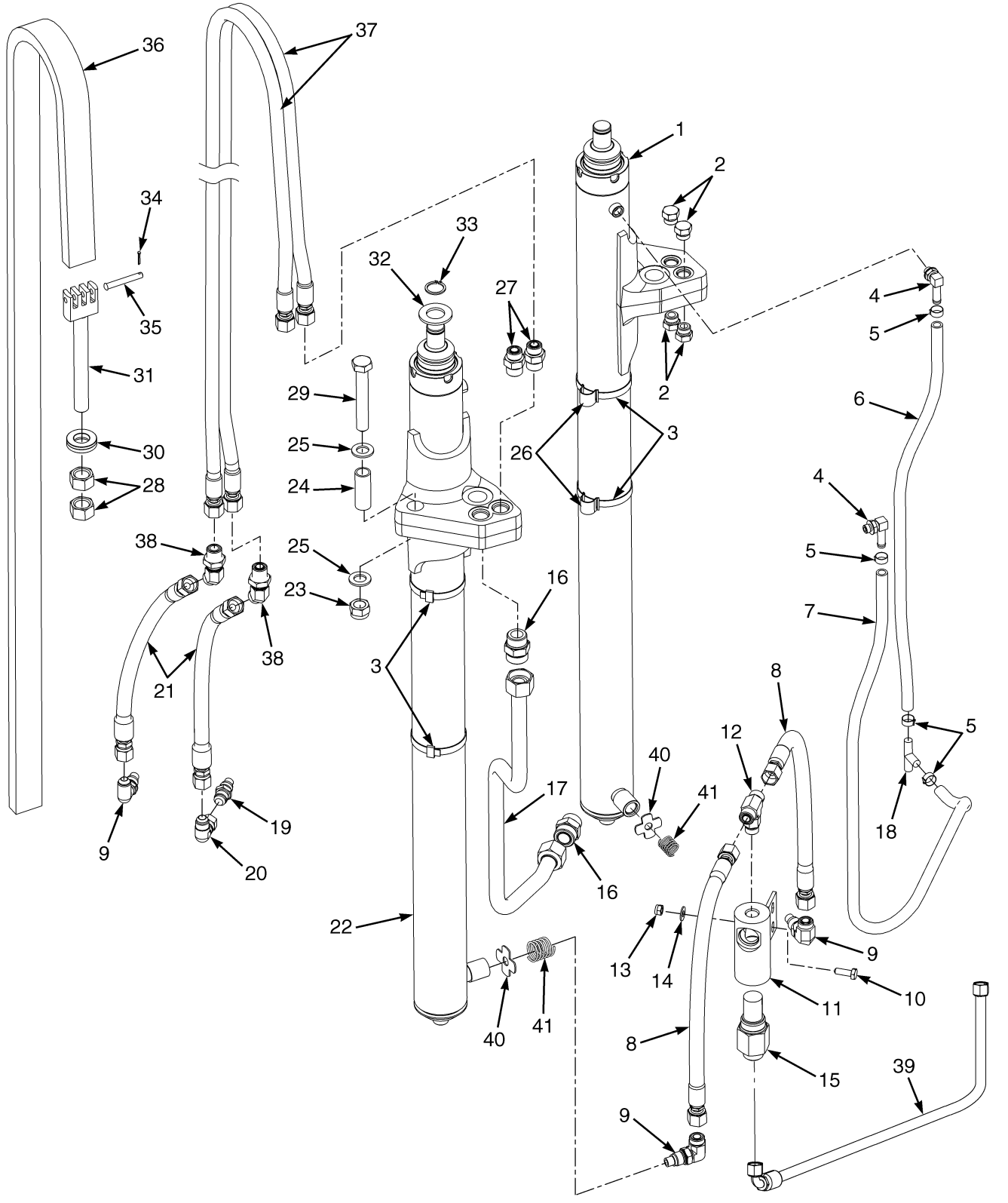

©2011 HYSTER COMPANY

MAIN LIFT
THREE STAGE FULL FREE-LIFT

A614

ITEM	DESCRIPTION 1 2 3 4	LIFT HEIGHT TO BOTTOM OF FORKS		
		4640 mm (182.7 in.)	5540 mm (218.1 in.)	6140 mm (241.7 in.)
	Mast Group Number	A614 4640	A614 5540	A614 6140
6	Hose Assy	1399077	1399089	1399099
7	Hose Assy	1399096	1399108	1399118
17	Tube Weldment	2085503	2085506	2085508
36	Chain	1619430	366523	1619436
37	Hose Assy	2086090	2079000	2086094

ITEM	PART NO.	DESCRIPTION	QTY
1	. . . . .	Lift Cylinder (RH) (☞Figure 11-5)	1
2	216590	Fitting	4
2	16485	O-Ring	1
3	1360529	Clamp	4
4	110178	Fitting	2
4	16483	O-Ring	1
5	379405	Clamp	4
6	**a**	Hose Assy	1
7	**a**	Hose Assy	1
8	2061806	Hose Assy	2
9	189595	Fitting	3
9	16485	O-Ring	1
10	1581587	Capscrew	2
11	1603961	Housing	1
12	16578	Fitting	1
12	16485	O-Ring	1
13	1581567	Nut	2
14	1581558	Washer	2
15	2043538	Lowering Control Valve	1
16	1473889	Fitting	2
16	244167	O-Ring	1
16	16487	O-Ring	1
17	**a**	Tube Weldment	1
18	2046871	Fitting	1
19	184799	Fitting	1
19	. . . . .	O-Ring	1
20	16882	Fitting	1
21	2079066	Hose Assy	2
22	. . . . .	Lift Cylinder (LH) (☞Figure 11-5)	1
23	1626491	Nut	4
24	372389	Spacer	2
25	1626490	Washer	8
26	1465585	Hose Clamp	4
27	1486751	Fitting	2

©2011 HYSTER COMPANY

MAIN LIFT
THREE STAGE FULL FREE-LIFT

ITEM	PART NO.	DESCRIPTION	QTY
27	16486	O-Ring	1
27	252729	O-Ring	1
28	1626521	Nut	4
29	1626459	Capscrew	4
30	343946	Kit-Washer	2
31	1331992	Chain Anchor	2
32	1626463	Washer	2
33	304523	Snap Ring	2
34	15222	Cotter Pin	4
35	1307395	Pin	2
36	**a**	Chain	2
37	**a**	Hose Assy	1
38	1528589	Fitting	2
38	252729	O-Ring	2
39	2092558	Hose Assy	1
39	2102655	Hose Assy	1
40	320334	Washer	2
41	388186	Spring	2

FOOTNOTES:

a Refer to Table

©2011 HYSTER COMPANY

NOTES

©2011 HYSTER COMPANY

MAIN LIFT CYLINDERS (FIGURE 11-5)
THREE STAGE FULL FREE-LIFT

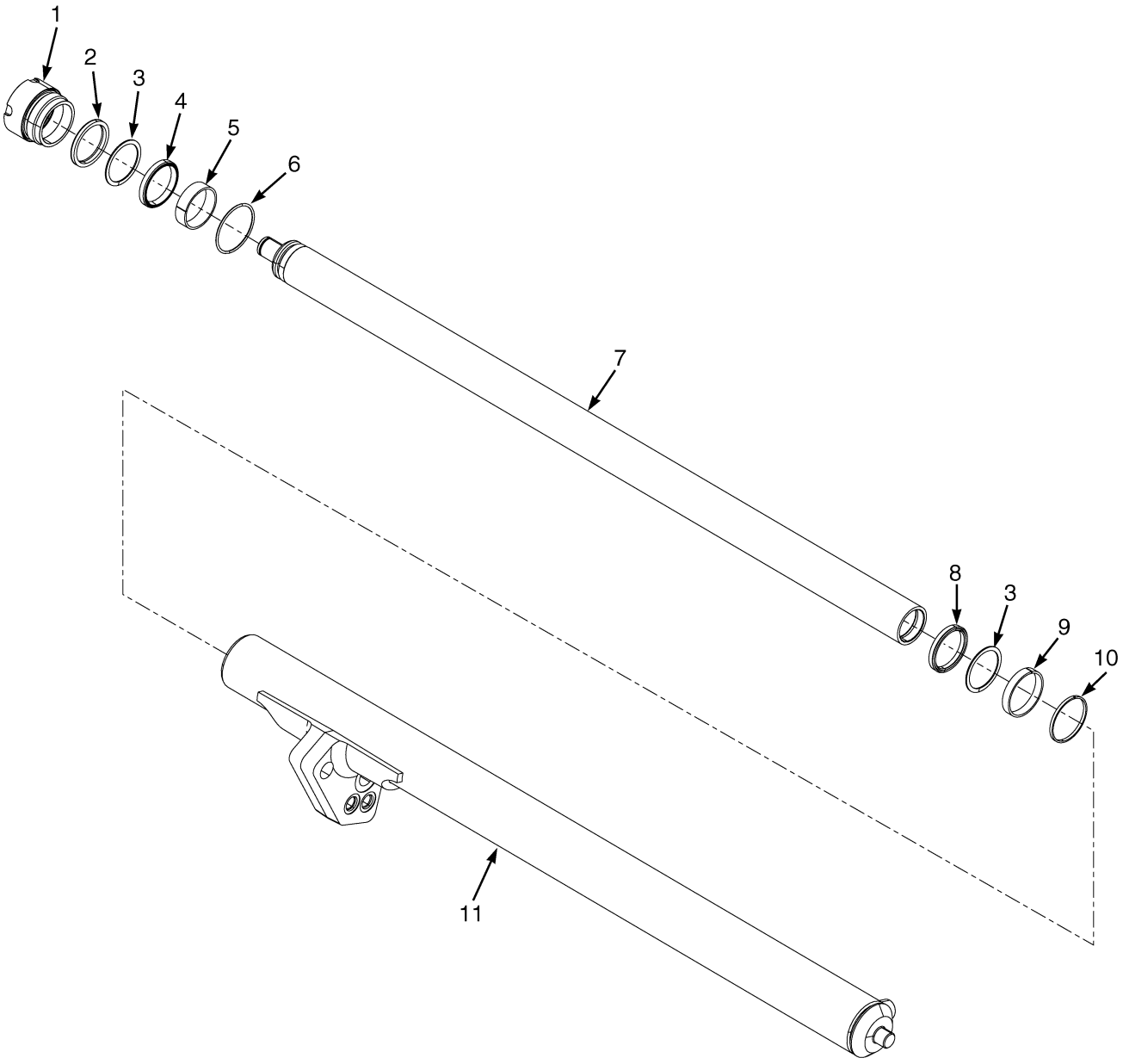

BP170281

©2011 HYSTER COMPANY

MAIN LIFT CYLINDERS
THREE STAGE FULL FREE-LIFT

LEFT HAND

ITEM	DESCRIPTION 1 2 3 4	LIFT HEIGHT TO BOTTOM OF FORKS		
		4640 mm (182.7 in.)	5540 mm (218.1 in.)	6140 mm (241.7 in.)
	Mast Group Number	**A614 4640**	**A614 5540**	**A614 6140**
	Cylinder Group Number	**8609204**	**8609207**	**8609209**
	Cylinder Assy	2087972	2087975	2087977
7	Cylinder Rod	2087904	2087921	2087908
11	Tube Wldmt-Cylinder	2087932	2087935	2087937
12	Spacer	----	----	383824

RIGHT HAND

ITEM	DESCRIPTION 1 2 3 4	LIFT HEIGHT TO BOTTOM OF FORKS		
		4640 mm (182.7 in.)	5540 mm (218.1 in.)	6140 mm (241.7 in.)
	Mast Group Number	**A614 4640**	**A614 5540**	**A614 6140**
	Cylinder Group Number	**8609254**	**8609257**	**8609259**
	Cylinder Assy	2087993	2087996	2087998
7	Cylinder Rod	2087904	2087921	2087908
11	Tube Wldmt-Cylinder	2087951	2087954	2087955
12	Spacer	----	----	383824

ITEM	PART NO.	DESCRIPTION	QTY
	a	Cylinder Assy	1
1	1618463	Gland	2
2	1383071	Rod Wiper	2
3	637565	Back-Up Ring	2
4	1381089	Rod Seal	2
5	316513	Wear Ring	2
6	15880	O-Ring	2
7	**a**	Cylinder Rod	2
8	309062	Rod Seal	2
9	636941	Wear Ring	2
10	364233	Piston Ring	2
11	**a**	Tube Wldmt-Cylinder	2
12	**a**	Spacer	2
	2093817	Kit-Seal	1

©2011 HYSTER COMPANY

FOOTNOTES:

a Refer to Table

©2011 HYSTER COMPANY

NOTES

©2011 HYSTER COMPANY

FREE-LIFT (FIGURE 11-6)
THREE STAGE FULL FREE-LIFT

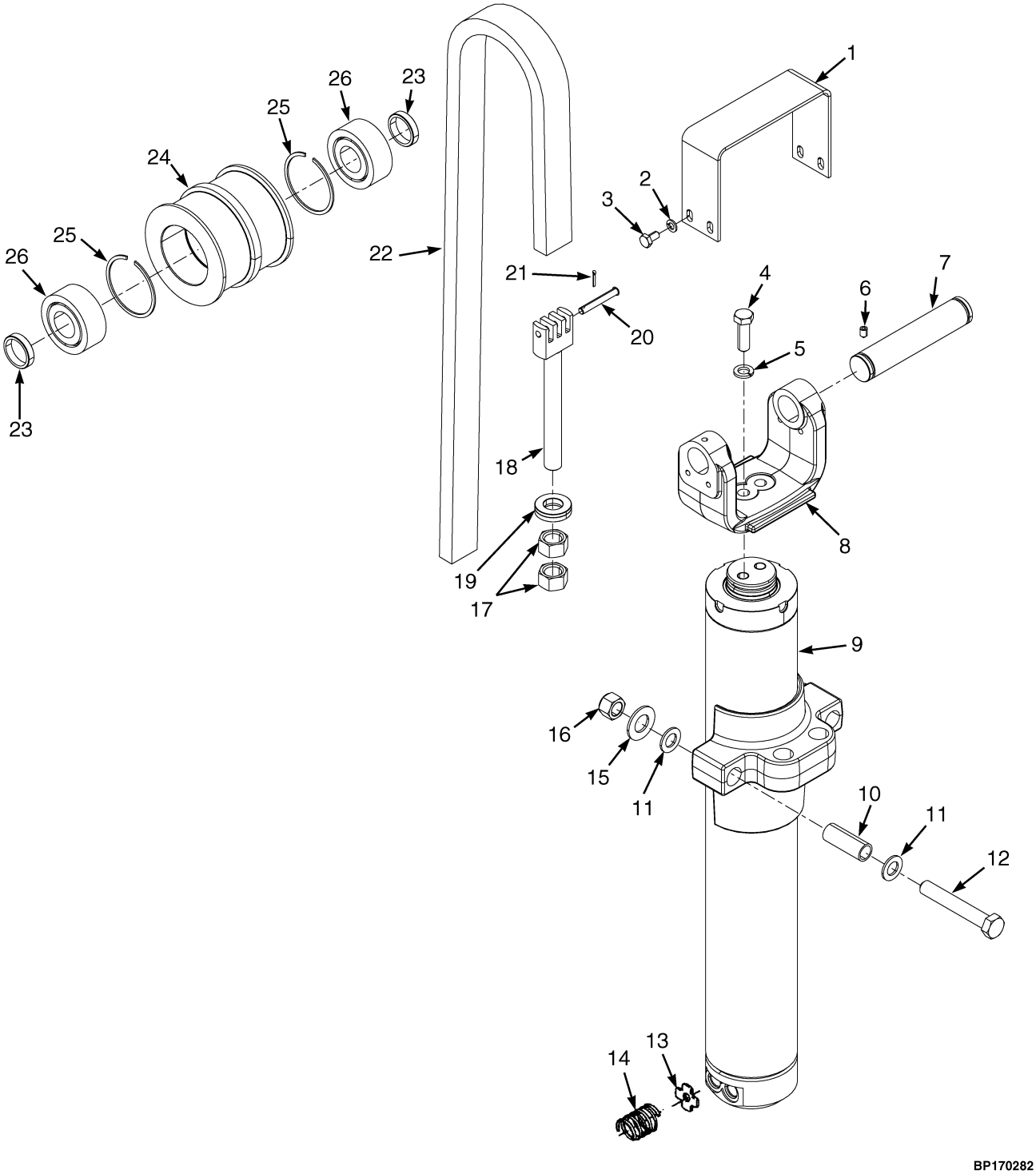

©2011 HYSTER COMPANY

FREE-LIFT
THREE STAGE FULL FREE-LIFT

A614

ITEM	DESCRIPTION 1 2 3 4	LIFT HEIGHT TO BOTTOM OF FORKS		
		4640 mm (182.7 in.)	5540 mm (218.1 in.)	6140 mm (241.7 in.)
	Mast Group Number	A614 4640	A614 5540	A614 6140
22	Chain	368140	1313789	1313791

ITEM	PART NO.	DESCRIPTION	QTY
1	366529	Chain Guard	1
2	1626478	Washer	4
3	1598659	Capscrew	4
4	1597457	Capscrew	2
5	1581854	Washer	2
6	302105	Setscrew	1
7	366526	Pin	1
8	366528	Crosshead	1
9	. . . . .	Lift Cylinder (☞Figure 11-7)	1
10	372389	Spacer	2
11	1626490	Washer	4
12	1626459	Capscrew	2
13	320334	Washer	2
14	388186	Spring	2
15	1626522	Washer	2
16	1626491	Nut	4
17	1626521	Nut	4
18	1331992	Chain Anchor	2
19	343946	Kit-Washer	2
20	1307395	Pin	2
21	15222	Cotter Pin	4
22	**a**	Chain	2
23	297573	Spacer	2
24	366524	Chain Sheave	1
24	366525	Chain Sheave	1
25	59625	Snap Ring	2
26	334932	Ball Bearing	2

FOOTNOTES:

a Refer to Table

FREE-LIFT CYLINDER (FIGURE 11-7)
THREE STAGE FULL FREE-LIFT

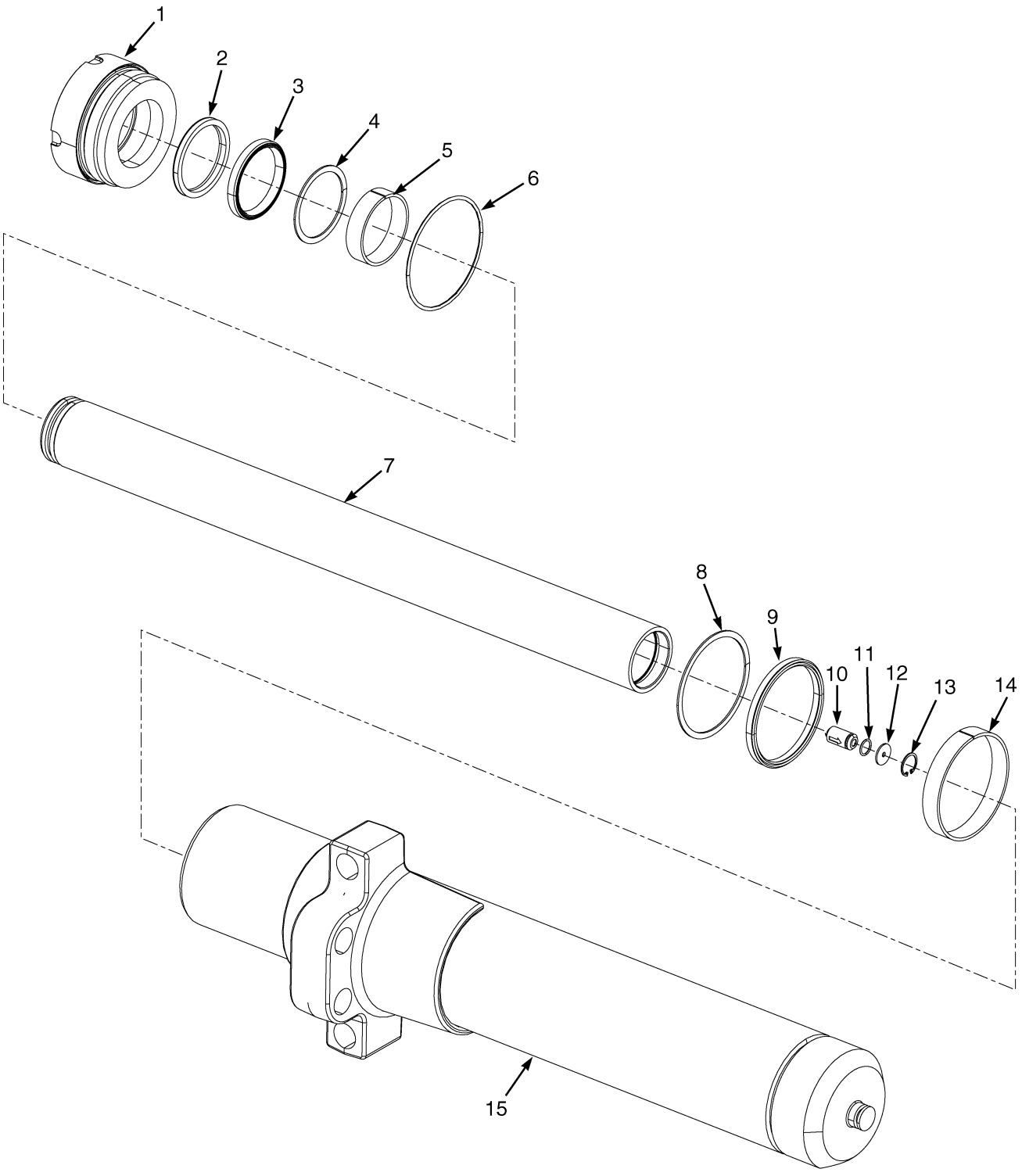

BP170283

©2011 HYSTER COMPANY

FREE-LIFT CYLINDER
THREE STAGE FULL FREE-LIFT

A614

ITEM	DESCRIPTION 1 2 3 4	LIFT HEIGHT TO BOTTOM OF FORKS		
		4640 mm (182.7 in.)	5540 mm (218.1 in.)	6140 mm (241.7 in.)
	Mast Group Number	**A614 4640**	**A614 5540**	**A614 6140**
	Cylinder Group Number	**8609304**	**8609307**	**8609309**
	Cylinder Assy	2085912	2085915	2087298
7	Cylinder Rod	2087324	2087107	2087339
15	Tube Wldmt-Cylinder	2096472	2096473	2096474

ITEM	PART NO.	DESCRIPTION	QTY
	a	Cylinder Assy	1
1	1623459	Gland	1
2	1383070	Rod Wiper	1
3	2033395	Seal	1
4	638251	Back-Up Ring	1
5	215345	Wear Ring	1
6	15889	O-Ring	1
7	**a**	Cylinder Rod	1
8	638223	Back-Up Ring	1
9	637166	Rod Seal	1
10	257913	Check Valve	1
11	190580	O-Ring	1
12	297531	Washer	1
13	187388	Snap Ring	1
14	636954	Wear Ring	1
15	**a**	Tube Wldmt-Cylinder	1
	2096470	Kit-Seal	1

FOOTNOTES:

a Refer to Table

©2011 HYSTER COMPANY

CARRIAGE (FIGURE 11-8)
THREE STAGE FULL FREE-LIFT — HOOK TYPE

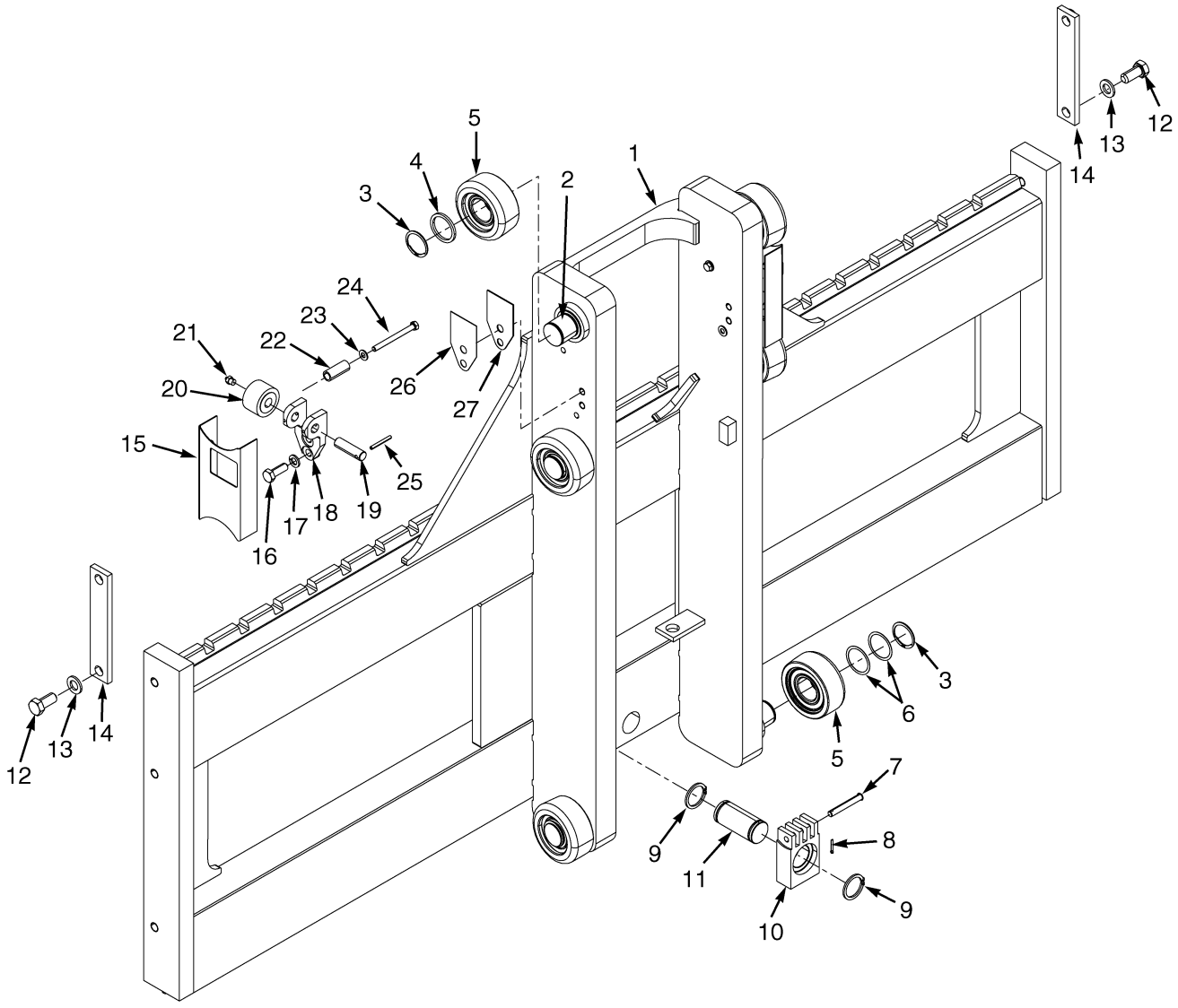

BP170289

©2011 HYSTER COMPANY

CARRIAGE

THREE STAGE FULL FREE-LIFT – HOOK TYPE

ITEM	PART NO.	DESCRIPTION	QTY
	2094242	Carriage	1
1	1649309	Carriage Wldmt	1
2	341144	Stubshaft	6
3	187489	Snap Ring	6
4	366116	Spacer	2
5	**a** 1333648	Load Roller ("A") (103.68/103.42)	AR
6	126765	Shim	AR
7	1307395	Pin	2
8	15222	Cotter Pin	2
9	122400	Snap Ring	4
10	358305	Chain Anchor	2
11	1330780	Pin	2
12	1581833	Capscrew	4
13	1581854	Washer	4
14	66468	Plate	2
15	319322	Bracket Wldmt (RH)	1
15	319323	Bracket Wldmt (LH)	1
16	**b** 292528	Capscrew	4
17	**b** 292683	Lockwasher	4
18	**b** 244008	Bracket	2
19	**b** 244009	Pin	2
20	**b** 244005	Side Roller	2
21	**b** 16001	Grease Fitting	2
22	317292	Spacer	4
23	1650842	Washer	4
24	1650841	Fitting	4
25	**b** 66333	Roll Pin	2
26	**b** 192424	Shim (0.030 in.)	AR
27	**b** 192425	Shim (0.062 in.)	AR

FOOTNOTES:

a Letter on Inside Face

b With Attachments

©2011 HYSTER COMPANY

CARRIAGE (FIGURE 11-9)
THREE STAGE FULL FREE-LIFT — PIN TYPE

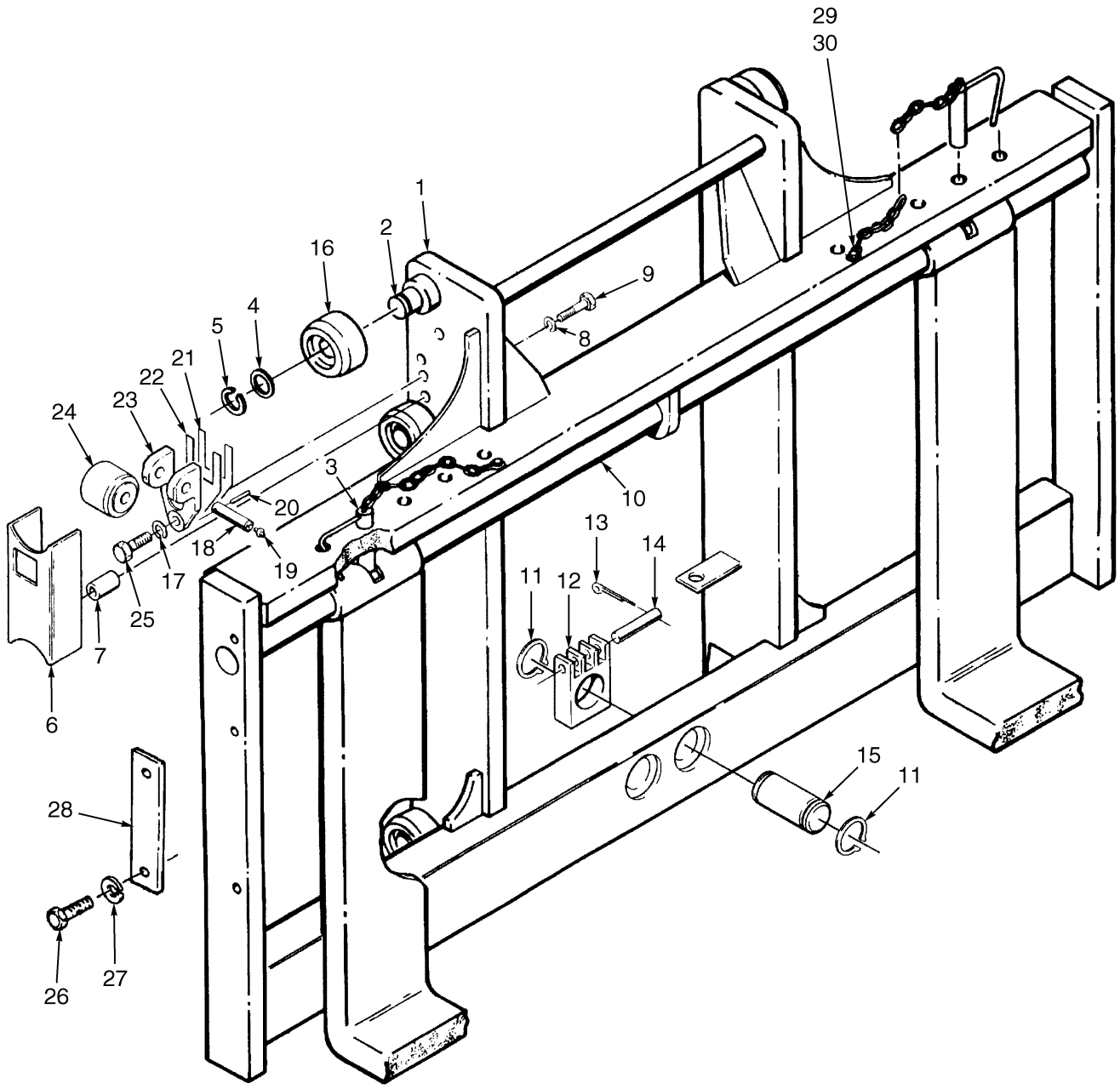

HP170606

©2011 HYSTER COMPANY

CARRIAGE

THREE STAGE FULL FREE-LIFT – PIN TYPE

ITEM	PART NO.	DESCRIPTION	QTY
	1318161	Carriage (78 in.)	1
1	1331270	Carriage Wldmt	1
2	341144	Stubshaft	6
3	1331269	Pin	2
4	126765	Shim (Bottom Four Rollers)	AR
4	366116	Spacer (Top Two Rollers)	2
5	187489	Snap Ring	6
6	319322	Bracket Wldmt (RH)	1
6	319323	Bracket Wldmt (LH)	1
7	317292	Spacer	4
8	15155	Lockwasher	4
9	18522	Capscrew	4
10	1330064	Pin	2
11	122400	Snap Ring	4
12	358305	Chain Anchor	2
13	15222	Cotter Pin	2
14	1307395	Pin	2
15	1330780	Pin	2
16	**a** 1333648	Load Roller ("A") (103.68/103.42) (0.060 in.)	AR
17	**b** 292683	Lockwasher	4
18	**b** 244009	Pin	2
19	**b** 16001	Grease Fitting	2
20	**b** 66333	Roll Pin	2
21	**b** 192424	Shim (0.030 in.)	AR
22	**b** 192425	Shim (0.062 in.)	AR
23	**b** 244008	Bracket	2
24	**b** 244005	Side Roller	2
25	**b** 292528	Capscrew	4
26	226458	Capscrew	4
27	292685	Lockwasher	4
28	66468	Plate	2
29	292513	Capscrew	2
30	296420	Washer	2

FOOTNOTES:

a Letter on Inside Face

b Optional

©2011 HYSTER COMPANY

HEADER HOSES AND AUXILIARY TUBE (FIGURE 11-10)

THREE STAGE FULL FREE-LIFT

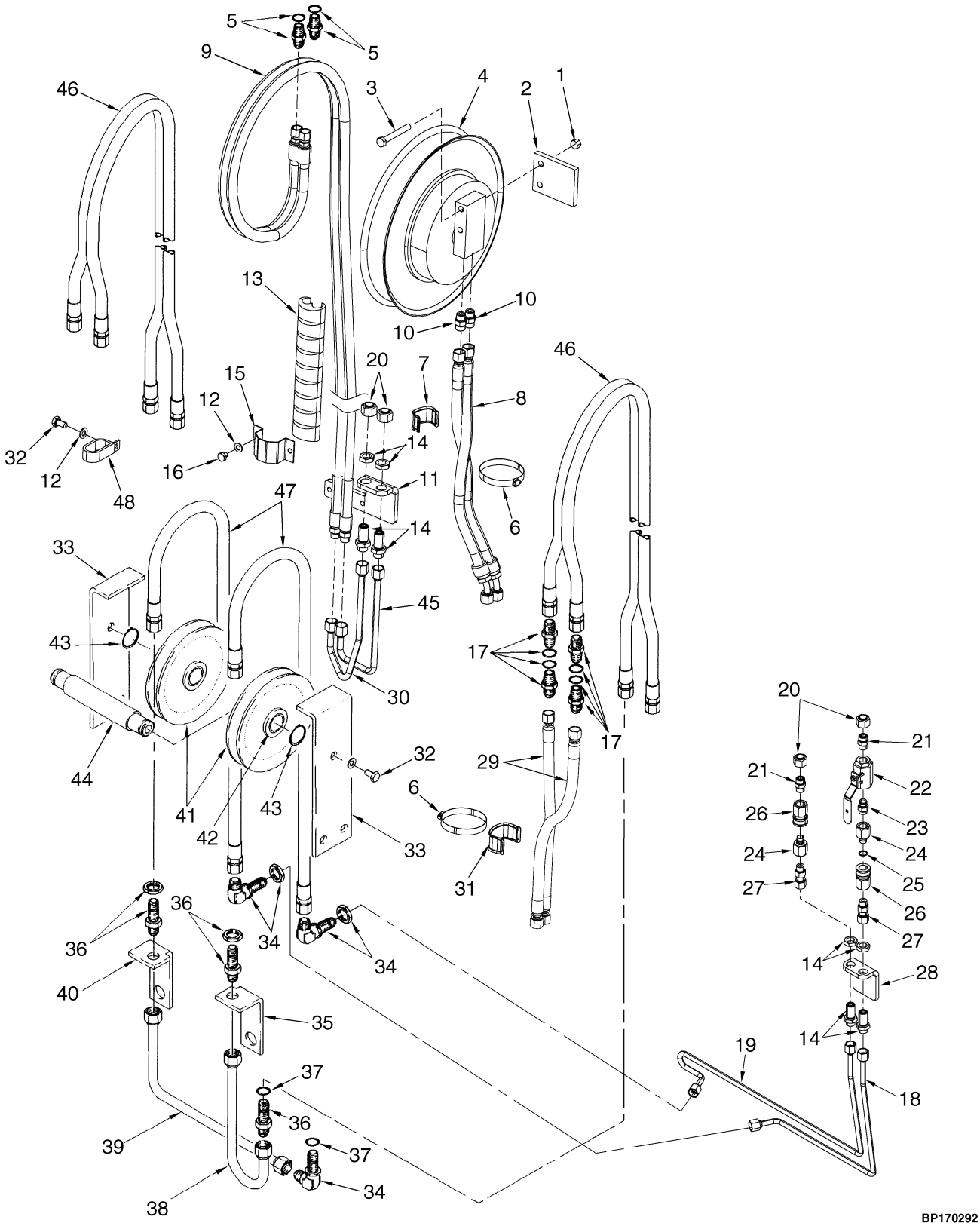

©2011 HYSTER COMPANY

HEADER HOSES AND AUXILIARY TUBE
THREE STAGE FULL FREE-LIFT

A614

ITEM	DESCRIPTION 1 2 3 4	LIFT HEIGHT TO BOTTOM OF FORKS		
		4640 mm (182.7 in.)	5540 mm (218.1 in.)	6140 mm (241.7 in.)
	Mast Group Number	A614 4640	A614 5540	A614 6140
8	Hose Assy	2088564	2088567	2078660
9	Hose Assy	2077914	2077916	2077916
29	Hose Assy	2088603	2088606	2088608
46	Hose Assy	2088624	2088627	2088629
47	Hose Assy	2088584	2088587	2088589

KEY:
A: Three Function
B: Four Function

ITEM	PART NO.	DESCRIPTION	QTY A	QTY B
1	1581849	Nut	..	2
2	386648	Mounting Plate	..	1
3	1597661	Capscrew	..	2
4	378044	Hose Reel (Left Hand)	1	..
4	358289	Hose Reel (Right Hand)	..	1
4	672563	Kit-Seal	1	1
5	16541	Fitting	..	2
5	16484	O-Ring	..	1
6	1360508	Clamp	AR	AR
7	1502809	Hose Clamp	..	2
8	**b**	Hose Assy	..	2
9	**b**	Hose Assy	..	2
10	1473887	Fitting	..	2
10	16484	O-Ring	..	1
10	265731	O-Ring	..	1
11	1649764	Bracket (Optional)	..	1
13	358286	Strain Relief	..	1
14	816591	Fitting (Includes Nut)	..	2
14	265731	O-Ring	..	1
15	358287	Bracket	..	1
16	1597852	Capscrew	..	2
16	1703560	Capscrew (Alternate Part)	..	2
17	1486746	Fitting	4	4
17	16485	O-Ring	1	1
17	265731	O-Ring	1	1
18	2095002	Tube Assy	1	1
19	2095003	Tube Assy	1	1
20	1529016	Fitting	2	4
21	**c** 1473887	Fitting	..	2
21	16484	O-Ring	1	1

©2011 HYSTER COMPANY

HEADER HOSES AND AUXILIARY TUBE
THREE STAGE FULL FREE-LIFT

KEY:
A: Three Function
B: Four Function

ITEM	PART NO.	DESCRIPTION	QTY A	QTY B
21	265731	O-Ring	1	1
22	**cd** 2087565	Drain Valve	1	1
23	**cd** 16541	Fitting	..	1
23	**d** 16484	O-Ring	1	1
24	**c** 1377954	Fitting	2	2
25	**c** 16484	O-Ring	1	1
26	**c** 1377953	Quick Disconnect Fitting	2	2
27	**cd** 1622610	Fitting	2	2
27	**d** 265731	O-Ring	1	1
27	**d** 16484	O-Ring	1	1
28	1646850	Bracket	1	1
29	**b**	Hose Assy	2	2
30	2093830	Tube Assy	..	1
31	1465489	Hose Clamp	AR	AR
32	1598659	Capscrew	3	3
33	380585	Bracket	2	2
34	1528580	Fitting (Includes Nut)	3	3
34	265731	O-Ring	1	1
35	380591	Bracket	1	1
36	816591	Fitting (Includes Nut)	3	3
36	252729	O-Ring	1	1
37	1625092	Shim	2	2
38	2096962	Tube Assy	1	1
39	2096959	Tube Assy	1	1
40	380590	Bracket	1	1
41	297647	Sheave	2	2
42	136045	Bushing	1	1
43	248212	Snap Ring	2	2
44	1632103	Shaft	1	1
45	2093829	Tube Assy	..	1
46	**b**	Hose Assy	2	2
47	**b**	Hose Assy	2	2
48	255578	Clamp	..	1
49	1581585	Capscrew	2	3
	a 181298	Dust Cap	1	1
	a 181266	Dust Cap	1	1

FOOTNOTES:

a Not Illustrated
b Refer to Table
c With Quick Disconnect Fittings
d → PENDING PER ECN 10594308

©2011 HYSTER COMPANY

NOTES

©2011 HYSTER COMPANY

AUXILIARY TUBE EXTENSIONS (FIGURE 11-11)

THREE STAGE FULL FREE-LIFT — WITHOUT QUICK DISCONNECT FITTINGS (S/N A614V02262H →)

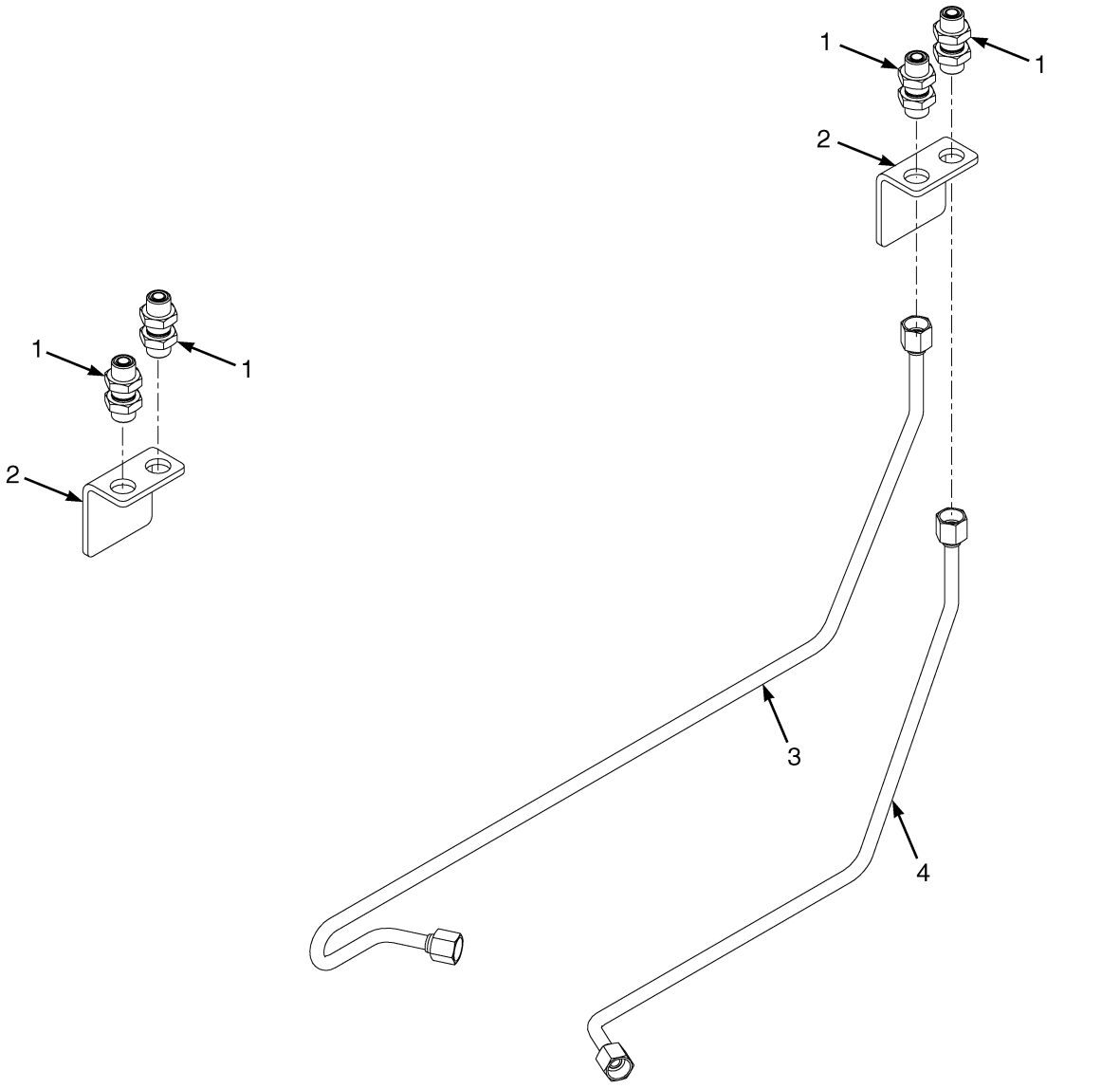

©2011 HYSTER COMPANY

AUXILIARY TUBE EXTENSIONS

THREE STAGE FULL FREE-LIFT – WITHOUT QUICK DISCONNECT FITTINGS (S/N A614V02262H →)

KEY:
A: A614 Three Function
B: A614 Four Function

ITEM	PART NO.	DESCRIPTION	QTY A	QTY B
1	816591	Fitting (Includes Nut)	2	4
2	1646850	Bracket	1	2
3	2095003	Tube Assy	1	1
4	2095003	Tube Assy	1	1
	a 2093830	Tube Assy (LH)	..	1
	a 2093829	Tube Assy (RH)	..	1

FOOTNOTES:

a Not Illustrated

©2011 HYSTER COMPANY

AUXILIARY TUBE EXTENSIONS (FIGURE 11-12)

THREE STAGE FULL FREE-LIFT — MANUAL HYDRAULICS WITH QUICK DISCONNECT FITTINGS (S/N A614V02262H →)

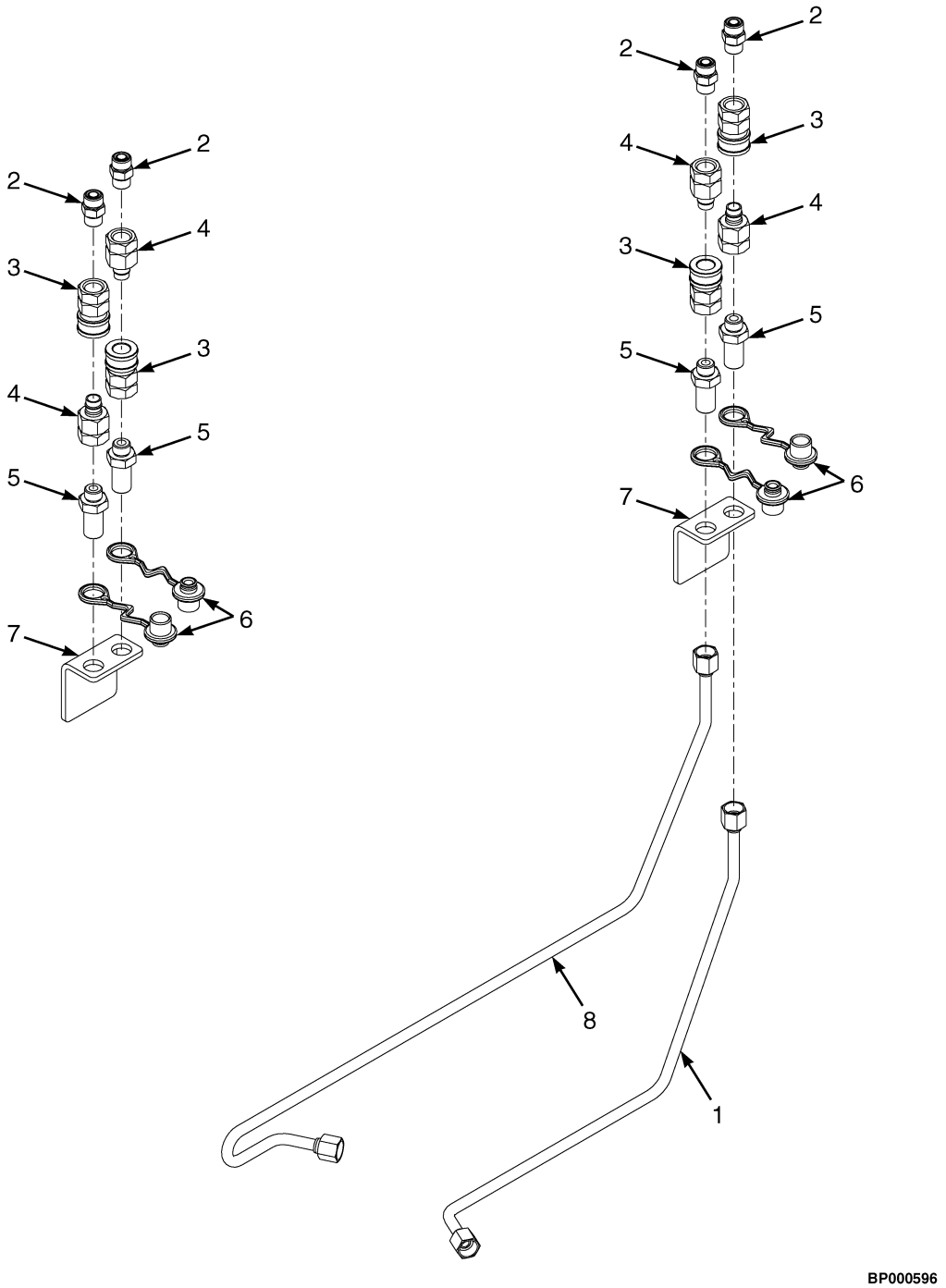

©2011 HYSTER COMPANY

AUXILIARY TUBE EXTENSIONS

THREE STAGE FULL FREE-LIFT – MANUAL HYDRAULICS WITH QUICK DISCONNECT FITTINGS (S/N A614V02262H →)

KEY:
A: A614 Three Function
B: A614 Four Function

ITEM	PART NO.	DESCRIPTION	QTY A	QTY B
1	2095003	Tube Assy	1	1
2	1473887	Fitting	2	4
3	1377953	Quick Disconnect Fitting	2	4
4	1377954	Fitting (Quick Disconnect)	2	4
5	1708365	Bulkhead (Fitting)	2	4
6	1708368	Dust Cover	2	4
7	1646850	Bracket	1	2
8	2095002	Tube Assy	1	1
	a 2093830	Tube Assy (LH)	..	1
	a 2093829	Tube Assy (RH)	..	1

FOOTNOTES:

a Not Illustrated

©2011 HYSTER COMPANY

AUXILIARY TUBE EXTENSIONS (FIGURE 11-13)

THREE STAGE FULL FREE-LIFT — E-HYDRAULICS WITH QUICK DISCONNECT FITTINGS (S/N A614V02262H →)

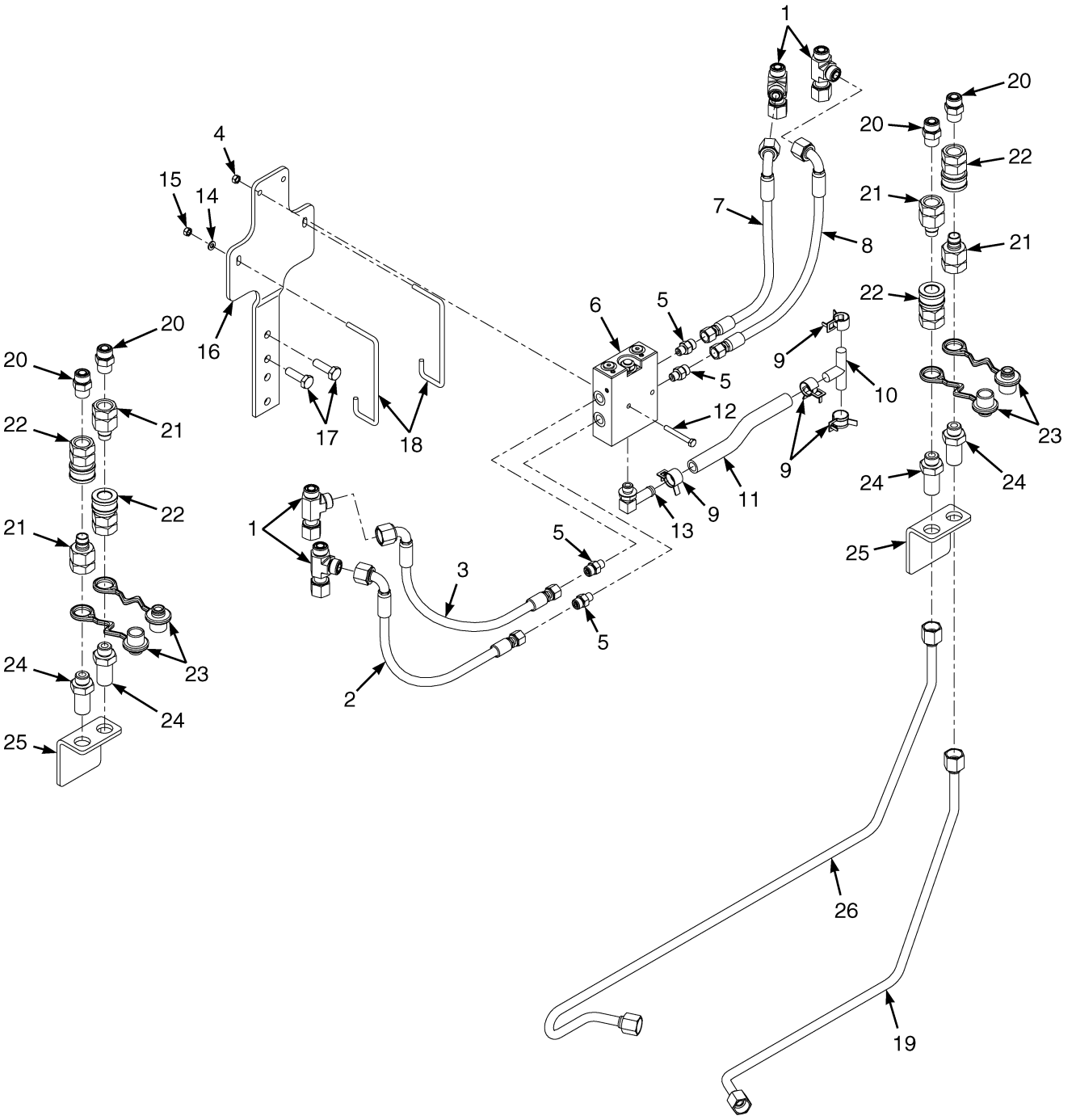

©2011 HYSTER COMPANY

AUXILIARY TUBE EXTENSIONS

THREE STAGE FULL FREE-LIFT – E-HYDRAULICS WITH QUICK DISCONNECT FITTINGS (S/N A614V02262H →)

KEY:
A: A614 Three Function
B: A614 Four Function

ITEM	PART NO.	DESCRIPTION	QTY A	QTY B
1	1487095	Fitting	2	4
2	4604682	Hose Assy	..	1
3	4604683	Hose Assy	..	1
4	302399	Nut	2	2
5	1486737	Fitting	2	4
6	2111754	Valve (Single Aux)	1	..
6	2111754	Valve (Dual Aux)	..	1
7	4604680	Hose Assy	1	1
8	4604683	Hose Assy	1	1
9	1527979	Hose Clamp	4	4
10	2046871	Fitting	1	1
11	1614069	Hose	1	1
12	292505	Capscrew	2	2
13	110178	Fitting	1	1
13	16483	O-Ring	1	1
14	1673754	Washer	2	2
15	302399	Nut	2	2
16	4013102	Bracket	1	1
17	1581588	Capscrew	2	2
18	4013097	Hook	2	2
19	2095003	Tube Assy	1	1
20	1473887	Fitting	2	4
21	1377954	Fitting (Quick Disconnect)	2	4
22	1377953	Quick Disconnect Fitting	2	4
23	1708368	Dust Cover	2	4
24	1708365	Bulkhead (Fitting)	2	4
25	1646850	Bracket	1	2
26	2095002	Tube Assy	1	1
	a 2093829	Tube Assy (RH)	..	1
	a 2093830	Tube Assy (LH)	..	1

FOOTNOTES:

a Not Illustrated

©2011 HYSTER COMPANY

AUXILIARY TUBE EXTENSIONS (FIGURE 11-14)

THREE STAGE FULL FREE LIFT WITH SIDE SHIFT FORK POSITIONER CARRIAGE — WITHOUT QUICK DISCONNECT FITTINGS (S/N A614V02262H →)

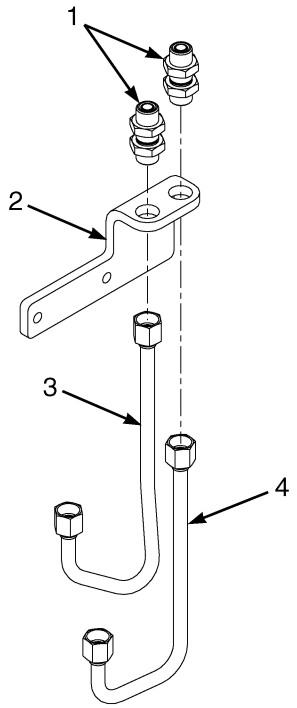

BP000609

ITEM	PART NO.	DESCRIPTION	QTY
1	816591	Fitting (Includes Nut)	2
2	1649764	Bracket	1
3	2093830	Tube Assy	1
4	2093829	Tube Assy	1

©2011 HYSTER COMPANY

NOTES

©2011 HYSTER COMPANY

AUXILIARY TUBE EXTENSIONS (FIGURE 11-15)

THREE STAGE FULL FREE LIFT WITH SIDE SHIFT FORK POSITIONER CARRIAGE — MANUAL HYDRAULICS WITH QUICK DISCONNECT FITTINGS (S/N A614V02262H →)

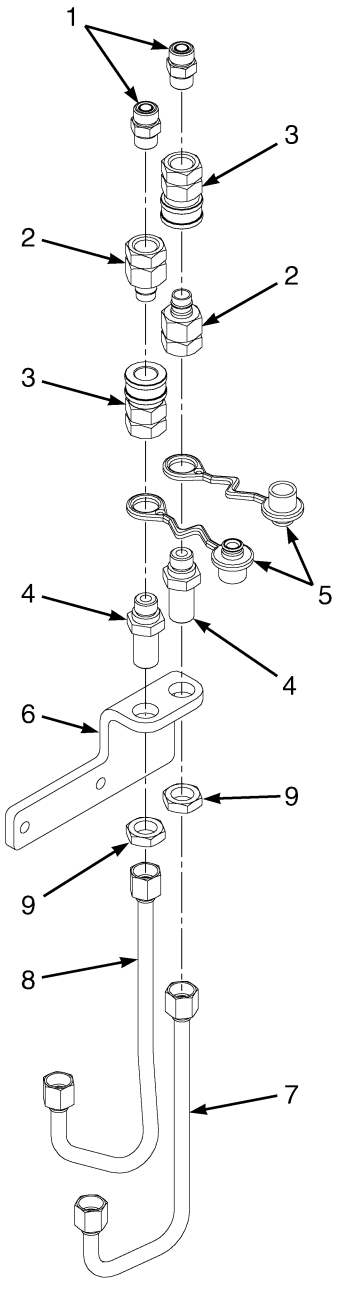

BP000607

©2011 HYSTER COMPANY

AUXILIARY TUBE EXTENSIONS

THREE STAGE FULL FREE LIFT WITH SIDE SHIFT FORK POSITIONER CARRIAGE – MANUAL HYDRAULICS WITH QUICK DISCONNECT FITTINGS (S/N A614V02262H →)

ITEM	PART NO.	DESCRIPTION	QTY
1	1473887	Fitting	2
2	1377954	Fitting (Quick Disconnect)	2
3	1377953	Quick Disconnect Fitting	2
4	1708365	Bulkhead	2
5	1708368	Dust Cover	2
6	1649764	Bracket	1
7	2093830	Tube Assy	1
8	2093829	Tube Assy	1

©2011 HYSTER COMPANY

AUXILIARY TUBE EXTENSIONS (FIGURE 11-16)

THREE STAGE FULL FREE LIFT WITH SIDE SHIFT FORK POSITIONER CARRIAGE — E-HYDRAULICS WITH QUICK DISCONNECT FITTINGS (S/N A614V02262H →)

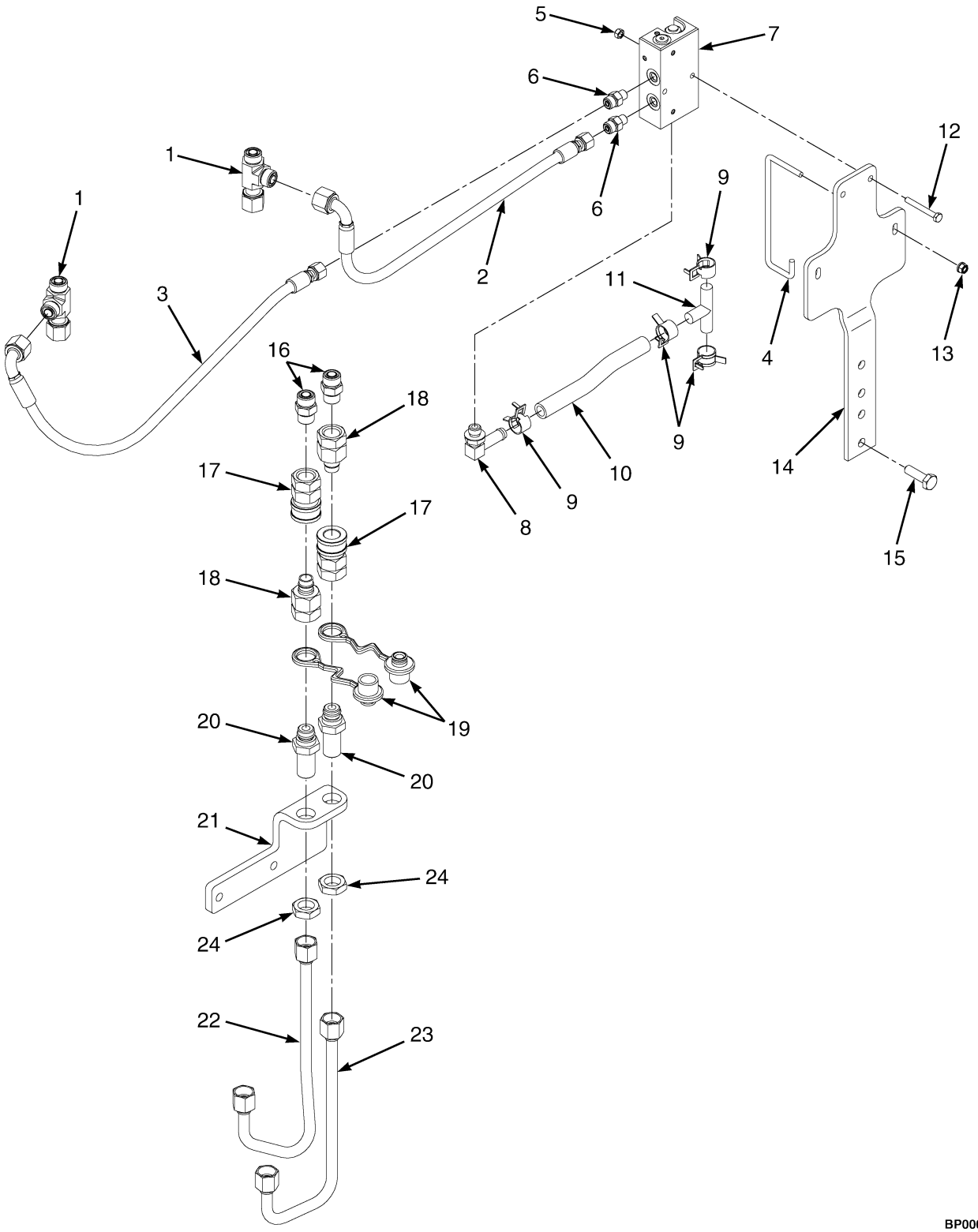

©2011 HYSTER COMPANY

AUXILIARY TUBE EXTENSIONS

THREE STAGE FULL FREE LIFT WITH SIDE SHIFT FORK POSITIONER CARRIAGE – E-HYDRAULICS WITH QUICK DISCONNECT FITTINGS (S/N A614V02262H →)

ITEM	PART NO.	DESCRIPTION	QTY
1	1487095	Fitting	2
2	4604888	Hose Assy	1
3	4604683	Hose Assy	1
4	4013104	Hook	2
5	302399	Nut	2
6	1486737	Fitting	2
7	2111754	Valve	1
8	110178	Fitting	1
9	1527979	Hose Clamp	4
10	1614069	Hose	1
11	2046871	Fitting	1
12	292505	Capscrew	2
13	302399	Nut	2
14	4013102	Bracket	1
15	1581588	Capscrew	2
16	1473887	Fitting	2
17	1377953	Quick Disconnect Fitting	2
18	1377954	Fitting (Quick Disconnect)	2
19	1708368	Dust Cover	2
20	1708365	Bulkhead	2
21	1649764	Bracket	1
22	2093830	Tube Assy	1
23	2093829	Tube Assy	1

©2011 HYSTER COMPANY

NOTES

©2011 HYSTER COMPANY

12 OPTIONS

SECTION 12
OPTIONS

DESCRIPTION	PAGE
ACCUMULATOR	12-10
BACK-UP ALARM	12-6
DUAL MIRRORS	
WITH CAB	12-8
WITH OVERHEAD GUARD	12-9
FIRE EXTINGUISHER	
WITH CAB	12-3
WITH OVERHEAD GUARD	12-4
FORK POSITIONER ASSEMBLY	12-14
FORK POSITIONER CYLINDER	12-16
GM LPG REGULATOR DRAIN KIT	12-26
HANG-ON SIDE-SHIFT CARRIAGE	
WITH FORK POSITIONER AND BACKREST	12-12
LIFTING EYE	12-28
SIDE-SHIFT ASSEMBLY	12-18
WITHOUT FORK POSITIONER (S/N A613V03724J →) (S/N A613V03724J →)	12-22
SIDE-SHIFT CYLINDER	12-20
WITHOUT FORK POSITIONER (PENDING PER ECN 106964 →)	12-24
STROBE LIGHT	
LED	12-2

©2011 HYSTER COMPANY

STROBE LIGHT (FIGURE 12-1)

LED

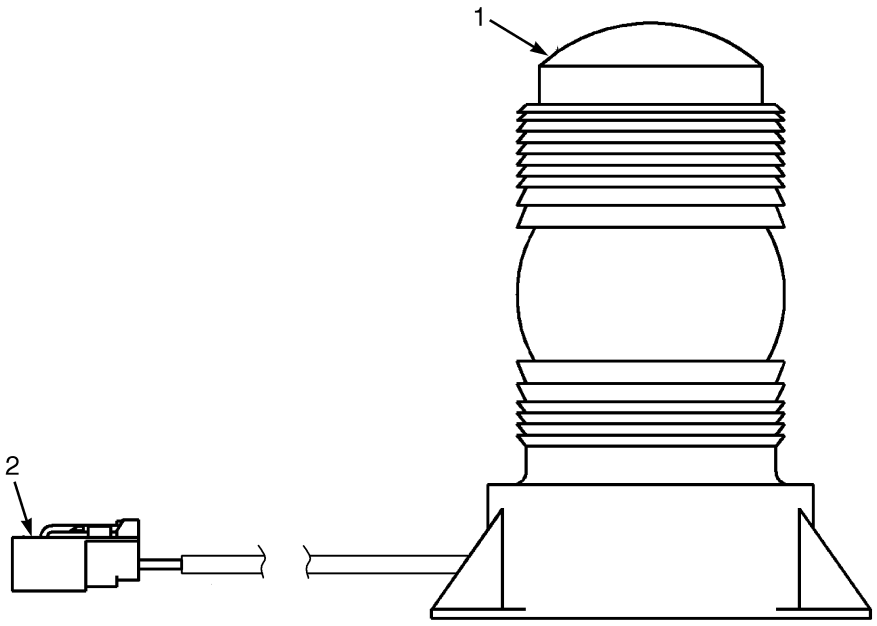

BP000363

ITEM	PART NO.	DESCRIPTION	QTY
	1654013	Strobe Light Assembly	1
1	1652290	Strobe Light (LED)	1
2	1463138	Terminal Pin	1
2	1561559	Connector	1
2	1561755	Connector (Secondary Lock)	1

©2011 HYSTER COMPANY

FIRE EXTINGUISHER (FIGURE 12-2)
WITH CAB

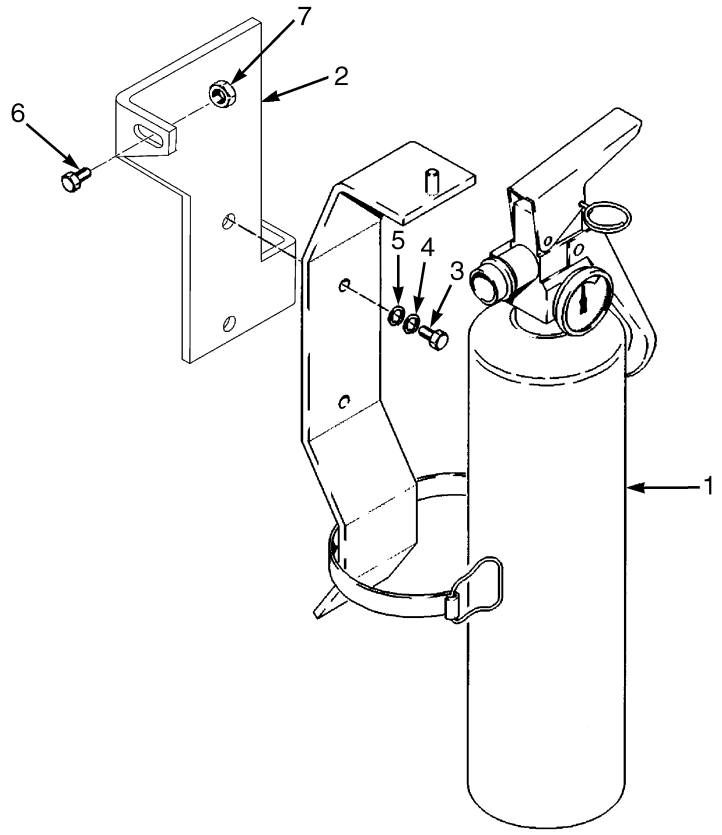

BP000252

ITEM	PART NO.	DESCRIPTION	QTY
1	146540	Fire Extinguisher	1
1	1561749	Bracket	1
2	1582141	Bracket	1
3	296507	Screw	2
4	292679	Washer	2
5	320155	Washer	2
6	1583611	Capscrew	1
7	1502543	Nut (Flange)	1

©2011 HYSTER COMPANY

FIRE EXTINGUISHER (FIGURE 12-3)
WITH OVERHEAD GUARD

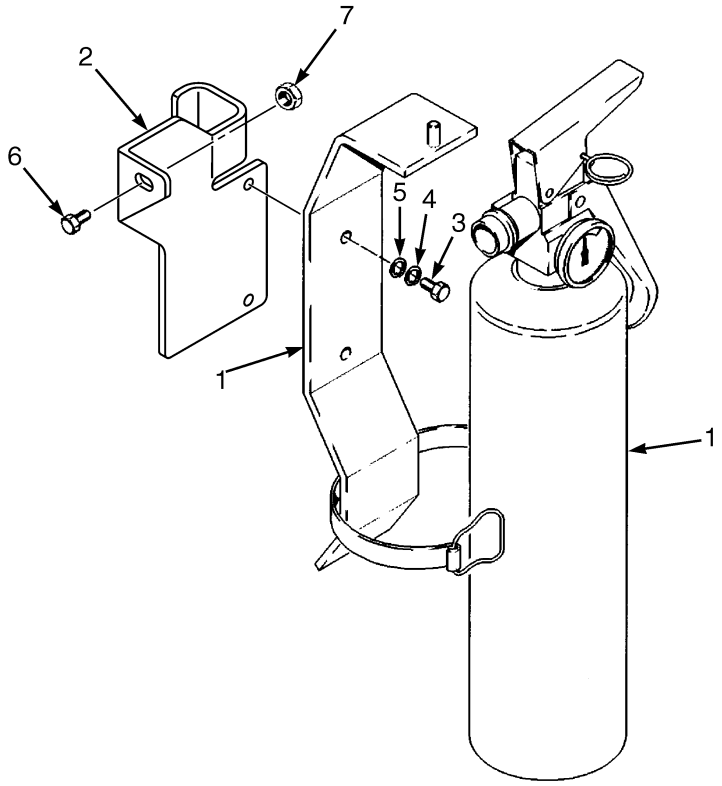

BP000354

ITEM	PART NO.	DESCRIPTION	QTY
1	146540	Fire Extinguisher	1
1	1561749	Bracket	1
2	1641394	Bracket	1
3	296507	Screw	2
4	292679	Washer	2
5	320155	Washer	2
6	1583611	Capscrew	1
7	1502543	Nut (Flange)	1

©2011 HYSTER COMPANY

NOTES

©2011 HYSTER COMPANY

BACK-UP ALARM (FIGURE 12-4)

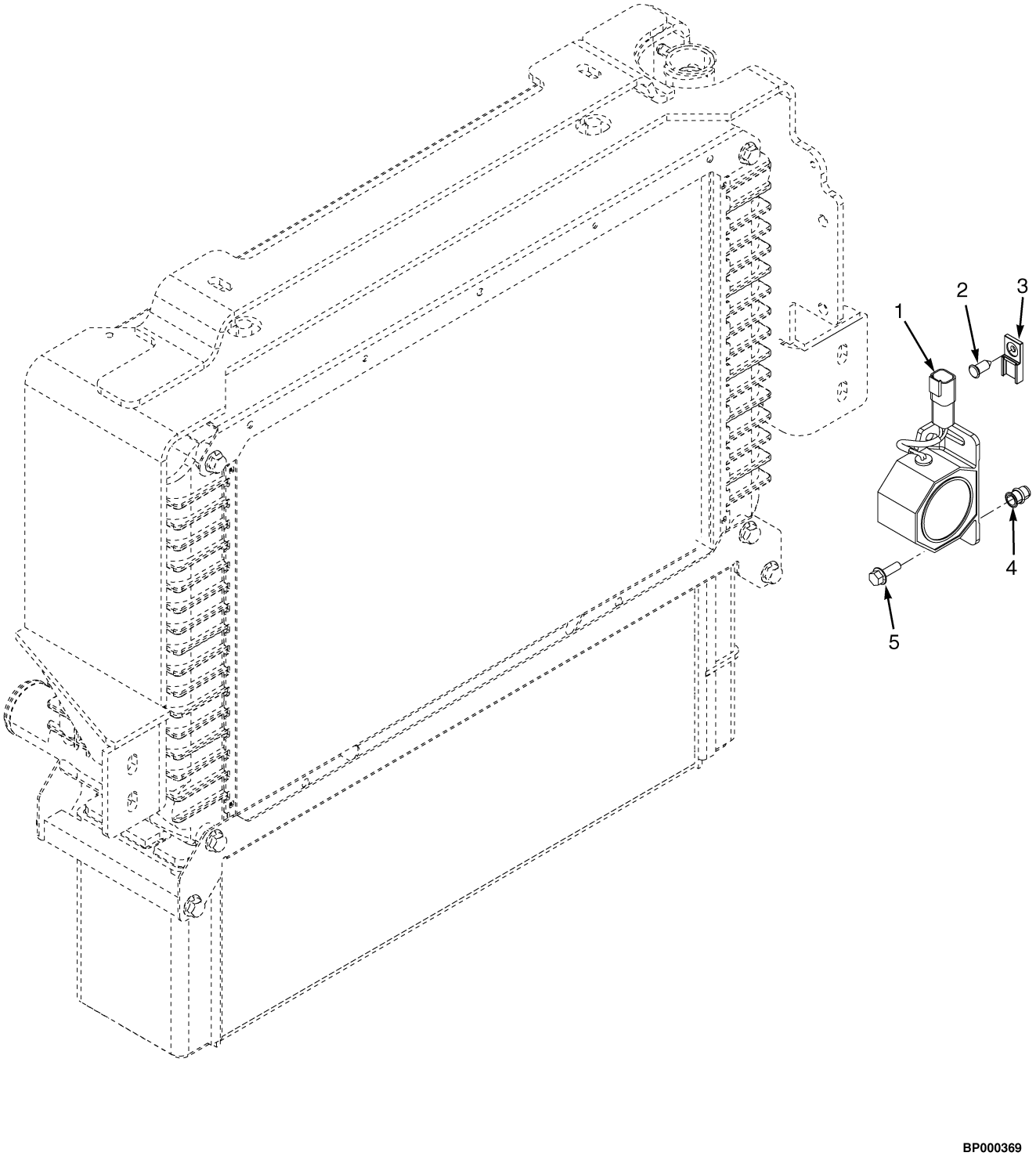

BP000369

©2011 HYSTER COMPANY

BACK-UP ALARM

ITEM	PART NO.	DESCRIPTION	QTY
1	2064929	Back-Up Alarm (82-102 dbA)	1
2	1582464	Fastener	1
3	1500912	Clip	1
4	1531001	Insert	2
5	1527877	Capscrew	2

©2011 HYSTER COMPANY

DUAL MIRRORS (FIGURE 12-5)
WITH CAB

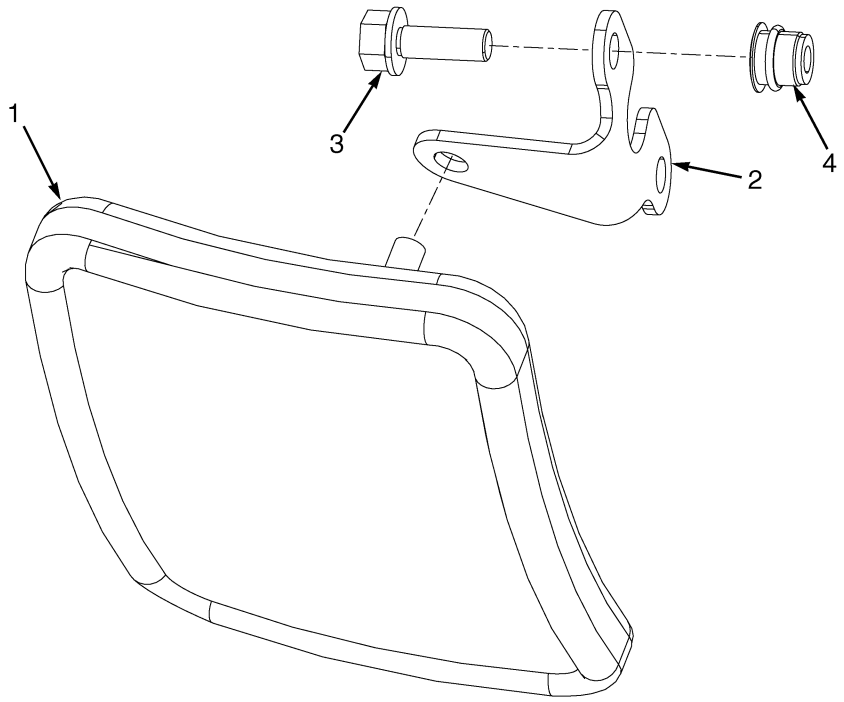

HP000896

ITEM	PART NO.	DESCRIPTION	QTY
1	4009488	Mirror	2
2	1579412	Bracket	2
3	1583611	Capscrew	4
4	1531557	Insert	4

©2011 HYSTER COMPANY

DUAL MIRRORS (FIGURE 12-6)
WITH OVERHEAD GUARD

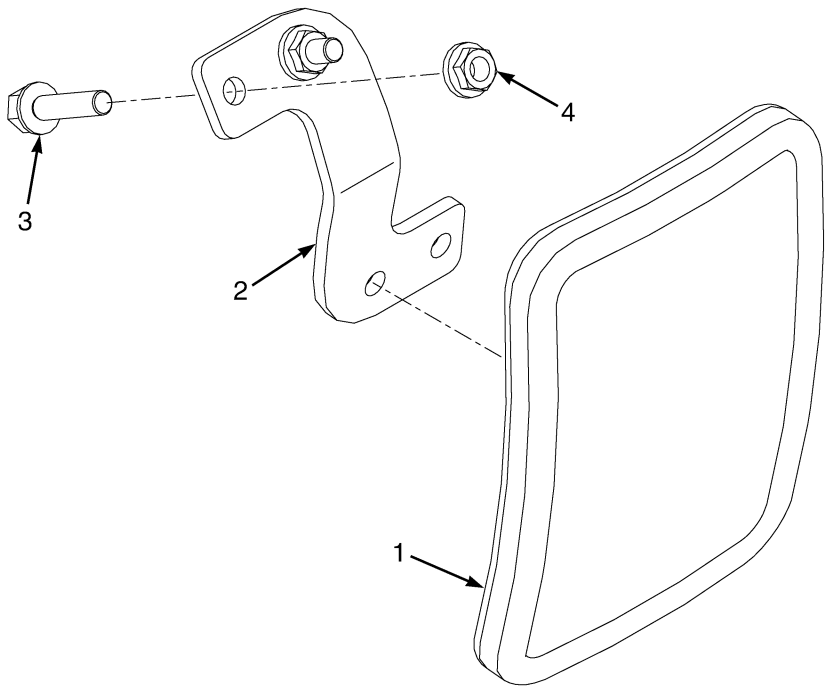

ITEM	PART NO.	DESCRIPTION	QTY
1	4009488	Mirror	2
2	1656215	Bracket (RH)	1
2	1656216	Bracket (LH)	1
3	1583611	Capscrew	4
4	1586430	Nut	4

©2011 HYSTER COMPANY

ACCUMULATOR (FIGURE 12-7)

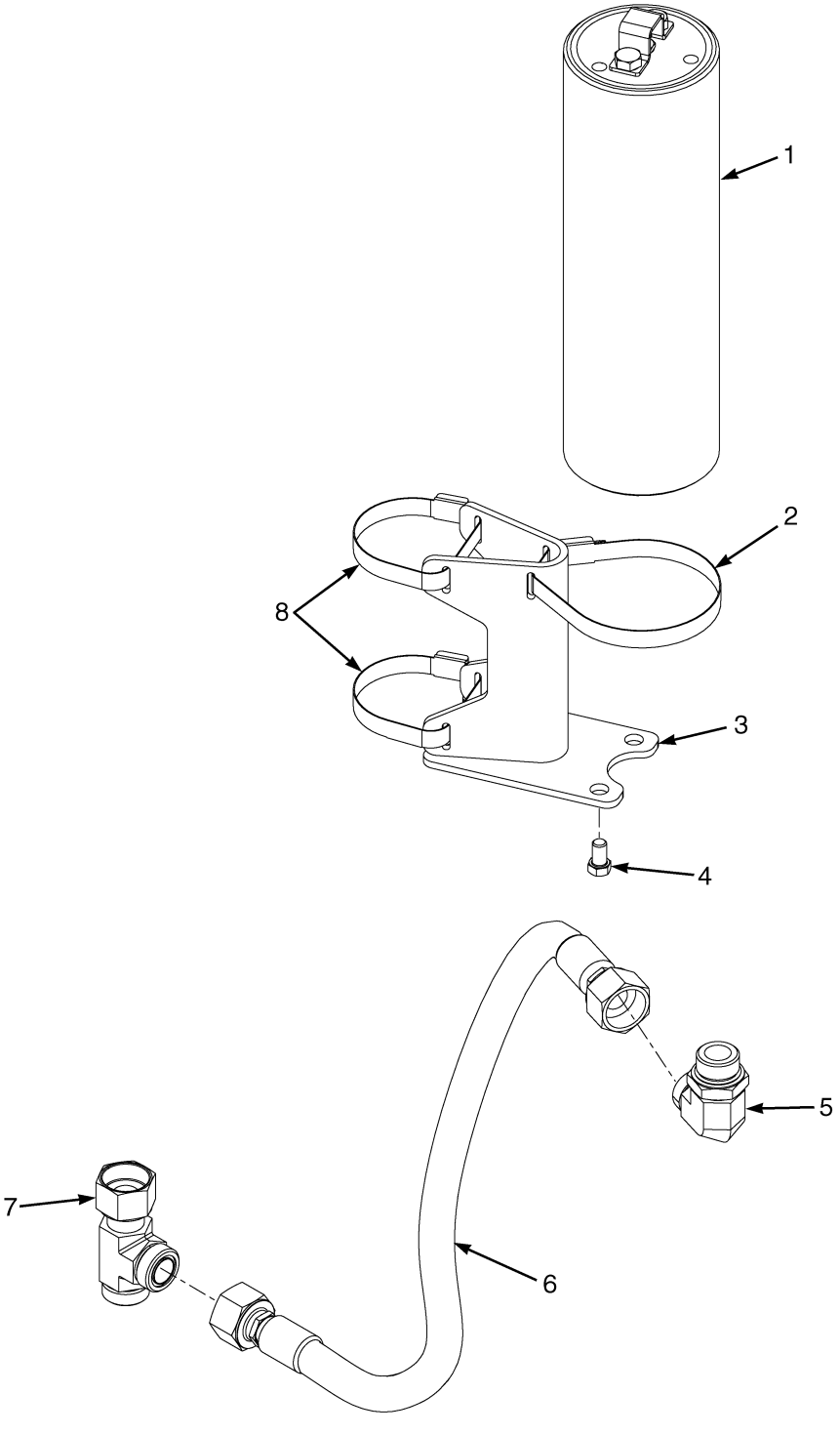

©2011 HYSTER COMPANY

ACCUMULATOR

ITEM	PART NO.	DESCRIPTION	QTY
1	1651275	Accumulator	1
2	1611564	Clamp	1
3	1651147	Bracket	1
3	1708890	Bracket Wldmt (Alternate Part)	1
4	16642	Capscrew	2
5	1487075	Fitting	1
5	16487	O-Ring	1
5	244167	O-Ring	1
6	2096180	Hose	1
7	1487099	Fitting	1
7	244167	O-Ring	2
8	1661416	Clamp	2

©2011 HYSTER COMPANY

HANG-ON SIDE-SHIFT CARRIAGE (FIGURE 12-8)
WITH FORK POSITIONER AND BACKREST

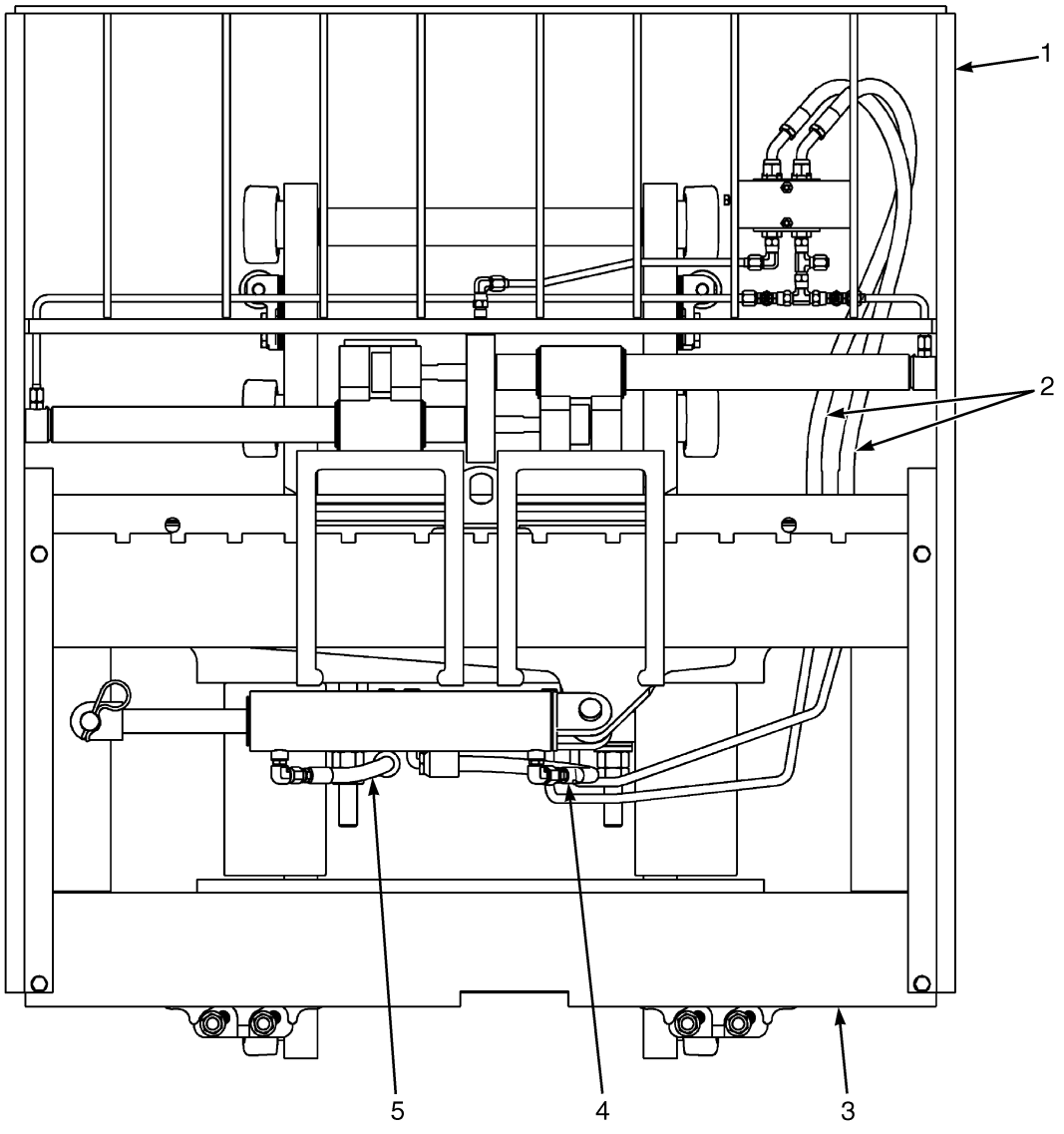

©2011 HYSTER COMPANY

HANG-ON SIDE-SHIFT CARRIAGE
WITH FORK POSITIONER AND BACKREST

KEY:
A: Two Stage Limited Free-Lift
B: Three Stage Full Free-Lift

ITEM	PART NO.	DESCRIPTION	QTY A	QTY B
	2096678	Side-Shift Carriage	1	1
1	1665416	Fork Positioner Assy (☞Figure 12-9)	1	1
2	2096512	Hose Assy	2	2
3	1665216	Side-Shift Carriage (☞Figure 12-11)	1	1
3	**abc** 4612189	Hang-ON Side Shift (☞Figure 12-13)	1	1
4	2096509	Hose Assy	1	..
4	**ab** 4612145	Hose Assy	1	..
4	2096511	Hose Assy	..	1
4	**ac** 4612147	Hose Assy	..	1
5	2096508	Hose Assy	1	..
5	**ab** 4612144	Hose Assy	1	..
5	2096510	Hose Assy	..	1
5	**ac** 4612147	Hose Assy	..	1

FOOTNOTES:

a Without Fork Positioner
b S/N A613V03724J →
c S/N A614V02455J →

©2011 HYSTER COMPANY

FORK POSITIONER ASSEMBLY (FIGURE 12-9)

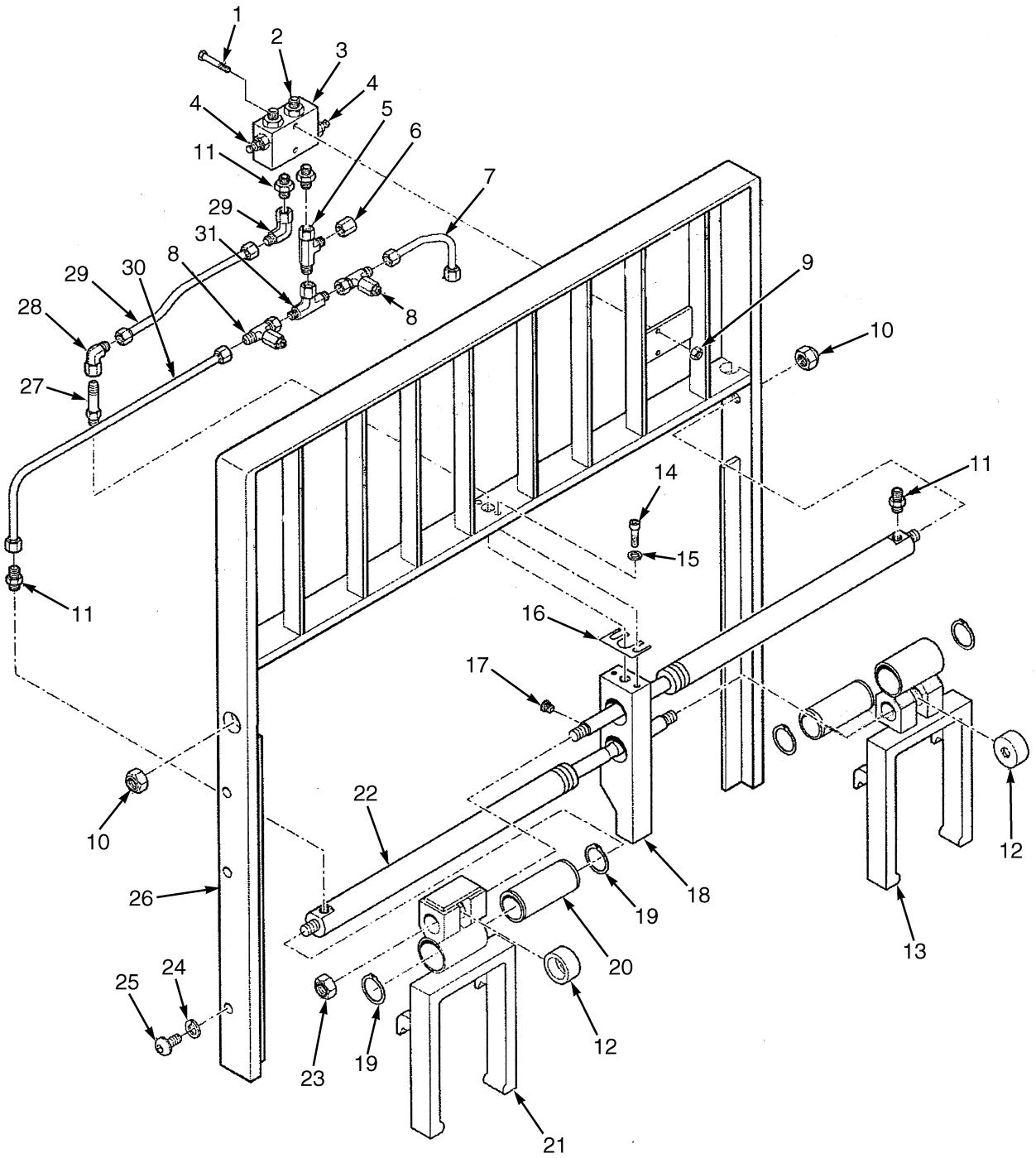

BP000373

©2011 HYSTER COMPANY

FORK POSITIONER ASSEMBLY

ITEM	PART NO.	DESCRIPTION	QTY
	1665416	Fork Positioner Assy	1
1	1665002	Capscrew	2
2	1664987	Fitting	2
3	1664995	Valve Block	1
4	1665009	Valve	2
5	1664998	Fitting	1
6	1665005	Nut	1
7	1665004	Tube	1
8	1665001	Fitting	2
8	1665092	T-Fitting	1
8	1665093	O-Ring	1
8	1665094	Setscrew	1
8	1665095	Cap	1
8	1665096	Nut	1
9	1665003	Nut	2
10	1664990	Nut	2
11	1664996	Fitting	4
12	1664983	Lug	2
13	1665420	Fork Frame (LH)	1
14	1664989	Capscrew	2
15	1664988	Lockwasher	2
16	1664982	Shim	1
17	1664991	Plug	1
18	1664981	Plate	1
19	1665008	Snap Ring	4
20	1664984	Bushing	2
21	1665419	Fork Frame (RH)	1
22	1665418	Cylinder Assy (☞Figure 12-10)	2
23	1665000	Nut	2
24	1665421	Lockwasher	6
25	1665422	Capscrew	6
26	1665417	Frame	1
27	1665010	Fitting	1
28	1664997	Fitting	2
29	1665424	Tube	1
30	1665423	Tube	1
31	1664999	Fitting	1

©2011 HYSTER COMPANY

FORK POSITIONER CYLINDER (FIGURE 12-10)

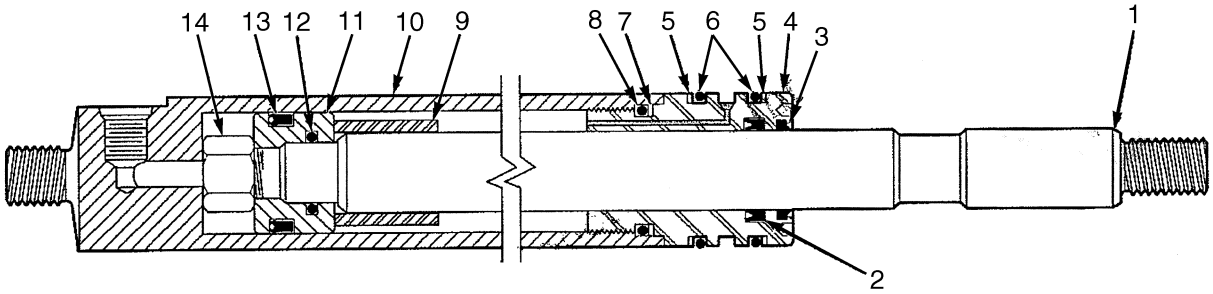

BP000374

ITEM	PART NO.	DESCRIPTION	QTY
	1665418	Cylinder Assy	1
1	1665427	Rod	1
2	. . . . .	Rod Seal	1
3	. . . . .	Wiper	1
4	1665078	Retainer	1
5	. . . . .	Back Up Ring	2
6	. . . . .	O-Ring	2
7	. . . . .	Back Up Ring	1
8	. . . . .	O-Ring	1
9	1665079	Spacer	1
10	. . . . .	Shell	1
11	1665077	Piston	1
12	. . . . .	O-Ring	1
13	. . . . .	Piston Seal	1
14	1665000	Nut	1
	1665089	Kit-Seal	1

©2011 HYSTER COMPANY

NOTES

©2011 HYSTER COMPANY

SIDE-SHIFT ASSEMBLY (FIGURE 12-11)

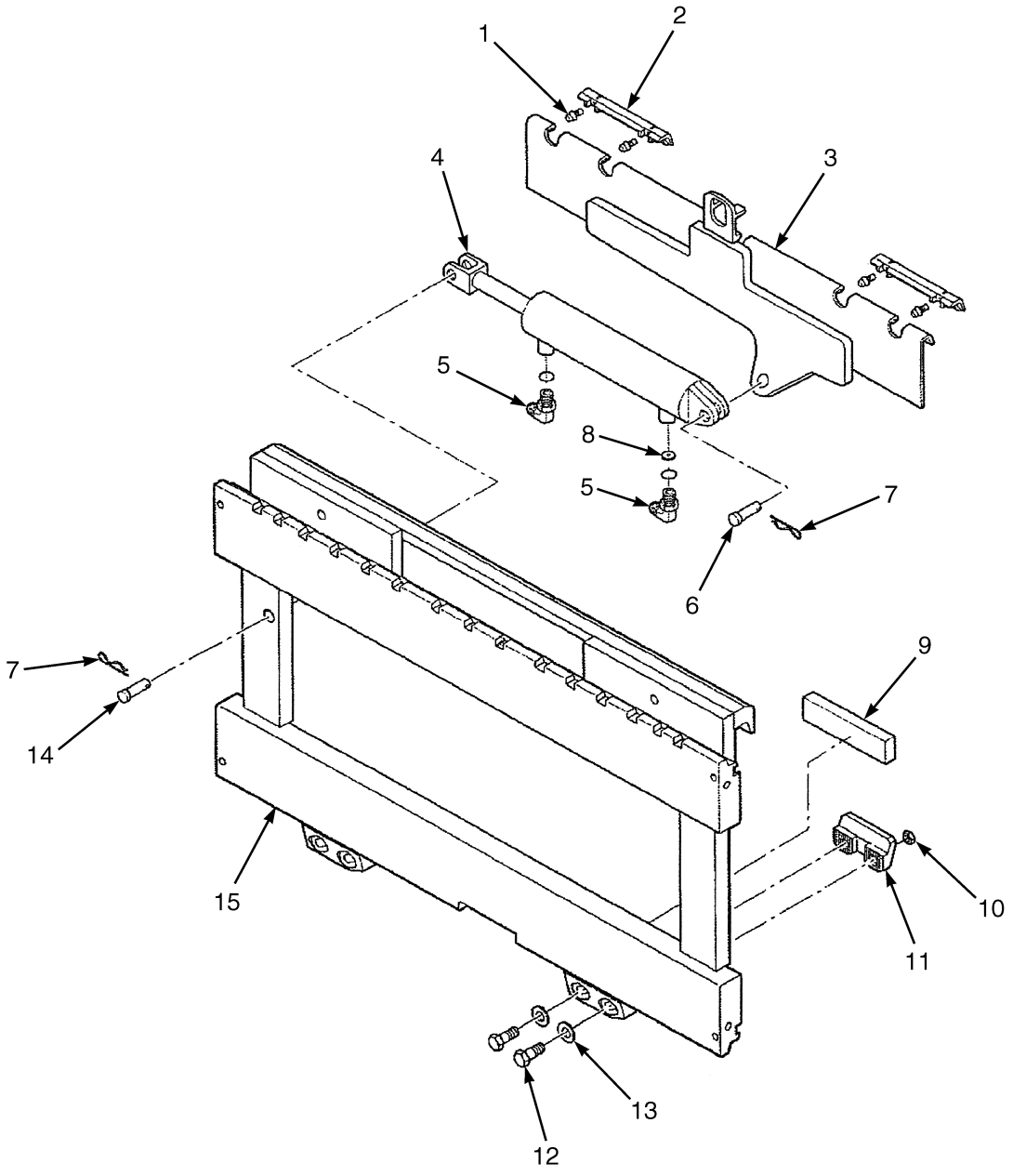

©2011 HYSTER COMPANY

SIDE-SHIFT ASSEMBLY

ITEM	PART NO.	DESCRIPTION	QTY
	1665216	Side-Shift Carriage	1
1	1664896	Grease Fitting	4
2	1664897	Bearing	2
3	1664898	Bracket	1
4	1664901	Cylinder Assy (☞Figure 12-12)	1
5	1664899	Fitting	2
5	. . . . .	O-Ring	1
6	1664904	Pin	1
7	1664903	Cotter Pin	2
8	1664912	Thrust Washer (Restrictor)	1
9	1664909	Bearing (Lower)	3
10	1664902	Nut	4
11	1664910	Hook	2
12	1664908	Capscrew	4
13	221775	Washer	4
14	1664911	Pin	1
15	. . . . .	Faceplate	1
	1664913	Kit-Service	1

©2011 HYSTER COMPANY

SIDE-SHIFT CYLINDER (FIGURE 12-12)

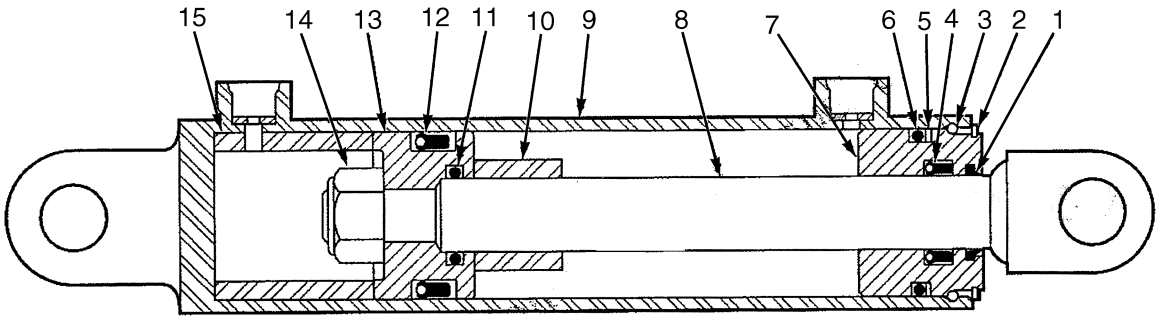

BP000375

ITEM	PART NO.	DESCRIPTION	QTY
	1664901	Cylinder Assy	1
1	1664965	Wiper	1
2	1664964	Snap Ring	1
3	1664963	Retaining Ring	1
4	1664962	Seal	1
5	1664961	Back-UP Ring	1
6	1664960	O-Ring	1
7	1664959	Retainer	1
8	. . . . .	Rod	1
9	. . . . .	Shell	1
10	. . . . .	Spacer (Rod)	1
11	1664955	O-Ring	1
12	1664953	Seal	1
13	1664956	Piston	1
14	1664916	Nut	1
15	1664954	Spacer (Head)	1
	1520671	Kit-Seal	1

©2011 HYSTER COMPANY

NOTES

©2011 HYSTER COMPANY

SIDE-SHIFT ASSEMBLY (FIGURE 12-13)

WITHOUT FORK POSITIONER (S/N A613V03724J →) (S/N A613V03724J →)

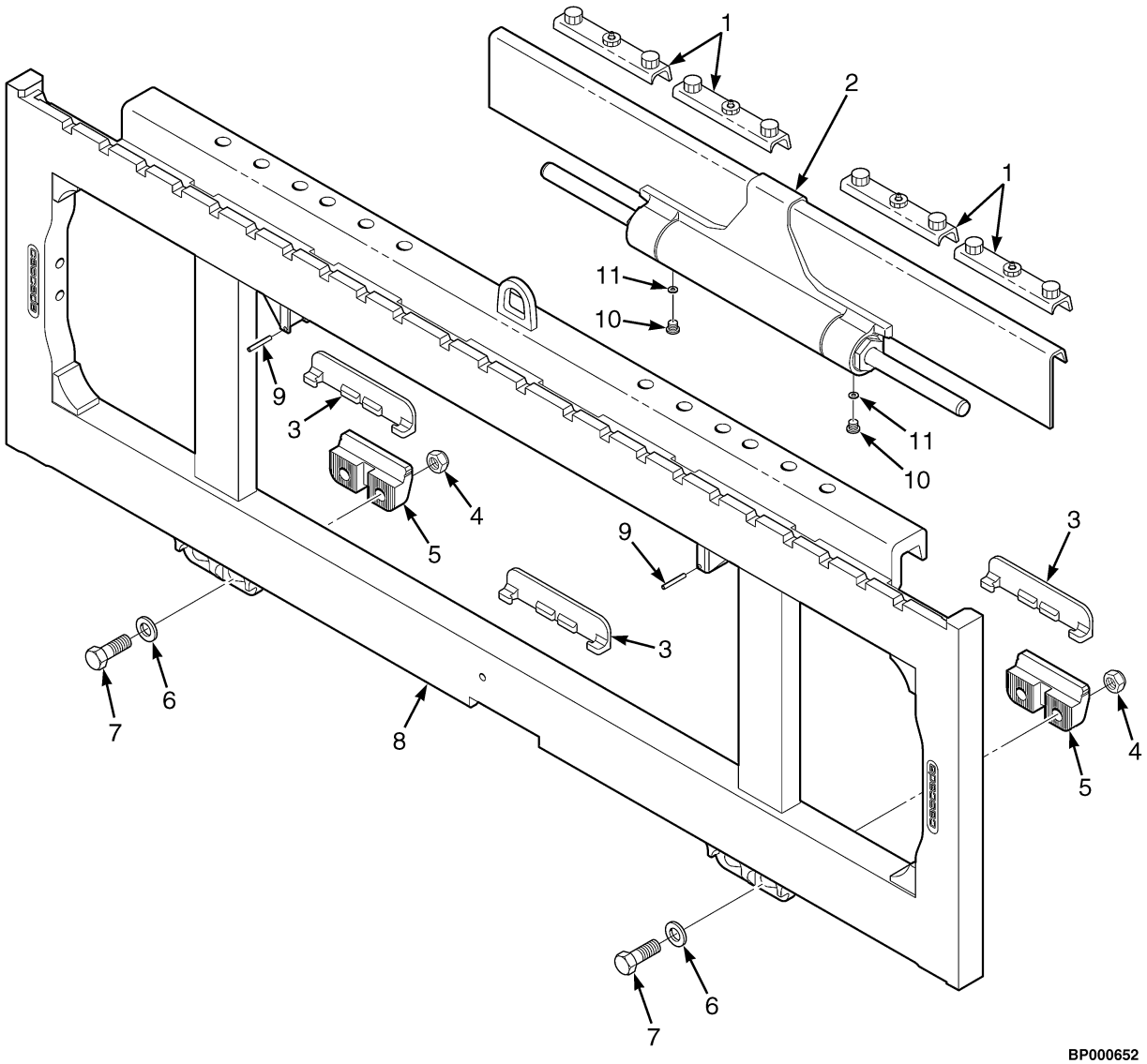

©2011 HYSTER COMPANY

SIDE-SHIFT ASSEMBLY

WITHOUT FORK POSITIONER (S/N A613V03724J →) (S/N A613V03724J →)

ITEM	PART NO.	DESCRIPTION	QTY
	4612189	Hang-ON Side Shift	1
1	4031747	Bearing	4
2	4031741	Cylinder Assy (☞Figure 12-14)	1
3	4009601	Bearing	3
4	4031749	Nut	4
5	4031750	Hook	2
6	1694170	Washer	4
7	4031751	Capscrew	4
8	4031752	Frame	1
9	4031754	Roll Pin	2
10	4031755	Plug	2
11	1694124	Washer	1
11	4017725	Restrictor	2
	4031748	Kit-Lower Hook	1

©2011 HYSTER COMPANY

SIDE-SHIFT CYLINDER (FIGURE 12-14)
WITHOUT FORK POSITIONER (PENDING PER ECN 106964 →)

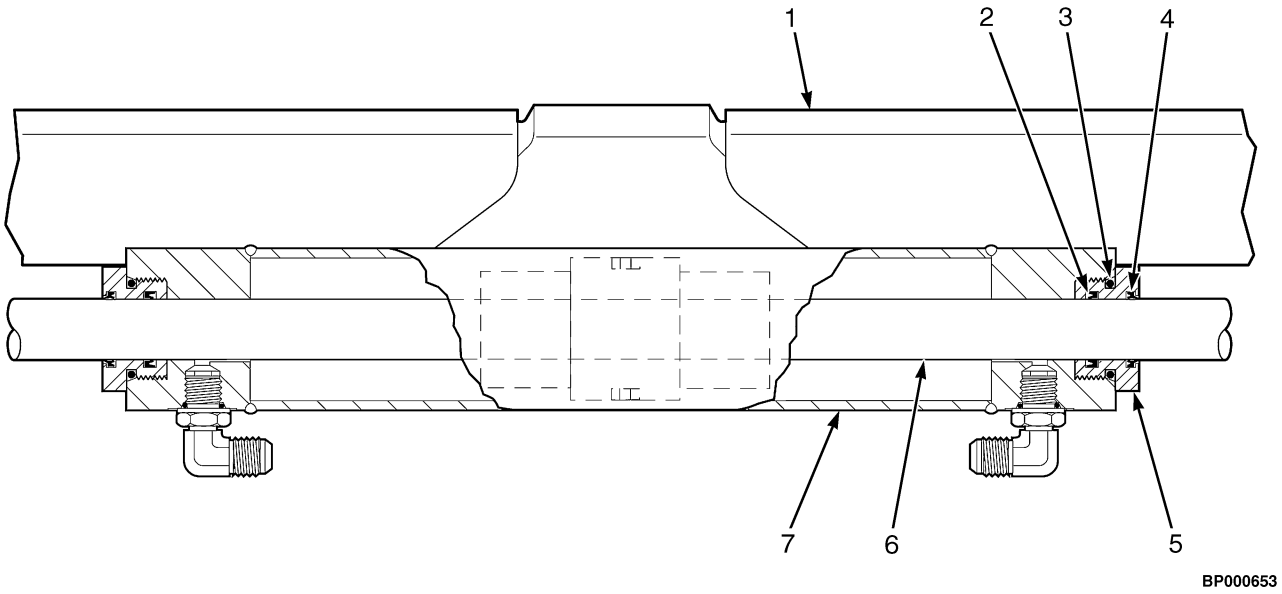

©2011 HYSTER COMPANY

SIDE-SHIFT CYLINDER

WITHOUT FORK POSITIONER (PENDING PER ECN 106964 →)

ITEM	PART NO.	DESCRIPTION	QTY
1	4031741	Cylinder Assy	1
2	4031742	Rod Seal	2
3	4031743	O-Ring	2
4	4031744	Rod Wiper	2
5	4031745	Retainer	2
6	. . . . .	Rod	1
7	. . . . .	Cylinder Shelf	1
8	4031746	Kit-Seal	1

©2011 HYSTER COMPANY

GM LPG REGULATOR DRAIN KIT (FIGURE 12-15)

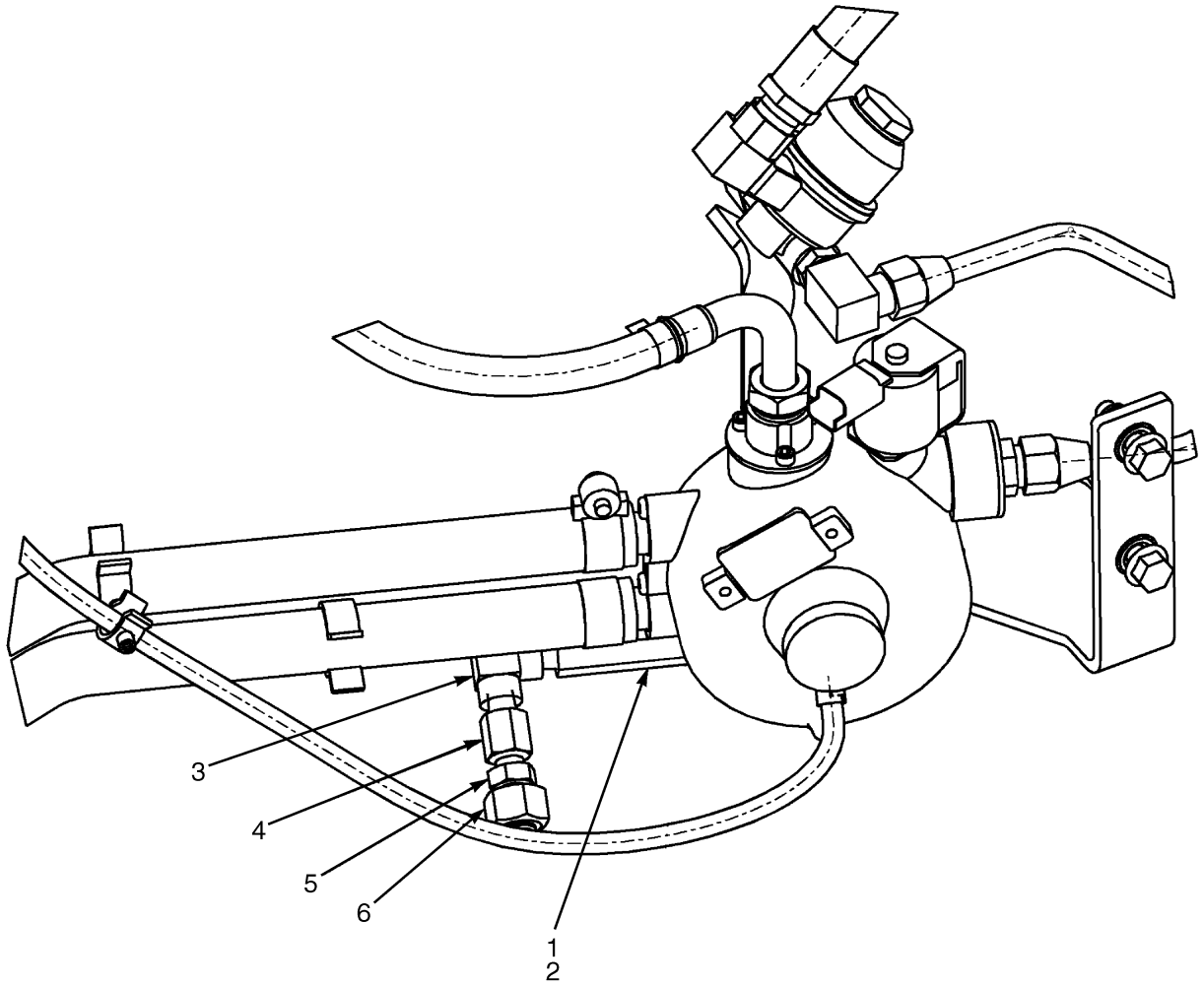

BP000396

©2011 HYSTER COMPANY

GM LPG REGULATOR DRAIN KIT

ITEM	PART NO.	DESCRIPTION	QTY
	1664940	Kit-Service (GM LPG regulator Drain GM2.4L and 4.32)	1
1	1652140	Fitting	1
2	16481	O-Ring	1
3	69392	Fitting	1
4	28584	Fitting	1
5	1488404	Fitting	1
6	1529014	Fitting	1

©2011 HYSTER COMPANY

LIFTING EYE (FIGURE 12-16)

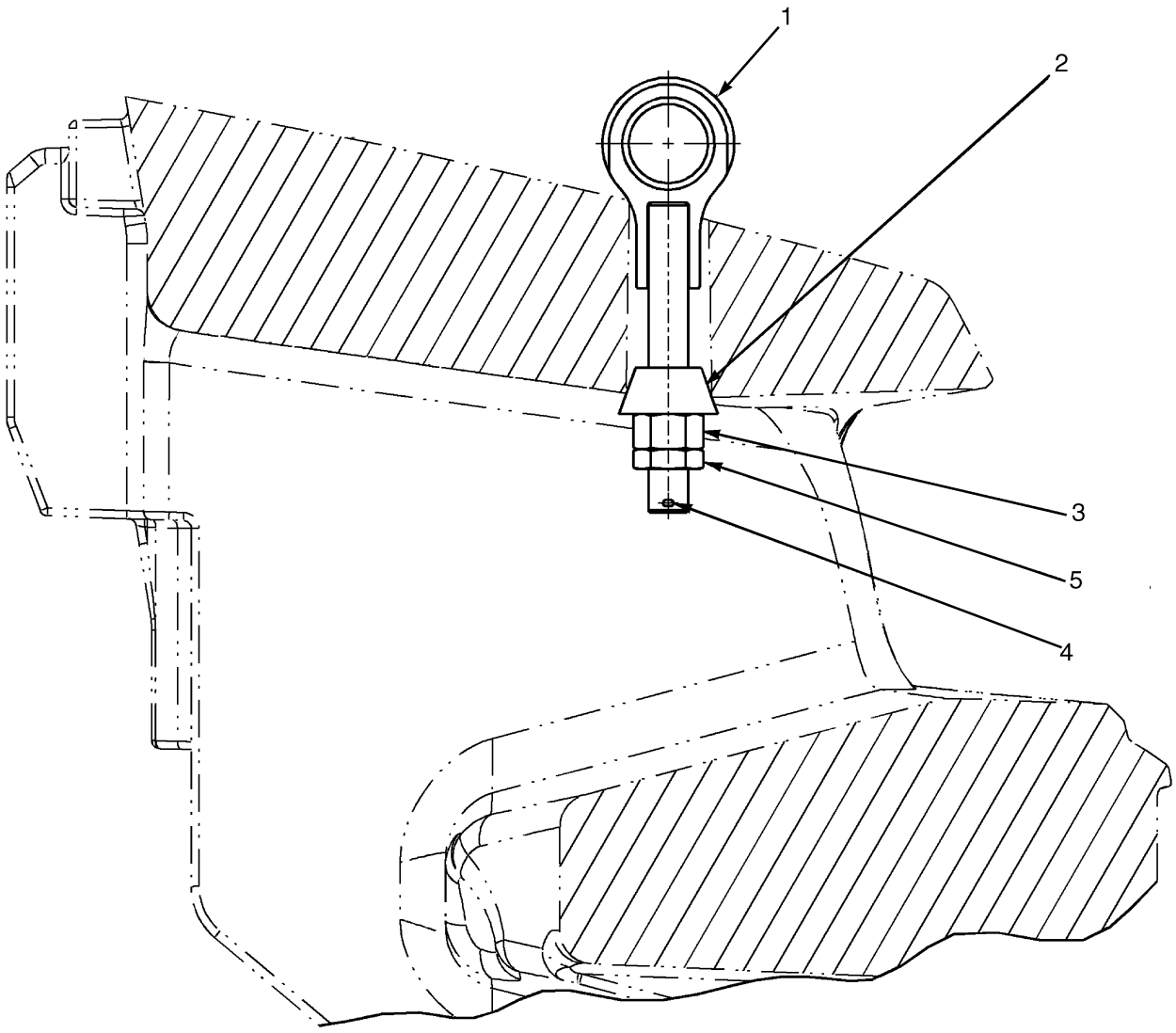

BP000445

©2011 HYSTER COMPANY

LIFTING EYE

ITEM	PART NO.	DESCRIPTION	QTY
1	1651797	Eyebolt	1
2	1474318	Anchor	1
3	292661	Nut	1
4	15246	Cotter Pin	1
5	1593341	Nut	1

©2011 HYSTER COMPANY

NOTES

©2011 HYSTER COMPANY

13 FIELD CONVERSION KITS

SECTION 13
FIELD CONVERSION KITS

DESCRIPTION	PAGE
ADD-ON OPTION KITS	13-3
ATTACHMENT MOUNTING KITS	13-2
AUXILIARY TUBE EXTENSION KITS	13-5
BRAKE AND INCHING PEDAL CONVERSION	13-2
E-HYDRAULIC CONTROL CONVERSION KITS	
→ S/N J006V02753H EXC. 02721	13-4
S/N J006V02754H → INC. 02721	13-5
HEADER HOSE CONVERSION KITS	
THREE STAGE FULL FREE-LIFT	13-7
TWO STAGE LIMITED FREE-LIFT	13-6
HYDRAULIC CONTROL CONVERSIONS	
MANUAL HYDRAULICS	13-5
LIGHT CONVERSION KITS	13-7
MISCELLANEOUS CONVERSION KITS	13-4
REPLACEMENT KITS	13-8
SEAT CONVERSION KITS	13-3

©2011 HYSTER COMPANY

ATTACHMENT MOUNTING KITS

DESCRIPTION	PART NUMBER
Kit-Attaching Parts (Single Block Handler, Std Carriage, 2 STG LFL Class IV)	**c**1664917
Kit-Attaching Parts (Single Block Handler, 3 Stg FFL, Class IV Std Carriage)	1664918
Kit-Attaching Parts (Dual Block Handler, Std Carriage, 2 Stg LFL Class IV)	**g**1664919
Kit-Attaching Parts (Dual Block Handler, 3 Stg FFl, Class IV Std Carriage)	**n**1664920
Kit-Attaching Parts (Dual Block Handler, Std Carriage 2 Stg LFL, Class IV)	**f**1664921
Kit-Attaching Parts (Dual Block Handler, 3 Std FFL, Class IV Std Carriage)	**p**1664922
Kit-Attaching Parts (SS Pulp Bale Clamp, Std Carriage, 2 Stg LFL, Class IV)	**a**1664925
Kit-Attaching Parts (SS Pulp Bale Clamp, Std Carriage. 3 Stg FFL, Class IV)	**m**1664926
Kit-Attaching Parts (Pivot Arm Roll Clamp, Std Carriage, 2 LFL Class IV)	**i**1664937
Kit-Attaching Parts (Pivot Roll Arm Clamp, Std Carriage, 3 Stg FFL Class IV)	**q**1664938
Kit-Attaching Parts (Pivot Arm Roll Clamp, Std Carriage, 2 Stg LFL Class IV)	**d**1664941
Kit-Attaching Parts (Pivot Roll Arm Clamp, Std Carriage, 3 Stg FFL Class IV)	**k**1664942
Kit-Attaching Parts (Pivot Arm Roll Clamp, Std Carriage, 2 Stg LFL Class IV)	**e**1664943
Kit-Attaching Parts (Pivot Roll Arm Clamp, Std Carriage, 3 Stg FFL Class IV)	**l**1664944
Kit-Attaching Parts (Rotator, Std Carriage. 2 Stg LFL Class IV)	**b**1664949
Kit-Attaching Parts (Rotator, Std Carriage, 3 Stg FFL, Class IV)	**j**1664950
Kit-Attaching Parts (Rotator, Std Carriage. 2 Stg LFL Class IV)	**h**1664951
Kit-Attaching Parts (Rotator, Std Carriage, 3 Stg FFL, Class IV)	**o**1664952

FOOTNOTES:

a Used On Mast A613, Attachment 100D-PBS
b Used On Mast A613, Attachment 100D-RRB, 120D-RRB
c Used On Mast A613, Attachment 100E-BDS
d Used On Mast A613, Attachment 120F-RCP
e Used On Mast A613, Attachment 130F-RCP
f Used On Mast A613, Attachment 150D-BDS
g Used On Mast A613, Attachment 150D-BSS
h Used On Mast A613, Attachment 150D-RRB
i Used On Mast A613, Attachment 90F-RCF, 90F-RCP, 100F-RCF, 100F-RCP
j Used On Mast A614, Attachment 100D-RRB, 120D-RRB
k Used On Mast A614, Attachment 120F-RCP
l Used On Mast A614, Attachment 130F-RCP
m Used On Mast A614, Attachment 140D-PBS
n Used On Mast A614, Attachment 150D-BSS
o Used On Mast A614, Attachment 150D-RRB
p Used On Mast A614, Attachment 159D-BDS
q Used On Mast A614, Attachment 90F-RCF, 90F-RCP, 100F-RCF, 100F-RCP

BRAKE AND INCHING PEDAL CONVERSION

DESCRIPTION	PART NUMBER
Kit-Single to Dual Drive Wheel	1655416
Kit-Brake (Single to Dual Pedal Inch Brake)	1655415

©2011 HYSTER COMPANY

BRAKE AND INCHING PEDAL CONVERSION (CONTINUED)

DESCRIPTION	PART NUMBER
Kit-Dual Brake Pedal (Bolt Actuation)	4017125

SEAT CONVERSION KITS

DESCRIPTION	PART NUMBER
Kit-Swivel Seat Full Susp (Vinyl w/o E-Hyd Controls)	1655405
Kit-Swivel Seat Full Susp (Cloth w/o E-Hyd Controls)	1655406
Kit-Swivel Seat Full Susp (Vinyl with E-Hyd Controls)	1655407
Kit-Swivel Seat Full Susp (Cloth with E-Hyd Controls)	1655408
Kit-Seat-Full Susp Non-Swivel (Vinyl w/o E-Hyd Controls) (FLM)	4016015
Kit-Seat-Full Susp Non-Swivel (Cloth w/o E-Hyd Controls) (FLM)	4016016
Kit-Seat-Full Susp Non-Swivel (Vinyl with E-Hyd Controls) (FLM)	4016019
Kit-Seat-Full Susp Non-Swivel (Cloth with E-Hyd Controls) (FLM)	4016020
Kit-Seat-Full Susp Swivel (Vinyl w/o E-Hyd Controls) (FLM)	4016017
Kit-Seat-Full Susp Swivel (Cloth w/o E-Hyd Controls) (FLM)	4016018
Kit-Seat-Full Susp Swivel (Vinyl with E-Hyd Controls) (FLM)	4016021
Kit-Seat-Full Susp Swivel (Cloth with E-Hyd Controls) (FLM)	4016022

ADD-ON OPTION KITS

DESCRIPTION	PART NUMBER
Kit-Fire Extinguisher (W/o Cab) (With Overhead Guard)	1650586
Kit-Fire Extinguisher (With Cab)	1635618
Kit-Load Weight on Display (With E-Hydraulics Only)	**a**1641495
Kit-Mirror (With Overhead Guard)	1581968
Kit-Mirror (Dual Mirrors For Cab)	1602398
Kit-Impact Monitoring (With Immediate Shutdown)	**a**1641523
Kit-Impact Monitoring (With 30 Second Shutdown)	**a**1641524
Kit-Powertrain Protection (English - US Language)	**a**1585854
Kit-Back-Up Alarm (87 dbA)	1657000
Kit-Back-Up Alarm (97 dbA)	1657001
Kit-Back-Up Alarm (102 dbA)	1657002
Kit-Back-Up Alarm (107 dbA)	1657003
Kit-Back-Up Alarm (82-102 dbA)	1657004
Kit-Accumulator	1658249
Kit-Electronic Monitoring	**a**1629208
Traction Speed Limit Kit	1581970
Operator Check List Kit	1624015

©2011 HYSTER COMPANY

ADD-ON OPTION KITS (CONTINUED)

DESCRIPTION	PART NUMBER
Kit-Service (GM LPG regulator Drain GM2.4L and 4.32) (LPG Regulator Drain)	1664940
Add Operator I.D. Kit	1623186
Remove Operator I.D. Kit	1624007
Kit-Sensor (Low LPG Fuel) (Pre-2010 GM Engines)	4007994
Kit-Sensor (Low LPG Fuel) (2010 GM Engines)	4007980

FOOTNOTES:

a This kit requires software that must be dealer installed. Dealer needs to obtain a new Configuration Data File (CDF) from Aftermarket Services. The CDF should be ordered from the Software Resources page of HYPASS Online. See Service Gram LD00018.

MISCELLANEOUS CONVERSION KITS

DESCRIPTION	PART NUMBER
Kit-Keyswitch to Pushbutton (Pushbutton Start with Remote Key Switch)	**a**1624521
Kit-Return to Set Tilt 3 Way (Mini Lever without Clamp)	**a**1658860
Kit-Return to Set Tilt 4 Way (Mini Lever without Clamp)	**a**1658861
Kit-Return to Set Tilt 3 Way (Mini Lever with Clamp)	**a**1658863
Kit-Return to Set Tilt 4 Way (Mini Lever with Clamp)	**a**1658864
Kit-Fwd/Rev Lever to Monotrol	**a**1625467
Kit-Monotrol to Fwd/Rev Lever	**a**1583198
Kit-Red Seat Belt	1636120
Kit -Liner Assy w/secondary Filter for 6" Air Cleaner, Diesel	1670586
Kit-Mini Lever Conv 4 Way (Altered GM 4.3L w/Intake Valve Seat Insert)	1703633
Kit-Gas Spring	4016889

FOOTNOTES:

a This kit requires software that must be dealer installed. Dealer needs to obtain a new Configuration Data File (CDF) from Aftermarket Services. The CDF should be ordered from the Software Resources page of HYPASS Online. See Service Gram LD00018.

E-HYDRAULIC CONTROL CONVERSION KITS

(→ S/N J006V02753H EXC. 02721)

DESCRIPTION	PART NUMBER
Kit-Mini Lever Conv 3 Way (without Clamp to 3 Way with Clamp)	**a**1585281
Kit-Mini Lever Conv 3 Way (With Clamp to 3 Way Without Clamp)	**a**1607685
Kit-Mini Lever Conv 4 Way (With Clamp to 4 Way Without Clamp)	**a**1635699
Kit-Mini Lever Conv 3 Way (without Clamp to 4 Way without Clamp)	**a**1661207
Kit-Mini Lever Conv 3 Way (without Clamp to 4 Way with Clamp)	**a**1661212
Kit-Mini Lever Conv 4 Way (without Clamp to 4 Way with Clamp)	**a**1703633

FOOTNOTES:

©2011 HYSTER COMPANY

a This kit requires software that must be dealer installed. Dealer needs to obtain a new Configuration Data File (CDF) from Aftermarket Services. The CDF should be ordered from the Software Resources page of HYPASS Online. See Service Gram LD00018.

E-HYDRAULIC CONTROL CONVERSION KITS
(S/N J006V02754H → INC. 02721)

DESCRIPTION	PART NUMBER
Kit-Mini Lever Conv 3 Way (without Lockout to with Lockout)	1701683
Kit-Mini Lever Conv 3 Way (with Lockout to without Lockout)	1701682
Kit-Mini Lever Conv 4 Way (with Lockout to with Lockout)	1701684
Kit-Mini Lever Conv 3 Way (without Clamp to 4 Way without Clamp)	4014687
Kit-Mini Lever Conv 3 Way (without Clamp to 4 Way with Clamp)	4014688
Kit-Mini Lever Conv 4 Way (without Lockout to with Lockout)	1701685

HYDRAULIC CONTROL CONVERSIONS
MANUAL HYDRAULICS

DESCRIPTION	PART NUMBER
Kit-Manual Lever Conv 3 Way (without Clamp to 3 Way with Clamp)	1677913
Kit-Manual Lever Conv 3 Way (without Clamp to 4 Way with Clamp)	1678508
Kit-Manual Lever Conv 3 Way (without Clamp to 4 Way without Clamp)	1678509

AUXILIARY TUBE EXTENSION KITS

DESCRIPTION	PART NUMBER
Kit-Quick Disconnect Fitting	1650605
Kit-Aux Tube Extension (Three Function Class IV Std Carriage, 2 LFL) (Three Function Class IV Std Carriage, 2 Stg LFL)	1658112
Kit-Aux Tube Extension (Four Function Class IV Std Carriage, 2 Stg LFL) (Four Function Class IV Std Carriage, 2 STG LFL)	1658113
Kit-Aux Tube Extension (Three Function Class IV, Std Carriage, 3 Stg FFL) (Three Function Class IV Std Carriage, 3 Stg FFL)	1658114
Kit (Quick Disconnect, 2 Stg LFL, 3rd Function)	4016365
Kit (Quick Disconnect, 2 Stg LFL, 3rd and 4th Function)	4016366
Kit (Quick Disconnect, 3 Stg FFL, 3rd Function)	4016367
Kit (Quick Disconnect, 3 Stg FFL, 3rd and 4th Function)	4016368
Kit (Quick Disconnect Fittings Single Auxiliary E-Hydraulics) (2 Stg LFL, 4th Function)	4024046
Kit (Quick Disconnect Fittings Single Auxiliary E-Hydraulics) (3 Stg FFL, 4th Function)	4024047

©2011 HYSTER COMPANY

HEADER HOSE CONVERSION KITS
TWO STAGE LIMITED FREE-LIFT

THREE TO FOUR FUNCTION

DESCRIPTION	LIFT HEIGHT TO BOTTOM OF FORKS				
	2940 mm (115.7 in.)	**3340 mm (131.5 in.)**	**4340 mm (170.9 in.)**	**5340 mm (210.2 in.)**	**5940 mm (233.9 in.)**
Mast Group Number	**A613 2940**	**A613 3340**	**A613 4340**	**A613 5340**	**A613 5940**
Kit-Hose Group 3 to 4 Way	1658989	1648692	1648696	1658992	1658995

TWO TO FOUR FUNCTION

DESCRIPTION	LIFT HEIGHT TO BOTTOM OF FORKS				
	2940 mm (115.7 in.)	**3340 mm (131.5 in.)**	**4340 mm (170.9 in.)**	**5340 mm (210.2 in.)**	**5940 mm (233.9 in.)**
Mast Group Number	**A613 2940**	**A613 3340**	**A613 4340**	**A613 5340**	**A613 5940**
Kit-Hose Group 2 to 4 Way	1658990	1648693	1648697	1658993	1658996

TWO TO THREE FUNCTION

DESCRIPTION	LIFT HEIGHT TO BOTTOM OF FORKS				
	2940 mm (115.7 in.)	**3340 mm (131.5 in.)**	**4340 mm (170.9 in.)**	**5340 mm (210.2 in.)**	**5940 mm (233.9 in.)**
Mast Group Number	**A613 2940**	**A613 3340**	**A613 4340**	**A613 5340**	**A613 5940**
Kit-Hose Group 2 to 3 Way	1658988	1648691	1648695	1658991	1658994

©2011 HYSTER COMPANY

HEADER HOSE CONVERSION KITS

THREE STAGE FULL FREE-LIFT

THREE TO FOUR FUNCTION

DESCRIPTION	LIFT HEIGHT TO BOTTOM OF FORKS	
	4640 mm (182.7 in.)	6140 mm (241.7 in.)
Mast Group Number	**A614 4640**	**A614 6140**
Kit-Hose Group 3 to 4 Way	1648928	1648936

TWO TO FOUR FUNCTION

DESCRIPTION	LIFT HEIGHT TO BOTTOM OF FORKS		
	4640 mm (182.7 in.)	5540 mm (218.1 in.)	6140 mm (241.7 in.)
Mast Group Number	**A614 4640**	**A614 5540**	**A614 6140**
Kit-Hose Group 2 to 4 Way	1648929	1648933	1648937

TWO TO THREE FUNCTION

DESCRIPTION	LIFT HEIGHT TO BOTTOM OF FORKS		
	4640 mm (182.7 in.)	5540 mm (218.1 in.)	6140 mm (241.7 in.)
Mast Group Number	**A614 4640**	**A614 5540**	**A614 6140**
Kit-Hose Group 2 to 3 Way	1648927	1648931	1648935

LIGHT CONVERSION KITS

DESCRIPTION	PART NUMBER
Kit-Light (Front Drive/Rear Work Light, with Harness and Overhead Guard)	1626526
Kit-Light (Strobe, Flash Tube w/o other lights, with Overhead Guard and with Harness)	1626527
Kit-Light (Strobe, Flash Tube with Other Lights and Overhead Guard, w/o Harness)	1583710
Kit-Strobe Light (Amber Strobe with Cab)	1625728
Kit-Strobe Light (Amber Strobe LED Light with Cab)	1655298
Kit-Light (LED Strobe with other lights for Overhead Guard, w/o Harness)	1655205
Kit-Light (LED Strobe w/o Other Lights for Overhead Guard with Harness)	1655206
Kit-Work Light Extension (Without Cab, with 2 Stg LFL Mast)	1670068
Kit-Work Light Extension (With Cab and 2 Stg LFL Mast)	1670070
Kit-Light (Front Drive/Rear Work lights, w/o Harness, with Overhead Guard)	1583708

©2011 HYSTER COMPANY

LIGHT CONVERSION KITS (CONTINUED)

DESCRIPTION	PART NUMBER
Kit-Light (Front Drive/Rear Work Light, with Harness and Overhead Guard)	1673180
Kit-Light (Front Drive/Rear Work lights, w/o Harness, with Overhead Guard)	1676111
Kit-Light (Brake/Tail/Back-up Lights with Harness, with Overhead Guard)	1626528
Kit-Light (Brake/Tail/Back-up Lights w/o Harness with Overhead Guard)	1583712
Kit-Light (Front Drive/Rear Work Light, with Harness and Overhead Guard)	1626526
Kit-Front Drive/Rear Worklight (LED w/o Other Lights for Overhead Guard with Harness)	1700248
Kit-Front Drive/Rear Worklight (LED with other lights for Overhead Guard, w/o Harness)	1700245
Kit-Front Drive/Rear Worklight (LED w/o Other Lights for Overhead Guard with Harness)	1700261
Kit-Front Drive/Rear Worklight (LED w/o Other Lights for Overhead Guard with Harness)	1700263

REPLACEMENT KITS

DESCRIPTION	PART NUMBER
Kit-Bracket (Exhaust)	4014278

©2011 HYSTER COMPANY

14 NUMERICAL INDEX

SECTION 14
NUMERICAL INDEX

PART NO.	PAGE	ITEM
126	4-17	8
206	8-7	11
12855	3-19	12
	3-37	17
12856	3-11	7
12921	2-33	8
12929	7-15	20
	8-7	10
13957	7-11	18
	7-11	26
	7-15	18
	7-15	26
13963	7-12	49
	7-16	49
14330	3-13	21
	3-17	22
	3-19	13
14349	3-13	27
	3-17	28
	3-19	6
14358	3-13	25
	3-17	23
	3-19	8
14385	2-11	5
	2-15	6
	3-35	19
14387	2-28	
14589	5-25	12
14592	5-13	17
	5-29	16
14594	5-13	23
	5-29	24
	5-33	14
14604	10-7	21
15002	4-17	3
15006	3-35	4
15049	1-41	27
15055	9-32	3
	9-57	4
	9-59	4
15127	1-47	21
15135	9-3	20
15155	11-23	8
15156	3-35	5
	4-17	2
15158	9-3	31
15180	2-33	6
15222	10-7	31
	10-13	6
	10-15	7
	11-7	6
	11-10	34
	11-17	21
	11-21	8
	11-23	13
15225	7-11	40
	7-15	40
15226	7-11	40
15246	12-29	4
15347	3-23	7
	3-25	16
15880	7-17	5
	7-18	5
	10-11	7
	11-13	6
15889	11-19	6
15906	2-35	12
15916	4-17	4
15917	2-40	5
15931	3-51	11
16001	9-61	7
	10-13	20
	10-15	22
	11-21	21
	11-23	19
16078	4-37	28
16079	4-13	7
	4-13	22
	4-35	10
	4-37	34
16121	3-37	24
	3-37	25
16134	3-37	21
16151	3-13	27
	3-17	28
	3-19	6
16190	3-37	19
16396	1-37	17
16481	8-3	16
	8-3	18
	8-7	20
	8-7	25
	8-13	17
	12-27	2
16482	5-13	18
	5-29	17
16483	5-13	24
	5-29	25
	5-33	15
	7-9	1
	8-13	1
	8-13	5
	8-13	6
	8-13	12
	8-13	14
	8-14	37
	8-14	40
	9-65	1
	10-25	13
	11-9	4
	11-33	13
16484	5-25	13
	5-41	23
	7-9	6
	8-13	18
	8-13	23
	8-14	39
	9-3	7
	9-4	38
	9-65	6
	9-65	10
	9-65	11
	9-65	13
	9-66	1
	10-17	10
	10-17	12
	10-17	14
	11-25	5
	11-25	10
	11-25	21
	11-26	23
	11-26	25
	11-26	27
16485	5-9	1
	9-3	33
	11-9	2
	11-9	9
	11-9	12
	11-25	17
16486	5-9	3
	5-9	4
	5-11	38
	5-13	27
	5-15	23
	5-27	36
	5-29	27
	5-31	23
	8-13	8
	8-13	15
	8-13	24
	9-3	1
	9-4	39
	11-10	27
16487	8-3	20
	8-7	23
	9-3	29
	10-7	21
	11-9	16
	12-11	5
16541	10-17	12
	11-25	5
	11-26	23
16578	11-9	12
16634	2-23	11
16642	12-11	4
16706	9-29	19
	9-31	3
16708	3-51	14
16745	9-3	7
16865	3-51	16
16882	11-9	20
16982	9-67	5
16983	9-3	28
	10-7	20
16984	9-3	24
17221	8-14	37
17314	3-37	18
17343	8-14	35
17352	3-37	20
17353	3-11	8
	3-37	16
17407	4-17	1
17536	1-37	16
17737	8-14	51
17758	8-13	8
18462	1-54	30
	1-59	22
18471	1-54	21
	1-59	23
18497	4-32	3
	4-35	4
18515	4-32	2
	4-35	5
18522	11-23	9
18735	1-53	9
18738	1-53	9

©2011 HYSTER COMPANY

NUMERICAL INDEX (continued)

PART NO.	PAGE	ITEM
	1-59	19
18748	9-21	3
18909	9-3	25
19901	1-54	15
19923	3-35	14
28584	12-27	4
30370	2-7	3
	2-9	4
30372	2-5	2
30375	2-5	6
34811	2-40	3
37065	5-5	12
39378	2-84	1
39678	7-11	9
	7-15	9
39679	7-17	3
	7-18	3
49189	6-5	8
53162	3-51	17
53641	7-12	42
	7-15	42
58903	7-11	20
58939	10-5	8
59625	11-17	25
60653	5-11	17
	5-13	10
	5-13	16
	5-15	34
	5-17	4
	5-27	18
	5-29	13
	5-29	19
	5-31	34
	5-33	4
	5-33	7
63108	8-14	29
66333	10-13	23
	10-15	13
	11-21	25
	11-23	20
66468	10-13	14
	10-15	18
	11-21	14
	11-23	28
69029	7-12	41
	7-15	41
69392	12-27	3
77441	9-31	6
	9-51	3
	9-55	3
77442	9-29	16
	9-31	7
	9-45	3
	9-49	4
	9-51	4
	9-53	4
	9-55	4
77443	9-29	17
	9-31	8
	9-45	4
	9-49	5
	9-51	5
	9-53	5
	9-55	5
78286	1-37	30
	1-39	30
87281	5-13	6
	5-17	7
	5-25	4
	5-29	6
	5-29	28
	5-33	5
92482	9-63	5
	9-63	5
97999	3-35	21
98334	3-35	3
101809	3-35	18
104264	10-3	9
	11-3	6
104506	10-3	6
	11-3	8
	11-5	13
110178	10-7	8
	10-25	13
	11-9	4
	11-33	13
	11-39	8
114312	1-54	
	3-11	14
	8-4	
	8-8	
115696	3-3	3
	3-5	3
	3-7	4
117989	8-3	17
	8-7	21
119236	2-11	9
	2-15	11
	3-11	17
	9-3	11
122400	11-7	5
	11-21	9
	11-23	11
126765	10-3	4
	10-5	6
	10-13	11
	10-15	4
	11-3	4
	11-5	4
	11-7	9
	11-21	6
	11-23	4
128408	4-23	11
129498	7-12	46
	7-15	46
129499	7-11	39
	7-15	39
129886	4-70	20
	4-74	23
	4-82	28
	4-86	35
130845	1-37	35
	1-39	11
	1-39	11
	2-31	1
	2-31	1
	2-49	16
	3-13	1
	3-17	13
	9-3	37
131190	7-11	32
	7-15	32
131191	7-11	31
	7-15	31
131193	7-11	34
	7-15	34
131716	11-5	14
132972	4-85	6
133483	4-147	15
	4-150	22
133696	2-24	44
	2-55	28
	2-59	28
134675	10-7	6
134810	4-149	6
	4-149	7
	4-149	18
	4-150	19
135657	7-11	10
	7-15	10
135658	7-11	15
	7-15	15
136045	11-26	42
136750	2-65	6
141331	3-8	5
146540	12-3	1
	12-4	1
148614	4-70	28
	4-74	28
	4-79	27
	4-79	28
	4-82	27
	4-85	12
148615	4-79	24
148638	4-37	22
	4-147	4
	4-149	13
148783	4-13	32
	4-37	31
148786	4-13	23
	4-37	36
148789	4-13	33
	4-37	32
148792	4-13	27
	4-37	37
148795	4-13	3
	4-35	15
148798	4-13	5
	4-13	25
	4-35	13
	4-37	39
148800	4-37	6
148818	4-23	9
148962	4-27	2
153715	7-11	2
	7-15	2
153716	7-11	4
	7-15	4
153717	7-11	3
	7-15	3
153834	7-11	37
	7-15	37
153835	7-12	44
	7-15	44
154067	1-63	11
154358	7-17	2
	7-18	2
154452	8-13	28
154821	3-3	1
	3-5	1
	3-7	1
158269	1-39	12
159708	2-42	3
159977	2-47	14
161272	10-3	8
161273	10-3	7
	11-3	7
162572	2-63	5

See Service Manual for service procedures.
©2011 HYSTER COMPANY

NUMERICAL INDEX (continued)

PART NO.	PAGE	ITEM
164488	2-27	25
165991	3-3	17
	3-5	17
166857	3-11	1
	8-3	14
	8-7	18
168718	2-28	29
	3-37	5
169787	9-3	17
169874	1-54	19
	1-59	26
170658	1-65	1
	3-35	
173247	2-95	5
	3-19	16
174413	2-27	20
175861	9-13	8
	9-17	8
175944	4-149	1
	4-149	2
	4-149	17
176454	3-37	12
	4-13	8
	4-37	27
178899	2-11	6
181045	4-149	6
	4-149	7
	4-149	18
	4-150	19
181046	4-149	6
	4-149	7
181089	4-85	16
181266	11-26	
181298	11-26	
184799	11-9	19
185856	7-11	11
	7-15	11
185857	7-11	12
	7-15	12
185858	7-11	13
	7-15	13
185860	7-12	48
	7-16	48
187388	11-19	13
187489	10-3	5
	10-5	7
	10-13	5
	10-15	5
	11-3	5
	11-5	5
	11-7	10
	11-21	3
	11-23	5
187727	1-41	26
188515	9-29	18
	9-31	4
188517	9-29	8
	9-31	11
189595	11-9	9
190383	4-79	23
	4-149	1
	4-149	2
	4-149	17
	4-159	4
	4-161	4
190580	11-19	11
190757	9-3	15
191534	1-7	18
	3-26	17
191941	1-49	8
	1-51	8
192306	3-11	6
192424	10-13	18
	10-15	17
	11-21	26
	11-23	21
192425	10-13	19
	10-15	17
	11-21	27
	11-23	22
192429	10-3	12
	11-3	12
193554	9-63	1
197066	2-15	19
	2-65	3
198675	2-27	19
199082	9-63	7
203689	4-37	9
204128	9-43	2
204223	4-13	4
	4-13	21
	4-35	12
	4-37	7
205222	5-5	15
	5-7	13
215211	11-5	15
215345	10-11	3
	11-19	5
216590	11-9	2
220289	1-41	22
220428	3-51	2
221353	1-47	15
	1-53	11
221416	4-22	8
221420	1-41	25
221493	4-23	8
221530	1-54	29
221536	1-47	13
	1-53	13
221539	2-21	6
221542	1-54	28
221544	2-23	13
221545	2-40	4
221769	2-21	7
221775	12-19	13
222442	9-3	8
	9-3	22
222491	8-3	18
	8-7	25
222492	8-13	12
222493	9-4	38
222498	8-14	30
222500	9-65	7
222502	9-66	1
222505	8-13	15
222509	8-3	16
	8-7	20
226430	6-5	2
226458	1-25	22
	10-15	20
	11-23	26
227096	1-41	29
227157	1-59	4
	1-59	13
227220	3-7	7
230324	7-11	38
	7-15	38
230325	7-12	45
	7-15	45
230421	7-11	1
	7-15	1
233683	8-3	20
	8-7	23
235691	5-41	22
	9-66	1
239182	9-63	10
239503	8-3	11
	8-7	15
241079	9-61	9
244005	10-13	21
	10-15	15
	11-21	20
	11-23	24
244008	10-13	17
	10-15	16
	11-21	18
	11-23	23
244009	10-13	22
	10-15	21
	11-21	19
	11-23	18
244167	9-67	5
	10-7	20
	11-9	16
	12-11	5
	12-11	7
244540	8-7	7
246108	2-24	50
	2-27	7
	3-19	
	3-25	
248212	11-26	43
252729	5-9	1
	5-9	3
	9-3	33
	11-10	27
	11-10	38
	11-26	36
255578	11-26	48
257913	11-19	10
258590	2-84	3
263794	2-61	11
263795	2-61	10
263828	2-53	13
263842	2-47	10
264148	4-21	16
	4-27	5
264749	2-21	5
265731	7-9	1
	7-9	6
	8-13	14
	8-13	16
	8-13	18
	8-13	22
	8-13	23
	8-14	39
	8-14	40
	9-65	6
	9-65	13
	10-17	10
	10-17	16
	10-17	17
	11-25	10
	11-25	14
	11-25	17
	11-26	21
	11-26	27
	11-26	34

©2011 HYSTER COMPANY

NUMERICAL INDEX (continued)

PART NO.	PAGE	ITEM
265787	8-13	1
	9-65	1
	9-65	11
266519	9-49	3
266612	7-11	15
	7-15	15
266728	7-11	8
	7-15	8
266733	7-11	7
	7-15	7
266735	7-11	15
	7-15	15
268573	2-61	3
272133	1-47	22
275493	4-91	12
	4-97	12
	4-103	12
	4-109	12
	4-115	10
	4-117	6
	4-119	6
	4-119	10
	4-131	5
	4-131	17
	4-135	13
	4-139	5
	4-139	11
	4-143	16
	4-149	5
	4-153	2
	4-153	15
	4-157	3
275494	4-154	27
275495	4-91	10
	4-97	10
	4-103	15
	4-104	19
	4-109	15
	4-110	19
	4-111	39
	4-115	6
	4-135	8
	4-143	12
	4-147	2
	4-147	7
	4-149	10
	4-153	7
	4-157	7
275496	4-91	6
	4-97	6
	4-103	6
	4-109	6
	4-117	2
	4-119	2
	4-131	10
	4-135	10
	4-139	17
	4-143	8
	4-153	4
275497	4-91	7
	4-97	7
	4-103	7
	4-109	7
	4-132	21
	4-135	18
	4-140	19
	4-143	20
	4-147	5
	4-149	14
	4-153	8
275498	4-91	16
	4-97	16
280154	9-4	39
287816	1-3	4
287844	8-11	8
287851	4-5	17
	4-65	14
287854	5-3	1
289968	9-63	11
289969	9-63	2
292500	1-47	20
292505	10-25	12
	11-33	12
	11-39	12
292513	10-15	23
	11-23	29
292515	2-21	10
292528	10-13	15
	10-15	14
	11-21	16
	11-23	25
292559	2-33	7
	2-35	13
292586	1-21	4
292629	1-21	6
292655	3-37	30
292656	3-7	12
292661	12-29	3
292667	1-37	22
	1-39	22
292668	4-21	12
	4-27	7
	8-3	30
	8-8	38
292672	3-30	7
292678	1-25	8
292679	12-3	4
	12-4	4
292680	4-51	2
292682	2-21	11
	2-23	10
	5-3	2
292683	2-7	24
	2-9	22
	10-13	16
	10-15	14
	11-21	17
	11-23	17
292685	7-11	28
	7-15	28
	10-15	19
	11-23	27
293626	5-7	14
293628	7-11	19
	7-15	19
293645	3-7	11
293657	1-15	7
293686	5-3	8
293688	5-3	7
	7-11	27
	7-15	27
293697	2-64	7
293699	2-17	3
293723	10-15	8
293730	9-61	14
293744	3-30	6
293774	3-26	16
293781	9-3	14
296003	3-26	18
296022	8-14	49
296026	9-3	13
296149	1-45	8
	1-49	
	1-51	12
296152	3-13	22
	3-17	25
	3-19	11
296165	1-59	9
296169	4-37	3
296229	1-33	
	1-35	
296357	1-47	18
	1-54	23
296360	1-59	6
	1-59	20
296378	3-49	12
	8-11	5
296379	1-54	20
296380	4-13	39
	4-15	5
	4-21	13
	4-35	21
	4-38	51
296418	2-23	17
	2-36	3
	2-65	7
296419	1-27	18
296420	5-5	10
	5-7	15
	10-15	24
	11-23	30
296423	1-15	3
296426	5-3	6
296427	5-3	13
296434	6-5	3
296452	1-37	23
	1-39	23
296507	12-3	3
	12-4	3
297531	11-19	12
297573	11-17	23
297647	11-26	41
300937	1-15	2
300939	1-15	4
	3-35	9
302023	2-11	13
	2-15	18
	2-65	4
302105	11-5	7
	11-17	6
302326	4-25	5
302398	4-61	7
	8-3	29
	8-7	35
302399	8-11	14
	10-25	4
	10-25	15
	11-33	4
	11-33	15
	11-39	5
	11-39	13
302400	1-45	4
	2-23	38
302428	9-13	9
	9-17	9
302437	3-49	8
302443	3-49	8
302492	1-21	8

©2011 HYSTER COMPANY

NUMERICAL INDEX (continued)

PART NO.	PAGE	ITEM
303150	2-17	8
304523	10-7	1
	11-10	33
306113	9-13	12
	9-17	12
309062	10-11	2
	11-13	8
309109	9-13	16
	9-15	11
	9-17	17
	9-19	12
313828	1-47	11
	1-54	25
	1-59	7
	1-59	21
	8-14	43
316448	1-63	3
316513	10-11	6
	11-13	5
316826	1-59	15
316834	9-13	3
	9-17	3
317292	11-21	22
	11-23	7
317594	1-3	22
319322	11-21	15
	11-23	6
319323	11-21	15
	11-23	6
320154	2-11	14
320155	12-3	5
	12-4	5
320156	9-13	4
	9-17	4
320157	1-3	11
	2-23	37
	4-5	16
	4-25	6
	4-65	14
320158	2-5	9
	2-7	10
	2-9	9
320159	2-7	16
	2-9	16
	7-11	16
	7-15	16
320160	1-59	16
320161	9-13	13
	9-17	14
320289	9-29	7
	9-31	10
320334	11-10	40
	11-17	13
321158	4-37	8
325182	1-13	23
	1-37	32
	1-39	32
325549	3-11	22
325699	3-51	13
329069	3-49	6
330502	5-11	20
	5-15	16
	5-27	21
	5-31	16
330513	5-11	19
	5-15	15
	5-27	20
	5-31	15
330514	5-11	18
	5-15	14
	5-27	19
	5-31	14
330527	5-11	32
	5-27	32
330532	5-7	5
330590	5-19	23
	5-21	7
	5-23	14
	5-23	24
	5-35	14
	5-35	21
	5-39	23
332057	10-17	3
332569	10-11	
334932	11-17	26
336550	2-11	20
	2-15	21
339735	2-11	20
341053	10-7	26
341117	10-5	1
341118	10-5	1
341123	10-7	26
341124	10-7	26
341144	10-3	2
	10-5	4
	10-13	2
	10-15	2
	11-3	2
	11-5	2
	11-21	2
	11-23	2
343946	10-7	28
	10-13	9
	10-15	9
	11-10	30
	11-17	19
344391	7-17	1
	7-18	1
345454	2-11	20
	2-15	22
345455	2-15	23
346299	7-11	6
346906	10-5	9
346961	10-5	1
349320	11-7	4
353000	3-11	4
	3-37	14
353198	9-65	8
356582	10-5	1
356593	10-7	26
356598	10-7	24
357529	10-17	1
358286	11-25	13
358287	11-25	15
358289	11-25	4
358305	11-7	3
	11-21	10
	11-23	12
360387	2-33	9
	5-5	17
362030	1-3	3
362036	3-51	10
362352	11-5	12
362356	11-5	11
362950	11-5	10
362953	11-5	9
364204	11-5	1
364233	11-13	10
366000	3-13	3
366116	10-13	4
	10-15	25
	11-21	4
	11-23	4
366473	3-13	18
	3-17	16
366496	11-5	8
366523	11-10	36
366524	11-17	24
366525	11-17	24
366526	11-17	7
366528	11-17	8
366529	11-17	1
368140	11-17	22
369431	10-5	2
369432	10-5	3
369804	2-11	16
	9-3	23
369815	2-11	18
	2-15	8
372389	11-9	24
	11-17	10
374923	3-8	1
375575	2-47	24
375587	2-49	26
	2-53	26
375601	2-47	20
375602	2-47	25
376026	6-5	9
	7-19	4
378044	11-25	4
379405	9-66	2
	10-7	9
	11-9	5
379407	2-55	7
	2-59	4
	3-3	11
	3-5	11
380585	11-26	33
380590	11-26	40
380591	11-26	35
381389	11-7	2
383824	11-13	12
	11-13	12
385107	2-11	11
385670	2-27	5
386015	9-29	12
386648	11-25	2
388186	10-7	25
	11-10	41
	11-17	14
388302	2-47	9
388306	2-61	7
388313	2-47	27
388364	2-53	44
389688	1-65	2
392620	2-27	2
397676	1-37	8
	1-39	8
636941	11-13	9
636954	11-19	14
637166	11-19	9
637565	10-11	1
	11-13	3
638223	11-19	8
638251	11-19	4
672563	11-25	4
806425	4-147	14
	4-150	20

©2011 HYSTER COMPANY

NUMERICAL INDEX (continued)

PART NO.	PAGE	ITEM
806426	4-13	34
	4-13	37
	4-21	25
	4-35	19
	4-37	21
	4-38	49
806427	4-37	23
	4-147	1
	4-147	3
	4-149	12
	4-150	21
816591	10-17	17
	10-21	1
	11-25	14
	11-26	36
	11-29	1
	11-34	1
866401	4-147	9
	4-149	8
930591	4-163	4
	4-163	7
115112W	1-76	1
1194254	5-5	13
	5-7	10
1301086	1-21	3
1302024	4-41	14
	4-43	14
1302955	2-11	19
	2-15	5
1305165	2-23	12
	2-40	1
1307395	10-7	30
	10-13	7
	10-15	6
	11-7	7
	11-10	35
	11-17	20
	11-21	7
	11-23	14
1307737	1-5	3
	1-11	36
1309839	2-47	12
1309993	2-27	4
	2-27	22
1311544	5-11	25
	5-15	17
	5-27	26
	5-31	17
1311552	5-15	29
	5-31	29
1311803	5-45	7
1311810	5-19	8
	5-21	10
	5-23	11
	5-35	11
	5-39	8
1311811	5-19	4
	5-21	16
	5-23	4
	5-35	4
	5-35	30
	5-39	4
	5-39	32
1311840	5-5	16
	5-7	11
1312274	5-7	
1312359	5-21	6
	5-23	15
	5-23	25
	5-35	15
	5-35	20
1312375	5-5	6
	5-7	6
1312376	5-5	7
	5-7	7
1313789	11-17	22
1313791	11-17	22
1313811	11-7	1
1316487	2-24	41
	2-41	2
1316488	2-24	47
	2-41	1
1316809	8-14	35
1318161	11-23	
1318162	10-15	
1318167	10-15	1
1320000	2-49	27
	2-53	27
1323576	4-69	16
	4-70	27
	4-70	31
	4-73	19
	4-74	30
	4-74	35
	4-81	10
	4-82	25
	4-85	13
	4-86	33
	4-106	54
	4-112	54
	4-121	5
	4-121	6
	4-123	8
	4-123	9
	4-157	1
1323578	4-77	7
	4-104	30
	4-110	30
	4-121	3
	4-123	6
	4-125	3
	4-127	6
	4-129	9
	4-167	5
1323579	4-77	5
	4-77	7
	4-93	37
	4-93	38
	4-93	40
	4-93	41
	4-99	41
	4-99	42
	4-99	44
	4-100	45
	4-105	42
	4-105	43
	4-106	45
	4-106	46
	4-111	42
	4-111	43
	4-112	45
	4-112	46
	4-121	8
	4-123	3
	4-125	2
	4-127	4
	4-127	8
	4-129	7
	4-167	3
1323581	4-153	11
	4-153	12
1323586	4-69	13
	4-70	27
	4-73	14
	4-74	30
	4-81	7
	4-81	10
	4-85	9
	4-85	13
1324309	4-131	13
	4-131	14
	4-135	19
	4-136	20
	4-139	9
	4-139	10
	4-143	21
	4-144	22
1324310	4-131	13
	4-131	14
	4-135	19
	4-136	20
	4-144	21
	4-144	22
1324480	1-65	11
1324790	5-25	9
	5-25	9
1324792	5-25	9
	5-25	9
1325119	10-7	7
1325271	1-63	22
1326653	4-15	9
1327164	4-77	5
	4-77	6
	4-92	20
	4-93	37
	4-93	38
	4-93	40
	4-98	20
	4-99	41
	4-99	42
	4-99	44
	4-104	20
	4-104	29
	4-105	42
	4-105	43
	4-106	45
	4-110	20
	4-110	29
	4-111	42
	4-111	43
	4-112	45
	4-117	11
	4-121	2
	4-123	3
	4-123	7
	4-125	2
	4-125	4
	4-127	4
	4-127	5
	4-129	7
	4-129	10
	4-167	3
	4-167	4
1327647	2-23	35
	4-25	1
1327957	4-69	14
	4-73	16
	4-82	22

See Service Manual for service procedures.
©2011 HYSTER COMPANY

NUMERICAL INDEX (continued)

PART NO.	PAGE	ITEM
	4-86	30
1327959	4-77	5
1329148	4-125	6
	4-129	2
1329150	4-92	20
	4-98	20
	4-104	20
	4-110	20
	4-117	11
1329151	4-92	20
	4-92	21
	4-98	20
	4-98	21
	4-104	21
	4-110	21
	4-117	10
	4-117	11
	4-125	6
	4-129	2
1329152	4-92	21
	4-98	21
	4-104	20
	4-104	21
	4-110	20
	4-110	21
	4-117	10
	4-125	6
	4-129	2
1329756	9-63	4
1330064	10-15	11
	11-23	10
1330281	4-77	5
	4-92	21
	4-93	37
	4-93	38
	4-93	41
	4-98	21
	4-99	41
	4-99	42
	4-100	45
	4-104	21
	4-105	42
	4-105	43
	4-106	46
	4-110	21
	4-111	42
	4-111	43
	4-112	46
	4-117	10
1330297	4-77	5
1330355	4-69	12
	4-69	15
	4-70	33
	4-73	13
	4-73	17
	4-74	36
	4-78	13
	4-78	14
	4-78	20
	4-81	6
	4-81	15
	4-82	23
	4-85	8
	4-85	20
	4-86	31
	4-93	39
	4-99	43
	4-105	31
	4-106	44
	4-111	31
	4-112	44
	4-119	11
	4-147	12
	4-163	4
	4-163	7
1330356	4-70	30
	4-74	32
	4-78	14
	4-81	12
	4-85	15
	4-93	39
	4-99	43
	4-106	44
	4-111	44
	4-147	12
	4-163	4
	4-163	7
1330413	4-69	2
	4-73	2
	4-82	20
	4-86	28
1330414	1-19	10
	4-115	9
	4-147	8
	4-149	9
	4-164	2
1330415	4-43	24
	4-43	25
1330416	3-51	4
	4-65	6
	4-65	17
	4-91	2
	4-97	2
	4-103	2
	4-109	2
1330417	4-117	1
1330418	4-78	16
	4-119	1
1330433	4-65	18
1330437	1-19	11
	4-43	24
	4-43	25
	4-65	7
	4-78	16
	4-91	2
	4-97	2
	4-103	2
	4-109	2
	4-115	9
	4-117	1
	4-119	1
	4-132	29
	4-135	2
	4-139	13
	4-140	27
	4-144	30
	4-147	8
	4-149	9
	4-164	2
1330438	4-63	2
	4-65	10
	4-91	1
	4-91	3
	4-91	11
	4-92	18
	4-92	22
	4-92	26
	4-92	28
	4-93	36
	4-97	1
	4-97	3
	4-97	11
	4-98	18
	4-98	22
	4-98	26
	4-98	30
	4-99	40
	4-103	1
	4-103	3
	4-103	11
	4-104	22
	4-104	26
	4-104	27
	4-105	31
	4-105	41
	4-109	1
	4-109	3
	4-109	11
	4-110	22
	4-110	26
	4-110	27
	4-111	31
	4-111	41
	4-115	11
	4-117	4
	4-117	7
	4-119	3
	4-119	8
	4-131	9
	4-131	15
	4-132	19
	4-132	23
	4-132	25
	4-132	27
	4-132	30
	4-135	1
	4-135	15
	4-135	16
	4-136	22
	4-136	24
	4-136	26
	4-139	14
	4-140	21
	4-140	23
	4-140	25
	4-140	28
	4-143	1
	4-143	6
	4-143	13
	4-143	17
	4-143	18
	4-144	24
	4-144	26
	4-144	28
	4-153	3
	4-153	6
	4-153	9
	4-153	16
	4-153	17
	4-154	18
	4-154	19
	4-154	20
	4-154	26
	4-157	4
	4-157	5
	4-157	6
	4-159	1
	4-159	8

©2011 HYSTER COMPANY

NUMERICAL INDEX (continued)

PART NO.	PAGE	ITEM
	4-159	9
	4-161	1
	4-161	10
	4-161	11
	4-163	1
	4-164	1
1330439	4-78	16
	4-91	13
	4-91	14
	4-94	43
	4-94	45
	4-97	13
	4-97	14
	4-100	47
	4-100	49
	4-103	13
	4-103	14
	4-104	18
	4-106	47
	4-106	49
	4-109	13
	4-109	14
	4-110	18
	4-112	47
	4-112	49
	4-159	1
1330450	2-47	6
1330453	2-61	5
1330780	11-21	11
	11-23	15
1330787	1-75	1
1330791	1-75	1
1330792	1-75	1
1330793	1-75	1
1330794	1-75	1
1330917	1-63	10
1330919	1-63	16
1330920	1-63	12
1331269	10-15	3
	11-23	3
1331270	11-23	1
1331341	2-47	26
	2-59	7
1331992	10-7	29
	10-13	8
	10-15	10
	11-10	31
	11-17	18
1333001	1-73	1
1333002	1-73	1
1333003	1-73	1
1333004	1-73	1
1333541	2-61	6
1333648	10-13	3
	10-15	12
	11-5	3
	11-7	8
	11-21	5
	11-23	16
1333649	10-3	3
	10-5	5
	11-3	3
	11-5	6
1334423	2-55	5
	4-24	4
1335129	1-63	13
1335137	1-65	8
1335497	4-24	8
1335499	2-47	16
1335870	7-11	33
	7-15	33
1335873	7-11	30
	7-15	30
1337197	4-18	7
1338223	2-61	2
1339452	3-13	29
	3-17	5
	3-19	4
1339963	2-49	20
	2-53	20
	2-59	23
1340470	3-51	12
1343002	10-3	3
	10-5	5
	11-3	3
	11-5	6
1343003	10-3	3
	10-5	5
	11-3	3
	11-5	6
1343010	11-5	3
	11-7	8
1343011	11-5	3
	11-7	8
1344753	11-3	9
1345684	7-11	23
	7-15	23
1345690	4-78	20
1345939	1-63	18
1346752	9-13	23
	9-15	14
	9-17	25
	9-19	15
1350215	4-5	8
	4-7	4
	4-21	8
1351139	4-70	30
	4-74	32
	4-81	12
	4-85	15
1351178	2-7	2
	2-9	2
1351682	4-143	14
1351689	1-3	18
	8-3	25
	8-7	30
	8-11	10
1352140	2-15	2
1352603	4-132	29
	4-135	2
	4-140	27
	4-144	30
1354165	1-63	20
1354171	3-35	23
1354237	4-69	13
	4-69	14
	4-70	31
	4-73	14
	4-73	16
	4-74	35
	4-81	7
	4-82	22
	4-82	25
	4-85	9
	4-86	30
	4-86	33
1356113	1-3	23
1357265	4-37	5
1357266	4-35	9
1357268	4-35	9
	4-37	33
1357533	4-38	48
1358182	6-2	1
1359562	1-25	3
1359580	2-15	9
1360178	2-49	33
	2-53	33
1360179	2-47	4
1360182	2-47	5
1360508	10-17	7
	10-27	2
	11-25	6
1360529	10-7	13
	11-9	3
1363886	4-91	1
	4-97	1
	4-103	1
	4-109	1
	4-163	3
	4-163	6
	4-163	8
1364263	4-37	18
	4-147	10
	4-149	15
1367150	1-57	7
	1-57	10
1371149	3-11	11
1371237	2-62	
1374108	2-49	15
1374288	2-55	6
	2-59	5
1374289	2-55	11
	2-59	10
1374290	2-55	3
1374293	2-55	14
	2-59	19
1374297	2-49	2
	2-53	2
1374298	2-49	8
	2-53	8
1374299	2-49	7
	2-53	7
1374301	2-49	6
	2-53	6
1374313	2-47	15
	2-49	25
	2-53	25
1374314	2-49	22
1374315	2-49	19
	2-53	19
1374317	2-49	18
	2-53	18
1374319	2-61	1
1374320	2-61	4
1374323	2-62	
1374326	2-49	21
	2-53	21
1375391	1-3	17
	8-3	26
	8-7	31
	8-11	9
1375676	1-63	19
1376782	3-13	16
	3-17	21
1377103	2-50	39
	2-53	39
1377107	2-49	23
	2-53	23

See Service Manual for service procedures.
©2011 HYSTER COMPANY

NUMERICAL INDEX (continued)

PART NO.	PAGE	ITEM
1377110	2-45	3
1377750	2-23	14
	2-40	2
1377792	2-55	15
	2-59	18
1377793	2-55	16
	2-59	16
1377794	2-55	17
	2-59	17
1377953	10-17	15
	10-23	2
	10-25	22
	11-26	26
	11-31	3
	11-33	22
	11-37	3
	11-39	17
1377954	10-17	13
	10-23	3
	10-25	21
	11-26	24
	11-31	4
	11-33	21
	11-37	2
	11-39	18
1378418	4-28	6
1380092	7-17	4
	7-18	4
1381085	9-63	3
1381089	11-13	4
1383070	11-19	2
1383071	10-11	9
	11-13	2
1383257	2-24	42
	2-41	7
	2-49	11
	2-53	11
1383263	2-49	17
1383775	7-12	43
	7-15	43
1383795	7-11	5
1383797	7-12	47
1383904	2-55	10
	2-59	11
1385102	1-65	3
1386176	2-49	28
	2-53	28
	2-61	
1386177	2-61	8
1386179	2-50	38
	2-53	38
1386183	2-49	32
	2-53	32
1386187	2-55	
	2-59	13
1386188	2-59	25
1386189	2-55	21
	2-59	21
1386190	2-45	1
	2-55	22
	2-59	22
1386194	2-45	4
1386195	2-45	5
1386197	2-45	7
1386198	2-45	8
1389050	2-55	19
	2-59	24
1389051	2-45	2
	2-55	20
1389092	2-50	40
	2-53	40
1389093	2-55	12
	2-59	9
1389102	2-55	2
	2-59	2
1389220	5-19	26
	5-39	26
1390759	2-47	2
1390760	2-47	2
1390761	2-47	3
1390765	2-47	3
1390770	2-47	7
1390773	2-47	12
1392255	7-11	24
1393127	2-45	6
1393348	7-11	36
	7-15	36
1393479	1-33	13
1393482	1-35	8
1393494	1-31	10
1393505	1-31	2
1393511	1-27	6
1393527	1-27	16
1393528	1-27	15
1393879	1-13	33
	2-5	19
1394001	4-32	1
	4-35	2
1397716	4-21	17
1398062	3-19	17
	4-11	8
1399077	11-9	6
1399083	9-66	5
1399089	10-7	11
	11-9	6
1399096	11-9	7
1399097	10-7	11
1399099	11-9	6
1399108	11-9	7
1399109	10-7	10
1399117	10-7	10
	10-7	11
1399118	11-9	7
1399137	10-7	10
	10-7	11
1399154	10-7	11
1399157	10-7	10
1399174	10-7	10
1399332	4-13	11
	4-15	14
1399400	2-95	19
1399437	3-13	20
	3-17	17
1402189	2-7	13
	2-9	14
1402613	4-69	16
	4-73	19
1402629	4-21	21
1402809	4-70	29
	4-74	31
	4-81	14
	4-85	19
1402814	4-70	32
	4-74	34
	4-82	24
	4-86	32
	4-153	1
	4-159	3
	4-159	5
	4-159	6
	4-159	7
	4-161	3
	4-161	5
	4-161	6
	4-161	7
	4-161	8
	4-161	9
1402815	4-37	15
	4-92	27
	4-98	27
	4-105	32
	4-111	32
	4-147	6
	4-149	11
	4-159	2
	4-161	2
1402816	4-107	55
	4-112	55
	4-131	16
	4-135	12
	4-139	15
	4-143	11
	4-149	3
1402849	4-103	10
	4-103	10
	4-109	10
	4-109	10
1402877	4-69	12
	4-70	30
	4-70	33
	4-73	13
	4-74	32
	4-74	36
	4-81	6
	4-81	12
	4-82	23
	4-85	8
	4-85	15
	4-86	31
1402883	4-5	7
	4-7	14
1402888	4-92	21
	4-93	38
	4-98	21
	4-99	42
	4-104	21
	4-104	30
	4-105	43
	4-106	46
	4-110	21
	4-110	30
	4-111	43
	4-112	46
	4-117	10
	4-121	3
	4-123	6
	4-125	3
	4-125	6
	4-127	6
	4-129	2
	4-129	9
	4-167	5
1402889	4-77	2
1402912	4-121	8
	4-123	3
	4-125	2
	4-127	4
	4-129	7

©2011 HYSTER COMPANY

NUMERICAL INDEX (continued)

PART NO.	PAGE	ITEM
	4-167	3
1402923	4-117	1
1402926	4-121	7
	4-123	1
	4-125	7
	4-127	1
	4-129	1
	4-167	1
1402927	4-121	7
	4-123	1
	4-125	7
	4-127	1
	4-129	1
	4-167	1
1402929	4-121	7
	4-123	1
	4-125	7
	4-127	1
	4-129	1
1450555	2-47	22
1450941	2-61	9
1451319	2-47	17
1451321	2-49	24
	2-53	22
	2-53	24
1452376	4-22	4
1453247	2-23	15
	2-36	2
1454827	4-70	26
	4-77	2
	4-81	9
1454829	4-70	24
	4-81	9
1454862	4-70	25
	4-77	2
	4-81	9
1454955	2-49	9
	2-53	9
1454957	2-49	10
	2-53	10
1460322	2-49	14
	2-53	14
1460330	2-47	21
1460331	2-47	23
1460332	2-59	15
1460384	2-45	9
1460386	2-47	8
1460477	1-3	21
	2-7	9
	2-9	25
	2-23	8
	2-35	11
	2-39	6
	4-13	15
	4-15	11
1460738	2-47	11
1460757	2-49	30
	2-53	30
1460758	2-49	30
	2-53	30
1461743	4-121	1
	4-125	1
	4-129	8
	4-167	3
1461744	4-121	8
	4-123	3
	4-125	2
	4-127	4
	4-129	7
	4-167	3
1463138	4-78	15
	4-115	7
	4-153	5
	4-157	8
	4-157	9
	12-2	2
1463139	4-91	4
	4-91	5
	4-91	17
	4-92	30
	4-92	31
	4-93	34
	4-94	46
	4-94	47
	4-94	48
	4-97	4
	4-97	5
	4-97	17
	4-98	28
	4-98	33
	4-99	34
	4-99	36
	4-100	50
	4-100	51
	4-100	52
	4-103	4
	4-103	5
	4-105	34
	4-105	36
	4-105	39
	4-106	51
	4-106	52
	4-106	53
	4-109	4
	4-109	5
	4-111	34
	4-111	36
	4-112	51
	4-112	52
	4-112	53
	4-113	57
	4-113	58
	4-115	1
	4-115	2
	4-131	1
	4-131	4
	4-131	6
	4-132	24
	4-132	28
	4-135	3
	4-135	4
	4-136	23
	4-139	1
	4-139	4
	4-139	6
	4-140	22
	4-140	26
	4-143	2
	4-144	25
	4-144	29
	4-163	5
1463194	4-131	15
	4-132	19
	4-135	15
	4-135	16
	4-139	13
	4-139	14
	4-143	13
	4-143	17
	4-143	18
	4-153	3
1463910	1-37	1
	1-39	1
	4-27	2
1463912	1-25	7
1465466	4-167	4
1465468	4-77	6
	4-104	29
	4-110	29
	4-121	2
	4-123	7
	4-125	4
	4-127	3
	4-127	5
	4-129	10
1465469	4-77	7
1465489	10-17	8
	11-26	31
1465585	10-7	12
	11-9	26
1467523	1-49	
	1-51	
1467524	1-49	
	1-51	
1467525	1-49	
	1-51	
1467526	1-49	
	1-51	
1467527	1-49	
	1-51	
1467529	1-49	
	1-51	
1469405	2-7	25
	2-9	23
1470152	1-49	1
	1-51	1
1470153	1-49	1
	1-51	1
1470155	1-49	
	1-51	
	1-54	
1470156	1-49	2
	1-51	2
1470157	1-49	2
	1-51	2
1470161	1-49	6
	1-51	6
1470163	1-49	5
	1-51	5
1471557	2-45	1
	2-55	24
1471559	2-55	18
1471560	2-55	25
1471598	6-2	1
	7-19	2
1471838	7-19	1
1471922	6-2	1
	7-19	2
1473099	2-95	11
1473887	7-9	6
	4-104	30
	4-110	30
	4-121	3
	4-123	6
	4-125	3
	4-127	6
	4-129	9
	4-167	5
	11-26	31

©2011 HYSTER COMPANY

NUMERICAL INDEX (continued)

PART NO.	PAGE	ITEM
	8-13	23
	9-65	6
	10-17	10
	10-23	1
	10-25	20
	10-27	7
	11-25	10
	11-25	21
	11-31	2
	11-33	20
	11-37	1
	11-39	16
1473888	9-4	39
1473889	11-9	16
1473897	9-65	13
	10-27	8
1473898	5-9	4
1473936	9-67	2
	10-7	33
1474318	12-29	2
1474704	1-31	12
1474709	1-27	
	1-33	
	1-35	11
	1-35	
1474710	1-27	3
	1-33	
	1-35	
1474893	4-13	2
	4-13	31
	4-37	30
1474952	1-27	17
1474953	1-27	7
1476064	4-93	39
	4-99	43
	4-106	44
	4-111	44
1476067	4-69	15
	4-73	17
	4-78	13
	4-81	15
	4-85	20
	4-119	11
1476071	4-70	30
	4-74	32
	4-78	14
	4-81	12
	4-85	15
1476077	4-106	54
	4-112	54
	4-121	5
	4-123	8
1476108	4-69	15
	4-73	17
	4-77	9
	4-77	10
	4-78	20
	4-81	15
	4-85	20
	4-93	39
	4-99	43
	4-106	44
	4-112	44
	4-119	11
	4-123	5
	4-127	10
	4-129	5
	4-163	4
	4-163	7
1476109	4-69	15
	4-70	30
	4-70	31
	4-73	17
	4-74	32
	4-74	35
	4-78	11
	4-78	13
	4-78	14
	4-81	12
	4-81	15
	4-82	25
	4-85	15
	4-85	20
	4-86	33
	4-93	39
	4-99	43
	4-106	44
	4-111	44
	4-119	11
1476421	1-3	5
1480187	4-37	16
	4-94	45
	4-100	49
	4-106	49
	4-112	49
	4-147	9
	4-149	8
1480188	4-147	9
	4-149	8
1480237	1-3	16
	1-13	20
	1-37	12
	2-95	6
	3-13	17
	3-17	2
	3-19	3
	4-5	14
	4-7	11
	4-13	12
	4-15	7
	4-21	6
	4-35	7
	4-37	42
	4-51	9
	5-9	5
	7-9	3
	9-3	3
	9-65	3
	10-27	11
1482663	4-69	12
	4-70	33
	4-73	13
	4-74	36
	4-81	6
	4-82	23
	4-85	8
	4-86	31
	4-147	12
1482666	4-123	5
	4-127	10
	4-129	5
1482667	4-69	12
	4-70	33
	4-73	13
	4-74	36
	4-81	6
	4-82	23
	4-85	8
	4-86	31
1482668	4-78	14
	4-147	12
	4-163	4
	4-163	7
1482701	2-45	4
1482905	1-57	4
1482906	1-57	6
1482950	1-47	9
1483828	1-49	
	1-51	
1484377	4-63	2
	4-91	3
	4-91	4
	4-91	5
	4-92	18
	4-92	29
	4-92	30
	4-94	46
	4-94	47
	4-94	48
	4-97	3
	4-97	4
	4-97	5
	4-98	18
	4-98	28
	4-98	29
	4-98	33
	4-99	34
	4-99	35
	4-100	50
	4-100	51
	4-100	52
	4-103	3
	4-103	4
	4-103	5
	4-104	17
	4-104	27
	4-105	33
	4-105	34
	4-106	52
	4-106	53
	4-109	3
	4-109	4
	4-109	5
	4-110	17
	4-110	27
	4-111	33
	4-111	34
	4-112	52
	4-112	53
	4-113	56
	4-113	57
	4-113	58
	4-115	1
	4-115	2
	4-115	3
	4-119	1
	4-132	24
	4-132	28
	4-132	29
	4-135	2
	4-135	3
	4-135	4
	4-136	23
	4-139	1
	4-140	22
	4-140	26
	4-140	27
	4-143	2

©2011 HYSTER COMPANY

NUMERICAL INDEX (continued)

PART NO.	PAGE	ITEM
	4-144	25
	4-144	29
	4-144	30
	4-147	8
	4-149	9
	4-153	5
	4-153	6
	4-154	26
	4-157	8
	4-157	9
	4-163	1
1484397	4-131	15
	4-131	19
	4-135	15
	4-135	16
	4-139	13
	4-139	14
	4-143	13
	4-143	17
	4-143	18
	4-153	3
1484557	4-131	4
	4-131	6
	4-139	4
	4-139	6
	4-163	5
1484558	4-131	4
	4-131	6
	4-139	4
	4-139	6
	4-163	5
1484709	4-43	10
	4-78	17
	4-163	2
1486737	8-13	17
	9-3	18
	10-25	5
	11-33	5
	11-39	6
1486738	8-13	6
1486740	8-13	5
1486742	9-65	11
1486745	8-13	14
1486746	11-25	17
1486749	5-9	1
1486751	11-9	27
1486772	8-13	22
1487058	8-13	1
	9-3	19
1487063	9-65	1
1487064	7-9	1
	8-14	40
1487067	9-3	33
1487069	5-9	3
1487075	12-11	5
1487095	10-25	1
	11-33	1
	11-39	1
1487099	12-11	7
1487951	1-41	19
1487956	1-42	8
1487957	1-42	6
1487959	1-42	3
1488404	12-27	5
1489643	2-45	10
1489655	3-51	5
	4-65	5
	4-65	16
	4-91	2
	4-97	2
	4-103	2
	4-109	2
1489656	4-65	8
	4-92	22
	4-93	36
	4-98	22
	4-99	40
	4-104	22
	4-105	41
	4-110	22
	4-111	41
	4-131	9
	4-132	23
	4-132	30
	4-135	1
	4-136	22
	4-140	21
	4-140	28
	4-143	1
	4-143	6
	4-144	24
1489657	4-65	9
	4-92	22
	4-93	36
	4-98	22
	4-99	40
	4-104	22
	4-105	41
	4-110	22
	4-111	41
	4-131	9
	4-132	23
	4-132	30
	4-135	1
	4-136	22
	4-140	21
	4-140	28
	4-143	1
	4-143	6
	4-144	24
1490242	4-37	25
	4-91	11
	4-92	26
	4-97	11
	4-98	26
	4-103	11
	4-104	26
	4-104	27
	4-109	11
	4-110	26
	4-110	27
	4-115	11
	4-117	4
	4-117	7
	4-119	3
	4-119	8
	4-132	27
	4-136	26
	4-140	25
	4-144	28
	4-153	16
	4-153	17
	4-153	18
	4-154	19
	4-154	20
	4-157	4
	4-157	5
	4-157	6
	4-159	8
	4-159	9
	4-161	10
	4-161	11
	4-163	3
	4-163	6
	4-163	8
	4-164	1
1490243	4-91	11
	4-92	26
	4-97	11
	4-98	26
	4-103	11
	4-104	26
	4-104	27
	4-109	11
	4-110	26
	4-110	27
	4-115	11
	4-117	4
	4-117	7
	4-119	3
	4-119	8
	4-132	27
	4-136	26
	4-140	25
	4-144	28
	4-153	16
	4-153	17
	4-153	18
	4-154	19
	4-154	20
	4-157	4
	4-157	5
	4-157	6
	4-159	8
	4-159	9
	4-161	10
	4-161	11
	4-163	3
	4-163	6
	4-163	8
	4-164	1
1490966	1-33	
	1-35	
1491220	1-27	14
1491466	1-27	13
1493428	4-91	3
	4-97	3
	4-103	3
	4-109	3
1493430	4-92	28
	4-98	30
	4-153	6
	4-154	26
1493435	4-153	1
	4-159	6
	4-159	7
	4-161	8
	4-161	9
1493447	4-161	5
	4-161	6
1493465	1-19	9
	4-37	17
	4-115	9
	4-147	8
	4-149	9
	4-164	2
1493466	4-43	24
	4-43	25

See Service Manual for service procedures.
©2011 HYSTER COMPANY

NUMERICAL INDEX (continued)

PART NO.	PAGE	ITEM
1494726	9-63	
1494888	1-19	2
	1-25	20
1495279	10-17	2
1498044	4-28	4
	4-77	5
	4-105	38
	4-111	38
1498045	4-92	32
	4-93	33
	4-99	37
	4-99	38
	4-105	35
	4-105	37
	4-111	35
	4-111	37
1498046	4-28	3
1498047	4-28	5
1498424	4-77	9
	4-77	10
	4-123	5
	4-127	10
	4-129	5
1498483	4-121	8
	4-125	2
1500786	1-73	4
1500884	2-47	18
1500899	4-77	2
	4-132	20
	4-135	17
	4-139	18
	4-143	19
	4-153	14
1500900	4-74	33
	4-85	18
1500901	1-45	7
	1-49	
	1-51	9
	4-74	26
1500912	1-19	12
	1-45	9
	1-49	
	1-51	10
	3-51	15
	4-5	2
	4-5	11
	4-7	7
	4-9	8
	4-11	4
	4-37	11
	4-49	3
	4-51	4
	4-65	2
	4-78	15
	4-78	17
	8-3	31
	8-8	39
	8-11	2
	12-7	3
1500913	4-63	2
	4-91	1
	4-91	3
	4-97	1
	4-97	3
	4-103	1
	4-103	3
	4-109	1
	4-109	3
	4-153	9
	4-159	1
	4-161	1
	4-163	1
1500925	4-132	29
	4-135	2
	4-140	27
	4-144	30
1501258	3-35	
1501259	3-35	
1501888	3-3	2
	3-5	2
1501896	4-38	46
1501919	4-37	20
	4-147	12
1501948	4-35	3
1501970	3-13	31
1501994	2-95	17
1502004	2-95	10
1502006	2-95	8
1502008	9-3	9
1502009	3-3	9
	3-5	9
	8-13	9
1502053	4-65	19
	9-66	4
1502055	4-65	13
1502057	3-37	9
1502059	3-19	19
1502061	3-5	
	3-19	18
	4-21	11
1502066	3-13	7
	3-17	7
	4-35	16
	8-13	20
	9-66	3
1502543	1-25	16
	2-5	16
	2-11	3
	2-13	4
	3-31	12
	4-5	6
	4-7	2
	4-13	18
	4-15	10
	4-17	11
	4-21	14
	12-3	7
	12-4	7
1502625	4-92	18
	4-98	18
	4-104	31
	4-110	31
1502626	4-92	18
	4-98	18
	4-104	31
	4-110	31
1502771	1-29	
1502772	1-29	
1502809	10-27	1
	11-25	7
1503088	4-123	3
	4-127	4
	4-129	7
	4-167	3
1503334	4-167	1
1504075	2-17	6
	2-64	6
1504083	1-29	
1507571	4-121	7
	4-123	1
	4-125	7
	4-127	1
	4-129	1
	4-167	1
1507725	4-104	17
	4-110	17
1508232	4-77	8
	4-127	8
	4-167	7
1509888	4-85	4
	4-117	9
	4-119	7
	4-123	4
	4-127	9
	4-129	6
	4-131	8
	4-135	9
	4-139	8
	4-157	2
1509889	4-73	15
1509890	4-98	32
	4-113	59
	4-115	4
	4-117	3
	4-119	12
	4-143	10
1510113	1-3	26
	2-5	10
	2-5	21
	2-11	4
	2-24	51
	3-3	15
	3-5	15
	3-7	10
	3-35	15
	8-14	41
1510114	1-37	9
1510115	2-7	4
	2-9	6
	4-9	11
	4-11	7
	4-37	43
	9-3	5
1510116	1-39	9
	2-31	8
	2-84	4
1510117	2-5	11
	2-7	28
	2-9	3
1510126	8-3	5
	8-7	5
1511729	3-11	13
1511970	2-75	8
1512403	7-2	1
	7-3	1
1512536	1-53	10
1513191	2-97	10
	2-103	5
1513714	2-99	10
	3-37	8
	3-43	11
	3-45	6
	3-45	12
1514267	2-47	19
1514429	2-23	1
	2-27	1
	2-27	15
	2-31	4

©2011 HYSTER COMPANY

NUMERICAL INDEX (continued)

PART NO.	PAGE	ITEM
	8-3	3
	8-7	3
1514597	4-43	10
	4-69	3
	4-73	3
	4-78	17
	4-82	21
	4-86	29
	4-91	13
	4-94	43
	4-97	13
	4-100	47
	4-103	14
	4-106	47
	4-109	14
	4-112	47
	4-163	2
1514598	4-43	10
	4-78	17
	4-163	2
1514602	4-91	14
	4-92	19
	4-93	42
	4-97	14
	4-98	19
	4-100	46
	4-103	13
	4-104	18
	4-106	48
	4-109	13
	4-110	18
	4-112	48
1514603	4-91	14
	4-92	19
	4-93	42
	4-97	14
	4-98	19
	4-100	46
	4-103	13
	4-104	18
	4-106	48
	4-109	13
	4-110	18
	4-112	48
1514962	2-50	43
	2-53	43
1514964	2-49	36
	2-53	36
1514965	2-49	34
	2-53	34
1514968	2-47	13
1515654	4-49	4
1516202	8-13	18
1516208	9-3	34
1517010	2-69	15
1517011	2-69	15
1517120	4-47	3
1517361	4-17	9
	9-13	15
	9-15	12
	9-17	16
	9-19	13
1517395	9-13	21
	9-15	9
	9-17	23
	9-19	10
1517906	8-13	11
1519025	4-70	21
	4-74	24
	4-81	1
	4-85	1
1519611	4-121	6
	4-123	9
1520543	4-70	24
	4-81	9
1520671	12-20	
1520864	4-79	27
1521183	4-93	37
	4-99	41
	4-105	42
	4-111	42
1521184	4-93	38
	4-99	42
	4-105	43
	4-111	43
1521185	4-93	41
	4-100	45
	4-106	46
	4-112	46
1521186	4-93	40
	4-99	44
	4-106	45
	4-112	45
1521188	4-93	37
	4-93	38
	4-93	40
	4-93	41
	4-99	41
	4-99	42
	4-99	44
	4-100	45
	4-105	42
	4-105	43
	4-106	45
	4-106	46
	4-111	42
	4-111	43
	4-112	45
	4-112	46
1521989	4-77	5
	4-93	37
	4-93	38
	4-93	40
	4-93	41
	4-99	41
	4-99	42
	4-100	44
	4-100	45
	4-105	42
	4-105	43
	4-106	45
	4-106	46
	4-111	42
	4-111	43
	4-112	45
	4-112	46
1523732	1-73	3
1523734	1-73	2
1523741	1-73	5
1523742	1-73	
1524267	3-49	1
1524397	4-79	23
1525563	4-91	1
	4-97	1
	4-103	1
	4-109	1
1525564	4-153	9
	4-159	1
	4-159	1
	4-161	1
1525565	4-63	2
1525566	4-163	1
1525567	4-91	4
	4-92	31
	4-94	46
	4-97	4
	4-99	36
	4-100	50
	4-103	4
	4-105	36
	4-106	51
	4-109	4
	4-111	36
	4-112	51
	4-132	24
	4-136	23
	4-140	22
	4-144	25
1525568	4-94	47
	4-100	51
	4-106	52
	4-112	52
	4-131	1
	4-135	4
	4-139	1
	4-143	2
1525569	4-91	5
	4-97	5
	4-103	5
	4-109	5
1525570	4-94	48
	4-100	52
	4-106	53
	4-112	53
	4-132	28
	4-135	3
	4-140	26
	4-144	29
1525573	4-93	35
	4-99	39
	4-105	40
	4-111	40
	4-131	12
	4-143	5
1525577	4-92	23
	4-98	23
	4-104	23
	4-110	23
	4-132	22
	4-136	21
	4-140	20
	4-144	23
1525584	4-131	7
	4-135	7
	4-139	7
	4-143	7
1527273	4-121	7
	4-125	7
	4-167	1
1527275	4-70	29
	4-81	14
1527305	4-121	7
	4-123	1
	4-125	7
	4-127	1
	4-129	1
	4-167	1
1527813	8-13	6

©2011 HYSTER COMPANY

NUMERICAL INDEX (continued)

PART NO.	PAGE	ITEM
	8-13	17
1527819	5-9	4
1527876	2-21	1
	2-24	54
	3-23	5
	3-25	8
	3-31	13
	4-5	5
	4-17	16
	4-23	7
	4-49	5
	4-51	1
	8-4	36
	8-7	26
1527877	1-7	16
	1-25	18
	2-23	2
	2-27	13
	2-31	5
	4-5	5
	4-7	1
	4-21	3
	12-7	5
1527878	1-37	33
	1-39	33
	9-13	6
	9-17	6
1527879	2-18	7
	2-23	19
	2-39	7
	2-63	6
	3-3	12
	3-5	12
	3-13	15
	3-17	19
	3-19	15
	3-49	4
	4-5	12
	4-7	10
	4-13	9
	4-15	6
	4-18	9
	4-21	15
	4-35	8
	4-37	4
	4-37	26
	4-37	44
	4-38	52
	4-51	11
	4-65	14
	5-9	7
	7-9	2
	8-3	1
	8-7	1
	9-13	2
	9-15	2
	9-17	2
	9-19	2
	9-65	14
	10-27	9
1527880	1-3	14
	1-25	11
	1-37	13
	2-5	20
	2-13	3
	3-13	24
	3-17	26
	3-19	9
	3-35	25
	4-21	5
	8-3	24
	8-7	29
	8-11	11
1527881	2-95	4
	3-11	3
	3-13	11
	3-17	1
	3-19	1
	3-37	13
1527883	2-95	15
	7-11	17
	7-15	17
1527884	4-13	16
	4-15	13
1527885	2-23	24
	4-25	7
1527886	1-3	24
1527888	3-35	10
1527979	10-25	9
	11-33	9
	11-39	9
1527980	2-95	2
1528132	4-67	3
1528133	4-67	4
1528315	4-67	2
1528481	3-11	
	9-4	
1528482	2-23	26
	4-11	8
	4-25	8
1528580	11-26	34
1528589	11-10	38
1528608	3-11	21
	3-38	7
1528630	4-67	5
1528631	4-67	6
1528778	4-37	13
1528888	2-64	10
	3-35	8
1528889	3-35	22
1528893	3-11	15
	3-37	26
1528930	2-7	6
1528938	2-7	5
1529010	2-41	5
1529014	8-13	16
	12-27	6
1529016	10-17	9
	11-25	20
1529046	4-91	4
	4-91	5
	4-92	31
	4-97	4
	4-97	5
	4-99	36
	4-103	4
	4-103	5
	4-105	36
	4-109	4
	4-109	5
	4-111	36
	4-131	1
	4-132	24
	4-132	28
	4-135	3
	4-135	4
	4-136	23
	4-139	1
	4-140	22
	4-140	26
	4-143	2
	4-144	25
	4-144	26
	4-144	29
1529052	4-92	28
	4-98	30
	4-153	6
	4-154	26
1529257	4-21	1
1529366	2-23	33
	3-13	10
	3-17	10
	3-38	6
	4-9	4
	4-9	4
	4-9	12
1529787	2-11	2
	2-13	2
1530019	1-13	13
1530037	4-94	46
	4-94	47
	4-94	48
	4-100	50
	4-100	51
	4-100	52
	4-106	51
	4-106	52
	4-106	53
	4-112	51
	4-112	52
	4-112	53
1530135	1-13	30
1530243	1-3	27
	1-7	7
	1-17	2
	2-5	17
	3-3	14
	3-5	14
	3-13	12
	3-17	12
	3-35	16
1530244	4-61	4
1530311	3-49	5
1530732	5-11	22
	5-13	14
	5-15	25
	5-17	15
	5-17	17
	5-27	23
	5-29	9
	5-31	25
	5-33	21
1530960	4-92	29
	4-98	29
	4-105	33
	4-111	33
	4-157	9
1530961	4-157	9
1530971	3-49	3
1531001	1-5	5

©2011 HYSTER COMPANY

NUMERICAL INDEX (continued)

PART NO.	PAGE	ITEM
	1-13	9
	4-43	17
	12-7	4
1531162	4-159	3
	4-159	5
	4-161	3
	4-161	7
1531312	3-51	6
1531404	2-11	5
1531480	4-7	8
	4-78	16
1531486	4-163	4
	4-163	7
1531557	1-3	19
	1-7	11
	1-19	16
	1-25	6
	1-37	25
	1-39	25
	3-35	26
	4-41	27
	12-8	4
1531558	1-13	8
	1-13	11
	1-25	17
	1-59	8
	4-17	17
	4-41	17
	4-41	22
1531563	7-2	3
	7-3	3
1531567	8-3	32
	8-7	36
1531973	4-92	30
	4-98	28
	4-98	33
	4-105	34
	4-111	34
	4-113	58
	4-115	1
1531974	4-92	30
	4-98	28
	4-98	33
	4-105	34
	4-111	34
	4-113	58
	4-115	1
1531975	4-9	5
1532571	4-131	7
	4-135	7
	4-139	7
	4-143	7
	4-153	11
	4-153	12
1532585	2-7	22
1532650	10-7	22
1532664	4-132	25
	4-136	24
	4-140	23
1532775	4-41	20
1532778	4-73	8
	4-74	38
1532779	4-73	9
	4-86	24
1533810	4-78	19
1534017	2-23	31
1534282	4-91	9
	4-97	9
	4-103	9
	4-109	9
	4-131	3
	4-135	6
	4-139	3
	4-143	4
1534329	1-25	21
	4-92	24
	4-98	24
	4-104	24
	4-110	24
1534417	2-27	11
	2-28	33
	4-27	2
	4-51	6
1534660	1-65	9
1534828	4-131	11
	4-135	11
	4-139	16
	4-143	9
1534871	8-3	12
	8-7	14
1535166	4-65	1
1535257	2-11	15
	2-15	3
	2-65	2
1536304	4-13	28
	4-37	38
1536813	1-7	5
1537422	4-32	8
1537551	1-45	10
	1-49	
	1-51	11
	4-41	23
	4-43	23
1539273	2-24	48
1539274	2-24	43
1539584	4-43	20
1539859	4-121	4
	4-123	2
	4-125	5
	4-127	2
	4-129	3
	4-167	2
1539872	4-78	20
1540388	4-91	8
	4-97	8
	4-103	8
	4-109	8
	4-131	2
	4-135	5
	4-139	2
	4-143	3
	4-153	13
1540643	1-13	6
	3-21	1
	3-23	2
	3-25	3
1540805	4-13	19
	4-15	17
	4-17	12
1540944	4-86	25
	4-86	26
1541231	4-49	6
	4-51	3
1541232	4-49	7
1541921	5-5	11
	5-7	17
1541988	4-69	1
	4-73	1
	4-78	15
	4-81	19
	4-86	27
	4-99	35
	4-112	56
	4-115	3
	4-115	7
1541989	4-78	15
	4-115	7
1541991	4-91	17
	4-93	34
	4-97	17
	4-99	34
	4-105	39
	4-113	57
	4-115	2
1541992	4-91	17
	4-93	34
	4-97	17
	4-99	34
	4-105	39
	4-113	57
	4-115	2
1542436	3-13	4
	3-17	14
1542439	3-13	19
	3-17	18
	4-65	12
	8-13	25
1542440	4-17	14
1542546	9-13	10
	9-17	10
1543337	2-75	7
	3-46	1
1543435	4-47	6
1543439	4-47	5
1543553	4-70	24
	4-77	2
	4-81	9
1543698	3-37	11
	4-17	15
1543842	3-5	
	3-13	8
	3-17	8
	3-37	28
1543933	2-28	32
1544153	4-32	4
1544157	4-13	13
	4-15	8
	4-21	20
	4-35	6
	7-9	4
	10-27	10
1544212	2-23	7
1544255	4-67	7
1544731	4-37	19
	4-147	11
	4-149	16
1544733	4-147	11
	4-149	16
1545202	4-94	44
	4-100	48
	4-104	28
	4-106	50
	4-110	28
	4-112	50
1546285	2-28	31
1546689	1-51	
1546697	4-94	44
	4-100	48

See Service Manual for service procedures.
©2011 HYSTER COMPANY

NUMERICAL INDEX (continued)

PART NO.	PAGE	ITEM
	4-104	28
	4-106	50
	4-110	28
	4-112	50
1547351	6-2	1
	7-19	1
1547352	6-2	1
	7-19	1
1547480	4-79	26
	4-79	29
1547483	4-70	31
	4-74	35
	4-78	11
	4-82	25
	4-86	33
1547629	4-77	8
	4-127	8
	4-167	7
1547849	8-3	28
	8-3	28
	8-7	34
	8-7	34
	8-11	4
	8-11	4
1548517	4-63	3
	4-78	11
	4-78	12
	4-79	26
	4-79	29
	4-131	18
	4-135	14
	4-139	12
	4-143	15
	4-154	21
	4-154	22
	4-154	23
	4-154	24
	4-154	25
1548519	4-63	3
	4-78	11
	4-78	12
	4-79	26
	4-79	29
	4-131	18
	4-135	14
	4-139	12
	4-143	15
	4-154	21
	4-154	22
	4-154	23
	4-154	24
	4-154	25
1551663	2-11	7
1551665	3-11	9
1551828	3-11	10
	3-37	15
1551839	7-2	3
	7-3	3
1552141	2-27	3
	2-55	3
	2-59	3
1552840	2-27	24
1553541	3-11	18
1553897	4-61	6
	8-3	33
	8-8	37
	8-11	6
1554359	4-91	14
	4-92	19
	4-93	42
	4-94	44
	4-97	14
	4-98	19
	4-100	46
	4-100	48
	4-103	13
	4-104	18
	4-104	28
	4-106	48
	4-106	50
	4-106	51
	4-109	13
	4-110	18
	4-110	28
	4-112	48
	4-112	50
	4-112	51
1554814	2-23	34
	4-25	4
1554902	4-9	2
	4-18	10
1556475	8-3	6
	8-8	41
1556910	5-11	24
	5-11	33
	5-13	12
	5-15	26
	5-17	18
	5-27	25
	5-29	11
	5-29	14
	5-31	26
	5-33	19
1556918	5-11	37
	5-13	26
	5-15	22
	5-27	35
	5-29	26
	5-31	22
1556965	5-19	6
	5-21	12
	5-23	8
	5-35	8
	5-39	6
1556985	5-19	15
	5-19	28
	5-21	1
	5-23	26
	5-35	17
	5-39	15
	5-39	28
1556992	5-11	13
	5-15	10
1556998	5-13	7
	5-17	13
	5-29	7
	5-33	17
1557007	5-17	10
	5-33	12
1557008	5-11	40
	5-15	12
	5-17	11
	5-27	38
	5-31	12
	5-33	13
1557009	5-25	1
	5-41	18
1557546	2-7	30
	2-9	18
	4-21	7
1557547	3-21	3
	3-23	1
	3-25	1
1557551	3-21	2
	3-23	4
	3-25	2
1557560	3-23	9
1557565	3-23	15
	3-25	15
1557566	3-23	3
1557737	2-17	4
	2-64	5
1558156	4-157	1
1558219	1-19	17
1558227	4-73	7
	4-86	24
1558771	4-41	24
1558807	2-47	11
1559557	3-21	4
1559561	3-21	4
1559563	3-21	4
1559567	2-55	13
1559570	2-55	12
1559695	2-55	4
	2-63	2
	4-24	
1559922	4-24	3
1559923	4-24	5
1559924	4-24	6
1559925	4-24	7
1560193	2-24	52
1560200	2-23	28
1560255	2-24	49
1560447	4-43	21
1560448	4-43	22
1560671	1-19	4
1560681	9-29	10
	9-31	13
1561015	1-7	21
1561027	4-79	22
1561117	4-149	6
	4-149	7
1561146	4-69	4
	4-69	5
	4-69	6
	4-69	17
	4-69	18
	4-69	19
	4-73	4
	4-73	5
	4-73	6
	4-73	20
	4-73	21
	4-74	22
	4-125	8
1561147	4-77	1
1561559	12-2	2
1561749	12-3	1
	12-4	1
1561755	12-2	2
1561759	1-39	14
	4-65	11
	8-13	26
1561847	3-3	16
	3-5	16
1561871	4-21	10
	4-35	17
1562088	1-37	4

©2011 HYSTER COMPANY

NUMERICAL INDEX (continued)

PART NO.	PAGE	ITEM
	1-39	4
	4-11	10
1562353	1-63	15
1562489	7-5	1
1562492	7-5	4
1562493	7-5	5
1562496	7-5	8
1562501	7-5	13
1562505	7-5	17
1562509	7-5	21
1562648	5-9	6
	7-9	9
1562649	4-70	32
	4-74	34
	4-82	24
	4-86	32
	4-153	1
	4-159	3
	4-159	5
	4-159	6
	4-159	7
	4-161	3
	4-161	5
	4-161	6
	4-161	7
	4-161	8
	4-161	9
1563207	1-49	4
	1-51	4
1563208	1-49	
	1-51	
	1-53	7
1563210	1-49	
1563211	1-49	
	1-51	
1563215	1-45	1
1563216	1-45	2
	1-47	2
1563217	1-45	2
	1-47	7
1563222	1-45	1
1563351	1-45	1
	1-47	1
1563369	1-3	12
1563841	4-9	
1563858	7-11	14
	7-15	14
1564035	2-23	6
	4-22	1
1564036	2-28	28
1564044	4-13	36
	4-21	25
	4-35	19
	4-38	50
1564392	3-38	5
1564526	8-3	30
	8-8	38
	8-11	3
1564670	2-55	9
	2-62	
1564747	9-13	11
	9-15	5
	9-17	11
	9-19	5
1564752	3-49	10
1564804	1-39	10
1565040	4-47	7
1565076	4-41	13
	4-43	13
1565125	1-25	9
	4-41	3
	4-43	3
1565195	2-17	10
1565382	4-17	18
1565407	3-30	9
	4-38	47
1565453	2-17	7
	2-64	9
	5-3	14
1566116	4-132	25
	4-136	24
	4-140	23
	4-144	26
1566117	4-132	26
	4-136	25
	4-140	24
	4-144	27
1566146	4-13	6
	4-13	26
	4-35	14
	4-37	40
	4-74	28
	4-82	27
	4-85	12
1566227	4-139	9
	4-139	10
1566420	4-21	2
1566453	1-49	4
	1-51	4
1566458	4-24	1
1566459	4-24	2
1566505	2-23	18
	2-36	4
1566514	6-5	7
1566654	2-27	10
1566726	1-19	8
1566792	9-61	2
1566853	2-17	11
1566890	9-3	28
1567316	4-28	2
1567317	4-28	1
1567469	4-78	21
1567470	4-78	21
1567471	4-78	21
1567835	4-28	7
1568039	7-11	25
1568075	8-3	8
1568076	8-7	12
1568077	8-7	8
1568078	7-11	24
1568199	9-3	29
1568256	8-7	13
1568270	7-11	22
1568271	7-11	21
1569465	1-39	18
1569540	2-23	29
1569602	9-26	2
1569616	2-95	12
	8-13	13
1569750	2-63	3
1569973	4-78	19
1570298	8-3	10
1570300	8-7	13
	8-7	16
1570303	9-61	11
1570327	4-74	37
1570597	1-39	13
	2-31	6
1571610	1-21	5
1573549	4-63	5
1573597	1-5	10
1573598	1-5	10
1574301	1-25	10
1578517	2-62	
1578518	2-62	
1578519	2-62	
1578520	2-62	
1578521	2-62	
1578522	2-62	
1578617	2-23	21
	2-35	4
1578619	2-23	23
	2-35	2
1578620	2-23	9
	2-35	3
1578660	4-17	5
1578671	9-11	9
1578672	9-11	10
1578673	9-11	6
1578704	9-35	4
	9-39	5
	9-57	1
1578705	9-29	11
1578706	9-43	13
1578707	9-23	6
	9-25	7
	9-29	2
	9-32	4
	9-57	2
	9-59	2
1578710	9-47	2
1578711	9-45	10
	9-49	11
	9-51	11
	9-53	10
	9-55	11
1578712	9-43	2
1578713	9-29	15
	9-31	6
	9-45	2
	9-49	2
	9-51	3
	9-53	2
	9-55	3
1578714	9-43	12
	9-49	2
	9-51	2
	9-53	2
	9-55	2
1578715	9-35	
	9-37	
	9-57	4
	9-59	4
1578718	9-49	3
1578747	9-23	4
	9-25	5
	9-29	2
1578875	9-43	7
1578876	9-43	11
1578878	9-45	9
	9-49	10
	9-53	9
1578882	9-45	7
	9-49	8
	9-51	8
	9-53	7
	9-55	8
1578883	9-45	8

See Service Manual for service procedures.
©2011 HYSTER COMPANY

NUMERICAL INDEX (continued)

PART NO.	PAGE	ITEM
	9-49	9
	9-51	9
	9-53	8
	9-55	9
1578886	9-49	3
1578887	9-45	11
1578888	9-43	8
1578889	9-45	6
	9-49	6
	9-51	6
	9-53	6
	9-55	6
1578904	9-43	5
1578905	9-45	5
1578906	9-49	7
	9-51	7
1578907	9-53	3
	9-55	7
1578908	9-41	
	9-43	
	9-45	
	9-49	
	9-53	
1578909	9-37	
	9-43	
	9-45	
	9-49	
1578911	9-26	4
	9-43	6
	9-53	11
	9-55	12
1578912	9-45	10
	9-49	
	9-51	12
1578940	9-29	14
1578943	9-29	4
1579136	2-27	17
	2-31	9
1579403	4-149	4
1579412	12-8	2
1579677	3-11	20
	3-38	1
1579908	7-7	
	9-37	10
	9-41	10
1580027	2-7	14
	2-9	13
1580028	2-7	23
	2-9	21
1580029	2-7	19
1580092	2-7	18
1580097	9-29	3
1580131	9-32	4
	9-37	9
	9-41	9
	9-57	3
	9-59	3
1580132	9-43	13
1580133	9-26	3
1580136	2-7	17
	2-9	17
1580146	9-26	
	9-31	
1580147	9-31	5
1580151	9-39	
	9-41	
	9-57	4
	9-59	4
1580155	9-32	2
1580156	9-32	2
1580694	9-29	2
1580695	9-29	2
1580696	9-29	2
1580697	9-29	2
1580698	9-29	2
1581055	1-69	1
	1-71	25
1581302	3-13	26
1581558	10-7	17
	11-9	14
1581564	9-61	12
1581565	1-3	6
	10-17	4
1581567	10-7	18
	10-17	24
	11-9	13
1581578	10-17	6
1581585	11-26	49
1581587	10-7	16
	11-9	10
1581588	10-25	17
	11-33	17
	11-39	15
1581593	10-17	25
1581739	1-25	15
1581761	3-29	7
1581762	3-29	1
1581763	3-29	2
1581764	3-29	3
1581833	1-76	3
	10-13	12
	11-21	12
1581848	9-61	3
1581849	11-25	1
1581851	8-3	23
	8-7	28
1581852	1-47	14
	1-53	12
	9-61	15
1581853	10-17	26
1581854	1-76	2
	10-13	13
	11-17	5
	11-21	13
1581859	9-29	9
	9-31	12
1581862	9-43	3
1582141	12-3	2
1582160	9-3	4
1582161	9-3	1
1582218	4-149	1
	4-149	2
	4-149	17
1582222	2-5	8
	2-7	11
	2-9	10
1582300	3-49	14
1582301	3-49	13
1582464	1-19	13
	3-51	9
	4-5	3
	4-7	6
	4-9	9
	4-11	4
	4-37	10
	4-49	2
	4-51	5
	4-65	3
	12-7	2
1582465	4-9	10
	4-11	6
1583611	1-7	23
	1-17	5
	1-25	4
	1-37	27
	1-39	27
	4-41	26
	8-4	37
	8-8	40
	9-13	7
	9-15	3
	9-17	7
	9-19	3
	12-3	6
	12-4	6
	12-8	3
	12-9	3
1583769	2-23	20
	2-33	
1583915	8-11	1
1584060	1-47	8
1584171	3-37	23
1584631	1-49	5
	1-51	5
1584632	1-57	9
1584638	1-57	11
1585575	8-3	9
	8-7	6
1585581	1-3	33
1585592	1-7	22
	1-7	22
1585747	3-29	6
1585748	3-29	5
1585751	3-29	4
1586020	9-47	6
1586109	7-2	4
	7-3	4
1586279	9-43	9
	9-47	12
1586280	9-43	10
1586428	4-41	16
	4-43	16
1586430	4-61	9
	12-9	4
1586431	1-7	9
1586432	1-13	16
1586436	1-19	15
1586439	1-63	7
1586495	1-13	4
	1-19	5
	4-41	18
	4-41	21
	4-43	18
1586627	1-7	4
	9-13	22
	9-15	13
	9-17	24
	9-19	14
	9-65	5
1586629	1-17	3
	2-21	9
	4-61	2
1586759	4-41	15
	4-43	15
1587778	4-119	5
1589377	1-65	5
1589397	1-65	6
1589417	1-65	7

©2011 HYSTER COMPANY

NUMERICAL INDEX (continued)

PART NO.	PAGE	ITEM
1589787	1-25	23
1590033	8-3	21
	8-7	22
1590201	2-27	6
1590211	3-11	12
1590368	4-17	6
	4-21	22
	4-37	36
1590397	2-17	1
1590399	2-17	1
1590532	5-11	9
	5-13	4
	5-15	31
	5-25	16
	5-27	9
	5-29	5
	5-31	31
	5-41	28
	5-42	5
1590977	3-37	24
1591181	4-53	3
	4-55	2
	4-57	11
	4-57	11
	4-59	11
	4-59	11
1591652	1-45	6
	1-49	7
	1-51	7
1591666	2-17	9
1591716	5-3	12
1591717	5-3	5
1591719	5-3	4
1591720	5-3	10
1591721	5-3	3
1592852	8-14	39
1593331	4-5	1
	4-7	15
1593334	1-47	23
1593335	1-3	11
1593341	12-29	5
1593391	3-38	4
1593425	1-49	
1593426	1-49	
1593437	1-51	
1593438	1-51	
1593913	2-31	7
1594029	2-21	3
1594137	7-17	6
	7-18	6
1594869	9-67	5
1594950	8-4	35
	8-7	2
1594958	7-11	
1595774	4-13	24
	4-37	35
1597381	9-61	1
1597451	4-61	8
1597457	11-17	4
1597479	1-19	14
1597661	11-25	3
1597705	2-55	1
	2-59	1
1597807	2-83	9
	4-31	2
1597852	11-25	16
1597959	1-7	12
1597960	1-13	24
1598063	6-5	4
1598221	4-53	
	4-53	
	4-53	
	4-55	
	4-55	
	4-55	
1598223	4-53	
	4-53	
	4-53	
	4-53	
	4-53	
	4-53	
	4-53	
	4-55	
	4-55	
	4-55	
	4-55	
	4-55	
1598224	4-53	
	4-53	
	4-53	
	4-53	
	4-53	
	4-53	6
1598225	4-57	12
	4-57	12
	4-59	12
	4-59	12
1598504	1-45	3
	1-47	10
	1-49	3
	1-51	3
	1-54	16
1598659	11-17	3
	11-26	32
1599337	4-125	8
	4-127	7
	4-129	4
	4-167	6
1599415	1-19	3
	1-25	25
1600126	1-49	5
	1-51	5
1600190	4-9	3
	4-11	3
1600414	2-11	12
1600676	9-3	10
1600923	8-11	13
1600925	2-55	29
1602430	4-153	10
1602431	4-92	32
	4-93	33
	4-99	37
	4-99	38
	4-105	35
	4-105	37
	4-105	38
	4-111	35
	4-111	37
	4-111	38
1602432	4-153	11
1602433	4-153	12
1602835	2-21	2
1602836	2-21	8
1603021	4-63	3
	4-78	12
	4-131	18
	4-135	14
	4-139	12
	4-143	15
	4-154	21
	4-154	22
	4-154	23
	4-154	24
	4-154	25
1603236	4-63	3
	4-78	12
	4-131	18
	4-135	14
	4-139	12
	4-143	15
	4-154	21
	4-154	22
	4-154	23
	4-154	24
	4-154	25
1603286	5-5	14
	5-7	12
1603367	4-51	7
1603701	1-47	10
1603898	7-11	35
	7-15	35
1603961	10-7	19
	11-9	11
1605087	10-7	23
1605266	8-3	22
	8-7	27
1605443	10-17	23
1605444	10-17	23
1605479	1-37	10
	9-65	4
1605770	9-67	4
1605990	1-7	8
1606271	7-19	
1606272	7-19	
1606274	7-19	
1606544	3-37	10
	4-43	12
	4-63	4
	8-13	19
1606547	8-7	9
	8-7	32
1606735	4-63	6
1606750	7-2	7
1607548	4-69	4
	4-69	5
	4-69	6
	4-69	17
	4-69	18
	4-69	19
	4-73	4
	4-73	5
	4-73	6
	4-73	20
	4-73	21
	4-74	22
1607634	1-13	29
1607743	4-70	23
	4-74	27
	4-81	8
	4-85	10
1607839	4-70	32
	4-74	34
	4-82	24
	4-86	32
1608204	1-13	32
1608412	3-49	7
	3-51	
1608413	1-7	15
1608414	1-7	17
1608589	4-43	8
1608590	4-43	9
1608591	4-41	8
1608592	4-41	12

See Service Manual for service procedures.
©2011 HYSTER COMPANY

NUMERICAL INDEX (continued)

PART NO.	PAGE	ITEM
1608622	7-2	2
	7-3	2
1608654	1-7	13
	1-13	18
	1-37	19
	1-39	19
	4-41	10
	4-43	7
	8-3	27
	8-7	33
1608667	1-13	21
1608669	1-13	26
1608671	1-13	19
1608673	1-13	25
1608857	4-73	18
1608872	3-11	5
1608931	10-3	1
1608933	10-3	1
1608938	10-3	1
1608943	10-3	1
1608946	10-3	1
1608961	11-3	1
1608964	11-3	1
1608966	11-3	1
1609046	1-21	1
1609047	1-21	1
1609048	1-21	9
1609049	1-21	2
1610906	1-3	29
1610975	4-78	19
1611062	7-17	10
1611065	7-17	8
	7-18	8
1611564	12-11	2
1611571	9-61	13
1611572	9-61	6
1611579	10-3	11
	11-3	11
1611580	10-3	10
	11-3	10
1611728	9-61	10
1611882	2-7	1
	2-9	1
1611885	2-7	20
	2-9	5
1611999	8-14	44
1612305	5-27	14
	5-31	27
1612314	5-42	3
1612451	9-63	13
1612452	9-63	13
1612453	9-63	13
1612454	9-63	13
1612529	5-19	26
	5-39	26
1612530	6-7	33
	6-9	11
1612617	1-39	15
1612710	5-45	13
1612711	5-45	12
1612863	5-11	21
	5-15	9
	5-27	22
	5-31	9
1612870	5-42	7
1612905	5-11	42
	5-13	20
	5-15	19
	5-17	9
	5-27	40
	5-29	21
	5-31	19
	5-33	11
1613734	1-25	5
1614069	10-25	11
	11-33	11
	11-39	10
1614156	3-35	17
1614250	8-14	42
1614903	1-15	1
1615172	9-7	3
1615240	9-61	8
1615395	1-3	10
1615638	1-3	34
1615757	1-7	10
1615758	1-7	20
1615817	2-33	1
1615818	2-33	4
1615920	2-33	2
1616054	8-13	11
1616122	4-21	23
	4-35	18
	4-37	32
1616249	2-7	8
	2-9	11
1616483	1-9	24
	1-11	10
1616484	1-9	23
	1-11	7
1617081	1-9	20
	1-11	11
1617082	1-9	22
	1-11	9
1617487	5-3	9
1617601	4-32	7
1618463	10-11	10
	11-13	1
1618482	9-4	
1618978	4-5	13
	4-7	12
1619178	11-5	1
1619182	11-5	1
1619230	11-7	1
1619234	11-7	1
1619425	10-7	26
1619430	11-10	36
1619436	11-10	36
1620142	3-8	3
1620145	3-8	2
1620149	4-91	15
	4-97	15
	4-103	16
	4-109	16
1622610	10-17	16
	11-26	27
1622865	1-13	15
1622867	1-13	28
1623050	4-78	16
	4-119	1
1623057	4-127	7
	4-129	4
	4-167	6
1623280	4-153	5
	4-157	8
1623281	4-153	5
	4-157	8
1623368	1-31	8
1623369	1-31	11
1623459	11-19	1
1623544	6-7	2
1623545	6-7	3
1623573	6-9	20
1623576	6-7	34
1623593	6-9	8
1623643	6-7	23
1623669	6-11	1
1623671	6-7	8
	6-11	6
1623672	6-11	8
1623673	6-11	9
1623674	6-11	10
1623675	6-11	11
1623690	6-11	19
1623694	6-11	2
1623696	6-11	4
1623819	2-11	8
1623821	2-11	8
1623860	2-27	26
1623917	2-23	39
1624368	5-11	41
	5-13	19
	5-15	18
	5-17	8
	5-27	39
	5-29	20
	5-31	18
	5-33	10
1624370	5-27	15
1624371	5-11	11
	5-27	11
1624372	5-11	12
	5-27	12
1624602	5-45	3
1624641	5-11	8
	5-13	3
	5-27	8
	5-29	4
1624861	9-9	6
1624862	9-9	7
1624863	9-9	8
1624865	9-9	15
1624866	9-9	9
1624867	9-9	10
1624904	9-3	24
1624905	9-3	25
1625092	11-26	37
1625338	8-14	31
1626361	7-17	
1626459	11-10	29
	11-17	12
1626460	10-7	4
1626461	10-17	22
1626462	10-7	5
1626463	10-7	2
	11-10	32
1626478	11-17	2
1626490	11-9	25
	11-17	11
1626491	11-9	23
	11-17	16
1626521	10-7	27
	11-10	28
	11-17	17
1626522	11-17	15
1626727	4-92	25
	4-98	25
	4-104	25
	4-110	25

©2011 HYSTER COMPANY

NUMERICAL INDEX (continued)

PART NO.	PAGE	ITEM
	4-115	12
	4-117	5
	4-117	8
	4-119	4
	4-119	9
1627183	2-47	2
1627196	2-49	1
	2-53	1
1627199	2-50	42
	2-53	42
1627349	2-59	12
1627354	2-55	23
1627639	1-49	
1627823	6-11	13
1628117	2-23	4
	2-27	14
1628118	2-27	16
1628746	9-31	14
1629155	9-37	8
	9-41	8
1629158	9-47	11
1629159	9-47	5
1629160	9-47	3
1629161	9-47	9
1629162	9-47	8
1629163	9-47	1
	9-47	7
1629164	9-47	10
1629165	9-47	4
1629166	9-49	3
1629198	9-35	3
	9-39	3
	9-49	1
1629200	9-35	6
	9-39	7
	9-47	
1629201	9-35	5
	9-39	6
	9-47	
1629204	4-37	29
1629210	9-43	4
1629280	1-37	21
	1-39	21
	1-41	
1632103	11-26	44
1632297	3-23	6
1632298	3-23	6
1632299	3-23	6
1632300	3-23	8
	3-25	10
1632301	3-23	10
1632302	3-23	11
1632303	3-23	12
1632304	3-23	13
	3-25	5
1632305	3-23	14
	3-25	4
1632306	3-25	15
1632307	3-23	
1633693	9-39	4
	9-53	1
1634047	4-43	10
1635026	1-25	19
1636047	2-27	18
1636048	2-27	9
1636120	1-45	3
	1-47	10
	1-49	3
	1-51	3
	1-54	16
1636241	1-37	6
	1-39	6
1636242	1-37	7
	1-39	7
1636243	1-37	20
	1-39	20
1636244	1-37	24
	1-39	24
1636393	1-63	8
1636510	1-37	29
	1-39	29
1636803	2-23	27
	4-25	3
1636808	9-3	30
1636867	2-21	4
1636958	5-5	9
1637805	4-31	15
1637812	4-31	10
1637881	1-21	7
1638510	1-3	25
	3-7	3
1638706	4-15	16
1638987	4-7	13
1639118	3-13	9
	3-17	9
1639119	3-13	23
	3-17	24
	3-19	10
1639478	1-63	6
1639479	1-63	6
1639673	3-13	14
	3-17	20
1639679	2-7	26
1639723	1-3	15
1639725	2-75	14
1639785	10-13	1
1639801	8-7	16
1640513	1-37	3
	1-39	3
1640531	4-21	18
	4-27	3
1640770	1-37	26
	1-39	26
1640776	1-17	4
1640778	1-37	5
	1-39	5
1640818	4-21	19
	4-27	4
1640863	3-3	13
	3-5	13
1640865	1-13	14
1640867	1-13	12
1640868	1-13	12
1640870	1-13	22
1640872	1-13	27
1640874	1-13	14
1640876	1-13	12
1640877	1-13	12
1640901	3-37	25
1641103	1-37	28
	1-39	28
1641126	10-5	1
1641352	6-7	7
1641371	2-23	5
1641394	12-4	2
1641492	2-55	8
1641590	1-3	28
1641591	1-3	28
1641656	1-5	7
1641657	1-5	7
1641658	1-5	8
1641937	4-77	5
1641938	4-77	5
1641944	4-77	3
1641945	4-77	3
1641947	4-77	4
1641949	4-77	1
1643342	2-11	21
	2-15	20
1643937	4-13	11
	4-15	14
1644113	2-101	4
	3-43	3
1644128	4-47	9
1644129	4-47	8
1644131	4-47	10
1644229	6-7	32
1644232	6-9	25
1644233	6-9	23
1644234	6-9	24
1644235	6-9	22
1644236	6-9	21
1644237	6-9	19
1644238	6-9	18
1644239	6-9	18
1644240	6-9	18
1644241	6-9	18
1644243	6-9	16
1644244	6-9	15
1644245	6-9	12
1644246	6-9	9
1644247	6-9	10
1644248	6-9	13
1644249	6-9	14
1644250	6-9	1
1644251	6-9	2
1644252	6-9	3
1644253	6-9	6
1644254	6-9	4
1644255	6-9	5
1644256	6-9	
1644257	6-9	7
1644260	6-7	6
1644275	6-7	26
1644276	6-7	27
1644277	6-7	28
1644294	6-11	18
1644305	6-11	12
1644398	4-43	11
1644673	6-9	15
1644840	1-37	34
	1-39	34
1645381	8-3	13
	8-7	17
1646397	8-3	13
	8-7	17
1646439	8-3	13
	8-7	17
1646456	4-23	1
1646509	1-7	6
1646593	1-7	14
1646609	1-5	9
1646850	10-17	18
	10-21	2
	10-23	6
	10-25	25
	11-26	28
	11-29	2

©2011 HYSTER COMPANY

NUMERICAL INDEX (continued)

PART NO.	PAGE	ITEM
	11-31	7
	11-33	25
1646922	1-25	19
1647413	1-7	14
1647422	1-31	7
1647423	1-27	4
1647424	1-31	13
1647439	1-27	11
1647440	1-27	12
	4-41	7
1647446	1-31	
1647451	1-33	3
	1-35	13
1647452	1-33	4
	1-35	12
1647453	1-33	12
	1-35	9
1647522	1-29	6
1647528	7-5	1
1647530	7-5	21
1647532	1-51	
1647909	1-73	1
1648259	4-63	7
1648691		
1648692		
1648693		
1648695		
1648696		
1648697		
1648771	9-65	15
1648772	9-65	15
1648927		
1648928		
1648929		
1648931		
1648933		
1648935		
1648936		
1648937		
1649309	11-21	1
1649334	2-21	
	2-23	
	2-27	
	2-31	
	2-45	
	2-47	
	2-49	
	2-55	
	2-61	
1649407	4-61	5
1649408	4-61	3
1649471	2-7	7
1649504	2-21	
	2-23	
	2-27	
	2-31	
	2-45	
	2-47	
	2-49	
	2-55	
	2-61	
1649639	1-7	2
1649640	1-7	2
1649656	8-3	7
1649689	8-14	48
1649764	11-25	11
	11-34	2
	11-37	6
	11-39	21
1649889	3-35	2
1649890	3-35	1
1649891	3-35	1
1650145	1-25	14
1650191	1-7	19
1650217	3-13	30
	3-17	3
	3-19	2
1650229	9-65	10
1650473	1-3	32
1650477	1-3	7
1650479	1-3	9
1650480	1-3	30
1650496	3-35	13
1650522	4-77	3
1650568	1-25	24
1650640	1-59	17
1650797	4-77	9
	4-77	10
	4-123	5
	4-127	10
	4-129	5
1650840	10-13	10
1650841	11-21	24
1650842	11-21	23
1651063	3-35	2
1651104	1-9	10
	1-11	22
1651105	1-9	11
	1-11	23
1651106	1-9	12
1651107	1-9	9
1651108	1-9	25
1651109	1-9	13
	1-11	31
1651110	1-9	3
	1-11	29
1651111	1-9	4
	1-11	27
1651112	1-9	2
	1-11	28
1651113	1-9	8
	1-11	25
1651114	1-9	28
	1-11	26
1651115	1-9	6
	1-11	24
1651116	1-9	27
	1-11	30
1651147	12-11	3
1651275	12-11	1
1651404	1-9	21
	1-11	1
1651405	1-9	19
	1-11	8
1651797	12-29	1
1651850	4-78	18
1652028	1-76	1
1652140	12-27	1
1652220	4-21	4
1652290	12-2	1
1653508	4-77	9
	4-77	10
1653510	4-77	1
1653887	2-45	2
1653888	2-45	1
	2-55	24
	2-59	20
1654013	4-41	28
	4-43	6
	12-2	
1654156	3-49	
1654319	8-11	
1654320	8-11	1
1654321	8-11	
1654322	8-11	1
1654373	8-13	3
1654374	8-13	24
1654411	3-49	1
1654480	2-49	37
	2-53	17
1654481	2-49	37
	2-53	16
1654754	3-49	2
1654871	2-24	52
1654872	2-24	52
1654891	1-49	7
	1-51	7
1655119	4-70	22
	4-74	25
	4-79	25
	4-81	2
	4-85	2
1655120	4-70	22
	4-74	25
	4-79	25
	4-81	2
	4-85	2
1655121	4-70	22
	4-74	25
	4-79	25
	4-81	2
	4-85	2
1655450	5-11	7
	5-27	7
1655451	5-11	6
	5-27	6
1655452	5-11	5
	5-15	5
	5-27	5
	5-31	5
1655453	5-11	4
	5-15	6
	5-27	4
	5-31	6
1655454	5-11	3
	5-15	7
	5-27	3
	5-31	7
1655455	5-11	2
	5-15	8
	5-27	2
	5-31	8
1655456	5-11	14
	5-15	27
1655457	5-11	31
	5-15	30
	5-27	31
	5-31	30
1655458	5-11	30
	5-13	8
	5-15	32
	5-17	12
	5-27	30
	5-29	8
	5-31	32
	5-33	16
1655459	5-11	16
	5-13	9

©2011 HYSTER COMPANY

NUMERICAL INDEX (continued)

PART NO.	PAGE	ITEM
	5-15	33
	5-17	3
	5-27	17
	5-29	12
	5-31	33
	5-33	6
1655460	5-11	39
	5-15	11
	5-27	37
	5-31	11
1655461	5-11	35
	5-27	33
1655462	5-11	36
	5-27	34
1655463	5-11	10
	5-27	10
1655464	5-11	1
	5-27	1
1655465	5-11	15
1655466	5-11	43
	5-15	20
	5-27	41
	5-31	20
1655467	5-11	44
	5-15	21
	5-27	42
	5-31	21
1655468	5-11	23
	5-15	24
	5-27	24
	5-29	10
	5-31	24
	5-33	20
1655469	5-11	34
	5-15	28
1655472	5-27	13
	5-31	10
1655514	5-13	1
1655515	5-13	2
	5-15	2
	5-17	2
	5-29	2
	5-31	2
	5-33	2
1655516	5-13	5
	5-29	3
1655517	5-13	22
	5-17	5
	5-29	23
	5-33	8
1655518	5-13	21
	5-17	6
	5-29	22
	5-33	9
1655519	5-13	25
	5-17	14
1655520	5-13	13
	5-17	16
1655521	5-13	15
	5-29	18
	5-33	3
1655522	5-13	11
	5-17	19
	5-29	15
	5-33	18
1655524	5-29	1
1655527	5-42	1
1655528	5-42	2
1655529	5-42	6
1655530	5-42	4
1655531	5-42	8
1655534	5-45	11
1655535	5-45	10
1655536	5-45	8
1655537	5-45	9
1655539	5-45	6
1655541	5-45	4
1655542	5-45	2
1655543	5-45	5
1655545	5-19	1
	5-39	1
1655546	5-19	2
	5-21	14
	5-23	2
	5-35	2
	5-39	2
1655547	5-19	3
	5-21	15
	5-23	3
	5-35	3
	5-35	31
	5-39	3
	5-39	31
1655548	5-19	5
	5-21	13
	5-23	9
	5-35	9
	5-39	5
1655549	5-19	17
	5-23	21
	5-35	24
	5-39	17
1655550	5-19	27
	5-39	27
1655551	5-35	29
	5-39	30
1655552	5-19	7
	5-21	11
	5-23	10
	5-35	10
	5-39	7
1655553	5-19	18
	5-23	22
	5-35	23
	5-39	18
1655554	5-19	20
	5-23	18
	5-35	27
	5-39	20
1655555	5-19	19
	5-23	17
	5-35	28
	5-39	19
1655556	5-19	21
	5-23	7
	5-35	7
	5-39	21
1655557	5-19	10
	5-21	8
	5-39	10
1655558	5-19	9
	5-21	9
	5-39	9
1655559	5-19	25
1655560	5-19	24
	5-39	24
1655561	5-19	11
	5-21	4
	5-23	12
	5-35	12
	5-35	25
	5-39	11
1655562	5-19	12
	5-39	12
1655596	5-19	13
	5-39	13
1655597	5-19	14
	5-39	14
1655598	5-19	16
	5-39	16
1655599	5-19	16
	5-39	16
1655600	5-19	16
	5-39	16
1655601	5-19	22
	5-23	20
	5-35	25
	5-39	22
1655602	5-39	25
1655604	5-23	1
	5-35	1
1655605	5-23	5
	5-35	5
1655606	5-19	21
	5-23	19
	5-35	26
1655607	5-23	16
	5-35	18
	5-36	8
1655608	5-23	23
1655609	5-23	13
	5-35	13
1655610	5-23	6
	5-35	6
1655612	5-35	19
1655614	5-21	17
1655615	5-21	3
1655616	5-21	5
1655617	5-21	2
1655618	5-21	22
1655621	5-21	21
	5-36	4
1655622	5-21	18
1655623	5-21	20
	5-36	3
1655624	5-21	19
	5-36	2
1655627	5-36	5
1655630	5-25	10
1655631	5-25	11
1655632	5-25	9
1655633	5-25	2
1655634	5-25	14
1655635	5-25	15
1655636	5-25	7
1655637	5-25	16
1655638	5-25	8
	5-41	4
1655639	5-25	3
1655642	5-41	2
1655645	5-41	3
1655812	5-5	1
	5-7	1
1655813	5-5	2
	5-7	2
1655814	5-5	3
	5-7	3
1655815	5-7	8

See Service Manual for service procedures.
©2011 HYSTER COMPANY

NUMERICAL INDEX (continued)

PART NO.	PAGE	ITEM
1655826	5-11	
	5-27	
1655865	1-59	3
	1-59	12
1656007	1-31	1
1656008	1-31	4
1656010	1-27	8
1656011	1-31	6
1656012	1-27	2
1656013	1-27	5
1656014	1-31	9
1656015	1-27	10
1656016	1-31	5
1656017	1-31	3
1656067	1-23	3
	1-33	
1656068	1-33	10
1656069	1-33	11
	1-35	10
1656070	1-33	1
1656071	1-33	2
	1-35	14
1656072	1-33	14
1656073	1-33	15
	1-35	7
1656074	1-33	8
1656081	1-23	4
	1-35	
1656083	1-35	6
1656084	1-35	15
1656085	1-35	4
1656089	1-29	2
1656090	1-29	3
1656091	1-29	5
1656093	1-29	1
1656215	12-9	2
1656216	12-9	2
1656755	6-2	1
	7-19	1
1657411	4-7	9
1657438	3-35	7
1657439	3-35	6
1657455	2-7	31
1657458	2-7	12
	2-9	12
1657460	9-9	4
1657462	9-9	11
1657464	9-9	13
1657465	9-9	16
1657466	9-9	14
1657467	9-9	17
1657468	9-9	18
1657471	9-9	
1657479	9-11	4
1657480	9-11	5
1657482	9-11	
1657631	9-23	
	9-25	
	9-35	
	9-37	8
	9-39	
	9-41	8
1657632	9-23	5
	9-25	6
	9-26	1
	9-35	7
	9-37	2
	9-39	8
	9-41	2
1657634	9-35	1
	9-37	4
	9-39	1
	9-41	3
	9-43	1
1657635	9-35	2
	9-39	2
	9-45	1
1657636	9-35	
	9-39	
1657638	9-23	1
	9-25	1
	9-32	1
1657719	8-11	12
1657743	9-37	8
	9-41	8
1657746	6-7	1
1657747	6-7	10
1657748	6-7	11
1657749	6-7	12
1657750	6-7	14
1657751	6-7	17
1657752	6-7	21
1657753	6-7	20
1657754	6-7	18
1657755	6-7	24
1657756	6-7	13
1657757	6-7	19
1657758	6-7	15
1657759	6-7	16
1657760	6-7	22
1657761	6-7	31
1657762	6-7	30
1657763	6-7	29
1657765	6-7	4
1657766	6-7	5
1657767	6-7	9
1657768	6-7	25
1657770	6-11	3
1657771	6-11	5
1657772	6-11	7
1657773	6-11	21
1657774	6-11	14
1657775	6-11	25
1657776	6-11	16
1657777	6-11	15
1657778	6-11	17
1657779	6-11	20
1657780	6-11	24
1657781	6-11	23
1657782	6-11	22
1657852	6-9	17
1657917	5-5	8
1657918	5-5	8
1657919	5-7	9
1657959	7-2	5
	7-5	
1657962	7-3	5
	7-5	
1658063	4-53	4
	4-55	4
1658065	9-43	14
1658988		
1658989		
1658990		
1658991		
1658992		
1658993		
1658994		
1658995		
1658996		
1659210	5-41	14
1659220	5-41	5
1659541	1-19	1
1659573	4-61	1
1659938	1-13	10
1660295	4-17	10
1660337	1-15	5
1660750	1-7	1
1661150	3-35	24
1661156	8-3	2
1661321	1-19	
1661416	12-11	8
1661488	8-14	34
1661511	1-59	2
	1-59	11
1661665	3-3	8
	3-5	8
1661688	4-35	11
1661971	1-41	1
1661972	1-41	2
1661973	1-41	3
1661974	1-41	4
1661975	1-41	5
1661976	1-41	6
1661978	1-41	8
1661979	1-41	9
1661980	1-41	10
1661981	1-41	11
1661982	1-41	12
1661983	1-41	13
1661984	1-41	14
1661985	1-41	15
1661986	1-41	16
1661987	1-41	17
1661988	1-41	18
1661989	1-41	20
1661990	1-41	21
1661991	1-41	28
1662007	1-41	23
1662008	1-41	24
1662012	9-3	16
1662013	9-3	16
1662014	9-3	16
1662253	3-13	
	3-17	
	3-19	13
1662302	4-51	8
1662565	9-9	1
1662566	9-9	5
1663183	2-64	3
1663630	1-3	31
1663631	1-3	8
1663739	2-64	8
	3-37	29
1663747	4-13	10
1663877	2-15	24
1663948	4-15	12
1664272	1-3	35
1664273	1-3	35
1664289	1-3	2
1664290	1-3	2
1664395	9-51	10
	9-55	10
1664618	3-7	9
1664626	4-41	5
1664656	4-41	25
1664870	4-103	17
	4-109	17

©2011 HYSTER COMPANY

NUMERICAL INDEX (continued)

PART NO.	PAGE	ITEM
1664886	4-104	17
	4-110	17
1664896	12-19	1
1664897	12-19	2
1664898	12-19	3
1664899	12-19	5
1664901	12-19	4
	12-20	
1664902	12-19	10
1664903	12-19	7
1664904	12-19	6
1664908	12-19	12
1664909	12-19	9
1664910	12-19	11
1664911	12-19	14
1664912	12-19	8
1664913	12-19	
1664916	12-20	14
1664940	12-27	
1664953	12-20	12
1664954	12-20	15
1664955	12-20	11
1664956	12-20	13
1664959	12-20	7
1664960	12-20	6
1664961	12-20	5
1664962	12-20	4
1664963	12-20	3
1664964	12-20	2
1664965	12-20	1
1664981	12-15	18
1664982	12-15	16
1664983	12-15	12
1664984	12-15	20
1664987	12-15	2
1664988	12-15	15
1664989	12-15	14
1664990	12-15	10
1664991	12-15	17
1664995	12-15	3
1664996	12-15	11
1664997	12-15	28
1664998	12-15	5
1664999	12-15	31
1665000	12-15	23
	12-16	14
1665001	12-15	8
1665002	12-15	1
1665003	12-15	9
1665004	12-15	7
1665005	12-15	6
1665008	12-15	19
1665009	12-15	4
1665010	12-15	27
1665077	12-16	11
1665078	12-16	4
1665079	12-16	9
1665089	12-16	
1665092	12-15	8
1665093	12-15	8
1665094	12-15	8
1665095	12-15	8
1665096	12-15	8
1665216	12-13	3
	12-19	
1665416	12-13	1
	12-15	
1665417	12-15	26
1665418	12-15	22
	12-16	
1665419	12-15	21
1665420	12-15	13
1665421	12-15	24
1665422	12-15	25
1665423	12-15	30
1665424	12-15	29
1665427	12-16	1
1665556	2-15	13
1665557	2-64	11
1665636	3-37	1
1665637	3-37	2
1665638	3-37	3
1665700	2-15	12
1665746	9-15	1
1665747	9-19	1
1665748	9-17	1
1666557	2-15	16
1666569	2-5	13
1666570	2-5	14
1667636	2-17	2
1668425	3-37	4
1668428	2-5	12
1668633	1-25	12
1668639	2-65	8
1668856	2-11	1
1669114	1-25	13
1669428	2-13	1
1669439	2-13	5
1669446	1-3	20
1669541	9-9	12
1669542	9-9	19
	9-11	
1669543	9-9	
1669547	9-11	
1669570	4-37	41
1669664	9-4	41
1670054	9-25	
	9-29	
1670194	9-13	1
1670195	9-13	14
1670196	9-17	13
1670292	9-15	4
1670293	9-19	4
1670413	9-21	4
1670434	9-23	
	9-29	
1670445	9-29	5
1670522	9-29	13
1670530	9-25	2
	9-31	2
1670531	9-23	2
	9-25	3
	9-29	1
1670532	9-23	3
	9-25	4
	9-31	1
1670592	1-9	1
	1-11	35
1670593	1-9	5
	1-11	34
1670604	2-5	1
1670677	9-13	5
	9-17	5
1670786	7-11	24
1670904	9-3	13
1671218	7-11	24
1671271	2-24	45
	2-55	26
	2-59	26
1671273	2-24	40
1671304	5-7	16
1671760	7-15	25
1672003	8-3	22
	8-7	27
1672004	8-3	22
	8-7	27
1672005	8-3	22
	8-7	27
1672006	8-3	22
	8-7	27
1672299	5-3	11
	5-11	
	5-13	
1672300	5-3	11
	5-27	
	5-29	
1672695	6-5	6
1672699	6-5	5
1672700	6-5	4
1672798	9-13	17
	9-15	10
	9-17	15
	9-19	11
1673444	7-15	24
1673481	7-15	22
1673482	7-15	21
1673486	4-147	13
1673586	1-23	1
	1-25	1
	1-27	
	1-31	
1673754	10-25	14
	11-33	14
1673877	3-37	7
	3-43	5
	3-45	10
1673878	2-99	8
	3-37	6
	3-43	8
	3-45	3
	3-45	11
1675474	1-3	1
1676205	1-29	6
1676423	7-15	47
1676424	7-15	5
1676606	7-7	
1676918	3-37	27
1676919	3-37	15
1676923	2-24	46
	2-55	27
	2-59	27
1676948	2-95	3
1676949	2-95	16
1677231	2-15	7
1677244	7-11	
	7-15	
1677286	1-45	11
	1-47	12
	1-54	26
1677426	2-95	13
1677428	1-63	4
1677429	3-21	4
1677717	2-95	9
1677787	3-21	4
1677808	1-37	2
	1-39	2
	1-42	
1677876	2-53	15

See Service Manual for service procedures.
©2011 HYSTER COMPANY

NUMERICAL INDEX (continued)

PART NO.	PAGE	ITEM
	4-21	17
	4-27	6
1677952	4-32	8
1678069	4-32	6
1678123	4-37	12
1678165	9-4	
	9-59	5
1678178	4-32	5
1678273	1-3	20
1678274	1-3	15
1678405	1-27	9
1678514	1-37	11
1683373	7-18	10
1683529	9-21	1
1683621	9-21	2
1683675	2-49	3
	2-53	3
1683677	2-49	13
1683678	2-49	12
1683720	2-49	37
	2-53	37
1683721	2-50	
1683722	2-50	
	2-53	37
1683744	2-49	31
	2-53	31
1683746	2-49	29
	2-53	29
1683747	2-49	35
	2-53	35
1683749	2-55	3
	2-59	3
1683840	2-7	15
1684085	2-55	12
1684098	2-55	12
1684099	2-55	12
1684259	5-11	26
1684266	5-45	14
1684268	5-45	1
1684271	5-5	4
	5-7	4
1684272	5-5	5
	5-7	5
1684274	5-11	
	5-27	
1684327	5-27	27
1684329	5-31	28
1684331	5-41	
1684332	5-41	6
1684333	5-41	7
1684334	5-41	8
1684335	5-41	9
1684336	5-41	10
1684337	5-41	11
1684338	5-41	12
1684339	5-41	13
1684340	5-41	15
1684341	5-41	16
1684342	5-41	17
1684343	5-41	19
1684344	5-41	20
1684345	5-41	21
1684346	5-41	24
1684347	5-41	25
1684348	5-41	26
1684349	5-41	27
1684395	1-51	
1684487	9-4	
	9-59	5
1686718	1-17	1
1686719	4-11	9
1686731	2-95	7
1686965	3-21	4
1686966	3-21	4
1687082	2-5	15
1687413	2-95	14
1688503	8-3	32
	8-8	36
1688547	3-8	4
1688654	1-33	7
	1-35	3
1688655	1-33	
	1-35	
1689026	2-45	8
1689296	3-7	8
1689455	4-53	
	4-53	
	4-53	
	4-53	
	4-55	
	4-55	
	4-55	
	4-55	
	4-55	
1689460	4-53	
	4-53	
	4-53	
	4-55	
	4-55	
	4-55	1
1689464	3-7	2
1689544	3-13	26
1689881	2-15	6
1689908	1-33	
	1-35	
1689940	3-21	4
1690066	1-42	7
1690067	1-42	1
1690068	1-42	2
1690069	1-42	5
1690070	1-42	4
1690267	2-50	41
	2-53	41
1690996	1-45	5
	1-47	3
1691441	4-37	2
1691544	4-37	1
1691576	2-104	1
1691577	2-103	6
	2-104	2
1691581	2-69	3
1691583	2-69	4
1691584	2-69	5
1691586	2-69	6
1691587	2-69	7
1691588	2-69	8
1691589	2-69	9
1691592	2-69	12
1691593	2-69	13
1691594	2-69	14
1691597	2-93	1
1691598	2-93	2
1691608	3-41	16
1691613	2-104	
1691614	2-105	1
1691615	2-105	2
1691624	2-105	3
1691625	2-105	4
1691626	2-105	5
1691627	2-72	1
1691629	2-72	2
1691632	3-41	15
1691634	4-31	4
1691635	4-31	5
1691636	4-31	11
1691637	4-31	14
1691638	4-31	8
1691639	4-31	9
1691640	4-31	12
1691641	4-31	6
1691642	4-31	13
1691645	2-103	3
1691647	2-77	14
1691649	3-46	2
1691650	3-46	3
1691651	3-46	4
1691652	3-46	5
1691653	3-41	2
1691654	3-45	2
1691655	3-45	4
1691656	3-45	5
1691657	3-45	7
1691658	3-45	8
1691659	3-45	9
1691660	2-75	1
	3-43	2
1691661	2-75	2
1691662	2-75	3
1691663	2-75	4
1691664	3-41	3
1691665	3-41	4
1691667	2-75	9
1691668	2-75	10
1691669	3-43	9
1691670	3-43	10
1691671	3-43	12
1691672	3-43	13
1691673	3-43	14
1691674	3-43	15
1691676	3-43	17
1691677	3-43	18
1691678	2-75	15
1691679	2-66	2
1691681	2-75	12
1691682	2-75	13
1691792	2-84	2
1691806	2-97	7
	3-39	1
1691807	2-75	16
	3-39	2
1691808	3-39	3
1691809	3-39	4
1691810	3-39	5
1691811	3-39	6
1691812	3-39	7
1691813	3-39	8
1691816	3-39	9
1691817	3-47	1
1691818	3-47	2
1691819	3-47	3
1691821	3-47	5
1691822	2-97	8
1691823	2-97	9
1691824	3-43	4
1691825	2-66	1
1691826	3-43	6
1691827	3-43	7
1691828	2-80	7
1691830	2-83	3

©2011 HYSTER COMPANY

NUMERICAL INDEX (continued)

PART NO.	PAGE	ITEM
	2-107	2
1691831	2-83	4
1691832	2-83	5
1691833	2-83	6
1691834	2-83	7
1691835	2-103	7
1691836	3-41	5
1691837	2-80	5
1691838	2-103	4
1691839	2-103	1
1691840	2-77	1
	2-103	2
1691841	2-80	3
1691842	2-80	4
1691843	2-80	6
1691844	2-80	1
1691845	2-80	2
1691846	2-80	8
1691847	2-106	1
1691848	2-106	2
1691849	2-106	3
1691850	2-106	4
1691851	2-106	5
1691852	2-106	6
1691853	2-79	2
	2-83	1
	2-83	8
	3-43	1
	3-45	1
1691855	2-83	12
1691856	2-83	10
1691857	2-83	11
1691858	2-84	5
	2-87	9
1691860	2-79	1
	2-99	2
1691861	4-47	11
1691862	2-79	3
1691864	2-75	5
	2-79	5
1691865	2-79	6
1691866	2-79	7
1691867	2-75	6
	2-79	8
1691868	4-47	12
1691869	2-83	2
	2-85	1
	2-107	1
	4-47	1
1691870	4-47	2
1691871	4-47	4
1691872	3-41	6
1691874	3-41	7
1691877	4-47	13
1691878	4-47	14
1691879	4-47	15
1691880	4-47	16
1691881	2-91	5
1691882	2-91	6
1691884	3-41	8
1691885	2-85	7
1691886	2-85	2
	3-41	1
1691887	2-85	3
1691888	2-85	4
1691890	2-91	1
1691892	2-91	
1691893	2-91	4
1691894	2-85	5
1691896	2-85	8
1691897	2-71	1
1691898	2-71	2
1691899	2-71	3
1691901	2-71	4
1691902	2-71	5
1691903	2-71	6
1691904	2-71	7
1691905	2-71	8
1691906	2-71	9
1691909	2-99	3
	3-41	13
1691911	3-41	14
1691912	3-41	17
1691913	2-71	
1691914	3-41	
1691982	3-41	9
1691983	3-41	10
1691984	3-41	11
1691986	2-97	1
1691987	2-97	2
1691988	2-97	3
1691989	2-97	4
1691990	2-97	5
1691992	2-88	1
1691993	2-88	2
1691994	2-88	3
1691996	2-88	4
1691997	2-88	5
1691998	2-88	6
1691999	2-88	7
1692000	2-88	8
1692001	2-88	9
1692002	2-88	10
1692003	2-97	
1692004	2-88	11
1692005	2-88	12
1692006	4-44	2
1692007	4-44	1
1692008	2-101	3
1692009	2-101	1
1692010	2-101	2
1692011	2-99	1
1692023	2-99	4
1692024	2-99	5
1692025	2-99	6
1692026	2-99	7
1692027	2-99	9
1692028	2-99	11
1692029	2-99	12
1692030	2-99	13
1692031	2-99	14
1692032	2-99	15
1692033	2-99	16
1692034	2-99	17
1692035	2-87	1
1692036	2-87	2
1692037	2-87	3
1692038	2-87	4
1692040	2-87	5
1692046	2-107	3
1692048	2-77	2
1692049	2-77	3
1692050	2-77	4
1692051	2-77	5
1692052	2-77	6
1692053	2-77	10
1692054	2-77	11
1692055	2-77	12
1692056	2-77	13
1692057	2-77	7
1692058	2-77	6
1692059	2-77	8
1692060	2-77	9
1692061	2-77	
1692176	3-29	
1692261	1-11	15
1692263	1-11	14
1692265	1-11	13
1692277	1-11	20
1692278	1-11	21
1692279	1-11	12
1692430	1-11	17
1692431	1-11	16
1693081	2-85	6
1693601	2-69	1
1694124	12-23	11
1694170	12-23	6
1694403	5-21	23
1694405	5-25	
1694476	5-36	7
1694477	5-36	1
1694586	2-21	
	2-23	
	2-27	
	2-31	
	2-45	
	2-47	
	2-49	
	2-55	
	2-61	
1694587	2-21	
	2-23	
	2-27	
	2-31	
	2-45	
	2-47	
	2-49	
	2-55	
	2-61	
1694700	1-54	27
1694830	1-47	19
	1-54	22
1695755	9-4	
1695810	1-11	18
1696278	7-11	6
	7-15	6
1696332	2-64	1
1696333	2-64	1
1696967	2-66	3
1697181	4-115	8
1697342	2-5	5
1697344	2-5	18
1697679	1-29	2
	1-29	5
1698449	4-57	9
	4-57	20
	4-59	9
	4-59	20
1698474	1-9	
	1-11	
1698475	1-11	19
1698541	4-41	5
	4-41	24
1698543	4-41	19
1698684	3-13	6
1698685	1-29	4
1699590	9-47	
1699591	9-47	5

See Service Manual for service procedures.
©2011 HYSTER COMPANY

NUMERICAL INDEX (continued)

PART NO.	PAGE	ITEM
1699754	4-98	31
	4-113	60
	4-115	5
1699926	5-3	11
	5-15	
	5-17	
1699927	5-3	11
	5-31	
	5-33	
1700243	4-89	1
1700460	4-131	15
	4-132	19
	4-139	13
	4-139	14
1700461	4-131	15
	4-132	19
	4-139	13
	4-139	14
1701768	8-3	33
	8-8	37
1701771	8-7	16
1702713	2-24	55
1702855	9-13	17
1702856	9-13	17
1703318	4-37	1
	4-44	
1703337	7-11	24
1703560	11-25	16
1703868	4-17	18
1703890	1-57	8
1703891	1-57	1
1703892	1-53	4
1703893	1-53	5
1703894	1-53	5
1703895	1-54	
1703896	1-54	
1703897	1-54	
1703898	1-53	2
1703899	1-53	3
1703900	1-53	1
1703901	1-53	2
1703902	1-53	3
1703903	1-53	1
1703904	1-53	6
1704529	4-57	13
	4-59	13
1704901	8-8	39
1704902	8-3	31
1705156	1-25	19
1705549	9-7	1
1705722	9-7	
1705728	9-7	
1705818	3-13	
	3-17	
1705821	9-7	1
1705954	2-77	6
1705956	2-104	1
1706804	9-63	2
1707012	8-3	7
1707215	2-71	11
1707217	4-44	2
1707735	5-15	1
1707736	5-15	3
	5-31	3
1707737	5-15	4
	5-31	4
1707738	5-15	13
	5-31	13
1707741	5-17	1
1707743	5-45	6
1707745	5-19	1
	5-39	1
1707746	5-19	18
	5-23	22
	5-35	23
	5-39	18
1707747	5-19	25
1707748	5-19	24
	5-39	24
1707749	5-19	16
1707750	5-19	22
	5-21	5
	5-23	7
	5-23	13
	5-23	23
	5-35	16
	5-35	22
	5-39	16
	5-39	29
1707762	5-23	1
	5-35	1
1707763	5-23	23
1707764	5-23	13
1707766	5-21	17
1707767	5-21	5
1707768	5-21	2
1707769	5-21	18
	5-36	1
1707770	5-21	19
	5-36	2
1707796	5-31	1
1707798	5-33	1
1707836	5-39	25
1707838	5-35	19
1708054	9-37	9
	9-41	9
1708296	9-37	5
	9-41	4
	9-45	1
1708297	9-37	7
	9-41	7
	9-59	1
1708298	9-37	6
	9-41	5
	9-51	1
1708299	9-41	6
	9-55	1
1708365	10-23	4
	10-25	24
	11-31	5
	11-33	24
	11-37	4
	11-39	20
1708368	10-23	5
	10-25	23
	11-31	6
	11-33	23
	11-37	5
	11-39	19
1708371	2-7	7
	2-9	8
1708573	7-17	
	7-18	
1708691	9-7	5
1708697	9-7	1
1708799	1-15	1
1708890	12-11	3
1709587	4-57	8
	4-59	8
1709808	5-15	
1709809	5-31	
1709876	1-45	1
	1-47	4
1709996	2-7	6
	2-9	7
1710007	1-5	3
2014670	2-33	3
2021353	8-3	4
	8-7	4
2021395	1-7	3
2021683	3-38	2
2021685	3-38	3
2027655	1-5	12
2028341	6-5	8
2032492	10-11	8
2033395	11-19	3
2034459	1-63	2
2035791	10-17	5
2036547	9-63	12
2037998	1-15	6
2043538	10-7	20
	11-9	15
2044712	4-67	1
2044821	9-63	9
2046765	7-17	9
	7-18	9
2046866	4-38	45
2046871	10-7	14
	10-25	10
	11-9	18
	11-33	10
	11-39	11
2056822	1-13	7
2056823	1-13	3
2056824	4-41	1
	4-43	1
2056826	4-41	2
	4-43	2
2057948	4-18	8
2058909	4-9	6
	4-161	
2060032	4-18	6
2060033	4-18	11
2060198	4-9	6
	4-159	
2060555	4-77	8
	4-167	7
2061646	9-67	3
2061806	11-9	8
2062587	2-27	27
2062875	1-59	28
2063017	2-23	36
	2-39	2
2063842	3-49	11
2063991	9-13	24
	9-15	15
	9-17	26
	9-19	16
2064554	7-12	
	7-16	
	8-8	
2064929	12-7	1
2065666	1-5	2
2065667	1-5	4
2065745	4-13	17
	4-15	15
	4-17	7
2065797	1-9	15

©2011 HYSTER COMPANY

NUMERICAL INDEX (continued)

PART NO.	PAGE	ITEM
	1-11	3
2065826	1-9	17
	1-11	5
2065827	1-9	18
	1-11	4
2066137	2-28	30
	3-11	19
	3-21	5
2066322	2-11	8
2066482	4-18	12
2066483	4-18	4
2066484	4-18	5
2066485	4-18	3
2067475	1-13	5
2067592	2-24	53
2068337	9-7	4
2068342	4-11	5
2068343	4-9	7
2068344	4-9	7
2069431	4-18	4
2069454	1-19	7
2069951	2-17	5
	2-64	2
	2-64	4
2070100	3-13	26
2070223	1-19	6
2070296	1-67	1
2070297	1-67	2
2070298	1-67	3
2070299	1-67	3
2070300	1-67	3
2070301	1-67	3
2070302	1-67	3
2070303	1-67	3
2070304	1-67	3
2070305	1-67	3
2070306	1-67	3
2070307	1-67	3
2070561	4-41	9
	4-43	24
2070562	4-41	11
	4-43	25
2070563	4-43	24
	4-43	25
2070655	1-67	
	9-17	23
	9-19	10
2070726	1-5	6
2070783	1-39	16
2070975	1-5	11
2070996	1-25	2
2071009	3-17	15
2071094	7-17	7
	7-18	7
2071181	3-49	9
2071261	1-5	3
2071517	3-35	20
2071579	2-23	32
2072202	2-7	27
	2-9	27
2072631	3-13	6
	3-17	6
2072782	3-51	3
2073114	1-69	3
2073115	1-69	2
2073116	1-69	6
2073117	1-69	7
2073118	1-69	4
2073119	1-69	8
2073121	1-69	9
2073122	1-69	10
2073123	1-69	11
2073192	8-14	36
2073197	1-63	5
	1-63	17
	1-65	4
2074209	1-65	10
2074231	3-11	16
2074255	1-63	9
2074256	1-63	9
2074702	3-51	1
2075656	1-63	14
2076134	1-9	14
	1-11	2
2076204	1-5	6
2076301	10-27	5
2076302	10-27	6
2076429	2-31	2
2076695	4-18	2
2076696	4-18	2
2076760	2-13	6
2077604	8-3	13
	8-7	17
2077914	11-25	9
2077916	11-25	9
	11-25	9
2078103	2-11	17
2078353	2-7	27
	2-9	27
2078660	11-25	8
2078968	6-5	1
	6-7	
	6-9	
	6-11	
2078969	6-5	1
	6-7	
	6-9	
	6-11	
2079000	11-10	37
2079065	10-7	15
2079066	11-9	21
2079281	4-65	4
2079326	4-63	1
2079365	7-11	29
	7-17	
2079369	7-2	6
2079843	4-5	15
	4-65	15
2079983	3-13	28
	3-17	4
	3-19	5
2080130	3-11	2
2080791	2-27	21
2081136	2-27	23
2081229	1-71	1
2081230	1-71	2
2081231	1-71	3
2081232	1-71	4
2081233	1-71	5
2081234	1-71	6
2081235	1-71	7
2081236	1-71	8
2081237	1-71	9
2081238	1-71	10
2081239	1-71	11
2081240	1-71	12
2081241	1-71	13
2081242	1-71	14
2081243	1-71	15
2081244	1-71	16
2081245	1-71	17
2081246	1-71	18
2081247	1-71	19
2081248	1-71	20
2081249	1-71	21
2081250	1-71	22
2081251	1-71	23
2081252	1-71	24
2081315	2-28	34
2081788	3-3	4
	3-5	4
2081840	3-38	1
2082194	9-3	27
2082240	9-3	35
2082241	9-3	26
2082657	2-31	3
2082826	9-61	4
	9-63	
2082827	9-61	4
	9-63	
2083136	3-35	12
2083634	2-33	5
	2-35	9
2084246	8-11	16
2084247	8-11	15
2084981	1-49	
2084982	1-49	
2085188	1-51	
2085190	1-51	
2085503	11-9	17
2085506	11-9	17
2085508	11-9	17
2085641	2-23	16
2085875	1-69	12
2085877	1-69	5
2085912	11-19	
2085915	11-19	
2085967	10-11	5
2085969	10-11	5
2085974	10-11	5
2085979	10-11	5
2085982	10-11	5
2086006	10-11	4
2086008	10-11	4
2086017	10-11	4
2086020	10-11	4
2086031	10-11	4
2086035	10-11	
2086037	10-11	
2086042	10-11	
2086047	10-11	
2086050	10-11	
2086090	11-10	37
2086094	11-10	37
2087107	11-19	7
2087117	2-24	56
2087298	11-19	
2087324	11-19	7
2087339	11-19	7
2087565	10-17	11
	11-26	22
2087904	11-13	7
	11-13	7
2087908	11-13	7
	11-13	7
2087921	11-13	7
	11-13	7
2087932	11-13	11

See Service Manual for service procedures.
©2011 HYSTER COMPANY

NUMERICAL INDEX (continued)

PART NO.	PAGE	ITEM
2087935	11-13	11
2087937	11-13	11
2087951	11-13	11
2087954	11-13	11
2087955	11-13	11
2087972	11-13	
2087975	11-13	
2087977	11-13	
2087993	11-13	
2087996	11-13	
2087998	11-13	
2088538	10-17	21
2088540	10-17	21
2088545	10-17	21
2088550	10-17	21
2088551	10-17	21
2088564	11-25	8
2088567	11-25	8
2088584	11-26	47
2088587	11-26	47
2088589	11-26	47
2088603	11-26	29
2088606	11-26	29
2088608	11-26	29
2088624	11-26	46
2088627	11-26	46
2088629	11-26	46
2088997	2-24	
	4-22	
2089017	4-51	10
2089112	1-63	21
2090051	2-23	25
	2-39	5
2090303	2-23	22
2090613	4-5	4
	4-7	3
	4-67	
2090626	9-61	5
	9-63	
2090627	9-61	5
	9-63	
2090693	1-13	17
2090917	9-35	
2090919	9-39	
2091014	9-3	12
2091441	8-13	11
2091442	8-13	27
2091460	4-51	10
2091513	8-14	50
2091573	9-65	12
2091581	9-65	18
2091582	9-65	17
2091583	9-65	16
2091584	9-65	2
2091585	9-65	19
2092323	1-13	34
2092324	1-13	31
2092345	10-3	
	10-5	
	10-17	
2092347	10-3	
	10-5	
	10-17	
2092352	10-3	
	10-5	
	10-17	
2092357	10-3	
	10-5	
	10-17	
2092360	10-3	
	10-5	
	10-17	
2092372	11-3	
	11-5	
	11-7	
2092375	11-3	
	11-5	
	11-7	
2092377	11-3	
	11-5	
	11-7	
2092396	10-27	3
2092397	10-27	4
2092437	4-117	
2092448	1-37	31
	1-39	31
2092558	11-10	39
2092613	8-3	19
	8-7	24
2092717	1-39	16
2092718	1-39	17
2092888	8-3	15
	8-7	19
2093121	4-17	13
2093220	4-13	35
	4-15	3
	4-21	25
	4-35	19
	4-38	48
2093224	8-4	
	8-8	
2093342	1-13	2
2093343	1-13	1
2093476	9-65	15
2093493	10-13	
2093681	2-27	8
	4-81	
2093682	2-27	8
	4-69	
2093738	3-3	10
2093817	11-13	
2093829	11-26	45
	11-29	
	11-31	
	11-33	
	11-34	4
	11-37	8
	11-39	23
2093830	11-26	30
	11-29	
	11-31	
	11-33	
	11-34	3
	11-37	7
	11-39	22
2093936	8-13	7
2093937	8-14	45
2093938	8-13	2
	8-13	2
2093939	8-13	21
2093940	8-14	33
2093942	8-13	10
2093987	8-14	47
2093989	8-13	4
2094021	9-35	
2094022	9-39	
2094200	6-2	2
2094201	7-19	3
2094242	11-21	
2094425	3-13	2
2094426	3-13	5
2094438	3-35	11
2094677	4-21	9
	4-121	
2094678	4-21	9
	4-125	
2094680	1-9	16
	1-11	6
2094998	10-18	28
	10-21	5
	10-23	8
	10-25	27
2094999	10-17	27
	10-21	6
	10-23	7
	10-25	28
2095000	10-17	19
	10-21	4
	10-23	9
	10-25	19
2095001	10-17	20
	10-21	3
	10-23	10
	10-25	26
2095002	11-25	18
	11-31	8
	11-33	26
2095003	11-25	19
	11-29	3
	11-29	4
	11-31	1
	11-33	19
2095409	9-65	9
2095852	9-63	8
2095895	4-43	10
2095922	8-14	46
2096180	12-11	6
2096469	10-11	
2096470	11-19	
2096472	11-19	15
2096473	11-19	15
2096474	11-19	15
2096508	12-13	5
2096509	12-13	4
2096510	12-13	5
2096511	12-13	4
2096512	12-13	2
2096559	2-11	10
2096678	12-13	
2096896	2-64	
2096959	11-26	39
2096962	11-26	38
2097624	3-7	1
2097900	8-14	38
2097933	9-3	16
2097983	9-3	32
2098011	4-9	1
	4-143	
2098012	4-9	1
	4-135	
2098082	4-41	6
	4-43	5
2098083	4-41	5
	4-43	4
2098084	4-41	4
2098085	4-41	4
2098086	4-43	4
2098087	4-43	4

©2011 HYSTER COMPANY

NUMERICAL INDEX (continued)

PART NO.	PAGE	ITEM
2098095	9-4	40
2098119	1-39	17
2098220	1-7	2
2098221	9-4	40
2098244	9-63	6
2098245	9-63	6
2098246	9-3	2
2098330	1-5	1
2098416	1-9	7
	1-11	32
2098417	1-9	26
	1-11	33
2098527	8-11	7
2098586	2-7	21
2098592	9-3	21
	9-9	
2098603	8-14	32
2098768	4-15	1
	4-21	22
2098769	4-15	2
	4-21	23
2098848	3-35	
2098994	4-17	6
2099080	3-7	6
2099263	4-164	
2099265	3-7	5
2099266	9-3	6
2099388	2-15	4
2099389	2-15	10
2099393	9-13	20
	9-15	6
	9-17	22
	9-19	9
2099394	9-13	19
	9-15	7
	9-17	21
	9-19	8
2099395	9-15	8
	9-17	20
	9-19	7
2099396	9-19	6
2099397	9-17	19
2099398	9-13	18
2099479	2-36	1
	2-65	5
2099799	4-13	29
	4-35	18
	4-37	28
2099800	4-37	5
2099801	4-35	9
2099951	1-54	17
2100071	9-23	
2100073	9-17	18
	9-19	17
	9-25	
2100074	9-23	
2100075	9-25	
2100090	2-11	22
2100119	3-7	8
2100258	5-9	2
2100260	5-9	8
2100401	2-15	17
2100710	4-5	10
	4-65	3
2101429	2-27	12
2101430	2-27	12
2101482	2-15	1
2101861	4-163	
2101862	4-43	19
2101871	2-15	15
	2-65	1
2101947	1-37	15
2101948	1-37	14
2101971	1-37	18
2101973	2-15	14
2102122	1-45	
2102125	1-45	
2102566	7-7	
	9-23	7
	9-25	8
	9-35	8
	9-39	9
2102567	9-37	10
	9-41	10
2102640	1-61	1
2102655	9-67	1
	10-7	32
	11-10	39
2102765	2-95	1
2102767	2-95	18
2102904	4-18	1
2102916	3-3	7
2102917	3-3	6
2103051	9-37	
2103053	9-41	
2103058	9-37	1
2103059	9-41	1
2103224	4-37	24
2103244	2-65	
	2-66	
	2-69	
	2-71	
	2-72	
	2-75	
	2-77	
	2-79	
	2-80	
	2-83	
	2-84	
	2-85	
	2-87	
	2-88	
	2-91	
	2-93	
	2-95	
	2-97	
	2-99	
	2-101	
2103360	1-45	
2103361	1-45	
2103458	9-3	21
	9-9	
2103459	4-147	
2103627	3-7	8
2103830	4-35	1
	4-149	
2104080	7-9	5
2104081	7-9	8
2104701	4-11	1
	4-131	
2104702	4-11	1
	4-139	
2105284	9-3	36
2105372	4-53	1
2105373	4-55	1
2105376	4-53	1
2105377	4-55	1
2105378	4-53	1
2105379	4-55	1
2105380	4-53	1
2105381	4-55	1
2105571	3-3	5
	3-8	
2105640	9-3	36
2105724	4-7	5
	4-91	
2105725	4-5	9
	4-103	
2105803	3-13	26
	3-17	27
	3-19	7
2106248	4-51	12
	4-153	
2106249	4-49	1
	4-157	
2106332	1-65	
	4-47	
2106387	4-119	
2107382	4-41	5
	4-43	4
2107383	4-41	4
	4-43	4
2107384	4-41	4
	4-43	4
2107736	2-5	7
2107957	1-13	3
	4-41	1
	4-43	1
2107958	1-13	7
	4-41	1
	4-43	1
2107969	1-47	16
	1-54	24
2108249	4-57	5
2108566	2-65	
	2-66	
	2-69	
	2-71	
	2-72	
	2-75	
	2-77	
	2-79	
	2-80	
	2-83	
	2-84	
	2-85	
	2-87	
	2-88	
	2-91	
	2-93	
	2-95	
	2-97	
	2-99	
	2-101	

See Service Manual for service procedures.
©2011 HYSTER COMPANY

NUMERICAL INDEX (continued)

PART NO.	PAGE	ITEM
	2-103	
	2-104	
	2-105	
	2-107	
	3-39	
	3-41	
	3-43	
	3-45	
	3-46	
	3-47	
	4-31	
	4-32	
	4-44	
	4-47	
2108841	4-51	10
2108843	4-51	10
2108963	7-15	29
	7-18	
2109562	2-79	4
2109666	4-27	1
2110791	4-57	2
	4-57	3
	4-57	4
	4-59	2
	4-59	3
	4-59	4
	4-59	5
2110792	4-57	4
	4-59	5
2110793	4-57	3
	4-59	3
2110942	4-57	19
	4-59	19
2110943	4-57	18
	4-59	18
2110983	3-13	14
	3-17	20
2110986	4-37	14
	4-147	
2110989	4-149	
2111004	4-9	3
	4-11	3
2111005	4-9	3
	4-11	3
2111098	4-13	20
	4-37	33
2111099	4-13	1
	4-35	9
2111754	10-25	6
	11-33	6
	11-33	6
	11-39	7
2111755	10-25	6
2111769	4-57	7
	4-59	7
2111770	4-57	17
	4-59	17
2111799	4-57	6
	4-59	6
2111800	4-57	15
	4-59	15
2314768	4-79	22
2314771	4-79	22
4001171	1-29	2
	1-29	5
4001172	1-29	2
	1-29	5
4001358	4-74	25
	4-79	25
	4-85	2
4002682	1-47	5
4004338	2-21	
	2-23	
	2-27	
	2-31	
	2-45	
	2-47	
	2-49	
	2-55	
	2-61	
4004339	2-21	
	2-23	
	2-27	
	2-31	
	2-45	
	2-47	
	2-49	
	2-55	
	2-61	
4004594	2-50	43
4004645	3-45	6
	3-45	12
4004775	1-59	14
4004776	1-54	14
	1-59	25
4005010	1-54	17
	1-59	
4006052	2-7	19
	2-9	19
4006329	4-74	31
	4-85	19
4006330	4-123	1
	4-127	1
	4-129	1
4006802	2-7	29
	2-9	24
4007052	1-59	5
4007318	1-54	18
	1-59	24
4007319	1-53	10
	1-59	18
4007486	4-31	15
4007891	1-47	17
4007984	4-74	29
	4-85	11
4008604	4-74	29
	4-85	11
4008610	2-23	39
4009488	12-8	1
	12-9	1
4009601	12-23	3
4009620	1-53	8
4010141	5-3	11
	5-15	
	5-17	
4010345	2-5	4
4010347	2-5	3
4010355	2-5	22
4011397	1-3	12
4013095	1-47	6
	1-53	7
4013097	10-25	18
	11-33	18
4013102	10-25	16
	11-33	16
	11-39	14
4013104	11-39	4
4013299	3-25	14
4013301	3-25	11
4013302	3-25	12
4013303	3-25	13
4013304	3-25	15
4013327	3-25	9
4013328	3-25	7
4013329	3-25	6
4014557	1-3	13
4015130	5-25	
4015131	5-25	10
4015132	5-25	9
4015133	5-25	6
4015134	5-25	6
4015631	4-13	14
4017128	2-45	1
	2-55	24
	2-59	20
4017129	1-29	2
	1-29	5
4017725	12-23	11
4017851	3-43	16
4019016	2-18	1
	2-35	1
4019018	3-32	1
4019019	3-32	2
4019020	3-32	3
4019021	2-42	1
4019022	2-42	2
4019033	2-35	5
4019034	2-35	6
4019035	2-35	7
4019036	2-35	8
4019038	2-35	10
4019045	4-23	3
4019046	4-23	4
4019047	4-23	5
4019050	4-23	6
4019052	4-23	10
4019058	2-63	4
4019061	4-22	2
4019082	2-18	8
4019086	3-31	2
4019090	3-26	5
4019092	3-31	4
4019099	3-26	14
4019103	3-26	1
4019104	3-26	6
4019105	3-26	8
4019106	3-26	9
4019107	3-26	12
4019117	3-30	5
4019118	3-30	4
4019119	3-30	2
4019120	3-26	7
	3-30	1
4019121	3-30	8
4019122	2-39	1
4019124	2-39	3
4019125	2-39	4
4019128	2-59	14
4019146	2-23	
	2-27	
	2-31	
	2-45	
	2-47	
	2-49	
	2-55	
	2-61	
4019177	4-25	2
4020186	2-23	

©2011 HYSTER COMPANY

NUMERICAL INDEX (continued)

PART NO.	PAGE	ITEM
	2-27	
	2-31	
	2-45	
	2-47	
	2-49	
	2-55	
	2-61	
4020187	2-23	
	2-27	
	2-31	
	2-45	
	2-47	
	2-49	
	2-55	
	2-61	
4020857	2-7	26
	2-9	26
4022937	2-11	21
4022959	7-9	7
4023295	4-77	1
4023450	7-3	5
	7-5	
4023451	7-2	5
	7-5	
4023567	4-31	1
4023568	2-75	11
	4-31	3
4024031	5-25	5
4025683	4-77	1
4025684	4-77	1
4027341	1-54	
4028642	7-5	1
4030497	3-8	6
4031741	12-23	2
	12-25	1
4031742	12-25	2
4031743	12-25	3
4031744	12-25	4
4031745	12-25	5
4031746	12-25	8
4031747	12-23	1
4031748	12-23	
4031749	12-23	4
4031750	12-23	5
4031751	12-23	7
4031752	12-23	8
4031754	12-23	9
4031755	12-23	10
4031944	1-7	21
4033440	2-41	8
4035760	2-91	2
4038241	2-47	5
4038242	2-47	4
4038256	2-11	8
4038262	2-11	8
4038264	2-11	8
4038265	2-11	8
4038266	2-11	8
4038267	2-11	8
4039968	2-7	15
	2-9	15
4040248	2-18	2
4040249	4-22	
	4-23	
	4-77	
4040250	3-26	10
4040251	4-22	3
4040252	2-63	1
4040254	3-31	1
4040255	2-59	8
	3-31	3
4040256	3-31	5
4040257	3-31	6
4040258	3-31	7
4040259	3-31	8
4040260	3-31	9
4040261	3-31	10
4040262	3-31	11
4040263	3-26	2
4040264	3-26	3
4040265	3-26	4
4040266	3-26	11
4040267	3-26	13
4040268	2-59	6
	3-26	15
4040269	2-18	6
4040270	3-30	3
4040271	2-42	4
4040272	2-41	3
4040273	2-41	4
4040274	2-41	6
4040276	2-53	12
4040281	2-41	6
4040286	4-23	2
4040288	3-31	9
4040289	2-18	3
4040290	2-18	4
	2-18	5
4600754	3-29	
4601093	4-57	1
4601094	4-59	1
4601096	4-59	1
4601097	4-57	1
4601098	4-59	1
4601099	4-57	1
4601100	4-59	1
4601101	4-57	1
4601102	4-59	1
4601103	4-57	1
4601104	4-59	1
4601105	4-57	1
4601106	4-59	1
4601107	4-57	1
4601108	4-59	1
4601120	4-57	16
	4-59	16
4601152	2-7	21
4601159	2-27	8
	4-85	
4601160	2-27	8
	4-73	
4601265	4-57	1
4601499	1-54	
	4-5	
	4-7	
	4-115	
4601526	4-167	
4602051	3-13	13
	3-13	13
	3-17	11
	3-17	11
	3-29	
4603281	4-11	1
	4-131	
4603282	4-11	1
	4-139	
4603376	1-47	
4603382	1-53	
4603383	1-53	
4603384	1-53	
4603385	1-53	
4603386	1-63	
4603425	2-27	12
4603426	2-27	12
4603427	2-27	12
4603439	4-57	6
	4-59	6
4603492	1-59	27
4603493	1-59	29
4603551	2-11	8
4604095	4-51	10
4604099	4-51	10
4604103	4-51	10
4604105	4-51	10
4604389	4-21	9
	4-127	
4604394	4-21	9
	4-129	
4604430	4-21	9
	4-123	
4604594	4-18	1
4604680	10-25	7
	11-33	7
4604682	10-25	2
	11-33	2
4604683	10-25	3
	10-25	8
	11-33	3
	11-33	8
	11-39	3
4604888	11-39	2
4605336	4-57	10
	4-59	10
4605337	4-57	14
	4-59	14
4607741	4-7	5
	4-97	
4607742	4-5	9
	4-109	
4611038	8-11	15
4611039	8-11	16
4612144	12-13	5
4612145	12-13	4
4612147	12-13	4
	12-13	5
4612189	12-13	3
	12-23	
4612836	4-79	22
4612844	4-79	22
4612911	1-53	8
4613024	3-3	5
	3-5	5
	3-8	
4615235	3-5	10
4615342	2-9	20
4615352	3-5	7
4615426	3-5	6
4615506	3-19	14
4615531	2-39	
	2-40	
	2-41	
	2-42	
	2-45	
	2-47	
	2-53	
	2-59	
4615533	2-39	
	2-40	

See Service Manual for service procedures.
©2011 HYSTER COMPANY

NUMERICAL INDEX (continued)

PART NO.	PAGE	ITEM
	2-41	
	2-42	
	2-45	
	2-47	
	2-53	
	2-59	

NUMERICAL INDEX (continued)

NOTES

©2011 HYSTER COMPANY


HYSTER