RUTHZIL TRATOR COMERCIAL DE PEÇAS LTDA 11 97083-6812 ROLANDO CITRANGULO

PARTS MANUAL

HYSTER

H135-155XL (G006)

JANEIRO 2004

CUSTOMER EDITION

HYSTER

1559719
01/2004

©2004 Hyster Company

SECTIONS

1 FRAME
2 ENGINE ASSEMBLY
3 FUEL SYSTEM
4 ELECTRICAL SYSTEM
5 TRANSMISSION
6 STEERING SYSTEM
7 BRAKE SYSTEM
8 HYDRAULIC SYSTEM
9 MAST-TWO STAGE LIMITED FREE-LIFT
10 MAST-THREE STAGE FULL FREE-LIFT
11 OPTIONS
12 NUMERICAL INDEX

This Parts Manual is divided into 12 major sections which are listed above. Quick reference to these sections can be made by placing the right thumb on the tab of the desired section, bending the book back and thumbing the pages to the corresponding tab.

TABLE OF CONTENTS

DESCRIPTION	PAGE
A	
ACCELERATOR PEDAL AND BRACKET	
MONOTROL	3-28
WITH FORWARD AND REVERSE LEVER	3-26
AIR FILTER	
HEAVY DUTY	
DIESEL	3-6
GASOLINE AND LPG	3-4
STANDARD	3-2
ALTERNATOR MOUNTING	
DIESEL	4-20
AXLE HOUSING AND ATTACHING PARTS	5-24
B	
BRAKE	7-10
BRAKE BOOSTER	7-12
BRAKE LINES	7-4
BRAKE PEDAL LINKAGE	
POWERSHIFT	7-6
C	
CAB	11-2
CAMSHAFT AND OIL PAN	
GASOLINE AND LPG	
4.3L EPA COMPLIANT	2-26
CARRIAGE	
THREE STAGE FULL FREE-LIFT	10-18
TWO STAGE LIMITED FREE-LIFT	9-10
CLUTCH PACK	
POWERSHIFT	
DIRECTIONAL	5-10
INPUT	5-8
CONTROL LINKAGE	
POWERSHIFT	5-18
CONTROL VALVE	
FOUR FUNCTION	8-16
TWO AND THREE FUNCTION	8-14
CONTROL VALVE ATTACHING PARTS WITH FITTINGS	
FOUR FUNCTION	8-22
TWO AND THREE FUNCTION	8-18
CONTROL VALVE ATTACHING TUBES	8-24
COOLING AND FAN DRIVE	
DIESEL TIER II	2-50
COUNTERWEIGHT	1-18
COWL AND FLOOR PLATES	1-12
CRANKSHAFT AND PISTONS	
DIESEL	
TIER II	2-46
CYLINDER BLOCK	
DIESEL	
TIER II	2-40

©2004 HYSTER COMPANY

TABLE OF CONTENTS (Continued)

DESCRIPTION **PAGE**

C (continued)

GASOLINE AND LPG
4.3L EPA COMPLIANT 2-24
CYLINDER HEAD
GASOLINE AND LPG
4.3L EPA COMPLIANT 2-36
CYLINDER HEAD AND INDUCTION MANIFOLD
DIESEL
TIER II 2-42

D

DIFFERENTIAL AND CARRIER 5-26
DISTRIBUTOR
4.3 L EPA COMPLIANT ENGINE 4-18
DRIVE ADAPTOR
DIESEL
TIER II 2-68
DRIVE AXLE 5-22
DRIVE SHAFT 8-30
DRIVE SHAFT ASSEMBLY 5-29

E

ELECTRICAL SYSTEM
DIESEL 4-4
GASOLINE AND LPG 4-2
ENGINE ASSEMBLY
GASOLINE
4.3L EPA COMPLIANT 2-22
LPG
4.3L EPA COMPLIANT 2-20
ENGINE FUEL SYSTEM
LPG
4.3L EPA COMPLIANT ENGINE 3-16
ENGINE MOUNTING
GASOLINE, LPG AND DIESEL 2-18
EXHAUST DIESEL
WITH CAB
TIER II ENGINE 2-58
WITHOUT CAB
TIER II ENGINE 2-60
EXHAUST GAS AND LPG
WITH CAB 2-10
EPA COMPLIANT 2-14
WITHOUT CAB 2-8
EPA COMPLIANT 2-12
EXHAUST MANIFOLD
DIESEL
TIER II 2-56
GASOLINE AND LPG
4.3L EPA COMPLIANT 2-16

©2004 HYSTER COMPANY

TABLE OF CONTENTS (Continued)

DESCRIPTION	PAGE
F	
FAN DRIVE AND ALTERNATOR MOUNTING	
4.3L EPA COMPLIANT ENGINE	2-6
FLYWHEEL	
GASOLINE, LPG AND DIESEL	2-70
FORKS	
PIN TYPE	1-20
FREE-LIFT	
THREE STAGE FULL FREE-LIFT	10-10
FREE-LIFT CYLINDER	
THREE STAGE FULL FREE-LIFT	10-16
FUEL INJECTION PUMP	
DIESEL	
TIER II	2-66
FUEL SUPPLY SYSTEM	
DIESEL TIER II	3-10
GASOLINE	3-8
LPG	3-14
FULL SUSPENSION SEAT	
SHEET 1 OF 2	1-6
SHEET 2 OF 2	1-8
G	
GAUGE CLUSTER	4-12
GENERAL TRUCK	1-2
H	
HEADER HOSE	
THREE STAGE FULL FREE LIFT	10-20
TWO STAGE LIMITED FREE-LIFT	9-12
HEATER	11-6
HOOD	1-10
HYDRAULIC OIL FILTER	8-12
HYDRAULIC PUMP	8-26
HYDRAULIC SYSTEM	8-2
HYDRAULIC TANK	8-10
I	
INNER MAST	
THREE STAGE FULL FREE-LIFT	10-6
TWO STAGE LIMITED FREE-LIFT	9-4
INSTRUMENT PANEL	4-8
INTAKE MANIFOLD AND FUEL RAIL	
GASOLINE	
4.3L EPA COMPLIANT ENGINE	2-34
INTERMEDIATE MAST	
THREE STAGE FULL FREE-LIFT	10-4

©2004 HYSTER COMPANY

TABLE OF CONTENTS (Continued)

DESCRIPTION	PAGE
L	
LABELS	1-14
LIFT	
TWO STAGE LIMITED FREE-LIFT	9-6
LIFT CYLINDER	
TWO STAGE LIMITED FREE-LIFT	9-8
LIGHTS	11-20
LOAD BACKREST EXTENSION	1-22
LPG REGULATOR	
4.3L EPA COMPLIANT ENGINE	3-20
M	
MAIN LIFT	
THREE STAGE FULL FREE-LIFT	10-8
MAIN LIFT CYLINDER	
THREE STAGE FULL FREE-LIFT	10-14
MASTER CYLINDER	7-14
MONOTROL PEDAL	3-30
N	
NON-SUSPENSION SEAT	1-4
O	
OIL COOLER	
DIESEL	
TIER II	2-64
OIL FILTER	
DIESEL	
TIER II	2-62
OIL PAN AND PUMP	
DIESEL	
TIER II	2-48
OIL PUMP	
GASOLINE AND LPG	
4.3L EPA COMPLIANT	2-38
OUTER MAST	
THREE STAGE FULL FREE-LIFT	10-2
TWO STAGE LIMITED FREE-LIFT	9-2
OVERHEAD GUARD	1-16
P	
PARK BRAKE	7-2
R	
RADIATOR	
GAS AND LPG	2-4

©2004 HYSTER COMPANY

TABLE OF CONTENTS (Continued)

DESCRIPTION	PAGE
S	
SIDE-SHIFT CARRIAGE	
78-INCH	
THREE STAGE FULL FREE-LIFT	11-14
TWO STAGE LIMITED FREE-LIFT	11-12
SIDE-SHIFT CYLINDER	11-18
STARTER	
GASOLINE AND LPG	4-14
STARTER MOTOR	
DIESEL	4-16
STEERING AXLE	6-8
STEERING COLUMN	6-2
STEERING CONTROL UNIT	6-6
STEERING CYLINDER	6-12
STEERING HYDRAULIC	8-4
STEERING PUMP	6-10
T	
THROTTLE BODY AND LPG MIXER	
4.3L EPA COMPLIANT ENGINE	3-18
THROTTLE BODY ASSEMBLY	
GASOLINE	
4.3L EPA COMPLIANT ENGINE	3-22
THROTTLE LINKAGE	
GAS, LPG, AND DIESEL	3-24
TILT CYLINDER	8-28
TIMING GEAR	
DIESEL	
TIER II	2-54
TIRES AND WHEELS	
DRIVE	11-24
STEERING	11-26
TORQUE CONVERTER	
POWERSHIFT	5-16
TRANSMISSION	
POWERSHIFT	5-2
TRANSMISSION CONTROL VALVE	
POWERSHIFT	5-12
TRANSMISSION COOLING	8-8
TRANSMISSION GEARS	
POWERSHIFT	5-6
V	
VALVE COVER AND INLET MANIFOLD	
GASOLINE AND LPG	
4.3L EPA COMPLIANT	2-30
VALVE COVER AND ROCKER ARM SHAFT	
DIESEL	
TIER II	2-44

©2004 HYSTER COMPANY

TABLE OF CONTENTS (Continued)

DESCRIPTION **PAGE**

W

WATER PUMP AND OUTLET
DIESEL
TIER II 2-52
WIPER AND FAN 11-10
WIRE HARNESS
COWL
DIESEL 4-24
GASOLINE AND LPG 4-22
NEUTRAL START MONOTROL PEDAL
GASOLINE AND LPG 4-27
NEUTRAL START, FORWARD AND REVERSE LEVER
GASOLINE AND LPG 4-28
WIRE HARNESS (ENGINE)
DIESEL 4-30

©2004 HYSTER COMPANY

ABBREVIATIONS QUICK REFERENCE SHEET

Listed below are abbreviations used in parts manuals to denote the following expressions:

TERM	DEFINITION
Amp	Amperes
AR	As Required
BDI	Battery Discharge Indicators
BWI	Brush Wear Indicator
CE	Communicator End
CRE	Corrosive Environment
D/B	Date Break
dbA	Decibel "A" Scale
DE	Drive End
ECH	Empty Container Handler
ECH-3	Empty Container Handler - 3 High Stacking
ECH-4	Empty Container Handler - 4 High Stacking
ECH-5	Empty Container Handler - 5 High Stacking
ECH-6	Empty Container Handler - 6 High Stacking
ECH-7	Empty Container Handler - 7 High Stacking
ECM	Electronic Control Module
ECN	Engineering Change Notice
EEPROM	Electrically Erasable Programmable Read Only Memory
EPROM	Electrically Programmable Read Only Memory

TERM	DEFINITION
FRE	Freezer Environment
in.	inches
LPG	Liquefied Petroleum Gas
MAP	Manifold Absolute Pressure
mm	millimeters
MSTS	Microprocessor Spark Timing System
NPT	National Pipe Threads
O/S	Oversize
PTO	Power Take Off
RPM	Revolutions per Minute
S/N	Serial Number
TMM	Truck Management Module
UL Type D	Diesel-Powered Safety Rating
UL Type DS	Diesel-Powered Safety Rating
UL Type E	Battery-Powered Safety Rating
UL Type EE	Battery-Powered Safety Rating
UL Type ES	Battery-Powered Safety Rating
UL Type G	Gasoline-Powered Safety Rating
UL Type GS	Gasoline-Powered Safety Rating
UL Type LP	Gas-Powered Safety Rating
UL Type LPS	LP Gas-Powered Safety Rating
U/S	Undersize
UL	Underwriters Laboratory
V	Volts

©2004 HYSTER COMPANY

HOW TO USE THE ILLUSTRATED PARTS MANUAL

This parts manual describes and illustrates assemblies, subassemblies, and detail parts needed for service replacement.

The different constructions are indicated by keys and footnotes. The callouts correspond to descriptions found on the next page.

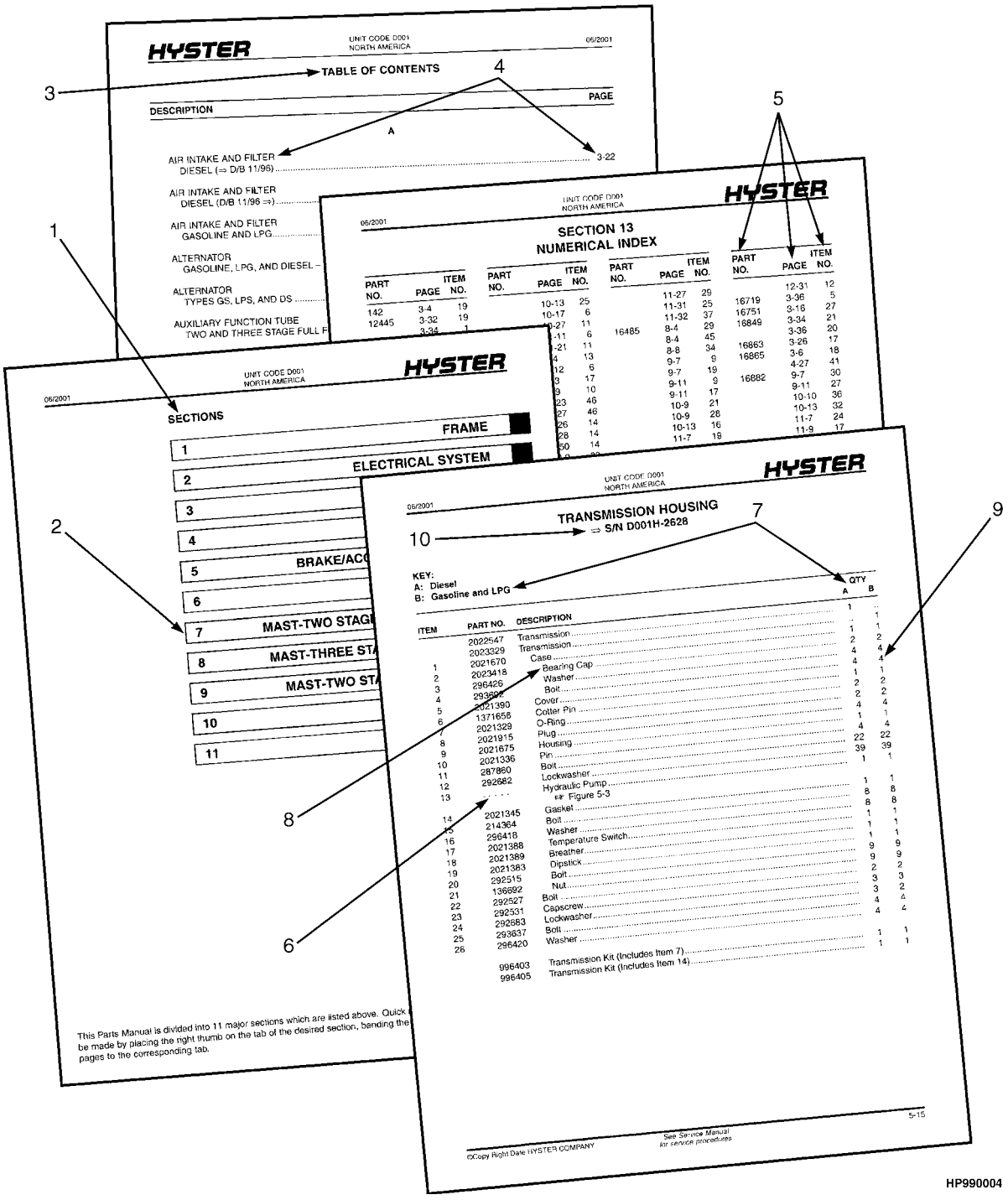

©2004 HYSTER COMPANY

HOW TO FIND THE DESIRED PART NUMBER

WHEN THE PART NUMBER AND THE NEXT HIGHER ASSEMBLY IS NOT KNOWN:

1. Determine the function and application of the part required. Turn to the Sections Page. Choose the general area of reference most likely to include the part.

2. Turn to the section you chose. Use the Section Table of Contents to determine the assembly which would normally contain the part required. Then locate the part on the assembly breakdown page.

WHEN THE PART NUMBER IS NOT KNOWN AND THE NEXT HIGHER ASSEMBLY IS KNOWN:

3. Determine the assembly the required part is used on. Turn to the Table of Contents on Page i.

4. Locate the assembly the required part is used on and turn to the page indicated for that assembly. Then locate the part on the assembly breakdown page.

WHEN THE PART NUMBER IS KNOWN:

5. Use the Numerical Index on Page 12-1 to find the part number. Turn to the page listed and locate the part as indicated by the item number.

GENERAL:

The assembly breakdowns include part numbers, descriptions, quantities required, keys and footnotes to help in selecting correct parts.

6. Five periods in the PART NO. column (. . . . .) indicate that the part is either *Not Serviced Separately* or there is a reference to another figure. A figure reference is denoted by a pointing hand followed by a figure number in the DESCRIPTION column (☞Figure 10)

7. Keys are used to show two or more similar assemblies, RH and LH assembly parts, etc. Select the appropriate key, "A", "B", "C", "D", or "E" and the corresponding quantity column to find the required parts. Two periods in the QTY column (..) indicate that the part is not used for that assembly.

8. Indented descriptions under the DESCRIPTION column are used to indicate assemblies and subparts of assemblies. In the example on the previous page, *BEARING CAP* (Item 2) is a subpart of the major assembly *CASE*.

9. Quantities shown are for one assembly. The quantities of the subpart *BEARING CAP* are indicated as two and two. This means two per *CASE* assembly.

10. Serial number breaks identify the most current parts information and are shown as follows:
    ⇒ S/N D001H-2628
    Indicates last serial number affected.
    S/N D001H-2629 ⇒
    Indicates the first serial number affected.
    S/N D001H-1553 ⇔ S/N D001H-3291
    Indicates a range of serial numbers affected.

    ECN numbers for pending serial numbers are shown to allow for the inclusion of the most current parts information and are identified as follows:
    ⇒ S/N Pending Per ECN 63243
    Indicates a pending serial number for last unit affected.
    S/N Pending Per ECN 63243 ⇒
    Indicates a pending serial number for first unit affected.

    Date breaks are used to indicate when a change occurred but a subsequent serial number break was not recorded. This is an arbitrary date usually based on the ECN release and are identified as follows:
    ⇒ D/B 3/00
    Indicates that a change occurred sometime within that month for the item affected.
    D/B 3/00 ⇒
    Indicates that a change occurred sometime within that month for the item affected.
    D/B 3/00 ⇔ D/B 4/00
    Indicates a range of production dates of the item affected.

    Contact your local dealer for Hyster lift trucks for serial number information for items with a ECN or a date break.

ORDERING PARTS:

When ordering replacement parts, give the unit serial number, part number, name of part and quantity required.

For any further information on parts, service, or ordering, consult your local dealer for Hyster lift trucks.

©2004 HYSTER COMPANY

IDENTIFICATION OF TRUCK SERIAL NUMBERS

X	OOO	X	OOOO	X
(1)	(2)	(3)	(4)	(5)

(1) and (2) The first letter and three numbers indicate the truck unit code.

(3) The second letter indicates the plant of manufacture.

(4) The four or five digit number indicates the production sequence number of the truck.

(5) The final letter indicates the year of manufacture starting with "A" in 1957 and 1980. The letters "I", "O", and "Q" will not be used.

For pending serial numbers contact your local dealer for Hyster lift trucks.

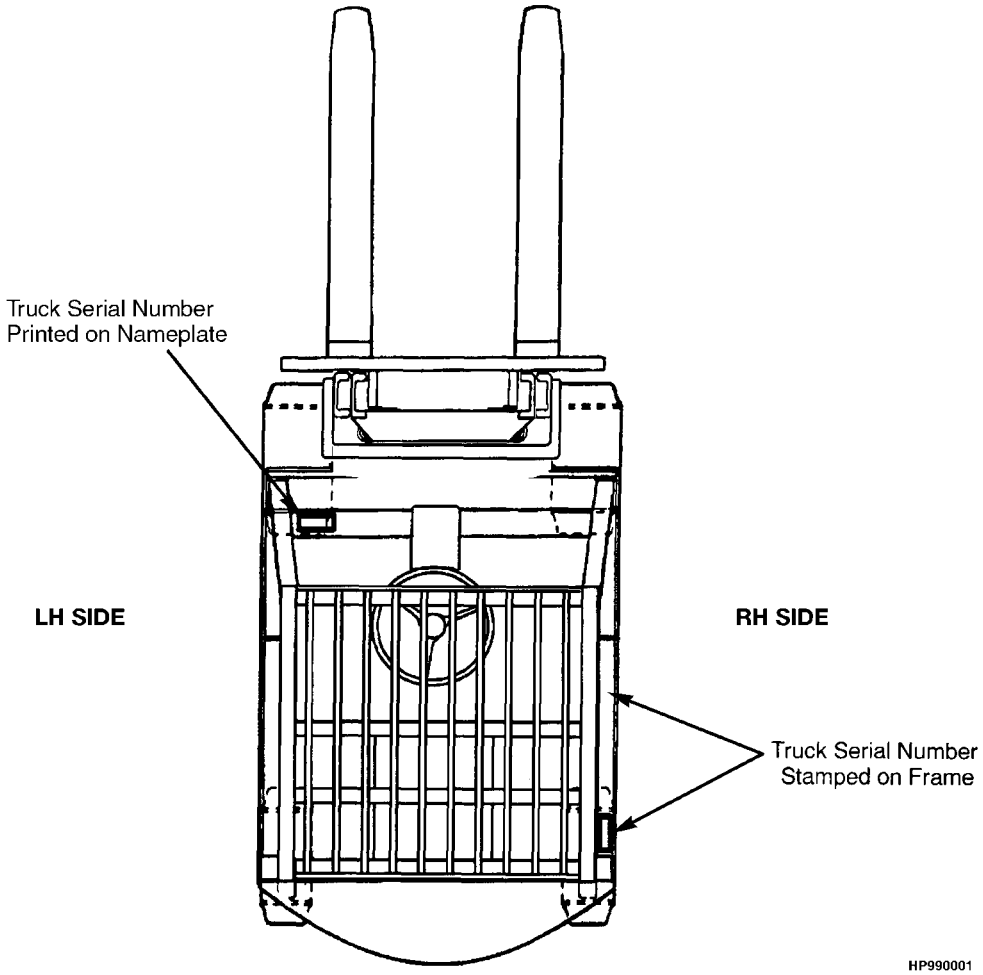

Parts referred to in this book as right or left hand parts are in accordance with the illustration above.

©2004 HYSTER COMPANY

PUBLICATIONS

Every new lift truck is provided with an OPERATING MANUAL. This manual has information that the operator must know for inspection and operation of the lift truck.

SERVICE MAINTENANCE MANUALS, which provide service and overhaul procedures, and PARTS MANUALS with complete replacement part identification, are available at a nominal fee from your Hyster dealer to assist users in effectively maintaining Hyster lift trucks in a safe, useful condition. See the list below for information on ordering specific publications for this model lift truck.

PUBLICATION	HYSTER PART NUMBER
Operating Manual	897364
Service Manual (Complete)	1559725
Parts Manual	1559719

©2004 HYSTER COMPANY

NOTES

1 FRAME

SECTION 1
FRAME

DESCRIPTION	PAGE
COUNTERWEIGHT	1-18
COWL AND FLOOR PLATES	1-12
FORKS	
PIN TYPE	1-20
FULL SUSPENSION SEAT	
SHEET 1 OF 2	1-6
SHEET 2 OF 2	1-8
GENERAL TRUCK	1-2
HOOD	1-10
LABELS	1-14
LOAD BACKREST EXTENSION	1-22
NON-SUSPENSION SEAT	1-4
OVERHEAD GUARD	1-16

©2004 HYSTER COMPANY

GENERAL TRUCK (Figure 1-1)

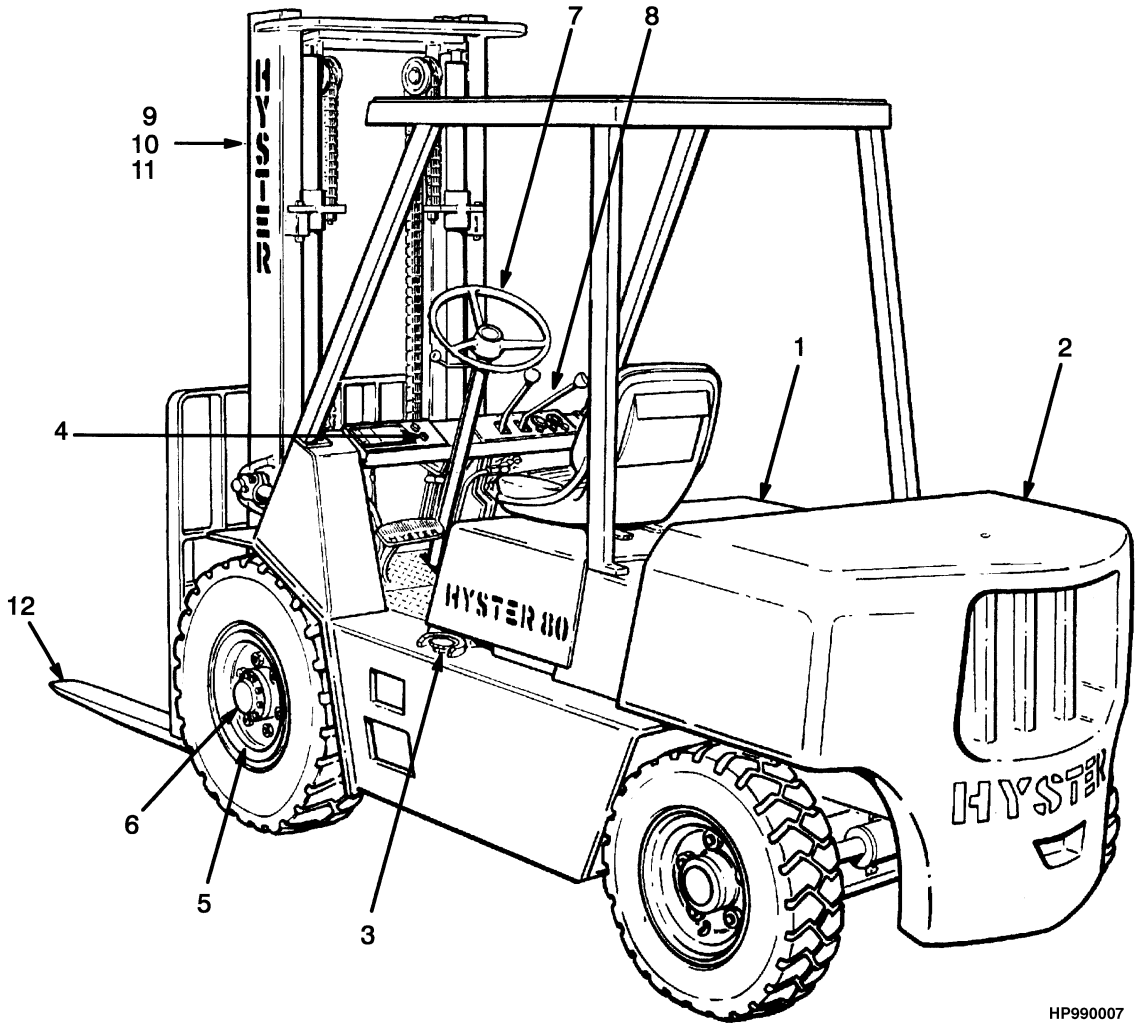

©2004 HYSTER COMPANY

GENERAL TRUCK

ITEM	PART NO.	DESCRIPTION	QTY
1	. . . . .	Frame (☞ Figure 1-6)	1
2	. . . . .	Engine Assembly (☞ Figure 2-9)	1
3	. . . . .	Fuel Assembly (☞ Figure 3-6)	1
4	. . . . .	Electrical System (☞ Figure 4-1)	1
5	. . . . .	Transmission (☞ Figure 5-1)	1
6	. . . . .	Brake System (☞ Figure 7-4)	1
7	. . . . .	Steering System (☞ Figure 6-1)	1
8	. . . . .	Hydraulic System (☞ Figure 8-1)	1
9	. . . . .	Mast-Two Stage Limited Free-Lift (☞ Figure 9-1)	1
10	. . . . .	Mast-Three Stage Full Free-Lift (☞ Figure 10-1)	1
11	. . . . .	Optional Equipment (☞ Figure 11-1)	1
12	. . . . .	Fork (☞ Figure 1-10)	1

©2004 HYSTER COMPANY

NON-SUSPENSION SEAT (Figure 1-2)

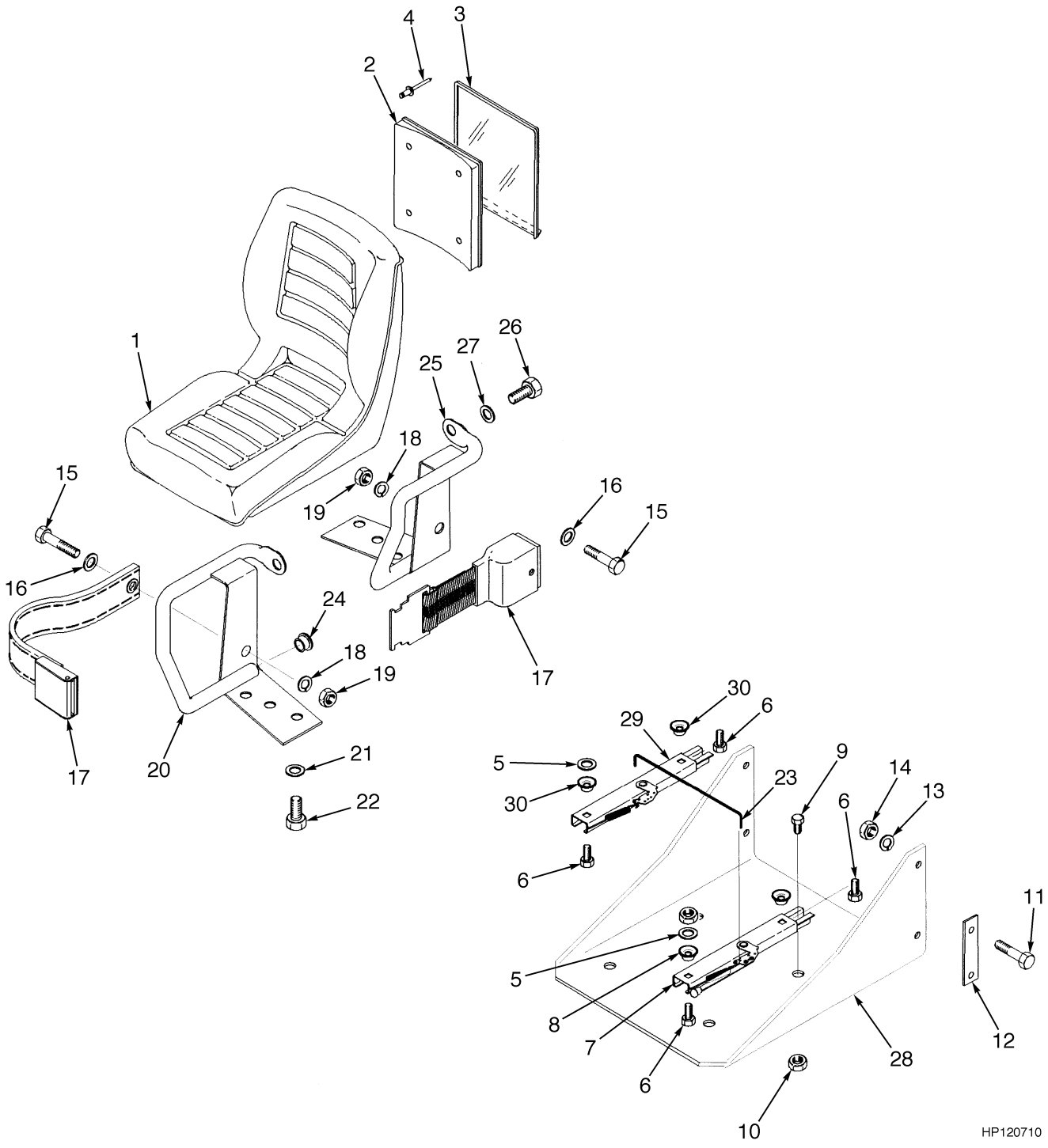

©2004 HYSTER COMPANY

NON-SUSPENSION SEAT

ITEM	PART NO.	DESCRIPTION	QTY
1	377901	Seat (Vinyl)	1
1	1303037	Seat (With Operator Restraint)	1
1	364911	Seat	1
2	335988	Base (Information Case)	1
3	335991	Cover (Information Case)	1
4	222029	Rivet	4
5	221733	Washer	2
6	364914	Capscrew	4
7	335553	Seat Rail	1
8	204114	Spacer	4
9	16836	Capscrew	4
10	145639	Nut	4
11	287854	Capscrew	4
12	385085	Spacer	2
13	292682	Lockwasher	4
14	136692	Nut	4
15	379199	Capscrew	2
16	379697	Washer	2
17	1374750	Seat Belt	1
18	379697	Washer	4
19	379698	Nut	4
20	364807	Hip Restraint (RH)	1
21	18515	Washer	4
22	18727	Capscrew	4
23	1300107	Rod	1
24	364854	Plug	2
25	364808	Hip Restraint (LH)	1
26	379197	Capscrew	2
27	379198	Washer	2
28	**a** 1479677	Seat Pan	1
28	**b** 1479678	Seat Pan	1
29	383116	Seat Rail	1
30	204114	Spacer	4

FOOTNOTES:
a With Cab
b Without Cab

©2004 HYSTER COMPANY

FULL SUSPENSION SEAT (Figure 1-3)
SHEET 1 OF 2

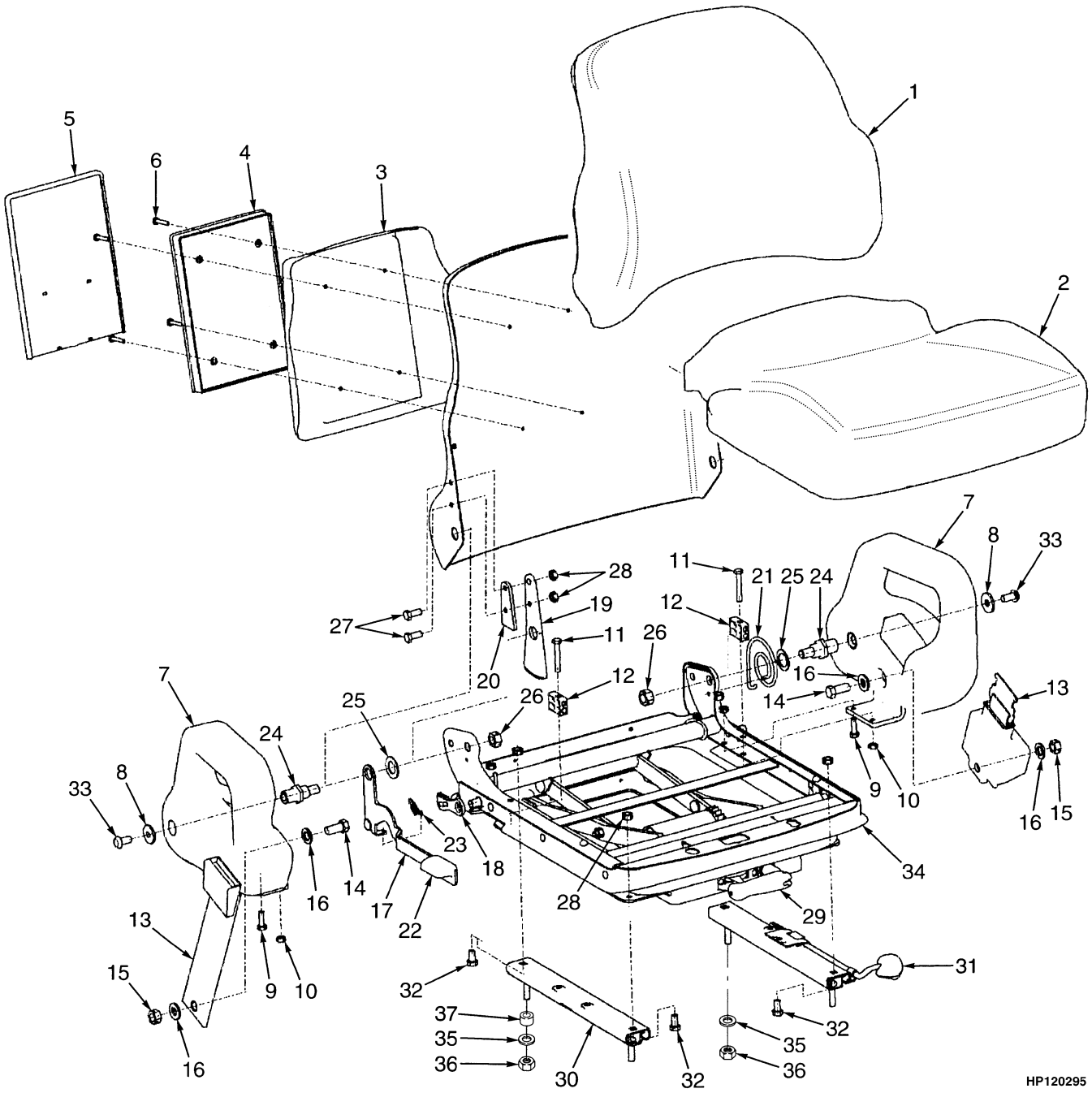

©2004 HYSTER COMPANY

FULL SUSPENSION SEAT
SHEET 1 OF 2

ITEM	PART NO.	DESCRIPTION	QTY
	1396619	Seat (Fabric)	1
	1396617	Seat (Vinyl)	1
1	1470152	Back Cushion (Vinyl)	1
1	1470153	Back Cushion (Fabric)	1
2	1494077	Seat Cushion (Fabric)	1
2	1494076	Seat Cushion (Vinyl)	1
3	. . . . .	Riser	1
4	. . . . .	Box	1
5	. . . . .	Cover	1
6	. . . . .	Screw	4
7	. . . . .	Hip Restraint (RH)	1
7	. . . . .	Hip Restraint (LH)	1
8	. . . . .	Washer	2
9	. . . . .	Bolt	2
10	. . . . .	Nut	4
11	. . . . .	Bolt	2
12	. . . . .	Block	2
13	. . . . .	Seat Belt	1
14	. . . . .	Bolt	2
15	. . . . .	Nut	2
16	. . . . .	Washer	4
17	. . . . .	Handle	1
18	. . . . .	Latch	1
19	. . . . .	Bracket	1
20	. . . . .	Spacer	1
21	. . . . .	Spring	1
22	. . . . .	Knob	1
23	. . . . .	Spring Extension	1
24	. . . . .	Pivot	2
25	. . . . .	Washer	2
26	. . . . .	Nut	2
27	. . . . .	Bolt	2
28	. . . . .	Nut	6
29	1470163	Handle Kit	1
30	. . . . .	Slide (RH)	1
31	. . . . .	Slide (LH)	1
32	. . . . .	Bolt	4
33	. . . . .	Screw	2
34	1470159	Suspension Kit	1
35	15175	Washer	4
36	145639	Nut	4
37	1484643	Spacer	4
	1470155	Manual Holder Kit (Includes Items 3-6)	1
	1470156	Hip Restraint Kit (RH) (Includes Items 7-12, 33)	1
	1470157	Hip Restraint Kit (LH) (Includes Items 7-12, 33)	1
	1470158	Seat Belt Kit (Includes Items 13-16)	1
	1470161	Slide Kit (Includes Items 30-32)	1
	1470164	Recliner Kit (Includes Items 17-28)	1

©2004 HYSTER COMPANY

FULL SUSPENSION SEAT (Figure 1-4)
SHEET 2 OF 2

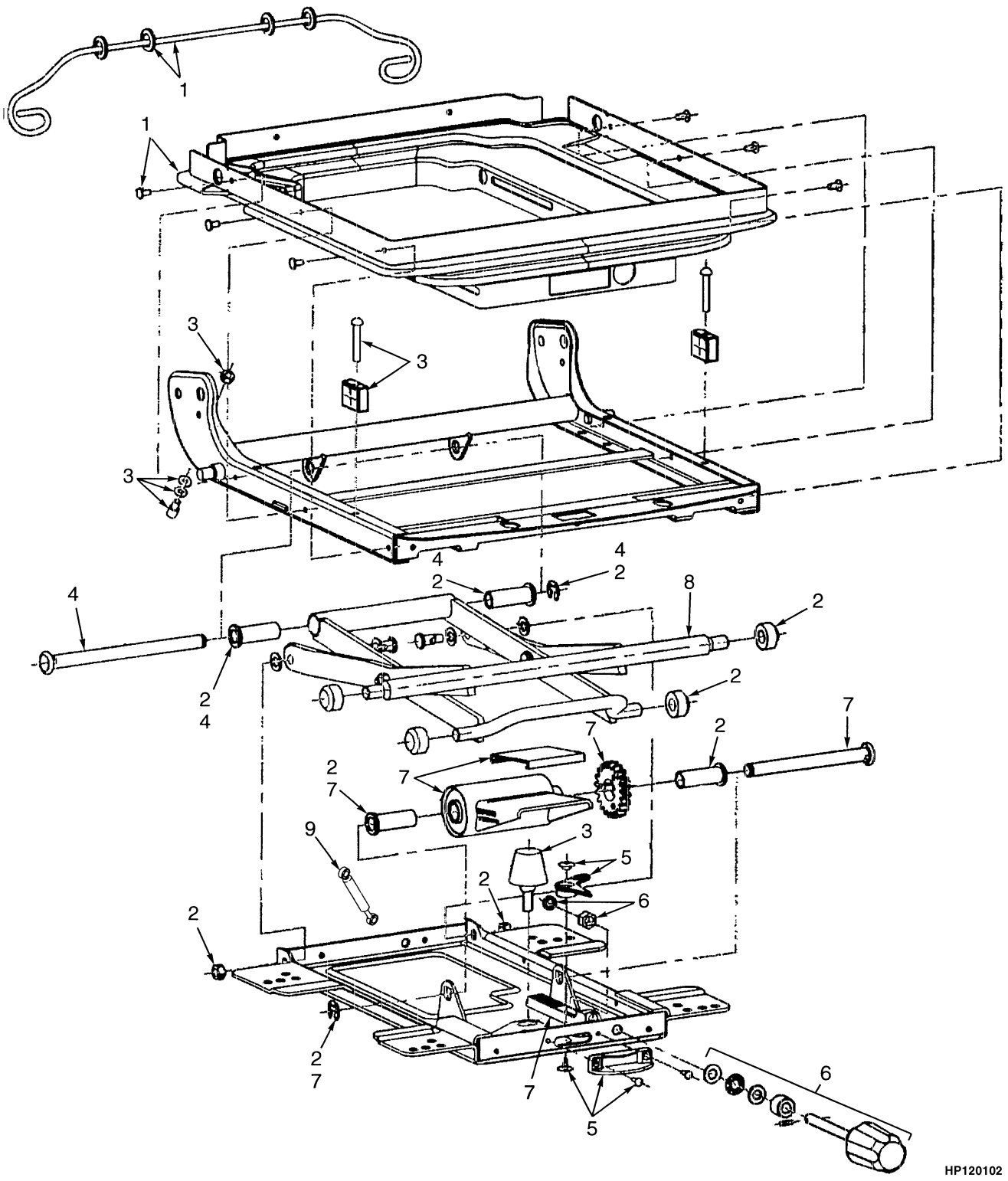

©2004 HYSTER COMPANY

FULL SUSPENSION SEAT
SHEET 2 OF 2

ITEM	PART NO.	DESCRIPTION	QTY
	1396619	Seat (Fabric)	1
	1396617	Seat (Vinyl)	1
1	1467523	Boot Kit	1
2	1467524	Roller and Bearing Kit	1
3	1467525	Bumper and Stop Kit	1
4	1467526	Bearing Shaft Kit	1
5	1467527	Weight Adjuster Indicator Kit	1
6	1467531	Recliner Knob	1
7	1467529	Suspension Spring Kit	1
8	1470160	Scissor Assembly	1
9	1483828	Shock Absorber	1

©2004 HYSTER COMPANY

HOOD (Figure 1-5)

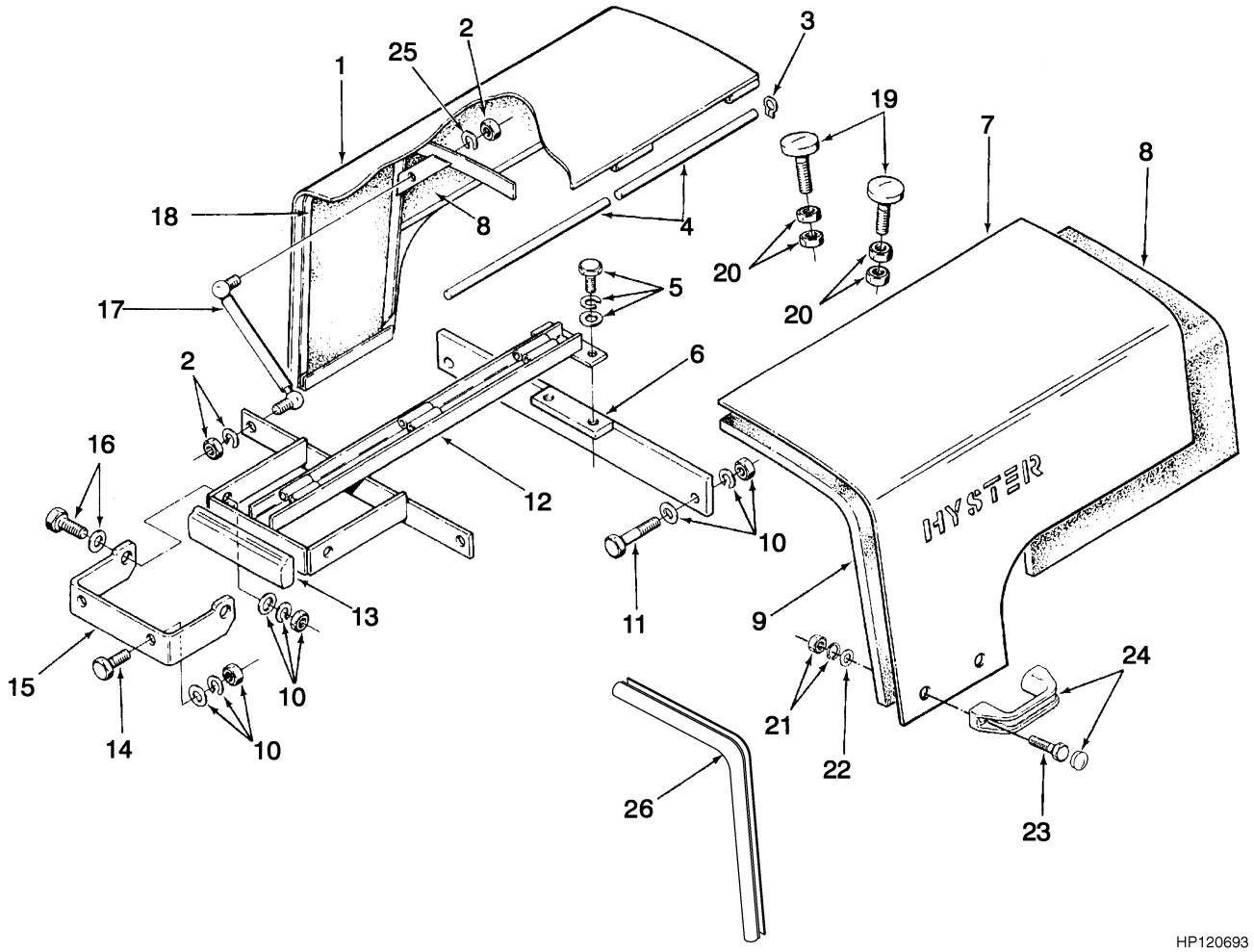

©2004 HYSTER COMPANY

HOOD

ITEM	PART NO.	DESCRIPTION	QTY
1	367260	Hood (RH)	1
2	292681	Lockwasher	2
2	303117	Nut	4
3	367228	Ring	4
4	367227	Pin	2
5	136985	Capscrew	4
5	292682	Lockwasher	2
5	296421	Washer	2
6	367233	Crossmember	1
7	367246	Hood (LH)	1
8	377624	Liner	2
9	377622	Liner (LH)	1
10	136692	Nut	6
10	292682	Lockwasher	6
10	296421	Washer	6
11	292519	Capscrew	2
12	367235	Channel	1
13	261165	Tape	AR
14	136985	Capscrew	2
15	377350	Bracket	1
16	287860	Capscrew	2
16	296421	Washer	2
17	353021	Gas Spring	2
18	377623	Liner (RH)	1
19	367251	Stop Screw	6
20	15055	Nut	10
21	136687	Nut	4
21	292680	Lockwasher	4
22	320156	Washer	4
23	292501	Capscrew	4
24	362030	Handle	2
25	296406	Washer	2
26	367259	Weather Strip	AR

©2004 HYSTER COMPANY

COWL AND FLOOR PLATES (Figure 1-6)

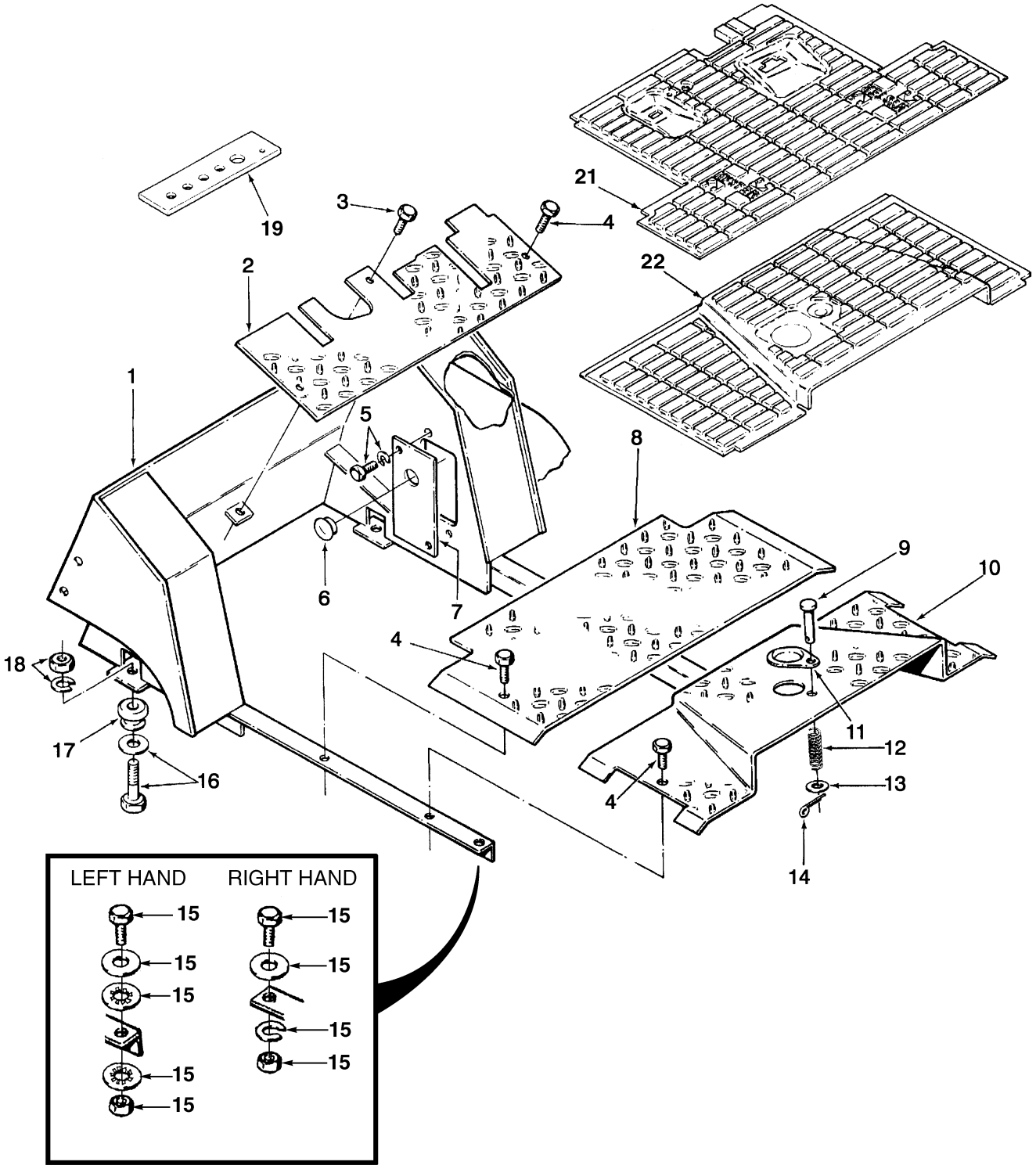

BP120058

©2004 HYSTER COMPANY

COWL AND FLOOR PLATES

ITEM		PART NO.	DESCRIPTION	QTY
1		1346710	Cowl	1
2		1466348	Floorplate	1
3		329067	Screw	1
4		329067	Screw	6
5		136681	Capscrew	4
5		292681	Lockwasher	4
6		374002	Plug	2
7		342980	Plate	2
8		357276	Floorplate	1
9	**b**	177590	Rod End Pin	1
10	**b**	357273	Floorplate	1
11	**b**	313815	Plate	1
12	**b**	137122	Spring	1
13	**b**	320157	Washer	2
14	**b**	15212	Cotter Pin	1
15		136692	Nut	2
15		136985	Capscrew	2
15		292682	Lockwasher (RH)	1
15		296361	Washer (LH)	2
15		320159	Washer	2
16		292533	Capscrew	2
16		300939	Washer	2
17		129962	Mount	2
18		216877	Nut	2
18		292683	Lockwasher	2
19		1479752	Seal	1
20		370278	Seal (Not Illustrated)	1
21	**a**	1312722	Floormat (Front)	1
21	**b**	1312722	Floormat (Front)	1
22	**a**	369525	Floormat (Rear)	1
22	**b**	374004	Floormat (Rear)	1

FOOTNOTES:
a With Cab
b Without Cab

©2004 HYSTER COMPANY

LABELS (Figure 1-7)

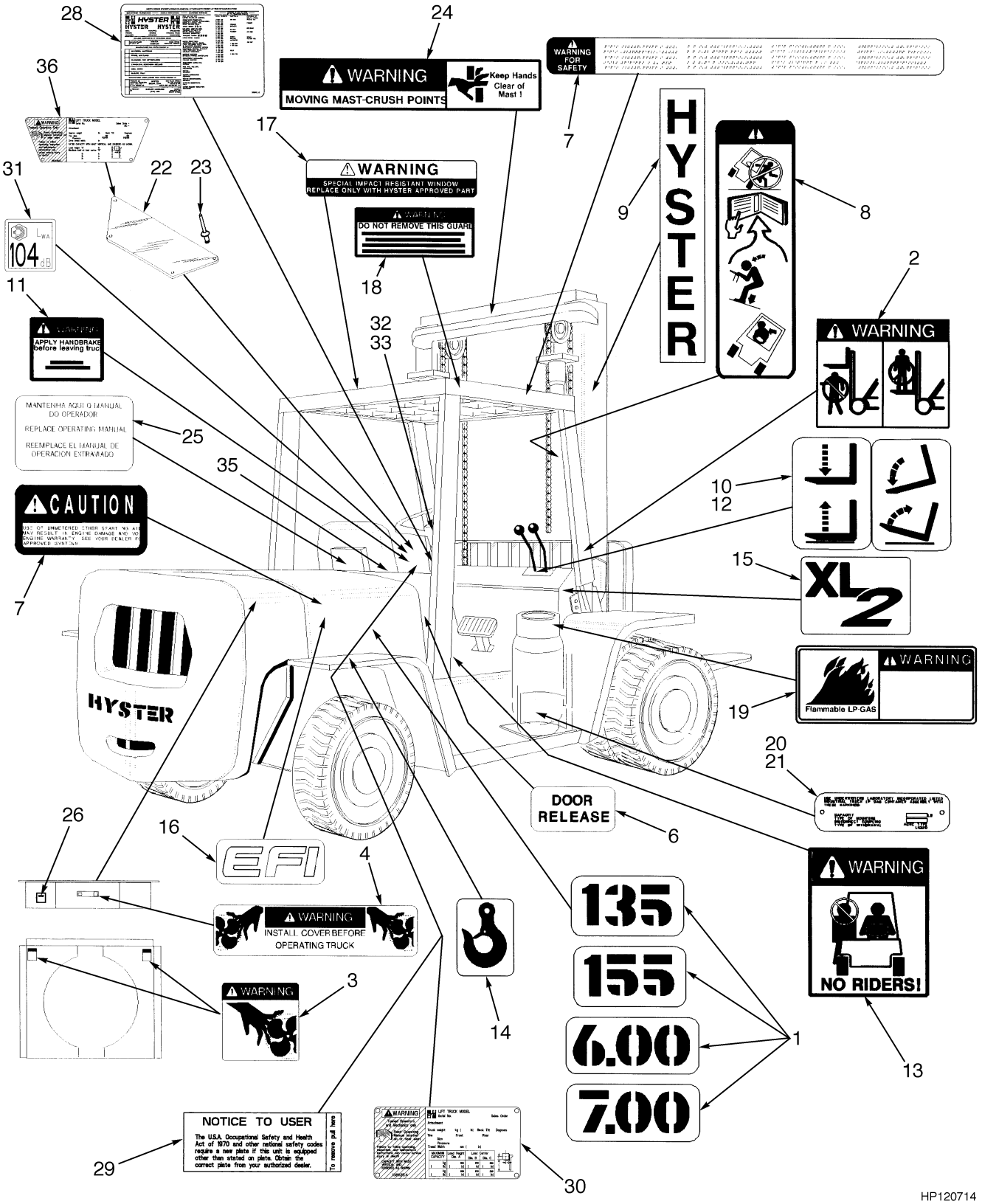

©2004 HYSTER COMPANY

LABELS

ITEM		PART NO.	DESCRIPTION	QTY
1		380333	Label (Model 135)	2
1		380334	Label (Model 155)	2
2		1338178	Label (Mast Warning)	2
3		1345939	Label (Fan Warning)	1
4		1325271	Label (Fan Warning)	1
5		2034459	Label (Ether Warning) (Not Illustrated)	1
6		. . . . .	Label (Door Release)	1
7		1335142	Label (Operator Warning)	1
8		1330917	Label (Operator Restraint)	2
9	**b**	1344131	Label (Hyster)	2
9	**a**	1344132	Label (Hyster)	2
10		370258	Label (Auxiliary Function - Side-Shift)	AR
11		1335146	Label (Park Brake Warning)	1
12		369573	Label (Lift/Tilt)	1
13		1330920	Label (No Riders)	2
14		316448	Label (Lifting Eye)	4
15		1346853	Label (XL2)	2
16		1345998	Label (EFI)	2
17		2038590	Label (Impact Resistant Window) (With Cab)	1
18		1338737	Label (Impact Rating)	1
19		1320264	Label (Flammable LP Gasoline)	1
20		329029	Label (LPG Tank)	1
20		1520824	Label (Optional)	1
21		170658	Rivet	2
21		340044	Gripnail (Optional)	2
22		389688	Cover (Nameplate)	1
23		222023	Rivet	4
24		1330919	Label (Mast Warning)	1
25		1328205	Label (Operator Manual)	1
26		1354165	Label (Antifreeze)	1
27		893697	Label (Hyster Optional Counterweight) (Not Illustrated)	1
28		389692	Label (US Patents and Trademarks)	1
29		1335137	Label (Notice To User) (Tag)	1
30		1381125	Label (Nameplate)	1
31		1503886	Label (Noise Level) (Noise Level)	1
32		179414	Inspection Plate - LPG (Not Illustrated)	1
32		179420	Inspection Plate - Gasoline (Not Illustrated)	1
32		179423	Inspection Plate - Diesel (Not Illustrated)	1
33		166818	Rivet	2
34		1379945	Fastener (Not Illustrated)	6
35		1303833	Plug (Button)	1
36		1304050	Label (Nameplate)	1

FOOTNOTES:

a All Masts 4540-5540 mm Lift without Lights

b Three Stage Full Free-Lift with Lights (4540-5540 mm Lift)

©2004 HYSTER COMPANY

OVERHEAD GUARD (Figure 1-8)

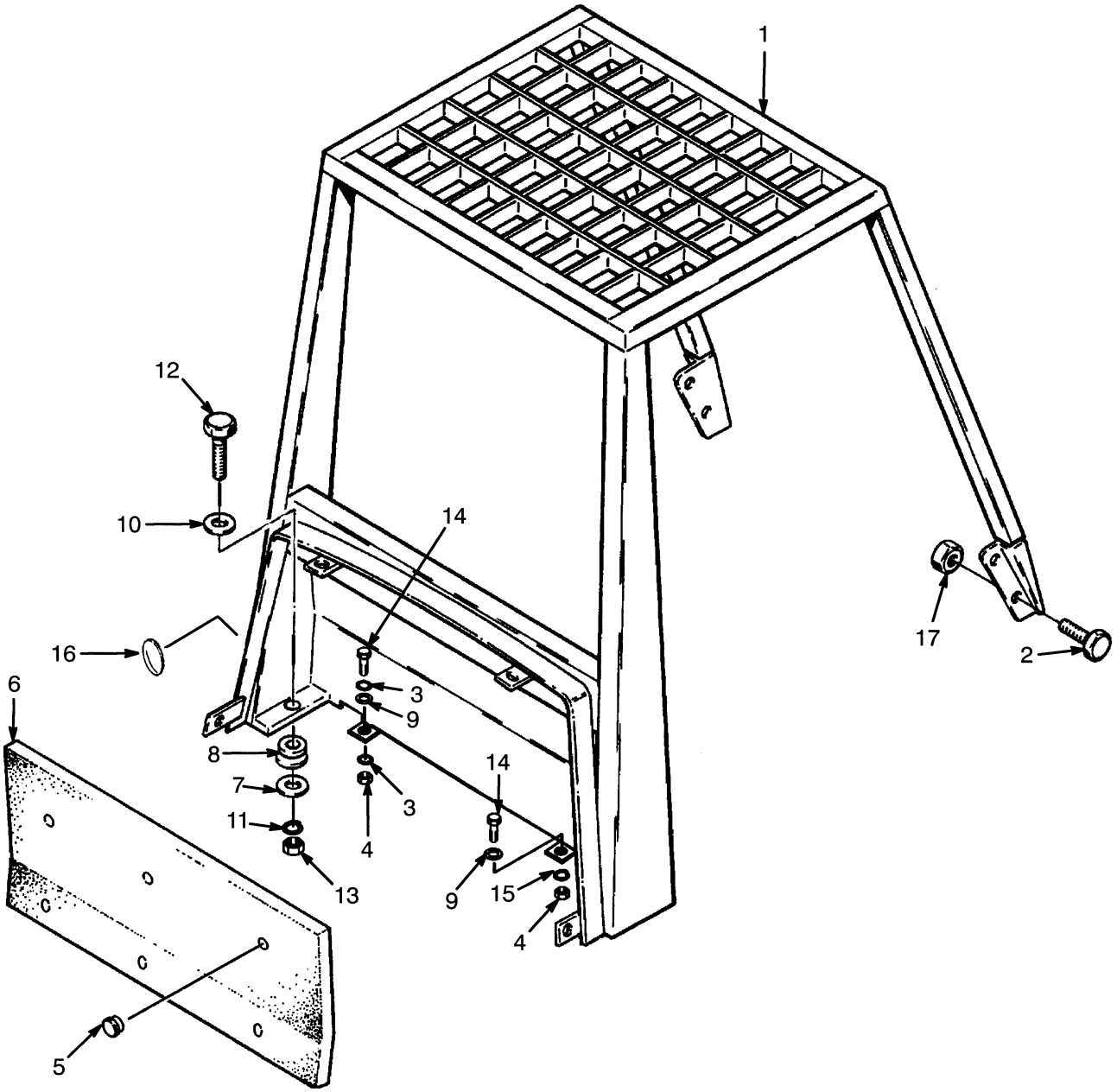

HP120477

©2004 HYSTER COMPANY

OVERHEAD GUARD

ITEM	PART NO.	DESCRIPTION	QTY
1	1552384	Overhead Guard	1
2	222163	Capscrew	4
3	296361	Washer	2
4	136692	Nut	2
5	228376	Button	6
6	1552599	Liner	1
7	164281	Washer	2
8	129962	Mount	2
9	320159	Washer	2
10	379402	Washer	4
11	292685	Lockwasher	2
12	292570	Capscrew	2
13	292600	Nut	2
14	136985	Capscrew	2
15	292682	Lockwasher	1
16	1315411	Plug	1
17	248320	Nut	4

©2004 HYSTER COMPANY

COUNTERWEIGHT (Figure 1-9)

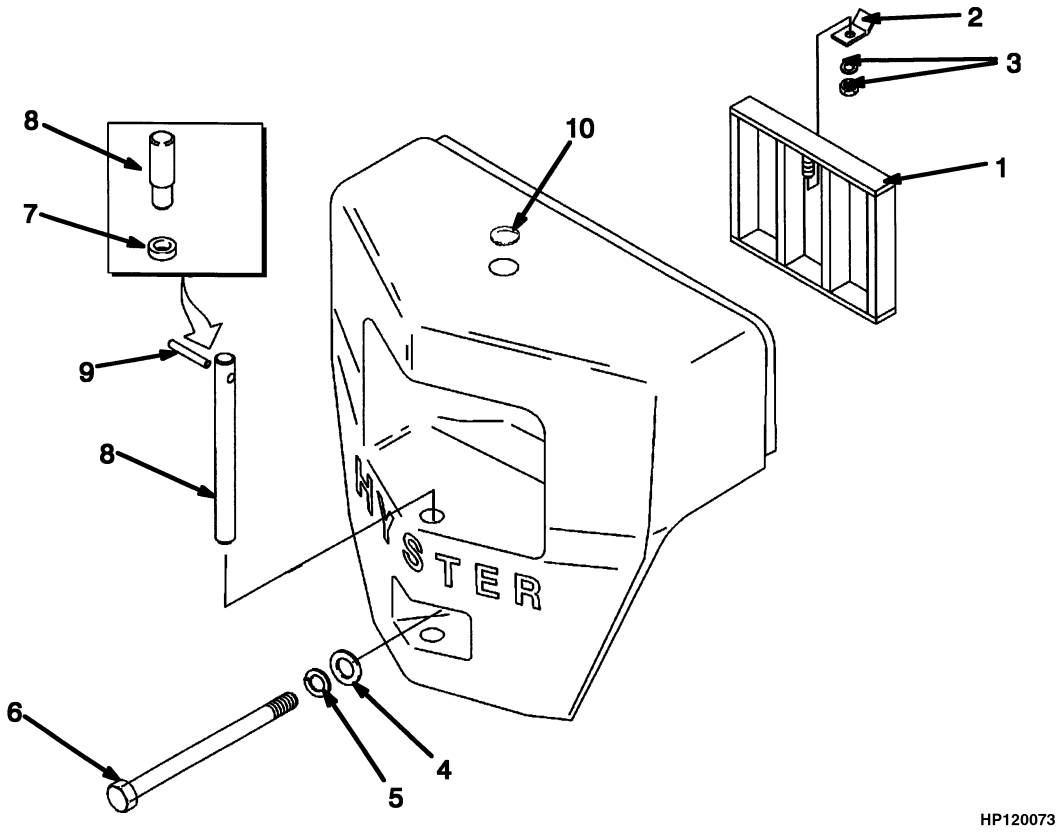

HP120073

©2004 HYSTER COMPANY

COUNTERWEIGHT

KEY:
A: H135XL
B: H155XL

ITEM		PART NO.	DESCRIPTION	QTY A	QTY B
	a	1357461	Counterweight	1	..
	ab	1357462	Counterweight	1	..
	a	1357463	Counterweight	..	1
	ab	1357464	Counterweight	..	1
1		1320109	Grill	1	1
2		270405	Bracket	1	1
3		15057	Nut	1	1
3		15157	Lockwasher	1	1
4		150181	Washer	1	1
5		15166	Lockwasher	1	1
6		240243	Capscrew	..	1
6		270074	Capscrew	1	..
7		15186	Washer	1	1
8		1334359	Tow Pin	1	1
9		1527470	Spring Pin (Slotted)	1	1
10		1337734	Plug	1	1

FOOTNOTES:
a 78 in. Carriage Width, 2.50 in. Fork Pin Diameter
b Optional

©2004 HYSTER COMPANY

FORKS (Figure 1-10)
PIN TYPE

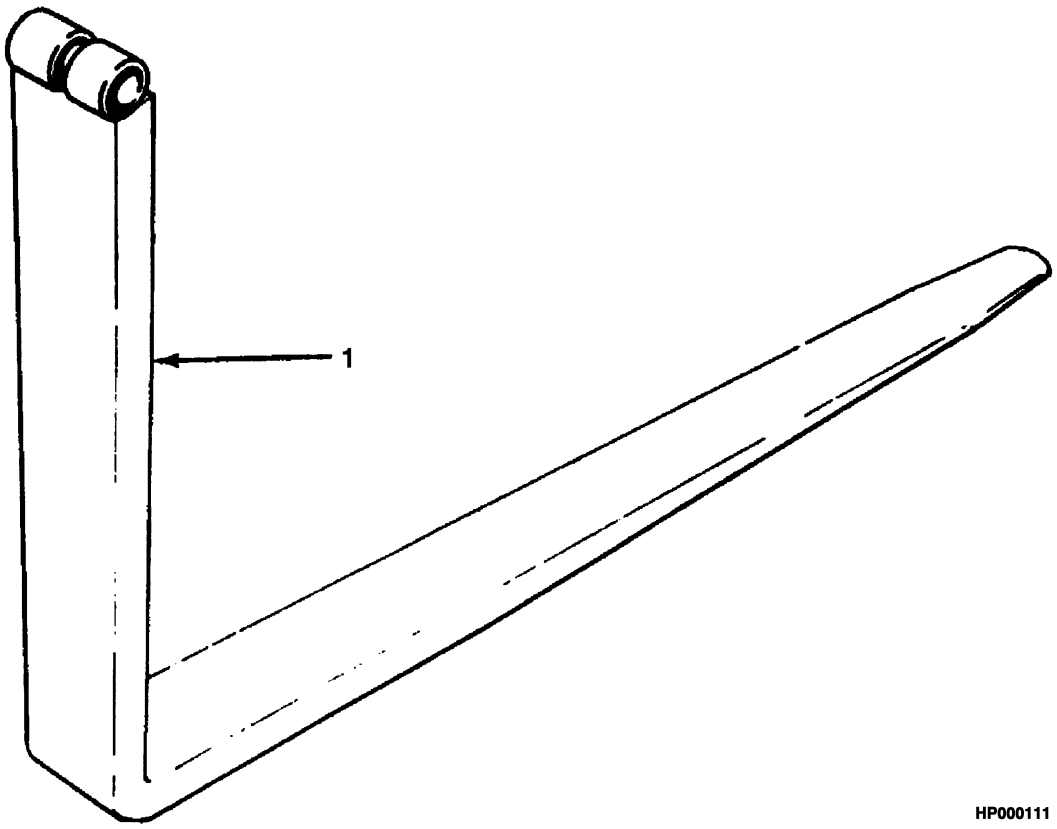

©2004 HYSTER COMPANY

FORKS
PIN TYPE

ITEM	PART NO.	DESCRIPTION	QTY
1	1330787	Fork (48.15 in.)	2
1	1330791	Fork (54.20 in.)	2
1	1330792	Fork (60.12 in.)	2
1	1330793	Fork (72.20 in.)	2
1	1330794	Fork (96.30 in.)	2

©2004 HYSTER COMPANY

LOAD BACKREST EXTENSION (Figure 1-11)

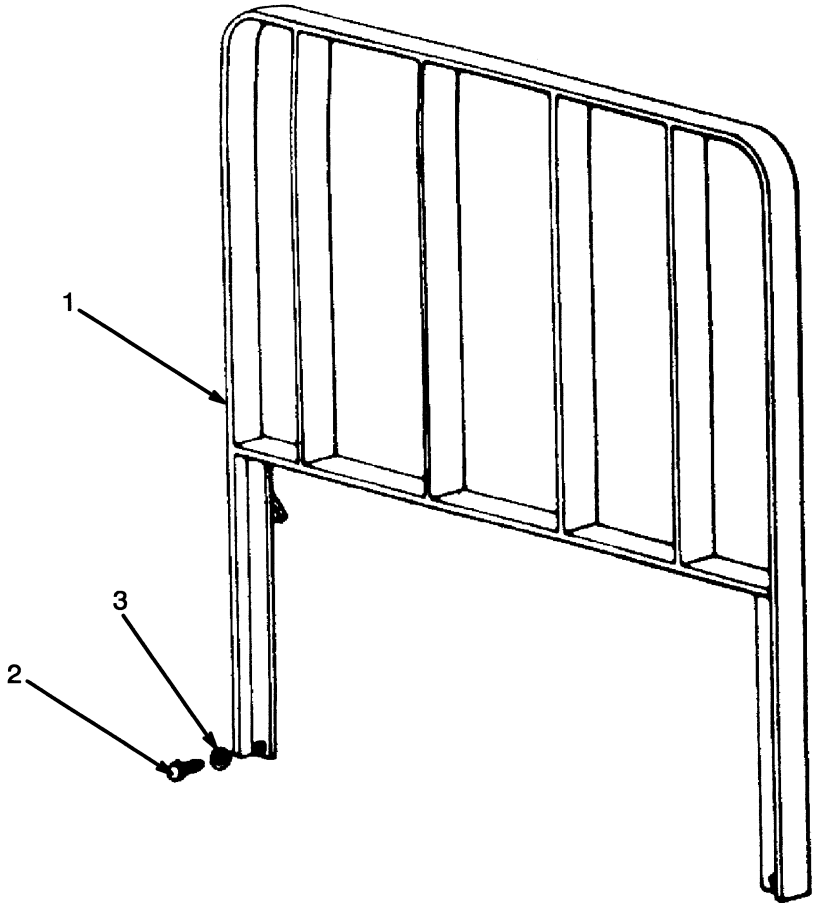

HP120074

ITEM	PART NO.	DESCRIPTION	QTY
1	115112W	Load Backrest (0.1381 in.) (1981 mm)	1
2	226458	Capscrew	6
3	292685	Lockwasher	6

©2004 HYSTER COMPANY

2 ENGINE ASSEMBLY

SECTION 2
ENGINE ASSEMBLY

DESCRIPTION	PAGE
CAMSHAFT AND OIL PAN	
GASOLINE AND LPG	
4.3L EPA COMPLIANT	2-26
COOLING AND FAN DRIVE	
DIESEL TIER II	2-50
CRANKSHAFT AND PISTONS	
DIESEL	
TIER II	2-46
CYLINDER BLOCK	
DIESEL	
TIER II	2-40
GASOLINE AND LPG	
4.3L EPA COMPLIANT	2-24
CYLINDER HEAD	
GASOLINE AND LPG	
4.3L EPA COMPLIANT	2-36
CYLINDER HEAD AND INDUCTION MANIFOLD	
DIESEL	
TIER II	2-42
DRIVE ADAPTOR	
DIESEL	
TIER II	2-68
ENGINE ASSEMBLY	
GASOLINE	
4.3L EPA COMPLIANT	2-22
LPG	
4.3L EPA COMPLIANT	2-20
ENGINE MOUNTING	
GASOLINE, LPG AND DIESEL	2-18
EXHAUST DIESEL	
WITH CAB	
TIER II ENGINE	2-58
WITHOUT CAB	
TIER II ENGINE	2-60
EXHAUST GAS AND LPG	
WITH CAB	2-10
EPA COMPLIANT	2-14
WITHOUT CAB	2-8
EPA COMPLIANT	2-12
EXHAUST MANIFOLD	
DIESEL	
TIER II	2-56
GASOLINE AND LPG	
4.3L EPA COMPLIANT	2-16
FAN DRIVE AND ALTERNATOR MOUNTING	
4.3L EPA COMPLIANT ENGINE	2-6
FLYWHEEL	
GASOLINE, LPG AND DIESEL	2-70
FUEL INJECTION PUMP	
DIESEL	

©2004 HYSTER COMPANY

SECTION 2
ENGINE ASSEMBLY (Continued)

DESCRIPTION	PAGE
TIER II	2-66
INTAKE MANIFOLD AND FUEL RAIL	
GASOLINE	
4.3L EPA COMPLIANT ENGINE	2-34
OIL COOLER	
DIESEL	
TIER II	2-64
OIL FILTER	
DIESEL	
TIER II	2-62
OIL PAN AND PUMP	
DIESEL	
TIER II	2-48
OIL PUMP	
GASOLINE AND LPG	
4.3L EPA COMPLIANT	2-38
RADIATOR	
GAS AND LPG	2-4
TIMING GEAR	
DIESEL	
TIER II	2-54
VALVE COVER AND INLET MANIFOLD	
GASOLINE AND LPG	
4.3L EPA COMPLIANT	2-30
VALVE COVER AND ROCKER ARM SHAFT	
DIESEL	
TIER II	2-44
WATER PUMP AND OUTLET	
DIESEL	
TIER II	2-52

©2004 HYSTER COMPANY

NOTES

RADIATOR (Figure 2-1)
GAS AND LPG

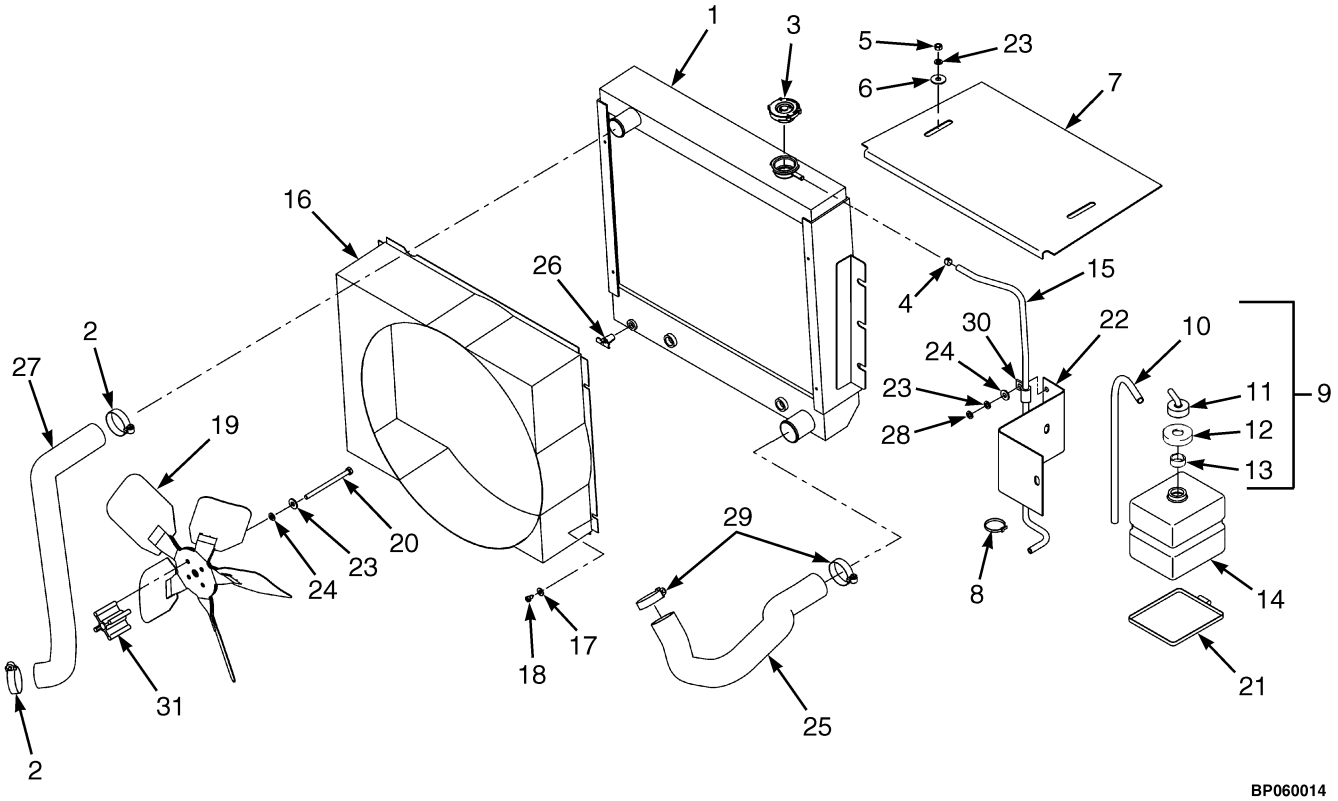

©2004 HYSTER COMPANY

RADIATOR
GAS AND LPG

ITEM	PART NO.	DESCRIPTION	QTY
1	1456899	Radiator	1
2	1502000	Clamp	2
3	178899	Cap	1
4	353310	Clamp	2
5	15055	Nut	4
6	221733	Washer	4
7	350052	Cover	1
8	137852	Strap Clamp	1
9	1359581	Outlet Assembly	1
10	1457312	Hose	1
11	345454	Cap	1
12	345453	Outlet (Reservoir)	1
13	336550	Bushing	1
14	344432	Reservoir	1
15	1302955	Tube	1
16	373109	Shroud	1
17	15127	Washer	4
18	16073	Screw	4
19	148891	Fan	1
20	18529	Capscrew	4
21	340204	Strap	1
22	340203	Bracket	1
23	292681	Lockwasher	10
24	320158	Washer	8
25	1377754	Hose	1
26	12815	Drain Valve	1
27	2062235	Hose	1
28	239503	Nut	4
29	1557312	Clamp	2
30	124297	Clamp	1
31	1377795	Spacer	1

©2004 HYSTER COMPANY

FAN DRIVE AND ALTERNATOR MOUNTING (Figure 2-2)
4.3L EPA COMPLIANT ENGINE

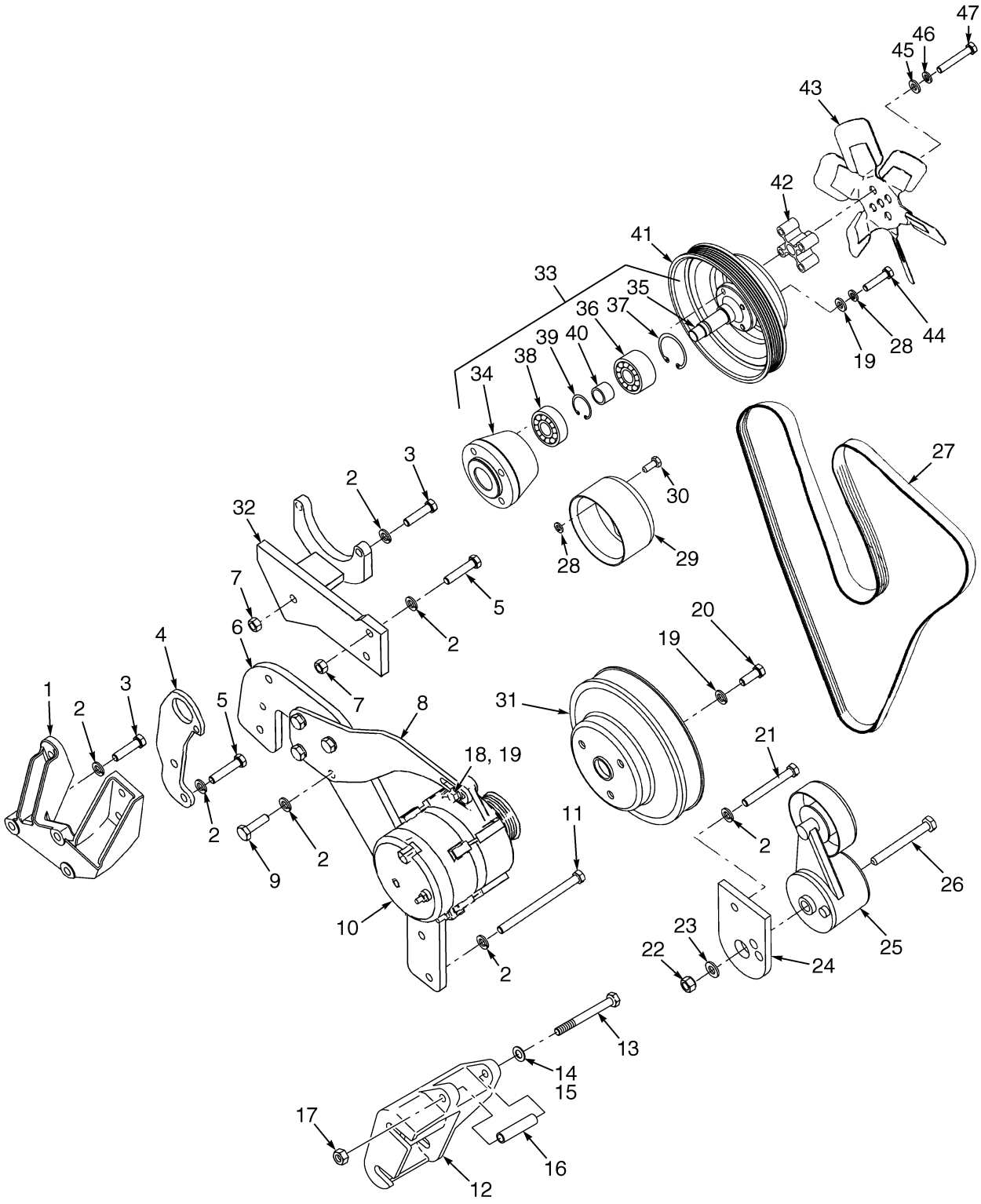

BP090128

©2004 HYSTER COMPANY

FAN DRIVE AND ALTERNATOR MOUNTING
4.3L EPA COMPLIANT ENGINE

ITEM	PART NO.	DESCRIPTION	QTY
1	1389348	Bracket	1
2	292682	Lockwasher	15
3	16815	Capscrew	2
4	1383228	Plate	1
5	16816	Capscrew	4
6	1383225	Plate	1
7	15056	Nut	3
8	1389337	Strap (Alternator)	1
9	287860	Capscrew	4
10	1469597	Alternator	1
11	18547	Capscrew	1
12	1383229	Mount	1
13	18548	Capscrew	1
14	261379	Washer	2
15	305100	Sleeve	1
16	189338	Spacer	1
17	139743	Locknut	1
18	1527881	Capscrew	1
19	320157	Washer	4
20	16634	Capscrew	3
21	18549	Capscrew	1
22	316826	Nut	1
23	320159	Washer	1
24	1383226	Plate	1
25	1377752	Tensioner	1
26	292524	Capscrew	1
27	2036995	Belt	1
28	292681	Lockwasher	8
29	1383204	Pulley (Water Pump)	1
30	136681	Capscrew	4
31	1377750	Pulley	1
32	1461800	Bracket	1
33	1506794	Fan Mount Assembly	1
34	1506713	Hub	1
35	1459007	Shaft	1
36	1459011	Bearing	1
37	12928	Snap Ring	1
38	124668	Bearing	1
39	160996	Snap Ring	1
40	1459012	Sleeve	1
41	1380309	Pulley	1
42	1377781	Spacer	1
43	148891	Fan	1
44	16835	Capscrew	4
45	292681	Lockwasher	4
46	320158	Washer	4
47	18529	Capscrew	4

©2004 HYSTER COMPANY

EXHAUST GAS AND LPG (Figure 2-3)
WITHOUT CAB

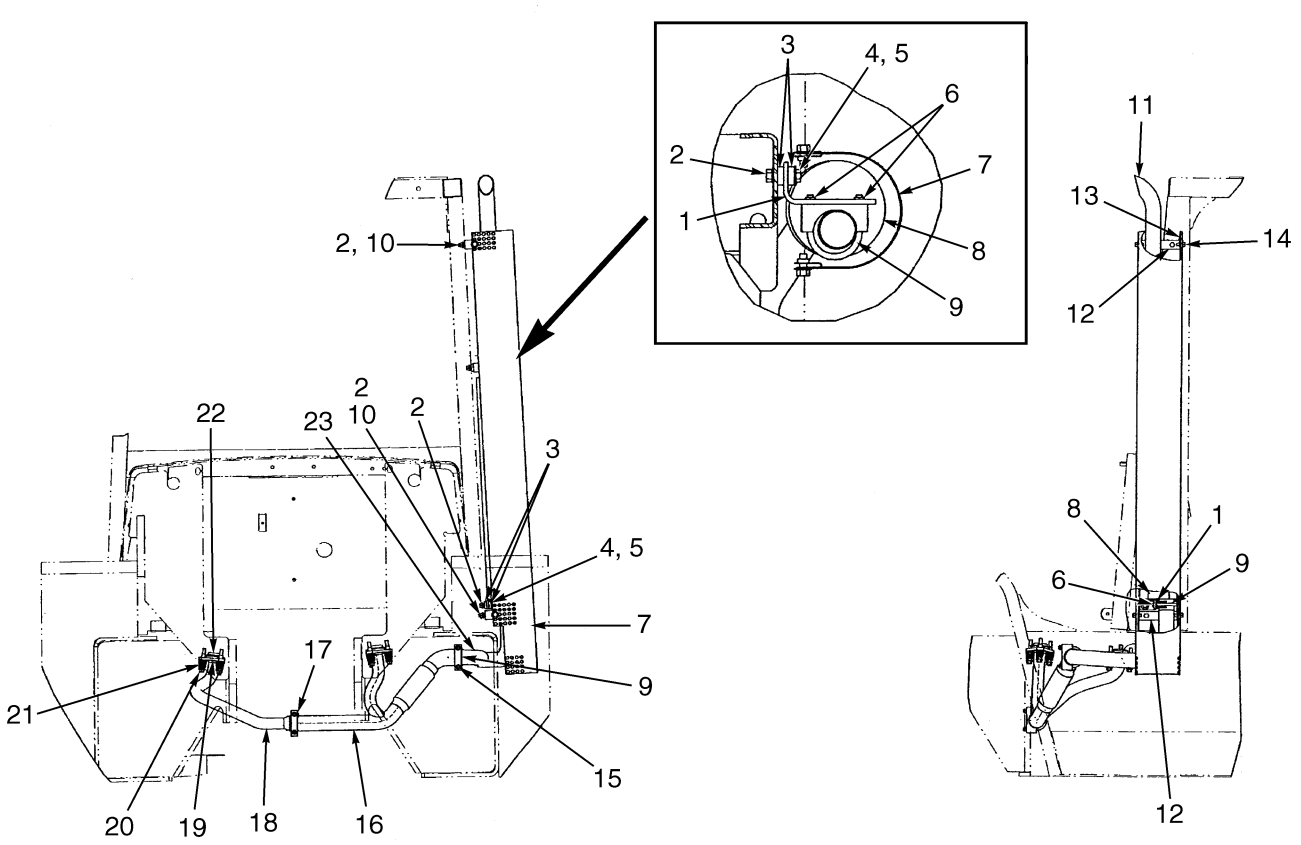

YP110047

©2004 HYSTER COMPANY

EXHAUST GAS AND LPG
WITHOUT CAB

ITEM	PART NO.	DESCRIPTION	QTY
1	1375986	Bracket	2
2	192077	Nut	4
3	223216	Bushing	4
4	16815	Capscrew	2
5	15176	Washer	2
6	1388300	Lockwasher	4
7	346295	Shield	1
8	344275	Muffler	1
9	30370	Clamp	3
10	16805	Capscrew	2
11	346293	Exhaust Pipe	1
12	344381	Bracket	2
13	269200	Nut	4
14	134803	Screw	4
15	320157	Washer	2
16	1500776	Exhaust Pipe	1
17	63116	Clamp	1
18	1476024	Exhaust Pipe	1
19	1499514	Flange	1
20	1337118	Bolt	6
21	1335898	Spring	6
22	1338258	Seal	2
23	346283	Exhaust Pipe	1

©2004 HYSTER COMPANY

EXHAUST GAS AND LPG (Figure 2-4)
WITH CAB

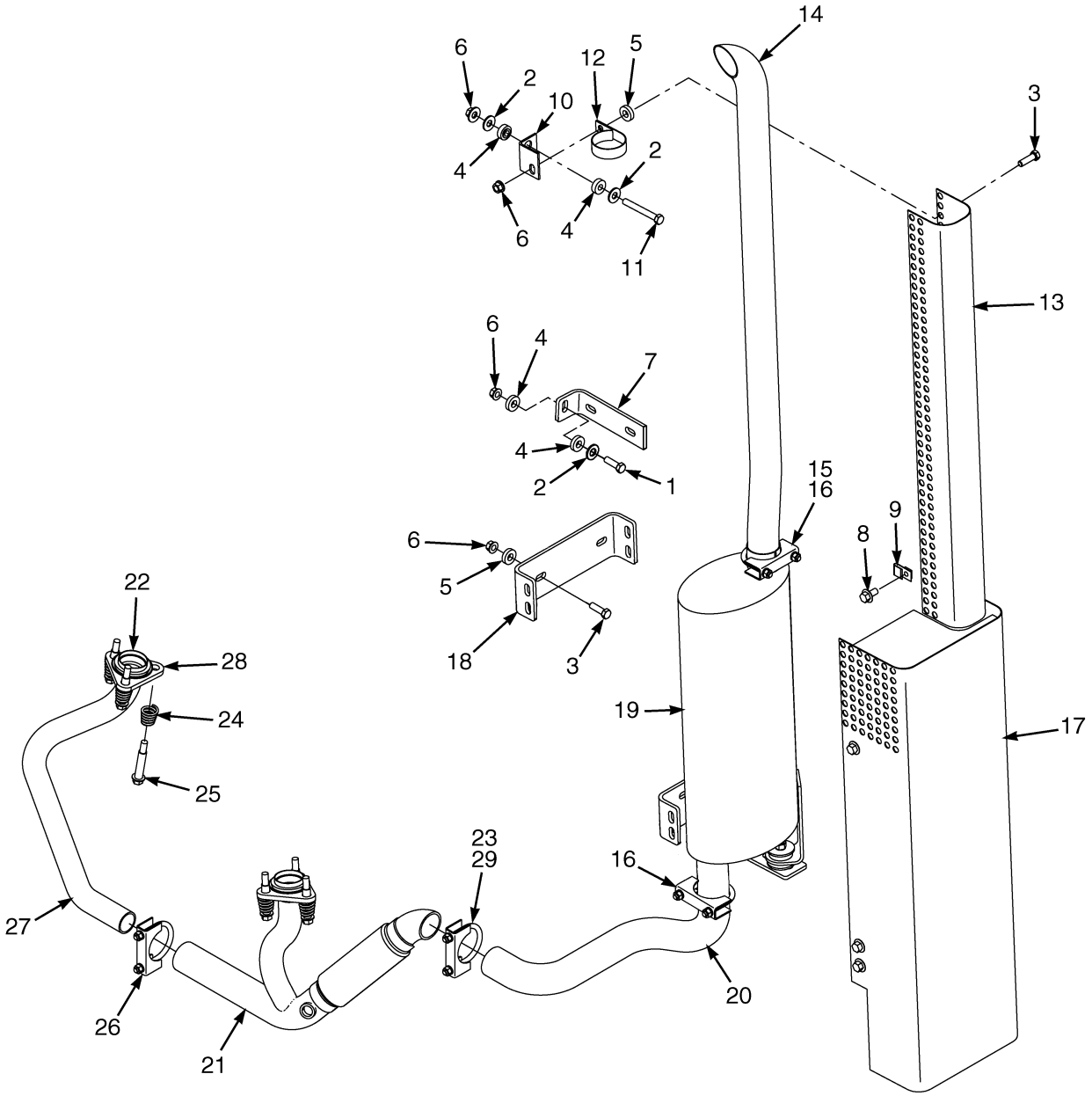

YP110086

©2004 HYSTER COMPANY

EXHAUST GAS AND LPG
WITH CAB

ITEM	PART NO.	DESCRIPTION	QTY
1	16816	Capscrew	2
2	15176	Washer	4
3	16828	Capscrew	4
4	223216	Bushing	6
5	107151	Washer	4
6	192077	Nut	7
7	1375986	Bracket	2
8	134803	Screw	6
9	269200	Nut	6
10	369135	Bracket	1
11	18540	Capscrew	1
12	369136	Clamp	1
13	369127	Exhaust Shield	1
14	369129	Exhaust Pipe	1
15	1388300	Lockwasher	4
16	30370	Clamp	2
17	1499677	Guard	1
18	369128	Bracket	2
19	367266	Muffler	1
20	368249	Exhaust Pipe	1
21	1500776	Exhaust Pipe	1
22	1338258	Seal	2
23	320157	Washer	2
24	1335898	Spring	6
25	1337118	Bolt	6
26	63116	Clamp	1
27	1476024	Exhaust Pipe	1
28	1499514	Flange	1
29	30370	Clamp	1

©2004 HYSTER COMPANY

EXHAUST GAS AND LPG (Figure 2-5)
WITHOUT CAB
EPA COMPLIANT

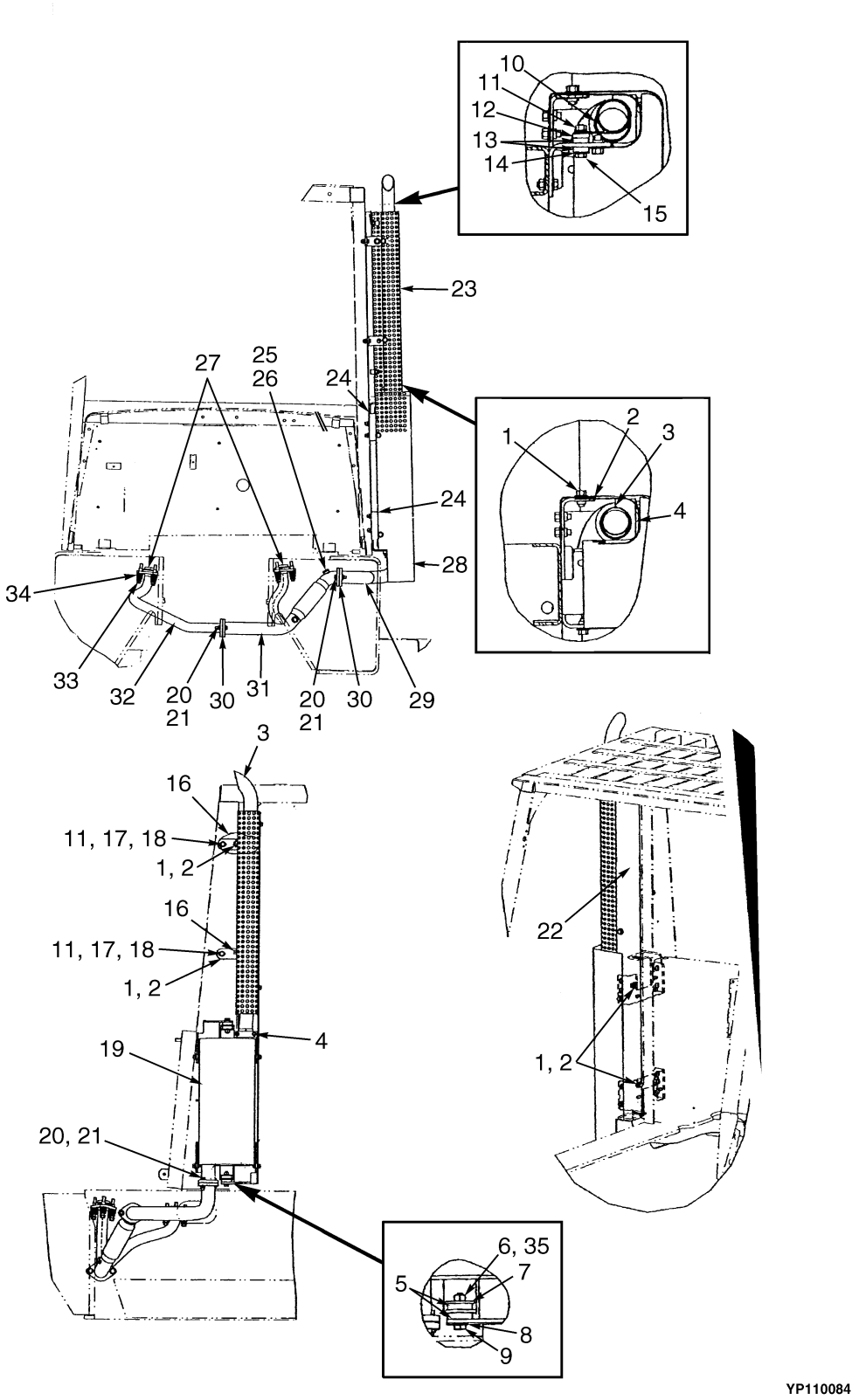

©2004 HYSTER COMPANY

EXHAUST GAS AND LPG
WITHOUT CAB
EPA COMPLIANT

ITEM	PART NO.	DESCRIPTION	QTY
1	134803	Screw	8
2	269200	Nut	8
3	369129	Exhaust Pipe	1
4	30370	Clamp	1
5	1351177	Rubber Cushion	4
6	313828	Nut	2
7	1351176	Washer	2
8	320159	Washer	2
9	292509	Capscrew	2
10	369136	Clamp	1
11	192077	Nut	7
12	107151	Washer	1
13	223216	Bushing	2
14	15176	Washer	1
15	16816	Capscrew	1
16	1499674	Bracket	2
17	16805	Capscrew	6
18	15134	Washer	6
19	2062650	Muffler	1
20	1512403	Capscrew	6
21	1460477	Nut (Flange)	6
22	1500402	Guard	1
23	1523680	Shield	1
24	1499664	Bracket	2
25	1396518	Plug	1
26	2047053	Lubricant	AR
27	1338258	Seal	2
28	1499677	Guard	1
29	1500389	Exhaust Pipe	1
30	1402189	Gasket	2
31	1499536	Exhaust Pipe	1
32	1501133	Exhaust Pipe	1
33	1337118	Bolt	6
34	1335898	Spring	6
35	1553420	Spacer	2

©2004 HYSTER COMPANY

EXHAUST GAS AND LPG (Figure 2-6)
WITH CAB
EPA COMPLIANT

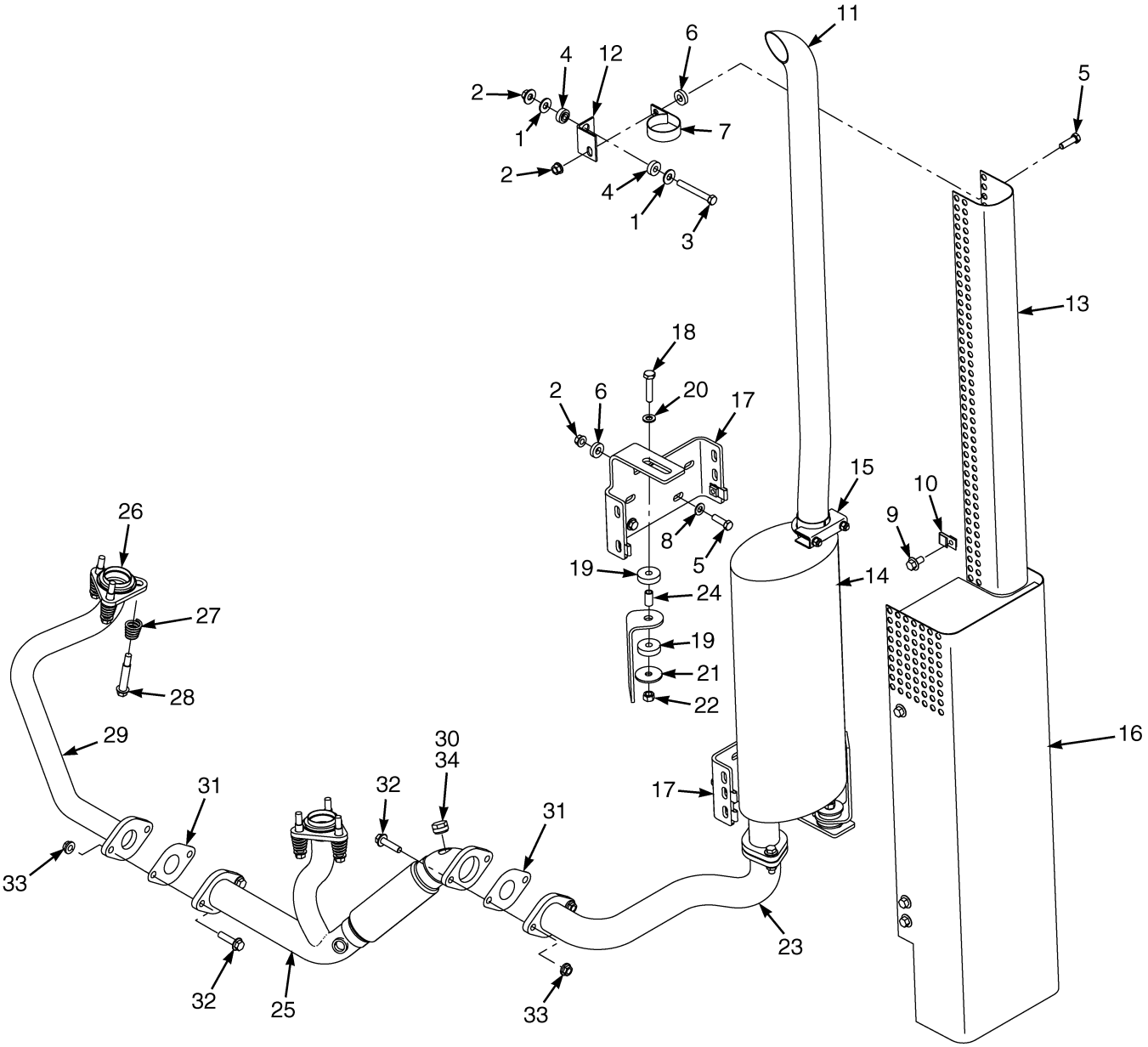

YP110085

©2004 HYSTER COMPANY

EXHAUST GAS AND LPG
WITH CAB
EPA COMPLIANT

ITEM	PART NO.	DESCRIPTION	QTY
1	15176	Washer	2
2	192077	Nut	6
3	18540	Capscrew	1
4	223216	Bushing	2
5	16828	Capscrew	5
6	107151	Washer	5
7	369136	Clamp	1
8	15134	Washer	4
9	134803	Screw	7
10	269200	Nut	7
11	369129	Exhaust Pipe	1
12	1542187	Bracket	1
13	1542188	Shield	1
14	2062650	Muffler	1
15	30370	Clamp	1
16	1499677	Guard	1
17	1499664	Bracket	2
18	292509	Capscrew	2
19	1351177	Rubber Cushion	4
20	320159	Washer	2
21	1351176	Washer	2
22	313828	Nut	2
23	1500389	Exhaust Pipe	1
24	1553420	Spacer	2
25	1499536	Exhaust Pipe	1
26	1338258	Seal	2
27	1335898	Spring	6
28	1337118	Bolt	6
29	1501133	Exhaust Pipe	1
30	1396518	Plug	1
31	1402189	Gasket	2
32	1512403	Capscrew	6
33	1460477	Nut (Flange)	6
34	2047053	Lubricant	AR

©2004 HYSTER COMPANY

EXHAUST MANIFOLD (Figure 2-7)
GASOLINE AND LPG
4.3L EPA COMPLIANT

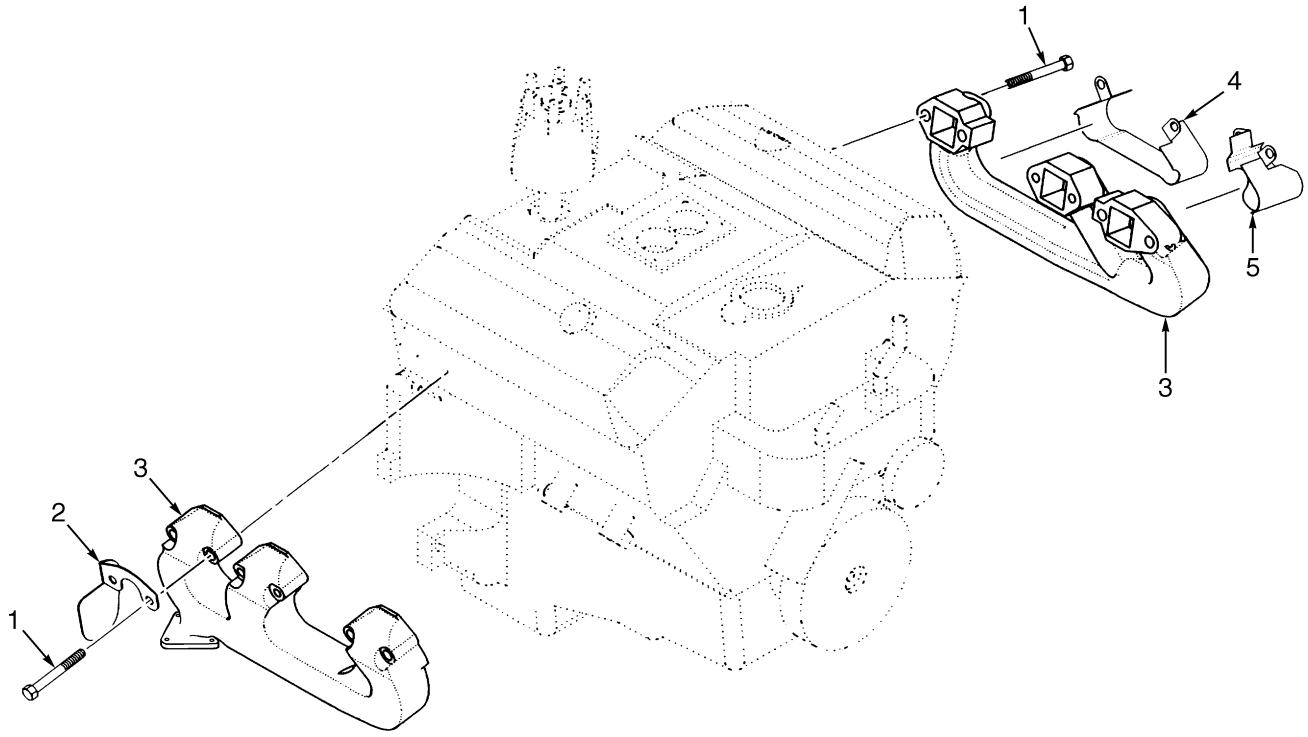

BP090136

ITEM	PART NO.	DESCRIPTION	QTY
1	1383257	Bolt	12
2	1529010	Shield	1
3	1502741	Manifold	2
4	1316488	Shield (Spark Plug)	2
5	1316494	Shield	2

©2004 HYSTER COMPANY

NOTES

ENGINE MOUNTING (Figure 2-8)
GASOLINE, LPG AND DIESEL

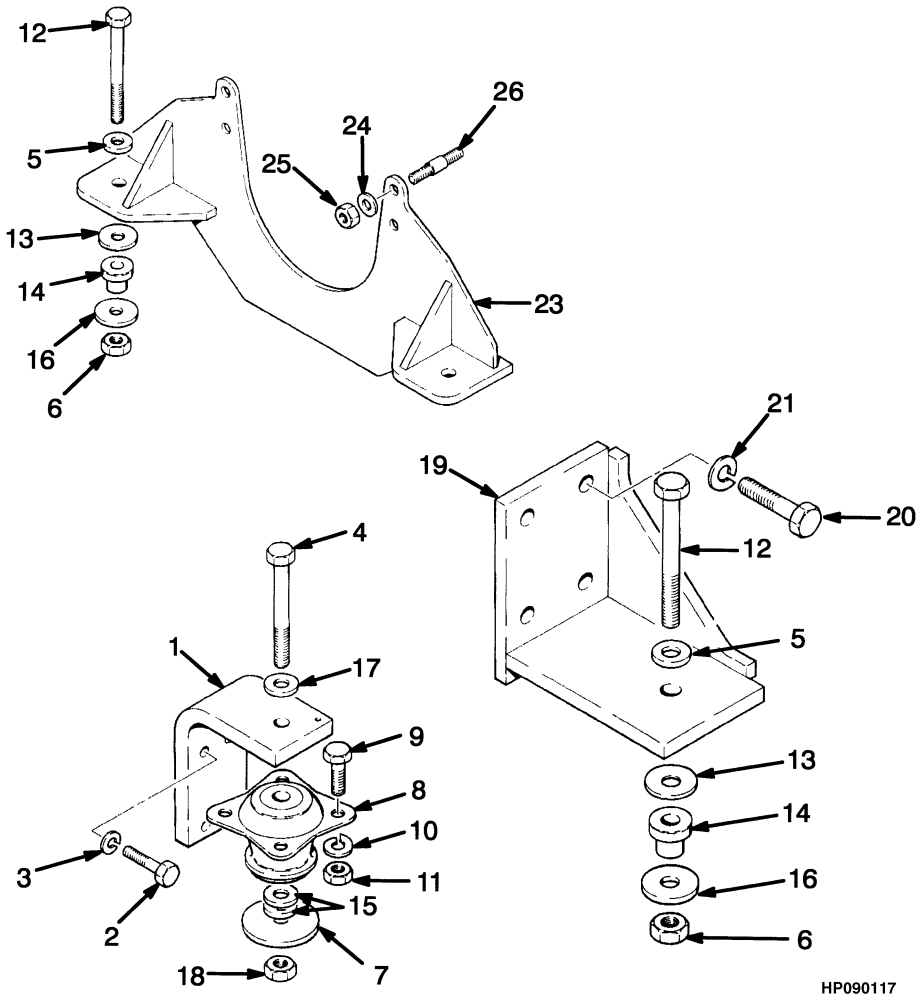

©2004 HYSTER COMPANY

ENGINE MOUNTING
GASOLINE, LPG AND DIESEL

KEY:
A: Gasoline and LPG
B: Diesel

ITEM	PART NO.	DESCRIPTION	QTY A	QTY B
1	340792	Bracket	2	2
2	293648	Capscrew	8	8
3	296422	Washer	8	8
4	292573	Capscrew	2	2
5	300932	Washer	2	2
6	300937	Nut	2	2
7	1357323	Washer	2	2
8	146628	Mount	2	2
9	287860	Capscrew	8	8
10	292682	Lockwasher	7	7
11	136692	Nut	8	8
12	292537	Capscrew	2	2
13	340796	Washer	2	2
14	398350	Mount	2	2
15	320165	Washer	4	4
16	300939	Washer	2	2
17	1357322	Washer	2	2
18	316828	Nut	2	2
19	377354	Bracket	..	2
20	292527	Capscrew	..	8
21	292683	Lockwasher	..	8
22	264159	Adhesive (Not Illustrated)	..	AR
23	1383350	Bracket	1	..
24	221767	Washer	4	..
25	139743	Locknut	4	..
26	372006	Stud	4	..
27	264134	Sealant (Not Illustrated)	AR	..

©2004 HYSTER COMPANY

ENGINE ASSEMBLY (Figure 2-9)
LPG
4.3L EPA COMPLIANT

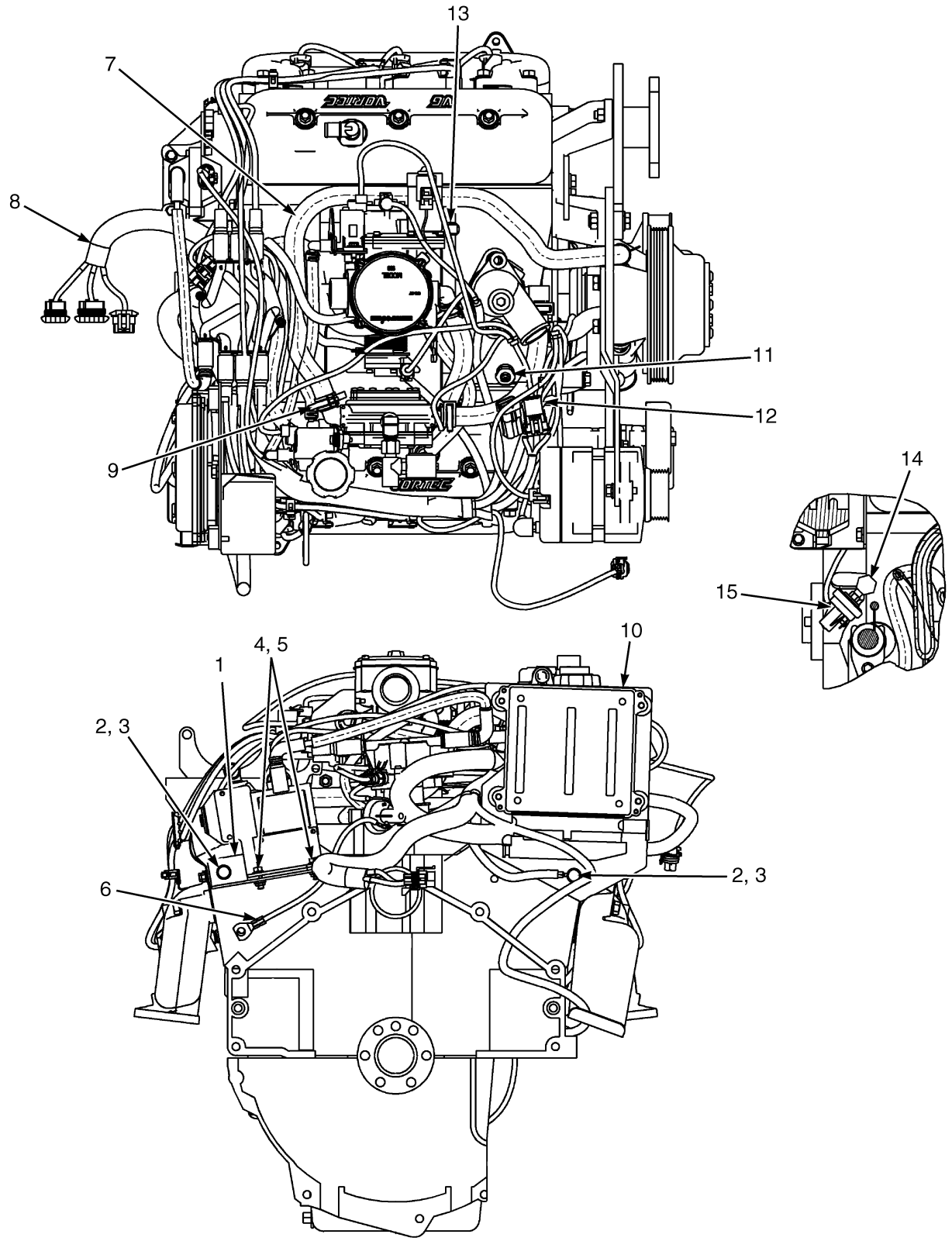

©2004 HYSTER COMPANY

ENGINE ASSEMBLY
LPG
4.3L EPA COMPLIANT

ITEM	PART NO.	DESCRIPTION	QTY
1	1551549	Bracket	1
2	15156	Lockwasher	4
3	18535	Capscrew	4
4	1527877	Screw	1
5	1514429	Nut (Flange)	2
6	2067573	Wire Harness (Oil Pressure Ground)	1
7	2066720	Hose (Coolant)	1
8	2068082	Wire Harness (Main Engine)	1
9	1501994	Clamp	2
10	2063101	Engine Control Unit	1
11	1319190	Temperature Sender	1
12	2067390	Wire Harness (LPG Regulator)	1
13	15302	Fitting	1
14	1476145	Fitting	1
15	1545857	Pressure Switch	1

©2004 HYSTER COMPANY

ENGINE ASSEMBLY (Figure 2-10)
GASOLINE
4.3L EPA COMPLIANT

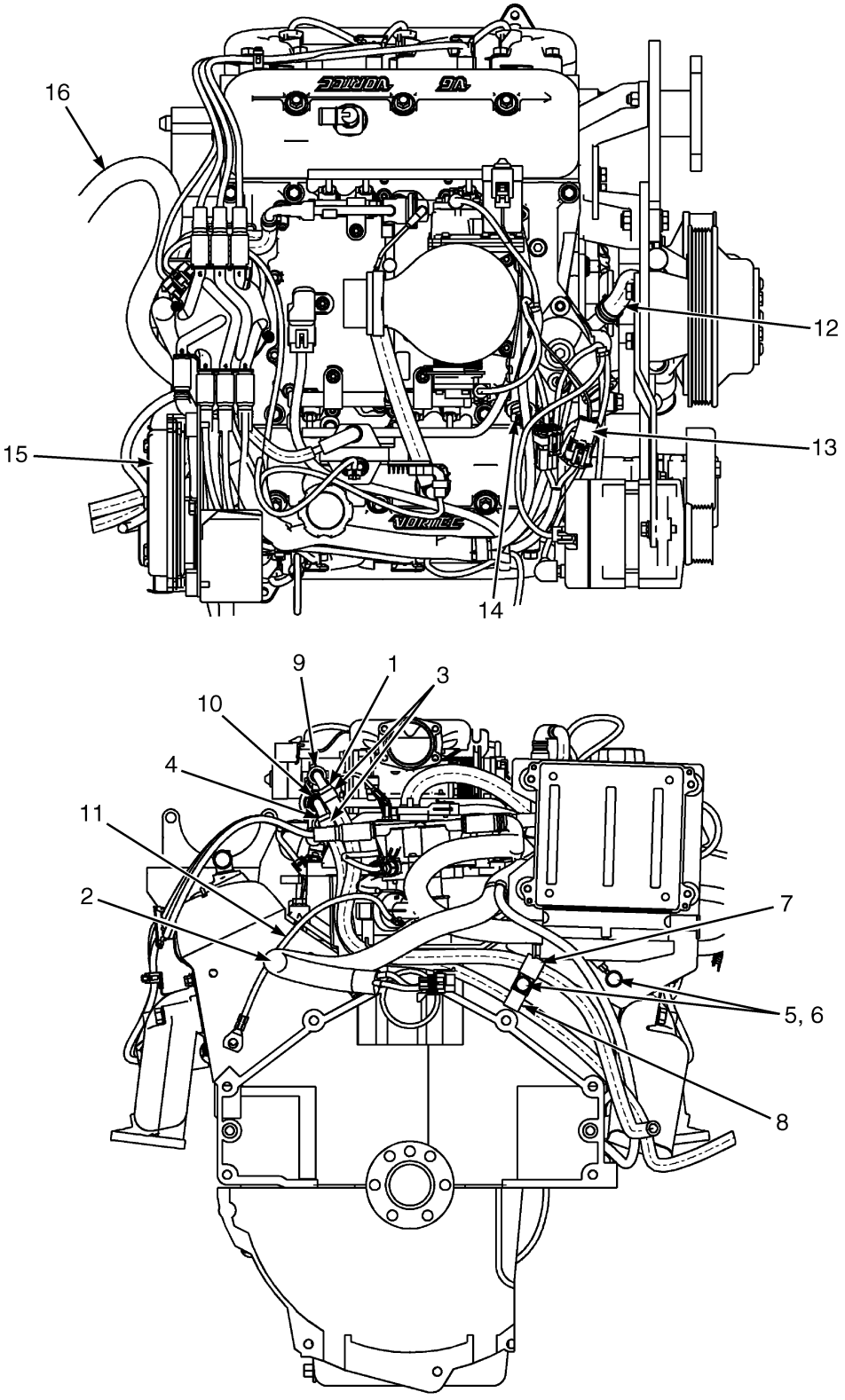

©2004 HYSTER COMPANY

ENGINE ASSEMBLY
GASOLINE
4.3L EPA COMPLIANT

ITEM	PART NO.	DESCRIPTION	QTY
1	2065965	Hose (Fuel)	1
2	1551680	Bracket	1
3	168718	Clamp	2
4	2065781	Hose (Fuel)	1
5	15156	Lockwasher	3
6	18535	Capscrew	3
7	128408	Clamp	1
8	113341	Clamp	1
9	1546285	Elbow	2
10	1546283	Elbow	2
11	2067573	Wire Harness (Oil Pressure Ground)	1
12	1401163	Hose	1
13	2066454	Wire Harness (Injector)	1
14	1319190	Temperature Sender	1
15	2063342	Engine Control Unit	1
16	2066453	Wire Harness (Main Engine)	1

©2004 HYSTER COMPANY

CYLINDER BLOCK (Figure 2-11)
GASOLINE AND LPG
4.3L EPA COMPLIANT

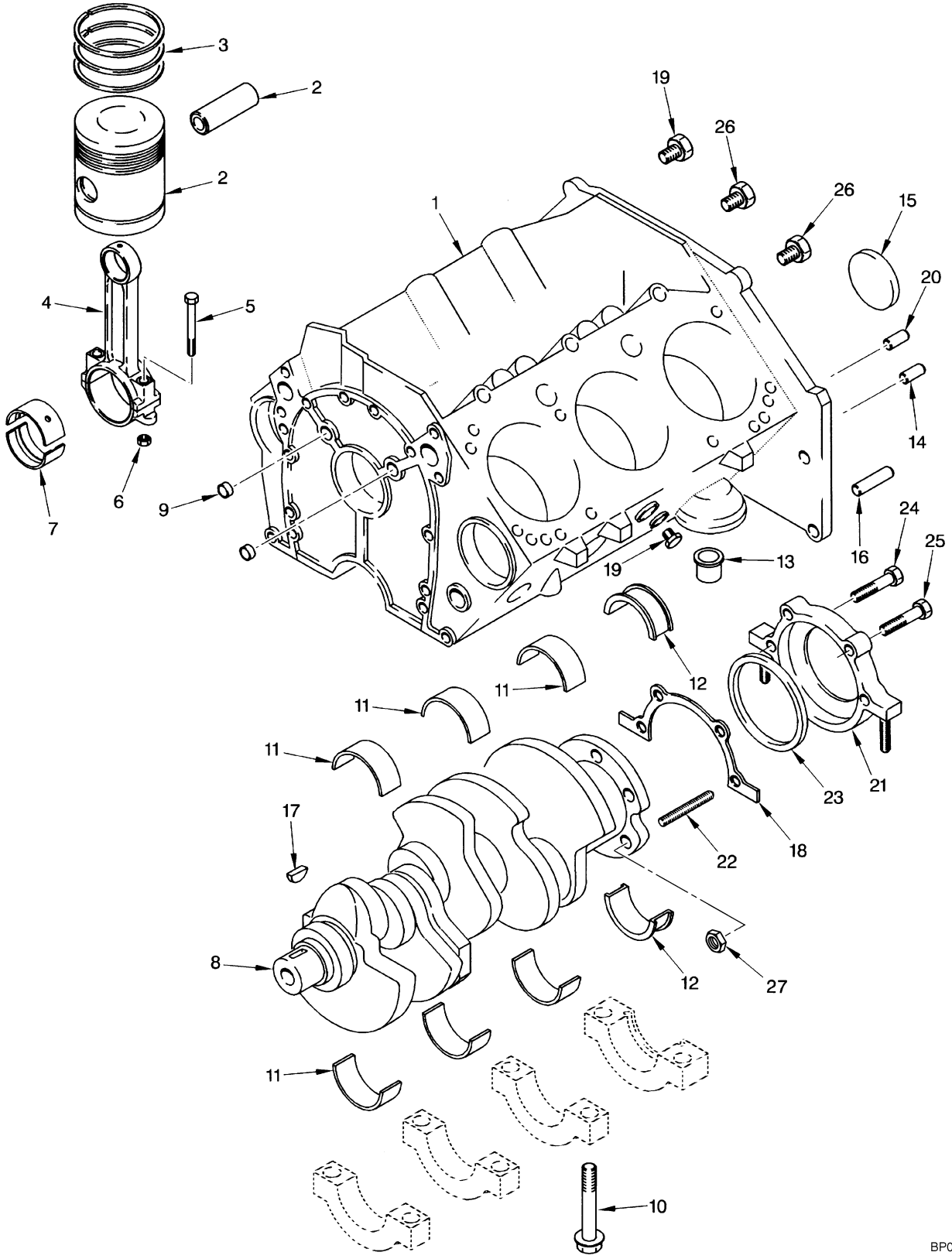

©2004 HYSTER COMPANY

CYLINDER BLOCK
GASOLINE AND LPG
4.3L EPA COMPLIANT

ITEM	PART NO.	DESCRIPTION	QTY
	1543776	Engine Assembly (Gasoline)	1
	1543978	Engine Assembly (LPG)	1
1	. . . . .	Short Block Assembly	1
2	1390759	Piston and Pin Kit (Standard)	6
2	1390760	Piston and Pin Kit (0,5 mm)	6
3	1390761	Piston Ring Kit (Standard)	6
3	1390765	Piston Ring Kit (0,5 mm)	6
4	1360179	Connecting Rod	6
5	1360182	Bolt	2
6	1330450	Nut	2
7	1390770	Bearing (Connecting Rod) (Standard)	1
8	1460386	Crankshaft	1
9	388302	Plug (RH)	3
10	263842	Bolt	10
11	1558807	Crankshaft Bearing Set (Standard)	3
11	1460738	Crankshaft Bearing Set (0.020 in.) (Crankshaft)	3
12	1390773	Crankshaft Bearing Set (0.001 in.) (Crankshaft)	1
13	1514968	Valve	1
14	159977	Pin	4
15	1374313	Plug	2
16	1335499	Pin	2
17	1451319	Key	1
18	1500884	Gasket	1
19	1514267	Plug	1
20	375601	Pin	1
21	1460330	Retainer Assembly	1
22	1450555	Stud	2
23	1460331	Seal	1
24	375575	Bolt	1
25	375602	Bolt	1
26	1331341	Plug	4
27	388313	Nut	1

©2004 HYSTER COMPANY

CAMSHAFT AND OIL PAN (Figure 2-12)
GASOLINE AND LPG
4.3L EPA COMPLIANT

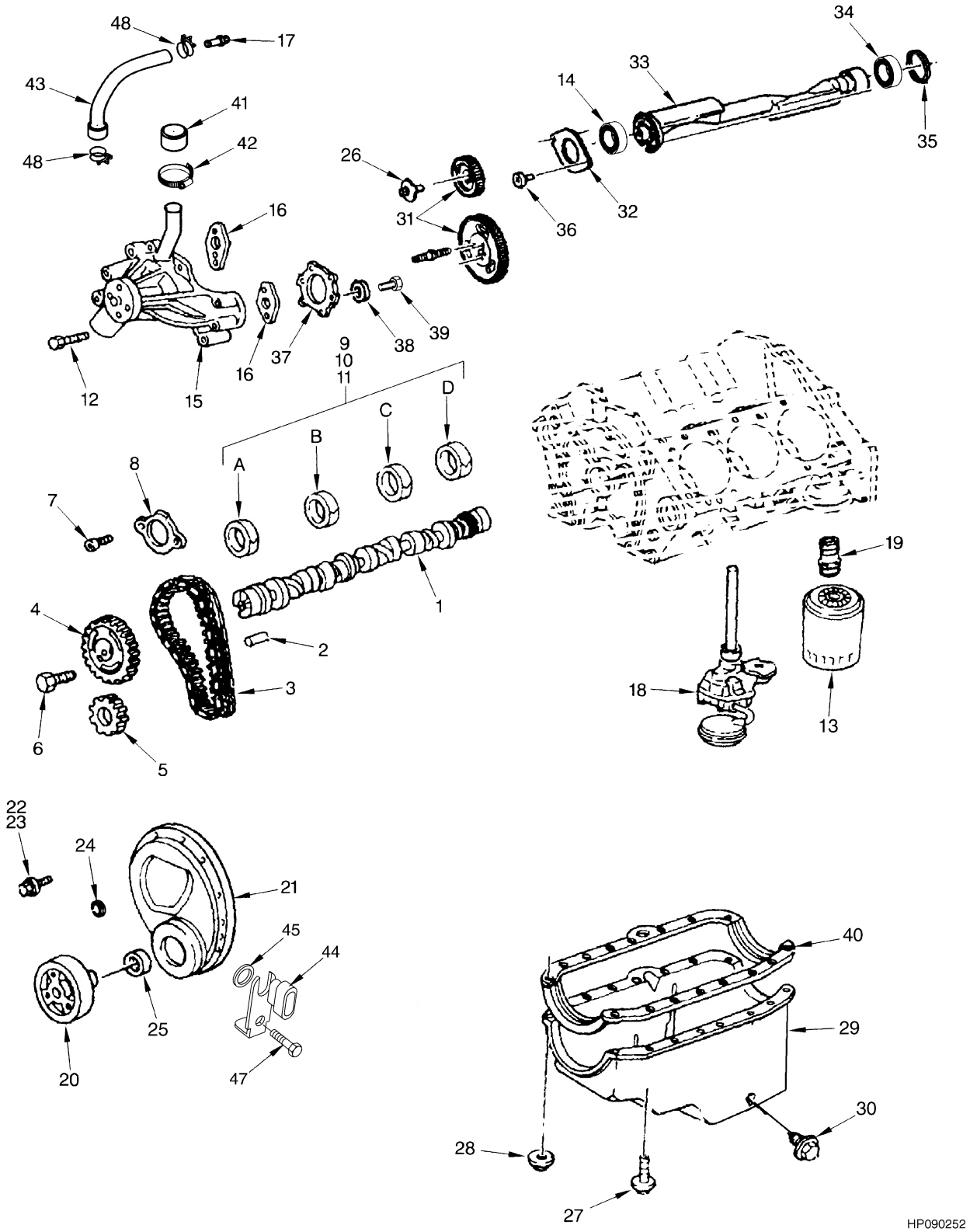

©2004 HYSTER COMPANY

CAMSHAFT AND OIL PAN
GASOLINE AND LPG
4.3L EPA COMPLIANT

ITEM		PART NO.	DESCRIPTION	QTY
		1543776	Engine Assembly (Gasoline)	1
		1543978	Engine Assembly (LPG)	1
1		1456111	Camshaft	1
2		1374297	Pin	1
3		1471556	Chain Kit	1
3		. . . . .	Timing Chain	1
4		. . . . .	Sprocket	1
5		. . . . .	Sprocket	1
6		1374301	Bolt	3
7		1374299	Bolt	2
8		1374298	Retainer	1
9	**b**	1454955	Bearing (Position A, D)	2
9	**a**	1454955	Bearing (Position A)	1
10	**b**	1454956	Bearing (Position C)	1
10	**a**	1454956	Bearing (Position B, D)	2
11	**b**	1454957	Bearing (Position B)	1
11	**a**	1454957	Bearing (Position C)	1
12		1383257	Bolt	5
13		1320000	Oil Filter	1
14		1374314	Bearing	1
15		1389100	Water Pump	1
16		263828	Gasket	2
17		1393350	Nipple	1
18		1386176	Oil Pump (☞ Figure 2-16)	1
19		375587	Fitting	1
20		1514969	Damper	1
21		1514268	Cover	1
22		1386179	Bolt	4
23		1377103	Bolt	2
24		1389092	Grommet	6
25		1377104	Seal	1
26		1374317	Bolt	6
27		1386183	Bolt	10
28		1360178	Nut	1
29		1471558	Oil Pan	1
30		1460757	Screw	1
30		1460758	Seal	1
31		1374315	Gear Kit	1
32		1374326	Retainer	1
33		1377107	Shaft	1
34		1451321	Bearing	1
35		1374313	Plug	2
36		1339963	Bolt	2
37		1460322	Gasket	1
38		369748	Washer	6
39		1374108	Bolt	10
40		1386184	Gasket	1
41		1383263	Cap	1
42		130845	Clamp	1
43		1460332	Hose	1

©2004 HYSTER COMPANY

CAMSHAFT AND OIL PAN
GASOLINE AND LPG
4.3L EPA COMPLIANT

ITEM	PART NO.	DESCRIPTION	QTY
44	1514963	Sensor	1
45	1514964	O-Ring	1
46	1514961	Insert (Not Illustrated)	1
47	1514965	Bolt	1
48	1471560	Clamp	2
	1460768	Bearing Kit (Includes Items 9-11)	1
	1454974	Bearing Kit (Includes Items 9-11)	1

FOOTNOTES:

a GM Identifcation Number on Left Side of Rear Transmission Housing Starts with "A" Followed by 8 Digits

b GM Identification Number on Left Side of Rear Transmission Housing is 8 Digits

©2004 HYSTER COMPANY

NOTES

VALVE COVER AND INLET MANIFOLD (Figure 2-13)
GASOLINE AND LPG
4.3L EPA COMPLIANT

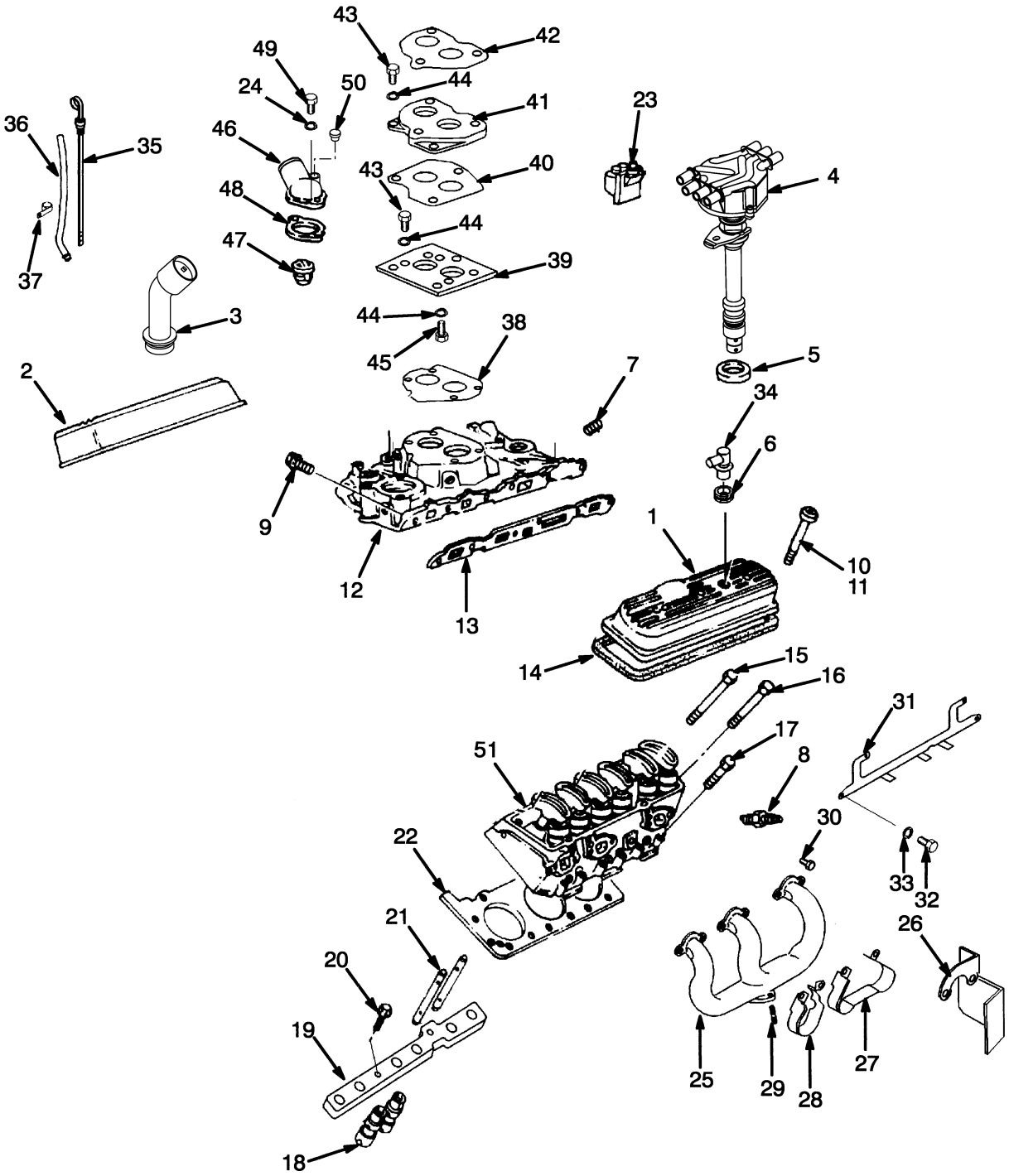

HP091048

©2004 HYSTER COMPANY

VALVE COVER AND INLET MANIFOLD
GASOLINE AND LPG
4.3L EPA COMPLIANT

ITEM	PART NO.	DESCRIPTION	QTY
	1543776	Engine Assembly (Gasoline)	1
	1543978	Engine Assembly (LPG)	1
1	1386185	Valve Cover (RH)	1
2	1389102	Valve Cover (LH)	1
3	1552141	Oil Filler	1
4	1559695	Distributor	1
5	1334423	Gasket	1
6	1374288	Grommet	3
7	1331341	Plug (LPG)	1
8	1389133	Spark Plug	6
8	1452376	Spark Plug (Optional)	6
9	1389093	Bolt (LPG)	8
10	1383904	Grommet	6
11	1374289	Bolt	6
12	1386186	Manifold (Intake) (LPG)	1
12	. . . . .	(Manifold (Intake) (Gasoline) (☞ Figure 2-14)	1
13	1386187	Gasket (LPG)	1
14	1374293	Gasket	2
15	1377792	Bolt	10
16	1377793	Bolt	4
17	1377794	Bolt	10
18	1471559	Lifter Assembly	12
19	1389050	Guide	2
20	1389051	Bolt	2
21	1386189	Push Rod	12
22	1460333	Gasket Kit (Cylinder Head)	1
23	1386191	Ignition Coil	1
24	15156	Lockwasher	5
25	1502741	Manifold	2
26	1529010	Shield	1
27	1316488	Shield	2
28	1316494	Shield	2
29	1398105	Stud	3
30	1383257	Bolt	12
31	1383241	Support	1
32	133469	Capscrew	4
33	15154	Lockwasher	4
34	379407	Fitting	1
35	1510649	Dipstick	1
36	1514915	Tube	1
37	133696	Clamp	1
38	1383237	Gasket	1
39	1383211	Plate	1
40	1383213	Gasket	1
41	1383239	Spacer	1
42	1333806	Gasket	1
43	16836	Capscrew	7
44	15155	Lockwasher	10
45	16394	Capscrew	1
46	1317468	Outlet	1

©2004 HYSTER COMPANY

VALVE COVER AND INLET MANIFOLD
GASOLINE AND LPG
4.3L EPA COMPLIANT

ITEM	PART NO.	DESCRIPTION	QTY
47	1450696	Thermostat	1
48	1330725	Gasket	1
49	16598	Capscrew	2
50	15962	Fitting	3

©2004 HYSTER COMPANY

NOTES

INTAKE MANIFOLD AND FUEL RAIL (Figure 2-14)
GASOLINE
4.3L EPA COMPLIANT ENGINE

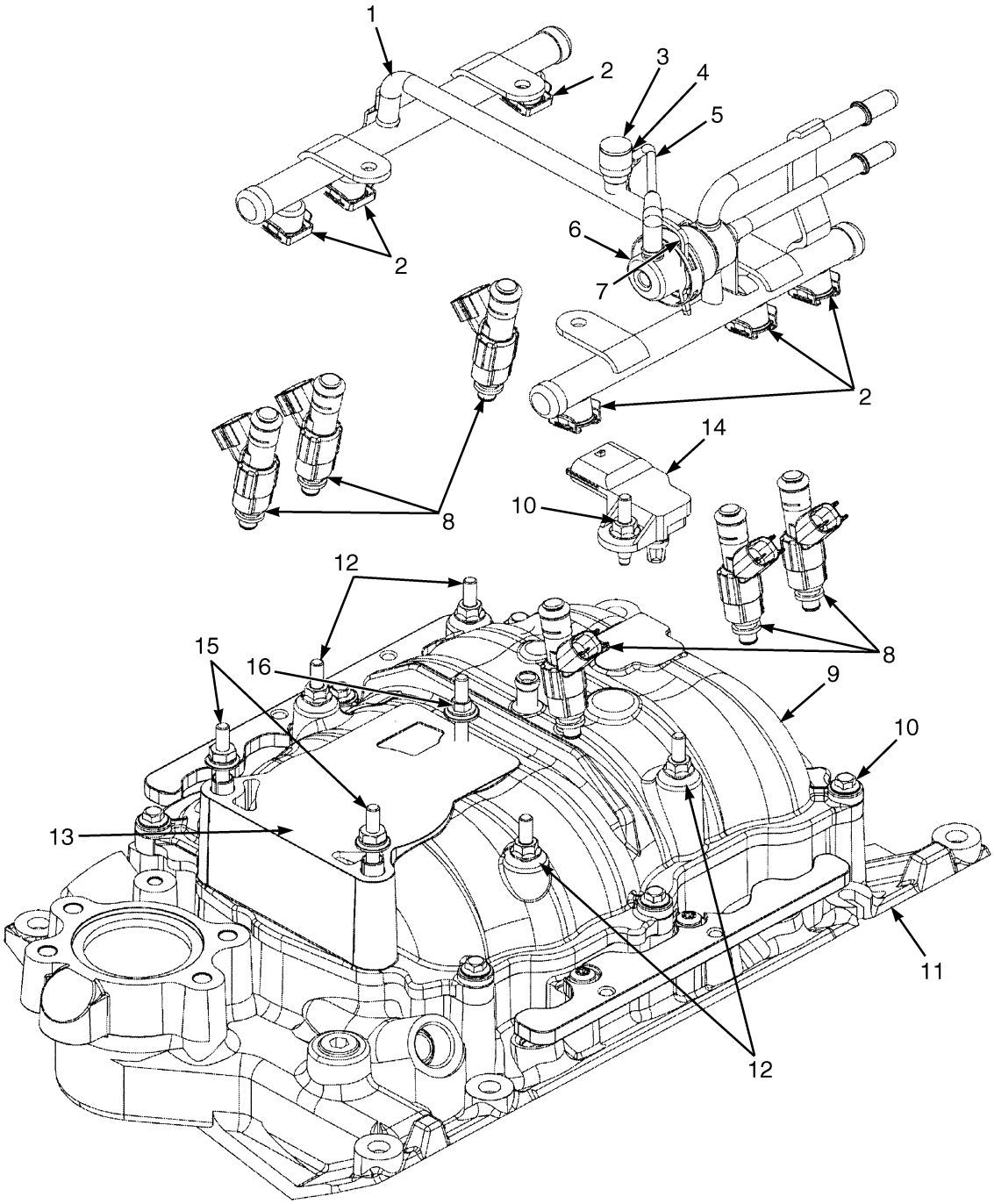

BP090124

©2004 HYSTER COMPANY

INTAKE MANIFOLD AND FUEL RAIL
GASOLINE
4.3L EPA COMPLIANT ENGINE

ITEM	PART NO.	DESCRIPTION	QTY
	1543776	Engine Assembly (Gasoline)	1
1	1559556	Fuel Rail	1
2	1559557	Clip	6
3	1559558	Cap	1
4	1559559	Pressure Valve	1
5	1559560	Hose	1
6	1559561	Regulator	1
7	1559562	Retainer	1
8	1559563	Injector	6
9	1559564	Manifold (Upper)	1
10	1358545	Bolt	7
11	1559565	Manifold (Lower)	1
12	1559566	Stud	4
13	1559570	Gasket	1
14	1559567	Sensor (TMAP)	1
15	1559568	Bolt	2
16	1559569	Bolt	1

©2004 HYSTER COMPANY

CYLINDER HEAD (Figure 2-15)
GASOLINE AND LPG
4.3L EPA COMPLIANT

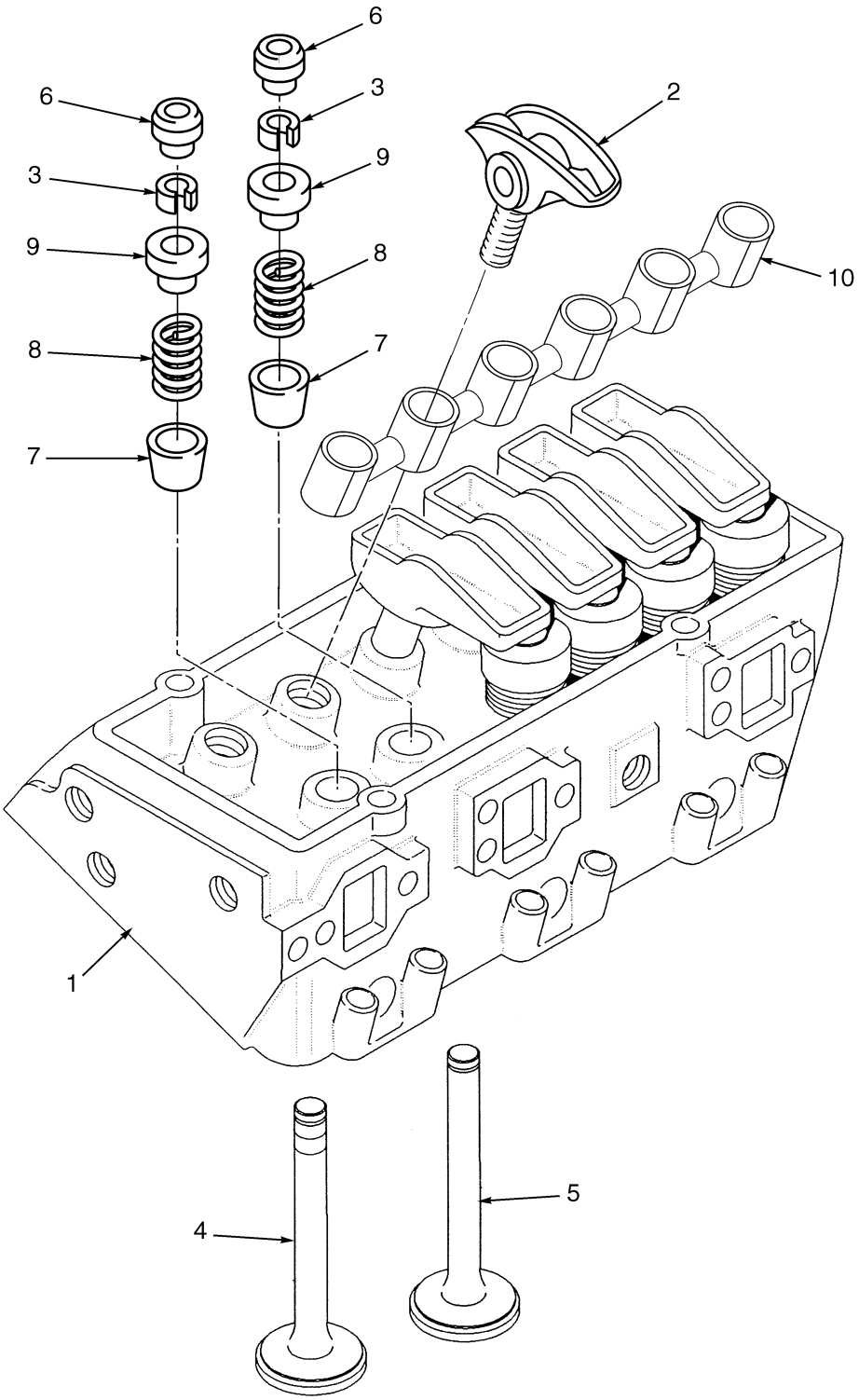

HP090254

©2004 HYSTER COMPANY

CYLINDER HEAD
GASOLINE AND LPG
4.3L EPA COMPLIANT

ITEM	PART NO.	DESCRIPTION	QTY
	1543776	Engine Assembly (Gasoline)	1
	1543978	Engine Assembly (LPG)	1
1	1471557	Cylinder Head (Gasoline)	2
1	1482700	Cylinder Head (LPG)	2
2	1471555	Rocker Arm	12
2	1389051	Bolt	4
3	1377110	Key (Valve)	24
4	1386194	Exhaust Valve (Gasoline)	6
4	1482701	Exhaust Valve (LPG)	6
5	1386195	Inlet Valve	6
6	1393127	Cap	12
7	1386197	Seal	12
8	1386198	Spring	12
9	1460384	Seal	12
10	1489643	Pivot Support (Rocker Arm)	2

©2004 HYSTER COMPANY

OIL PUMP (Figure 2-16)
GASOLINE AND LPG
4.3L EPA COMPLIANT

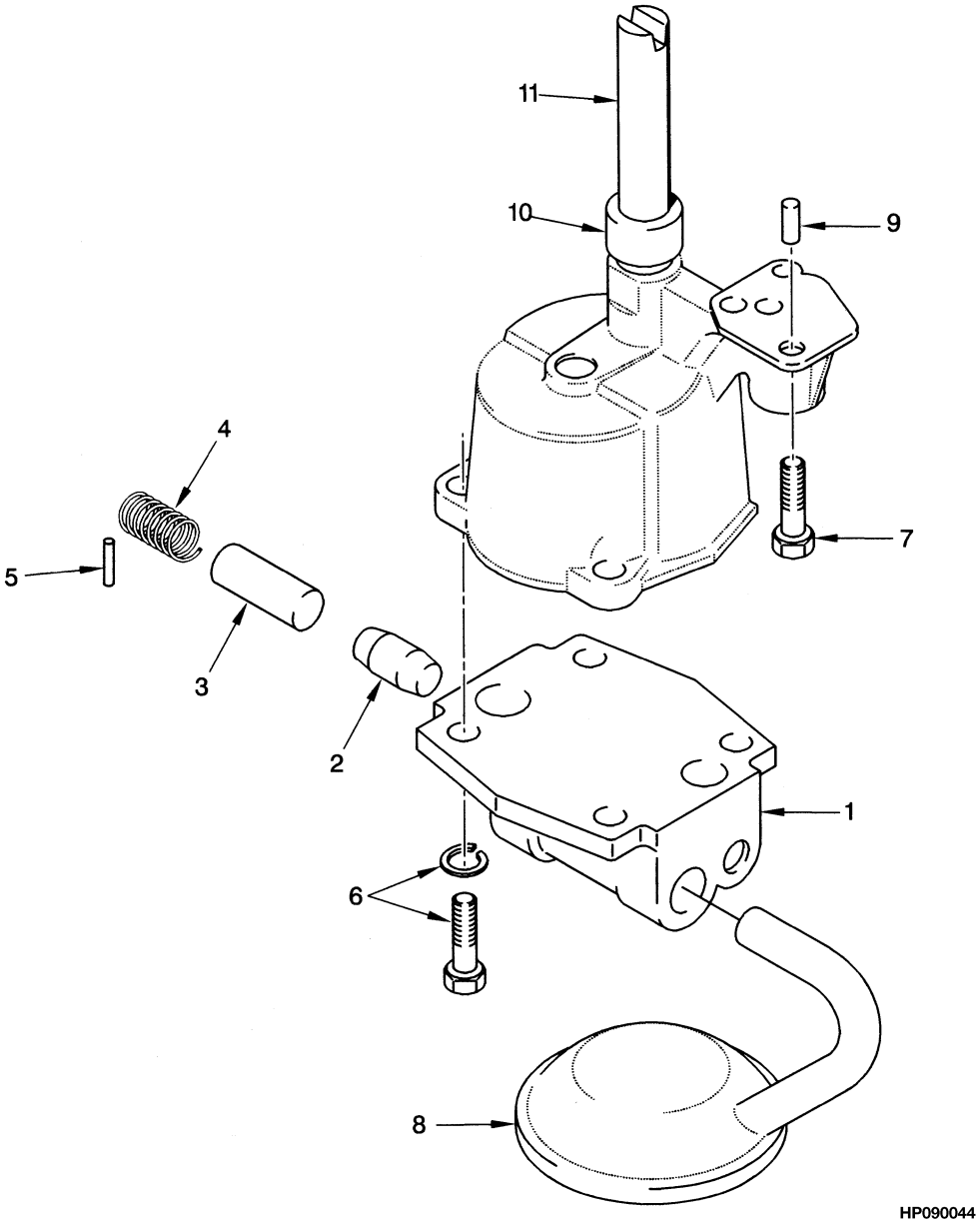

©2004 HYSTER COMPANY

OIL PUMP
GASOLINE AND LPG
4.3L EPA COMPLIANT

ITEM	PART NO.	DESCRIPTION	QTY
	1543978	Engine Assembly (LPG)	1
	1543776	Engine Assembly (Gasoline)	1
	1386176	Oil Pump	1
1	1374319	Cover	1
2	1338223	Stop	1
3	268573	Regulator Valve	1
4	1374320	Spring	1
5	1330453	Pin	1
6	1333541	Screw and Washer	2
7	388306	Bolt	1
8	1386177	Screen	1
9	1450941	Pin	1
10	263795	Retainer	1
11	263794	Shaft	1

©2004 HYSTER COMPANY

CYLINDER BLOCK (Figure 2-17)
DIESEL
TIER II

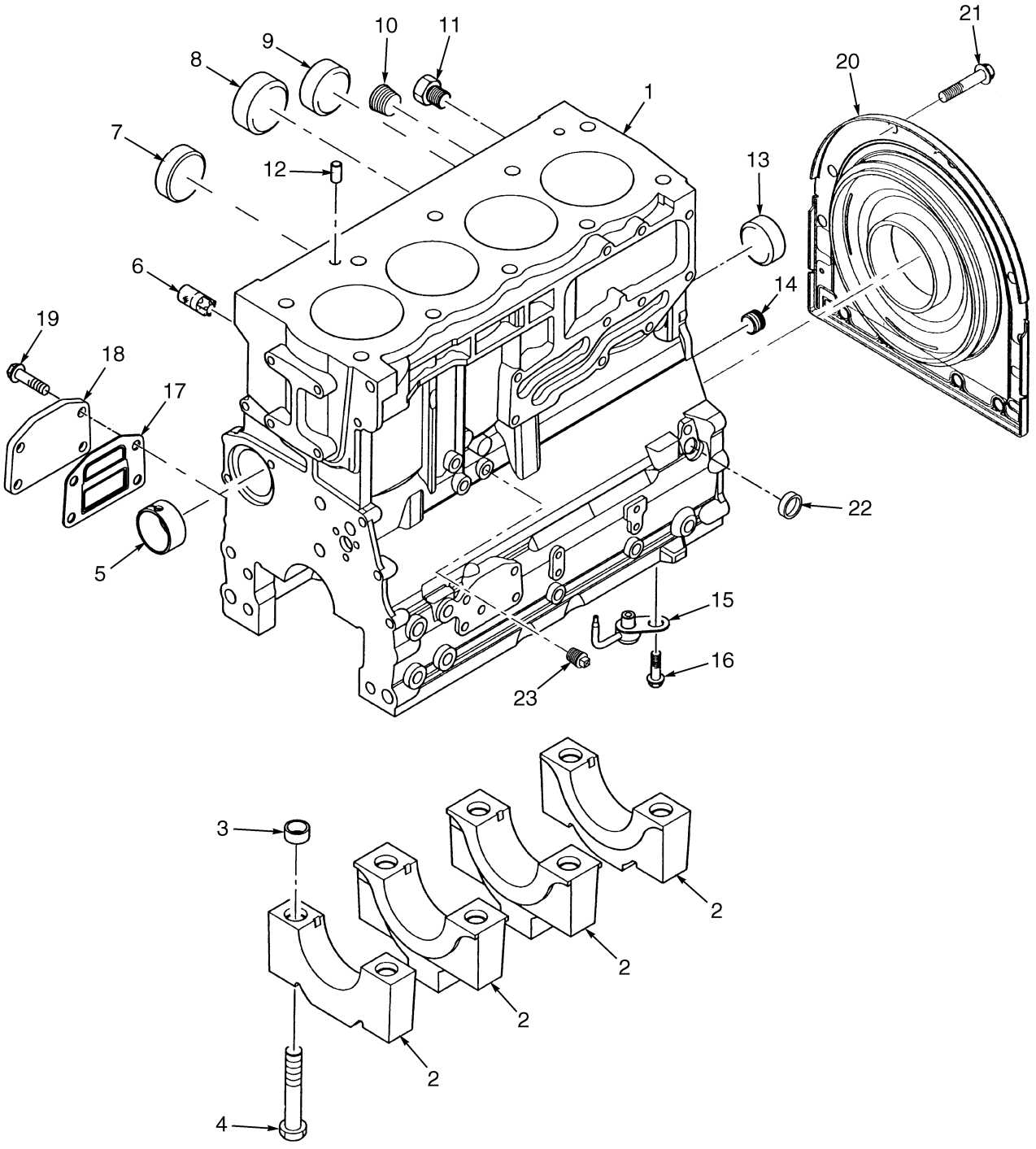

BP090101

©2004 HYSTER COMPANY

CYLINDER BLOCK
DIESEL
TIER II

ITEM	PART NO.	DESCRIPTION	QTY
	1523800	Engine	1
1	1554974	Cylinder Block Kit	1
2	. . . . .	Bearing Caps	5
3	99576	Thimble	10
4	16794	Capscrew	10
5	1554975	Bushing	1
6	1554981	Plug	1
7	1554980	Plug	1
8	1554977	Plug	2
9	980727	Plug	1
10	15304	Fitting	1
11	1554979	Plug	2
12	1456711	Pin	2
13	1554976	Plug	1
14	1554978	Plug	1
15	1554982	Cooling Jet	4
16	1382546	Screw	4
17	1554984	Gasket	1
18	1554983	Plate	1
19	1307894	Screw	4
20	1555071	Housing	1
21	1537224	Bolt	10
22	1555421	Plug	1
23	15483	Fitting	1
	1555686	Top Gasket (Includes Item 17)	1

©2004 HYSTER COMPANY

CYLINDER HEAD AND INDUCTION MANIFOLD (Figure 2-18)

DIESEL

TIER II

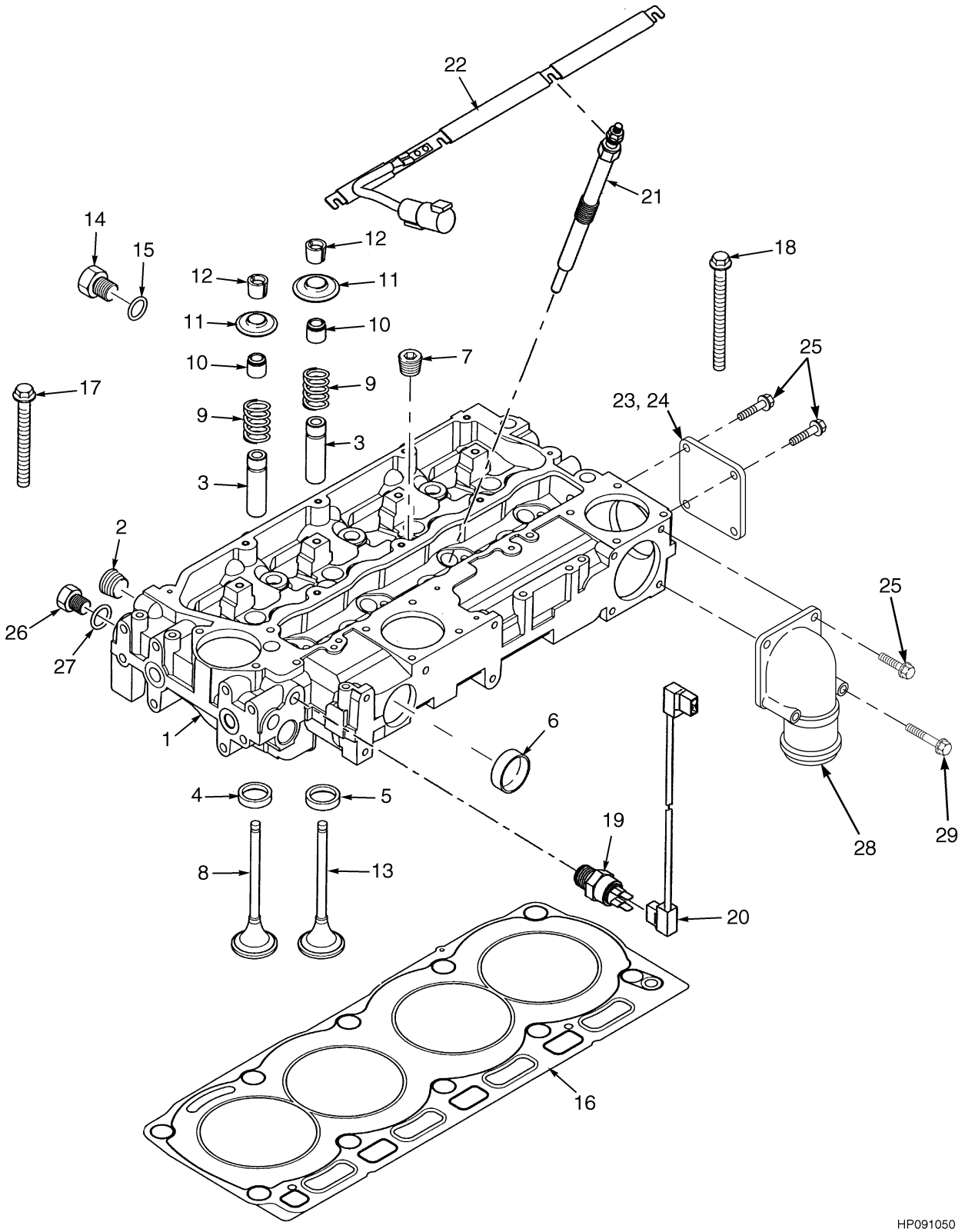

©2004 HYSTER COMPANY

CYLINDER HEAD AND INDUCTION MANIFOLD
DIESEL
TIER II

ITEM	PART NO.	DESCRIPTION	QTY
	1523800	Engine	1
1	1555072	Cylinder Head Kit	1
2	15962	Fitting	1
3	1451629	Valve Guide	8
4	1555073	Inlet Valve Insert	4
5	1555074	Exhaust Valve Insert	4
6	1388387	Plug	2
7	15304	Fitting	4
8	1555075	Inlet Valve	4
9	1555077	Valve Spring	8
10	1555076	Seal	8
11	1555078	Cap	8
12	1451636	Keeper	16
13	1555079	Exhaust Valve	4
14	1555080	Plug	1
15	1537258	O-Ring	1
16	1555081	Gasket	1
17	1555082	Screw	7
18	1555083	Screw	3
19	1555419	Sender	1
20	1555420	Cable	1
21	1555505	Glow Plug	4
22	1555506	Bar	3
23	1555689	Plate	3
24	1460209	Sealant	AR
25	1307894	Screw	14
26	1555080	Plug	1
27	1537258	O-Ring	1
28	1556774	Elbow	1
29	1556775	Screw	2
	1555686	Top Gasket (Includes Item 16)	1

©2004 HYSTER COMPANY

VALVE COVER AND ROCKER ARM SHAFT (Figure 2-19)

DIESEL

TIER II

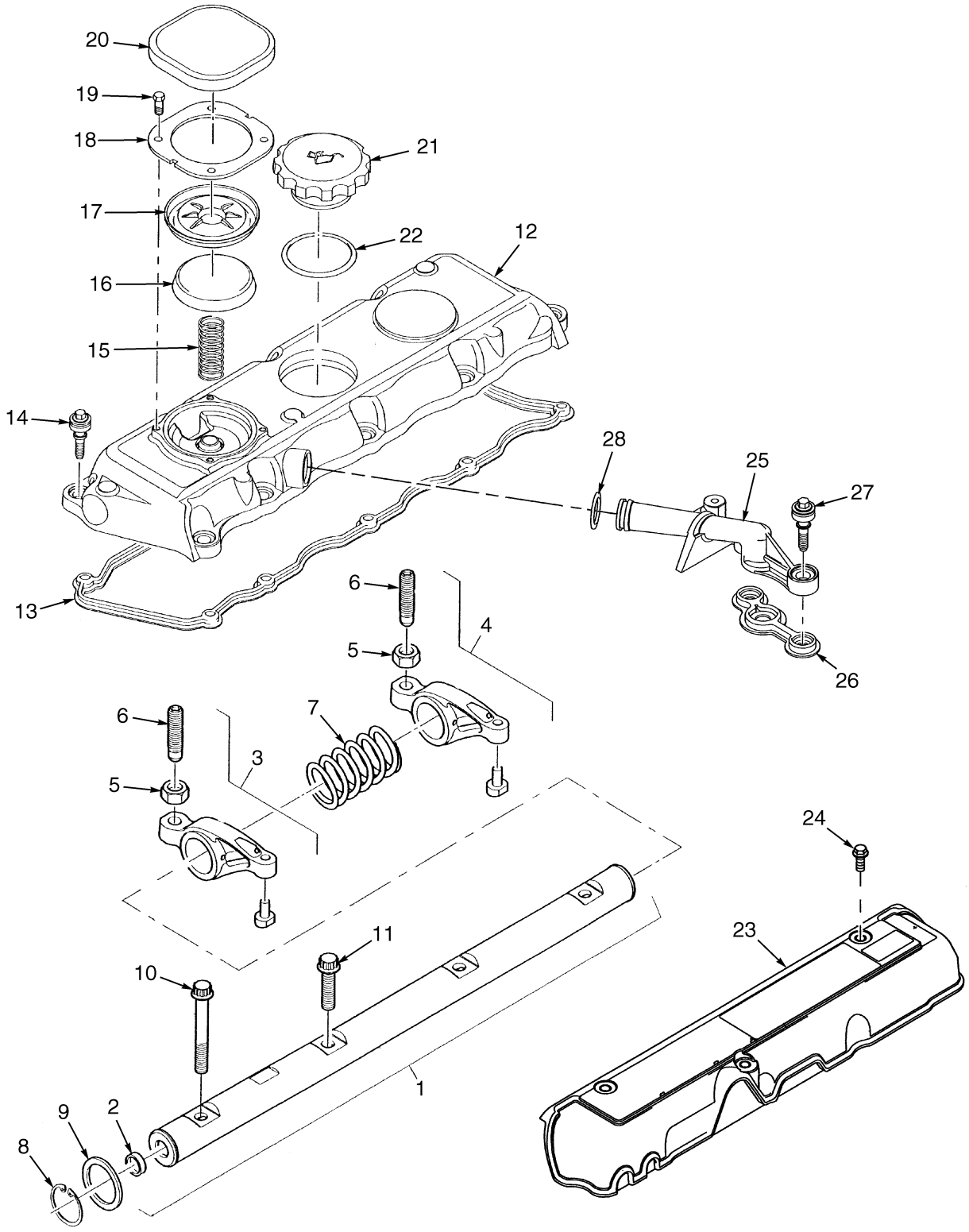

BP090102

©2004 HYSTER COMPANY

VALVE COVER AND ROCKER ARM SHAFT
DIESEL
TIER II

ITEM	PART NO.	DESCRIPTION	QTY
	1523800	Engine	1
	1555084	Rocker Assembly	1
1	1555085	Shaft Assembly	1
2	1555086	Plug	2
3	1555088	Rocker Arm Assembly	4
4	1555092	Rocker Arm Assembly	4
5	15026	Nut	1
6	1466859	Screw	1
7	1555091	Spring	3
8	1555090	Snap Ring	2
9	1555094	Washer	2
10	1555095	Screw	1
11	1555096	Screw	3
12	1555430	Cover Assembly	1
13	1555431	Gasket	1
14	1555432	Screw	10
15	1555433	Spring	2
16	1555434	Cap	1
17	1555435	Diaphragm	1
18	1555436	Plate	1
19	1555437	Screw	4
20	1555438	Cap	1
21	1391246	Cap Assembly	1
22	1516930	O-Ring	1
23	1555447	Cover	1
24	1306361	Screw	3
25	1555448	Breather Pipe	1
26	1555449	Gasket	1
27	1555432	Screw	2
28	1555451	O-Ring	1
	1555686	Top Gasket (Includes Items 13, 26)	1

©2004 HYSTER COMPANY

CRANKSHAFT AND PISTONS (Figure 2-20)
DIESEL
TIER II

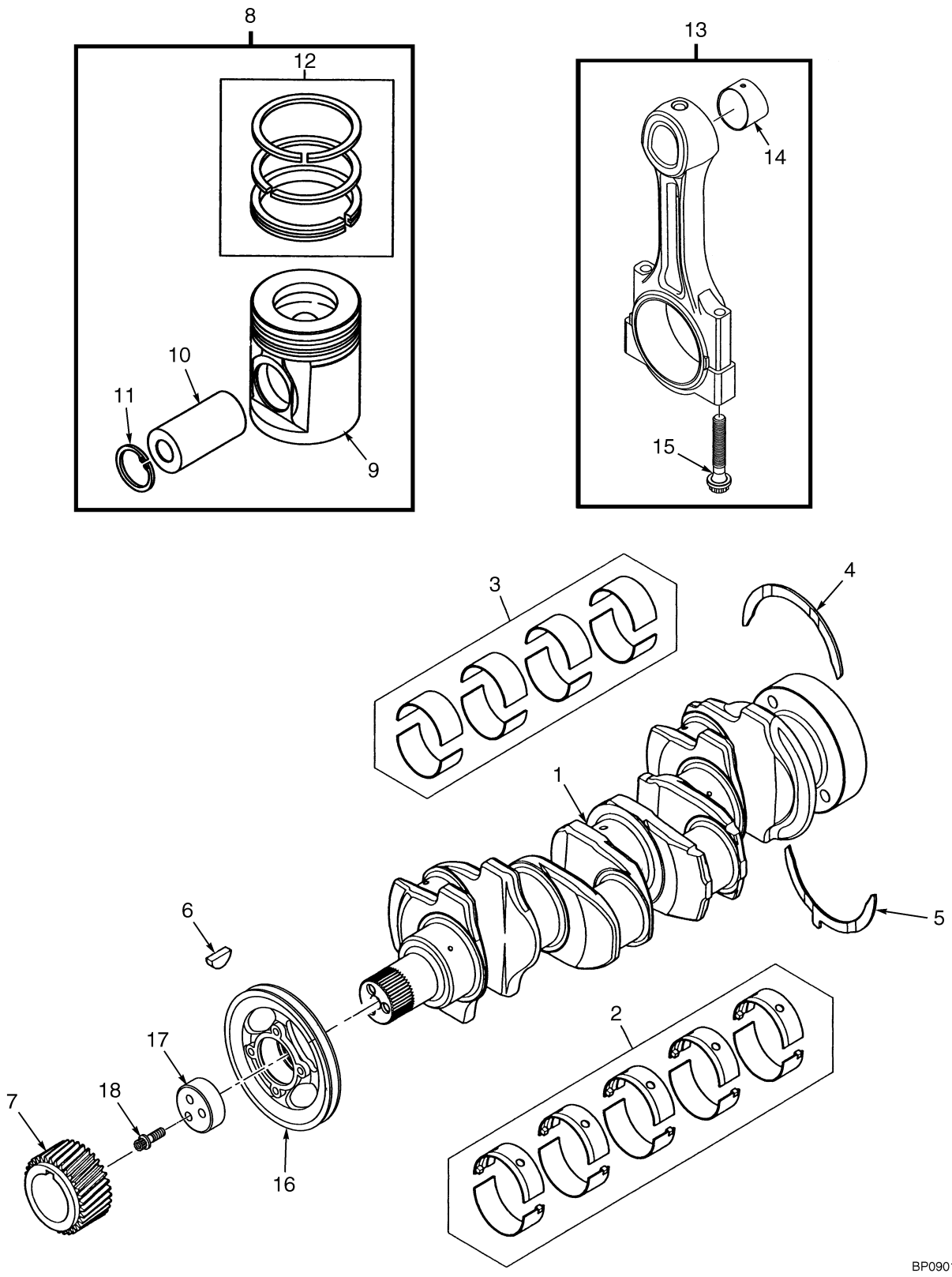

©2004 HYSTER COMPANY

CRANKSHAFT AND PISTONS
DIESEL
TIER II

ITEM	PART NO.	DESCRIPTION	QTY
	1523800	Engine	1
1	1554985	Crankshaft Assembly	1
2	1554986	Main Bearing Kit (Standard)	1
2	1554988	Main Bearing Kit (0.10 in.)	1
2	1554989	Main Bearing Kit (0.20 in.)	1
2	1554990	Main Bearing Kit (0.30 in.)	1
3	1554987	Bearing Kit (Standard)	1
3	1554991	Bearing Kit (0.10 in)	1
3	1554992	Bearing Kit (0.20 in.)	1
3	1554993	Bearing Kit (0.30 in.)	1
4	842799	Thrust Washer (Standard)	2
4	161296	Thrust Washer (0.007 in.)	2
5	842800	Thrust Washer (Standard)	2
5	161297	Thrust Washer (0.007 in.)	2
6	99610	Key	1
7	1537216	Gear	1
8	1554994	Piston and Ring Kit	4
9	. . . . .	Piston	1
10	. . . . .	Pin	1
11	1451606	Snap Ring	2
12	1554995	Piston Ring Kit	1
13	1555065	Connecting Rod Kit ("F Red")	4
13	1555066	Connecting Rod Kit ("G Orange")	4
13	1555067	Connecting Rod Kit ("H White")	4
13	1555068	Connecting Rod Kit ("J Brown")	4
13	1555069	Connecting Rod Kit ("K Purple")	4
13	1555070	Connecting Rod Kit ("L Blue")	4
14	1555063	Bushing	1
15	1555064	Bolt	2
16	1306193	Pulley	1
17	1306194	Block	1
18	302713	Screw	3

©2004 HYSTER COMPANY

OIL PAN AND PUMP (Figure 2-21)
DIESEL
TIER II

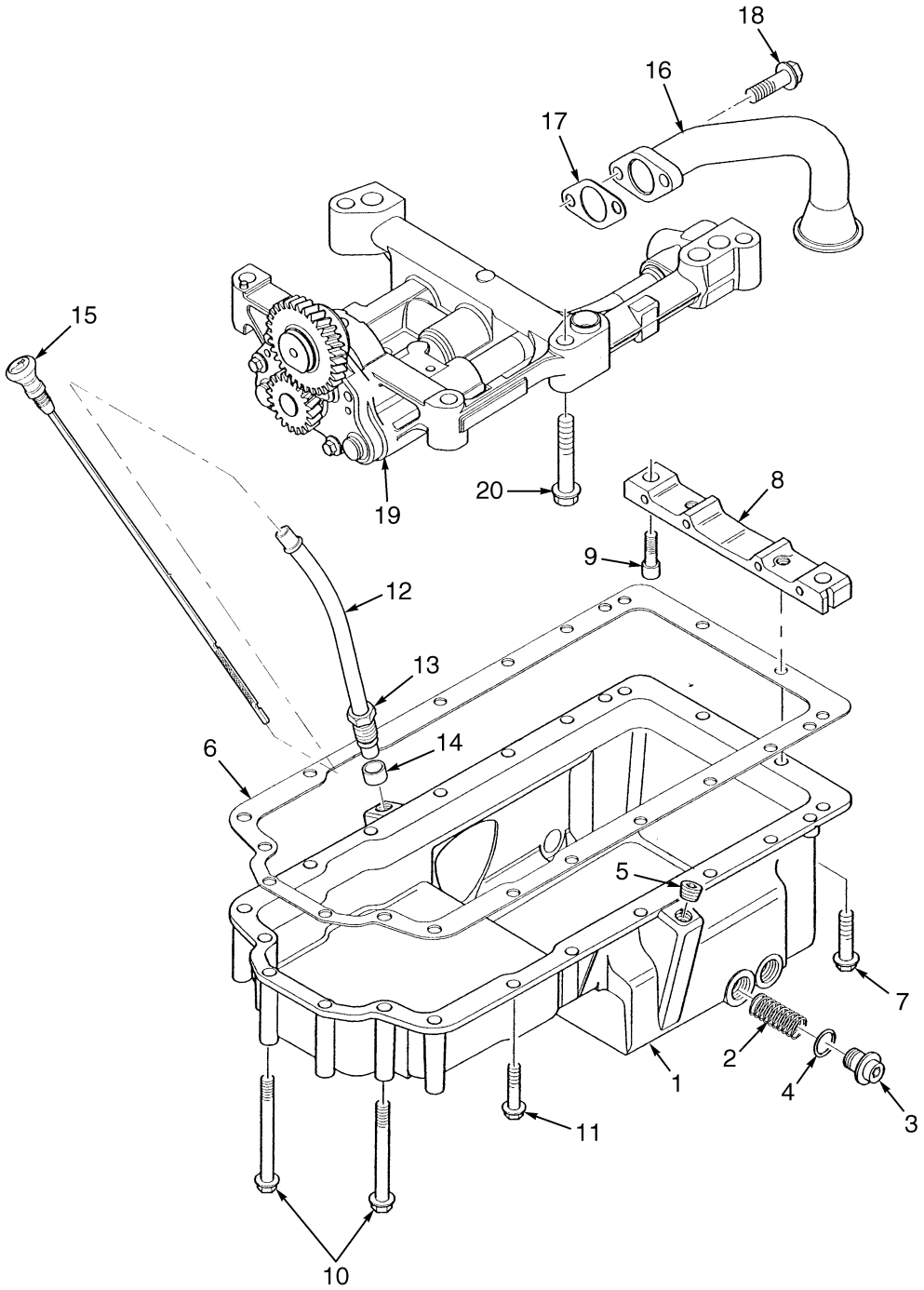

BP090116

©2004 HYSTER COMPANY

OIL PAN AND PUMP
DIESEL
TIER II

ITEM	PART NO.	DESCRIPTION	QTY
	1523800	Engine	1
1	1460557	Sump	1
2	266465	Insert	2
3	377976	Plug	2
4	1306374	O-Ring	2
5	1377908	Plug	1
6	1555422	Gasket	1
7	1307894	Screw	2
8	1555423	Bridge Piece	1
9	1307875	Screw	2
10	1318965	Screw	6
11	386459	Screw	12
12	1385704	Tube Assembly	1
13	1307880	Nut	1
14	1306143	Olive	1
15	1557096	Dipstick	1
16	1555429	Pipe	1
17	1344921	Gasket	1
18	1306358	Screw	2
19	1555490	Oil Pump	1
20	1306365	Screw	5
	1555729	Bottom Gasket Kit (Includes Items 4, 17)	1

©2004 HYSTER COMPANY

COOLING AND FAN DRIVE (Figure 2-22)
DIESEL TIER II

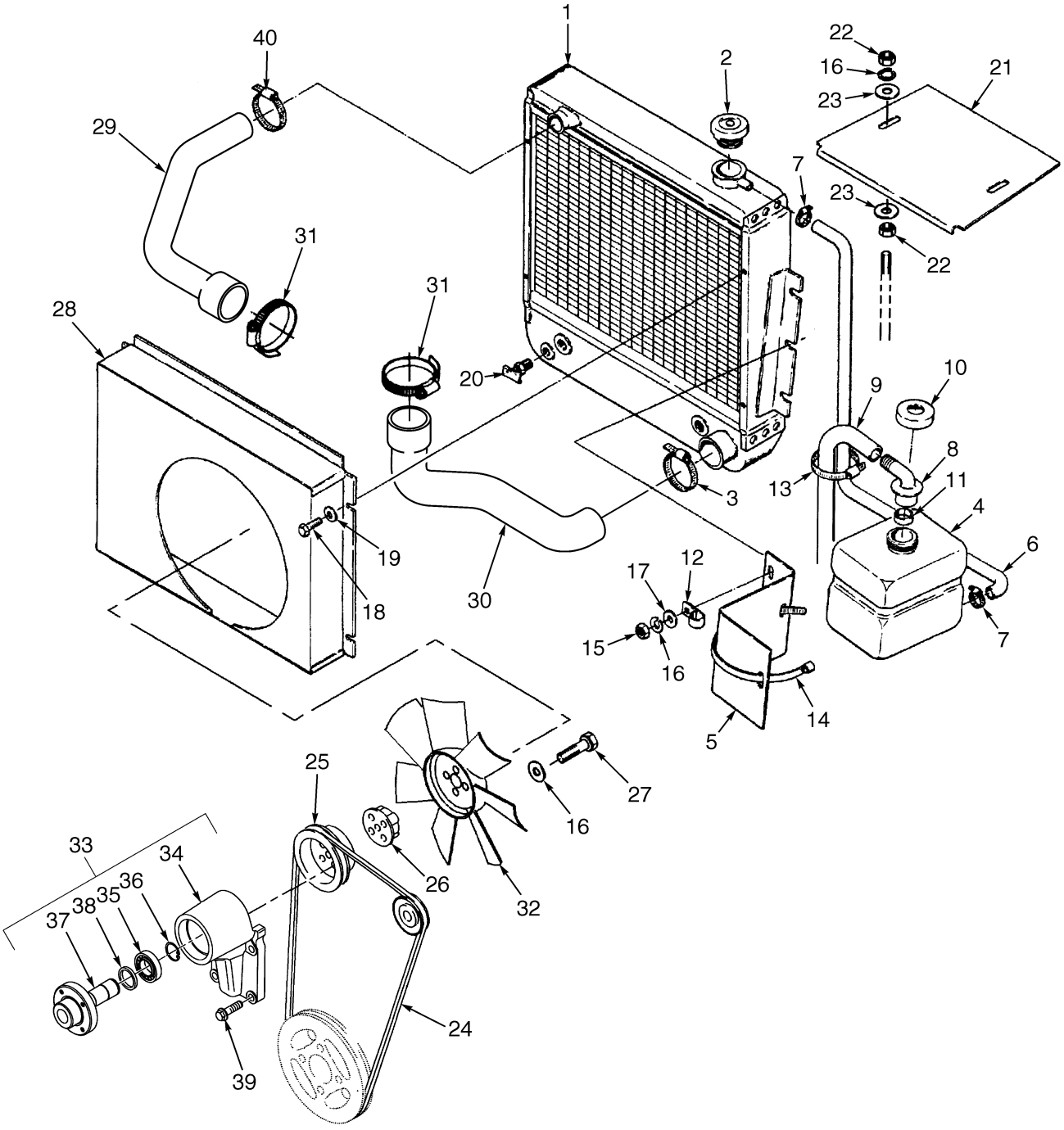

BP060016

©2004 HYSTER COMPANY

COOLING AND FAN DRIVE
DIESEL TIER II

ITEM	PART NO.	DESCRIPTION	QTY
1	1456899	Radiator	1
2	178899	Cap	1
3	1557312	Clamp	1
4	344432	Reservoir	1
5	340203	Bracket	1
6	1302955	Tube	1
7	353310	Clamp	2
8	1359581	Outlet Assembly	1
8	345453	Outlet (Reservoir)	1
9	1457312	Hose	1
10	345454	Cap	1
11	336550	Bushing	1
12	124297	Clamp	1
13	137852	Strap Clamp	1
14	340204	Strap	1
15	239503	Nut	4
16	292681	Lockwasher	10
17	320158	Washer	4
18	16073	Screw	4
19	15127	Washer	4
20	12815	Drain Valve	1
21	350052	Cover	1
22	15055	Nut	4
23	221733	Washer	4
24	1455809	Belt	1
25	1455578	Pulley	1
26	1455580	Spacer (Fan)	1
27	292511	Capscrew	4
28	377342	Shroud	1
29	1528969	Hose (Upper)	1
30	1528944	Hose (Lower)	1
31	1549449	Clamp	2
32	377331	Fan	1
33	1556761	Fan Drive Assembly	1
34	. . . . .	Housing	4
35	. . . . .	Bearing	1
36	1555090	Snap Ring	1
37	. . . . .	Hub	1
38	. . . . .	Spacer	1
39	1315499	Screw	4
40	1502000	Clamp	1

©2004 HYSTER COMPANY

WATER PUMP AND OUTLET (Figure 2-23)
DIESEL
TIER II

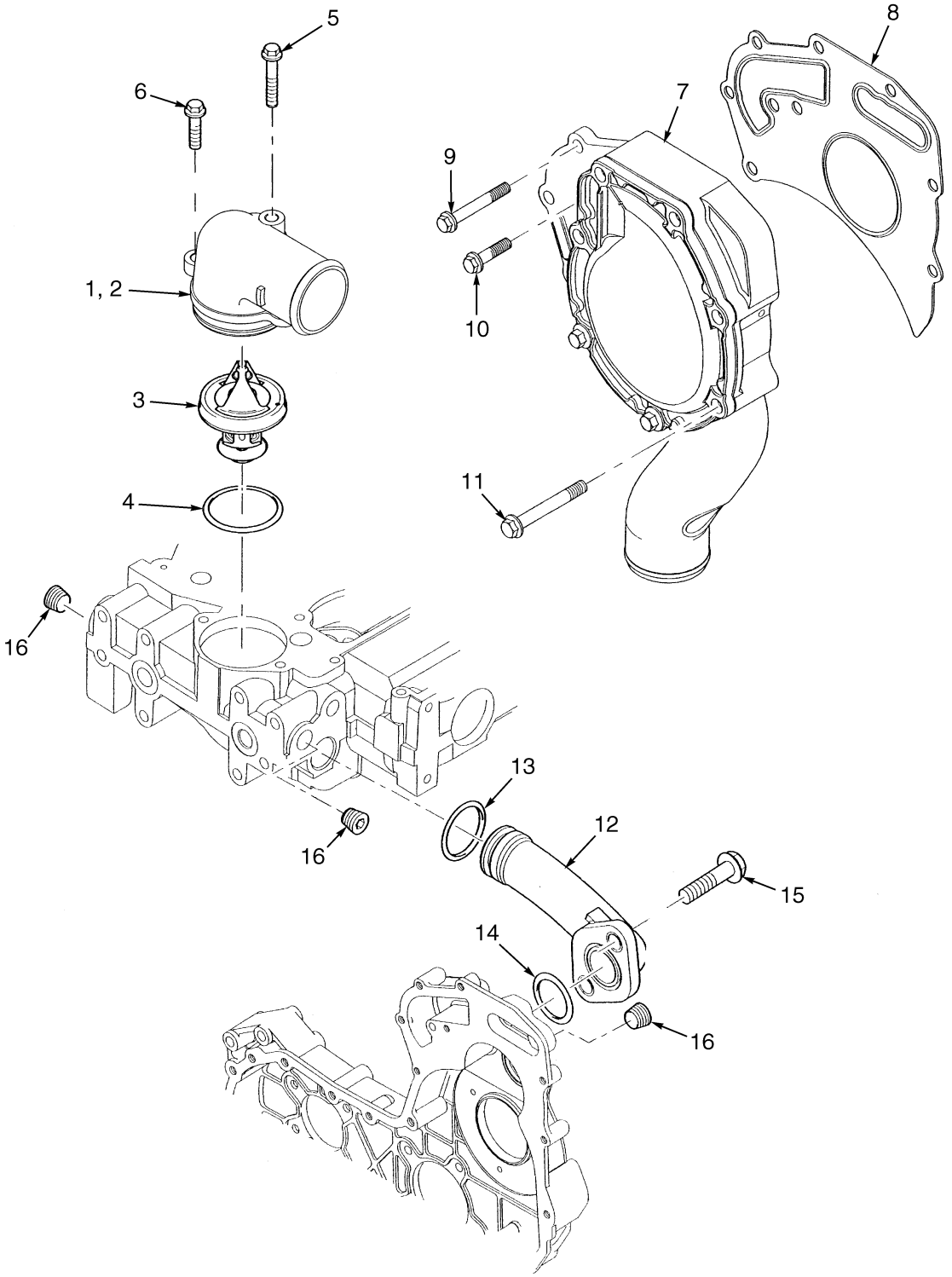

BP090117

©2004 HYSTER COMPANY

WATER PUMP AND OUTLET
DIESEL
TIER II

ITEM	PART NO.	DESCRIPTION	QTY
	1523800	Engine	1
1	1556767	Outlet Assembly	1
2	. . . . .	Housing	1
3	1556768	Thermostat	1
4	1555478	O-Ring	1
5	1307909	Screw	1
6	1306358	Screw	1
7	1555464	Water Pump Replacement Kit	1
7	1555466	Gear	1
7	1555468	Repair Kit	1
8	1555467	Gasket	1
9	1380261	Screw	2
10	1306362	Screw	2
11	1307909	Screw	2
12	1555471	Pipe	1
13	1555472	O-Ring	1
14	1555473	O-Ring	1
15	386459	Screw	2
16	15962	Fitting	3

©2004 HYSTER COMPANY

TIMING GEAR (Figure 2-24)
DIESEL
TIER II

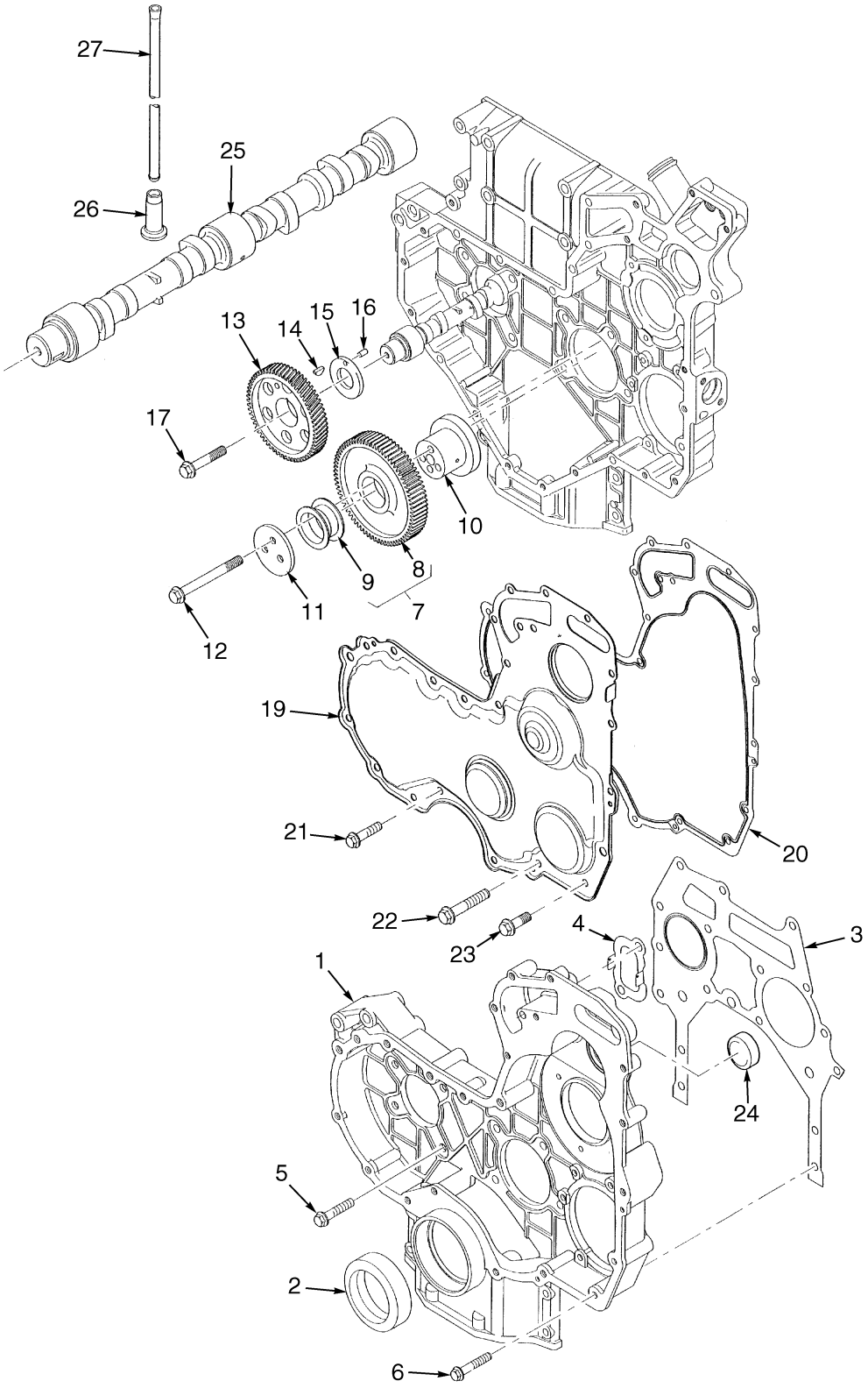

BP090106

©2004 HYSTER COMPANY

TIMING GEAR
DIESEL
TIER II

ITEM	PART NO.	DESCRIPTION	QTY
	1523800	Engine	1
1	1555482	Timing Case	1
2	350399	Seal	1
3	1555483	Gasket	1
4	1555484	Gasket	1
5	386459	Screw	8
6	1306354	Screw	4
7	1555485	Idler Gear Assembly	1
8	. . . . .	Idler Gear	1
9	983484	Bushing	2
10	229875	Hub	1
11	1382479	Plate	1
12	1306356	Screw	6
13	1537297	Gear	1
14	99610	Key	1
15	1306364	Washer	1
16	298096	Pin	1
17	1328565	Screw	1
18	1555486	Thrust Washer (Not Illustrated)	1
19	1555487	Cover	1
20	1555488	Gasket	1
21	1307881	Screw	9
22	1307909	Screw	5
23	1306371	Screw	1
24	1555452	Plug	1
25	1555098	Camshaft	1
26	224248	Tappet	8
27	99728	Rod	8
	1555729	Bottom Gasket Kit (Includes Items 3-4, 20)	1

©2004 HYSTER COMPANY

EXHAUST MANIFOLD (Figure 2-25)
DIESEL
TIER II

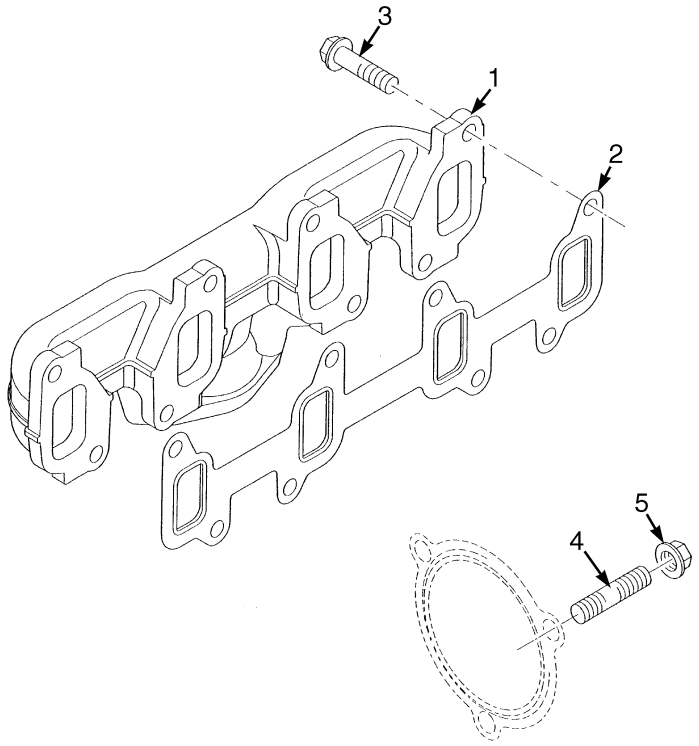

BP090107

ITEM	PART NO.	DESCRIPTION	QTY
	1523800	Engine	1
1	1555491	Exhaust Manifold	1
2	1555492	Gasket	1
3	1516677	Screw	8
4	1307877	Stud	3
5	1306370	Nut	3

©2004 HYSTER COMPANY

NOTES

EXHAUST DIESEL (Figure 2-26)
WITH CAB
TIER II ENGINE

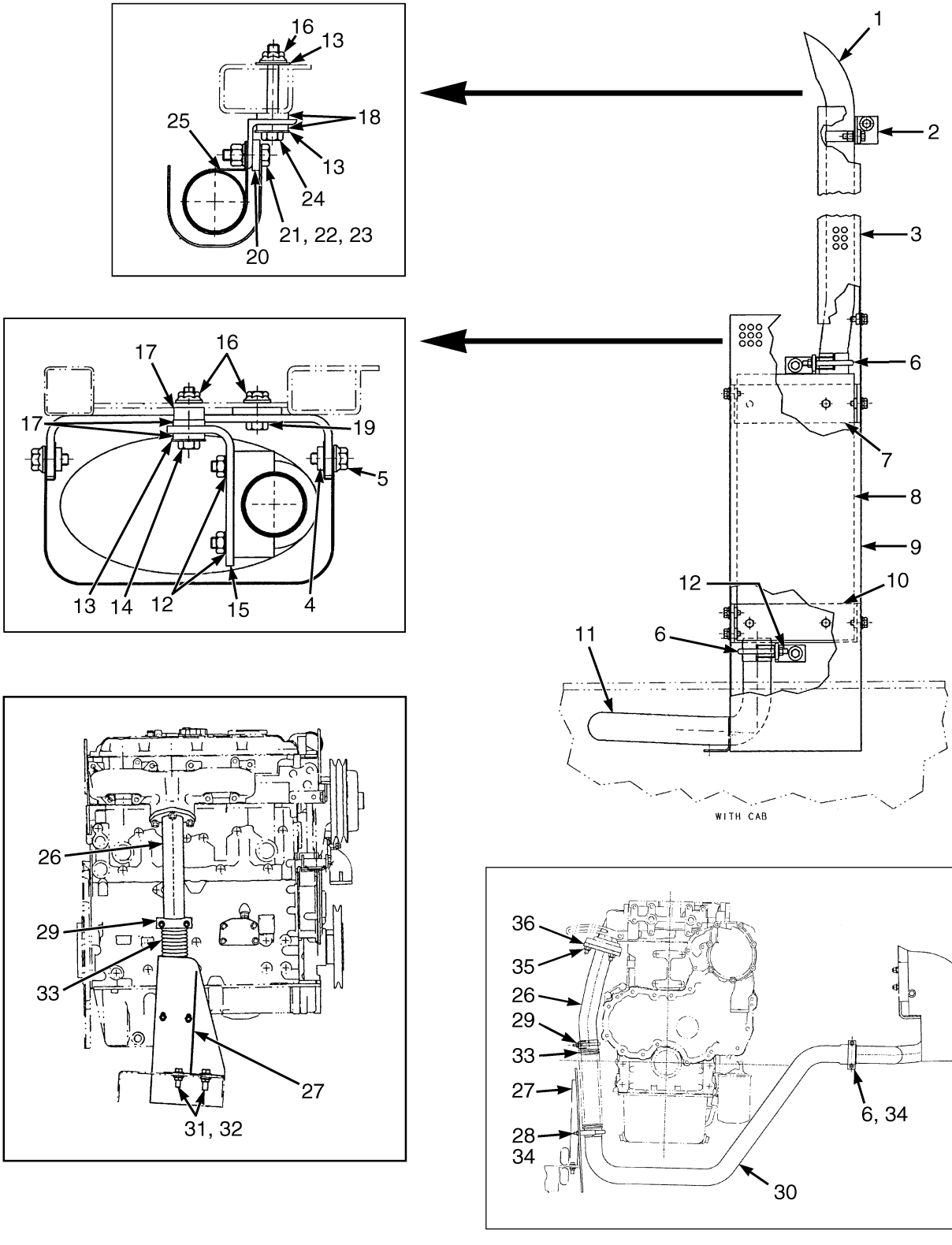

YP110083

©2004 HYSTER COMPANY

EXHAUST DIESEL
WITH CAB
TIER II ENGINE

ITEM	PART NO.	DESCRIPTION	QTY
1	369129	Exhaust Pipe	1
2	369135	Bracket	1
3	369127	Exhaust Shield	1
4	269200	Nut	6
5	399066	Capscrew	6
6	30370	Clamp	3
7	377616	Bracket	1
8	367266	Muffler	1
9	1392553	Shield	1
10	377617	Bracket	1
11	1541597	Exhaust Pipe	1
12	1388300	Lockwasher	4
13	15176	Washer	4
14	16816	Capscrew	2
15	1375986	Bracket	2
16	192077	Nut	6
17	379952	Spacer	2
18	223216	Bushing	6
19	16805	Capscrew	3
20	107151	Washer	1
21	15056	Nut	1
22	15156	Lockwasher	1
23	16828	Capscrew	1
24	18540	Capscrew	1
25	369136	Clamp	1
26	1529022	Exhaust Pipe	1
27	1541601	Bracket	1
28	222899	Clamp	1
29	63116	Clamp	1
30	1541599	Exhaust Pipe	1
31	1527884	Capscrew	2
32	1460477	Nut (Flange)	2
33	292841	Flex Tube	1
34	320157	Washer	4
35	1306370	Nut	3
36	1355319	Gasket	1

©2004 HYSTER COMPANY

EXHAUST DIESEL (Figure 2-27)
WITHOUT CAB
TIER II ENGINE

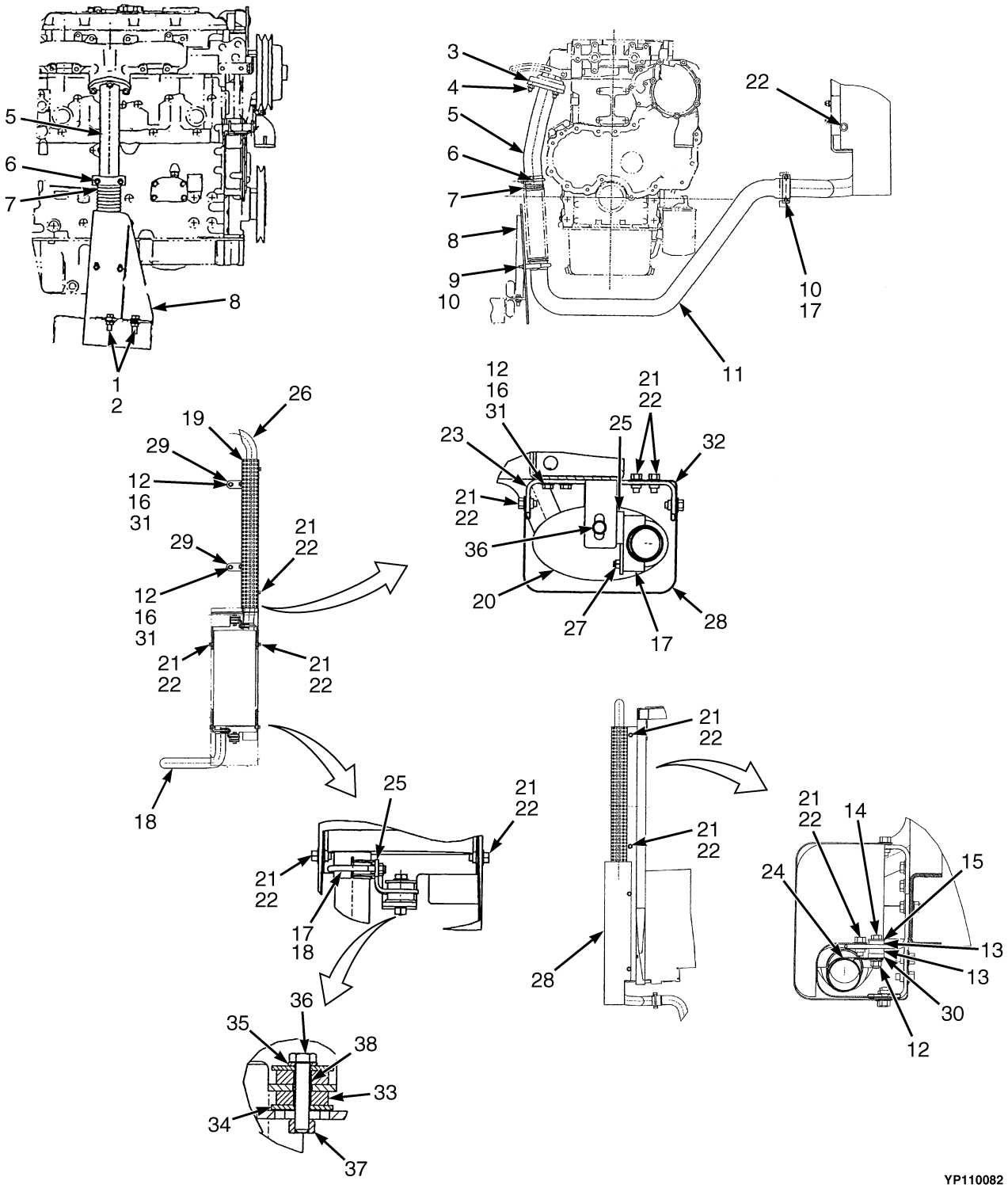

©2004 HYSTER COMPANY

EXHAUST DIESEL
WITHOUT CAB
TIER II ENGINE

ITEM	PART NO.	DESCRIPTION	QTY
1	1527884	Capscrew	2
2	1460477	Nut (Flange)	2
3	1355319	Gasket	1
4	1306370	Nut	3
5	1529022	Exhaust Pipe	1
6	63116	Clamp	1
7	292841	Flex Tube	1
8	1541601	Bracket	1
9	222899	Clamp	1
10	320157	Washer	1
11	1541599	Exhaust Pipe	4
12	192077	Nut	8
13	223216	Bushing	4
14	16816	Capscrew	2
15	15176	Washer	2
16	16805	Capscrew	6
17	30370	Clamp	6
18	1554943	Exhaust Pipe	1
19	1523680	Shield	1
20	367266	Muffler	1
21	269200	Nut	10
22	134803	Screw	10
23	1554942	Bracket	4
24	369136	Clamp	2
25	1554941	Bracket	2
26	369129	Exhaust Pipe	1
27	1388300	Lockwasher	4
28	1499677	Guard	1
29	1499674	Bracket	2
30	107151	Washer	2
31	15134	Washer	6
32	1500402	Guard	1
33	1351177	Rubber Cushion	4
34	1351176	Washer	4
35	320159	Washer	2
36	292517	Capscrew	2
37	316826	Nut	2
38	1553420	Spacer	2

©2004 HYSTER COMPANY

OIL FILTER (Figure 2-28)
DIESEL
TIER II

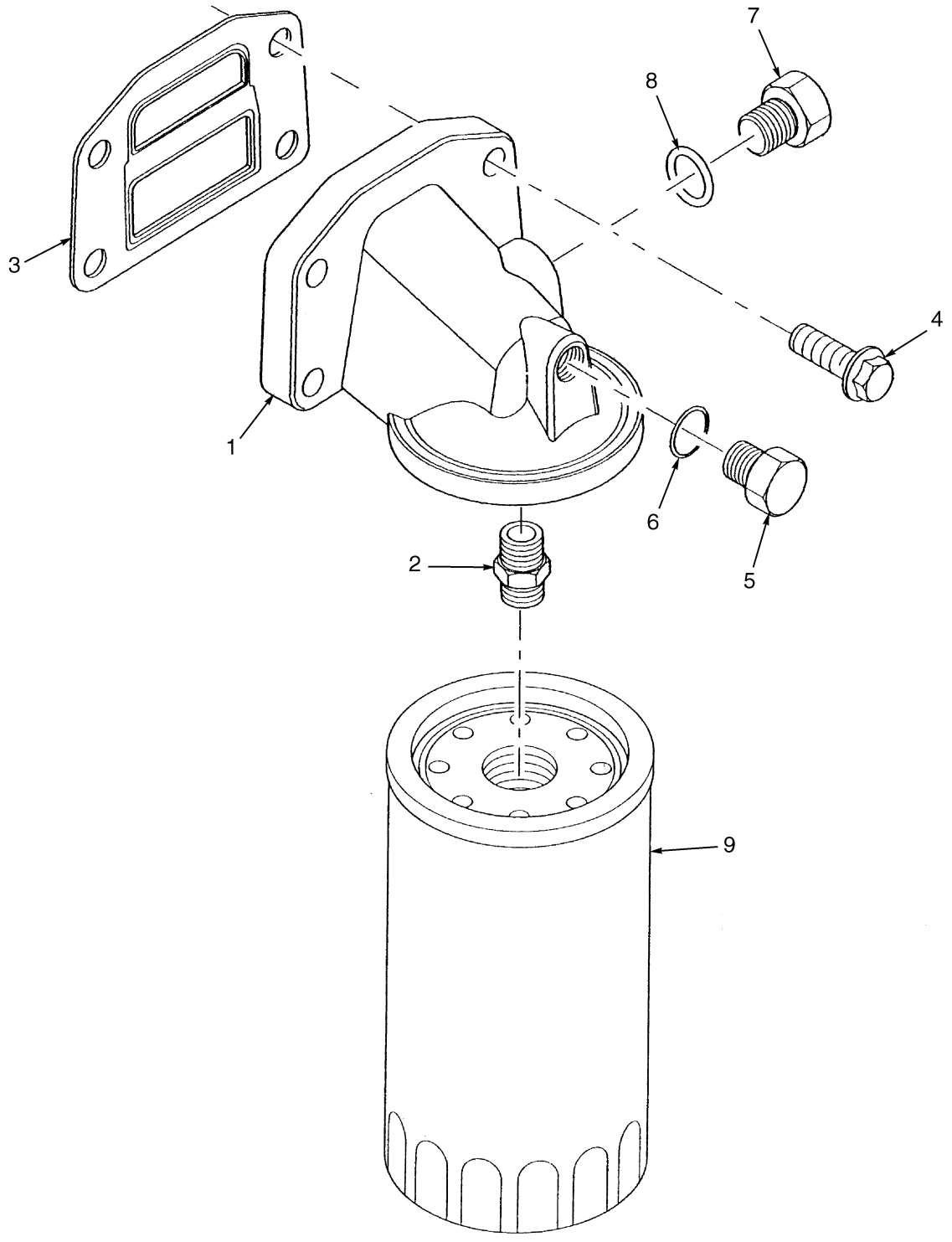

©2004 HYSTER COMPANY

OIL FILTER
DIESEL
TIER II

ITEM	PART NO.	DESCRIPTION	QTY
	1523800	Engine	1
1	1555457	Filter Head Assembly	1
2	1382954	Connector	1
3	1554984	Gasket	1
4	1306354	Screw	4
5	1555459	Plug	1
6	1555460	O-Ring	1
7	1555461	Plug	1
8	1537265	O-Ring	1
9	1327905	Oil Filter	1
	1555729	Bottom Gasket Kit (Includes Item 3)	1

©2004 HYSTER COMPANY

OIL COOLER (Figure 2-29)
DIESEL
TIER II

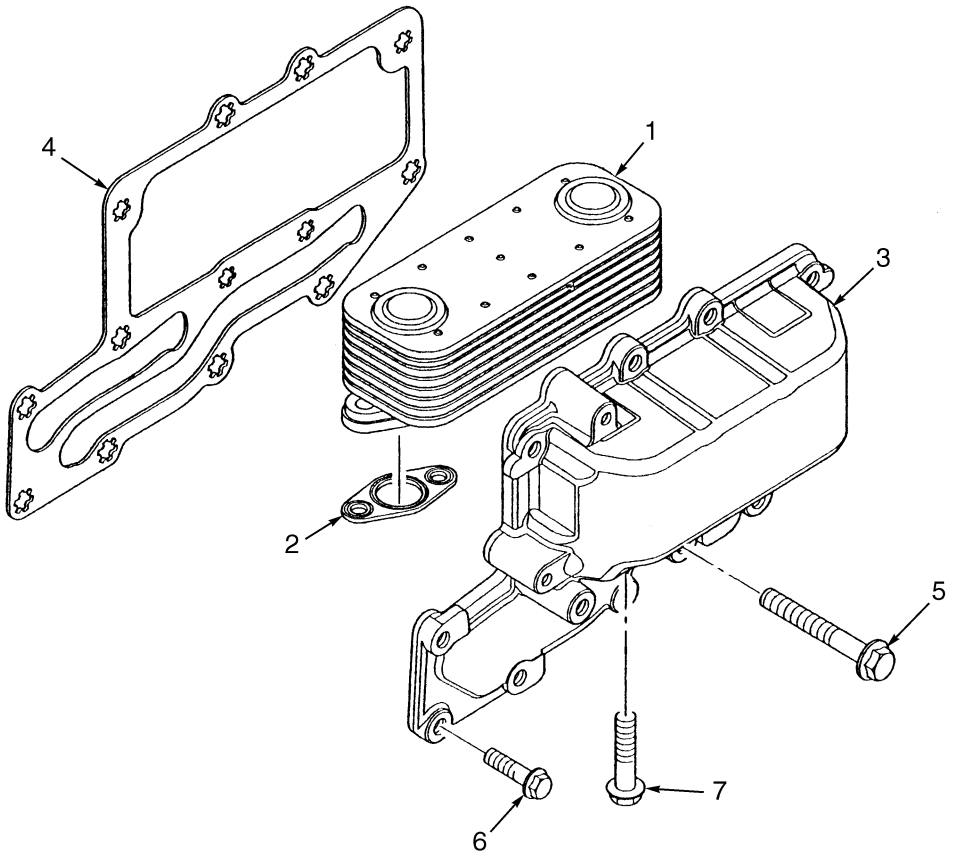

BP090109

ITEM	PART NO.	DESCRIPTION	QTY
	1523800	Engine	1
	1555453	Oil Cooler Assembly	1
1	1555454	Cooler	1
2	1555455	Gasket	2
3	. . . . .	Housing	1
4	1555456	Gasket	1
5	1318968	Screw	3
6	1306358	Screw	10
7	1306373	Screw	4
	1555729	Bottom Gasket Kit (Includes Item 4)	1

©2004 HYSTER COMPANY

NOTES

FUEL INJECTION PUMP (Figure 2-30)
DIESEL
TIER II

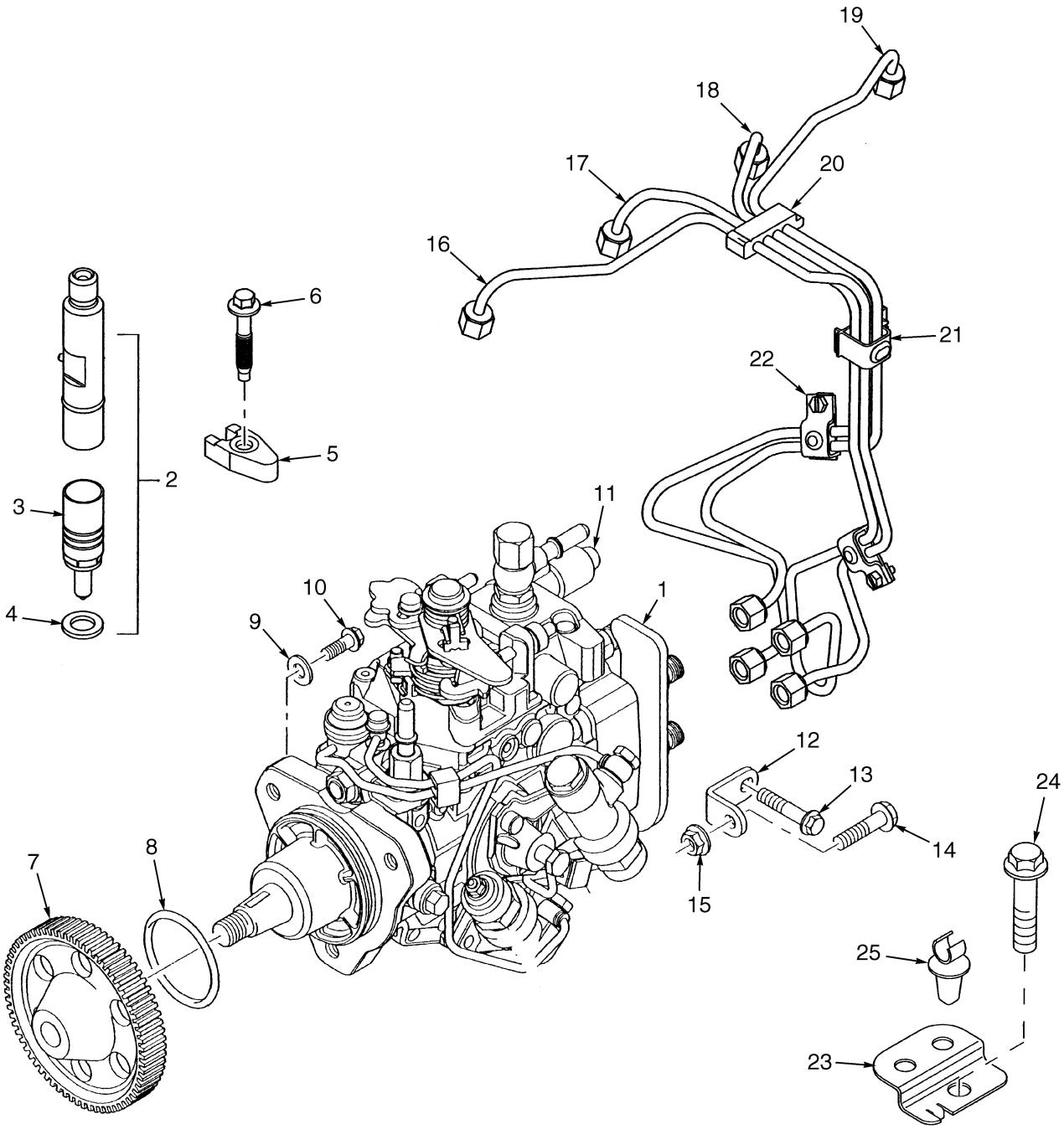

BP090110

©2004 HYSTER COMPANY

FUEL INJECTION PUMP
DIESEL
TIER II

ITEM	PART NO.	DESCRIPTION	QTY
	1523800	Engine	1
1	1563921	Fuel Injection Pump	1
2	1555262	Atomiser	4
3	1555413	Nozzle	1
4	1451669	Washer	1
5	1555414	Clamp	4
6	1555415	Screw	4
7	1555101	Gear	1
8	1537238	O-Ring	1
9	1555102	Washer	3
10	1306358	Screw	3
11	1555103	Cap	1
12	1555104	Bracket	1
13	1306371	Screw	1
14	386459	Screw	1
15	1306359	Nut	1
16	1555105	Fuel Pipe (# 1)	1
17	1555106	Fuel Pipe (# 2)	1
18	1555107	Fuel Pipe (# 3)	1
19	1555108	Fuel Pipe (# 4)	1
20	1388386	Clip	1
21	1555110	Clip	1
22	1555109	Clip	2
23	1555416	Bracket	1
24	1307881	Screw	1
25	1555417	Clip	1

©2004 HYSTER COMPANY

DRIVE ADAPTOR (Figure 2-31)
DIESEL
TIER II

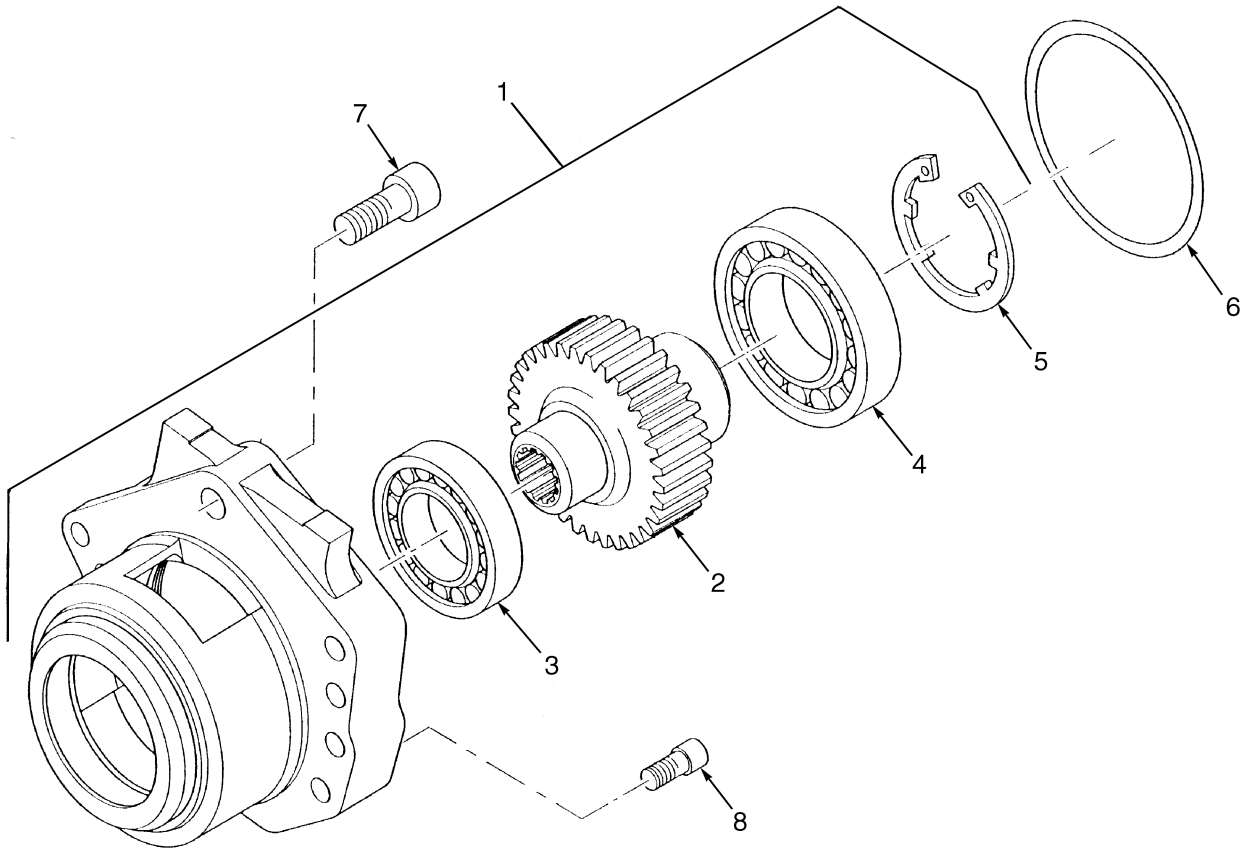

BP090115

©2004 HYSTER COMPANY

DRIVE ADAPTOR
DIESEL
TIER II

ITEM	PART NO.	DESCRIPTION	QTY
1	1556770	Drive Adaptor	1
2	1556771	Gear	1
3	1311600	Bearing	1
4	360667	Bearing	1
5	1311602	Snap Ring	1
6	1311603	O-Ring	1
7	1311604	Screw	1
8	1311605	Screw	5

©2004 HYSTER COMPANY

FLYWHEEL (Figure 2-32)
GASOLINE, LPG AND DIESEL

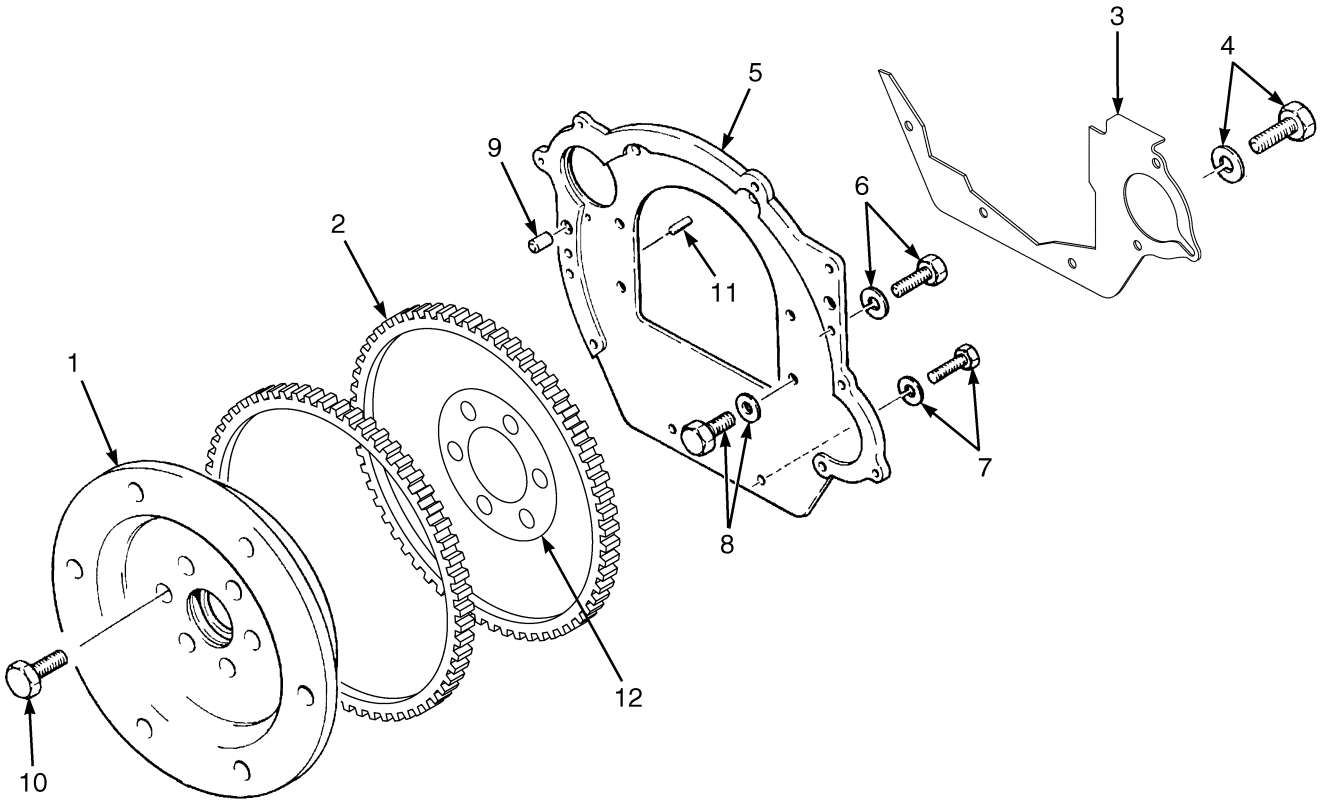

HP090256

©2004 HYSTER COMPANY

FLYWHEEL
GASOLINE, LPG AND DIESEL

KEY:
A: Gasoline and LPG (Powershift)
B: Diesel (Powershift)

ITEM	PART NO.	DESCRIPTION	QTY A	QTY B
1	1454600	Flywheel Assembly	..	1
1	195856	Ring Gear	..	1
2	1459400	Flywheel Assembly	1	..
2	195856	Ring Gear	1	..
3	1384335	Cover	1	..
4	287851	Capscrew	4	..
4	292681	Lockwasher	4	..
5	377326	Plate	..	1
6	15156	Lockwasher	..	3
6	16828	Capscrew	..	3
7	176640	Capscrew	..	4
7	292681	Lockwasher	..	4
8	293630	Capscrew	..	6
8	296420	Washer	..	6
9	1335499	Pin	..	2
10	284152	Bolt	6	..
10	97577	Bolt	..	6
11	186420	Pin	..	2
12	1459391	Shim (0.118 in.)	1	..

©2004 HYSTER COMPANY

NOTES

3 FUEL SYSTEM

SECTION 3
FUEL SYSTEM

DESCRIPTION	PAGE
ACCELERATOR PEDAL AND BRACKET	
MONOTROL	3-28
WITH FORWARD AND REVERSE LEVER	3-26
AIR FILTER	
HEAVY DUTY	
DIESEL	3-6
GASOLINE AND LPG	3-4
STANDARD	3-2
ENGINE FUEL SYSTEM	
LPG	
4.3L EPA COMPLIANT ENGINE	3-16
FUEL SUPPLY SYSTEM	
DIESEL TIER II	3-10
GASOLINE	3-8
LPG	3-14
LPG REGULATOR	
4.3L EPA COMPLIANT ENGINE	3-20
MONOTROL PEDAL	3-30
THROTTLE BODY AND LPG MIXER	
4.3L EPA COMPLIANT ENGINE	3-18
THROTTLE BODY ASSEMBLY	
GASOLINE	
4.3L EPA COMPLIANT ENGINE	3-22
THROTTLE LINKAGE	
GAS, LPG, AND DIESEL	3-24

©2004 HYSTER COMPANY

AIR FILTER (Figure 3-1)
STANDARD

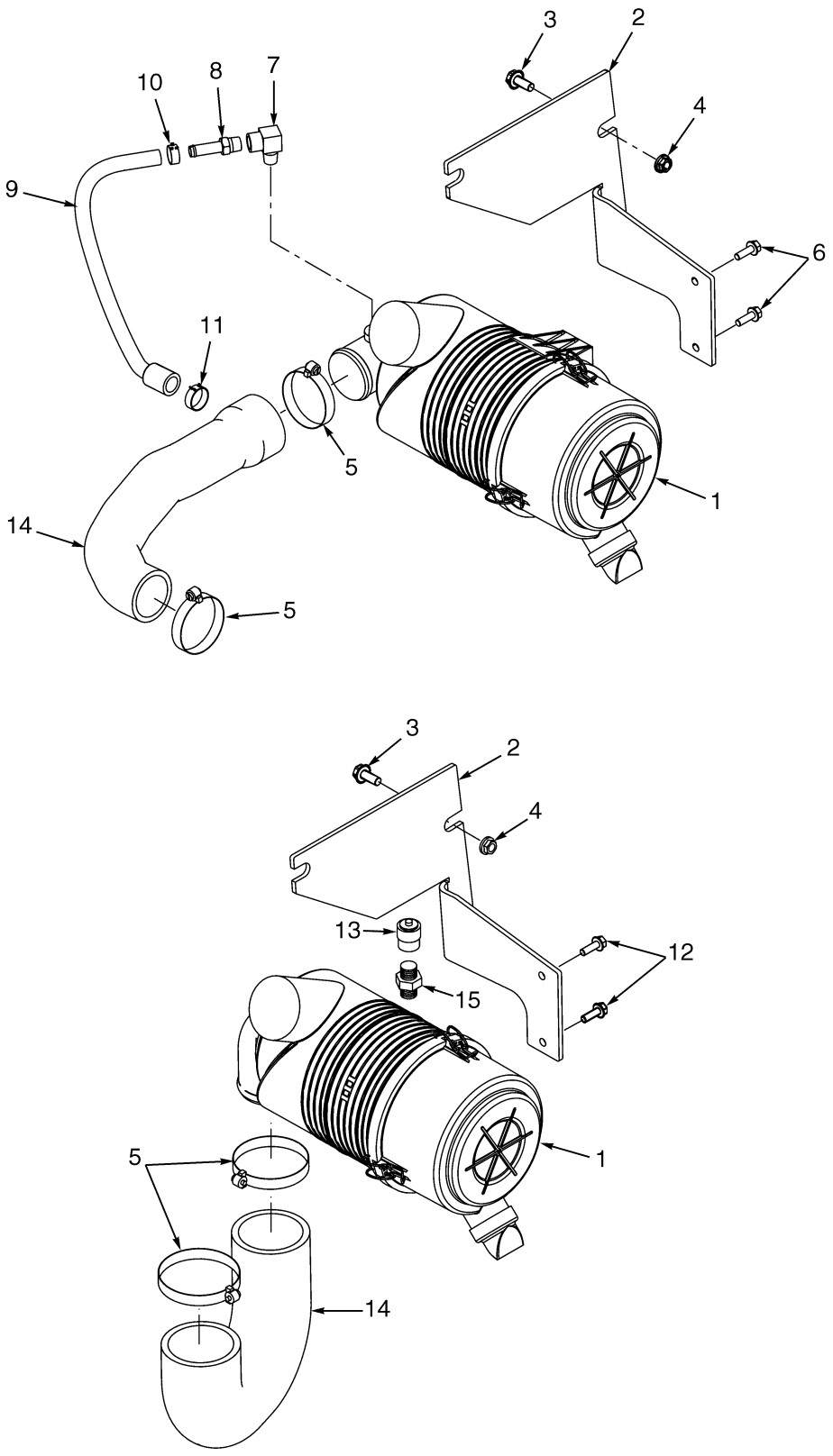

©2004 HYSTER COMPANY

AIR FILTER
STANDARD

KEY:
A: Gasoline
B: LPG
C: Diesel

ITEM	PART NO.	DESCRIPTION	QTY A	QTY B	QTY C
1	2062384	Air Filter	1	1	..
1	1462439	Filter Element	1	1	..
1	1462441	Cover	1	1	..
1	374923	Valve	1	1	..
1	1462442	Plug	1	1	..
1	2063214	Air Filter	..	..	1
1	1462439	Filter Element	..	..	1
1	1462441	Cover	..	..	1
1	374923	Valve	..	..	1
1	1462442	Plug	..	..	1
2	1508007	Bracket	1	1	1
3	1510117	Capscrew	3	3	3
4	1460477	Nut (Flange)	3	3	3
5	115696	Clamp	2	2	2
6	1510113	Capscrew	2	2	..
7	16143	Fitting	1	1	..
8	102919	Fitting	1	1	..
9	1542479	Hose (Breather)	1	1	..
10	1452463	Clamp	1	1	..
11	353199	Clamp	1	1	..
12	1527879	Capscrew	..	..	2
13	165991	Restriction Indicator	..	..	1
14	2061655	Hose (Intake)	1	..	..
14	2061651	Hose (Intake)	..	1	..
14	2058358	Hose (Intake)	..	..	1
15	16150	Fitting	..	..	1

©2004 HYSTER COMPANY

AIR FILTER (Figure 3-2)
HEAVY DUTY
GASOLINE AND LPG

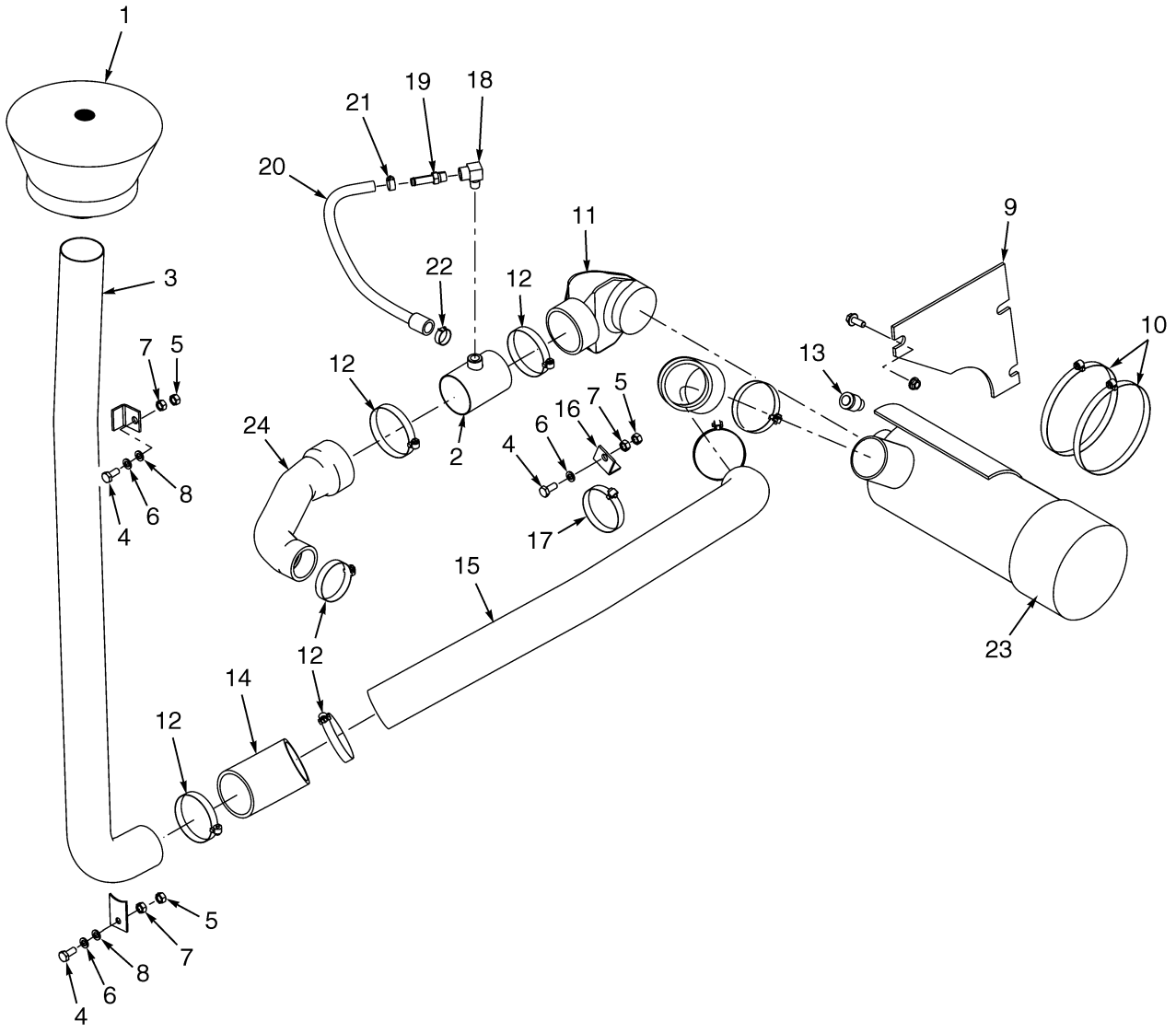

HP130318

©2004 HYSTER COMPANY

AIR FILTER
HEAVY DUTY
GASOLINE AND LPG

KEY:
A: Gasoline
B: LPG

ITEM	PART NO.	DESCRIPTION	QTY A	QTY B
1	1301167	Pre-Cleaner	1	1
1	328753	Cover	1	1
1	1313904	Sleeve	1	1
1	328754	Bowl	1	1
1	115696	Clamp	1	1
2	1550718	Pipe	1	1
3	1456523	Tube	1	1
4	1510117	Capscrew	3	3
5	1460477	Nut (Flange)	3	3
6	292682	Lockwasher	3	3
7	136692	Nut	3	3
8	320159	Washer	2	2
9	379968	Bracket (Filter)	1	1
10	227221	Clamp	2	2
11	317367	Elbow	1	1
12	115696	Clamp	8	8
13	295440	Indicator	1	1
14	159787	Hose (45° Elbow)	2	2
15	379957	Tube (Intake)	1	1
16	379966	Bracket	1	1
17	1394008	Clamp	1	1
18	16143	Fitting	1	1
19	102919	Fitting	1	1
20	1542479	Hose (Breather)	1	1
21	1452463	Clamp	1	1
22	353199	Clamp	1	1
23	321109	Air Filter	1	1
23	336567	Element	1	1
23	125847	Nut and Gasket	1	1
23	321916	Cup	1	1
23	290734	Clamp	1	1
23	290735	Baffle	1	1
24	2061835	Hose (Intake)	1	..
24	2061836	Hose (Intake)	..	1

©2004 HYSTER COMPANY

AIR FILTER (Figure 3-3)
HEAVY DUTY
DIESEL

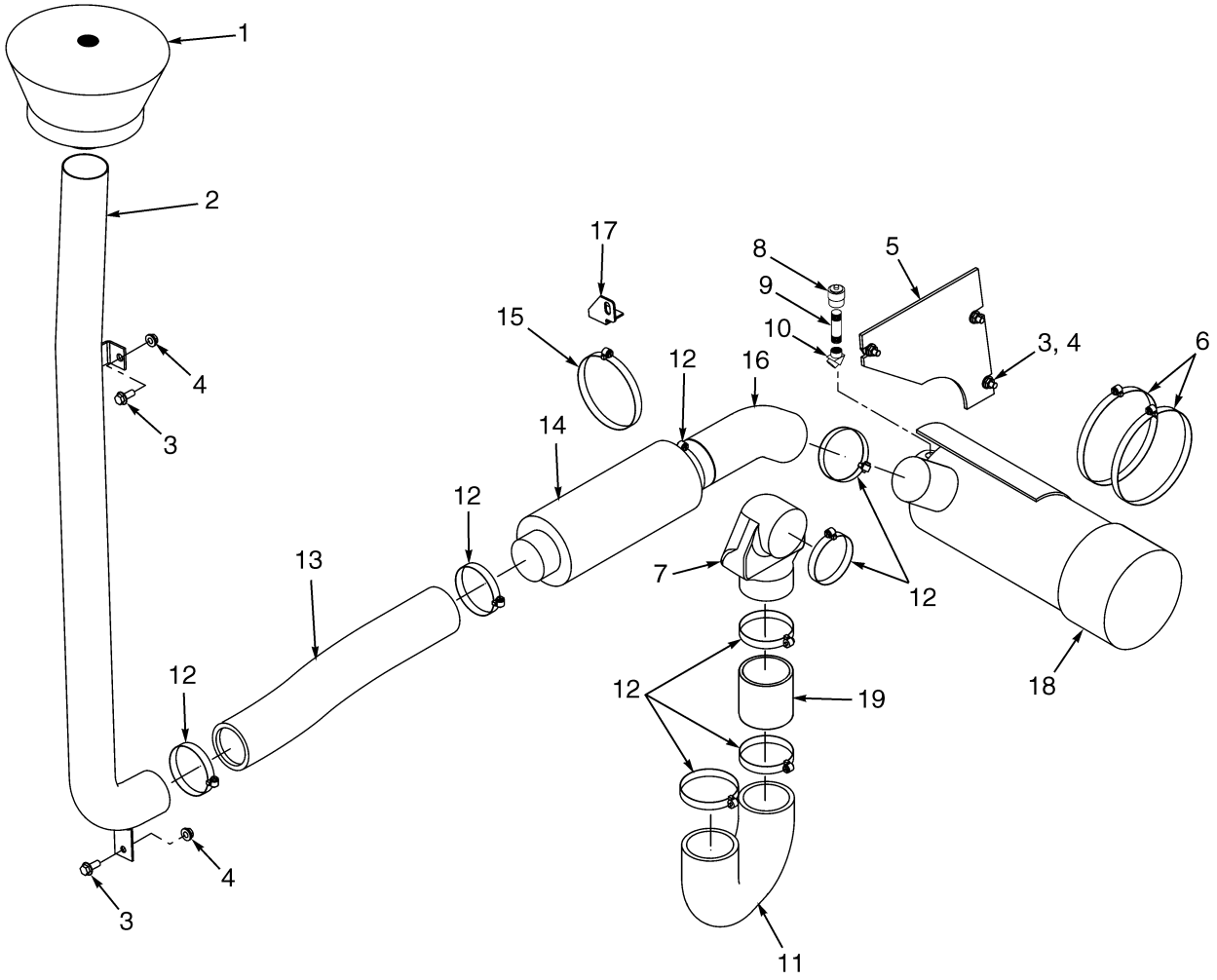

HP130317

©2004 HYSTER COMPANY

AIR FILTER
HEAVY DUTY
DIESEL

ITEM	PART NO.	DESCRIPTION	QTY
1	1301167	Pre-Cleaner	1
1	328753	Cover	1
1	1313904	Sleeve	1
1	328754	Bowl	1
1	115696	Clamp	1
2	1456523	Tube	1
3	1510117	Capscrew	5
4	1460477	Nut (Flange)	5
5	379968	Bracket (Filter)	1
6	227221	Clamp	2
7	317367	Elbow	1
8	165991	Restriction Indicator	1
9	17801	Fitting	1
10	17652	Fitting	1
11	2058196	Hose (Inlet)	1
12	115696	Clamp	8
13	377348	Hose (Inlet)	1
14	321108	Silencer	1
15	227220	Clamp	1
16	377347	Hose (Intake)	1
17	377355	Bracket (Silencer)	1
18	321109	Air Filter	1
18	336567	Element	1
18	125847	Nut and Gasket	1
18	321916	Cup	1
18	290734	Clamp	1
18	290735	Baffle	1
19	379972	Tube	1

©2004 HYSTER COMPANY

FUEL SUPPLY SYSTEM (Figure 3-4)
GASOLINE

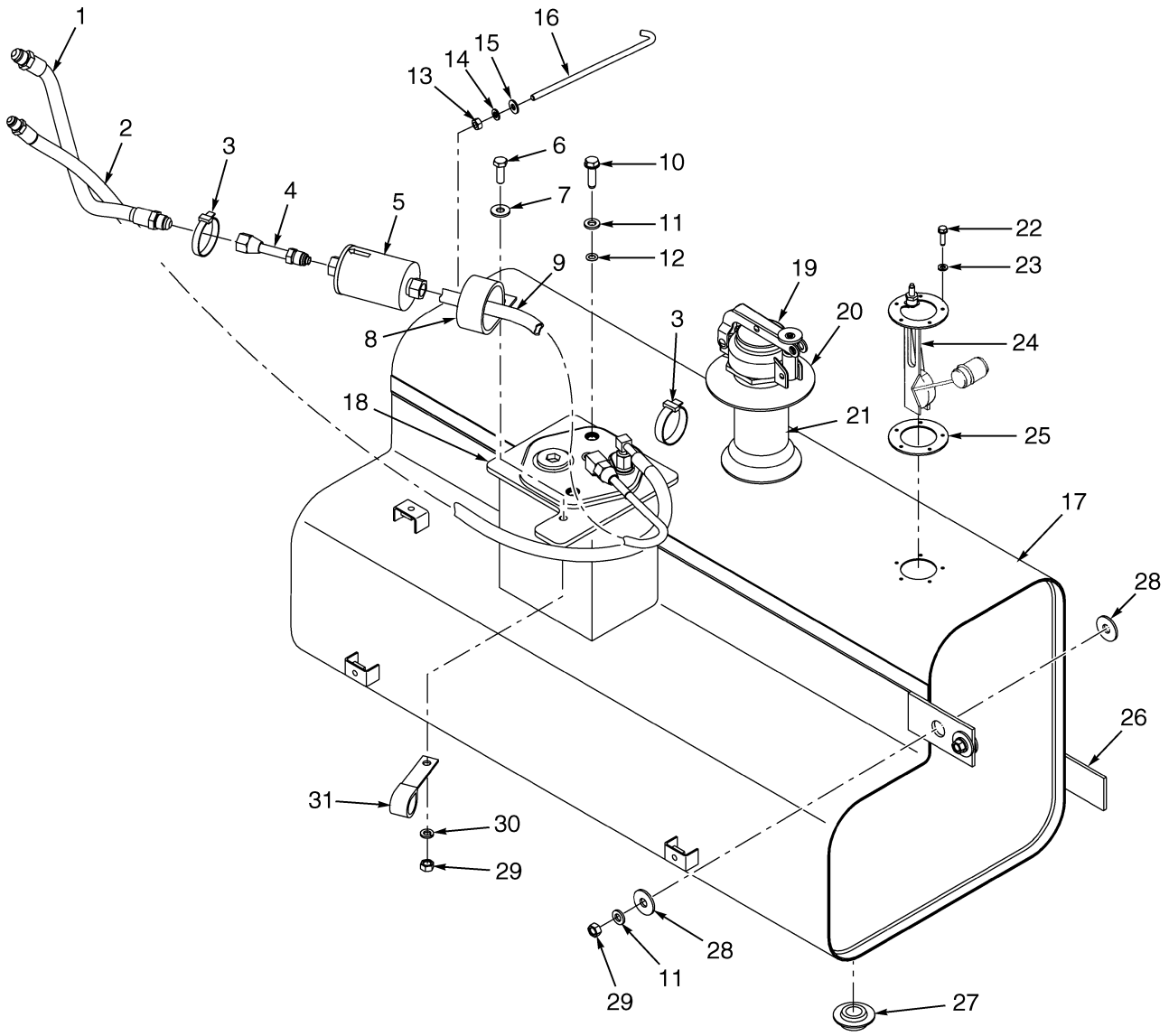

BP130026

©2004 HYSTER COMPANY

FUEL SUPPLY SYSTEM
GASOLINE

ITEM	PART NO.	DESCRIPTION	QTY
1	2067339	Hose	1
2	1375711	Hose	1
3	166857	Clamp	2
4	1541920	Tube (Supply)	1
5	1330342	Filter	1
6	136749	Capscrew	1
7	320158	Washer	1
8	176451	Clamp (Insulated)	1
9	1528824	Tube (Supply)	1
10	1339779	Screw	2
11	320157	Washer	4
12	353000	O-Ring	2
13	15004	Nut	1
14	15154	Lockwasher	1
15	15127	Washer	1
16	293048	Link	1
17	1496475	Tank	1
18	1343449	Seal	1
18	1508245	Fuel Pump And Sender	1
18	. . . . .	Tube (Male)	1
18	16124	Fitting	1
18	14358	Fitting	1
18	222480	Fitting	1
18	38807	Fitting	1
18	1371149	Connector	1
18	. . . . .	Wire Harness (Fuel Pump)	1
18	1330378	Connector	1
18	1511718	Connector	1
18	1330279	Terminal	2
18	1330379	Terminal	2
18	1330381	Secondary Lock	1
18	200659	Fitting	1
18	16982	O-Ring	1
18	16982	O-Ring	1
18	1330325	O-Ring	1
18	28584	Fitting	1
19	298831	Cap Assembly (Standard)	1
19	63899	Cap Assembly (Safety)	1
19	138880	Shim (0.020 in.) (Safety)	1
20	270770	Grommet	1
21	344429	Tube	1
22	16708	Screw	5
23	350483	Seal	5
24	321004	Sender	1
25	111561	Gasket	1
26	895411	Seal (Neoprene)	1
27	15962	Fitting	1
28	1334790	Washer	4
29	239503	Nut	3
30	292681	Lockwasher	1
31	1474893	Clamp (Insulated)	1

©2004 HYSTER COMPANY

FUEL SUPPLY SYSTEM (Figure 3-5)
DIESEL TIER II

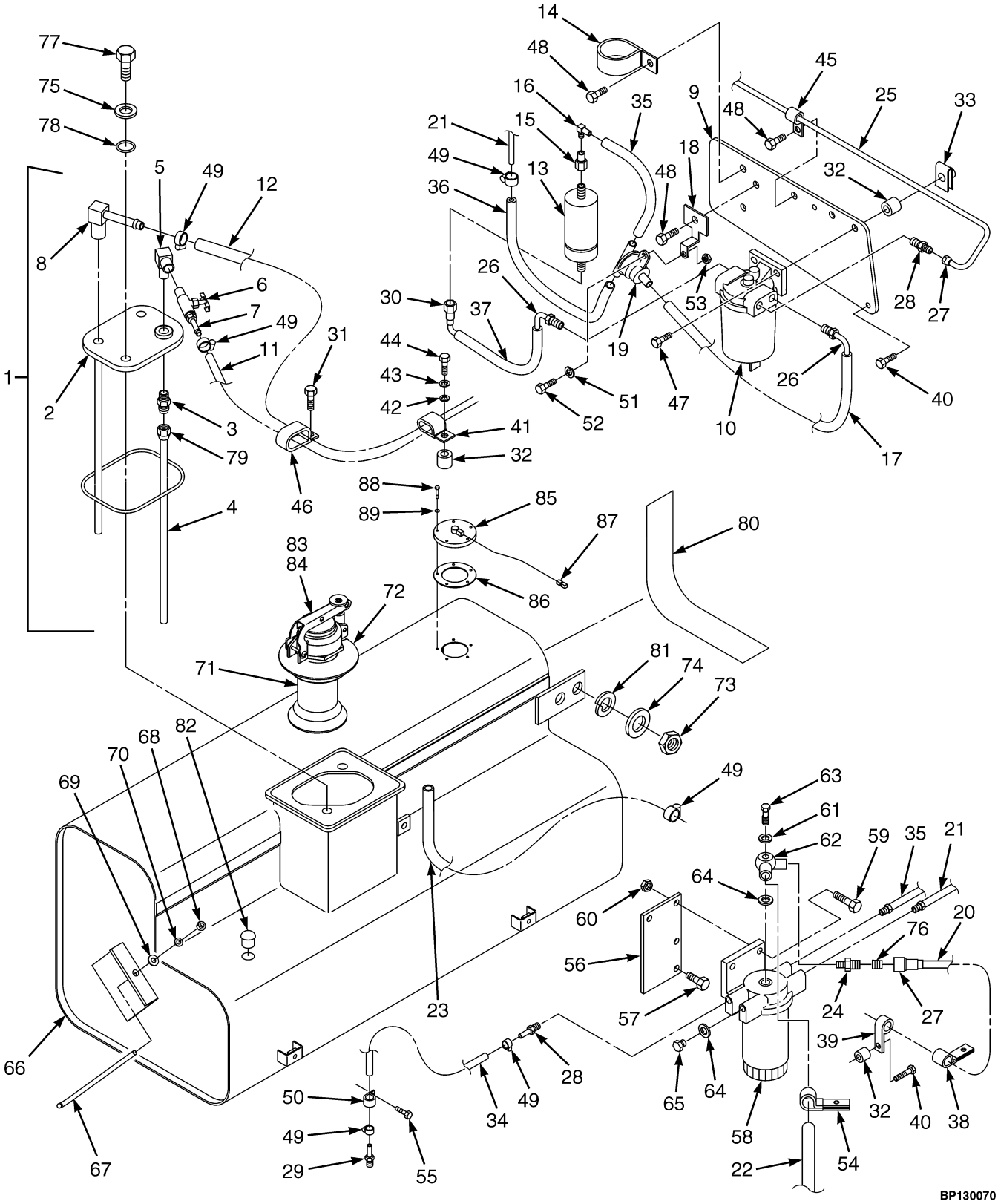

©2004 HYSTER COMPANY

FUEL SUPPLY SYSTEM
DIESEL TIER II

ITEM	PART NO.	DESCRIPTION	QTY
1	1544814	Tank Cover (Assembly)	1
2	1555946	Cover	1
3	16134	Fitting	1
4	1330254	Pipe	1
5	17314	Fitting	1
6	16190	Valve	1
7	222480	Fitting	1
8	1502038	Fitting	1
9	1544149	Bracket	1
10	271047	Water Separator	1
11	1375711	Hose	1
12	2067339	Hose	1
13	1551260	Fuel Pump	1
14	176451	Clamp	2
15	1475493	Fitting (Adapter)	1
16	222480	Fitting	1
17	1482734	Hose	1
18	1553474	Bracket	1
19	1558148	Regulator (Fuel Pressure)	1
20	1556642	Tube	1
21	1553089	Tube	1
22	1557255	Tube	1
23	1486843	Tube	1
24	14773	Fitting	2
25	1551262	Tube	1
26	1486842	Tube	2
27	16177	Fitting	7
28	16100	Fitting	5
29	1544024	Fitting	2
30	1543933	Fitting	1
31	1527881	Capscrew (Not Illustrated)	1
32	381879	Spacer	6
33	1480237	Nut-Clip	4
34	193653	Hose	2
35	309655	Hose	1
36	193656	Hose	1
37	274334	Hose (Not Illustrated)	1
38	188631	Clamp (Not Illustrated)	2
39	164488	Clamp	4
40	1528482	Capscrew	5
41	119074	Clamp	1
42	18515	Washer	1
43	15155	Lockwasher	1
44	18496	Capscrew	1
45	272133	Clamp	1
46	1301721	Clamp	1
47	1510117	Capscrew	3
48	1528778	Capscrew	4
49	168718	Clamp	16
50	209266	Wire Clamp	1
51	320155	Washer	1

©2004 HYSTER COMPANY

FUEL SUPPLY SYSTEM
DIESEL TIER II

ITEM		PART NO.	DESCRIPTION	QTY
52		2044515	Screw	1
53		292668	Nut	1
54		164365	Clamp (Not Illustrated)	1
55		1527880	Capscrew	2
56		1559417	Bracket	1
57		1527879	Capscrew	2
58		1306345	Fuel Filter Assembly	1
59		1527884	Capscrew	2
60		1460477	Nut (Flange)	2
61		1556819	Washer	2
62		1559233	Fitting (Not Illustrated)	1
63		1456522	Banjo Bolt	1
64		1559422	Washer (Not Illustrated)	2
65		173941	Plug	2
66		1327973	Fuel Tank	1
67		293048	Link	1
68		15004	Nut	1
69		15127	Washer	1
70		15154	Lockwasher	1
71		344429	Tube (Not Illustrated)	1
72		270770	Grommet (Not Illustrated)	1
73		239503	Nut	2
74		292681	Lockwasher (Not Illustrated)	2
75		320157	Washer	2
76		15962	Fitting (Not Illustrated)	1
77		329067	Screw	2
78		353000	O-Ring	2
79		353106	Seal	1
80		895411	Seal	AR
81		1334790	Washer	AR
82		375479	Plug (Not Illustrated)	1
83		298832	Cap	1
83	**a**	63899	Cap Assembly	1
84	**a**	138880	Shim (0.020 in.)	AR
85		1322232	Fuel Sender	1
86		111561	Gasket	1
87		1318511	Wire Harness	1
88		16708	Screw	5
89		350483	Seal	5

FOOTNOTES:
a U.L. Safety

©2004 HYSTER COMPANY

NOTES

FUEL SUPPLY SYSTEM (Figure 3-6)
LPG

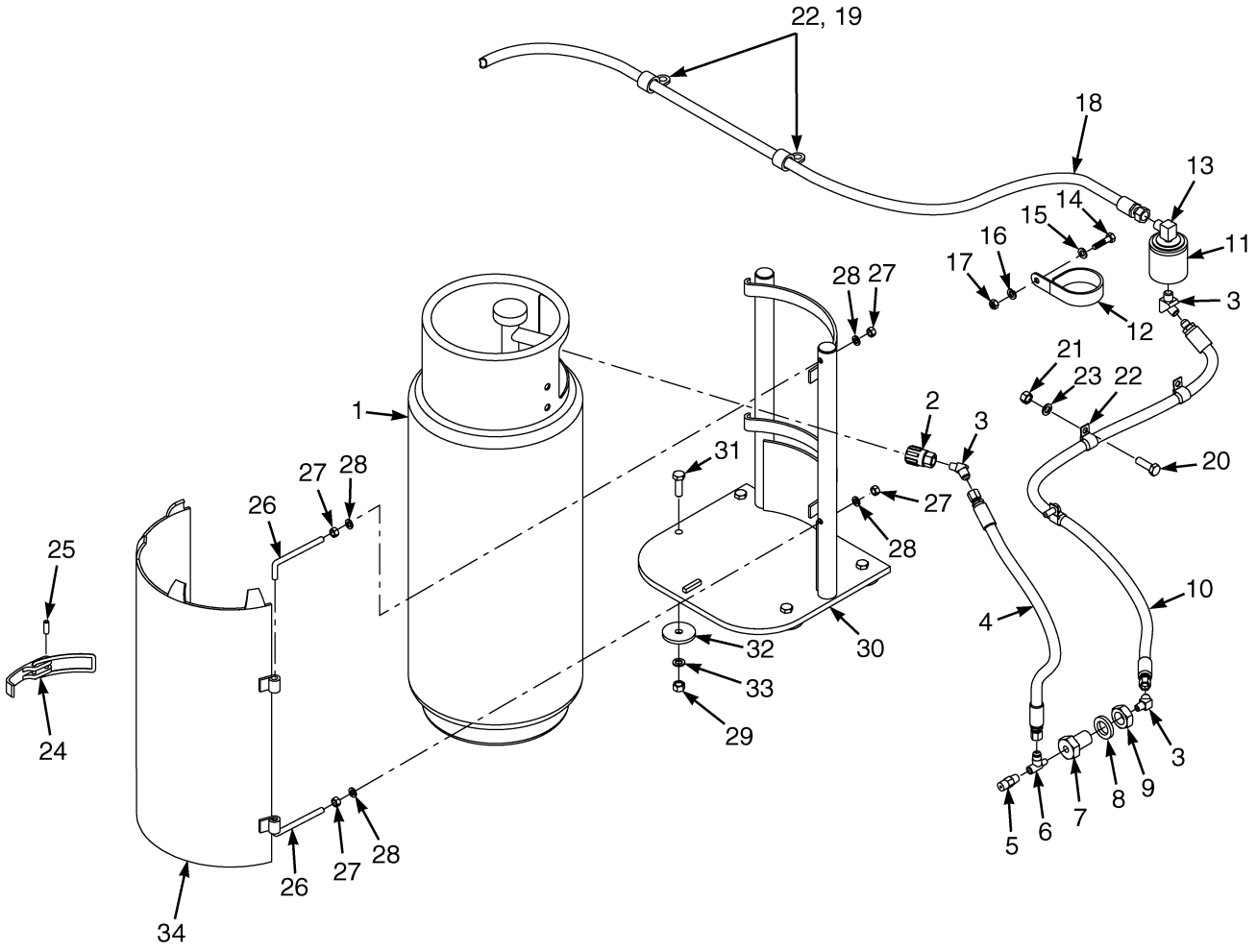

©2004 HYSTER COMPANY

FUEL SUPPLY SYSTEM
LPG

ITEM	PART NO.	DESCRIPTION	QTY
1	125789	Tank (LPG)	1
1	15963	Fitting	1
1	124010	Coupling	1
2	97999	Disconnect	1
3	16863	Fitting	4
4	146005	Hose	1
5	101809	Relief Valve	1
6	14440	Fitting	1
7	121347	Fitting	1
8	15166	Lockwasher	1
9	15036	Nut	1
10	381012	Hose	1
11	1544792	Filter	1
12	1384699	Clamp	1
13	14372	Fitting	1
14	292501	Capscrew	1
15	292680	Lockwasher	1
16	1476421	Washer	1
17	136687	Nut	1
18	1544794	Hose	1
19	320159	Washer	2
20	136985	Capscrew	2
21	136692	Nut	2
22	153069	Clamp	4
23	292682	Lockwasher	2
24	97988W	Latch	2
25	19923	Pin	2
26	98334	Pin	2
27	15006	Nut	4
28	15156	Lockwasher	4
29	216877	Nut	4
30	357310	Bracket	1
31	246001	Capscrew	4
32	300939	Washer	4
33	292683	Lockwasher	4
34	1331042	Cover	1

©2004 HYSTER COMPANY

ENGINE FUEL SYSTEM (Figure 3-7)
LPG
4.3L EPA COMPLIANT ENGINE

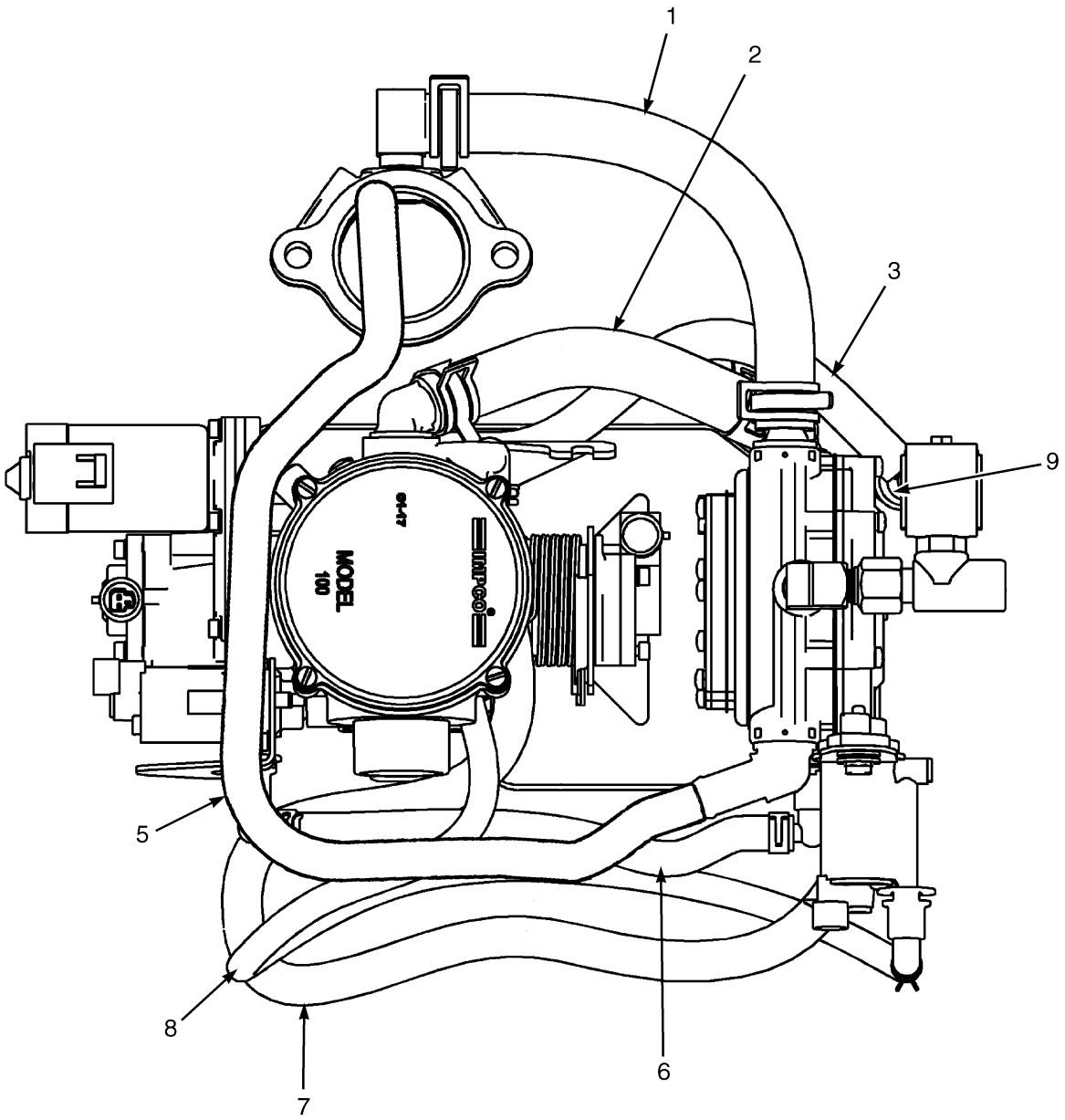

BP130067

©2004 HYSTER COMPANY

ENGINE FUEL SYSTEM
LPG
4.3L EPA COMPLIANT ENGINE

ITEM	PART NO.	DESCRIPTION	QTY
1	. . . . .	Hose	1
2	1558202	Hose (Vapor)	1
3	1558195	Hose (PCV)	1
4	1501994	Clamp (Not Illustrated)	2
5	2066720	Hose (Coolant)	1
6	1558206	Hose (Trim Valve)	1
7	1558542	Hose (Balance)	1
8	1558205	Hose (PTV)	1
9	1558196	PCV Valve	1
10	1561870	Oxygen Sensor (Not Illustrated)	1

©2004 HYSTER COMPANY

THROTTLE BODY AND LPG MIXER (Figure 3-8)
4.3L EPA COMPLIANT ENGINE

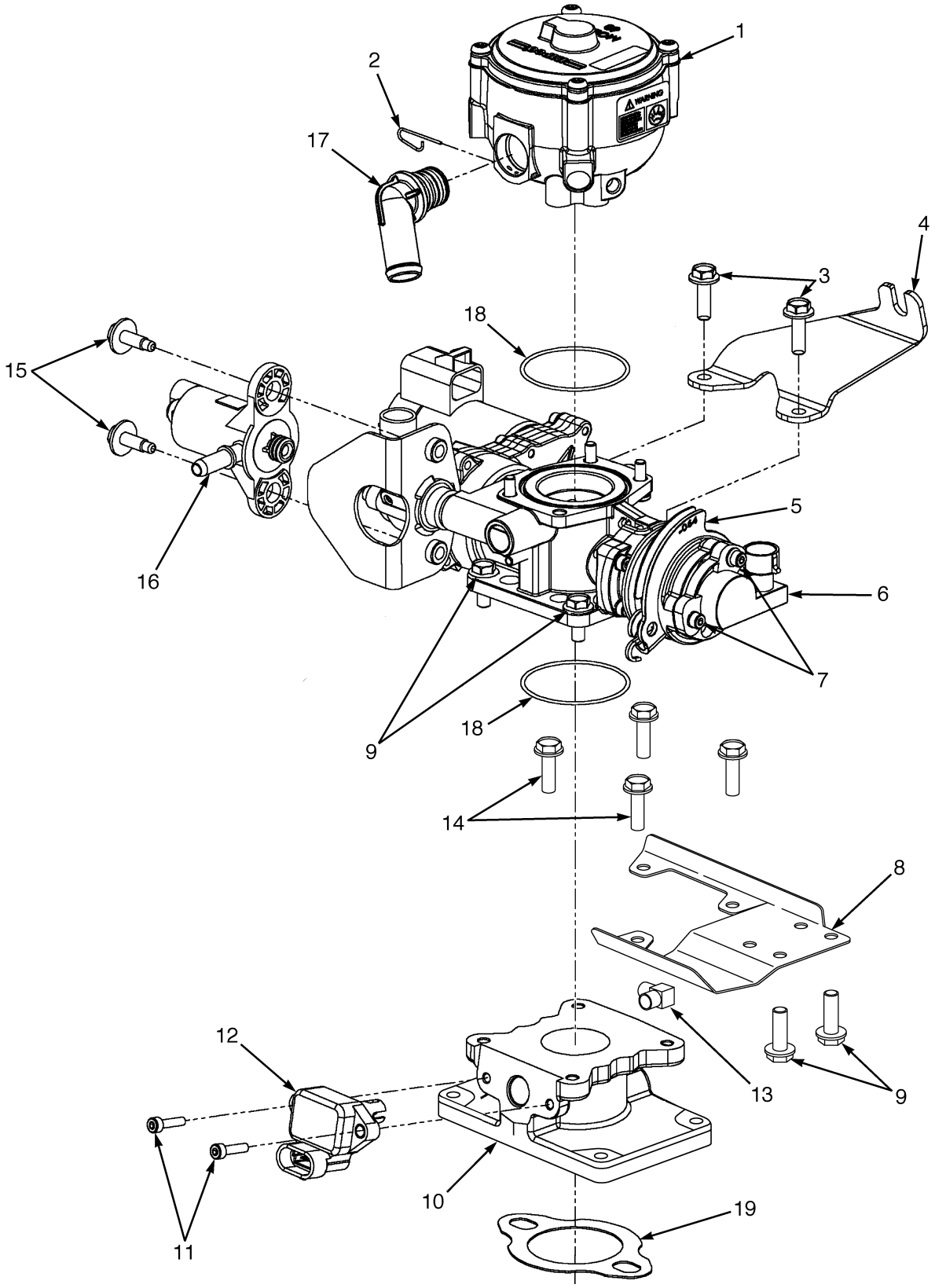

©2004 HYSTER COMPANY

THROTTLE BODY AND LPG MIXER
4.3L EPA COMPLIANT ENGINE

ITEM	PART NO.	DESCRIPTION	QTY
1	1558160	Mixer	1
2	1558161	Pin	1
3	1558173	Bolt	4
4	1558163	Bracket	1
5	1558164	Throttle Body	1
6	1558165	Sensor	1
7	1558166	Screw	2
8	1558167	Bracket	1
9	1558168	Bolt	2
10	1558169	Adapter	1
11	1558170	Screw	2
12	1558171	Sensor	1
13	1361164	Fitting	1
14	1558172	Bolt	4
15	1558204	Bolt	1
16	1558175	Fuel Valve	1
17	1558176	Fitting	1
18	1558177	O-Ring	2
19	1558178	Gasket	1

©2004 HYSTER COMPANY

LPG REGULATOR (Figure 3-9)
4.3L EPA COMPLIANT ENGINE

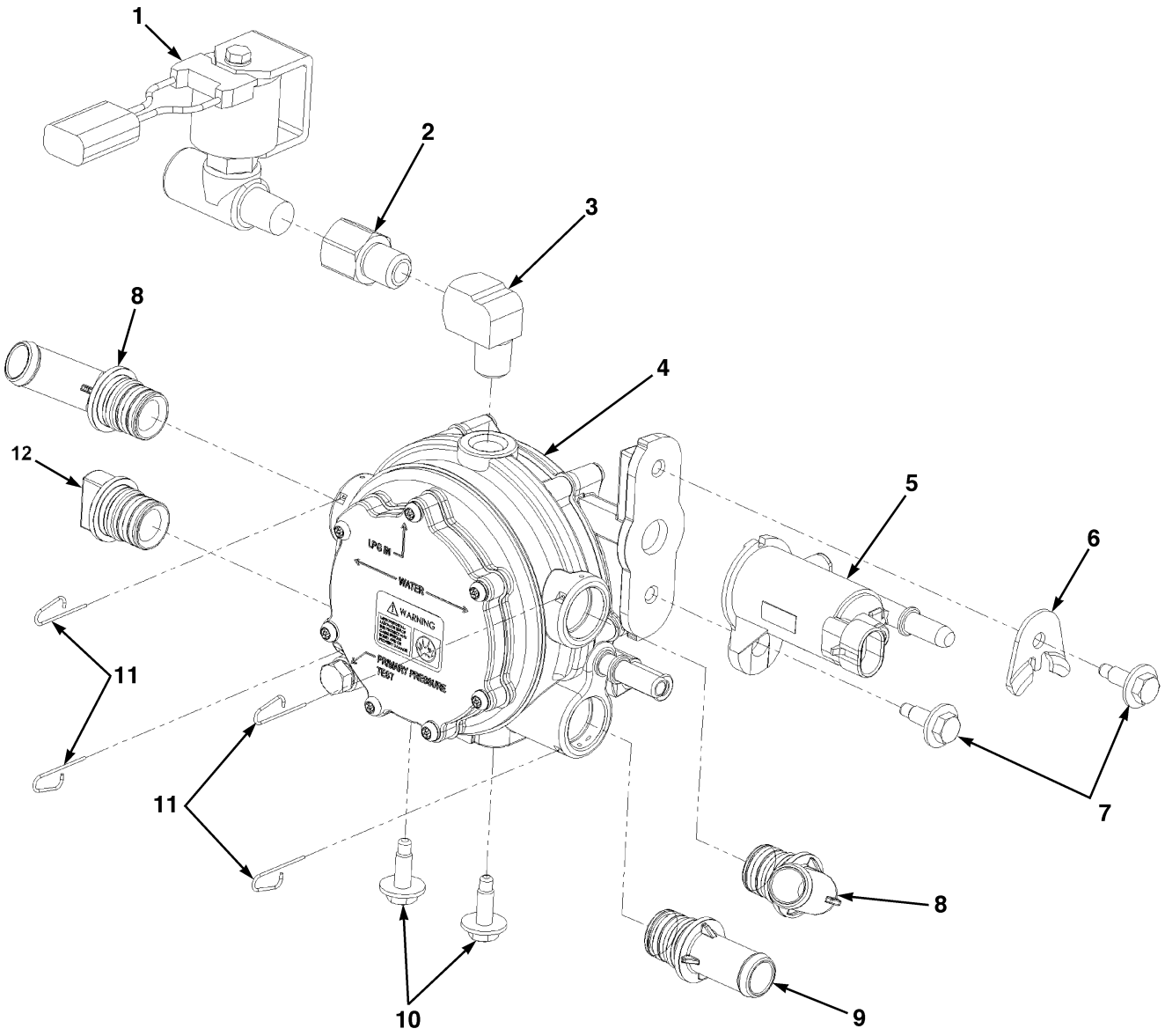

BP130051

©2004 HYSTER COMPANY

LPG REGULATOR
4.3L EPA COMPLIANT ENGINE

ITEM	PART NO.	DESCRIPTION	QTY
1	1558187	Lock-Off	1
2	1558188	Fitting	1
3	1558189	Fitting	1
4	1558190	Regulator	1
5	1558191	Pressure Reducing Valve	1
6	1558192	Clamp	1
7	1558168	Bolt	2
8	1558176	Fitting	2
9	1558193	Fitting	1
10	1558168	Bolt	2
11	1558161	Pin	4
12	1558194	Cap	1

©2004 HYSTER COMPANY

THROTTLE BODY ASSEMBLY (Figure 3-10)
GASOLINE
4.3L EPA COMPLIANT ENGINE

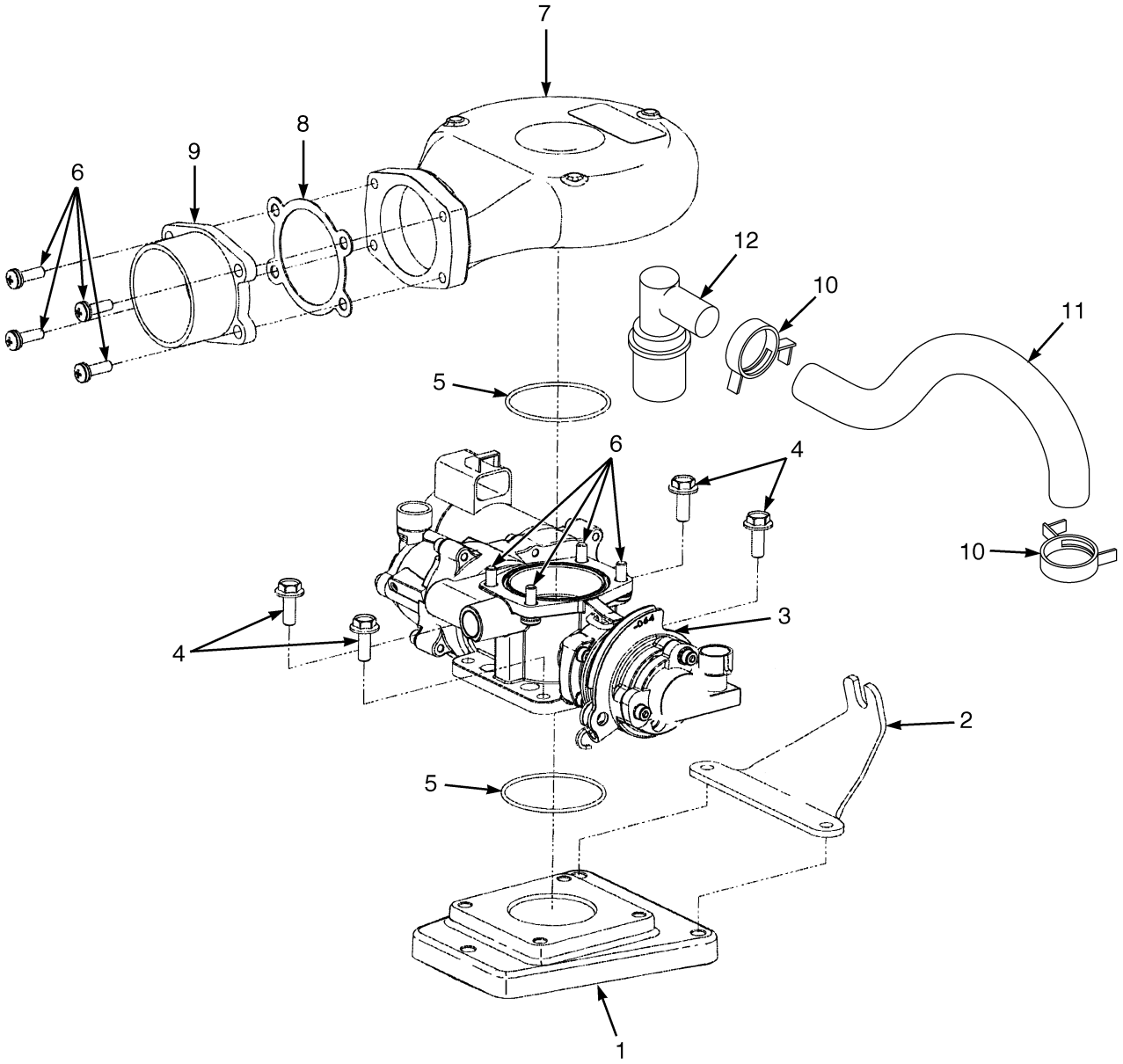

BP130064

©2004 HYSTER COMPANY

THROTTLE BODY ASSEMBLY
GASOLINE
4.3L EPA COMPLIANT ENGINE

ITEM		PART NO.	DESCRIPTION	QTY
1		1558209	Adapter	1
2		1558210	Bracket	1
3		1558211	Throttle Body	1
4		1558432	Bolt	4
5		1558177	O-Ring	2
6		1558435	Screw	8
7		1558433	Bonnet	1
8		204787	Gasket	1
9		1558434	Bonnet Adapter	1
10		. . . . .	Clamp	2
11		1558195	Hose (PCV)	1
12		1558437	Valve (PCV)	1
13	**a**	1558436	Gasket (Not Illustrated)	1
14		1561870	Oxygen Sensor (Not Illustrated)	1

FOOTNOTES:
a Adapter to Manifold

©2004 HYSTER COMPANY

THROTTLE LINKAGE (Figure 3-11)
GAS, LPG, AND DIESEL

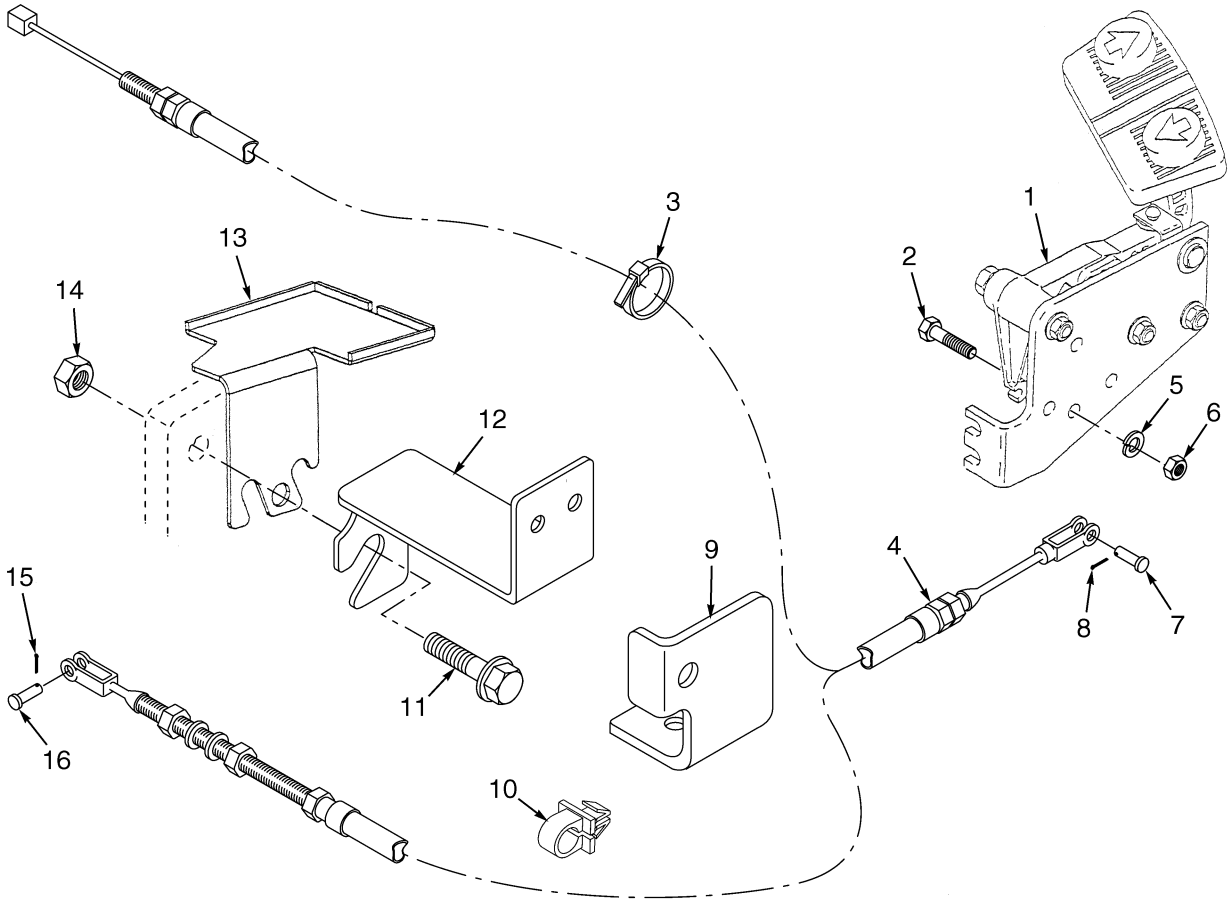

BP130041

©2004 HYSTER COMPANY

THROTTLE LINKAGE
GAS, LPG, AND DIESEL

KEY:
A: Gasoline
B: LPG
C: Diesel

ITEM	PART NO.	DESCRIPTION	QTY A	QTY B	QTY C
1	1515138	Pedal and Bracket Assembly (Forward and Reverse Lever) (☞ Figure 3-12)	1	1	1
1	1513957	Pedal and Bracket Assembly (Monotrol Pedal) (☞ Figure 3-13)	1	1	1
2	136985	Capscrew	2	2	2
3	137852	Strap Clamp	..	..	1
4	2065701	Throttle Cable	..	..	1
4	2062323	Throttle Cable	1	1	..
5	292682	Lockwasher	2	2	2
6	136692	Nut	2	2	2
7	162836	Rod End Pin	1	1	1
8	15212	Cotter Pin	1	1	1
9	1551859	Bracket	..	..	1
10	1524320	Clip	..	..	2
11	1527877	Screw	..	..	2
12	1551253	Bracket	..	..	1
13	1539747	Shield	..	..	1
14	1514429	Nut (Flange)	..	..	2
15	15200	Cotter Pin	..	..	1
16	167218	Rod End Pin	..	..	1

©2004 HYSTER COMPANY

ACCELERATOR PEDAL AND BRACKET (Figure 3-12)
WITH FORWARD AND REVERSE LEVER

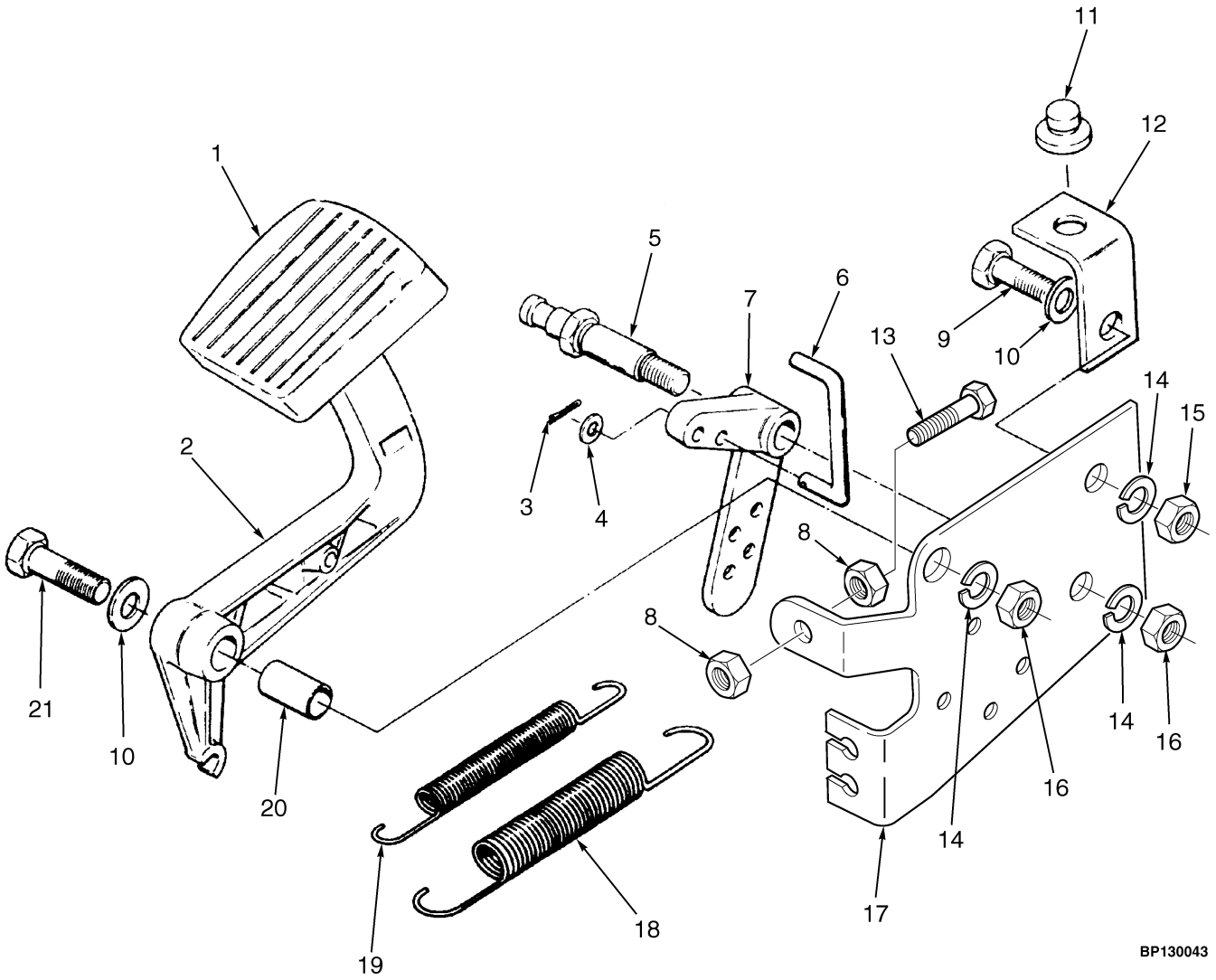

©2004 HYSTER COMPANY

ACCELERATOR PEDAL AND BRACKET
WITH FORWARD AND REVERSE LEVER

ITEM	PART NO.	DESCRIPTION	QTY
1	352885	Pad	1
2	352499	Pedal	1
3	15200	Cotter Pin	1
4	320156	Washer	1
5	352485	Shaft	1
6	353129	Rod	1
7	353164	Crank	1
8	15001	Nut	2
9	287854	Capscrew	1
10	320160	Washer	2
11	353195	Bumper	1
12	353159	Bracket	1
13	1347088	Stop Screw	1
14	292682	Lockwasher	3
15	296128	Nut	1
16	136692	Nut	2
17	1513870	Bracket	1
18	353142	Spring	1
19	353143	Spring	1
20	325708	Bushing	1
21	292521	Capscrew	1

©2004 HYSTER COMPANY

ACCELERATOR PEDAL AND BRACKET (Figure 3-13)
MONOTROL

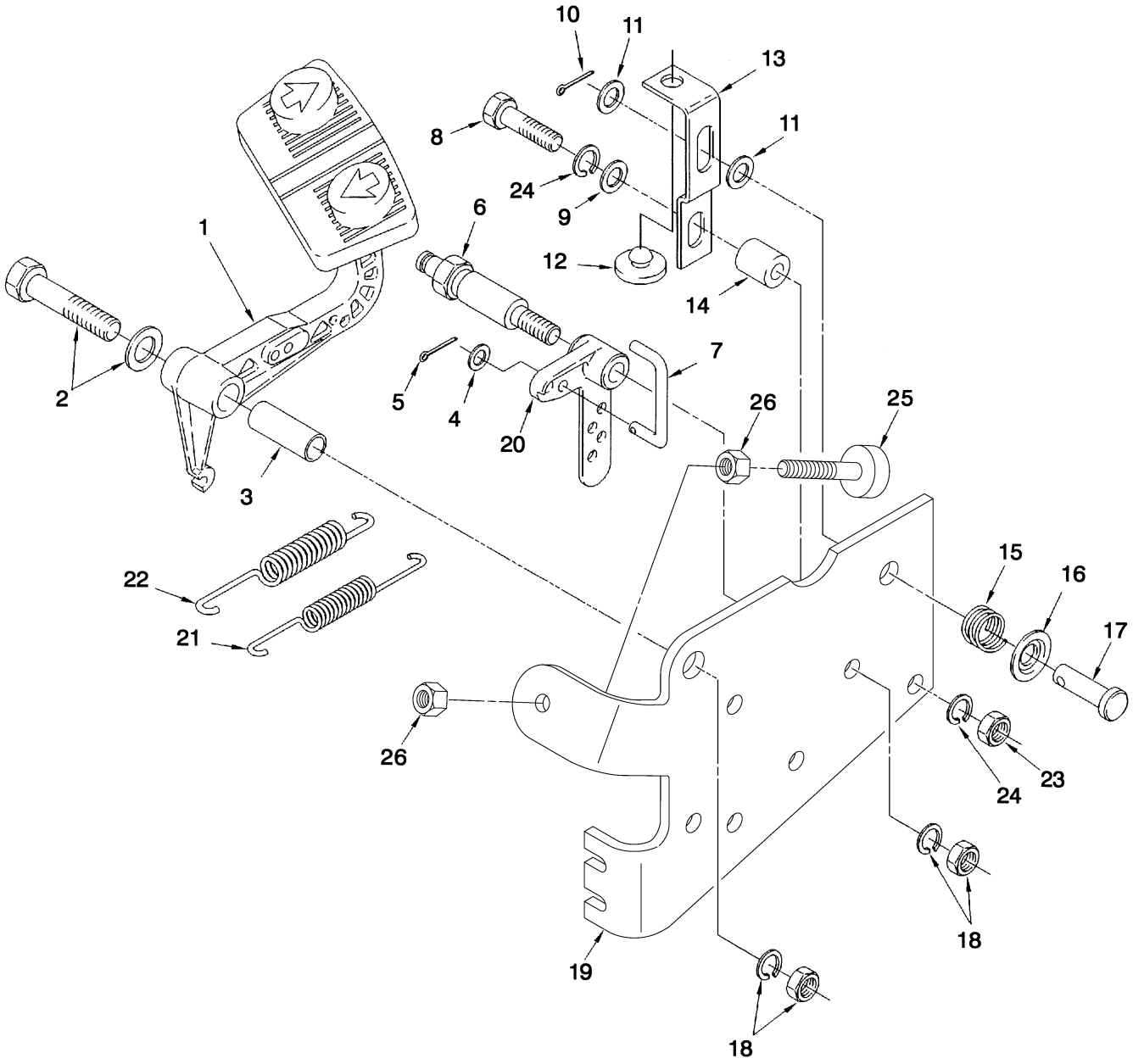

BP130044

©2004 HYSTER COMPANY

ACCELERATOR PEDAL AND BRACKET
MONOTROL

ITEM	PART NO.	DESCRIPTION	QTY
1	353398	Pedal Assembly (☞ Figure 3-14)	1
2	292523	Capscrew	1
2	320160	Washer	1
3	353141	Bushing	1
4	320156	Washer	1
5	15200	Cotter Pin	1
6	352485	Shaft	1
7	353129	Rod	1
8	287851	Capscrew	1
9	320158	Washer	1
10	15212	Cotter Pin	1
11	320160	Washer	2
12	353195	Bumper	1
13	352950	Bracket	1
14	353453	Mount	1
15	353172	Spring	1
16	353230	Cap	1
17	142	Pin	1
18	136692	Nut	2
18	292682	Lockwasher	2
19	1513870	Bracket	1
20	353164	Crank	1
21	353142	Spring	1
22	353143	Spring	1
23	239503	Nut	1
24	292681	Lockwasher	2
25	1347088	Stop Screw	1
26	15001	Nut	2

©2004 HYSTER COMPANY

MONOTROL PEDAL (Figure 3-14)

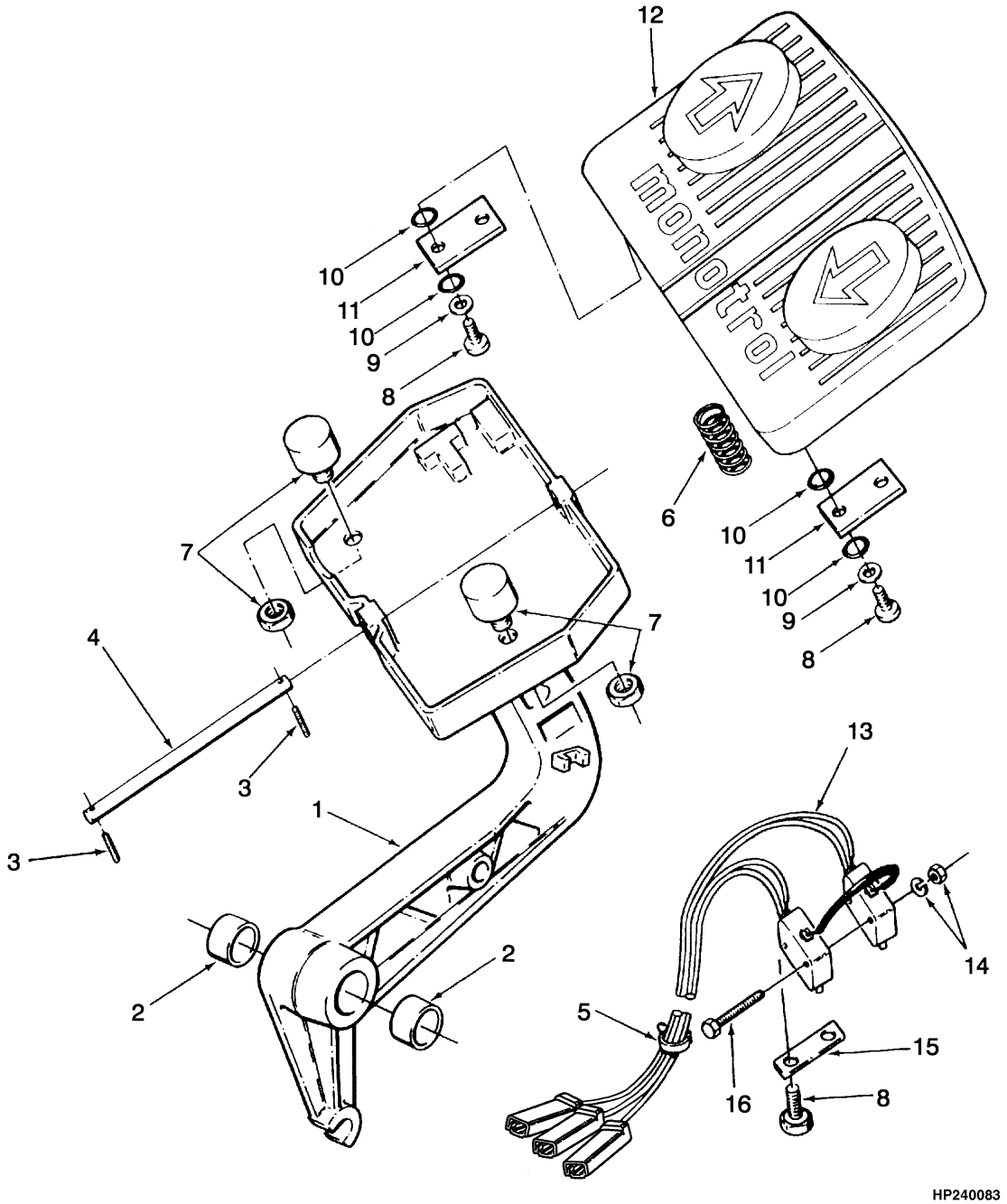

©2004 HYSTER COMPANY

MONOTROL PEDAL

ITEM	PART NO.	DESCRIPTION	QTY
	353398	Pedal Assembly	1
1	353397	Pedal	1
2	135685	Bushing	2
3	220932	Screw	2
3	360387	Sealant	AR
4	353154	Pin	1
5	114312	Strap Clamp	2
6	353168	Spring	1
7	353432	Nut	2
7	353422	Magnet	2
8	352969	Screw	6
9	353448	Washer	4
10	57568	O-Ring	8
11	359207	Plate	2
12	353175	Pad	1
13	353220	Switch Assembly	1
14	16865	Nut	2
14	53162	Lockwasher	2
15	353165	Retainer	1
16	220434	Capscrew	2

©2004 HYSTER COMPANY

NOTES

4 ELECTRICAL SYSTEM

SECTION 4
ELECTRICAL SYSTEM

DESCRIPTION	PAGE
ALTERNATOR MOUNTING	
DIESEL	4-20
DISTRIBUTOR	
4.3 L EPA COMPLIANT ENGINE	4-18
ELECTRICAL SYSTEM	
DIESEL	4-4
GASOLINE AND LPG	4-2
GAUGE CLUSTER	4-12
INSTRUMENT PANEL	4-8
STARTER	
GASOLINE AND LPG	4-14
STARTER MOTOR	
DIESEL	4-16
WIRE HARNESS	
COWL	
DIESEL	4-24
GASOLINE AND LPG	4-22
NEUTRAL START MONOTROL PEDAL	
GASOLINE AND LPG	4-27
NEUTRAL START, FORWARD AND REVERSE LEVER	
GASOLINE AND LPG	4-28
WIRE HARNESS (ENGINE)	
DIESEL	4-30

©2004 HYSTER COMPANY

ELECTRICAL SYSTEM (Figure 4-1)
GASOLINE AND LPG

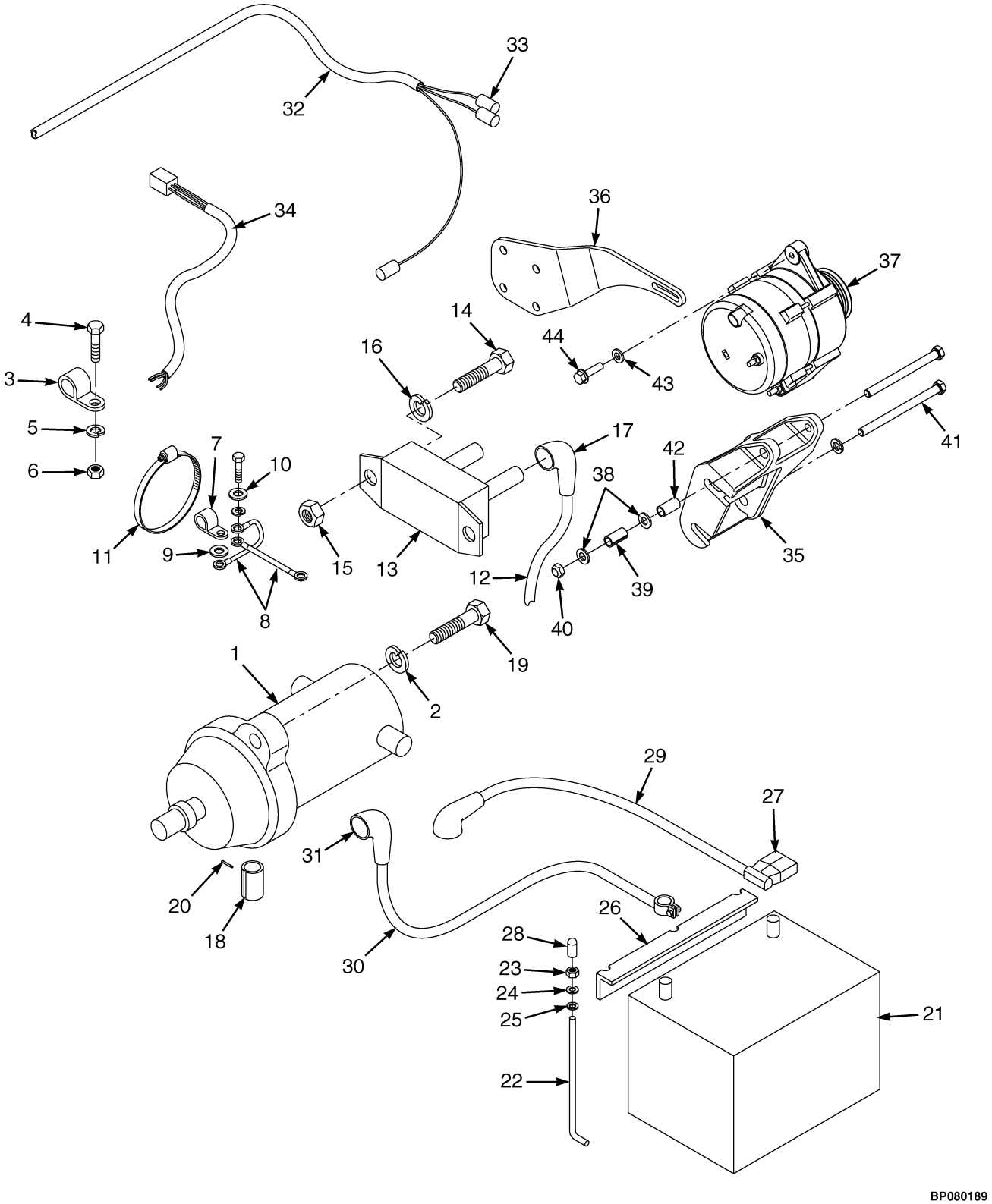

©2004 HYSTER COMPANY

ELECTRICAL SYSTEM
GASOLINE AND LPG

ITEM	PART NO.	DESCRIPTION	QTY
1	1383240	Starter (☞ Figure 4-5)	1
2	15165	Lockwasher	2
3	153069	Clamp	1
4	287854	Capscrew	1
5	292682	Lockwasher	2
6	136692	Nut	1
7	1350914	Strap	1
8	362416	Ground Wire	2
9	320159	Washer	1
10	296361	Washer	1
11	129563	Strap Clamp	1
12	2062382	Wire Harness (Interface)	1
13	2044948	Circuit Breaker (50 Amp)	1
14	2062262	Capscrew	2
15	292667	Nut	4
16	292678	Lockwasher	4
17	190383	Boot	1
18	350065	Spacer	1
19	16376	Capscrew	2
20	234898	Pin	1
21	1383331	Battery (Wet)	1
22	309124	Link (Battery Holddown)	2
23	136687	Nut	2
24	320156	Washer	2
25	292680	Lockwasher	2
26	309152	Battery Hold Down	1
27	257241	Boot	1
28	1326939	Cap	2
29	1523474	Battery Cable	1
30	1383347	Battery Cable	1
31	204223	Boot	1
32	1339440	Wire Harness (Montrol Pedal)	1
33	181045	Connector (Montrol Pedal)	2
34	1345997	Wire Harness (Neutral Start) (Monotrol Pedal) (☞ Figure 4-11)	1
34	1335842	Wire Harness (Neutral Start) (Forward and Reverse) (☞ Figure 4-12)	1
35	1383229	Mount	1
36	1389337	Strap (Alternator)	1
37	1469597	Alternator	1
38	261379	Washer	2
39	189338	Spacer	1
40	139743	Locknut	1
41	18548	Capscrew	1
42	305100	Sleeve	1
43	320157	Washer	5
44	1527881	Capscrew	1

©2004 HYSTER COMPANY

ELECTRICAL SYSTEM (Figure 4-2)
DIESEL

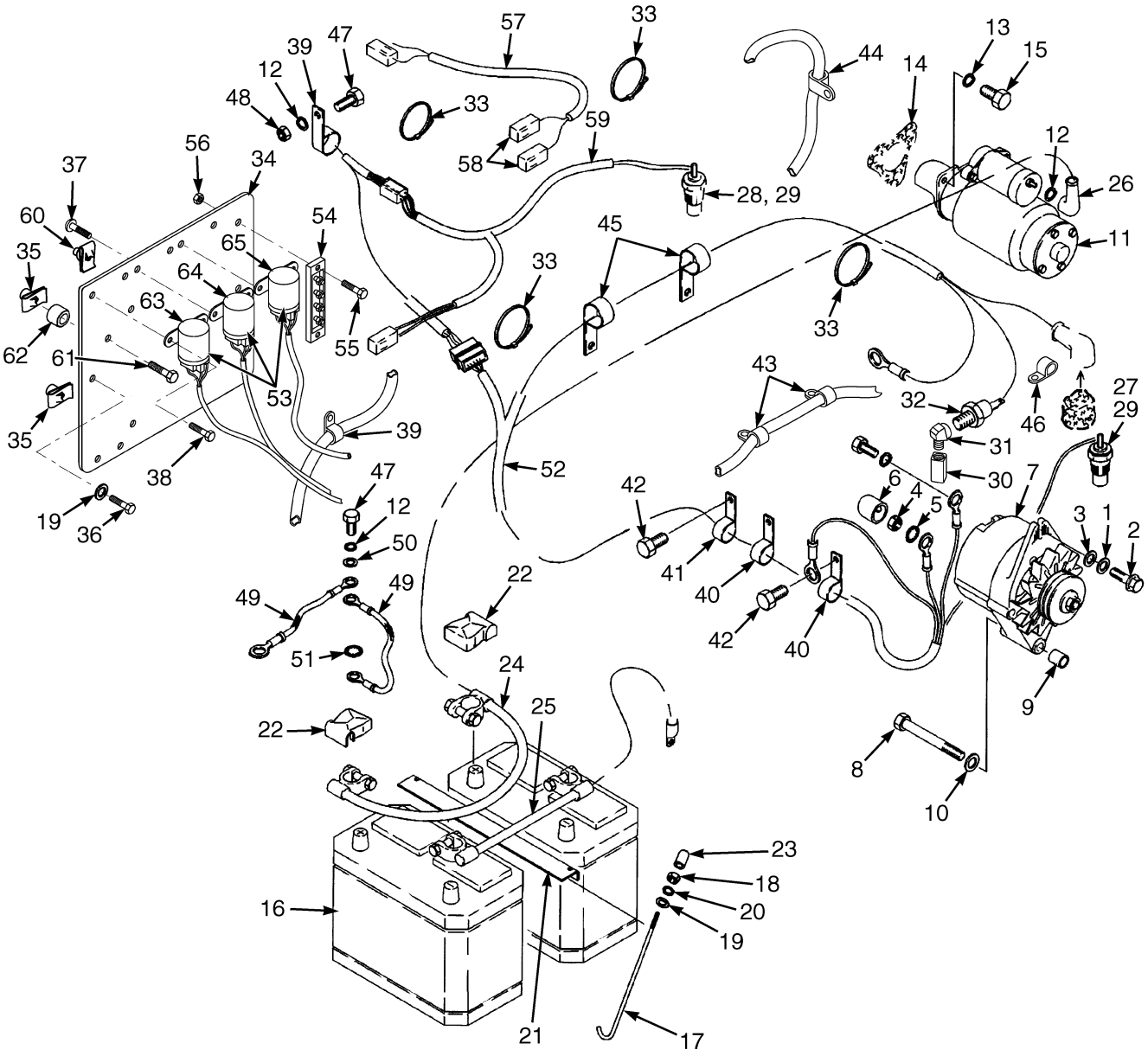

©2004 HYSTER COMPANY

ELECTRICAL SYSTEM
DIESEL

ITEM	PART NO.	DESCRIPTION	QTY
1	292681	Lockwasher	1
2	176640	Capscrew	1
3	320157	Washer	1
4	136687	Nut	2
5	296359	Lockwasher	2
6	157065	Boot	1
7	1469598	Alternator	1
8	292523	Capscrew	1
9	1345014	Sleeve	1
10	1318306	Washer	1
11	2065976	Starter (☞ Figure 4-6)	1
12	292682	Lockwasher	3
13	15156	Lockwasher	3
14	264159	Adhesive	AR
15	16815	Capscrew	3
16	1383331	Battery (Wet)	2
16	146938	Battery (Wet) (Optional)	2
16	177894	Battery (Dry)	2
17	309124	Link (Battery Holddown)	4
18	136687	Nut	4
19	320156	Washer	5
20	292680	Lockwasher	4
21	309152	Battery Hold Down	2
22	257241	Boot	2
23	1326939	Cap	4
24	1536269	Battery Cable	1
25	366682	Battery Cable	1
26	204223	Boot	1
27	1330353	Sender (Oil Pressure)	1
28	1319190	Temperature Sender	1
29	246108	Sealant	AR
30	1475493	Fitting (Adapter)	1
31	12821	Fitting	1
32	190252	Pressure Switch	1
33	129563	Strap Clamp	4
34	1544837	Bracket	1
35	1480237	Nut-Clip	5
36	2044515	Screw	1
37	2067651	Screw	2
38	1527876	Capscrew	6
39	272133	Clamp	1
40	124297	Clamp	5
41	387316	Clamp	2
42	1528778	Capscrew	5
43	164488	Clamp	4
44	124359	Clamp	2
45	128408	Clamp	2
46	1376727	Clamp	1
47	287854	Capscrew	2
48	136692	Nut	1
49	362416	Ground Wire	2

©2004 HYSTER COMPANY

ELECTRICAL SYSTEM
DIESEL

ITEM	PART NO.	DESCRIPTION	QTY
50	320159	Washer	1
51	296361	Washer	1
52	2062380	Wire Harness (Engine) (☞ Figure 4-13)	1
53	1454967	Relay	3
54	1545154	Bus Bar (100 Amp)	1
55	1531479	Capscrew	2
56	1514429	Nut (Flange)	2
57	1339440	Wire Harness (Monotrol Pedal)	1
58	181045	Connector	2
59	1312702	Wire Harness (Neutral Start) (Monotrol Pedal)	1
59	1312703	Wire Harness (Neutral Start) (Forward and Reverse Lever)	1
60	325182	Nut	6
61	1528482	Capscrew	4
62	381879	Spacer	6
63	1558221	Label (Relay Lift Pump)	1
64	1558222	Label (Relay Glow Plug)	1
65	1558218	Label (Relay Starter Solenoid)	1

©2004 HYSTER COMPANY

NOTES

INSTRUMENT PANEL (Figure 4-3)

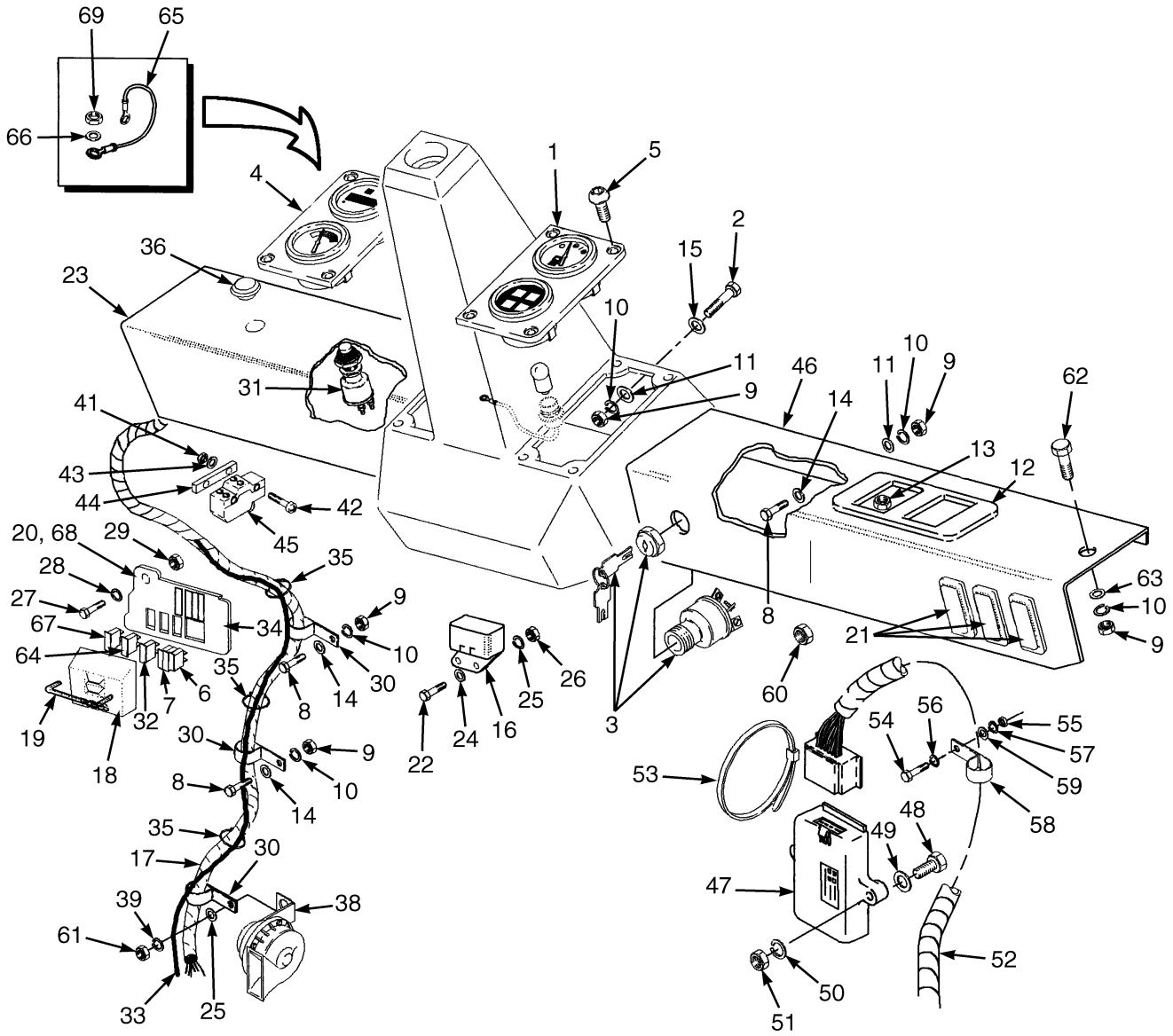

HP081386

©2004 HYSTER COMPANY

INSTRUMENT PANEL

ITEM		PART NO.	DESCRIPTION	QTY
1	**a**	1346745	Gauge Cluster (RH) (☞ Figure 4-4)	1
1	**c**	2067519	Gauge Cluster (RH) (☞ Figure 4-4)	1
1	**b**	1346708	Gauge Cluster (RH) (☞ Figure 4-4)	1
2		292502	Capscrew	4
3		379902	Ignition Switch	1
3		1337197	Key Set	1
4	**abc**	1324313	Gauge Cluster (LH) (☞ Figure 4-4)	1
4	**abc**	2035913	Gauge Cluster (LH) (☞ Figure 4-4)	1
5		370676	Screw	8
6		370646	Fuse (5 Amp)	2
7		370647	Fuse (10 Amp)	1
8		292502	Capscrew	4
9		136687	Nut	8
10		292680	Lockwasher	8
11		197068	Washer	6
12		352985	Bezel	1
13		352987	Nut	2
14		296359	Lockwasher	6
15		296359	Lockwasher	6
16		157554	Horn Relay	1
17		1346717	Wire Harness (Cowl) (☞ Figure 4-9)	1
17		1346716	Wire Harness (Cowl) (☞ Figure 4-10)	1
18		370863	Cover	1
19		370864	Latch (Cover)	1
20		1337886	Bracket (LPG and Gasoline)	1
20		1320659	Bracket (Diesel)	1
21		374046	Plug	4
22		136749	Capscrew	1
23		1346715	Instrument Panel (LH)	1
24		320158	Washer	1
25		292681	Lockwasher	3
26		239503	Nut	2
27		16836	Capscrew	1
28		15155	Lockwasher	1
29		376397	Nut	1
30		101625	Clamp	1
31	**a**	370776	Switch (Momentary)	1
32	**a**	370648	Fuse (20 Amp)	1
33	**a**	1322652	Wire Harness (Thermo Start)	1
34	**a**	1323597	Label (Diesel Fuses)	1
35	**a**	129563	Strap Clamp	3
36	**bc**	350498	Plug	1
37	**bc**	1383791	Label	1
38		1511904	Horn	1
39		320159	Washer	AR
41	**d**	15059	Nut	2
42	**d**	86510	Screw	2
43	**d**	138573	Lockwasher	2
44	**d**	316132	Spacer	1
45	**d**	370868	Switch	1
46		1346713	Instrument Panel (RH)	1

©2004 HYSTER COMPANY

INSTRUMENT PANEL

ITEM		PART NO.	DESCRIPTION	QTY
47	**c**	1335001	Governor Controller (Standard)	1
48	**c**	302250	Screw	2
49	**c**	197067	Washer	4
50	**c**	292679	Lockwasher	2
51	**c**	292668	Nut	2
52	**c**	1360971	Wire Harness (Governor)	1
53	**c**	114312	Strap Clamp	1
54	**c**	136681	Capscrew	1
55	**c**	239503	Nut	1
56	**c**	296360	Washer	1
57	**c**	292681	Lockwasher	1
58	**c**	146047	Clamp	1
59	**c**	320157	Washer	1
60	**c**	302399	Nut	1
61		239503	Nut	2
62		353144	Capscrew	2
63		197068	Washer	2
64		1310630	Fuse (15 Amp)	1
65		1346733	Wire Harness	1
66		16743	Lockwasher	1
67	**bc**	1300057	Fuse (7.5 Amp)	1
68	**bc**	381846	Fuse Holder	1
69		15049	Nut	1

FOOTNOTES:
a Diesel
b Gasoline
c LPG
d Monotrol Pedal

©2004 HYSTER COMPANY

NOTES

GAUGE CLUSTER (Figure 4-4)

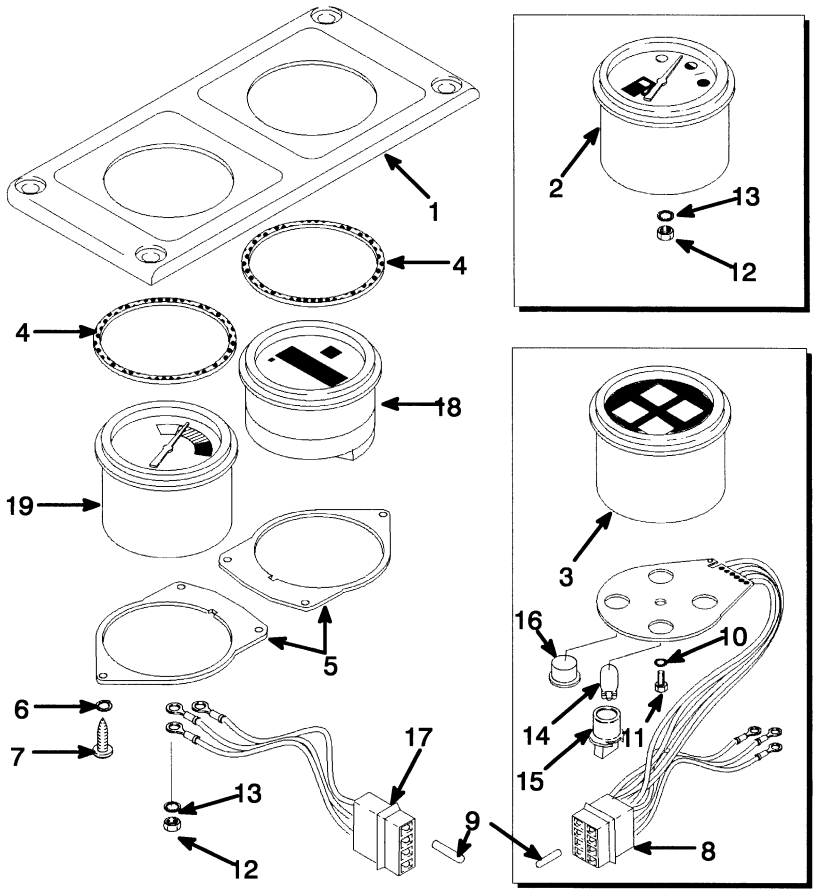

HP080114

©2004 HYSTER COMPANY

GAUGE CLUSTER

KEY:
A: Right Hand Side (Gasoline)
B: Right Hand Side (Diesel)
C: Right Hand Side (LPG)
D: Left Hand Side

ITEM		PART NO.	DESCRIPTION	QTY A	B	C	D
		1346708	Gauge Cluster	1	..	..	..
		1346745	Gauge Cluster	..	1	..	..
		2067519	Gauge Cluster	..	..	1	..
	b	1324313	Gauge Cluster	..	..	..	1
	a	2035913	Gauge Cluster (Optional)	..	..	..	1
1		1312473	Bezel	1	1	..	1
1		1458291	Bezel	..	..	1	..
2		1312344	Fuel Gauge	1	1	..	..
3		1312345	Light Cluster	..	..	1	..
3		1347952	Light Cluster	1	..	..	..
4		1312339	Gasket	2	2	1	2
5		1312340	Bracket	2	2	1	2
6		18419	Lockwasher	6	6	3	6
7		227131	Screw	6	6	3	6
8		1317393	Connector Body	1	1	1	..
9		367966	Pin	8	6	5	3
10		15916	Lockwasher	1	1	1	..
11		185806	Screw	1	1	1	..
12		15049	Nut	3	3	..	3
13		16743	Lockwasher	3	3	..	3
14		1320001	Bulb	4	3	4	..
15		1317394	Socket	4	3	4	..
16		1312348	Plug	..	1	..	..
17		367953	Housing	..	..	..	1
18		1312337	Hour Meter	..	..	..	1
18		1479807	Hourmeter (Optional)	..	..	..	1
19		1329414	Temperature Gauge	..	..	..	1

FOOTNOTES:
a Diesel
b LPG, Gasoline and Diesel

©2004 HYSTER COMPANY

STARTER (Figure 4-5)
GASOLINE AND LPG

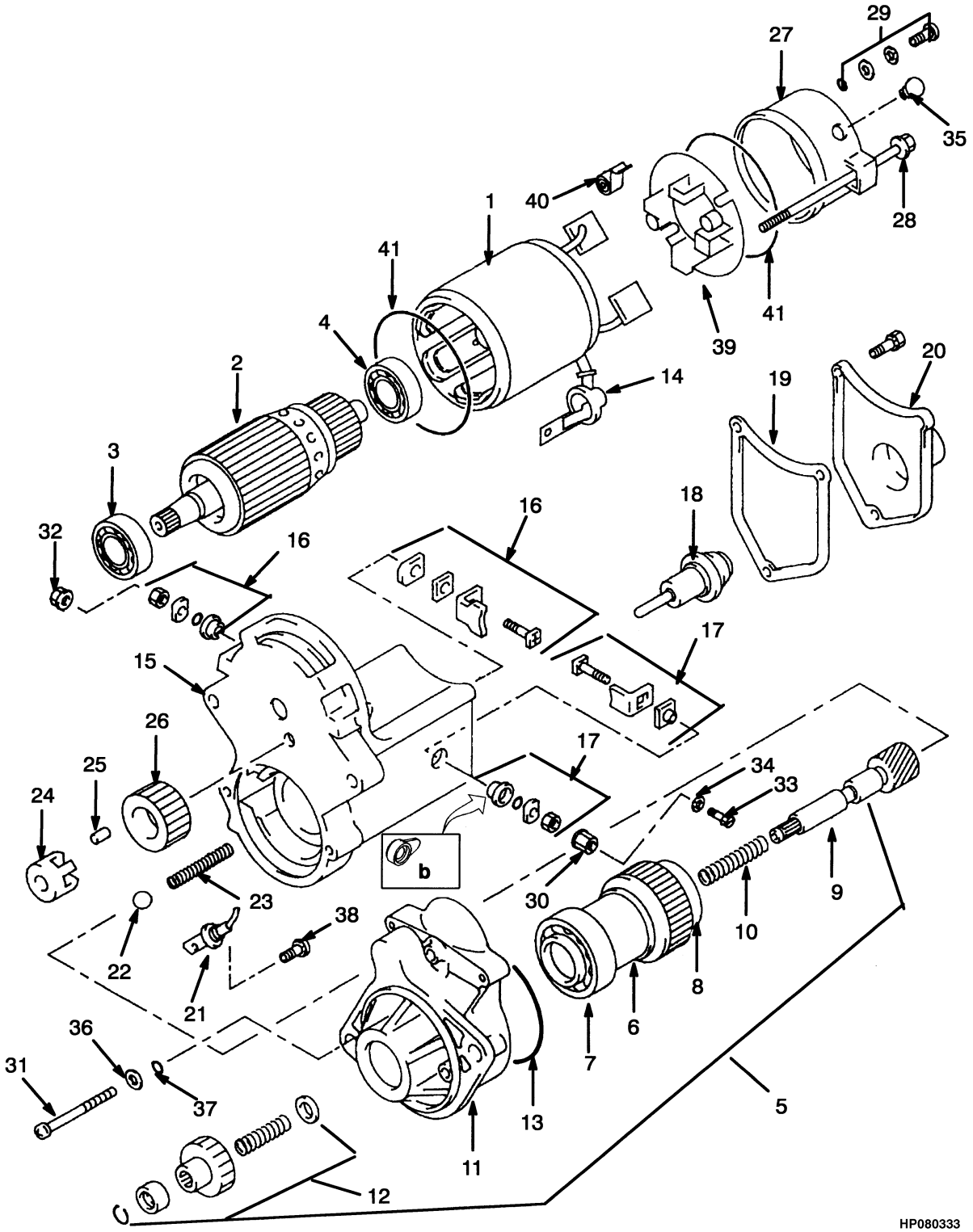

©2004 HYSTER COMPANY

STARTER
GASOLINE AND LPG

ITEM	PART NO.	DESCRIPTION	QTY
	1383240	Starter	1
1	1390149	Yoke	1
1	. . . . .	Brushes	2
2	1390152	Armature	1
3	1390168	Ball Bearing	1
3	1453889	Ball Bearing (Optional)	1
4	1390169	Ball Bearing	1
5	1453546	Clutch Assembly	1
6	. . . . .	Clutch	1
7	. . . . .	Bearing	1
8	. . . . .	Ball Bearing	1
9	. . . . .	Shaft	1
10	. . . . .	Spring	1
11	. . . . .	Housing	1
12	. . . . .	Pinion Kit	1
13	1459303	Seal	1
14	1390173	Cover	1
15	1465586	Switch	1
16	1465587	Terminal Kit (M)	1
17	1453551	Terminal Kit (C)	1
18	1391238	Plunger	1
19	1391239	Gasket	1
20	1391240	Cover	1
21	1391241	Bolt (Terminal)	1
22	1453890	Ball Bearing (Optional)	1
22	324637	Ball	1
23	1390158	Spring	1
24	1390157	Retainer	1
25	324634	Roller	5
26	1390156	Pinion	1
27	1391243	Frame	1
28	1390161	Bolt	2
29	1390162	Screw	2
30	1390165	Nut	1
31	1390160	Screw	2
32	1390172	Nut	1
33	1390166	Bolt	1
34	1391244	Washer	1
35	1390171	Cover	1
36	1390163	Washer	2
37	1390164	O-Ring	2
38	1390167	Screw	1
39	1390155	Brush Holder	1
40	1390159	Spring	4
41	1390170	O-Ring	2

©2004 HYSTER COMPANY

STARTER MOTOR (Figure 4-6)
DIESEL

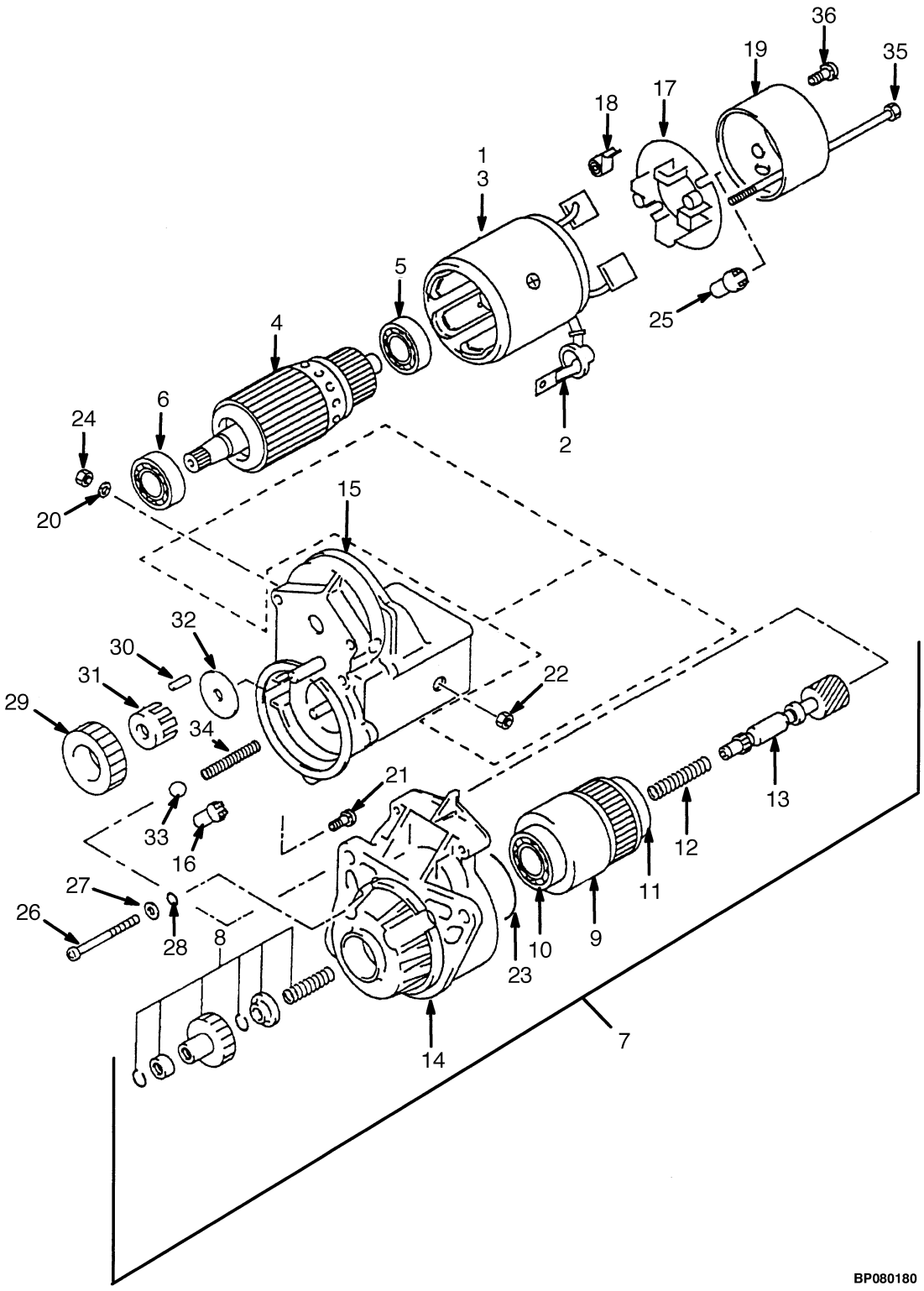

©2004 HYSTER COMPANY

STARTER MOTOR
DIESEL

ITEM	PART NO.	DESCRIPTION	QTY
	2065976	Starter	1
1	1462233	Yoke Assembly	1
2	1462234	Cover	1
3	1462235	Brush Kit	2
4	1462236	Armature	1
5	1462239	Bearing	1
6	1462240	Bearing	1
7	1462241	Clutch Assembly	1
8	. . . . .	Kit-Pinion	1
9	. . . . .	Clutch Sub Assembly	1
10	. . . . .	Ball Bearing	1
11	. . . . .	Ball Bearing	1
12	. . . . .	Spring	1
13	. . . . .	Shaft	1
14	. . . . .	Housing	1
15	1558111	Switch Assembly (Magnetic)	1
16	1462256	Bushing	1
17	1462257	Brush Holder Assembly	1
18	1462258	Spring	4
19	1558015	Frame	1
20	1462271	Lockwasher	1
21	1390167	Screw	1
22	1462273	Nut	1
23	1462272	Seal	1
24	1462270	Nut	1
25	1367107	Cover	1
26	1367106	Bolt	3
27	1390163	Washer	3
28	1390164	O-Ring	3
29	1462262	Pinion	1
30	1462263	Roller	5
31	1462264	Retainer	1
32	1462265	Retainer	1
33	324637	Ball	1
34	1462261	Spring	1
35	1558109	Bolt	2
36	1462267	Screw	2
	1558112	Kit (Bolt) (Includes Items 26-28)	1
	1558113	Kit (Pinion) (Includes Items 29-32)	1
	1558114	Kit (Compression Spring) (Includes Items 33-34)	1
	1558115	Kit (Bolt) (Includes Items 35-36)	1

©2004 HYSTER COMPANY

DISTRIBUTOR (Figure 4-7)
4.3 L EPA COMPLIANT ENGINE

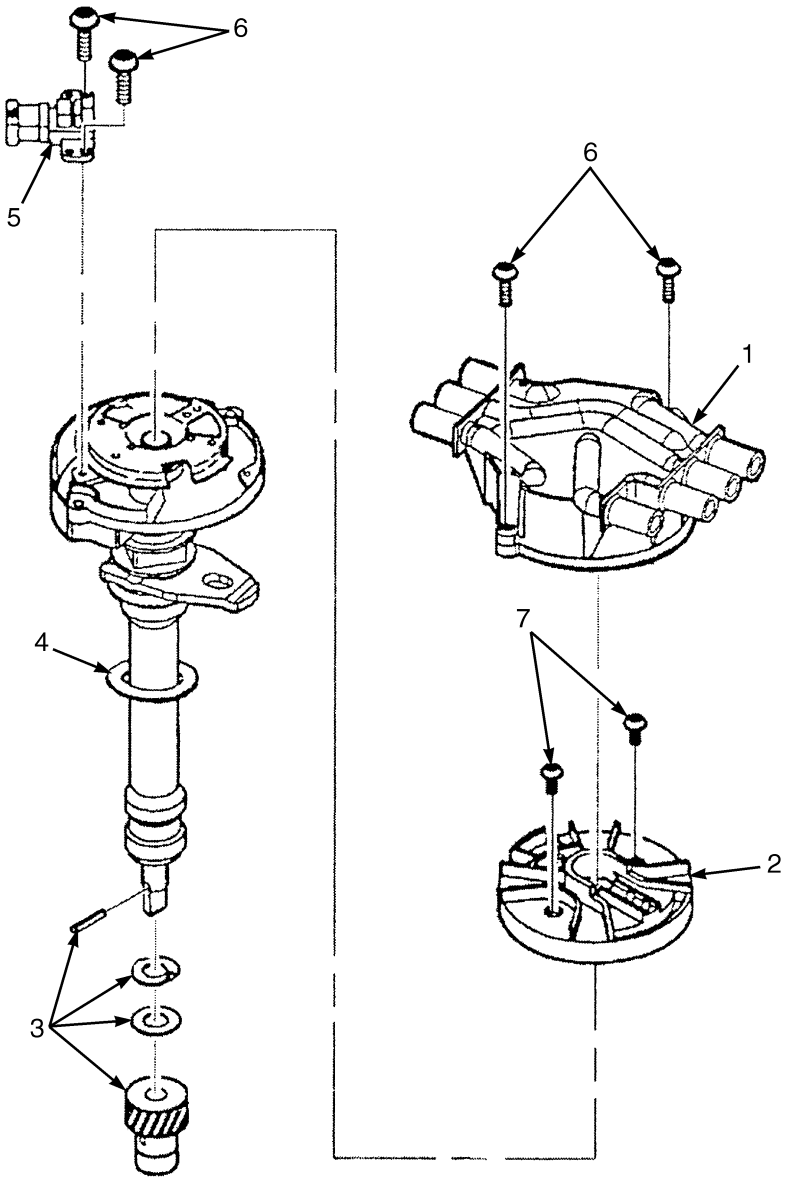

ITEM	PART NO.	DESCRIPTION	QTY
	1559695	Distributor	1
1	1342528	Cap	1
1	1559925	Screw	2
2	1374329	Rotor	1
3	1559922	Gear Kit	1
4	1334423	Gasket	1
5	1559923	Sensor	1
6	1559924	Screw	4
7	1559925	Screw	2

©2004 HYSTER COMPANY

NOTES

ALTERNATOR MOUNTING (Figure 4-8)
DIESEL

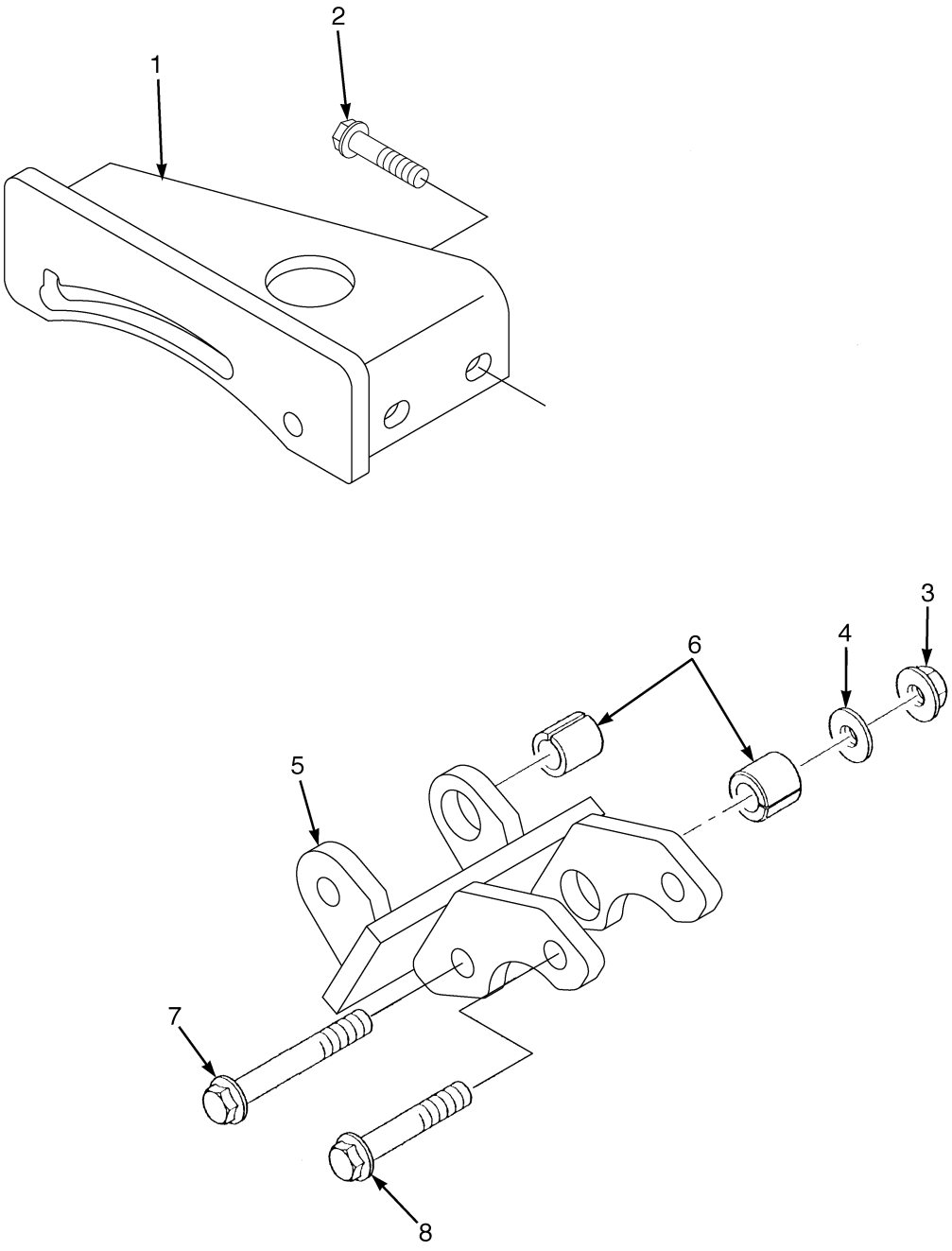

BP080003

©2004 HYSTER COMPANY

ALTERNATOR MOUNTING
DIESEL

ITEM	PART NO.	DESCRIPTION	QTY
1	1563048	Bracket	1
2	1527883	Capscrew	2
3	1502543	Nut (Flange)	1
4	296421	Washer	1
5	1563548	Bracket	1
6	1345014	Sleeve	2
7	1307897	Capscrew	1
8	292521	Capscrew	1

©2004 HYSTER COMPANY

WIRE HARNESS (Figure 4-9)
COWL
GASOLINE AND LPG

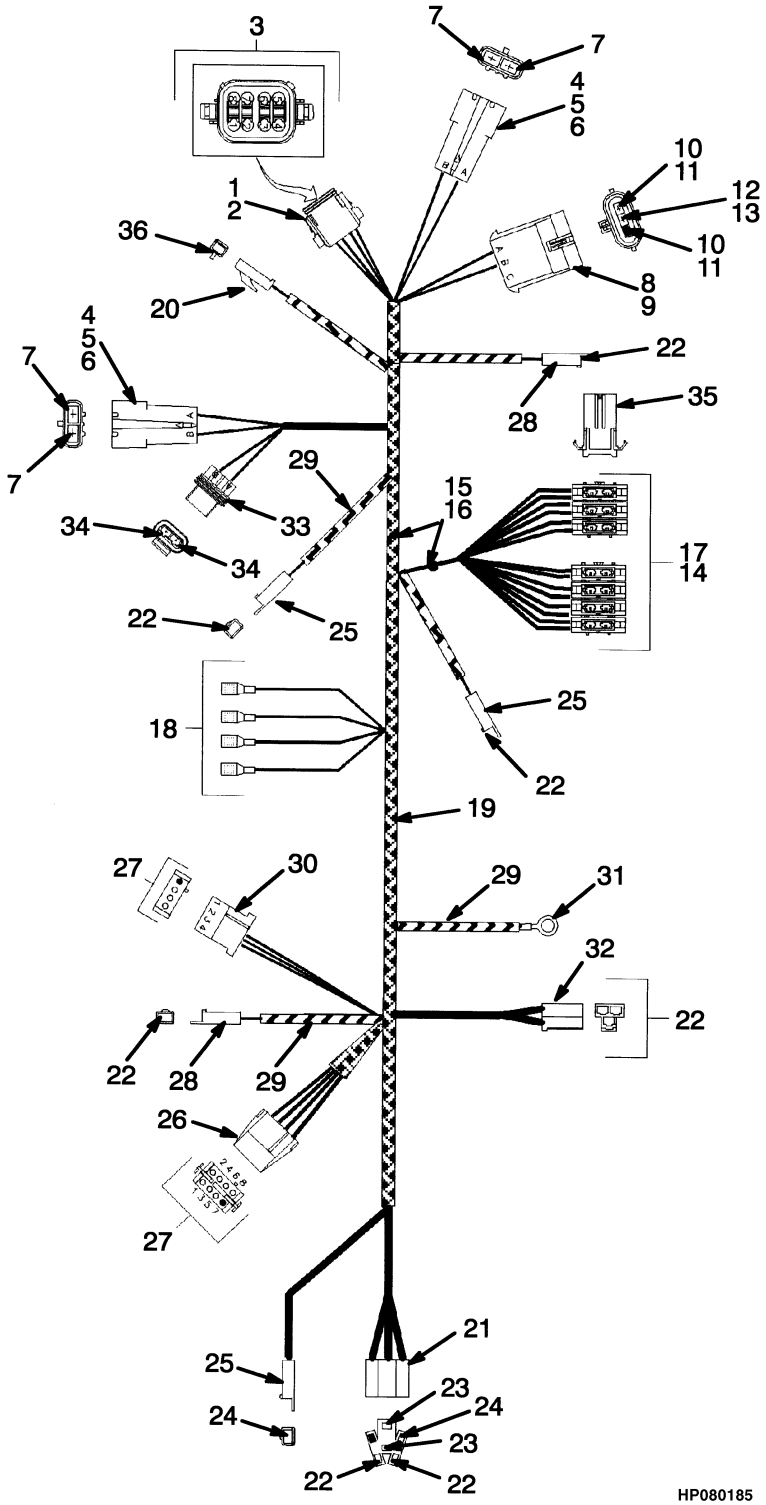

©2004 HYSTER COMPANY

WIRE HARNESS
COWL
GASOLINE AND LPG

ITEM	PART NO.	DESCRIPTION	QTY
	1346717	Wire Harness (Cowl)	1
1	1330423	Connector (Engine Harness)	1
2	1330429	Lock	1
3	1330434	Terminal (Optional)	8
3	1330438	Socket	8
4	1336870	Connector (Engine Harness)	2
5	1336874	Seal	2
6	1336871	Secondary Lock	2
7	1337392	Terminal	4
8	1337383	Connector (Engine Harness)	1
9	1337384	Secondary Lock	1
10	1336872	Terminal	2
11	1337386	Seal	2
12	1337385	Terminal	1
13	1337388	Seal	1
14	381846	Fuse Holder	7
15	201954	Splice	2
16	175944	Heat Shrink Tube	AR
17	381847	Terminal	12
18	325789	Electrical Fitting (Female)	4
19	381919	Conduit	AR
20	181045	Connector	1
21	370728	Connector	1
22	134812	Blade	8
23	141462	Blade	2
24	134811	Terminal	2
25	181046	Connector	2
26	370727	Connector	1
27	367968	Socket	10
28	129889	Connector Body	1
29	30492	Loom	AR
30	367960	Connector	1
31	129888	Terminal	1
32	126319	Connector	1
33	1330292	Connector (Neutral Start Harness)	1
34	1330283	Terminal	2
35	277446	Connector	1
36	134810	Blade	1

©2004 HYSTER COMPANY

WIRE HARNESS (Figure 4-10)
COWL
DIESEL

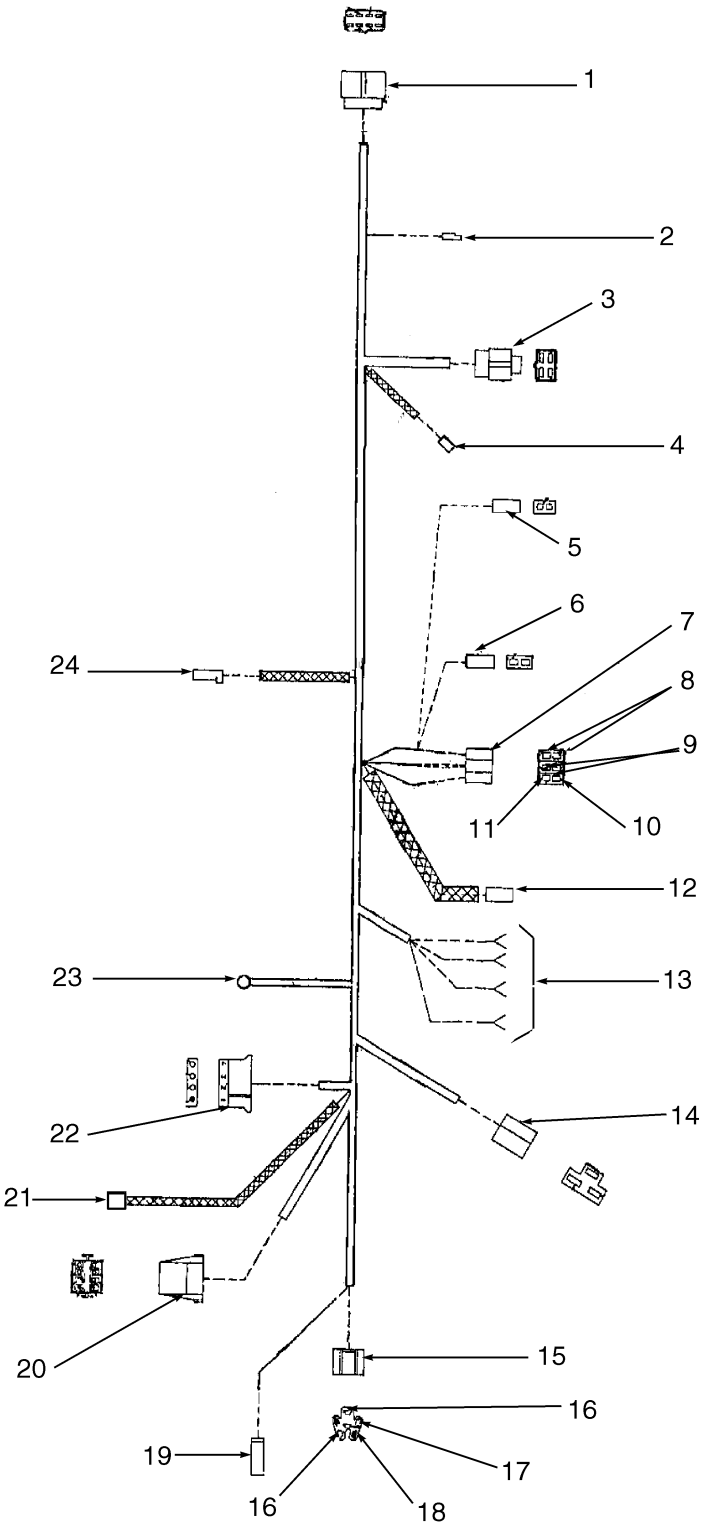

BP080133

©2004 HYSTER COMPANY

WIRE HARNESS
COWL
DIESEL

ITEM	PART NO.	DESCRIPTION	QTY
	1346716	Wire Harness (Cowl)	1
1	. . . . .	Connector Assembly (Engine Harness)	1
1	181053	Connector Body	1
1	134810	Blade	8
2	. . . . .	Connector Assembly (Monotrol Harness)	1
2	181045	Connector	1
3	. . . . .	Connector Assembly (Neutral Start)	1
3	181049	Connector Body	1
3	134810	Blade	4
4	. . . . .	Connector Assembly (Fuel Level Sender)	1
4	129889	Connector Body	1
4	134812	Blade	1
5	. . . . .	Connector Assembly (Light Kit, Europe)	1
5	381846	Fuse Holder	1
5	381847	Terminal	2
6	. . . . .	Connector Assembly (Light Kit, US and Europe)	1
6	381846	Fuse Holder	1
6	381847	Terminal	2
7	. . . . .	Connector Assembly	1
7	381846	Fuse Holder	3
8	381847	Terminal (Horn)	2
9	381847	Terminal (RH Instruments)	2
10	1300231	Terminal (Transmission Solenoid)	1
11	381847	Terminal (LH Instruments)	1
12	. . . . .	Connector Assembly (Cab)	1
12	181053	Connector Body	1
12	134812	Blade	1
13	134812	Blade (Park Brake Switch)	1
14	. . . . .	Connector Assembly (Horn Relay)	1
14	126319	Connector	1
14	134812	Blade	3
15	. . . . .	Connector Assembly (Ignition Switch)	1
15	370728	Connector	1
16	134812	Blade	2
17	134811	Terminal	1
18	141462	Blade	1
19	. . . . .	Connector Assembly (Ground)	1
19	181046	Connector	1
19	134811	Terminal	1
20	. . . . .	Connector Assembly (RH Cluster)	1
20	370728	Connector	1
20	367968	Socket	6
21	. . . . .	Connector Assembly (Horn Button)	1
21	129889	Connector Body	1
21	134812	Blade	1
22	. . . . .	Connector Assembly (LH Cluster)	1
22	367960	Connector	1
22	367968	Socket	3
23	129888	Terminal (Cowl Ground)	1
24	. . . . .	Connector Assembly (Horn)	1

©2004 HYSTER COMPANY

WIRE HARNESS
COWL
DIESEL

ITEM	PART NO.	DESCRIPTION	QTY
24	277446	Connector	1
24	134812	Blade	1

©2004 HYSTER COMPANY

WIRE HARNESS (Figure 4-11)
NEUTRAL START MONOTROL PEDAL
GASOLINE AND LPG

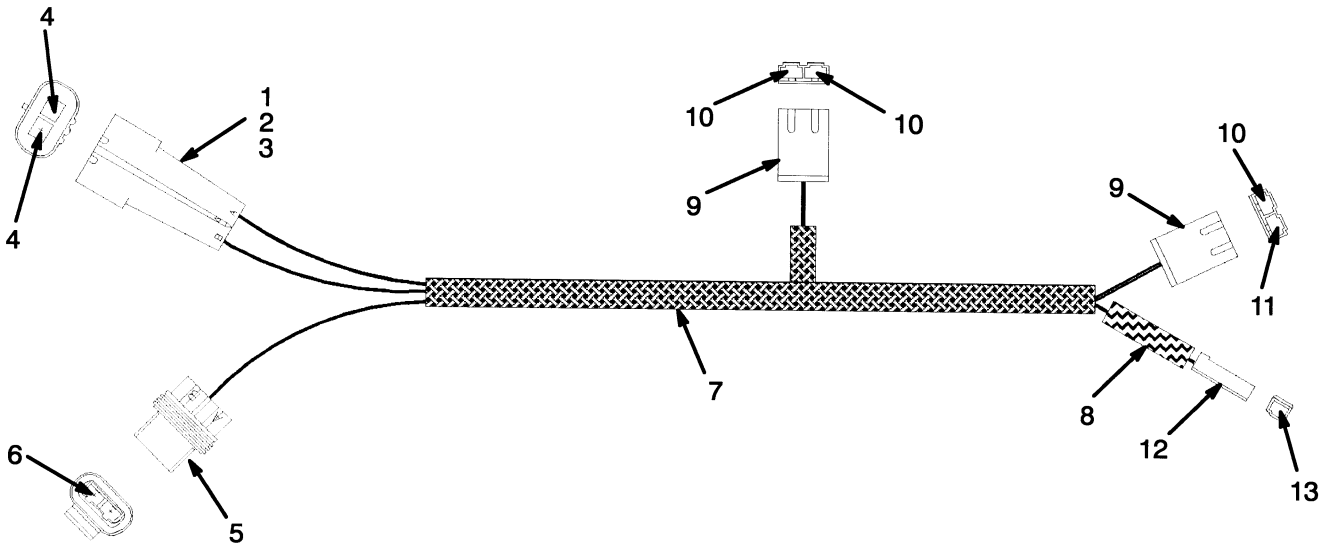

HP081362

ITEM	PART NO.	DESCRIPTION	QTY
	1345997	Wire Harness (Neutral Start)	1
1	1336870	Connector (Frame Harness)	1
2	1336874	Seal	1
3	1336871	Secondary Lock	1
4	1337392	Terminal	2
5	1330292	Connector (Frame Harness)	1
6	1330283	Terminal	1
7	381919	Conduit	AR
8	16906	Conduit	AR
9	346330	Connector	2
10	370730	Blade	3
11	1322673	Blade	1
12	181046	Connector	1
13	134812	Blade	1

WIRE HARNESS (Figure 4-12)
NEUTRAL START, FORWARD AND REVERSE LEVER
GASOLINE AND LPG

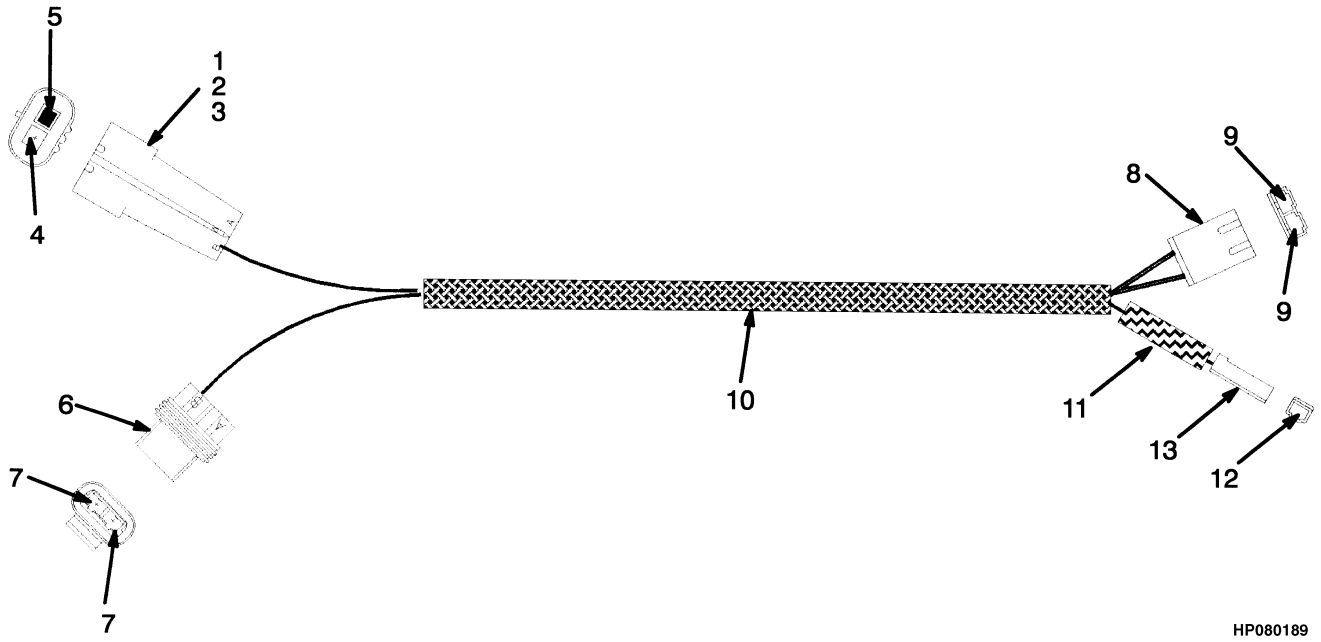

ITEM	PART NO.	DESCRIPTION	QTY
	1335842	Wire Harness (Neutral Start)	1
1	1336870	Connector (Frame Harness)	1
2	1336874	Seal	1
3	1336871	Secondary Lock	1
4	1337392	Terminal	1
5	1337391	Plug	1
6	1330292	Connector (Frame Harness)	1
7	1330283	Terminal	2
8	346330	Connector	1
9	370730	Blade	2
10	381919	Conduit	AR
11	16906	Conduit	AR
12	134812	Blade	1
13	181046	Connector	1

©2004 HYSTER COMPANY

NOTES

WIRE HARNESS (ENGINE) (Figure 4-13)
DIESEL

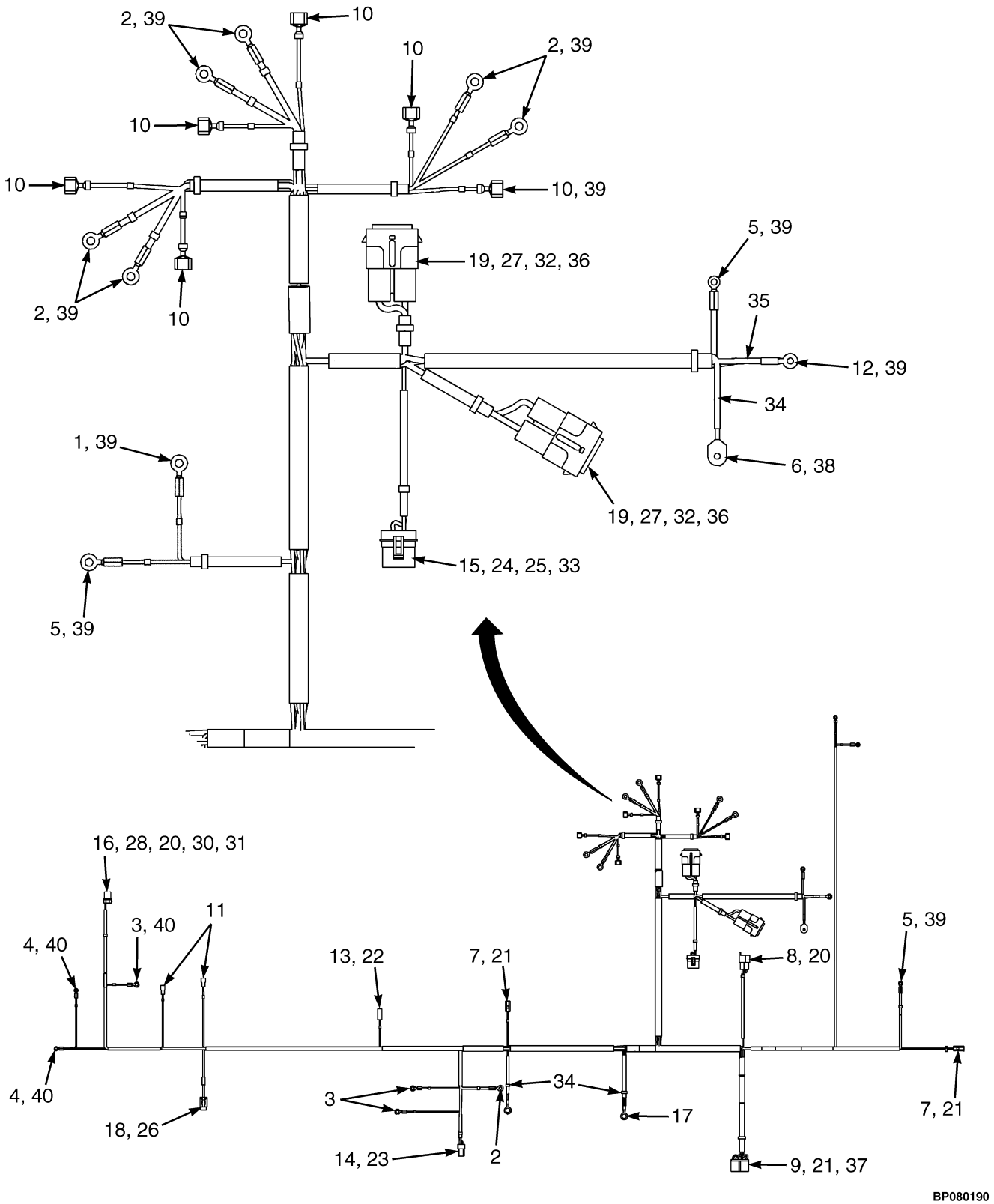

©2004 HYSTER COMPANY

WIRE HARNESS (ENGINE)
DIESEL

ITEM	PART NO.	DESCRIPTION	QTY
	2062380	Wire Harness (Engine)	1
1	129887	Ring	1
2	129888	Terminal	7
3	129894	Terminal	3
4	148605	Fitting	3
5	148610	Ring	2
6	148613	Ring Terminal	1
7	181046	Connector	2
8	181047	Connector	1
9	181054	Connector Body	1
10	325789	Electrical Fitting (Female)	6
11	367540	Fitting (Female)	2
12	806424	Terminal Ring	1
13	1301720	Connector Body	1
14	1323586	Connector	1
15	1330292	Connector	1
16	1330354	Connector	1
17	1354497	Terminal	2
18	1375782	Connector	1
19	1454860	Connector	2
20	134810	Blade	2
21	134812	Blade	9
22	370730	Blade	1
23	1323576	Terminal	2
24	1330283	Terminal	1
25	1336171	Terminal	1
26	1375783	Socket	1
27	1454828	Terminal	4
28	1330355	Terminal	2
29	1330356	Seal	2
30	1330357	Secondary Lock	1
31	1330424	Secondary Lock	1
32	1454862	Cover	2
33	1330293	Cover (Fuse)	1
34	222523	Heat Shrink Tube	AR
35	275493	Conduit	AR
36	1454827	Seal	4
37	1322673	Blade	1
38	204223	Boot	1
39	190383	Boot	11
40	190382	Boot	3

©2004 HYSTER COMPANY

NOTES

5 TRANSMISSION

SECTION 5
TRANSMISSION

DESCRIPTION	PAGE
AXLE HOUSING AND ATTACHING PARTS	5-24
CLUTCH PACK	
POWERSHIFT	
DIRECTIONAL	5-10
INPUT	5-8
CONTROL LINKAGE	
POWERSHIFT	5-18
DIFFERENTIAL AND CARRIER	5-26
DRIVE AXLE	5-22
DRIVE SHAFT ASSEMBLY	5-29
TORQUE CONVERTER	
POWERSHIFT	5-16
TRANSMISSION	
POWERSHIFT	5-2
TRANSMISSION CONTROL VALVE	
POWERSHIFT	5-12
TRANSMISSION GEARS	
POWERSHIFT	5-6

©2004 HYSTER COMPANY

TRANSMISSION (Figure 5-1)
POWERSHIFT

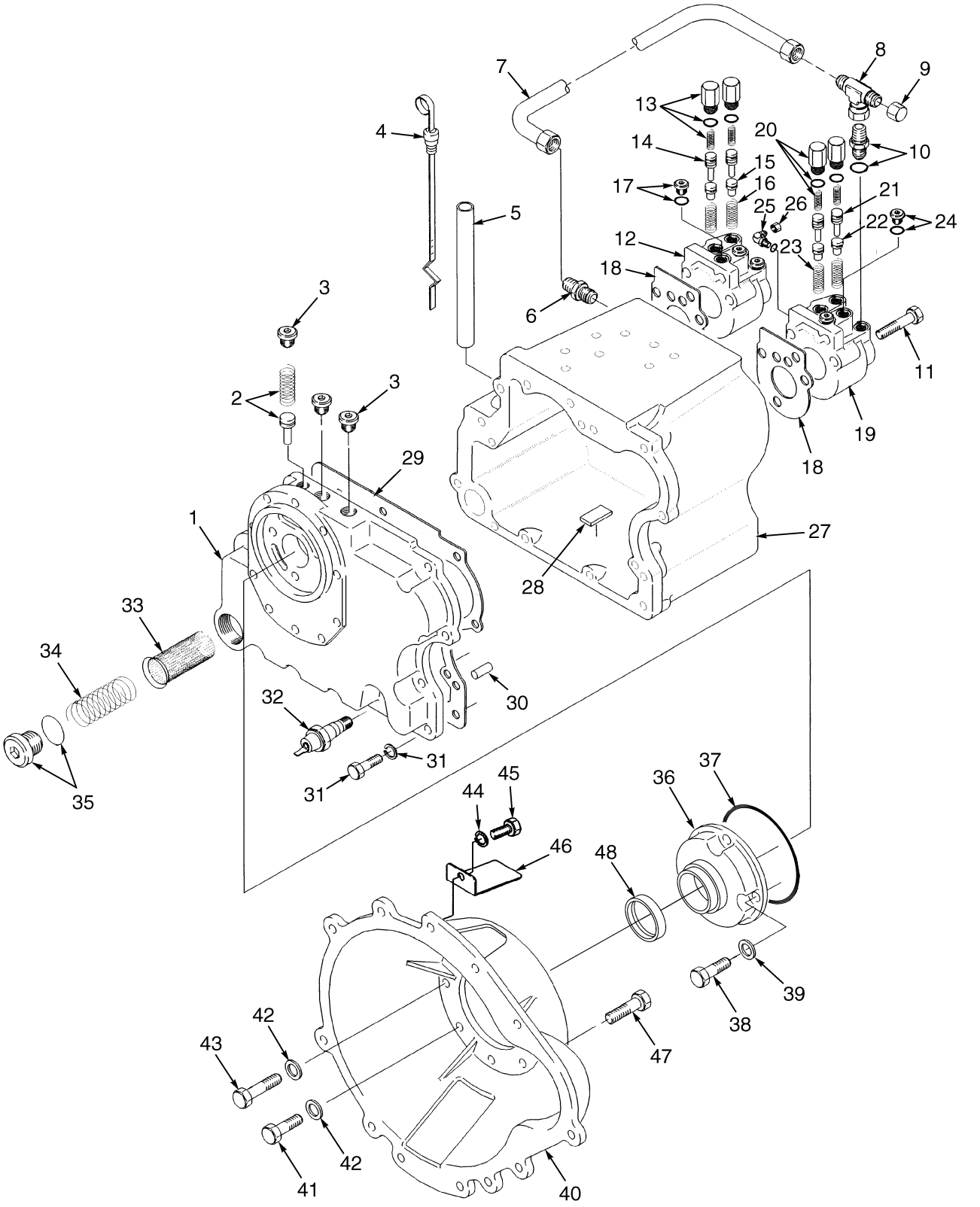

©2004 HYSTER COMPANY

TRANSMISSION
POWERSHIFT

ITEM	PART NO.	DESCRIPTION	QTY
	1386976	Transmission (Monotrol Pedal)	1
	1386977	Transmission (Forward/Reverse Lever)	1
1	1313764	Cover	1
2	334524	Spool	1
2	1313774	Spring (Relief Valve)	1
3	235691	Fitting	3
4	346682	Dipstick	1
5	346683	Dipstick Tube	1
6	17315	Fitting	1
7	374019	Tube	1
8	17050	Fitting	1
9	16925	Fitting	1
10	131460	Fitting	1
10	16483	O-Ring	1
11	346691	Capscrew	6
12	346690	Manifold Assembly	1
12	346684	Manifold	1
13	374039	Fitting	2
13	16484	O-Ring	2
13	346789	Spring	2
14	346801	Spool (Priority)	2
15	346800	Spool (Lube)	2
16	346688	Spring (Priority)	2
17	134436	Fitting	5
17	16482	O-Ring	1
18	346686	Gasket	2
19	346819	Manifold Assembly (Forward)	1
19	346818	Manifold	1
20	374039	Fitting	2
20	16484	O-Ring	2
20	346789	Spring	2
21	346801	Spool (Priority)	2
22	346800	Spool (Lube)	2
23	346688	Spring (Priority)	2
24	134436	Fitting	3
24	16482	O-Ring	1
25	222399	Fitting	1
26	16923	Fitting	1
27	346625	Housing (Transmission)	1
28	334560	Magnet	1
28	264159	Adhesive	AR
29	346660	Gasket	1
30	186420	Pin	2
31	136985	Capscrew	7
31	292682	Lockwasher	16
32	1322627	Switch (Oil Temperature Warning)	1
33	346680	Screen	1
34	346681	Spring	1
35	188210	Fitting	1
35	16983	O-Ring	1
36	1320018	Charge Pump	1

©2004 HYSTER COMPANY

TRANSMISSION
POWERSHIFT

ITEM	PART NO.	DESCRIPTION	QTY
36	1322333	Bushing	1
37	373950	O-Ring	1
38	292517	Capscrew	4
39	380524	Washer	4
40	344448	Housing (Converter)	1
41	136985	Capscrew	8
42	292682	Lockwasher	8
43	292524	Capscrew	5
44	292681	Lockwasher	2
45	287851	Capscrew	2
46	340268	Cover	1
47	1359458	Capscrew	4
48	1498807	Oil Seal (Double Lip)	1
	996476	Transmission Kit (Includes Items 10, 13, 17, 20, 24, 35-37)	1

©2004 HYSTER COMPANY

NOTES

TRANSMISSION GEARS (Figure 5-2)
POWERSHIFT

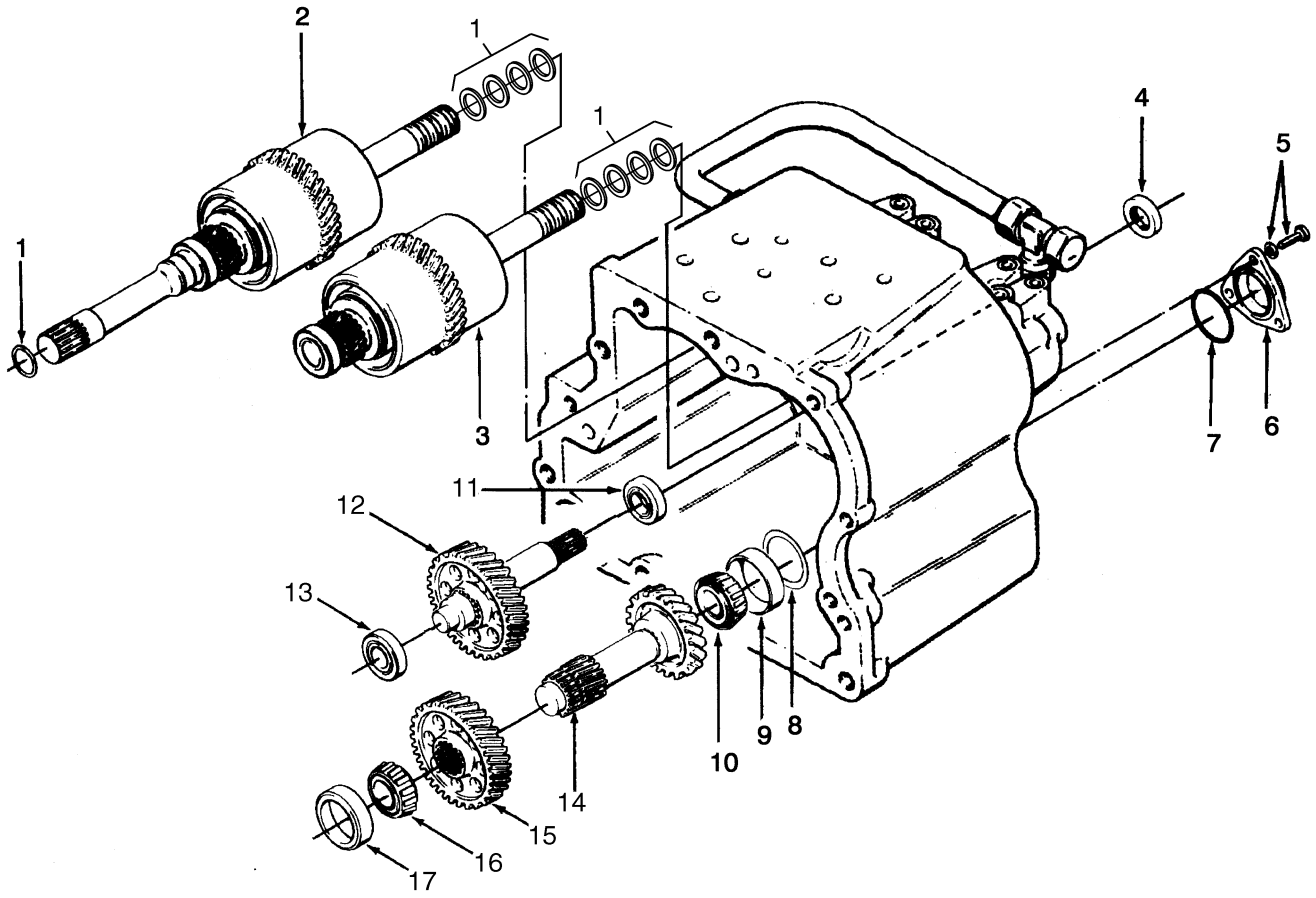

BP000029

©2004 HYSTER COMPANY

TRANSMISSION GEARS
POWERSHIFT

ITEM	PART NO.	DESCRIPTION	QTY
	1386976	Transmission (Monotrol Pedal)	1
	1386977	Transmission (Forward/Reverse Lever)	1
1	346677	O-Ring	9
2	1386979	Clutch Pack Assembly (Input) (☞ Figure 5-3)	1
3	1386980	Clutch Pack Assembly (Directional) (☞ Figure 5-4)	1
4	79389	Oil Seal	1
5	302335	Capscrew	3
5	320159	Washer	3
6	289642	Cover	1
7	39675	O-Ring	1
8	289760	Shim (0.020 in.)	AR
8	289761	Shim (0.007 in.)	AR
8	289762	Shim (0.015 in.)	AR
9	156194	Bearing Cup	1
10	156195	Bearing Cone	1
11	41210	Ball Bearing	1
12	1386997	Shaft (Output)	1
13	43309	Ball Bearing	1
14	1386995	Shaft (Counterbalance)	1
15	1386993	Gear (Low)	1
16	30085	Bearing Cone	1
17	30077	Bearing Cup	1

©2004 HYSTER COMPANY

CLUTCH PACK (Figure 5-3)
POWERSHIFT
INPUT

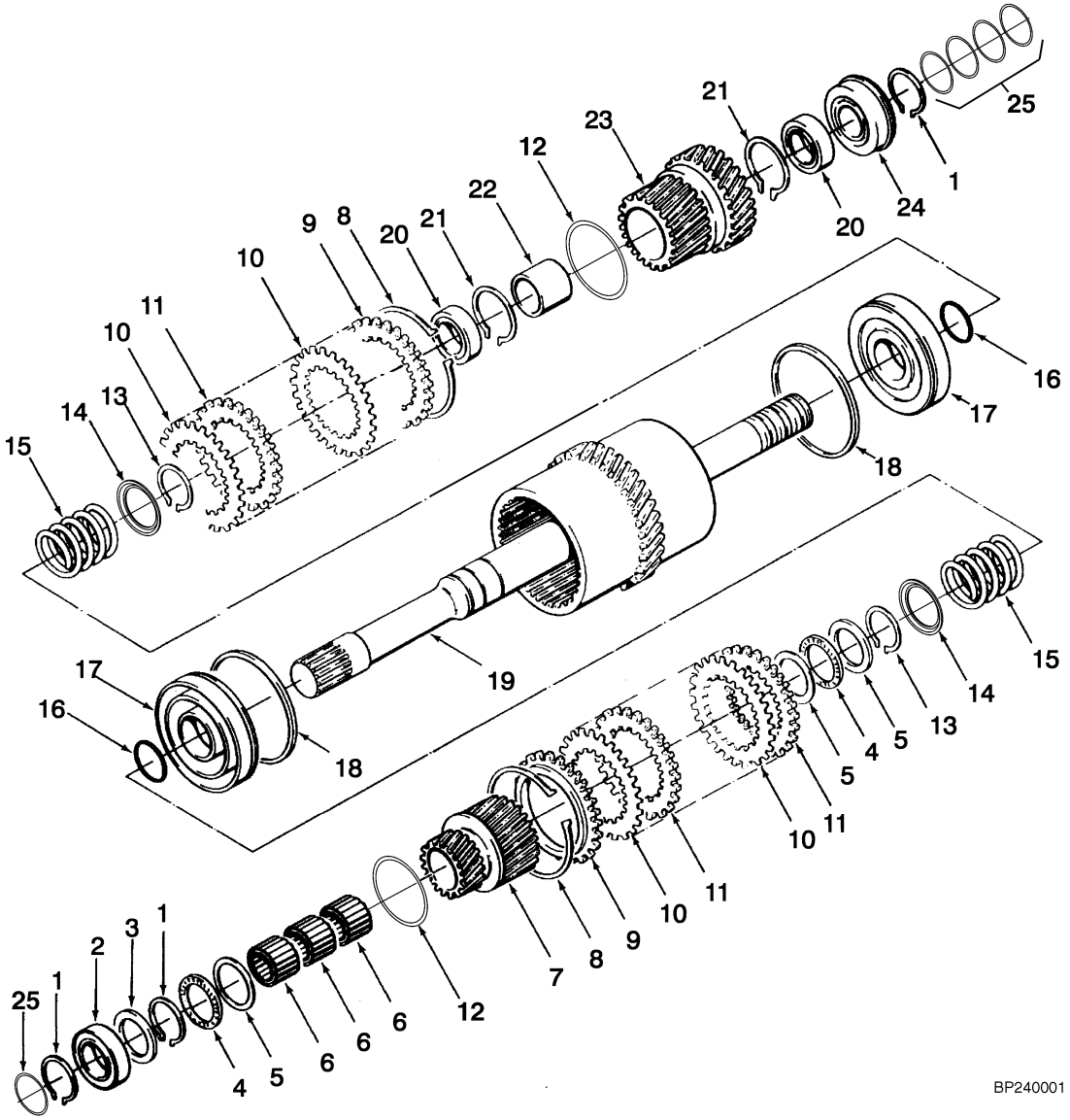

©2004 HYSTER COMPANY

CLUTCH PACK
POWERSHIFT
INPUT

ITEM	PART NO.	DESCRIPTION	QTY
	1386976	Transmission (Monotrol)	1
	1386977	Transmission (Forward/Reverse Lever)	1
	1386979	Clutch Pack Assembly (Input)	1
1	346675	Snap Ring	3
2	41208	Bearing	1
3	1396053	Thrust Washer	1
4	346731	Needle Bearing	2
5	346696	Thrust Washer	3
6	346730	Needle Bearing	3
7	1386989	Gear (Low Output)	1
8	334475	Snap Ring	2
9	1394881	Pressure Plate (0.248-0.252 in.) (Shimming)	2
10	1469301	Plate (Friction)	18
11	1387235	Plate (Separator)	18
12	1386958	O-Ring	2
13	1394912	Snap Ring	2
14	1394893	Guide	2
15	1394882	Spring	2
16	1394879	O-Ring	2
17	1394885	Piston	2
18	334402	Seal	2
19	1386982	Shaft (Input)	1
20	124606	Ball Bearing	2
21	12894	Snap Ring	2
22	1386916	Spacer	1
23	1386991	Gear (High Output)	1
24	124682	Ball Bearing	1
25	346677	O-Ring	5

©2004 HYSTER COMPANY

CLUTCH PACK (Figure 5-4)
POWERSHIFT
DIRECTIONAL

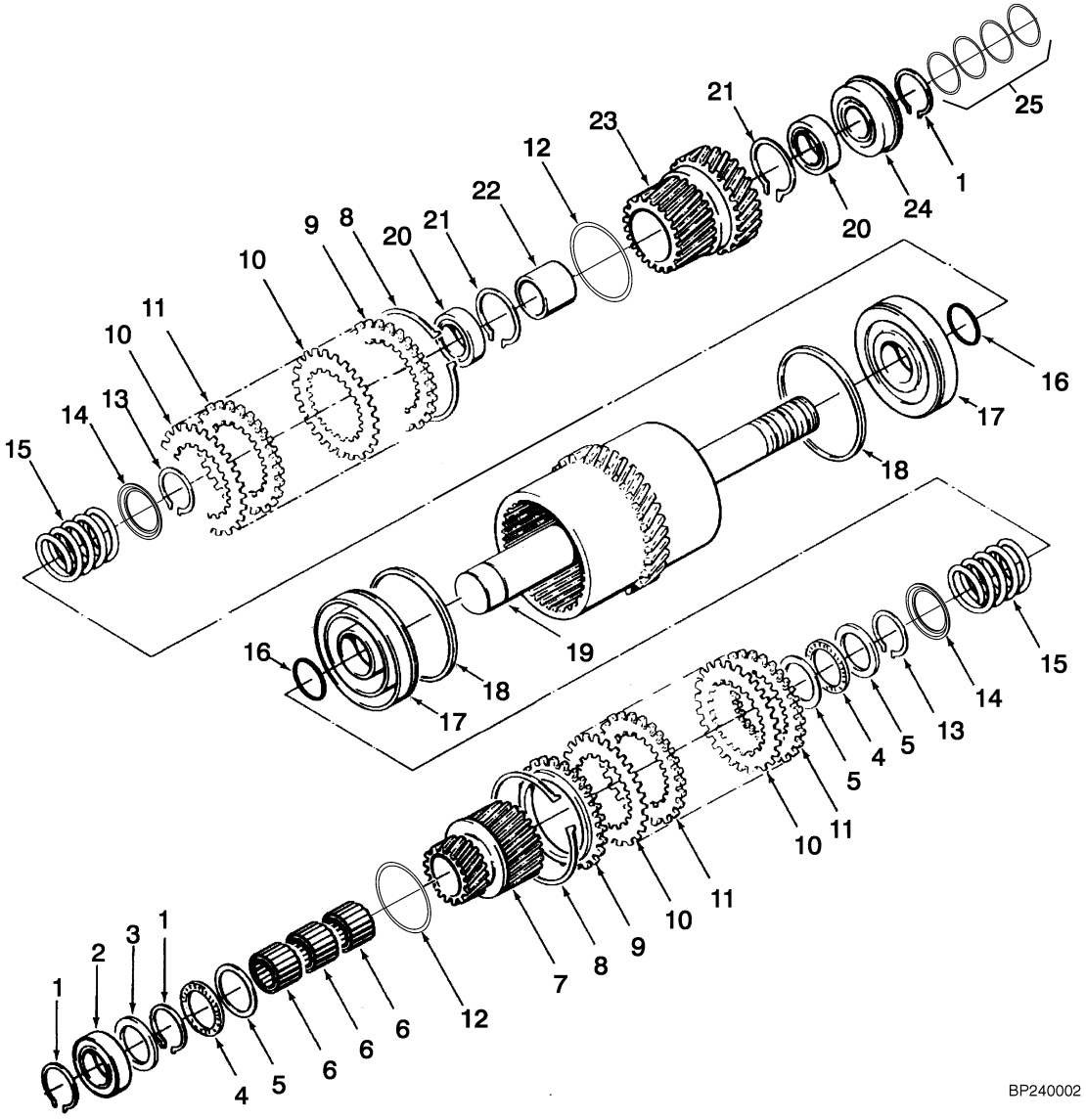

©2004 HYSTER COMPANY

CLUTCH PACK
POWERSHIFT
DIRECTIONAL

ITEM	PART NO.	DESCRIPTION	QTY
	1386976	Transmission (Monotrol)	1
	1386977	Transmission (Forward/Reverse Lever)	1
	1386980	Clutch Pack Assembly (Directional)	1
1	346675	Snap Ring	3
2	41208	Bearing	1
3	1396053	Thrust Washer	1
4	346731	Needle Bearing	2
5	346696	Thrust Washer	3
6	346730	Needle Bearing	3
7	1386989	Gear (Low Output)	1
8	334475	Snap Ring	2
9	1394881	Pressure Plate (0.248-0.252 in.) (Shimming)	2
10	1469301	Plate (Friction)	18
11	1387235	Plate (Separator)	18
12	1386958	O-Ring	2
13	1394912	Snap Ring	2
14	1394893	Guide	2
15	1394882	Spring	2
16	1394879	O-Ring	2
17	1394885	Piston	2
18	334402	Seal	2
19	1386983	Shaft (Directional)	1
20	124606	Ball Bearing	2
21	12894	Snap Ring	2
22	1386916	Spacer	1
23	1386991	Gear (High Output)	1
24	124682	Ball Bearing	1
25	346677	O-Ring	4

©2004 HYSTER COMPANY

TRANSMISSION CONTROL VALVE (Figure 5-5)
POWERSHIFT

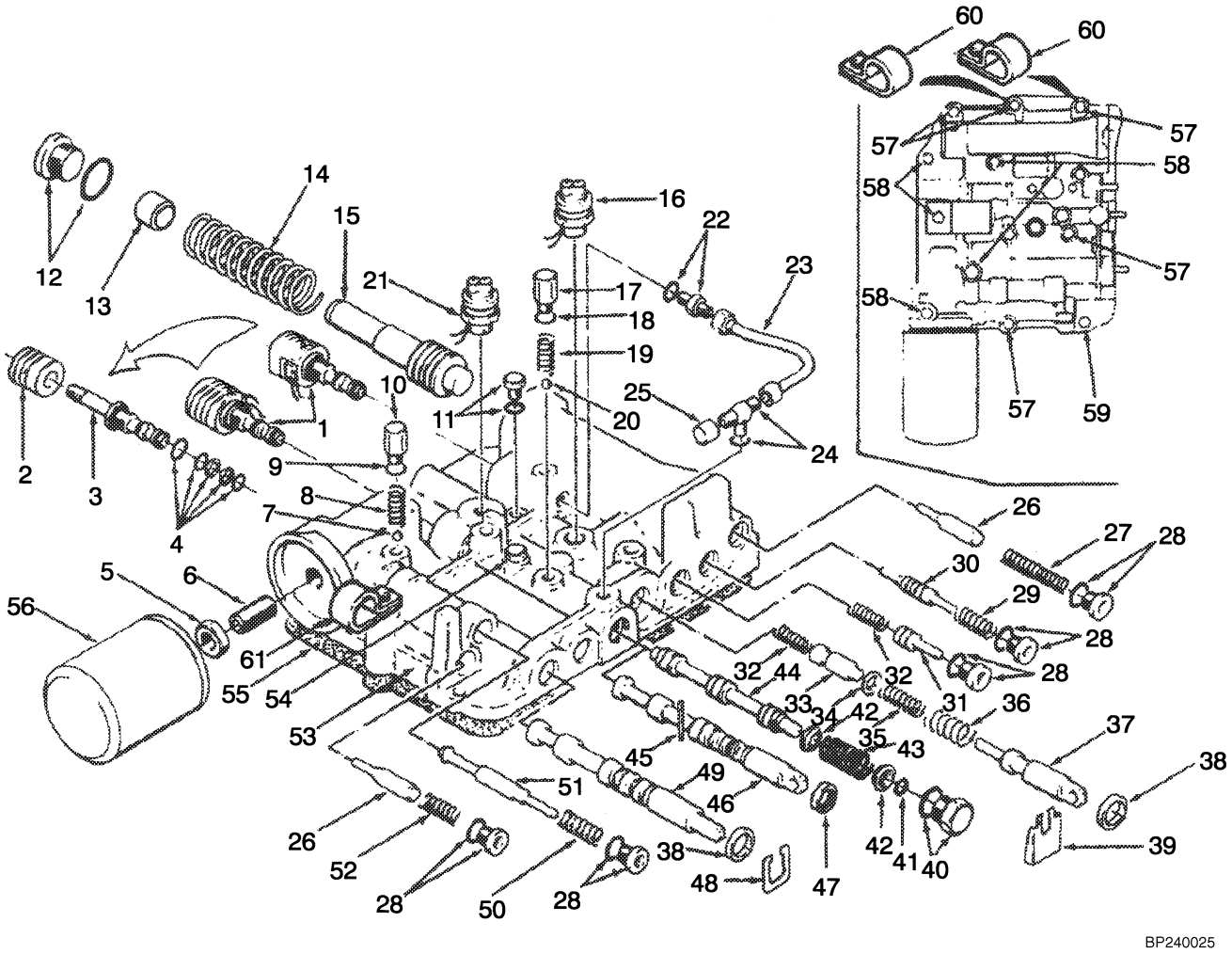

©2004 HYSTER COMPANY

TRANSMISSION CONTROL VALVE
POWERSHIFT

KEY:
A: Monotrol Pedal
B: Forward/Reverse Lever

ITEM	PART NO.	DESCRIPTION	QTY A	QTY B
	1322633	Control Valve	1	..
	1322634	Control Valve	..	1
1	1390609	Solenoid Valve	2	..
2	1452597	Coil	1	..
3	1452596	Cartridge	1	..
4	1393164	Nut	1	..
4	1393160	Seal Kit	1	..
5	15032	Nut	1	1
6	181766	Nipple	1	1
7	55280	Ball	1	1
8	346652	Spring	1	1
9	16483	O-Ring	1	1
10	346651	Plug	1	1
11	14591	Fitting	1	..
11	16481	O-Ring	1	..
12	200659	Fitting	1	1
12	16982	O-Ring	1	1
13	346848	Spacer	1	1
14	346636	Spring (Outer)	1	1
15	346788	Spool	1	1
16	1388574	Switch	1	..
17	334515	Plug	..	1
18	16482	O-Ring	..	1
19	334513	Spring	..	1
20	55280	Ball	..	1
21	1388574	Switch	..	1
22	16538	Fitting	1	..
22	16481	O-Ring	1	..
23	346654	Tube	1	..
24	16574	Fitting	1	..
24	16481	O-Ring	1	..
25	16923	Fitting	1	..
26	334524	Spool	2	2
27	1313774	Spring	1	1
28	235691	Fitting	5	5
28	16484	O-Ring	1	1
29	346805	Spring	1	1
30	346634	Spool (Trimmer)	1	1
31	334542	Spool (Dump)	1	1
32	334543	Spring	2	2
33	346813	Spool	1	1
34	296418	Washer	1	1
35	346643	Spring (Inching)	1	1
36	334531	Spring	1	1
37	346734	Spool (Inching)	1	1
38	334500	Oil Seal	2	2

©2004 HYSTER COMPANY

TRANSMISSION CONTROL VALVE
POWERSHIFT

ITEM	PART NO.	DESCRIPTION	QTY A	QTY B
39	346647	Stop (Inching)	1	1
40	346653	Plug (Forward/Reverse Lever)	1	..
40	16486	O-Ring	1	..
41	346650	Snap Ring	1	..
42	346648	Cap (Spring)	2	..
43	346645	Spring (Center)	1	..
44	346644	Spool (Forward/Reverse Lever)	1	..
45	221989	Pin	..	1
46	1337816	Spool	..	1
47	334500	Oil Seal	..	1
48	346649	Stop (High and Low)	1	1
49	346646	Spool (High and Low)	1	1
50	346770	Spring (Clutch Pack)	1	1
51	346768	Spool (Clutch Pack)	1	1
52	346640	Spring	1	1
53	1313762	Body	1	..
53	1313763	Body	..	1
54	14591	Fitting	1	1
54	16481	O-Ring	1	1
55	1329630	Gasket	1	1
56	1328691	Filter	1	1
57	136704	Capscrew	6	6
57	320157	Washer	6	6
58	346656	Capscrew	3	3
58	320157	Washer	3	3
59	292508	Capscrew	3	3
59	320157	Washer	3	3
60	325897	Clamp	2	2
61	186480	Clamp	1	..

©2004 HYSTER COMPANY

NOTES

TORQUE CONVERTER (Figure 5-6)
POWERSHIFT

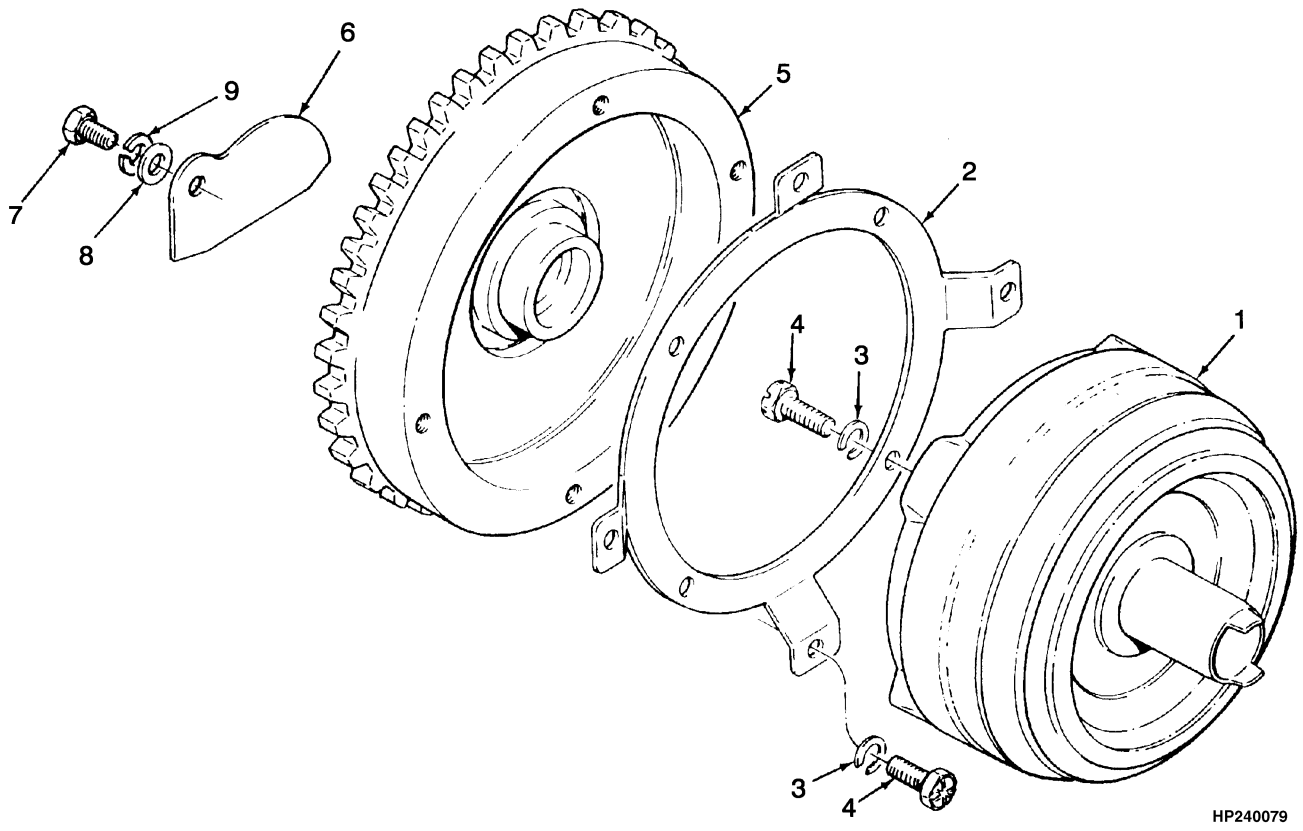

©2004 HYSTER COMPANY

TORQUE CONVERTER
POWERSHIFT

KEY:
A: Gasoline and LPG
B: Diesel

ITEM	PART NO.	DESCRIPTION	QTY A	QTY B
1	344343	Torque Converter	1	1
2	304464	Plate	1	1
3	261379	Washer	8	8
4	15942	Bolt	8	8
5	1454600	Flywheel Assembly	..	1
5	1459400	Flywheel Assembly	1	..
6	388513	Plate	1	..
7	287851	Capscrew	1	..
8	320158	Washer	1	..
9	292681	Lockwasher	1	..

©2004 HYSTER COMPANY

CONTROL LINKAGE (Figure 5-7)
POWERSHIFT

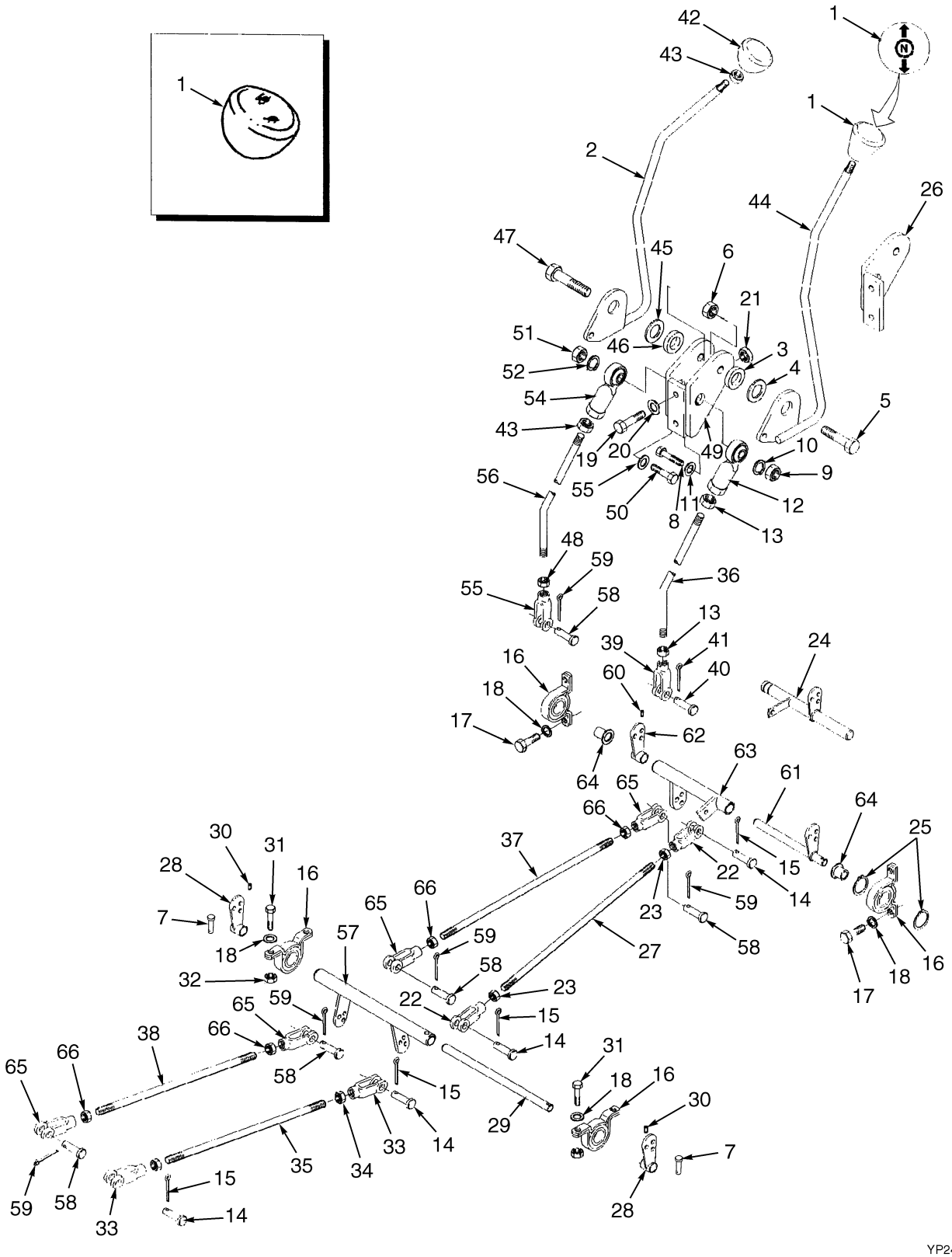

©2004 HYSTER COMPANY

CONTROL LINKAGE
POWERSHIFT

KEY:
A: High and Low
B: Forward/Reverse Lever

ITEM	PART NO.	DESCRIPTION	QTY A	QTY B
1	284077	Knob	1	1
2	1318417	Shift Lever (High/Low)	1	1
3	1303158	Bushing	1	1
4	1300139	Washer	1	1
5	292515	Capscrew	1	1
6	316826	Nut	1	1
7	133683	Pin	2	2
8	16316	Capscrew	1	1
9	15056	Nut	1	1
10	15156	Lockwasher	1	1
11	15134	Washer	1	1
12	161652	Rod End	1	1
13	15026	Nut	2	2
14	139	Rod End Pin	4	4
15	15211	Cotter Pin	4	4
16	313859	Bearing	4	4
17	287817	Capscrew	4	4
18	292680	Lockwasher	8	8
19	176640	Capscrew	2	2
20	292681	Lockwasher	2	2
21	239503	Nut	2	2
22	138	Rod End	2	2
23	15025	Nut	2	2
24	1310988	Crank	1	1
25	58951	Snap Ring	2	2
26	1303154	Bracket	1	..
27	43370	Link	1	1
28	357235	Crank	2	2
29	1310985	Shaft	1	1
30	71153	Pin	2	2
31	292501	Capscrew	4	4
32	136687	Nut	4	4
33	138	Rod End	2	2
34	15025	Nut	2	2
35	311540	Link	1	1
36	1310996	Rod	1	1
37	43370	Link	..	1
38	311540	Link	..	1
39	141	Rod End	1	1
40	142	Pin	1	1
41	15211	Cotter Pin	1	1
42	154878	Knob	..	1
43	15026	Nut	..	3
44	1312735	Lever (Forward and Reverse)	..	1
45	1300139	Washer	..	1
46	1303158	Bushing	..	1

©2004 HYSTER COMPANY

CONTROL LINKAGE
POWERSHIFT

ITEM	PART NO.	DESCRIPTION	QTY A	QTY B
47	292515	Capscrew	..	1
48	316826	Nut	..	1
49	1303150	Bracket	..	1
50	16316	Capscrew	..	1
51	15056	Nut	..	1
52	15156	Lockwasher	..	1
53	15134	Washer	..	1
54	161652	Rod End	..	1
55	228122	Rod End	..	1
56	1310996	Rod	..	1
57	357249	Crank	..	1
58	139	Rod End Pin	..	5
59	15211	Cotter Pin	..	5
60	71153	Pin	..	1
61	1310975	Crank	..	1
62	357235	Crank	..	1
63	1310978	Crank	..	1
64	368231	Bushing	..	4
65	138	Rod End	..	4
66	15025	Nut	..	4

See Service Manual for service procedures.
©2004 HYSTER COMPANY

NOTES

DRIVE AXLE (Figure 5-8)

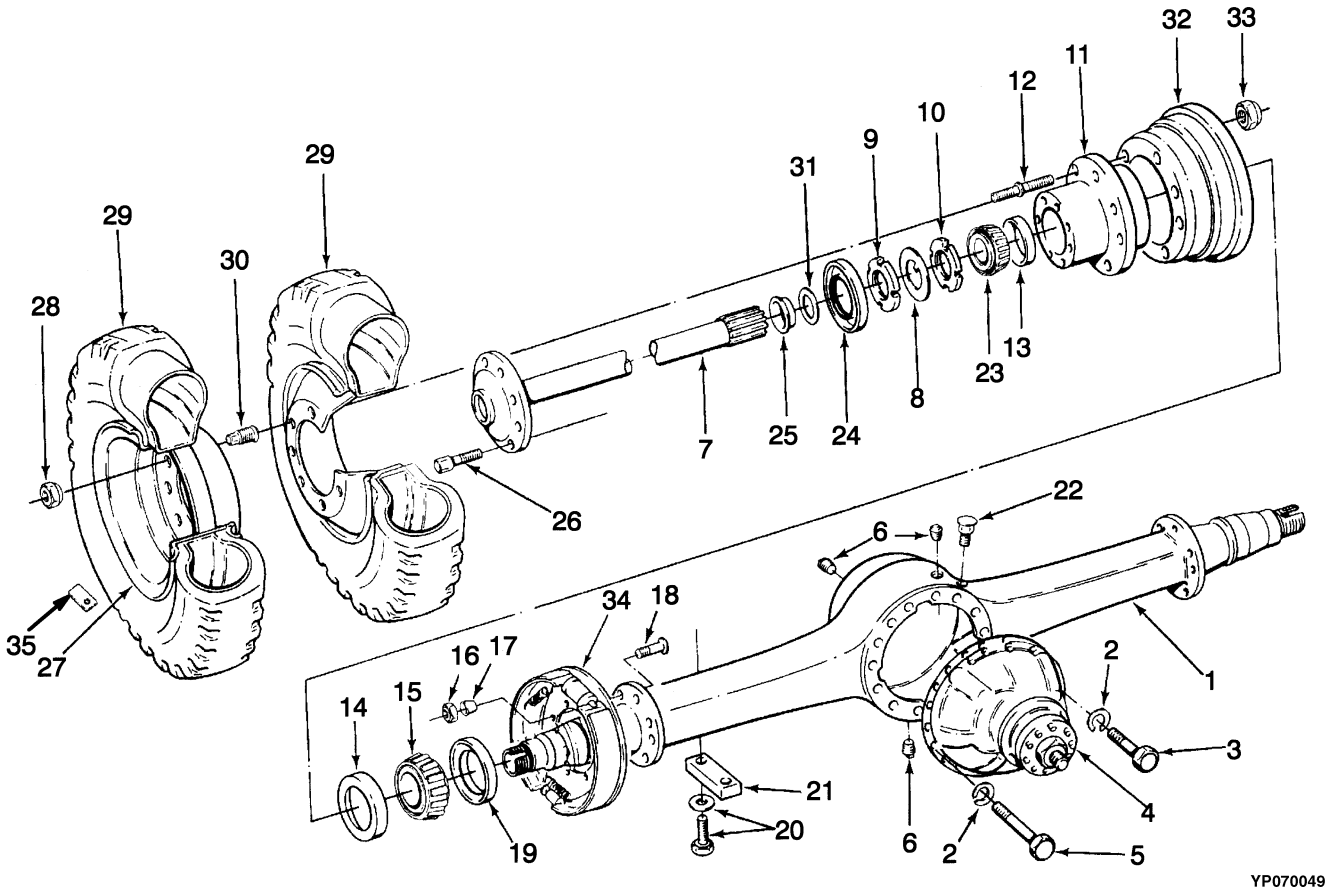

©2004 HYSTER COMPANY

DRIVE AXLE

ITEM	PART NO.	DESCRIPTION	QTY
1	1479160	Drive Axle (Powershift)	1
1	1497902	Axle Housing (☞ Figure 5-9)	1
2	86007	Washer	12
3	1497903	Screw	8
4	1497909	Differential And Carrier Assembly	1
5	1497904	Screw	4
6	332276	Plug	3
7	1497907	Axle Shaft (LH)	1
7	1497908	Axle Shaft (RH)	1
7	313022	Sealant	AR
8	116067	Lockwasher	2
9	293323	Nut	2
10	293322	Nut	2
11	372011	Hub	2
12	26400	Stud	6
13	230324	Bearing Cup	1
14	30190	Bearing Cup	1
15	230378	Bearing Cone	2
16	278326	Nut	14
17	153778	Thimble	14
18	1491571	Capscrew	14
19	44538	Oil Seal	2
20	221702	Capscrew	4
20	221780	Washer	4
21	1361489	Retainer	2
22	114826	Breather	1
23	230325	Bearing Cone	2
24	258120	Oil Seal	2
25	265659	Wear Sleeve	2
26	213670	Capscrew	32
27	. . . . .	Wheel (☞ Figure 11-8)	4
28	11286	Nut	12
29	. . . . .	Tire (☞ Figure 11-8)	4
30	11287	Nut	12
31	265666	Gasket	2
32	1392223	Brake Drum (☞ Figure 7-4)	2
33	248320	Nut	12
34	. . . . .	Brake	2
35	336555	Plate (Valve Stem)	2

©2004 HYSTER COMPANY

AXLE HOUSING AND ATTACHING PARTS (Figure 5-9)

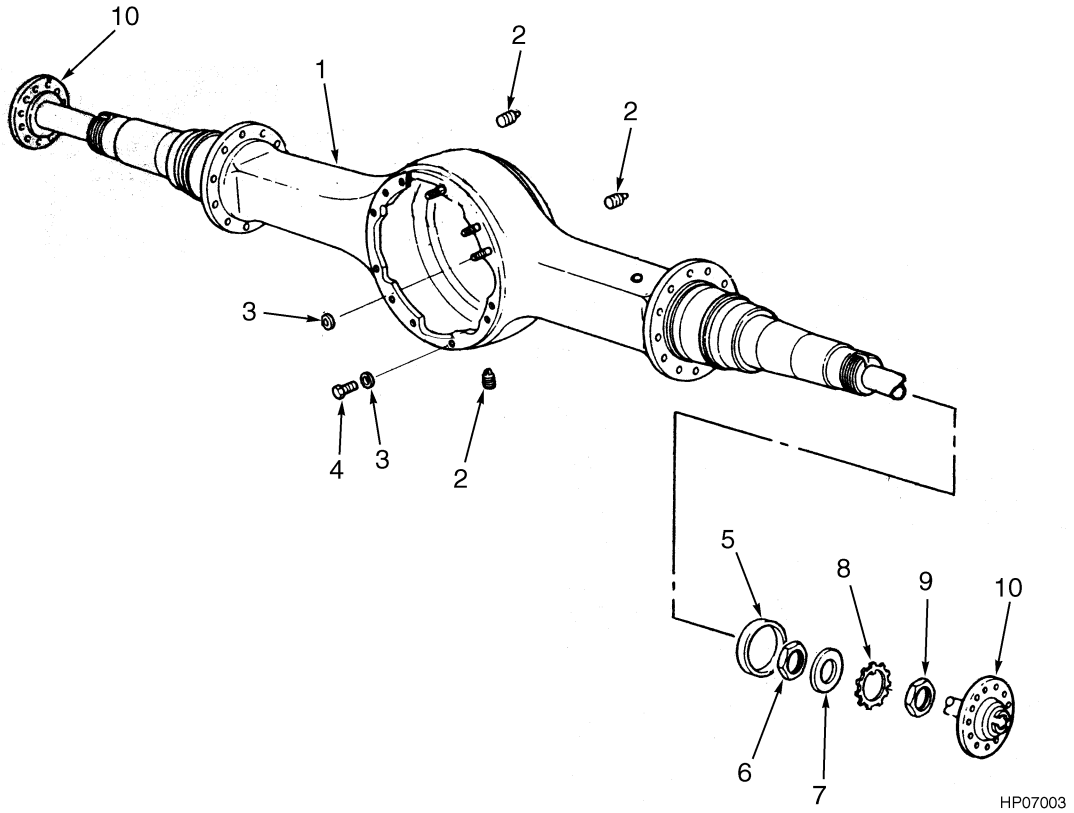

ITEM	PART NO.	DESCRIPTION	QTY
	1479160	Drive Axle	1
1	1497902	Axle Housing	1
2	332276	Plug	3
3	86007	Washer	12
4	1497903	Screw (Short)	8
4	1497904	Screw (Medium)	4
5	1497905	Wiper (Inner)	2
6	293322	Nut	2
7	116067	Lockwasher	2
8	1497906	Lockwasher	2
9	293323	Nut	2
10	1497907	Axle Shaft (LH)	1
10	1497908	Axle Shaft (RH)	1

©2004 HYSTER COMPANY

NOTES

DIFFERENTIAL AND CARRIER (Figure 5-10)

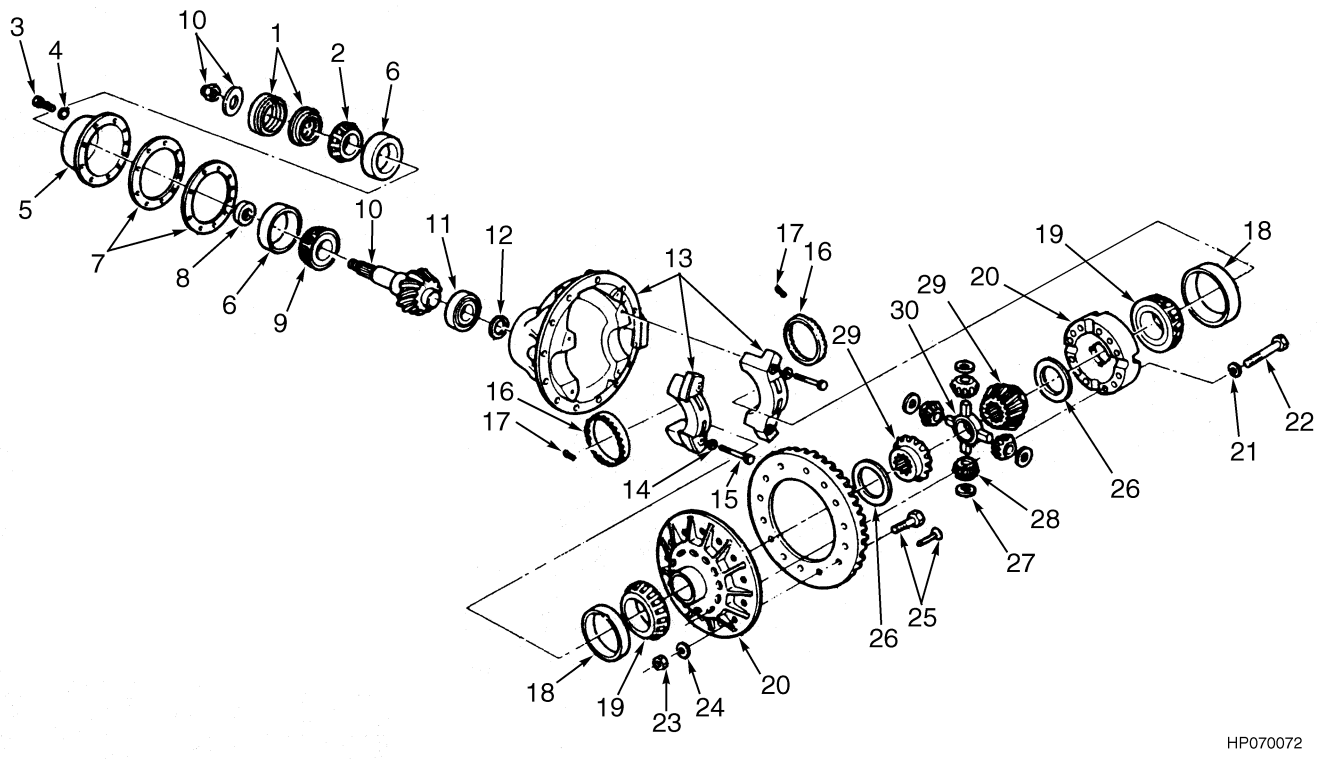

©2004 HYSTER COMPANY

DIFFERENTIAL AND CARRIER

ITEM	PART NO.	DESCRIPTION	QTY
	1479160	Drive Axle	1
	1497909	Differential And Carrier Assembly	1
1	1374090	Oil Seal	1
2	1347812	Bearing Cone	1
3	1347819	Capscrew	8
4	1450861	Washer	8
5	200972	Bearing Cup	1
6	30062	Bearing Cup	1
7	1489281	Shim (0.003 in.)	1
7	1489282	Shim (0.005 in.)	1
7	1489283	Shim (0.010 in.)	2
7	1489284	Shim (0.20 in.)	3
8	1347803	Spacer	2
8	1347804	Spacer	2
8	1347805	Spacer	2
8	1347806	Spacer	2
8	1347807	Spacer	2
8	1347808	Spacer	2
8	1347809	Spacer	2
8	1347810	Spacer	2
8	1347811	Spacer	2
8	1347801	Spacer	2
8	1347802	Spacer	2
9	1347774	Bearing Cone	1
10	1497910	Bevel Gear Assembly	1
10	1357734	Nut	1
10	1312083	Washer	1
11	296844	Bearing	1
12	240683	Snap Ring	1
13	1374097	Screw (Not Illustrated)	1
13	1312616	Nut (Not Illustrated)	1
13	1380777	Ball (Not Illustrated)	2
13	1502129	Cap	1
14	1347770	Washer	4
15	293716	Capscrew	4
16	1347839	Bearing Ring	2
17	86008	Cotter Pin	2
18	1475420	Roller Bearing	2
19	1475421	Roller Bearing	2
20	1489409	Case Assembly	1
20	1489410	Case	1
21	1450861	Washer	16
22	1347831	Capscrew	16
23	1374550	Nut	12
24	125428	Washer	12
25	1347822	Bolt	12
26	1380797	Washer	2
27	200982	Washer	4
28	1347835	Pinion	4
29	1380776	Side Gear	2
30	1318626	Spider	1

©2004 HYSTER COMPANY

DIFFERENTIAL AND CARRIER

ITEM	PART NO.	DESCRIPTION	QTY
	1380779	Cage Assembly (Includes Items 5-6)	1
	1347813	Shim Kit (Includes Item 7)	1
	1347800	Split Spacer Kit (Includes Item 8)	1
	1380798	Carrier Assembly (Includes Items 13-15)	1
	1489287	Hardware Kit (Includes Items 23-25)	1
	1489286	Differential Kit (Includes Items 26-30)	1

See Service Manual for service procedures.
©2004 HYSTER COMPANY

DRIVE SHAFT ASSEMBLY (Figure 5-11)

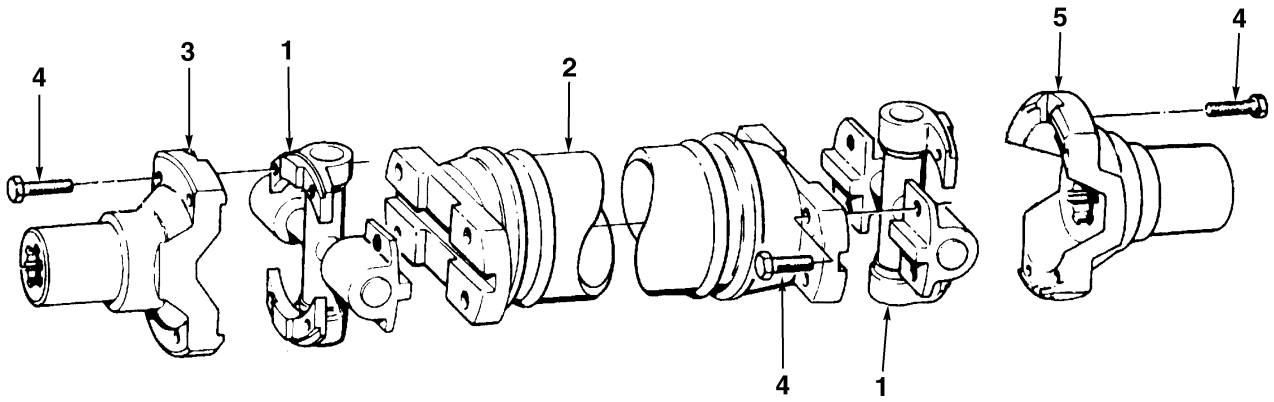

HP240419

ITEM	PART NO.	DESCRIPTION	QTY
	1484173	Drive Shaft Assembly	1
1	199861	Spider and Bearing	2
2	1498113	Tube	1
3	366790	Yoke (Transmission End)	1
4	221507	Capscrew	16
5	1483880	Yoke (Differential End)	1

NOTES

6 STEERING SYSTEM

SECTION 6
STEERING SYSTEM

DESCRIPTION **PAGE**

STEERING AXLE 6-8
STEERING COLUMN 6-2
STEERING CONTROL UNIT 6-6
STEERING CYLINDER 6-12
STEERING PUMP 6-10

STEERING COLUMN (Figure 6-1)

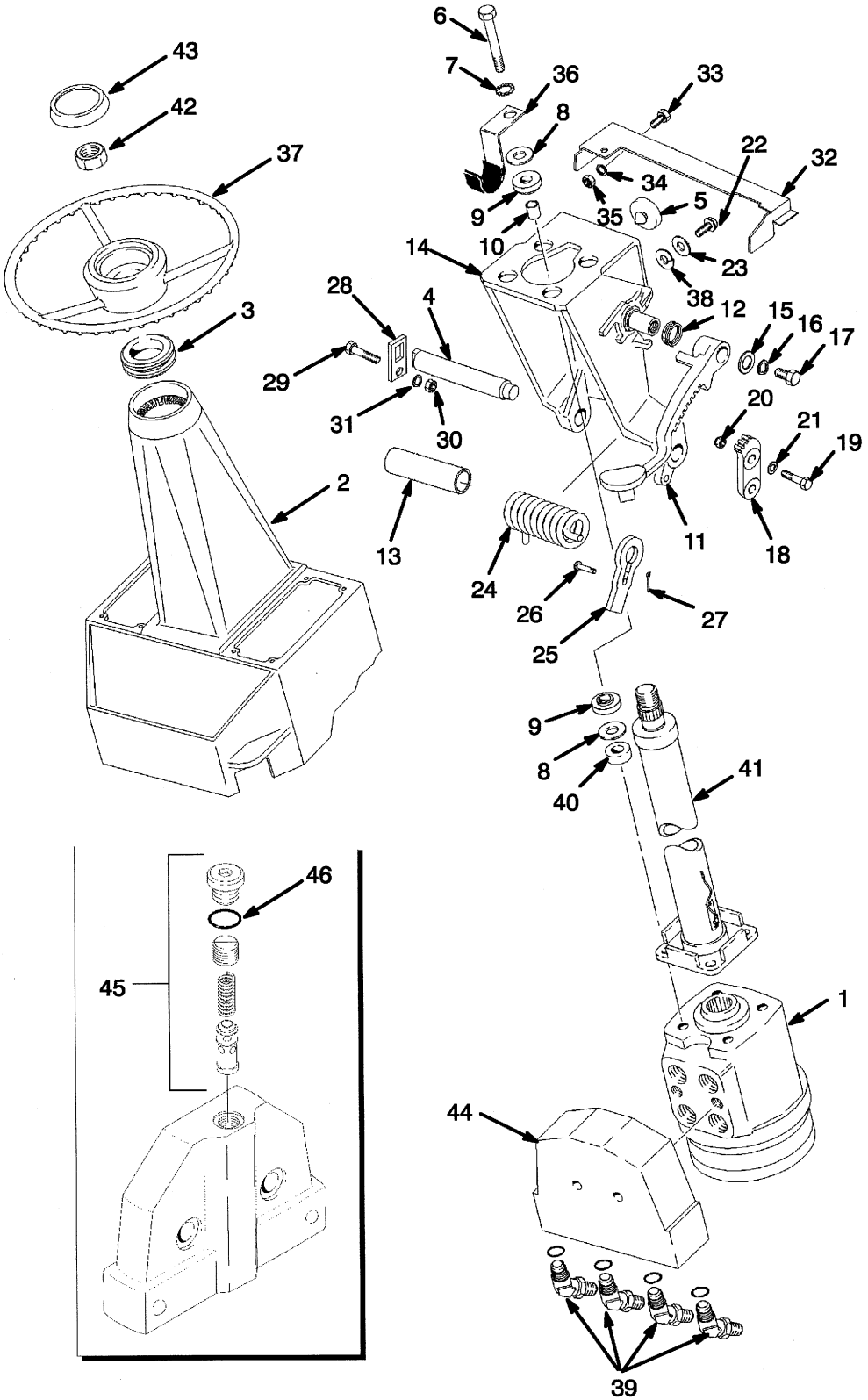

HP220278

©2004 HYSTER COMPANY

STEERING COLUMN

ITEM	PART NO.	DESCRIPTION	QTY
1	357288	Steering Control Unit (☞ Figure 6-2)	1
2	1336570	Steering Pod	1
3	1336465	Grommet	1
4	1336479	Shaft	1
5	1346744	Bumper	1
6	16376	Capscrew	4
7	15920	Washer	4
8	1334790	Washer	8
9	1336468	Isolator	8
10	1336503	Spacer	4
11	1336480	Latch	1
12	1336483	Spring	1
13	1350404	Bushing	1
14	1346867	Bracket (Optional)	1
14	1344055	Bracket	1
15	296442	Washer	1
16	292683	Lockwasher	1
17	132860	Capscrew	1
18	1336474	Anchor	1
19	287860	Capscrew	2
20	316826	Nut	2
21	296421	Washer	2
22	1346863	Capscrew	2
23	1346862	Washer	2
24	1346743	Spring	1
25	1336476	Tensioner	1
26	930775	Rod End Pin	1
27	15203	Cotter Pin	1
28	1336472	Plate	1
29	136749	Capscrew	1
30	239503	Nut	1
31	293780	Lockwasher	1
32	1336481	Cover	1
33	292500	Capscrew	2
34	292680	Lockwasher	2
35	136687	Nut	2
36	1344054	Clamp	1
37	352955	Steering Wheel	1
38	1346866	Lockwasher	2
39	17196	Fitting	4
40	1300165	Spacer	4
41	1312733	Steering Column	1
42	345423	Nut	1
43	371666	Horn Button	1
44	1311011	Valve Block Assembly	1
44	366063	Relief Valve	1
44	366064	Pin	1
44	389824	Seal Kit	1
44	366066	Service Kit	1
45	366063	Relief Valve	1

©2004 HYSTER COMPANY

STEERING COLUMN

ITEM	PART NO.	DESCRIPTION	QTY
45	366065	Seal	1
46	366065	Seal	1

©2004 HYSTER COMPANY

NOTES

STEERING CONTROL UNIT (Figure 6-2)

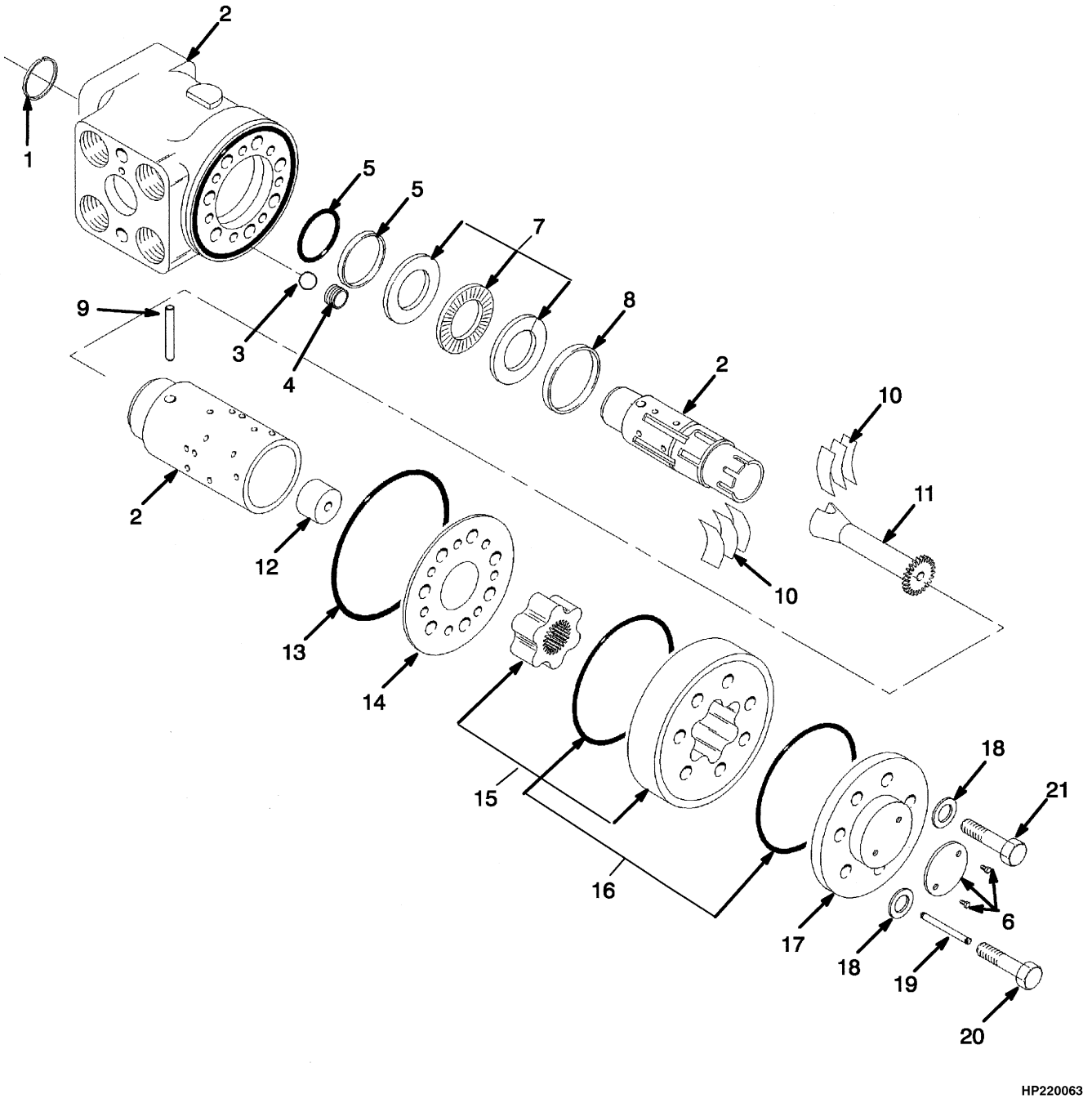

©2004 HYSTER COMPANY

STEERING CONTROL UNIT

ITEM	PART NO.	DESCRIPTION	QTY
	357288	Steering Control Unit	1
1	. . . . .	Sealing Ring	1
2	. . . . .	Housing	1
2	. . . . .	Spool	1
3	345408	Ball	1
4	345409	Bushing	1
5	2032230	Seal	1
6	. . . . .	Plate	1
6	. . . . .	Screw	2
7	345410	Bearing Set	1
8	345411	Ring	1
9	345412	Pin	1
10	1303787	Spring	2
11	1355326	Shaft	1
12	366067	Spacer	1
13	. . . . .	O-Ring	1
14	1357026	Plate	1
15	366068	Gear	1
16	. . . . .	O-Ring	2
17	345424	Cover	1
18	. . . . .	Washer	7
19	345418	Pin	1
20	366069	Screw	1
21	371344	Capscrew	6
	2032229	Seal Kit (Includes Items 1, 5, 13, 16, 18)	1

©2004 HYSTER COMPANY

STEERING AXLE (Figure 6-3)

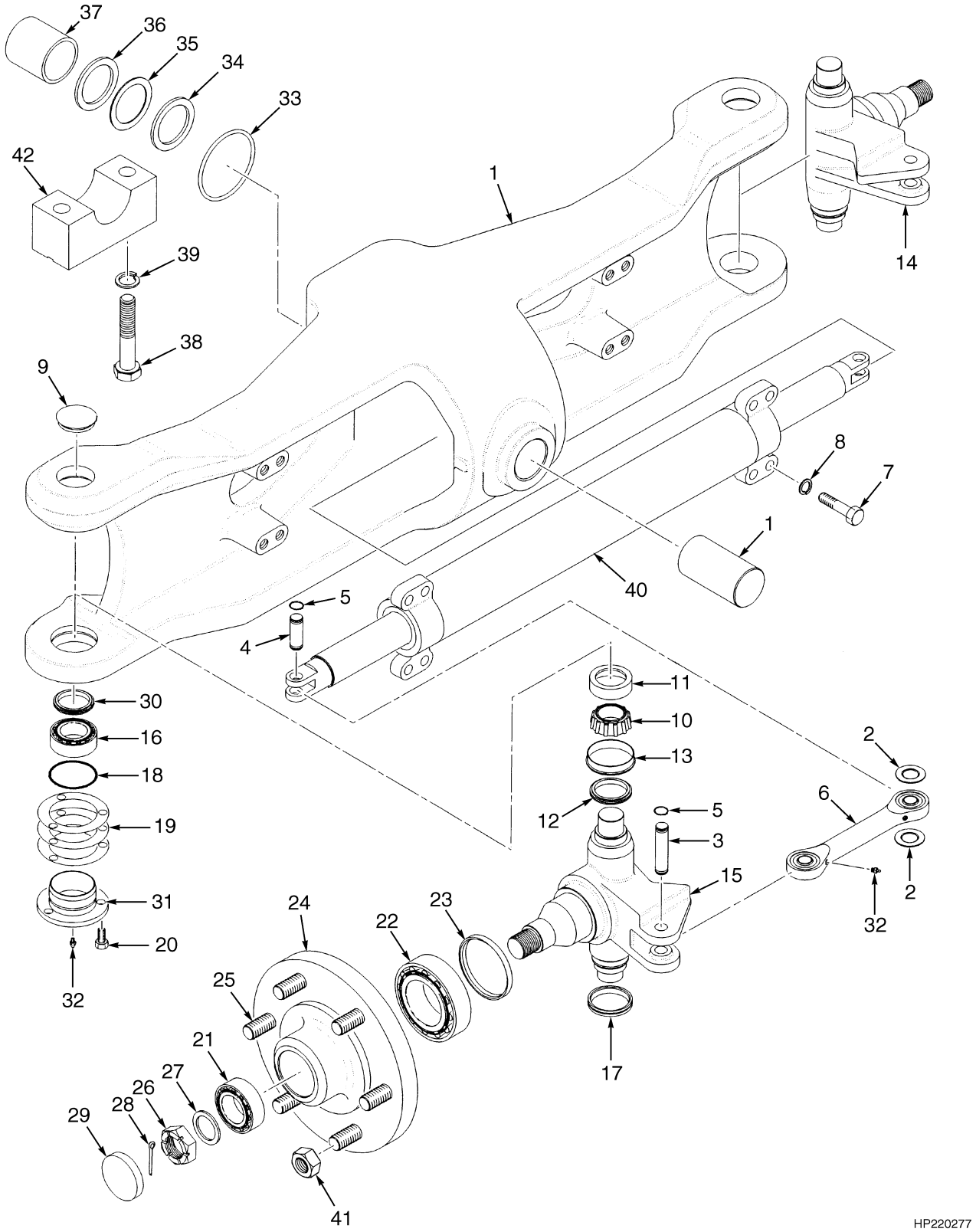

©2004 HYSTER COMPANY

STEERING AXLE

ITEM	PART NO.	DESCRIPTION	QTY
1	346299	Steering Axle	1
1	349281	Shaft	2
2	1345684	Seal	8
3	1544970	Pin	2
4	1544971	Pin	2
5	58903	Snap Ring	8
6	1491406	Tie Rod	2
6	1350680	Bearing	2
7	293688	Capscrew	8
8	292685	Lockwasher	8
9	185860	Plug	2
10	153715	Bearing Cone	2
11	230421	Bearing Cup	2
12	153716	Seal	2
13	153717	Wear Sleeve	2
14	1383795	Spindle (RH)	1
15	1383797	Spindle (LH)	1
16	135657	Bearing Cone	1
17	266733	Seal	2
18	39678	O-Ring	2
19	185856	Shim (0.005 in.)	AR
19	185857	Shim (0.007 in.)	AR
19	185858	Shim (0.020 in.)	AR
20	293628	Screw	6
21	153835	Bearing Cone	2
22	230325	Bearing Cone	2
23	129498	Oil Seal	2
24	357293	Hub	2
24	230324	Bearing Cup	1
24	153834	Bearing Cup	1
24	129499	Wear Sleeve	1
25	107296	Stud	6
26	53641	Wheel Nut	2
27	1383775	Washer	2
28	15225	Cotter Pin	2
29	69029	Hub Cap	2
30	266728	Seal	2
31	266612	Cap	2
32	13957	Lube Fitting	6
33	131193	Seal	2
34	1335870	Flange	2
35	131190	Shim (0.110 in.)	3
36	131191	Shim (0.040 in.)	3
37	1335873	Bushing	2
38	292590	Capscrew	4
39	292687	Lockwasher	4
40	344390	Steer Cylinder (☞ Figure 6-5)	1
41	11276	Wheel Nut	12
42	350183	Bearing Cap	2

©2004 HYSTER COMPANY

STEERING PUMP (Figure 6-4)

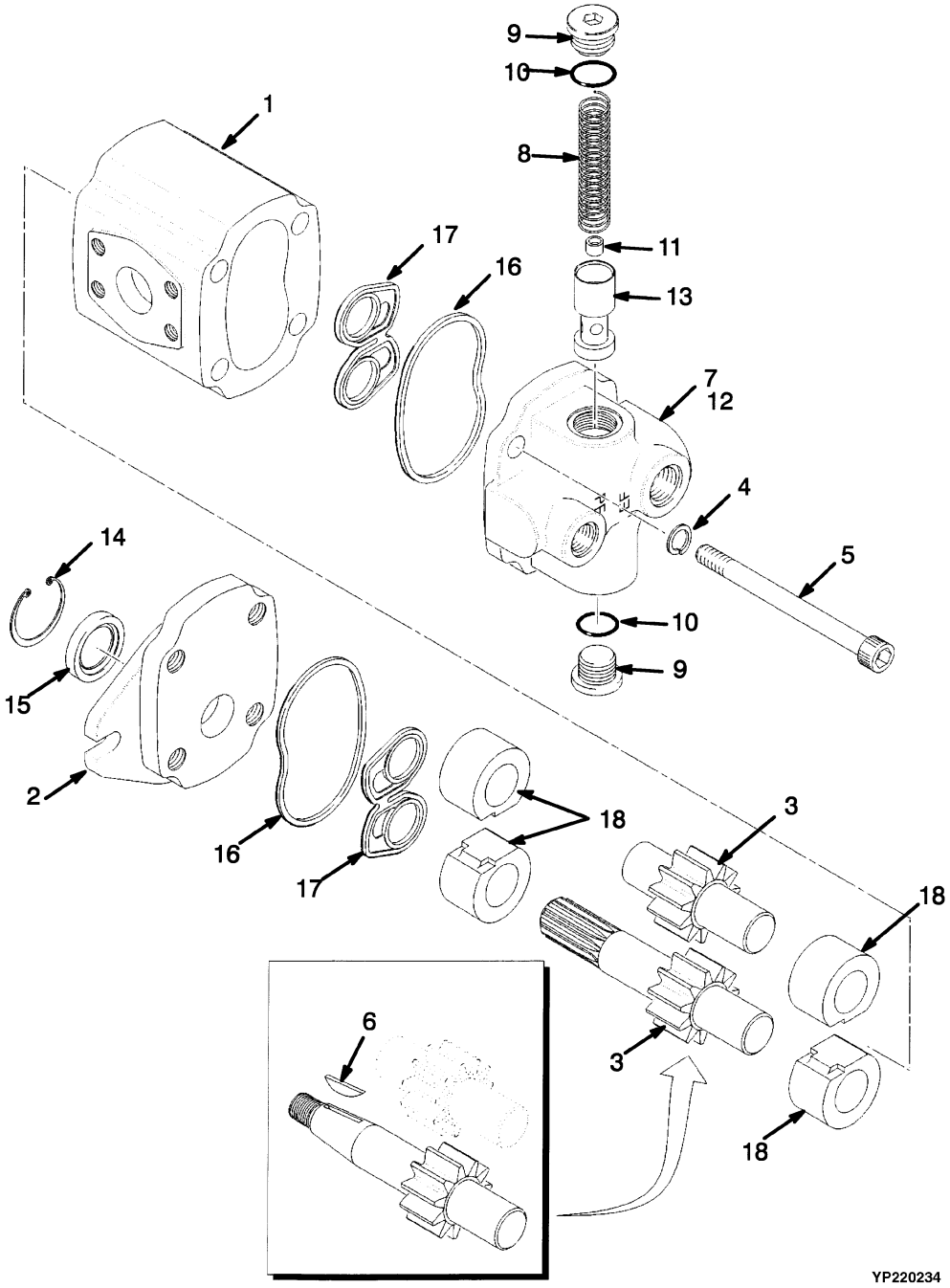

©2004 HYSTER COMPANY

STEERING PUMP

KEY:
A: Gasoline and LPG
B: Diesel

ITEM	PART NO.	DESCRIPTION	QTY A	QTY B
	2036997	Steering Pump	1	..
	2036998	Steering Pump	..	1
1	. . . . .	Body	1	1
2	1458844	Flange	1	1
3	1465574	Gear Set	1	..
3	1465577	Gear Set	..	1
4	293781	Washer	4	4
5	1328812	Bolt	4	4
6	1465572	Key	1	..
7	1465573	Valve Assembly	1	1
8	321797	Spring	1	1
9	321792	Plug ("B")	2	2
10	16485	O-Ring	2	2
11	1465575	Plug	1	1
12	. . . . .	Body	1	1
13	. . . . .	Plunger	1	1
14	. . . . .	Snap Ring	1	1
15	. . . . .	Oil Seal	1	1
16	. . . . .	Seal	2	2
17	. . . . .	Seal	2	2
18	. . . . .	Bushing	4	4
	1458845	Seal Kit (Includes Items 14-17)	1	1
	1465574	Gear Set (Includes Items 3, 18)	1	..
	1465577	Gear Set (Includes Items 3, 18)	..	1

©2004 HYSTER COMPANY

STEERING CYLINDER (Figure 6-5)

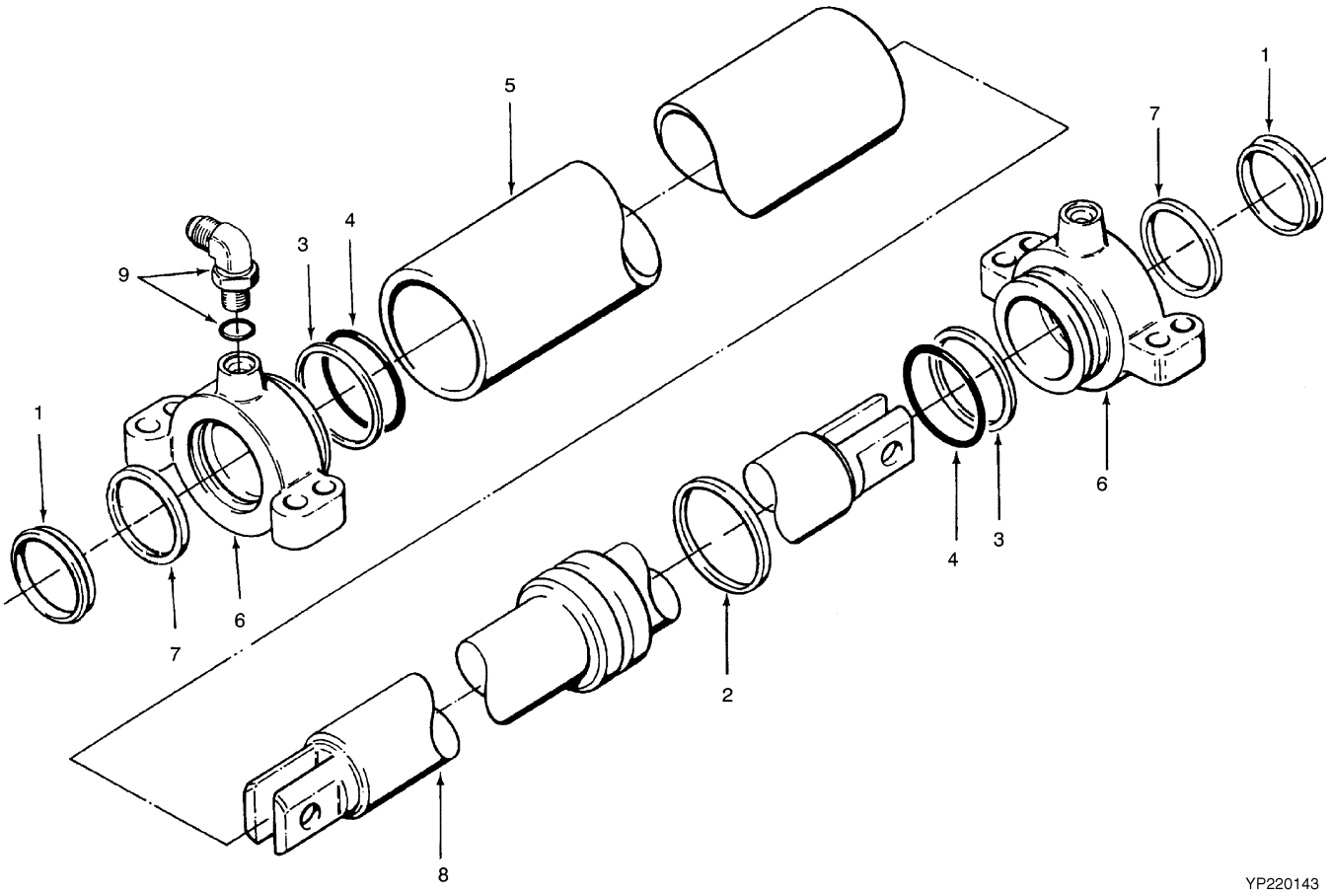

©2004 HYSTER COMPANY

STEERING CYLINDER

ITEM	PART NO.	DESCRIPTION	QTY
	344390	Steer Cylinder	1
1	203071	Rod Wiper	2
2	2046765	Seal	1
3	154358	Back-Up Ring	2
4	133920	O-Ring	2
5	344391	Tube	1
6	344395	End Cap	2
7	210183	Seal	2
8	344392	Rod	1
9	16558	Fitting	2
9	16483	O-Ring	1
	1501408	Seal Kit (Includes Items 1-4, 7)	1

©2004 HYSTER COMPANY

NOTES

7 BRAKE SYSTEM

SECTION 7
BRAKE SYSTEM

DESCRIPTION	PAGE
BRAKE	7-10
BRAKE BOOSTER	7-12
BRAKE LINES	7-4
BRAKE PEDAL LINKAGE POWERSHIFT	7-6
MASTER CYLINDER	7-14
PARK BRAKE	7-2

©2004 HYSTER COMPANY

PARK BRAKE (Figure 7-1)

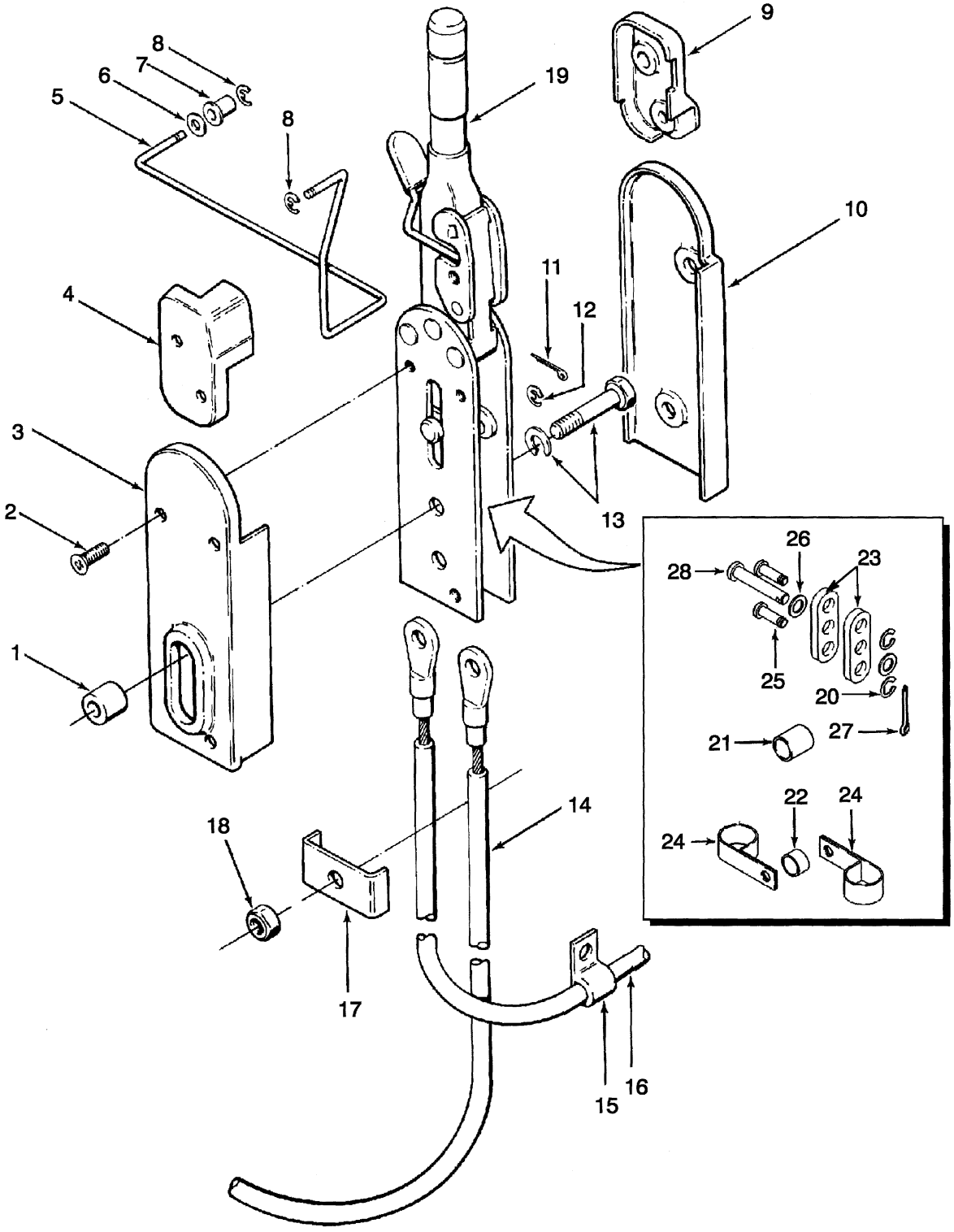

©2004 HYSTER COMPANY

PARK BRAKE

ITEM		PART NO.	DESCRIPTION	QTY
1		342962	Spacer	2
2		1328688	Screw	7
3		353013	Cover	1
4		353012	Cover	1
5	**a**	1322669	Link	1
6	**a**	15172	Washer	2
7	**a**	352605	Bearing	1
8	**a**	352575	Ring	2
9		353011	Cover	1
10		353009	Cover	1
11		15200	Cotter Pin	1
12		353206	Snap Ring	2
13		136703	Capscrew	2
13		292681	Lockwasher	2
14		1460789	Cable (LH)	1
15		387316	Clamp	1
16		1460790	Cable (RH)	1
17		353497	Clamp	1
18		313828	Nut	1
19		1494931	Brake Lever Assembly	1
20		1331006	Snap Ring	2
21		1330998	Spacer	1
22		1330999	Spacer	1
23		1331001	Link	2
24		1331002	Clamp	2
25		1335467	Pin	2
26		1335468	Washer	2
27		15200	Cotter Pin	1
28		1333572	Pin	1

FOOTNOTES:

a Monotrol Pedal

©2004 HYSTER COMPANY

BRAKE LINES (Figure 7-2)

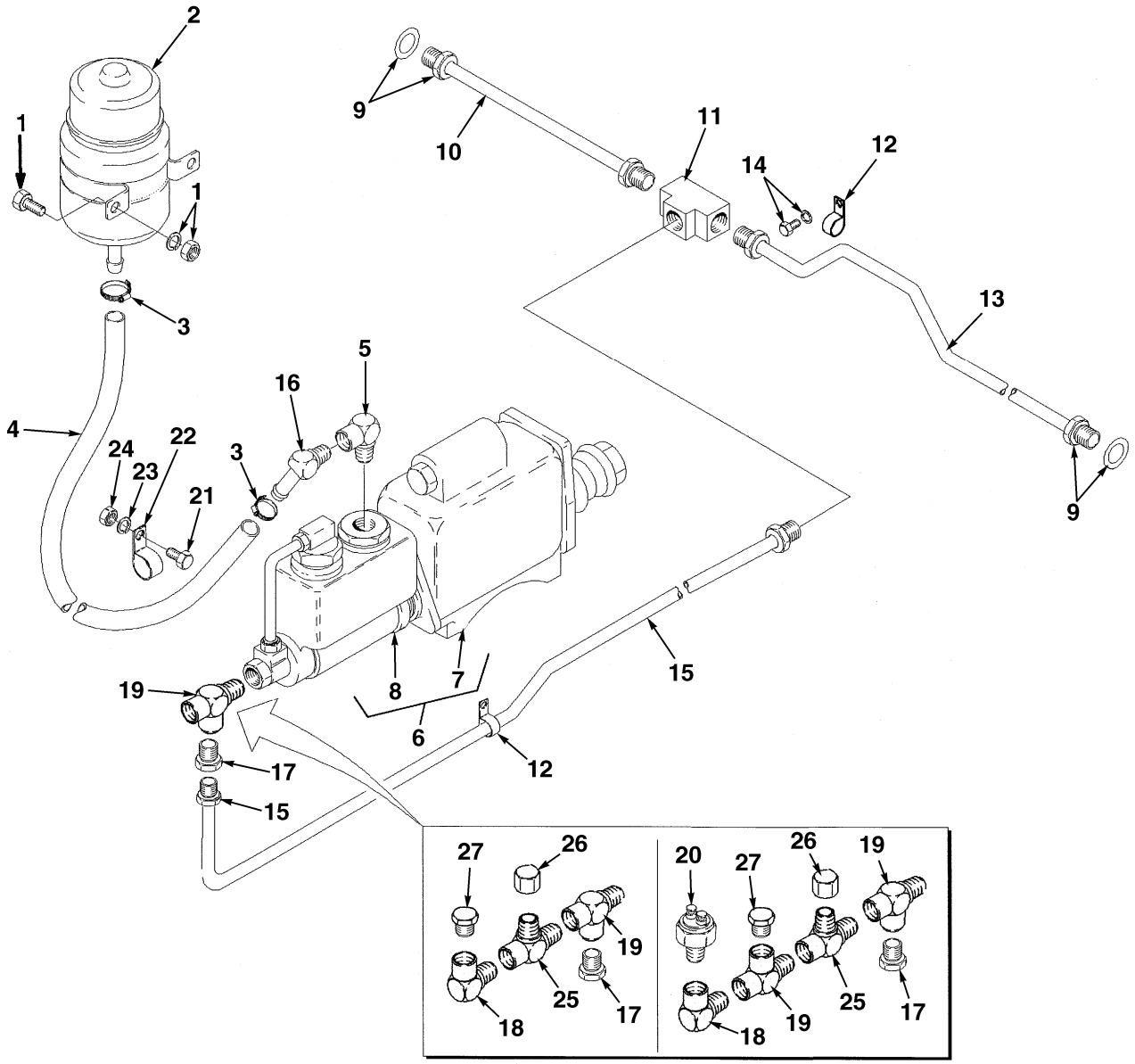

HP040381

©2004 HYSTER COMPANY

BRAKE LINES

ITEM		PART NO.	DESCRIPTION	QTY
1		136687	Nut	2
1		292501	Capscrew	2
1		292680	Lockwasher	2
2		1489805	Reservoir	1
2		1491824	Brake Reservoir Cap	1
2		317741	Clamp	1
2		317742	Cap	1
2		317743	Filter	1
3		353311	Clamp	2
4		340206	Hose	1
5		16151	Fitting	1
6		1335187	Power Brake Valve	1
7		379238	Booster (☞ Figure 7-5)	1
8		1347574	Master Cylinder (☞ Figure 7-6)	1
9		26801	Fitting	2
9		29344	Gasket	2
10		372014	Tube	1
11		16195	Fitting	1
12		124359	Clamp	2
13		372015	Tube	1
14		287851	Capscrew	1
14		292681	Lockwasher	1
15		377620	Tube	1
16		222476	Fitting	1
17		16115	Fitting	1
18	**ab**	16151	Fitting	1
19	**ab**	16186	Fitting	1
20	**b**	387867	Pressure Switch	1
21		136749	Capscrew	1
22		136516	Clamp	1
23		292681	Lockwasher	1
24		239503	Nut	1
25		16125	Fitting	1
26		281700	Nut	1
27	**ab**	14349	Fitting	1

FOOTNOTES:

a Oil Clutch (Powershift Forward/Reverse Lever)

b Powershift (Monotrol Pedal)

©2004 HYSTER COMPANY

BRAKE PEDAL LINKAGE (Figure 7-3)
POWERSHIFT

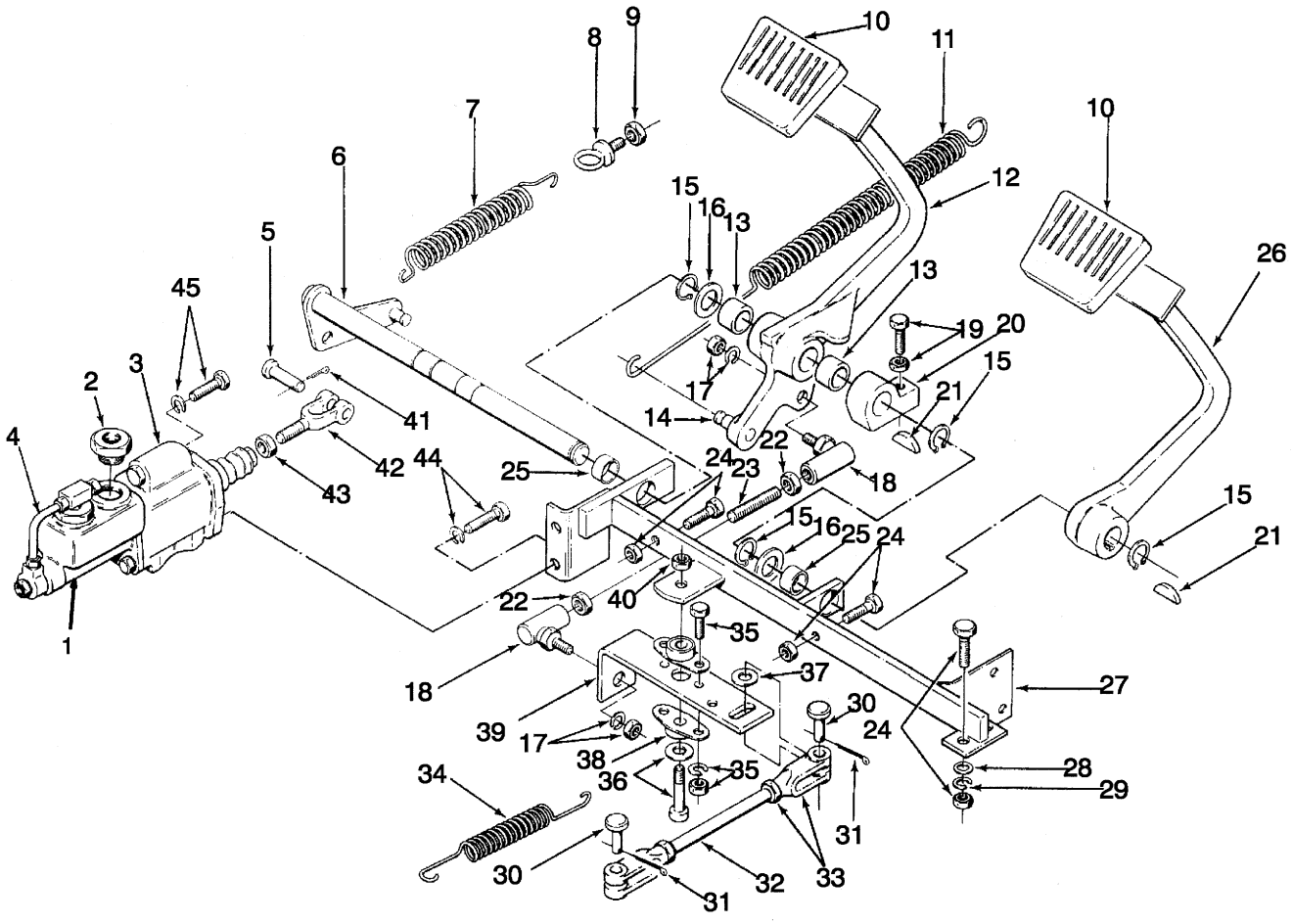

HP040379

©2004 HYSTER COMPANY

BRAKE PEDAL LINKAGE
POWERSHIFT

ITEM	PART NO.	DESCRIPTION	QTY
1	1335187	Power Brake Valve	1
1	1347574	Master Cylinder (☞ Figure 7-6)	1
2	353835	Plug	1
3	379238	Booster (☞ Figure 7-5)	1
4	278060	Tube	1
5	153	Rod End Pin	1
6	372019	Shaft	1
7	372020	Spring	1
8	295580	Eye Bolt	1
9	221354	Nut	1
10	114496	Pad	2
11	340214	Spring	1
12	357301	Inching Pedal	1
13	270632	Bushing	2
14	227070	Pin	1
15	58908	Snap Ring	4
16	247747	Washer	2
17	15026	Nut	2
17	15156	Lockwasher	2
18	119758	Ball Joint	2
19	15028	Nut	1
19	37562	Capscrew	1
20	247748	Crank	1
21	17253	Key	2
22	15026	Nut	2
23	340215	Link	1
24	136692	Nut	4
24	292515	Capscrew	4
25	270632	Bushing	2
26	344256	Brake Pedal	1
27	342931	Bracket	1
28	320159	Washer	2
29	292682	Lockwasher	2
30	139	Rod End Pin	2
31	15211	Cotter Pin	2
32	357278	Link	1
33	138	Rod End	2
33	15025	Nut	2
34	309704	Spring	1
35	136687	Nut	2
35	292501	Capscrew	2
35	292680	Lockwasher	2
36	320161	Washer	1
36	340213	Shoulder Bolt	1
37	320157	Washer	1
38	313860	Bearing	2
39	340210	Plate	1
40	15086	Nut	1
41	15223	Cotter Pin	1
42	340212	Rod End	1
43	15028	Nut	1

©2004 HYSTER COMPANY

BRAKE PEDAL LINKAGE
POWERSHIFT

ITEM	PART NO.	DESCRIPTION	QTY
44	15157	Lockwasher	2
44	18559	Capscrew	2
45	15157	Lockwasher	2
45	18558	Capscrew	2

©2004 HYSTER COMPANY

NOTES

BRAKE (Figure 7-4)

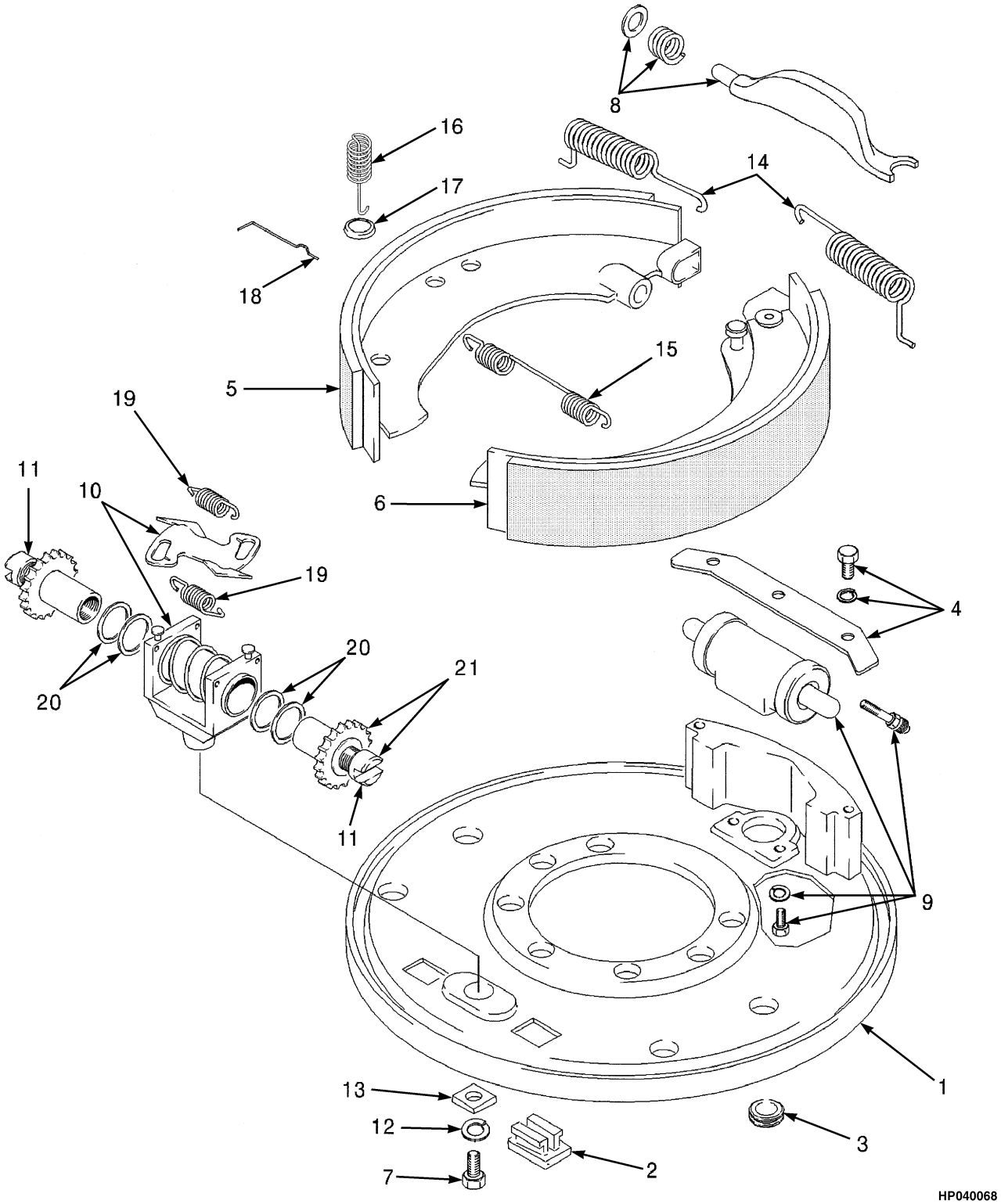

©2004 HYSTER COMPANY

BRAKE

KEY:
A: Right Hand
B: Left Hand

ITEM		PART NO.	DESCRIPTION	QTY A	QTY B
		1327565	Brake	1	..
		1327566	Brake	..	1
1		1323995	Plate	1	..
1		1324002	Plate	..	1
2		374535	Plug	2	2
3		374548	Plug (Inspection)	2	2
4		1321836	Screw	2	2
4		1321837	Washer	2	2
4		1323996	Plate	1	1
5		1321838	Brake Shoe (Common)	1	1
6		1321839	Brake Shoe	..	1
6		1321843	Brake Shoe	1	..
7		293664	Capscrew	1	1
8		1323998	Strut	1	1
8		374540	Spring	1	1
8		374541	Washer	1	1
9		1312904	Wheel Cylinder	1	1
9	**a**	1321373	Wheel Cylinder Kit	1	1
9		1371220	Bleeder Screw	1	1
10		1357370	Adjuster	1	1
11		1323999	Screw	2	2
12		1321842	Lockwasher	1	1
13		1345903	Washer	1	1
14		374543	Spring (Return)	2	2
15		1520835	Spring	1	1
16		374545	Spring	2	2
17		374546	Plate	2	2
18		374547	Ring	2	2
19		374542	Spring	2	2
20		1300494	Washer (0.01 in.)	AR	AR
20		1300495	Washer (0.02 in.)	AR	AR
20		1300496	Washer (0.04 in.)	AR	AR
		1300493	Adjuster Kit (Includes Item 10)	2	2

FOOTNOTES:
a Includes Cups, Boots, Pistons and Pushrods

©2004 HYSTER COMPANY

BRAKE BOOSTER (Figure 7-5)

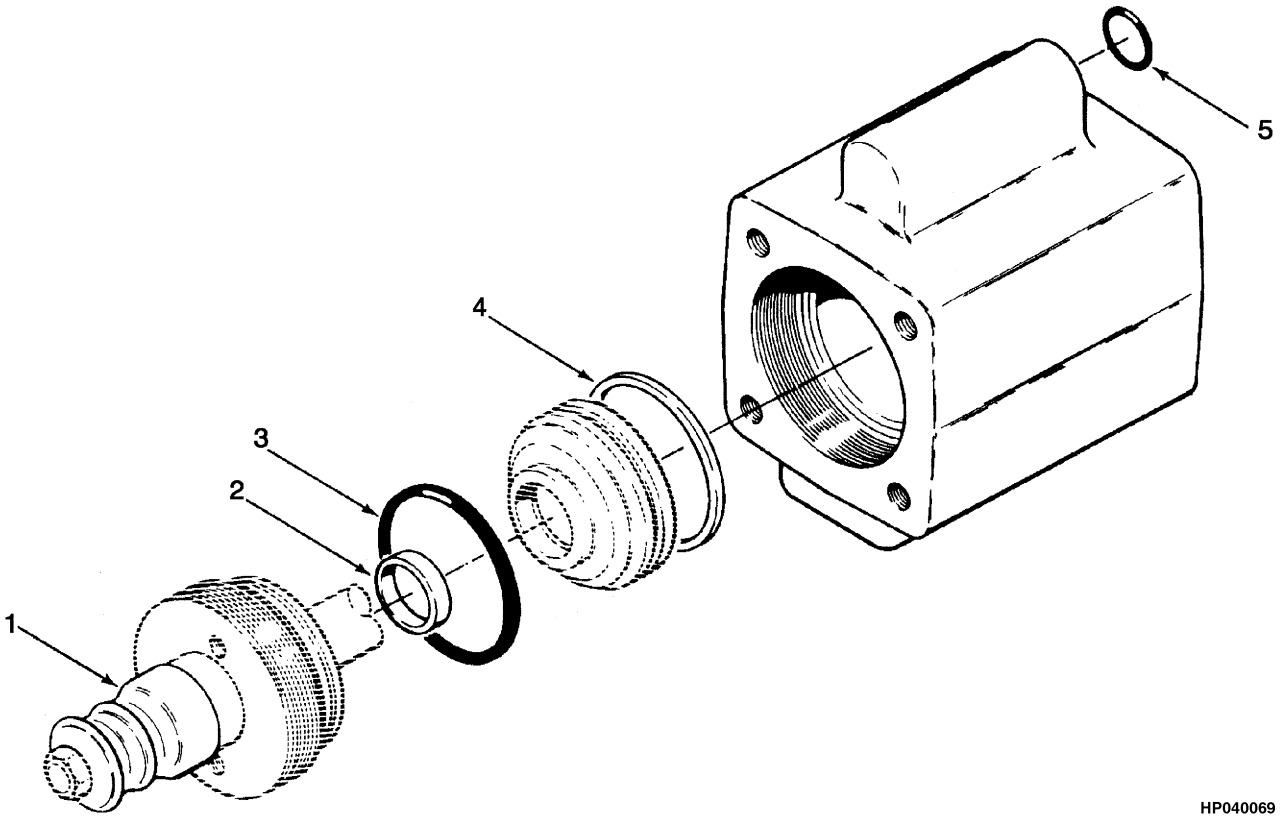

©2004 HYSTER COMPANY

BRAKE BOOSTER

ITEM	PART NO.	DESCRIPTION	QTY
	379238	Booster	1
1	. . . . .	Cover	1
2	. . . . .	Cup	2
3	. . . . .	O-Ring	1
4	. . . . .	Piston Ring	1
5	. . . . .	O-Ring	1
	319144	Booster Repair Kit (Includes Items 1-5)	1

©2004 HYSTER COMPANY

MASTER CYLINDER (Figure 7-6)

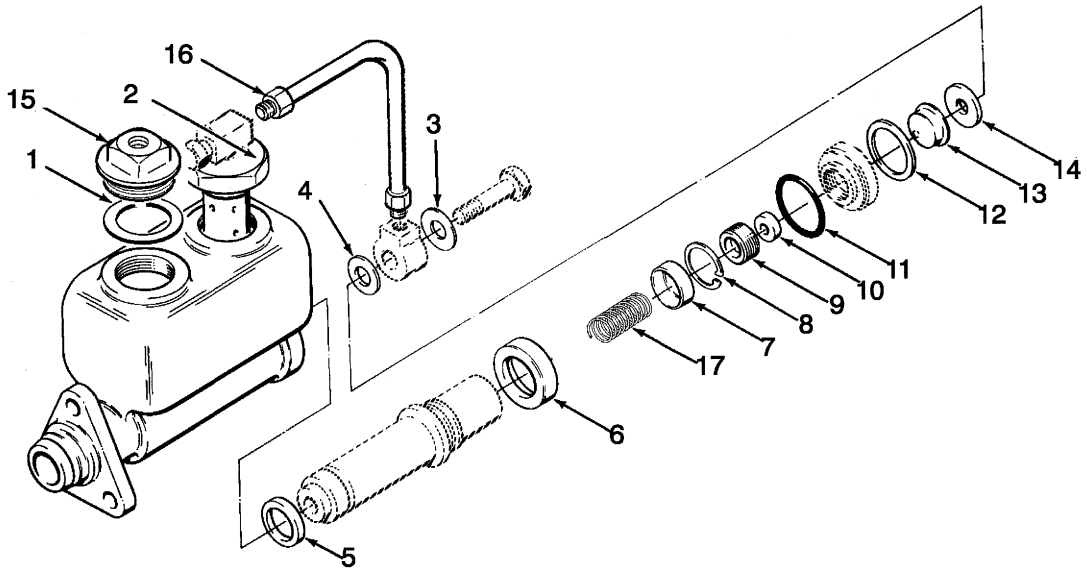

HP040380

©2004 HYSTER COMPANY

MASTER CYLINDER

ITEM	PART NO.	DESCRIPTION	QTY
	1347574	Master Cylinder	1
1	. . . . .	Gasket	1
2	319148	Relief Valve	1
3	. . . . .	Gasket	1
4	. . . . .	Gasket	1
5	. . . . .	Cup	1
6	. . . . .	Cup	1
7	. . . . .	Cup	1
8	. . . . .	Retaining Ring	1
9	. . . . .	Retainer	1
10	. . . . .	Seat	1
11	. . . . .	O-Ring	1
12	. . . . .	Seal	1
13	. . . . .	Check Valve	1
14	. . . . .	Valve Seat	1
15	278063	Plug	1
16	278060	Tube	1
17	70226	Spring	1
	1347573	Repair Kit (Includes Items 1-14)	1

©2004 HYSTER COMPANY

NOTES

8 HYDRAULIC SYSTEM

SECTION 8
HYDRAULIC SYSTEM

DESCRIPTION	PAGE
CONTROL VALVE	
FOUR FUNCTION	8-16
TWO AND THREE FUNCTION	8-14
CONTROL VALVE ATTACHING PARTS WITH FITTINGS	
FOUR FUNCTION	8-22
TWO AND THREE FUNCTION	8-18
CONTROL VALVE ATTACHING TUBES	8-24
DRIVE SHAFT	8-30
HYDRAULIC OIL FILTER	8-12
HYDRAULIC PUMP	8-26
HYDRAULIC SYSTEM	8-2
HYDRAULIC TANK	8-10
STEERING HYDRAULIC	8-4
TILT CYLINDER	8-28
TRANSMISSION COOLING	8-8

©2004 HYSTER COMPANY

HYDRAULIC SYSTEM (Figure 8-1)

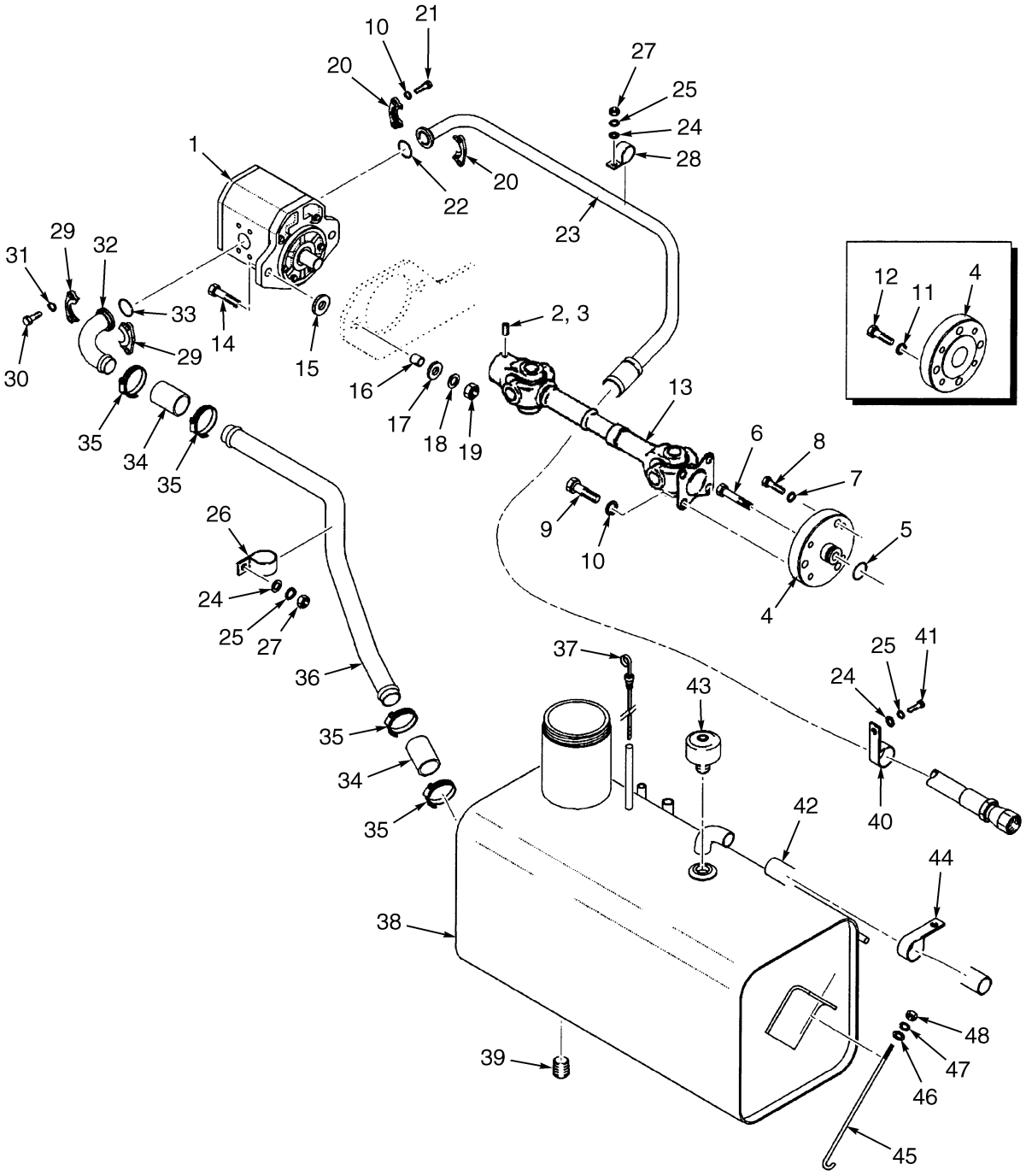

YP150250

©2004 HYSTER COMPANY

HYDRAULIC SYSTEM

ITEM	PART NO.	DESCRIPTION	QTY
1	1367711	Hydraulic Pump (☞ Figure 8-11)	1
2	18886	Set Screw	1
3	246108	Sealant	AR
4	1378948	Adapter (Gasoline and LPG)	1
4	350054	Adapter (Diesel)	1
5	39373	O-Ring	1
6	221547	Capscrew	1
7	177947	Lockwasher	3
8	34811	Capscrew	3
9	34811	Capscrew	4
10	15156	Lockwasher	8
11	177948	Lockwasher	4
12	35116	Capscrew	4
13	340218	Drive Shaft (Gasoline and LPG) (☞ Figure 8-13)	1
13	350055	Drive Shaft (Diesel) (☞ Figure 8-13)	1
14	292529	Capscrew	2
15	182889	Mount	1
16	182891	Hose	1
17	182890	Washer	2
18	320162	Washer	2
19	300937	Nut	2
20	190757	Fitting	2
21	16828	Capscrew	4
22	15866	O-Ring	1
23	350079	Tube	1
24	320157	Washer	4
25	292681	Lockwasher	4
26	181899	Clamp	1
27	239503	Nut	2
28	173247	Clamp	1
29	17765	Fitting	2
30	18588	Capscrew	4
31	15158	Lockwasher	4
32	222588	Fitting	1
33	92861	O-Ring	1
34	173685	Collar	2
35	119236	Clamp	4
36	377346	Tube	1
37	350099	Dipstick	1
38	1474964	Tank (☞ Figure 8-4)	1
39	15962	Fitting	1
40	144067	Clamp	2
41	18496	Capscrew	2
42	96481	Hose	1
43	353302	Breather	1
44	313221	Clamp	1
45	345881	Link	2
46	15175	Washer	2
47	15155	Lockwasher	2
48	221705	Nut	2

©2004 HYSTER COMPANY

STEERING HYDRAULIC (Figure 8-2)

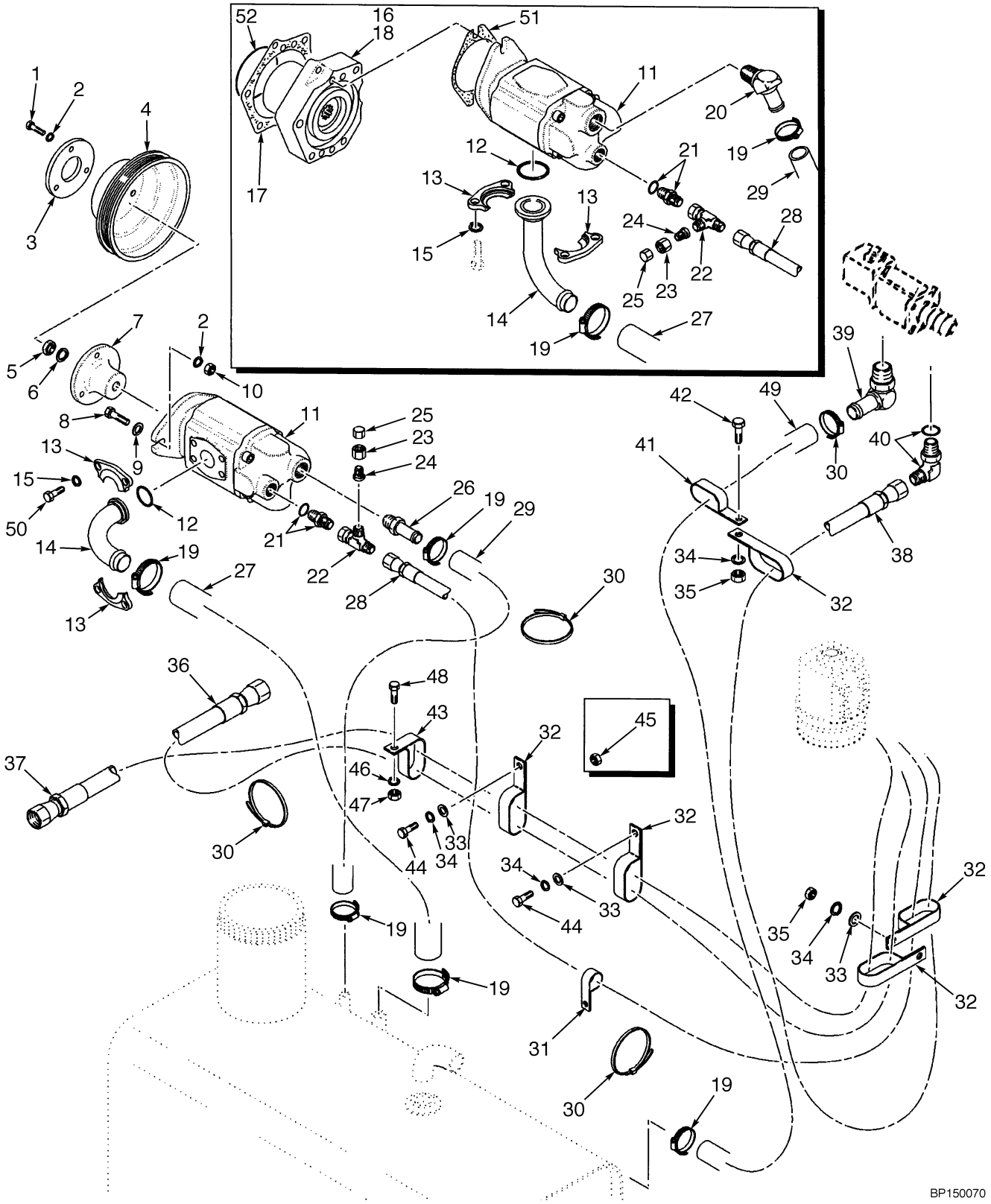

©2004 HYSTER COMPANY

STEERING HYDRAULIC

KEY:
A: Gas And LPG
B: Diesel

ITEM	PART NO.	DESCRIPTION	QTY A	QTY B
1	16634	Capscrew	3	..
2	15156	Lockwasher	5	..
3	1462305	Stiffener	1	..
4	1459843	Pulley	1	..
5	1461876	Nut	1	..
6	292683	Lockwasher	1	..
7	1459838	Adapter	1	..
8	16815	Capscrew	2	..
9	221767	Washer	4	..
10	15056	Nut	2	..
11	2036997	Steering Pump (☞ Figure 6-4)	1	..
11	2036998	Steering Pump (☞ Figure 6-4)	..	1
12	15866	O-Ring	1	1
13	190757	Fitting	2	2
14	222580	Fitting	1	1
15	293781	Washer	4	4
16	1462995	Adapter	..	1
17	1329660	Gasket	..	1
18	280472	Sealant	AR	AR
19	127045	Clamp	4	4
20	222504	Fitting	1	..
20	16485	O-Ring	1	..
21	16541	Fitting	1	..
21	16484	O-Ring	1	..
21	16568	Fitting	..	1
21	16484	O-Ring	..	1
22	17062	Fitting	1	1
23	17319	Fitting	1	1
24	17777	Fitting	1	1
25	16923	Fitting	1	1
26	222504	Fitting	..	1
26	16485	O-Ring	..	1
27	114371	Hose (Gasoline and LPG)	1	..
27	241975	Hose (Diesel)	..	1
28	1312741	Hose (Gasoline and LPG)	1	..
28	1312740	Hose (Diesel)	..	1
29	139919	Hose (Gasoline and LPG)	1	..
29	125792	Hose (Diesel)	..	1
30	2033612	Strap Clamp	4	4
31	198678	Clamp	1	1
32	129684	Clamp	5	5
33	320157	Washer	3	3
34	292681	Lockwasher	4	4
35	239503	Nut	2	2
36	1311014	Hose	1	1
37	1311015	Hose	1	1

©2004 HYSTER COMPANY

STEERING HYDRAULIC

ITEM	PART NO.	DESCRIPTION	QTY A	QTY B
38	114371	Hose	1	..
39	222512	Fitting	1	1
39	16485	O-Ring	1	1
40	222400	Fitting	1	1
40	16485	O-Ring	1	1
41	251994	Clamp	1	1
42	136749	Capscrew	1	1
43	1326653	Clamp	1	1
44	18497	Capscrew	2	2
45	15055	Nut	2	..
46	292682	Lockwasher	1	..
47	136692	Nut	1	..
48	287854	Capscrew	1	..
49	392649	Hose	1	1
50	309740	Capscrew	4	4
51	1471345	Gasket	..	1
52	1311603	O-Ring	2	..

©2004 HYSTER COMPANY

NOTES

TRANSMISSION COOLING (Figure 8-3)

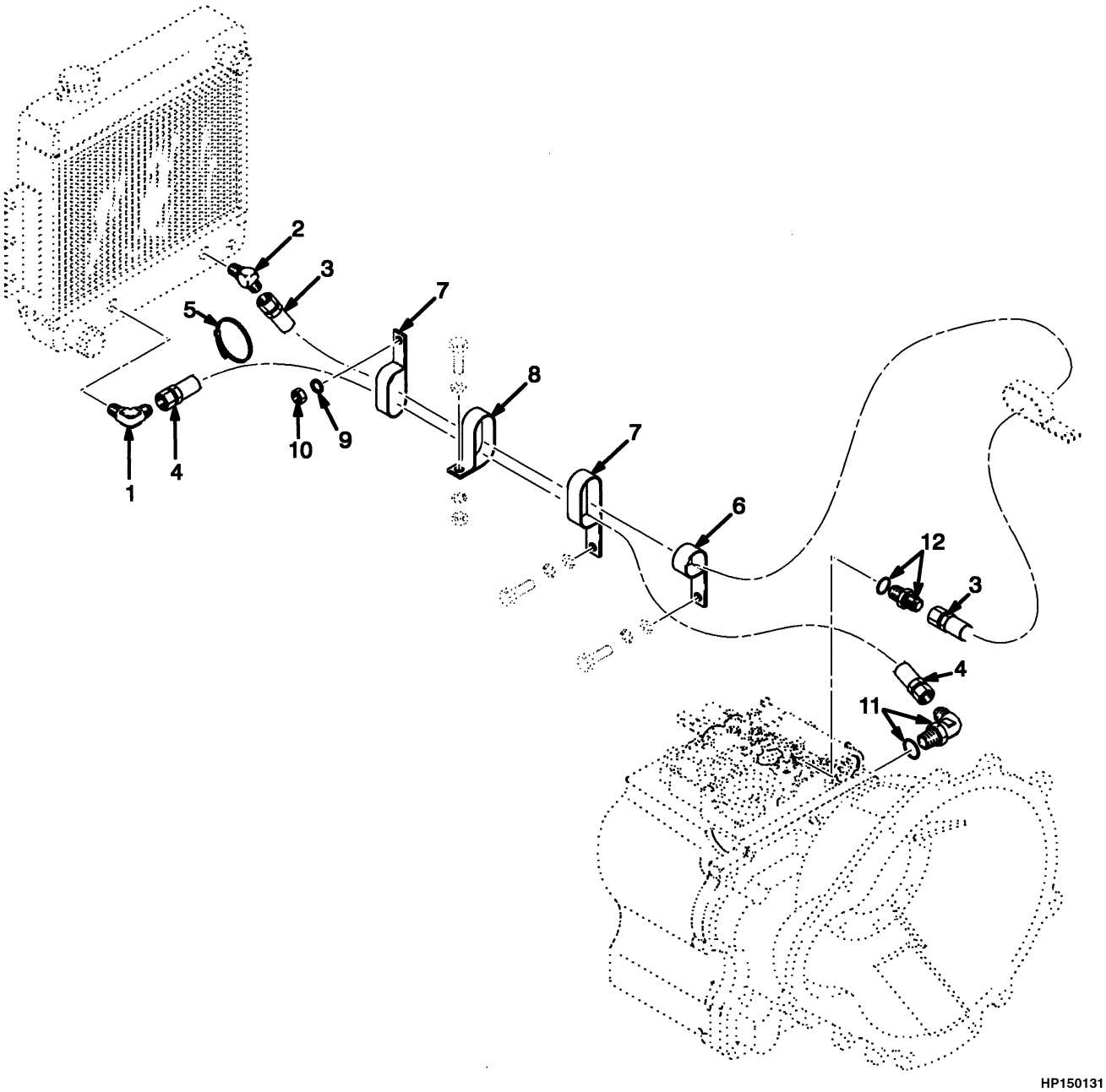

©2004 HYSTER COMPANY

TRANSMISSION COOLING

KEY:
A: Gasoline and LPG
B: Diesel

ITEM	PART NO.	DESCRIPTION	QTY A	QTY B
1	66885	Fitting	1	1
2	66997	Fitting	1	1
3	1326651	Hose	1	1
4	1326927	Hose	1	1
5	129563	Strap Clamp	1	1
6	198678	Clamp	1	1
7	251994	Clamp	2	2
8	1326652	Clamp	1	1
9	292681	Lockwasher	1	1
10	239503	Nut	1	1
11	16542	Fitting	1	1
11	16485	O-Ring	1	1
12	16569	Fitting	1	1
12	16485	O-Ring	1	1

©2004 HYSTER COMPANY

HYDRAULIC TANK (Figure 8-4)

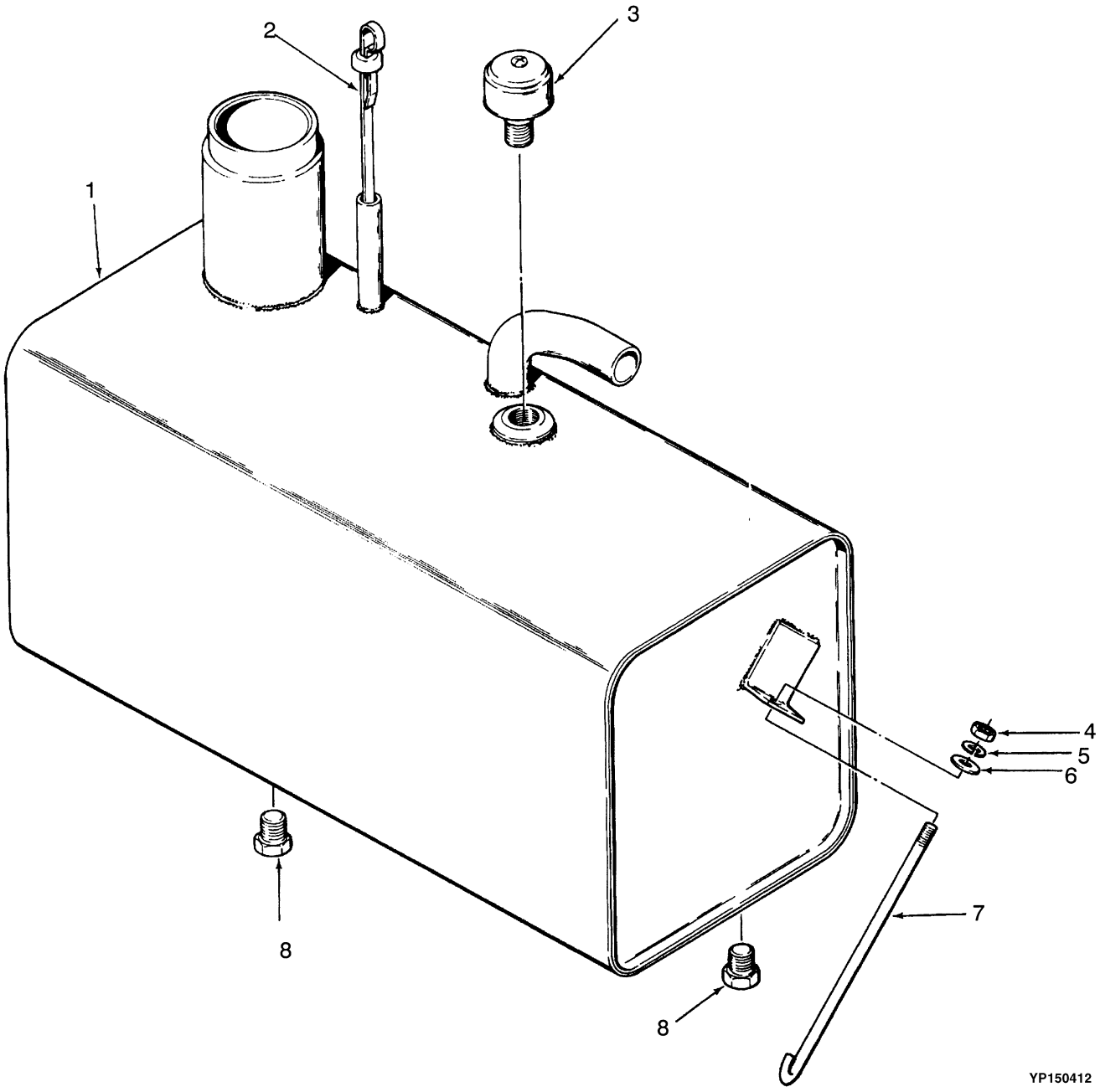

©2004 HYSTER COMPANY

HYDRAULIC TANK

ITEM	PART NO.	DESCRIPTION	QTY
1	1474964	Tank	
2	350099	Dipstick	1
3	353302	Breather	1
4	221705	Nut	2
5	15155	Lockwasher	2
6	15175	Washer	2
7	345881	Link	2
8	15962	Fitting	2

©2004 HYSTER COMPANY

HYDRAULIC OIL FILTER (Figure 8-5)

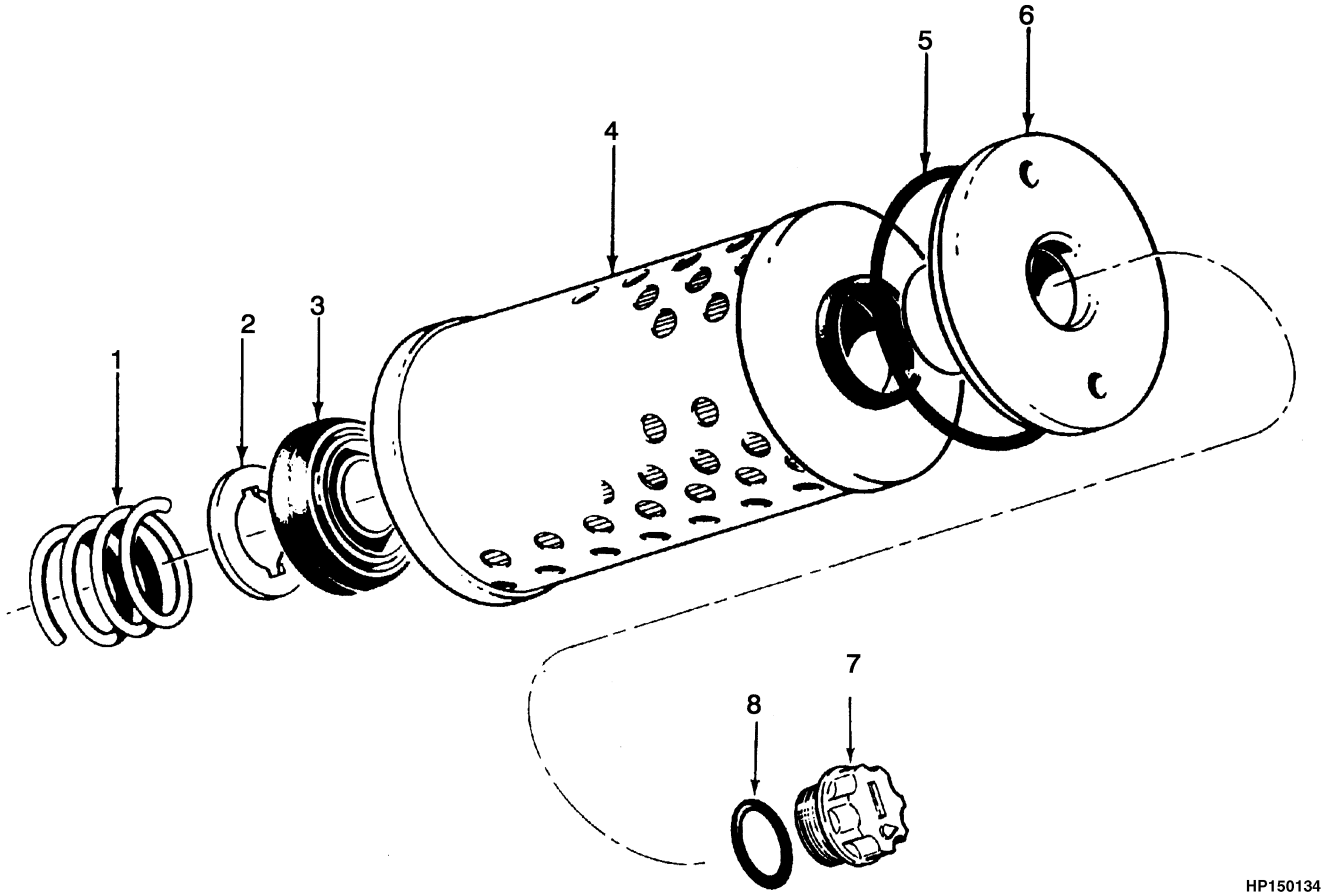

ITEM	PART NO.	DESCRIPTION	QTY
1	190784	Spring	1
2	190785	Washer	1
3	181941	Seal	1
4	190786	Filter	1
5	39742	O-Ring	1
6	190787	Filter Head	1
7	218612	Cap	1
8	16487	O-Ring	1

©2004 HYSTER COMPANY

NOTES

CONTROL VALVE (Figure 8-6)
TWO AND THREE FUNCTION

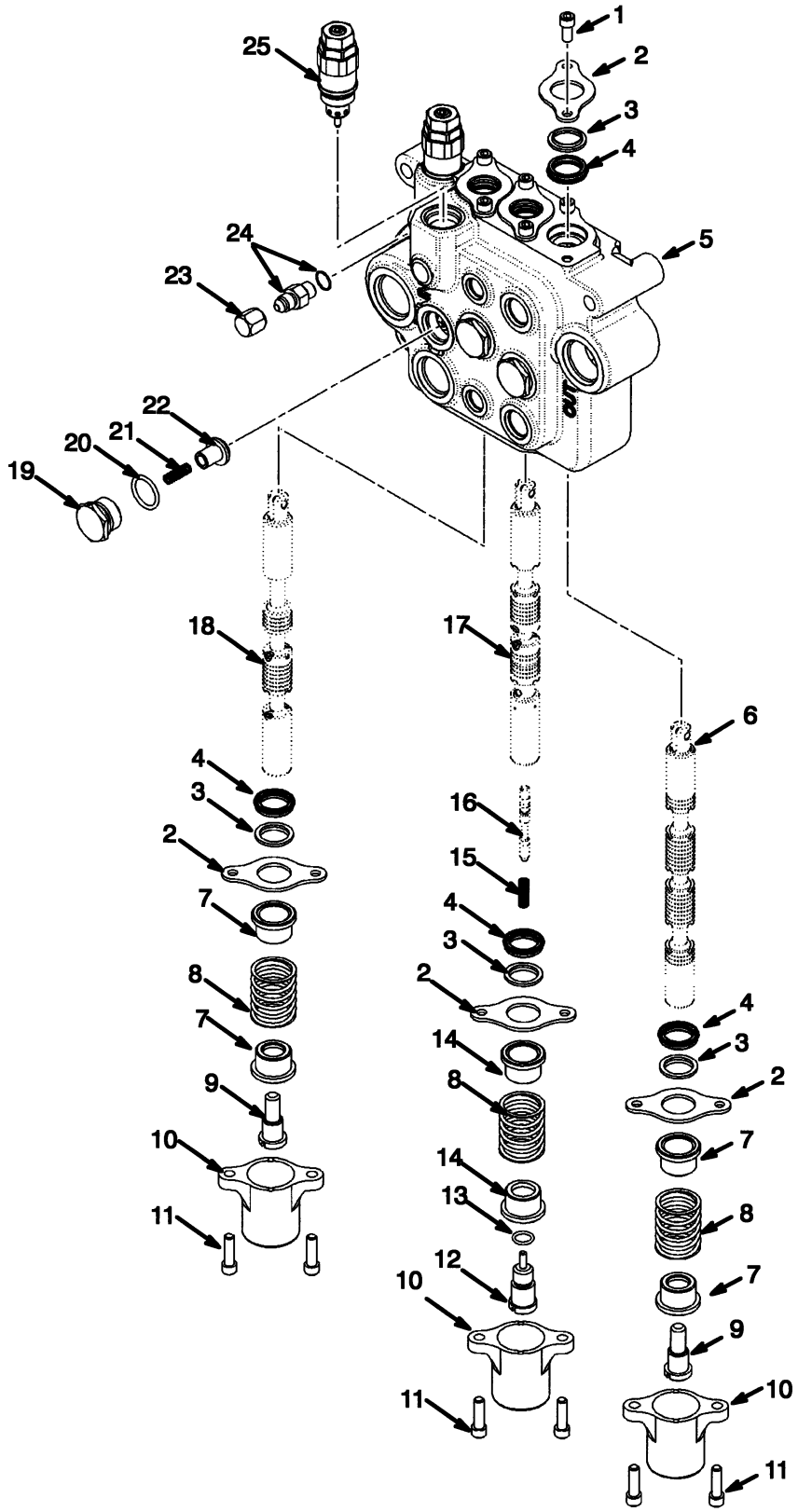

©2004 HYSTER COMPANY

CONTROL VALVE
TWO AND THREE FUNCTION

ITEM	PART NO.	DESCRIPTION	QTY
	2038290	Control Valve	1
1	16632	Bolt	6
2	77451	Plate	6
3	1393703	Wiper	6
4	1393704	Seal	6
5	. . . . .	Housing	1
6	. . . . .	Spool (Lift)	1
7	274427	Spring Seat	4
8	300723	Spring	3
9	274548	Capscrew	2
10	274426	Cap	3
11	16328	Capscrew	6
12	304006	Capscrew	1
13	16482	O-Ring	1
14	300724	Spring Seat	2
15	304002	Spring	1
16	. . . . .	Piston	1
17	. . . . .	Spool	1
18	. . . . .	Spool	1
19	77441	Plug	3
20	16485	O-Ring	3
21	77442	Spring	3
22	77443	Poppet	3
23	16923	Fitting	1
24	16538	Fitting	1
24	16481	O-Ring	1
25	378424	Relief Valve	2
25	1309419	Seal Kit	1

©2004 HYSTER COMPANY

CONTROL VALVE (Figure 8-7)
FOUR FUNCTION

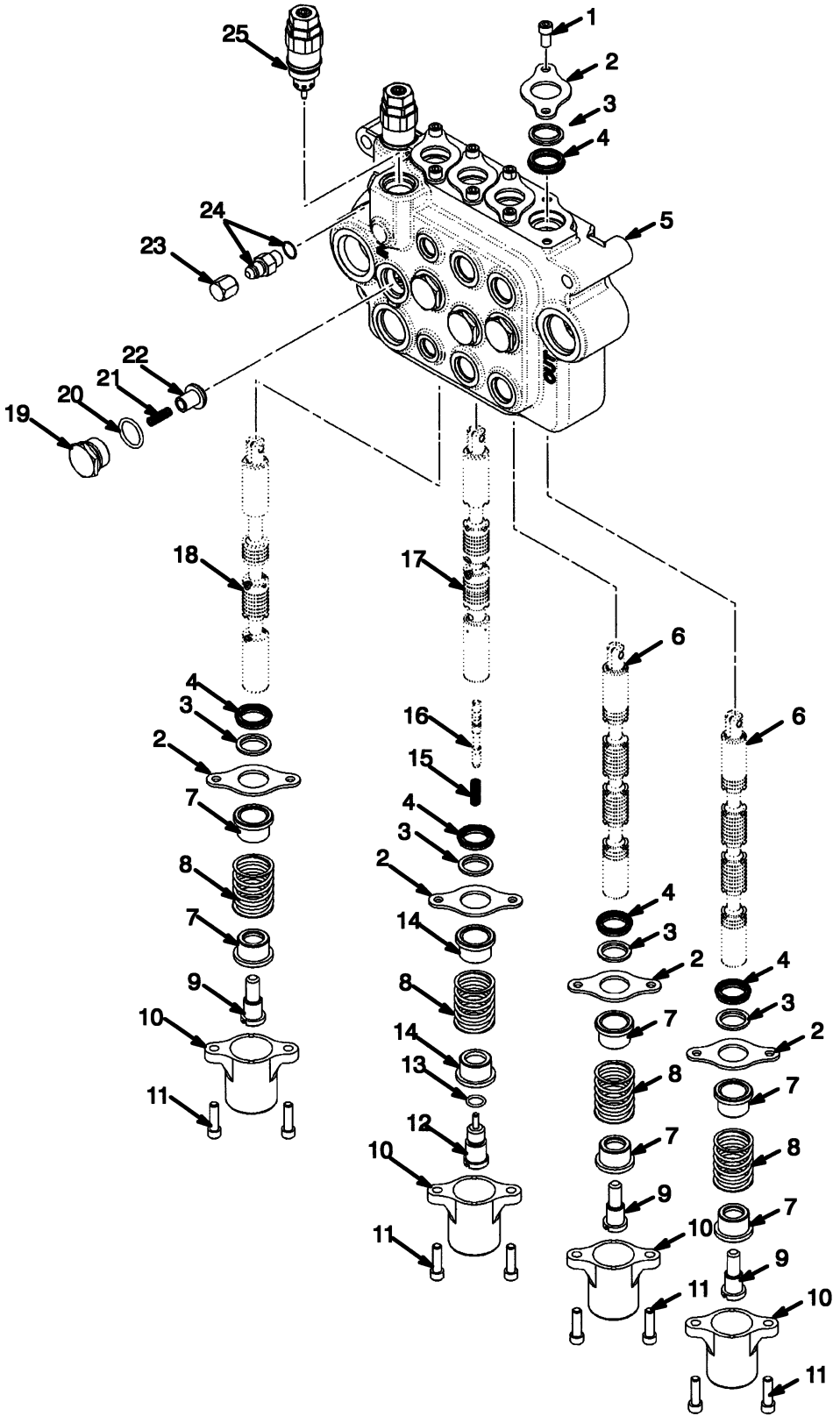

©2004 HYSTER COMPANY

CONTROL VALVE
FOUR FUNCTION

ITEM	PART NO.	DESCRIPTION	QTY
	2038291	Control Valve	6
1	16632	Bolt	8
2	77451	Plate	8
3	1393703	Wiper	8
4	1393704	Seal	8
5	. . . . .	Housing	1
6	. . . . .	Spool (Lift)	2
7	274427	Spring Seat	6
8	300723	Spring	4
9	274548	Capscrew	3
10	274426	Cap	4
11	16328	Capscrew	8
12	304006	Capscrew	1
13	16482	O-Ring	1
14	300724	Spring Seat	2
15	304002	Spring	1
16	. . . . .	Piston	1
17	. . . . .	Spool	1
18	. . . . .	Spool	1
19	77441	Plug	4
20	16485	O-Ring	4
21	77442	Spring	4
22	77443	Poppet	4
23	16923	Fitting	1
24	16538	Fitting	1
24	16481	O-Ring	1
25	378424	Relief Valve	2
25	1309419	Seal Kit	1

©2004 HYSTER COMPANY

CONTROL VALVE ATTACHING PARTS WITH FITTINGS (Figure 8-8)
TWO AND THREE FUNCTION

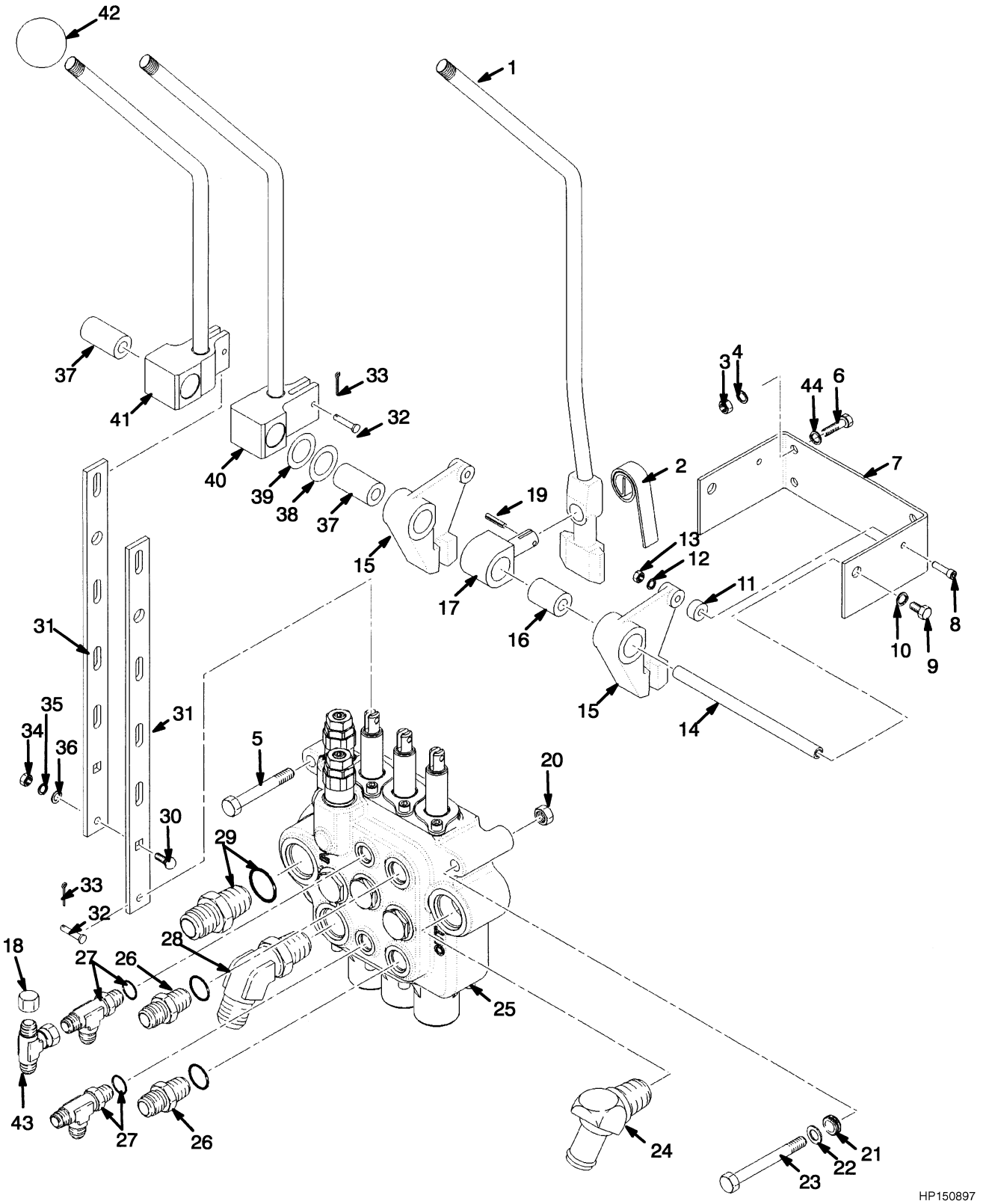

©2004 HYSTER COMPANY

CONTROL VALVE ATTACHING PARTS WITH FITTINGS
TWO AND THREE FUNCTION

KEY:
A: 2 Function
B: 3 Function

ITEM	PART NO.	DESCRIPTION	QTY A	QTY B
1	306117	Lever	..	1
2	175861	Spring	..	1
3	136687	Nut	4	4
4	292680	Lockwasher	4	4
5	292521	Capscrew	2	2
6	292501	Capscrew	4	4
7	1309491	Bracket	1	1
8	18085	Capscrew	..	1
9	1328930	Capscrew	2	2
10	292681	Lockwasher	2	2
11	306118	Spacer	..	1
12	15163	Lockwasher	..	1
13	230881	Nut	..	1
14	1305174	Pivot Shaft	1	1
15	306111	Lever	..	2
16	1328697	Bushing	..	3
17	306113	Pin (Selector)	..	1
18	16693	Fitting	1	1
19	302428	Pin	1	1
20	316826	Nut	3	3
21	91946	Grommet	3	3
22	320160	Washer	3	3
23	292524	Capscrew	1	1
24	1478715	Fitting	1	1
25	2038290	Control Valve (☞ Figure 8-6)	1	1
26	16541	Fitting	..	2
26	16484	O-Ring	..	1
27	16969	Fitting	2	2
27	16483	O-Ring	1	1
28	16570	Fitting	1	1
28	16486	O-Ring	1	1
29	16954	Fitting	1	1
29	16982	O-Ring	1	1
30	15937	Bolt	4	6
31	325729	Plate	4	6
32	309109	Rod End Pin	4	6
33	15200	Cotter Pin	4	6
34	15054	Nut	4	6
35	15154	Lockwasher	4	6
36	15127	Washer	4	6
37	1328698	Bushing	2	2
38	1309479	Shim (0.020 in.)	..	6
39	1328696	Shim (0.010 in.)	..	AR
40	1324352	Lever (Tilt)	1	1
41	1324350	Lever (Hoist)	1	1
42	308993	Knob	2	3

©2004 HYSTER COMPANY

CONTROL VALVE ATTACHING PARTS WITH FITTINGS
TWO AND THREE FUNCTION

ITEM	PART NO.	DESCRIPTION	QTY A	QTY B
43	17049	Fitting	1	1
44	320156	Washer	4	4

©2004 HYSTER COMPANY

NOTES

CONTROL VALVE ATTACHING PARTS WITH FITTINGS (Figure 8-9)
FOUR FUNCTION

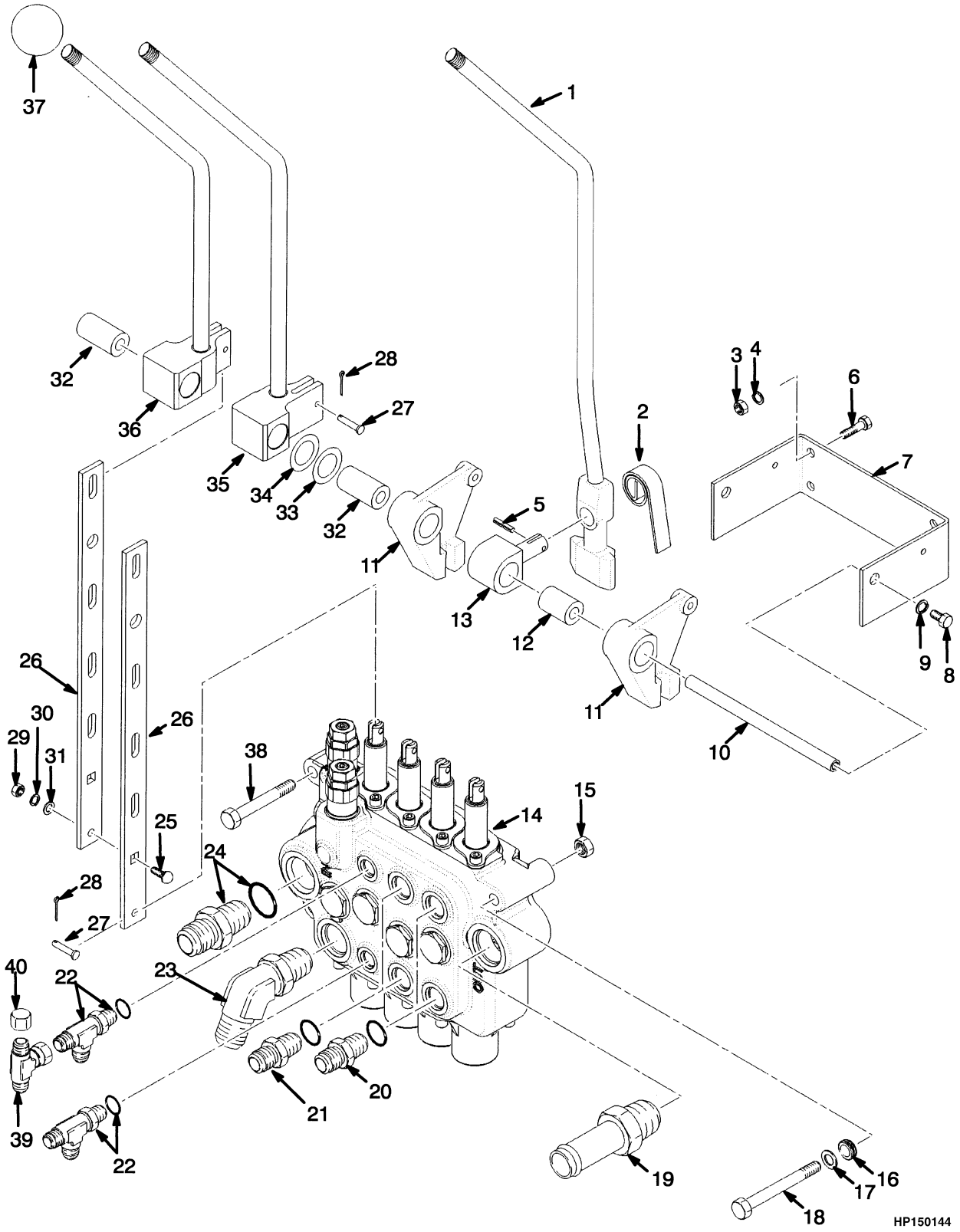

©2004 HYSTER COMPANY

CONTROL VALVE ATTACHING PARTS WITH FITTINGS
FOUR FUNCTION

ITEM	PART NO.	DESCRIPTION	QTY
1	306117	Lever	1
2	175861	Spring	1
3	136687	Nut	4
4	292680	Lockwasher	4
5	302428	Pin	1
6	292501	Capscrew	4
7	1309491	Bracket	1
7	320156	Washer	4
8	1328930	Capscrew	2
9	292681	Lockwasher	2
10	1305174	Pivot Shaft	1
11	306111	Lever	2
12	1328697	Bushing	3
13	306113	Pin (Selector)	1
14	2038291	Control Valve (☞ Figure 8-7)	1
15	316826	Nut	3
16	91946	Grommet	3
17	320160	Washer	3
18	292524	Capscrew	1
19	1478700	Fitting	1
20	16541	Fitting	2
20	16484	O-Ring	1
21	16541	Fitting	2
21	16484	O-Ring	1
22	16969	Fitting	2
22	16483	O-Ring	1
23	16570	Fitting	1
23	16486	O-Ring	1
24	16954	Fitting	1
24	16982	O-Ring	1
25	15937	Bolt	8
26	325729	Plate	8
27	309109	Rod End Pin	8
28	15200	Cotter Pin	8
29	15054	Nut	8
30	15154	Lockwasher	8
31	15127	Washer	8
32	1328698	Bushing	2
33	1309479	Shim (0.020 in.)	6
34	1328696	Shim (0.010 in.)	AR
35	1324352	Lever (Tilt)	1
36	1324350	Lever (Hoist)	1
37	308993	Knob	3
38	292521	Capscrew	2
39	17049	Fitting	1
40	16693	Fitting	1

©2004 HYSTER COMPANY

CONTROL VALVE ATTACHING TUBES (Figure 8-10)

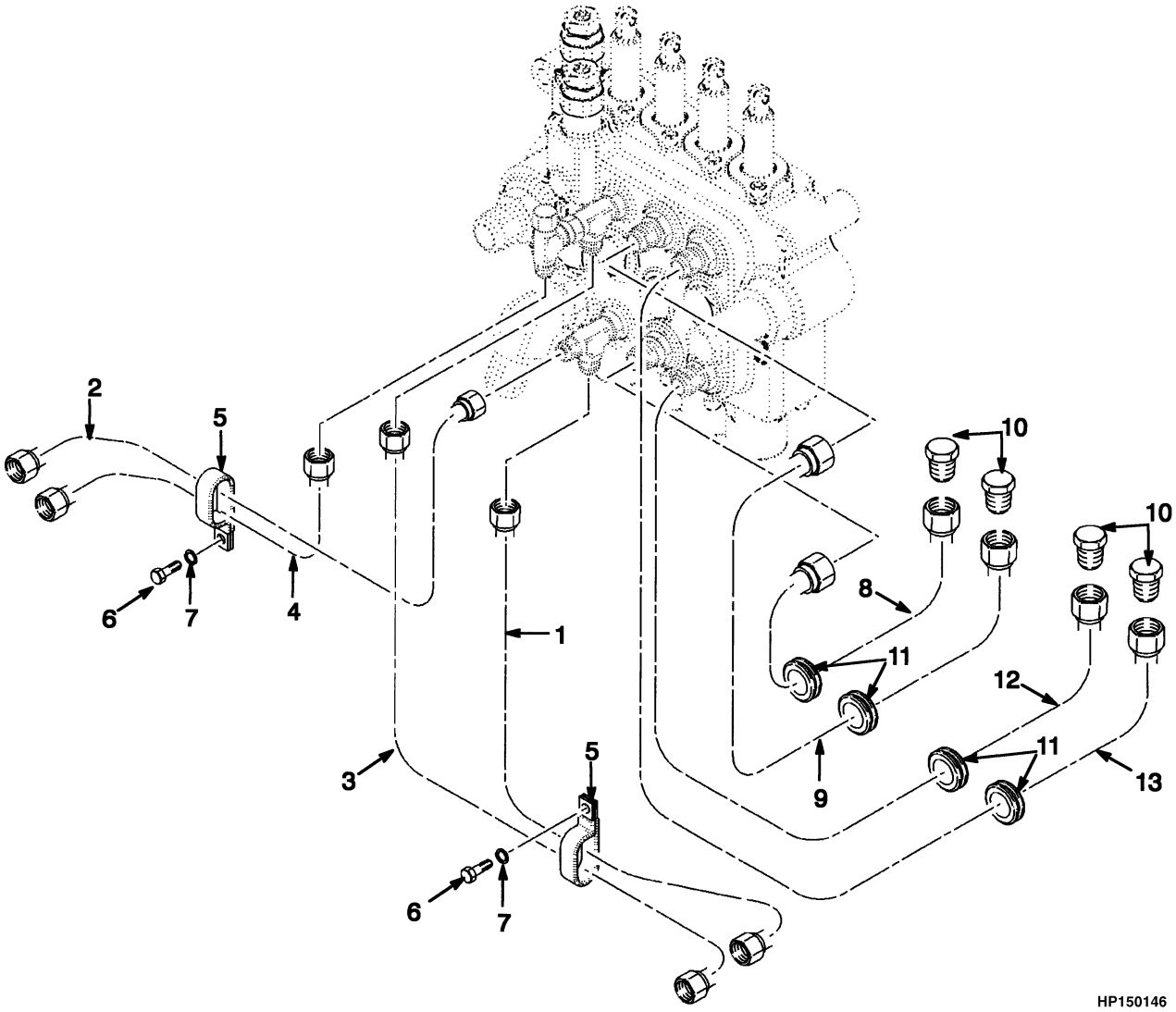

©2004 HYSTER COMPANY

CONTROL VALVE ATTACHING TUBES

KEY:
A: 2 and 3 Function
B: 4 Function

ITEM	PART NO.	DESCRIPTION	QTY A	QTY B
1	369552	Tube	1	1
2	369556	Tube	1	1
3	369555	Tube	1	1
4	369557	Tube	1	1
5	133203	Clamp	2	2
6	287851	Capscrew	2	2
7	292681	Lockwasher	2	2
8	377613	Tube	2	1
9	377614	Tube	2	1
10	17321	Fitting	2	4
11	339969	Grommet	2	4
12	369549	Tube	..	1
13	369550	Tube	..	1

©2004 HYSTER COMPANY

HYDRAULIC PUMP (Figure 8-11)

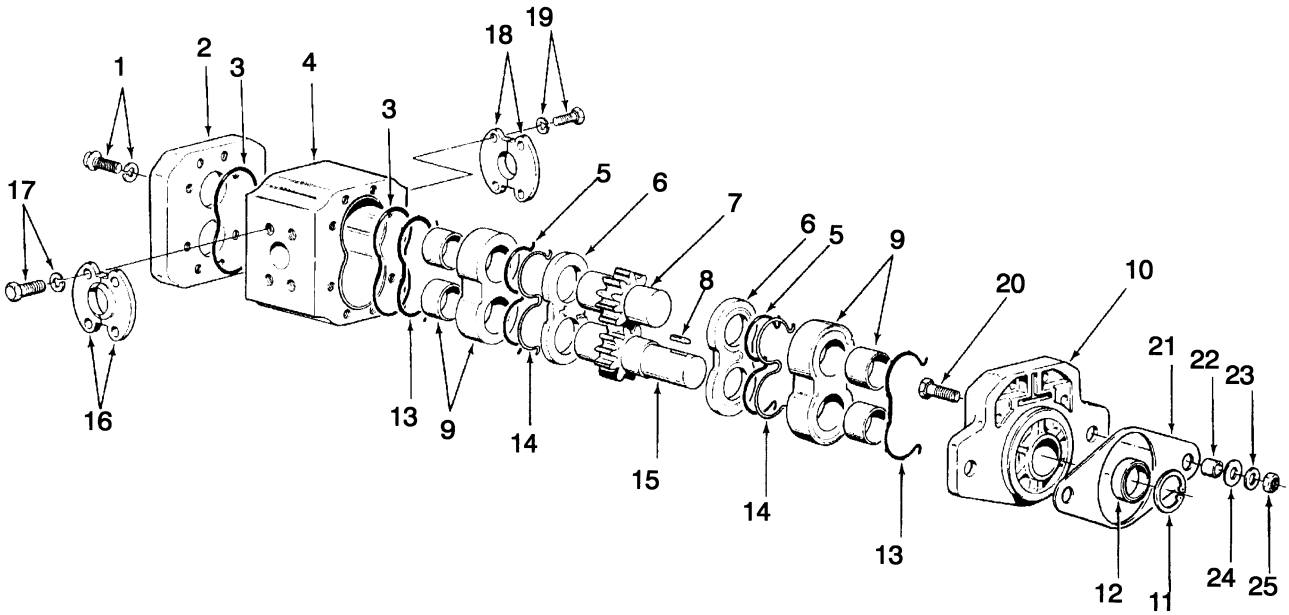

HP150895

©2004 HYSTER COMPANY

HYDRAULIC PUMP

ITEM	PART NO.	DESCRIPTION	QTY
	1367711	Hydraulic Pump	1
1	. . . . .	Bolt	8
1	. . . . .	Washer	8
2	. . . . .	Cover	1
3	. . . . .	Sealing Ring	2
4	. . . . .	Body	1
5	. . . . .	Ring	2
6	. . . . .	Plate	2
7	. . . . .	Driven Gear	1
8	. . . . .	Key	1
9	. . . . .	Bearing	2
10	. . . . .	Flange	1
11	. . . . .	Snap Ring	1
12	. . . . .	Seal	1
13	. . . . .	Ring	2
14	. . . . .	Ring	2
15	. . . . .	Drive Gear	1
16	17765	Fitting	2
17	15158	Lockwasher	4
17	18588	Capscrew	4
18	190757	Fitting	2
19	15156	Lockwasher	4
19	16828	Capscrew	4
20	292529	Capscrew	2
21	182889	Mount	1
22	182891	Hose	2
23	320162	Washer	2
24	182890	Washer	2
25	300937	Nut	2
	1376881	Seal Kit (Includes Items 3, 5, 12-14)	1
	385402	Seal Kit (Includes Items 3, 5, 12-14)	1

©2004 HYSTER COMPANY

TILT CYLINDER (Figure 8-12)

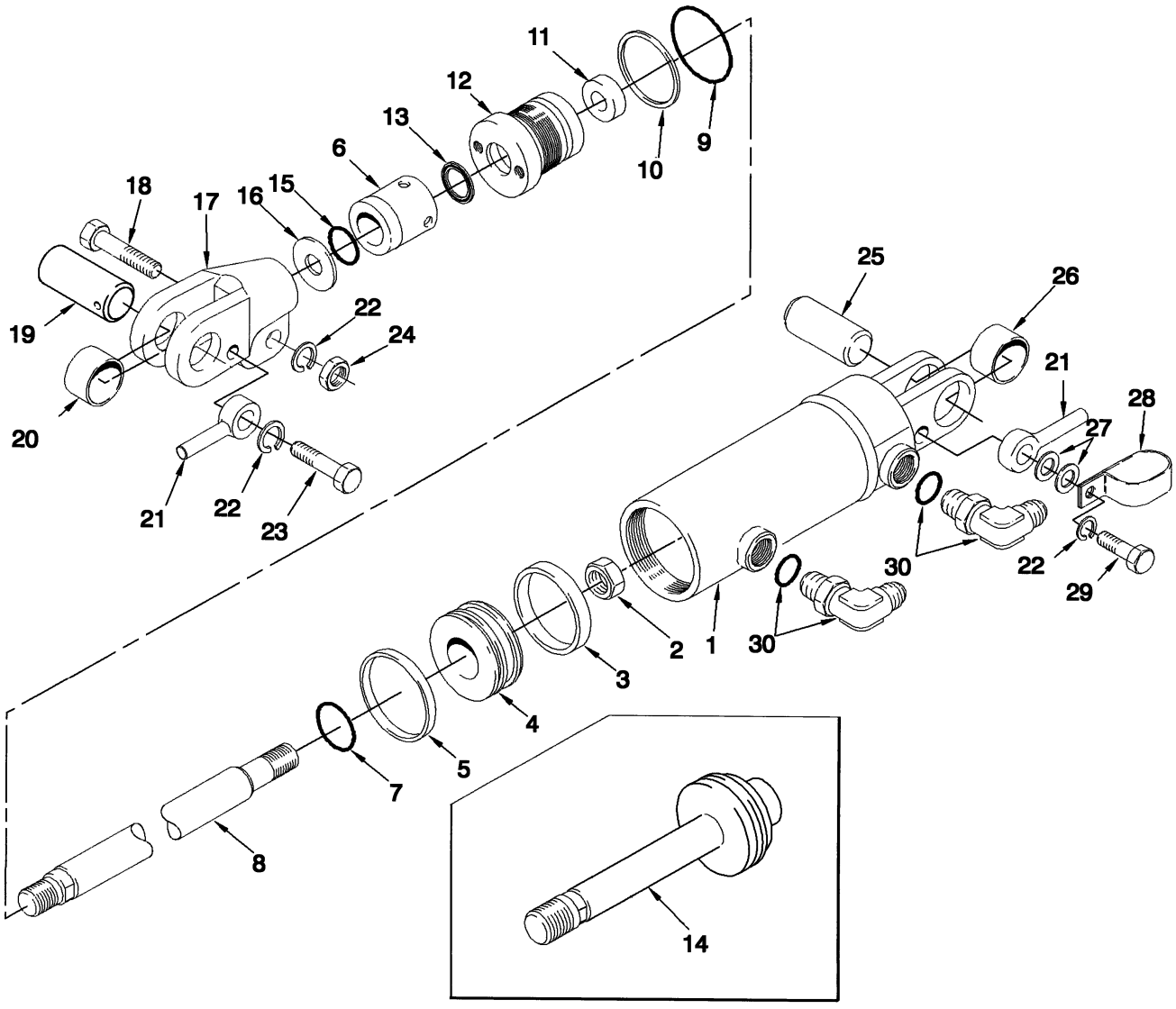

HP150887

©2004 HYSTER COMPANY

TILT CYLINDER

ITEM		PART NO.	DESCRIPTION	QTY
		2037392	Tilt Cylinder	2
1		2014714	Tube	1
2		2036547	Nut (Optional)	1
3		239182	Guide Ring	1
4		289968	Piston (Optional)	1
5		2044821	Seal	1
6	**a**	358259	Spacer	2
7		199082	O-Ring	1
8		289967	Rod (Optional)	1
9		92482	O-Ring	1
10		1329756	Back-Up Ring	1
11		1381085	Rod Seal	1
12		289969	End Plug	1
13		193554	Rod Wiper	1
14		387058	Piston Rod	1
15	**a**	15869	O-Ring	2
16	**a**	1344751	Shim (0.120 in.)	AR
16	**a**	192830	Shim (0.060 in.)	AR
17		248462	Rod End	2
18		18590	Capscrew	2
19		248465	Pin	2
20		192429	Bushing	1
21		241079	Anchor	4
22		15158	Lockwasher	6
23		169268	Capscrew	2
24		221711	Nut	2
25		248461	Pin	2
26		192429	Bushing	1
27		15135	Washer	AR
28		178794	Clamp	2
29		246195	Capscrew	2
30		16558	Fitting	4
30		16483	O-Ring	1
		1494726	Seal Kit (Includes Items 3, 5, 7, 9-11, 13)	1

FOOTNOTES:

a 5° Forward/6° Back

DRIVE SHAFT (Figure 8-13)

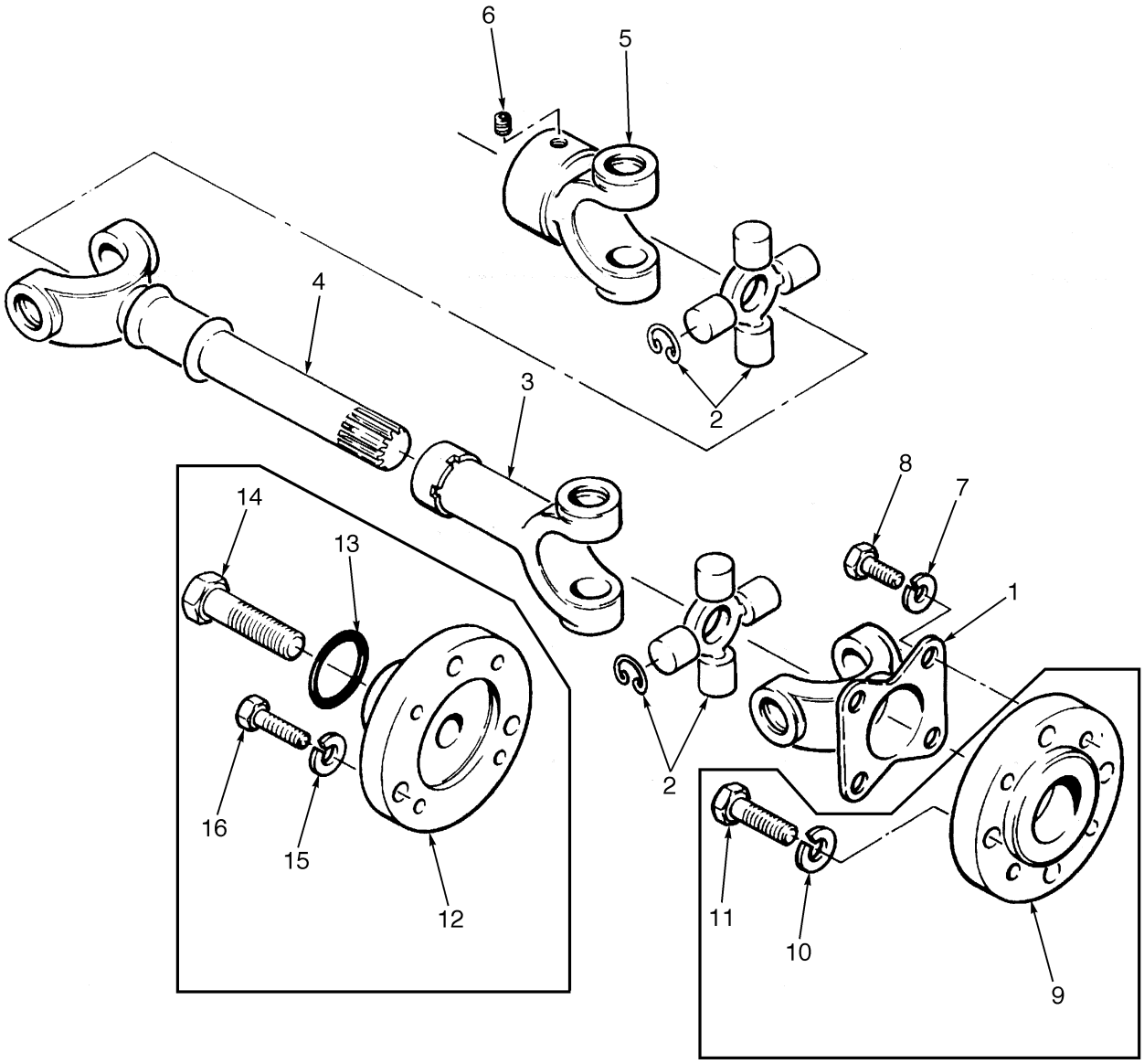

BP150066

©2004 HYSTER COMPANY

DRIVE SHAFT

KEY:
A: Gasoline and LPG
B: Diesel

ITEM	PART NO.	DESCRIPTION	QTY A	QTY B
	350055	Drive Shaft	..	1
	340218	Drive Shaft	1	..
1	53065	Flange	1	1
2	278085	Spider Bearing	2	2
3	1309409	Yoke	1	1
4	. . . . .	Yoke	1	1
5	1300301	Yoke	1	1
6	18886	Set Screw	1	1
7	15156	Lockwasher	4	4
8	16634	Capscrew	4	4
9	350054	Adapter	..	1
10	177948	Lockwasher	..	4
11	35116	Capscrew	..	4
12	1378948	Adapter	1	..
13	39373	O-Ring	1	..
14	221547	Capscrew	1	..
15	177947	Lockwasher	3	..
16	34811	Capscrew	3	..

©2004 HYSTER COMPANY

NOTES

9 MAST-TWO STAGE LIMITED FREE-LIFT

SECTION 9
MAST-TWO STAGE LIMITED FREE-LIFT

DESCRIPTION **PAGE**

CARRIAGE
TWO STAGE LIMITED FREE-LIFT 9-10
HEADER HOSE
TWO STAGE LIMITED FREE-LIFT 9-12
INNER MAST
TWO STAGE LIMITED FREE-LIFT 9-4
LIFT
TWO STAGE LIMITED FREE-LIFT 9-6
LIFT CYLINDER
TWO STAGE LIMITED FREE-LIFT 9-8
OUTER MAST
TWO STAGE LIMITED FREE-LIFT 9-2

©2004 HYSTER COMPANY

OUTER MAST (Figure 9-1)
TWO STAGE LIMITED FREE-LIFT

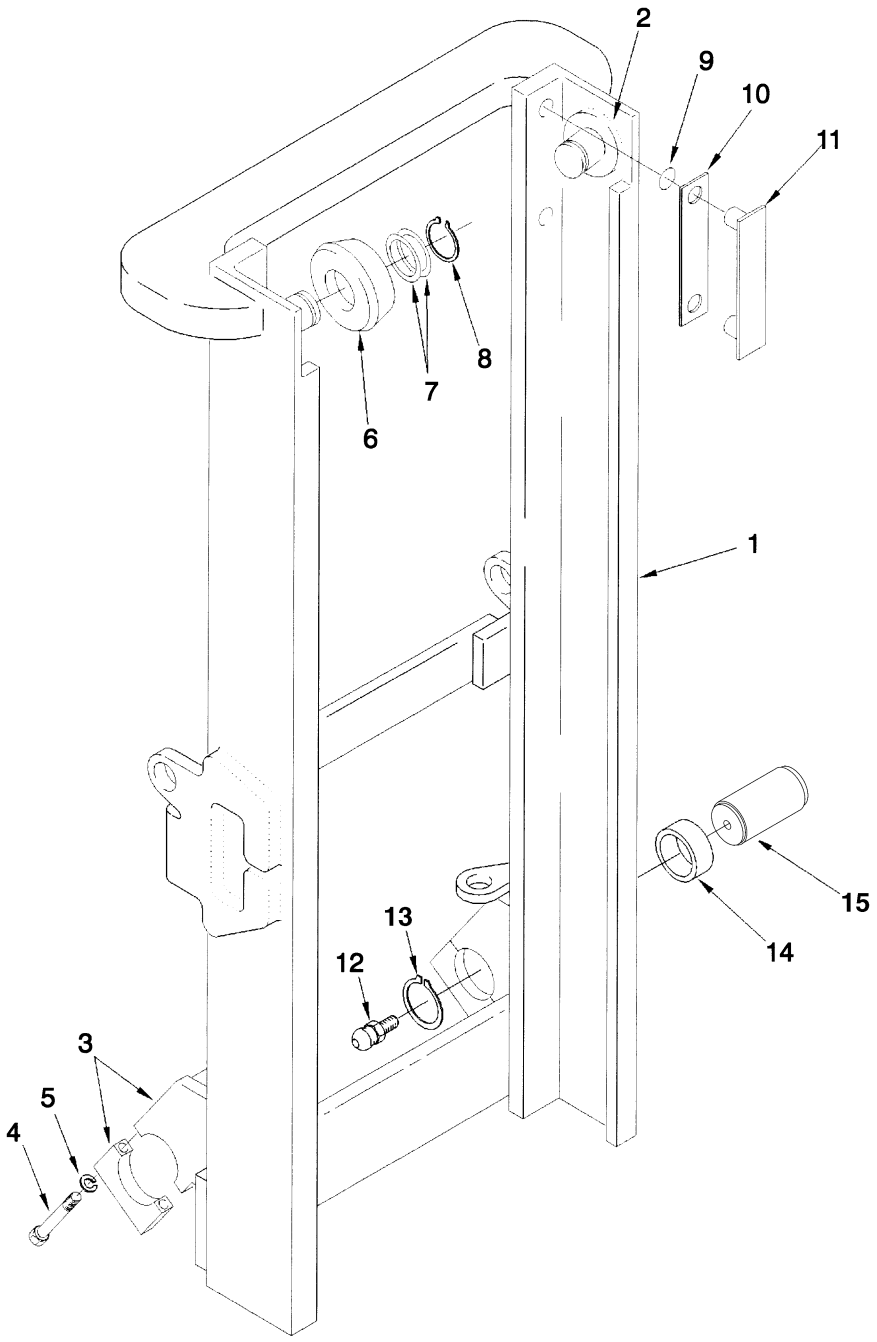

YP170085

©2004 HYSTER COMPANY

OUTER MAST
TWO STAGE LIMITED FREE-LIFT

ITEM	DESCRIPTION 1 2 3 4	LIFT HEIGHT TO BOTTOM OF FORKS			
		2340 mm (92.1 in.)	3340 mm (131.5 in.)	4340 mm (170.9 in.)	5340 mm (210.2 in.)
	Mast Group Number	A513 2340	A513 3340	A513 4340	A513 5340
	Mast Assembly	2044486	2044487	2044488	2044489
1	Outer Mast	1493287	1493289	1493291	1493293

ITEM		PART NO.	DESCRIPTION	QTY
	c	. . . . .	Mast Assembly	1
1	**c**	. . . . .	Outer Mast	1
2		341144	Stubshaft	2
3		346957	Hanger	2
3		369441	Cap	1
4		292570	Capscrew	2
5		292685	Lockwasher	2
6	**a**	1333649	Load Roller	2
7		126765	Shim (0.020 in.)	AR
8		187489	Snap Ring	2
9		104506	O-Ring	4
10	**b**	161272	Shim (0.007 in.)	AR
10		161273	Shim (0.020 in.) (0,51 mm)	AR
11		104264	Bearing Strip	2
12		16005	Lube Fitting	2
12	**b**	16009	Lube Fitting	2
13		12940	Snap Ring	2
14		115069	Bushing	2
15		114841	Pin	2

FOOTNOTES:
a Letter on Inside Face
b Optional
c Refer to Table

©2004 HYSTER COMPANY

INNER MAST (Figure 9-2)
TWO STAGE LIMITED FREE-LIFT

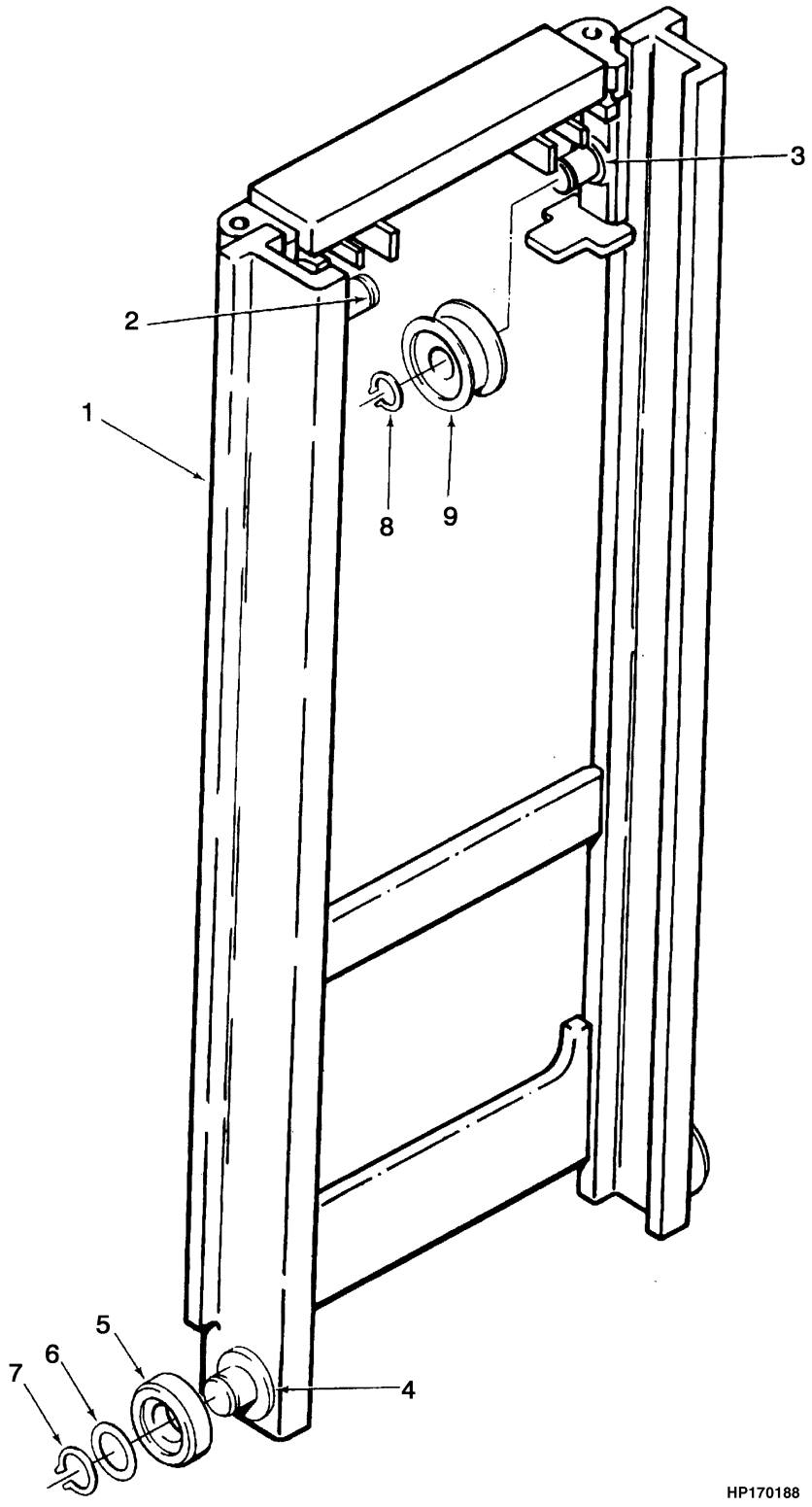

©2004 HYSTER COMPANY

INNER MAST
TWO STAGE LIMITED FREE-LIFT

ITEM	DESCRIPTION 1 2 3 4	LIFT HEIGHT TO BOTTOM OF FORKS			
		2340 mm (92.1 in.)	3340 mm (131.5 in.)	4340 mm (170.9 in.)	5340 mm (210.2 in.)
	Mast Group Number	A513 2340	A513 3340	A513 4340	A513 5340
	Mast Assembly	2044486	2044487	2044488	2044489
1	Inner Mast	341116	341117	341118	346961

ITEM		PART NO.	DESCRIPTION	QTY
	b	. . . . .	Mast Assembly	1
1	**b**	. . . . .	Inner Mast	1
2		369431	Stubshaft	1
3		369432	Stubshaft	1
4		341144	Stubshaft	2
5	**a**	1333649	Load Roller	2
6		126765	Shim (0.020 in.)	AR
7		187489	Snap Ring	2
8		58939	Snap Ring	2
9		346906	Sheave	2

FOOTNOTES:
a Letter on Inside Face
b Refer to Table

©2004 HYSTER COMPANY

LIFT (Figure 9-3)
TWO STAGE LIMITED FREE-LIFT

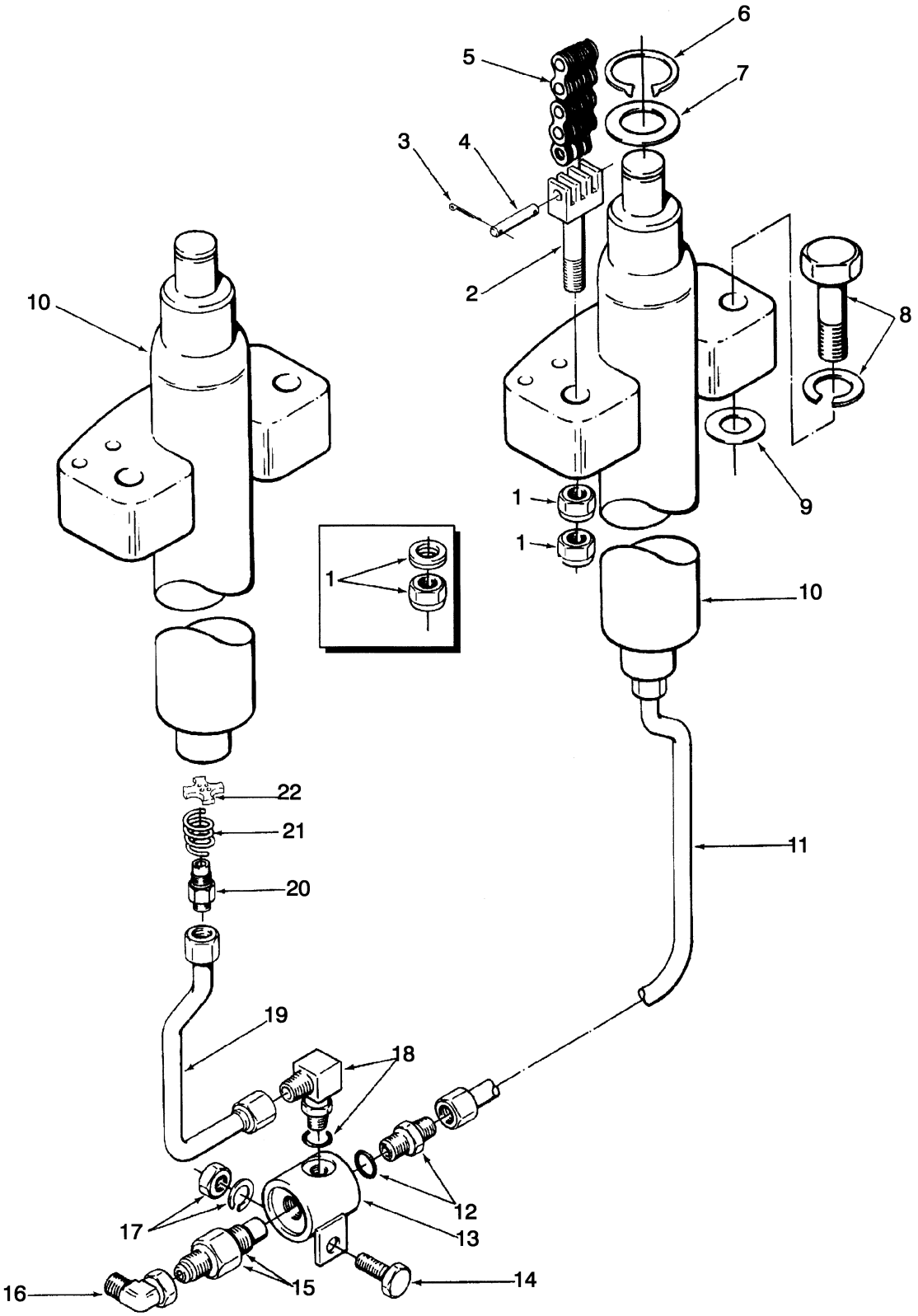

©2004 HYSTER COMPANY

LIFT
TWO STAGE LIMITED FREE-LIFT

ITEM	DESCRIPTION 1 2 3 4	LIFT HEIGHT TO BOTTOM OF FORKS			
		2340 mm (92.1 in.)	3340 mm (131.5 in.)	4340 mm (170.9 in.)	5340 mm (210.2 in.)
	Mast Group Number	A513 2340	A513 3340	A513 4340	A513 5340
5	Chain	341122	341123	341124	341053

ITEM		PART NO.	DESCRIPTION	QTY
1		293723	Nut	4
1		343946	Washer	2
2		1331992	Chain Anchor	2
3		15222	Cotter Pin	4
4		1307395	Pin	2
5	**a**	. . . . .	Chain	1
6		304523	Snap Ring	2
7		296438	Washer	2
8		292608	Capscrew (4 in.)	2
8		292689	Lockwasher	2
9		1325119	Shim (0.030 in.)	AR
9		134675	Shim (0.060 in.)	AR
10		. . . . .	Lift Cylinder (☞ Figure 9-4)	2
11		1485325	Tube (LH)	1
12		16542	Fitting	1
12		16485	O-Ring	1
13		366501	Block	1
14		292519	Capscrew	1
15		346971	Control Valve	1
15		16983	O-Ring	1
16		16992	Fitting	1
17		316826	Nut	1
17		320160	Washer	2
18		16560	Fitting	1
18		16485	O-Ring	1
19		1485324	Tube	1
20		184799	Fitting	2
21		388186	Spring	2
22		356598	Washer	2

FOOTNOTES:
a Refer to Table

LIFT CYLINDER (Figure 9-4)
TWO STAGE LIMITED FREE-LIFT

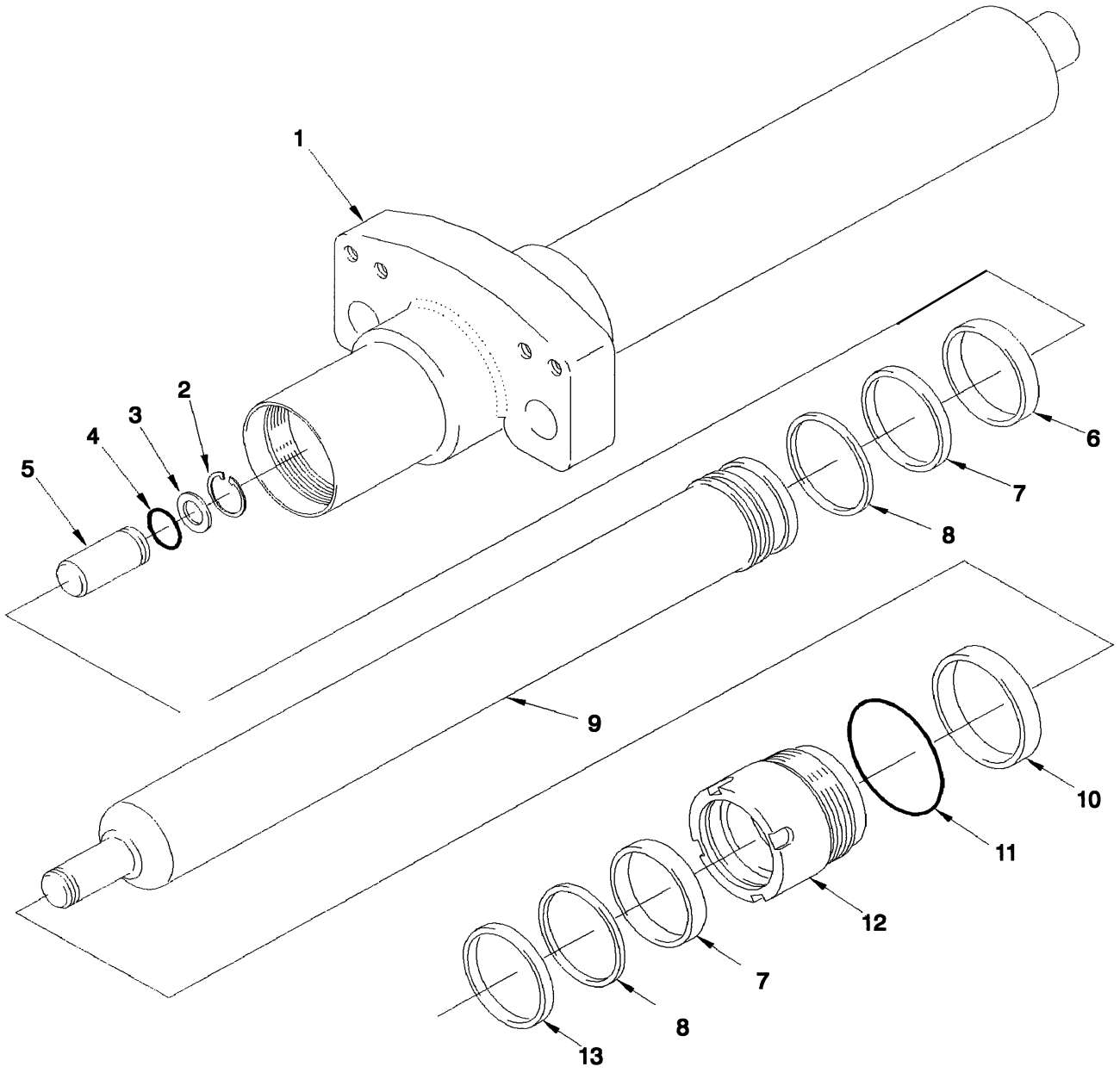

HP170618

©2004 HYSTER COMPANY

LIFT CYLINDER
TWO STAGE LIMITED FREE-LIFT

ITEM	DESCRIPTION 1 2 3 4	LIFT HEIGHT TO BOTTOM OF FORKS			
		2340 mm (92.1 in.)	3340 mm (131.5 in.)	4340 mm (170.9 in.)	5340 mm (210.2 in.)
	Mast Group Number	A513 2340	A513 3340	A513 4340	A513 5340
	Lift Cylinder	1331994	1331995	1331996	1331997
1	Shell	341331	341332	341333	346916
9	Rod	341340	341341	341342	346917

ITEM		PART NO.	DESCRIPTION	QTY
	a	. . . . .	Lift Cylinder	2
1	**a**	. . . . .	Shell	1
2		187388	Snap Ring	1
3		297531	Washer	1
3		637635	Washer (Optional)	1
4		39348	O-Ring	1
5		257913	Check Valve	1
6		215345	Wear Ring	1
7		309062	Seal	2
8		637565	Back-Up Ring	2
9	**a**	. . . . .	Rod	1
10		316513	Wear Ring	1
11		15880	O-Ring	1
12		1331993	Retainer	1
13		1314311	Wiper Ring	1
		1332017	Seal Kit (Includes Items 4, 6-8, 10-11, 13)	1

FOOTNOTES:
a Refer to Table

©2004 HYSTER COMPANY

CARRIAGE (Figure 9-5)
TWO STAGE LIMITED FREE-LIFT

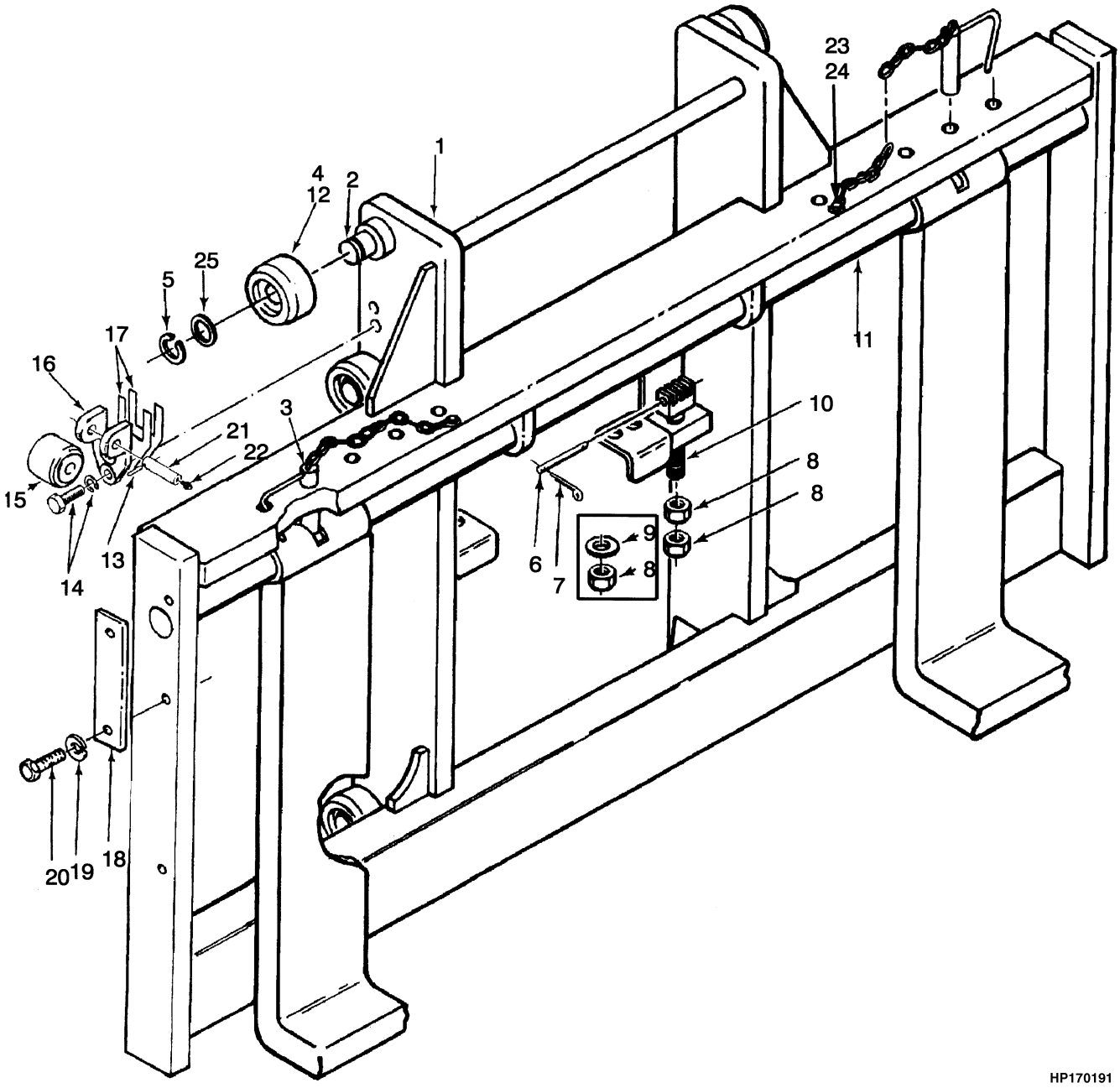

©2004 HYSTER COMPANY

CARRIAGE
TWO STAGE LIMITED FREE-LIFT

ITEM		PART NO.	DESCRIPTION	QTY
		1318162	Carriage Assembly (78 in.)	1
1		1318167	Frame	1
2		341144	Stubshaft	6
3		1331269	Pin	2
4		126765	Shim (0.020 in.)	AR
5		187489	Snap Ring	6
6		1307395	Pin	2
7		15222	Cotter Pin	2
8		293723	Nut	4
9		343946	Washer	2
10		1331992	Chain Anchor	2
11		1330064	Pin	2
12	**a**	1333648	Load Roller (0.060 in.)	AR
13	**b**	66333	Pin	2
14	**b**	292528	Capscrew	4
14	**b**	292683	Lockwasher	4
15	**b**	244005	Roller	2
16	**b**	244008	Bracket	2
17	**b**	192424	Shim (0.030 in.)	AR
17	**b**	192425	Shim (0.062 in.)	AR
18		66468	Plate	2
19		292685	Lockwasher	4
20		226458	Capscrew	4
21	**b**	244009	Pin	2
22	**b**	16001	Lube Fitting	2
23		292513	Capscrew	2
24		296420	Washer	2
25		366116	Spacer	2

FOOTNOTES:
a Letter on Inside Face
b Optional

©2004 HYSTER COMPANY

HEADER HOSE (Figure 9-6)
TWO STAGE LIMITED FREE-LIFT

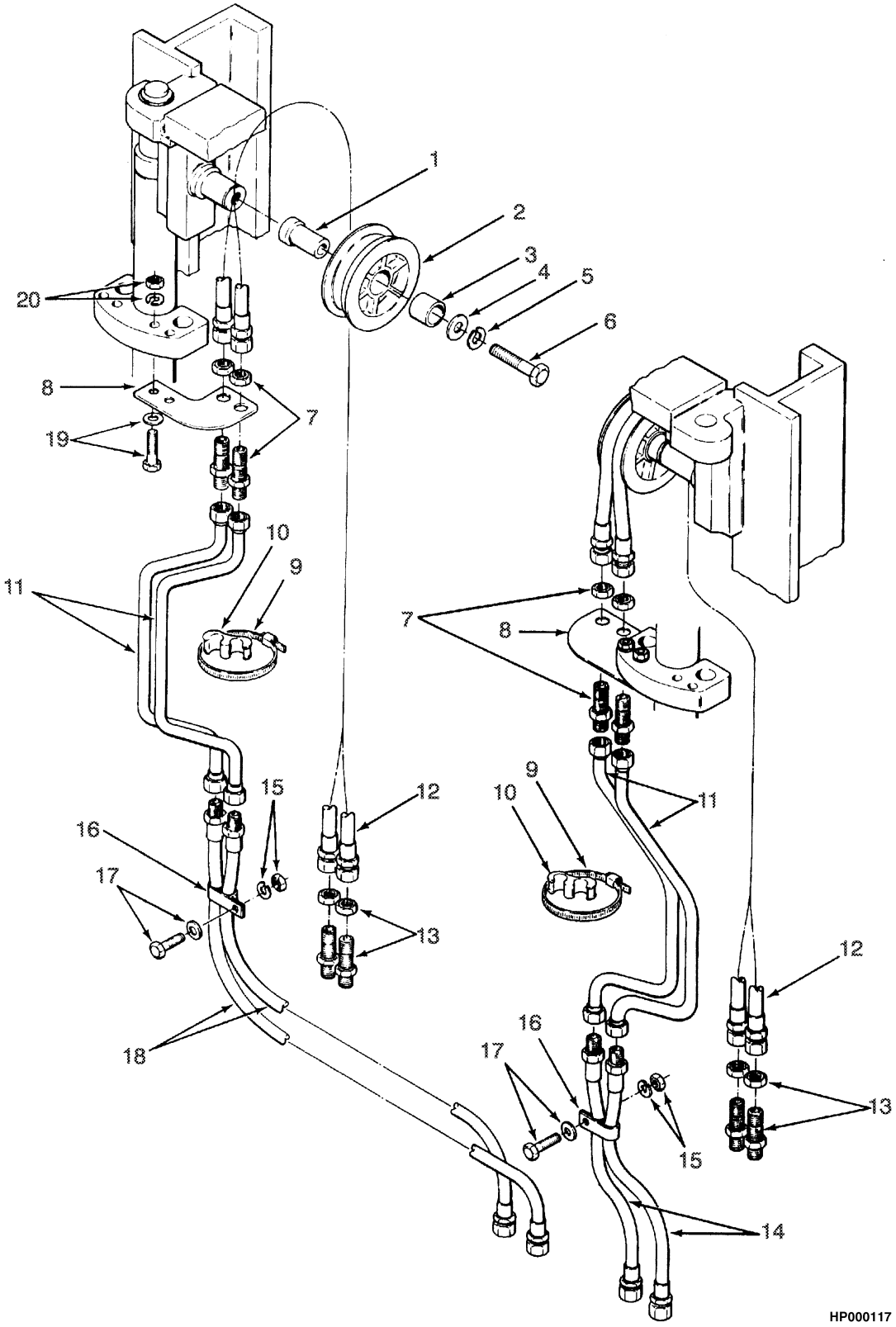

©2004 HYSTER COMPANY

HEADER HOSE
TWO STAGE LIMITED FREE-LIFT

ITEM	DESCRIPTION 1 2 3 4	LIFT HEIGHT TO BOTTOM OF FORKS			
		2340 mm (92.1 in.)	3340 mm (131.5 in.)	4340 mm (170.9 in.)	5340 mm (210.2 in.)
	Mast Group Number	A513 2340	A513 3340	A513 4340	A513 5340
11	Tube	341058	341059	341060	341061
12	Hose	358261	358240	358262	341074

KEY:
A: Three Function
B: Four Function

ITEM		PART NO.	DESCRIPTION	QTY A	QTY B
1		357529	Stubshaft	1	2
2		1332705	Sheave	1	2
3		332057	Bushing	1	1
4		320162	Washer	1	2
5		292683	Lockwasher	1	2
6		292535	Capscrew	1	2
7		16449	Fitting	2	4
8		369426	Plate	1	2
9	**a**	78286	Clamp	2	4
9	**b**	78286	Clamp	3	6
10	**a**	340054	Spacer	2	4
10	**b**	340054	Spacer	3	6
11	**c**	. . . . .	Tube	2	4
12	**c**	. . . . .	Hose	2	4
13		16448	Fitting (Pin Type)	2	4
14		1302636	Hose	2	2
15		302401	Locknut	1	2
15		320160	Washer	1	2
16		255578	Clamp	1	2
17		15176	Washer	1	2
17		292517	Capscrew	1	2
18		1302637	Hose	..	2
19		15176	Washer	2	4
19		292522	Capscrew	2	4
20		302401	Locknut	2	4
20		320160	Washer	2	4

FOOTNOTES:
a 2340 mm (92.0 in.) Lift Height and 3340 mm (131.5 in.) Lift Height
b 4340 mm (171.0 in.) Lift Height and Above
c Refer to Table

©2004 HYSTER COMPANY

NOTES

10 MAST-THREE STAGE FULL FREE-LIFT

SECTION 10
MAST-THREE STAGE FULL FREE-LIFT

DESCRIPTION **PAGE**

CARRIAGE
THREE STAGE FULL FREE-LIFT 10-18
FREE-LIFT
THREE STAGE FULL FREE-LIFT 10-10
FREE-LIFT CYLINDER
THREE STAGE FULL FREE-LIFT 10-16
HEADER HOSE
THREE STAGE FULL FREE LIFT 10-20
INNER MAST
THREE STAGE FULL FREE-LIFT 10-6
INTERMEDIATE MAST
THREE STAGE FULL FREE-LIFT 10-4
MAIN LIFT
THREE STAGE FULL FREE-LIFT 10-8
MAIN LIFT CYLINDER
THREE STAGE FULL FREE-LIFT 10-14
OUTER MAST
THREE STAGE FULL FREE-LIFT 10-2

©2004 HYSTER COMPANY

OUTER MAST (Figure 10-1)
THREE STAGE FULL FREE-LIFT

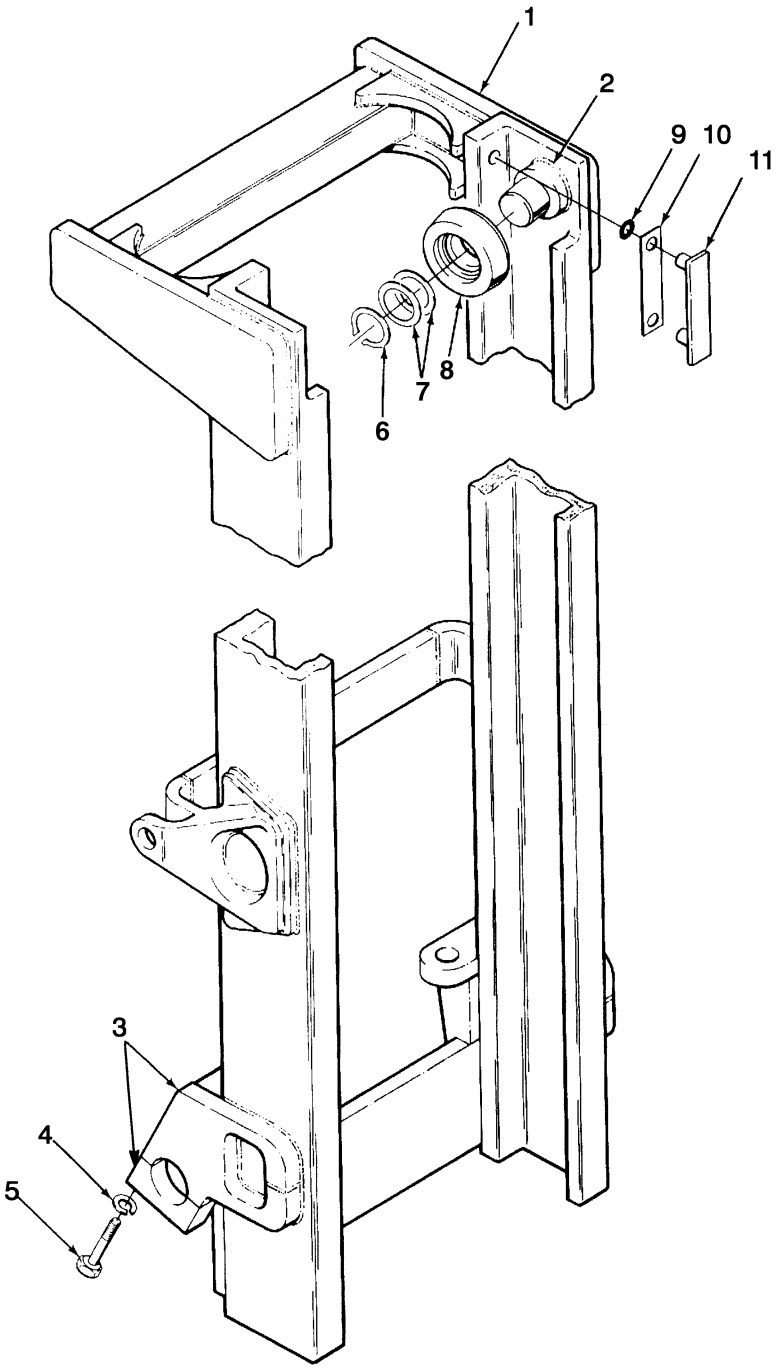

HP170634

©2004 HYSTER COMPANY

OUTER MAST
THREE STAGE FULL FREE-LIFT

ITEM	DESCRIPTION 1 2 3 4	LIFT HEIGHT TO BOTTOM OF FORKS		
		3590 mm (141.3 in.)	4538 mm (178.7 in.)	5540 mm (218.1 in.)
	Mast Group Number	**A514 3590**	**A514 4538**	**A514 5540**
	Mast Assembly	2044527	2044528	2044529
1	Outer Mast	1493517	1493519	1493520

ITEM		PART NO.	DESCRIPTION	QTY
	b	. . . . .	Mast Assembly	1
1	**b**	. . . . .	Outer Mast	1
2		341144	Stubshaft	2
3		362339	Hanger	2
4		296426	Washer (Hardened)	2
5		292570	Capscrew	2
6		187489	Snap Ring	2
7		126765	Shim (0.020 in.)	AR
8	**a**	1333649	Load Roller (0.50 in.)	AR
9		104506	O-Ring	4
10		161272	Shim (0.007 in.) (Optional)	AR
10		161273	Shim (0.020 in.)	AR
11		104264	Bearing Strip	2

FOOTNOTES:
a Letter on Inside Face
b Refer to Table

©2004 HYSTER COMPANY

INTERMEDIATE MAST (Figure 10-2)
THREE STAGE FULL FREE-LIFT

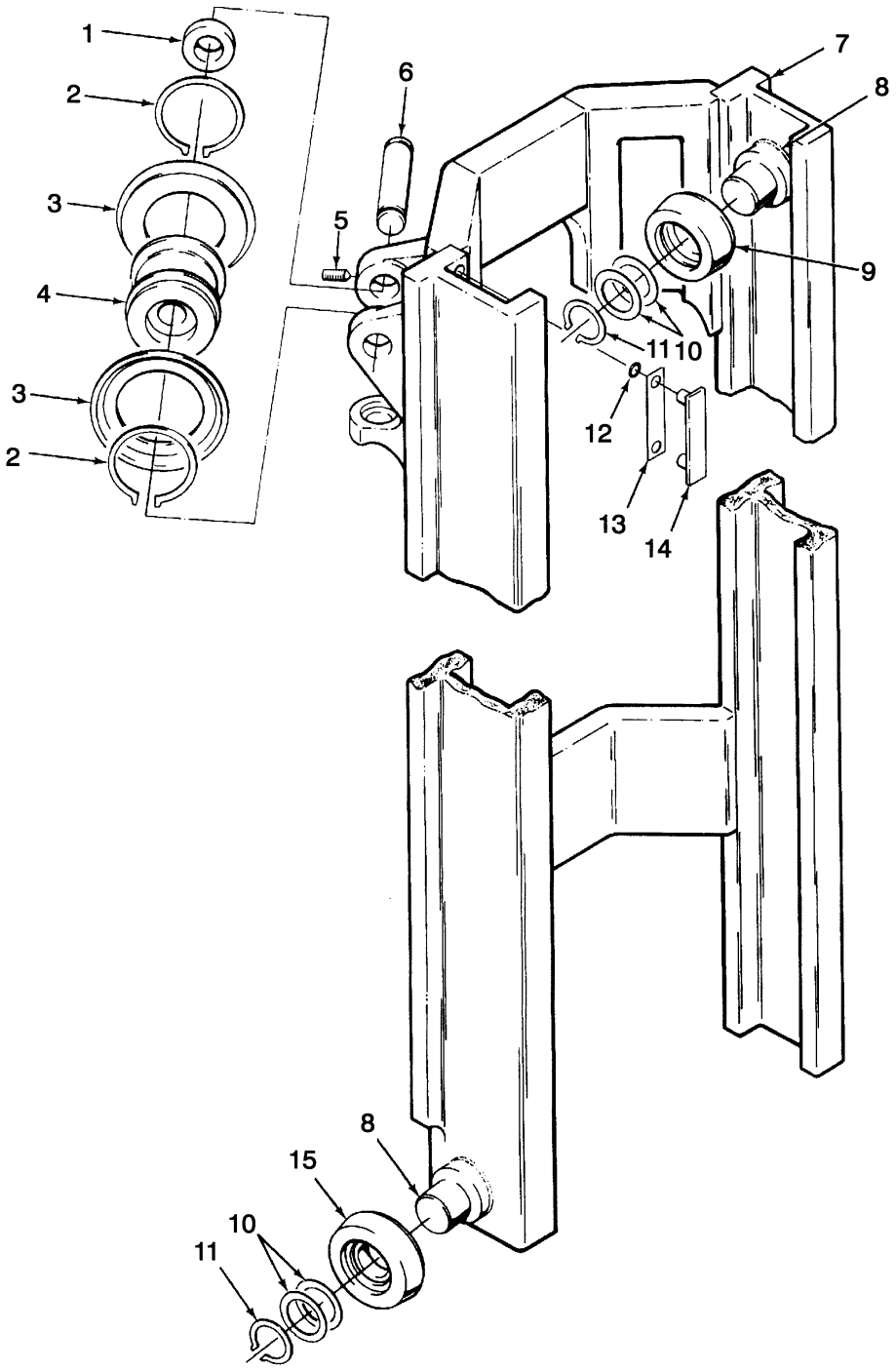

HP170635

©2004 HYSTER COMPANY

INTERMEDIATE MAST
THREE STAGE FULL FREE-LIFT

ITEM	DESCRIPTION 1 2 3 4	LIFT HEIGHT TO BOTTOM OF FORKS		
		3590 mm (141.3 in.)	4538 mm (178.7 in.)	5540 mm (218.1 in.)
	Mast Group Number	**A514 3590**	**A514 4538**	**A514 5540**
	Mast Assembly	2044527	2044528	2044529
7	Intermediate Mast	364202	364203	364204

ITEM		PART NO.	DESCRIPTION	QTY
	b	. . . . .	Mast Assembly	1
1		362356	Spacer	4
2		362953	Snap Ring	4
3		362950	Guide	4
4		362352	Sheave	2
5		302105	Screw	2
6		366496	Pin	2
7	**b**	. . . . .	Intermediate Mast	1
8		341144	Stubshaft	4
9	**a**	1333648	Load Roller (0.050 in.)	AR
10		126765	Shim (0.020 in.)	AR
11		187489	Snap Ring	4
12		104506	O-Ring	4
13		131715	Shim (0.007 in.) (Optional)	AR
13		131716	Shim (0.020 in.)	AR
14		215211	Bearing Strip	2
15	**a**	1333649	Load Roller (0.050 in.)	AR

FOOTNOTES:
a Letter on Inside Face
b Refer to Table

©2004 HYSTER COMPANY

INNER MAST (Figure 10-3)
THREE STAGE FULL FREE-LIFT

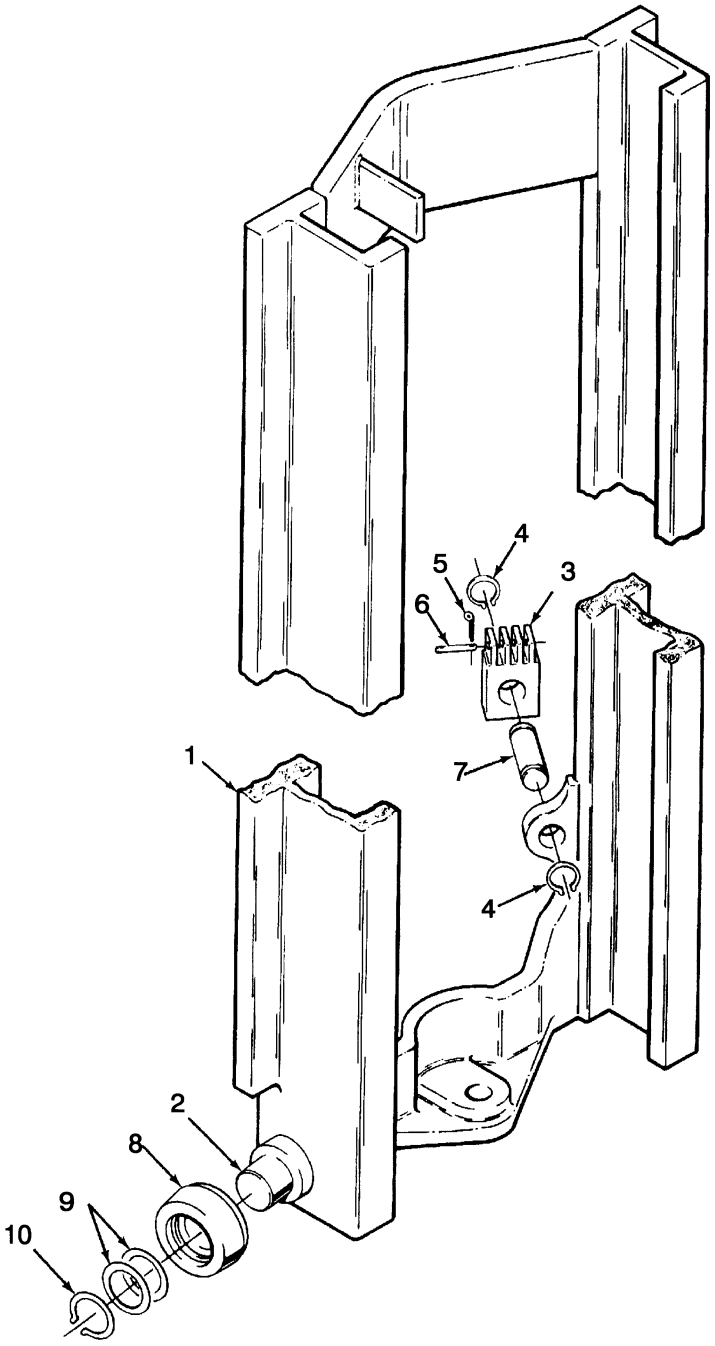

HP170649

©2004 HYSTER COMPANY

INNER MAST
THREE STAGE FULL FREE-LIFT

ITEM	DESCRIPTION 1 2 3 4	LIFT HEIGHT TO BOTTOM OF FORKS		
		3590 mm (141.3 in.)	4538 mm (178.7 in.)	5540 mm (218.1 in.)
	Mast Group Number	A514 3590	A514 4538	A514 5540
	Mast Assembly	2044527	2044528	2044529
1	Inner Mast	1307391	1307392	1313811

ITEM		PART NO.	DESCRIPTION	QTY
	b	. . . . .	Mast Assembly	1
1	**b**	. . . . .	Inner Mast	1
2		341144	Stubshaft	2
3		358305	Chain Anchor	2
4		122400	Snap Ring	4
5		15222	Cotter Pin	2
6		1307395	Pin	2
7		349320	Pin	2
8	**a**	1333648	Load Roller (0.050 in.)	AR
9		126765	Shim (0.020 in.)	AR
10		187489	Snap Ring	2

FOOTNOTES:
a Letter on Inside Face
b Refer to Table

©2004 HYSTER COMPANY

MAIN LIFT (Figure 10-4)
THREE STAGE FULL FREE-LIFT

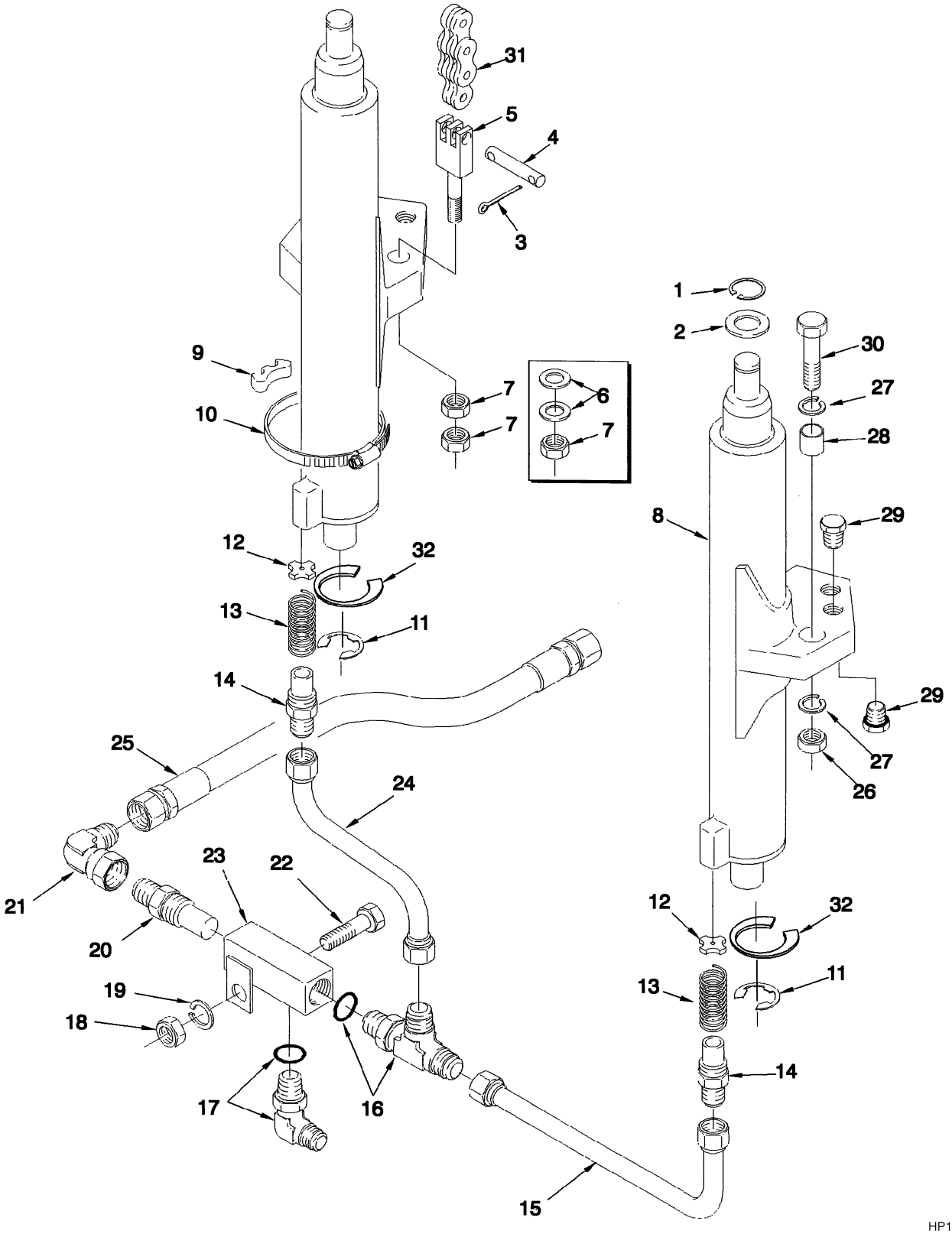

©2004 HYSTER COMPANY

MAIN LIFT
THREE STAGE FULL FREE-LIFT

ITEM	DESCRIPTION 1 2 3 4	LIFT HEIGHT TO BOTTOM OF FORKS		
		3590 mm (141.3 in.)	4538 mm (178.7 in.)	5540 mm (218.1 in.)
	Mast Group Number	A514 3590	A514 4538	A514 5540
	Mast Assembly	2044527	2044528	2044529
31	Chain	341123	366516	366523

ITEM		PART NO.	DESCRIPTION	QTY
	a	. . . . .	Mast Assembly	1
1		304523	Snap Ring	2
2		296438	Washer	2
3		15222	Cotter Pin	2
4		1307395	Pin	2
5		1331992	Chain Anchor	2
6		343946	Washer	2
7		293723	Nut	4
8		. . . . .	Lift Cylinder (LH) (☞ Figure 10-6)	2
8		. . . . .	Lift Cylinder (RH) (☞ Figure 10-6)	2
9		340054	Spacer	1
10		162562	Clamp	1
11		1307300	E-Ring	..
12		320334	Washer	2
13		388186	Spring	2
14		184799	Fitting	2
15		1485589	Tube	1
16		14586	Fitting	1
16		16485	O-Ring	1
17		16562	Fitting	1
17		16487	O-Ring	1
18		316826	Nut	1
19		320160	Washer	2
20		346971	Control Valve	1
21		16938	Fitting	1
22		292519	Capscrew	1
23		372346	Housing	1
24		1485590	Tube	1
25		1485326	Hose	1
26		316829	Nut	4
27		296431	Washer	8
28		372389	Spacer	2
29		216590	Fitting	4
30		292593	Capscrew	4
31	**a**	. . . . .	Chain	2
32		1344753	Shim (0.030 in.)	AR

FOOTNOTES:
a Refer to Table

©2004 HYSTER COMPANY

FREE-LIFT (Figure 10-5)
THREE STAGE FULL FREE-LIFT

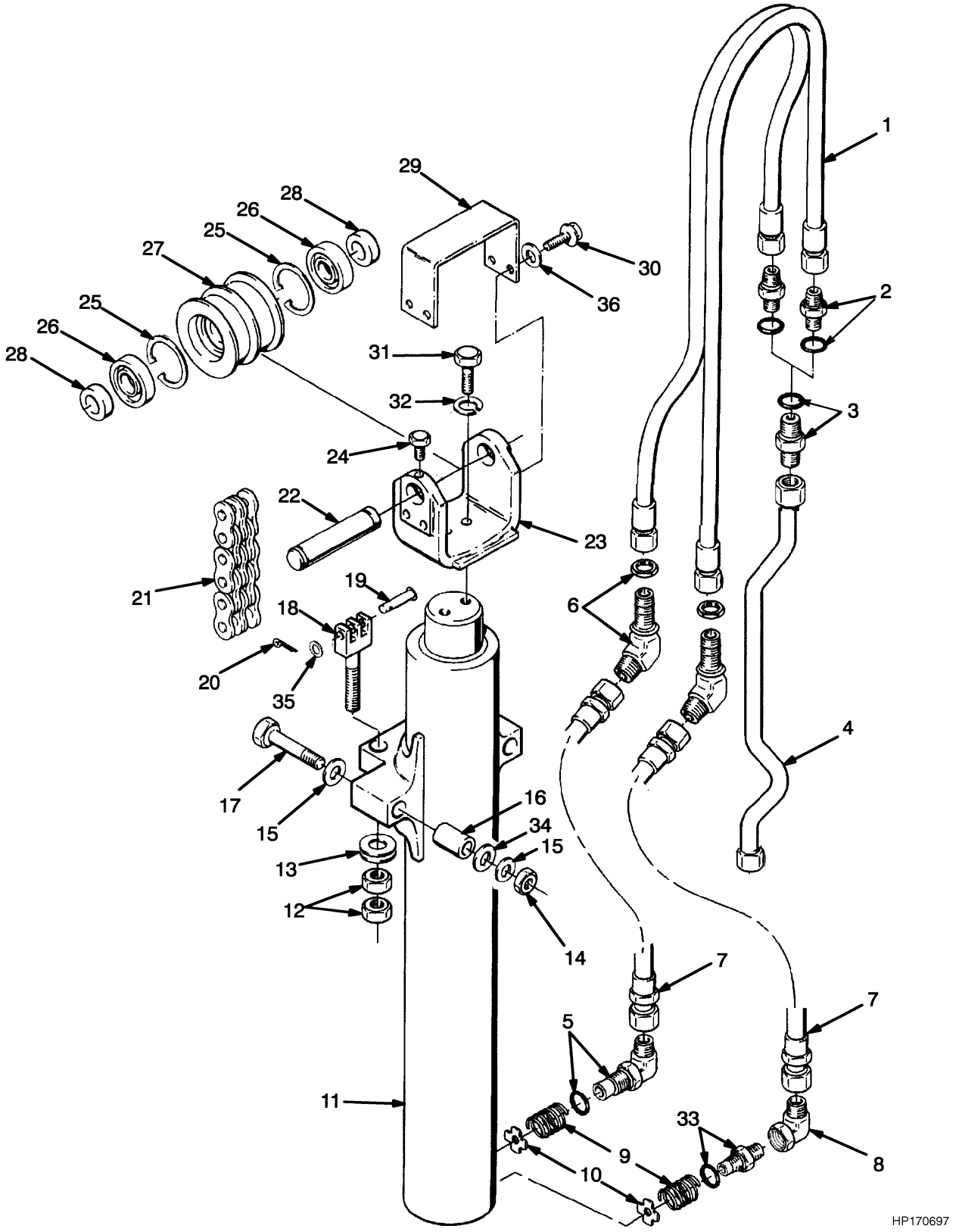

©2004 HYSTER COMPANY

FREE-LIFT
THREE STAGE FULL FREE-LIFT

ITEM	DESCRIPTION 1 2 3 4	LIFT HEIGHT TO BOTTOM OF FORKS		
		3590 mm (141.3 in.)	4538 mm (178.7 in.)	5540 mm (218.1 in.)
	Mast Group Number	A514 3590	A514 4538	A514 5540
1	Hose	366517	366518	366519
4	Tube	1493523	1485591	1493524
21	Chain	368139	368140	1313789

ITEM		PART NO.	DESCRIPTION	QTY
1	**a**	. . . . .	Hose	1
2		201783	Fitting	2
2		16486	O-Ring	1
3		16544	Fitting	1
3		16487	O-Ring	1
4	**a**	. . . . .	Tube	1
5		189595	Fitting	1
6		16467	Fitting	2
7		330028	Hose	2
8		16882	Fitting	2
9		388186	Spring	2
10		320334	Washer	2
11		. . . . .	Lift Cylinder (☞ Figure 10-7)	1
12		293723	Nut	4
13		343946	Washer	2
14		316829	Nut	4
15		296431	Washer	4
16		372389	Spacer	2
17		292593	Capscrew	2
18		1331992	Chain Anchor	2
19		1307395	Pin	2
20		15222	Cotter Pin	2
21	**a**	. . . . .	Chain	2
22		366526	Pin	1
23		366528	Crosshead	1
24		302105	Screw	1
25		59625	Snap Ring	2
26		334932	Bearing	2
27		366524	Sheave	1
28		297573	Spacer	2
29		366529	Guard	1
30		292514	Capscrew	4
31		292562	Capscrew	2
32		292685	Lockwasher	2
33		184799	Fitting	1
34		15133	Washer	2

©2004 HYSTER COMPANY

FREE-LIFT
THREE STAGE FULL FREE-LIFT

ITEM	PART NO.	DESCRIPTION	QTY
35	320160	Washer	AR
36	292682	Lockwasher	4

FOOTNOTES:
a Refer to Table

©2004 HYSTER COMPANY

NOTES

MAIN LIFT CYLINDER (Figure 10-6)
THREE STAGE FULL FREE-LIFT

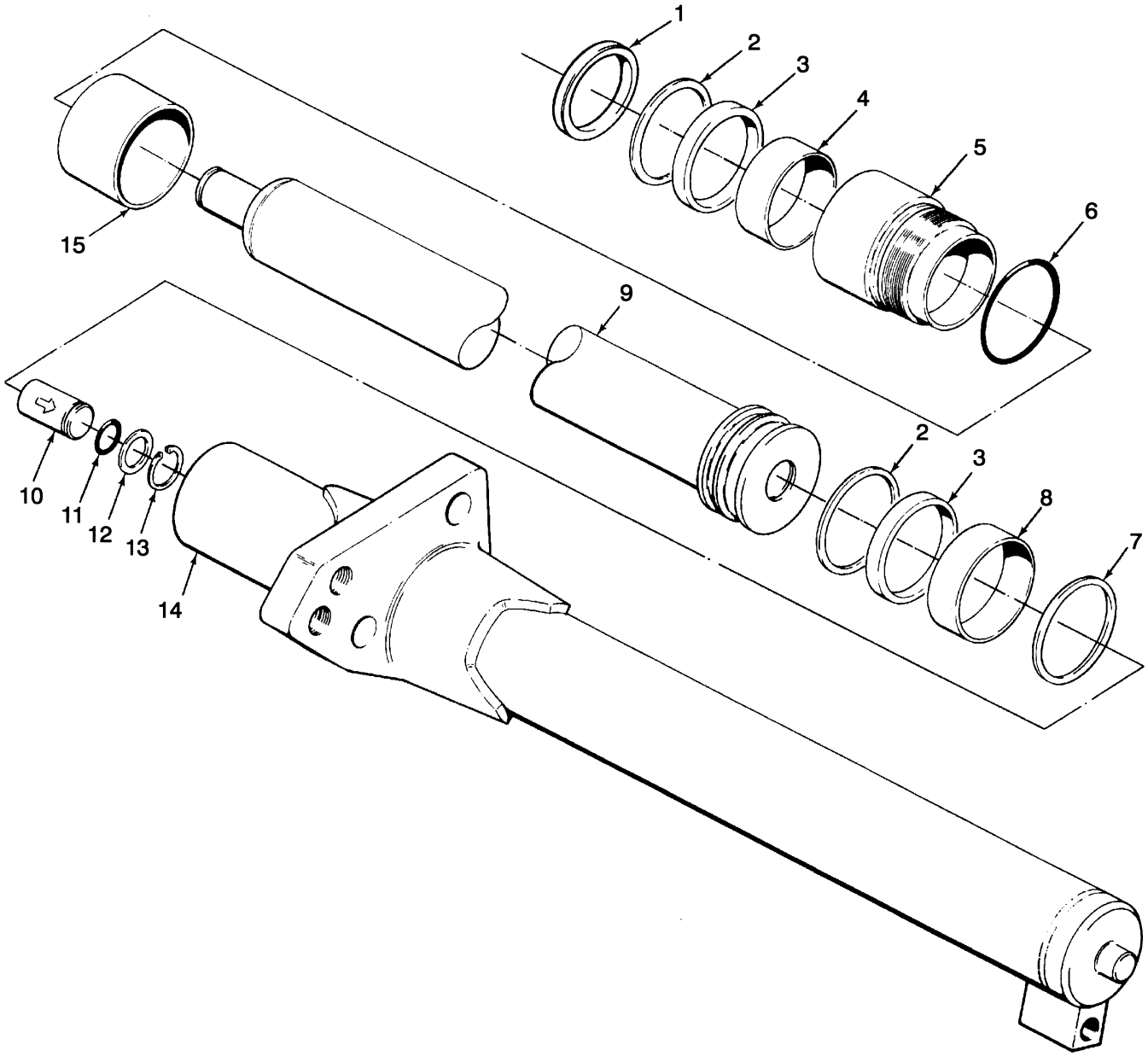

HP170717

©2004 HYSTER COMPANY

MAIN LIFT CYLINDER
THREE STAGE FULL FREE-LIFT

LEFT HAND

ITEM	DESCRIPTION 1 2 3 4	LIFT HEIGHT TO BOTTOM OF FORKS		
		3590 mm (141.3 in.)	4538 mm (178.7 in.)	5540 mm (218.1 in.)
	Mast Group Number	A514 3590	A514 4538	A514 5540
	Lift Cylinder	1332000	1332002	1332003
9	Rod	362965	362966	362967
14	Shell	362986	362987	362988

RIGHT HAND

ITEM	DESCRIPTION 1 2 3 4	LIFT HEIGHT TO BOTTOM OF FORKS		
		3590 mm (141.3 in.)	4538 mm (178.7 in.)	5540 mm (218.1 in.)
	Mast Group Number	A514 3590	A514 4538	A514 5540
	Lift Cylinder	1332005	1332007	1332008
9	Rod	362965	362966	362967
14	Shell	362975	362976	362977

ITEM		PART NO.	DESCRIPTION	QTY
	a	. . . . .	Lift Cylinder	2
1		1314311	Wiper Ring	1
2		637565	Back-Up Ring	2
3		309062	Seal	2
4		316513	Wear Ring	1
5		1331993	Retainer	1
6		15880	O-Ring	1
7		364233	Seal	1
8		636941	Wear Ring	1
9	**a**	. . . . .	Rod	1
10		257913	Check Valve	1
11		39348	O-Ring	1
12		297531	Washer	1
12		637635	Washer (Optional)	1
13		187388	Snap Ring	1
14	**a**	. . . . .	Shell	1
15		383824	Spacer	..
		1332019	Seal Kit (Includes Items 1-4, 6-8, 11)	1

FOOTNOTES:
a Refer to Table

©2004 HYSTER COMPANY

FREE-LIFT CYLINDER (Figure 10-7)
THREE STAGE FULL FREE-LIFT

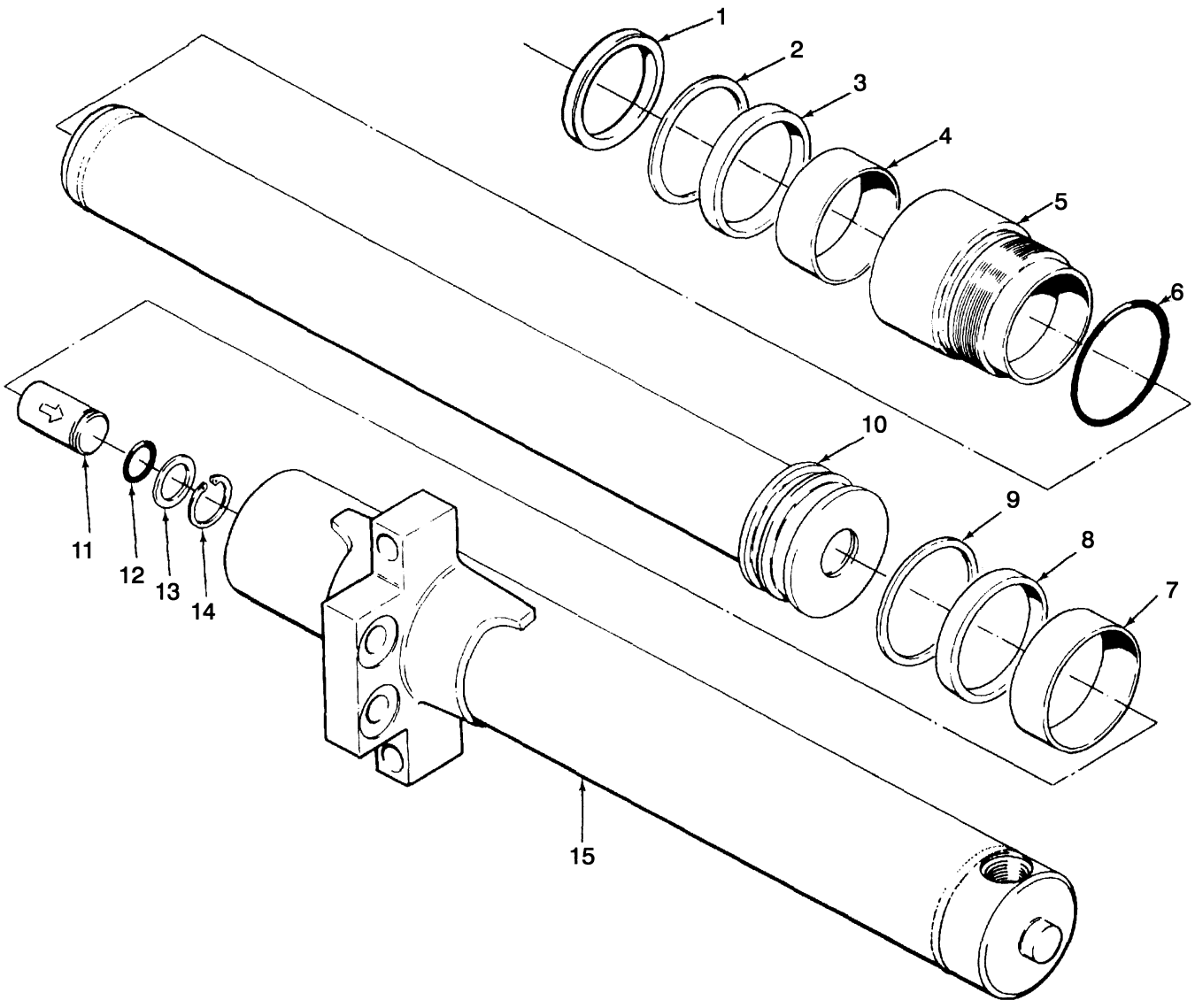

HP170718

©2004 HYSTER COMPANY

FREE-LIFT CYLINDER
THREE STAGE FULL FREE-LIFT

ITEM	DESCRIPTION 1 2 3 4	LIFT HEIGHT TO BOTTOM OF FORKS		
		3590 mm (141.3 in.)	4538 mm (178.7 in.)	5540 mm (218.1 in.)
	Mast Group Number	A514 3590	A514 4538	A514 5540
	Lift Cylinder	364246	364247	1313809
10	Rod	366484	366485	366486
15	Shell	366476	366477	1313807

ITEM	PART NO.	DESCRIPTION	QTY
	a	Lift Cylinder	1
1	636858	Wiper Ring	1
2	638251	Back-Up Ring	1
3	637161	Rod Seal	1
4	215345	Wear Ring	1
5	324023	Retainer	1
6	15889	O-Ring	1
7	636954	Wear Ring	1
8	637166	Seal	1
9	638223	Back-Up Ring	1
10	**a**	Rod	1
11	257913	Check Valve	1
12	39348	O-Ring	1
13	297531	Washer	1
13	637635	Washer (Optional)	1
14	187388	Snap Ring	1
15	**a**	Shell	1
	368137	Seal Kit (Includes Items 1-4, 6-9)	1

FOOTNOTES:
a Refer to Table

CARRIAGE (Figure 10-8)
THREE STAGE FULL FREE-LIFT

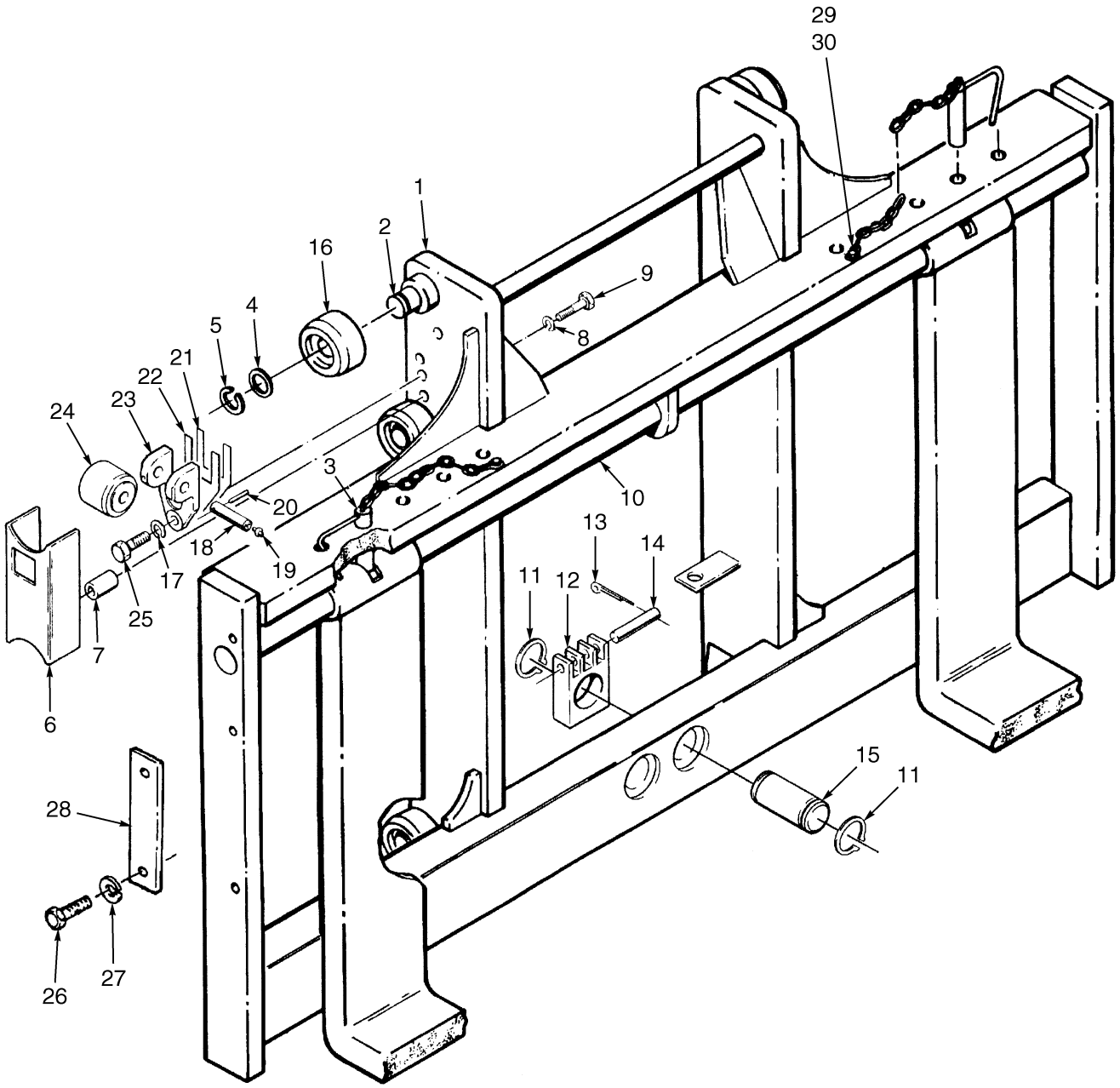

HP170606

©2004 HYSTER COMPANY

CARRIAGE
THREE STAGE FULL FREE-LIFT

ITEM		PART NO.	DESCRIPTION	QTY
		1318161	Carriage Assembly (78 in.)	1
1		1331270	Frame	1
2		341144	Stubshaft	6
3		1331269	Pin	2
4		126765	Shim (0.020 in.) (Bottom Four Rollers)	AR
4		366116	Spacer (Top Two Rollers)	2
5		187489	Snap Ring	6
6		319322	Guard (RH)	1
6		319323	Guard (LH)	1
7		317292	Spacer	4
8		15155	Lockwasher	4
9		18522	Capscrew	4
10		1330064	Pin	2
11		122400	Snap Ring	4
12		358305	Chain Anchor	2
13		15222	Cotter Pin	2
14		1307395	Pin	2
15		1330780	Pin	2
16	**a**	1333648	Load Roller (0.060 in.)	AR
17	**b**	292683	Lockwasher	4
18	**b**	244009	Pin	2
19	**b**	16001	Lube Fitting	2
20	**b**	66333	Pin	2
21	**b**	192424	Shim (0.030 in.)	AR
22	**b**	192425	Shim (0.062 in.)	AR
23	**b**	244008	Bracket	2
24	**b**	244005	Roller	2
25	**b**	292528	Capscrew	4
26		226458	Capscrew	4
27		292685	Lockwasher	4
28		66468	Plate	2
29		292513	Capscrew	2
30		296420	Washer	2

FOOTNOTES:
a Letter on Inside Face
b Optional

©2004 HYSTER COMPANY

HEADER HOSE (Figure 10-9)
THREE STAGE FULL FREE LIFT

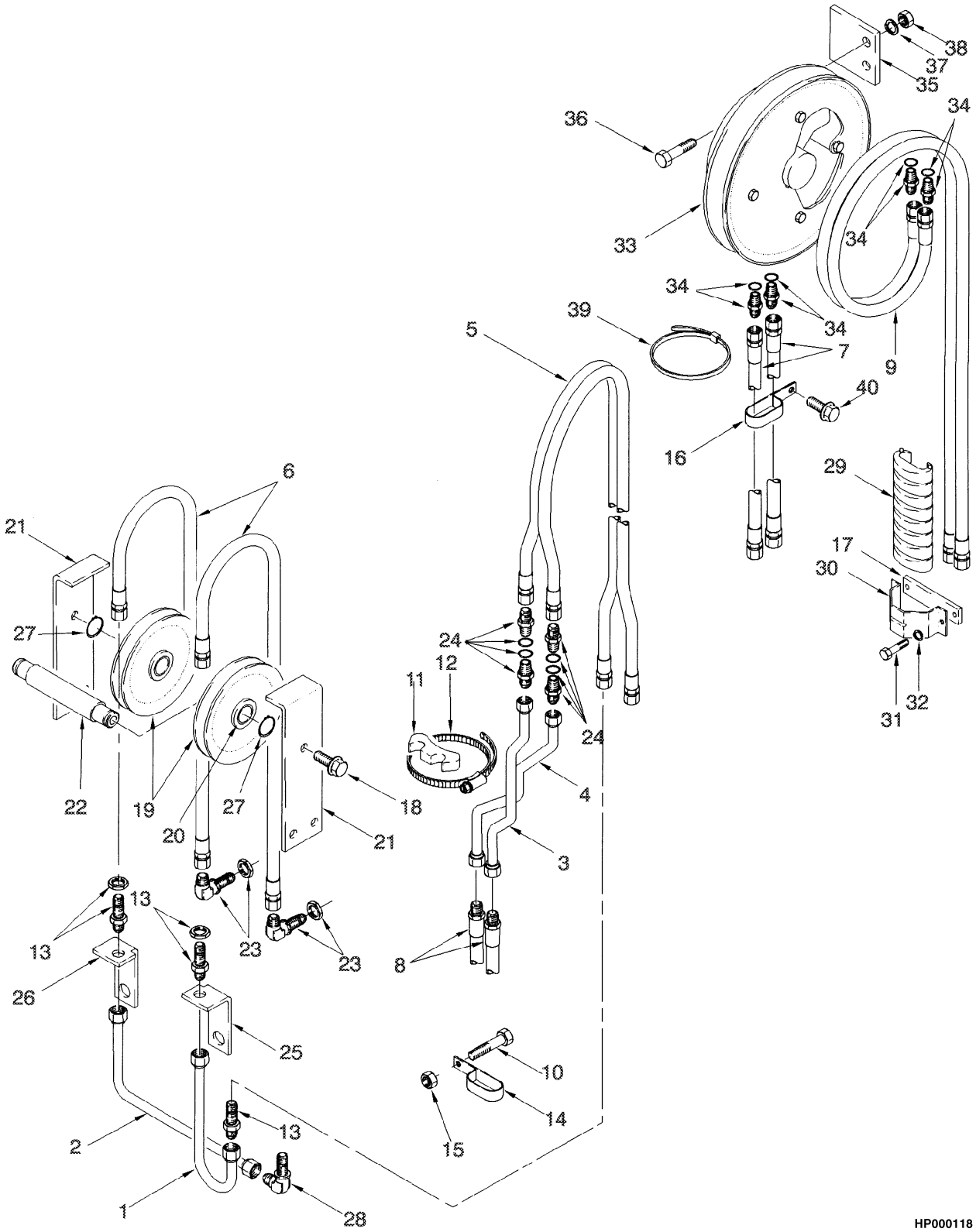

©2004 HYSTER COMPANY

HEADER HOSE
THREE STAGE FULL FREE LIFT

ITEM	DESCRIPTION 1 2 3 4	LIFT HEIGHT TO BOTTOM OF FORKS		
		3590 mm (141.3 in.)	4538 mm (178.7 in.)	5540 mm (218.1 in.)
	Mast Group Number	A514 3590	A514 4538	A514 5540
1	Tube	380567	380569	380569
2	Tube	380568	380570	380570
3	Tube	386625	386626	386627
4	Tube	386629	386630	386631
5	Hose	386634	386635	386636
6	Hose	386638 1302591	386639 1302592	386641 1302593 1306159
7	Hose	386642	386643	386644

KEY:
A: Three Function
B: Four Function

ITEM		PART NO.	DESCRIPTION	QTY A	QTY B
1	**b**	. . . . .	Tube	1	1
2	**b**	. . . . .	Tube	1	1
3	**b**	. . . . .	Tube	1	1
4	**b**	. . . . .	Tube	1	1
5	**b**	. . . . .	Hose	1	1
6	**b**	. . . . .	Hose	2	2
7	**b**	. . . . .	Hose	..	2
8		346571	Hose	2	2
9	**a**	386646	Hose	..	1
10		292519	Capscrew	1	1
11		340054	Spacer	2	2
12		78286	Clamp	2	2
13		16449	Fitting	3	3
14		255578	Clamp	1	1
15		302401	Locknut	1	1
16		255578	Clamp	..	1
17		356431	Plate	..	1
18		351668	Screw	2	2
19		297647	Sheave	2	2
20		136045	Bushing	1	1
21		380585	Bracket	2	2
22		380587	Shaft	1	1
23		16458	Fitting	2	2
24		16542	Fitting	4	4
24		16485	O-Ring	1	1
25		380590	Bracket	1	1
26		380591	Bracket	1	1
27		248212	Snap Ring	2	2

©2004 HYSTER COMPANY

HEADER HOSE
THREE STAGE FULL FREE LIFT

ITEM	PART NO.	DESCRIPTION	QTY A	QTY B
28	16459	Fitting	1	1
29	358286	Strain Relief	..	1
30	358287	Bracket	..	1
31	16870	Capscrew	..	2
32	15156	Lockwasher	..	2
33	358289	Hose Reel	..	1
33	672563	Seal Kit	..	1
34	16541	Fitting	..	4
34	16484	O-Ring	..	1
35	386648	Plate	..	1
36	292537	Capscrew	..	2
37	292683	Lockwasher	..	2
38	216877	Nut	..	2
39	273775	Strap Clamp	..	2
40	351668	Screw	..	1

FOOTNOTES:
a 3590 mm (141.5 in.) thru 5540 mm (218.0 in.) Lift Heights
b Refer to Table

©2004 HYSTER COMPANY

11 OPTIONS

SECTION 11
OPTIONS

DESCRIPTION	PAGE
CAB	11-2
HEATER	11-6
LIGHTS	11-20
SIDE-SHIFT CARRIAGE	
78-INCH	
THREE STAGE FULL FREE-LIFT	11-14
TWO STAGE LIMITED FREE-LIFT	11-12
SIDE-SHIFT CYLINDER	11-18
TIRES AND WHEELS	
DRIVE	11-24
STEERING	11-26
WIPER AND FAN	11-10

©2004 HYSTER COMPANY

CAB (Figure 11-1)

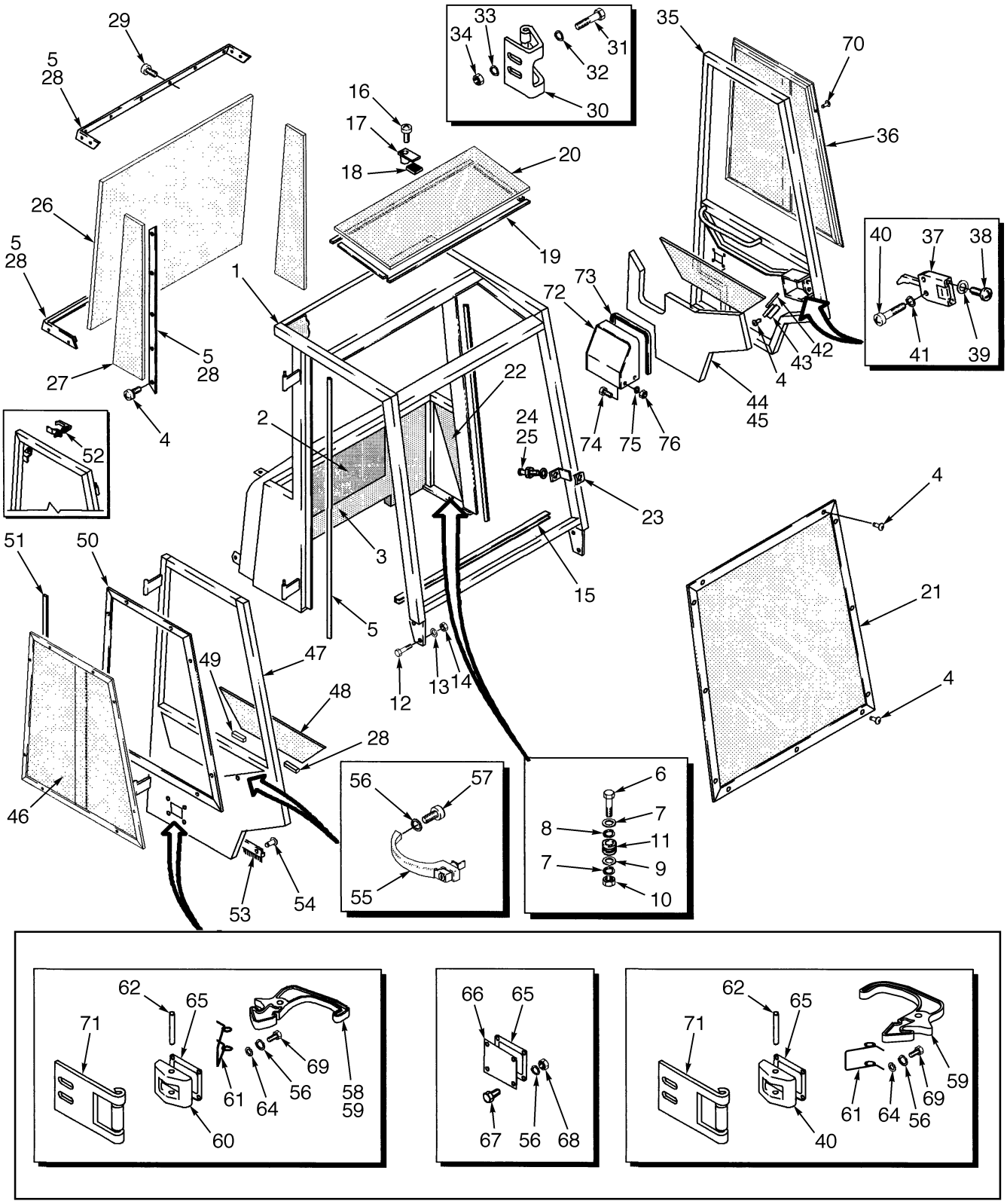

BP000154

©2004 HYSTER COMPANY

CAB

KEY:
A: LPG
B: Gasoline and Diesel

ITEM	PART NO.	DESCRIPTION	QTY A	QTY B
1	1552405	Frame	1	1
2	1479609	Liner	1	1
3	1479608	Sound Liner	1	1
4	1321870	Rivet	24	32
5	365327	Seal	AR	AR
6	292570	Capscrew	2	2
7	379402	Washer	4	4
8	292685	Lockwasher	2	2
9	164281	Washer	2	2
10	292600	Nut	2	2
11	129962	Mount	2	2
12	222163	Capscrew	4	4
13	134674	Shim (0.060 in.)	AR	AR
14	248320	Nut	4	4
15	. . . . .	Seal	AR	AR
16	302031	Screw	3	3
17	3047238	Plate (Window)	3	3
18	1342660	Strip	3	3
19	318352	Seal	AR	AR
20	1321868	Safety Glass (Top)	1	1
21	1375978	Windshield (Front)	1	1
22	3047419	Sound Liner (LH Door)	1	1
22	3047420	Sound Liner (RH Door)	1	1
23	365343	Plate	2	2
24	365344	Bolt	2	2
25	15178	Washer	2	2
26	1319365	Safety Glass (Rear)	1	1
27	1319364	Safety Glass (Rear)	2	2
28	366123	Strip	AR	AR
29	3047332	Screw	31	31
30	1369520	Striker	1	1
31	292513	Capscrew	2	2
32	292682	Lockwasher	2	2
33	320159	Washer	2	2
34	136692	Nut	2	2
35	1374427	Door (LH)	1	1
36	1375981	Window Assembly (LH)	1	1
37	1309824	Door Handle (LH)	1	1
37	1312450	Door Handle (RH)	1	1
38	296464	Screw	4	4
39	296396	Washer	4	4
40	302248	Screw	4	4
41	15165	Lockwasher	4	4
42	261158	Foam Tape	AR	AR
43	3047178	Clip	4	4
44	1374440	Foam Lining (LH Door)	1	1

©2004 HYSTER COMPANY

CAB

ITEM		PART NO.	DESCRIPTION	QTY A	QTY B
45		1374441	Foam Lining (RH Door)	1	1
46		1375982	Window Assembly (RH)	1	1
47		1374425	Door (RH)	1	..
47		1374426	Door (RH)	..	1
48		3047356	Window	2	2
49		334369	Block	4	4
50		1321677	Frame (Window)	1	..
51		283259	Foam Tape	AR	..
52		320048	Latch	2	..
53		365325	Seal	AR	AR
54		222024	Rivet	20	20
55		3047176	Handle	2	2
56		292680	Lockwasher	12	12
57		302043	Screw	2	2
58		1374428	Latch Assembly	1	2
59		1356943	Latch	1	1
60		1356948	Bracket	1	1
61		1358734	Spring	1	1
62		226774	Pin	1	1
63		292500	Capscrew	4	4
64		320156	Washer	2	6
65		1369496	Seal	2	2
66		825843	Cover	1	..
67		353144	Capscrew	4	..
68		136687	Nut	4	..
69		292500	Capscrew	..	4
70		302031	Screw	8	..
71		1369498	Striker	1	2
72		370269	Cover Fuel Fill	..	1
73	**a**	1328887	Seal	..	AR
73	**b**	350187	Trim	..	AR
74		287851	Capscrew	..	4
75		320157	Washer	..	4
76		239503	Nut	..	4
77		1466459	Foam Lining (Not Illustrated)	1	1

FOOTNOTES:

a Standard on Cab/Optional on Fuel Fill Cover

b Standard on Fuel Fill Cover/Optional on Cab

See Service Manual for service procedures.

©2004 HYSTER COMPANY

NOTES

HEATER (Figure 11-2)

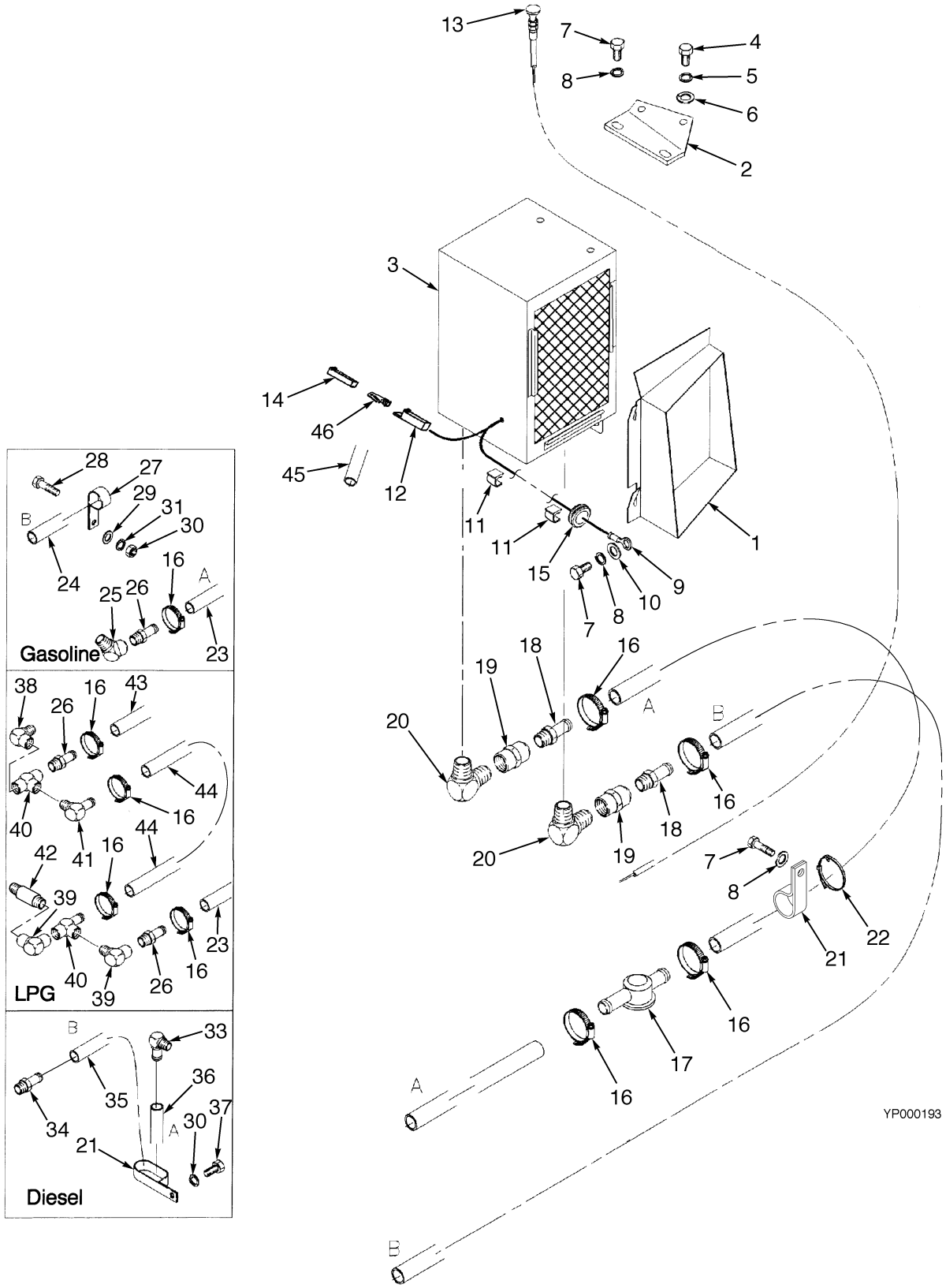

©2004 HYSTER COMPANY

HEATER

ITEM	PART NO.	DESCRIPTION	QTY
1	379413	Intake	1
2	379416	Bracket	1
3	379417	Heater Assembly	1
3	1350058	Motor and Fan	1
3	1350059	Radiator	1
4	220497	Capscrew	2
5	15152	Lockwasher	2
6	197067	Washer	2
7	292500	Capscrew	4
8	292680	Lockwasher	4
9	129894	Terminal	1
10	320156	Washer	2
11	279739	Clamp	8
12	181045	Connector	1
13	1302129	Cable	1
14	181046	Connector	1
15	317192	Grommet	1
16	130845	Clamp (LPG)	4
16	130845	Clamp (Gasoline)	5
17	1300741	Valve	1
18	16156	Fitting	2
19	12828	Fitting	2
20	14836	Fitting	2
21	251994	Clamp	1
22	397676	Strap Clamp	AR
23	151857	Hose (LPG)	1
23	151857	Hose (Gasoline)	1
24	129114	Hose (Gasoline)	1
25	12823	Fitting (Gasoline)	1
26	138710	Fitting (Gasoline)	1
26	138710	Fitting (LPG)	2
27	178119	Clamp (Gasoline)	1
28	293615	Capscrew (Gasoline)	1
29	296418	Washer (Gasoline)	2
30	239503	Nut (Gasoline)	1
31	292681	Lockwasher (Diesel)	1
31	292681	Lockwasher (Gasoline)	1
33	16156	Fitting (Diesel)	1
34	16155	Fitting (Diesel)	1
35	131286	Hose (Diesel)	1
36	925952	Hose (Diesel)	1
37	136681	Capscrew (Diesel)	1
38	19589	Fitting (LPG)	1
39	12817	Fitting (LPG)	2
40	154452	Fitting (LPG)	2
41	201808	Fitting (LPG)	2
42	16143	Fitting (LPG)	1
43	123799	Hose (LPG)	1
44	164289	Hose (LPG)	1
45	358354	Hose	1

©2004 HYSTER COMPANY

HEATER

ITEM	PART NO.	DESCRIPTION	QTY
46	134810	Blade	1
47	175899	Electrical Tape (Not Illustrated)	AR

©2004 HYSTER COMPANY

NOTES

WIPER AND FAN (Figure 11-3)

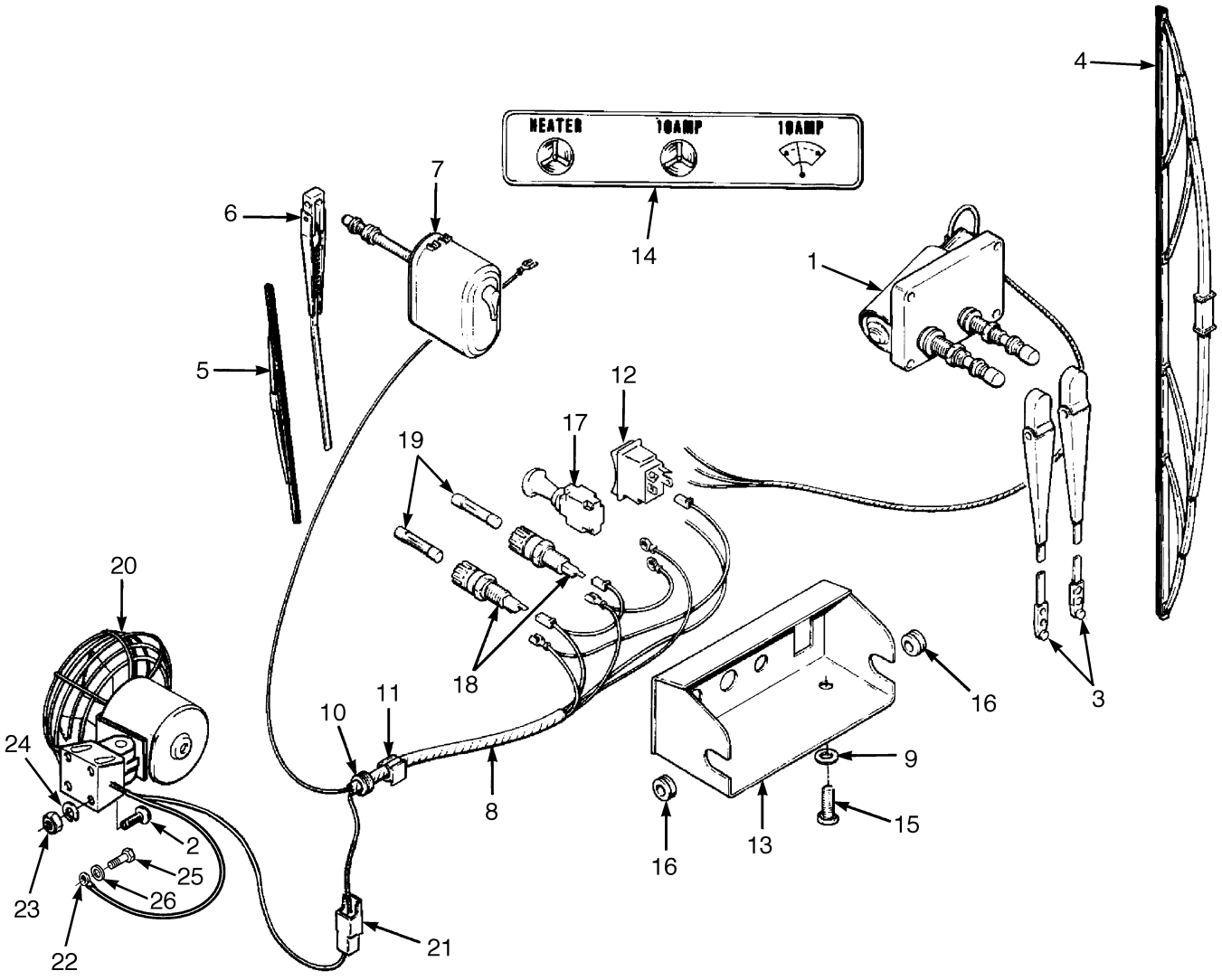

YP000194

©2004 HYSTER COMPANY

WIPER AND FAN

ITEM	PART NO.	DESCRIPTION	QTY
1	1505234	Wiper Motor (Front)	1
2	16750	Screw	4
3	816045	Wiper Arm	1
4	816046	Wiper Blade	1
5	1466437	Wiper Blade	1
6	1466435	Wiper Arm	1
7	2038038	Wiper Motor (Rear)	1
8	2038035	Wire Harness	1
8	1506561	Adaptor (Harness)	1
9	320156	Washer	2
10	26283	Grommet	3
11	279740	Clamp	2
12	334635	Switch	1
13	377606	Panel	1
14	377608	Label	1
15	148962	Capscrew	2
16	1151997	Grommet	2
17	1377797	Switch	1
18	377607	Holder	2
19	53124	Fuse (10 Amp)	2
20	1301745	Fan Assembly	1
20	1311213	Fan	1
21	134810	Blade	1
21	181045	Connector	1
22	1301783	Ring	1
23	15002	Nut	4
24	15152	Lockwasher	4
25	244272	Screw	1
26	16743	Lockwasher	1

©2004 HYSTER COMPANY

SIDE-SHIFT CARRIAGE (Figure 11-4)
78-INCH
TWO STAGE LIMITED FREE-LIFT

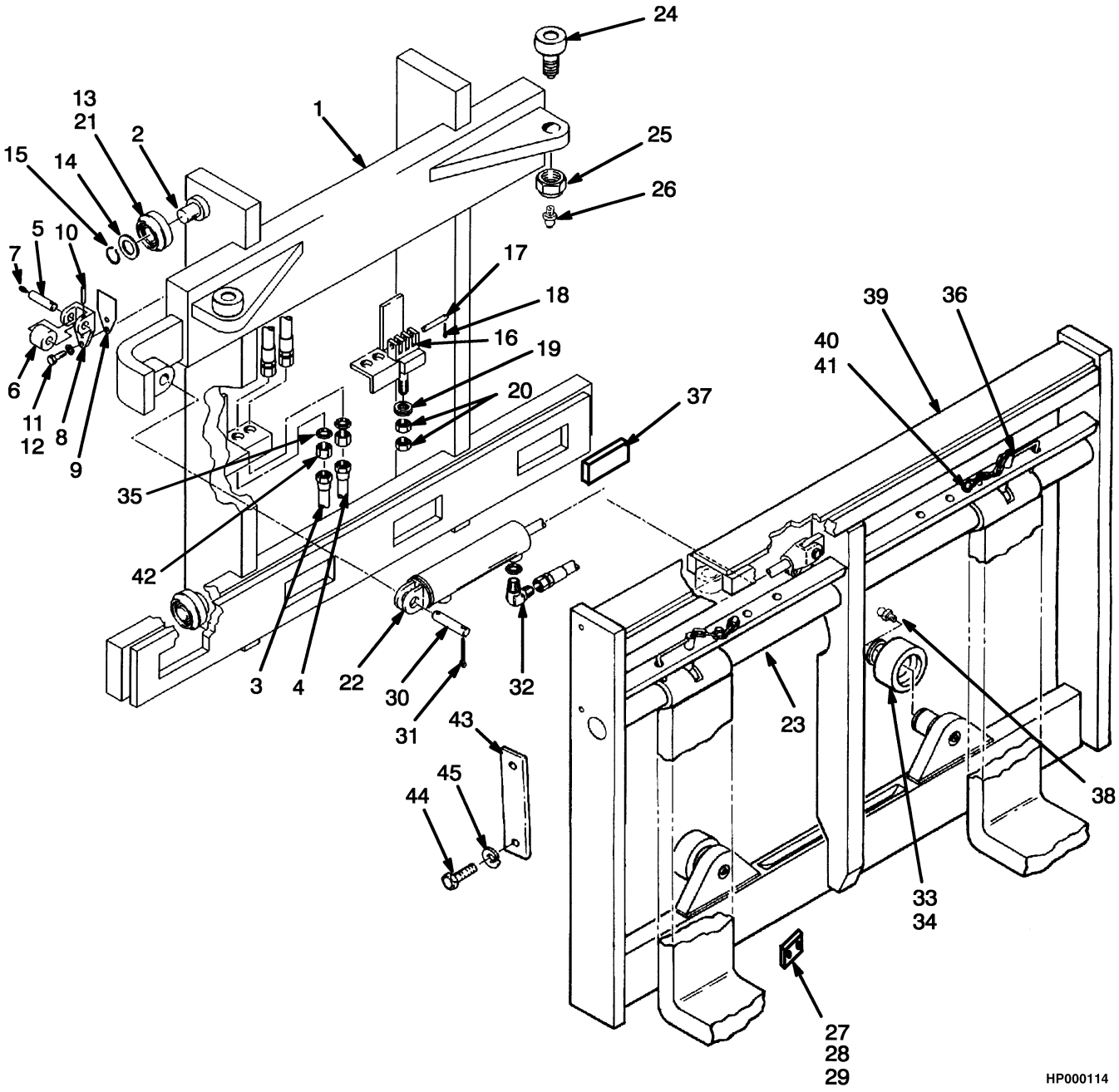

©2004 HYSTER COMPANY

SIDE-SHIFT CARRIAGE
78-INCH
TWO STAGE LIMITED FREE-LIFT

ITEM	PART NO.	DESCRIPTION	QTY
	1376381	Side-Shift Carriage	1
1	1330795	Frame	1
2	341144	Stubshaft	6
3	1379293	Tube	1
4	1379294	Tube	1
5	66333	Pin	2
6	244005	Roller	2
7	16001	Lube Fitting	2
8	244008	Bracket	2
9	192424	Shim (0.030 in.)	AR
9	192425	Shim (0.062 in.)	AR
10	244009	Pin	2
11	292528	Capscrew	4
12	292683	Lockwasher	4
13	1333648	Load Roller	6
14	126765	Shim (0.020 in.)	AR
15	187489	Snap Ring	6
16	1331992	Chain Anchor	2
17	1307395	Pin	2
18	15222	Cotter Pin	2
19	343946	Washer	2
20	293723	Nut	4
21	366116	Spacer	4
22	2047836	Side-Shift Cylinder (☞ Figure 11-6)	1
23	1330064	Pin	2
24	340105	Cam Follower	2
25	17411	Nut	2
26	16005	Lube Fitting	2
27	1330784	Plate	2
28	226458	Capscrew	4
29	292685	Lockwasher	4
30	308117	Rod End Pin	2
31	15236	Cotter Pin	2
32	16558	Fitting	2
32	16483	O-Ring	1
33	117317	Load Roller	2
34	58954	Snap Ring	2
35	16448	Fitting	2
36	1330790	Pin	2
37	351458	Bearing Block	4
38	16006	Lube Fitting	2
39	1330052	Apron	1
40	292513	Capscrew	2
41	296420	Washer	2
42	17218	Fitting	2
43	149634	Plate	2
44	226458	Capscrew	4
45	292685	Lockwasher	4

©2004 HYSTER COMPANY

SIDE-SHIFT CARRIAGE (Figure 11-5)
78-INCH
THREE STAGE FULL FREE-LIFT

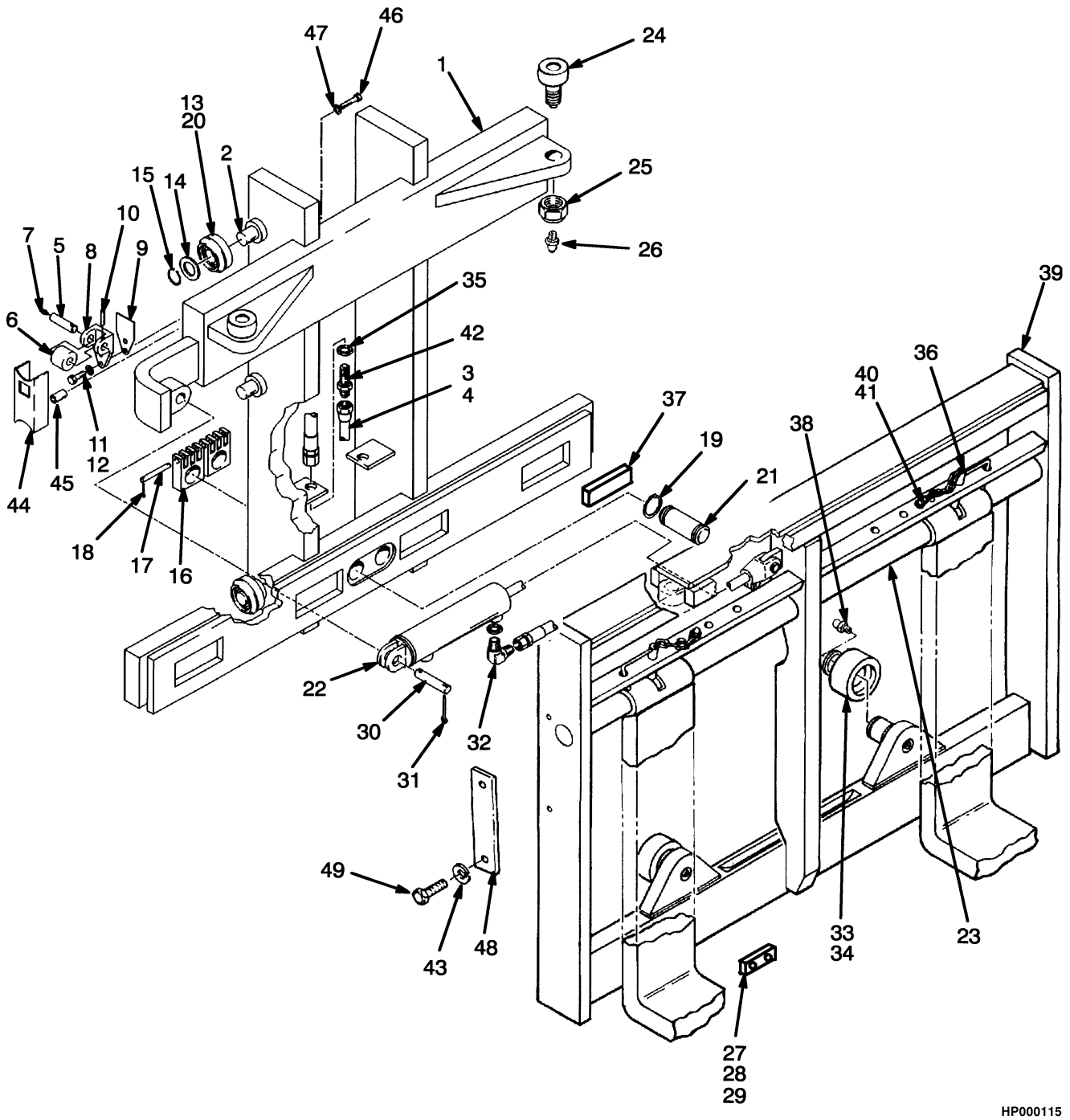

©2004 HYSTER COMPANY

SIDE-SHIFT CARRIAGE
78-INCH
THREE STAGE FULL FREE-LIFT

ITEM	PART NO.	DESCRIPTION	QTY
	1376382	Side-Shift Carriage	1
1	1330051	Carriage	1
2	341144	Stubshaft	6
3	1379295	Tube (RH)	1
4	1379296	Tube (LH)	1
5	66333	Pin	2
6	244005	Roller	2
7	16001	Lube Fitting	2
8	244008	Bracket	2
9	192424	Shim (0.030 in.)	AR
9	192425	Shim (0.062 in.)	AR
10	244009	Pin	2
11	292528	Capscrew	4
12	292683	Lockwasher	4
13	1333648	Load Roller	6
14	126765	Shim (0.020 in.)	AR
15	187489	Snap Ring	6
16	358305	Chain Anchor	2
17	1307395	Pin	2
18	15222	Cotter Pin	2
19	122400	Snap Ring	4
20	366116	Spacer	4
21	1330780	Pin	4
22	2047836	Side-Shift Cylinder (☞ Figure 11-6)	1
23	1330064	Pin	2
24	340105	Cam Follower	2
25	17411	Nut	2
26	16005	Lube Fitting	2
27	1330784	Plate	2
28	226458	Capscrew	4
29	292685	Lockwasher	4
30	308117	Rod End Pin	2
31	15236	Cotter Pin	2
32	16558	Fitting	2
32	16483	O-Ring	1
33	117317	Load Roller	2
34	58954	Snap Ring	2
35	16448	Fitting	2
35	16484	O-Ring	1
36	1330790	Pin	2
37	351458	Bearing Block	4
38	16006	Lube Fitting	2
39	1330052	Apron	1
40	292513	Capscrew	2
41	296420	Washer	2
42	17218	Fitting	2
43	292685	Lockwasher	4
44	319322	Guard (RH)	1
44	319323	Guard (LH)	1
45	317292	Spacer	4

©2004 HYSTER COMPANY

SIDE-SHIFT CARRIAGE
78-INCH
THREE STAGE FULL FREE-LIFT

ITEM	PART NO.	DESCRIPTION	QTY
46	18522	Capscrew	4
47	15155	Lockwasher	4
48	149634	Plate	2
49	226458	Capscrew	4

©2004 HYSTER COMPANY

NOTES

SIDE-SHIFT CYLINDER (Figure 11-6)

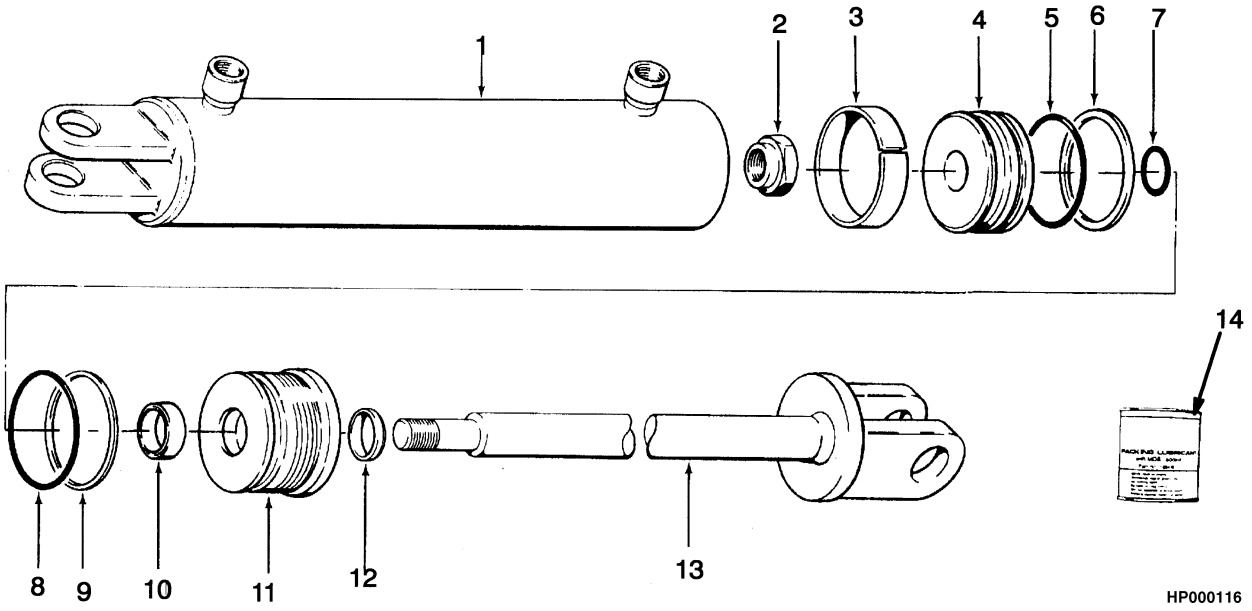

©2004 HYSTER COMPANY

SIDE-SHIFT CYLINDER

ITEM	PART NO.	DESCRIPTION	QTY
	2047836	Side-Shift Cylinder	1
1	1506728	Shell	1
2	53156	Nut	1
3	300823	Guide Ring	1
4	328073	Piston	1
5	1381082	Seal	1
6	2044370	Seal (Piston)	1
7	61056	O-Ring	1
8	46388	O-Ring	1
9	154375	Back-Up Ring	1
10	637151	Seal	1
11	328220	Retainer	1
12	626468	Wiper Ring	1
13	1344761	Rod (Optional)	1
13	358243	Rod	1
14	186061	Packing Lubricant	AR
	369444	Seal Kit (Includes Items 3, 6-10, 12)	1

©2004 HYSTER COMPANY

LIGHTS (Figure 11-7)

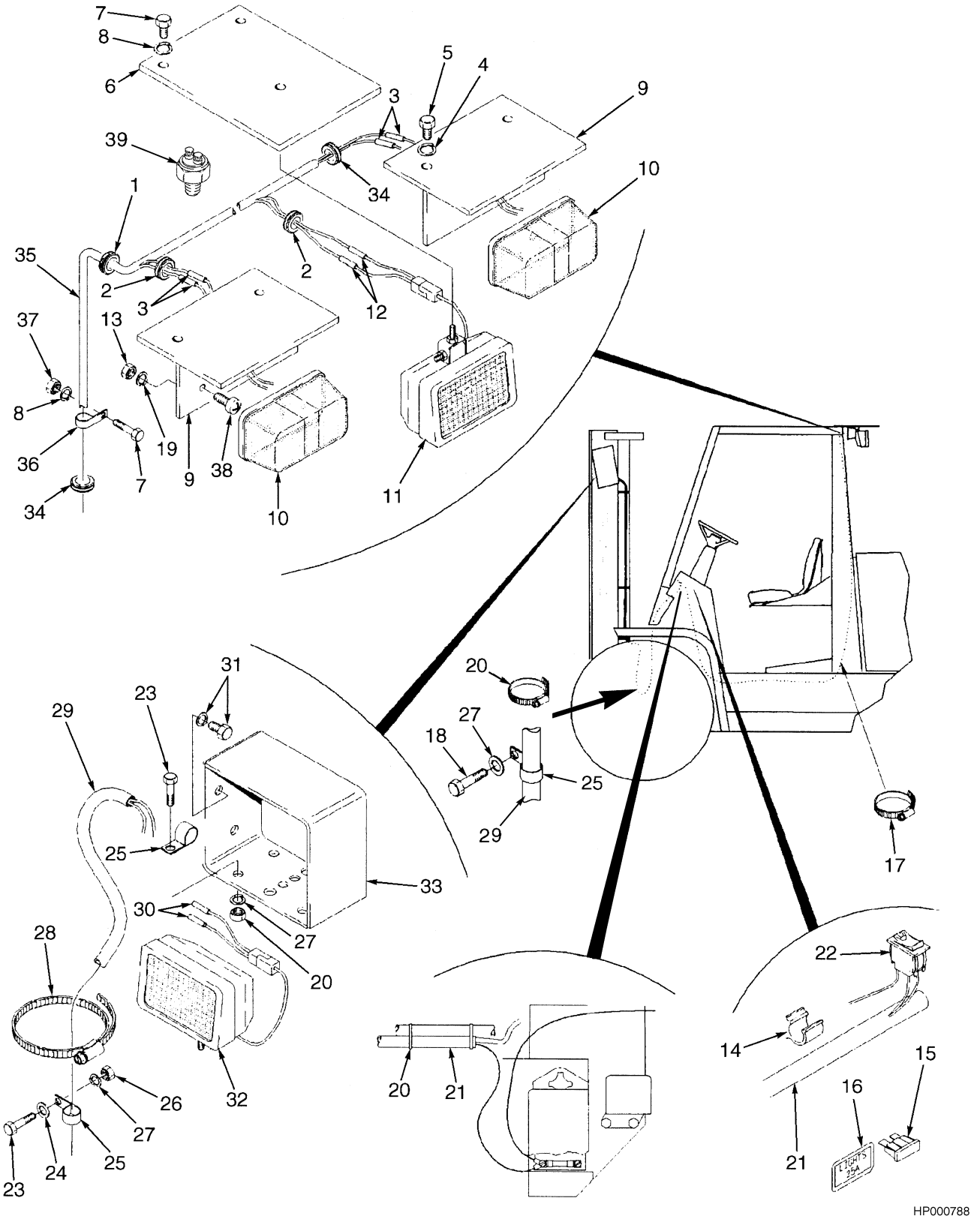

©2004 HYSTER COMPANY

LIGHTS

KEY:
A: Work Lights
B: Work and Rear Drive Lights
C: Work, Rear Drive, and Stop/Tail Lights

ITEM		PART NO.	DESCRIPTION	QTY A	QTY B	QTY C
1		26283	Grommet	..	1	1
2		26283	Grommet	..	..	2
3		1152571	Connector	..	..	4
4		292681	Lockwasher	..	..	4
5		316678	Screw	..	..	4
6		353379	Plate	..	1	1
7		316678	Screw	..	5	5
7		358674	Sealant	..	AR	AR
7	**a**	280472	Sealant	..	AR	AR
8		292681	Lockwasher	..	5	5
9		383141	Bracket	..	..	2
10		353479	Lamp Assembly	..	..	2
10		389792	Lens	..	..	1
10		177521	Bulb (12 Volt)	..	..	1
11		353478	Light Assembly	..	1	1
11		389793	Lamp	..	1	1
11	**a**	357934	Light Assembly	..	1	1
11		1350992	Lens	..	1	1
12		1152571	Connector	..	2	2
13		15052	Nut	..	..	4
14		241878	Clamp	2	2	2
15		1300134	Fuse (25 Amp)	1	1	1
16		1323595	Label (Light Fuse)	1	1	1
17		137852	Strap Clamp	..	5	5
18		287851	Capscrew	2	2	2
19		15152	Lockwasher	..	..	4
20		137852	Strap Clamp	10	10	10
21		1324181	Wire Harness	1	1	1
22		374047	Switch	1	1	1
23		176640	Capscrew	2	2	2
24		15135	Washer	2	2	2
25		132131	Clamp	4	4	4
26		239503	Nut	2	2	2
27		292681	Lockwasher	4	4	4
28		129563	Strap Clamp	6	6	6
29		1324176	Wire Harness	2	2	2
30		1152571	Connector	4	4	4
31		292514	Capscrew	4	4	4
31		292682	Lockwasher	4	4	4
32		353478	Light Assembly	2	2	2
32		389793	Lamp	1	1	1
32	**a**	357934	Light Assembly	2	2	2
32		1350992	Lens	1	1	1
33		389136	Bracket	2	2	2
34		69727	Grommet	..	1	1
35		1324182	Wire Harness	..	1	1

©2004 HYSTER COMPANY

LIGHTS

ITEM	PART NO.	DESCRIPTION	QTY A	QTY B	QTY C
36	132131	Clamp	..	3	3
37	239503	Nut	..	3	3
38	1300742	Screw	..	..	4
39	387867	Pressure Switch	..	..	1

FOOTNOTES:
a Optional

©2004 HYSTER COMPANY

NOTES

TIRES AND WHEELS (Figure 11-8)
DRIVE

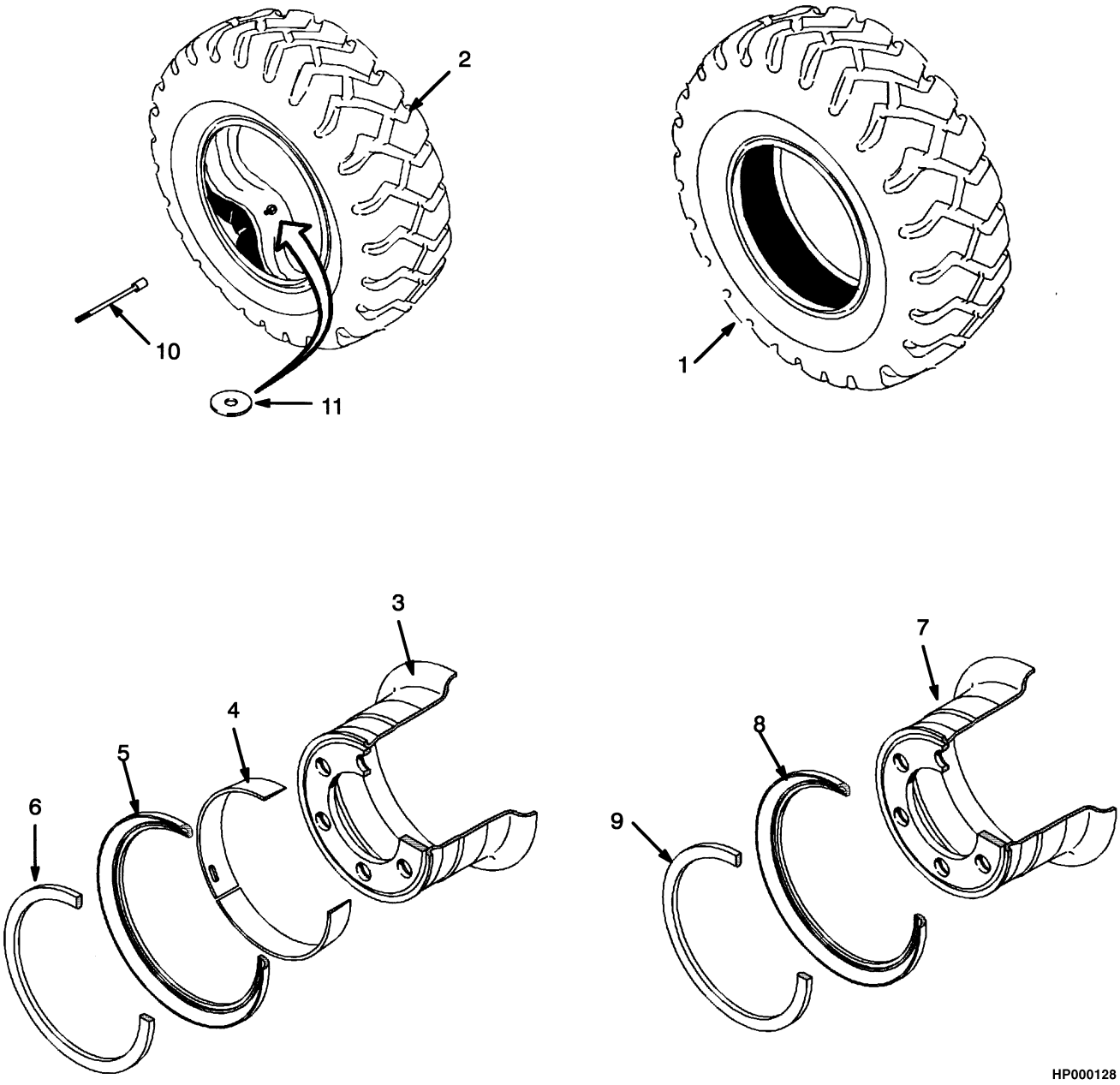

©2004 HYSTER COMPANY

TIRES AND WHEELS
DRIVE

KEY:
A: 12 Ply 8.25 x 15
B: Solid 8.25 x 15

ITEM		PART NO.	DESCRIPTION	QTY A	QTY B
1	**d**	237050	Tire	..	1
1	**c**	336093	Tire	..	1
2		130616	Tire Assembly	1	..
2		129846	Tire (With Flap)	1	..
2		. . . . .	Flap	1	..
2		11280	Tube	..	..
2		25722	Tube	1	..
2	**b**	1357303	Tire Assembly	..	1
2	**b**	1358182	Tire	..	1
2	**b**	1358191	Tube	..	1
2		1394500	Plate (Valve Stem)	..	1
2	**a**	336555	Plate (Valve Stem)	..	1
2	**a**	1376007	Washer (Valve Stem)	..	1
2	**abe**	1471838	Tire Assembly	1	..
2	**b**	1358182	Tire	1	..
2		1471598	Tubeless Bead Seal	1	..
2		1471922	Tubeless Bead Seal Valve	1	..
3		340292	Wheel Assembly	1	..
3	**a**	340292	Wheel Assembly	..	1
4		806557	Shoulder Ring	1	1
5		980541	Side Ring	1	1
6		980542	Lock Ring	1	1
7		350060	Wheel	..	1
8		980541	Side Ring	..	1
9		980542	Lock Ring	..	1
10		49189	Extension Valve	1	..
11		1376007	Washer (Valve Stem)	1	..

FOOTNOTES:
a Optional
b Pneumatic Radial
c Soft Ride
d Standard Hardness
e Tubeless

©2004 HYSTER COMPANY

TIRES AND WHEELS (Figure 11-9)
STEERING

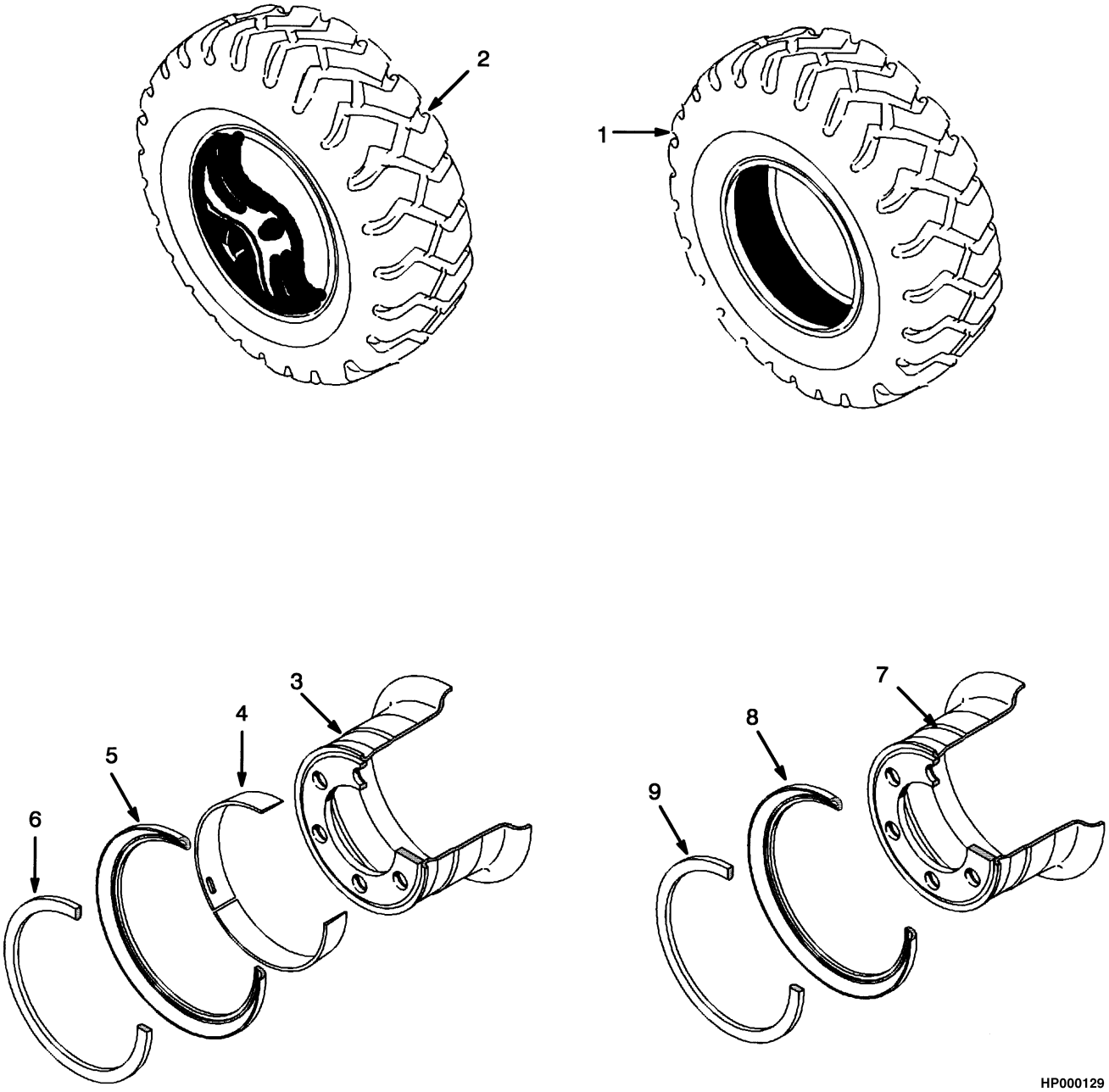

©2004 HYSTER COMPANY

TIRES AND WHEELS
STEERING

KEY:
A: 12 Ply 8.25 x 15
B: Solid 8.25 x 15

ITEM		PART NO.	DESCRIPTION	QTY A	QTY B
1	**d**	237050	Tire	..	1
1	**c**	336093	Tire	..	1
2		130616	Tire Assembly	1	..
2		129846	Tire (With Flap)	1	..
2		25722	Tube	1	..
2	**b**	1357303	Tire Assembly	..	2
2	**b**	1358182	Tire	..	1
2		. . . . .	Flap	..	1
2		1358191	Tube	..	1
2		1394500	Plate (Valve Stem)	..	1
2	**a**	336555	Plate (Valve Stem)	..	1
2	**a**	1376007	Washer (Valve Stem)	..	1
2	**abe**	1471838	Tire Assembly	..	2
2	**b**	1358182	Tire	..	1
2		1471598	Tubeless Bead Seal	..	1
2		1471922	Tubeless Bead Seal Valve	..	1
3		237042	Wheel	1	1
4		806557	Shoulder Ring	1	1
5		980541	Side Ring	1	1
6		980542	Lock Ring	1	1
7		317498	Wheel	..	1
8		980541	Side Ring	..	1
9		980542	Lock Ring	..	1

FOOTNOTES:
a Optional
b Pneumatic Radial
c Soft Ride
d Standard Hardness
e Tubeless

©2004 HYSTER COMPANY

NOTES

12 NUMERICAL INDEX

SECTION 12
NUMERICAL INDEX

PART NO.	PG	ITEM
138	5-19	22
	5-19	33
	5-20	65
	7-7	33
139	5-19	14
	5-20	58
	7-7	30
141	5-19	39
142	3-29	17
	5-19	40
153	7-7	5
11276	6-9	41
11280	11-25	2
11286	5-23	28
11287	5-23	30
12815	2-5	26
	2-51	20
12817	11-7	39
12821	4-5	31
12823	11-7	25
12828	11-7	19
12894	5-9	21
	5-11	21
12928	2-7	37
12940	9-3	13
13957	6-9	32
14349	7-5	27
14358	3-9	18
14372	3-15	13
14440	3-15	6
14586	10-9	16
14591	5-13	11
	5-14	54
14773	3-11	24
14836	11-7	20
15001	3-27	8
	3-29	26
15002	11-11	23
15004	3-9	13
	3-12	68
15006	3-15	27
15025	5-19	23
	5-19	34
	5-20	66
	7-7	33
15026	2-45	5
	5-19	13
	5-19	43
	7-7	17
	7-7	22
15028	7-7	19
	7-7	43
15032	5-13	5
15036	3-15	9
15049	4-10	69
	4-13	12
15052	11-21	13
15054	8-19	34
	8-23	29
15055	1-11	20
	2-5	5
	2-51	22
	8-6	45
15056	2-7	7
	2-59	21
	5-19	9
	5-20	51
	8-5	10
15057	1-19	3
15059	4-9	41
15086	7-7	40
15127	2-5	17
	2-51	19
	3-9	15
	3-12	69
	8-19	36
	8-23	31
15133	10-11	34
15134	2-13	18
	2-15	8
	2-61	31
	5-19	11
	5-20	53
15135	8-29	27
	11-21	24
15152	11-7	5
	11-11	24
	11-21	19
15154	2-31	33
	3-9	14
	3-12	70
	8-19	35
	8-23	30
15155	2-31	44
	3-11	43
	4-9	28
	8-3	47
	8-11	5
	10-19	8
	11-16	47
15156	2-21	2
	2-23	5
	2-31	24
	2-59	22
	2-71	6
	3-15	28
	4-5	13
	5-19	10
	5-20	52
	7-7	17
	8-3	10
	8-5	2
	8-27	19
	8-31	7
	10-22	32
15157	1-19	3
	7-7	44
	7-8	45
15158	8-3	31
	8-27	17
	8-29	22
15163	8-19	12
15165	4-3	2
	11-3	41
15166	1-19	5
	3-15	8
15172	7-3	6
15175	1-7	35
	8-3	46
	8-11	6
15176	2-9	5
	2-11	2
	2-13	14
	2-15	1
	2-59	13
	2-61	15
	9-13	17
	9-13	19
15178	11-3	25
15186	1-19	7
15200	3-25	15
	3-27	3
	3-29	5
	7-3	11
	7-3	27
	8-19	33
	8-23	28
15203	6-3	27
15211	5-19	15
	5-19	41
	5-20	59
	7-7	31
15212	1-13	14
	3-25	8
	3-29	10
15222	9-7	3
	9-11	7
	10-7	5
	10-9	3
	10-11	20
	10-19	13
	11-13	18
	11-15	18
15223	7-7	41
15225	6-9	28
15236	11-13	31
	11-15	31
15302	2-21	13
15304	2-41	10
	2-43	7
15483	2-41	23
15866	8-3	22
	8-5	12
15869	8-29	15
15880	9-9	11
	10-15	6
15889	10-17	6
15916	4-13	10
15920	6-3	7
15937	8-19	30
	8-23	25
15942	5-17	4
15962	2-32	50
	2-43	2
	2-53	16
	3-9	27
	3-12	76
	8-3	39
	8-11	8
15963	3-15	1
16001	9-11	22
	10-19	19
	11-13	7
	11-15	7
16005	9-3	12
	11-13	26
	11-15	26
16006	11-13	38
	11-15	38
16009	9-3	12
16073	2-5	18
	2-51	18
16100	3-11	28
16115	7-5	17
16124	3-9	18
16125	7-5	25
16134	3-11	3
16143	3-3	7

©2004 HYSTER COMPANY

NUMERICAL INDEX (Continued)

PART NO.	PG	ITEM
	3-5	18
	11-7	42
16150	3-3	15
16151	7-5	5
	7-5	18
16155	11-7	34
16156	11-7	18
	11-7	33
16177	3-11	27
16186	7-5	19
16190	3-11	6
16195	7-5	11
16316	5-19	8
	5-20	50
16328	8-15	11
	8-17	11
16376	4-3	19
	6-3	6
16394	2-31	45
16448	9-13	13
	11-13	35
	11-15	35
16449	9-13	7
	10-21	13
16458	10-21	23
16459	10-21	28
16467	10-11	6
16481	5-13	11
	5-13	22
	5-13	24
	5-14	54
	8-15	24
	8-17	24
16482	5-3	17
	5-3	24
	5-13	18
	8-15	13
	8-17	13
16483	5-3	10
	5-13	9
	6-13	9
	8-19	27
	8-23	22
	8-29	30
	11-13	32
	11-15	32
16484	5-3	13
	5-3	20
	5-13	28
	8-5	21
	8-5	21
	8-19	26
	8-23	20
	8-23	21
	10-22	34
	11-15	35
16485	6-11	10
	8-5	20
	8-5	26
	8-6	39
	8-6	40
	8-9	11
	8-9	12
	8-15	20
	8-17	20
	9-7	12
	9-7	18
	10-9	16
	10-21	24
16486	5-14	40
	8-19	28
	8-23	23
	10-11	2
16487	8-12	8
	10-9	17
	10-11	3
16538	5-13	22
	8-15	24
	8-17	24
16541	8-5	21
	8-19	26
	8-23	20
	8-23	21
	10-22	34
16542	8-9	11
	9-7	12
	10-21	24
16544	10-11	3
16558	6-13	9
	8-29	30
	11-13	32
	11-15	32
16560	9-7	18
16562	10-9	17
16568	8-5	21
16569	8-9	12
16570	8-19	28
	8-23	23
16574	5-13	24
16598	2-32	49
16632	8-15	1
	8-17	1
16634	2-7	20
	8-5	1
	8-31	8
16693	8-19	18
	8-23	40
16708	3-9	22
	3-12	88
16743	4-10	66
	4-13	13
	11-11	26
16750	11-11	2
16794	2-41	4
16805	2-9	10
	2-13	17
	2-59	19
	2-61	16
16815	2-7	3
	2-9	4
	4-5	15
	8-5	8
16816	2-7	5
	2-11	1
	2-13	15
	2-59	14
	2-61	14
16828	2-11	3
	2-15	5
	2-59	23
	2-71	6
	8-3	21
	8-27	19
16835	2-7	44
16836	1-5	9
	2-31	43
	4-9	27
16863	3-15	3
16865	3-31	14
16870	10-22	31
16882	10-11	8
16906	4-27	8
	4-28	11
16923	5-3	26
	5-13	25
	8-5	25
	8-15	23
	8-17	23
16925	5-3	9
16938	10-9	21
16954	8-19	29
	8-23	24
16969	8-19	27
	8-23	22
16982	3-9	18
	3-9	18
	5-13	12
	8-19	29
	8-23	24
16983	5-3	35
	9-7	15
16992	9-7	16
17049	8-19	43
	8-23	39
17050	5-3	8
17062	8-5	22
17196	6-3	39
17218	11-13	42
	11-15	42
17253	7-7	21
17314	3-11	5
17315	5-3	6
17319	8-5	23
17321	8-25	10
17411	11-13	25
	11-15	25
17652	3-7	10
17765	8-3	29
	8-27	16
17777	8-5	24
17801	3-7	9
18085	8-19	8
18419	4-13	6
18496	3-11	44
	8-3	41
18497	8-6	44
18515	1-5	21
	3-11	42
18522	10-19	9
	11-15	46
18529	2-5	20
	2-7	47
18535	2-21	3
	2-23	6
18540	2-11	11
	2-15	3
	2-59	24
18547	2-7	11
18548	2-7	13
	4-3	41
18549	2-7	21
18558	7-8	45
18559	7-8	44
18588	8-3	30
	8-27	17
18590	8-29	18
18727	1-5	22
18886	8-3	2

©2004 HYSTER COMPANY

NUMERICAL INDEX (Continued)

PART NO.	PG	ITEM
	8-31	6
19589	11-7	38
19923	3-15	25
25722	11-25	2
	11-27	2
26283	11-11	10
	11-21	1
	11-21	2
26400	5-23	12
26801	7-5	9
28584	3-9	18
29344	7-5	9
30062	5-27	6
30077	5-7	17
30085	5-7	16
30190	5-23	14
30370	2-9	9
	2-11	16
	2-11	29
	2-13	4
	2-15	15
	2-59	6
	2-61	17
30492	4-23	29
34811	8-3	8
	8-3	9
	8-31	16
35116	8-3	12
	8-31	11
37562	7-7	19
38807	3-9	18
39348	9-9	4
	10-15	11
	10-17	12
39373	8-3	5
	8-31	13
39675	5-7	7
39678	6-9	18
39742	8-12	5
41208	5-9	2
	5-11	2
41210	5-7	11
43309	5-7	13
43370	5-19	27
	5-19	37
44538	5-23	19
46388	11-19	8
49189	11-25	10
53065	8-31	1
53124	11-11	19
53156	11-19	2
53162	3-31	14
53641	6-9	26
55280	5-13	7
	5-13	20
57568	3-31	10
58903	6-9	5
58908	7-7	15
58939	9-5	8
58951	5-19	25
58954	11-13	34
	11-15	34
59625	10-11	25
61056	11-19	7
63116	2-9	17
	2-11	26
	2-59	29
	2-61	6
63899	3-9	19
	3-12	83
66333	9-11	13
	10-19	20
	11-13	5
	11-15	5
66468	9-11	18
	10-19	28
66885	8-9	1
66997	8-9	2
69029	6-9	29
69727	11-21	34
70226	7-15	17
71153	5-19	30
	5-20	60
77441	8-15	19
	8-17	19
77442	8-15	21
	8-17	21
77443	8-15	22
	8-17	22
77451	8-15	2
	8-17	2
78286	9-13	9
	9-13	9
	10-21	12
79389	5-7	4
86007	5-23	2
	5-24	3
86008	5-27	17
86510	4-9	42
91946	8-19	21
	8-23	16
92482	8-29	9
92861	8-3	33
96481	8-3	42
97577	2-71	10
97988W	3-15	24
97999	3-15	2
98334	3-15	26
99576	2-41	3
99610	2-47	6
	2-55	14
99728	2-55	27
101625	4-9	30
101809	3-15	5
102919	3-3	8
	3-5	19
104264	9-3	11
	10-3	11
104506	9-3	9
	10-3	9
	10-5	12
107151	2-11	5
	2-13	12
	2-15	6
	2-59	20
	2-61	30
107296	6-9	25
111561	3-9	25
	3-12	86
113341	2-23	8
114312	3-31	5
	4-10	53
114371	8-5	27
	8-5	38
114496	7-7	10
114826	5-23	22
114841	9-3	15
115069	9-3	14
115112W	1-22	1
115696	3-3	5
	3-5	1
	3-5	12
	3-7	1
	3-7	12
116067	5-23	8
	5-24	7
117317	11-13	33
	11-15	33
119074	3-11	41
119236	8-3	35
119758	7-7	18
121347	3-15	7
122400	10-7	4
	10-19	11
	11-15	19
123799	11-7	43
124010	3-15	1
124297	2-5	30
	2-51	12
	4-5	40
124359	4-5	44
	7-5	12
124606	5-9	20
	5-11	20
124668	2-7	38
124682	5-9	24
	5-11	24
125428	5-27	24
125789	3-15	1
125792	8-5	29
125847	3-5	23
	3-7	18
126319	4-23	32
	4-25	14
126765	9-3	7
	9-5	6
	9-11	4
	10-3	7
	10-5	10
	10-7	9
	10-19	4
	11-13	14
	11-15	14
127045	8-5	19
128408	2-23	7
	4-5	45
129114	11-7	24
129498	6-9	23
129499	6-9	24
129563	4-3	11
	4-5	33
	4-9	35
	8-9	5
	11-21	28
129684	8-5	32
129846	11-25	2
	11-27	2
129887	4-31	1
129888	4-23	31
	4-25	23
	4-31	2
129889	4-23	28
	4-25	4
	4-25	21
129894	4-31	3
	11-7	9
129962	1-13	17
	1-17	8

©2004 HYSTER COMPANY

NUMERICAL INDEX (Continued)

PART NO.	PG	ITEM
	11-3	11
130616	11-25	2
	11-27	2
130845	2-27	42
	11-7	16
	11-7	16
131190	6-9	35
131191	6-9	36
131193	6-9	33
131286	11-7	35
131460	5-3	10
131715	10-5	13
131716	10-5	13
132131	11-21	25
	11-21	36
132860	6-3	17
133203	8-25	5
133469	2-31	32
133683	5-19	7
133696	2-31	37
133920	6-13	4
134436	5-3	17
	5-3	24
134674	11-3	13
134675	9-7	9
134803	2-9	14
	2-11	8
	2-13	1
	2-15	9
	2-61	22
134810	4-23	36
	4-25	1
	4-25	3
	4-31	20
	11-7	46
	11-11	21
134811	4-23	24
	4-25	17
	4-25	19
134812	4-23	22
	4-25	4
	4-25	12
	4-25	13
	4-25	14
	4-25	16
	4-25	21
	4-26	24
	4-27	13
	4-28	12
	4-31	21
135657	6-9	16
135685	3-31	2
136045	10-21	20
136516	7-5	22
136681	1-13	5
	2-7	30
	4-10	54
	11-7	37
136687	1-11	21
	3-15	17
	4-3	23
	4-5	4
	4-5	18
	4-9	9
	5-19	32
	6-3	35
	7-5	1
	7-7	35
	8-19	3
	8-23	3
	11-4	68
136692	1-5	14
	1-11	10
	1-13	15
	1-17	4
	2-19	11
	3-5	7
	3-15	21
	3-25	6
	3-27	16
	3-29	18
	4-3	6
	4-5	48
	7-7	24
	8-6	47
	11-3	34
136703	7-3	13
136704	5-14	57
136749	3-9	6
	4-9	22
	6-3	29
	7-5	21
	8-6	42
136985	1-11	5
	1-11	14
	1-13	15
	1-17	14
	3-15	20
	3-25	2
	5-3	31
	5-4	41
137122	1-13	12
137852	2-5	8
	2-51	13
	3-25	3
	11-21	17
	11-21	20
138573	4-9	43
138710	11-7	26
	11-7	26
138880	3-9	19
	3-12	84
139743	2-7	17
	2-19	25
	4-3	40
139919	8-5	29
141462	4-23	23
	4-25	18
144067	8-3	40
145639	1-5	10
	1-7	36
146005	3-15	4
146047	4-10	58
146628	2-19	8
146938	4-5	16
148605	4-31	4
148610	4-31	5
148613	4-31	6
148891	2-5	19
	2-7	43
148962	11-11	15
149634	11-13	43
	11-16	48
150181	1-19	4
151857	11-7	23
	11-7	23
153069	3-15	22
	4-3	3
153715	6-9	10
153716	6-9	12
153717	6-9	13
153778	5-23	17
153834	6-9	24
153835	6-9	21
154358	6-13	3
154375	11-19	9
154452	11-7	40
154878	5-19	42
156194	5-7	9
156195	5-7	10
157065	4-5	6
157554	4-9	16
159787	3-5	14
159977	2-25	14
160996	2-7	39
161272	9-3	10
	10-3	10
161273	9-3	10
	10-3	10
161296	2-47	4
161297	2-47	5
161652	5-19	12
	5-20	54
162562	10-9	10
162836	3-25	7
164281	1-17	7
	11-3	9
164289	11-7	44
164365	3-12	54
164488	3-11	39
	4-5	43
165991	3-3	13
	3-7	8
166818	1-15	33
166857	3-9	3
167218	3-25	16
168718	2-23	3
	3-11	49
169268	8-29	23
170658	1-15	21
173247	8-3	28
173685	8-3	34
173941	3-12	65
175861	8-19	2
	8-23	2
175899	11-8	47
175944	4-23	16
176451	3-9	8
	3-11	14
176640	2-71	7
	4-5	2
	5-19	19
	11-21	23
177521	11-21	10
177590	1-13	9
177894	4-5	16
177947	8-3	7
	8-31	15
177948	8-3	11
	8-31	10
178119	11-7	27
178794	8-29	28
178899	2-5	3
	2-51	2
179414	1-15	32
179420	1-15	32
179423	1-15	32
181045	4-3	33

See Service Manual for service procedures.
©2004 HYSTER COMPANY

NUMERICAL INDEX (Continued)

PART NO.	PG	ITEM
	4-6	58
	4-23	20
	4-25	2
	11-7	12
	11-11	21
181046	4-23	25
	4-25	19
	4-27	12
	4-28	13
	4-31	7
	11-7	14
181047	4-31	8
181049	4-25	3
181053	4-25	1
	4-25	12
181054	4-31	9
181766	5-13	6
181899	8-3	26
181941	8-12	3
182889	8-3	15
	8-27	21
182890	8-3	17
	8-27	24
182891	8-3	16
	8-27	22
184799	9-7	20
	10-9	14
	10-11	33
185806	4-13	11
185856	6-9	19
185857	6-9	19
185858	6-9	19
185860	6-9	9
186061	11-19	14
186420	2-71	11
	5-3	30
186480	5-14	61
187388	9-9	2
	10-15	13
	10-17	14
187489	9-3	8
	9-5	7
	9-11	5
	10-3	6
	10-5	11
	10-7	10
	10-19	5
	11-13	15
	11-15	15
188210	5-3	35
188631	3-11	38
189338	2-7	16
	4-3	39
189595	10-11	5
190252	4-5	32
190382	4-31	40
190383	4-3	17
	4-31	39
190757	8-3	20
	8-5	13
	8-27	18
190784	8-12	1
190785	8-12	2
190786	8-12	4
190787	8-12	6
192077	2-9	2
	2-11	6
	2-13	11
	2-15	2
	2-59	16
	2-61	12
192424	9-11	17
	10-19	21
	11-13	9
	11-15	9
192425	9-11	17
	10-19	22
	11-13	9
	11-15	9
192429	8-29	20
	8-29	26
192830	8-29	16
193554	8-29	13
193653	3-11	34
193656	3-11	36
195856	2-71	1
	2-71	2
197067	4-10	49
	11-7	6
197068	4-9	11
	4-10	63
198678	8-5	31
	8-9	6
199082	8-29	7
199861	5-29	1
200659	3-9	18
	5-13	12
200972	5-27	5
200982	5-27	27
201783	10-11	2
201808	11-7	41
201954	4-23	15
203071	6-13	1
204114	1-5	8
	1-5	30
204223	4-3	31
	4-5	26
	4-31	38
204787	3-23	8
209266	3-11	50
210183	6-13	7
213670	5-23	26
215211	10-5	14
215345	9-9	6
	10-17	4
216590	10-9	29
216877	1-13	18
	3-15	29
	10-22	38
218612	8-12	7
220434	3-31	16
220497	11-7	4
220932	3-31	3
221354	7-7	9
221507	5-29	4
221547	8-3	6
	8-31	14
221702	5-23	20
221705	8-3	48
	8-11	4
221711	8-29	24
221733	1-5	5
	2-5	6
	2-51	23
221767	2-19	24
	8-5	9
221780	5-23	20
221989	5-14	45
222023	1-15	23
222024	11-4	54
222029	1-5	4
222163	1-17	2
	11-3	12
222399	5-3	25
222400	8-6	40
222476	7-5	16
222480	3-9	18
	3-11	7
	3-11	16
222504	8-5	20
	8-5	26
222512	8-6	39
222523	4-31	34
222580	8-5	14
222588	8-3	32
222899	2-59	28
	2-61	9
223216	2-9	3
	2-11	4
	2-13	13
	2-15	4
	2-59	18
	2-61	13
224248	2-55	26
226458	1-22	2
	9-11	20
	10-19	26
	11-13	28
	11-13	44
	11-15	28
	11-16	49
226774	11-4	62
227070	7-7	14
227131	4-13	7
227220	3-7	15
227221	3-5	10
	3-7	6
228122	5-20	55
228376	1-17	5
229875	2-55	10
230324	5-23	13
	6-9	24
230325	5-23	23
	6-9	22
230378	5-23	15
230421	6-9	11
230881	8-19	13
234898	4-3	20
235691	5-3	3
	5-13	28
237042	11-27	3
237050	11-25	1
	11-27	1
239182	8-29	3
239503	2-5	28
	2-51	15
	3-9	29
	3-12	73
	3-29	23
	4-9	26
	4-10	55
	4-10	61
	5-19	21
	6-3	30
	7-5	24
	8-3	27
	8-5	35
	8-9	10

©2004 HYSTER COMPANY

NUMERICAL INDEX (Continued)

PART NO.	PG	ITEM
	11-4	76
	11-7	30
	11-21	26
	11-22	37
240243	1-19	6
240683	5-27	12
241079	8-29	21
241878	11-21	14
241975	8-5	27
244005	9-11	15
	10-19	24
	11-13	6
	11-15	6
244008	9-11	16
	10-19	23
	11-13	8
	11-15	8
244009	9-11	21
	10-19	18
	11-13	10
	11-15	10
244272	11-11	25
246001	3-15	31
246108	4-5	29
	8-3	3
246195	8-29	29
247747	7-7	16
247748	7-7	20
248212	10-21	27
248320	1-17	17
	5-23	33
	11-3	14
248461	8-29	25
248462	8-29	17
248465	8-29	19
251994	8-6	41
	8-9	7
	11-7	21
255578	9-13	16
	10-21	14
	10-21	16
257241	4-3	27
	4-5	22
257913	9-9	5
	10-15	10
	10-17	11
258120	5-23	24
261158	11-3	42
261165	1-11	13
261379	2-7	14
	4-3	38
	5-17	3
263794	2-39	11
263795	2-39	10
263828	2-27	16
263842	2-25	10
264134	2-19	27
264159	2-19	22
	4-5	14
	5-3	28
265659	5-23	25
265666	5-23	31
266465	2-49	2
266612	6-9	31
266728	6-9	30
266733	6-9	17
268573	2-39	3
269200	2-9	13
	2-11	9
	2-13	2
	2-15	10
	2-59	4
	2-61	21
270074	1-19	6
270405	1-19	2
270632	7-7	13
	7-7	25
270770	3-9	20
	3-12	72
271047	3-11	10
272133	3-11	45
	4-5	39
273775	10-22	39
274334	3-11	37
274426	8-15	10
	8-17	10
274427	8-15	7
	8-17	7
274548	8-15	9
	8-17	9
275493	4-31	35
277446	4-23	35
	4-25	24
278060	7-7	4
	7-15	16
278063	7-15	15
278085	8-31	2
278326	5-23	16
279739	11-7	11
279740	11-11	11
280472	8-5	18
	11-21	7
281700	7-5	26
283259	11-4	51
284077	5-19	1
284152	2-71	10
287817	5-19	17
287851	2-71	4
	3-29	8
	5-4	45
	5-17	7
	7-5	14
	8-25	6
	11-4	74
	11-21	18
287854	1-5	11
	3-27	9
	4-3	4
	4-5	47
	8-6	48
287860	1-11	16
	2-7	9
	2-19	9
	6-3	19
289642	5-7	6
289760	5-7	8
289761	5-7	8
289762	5-7	8
289967	8-29	8
289968	8-29	4
289969	8-29	12
290734	3-5	23
	3-7	18
290735	3-5	23
	3-7	18
292500	6-3	33
	11-4	63
	11-4	69
	11-7	7
292501	1-11	23
	3-15	14
	5-19	31
	7-5	1
	7-7	35
	8-19	6
	8-23	6
292502	4-9	2
	4-9	8
292508	5-14	59
292509	2-13	9
	2-15	18
292511	2-51	27
292513	9-11	23
	10-19	29
	11-3	31
	11-13	40
	11-15	40
292514	10-11	30
	11-21	31
292515	5-19	5
	5-19	47
	7-7	24
292517	2-61	36
	5-4	38
	9-13	17
292519	1-11	11
	9-7	14
	10-9	22
	10-21	10
292521	3-27	21
	4-21	8
	8-19	5
	8-23	38
292522	9-13	19
292523	3-29	2
	4-5	8
292524	2-7	26
	5-4	43
	8-19	23
	8-23	18
292527	2-19	20
292528	9-11	14
	10-19	25
	11-13	11
	11-15	11
292529	8-3	14
	8-27	20
292533	1-13	16
292535	9-13	6
292537	2-19	12
	10-22	36
292562	10-11	31
292570	1-17	12
	9-3	4
	10-3	5
	11-3	6
292573	2-19	4
292590	6-9	38
292593	10-9	30
	10-11	17
292600	1-17	13
	11-3	10
292608	9-7	8
292667	4-3	15
292668	3-12	53
	4-10	51
292678	4-3	16
292679	4-10	50

©2004 HYSTER COMPANY

NUMERICAL INDEX (Continued)

PART NO.	PG	ITEM
292680	1-11	21
	3-15	15
	4-3	25
	4-5	20
	4-9	10
	5-19	18
	6-3	34
	7-5	1
	7-7	35
	8-19	4
	8-23	4
	11-4	56
	11-7	8
292681	1-11	2
	1-13	5
	2-5	23
	2-7	28
	2-7	45
	2-51	16
	2-71	4
	2-71	7
	3-9	30
	3-12	74
	3-29	24
	4-5	1
	4-9	25
	4-10	57
	5-4	44
	5-17	9
	5-19	20
	7-3	13
	7-5	14
	7-5	23
	8-3	25
	8-5	34
	8-9	9
	8-19	10
	8-23	9
	8-25	7
	11-7	31
	11-7	31
	11-21	4
	11-21	8
	11-21	27
292682	1-5	13
	1-11	5
	1-11	10
	1-13	15
	1-17	15
	2-7	2
	2-19	10
	3-5	6
	3-15	23
	3-25	5
	3-27	14
	3-29	18
	4-3	5
	4-5	12
	5-3	31
	5-4	42
	7-7	29
	8-6	46
	10-12	36
	11-3	32
	11-21	31
292683	1-13	18
	2-19	21
	3-15	33
	6-3	16
	8-5	6
	9-11	14
	9-13	5
	10-19	17
	10-22	37
	11-13	12
	11-15	12
292685	1-17	11
	1-22	3
	6-9	8
	9-3	5
	9-11	19
	10-11	32
	10-19	27
	11-3	8
	11-13	29
	11-13	45
	11-15	29
	11-15	43
292687	6-9	39
292689	9-7	8
292841	2-59	33
	2-61	7
293048	3-9	16
	3-12	67
293322	5-23	10
	5-24	6
293323	5-23	9
	5-24	9
293615	11-7	28
293628	6-9	20
293630	2-71	8
293648	2-19	2
293664	7-11	7
293688	6-9	7
293716	5-27	15
293723	9-7	1
	9-11	8
	10-9	7
	10-11	12
	11-13	20
293780	6-3	31
293781	6-11	4
	8-5	15
295440	3-5	13
295580	7-7	8
296128	3-27	15
296359	4-5	5
	4-9	14
	4-9	15
296360	4-10	56
296361	1-13	15
	1-17	3
	4-3	10
	4-6	51
296396	11-3	39
296406	1-11	25
296418	5-13	34
	11-7	29
296420	2-71	8
	9-11	24
	10-19	30
	11-13	41
	11-15	41
296421	1-11	5
	1-11	10
	1-11	16
	4-21	4
	6-3	21
296422	2-19	3
296426	10-3	4
296431	10-9	27
	10-11	15
296438	9-7	7
	10-9	2
296442	6-3	15
296464	11-3	38
296844	5-27	11
297531	9-9	3
	10-15	12
	10-17	13
297573	10-11	28
297647	10-21	19
298096	2-55	16
298831	3-9	19
298832	3-12	83
300723	8-15	8
	8-17	8
300724	8-15	14
	8-17	14
300823	11-19	3
300932	2-19	5
300937	2-19	6
	8-3	19
	8-27	25
300939	1-13	16
	2-19	16
	3-15	32
302031	11-3	16
	11-4	70
302043	11-4	57
302105	10-5	5
	10-11	24
302248	11-3	40
302250	4-10	48
302335	5-7	5
302399	4-10	60
302401	9-13	15
	9-13	20
	10-21	15
302428	8-19	19
	8-23	5
302713	2-47	18
303117	1-11	2
304002	8-15	15
	8-17	15
304006	8-15	12
	8-17	12
304464	5-17	2
304523	9-7	6
	10-9	1
305100	2-7	15
	4-3	42
306111	8-19	15
	8-23	11
306113	8-19	17
	8-23	13
306117	8-19	1
	8-23	1
306118	8-19	11
308117	11-13	30
	11-15	30
308993	8-19	42
	8-23	37
309062	9-9	7
	10-15	3
309109	8-19	32
	8-23	27
309124	4-3	22

©2004 HYSTER COMPANY

NUMERICAL INDEX (Continued)

PART NO.	PG	ITEM
	4-5	17
309152	4-3	26
	4-5	21
309655	3-11	35
309704	7-7	34
309740	8-6	50
311540	5-19	35
	5-19	38
313022	5-23	7
313221	8-3	44
313815	1-13	11
313828	2-13	6
	2-15	22
	7-3	18
313859	5-19	16
313860	7-7	38
316132	4-9	44
316448	1-15	14
316513	9-9	10
	10-15	4
316678	11-21	5
	11-21	7
316826	2-7	22
	2-61	37
	5-19	6
	5-20	48
	6-3	20
	8-19	20
	8-23	15
	9-7	17
	10-9	18
316828	2-19	18
316829	10-9	26
	10-11	14
317192	11-7	15
317292	10-19	7
	11-15	45
317367	3-5	11
	3-7	7
317498	11-27	7
317741	7-5	2
317742	7-5	2
317743	7-5	2
318352	11-3	19
319144	7-13	6
319148	7-15	2
319322	10-19	6
	11-15	44
319323	10-19	6
	11-15	44
320048	11-4	52
320155	3-11	51
320156	1-11	22
	3-27	4
	3-29	4
	4-3	24
	4-5	19
	8-20	44
	8-23	7
	11-4	64
	11-7	10
	11-11	9
320157	1-13	13
	2-7	19
	2-9	15
	2-11	23
	2-59	34
	2-61	10
	3-9	11
	3-12	75
	4-3	43
	4-5	3
	4-10	59
	5-14	57
	5-14	58
	5-14	59
	7-7	37
	8-3	24
	8-5	33
	11-4	75
320158	2-5	24
	2-7	46
	2-51	17
	3-9	7
	3-29	9
	4-9	24
	5-17	8
320159	1-13	15
	1-17	9
	2-7	23
	2-13	8
	2-15	20
	2-61	35
	3-5	8
	3-15	19
	4-3	9
	4-5	50
	4-9	39
	5-7	5
	7-7	28
	11-3	33
320160	3-27	10
	3-29	2
	3-29	11
	8-19	22
	8-23	17
	9-7	17
	9-13	15
	9-13	20
	10-9	19
	10-11	35
320161	7-7	36
320162	8-3	18
	8-27	23
	9-13	4
320165	2-19	15
320334	10-9	12
	10-11	10
321004	3-9	24
321108	3-7	14
321109	3-5	23
	3-7	18
321792	6-11	9
321797	6-11	8
321916	3-5	23
	3-7	18
324023	10-17	5
324634	4-15	25
324637	4-15	22
	4-17	33
325182	4-6	60
325708	3-27	20
325729	8-19	31
	8-23	26
325789	4-23	18
	4-31	10
325897	5-14	60
328073	11-19	4
328220	11-19	11
328753	3-5	1
	3-7	1
328754	3-5	1
	3-7	1
329029	1-15	20
329067	1-13	3
	1-13	4
	3-12	77
330028	10-11	7
332057	9-13	3
332276	5-23	6
	5-24	2
334369	11-4	49
334402	5-9	18
	5-11	18
334475	5-9	8
	5-11	8
334500	5-13	38
	5-14	47
334513	5-13	19
334515	5-13	17
334524	5-3	2
	5-13	26
334531	5-13	36
334542	5-13	31
334543	5-13	32
334560	5-3	28
334635	11-11	12
334932	10-11	26
335553	1-5	7
335988	1-5	2
335991	1-5	3
336093	11-25	1
	11-27	1
336550	2-5	13
	2-51	11
336555	5-23	35
	11-25	2
	11-27	2
336567	3-5	23
	3-7	18
339969	8-25	11
340044	1-15	21
340054	9-13	10
	9-13	10
	10-9	9
	10-21	11
340105	11-13	24
	11-15	24
340203	2-5	22
	2-51	5
340204	2-5	21
	2-51	14
340206	7-5	4
340210	7-7	39
340212	7-7	42
340213	7-7	36
340214	7-7	11
340215	7-7	23
340218	8-3	13
	8-31	
340268	5-4	46
340292	11-25	3
	11-25	3
340792	2-19	1
340796	2-19	13
341053	9-7	5
341058	9-13	11
341059	9-13	11

See Service Manual for service procedures.
©2004 HYSTER COMPANY

NUMERICAL INDEX (Continued)

PART NO.	PG	ITEM
341060	9-13	11
341061	9-13	11
341074	9-13	12
341116	9-5	1
341117	9-5	1
341118	9-5	1
341122	9-7	5
341123	9-7	5
	10-9	31
341124	9-7	5
341144	9-3	2
	9-5	4
	9-11	2
	10-3	2
	10-5	8
	10-7	2
	10-19	2
	11-13	2
	11-15	2
341331	9-9	1
341332	9-9	1
341333	9-9	1
341340	9-9	9
341341	9-9	9
341342	9-9	9
342931	7-7	27
342962	7-3	1
342980	1-13	7
343946	9-7	1
	9-11	9
	10-9	6
	10-11	13
	11-13	19
344256	7-7	26
344275	2-9	8
344343	5-17	1
344381	2-9	12
344390	6-9	40
	6-13	
344391	6-13	5
344392	6-13	8
344395	6-13	6
344429	3-9	21
	3-12	71
344432	2-5	14
	2-51	4
344448	5-4	40
345408	6-7	3
345409	6-7	4
345410	6-7	7
345411	6-7	8
345412	6-7	9
345418	6-7	19
345423	6-3	42
345424	6-7	17
345453	2-5	12
	2-51	8
345454	2-5	11
	2-51	10
345881	8-3	45
	8-11	7
346283	2-9	23
346293	2-9	11
346295	2-9	7
346299	6-9	1
346330	4-27	9
	4-28	8
346571	10-21	8
346625	5-3	27
346634	5-13	30
346636	5-13	14
346640	5-14	52
346643	5-13	35
346644	5-14	44
346645	5-14	43
346646	5-14	49
346647	5-13	39
346648	5-14	42
346649	5-14	48
346650	5-14	41
346651	5-13	10
346652	5-13	8
346653	5-14	40
346654	5-13	23
346656	5-14	58
346660	5-3	29
346675	5-9	1
	5-11	1
346677	5-7	1
	5-9	25
	5-11	25
346680	5-3	33
346681	5-3	34
346682	5-3	4
346683	5-3	5
346684	5-3	12
346686	5-3	18
346688	5-3	16
	5-3	23
346690	5-3	12
346691	5-3	11
346696	5-9	5
	5-11	5
346730	5-9	6
	5-11	6
346731	5-9	4
	5-11	4
346734	5-13	37
346768	5-14	51
346770	5-14	50
346788	5-13	15
346789	5-3	13
	5-3	20
346800	5-3	15
	5-3	22
346801	5-3	14
	5-3	21
346805	5-13	29
346813	5-13	33
346818	5-3	19
346819	5-3	19
346848	5-13	13
346906	9-5	9
346916	9-9	1
346917	9-9	9
346957	9-3	3
346961	9-5	1
346971	9-7	15
	10-9	20
349281	6-9	1
349320	10-7	7
350052	2-5	7
	2-51	21
350054	8-3	4
	8-31	9
350055	8-3	13
	8-31	
350060	11-25	7
350065	4-3	18
350079	8-3	23
350099	8-3	37
	8-11	2
350183	6-9	42
350187	11-4	73
350399	2-55	2
350483	3-9	23
	3-12	89
350498	4-9	36
351458	11-13	37
	11-15	37
351668	10-21	18
	10-22	40
352485	3-27	5
	3-29	6
352499	3-27	2
352575	7-3	8
352605	7-3	7
352885	3-27	1
352950	3-29	13
352955	6-3	37
352969	3-31	8
352985	4-9	12
352987	4-9	13
353000	3-9	12
	3-12	78
353009	7-3	10
353011	7-3	9
353012	7-3	4
353013	7-3	3
353021	1-11	17
353106	3-12	79
353129	3-27	6
	3-29	7
353141	3-29	3
353142	3-27	18
	3-29	21
353143	3-27	19
	3-29	22
353144	4-10	62
	11-4	67
353154	3-31	4
353159	3-27	12
353164	3-27	7
	3-29	20
353165	3-31	15
353168	3-31	6
353172	3-29	15
353175	3-31	12
353195	3-27	11
	3-29	12
353199	3-3	11
	3-5	22
353206	7-3	12
353220	3-31	13
353230	3-29	16
353302	8-3	43
	8-11	3
353310	2-5	4
	2-51	7
353311	7-5	3
353379	11-21	6
353397	3-31	1
353398	3-29	1
	3-31	
353422	3-31	7
353432	3-31	7
353448	3-31	9
353453	3-29	14

©2004 HYSTER COMPANY

NUMERICAL INDEX (Continued)

PART NO.	PG	ITEM
353478	11-21	11
	11-21	32
353479	11-21	10
353497	7-3	17
353835	7-7	2
356431	10-21	17
356598	9-7	22
357235	5-19	28
	5-20	62
357249	5-20	57
357273	1-13	10
357276	1-13	8
357278	7-7	32
357288	6-3	1
	6-7	
357293	6-9	24
357301	7-7	12
357310	3-15	30
357529	9-13	1
357934	11-21	11
	11-21	32
358240	9-13	12
358243	11-19	13
358259	8-29	6
358261	9-13	12
358262	9-13	12
358286	10-22	29
358287	10-22	30
358289	10-22	33
358305	10-7	3
	10-19	12
	11-15	16
358354	11-7	45
358674	11-21	7
359207	3-31	11
360387	3-31	3
360667	2-69	4
362030	1-11	24
362339	10-3	3
362352	10-5	4
362356	10-5	1
362416	4-3	8
	4-5	49
362950	10-5	3
362953	10-5	2
362965	10-15	9
362966	10-15	9
362967	10-15	9
362975	10-15	14
362976	10-15	14
362977	10-15	14
362986	10-15	14
362987	10-15	14
362988	10-15	14
364202	10-5	7
364203	10-5	7
364204	10-5	7
364233	10-15	7
364246	10-17	
364247	10-17	
364807	1-5	20
364808	1-5	25
364854	1-5	24
364911	1-5	1
364914	1-5	6
365325	11-4	53
365327	11-3	5
365343	11-3	23
365344	11-3	24
366063	6-3	44
	6-3	45
366064	6-3	44
366065	6-3	45
	6-4	46
366066	6-3	44
366067	6-7	12
366068	6-7	15
366069	6-7	20
366116	9-11	25
	10-19	4
	11-13	21
	11-15	20
366123	11-3	28
366476	10-17	15
366477	10-17	15
366484	10-17	10
366485	10-17	10
366486	10-17	10
366496	10-5	6
366501	9-7	13
366516	10-9	31
366517	10-11	1
366518	10-11	1
366519	10-11	1
366523	10-9	31
366524	10-11	27
366526	10-11	22
366528	10-11	23
366529	10-11	29
366682	4-5	25
366790	5-29	3
367227	1-11	4
367228	1-11	3
367233	1-11	6
367235	1-11	12
367246	1-11	7
367251	1-11	19
367259	1-11	26
367260	1-11	1
367266	2-11	19
	2-59	8
	2-61	20
367540	4-31	11
367953	4-13	17
367960	4-23	30
	4-25	22
367966	4-13	9
367968	4-23	27
	4-25	20
	4-25	22
368137	10-17	16
368139	10-11	21
368140	10-11	21
368231	5-20	64
368249	2-11	20
369127	2-11	13
	2-59	3
369128	2-11	18
369129	2-11	14
	2-13	3
	2-15	11
	2-59	1
	2-61	26
369135	2-11	10
	2-59	2
369136	2-11	12
	2-13	10
	2-15	7
	2-59	25
	2-61	24
369426	9-13	8
369431	9-5	2
369432	9-5	3
369441	9-3	3
369444	11-19	15
369525	1-13	22
369549	8-25	12
369550	8-25	13
369552	8-25	1
369555	8-25	3
369556	8-25	2
369557	8-25	4
369573	1-15	12
369748	2-27	38
370258	1-15	10
370269	11-4	72
370278	1-13	20
370646	4-9	6
370647	4-9	7
370648	4-9	32
370676	4-9	5
370727	4-23	26
370728	4-23	21
	4-25	15
	4-25	20
370730	4-27	10
	4-28	9
	4-31	22
370776	4-9	31
370863	4-9	18
370864	4-9	19
370868	4-9	45
371344	6-7	21
371666	6-3	43
372006	2-19	26
372011	5-23	11
372014	7-5	10
372015	7-5	13
372019	7-7	6
372020	7-7	7
372346	10-9	23
372389	10-9	28
	10-11	16
373109	2-5	16
373950	5-4	37
374002	1-13	6
374004	1-13	22
374019	5-3	7
374039	5-3	13
	5-3	20
374046	4-9	21
374047	11-21	22
374535	7-11	2
374540	7-11	8
374541	7-11	8
374542	7-11	19
374543	7-11	14
374545	7-11	16
374546	7-11	17
374547	7-11	18
374548	7-11	3
374923	3-3	1
	3-3	1
375479	3-12	82
375575	2-25	24
375587	2-27	19
375601	2-25	20
375602	2-25	25

©2004 HYSTER COMPANY

NUMERICAL INDEX (Continued)

PART NO.	PG	ITEM
376397	4-9	29
377326	2-71	5
377331	2-51	32
377342	2-51	28
377346	8-3	36
377347	3-7	16
377348	3-7	13
377350	1-11	15
377354	2-19	19
377355	3-7	17
377606	11-11	13
377607	11-11	18
377608	11-11	14
377613	8-25	8
377614	8-25	9
377616	2-59	7
377617	2-59	10
377620	7-5	15
377622	1-11	9
377623	1-11	18
377624	1-11	8
377901	1-5	1
377976	2-49	3
378424	8-15	25
	8-17	25
379197	1-5	26
379198	1-5	27
379199	1-5	15
379238	7-5	7
	7-7	3
	7-13	
379402	1-17	10
	11-3	7
379407	2-31	34
379413	11-7	1
379416	11-7	2
379417	11-7	3
379697	1-5	16
	1-5	18
379698	1-5	19
379902	4-9	3
379952	2-59	17
379957	3-5	15
379966	3-5	16
379968	3-5	9
	3-7	5
379972	3-7	19
380333	1-15	1
380334	1-15	1
380524	5-4	39
380567	10-21	1
380568	10-21	2
380569	10-21	1
380570	10-21	2
380585	10-21	21
380587	10-21	22
380590	10-21	25
380591	10-21	26
381012	3-15	10
381846	4-10	68
	4-23	14
	4-25	5
	4-25	6
	4-25	7
381847	4-23	17
	4-25	5
	4-25	6
	4-25	8
	4-25	9
	4-25	11
381879	3-11	32
	4-6	62
381919	4-23	19
	4-27	7
	4-28	10
383116	1-5	29
383141	11-21	9
383824	10-15	15
385085	1-5	12
385402	8-27	27
386459	2-49	11
	2-53	15
	2-55	5
	2-67	14
386625	10-21	3
386626	10-21	3
386627	10-21	3
386629	10-21	4
386630	10-21	4
386631	10-21	4
386634	10-21	5
386635	10-21	5
386636	10-21	5
386638	10-21	6
386639	10-21	6
386641	10-21	6
386642	10-21	7
386643	10-21	7
386644	10-21	7
386646	10-21	9
386648	10-22	35
387058	8-29	14
387316	4-5	41
	7-3	15
387867	7-5	20
	11-22	39
388186	9-7	21
	10-9	13
	10-11	9
388302	2-25	9
388306	2-39	7
388313	2-25	27
388513	5-17	6
389136	11-21	33
389688	1-15	22
389692	1-15	28
389792	11-21	10
389793	11-21	11
	11-21	32
389824	6-3	44
392649	8-6	49
397676	11-7	22
398350	2-19	14
399066	2-59	5
626468	11-19	12
636858	10-17	1
636941	10-15	8
636954	10-17	7
637151	11-19	10
637161	10-17	3
637166	10-17	8
637565	9-9	8
	10-15	2
637635	9-9	3
	10-15	12
	10-17	13
638223	10-17	9
638251	10-17	2
672563	10-22	33
806424	4-31	12
806557	11-25	4
	11-27	4
816045	11-11	3
816046	11-11	4
825843	11-4	66
842799	2-47	4
842800	2-47	5
893697	1-15	27
895411	3-9	26
	3-12	80
925952	11-7	36
930775	6-3	26
980541	11-25	5
	11-25	8
	11-27	5
	11-27	8
980542	11-25	6
	11-25	9
	11-27	6
	11-27	9
980727	2-41	9
983484	2-55	9
996476	5-4	49
1151997	11-11	16
1152571	11-21	3
	11-21	12
	11-21	30
1300057	4-10	67
1300107	1-5	23
1300134	11-21	15
1300139	5-19	4
	5-19	45
1300165	6-3	40
1300231	4-25	10
1300301	8-31	5
1300493	7-11	21
1300494	7-11	20
1300495	7-11	20
1300496	7-11	20
1300741	11-7	17
1300742	11-22	38
1301167	3-5	1
	3-7	1
1301720	4-31	13
1301721	3-11	46
1301745	11-11	20
1301783	11-11	22
1302129	11-7	13
1302591	10-21	6
1302592	10-21	6
1302593	10-21	6
1302636	9-13	14
1302637	9-13	18
1302955	2-5	15
	2-51	6
1303037	1-5	1
1303150	5-20	49
1303154	5-19	26
1303158	5-19	3
	5-19	46
1303787	6-7	10
1303833	1-15	35
1304050	1-15	36
1305174	8-19	14
	8-23	10
1306143	2-49	14
1306159	10-21	6
1306193	2-47	16

©2004 HYSTER COMPANY

NUMERICAL INDEX (Continued)

PART NO.	PG	ITEM
1306194	2-47	17
1306345	3-12	58
1306354	2-55	6
	2-63	4
1306356	2-55	12
1306358	2-49	18
	2-53	6
	2-64	6
	2-67	10
1306359	2-67	15
1306361	2-45	24
1306362	2-53	10
1306364	2-55	15
1306365	2-49	20
1306370	2-56	5
	2-59	35
	2-61	4
1306371	2-55	23
	2-67	13
1306373	2-64	7
1306374	2-49	4
1307300	10-9	11
1307391	10-7	1
1307392	10-7	1
1307395	9-7	4
	9-11	6
	10-7	6
	10-9	4
	10-11	19
	10-19	14
	11-13	17
	11-15	17
1307875	2-49	9
1307877	2-56	4
1307880	2-49	13
1307881	2-55	21
	2-67	24
1307894	2-41	19
	2-43	25
	2-49	7
1307897	4-21	7
1307909	2-53	5
	2-53	11
	2-55	22
1309409	8-31	3
1309419	8-15	25
	8-17	25
1309479	8-19	38
	8-23	33
1309491	8-19	7
	8-23	7
1309824	11-3	37
1310630	4-10	64
1310975	5-20	61
1310978	5-20	63
1310985	5-19	29
1310988	5-19	24
1310996	5-19	36
	5-20	56
1311011	6-3	44
1311014	8-5	36
1311015	8-5	37
1311213	11-11	20
1311600	2-69	3
1311602	2-69	5
1311603	2-69	6
	8-6	52
1311604	2-69	7
1311605	2-69	8
1312083	5-27	10
1312337	4-13	18
1312339	4-13	4
1312340	4-13	5
1312344	4-13	2
1312345	4-13	3
1312348	4-13	16
1312450	11-3	37
1312473	4-13	1
1312616	5-27	13
1312702	4-6	59
1312703	4-6	59
1312722	1-13	21
	1-13	21
1312733	6-3	41
1312735	5-19	44
1312740	8-5	28
1312741	8-5	28
1312904	7-11	9
1313762	5-14	53
1313763	5-14	53
1313764	5-3	1
1313774	5-3	2
	5-13	27
1313789	10-11	21
1313807	10-17	15
1313809	10-17	
1313811	10-7	1
1313904	3-5	1
	3-7	1
1314311	9-9	13
	10-15	1
1315411	1-17	16
1315499	2-51	39
1316488	2-16	4
	2-31	27
1316494	2-16	5
	2-31	28
1317393	4-13	8
1317394	4-13	15
1317468	2-31	46
1318161	10-19	
1318162	9-11	
1318167	9-11	1
1318306	4-5	10
1318417	5-19	2
1318511	3-12	87
1318626	5-27	30
1318965	2-49	10
1318968	2-64	5
1319190	2-21	11
	2-23	14
	4-5	28
1319364	11-3	27
1319365	11-3	26
1320000	2-27	13
1320001	4-13	14
1320018	5-3	36
1320109	1-19	1
1320264	1-15	19
1320659	4-9	20
1321373	7-11	9
1321677	11-4	50
1321836	7-11	4
1321837	7-11	4
1321838	7-11	5
1321839	7-11	6
1321842	7-11	12
1321843	7-11	6
1321868	11-3	20
1321870	11-3	4
1322232	3-12	85
1322333	5-3	36
1322627	5-3	32
1322633	5-13	
1322634	5-13	
1322652	4-9	33
1322669	7-3	5
1322673	4-27	11
	4-31	37
1323576	4-31	23
1323586	4-31	14
1323595	11-21	16
1323597	4-9	34
1323995	7-11	1
1323996	7-11	4
1323998	7-11	8
1323999	7-11	11
1324002	7-11	1
1324176	11-21	29
1324181	11-21	21
1324182	11-21	35
1324313	4-9	4
	4-13	
1324350	8-19	41
	8-23	36
1324352	8-19	40
	8-23	35
1325119	9-7	9
1325271	1-15	4
1326651	8-9	3
1326652	8-9	8
1326653	8-6	43
1326927	8-9	4
1326939	4-3	28
	4-5	23
1327565	7-11	
1327566	7-11	
1327905	2-63	9
1327973	3-12	66
1328205	1-15	25
1328565	2-55	17
1328688	7-3	2
1328691	5-14	56
1328696	8-19	39
	8-23	34
1328697	8-19	16
	8-23	12
1328698	8-19	37
	8-23	32
1328812	6-11	5
1328887	11-4	73
1328930	8-19	9
	8-23	8
1329414	4-13	19
1329630	5-14	55
1329660	8-5	17
1329756	8-29	10
1330051	11-15	1
1330052	11-13	39
	11-15	39
1330064	9-11	11
	10-19	10
	11-13	23
	11-15	23
1330254	3-11	4
1330279	3-9	18
1330283	4-23	34
	4-27	6

See Service Manual for service procedures.
©2004 HYSTER COMPANY

NUMERICAL INDEX (Continued)

PART NO.	PG	ITEM
	4-28	7
	4-31	24
1330292	4-23	33
	4-27	5
	4-28	6
	4-31	15
1330293	4-31	33
1330325	3-9	18
1330342	3-9	5
1330353	4-5	27
1330354	4-31	16
1330355	4-31	28
1330356	4-31	29
1330357	4-31	30
1330378	3-9	18
1330379	3-9	18
1330381	3-9	18
1330423	4-23	1
1330424	4-31	31
1330429	4-23	2
1330434	4-23	3
1330438	4-23	3
1330450	2-25	6
1330453	2-39	5
1330725	2-32	48
1330780	10-19	15
	11-15	21
1330784	11-13	27
	11-15	27
1330787	1-21	1
1330790	11-13	36
	11-15	36
1330791	1-21	1
1330792	1-21	1
1330793	1-21	1
1330794	1-21	1
1330795	11-13	1
1330917	1-15	8
1330919	1-15	24
1330920	1-15	13
1330998	7-3	21
1330999	7-3	22
1331001	7-3	23
1331002	7-3	24
1331006	7-3	20
1331042	3-15	34
1331269	9-11	3
	10-19	3
1331270	10-19	1
1331341	2-25	26
	2-31	7
1331992	9-7	2
	9-11	10
	10-9	5
	10-11	18
	11-13	16
1331993	9-9	12
	10-15	5
1331994	9-9	
1331995	9-9	
1331996	9-9	
1331997	9-9	
1332000	10-15	
1332002	10-15	
1332003	10-15	
1332005	10-15	
1332007	10-15	
1332008	10-15	
1332017	9-9	13
1332019	10-15	16
1332705	9-13	2
1333541	2-39	6
1333572	7-3	28
1333648	9-11	12
	10-5	9
	10-7	8
	10-19	16
	11-13	13
	11-15	13
1333649	9-3	6
	9-5	5
	10-3	8
	10-5	15
1333806	2-31	42
1334359	1-19	8
1334423	2-31	5
	4-18	4
1334790	3-9	28
	3-12	81
	6-3	8
1335001	4-9	47
1335137	1-15	29
1335142	1-15	7
1335146	1-15	11
1335187	7-5	6
	7-7	1
1335467	7-3	25
1335468	7-3	26
1335499	2-25	16
	2-71	9
1335842	4-3	34
	4-28	
1335870	6-9	34
1335873	6-9	37
1335898	2-9	21
	2-11	24
	2-13	34
	2-15	27
1336171	4-31	25
1336465	6-3	3
1336468	6-3	9
1336472	6-3	28
1336474	6-3	18
1336476	6-3	25
1336479	6-3	4
1336480	6-3	11
1336481	6-3	32
1336483	6-3	12
1336503	6-3	10
1336570	6-3	2
1336870	4-23	4
	4-27	1
	4-28	1
1336871	4-23	6
	4-27	3
	4-28	3
1336872	4-23	10
1336874	4-23	5
	4-27	2
	4-28	2
1337118	2-9	20
	2-11	25
	2-13	33
	2-15	28
1337197	4-9	3
1337383	4-23	8
1337384	4-23	9
1337385	4-23	12
1337386	4-23	11
1337388	4-23	13
1337391	4-28	5
1337392	4-23	7
	4-27	4
	4-28	4
1337734	1-19	10
1337816	5-14	46
1337886	4-9	20
1338178	1-15	2
1338223	2-39	2
1338258	2-9	22
	2-11	22
	2-13	27
	2-15	26
1338737	1-15	18
1339440	4-3	32
	4-6	57
1339779	3-9	10
1339963	2-27	36
1342528	4-18	1
1342660	11-3	18
1343449	3-9	18
1344054	6-3	36
1344055	6-3	14
1344131	1-15	9
1344132	1-15	9
1344751	8-29	16
1344753	10-9	32
1344761	11-19	13
1344921	2-49	17
1345014	4-5	9
	4-21	6
1345684	6-9	2
1345903	7-11	13
1345939	1-15	3
1345997	4-3	34
	4-27	
1345998	1-15	16
1346708	4-9	1
	4-13	
1346710	1-13	1
1346713	4-9	46
1346715	4-9	23
1346716	4-9	17
	4-25	1
1346717	4-9	17
	4-23	
1346733	4-10	65
1346743	6-3	24
1346744	6-3	5
1346745	4-9	1
	4-13	
1346853	1-15	15
1346862	6-3	23
1346863	6-3	22
1346866	6-3	38
1346867	6-3	14
1347088	3-27	13
	3-29	25
1347573	7-15	18
1347574	7-5	8
	7-7	1
	7-15	
1347770	5-27	14
1347774	5-27	9
1347800	5-28	33
1347801	5-27	8
1347802	5-27	8
1347803	5-27	8

©2004 HYSTER COMPANY

NUMERICAL INDEX (Continued)

PART NO.	PG	ITEM
1347804	5-27	8
1347805	5-27	8
1347806	5-27	8
1347807	5-27	8
1347808	5-27	8
1347809	5-27	8
1347810	5-27	8
1347811	5-27	8
1347812	5-27	2
1347813	5-28	32
1347819	5-27	3
1347822	5-27	25
1347831	5-27	22
1347835	5-27	28
1347839	5-27	16
1347952	4-13	3
1350058	11-7	3
1350059	11-7	3
1350404	6-3	13
1350680	6-9	6
1350914	4-3	7
1350992	11-21	11
	11-21	32
1351176	2-13	7
	2-15	21
	2-61	34
1351177	2-13	5
	2-15	19
	2-61	33
1354165	1-15	26
1354497	4-31	17
1355319	2-59	36
	2-61	3
1355326	6-7	11
1356943	11-4	59
1356948	11-4	60
1357026	6-7	14
1357303	11-25	2
	11-27	2
1357322	2-19	17
1357323	2-19	7
1357370	7-11	10
1357461	1-19	
1357462	1-19	
1357463	1-19	
1357464	1-19	
1357734	5-27	10
1358182	11-25	2
	11-25	2
	11-27	2
	11-27	2
1358191	11-25	2
	11-27	2
1358545	2-35	10
1358734	11-4	61
1359458	5-4	47
1359581	2-5	9
	2-51	8
1360178	2-27	28
1360179	2-25	4
1360182	2-25	5
1360971	4-10	52
1361164	3-19	13
1361489	5-23	21
1367106	4-17	26
1367107	4-17	25
1367711	8-3	1
	8-27	
1369496	11-4	65
1369498	11-4	71
1369520	11-3	30
1371149	3-9	18
1371220	7-11	9
1374090	5-27	1
1374097	5-27	13
1374108	2-27	39
1374288	2-31	6
1374289	2-31	11
1374293	2-31	14
1374297	2-27	2
1374298	2-27	8
1374299	2-27	7
1374301	2-27	6
1374313	2-25	15
	2-27	35
1374314	2-27	14
1374315	2-27	31
1374317	2-27	26
1374319	2-39	1
1374320	2-39	4
1374326	2-27	32
1374329	4-18	2
1374425	11-4	47
1374426	11-4	47
1374427	11-3	35
1374428	11-4	58
1374440	11-3	44
1374441	11-3	45
1374550	5-27	23
1374750	1-5	17
1375711	3-9	2
	3-11	11
1375782	4-31	18
1375783	4-31	26
1375978	11-3	21
1375981	11-3	36
1375982	11-4	46
1375986	2-9	1
	2-11	7
	2-59	15
1376007	11-25	2
	11-25	11
	11-27	2
1376381	11-13	
1376382	11-15	
1376727	4-5	46
1376881	8-27	26
1377103	2-27	23
1377104	2-27	25
1377107	2-27	33
1377110	2-37	3
1377750	2-7	31
1377752	2-7	25
1377754	2-5	25
1377781	2-7	42
1377792	2-31	15
1377793	2-31	16
1377794	2-31	17
1377795	2-5	31
1377797	11-11	17
1377908	2-49	5
1378948	8-3	4
	8-31	12
1379293	11-13	3
1379294	11-13	4
1379295	11-15	3
1379296	11-15	4
1379945	1-15	34
1380261	2-53	9
1380309	2-7	41
1380776	5-27	29
1380777	5-27	13
1380779	5-27	31
1380797	5-27	26
1380798	5-28	34
1381082	11-19	5
1381085	8-29	11
1381125	1-15	30
1382479	2-55	11
1382546	2-41	16
1382954	2-63	2
1383204	2-7	29
1383211	2-31	39
1383213	2-31	40
1383225	2-7	6
1383226	2-7	24
1383228	2-7	4
1383229	2-7	12
	4-3	35
1383237	2-31	38
1383239	2-31	41
1383240	4-3	1
	4-15	
1383241	2-31	31
1383257	2-16	1
	2-27	12
	2-31	30
1383263	2-27	41
1383331	4-3	21
	4-5	16
1383347	4-3	30
1383350	2-19	23
1383775	6-9	27
1383791	4-9	37
1383795	6-9	14
1383797	6-9	15
1383904	2-31	10
1384335	2-71	3
1384699	3-15	12
1385704	2-49	12
1386176	2-27	18
	2-39	
1386177	2-39	8
1386179	2-27	22
1386183	2-27	27
1386184	2-27	40
1386185	2-31	1
1386186	2-31	12
1386187	2-31	13
1386189	2-31	21
1386191	2-31	23
1386194	2-37	4
1386195	2-37	5
1386197	2-37	7
1386198	2-37	8
1386916	5-9	22
	5-11	22
1386958	5-9	12
	5-11	12
1386976	5-3	
	5-7	
	5-9	
	5-11	
1386977	5-3	
	5-7	
	5-9	
	5-11	
1386979	5-7	2

See Service Manual for service procedures.
©2004 HYSTER COMPANY

NUMERICAL INDEX (Continued)

PART NO.	PG	ITEM
	5-9	
1386980	5-7	3
	5-11	
1386982	5-9	19
1386983	5-11	19
1386989	5-9	7
	5-11	7
1386991	5-9	23
	5-11	23
1386993	5-7	15
1386995	5-7	14
1386997	5-7	12
1387235	5-9	11
	5-11	11
1388300	2-9	6
	2-11	15
	2-59	12
	2-61	27
1388386	2-67	20
1388387	2-43	6
1388574	5-13	16
	5-13	21
1389050	2-31	19
1389051	2-31	20
	2-37	2
1389092	2-27	24
1389093	2-31	9
1389100	2-27	15
1389102	2-31	2
1389133	2-31	8
1389337	2-7	8
	4-3	36
1389348	2-7	1
1390149	4-15	1
1390152	4-15	2
1390155	4-15	39
1390156	4-15	26
1390157	4-15	24
1390158	4-15	23
1390159	4-15	40
1390160	4-15	31
1390161	4-15	28
1390162	4-15	29
1390163	4-15	36
	4-17	27
1390164	4-15	37
	4-17	28
1390165	4-15	30
1390166	4-15	33
1390167	4-15	38
	4-17	21
1390168	4-15	3
1390169	4-15	4
1390170	4-15	41
1390171	4-15	35
1390172	4-15	32
1390173	4-15	14
1390609	5-13	1
1390759	2-25	2
1390760	2-25	2
1390761	2-25	3
1390765	2-25	3
1390770	2-25	7
1390773	2-25	12
1391238	4-15	18
1391239	4-15	19
1391240	4-15	20
1391241	4-15	21
1391243	4-15	27
1391244	4-15	34
1391246	2-45	21
1392223	5-23	32
1392553	2-59	9
1393127	2-37	6
1393160	5-13	4
1393164	5-13	4
1393350	2-27	17
1393703	8-15	3
	8-17	3
1393704	8-15	4
	8-17	4
1394008	3-5	17
1394500	11-25	2
	11-27	2
1394879	5-9	16
	5-11	16
1394881	5-9	9
	5-11	9
1394882	5-9	15
	5-11	15
1394885	5-9	17
	5-11	17
1394893	5-9	14
	5-11	14
1394912	5-9	13
	5-11	13
1396053	5-9	3
	5-11	3
1396518	2-13	25
	2-15	30
1396617	1-7	
	1-9	
1396619	1-7	
	1-9	
1398105	2-31	29
1401163	2-23	12
1402189	2-13	30
	2-15	31
1450555	2-25	22
1450696	2-31	47
1450861	5-27	4
	5-27	21
1450941	2-39	9
1451319	2-25	17
1451321	2-27	34
1451606	2-47	11
1451629	2-43	3
1451636	2-43	12
1451669	2-67	4
1452376	2-31	8
1452463	3-3	10
	3-5	21
1452596	5-13	3
1452597	5-13	2
1453546	4-15	5
1453551	4-15	17
1453889	4-15	3
1453890	4-15	22
1454600	2-71	1
	5-17	5
1454827	4-31	36
1454828	4-31	27
1454860	4-31	19
1454862	4-31	32
1454955	2-27	9
	2-27	9
1454956	2-27	10
	2-27	10
1454957	2-27	11
	2-27	11
1454967	4-6	53
1454974	2-28	50
1455578	2-51	25
1455580	2-51	26
1455809	2-51	24
1456111	2-27	1
1456522	3-12	63
1456523	3-5	3
	3-7	2
1456711	2-41	12
1456899	2-5	1
	2-51	1
1457312	2-5	10
	2-51	9
1458291	4-13	1
1458844	6-11	2
1458845	6-11	19
1459007	2-7	35
1459011	2-7	36
1459012	2-7	40
1459303	4-15	13
1459391	2-71	12
1459400	2-71	2
	5-17	5
1459838	8-5	7
1459843	8-5	4
1460209	2-43	24
1460322	2-27	37
1460330	2-25	21
1460331	2-25	23
1460332	2-27	43
1460333	2-31	22
1460384	2-37	9
1460386	2-25	8
1460477	2-13	21
	2-15	33
	2-59	32
	2-61	2
	3-3	4
	3-5	5
	3-7	4
	3-12	60
1460557	2-49	1
1460738	2-25	11
1460757	2-27	30
1460758	2-27	30
1460768	2-28	49
1460789	7-3	14
1460790	7-3	16
1461800	2-7	32
1461876	8-5	5
1462233	4-17	1
1462234	4-17	2
1462235	4-17	3
1462236	4-17	4
1462239	4-17	5
1462240	4-17	6
1462241	4-17	7
1462256	4-17	16
1462257	4-17	17
1462258	4-17	18
1462261	4-17	34
1462262	4-17	29
1462263	4-17	30
1462264	4-17	31
1462265	4-17	32
1462267	4-17	36
1462270	4-17	24

©2004 HYSTER COMPANY

NUMERICAL INDEX (Continued)

PART NO.	PG	ITEM
1462271	4-17	20
1462272	4-17	23
1462273	4-17	22
1462305	8-5	3
1462439	3-3	1
	3-3	1
1462441	3-3	1
	3-3	1
1462442	3-3	1
	3-3	1
1462995	8-5	16
1465572	6-11	6
1465573	6-11	7
1465574	6-11	3
	6-11	20
1465575	6-11	11
1465577	6-11	3
	6-11	21
1465586	4-15	15
1465587	4-15	16
1466348	1-13	2
1466435	11-11	6
1466437	11-11	5
1466459	11-4	77
1466859	2-45	6
1467523	1-9	1
1467524	1-9	2
1467525	1-9	3
1467526	1-9	4
1467527	1-9	5
1467529	1-9	7
1467531	1-9	6
1469301	5-9	10
	5-11	10
1469597	2-7	10
	4-3	37
1469598	4-5	7
1470152	1-7	1
1470153	1-7	1
1470155	1-7	38
1470156	1-7	39
1470157	1-7	40
1470158	1-7	41
1470159	1-7	34
1470160	1-9	8
1470161	1-7	42
1470163	1-7	29
1470164	1-7	43
1471345	8-6	51
1471555	2-37	2
1471556	2-27	3
1471557	2-37	1
1471558	2-27	29
1471559	2-31	18
1471560	2-28	48
1471598	11-25	2
	11-27	2
1471838	11-25	2
	11-27	2
1471922	11-25	2
	11-27	2
1474893	3-9	31
1474964	8-3	38
	8-11	1
1475420	5-27	18
1475421	5-27	19
1475493	3-11	15
	4-5	30
1476024	2-9	18
	2-11	27
1476145	2-21	14
1476421	3-15	16
1478700	8-23	19
1478715	8-19	24
1479160	5-23	1
	5-24	
	5-27	
1479608	11-3	3
1479609	11-3	2
1479677	1-5	28
1479678	1-5	28
1479752	1-13	19
1479807	4-13	18
1480237	3-11	33
	4-5	35
1482700	2-37	1
1482701	2-37	4
1482734	3-11	17
1483828	1-9	9
1483880	5-29	5
1484173	5-29	
1484643	1-7	37
1485324	9-7	19
1485325	9-7	11
1485326	10-9	25
1485589	10-9	15
1485590	10-9	24
1485591	10-11	4
1486842	3-11	26
1486843	3-11	23
1489281	5-27	7
1489282	5-27	7
1489283	5-27	7
1489284	5-27	7
1489286	5-28	36
1489287	5-28	35
1489409	5-27	20
1489410	5-27	20
1489643	2-37	10
1489805	7-5	2
1491406	6-9	6
1491571	5-23	18
1491824	7-5	2
1493287	9-3	1
1493289	9-3	1
1493291	9-3	1
1493293	9-3	1
1493517	10-3	1
1493519	10-3	1
1493520	10-3	1
1493523	10-11	4
1493524	10-11	4
1494076	1-7	2
1494077	1-7	2
1494726	8-29	33
1494931	7-3	19
1496475	3-9	17
1497902	5-23	1
	5-24	1
1497903	5-23	3
	5-24	4
1497904	5-23	5
	5-24	4
1497905	5-24	5
1497906	5-24	8
1497907	5-23	7
	5-24	10
1497908	5-23	7
	5-24	10
1497909	5-23	4
	5-27	
1497910	5-27	10
1498113	5-29	2
1498807	5-4	48
1499514	2-9	19
	2-11	28
1499536	2-13	31
	2-15	25
1499664	2-13	24
	2-15	17
1499674	2-13	16
	2-61	29
1499677	2-11	17
	2-13	28
	2-15	16
	2-61	28
1500389	2-13	29
	2-15	23
1500402	2-13	22
	2-61	32
1500776	2-9	16
	2-11	21
1500884	2-25	18
1501133	2-13	32
	2-15	29
1501408	6-13	10
1501994	2-21	9
	3-17	4
1502000	2-5	2
	2-51	40
1502038	3-11	8
1502129	5-27	13
1502543	4-21	3
1502741	2-16	3
	2-31	25
1503886	1-15	31
1505234	11-11	1
1506561	11-11	8
1506713	2-7	34
1506728	11-19	1
1506794	2-7	33
1508007	3-3	2
1508245	3-9	18
1510113	3-3	6
1510117	3-3	3
	3-5	4
	3-7	3
	3-11	47
1510649	2-31	35
1511718	3-9	18
1511904	4-9	38
1512403	2-13	20
	2-15	32
1513870	3-27	17
	3-29	19
1513957	3-25	1
1514267	2-25	19
1514268	2-27	21
1514429	2-21	5
	3-25	14
	4-6	56
1514915	2-31	36
1514961	2-28	46
1514963	2-27	44
1514964	2-28	45
1514965	2-28	47
1514968	2-25	13
1514969	2-27	20

©2004 HYSTER COMPANY

NUMERICAL INDEX (Continued)

PART NO.	PG	ITEM
1515138	3-25	1
1516677	2-56	3
1516930	2-45	22
1520824	1-15	20
1520835	7-11	15
1523474	4-3	29
1523680	2-13	23
	2-61	19
1523800	2-41	
	2-43	
	2-45	
	2-47	
	2-49	
	2-53	
	2-55	
	2-56	
	2-63	
	2-64	
	2-67	
1524320	3-25	10
1527470	1-19	9
1527876	4-5	38
1527877	2-21	4
	3-25	11
1527879	3-3	12
	3-12	57
1527880	3-12	55
1527881	2-7	18
	3-11	31
	4-3	44
1527883	4-21	2
1527884	2-59	31
	2-61	1
	3-12	59
1528482	3-11	40
	4-6	61
1528778	3-11	48
	4-5	42
1528824	3-9	9
1528944	2-51	30
1528969	2-51	29
1529010	2-16	2
	2-31	26
1529022	2-59	26
	2-61	5
1531479	4-6	55
1536269	4-5	24
1537216	2-47	7
1537224	2-41	21
1537238	2-67	8
1537258	2-43	15
	2-43	27
1537265	2-63	8
1537297	2-55	13
1539747	3-25	13
1541597	2-59	11
1541599	2-59	30
	2-61	11
1541601	2-59	27
	2-61	8
1541920	3-9	4
1542187	2-15	12
1542188	2-15	13
1542479	3-3	9
	3-5	20
1543776	2-25	
	2-27	
	2-31	
	2-35	
	2-37	
	2-39	
1543933	3-11	30
1543978	2-25	
	2-27	
	2-31	
	2-37	
	2-39	
1544024	3-11	29
1544149	3-11	9
1544792	3-15	11
1544794	3-15	18
1544814	3-11	1
1544837	4-5	34
1544970	6-9	3
1544971	6-9	4
1545154	4-6	54
1545857	2-21	15
1546283	2-23	10
1546285	2-23	9
1549449	2-51	31
1550718	3-5	2
1551253	3-25	12
1551260	3-11	13
1551262	3-11	25
1551549	2-21	1
1551680	2-23	2
1551859	3-25	9
1552141	2-31	3
1552384	1-17	1
1552405	11-3	1
1552599	1-17	6
1553089	3-11	21
1553420	2-13	35
	2-15	24
	2-61	38
1553474	3-11	18
1554941	2-61	25
1554942	2-61	23
1554943	2-61	18
1554974	2-41	1
1554975	2-41	5
1554976	2-41	13
1554977	2-41	8
1554978	2-41	14
1554979	2-41	11
1554980	2-41	7
1554981	2-41	6
1554982	2-41	15
1554983	2-41	18
1554984	2-41	17
	2-63	3
1554985	2-47	1
1554986	2-47	2
1554987	2-47	3
1554988	2-47	2
1554989	2-47	2
1554990	2-47	2
1554991	2-47	3
1554992	2-47	3
1554993	2-47	3
1554994	2-47	8
1554995	2-47	12
1555063	2-47	14
1555064	2-47	15
1555065	2-47	13
1555066	2-47	13
1555067	2-47	13
1555068	2-47	13
1555069	2-47	13
1555070	2-47	13
1555071	2-41	20
1555072	2-43	1
1555073	2-43	4
1555074	2-43	5
1555075	2-43	8
1555076	2-43	10
1555077	2-43	9
1555078	2-43	11
1555079	2-43	13
1555080	2-43	14
	2-43	26
1555081	2-43	16
1555082	2-43	17
1555083	2-43	18
1555084	2-45	
1555085	2-45	1
1555086	2-45	2
1555088	2-45	3
1555090	2-45	8
	2-51	36
1555091	2-45	7
1555092	2-45	4
1555094	2-45	9
1555095	2-45	10
1555096	2-45	11
1555098	2-55	25
1555101	2-67	7
1555102	2-67	9
1555103	2-67	11
1555104	2-67	12
1555105	2-67	16
1555106	2-67	17
1555107	2-67	18
1555108	2-67	19
1555109	2-67	22
1555110	2-67	21
1555262	2-67	2
1555413	2-67	3
1555414	2-67	5
1555415	2-67	6
1555416	2-67	23
1555417	2-67	25
1555419	2-43	19
1555420	2-43	20
1555421	2-41	22
1555422	2-49	6
1555423	2-49	8
1555429	2-49	16
1555430	2-45	12
1555431	2-45	13
1555432	2-45	14
	2-45	27
1555433	2-45	15
1555434	2-45	16
1555435	2-45	17
1555436	2-45	18
1555437	2-45	19
1555438	2-45	20
1555447	2-45	23
1555448	2-45	25
1555449	2-45	26
1555451	2-45	28
1555452	2-55	24
1555453	2-64	
1555454	2-64	1
1555455	2-64	2
1555456	2-64	4
1555457	2-63	1

©2004 HYSTER COMPANY

NUMERICAL INDEX (Continued)

PART NO.	PG	ITEM
1555459	2-63	5
1555460	2-63	6
1555461	2-63	7
1555464	2-53	7
1555466	2-53	7
1555467	2-53	8
1555468	2-53	7
1555471	2-53	12
1555472	2-53	13
1555473	2-53	14
1555478	2-53	4
1555482	2-55	1
1555483	2-55	3
1555484	2-55	4
1555485	2-55	7
1555486	2-55	18
1555487	2-55	19
1555488	2-55	20
1555490	2-49	19
1555491	2-56	1
1555492	2-56	2
1555505	2-43	21
1555506	2-43	22
1555686	2-41	24
	2-43	30
	2-45	29
1555689	2-43	23
1555729	2-49	21
	2-55	28
	2-63	10
	2-64	8
1555946	3-11	2
1556642	3-11	20
1556761	2-51	33
1556767	2-53	1
1556768	2-53	3
1556770	2-69	1
1556771	2-69	2
1556774	2-43	28
1556775	2-43	29
1556819	3-12	61
1557096	2-49	15
1557255	3-11	22
1557312	2-5	29
	2-51	3
1558015	4-17	19
1558109	4-17	35
1558111	4-17	15
1558112	4-17	41
1558113	4-17	42
1558114	4-17	43
1558115	4-17	44
1558148	3-11	19
1558160	3-19	1
1558161	3-19	2
	3-21	11
1558163	3-19	4
1558164	3-19	5
1558165	3-19	6
1558166	3-19	7
1558167	3-19	8
1558168	3-19	9
	3-21	7
	3-21	10
1558169	3-19	10
1558170	3-19	11
1558171	3-19	12
1558172	3-19	14
1558173	3-19	3
1558175	3-19	16
1558176	3-19	17
	3-21	8
1558177	3-19	18
	3-23	5
1558178	3-19	19
1558187	3-21	1
1558188	3-21	2
1558189	3-21	3
1558190	3-21	4
1558191	3-21	5
1558192	3-21	6
1558193	3-21	9
1558194	3-21	12
1558195	3-17	3
	3-23	11
1558196	3-17	9
1558202	3-17	2
1558204	3-19	15
1558205	3-17	8
1558206	3-17	6
1558209	3-23	1
1558210	3-23	2
1558211	3-23	3
1558218	4-6	65
1558221	4-6	63
1558222	4-6	64
1558432	3-23	4
1558433	3-23	7
1558434	3-23	9
1558435	3-23	6
1558436	3-23	13
1558437	3-23	12
1558542	3-17	7
1558807	2-25	11
1559233	3-12	62
1559417	3-12	56
1559422	3-12	64
1559556	2-35	1
1559557	2-35	2
1559558	2-35	3
1559559	2-35	4
1559560	2-35	5
1559561	2-35	6
1559562	2-35	7
1559563	2-35	8
1559564	2-35	9
1559565	2-35	11
1559566	2-35	12
1559567	2-35	14
1559568	2-35	15
1559569	2-35	16
1559570	2-35	13
1559695	2-31	4
	4-18	
1559922	4-18	3
1559923	4-18	5
1559924	4-18	6
1559925	4-18	1
	4-18	7
1561870	3-17	10
	3-23	14
1563048	4-21	1
1563548	4-21	5
1563921	2-67	1
2014714	8-29	1
2032229	6-7	22
2032230	6-7	5
2033612	8-5	30
2034459	1-15	5
2035913	4-9	4
	4-13	
2036547	8-29	2
2036995	2-7	27
2036997	6-11	
	8-5	11
2036998	6-11	
	8-5	11
2037392	8-29	
2038035	11-11	8
2038038	11-11	7
2038290	8-15	
	8-19	25
2038291	8-17	
	8-23	14
2038590	1-15	17
2044370	11-19	6
2044486	9-3	
	9-5	
2044487	9-3	
	9-5	
2044488	9-3	
	9-5	
2044489	9-3	
	9-5	
2044515	3-11	52
	4-5	36
2044527	10-3	
	10-5	
	10-7	
	10-9	
2044528	10-3	
	10-5	
	10-7	
	10-9	
2044529	10-3	
	10-5	
	10-7	
	10-9	
2044821	8-29	5
2044948	4-3	13
2046765	6-13	2
2047053	2-13	26
	2-15	34
2047836	11-13	22
	11-15	22
	11-19	
2058196	3-7	11
2058358	3-3	14
2061651	3-3	14
2061655	3-3	14
2061835	3-5	24
2061836	3-5	24
2062235	2-5	27
2062262	4-3	14
2062323	3-25	4
2062380	4-6	52
	4-31	
2062382	4-3	12
2062384	3-3	1
2062650	2-13	19
	2-15	14
2063101	2-21	10
2063214	3-3	1
2063342	2-23	15
2065701	3-25	4
2065781	2-23	4
2065965	2-23	1
2065976	4-5	11

©2004 HYSTER COMPANY

NUMERICAL INDEX (Continued)

PART NO.	PG	ITEM
	4-17	
2066453	2-23	16
2066454	2-23	13
2066720	2-21	7
	3-17	5
2067339	3-9	1
	3-11	12
2067390	2-21	12
2067519	4-9	1
	4-13	
2067573	2-21	6
	2-23	11
2067651	4-5	37
2068082	2-21	8
3047176	11-4	55
3047178	11-3	43
3047238	11-3	17
3047332	11-3	29
3047356	11-4	48
3047419	11-3	22
3047420	11-3	22

©2004 HYSTER COMPANY

NOTES

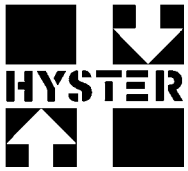
HYSTER