RUTHZIL TRATOR COMERCIAL DE PEÇAS LTDA 11 97083-6812 ROLANDO

HYSTER

PARTS MANUAL

H1.50XM H1.75XM H2.00XMS

CHALLENGER

H1.50-1.75XM
H2.00XMS

(D001)

Customer Edition

HYSTER

897539
3/96

© 1996 HYSTER COMPANY

MAINTENANCE PARTS QUICK REFERENCE LIST

DESCRIPTION	DIESEL 2,5L ENGINE	LPG 2,0L ENGINE	PETROL 2,0L ENGINE
Periodic Maintenance			
Oil Filter	1368795	333642	333642
Air Filter	1368784	1369809	1369809
Fuel Filter	1368758		
Fuel Filter			1304950
Filter (Filter and Lock-Off Valve LPG)		1367589	
Oil Filter (Transmission)	2021461	2021461	2021461
Hydraulic Oil Filter (Return)	2021933	2021933	2021933
Hydraulic Oil Filter (Suction)	2021935	2021935	2021935
Hydraulic Breather Cap	2021908	2021908	2021908
Tune-Up			
Spark Plug		1332683	1332683
Distributor Cap		1370740	1370740
Rotor (Distributor)		1326395	1326395
Kit-LPG Converter		204837	
Cooling			
Thermostat	1368835		
Thermostat		1361820	1361820
Joint (Thermostat)	2022486	1367191	1367191
Belt			
Belt (Water Pump)	[a]1368841	[a]1368841	[a]1368841
Fan Belt	[b]2022520	[b]2022515	[b]2022515
Belt (Alternator)		[c]2022016	[c]2022016
Electrical System			
Key	1337197	1337197	1337197
Fuse (10 Amp)	2021953	2021953	2021953
Fuse (20 Amp)	21778	21778	21778
Aerosols (400 ml)			
Paint (Yellow)	1345809	1345809	1345809
Lubricant (Chain Cable)	171350	171350	171350
Multipurpose Lubricant	3041621	3041621	3041621
Silicone Spray	3041620	3041620	3041620

a Standard
b with (Tube and Fin Radiator)
c Low Noise

©1996 HYSTER COMPANY

NOTES

©1996 HYSTER COMPANY

ILLUSTRATED CONTENTS

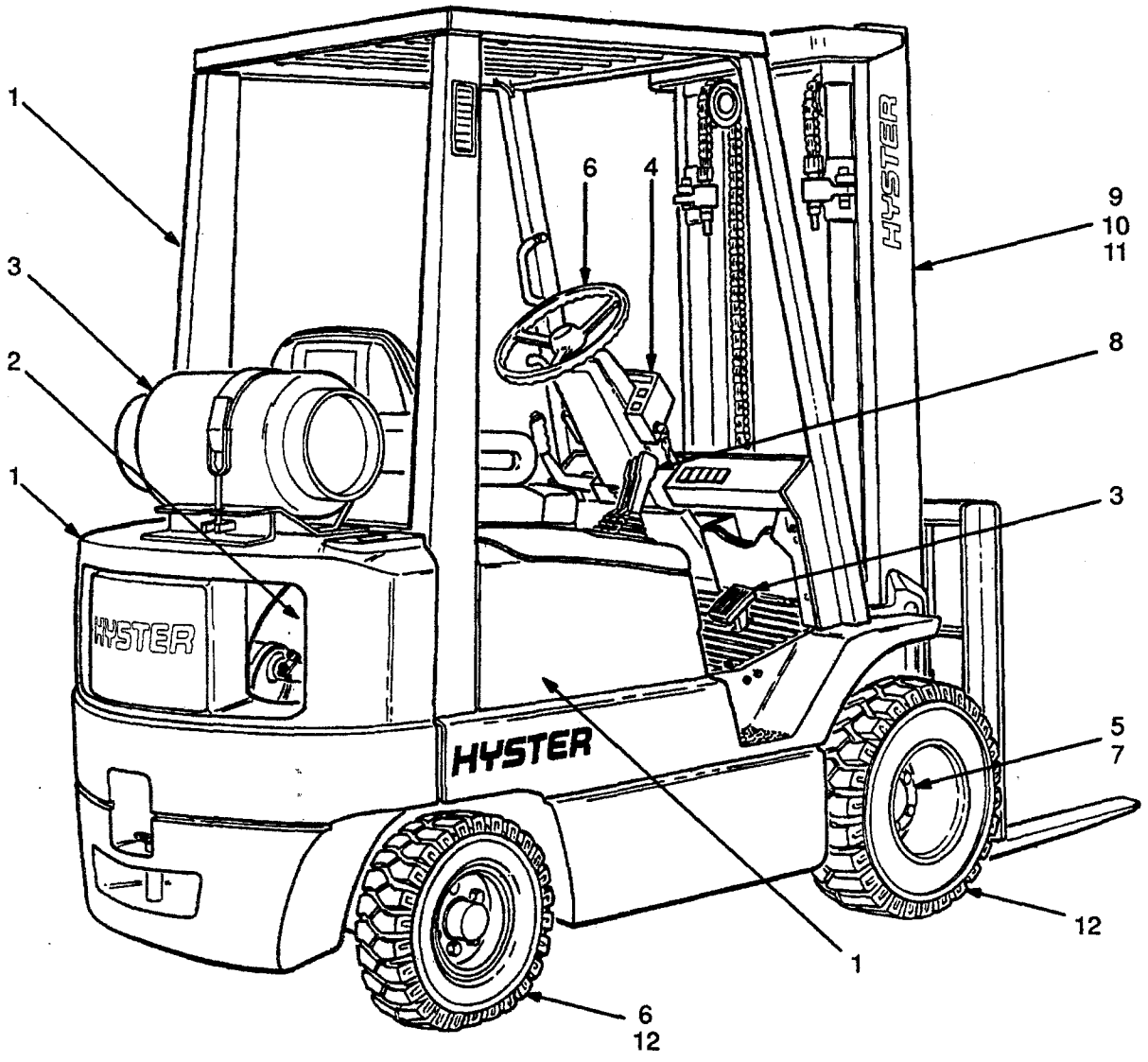

REF	SECTION	PAGE
1	Frame	3
2	Engine	23
3	Fuel	79
4	Electrical	125
5	Transmission	163
6	Steering	201
7	Brake	211
8	Hydraulic	225
9	Two-Stage Limited Free Lift Mast	253
10	Three-Stage Full Free Lift Mast	279
11	Two-Stage Full Free-Lift Mast	311
12	Optional Equipment	341
13	Numerical Index	377

©1996 HYSTER COMPANY

TABLE OF CONTENTS

DESCRIPTION PAGE

A

AIR FILTER
DIESEL 2,5L ..... PAGE 98

AIR FILTER
PETROL AND LPG ..... PAGE 96

ALTERNATOR ..... PAGE 160

AUXILIARY FUNCTION TUBE
TWO-STAGE FFL AND THREE-STAGE FFL ..... PAGE 374

AUXILIARY FUNCTION TUBE
TWO-STAGE LFL ..... PAGE 372

B

BACKUP ALARM ..... PAGE 370

BATTERY ..... PAGE 130

BRAKE ASSY ..... PAGE 218

BRAKE LINES ..... PAGE 216

BRAKE LINKAGE
FIRST USED ON S/N
D001B-3932 ..... PAGE 214

BRAKE MASTER CYLINDER ..... PAGE 222

BRAKE PEDAL LINKAGE
LAST USED ON S/N
D001B-3931 ..... PAGE 212

C

CAMSHAFT AND VALVES
DIESEL 2,5L ..... PAGE 56

CAMSHAFT AND VALVES
PETROL AND LPG 2,0L ..... PAGE 34

CARBURETTOR
LPG ..... PAGE 92

CARBURETTOR
PETROL ..... PAGE 90

CARRIAGE
THREE STAGE FFL ..... PAGE 298

CARRIAGE
TWO-STAGE FFL ..... PAGE 328

CARRIAGE
TWO-STAGE LFL ..... PAGE 266

©1996 HYSTER COMPANY

TABLE OF CONTENTS

DESCRIPTION **PAGE**

C

CHARGE PUMP
FIRST USED ON S/N
D001B-3932 ..... PAGE 170

CHARGE PUMP
LAST USED ON S/N
D001B-3931 ..... PAGE 168

CHASSIS HARNESS
DIESEL
2,5L ..... PAGE 152

CHASSIS HARNESS
PETROL AND LPG
2,0L ..... PAGE 148

CLUSTER HARNESS ..... PAGE 140

CLUSTER POWER HARNESS ..... PAGE 142

CONTROL VALVE
FIRST USED ON S/N
D001B-3932 ..... PAGE 192

CONTROL VALVE
LAST USED ON S/N
D001B-2931 ..... PAGE 190

COOLING SYSTEM
DIESEL
2,5L ..... PAGE 62

COOLING SYSTEM
PETROL AND LPG
2,0L ..... PAGE 42

COUNTERWEIGHT ..... PAGE 16

COWL ELECTRICAL ..... PAGE 136

COWL HARNESS ..... PAGE 138

CRANKSHAFT AND PISTON
DIESEL
2,5L ..... PAGE 54

CRANKSHAFT AND PISTON
PETROL AND LPG
2,0L ..... PAGE 32

CYLINDER BLOCK
DIESEL
2,0L ..... PAGE 50

CYLINDER BLOCK
PETROL AND LPG
2,0L ..... PAGE 28

CYLINDER HEAD
DIESEL
2,5L ..... PAGE 48

CYLINDER HEAD
PETROL AND LPG
2,0L ..... PAGE 26

©1996 HYSTER COMPANY

TABLE OF CONTENTS

DESCRIPTION **PAGE**

D

DIFFERENTIAL ..... PAGE 194

DISTRIBUTOR
PETROL AND LPG
2,0L ..... PAGE 154

DOUBLE GEAR PUMP
DIESEL
2,5L ENGINE ..... PAGE 232

DRIVE AXLE ..... PAGE 196

DRIVE, REAR LIGHTS AND SPOTLIGHT ..... PAGE 358

DRIVE TYRE AND WHEEL
WATTS ..... PAGE 350

DRIVE TYRE AND WHEEL ..... PAGE 352

E

ELECTRICAL SYSTEM
DIESEL ..... PAGE 128

ELECTRICAL SYSTEM
PETROL AND LPG
2,0L ..... PAGE 126

END PLATE ..... PAGE 198

ENGINE COVER ..... PAGE 8

ENGINE ELECTRICAL SYSTEM
DIESEL
2,5L ..... PAGE 66

ENGINE ELECTRICAL SYSTEM
PETROL AND LPG
2,0L ..... PAGE 38

ENGINE MOUNT
DIESEL
2,5L ..... PAGE 68

ENGINE MOUNT
PETROL AND LPG
2,0L ..... PAGE 46

EXHAUST
DIESEL
2,5L ..... PAGE 70

EXHAUST
PETROL AND LPG
2,0L ..... PAGE 72

©1996 HYSTER COMPANY

TABLE OF CONTENTS

DESCRIPTION PAGE

F

FENDER ..... PAGE 346

FILTER AND LOCK-OFF VALVE
LPG ..... PAGE 106

FIRE EXTINGUISHER ..... PAGE 366

FORK
THREE STAGE FFL ..... PAGE 308

FORK
TWO-STAGE FFL ..... PAGE 338

FORK
TWO-STAGE LFL ..... PAGE 276

FOUR FUNCTION CONTROL VALVE
DUAL RELIEF VALVE ..... PAGE 248

FOUR FUNCTION CONTROL VALVE
SINGLE RELIEF ..... PAGE 246

FRAME AND FLOORPLATE ..... PAGE 4

FREE-LIFT CYLINDER
THREE STAGE FFL ..... PAGE 296

FREE-LIFT CYLINDER
TWO-STAGE FFL ..... PAGE 326

FREE-LIFT
THREE STAGE FFL ..... PAGE 290

FREE-LIFT
TWO-STAGE FFL ..... PAGE 320

FUEL FILTER
DIESEL
2,5L ..... PAGE 116

FUEL SYSTEM ..... PAGE 112

FUEL TANK AND LINES
DIESEL
2,5L ..... PAGE 122

FUEL TANK AND LINES
PETROL
2,0L ..... PAGE 120

FUEL
PETROL AND LPG ..... PAGE 102

G

GOVERNOR
PETROL AND LPG ..... PAGE 94

©1996 HYSTER COMPANY

TABLE OF CONTENTS

DESCRIPTION **PAGE**

H

HARNESS
FORWARD AND REVERSE ..... PAGE 144

HARNESS
MONOTROL PEDAL ..... PAGE 146

HARNESS
SEAT SWITCH ..... PAGE 150

HARNESS
TAIL LIGHT ..... PAGE 364

HEADER HOSE
THREE STAGE FFL
FOUR FUNCTION ..... PAGE 306

HEADER HOSE
THREE STAGE FFL
THREE FUNCTION ..... PAGE 304

HEADER HOSE
TWO-STAGE FFL
FOUR FUNCTION ..... PAGE 336

HEADER HOSE
TWO-STAGE FFL
THREE FUNCTION ..... PAGE 334

HEADER HOSE
TWO-STAGE LFL
FOUR FUNCTION ..... PAGE 274

HEADER HOSE
TWO-STAGE LFL
THREE FUNCTION ..... PAGE 272

HYDRAULIC CLUTCH
FIRST USED ON S/N
D001B-3932 ..... PAGE 188

HYDRAULIC CLUTCH
LAST USED ON S/N
D001B-3931 ..... PAGE 186

HYDRAULIC PUMP
PETROL AND LPG ..... PAGE 230

HYDRAULICS GROUP
FIRST USED ON S/N
D001B-3023 ..... PAGE 228

HYDRAULICS GROUP
LAST USED ON S/N
D001B-3022 ..... PAGE 226

©1996 HYSTER COMPANY

TABLE OF CONTENTS

DESCRIPTION **PAGE**

I

INJECTION PUMP
DIESEL
2,5L ..... PAGE 118

INNER MAST
THREE STAGE FFL ..... PAGE 284

INNER MAST
TWO-STAGE FFL ..... PAGE 314

INNER MAST
TWO-STAGE LFL ..... PAGE 256

INSTRUMENT CLUSTER ..... PAGE 132

INTAKE AND EXHAUST MANIFOLD
DIESEL
2,5L ..... PAGE 58

INTAKE AND EXHAUST MANIFOLD
PETROL AND LPG
2,0L ..... PAGE 36

INTERMEDIATE MAST
THREE STAGE FFL ..... PAGE 282

L

LABELS AND PAINT ..... PAGE 14

LIFT CYLINDER
TWO-STAGE LFL
LEFT HAND ..... PAGE 262

LIFT CYLINDER
TWO-STAGE LFL
RIGHT HAND ..... PAGE 264

LIFT
FIRST USED ON S/N A550B-2250
TWO-STAGE LFL ..... PAGE 260

LIFT
TWO-STAGE LFL
LAST USED ON S/N A550B-2249 ..... PAGE 258

LIFTING EYES ..... PAGE 348

LOAD BACKREST EXTENSION
THREE STAGE FFL ..... PAGE 300

LOAD BACKREST EXTENSION
TWO-STAGE FFL ..... PAGE 330

LOAD BACKREST EXTENSION
TWO-STAGE LFL ..... PAGE 268

©1996 HYSTER COMPANY

TABLE OF CONTENTS

DESCRIPTION **PAGE**

L (Continued)

LPG CONVERTER
IDENTIFY BY CODE LETTER "J" ..... PAGE 108

LPG CONVERTER
IDENTIFY BY CODE LETTER "K" ..... PAGE 110

LPG FUEL SYSTEM ..... PAGE 104

LPG TANK ..... PAGE 100

M

MAIN CYLINDER
THREE STAGE FFL
LEFT HAND ..... PAGE 292

MAIN CYLINDER
THREE STAGE FFL
RIGHT HAND ..... PAGE 294

MAIN CYLINDER
TWO-STAGE FFL
LEFT HAND ..... PAGE 322

MAIN CYLINDER
TWO-STAGE FFL
RIGHT HAND ..... PAGE 324

MAIN LIFT
THREE STAGE FFL
FIRST USED ON S/N A554B-2100 ..... PAGE 288

MAIN LIFT
THREE STAGE FFL
LAST USED ON S/N A554B-2099 ..... PAGE 286

MAIN LIFT
TWO-STAGE FFL
FIRST USED ON S/N A558B-1671 ..... PAGE 318

MAIN LIFT
TWO-STAGE FFL
LAST USED ON S/N A558B-1670 ..... PAGE 316

MAINTENANCE PARTS QUICK REFERENCE LIST ..... PAGE 1

MAST INSTALLATION
THREE STAGE FFL ..... PAGE 302

MAST INSTALLATION
TWO-STAGE FFL ..... PAGE 332

MAST INSTALLATION
TWO-STAGE LFL ..... PAGE 270

MIRROR ..... PAGE 368

MONOTROL PEDAL ..... PAGE 82

©1996 HYSTER COMPANY

TABLE OF CONTENTS

DESCRIPTION PAGE

N

NOISE REDUCTION
ENGINE COVER ..... PAGE 20

NOISE REDUCTION
FRAME ..... PAGE 18

NON-SUSPENSION SEAT ..... PAGE 12

NOZZLE HOLDER
DIESEL ..... PAGE 114

O

OIL PUMP AND FILTER
DIESEL
2,5L ..... PAGE 60

OIL PUMP AND FILTER
PETROL AND LPG
2,0L ..... PAGE 40

OUTER MAST
THREE STAGE FFL ..... PAGE 280

OUTER MAST
TWO-STAGE FFL ..... PAGE 312

OUTER MAST
TWO-STAGE LFL ..... PAGE 254

OVERHEAD GUARD ..... PAGE 6

P

PARK BRAKE LEVER ..... PAGE 220

PUBLICATIONS ..... PAGE 2

PUMP DRIVE
DIESEL 2,5L ..... PAGE 236

PUMP DRIVE
PETROL AND LPG 2,0L ..... PAGE 234

RADIATOR AND HOSES
DIESEL
2,5L ..... PAGE 64

RADIATOR AND HOSES
PETROL AND LPG
2,0L ..... PAGE 44

©1996 HYSTER COMPANY

TABLE OF CONTENTS

DESCRIPTION PAGE

S

SHIFT LEVER ..... PAGE 134
SIDELIGHT ..... PAGE 356
SIDESHIFT CARRIAGE ..... PAGE 342
SIDESHIFT CYLINDER ..... PAGE 344
SOLENOID VALVE ..... PAGE 172
STARTER MOTOR DIESEL 2,5L ..... PAGE 158
STARTER MOTOR PETROL AND LPG 2,0L ..... PAGE 156
STEERING COLUMN ..... PAGE 202
STEERING CONTROL VALVE ..... PAGE 206
STEERING CYLINDER ..... PAGE 208
STEERING TYRE AND WHEEL ..... PAGE 354
STROBE LIGHT ..... PAGE 360
SUSPENSION SEAT ..... PAGE 10

T

TAIL LIGHT ..... PAGE 362
THREE FUNCTION CONTROL VALVE DUAL RELIEF VALVE ..... PAGE 242
THREE FUNCTION CONTROL VALVE SINGLE RELIEF ..... PAGE 240
THROTTLE ASSY ..... PAGE 80
THROTTLE LINKAGE DIESEL ..... PAGE 88
THROTTLE LINKAGE ..... PAGE 84
THROTTLE LINKAGE ..... PAGE 86
TILT CYLINDER ..... PAGE 250
TIMING GEAR COVER AND OIL SUMP DIESEL 2,5L ..... PAGE 52
TIMING GEAR COVER AND OIL SUMP PETROL AND LPG 2,0L ..... PAGE 30

©1996 HYSTER COMPANY

TABLE OF CONTENTS

DESCRIPTION **PAGE**

T (Continued)

TORQUE CONVERTER
FIRST USED ON S/N D001B-3932 ..... PAGE 166

TORQUE CONVERTER
LAST USED ON S/N D001B-3931 ..... PAGE 164

TRAIL AXLE ..... PAGE 204

TRANSMISSION GEARS
FIRST USED ON S/N D001B-3932 ..... PAGE 180

TRANSMISSION GEARS
LAST USED ON S/N D001B-3931 ..... PAGE 178

TRANSMISSION HOUSING
FIRST USED ON S/N D001B-3932 ..... PAGE 176

TRANSMISSION HOUSING
LAST USED ON S/N D001B-3931 ..... PAGE 174

TRANSMISSION HYDRAULIC LINES
FIRST USED ON S/N D001B-3932 ..... PAGE 184

TRANSMISSION HYDRAULIC LINES
LAST USED ON S/N D001B-3931 ..... PAGE 182

U

UPSWEPT EXHAUST
DIESEL 2,5L ..... PAGE 74

UPSWEPT EXHAUST
PETROL AND LPG 2,0L ..... PAGE 76

V

VALVE ATTACHING PARTS
FOUR FUNCTION ..... PAGE 244

VALVE ATTACHING PARTS
THREE FUNCTION ..... PAGE 238

©1996 HYSTER COMPANY

NOTES

©1996 HYSTER COMPANY

HOW TO USE THE ILLUSTRATED PARTS MANUAL

This parts manual describes and illustrates assemblies, subassemblies, and detail parts needed for service replacement.

The different constructions are indicated by keys, symbols and footnotes.

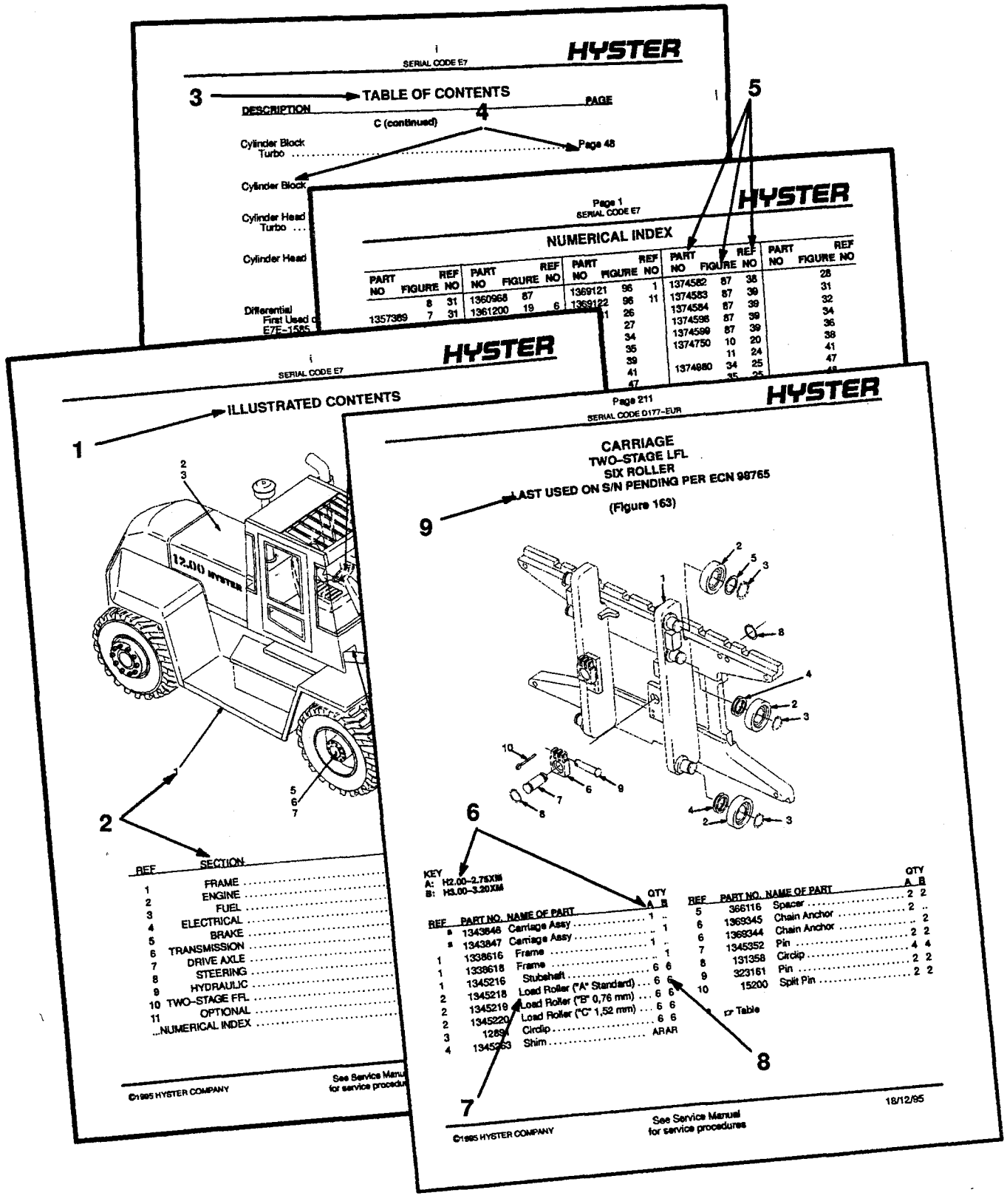

HOW TO FIND THE DESIRED PART NUMBER

WHEN THE PART NUMBER AND THE NEXT HIGHER ASSEMBLY IS NOT KNOWN:

1. Determine the function and application of the part required. Turn to the illustrated index page immediately behind the front cover. Choose the general area of reference most likely to include the part.
2. Find the page number for the reference number you choose and turn to that page. Use the division index to determine the assembly which would normally contain the part required. Then locate the part on the assembly breakdown page.

WHEN THE PART NUMBER IS NOT KNOWN AND THE NEXT HIGHER ASSEMBLY IS KNOWN:

3. Determine the assembly the required part is used on. Turn to the Master Index immediately following the Illustrated Index.
4. Locate the assembly the required part is used on and turn to the page indicated for that assembly. Then locate the part on the assembly breakdown page.

WHEN THE PART NUMBER IS KNOWN:

5. Use the numerical index at the back of the manual to find the part number. Turn to the figure listed and locate the part as indicated by the reference number.

GENERAL:

The assembly breakdowns include part numbers, description, quantities required, keys and footnotes to help in selecting the correct parts.

6. Keys are used to show effective serial numbers for two or more similar assemblies, RH and LH assembly parts, etc. Select the appropriate key, "A", "B", "C" or "D" and the corresponding quantity column to find the required parts.
7. Indented descriptions under "Name of Part" are used to indicate assemblies and sub-parts of assemblies. In the example, *LOAD ROLLER* (Item 7) is a subpart of the major assembly *CARRIAGE*.
8. Quantities shown are for one assembly. The quantities of the subpart *LOAD ROLLER* are indicated as six and six. This means six per *CARRIAGE* assembly.
9. Engineering change notice (ECN) numbers for pending serial numbers are shown to allow for the inclusion of the most current parts information. Contact your local dealer for Hyster lift trucks for serial number information listed by ECN number.
10. Additional fork lengths are available. Contact your dealer for Hyster lift trucks.

ORDERING PARTS:

When ordering replacement parts, give the unit serial number, part number, name of part and quantity required.

For any further information on parts, service, or ordering, consult your local dealer for Hyster lift trucks.

©1996 HYSTER COMPANY

IDENTIFICATION OF TRUCK SERIAL NUMBERS

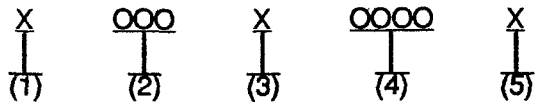

(1) & (2) The first letter and three numbers indicate the truck model code.

(3) The second letter indicates the plant of manufacture.

(4) The four or five digit number series indicates the serial number of the truck.

(5) The final letter indicates the year of manufacture starting with "A" in 1957 and 1980. The letters "I", "O", and "Q" will not be used.

For pending serial numbers contact your local dealer for Hyster lift trucks.

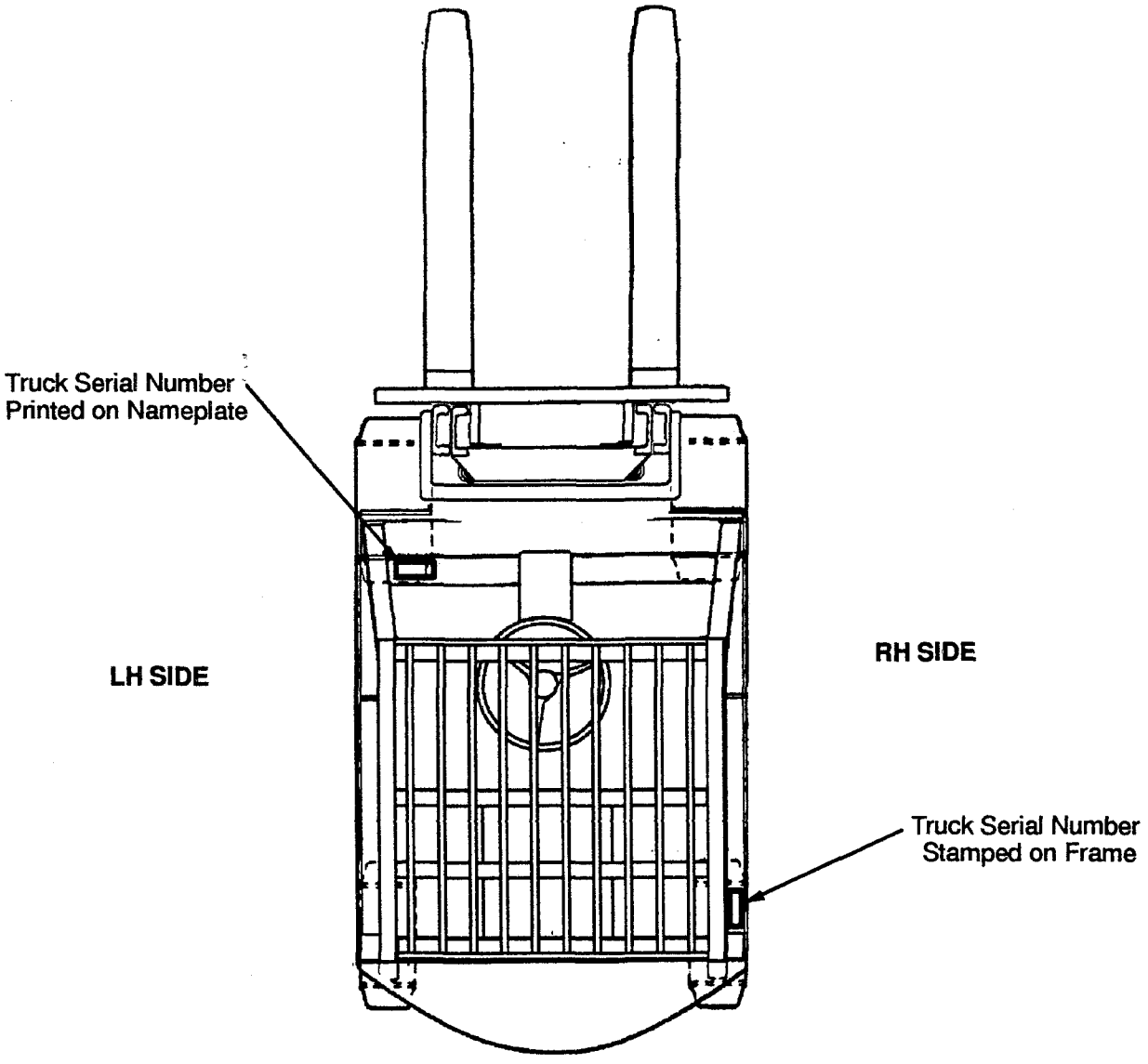

Parts referred to in this book as right or left hand parts are in accordance with the illustration above.

©1996 HYSTER COMPANY

IDENTIFICATION OF MAST SERIAL NUMBERS

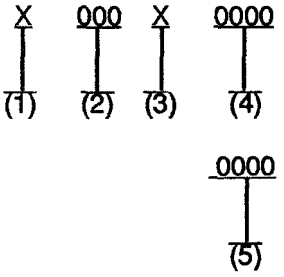

(1) & (2) The first letter and number indicates the mast model code.

(3) The second letter indicates the plant of manufacture.

(4) The four or five digit number series indicates the serial number of the mast.

(5) Lift Height in millimetres stamped just below the serial number

Mast Group Identification consists of mast unit code (1) & (2) plus lift height (5).

For pending serial numbers contact your local dealer for Hyster lift trucks.

LIFT EQUIPMENT IDENTIFICATION

1. Fork part number, capacity rating, plant code letter and date of manufacture are stamped approximately six inches below the top of most forks.
2. The carriage group number is stamped on the right hand side of the top crossmember (pin type) or on the back of the right hand end of the bottom crossmember (hook type). A date code has two letters in line with or below the carriage group number.
3. The mast identification number has a model code, a letter indicating the plant of manufacture, and a serial number. Underneath the serial number is a four digit number that indicates the total lift height for the mast in millimetres.
4. Tilt and lift cylinder group numbers are stamped on the cylinder shell.

   Always refer to the group, serial or part number when ordering service parts.

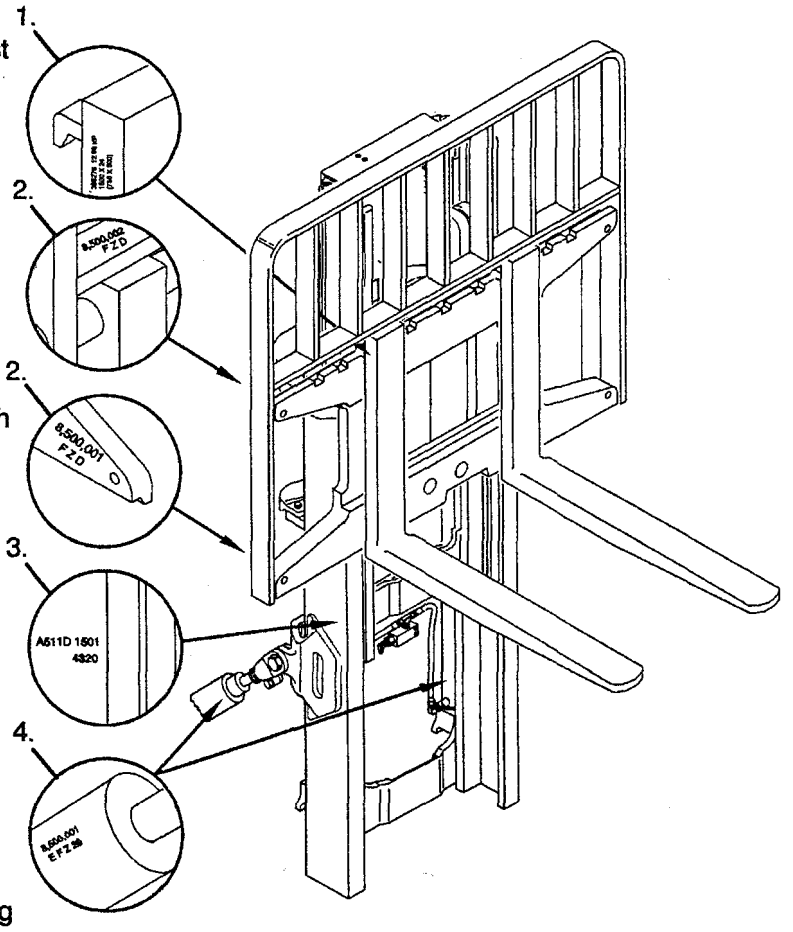

Modification of masts and carriages by SPED (Special Products Engineering Department) are identified by a model prefix code beginning with the letter "S". Contact your dealer for Hyster lift trucks for information on these assemblies.

©1996 HYSTER COMPANY

IDENTIFICATION OF ATTACHMENT AND SIDE-SHIFT CARRIAGE SERIAL NUMBERS

X 000 X 0000
(1) (2) (3) (4)

(1) & (2) The first letter and three numbers indicate the attachment model code.

(3) The second letter indicates the plant of manufacture.

(4) The four or five digit number series indicates the serial number.

For pending serial numbers contact your local dealer for Hyster lift trucks.

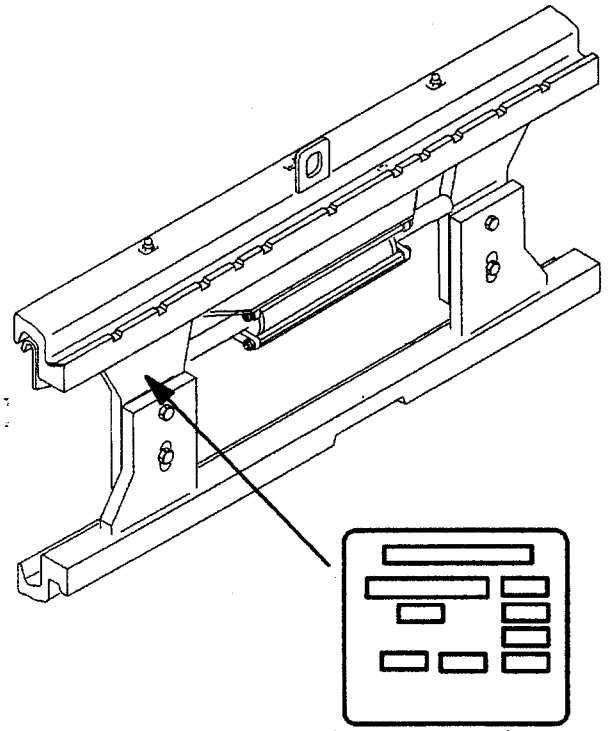

NAMEPLATE

Side-Shift Carriages and Attachments have nameplates. Use the serial number found on the nameplate to identify the attachment.

Always refer to the group, serial or part number when ordering service parts.

Modifications of attachments and side-shift carriages by SPED (Special Products Engineering Department) are identified by a model prefix code beginning with the letter "S". Contact your dealer for Hyster lift trucks for information on these assemblies.

©1996 HYSTER COMPANY

NOTES

©1996 HYSTER COMPANY

HYSTER

MAINTENANCE PARTS QUICK REFERENCE LIST

(Figure 1)

DESCRIPTION	DIESEL 2,5L ENGINE	LPG 2,0L ENGINE	PETROL 2,0L ENGINE
Periodic Maintenance			
Oil Filter	1368795	333642	333642
Air Filter	1368784	1369809	1369809
Fuel Filter	1368758		
Fuel Filter			1304950
Filter (Filter and Lock-Off Valve LPG)		1367589	
Oil Filter (Transmission)	2021461	2021461	2021461
Hydraulic Oil Filter (Return)	2021933	2021933	2021933
Hydraulic Oil Filter (Suction)	2021935	2021935	2021935
Hydraulic Breather Cap	2021908	2021908	2021908
Tune-Up			
Spark Plug		1332683	1332683
Distributor Cap		1370740	1370740
Rotor (Distributor)		1326395	1326395
Kit-LPG Converter		204837	
Cooling			
Thermostat	1368835		
Thermostat		1361820	1361820
Joint (Thermostat)	2022486	1367191	1367191
Belt			
Belt (Water Pump)	[a]1368841	[a]1368841	[a]1368841
Fan Belt	[b]2022520	[b]2022515	[b]2022515
Belt (Alternator)		[c]2022016	[c]2022016
Electrical System			
Key	1337197	1337197	1337197
Fuse (10 Amp)	2021953	2021953	2021953
Fuse (20 Amp)	21778	21778	21778
Aerosols (400 ml)			
Paint (Yellow)	1345809	1345809	1345809
Lubricant (Chain Cable)	171350	171350	171350
Multipurpose Lubricant	3041621	3041621	3041621
Silicone Spray	3041620	3041620	3041620

[a] Standard
[b] with (Tube and Fin Radiator)
[c] Low Noise

©1996 HYSTER COMPANY

PUBLICATIONS
(Figure 2)

For every Hyster truck at least three publications are available. These publications are the Parts Manual, the Operating Manual and the Service Manual.
The OPERATING MANUAL must always be available on every lift truck. This manual has information that the operator must know for inspection and operation of the lift truck.
The SERVICE MANUAL *consists of SRM sections each describing or* providing the repair and adjustment procedures of a different component or system. Each SRM section can be ordered separately as well.

These manuals, other publications and programs are available from your Dealer for Hyster Lift Trucks to help you operate and maintain your lift truck professionally. See the list here below for reference to the publications *concerning the lift truck model as described in this* PARTS MANUAL.

PUBLICATIONS	PART NO.
Operating Manual	
English	897534
Spanish	857494
French	857492
German	857493
Dutch	857496
Danish	857497
Italian	857495
Portuguese	857498
Service Manual (Complete)	857499
Frame (100 SRM 545)	897559
Engine (600 SRM 496)	897477
Engine (600 SRM 538)	897551
LPG Fuel System (900 SRM 523)	897508
Single-Speed Powershift Transmission (1300 SRM 543)	897557
Drive Axle (1400 SRM 542)	897556
Trail Axle (1600 SRM 532)	897545
Steering Housing and Control Unit (1600 SRM 565)	897649
Brake System (1800 SRM 540)	897554
Hydraulic System (1900 SRM 539)	897553
Main Control Valve (2000 SRM 541)	897555
Tilt Cylinder (2100 SRM 103)	910102
Electrical System (2200 SRM 524)	897509
Electrical System (2200 SRM 550)	897594
Instrument Cluster (2200 SRM 514)	897495
Mast-Description (4000 SRM 521)	897506
Mast-Repair (4000 SRM 522)	897507
Periodic Maintenance (8000 SRM 531)	897538
Capacities and Specifications (8000 SRM 546)	897590
Wiring Diagram (8000 SRM 544)	897558
Inch (SAE) and Metric Fasteners (8000 SRM 231)	910442
Parts Manual	
English	897539
French	897542
German	897540
Spanish	897541
Italian	897543
Dutch	897544

©1996 HYSTER COMPANY

FRAME

Counterweight ..... Page 16

Engine Cover ..... Page 8

Frame and Floorplate ..... Page 4

Labels and Paint ..... Page 14

Noise Reduction
Engine Cover ..... Page 20

Noise Reduction
Frame ..... Page 18

Non-Suspension Seat ..... Page 12

Overhead Guard ..... Page 6

Suspension Seat ..... Page 10

©1996 HYSTER COMPANY

FRAME AND FLOORPLATE

(Figure 3)

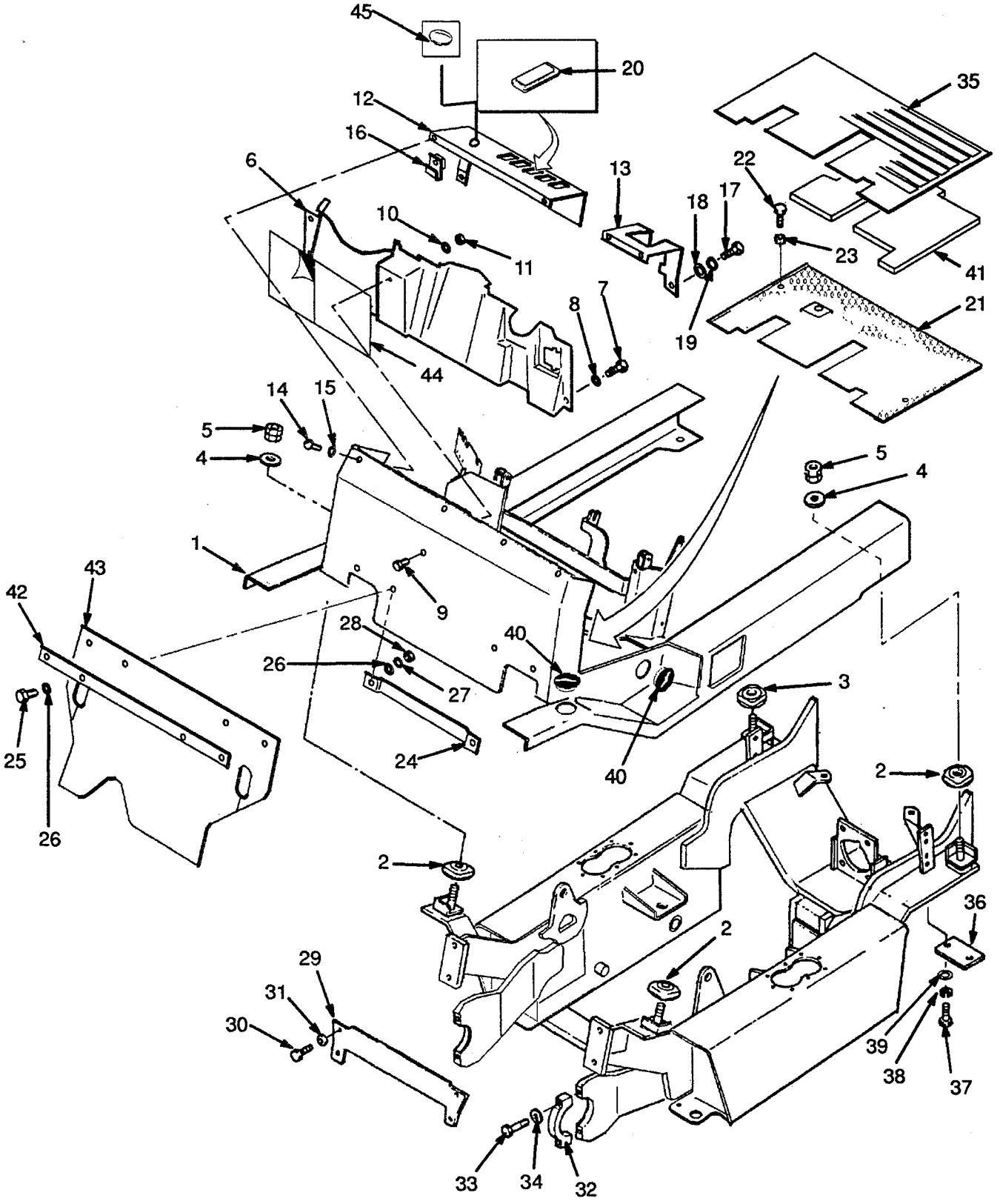

FRAME AND FLOORPLATE

REF	PART NO.	NAME OF PART	QTY
1	2021663	Operator Module	1
2	2021234	Rubber Cushion	3
3	2021235	Rubber Cushion	1
4	2021238	Washer	4
5	2021237	Locknut	4
6	2021232	Cover	1
7	316678	Screw	4
8	320157	Washer	4
9	292500	Hex Head Bolt	1
10	320156	Washer	1
11	136687	Nut	1
12	2021497	Panel	1
13	2021499	Panel	1
14	296166	Screw	4
15	292681	Lockwasher	4
16	1350282	Nut	4
17	316678	Screw	2
18	320157	Washer	2
19	292681	Lockwasher	2
20	376949	Cover	AR
21	2021225	Floorplate	1
22	136681	Hex Head Bolt	2
23	15175	Washer	2
24	2021231	Bracket	1
25	136681	Hex Head Bolt	2

REF		PART NO.	NAME OF PART	QTY
25	a	176648	Hex Head Bolt	2
26		320157	Washer	4
27		292681	Lockwasher	2
28		239503	Nut	2
29		2021665	Plate	1
30		2022636	Hex Head Bolt	4
31		2021490	Washer	4
32		2021833	Cap	2
33		292533	Hex Head Bolt	4
34		2021834	Lockwasher	4
35		2022821	Floor Mat	1
36		2021900	Plate	2
37		136985	Hex Head Bolt	4
38		292682	Lockwasher	4
39		320159	Washer	4
40	a	2021395	Plug	4
41	a	2022045	Pad	1
41		2022822	Barrier	1
42	a	2022030	Plate	1
43	a	2022029	Flap	1
44		2022798	Label	1
45	b	2022544	Cap (Choke Cable)	1

a Noise Reduction
b Petrol and Diesel

©1996 HYSTER COMPANY

OVERHEAD GUARD

(Figure 4)

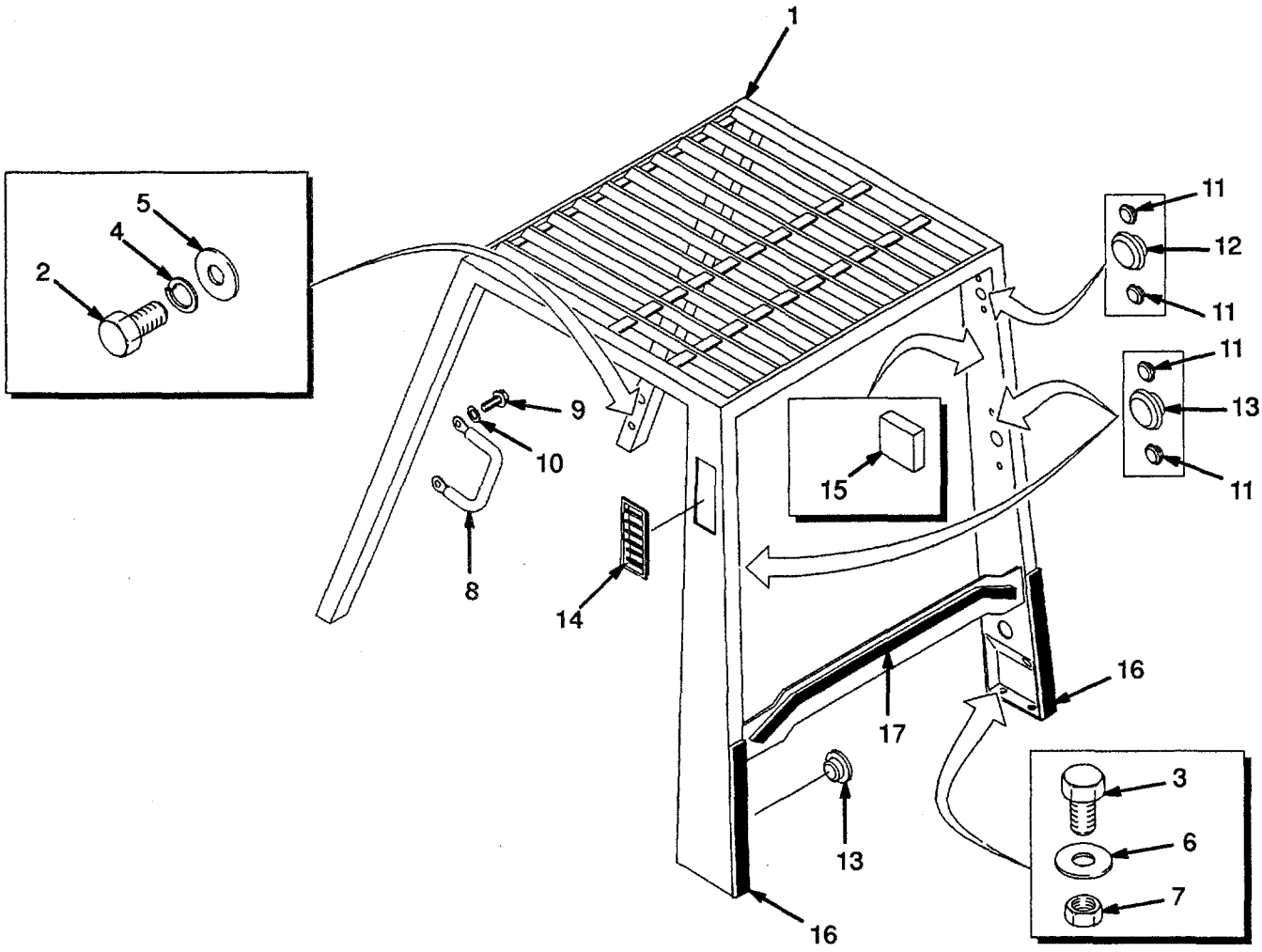

OVERHEAD GUARD

REF	PART NO.	NAME OF PART	QTY
1 [a]	2021660	Overhead Guard	1
1 [b]	2021662	Overhead Guard	1
2	132860	Bolt	4
3	292528	Bolt	4
4	292683	Lockwasher	4
5	15177	Washer	4
6	320161	Washer	4
7	300937	Locknut	4
8	1343647	Handle	1
9	2021233	Screw	2
10	320157	Washer	2

REF	PART NO.	NAME OF PART	QTY
11	1363916	Hole Plug	12
12	1363917	Hole Plug	4
13	1363918	Hole Plug	3
14	1339265	Grille	2
15 [c]	2022904	Pad (Diesel)	2
16	2022035	Pad	2
17	2022043	Pad	1

[a] Standard Height
[b] Raised Height
[c] Noise Reduction

©1996 HYSTER COMPANY

ENGINE COVER

(Figure 5)

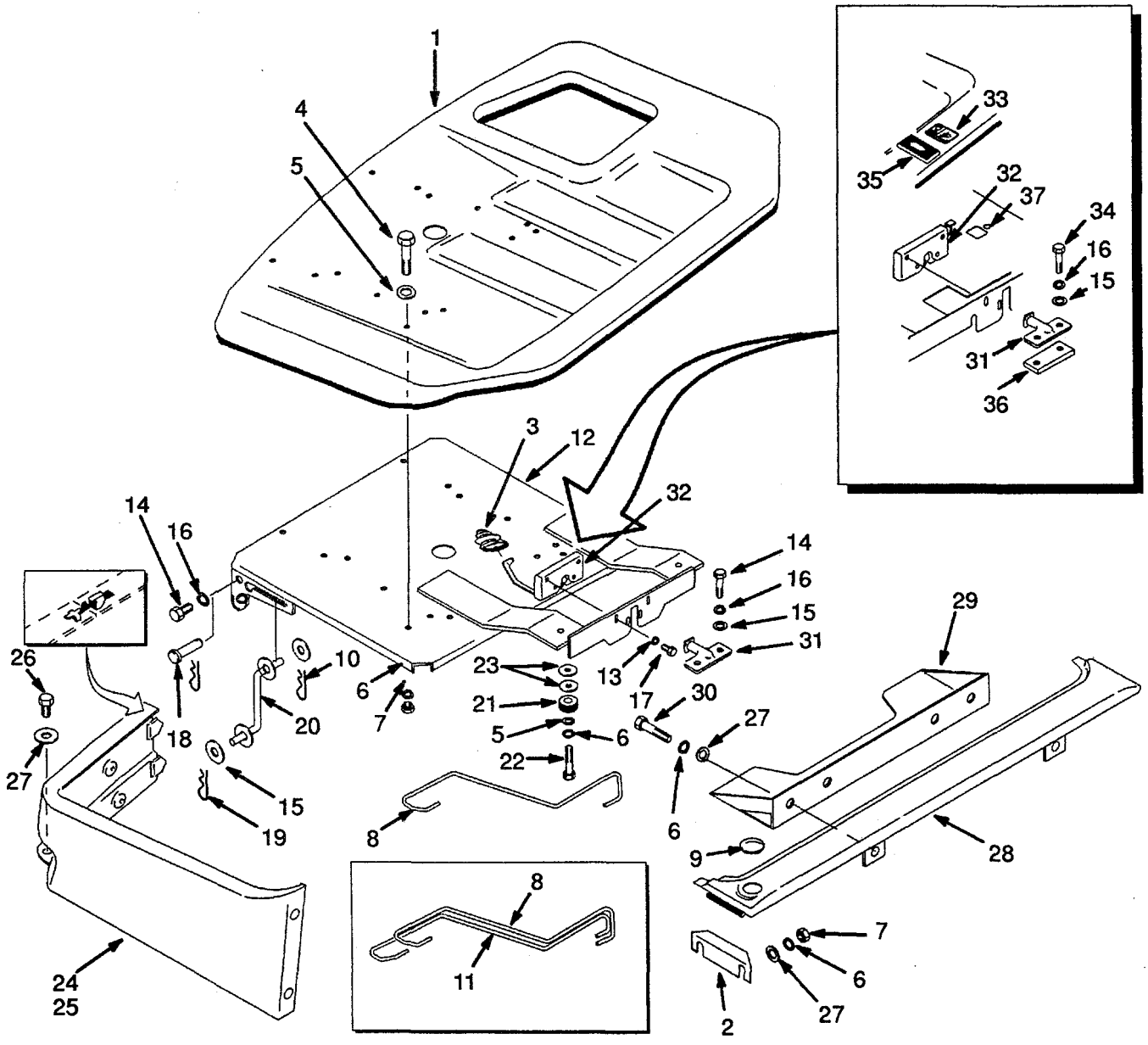

ENGINE COVER

KEY
A: Non-Suspension Seat
B: Suspension Seat

REF		PART NO.	NAME OF PART	QTY A	QTY B
1	a	2021197	Engine Cover	1	1
1	b	1385128	Engine Cover	1	1
2		2021223	Bracket	2	2
3		1339786	Boot	1	1
4		176640	Hex Head Bolt	2	2
5		320157	Washer	6	6
6		292681	Lockwasher	12	12
7		239503	Nut	6	6
8		2022615	Torsion Spring	1	1
9		1363918	Plug	1	1
10		15222	Pin	1	1
11		2022613	Torsion Spring	..	1
12		2023532	Seat Pan	1	1
13		320156	Washer	4	4
14		287854	Hex Head Bolt	2	2
15		320159	Washer	4	4
16		292682	Lockwasher	2	2
17		199563	Hex Head Bolt	4	4
18		2021207	Pin	2	2
19		1362714	Pin	4	4
20		2021208	Support	1	1
21		2021213	Rubber Cushion	2	2
22		296167	Screw	2	2
23		15177	Washer	ARA	R
24		2021215	Panel (RH)	1	
25		2021216	Panel (LH)	1	1
25		1373801	Latch (Kit)	1	1
26		136749	Hex Head Bolt	2	2
27		15175	Washer	10	10
28		2021218	Cover	1	1
29		2021219	Support	1	1
30		136749	Hex Head Bolt	4	4
31		1337148	Striker Plate	1	
32	a	2021222	Latch	1	
32	b	1386216	Latch	1	
33	b	1386223	Nut	1	
34	b	287860	Hex Head Bolt	2	2
35	b	1386224	Cover	1	
36	b	1385129	Spacer	1	

a Last Used on S/N Pending per ECN 86731
b First Used on S/N Pending per ECN 86731

©1996 HYSTER COMPANY

SUSPENSION SEAT

(Figure 6)

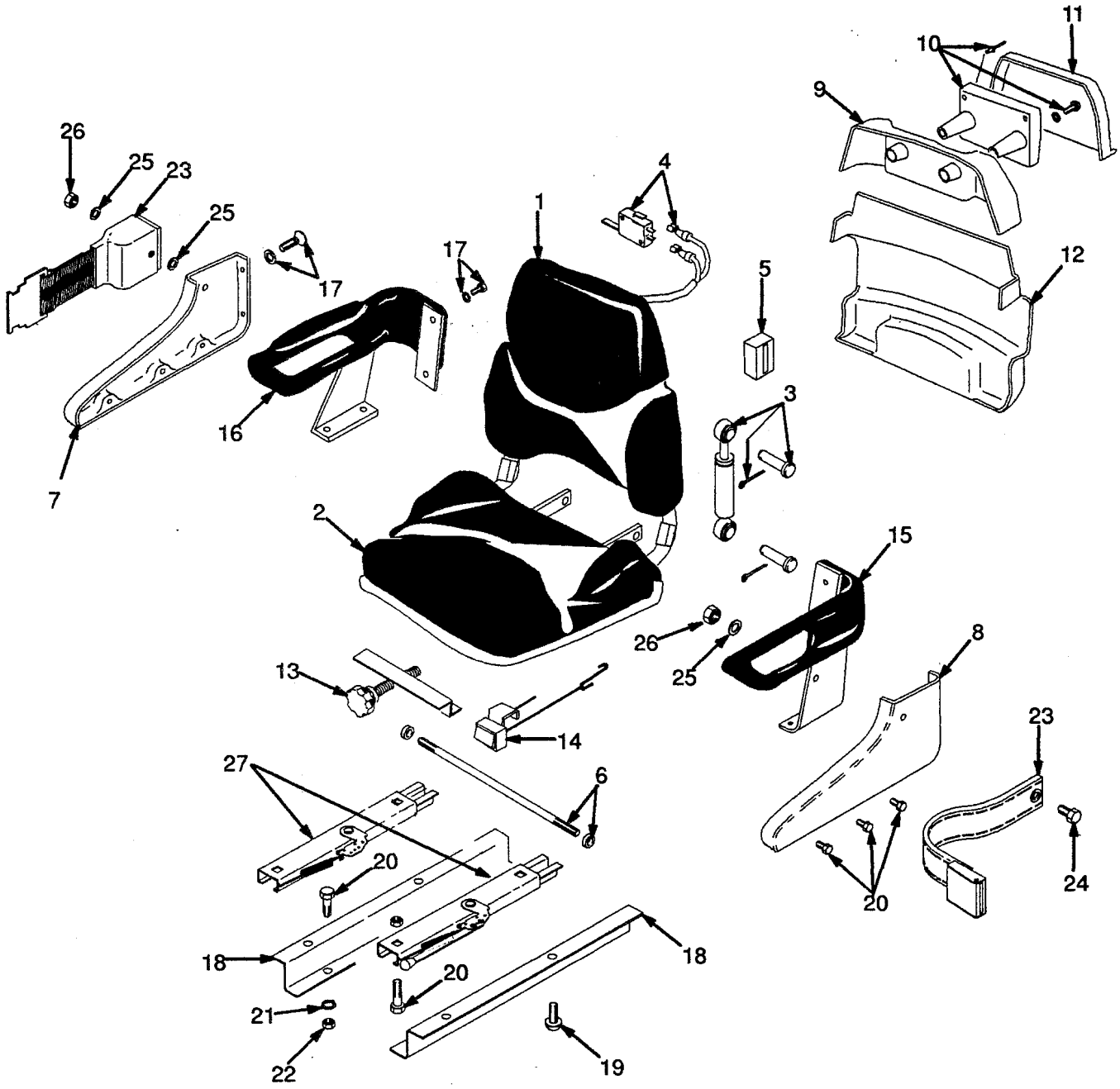

SUSPENSION SEAT

REF		PART NO.	NAME OF PART	QTY
	a	1376681	Seat Assy	1
	b	1376677	Seat Assy	1
1	a	1374179	Seat Cushion	1
1	b	1362047	Seat Cushion	1
2	a	1374180	Seat Cushion	1
2	b	1362048	Seat Cushion	1
3		1362049	Shock Absorber	1
4		1354140	Switch Assy	1
5		1362052	Block	1
6		1362053	Shaft	1
7		1360869	Cover (RH)	1
8		1360871	Cover (LH)	1
9		1374188	Cover	1
10		1362058	Holder	1
11		1374190	Cover	1
12		1360872	Rear Cover	1
13		1362061	Knob	1
14		1362062	Tape	1
15		1362063	Hip Restraint (LH)	1
16		1362064	Hip Restraint (RH)	1
17		1362065	Hardware	1
18		2022900	Spacer	2
19		18727	Hex Head Bolt	4
20		18496	Hex Head Bolt	4
21		15175	Washer	4
22		145639	Nut	4
23	c	1374750	Seat Belt	1
24	c	379199	Hex Head Bolt	2
25	c	379697	Washer	4
26	c	379698	Nut	2
27		1378305	Kit-Slide Rail	1

a Fabric Cover
b Vinyl Cover
c with Seat Belt

©1996 HYSTER COMPANY

NON-SUSPENSION SEAT

(Figure 7)

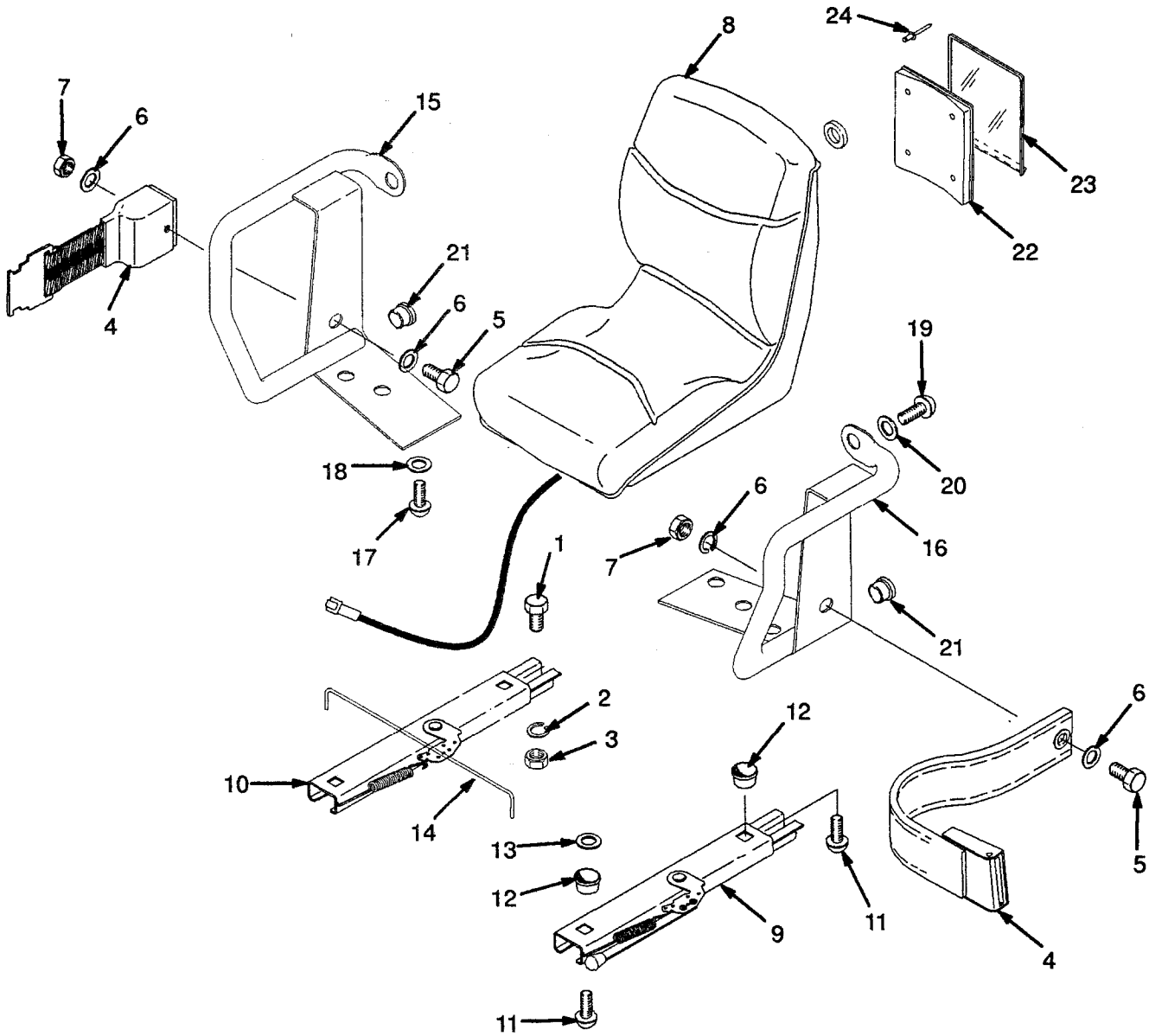

©1996 HYSTER COMPANY

NON-SUSPENSION SEAT

REF		PART NO.	NAME OF PART	QTY
		1375150	Seat Assy	1
1		18496	Hex Head Bolt	4
2		15175	Washer	4
3		145639	Nut	4
4	a	1374750	Seat Belt	1
5		379199	Hex Head Bolt	2
6		379697	Washer	4
7		379698	Nut	2
8		1351431	Seat	1
8		1354140	Switch	1
9		335553	Seat Rail (LH)	1
10		383116	Seat Rail (RH)	1
11		364914	Hex Head Bolt	4
12		204114	Spacer	4
13		221733	Washer	2
14		1300107	Rod	1
15	a	364807	Hip Restraint (RH)	1
16	a	364808	Hip Restraint (LH)	1
17	a	18727	Hex Head Bolt	4
18	a	18515	Washer	4
19	a	379197	Hex Head Bolt	2
20	a	379198	Washer	2
21	a	364854	Plug	2
22		335988	Base	1
23		335991	Cover	1
24		222029	Rivet	4

a with Operator Restraint

©1996 HYSTER COMPANY

LABELS AND PAINT

(Figure 8)

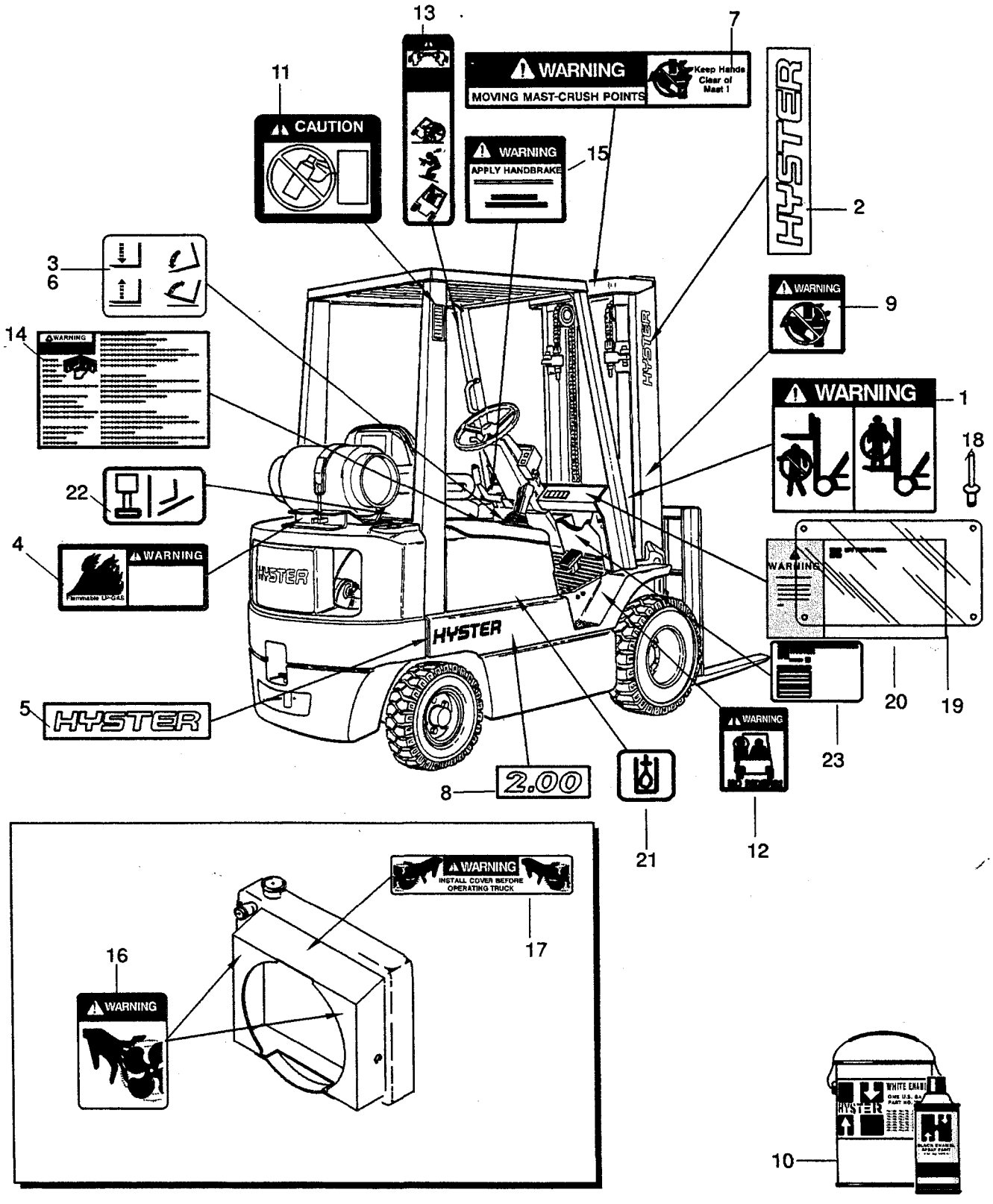

LABELS AND PAINT

REF		PART NO.	NAME OF PART	QTY
1		1339830	Label-Mast Warning	2
2		1339672	Label-Hyster	2
3	a	....	Label-Auxiliary Function	AR
4		1354172	Label-Flammability	1
5		2020517	Label-Hyster	2
6		1356137	Label-Lift/Tilt	1
7		1343276	Label-Mast Warning	1
8		2020510	Label (1.50)	2
8		2020511	Label (1.75)	2
8		2020512	Label (2.00)	2
9		1339832	Label-Pinch Point	2
10		1345808	Paint-Nugget Yellow 3,8L	AR
10		1345809	Paint-Nugget Yellow Spray	AR
10		316844	Red Spray Paint	AR
10		1344902	Paint-Low Gloss Black 3,8L	AR
10		1344901	Paint-Low Gloss Black spray	AR
10		1346270	Paint-Powder Black Spray	AR
11		1356109	Label-Caution	1
12		1339828	Label-No Riders	2

REF		PART NO.	NAME OF PART	QTY
13	b	1359588	Label-Operator Warning	2
13	c	1335143	Label-Tip-Over	2
14	b	1366725	Label-Operator Warning	1
14	c	1336592	Label-Operator Warning	1
15		1356138	Label-Park Brake	1
16		1300094	Label-Fan	2
17		1345926	Label-Fan	1
18		170658	Rivet	4
19		389688	Cover	1
20	d	....	Nameplate	1
21	e	1385099	Label (Hydraulic Oil)	1
22	e	1385100	Label (Locking Hood Latch)	1
23		320037	Label (Patents and Trademarks)	1

a ☞ Table
b with Operator Restraint
c without Operator Restraint
d Contact your Hyster Dealer
e First Used on S/N Pending per ECN 70035-02

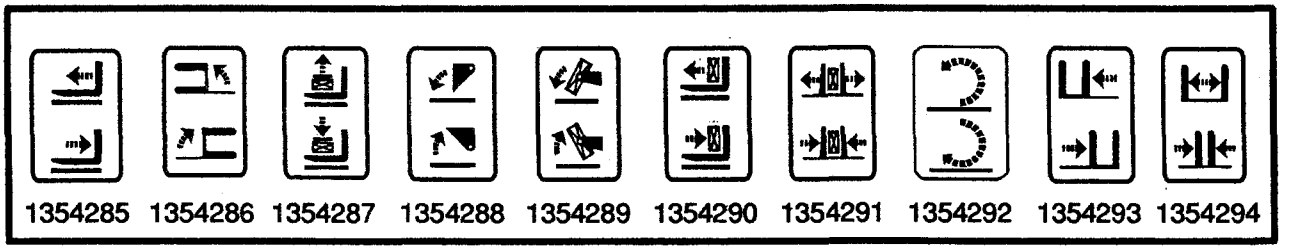

©1996 HYSTER COMPANY

COUNTERWEIGHT

(Figure 9)

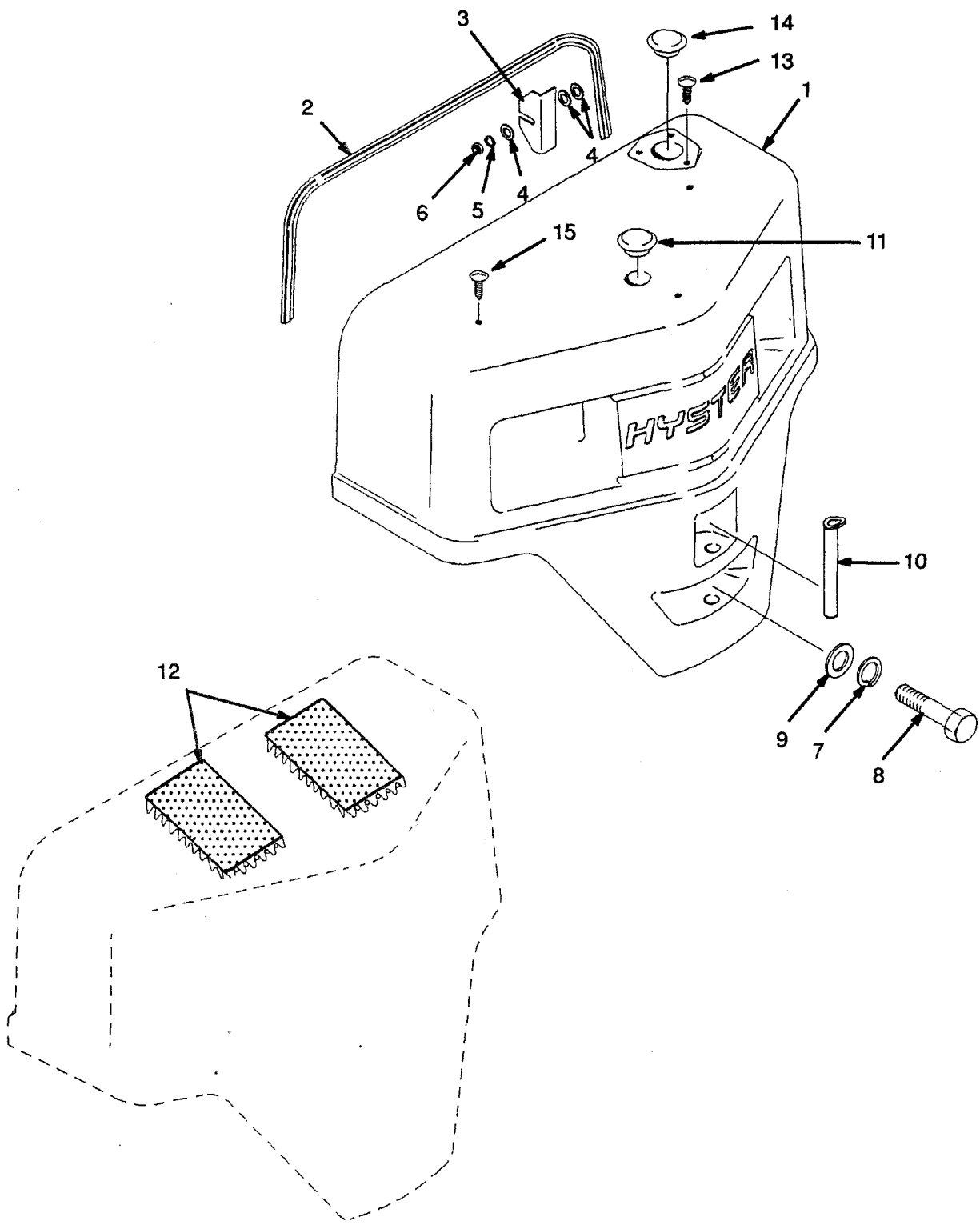

©1996 HYSTER COMPANY

COUNTERWEIGHT

REF		PART NO.	NAME OF PART	QTY
1	a	2023469	Counterweight	1
1	b	2023470	Counterweight	1
1	c	2023472	Counterweight	1
2		2022356	Seal	1
3		2021563	Shim	AR
4		320157	Washer	12
5		292681	Lockwasher	4
6		239503	Nut	4
7		292689	Lockwasher	2
8		292609	Hex Head Bolt	2
9		2021562	Washer	2
10		2021564	Pin	1

REF		PART NO.	NAME OF PART	QTY
10		2022849	Pin (Optional)	1
11		1350231	Hole Plug	1
12		2022042	Noise Reduction Pad	2
13	d	1347045	Plug	3
14	d	2021395	Cap	1
15	e	1347045	Plug	3

a H1.50XM
b H1.75XM
c H2.00XMS
d without Upswept Exhaust
e Petrol and Diesel

©1996 HYSTER COMPANY

NOISE REDUCTION

FRAME

(Figure 10)

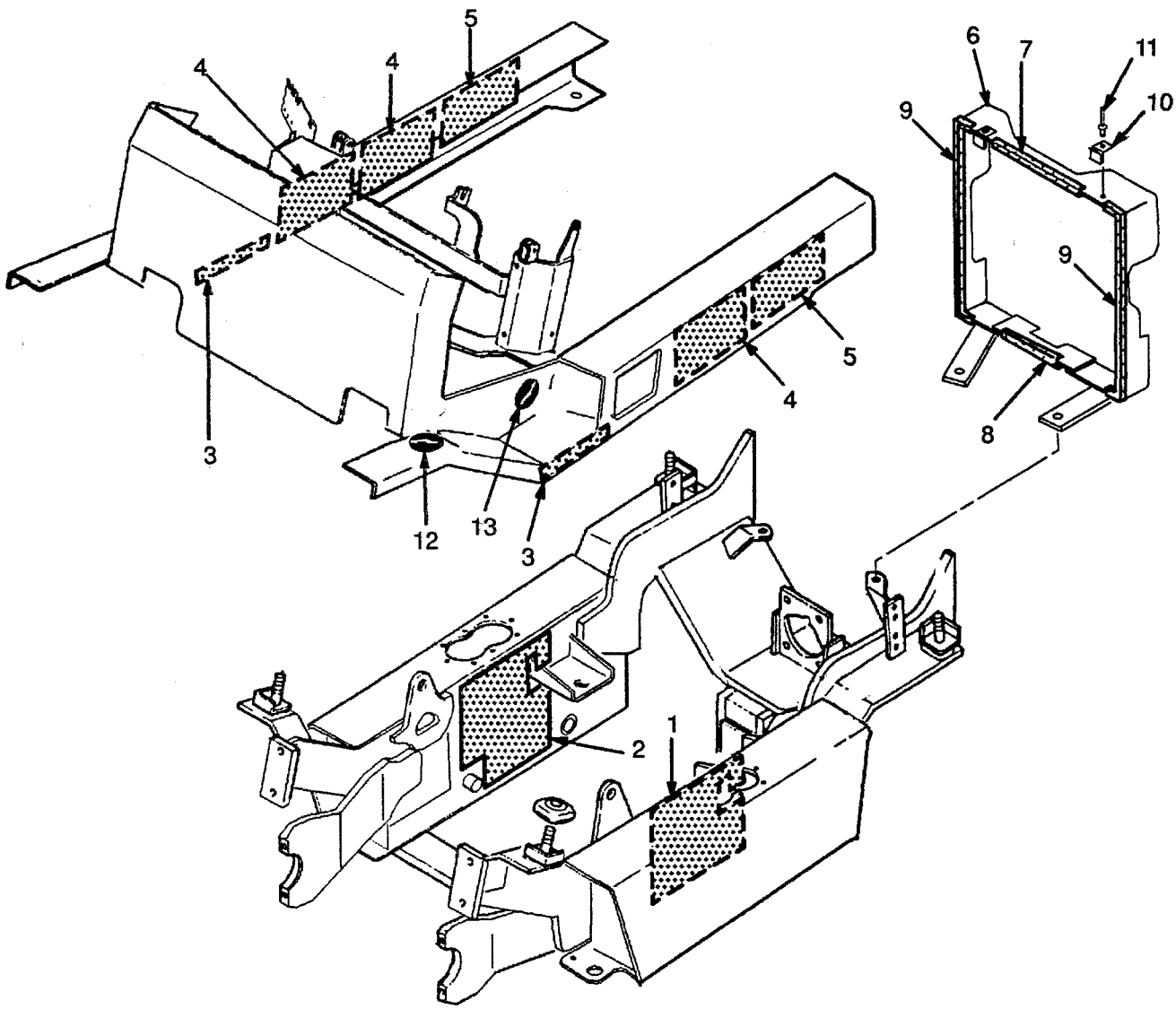

©1996 HYSTER COMPANY

NOISE REDUCTION

FRAME

KEY
A: Petrol and LPG
B: Diesel

REF	PART NO.	NAME OF PART	QTY A	QTY B
1	2022038	Pad	1	1
2	2022039	Pad	1	1
3	2022035	Pad	2	2
4	2022036	Pad	3	3
5	2022037	Pad	2	2
6	2022019	Duct	1	..
6	2022023	Duct	..	1
7	2023406	Pad	1	1
8	2022027	Pad	1	1
9	2022034	Pad	2	2
10	2021752	Clip	2	2
11	222021	Rivet	2	2
12	2021395	Cap	2	2
13	2022803	Cap	2	2

©1996 HYSTER COMPANY

NOISE REDUCTION

ENGINE COVER

(Figure 11)

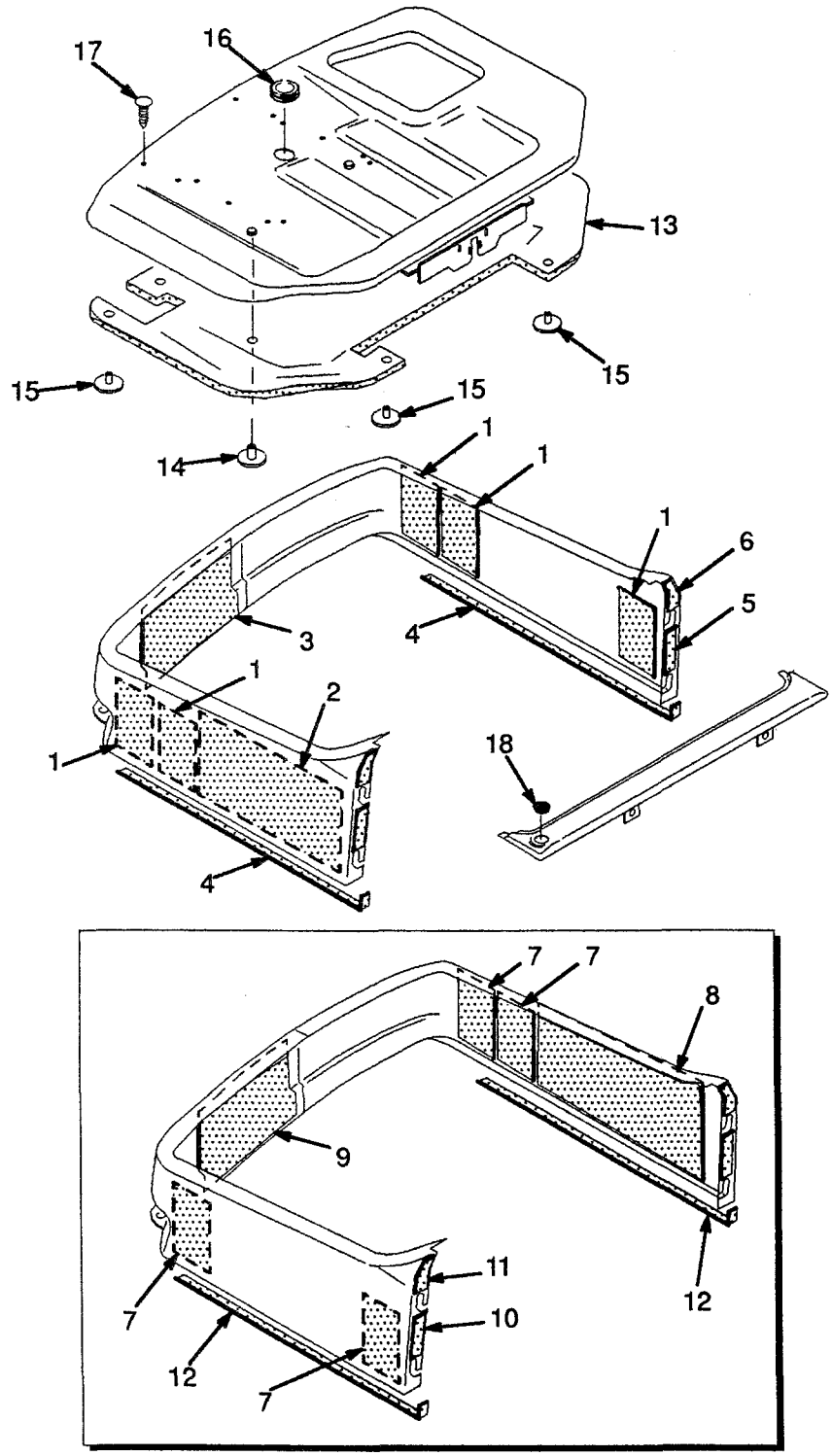

NOISE REDUCTION
ENGINE COVER

KEY
A: Petrol and LPG
B: Diesel

REF	PART NO.	NAME OF PART	QTY A	QTY B
1	2022040	Pad	5	..
2	2022041	Pad	1	..
3	2022046	Pad	1	..
4	2022032	Pad	2	..
5	2022033	Pad	2	..
6	2022034	Pad	2	..
7	2022040	Pad	..	4
8	2022041	Pad	..	1
9	2022046	Pad	..	1
10	2022033	Pad	..	2
11	2022034	Pad	..	2
12	2022032	Pad	..	2
13	2022044	Pad	1	1
14	1361087	Button	4	4
15	280644	Button	4	4
16	1359587	Grommet	1	1
17	1347045	Fastener	4	4
18	1335932	Hole Plug	1	1

©1996 HYSTER COMPANY

NOTES

©1996 HYSTER COMPANY

ENGINE

Camshaft and Valves
Diesel
2,5L ..... Page 56

Camshaft and Valves
Petrol and LPG
2,0L ..... Page 34

Cooling System
Diesel
2,5L ..... Page 62

Cooling System
Petrol and LPG
2,0L ..... Page 42

Crankshaft and Piston
Diesel
2,5L ..... Page 54

Crankshaft and Piston
Petrol and LPG
2,0L ..... Page 32

Cylinder Block
Diesel
2,0L ..... Page 50

Cylinder Block
Petrol and LPG
2,0L ..... Page 28

Cylinder Head
Diesel
2,5L ..... Page 48

Cylinder Head
Petrol and LPG
2,0L ..... Page 26

Engine Electrical System
Diesel
2,5L ..... Page 66

Engine Electrical System
Petrol and LPG
2,0L ..... Page 38

Engine Mount
Diesel
2,5L ..... Page 68

Engine Mount
Petrol and LPG
2,0L ..... Page 46

©1996 HYSTER COMPANY

ENGINE

Exhaust
Diesel
2,5L ..... Page 70

Exhaust
Petrol and LPG
2,0L ..... Page 72

Intake and Exhaust Manifold
Diesel
2,5L ..... Page 58

Intake and Exhaust Manifold
Petrol and LPG
2,0L ..... Page 36

Oil Pump and Filter
Diesel
2,5L ..... Page 60

Oil Pump and Filter
Petrol and LPG
2,0L ..... Page 40

Radiator and Hoses
Diesel
2,5L ..... Page 64

Radiator and Hoses
Petrol and LPG
2,0L ..... Page 44

Timing Gear Cover and Oil Sump
Diesel
2,5L ..... Page 52

Timing Gear Cover and Oil Sump
Petrol and LPG
2,0L ..... Page 30

Upswept Exhaust
Diesel
2,5L ..... Page 74

Upswept Exhaust
Petrol and LPG
2,0L ..... Page 76

©1996 HYSTER COMPANY

NOTES

©1996 HYSTER COMPANY

CYLINDER HEAD

PETROL AND LPG

2,0L

(Figure 12)

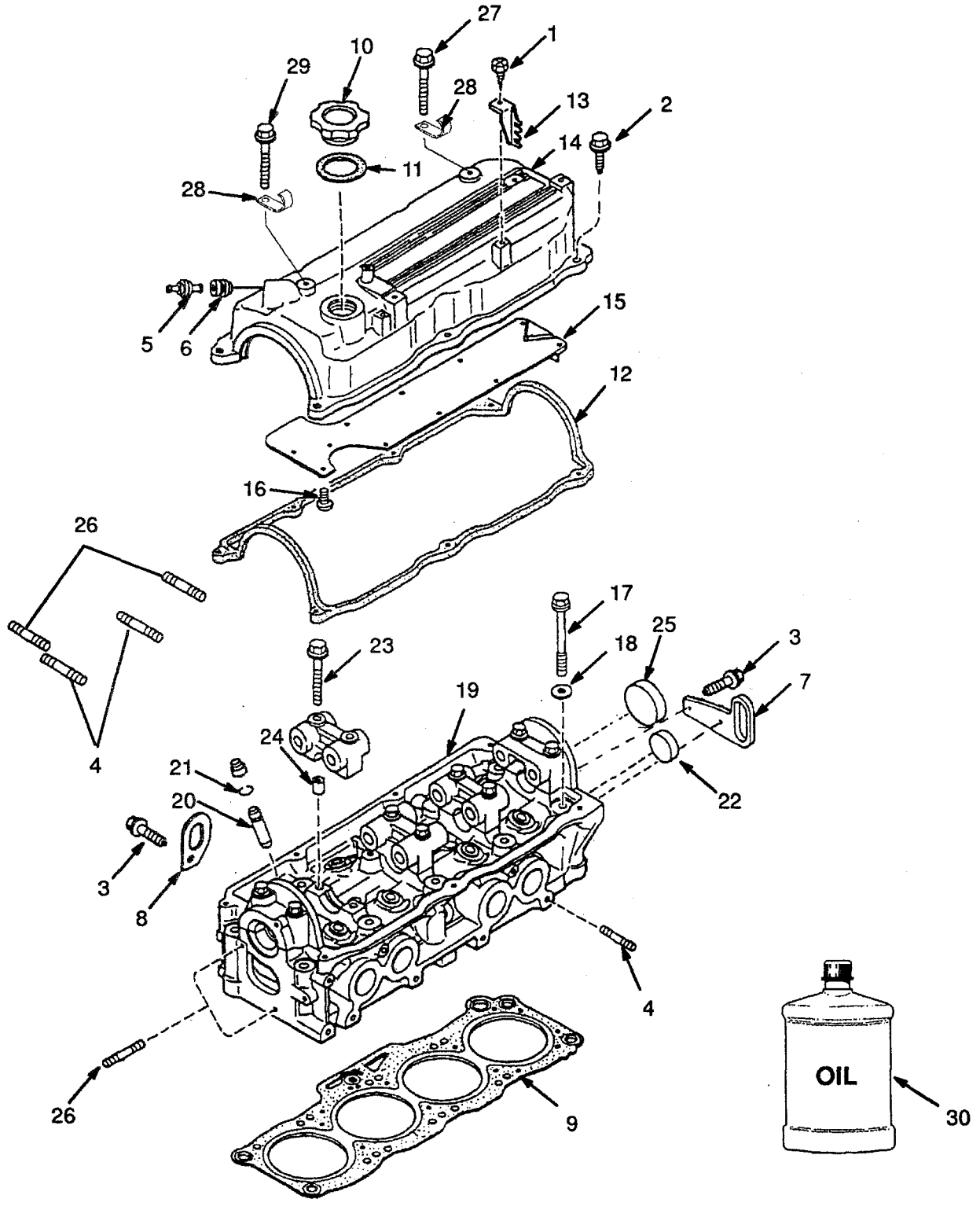

©1996 HYSTER COMPANY

CYLINDER HEAD
PETROL AND LPG
2,0L

REF	PART NO.	NAME OF PART	QTY
	2022647	Engine (Petrol)	1
	2022648	Engine (LPG)	1
1	1362000	Screw	2
2	1362001	Bolt	7
3	1361898	Bolt	2
4	1361897	Stud	8
5	1360893	PCV Valve	1
6	1360892	Seal	1
7	1360891	Support	17
8	1360890	Support	1
9	2022494	Joint	1
10	1360887	Oil Cap	1
11	1360888	Joint	1
12	1360886	Joint	1
13	1369875	Bracket	2
14	1360883	Cover	1
15	1360884	Plate	1
16	1361896	Screw	2
17	1360880	Bolt	10
18	1360881	Washer	10
19	1360878	Cylinder Head	1
20	1360895	Valve Guide	8
21	1360879	Clip	8
22	1362003	Plug	1
23	1361894	Bolt	10
24	1362002	Pin	10
25	1360882	Cap	1
26	1361899	Stud	4
27	1361868	Screw	1
28	1369876	Clamp	2
29	327327	Bolt	1
30	3043645	Engine Oil (5L)	AR

©1996 HYSTER COMPANY

CYLINDER BLOCK

PETROL AND LPG

2,0L

(Figure 13)

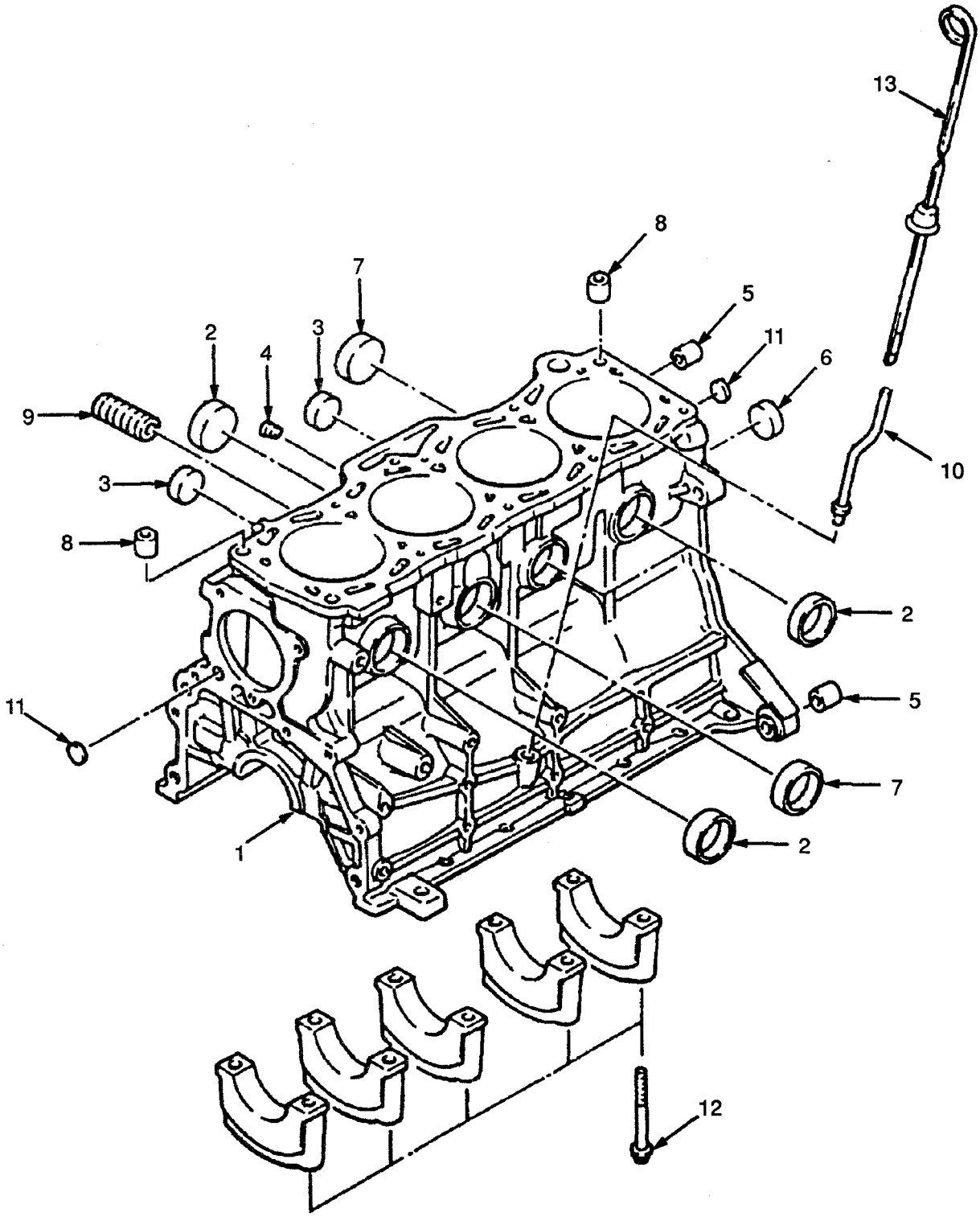

CYLINDER BLOCK
PETROL AND LPG
2,0L

REF	PART NO.	NAME OF PART	QTY
	2022647	Engine (Petrol)	1
	2022648	Engine (LPG)	..
1	1360897	Cylinder Block	1
2	1362003	Plug	4
3	1362005	Plug	2
4	1366862	Plug	2
5	1362008	Pin	2
6	1362009	Plug	1
7	1362007	Plug	2
8	1360896	Pin	2
9	1360898	Stud	1
10	1360899	Pipe	1
11	1361675	Plug	2
12	1361676	Bolt	10
13	1361677	Dipstick	1

©1996 HYSTER COMPANY

TIMING GEAR COVER AND OIL SUMP

PETROL AND LPG

2,0L

(Figure 14)

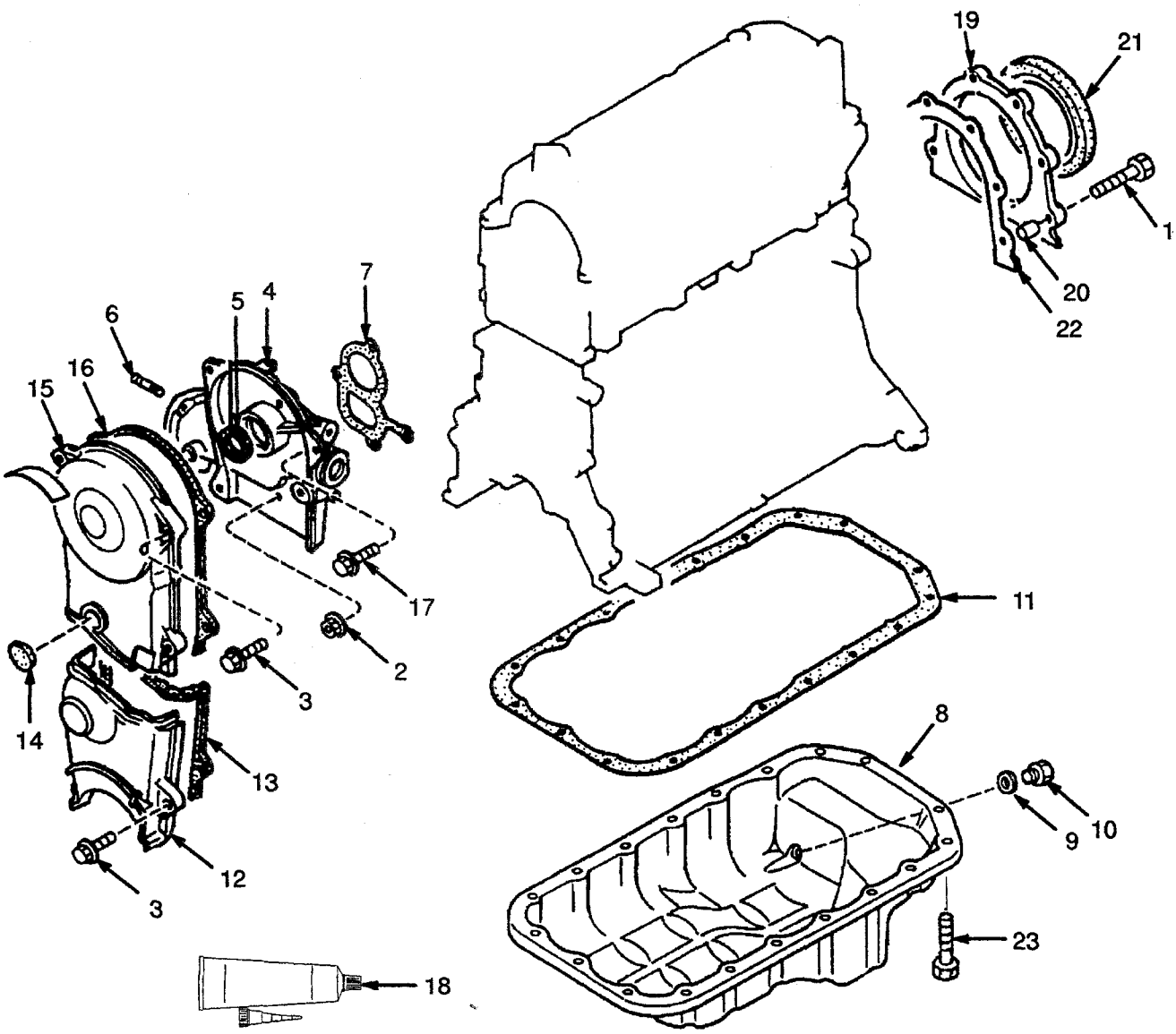

©1996 HYSTER COMPANY

TIMING GEAR COVER AND OIL SUMP

PETROL AND LPG

2,0L

REF	PART NO.	NAME OF PART	QTY
	2022647	Engine (Petrol)	1
	2022648	Engine (LPG)	1
1	1362011	Bolt	6
2	326504	Nut	2
3	1362001	Bolt	7
4	1369934	Housing (Front)	1
5	1361688	Oil Seal	1
6	1362012	Stud	2
7	1361679	Joint	1
8	1361680	Oil Sump	1
9	1362015	Joint	1
10	1361681	Drain Plug	1
11	1361682	Oil Sump Joint	1
12	1361683	Cover	1
13	1361684	Joint	1
14	1361685	Cap	1
15	1361686	Cover	1
16	1361687	Joint	1
17	1369993	Bolt	2
18	1370737	Silicone	AR
19 [a]	1361689	Rear Cover	1
20	1362010	Pin	2
21	1361691	Oil Seal	1
22	1361690	Joint	1
23	1370736	Hex Head Bolt	19

[a] Included In Short Block 1360877

©1996 HYSTER COMPANY

CRANKSHAFT AND PISTON

PETROL AND LPG

2,0L

(Figure 15)

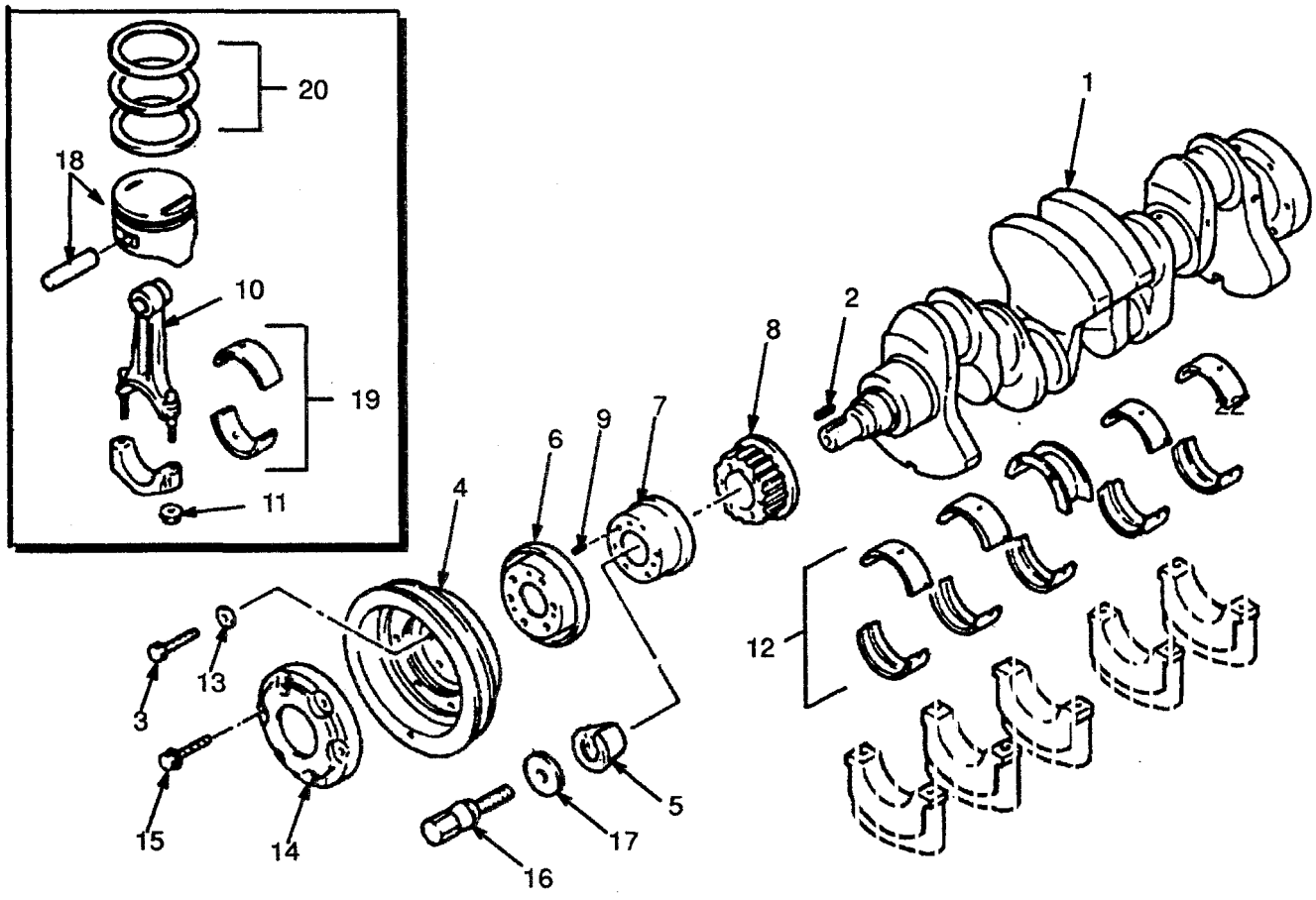

©1996 HYSTER COMPANY

HYSTER

CRANKSHAFT AND PISTON

PETROL AND LPG

2,0L

REF	PART NO.	NAME OF PART	QTY
	2022647	Engine (Petrol)	1
	2022648	Engine (LPG)	1
1	1369963	Crankshaft	1
2	1369964	Woodruff Key	1
3	1369965	Bolt	6
4	1369966	Pulley	1
5	1369967	Ring	1
6	1369968	Plate	1
7	1369969	Spacer	1
8	1369970	Pulley	1
9	2022634	Pin	1
10	1361694	Rod Assy	4
11	1361695	Nut	8
12	1361710	Bearing Set (Standard)	1
12	1361713	Bearing Set (0,25 mm)	1
12	1361711	Bearing Set (0,50 mm)	1
12	1361712	Bearing Set (0,75 mm)	1
13	1369973	Washer	6
14	1369974	Plate	1
15	1361875	Screw	6
16	1369975	Bolt	1
17	1369976	Washer	1
18 [a]	1361714	Piston (Standard)	4
18	1361715	Piston (0,25 mm)	4
18	1361716	Piston (0,50 mm)	4
19 [a]	1361703	Bearing Set (Standard)	1
19	1361704	Bearing Set (0,25 mm)	1
19	1361705	Bearing Set (0,50 mm)	1
19	1361706	Bearing Set (0,75 mm)	1
20 [a]	1361707	Piston Ring Set (Standard)	1
20	1361709	Piston Ring Set (0,25 mm)	1
20	1361708	Piston Ring Set (0,50 mm)	1

[a] Included In Short Block 1360877

©1996 HYSTER COMPANY

CAMSHAFT AND VALVES

PETROL AND LPG

2,0L

(Figure 16)

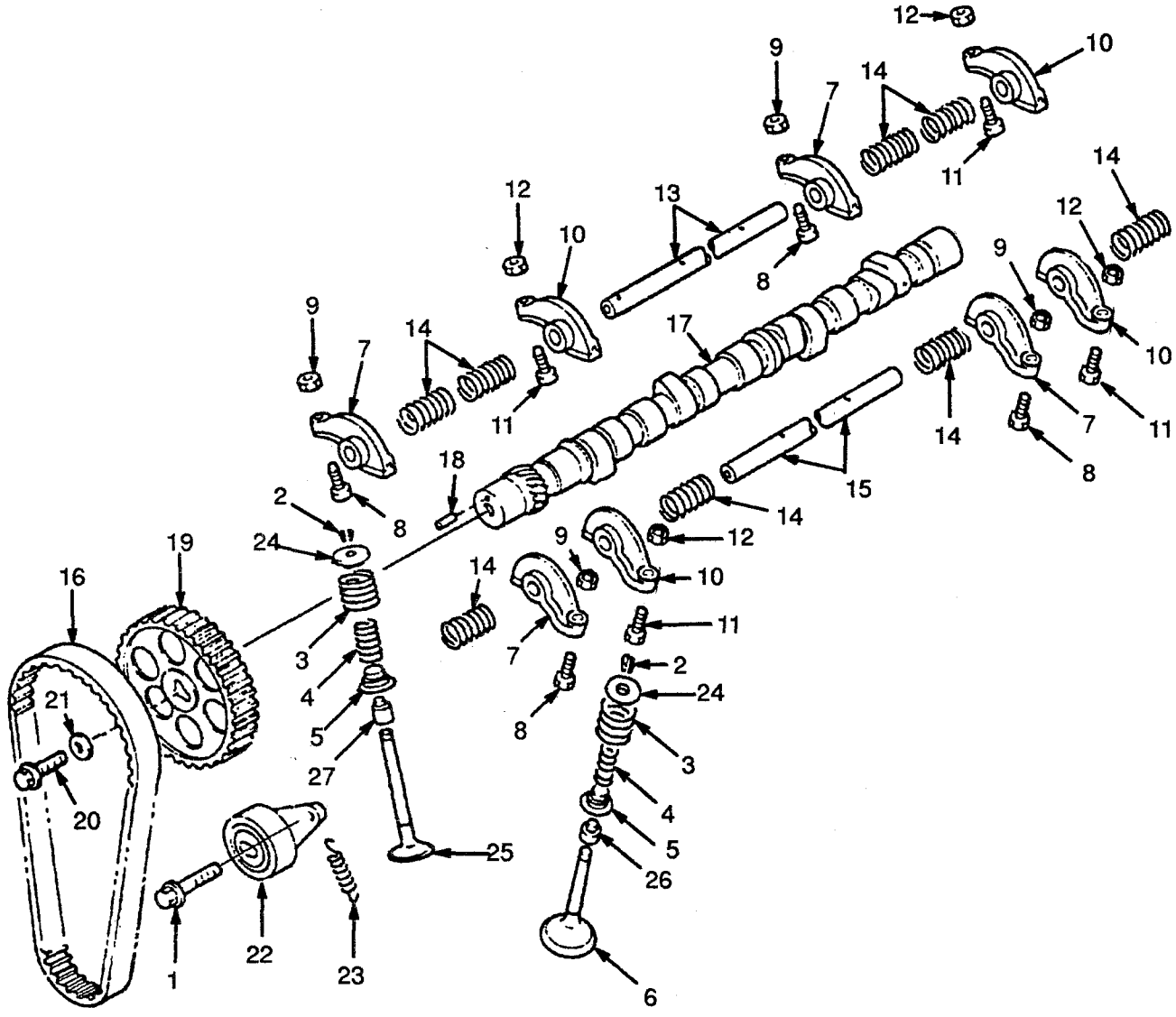

©1996 HYSTER COMPANY

CAMSHAFT AND VALVES

PETROL AND LPG

2,0L

REF	PART NO.	NAME OF PART	QTY
	2022647	Engine (Petrol)	1
	2022648	Engine (LPG)	1
1	1362016	Bolt	1
2	326612	Keeper	16
3	1361722	Spring	8
4	1361723	Spring	8
5	1361724	Seat	8
6	1361725	Exhaust Valve	4
7	1361726	Rocker Arm	4
8	1361727	Adjusting Screw	4
9	1361728	Nut	4
10	1361729	Rocker Arm	4
11	1361727	Adjusting Screw	4
12	1361728	Nut	4
13	1361730	Rocker Arm Shaft	1
14	1361731	Spring	8
15	1361732	Rocker Arm Shaft	1
16	1361733	Timing Belt	1
17	2020769	Camshaft	1
18	1361717	Pin	1
19	1361735	Pulley	1
20	1361736	Bolt	1
21	1361737	Washer	1
22	1361738	Tensioner	1
23	1361739	Spring	1
24	1361721	Valve Seat	8
25	1361720	Intake Valve	4
26	1361719	Exhaust Valve Seal	4
27	1361718	Intake Valve Seal	4

©1996 HYSTER COMPANY

INTAKE AND EXHAUST MANIFOLD

PETROL AND LPG

2,0L

(Figure 17)

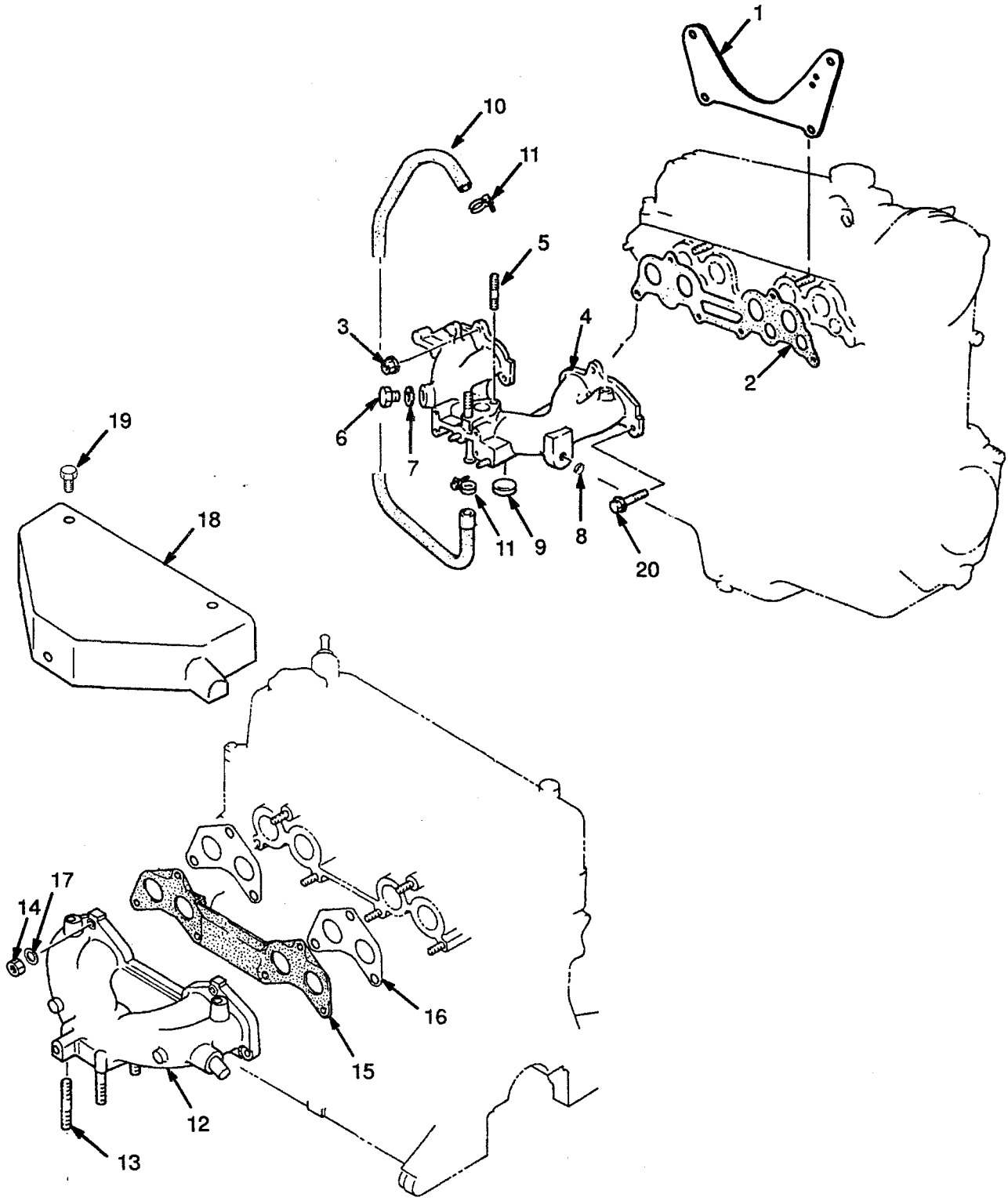

©1996 HYSTER COMPANY

INTAKE AND EXHAUST MANIFOLD

PETROL AND LPG

2,0L

REF	PART NO.	NAME OF PART	QTY
1	1370676	Support	1
2	1361742	Joint	3
3	326504	Nut	4
4	2020783	Intake Manifold	1
5	1370682	Stud	2
6	326778	Plug (Petrol)	1
7	324718	Joint	1
8	1370683	Plug	1
9	1362005	Plug	1
10	1370743	Hose	1
11	2020745	Clamp	2
12	1370688	Exhaust Manifold	1
13	1361745	Stud	4
14	2020755	Nut	6
15	1361747	Joint	1
16	1370689	Joint	2
17	1370690	Washer	6
18	1370691	Cover	1
19	1370692	Bolt	3
20	1361885	Bolt	2

©1996 HYSTER COMPANY

ENGINE ELECTRICAL SYSTEM

PETROL AND LPG

2,0L

(Figure 18)

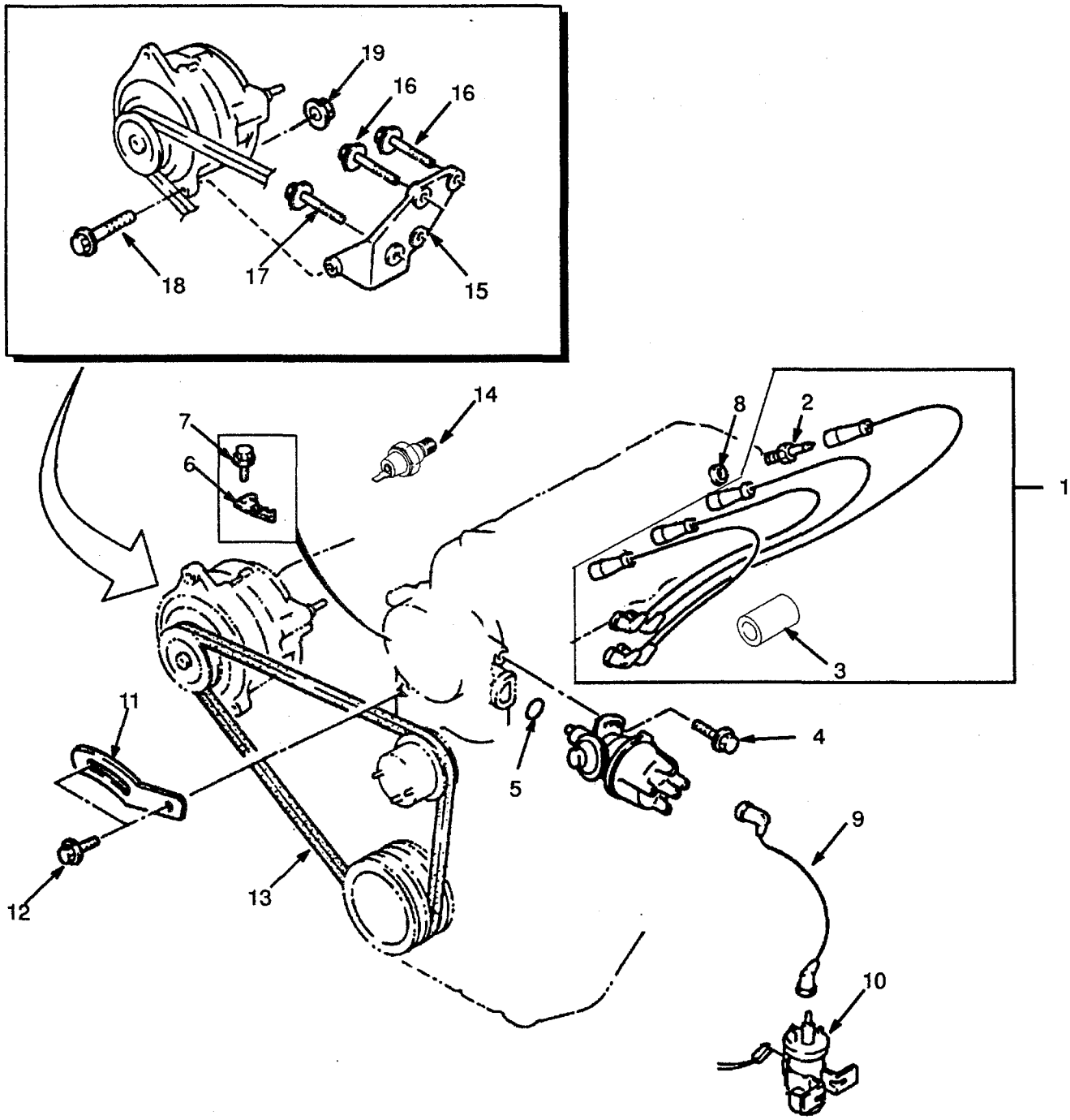

©1996 HYSTER COMPANY

ENGINE ELECTRICAL SYSTEM
PETROL AND LPG
2,0L

REF	PART NO.	NAME OF PART	QTY
1	1369893	Kit-Ignition Cables	1
1	....	Cable	1
1	....	Cable	1
1	....	Cable	1
1	....	Cable	1
2	1332683	Spark Plug	4
3	1369894	Support	1
4	1361895	Bolt	1
5	326850	O-Ring	1
6	1361844	Bracket	1
7	1369897	Bolt	1
8	1369895	Packing	4
9	1369896	Igntion Cable	1
10	2021440	Ignition Coil	1
11	1361845	Strap	1
12	1361881	Bolt	2
13	1368841	Belt (Standard)	1
13	2022515	Belt (Tube and Fin Radiator)	1
13	2022016	Belt (Low Noise)	1
14	1361867	Temperature Sender	1
15	1361846	Bracket	1
16	1361891	Bolt	3
17	1361888	Bolt	1
18	1368844	Bolt	1
19	1368748	Nut	1

©1996 HYSTER COMPANY

OIL PUMP AND FILTER

PETROL AND LPG

2,0L

(Figure 19)

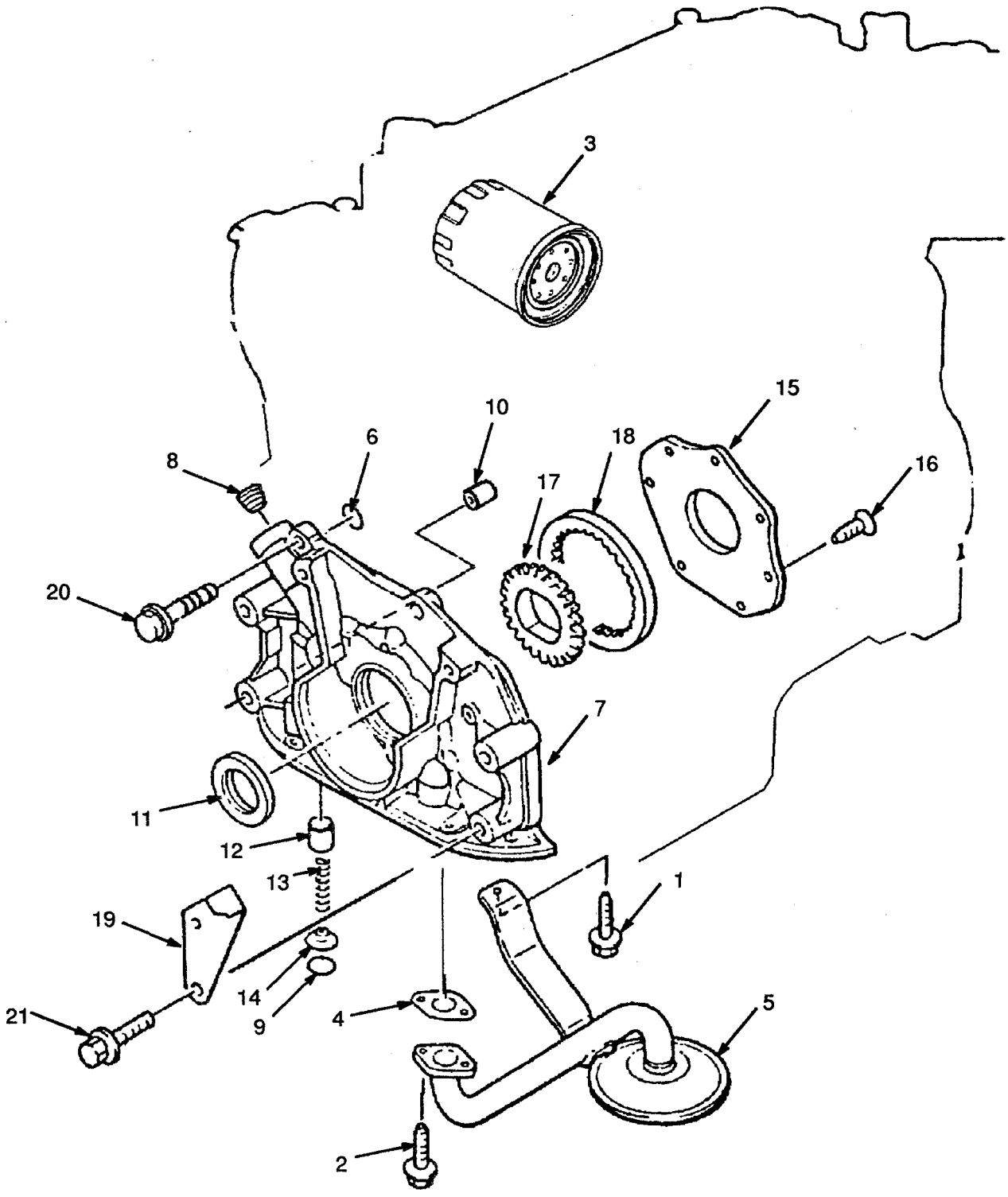

©1996 HYSTER COMPANY

OIL PUMP AND FILTER

PETROL AND LPG

2,0L

REF	PART NO.	NAME OF PART	QTY
1	1361868	Screw	1
2	1361878	Screw	2
3	333642	Cartridge	2
4	1361807	Joint	1
5	1361806	Strainer	1
6	1361801	O-Ring	1
7	1361800	Oil Pump	1
8	1368790	Plug	1
9	1361879	Circlip	1
10	1361798	Pin	2
11	1361688	Oil Seal	3
12	326747	Plunger	1
13	326748	Spring	1
14	326749	Seat	1
15	1361802	Cover	1
16	1361803	Screw	7
17	1361804	Gear (Inner)	1
18	1361805	Gear (Outer)	1
19	1369913	Plate	1
20	1369914	Bolt	2
21	1361887	Screw	4

©1996 HYSTER COMPANY

COOLING SYSTEM

PETROL AND LPG

2,0L

(Figure 20)

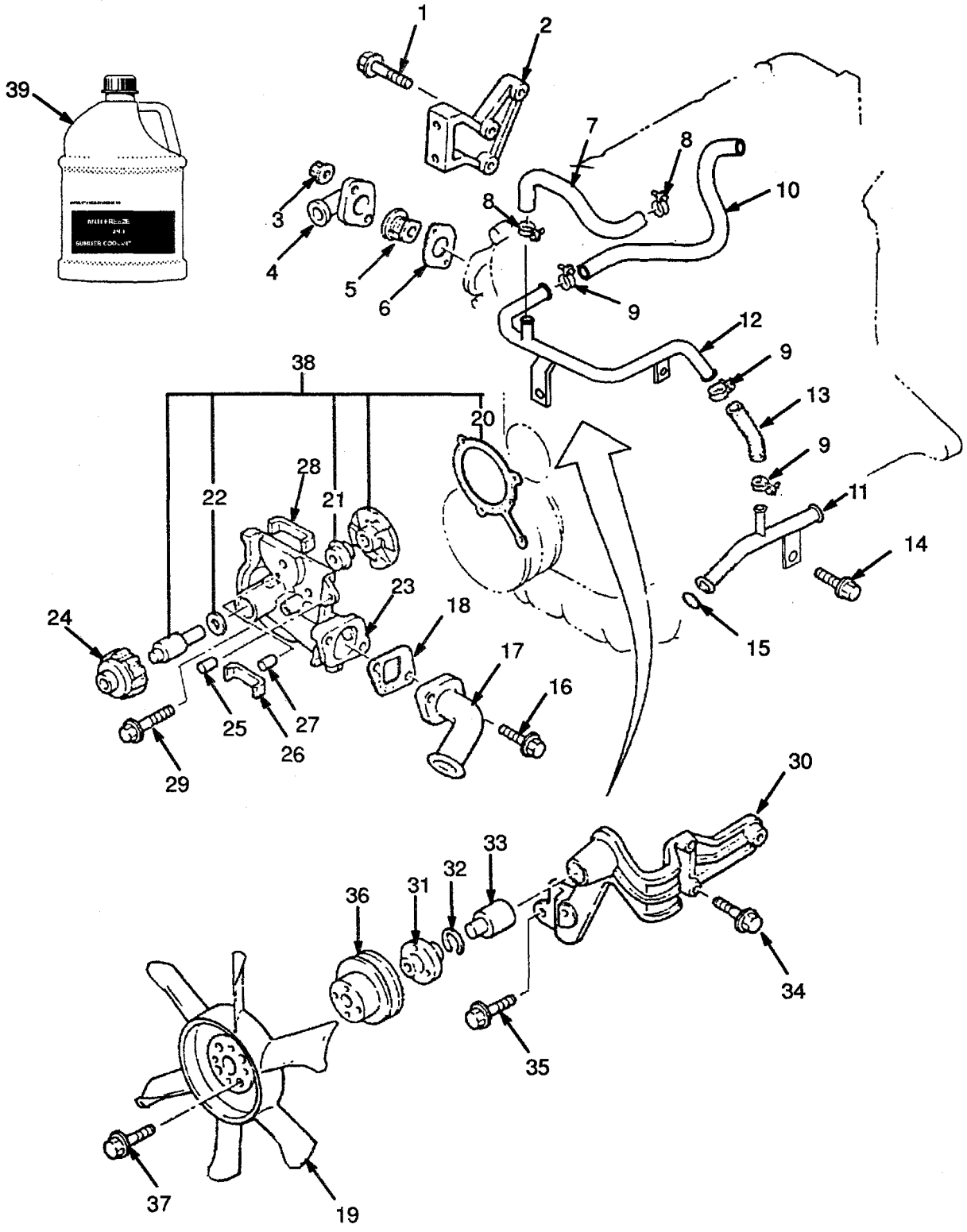

COOLING SYSTEM
PETROL AND LPG
2,0L

REF	PART NO.	NAME OF PART	QTY
1	1361882	Bolt	3
2	1361829	Bracket	1
3	326504	Nut	2
4	1361821	Cover	1
5	1361820	Thermostat	1
6	1367191	Joint	1
7	2022301	Hose	1
8	2020745	Clamp	2
9	1369990	Clamp	3
10	2022303	Hose	1
11	2022305	Pipe	1
12	2022302	Pipe	1
13	2022300	Hose	1
14	2022309	Bolt	1
15	1361827	O-Ring	1
16	324707	Bolt	2
17	1361818	Pipe	1
18	1361819	Joint	1
19	1361817	Fan	1
20	1361812	Joint	1
21	1370698	Seal	1
22	1361815	Plate	1
23	2022312	Water Pump	1
24	1361816	Pulley	1
25	1361880	Stud	1
26	1361809	Seal	1
27	1361834	Pin	1
28	1361810	Seal	1
29	1361875	Screw	3
30	1361830	Bracket	1
31	1361813	Hub	1
32	1361835	Ring	1
33	1361832	Shaft	1
34	1361884	Bolt	3
35	324706	Bolt	2
36 a	2022318	Pulley	1
36 b	2022510	Pulley	1
37 c	1361831	Pulley	1
37	1361878	Bolt	4
38	2022319	Kit-Repair	1
39	3043618	Coolant (5L)	AR
39	3043619	Antifreeze (5L)	AR
39	3061225	Coolant (25L)	AR
39	3061325	Antifreeze (25L)	AR

a Standard
b Tube and Fin Radiator
c Low Noise

©1996 HYSTER COMPANY

RADIATOR AND HOSES

PETROL AND LPG

2,0L

(Figure 21)

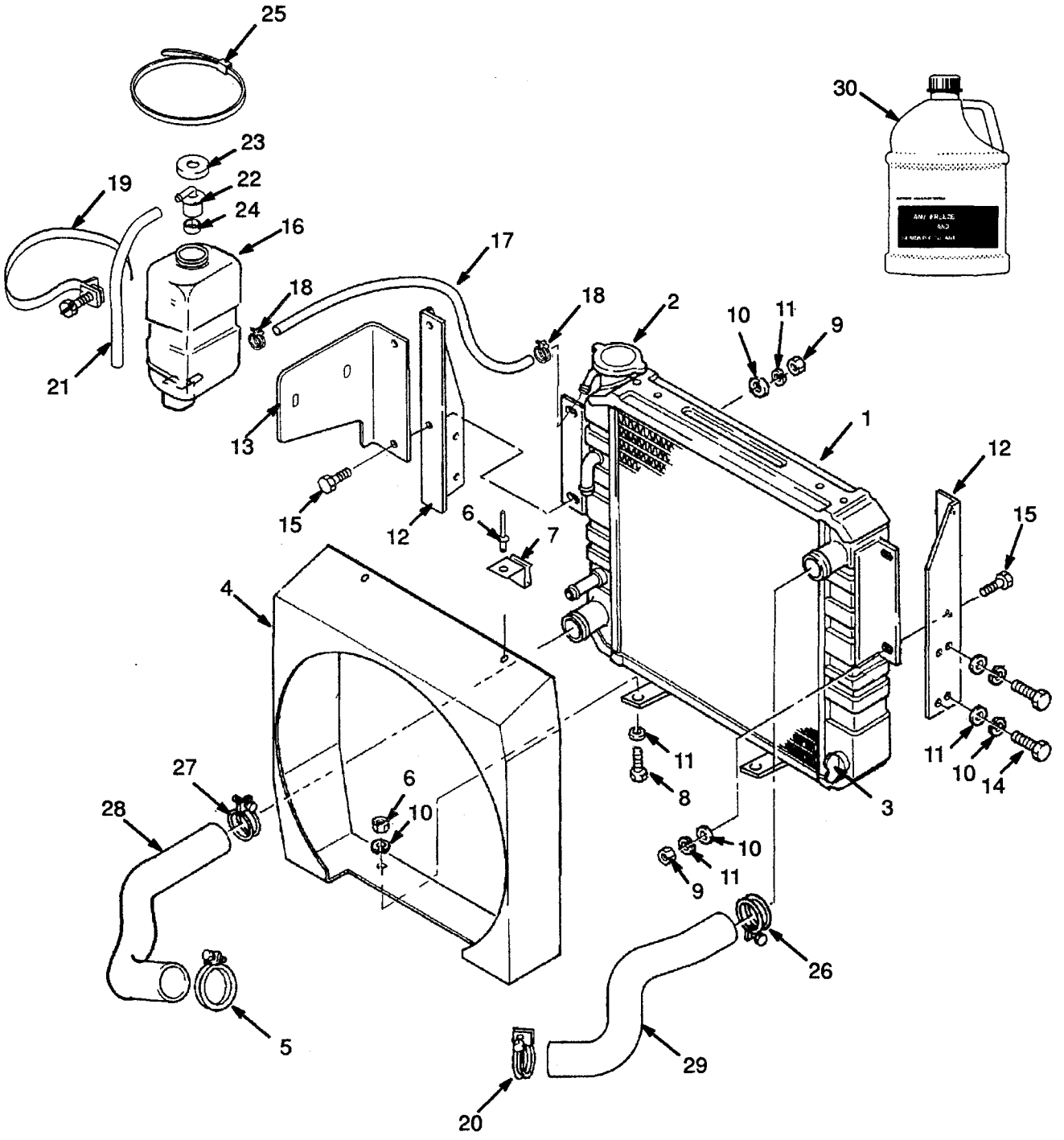

©1996 HYSTER COMPANY

RADIATOR AND HOSES

PETROL AND LPG

2,0L

REF	PART NO.	NAME OF PART	QTY
1	2021741	Radiator (Standard)	1
1	2022513	Radiator (Tube and Fin)	1
2	2022397	Cap	1
3	1367113	Drain Cock	1
4	2021745	Fan Shroud	1
5	2022557	Clamp	1
5	2022558	Clamp (Optional)	1
6	222021	Rivet	2
7	2021752	Clip	2
8	136749	Hex Head Bolt	2
9	239503	Nut	6
10	320157	Washer	10
11	292681	Washer	10
12	2021753	Bracket	2
13	2022470	Bracket	1
14	2021233	Screw	4
15	136681	Hex Head Bolt	4
16	1347026	Reservoir	1
17	2022519	Tube	1
18	168718	Clamp	2
19	1345825	Strap	1
20	2022556	Clamp	AR
20	2022557	Clamp (Optional)	1
21	336573	Hose	1
22	345453	Outlet	1
23	345454	Cap	1
24	336550	Bush	1
25	397676	Clamp	1
26	127045	Clamp	1
27	119236	Clamp	1
28	2021762	Radiator Hose (Lower)	1
29	2021765	Radiator Hose (Upper)	1
30	3043618	Coolant (5L)	AR
30	3043619	Antifreeze (5L)	AR
30	3061225	Coolant (25L)	AR
30	3061325	Antifreeze (25L)	AR

©1996 HYSTER COMPANY

ENGINE MOUNT

PETROL AND LPG

2,0L

(Figure 22)

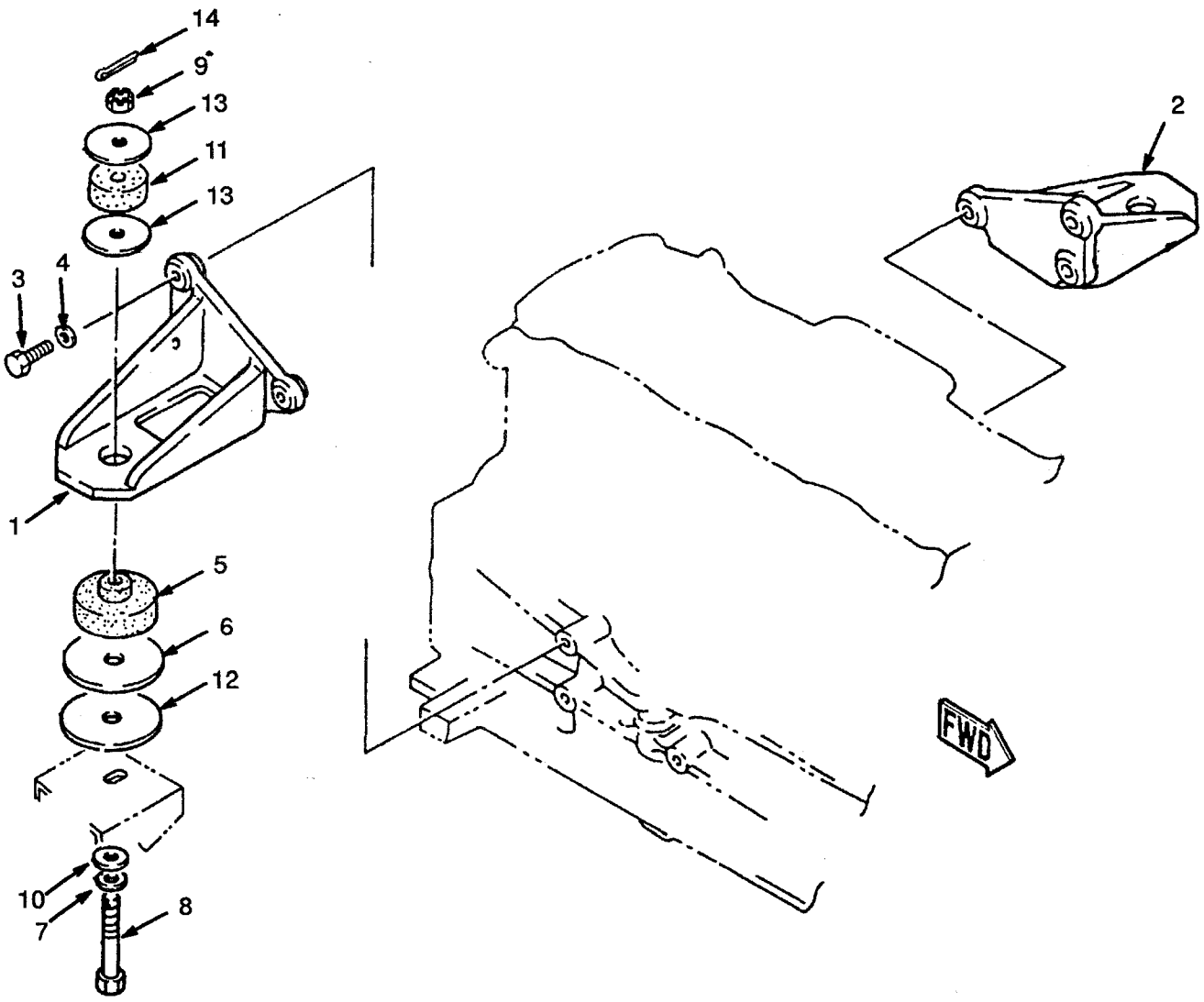

ENGINE MOUNT
PETROL AND LPG
2,0L

REF	PART NO.	NAME OF PART	QTY
1	2021505	Bracket (RH)	1
2	2021506	Bracket (LH)	1
3	2022551	Screw	6
4	296420	Washer	6
5	2021513	Rubber Washer	2
6	2021516	Rubber Washer	2
7	296422	Washer	2
8	2021511	Bolt	2
9	302328	Nut	2
10	15177	Washer	2
11	2021512	Rubber Washer	2
12	2021517	Washer	AR
13	2021515	Washer	4
14	15223	Split Pin	2

©1996 HYSTER COMPANY

CYLINDER HEAD

DIESEL

2,5L

(Figure 23)

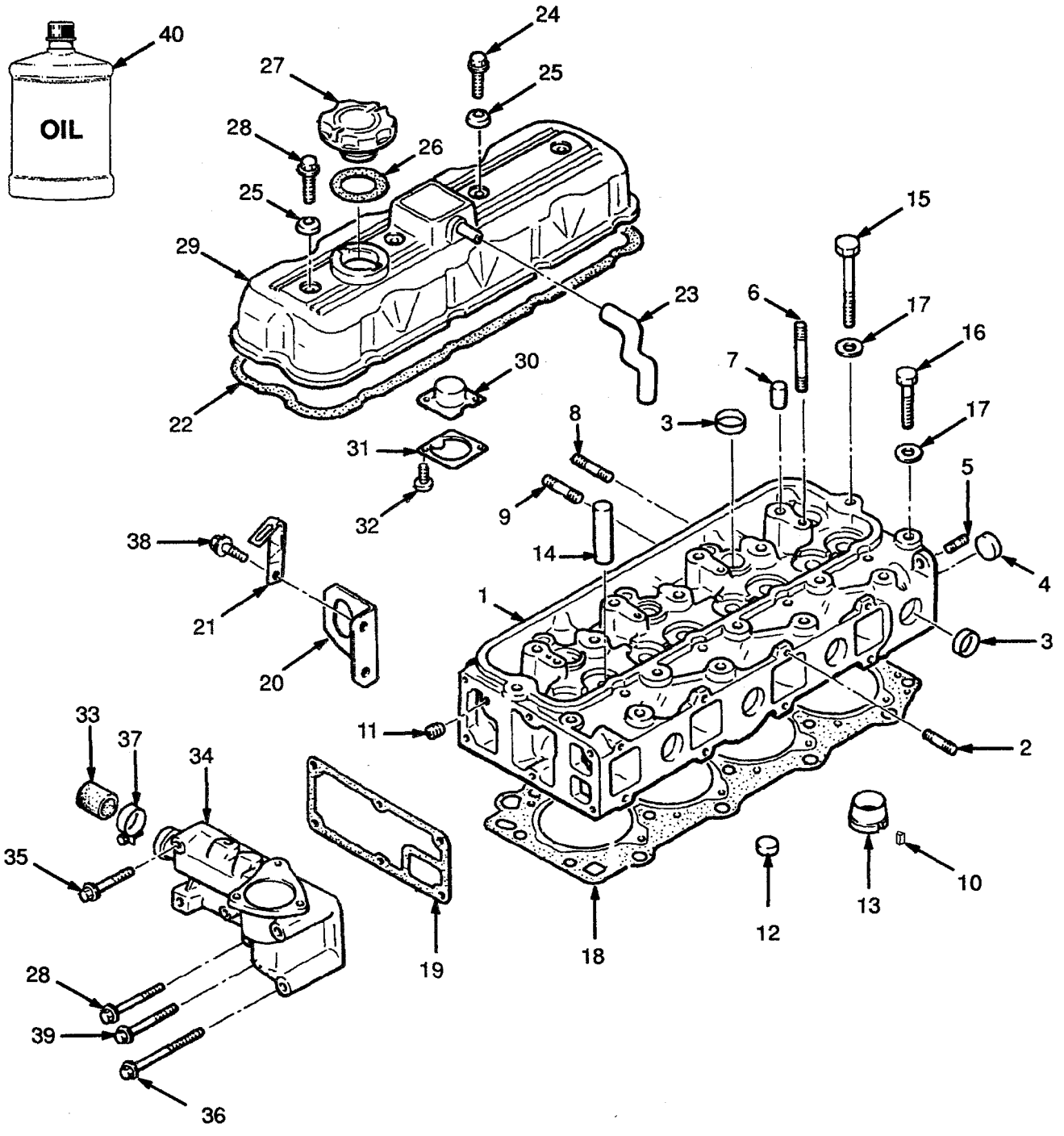

CYLINDER HEAD

DIESEL

2,5L

REF	PART NO.	NAME OF PART	QTY
1	1366853	Cylinder Head	1
2	1366854	Stud	2
3	1362009	Plug	8
4	1366855	Cap	1
5	1366856	Stud	1
6	1366857	Stud	4
7	1366858	Cap	4
8	1366859	Stud	4
9	1366860	Stud	4
10	1366861	Pin	4
11	1366862	Plug	1
12	1362005	Plug	3
13	1366864	Insert	4
14	1369866	Valve Guide	8
15	1366865	Bolt	11
16	1366866	Bolt	7
17	1366867	Washer	18
18	1366868	Joint	1
19	1366869	Joint	1
20	1366870	Support (Front)	1
21	1366871	Clip	1
22	1366872	Joint	1
23	1366873	Breather Pipe	1
24	1366874	Bolt	1
25	1366875	Washer	1
26	1360888	Joint	1
27	1360887	Cap	1
28	1366876	Bolt	6
29	1366877	Valve Cover	1
30	1366878	Plate	1
31	1366879	Plate	1
32	1361896	Screw	2
33	1366880	Cap	1
34	1366881	Case	1
35	1366882	Bolt	4
36	1362016	Bolt	1
37	1361886	Clamp	1
38	1370675	Bolt	2
39	1366883	Bolt	2
40	3043646	Engine Oil (5L)	AR

©1996 HYSTER COMPANY

CYLINDER BLOCK

DIESEL

2,0L

(Figure 24)

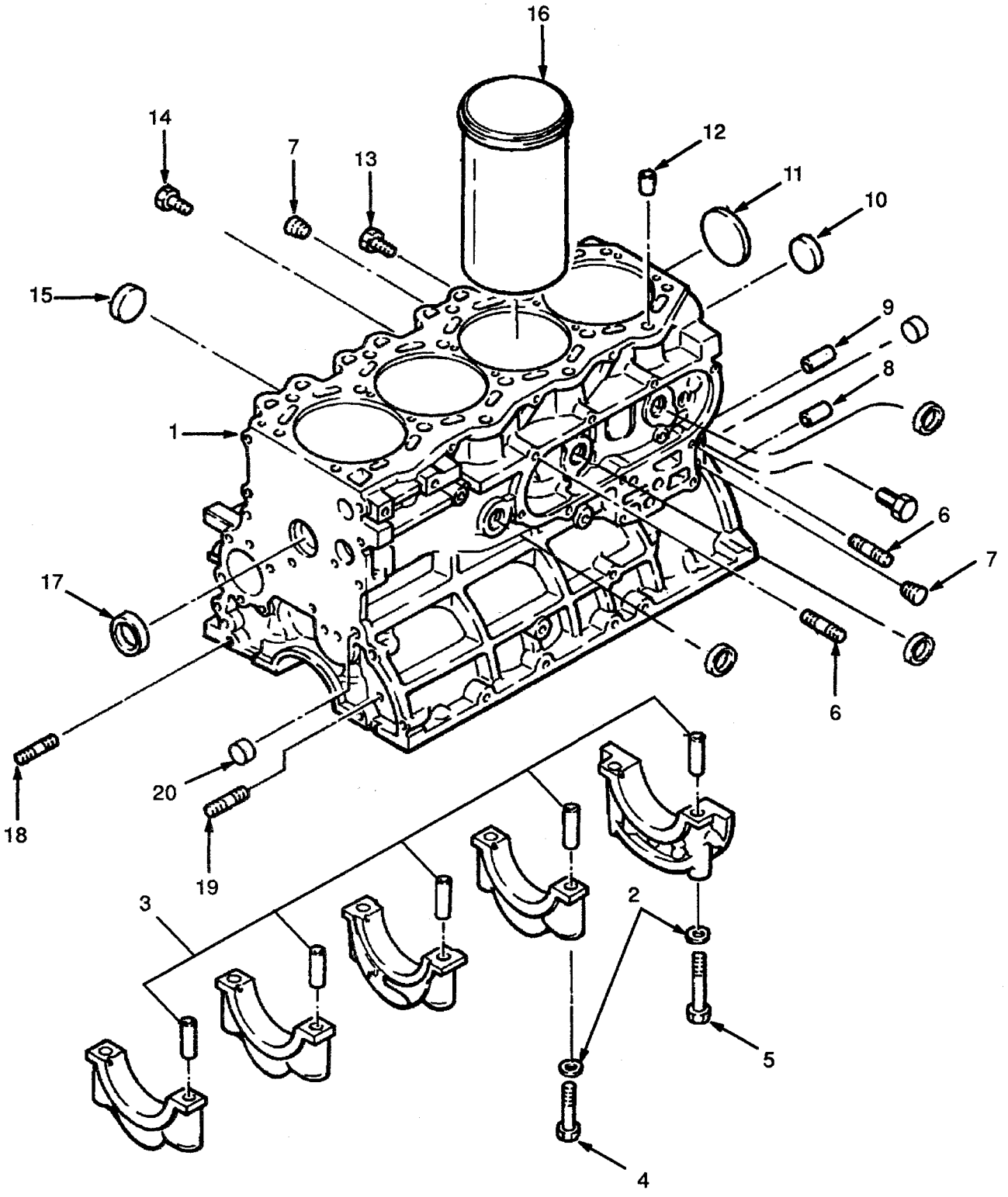

©1996 HYSTER COMPANY

CYLINDER BLOCK

DIESEL

2,0L

REF		PART NO.	NAME OF PART	QTY
		2022649	Engine	1
1	a	1369852	Cylinder Block	1
2		1366867	Washer	10
3		1369853	Pin	10
4		1369854	Bolt	8
5		1369855	Bolt	2
6		1369856	Stud	9
7		1366862	Plug	3
8		1369857	Pin	1
9		1369858	Pin	2
10		1362009	Plug	8
11		1369859	Plug	1
12		1366919	Pin	2
13		1369860	Plug	1
14		1369861	Plug	1
15		1362005	Plug	3
16		1369862	Cylinder Liner	4
17		1362003	Plug	1
18		1369863	Stud	1
19		1369864	Stud	1
20		1361675	Plug	1

[a] Included In Short Block 2022652

©1996 HYSTER COMPANY

TIMING GEAR COVER AND OIL SUMP

DIESEL

2,5L

(Figure 25)

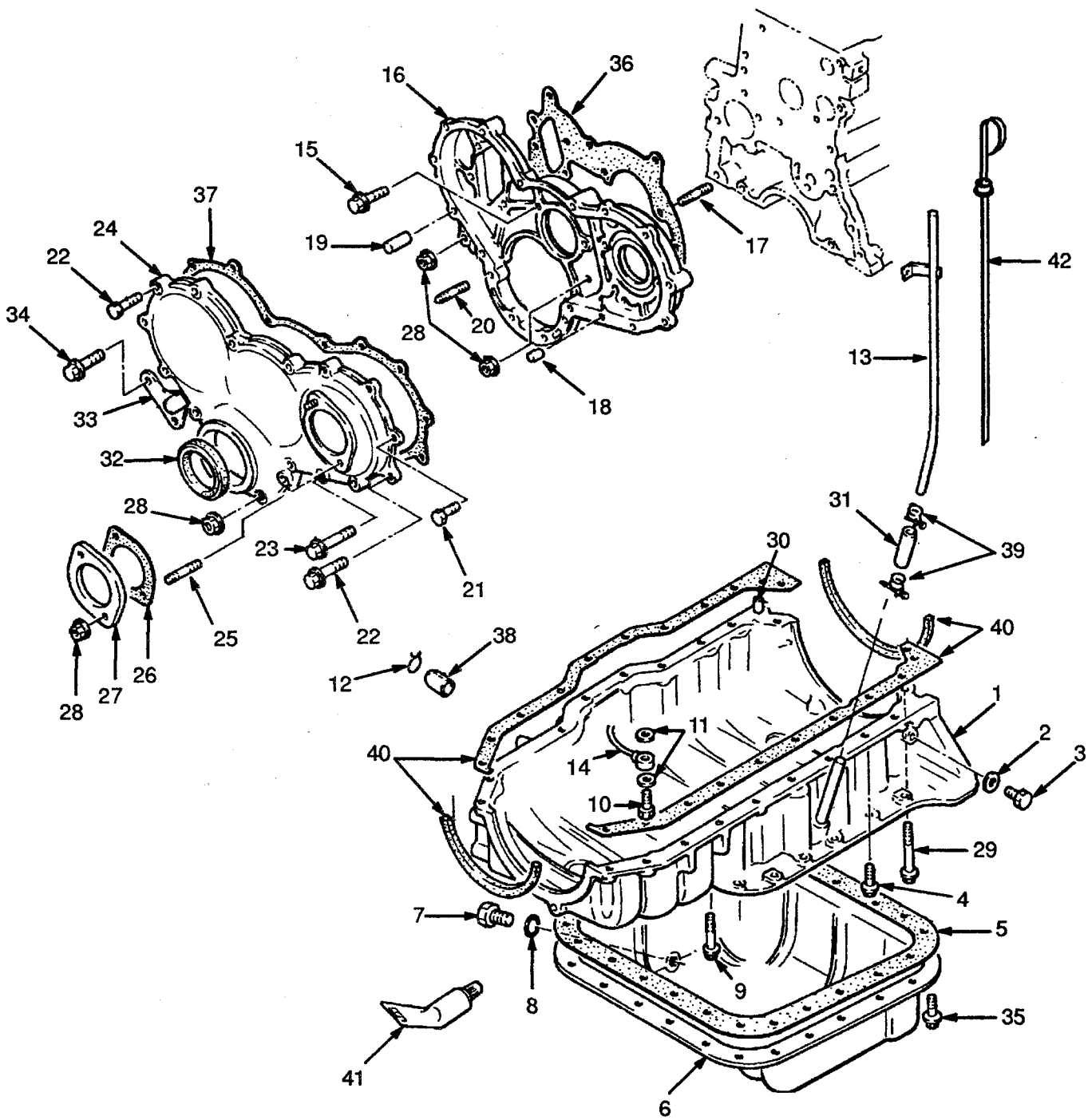

©1996 HYSTER COMPANY

TIMING GEAR COVER AND OIL SUMP

DIESEL

2,5L

REF		PART NO.	NAME OF PART	QTY
		2022649	Engine	1
1		1366900	Block (Upper)	1
2		1368743	Packing	1
3		1366902	Bolt	1
4		324707	Bolt	14
5		1369932	Joint	1
6		1366904	Oil Sump	1
7		1361681	Drain Plug	1
8		1362015	Joint	1
9		1366883	Bolt	6
10	a	1366905	Valve (Oil Jet)	4
11	a	1366906	Joint	8
12		324709	Clip	1
13		1366908	Pipe (Dipstick)	1
14	a	1366909	Oil Jet	4
15		324706	Bolt	6
16		1366911	Case	1
17		1366912	Stud	2
18		1366913	Pin	1
19		1366914	Pin	1
20		1361897	Stud	4
21		1366915	Bolt	2
22		1366916	Bolt	5
23		1366917	Bolt	6
24		1366921	Cover	1
25		1366922	Stud	2
26		1366923	Joint	1
27		1366924	Cover	1
28		326504	Nut	8
29		1369933	Bolt	2
30		1366919	Pin	1
31		1366920	Holder	1
32		1366925	Oil Seal	1
33		1366926	Plate	1
34		1366927	Bolt	2
35		324721	Bolt	20
36	a	2022479	Joint	1
37	a	2022480	Joint	1
38		1366931	Cap	1
39		1366933	Clamp	2
40		2022478	Joint	1
41		1370737	Silicone	1
42		1369865	Dipstick	1

a Included In Short Block 2022652

©1996 HYSTER COMPANY

CRANKSHAFT AND PISTON

DIESEL

2,5L

(Figure 26)

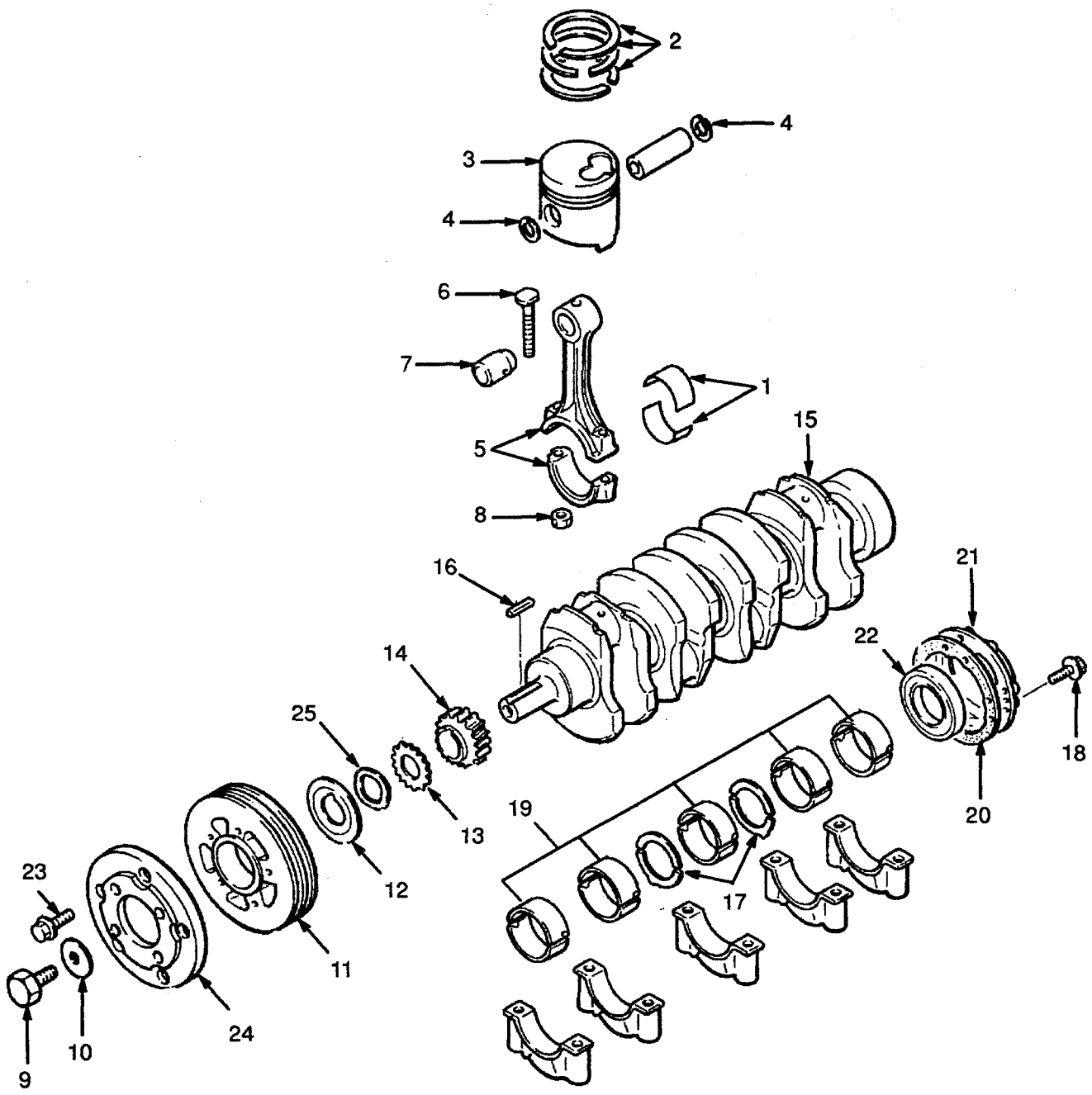

©1996 HYSTER COMPANY

CRANKSHAFT AND PISTON

DIESEL

2,5L

REF		PART NO.	NAME OF PART	QTY
		2022649	Engine	1
1	a	1366934	Bearing (Standard)	1
1		1366935	Bearing (0,762 mm)	1
1		1366936	Bearing (0,508 mm)	1
1		1366937	Bearing (0,254 mm)	1
2	a	1366938	Piston Ring Set	1
3	a	1366939	Piston	4
4		1366940	Retaining Ring	2
5	a	1366941	Connecting Rod	4
6		1366942	Bolt	8
7		1366943	Bush	4
8		1366944	Nut	4
9		1366945	Bolt	1
10		1366946	Washer	1
11		1366947	Pulley	1
12		1366948	Plate	1
13		1366950	Friction Gear	1
14		1366951	Gear	
15	a	1366952	Crankshaft	
16		1366953	Key	
17	a	1366954	Kit-Washer (Standard)	
17		1366955	Kit-Washer	
18	a	1366916	Bolt	
19	a	245244	Bearing (Standard)	
19		1366957	Bearing (0,762 mm)	
19		1366958	Bearing (0,508 mm)	
19		1366959	Bearing (0,254 mm)	
20	a	1366960	Joint	
21	a	1366962	Cap	
22		1366961	Oil Seal	
23		1366963	Bolt	
24		1366964	Drive Plate	
25		1369977	Spring	

a Included In Short Block 2022652

©1996 HYSTER COMPANY

CAMSHAFT AND VALVES

DIESEL

2,5L

(Figure 27)

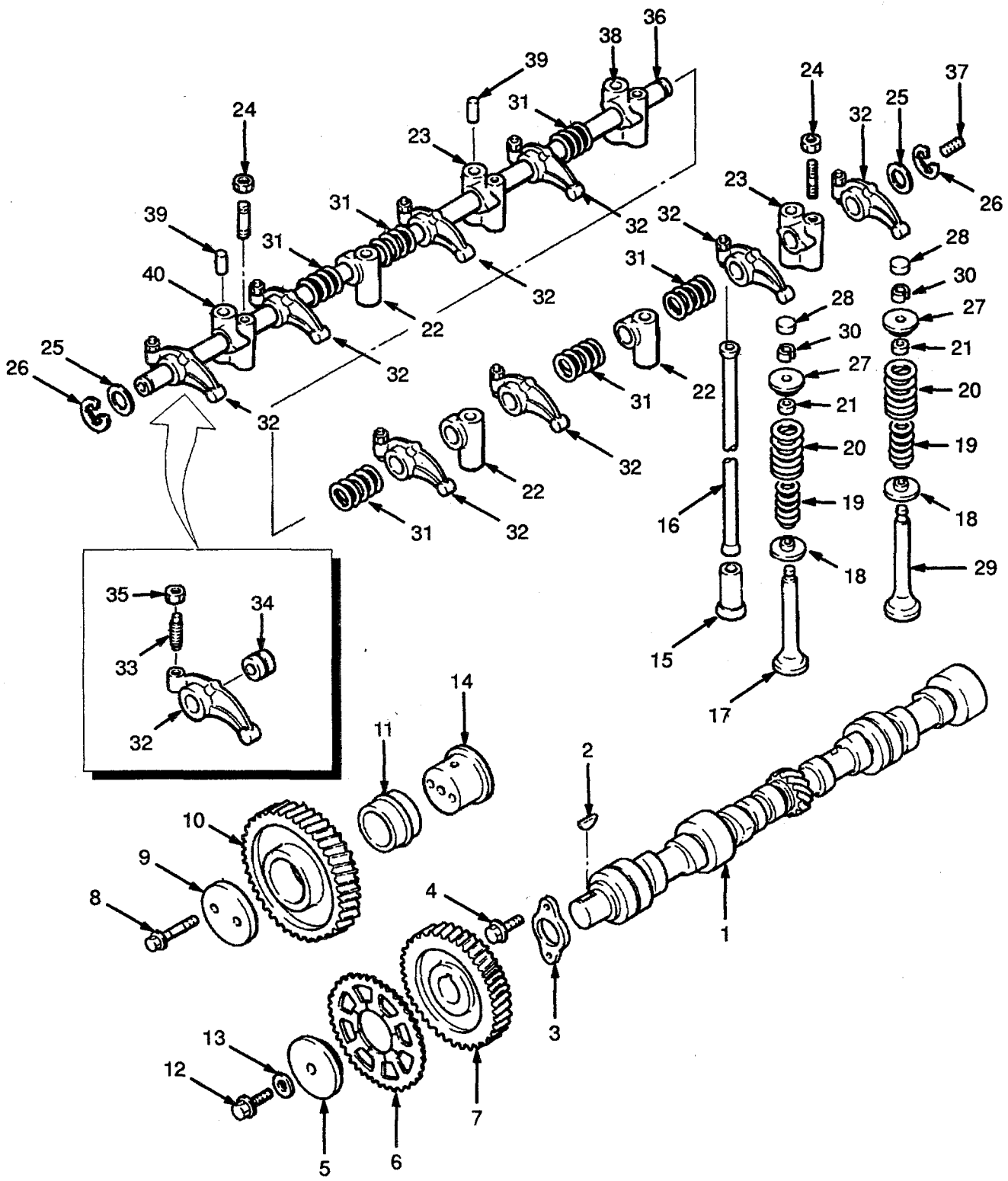

CAMSHAFT AND VALVES

DIESEL

2,5L

REF	PART NO.	NAME OF PART	QTY
	2022649	Engine	1
1	1366965	Camshaft	1
2	1366966	Key	1
3	1366967	Thrust Plate	1
4	1366874	Bolt	2
5	1366970	Locking Plate	1
6	1366971	Friction Gear	1
7	1366972	Gear	1
8	1366883	Bolt	2
9	1366973	Thrust Plate	1
10	1366974	Idler Gear	1
11	1366975	Bush (Idler Gear)	1
12	1366976	Bolt	1
13	1366977	Washer	1
14	1366978	Spindle	1
15	1366979	Tappet	8
16	1366980	Push Rod	8
17	1366981	Exhaust Valve	4
18	1366982	Valve Seat	8
19	1366983	Spring	8
20	1366984	Spring	8
21	1366985	Valve Seat	8
22	1366992	Bracket	3
23	1366993	Bracket	2
24	1366994	Nut	2
25	1366995	Washer	2
26	1366996	Retaining Ring	2
27	1366986	Valve Seat	4
28	1366987	Cap	8
29	1366988	Intake Valve	4
30	1366989	Keeper	16
31	1366990	Spring	6
32	1366991	Rocker Arm	8
33	1368727	Screw	8
34	1368728	Bush	8
35	2021077	Nut	8
36	1366997	Shaft	1
37	1366998	Plug	2
38	1366999	Bracket	1
39	1368725	Pin	4
40	1368726	Bracket	1

©1996 HYSTER COMPANY

INTAKE AND EXHAUST MANIFOLD

DIESEL

2,5L

(Figure 28)

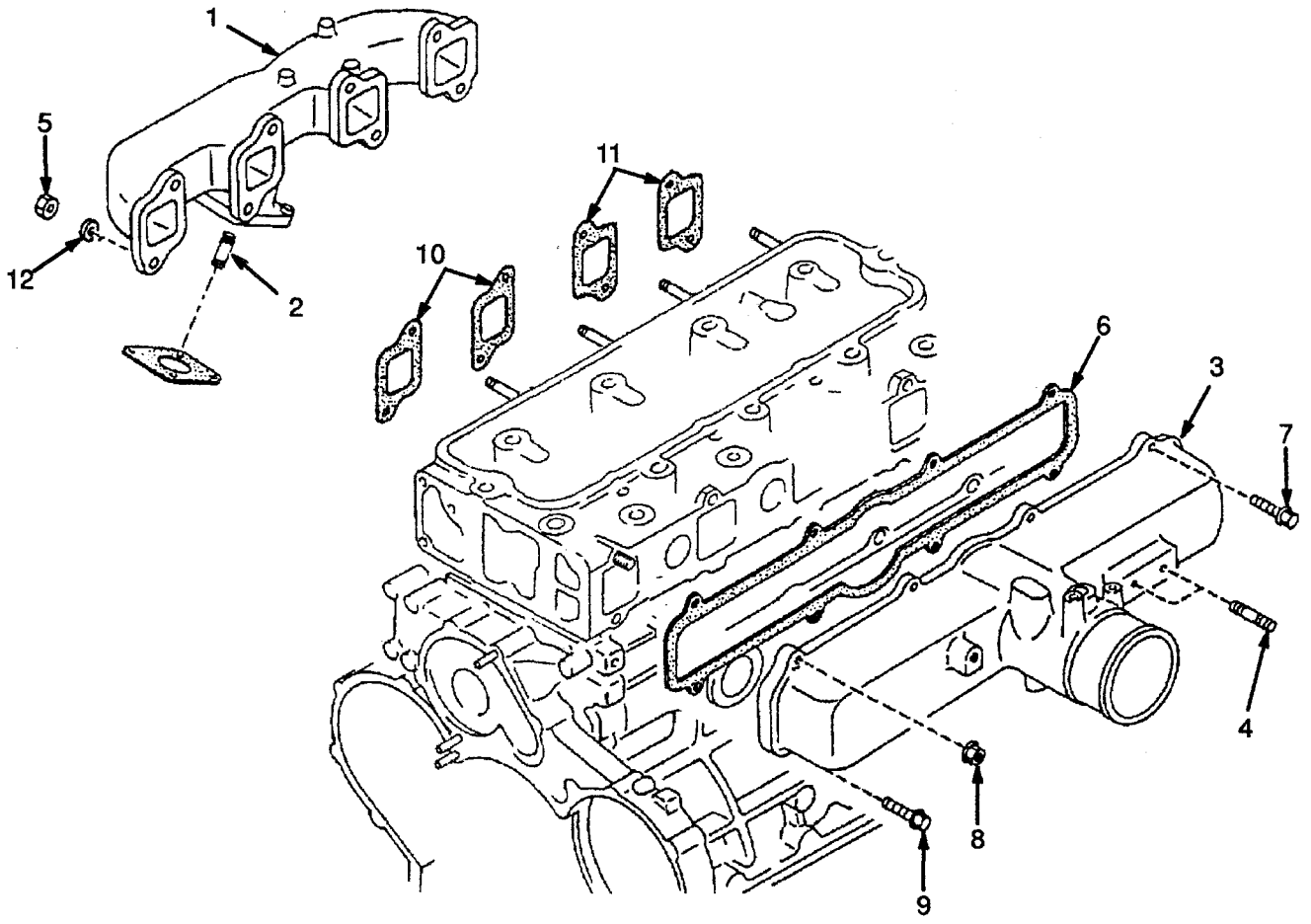

©1996 HYSTER COMPANY

INTAKE AND EXHAUST MANIFOLD

DIESEL

2,5L

REF	PART NO.	NAME OF PART	QTY
1	1368729	Exhaust Manifold	1
2	1368730	Stud	4
3	1368732	Inlet Manifold	1
4	1368733	Stud	2
5	2020755	Nut	8
6	1368734	Joint	1
7	324707	Bolt	2
8	326504	Nut	5
9	324706	Bolt	4
10	2022483	Joint	2
11	2022484	Joint	2
12	1368737	Washer	8

©1996 HYSTER COMPANY

OIL PUMP AND FILTER

DIESEL

2,5L

(Figure 29)

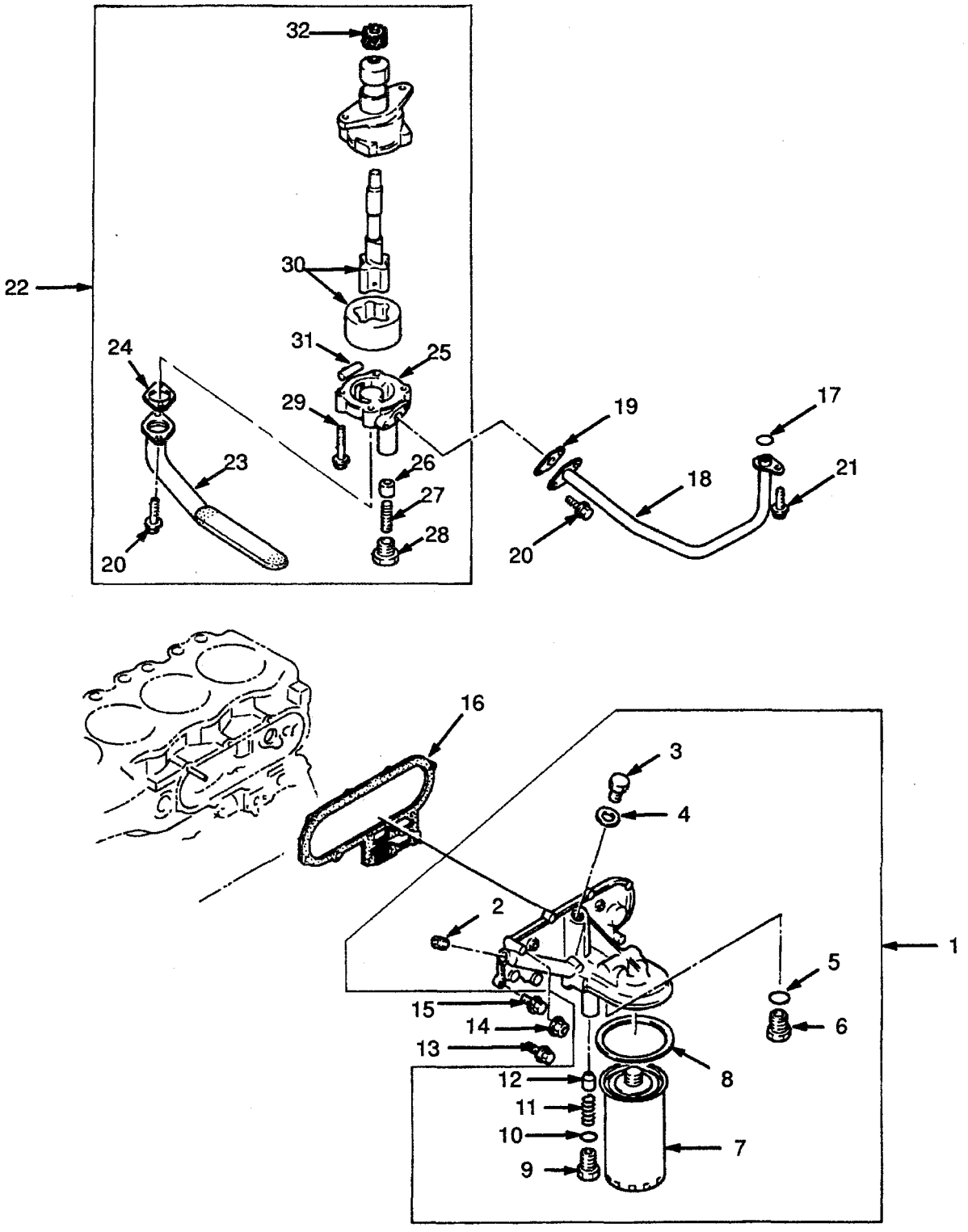

©1996 HYSTER COMPANY

OIL PUMP AND FILTER

DIESEL

2,5L

REF	PART NO.	NAME OF PART	QTY
1	1368789	Oil Filter	1
2	1368790	Plug	1
3	1368791	Plug	1
4	1368792	Packing	1
5	1368793	O-Ring	1
6	1368794	Plug	1
7	1368795	Cartridge	1
8	1368796	Joint	1
9	1368797	Plug	1
10	1368798	O-Ring	1
11	1368799	Valve Spring	1
12	1368800	Plunger	1
13	324707	Bolt	7
14	326504	Nut	3
15	1366876	Bolt	3
16	1368801	Joint	1
17	1368802	O-Ring	1
18	1368803	Pipe	1
19	2022482	Joint	1
20	1368805	Bolt	4
21	324706	Bolt	1
22	1368807	Oil Pump	1
23	1368808	Strainer	1
24	2022481	Joint	1
25	1368810	Cover	1
26	1368800	Plunger	1
27	1368811	Spring	1
28	1368812	Plug	1
29	1368813	Bolt	4
30	1368814	Shaft	1
31	1368815	Pin	2
32	1368816	Gear	1

©1996 HYSTER COMPANY

COOLING SYSTEM

DIESEL

2,5L

(Figure 30)

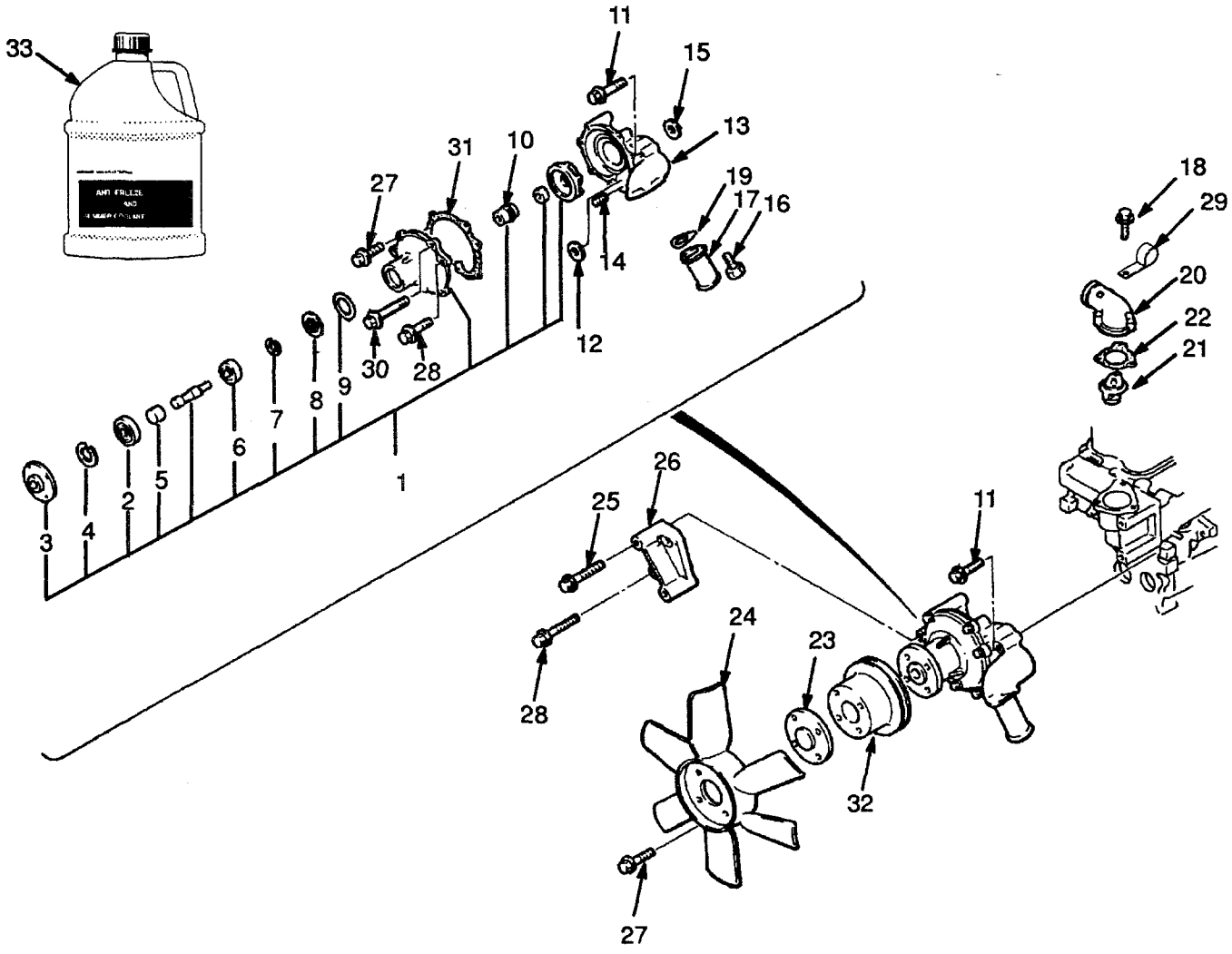

COOLING SYSTEM

DIESEL

2,5L

REF	PART NO.	NAME OF PART	QTY
1	1368817	Body	1
2	1368818	Bearing	1
3	1368819	Pulley	1
4	1368820	Retainer Ring	1
5	1368821	Spacer	1
6	1368822	Bearing	1
7	1368823	Retaining Ring	1
8	1368824	Plate	1
9	1368826	Plate	1
10	1368827	Seal	1
11	1366917	Bolt	2
12	1368829	Joint	1
13	1368830	Body	1
14	1366913	Pin	2
15	1368831	Joint	1
16	1366874	Bolt	3
17	1368833	Pipe	1
18	1366916	Bolt	3
19	1368734	Joint	1
20	1368834	Cover	1
21	1368835	Thermostat	1
22	2022486	Joint	1
23	1370719	Spacer	1
24	1361817	Fan	1
25	1366876	Bolt	2
26	1368838	Spacer	1
27	324706	Bolt	4
28	324707	Bolt	1
29	1368840	Clamp	1
30	1368825	Bolt	6
31	1368828	Joint	1
32	2021165	Pulley (Standard)	1
32	2022511	Pulley (Tube and Fin Radiator)	1
33	3043618	Coolant (5L)	AR
33	3043619	Antifreeze (5L)	AR
33	3061225	Coolant (25L)	AR
33	3061325	Antifreeze (25L)	AR

©1996 HYSTER COMPANY

RADIATOR AND HOSES

DIESEL

2,5L

(Figure 31)

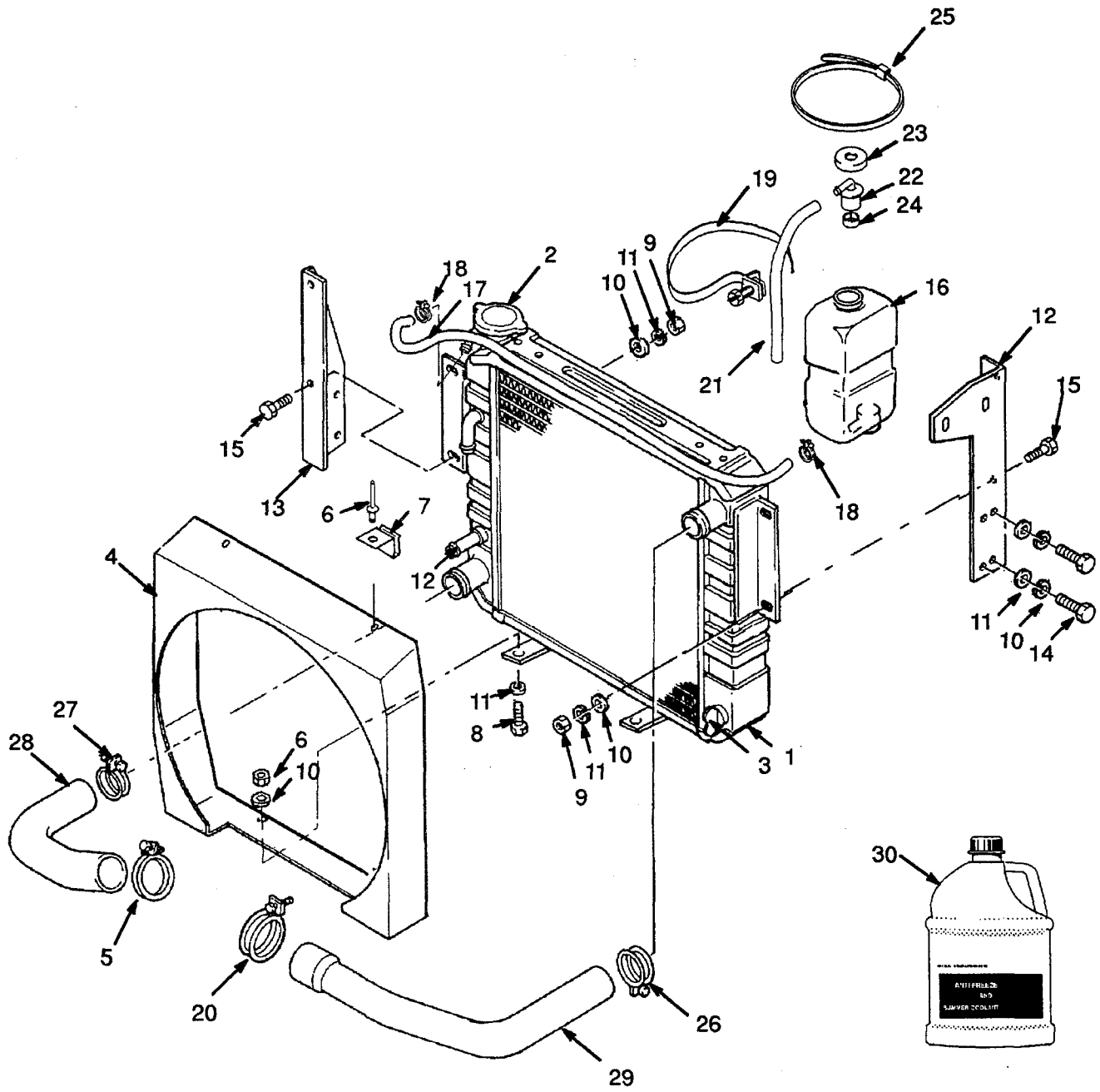

RADIATOR AND HOSES

DIESEL

2,5L

REF	PART NO.	NAME OF PART	QTY
1	2021741	Radiator (Standard)	1
1	2022513	Radiator (Tube and Fin Radiator)	1
2	2022397	Cap	1
3	1367113	Drain Cock	1
4	2021747	Fan Shroud	1
5	2022558	Clamp	1
6	222021	Rivet	2
7	2021752	Clip	2
8	136749	Hex Head Bolt	2
9	239503	Nut	6
10	320157	Washer	10
11	292681	Washer	10
12	2021753	Bracket	1
13	2021754	Bracket	1
14	2021233	Screw	4
15	136681	Hex Head Bolt	4
16	1347026	Reservoir	1

REF	PART NO.	NAME OF PART	QTY
17	2022519	Tube	1
18	168718	Clamp	2
19	1345825	Strap	1
20	2022726	Clamp	1
20	2022725	Hose Clamp (Optional)	1
21	336573	Hose	1
22	345453	Outlet	-
23	345454	Cap	-
24	336550	Bush	-
25	397676	Clamp	1
26	127045	Clamp	1
27	119236	Clamp	-
28	2021763	Radiator Hose (Lower)	-
29	2021766	Radiator Hose (Upper)	-
30	3043618	Coolant (5L)	AR
30	3043619	Antifreeze (5L)	AR
30	3061225	Coolant (25L)	AR
30	3061325	Antifreeze (25L)	AR

©1996 HYSTER COMPANY

ENGINE ELECTRICAL SYSTEM

DIESEL

2,5L

(Figure 32)

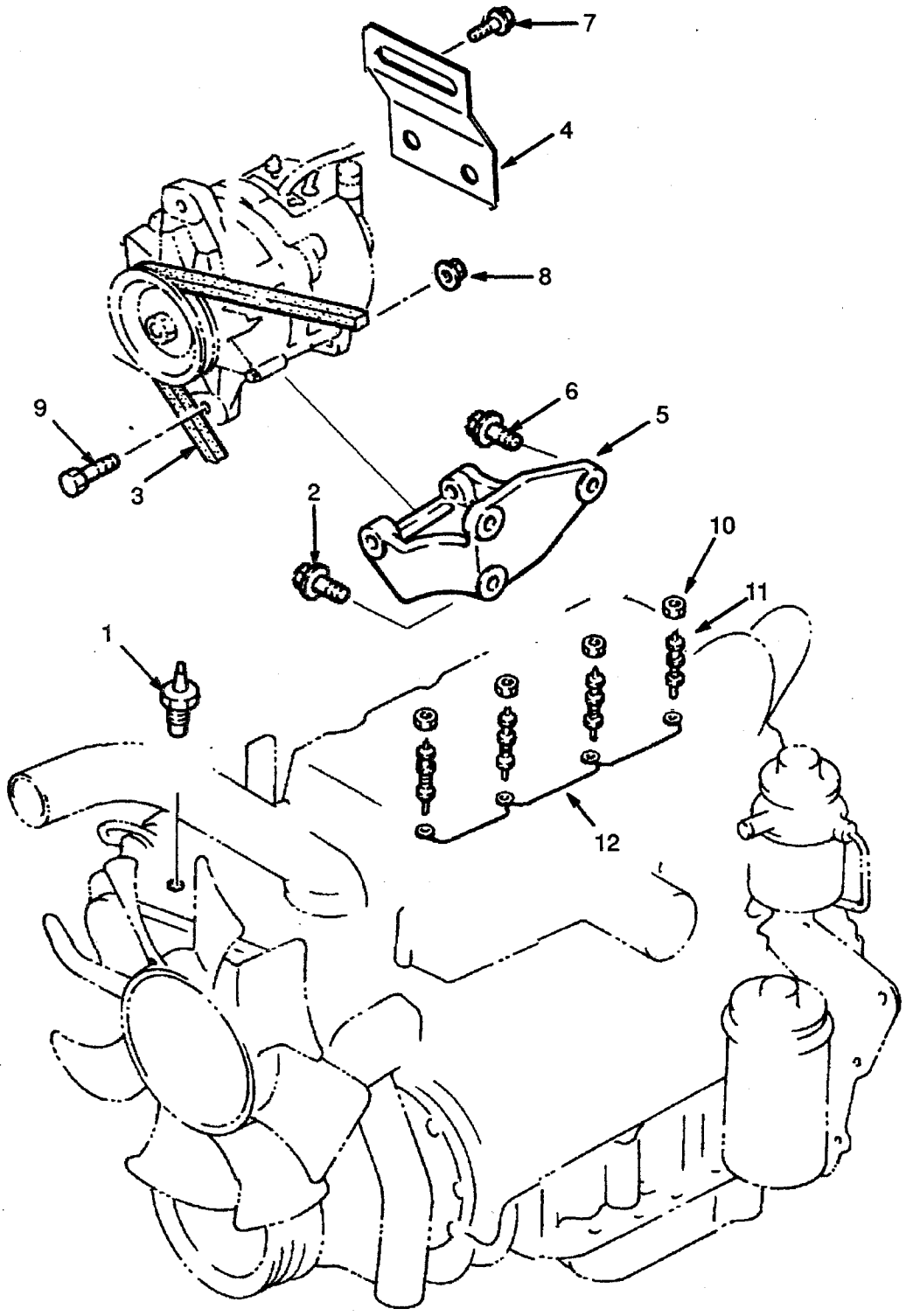

©1996 HYSTER COMPANY

ENGINE ELECTRICAL SYSTEM

DIESEL

2,5L

REF		PART NO.	NAME OF PART	QTY
1		2021354	Muffler	1
2	a	2022560	Flange	1
3		320159	Washer	4
4		2021836	Nut	4
5		2021377	Tail Pipe	1
6		63117	Clamp (Exhaust)	1
7	a	2022561	Exhaust Pipe	1
7		2021366	Exhaust Pipe	1
8		1351177	Spacer	4
9		1351176	Washer	2
10		292517	Hex Head Bolt	2
11		2021359	Nut	2
12		15177	Washer	2
13		2021370	Clamp	1
14		2022496	Joint	1
15		3061350	Anti-Seize	AR
16	a	2022562	Catalytic Converter	1
17	a	63117	Clamp	2

a with Catalytic Converter

©1996 HYSTER COMPANY

ENGINE MOUNT

DIESEL

2,5L

(Figure 33)

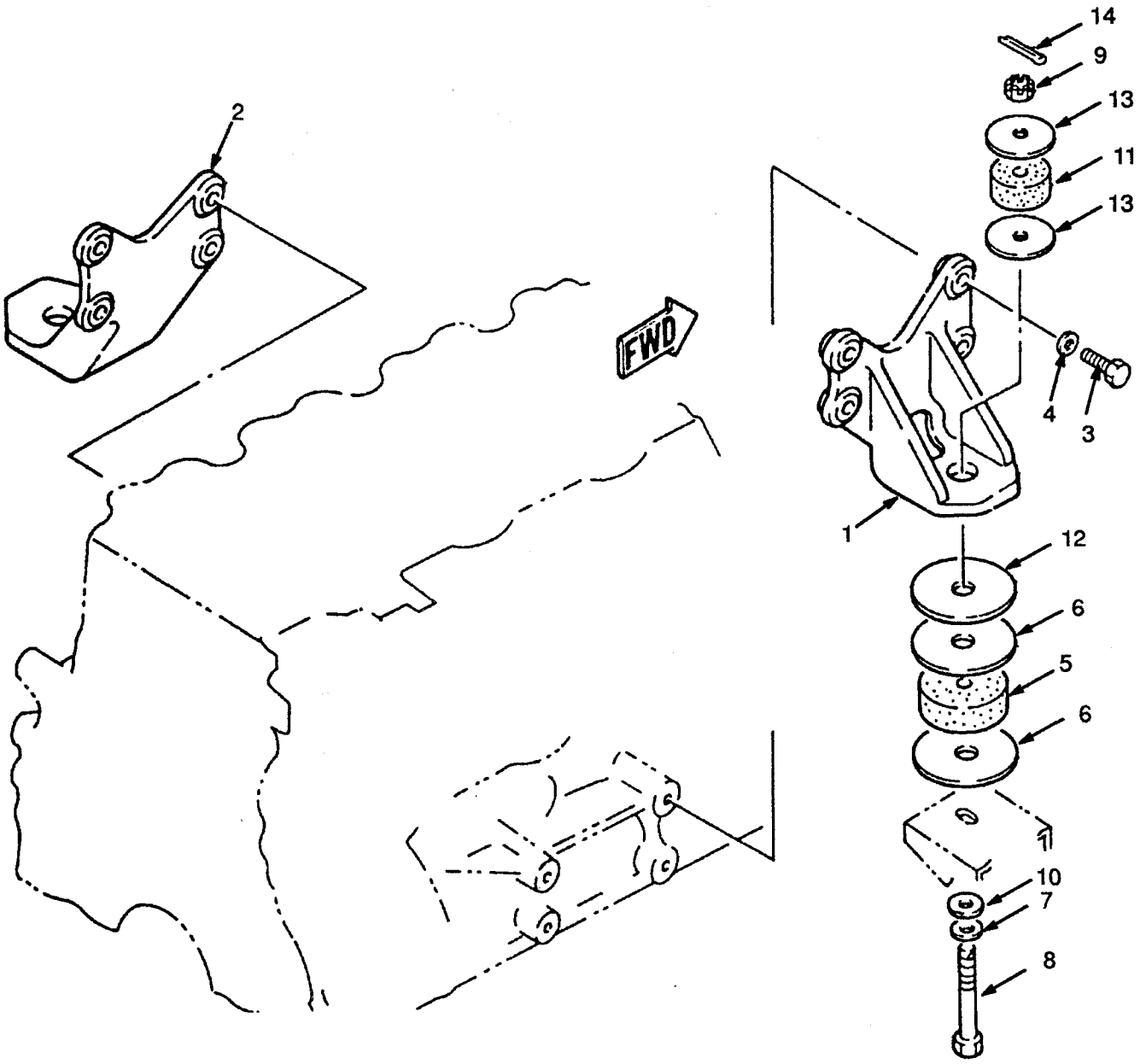

©1996 HYSTER COMPANY

EXHAUST
DIESEL
2,5L

REF		PART NO.	NAME OF PART	QTY
1		2021354	Muffler	1
2	a	2022560	Flange	1
3		320159	Washer	4
4		2021836	Nut	4
5		2021377	Tail Pipe	1
6		63117	Exhaust Clamp	1
7	a	2022561	Exhaust Pipe	1
7		2021366	Exhaust Pipe	1
8		1351177	Spacer	4
9		1351176	Washer	2
10		292517	Hex Head Bolt	2
11		2021359	Locknut	2
12		15177	Washer	2
13		2021370	Exhaust Clamp	1
14		2022496	Joint	1
15		3061350	Anti-Seize	AR
16	a	2022562	Catalytic Converter	1
17	a	63117	Clamp	2

a with Catalytic Converter

©1996 HYSTER COMPANY

EXHAUST

PETROL AND LPG

2,0L

(Figure 35)

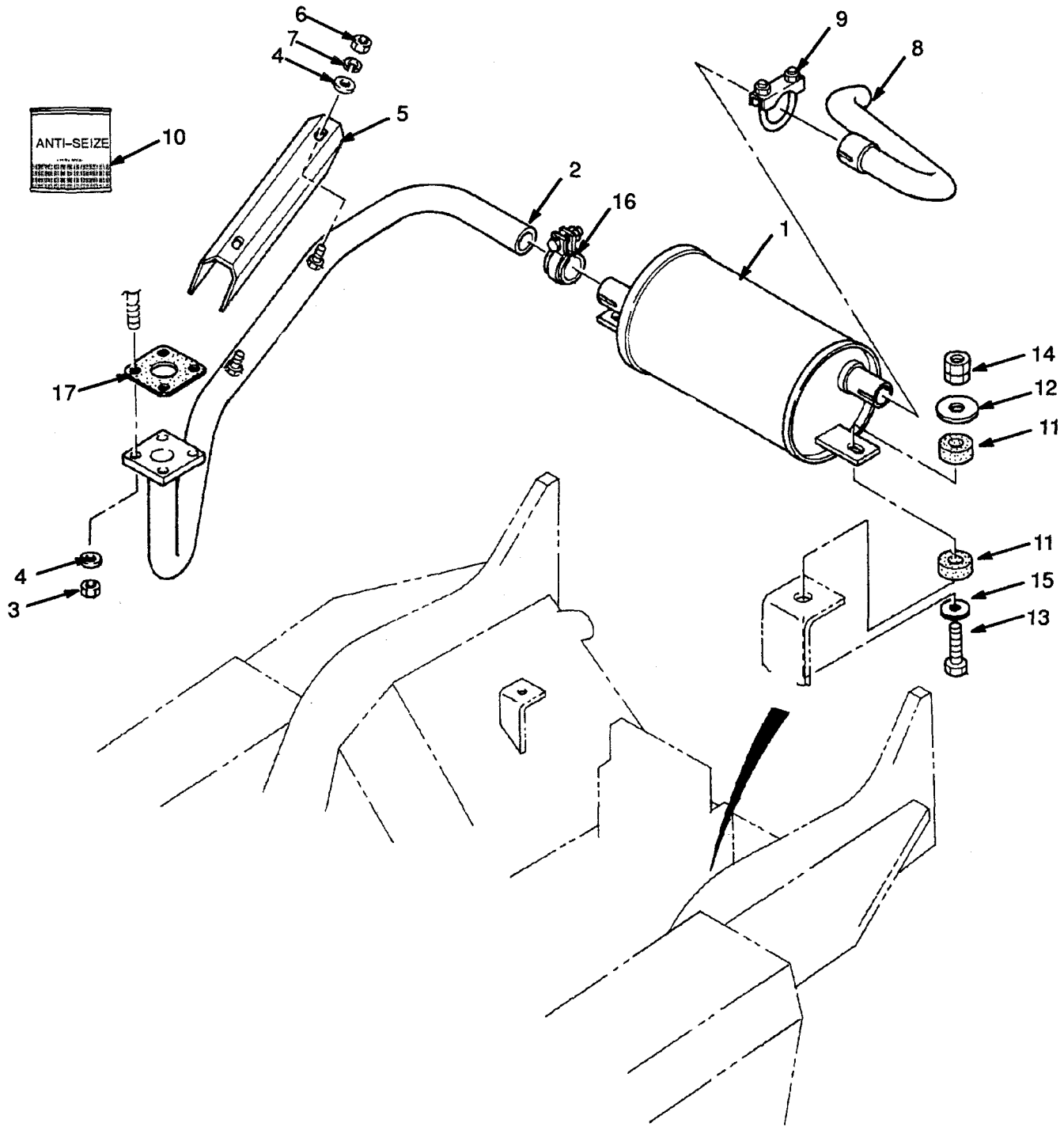

©1996 HYSTER COMPANY

EXHAUST
PETROL AND LPG
2,0L

REF		PART NO.	NAME OF PART	QTY
1		2021354	Muffler	1
1	a	2022315	2-Way Catalytic Converter	1
1	b	2023445	2-Way Catalytic Converter	1
2		2021363	Exhaust Pipe	1
3		2020755	Nut	4
4		320157	Washer	6
5		2021373	Cover	1
6		239503	Nut	2
7		292681	Washer	2
8		2021374	Tail Pipe	1
9		63117	Exhaust Clamp	1
10		3061350	Anti-Seize	AR
11		1351177	Spacer	4
12		1351176	Washer	2
13		292517	Hex Head Bolt	2
14		2021359	Locknut	2
15		15177	Washer	2
16		2021370	Exhaust Clamp	1
17		1338308	Joint	1

a Last Used on S/N D001B-3354
b First Used on S/N D001B-3355

©1996 HYSTER COMPANY

UPSWEPT EXHAUST

DIESEL

2,5L

(Figure 36)

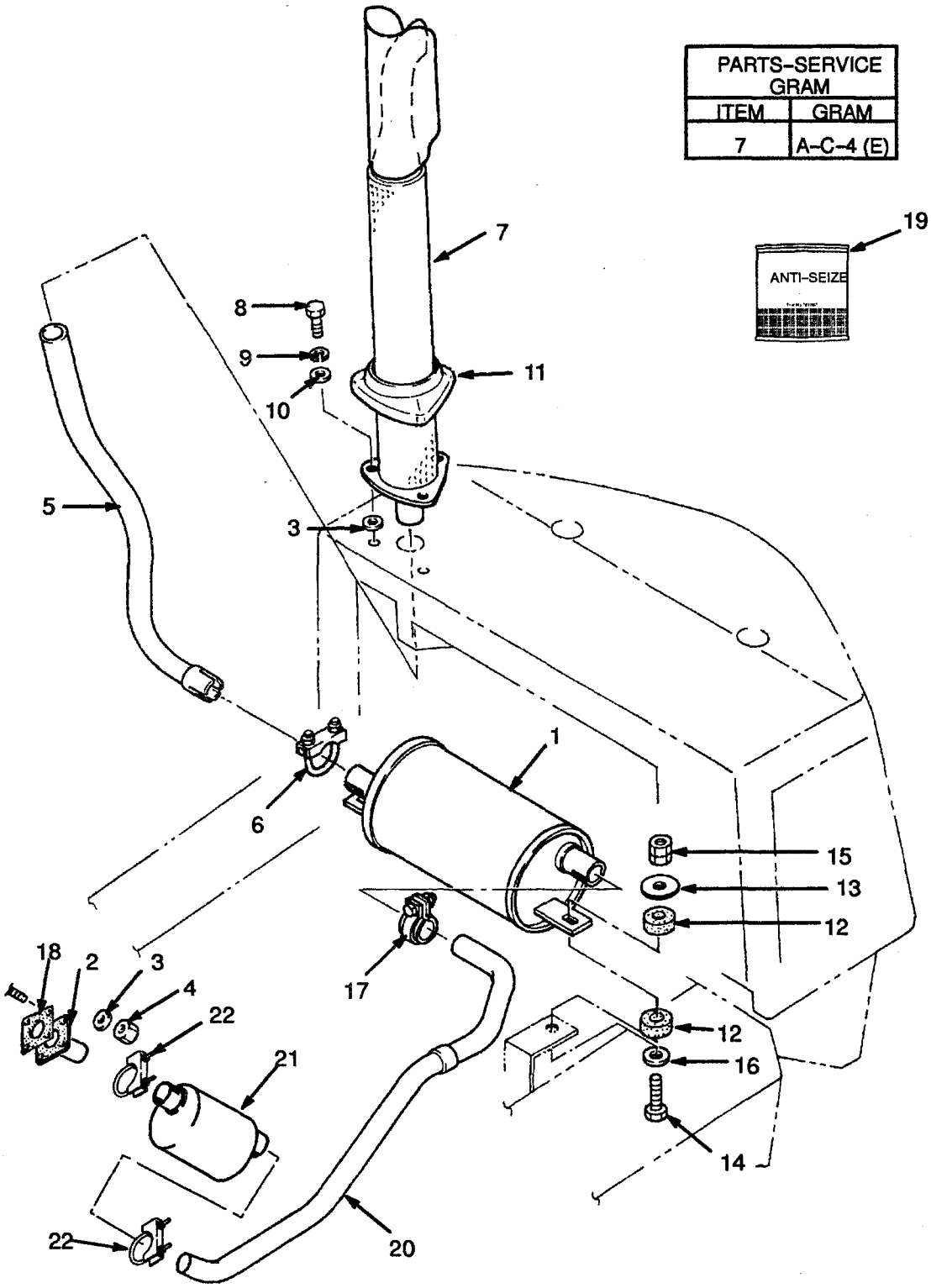

UPSWEPT EXHAUST
DIESEL
2,5L

REF		PART NO.	NAME OF PART	QTY
1		2021354	Muffler	1
2	a	202560	Flange	1
3		320159	Washer	1
4		2021836	Nut	4
5		2021382	Tail Pipe	1
6		63117	Exhaust Clamp	1
7		2021387	Tail Pipe	1
8		136985	Hex Head Bolt	3
9		292682	Washer	3
10		15176	Washer	1
11		2021394	Cover	1
12		1351177	Spacer	4
13		1351176	Washer	2
14		292517	Hex Head Bolt	3
15		2021359	Nut	2
16		15177	Washer	2
17		2021370	Exhaust Clamp	1
18		2022496	Joint	1
19		3061350	Anti-Seize	AR
20		2021366	Exhaust Pipe	1
20	a	2022561	Exhaust Pipe	1
21	a	2022562	Catalytic Converter	1
22	a	63117	Clamp	2

a with Catalytic Converter

©1996 HYSTER COMPANY

UPSWEPT EXHAUST

PETROL AND LPG

2,0L

(Figure 37)

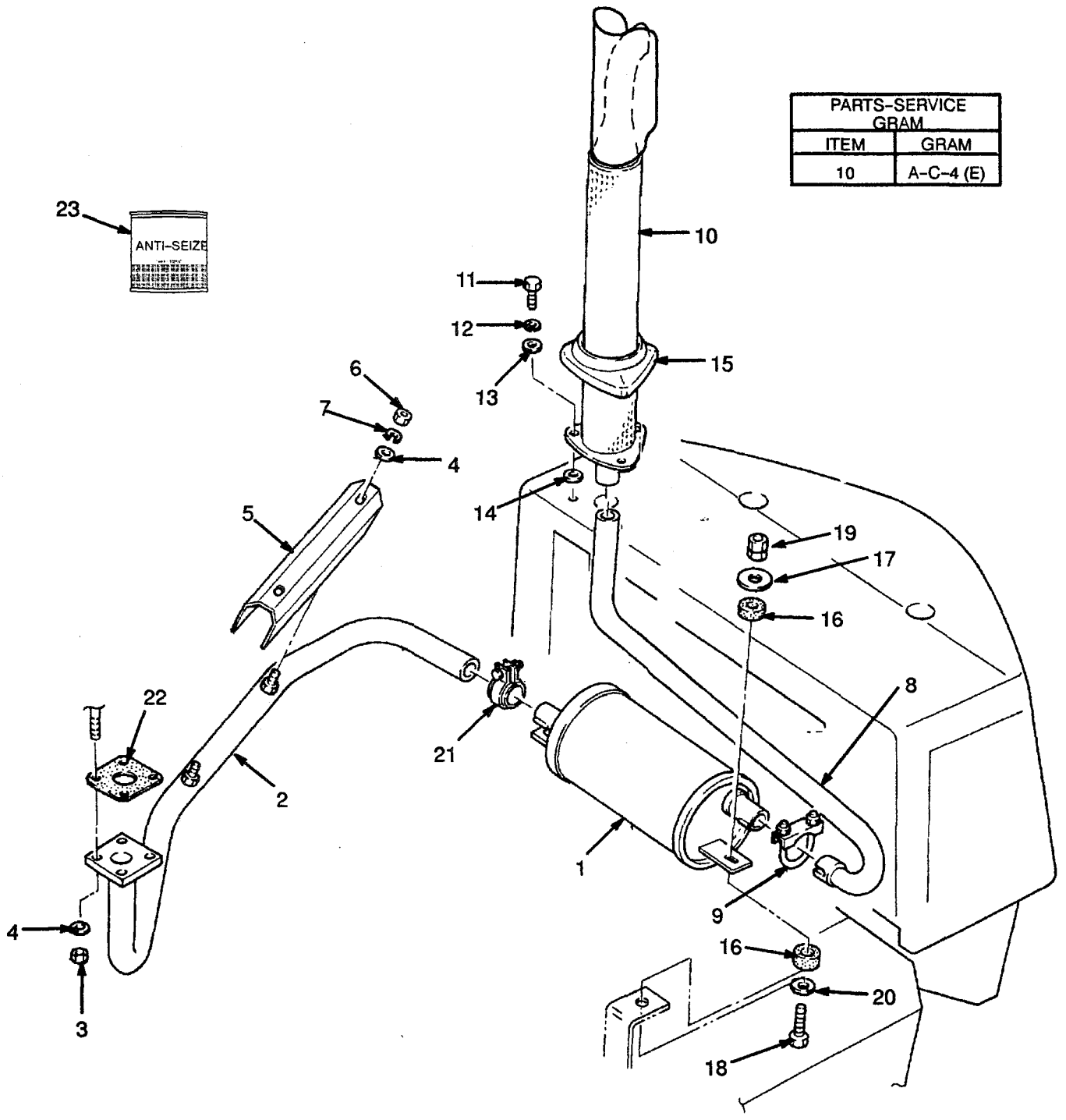

UPSWEPT EXHAUST
PETROL AND LPG
2,0L

REF		PART NO.	NAME OF PART	QTY
1	a	2022315	2-Way Catalytic Converter	1
1	b	2023445	2-Way Catalytic Converter	1
2		2021363	Exhaust Pipe	1
3		2020755	Nut	4
4		320157	Washer	6
5		2021373	Cover	1
6		239503	Nut	2
7		292681	Washer	2
8		2021379	Tail Pipe	1
9		63117	Exhaust Clamp	1
10	a	2021387	Tail Pipe	1
10	b	2023533	Tail Pipe	1
11		136985	Hex Head Bolt	3
12		292682	Washer	3
13		15176	Washer	1
14		320159	Washer	1
15		2021394	Cover	1
16		1351177	Spacer	4
17		1351176	Washer	2
18		292517	Hex Head Bolt	2
19		2021359	Locknut	2
20		15177	Washer	2
21		2021370	Exhaust Clamp	1
22		1338308	Joint	1
23		3061350	Anti-Seize	AR

a Last Used on S/N D001B-3354
b First Used on S/N D001B-3355

©1996 HYSTER COMPANY

NOTES

©1996 HYSTER COMPANY

FUEL

Air Filter
Diesel 2,5L ..... Page 98

Air Filter
Petrol and LPG ..... Page 96

Carburettor
LPG ..... Page 92

Carburettor
Petrol ..... Page 90

Filter and Lock-Off Valve
LPG ..... Page 106

Fuel Filter
Diesel 2,5L ..... Page 116

Fuel System ..... Page 112

Fuel Tank and Lines
Diesel 2,5L ..... Page 122

Fuel Tank and Lines
Petrol 2,0L ..... Page 120

Fuel
Petrol and LPG ..... Page 102

Governor
Petrol and LPG ..... Page 94

Injection Pump
Diesel 2,5L ..... Page 118

LPG Converter
Identify by Code Letter "J" ..... Page 108

LPG Converter
Identify by Code Letter "K" ..... Page 110

LPG Fuel System ..... Page 104

LPG Tank ..... Page 100

Monotrol Pedal ..... Page 82

Nozzle Holder
Diesel ..... Page 114

Throttle Assy ..... Page 80

Throttle Linkage
Diesel ..... Page 88

Throttle Linkage ..... Page 84

Throttle Linkage ..... Page 86

©1996 HYSTER COMPANY

THROTTLE ASSY

(Figure 38)

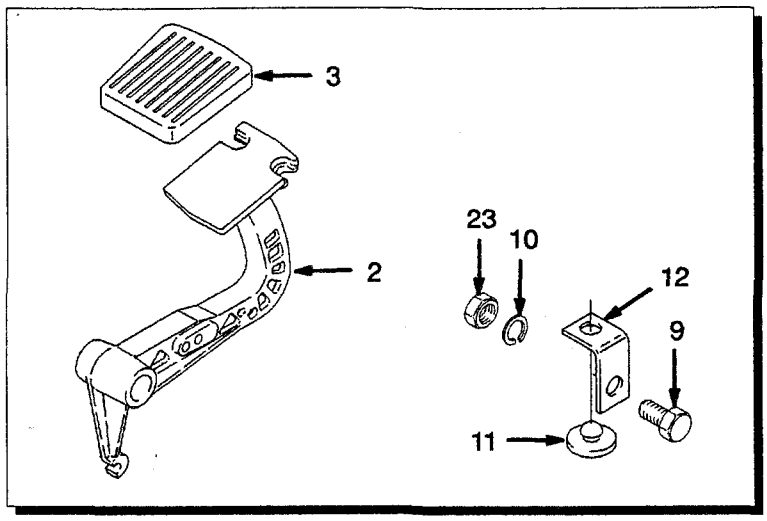

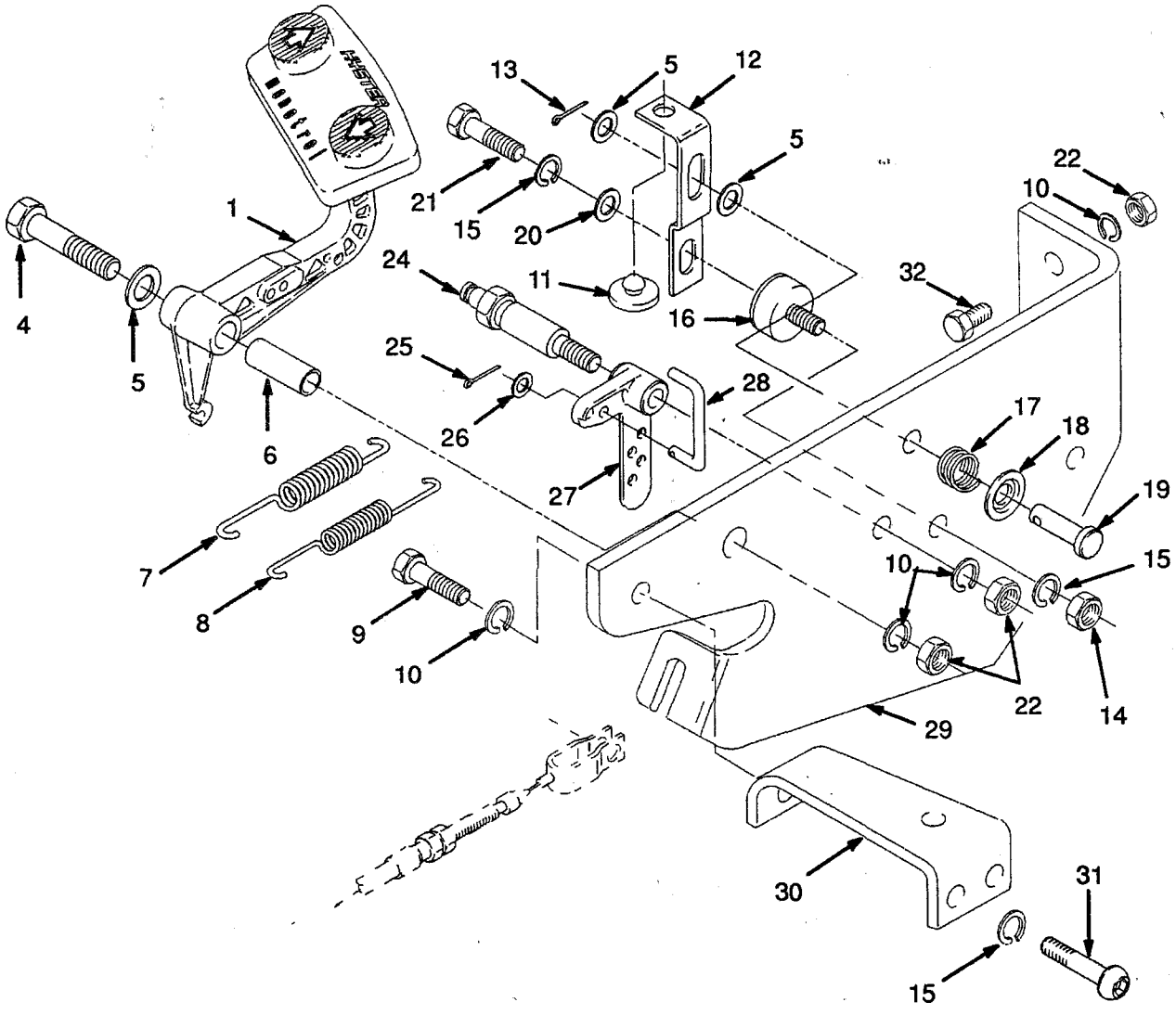

THROTTLE ASSY

KEY
A: Monotrol Pedal
B: Forward/Reverse Lever

REF	PART NO.	NAME OF PART	QTY A	QTY B
1	....	Monotrol Pedal	1	..
		☞ Figure 39		
2	352499	Accelerator Pedal	..	1
3	352885	Pad	..	1
4	292521	Hex Head Bolt	..	1
4	292523	Hex Head Bolt	1	..
5	320160	Washer	2	2
6	325708	Tube	..	1
6	353141	Tube	1	..
7	353143	Spring	1	1
8	353142	Spring	1	1
9	287854	Hex Head Bolt	1	2
10	292682	Lockwasher	4	4
11	353195	Bumper	1	1
12	352950	Bracket	1	..
12	353159	Bracket	..	1
13	15212	Split Pin	1	..
14	239503	Nut	1	..
15	292681	Lockwasher	2	..
16	353453	Mount	1	..
17	353172	Spring	1	..
18	353230	Cap	1	..
19	142	Pin	1	..
20	320158	Washer	1	..
21	287851	Hex Head Bolt	1	..
22	136692	Nut	2	2
23	296128	Nut	..	1
24	352485	Shaft	1	1
25	15200	Split Pin	1	1
26	320156	Washer	1	1
27	353164	Crank	1	1
28	353129	Rod	1	1
29	2021421	Bracket	1	1
30	2021426	Support	1	1
31	296166	Hex Head Bolt	2	2
32	292514	Hex Head Bolt	2	2

©1996 HYSTER COMPANY

MONOTROL PEDAL

(Figure 39)

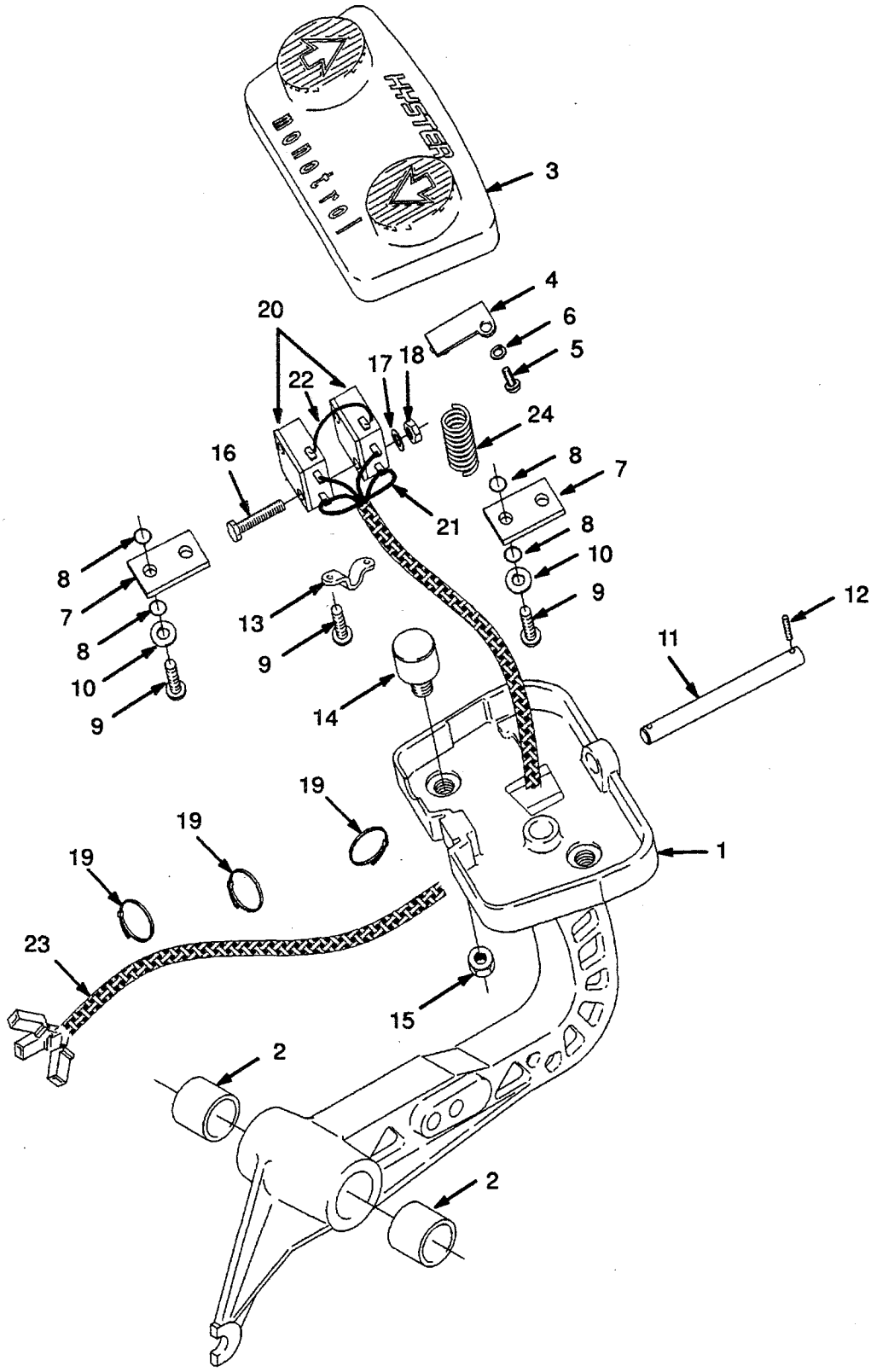

MONOTROL PEDAL

REF	PART NO.	NAME OF PART	QTY
	353398	Monotrol Pedal	1
1	353397	Pedal	1
2	135685	Bush	2
3	353175	Pad	1
3	....	Pad	1
4	353231	Plate	1
4	152990	Adhesive	AR
5	186493	Screw	1
6	15152	Washer	1
7	359207	Plate	2
8	57568	O-Ring	8
9	352969	Screw	6
10	353448	Washer	4
11	353154	Pin	1
12	220932	Screw	2
12	360387	Adhesive	AR
13	353165	Retainer	1
14	353441	Magnet	2
14	353422	Magnet	1
15	353432	Nut	1
16	220434	Screw	2
17	53162	Washer	2
18	16865	Nut	2
19	114312	Strap Clamp	3
20	1352090	Switch Assy	1
20	353128	Switch	2
21	....	Wire	1
22	....	Wire	1
23	1352089	Wire Harness	1
24	353168	Spring	1

©1996 HYSTER COMPANY

THROTTLE LINKAGE

(Figure 40)

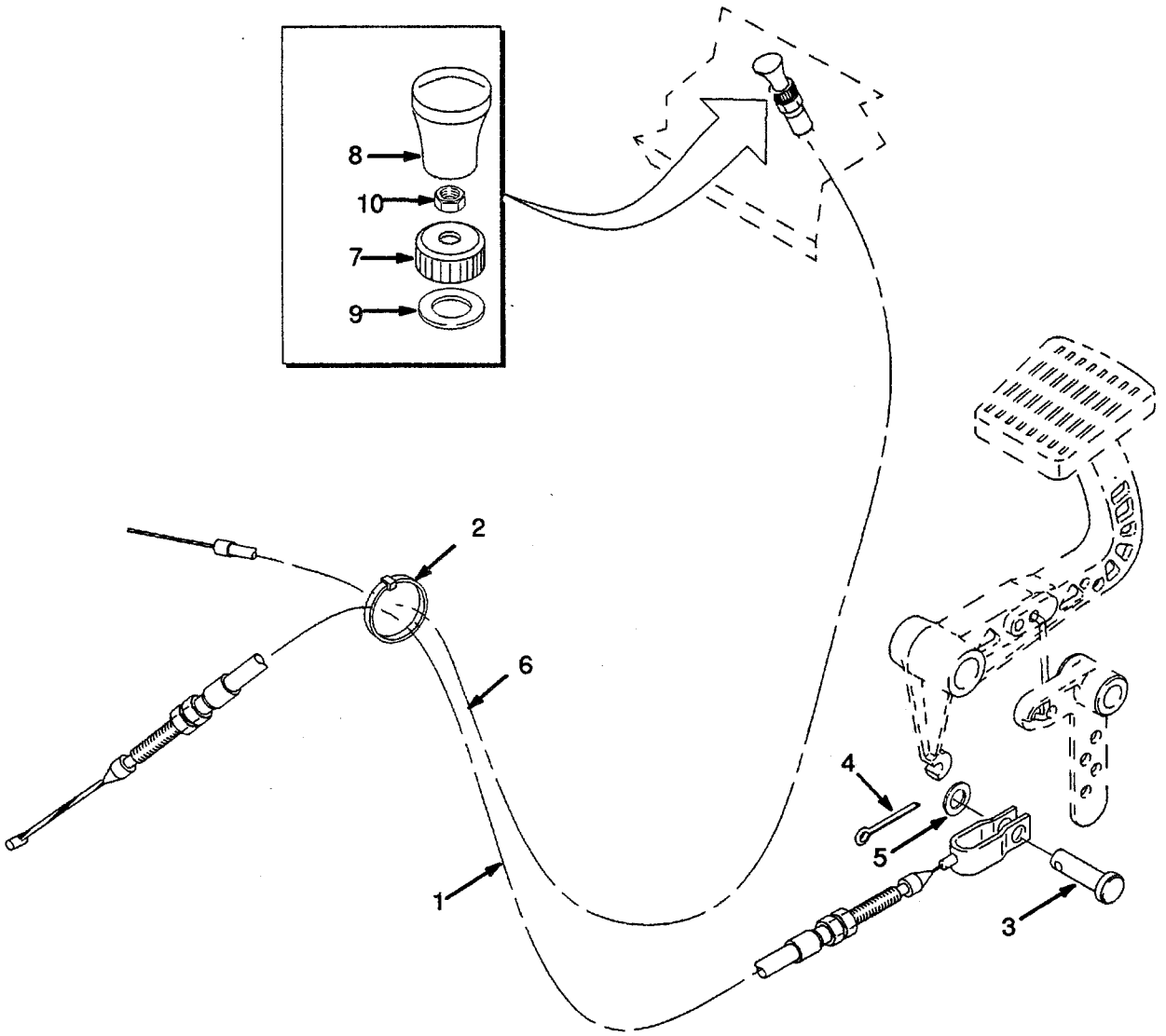

©1996 HYSTER COMPANY

THROTTLE LINKAGE

REF	PART NO.	NAME OF PART	QTY
1	2021427	Cable Assy	1
2	137852	Strap Clamp	2
3	292681	Pin	1
4	15200	Split Pin	1
5	320155	Washer	1
6	2021458	Choke Cable	1
7	1367116	Nut	1
8	1367117	Knob	1
9	320159	Washer	1
10	1367118	Nut	1

©1996 HYSTER COMPANY

THROTTLE LINKAGE

(Figure 41)

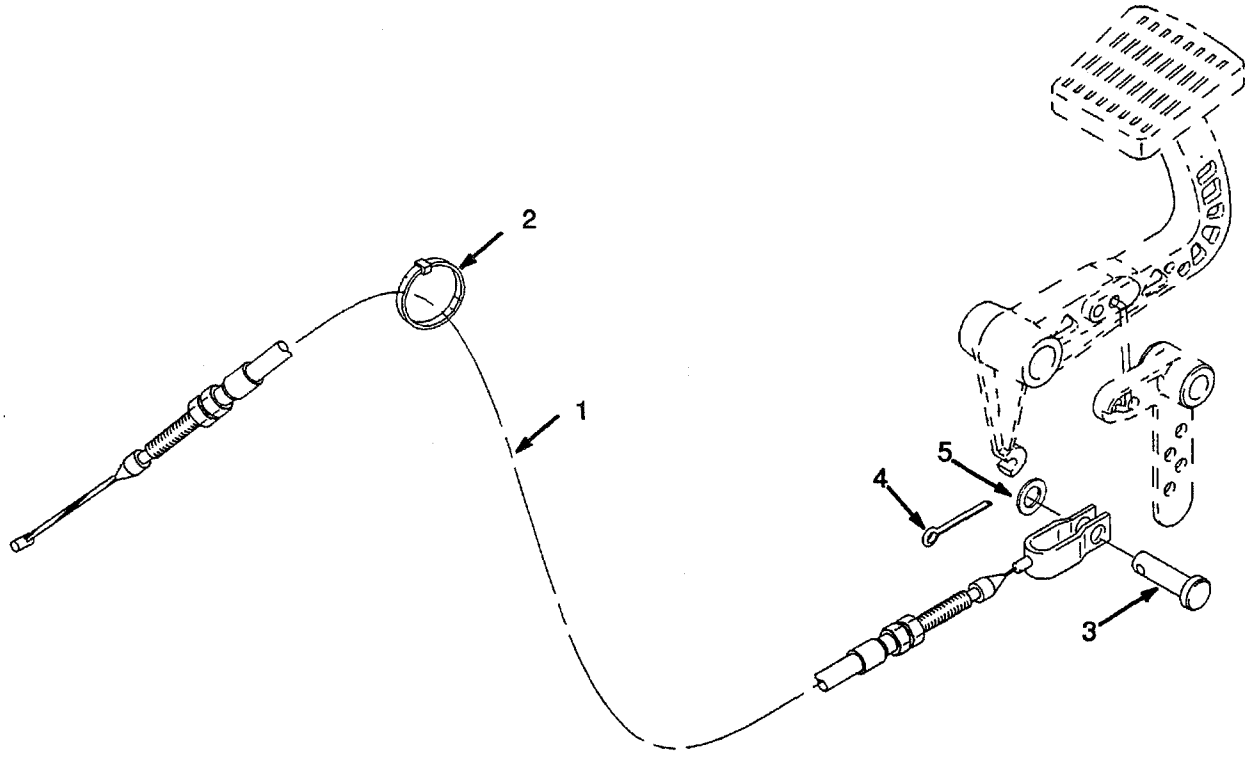

©1996 HYSTER COMPANY

THROTTLE LINKAGE

REF	PART NO.	NAME OF PART	QTY
1	2021429	Cable	1
2	137852	Strap Clamp	1
3	309109	Pin	1
4	15200	Split Pin	1
5	320155	Washer	1

©1996 HYSTER COMPANY

THROTTLE LINKAGE

DIESEL

(Figure 42)

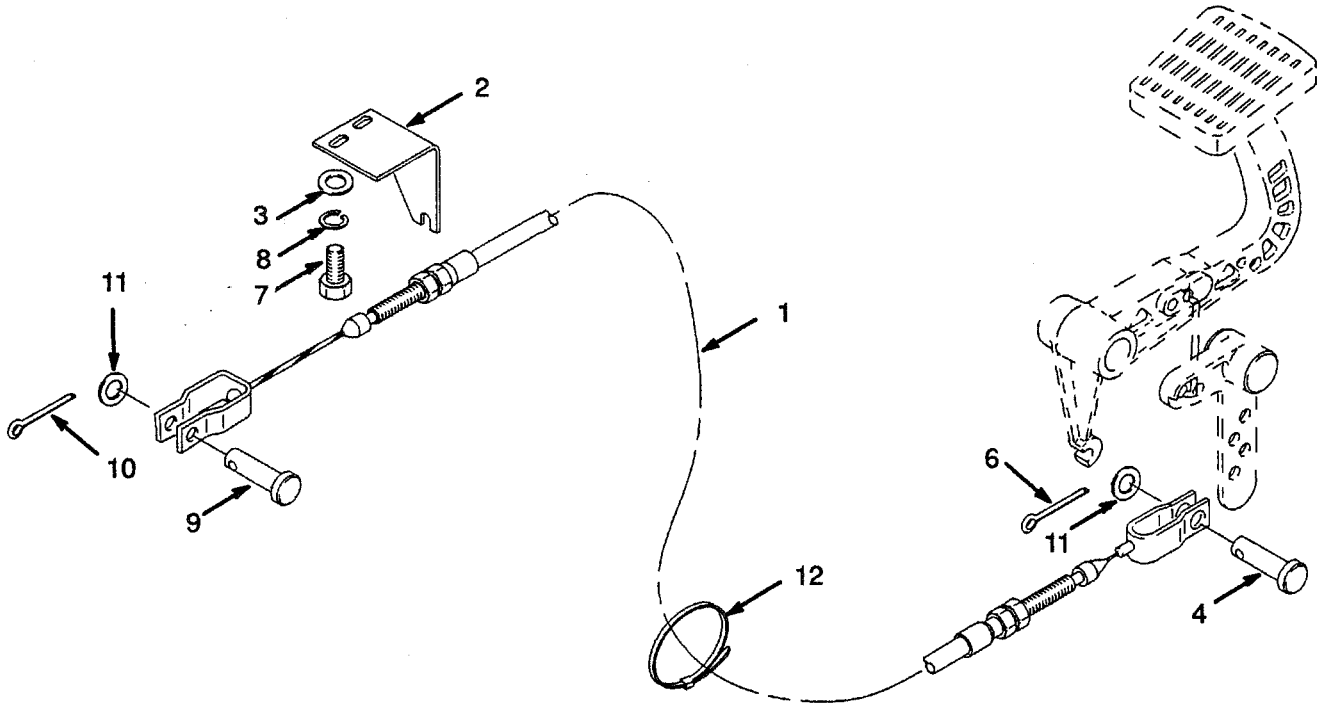

©1996 HYSTER COMPANY

THROTTLE LINKAGE
DIESEL

REF	PART NO.	NAME OF PART	QTY
1	2021428	Cable	1
2	2021431	Bracket	1
3	797068	Washer	2
4	297891	Pin	1
5	197068	Washer	1
6	15212	Split Pin	1
7	292500	Hex Head Bolt	2
8	292680	Washer	2
9	239503	Pin	1
10	15200	Split Pin	1
11	320155	Washer	1
12	137852	Strap Clamp	1

©1996 HYSTER COMPANY

CARBURETTOR

PETROL

(Figure 43)

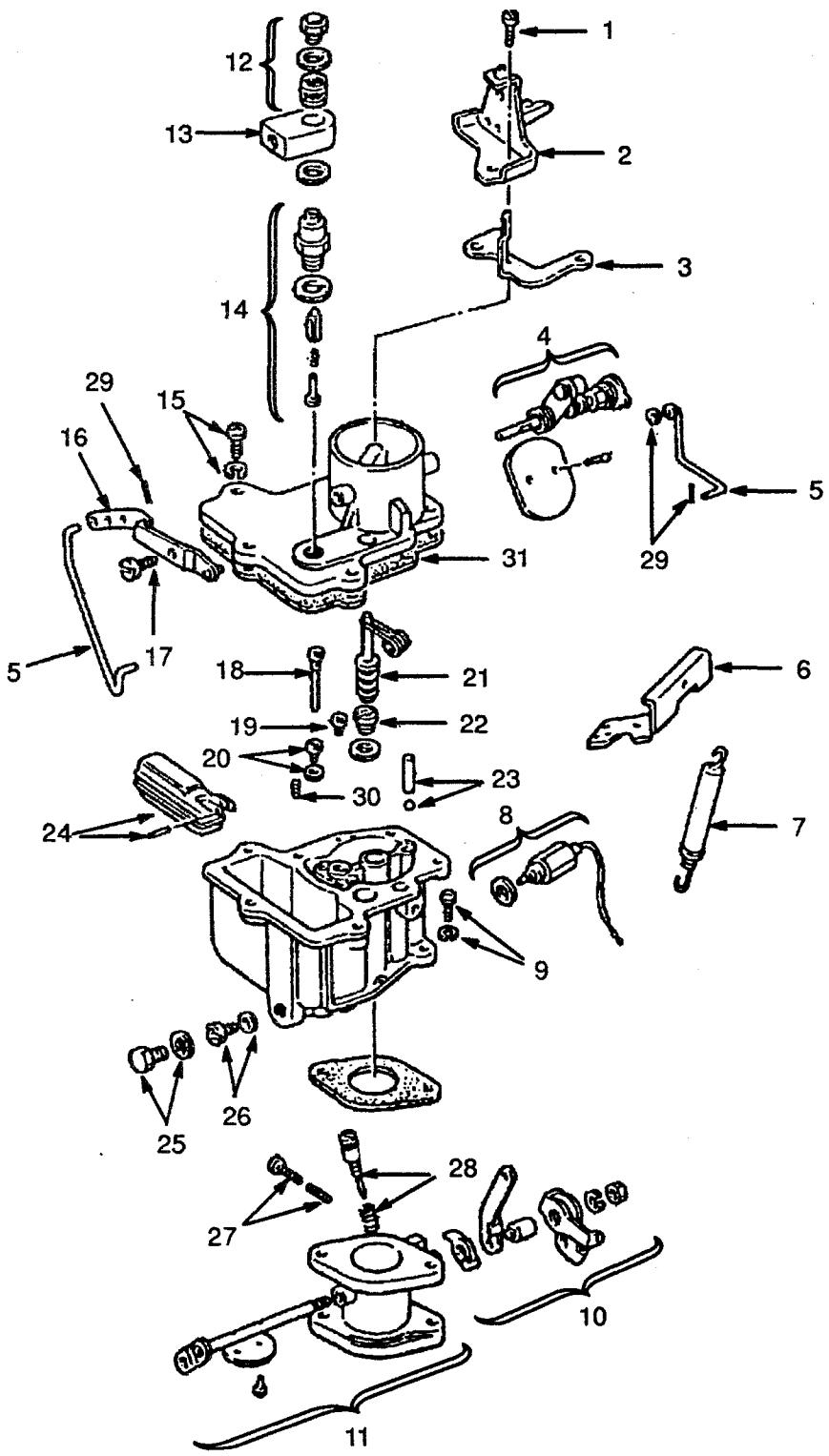

CARBURETTOR
PETROL

REF	PART NO.	NAME OF PART	QTY
	2022908	Carburettor	1
1	1369815	Bolt	2
2	1369816	Holder	1
3	326742	Clamp	1
4	1369817	Air Inlet	1
5	1369818	Rod	1
6	1369819	Support	1
7	1369820	Spring	1
8	1369821	Shut-Off Cock	1
9	326716	Kit-Screw	1
10	1369822	Lever	1
11	1369823	Body	1
12	1369824	Strainer	1
13	326741	Connector	1
14	326733	Valve Seat	1
15	326744	Screw and Washer	5
16	326719	Lever	1
17	326720	Screw	1
18	326718	Jet	1
19	1369825	Jet	1
20	326726	Jet	1
21	326730	Pump Assy	1
22	1369826	Valve	1
23	326732	Weight Set	1
24	326731	Float	1
25	326729	Plug	1
26	1369827	Jet (Main)	1
27	1369828	Setscrew	1
28	1369829	Kit-Idle Adjust	1
29	326739	Clip	1
30	326725	Jet	1
31	326743	Kit-Joint	1

©1996 HYSTER COMPANY

CARBURETTOR

LPG

(Figure 44)

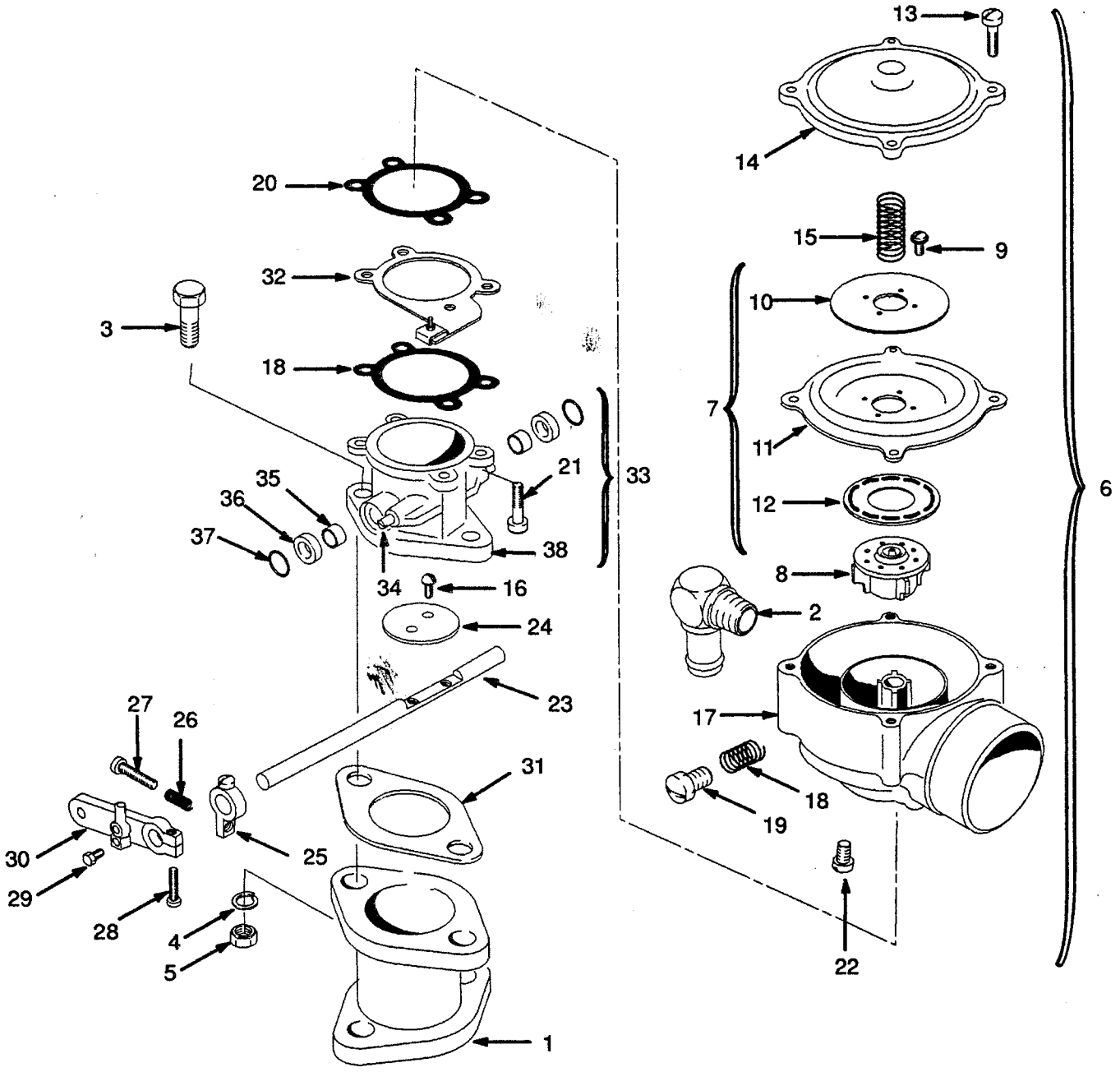

©1996 HYSTER COMPANY

CARBURETTOR

LPG

REF	PART NO.	NAME OF PART	QTY
	2021693	Carburettor	1
1	2021695	Adapter	1
2	2021696	Elbow	1
3	2021697	Bolt	2
4	292681	Lockwasher	2
5	2021698	Nut	2
6	2021694	Carburettor	1
7	1367758	Diaphragm	1
8	....	Valve Assy	1
9	220283	Screw	4
10	....	Back-Up Plate	1
11	1369038	Diaphragm	1
12	204858	Air Valve Ring	1
13	132473	Screw	4
14	204780	Cover	1
15	374713	Spring	1
16	220283	Screw	2
17	1357715	Body	1
18	332277	Spring	1
19	204786	Spring	1
20	204787	Joint	2
21	204790	Screw	4
22	214119	Plug	1
23	236842	Throttle Shaft	1
24	236843	Throttle Plate	1
25	1367752	Lever	1
26	204824	Spring	1
27	16751	Stop Screw	1
28	204825	Screw	1
29	1367753	Lever	1
30	185544	Screw	1
31	236851	Joint	1
32	1367754	Bracket	1
33	1367755	Throat	1
34	204862	Pin	1
35	236844	Bearing	2
36	236845	Seal	2
37	204797	Retainer	1
38	236841	Throttle Body	1

©1996 HYSTER COMPANY

GOVERNOR

PETROL AND LPG

(Figure 45)

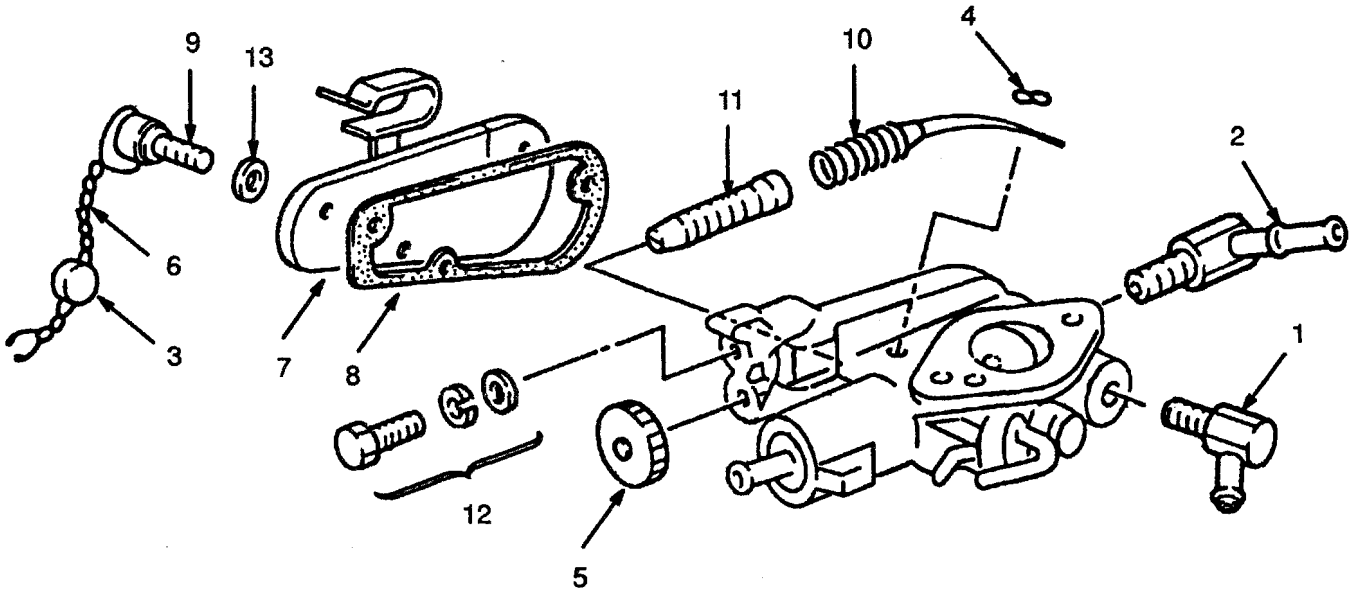

©1996 HYSTER COMPANY

GOVERNOR
PETROL AND LPG

REF	PART NO.	NAME OF PART	QTY
	1369834	Governor	1
1	1369842	Connector	1
2	1369835	Connector	1
3	1367518	Seal	1
4	1367519	Circlip	1
5	1367520	Bush	1
6	1367521	Wire	1
7	1369836	Cover	1
8	1369837	Joint	1
9	1369838	Screw	3
10	1369839	Spring	1
11	1367526	Screw	1
12	1369840	Bolt	1
13	1369841	Washer	3

©1996 HYSTER COMPANY

AIR FILTER

PETROL AND LPG

(Figure 46)

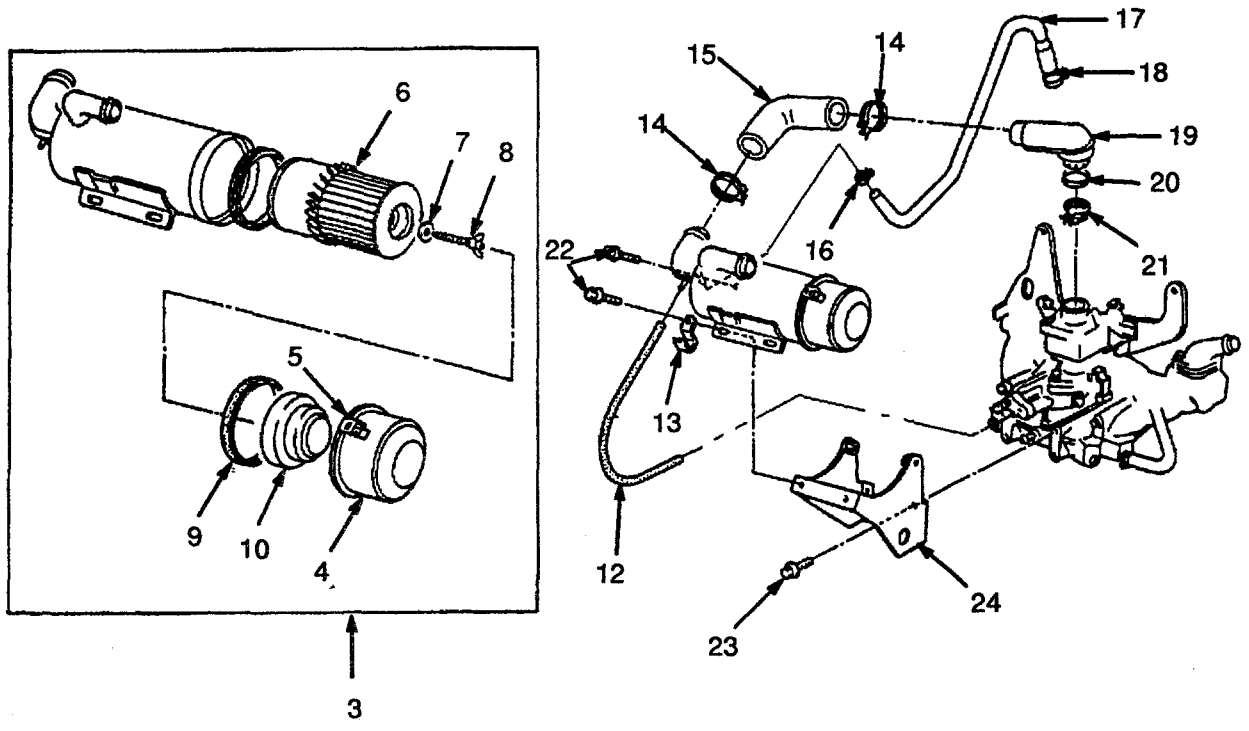

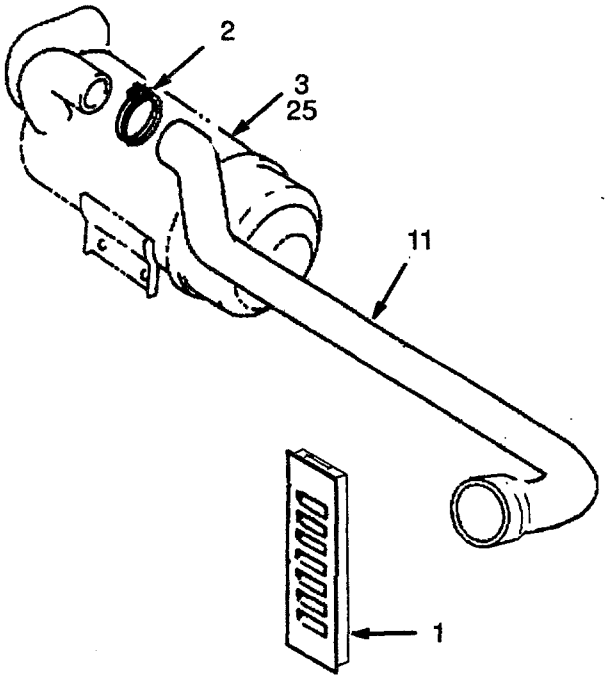

AIR FILTER
PETROL AND LPG

REF	PART NO.	NAME OF PART	QTY
1	1339265	Grille	2
2	119236	Clamp	1
3	1369807	Air Filter	1
4	1369808	Dust Pan	1
5	324403	Clamp	1
6	1369809	Element	1
7	324406	Washer	1
8	2020834	Bolt	1
9	....	Joint	1
10	1300916	Support	1
11	2021726	Hose	1
11	2023647	Hose (Dual Element)	1
12	1361797	Hose	1
13	1369887	Clamp	1
14	326512	Clamp (Petrol)	1
15	2020821	Hose (Air)	1
16	326513	Clip	1
17	1369878	Hose	1
18	324709	Clip	1
19	314787	Funnel	1
20	314797	Dust Seal	1
21	326511	Clamp	1
22	324721	Bolt	4
23	1366874	Bolt	4
24	1369813	Bracket	1
25	2022744	Air Cleaner (Dual Element)	1

©1996 HYSTER COMPANY

AIR FILTER

DIESEL

2,5L

(Figure 47)

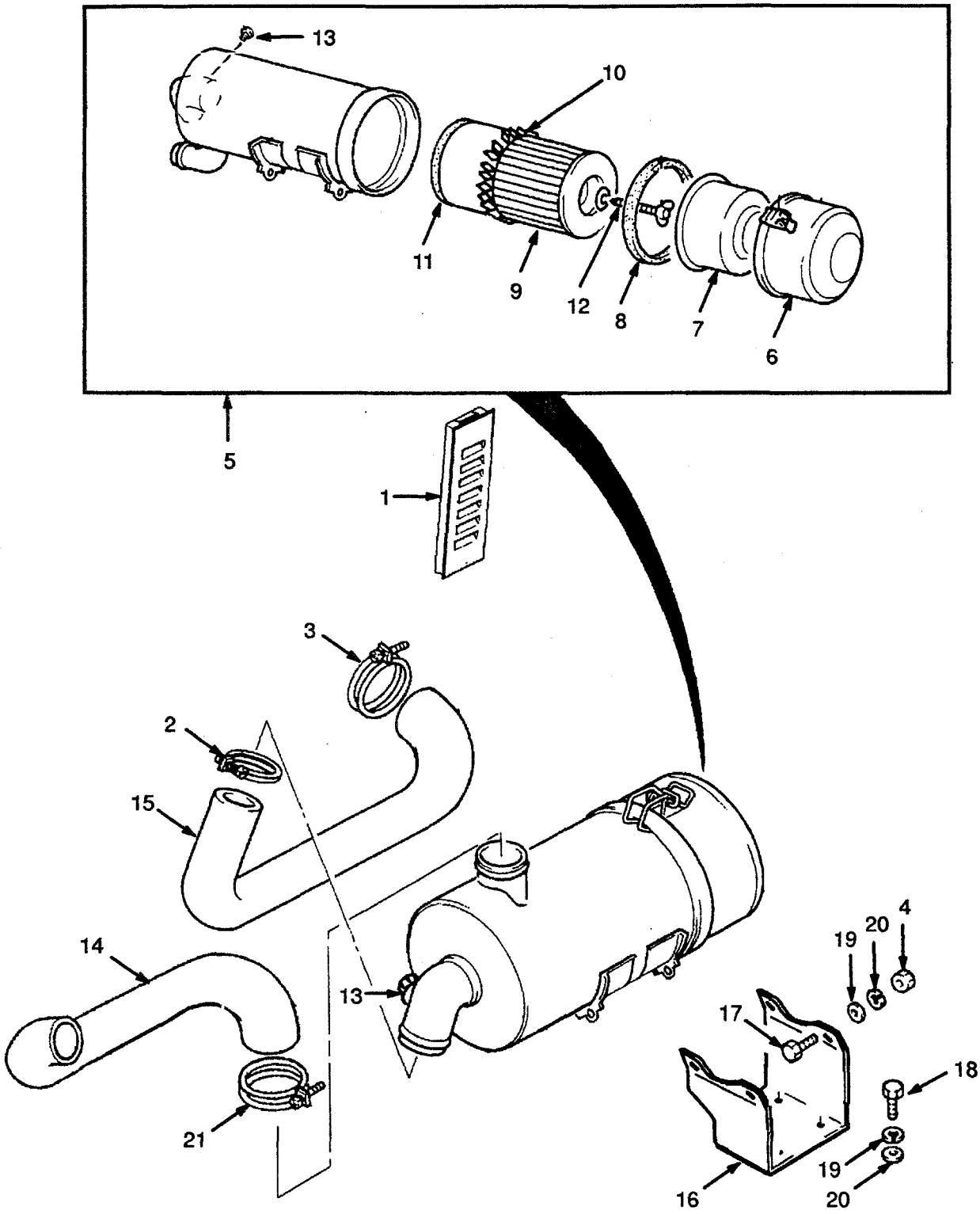

AIR FILTER
DIESEL
2,5L

REF	PART NO.	NAME OF PART	QTY
1	1339265	Grille	2
2	112989	Clamp	1
3	115696	Clamp	1
4	2022719	Nut	2
5	2022639	Air Filter	1
6	1368781	Cap	1
7	1368782	Support	1
8	1368783	Joint	1
9	1368784	Element	1
10	1368785	Baffle	1
11	1368786	Joint	1
12	1368787	Bolt	1
13	1368788	Plug	1
13 [a]	2022640	Socket	1
14	2022638	Hose	1
15	2021728	Hose	1
16	2021733	Bracket	1
17	136681	Hex Head Bolt	4
18	2021233	Screw	4
19	320157	Washer	8
20	292681	Washer	8
21	119236	Clamp	1

[a] with Restriction Indicator

©1996 HYSTER COMPANY

LPG TANK
(Figure 48)

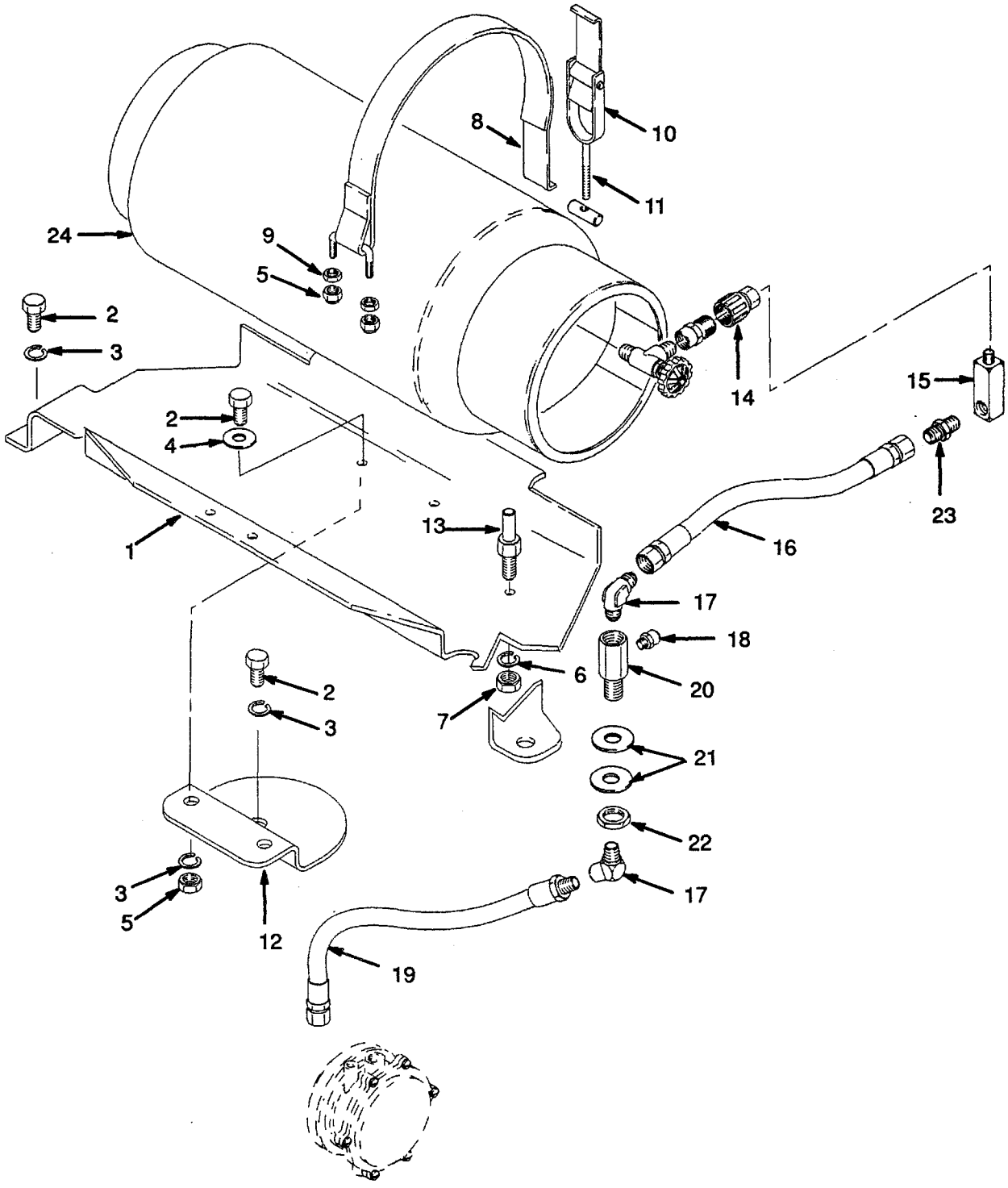

LPG TANK

REF	PART NO.	NAME OF PART	QTY
1	2022568	Bracket	1
2	287854	Bolt	5
3	292682	Lockwasher	5
4	320159	Washer	2
5	316826	Nut	4
6	292683	Lockwasher	1
7	296130	Locknut	1
8	1339769	Strap	1
9	136692	Nut	2
10	196297	Latch	1
11	147294	Nut	1
12	2022853	Bracket	1
13	2022565	Pin	1
14	97999	Disconnect	1
15	1327554	Fitting	1
16	2021721	Hose	..
17	16863	Fitting	1
18	101809	Relief Valve	1
19	2021712	Hose	1
20	2021720	Adapter	1
21	320173	Washer	2
22	296138	Locknut	1
23	172654	LPG Tank	1
23	16134	Fitting	1
24	....	Tank (12 kg)	1
24	....	Tank (15 kg)	1
24 [a]	....	Tank (18 kg)	1

[a] H2.00XMS

©1996 HYSTER COMPANY

FUEL

PETROL AND LPG

(Figure 49)

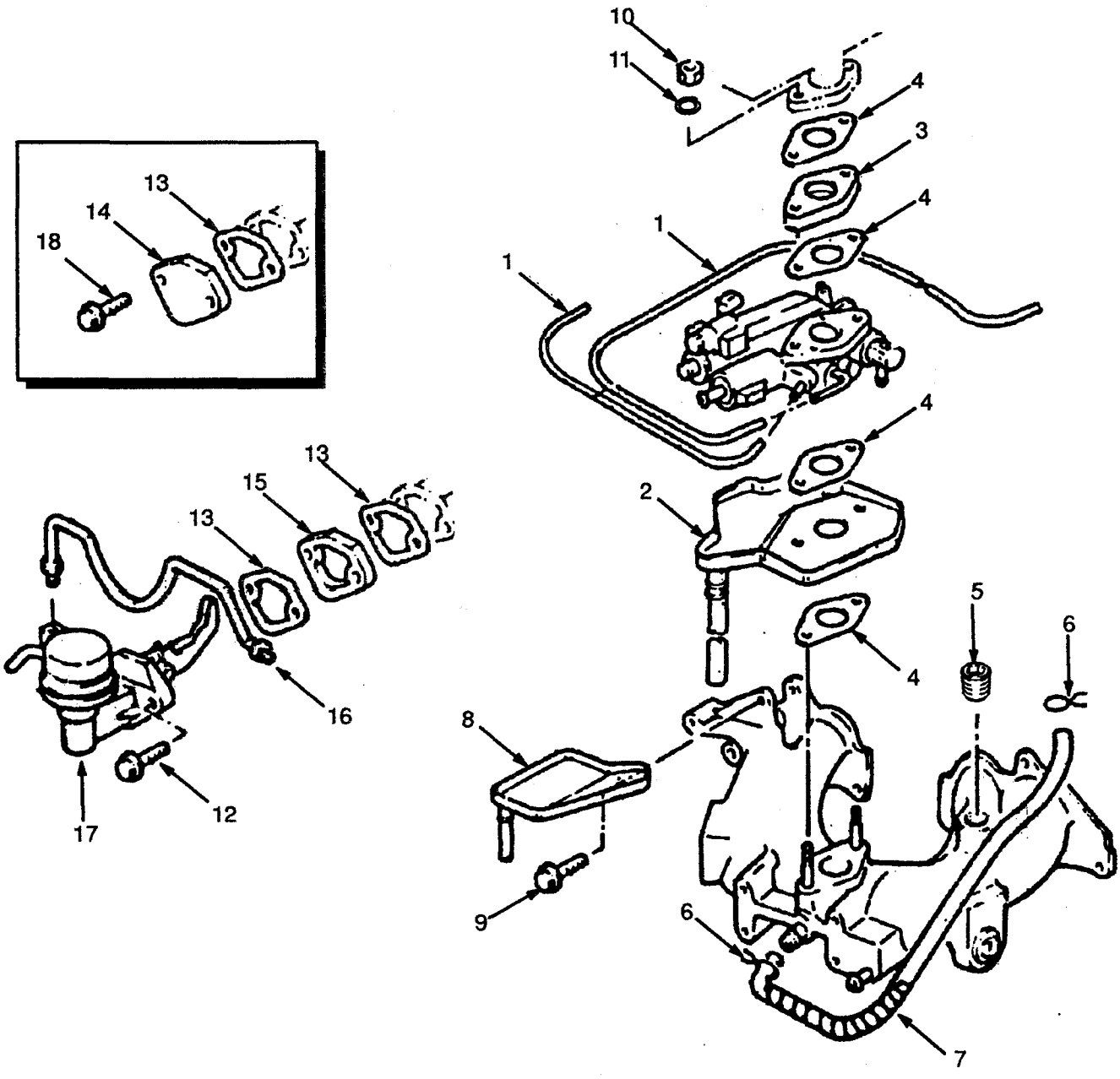

FUEL
PETROL AND LPG

KEY
A: Petrol
B: LPG

REF	PART NO.	NAME OF PART	QTY A	QTY B
1	1361796	Hose	1	1
2	1369979	Deflector	1	1
3	2022490	Joint	4	4
4	1369981	Insulator	1	1
5	1369995	Plug	1	1
6	1369996	Clamp	2	2
7	1369997	Hose	1	1
8	1361754	Deflector	1	1
9	1361868	Screw	2	2
10	326653	Nut	2	2
11	326654	Washer	2	2
12	1361885	Bolt	2	2
13	1361756	Joint	1	1
14	1361749	Cover	..	1
15	1361755	Insulator	1	..
16	1369998	Pipe	1	..
17	1361753	Fuel Pump	1	..
18	1361898	Screw	2	..

©1996 HYSTER COMPANY

LPG FUEL SYSTEM

(Figure 50)

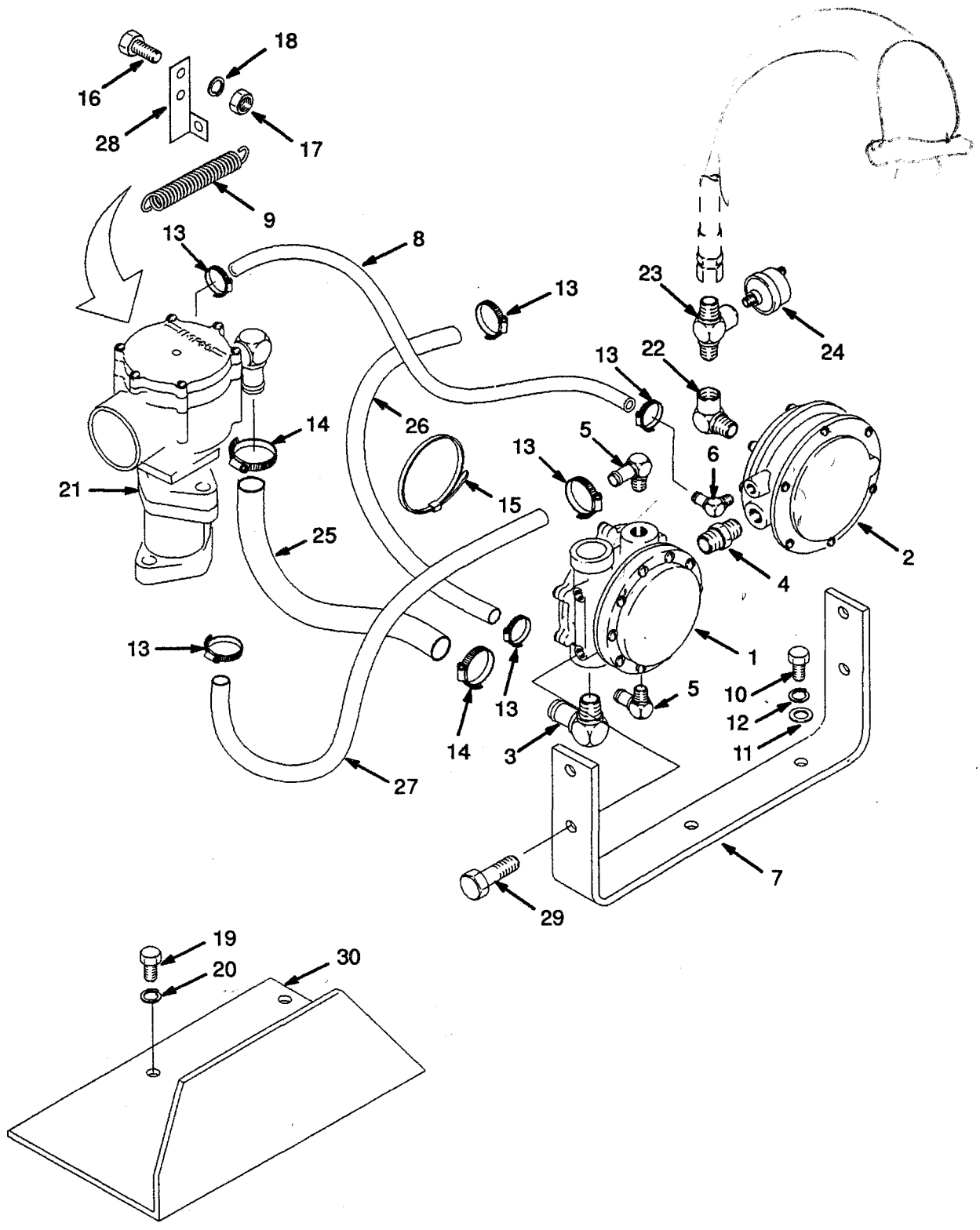

©1996 HYSTER COMPANY

LPG FUEL SYSTEM

REF	PART NO.	NAME OF PART	QTY
1	....	LPG Converter	1
		☞ Figure 52	
2	....	Filter and Lock-Off Valve	1
		☞ Figure 51	
3	2021696	Fitting	1
4	2021704	Adapter	1
5	2021705	Fitting	1
6	2021706	Fitting	1
7	2021707	Bracket	1
8	2021711	Hose	1
9	2021715	Spring	1
10	287851	Bolt	2
11	320157	Washer	2
12	292681	Lockwasher	6
13	166857	Clamp	6
14	130845	Clamp	2
15	137852	Strap	2
16	302258	Bolt	2
17	2021892	Nut	2
18	292680	Lockwasher	2
19	316678	Screw	4
20	292681	Lockwasher	4
21	....	Carburettor	1
		☞ Figure 44	
22	17314	Fitting	1
23	1351146	Fitting	1
24	1351133	Pressure Switch	1
25	2021708	Hose	1
26	2021709	Hose	1
27	2021710	Hose	1
28	2021714	Bracket	1
29	1369065	Screw and Washer	4
30	2021671	Fuel Tank (Cover)	1

©1996 HYSTER COMPANY

FILTER AND LOCK-OFF VALVE

LPG

(Figure 51)

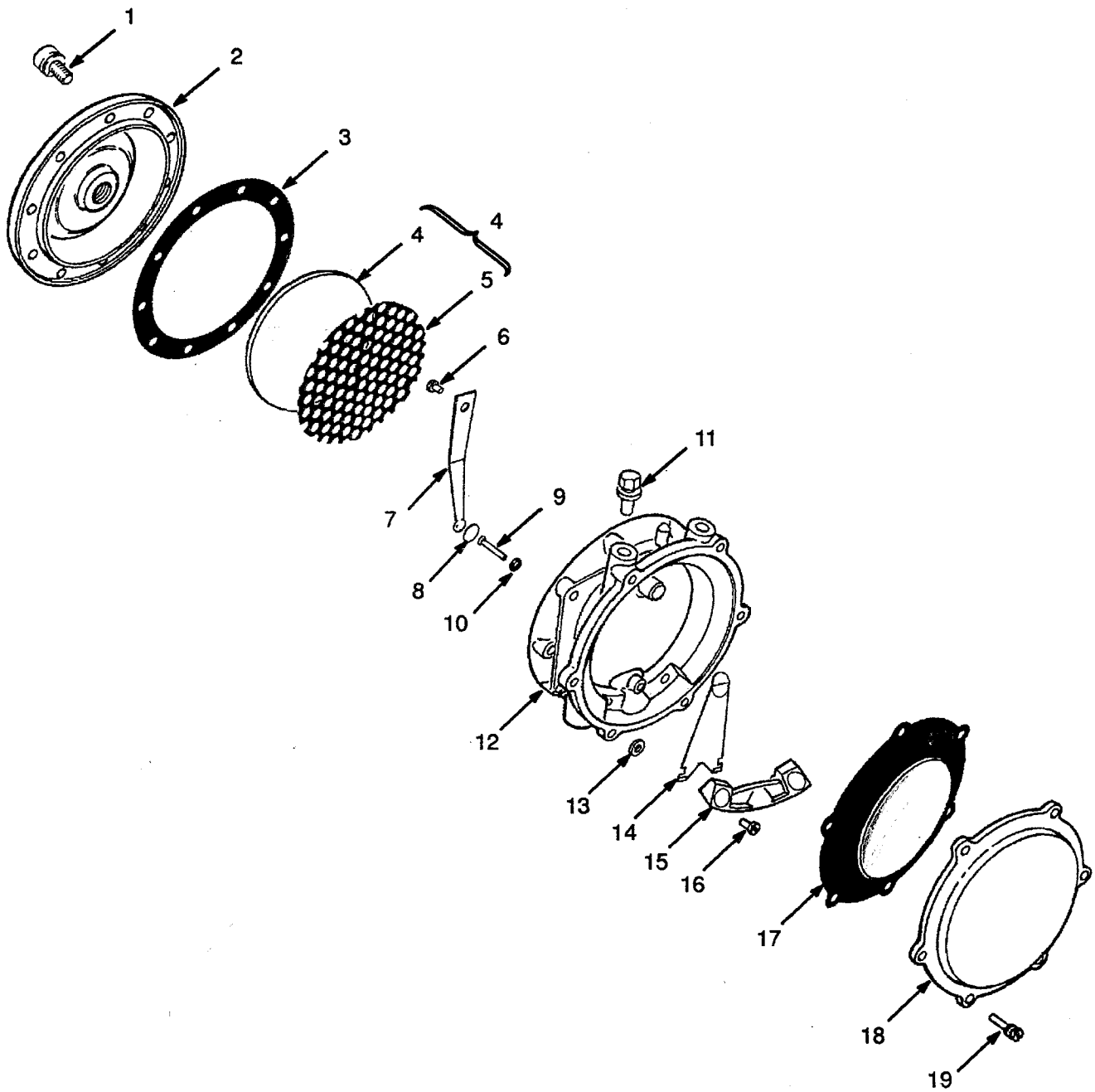

©1996 HYSTER COMPANY

FILTER AND LOCK-OFF VALVE

LPG

REF		PART NO.	NAME OF PART	QTY
		1339126	Filter and Lock-Off Valve	1
1	a	1367593	Screw	8
2		1367588	Cover	1
3	a	....	Joint	1
4	a	....	Filter Assy	1
4	a	....	Filter	1
5		1367595	Screen	1
6		12490	Screw	6
7		1367594	Valve Spring	1
8	a	....	Valve Seat	1
9	a	....	Pin	1
10	a	....	Seal	1
11		1369065	Screw and Washer	2
12		1367584	Body	1
13	a	....	Sealing Washer	1
14		1367591	Lever	1
15	a	....	Fulcrum	1
16		16852	Screw	2
17	a	....	Diaphragm Assy	1
18		1367587	Diaphragm (Cover)	1
19	a	12445	Screw	4

a Included In Repair Kit 1369036

©1996 HYSTER COMPANY

LPG CONVERTER

IDENTIFY BY CODE LETTER "J"

(Figure 52)

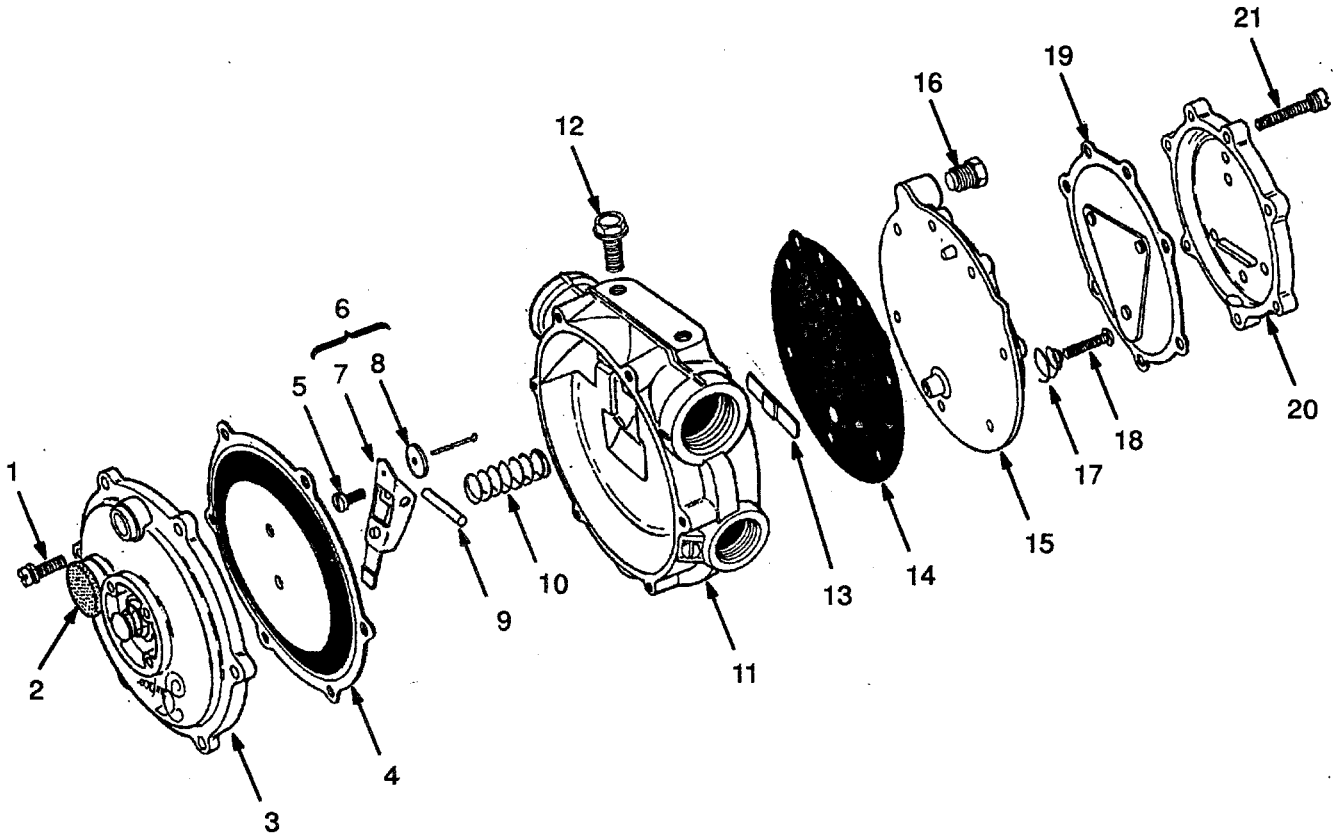

©1996 HYSTER COMPANY

LPG CONVERTER

IDENTIFY BY CODE LETTER "J"

REF		PART NO.	NAME OF PART	QTY
		2021702	LPG Converter (Assembly)	1
1	a	12445	Screw	6
2		1367622	Screen	1
3		1357740	Cover	1
4	a	....	Diaphragm	1
5	a	....	Screw	1
6		204829	Lever	1
7		1357746	Lever	1
8	a	1357704	Seat	1
9	a	204830	Pin	1
10		204831	Spring (Blue)	1
11		1357739	Body	1
12		1369065	Screw and Washer	2
13	a	1357703	Seat	1
14	a	1357745	Joint	1
15		1357748	Cover	1
16		1357749	Plug	1
17		204835	Primary (Spring)	1
18	a	1357747	Pin	1
19	a	1357741	Diaphragm	1
20		1357743	Cover	1
21	a	16849	Screw	7

a Included In Repair Kit 204837

©1996 HYSTER COMPANY

LPG CONVERTER

IDENTIFY BY CODE LETTER "K"

(Figure 53)

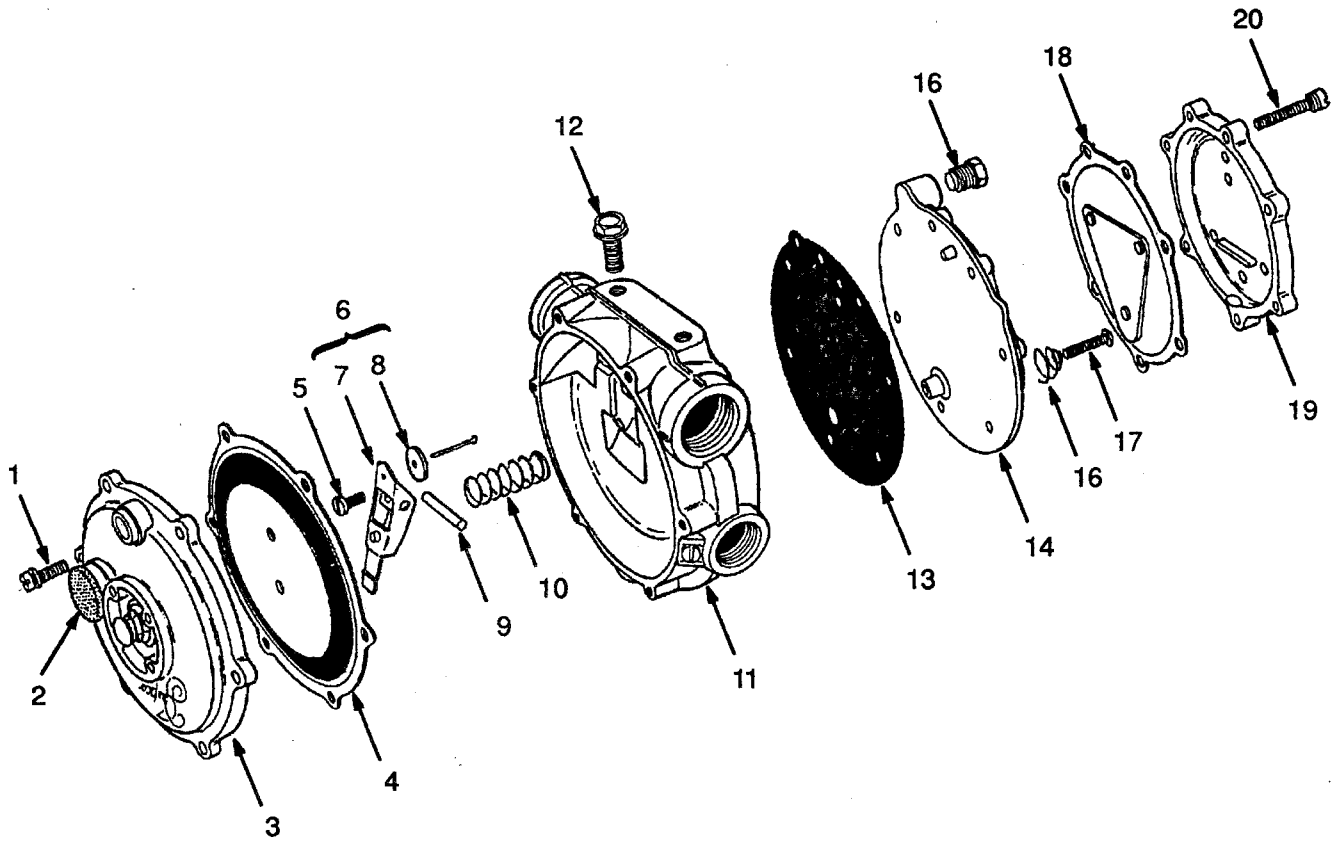

©1996 HYSTER COMPANY

LPG CONVERTER

IDENTIFY BY CODE LETTER "K"

REF		PART NO.	NAME OF PART	QTY
		2023640	LPG Converter	1
1	a	12445	Screw	6
2		1367622	Screen	1
3		....	Cover	1
4	a	....	Diaphragm Assy	1
5	a	16719	Screw	1
6		204829	Lever	1
7		1357746	Lever	1
8		204830	Pin	1
9	a	1357704	Seat	1
10		204831	Spring (Secondary Blue)	1
11		1375027	Body	1
12		1369065	Screw and Washer	2
13	a	1375033	Joint	1
14		1375029	Plate (Cover)	1
15		1357749	Plug	1
16		1375030	Spring (Primary)	1
17	a	1376429	Pin	1
18	a	1375032	Diaphragm Assy	1
19		1375037	Cover	1
20	a	16849	Screw	7
21		1357707	Plug (Not Illustrated)	7

a Included In Repair Kit 2023646

©1996 HYSTER COMPANY

FUEL SYSTEM

(Figure 54)

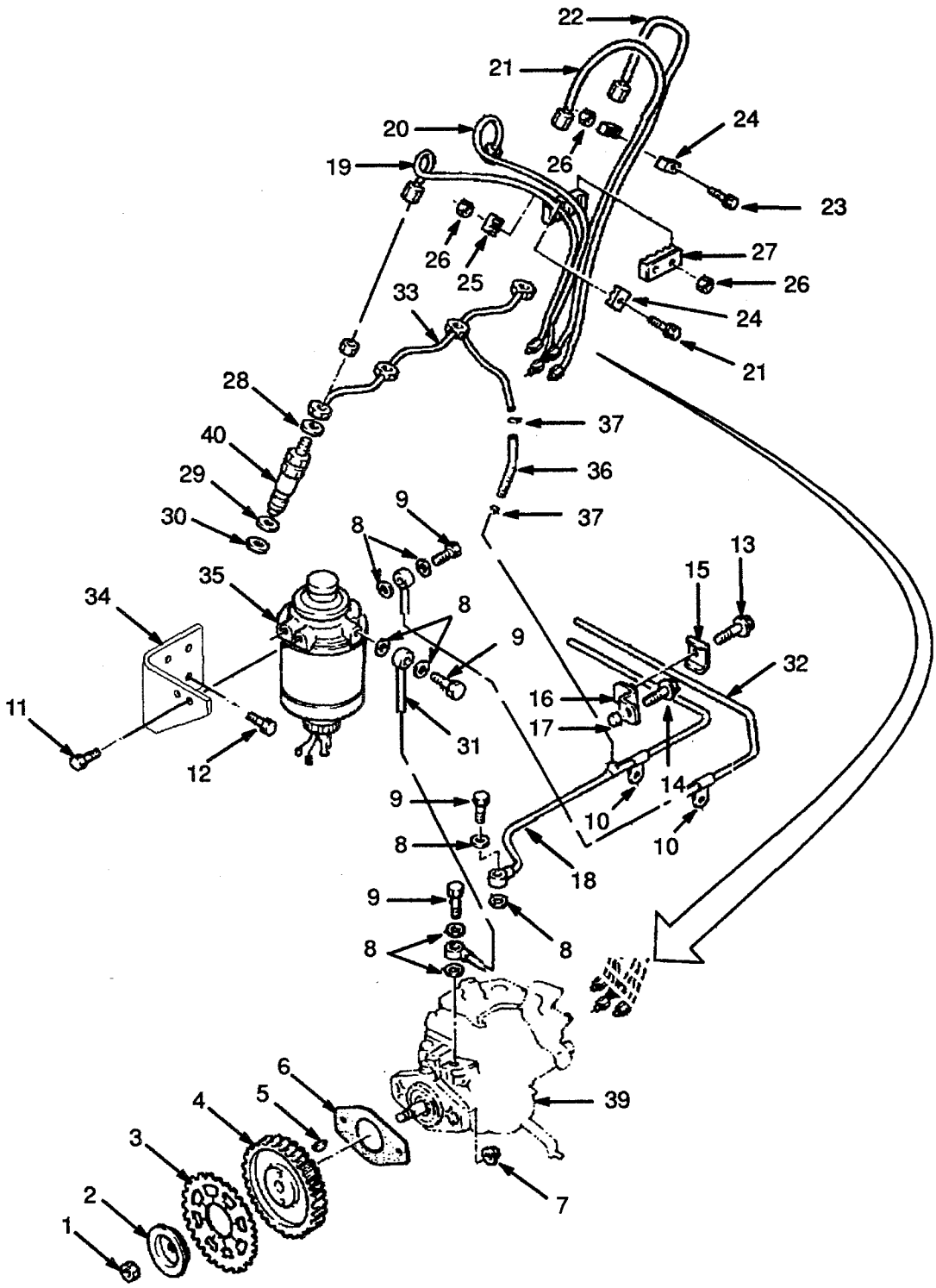

FUEL SYSTEM

REF	PART NO.	NAME OF PART	QTY
1	1368738	Nut	1
2	1368739	Washer	1
3	1366971	Friction Gear	1
4	1368740	Gear	1
5	1368741	Key	1
6	1368742	Joint	1
7	326504	Nut	2
8	1368743	Packing	8
9	1368744	Bolt	4
10	1368745	Clip	2
11	1370675	Bolt	2
12	1368749	Bolt	3
13	1361882	Bolt	1
14	....	Bolt	1
15	1368750	Clip	1
16	1368751	Bracket	1
17	1368752	Spacer	1
18	1368760	Fuel Pipe	1
19	1368762	Injection Pipe (#1)	1
20	1368763	Injection Pipe (#2)	1
21	1368764	Injection Pipe (#3)	1
22	1368765	Injection Pipe (#4)	1

REF	PART NO.	NAME OF PART	QTY
23	1368766	Bolt	4
24	1368767	Clip	4
25	1368768	Clip	-
26	1368769	Nut	2
27	1368770	Clip	2
28	1368771	Joint (Copper)	4
29	1368772	Washer (Aluminium)	4
30	1368773	Joint (Steel)	4
31	1368774	Fuel Pipe (Filter → Pump)	-
32	1368775	Fuel Pipe (Tank → Filter)	-
33	1368776	Fuel Pipe (Return)	-
34	1368746	Bracket	-
35	....	Fuel Filter ☞ Figure 56	-
36	1361796	Hose	-
37	1368779	Clamp	2
37	1368780	Clip	8
38	....	Nozzle Holder ☞ Figure 55	4
39	....	Injection Pump ☞ Figure 57	1

©1996 HYSTER COMPANY

NOZZLE HOLDER
DIESEL
(Figure 55)

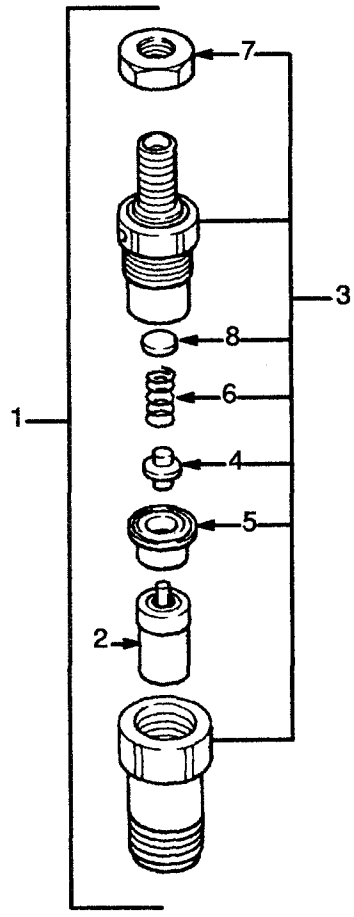

©1996 HYSTER COMPANY

NOZZLE HOLDER
DIESEL

REF	PART NO.	NAME OF PART	QTY
1	1366825	Holder	4
2	1369870	Nozzle	4
3	1366826	Holder	4
4	1366827	Seat	4
5	1366828	Seat	4
6	1366829	Spring	4
7	1366830	Nut	4
8	1366831	Shim (1,00 mm)	4
8	1366832	Shim (1,05 mm)	4
8	1366833	Shim (1,10 mm)	4
8	1366834	Shim (1,15 mm)	4
8	1366835	Shim (1,12 mm)	4
8	1366836	Shim (1,25 mm)	4
8	1366837	Shim (1,30 mm)	4
8	1366838	Shim (1,35 mm)	4
8	1366839	Shim (1,40 mm)	4
8	1366840	Shim (1,45 mm)	4
8	1366841	Shim (1,50 mm)	4
8	1366842	Shim (1,55 mm)	4
8	1366843	Shim (1,60 mm)	4
8	1366844	Shim (1,65 mm)	4
8	1366845	Shim (1,70 mm)	4
8	1366846	Shim (1,75 mm)	4
8	1366847	Shim (1,80 mm)	4
8	1366848	Shim (1,85 mm)	4
8	1366849	Shim (1,90 mm)	4
8	1366850	Shim (1,95 mm)	4

©1996 HYSTER COMPANY

FUEL FILTER

DIESEL

2,5L

(Figure 56)

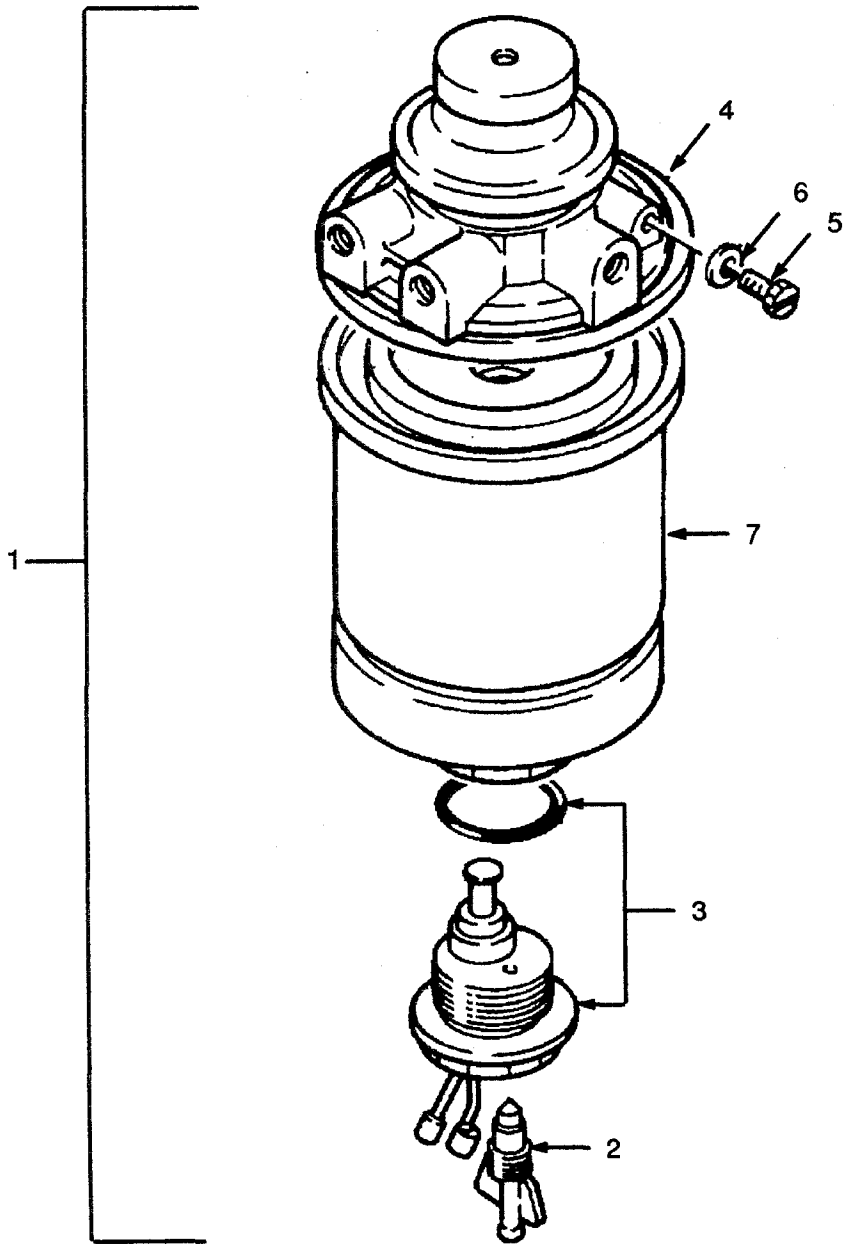

©1996 HYSTER COMPANY

FUEL FILTER
DIESEL
2,5L

REF	PART NO.	NAME OF PART	QTY
1	1368753	Fuel Filter	1
2	1368755	Plug	1
3	1368756	Sensor	1
4	1368757	Cover	1
5	1369871	Plug	1
6	1369872	Joint	1
7	1368758	Cartridge	1

©1996 HYSTER COMPANY

INJECTION PUMP

DIESEL

2,5L

(Figure 57)

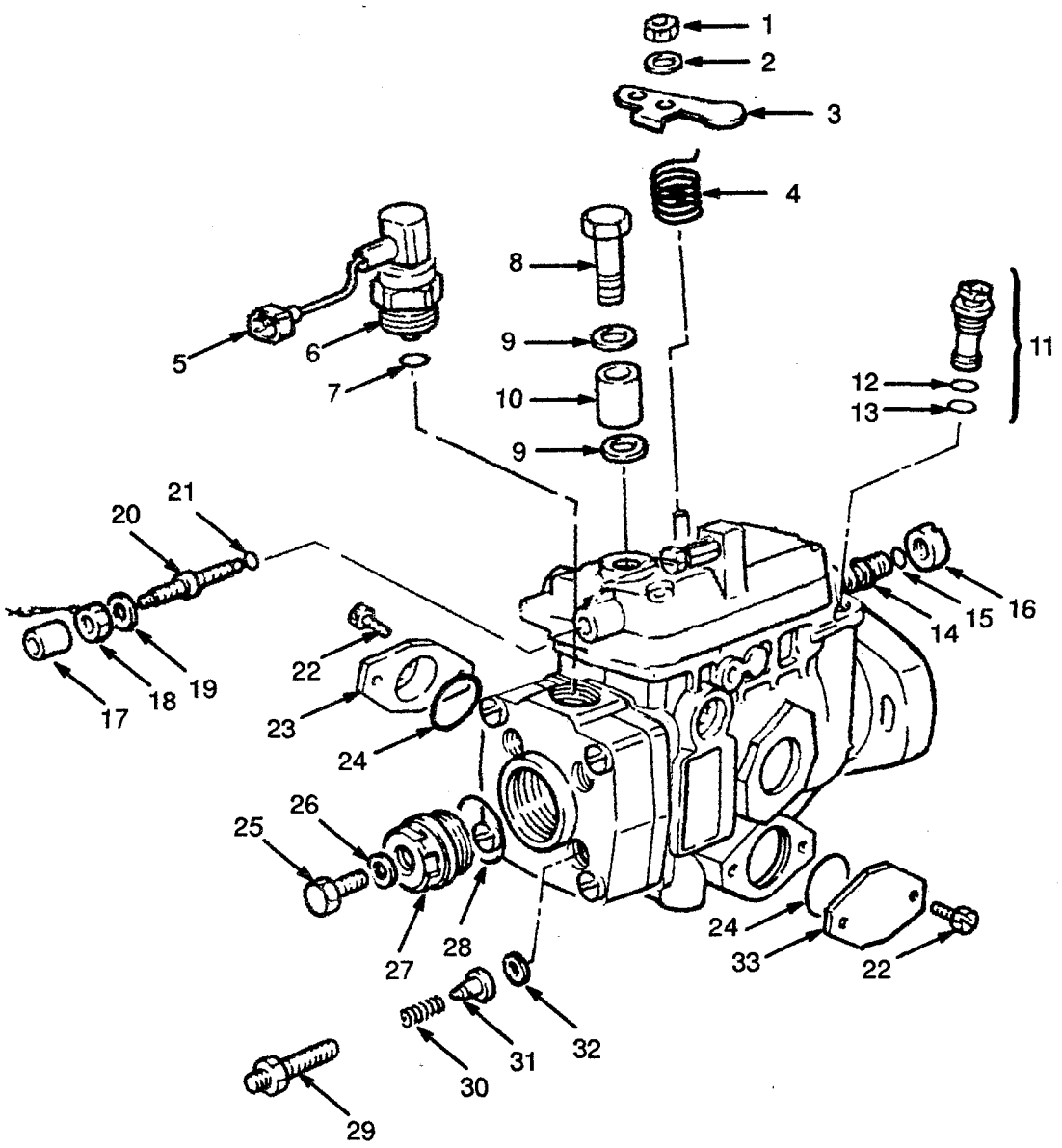

©1996 HYSTER COMPANY

INJECTION PUMP
DIESEL
2,5L

REF		PART NO.	NAME OF PART	QTY
		1366851	Injection Pump	1
1		2022110	Nut	1
2		2022109	Lockwasher	2
3		2021531	Lever	1
3		2021532	Lever (Optional)	1
4		2022111	Spring	1
5		2021526	Connector Assy	1
6		2022064	Valve	1
7	a	....	O-Ring	1
8		2022061	Valve	1
9	a	....	Washer	2
10		2022062	Collar	2
11		2022131	Valve Assy	1
12	a	....	O-Ring	1
13	a	....	O-Ring	1
14		2022125	Shaft	1
15	a	....	O-Ring	1
16		2022124	Nut	1
17		2022121	Collar	1
18		2022120	Nut	1
19		202119	Washer	1
20		2022118	Screw	1
21	a	....	O-Ring	1
22		2022070	Screw	4
23		2022069	Cover	1
24	a	....	O-Ring	2
25		2022105	Bolt	1
26	a	....	Joint	3
27		2022104	Plug	1
28	a	....	O-Ring	1
29		2021669	Holder	4
30		2022102	Spring	4
31		2021534	Valve	4
32	a	....	Joint	4
33		2022071	Cover	1

a Included In Repair Kit 1366852

©1996 HYSTER COMPANY

FUEL TANK AND LINES

PETROL

2,0L

(Figure 58)

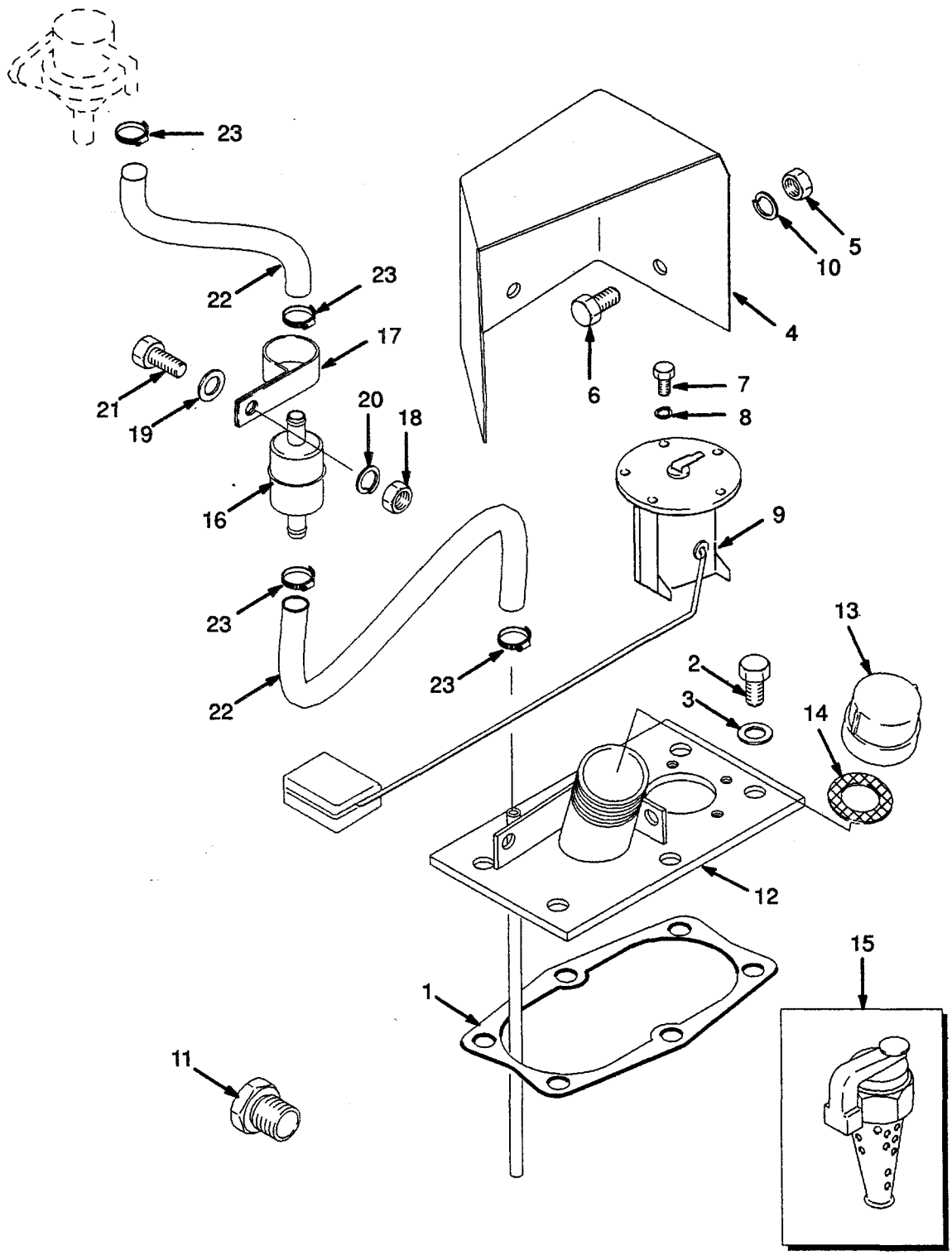

FUEL TANK AND LINES

PETROL

2,0L

REF	PART NO.	NAME OF PART	QTY
1	2021672	Joint	1
2	2021233	Bolt	6
3	2021673	Washer	6
4	2021674	Deflector	1
5	136687	Nut	2
6	292500	Hex Head Bolt	2
7	2021687	Bolt	2
8	320155	Washer	5
9	2021686	Fuel Sender	1
9	1367108	Packing	1
10	197068	Washer	4
11	17636	Fitting	1
12	2021647	Cover	1
13	2021679	Cap	1
14	2021683	Joint	1
15 [a]	120299	Cap	1
15 [a]	2021685	Joint	1
16	1304950	Filter	1
17	335047	Clamp	1
18	239503	Nut	1
19	320157	Washer	1
20	292681	Washer	1
21	136749	Hex Head Bolt	1
22	271862	Tube	1
23	166857	Clamp	1

[a] Optional

©1996 HYSTER COMPANY

FUEL TANK AND LINES

DIESEL

2,5L

(Figure 59)

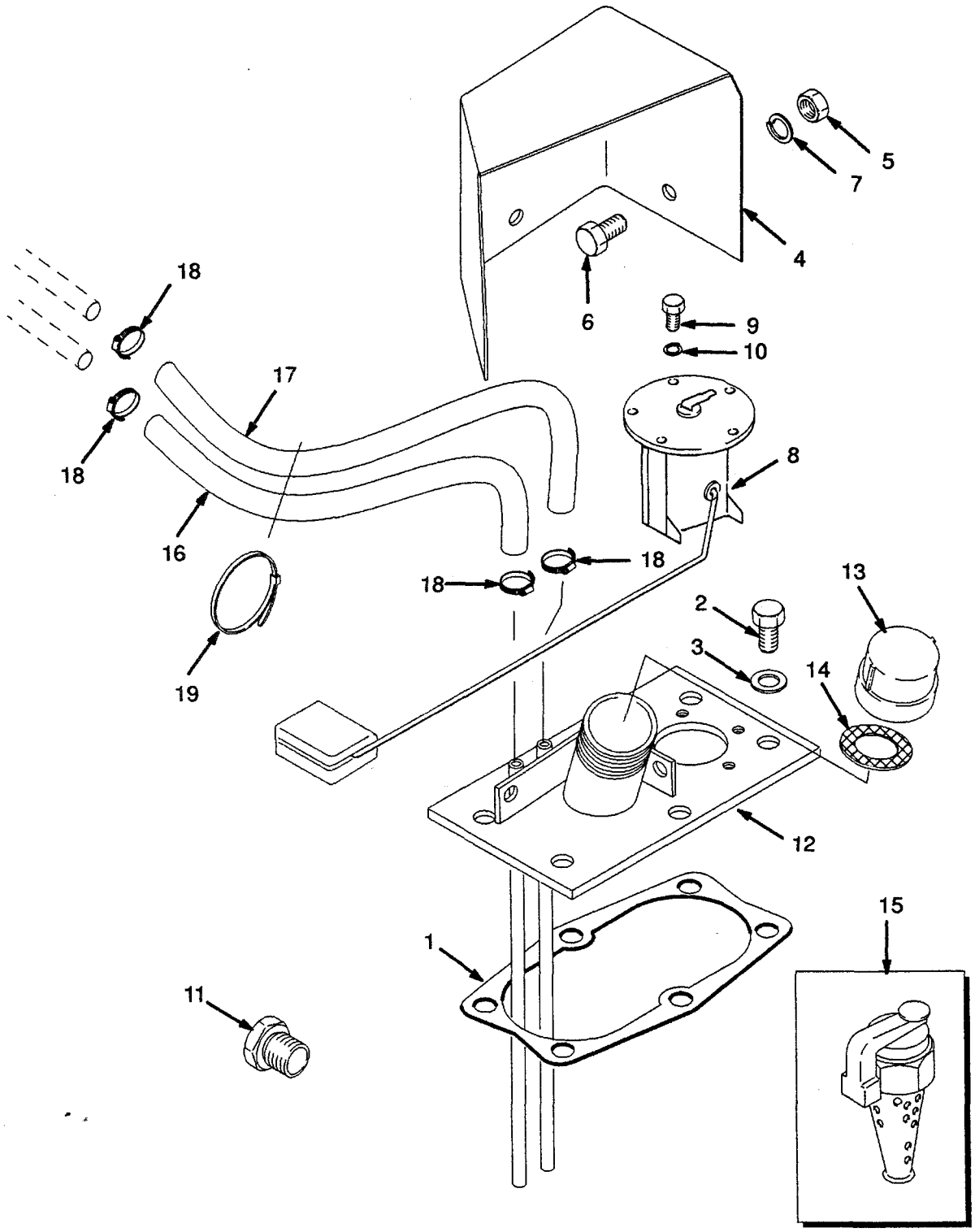

©1996 HYSTER COMPANY

HYSTER

FUEL TANK AND LINES

DIESEL

2,5L

REF	PART NO.	NAME OF PART	QTY
1	2021672	Joint	1
2	2021233	Bolt	6
3	2021673	Washer	6
4	2021674	Deflector	1
5	136687	Nut	2
6	292500	Hex Head Bolt	2
7	197068	Washer	2
8	2021686	Fuel Gauge Sender	1
8	1367108	Packing	1
9	2021687	Bolt	5
10	320155	Washer	5
11	17636	Fitting	1
12	2021661	Cover	1
13	2021681	Cap	1
14	2021683	Joint	1
15 [a]	120299	Cap	1
15 [a]	2021685	Joint	1
16	193656	Tube	1
17	260878	Tube	1
18	166857	Clamp	4
19	137852	Strap Clamp	1

[a] Optional

©1996 HYSTER COMPANY

NOTES

©1996 HYSTER COMPANY

ELECTRICAL

Alternator ..... Page 160

Battery ..... Page 130

Chassis Harness
Diesel
2,5L ..... Page 152

Chassis Harness
Petrol and LPG
2,0L ..... Page 148

Cluster Harness ..... Page 140

Cluster Power Harness ..... Page 142

Cowl Electrical ..... Page 136

Cowl Harness ..... Page 138

Distributor
Petrol and LPG
2,0L ..... Page 154

Electrical System
Diesel ..... Page 128

Electrical System
Petrol and LPG
2,0L ..... Page 126

Harness
Forward And Reverse ..... Page 144

Harness
Monotrol Pedal ..... Page 146

Harness
Seat Switch ..... Page 150

Instrument Cluster ..... Page 132

Shift Lever ..... Page 134

Starter Motor
Diesel
2,5L ..... Page 158

Starter Motor
Petrol and LPG
2,0L ..... Page 156

©1996 HYSTER COMPANY

ELECTRICAL SYSTEM

PETROL AND LPG

2,0L

(Figure 60)

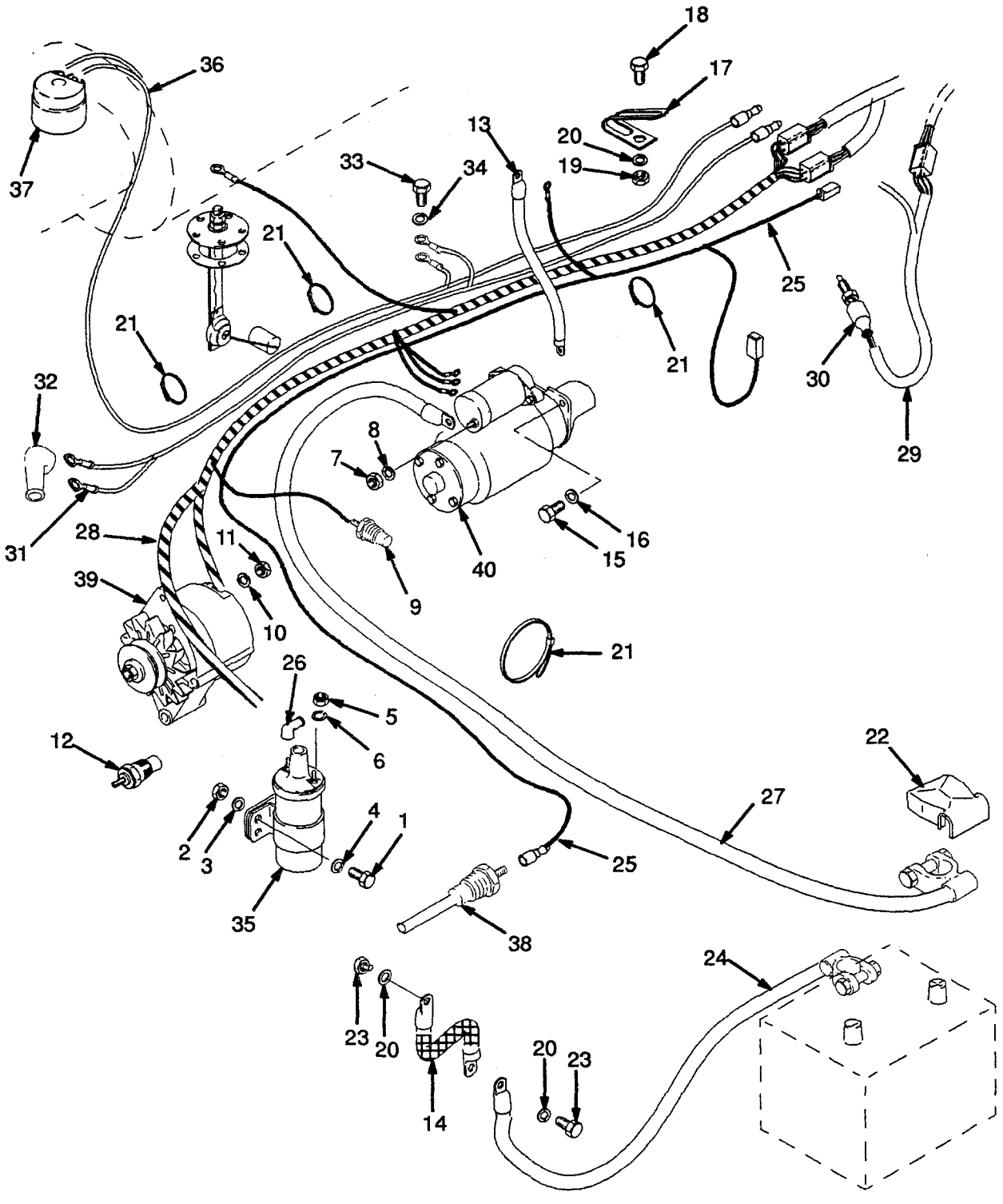

©1996 HYSTER COMPANY

ELECTRICAL SYSTEM
PETROL AND LPG
2,0L

KEY
A: Petrol
B: LPG

REF		PART NO.	NAME OF PART	QTY A	QTY B
1		292500	Hex Head Bolt	2	2
2		136687	Nut	2	2
3		292680	Lockwasher	2	2
4		320156	Washer	2	2
5		292668	Nut	1	1
6		292679	Lockwasher	1	1
7		239503	Nut	1	1
8		292681	Lockwasher	1	1
9		1360086	Oil Pressure Switch	1	1
10		292680	Lockwasher	1	1
11		2022614	Nut	1	1
12		1367633	Sender	1	1
13		2021986	Cable	1	1
14		2021996	Wire Assy	1	1
15		302285	Bolt	1	1
16		292682	Lockwasher	1	1
17		2022013	Clamp	5	5
18		136681	Hex Head Bolt	1	1
19		239503	Nut	1	1
20		292681	Lockwasher	3	3
21		137852	Strap Clamp	AR	AR
22		257241	Boot	1	1
23		329067	Bolt	2	2
24		2021985	Battery Cable	1	1
25		2021994	Wire Harness (Seat Switch) ☞ Figure 72	1	1
26		2022502	Boot	1	1
27		2021987	Battery Cable	1	1
28		2021998	Engine Harness ☞ Figure 71	1	1
29	a	2022002	Wire Harness (Monotrol) ☞ Figure 70	1	1
30	a	2021434	Neutral Start Switch	1	1
31		2022003	Wire Harness	..	1
32		190383	Boot	..	1
33		329067	Bolt	..	1
34		292681	Lockwasher	..	1
35		2021440	Ignition Coil	1	1
36		2022004	Wire Harness	1	1
37		2022517	Sender	1	1
38		1356105	Low Coolant Sender	1	1
39		....	Alternator ☞ Figure 77	1	1
40		....	Starter Motor ☞ Figure 75	1	1

a Monotrol Pedal

©1996 HYSTER COMPANY

ELECTRICAL SYSTEM

DIESEL

(Figure 61)

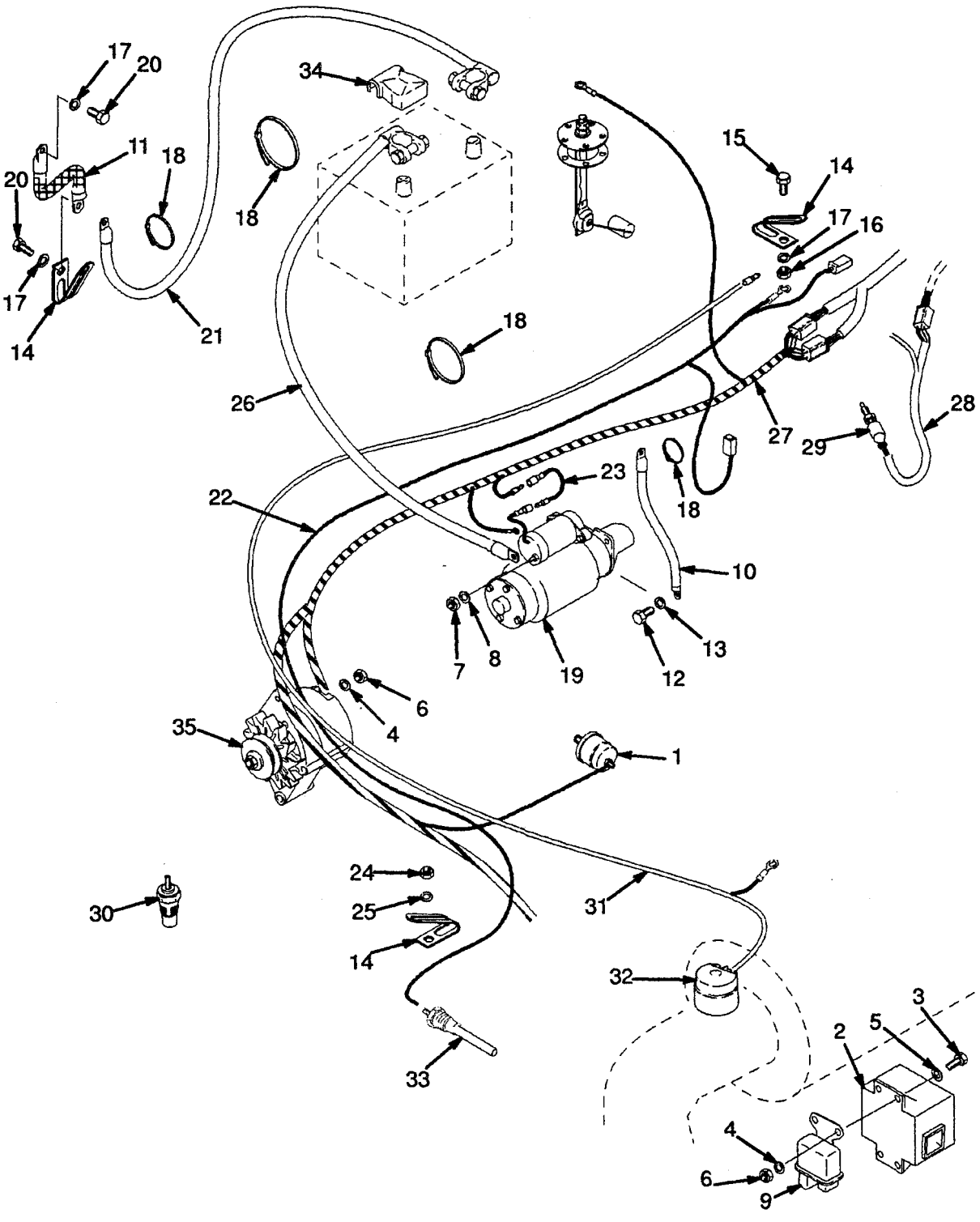

ELECTRICAL SYSTEM
DIESEL

REF	PART NO.	NAME OF PART	QTY
1	1360086	Oil Pressure Switch	1
2	2021971	Controller	1
3	292501	Bolt	4
4	292680	Lockwasher	5
5	320156	Washer	4
6	136687	Nut	5
7	239503	Nut	1
8	292681	Lockwasher	1
9	2021455	Relay	1
10	2021986	Battery Cable	1
11	2021996	Wire Assy	1
12	302285	Bolt	1
13	292682	Lockwasher	1
14	2022013	Clamp	5
15	136681	Hex Head Bolt	1
16	239503	Nut	1
17	292681	Lockwasher	3
18	137852	Strap Clamp	AR
19	....	Starter Motor ☞ Figure 76	1
20	2021233	Bolt	2
21	2021990	Battery Cable	1
22	2021995	Wire Harness (Seat Switch) ☞ Figure 72	1
23	2022012	Wire Assy	1
24	239503	Nut	1
25	292681	Lockwasher	1
26	2021991	Battery Cable	1
27	2022000	Engine Harness (Frame) ☞ Figure 73	1
28 [a]	2022002	Wire Harness (Monotrol Pedal) ☞ Figure 70	1
29 [a]	2021434	Switch	1
30	1367633	Temperature Sender	1
31	2022005	Wire Harness	1
32	2022516	Sender	1
33	1356105	Low Coolant Sender	1
34	257241	Boot	1
35	....	Alternator ☞ Figure 77	1

[a] Monotrol Pedal

©1996 HYSTER COMPANY

BATTERY
(Figure 62)

2,0L

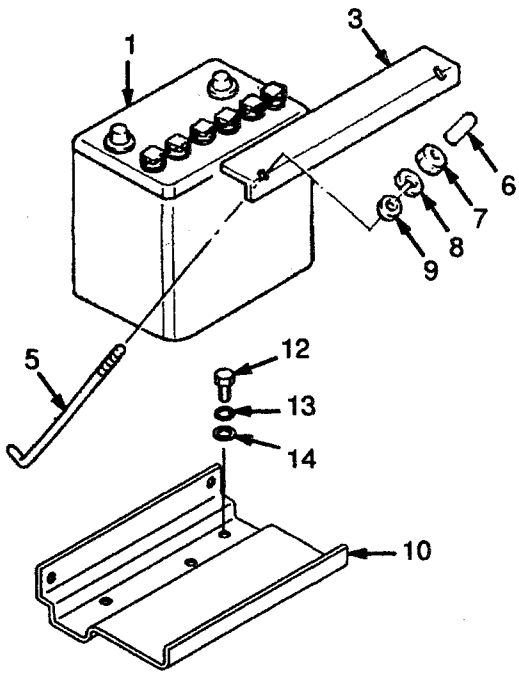

2,5L

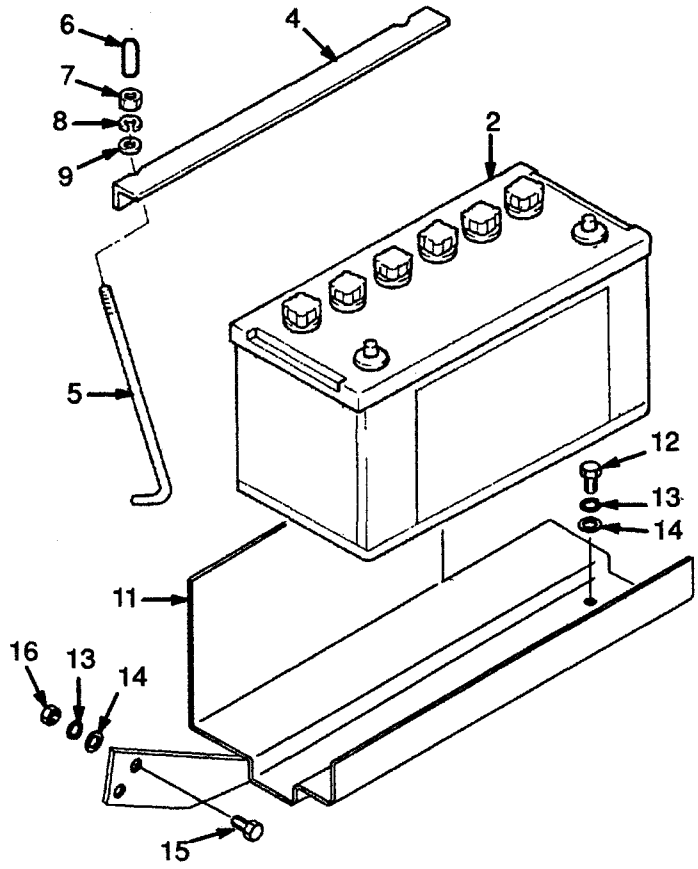

BATTERY

KEY
A: Petrol and LPG
B: Diesel

REF	PART NO.	NAME OF PART	QTY A	QTY B
1	2022635	Battery	1	..
2	2022820	Battery	..	1
3	2021943	Clamp	1	..
4	1332658	Clamp	..	1
5	309124	Rod	2	2
6	1326939	Cap	2	2
7	136687	Nut	2	2
8	292680	Lockwasher	2	2
9	320156	Washer	2	2
10	2021947	Tray	1	..
11	2021948	Tray	..	1
12	316678	Screw	3	1
13	292681	Lockwasher	3	3
14	320157	Washer	3	3
15	136749	Hex Head Bolt	..	2
16	239503	Nut	..	2

©1996 HYSTER COMPANY

INSTRUMENT CLUSTER

(Figure 63)

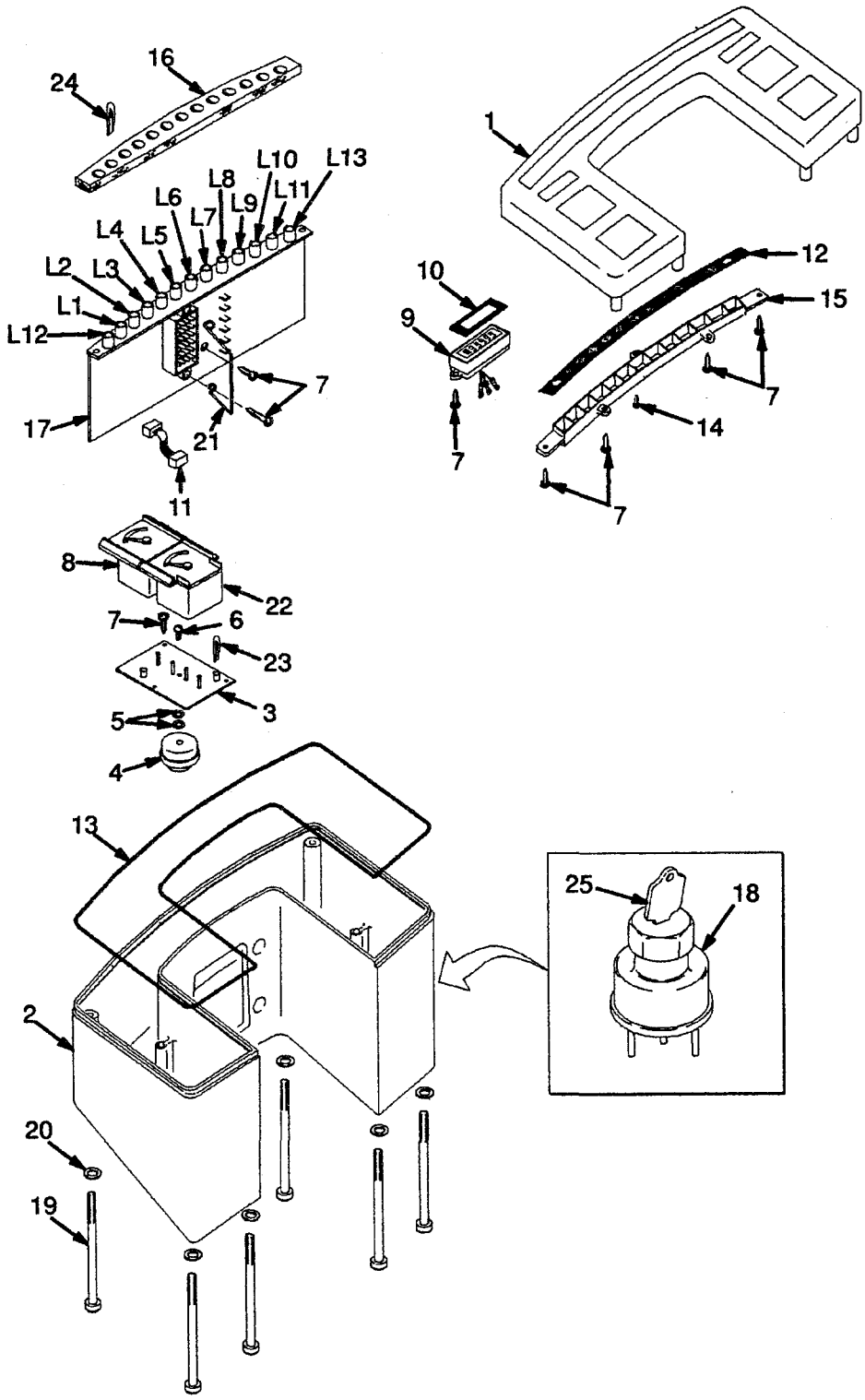

INSTRUMENT CLUSTER

PART NO.	DESCRIPTION	INCLUDES REF NO.S	REF NO. 23 QTY	REF NO. 24 QTY LOCATION
[b] 2022714	Instrument Cluster (Petrol)	Incld's 1-24	4	7 L1-L5,L9,L12-L13
[b] 2022715	Instrument Cluster (LPG)	Incld's 1-21,23,24	5	7 L1-L5,L10,L12-L13
[b] 2022716	Instrument Cluster (Diesel)	Incld's 1-24	4	7 L1-L5,L7-L8,L12-L13
[c] 2022740	Instrument Cluster (Petrol)	Incld's 1-24	2	9 L1-L5,L10-L13
[c] 2022741	Instrument Cluster (LPG)	Incld'd 1-21,23,24	1	9 L1-L5,L10-L13
[c] 2022742	Instrument Cluster (Diesel)	Incld's 1-24	2	10 L1-L5,L8,L11-L13
[d] 1343612	Instrument Cluster (Petrol)	Incld's 1-24	2	8 L1-L5,L19,L11-13
[d] 1343613	Instrument Cluster (LPG)	Incld's 1-21,23,24	1	8 L1-L5,L9,L11-13
[d] 1343614	Instrument Cluster (Diesel)	Incld's 1-24	2	9 L1-L5,L7,L8,L11-L13

[b] Includes Standard Indicators [c] Includes Premium Indicators [d] Includes Optional Indicators

REF		PART NO.	NAME OF PART	QTY
		1343612	Instrument Cluster (Petrol)	1
		1343613	Instrument Cluster (LPG)	1
		1343614	Instrument Cluster (Diesel)	1
	[a]	....	Instrument Cluster	1
1		1354775	Top Cover	1
2		1354776	Case	1
3		1354049	Circuit Board	1
4		1354804	Buzzer	1
5		1354780	Fibre Washer	1
6		189756	Screw	1
7		227131	Screw	14
8		1354778	Water Temperature Gauge	1
9		1354783	Hourmeter	1
10		1354782	Joint	1
11		1354805	Wire Harness	1
12		1354784	Warning Lamp Filter	1
13		1354785	Joint	1
14		1354786	Screw	1
15		1354787	Warning Lamp Housing	1
16		1354788	Seal	1
17		1354806	Circuit Board	1
18		1337114	Ignition Switch	1
19		1354797	Screw	8
20		320154	Washer	8
21		1358858	Clip	1
22		1354777	Fuel Gauge (Petrol)	1
23	[a]	1354796	Lamp	AR
24	[a]	1357367	Lamp	AR
25		1337197	Key	1

[a] ☞ Table

©1996 HYSTER COMPANY

SHIFT LEVER

(Figure 64)

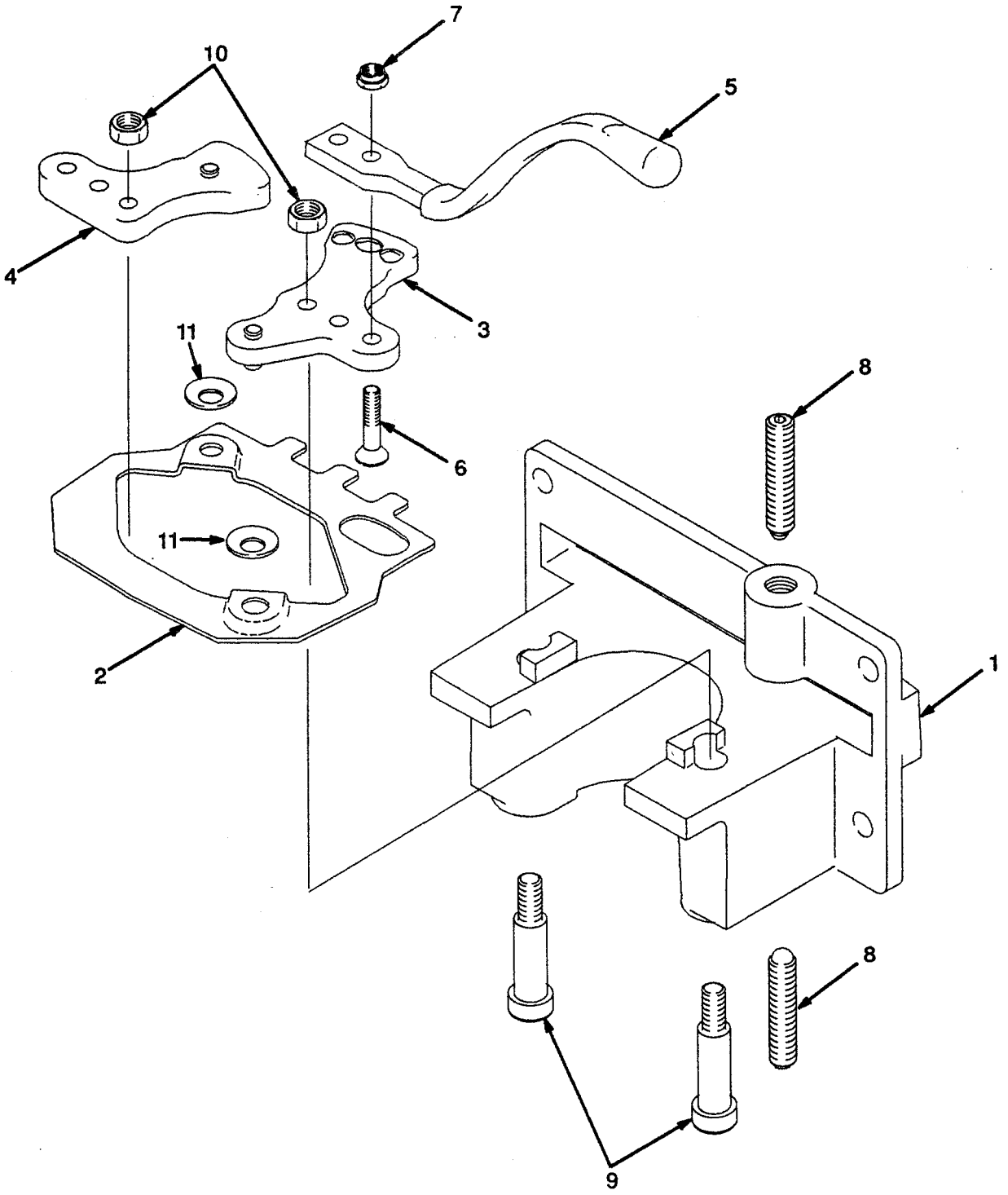

©1996 HYSTER COMPANY

SHIFT LEVER

REF	PART NO.	NAME OF PART	QTY
	1347004	Shift Lever	1
1	1343577	Base	1
2	1343578	Link	1
3	1343579	Crank	1
4	1343598	Crank	1
5	1343593	Shift Lever	1
6	296205	Hex Head Bolt	2
7	302398	Nut	2
8	1338291	Spring Plunger	2
9	1343594	Bolt	2
10	136687	Nut	2
11	1354300	Washer	2

©1996 HYSTER COMPANY

COWL ELECTRICAL

(Figure 65)

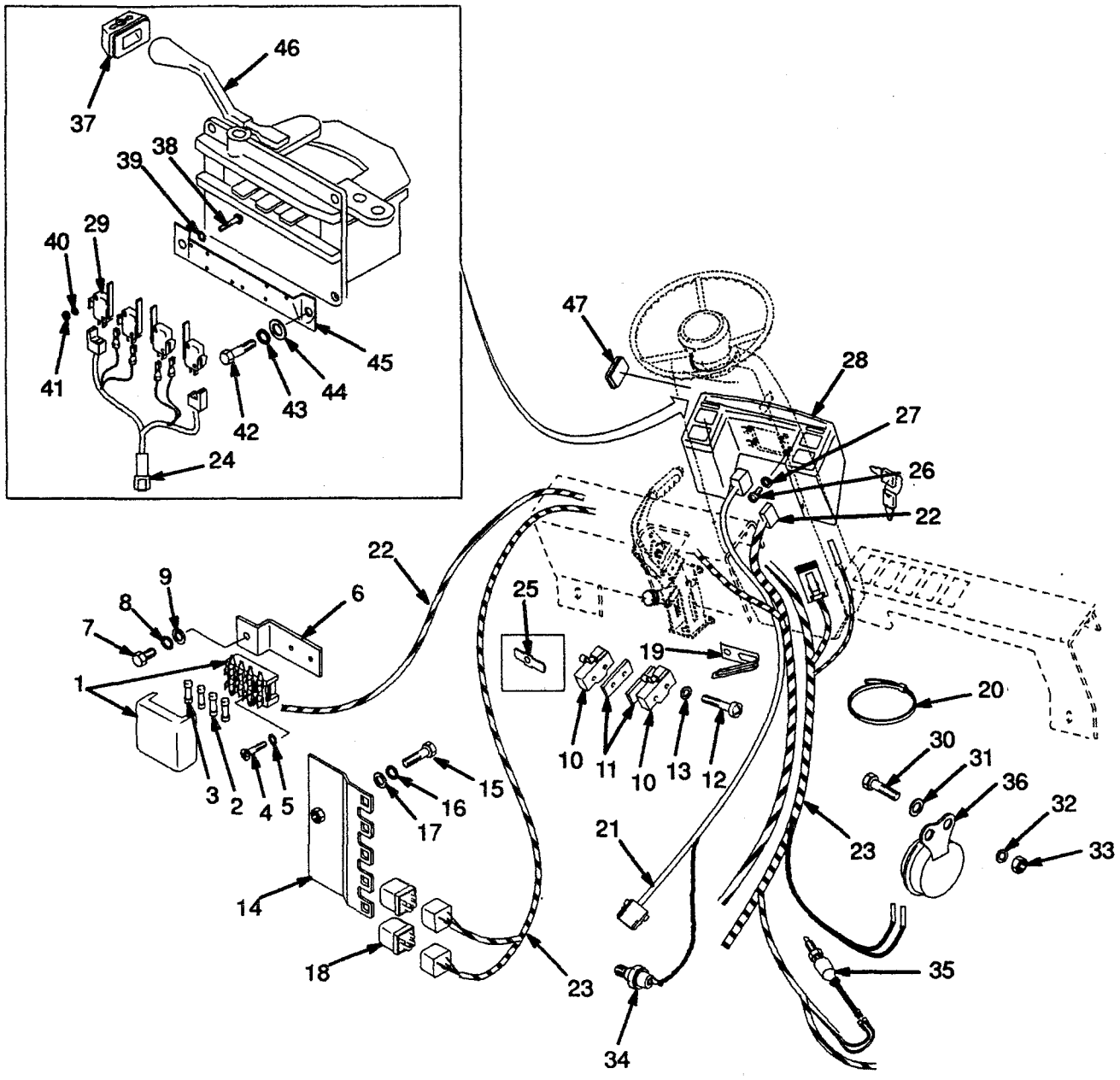

COWL ELECTRICAL

REF		PART NO.	NAME OF PART	QTY
1		2021952	Fuse Box	1
2		2021953	Fuse (10 Amp)	3
3		21778	Fuse (20 Amp)	1
4		302035	Screw	2
5		292679	Lockwasher	2
6		2021954	Bracket	1
7		287817	Bolt	1
8		292680	Lockwasher	1
9		320156	Washer	1
10	c	370868	Switch	2
10	ad	370868	Switch	2
10	ae	370868	Switch	1
11	c	316132	Spacer	2
11	ad	316132	Spacer	2
11	ae	316132	Spacer	1
12	c	86510	Screw	4
12	ad	86510	Screw	2
12	ae	86510	Screw	1
13	c	138573	Washer	4
13	ad	135873	Washer	2
13	ae	135873	Washer	1
14		2021955	Bracket	1
15		287851	Hex Head Bolt	1
16		292681	Lockwasher	1
17		320157	Washer	1
18		2021959	Relay	2
19		2022013	Clamp	1
20		137852	Strap Clamp	AR
21		2022506	Instrument Panel Harness ☞ Figure 67	1
22		2022514	Wire Harness ☞ Figure 68	1
23		2022507	Cowl Harness ☞ Figure 66	1
24	a	1352088	Wire Harness (Forward and Reverse) ☞ Figure 69	1
25	a	1361121	Connector	1
26		292500	Hex Head Bolt	4
27		292680	Lockwasher	4
28		....	Instrument Panel ☞ Figure 63	1
29	a	1343636	Switch	4
30		292501	Bolt	2
31		137852	Washer	2
32		292680	Lockwasher	2
33		136687	Nut (Coolant Level)	2
34		2021388	Temperature Switch	1
35	b	2021434	Switch	1
36		2021957	Horn	1
37		1343596	Bracket	1
38		220426	Screw	8
39		18419	Lockwasher	8
40		53162	Lockwasher	8
41		16865	Nut	8
42		292500	Hex Head Bolt	4
43		292680	Lockwasher	4
44		320156	Washer	4
45		1343595	Plate	1
46		....	Shift Lever ☞ Figure 64	1
47	c	1343597	Plug	1

a Forward/Reverse Lever
b with Brake/Tail Lights
c Monotrol Pedal
d Last Used on S/N D001B-2637
e First Used on S/N D001B-2638

©1996 HYSTER COMPANY

COWL HARNESS

(Figure 66)

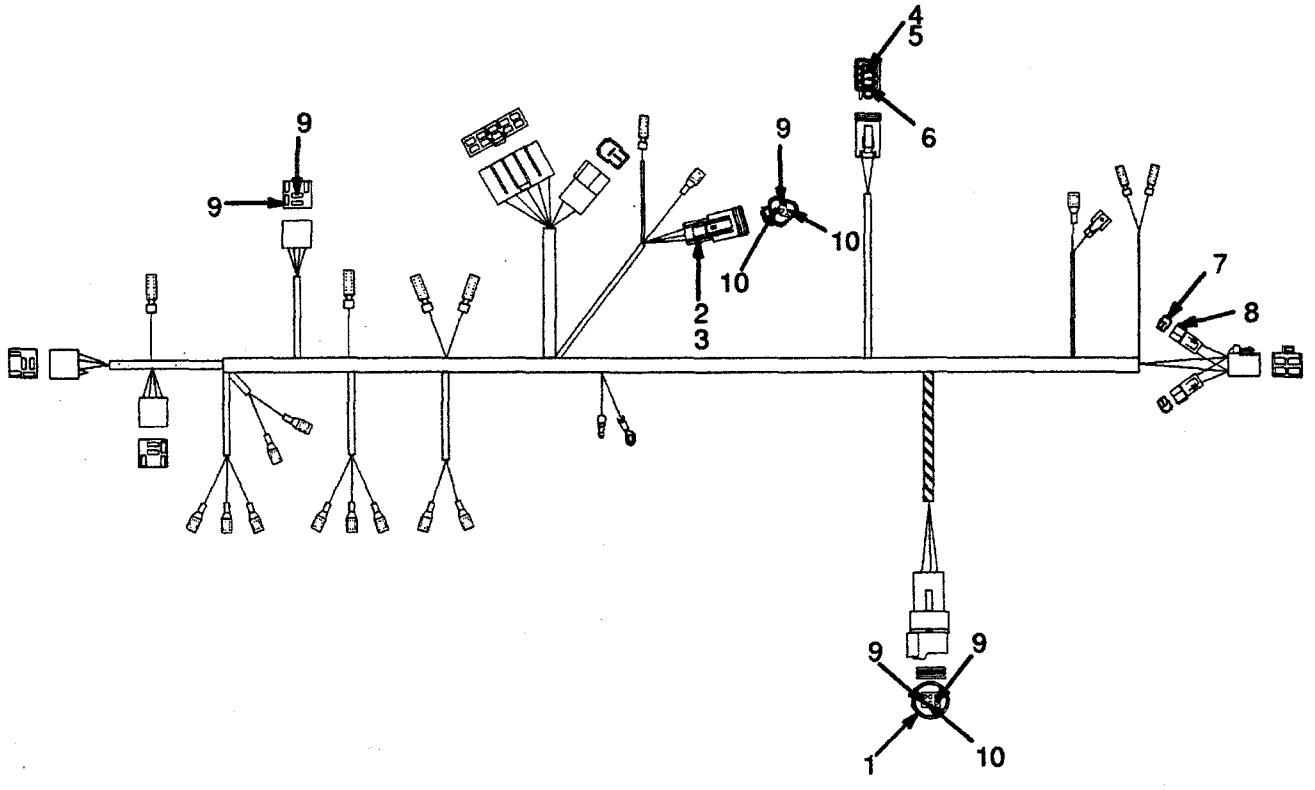

©1996 HYSTER COMPANY

COWL HARNESS

REF	PART NO.	NAME OF PART	QTY
	2023731	Cowl Harness	1
1	2022622	Connector (Rear Light)	1
2	1330426	Lock	1
3	1330420	Connector	1
4	1330422	Connector (Monotrol Pedal)	1
5	1330428	Lock	1
6	1330439	Plug	1
7	2022629	Diode	1
8	1361304	Connector	1
9	2022623	Terminal	5
10	1363886	Socket	5

©1996 HYSTER COMPANY

CLUSTER HARNESS

(Figure 67)

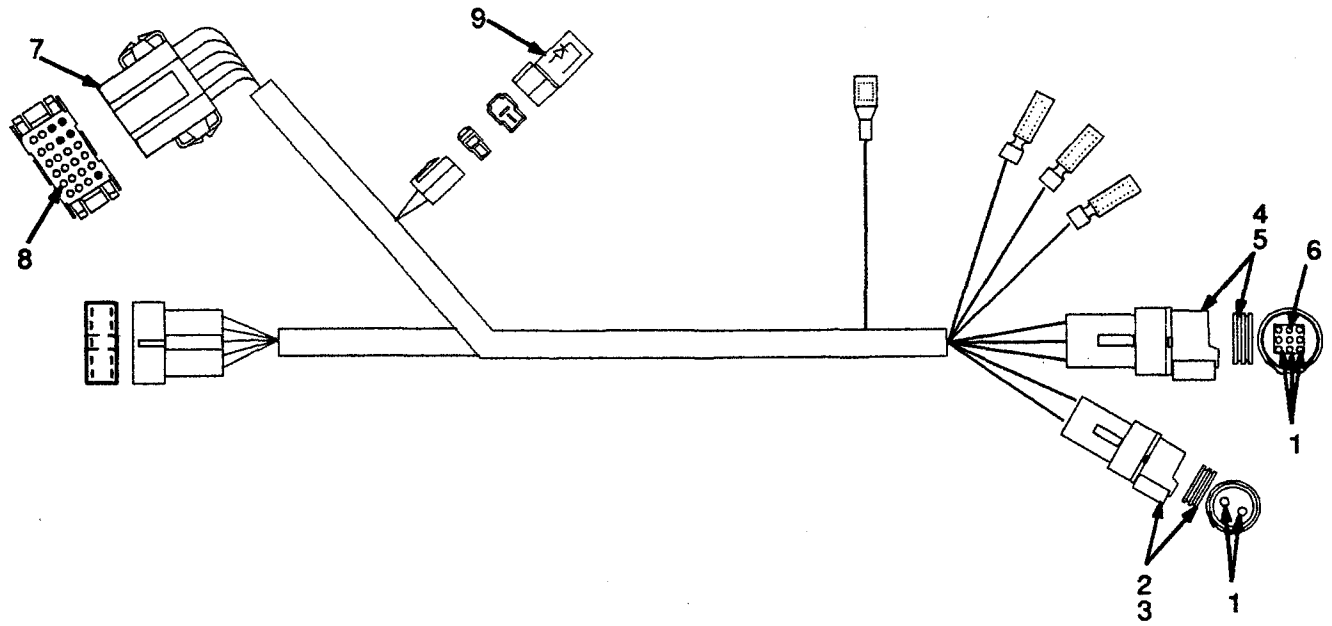

©1996 HYSTER COMPANY

CLUSTER HARNESS

REF	PART NO.	NAME OF PART	QTY
	2022506	Cluster Harness	1
1	2022623	Terminal	10
2	1351070	Frame	1
3	1351076	Seal	1
4	2022626	Connector (Frame)	1
5	2022627	Seal	1
6	2022628	Plug	1
7	1352599	Connector (Instrument Panel)	1
8	1352600	Socket	19
9	2022629	Diode	1

©1996 HYSTER COMPANY

CLUSTER POWER HARNESS

(Figure 68)

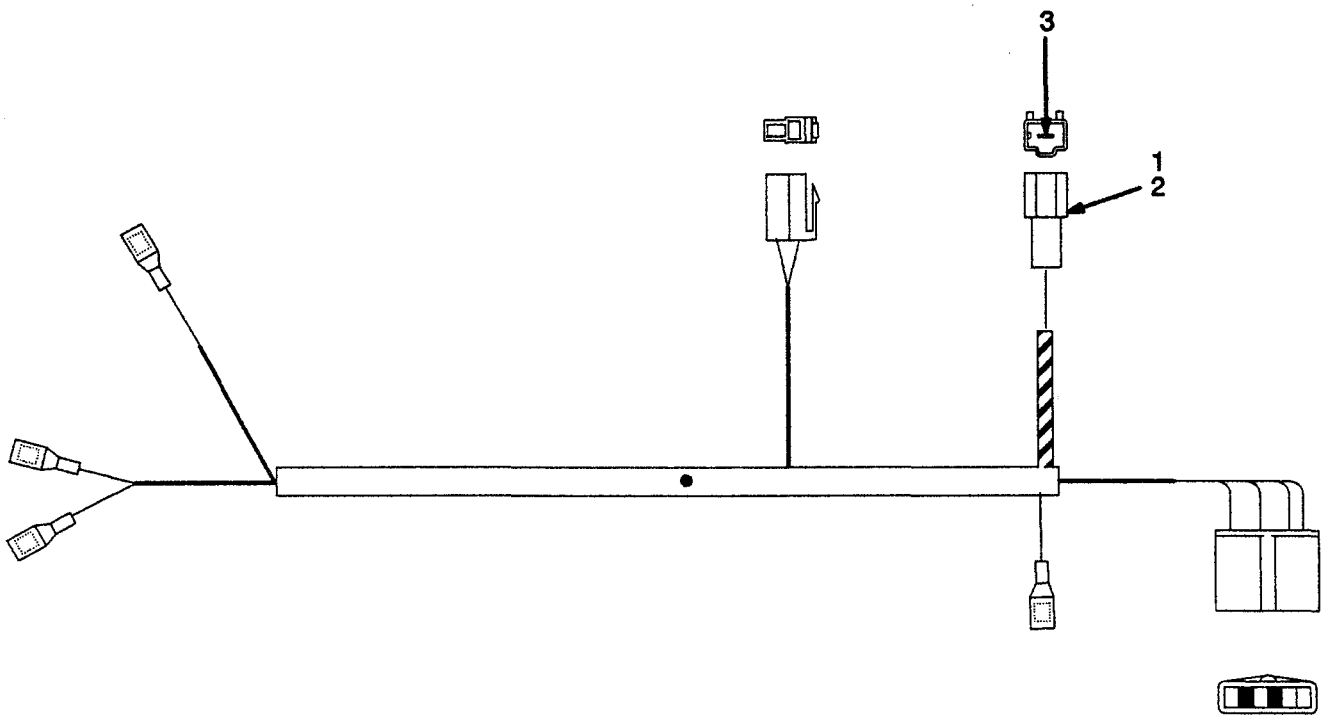

©1996 HYSTER COMPANY

CLUSTER POWER HARNESS

REF	PART NO.	NAME OF PART	QTY
	2022514	Cluster Power Harness	1
1	2022619	Connector (Frame)	1
2	2022621	Seal	1
3	2022618	Terminal	1

©1996 HYSTER COMPANY

HARNESS
FORWARD AND REVERSE
(Figure 69)

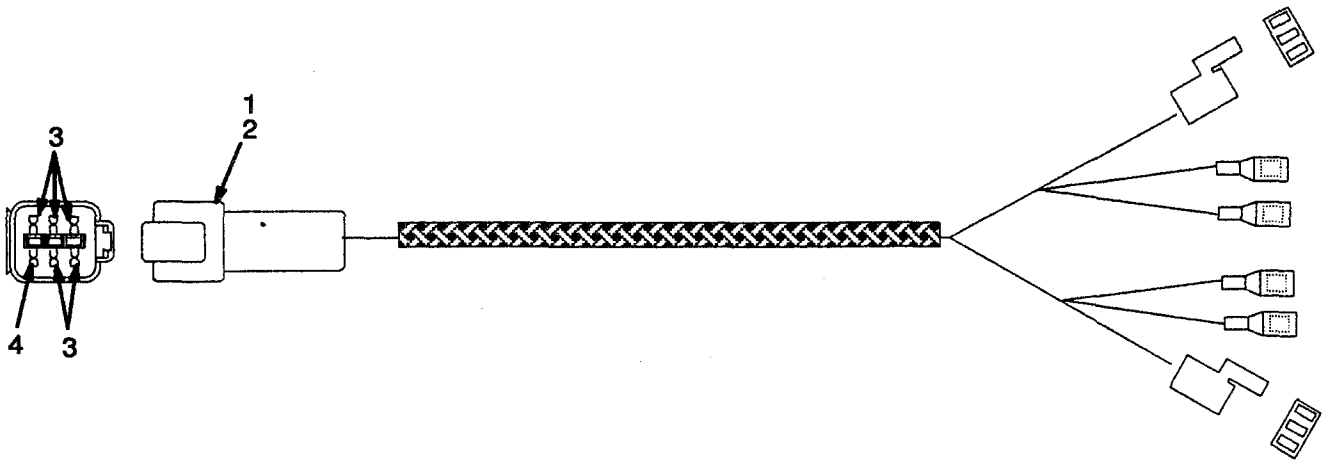

©1996 HYSTER COMPANY

HARNESS
FORWARD AND REVERSE

REF	PART NO.	NAME OF PART	QTY
	1352088	Wire Harness	1
1	1330412	Connector (Cowl)	1
2	1330417	Lock	1
3	1363885	Pin	5
4	1330439	Plug	1

©1996 HYSTER COMPANY

HARNESS
MONOTROL PEDAL
(Figure 70)

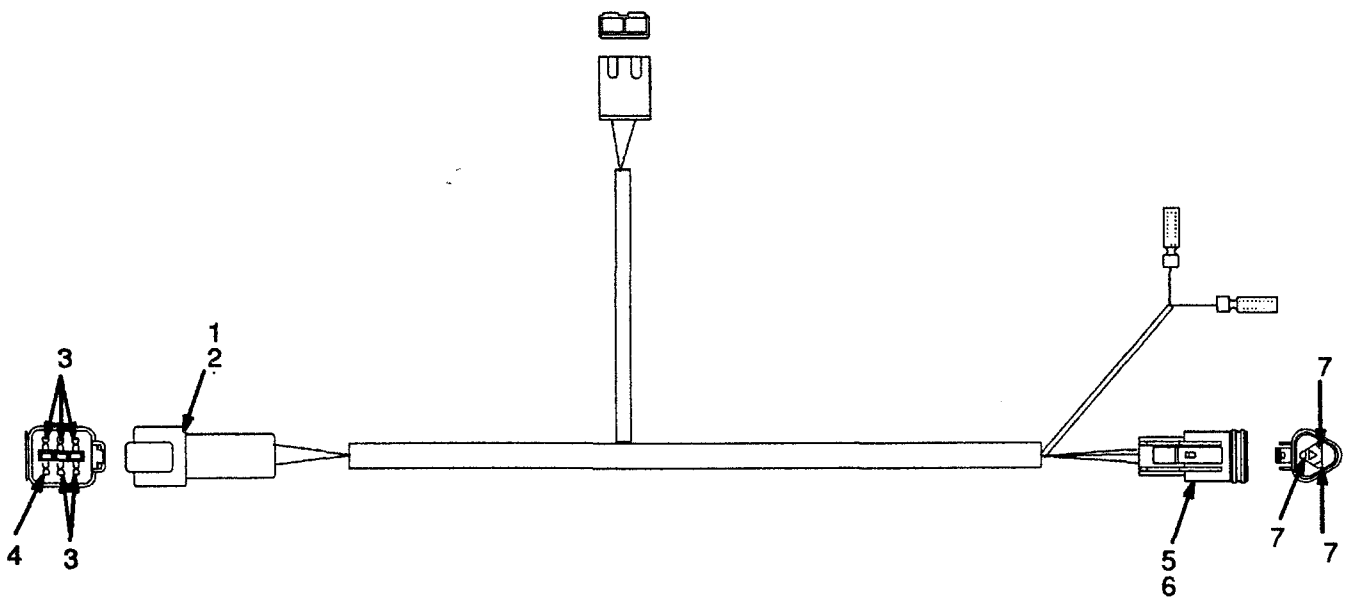

©1996 HYSTER COMPANY

HARNESS
MONOTROL PEDAL

REF	PART NO.	NAME OF PART	QTY
	2022002	Wire Harness	1
1	1330412	Connector (Cowl)	1
2	1330417	Lock	1
3	1363885	Pin	5
4	1330439	Plug	1
5	1330420	Connector (Solenoid)	1
6	1330426	Lock	1
7	1363886	Socket	3

©1996 HYSTER COMPANY

CHASSIS HARNESS

PETROL AND LPG

2,0L

(Figure 71)

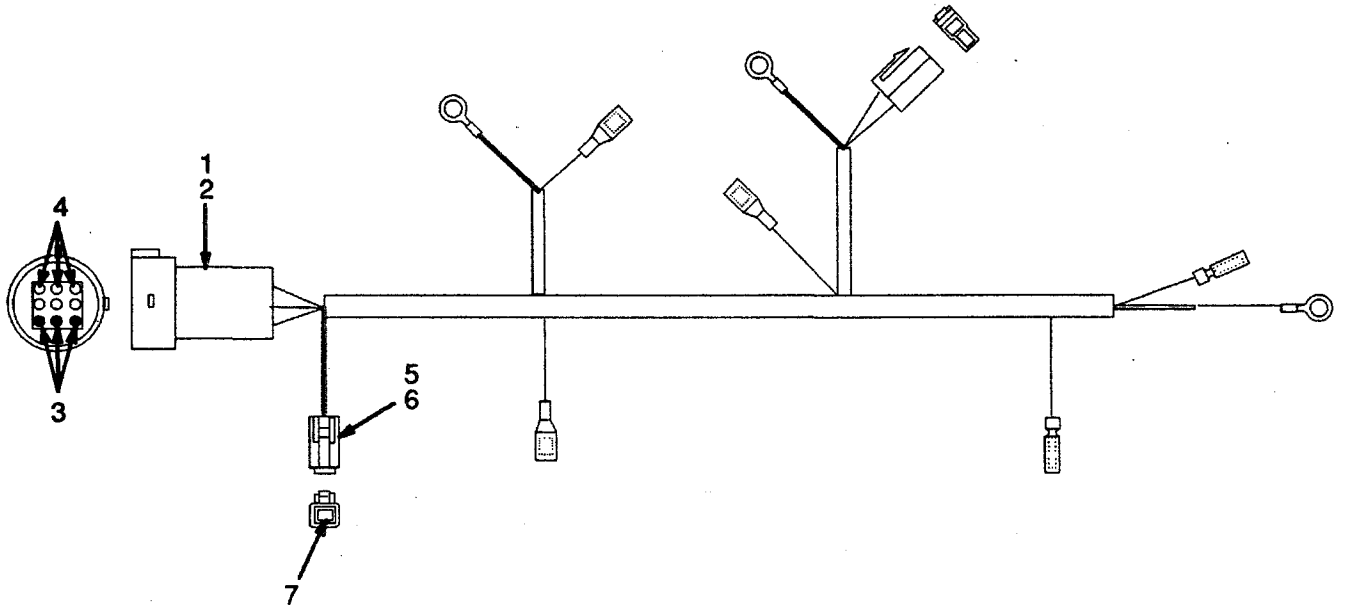

©1996 HYSTER COMPANY

CHASSIS HARNESS

PETROL AND LPG

2,0L

REF	PART NO.	NAME OF PART	QTY
	2021998	Chassis Harness	1
1	2022739	Connector (Cowl)	1
2	2022627	Seal	1
3	2022628	Plug	3
4	2022737	Terminal	6
5	2022736	Connector (Horn Fuse)	1
6	2022621	Seal	1
7	2022735	Terminal	1

©1996 HYSTER COMPANY

HARNESS
SEAT SWITCH
(Figure 72)

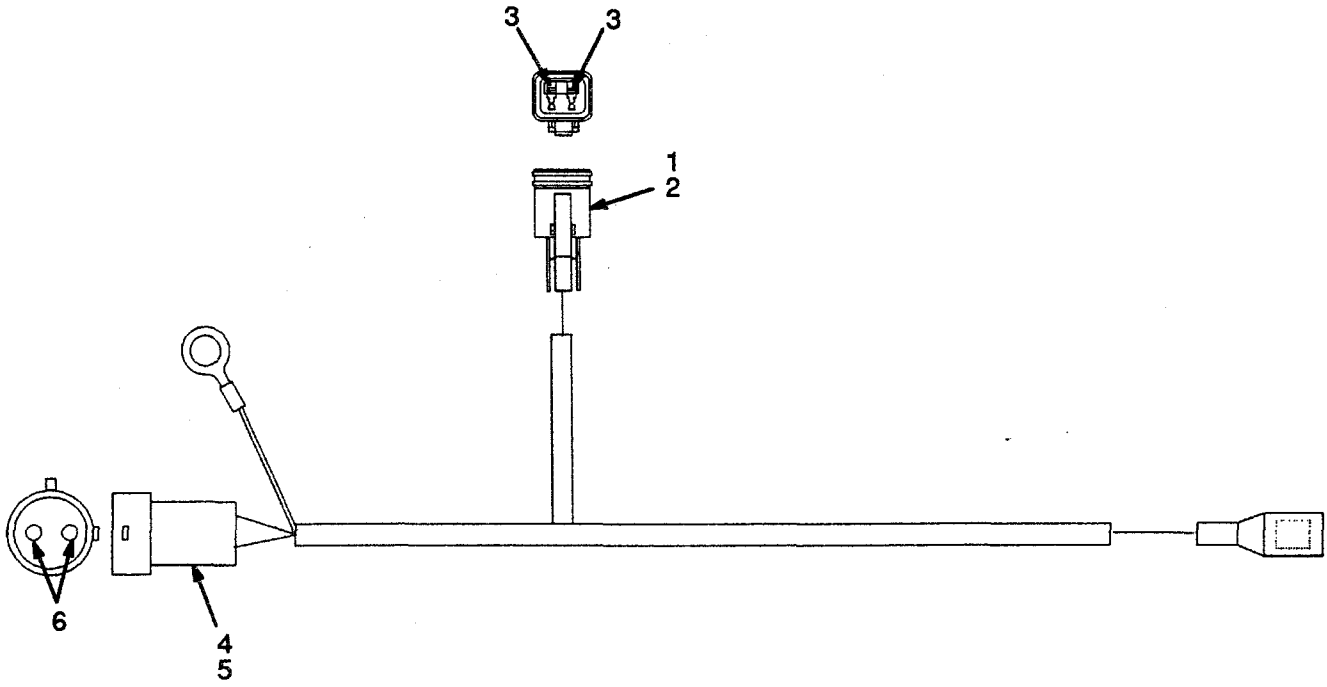

©1996 HYSTER COMPANY

STARTER MOTOR
PETROL AND LPG
2,0L

REF	PART NO.	NAME OF PART	QTY
	1362069	Starter Motor	1
1	1368862	Switch	1
2	1368849	Bracket (Front)	1
3	1368858	Sleeve	1
4	1368860	Brush Holder	1
5	326889	Brush Spring	3
6	1368861	Brush	1
7	1368857	Bracket (Rear)	1
8	1368859	Sleeve (Rear)	1
9	1368848	Yoke	1
10	1368863	Brush	2
11	1368850	Kit	1
12	1368851	Armature	1
13	1368852	Clutch	1
14	1368853	Kit-Screw	1
15	1368854	Kit-Washer	1
16	1368855	Lever	1
17	1368856	Bolt	2

©1996 HYSTER COMPANY

STARTER MOTOR

DIESEL

2,5L

(Figure 76)

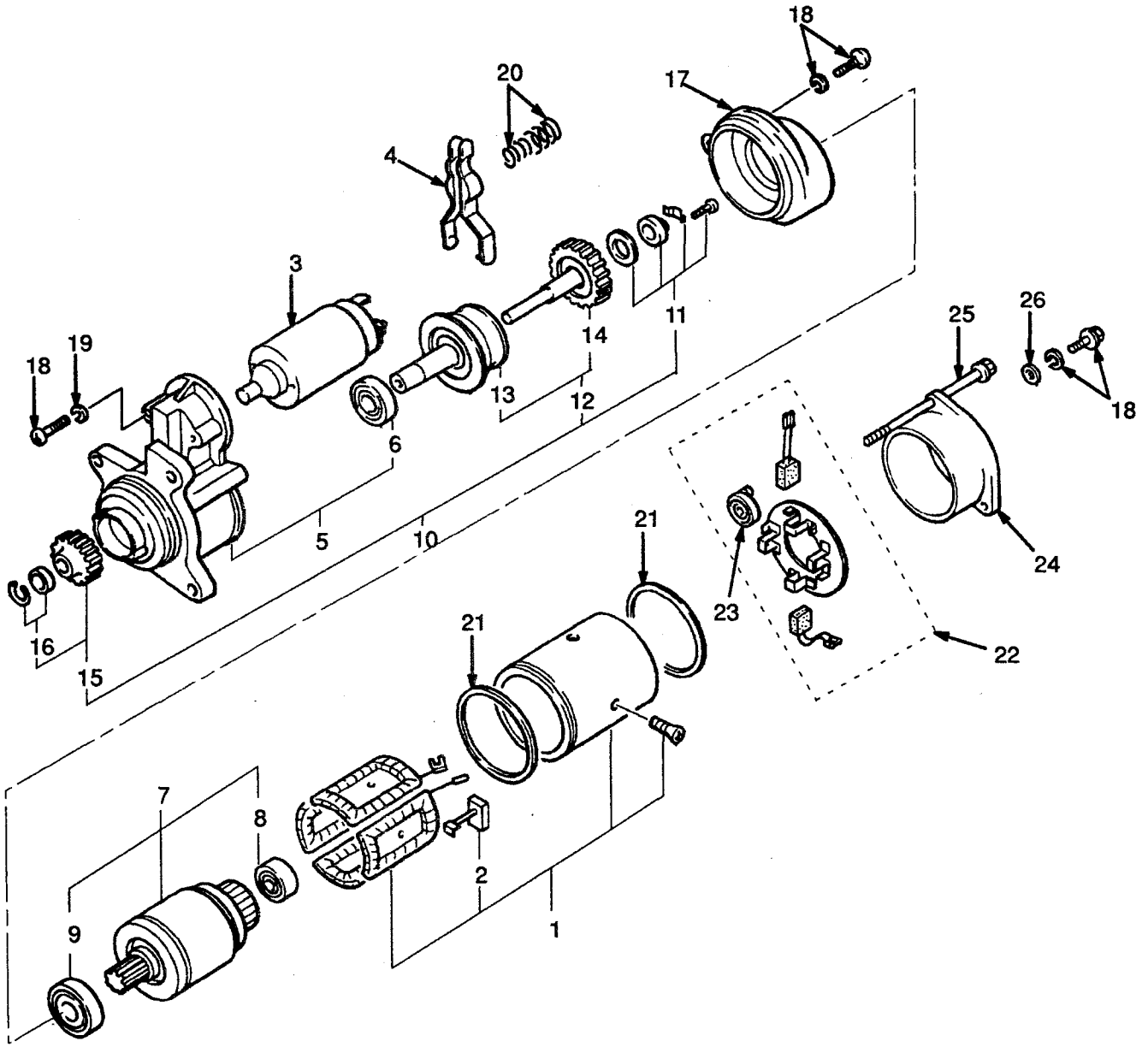

STARTER MOTOR

DIESEL

2,5L

REF	PART NO.	NAME OF PART	QTY
	2021166	Starter Motor	1
1	1362085	Yoke	1
2	1362086	Brush	2
3	1362087	Switch	1
4	1362088	Lever	1
5	1362089	Bracket (Front)	1
6	1362090	Bearing	1
7	1362091	Armature	1
8	1362092	Bearing	1
9	1362093	Bearing	1
10	1362094	Shaft	1
11	1362095	Cover	1
12	1362096	Gear Set	1
13	1362097	Shaft	1
14	1362098	Gear	1
15	1362099	Pinion	1
16	1362100	Kit-Stopper	1
17	1362101	Bracket (Centre)	1
18	1362102	Screw	3
19	1362103	Joint	2
20	1362104	Spring Set	1
21	1362106	Joint	2
22	1362107	Brush Holder	1
23	1362108	Brush Spring	4
24	1362109	Bracket (Rear)	1
25	1362110	Kit-Bolt	1
26	1362105	Ring	2

©1996 HYSTER COMPANY

ALTERNATOR

(Figure 77)

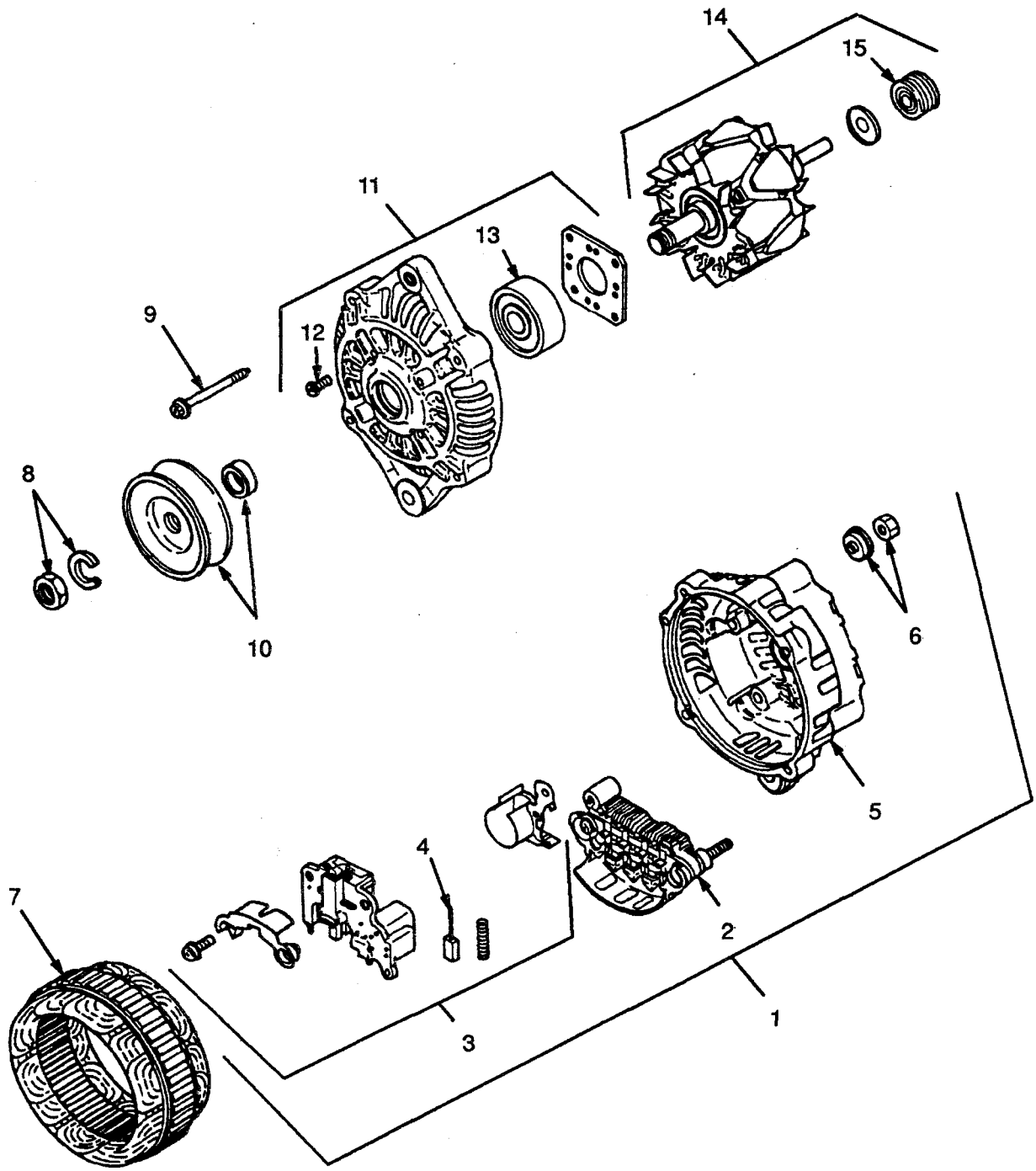

©1996 HYSTER COMPANY

ALTERNATOR

REF	PART NO.	NAME OF PART	QTY
	1361853	Alternator	1
1	1361851	Rear Cover	1
2	1361856	Rectifier	1
3	1361858	Regulator	1
4	1361859	Brush	2
5	1361852	Cover	1
6	1361862	Kit-Nut	1
7	1361854	Stator	1
8	1361863	Kit-Nut	1
9	1361864	Kit-Screw	1
10	1361861	Pulley	1
11	1361850	Front Cover	1
12	1361860	Kit-Screw	1
13	1361857	Bearing	1
14	1361865	Rotor	1
15	1361855	Bearing	1

©1996 HYSTER COMPANY

NOTES

©1996 HYSTER COMPANY

TRANSMISSION

Charge Pump
First Used on S/N D001B-3932 ..... Page 170

Charge Pump
Last Used on S/N D001B-3931 ..... Page 168

Control Valve
First Used on S/N D001B-3932 ..... Page 192

Control Valve
Last Used on S/N D001B-2931 ..... Page 190

Differential ..... Page 194

Drive Axle ..... Page 196

End Plate ..... Page 198

Hydraulic Clutch
First Used on S/N D001B-3932 ..... Page 188

Hydraulic Clutch
Last Used on S/N D001B-3931 ..... Page 186

Solenoid Valve ..... Page 172

Torque Converter
First Used on S/N D001B-3932 ..... Page 166

Torque Converter
Last Used on S/N D001B-3931 ..... Page 164

Transmission Gears
First Used on S/N D001B-3932 ..... Page 180

Transmission Gears
Last Used on S/N D001B-3931 ..... Page 178

Transmission Housing
First Used on S/N D001B-3932 ..... Page 176

Transmission Housing
Last Used on S/N D001B-3931 ..... Page 174

Transmission Hydraulic Lines
First Used on S/N D001B-3932 ..... Page 184

Transmission Hydraulic Lines
Last Used on S/N D001B-3931 ..... Page 182

©1996 HYSTER COMPANY

TORQUE CONVERTER

LAST USED ON S/N

D001B-3931

(Figure 78)

PARTS-SERVICE GRAM	
ITEM	GRAM
1	C-B-15 (E)

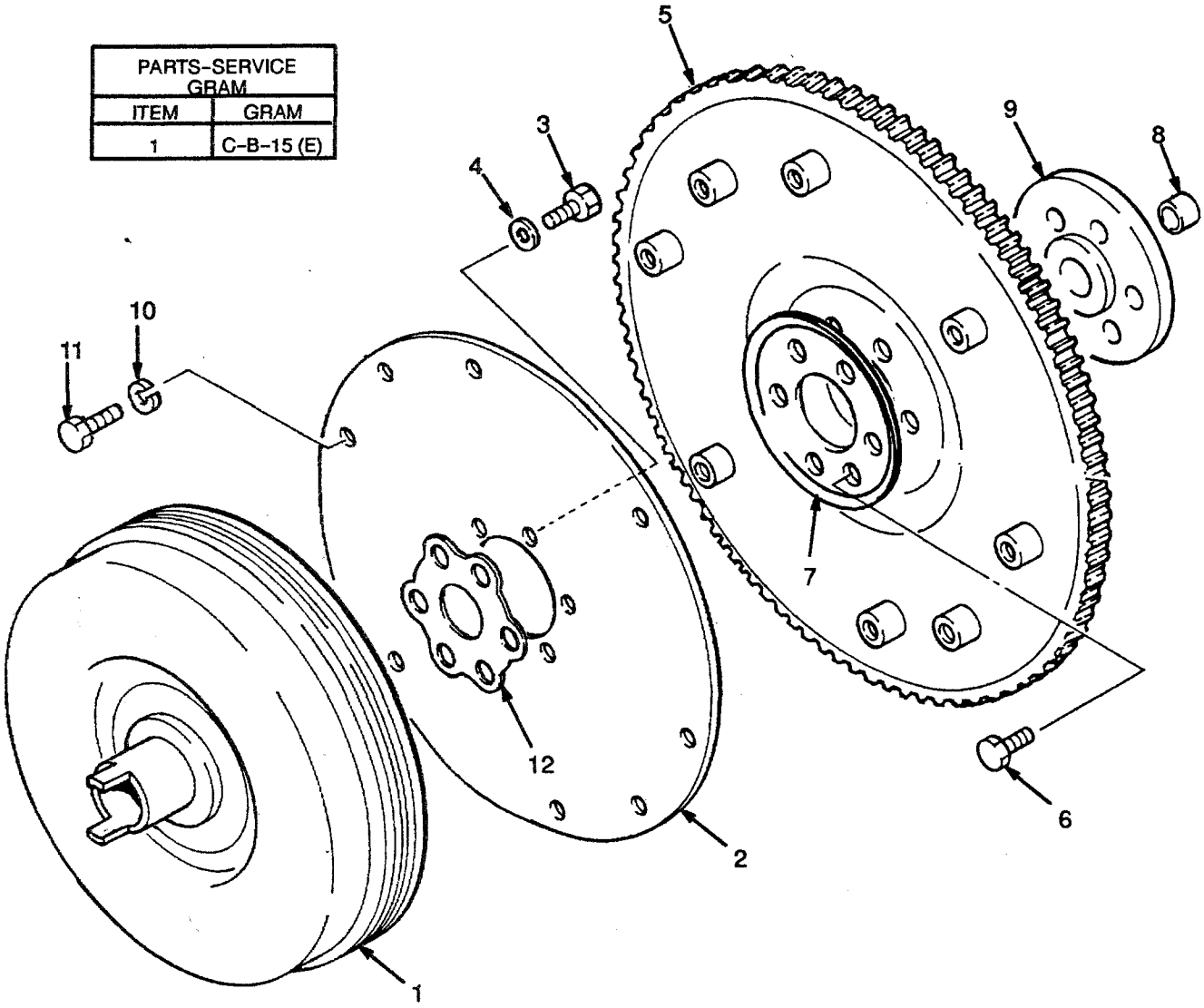

©1996 HYSTER COMPANY

TORQUE CONVERTER

FIRST USED ON S/N

D001B–3932

REF		PART NO.	NAME OF PART	QTY
		2023912	Torque Converter	1
1		2023993	Torque Converter	1
2		2023994	Plate	1
3		293626	Bolt	6
4		296420	Washer	6
5	a	2021362	Flywheel Assy	1
5	b	2021368	Flywheel Assy	1
6	a	2021438	Bolt	6
6	b	2021019	Bolt	6
7	a	2021442	Backplate	1
8		2021380	Bush	1
9	b	2021376	Flange	1
9	a	2021378	Flange	1
10		292682	Lockwasher	4
11		292514	Bolt	4
12	a	2021834	Washer	6

a Petrol and LPG
b Diesel

©1996 HYSTER COMPANY

CHARGE PUMP

LAST USED ON S/N

D001B-3931

(Figure 80)

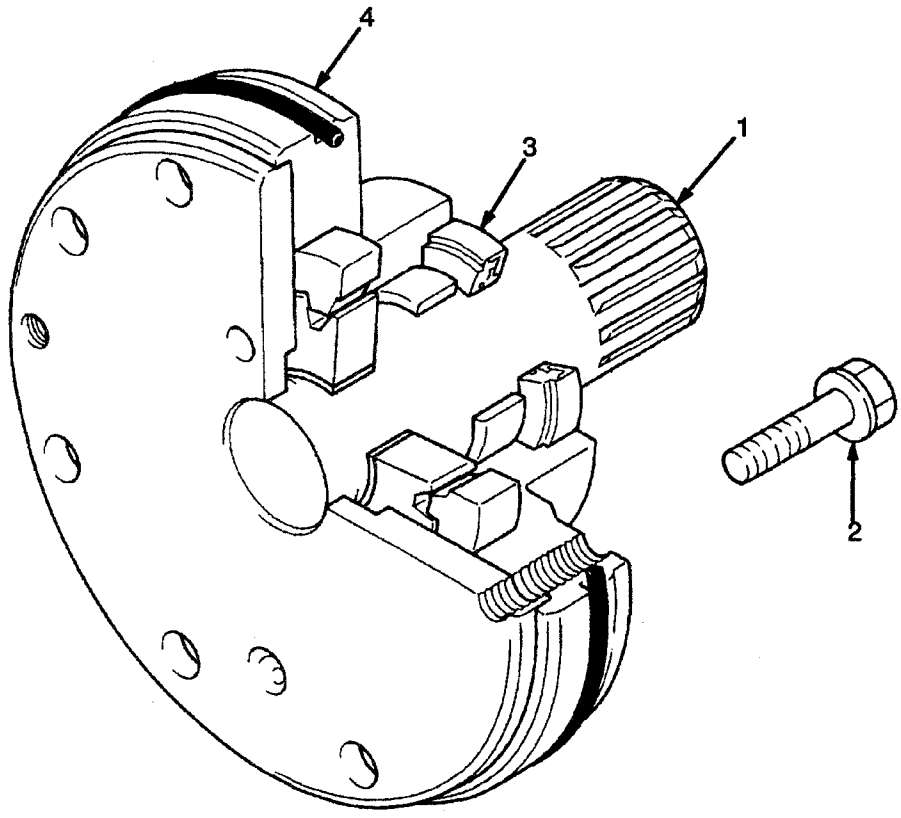

©1996 HYSTER COMPANY

CHARGE PUMP
LAST USED ON S/N
D001B-3931

REF	PART NO.	NAME OF PART	QTY
	2021344	Pump	1
1	1367598	Shaft	1
2	1367601	Bolt	2
3	1367600	Oil Seal	1
4	1367599	O-Ring	1

©1996 HYSTER COMPANY

CHARGE PUMP

FIRST USED ON S/N

D001B-3932

(Figure 81)

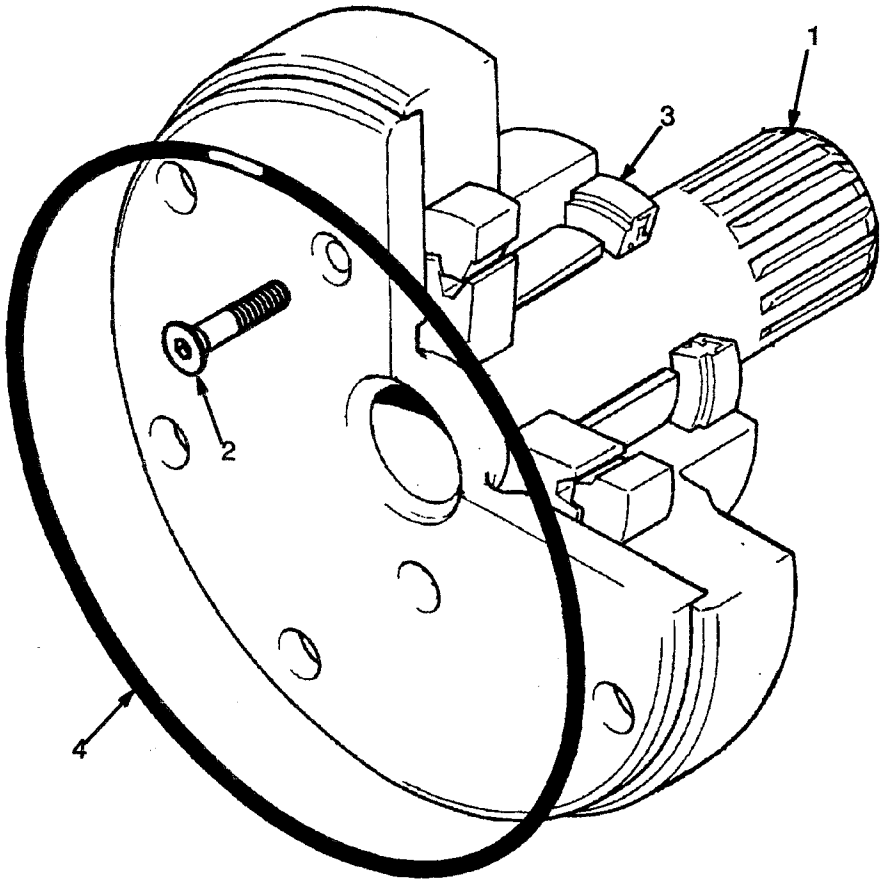

©1996 HYSTER COMPANY

CHARGE PUMP

FIRST USED ON S/N

D001B-3932

REF	PART NO.	NAME OF PART	QTY
	2023917	Pump	1
1	....	Shaft	1
2	1385124	Bolt	2
3	2023995	Oil Seal	1
4	2023996	O-Ring	1

©1996 HYSTER COMPANY

SOLENOID VALVE

(Figure 82)

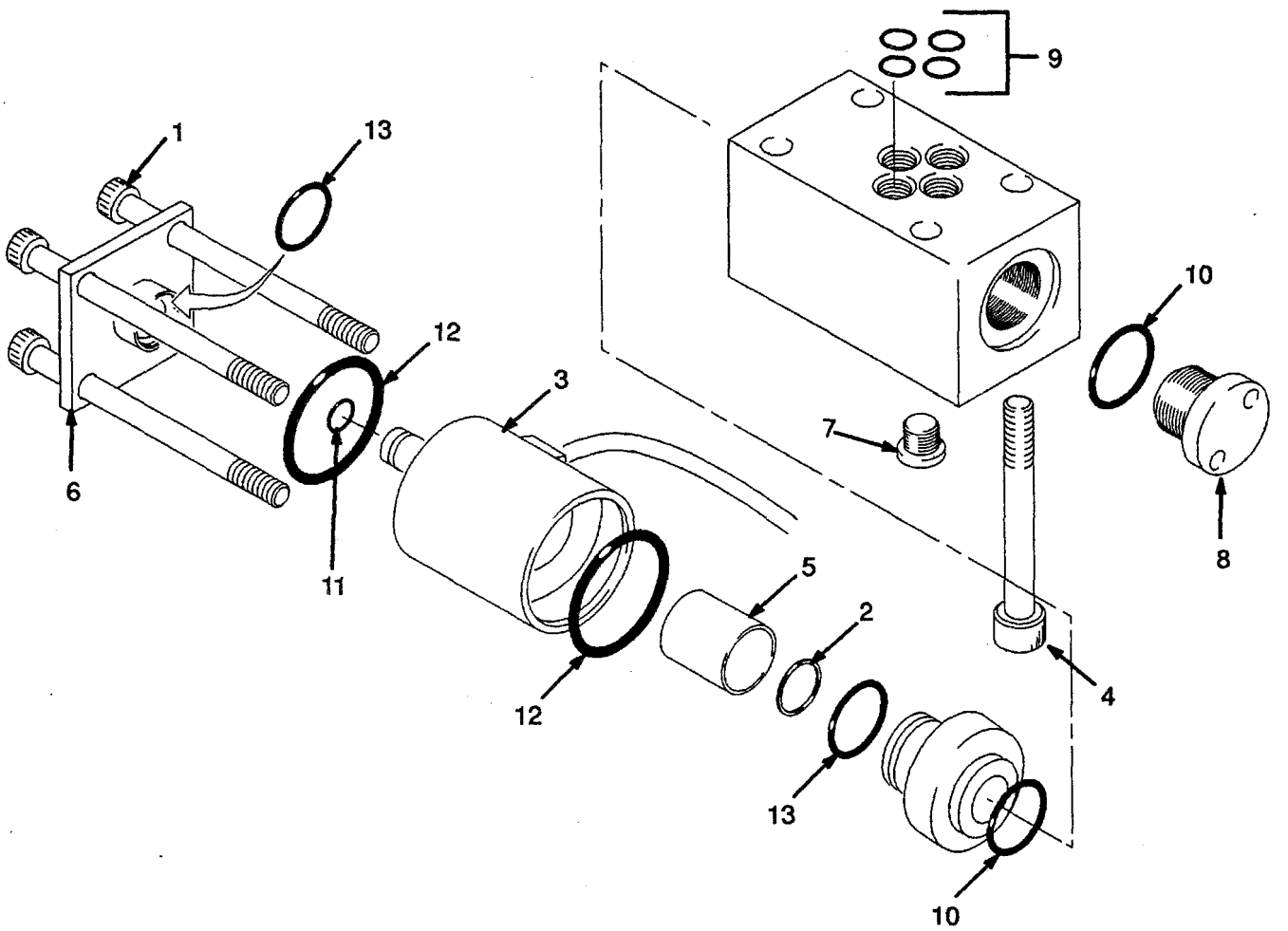

©1996 HYSTER COMPANY

SOLENOID VALVE

REF	PART NO.	NAME OF PART	QTY
	2021325	Solenoid Valve	1
1	1367604	Bolt	4
2	....	Retaining Ring	1
3	1367603	Coil	1
4	2021328	Bolt	4
5	1367607	Tube	1
6	1367606	Plug	1
7	1367605	Plug	1
8	1367602	Plug	1
9 [a]	1367611	O-Ring	4
10 [a]	1367613	O-Ring	2
11 [a]	....	O-Ring	1
12 [a]	....	O-Ring	2
13 [a]	....	O-Ring	2

[a] Included In Seal Kit 1367609

©1996 HYSTER COMPANY

TRANSMISSION HOUSING

LAST USED ON S/N

D001B-3931

(Figure 83)

PARTS-SERVICE GRAM	
ITEM	GRAM
1	C-B-15 (E)

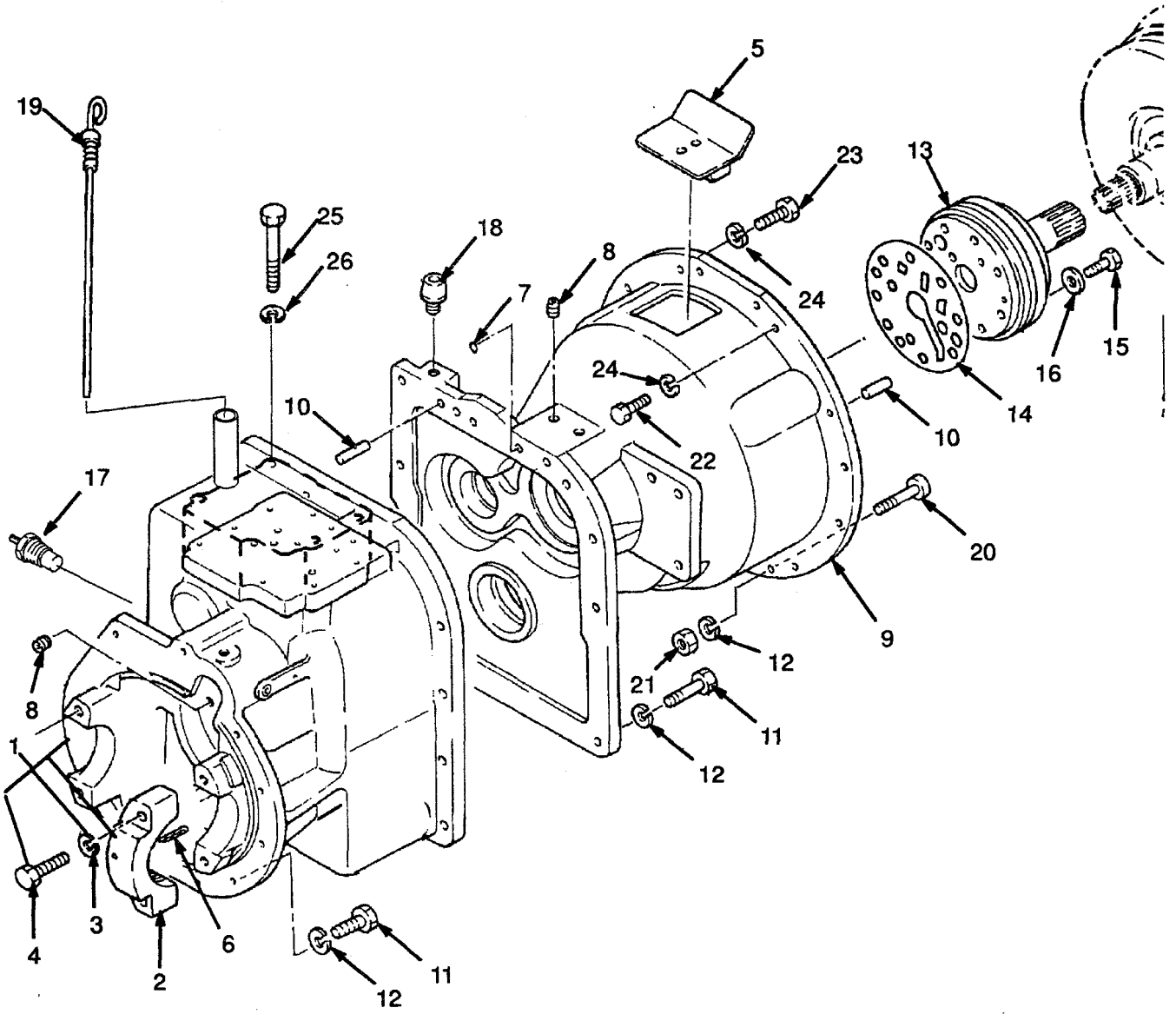

TRANSMISSION HOUSING

LAST USED ON S/N

D001B-3931

REF	PART NO.	NAME OF PART	QTY
	2022547	Transmission (2,0L)	1
	2023329	Transmission (2,5L)	1
1	2021670	Case	1
2	293642	Bolt	4
3	296426	Washer	4
4	2023418	Bearing Cap	2
5	2021390	Cover	1
6	1371656	Split Pin	2
7	2021329	O-Ring	2
8	2021915	Plug	4
9	2021675	Housing	1
10	2021336	Pin	4
11	287860	Bolt	22
12	292682	Lockwasher	39
13	....	Hydraulic Pump	1
		☞ Figure 80	

REF	PART NO.	NAME OF PART	QTY
14	2021345	Packing	1
15	214364	Bolt	8
16	296418	Washer	8
17	2021388	Temperature Sender	1
18	2021389	Breather	1
19	2021383	Dipstick	1
20	292515	Bolt	9
21	136692	Nut	9
22	292527	Bolt (2,0L Petrol and LPG)	2
23	292531	Bolt (2,5L Diesel)	3
24	292683	Lockwasher (2,0L Petrol and LPG)	2
24	292683	Lockwasher (2,5L Diesel)	3
25	293637	Bolt	4
26	296420	Washer	4

©1996 HYSTER COMPANY

TRANSMISSION HOUSING

FIRST USED ON S/N

D001B-3932

(Figure 84)

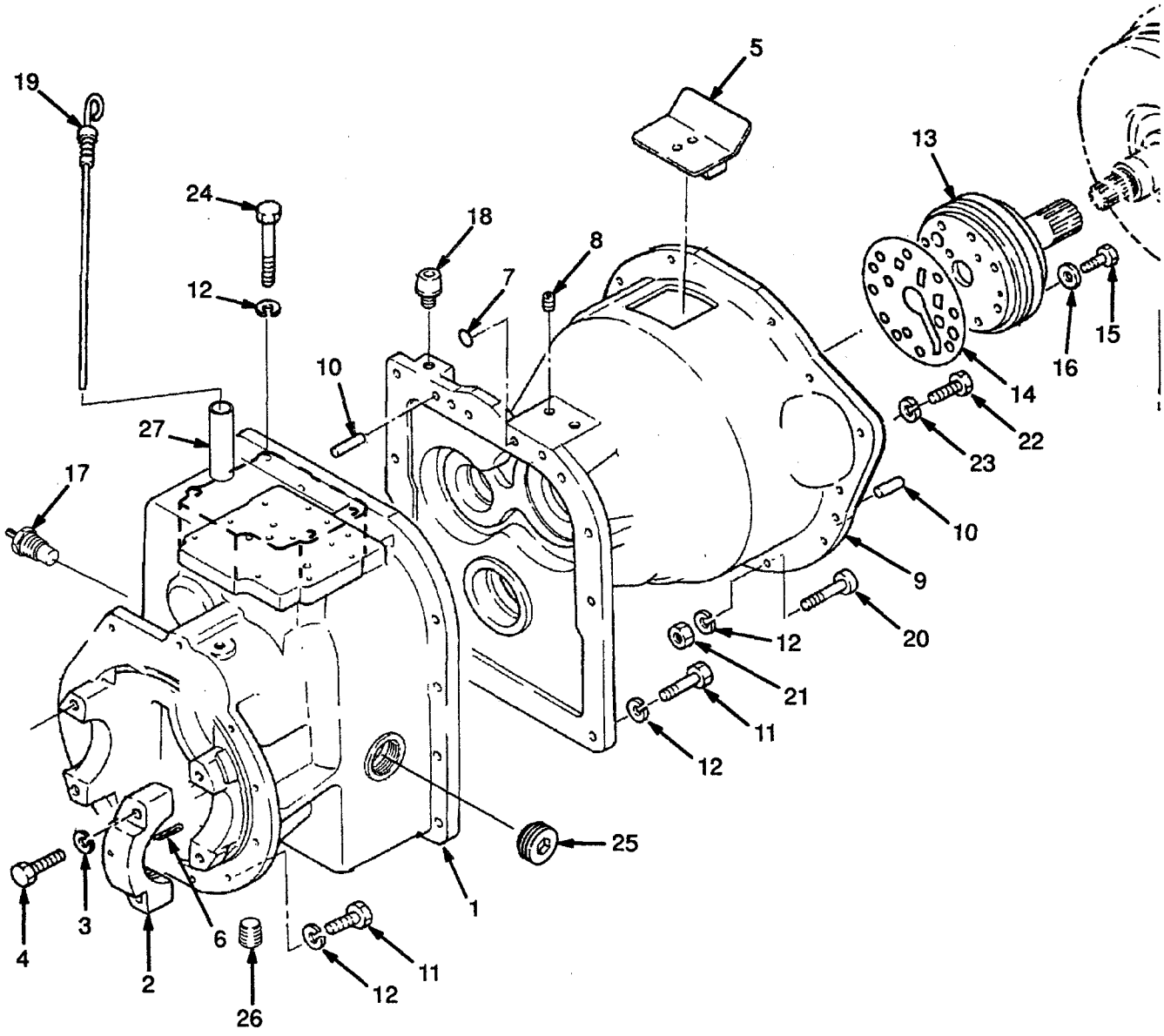

©1996 HYSTER COMPANY

TRANSMISSION HOUSING

FIRST USED ON S/N

D001B-3932

REF	PART NO.	NAME OF PART	QTY
	2023970	Transmission (Petrol and LPG)	1
	2023971	Transmission (Diesel)	1
1	2026113	Case	1
2	2023418	Bearing Cap	2
3	296426	Washer	4
4	293692	Bolt	4
5	2021390	Cover	1
6	1371656	Split Pin	2
7	2021329	O-Ring	2
8	2021915	Plug	4
9	2026112	Housing	1
10	2021336	Pin	4
11	2023422	Bolt	10
12	292682	Lockwasher	38
13	....	Hydraulic Pump ☞ Figure 81	1
14	2021345	Joint	1
15	214364	Bolt	5
16	296418	Washer	5
17	2021388	Temperature Sender	1
18	2021389	Breather	1
19	2021383	Dipstick	1
20	292515	Bolt	9
21	136692	Nut	9
22	292527	Bolt (2,0L Petrol and LPG)	2
23	292531	Bolt (2,5L Diesel)	3
24	292683	Lockwasher (2,0L Petrol and LPG)	2
24	292683	Lockwasher (2,5L Diesel)	3
25	292531	Hex Head Bolt	4
26	2023976	Plug	1
27	2021917	Plug	1
28	2022354	Pipe	1

©1996 HYSTER COMPANY

TRANSMISSION GEARS

LAST USED ON S/N

D001B-3931

(Figure 85)

PARTS-SERVICE GRAM	
ITEM	GRAM
10,16	C-B-15 (E)

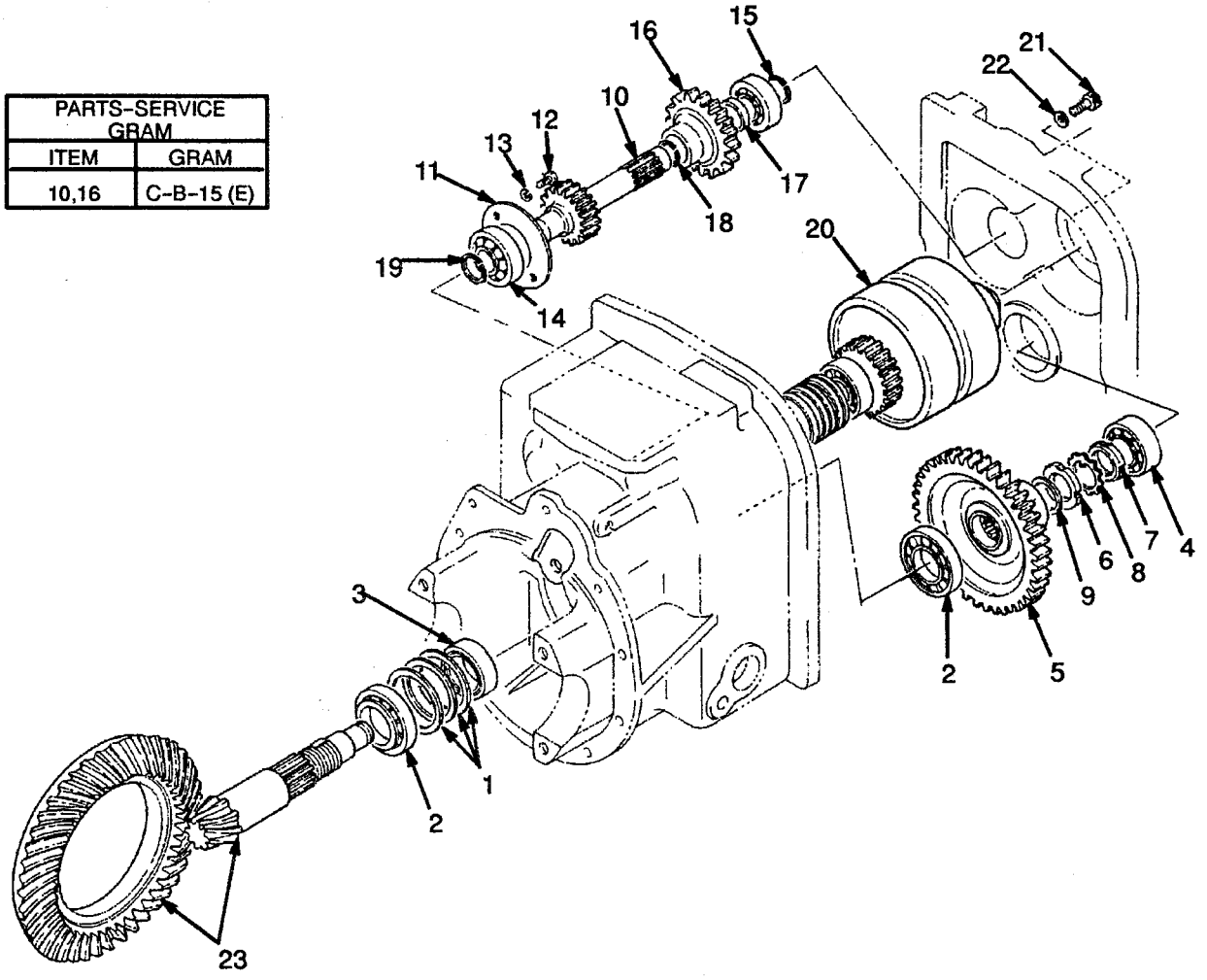

©1996 HYSTER COMPANY

TRANSMISSION GEARS

LAST USED ON S/N

D001B-3931

REF	PART NO.	NAME OF PART	QTY
	2022547	Transmission (2,0L Petrol and LPG)	1
	2023329	Transmission (2,5L)	1
1	2021293	Shim (0,10 mm)	1
1	2021294	Shim (0,20 mm)	1
1	2021295	Shim (0,30 mm)	AR
1	2021296	Shim (0,40 mm)	AR
1	2021298	Shim (0,50 mm)	1
2	2022352	Roller Bearing	2
3	2021299	Oil Seal	1
4	2021300	Bearing	1
5	2021301	Gear (2,0L Petrol and LPG)	1
5	2021302	Gear (2,5L Diesel)	1
6	2021912	Locknut	1
7	2021303	Nut	1
8	2021305	Lockwasher	1
9	2021914	Lockwasher	1
10 [a]	2021309	Shaft (2,0L Petrol and LPG)	1
10	2021313	Shaft (2,5L Diesel)	1
11	2021314	Plate	1
12	287851	Hex Head Bolt	2
13	292681	Lockwasher	2
14	2021300	Bearing	1
15	2021318	Bearing	1
16	2021319	Gear	1
17	2021320	Washer	1
18	2021321	Retaining Ring	1
19	3041266	Retaining Ring	2
20	....	Hydraulic Clutch ☞ Figure 89	1
21	1368867	Screw	2
22	292680	Lockwasher	2
23	2021283	Crown Wheel and Pinion	1

©1996 HYSTER COMPANY

TRANSMISSION GEARS

FIRST USED ON S/N

D001B-3932

(Figure 86)

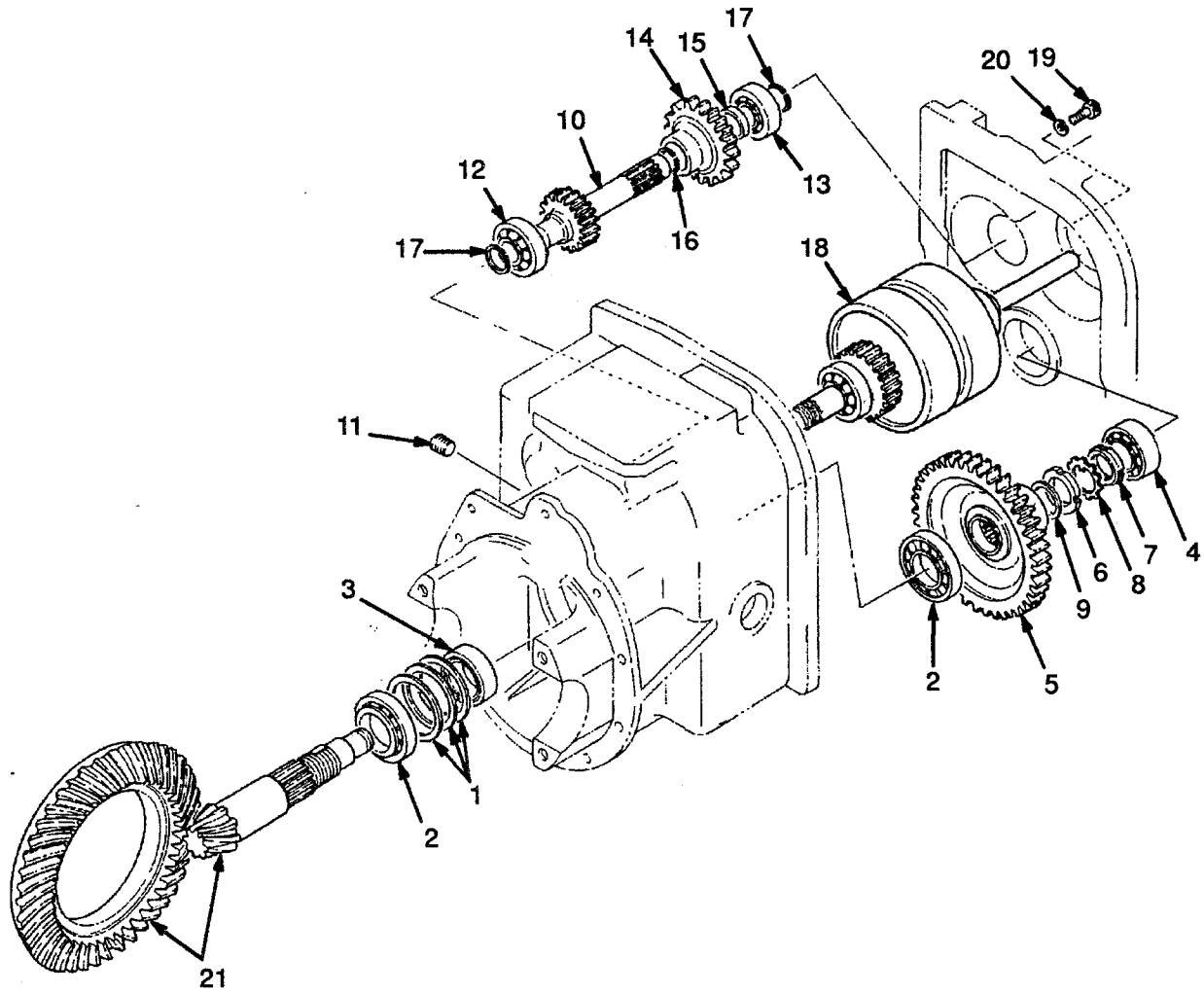

©1996 HYSTER COMPANY

TRANSMISSION GEARS

FIRST USED ON S/N

D001B–3932

REF	PART NO.	NAME OF PART	QTY
	2023970	Transmission (2,0L Petrol and LPG)	1
	2023971	Transmission (2,5L Diesel)	1
1	2021293	Shim (0,10 mm)	AR
1	2021294	Shim (0,20 mm)	AR
1	2021295	Shim (0,30 mm)	AR
1	2021296	Shim (0,40 mm)	AR
1	2021298	Shim (0,50 mm)	AR
2	2022352	Roller Bearing	2
3	2021299	Oil Seal	1
4	2021300	Bearing	1
5	2023923	Gear (2,0 Petrol and LPG)	1
5	2023922	Gear (2,5L Diesel)	1
6	2021912	Locknut	1
7	2021303	Nut	1
8	2021305	Lockwasher	1
9	2021914	Lockwasher	1
10	2023920	Shaft	1
11	2021915	Plug	1
12	2023975	Bearing	1
13	2021318	Bearing	1
14	2023941	Gear	1
15	2021320	Washer	1
16	2021321	Retaining Ring	1
17	1374796	Retaining Ring	2
18	....	Hydraulic Clutch ☞ Figure 90	1
19	292515	Screw	2
20	292682	Screw	2
21	2021283	Crown Wheel and Pinion	1

©1996 HYSTER COMPANY

TRANSMISSION HYDRAULIC LINES

LAST USED ON S/N

D001B–3931

(Figure 87)

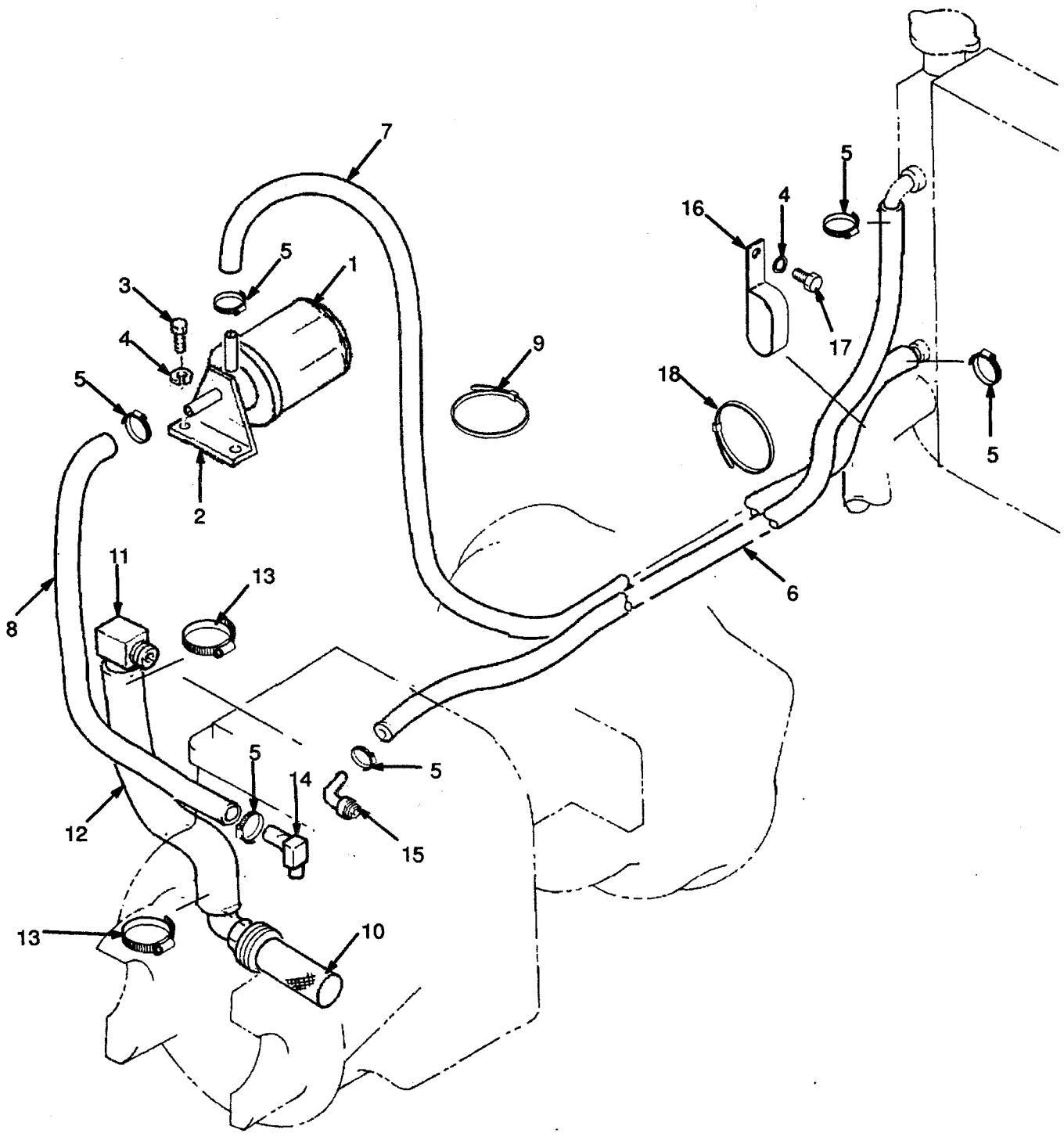

©1996 HYSTER COMPANY

TRANSMISSION HYDRAULIC LINES

LAST USED ON S/N

D001B-3931

REF	PART NO.	NAME OF PART	QTY
1	2021461	Filter	1
2	2021462	Bracket	1
3	287805	Hex Head Bolt	2
4	292681	Washer	2
5	130845	Clamp	6
6	2022884	Hose	1
7	2022885	Hose	1
8	2022826	Hose	1
9	397676	Strap Clamp	1
10	2021404	Suction	1
11	2021405	Elbow	1
12	2021406	Hose	1
13	2022829	Clamp	2
14	2023719	Elbow	1
15	2021407	Tube	1
16	176454	Clamp	1
17	287851	Hex Head Bolt	1
18	137852	Clamp	1

©1996 HYSTER COMPANY

TRANSMISSION HYDRAULIC LINES

FIRST USED ON S/N

D001B-3932

(Figure 88)

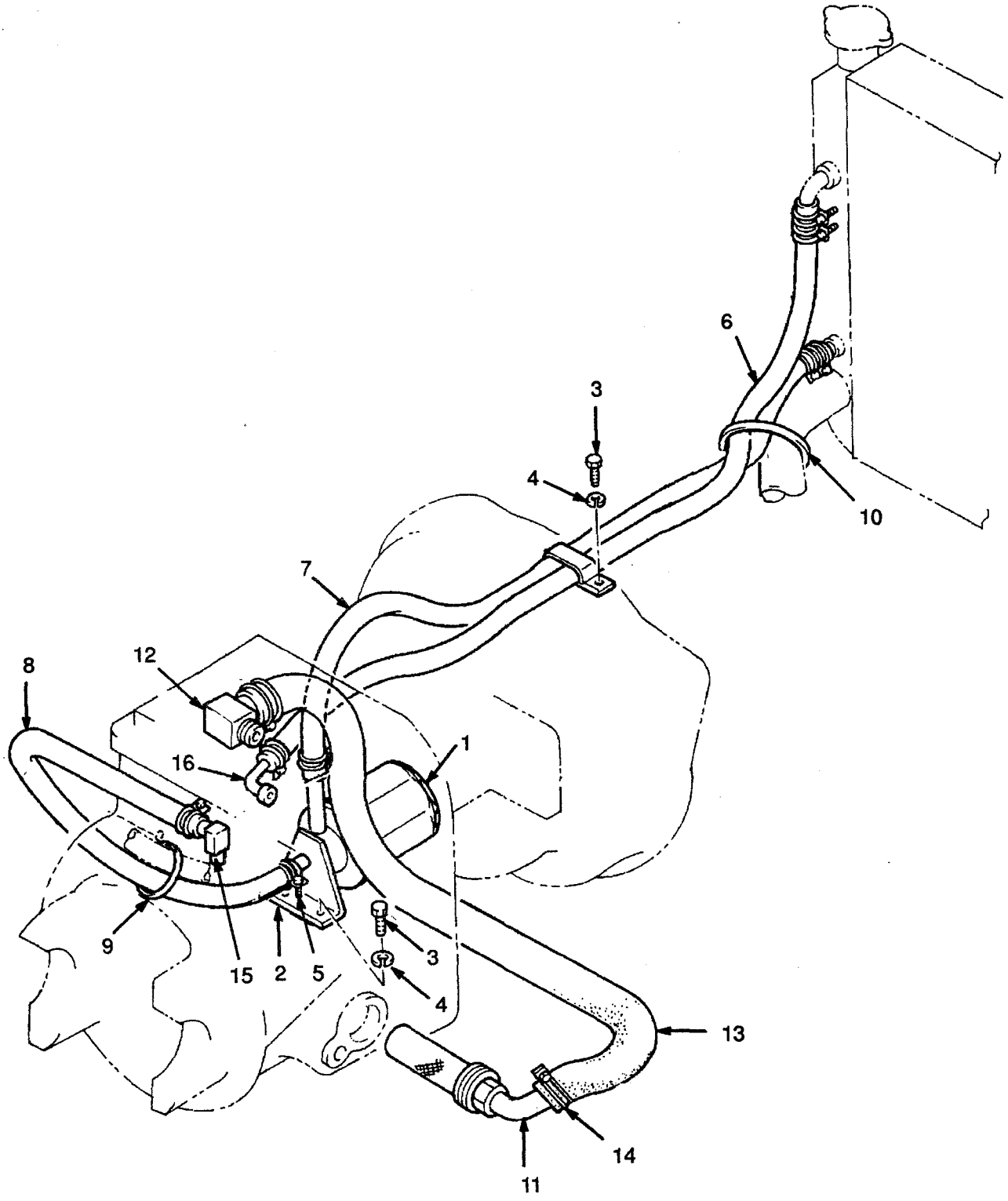

©1996 HYSTER COMPANY

TRANSMISSION HYDRAULIC LINES

FIRST USED ON S/N

D001B-3932

REF	PART NO.	NAME OF PART	QTY
1	2021461	Filter	1
2	2021462	Bracket	1
3	302269	Hex Head Bolt	2
4	292681	Washer	2
5	2022723	Clamp	8
5	2022724	Clamp	AR
6	2023932	Hose	1
7	2021464	Hose	1
8	2022826	Hose	1
9	2022545	Strap Clamp	1
10	397676	Strap Clamp	1
11	2021404	Suction Strainer	1
12	2021405	Elbow	1
13	2021406	Hose	1
14	2022829	Clamp	2
15	2021423	Elbow	1
16	2021407	Tube	1

©1996 HYSTER COMPANY

HYDRAULIC CLUTCH

LAST USED ON S/N

D001B-3931

(Figure 89)

PARTS-SERVICE GRAM	
ITEM	GRAM
	C-B-15 (E)

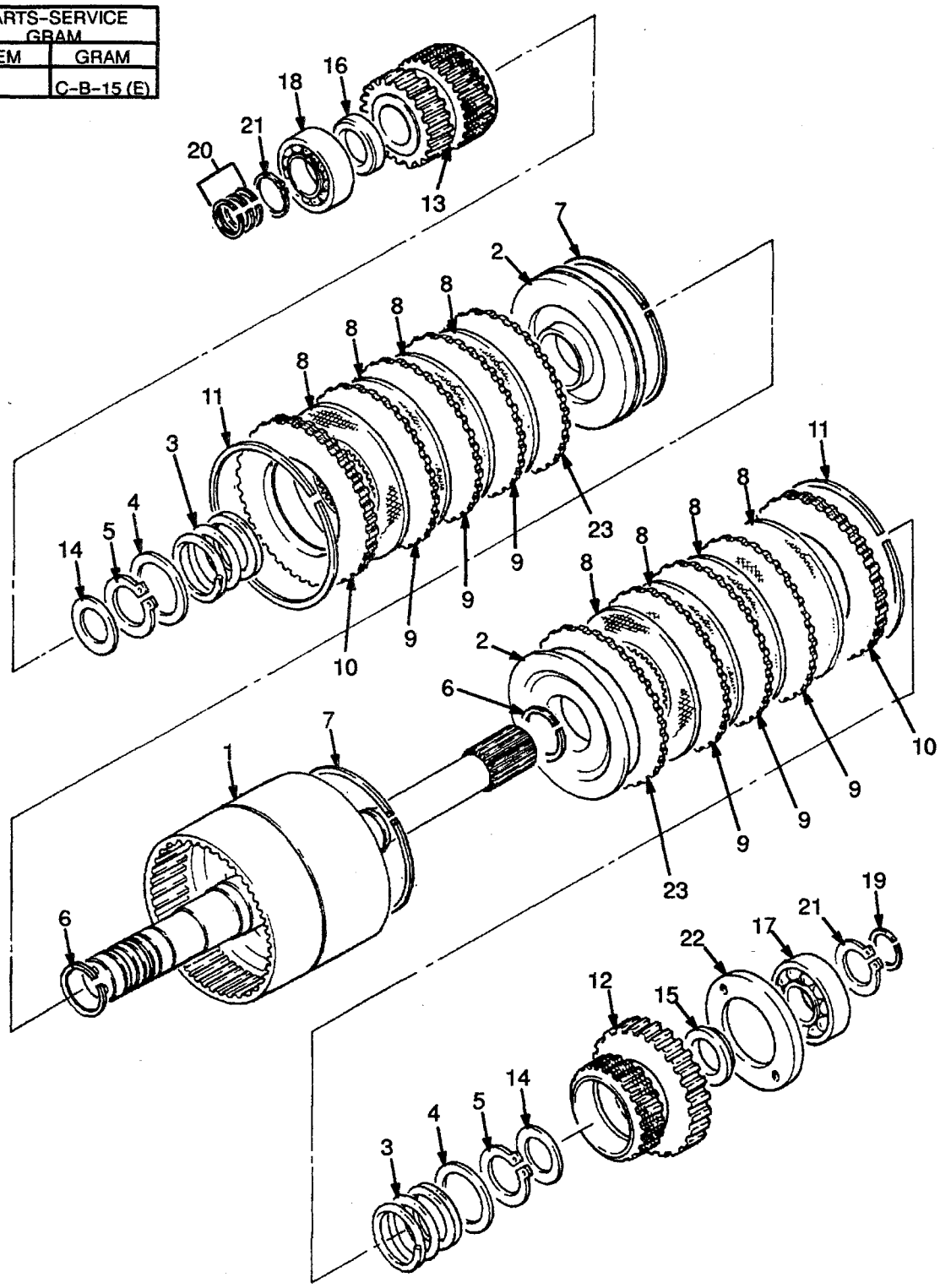

HYDRAULIC CLUTCH

LAST USED ON S/N

D001B–3931

KEY
A: Diesel 2,5L
B: Gasoline And Lpg 2,0L

REF		PART NO.	NAME OF PART	QTY A	QTY B
		2021306	Hydraulic Clutch	..	1
		2021308	Hydraulic Clutch	1	..
1		....	Shaft	1	1
2		1367420	Piston	2	2
3		1367407	Spring	2	2
4		1367421	Guide	2	2
5		1374532	Circlip	2	2
6	ab	....	Seal Ring	2	2
7	ab	....	Ring	2	2
8	cb	....	Friction Disc	8	8
9	cb	....	Friction Gear	6	6
10	cb	....	Backplate	2	2
11		1367422	Circlip	2	2
12		1367423	Gear (Reverse)	1	1
13		1367424	Gear (Forward)	1	..
13		1367583	Gear (Forward)	..	1
14		1367575	Thrust Washer	2	2
15		1367576	Thrust Washer	1	1
16		1367577	Thrust Washer	1	1
17		1367578	Bearing	1	1
18		1367579	Bearing	1	1
19	ab	....	Seal Ring	1	1
20	ab	....	Seal Ring	3	3
21		3041266	Circlip	2	2
22		1367580	Plate	1	1
23	cb	....	Plate	2	2

a Included In Seal Kit 1367582
b Included In Repair Kit 1368101
c Kit-Drive Plate 1367581

©1996 HYSTER COMPANY

HYDRAULIC CLUTCH

FIRST USED ON S/N

D001B–3932

(Figure 90)

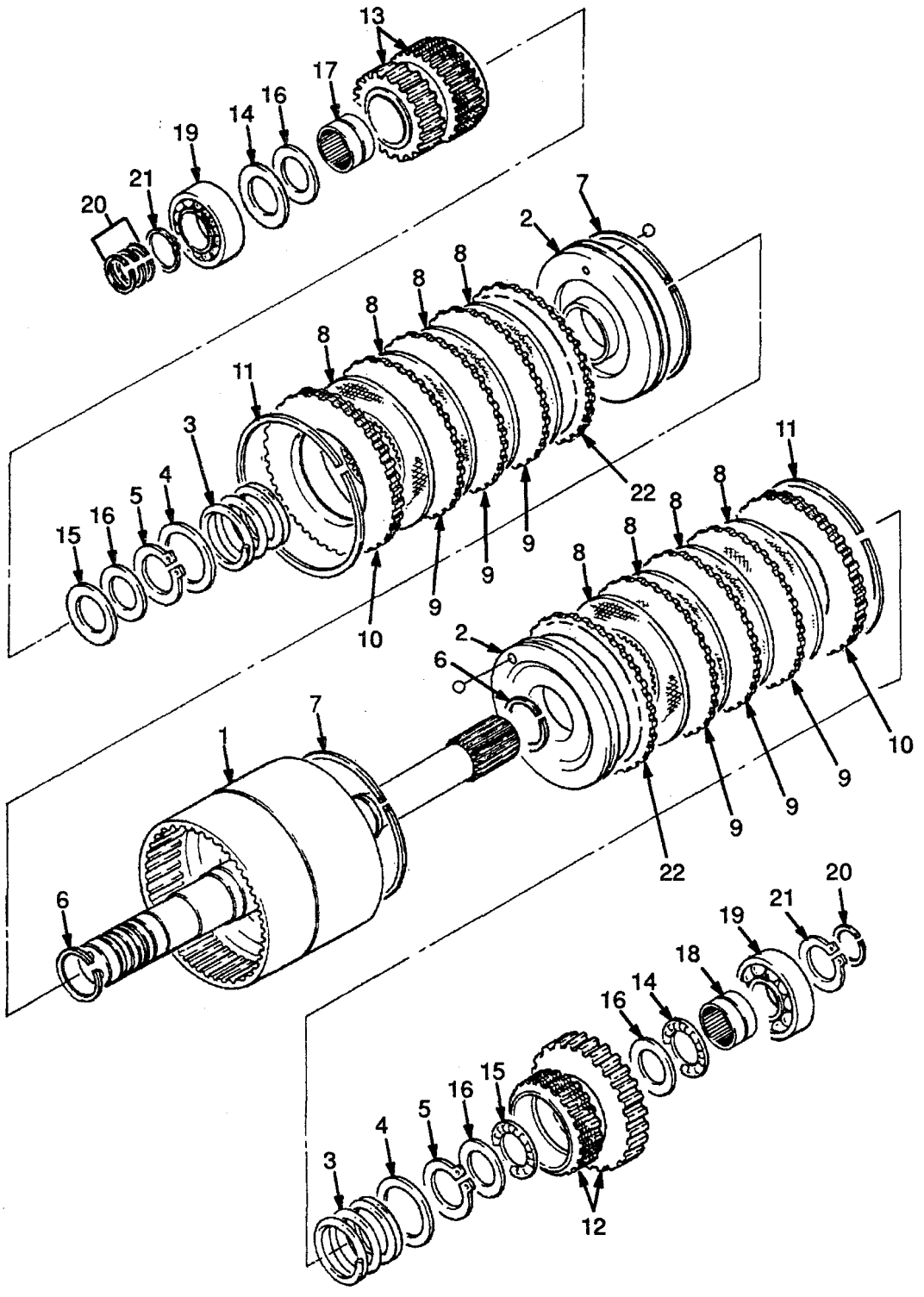

HYDRAULIC CLUTCH

FIRST USED ON S/N

D001B-3932

REF		PART NO.	NAME OF PART	QTY
		2026321	Hydraulic Clutch	1
1		....	Shaft	1
2		2026008	Piston	2
3		1367407	Spring	2
4		2026009	Guide	2
5		1374532	Circlip	2
6	ab	....	Seal Ring	2
7	ab	....	Ring	2
8	bc	....	Friction Disc	8
9	bc	....	Friction Gear	6
10	bc	....	Backplate	2
11		1367422	Circlip	2
12		2026323	Gear (Reverse)	1
13		2026324	Gear (Forward)	1

REF		PART NO.	NAME OF PART	QTY
14	d	....	Thrust Bearing	2
15	d	....	Thrust Bearing	2
16	d	....	Thrust Bearing	4
17		2026013	Bearing	1
18		2026012	Bearing	2
19		1367579	Bearing	2
20	ab	....	Seal Ring	4
21		1374796	Circlip	2
22	bc	....	Plate	2

a Included In Seal Kit 2023989
b Included In Repair Kit 2023991
c Included In Kit-Drive Plate 2023990
d Included In Repair Kit 2026326

©1996 HYSTER COMPANY

CONTROL VALVE

LAST USED ON S/N

D001B-2931

(Figure 91)

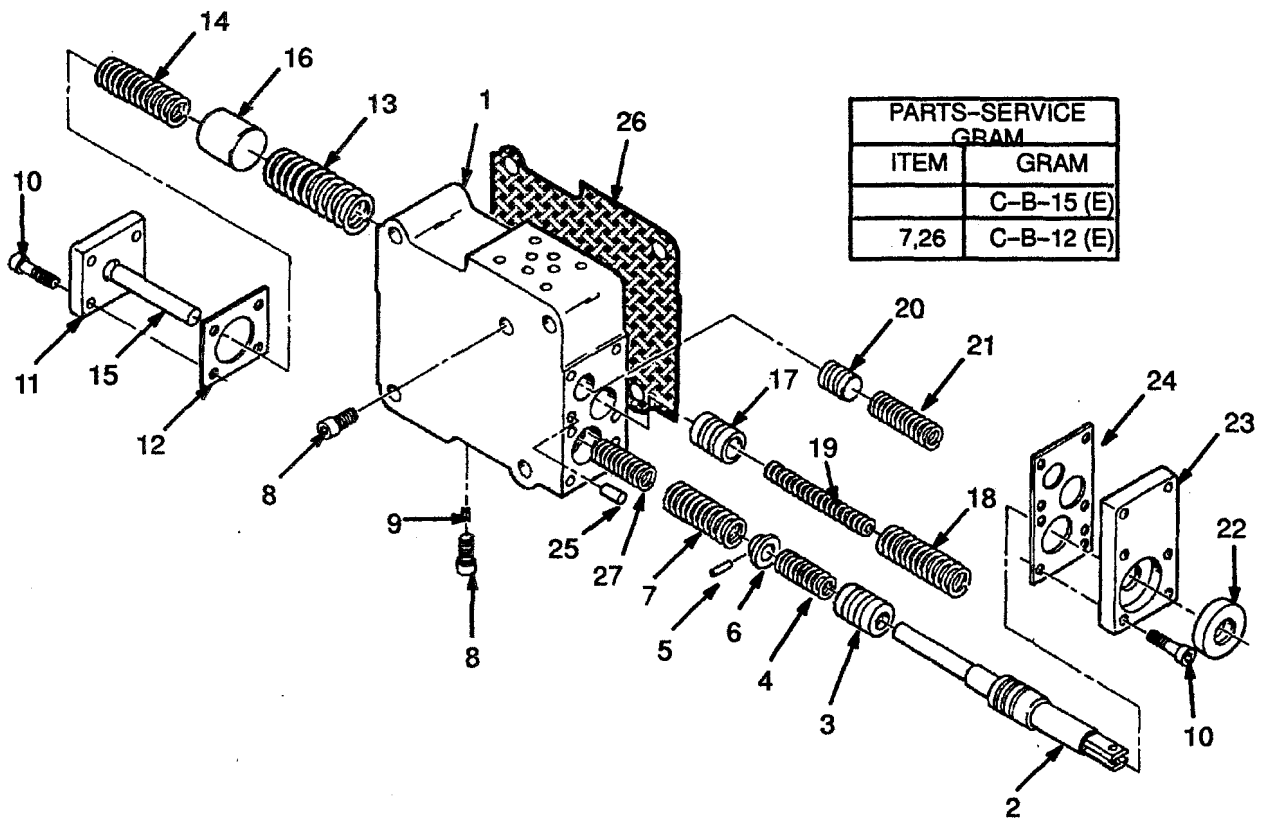

PARTS-SERVICE GRAM	
ITEM	GRAM
	C-B-15 (E)
7,26	C-B-12 (E)

CONTROL VALVE
LAST USED ON S/N
D001B-2931

REF		PART NO.	NAME OF PART	QTY
		2021323	Control Valve Assy	1
1		....	Body	1
2		1367399	Inching Spool	1
3		1367400	Piston	1
4		1367401	Spring	1
5		1367402	Pin	1
6		1367403	Stop	1
7		....	Spring	1
8		2021917	Plug	2
9		1367406	Choke	1
10		1344851	Bolt	10
11		1367408	Cover	1
12	a	....	Joint	1
13		1367409	Spring	1
14		1367410	Spring	1
15		1367411	Stop	1
16		1367412	Piston	1
17		1367413	Piston	1
18		1367414	Spring	1
19		1367415	Spring	1
20		1367416	Piston	1
21		1367417	Spring	1
22	a	....	Oil Seal	1
23		1367418	Cover	1
24	a	....	Joint	1
25		....	Pin	2
26		2021345	Joint	1
27	b	....	Spring	1

a Included In Repair Kit 1367419
b Included In Repair Kit 2023481

©1996 HYSTER COMPANY

CONTROL VALVE

FIRST USED ON S/N D001B–3932

(Figure 92)

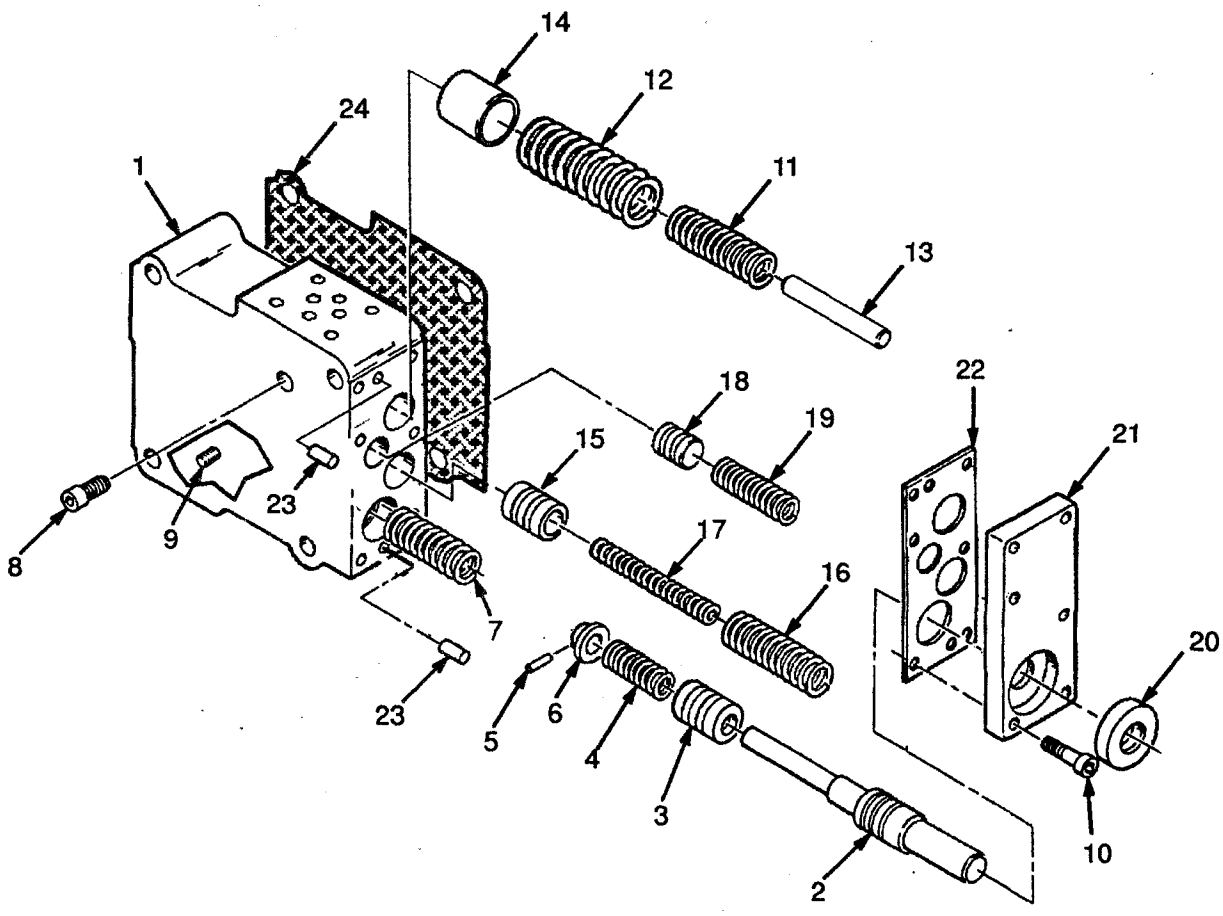

©1996 HYSTER COMPANY

DIFFERENTIAL

REF	PART NO.	NAME OF PART	QTY
	2021282	Differential Assy	1
1	1367617	Pinion	2
2	1367616	Gear	2
3	1367619	Spacer	2
4	1367620	Pin	1
5	1367618	Shaft	1

REF	PART NO.	NAME
6	1367615	Cas
7	2021286	Bolt
8	2021287	Ret
9	2021288	Ro
10	2021283	Ge

©1996 HYSTER COMPANY

DRIVE AXLE

(Figure 94)

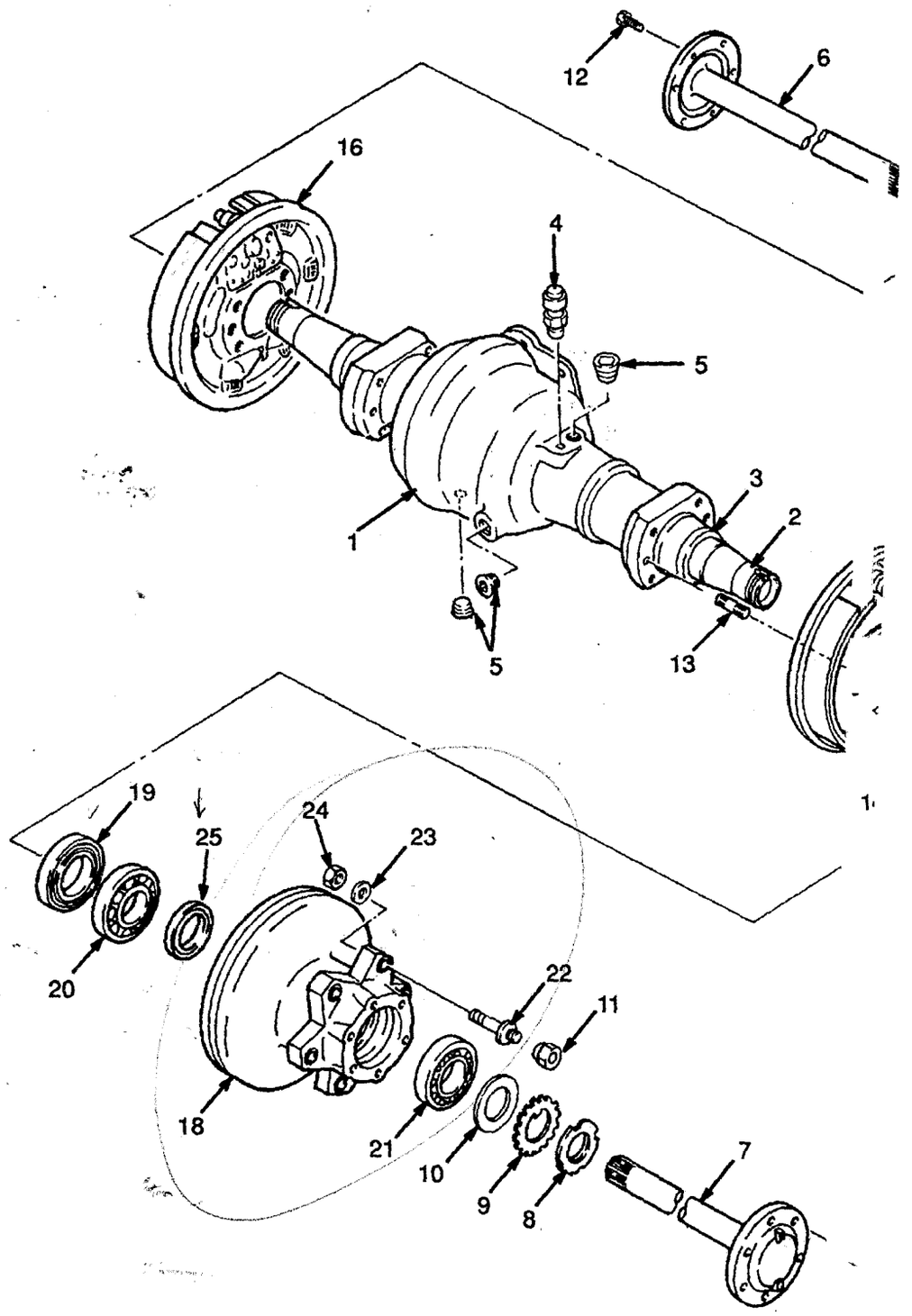

©1996 HYSTER COMPANY

DRIVE AXLE

REF	PART NO.	NAME OF PART	QTY
	....	Drive Axle	1
	2021666	Housing Assy	1
1	2022825	Housing	1
2	....	Sleeve	2
3	2021491	Sleeve	2
4	2021510	Breather	1
5	15962	Plug	3
6	2021565	Shaft (RH)	1
7	2021567	Shaft (LH)	1
8	2021918	Nut	2
9	2021588	Lockwasher	2
10	2021592	Washer	2
11	2021593	Nut	12
12	2021919	Bolt	12
13	2022729	Bolt	12
14	2021834	Washer	12
15	2021595	Nut	12
16	....	Brake Assy (RH) ☞ Figure 103	1
17	....	Brake Assy (LH) ☞ Figure 103	1
18	2021668	Hub	2
19	2021554	Oil Seal	2
20	2021555	Bearing (Inner)	2
21	2021288	Bearing (Outer)	2
22	2021556	Bolt	12
23	1366814	Washer	12
24	303120	Nut	12
25	2021557	Oil Seal	2

©1996 HYSTER COMPANY

END PLATE

(Figure 95)

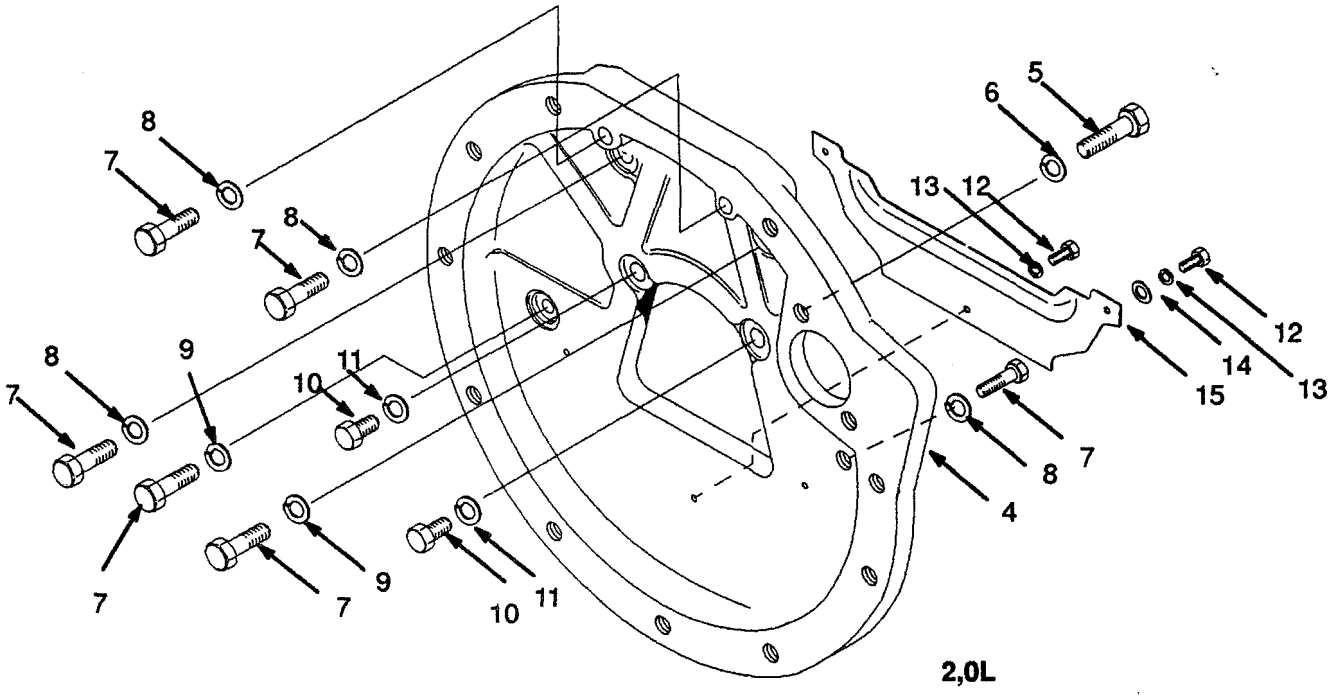

2,0L

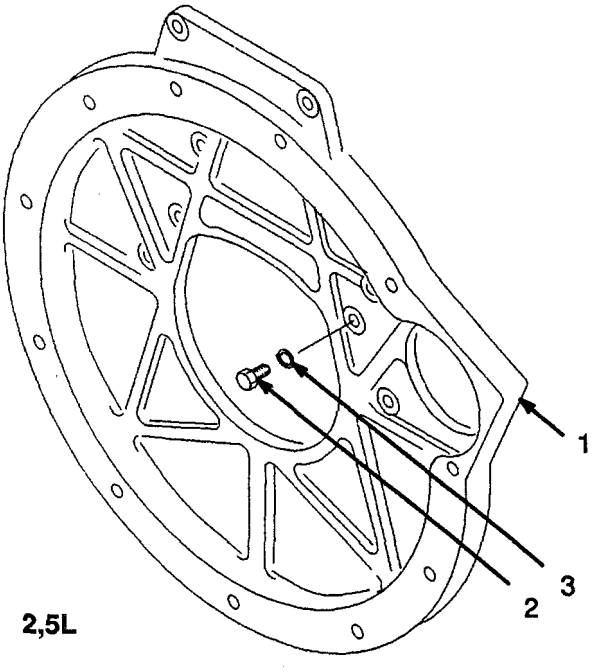

2,5L

END PLATE

REF	PART NO.	NAME OF PART	QTY
1	2023501	End Plate (Diesel)	1
2	2022251	Bolt	8
3	292682	Lockwasher	8
4	2023500	End Plate (Petrol and LPG)	1
5	2022718	Screw	2
6	292682	Lockwasher	2
7	2021646	Bolt	6
8	292684	Lockwasher	4
9	296424	Washer	2
10	136749	Hex Head Bolt	2
11	292681	Lockwasher	2
12	302256	Bolt	3
13	292680	Lockwasher	3
14	2021432	Washer	2
15	2022250	Cover	1

©1996 HYSTER COMPANY

NOTES

©1996 HYSTER COMPANY

STEERING

Steering Column ..... Page 202

Steering Control Valve ..... Page 206

Steering Cylinder ..... Page 208

Trail Axle ..... Page 204

©1996 HYSTER COMPANY

STEERING COLUMN

(Figure 96)

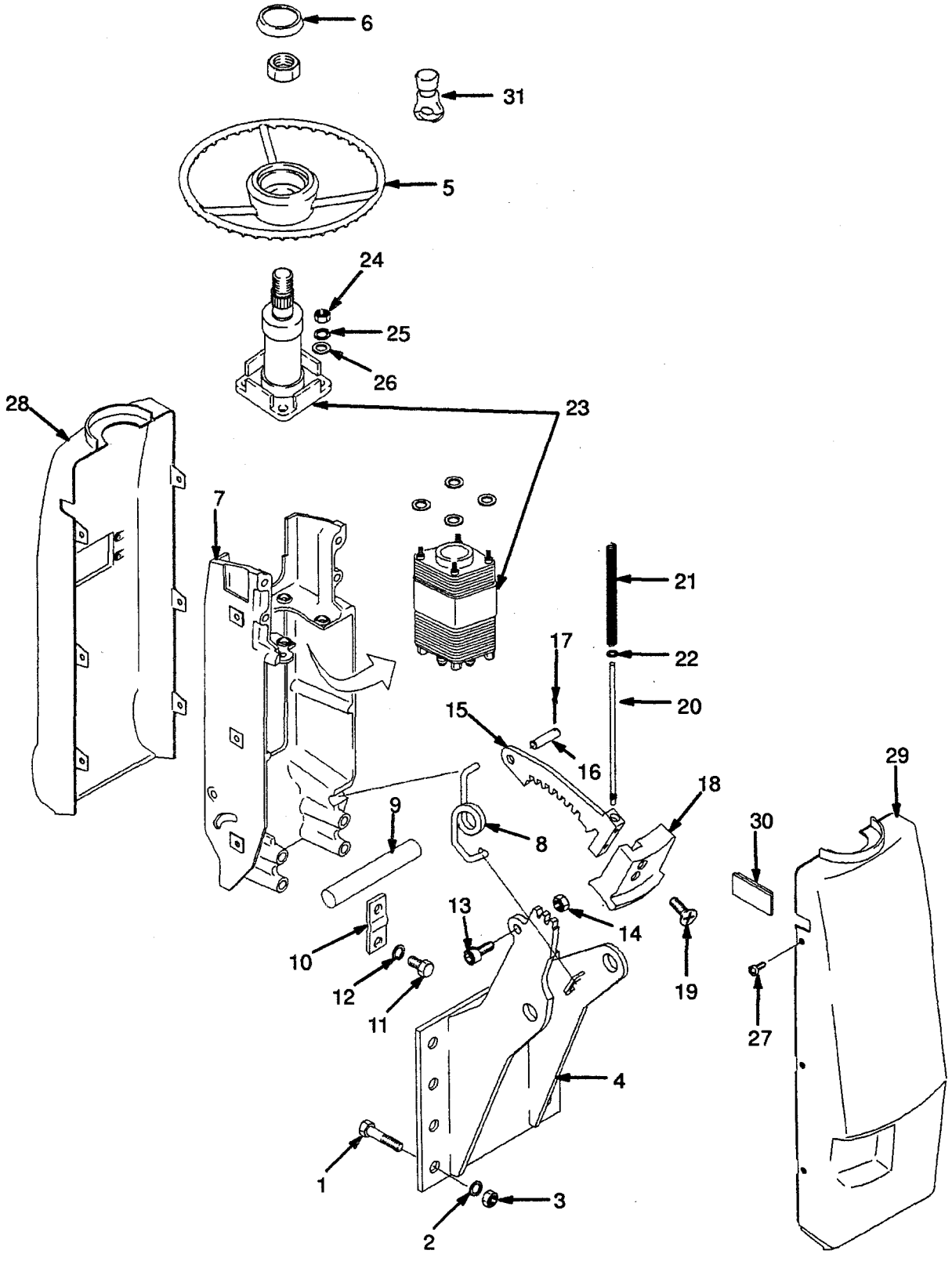

STEERING COLUMN

REF		PART NO.	NAME OF PART	QTY
1		136985	Hex Head Bolt	4
2		292682	Washer	4
3		136692	Nut	4
4		1337043	Bracket	1
5		1329250	Steering Wheel	1
6		1347135	Horn Button	1
7		1343573	Bracket	1
8		1378600	Spring	1
9		1335987	Shaft	1
10		1335967	Plate	2
11		136749	Hex Head Bolt	4
12		292681	Washer	4
13		296009	Hex Head Bolt	1
14		239503	Nut	1
15		1343548	Latch	1
16		1343607	Pin	1
17		15212	Pin	1
18		1343574	Handle	1
19		296472	Screw	2
20		1343572	Rod	1
21		1343537	Spring	1
22		320155	Washer	1
23		....	Steering Control Valve ☞ Figure 98	1
24		221706	Nut	4
25		15155	Lockwasher	4
26		18515	Washer	8
27		1337196	Screw	6
28	a	1343605	Cover (Upper)	1
28	b	1335879	Cover (Upper)	1
29	a	1343606	Cover (Lower)	1
29	b	1335880	Cover (Lower)	1
30	c	1343597	Plug	1
31		895468	Spinner Knob	1

a Forward/Reverse Lever (with Turn Signal)
b Forward/Reverse Lever (without Turn Signal)
c Monotrol Pedal

©1996 HYSTER COMPANY

TRAIL AXLE

(Figure 97)

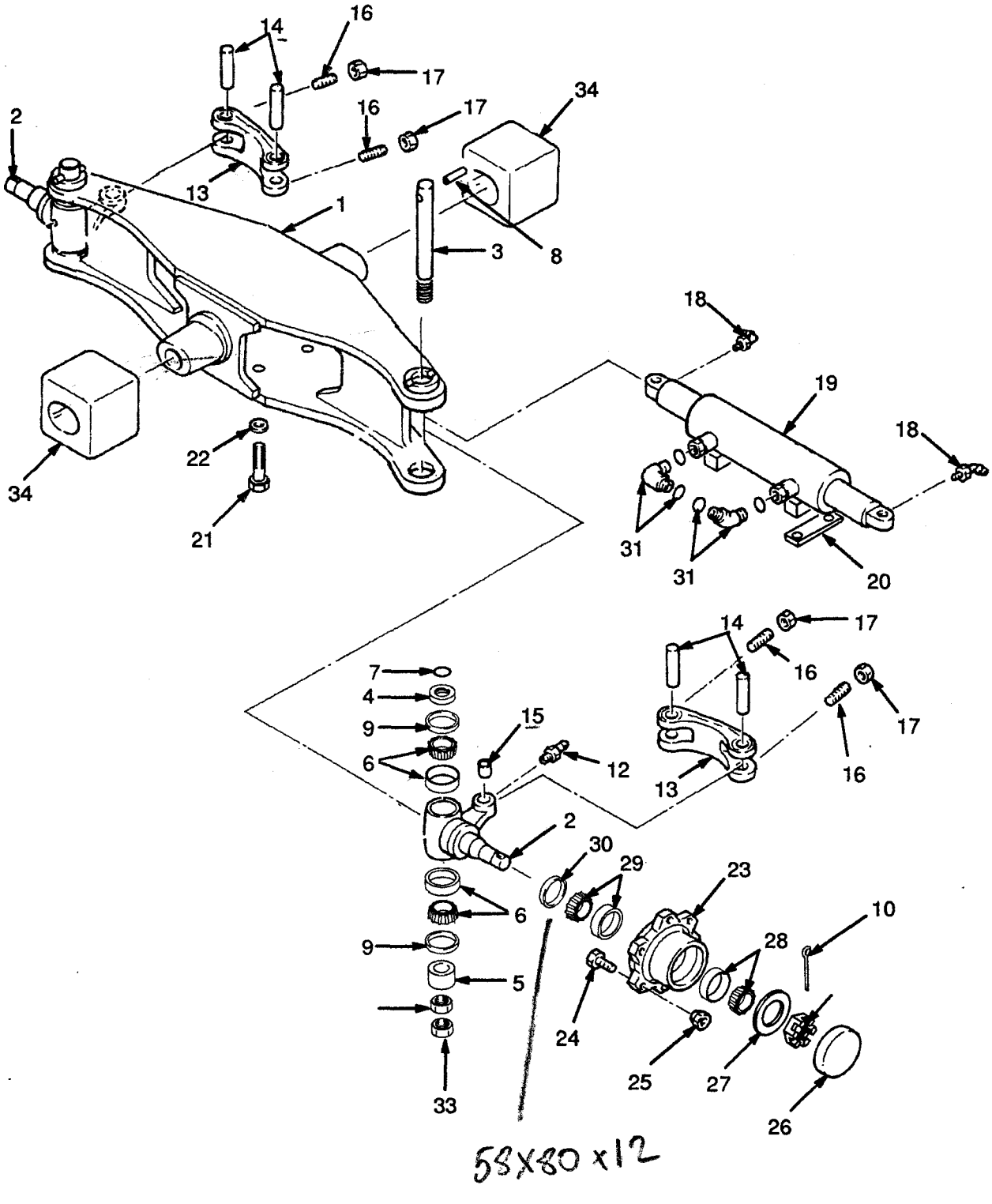

TRAIL AXLE

REF	PART NO.	NAME OF PART	QTY
1	2021767	Trail Axle	1
2	2021778	Knuckle	2
3	2021781	King Pin	2
4	2021783	Sleeve (Upper)	2
5	2021784	Sleeve (Lower)	2
6	2021785	Bearing	4
7	2021882	O-Ring	2
8	2021786	Pin	2
9	....	Oil Seal	4
10	2021885	Split Pin	2
11	2021889	Nut	2
12	2305757	Lube Fitting	2
13	2021791	Intermediate Link	2
14	2021793	Pin	4
15	2021794	Bush	2
16	302146	Screw	4
17	2021892	Locknut	4
18	2021895	Lube Fitting	2
19	....	Steering Cylinder ☞ Figure 99	1
20	2021796	Spacer	2
21	2021897	Fitting	4
22	296426	Washer	4
23	2021797	Hub	2
24	2021798	Bolt	12
25	2021799	Nut	12
26	2021800	Cap	2
27	2021801	Washer	2
28	2021802	Bearing	2
29	2021803	Bearing	2
30	2021898	Oil Seal	2
31	16567	Fitting	1
32	16558	Fitting	1
33	2021790	Locknut	2
34	2021804	Rubber Cushion	2

©1996 HYSTER COMPANY

STEERING CONTROL VALVE

(Figure 98)

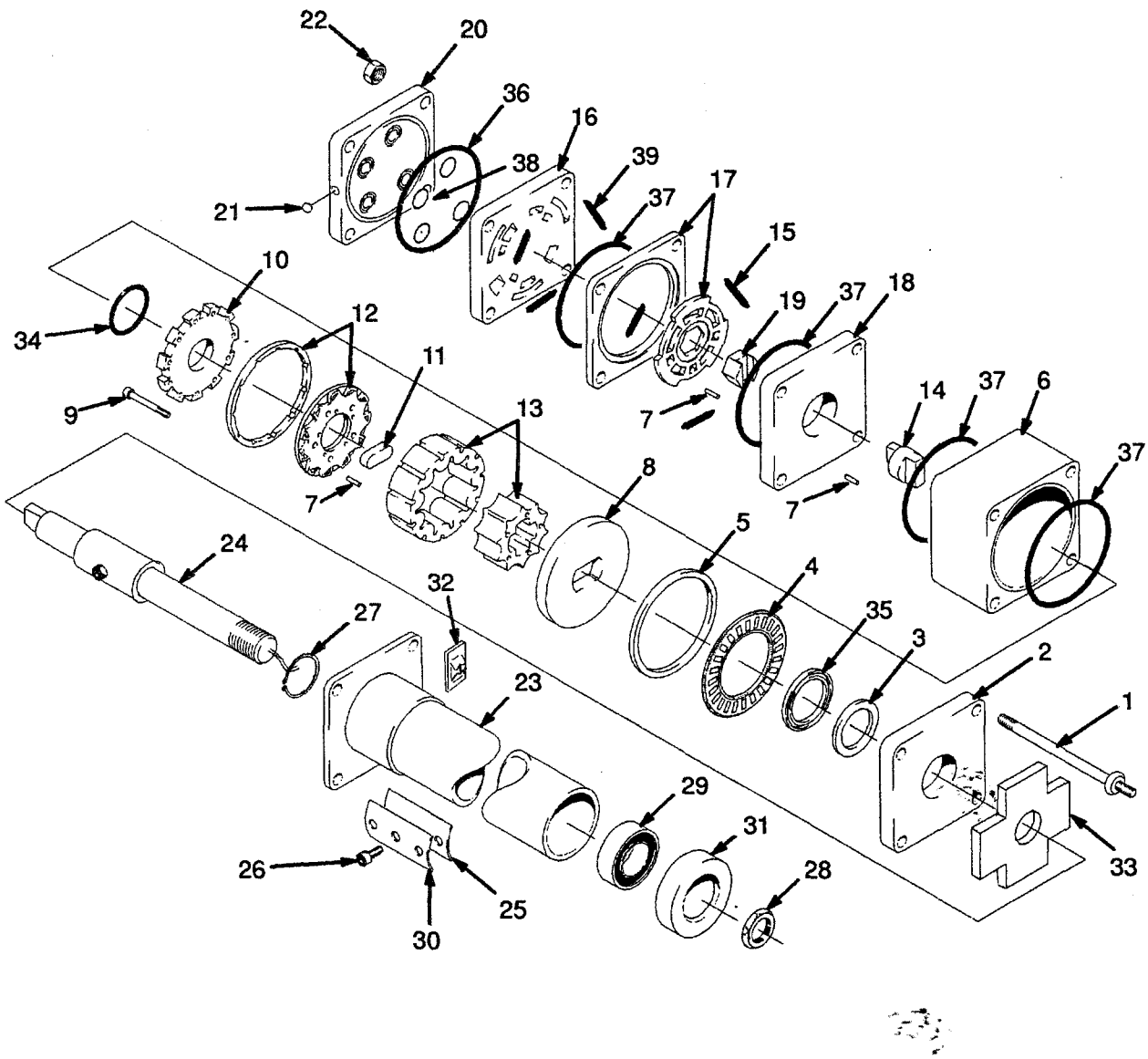

©1996 HYSTER COMPANY

STEERING CONTROL VALVE

REF		PART NO.	NAME OF PART	QTY
		1367881	Guide Assy	1
1		1367882	Bolt	4
2		1367883	Plate (Upper)	1
3		358766	Seal (Spacer)	1
4		1302027	Thrust Bearing	1
5		358818	Spacer	1
6		306756	Metering Ring	1
7	a	....	Needle Roller	9
8	b	358771	Drive Plate	1
9	b	306758	Screw	11
10	b	358772	Cover (Commutator)	1
11	b	306759	Spacer	1
12	b	358773	Commutator Ring	1
13	b	306760	Rotator Assy	1
14		358803	Link (Drive)	1
15	c	....	Spring	3
16	d	1367885	Port Manifold	1
17	d	1367886	Valve And Ring Assy	1
18	d	1367887	Isolation Plate	1
19	d	358805	Drive Unit Assy	1
20		1367888	Valve Assy	1
21		320857	Ball	1
22		15005	Nut	4

REF		PART NO.	NAME OF PART	QTY
23		1367891	Column Assy	1
23		....	Tube	1
24		....	Shaft	1
25		1371650	Joint	1
26		1367895	Screw	1
27		1367896	Circlip	1
28		14189	Nut	1
29		1367897	Bearing	1
30		1367898	Brush Assy	1
31		1324293	Dust Seal	1
32		1368001	Nut	4
33		....	Joint (Upper Cover)	1
34	e	....	Seal	1
35	e	....	Seal	1
36	e	1328762	O-Ring	1
37	e	....	Seal Ring	4
38	e	....	O-Ring	3
39	c	....	Spring	3

a Included In Needle Roller Kit 358806
b Included In Metering Assy 306757
c included in Spring Kit 358810
d Included In Drive And Valve Assy 1375553
e Included In Seal Kit 1354725

©1996 HYSTER COMPANY

STEERING CYLINDER

(Figure 99)

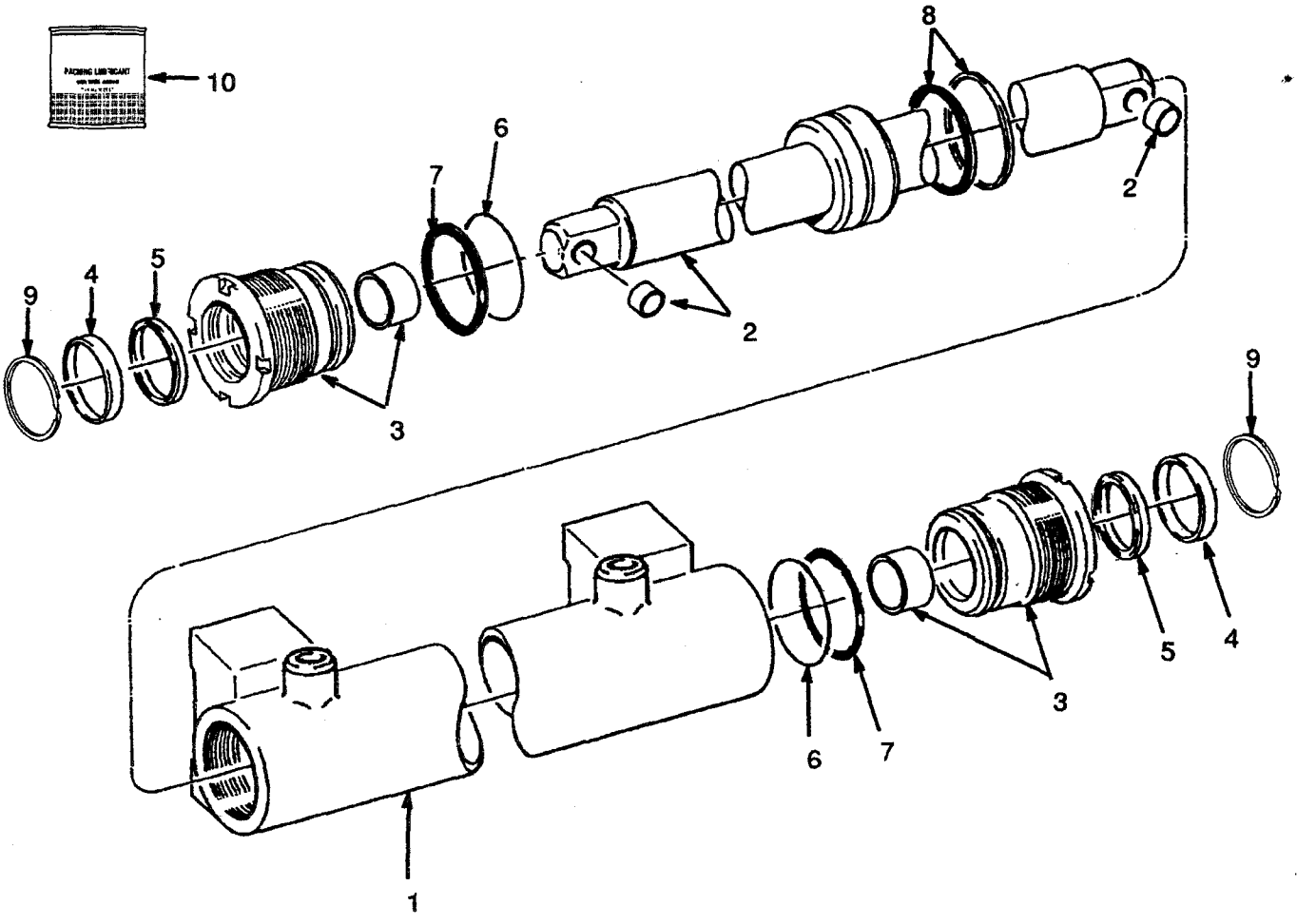

©1996 HYSTER COMPANY

STEERING CYLINDER

REF		PART NO.	NAME OF PART	QTY
		2021795	Steering Cylinder	1
1		1367169	Shell	1
2		1367170	Rod	1
2	a	2022923	Bush	2
3		1367171	Guide	2
3	a	....	Bush	2
4	a	....	Dust Seal	2
5	a	....	Packing	2
6	a	....	O-Ring	2
7	a	....	O-Ring	2
8	a	....	Seal	1
9	a	....	Circlip	2
10		186061	Packing Lube	AR

a Included In Seal Kit 1367172

©1996 HYSTER COMPANY

NOTES

©1996 HYSTER COMPANY

BRAKE

Brake Assy ..... Page 218

Brake Lines ..... Page 216

Brake Linkage
First Used on S/N D001B-3932 ..... Page 214

Brake Master Cylinder ..... Page 222

Brake Pedal Linkage
Last Used on S/N D001B-3931 ..... Page 212

Park Brake Lever ..... Page 220

©1996 HYSTER COMPANY

BRAKE PEDAL LINKAGE

LAST USED ON S/N

D001B-3931

(Figure 100)

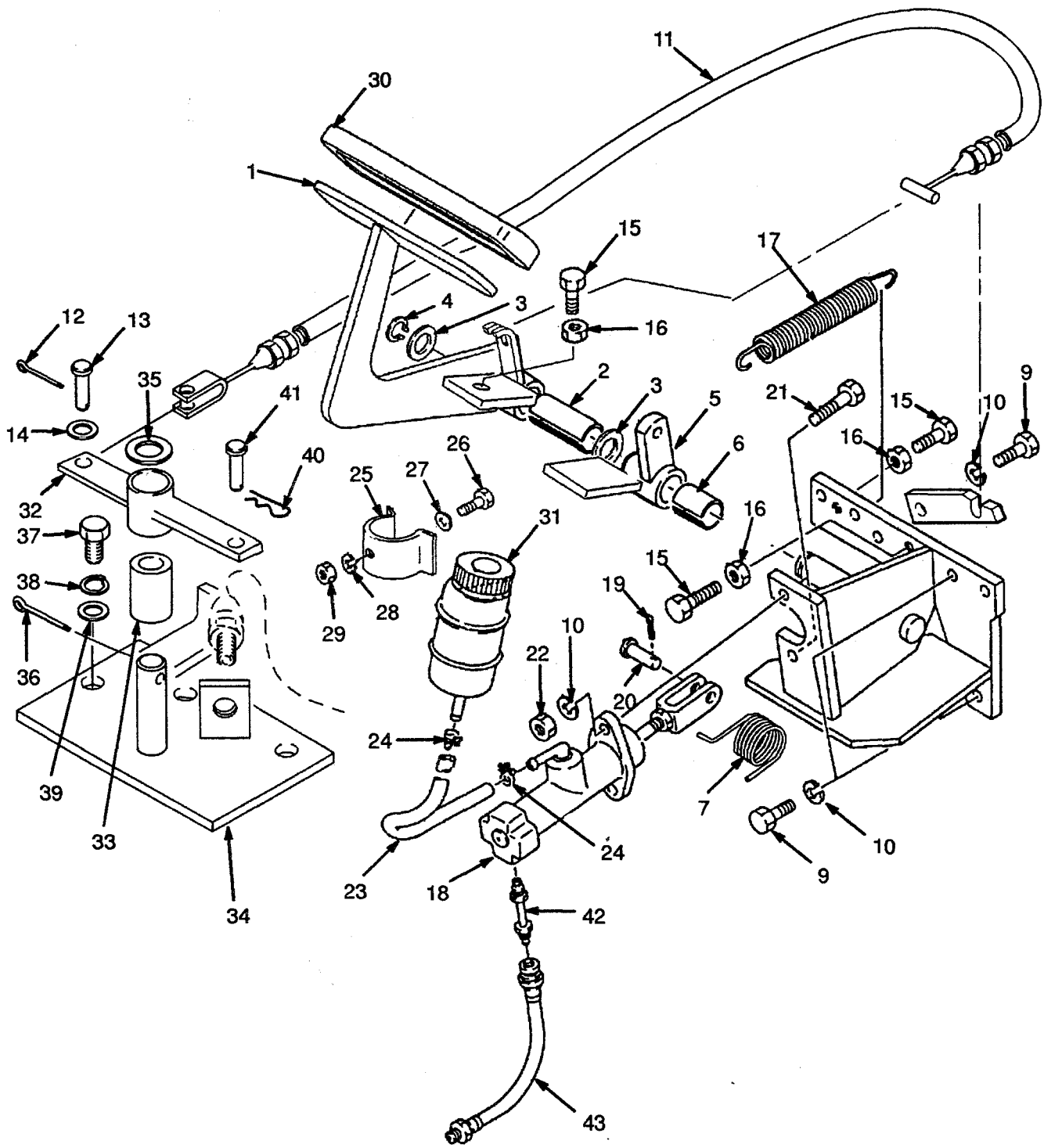

BRAKE PEDAL LINKAGE

LAST USED ON S/N

D001B–3931

REF	PART NO.	NAME OF PART	QTY
1	2021291	Brake Pedal	1
2	2021310	Bush	1
3	320169	Washer	2
4	1374533	Retaining Ring	1
5	2021312	Bellcrank	1
6	2021315	Bush	1
7	2021316	Spring	1
8	2021317	Bracket	1
9	287854	Hex Head Bolt	3
10	292682	Lockwasher	5
11	2021332	Cable	1
12	2022509	Pin	1
13	2021907	Clevis Pin	1
14	320155	Washer	1
15	2021335	Bolt	3
16	2304281	Locknut	3
17	2021337	Spring	1
18	....	Master Cylinder	1
		☞ Figure 105	
19	2021339	Pin	1
20	1362714	Clevis Pin	1
21	287860	Bolt	2
22	136692	Nut	2
23	2021346	Hose	1
24	168718	Clamp	2
25	2021353	Bracket	1
26	2022617	Bolt	1
27	320156	Washer	1
28	292680	Lockwasher	1
29	2021892	Locknut	1
30	1343630	Pedal	1
31	2021340	Reservoir	1
32	2021322	Bellcrank	1
33	2021326	Bush	1
34	2021327	Bracket	1
35	320161	Washer	1
36	2022553	Pin	1
37	287851	Bolt	2
38	292681	Lockwasher	2
39	320157	Washer	2
40	2021334	Pin	1
41	2021907	Pin	1
42	2021347	Pipe Assy	1
43	2021349	Hose	1

©1996 HYSTER COMPANY

BRAKE LINKAGE

FIRST USED ON S/N

D001B-3932

(Figure 101)

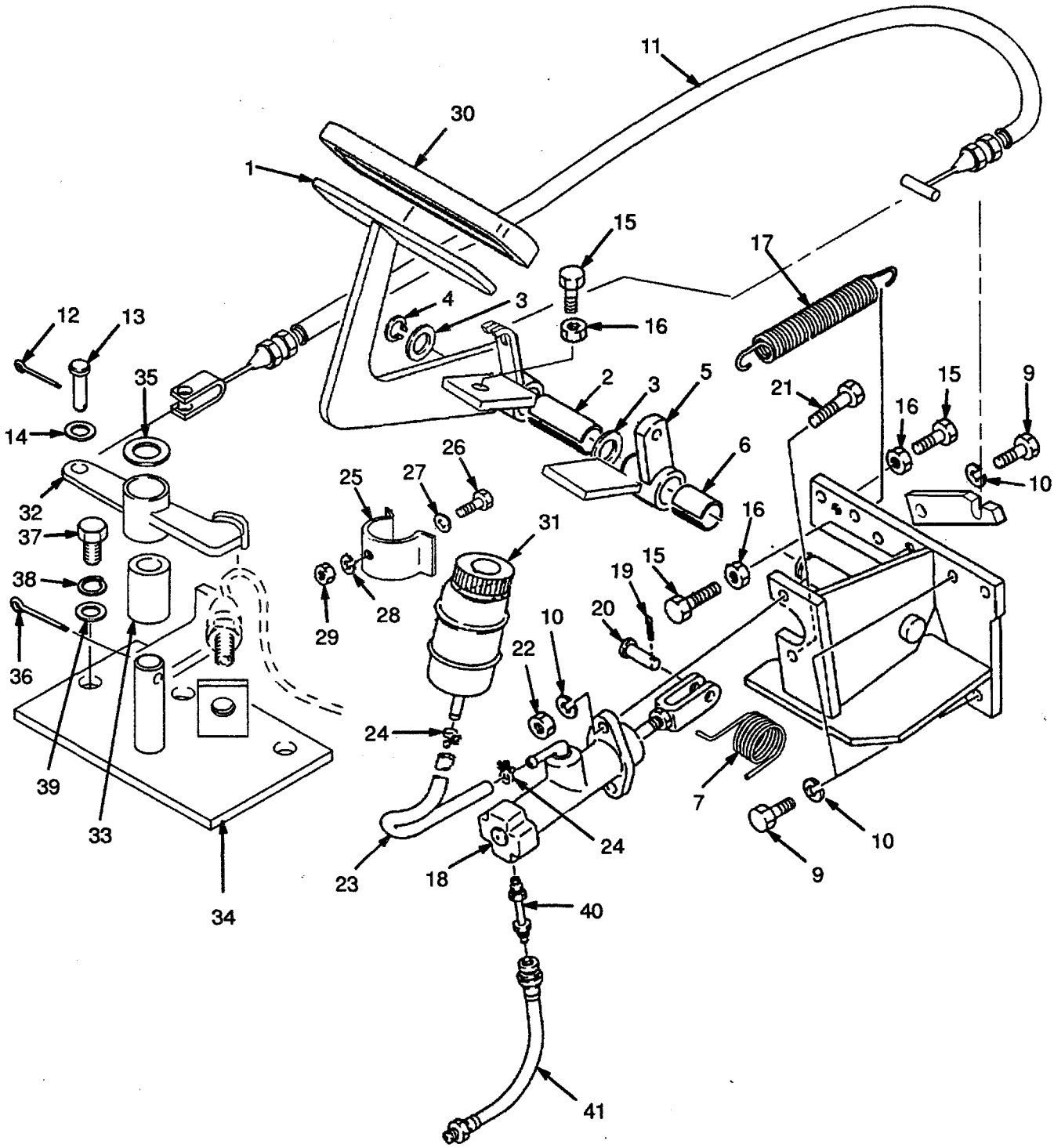

BRAKE LINKAGE

FIRST USED ON S/N

D001B–3932

REF	PART NO.	NAME OF PART	QTY
1	2021291	Brake Pedal	1
2	2021310	Bush	1
3	320169	Washer	2
4	1374533	Retaining Ring	1
5	2021312	Bellcrank	1
6	2021315	Bush	1
7	2021316	Spring	1
8	2021317	Bracket	1
9	287854	Hex Head Bolt	3
10	292682	Lockwasher	5
11	2021332	Cable	1
12	2022509	Pin	1
13	2021907	Clevis Pin	1
14	320155	Washer	1
15	2021335	Bolt	3
16	2304281	Locknut	3
17	2021337	Spring	1
18	....	Master Cylinder ☞ Figure 105	1
19	2021339	Pin	1
20	1362714	Clevis Pin	1
21	287860	Bolt	2
22	136692	Nut	2
23	2021346	Hose	1
24	166857	Clamp	2
25	2021353	Bracket	1
26	2022617	Bolt	1
27	320156	Washer	1
28	292680	Lockwasher	1
29	2021892	Locknut	1
30	1343630	Pedal	1
31	2021340	Reservoir	1
32	2023940	Bellcrank	1
33	2021326	Bush	1
34	2021327	Bracket	1
35	320161	Washer	1
36	2022553	Pin	1
37	2022552	Bolt	2
38	292681	Lockwasher	2
39	320157	Washer	2
40	2021347	Pipe Assy	1
41	2021349	Hose	1

©1996 HYSTER COMPANY

BRAKE LINES

(Figure 102)

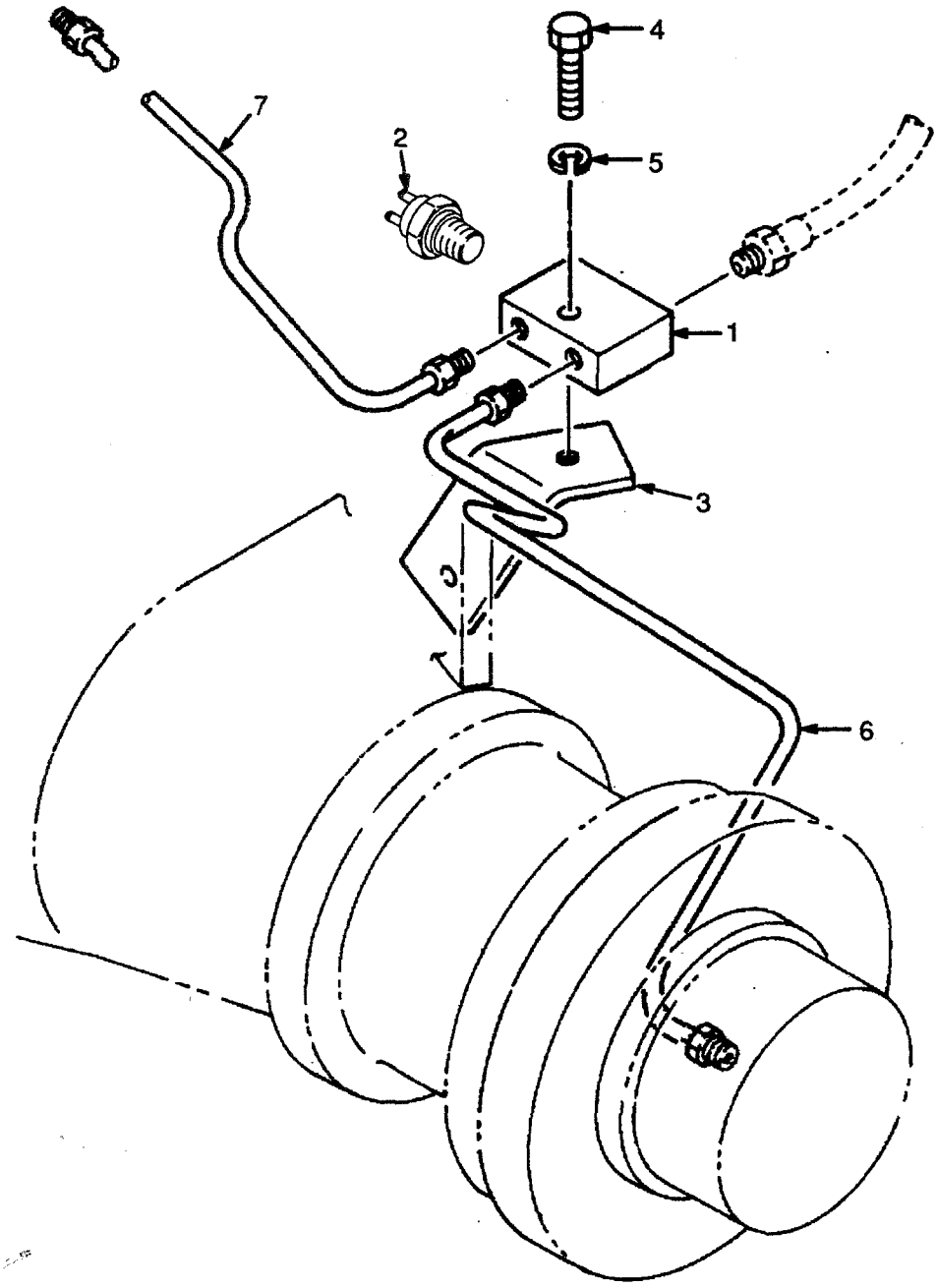

©1996 HYSTER COMPANY

BRAKE LINES

REF	PART NO.	NAME OF PART	QTY
1	2021470	Manifold	1
2	387867	Pressure Switch	1
3	2021471	Bracket	1
4	287816	Hex Head Bolt	1
5	292680	Washer	1
6	2021472	Pipe Assy (LH)	1
7	2021474	Pipe Assy (RH)	1

©1996 HYSTER COMPANY

BRAKE ASSY

(Figure 103)

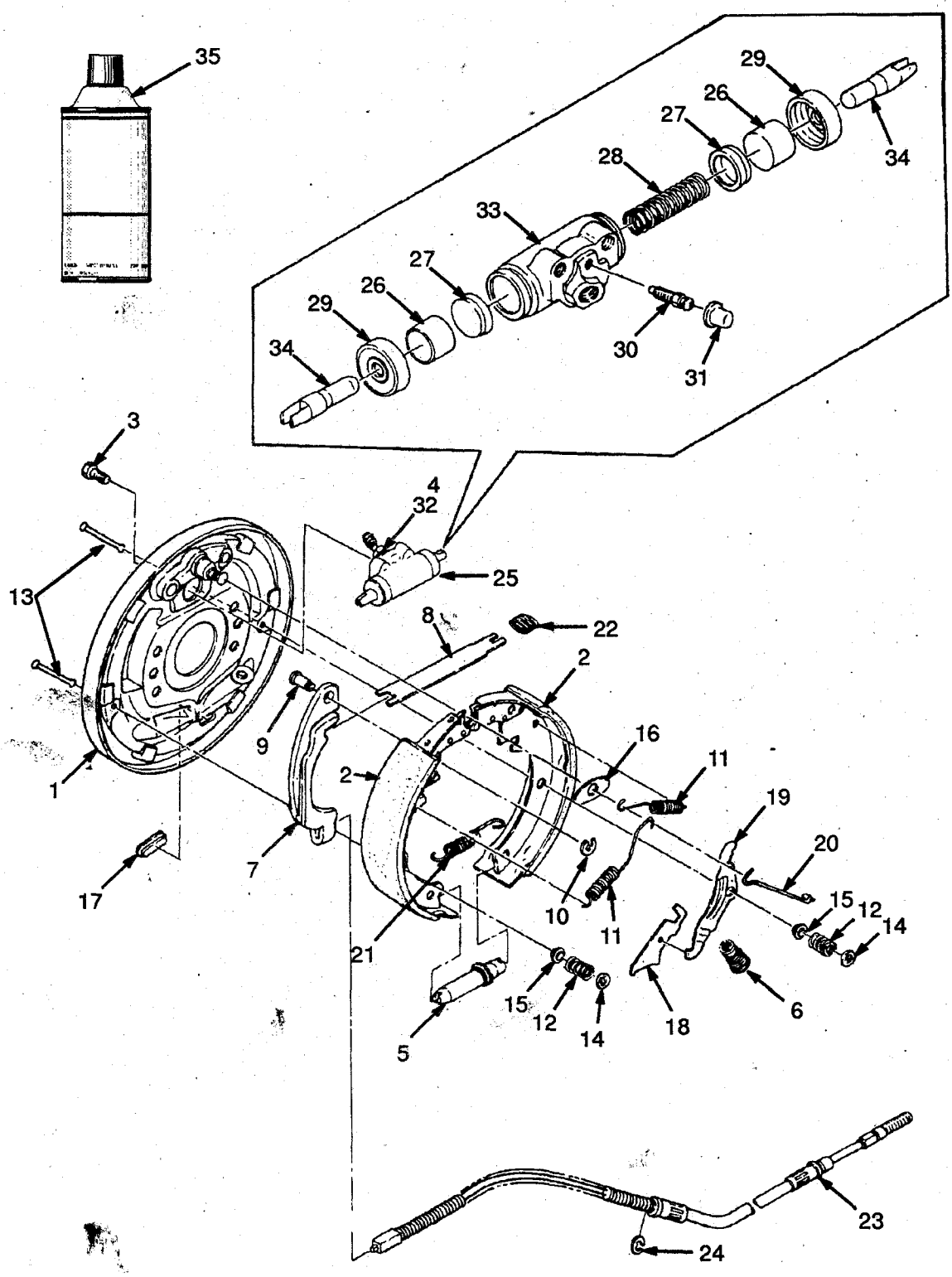

BRAKE ASSY

KEY
A: LH Brake
B: RH Brake

REF		PART NO.	NAME OF PART	QTY A	QTY B
		2021596	Brake Assy (LH)	1	..
		2022351	Brake Assy (RH)	..	1
1		1367759	Backing Plate (LH)	1	..
1		1367760	Backing Plate (RH)	..	1
2	a	....	Brake Shoe	2	2
3		1367764	Bolt	2	2
4		1367765	Plug	1	1
5	b	....	Adjuster (LH)	1	..
5	c	....	Adjuster (RH)	..	1
6	bc	....	Spring	1	1
7		1367769	Lever (LH)	1	..
7		1367770	Lever (RH)	..	1
8		1367771	Strut	1	1
9	a	....	Pin	1	1
10	a	....	Retainer	1	1
11		1367774	Spring	2	2
12	d	....	Spring	2	2
13	d	....	Pin	2	2
14	d	....	Sleeve	1	1
15	d	....	Washer	3	3
16		1367854	Plate	1	1
17		1367855	Plug	1	1
18	b	....	Lever (LH)	1	..
18	c	....	Lever (RH)	..	1
19	b	....	Lever (LH)	1	..
19	c	....	Lever (RH)	..	1
20	bc	....	Link	1	1
21	bc	....	Spring	1	1
22		1367862	Spring	1	1
23		2021599	Cable (LH)	1	..
23		2021620	Cable (RH)	..	1
24		1367865	Retainer	1	1
25		1367762	Wheel Cylinder (LH)	1	..
25		1367763	Wheel Cylinder (RH)	..	1
26	e	....	Piston	2	2
27	e	....	Cup	2	2
28	e	....	Spring	1	1
29	e	....	Boot	2	2
30		1367870	Screw	1	1
31		1367871	Cup	1	1
32		1367872	Tube	1	1
33	e	....	Body (LH)	1	..
33	e	....	Body (RH)	..	1
34		1367875	Piston Rod	2	2
35		3060380	Brake Cleaner	AR	AR

a Included In Kit-Brake Shoe 1367880
b Included In Kit-Auto Adjuster LH 1367877
c Included In Kit-Auto Adjuster RH 1367878
d Included In Kit-Shoe Hold Down 1367879
e Included In Kit-Wheel Cylinder 1367876

©1996 HYSTER COMPANY

PARK BRAKE LEVER

(Figure 104)

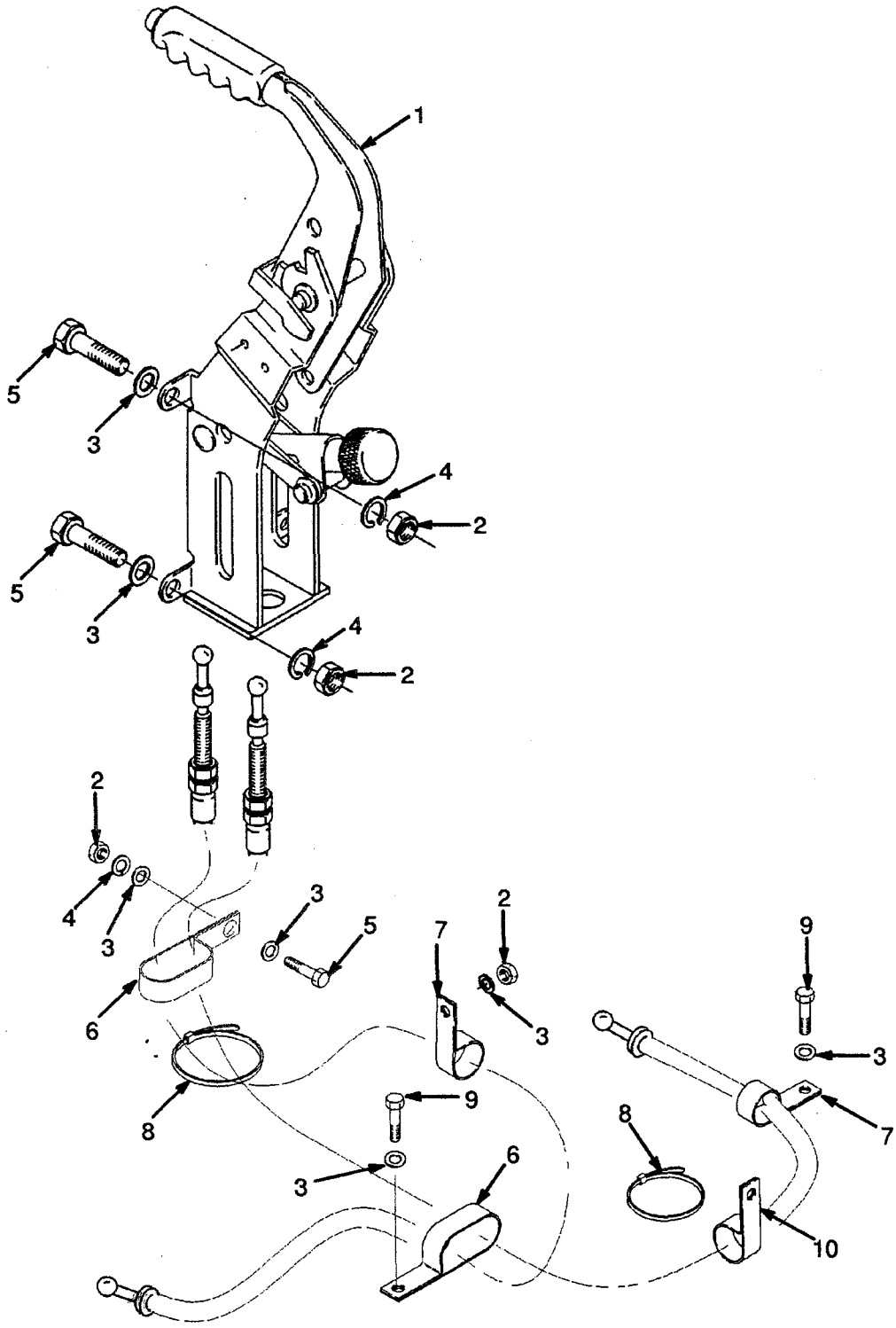

©1996 HYSTER COMPANY

PARK BRAKE LEVER

REF	PART NO.	NAME OF PART	QTY
1	1376557	Park Brake Lever	1
2	239503	Nut	5
3	320157	Washer	8
4	292681	Washer	5
5	136749	Hex Head Bolt	5
6	176910	Clamp	2
7	124297	Clamp	2
8	137852	Strap Clamp	2
9	287805	Hex Head Bolt	3
10	16112	Clamp (Transmission)	1

©1996 HYSTER COMPANY

BRAKE MASTER CYLINDER

(Figure 105)

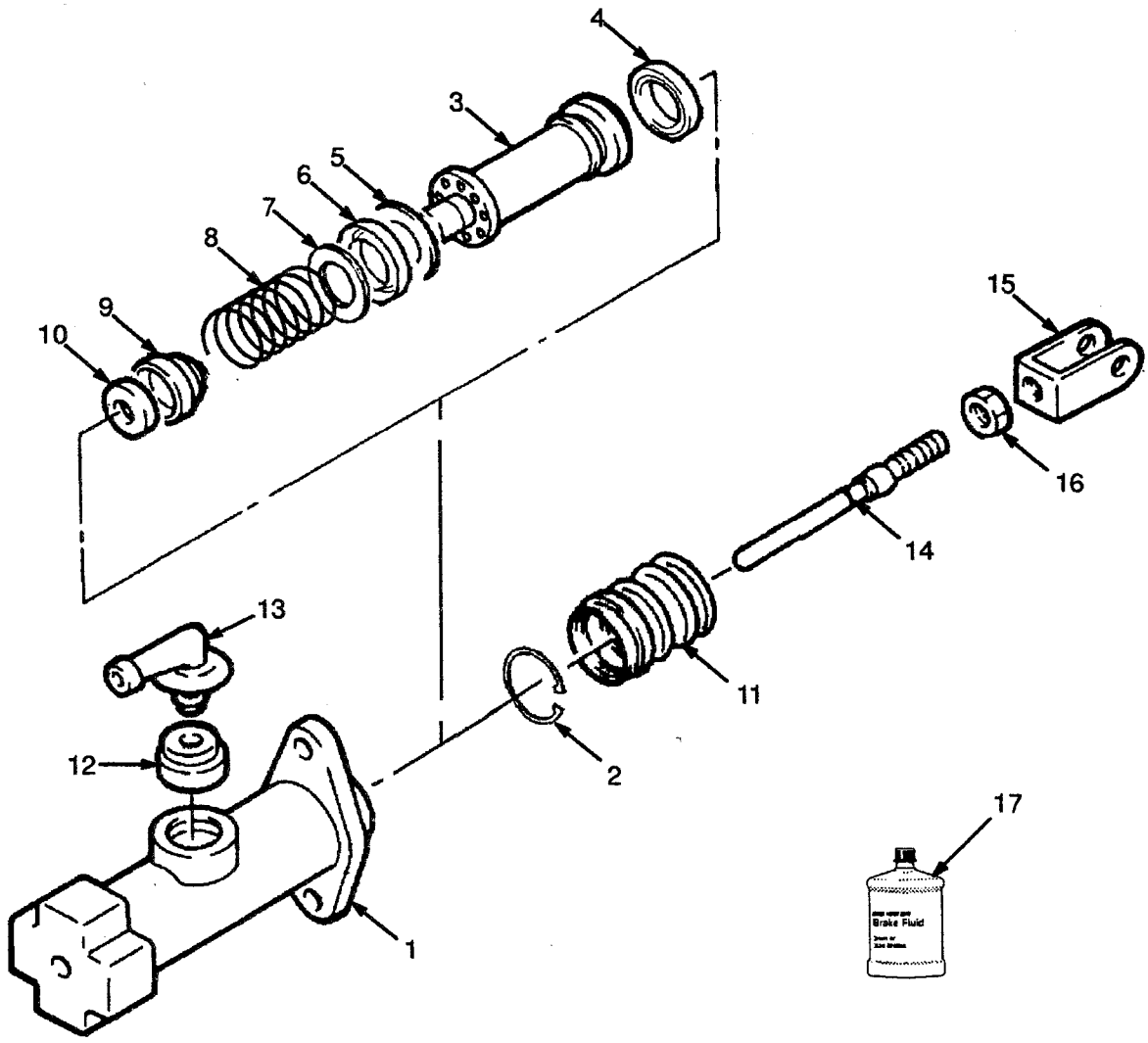

©1996 HYSTER COMPANY

BRAKE MASTER CYLINDER

REF		PART NO.	NAME OF PART	QTY
		2021338	Master Cylinder	1
1	a	....	Cylinder Assy	1
2	a	....	Circlip	1
3	a	....	Piston	1
4	a	....	Cup	1
5	a	....	Cup	1
6	a	....	Cup	1
7	a	....	Retainer	1
8	a	....	Spring	1
9	a	....	Check Valve	1
10	a	....	Valve Seat	1
11	a	....	Boot	1
12	a	....	Fitting	1
13	a	....	Fitting	1
14	a	....	Push Rod	1
15		1367194	Clevis	1
16		2304281	Locknut	1
17		3060656	Brake Fluid (1L)	AR
17		3060657	Brake Fluid (0,5L)	AR

[a] Included In Repair Kit 1367193

©1996 HYSTER COMPANY

NOTES

©1996 HYSTER COMPANY

HYDRAULIC

Double Gear Pump
Diesel
2,5L Engine ..... Page 232

Four Function Control Valve
Dual Relief Valve ..... Page 248

Four Function Control Valve
Single Relief ..... Page 246

Hydraulic Pump
Petrol and LPG ..... Page 230

Hydraulics Group
First Used on S/N D001B-3023 ..... Page 228

Hydraulics Group
Last Used on S/N D001B-3022 ..... Page 226

Pump Drive
Diesel 2,5L ..... Page 236

Pump Drive
Petrol and LPG 2,0L ..... Page 234

Three Function Control Valve
Dual Relief Valve ..... Page 242

Three Function Control Valve
Single Relief ..... Page 240

Tilt Cylinder ..... Page 250

Valve Attaching Parts
Four Function ..... Page 244

Valve Attaching Parts
Three Function ..... Page 238

©1996 HYSTER COMPANY

HYDRAULICS GROUP

LAST USED ON S/N

D001B–3022

(Figure 106)

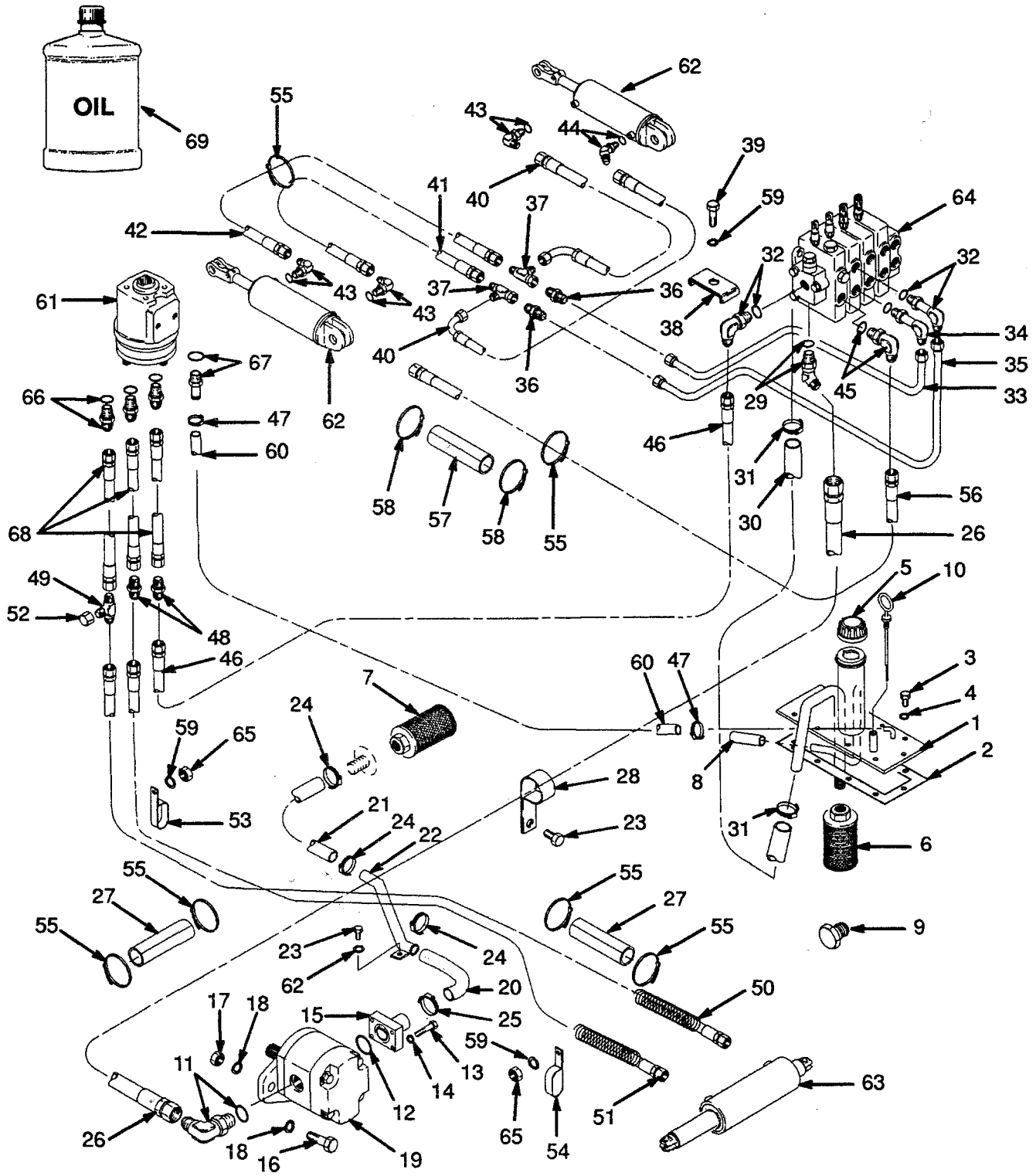

HYDRAULICS GROUP

LAST USED ON S/N

D001B-3022

REF	PART NO.	NAME OF PART	QTY
1	2021916	Tank Cover	1
2	2021672	Joint	1
3	2021233	Hex Head Bolt	6
4	2021673	Washer	6
5	2021908	Cap	1
6	2021933	Filter	1
7	2021935	Filter	1
8	2021939	Hose	1
9	17636	Fitting	1
10	2021936	Dipstick	1
11	2021271	Fitting	1
12	2021909	O-Ring	1
13	296010	Hex Head Bolt	4
14	2021272	Lockwasher	4
15	2021273	Connector	1
16	287860	Hex Head Bolt	2
17	136692	Nut	2
18	296420	Washer	4
19	....	Hydraulic Pump ☞ Figure 108, Figure 109	1
20	2021880	Hose	1
20 [a]	2022549	Hose	1
21	2021880	Hose	1
22	2021881	Tube	1
23	287851	Hex Head Bolt	3
24	127045	Clamp	3
25	119236	Clamp	1
26	2021884	Hose	1
27	2021886	Hose	2
28	166112	Clamp	2
29	2021887	Fitting	1
29	16485	O-Ring	1
30	2021888	Hose	1
31	127045	Clamp	2
32	16558	Fitting	2
32	16483	O-Ring	1
33	2021890	Tube	1
34	2021893	Fitting	1
34	16483	O-Ring	1
35	2022474	Tube	1
36	17627	Fitting	2
37	17059	Fitting	2
38	2021896	Clamp	1
39	176640	Hex Head Bolt	1
40	2021899	Hose	2
41	2021901	Hose	1
42	2021903	Hose	1
43	16556	Fitting	3
43	16481	O-Ring	1
44	16565	Fitting	1
44	16481	O-Ring	1
45	16560	Fitting	1
45	16485	O-Ring	1
46	2021906	Hose	1
47	166857	Clamp	2
48	14691	Fitting	2
49	1347212	Fitting	1
50	240565	Hose	1
51	320717	Hose	1
52	16923	Fitting	1
53	129684	Clamp	2
54	176454	Clamp	1
55	137852	Strap Clamp	10
56	2006579	Hose	1
57	2021886	Hose	1
58	137852	Strap Clamp	2
59	292681	Washer	7
60	55488	Hose (1930 mm)	1
61	....	Steering Control Valve ☞ Figure 98	1
62	....	Tilt Cylinder ☞ Figure 118	2
63	....	Steering Cylinder ☞ Figure 99	1
64	....	Control Valve ☞ Figure 113, Figure 114, Figure 116, Figure 117	1
65	239503	Nut	3
66	16540	Fitting	3
66	16483	O-Ring	1
67	222492	Nipple	1
67	16483	O-Ring	1
68	278510	Hose	3
69	909190	Hydraulic Oil (5L)	AR
69	823301	Hydraulic Oil (20L)	AR

[a] Diesel (Low Noise)

©1996 HYSTER COMPANY

HYDRAULICS GROUP

FIRST USED ON S/N

D001B-3023

(Figure 107)

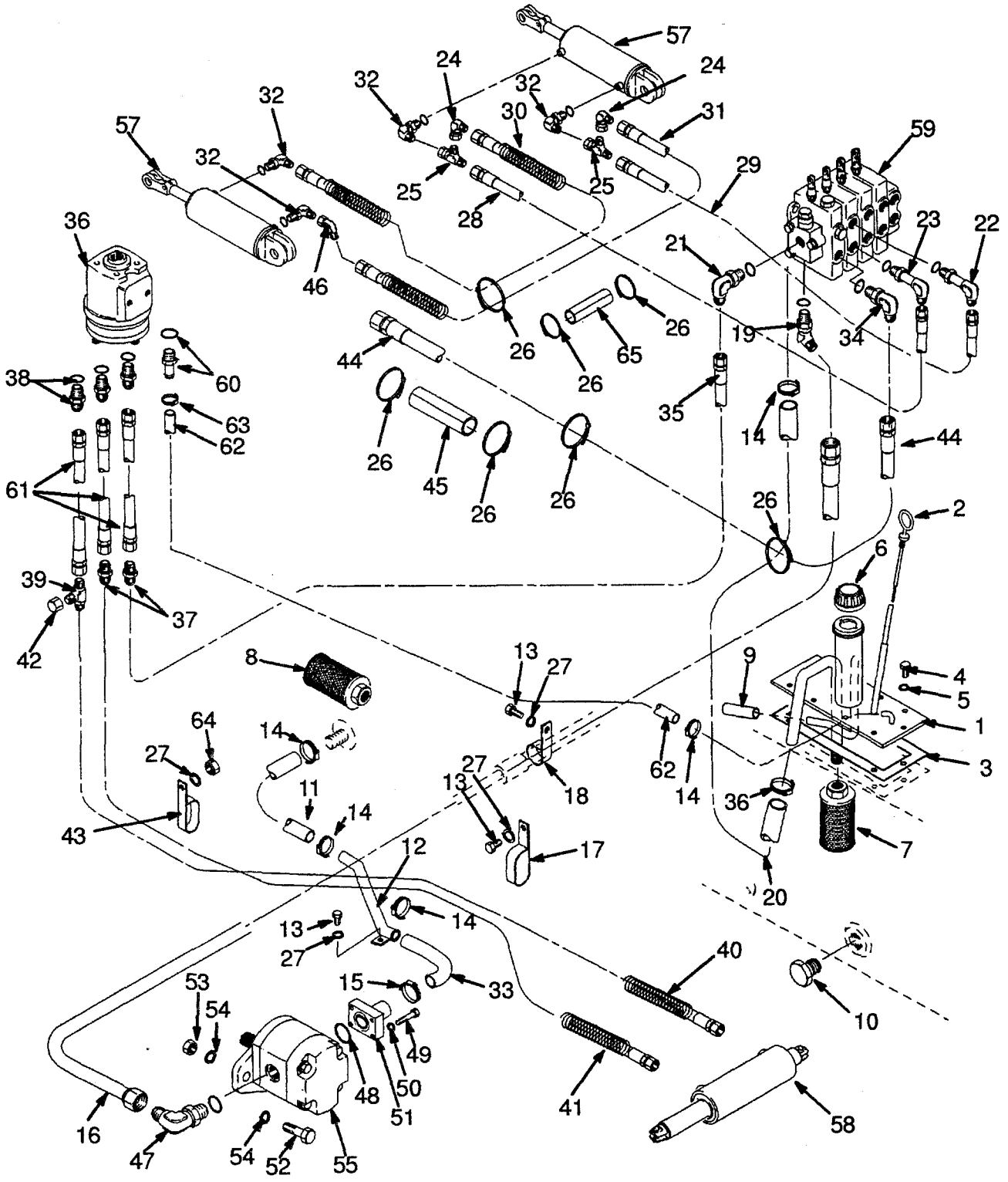

HYDRAULICS GROUP

FIRST USED ON S/N

D001B-3023

REF		PART NO.	NAME OF PART	QTY
1	a	2021916	Tank Cover	1
1	b	2023459	Tank Cover	1
2	a	2021936	Dipstick	1
2	b	2023462	Dipstick	1
3		2021672	Joint	1
4		316678	Hex Head Bolt	6
5		2021673	Washer	6
6		2021908	Cap	1
7		2021933	Filter	1
8		2021935	Filter	1
9		2021939	Hose	1
10		17636	Fitting	1
11		2021880	Hose	1
12		2021881	Tube	1
13		287851	Hex Head Bolt	3
14		127045	Clamp	5
15		119236	Clamp	1
16		2021884	Hose	1
17		176454	Clamp	1
18		166112	Clamp	2
19		2021887	Fitting	1
20		2022890	Hose	1
21		16558	Fitting	1
21		16483	O-Ring	1
22		2023534	Fitting	1
23		201766	Fitting	1
23		16483	O-Ring	1
24		16987	Fitting	2
25		17059	Fitting	4
26		137852	Strap Clamp	14
27		292681	Washer	6
28		2023537	Hose	1
29		2023535	Hose	1
30		2023538	Hose	1
31		2023536	Hose	1
32		16556	Fitting	4
32		16481	O-Ring	1
33		2021879	Hose (Suction)	1
33	c	2022549	Hose (Suction Low Noise)	..
34		165560	Fitting	1
34		16485	O-Ring	1
35		2021906	Hose	1
36		166857	Clamp	1
37		14691	Fitting	1
38		16540	Fitting	1
38		16483	O-Ring	1
39		1347212	Fitting	1
40		895900	Hose	1
41		895899	Hose	1
42		16923	Fitting	1
43		129684	Clamp	2
44		2006579	Hose	1
45		2021886	Hose	3
46		16997	Fitting	1
47		2021271	Fitting	1
48		2021909	O-Ring	1
49		296010	Hex Head Bolt	4
50		2021272	Lockwasher	4
51		2021273	Connector	1
52		287860	Hex Head Bolt	2
53		136692	Nut	3
54		296420	Washer	4
55		....	Pump ☞ Figure 108, Figure 109	1
56		....	Steering Control Valve ☞ Figure 98	1
57		....	Tilt Cylinder ☞ Figure 118	2
58		....	Steering Cylinder ☞ Figure 99	1
59		....	Control Valve ☞ Figure 113, Figure 114, Figure 116, Figure 117	1
60		222492	Fitting	1
60		16483	O-Ring	1
61		278510	Hose	3
62		340609	Hose	1
63		166857	Clamp	1
64		239503	Nut	3
65		1379457	Hose	1

a Last Used on S/N Pending per ECN 81003-79
b First Used on S/N Pending per ECN 81003-79
c Diesel

©1996 HYSTER COMPANY

HYDRAULIC PUMP

PETROL AND LPG

(Figure 108)

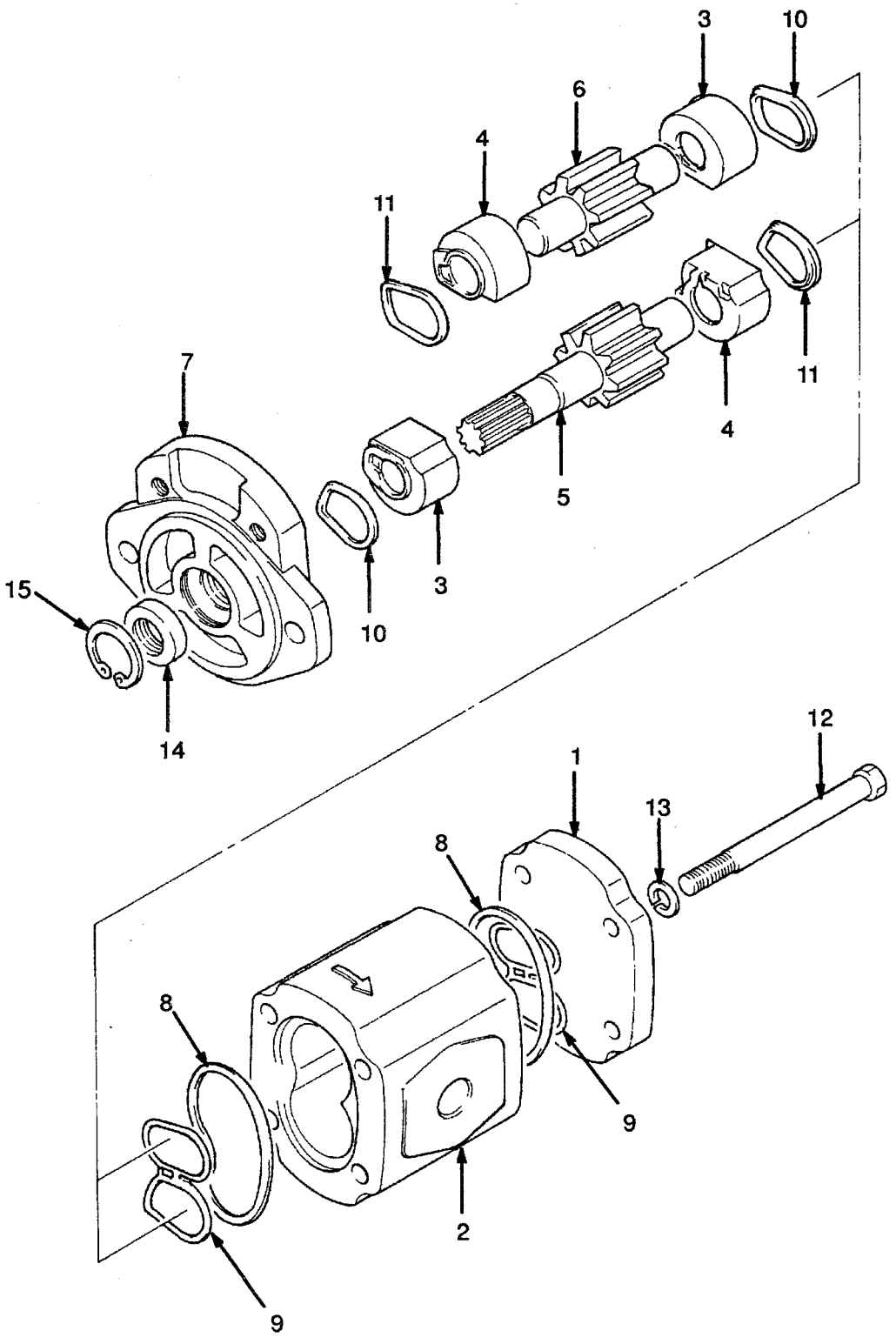

©1996 HYSTER COMPANY

HYDRAULIC PUMP
PETROL AND LPG

KEY
A: Pump 2021265
B: Pump 2021266 First Used On S/N D001B–3932

REF		PART NO.	NAME OF PART	QTY A	QTY B
		2021265	Hydraulic Pump	1	..
		2021266	Hydraulic Pump	..	1
1		355850	Cover	1	1
2		....	Body	1	1
3	ab	1366643	Bearing	2	2
4	ab	1366634	Bearing	2	2
5	ab	....	Gear	1	1
6	ab	....	Gear	1	1
7		1366637	Flange	1	1
8	c	....	Oil Seal	2	2
9	c	....	Oil Seal	2	2
10	c	....	Back-Up Ring (RH)	2	2
11	c	....	Back-Up Ring (LH)	2	2
12		1366638	Bolt	4	..
12		1382665	Bolt	..	4
13		292682	Lockwasher	4	4
14	c	....	Oil Seal	1	1
15	c	....	Circlip	1	1

a Included In Repair Kit 1366642
b Included In Repair Kit 1382666 (Pump 2021266)
c Included In Seal Kit 1366641

©1996 HYSTER COMPANY

DOUBLE GEAR PUMP

DIESEL

2,5L ENGINE

(Figure 109)

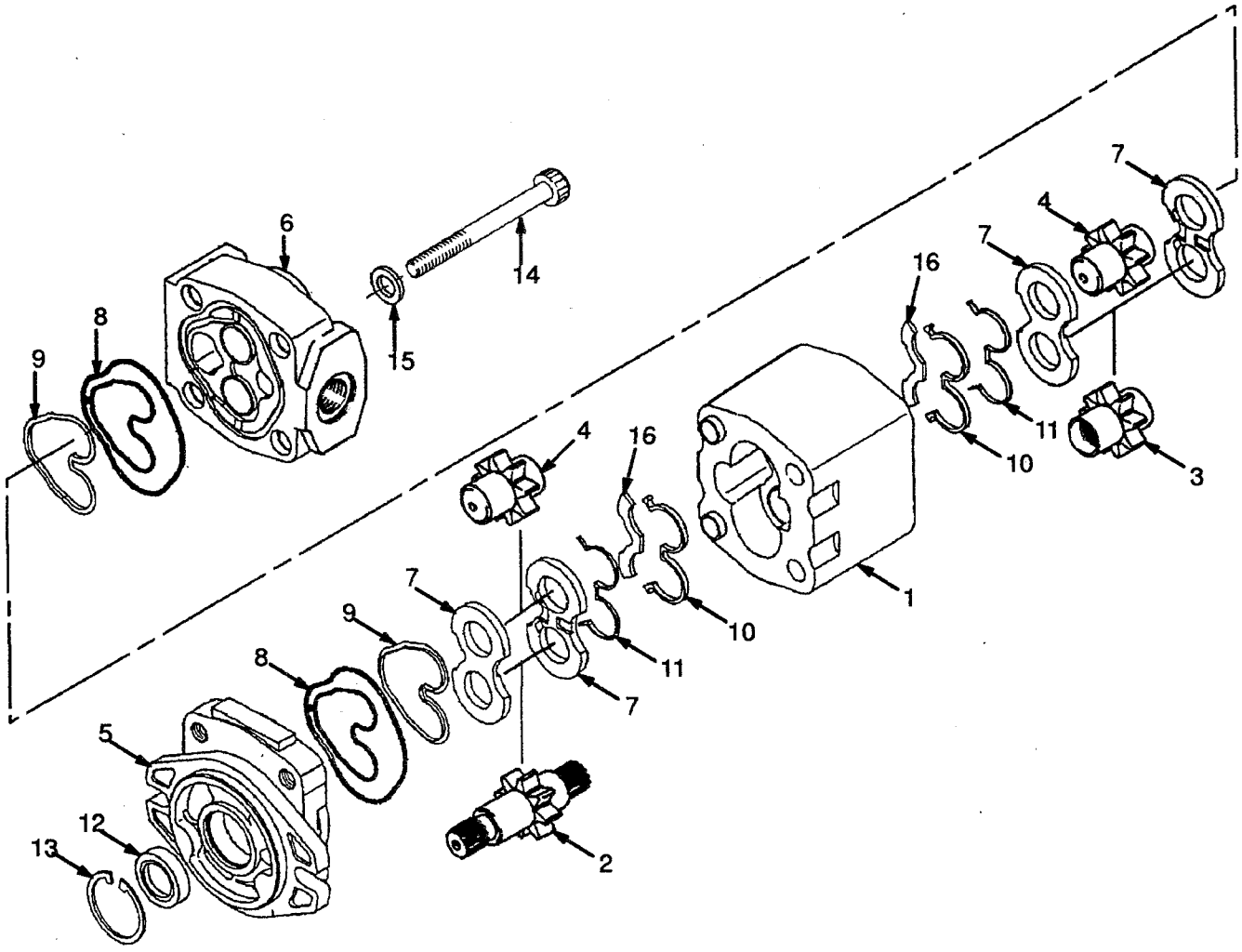

©1996 HYSTER COMPANY

HYSTER

DOUBLE GEAR PUMP
DIESEL
2,5L ENGINE

REF		PART NO.	NAME OF PART	QTY
		2022017	Hydraulic Pump	1
1		....	Body	1
2	a	....	Drive Gear (Front)	1
3	a	....	Drive Gear (Rear)	1
4	a	....	Driven Gear	2
5		1354746	Flange	1
6		1371646	End Cover	1
7		1354748	Pressure Plate	4
8	b	....	Seal	2
9	b	....	Back-Up Ring	2
10	b	....	Bush Seal	2
11	b	....	Back-Up Seal	2
12	b	....	Seal	1
13	b	....	Circlip	1
14		1371647	Hex Head Bolt	4
15		2021834	Washer	4
16		1352470	Isolation Plate	2

a Included In Repair Kit 2022577
b Included In Seal Kit 2022576

©1996 HYSTER COMPANY

PUMP DRIVE

PETROL AND LPG 2,0L

(Figure 110)

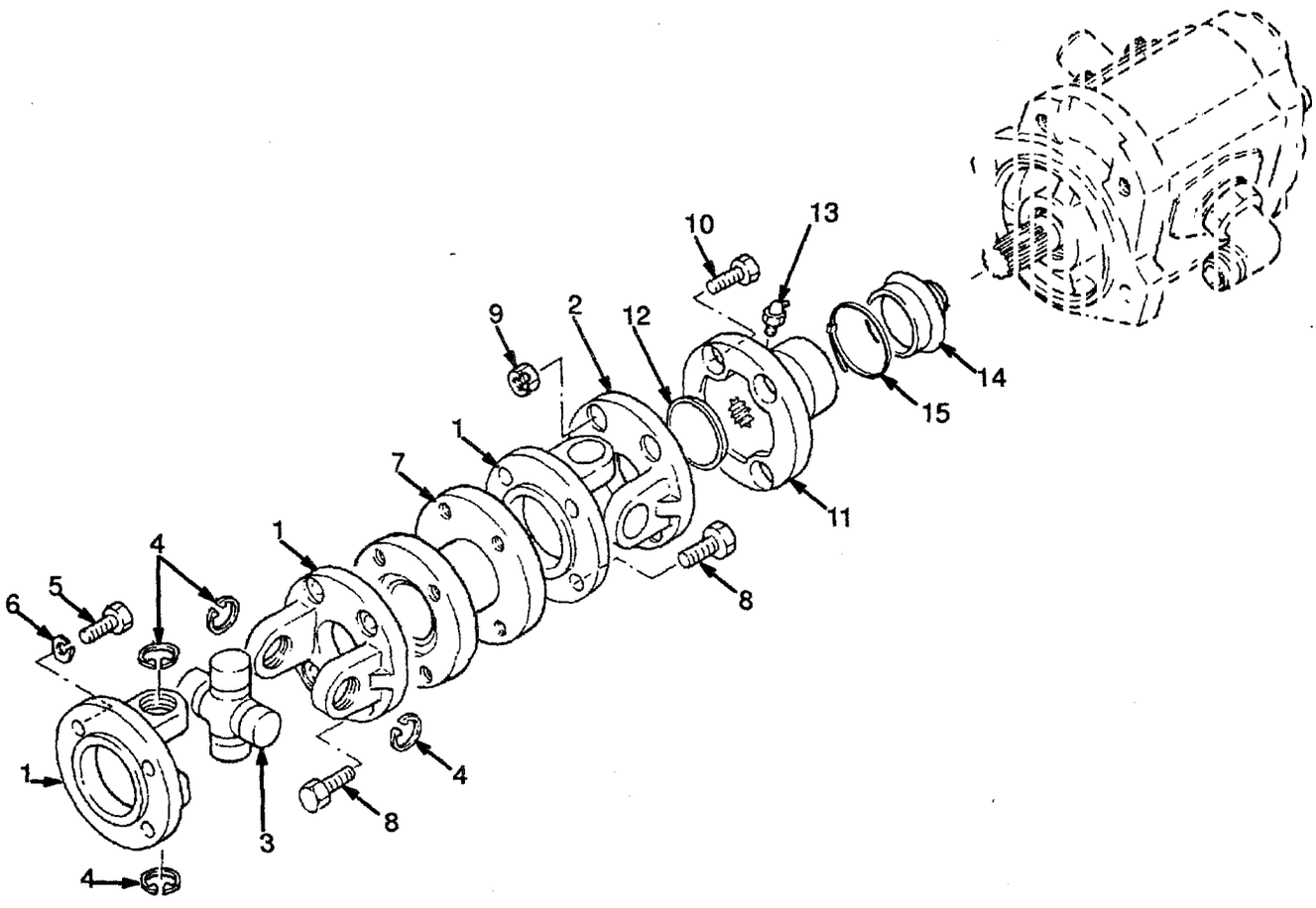

©1996 HYSTER COMPANY

PUMP DRIVE
PETROL AND LPG 2,0L

REF	PART NO.	NAME OF PART	QTY
1	2021239	Yoke	3
2	2021240	Yoke	1
3	1379468	Universal Joint	1
4	2021243	Circlip (0,95 mm)	AR
4	2021244	Circlip (1,00 mm)	AR
5	2022550	Bolt	4
6	2021245	Lockwasher	4
7	2021250	Coupling	1
8	136681	Hex Head Bolt	8
9	239503	Nut	4
10	136749	Hex Head Bolt	4
11	2021252	Coupling	1
12	2022555	Plug	1
13	2022554	Grease Fitting	1
14	2021254	Boot	1
15	2022545	Strap Clamp	1

©1996 HYSTER COMPANY

PUMP DRIVE

DIESEL 2,5L

(Figure 111)

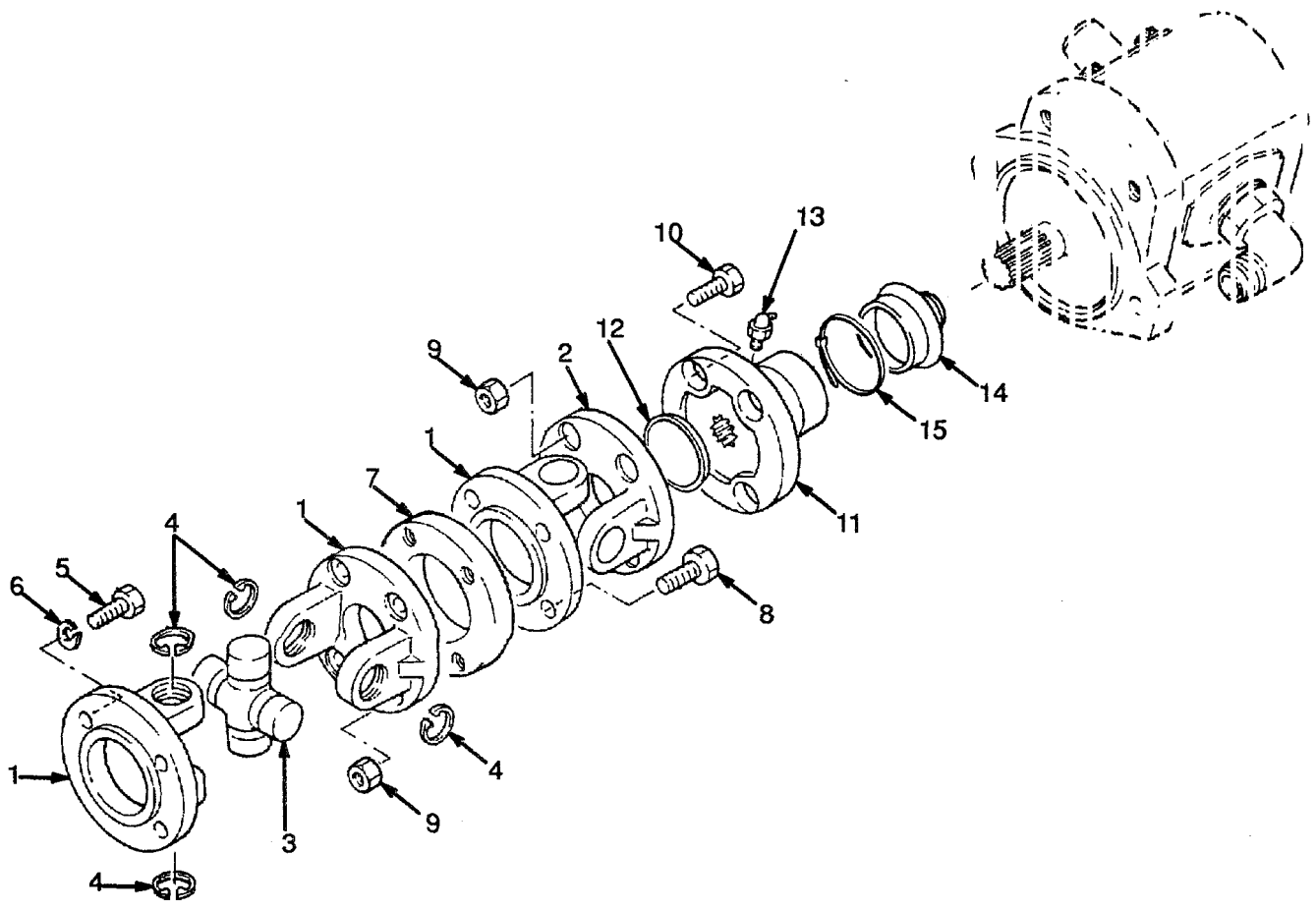

©1996 HYSTER COMPANY

PUMP DRIVE
DIESEL 2,5L

REF	PART NO.	NAME OF PART	QTY
1	2021239	Yoke	3
2	2021240	Yoke	1
3	1379468	Universal Joint	1
4	2021243	Circlip (0,95 mm)	AR
4	2021244	Circlip (1,00 mm)	AR
5	2022550	Bolt	4
6	2021245	Lockwasher	4
7	2021251	Coupling	1
8	2022717	Bolt	4
9	239503	Nut	8
10	136749	Hex Head Bolt	4
11	2021252	Coupling	1
12	2022555	Plug	1
13	2022554	Grease Fitting	1
14	2021254	Boot	1
15	2022545	Strap Clamp	1

©1996 HYSTER COMPANY

VALVE ATTACHING PARTS

THREE FUNCTION

(Figure 112)

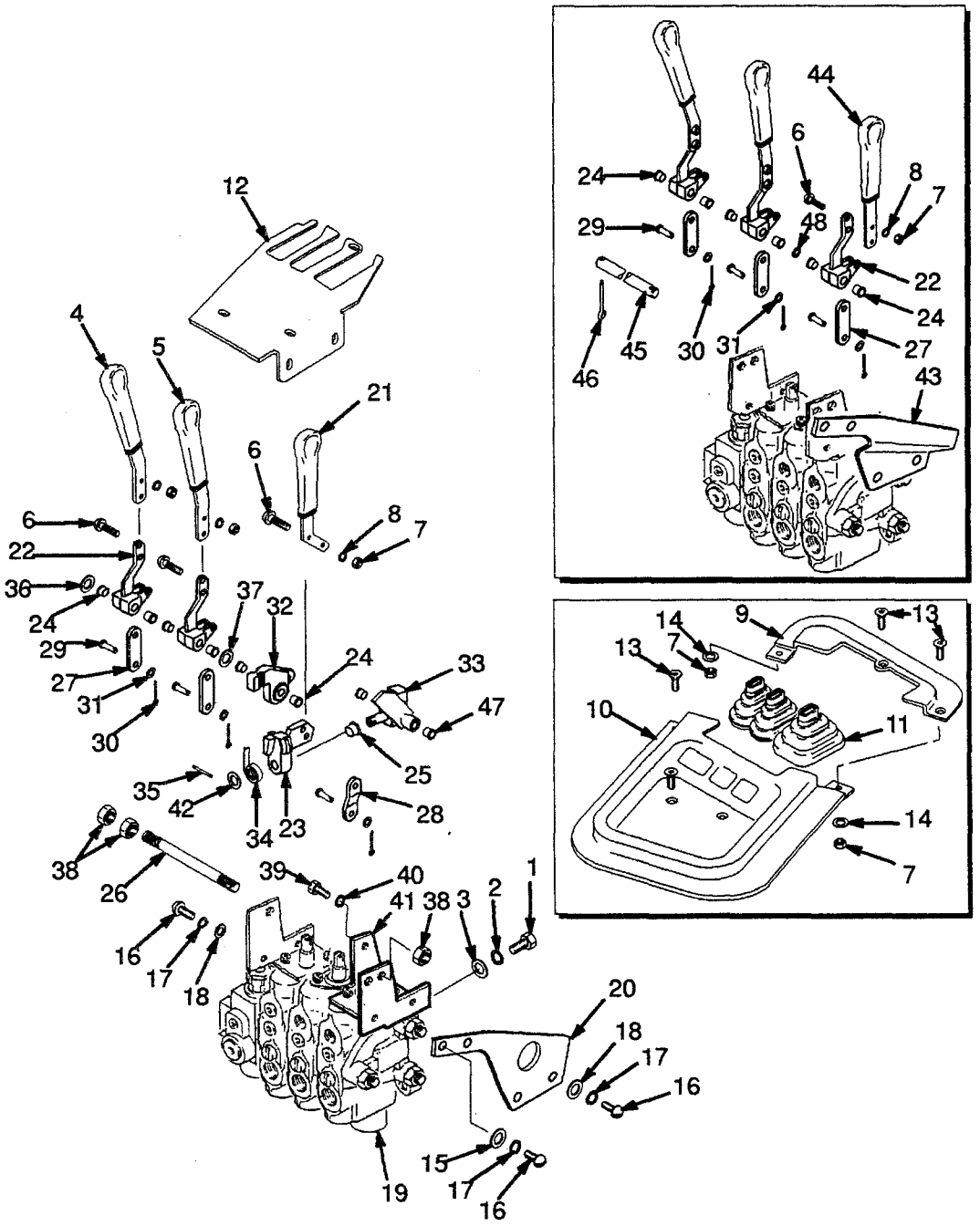

VALVE ATTACHING PARTS
THREE FUNCTION

KEY
A: with Detented Levers
B: without Detented Levers

REF	PART NO.	NAME OF PART	QTY A	QTY B
1	287503	Hex Head Bolt	3	3
2	292682	Lockwasher	3	3
3	15177	Washer	3	3
4	2020500	Lever	1	1
5	2020501	Lever	1	1
6	296160	Hex Head Bolt	6	6
7	313805	Nut	11	11
8	292680	Washer	6	6
9	2021862	Front Cover	1	1
10	2021863	Rear Cover	1	1
11	2021864	Boot	1	1
12	2021865	Plate	1	1
13	2022702	Screw	5	5
14	320156	Washer	5	5
15	320157	Washer	2	2
16	296165	Hex Head Bolt	5	5
17	292681	Lockwasher	5	5
18	15175	Washer	3	3
19	....	Control Valve ☞ Figure 113, Figure 114	1	1
20	2021867	Bracket	1	..
21	2020503	Lever	1	..
22	2021823	Yoke	2	3
23	2022912	Pivot	1	..
24	2022796	Bush	AR	AR
25	2021810	Bush	1	..
26	2021813	Pin	1	..
27	2021815	Link	2	3
28	2021816	Link	1	..
29	2021817	Pin	6	6
30	2021818	Split Pin	6	6
31	320155	Washer	6	6
32	2022911	Yoke	1	..
33	2021852	Pivot Pin	1	..
34	175861	Spring	1	..
35	302427	Pin	1	..
36	2021860	Shim	AR	..
37	296417	Washer	1	..
38	296128	Nut	3	..
39	287817	Hex Head Bolt	1	..
40	296417	Washer	1	..
41	2021856	Bracket	1	..
42	2311502	Shim (0,4 mm)	AR	..
43	2021866	Bracket	..	1
44	2020502	Lever	..	1
45	1345348	Pin	..	1
46	136704	Split Pin	..	2
47	2021809	Bush	2	..
48	320159	Washer (Optional)	..	1

©1996 HYSTER COMPANY

THREE FUNCTION CONTROL VALVE

SINGLE RELIEF

(Figure 113)

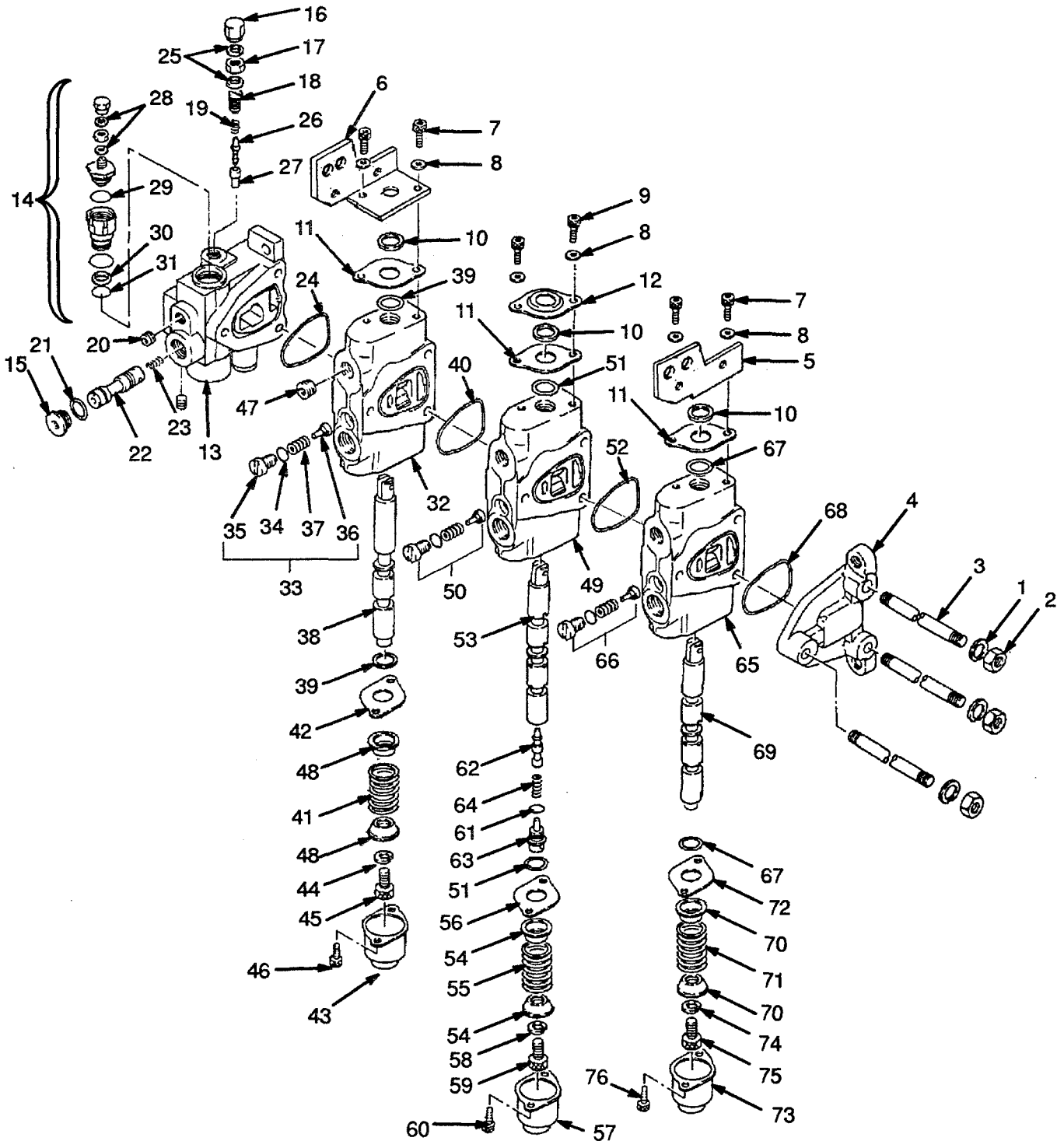

THREE FUNCTION CONTROL VALVE
SINGLE RELIEF

REF		PART NO.	NAME OF PART	QTY
		2023309	Control Valve	1
1		292682	Lockwasher	3
2		1368046	Nut	3
3		1368126	Tie Rod	3
4		1368049	End Cover	1
5		1368005	Bracket	1
6		1368008	Bracket	1
7		2022208	Screw	4
8		292680	Washer	6
9		1368026	Screw	2
10		1368006	Wiper	3
11		1368007	Retainer	3
12		1368036	Plate	1
13		1368041	Inlet Section	1
14		2022205	Relief Valve	1
15		1368011	Plug	1
16		1368012	Nut	1
17		1368014	Locknut	1
18		1368015	Adjusting Screw	1
19		1368016	Spring	1
20		1368017	Plug	1
21	a	1368037	O-Ring	1
22		....	Piston	1
23		....	Spring	1
24	a	2022191	O-Ring	1
25	a	1368013	Joint	2
26		....	Poppet	1
27		....	Seat	1
28	a	1368047	Joint	2
29	a	2022217	O-Ring	1
30	a	1368033	Back-Up Ring	1
31	a	1368032	O-Ring	1
32		1368042	Spool Section (Lift)	1
33		1368028	Plug Assy	1
34	a	2022192	O-Ring	1
35		....	Plug	1
36		....	Check Valve	1
37		....	Spring	1
38		....	Spool	1
39	a	1368018	O-Ring	2
40	a	2022191	O-Ring	1
41		1368023	Spring	1
42		1368007	Retainer	1
43		1368024	Cap	1
44		1368025	Washer	1
45		296009	Screw	1
46		1368026	Screw	2
47		1368027	Plug	1
48		1368022	Collar	2
49		2023311	Spool Section (Tilt)	1
50	b	1368028	Plug Assy	1
51	a	1368018	O-Ring	2
52	a	2022191	O-Ring	1
53		....	Spool	1
54		1368022	Collar	2
55		1368023	Spring	1
56		1368007	Retainer	1
57		1368024	Cap	1
58		1368029	Washer	1
59		2022208	Screw	1
60		1368026	Screw	2
61	a	2022210	O-Ring	1
62		....	Spool	1
63		1368030	Plug	1
64		1368031	Spring	1
65		1368043	Spool Section (Auxiliary)	1
66	b	1368028	Plug Assy	1
67	a	1368018	O-Ring	2
68	a	2022191	O-Ring	1
69		....	Spool	1
70		1368022	Collar	2
71		1368023	Spring	1
72		1368007	Retainer	1
73		1368024	Cap	1
74		1368025	Washer	1
75		296009	Screw	1
76		1368026	Screw	2

a Included In Seal Kit 1368127
b Includes 34-37

©1996 HYSTER COMPANY

THREE FUNCTION CONTROL VALVE

DUAL RELIEF VALVE

(Figure 114)

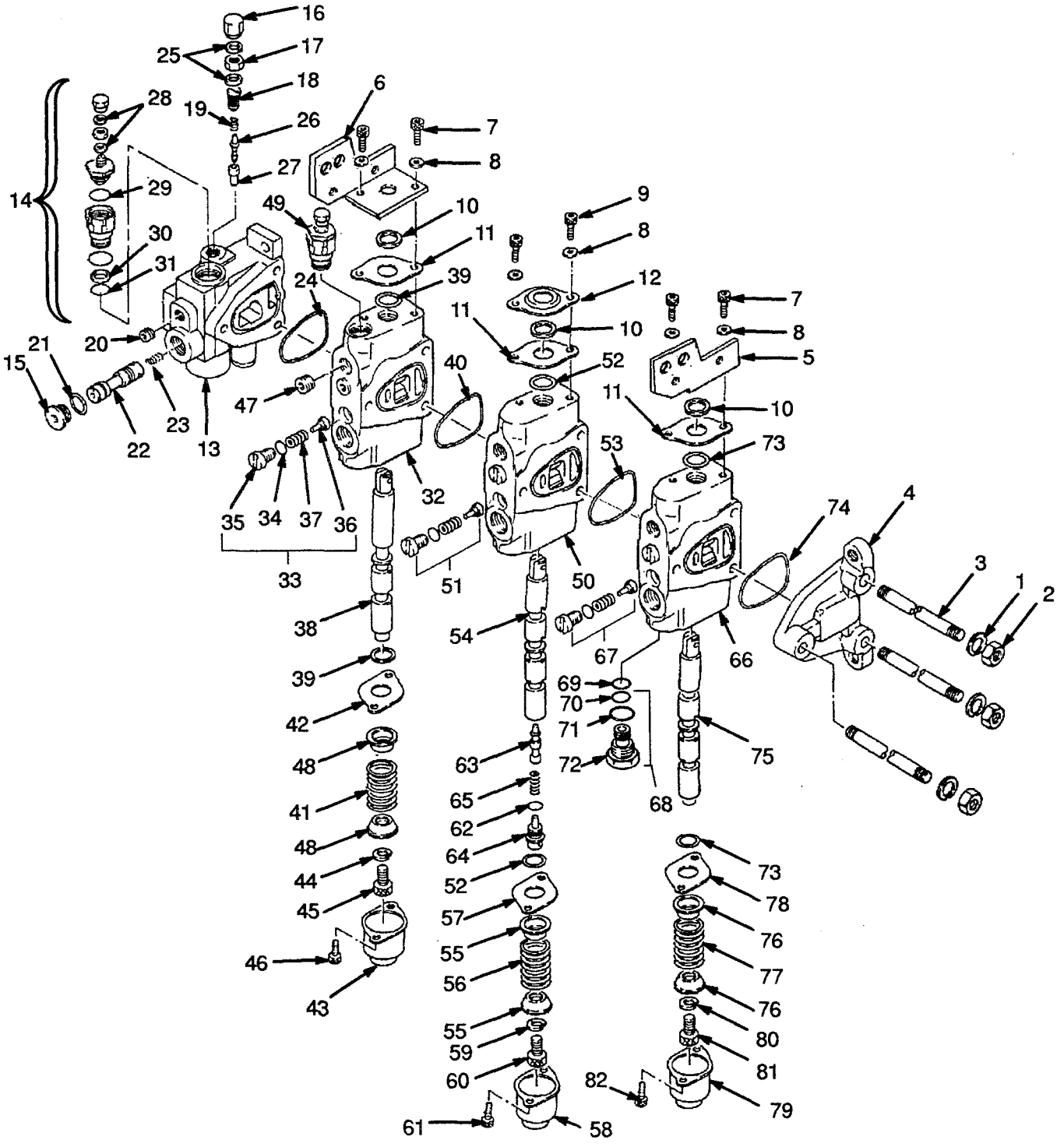

THREE FUNCTION CONTROL VALVE
DUAL RELIEF VALVE

REF		PART NO.	NAME OF PART	QTY
		2023354	Control Valve	1
1		292682	Lockwasher	3
2		1368046	Nut	3
3		1368126	Tie Rod	3
4		1368049	End Cover	1
5		1368005	Bracket	1
6		1368008	Bracket	1
7		2022208	Screw	4
8		292680	Washer	6
9		1368026	Screw	2
10		1368006	Wiper	3
11		1368007	Retainer	3
12		1368036	Plate	1
13		1368041	Inlet Section	1
14		2022205	Relief Valve	1
15		1368011	Plug	1
16		1368012	Nut	1
17		1368014	Locknut	1
18		1368015	Adjusting Screw	1
19		1368016	Spring	1
20		1368017	Plug	1
21	a	1368037	O-Ring	1
22		....	Piston	1
23		....	Spring	1
24	a	2022191	O-Ring	1
25	a	1368013	Joint	2
26		....	Poppet	1
27		....	Seat	1
28	ab	1368047	Joint	2
29	ab	2022217	O-Ring	1
30	ab	1368033	Back-Up Ring	1
31	ab	1368032	O-Ring	1
32		1369070	Spool Section (Lift)	1
33		1368028	Plug Assy	1
34	a	2022192	O-Ring	1
35		....	Plug	1
36		....	Check Valve	1
37		....	Spring	1
38		....	Spool	1
39	a	1368018	O-Ring	2
40	a	2022191	O-Ring	1
41		1368023	Spring	1
42		1368007	Retainer	1
43		1368024	Cap	1
44		1368025	Washer	1
45		296009	Screw	1
46		1368026	Screw	2
47		1368027	Plug	2
48		1368022	Collar	2
49		2022205	Relief Valve	1
50		2023312	Spool Section (Tilt)	1
51	c	1368028	Plug Assy	2
52	a	1368018	O-Ring	2
53	a	2022191	O-Ring	1
54		....	Spool	1
55		1368022	Collar	2
56		1368023	Spring	1
57		1368007	Retainer	1
58		1368024	Cap	1
59		1368029	Washer	1
60		2022208	Screw	1
61		1368026	Screw	2
62	a	2022210	O-Ring	1
63		....	Spool	1
64		1368030	Plug	1
65		1368031	Spring	1
66		2022441	Spool Section (Auxiliary)	1
67	c	1368028	Plug Assy	2
68		1368035	Plug Assy	1
69	a	1368032	O-Ring	1
70	a	1368033	Back-Up Ring	1
71	a	2022217	O-Ring	1
72		1368034	Plug	1
73	a	1368018	O-Ring	2
74	a	2022191	O-Ring	1
75		....	Spool	1
76		1368022	Collar	2
77		1368023	Spring	1
78		1368007	Retainer	1
79		1368024	Cap	1
80		1368025	Washer	1
81		296009	Screw	1
82		1368026	Screw	2

a Included In Seal Kit 1368127
b Included In Seal Kit 2022569
c Includes 34-37

©1996 HYSTER COMPANY

VALVE ATTACHING PARTS

FOUR FUNCTION

(Figure 115)

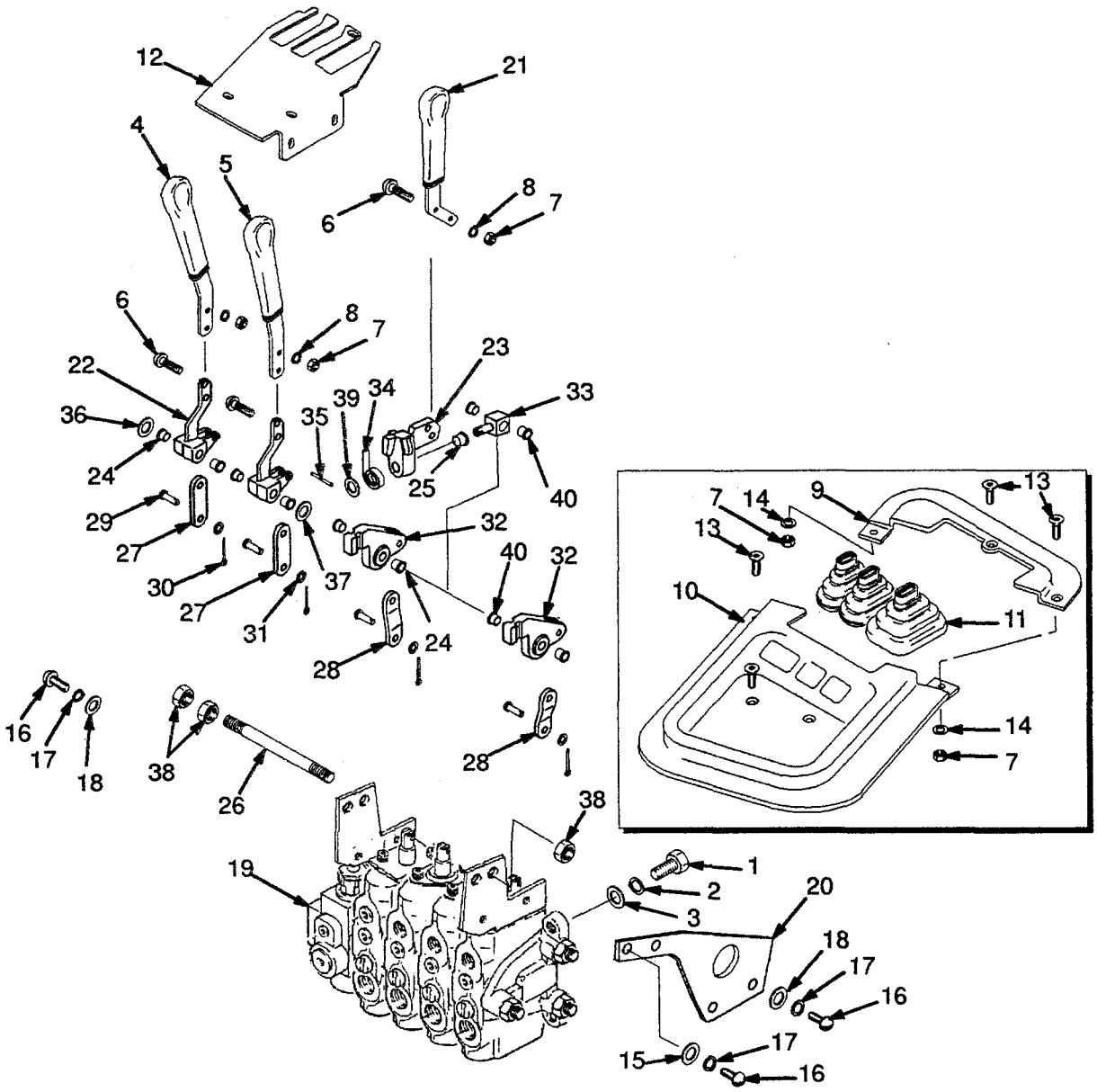

VALVE ATTACHING PARTS
FOUR FUNCTION

REF	PART NO.	NAME OF PART	QTY
1	287503	Hex Head Bolt	3
2	292682	Lockwasher	3
3	15177	Washer	3
4	2020500	Lever	1
5	2020501	Lever	1
6	296160	Hex Head Bolt	6
7	313805	Nut	11
8	292680	Washer	6
9	2021862	Front Cover	1
10	2021863	Rear Cover	1
11	2021864	Boot	1
12	2021865	Plate	1
13	2022702	Screw	5
14	320156	Washer	5
15	320157	Washer	2
16	296165	Hex Head Bolt	5
17	292681	Lockwasher	5
18	15175	Washer	3
19	....	Control Valve	1
		☞ Figure 116, Figure 117	
20	2021867	Bracket	1

REF	PART NO.	NAME OF PART	QTY
21	2020503	Lever	1
22	2021823	Yoke	2
23	2022912	Pivot	1
24	2022796	Bush	6
25	2021810	Bush	1
26	2021813	Pin	1
27	2021815	Link	2
28	2021816	Link	2
29	2021817	Pin	8
30	2021818	Split Pin	8
31	320155	Washer	8
32	2022910	Yoke	1
33	2021851	Pivot Pin	1
34	175861	Spring	1
35	302427	Pin	1
36	2021860	Shim	AR
37	320159	Washer	1
38	296128	Nut	3
39	2311502	Shim	AR
40	2021809	Bush	4

©1996 HYSTER COMPANY

FOUR FUNCTION CONTROL VALVE

SINGLE RELIEF

(Figure 116)

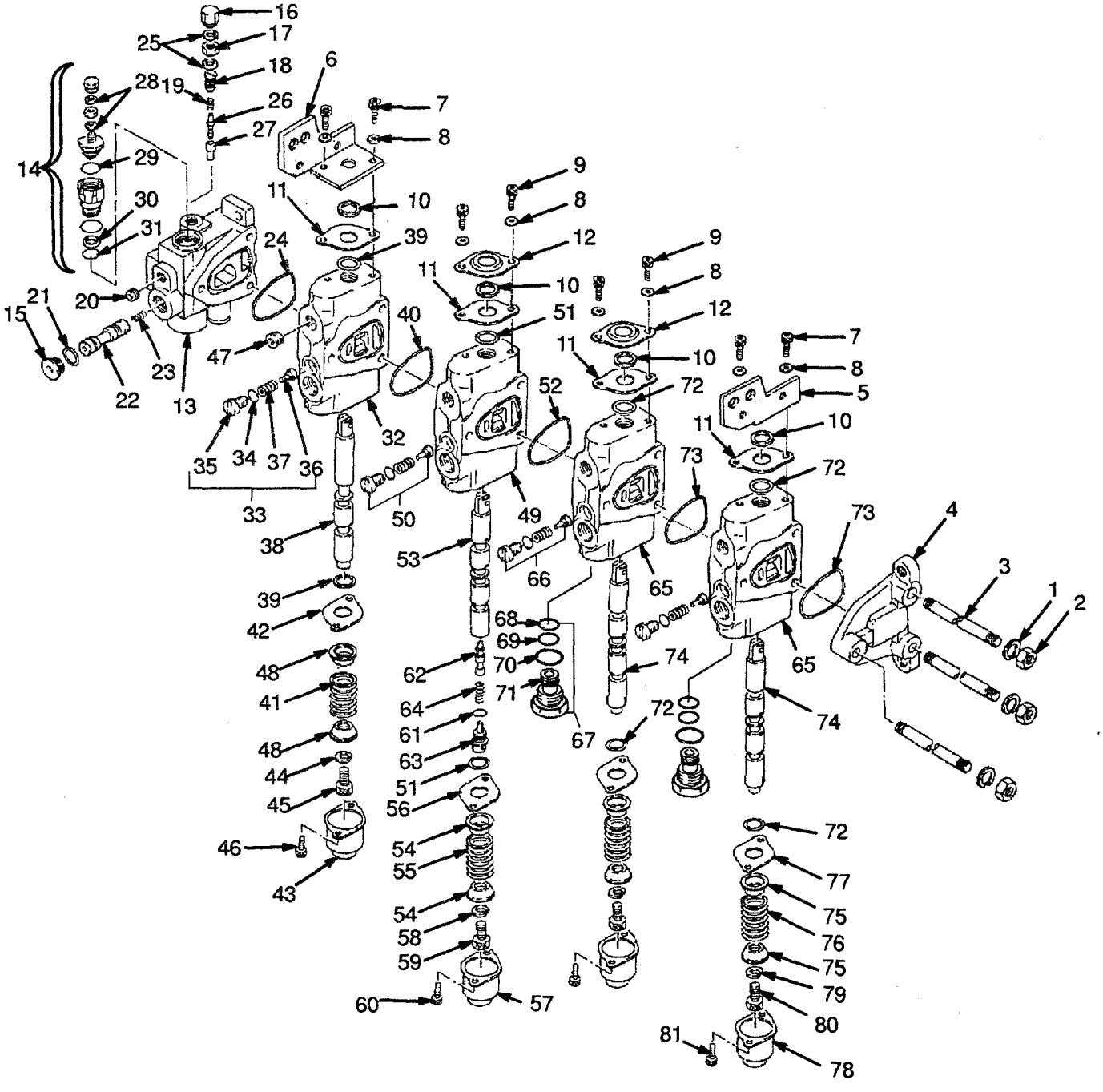

FOUR FUNCTION CONTROL VALVE
SINGLE RELIEF

REF		PART NO.	NAME OF PART	QTY
		2023310	Control Valve	1
1		292682	Lockwasher	3
2		1368046	Nut	3
3		1368048	Tie Rod	3
4		1368049	End Cover	1
5		1368005	Bracket	1
6		1368008	Bracket	1
7		2022208	Screw	4
8		292680	Washer	8
9		1368026	Screw	4
10		1368006	Wiper	4
11		1368007	Retainer	4
12		1368036	Plate	2
13		1368041	Inlet Section	1
14		2022205	Relief Valve	1
15		1368011	Plug	1
16		1368012	Nut	1
17		1368014	Locknut	1
18		1368015	Adjusting Screw	1
19		1368016	Spring	1
20		1368017	Plug	1
21	a	....	O-Ring	1
22		....	Piston	1
23		....	Spring	1
24	a	2022191	O-Ring	1
25	a	1368013	Joint	2
26		....	Poppet	1
27		....	Seat	1
28	a	1368047	Joint	2
29	a	2022217	O-Ring	1
30	a	1368033	Back-Up Ring	1
31	a	1368032	O-Ring	1
32		1368042	Spool Section (Lift)	1
33		1368028	Plug Assy	1
34	a	2022192	O-Ring	1
35		....	Plug	1
36		....	Check Valve	1
37		....	Spring	1
38		....	Spool	1
39	a	1368018	O-Ring	2
40	a	2022191	O-Ring	1
41		1368023	Spring	1
42		1368007	Retainer	1
43		1368024	Cap	1
44		1368025	Washer	1
45		296009	Screw	1
46		1368026	Screw	2
47		1368027	Plug	1
48		1368022	Collar	2
49		2023311	Spool Section (Tilt)	1
50	b	1368028	Plug Assy	1
51	a	1368018	O-Ring	2
52	a	2022191	O-Ring	1
53		....	Spool	1
54		1368022	Collar	2
55		1368023	Spring	1
56		1368007	Retainer	1
57		1368024	Cap	1
58		1368029	Washer	1
59		2022208	Screw	1
60		1368026	Screw	2
61	a	2022210	O-Ring	1
62		....	Spool	1
63		1368030	Plug	1
64		1368031	Spring	1
65		1368045	Spool Section (Auxiliary)	2
66	b	1368028	Plug Assy	1
67		1368035	Plug Assy	1
68	a	1368032	O-Ring	1
69	a	1368033	Back-Up Ring	1
70	a	2022217	O-Ring	1
71		1368034	Plug	1
72	a	1368018	O-Ring	2
73	a	2022191	O-Ring	1
74		....	Spool	1
75		1368022	Collar	2
76		1368023	Spring	1
77		1368007	Retainer	1
78		1368024	Cap	1
79		1368025	Washer	1
80		296009	Screw	1
81		1368026	Screw	2

a Included In Seal Kit 1368128
b Includes 34-37

©1996 HYSTER COMPANY

FOUR FUNCTION CONTROL VALVE

DUAL RELIEF VALVE

(Figure 117)

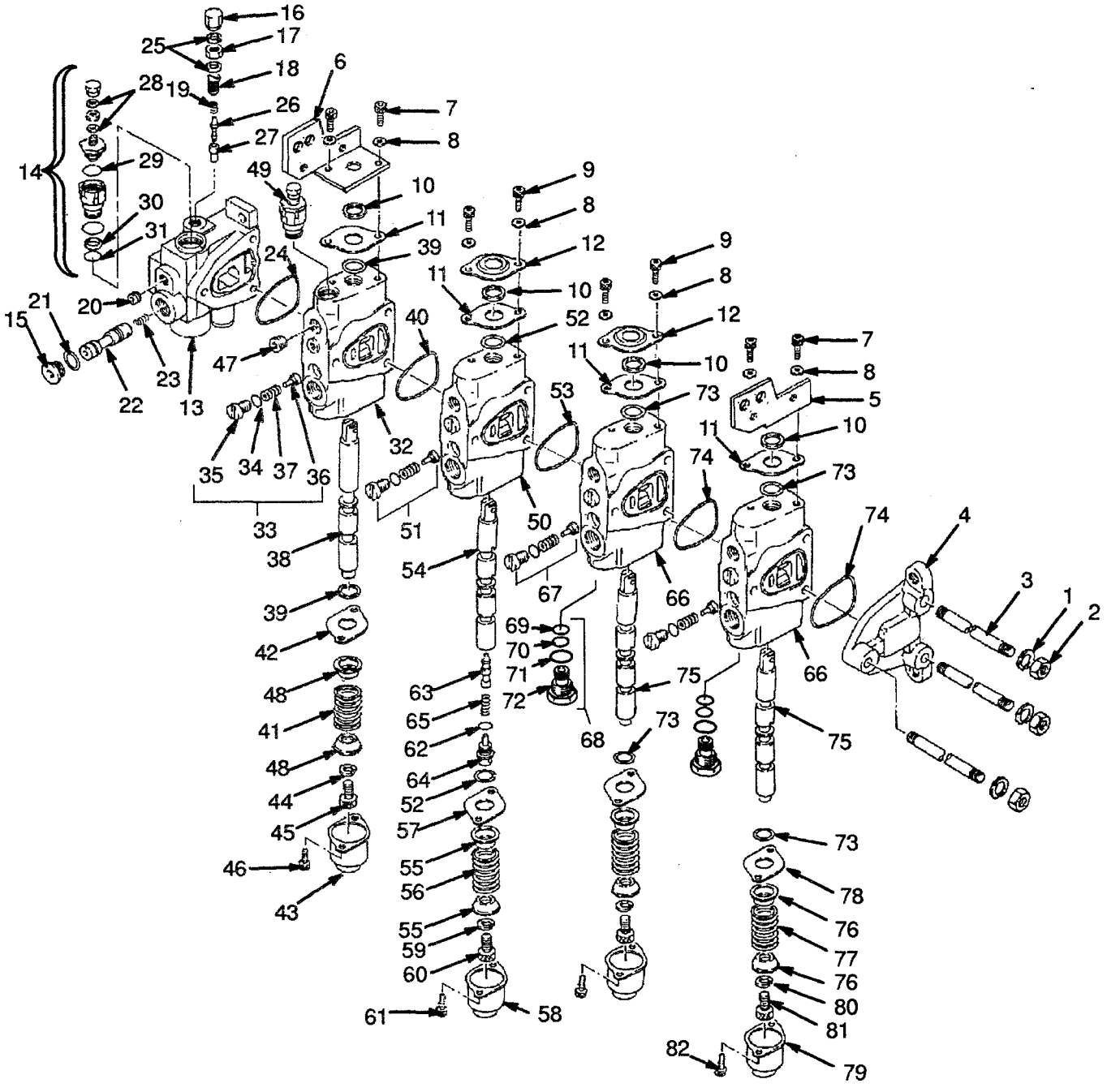

FOUR FUNCTION CONTROL VALVE
DUAL RELIEF VALVE

REF		PART NO.	NAME OF PART	QTY
		2023355	Control Valve	1
1		292682	Lockwasher	3
2		1368046	Nut	3
3		1368048	Tie Rod	3
4		1368049	End Cover	1
5		1368005	Bracket	1
6		1368008	Bracket	1
7		2022208	Screw	4
8		292680	Washer	8
9		1368026	Screw	4
10		1368006	Wiper	4
11		1368007	Retainer	4
12		1368036	Plate	2
13		1368041	Inlet Section	1
14		2022205	Relief Valve	1
15		1368011	Plug	1
16		1368012	Nut	1
17		1368014	Locknut	1
18		1368015	Adjusting Screw	1
19		1368016	Spring	1
20		1368017	Plug	1
21	a	....	O-Ring	1
22		....	Piston	1
23		....	Spring	1
24	a	2022191	O-Ring	1
25	a	1368013	Joint	2
26		....	Poppet	1
27		....	Seat	1
28	ab	1368047	Joint	2
29	ab	2022217	O-Ring	1
30	ab	1368033	Back-Up Ring	1
31	ab	1368032	O-Ring	1
32		1369070	Spool Section (Lift)	1
33		1368028	Plug Assy	1
34	a	2022192	O-Ring	1
35		....	Plug	1
36		....	Check Valve	1
37		....	Spring	1
38		....	Spool	1
39	a	1368018	O-Ring	2
40	a	2022191	O-Ring	1
41		1368023	Spring	1
42		1368007	Retainer	1
43		1368024	Cap	1
44		1368025	Washer	1
45		296009	Screw	1
46		1368026	Screw	2
47		1368027	Plug	2
48		1368022	Collar	2
49		2022205	Relief Valve	1
50		2023312	Spool Section (Tilt)	1
51	c	1368028	Plug Assy	2
52	a	1368018	O-Ring	2
53	a	2022191	O-Ring	1
54		....	Spool	1
55		1368022	Collar	2
56		1368023	Spring	1
57		1368007	Retainer	1
58		1368024	Cap	1
59		1368029	Washer	1
60		2022208	Screw	1
61		1368026	Screw	2
62	a	2022210	O-Ring	1
63		....	Spool	1
64		1368030	Plug	1
65		1368031	Spring	1
66		2022441	Spool Section (Auxiliary)	2
67	c	1368028	Plug Assy	2
68		1368035	Plug Assy	1
69	a	1368032	O-Ring	1
70	a	1368033	Back-Up Ring	1
71	a	2022217	O-Ring	1
72		1368034	Plug	1
73	a	1368018	O-Ring	2
74	a	2022191	O-Ring	1
75		....	Spool	1
76		1368022	Collar	2
77		1368023	Spring	1
78		1368007	Retainer	1
79		1368024	Cap	1
80		1368025	Washer	1
81		296009	Screw	1
82		1368026	Screw	2

a Included In Seal Kit 1368128
b Included In Seal Kit 2022569
c Includes 34-37

©1996 HYSTER COMPANY

TILT CYLINDER

(Figure 118)

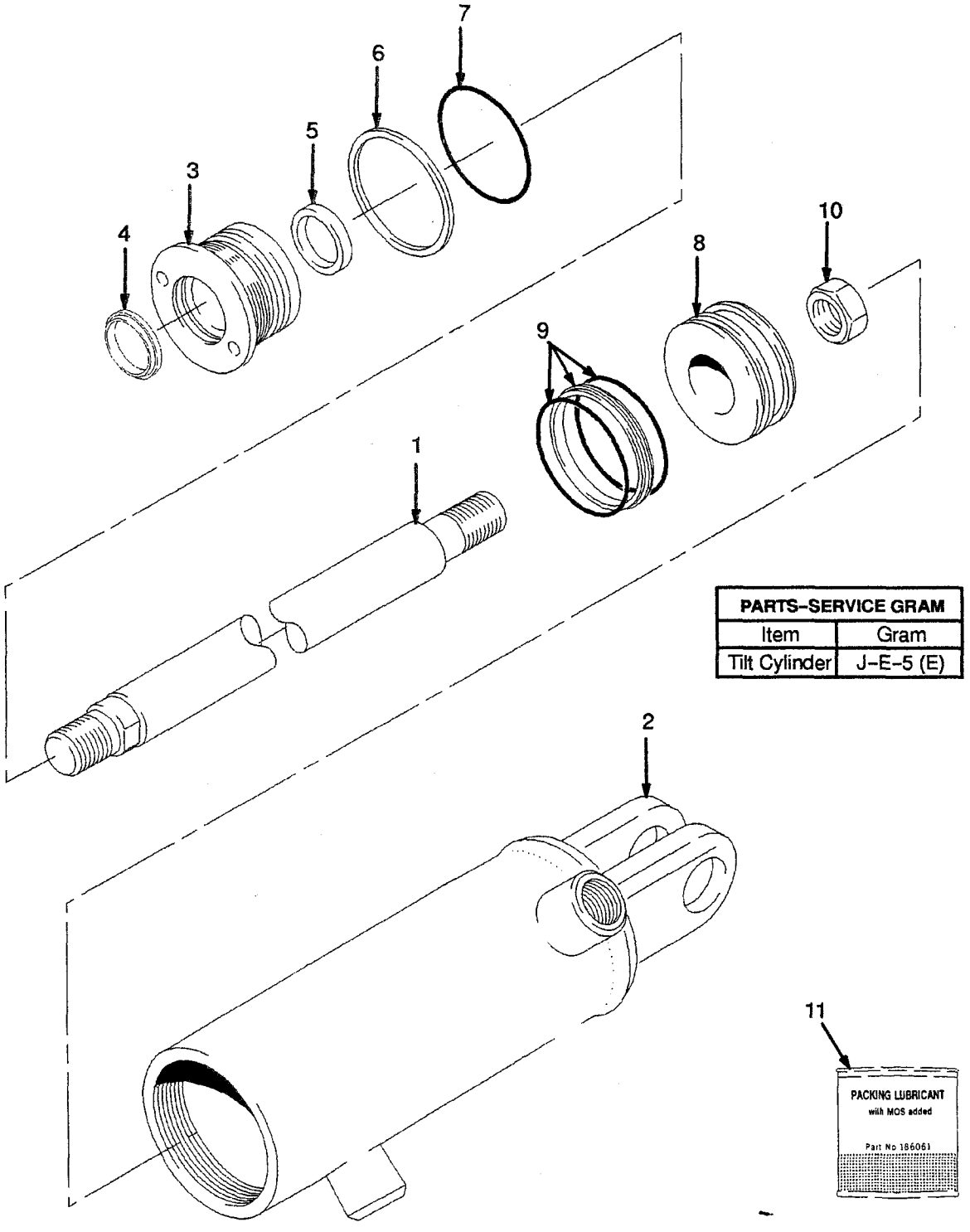

PARTS-SERVICE GRAM	
Item	Gram
Tilt Cylinder	J-E-5 (E)

TILT CYLINDER

REF		PART NO.	NAME OF PART	QTY
	a	8602102	Group No.	..
	c	8602103	Group No.	..
	a	2310066	Tilt Cylinder	2
	c	2309376	Tilt Cylinder	2
1	a	2308689	Rod	1
1	c	2308013	Rod	1
2		1371668	Shell	1
3		2308169	Gland	1
4	b	2311937	Wiper	1
5	b	2311816	Seal	1
6	b	276627	Back-Up Ring	1
7	b	57664	O-Ring	1
8		2304677	Piston	1
9	b	2306303	Piston Seal	1
10		2302899	Locknut	1
11		186061	Packing Lube	AR

a 6 Degree Forward Tilt/6 Degree Back Tilt
b Included In Seal Kit 2302714
c 6 Degree Forward Tilt/10 Degree Back Tilt

©1996 HYSTER COMPANY

NOTES

©1996 HYSTER COMPANY

NUMERICAL INDEX

PART NO	FIGURE	REF NO
2022742	63	
2022744	46	25
2022748	167	9
2022789	165	
2022796	112	24
	115	24
2022798	3	44
2022803	10	13
2022820	62	2
2022821	3	35
2022822	3	41
2022823	171	2
2022825	94	1
2022826	87	8
	88	8
2022827	171	3
2022828	163	1
2022829	87	13
	88	14
2022830	128	24
	129	6
	143	34
	157	30
	158	38
2022849	9	10
2022853	48	12
2022858	164	
2022859	164	
	165	
2022861	164	
	165	
2022862	164	
2022864	164	
	165	
2022869	166	
2022870	166	
2022872	166	
2022874	166	
2022884	87	6
2022885	87	7
2022890	107	20
2022900	6	18
2022901	171	5
2022902	163	2
2022903	168	5
2022904	4	15
2022908	43	
2022910	115	32
2022911	112	32
2022912	112	23
	115	23
2022923	99	2
2023309	113	
2023310	116	
2023311	113	49
	116	49
2023312	114	50
	117	50
2023313	168	20
2023314	174	1
2023329	83	
	85	
2023354	114	
2023355	117	
2023406	10	7
2023409	78	5
2023418	83	4
	84	2
2023422	84	11
2023445	35	1
	37	1
2023459	107	1
2023462	107	2
2023469	9	1
2023470	9	1
2023472	9	1
2023481	91	
2023489	165	
2023490	165	
2023491	165	
2023500	95	4
2023501	95	1
2023532	5	12
2023533	37	10
2023534	107	22
2023535	107	29
2023536	107	31
2023537	107	28
2023538	107	30
2023640	53	
2023646	53	
2023647	46	11
2023719	87	14
2023731	66	
2023824	164	
	165	
2023827	166	
2023830	164	
	165	
2023833	166	
2023912	79	
2023916	92	
2023917	81	
2023920	86	10
2023922	86	5
2023923	86	5
2023927	92	24
2023932	88	6
2023940	101	32
2023941	86	14
2023970	84	
	86	
2023971	84	
	86	
2023975	86	12
2023976	84	26
2023988	92	
2023989	90	
2023990	90	
2023991	90	
2023993	79	1
2023994	79	2
2023995	81	3
2023996	81	4
2023997	92	2
2023998	92	7
2023999	92	8
2026005	92	12
2026006	92	13
2026008	90	2
2026009	90	4
2026012	90	18
2026013	90	17
2026112	84	9
2026113	84	1
2026321	90	
2026323	90	12
2026324	90	13
2026326	90	
2302714	118	
2302899	118	10
2304281	100	16
	101	16
	105	16
2304677	118	8
2305757	97	12
2306303	118	9
2306755	161	3
2308013	118	1
2308169	118	3
2308689	118	1
2309376	118	
2309719	161	2
2310066	118	
2310768	161	8
2311471	161	1
2311502	112	42
	115	39
2311624	161	
2311816	118	5
2311937	118	4
3041266	85	19
	89	21
3041620	1	
3041621	1	
3043618	20	39
	21	30
	30	33
	31	30
3043619	20	39
	21	30
	30	33
	31	30
3043645	12	30
3043646	23	40
3060380	103	35
3060656	105	17
3060657	105	17
3061225	20	39
	21	30
	30	33
3061325	20	39
	21	30
	30	33
	31	30
3061350	32	15
	34	15
	35	10
	36	19
	37	23
8601096	139	
8601301	161	
8601606	123	
8601609	123	
8601614	123	
8601616	123	
8601619	123	
8601656	124	
8601659	124	
8601664	124	
8601666	124	
8601669	124	
8601706	137	
8601708	137	
8601713	137	
8601716	137	
8601756	138	
8601758	138	
8601763	138	
8601766	138	
8601806	152	
8601808	152	
8601814	152	
8601856	151	
8601858	151	
8601864	151	
8601906	153	
8601908	139	
	153	
8601914	139	
	153	
8601917	139	
8602102	118	
8602103	118	

©1996 HYSTER COMPANY

NUMERICAL INDEX

PART NO	FIGURE	REF NO
2022027	10	8
2022029	3	43
2022030	3	42
2022032	11	4
	11	12
2022033	11	5
	11	10
2022034	10	9
	11	6
	11	11
2022035	4	16
	10	3
2022036	10	4
2022037	10	5
2022038	10	1
2022039	10	2
2022040	11	1
	11	7
2022041	11	2
	11	8
2022042	9	12
2022043	4	17
2022044	11	13
2022045	3	41
2022046	11	3
	11	9
2022061	57	8
2022062	57	10
2022064	57	6
2022069	57	23
2022070	57	22
2022071	57	33
2022102	57	30
2022104	57	27
2022105	57	25
2022109	57	2
2022110	57	1
2022111	57	4
2022118	57	20
2022120	57	18
2022121	57	17
2022124	57	16
2022125	57	14
2022131	57	11
2022191	113	24
	113	40
	113	52
	113	68
	114	24
	114	40
	114	53
	114	74
	116	24
	116	40
	116	52
	116	73
	117	24
	117	40
	117	53
	117	74
2022192	113	34
	114	34
	116	34
	117	34
2022205	113	14
	114	14
	114	49
	116	14
	117	14
	117	49
2022208	113	7
	113	59
	114	7
	114	60
	116	7
	116	59
	117	7
	117	60
2022210	113	61
	114	62
	116	61
	117	62
2022217	113	29
	114	29
	114	71
	116	29
	116	70
	117	29
	117	71
2022250	95	15
2022251	33	3
	95	2
2022300	20	13
2022301	20	7
2022302	20	12
2022303	20	10
2022305	20	11
2022309	20	14
2022312	20	23
2022315	35	1
	37	1
2022318	20	36
2022319	20	38
2022351	103	
2022352	85	2
	86	2
2022354	84	28
2022356	9	2
2022397	21	2
	31	2
2022441	114	66
	117	66
2022470	21	13
2022474	106	35
2022478	25	40
2022479	25	36
2022480	25	37
2022481	29	24
2022482	29	19
2022483	28	10
2022484	28	11
2022486	1	
	30	22
2022490	49	3
2022494	12	9
2022496	32	14
	34	14
	36	18
2022502	60	26
2022506	65	21
	67	
2022507	65	23
2022509	100	12
	101	12
2022510	20	36
2022511	30	32
2022513	21	1
	31	1
2022514	65	22
	68	
2022515	1	
	18	13
2022516	61	32
2022517	60	37
2022519	21	17
	31	17
2022520	1	
2022544	3	45
2022545	88	9
	110	15
	111	15
2022547	83	
	85	
2022549	106	20
	107	33
2022550	110	5
	111	5
2022551	22	3
2022552	101	37
2022553	100	36
	101	36
2022554	110	13
	111	13
2022555	110	12
	111	12
2022556	21	20
2022557	21	5
	21	20
2022558	21	5
	31	5
2022560	32	2
	34	2
2022561	32	7
	34	7
	36	20
2022562	32	16
	34	16
	36	21
2022565	48	13
2022568	48	1
2022569	114	
	117	
2022576	109	
2022577	109	
2022603	170	13
2022613	5	11
2022614	60	11
2022615	5	8
2022617	100	26
	101	26
2022618	68	3
2022619	68	1
2022621	68	2
	71	6
	73	2
2022622	66	1
2022623	66	9
	67	1
2022626	67	4
2022627	67	5
	71	2
	73	5
2022628	67	6
	71	3
	73	6
2022629	66	7
	67	9
2022634	15	9
2022635	62	1
2022636	3	30
2022638	47	14
2022639	47	5
2022640	47	13
2022647	12	
	13	
	14	
	15	
	16	
2022648	12	
	13	
	14	
	15	
	16	
2022649	24	
	25	
	26	
	27	
2022652	24	
	25	
	26	
2022702	112	13
	115	13
2022705	168	12
	169	19
2022710	168	22
	169	17
2022714	63	
2022715	63	
2022716	63	
2022717	111	8
2022718	95	5
2022719	47	4
2022723	88	5
2022724	88	5
2022725	31	20
2022726	31	20
2022729	94	13
2022735	71	7
	73	3
2022736	71	5
	73	1
2022737	71	4
	72	6
	73	7
	171	1
2022738	72	4
2022739	71	1
	73	4
2022740	63	
2022741	63	

©1996 HYSTER COMPANY

NUMERICAL INDEX

PART NO	FIGURE	REF NO
2021216	5	25
2021218	5	28
2021219	5	29
2021222	5	32
2021223	5	2
2021225	3	21
2021231	3	24
2021232	3	6
2021233	4	9
	21	14
	31	14
	47	18
	58	2
	59	2
	61	20
	106	3
2021234	3	2
2021235	3	3
2021237	3	5
2021238	3	4
2021239	110	1
	111	1
2021240	110	2
	111	2
2021243	110	4
	111	4
2021244	110	4
	111	4
2021245	110	6
	111	6
2021250	110	7
2021251	111	7
2021252	110	11
	111	11
2021254	110	14
	111	14
2021265	108	
2021266	108	
2021271	106	11
	107	47
2021272	106	14
	107	50
2021273	106	15
	107	51
2021282	93	
2021283	85	23
	86	21
	93	10
2021286	93	7
2021287	93	8
2021288	93	9
	94	21
2021291	100	1
	101	1
2021293	85	1
	86	1
2021294	85	1
	86	1
2021295	85	1
	86	1
2021296	85	1
	86	1
2021298	85	1
	86	1
2021299	85	3
	86	3
2021300	85	4
	85	14
	86	4
2021301	85	5
2021302	85	5
2021303	85	7
	86	7
2021305	85	8
	86	8
2021306	89	
2021308	89	
2021309	85	10
2021310	100	2
	101	2
2021312	100	5
	101	5
2021313	85	10
2021314	85	11
2021315	100	6
	101	6
2021316	100	7
	101	7
2021317	100	8
	101	8
2021318	85	15
	86	13
2021319	85	16
2021320	85	17
	86	15
2021321	85	18
	86	16
2021322	100	32
2021323	91	
2021325	82	
2021326	100	33
	101	33
2021327	100	34
	101	34
2021328	82	4
2021329	83	7
	84	7
2021332	100	11
	101	11
2021334	100	40
2021335	100	15
	101	15
2021336	83	10
	84	10
2021337	100	17
	101	17
2021338	105	
2021339	100	19
	101	19
2021340	100	31
	101	31
2021344	80	
2021345	83	14
	84	14
	91	26
2021346	100	23
	101	23
2021347	100	42
	101	40
2021349	100	43
	101	41
2021351	78	
2021353	100	25
	101	25
2021354	32	1
	34	1
	35	1
	36	1
2021359	32	11
	34	11
	35	14
	36	15
	37	19
2021362	78	5
	79	5
2021363	35	2
	37	2
2021366	32	7
	34	7
	36	20
2021368	78	5
	79	5
2021370	32	13
	34	13
	35	16
	36	17
	37	21
2021373	35	5
	37	5
2021374	35	8
2021376	78	9
	79	9
2021377	32	5
	34	5
2021378	78	9
	79	9
2021379	37	8
2021380	78	8
	79	8
2021382	36	5
2021383	83	19
	84	19
2021387	36	7
	37	10
2021388	65	34
	83	17
	84	17
2021389	83	18
	84	18
2021390	83	5
	84	5
2021394	36	11
	37	15
2021395	3	40
	9	14
	10	12
2021404	87	10
	88	11
2021405	87	11
	88	12
2021406	87	12
	88	13
2021407	87	15
	88	16
2021421	38	29
2021423	88	15
2021426	38	30
2021427	40	1
2021428	42	1
2021429	41	1
2021431	42	2
2021432	95	14
2021434	60	30
	61	29
	65	35
2021438	78	6
	79	6
2021440	18	10
	60	35
2021442	78	7
	79	7
2021455	61	9
2021458	40	6
2021461	1	
	87	1
	88	1
2021462	87	2
	88	2
2021464	88	7
2021470	102	1
2021471	102	3
2021472	102	6
2021474	102	7
2021490	3	31
2021491	94	3
2021497	3	12
2021499	3	13
2021505	22	1
2021506	22	2
2021507	33	1
2021508	33	2
2021510	94	4
2021511	22	8
	33	8
2021512	22	11
	33	11
2021513	22	5
2021514	33	5
2021515	22	13
	33	13
2021516	22	6
	33	6
2021517	22	12
	33	12
2021526	57	5
2021531	57	3
2021532	57	3
2021534	57	31
2021554	94	19
2021555	94	20
2021556	94	22
2021557	94	25
2021562	9	9
2021563	9	3
2021564	9	10
2021565	94	6
2021567	94	7
2021578	165	
2021588	94	9
2021591	165	

©1996 HYSTER COMPANY

NUMERICAL INDEX

PART NO	FIGURE	REF NO	PART NO	FIGURE	REF NO	PART NO	FIGURE	REF NO	PART NO	FIGURE	REF NO	PART NO	FIGURE	REF NO
2021592	94	10	2021708	50	25		115	26	2021884	106	26		107	8
2021593	94	11	2021709	50	26	2021815	112	27		107	16	2021936	106	10
2021595	94	15	2021710	50	27		115	27	2021885	97	10		107	2
2021596	103		2021711	50	8	2021816	112	28	2021886	106	27	2021939	106	8
2021599	103	23	2021712	48	19		115	28		106	57		107	9
2021620	103	23	2021714	50	28	2021817	112	29		107	45	2021943	62	3
2021646	95	7	2021715	50	9		115	29	2021887	106	29	2021947	62	10
2021647	58	12	2021720	48	20	2021818	112	30		107	19	2021948	62	11
2021660	4	1	2021721	48	16		115	30	2021888	106	30	2021952	65	1
2021661	59	12	2021726	46	11	2021823	112	22	2021889	97	11	2021953	1	
2021662	4	1	2021728	47	15		115	22	2021890	106	33		65	2
2021663	3	1	2021733	47	16	2021833	3	32	2021892	50	17		168	21
2021665	3	29	2021741	21	1	2021834	3	34		97	17	2021954	65	6
2021666	94			31	1		79	12		100	29	2021955	65	14
2021668	94	18	2021745	21	4		94	14		101	29	2021957	65	36
2021669	57	29	2021747	31	4		109	15	2021893	106	34	2021959	65	18
2021670	83	1	2021752	10	10	2021836	32	4	2021895	97	18		168	6
2021671	50	30		21	7		34	4	2021896	106	38	2021971	61	2
2021672	58	1		31	7		36	4	2021897	97	21	2021980	170	17
	59	1	2021753	21	12	2021839	165		2021898	97	30	2021985	60	24
	106	2		31	12	2021846	165		2021899	106	40	2021986	60	13
	107	3	2021754	31	13	2021851	115	33	2021900	3	36		61	10
2021673	58	3	2021762	21	28	2021852	112	33	2021901	106	41	2021987	60	27
	59	3	2021763	31	28	2021856	112	41	2021903	106	42	2021990	61	21
	106	4	2021765	21	29	2021860	112	36	2021906	106	46	2021991	61	26
	107	5	2021766	31	29		115	36		107	35	2021994	60	25
2021674	58	4	2021767	97	1	2021862	112	9	2021907	100	13		72	
	59	4	2021778	97	2		115	9		100	41	2021995	61	22
2021675	83	9	2021781	97	3	2021863	112	10		101	13		72	
2021678	78		2021783	97	4		115	10	2021908	1		2021996	60	14
2021679	58	13	2021784	97	5	2021864	112	11		106	5		61	11
2021681	59	13	2021785	97	6		115	11		107	6	2021997	171	
2021683	58	14	2021786	97	8	2021865	112	12	2021909	106	12	2021998	60	28
	59	14	2021790	97	33		115	12		107	48		71	
2021685	58	15	2021791	97	13	2021866	112	43	2021912	85	6	2022000	61	27
	59	15	2021793	97	14	2021867	112	20		86	6		73	
2021686	58	9	2021794	97	15		115	20	2021914	85	9	2022002	60	29
	59	8	2021795	99		2021869	162	1		86	9		61	28
2021687	58	7	2021796	97	20	2021870	162	1	2021915	83	8		70	
	59	9	2021797	97	23	2021871	162	2		84	8	2022003	60	31
2021693	44		2021798	97	24	2021872	162	2		86	11	2022004	60	36
2021694	44	6	2021799	97	25	2021873	162	3	2021916	106	1	2022005	61	31
2021695	44	1	2021800	97	26	2021874	162	3		107	1	2022012	61	23
2021696	44	2	2021801	97	27	2021875	162	4	2021917	84	27	2022013	60	17
	50	3	2021802	97	28	2021876	162	4		91	8		61	14
2021697	44	3	2021803	97	29	2021879	107	33	2021918	94	8		65	19
2021698	44	5	2021804	97	34	2021880	106	20	2021919	94	12		170	20
2021702	52		2021809	112	47		106	21	2021933	1		2022016	1	
2021704	50	4		115	40		107	11		106	6		18	13
2021705	50	5	2021810	112	25	2021881	106	22		107	7	2022017	109	
2021706	50	6		115	25		107	12	2021935	1		2022019	10	6
2021707	50	7	2021813	112	26	2021882	97	7		106	7	2022023	10	6

©1996 HYSTER COMPANY

NUMERICAL INDEX

PART NO	FIGURE	REF NO
	114	47
	116	47
	117	47
1368028	113	33
	113	50
	113	66
	114	33
	114	51
	114	67
	116	33
	116	50
	116	66
	117	33
	117	51
	117	67
1368029	113	58
	114	59
	116	58
	117	59
1368030	113	63
	114	64
	116	63
	117	64
1368031	113	64
	114	65
	116	64
	117	65
1368032	113	31
	114	31
	114	69
	116	31
	116	68
	117	31
	117	69
1368033	113	30
	114	30
	114	70
	116	30
	116	69
	117	30
	117	70
1368034	114	72
	116	71
	117	72
1368035	114	68
	116	67
	117	68
1368036	113	12
	114	12
	116	12
	117	12
1368037	113	21
	114	21
	117	21
1368041	113	13
	114	13
	116	13
	117	13
1368042	113	32
	116	32
1368043	113	65
1368045	116	65
1368046	113	2
	114	2
	116	2
	117	2
1368047	113	28
	114	28
	116	28
	117	28
1368048	116	3
	117	3
1368049	113	4
	114	4
	116	4
	117	4
1368101	89	
1368126	113	3
	114	3
1368127	113	
	114	
1368128	116	
	117	
1368305	128	
	129	
1368308	128	
	129	
1368313	128	
	129	
1368315	128	
	129	
1368318	128	
	129	
1368405	143	
	144	
1368407	143	
	144	
1368412	143	
	144	
1368415	143	
	144	
1368546	157	
	158	
1368548	157	
	158	
1368554	157	
	158	
1368576	157	
	158	
1368578	157	
	158	
1368584	157	
	158	
1368725	27	39
1368726	27	40
1368727	27	33
1368728	27	34
1368729	28	1
1368730	28	2
1368732	28	3
1368733	28	4
1368734	28	6
	30	19
1368737	28	12
1368738	54	1
1368739	54	2
1368740	54	4
1368741	54	5
1368742	54	6
1368743	25	2
	54	8
1368744	54	9
1368745	54	10
1368746	54	34
1368748	18	19
1368749	54	12
1368750	54	15
1368751	54	16
1368752	54	17
1368753	56	1
1368755	56	2
1368756	56	3
1368757	56	4
1368758	1	
	56	7
1368760	54	18
1368762	54	19
1368763	54	20
1368764	54	21
1368765	54	22
1368766	54	23
1368767	54	24
1368768	54	25
1368769	54	26
1368770	54	27
1368771	54	28
1368772	54	29
1368773	54	30
1368774	54	31
1368775	54	32
1368776	54	33
1368779	54	37
1368780	54	37
1368781	47	6
1368782	47	7
1368783	47	8
1368784	1	
	47	9
1368785	47	10
1368786	47	11
1368787	47	12
1368788	47	13
1368789	29	1
1368790	19	8
	29	2
1368791	29	3
1368792	29	4
1368793	29	5
1368794	29	6
1368795	1	
	29	7
1368796	29	8
1368797	29	9
1368798	29	10
1368799	29	11
1368800	29	12
	29	26
1368801	29	16
1368802	29	17
1368803	29	18
1368805	29	20
1368807	29	22
1368808	29	23
1368810	29	25
1368811	29	27
1368812	29	28
1368813	29	29
1368814	29	30
1368815	29	31
1368816	29	32
1368817	30	1
1368818	30	2
1368819	30	3
1368820	30	4
1368821	30	5
1368822	30	6
1368823	30	7
1368824	30	8
1368825	30	30
1368826	30	9
1368827	30	10
1368828	30	31
1368829	30	12
1368830	30	13
1368831	30	15
1368833	30	17
1368834	30	20
1368835	1	
	30	21
1368838	30	26
1368840	30	29
1368841	1	
	18	13
1368844	18	18
1368848	75	9
1368849	75	2
1368850	75	11
1368851	75	12
1368852	75	13
1368853	75	14
1368854	75	15
1368855	75	16
1368856	75	17
1368857	75	7
1368858	75	3
1368859	75	8
1368860	75	4
1368861	75	6
1368862	75	1
1368863	75	10
1368867	85	21
1369036	51	
1369038	44	11
1369065	50	29
	51	11
	52	12
	53	12
1369070	114	32
	117	32
1369323	143	3
	144	3
	157	14
	158	14
1369333	143	9
	144	9
	157	15
	158	15
1369345	125	7
	140	7
	154	7

©1996 HYSTER COMPANY

NUMERICAL INDEX

PART NO	FIGURE	REF NO
1369357	122	24
	135	26
	136	7
	150	7
1369807	46	3
1369808	46	4
1369809	1	
	46	6
1369813	46	24
1369815	43	1
1369816	43	2
1369817	43	4
1369818	43	5
1369819	43	6
1369820	43	7
1369821	43	8
1369822	43	10
1369823	43	11
1369824	43	12
1369825	43	19
1369826	43	22
1369827	43	26
1369828	43	27
1369829	43	28
1369834	45	
1369835	45	2
1369836	45	7
1369837	45	8
1369838	45	9
1369839	45	10
1369840	45	12
1369841	45	13
1369842	45	1
1369852	24	1
1369853	24	3
1369854	24	4
1369855	24	5
1369856	24	6
1369857	24	8
1369858	24	9
1369859	24	11
1369860	24	13
1369861	24	14
1369862	24	16
1369863	24	18
1369864	24	19
1369865	25	42
1369866	23	14
1369870	55	2
1369871	56	5
1369872	56	6
1369875	12	13
1369876	12	28
1369878	46	17
1369887	46	13
1369893	18	1
1369894	18	3
1369895	18	8
1369896	18	9
1369897	18	7
1369913	19	19
1369914	19	20
1369932	25	5
1369933	25	29
1369934	14	4
1369963	15	1
1369964	15	2
1369965	15	3
1369966	15	4
1369967	15	5
1369968	15	6
1369969	15	7
1369970	15	8
1369973	15	13
1369974	15	14
1369975	15	16
1369976	15	17
1369977	26	25
1369979	49	2
1369981	49	4
1369990	20	9
1369993	14	17
1369995	49	5
1369996	49	6
1369997	49	7
1369998	49	16
1370479	175	5
	176	5
1370480	176	4
1370481	176	3
1370482	176	2
1370483	176	1
1370496	175	2
1370497	175	1
1370498	175	8
	176	8
1370510	175	4
1370511	175	3
1370675	23	38
	54	11
1370676	17	1
1370682	17	5
1370683	17	8
1370688	17	12
1370689	17	16
1370690	17	17
1370691	17	18
1370692	17	19
1370698	20	21
1370719	30	23
1370721	127	11
	142	11
	156	11
1370722	127	12
	142	12
	156	12
1370723	74	
1370724	74	7
1370732	165	
1370736	14	23
1370737	14	18
	25	41
1370740	1	
1370743	17	10
1371287	127	8
	142	8
	156	8
1371289	160	9
1371646	109	6
1371647	109	14
1371650	98	25
1371653	123	3
	124	3
	137	3
	138	3
1371654	151	4
	152	4
1371655	127	16
	142	16
	156	16
1371656	83	6
	84	6
1371668	118	2
1373801	5	25
1374179	6	1
1374180	6	2
1374188	6	9
1374190	6	11
1374532	89	5
	90	5
1374533	100	4
	101	4
1374750	6	23
	7	4
1374796	86	17
	90	21
1374802	151	8
1375027	53	11
1375029	53	14
1375030	53	16
1375032	53	18
1375033	53	13
1375037	53	19
1375150	7	
1375574	128	19
	129	20
	143	29
	144	2
	157	4
	158	4
1376100	122	26
	135	31
	149	20
1376110	157	
	158	
1376112	157	
	158	
1376118	157	
	158	
1376148	158	
1376150	158	
1376156	158	
1376324	135	30
1376429	53	17
1376557	104	1
1376677	6	
1376681	6	
1377371	128	21
	129	22
	143	31
	144	34
	157	26
	158	26
1377372	128	22
	129	23
	143	32
	144	35
	157	27
	158	27
1377373	129	30
	144	43
	158	34
1377374	129	31
	144	44
	144	45
	158	35
1378053	160	2
1378305	6	27
1378600	96	8
1379457	107	65
1379468	110	3
	111	3
1382665	108	12
1382666	108	
1385099	8	21
1385100	8	22
1385124	81	2
1385128	5	1
1385129	5	36
1386216	5	32
1386223	5	33
1386224	5	35
2004005	157	20
	158	20
2006579	106	56
	107	44
2013099	139	3
	153	3
2020500	112	4
	115	4
2020501	112	5
	115	5
2020502	112	44
2020503	112	21
	115	21
2020510	8	8
2020511	8	8
2020512	8	8
2020517	8	5
2020745	17	11
	20	8
2020755	17	14
	28	5
	35	3
	37	3
2020769	16	17
2020783	17	4
2020821	46	15
2020834	46	8
2021019	78	6
	79	6
2021020	78	12
2021077	27	35
2021165	30	32
2021166	76	
2021197	5	1
2021207	5	18
2021208	5	20
2021213	5	21
2021215	5	24

©1996 HYSTER COMPANY

NUMERICAL INDEX

PART NO	FIGURE	REF NO
1363012	167	1
1363013	169	1
1363015	169	1
1363250	134	15
	135	14
1363251	134	17
	135	15
1363255	143	37
	144	29
1363256	144	30
1363260	127	1
	142	1
	156	1
1363261	127	2
	142	2
	156	2
1363271	140	6
1363272	140	6
1363273	140	6
1363306	135	
	136	
1363308	135	
	136	
1363313	135	
	136	
1363316	135	
	136	
1363486	128	7
	129	8
1363498	143	12
	144	12
1363499	144	31
1363885	69	3
	70	3
1363886	66	10
	70	7
	72	3
1363916	4	11
1363917	4	12
1363918	4	13
	5	9
1365061	157	8
	158	8
1365140	134	32
	135	27
1365306	150	
1365308	150	
1365314	150	
1365501	157	
	158	
1365504	157	
	158	
1365510	157	
	158	
1365514	157	
	158	
1365516	157	
	158	
1365523	157	
	158	
1365555	152	
1365576	151	
1365578	151	
1365584	151	
1365605	151	
	152	
1365607	151	
	152	
1365613	151	
	152	
1365635	152	
1365637	152	
1365643	152	
1365658	151	
1365664	151	
1365672	151	
1365689	151	5
	152	5
1366057	137	
1366634	108	4
1366637	108	7
1366638	108	12
1366641	108	
1366642	108	
1366643	108	3
1366725	8	14
1366814	94	23
1366825	55	1
1366826	55	3
1366827	55	4
1366828	55	5
1366829	55	6
1366830	55	7
1366831	55	8
1366832	55	8
1366833	55	8
1366834	55	8
1366835	55	8
1366836	55	8
1366837	55	8
1366838	55	8
1366839	55	8
1366840	55	8
1366841	55	8
1366842	55	8
1366843	55	8
1366844	55	8
1366845	55	8
1366846	55	8
1366847	55	8
1366848	55	8
1366849	55	8
1366850	55	8
1366851	57	
1366852	57	
1366853	23	1
1366854	23	2
1366855	23	4
1366856	23	5
1366857	23	6
1366858	23	7
1366859	23	8
1366860	23	9
1366861	23	10
1366862	13	4
	23	11
	24	7
1366864	23	13
1366865	23	15
1366866	23	16
1366867	23	17
	24	2
1366868	23	18
1366869	23	19
1366870	23	20
1366871	23	21
1366872	23	22
1366873	23	23
1366874	23	24
	27	4
	30	16
	46	23
1366875	23	25
1366876	23	28
	29	15
	30	25
1366877	23	29
1366878	23	30
1366879	23	31
1366880	23	33
1366881	23	34
1366882	23	35
1366883	23	39
	25	9
	27	8
1366900	25	1
1366902	25	3
1366904	25	6
1366905	25	10
1366906	25	11
1366908	25	13
1366909	25	14
1366911	25	16
1366912	25	17
1366913	25	18
	30	14
1366914	25	19
1366915	25	21
1366916	25	22
	26	18
	30	18
1366917	25	23
	30	11
1366919	24	12
	25	30
1366920	25	31
1366921	25	24
1366922	25	25
1366923	25	26
1366924	25	27
1366925	25	32
1366926	25	33
1366927	25	34
1366931	25	38
1366933	25	39
1366934	26	1
1366935	26	1
1366936	26	1
1366937	26	1
1366938	26	2
1366939	26	3
1366940	26	4
1366941	26	5
1366942	26	6
1366943	26	7
1366944	26	8
1366945	26	9
1366946	26	10
1366947	26	11
1366948	26	12
1366950	26	13
1366951	26	14
1366952	26	15
1366953	26	16
1366954	26	17
1366955	26	17
1366957	26	19
1366958	26	19
1366959	26	19
1366960	26	20
1366961	26	22
1366962	26	21
1366963	26	23
1366964	26	24
1366965	27	1
1366966	27	2
1366967	27	3
1366970	27	5
1366971	27	6
	54	3
1366972	27	7
1366973	27	9
1366974	27	10
1366975	27	11
1366976	27	12
1366977	27	13
1366978	27	14
1366979	27	15
1366980	27	16
1366981	27	17
1366982	27	18
1366983	27	19
1366984	27	20
1366985	27	21
1366986	27	27
1366987	27	28
1366988	27	29
1366989	27	30
1366990	27	31
1366991	27	32
1366992	27	22
1366993	27	23
1366994	27	24
1366995	27	25
1366996	27	26
1366997	27	36
1366998	27	37
1366999	27	38
1367108	58	9
	59	8
1367113	21	3
	31	3
1367116	40	7
1367117	40	8
1367118	40	10
1367169	99	1
1367170	99	2
1367171	99	3
1367172	99	
1367191	1	

©1996 HYSTER COMPANY

NUMERICAL INDEX

PART NO	FIGURE	REF NO
	20	6
1367193	105	
1367194	105	15
1367387	78	1
1367389	78	
1367399	91	2
1367400	91	3
	92	3
1367401	91	4
	92	4
1367402	91	5
	92	5
1367403	91	6
	92	6
1367406	91	9
	92	9
1367407	89	3
	90	3
1367408	91	11
1367409	91	13
	92	11
1367410	91	14
1367411	91	15
1367412	91	16
	92	14
1367413	91	17
	92	15
1367414	91	18
	92	16
1367415	91	19
	92	17
1367416	91	20
	92	18
1367417	91	21
	92	19
1367418	91	23
	92	21
1367419	91	
1367420	89	2
1367421	89	4
1367422	89	11
	90	11
1367423	89	12
1367424	89	13
1367518	45	3
1367519	45	4
1367520	45	5
1367521	45	6
1367526	45	11
1367575	89	14
1367576	89	15
1367577	89	16
1367578	89	17
1367579	89	18
	90	19
1367580	89	22
1367581	89	
1367582	89	
1367583	89	13
1367584	51	12
1367587	51	18
1367588	51	2
1367589	1	
1367591	51	14
1367593	51	1
1367594	51	7
1367595	51	5
1367598	80	1
1367599	80	4
1367600	80	3
1367601	80	2
1367602	82	8
1367603	82	3
1367604	82	1
1367605	82	7
1367606	82	6
1367607	82	5
1367609	82	
1367611	82	9
1367613	82	10
1367615	93	6
1367616	93	2
1367617	93	1
1367618	93	5
1367619	93	3
1367620	93	4
1367622	52	2
	53	2
1367633	60	12
	61	30
1367752	44	25
1367753	44	29
1367754	44	32
1367755	44	33
1367758	44	7
1367759	103	1
1367760	103	1
1367762	103	25
1367763	103	25
1367764	103	3
1367765	103	4
1367769	103	7
1367770	103	7
1367771	103	8
1367774	103	11
1367854	103	16
1367855	103	17
1367862	103	22
1367865	103	24
1367870	103	30
1367871	103	31
1367872	103	32
1367875	103	34
1367876	103	
1367877	103	
1367878	103	
1367879	103	
1367880	103	
1367881	98	
1367882	98	1
1367883	98	2
1367885	98	16
1367886	98	17
1367887	98	18
1367888	98	20
1367891	98	23
1367895	98	26
1367896	98	27
1367897	98	29
1367898	98	30
1368001	98	32
1368005	113	5
	114	5
	116	5
	117	5
1368006	113	10
	114	10
	116	10
	117	10
1368007	113	11
	113	42
	113	56
	113	72
	114	11
	114	42
	114	57
	114	78
	116	11
	116	42
	116	56
	116	77
	117	11
	117	42
	117	57
	117	78
1368008	113	6
	114	6
	116	6
	117	6
1368011	113	15
	114	15
	116	15
	117	15
1368012	113	16
	114	16
	116	16
	117	16
1368013	113	25
	114	25
	116	25
	117	25
1368014	113	17
	114	17
	116	17
	117	17
1368015	113	18
	114	18
	116	18
	117	18
1368016	113	19
	114	19
	116	19
	117	19
1368017	113	20
	114	20
	116	20
	117	20
1368018	113	39
	113	51
	113	67
	114	39
	114	52
	114	73
	116	39
	116	51
	116	72
	117	39
	117	52
	117	73
1368022	113	48
	113	54
	113	70
	114	48
	114	55
	114	76
	116	48
	116	54
	116	75
1368023	113	41
	113	55
	113	71
	114	41
	114	56
	114	77
	116	41
	116	55
	116	76
	117	41
	117	56
	117	77
1368024	113	43
	113	57
	113	73
	114	43
	114	58
	114	79
	116	43
	116	57
	116	78
	117	43
	117	58
	117	79
1368025	113	44
	113	74
	114	44
	114	80
	116	44
	116	79
	117	44
	117	80
1368026	113	9
	113	46
	113	60
	113	76
	114	9
	114	46
	114	61
	114	82
	116	9
	116	46
	116	60
	116	81
	117	9
	117	46
	117	61
	117	82
1368027	113	47

©1996 HYSTER COMPANY

NUMERICAL INDEX

PART NO	FIGURE	REF NO
1354286	8	
1354287	8	
1354288	8	
1354289	8	
1354290	8	
1354291	8	
1354292	8	
1354293	8	
1354294	8	
1354300	64	11
1354387	167	16
1354725	98	
1354746	109	5
1354748	109	7
1354775	63	1
1354776	63	2
1354777	63	22
1354778	63	8
1354780	63	5
1354782	63	10
1354783	63	9
1354784	63	12
1354785	63	13
1354786	63	14
1354787	63	15
1354788	63	16
1354796	63	23
1354797	63	19
1354804	63	4
1354805	63	11
1354806	63	17
1354901	136	21
1354911	136	25
	150	30
1354912	136	22
	150	27
1354915	121	23
	122	21
	134	10
	135	10
	148	9
	149	9
1354916	121	23
	122	21
	134	10
	135	10
	148	9
	149	9
1354917	121	23
	122	21
	134	10
	135	10
	148	9
	149	9
1354918	157	12
	158	12
1355189	123	
	124	
1355516	160	3
1355533	160	1
1355535	160	2
1355537	160	5
1355538	160	4
1355610	137	
	138	
1356105	60	38
	61	33
1356109	8	11
1356117	167	2
1356121	168	9
1356126	170	8
1356130	168	9
1356137	8	6
1356138	8	15
1356141	8	15
1356143	8	15
1356144	8	15
1356145	8	15
1356148	8	15
1356325	168	9
1356335	168	8
1356336	168	8
1356342	169	3
1356347	169	1
1356351	168	1
1356352	168	2
1356354	168	4
	168	10
	169	16
	169	18
1356355	168	19
1356356	167	17
	170	10
1356520	173	2
1356540	169	5
1356542	169	3
1356749	123	10
	124	10
	137	10
	138	10
1357367	63	24
1357388	78	2
1357703	52	13
1357704	52	8
	53	9
1357707	53	21
1357715	44	17
1357739	52	11
1357740	52	3
1357741	52	19
1357743	52	20
1357745	52	14
1357746	52	7
	53	7
1357747	52	18
1357748	52	15
1357749	52	16
	53	15
1358809	160	20
1358821	160	13
1358858	63	21
1358970	139	4
	153	4
1359587	11	16
1359588	8	13
1359591	8	14
1359593	8	14
1359594	8	14
1359595	8	14
1359598	8	14
1360086	60	9
	61	1
1360125	161	
1360138	151	
	152	
1360139	137	
	138	
1360140	123	
	124	
1360141	139	
	153	
1360245	160	14
1360261	160	17
1360262	160	18
1360271	160	
1360275	160	15
1360276	160	16
1360386	128	13
	129	14
	143	21
	144	21
	157	5
	157	10
	158	5
	158	10
1360507	157	6
	157	24
	158	6
1360508	128	2
	128	28
	129	3
	129	34
	143	28
	143	39
	144	27
	144	49
	157	7
	158	7
1360534	136	20
1360536	144	23
1360537	143	23
	144	32
1360544	136	8
	150	8
1360548	128	8
	129	9
	143	10
	144	10
1360549	128	3
	129	2
	143	17
	144	17
1360869	6	7
1360871	6	8
1360872	6	12
1360877	14	
	15	
1360878	12	19
1360879	12	21
1360880	12	17
1360881	12	18
1360882	12	25
1360883	12	14
1360884	12	15
1360886	12	12
1360887	12	10
	23	27
1360888	12	11
	23	26
1360890	12	8
1360891	12	7
1360892	12	6
1360893	12	5
1360895	12	20
1360896	13	8
1360897	13	1
1360898	13	9
1360899	13	10
1361087	11	14
1361121	65	25
1361302	139	15
	153	15
1361303	171	4
1361304	66	8
1361354	123	
1361356	123	
	124	
1361358	124	
1361359	124	
1361372	123	
1361373	123	
1361374	123	
	124	
1361376	124	
1361377	124	
1361552	174	5
1361675	13	11
	24	20
1361676	13	12
1361677	13	13
1361679	14	7
1361680	14	8
1361681	14	10
	25	7
1361682	14	11
1361683	14	12
1361684	14	13
1361685	14	14
1361686	14	15
1361687	14	16
1361688	14	5
	19	11
1361689	14	19
1361690	14	22
1361691	14	21
1361694	15	10
1361695	15	11
1361703	15	19
1361704	15	19
1361705	15	19
1361706	15	19
1361707	15	20
1361708	15	20
1361709	15	20
1361710	15	12
1361711	15	12
1361712	15	12
1361713	15	12
1361714	15	18
1361715	15	18

©1996 HYSTER COMPANY

NUMERICAL INDEX

PART NO	FIGURE	REF NO
1361716	15	18
1361717	16	18
1361718	16	27
1361719	16	26
1361720	16	25
1361721	16	24
1361722	16	3
1361723	16	4
1361724	16	5
1361725	16	6
1361726	16	7
1361727	16	8
	16	11
1361728	16	9
	16	12
1361729	16	10
1361730	16	13
1361731	16	14
1361732	16	15
1361733	16	16
1361735	16	19
1361736	16	20
1361737	16	21
1361738	16	22
1361739	16	23
1361742	17	2
1361745	17	13
1361747	17	15
1361749	49	14
1361753	49	17
1361754	49	8
1361755	49	15
1361756	49	13
1361796	49	1
	54	36
1361797	46	12
1361798	19	10
1361800	19	7
1361801	19	6
1361802	19	15
1361803	19	16
1361804	19	17
1361805	19	18
1361806	19	5
1361807	19	4
1361809	20	26
1361810	20	28
1361812	20	20
1361813	20	31
1361815	20	22
1361816	20	24
1361817	20	19
	30	24
1361818	20	17
1361819	20	18
1361820	1	
	20	5
1361821	20	4
1361827	20	15
1361829	20	2
1361830	20	30
1361831	20	37
1361832	20	33
1361834	20	27
1361835	20	32
1361844	18	6
1361845	18	11
1361846	18	15
1361850	77	11
1361851	77	1
1361852	77	5
1361853	77	
1361854	77	7
1361855	77	15
1361856	77	2
1361857	77	13
1361858	77	3
1361859	77	4
1361860	77	12
1361861	77	10
1361862	77	6
1361863	77	8
1361864	77	9
1361865	77	14
1361867	18	14
1361868	12	27
	19	1
	49	9
1361875	15	15
	20	29
1361878	19	2
	20	37
1361879	19	9
1361880	20	25
1361881	18	12
1361882	20	1
	54	13
1361884	20	34
1361885	17	20
	49	12
1361886	23	37
1361887	19	21
1361888	18	17
1361891	18	16
1361894	12	23
1361895	18	4
1361896	12	16
	23	32
1361897	12	4
	25	20
1361898	12	3
	49	18
1361899	12	26
1362000	12	1
1362001	12	2
	14	3
1362002	12	24
1362003	12	22
	13	2
	24	17
1362005	13	3
	17	9
	23	12
	24	15
1362007	13	7
1362008	13	5
1362009	13	6
	23	3
	24	10
1362010	14	20
1362011	14	1
1362012	14	6
1362015	14	9
	25	8
1362016	16	1
	23	36
1362036	74	11
1362038	74	14
1362039	74	12
1362040	74	1
1362042	74	15
1362047	6	1
1362048	6	2
1362049	6	3
1362052	6	5
1362053	6	6
1362058	6	10
1362061	6	13
1362062	6	14
1362063	6	15
1362064	6	16
1362065	6	17
1362069	75	
1362085	76	1
1362086	76	2
1362087	76	3
1362088	76	4
1362089	76	5
1362090	76	6
1362091	76	7
1362092	76	8
1362093	76	9
1362094	76	10
1362095	76	11
1362096	76	12
1362097	76	13
1362098	76	14
1362099	76	15
1362100	76	16
1362101	76	17
1362102	76	18
1362103	76	19
1362104	76	20
1362105	76	26
1362106	76	21
1362107	76	22
1362108	76	23
1362109	76	24
1362110	76	25
1362527	123	
1362528	123	
1362529	123	
	124	
1362531	124	
1362532	124	
1362539	123	
1362540	123	
1362541	123	
	124	
1362543	124	
1362544	124	
1362557	123	
1362558	123	
1362559	123	
	124	
1362561	124	
1362562	124	
1362702	137	
1362703	137	
1362704	137	
	138	
1362706	138	
1362713	138	
1362714	5	19
	100	20
	101	20
1362715	137	
1362716	137	
1362717	137	
	138	
1362719	138	
1362726	138	
1362745	137	
1362746	137	
	138	
1362749	138	
1362756	138	
1362763	137	
1362764	137	
1362765	137	
	138	
1362767	138	
1362774	138	
1362871	123	14
	124	14
	137	14
	138	14
	152	8
1362875	137	15
	138	15
	151	9
1362880	139	5
	153	5
1362881	139	10
	153	10
1362886	139	
	153	
1362888	139	
	153	
1362894	139	
	153	
1362897	139	
1362923	139	
	153	
1362925	139	
	153	
1362931	139	
	153	
1362934	139	
1362960	139	
	153	
1362962	139	
	153	
1362968	139	
	153	
1362971	139	
1362997	152	
1362999	152	
1363010	167	1
1363011	167	1

©1996 HYSTER COMPANY

NUMERICAL INDEX

PART NO	FIGURE	REF NO
857377	2	
857378	2	
857379	2	
857380	2	
857381	2	
857382	2	
857383	2	
857384	2	
857392	2	
857393	2	
857395	2	
857447	2	
857448	2	
857449	2	
857450	2	
857451	2	
857452	2	
857453	2	
857454	2	
857455	2	
857456	2	
857458	2	
857459	2	
857460	2	
857461	2	
857462	2	
857463	2	
857464	2	
857465	2	
857466	2	
857470	2	
857471	2	
857472	2	
857475	2	
857476	2	
857477	2	
857478	2	
857479	2	
857480	2	
857481	2	
857482	2	
857483	2	
857484	2	
857485	2	
857486	2	
857487	2	
857488	2	
857489	2	
857490	2	
857492	2	
857493	2	
857494	2	
857495	2	
857496	2	
857497	2	
857498	2	
857499	2	
879012	2	
879027	2	
879044	2	
879045	2	
879067	2	
879068	2	
879069	2	
879070	2	
895468	96	31
895899	107	41
895900	107	40
897477	2	
897495	2	
897506	2	
897507	2	
897508	2	
897509	2	
897534	2	
897538	2	
897539	2	
897540	2	
897541	2	
897542	2	
897543	2	
897544	2	
897545	2	
897551	2	
897553	2	
897554	2	
897555	2	
897556	2	
897557	2	
897558	2	
897559	2	
897590	2	
897594	2	
897649	2	
909190	106	69
910102	2	
910359	2	
910442	2	
910477	2	
910497	2	
910559	2	
1300094	8	16
1300107	7	14
1300916	46	10
1301156	168	7
	168	11
1301160	168	7
	168	11
1301224	168	13
1301286	173	1
1301727	169	11
1302027	98	4
1304950	1	
	58	16
1310369	151	3
	152	3
1319668	123	9
	124	9
	137	9
	138	9
1324293	98	31
1326395	1	
	74	5
1326396	74	13
1326397	74	8
1326398	74	4
1326399	74	6
1326536	74	9
1326537	74	10
1326538	74	3
1326939	62	6
1327554	48	15
1328762	98	36
1329250	96	5
1330412	69	1
	70	1
1330417	69	2
	70	2
1330419	72	1
1330420	66	3
	70	5
1330422	66	4
1330424	72	2
1330426	66	2
	70	6
1330428	66	5
1330439	66	6
	69	4
	70	4
1332658	62	4
1332683	1	
	18	2
1333243	136	17
	150	17
1333382	121	22
	122	20
1333392	121	11
	122	11
	134	20
	135	18
	148	11
	149	11
1335143	8	13
1335879	96	28
1335880	96	29
1335932	11	18
1335967	96	10
1335987	96	9
1336592	8	14
1336595	8	14
1336597	8	14
1336598	8	14
1336599	8	14
1336602	8	14
1337043	96	4
1337114	63	18
1337148	5	31
1337196	96	27
1337197	1	
	63	25
1337905	136	18
	150	18
1338128	130	
	145	
	159	
1338130	130	
	145	
	159	
1338291	64	8
1338308	35	17
	37	22
1339126	51	
1339127	170	5
1339151	74	2
1339265	4	14
	46	1
	47	1
1339672	8	2
1339769	48	8
1339786	5	3
1339828	8	12
1339830	8	1
1339832	8	9
1343276	8	7
1343279	8	7
1343281	8	7
1343282	8	7
1343283	8	7
1343286	8	7
1343537	96	21
1343548	96	15
1343572	96	20
1343573	96	7
1343574	96	18
1343577	64	1
1343578	64	2
1343579	64	3
1343593	64	5
1343594	64	9
1343595	65	45
1343596	65	37
1343597	65	47
	96	30
1343598	64	4
1343605	96	28
1343606	96	29
1343607	96	16
1343612	63	
1343613	63	
1343614	63	
1343630	100	30
	101	30
1343636	65	29
1343647	4	8
1343887	170	1
1343888	169	2
1343889	167	1
1343890	169	4
1343892	174	11
1343989	136	21
1344323	136	13
	150	13
1344798	170	2
1344799	170	4
1344851	91	10
	92	10
1344901	8	10
1344902	8	10
1345181	120	8
	132	11
1345183	120	7
	132	10
1345190	128	10
	129	11
	143	13
	144	13

©1996 HYSTER COMPANY

NUMERICAL INDEX

PART NO	FIGURE	REF NO
1345194	128	9
	129	10
	143	11
	144	11
1345199	143	7
	144	7
	157	18
	158	18
1345204	143	8
	144	8
	157	19
	158	19
1345216	119	2
	120	2
	125	2
	131	2
	132	2
	133	2
	140	2
	146	2
	147	2
	154	2
1345348	112	45
	128	18
	129	19
1345403	135	34
1345412	128	5
	129	5
1345413	129	5
1345423	157	11
	158	11
1345808	8	10
1345809	1	
	8	10
1345825	21	19
	31	19
1345926	8	17
1345929	8	17
1345931	8	17
1345932	8	17
1345933	8	17
1345936	8	17
1346270	8	10
1347004	64	
1347026	21	16
	31	16
1347045	9	13
	9	15
	11	17
1347135	96	6
1347144	162	5
1347202	121	12
	134	11
	148	12
1347212	106	49
	107	39
1348185	127	9
	142	9
	156	9
1348188	127	10
	142	10
	156	10
1349256	120	
1349259	120	
1349264	120	
1349266	120	
1349269	120	
1349446	126	1
	141	1
	155	1
1350231	9	11
1350282	3	16
1350337	130	
	145	
	159	
1350338	130	
	145	
	159	
1350339	130	
	145	
	159	
1350340	130	
	145	
	159	
1350341	130	
	145	
	159	
1350342	130	
	145	
	159	
1350343	130	
	145	
	159	
1350344	130	
	145	
	159	
1350345	130	
	145	
	159	
1350347	130	
	145	
	159	
1350348	130	
	145	
	159	
1350349	130	
	145	
	159	
1350733	174	6
1350734	174	6
1350735	174	6
1350736	174	6
1350737	174	6
1351070	67	2
1351076	67	3
	72	5
1351133	50	24
1351146	50	23
1351176	32	9
	34	9
	35	12
	36	13
	37	17
1351177	32	8
	34	8
	35	11
	36	12
	37	16
1351355	123	
1351431	7	8
1352088	65	24
	69	
1352089	39	23
1352090	39	20
1352325	130	
	145	
	159	
1352326	130	
	145	
	159	
1352327	130	
	145	
	159	
1352328	130	
	145	
	159	
1352329	130	
	145	
	159	
1352330	130	
	145	
	159	
1352332	130	
	145	
	159	
1352333	130	
	145	
	159	
1352334	130	
	145	
	159	
1352470	109	16
1352599	67	7
1352600	67	8
1352856	133	
1352858	133	
1352863	133	
1352866	133	
1352956	132	
1352958	132	
1352963	132	
1352966	132	
1353056	119	
	131	
	146	
1353058	131	
	146	
1353059	119	
1353064	119	
	131	
	146	
1353067	119	
	131	
1353070	119	
1353191	119	6
	120	3
	125	6
	131	6
	132	6
	133	5
	146	6
	147	3
	154	6
1353192	119	6
	120	3
	125	6
	131	6
	132	6
	133	5
	146	6
	147	3
	154	6
1353193	119	6
	120	3
	125	6
	131	6
	132	6
	133	5
1353324	125	1
1353329	125	
1353399	134	18
1353408	125	8
	140	8
	154	8
1353464	143	22
	144	22
1353467	140	1
1353469	154	1
1353527	140	
1353529	154	
1353530	128	17
	128	27
	129	18
	129	33
	143	27
	143	38
	144	27
	144	48
	157	23
	158	40
1353533	126	2
	141	2
	155	2
1353534	121	29
	134	23
	148	22
1353535	121	28
	134	24
	148	23
1353546	150	11
1353547	136	11
1353706	147	
1353708	147	
1353714	147	
1354049	63	3
1354105	170	11
1354106	170	7
1354140	6	4
	7	8
1354172	8	4
1354200	167	8
1354274	8	4
1354276	8	4
1354277	8	4
1354278	8	4
1354281	8	4
1354285	8	

©1996 HYSTER COMPANY

NUMERICAL INDEX

PART NO	FIGURE	REF NO	PART NO	FIGURE	REF NO	PART NO	FIGURE	REF NO	PART NO	FIGURE	REF NO	PART NO	FIGURE	REF NO
	60	16		152	10	296426	83	3	302427	112	35		3	17
	61	13	296001	158	13		84	3		115	35		50	19
	78	10	296009	96	13		97	22	302461	136	12		62	12
	79	10		113	45	296431	160	8		150	12		107	4
	83	12		113	75	296472	96	19	303120	94	24		168	3
	84	12		114	45	296484	175	10	304200	134			168	18
	86	20		114	81		176	10	304526	120	6		170	9
	95	3		116	45	296508	172	3		132	9		173	3
	95	6		116	80	297531	123	6		136	26	316826	48	5
	96	2		117	45		124	6		150	26		143	26
	100	10		117	81		137	6	306015	165			144	26
	101	10	296010	106	13		138	6	306016	165		316844	8	10
	108	13		107	49		139	13	306198	165		320037	8	23
	112	2	296128	38	23		153	13	306756	98	6	320154	63	20
	113	1		112	38	297649	121	4	306757	98		320155	40	5
	114	1		115	38		122	4	306758	98	9		41	5
	115	2	296130	48	7		134	35	306759	98	11		42	11
	116	1	296138	48	22		135	22	306760	98	13		58	8
	117	1	296160	112	6		136	4	308117	127	13		59	10
	127	18		115	6		150	4		142	13		96	22
	156	18	296165	112	16	297891	42	4		156	13		100	14
	162	7		115	16	300937	4	7	309109	41	3		101	14
	163	5	296166	3	14		121	8	309124	62	5		112	31
	167	6		38	31		122	8	313805	112	7		115	31
292683	4	4	296167	5	22		126	4		115	7		168	16
	48	6	296205	64	6		134	7		128	11		172	4
	83	24	296417	112	37		135	7		129	12	320156	3	10
	84	24		112	40		136	16		143	20		5	13
	127	4		174	3		141	4		144	20		38	26
	128	14	296418	83	16		143	16		169	7		60	4
	129	15		84	16		144	16		169	13		61	5
	136	10	296420	22	4		149	6	313828	121	14		62	9
	142	4		33	4		150	16		122	13		65	9
	150	10		78	4		155	4		128	6		65	44
	156	4		79	4	300982	127	14		129	7		100	27
292684	95	8		83	26		142	14		134	13		101	27
292689	9	7		106	18		156	14		135	11		112	14
293626	79	3		107	54	302035	65	4		143	6		115	14
293629	163	3		163	6	302048	169	6		144	6		167	12
293631	163	4		167	5	302054	169	8		148	14		169	9
293637	83	25	296422	22	7	302056	169	12		149	13		169	15
293642	83	2		33	7	302146	97	16		157	17	320157	3	8
293692	84	4		121	6	302249	168	14		158	17		3	18
293704	160	7		122	6	302256	95	12		160	11		3	26
293795	143	18		134	5	302258	50	16		160	21		4	10
	144	18		135	5	302269	88	3		175	9		5	5
293796	143	19		148	4	302285	60	15		176	9		9	4
	144	19		149	4		61	12	314787	46	19		21	10
	157	13	296423	126	3	302328	22	9	314797	46	20		31	10
	158	21		141	3		33	9	316132	65	11		35	4
294643	161	6		155	3	302398	64	7	316448	163	7		37	4
295649	151	10	296424	95	9	302399	174	4	316678	3	7		47	19

©1996 HYSTER COMPANY

NUMERICAL INDEX

PART NO	FIGURE	REF NO
	50	11
	58	19
	62	14
	65	17
	100	39
	101	39
	104	3
	112	15
	115	15
	121	16
	129	27
	134	14
	144	39
	148	15
	158	31
	174	9
320158	38	20
	150	19
320159	3	39
	5	15
	32	3
	34	3
	36	3
	37	14
	40	9
	48	4
	112	48
	115	37
	169	14
320160	38	5
	143	25
	144	15
	144	25
320161	4	6
	100	35
	101	35
	136	15
	143	15
	150	15
320169	100	3
	101	3
320173	48	21
320177	127	15
	142	15
	156	15
320313	121	26
	122	24
	134	29
	136	7
	150	7
320717	106	51
320857	98	21
322824	123	13
	124	13
	137	13
	138	13
322902	123	15
	124	15
	137	16
	138	16
323061	121	10
	122	10
	134	19
	135	17
	148	10
	149	10
323090	121	7
	122	7
	134	6
	135	6
	148	5
	149	5
323160	121	18
	122	16
	134	27
	135	29
	148	18
	149	19
323161	121	24
	122	22
	125	10
	134	30
	135	24
	136	5
	140	10
	150	5
	154	10
324403	46	5
324406	46	7
324706	20	35
	25	15
	28	9
	29	21
	30	27
324707	20	16
	25	4
	28	7
	29	13
	30	28
324709	25	12
	46	18
324718	17	7
324721	25	35
	46	22
325708	38	6
326504	14	2
	17	3
	20	3
	25	28
	28	8
	29	14
	54	7
326511	46	21
326512	46	14
326513	46	16
326612	16	2
326653	49	10
326654	49	11
326716	43	9
326718	43	18
326719	43	16
326720	43	17
326725	43	30
326726	43	20
326729	43	25
326730	43	21
326731	43	24
326732	43	23
326733	43	14
326739	43	29
326741	43	13
326742	43	3
326743	43	31
326744	43	15
326747	19	12
326748	19	13
326749	19	14
326778	17	6
326850	18	5
326889	75	5
327327	12	29
329067	60	23
	60	33
330692	123	12
	124	12
	137	12
	138	12
332277	44	18
333642	1	
	19	3
335041	122	25
335047	58	17
335553	7	9
335988	7	22
335991	7	23
336550	21	24
	31	24
336573	21	21
	31	21
337174	121	
340609	107	62
345453	21	22
	31	22
345454	21	23
	31	23
352485	38	24
352499	38	2
352885	38	3
352950	38	12
352969	39	9
353128	39	20
353129	38	28
353141	38	6
353142	38	8
353143	38	7
353154	39	11
353159	38	12
353164	38	27
353165	39	13
353168	39	24
353172	38	17
353175	39	3
353195	38	11
353230	38	18
353231	39	4
353397	39	1
353398	39	
353422	39	14
353432	39	15
353441	39	14
353448	39	10
353453	38	16
355850	108	1
358766	98	3
358771	98	8
358772	98	10
358773	98	12
358803	98	14
358805	98	19
358806	98	
358810	98	
358818	98	5
359207	39	7
360387	39	12
364807	7	15
364808	7	16
364854	7	21
364914	7	11
366115	125	5
	140	5
	154	5
368821	167	18
369795	130	
	145	
	159	
370868	65	10
374030	167	7
374713	44	15
376949	3	20
379197	7	19
379198	7	20
379199	6	24
	7	5
379697	6	25
	7	6
379698	6	26
	7	7
383116	7	10
383789	161	8
387867	102	2
389688	8	19
397676	21	25
	31	25
	87	9
	88	10
599737	121	32
	122	28
	134	38
	135	35
	136	30
	150	35
615135	139	6
	153	6
636851	161	7
638250	139	8
	153	8
797068	42	3
823301	106	69
857308	2	
857309	2	
857310	2	
857311	2	
857369	2	
857370	2	
857371	2	
857372	2	
857373	2	
857374	2	
857375	2	
857376	2	

©1996 HYSTER COMPANY

NUMERICAL INDEX

PART NO	FIGURE	REF NO
	148	17
	149	18
124297	104	7
127045	21	26
	31	26
	106	24
	106	31
	107	14
129358	121	
129387	119	8
	120	5
	125	4
	131	8
	132	8
	133	4
	140	4
	146	8
	147	
	147	5
	154	4
129684	106	53
	107	43
130845	50	14
	87	5
131358	121	21
	122	19
	125	9
	134	8
	135	8
	136	27
	140	9
	148	7
	149	7
	150	32
	154	9
131716	119	4
	131	4
	132	4
	146	4
132473	44	13
132834	151	6
	152	6
132860	4	2
132861	150	21
135588	121	
	122	25
135685	39	2
135873	65	13
136681	3	22
	3	25
	21	15
	31	15
	47	17
	60	18
	61	15
	110	8
	135	12
	174	7
	175	6
	176	6
136687	3	11
	58	5
	59	5
	60	2
	61	6
	62	7
	64	10
	65	33
	167	11
136692	38	22
	48	9
	83	21
	84	21
	96	3
	100	22
	101	22
	106	17
	107	53
	167	4
136704	112	46
	121	13
	128	15
	129	16
	134	12
	143	4
	144	4
	148	13
136749	5	26
	5	30
	21	8
	31	8
	58	21
	62	15
	95	10
	96	11
	104	5
	110	10
	111	10
	143	5
	144	5
	157	16
	158	16
136985	3	37
	36	8
	37	11
	96	1
	162	6
137553	98	
137852	40	2
	41	2
	42	12
	50	15
	59	19
	60	21
	61	18
	65	20
	65	31
	87	18
	104	8
	106	55
	106	58
	107	26
	143	2
	144	36
	157	28
	158	28
	170	19
138573	65	13
145639	6	22
	7	3
146540	172	1
147294	48	11
152990	39	4
153919	161	5
161003	121	3
	122	3
	134	34
	135	21
	136	3
	150	3
164488	169	10
165560	107	34
166112	106	28
	107	18
	150	33
166857	50	13
	58	23
	59	18
	101	24
	106	47
	107	36
	107	63
168718	21	18
	31	18
	100	24
170658	8	18
171350	1	
	121	31
	122	29
	134	37
	135	36
	136	29
	150	34
172654	48	23
174208	165	
175861	112	34
	115	34
176454	87	16
	106	54
	107	17
176640	5	4
	106	39
176648	3	25
176910	104	6
177521	170	6
178119	150	22
180057	122	
182343	121	
	136	
	150	
185544	44	30
	167	14
186061	99	10
	118	11
	123	16
	124	16
	137	17
	138	17
	139	17
	151	12
	152	11
	153	17
186493	39	5
187388	123	7
	124	7
	137	7
	138	7
	139	14
	153	14
189595	121	19
	122	17
	134	28
	135	19
	148	19
	149	15
189756	63	6
190383	60	32
190887	139	16
	151	11
	152	9
	153	16
193656	59	16
196297	48	10
197068	42	5
	58	10
	59	7
197345	136	
	150	
199563	5	17
201766	107	23
201829	139	9
	153	9
202119	57	19
202560	36	2
204114	7	12
204780	44	14
204786	44	19
204787	44	20
204790	44	21
204797	44	37
204824	44	26
204825	44	28
204829	52	6
	53	6
204830	52	9
	53	8
204831	52	10
	53	10
204835	52	17
204837	1	
	52	
204858	44	12
204862	44	34
207495	170	3
214119	44	22
214364	83	15
	84	15
214444	121	
215212	119	3
	131	3
	132	3
	146	3
216877	127	5
	142	5
	156	5
220283	44	9
	44	16
220426	65	38
220434	39	16
220932	39	12

©1996 HYSTER COMPANY

NUMERICAL INDEX

PART NO	FIGURE	REF NO
221706	96	24
221733	7	13
221771	126	3
	141	3
	155	3
222021	10	11
	21	6
	31	6
222029	7	24
222492	106	67
	107	60
223389	122	25
	136	
227131	63	7
230882	167	15
231020	120	9
	132	12
	136	24
	150	29
231084	136	
	150	
236841	44	38
236842	44	23
236843	44	24
236844	44	35
236845	44	36
236851	44	31
239503	3	28
	5	7
	9	6
	21	9
	31	9
	35	6
	37	6
	38	14
	42	9
	58	18
	60	7
	60	19
	61	7
	61	16
	61	24
	62	16
	96	14
	104	2
	106	65
	107	64
	110	9
	111	9
	128	25
	129	24
	129	25
	143	36
	144	37
	144	47
	150	23
	157	31
	158	29
	158	39
	170	15
	174	10
239784	160	10
240565	106	50
245244	26	19
246994	122	25
	134	
252682	142	18
257241	60	22
	61	34
257913	123	5
	124	5
	137	5
	138	5
	139	11
	153	11
260878	59	17
271862	58	22
276627	118	6
278510	106	68
	107	61
280644	11	15
287503	112	1
	115	1
287805	87	3
	104	9
287816	102	4
	128	16
	129	17
287817	65	7
	112	39
287837	150	14
287851	38	21
	50	10
	65	15
	85	12
	87	17
	100	37
	106	23
	107	13
	134	16
	170	14
287854	5	14
	38	9
	48	2
	100	9
	101	9
	167	3
287860	5	34
	83	11
	100	21
	101	21
	106	16
	107	52
292500	3	9
	42	7
	58	6
	59	6
	60	1
	65	26
	65	42
	167	10
	174	2
292501	61	3
	65	30
292508	128	4
	129	4
	144	42
	158	33
292509	122	12
	135	33
	149	12
292513	78	3
292514	38	32
	78	11
	79	11
	127	7
	142	7
	156	7
292515	83	20
	84	20
	86	19
292517	32	10
	34	10
	35	13
	36	14
	37	18
292521	38	4
	143	24
	144	24
292523	38	4
292527	83	22
	84	22
	136	9
	150	9
292528	4	3
	136	14
292531	83	23
	84	23
	84	25
	121	5
	122	5
	127	3
	134	4
	135	4
	142	3
	148	3
	149	3
	156	3
292533	3	33
	128	12
	129	13
	136	19
	143	14
	144	14
292609	9	8
292668	60	5
	168	15
292679	60	6
	65	5
	168	17
	172	2
292680	42	8
	50	18
	60	3
	60	10
	61	4
	62	8
	65	8
	65	27
	65	32
	65	43
	85	22
	95	13
	100	28
	101	28
	102	5
	112	8
	113	8
	114	8
	115	8
	116	8
	117	8
	167	13
292681	3	15
	3	19
	3	27
	5	6
	9	5
	21	11
	31	11
	35	7
	37	7
	38	15
	40	3
	44	4
	47	20
	50	12
	50	20
	58	20
	60	8
	60	20
	60	34
	61	8
	61	17
	61	25
	62	13
	65	16
	85	13
	87	4
	88	4
	95	11
	96	12
	100	38
	101	38
	104	4
	106	59
	107	27
	112	17
	115	17
	128	23
	129	26
	129	32
	143	35
	144	38
	144	46
	150	20
	157	32
	158	30
	158	32
	170	16
	170	18
	174	8
	175	7
	176	7
292682	3	38
	5	16
	36	9
	37	12
	38	10
	48	3

©1996 HYSTER COMPANY

NUMERICAL INDEX

©1996 HYSTER COMPANY

NUMERICAL INDEX

PART NO	FIGURE	REF NO
142	38	19
12445	51	19
	52	1
	53	1
12490	51	6
14189	98	28
14603	121	20
	122	18
	148	20
	149	16
14691	106	48
	107	37
14692	157	9
	158	9
15005	98	22
15152	39	6
15155	96	25
15175	3	23
	5	27
	6	21
	7	2
	112	18
	115	18
15176	36	10
	37	13
15177	4	5
	5	23
	22	10
	32	12
	33	10
	34	12
	35	15
	36	16
	37	20
	112	3
	115	3
15200	38	25
	40	4
	41	4
	42	10
	121	25
	122	23
	125	11
	134	31
	135	25
	136	6
	140	11
	150	6
	154	11
15212	38	13
	42	6
	96	17
15222	5	10
15223	22	14
	33	14
	134	33
	135	20
15962	94	5
16001	127	6
	142	6
	156	6
16041	160	12
16112	104	10
16134	48	23
16447	175	11
	176	11
16481	106	43
	106	44
	107	32
	160	10
16483	106	32
	106	34
	106	66
	106	67
	107	21
	107	23
	107	38
	107	60
	128	20
	128	26
	129	21
	129	28
	143	30
	143	33
	144	33
	144	40
	157	25
	157	29
	158	25
	158	37
16484	150	24
16485	106	29
	106	45
	107	34
	121	9
	121	19
	122	9
	122	17
	134	21
	134	28
	135	16
	148	19
	148	21
	149	21
	150	17
16486	121	20
	122	18
	134	22
	135	23
	148	20
	149	16
16540	106	66
	107	38
16542	121	9
	134	21
	148	21
16543	134	22
	135	23
16556	106	43
	107	32
16558	97	32
	106	32
	107	21
	128	20
	129	21
	143	33
	144	40
	157	29
	158	37
16560	106	45
	122	9
	135	16
	149	21
16565	106	44
16567	97	31
16600	160	19
16693	175	12
	176	12
16719	53	5
16751	44	27
16849	52	21
	53	20
16852	51	16
16863	48	17
16865	39	18
	65	41
16882	121	30
	122	27
	134	36
	135	32
	148	24
	149	17
	150	25
16923	106	52
	107	42
16982	121	10
	122	10
16987	107	24
16997	107	46
17051	122	14
	135	13
	149	14
17059	106	37
	107	25
17063	121	15
	134	25
	148	16
17197	150	24
17222	128	26
	129	28
	143	30
	144	33
	157	25
	158	25
17314	50	22
17627	106	36
17636	58	11
	59	11
	106	9
	107	10
18419	65	39
18496	6	20
	7	1
18515	7	18
	96	26
18727	6	19
	7	17
21778	1	
	65	3
34044	160	19
37752	120	10
	132	13
	136	23
	150	28
39348	123	8
	124	8
	137	8
	138	8
	139	12
	153	12
53162	39	17
	65	40
55146	139	7
	153	7
55407	123	11
	124	11
	137	11
	138	11
	151	7
	152	7
	161	4
55488	106	60
57568	39	8
57664	118	7
58901	119	7
	120	4
	125	3
	131	7
	132	7
	133	3
	140	3
	146	7
	147	4
	154	3
63117	32	6
	32	17
	34	6
	34	17
	35	9
	36	6
	36	22
	37	9
86510	65	12
88436	134	
88441	134	
88446	134	
97999	48	14
101625	129	29
	144	41
	158	36
101809	48	18
104506	119	5
	131	5
	132	5
	146	5
112989	47	2
114312	39	19
115696	47	3
119236	21	27
	31	27
	46	2
	47	21
	106	25
	107	15
120299	58	15
	59	15
120938	121	17
	122	15
	134	26
	135	28

©1996 HYSTER COMPANY

AUXILIARY FUNCTION TUBE

TWO-STAGE FFL AND THREE-STAGE FFL

KEY
A: Three Function Group
B: *Four Function Group*

REF	PART NO.	NAME OF PART	QTY A	QTY B
1	1370483	Tube	1	..
2	1370482	Tube	1	..
3	1370481	Tube	..	1
4	1370480	Tube	..	1
5	1370479	Bracket	1	1
6	136681	Hex Head Bolt	2	2
7	292681	Washer	2	2
8	1370498	Clamp	1	1
9	313828	Nut	1	1
10	296484	Hex Head Bolt	1	1
11	16447	Fitting	2	2
12	16693	Fitting	2	2

©1996 HYSTER COMPANY

NOTES

©1996 HYSTER COMPANY

AUXILIARY FUNCTION TUBE
TWO-STAGE LFL

KEY
A: Three Function Group
B: Four Function Group

REF	PART NO.	NAME OF PART	QTY A	QTY B
1	1370497	Tube	1	..
2	1370496	Tube	1	..
3	1370511	Tube	..	1
4	1370510	Tube	..	1
5	1370479	Bracket	1	1
6	136681	Hex Head Bolt	2	2
7	292681	Washer	2	2
8	1370498	Clamp	1	1
9	313828	Nut	1	1
10	296484	Hex Head Bolt	1	1
11	16447	Fitting	2	2
12	16693	Fitting	2	2

©1996 HYSTER COMPANY

AUXILIARY FUNCTION TUBE

TWO-STAGE FFL AND THREE-STAGE FFL

(Figure 176)

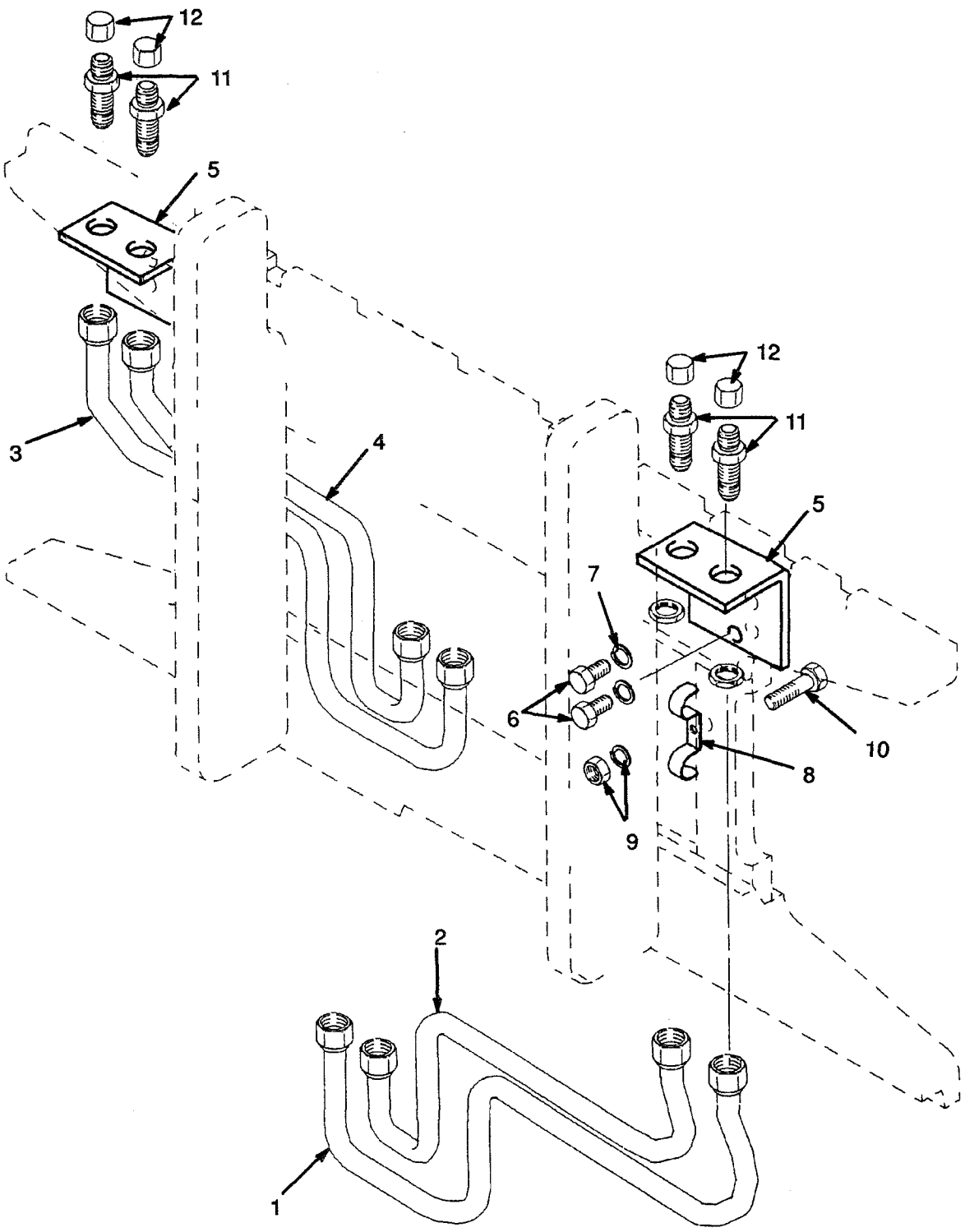

©1996 HYSTER COMPANY

BACKUP ALARM

KEY
A: 90 dB Horn
B: 87,97,102,107, And 82-102 dB Alarms

REF	PART NO.	NAME OF PART	QTY A	QTY B
1	2023314	Bracket	1	1
2	292500	Hex Head Bolt	..	2
3	296417	Washer	..	2
4	302399	Nut	..	2
5	1361552	Harness	..	1
6	1350733	Alarm (87 dB)	..	1
6	1350734	Alarm (97 dB)	..	1
6	1350735	Alarm (102 dB)	..	1
6	1350736	Alarm (107 dB)	..	1
6	1350737	Alarm (82-102 dB)	..	1
7	136681	Hex Head Bolt	1	..
8	292681	Washer	1	..
9	320157	Washer	1	..
10	239503	Nut	2	..
11	1343892	Horn (90 dB)	1	..

©1996 HYSTER COMPANY

AUXILIARY FUNCTION TUBE

TWO-STAGE LFL

(Figure 175)

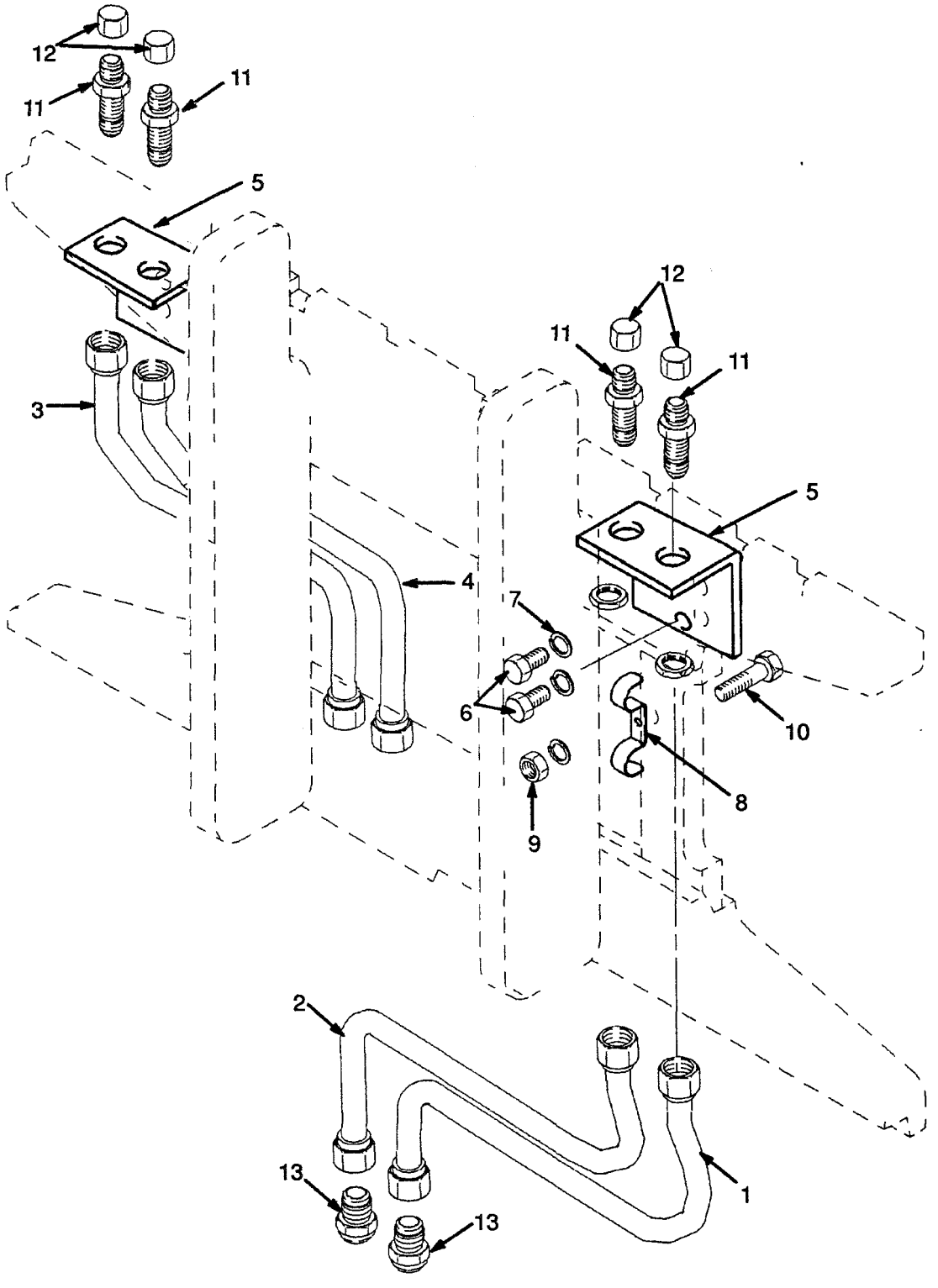

©1996 HYSTER COMPANY

MIRROR

REF	PART NO.	NAME OF PART	QTY
1	1301286	Mirror	2
2	1356520	Bracket	1
3	316678	Screw	4

©1996 HYSTER COMPANY

BACKUP ALARM

(Figure 174)

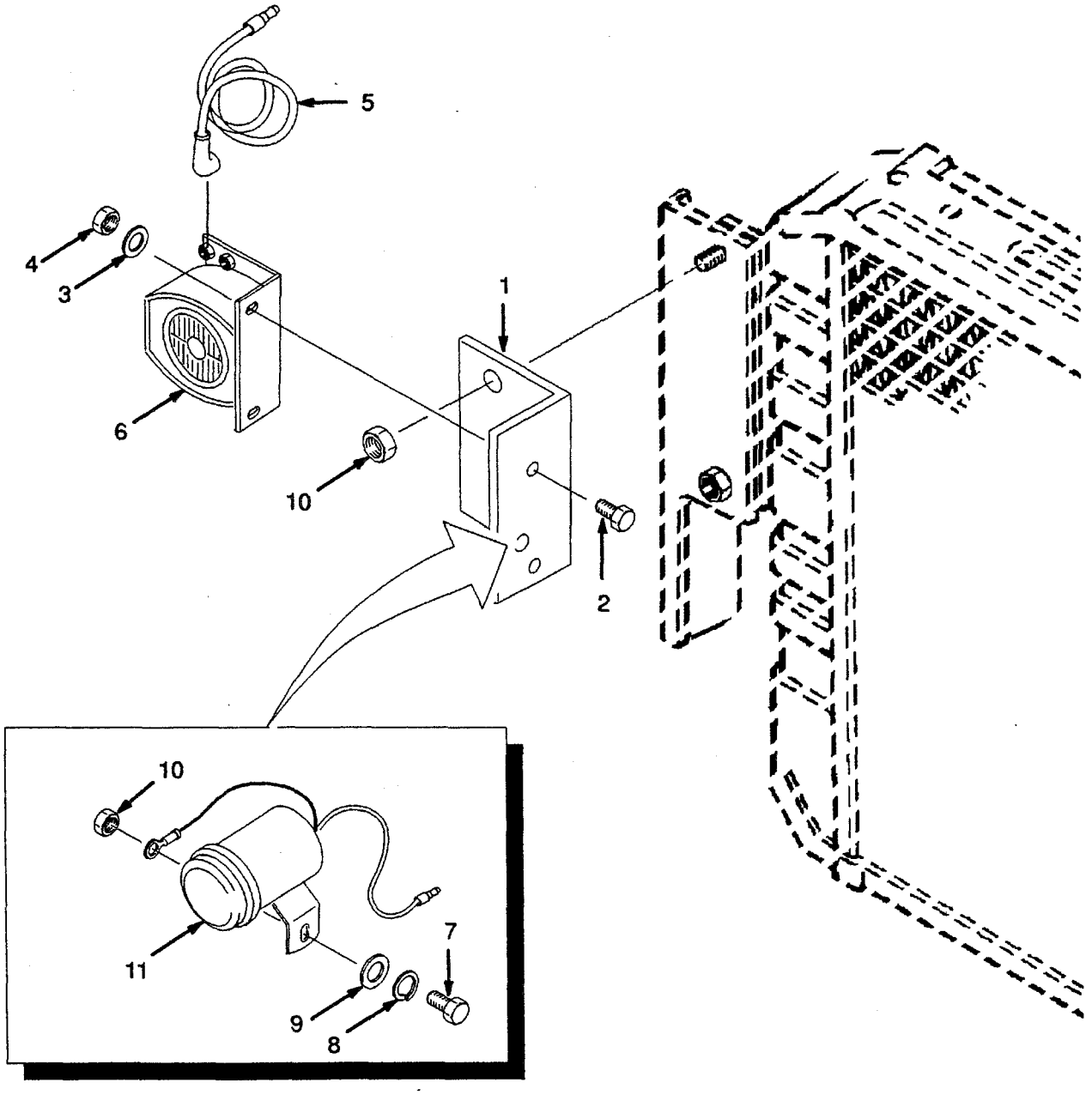

©1996 HYSTER COMPANY

FIRE EXTINGUISHER

REF	PART NO.	NAME OF PART	QTY
1	146540	Fire Extinguisher	1
2	292679	Washer	2
3	296508	Screw	2
4	320155	Washer	2

©1996 HYSTER COMPANY

MIRROR

(Figure 173)

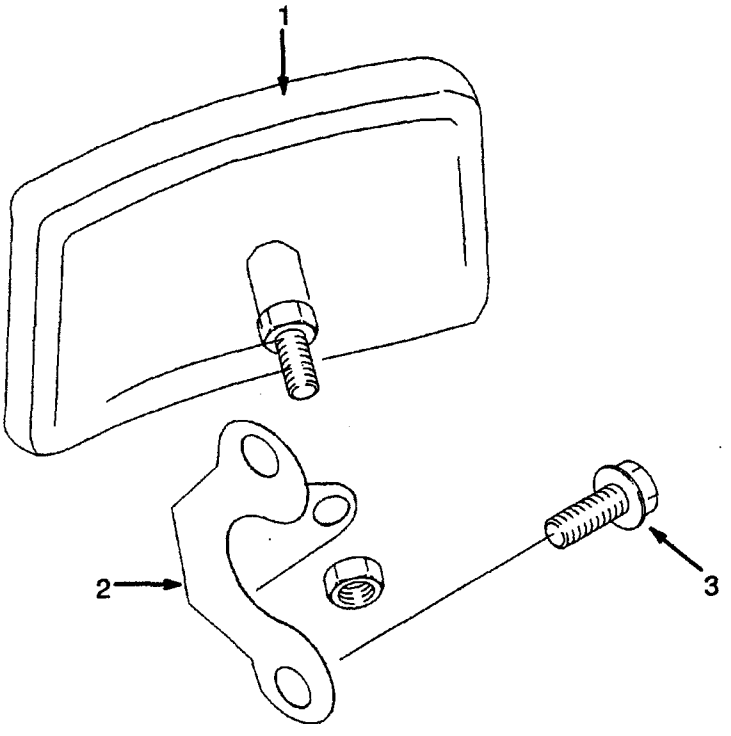

©1996 HYSTER COMPANY

HARNESS
TAIL LIGHT

REF	PART NO.	NAME OF PART	QTY
	2021997	Harness (Tail Light)	1
1	2022737	Terminal	5
2	2022823	Connector (Cowl)	1
3	2022827	Seal	1
4	1361303	Terminal	6
5	2022901	Connector	2

©1996 HYSTER COMPANY

FIRE EXTINGUISHER

(Figure 172)

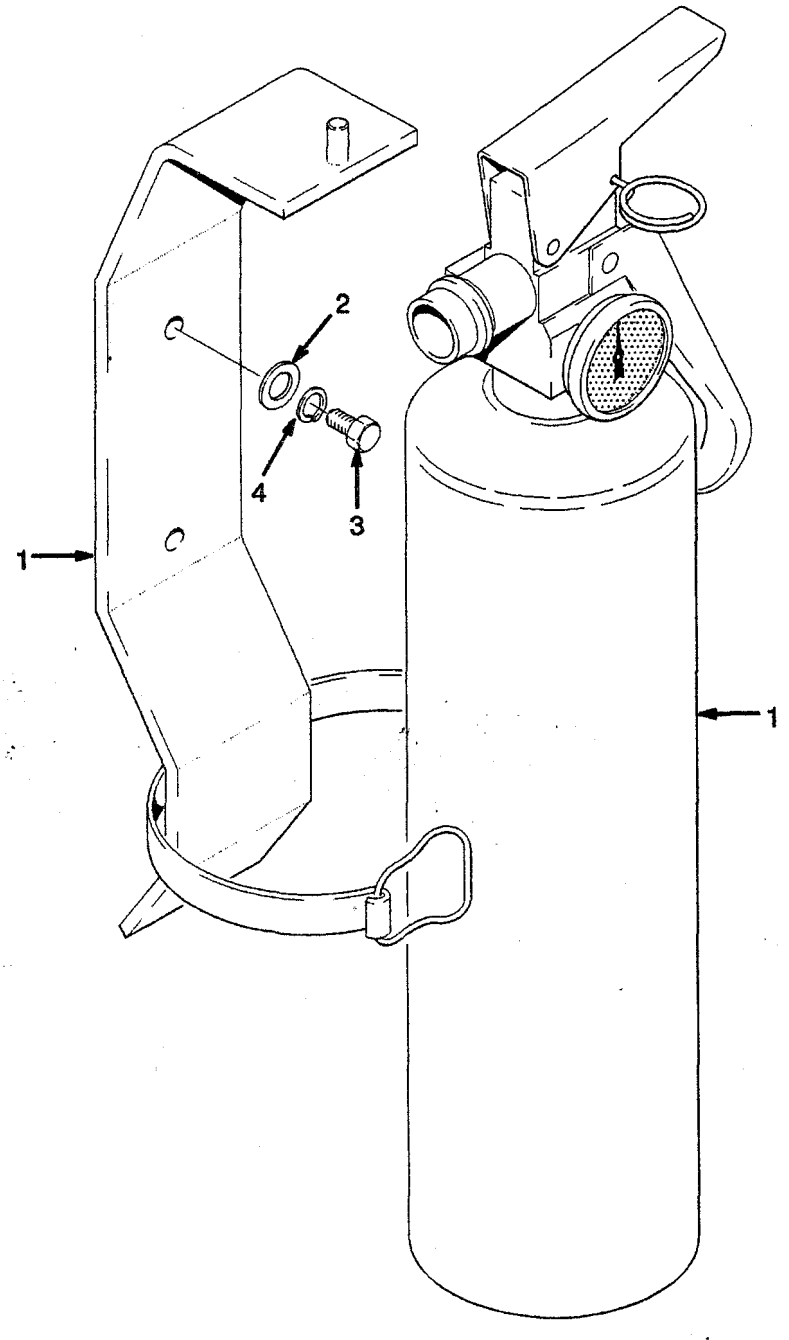

©1996 HYSTER COMPANY

TAIL LIGHT

REF	PART NO.	NAME OF PART	QTY
1	1343887	Light	2
2	1344798	Lens	1
3	207495	Bulb (12V)	1
4	1344799	Bulb	1
5	1339127	Screw	2
6	177521	Bulb (12V)	1
7	1354106	Cover	2
8	1356126	Screw	4
9	316678	Screw	5
10	1356356	Bush	2
11	1354105	Bracket	2
12	....	Harness (Tail Light) ☞ Figure 171	1
13	2022603	Harness	2
14	287851	Screw (Upswept Exhaust)	2
15	239503	Nut (Upswept Exhaust)	2
16	292681	Washer (Upswept Exhaust)	2
17	2021980	Bracket (Upswept Exhaust)	1
18	292681	Lockwasher	1
19	137852	Clamp	AR
20	2022013	Clamp	1

©1996 HYSTER COMPANY

HARNESS
TAIL LIGHT
(Figure 171)

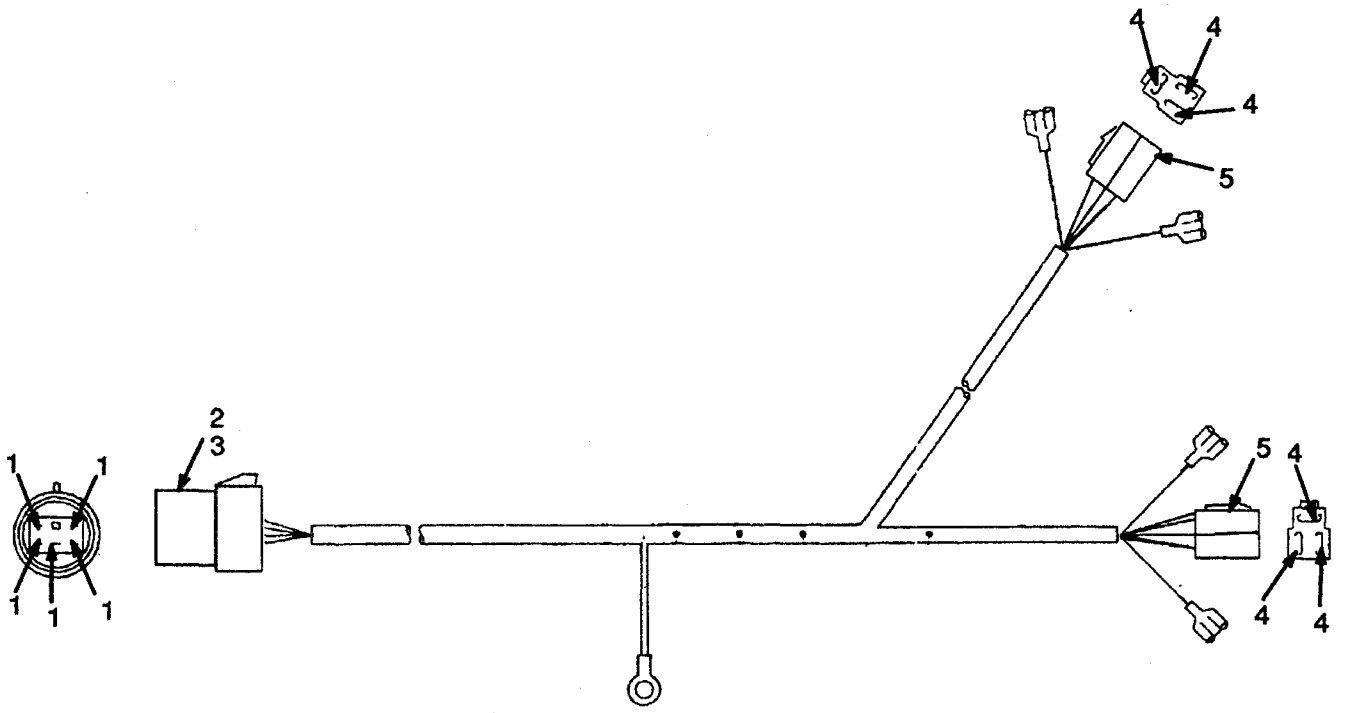

©1996 HYSTER COMPANY

STROBE LIGHT

REF	PART NO.	NAME OF PART	QTY
1	1356347	Strobe Light	1
1	1363013	Bulb	1
1	....	Motor	1
1	1363015	Lens	1
2	1343888	Guard	1
3	1356542	Bracket (Low Mount)	1
3	1356342	Bracket (High Mount)	1
4	1343890	Joint	1
5	1356540	Bar (Low Mount)	1
6	302048	Screw (Low Mount)	5
7	313805	Nut (Low Mount)	7
8	302054	Screw (Low Mount)	2
9	320156	Washer (Low Mount)	3
10	164488	Clamp	1
11	1301727	Clamp	4
12	302056	Screw (High Mount)	4
13	313805	Nut (High Mount)	4
14	320159	Washer (High Mount)	1
15	320156	Washer (High Mount)	1
16	1356354	Bush	1
17	2022710	Harness (Without Rear Light)	1
18	1356354	Bush (Without Rear Light)	1
19	2022705	Harness (Without Rear Light)	1

©1996 HYSTER COMPANY

TAIL LIGHT
(Figure 170)

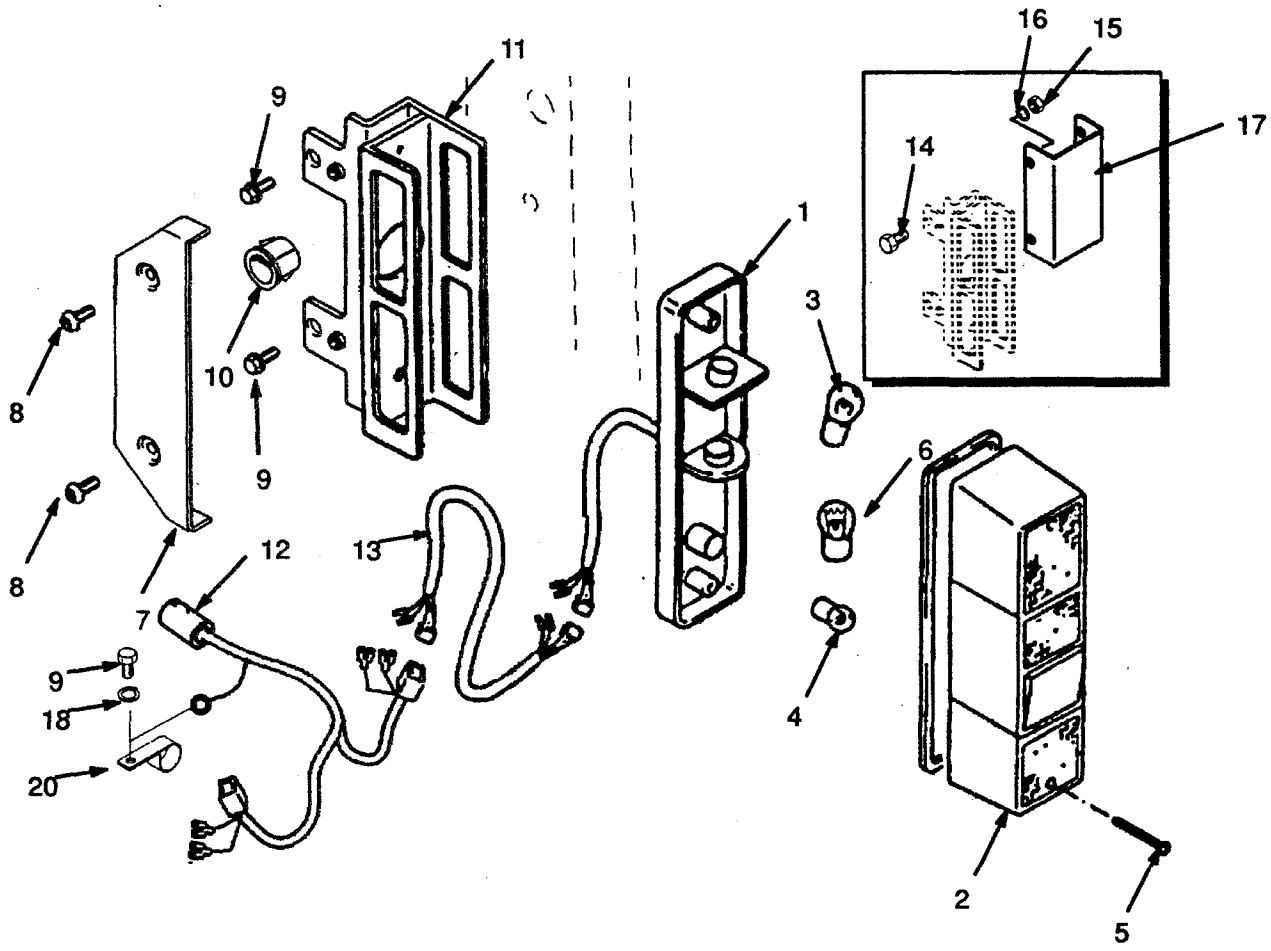

DRIVE, REAR LIGHTS AND SPOTLIGHT

REF	PART NO.	NAME OF PART	QTY
1	1356351	SpotLight	1
2	1356352	Bracket	1
3	316678	Screw	2
4	1356354	Bush	1
5	2022903	Harness	1
6	2021959	Relay	2
7	1301160	Switch (SpotLight)	1
7	1301156	Lens	1
8	1356336	Head Light	3
8	1356335	Bulb	1
9	1356121	Bracket (LH Front)	1
9	1356325	Bracket (RH Front)	1
9	1356130	Bracket (Rear)	1
10	1356354	Bush	2
11	1301160	Switch (Front and Rear Lights)	1
11	1301156	Lens	1
12	2022705	Harness (Front Lights)	2
12	2022705	Harness (Rear Light)	1
13	1301224	Diode	1
14	302249	Screw	1
15	292668	Nut	1
16	320155	Washer	1
17	292679	Washer	1
18	316678	Screw (Front)	4
18	316678	Screw (Rear)	2
19	1356355	Bush	2
20	2023313	Harness	1
21	2021953	Fuse (10 Amp)	1
22	2022710	Harness	1

©1996 HYSTER COMPANY

STROBE LIGHT

(Figure 169)

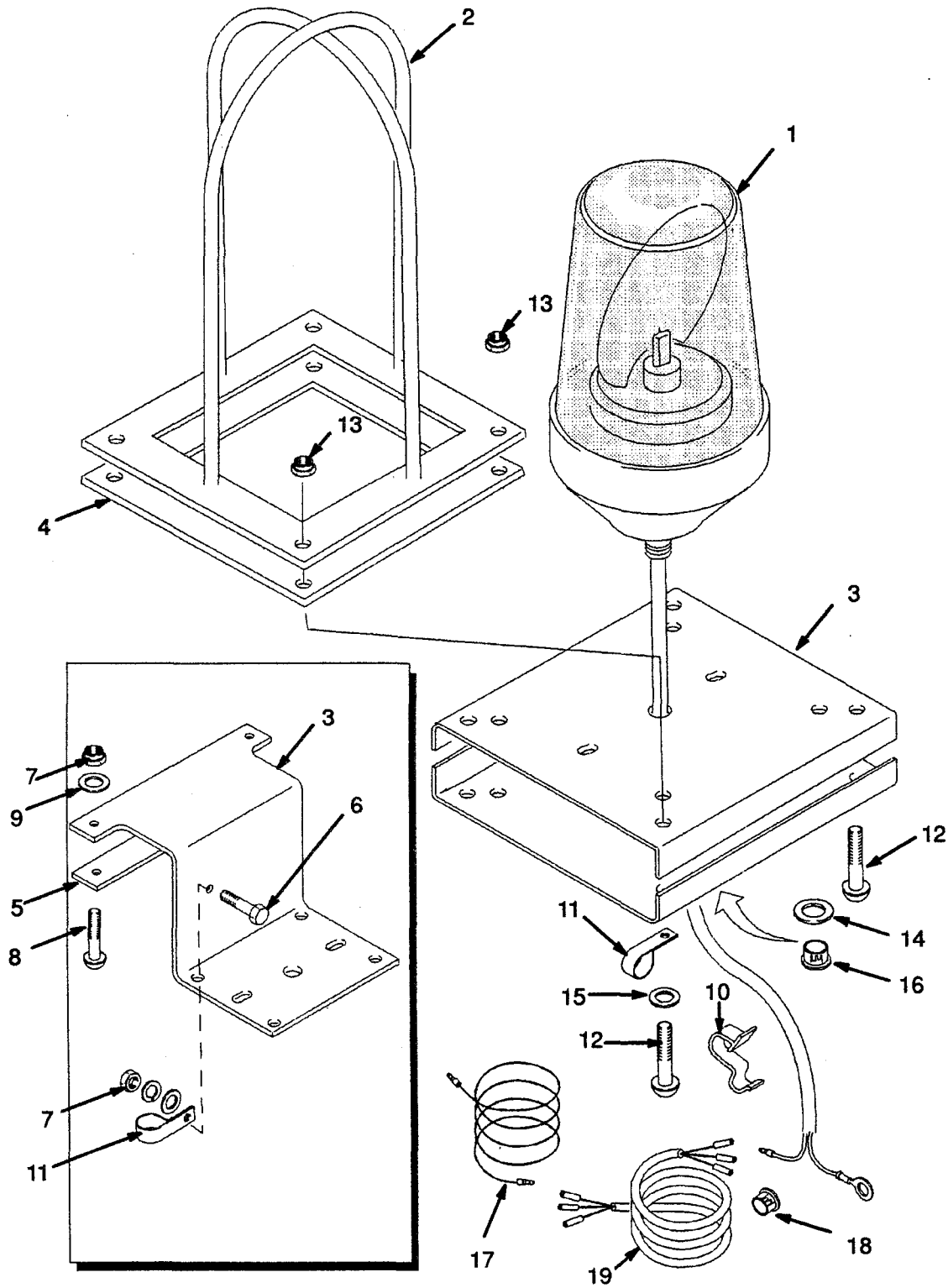

SIDELIGHT

REF	PART NO.	NAME OF PART	QTY
1	1343889	Sidelight	2
1	1363010	Lens	1
1	1363011	Bulb	1
1	1363012	Bulb-Flasher	1
2	1356117	Bracket	2
3	287854	Screw	2
4	136692	Nut	2
5	296420	Washer	4
6	292682	Washer	2
7	374030	Switch (Turn Signal)	1
8	1354200	Harness	1
9	2022748	Flasher Unit	1
10	292500	Screw	1
11	136687	Nut	1
12	320156	Washer	1
13	292680	Washer	1
14	185544	Screw	2
15	230882	Nut	2
16	1354387	Harness	2
17	1356356	Bush	2
18	368821	Bulb	1

©1996 HYSTER COMPANY

DRIVE, REAR LIGHTS AND SPOTLIGHT

(Figure 168)

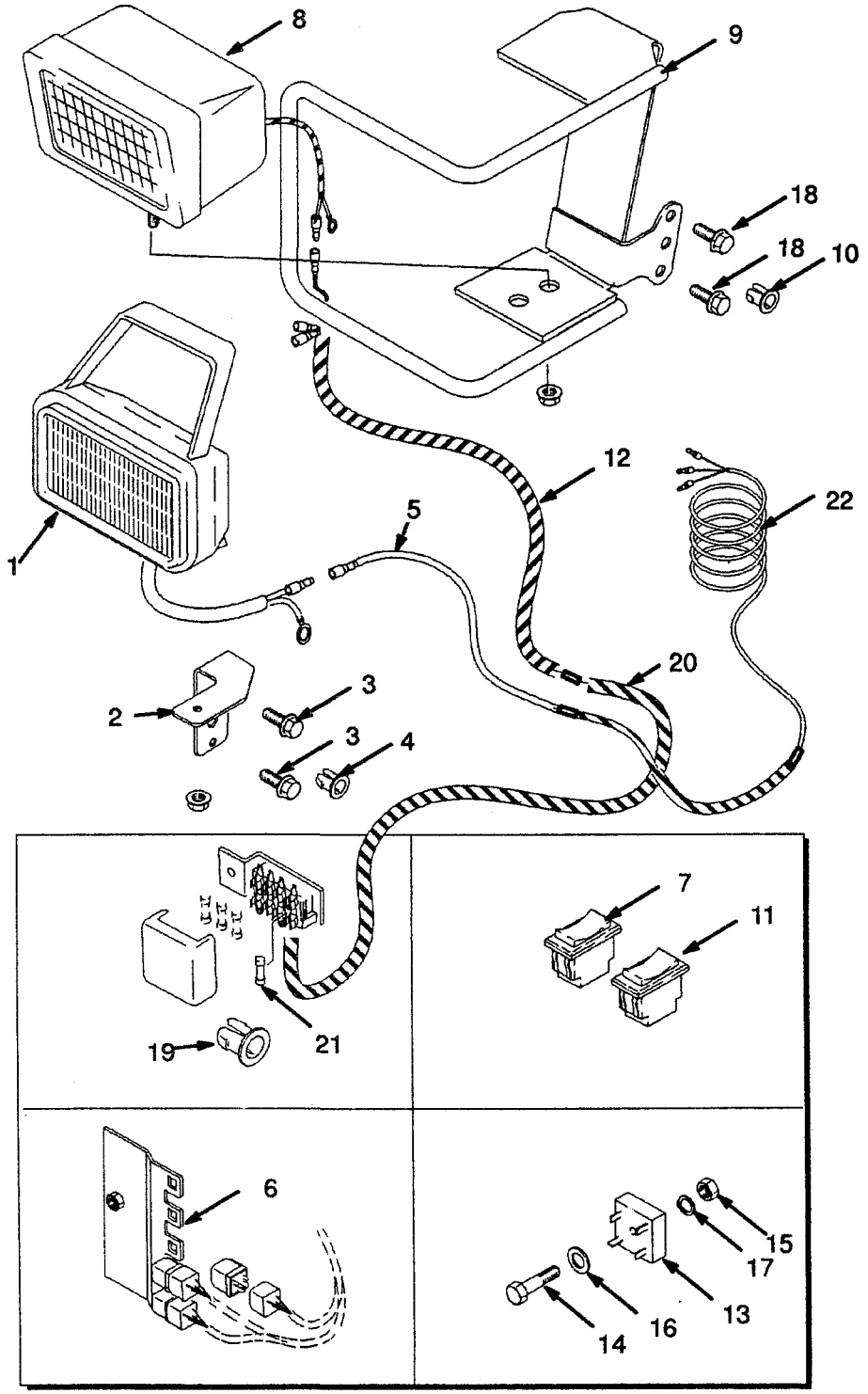

STEERING TYRE AND WHEEL

REF.	DESCRIPTION	H1.25-1.75XM	H2.00XM	ALL MODELS	QTY
		5.00 -8-8 Pneumatic	5.00-8-10 Pneumatic	5.00 - 8 Solid Pneumatic Tyre	
1	Wheel	2022869	2022869	2022869	1
2	Flange	.....	.....	.....	1
3	Lockring	.....	.....	.....	1
4	Tyre and Tube	2022870	2022872	2022874	1
5	Tyre and Flap	.....	.....	-	1
6	Tube	2023833	2023827	-	1

©1996 HYSTER COMPANY

SIDELIGHT
(Figure 167)

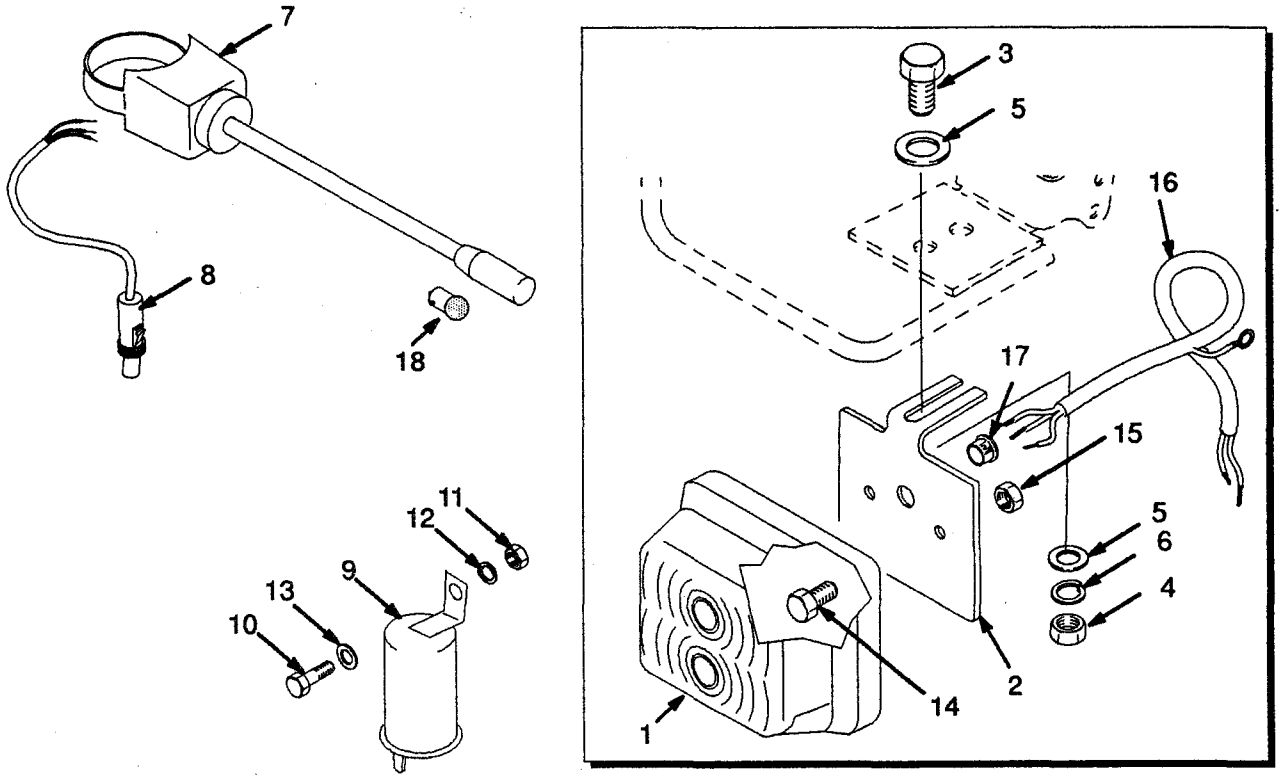

©1996 HYSTER COMPANY

DRIVE TYRE AND WHEEL

887 mm
STANDARD TRACK

REF.	DESCRIPTION	H1.25-H1.75XM	H2.00XM	ALL MODELS	QTY
		6.50-10-10 Pneumatic	6.50-10-12 Pneumatic	6.50-10 Solid Pneumatic Tyre	
1	Wheel	2021591	2021591	2021591	1
2	Band	2023489	2023489	2023489	
3	Flange	2023490	2023490	2023490	1
4	Lockring	2023491	2023491	2023491	1
5	Tyre and Tube	306015	2021578	174208	1
6	Tyre and flap	306016	1370732	-	1
7	Tube	306198	2022789	-	1

930 mm
INTERMEDIATE TRACK

REF.	DESCRIPTION	H1.25-H1.75XM	H2.00XM	H2.00XM	ALL MODELS	QTY
		6.50-10-10 Pneumatic	6.50-10-12 Pneumatic	6.50-10-12 Pneumatic (Optional)	6.50-10 Solid Pneumatic Tyre	
1	Wheel	2021846	2021846	2021846	2021846	1
2	Band	2023489	2023489	2023489	2023489	1
3	Flange	2023490	2023490	2023490	2023490	1
4	Lockring	2023491	2023491	2023491	2023491	1
5	Tyre	2022859	2022861	2021578	2022864	1
6	Tyre and flap	.....	.....	1370732	-	1
7	Tube	2023830	2023824	2022789	-	1

1060 mm
WIDE TRACK

REF.	DESCRIPTION	H1.25-1.75XM	ALL MODELS	QTY
		6.50-10-10 Pneumatic	6.50-10 Solid Pneumatic Tyre	
1	Wheel	2021839	2021839	1
2	Band	2023489	2023489	1
3	Flange	2023490	2023490	1
4	Lockring	2023491	2023491	1
5	Tyre and Tube	2022859	2022864	1
6	Tyre and flap	.....	-	1
7	Tube	2023830	-	1

©1996 HYSTER COMPANY

STEERING TYRE AND WHEEL

(Figure 166)

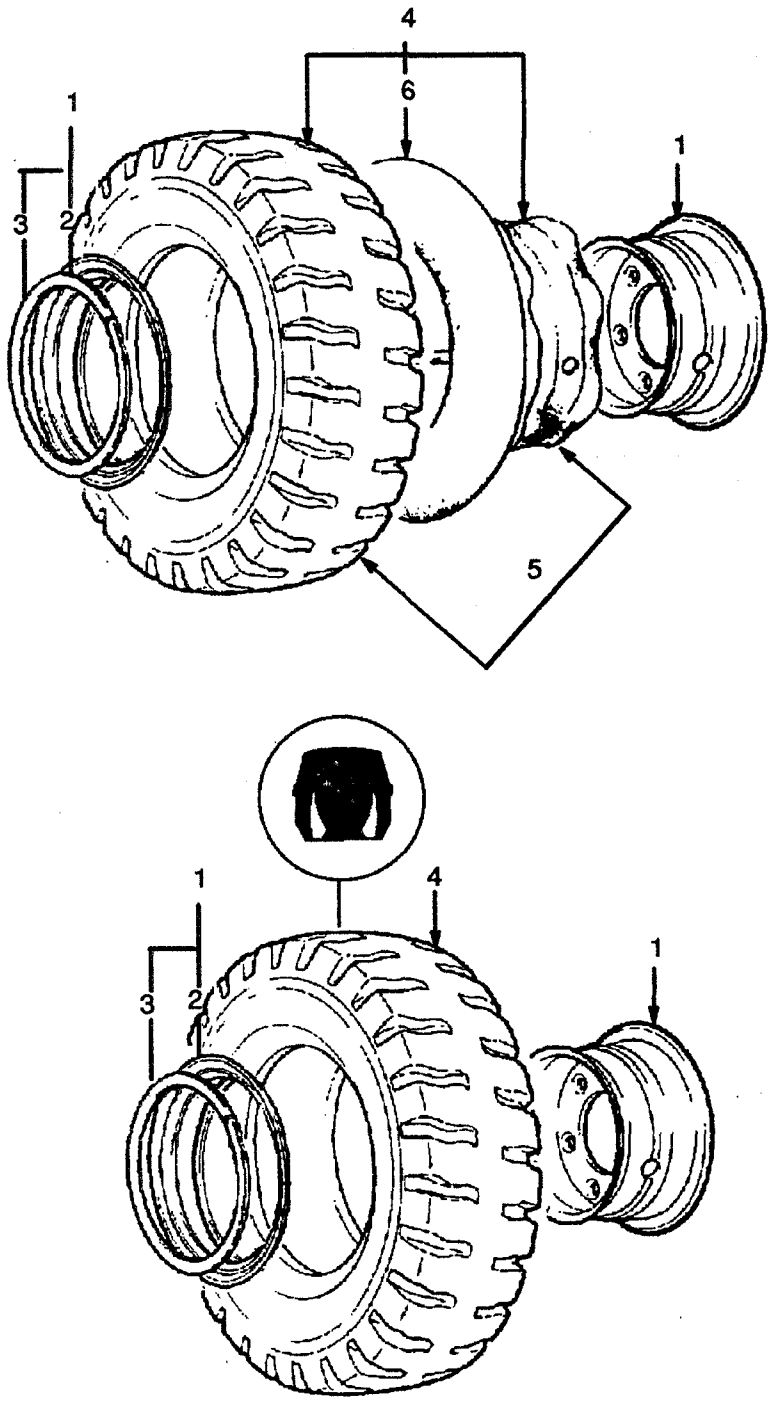

©1996 HYSTER COMPANY

DRIVE TYRE AND WHEEL
WATTS BRAND

887 mm STANDARD TRACK				
REF.	DESCRIPTION	H1.25XM	H2.00XM	QTY
		6.50-10-10 Pneumatic	6.50-10-12 Pneumatic	
1	Wheel	2022858	2022858	1
2	Flange	. . . . .	. . . . .	1
3	Lockring	. . . . .	. . . . .	1
4	Tyre and Tube	2022859	2022861	1
5	Tyre	. . . . .	. . . . .	1
6	Tube	2023830	2023824	1
7	Flap	. . . . .	. . . . .	1
8	Bridge Piece	2022862	2022862	1

887 mm STANDARD TRACK			
REF.	DESCRIPTION	All Models	QTY
		6.50-10-12 Solid Pneumatic Tyre	
1	Wheel	2022858	1
2	Flange	. . . . .	1
3	Lockring	. . . . .	1
9	Solid Pneumatic Tyre	2022864	1

©1996 HYSTER COMPANY

DRIVE TYRE AND WHEEL

(Figure 165)

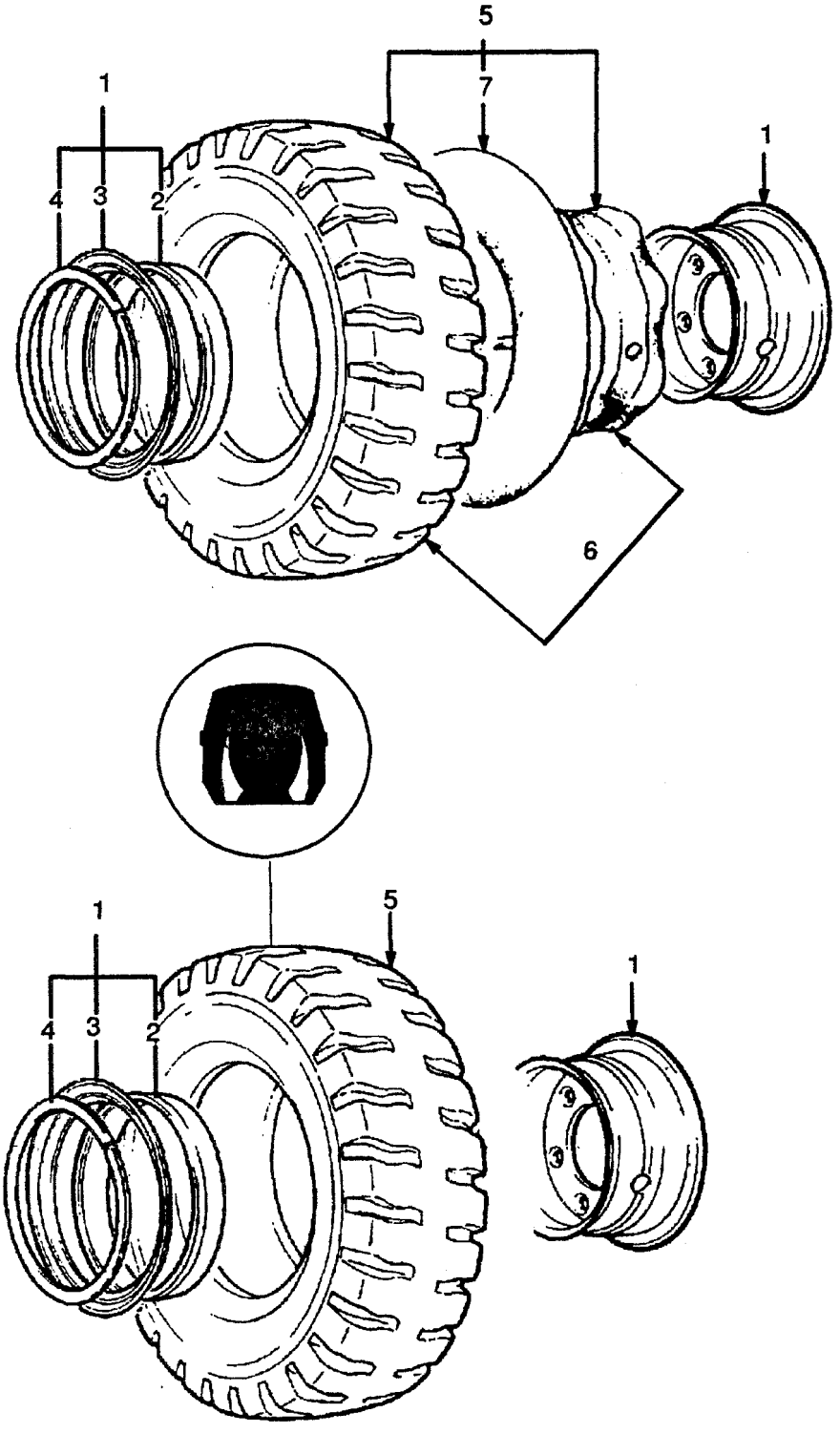

©1996 HYSTER COMPANY

LIFTING EYES

REF	PART NO.	NAME OF PART	QTY
1	2022828	Plate	2
2	2022902	Plate	2
3	293629	Bolt	8
4	293631	Bolt	8
5	292682	Lockwasher	16
6	296420	Washer	16
7	316448	Label	4

©1996 HYSTER COMPANY

DRIVE TYRE AND WHEEL
WATTS BRAND

(Figure 164)

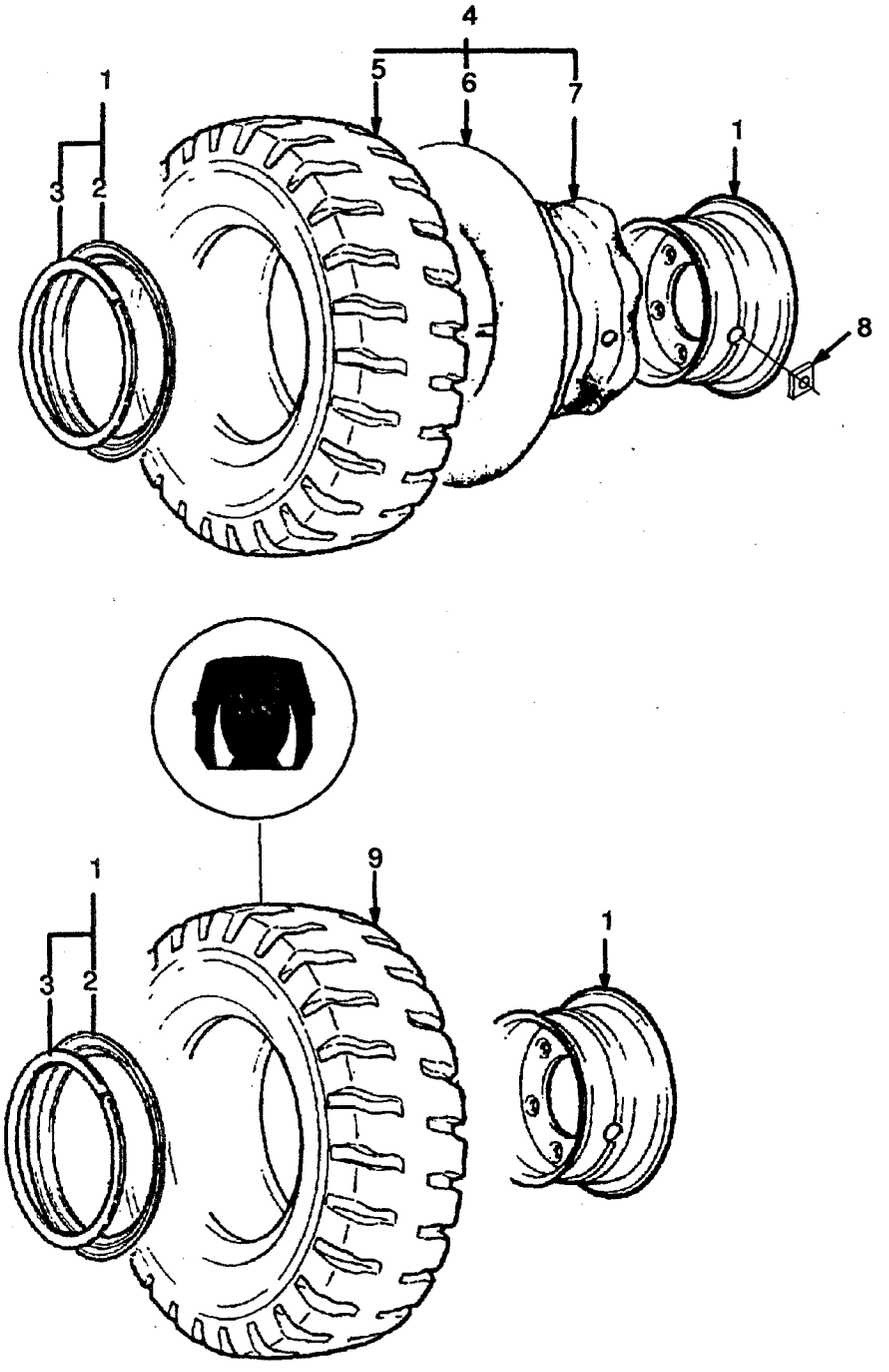

FENDER

KEY
A: 930 mm Track (Left Hand)
B: 930 mm Track (Right Hand)
C: 1060 mm Track (Left Hand)
D: 1060 mm Track (Right Hand)

REF	PART NO.	NAME OF PART	QTY A	B	C	D
1	2021869	Fender	1	..	..	..
1	2021870	Fender	..	1	..	..
2	2021871	Fender	1	..	..	..
2	2021872	Fender	..	1	..	..
3	2021873	Fender	..	..	1	..
3	2021874	Fender	..	..	..	1
4	2021875	Fender	..	..	1	..
4	2021876	Fender	..	..	..	1
5	1347144	Bar	5	5	5	5
6	136985	Hex Head Bolt	5	5	5	5
7	292682	Lockwasher	5	5	5	5

©1996 HYSTER COMPANY

LIFTING EYES

(Figure 163)

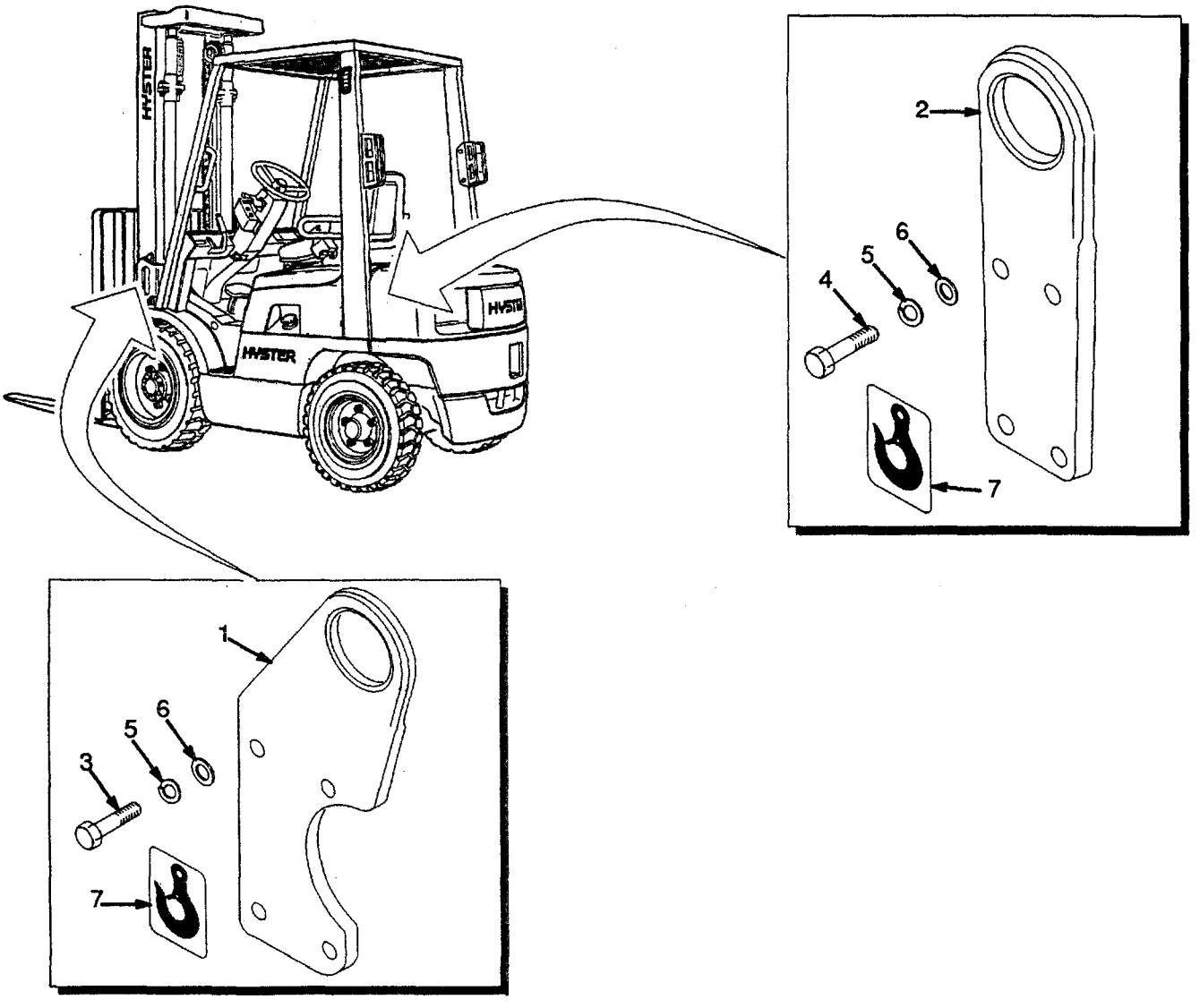

©1996 HYSTER COMPANY

SIDESHIFT CYLINDER

REF		PART NO.	NAME OF PART	QTY
		8601301	Group No.	..
		1360125	Cylinder	1
1		2311471	Shell	1
2		2309719	Rod	1
3		2306755	Piston Seal	1
4	a	55407	O-Ring	2
5	a	153919	Back-Up Ring	2
6	a	294643	Seal	2
7	a	636851	Wiper Ring	2
8		2310768	Gland	2
8		383789	Sealant	AR

a Included In Seal Kit 2311624

©1996 HYSTER COMPANY

FENDER

(Figure 162)

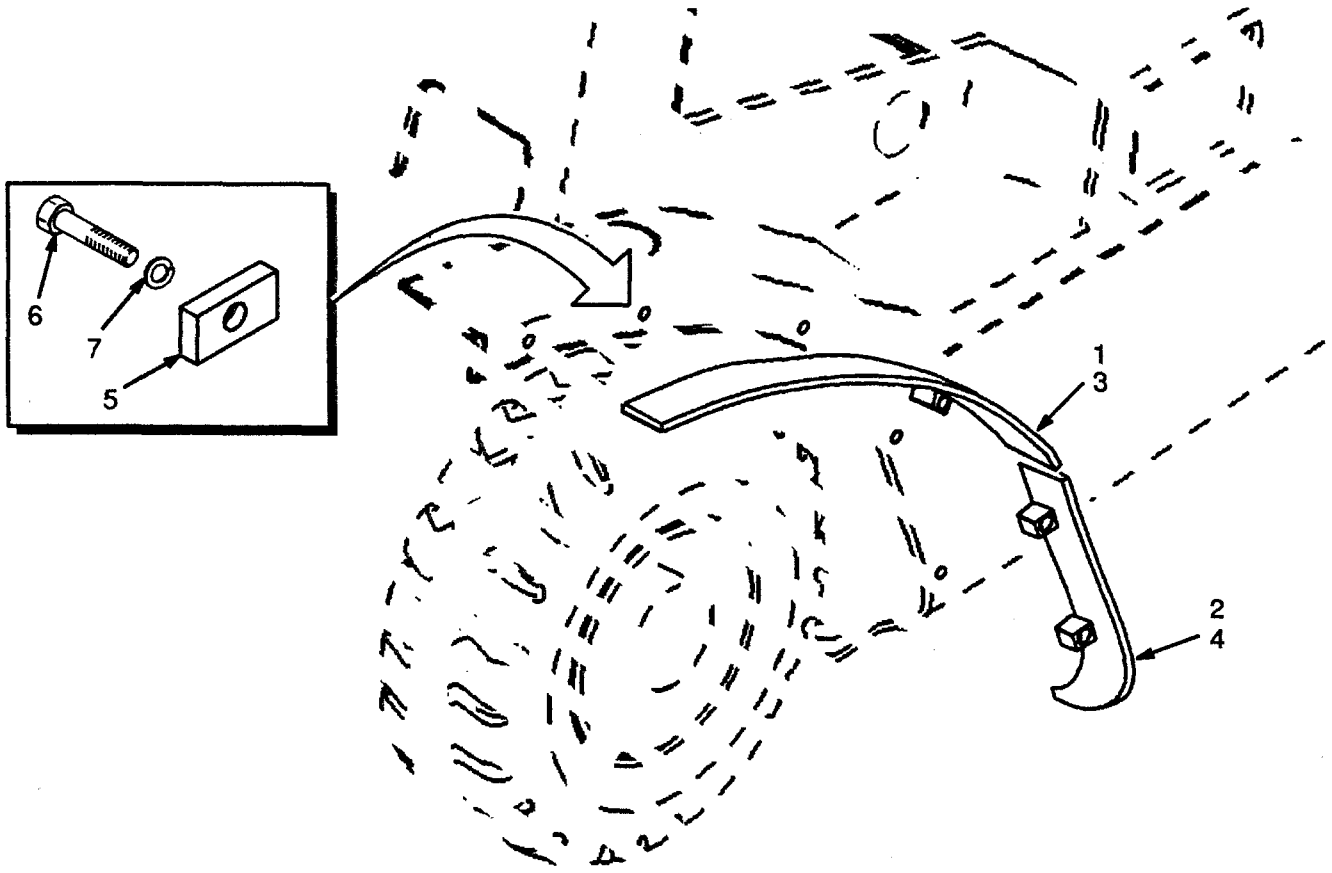

©1996 HYSTER COMPANY

SIDESHIFT CARRIAGE

REF		PART NO.	NAME OF PART	QTY
		1360271	Sideshift Carriage	1
1		1355533	Frame (Top)	1
2	c	1355535	Frame (Bottom)	1
2	d	1378053	Frame (Bottom)	1
3		1355516	Support	1
4		1355538	Bearing	1
5		1355537	Bearing	1
6		....	Cylinder	1
			☞ Figure 161	
7		293704	Hex Head Bolt	4
8		296431	Washer	4
9		1371289	Screw	2
10		239784	Fitting	2
10		16481	O-Ring	1
11		313828	Locknut	2

REF		PART NO.	NAME OF PART	QTY
12		16041	Grease Fitting	3
13		1358821	Shim	AR
14		1360245	Nameplate	1
15	a	1360275	Tube	1
16	a	1360276	Tube	1
17	b	1360261	Tube	1
18	b	1360262	Tube	1
19		16600	Screw	4
19		34044	Gripnail (Optional)	4
20		1358809	Rod (Optional)	1
21		313828	Nut (Optional)	2

a Two-Stage LFL
b Two-Stage FFL And Three-Stage FFL
c Last Used on S/N B601B-11719
d First Used on S/N B601B-11720

©1996 HYSTER COMPANY

SIDESHIFT CYLINDER

(Figure 161)

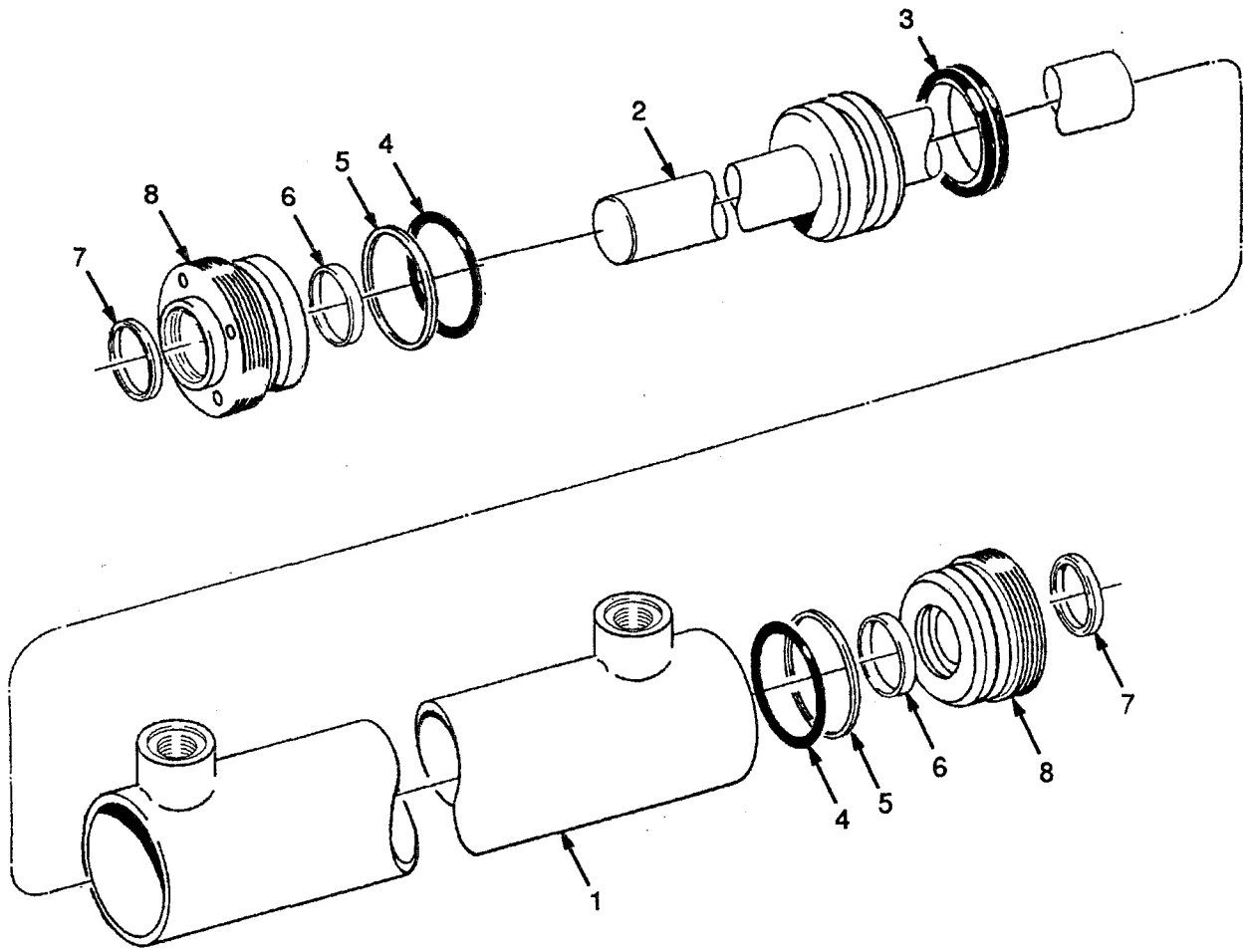

©1996 HYSTER COMPANY

OPTIONAL

Auxiliary Function Tube
Two-Stage FFL and Three-Stage FFL ..... Page 374

Auxiliary Function Tube
Two-Stage LFL ..... Page 372

Backup Alarm ..... Page 370

Drive, Rear Lights and Spotlight ..... Page 358

Drive Tyre and Wheel
Watts ..... Page 350

Drive Tyre and Wheel ..... Page 352

Fender ..... Page 346

Fire Extinguisher ..... Page 366

Harness
Tail Light ..... Page 364

Lifting Eyes ..... Page 348

Mirror ..... Page 368

Sidelight ..... Page 356

Sideshift Carriage ..... Page 342

Sideshift Cylinder ..... Page 344

Steering Tyre and Wheel ..... Page 354

Strobe Light ..... Page 360

Tail Light ..... Page 362

©1996 HYSTER COMPANY

SIDESHIFT CARRIAGE

(Figure 160)

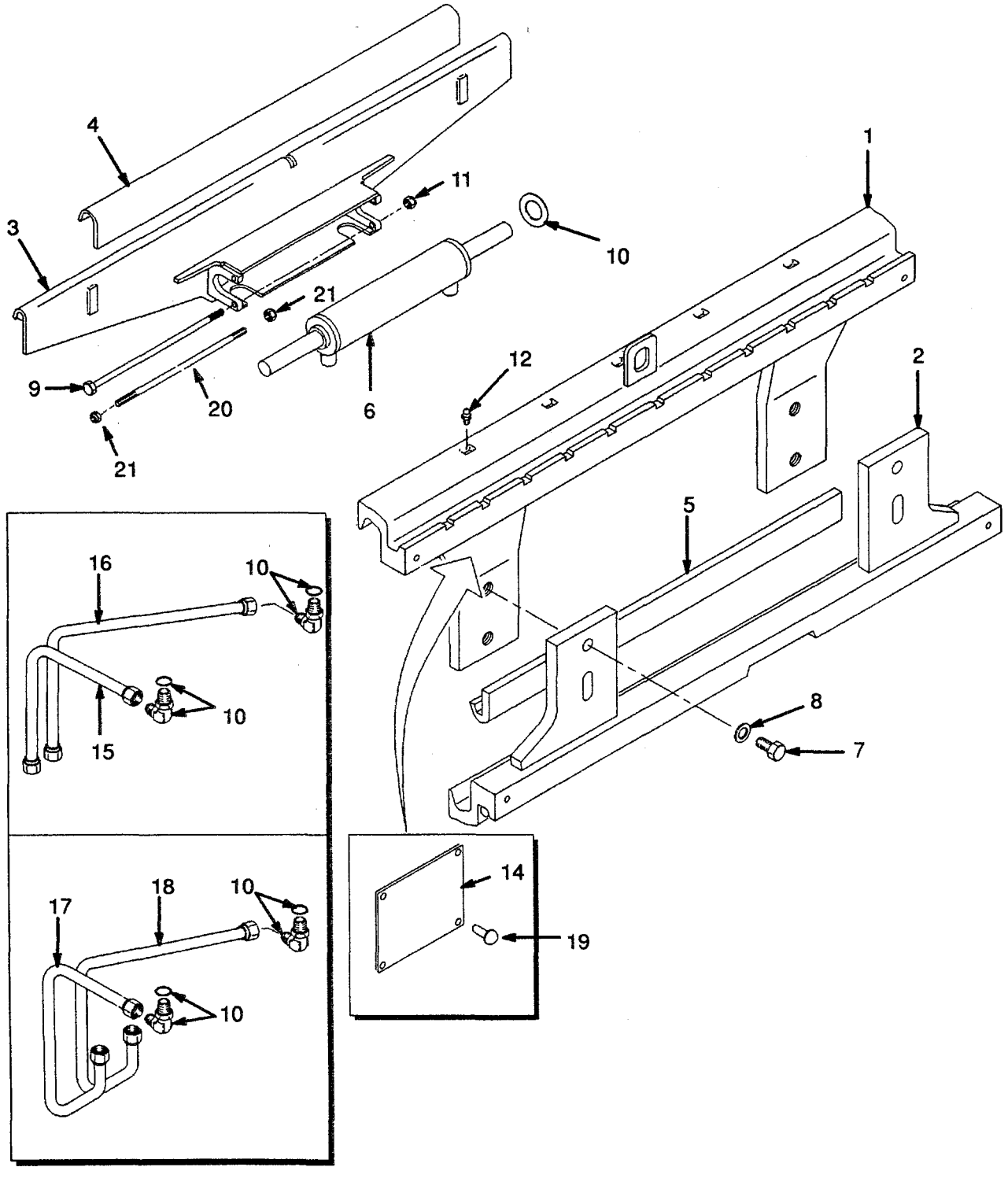

FORK

TWO-STAGE FFL

REF NO.	NAME OF PART 1 2 3 4	STANDARD TAPER		FULL BOTTOM TAPER	QTY
		PART NO.			
1	Fork	40 mm x 80 mm	40 mm x 100 mm	40 mm x 100 mm	2
	762 mm		1350344		
	900 mm	1338128	1352326		
	914 mm	1350337	1350345	1352332	
	1000 mm	1350341	1352327		
	1067 mm	1350338	1350347	1352333	
	1100 mm	1350342	1352328		
	1150 mm	1338130	1352330		
	1200 mm	1350343	1352329		
	1219 mm	1350339	1350348	1352334	
	1372 mm	1350340	1350349		
	1524 mm		1352325		
2	Latch	369795	369795	369795	1

NOTE: OTHER FORK DIMENSIONS AVAILABLE ON REQUEST, CONTACT YOUR HYSTER DEALER.

©1996 HYSTER COMPANY

NOTES

©1996 HYSTER COMPANY

HEADER HOSE
TWO-STAGE FFL
FOUR FUNCTION

REF NO.	NAME OF PART 1 2 3 4	LIFT HEIGHT TO BOTTOM OF FORKS		
		3048 mm	3248 mm	3848 mm
		PART NO.		
	Mast Group No.	A554-3048	A554-3248	A554-3848
1	Channel	1365501	1365304	1365510
2	Channel	1365514	1365516	1365523
3	Hose	1376110	1376112	1376118
22	Tube	1368546	1368548	1368554
23	Tube	1368576	1368578	1368584
24	Hose	1376148	1376150	1376156

REF		PART NO.	NAME OF PART	QTY
	a	....	Mast Assy	..
1	a	....	Channel	1
2	a	....	Channel	1
3	a	....	Hose	4
4		1375574	Strap	4
5		1360386	Clamp	2
6		1360507	Clamp	8
7		1360508	Clamp	4
8		1365061	Clamp	1
9		14692	Fitting	2
10		1360386	Clamp	4
11		1345423	Bracket	2
12		1354918	Bracket	1
13		296001	Hex Head Bolt	4
14		1369323	Bracket	1
15		1369333	Clamp	2
16		136749	Hex Head Bolt	8
17		313828	Nut	8
18		1345199	Hose Guide	4
19		1345204	Circlip	4
20		2004005	Strap Clamp	2
21		293796	Hex Head Bolt	2

REF		PART NO.	NAME OF PART	QTY
22	a	....	Tube	1
23	a	....	Tube	1
24	a	....	Hose	2
25		17222	Fitting	2
25		16483	O-Ring	2
26		1377371	Hose	1
27		1377372	Hose	1
28		137852	Strap Clamp	4
29		239503	Nut	1
30		292681	Washer	1
31		320157	Washer	1
32		292681	Washer	1
33		292508	Hex Head Bolt	1
34		1377373	Hose	1
35		1377374	Hose	1
36		101625	Clamp	2
37		16558	Fitting	2
37		16483	O-Ring	2
38		2022830	Clamp	1
39		239503	Nut	3
40		1353530	Clamp	8

a ☞ Table

©1996 HYSTER COMPANY

FORK

TWO-STAGE FFL

(Figure 159)

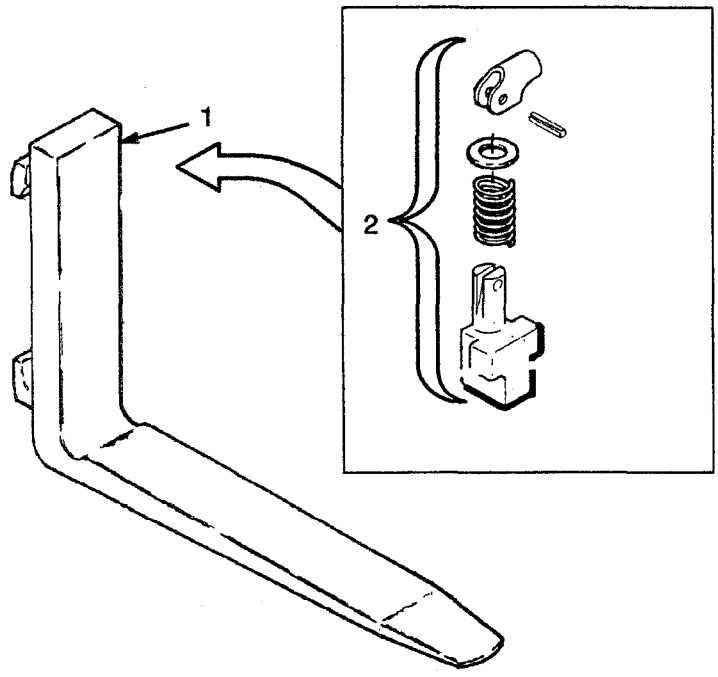

©1996 HYSTER COMPANY

HEADER HOSE
TWO-STAGE FFL
THREE FUNCTION

REF NO.	NAME OF PART 1 2 3 4	LIFT HEIGHT TO BOTTOM OF FORKS		
		3048 mm	3248 mm	3848 mm
		PART NO.		
	Mast Group No.	A554-3048	A554-3248	A554-3848
1	Channel	1365501	1365504	1365510
2	Channel	1365514	1365516	1365523
3	Hose	1376110	1376112	1376118
21	Tube	1368546	1368548	1368554
22	Tube	1368576	1368578	1368584

REF		PART NO.	NAME OF PART	QTY
	a	....	Mast Assy	..
1	a	....	Channel	1
2	a	....	Channel	1
3	a	....	Hose	2
4		1375574	Strap	2
5		1360386	Clamp	1
6		1360507	Clamp	2
7		1360508	Clamp	4
8		1365061	Clip	1
9		14692	Fitting	2
10		1360386	Clamp	2
11		1345423	Bracket	2
12		1354918	Bracket	1
13		293796	Hex Head Bolt	6
14		1369323	Bracket	1
15		1369333	Clamp	1
16		136749	Hex Head Bolt	6
17		313828	Nut	6
18		1345199	Hose Guide	2
19		1345204	Circlip	2
20		2004005	Strap Clamp	1
21	a	....	Tube	1
22	a	....	Tube	1
23		1353530	Clamp	5
24		1360507	Clamp	3
25		17222	Fitting	1
25		16483	O-Ring	1
26		1377371	Hose	1
27		1377372	Hose	1
28		137852	Strap Clamp	2
29		16558	Fitting	1
29		16483	O-Ring	1
30		2022830	Clamp	1
31		239503	Nut	3
32		292681	Washer	1

a ☞ Table

©1996 HYSTER COMPANY

HEADER HOSE
TWO-STAGE FFL
FOUR FUNCTION
(Figure 158)

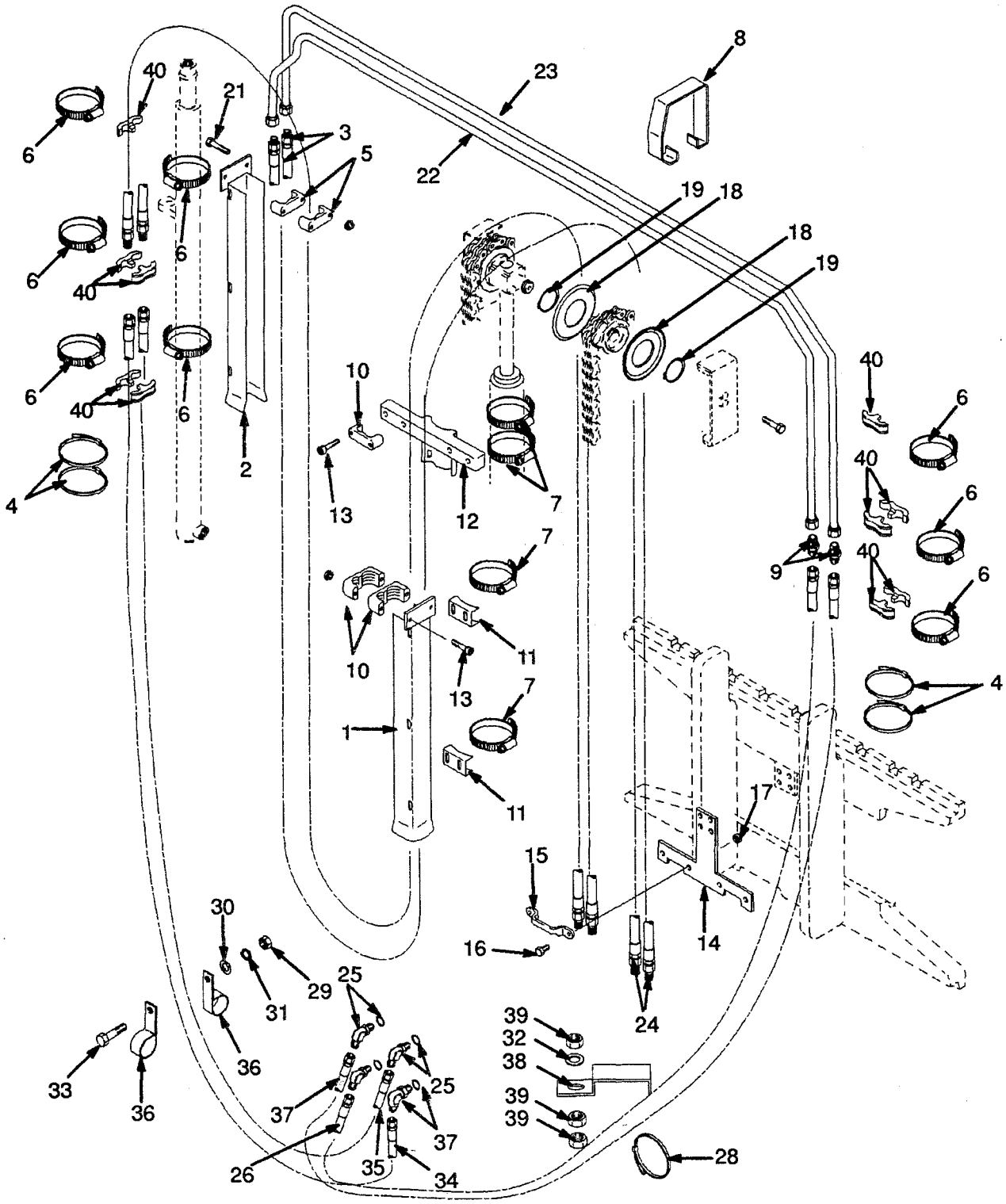

MAST INSTALLATION
TWO–STAGE FFL

REF	PART NO.	NAME OF PART	QTY
1	1363260	Rod End (RH)	1
2	1363261	Rod End (LH)	1
3	292531	Hex Head Bolt	6
4	292683	Lockwasher	6
5	216877	Nut	2
6	16001	Grease Fitting	2
7	292514	Hex Head Bolt	2
8	1371287	Washer	2
9	1348185	Bush	2
10	1348188	Pin	2
11	1370721	Bush	2
12	1370722	Cap	2
13	308117	Pin	2
14	300982	Bush	2
15	320177	Washer	2
16	1371655	Split Pin	2
17	....	Tilt Cylinder ☞ Figure 118	2
18	292682	Lockwasher	2

©1996 HYSTER COMPANY

HEADER HOSE
TWO-STAGE FFL
THREE FUNCTION
(Figure 157)

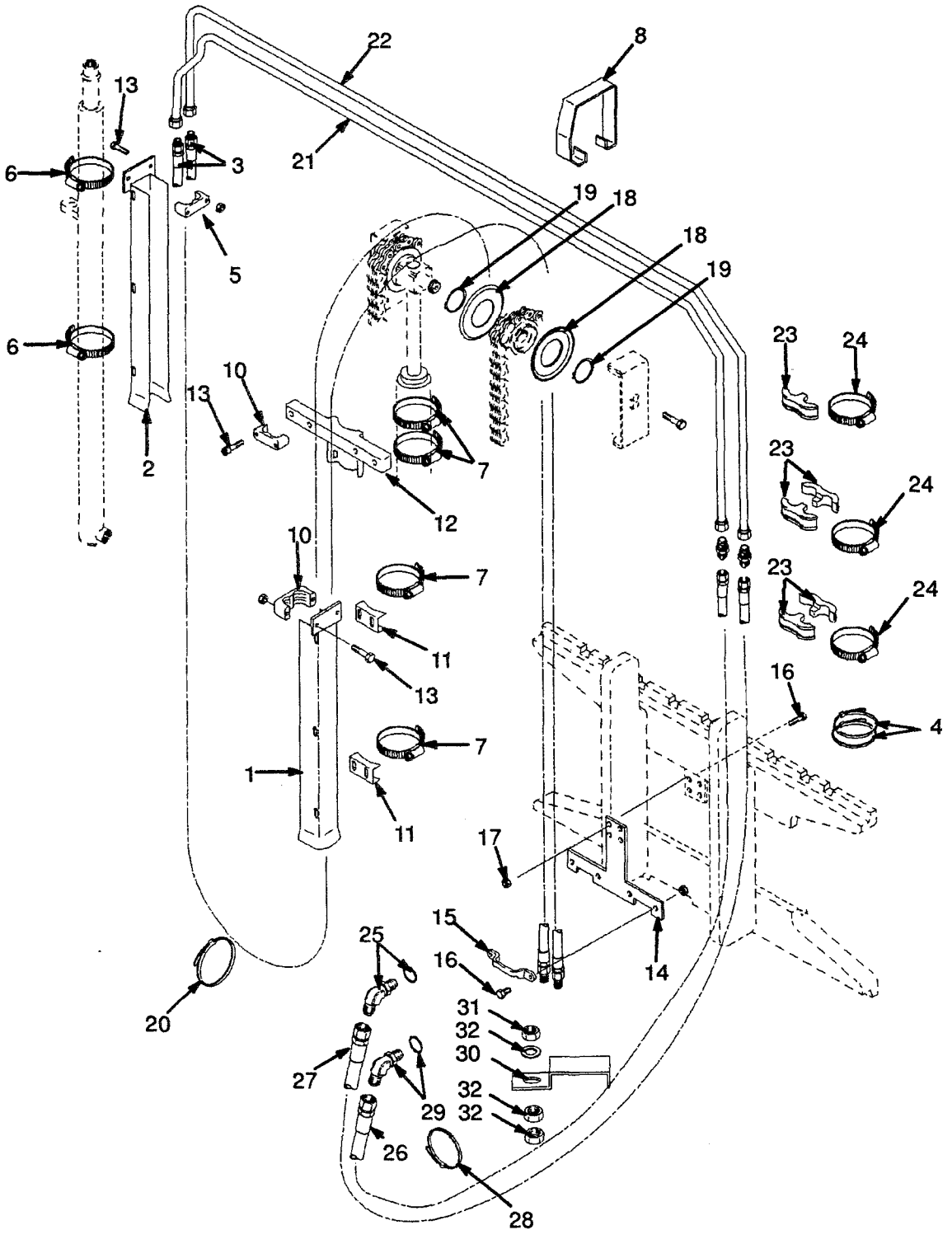

LOAD BACKREST EXTENSION
TWO-STAGE FFL

REF	PART NO.	NAME OF PART	QTY
1	1349446	Load Backrest Extension	1
2	1353533	Hex Head Bolt	4
3	221771	Washer	4
3	296423	Washer (Optional)	4
4	300937	Nut	4

©1996 HYSTER COMPANY

MAST INSTALLATION

TWO-STAGE FFL

(Figure 156)

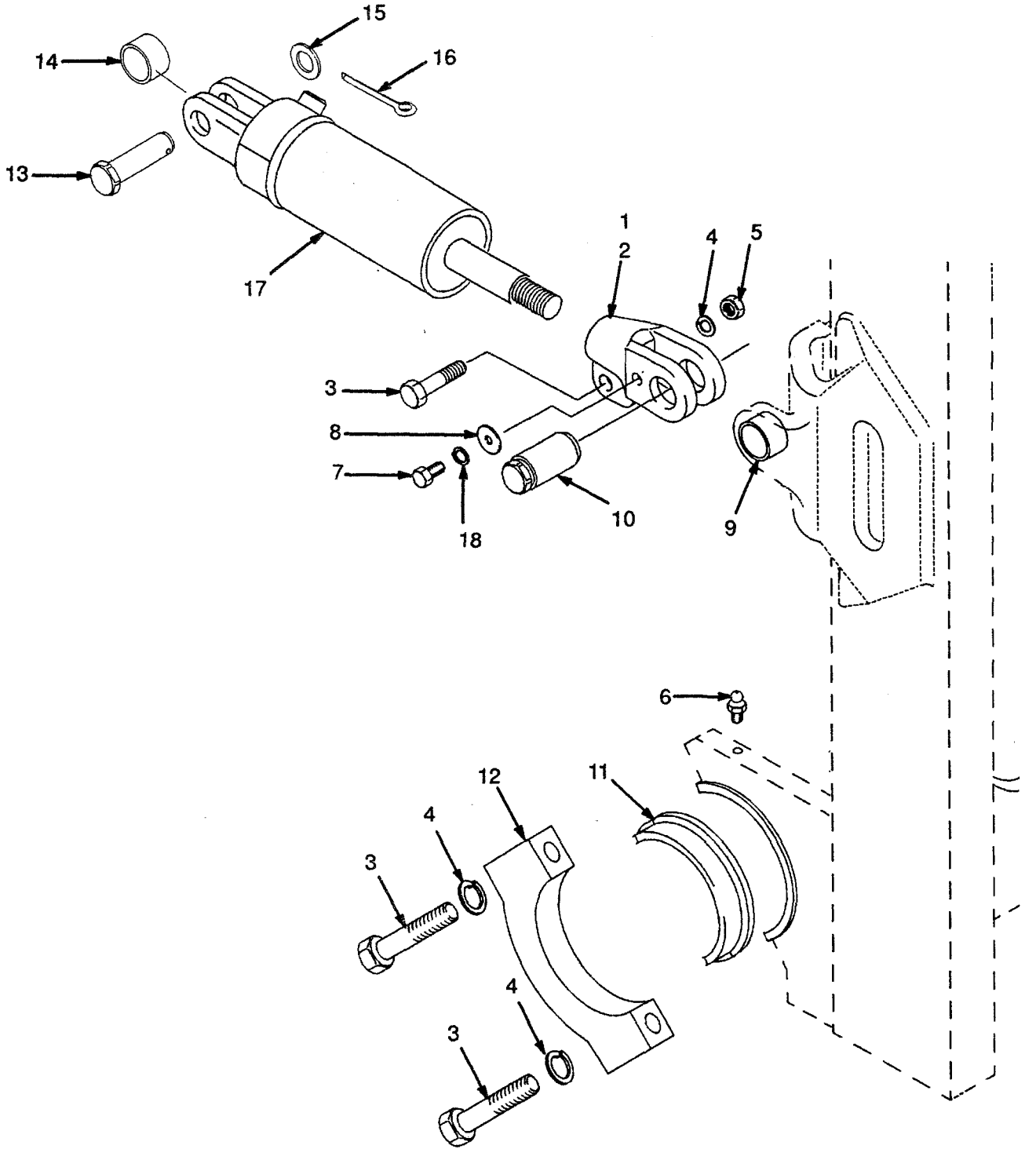

CARRIAGE
TWO-STAGE FFL

REF	PART NO.	NAME OF PART	QTY
	1353529	Carriage	1
1	1353469	Frame	1
2	1345216	Stubshaft	6
3	58901	Circlip	6
4	129387	Shim	AR
5	366115	Spacer	2
6	1353191	Load Roller ("A" Standard)	6
6	1353192	Load Roller ("B" 0,76 mm)	AR
6	1353193	Load Roller ("C" 1,52 mm)	AR
7	1369345	Chain Anchor	2
8	1353408	Pin	2
9	131358	Circlip	4
10	323161	Pin	2
11	15200	Split Pin	2

©1996 HYSTER COMPANY

LOAD BACKREST EXTENSION

TWO-STAGE FFL

(Figure 155)

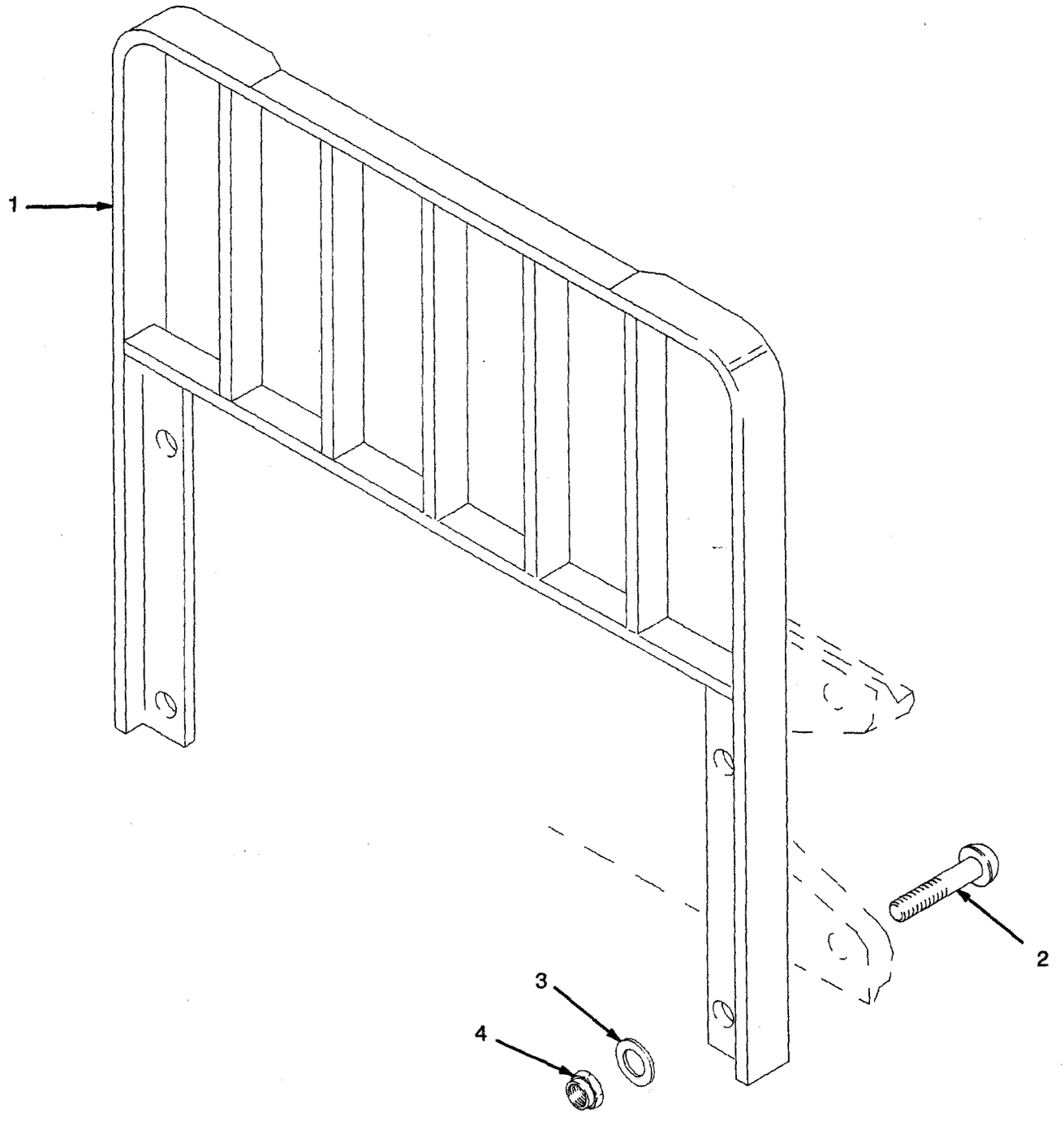

©1996 HYSTER COMPANY

FREE-LIFT CYLINDER
TWO-STAGE FFL

REF NO.	NAME OF PART 1 2 3 4	LIFT HEIGHT TO BOTTOM OF FORKS		
		3048 mm	3248 mm	3848 mm
		PART NO.		
	Group No.	8601906	8601908	8601914
	Lift Cylinder	1362886	1362888	1362894
1	Shell	1362923	1362925	1362931
2	Rod	1362960	1362962	1362968

REF		PART NO.	NAME OF PART	QTY
	a	....	Group No.	..
	a	....	Cylinder	1
1	a	....	Shell	1
2	a	....	Rod	1
3	b	2013099	Wiper	1
4	b	1358970	Seal	1
5		1362880	Gland	1
6	b	615135	Back-Up Ring	1
7	b	55146	O-Ring	1
8	b	638250	Back-Up Ring	1
9	b	201829	Seal	1
10	b	1362881	Wear Ring	1
11		257913	Check Valve	1
12	b	39348	O-Ring	1
13		297531	Washer	1
14		187388	Circlip	1
15		1361302	Screw	1
16	b	190887	Washer	1
17		186061	Packing Lube	AR

a ☞ Table
b Included In Seal Kit 1360141

©1996 HYSTER COMPANY

CARRIAGE

TWO-STAGE FFL

(Figure 154)

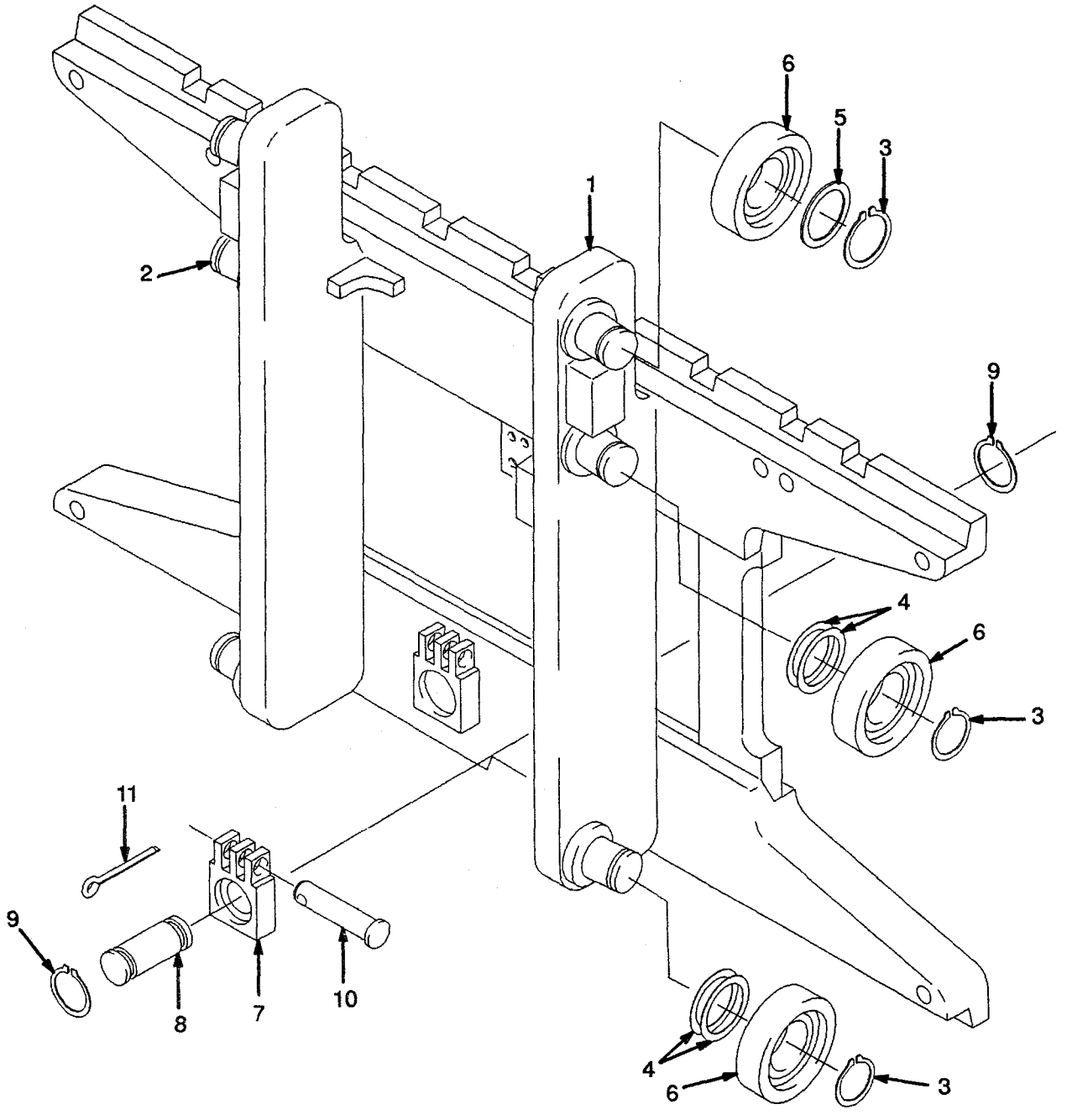

MAIN CYLINDER
TWO-STAGE FFL
RIGHT HAND

REF NO.	NAME OF PART 1 2 3 4	LIFT HEIGHT TO BOTTOM OF FORKS		
		3048 mm	3248 mm	3848 mm
		PART NO.		
	Group No.	8601806	8601808	8601814
	Lift Cylinder	1362997	1362999	1365555
1	Shell	1365605	1365607	1365613
2	Rod	1365635	1365637	1365643

REF		PART NO.	NAME OF PART	QTY
	a	....	Group No.	..
	a	....	Lift Cylinder	1
1	a	....	Shell	1
2	a	....	Rod	1
3	b	1310369	Wiper	1
4	b	1371654	Seal	1
5		1365689	Gland	1
6	b	132834	Back-Up Ring	1
7	b	55407	O-Ring	1
8	b	1362871	Wear Ring	1
9		190887	Sealing Washer	1
10		295649	Screw	1
11		186061	Packing Lube	AR

a ☞ Table
b Included In Seal Kit 1360138

©1996 HYSTER COMPANY

FREE-LIFT CYLINDER
TWO-STAGE FFL
(Figure 153)

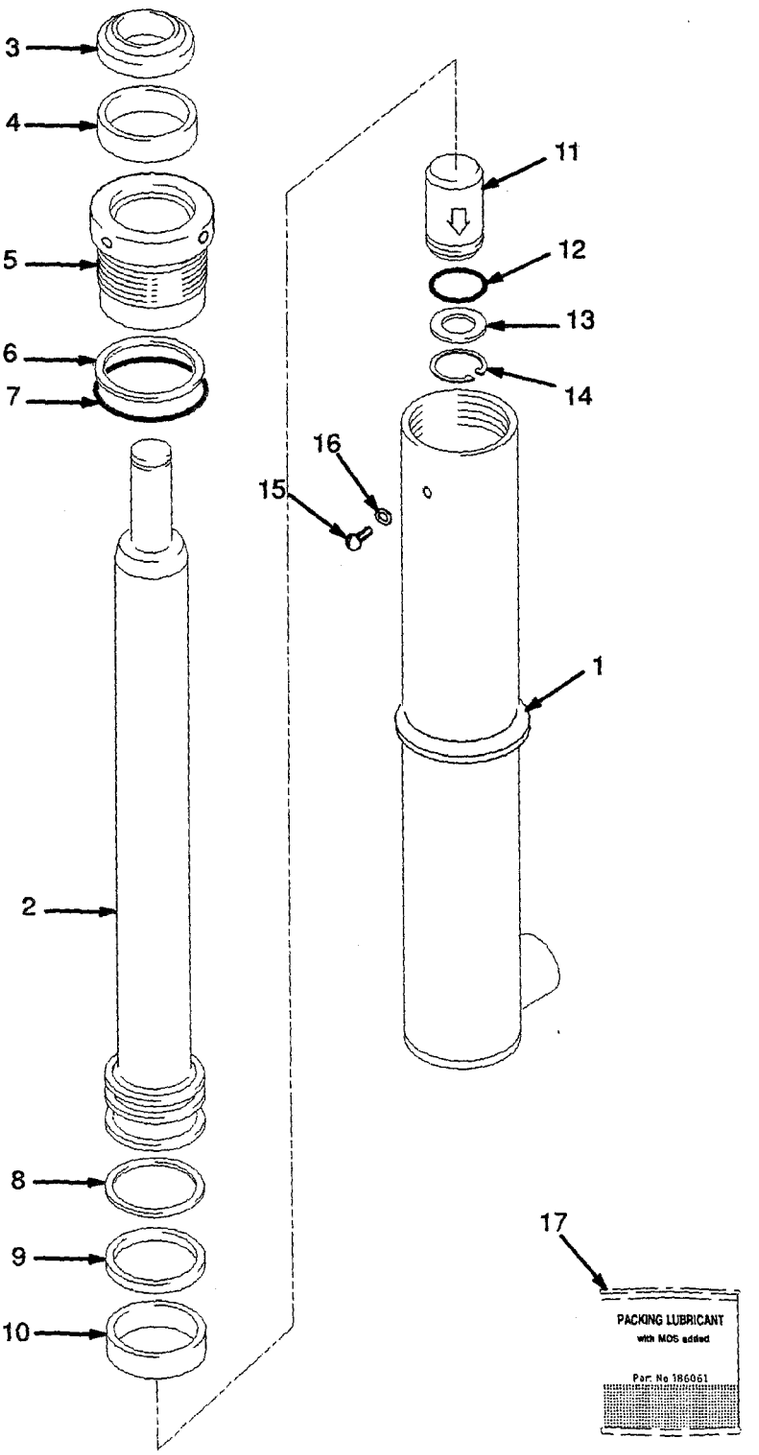

©1996 HYSTER COMPANY

MAIN CYLINDER
TWO-STAGE FFL
LEFT HAND

REF NO.	NAME OF PART 1 2 3 4	LIFT HEIGHT TO BOTTOM OF FORKS		
		3048 mm	3248 mm	3848 mm
		PART NO.		
	Group No.	8601856	8601858	8601864
	Lift Cylinder	1365576	1365578	1365584
1	Shell	1365605	1365607	1365613
2	Rod	1365664	1365658	1365672

REF		PART NO.	NAME OF PART	QTY
	a	....	Group No.	..
	a	....	Lift Cylinder	1
1	a	....	Shell	1
2	a	....	Rod	1
3	b	1310369	Wiper	1
4	b	1371654	Seal	1
5		1365689	Gland	1
6	b	132834	Back-Up Ring	1
7	b	55407	O-Ring	1
8	b	1374802	Wear Ring	1
9	b	1362875	Piston Ring	1
10		295649	Screw	1
11		190887	Sealing Washer	1
12		186061	Packing Lube	AR

a ☞ Table
b Included In Seal Kit 1360138

©1996 HYSTER COMPANY

MAIN CYLINDER
TWO-STAGE FFL
RIGHT HAND
(Figure 152)

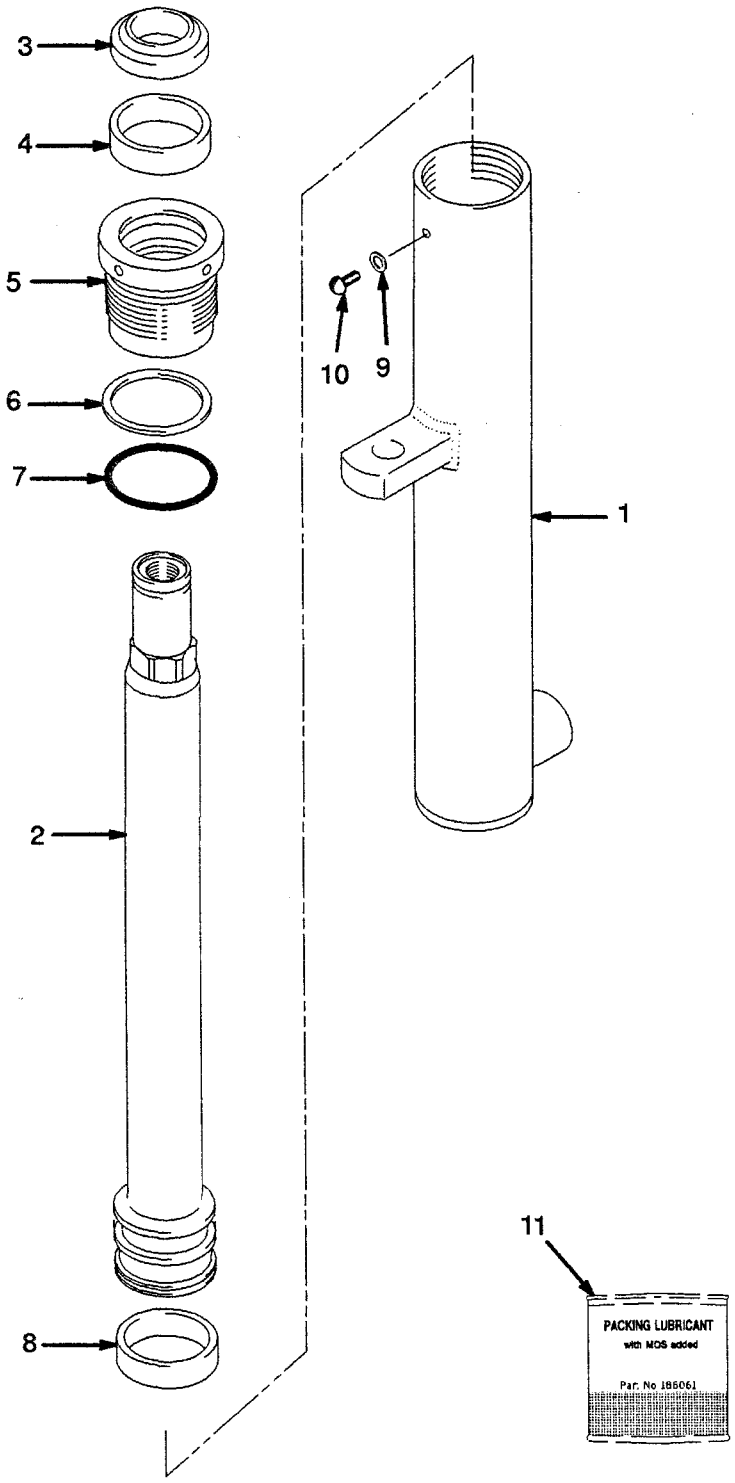

FREE-LIFT
TWO-STAGE FFL

REF NO.	NAME OF PART 1 2 3 4	LIFT HEIGHT TO BOTTOM OF FORKS		
		3048 mm	3248 mm	3848 mm
		PART NO.		
	Mast Group No.	A554-3048	A554-3248	A554-3848
1	Chain	197345	231084	182343
2	Hose	1365306	1365308	1365314

REF		PART NO.	NAME OF PART	QTY
	a	....	Mast Assy	1
1	a	....	Chain	2
2	a	....	Hose	1
3		161003	Nut	2
4		297649	Ring	2
5		323161	Pin	2
6		15200	Split Pin	2
7	b	320313	Chain Anchor	2
7	c	1369357	Chain Anchor	2
8		1360544	Chain Guard	2
9		292527	Hex Head Bolt	2
10		292683	Washer	2
11		1353546	Guard	1
12		302461	Pin	2
13		1344323	Bracket	1
14		287837	Hex Head Bolt	4
15		320161	Washer	6
16		300937	Nut	4
17		1333243	Flow Valve	1
17		16485	O-Ring	1
18		1337905	Crosshead	1
19		320158	Washer	2
20		292681	Lockwasher	2
21		132861	Hex Head Bolt	2
22		178119	Clamp	1
23		239503	Nut	2
24		17197	Fitting	1
24		16484	O-Ring	1
25		16882	Fitting	1
26		304526	Circlip	2
27		1354912	Sheave	2
28		37752	Circlip	2
29		231020	Bearing	1
30		1354911	Roller	1
31		....	Free-Lift Cylinder ☞ Figure 153	1
32		131358	Circlip	1
33		166112	Clamp	1
34		171350	Chain Lube (400 ml)	AR
35		599737	Chain Wear Scale	AR

a ☞ Table
b Last Used on S/N A558B-1584
c First Used on S/N A558B-1585

©1996 HYSTER COMPANY

MAIN CYLINDER
TWO-STAGE FEL
LEFT HAND
(Figure 151)

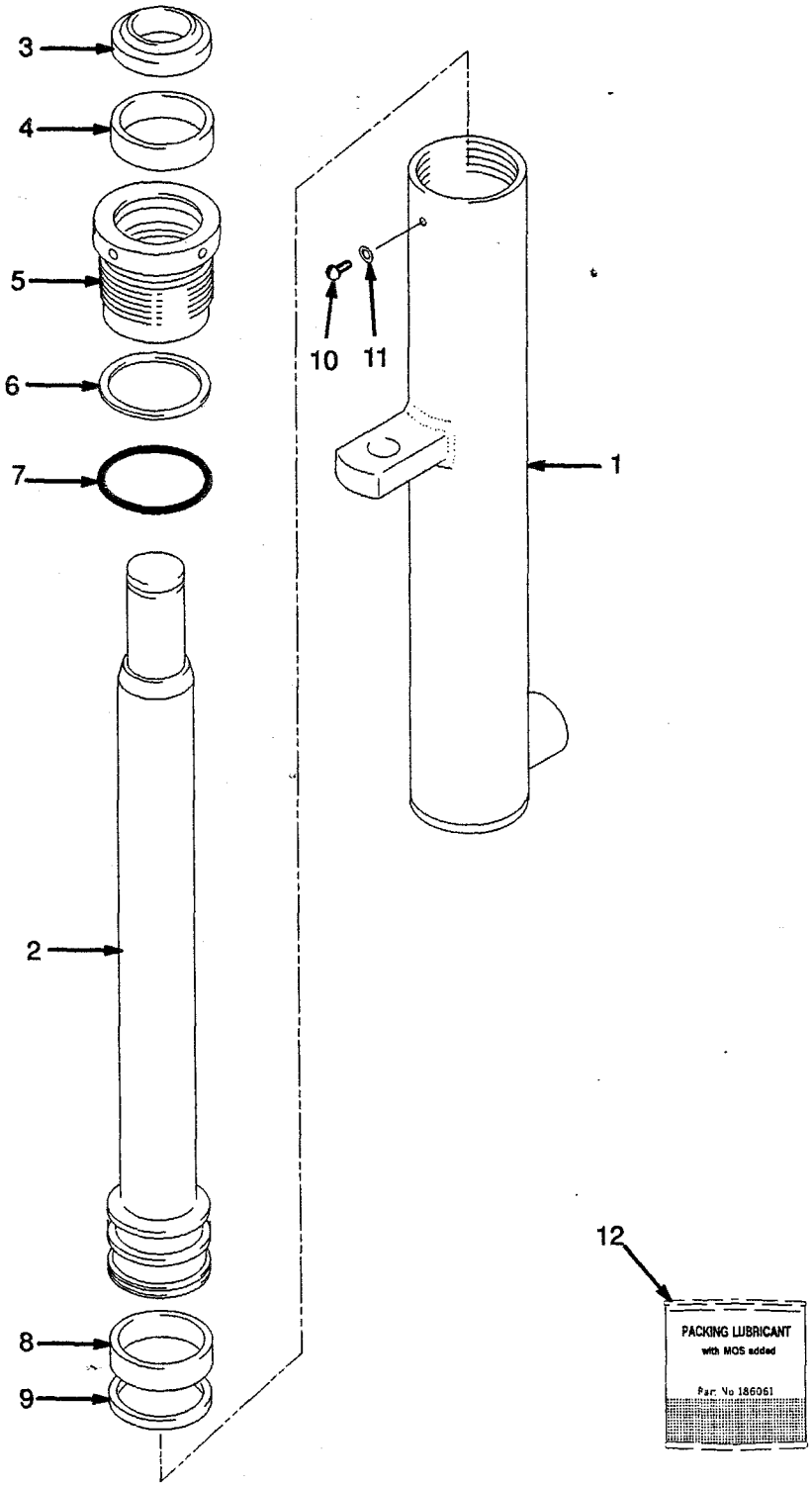

MAIN LIFT
TWO-STAGE FFL
FIRST USED ON S/N
A558B-1671

REF	PART NO.	NAME OF PART	QTY
1	....	Lift Cylinder (LH)	1
		☞ Figure 151	
2	....	Lift Cylinder (RH)	1
		☞ Figure 152	
3	292531	Hex Head Bolt	2
4	296422	Washer	4
5	323090	Spacer	2
6	300937	Nut	2
7	131358	Circlip	3
8	1333382	Washer	2
9	1354915	Washer (0,25 mm)	AR
9	1354916	Washer (0,75 mm)	AR
9	1354917	Washer (1,50 mm)	AR
10	323061	Valve	1

REF	PART NO.	NAME OF PART	QTY
11	1333392	Valve Housing	1
12	292509	Hex Head Bolt	2
13	313828	Nut	2
14	17051	Fitting	1
15	189595	Fitting	2
16	14603	Fitting	1
16	16486	O-Ring	1
17	16882	Fitting	1
18	120938	Spring	1
19	323160	Washer	1
20	1376100	Hose	2
21	16560	Fitting	1
21	16485	O-Ring	1

©1996 HYSTER COMPANY

FREE–LIFT
TWO–STAGE FFL
(Figure 150)

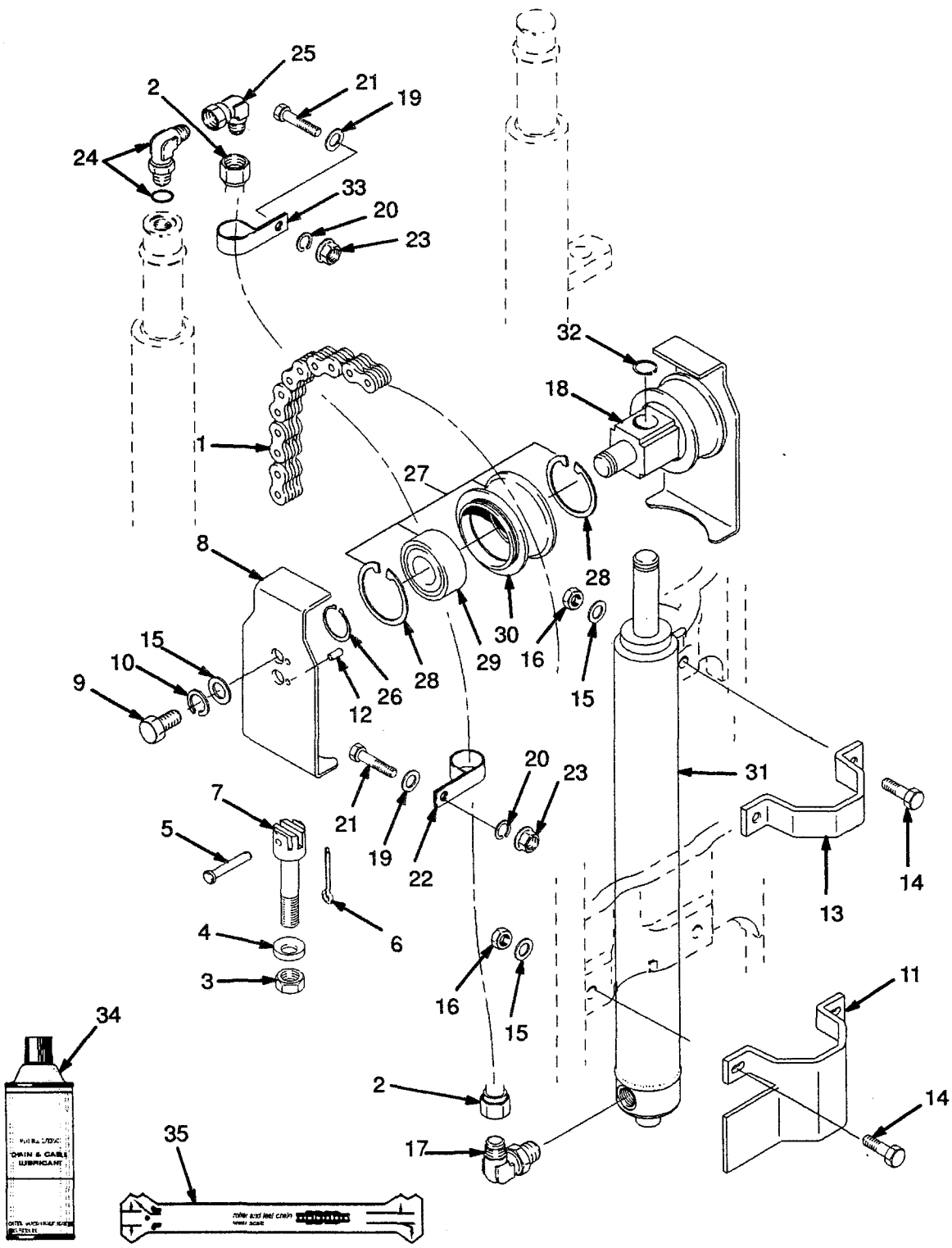

MAIN LIFT
TWO-STAGE FFL
LAST USED ON S/N
A558B-1670

REF	PART NO.	NAME OF PART	QTY
1	....	Lift Cylinder (LH)	1
		☞ Figure 151	
2	....	Lift Cylinder (RH)	1
		☞ Figure 152	
3	292531	Hex Head Bolt	2
4	296422	Washer	4
5	323090	Spacer	2
6	....	Nut	2
7	131358	Circlip	2
8	1333382	Washer	2
9	1354915	Washer (0,25 mm)	AR
9	1354916	Washer (0,75 mm)	AR
9	1354917	Washer (1,50 mm)	AR
10	323061	Valve	1
11	1333392	Valve Housing	1
12	1347202	Clamp	1
13	136704	Hex Head Bolt	2
14	313828	Nut	2
15	320157	Washer	6
16	17063	Fitting	1
17	120938	Spring	1
18	323160	Washer	1
19	189595	Fitting	2
19	16485	O-Ring	1
20	14603	Fitting	1
20	16486	O-Ring	1
21	16542	Fitting	1
21	16485	O-Ring	1
22	1353534	Hose	1
23	1353535	Hose	1
24	16882	Fitting	1

©1996 HYSTER COMPANY

MAIN LIFT

TWO-STAGE FFL

FIRST USED ON S/N A558B-1671

(Figure 149)

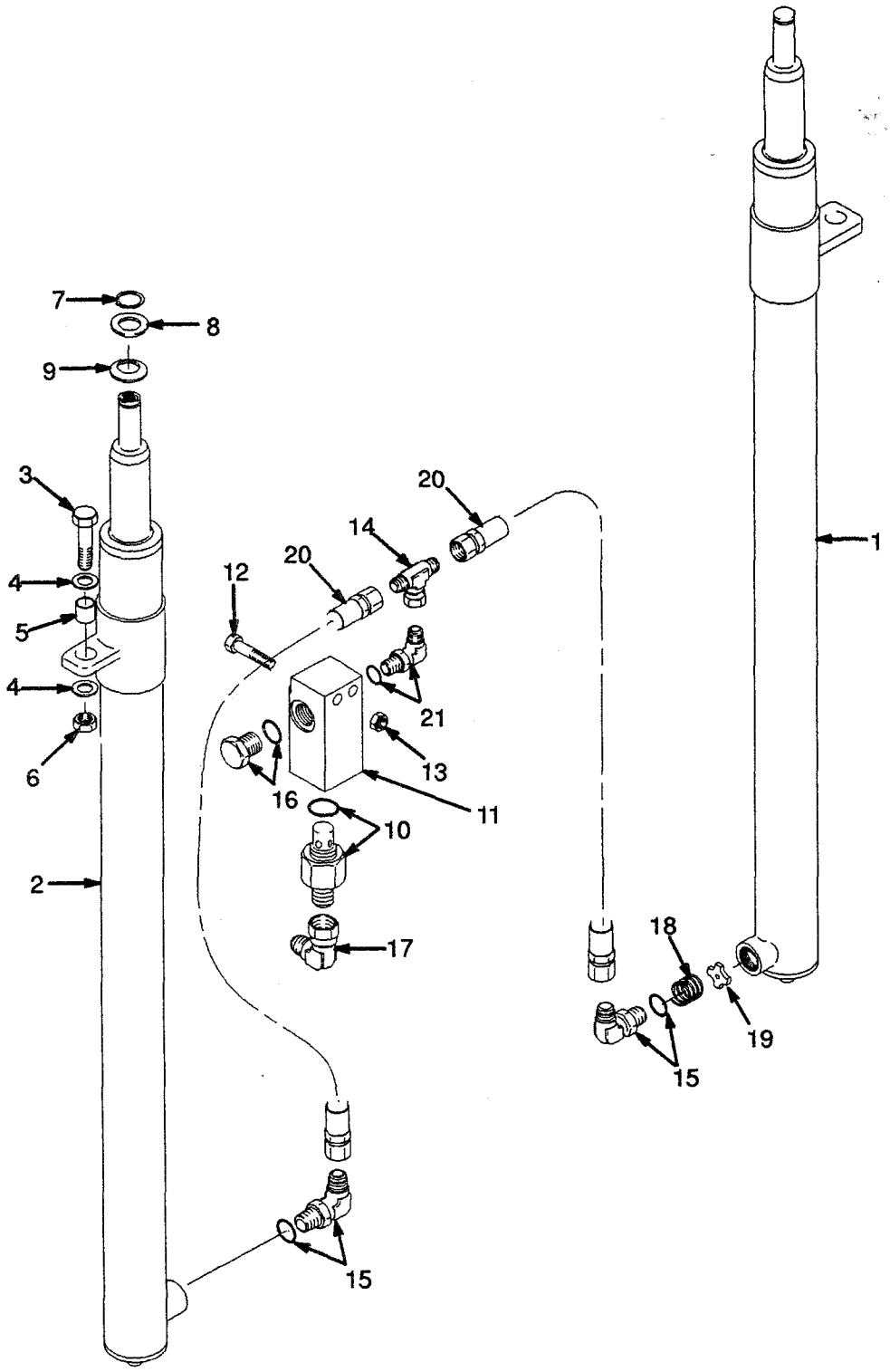

©1996 HYSTER COMPANY

INNER MAST
TWO-STAGE FFL

REF NO.	NAME OF PART 1 2 3 4	LIFT HEIGHT TO BOTTOM OF FORKS		
		3048 mm	3248 mm	3848 mm
		PART NO.		
	Mast Group No.	A554-3048	A554-3248	A554-3848
1	Inner Mast	1353706	1353708	1353714

REF		PART NO.	NAME OF PART	QTY
	a	....	Mast Assy	1
1	a	....	Inner Mast	1
2		1345216	Stubshaft	2
3		1353191	Load Roller ("A" Standard)	2
3		1353192	Load Roller ("B" 0,76 mm)	AR
3		1353193	Load Roller ("C" 1,52 mm)	AR
4		58901	Circlip	2
5		129387	Shim (0,508 mm)	AR

a ☞ Table

©1996 HYSTER COMPANY

MAIN LIFT

TWO-STAGE FFL

LAST USED ON S/N A558B-1670

(Figure 148)

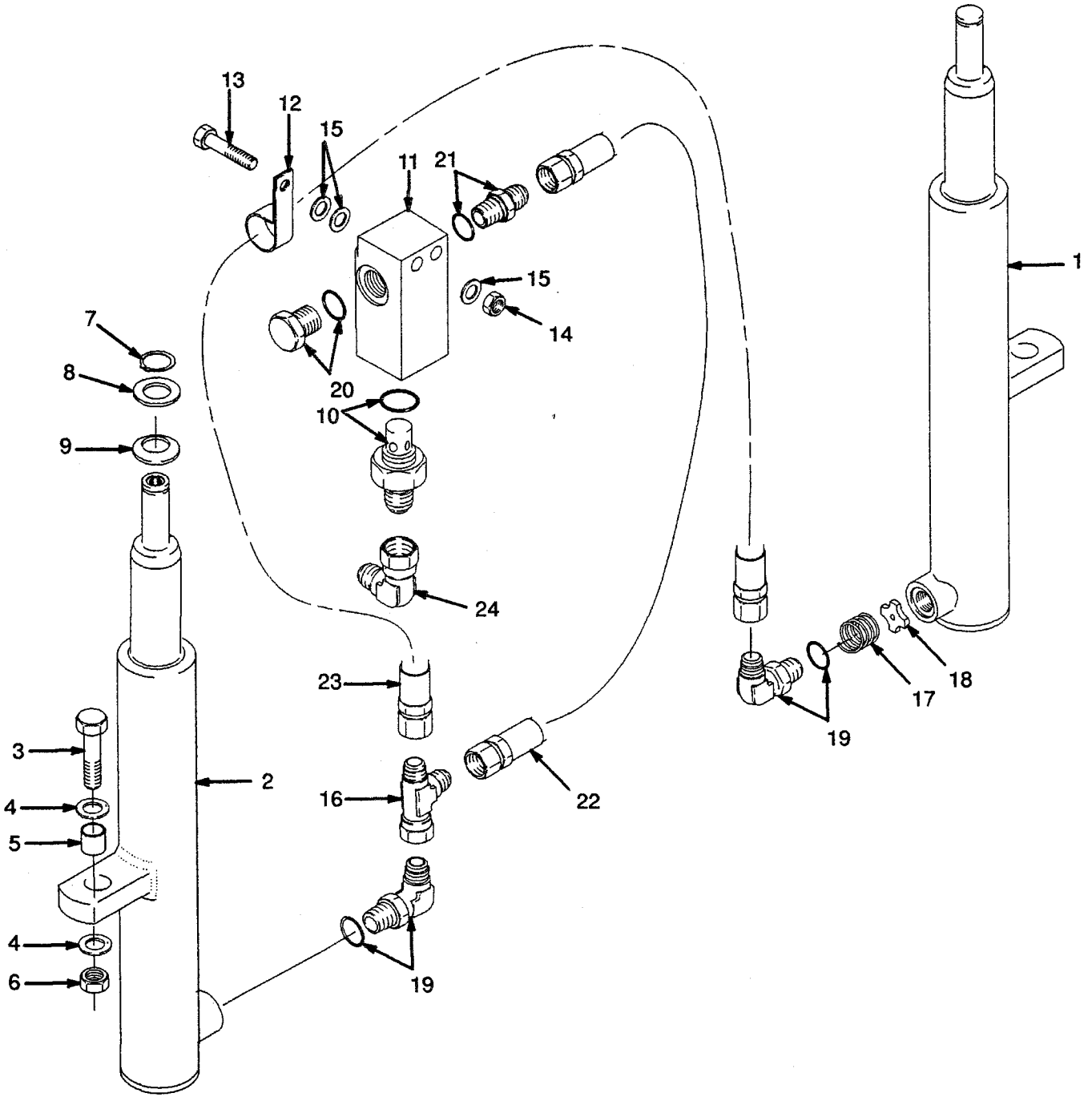

©1996 HYSTER COMPANY

HYSTER

OUTER MAST
TWO-STAGE FFL

REF NO.	NAME OF PART 1 2 3 4	LIFT HEIGHT TO BOTTOM OF FORKS		
		3048 mm	3248 mm	3848 mm
		PART NO.		
	Mast Group No.	A554-3048	A554-3248	A554-3848
1	Outer Mast	1353056	1353058	1353064

REF		PART NO.	NAME OF PART	QTY
	a	....	Mast Assy	1
1	a	....	Outer Mast	1
2		1345216	Stubshaft	2
3		215212	Bearing Strip	2
4		131716	Shim (0,508 mm)	4
5		104506	O-Ring	4
6		1353191	Load Roller ("A" Standard)	2
6		1353192	Load Roller ("B" 0,76 mm)	AR
6		1353193	Load Roller ("C" 1,32 mm)	AR
7		58901	Circlip	2
8		129387	Shim (0,508 mm)	AR

a ☞ Table

©1996 HYSTER COMPANY

INNER MAST

TWO-STAGE FFL

(Figure 147)

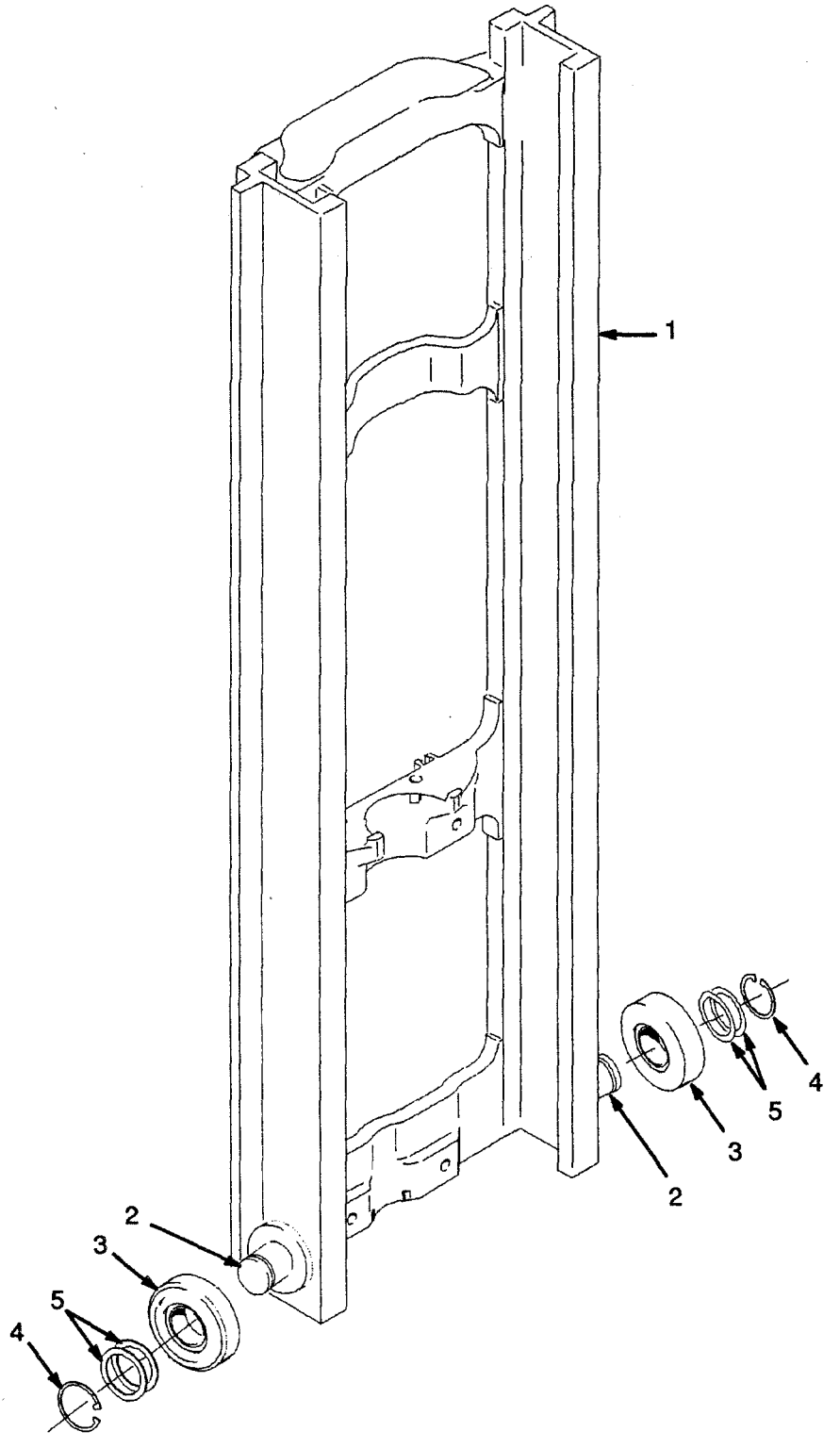

©1996 HYSTER COMPANY

TWO-STAGE FFL

Carriage
Two-Stage FFL ..... Page 328

Fork
Two-Stage FFL ..... Page 338

Free-Lift Cylinder
Two-Stage FFL ..... Page 326

Free-Lift
Two-Stage FFL ..... Page 320

Header Hose
Two-Stage FFL
Four Function ..... Page 336

Header Hose
Two-Stage FFL
Three Function ..... Page 334

Inner Mast
Two-Stage FFL ..... Page 314

Load Backrest Extension
Two-Stage FFL ..... Page 330

Main Cylinder
Two-Stage FFL
Left Hand ..... Page 322

Main Cylinder
Two-Stage FFL
Right Hand ..... Page 324

Main Lift
Two-Stage FFL
First Used on S/N A558B-1671 ..... Page 318

Main Lift
Two-Stage FFL
Last Used on S/N A558B-1670 ..... Page 316

Mast Installation
Two-Stage FFL ..... Page 332

Outer Mast
Two-Stage FFL ..... Page 312

©1996 HYSTER COMPANY

OUTER MAST

TWO–STAGE FFL

(Figure 146)

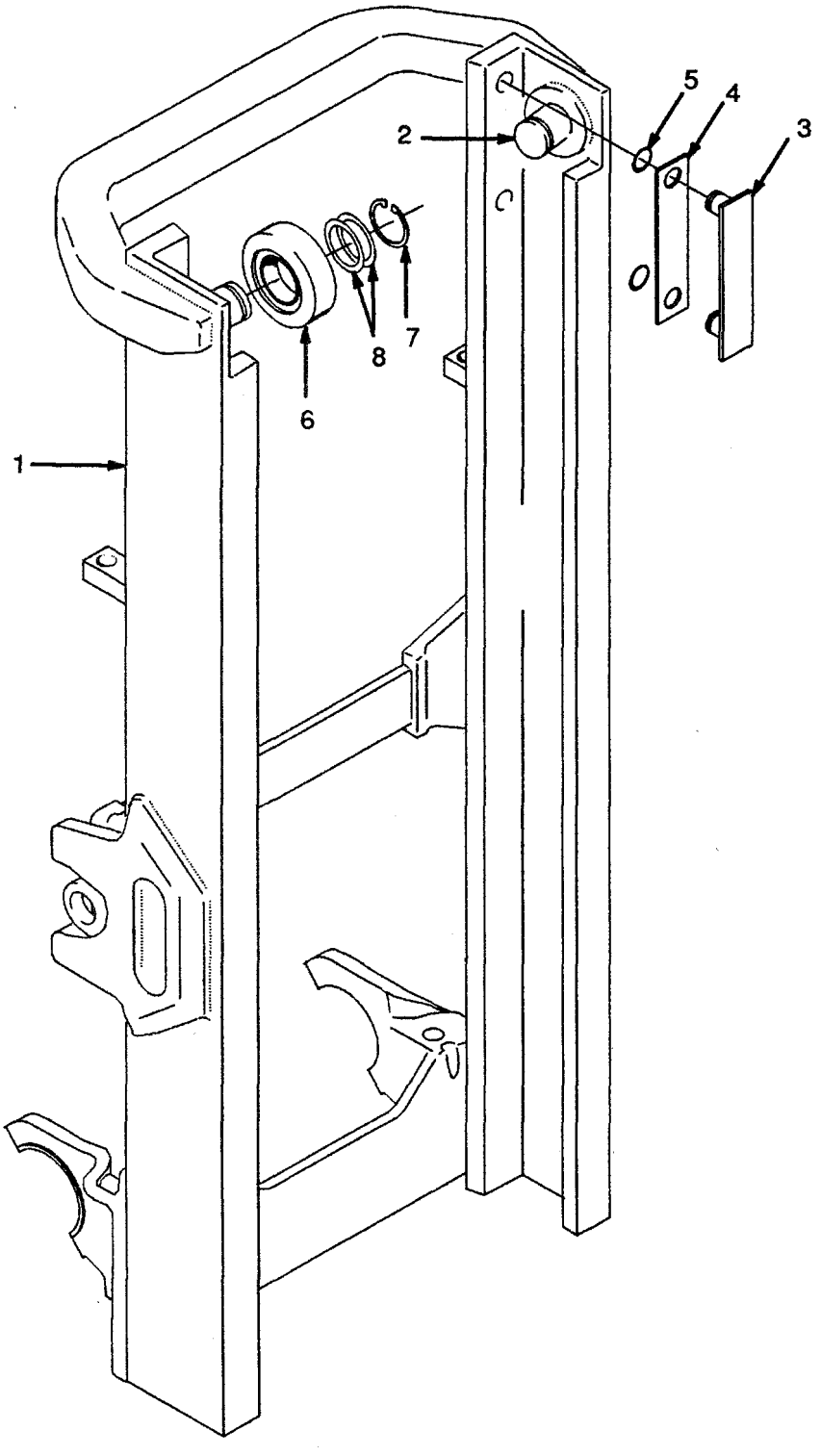

©1996 HYSTER COMPANY

FORK

THREE STAGE FFL

REF NO.	NAME OF PART 1 2 3 4	STANDARD TAPER		FULL BOTTOM TAPER	QTY
		PART NO.			
1	Fork	40 mm x 80 mm	40 mm x 100 mm	40 mm x 100 mm	2
	762 mm		1350344		
	900 mm	1338128	1352326		
	914 mm	1350337	1350345	1352332	
	1000 mm	1350341	1352327		
	1067 mm	1350338	1350347	1352333	
	1100 mm	1350342	1352328		
	1150 mm	1338130	1352330		
	1200 mm	1350343	1352329		
	1219 mm	1350339	1350348	1352334	
	1372 mm	1350340	1350349		
	1524 mm		1352325		
2	Latch	369795	369795	369795	1

NOTE: OTHER FORK DIMENSIONS AVAILABLE ON REQUEST, CONTACT YOUR HYSTER DEALER.

©1996 HYSTER COMPANY

NOTES

©1996 HYSTER COMPANY

HEADER HOSE
THREE STAGE FFL
FOUR FUNCTION

REF NO.	NAME OF PART 1 2 3 4	LIFT HEIGHT TO BOTTOM OF FORKS			
		4460 mm	4760 mm	5510 mm	5960 mm
		PART NO.			
	Mast Group No.	A554-4460	A554-4760	A554-5510	A554-5960
1	Hose	1368405	1368407	1368412	1368415

REF		PART NO.	NAME OF PART	QTY
	a	....	Mast Assy	..
1	a	....	Hose	4
2		1375574	Strap	4
3		1369323	Bracket	1
4		136704	Hex Head Bolt	4
5		136749	Hex Head Bolt	10
6		313828	Locknut	14
7		1345199	Hose Guide	4
8		1345204	Circlip	4
9		1369333	Clamp	2
10		1360548	Stubshaft	2
11		1345194	Sheave	2
12		1363498	Bracket (RH)	1
13		1345190	Washer	2
14		292533	Hex Head Bolt	2
15		320160	Washer	2
16		300937	Nut	2
17		1360549	Spacer	2
18		293795	Hex Head Bolt	4
19		293796	Hex Head Bolt	4
20		313805	Nut	4
21		1360386	Clamp	4
22		1353464	Plate	1
23		1360536	Hose Guide (RH)	1
24		292521	Hex Head Bolt	2
25		320160	Washer	2
26		316826	Locknut	2
27		1353530	Clamp	8
27		1360508	Clamp	4
29		1363255	Bracket (RH)	1
30		1363256	Bracket (LH)	1
31		1363499	Bracket (LH)	1
32		1360537	Hose Guide (LH)	1
33		17222	Fitting	2
33		16483	O-Ring	1
34		1377371	Hose	1
35		1377372	Hose	1
36		137852	Strap Clamp	4
37		239503	Nut	1
38		292681	Washer	1
39		320157	Washer	1
40		16558	Fitting	2
40		16483	O-Ring	2
41		101625	Clamp	2
42		292508	Hex Head Bolt	1
43		1377373	Hose	1
44		1377374	Hose	1
45		1377374	Hose	1
46		292681	Washer	1
47		239503	Nut	3
48		1353530	Clamp (5960 mm)	4
49		1360508	Clamp (5960 mm)	2

a ☞ Table

©1996 HYSTER COMPANY

FORK

THREE STAGE FFL

(Figure 145)

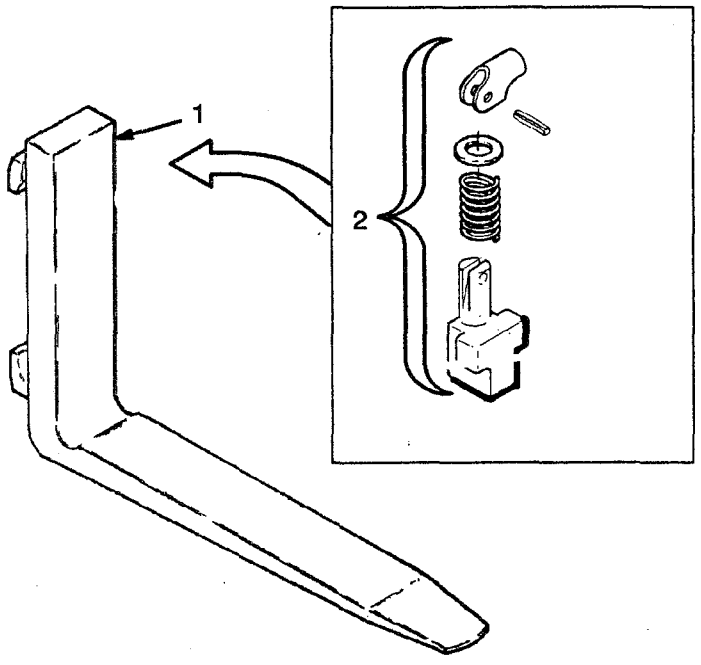

©1996 HYSTER COMPANY

HEADER HOSE
THREE STAGE FFL
THREE FUNCTION

REF NO.	NAME OF PART 1 2 3 4	LIFT HEIGHT TO BOTTOM OF FORKS			
		4460 mm	4760 mm	5510 mm	5960 mm
		PART NO.			
	Mast Group No.	A554-4460	A554-4760	A554-5510	A554-5960
1	Hose	1368405	1368407	1368412	1368415

REF		PART NO.	NAME OF PART	QTY
	a	....	Mast Assy	..
1	a	....	Hose	2
2		137852	Strap Clamp	2
3		1369323	Bracket	1
4		136704	Hex Head Bolt	2
5		136749	Hex Head Bolt	8
6		313828	Locknut	10
7		1345199	Hose Guide	2
8		1345204	Circlip	2
9		1369333	Clamp	1
10		1360548	Stubshaft	1
11		1345194	Sheave	1
12		1363498	Bracket (RH)	1
13		1345190	Washer	1
14		292533	Hex Head Bolt	1
15		320161	Washer	1
16		300937	Nut	1
17		1360549	Spacer	1
18		293795	Hex Head Bolt	2
19		293796	Hex Head Bolt	2
20		313805	Nut	2
21		1360386	Clamp	2
22		1353464	Plate	1
23		1360537	Hose Guide	1
24		292521	Hex Head Bolt	1
25		320160	Washer	1
26		316826	Locknut	1
27		1353530	Clamp	4
28		1360508	Clamp	2
29		1375574	Strap	2
30		17222	Fitting	1
30		16483	O-Ring	1
31		1377371	Hose	1
32		1377372	Hose	1
33		16558	Fitting	1
33		16483	O-Ring	1
34		2022830	Clamp	1
35		292681	Washer	1
36		239503	Nut	3
37		1363255	Bracket (RH)	1
38		1353530	Clamp (5960 mm)	2
39		1360508	Clamp (5960 mm)	1

a ☞ Table

©1996 HYSTER COMPANY

HEADER HOSE
THREE STAGE FFL
FOUR FUNCTION
(Figure 144)

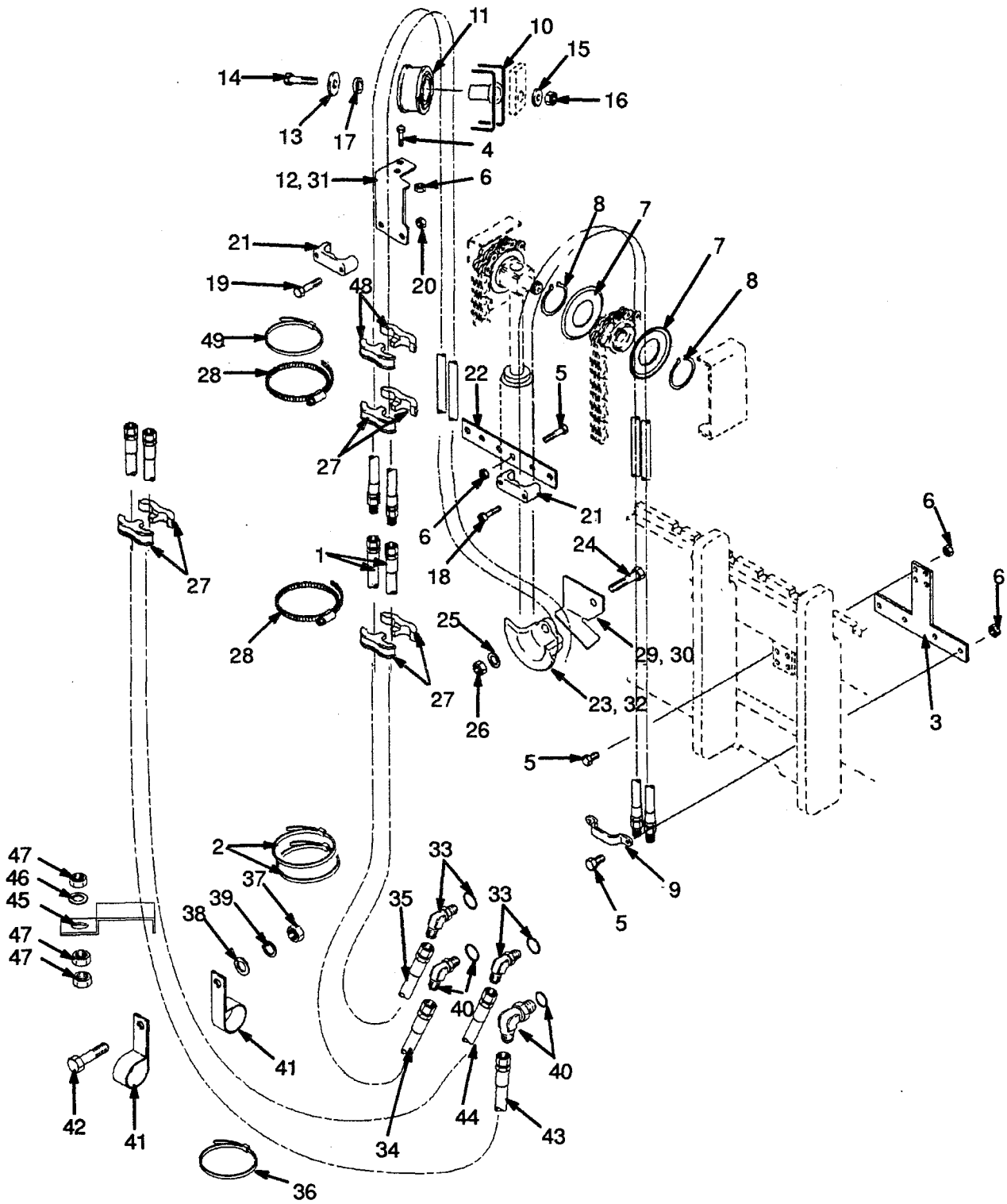

MAST INSTALLATION
THREE STAGE FFL

REF	PART NO.	NAME OF PART	QTY
1	1363260	Rod End (RH)	1
2	1363261	Rod End (LH)	1
3	292531	Hex Head Bolt	6
4	292683	Lockwasher	6
5	216877	Nut	2
6	16001	Grease Fitting	2
7	292514	Hex Head Bolt	2
8	1371287	Washer	2
9	1348185	Bush	2
10	1348188	Pin	2
11	1370721	Bush	2
12	1370722	Cap	2
13	308117	Pin	2
14	300982	Bush	2
15	320177	Washer	2
16	1371655	Split Pin	2
17	....	Tilt Cylinder ☞ Figure 118	2
18	252682	Lockwasher	2

©1996 HYSTER COMPANY

HEADER HOSE
THREE STAGE FFL
THREE FUNCTION
(Figure 143)

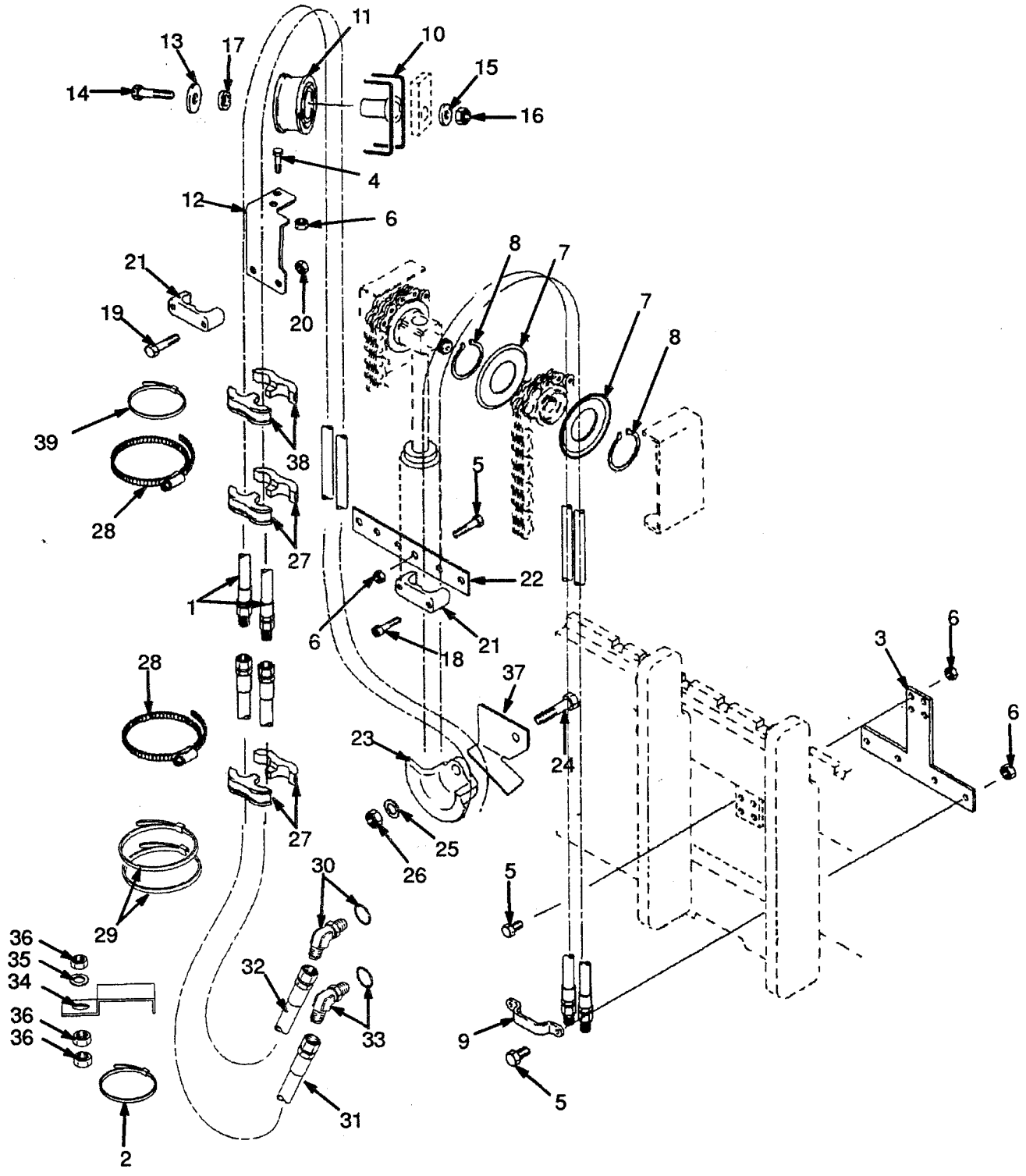

LOAD BACKREST EXTENSION

THREE STAGE FFL

REF	PART NO.	NAME OF PART	QTY
1	1349446	Load Backrest Extension	1
2	1353533	Hex Head Bolt	4
3	221771	Washer	4
3	296423	Washer (Optional)	4
4	300937	Nut	4

©1996 HYSTER COMPANY

MAST INSTALLATION

THREE STAGE FFL

(Figure 142)

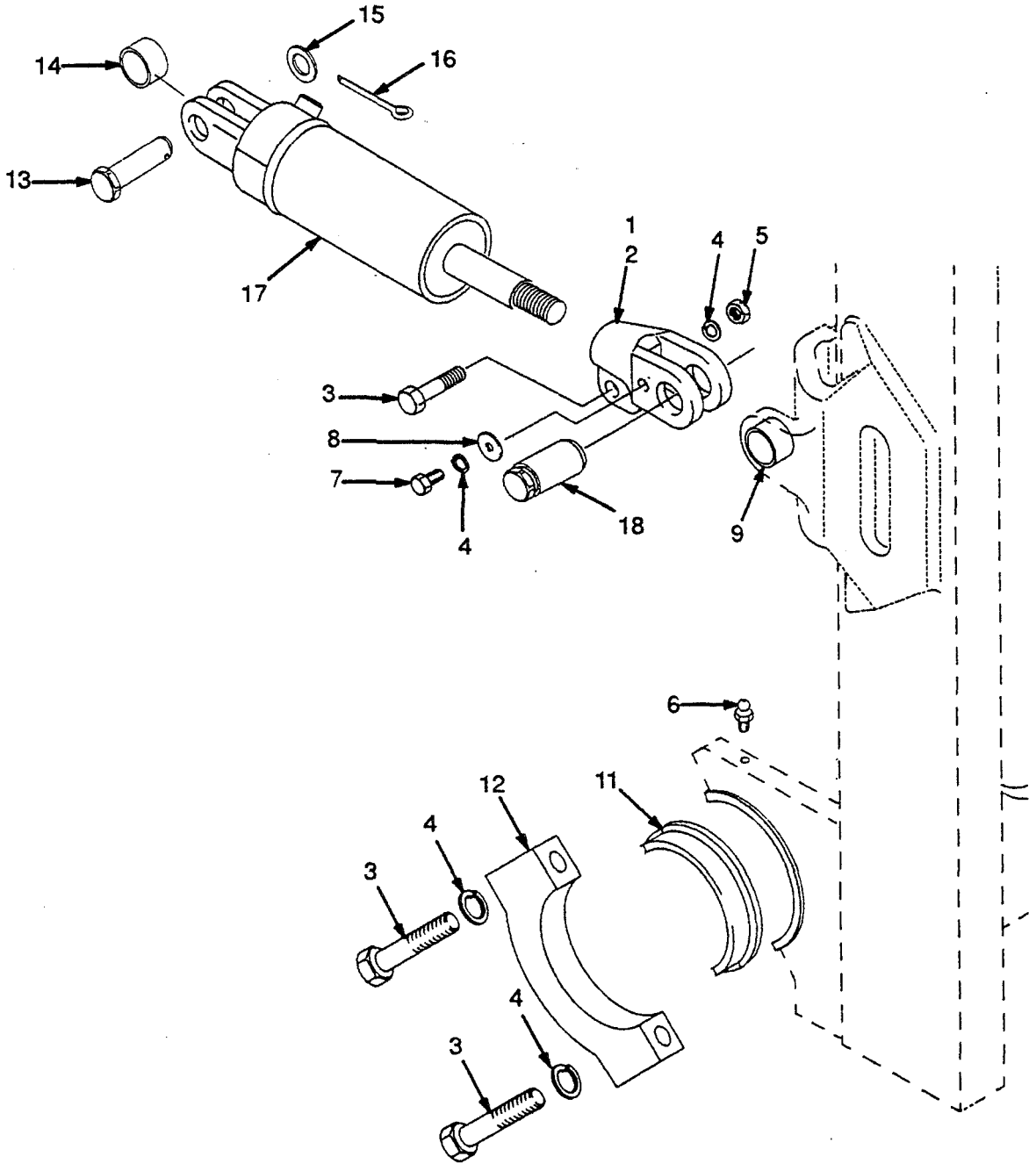

CARRIAGE

THREE STAGE FFL

REF	PART NO.	NAME OF PART	QTY
	1353527	Carriage	1
1	1353467	Frame	1
2	1345216	Stubshaft	6
3	58901	Circlip	6
4	129387	Shim	AR
5	366115	Spacer	2
6	1363271	Load Roller ("A" Standard)	6
6	1363272	Load Roller ("B" 0,76 mm)	AR
6	1363273	Load Roller ("C" 1,52 mm)	AR
7	1369345	Chain Anchor	2
8	1353408	Pin	2
9	131358	Circlip	4
10	323161	Pin	2
11	15200	Split Pin	2

©1996 HYSTER COMPANY

LOAD BACKREST EXTENSION

THREE STAGE FFL

(Figure 141)

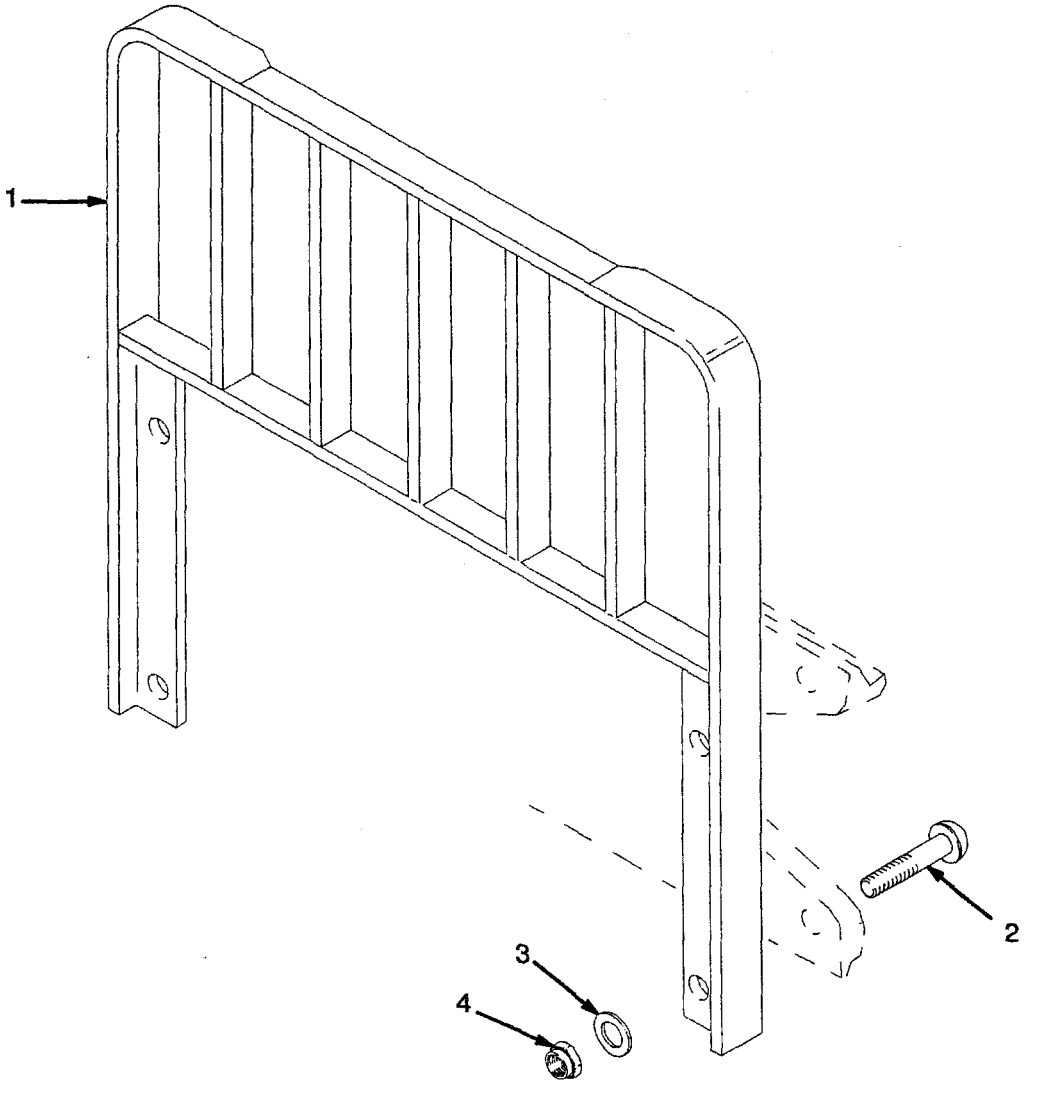

©1996 HYSTER COMPANY

FREE-LIFT CYLINDER
THREE STAGE FFL

REF NO.	NAME OF PART 1 2 3 4	LIFT HEIGHT TO BOTTOM OF FORKS			
		4460 mm	4760 mm	5510 mm	5960 mm
		PART NO.			
	Group No.	8601906	8601908	8601914	8601917
	Lift Cylinder	1362886	1362888	1362894	1362897
1	Shell	1362923	1362925	1362931	1362934
2	Rod	1362960	1362962	1362968	1362971

REF		PART NO.	NAME OF PART	QTY
	a	....	Group No.	..
	a	....	Cylinder	1
1	a	....	Shell	1
2	a	....	Rod	1
3	b	2013099	Wiper	1
4	b	1358970	Seal	1
5		1362880	Gland	1
6	b	615135	Back-Up Ring	1
7	b	55146	O-Ring	1
8	b	638250	Back-Up Ring	1
9	b	201829	Seal	1
10	b	1362881	Wear Ring	1
11		257913	Check Valve	1
12	b	39348	O-Ring	1
13		297531	Washer	1
14		187388	Circlip	1
15		1361302	Screw	1
16	b	190887	Washer	1
17		186061	Packing Lube	AR

a ☞ Table
b Included In Seal Kit 1360141

©1996 HYSTER COMPANY

CARRIAGE

THREE STAGE FFL

(Figure 140)

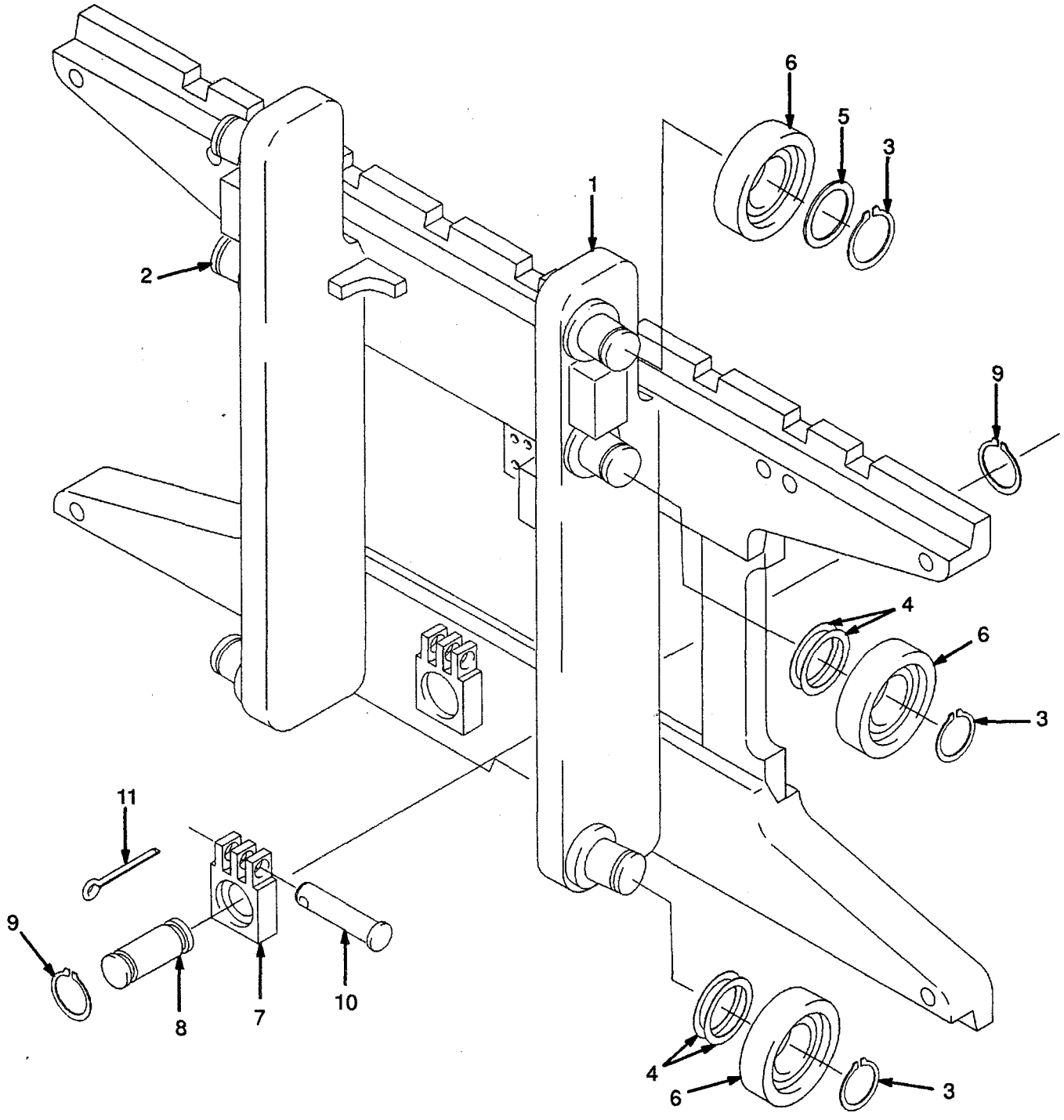

©1996 HYSTER COMPANY

MAIN CYLINDER
THREE STAGE FFL
RIGHT HAND

REF NO.	NAME OF PART 1 2 3 4	LIFT HEIGHT TO BOTTOM OF FORKS			
		4460 mm	4760 mm	5510 mm	5960 mm
		PART NO.			
	Group No.	8601756	8601758	8601763	8601766
	Lift Cylinder	1362706	1362719	1362749	1362767
1	Shell	1362713	1362726	1362756	1362774
2	Rod	1362704	1362717	1362746	1362765
4	Spacer	-	-	-	1355610

REF		PART NO.	NAME OF PART	QTY
	a	....	Group No.	..
	a	....	Lift Cylinder	1
1	a	....	Shell	1
2	a	....	Rod	1
3		1371653	Gland	1
4	a	....	Spacer	1
5		257913	Check Valve	1
6		297531	Washer	1
7		187388	Circlip	1
8	b	39348	O-Ring	1
9	b	1319668	Wiper	1
10	b	1356749	Seal	1
11	b	55407	O-Ring	1
12	b	330692	Seal	1
13	b	322824	Back-Up Ring	2
14	b	1362871	Wear Ring	1
15	b	1362875	Piston Ring	1
16	b	322902	Wear Ring	1
17		186061	Packing Lube	AR

a ☞ Table
b Included In Seal Kit 1360139

©1996 HYSTER COMPANY

FREE-LIFT CYLINDER

THREE STAGE FFL

(Figure 139)

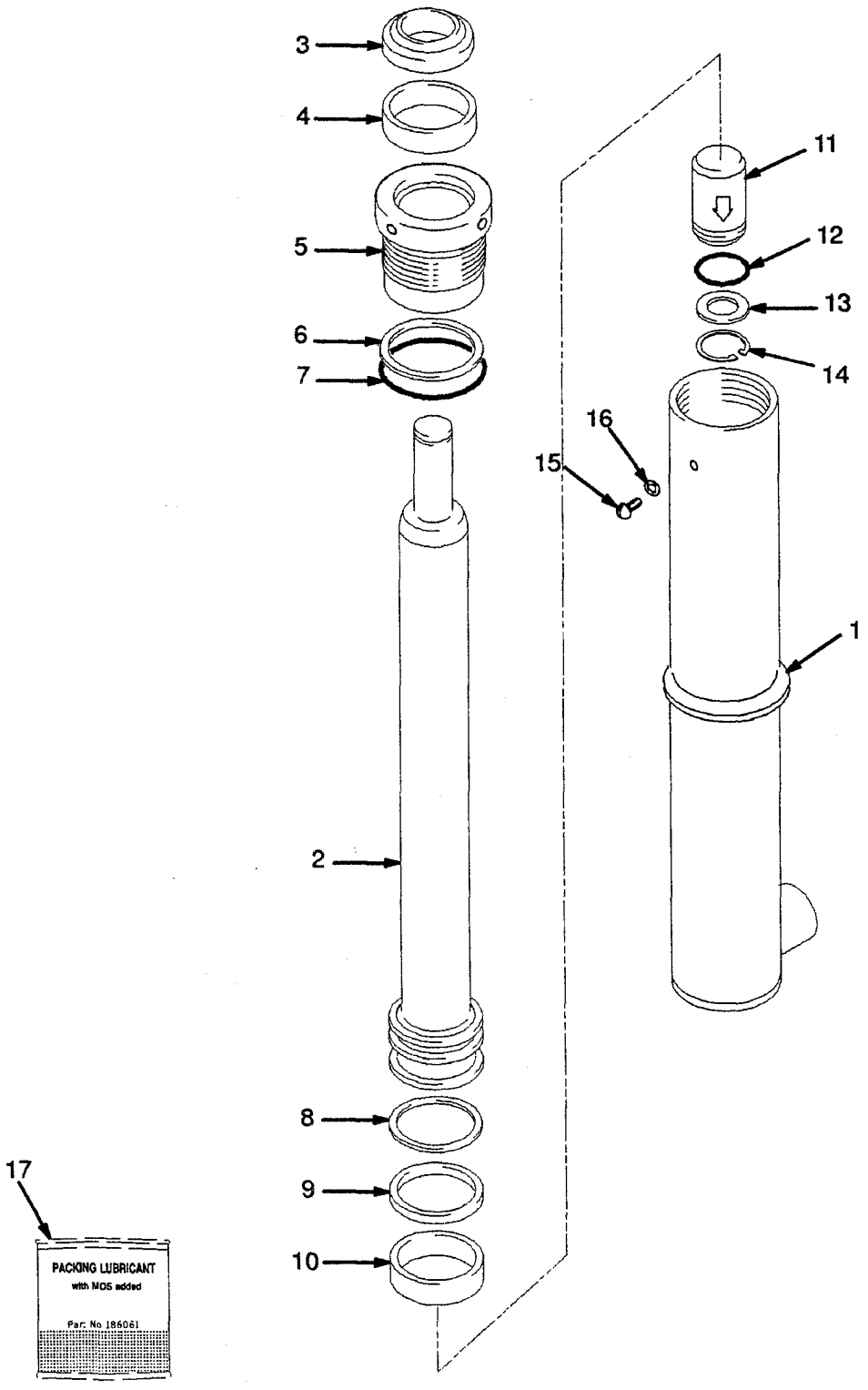

MAIN CYLINDER
THREE STAGE FFL
LEFT HAND

REF NO.	NAME OF PART 1 2 3 4	LIFT HEIGHT TO BOTTOM OF FORKS			
		4460 mm	4760 mm	5510 mm	5960 mm
		PART NO.			
	Group No.	8601706	8601708	8601713	8601716
	Lift Cylinder	1362702	1362715	1362745	1362763
1	Shell	1362703	1362716	1366057	1362764
2	Rod	1362704	1362717	1362746	1362765
4	Spacer	-	-	-	1355610

REF		PART NO.	NAME OF PART	QTY
	a	....	Group No.	..
	a	....	Lift Cylinder	1
1	a	....	Shell	1
2	a	....	Rod	1
3		1371653	Gland	1
4	a	....	Spacer	1
5		257913	Check Valve	1
6		297531	Washer	1
7		187388	Circlip	1
8	b	39348	O-Ring	1
9	b	1319668	Wiper	1
10	b	1356749	Seal	1
11	b	55407	O-Ring	1
12	b	330692	Seal	1
13	b	322824	Back-Up Ring	2
14	b	1362871	Wear Ring	1
15	b	1362875	Piston Ring	1
16	b	322902	Wear Ring	1
17		186061	Packing Lube	AR

a ☞ Table
b Included In Seal Kit 1360139

©1996 HYSTER COMPANY

MAIN CYLINDER
THREE STAGE FFL
RIGHT HAND
(Figure 138)

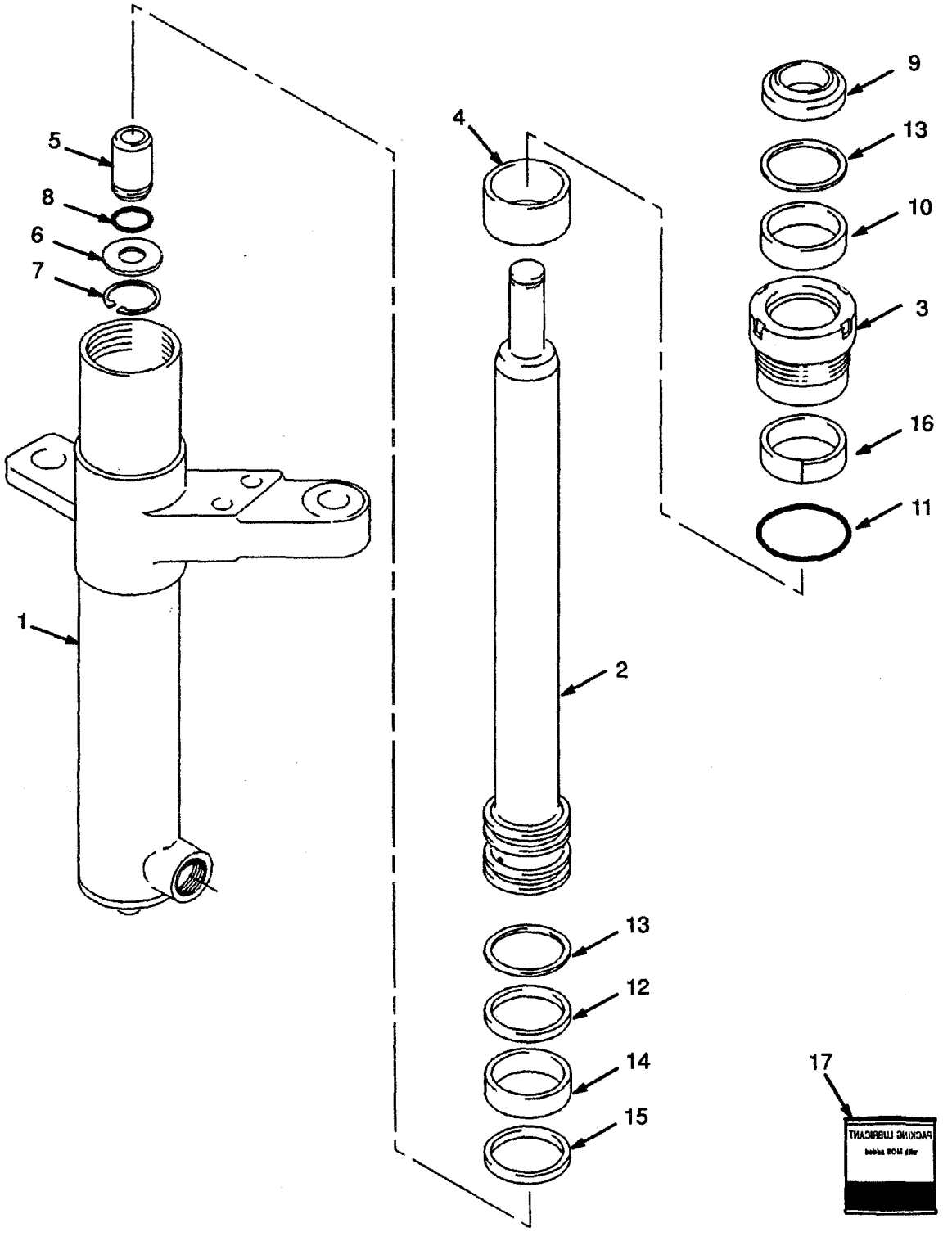

FREE-LIFT
THREE STAGE FFL

REF NO.	NAME OF PART 1 2 3 4	LIFT HEIGHT TO BOTTOM OF FORKS			
		4460 mm	4760 mm	5510 mm	5960 mm
		PART NO.			
	Mast Group No.	A554-4460	A554-4760	A554-5510	A554-5960
1	Chain	197345	231084	182343	223389
2	Hose	1363306	13633008	1363313	1363316

REF		PART NO.	NAME OF PART	QTY
	a	....	Mast Assy	1
1	a	....	Chain	2
2	a	....	Hose	1
3		161003	Nut	2
4		297649	Base Ring	2
5		323161	Pin	2
6		15200	Split Pin	2
7	b	320313	Chain Anchor	2
7	c	1369357	Chain Anchor	2
8		1360544	Chain Guard	2
9		292527	Hex Head Bolt	2
10		292683	Lockwasher	3
11		1353547	Guard	1
12		302461	Pin	2
13		1344323	Bracket	1
14		292528	Hex Head Bolt	4
15		320161	Washer	6
16		300937	Nut	4
17		1333243	Flow Valve	1
18		1337905	Crosshead	1
19		292533	Hex Head Bolt	1
20		1360534	Stubshaft	1
21		1343989	Sheave	1
21		1354901	Bush	1
22		1354912	Sheave	2
23		37752	Circlip	2
24		231020	Bearing	1
25		1354911	Roller	1
26		304526	Circlip	2
27		131358	Circlip	1
28		....	Cylinder	1
			☞ Figure 139	
29		171350	Chain Lube (400 ml)	AR
30		599737	Chain Wear Scale	AR

a ☞ Table
b Last Used on S/N A554B-1819
c First Used on S/N A554B-1820

©1996 HYSTER COMPANY

MAIN CYLINDER
THREE STAGE FFL
LEFT HAND
(Figure 137)

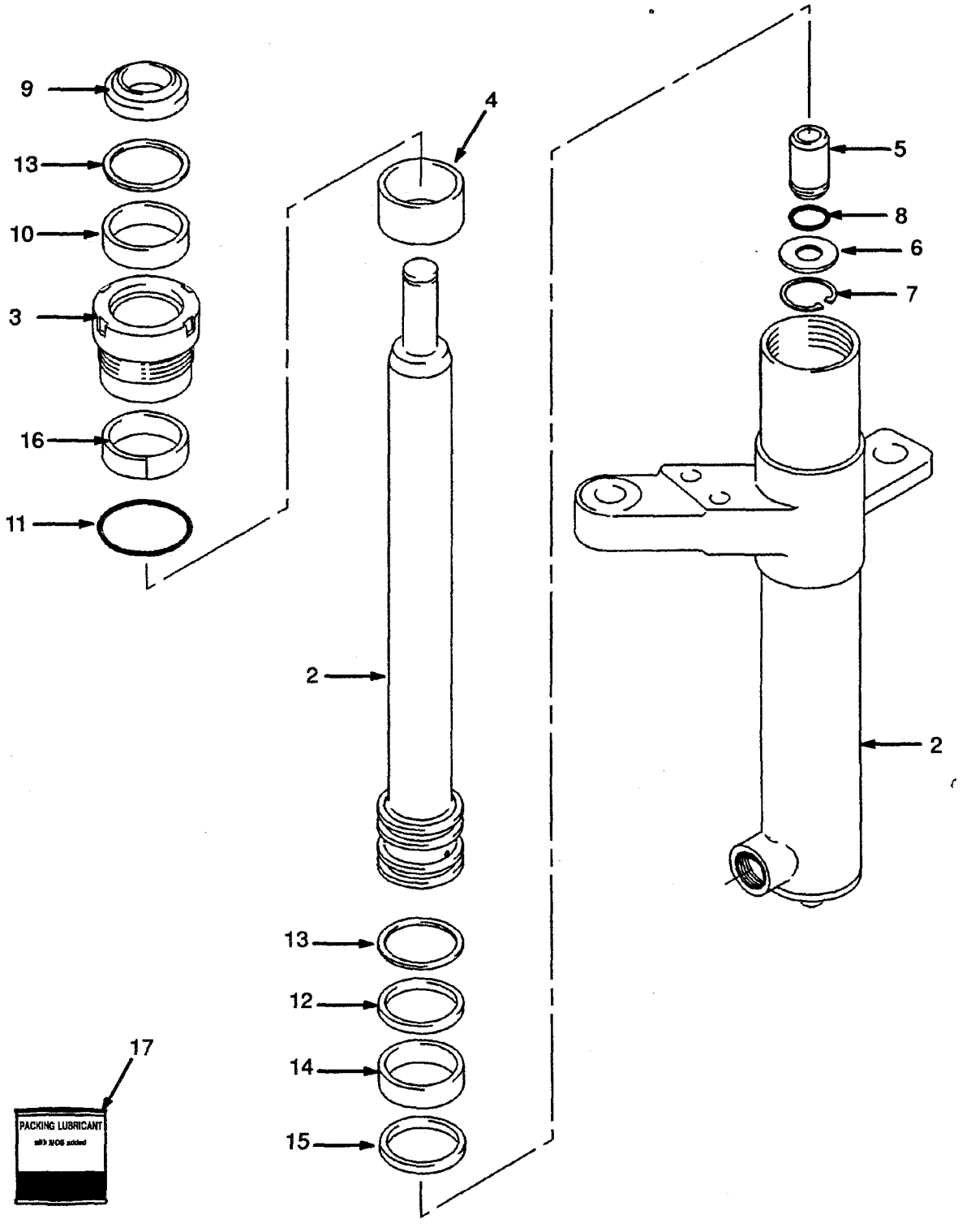

©1996 HYSTER COMPANY

MAIN LIFT
THREE STAGE FFL
FIRST USED ON S/N
A554B-2100

REF NO.	NAME OF PART 1 2 3 4	LIFT HEIGHT TO BOTTOM OF FORKS			
		4460 mm	4760 mm	5510 mm	5960 mm
		PART NO.			
	Mast Group No.	A554-4460	A554-4760	A554-5510	A554-5960
1	Lift Chain	1363306	1363308	1363313	1363316

REF		PART NO.	NAME OF PART	QTY
	a	....	Mast Assy	1
1	a	....	Lift Chain	2
2		....	Cylinder (LH)	1
			☞ Figure 137	
3		....	Cylinder (RH)	1
			☞ Figure 138	
4		292531	Hex Head Bolt	2
5		296422	Washer	4
6		323090	Spacer	2
7		300937	Locknut	2
8		131358	Circlip	1
9		1333382	Washer	2
10		1354915	Washer (0,25 mm)	AR
10		1354916	Washer (0,75 mm)	AR
10		1354917	Washer (1,50 mm)	AR
11		313828	Nut	4
12		136681	Hex Head Bolt	4
13		17051	Fitting	1
14		1363250	Plate	1
15		1363251	Clamp	1
16		16560	Fitting	1
16		16485	O-Ring	1
17		323061	Valve	1

REF	PART NO.	NAME OF PART	QTY
18	1333392	Housing	1
19	189595	Fitting	2
20	15223	Pin	2
21	161003	Nut	4
22	297649	Base Ring	4
23	16543	Fitting	1
23	16486	O-Ring	1
24	323161	Pin	4
25	15200	Pin	4
26	1369357	Chain Anchor	2
27	1365140	Chain Anchor	1
28	120938	Spring	2
29	323160	Washer	2
30	1376324	Tube	1
31	1376100	Hose	1
32	16882	Fitting	1
33	292509	Hex Head Bolt	2
34	1345403	Hose	1
35	599737	Chain Wear Scale	AR
36	171350	Chain Lube (400 ml)	AR

a ☞ Table

©1996 HYSTER COMPANY

FREE-LIFT
THREE STAGE FFL
(Figure 136)

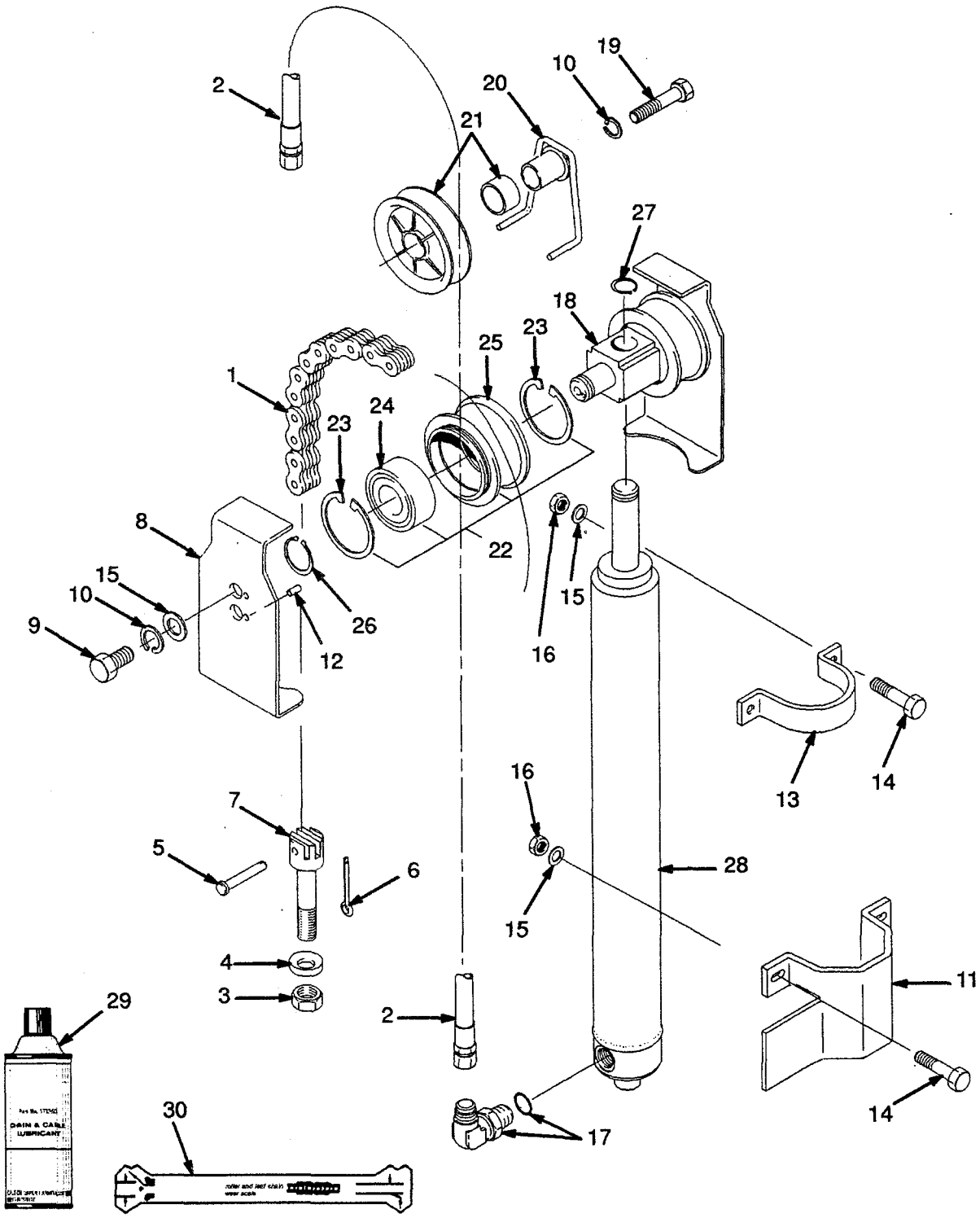

MAIN LIFT
THREE STAGE FFL
LAST USED ON S/N
A554B-2099

REF NO.	NAME OF PART 1 2 3 4	LIFT HEIGHT TO BOTTOM OF FORKS				
		4460 mm	4760 mm	5360 mm	5960 mm	6410 mm
		PART NO.				
	Mast Group No.	A554-4460	A554-4760	A554-5360	A554-5960	A554-6410
1	Lift Chain	88436	88441	88446	304200	246994

REF		PART NO.	NAME OF PART	QTY
	a	....	Mast Assy	1
1	a	....	Chain	2
2		....	Cylinder (LH)	1
			☞ Figure 137	
3		....	Cylinder (RH)	1
			☞ Figure 138	
4		292531	Hex Head Bolt	2
5		296422	Washer	4
6		323090	Spacer	2
7		300937	Locknut	2
8		131358	Circlip	2
9		1333382	Washer	2
10		1354915	Washer (0,25 mm)	AR
10		1354916	Washer (0,75 mm)	AR
10		1354917	Washer (1,50 mm)	AR
11		1347202	Clamp	1
12		136704	Hex Head Bolt	2
13		313828	Locknut	4
14		320157	Washer	6
15		1363250	Plate	1
16		287851	Hex Head Bolt	2
17		1363251	Clamp	1
18		1353399	Tube	1
19		323061	Valve	1
20		1333392	Valve Housing	1
21		16542	Fitting	1
21		16485	O-Ring	1
22		16543	Fitting	1
22		16486	O-Ring	1
23		1353534	Hose	1
24		1353535	Hose	1
25		17063	Fitting	1
26		120938	Spring	2
27		323160	Washer	2
28		189595	Fitting	2
28		16485	O-Ring	1
29		320313	Chain Anchor	2
30		323161	Pin	4
31		15200	Split Pin	4
32		1365140	Chain Anchor	2
33		15223	Split Pin	2
34		161003	Nut	4
35		297649	Base Ring	4
36		16882	Fitting	1
37		171350	Chain Lube (400 ml)	AR
38		599737	Chain Wear Scale	AR

a ☞ Table

©1996 HYSTER COMPANY

MAIN LIFT

THREE STAGE FFL

FIRST USED ON S/N A554B-2100

(Figure 135)

PARTS-SERVICE GRAM	
Item	Gram
1,27	I-F-83

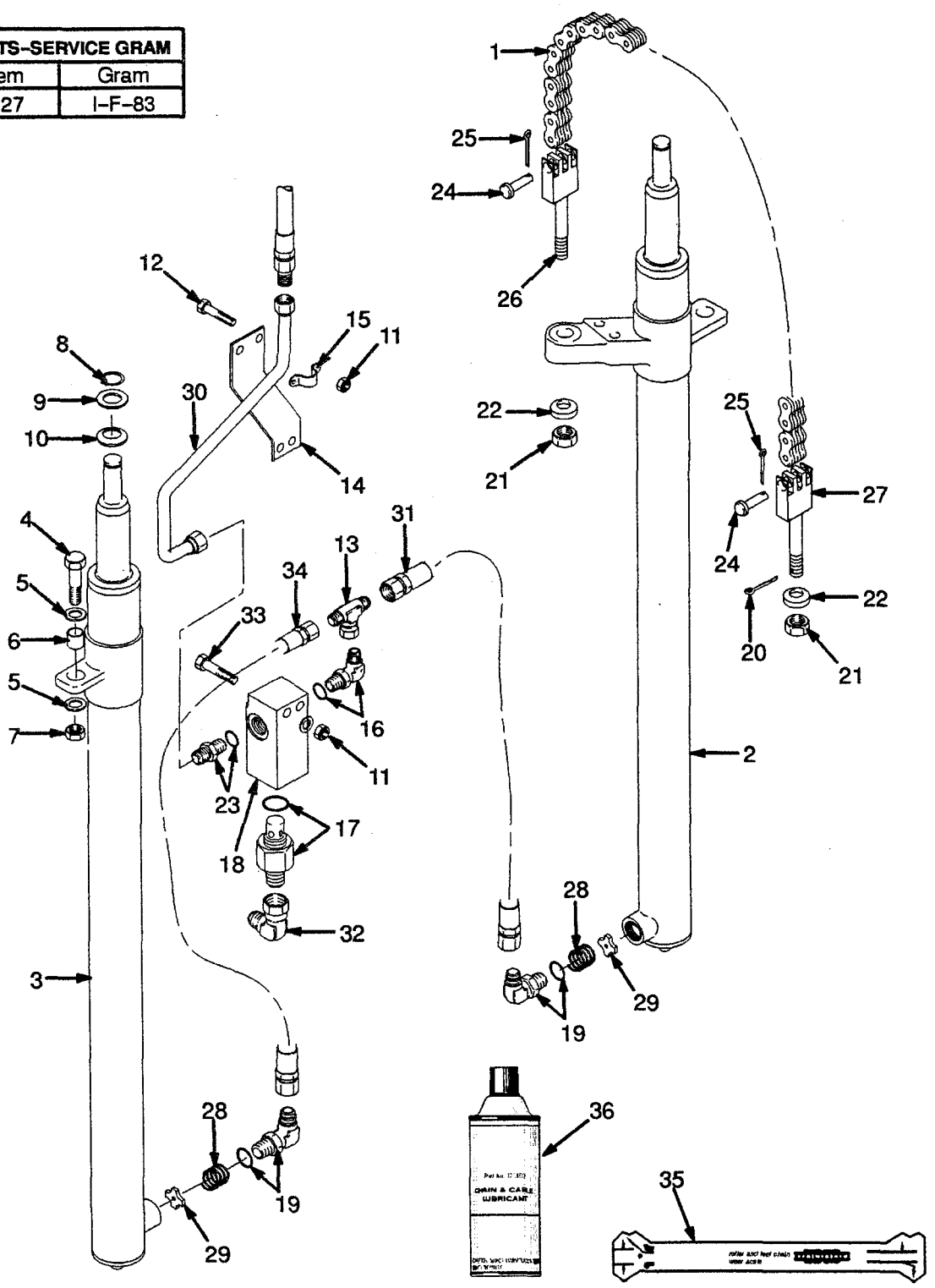

HYSTER

INNER MAST
THREE STAGE FFL

REF NO.	NAME OF PART 1 2 3 4	LIFT HEIGHT TO BOTTOM OF FORKS			
		4460 mm	4760 mm	5510 mm	5960 mm
		PART NO.			
	Mast Group No.	A554-4460	A554-4760	A554-5510	A554-5960
1	Inner Mast	1352856	1352858	1352863	1352866

REF		PART NO.	NAME OF PART	QTY
	a	....	Mast Assy	1
1	a	....	Inner Mast	1
2		1345216	Stubshaft	2
3		58901	Circlip	2
4		129387	Shim (0,508 mm)	AR

REF	PART NO.	NAME OF PART	QTY
5	1353191	Load Roller ("A" Standard)	2
5	1353192	Load Roller ("B" 0,76 mm)	AR
5	1353193	Load Roller ("C" 1,52 mm)	AR

a ☞ Table

©1996 HYSTER COMPANY

MAIN LIFT

THREE STAGE FFL

LAST USED ON S/N A554B-2099

(Figure 134)

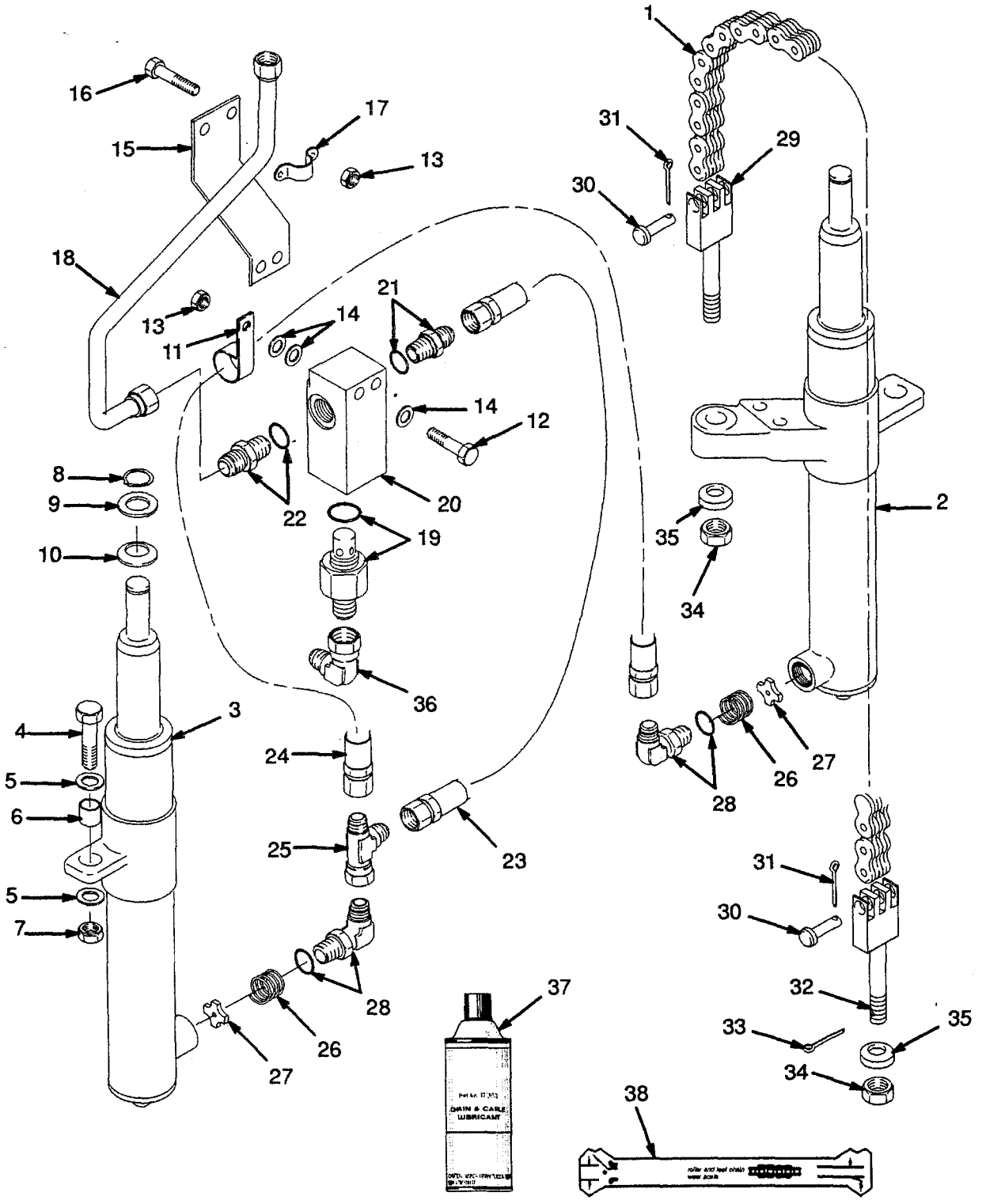

INTERMEDIATE MAST
THREE STAGE FFL

REF NO.	NAME OF PART 1 2 3 4	LIFT HEIGHT TO BOTTOM OF FORKS			
		4460 mm	4760 mm	5510 mm	5960 mm
		PART NO.			
	Mast Group No.	A554-4460	A554-4760	A554-5510	A554-5960
1	Intermediate Mast	1352956	1352958	1352963	1352966

REF		PART NO.	NAME OF PART	QTY
	a	....	Mast Assy	1
1	a	....	Intermediate Mast	1
2		1345216	Stubshaft	4
3		215212	Bearing Strip	2
4		131716	Shim (0,508 mm)	4
5		104506	O-Ring	4
6		1353191	Load Roller ("A" Standard)	4
6		1353192	Load Roller ("B" 0,76 mm)	AR
6		1353193	Load Roller ("C" 1,52 mm)	AR

REF	PART NO.	NAME OF PART	QTY
7	58901	Circlip	4
8	129387	Shim (0,508 mm)	AR
9	304526	Circlip	2
10	1345183	Sheave	2
11	1345181	Roller	1
12	231020	Bearing	1
13	37752	Circlip	2

a ☞ Table

©1996 HYSTER COMPANY

INNER MAST
THREE STAGE FFL
(Figure 133)

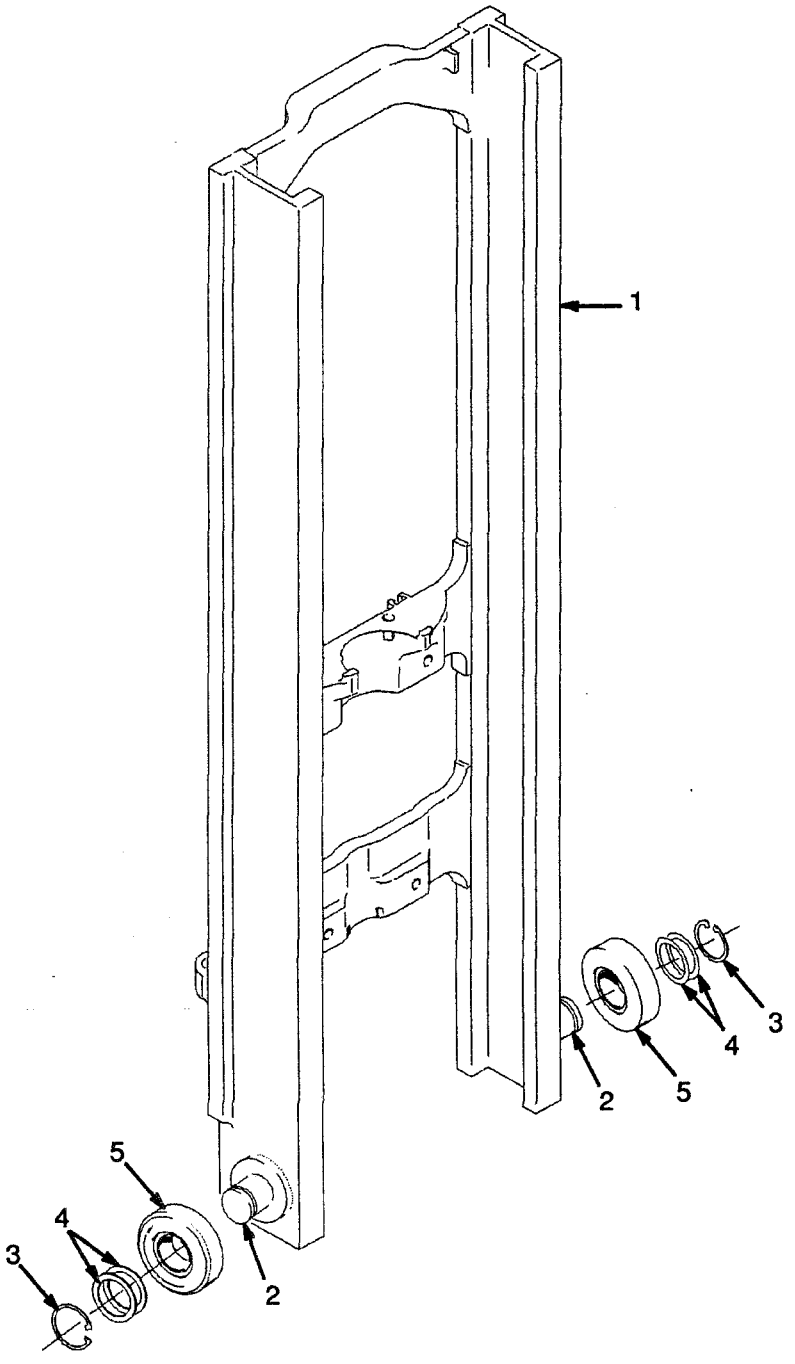

©1996 HYSTER COMPANY

OUTER MAST
THREE STAGE FFL

REF NO.	NAME OF PART 1 2 3 4	LIFT HEIGHT TO BOTTOM OF FORKS			
		4460 mm	4760 mm	5510 mm	5960 mm
		PART NO.			
	Mast Group No.	A554-4460	A554-4760	A554-5510	A554-5960
1	Outer Mast	1353056	1353058	1353064	1353067

REF		PART NO.	NAME OF PART	QTY
	a	....	Mast Assy	1
1	a	....	Outer Mast	1
2		1345216	Stubshaft	2
3		215212	Bearing Strip	2
4		131716	Shim (0,508 mm)	4
5		104506	O-Ring	4
6		1353191	Load Roller ("A" Standard)	2
6		1353192	Load Roller ("B" 0,76 mm)	AR
6		1353193	Load Roller ("C" 1,52 mm)	AR
7		58901	Circlip	2
8		129387	Shim (0,508 mm)	AR

a ☞ Table

©1996 HYSTER COMPANY

INTERMEDIATE MAST

THREE STAGE FFL

(Figure 132)

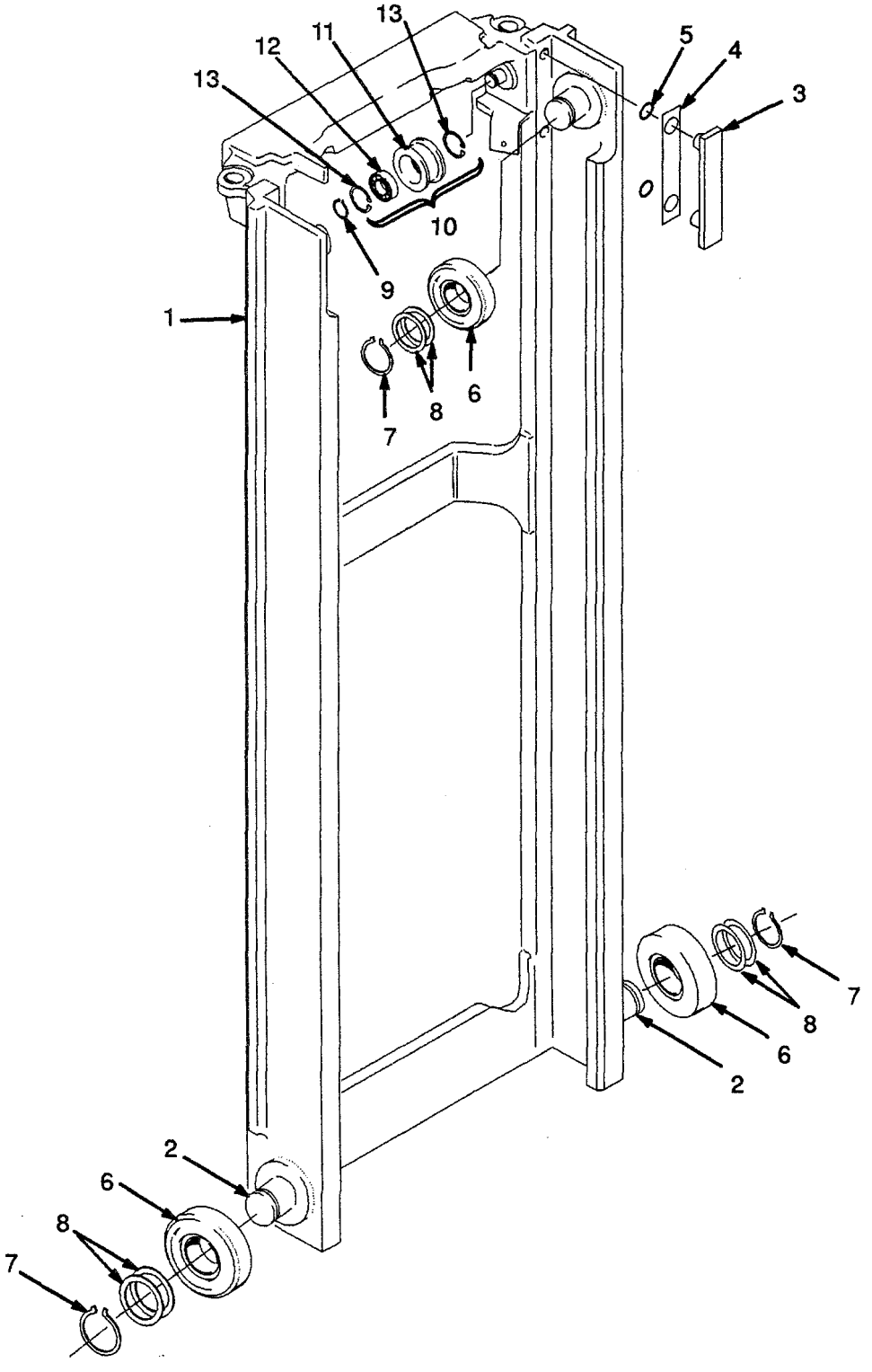

©1996 HYSTER COMPANY

THREE STAGE FFL

Carriage
Three Stage FFL ..... Page 298

Fork
Three Stage FFL ..... Page 308

Free-Lift Cylinder
Three Stage FFL ..... Page 296

Free-Lift
Three Stage FFL ..... Page 290

Header Hose
Three Stage FFL
Four Function ..... Page 306

Header Hose
Three Stage FFL
Three Function ..... Page 304

Inner Mast
Three Stage FFL ..... Page 284

Intermediate Mast
Three Stage FFL ..... Page 282

Load Backrest Extension
Three Stage FFL ..... Page 300

Main Cylinder
Three Stage FFL
Left Hand ..... Page 292

Main Cylinder
Three Stage FFL
Right Hand ..... Page 294

Main Lift
Three Stage FFL
First Used on S/N A554B-2100 ..... Page 288

Main Lift
Three Stage FFL
Last Used on S/N A554B-2099 ..... Page 286

Mast Installation
Three Stage FFL ..... Page 302

Outer Mast
Three Stage FFL ..... Page 280

©1996 HYSTER COMPANY

OUTER MAST

THREE STAGE FFL

(Figure 131)

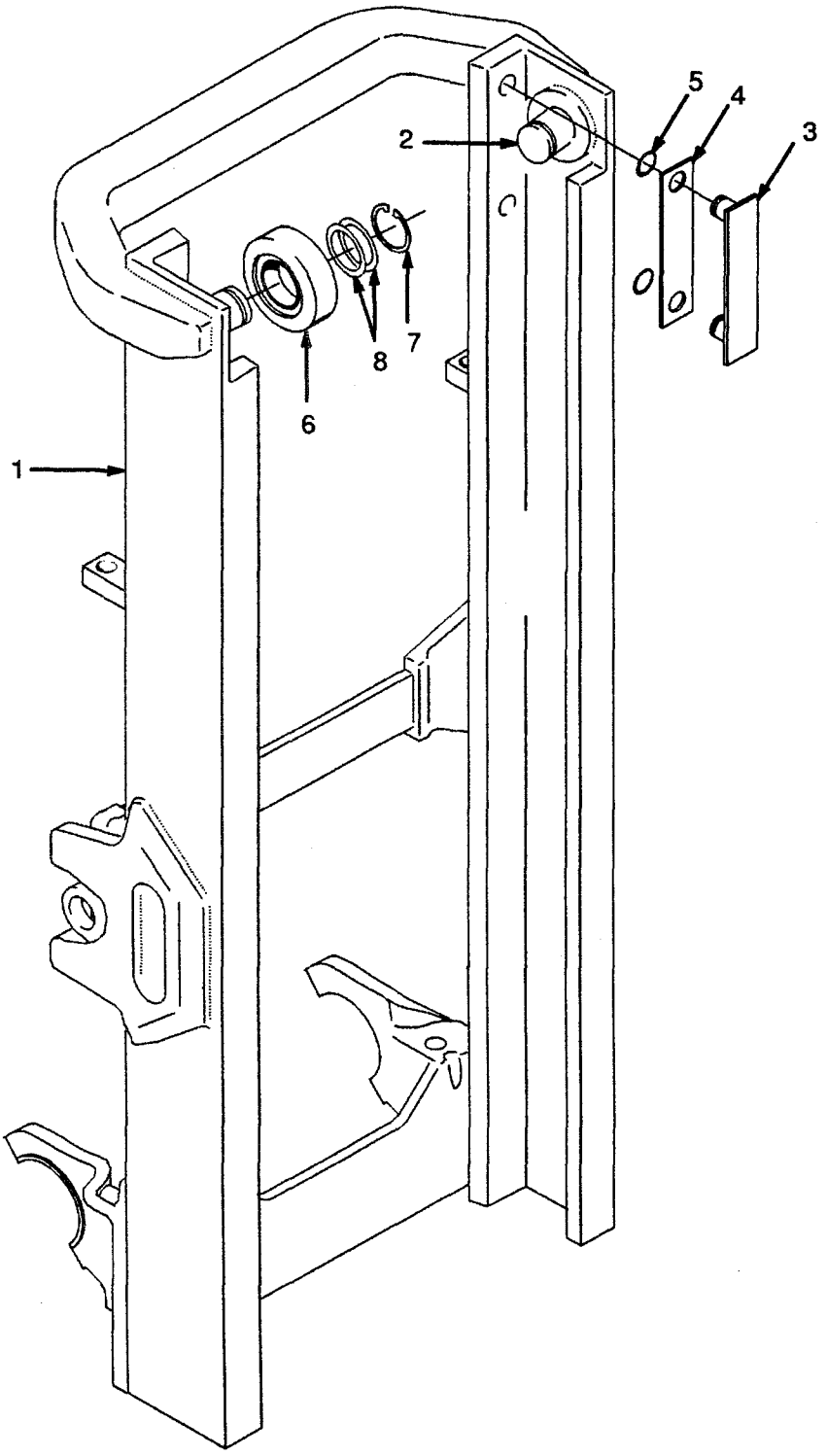

©1996 HYSTER COMPANY

FORK

TWO-STAGE LFL

REF NO.	NAME OF PART 1 2 3 4	STANDARD TAPER		FULL BOTTOM TAPER	QTY
		PART NO.			
1	Fork	40 mm x 80 mm	40 mm x 100 mm	40 mm x 100 mm	2
	762 mm		1350344		
	900 mm	1338128	1352326		
	914 mm	1350337	1350345	1352332	
	1000 mm	1350341	1352327		
	1067 mm	1350338	1350347	1352333	
	1100 mm	1350342	1352328		
	1150 mm	1338130	1352330		
	1200 mm	1350343	1352329		
	1219 mm	1350339	1350348	1352334	
	1372 mm	1350340	1350349		
	1524 mm		1352325		
2	Latch	369795	369795	369795	1

NOTE: OTHER FORK DIMENSIONS AVAILABLE ON REQUEST, CONTACT YOUR HYSTER DEALER.

©1996 HYSTER COMPANY

NOTES

©1996 HYSTER COMPANY

HEADER HOSE
TWO-STAGE LFL
FOUR FUNCTION

REF NO.	NAME OF PART 1 2 3 4	LIFT HEIGHT TO BOTTOM OF FORKS				
		2992 mm	3292 mm	3792 mm	3992 mm	4292 mm
		PART NO.				
	Mast Group No.	A550-2992	A550-3292	A550-3792	A550-3992	A550-4292
1	Hose	1368305	11368308	1368313	1368315	1368318

REF		PART NO.	NAME OF PART	QTY
	a	....	Mast Assy	..
1	a	....	Hose	4
2		1360549	Spacer	2
3	b	1360508	Clamp	4
4		292508	Hex Head Bolt	8
5		1345412	Bracket (RH)	1
5		1345413	Bracket (LH)	1
6		2022830	Clamp	1
7		313828	Nut	12
8		1363486	Bracket	2
9		1360548	Stubshaft	2
10		1345194	Sheave	2
11		1345190	Washer	4
12		313805	Nut	4
13		292533	Hex Head Bolt	2
14		1360386	Clamp	2
15		292683	Washer	2
16		136704	Hex Head Bolt	4
17		287816	Hex Head Bolt	4
18		1353530	Clamp	8
19		1345348	Clamp	4

REF	PART NO.	NAME OF PART	QTY
20	1375574	Strap	4
21	16558	Fitting	2
21	16483	O-Ring	2
22	1377371	Hose	1
23	1377372	Hose	1
24	239503	Nut	3
25	239503	Nut	1
26	292681	Washer	1
27	320157	Washer	1
28	17222	Fitting	2
28	16483	O-Ring	2
29	101625	Clamp	2
30	1377373	Hose	1
31	1377374	Hose	1
32	292681	Washer	1
33	1353530	Clamp (3792 mm,3992 mm,4292 mm)	2
34	1360508	Clamp (3792 mm,3992 mm,4292 mm)	2

a ☞ Table

©1996 HYSTER COMPANY

FORK

TWO-STAGE LFL

(Figure 130)

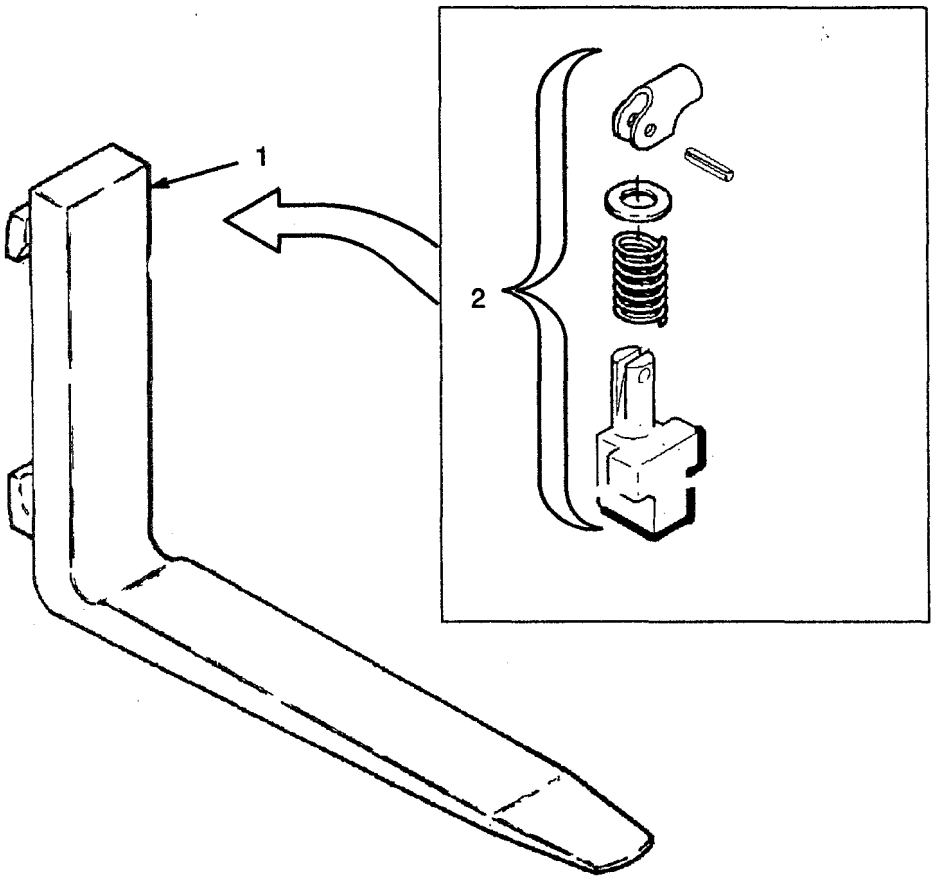

©1996 HYSTER COMPANY

HEADER HOSE
TWO-STAGE LFL
THREE FUNCTION

REF NO.	NAME OF PART 1 2 3 4	LIFT HEIGHT TO BOTTOM OF FORKS				
		2992 mm	3292 mm	3792 mm	3992 mm	4292 mm
		PART NO.				
	Mast Group No.	A550-2992	A550-3292	A550-3792	A550-3992	A550-4292
1	Hose	1368305	11368308	1368313	1368315	1368318

REF		PART NO.	NAME OF PART	QTY
	a	....	Mast Assy	..
1	a	....	Hose	2
2		1360508	Clamp	2
3		1360549	Spacer	1
4		292508	Hex Head Bolt	4
5		1345412	Bracket (RH)	1
6		313828	Nut	6
7		1363486	Bracket	1
8		1360548	Stubshaft	1
9		1345194	Sheave	1
10		1345190	Washer	2
11		313805	Nut	2
12		292533	Hex Head Bolt	1
13		1360386	Clamp	1
14		292683	Washer	1
15		136704	Hex Head Bolt	2
16		287816	Hex Head Bolt	2
17		1353530	Clamp	4
18		1345348	Clamp	2
19		1375574	Strap	2
20		16558	Fitting	1
20		16483	O-Ring	1
21		1377371	Hose	1
22		1377372	Hose	1
23		292681	Washer	1
24		2022830	Clamp	1
25		239503	Nut	3
26		17222	Fitting	1
26		16483	O-Ring	1
27		1353530	Clamp (3792 mm,3992 mm,4292 mm)	1
28		1360508	Clamp (3792 mm,3992 mm,4292 mm)	1

a ☞ Table

©1996 HYSTER COMPANY

HEADER HOSE
TWO–STAGE LFL
FOUR FUNCTION
(Figure 129)

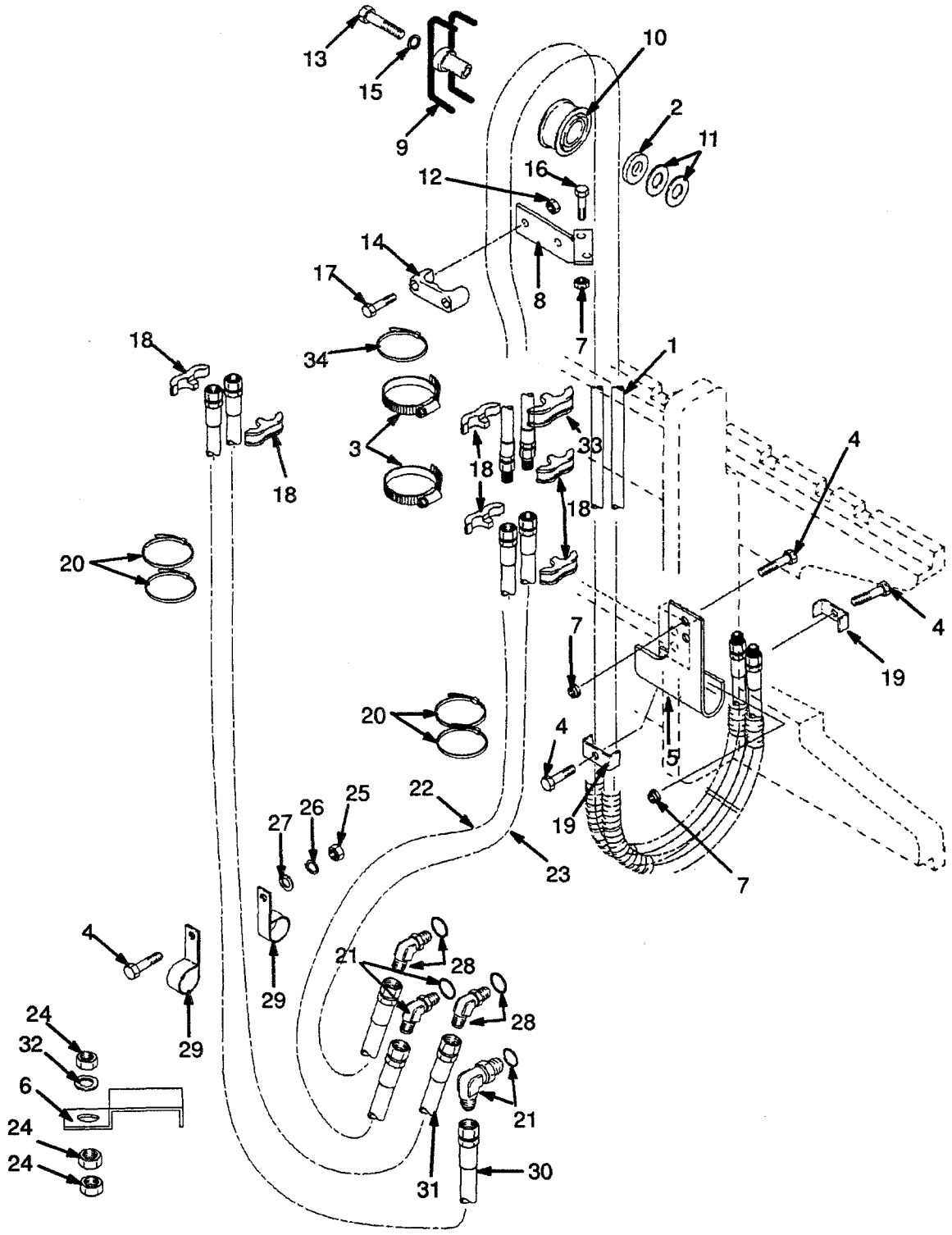

MAST INSTALLATION
TWO–STAGE LFL

REF	PART NO.	NAME OF PART	QTY
1	1363260	Rod End (RH)	1
2	1363261	Rod End (LH)	1
3	292531	Hex Head Bolt	6
4	292683	Lockwasher	6
5	216877	Nut	2
6	16001	Grease Fitting	2
7	292514	Hex Head Bolt	2
8	1371287	Washer	2
9	1348185	Bush	2
10	1348188	Pin	2
11	1370721	Bush	2
12	1370722	Cap	2
13	308117	Pin	2
14	300982	Bush	2
15	320177	Washer	2
16	1371655	Split Pin	2
17	....	Tilt Cylinder ☞ Figure 118	2
18	292682	Lockwasher	2

©1996 HYSTER COMPANY

HEADER HOSE
TWO–STAGE LFL
THREE FUNCTION
(Figure 128)

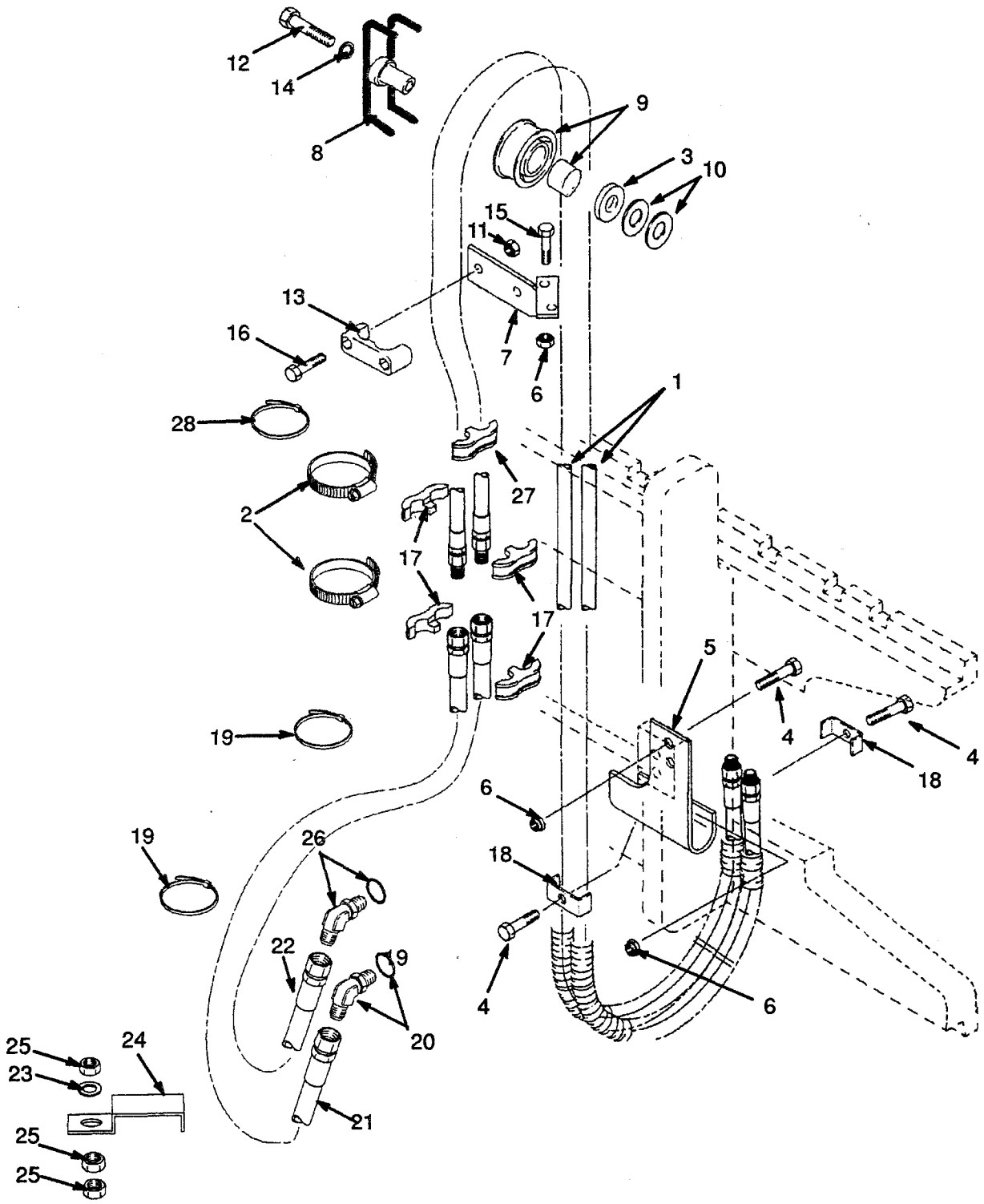

©1996 HYSTER COMPANY

LOAD BACKREST EXTENSION
TWO-STAGE LFL

REF	PART NO.	NAME OF PART	QTY
1	1349446	Load Backrest Extension	1
2	1353533	Hex Head Bolt	4
3	221771	Washer	4
3	296423	Washer (Optional)	4
4	300937	Nut	4

©1996 HYSTER COMPANY

MAST INSTALLATION

TWO–STAGE LFL

(Figure 127)

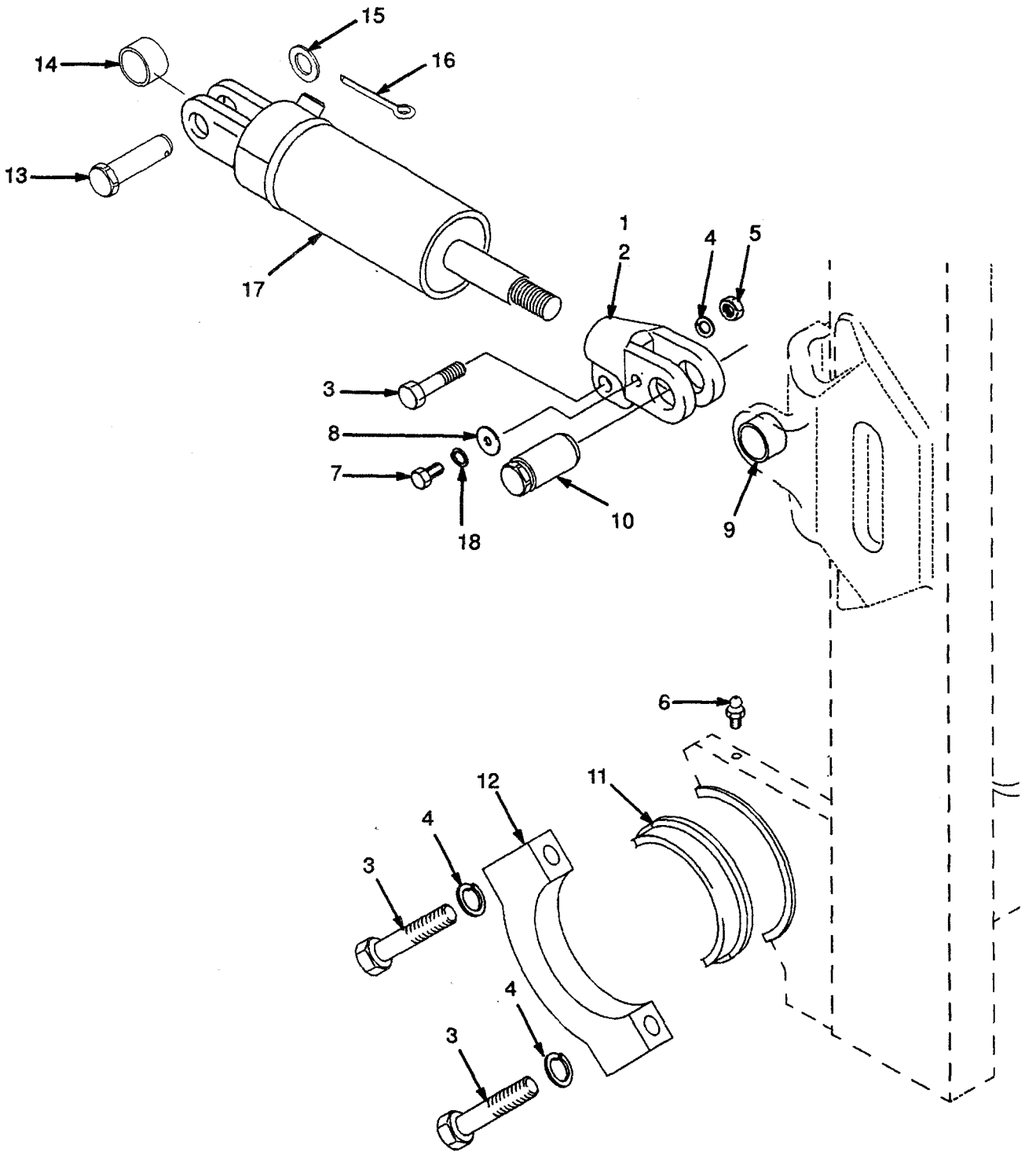

CARRIAGE
TWO-STAGE LFL

REF	PART NO.	NAME OF PART	QTY
	1353329	Carriage	1
1	1353324	Frame	1
2	1345216	Stubshaft	6
3	58901	Circlip	6
4	129387	Shim	AR
5	366115	Spacer	2
6	1353191	Load Roller ("A" Standard)	6
6	1353192	Load Roller ("B" 0,76 mm)	AR
6	1353193	Load Roller ("C" 1,52 mm)	AR
7	1369345	Chain Anchor	2
8	1353408	Pin	2
9	131358	Circlip	4
10	323161	Pin	2
11	15200	Split Pin	2

©1996 HYSTER COMPANY

LOAD BACKREST EXTENSION

TWO-STAGE LFL

(Figure 126)

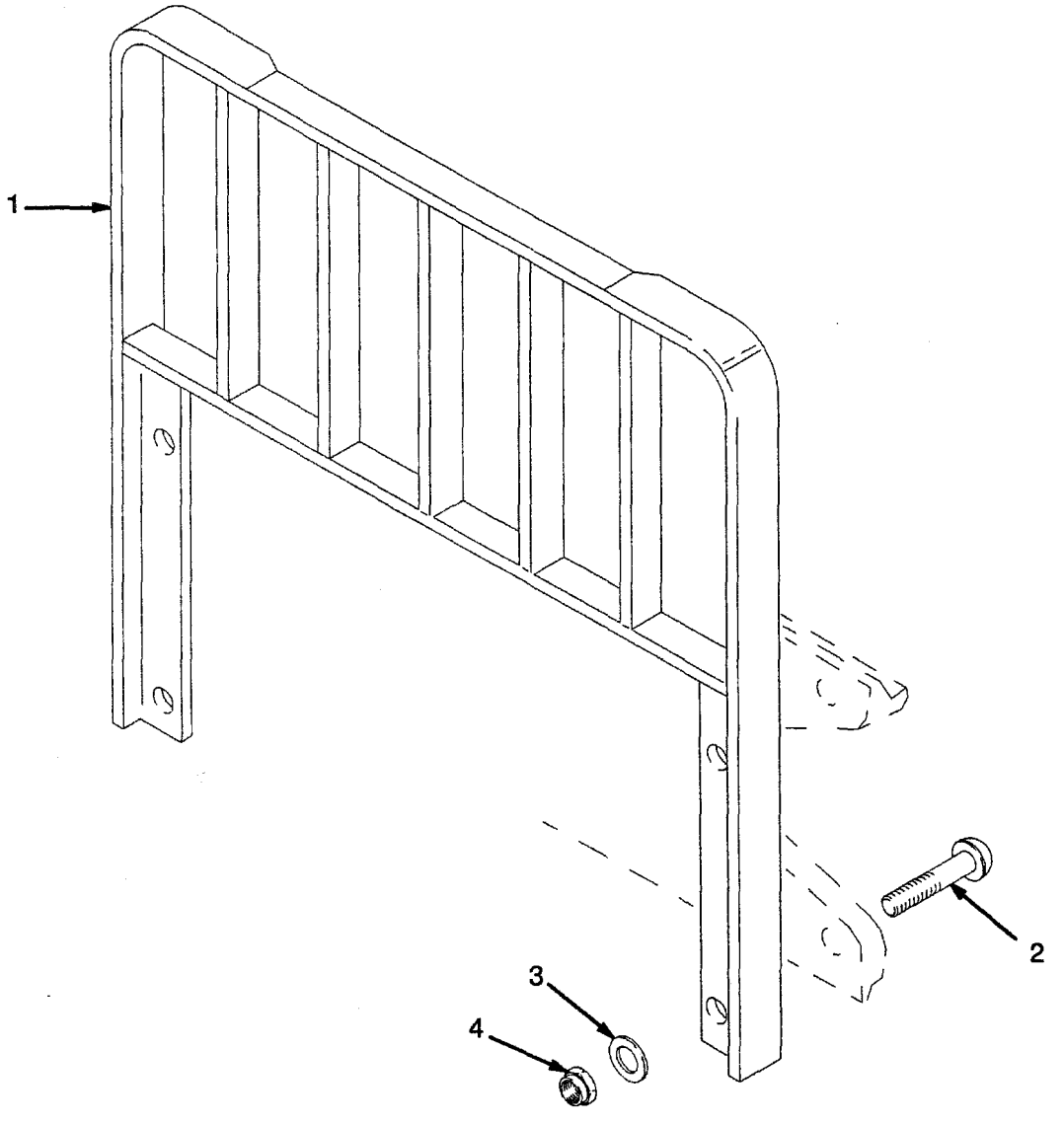

©1996 HYSTER COMPANY

LIFT CYLINDER
TWO-STAGE LFL
RIGHT HAND

REF NO.	NAME OF PART 1 2 3 4	LIFT HEIGHT TO BOTTOM OF FORKS				
		2992 mm	3292 mm	3792 mm	3992 mm	4292 mm
		PART NO.				
	Group No.	8601656	8601659	8601664	8601666	8601669
	Lift Cylinder	1361358	1361376	1362531	1362543	1362561
1	Shell	1361359	1361377	1362532	1362544	1362562
2	Rod	1361356	1361374	1362529	1362541	1362559
4	Spacer	-	-	-	1355189	1355189

REF		PART NO.	NAME OF PART	QTY
	a	....	Group No.	..
	a	....	Lift Cylinder (RH)	1
1	a	....	Shell	1
2	a	....	Rod	1
3		1371653	Gland	1
4	a	....	Spacer	1
5		257913	Check Valve	1
6		297531	Washer	1
7		187388	Circlip	1
8		39348	O-Ring	1
9	b	1319668	Wiper	1
10	b	1356749	Seal	1
11	b	55407	O-Ring	1
12	b	330692	Seal	1
13	b	322824	Back-Up Ring	2
14	b	1362871	Wear Ring	1
15	b	322902	Wear Ring	1
16		186061	Packing Lube	AR

a ☞ Table
b Included In Seal Kit 1360140

©1996 HYSTER COMPANY

CARRIAGE

TWO–STAGE LFL

(Figure 125)

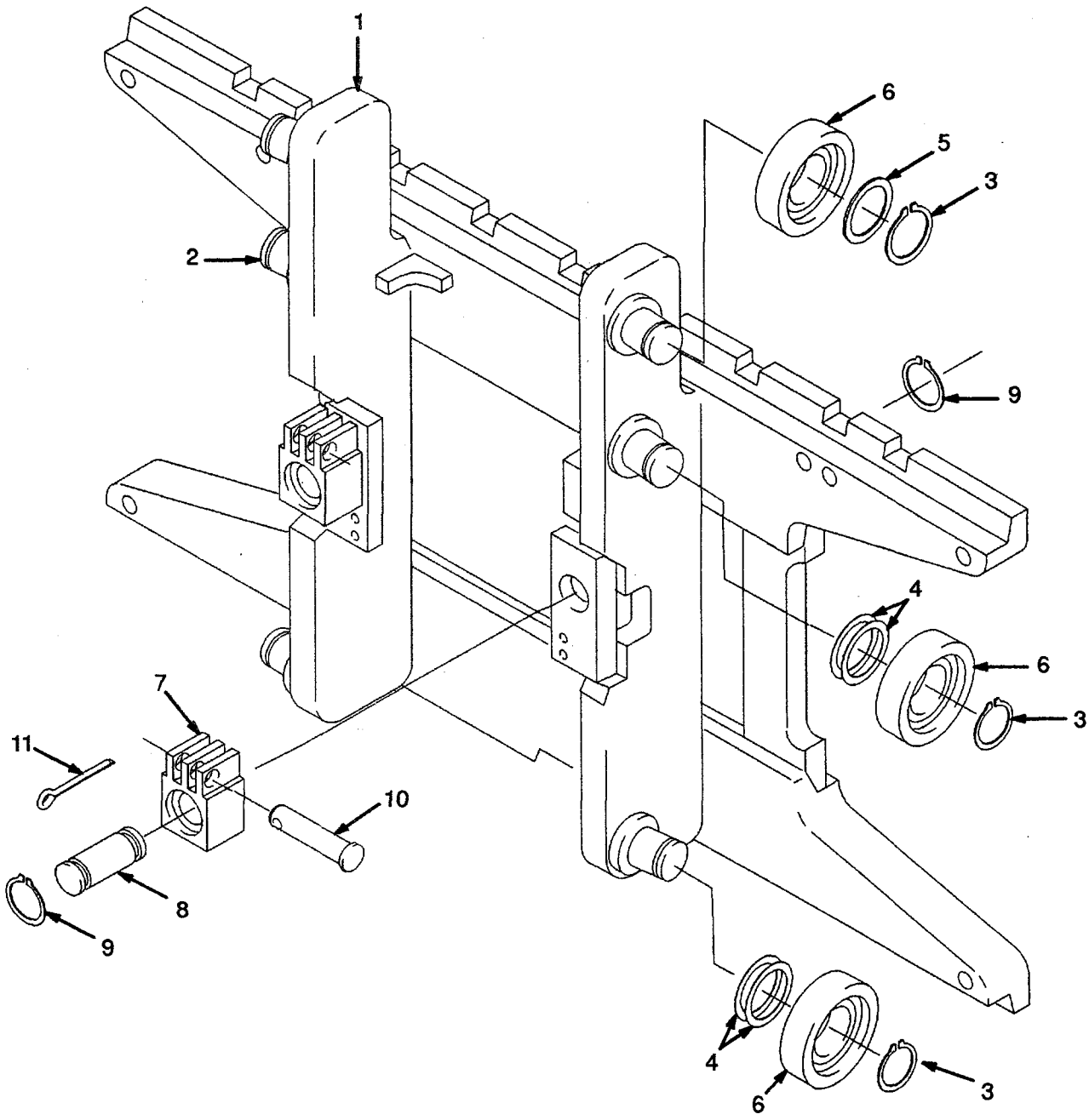

©1996 HYSTER COMPANY

LIFT CYLINDER
TWO-STAGE LFL
LEFT HAND

REF NO.	NAME OF PART 1 2 3 4	LIFT HEIGHT TO BOTTOM OF FORKS				
		2992 mm	3292 mm	3792 mm	3992 mm	4292 mm
		PART NO.				
	Group No.	8601606	8601609	8601614	8601616	8601619
	Lift Cylinder	1361354	1361372	1362527	1362539	1362557
1	Shell	1361355	1361373	1362528	1362540	1362558
2	Rod	1361356	1361374	1362529	1362541	1362559
4	Spacer	-	-	-	1355189	1355189

REF		PART NO.	NAME OF PART	QTY
	a	....	Group No.	..
	a	....	Lift Cylinder (LH)	1
1	a	....	Shell	1
2	a	....	Rod	1
3		1371653	Gland	1
4	a	....	Spacer	1
5		257913	Check Valve	1
6		297531	Washer	1
7		187388	Circlip	1
8		39348	O-Ring	1
9	b	1319668	Wiper	1
10	b	1356749	Seal	1
11	b	55407	O-Ring	1
12	b	330692	Seal	1
13	b	322824	Back-Up Ring	1
14	b	1362871	Wear Ring	1
15	b	322902	Wear Ring	1
16		186061	Packing Lube	AR

a ☞ Table
b Included In Seal Kit 1360140

©1996 HYSTER COMPANY

LIFT CYLINDER
TWO-STAGE LFL
RIGHT HAND
(Figure 124)

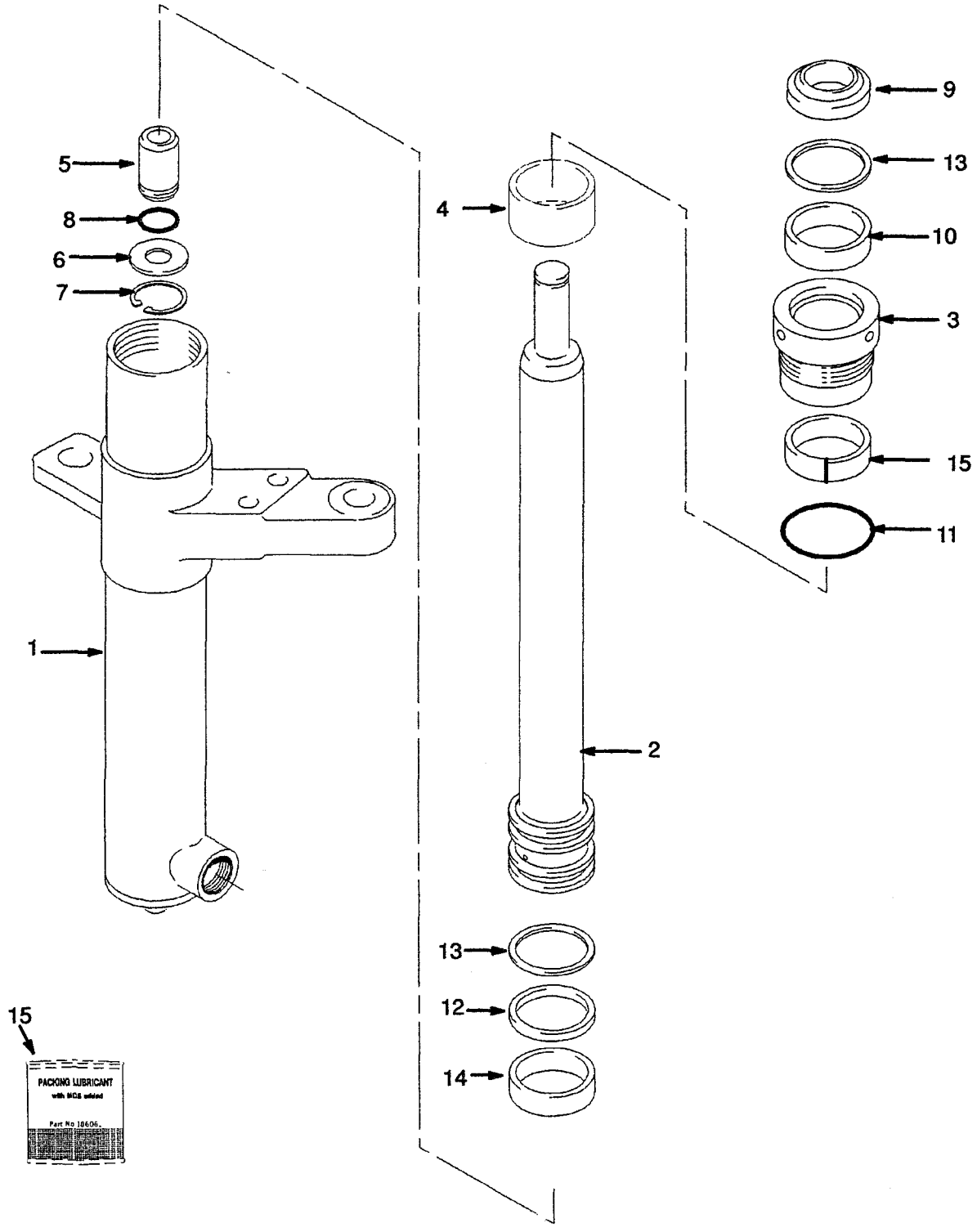

LIFT

FIRST USED ON S/N A550B-2250

TWO-STAGE LFL

REF NO.	NAME OF PART 1 2 3 4	LIFT HEIGHT TO BOTTOM OF FORKS				
		2992 mm	3292 mm	3792 mm	3992 mm	4292 mm
		PART NO.				
	Mast Group No.	A550-2992	A550-3292	A550-3792	A550-3992	A550-4292
1	Lift Chain	180057	223389	135588	335041	246994

REF		PART NO.	NAME OF PART	QTY
	a	....	Mast Assy	1
1		....	Lift Cylinder (LH)	1
			☞ Figure 123	
2		....	Lift Cylinder (RH)	1
			☞ Figure 124	
3		161003	Nut	2
4		297649	Ring	2
5		292531	Hex Head Bolt	2
6		296422	Washer	4
7		323090	Spacer	2
8		300937	Nut	2
9		16560	Fitting	1
9		16485	O-Ring	1
10		323061	Valve	1
10		16982	O-Ring	1
11		1333392	Valve Housing	1
12		292509	Hex Head Bolt	2
13		313828	Nut	2
14		17051	Fitting	1
15		120938	Spring	2
16		323160	Washer	2
17		189595	Fitting	2
17		16485	O-Ring	1
18		14603	Fitting	1
18		16486	O-Ring	1
19		131358	Circlip	2
20		1333382	Washer	2
21		1354915	Washer (0,25 mm)	AR
21		1354916	Washer (0,75 mm)	AR
21		1354917	Washer (1.50 mm)	AR
22		323161	Pin	2
23		15200	Split Pin	2
24	c	1369357	Chain Anchor	2
24	b	320313	Chain Anchor	2
25	a	....	Chain	2
26	e	1376100	Hose	2
27		16882	Fitting	1
28		599737	Chain Wear Scale	AR
29		171350	Chain Lube (400 ml)	AR

a ☞ Table
b Last Used on S/N A550B-1949
c First Used on S/N A550B-1950

©1996 HYSTER COMPANY

LIFT CYLINDER
TWO-STAGE LFL
LEFT HAND
(Figure 123)

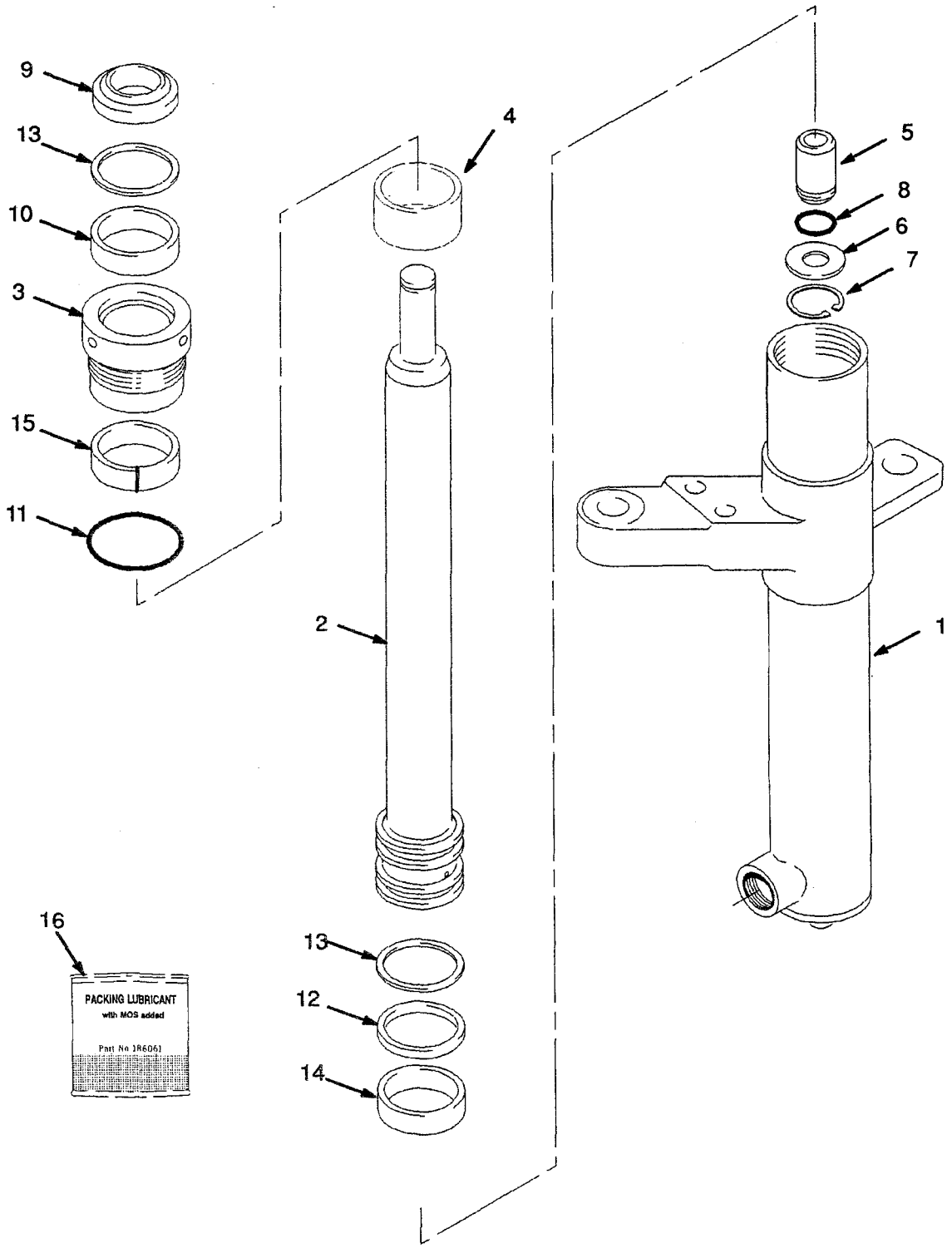

LIFT
TWO-STAGE LFL
LAST USED ON S/N
A550B-2249

REF NO.	NAME OF PART 1 2 3 4	LIFT HEIGHT TO BOTTOM OF FORKS				
		2992 mm	3292 mm	3792 mm	4292 mm	4792 mm
		PART NO.				
	Mast Group No.	A550-2892	A550-3292	A550-3792	A550-4292	A550-4792
1	Lift Chain	182343	337174	135588	214444	129358

REF	PART NO.	NAME OF PART	QTY
a	....	Mast Assy	1
1	....	Lift Cylinder (LH)	1
		☞ Figure 123	
2	....	Lift Cylinder (RH)	1
		☞ Figure 124	
3	161003	Nut	2
4	297649	Ring	2
5	292531	Hex Head Bolt	2
6	296422	Washer	4
7	323090	Spacer	2
8	300937	Nut	2
9	16542	Fitting	1
9	16485	O-Ring	1
10	323061	Valve	1
10	16982	O-Ring	1
11	1333392	Valve Housing	1
12	1347202	Clamp	1
13	136704	Hex Head Bolt	2
14	313828	Nut	2
15	17063	Fitting	1
16	320157	Washer	6
17	120938	Spring	2

REF	PART NO.	NAME OF PART	QTY
18	323160	Washer	2
19	189595	Fitting	2
19	16485	O-Ring	1
20	14603	Fitting	1
20	16486	O-Ring	1
21	131358	Circlip	2
22	1333382	Washer	
23	1354915	Washer (0,25 mm)	A/
23	1354916	Washer (0,75 mm)	A/
23	1354917	Washer (1,50 mm)	A/
24	323161	Pin	
25	15200	Split Pin	2
26	320313	Chain Anchor	2
27 a	....	Chain	2
28	1353535	Hose	1
29	1353534	Hose	1
30	16882	Fitting	1
31	171350	Chain Lube (400 ml)	AR
32	599737	Chain Wear Scale	AR

a ☞ Table

©1996 HYSTER COMPANY

LIFT

FIRST USED ON S/N A550B-2250

TWO-STAGE LFL

(Figure 122)

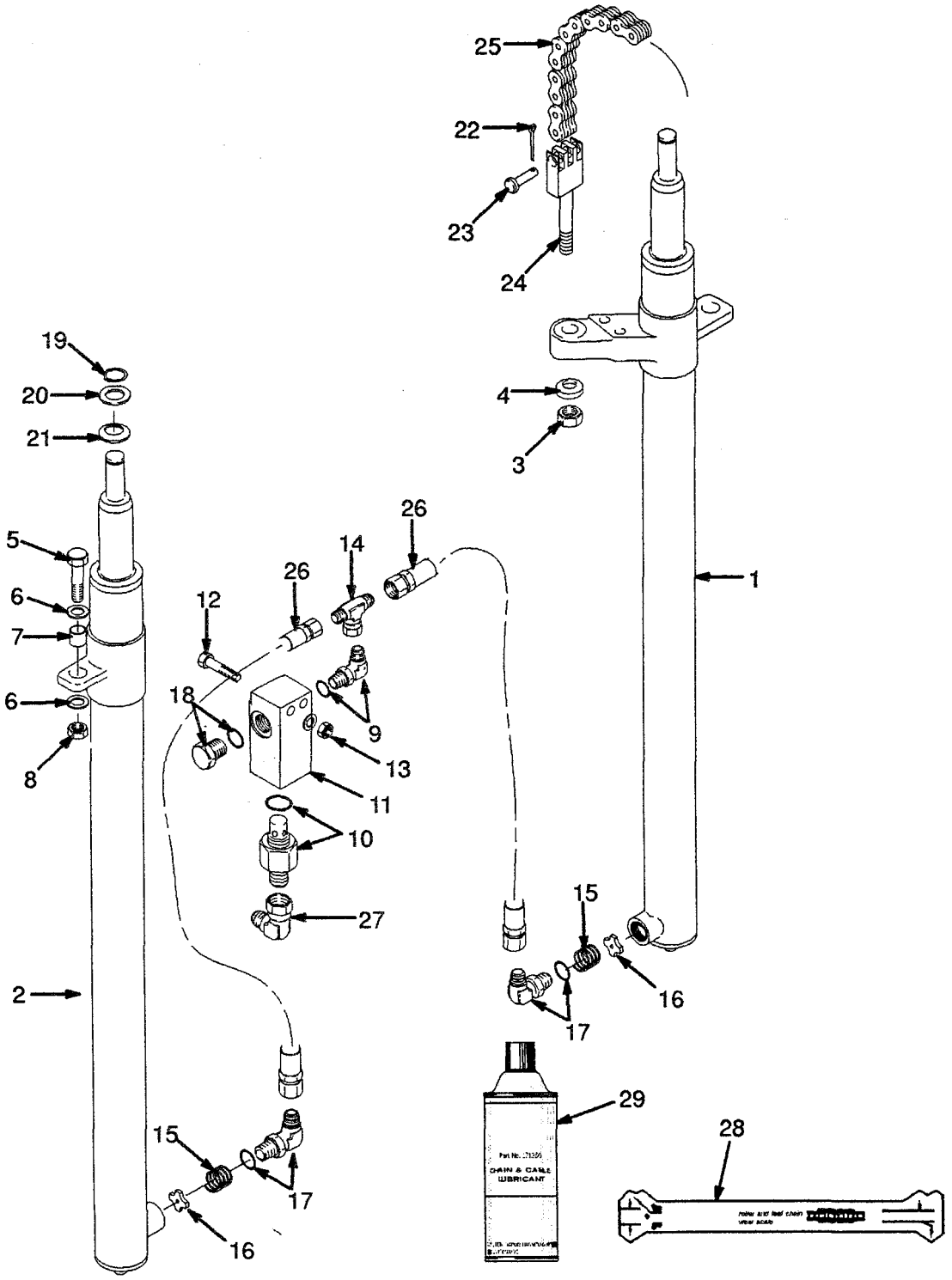

INNER MAST
TWO-STAGE LFL

REF NO.	NAME OF PART 1 2 3 4	LIFT HEIGHT TO BOTTOM OF FORKS				
		2992 mm	3292 mm	3792 mm	3992 mm	4292 mm
		PART NO.				
	Mast Group No.	A550-2992	A550-3292	A550-3792	A550-3992	A550-4292
1	Inner Mast	1349256	1349259	1349264	1349266	1349269

REF		PART NO.	NAME OF PART	QTY
	a	....	Mast Assy	1
1	a	....	Inner Mast	1
2		1345216	Stubshaft	2
3		1353191	Load Roller ("A" Standard)	2
3		1353192	Load Roller ("B" 0,76 mm)	AR
3		1353193	Load Roller ("C" 1,52 mm)	AR
4		58901	Circlip	2
5		129387	Shim (0,508 mm)	AR
6		304526	Circlip	2
7		1345183	Sheave	2
8		1345181	Roller	1
9		231020	Bearing	1
10		37752	Circlip	2

a ☞ Table

©1996 HYSTER COMPANY

LIFT

TWO-STAGE LFL

LAST USED ON S/N A550B-2249

(Figure 121)

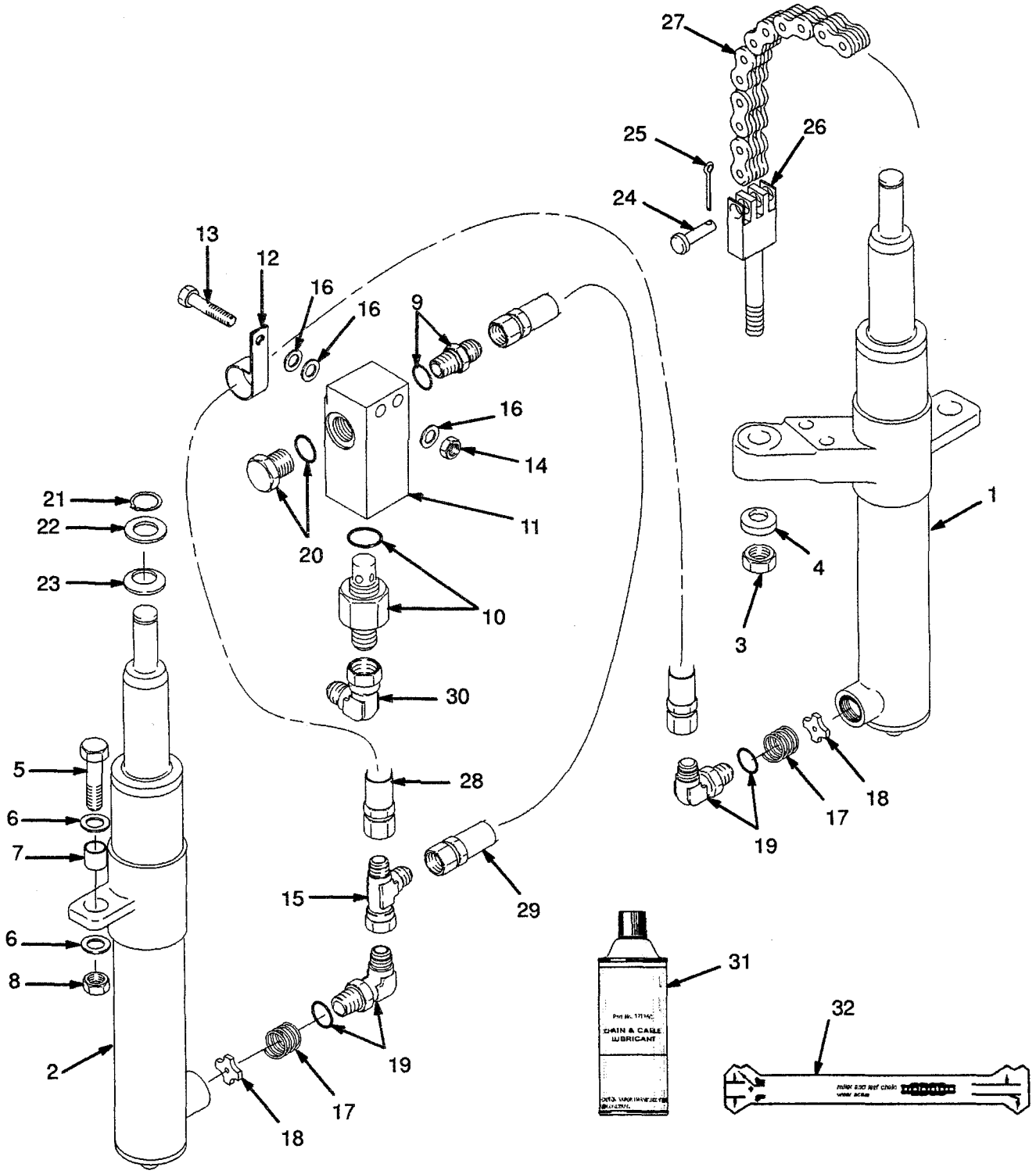

OUTER MAST
TWO-STAGE LFL

REF NO.	NAME OF PART 1 2 3 4	LIFT HEIGHT TO BOTTOM OF FORKS				
		2992 mm	3292 mm	3792 mm	3992 mm	4292 mm
		PART NO.				
	Mast Group No.	A550-2992	A550-3292	A550-37992	A550-3992	A550-4292
1	Outer Mast	1353056	1353059	1353064	1353067	1353070

REF		PART NO.	NAME OF PART	QTY
	a	....	Mast Assy	1
1	a	....	Outer Mast	1
2		1345216	Stubshaft	2
3		215212	Bearing Strip	2
4		131716	Shim (0,508 mm)	4
5		104506	O-Ring	4
6		1353191	Load Roller ('A' Standard)	2
6		1353192	Load Roller ('B' 0,76 mm)	AR
6		1353193	Load Roller ("C" 1,52 mm)	AR
7		58901	Circlip	2
8		129387	Shim (0,508 mm)	AR

a ☞ Table

©1996 HYSTER COMPANY

INNER MAST
TWO-STAGE LFL
(Figure 120)

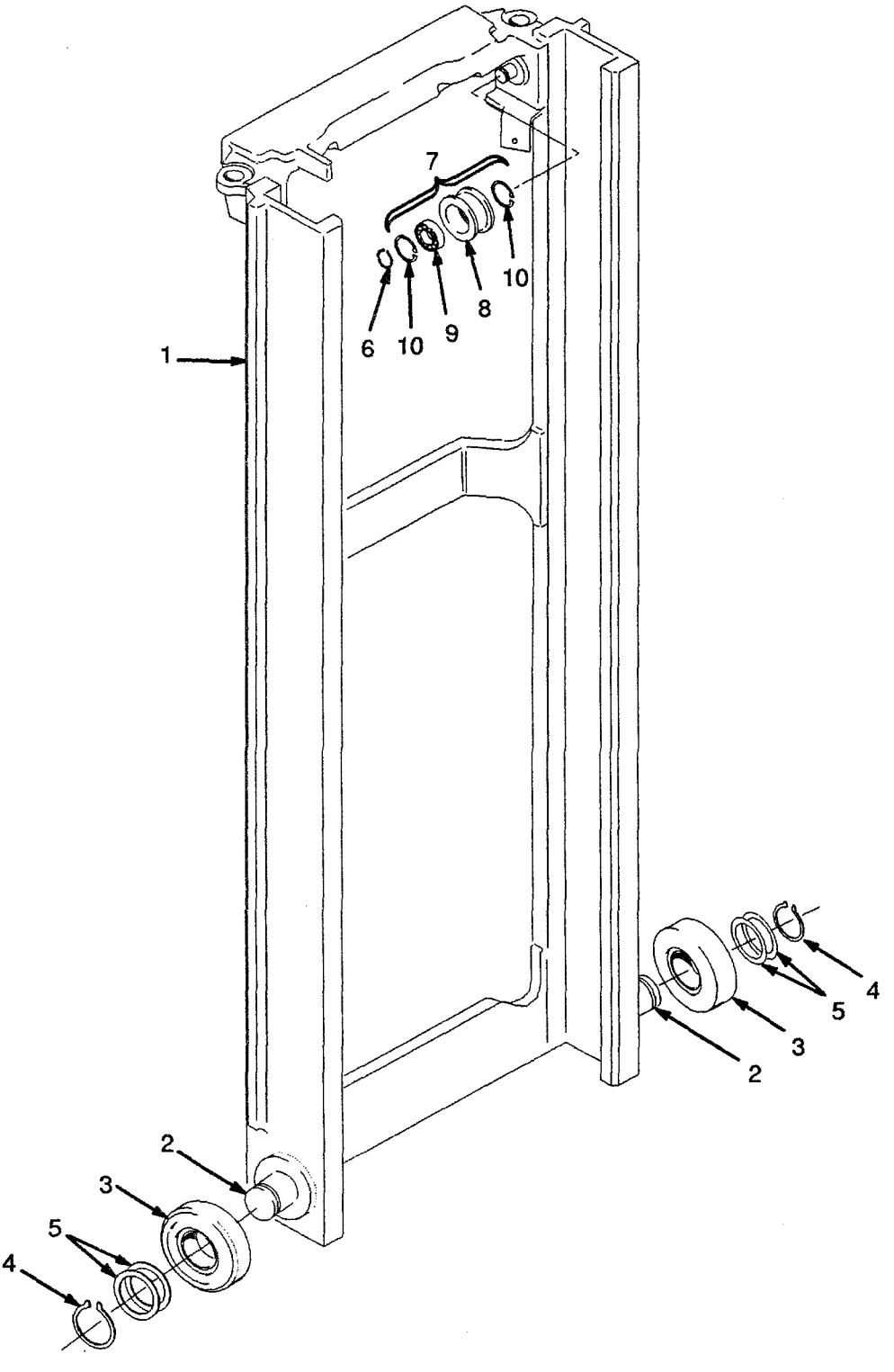

©1996 HYSTER COMPANY

TWO-STAGE LFL

Carriage
Two-Stage LFL ..... Page 266

Fork
Two-Stage LFL ..... Page 276

Header Hose
Two-Stage LFL
Four Function ..... Page 274

Header Hose
Two-Stage LFL
Three Function ..... Page 272

Inner Mast
Two-Stage LFL ..... Page 256

Lift Cylinder
Two-Stage LFL
Left Hand ..... Page 262

Lift Cylinder
Two-Stage LFL
Right Hand ..... Page 264

Lift
First Used On S/N A550B-2250
Two-Stage LFL ..... Page 260

Lift
Two-Stage LFL
Last Used on S/N A550B-2249 ..... Page 258

Load Backrest Extension
Two-Stage LFL ..... Page 268

Mast Installation
Two-Stage LFL ..... Page 270

Outer Mast
Two-Stage LFL ..... Page 254

©1996 HYSTER COMPANY

OUTER MAST
TWO-STAGE LFL
(Figure 119)

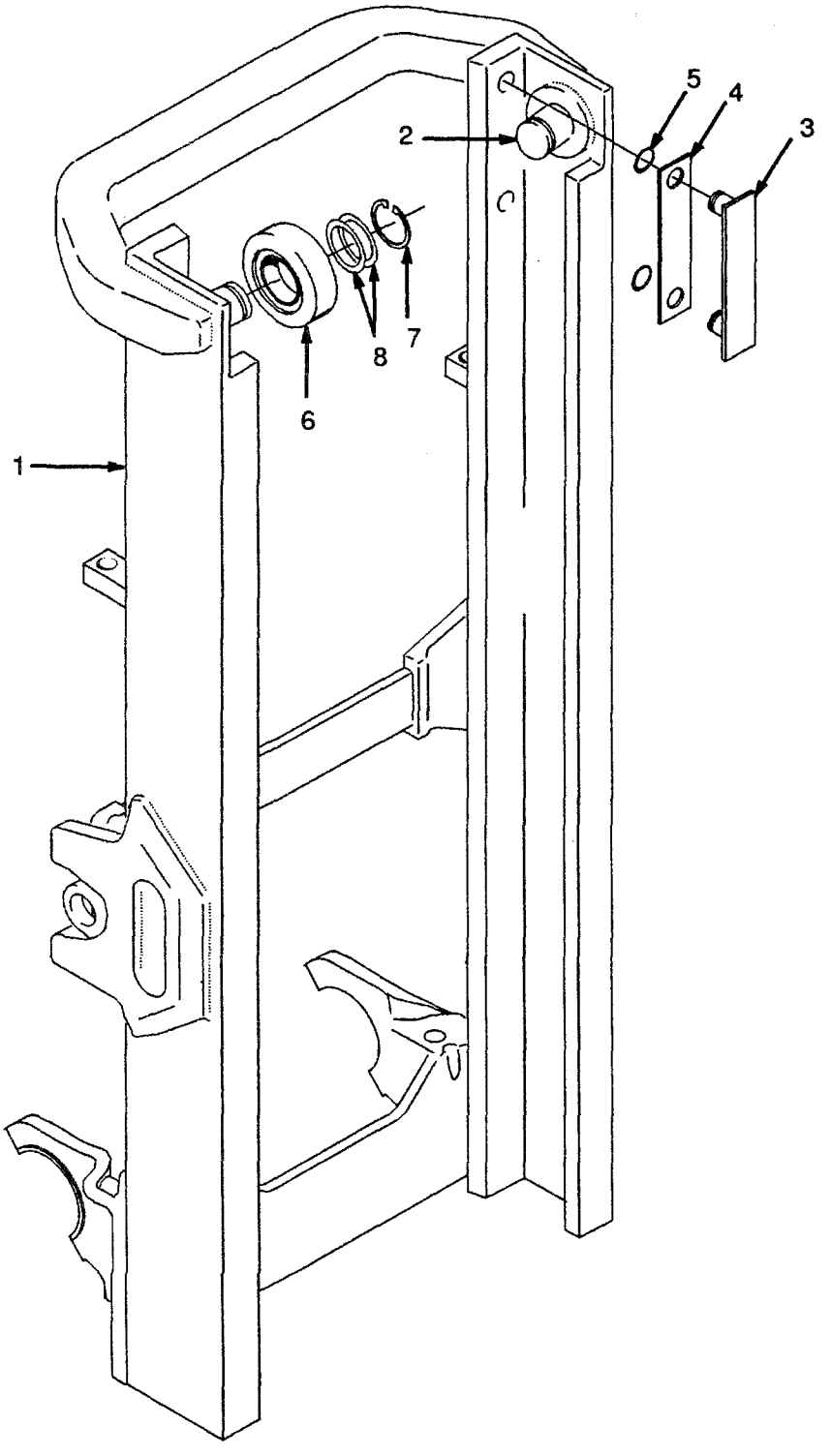

©1996 HYSTER COMPANY