RUTHZIL TRATOR COMERCIAL DE PEÇAS LTDA 11 97083-6812 ROLANDO

HYSTER

PARTS MANUAL

FORTENS

H1.6-1.8FT, H2.0FTS (F001)

CUSTOMER EDITION

HYSTER

1598527
12/2006

©2006 Hyster Company

SECTIONS

1 FRAME
2 ENGINES
3 FUEL SYSTEM
4 ELECTRICAL SYSTEM
5 TRANSMISSION
6 DRIVE AXLE
7 STEERING SYSTEM
8 BRAKE SYSTEM
9 HYDRAULIC SYSTEM
10 MAST-TWO STAGE LIMITED FREE-LIFT
11 MAST-TWO STAGE FULL FREE-LIFT
12 MAST-THREE STAGE FULL FREE-LIFT
13 OPTIONS
14 NUMERICAL INDEX

This Parts Manual is divided into 14 major sections which are listed above. Quick reference to these sections can be made by placing the right thumb on the tab of the desired section, bending the book back and thumbing the pages to the corresponding tab.

TABLE OF CONTENTS

DESCRIPTION	PAGE
A	
AIR CLEANER FILTER ASSEMBLY	
LPG AND DIESEL	3-10
AIR CLEANER SYSTEM	
DIESEL	
PENDING PER ECN 10402532⇒	3-6
⇒PENDING PER ECN 10402532	3-4
MAZDA 2.0L	3-2
ALTERNATOR AND MOUNTING	
YANMAR 2.6L DIESEL	4-37
AUXILARY TUBE EXTENSIONS	
TWO STAGE FULL FREE-LIFT AND THREE STAGE FULL FREE-LIFT	13-16
TWO STAGE LIMITED FREE-LIFT	13-14
AUXILIARY ONE SECTION	
ELECTRONIC CONTROL	
THREE AND FOUR FUNCTION	9-34
AUXILIARY SECTIONS, ONE AND TWO	
MANUAL CONTROL VALVE	
THREE AND FOUR FUNCTION	9-22
AUXILIARY TWO SECTION	
ELECTRONIC CONTROL	
FOUR FUNCTION	9-36
B	
BACK-UP ALARM	13-2
BRAKE ASSEMBLY	8-6
BRAKE LINKAGE	
DUAL PEDAL	8-4
SINGLE PEDAL	8-2
C	
CAB	
WINDOWS AND WINDOW WIPER SYSTEM	1-60
WIRING AND ATTACHING PARTS	1-58
CAB AND ATTACHING PARTS	
WITH PVC DOORS	1-54
WITH STEEL DOORS	1-46
CAB ASSEMBLY	
WITH STEEL DOORS	1-44
CAB DOORS	
PVC	1-56
CAMSHAFT AND DRIVE GEAR	
YANMAR 2.6L DIESEL	2-58
CAMSHAFT AND VALVES	
MAZDA 2.0L	2-36
CARBURETOR	
LPG	
MAZDA 2.0L	2-22
CARRIAGE	
THREE STAGE FULL FREE-LIFT	12-20
TWO STAGE FULL FREE-LIFT	11-16

©2006 HYSTER COMPANY

TABLE OF CONTENTS (Continued)

DESCRIPTION **PAGE**

C (continued)

TWO STAGE LIMITED FREE-LIFT 10-12
CONTROL LEVER LABELS 1-30
CONTROL VALVE
TRANSMISSION 5-34
CONTROL VALVE ASSEMBLY
ELECTRONIC CONTROL
THREE AND FOUR FUNCTION 9-25
MANUAL CONTROL
THREE AND FOUR FUNCTION 9-18
COOLING
MAZDA 2.0L
LPG 2-8
YANMAR 2.6L DIESEL 2-42
COUNTERWEIGHT 1-10
COUNTERWEIGHT EXHAUST
MAZDA 2.0L
WITH CATALYTIC CONVERTER 2-10
COWL ELECTRICAL 4-18
COWL MOUNTING 1-8
CRANKSHAFT AND PISTONS
MAZDA 2.0L 2-38
YANMAR 2.6L DIESEL 2-60
CYLINDER BLOCK
MAZDA 2.0L 2-40
YANMAR 2.6L DIESEL 2-62
CYLINDER HEAD
MAZDA 2.0L 2-34
YANMAR 2.6L DIESEL 2-56

D

DELAY VALVE
MAZDA 2.0L
LPG
S/N F001B02574D⇒ 2-24
DISTRIBUTER
MAZDA 2.0L 4-36
DRIVE AXLE 6-2
DRIVE TIRES AND WHEELS 6-5
PNEUMATIC RADIAL 6-6

E

ELECTRICAL SYSTEM
CHASSIS 4-4
ELECTRO HYDRAULIC POPPET VALVE
ELECTRONIC CONTROL
HOIST AND LOWER 9-32
ELECTRONIC LEVER LABELS
AUXILIARY DUAL FUNCTION 1-34
AUXILIARY SINGLE FUNCTION 1-32

©2006 HYSTER COMPANY

TABLE OF CONTENTS (Continued)

DESCRIPTION **PAGE**

E (continued)

ELECTRONIC THROTTLE LINKAGE
YANMAR DIESEL 3-38
ENGINE ELECTRICAL COMPONENTS
MAZDA 2.0L 4-8
ENGINE ELECTRICAL SYSTEM
MAZDA 2.0L
LPG 4-10
YANMAR 2.6L DIESEL 4-14
ENGINE FUEL SYSTEM AND EMMISSION CONTROL
MAZDA 2.0L 2-20
ENGINE MOUNTING 2-4
EXHAUST
WITH PURIFIER
YANMAR 2.6L DIESEL 2-44
WITHOUT PURIFIER
YANMAR 2.6L DIESEL 2-46

F

FAN ASSEMBLY 2-6
FENDER EXTENSIONS AND MUD GUARDS
WITH WIDE TREAD 1-6
FLOORPLATES AND COVERS 1-4
FLYWHEEL AND HOUSING
MAZDA 2.0L 2-26
YANMAR 2.6L DIESEL 2-50
FORKS 1-40
FORWARD CLUTCH
INPUT
⇒PENDING PER ECN 10402574 5-20
FORWARD CLUTCH (INPUT)
PENDING PER ECN 10402574⇒ 5-30
FREE LIFT CYLINDER
TWO STAGE FULL FREE-LIFT 11-14
FREE-LIFT
THREE STAGE FULL FREE-LIFT 12-16
TWO STAGE FULL FREE-LIFT 11-12
FREE-LIFT CYLINDER
THREE STAGE FULL FREE-LIFT 12-18
FUEL FILTER
YANMAR 2.6L DIESEL 3-30
FUEL INJECTION
YANMAR 2.6L DIESEL 3-32
FUEL SYSTEM
DIESEL 3-28
MAZDA 2.0L 3-12
FULL SUSPENSION SEAT
WITH AND WITHOUT ELECTRONIC CONTROLS 1-18
WITH LIMITED BACK TILT
D/B 09/2006⇒ 1-22

©2006 HYSTER COMPANY

TABLE OF CONTENTS (Continued)

DESCRIPTION **PAGE**

F (continued)

FULL SUSPENSION SWIVEL SEAT
WITH AND WITHOUT ELECTRONIC CONTROLS 1-20
WITH LIMITED BACK TILT
D/B 09/2006⇒ 1-24

G

GEAR HOUSING
YANMAR 2.6L DIESEL 2-52
GEAR PUMP
MAZDA 2.0L 9-4
YANMAR DIESEL 9-5

H

HAND LEVERS
FOUR FUNCTION
WITH DETENTED LEVERS 9-16
WITHOUT DETENTED LEVERS 9-14
THREE FUNCTION
WITH DETENTED LEVERS 9-12
WITHOUT DETENTED LEVERS 9-10
HEADER HOSE
THREE STAGE FULL FREE-LIFT 12-22
TWO STAGE FULL FREE-LIFT 11-18
HEADER HOSES
TWO STAGE LIMITED FREE-LIFT 10-14
HOOD 1-2
HYDRAULIC FILTER 9-6
HYDRAULIC SUPPLY AND RETURN 9-2

I

IMPACT SENSOR 4-6
INNER MAST
THREE STAGE FULL FREE-LIFT 12-6
TWO STAGE FULL FREE-LIFT 11-4
TWO STAGE LIMITED FREE-LIFT 10-4
INSTRUMENT CLUSTER 4-22
INTAKE AND EXHAUST MANIFOLDS
MAZDA 2.0L 2-18
YANMAR 2.6L DIESEL 2-48
INTEGRAL SIDE-SHIFT ASSEMBLY
TWO AND THREE STAGE FULL FREE-LIFT 13-8
TWO STAGE LIMITED FREE-LIFT 13-6
INTEGRAL SIDE-SHIFT CYLINDER 13-10
INTEGRAL SIDE-SHIFT HYDRAULIC HOSES
TWO AND THREE STAGE FULL FREE-LIFT 13-12
TWO STAGE LIMITED FREE-LIFT 13-11
INTERMEDIATE MAST
THREE STAGE FULL FREE-LIFT 12-4

©2006 HYSTER COMPANY

TABLE OF CONTENTS (Continued)

DESCRIPTION	PAGE
J	
JOY STICK AND ELECTRONIC CONTROL LEVERS	4-24
JOYSTICK LABELS	1-36
WITH RETURN TO SET TILT	1-38
L	
LABELS	
EXTERIOR	1-26
INTERIOR	1-28
LOAD BACKREST EXTENSION	1-42
LOAD WEIGH ELECTRICAL	4-34
LPG TANK BRACKET	
SWING OUT	
⇒D/B 09/2006	3-16
SWING OUT, WITH FABRIC STRAP	
D/B 09/2006⇒	3-18
SWING OUT/DROP DOWN	
D/B 09/2006⇒	3-24
⇒D/B 09/2006	3-20
LUBRICATION SYSTEM	
YANMAR 2.6L DIESEL	2-66
M	
MAIN LIFT	
THREE STAGE FULL FREE-LIFT	12-8
TWO STAGE FULL FREE-LIFT	11-6
TWO STAGE LIMITED FREE-LIFT	10-6
MAIN LIFT CYLINDER	
LEFT HAND	
THREE STAGE FULL FREE-LIFT	12-14
TWO STAGE FULL FREE-LIFT	11-10
TWO STAGE LIMITED FREE-LIFT	10-10
RIGHT HAND	
THREE STAGE FULL FREE-LIFT	12-12
TWO STAGE FULL FREE-LIFT	11-8
TWO STAGE LIMITED FREE-LIFT	10-8
MAST ELECTRICAL	
TILT SENSOR	4-32
MAST INSTALLATION	9-40
MIRRORS	13-4
MONOTROL PEDAL	3-40
N	
NON SUSPENSION SEAT	
WITHOUT ELECTRONIC CONTROLS	1-14
O	
OIL PAN	
YANMAR 2.6L DIESEL	2-54
OIL PUMP AND FILTER	
MAZDA 2.0L	2-32

©2006 HYSTER COMPANY

TABLE OF CONTENTS (Continued)

DESCRIPTION **PAGE**

O (continued)

OUTER MAST
THREE STAGE FULL FREE-LIFT 12-2
TWO STAGE FULL FREE-LIFT 11-2
TWO STAGE LIMITED FREE-LIFT 10-2
OUTLET SECTION
ELECTRONIC CONTROL;
THREE AND FOUR FUNCTION 9-38
MANUAL CONTROL VALVE
THREE AND FOUR FUNCTION 9-24
OVERHEAD EXHAUST
MAZDA 2.0L
WITH CATALYTIC CONVERTER 2-16
WITHOUT CATALYTIC CONVERTER
⇒S/N F001B01812D 2-12
WITHOUT CATALYTIC CONVERTER
(LPG)
S/N F001B01813D⇒ 2-14
OVERHEAD GUARD 1-12

P

PARK BRAKE 8-8
POWER DISTRIBUTION MODULE
PENDING PER ECN 10419489⇒ 4-21
⇒PENDING PER ECN 10419489 4-20
PRE-CLEANER AND MOUNT 3-8

R

REVERSE CLUTCH
COUNTER
⇒PENDING PER ECN 10402574 5-22
REVERSE CLUTCH (COUNTER)
PENDING PER ECN 10402574⇒ 5-32

S

SEMI SUSPENSION SEAT
WITH AND WITHOUT ELECTRONIC CONTROLS 1-16
STEEL DOOR
LEFT HAND 1-52
STEEL DOOR AND HEATER ASSEMBLY
RIGHT HAND 1-48
STEER TIRES AND WHEELS 7-11
STEERING AXLE 7-8
STEERING COLUMN ASSEMBLY 7-4
STEERING CONTROL UNIT 7-6
STEERING CYLINDER 7-10
STEERING SYSTEM 7-2

©2006 HYSTER COMPANY

TABLE OF CONTENTS (Continued)

DESCRIPTION **PAGE**

T

THROTTLE CABLE LINKAGE
YANMAR DIESEL 3-36
THROTTLE LINKAGE
MAZDA 2.0L 3-34
TILT AND AUXILIARY HOSES 9-8
TILT CYLINDERS
LEFT HAND 9-44
RIGHT HAND 9-42
TILT SECTION
ELECTRONIC CONTROL
THREE AND FOUR FUNCTION 9-30
TIMING GEAR COVER AND OIL PAN
MAZDA 2.0L 2-30
TORQUE CONVERTER 5-3
TRANSMISSION
SINGLE SPEED
SHEET 1 OF 2
PENDING PER ECN 10402574⇒ 5-24
⇒S/N T117M016844 ⇒D/B 09/2006 5-8
S/N T117M016845⇒ S/N PENDING PER ECN 10402574 D/B 09/2006⇒ 5-14
SHEET 2 OF 2
PENDING PER ECN 10402574⇒ 5-26
⇒S/N T117M016844 ⇒D/B 09/2006 5-12
S/N T117M016845⇒ S/N PENDING PER ECN 10402574 D/B 09/2006⇒ 5-17
TRANSMISSION COOLING
MAZDA 2.0L 5-4
YANMAR 2.6L DIESEL 5-6
TRANSMISSION ELECTRICAL SYSTEM 4-30
TRANSMISSION MOUNT 5-2

V

VALVE ASSEMBLY, LIFT AND LOWER
ELECTRONIC CONTROL VALVE
THREE AND FOUR FUNCTION 9-28
VALVE ASSEMBLY, LIFT AND TILT
MANUAL CONTROL VALVE
THREE AND FOUR FUNCTION 9-20

W

WATER PUMP
MAZDA 2.0L 2-28
YANMAR 2.6L DIESEL 2-64
WIRE HARNESS
BACK-UP ALARM 13-5
CHASSIS
MAZDA 2.0L
D/B 08/2006⇒ 4-44
⇒D/B 08/2006 4-38
YANMAR 2.6L DIESEL
D/B 08/2006⇒ 4-56
YANMAR DIESEL 2.6L

©2006 HYSTER COMPANY

TABLE OF CONTENTS (Continued)

DESCRIPTION **PAGE**

W (continued)

⇒D/B 08/2006 4-50
COWL WITH FORWARD/REVERSE LEVER
WITHOUT RETURN TO SET TILT 4-66
COWL WITH MONOTROL PEDAL
WITH RETURN TO SET TILT 4-62
DIESEL ENGINE
YANMAR 2.6L
D/B 08/2006⇒ 4-76
⇒D/B 08/2006 4-74
ELECTRONIC CONTROL VALVE
3 FUNCTION 4-78
4 FUNCTION 4-80
LIGHTS
PENDING PER ECN 10419449⇒ 4-88
⇒PENDING PER ECN 10419449 4-86
LPG ENGINE
MAZDA 2.0L
D/B 08/2006⇒ 4-72
⇒D/B 08/2006 4-70
TRANSMISSION
SINGLE SPEED
D/B 08/2006⇒ 4-84
⇒D/B 08/2006 4-82
WORK, REAR DRIVE, AND BRAKE/TAIL LIGHTS 4-28

©2006 HYSTER COMPANY

ABBREVIATIONS QUICK REFERENCE SHEET

Listed below are abbreviations used in parts manuals to denote the following expressions:

TERM	DEFINITION
Amp	Amperes
AR	As Required
BDI	Battery Discharge Indicators
BWI	Brush Wear Indicator
CE	Communicator End
CRE	Corrosive Environment
D/B	Date Break
dbA	Decibel "A" Scale
DE	Drive End
ECH	Empty Container Handler
ECH-3	Empty Container Handler - 3 High Stacking
ECH-4	Empty Container Handler - 4 High Stacking
ECH-5	Empty Container Handler - 5 High Stacking
ECH-6	Empty Container Handler - 6 High Stacking
ECH-7	Empty Container Handler - 7 High Stacking
ECM	Electronic Control Module
ECN	Engineering Change Notice
EEPROM	Electrically Erasable Programmable Read Only Memory
EPA	US Environmental Protection Agency
EPROM	Electrically Programmable Read Only Memory

TERM	DEFINITION
FRE	Freezer Environment
in.	inches
LPG	Liquefied Petroleum Gas
MAP	Manifold Absolute Pressure
mm	millimeters
MSTS	Microprocessor Spark Timing System
NPT	National Pipe Threads
O/S	Oversize
PTO	Power Take Off
RPM	Revolutions per Minute
S/N	Serial Number
TMM	Truck Management Module
UL Type D	Diesel-Powered Safety Rating
UL Type DS	Diesel-Powered Safety Rating
UL Type E	Battery-Powered Safety Rating
UL Type EE	Battery-Powered Safety Rating
UL Type ES	Battery-Powered Safety Rating
UL Type G	Gasoline-Powered Safety Rating
UL Type GS	Gasoline-Powered Safety Rating
UL Type LP	Gas-Powered Safety Rating
UL Type LPS	LP Gas-Powered Safety Rating
U/S	Undersize
UL	Underwriters Laboratory
V	Volts

©2006 HYSTER COMPANY

HOW TO USE THE ILLUSTRATED PARTS MANUAL

This parts manual describes and illustrates assemblies, subassemblies, and detail parts needed for service replacement.

The different constructions are indicated by keys and footnotes. The callouts correspond to descriptions found on the next page.

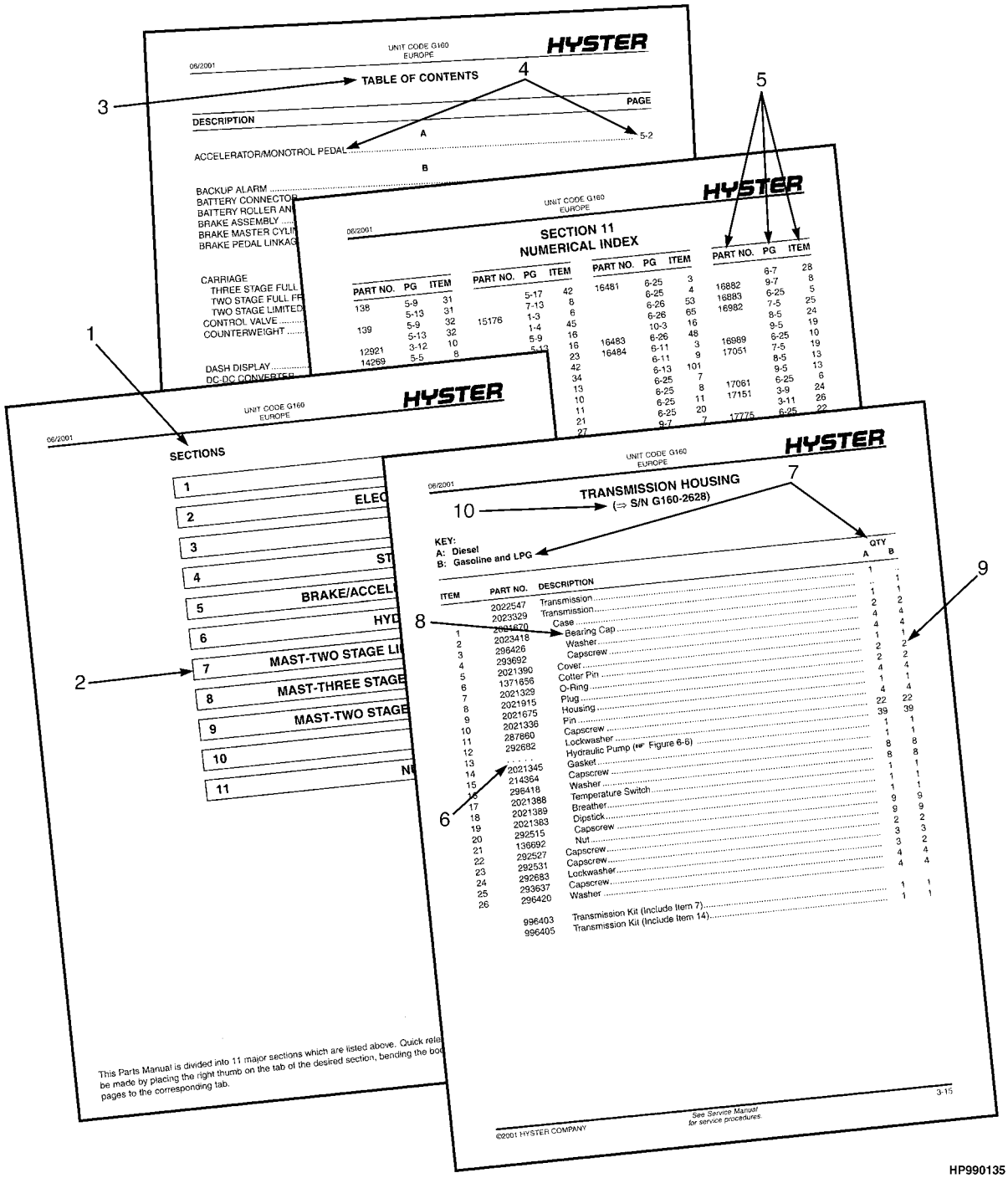

©2006 HYSTER COMPANY

HOW TO FIND THE DESIRED PART NUMBER

WHEN THE PART NUMBER AND THE NEXT HIGHER ASSEMBLY IS NOT KNOWN:

1. Determine the function and application of the part required. Turn to the Sections Page. Choose the general area of reference most likely to include the part.

2. Turn to the section you chose. Use the Section Table of Contents to determine the assembly which would normally contain the part required. Then locate the part on the assembly breakdown page.

WHEN THE PART NUMBER IS NOT KNOWN AND THE NEXT HIGHER ASSEMBLY IS KNOWN:

3. Determine the assembly the required part is used on. Turn to the Table of Contents on Page i.

4. Locate the assembly the required part is used on and turn to the page indicated for that assembly. Then locate the part on the assembly breakdown page.

WHEN THE PART NUMBER IS KNOWN:

5. Use the Numerical Index on Page 14-1 to find the part number. Turn to the page listed and locate the part as indicated by the item number.

GENERAL:

The assembly breakdowns include part numbers, descriptions, quantities required, keys and footnotes to help in selecting correct parts.

6. Five periods in the PART NO. column (. . . . .) indicate that the part is either *Not Serviced Separately* or there is a reference to another figure. A figure reference is denoted by a pointing hand followed by a figure number in the DESCRIPTION column (☞Figure 10)

7. Keys are used to show two or more similar assemblies, RH and LH assembly parts, etc. Select the appropriate key, "A", "B", "C", "D", or "E" and the corresponding quantity column to find the required parts. Two periods in the QTY column (..) indicate that the part is not used for that assembly.

8. Indented descriptions under the DESCRIPTION column are used to indicate assemblies and subparts of assemblies. In the example on the previous page, *BEARING CAP* (Item 2) is a subpart of the major assembly *CASE*.

9. Quantities shown are for one assembly. The quantities of the subpart *BEARING CAP* are indicated as two and two. This means two per *CASE* assembly.

10. Serial number breaks identify the most current parts information and are shown as follows:
    ⇒ S/N D001H-2628
    Indicates last serial number affected.
    S/N D001H-2629 ⇒
    Indicates the first serial number affected.
    S/N D001H-1553 ⇔ S/N D001H-3291
    Indicates a range of serial numbers affected.

    ECN numbers for pending serial numbers are shown to allow for the inclusion of the most current parts information and are identified as follows:
    ⇒ S/N Pending Per ECN 63243
    Indicates a pending serial number for last unit affected.
    S/N Pending Per ECN 63243 ⇒
    Indicates a pending serial number for first unit affected.

    Date breaks are used to indicate when a change occurred but a subsequent serial number break was not recorded. This is an arbitrary date usually based on the ECN release and are identified as follows:
    ⇒ D/B 3/00
    Indicates that a change occurred sometime within that month for the item affected.
    D/B 3/00 ⇒
    Indicates that a change occurred sometime within that month for the item affected.
    D/B 3/00 ⇔ D/B 4/00
    Indicates a range of production dates of the item affected.

    Contact your local dealer for Hyster lift trucks for serial number information for items with a ECN or a date break.

ORDERING PARTS:

When ordering replacement parts, give the unit serial number, part number, name of part and quantity required.

For any further information on parts, service, or ordering, consult your local dealer for Hyster lift trucks.

©2006 HYSTER COMPANY

IDENTIFICATION OF TRUCK SERIAL NUMBERS

X	OOO	X	OOOO	X
(1)	(2)	(3)	(4)	(5)

(1) and (2) The first letter and three numbers indicate the truck unit code.

(3) The second letter indicates the plant of manufacture.

(4) The four or five digit number indicates the production sequence number of the truck.

(5) The final letter indicates the year of manufacture starting with "A" in 1957, 1980, and 2003. The letters "I", "O", and "Q" will not be used.

For pending serial numbers contact your local dealer for Hyster lift trucks.

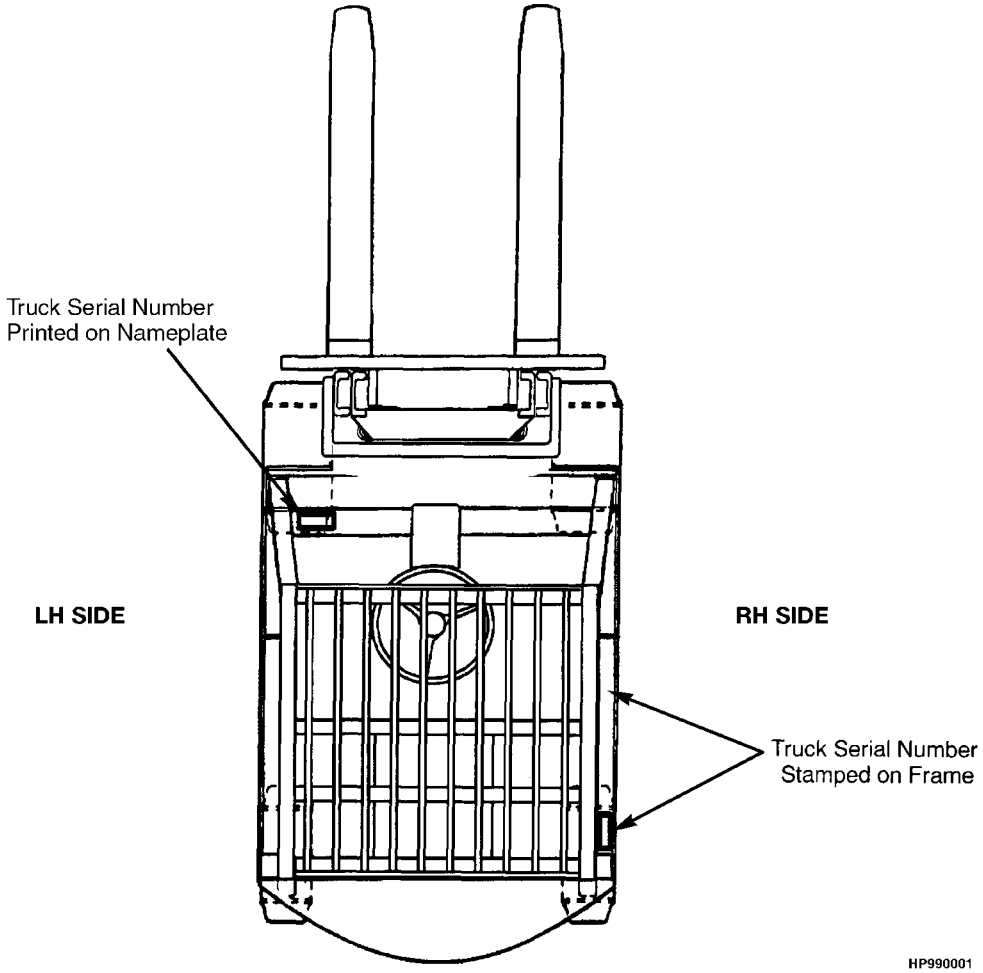

Parts referred to in this book as right or left hand parts are in accordance with the illustration above.

©2006 HYSTER COMPANY

IDENTIFICATION OF MAST SERIAL NUMBERS

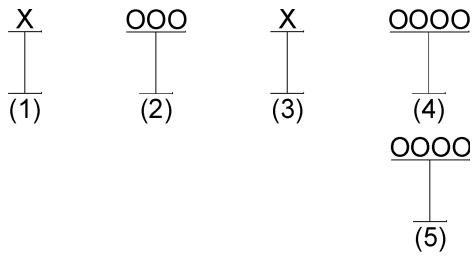

(1) and (2) The first letter and number indicates the mast unit code.

(3) The second letter indicates the plant of manufacture.

(4) The four or five digit number indicates the production sequence number of the mast.

(5) Carriage travel in millimeters stamped just below the serial number.

Mast Group identification consists of mast unit code (1) and (2) plus carriage travel (5).

For pending production sequence numbers contact your local dealer for Hyster lift trucks.

LIFT EQUIPMENT IDENTIFICATION

1. Fork part number, capacity rating, plant code letter, and date of manufacture are stamped approximately six inches below the top of most forks.

2. The carriage group number is stamped on the right hand side of the top crossmember (pin type) or on the back of the right hand end of the bottom crossmember (hook type). A date code has two letters in line with or below the carriage group number.

3. The mast identification number has a unit code, a letter indicating the plant of manufacture, and a serial number. Underneath the production sequence number is a four digit number that indicates the carriage travel in millimeters.

4. Tilt and lift cylinder group numbers are stamped on the cylinder shell.

   Always refer to the group, serial, or part number when ordering service parts.

   Modification of masts and carriages by SPED (Special Products Engineering Department) are identified by a model prefix code beginning with the letter "S". contact your dealer for Hyster lift trucks for information on these assemblies.

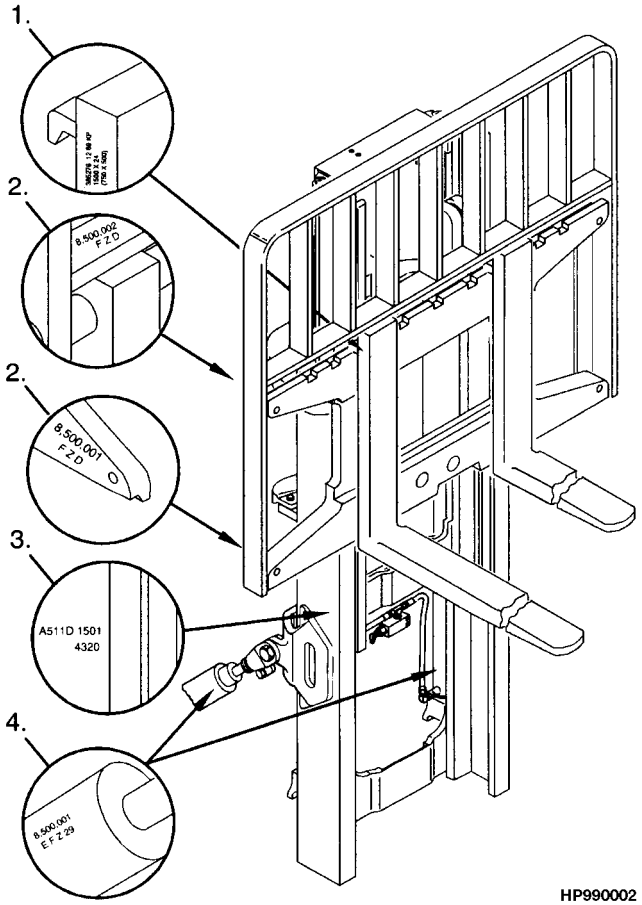

IDENTIFICATION OF ATTACHMENT AND SIDE-SHIFT CARRIAGE SERIAL NUMBERS

X OOO X OOOO

(1) (2) (3) (4)

(1) and (2) The first letter and three numbers indicate the attachment unit code.

(3) The second letter indicates the plant of manufacture.

(4) The four or five digit number indicates the production sequence number.

For pending production sequence numbers contact your local dealer for Hyster lift trucks.

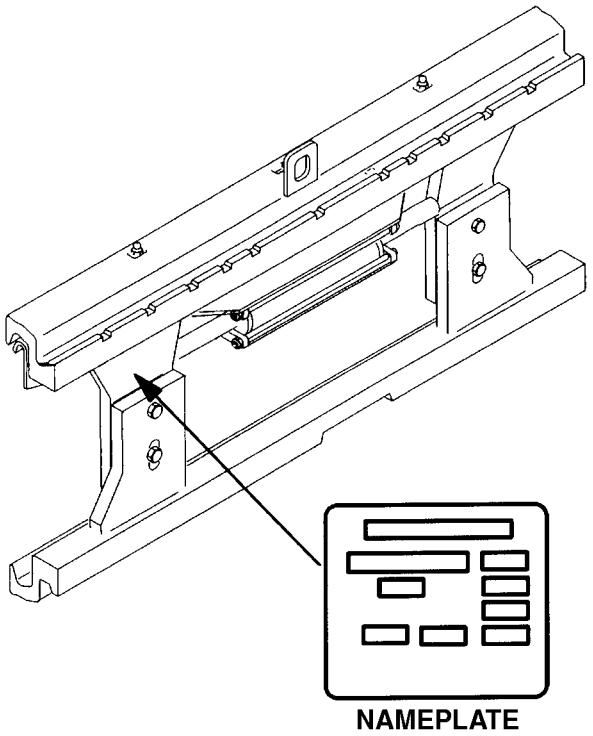

Side-shift carriages and attachments have nameplates. Use the serial number found on the nameplate to identify the attachment.

Always refer to the group, serial, or part number when ordering service parts.

Modifications of attachments and side-shift carriages by SPED (Special Products Engineering Department) are identified by a model prefix code beginning with the letter "S". Contact your dealer for Hyster lift trucks for information on these assemblies.

©2006 HYSTER COMPANY

PUBLICATIONS

Every new lift truck is provided with an OPERATING MANUAL. This manual has information that the operator must know for inspection and operation of the lift truck.

SERVICE MAINTENANCE MANUALS, which provide service and overhaul procedures, and PARTS MANUALS with complete replacement part identification, are available at a nominal fee from your Hyster dealer to assist users in effectively maintaining Hyster lift trucks in a safe, useful condition. See the list below for information on ordering specific publications for this model lift truck.

PUBLICATION	HYSTER PART NUMBER
Operating Manual	1598520
Service Manual (Complete)	1602993
Parts Manual	1598527

©2006 HYSTER COMPANY

NOTES

1 FRAME

SECTION 1
FRAME

DESCRIPTION	PAGE
CAB	
WINDOWS AND WINDOW WIPER SYSTEM	1-60
WIRING AND ATTACHING PARTS	1-58
CAB AND ATTACHING PARTS	
WITH PVC DOORS	1-54
WITH STEEL DOORS	1-46
CAB ASSEMBLY	
WITH STEEL DOORS	1-44
CAB DOORS	
PVC	1-56
CONTROL LEVER LABELS	1-30
COUNTERWEIGHT	1-10
COWL MOUNTING	1-8
ELECTRONIC LEVER LABELS	
AUXILIARY DUAL FUNCTION	1-34
AUXILIARY SINGLE FUNCTION	1-32
FENDER EXTENSIONS AND MUD GUARDS	
WITH WIDE TREAD	1-6
FLOORPLATES AND COVERS	1-4
FORKS	1-40
FULL SUSPENSION SEAT	
WITH AND WITHOUT ELECTRONIC CONTROLS	1-18
WITH LIMITED BACK TILT	
D/B 09/2006⇒	1-22
FULL SUSPENSION SWIVEL SEAT	
WITH AND WITHOUT ELECTRONIC CONTROLS	1-20
WITH LIMITED BACK TILT	
D/B 09/2006⇒	1-24
HOOD	1-2
JOYSTICK LABELS	1-36
WITH RETURN TO SET TILT	1-38
LABELS	
EXTERIOR	1-26
INTERIOR	1-28
LOAD BACKREST EXTENSION	1-42
NON SUSPENSION SEAT	
WITHOUT ELECTRONIC CONTROLS	1-14
OVERHEAD GUARD	1-12
SEMI SUSPENSION SEAT	
WITH AND WITHOUT ELECTRONIC CONTROLS	1-16
STEEL DOOR	
LEFT HAND	1-52
STEEL DOOR AND HEATER ASSEMBLY	
RIGHT HAND	1-48

©2006 HYSTER COMPANY

HOOD (Figure 1-1)

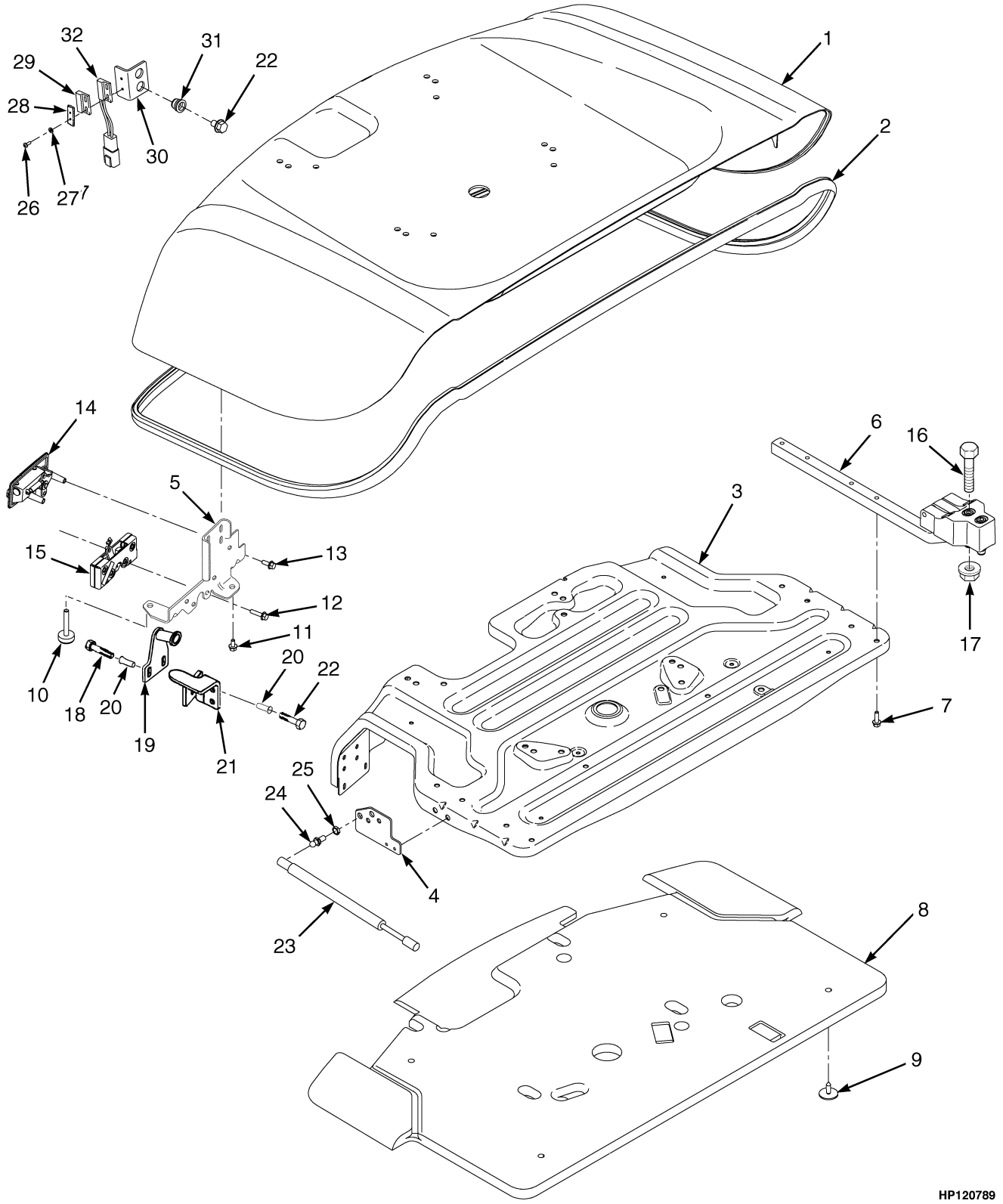

©2006 HYSTER COMPANY

HOOD

ITEM	PART NO.	DESCRIPTION	QTY
1	1616246	Hood (Without Cab)	1
1	1636706	Hood (With Cab)	1
2	1578698	Seal (Hood)	1
3	1564009	Reinforcement Assembly	1
4	1608875	Bracket (Gas Spring Mount)	2
5	1580293	Plate	1
6	1557697	Hinge	2
7	1500113	Capscrew	10
8	1624019	Liner	1
9	1304971	Fastener	4
10	1585581	Bumper (Hood)	2
11	1534417	Capscrew	6
12	1527878	Capscrew	4
13	1527876	Capscrew	2
14	1582287	Handle	1
15	1582286	Latch Rotor	1
16	296030	Capscrew	4
17	1460477	Nut	4
18	1527881	Capscrew	2
19	1580794	Striker Bolt	1
20	1530243	Insert	4
21	1595826	Bumper Rest	1
22	1583611	Capscrew	4
23	1563497	Gas Spring (Without Cab)	2
23	1560647	Gas Spring (LH) (With Cab) (With Lift and Latch)	1
23	1563836	Gas Spring (RH) (With Cab) (With Lift and Latch)	1
24	1563369	Ball Stud (Without Cab)	4
24	1563369	Ball Stud (With Cab)	4
24	1606659	Ball Stud (With Lift and Latch)	1
24	1563369	Ball Stud (With Lift and Latch)	3
25	329069	Nut	2
26	302010	Screw	4
27	320152	Washer	4
28	1585765	Plate	1
29	1565545	Magnet	1
30	1527228	Bracket (Hood Switch)	2
31	1531557	Insert	2
32	1627835	Reed Switch	1
	1347045	Fastener (Not Illustrated)	8
	1561015	Grommet (Not Illustrated)	1
	1622977	Sound Liner (With Cab, Not Illustrated)	1

©2006 HYSTER COMPANY

FLOORPLATES AND COVERS (Figure 1-2)

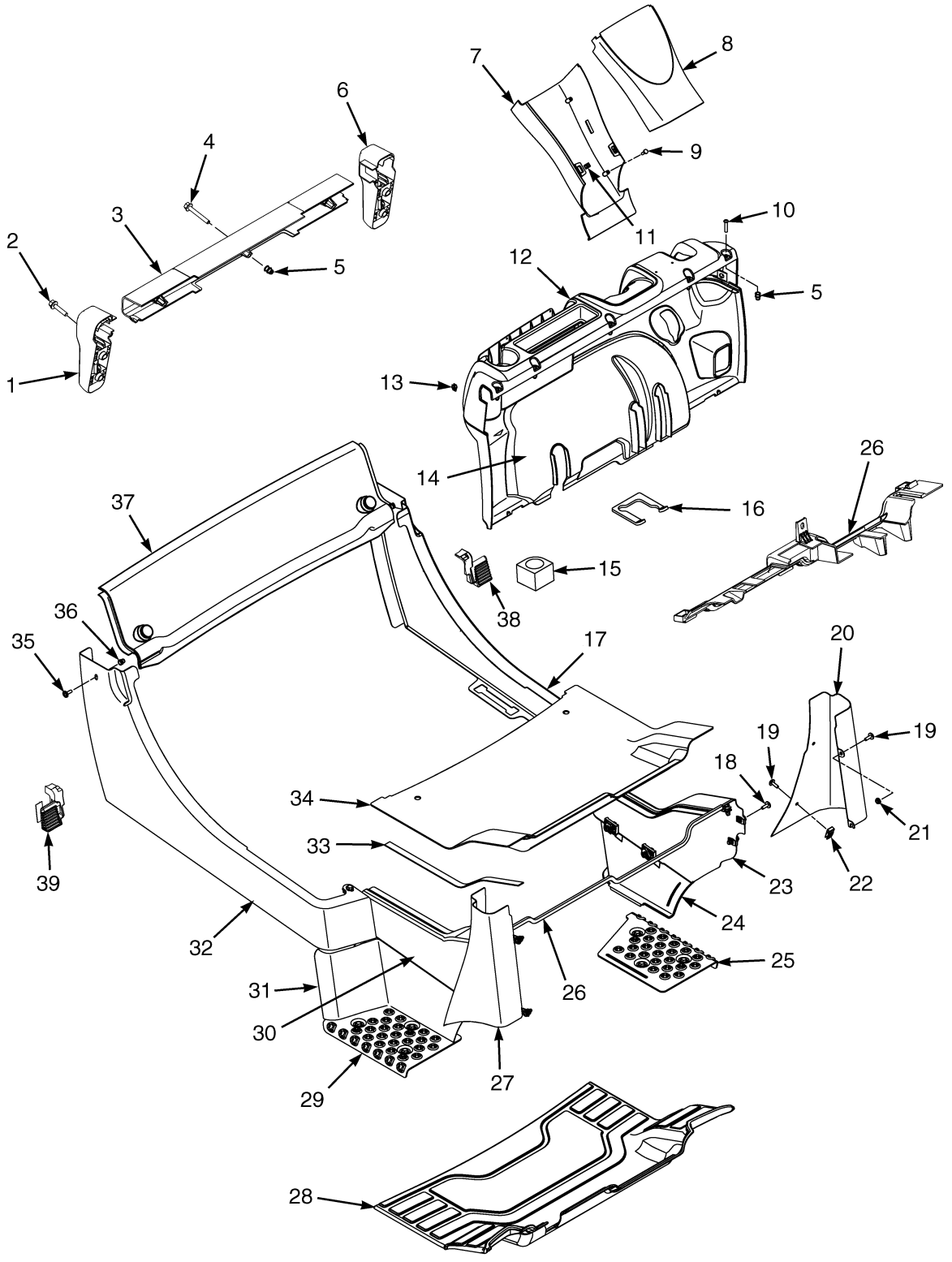

BP120095

©2006 HYSTER COMPANY

FLOORPLATES AND COVERS

ITEM		PART NO.	DESCRIPTION	QTY
1		2056823	Tail Light Base (RH)	1
2		1586495	Capscrew	4
3		2067455	Cover (Rear) (Crossmember)	1
4		1540643	Capscrew	3
5		1531001	Insert	8
6		2056822	Tail Light Base (LH)	1
7		2065666	Cover (Steering Column) (Lower)	1
8		2065668	Cover (Steering Column) (Upper)	1
9		2027655	Screw	2
10		2071261	Capscrew	5
11		2065667	Clip	2
12		1517418	Dash Assembly (Electronic Hydraulics)	1
12		2070975	Cup Holder	1
12		1517419	Dash Assembly (Manual Valve)	1
12		2070975	Cup Holder	1
13		2065667	Clip	4
14		2071593	Panel (Kick) (Single Pedal)	1
14		2071594	Panel (Kick) (Dual Pedal)	1
15		1530135	Grommet (RH) (Foam)	1
16		1581569	Seal	1
17	**a**	1527939	Panel (Rear) (LH)	1
17	**b**	1527940	Panel (Rear) (LH)	1
18		1583611	Capscrew	2
19		1530019	Screw	8
20		1564026	Cover (Fender) (LH)	1
21		1514429	Nut (Flange)	4
22		1350215	Nut (Foldover)	4
23		1540859	Panel (Front) (LH)	1
24		1574271	Panel (Step) (LH)	1
25		1519787	Plate (Tread) (LH)	1
26		1564396	Seal Plate Assembly	1
26		1529426	Seal	1
27		1564028	Cover (Fender) (RH)	1
28		2072213	Floormat	1
29		1519788	Plate (Tread) (RH)	1
30		1540869	Panel (Front) (RH)	1
31		1574273	Panel (Step) (RH)	1
32		1527946	Rear Panel (RH)	1
33		1564529	Seal	2
34		1509754	Floor Plate	1
35		1530019	Screw	2
36		1531558	Insert	6
37		1547460	Cover (Radiator)	1
37		1547467	Seal (LH)	1
37		1547468	Seal (RH)	1
38		2072802	Panel Seal (LH)	1
39		2071508	Panel Seal (RH)	1

FOOTNOTES:

a Diesel

b LPG

©2006 HYSTER COMPANY

See Service Manual for service procedures.

FENDER EXTENSIONS AND MUD GUARDS (Figure 1-3)
WITH WIDE TREAD

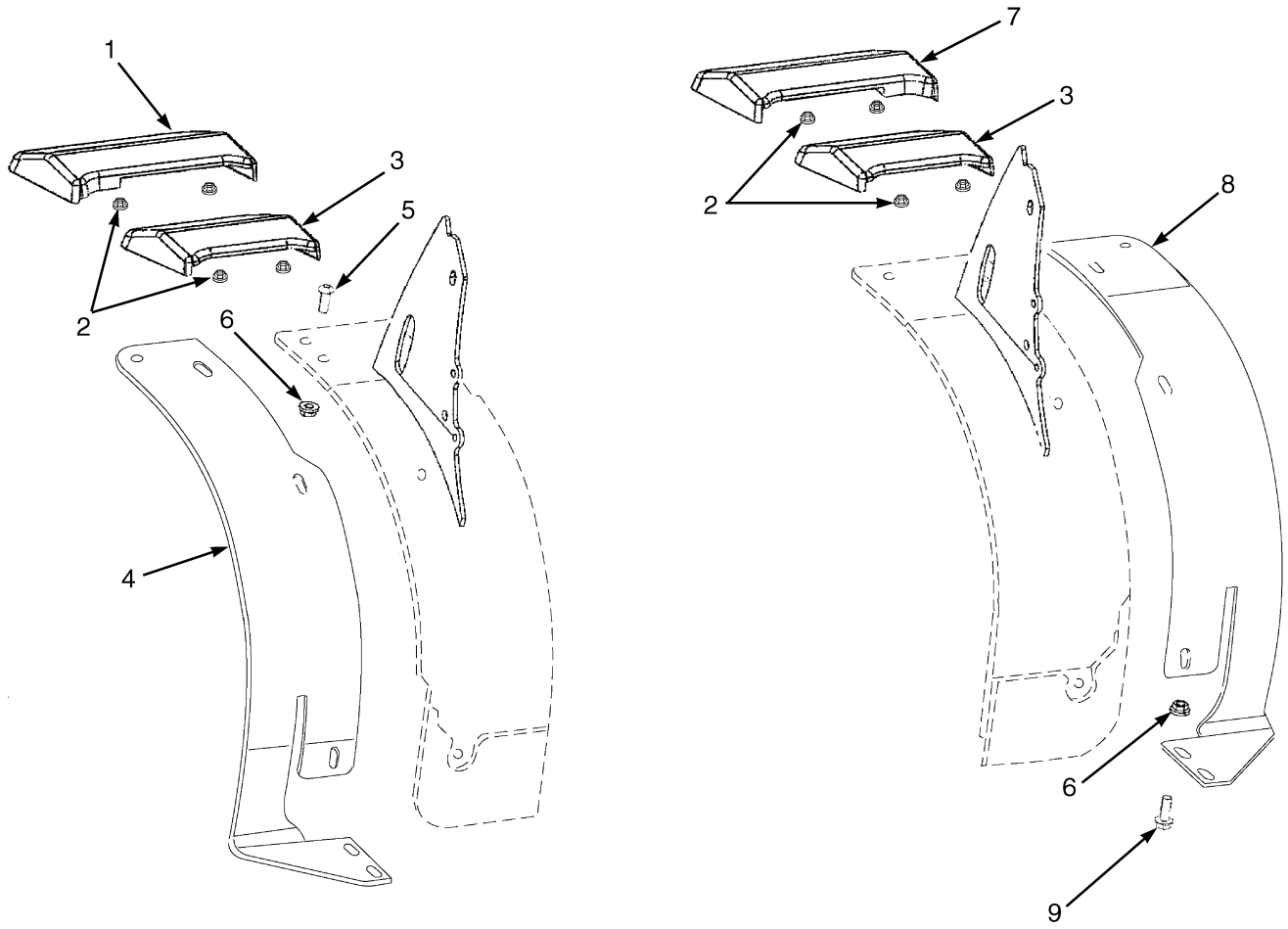

BP120089

©2006 HYSTER COMPANY

FENDER EXTENSIONS AND MUD GUARDS
WITH WIDE TREAD

ITEM	PART NO.	DESCRIPTION	QTY
1	2069545	Mud Guard (Wide, RH)	1
2	1544153	Lock Nut	4
3	2069008	Mud Guard (Standard)	2
4	1555786	Fender (Extension, RH)	1
5	2072664	Capscrew	4
6	1586432	Nut	10
7	2069544	Mud Guard (Wide, LH)	1
8	1555755	Fender (Extension, LH)	1
9	1586630	Capscrew	6

©2006 HYSTER COMPANY

COWL MOUNTING (Figure 1-4)

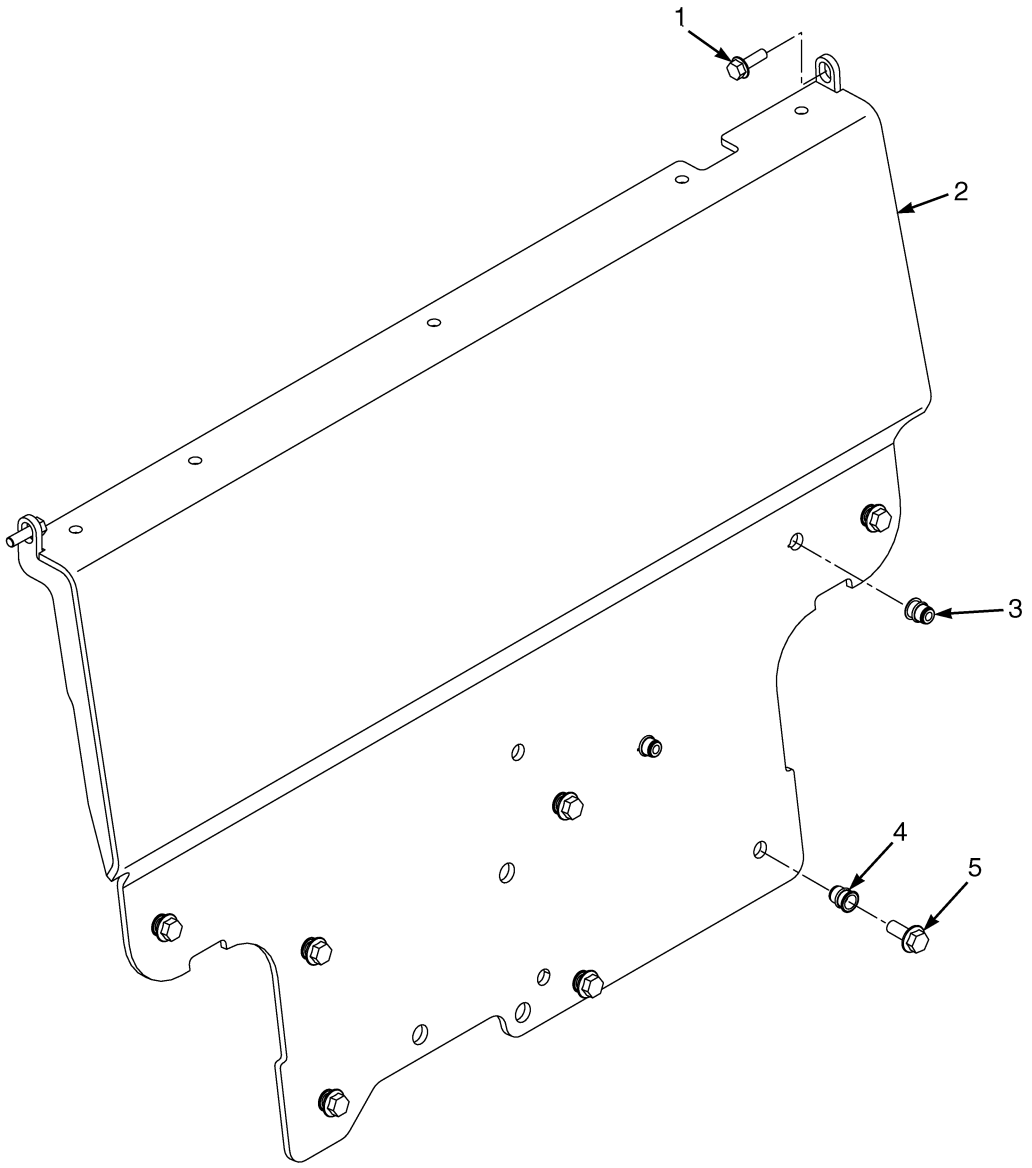

HP120730

ITEM	PART NO.	DESCRIPTION	QTY
1	1583611	Capscrew	2
2	1566545	Cowl	1
3	1530243	Insert	2
4	1640776	Insert	7
5	1605990	Capscrew	7

©2006 HYSTER COMPANY

NOTES

COUNTERWEIGHT (Figure 1-5)

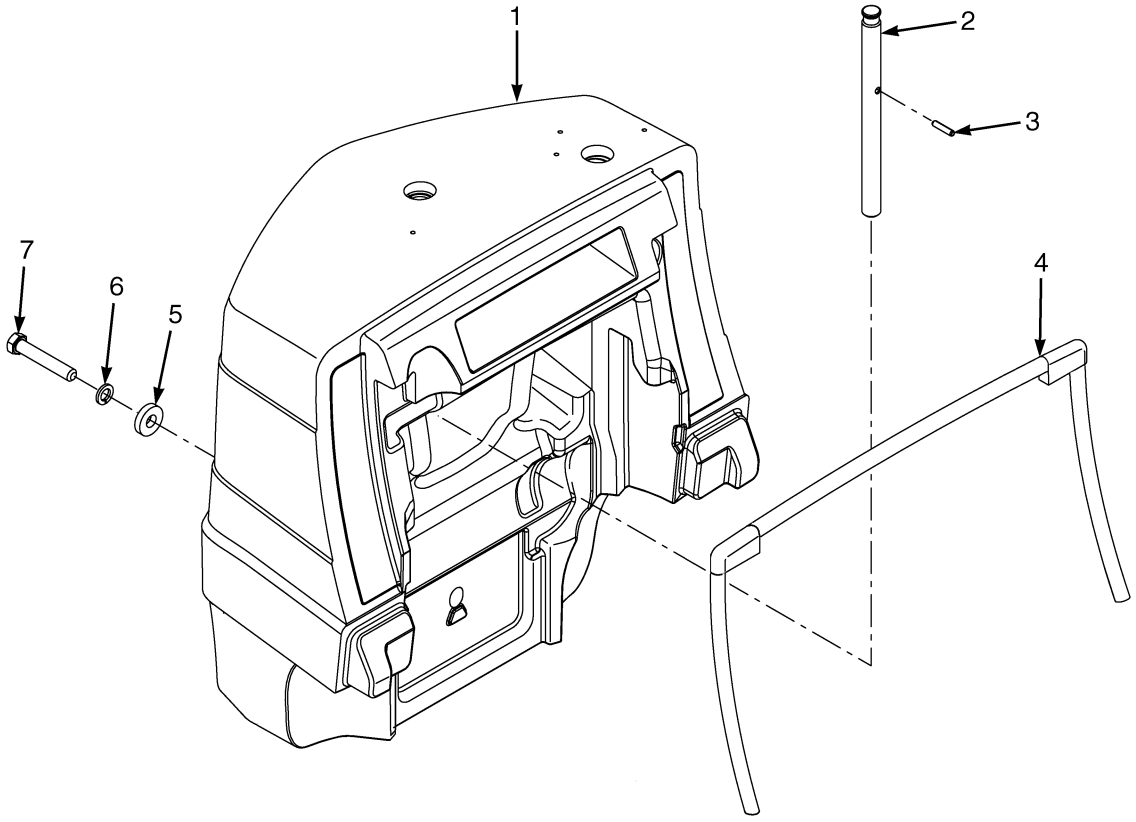

HP120727

©2006 HYSTER COMPANY

COUNTERWEIGHT

ITEM	PART NO.	DESCRIPTION	QTY
1	1528754	Counterweight (H1.6FT)	1
1	1528755	Counterweight (H1.8FT)	1
1	1548756	Counterweight (H2.0FTS)	1
2	1521190	Tow Pin	1
3	302491	Pin	1
4	1565084	Seal	1
5	1375214	Washer	1
6	292689	Lockwasher	1
7	292608	Capscrew (101,6 mm)	1

©2006 HYSTER COMPANY

OVERHEAD GUARD (Figure 1-6)

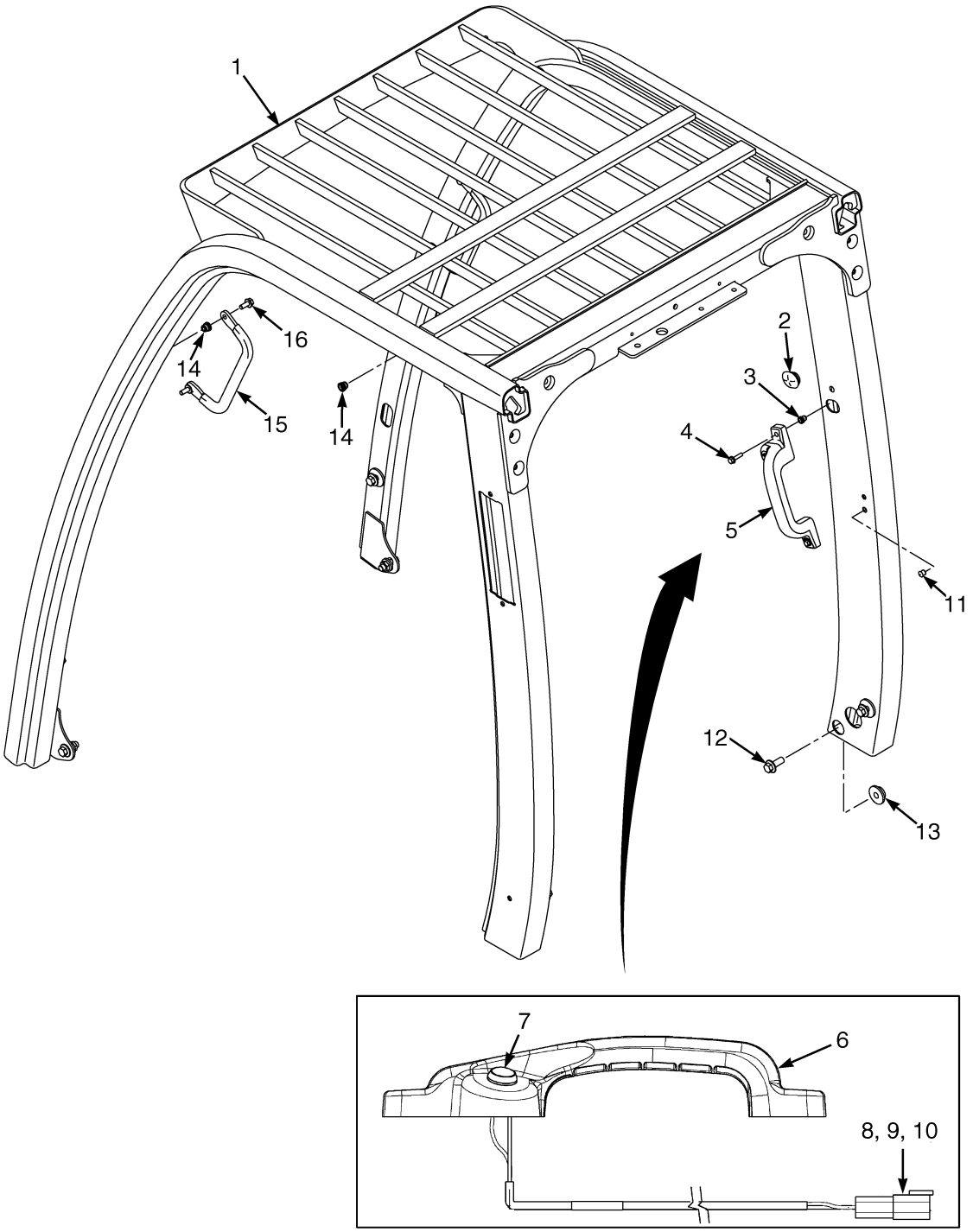

HP120732

©2006 HYSTER COMPANY

OVERHEAD GUARD

ITEM	PART NO.	DESCRIPTION	QTY
1	1599203	Overhead Guard (High)	1
1	1599209	Overhead Guard (Low)	1
2	1558219	Grommet	3
3	1531558	Insert	2
4	1586495	Capscrew	2
5	2070223	Handle Assembly (Optional)	1
6	2069454	Handle	1
7	1566726	Switch (Horn)	1
8	1493465	Connector	1
9	1330414	Secondary Lock	1
10	1330437	Terminal (Pin)	2
11	1494888	Plug	2
12	1527888	Capscrew	8
13	1528888	Nut	2
14	1531557	Insert	4
15	1536813	Handle (Grab)	1
16	1510113	Capscrew	2
a	1527395	Grommet	1

FOOTNOTES:
a Not Illustrated

NON SUSPENSION SEAT (Figure 1-7)
WITHOUT ELECTRONIC CONTROLS

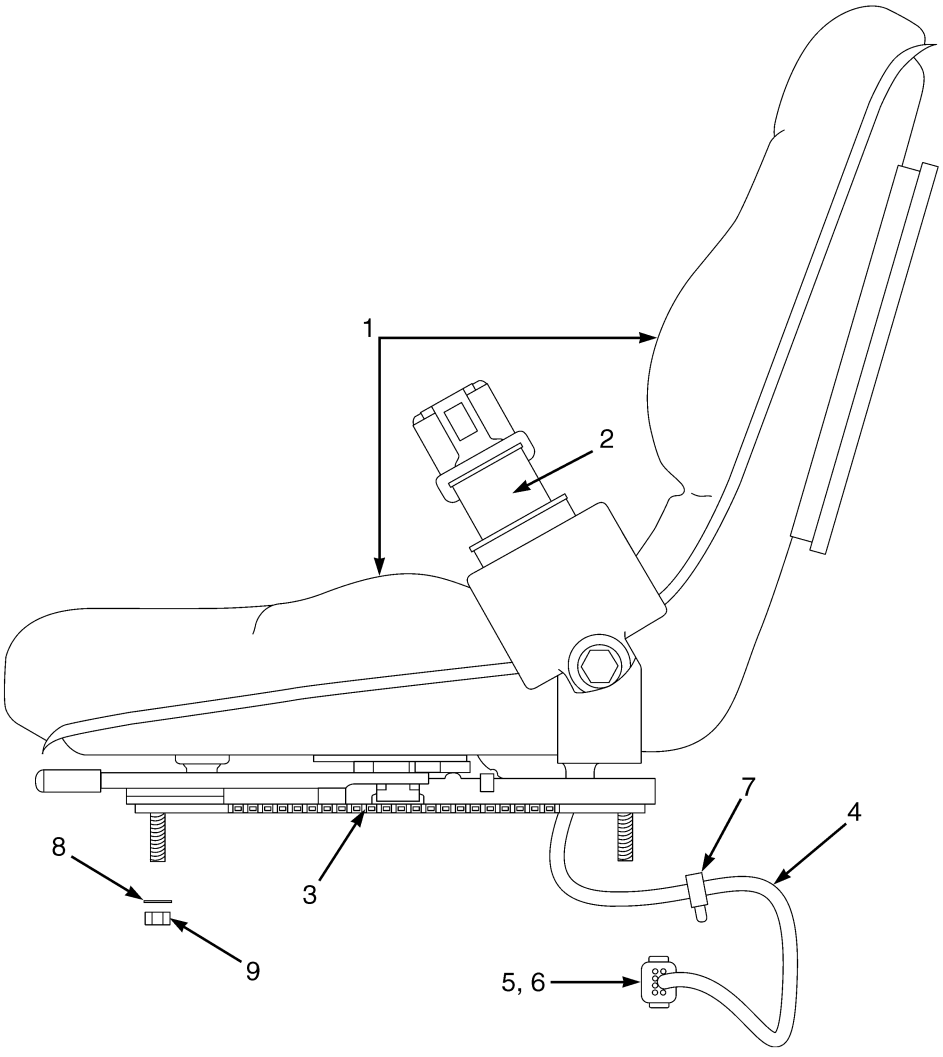

HP120851

©2006 HYSTER COMPANY

NON SUSPENSION SEAT
WITHOUT ELECTRONIC CONTROLS

ITEM	PART NO.	DESCRIPTION	QTY
	1593409	Non-Suspension Seat (Vinyl)	1
1	1563351	Cushions (Both) (Vinyl)	1
2	1598504	Seat Belt Kit	1
3	1459173	Slide Kit	1
4	1591652	Harness Kit	1
4	2089673	Wire Harness	1
4	2070392	Pigtail	1
5	1537551	Clip Nut	1
6	296149	Capscrew	1
7	1500901	Clip	1
8	320158	Washer	4
9	145639	Nut	4
a	1563215	Sensor (Operator Presence)	1

FOOTNOTES:
a Not Illustrated

SEMI SUSPENSION SEAT (Figure 1-8)
WITH AND WITHOUT ELECTRONIC CONTROLS

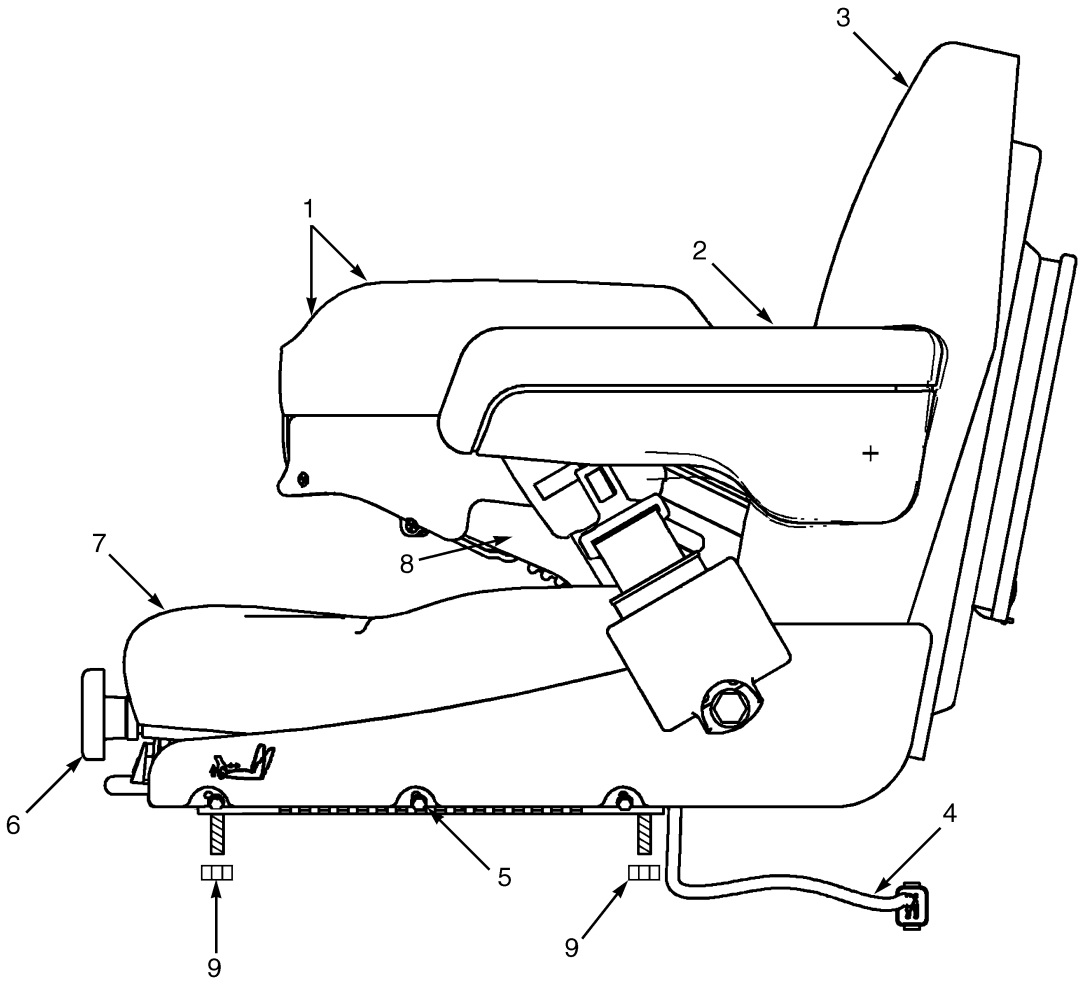

BP120109

©2006 HYSTER COMPANY

SEMI SUSPENSION SEAT
WITH AND WITHOUT ELECTRONIC CONTROLS

KEY:
A: Without Arm Controls
B: With Arm Controls

ITEM		PART NO.	DESCRIPTION	QTY A	QTY B
		1593411	Seat Assembly (Vinyl)	1	..
		1593412	Seat Assembly (Cloth)	1	..
		1593415	Seat Assembly (Vinyl)	..	1
		1593416	Seat Assembly (Cloth)	..	1
1		1453882	Armrest	1	..
1		1453883	Armrest	1	..
2		1563210	Foam Cap (Electronic Control Arm)	..	1
2		1563211	Knobs (Electronic Control Arm)	..	1
3		1382111	Back Cushion (Vinyl)	1	1
3		1382113	Back Cushion (Cloth)	1	1
4		2089673	Wire Harness	1	..
4		2075428	Wire Harness	..	1
5		1459173	Slide Kit	1	..
5		1563895	Slide Kit	..	1
6		1563227	Weight Adjust Knob	1	1
7		1382112	Seat Cushion (Vinyl)	1	1
7		1382114	Seat Cushion (Cloth)	1	1
8		1598504	Seat Belt Kit	1	1
9		191941	Nut	4	4
	a	1362049	Shock Absorber Kit	1	1
	a	1563215	Sensor (Operator Presence)	1	1

FOOTNOTES:
a Not Illustrated

©2006 HYSTER COMPANY

FULL SUSPENSION SEAT (Figure 1-9)
WITH AND WITHOUT ELECTRONIC CONTROLS

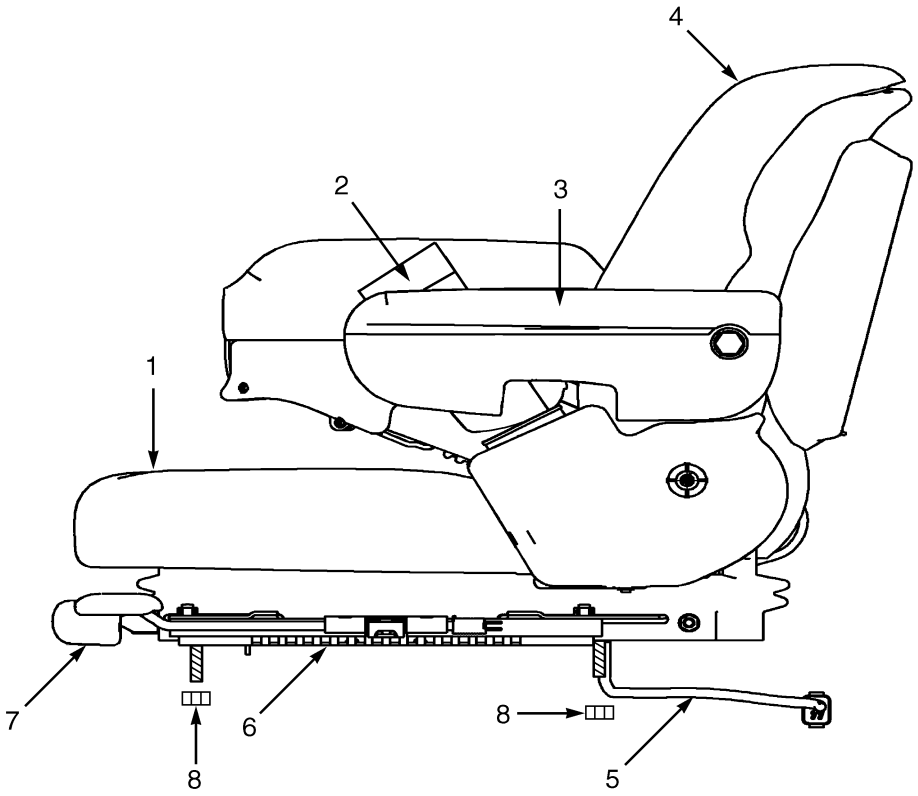

BP120111

©2006 HYSTER COMPANY

FULL SUSPENSION SEAT
WITH AND WITHOUT ELECTRONIC CONTROLS

KEY:
A: Full Suspension (Vinyl)
B: Full Suspension (Cloth)
C: Full Suspension (Vinyl with Electronic Control Arm)
D: Full Suspension (Cloth with Electronic Control Arm)

ITEM	PART NO.	DESCRIPTION	QTY A	B	C	D
	1593413	Full Suspension Seat (Vinyl)	1	..	..	..
	1593414	Full Suspension Seat (Cloth)	..	1	..	..
	1593417	Full Suspension Seat (Vinyl)	..	..	1	..
	1593418	Full Suspension Seat (Cloth)	..	..	..	1
1	1563207	Seat Cushion	1	..	1	..
1	1566453	Seat Cushion	..	1	..	1
2	1598504	Seat Belt Kit	1	1	1	1
3	1563230	Arm Cushion (LH)	1	1	1	1
3	1563231	Arm Cushion (RH)	1	1	..	..
4	1470152	Back Cushion (Vinyl)	1	..	1	..
4	1470153	Back Cushion (Cloth)	..	1	..	1
5	2089673	Wire Harness	1	1	..	..
5	2075428	Wire Harness	..	..	1	1
6	1470161	Slide Kit	1	1	1	1
7	1470163	Weight Adjuster Kit	1	1	1	1
8	191941	Nut	4	4	4	4
a	1483828	Shock Kit	1	1	1	1
a	1563210	Foam Cap (Electronic Control Arm)	..	..	1	1
a	1563211	Knobs (Electronic Control Arm)	..	..	1	1
a	1563208	Sensor (Operator Presence)	1	1	1	1

FOOTNOTES:
a Not Illustrated

©2006 HYSTER COMPANY

FULL SUSPENSION SWIVEL SEAT (Figure 1-10)
WITH AND WITHOUT ELECTRONIC CONTROLS

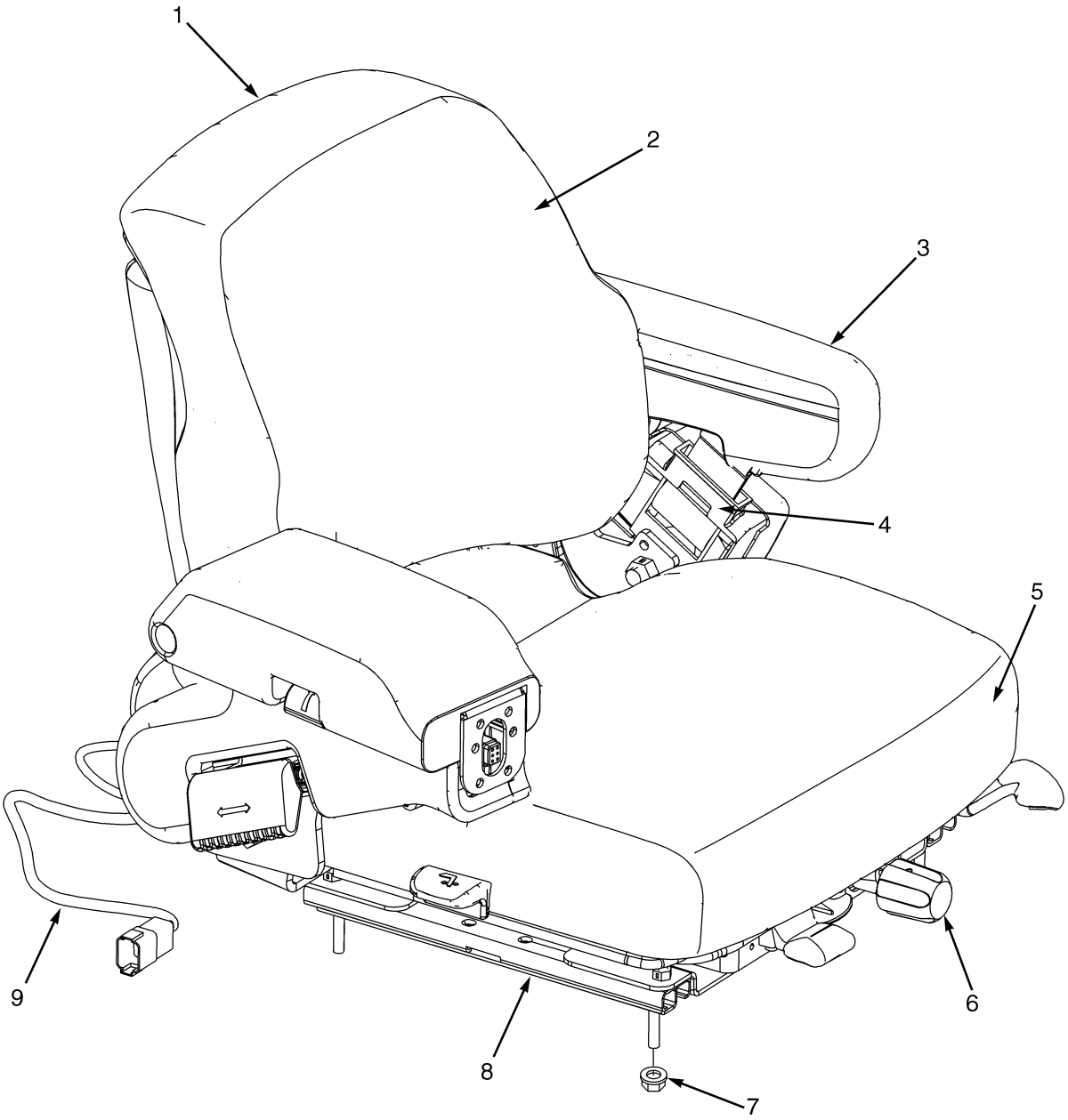

BP120119

©2006 HYSTER COMPANY

FULL SUSPENSION SWIVEL SEAT
WITH AND WITHOUT ELECTRONIC CONTROLS

ITEM	PART NO.	DESCRIPTION	QTY
1	1593421	Seat Assembly (Vinyl) (With Armrests)	1
1	1593422	Seat Assembly (Cloth) (With Armrests)	1
1	1593423	Seat Assembly (Vinyl) (With Electronic Controls)	1
1	1593424	Seat Assembly (Cloth) (With Electronic Controls)	1
2	1470152	Back Cushion (Vinyl)	1
2	1470153	Back Cushion (Cloth)	1
3	1563230	Arm Cushion (LH)	1
4	1598504	Seat Belt Kit	1
5	1563207	Seat Cushion (Vinyl)	1
5	1566453	Seat Cushion (Cloth)	1
6	1470163	Weight Adjuster Kit	1
7	191941	Nut	4
8	1470161	Slide Kit	1
9	2089673	Wire Harness (Without Electronic Controls)	1
9	2075428	Wire Harness (With Electronic Controls)	1
a	1563211	Knobs (Electronic Control Arm)	1
a	1563210	Foam Cap (Electronic Control Arm)	1
a	1563231	Arm Cushion (RH) (RH) (Without Electronic Controls)	1
a	1483828	Shock Kit	1
a	1563208	Sensor (Operator Presence)	1

FOOTNOTES:
a Not Illustrated

FULL SUSPENSION SEAT (Figure 1-11)
WITH LIMITED BACK TILT
(D/B 09/2006⇒)

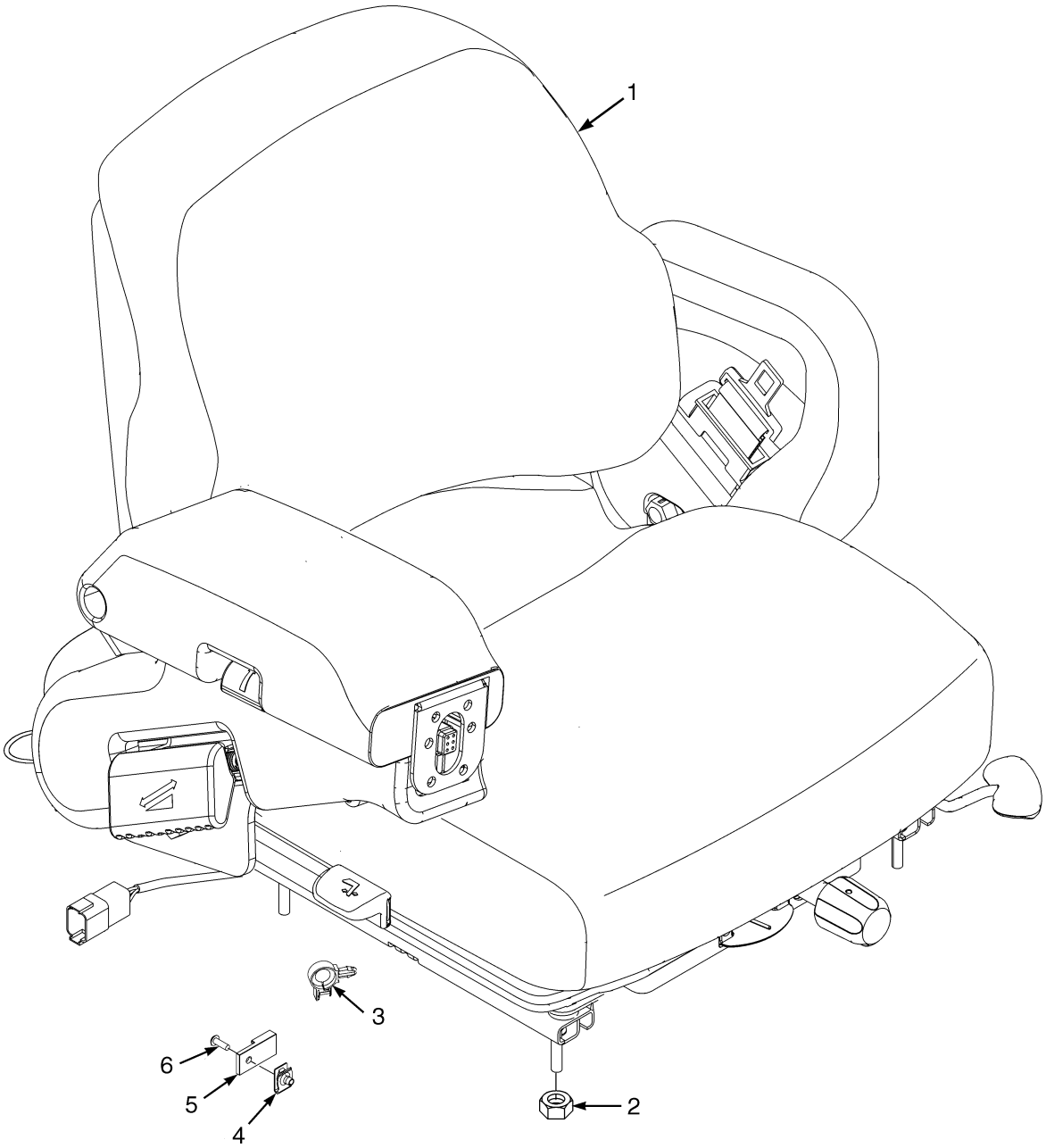

BP120203

©2006 HYSTER COMPANY

FULL SUSPENSION SEAT
WITH LIMITED BACK TILT
(D/B 09/2006⇒)

KEY:
A: Full Suspension (Vinyl)
B: Full Suspension (Cloth)
C: Full Suspension (Vinyl with Electronic Control Arm)
D: Full Suspension (Cloth with Electronic Control Arm)

ITEM	PART NO.	DESCRIPTION	QTY A	B	C	D
1	2086295	Full Suspension Seat (Vinyl)	1	..	..	..
1	2086294	Full Suspension Seat (Cloth)	..	1	..	..
1	2086296	Full Suspension Seat (Vinyl)	..	..	1	..
1	2086297	Full Suspension Seat (Cloth)	..	..	..	1
2	191941	Nut	4	4	4	4
3	1500901	Clip	1	1	1	1
4	1537551	Clip Nut	1	1	1	1
5	1500912	Clip	1	1	1	1
6	296149	Capscrew	1	1	1	1

©2006 HYSTER COMPANY

FULL SUSPENSION SWIVEL SEAT (Figure 1-12)
WITH LIMITED BACK TILT
(D/B 09/2006⇒)

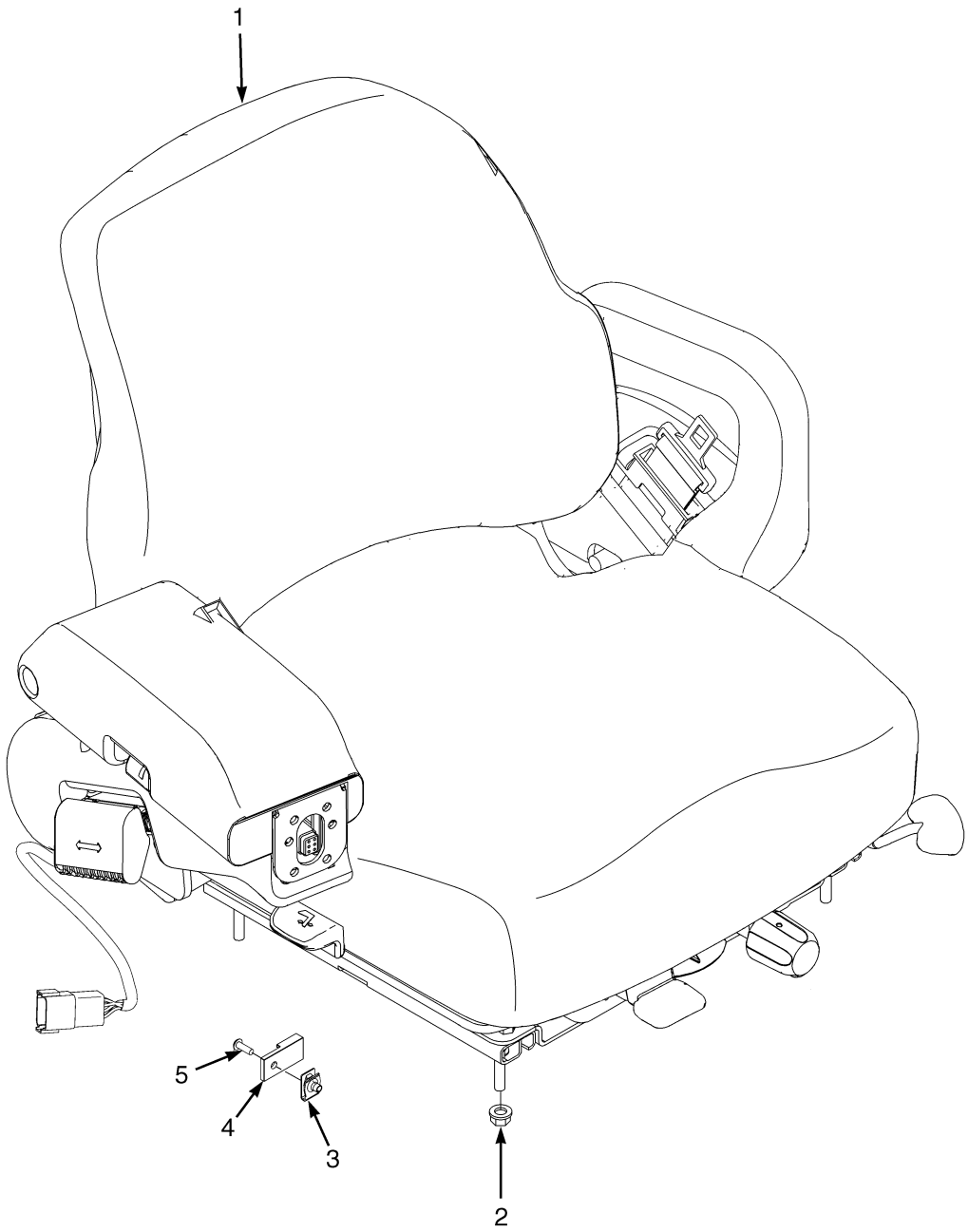

BP120204

©2006 HYSTER COMPANY

FULL SUSPENSION SWIVEL SEAT
WITH LIMITED BACK TILT
(D/B 09/2006⇒)

ITEM	PART NO.	DESCRIPTION	QTY
1	2086302	Full Suspension Swivel Seat (Vinyl) (With Armrests)	1
1	2086303	Full Suspension Swivel Seat (Cloth) (With Armrests)	1
1	2086304	Full Suspension Swivel Seat (Vinyl) (With Electronic Controls)	1
1	2086305	Full Suspension Swivel Seat (Cloth) (With Electronic Controls)	1
2	191941	Nut	4
3	1537551	Clip Nut	1
4	1500912	Clip	1
5	296149	Capscrew	1

©2006 HYSTER COMPANY

LABELS (Figure 1-13)
EXTERIOR

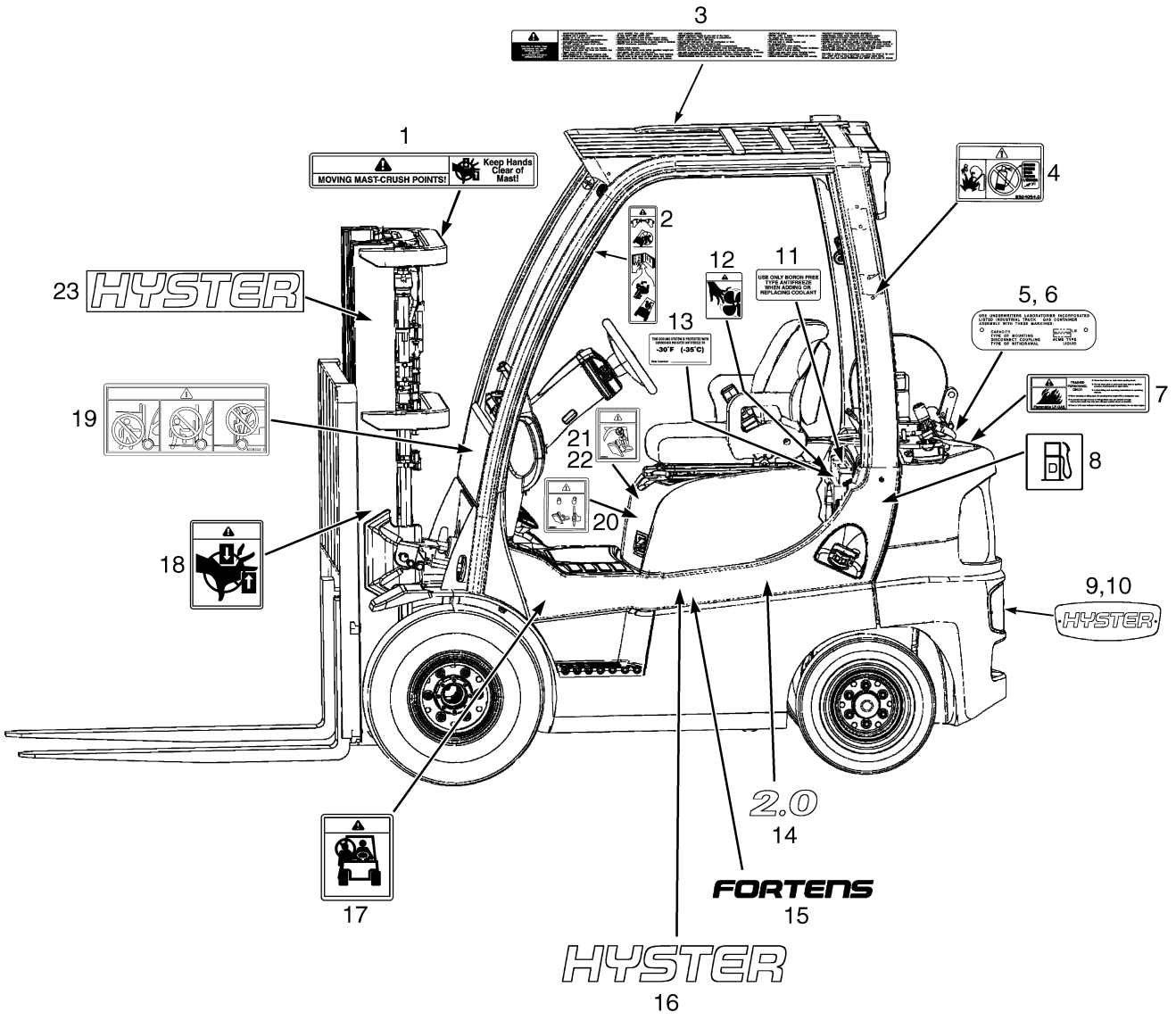

BP120116

©2006 HYSTER COMPANY

LABELS
EXTERIOR

ITEM		PART NO.	DESCRIPTION	QTY
1		1343276	Label (Mast Warning)	1
2		1359588	Label (Operator Restraint)	2
3		2073198	Label (Operator Warning)	1
4	**a**	2034460	Label (Ether Warning)	1
5		1501258	Nameplate (LP Tank)	1
6		170658	Rivet	4
7		1354172	Label (Flammable LPG)	1
8		2074256	Label (Diesel Fuel Only)	1
9		1566953	Plate (Hyster Logo)	1
10		1566951	Fastener	2
11		1375676	Label (Boron-Free Anti-Freeze)	1
12		1300094	Label (Fan Warning)	2
13		1354165	Label (Anti-freeze)	2
14		1598331	Label (Model 1.6)	2
14		1598330	Label (Model 1.8)	2
14		1598305	Label (Model 2.0)	2
15		1601748	Label (Fortens)	2
16		1586440	Label (Hyster)	2
17		1339828	Label (No Riders)	2
18		1339832	Label (Pinch Point)	2
19		2075655	Label (Mast Warning)	2
20		2075417	Label (Locking Gas Spring)	1
21		2074740	Label (Joystick Caution)	1
22	**b**	2075614	Label (Hood Opening Warning)	1
23		1562353	Label (Hyster)	2

FOOTNOTES:
a Diesel Only
b LPG Only

©2006 HYSTER COMPANY

LABELS (Figure 1-14)
INTERIOR

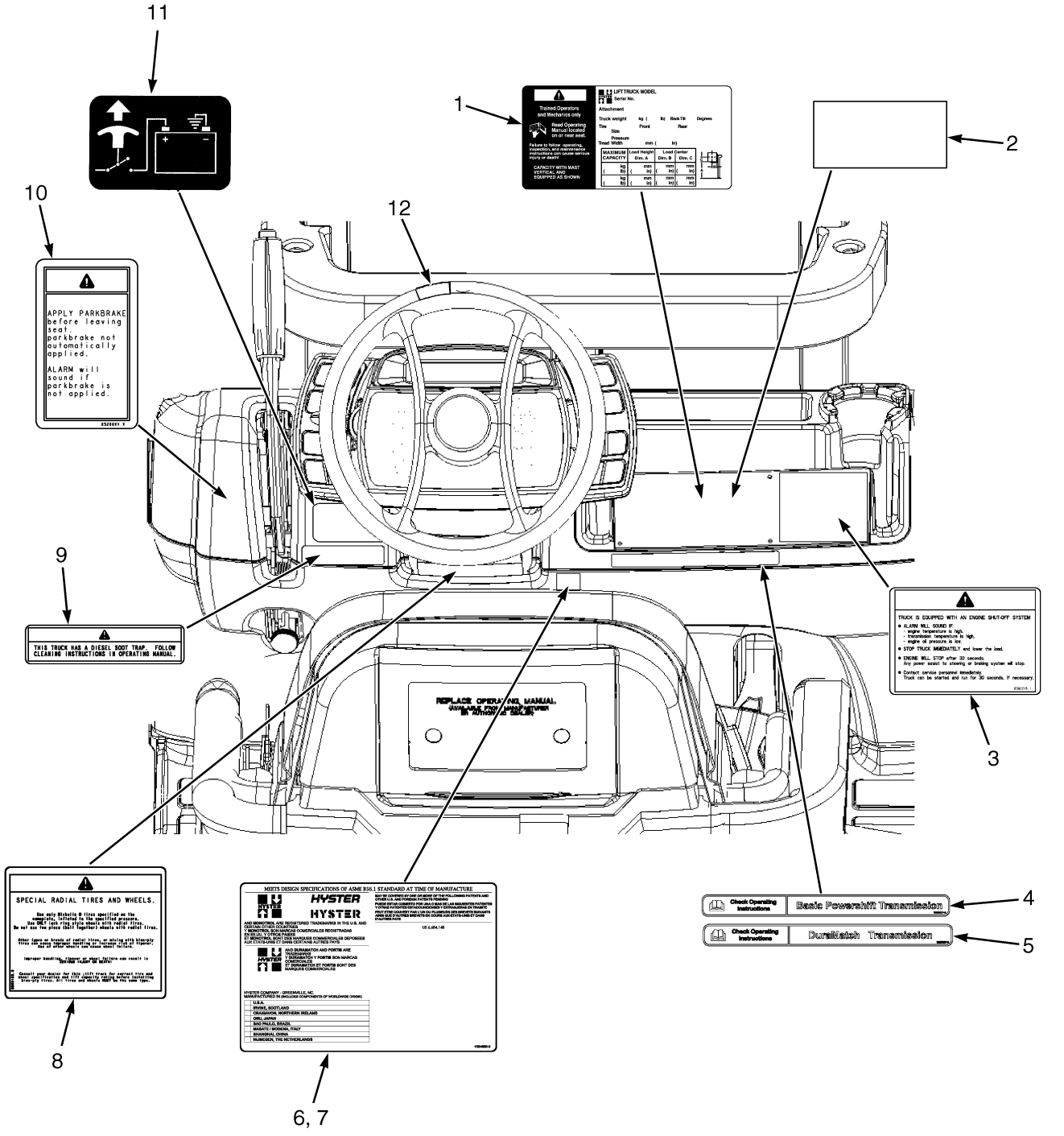

BP110028

©2006 HYSTER COMPANY

LABELS
INTERIOR

ITEM		PART NO.	DESCRIPTION	QTY
1	**a**	. . . . .	Nameplate	1
2		389688	Cover	1
3		2038100	Label (Drive Train Protection)	1
4		1589377	Label (Basic Powershift Transmission)	1
5		1589397	Label (DuraMatch Transmission)	1
6		1534660	Label (Patents and Trademarks)	1
7		170658	Rivet	4
8		1374775	Label (Radial Tire Warning)	1
9		1365830	Label (Caution Soot Trap)	1
10		2074210	Label (Park Brake Warning)	1
11		1324480	Label (Battery Switch)	1
12		1365843	Label (Diesel Caution Soot Trap)	1

FOOTNOTES:
a Contact Your Local Hyster Dealer

©2006 HYSTER COMPANY

CONTROL LEVER LABELS (Figure 1-15)

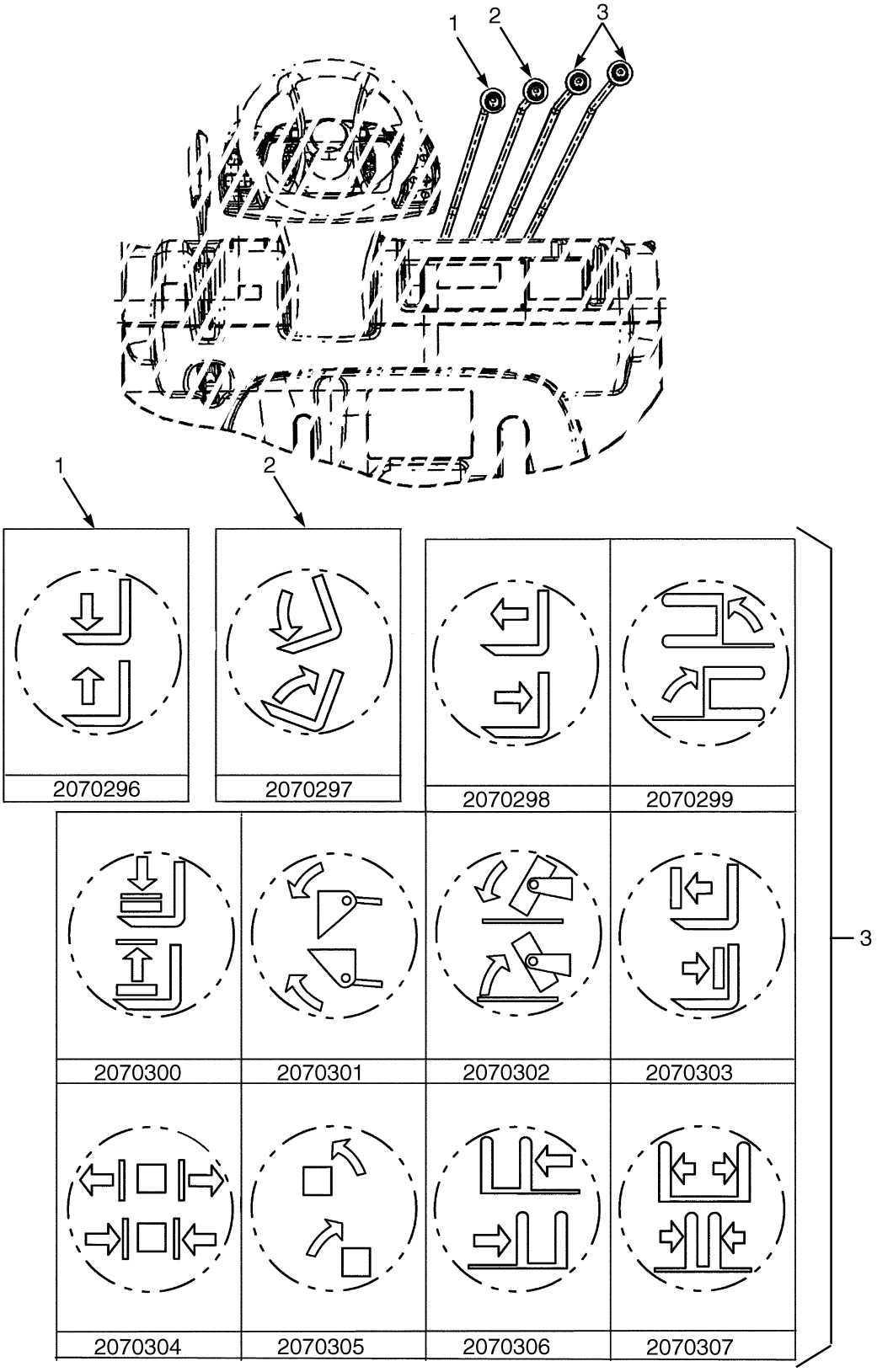

©2006 HYSTER COMPANY

CONTROL LEVER LABELS

ITEM	PART NO.	DESCRIPTION	QTY
1	2070296	Lens (Lift)	1
2	2070297	Lens (Tilt)	1
3	2070298	Lens (Reach)	1
3	2070299	Lens (Swing)	1
3	2070300	Lens (Load Stabilizer)	1
3	2070301	Lens (Scoop)	1
3	2070302	Lens (Upender)	1
3	2070303	Lens (Push/Pull)	1
3	2070304	Lens (Clamp)	1
3	2070305	Lens (Rotate)	1
3	2070306	Lens (Side-Shift)	1
3	2070307	Lens (Fork Spread)	1

©2006 HYSTER COMPANY

ELECTRONIC LEVER LABELS (Figure 1-16)
AUXILIARY SINGLE FUNCTION

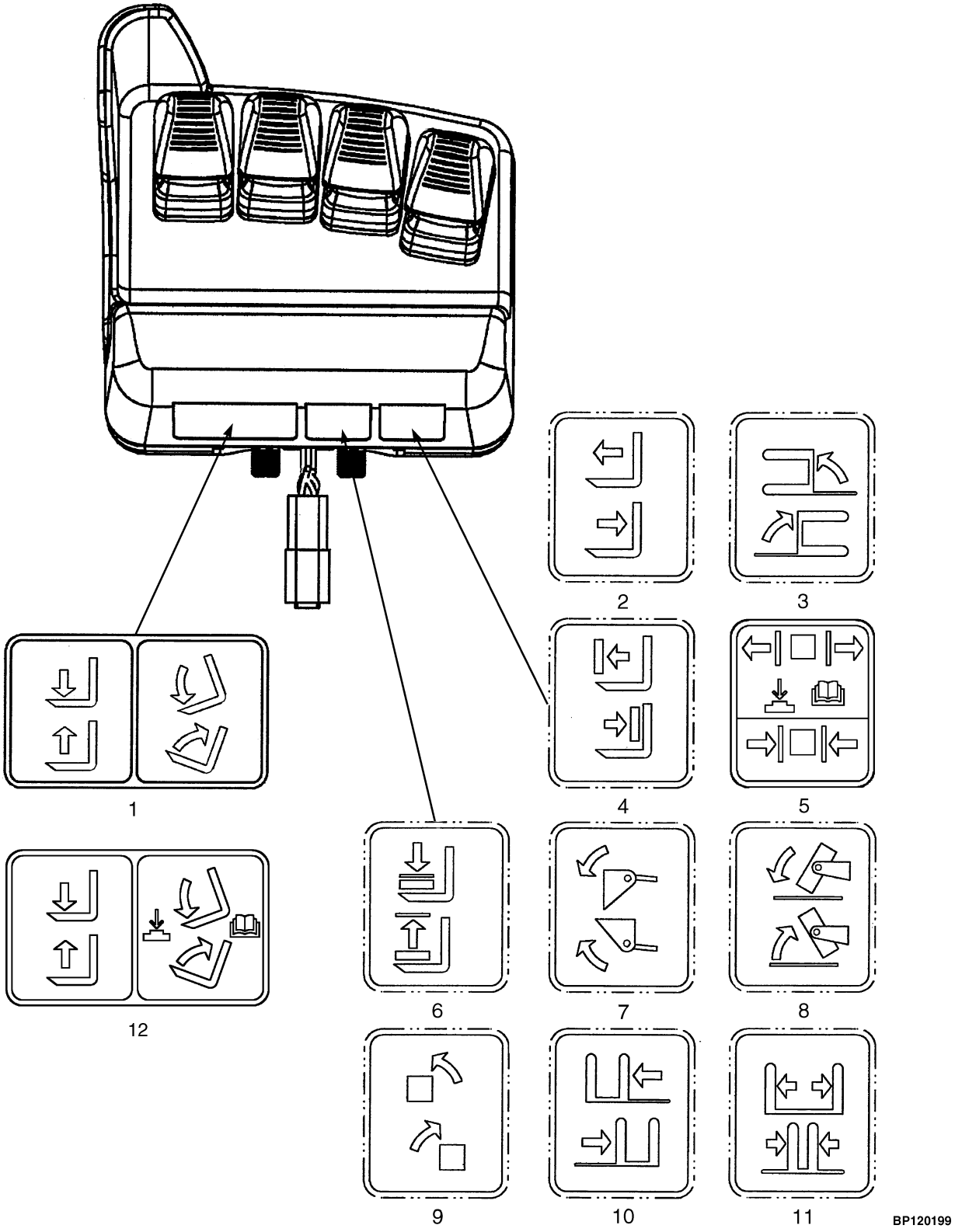

©2006 HYSTER COMPANY

ELECTRONIC LEVER LABELS
AUXILIARY SINGLE FUNCTION

ITEM	PART NO.	DESCRIPTION	QTY
1	1581055	Label (Hoist and Tilt)	1
2	2073115	Label (Reach)	1
3	2073114	Label (Swing)	1
4	2073118	Label (Push/Pull)	1
5	2085877	Label (Clamp)	1
6	2073116	Label (Load Stabilizer)	1
7	2073117	Label (Scoop)	1
8	2073119	Label (Upender)	1
9	2073121	Label (Rotate)	1
10	2073122	Label (Side-Shift)	1
11	2073123	Label (Fork Spread)	1
12	2085875	Label (Hoist and Tilt with Return to Set Tilt)	1

©2006 HYSTER COMPANY

ELECTRONIC LEVER LABELS (Figure 1-17)
AUXILIARY DUAL FUNCTION

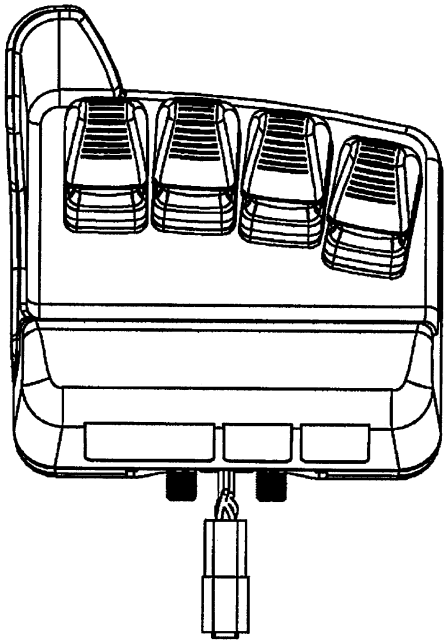

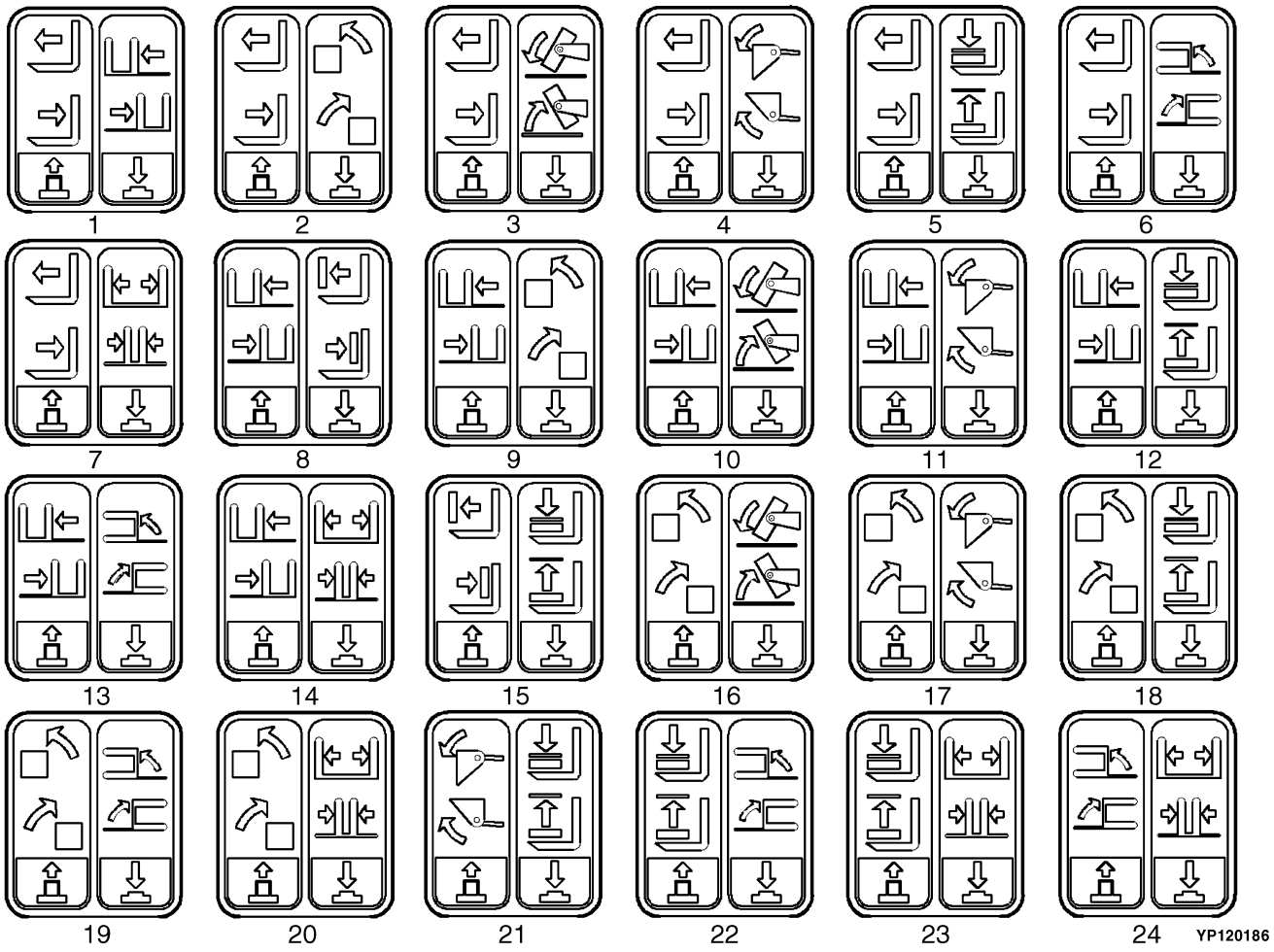

©2006 HYSTER COMPANY

ELECTRONIC LEVER LABELS
AUXILIARY DUAL FUNCTION

ITEM	PART NO.	DESCRIPTION	QTY
1	2081229	Label (Reach/Side-Shift)	1
2	2081230	Label (Reach/Rotate)	1
3	2081231	Label (Reach/Upender)	1
4	2081232	Label (Reach/Scoop)	1
5	2081233	Label (Reach/Load Stabilizer)	1
6	2081234	Label (Reach /Swing)	1
7	2081235	Label (Reach/Fork Spread	1
8	2081236	Label (Side-Shift/Push or Pull)	1
9	2081237	Label (Side-Shift/Rotate)	1
10	2081238	Label (Side-Shift/Upender)	1
11	2081239	Label (Side-Shift/Scoop)	1
12	2081240	Label (Side-Shift/Load)	1
13	2081241	Label (Side-Shift/Swing)	1
14	2081242	Label (Side-Shift/Fork Spread)	1
15	2081243	Label (Push or Pull/Load)	1
16	2081244	Label (Rotate/Upender)	1
17	2081245	Label (Rotate/Scoop)	1
18	2081246	Label (Rotate/Load Stabilizer)	1
19	2081247	Label (Rotate/Swing)	1
20	2081248	Label (Rotate/Fork Spreader)	1
21	2081249	Label (Scoop/Load Stabilizer)	1
22	2081250	Label (Load Stabilizer/Swing)	1
23	2081251	Label (Load Stabilizer/Fork Spread)	1
24	2081252	Label (Swing/Fork Spread)	1

©2006 HYSTER COMPANY

JOYSTICK LABELS (Figure 1-18)

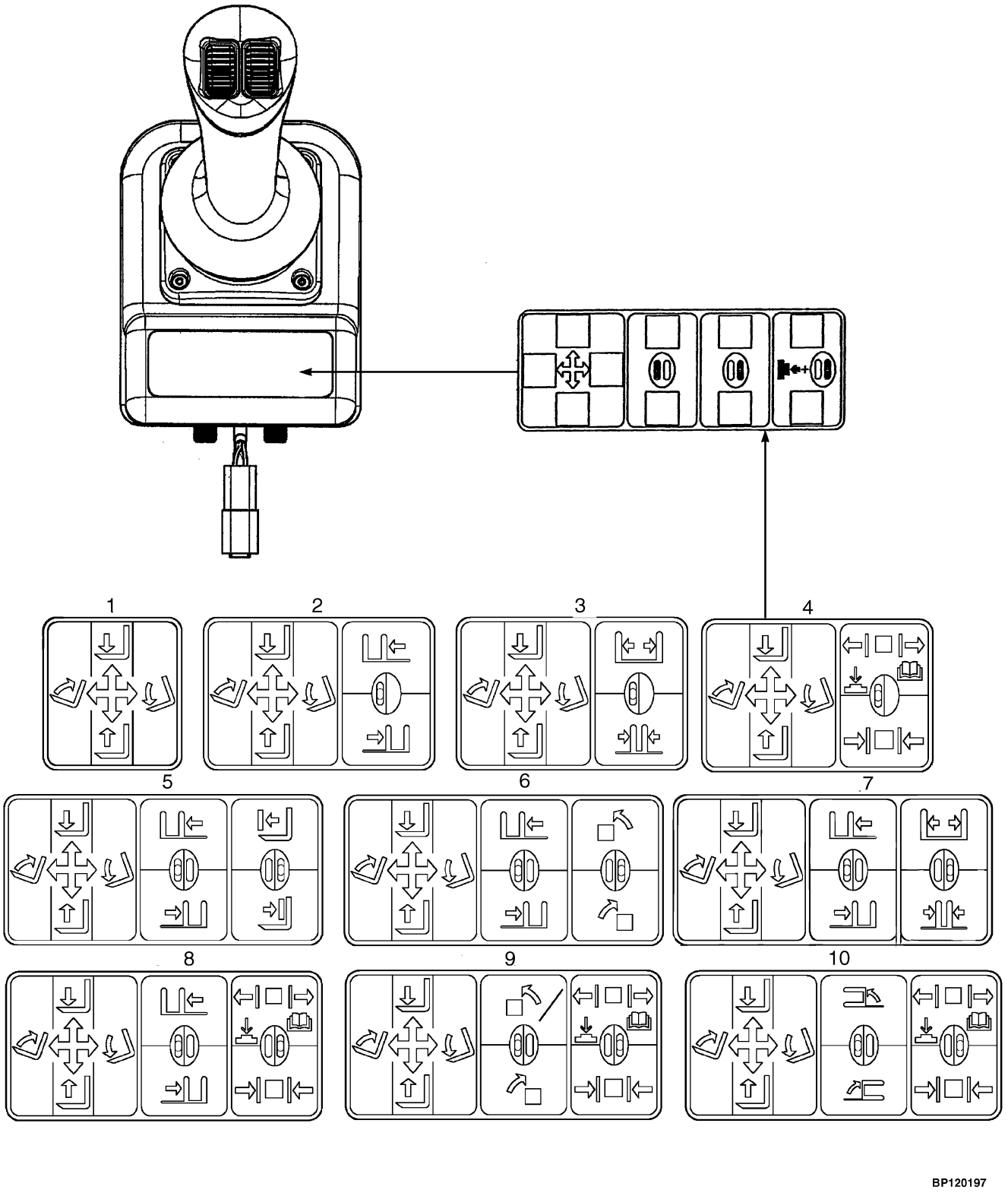

BP120197

©2006 HYSTER COMPANY

JOYSTICK LABELS

ITEM	PART NO.	DESCRIPTION	QTY
1	2086556	Label (Hoist and Tilt)	1
2	2086557	Label (Hoist and Tilt, Side-Shift)	1
3	2086558	Label (Hoist and Tilt, Fork Spread)	1
4	2085878	Label (Hoist and Tilt, Clamp)	1
5	2086560	Label (Hoist and Tilt, Side-Shift, Push/Pull)	1
6	2086561	Label (Hoist and Tilt, Side-Shift, Rotate)	1
7	2086559	Label (Hoist and Tilt, Side-Shift, Fork Spread)	1
8	2085879	Label (Hoist and Tilt, Side-Shift, Clamp)	1
9	2085880	Label (Hoist and Tilt, Rotate, Clamp)	1
10	2085881	Label (Hoist and Tilt, Swing, Clamp)	1

©2006 HYSTER COMPANY

JOYSTICK LABELS (Figure 1-19)
WITH RETURN TO SET TILT

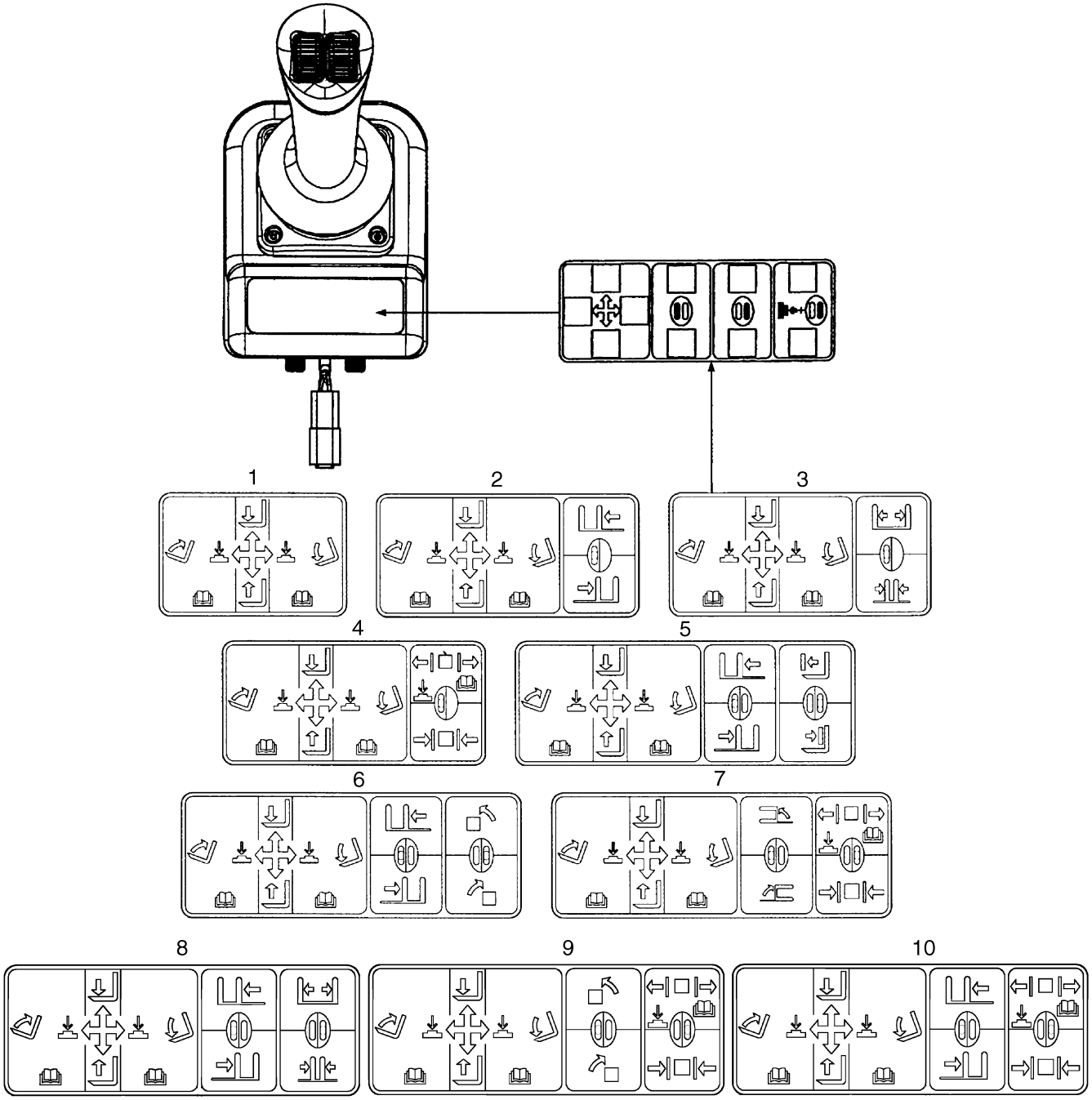

BP120198

©2006 HYSTER COMPANY

JOYSTICK LABELS
WITH RETURN TO SET TILT

ITEM	PART NO.	DESCRIPTION	QTY
1	2085882	Label (Hoist and Tilt)	1
2	2085885	Label (Hoist and Tilt, Side-Shift)	1
3	2085886	Label (Hoist and Tilt, Fork Spread)	1
4	2085889	Label (Hoist and Tilt, Clamp)	1
5	2085888	Label (Hoist and Tilt, Side-Shift, Push/Pull)	1
6	2085891	Label (Hoist and Tilt, Side-Shift, Rotate)	1
7	2085893	Label (Hoist and Tilt, Swing, Clamp)	1
8	2085887	Label (Hoist and Tilt, Side-Shift, Fork Spread)	1
9	2085892	Label (Hoist and Tilt, Rotate, Clamp)	1
10	2085890	Label (Hoist and Tilt, Side-Shift, Clamp)	1

©2006 HYSTER COMPANY

FORKS (Figure 1-20)

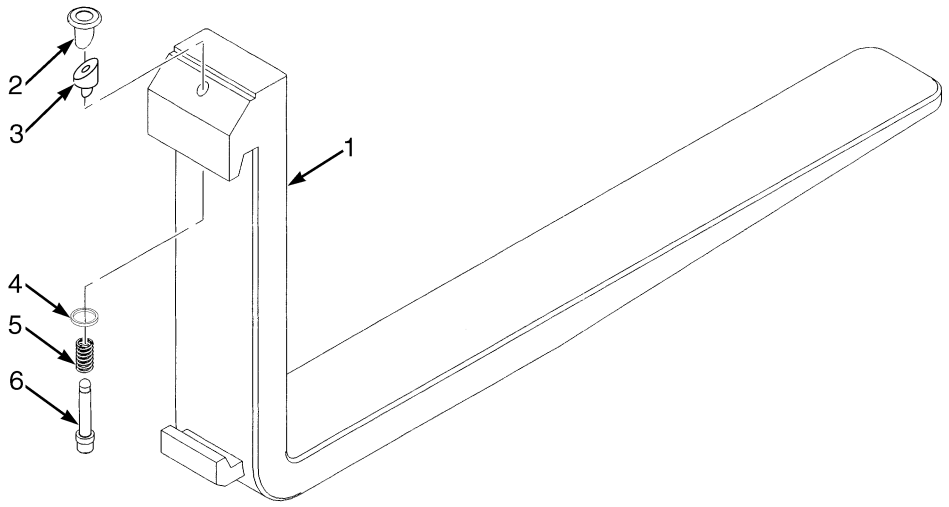

HP120794

KEY:
A: 80 mm x 40 mm (4 in. x 1.5 in.) Standard Taper
B: 100 mm x 40 mm (4 in. x 1.5 in.) Full Bottom Taper

ITEM	PART NO.	DESCRIPTION	QTY A	QTY B
1	1327021	Fork (1000 mm)	2	..
1	1327022	Fork (1100 mm)	2	..
1	1327023	Fork (1200 mm)	2	..
1	1333043	Fork (1000 mm)	..	2
1	1333044	Fork (1100 mm)	..	2
1	1333045	Fork (1200 mm)	..	2
2	1523732	Knob	1	1
3	1477237	Wedge	1	1
4	1477166	Washer	1	1
5	1500782	Spring	1	1
6	1523733	Pin	1	1
7	1523734	Retainer Pin	1	1
	1523735	Latch Kit (Class II) (Includes Items 2-7)	2	2

©2006 HYSTER COMPANY

NOTES

LOAD BACKREST EXTENSION (Figure 1-21)

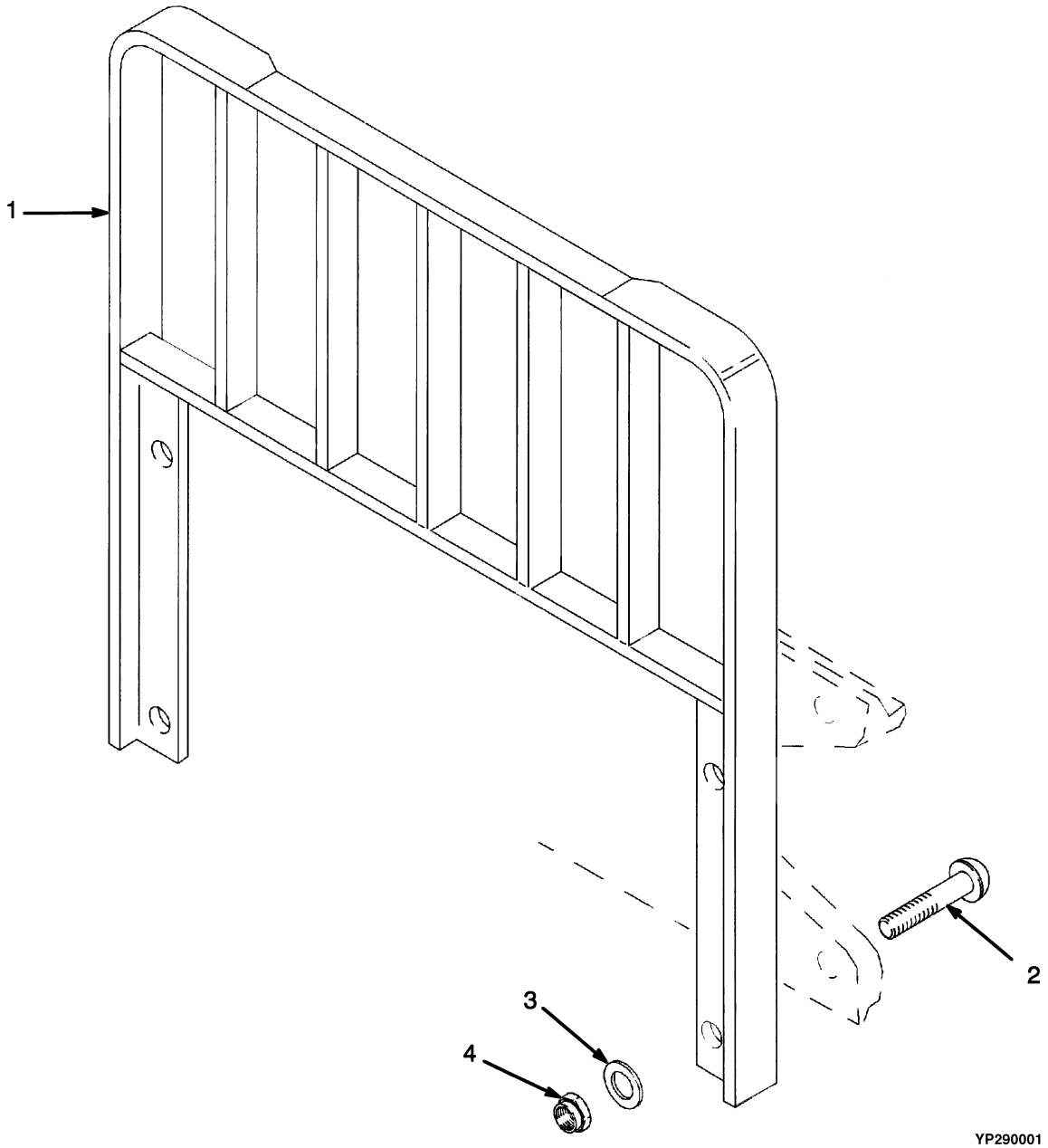

©2006 HYSTER COMPANY

LOAD BACKREST EXTENSION

ITEM	PART NO.	DESCRIPTION	QTY
1	1349446	Load Backrest Extension (977 mm)	1
2	1343990	Capscrew	4
3	221771	Washer	4
3	296423	Washer (Optional)	4
4	300937	Locknut	4

©2006 HYSTER COMPANY

CAB ASSEMBLY (Figure 1-22)
WITH STEEL DOORS

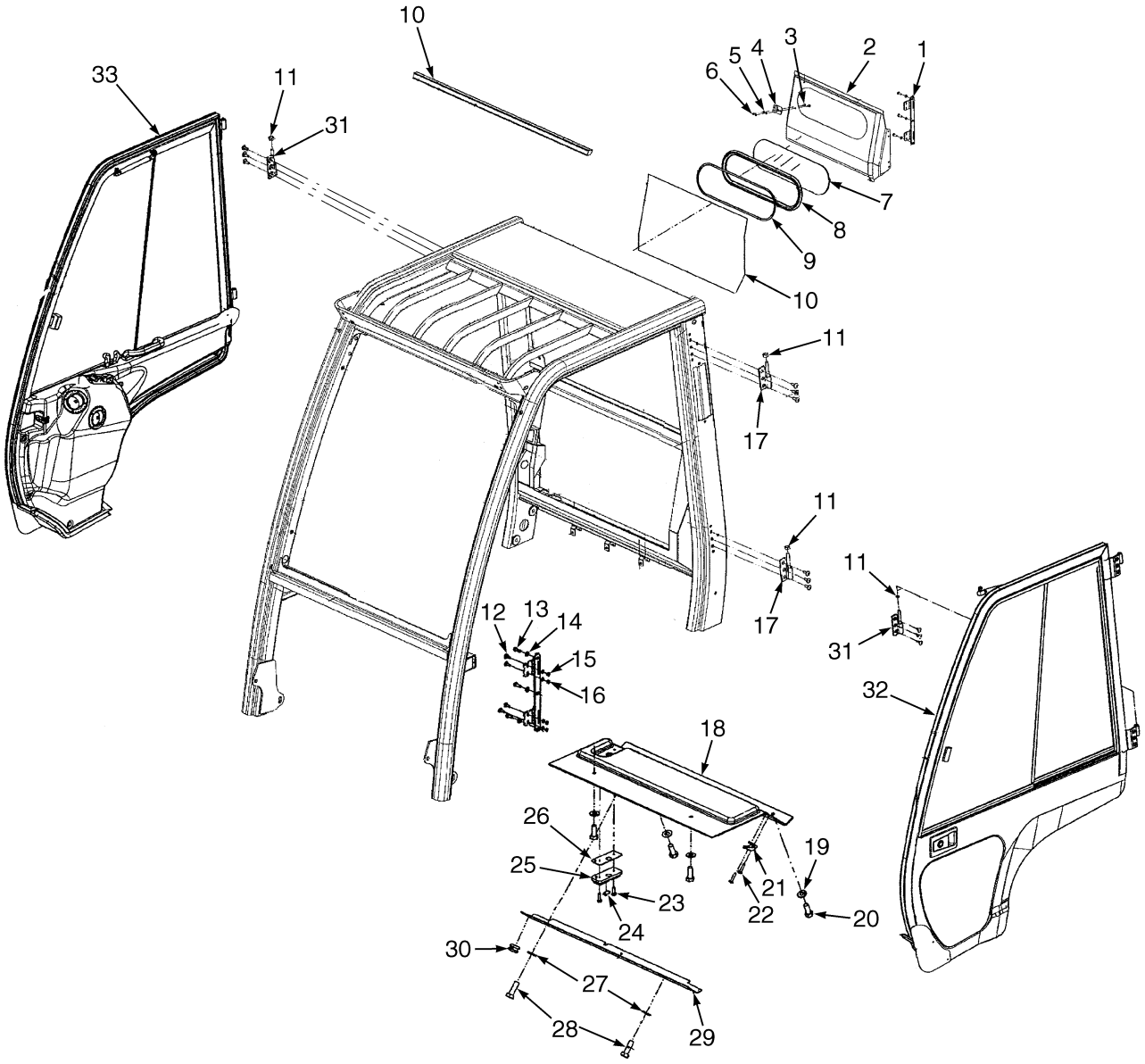

©2006 HYSTER COMPANY

CAB ASSEMBLY
WITH STEEL DOORS

ITEM	PART NO.	DESCRIPTION	QTY
	1642135	Cab Assembly	1
1	1653577	Hinge (Rear Door)	1
2	1653576	Rear Door	1
3	1653633	Screw	2
4	1653578	Hinge	1
5	320156	Washer	2
6	136687	Nut	2
7	1653635	Screen (Rear Door)	1
8	1393465	Seal	1
9	1393466	Seal	1
10	1651735	Seal	AR
11	1468312	Washer	4
12	1653634	Screw	4
13	136681	Capscrew	3
14	320158	Washer	3
15	136687	Nut	6
16	320156	Washer	6
17	1503958	Hinge	2
18	1651729	Headliner	1
19	1504941	Washer	4
20	1651727	Screw	4
21	1393458	Hanger	1
22	1651725	Screw	2
23	1468319	Screw	2
24	1393527	Bulb	1
25	1393528	Dome Light	1
26	1566767	Bracket	1
27	320158	Washer	2
28	136749	Capscrew	2
29	1653642	Cover	1
30	1646728	Grommet	2
31	1503959	Hinge (RH)	2
32	1641870	Door Assembly (LH)	1
32	1651831	Panel	1
32	1651795	Screw	3
32	1651741	Door Assembly (LH) (☞ Figure 1-25)	1
33	1641871	Door Assembly (RH)	1
33	1651831	Panel	1
33	1651795	Screw	1
33	1651798	Door Assembly (RH) (☞ Figure 1-24)	1
33	1644862	Door Cover	1
33	1623400	Hose	AR

©2006 HYSTER COMPANY

CAB AND ATTACHING PARTS (Figure 1-23)
WITH STEEL DOORS

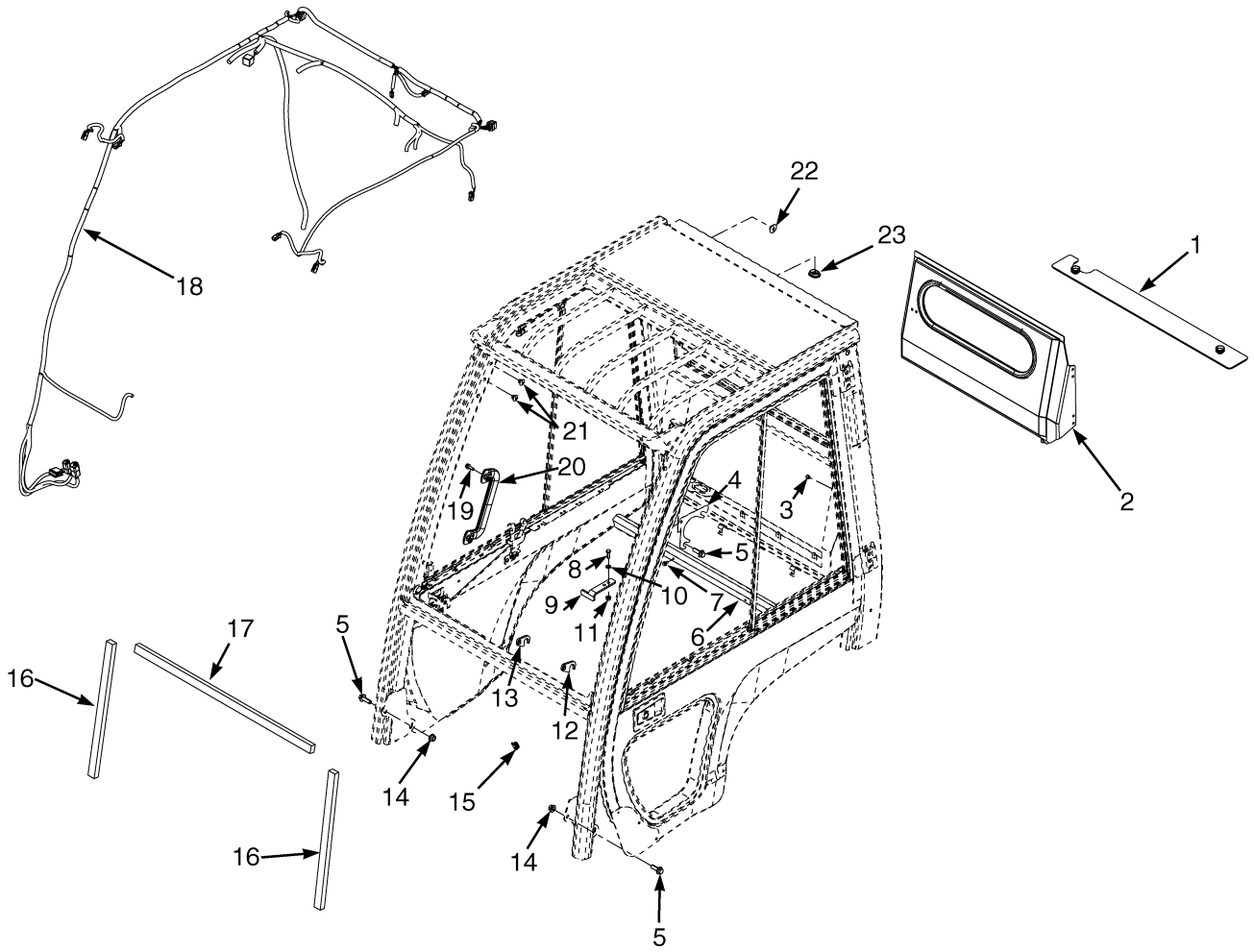

BP120300

©2006 HYSTER COMPANY

CAB AND ATTACHING PARTS
WITH STEEL DOORS

ITEM		PART NO.	DESCRIPTION	QTY
		1642135	Cab Assembly (With Steel Doors)	1
1		1642137	Radiator Cover Assembly	1
1		1653648	Cover	1
1		1653645	Screw	2
1		1651739	Rivet	2
1		1653646	Seal	2
2		1653576	Rear Door (☞ Figure 1-22)	1
3		1494888	Plug	4
4		1636853	Shim	AR
5		1527888	Capscrew	8
6		1650878	Cover	1
7		1534417	Capscrew	2
8	**a**	18497	Capscrew	2
9	**a**	1634941	Bracket	1
10	**a**	18515	Washer	2
11	**a**	191941	Nut	2
12		1637307	Plate	1
13		1635509	Plate	1
14		1528888	Nut	2
15		1589787	Seal	2
16		1636611	Seal	2
17		1636610	Seal	1
18		1623382	Wire Harness	1
19		1583611	Capscrew	8
20		1536813	Handle (Grab)	1
21		1574301	Plug	6
22		1599415	Plug	1
23		2070996	Grommet	1

FOOTNOTES:
a Seat Restriction

©2006 HYSTER COMPANY

STEEL DOOR AND HEATER ASSEMBLY (Figure 1-24)
RIGHT HAND

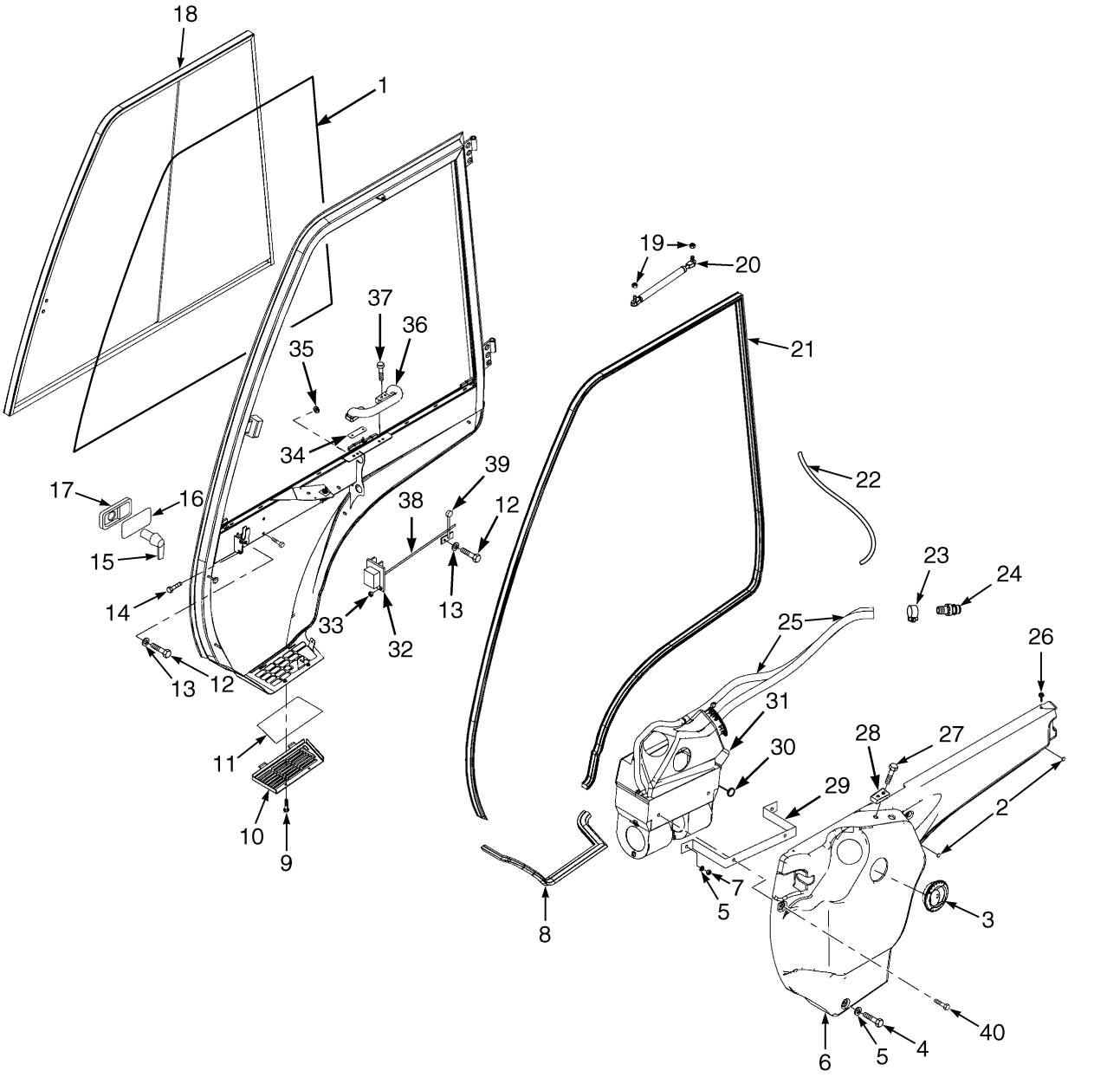

BP120295

©2006 HYSTER COMPANY

STEEL DOOR AND HEATER ASSEMBLY
RIGHT HAND

ITEM	PART NO.	DESCRIPTION	QTY
	1642135	Cab Assembly	1
	1651798	Door Assembly (RH)	1
1	1558294	Seal	AR
2	1651739	Rivet	2
3	1598398	Louver	3
4	1623395	Screw	2
5	320158	Washer	4
6	1653971	Door Cover	1
7	239503	Nut	2
8	1623391	Seal	AR
9	1598399	Screw	4
10	1598401	Bracket	1
11	1598400	Filter	1
12	302047	Screw	4
13	320156	Washer	4
14	296229	Capscrew	2
15	1598411	Lever	1
16	1598394	Seal	1
17	1598393	Grip	1
18	1653970	Sliding Window (RH)	1
18	1653936	Latch Assembly	1
18	1639489	Guide	4
19	316835	Nut	2
20	1598414	Gas Spring	1
20	1393472	Ball Stud	2
21	1393463	Seal	AR
22	1623402	Clamp	1
23	1393499	Clamp	1
24	1598670	Connector	2
25	1623400	Hose	2
26	1558034	Plastic Button	2
27	1468318	Screw	4
28	1623403	Plate	1
29	1598669	Bracket	1
30	1598390	Plug	5
31	1598404	Heater Assembly	1
31	1598675	Heater	1
31	1598674	Hose	4
31	1598673	Switch	1
31	1640800	Knob	1
31	1598672	Valve (Water)	1
31	1654298	Knob (Heater Valve)	1
31	1598671	Wire Harness	1
31	1598670	Connector (Heater Hose)	2
32	1598412	Lock (RH)	1
33	1598408	Nut	2
34	1623397	Plate	2
35	1646729	Grommet	2
36	1598406	Handle	1
37	1623393	Screw	2
38	1598409	Release Bar	1

©2006 HYSTER COMPANY

STEEL DOOR AND HEATER ASSEMBLY
RIGHT HAND

ITEM	PART NO.	DESCRIPTION	QTY
39	1598410	Lever	1
40	1598389	Fastener	3
a	1593629	Key	2
a	1506825	Strap Clamp	1

FOOTNOTES:
a Not Illustrated

©2006 HYSTER COMPANY

NOTES

STEEL DOOR (Figure 1-25)
LEFT HAND

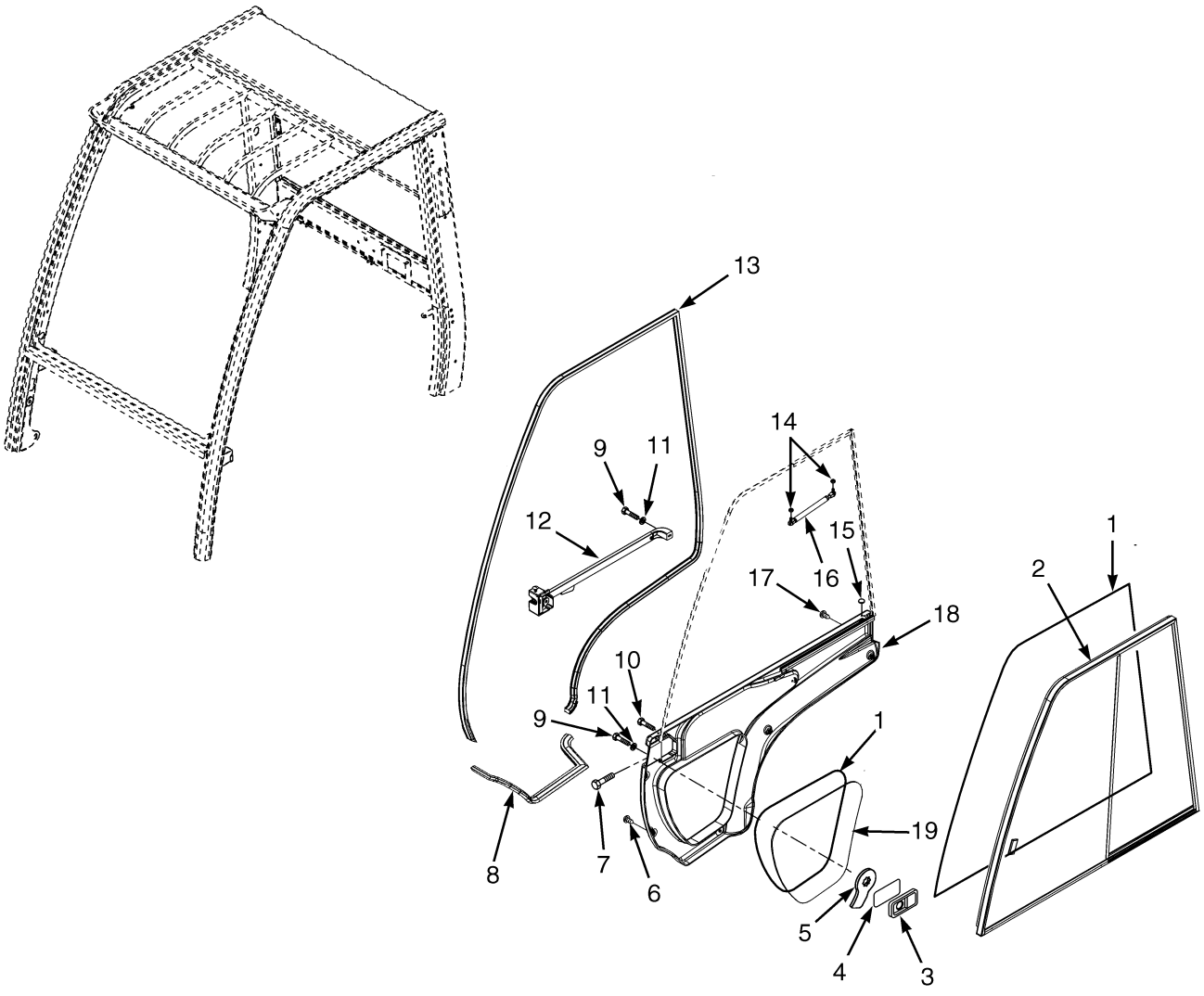

©2006 HYSTER COMPANY

STEEL DOOR
LEFT HAND

ITEM	PART NO.	DESCRIPTION	QTY
	1642135	Cab Assembly	1
	1651741	Door Assembly (LH)	1
1	1558294	Seal	AR
2	1653967	Sliding Window	1
2	1653969	Latch Assembly	1
2	1639489	Guide	4
3	1598393	Grip	1
4	1598394	Seal	1
5	1598392	Lever	1
6	1598389	Fastener	3
7	296229	Capscrew	2
8	1623391	Seal	AR
9	302047	Screw	5
10	1623393	Screw	2
11	320156	Washer	5
12	1393479	Handle and Latch	1
13	1393463	Seal	AR
14	316835	Nut	2
15	1558034	Plastic Button	2
16	1598397	Gas Spring	1
16	1393472	Ball Stud	2
17	1598389	Fastener	5
18	1653973	Cover	1
19	1598395	Screen	1
a	1593629	Key	2

FOOTNOTES:
a Not Illustrated

©2006 HYSTER COMPANY

CAB AND ATTACHING PARTS (Figure 1-26)
WITH PVC DOORS

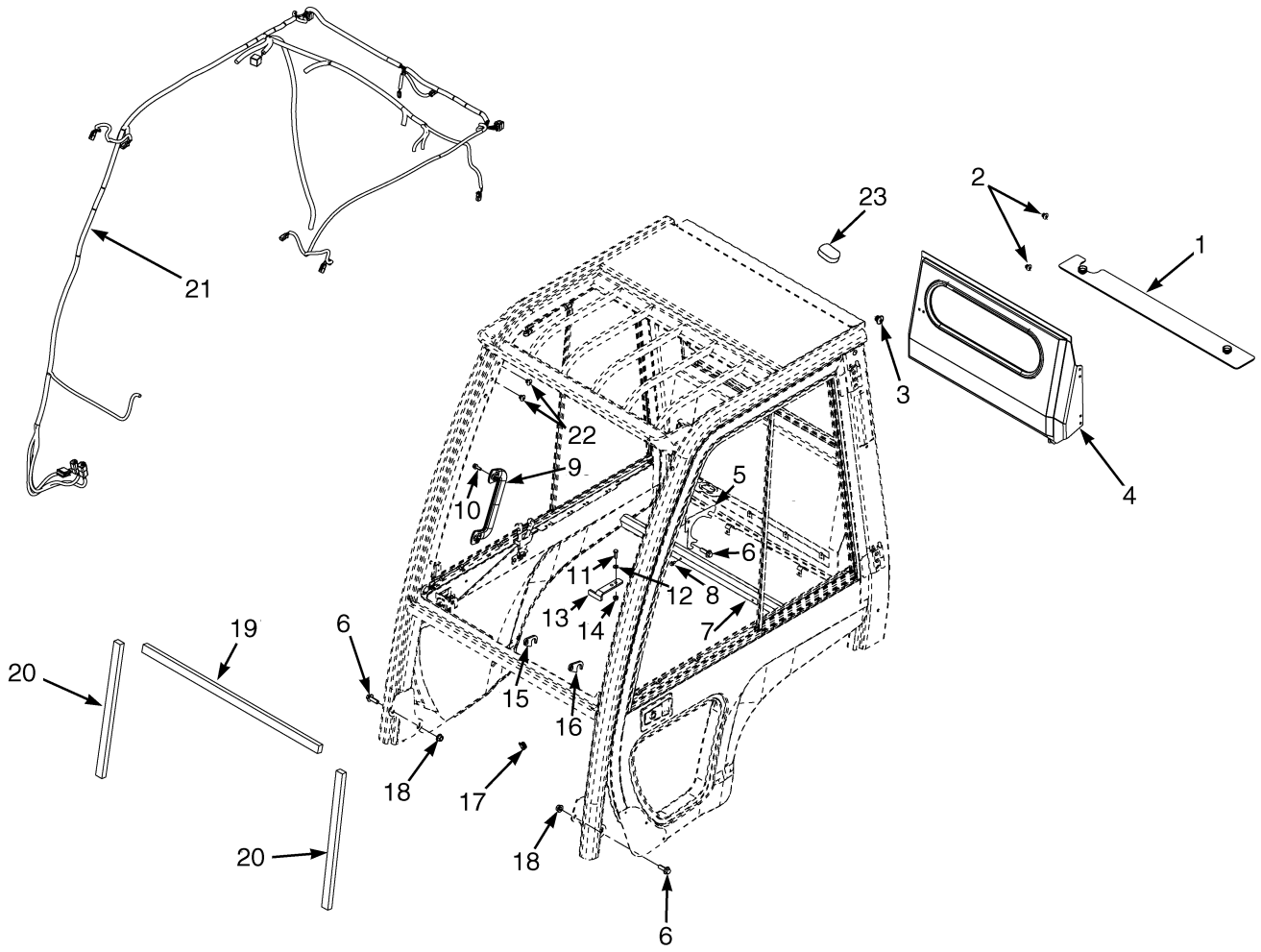

©2006 HYSTER COMPANY

CAB AND ATTACHING PARTS
WITH PVC DOORS

ITEM		PART NO.	DESCRIPTION	QTY
		1642136	Cab Assembly (With PVC Doors)	1
1		1642138	Radiator Cover Assembly	1
1		1651739	Rivet	2
1		1653644	Cover	1
1		1653645	Screw	2
1		1653646	Seal	AR
2		1494888	Plug	4
3		1599415	Plug	1
4		1653576	Rear Door (☞ Figure 1-22)	1
5		1636853	Shim	AR
6		1527888	Capscrew	8
7		1650878	Cover	1
8		1534417	Capscrew	2
9		1536813	Handle (Grab)	1
10		1583611	Capscrew	2
11	**a**	18497	Capscrew	2
12	**a**	18515	Washer	2
13	**a**	1634941	Bracket	1
14	**a**	191941	Nut	2
15		1637307	Plate	1
16		1635509	Plate	1
17		1589787	Seal	2
18		1528888	Nut	4
19		1636610	Seal	1
20		1636611	Seal	2
21		1623382	Wire Harness	1
22		1574301	Plug	6
23		2070996	Grommet	1
		. . . . .	Door Assembly (Right and Left Hand) (☞ Figure 1-27)	2

FOOTNOTES:
a Seat Restriction

©2006 HYSTER COMPANY

CAB DOORS (Figure 1-27)
PVC

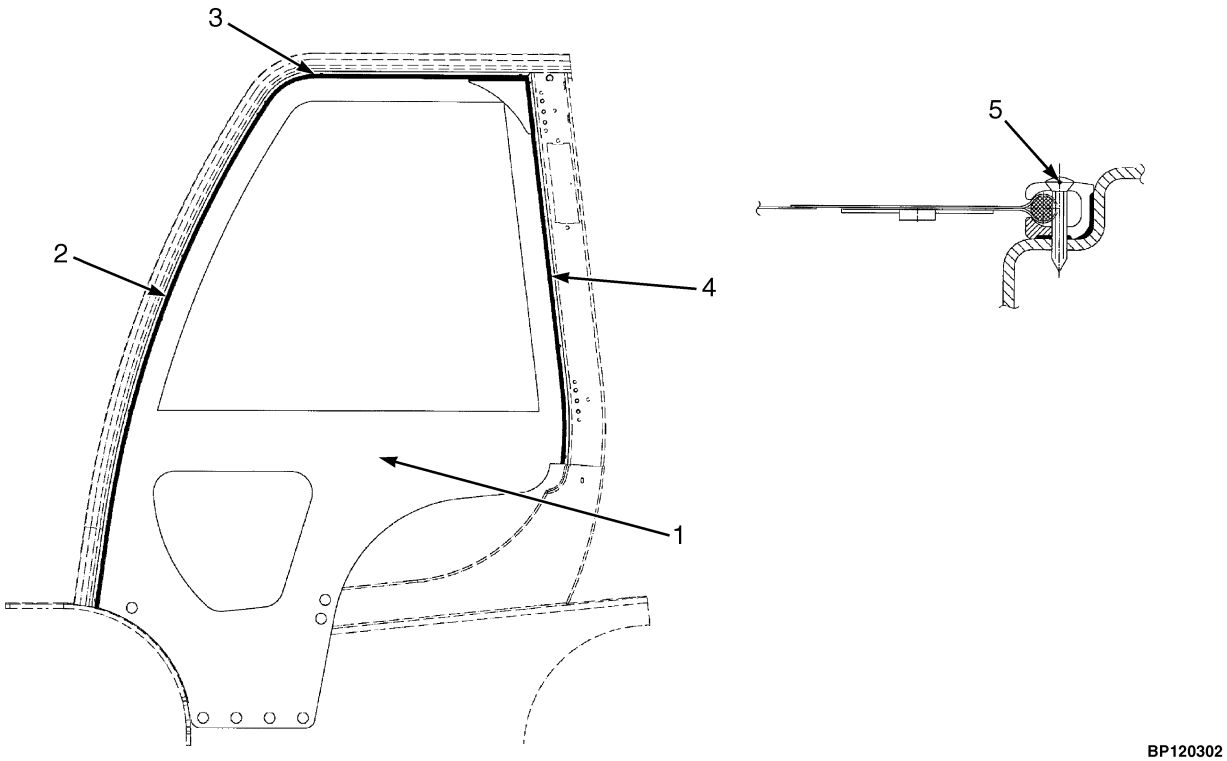

©2006 HYSTER COMPANY

CAB DOORS
PVC

KEY:
A: Right Hand
B: Left Hand

ITEM	PART NO.	DESCRIPTION	QTY A	QTY B
	1652430	Door Assembly	1	..
	1642429	Door Assembly	..	1
1	1652437	Door	1	..
1	1652434	Door	..	1
2	1652436	Molding (Front)	1	..
2	1652433	Molding (Front)	..	1
3	1627174	Molding (Top)	1	..
3	1627178	Molding (Top)	..	1
4	1627173	Molding (Back)	1	..
4	1627177	Molding (Back)	..	1
5	1627172	Screw	10	10

©2006 HYSTER COMPANY

CAB (Figure 1-28)
WIRING AND ATTACHING PARTS

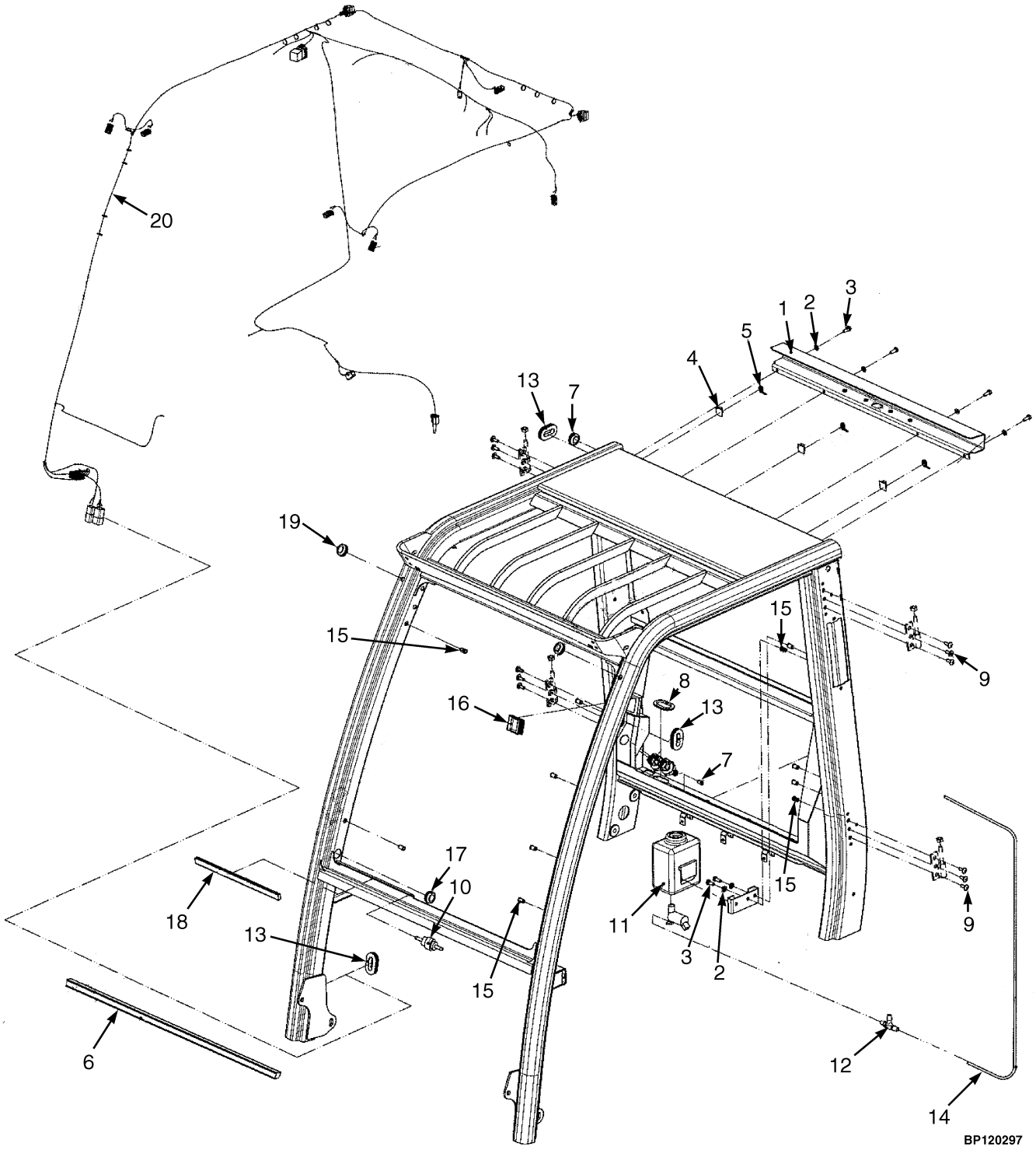

©2006 HYSTER COMPANY

CAB
WIRING AND ATTACHING PARTS

ITEM	PART NO.	DESCRIPTION	QTY
	1642135	Cab Assembly	1
	1642136	Cab Assembly	1
1	1651723	Cover	1
2	320158	Washer	4
3	136681	Capscrew	4
4	1558036	Clip	3
5	1393499	Clamp	3
6	1515337	Seal	AR
7	1651721	Rivet Nut	4
8	1492167	Edge Protector	1
9	1493308	Bolt	17
10	1393495	Check Valve	1
11	1653632	Pump	1
12	1646727	Connector	1
13	1598332	Grommet	3
14	1393509	Hose	1
15	1646724	Rivet	6
16	1653631	Clip	1
17	1646729	Grommet	2
18	1646726	Seal	1
19	1646728	Grommet	4
20	1623382	Wire Harness	1

©2006 HYSTER COMPANY

CAB (Figure 1-29)
WINDOWS AND WINDOW WIPER SYSTEM

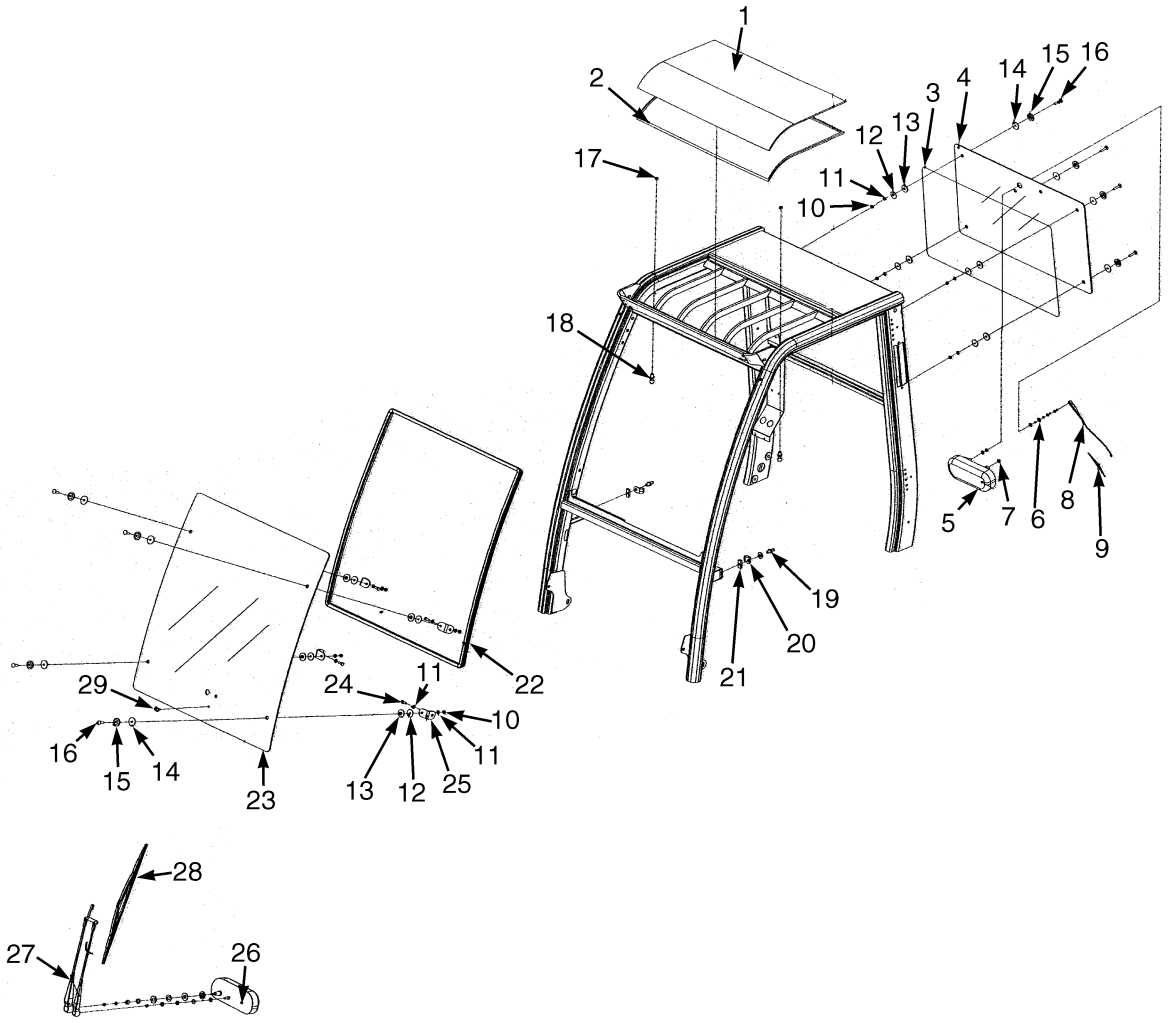

BP120298

©2006 HYSTER COMPANY

CAB
WINDOWS AND WINDOW WIPER SYSTEM

ITEM	PART NO.	DESCRIPTION	QTY
	1642135	Cab Assembly	1
	1642136	Cab Assembly	1
1	1641684	Window (Top Screen)	1
2	1623377	Seal	AR
3	1495441	Seal	AR
4	1641688	Window (Rear Screen)	1
5	1641683	Wiper Motor (Rear)	1
6	1558025	Washer	1
7	1554125	Washer	2
8	1641685	Wiper Arm (Rear)	1
9	1641687	Wiper Blade (Rear)	1
10	239503	Nut	8
11	320150	Washer	8
12	1598211	Washer	12
13	1468317	Washer	8
14	1468316	Washer	8
15	1468315	Washer	8
16	1468314	Screw	8
17	316835	Nut	2
18	1393472	Ball Stud	2
19	1653630	Striker Bolt	2
20	1393541	Guard	2
21	1393488	Block	2
22	1495441	Seal	AR
23	1641686	Windsheild (Front)	1
24	1623364	Screw	4
25	1598210	Bracket	1
26	1598294	Wiper Motor	1
27	1598298	Wiper Arm	1
28	1598299	Wiper Blade	1
29	1493336	Connector	1

©2006 HYSTER COMPANY

NOTES

2 ENGINES

SECTION 2
ENGINES

DESCRIPTION **PAGE**

CAMSHAFT AND DRIVE GEAR
YANMAR 2.6L DIESEL 2-58
CAMSHAFT AND VALVES
MAZDA 2.0L 2-36
CARBURETOR
LPG
MAZDA 2.0L 2-22
COOLING
MAZDA 2.0L
LPG 2-8
YANMAR 2.6L DIESEL 2-42
COUNTERWEIGHT EXHAUST
MAZDA 2.0L
WITH CATALYTIC CONVERTER 2-10
CRANKSHAFT AND PISTONS
MAZDA 2.0L 2-38
YANMAR 2.6L DIESEL 2-60
CYLINDER BLOCK
MAZDA 2.0L 2-40
YANMAR 2.6L DIESEL 2-62
CYLINDER HEAD
MAZDA 2.0L 2-34
YANMAR 2.6L DIESEL 2-56
DELAY VALVE
MAZDA 2.0L
LPG
S/N F001B02574D⇒ 2-24
ENGINE FUEL SYSTEM AND EMMISSION CONTROL
MAZDA 2.0L 2-20
ENGINE MOUNTING 2-4
EXHAUST
WITH PURIFIER
YANMAR 2.6L DIESEL 2-44
WITHOUT PURIFIER
YANMAR 2.6L DIESEL 2-46
FAN ASSEMBLY 2-6
FLYWHEEL AND HOUSING
MAZDA 2.0L 2-26
YANMAR 2.6L DIESEL 2-50
GEAR HOUSING
YANMAR 2.6L DIESEL 2-52
INTAKE AND EXHAUST MANIFOLDS
MAZDA 2.0L 2-18
YANMAR 2.6L DIESEL 2-48
LUBRICATION SYSTEM
YANMAR 2.6L DIESEL 2-66
OIL PAN
YANMAR 2.6L DIESEL 2-54
OIL PUMP AND FILTER
MAZDA 2.0L 2-32

©2006 HYSTER COMPANY

SECTION 2
ENGINES (Continued)

DESCRIPTION	PAGE
OVERHEAD EXHAUST	
MAZDA 2.0L	
WITH CATALYTIC CONVERTER	2-16
WITHOUT CATALYTIC CONVERTER ⇒S/N F001B01812D	2-12
WITHOUT CATALYTIC CONVERTER (LPG) S/N F001B01813D⇒	2-14
TIMING GEAR COVER AND OIL PAN	
MAZDA 2.0L	2-30
WATER PUMP	
MAZDA 2.0L	2-28
YANMAR 2.6L DIESEL	2-64

©2006 HYSTER COMPANY

NOTES

ENGINE MOUNTING (Figure 2-1)

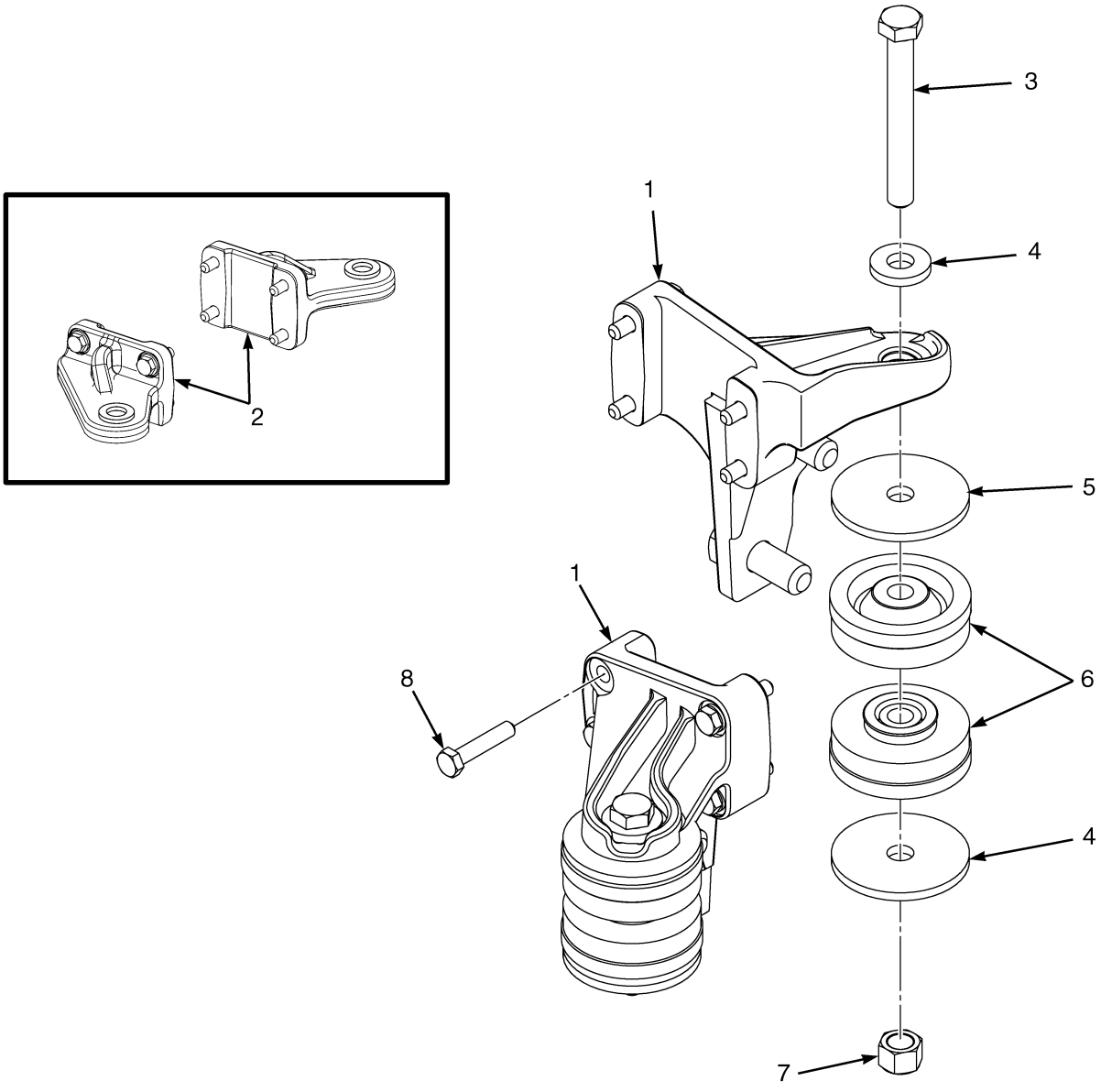

©2006 HYSTER COMPANY

ENGINE MOUNTING

KEY:
A: Mazda Engine
B: Yanmar Diesel Engine

ITEM	PART NO.	DESCRIPTION	QTY A	QTY B
1	1557478	Engine Mount (RH)	1	..
1	1557479	Engine Mount (LH)	1	..
2	1557767	Engine Mount	..	2
3	293698	Capscrew	2	2
4	1504075	Washer	2	2
5	1557737	Washer	4	4
6	2069951	Isolator	4	4
7	1565453	Nut (Flange)	2	2
8	1565150	Bolt (Flange)	8	8

©2006 HYSTER COMPANY

FAN ASSEMBLY (Figure 2-2)

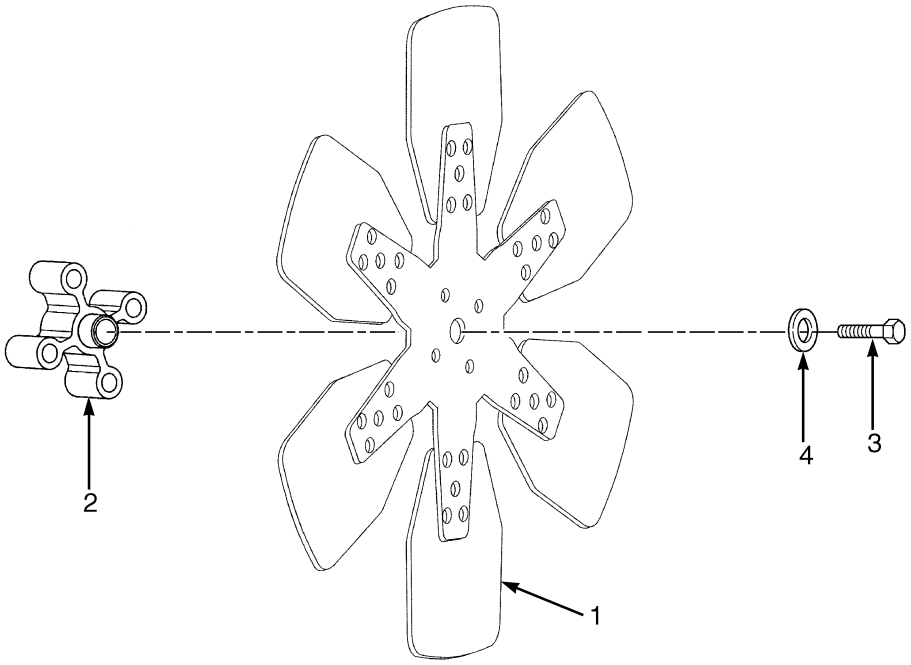

HP091244

KEY:
A: Mazda Engine
B: Yanmar Diesel Engine

ITEM	PART NO.	DESCRIPTION	QTY A	QTY B
1	1375642	Fan	1	1
2	1528140	Spacer	1	..
2	1377781	Spacer	..	1
3	293619	Capscrew	4	4
4	296418	Washer	4	4

©2006 HYSTER COMPANY

NOTES

COOLING (Figure 2-3)
MAZDA 2.0L
LPG

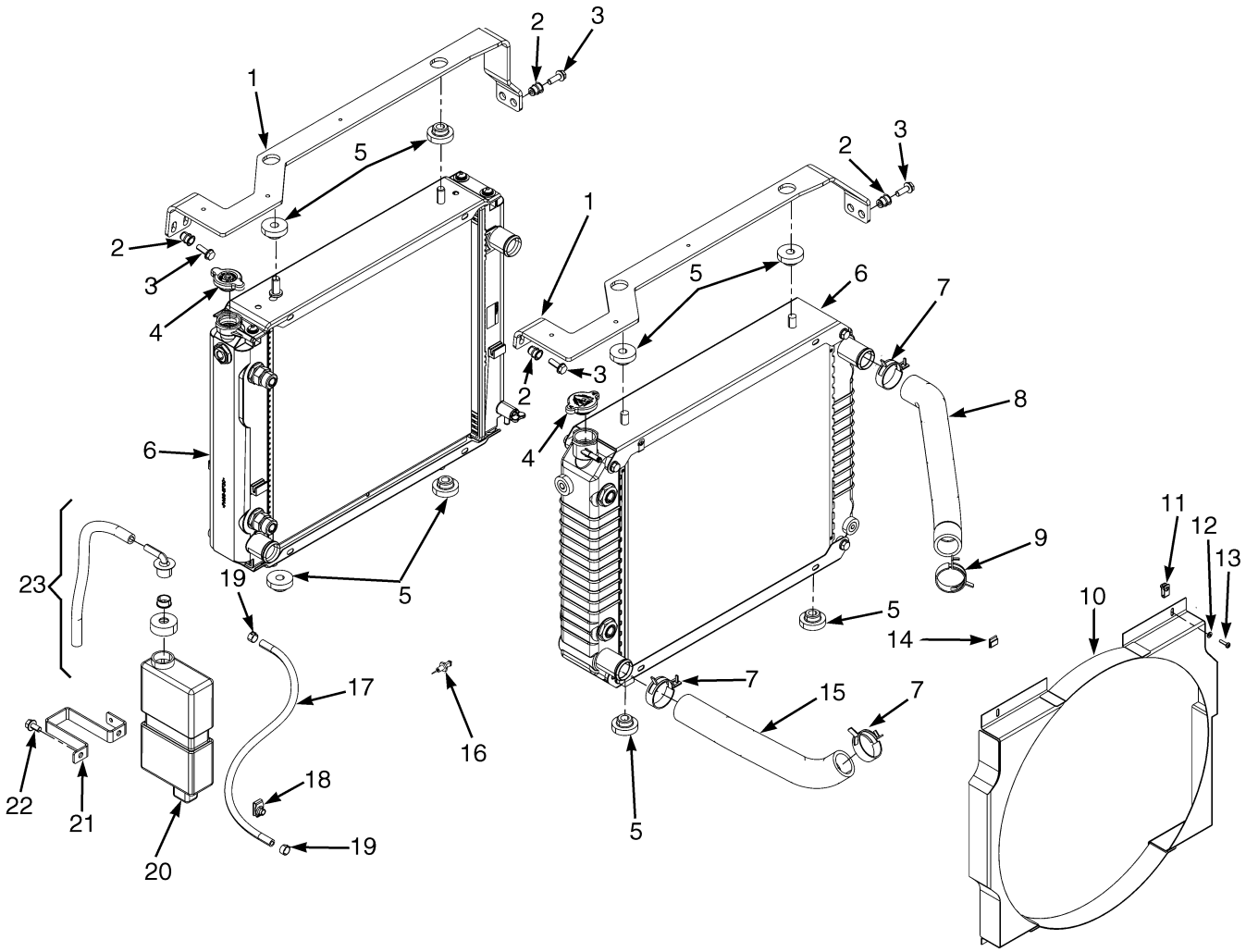

BP0090175

©2006 HYSTER COMPANY

COOLING
MAZDA 2.0L
LPG

KEY:
A: Serpentine Radiator
B: Square Wave Radiator

ITEM	PART NO.	DESCRIPTION	QTY A	QTY B
1	1534355	Bracket (Top)	1	..
1	1534356	Bracket (Top)	..	1
2	1530243	Insert	4	4
3	1583611	Capscrew	4	4
4	1352140	Cap	1	1
5	1529787	Isolator	4	4
6	2060012	Radiator	1	..
6	1528595	Fitting (Drain)	1	..
6	2060015	Radiator	..	1
7	1527982	Clamp	3	3
8	2058863	Hose (Upper) (Upper)	1	1
9	1501999	Clamp	1	1
10	1581392	Shroud	1	..
10	1581391	Shroud	..	1
11	1535257	Clip Nut	2	2
12	320154	Washer	2	2
13	302023	Screw	2	2
14	1329271	Clip	2	2
15	2059211	Hose (Lower)	1	1
16	1531404	Sensor (Low Coolant Level) (Optional)	1	1
16	14385	Plug (Optional)	1	1
16	246108	Sealant	AR	AR
17	1329240	Tube	1	1
18	1480237	Clip Nut	1	1
19	369815	Clamp	2	2
20	1347026	Reservoir	1	1
21	1531167	Bracket	1	1
22	1527879	Capscrew	2	2
23	345455	Outlet Assembly	1	1
23	339735	Hose	1	1
23	345453	Outlet (Reservoir)	1	1
23	345454	Cap	1	1
23	336550	Bushing	1	1

©2006 HYSTER COMPANY

COUNTERWEIGHT EXHAUST (Figure 2-4)
MAZDA 2.0L
WITH CATALYTIC CONVERTER

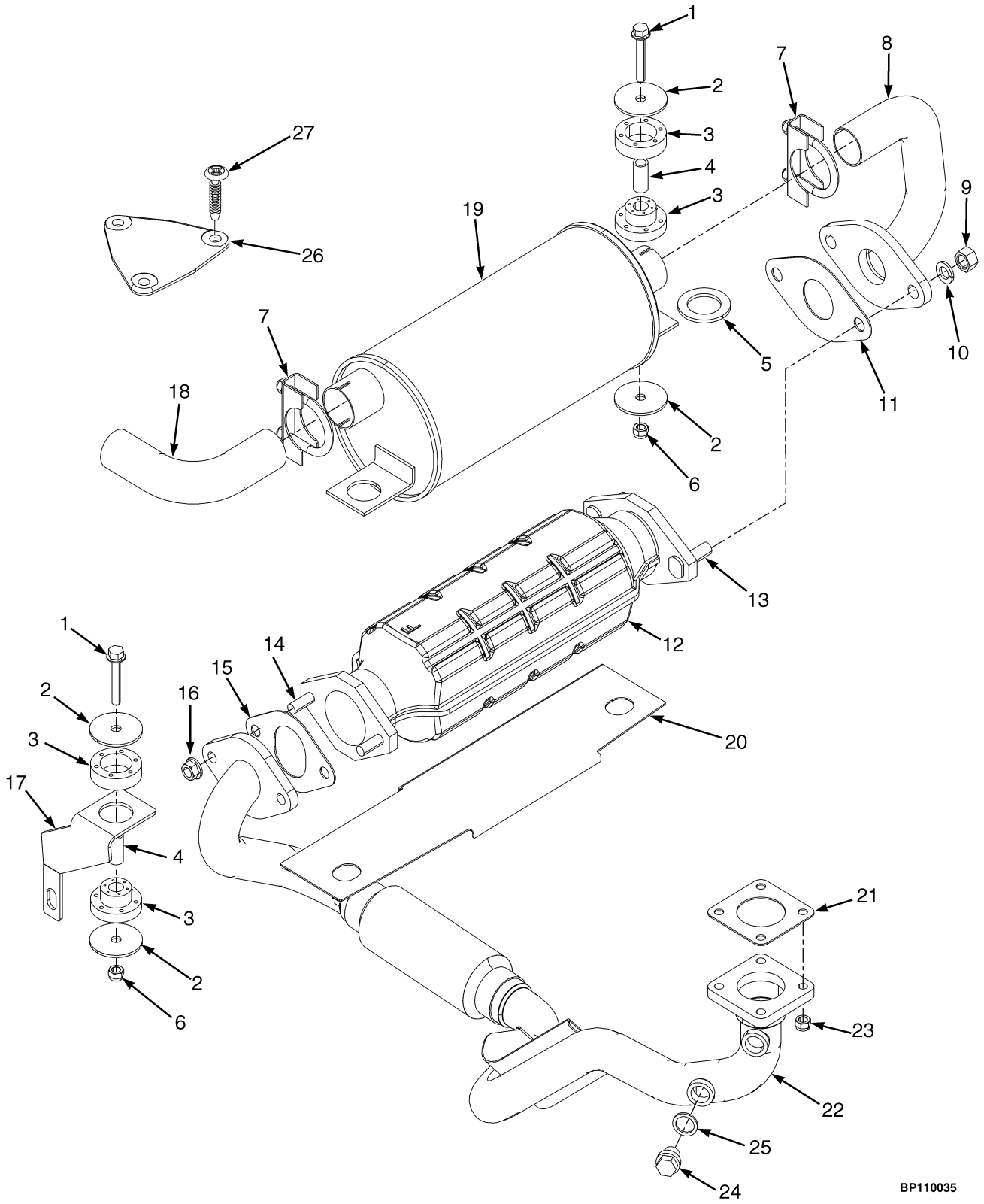

©2006 HYSTER COMPANY

COUNTERWEIGHT EXHAUST
MAZDA 2.0L
WITH CATALYTIC CONVERTER

ITEM	PART NO.	DESCRIPTION	QTY
1	1510115	Capscrew	2
2	1528938	Washer	4
3	1528930	Isolator	2
4	1528934	Spacer	2
5	1532585	Washer	2
6	1582222	Lock Nut	2
7	68968	Clamp	3
8	1534174	Exhaust Pipe	1
9	1469405	Nut	2
10	292683	Lockwasher	2
11	1469379	Gasket	1
12	1560278	Catalytic Converter	1
13	1495501	Bolt	2
14	1495502	Bolt	2
15	1547712	Gasket	1
16	1460477	Nut	2
17	1532523	Bracket	1
18	1589312	Exhaust Pipe	1
19	2060957	Muffler (G/LPG)	1
19	2056524	Muffler (GS/LPS)	1
20	1585595	Exhaust Shield	1
21	1528937	Gasket	1
22	1585483	Exhaust Pipe	1
23	1582222	Lock Nut	4
24	1396518	Plug Assembly	1
25	1509103	Ring (Copper)	1
26	1533639	Cover	1
27	1347045	Fastener	3

©2006 HYSTER COMPANY

OVERHEAD EXHAUST (Figure 2-5)
MAZDA 2.0L
WITHOUT CATALYTIC CONVERTER
(⇒S/N F001B01812D)

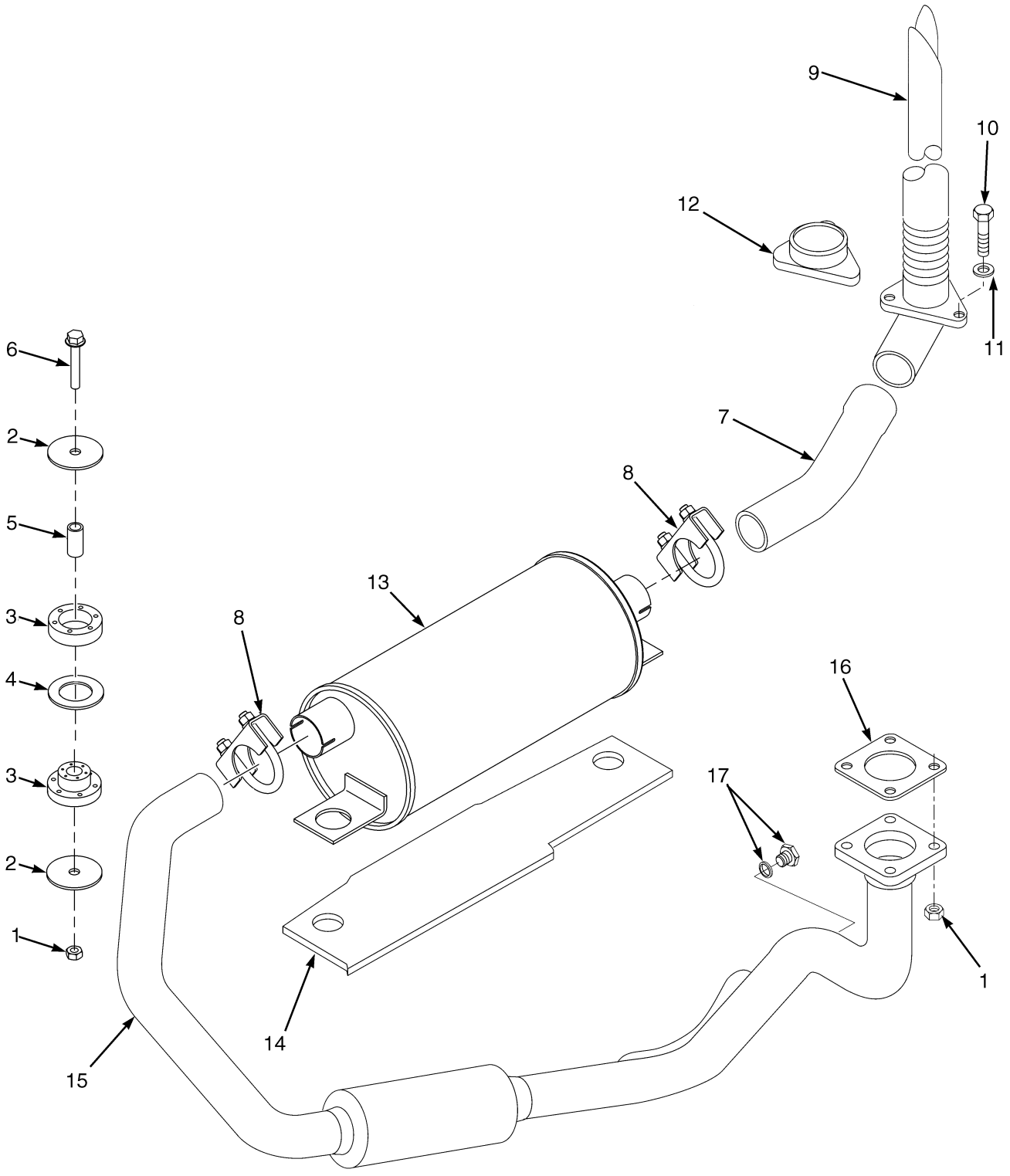

©2006 HYSTER COMPANY

OVERHEAD EXHAUST
MAZDA 2.0L
WITHOUT CATALYTIC CONVERTER
(⇒S/N F001B01812D)

ITEM	PART NO.	DESCRIPTION	QTY
1	1582222	Lock Nut	6
2	1528938	Washer	4
3	1528930	Isolator	2
4	1532585	Washer	2
5	1528934	Spacer	2
6	1510115	Capscrew	2
7	1531829	Exhaust Pipe	1
8	68968	Clamp	2
9	1610940	Tail Pipe	1
10	1586013	Capscrew	3
11	320159	Washer	3
12	2021394	Cover	1
13	2060957	Muffler (LPG)	1
14	1585595	Exhaust Shield	1
15	1565946	Exhaust Pipe	1
16	1528937	Gasket	1
17	1396518	Plug Assembly	1
17	1509103	Ring (Copper)	1

©2006 HYSTER COMPANY

OVERHEAD EXHAUST (Figure 2-6)
WITHOUT CATALYTIC CONVERTER
(LPG)
(S/N F001B01813D⇒)

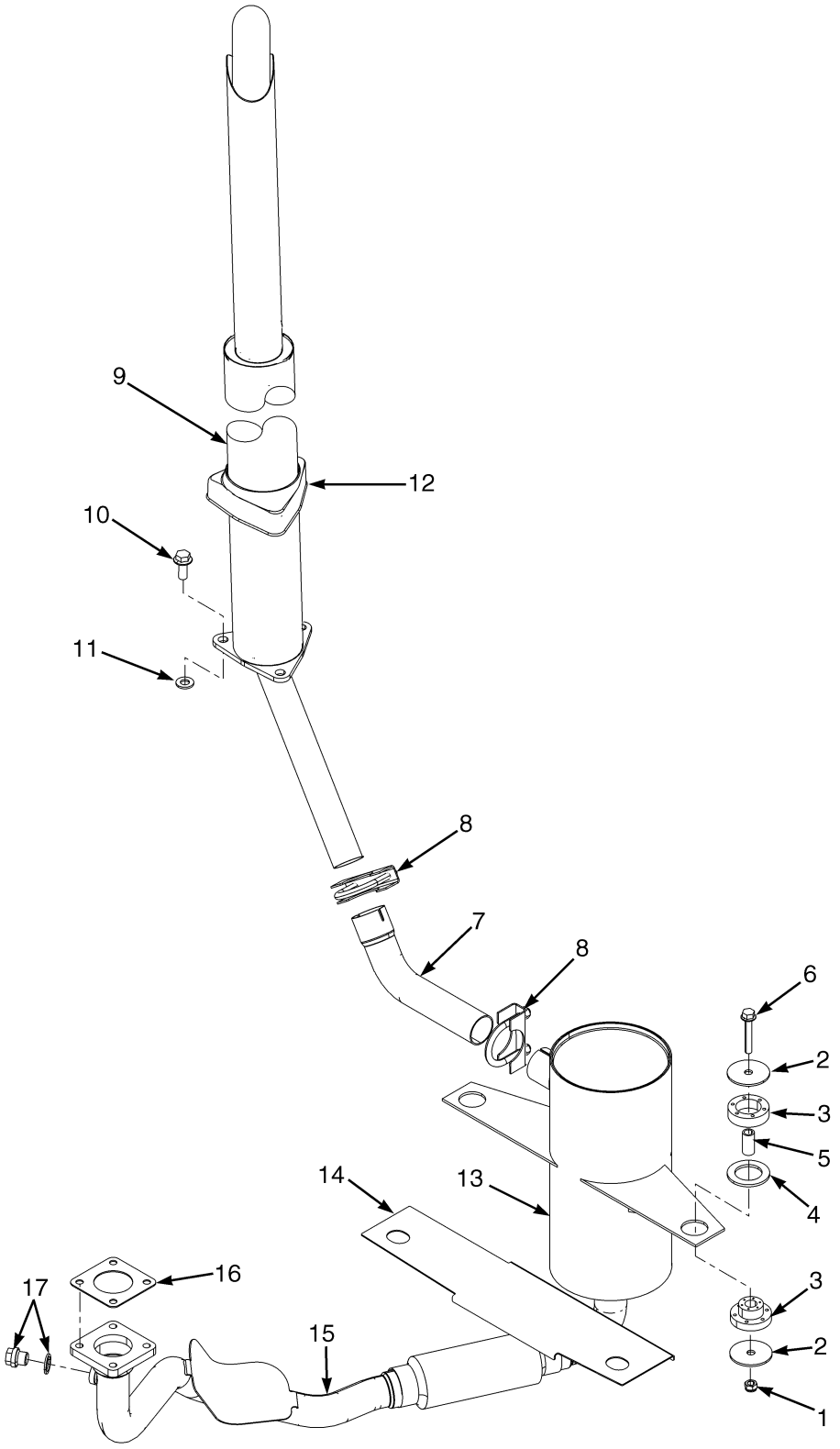

©2006 HYSTER COMPANY

OVERHEAD EXHAUST
WITHOUT CATALYTIC CONVERTER
(LPG)
(S/N F001B01813D⇒)

ITEM	PART NO.	DESCRIPTION	QTY
1	1582222	Lock Nut	6
2	1528938	Washer	4
3	1528930	Isolator	2
4	1532585	Washer	2
5	1528934	Spacer	2
6	1510115	Capscrew	2
7	1566324	Exhaust Pipe	1
8	68968	Clamp	2
9	1610940	Tail Pipe	1
10	1510117	Capscrew	3
11	320159	Washer	3
12	2021394	Cover	1
13	2070070	Muffler (LPG)	1
14	1585595	Exhaust Shield	1
15	1625659	Exhaust Pipe	1
16	1528937	Gasket	1
17	1396518	Plug Assembly	1
17	1509103	Ring (Copper)	1

©2006 HYSTER COMPANY

OVERHEAD EXHAUST (Figure 2-7)
MAZDA 2.0L
WITH CATALYTIC CONVERTER

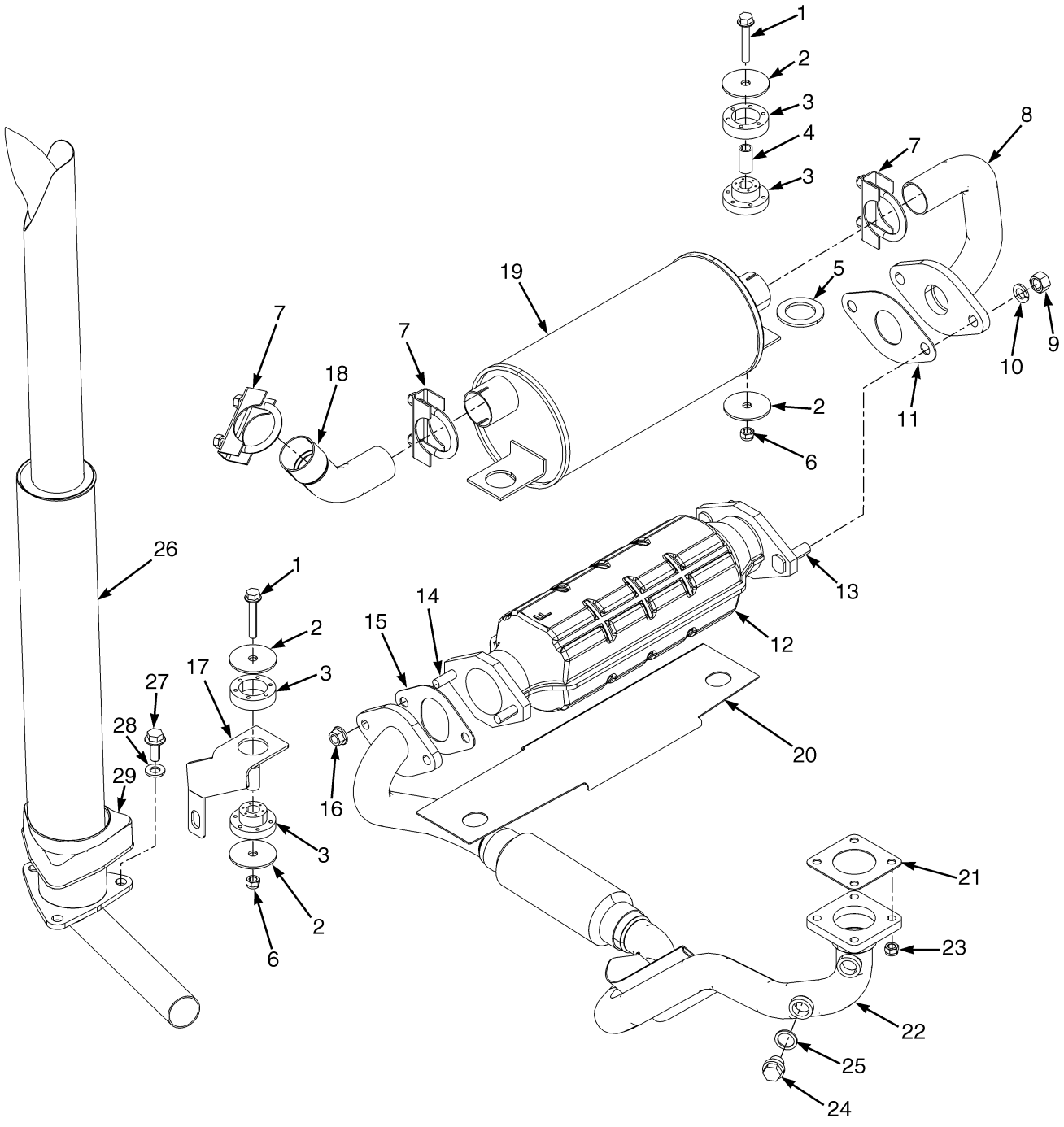

©2006 HYSTER COMPANY

OVERHEAD EXHAUST
MAZDA 2.0L
WITH CATALYTIC CONVERTER

ITEM	PART NO.	DESCRIPTION	QTY
1	1510115	Capscrew	2
2	1528938	Washer	4
3	1528930	Isolator	2
4	1528934	Spacer	2
5	1532585	Washer	2
6	1582222	Lock Nut	2
7	68968	Clamp	3
8	1534174	Exhaust Pipe	1
9	1469405	Nut	2
10	292683	Lockwasher	2
11	1469379	Gasket	1
12	1560278	Catalytic Converter	1
13	1495501	Bolt	2
14	1495502	Bolt	2
15	1547712	Gasket	1
16	1460477	Nut	2
17	1532523	Bracket	1
18	1531829	Exhaust Pipe	1
19	2060957	Muffler (G/LPG)	1
19	2056524	Muffler (GS/LPS)	1
20	1585595	Exhaust Shield	1
21	1528937	Gasket	1
22	1585483	Exhaust Pipe	1
23	1582222	Lock Nut	4
24	1396518	Plug Assembly	1
25	1509103	Ring (Copper)	1
26	1610940	Tail Pipe	1
27	1510117	Capscrew	3
28	320159	Washer	3
29	2021394	Cover	1

©2006 HYSTER COMPANY

INTAKE AND EXHAUST MANIFOLDS (Figure 2-8)
MAZDA 2.0L

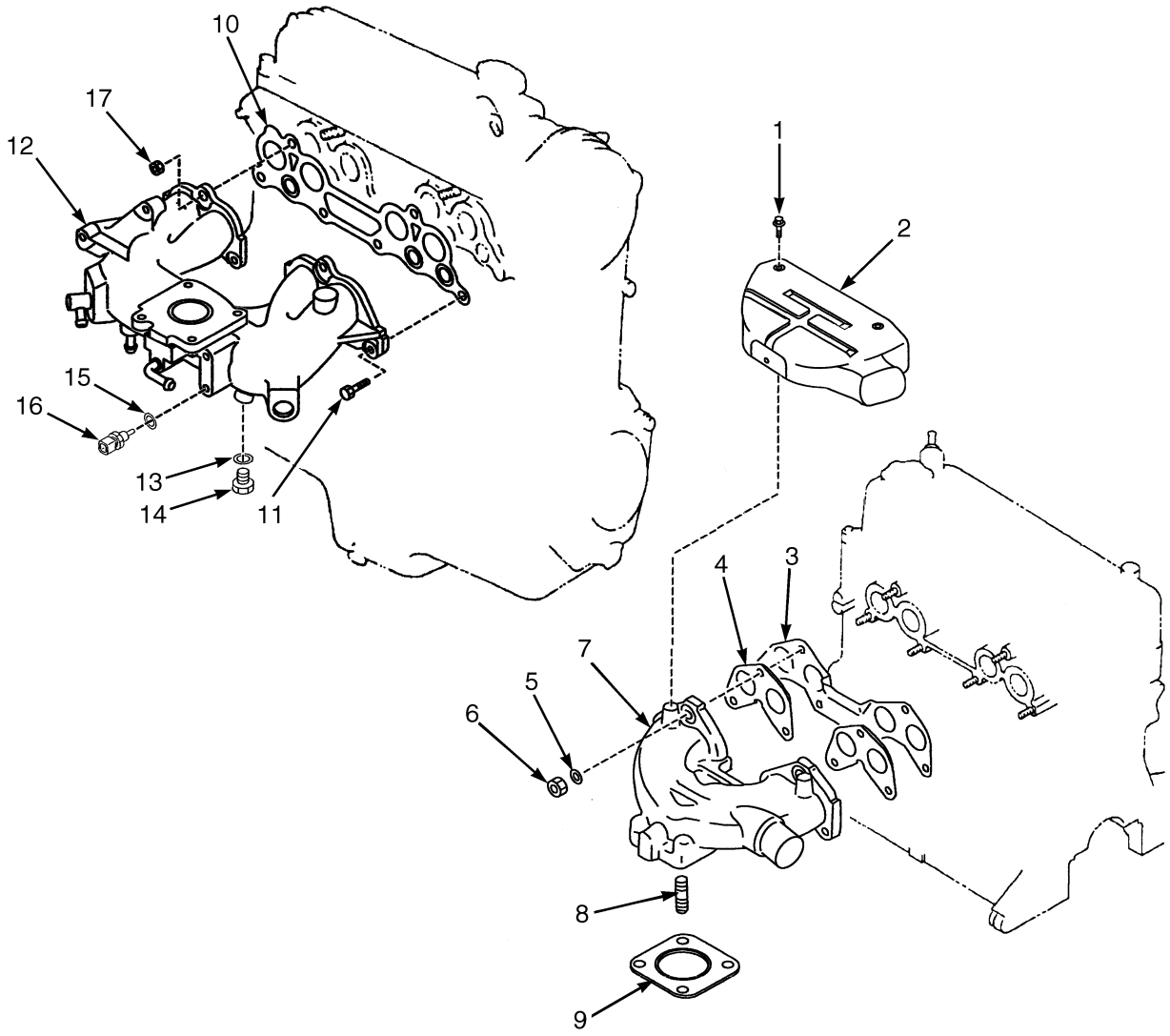

BP090192

©2006 HYSTER COMPANY

INTAKE AND EXHAUST MANIFOLDS
MAZDA 2.0L

ITEM	PART NO.	DESCRIPTION	QTY
1	1361898	Bolt	3
2	1370691	Cover	1
3	1361747	Gasket Set	1
4	1370689	Gasket	2
5	1370690	Washer	6
6	1361746	Nut	6
7	1370688	Manifold (Exhaust)	1
8	1361745	Stud	4
9	1338308	Gasket	1
10	1553776	Gasket	1
11	1361885	Bolt	2
12	1573015	Intake Manifold	1
13	1368743	Washer	1
14	1366902	Bolt	1
15	1368886	Washer	1
16	1539962	Sensor (Air Temperature)	1
17	326504	Nut	4

©2006 HYSTER COMPANY

ENGINE FUEL SYSTEM AND EMMISSION CONTROL (Figure 2-9)
MAZDA 2.0L

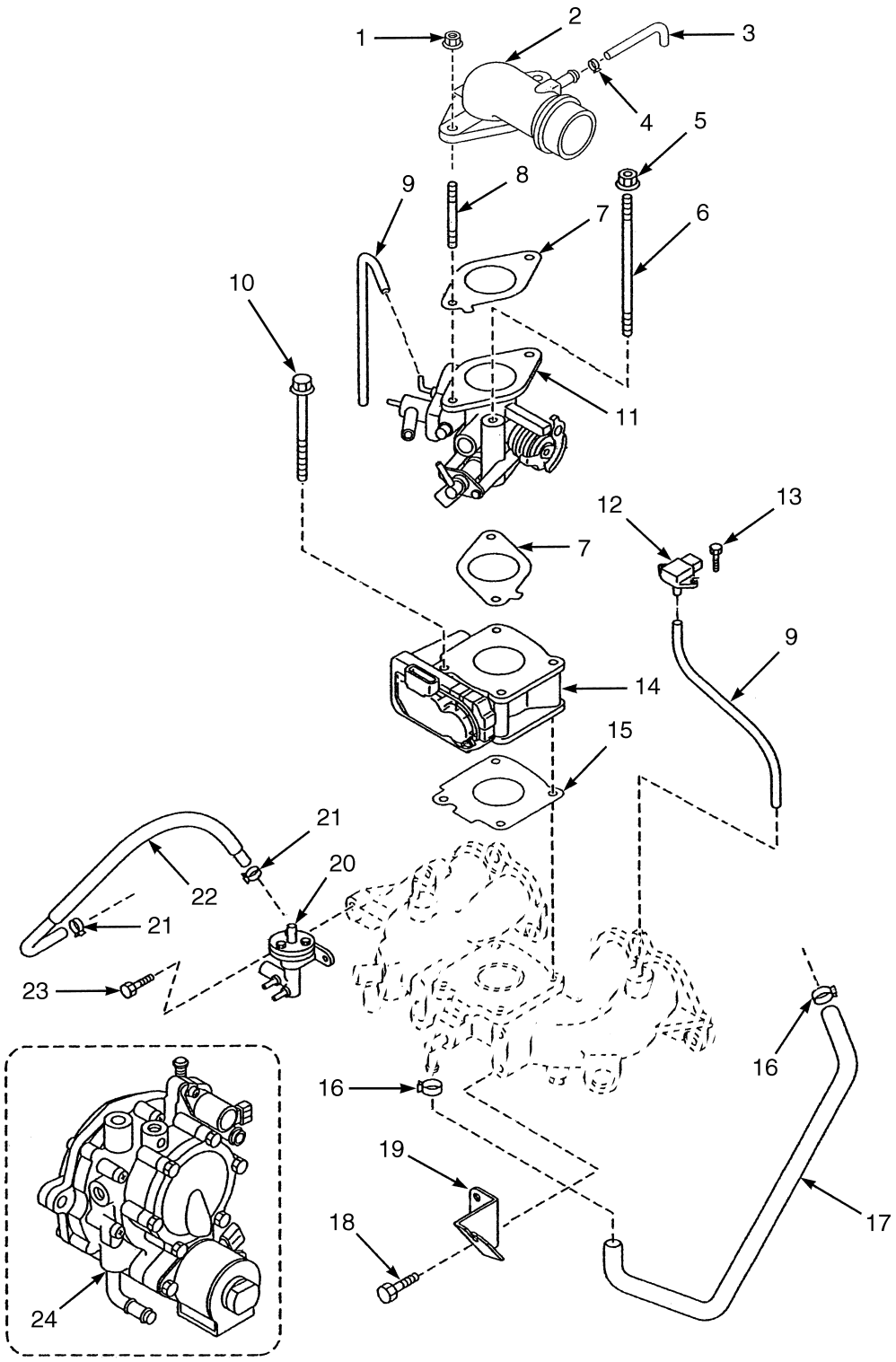

BP090011

©2006 HYSTER COMPANY

ENGINE FUEL SYSTEM AND EMMISSION CONTROL
MAZDA 2.0L

ITEM		PART NO.	DESCRIPTION	QTY
1		2066629	Nut	2
2		1573118	Air Funnel	1
3		1573562	Hose (Ventilation)	1
4		1361871	Clamp	1
5		326504	Nut	2
6		1582323	Stud	2
7		1573117	Gasket	2
8		1553774	Stud	2
9	**a**	1495413	Hose	AR
10		1582321	Bolt	1
11		1573119	Carburetor (☞ Figure 2-8)	1
11		1616236	Screw Set	1
11		1620009	Injector	1
12		1548352	MAP Sensor	1
13		1582324	Screw	2
14		1553838	Governor	1
15		1553832	Gasket	1
16		1366933	Clamp	2
17		1573564	Hose (PCV)	1
18		1361898	Bolt	2
19		1573021	Bracket (Throttle)	1
20		1581048	Fuel Filter Assembly (LPG Vapor)	1
20		1583593	Cover Set	1
20		1581051	Screw Set	1
20		1581052	Fuel Filter Set (With O-Ring)	1
21		1553799	Clamp	2
22		1573120	Hose (Fuel)	1
23		1361878	Screw	2
24		1594144	Regulator Lockout	1
		1374788	Valve (Delay) (Not illustrated_) (☞ Figure 2-11)	1

FOOTNOTES:
a Cut To Length

CARBURETOR (Figure 2-10)
LPG
MAZDA 2.0L

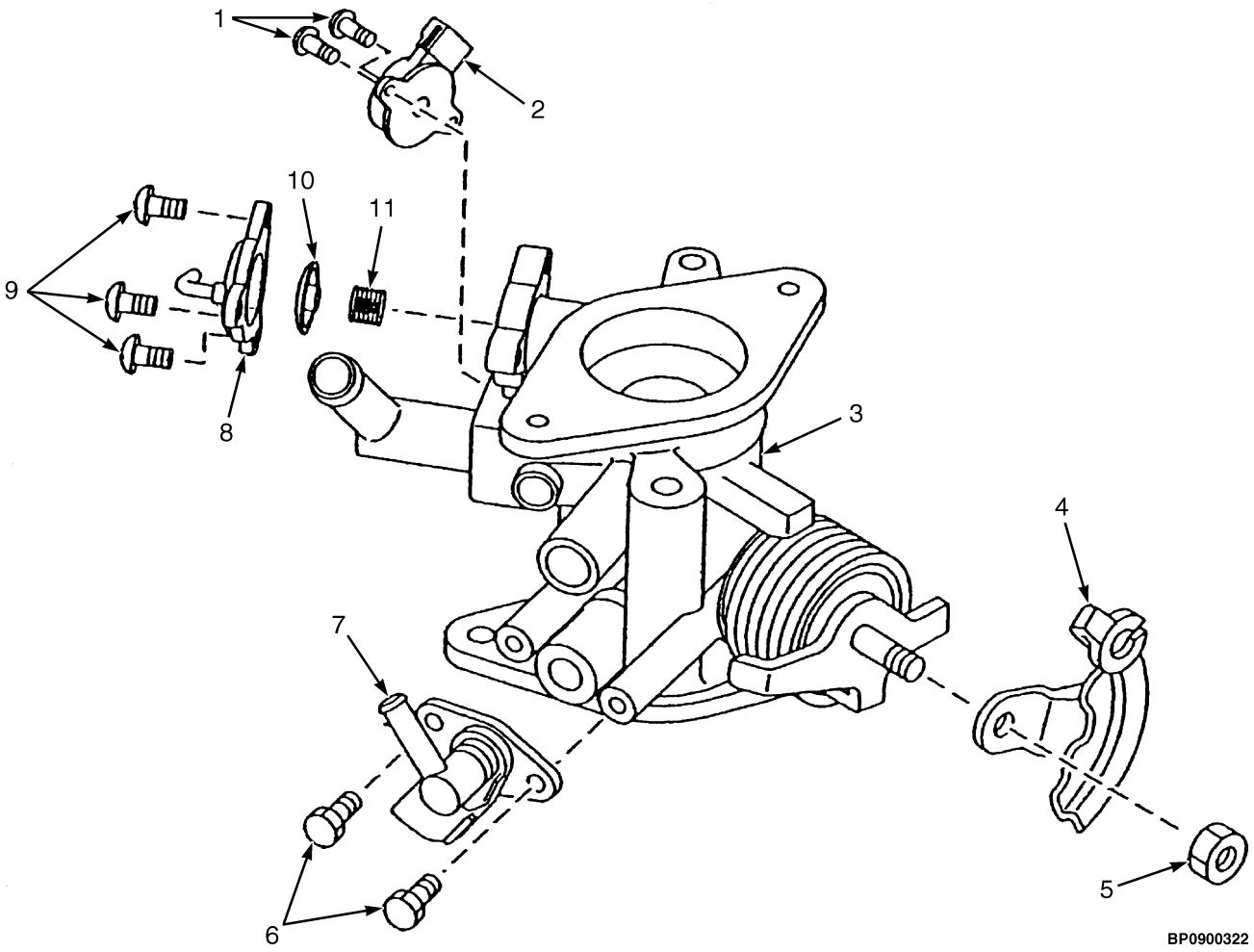

©2006 HYSTER COMPANY

CARBURETOR
LPG
MAZDA 2.0L

ITEM	PART NO.	DESCRIPTION	QTY
	1573119	Carburetor (LPG)	1
1	1652216	Screw (Sensor)	2
2	1639791	Sensor (Throttle Position)	1
3	. . . . .	Body	1
4	2051839	Lever (Throttle)	1
5	1652217	Nut	1
6	1616236	Screw Set	1
7	1620009	Injector	1
8	2051836	Cover (Power Valve)	1
9	1652215	Screw (Diaphragm)	3
10	2051834	Diaphragm (Power)	1
11	2051835	Spring (Power)	1

©2006 HYSTER COMPANY

DELAY VALVE (Figure 2-11)
MAZDA 2.0L
LPG
(S/N F001B02574D⇒)

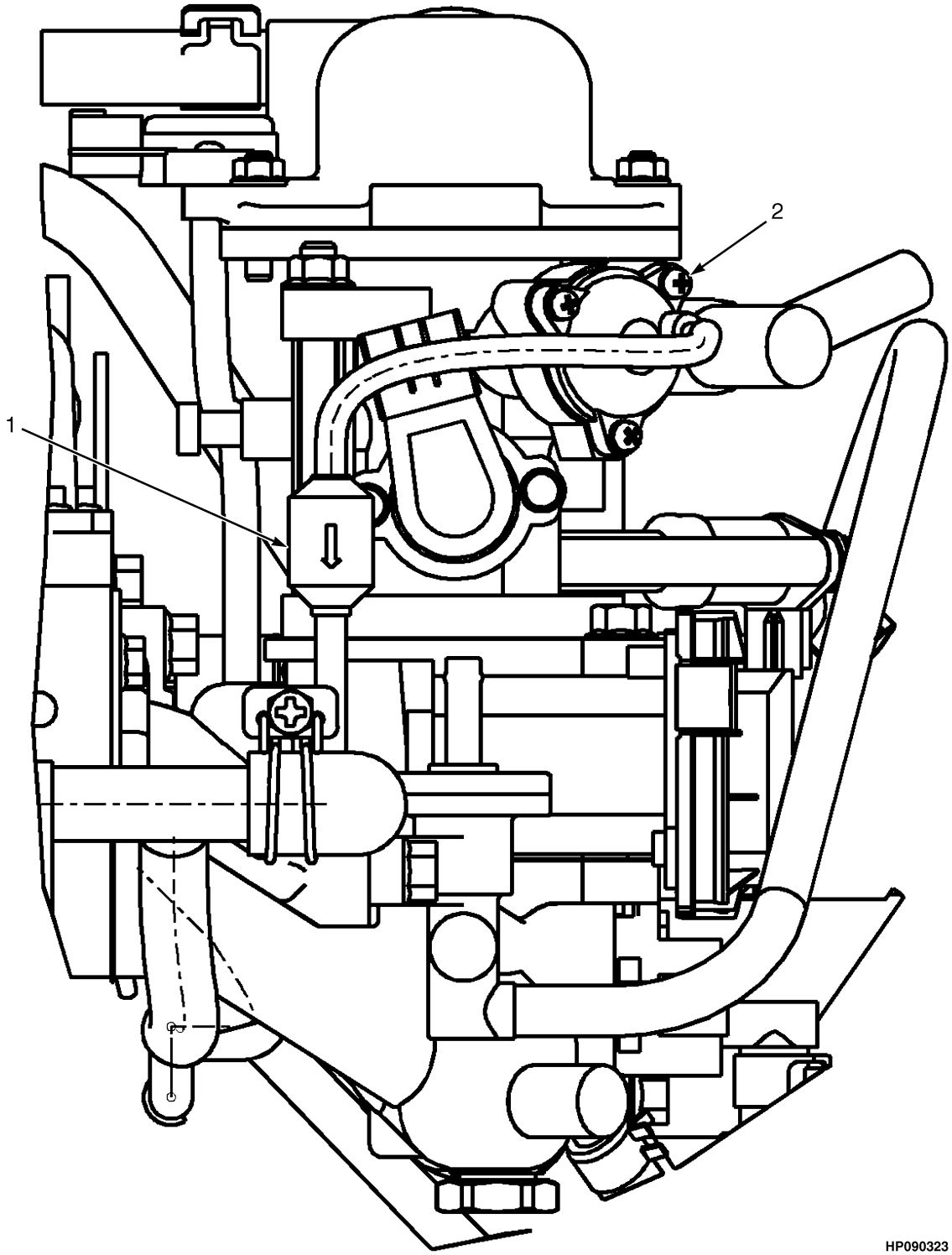

©2006 HYSTER COMPANY

DELAY VALVE
MAZDA 2.0L
LPG
(S/N F001B02574D⇒)

ITEM	PART NO.	DESCRIPTION	QTY
1	1374788	Valve (Delay)	1
2	1573119	Carburetor	1

FLYWHEEL AND HOUSING (Figure 2-12)
MAZDA 2.0L

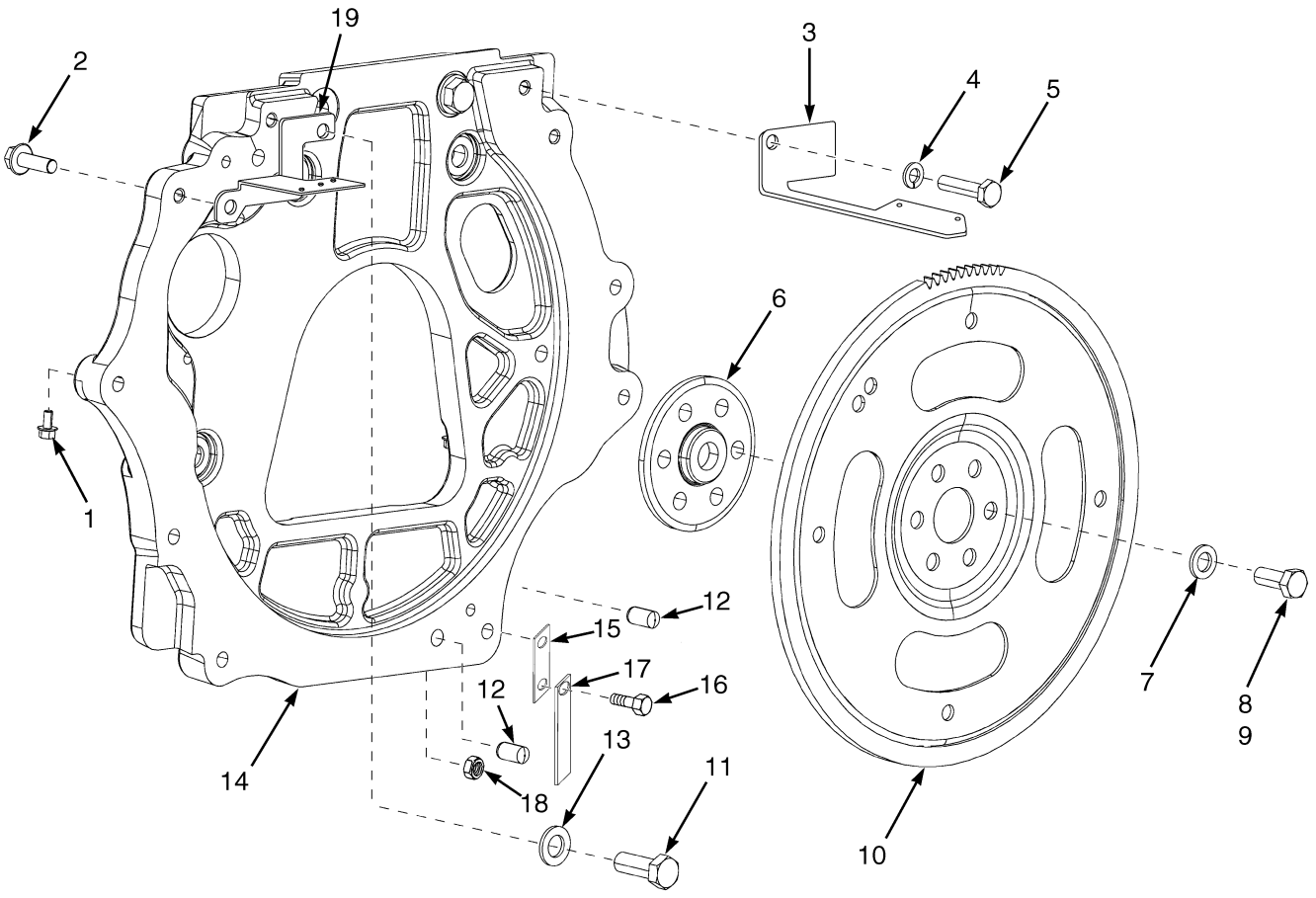

HP091060

©2006 HYSTER COMPANY

FLYWHEEL AND HOUSING
MAZDA 2.0L

ITEM	PART NO.	DESCRIPTION	QTY
1	1534417	Capscrew	3
2	1527884	Capscrew	2
3	1624727	Bracket	1
4	292682	Lockwasher	10
5	292517	Capscrew	10
6	1506572	Adapter	1
7	296422	Washer	6
8	1528415	Capscrew	6
9	360387	Sealant	AR
10	1605467	Flywheel (With Ring Gear)	1
11	2072918	Capscrew	6
12	303150	Pin	2
13	296424	Washer	6
14	1553266	Flywheel Housing	1
15	1565832	Bracket	1
16	1586013	Capscrew	1
17	240072	Static Strap	1
18	1460477	Nut	1
19	1623093	Bracket	1
a	1625999	Dust Cover (Not Illustrated)	1

FOOTNOTES:
a S/N F001B02043D ⇒

WATER PUMP (Figure 2-13)
MAZDA 2.0L

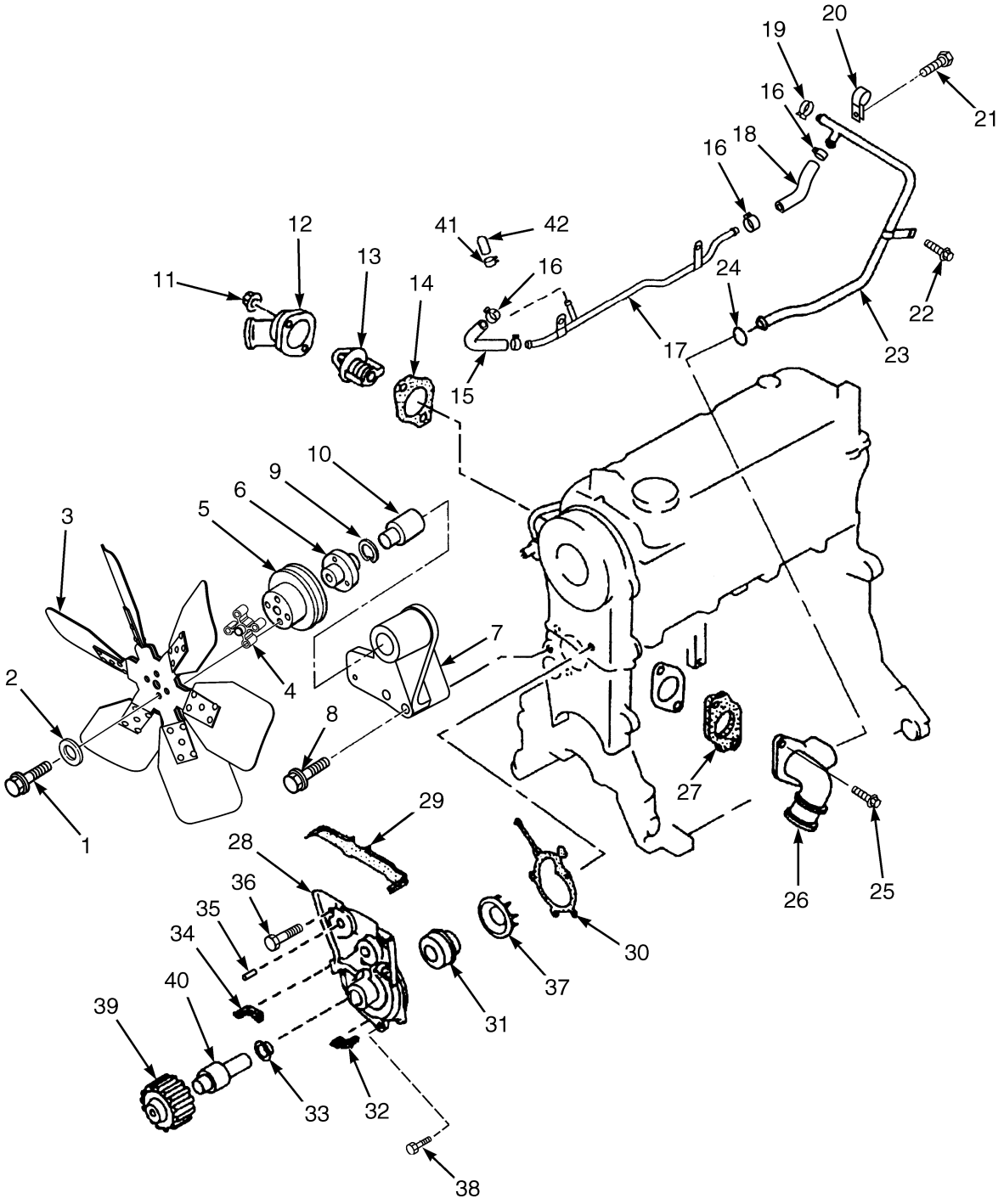

BP090174

©2006 HYSTER COMPANY

WATER PUMP
MAZDA 2.0L

ITEM	PART NO.	DESCRIPTION	QTY
	1587843	Engine Block (Long) (2.0L)	1
1	293619	Capscrew	4
2	296418	Washer	4
3	1375642	Fan	1
4	1528140	Spacer	1
5	1573179	Pulley (Fan)	1
6	1361813	Hub	1
7	1573176	Bracket Assembly	1
8	2045026	Screw	3
9	2045025	Clip	1
10	2029116	Shaft (Bearing)	1
11	326504	Nut	2
12	1361821	Cover (Thermostat)	1
13	1495428	Thermostat Assembly	1
14	1367191	Gasket	1
15	1361825	Hose	1
16	1361873	Clamp	3
17	1553945	Pipe (Water Bypass)	1
18	2029108	Hose	1
19	1361886	Clamp	1
20	1361826	Clip	1
21	1361898	Bolt	1
22	2022309	Bolt	1
23	1553943	Pipe	1
24	1361827	O-Ring	1
25	1361875	Capscrew	2
26	2029112	Pipe (Intake)	1
27	2029120	Gasket (Intake)	1
28	2028644	Water Pump	1
29	. . . . .	Seal (Upper)	1
30	2028645	Gasket	1
31	. . . . .	Seal	1
32	. . . . .	Seal	1
33	. . . . .	Baffle	1
34	. . . . .	Seal (Lower)	1
35	. . . . .	Stud	1
36	326608	Bolt	2
37	. . . . .	Impeller	1
38	1369914	Bolt	5
39	. . . . .	Pulley	1
40	. . . . .	Shaft	1
41	1495429	Clamp	1
42	1361790	Cap	1
	2045036	Gasket Kit (Includes Items 14, 24, 27, 30)	1

©2006 HYSTER COMPANY

TIMING GEAR COVER AND OIL PAN (Figure 2-14)
MAZDA 2.0L

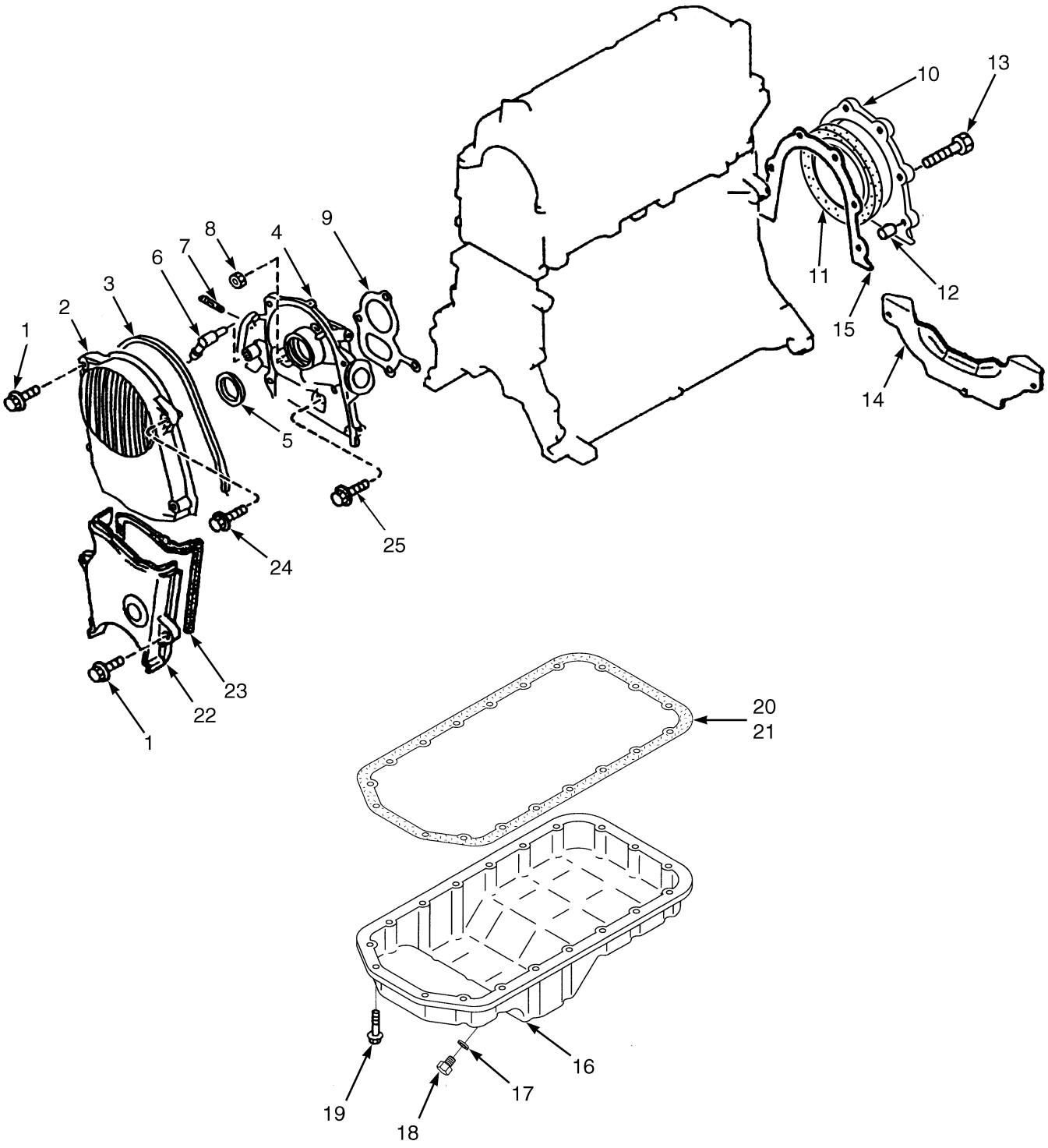

HP091085

©2006 HYSTER COMPANY

TIMING GEAR COVER AND OIL PAN
MAZDA 2.0L

ITEM	PART NO.	DESCRIPTION	QTY
	1587843	Engine Block (Long)	1
1	1362001	Bolt	5
2	1553716	Cover (Upper Timing Belt)	1
3	1553717	Gasket	1
4	1553715	Housing Assembly	1
5	1361688	Oil Seal	1
6	1361692	Hose	1
7	1362012	Stud	2
8	326504	Nut	1
9	1361679	Gasket	1
10	1361689	Cover Assembly	1
11	1361691	Oil Seal (Rear)	1
12	1362010	Pin	2
13	1362011	Bolt	6
14	1371652	Cover	1
15	1361690	Gasket	1
16	1361680	Oil Pan Assembly	1
17	1362015	Gasket	1
18	1361681	Drain Plug	1
19	1370736	Capscrew	19
20	1361682	Gasket (Oil Pan)	1
21	1370737	Sealant	1
22	2051128	Cover	1
23	2028853	Gasket	1
24	2029086	Bolt	1
25	1369993	Bolt	2
	2045036	Gasket Kit (Includes Items 3, 5, 9-11, 20, 23)	1

©2006 HYSTER COMPANY

OIL PUMP AND FILTER (Figure 2-15)
MAZDA 2.0L

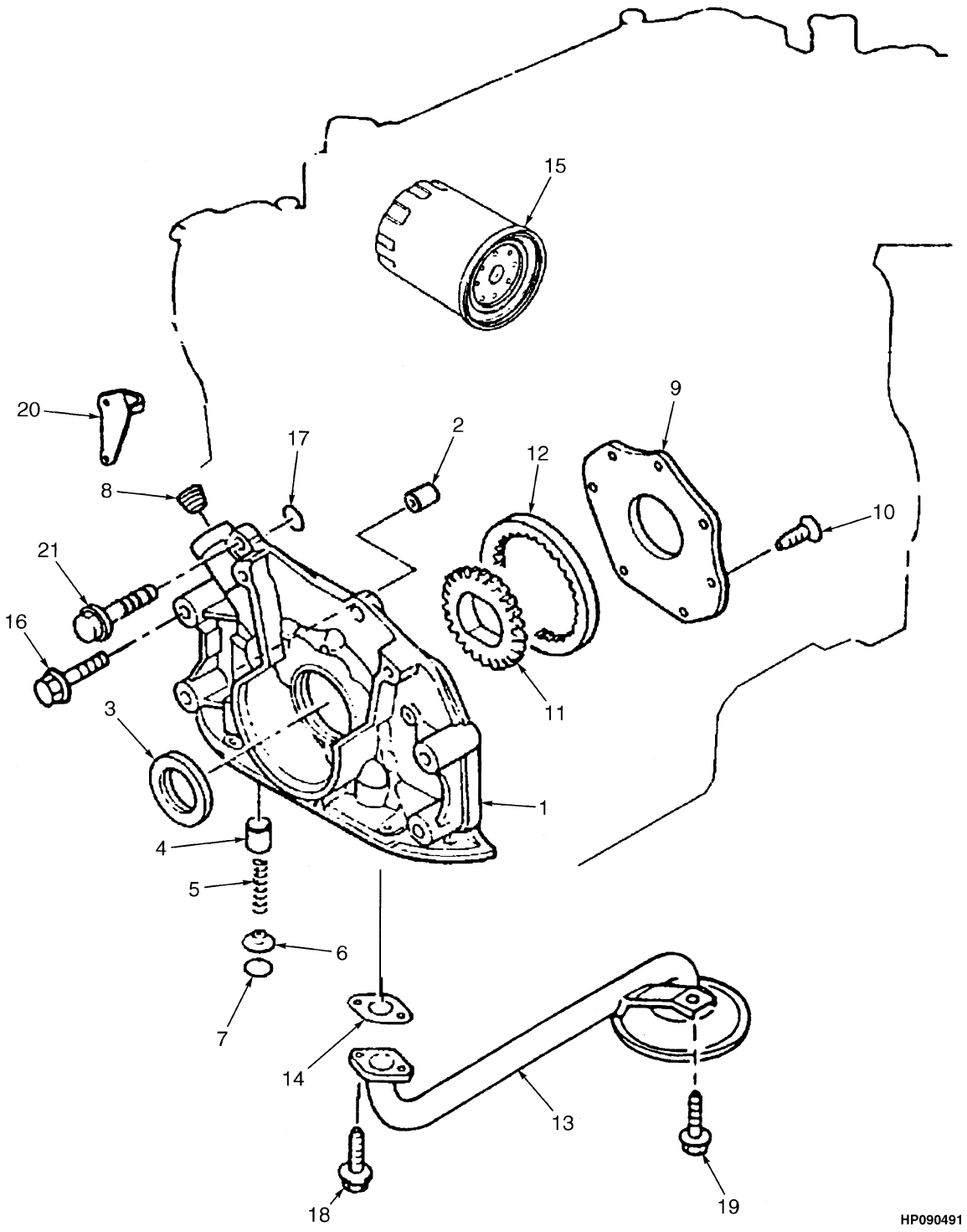

©2006 HYSTER COMPANY

OIL PUMP AND FILTER
MAZDA 2.0L

ITEM	PART NO.	DESCRIPTION	QTY
	1587843	Engine Block (Long)	1
1	1455676	Oil Pump	1
2	1361798	Pin (Timing Indicator)	2
3	1361688	Oil Seal	1
4	1455674	Plunger	1
5	326748	Spring	1
6	326749	Seat	1
7	1361879	Snap Ring	1
8	1495426	Plug	1
9	2029100	Cover	1
10	1455677	Screw	7
11	2029101	Gear	1
12	2029102	Gear	1
13	1361806	Strainer	1
14	1361807	Gasket	1
15	333642	Filter	1
16	1553878	Bolt	2
17	1361801	O-Ring	1
18	1361878	Screw	2
19	1361868	Screw	1
20	1495427	Pin (Timing Indicator) (Top Indicator)	1
21	2029103	Bolt	4

©2006 HYSTER COMPANY

CYLINDER HEAD (Figure 2-16)
MAZDA 2.0L

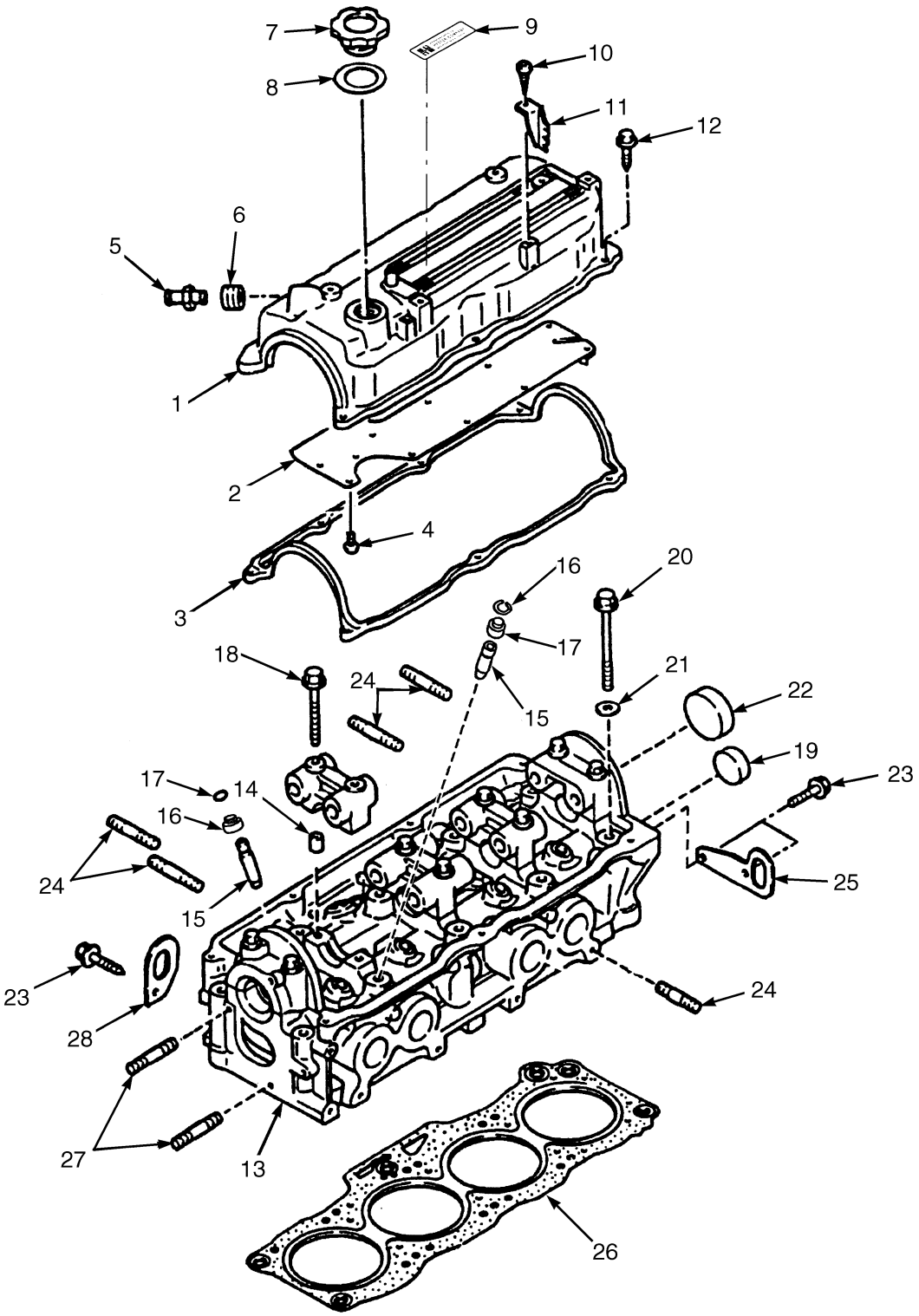

BP090199

©2006 HYSTER COMPANY

CYLINDER HEAD
MAZDA 2.0L

ITEM		PART NO.	DESCRIPTION	QTY
		1587843	Engine Block (Long)	1
1		1360883	Cover Assembly	1
2		1360884	Plate	1
3		1360886	Gasket	1
4		2022655	Screw	10
5		1360893	PCV Valve	1
6		1360892	Seal	1
7		1360887	Cap (Oil)	1
8		1360888	Gasket	1
9		. . . . .	Label	1
10		1362000	Screw	2
11		1360885	Cord Protector	2
12		1362001	Bolt	7
13		1360878	Cylinder Head	1
14		1362002	Pin	10
15		1360895	Valve Guide Assembly	8
16		1360879	Clip	1
17	**b**	1361718	Seal (Intake)	4
17	**a**	1361719	Seal (Exhaust)	4
18		1361894	Bolt	10
19		1362003	Plug	1
20		1360880	Bolt	10
21		1360881	Washer	10
22		1360882	Cap	8
23		1361898	Bolt	3
24		1361897	Stud	20
25		2314973	Hanger	1
26		1360889	Gasket (Cylinder Head)	1
27		1361899	Stud	2
28		1360890	Bracket	1

FOOTNOTES:
a Black
b Red/Brown

CAMSHAFT AND VALVES (Figure 2-17)
MAZDA 2.0L

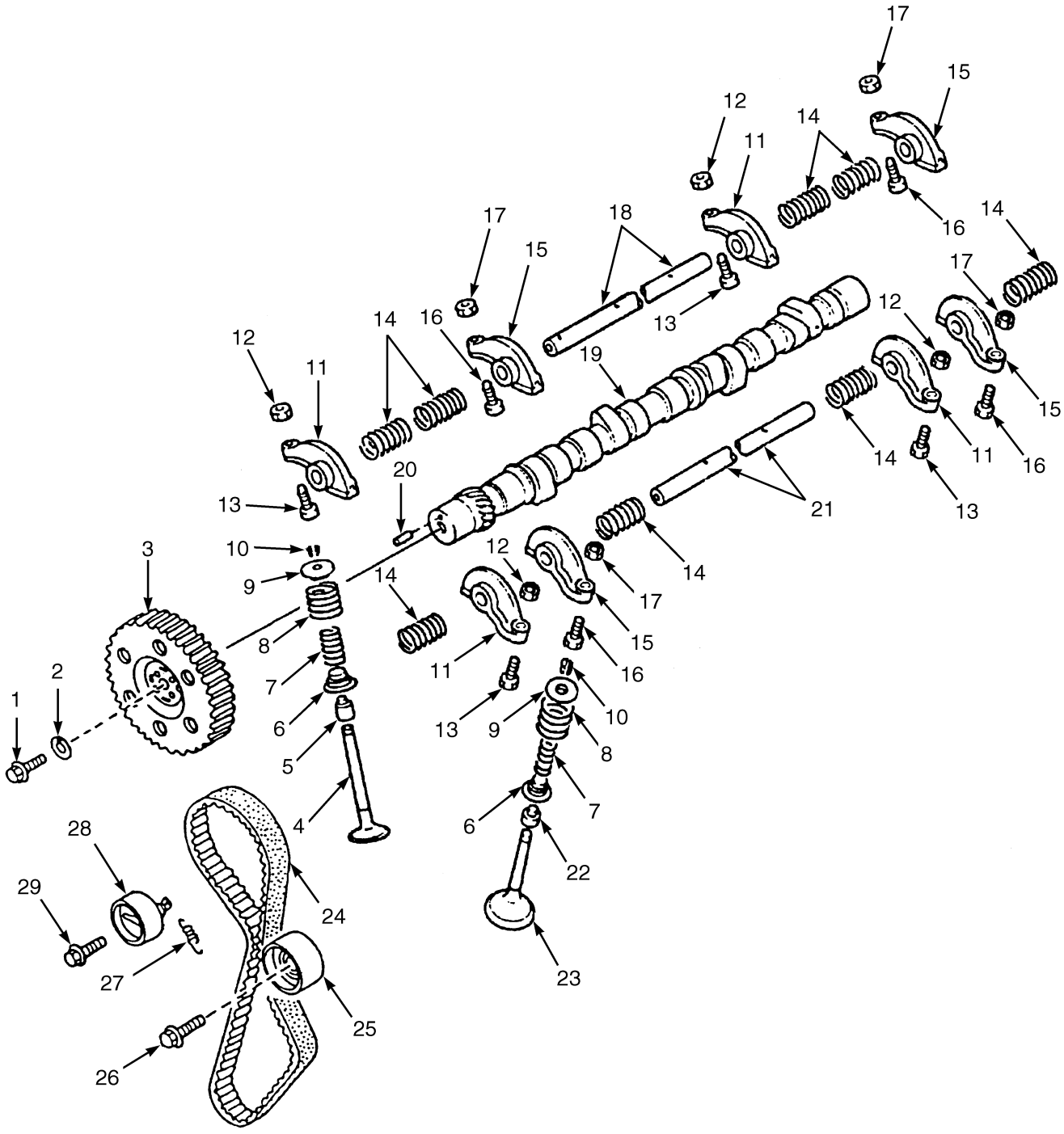

©2006 HYSTER COMPANY

CAMSHAFT AND VALVES
MAZDA 2.0L

ITEM	PART NO.	DESCRIPTION	QTY
	1587843	Engine Block (Long)	1
1	1361736	Bolt	1
2	1361737	Washer	1
3	2029095	Pulley (Camshaft)	1
4	1361720	Valve (Intake)	4
5	1361718	Seal	4
6	1361724	Seat	8
7	1361723	Spring	8
8	1361722	Spring	8
9	1361721	Valve Seat	8
10	326612	Keeper	16
11	1361726	Rocker Arm	4
12	1361728	Nut	1
13	1361727	Screw	1
14	1361731	Spring	8
15	1361729	Rocker Arm	4
16	1361727	Screw	1
17	1361728	Nut	1
18	1361730	Shaft	1
19	1361734	Camshaft	1
20	1361717	Pin	1
21	1361732	Shaft	1
22	1361719	Seal	4
23	1361725	Valve (Exhaust)	4
24	1553762	Timing Belt	1
25	2029098	Idler	1
26	1361884	Bolt	1
27	1553763	Spring	1
28	2029097	Belt Tensioner	1
29	1362016	Bolt	1

©2006 HYSTER COMPANY

CRANKSHAFT AND PISTONS (Figure 2-18)
MAZDA 2.0L

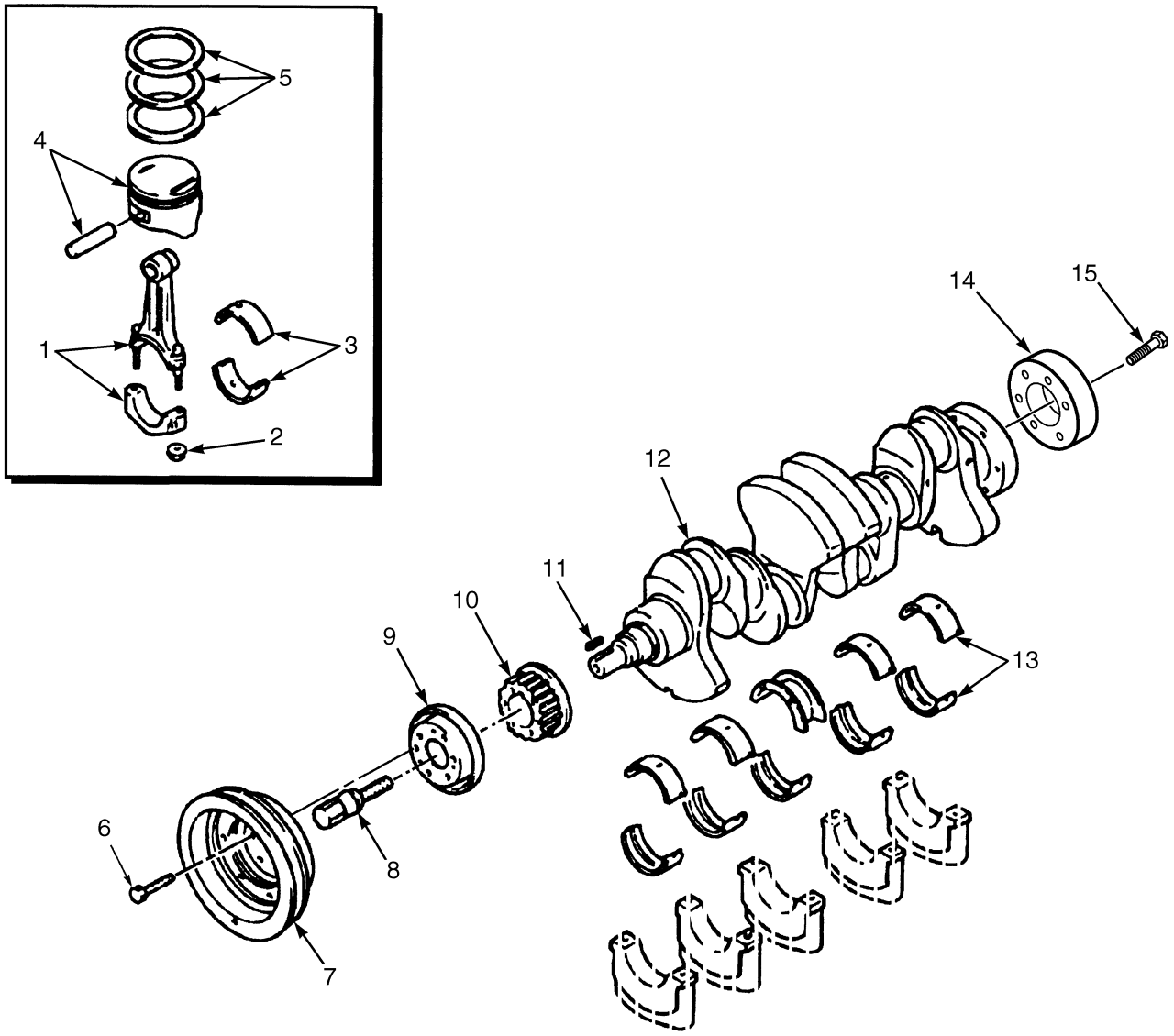

HP090487

©2006 HYSTER COMPANY

CRANKSHAFT AND PISTONS
MAZDA 2.0L

KEY:
A: Gasoline
B: LPG

ITEM		PART NO.	DESCRIPTION	QTY A	QTY B
		1587843	Engine Block (Long)	..	1
1		1361694	Piston Rod Assembly	4	4
2		1361695	Nut	2	2
3	**d**	1361703	Bearing Set	1	1
3	**a**	1361704	Bearing Set	1	1
3	**b**	1361705	Bearing Set	1	1
3	**c**	1361706	Bearing Set	1	1
4	**d**	1572593	Piston	..	4
4	**d**	1361714	Piston	4	..
4	**a**	1572597	Piston	..	4
4	**a**	1361715	Piston	4	..
4	**b**	1572595	Piston	..	4
4	**b**	1361716	Piston	4	..
5	**d**	1495473	Piston Ring Set	1	1
5	**a**	1495475	Piston Ring Set	1	1
5	**b**	1495474	Piston Ring Set	1	1
6		1361700	Bolt (Pulley)	6	6
7		1495472	Pulley (Crankshaft)	..	1
8		1361701	Bolt	..	1
9		2045033	Plate	1	1
10		2045030	Pulley (Timing Belt)	1	1
11		1361697	Key	1	1
12		1361696	Crankshaft	1	1
13	**d**	1361710	Bearing Set	1	1
13	**a**	1361713	Bearing Set	1	1
13	**b**	1361711	Bearing Set	1	1
13	**c**	1361712	Bearing Set	1	1
14		2021442	Back Plate	1	1
15		2021438	Bolt	1	1

FOOTNOTES:
a 0.25 mm
b 0.50 mm
c 0.75 mm
d Standard

©2006 HYSTER COMPANY

CYLINDER BLOCK (Figure 2-19)
MAZDA 2.0L

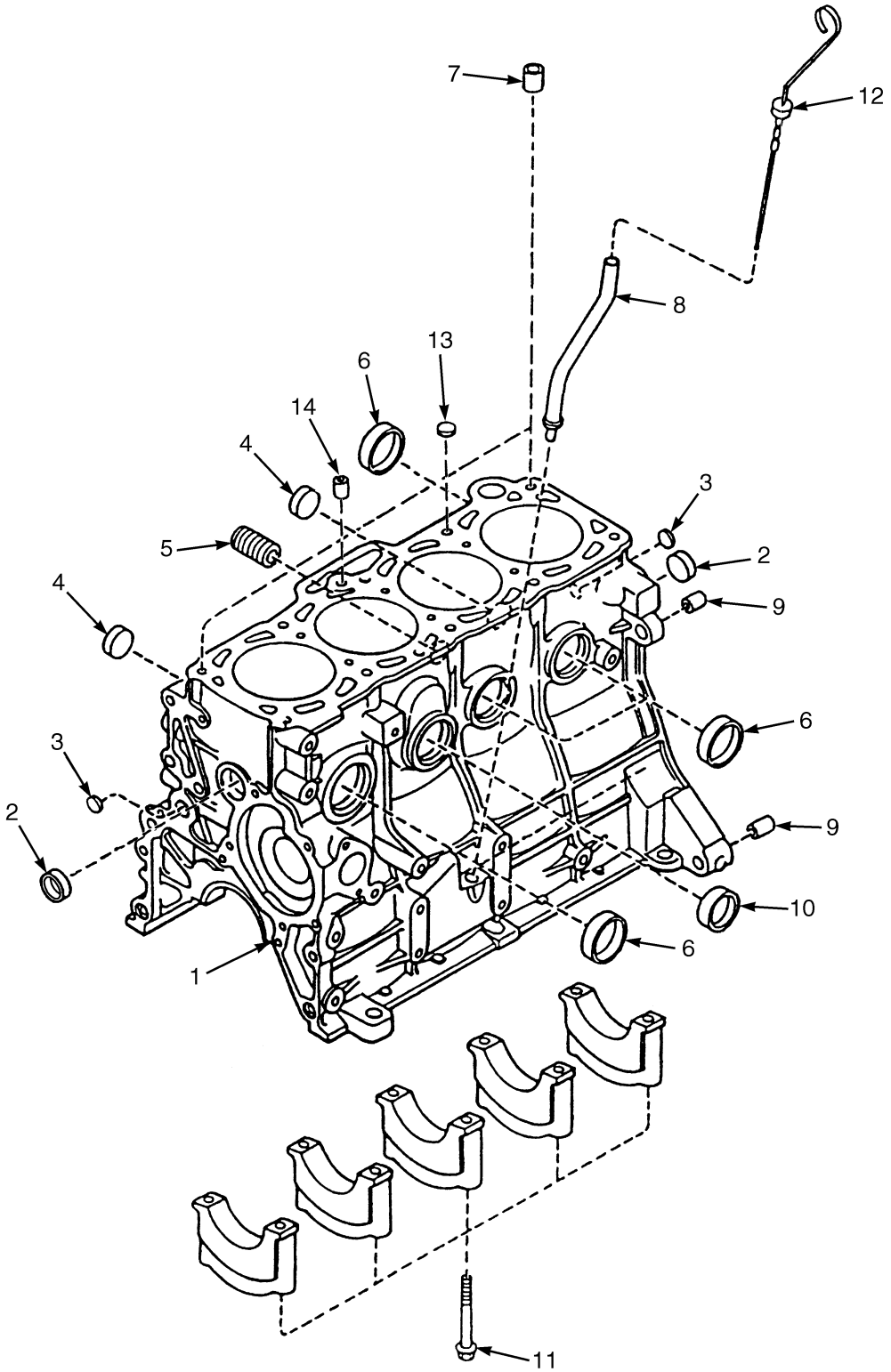

HP091087

©2006 HYSTER COMPANY

CYLINDER BLOCK
MAZDA 2.0L

ITEM	PART NO.	DESCRIPTION	QTY
	1572387	Engine Block (Short)	1
1	1553710	Cylinder Block	1
2	1362009	Plug	1
3	1361675	Plug	2
4	1362005	Plug	2
5	1360898	Joint	1
6	1362003	Plug	4
7	1360896	Pin	2
8	1360899	Pipe	1
9	1362008	Pin	2
10	1362007	Plug	2
11	1361676	Bolt	10
12	1361677	Dipstick	1
13	2028927	Plug	1
14	2029081	Plug	2

©2006 HYSTER COMPANY

COOLING (Figure 2-20)
YANMAR 2.6L DIESEL

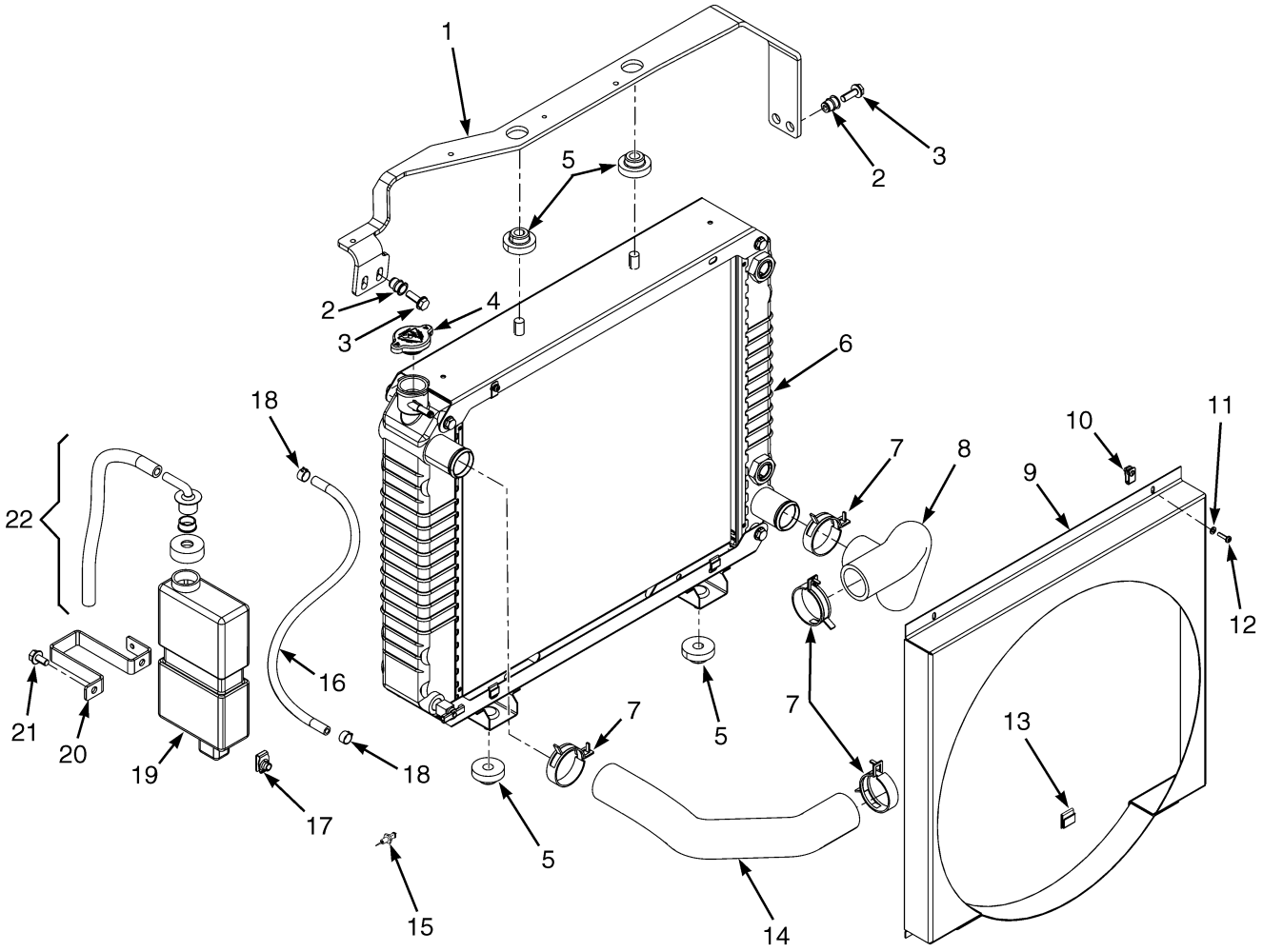

BP090177

©2006 HYSTER COMPANY

COOLING
YANMAR 2.6L DIESEL

ITEM	PART NO.	DESCRIPTION	QTY
1	1561737	Bracket (Top)	1
2	1530243	Insert	4
3	1583611	Capscrew	4
4	1352140	Cap	1
5	1529787	Isolator	4
6	2068441	Radiator (Square Wave)	1
6	1569079	Draincock (With Thread Wrap) (Not Illustrated)	1
7	1502001	Clamp	4
8	2068099	Hose (Lower)	1
9	1581392	Shroud	1
10	1535257	Clip Nut	2
11	320154	Washer	2
12	302023	Screw	2
13	1329271	Clip	2
14	2068098	Hose (Upper)	1
15	1531404	Sensor (Low Coolant Level) (Optional)	1
15	14385	Plug (Optional)	1
15	246108	Sealant	AR
16	1329240	Tube	1
17	1480237	Clip Nut	1
18	369815	Clamp	2
19	1347026	Reservoir	1
20	1531167	Bracket	1
21	1527879	Capscrew	2
22	345455	Outlet Assembly	1
22	339735	Hose	1
22	345453	Outlet (Reservoir)	1
22	345454	Cap	1
22	336550	Bushing	1

©2006 HYSTER COMPANY

EXHAUST (Figure 2-21)
WITH PURIFIER
YANMAR 2.6L DIESEL

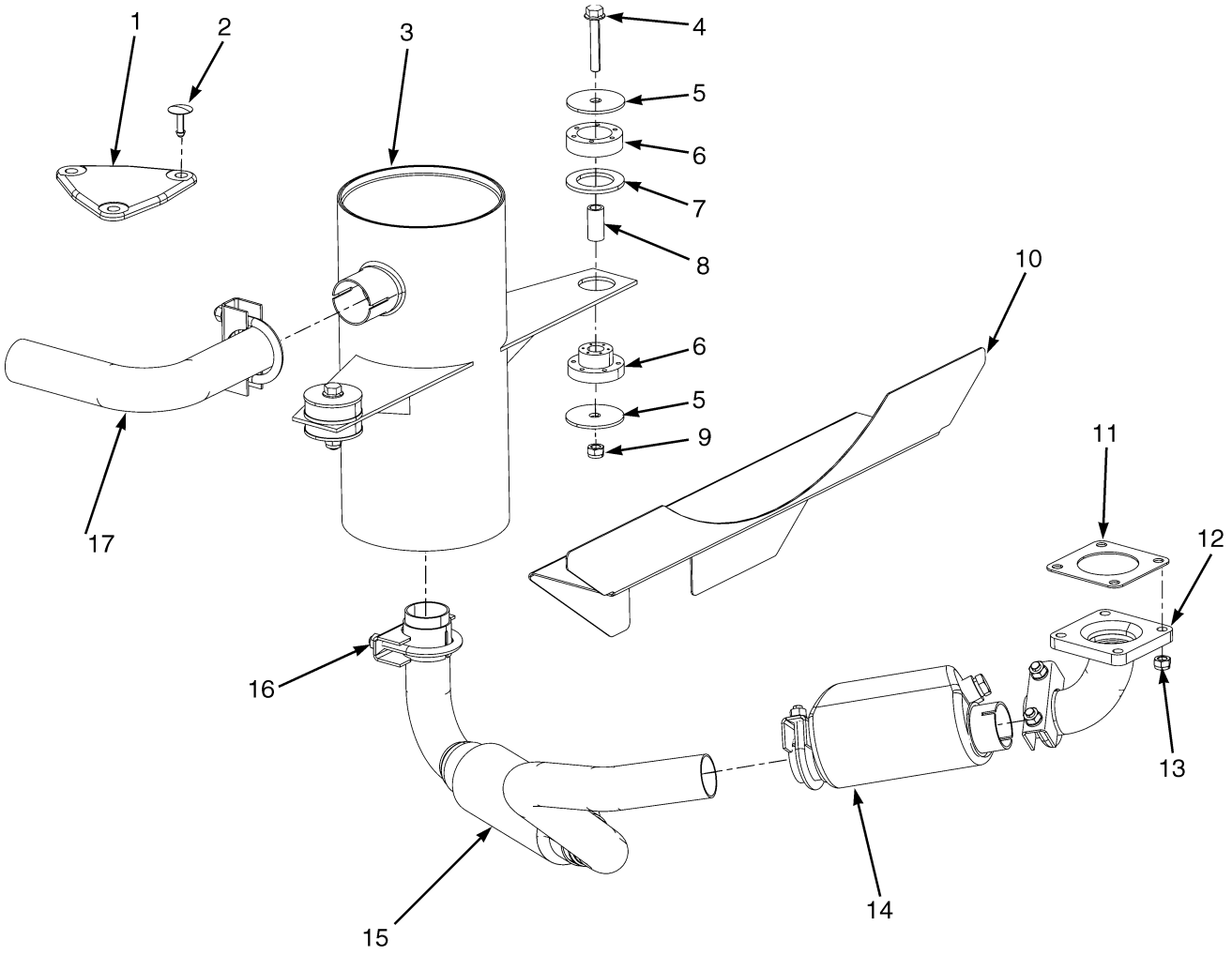

BP090179

©2006 HYSTER COMPANY

EXHAUST
WITH PURIFIER
YANMAR 2.6L DIESEL

ITEM		PART NO.	DESCRIPTION	QTY
1		1533639	Cover	1
2		1347045	Fastener	3
3		2070070	Muffler	1
4		1510115	Capscrew	2
5		1528938	Washer	2
6		1528930	Isolator	2
7		1532585	Washer	2
8		1528934	Spacer	2
9		1582222	Lock Nut	2
10		1565917	Exhaust Shield	1
11		1532363	Gasket	1
12		1533637	Exhaust Pipe	1
13		1582222	Lock Nut	4
14		878258	Purifier (Exhaust)	1
14		1391757	Clamp	1
14		1391758	Sock (Fiberglass)	1
15		1533638	Exhaust Pipe	1
16		68968	Clamp	2
17		1585212	Exhaust Pipe	1
17	**a**	1566324	Exhaust Pipe	1

FOOTNOTES:

a Overhead Exhaust Only

EXHAUST (Figure 2-22)
WITHOUT PURIFIER
YANMAR 2.6L DIESEL

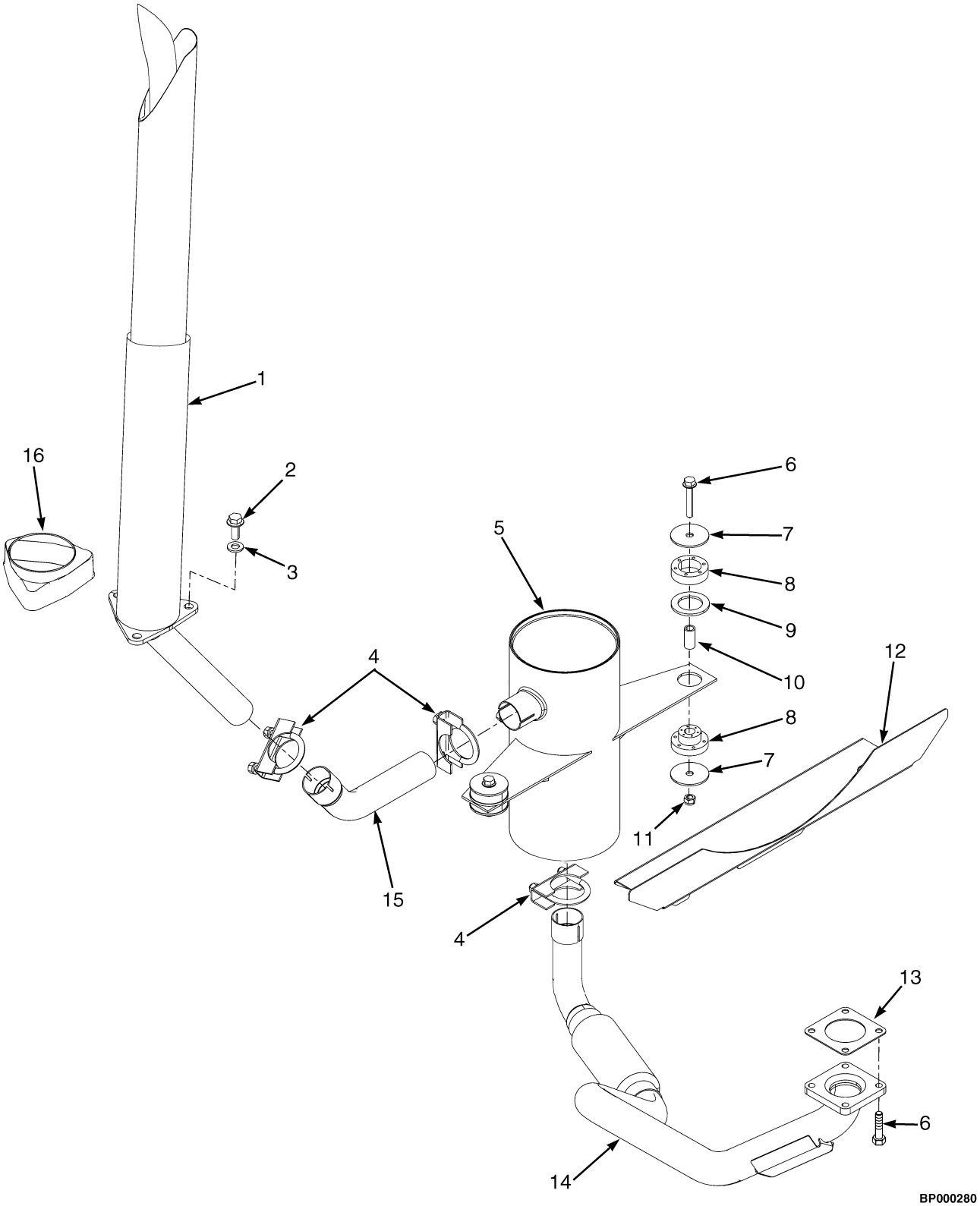

©2006 HYSTER COMPANY

EXHAUST
WITHOUT PURIFIER
YANMAR 2.6L DIESEL

ITEM		PART NO.	DESCRIPTION	QTY
1	**b**	1610940	Tail Pipe	1
2	**b**	1586013	Capscrew	3
3		320159	Washer	3
4		68968	Clamp	2
5		2070070	Muffler	1
6		1510115	Capscrew	2
7		1528938	Washer	4
8		1528930	Isolator	2
9		1532585	Washer	2
10		1528934	Spacer	2
11		1582222	Lock Nut	6
12		1565917	Exhaust Shield	1
13		1532363	Gasket	1
14		1539815	Exhaust Pipe	1
15	**b**	1566324	Exhaust Pipe	1
15	**a**	1585212	Exhaust Pipe	1
16	**b**	2021394	Cover	1

FOOTNOTES:
a Not Illustrated
b Overhead Exhaust Only

©2006 HYSTER COMPANY

INTAKE AND EXHAUST MANIFOLDS (Figure 2-23)
YANMAR 2.6L DIESEL

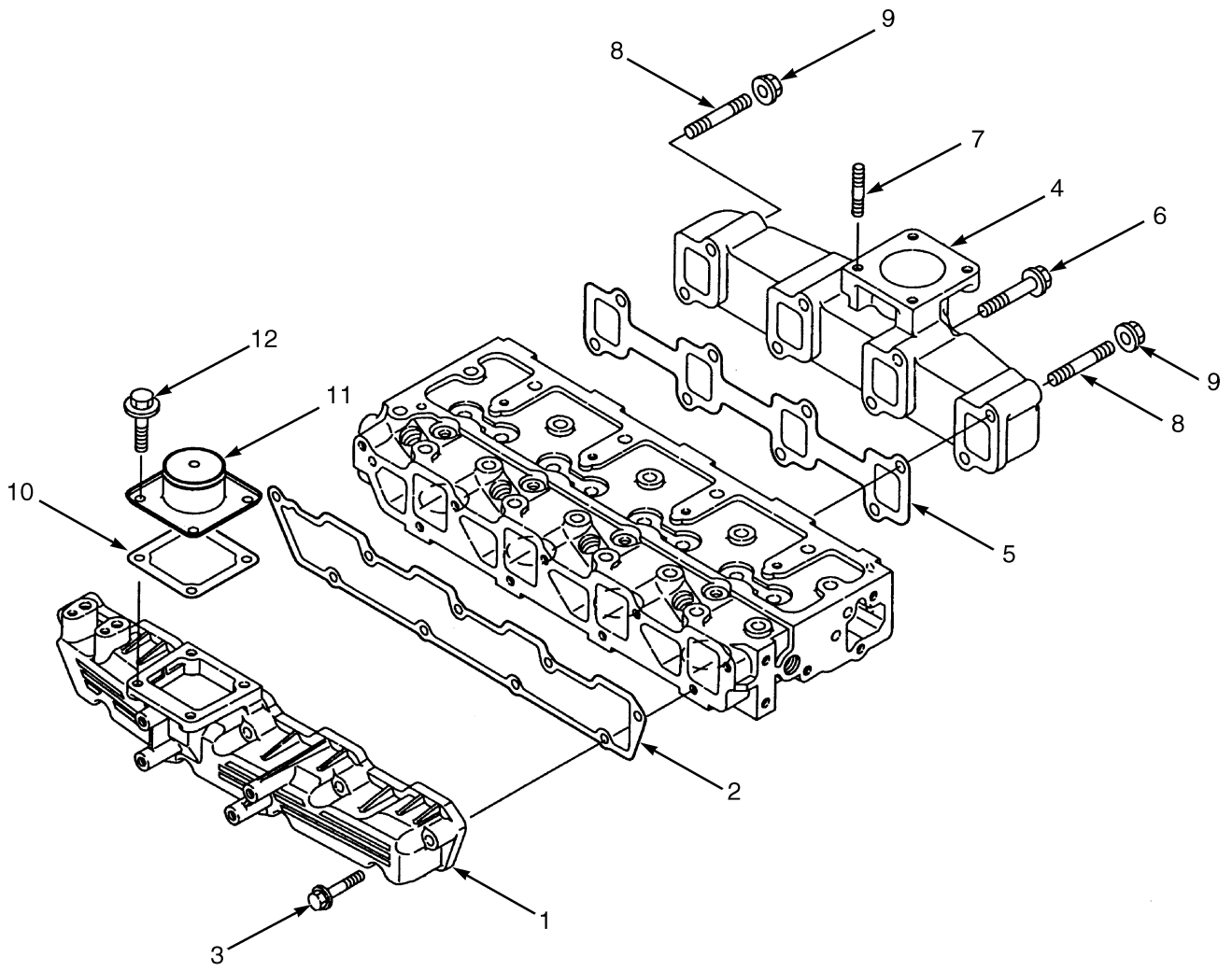

BP090185

©2006 HYSTER COMPANY

INTAKE AND EXHAUST MANIFOLDS
YANMAR 2.6L DIESEL

ITEM	PART NO.	DESCRIPTION	QTY
	1536725	Engine Assembly	1
1	1599556	Intake Manifold	1
2	1599543	Gasket	1
3	1599475	Bolt	9
4	1599559	Exhaust Manifold	1
5	1599560	Gasket	1
6	1599561	Bolt	9
7	1599562	Stud	4
8	1599563	Stud	2
9	2068378	Nut	2
10	1599565	Gasket	1
11	1599567	Joint	1
12	1599568	Bolt	4
	1599898	Gasket Set (Includes Items 2, 5, 10)	1

©2006 HYSTER COMPANY

FLYWHEEL AND HOUSING (Figure 2-24)
YANMAR 2.6L DIESEL

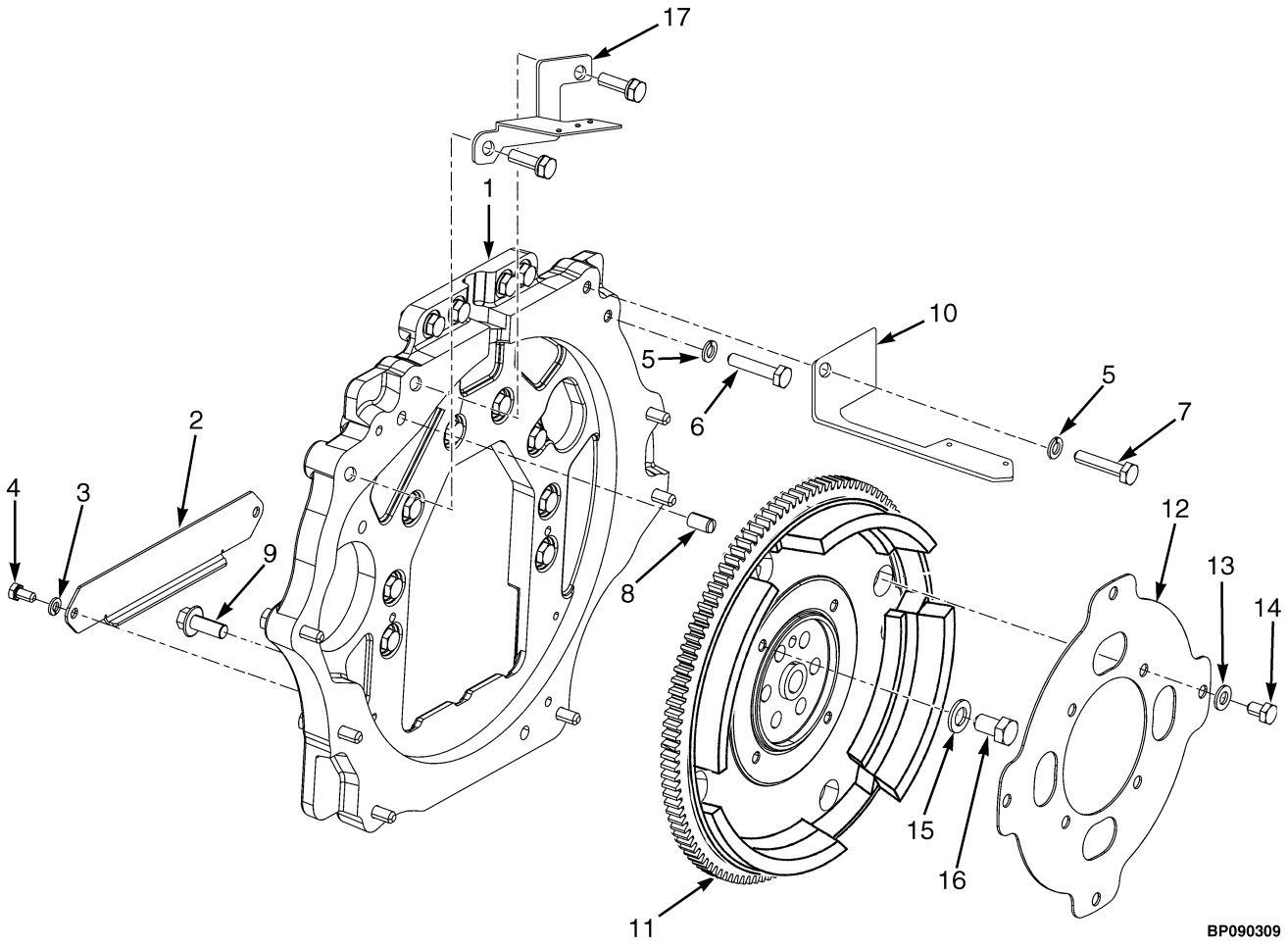

©2006 HYSTER COMPANY

FLYWHEEL AND HOUSING
YANMAR 2.6L DIESEL

ITEM		PART NO.	DESCRIPTION	QTY
1		1553265	Housing	1
2		1522363	Cover	1
3		292681	Lockwasher	2
4		287851	Capscrew	2
5		292682	Lockwasher	22
6		136985	Capscrew	12
7		292517	Capscrew	10
8		303150	Pin	2
9		1528889	Capscrew	2
10		1622886	Bracket	1
11		1615800	Flywheel	1
12		1531806	Flex Plate	1
13		296420	Washer	4
14		293626	Capscrew	4
14		360387	Sealant	AR
15		296424	Washer	6
16		1550747	Capscrew	6
17		1623093	Bracket	1
18	**a**	1625999	Dust Cover (Not Illustrated)	1

FOOTNOTES:
a S/N F001B02057D ⇒

GEAR HOUSING (Figure 2-25)
YANMAR 2.6L DIESEL

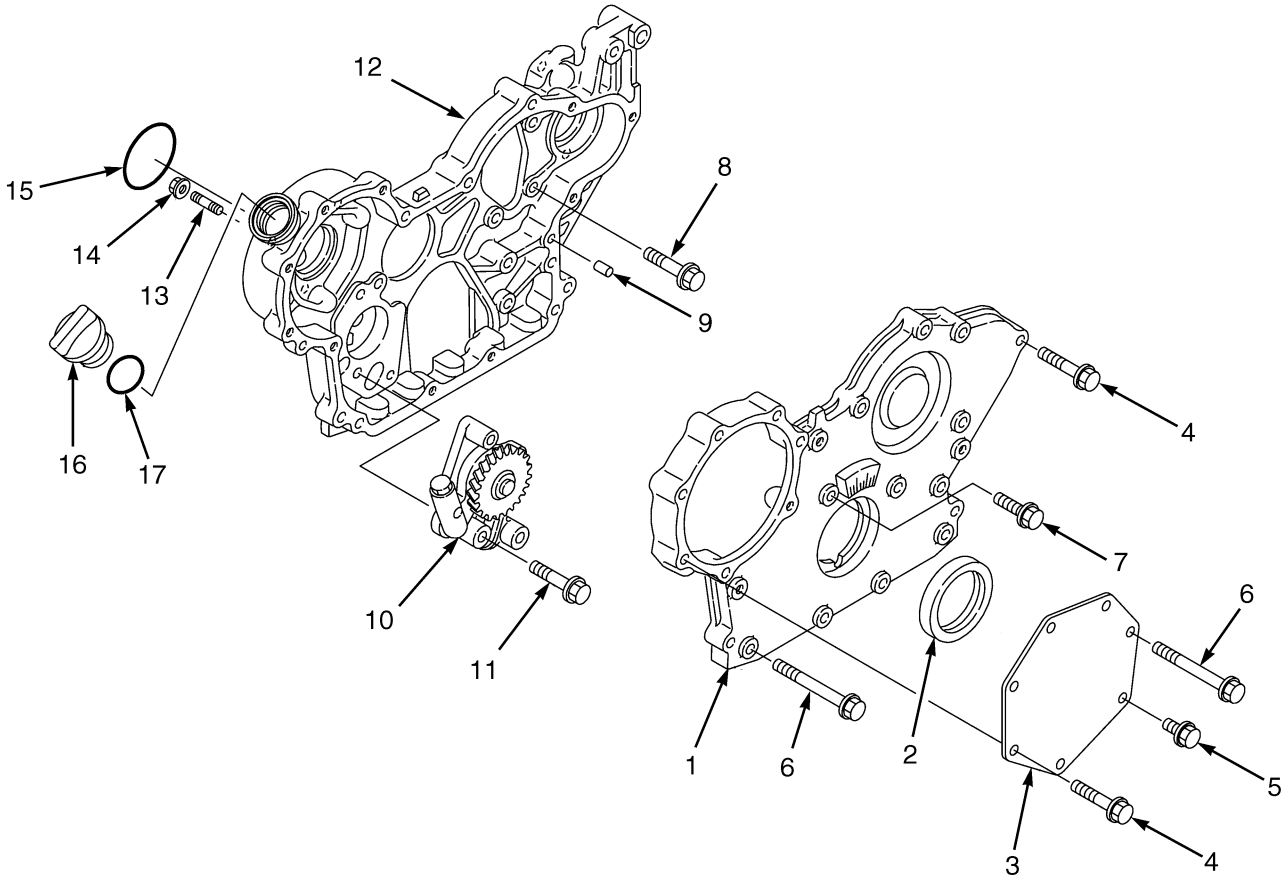

BP090182

©2006 HYSTER COMPANY

GEAR HOUSING
YANMAR 2.6L DIESEL

ITEM	PART NO.	DESCRIPTION	QTY
	1536725	Engine Assembly	1
1	1599459	Gear Cover Assembly	1
2	1599460	Oil Seal	1
3	1599461	Cover	1
4	1599473	Bolt	10
5	1599470	Bolt	1
6	1599476	Bolt	7
7	1599472	Bolt	1
8	1599471	Bolt	3
9	1599458	Pin	4
10	1599466	Pump	1
11	1599475	Bolt	1
12	1599465	Gear Case	1
13	1599467	Stud	3
14	2068378	Nut	3
15	1599462	O-Ring	1
16	1599463	Cap (Oil Fill)	1
17	1599464	O-Ring	1
	1599478	Liquid Gasket (Not Illustrated)	AR
	1599898	Gasket Set (Includes Items 15, 17)	1

©2006 HYSTER COMPANY

OIL PAN (Figure 2-26)
YANMAR 2.6L DIESEL

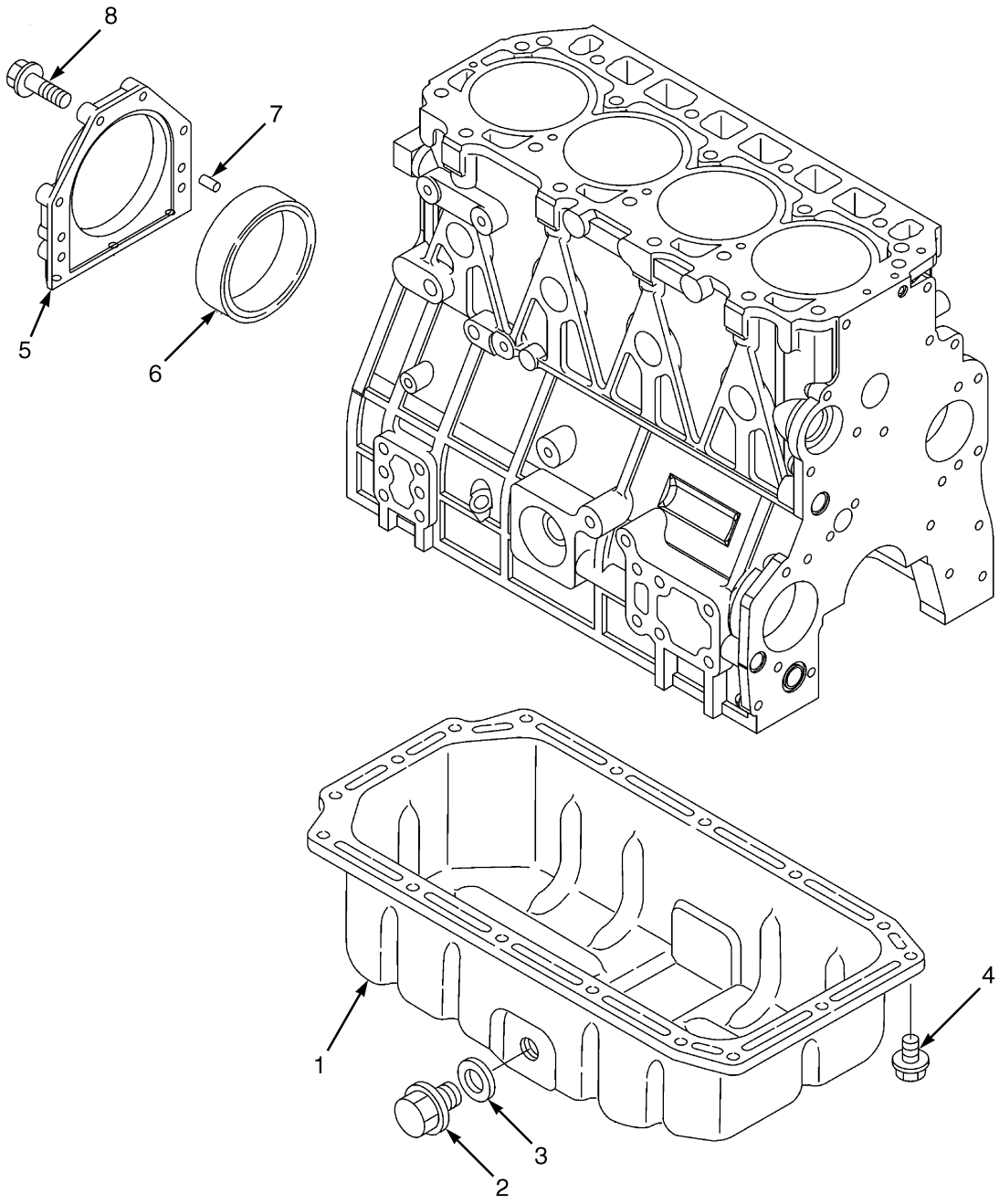

BP090183

©2006 HYSTER COMPANY

OIL PAN
YANMAR 2.6L DIESEL

ITEM	PART NO.	DESCRIPTION	QTY
	1536725	Engine Assembly	1
1	1599479	Oil Pan	1
2	1599480	Drain Plug	1
3	1599481	Seal	1
4	1599448	Bolt	16
5	1599483	Case	1
6	1599484	Seal	1
7	1599458	Pin	2
8	1599485	Bolt	6
	1599478	Liquid Gasket (Not Illustrated)	AR
	1599898	Gasket Set (Includes Items 3, 9)	1

©2006 HYSTER COMPANY

CYLINDER HEAD (Figure 2-27)
YANMAR 2.6L DIESEL

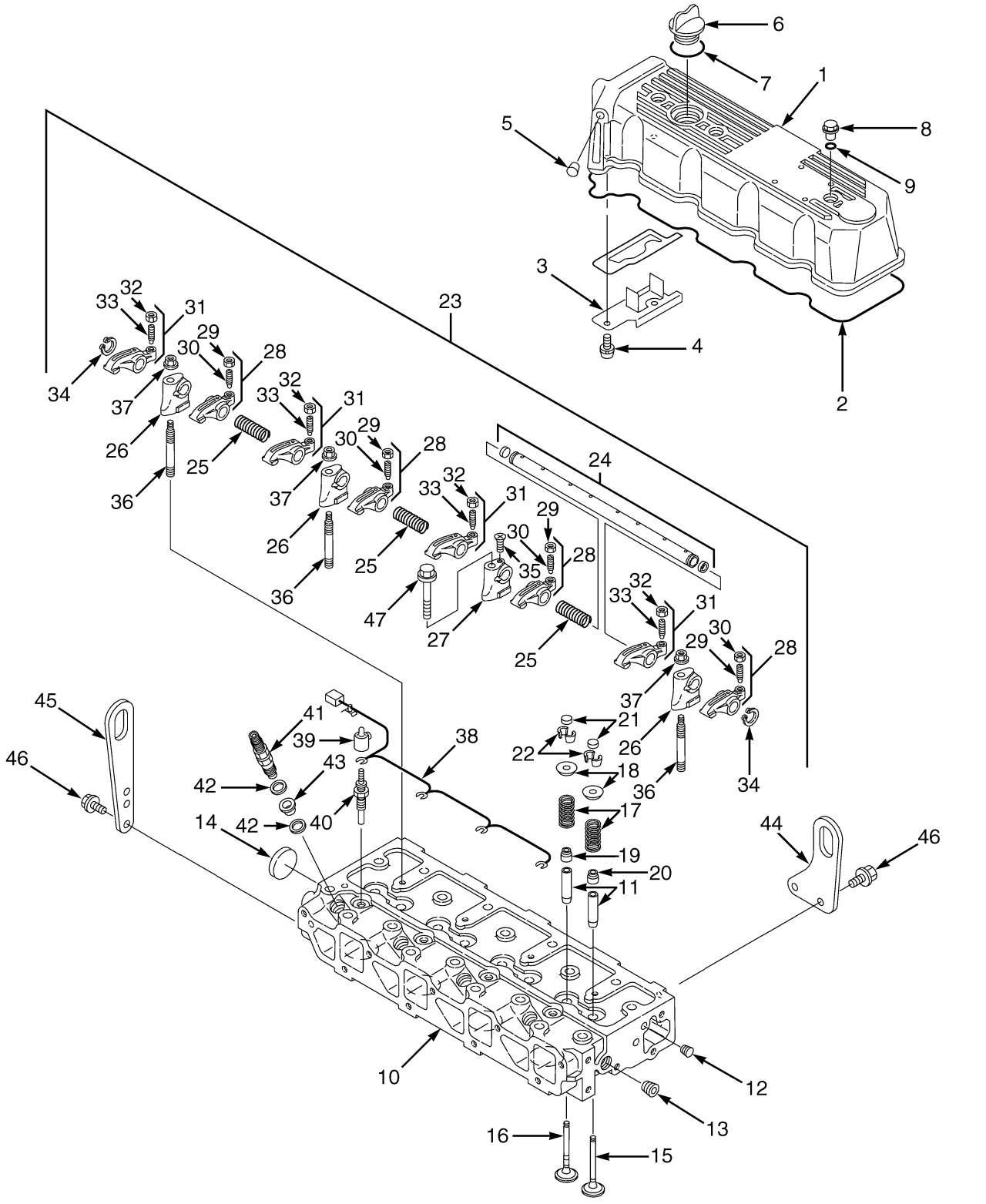

BP090184

©2006 HYSTER COMPANY

CYLINDER HEAD
YANMAR 2.6L DIESEL

ITEM	PART NO.	DESCRIPTION	QTY
	1536725	Engine Assembly	1
1	1599545	Cover	1
2	1599546	Gasket	1
3	1599547	Plate	1
4	1599548	Screw	2
5	1599549	Plug	1
6	1599463	Cap (Oil Fill)	1
7	1599464	O-Ring	1
8	1599544	Valve Cover Nut	3
9	1599550	O-Ring	3
10	1599488	Cylinder Head Assembly	1
10	1599524	Cylinder Head	1
11	1599525	Valve Guide	8
12	1599526	Plug	1
13	1599441	Plug	1
14	1599528	Plug	1
15	1599489	Intake Valve	4
16	1599516	Exhaust Valve	4
17	1599517	Spring	8
18	1599518	Retainer	8
19	1599519	Seal (Exhaust Valve)	4
20	1599520	Seal (Intake Valve)	4
21	1599521	Cap	8
22	1599529	Cotter	8
23	1599530	Rocker Arm Support Assembly	1
24	1599531	Rocker Arm Shaft	1
25	1599532	Spring	3
26	1599533	Support	3
27	1599534	Support	1
28	1599535	Intake Rocker Arm Kit	4
29	1599536	Screw	1
30	1599537	Nut	1
31	1599538	Exhaust Rocker Arm Kit	4
32	1599536	Screw	1
33	1599537	Nut	1
34	1599539	Clip	2
35	1599540	Screw	1
36	1599541	Stud	3
37	2092548	Main Bearing Set (Standard)	3
38	1599553	Connector (Glow Plug)	1
39	1599557	Cover	4
40	1599552	Glow Plug	4
41	1599818	Fuel Injector Assembly (☞ Figure 3-13)	4
42	1599523	Gasket	8
43	1599522	Protector	4
44	1599487	Lifting Eye	1
45	1599486	Lifting Eye	1
46	1599470	Bolt	4
47	1599555	Bolt	1
	1599898	Gasket Set (Includes Items 2, 7, 9, 19-20, 42-43)	1

©2006 HYSTER COMPANY

CAMSHAFT AND DRIVE GEAR (Figure 2-28)
YANMAR 2.6L DIESEL

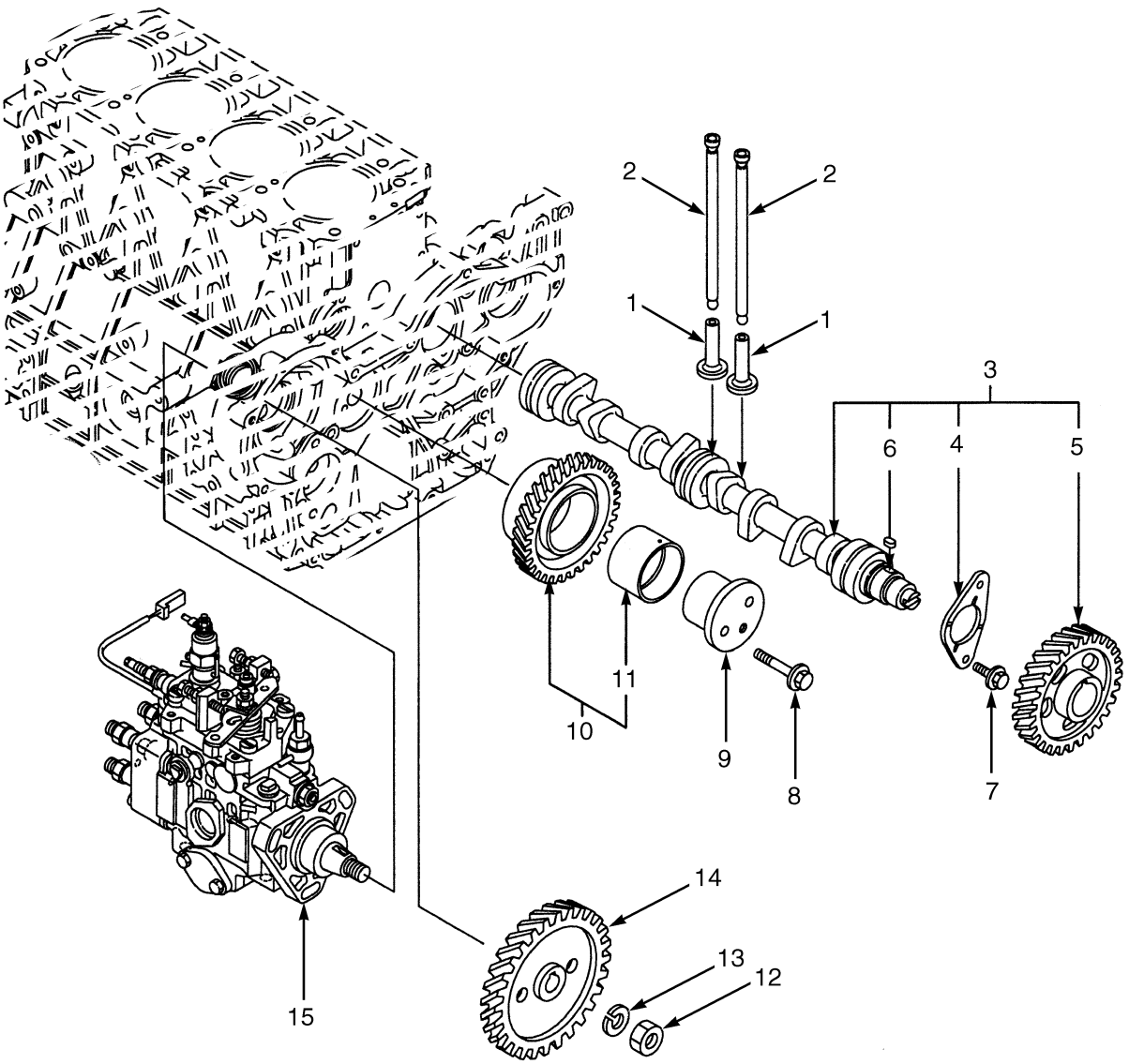

BP090186

©2006 HYSTER COMPANY

CAMSHAFT AND DRIVE GEAR
YANMAR 2.6L DIESEL

ITEM	PART NO.	DESCRIPTION	QTY
	1536725	Engine Assembly	1
1	1599569	Tappet	8
2	1599570	Push Rod	8
3	1599571	Camshaft Assembly	1
4	1599572	Retainer	1
5	1599573	Gear	1
6	1599574	Key	1
7	1599470	Bolt	2
8	1599579	Bolt	2
9	1599576	Idler Shaft	1
10	1599577	Idler Gear	1
11	1599578	Bushing	1
12	1599582	Lock Nut	1
13	1599581	Spring Washer	1
14	1599580	Gear	1
15	1599914	Injector Pump (☞ Figure 3-13)	1

©2006 HYSTER COMPANY

CRANKSHAFT AND PISTONS (Figure 2-29)
YANMAR 2.6L DIESEL

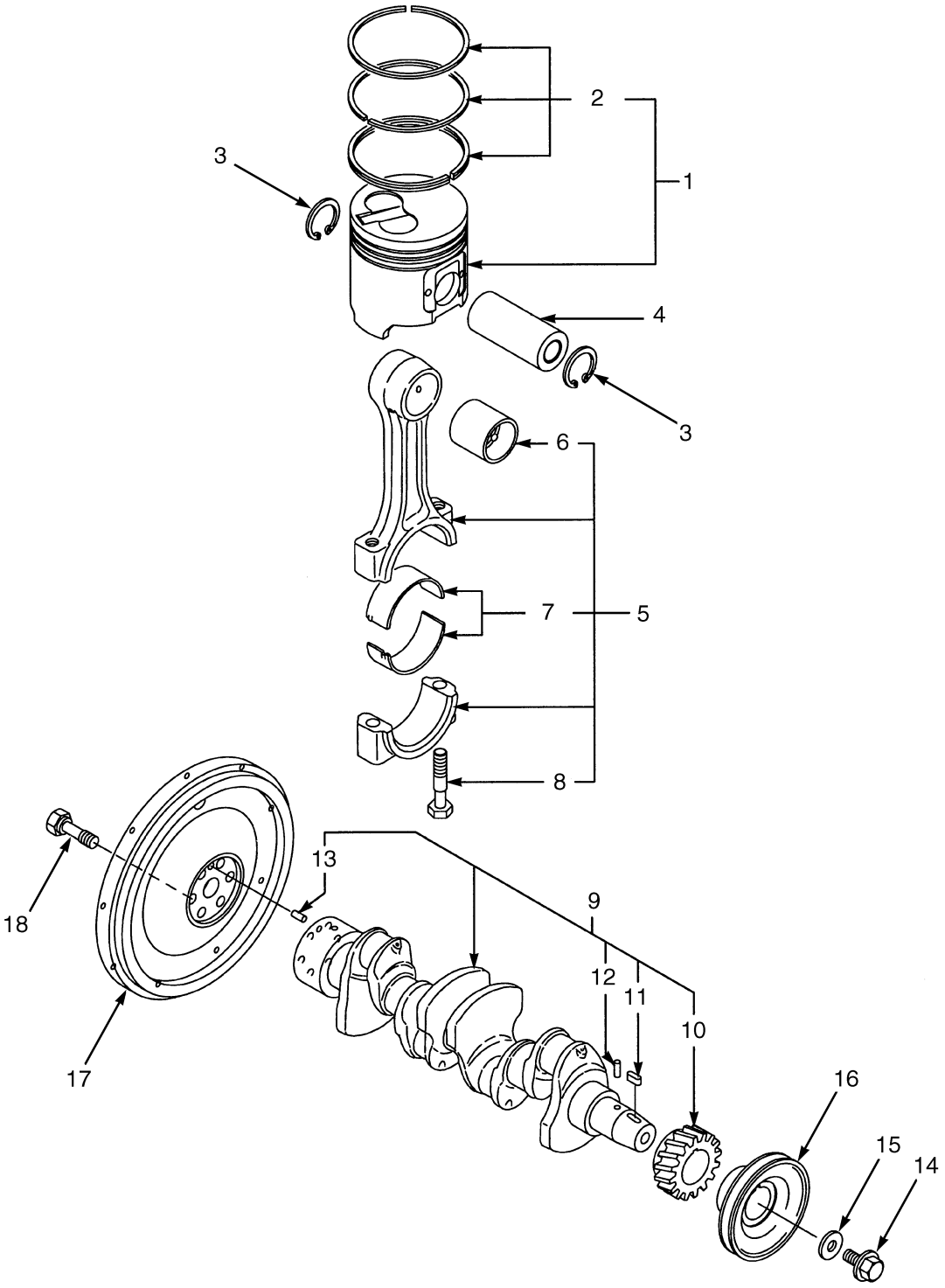

BP090187

©2006 HYSTER COMPANY

CRANKSHAFT AND PISTONS
YANMAR 2.6L DIESEL

ITEM	PART NO.	DESCRIPTION	QTY
	1536725	Engine Assembly	1
1	1599592	Piston Assembly (With Standard Rings)	4
1	1599600	Piston Assembly (With O/S 0.25 Rings)	4
2	1599593	Ring Set (Standard)	1
2	1599601	Ring Set (O/S 0.25)	1
3	1599595	Snap Ring	8
4	1599594	Pin	4
5	1599596	Connecting Rod Assembly	4
6	1599597	Bushing	1
7	2092550	Bearing (Standard)	1
7	2092551	Bearing (U/S 0.25)	4
8	1599598	Bolt	2
9	1599583	Crankshaft Assembly	1
10	1599584	Gear	1
11	1599574	Key	1
12	1599585	Pin	1
13	1599586	Pin	1
14	1599590	Bolt	1
15	1599589	Washer	1
16	1599588	Pulley	1
17	1615800	Flywheel	1
18	1599591	Bolt	6

©2006 HYSTER COMPANY

CYLINDER BLOCK (Figure 2-30)
YANMAR 2.6L DIESEL

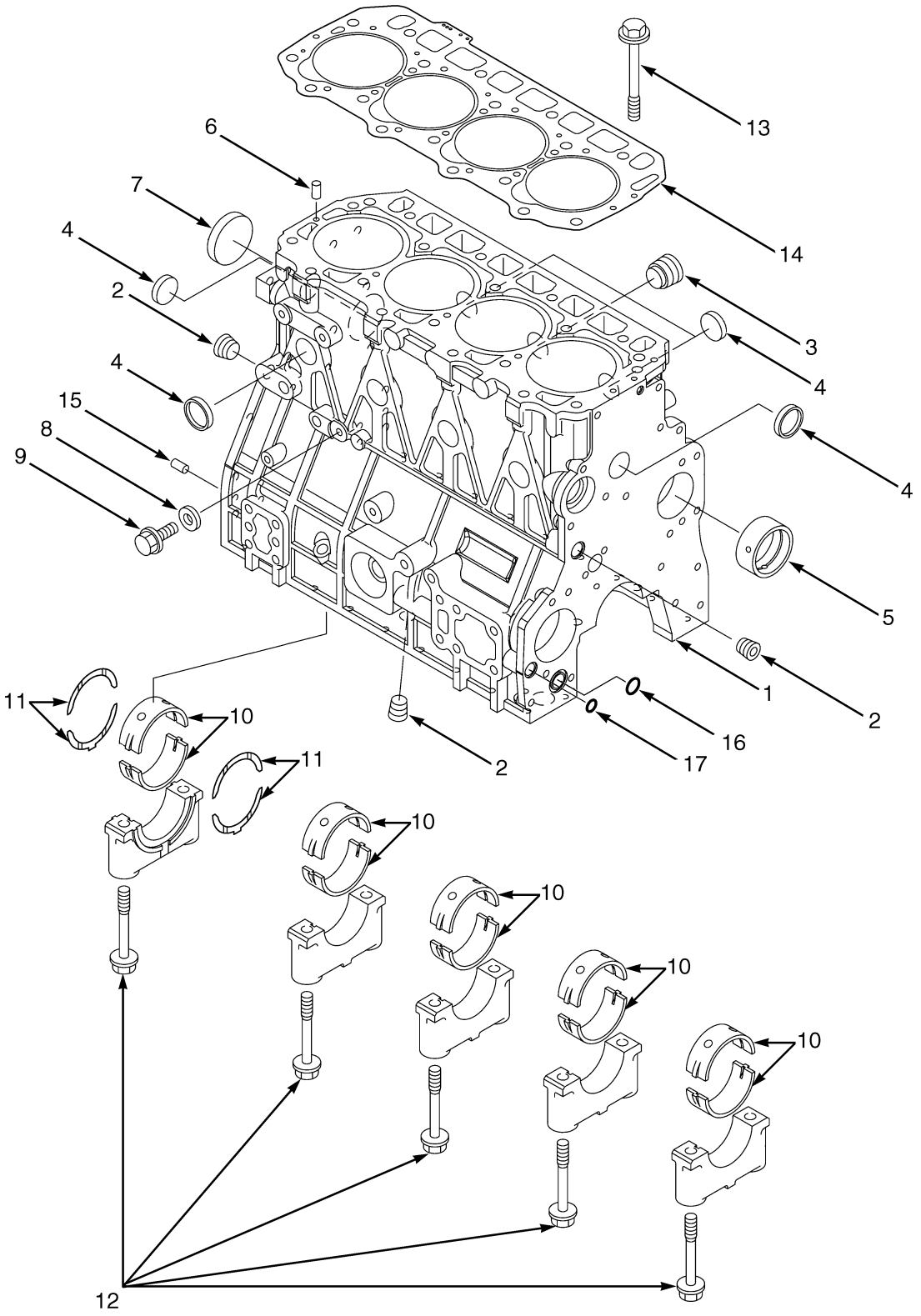

©2006 HYSTER COMPANY

CYLINDER BLOCK
YANMAR 2.6L DIESEL

ITEM	PART NO.	DESCRIPTION	QTY
	1536725	Engine Assembly	1
1	1599440	Cylinder Block Assembly	1
2	1599441	Plug	3
3	1599442	Plug	1
4	1599451	Plug	8
5	1599444	Bushing	1
6	1599446	Spring Pin	2
7	1599449	Plug	1
8	1599445	Washer	1
9	1599448	Bolt	1
10	2092548	Main Bearing Set (Standard)	5
10	2092549	Main Bearing Set (U/S 0.25)	5
11	2092552	Thrust Bearing Set (Standard)	2
11	2092553	Thrust Bearing Set (U/S 0.25)	2
12	1599443	Bolt	10
13	1599454	Bolt	18
14	1599455	Gasket	1
15	1599458	Pin	2
16	1599468	O-Ring	1
17	1599469	O-Ring	1
	1599898	Gasket Set (Includes Items 8, 14, 16-17)	1

©2006 HYSTER COMPANY

WATER PUMP (Figure 2-31)
YANMAR 2.6L DIESEL

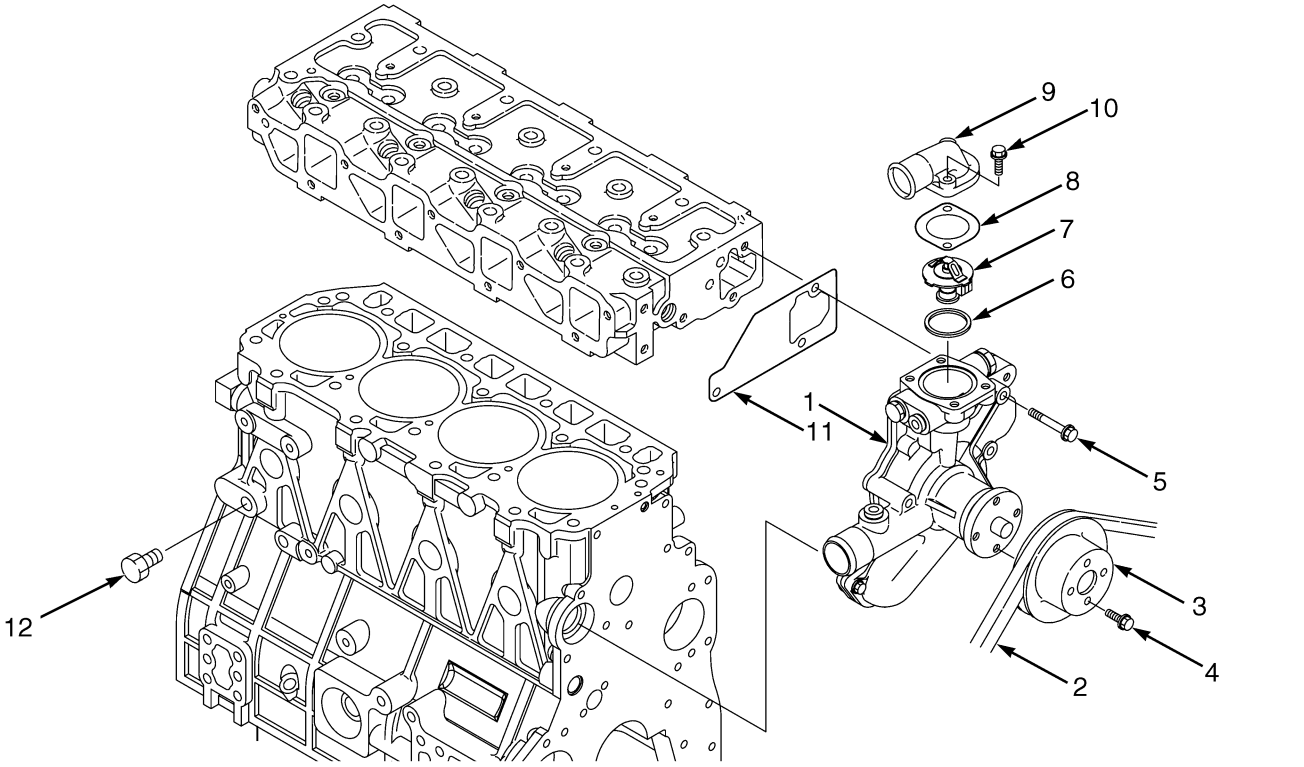

©2006 HYSTER COMPANY

WATER PUMP
YANMAR 2.6L DIESEL

ITEM	PART NO.	DESCRIPTION	QTY
	1536725	Engine Assembly	1
1	1599805	Water Pump	1
2	1599796	V-Belt	1
3	1599795	Pulley	1
4	1599448	Bolt	4
5	1599579	Bolt	3
6	1597709	Gasket	1
7	1599800	Thermostat	1
8	1597710	Gasket	1
9	1599798	Cover	1
10	1599801	Bolt	1
11	1599803	Gasket	1
12	1599802	Drain Plug	2
	1599898	Gasket Set (Includes Item 11)	1

©2006 HYSTER COMPANY

LUBRICATION SYSTEM (Figure 2-32)
YANMAR 2.6L DIESEL

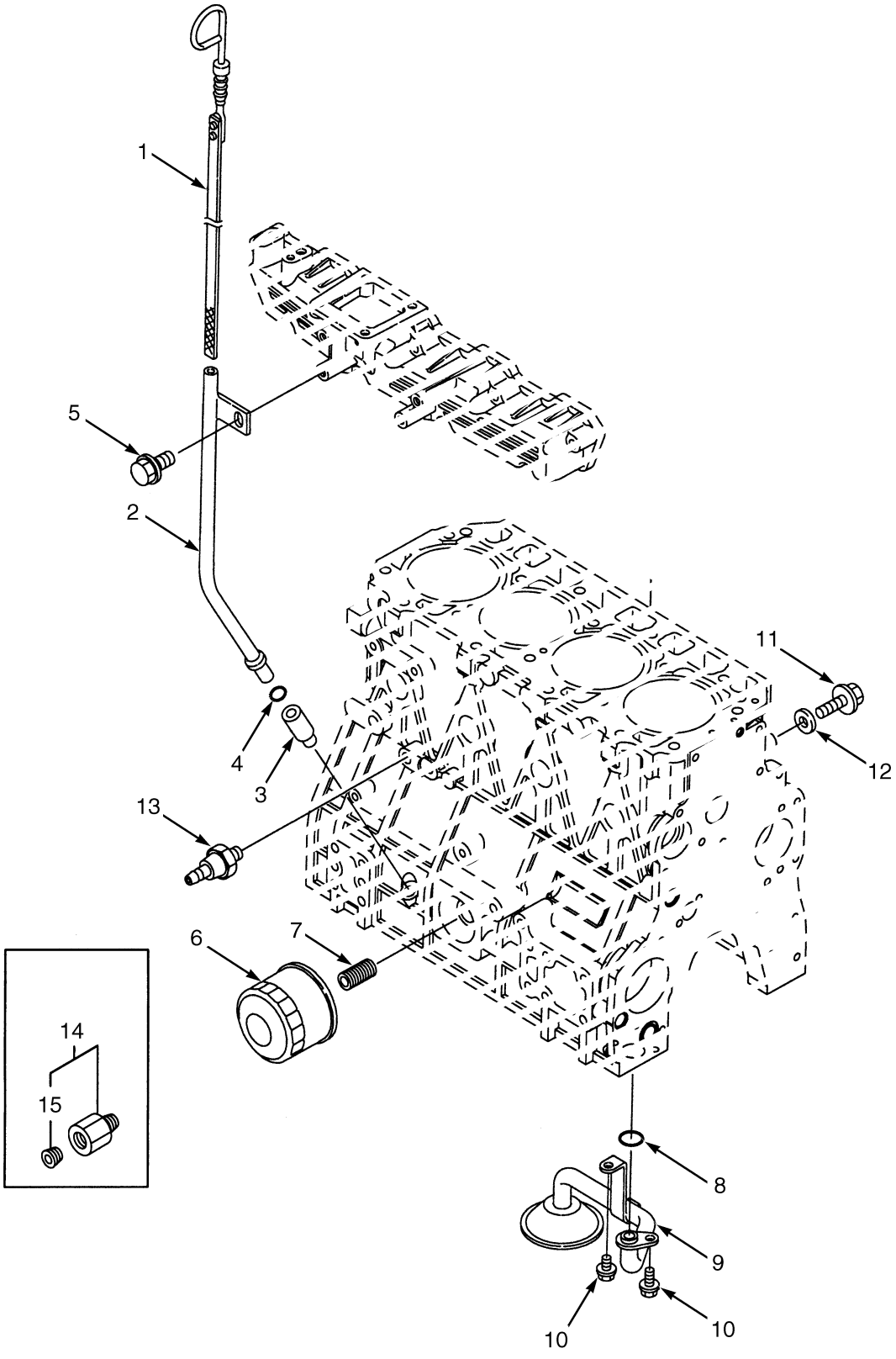

©2006 HYSTER COMPANY

LUBRICATION SYSTEM
YANMAR 2.6L DIESEL

ITEM	PART NO.	DESCRIPTION	QTY
	1536725	Engine Assembly	1
1	1599604	Dipstick	1
2	1599606	Tube (Dipstick)	1
3	1599605	Guide	1
4	1599607	O-Ring	1
5	1599470	Bolt	1
6	2077983	Oil Filter	1
7	1599610	Stud	1
8	1599468	O-Ring	1
9	1599611	Pipe	1
10	1599612	Bolt	2
11	1599448	Bolt	1
12	1599445	Washer	1
13	1599613	Switch (Oil Pressure)	1
14	1599616	Adapter Plug (Oil Pressure Sensor)	1
15	1599793	Plug	1
	1599898	Gasket Set (Includes Item 4)	1

©2006 HYSTER COMPANY

NOTES

3 FUEL SYSTEM

SECTION 3
FUEL SYSTEM

DESCRIPTION	PAGE
AIR CLEANER FILTER ASSEMBLY	
LPG AND DIESEL	3-10
AIR CLEANER SYSTEM	
DIESEL	
PENDING PER ECN 10402532⇒	3-6
⇒PENDING PER ECN 10402532	3-4
MAZDA 2.0L	3-2
ELECTRONIC THROTTLE LINKAGE	
YANMAR DIESEL	3-38
FUEL FILTER	
YANMAR 2.6L DIESEL	3-30
FUEL INJECTION	
YANMAR 2.6L DIESEL	3-32
FUEL SYSTEM	
DIESEL	3-28
MAZDA 2.0L	3-12
LPG TANK BRACKET	
SWING OUT	
⇒D/B 09/2006	3-16
SWING OUT, WITH FABRIC STRAP	
D/B 09/2006⇒	3-18
SWING OUT/DROP DOWN	
D/B 09/2006⇒	3-24
⇒D/B 09/2006	3-20
MONOTROL PEDAL	3-40
PRE-CLEANER AND MOUNT	3-8
THROTTLE CABLE LINKAGE	
YANMAR DIESEL	3-36
THROTTLE LINKAGE	
MAZDA 2.0L	3-34

©2006 HYSTER COMPANY

AIR CLEANER SYSTEM (Figure 3-1)
MAZDA 2.0L

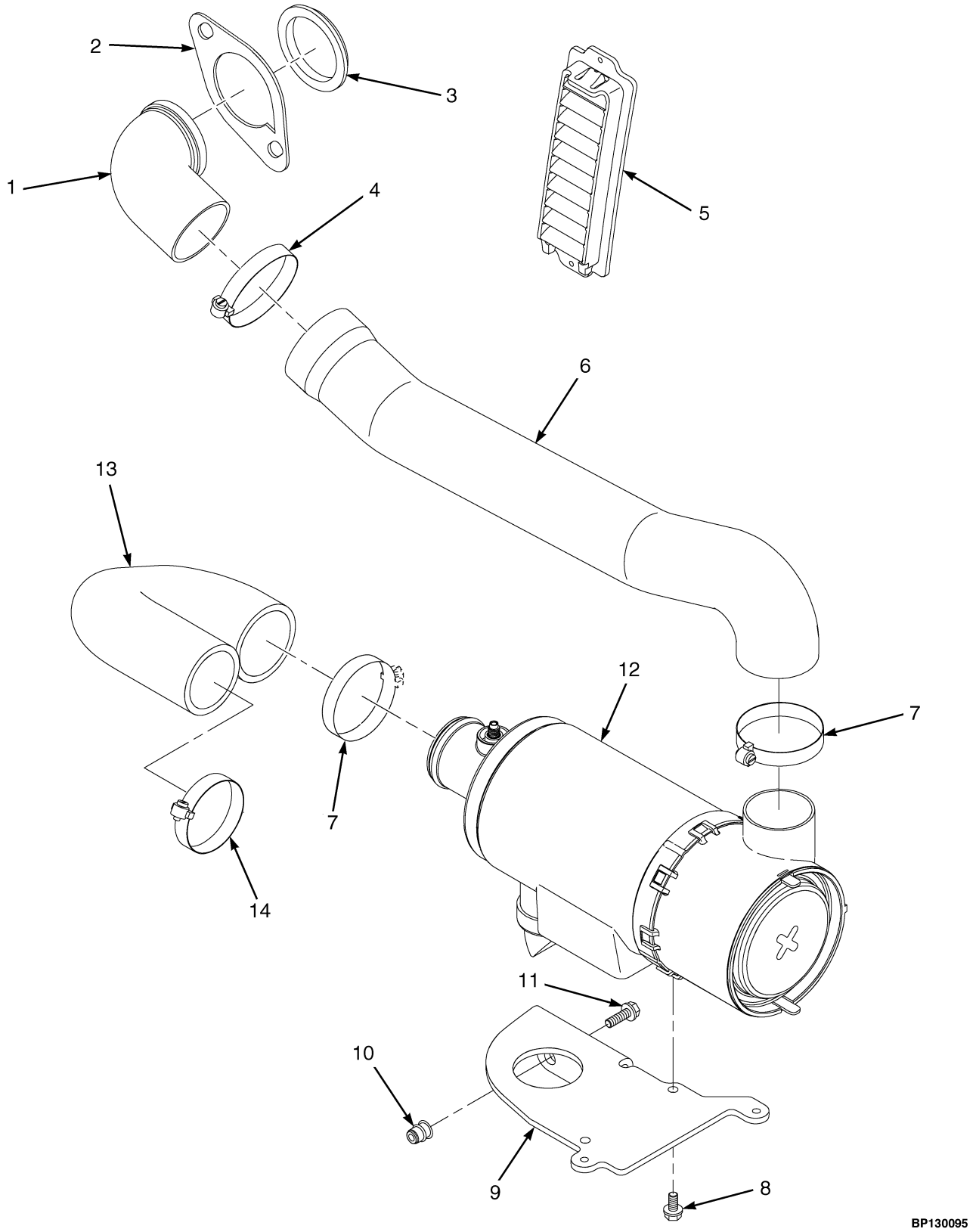

©2006 HYSTER COMPANY

AIR CLEANER SYSTEM
MAZDA 2.0L

ITEM	PART NO.	DESCRIPTION	QTY
1	1581438	Elbow	1
2	1581439	Retainer	1
3	1502079	Grommet	1
4	115696	Clamp	1
5	2067476	Grill	1
6	1502034	Hose	1
7	119236	Clamp	2
8	1583611	Capscrew	2
9	1501848	Bracket	1
10	1530243	Insert	3
11	1527880	Capscrew	3
12	2055193	Air Filter Assembly (☞ Figure 3-5)	1
13	1502032	Hose (Air Cleaner)	1
14	112989	Clamp	1

©2006 HYSTER COMPANY

AIR CLEANER SYSTEM (Figure 3-2)
DIESEL
(⇒PENDING PER ECN 10402532)

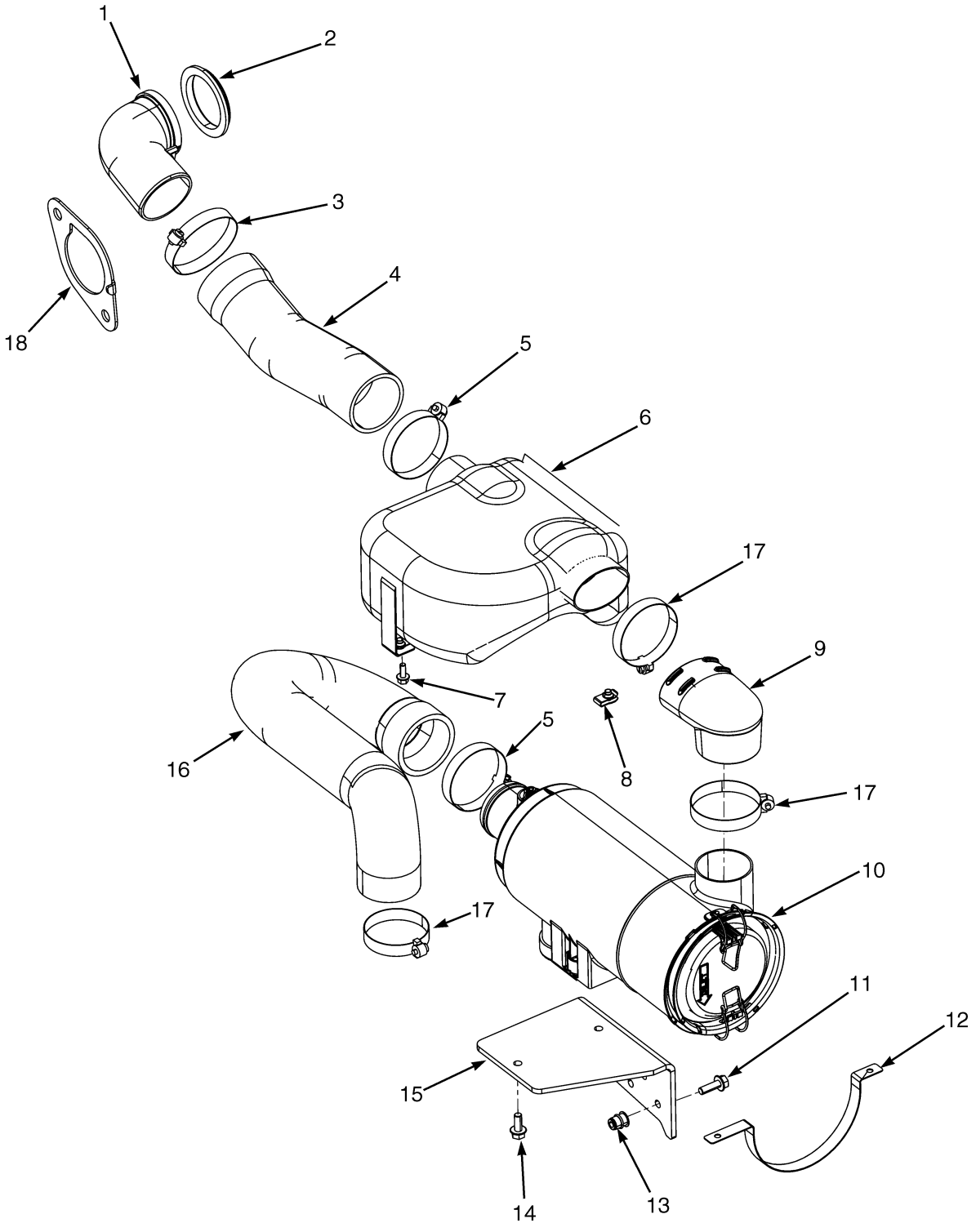

©2006 HYSTER COMPANY

AIR CLEANER SYSTEM
DIESEL
(⇒PENDING PER ECN 10402532)

ITEM		PART NO.	DESCRIPTION	QTY
1		1581438	Elbow	1
2		1502079	Grommet	1
3		1394008	Clamp	1
4		1565212	Hose (Dirty Air)	1
5		112989	Clamp	5
6	**a**	1565211	Silencer	1
6	**b**	2087115	Silencer	1
7		1527876	Capscrew	2
8		1566420	Clip Nut	2
9		1565199	Elbow	1
10		1501855	Air Cleaner Assembly (☞ Figure 3-5)	1
11		1583611	Capscrew	3
12		1636797	Strap	1
13		1530243	Insert	3
14		1527880	Capscrew	2
15		1501849	Bracket	1
16		1568082	Hose (Clean Air)	1
17		1581439	Retainer	1

FOOTNOTES:
a ⇒ S/N F001B02111D
b S/N F001B02112D ⇒

©2006 HYSTER COMPANY

AIR CLEANER SYSTEM (Figure 3-3)
DIESEL
(PENDING PER ECN 10402532⇒)

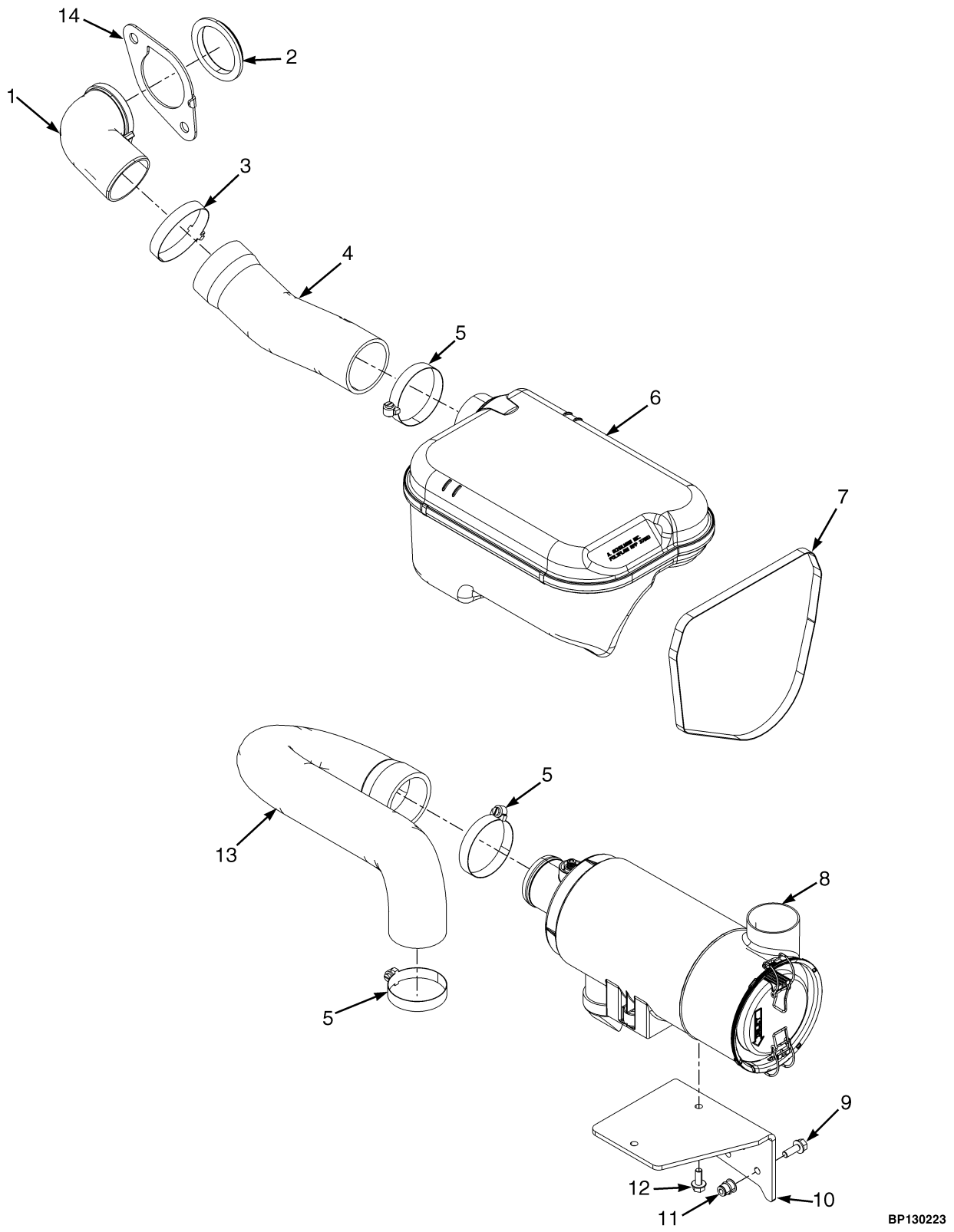

©2006 HYSTER COMPANY

AIR CLEANER SYSTEM
DIESEL
(PENDING PER ECN 10402532⇒)

ITEM	PART NO.	DESCRIPTION	QTY
1	1581438	Elbow	1
2	1502079	Grommet	1
3	1394008	Clamp	1
4	1565212	Hose (Dirty Air)	1
5	112989	Clamp	3
6	2090086	Silencer	1
7	1636797	Strap	1
8	1501855	Air Cleaner Assembly	1
9	1583611	Capscrew	3
10	1501849	Bracket	1
11	1527880	Capscrew	2
12	1530243	Insert	3
13	1568082	Hose (Clean Air)	1
14	1581439	Retainer	1

©2006 HYSTER COMPANY

PRE-CLEANER AND MOUNT (Figure 3-4)

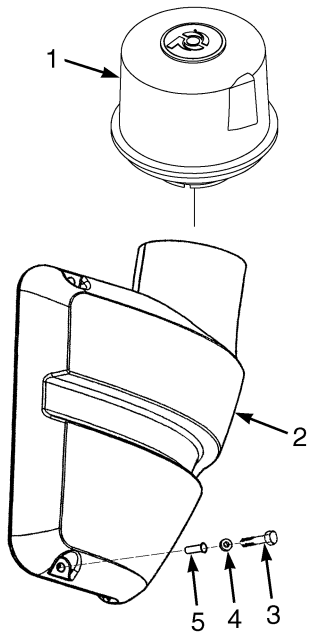

BP130092

ITEM	PART NO.	DESCRIPTION	QTY
1	1501888	Pre-Cleaner	1
2	1565201	Air Duct	1
3	2071261	Capscrew	2
4	1506738	Washer	2
5	1531558	Insert	2

©2006 HYSTER COMPANY

NOTES

AIR CLEANER FILTER ASSEMBLY (Figure 3-5)
LPG AND DIESEL

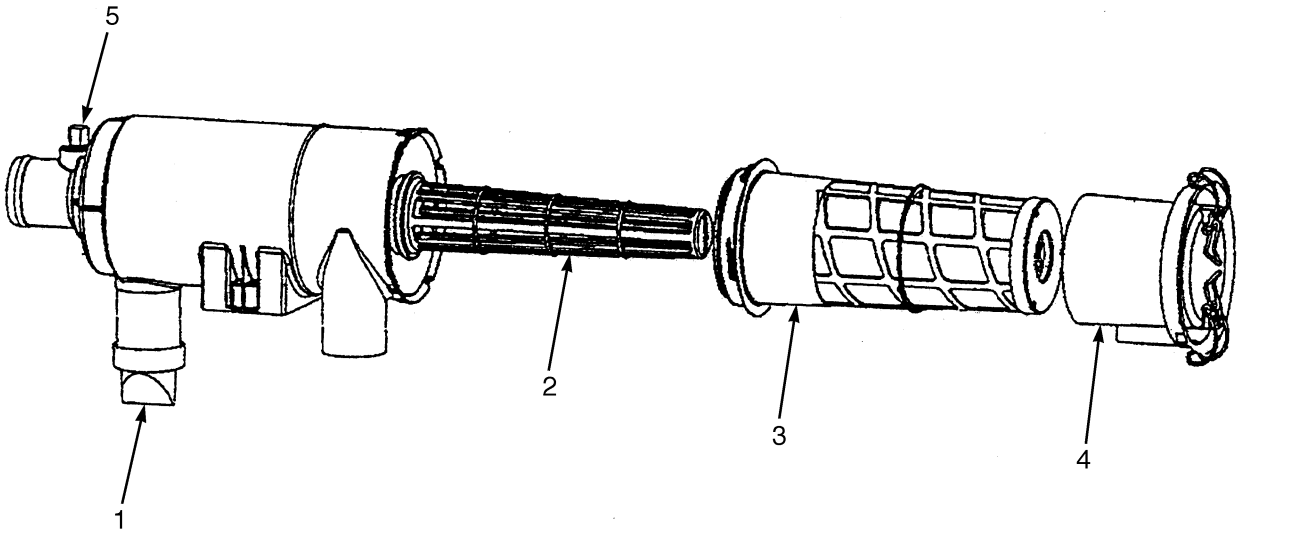

BP130113

©2006 HYSTER COMPANY

AIR CLEANER FILTER ASSEMBLY
LPG AND DIESEL

KEY:
A: LPG
B: Diesel

ITEM	PART NO.	DESCRIPTION	QTY A	QTY B
	2055193	Air Filter Assembly	1	..
	1501855	Air Cleaner Assembly	..	1
1	374923	Valve	1	1
2	1559419	Liner (with O-Ring)	1	..
2	1574260	Liner (with O-ring)	..	1
3	1559418	Filter	1	..
3	1574111	Filter	..	1
4	1559420	Cover	1	..
4	1574131	Cover	..	1
5	141331	Cap	1	1

©2006 HYSTER COMPANY

FUEL SYSTEM (Figure 3-6)
MAZDA 2.0L

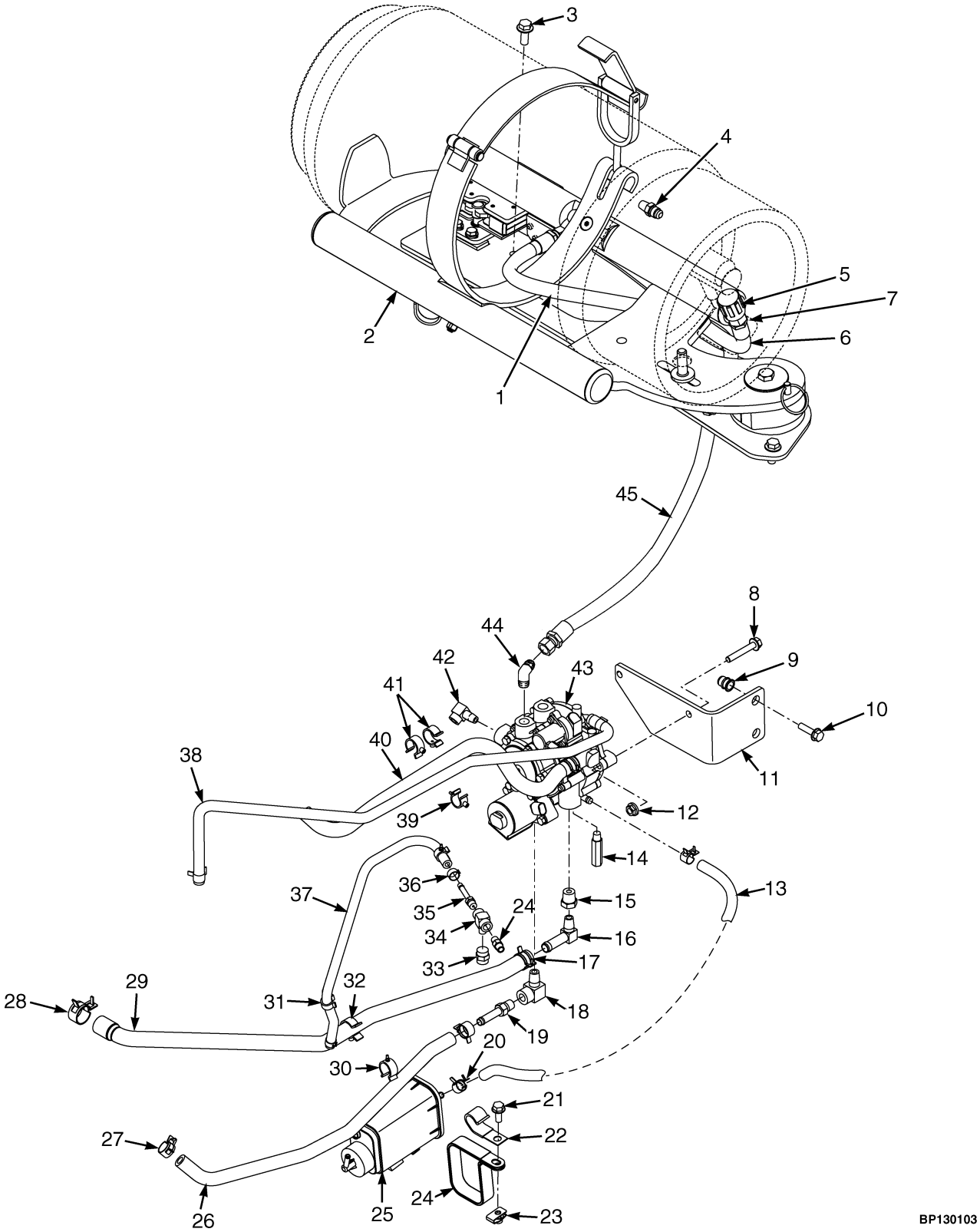

©2006 HYSTER COMPANY

FUEL SYSTEM
MAZDA 2.0L

ITEM		PART NO.	DESCRIPTION	QTY
1		2072298	Hose	1
2		1582412	LPG Bracket Assembly (Swing Out) (☞ Figure 3-7)	1
2		1584269	LPG Bracket Assembly (Swing Out, Drop Down) (☞ Figure 3-9)	1
3		1586013	Capscrew	4
4		16134	Fitting	2
5		97999	Disconnect	1
5	**a**	878758	Fitting	1
6		2085908	Hose	1
7		2071517	Sleeve	1
7	**a**	895603	Fitting	1
8		1510115	Capscrew	2
9		1530243	Insert	2
10		1527881	Capscrew	2
11		1502049	Bracket (Regulator)	1
12		1502543	Nut (Flange)	2
13		260878	Hose	1
14		1502058	Fitting	1
15		63108	Fitting	1
16		16788	Fitting	1
17		1502007	Clamp	3
18		17353	Fitting	1
19		141776	Fitting	1
20		1502003	Clamp	4
21		1527880	Capscrew	1
22		1339452	Clamp	1
23		1480237	Clip Nut	1
24		1475409	Clamp	1
25		1471694	Resonator	1
26		1625312	Hose (Coolant)	1
27		1502005	Clamp	2
28		1501995	Clamp	1
29		1502015	Hose (Coolant)	1
30		1502066	Clamp	1
31		1502055	Clamp	1
32		1502054	Clamp	1
33		16168	Fitting	1
34		16199	Fitting	1
35		1502027	Nipple	1
36		369815	Clamp	2
37		1502047	Hose (Balance Line)	1
38		1502048	Hose (Fuel Vapor)	1
39		1502053	Clamp (Swivel)	2
40		1502046	Hose (Fuel Vapor)	1
41		1543691	Clamp (Swivel)	1
42		15971	Fitting	1
43		1594144	Regulator Lockout	1
43		1578553	Screw Set	1
43		1616232	Filter Assembly	1
44		16863	Fitting	1

©2006 HYSTER COMPANY

FUEL SYSTEM
MAZDA 2.0L

ITEM		PART NO.	DESCRIPTION	QTY
44	**a**	16134	Fitting	1
45		2070676	Hose	1

FOOTNOTES:
a German Market

©2006 HYSTER COMPANY

NOTES

LPG TANK BRACKET (Figure 3-7)
SWING OUT
(⇒D/B 09/2006)

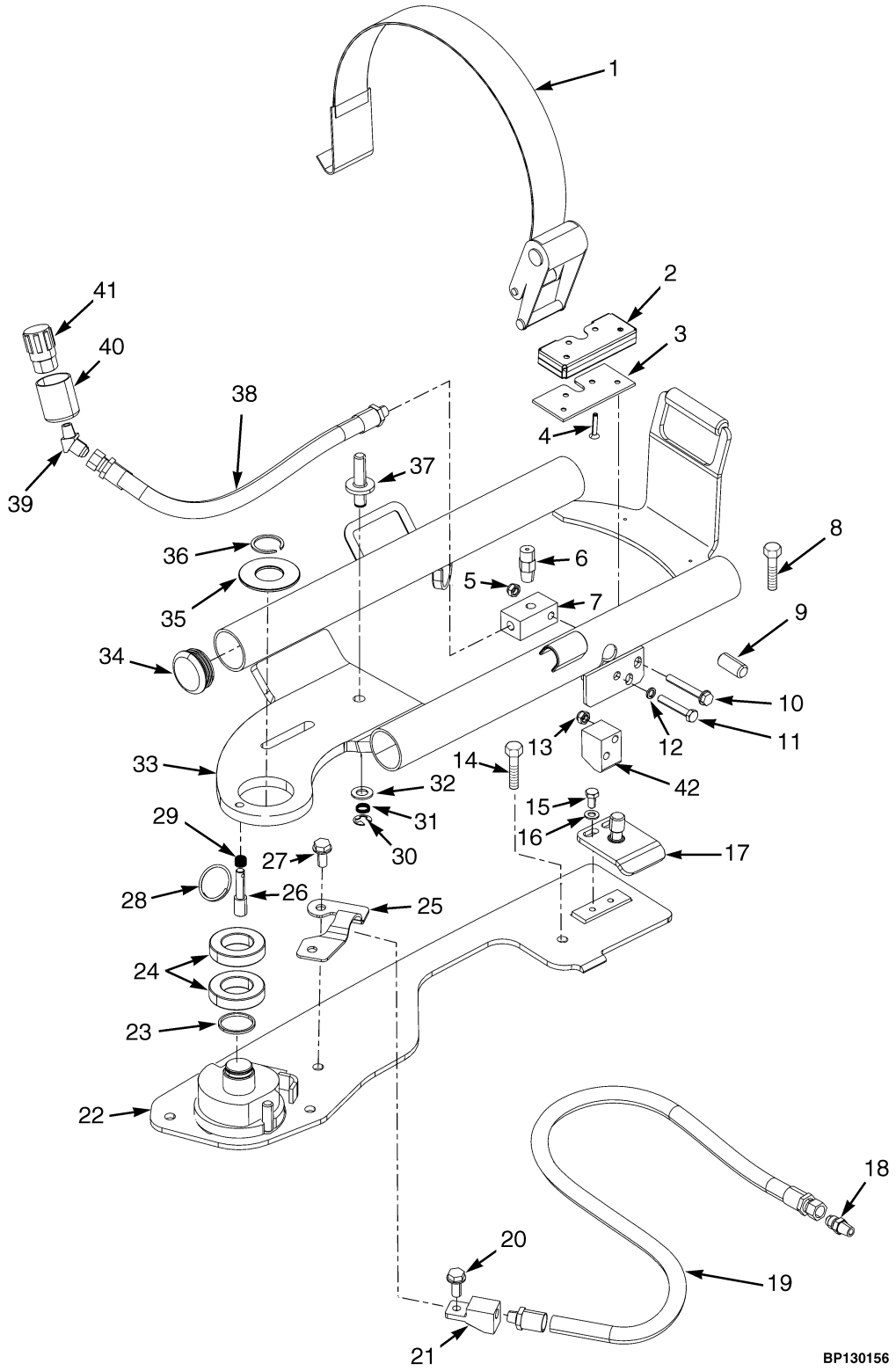

©2006 HYSTER COMPANY

LPG TANK BRACKET
SWING OUT
(⇒D/B 09/2006)

ITEM	PART NO.	DESCRIPTION	QTY
	1582412	LPG Bracket Assembly	1
1	1379455	Retention Strap	1
2	1517405	Latch	1
3	1534674	Plate	1
4	1581899	Capscrew	4
5	1581739	Nut	2
6	101809	Relief Valve	1
6	246108	Sealant	AR
7	1534675	Fitting	1
8	1581740	Capscew	1
8	264134	Sealant	AR
9	1534677	Pin	1
10	1585835	Capscrew	2
10	246108	Sealant	AR
11	1581583	Capscrew	1
11	264134	Sealant	AR
12	1581898	Washer	1
13	1581739	Nut	1
14	1586013	Capscrew	1
15	1581885	Capscrew	2
16	1581556	Washer	2
17	1534649	Pin Weldment	1
18	16134	Fitting	1
18	246108	Sealant	AR
19	2072298	Hose	1
20	1581579	Capscrew	1
21	1525451	Fitting	1
22	1568844	Base	1
23	1568853	Washer	1
24	184451	Ball Bearing	2
25	1564061	Bracket	1
26	1534671	Pin	1
27	1586013	Capscrew	2
28	1534672	Ring	1
29	1528903	Compression Spring	1
30	182118	Retaining Ring	1
31	1528899	Compression Spring	1
32	1581559	Washer	1
33	1582413	Tank Support	1
34	1398099	Plug	4
35	1568839	Washer (Pivot)	1
36	34507	Snap Ring	1
37	1651119	Pin (Offset)	1
38	2085908	Hose	1
39	16863	Fitting	1
40	2071517	Sleeve	1
41	97999	Disconnect	1
42	1534679	Block	1

©2006 HYSTER COMPANY

LPG TANK BRACKET (Figure 3-8)
SWING OUT, WITH FABRIC STRAP
(D/B 09/2006⇒)

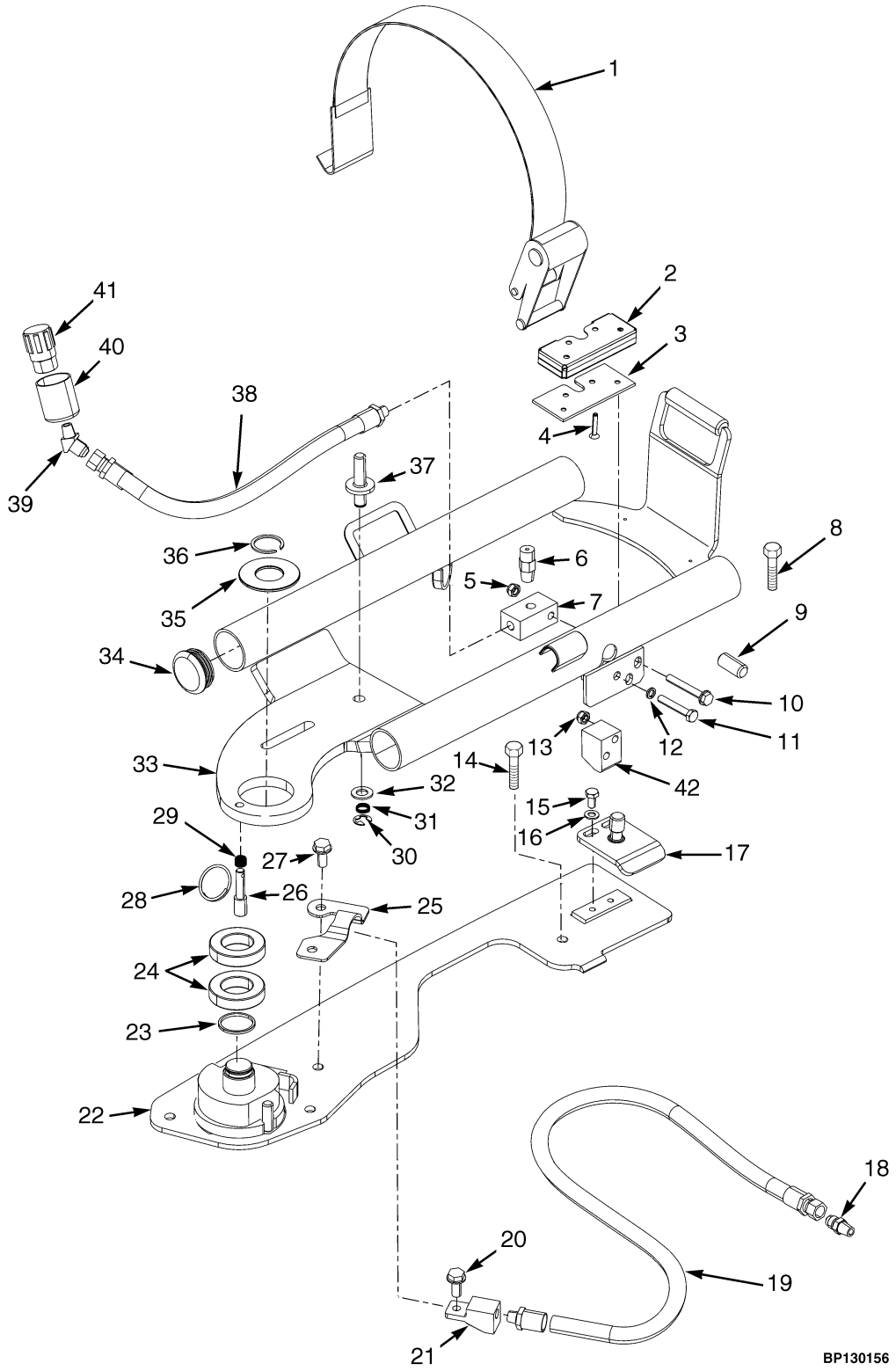

©2006 HYSTER COMPANY

LPG TANK BRACKET
SWING OUT, WITH FABRIC STRAP
(D/B 09/2006⇒)

ITEM	PART NO.	DESCRIPTION	QTY
	1640249	LPG Bracket Assembly	1
1	1640179	Tank Support	1
2	1528903	Compression Spring	1
3	1534672	Ring	1
4	184451	Ball Bearing	2
5	1568853	Washer	1
6	1568844	Base	1
7	1534671	Pin	1
8	1534649	Pin Weldment	1
9	1581556	Washer	2
10	1581885	Capscrew	2
11	182118	Retaining Ring	1
12	1528899	Compression Spring	1
13	1581559	Washer	1
14	1534675	Fitting	1
15	1581739	Nut	1
16	1581898	Washer	1
17	1581583	Capscrew	1
18	1585835	Capscrew	2
19	1534677	Pin	1
20	1581740	Capscew	1
21	1637661	Foot Rest	1
22	1583611	Capscrew	4
23	1534679	Block	1
24	101809	Relief Valve	1
25	1581739	Nut	6
26	1581899	Capscrew	4
27	1534674	Plate	1
28	1517405	Latch	1
29	1651119	Pin (Offset)	1
30	1568839	Washer (Pivot)	1
31	34507	Snap Ring	1
32	1398099	Plug	4
33	1581579	Capscrew	1
34	1525451	Fitting	1
35	2072298	Hose	1
36	16134	Fitting	1
37	1564061	Bracket	1
38	1586013	Capscrew	2
39	16863	Fitting	1
40	2071517	Sleeve	1
41	97999	Disconnect	1
42	2085908	Hose	1
43	1379455	Retention Strap	1

©2006 HYSTER COMPANY

LPG TANK BRACKET (Figure 3-9)
SWING OUT/DROP DOWN
(⇒D/B 09/2006)

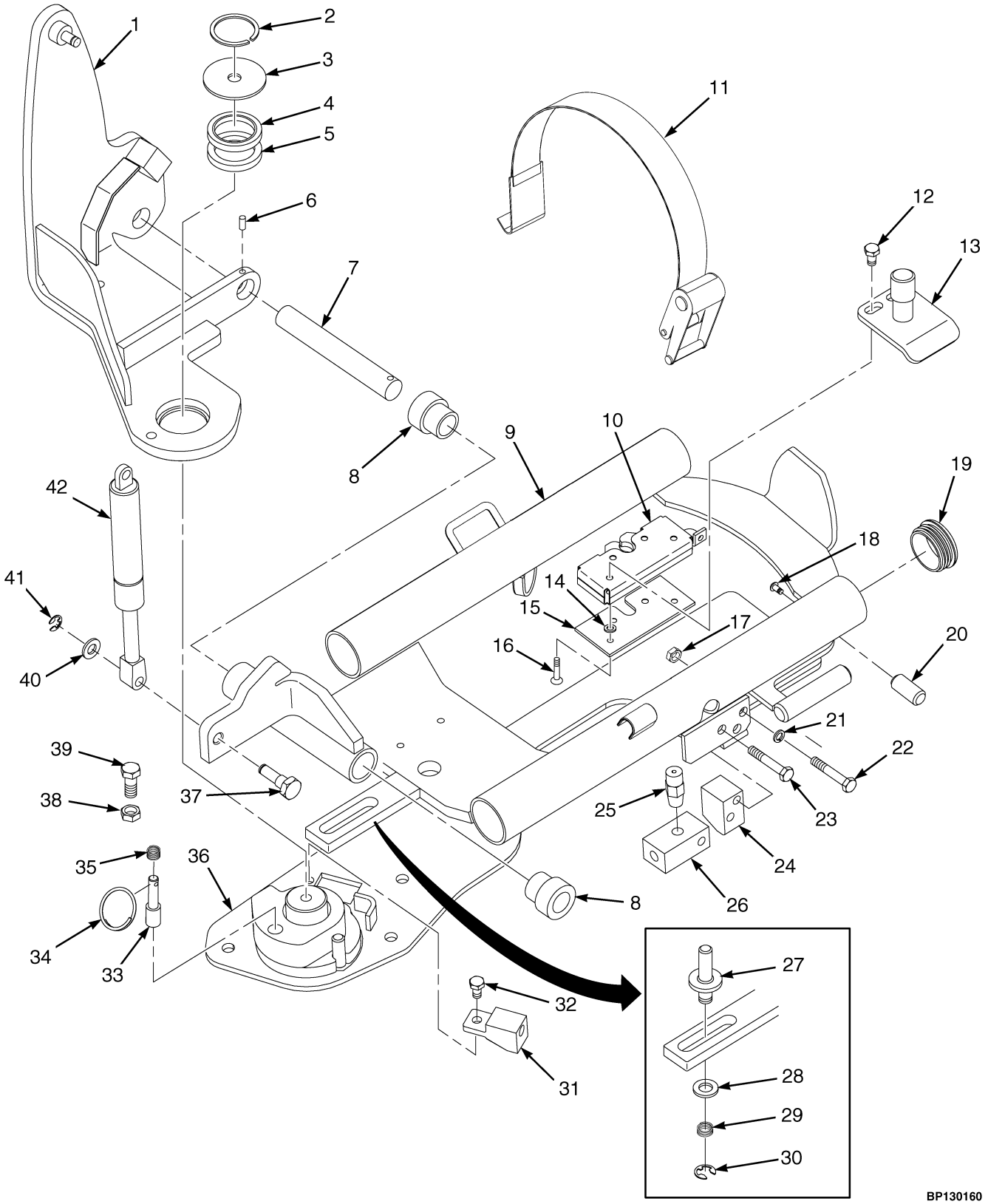

©2006 HYSTER COMPANY

LPG TANK BRACKET
SWING OUT/DROP DOWN
(⇒D/B 09/2006)

ITEM		PART NO.	DESCRIPTION	QTY
	a	1584269	LPG Bracket Assembly	1
	b	1629124	LPG Bracket Assembly	1
1	**a**	1517437	Pivot (Intermediate)	1
1	**b**	1615671	Pivot (Intermediate)	1
2		34507	Snap Ring	1
3		1568839	Washer (Pivot)	1
4		184451	Ball Bearing	2
5		1568853	Washer (Thrust)	1
6		302363	Pin	1
7		1581887	Shaft	1
8		1581888	Bushing	2
9	**a**	1584270	Support	1
9	**b**	1628164	Support	1
10		1517405	Latch	1
11		1379455	Retention Strap	1
12		293612	Capscrew	2
13		1534649	Pin Weldment	1
14		320157	Washer	4
15		1534674	Plate	1
16		1581899	Capscrew	4
16		264134	Sealant	AR
17		1581739	Nut	4
18		296151	Capscrew	1
19		1398099	Plug	4
20		1534677	Pin	1
21		1581898	Washer	1
22		1585835	Capscrew	2
23		1581583	Capscrew	1
23		246108	Sealant	AR
24		1534679	Block (Anti-Rattle)	1
25		101809	Relief Valve	1
25		264134	Sealant	AR
26		1534675	Fitting	1
27		1651119	Pin (Offset)	1
28		1581559	Washer	1
29		1528899	Compression Spring	1
30		182118	Retaining Ring	1
31		1525451	Fitting	1
32		1581579	Capscrew	1
33		1534671	Pin	1
34		1534672	Ring	1
35		1528903	Compression Spring	1
36		1568844	Base	1
37		1525478	Pin	1
38		292656	Nut	1
38		246108	Sealant	AR
39		1586013	Capscrew	1
40		1581557	Washer	2

©2006 HYSTER COMPANY

LPG TANK BRACKET
SWING OUT/DROP DOWN
(⇒D/B 09/2006)

ITEM	PART NO.	DESCRIPTION	QTY
41	1525442	Retaining Ring	2
42	1402414	Gas Spring	1

FOOTNOTES:
a ⇒ PENDING PER ECN 10419402
b PENDING PER ECN 10419402 ⇒

©2006 HYSTER COMPANY

NOTES

LPG TANK BRACKET (Figure 3-10)
SWING OUT/DROP DOWN
(D/B 09/2006⇒)

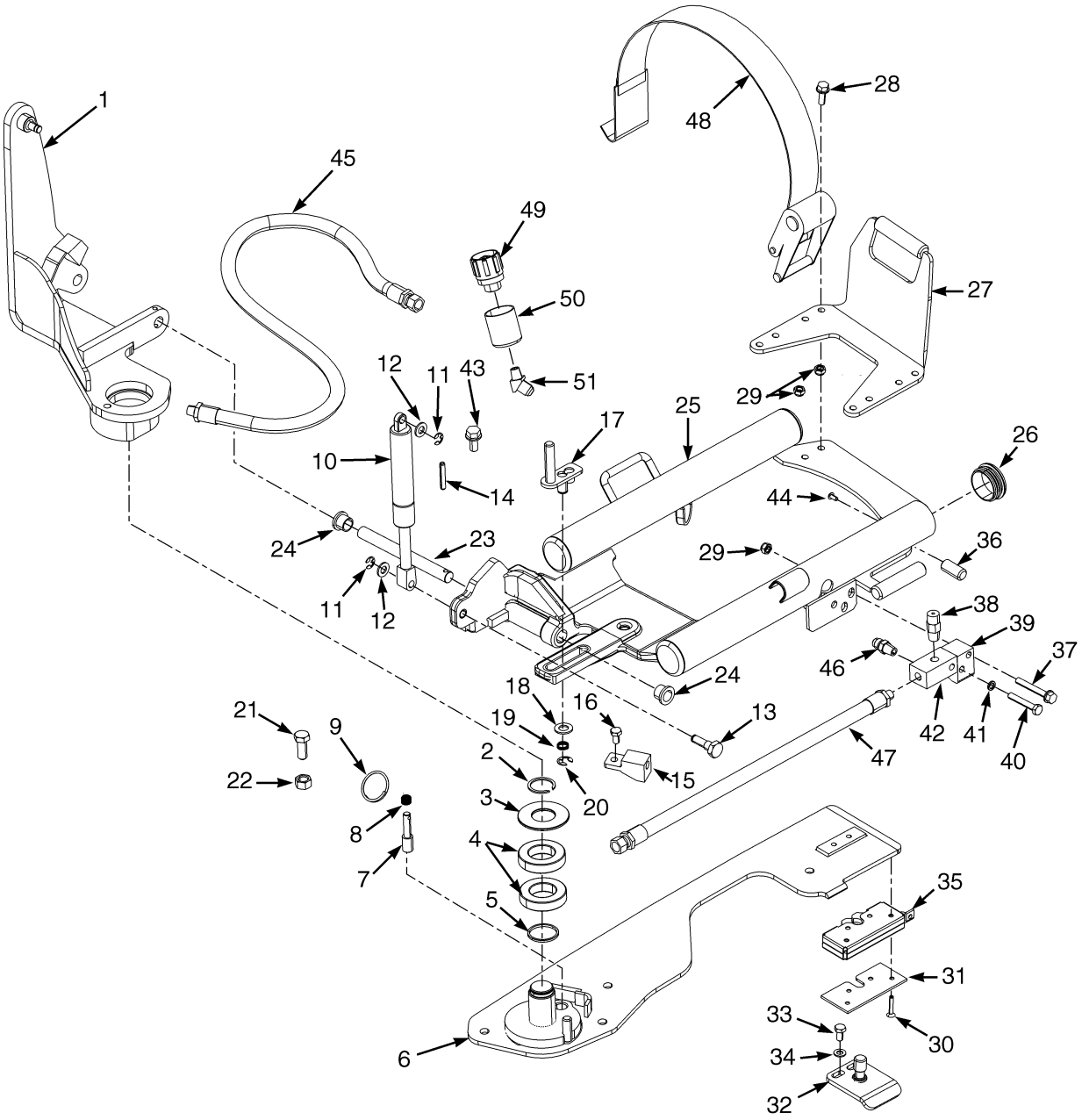

BP130221

©2006 HYSTER COMPANY

LPG TANK BRACKET
SWING OUT/DROP DOWN
(D/B 09/2006⇒)

ITEM	PART NO.	DESCRIPTION	QTY
	1640406	LPG Bracket Assembly	1
1	1615671	Pivot	1
2	34507	Snap Ring	1
3	1568839	Washer (Pivot)	1
4	184451	Ball Bearing	2
5	1568853	Washer	1
6	1568844	Base	1
7	1534671	Pin	1
8	1528903	Compression Spring	1
9	1534672	Ring	1
10	1402414	Gas Spring	1
11	1525442	Retaining Ring	2
12	1581557	Washer	2
13	1525478	Pin	1
14	302468	Pin	1
15	1525451	Fitting	1
16	1581579	Capscrew	1
17	1651119	Pin (Offset)	1
18	1581559	Washer	1
19	1528899	Compression Spring	1
20	182118	Retaining Ring	1
21	1586022	Capscrew	1
22	1581848	Nut	1
23	1581887	Shaft	1
24	1581888	Bushing	2
25	1640178	Tank Support	1
26	1398099	Plug	4
27	1637661	Foot Rest	1
28	1583611	Capscrew	4
29	1581739	Nut	6
30	1581740	Capscew	1
31	1534674	Plate	1
32	1534649	Pin Weldment	1
33	1581885	Capscrew	2
34	1581556	Washer	2
35	1517405	Latch	1
36	1534677	Pin	1
37	101809	Relief Valve	1
38	1585835	Capscrew	1
39	1534679	Block	1
40	1581593	Capscrew	1
41	1581898	Washer	1
42	1534675	Fitting	1
43	1581899	Capscrew	4
44	1586013	Capscrew	4
45	2072298	Hose	1
46	16134	Fitting	1
47	2085908	Hose	1
48	1379455	Retention Strap	1
49	97999	Disconnect	1

©2006 HYSTER COMPANY

LPG TANK BRACKET
SWING OUT/DROP DOWN
(D/B 09/2006⇒)

ITEM		PART NO.	DESCRIPTION	QTY
49	**a**	878758	Fitting	1
50		2071517	Sleeve	1
50	**a**	895603	Fitting	1
51		16863	Fitting	1
51	**a**	16134	Fitting	1

FOOTNOTES:
a For Germany Market, Not illustrated.

©2006 HYSTER COMPANY

NOTES

FUEL SYSTEM (Figure 3-11)
DIESEL

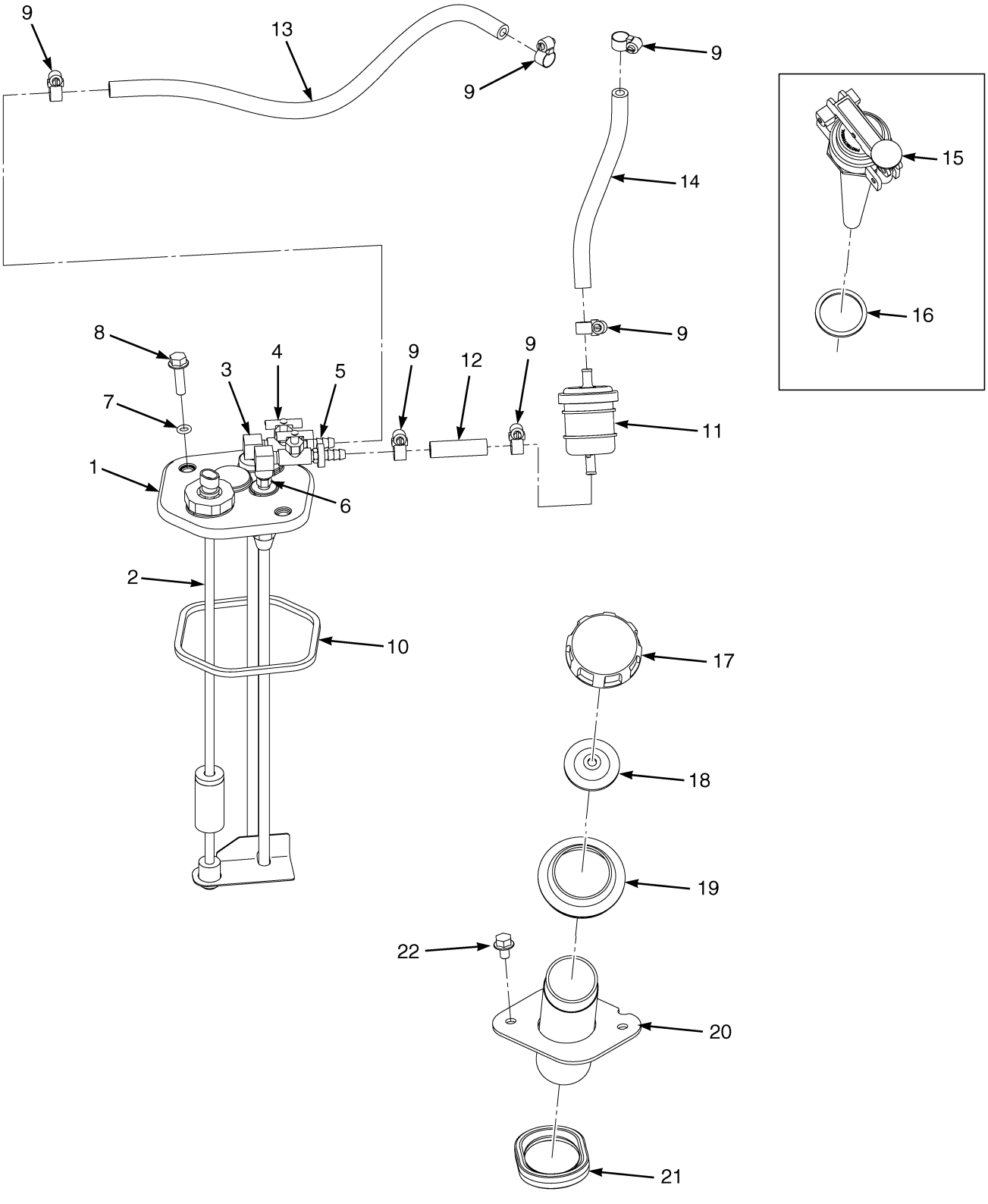

©2006 HYSTER COMPANY

FUEL SYSTEM
DIESEL

ITEM		PART NO.	DESCRIPTION	QTY
1		1532532	Fuel Sender Assembly	1
2		1501811	Fuel Sender	1
3		17650	Fitting	1
4		87446	Valve (Shut-Off)	2
5		309651	Fitting	2
6		16151	Fitting	1
7		353000	O-Ring	2
8		1527881	Capscrew	2
9		168718	Clamp (Worm Screw)	6
10		1528893	Quadrant Ring	1
11		1304950	Fuel Filter	1
12		2081870	Hose	1
13		1551452	Hose	1
14		2062589	Hose	1
15	**a**	1579677	Fuel Cap	1
16	**a**	2021685	Gasket	1
17	**b**	2081840	Fuel Cap	1
18	**b**	2021683	Gasket	1
19		1528608	Grommet	1
20		1564392	Pipe (Fill)	1
21		1528314	Seal	1
22		1529366	Capscrew	2

FOOTNOTES:
a DS Models Only
b Standard Models Only

FUEL FILTER (Figure 3-12)
YANMAR 2.6L DIESEL

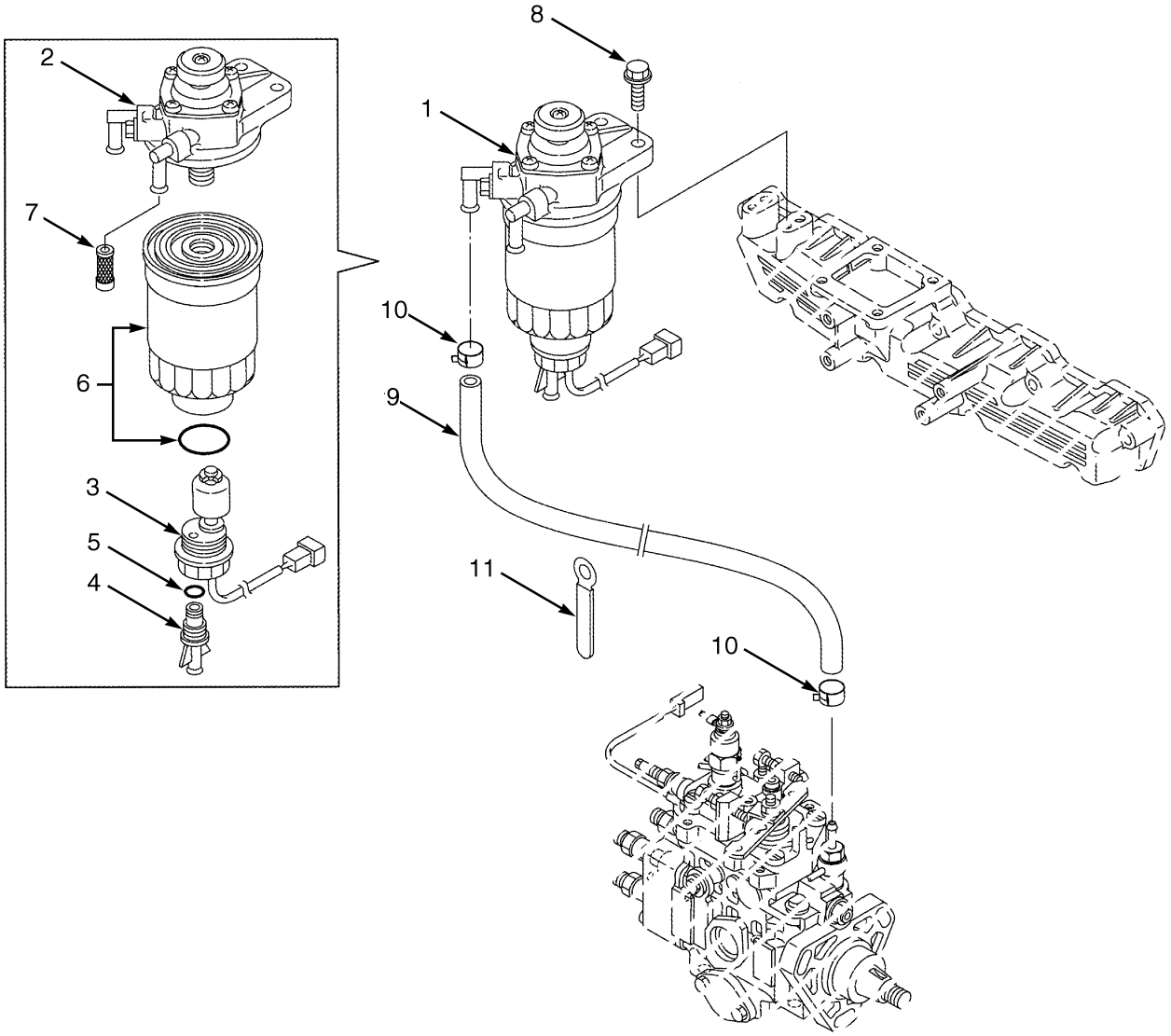

©2006 HYSTER COMPANY

FUEL FILTER
YANMAR 2.6L DIESEL

ITEM	PART NO.	DESCRIPTION	QTY
	1536725	Engine Assembly	1
1	1599833	Fuel Filter Assembly	1
2	1599834	Body	1
3	1599835	Sensor	1
4	1599836	Plug	1
5	1599837	O-Ring	1
6	1330033	Fuel Filter Cartridge	1
7	1599839	Filter	1
8	1599801	Bolt	2
9	1599841	Pipe	1
10	1599842	Clamp	2
11	1599843	Clamp	2

©2006 HYSTER COMPANY

FUEL INJECTION (Figure 3-13)
YANMAR 2.6L DIESEL

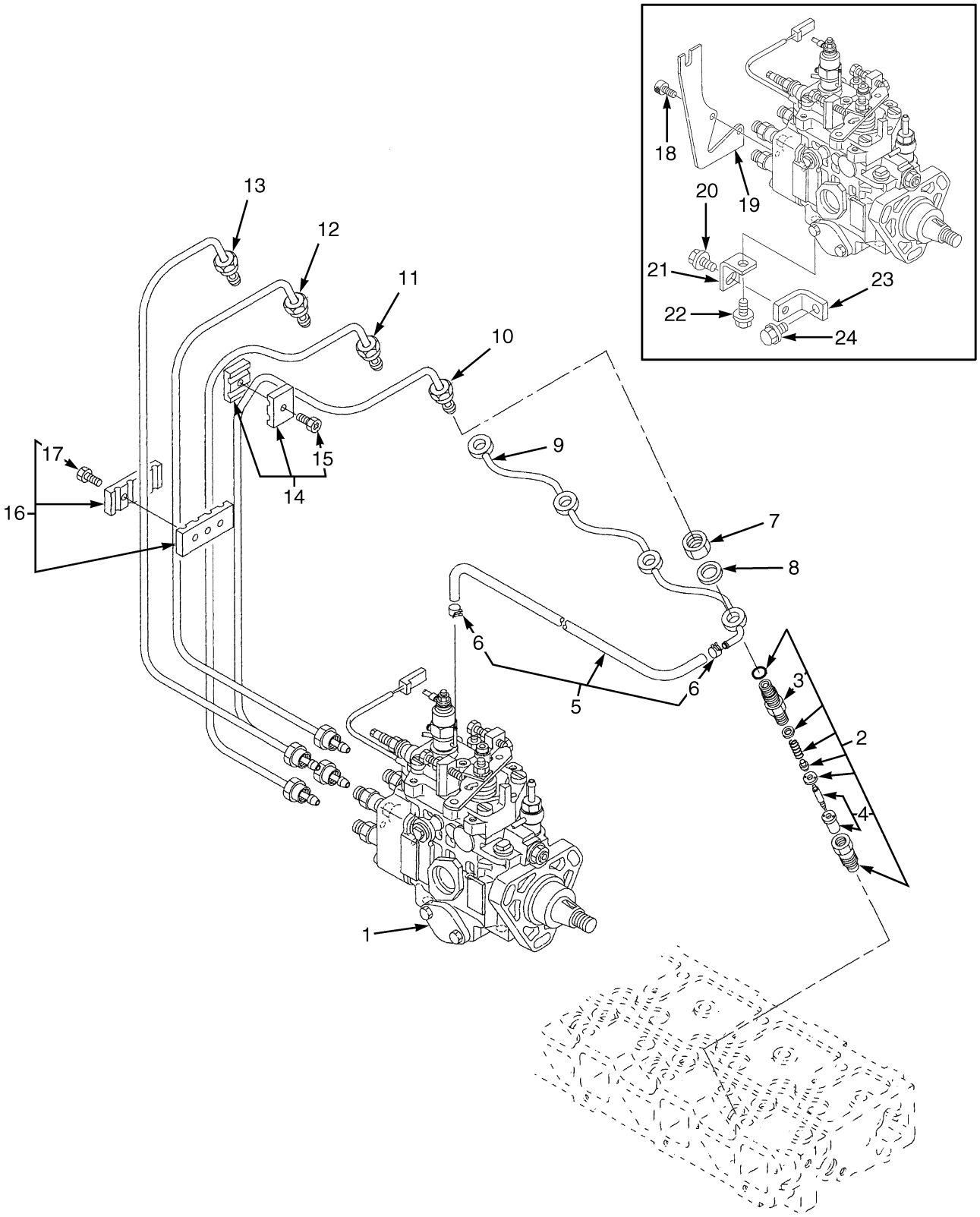

BP090190

©2006 HYSTER COMPANY

FUEL INJECTION
YANMAR 2.6L DIESEL

ITEM	PART NO.	DESCRIPTION	QTY
	1536725	Engine Assembly	1
1	1599914	Injector Pump	4
1	1608616	Solenoid (Fuel Shut-Off)	1
1	1597644	Solenoid Valve (Cold Start)	1
1	1600093	O-Ring	1
2	1599818	Fuel Injector Assembly	1
3	1599820	Retainer	1
4	1599819	Nozzle	1
5	1599828	Pipe	1
6	1599829	Clamp	2
7	1599832	Nut	4
8	1599831	Gasket	4
9	1599830	Pipe (Fuel Return)	1
10	1599827	Pipe (#4)	1
11	1599826	Pipe (#3)	1
12	1599825	Pipe (#2)	1
13	1599824	Pipe (#1)	1
14	1599821	Retainer	2
15	1599822	Bolt	1
16	1599823	Retainer	1
17	1599822	Bolt	2
18	1599908	Bolt	2
19	1599907	Bracket	1
20	1599912	Bolt	1
21	1599909	Retainer	1
22	1599911	Bolt	1
23	1599910	Bracket	1
24	1599913	Bolt	1
	1599898	Gasket Set (Includes Item 8)	1

©2006 HYSTER COMPANY

THROTTLE LINKAGE (Figure 3-14)
MAZDA 2.0L

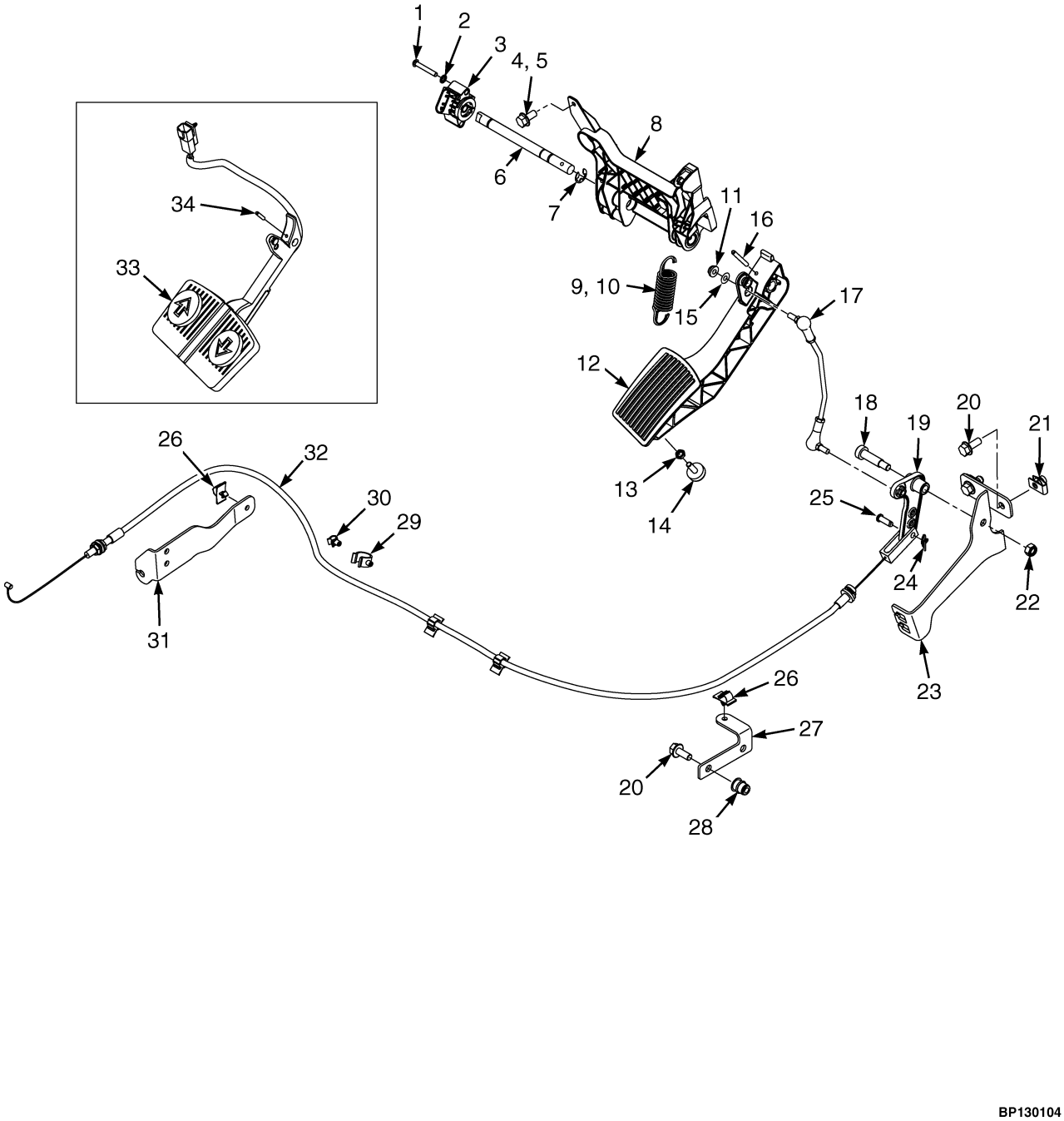

BP130104

©2006 HYSTER COMPANY

THROTTLE LINKAGE
MAZDA 2.0L

ITEM		PART NO.	DESCRIPTION	QTY
1		1564752	Screw	2
2		296378	Washer	2
3		2063842	Throttle Position Sensor	1
4		1527879	Capscrew	3
5		251099	Adhesive	AR
6	**a**	1556962	Shaft	1
6	**b**	1521005	Shaft	1
7		1530971	Retaining Ring	1
8		1538488	Base (Throttle)	1
9		1582303	Spring (Inner)	1
10		1582302	Spring (Outer)	1
11		1514429	Nut (Flange)	2
12		2071181	Pedal (Standard)	1
13		329069	Nut	1
14		1530311	Screw (Stop)	1
15		320156	Washer	2
16		302443	Pin	1
17		1538782	Push Rod Assembly	1
17		1538490	Pushrod	1
17		2308541	Jam Nut	2
17		2027949	Joint Ball	2
18		1399802	Bolt	1
19		1538162	Bellcrank	1
20		1527880	Capscrew	4
21		1480237	Clip Nut	2
22		302400	Locknut	1
23		1609374	Bracket (Throttle Cable)	1
24		1517361	Lock Ring	1
25		126	Rod End Pin	1
26		1562088	Clip	4
27		1542082	Bracket (RH Frame)	1
28		1530243	Insert	2
29		1543691	Clamp (Swivel)	1
30		1542440	Clamp (Swivel)	1
31		1569544	Bracket (Engine)	1
32		2067391	Throttle Cable	1
33		1608412	Monotrol Pedal Assembly (☞ Figure 3-17)	1
33		1340470	Pad	1
34		302437	Roll Pin (Monotrol Pedal)	1

FOOTNOTES:
a ⇒ D/B 09/2005
b D/B 09/2005 ⇒

©2006 HYSTER COMPANY

THROTTLE CABLE LINKAGE (Figure 3-15)
YANMAR DIESEL

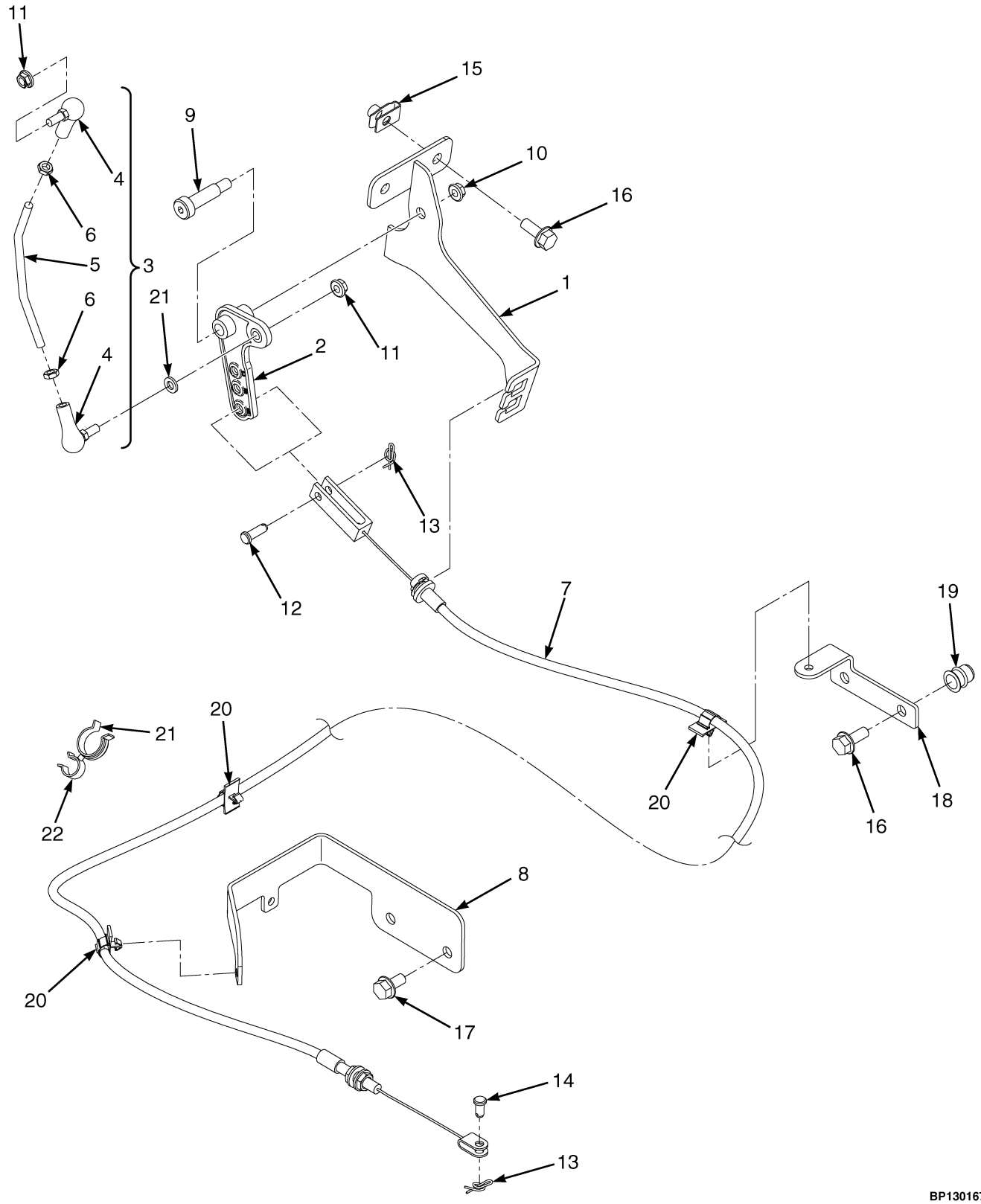

©2006 HYSTER COMPANY

THROTTLE CABLE LINKAGE
YANMAR DIESEL

ITEM	PART NO.	DESCRIPTION	QTY
1	1609374	Bracket (Throttle Cable)	1
2	1538162	Bellcrank	1
3	1538782	Push Rod Assembly	1
4	2027949	Joint Ball	2
5	1538490	Pushrod	1
6	2308541	Jam Nut	2
7	2067396	Throttle Cable	1
8	1542500	Bracket	1
9	1399802	Bolt	1
10	302400	Locknut	1
11	1514429	Nut (Flange)	2
12	126	Rod End Pin	1
13	1517361	Lock Ring	2
14	128263	Pin	1
15	1480237	Clip Nut	2
16	1527880	Capscrew	4
17	1527879	Capscrew	2
18	1542082	Bracket	1
19	1530243	Insert	2
20	1562088	Clip	3
21	1542440	Clamp (Swivel)	1
22	1543691	Clamp (Swivel)	1

©2006 HYSTER COMPANY

ELECTRONIC THROTTLE LINKAGE (Figure 3-16)
YANMAR DIESEL

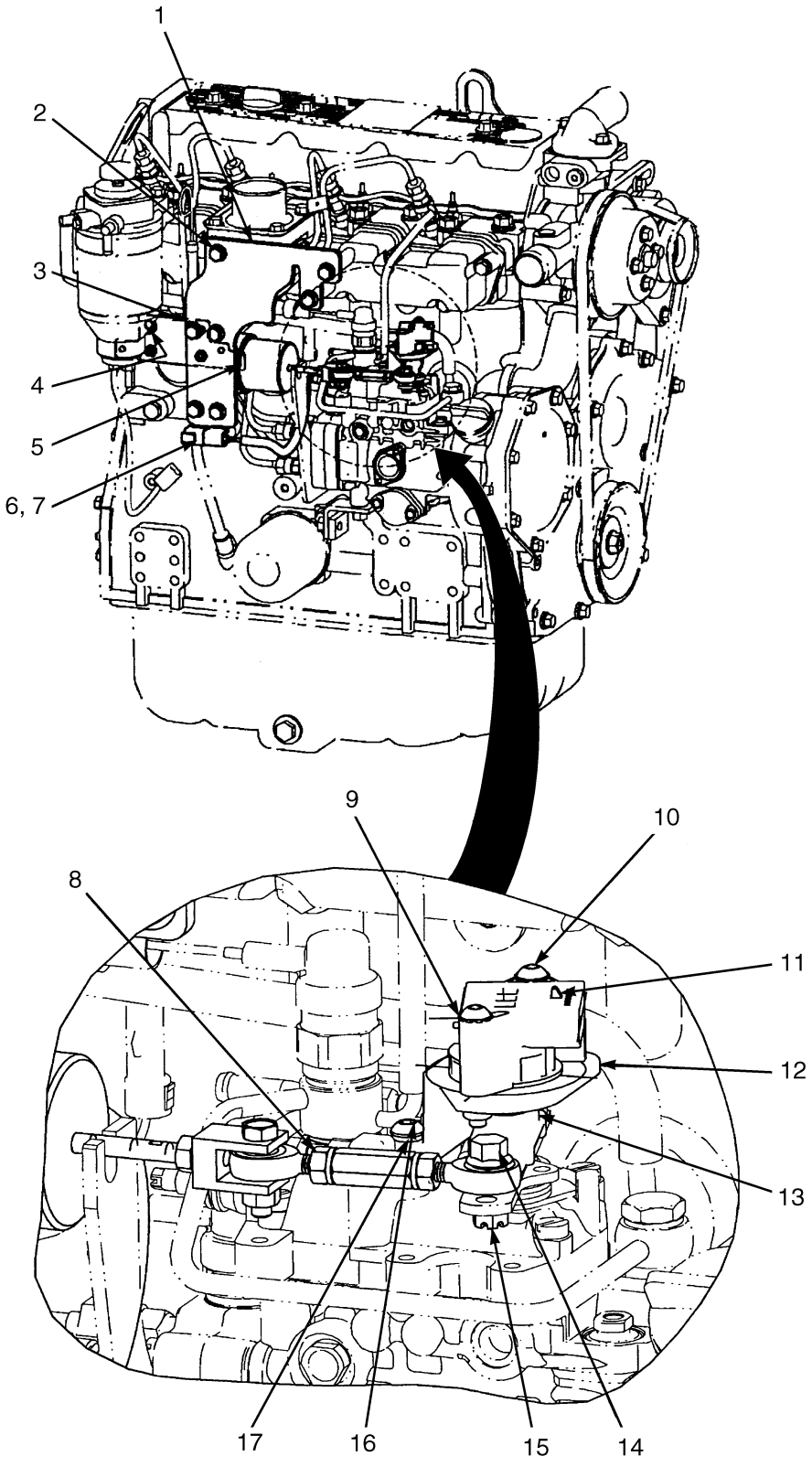

BP130157

©2006 HYSTER COMPANY

ELECTRONIC THROTTLE LINKAGE
YANMAR DIESEL

ITEM	PART NO.	DESCRIPTION	QTY
1	1547550	Bracket (Actuator)	1
2	1527880	Capscrew	7
3	1502543	Nut (Flange)	4
4	293774	Capscrew	2
5	1542772	Actuator (Pull)	1
6	1344124	Fastener	1
7	1500912	Clip	1
8	1542773	Electronic Throttle Linkage Assembly	1
9	296378	Washer	2
10	1553897	Capscrew	2
11	2063842	Throttle Position Sensor	1
12	1616491	Bracket	1
13	2078335	Rotor	1
14	1527877	Capscrew	1
15	313805	Nut	1
16	296158	Capscrew	2
17	293779	Lockwasher	2

©2006 HYSTER COMPANY

MONOTROL PEDAL (Figure 3-17)

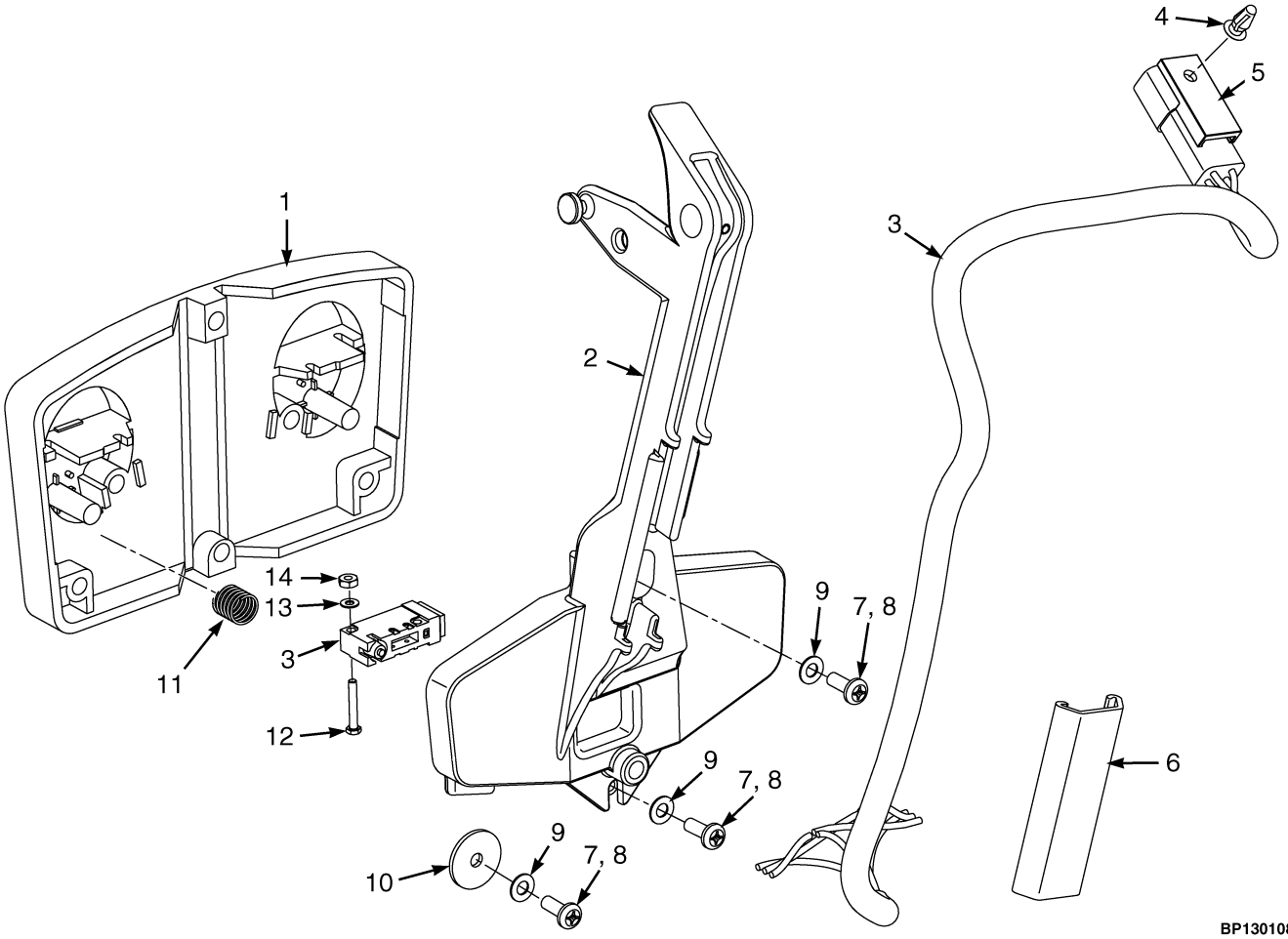

ITEM	PART NO.	DESCRIPTION	QTY
	1608412	Monotrol Pedal Assembly	1
1	1340470	Pad	1
2	2074702	Pedal	1
3	2072782	Wire Harness	1
3	. . . . .	Switch	1
3	. . . . .	Switch	1
3	1489655	Connector (4 Way)	1
3	1330416	Secondary Lock	1
3	1531312	Terminal	4
4	1564526	Clip	1
5	1500912	Clip	1
6	1539418	Clip	1
7	16708	Screw	4
8	360387	Sealant	AR
9	15931	Lockwasher	4
10	362036	Washer	2
11	325699	Spring	2
12	220428	Capscrew	4
13	53162	Lockwasher	4
14	16865	Nut	4

©2006 HYSTER COMPANY

4 ELECTRICAL SYSTEM

SECTION 4
ELECTRICAL SYSTEM

DESCRIPTION **PAGE**

ALTERNATOR AND MOUNTING
YANMAR 2.6L DIESEL 4-37
COWL ELECTRICAL 4-18
DISTRIBUTER
MAZDA 2.0L 4-36
ELECTRICAL SYSTEM
CHASSIS 4-4
ENGINE ELECTRICAL COMPONENTS
MAZDA 2.0L 4-8
ENGINE ELECTRICAL SYSTEM
MAZDA 2.0L
LPG 4-10
YANMAR 2.6L DIESEL 4-14
IMPACT SENSOR 4-6
INSTRUMENT CLUSTER 4-22
JOY STICK AND ELECTRONIC CONTROL LEVERS 4-24
LOAD WEIGH ELECTRICAL 4-34
MAST ELECTRICAL
TILT SENSOR 4-32
POWER DISTRIBUTION MODULE
PENDING PER ECN 10419489⇒ 4-21
⇒PENDING PER ECN 10419489 4-20
TRANSMISSION ELECTRICAL SYSTEM 4-30
WIRE HARNESS
CHASSIS
MAZDA 2.0L
D/B 08/2006⇒ 4-44
⇒D/B 08/2006 4-38
YANMAR 2.6L DIESEL
D/B 08/2006⇒ 4-56
YANMAR DIESEL 2.6L
⇒D/B 08/2006 4-50
COWL WITH FORWARD/REVERSE LEVER
WITHOUT RETURN TO SET TILT 4-66
COWL WITH MONOTROL PEDAL
WITH RETURN TO SET TILT 4-62
DIESEL ENGINE
YANMAR 2.6L
D/B 08/2006⇒ 4-76
⇒D/B 08/2006 4-74
ELECTRONIC CONTROL VALVE
3 FUNCTION 4-78
4 FUNCTION 4-80
LIGHTS
PENDING PER ECN 10419449⇒ 4-88
⇒PENDING PER ECN 10419449 4-86
LPG ENGINE
MAZDA 2.0L
D/B 08/2006⇒ 4-72
⇒D/B 08/2006 4-70

©2006 HYSTER COMPANY

SECTION 4
ELECTRICAL SYSTEM (Continued)

DESCRIPTION **PAGE**

TRANSMISSION
SINGLE SPEED
D/B 08/2006⇒ 4-84
⇒D/B 08/2006 4-82
WORK, REAR DRIVE, AND BRAKE/TAIL LIGHTS 4-28

©2006 HYSTER COMPANY

NOTES

ELECTRICAL SYSTEM (Figure 4-1)
CHASSIS

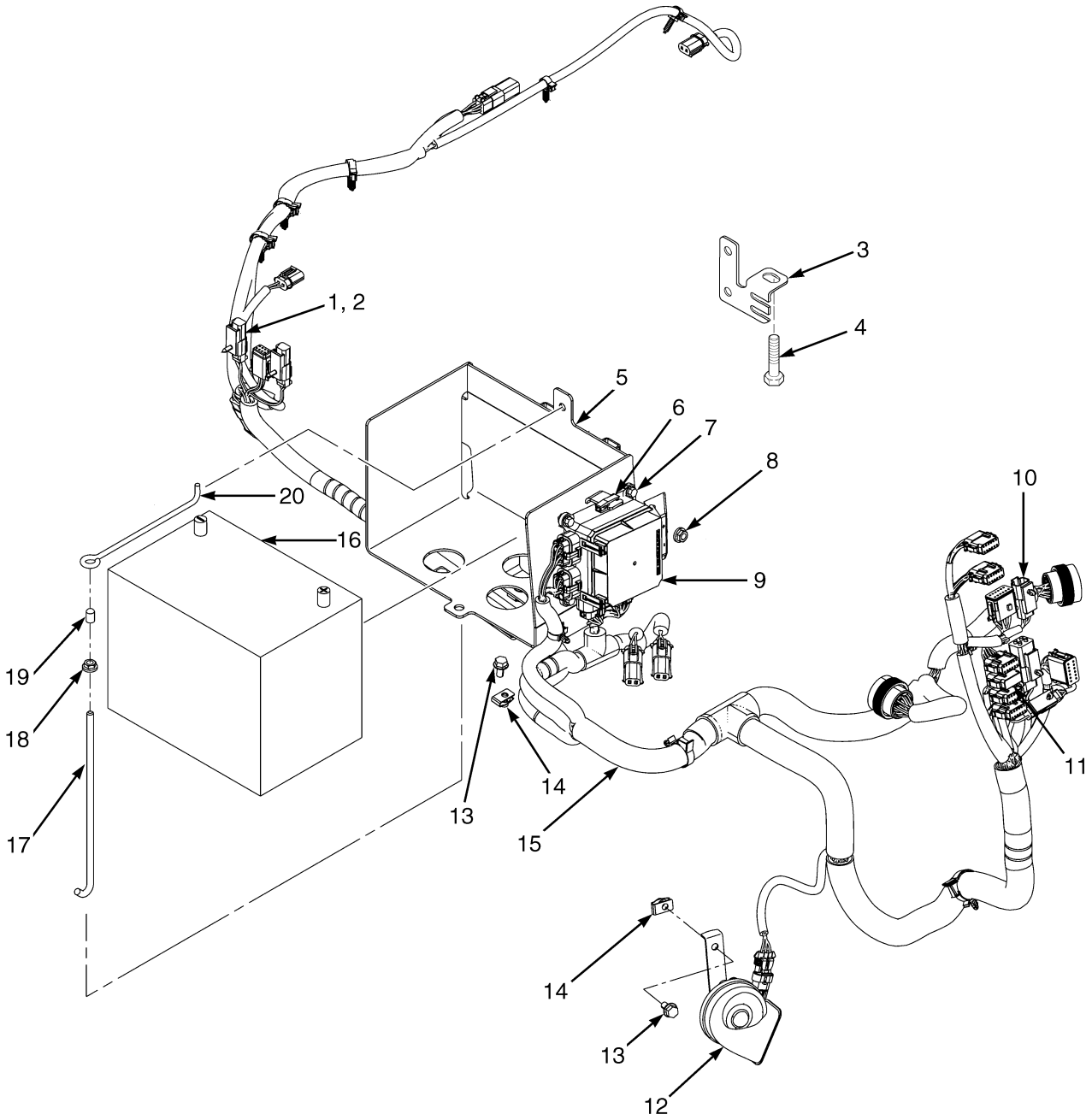

©2006 HYSTER COMPANY

ELECTRICAL SYSTEM
CHASSIS

ITEM		PART NO.	DESCRIPTION	QTY
1		1582464	Fastener	6
2		1582442	Clip	1
3	**c**	1585436	Bracket	1
3	**d**	1617080	Bracket (Hood Switch)	1
4		1529366	Capscrew	1
5		1616981	Battery Tray	1
6		1402883	Fuse Puller	1
7		1534417	Capscrew	4
8		1502543	Nut (Flange)	1
9	**b**	2063093	Power Distribution Module (☞ Figure 4-7)	1
9	**a**	2090613	Power Distribution Module (☞ Figure 4-8)	1
9		1559928	Seal	1
10		1500912	Clip	6
11		1593331	Connector (Mazda Only)	1
12		1527264	Horn	1
13		1527879	Capscrew	4
14		1480237	Clip Nut	4
15	**c**	2075026	Wire Harness (RH Chassis) (Mazda 2.0L) (☞ Figure 4-17)	1
15	**d**	2085948	Wire Harness (RH Chassis) (Mazda 2.0L) (☞ Figure 4-18)	1
15	**c**	2074736	Wire Harness (Chassis) (Yanmar 2.6L Diesel) (☞ Figure 4-19)	1
15	**d**	2085950	Wire Harness (Chassis) (Yanmar 2.6L Diesel) (☞ Figure 4-20)	1
16		1383331	Battery (Wet)	1
17		2065745	Link (Battery Hold Down)	1
18		1502543	Nut (Flange)	1
19		1540805	Cap	1
20		1638706	Link (Battery Hold Down)	1

FOOTNOTES:

a PENDING PER ECN 104019489 ⇒

b ⇒ PENDING PER ECN 10419489

c ⇒ D/B 08/2006

d D/B 08/2006 ⇒

©2006 HYSTER COMPANY

IMPACT SENSOR (Figure 4-2)

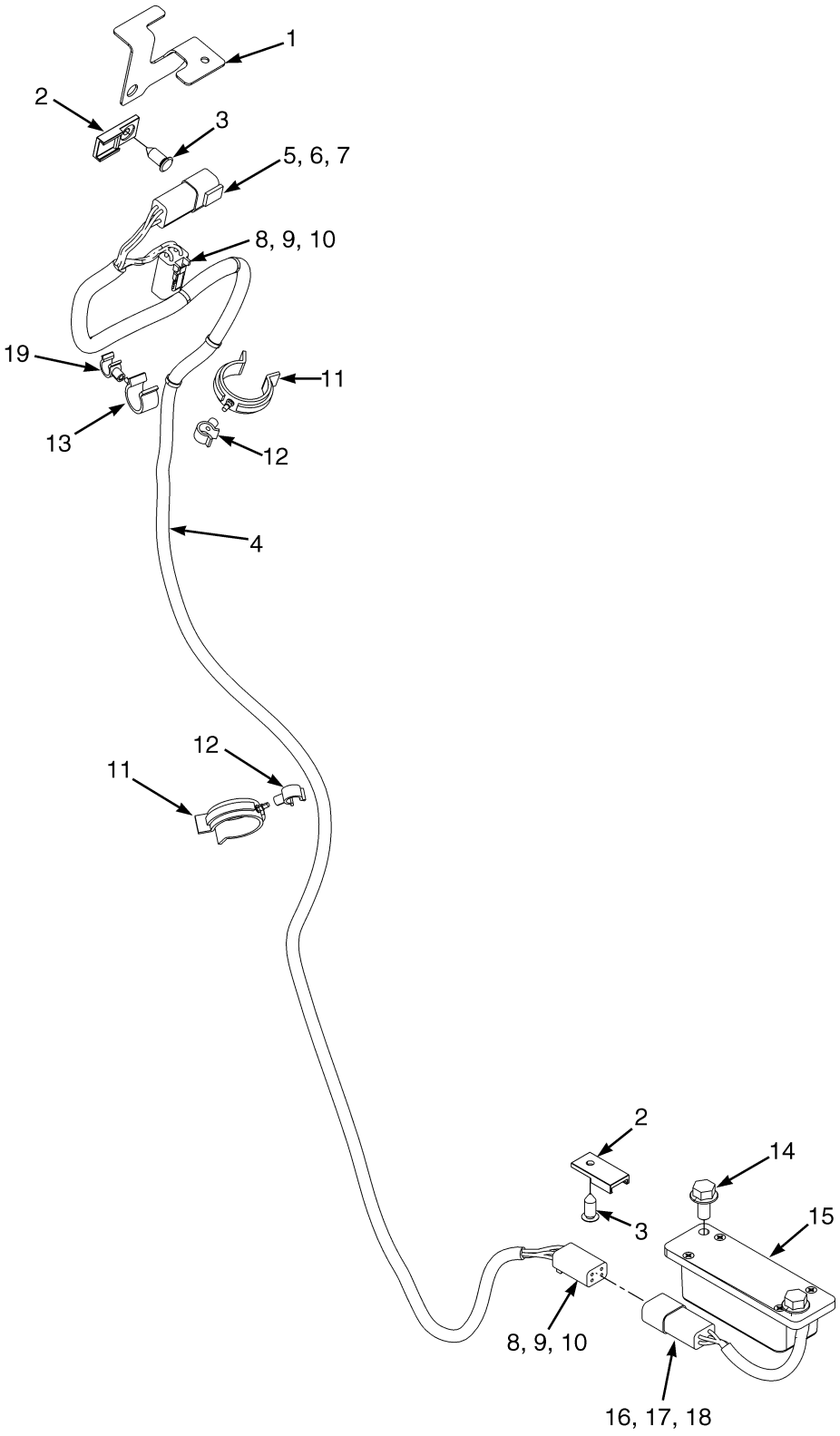

BP080394

©2006 HYSTER COMPANY

IMPACT SENSOR

ITEM	PART NO.	DESCRIPTION	QTY
1	1535166	Bracket	1
2	1500912	Clip	2
3	1582464	Fastener	2
4	2079281	Wire Harness (Impact Sensor)	1
5	1489655	Connector (4 Way)	1
6	1330416	Secondary Lock	1
7	1330437	Terminal (Pin)	4
8	1489656	Connector (4-Way)	2
9	1489657	Secondary Lock	2
10	1330438	Terminal (Socket)	8
11	1561759	Clamp (Swivel)	2
12	1542439	Clamp	2
13	1502055	Clamp	1
14	1527879	Capscrew	2
15	2079843	Impact Sensor	1
16	1489655	Connector (4 Way)	1
17	1330416	Secondary Lock	1
18	1330433	Pin	4
19	1502053	Clamp	1

©2006 HYSTER COMPANY

ENGINE ELECTRICAL COMPONENTS (Figure 4-3)
MAZDA 2.0L

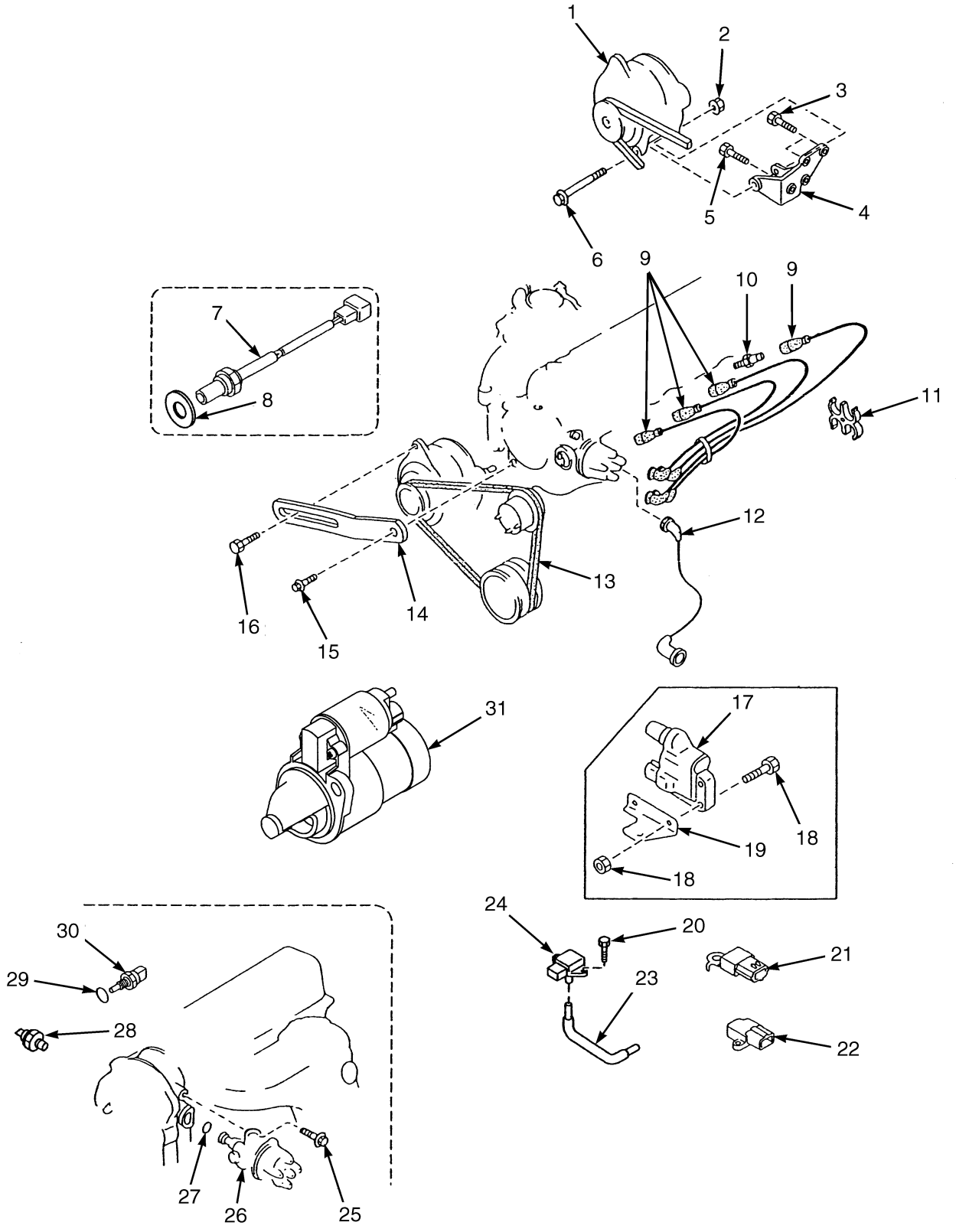

BP090180

©2006 HYSTER COMPANY

ENGINE ELECTRICAL COMPONENTS
MAZDA 2.0L

ITEM	PART NO.	DESCRIPTION	QTY
1	1450928	Alternator	1
2	1361890	Nut	1
3	1361891	Bolt	3
4	1361846	Bracket	1
5	1361888	Bolt	1
6	1368844	Bolt	1
7	1556342	Sensor (Oxygen)	1
8	1368886	Washer	1
9	1362113	Ignition Cable Set	1
9	1361840	Cable (Spark Plug)	1
9	1361841	Cable (Spark Plug)	1
9	1361842	Cable (Spark Plug)	1
9	1361843	Cable (Spark Plug)	1
10	1361837	Spark Plug	4
11	1361838	Support	1
12	1553984	Coil Wire	1
13	1368841	V-Belt	1
14	1361845	Strap	1
15	1361881	Bolt	1
16	326898	Bolt	1
17	1527571	Ignition Coil	1
18	1553997	Screw Set	1
19	1553996	Bracket	1
20	1582324	Screw	2
21	1545443	Condenser	1
22	1545444	Igniter	1
23	1495413	Hose	1
24	1548352	MAP Sensor	1
25	1361895	Bolt	1
26	1554030	Distributor (☞ Figure 4-15)	1
27	1553985	O-Ring	1
28	2026608	Oil Pressure Switch	1
29	1368743	Washer	1
30	1539962	Sensor (Air Temperature)	1
31	1534424	Starter	1
	1499666	Gauge (Heat) (Not Illustrated)	1

©2006 HYSTER COMPANY

ENGINE ELECTRICAL SYSTEM (Figure 4-4)
MAZDA 2.0L
LPG

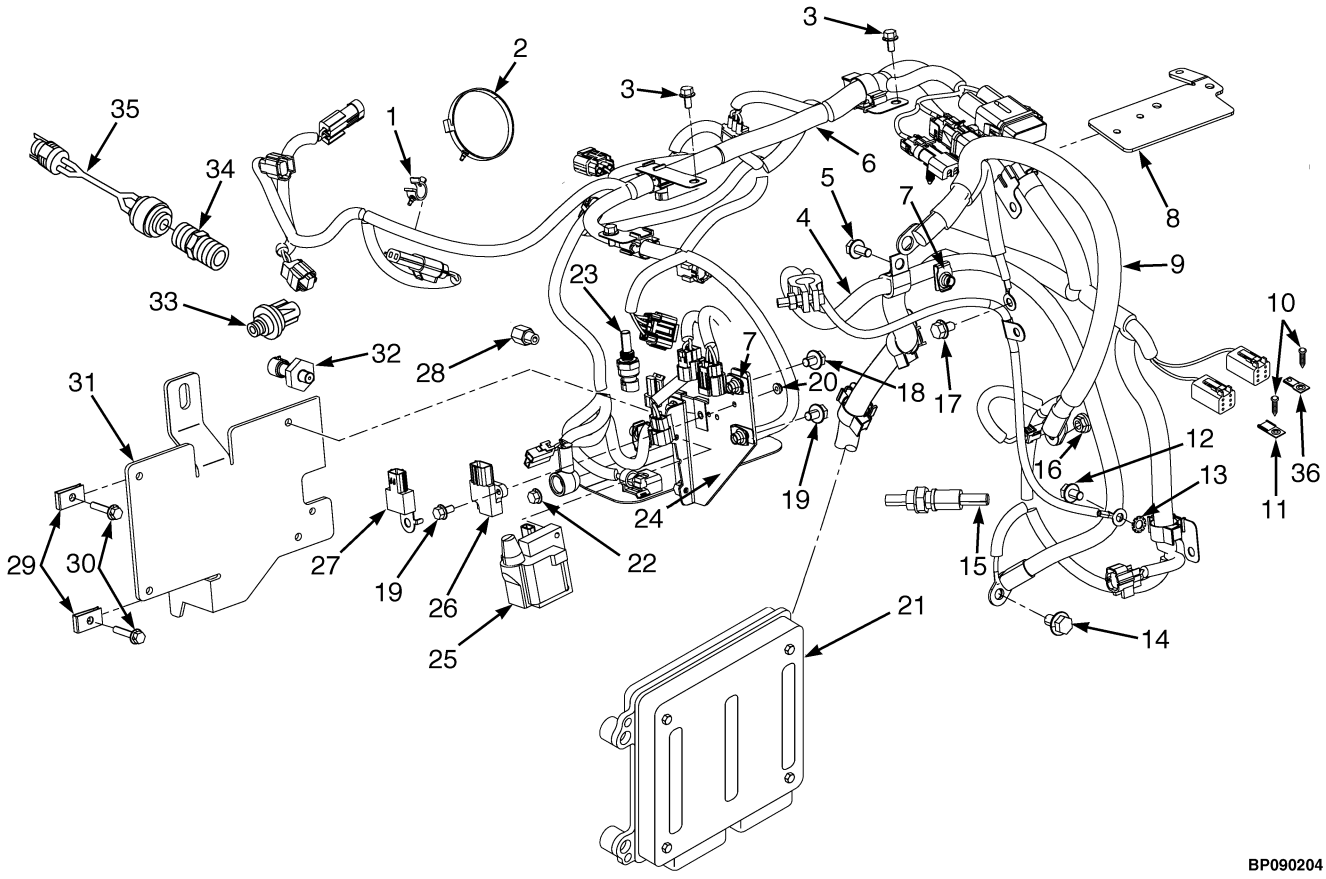

©2006 HYSTER COMPANY

ENGINE ELECTRICAL SYSTEM
MAZDA 2.0L
LPG

ITEM		PART NO.	DESCRIPTION	QTY
1		1542439	Clamp	1
2		1502061	Clamp	1
3		1534417	Capscrew	9
4		2069225	Battery Cable (Negative)	1
4		148789	Terminal	1
4		1564044	Fitting	1
4		806426	Terminal	1
5		1527879	Capscrew	3
6	**a**	2065855	Wire Harness (LPG Engine) (☞ Figure 4-23)	1
6	**b**	2087189	Wire Harness (LPG Engine) (☞ Figure 4-24)	1
7		1480237	Clip Nut	4
8		1560121	Bracket	1
9		2061383	Battery Cable (Positive)	1
9		148792	Terminal	1
9		16079	Terminal	1
9		806426	Terminal	1
9		1536304	Boot	1
9		1560091	Boot	1
10	**a**	1539085	Nut (Not Illustrated)	1
10	**b**	1582464	Fastener	2
11	**a**	1539086	Lockwasher (Not Illustrated)	1
11	**b**	1500912	Clip	1
12		1529366	Capscrew	1
13		296380	Lockwasher	1
14		1556623	Bolt	1
15		1556342	Sensor (Oxygen)	1
16		1502543	Nut (Flange)	1
17		1529366	Capscrew	1
18		1527879	Capscrew	4
19		296150	Capscrew	2
20		1549398	Nut	2
21		2068062	Engine Control Unit	1
22		1514429	Nut (Flange)	1
23		1566654	Sender (Oil Pressure)	1
24		1556838	Plate	1
25		1527571	Ignition Coil	1
26		1545444	Igniter	1
27		1545443	Condenser	1
28		367224	Adapter	1
29		325182	Nut	9
30		1586495	Capscrew	4
31		1581526	Formed Bracket (Engine Control)	1
32		1515654	Sensor (Coolant Temperature)	1
33		1501970	Switch (Low Pressure)	1
34		141259	Fitting	1

©2006 HYSTER COMPANY

ENGINE ELECTRICAL SYSTEM
MAZDA 2.0L
LPG

ITEM		PART NO.	DESCRIPTION	QTY
35		1529257	Sensor (Air Flow Restriction)	1
36	**b**	1531480	Clip	1

FOOTNOTES:
a ⇒ D/B 08/2006
b D/B 08/2006 ⇒

©2006 HYSTER COMPANY

NOTES

ENGINE ELECTRICAL SYSTEM (Figure 4-5)
YANMAR 2.6L DIESEL

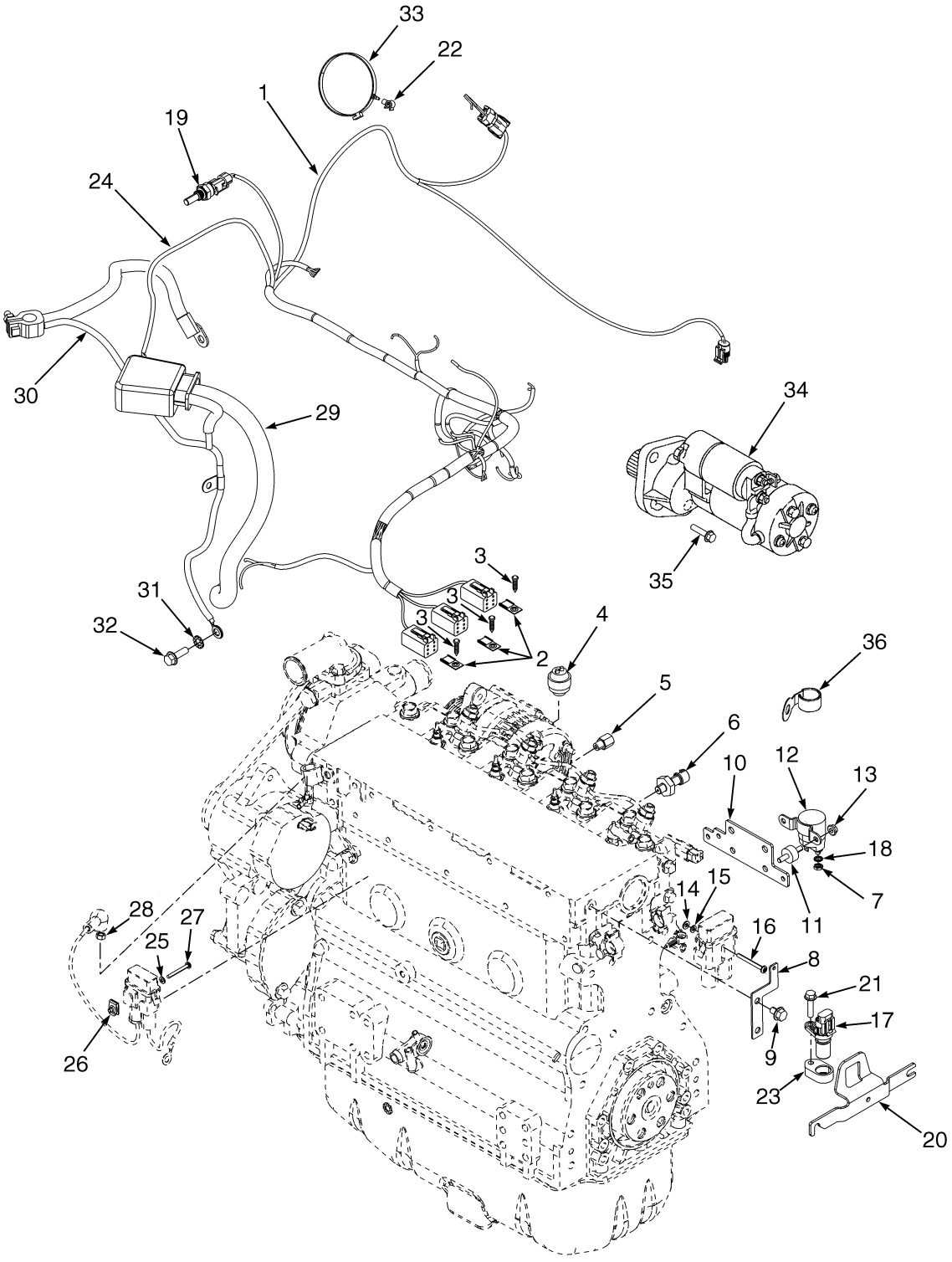

HP081653

©2006 HYSTER COMPANY

ENGINE ELECTRICAL SYSTEM
YANMAR 2.6L DIESEL

ITEM		PART NO.	DESCRIPTION	QTY
1	**a**	2060844	Wire Harness (Engine) (☞ Figure 4-25)	1
1	**b**	2087191	Wire Harness (Engine) (☞ Figure 4-26)	1
2	**a**	1539086	Lockwasher (Not Illustrated)	1
2	**b**	1500912	Clip	3
3	**a**	1539085	Nut (Not Illustrated)	1
3	**b**	1582464	Fastener	3
4		1529257	Sensor (Air Flow Restriction)	1
5		367224	Adapter	1
6		1566654	Sender (Oil Pressure)	1
7		1560678	Nut	2
8		1582150	Bracket	1
9		1529366	Capscrew	2
10		1582151	Bracket	1
11		1527562	Isolation Mount	2
12		1454967	Relay	1
13		1514429	Nut (Flange)	2
14		320152	Washer	1
15		292676	Lockwasher	1
16		302015	Screw	1
17		1541231	Speed Sensor (Engine RPM)	1
17		296379	Washer	2
19		1515654	Sensor (Coolant Temperature)	1
20		1594055	Bracket	1
21		1527878	Capscrew	1
22		1542439	Clamp	1
23		1591454	Bracket	1
24		2065098	Wire Harness (Alternator)	1
24		1454860	Connector	1
24		1566145	Terminal	1
24		1560015	Terminal	1
24		1454829	Fuse (60 Amp)	1
24		1454862	Cover (With Seal)	1
24		1566146	Boot	1
24		1454827	Seal	2
24		1454828	Terminal	2
25		320154	Washer	1
26		1537551	Clip Nut	1
27		302027	Screw	1
28		136687	Nut	1
29		2066344	Battery Cable (Positive)	1
29		148792	Terminal	1
29		16079	Terminal	1
29		806426	Terminal	1
29		1560091	Boot	1
29		1536304	Boot	1
30		2069226	Battery Cable (Negative)	1
30		148789	Terminal	1
30		16079	Terminal	1
30		1564044	Fitting	1
30		128408	Clamp	1
30		806426	Terminal	1

©2006 HYSTER COMPANY

ENGINE ELECTRICAL SYSTEM
YANMAR 2.6L DIESEL

ITEM	PART NO.	DESCRIPTION	QTY
31	296380	Lockwasher	1
32	1529366	Capscrew	2
33	1502061	Clamp	1
34	1599845	Starter	1
34	1599847	Ball Bearing	1
34	1599848	Ball Bearing	1
34	1599850	Screw	4
34	1599851	Brush	2
34	1599853	Spring	4
34	1599860	Pinion	1
34	1599867	Housing	1
35	1528889	Capscrew	1
36	1599843	Clamp	2

FOOTNOTES:
a ⇒ D/B 08/2006
b D/B 08/2006 ⇒

©2006 HYSTER COMPANY

NOTES

COWL ELECTRICAL (Figure 4-6)

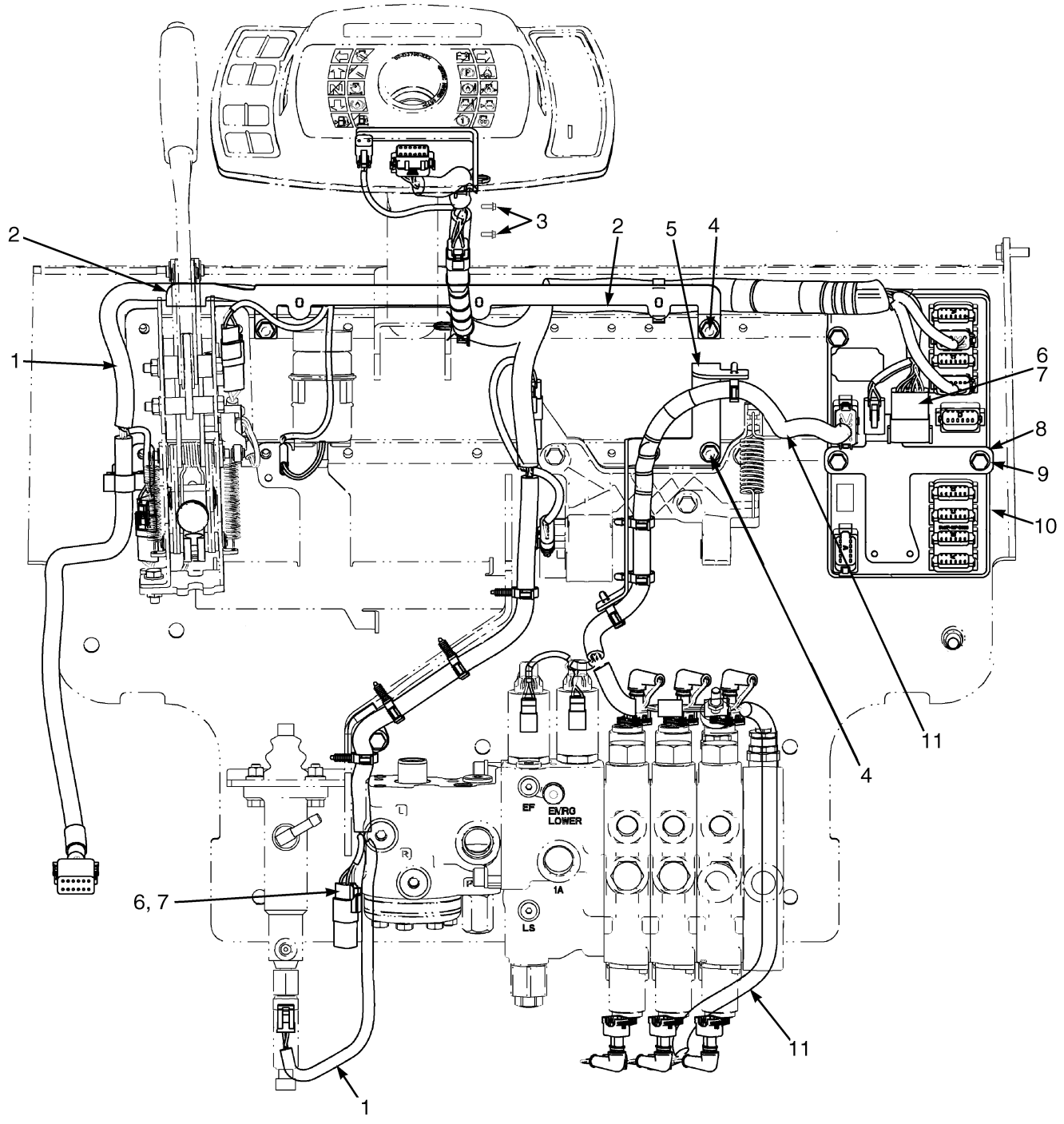

©2006 HYSTER COMPANY

COWL ELECTRICAL

ITEM		PART NO.	DESCRIPTION	QTY
1		2070269	Wire Harness (Cowl) (☞ Figure 4-21)	1
2		1600190	Bracket	1
3		1554902	Screw	2
4		1529366	Capscrew	2
5		1531975	Bracket	1
6		1500912	Clip	3
7		1582464	Fastener	3
8		1582465	Bracket	1
9		1510115	Capscrew	3
10	**e**	2068342	Vehicle System Manager (VSM) -8525419	1
10	**d**	2068343	Vehicle System Manager (VSM) -8525420	1
11	**a**	2058909	Wire Harness (Electronic Control Valve) (☞ Figure 4-28)	1
11	**c**	2060198	Wire Harness (Electronic Control Valve) (☞ Figure 4-27)	1
12	**b**	1563841	Connector (12 Pin)	1

FOOTNOTES:
a Four Function
b Not Illustrated
c Three Function
d With Electronic Hydraulics
e Without Electronic Hydraulics

©2006 HYSTER COMPANY

POWER DISTRIBUTION MODULE (Figure 4-7)
(⇒PENDING PER ECN 10419489)

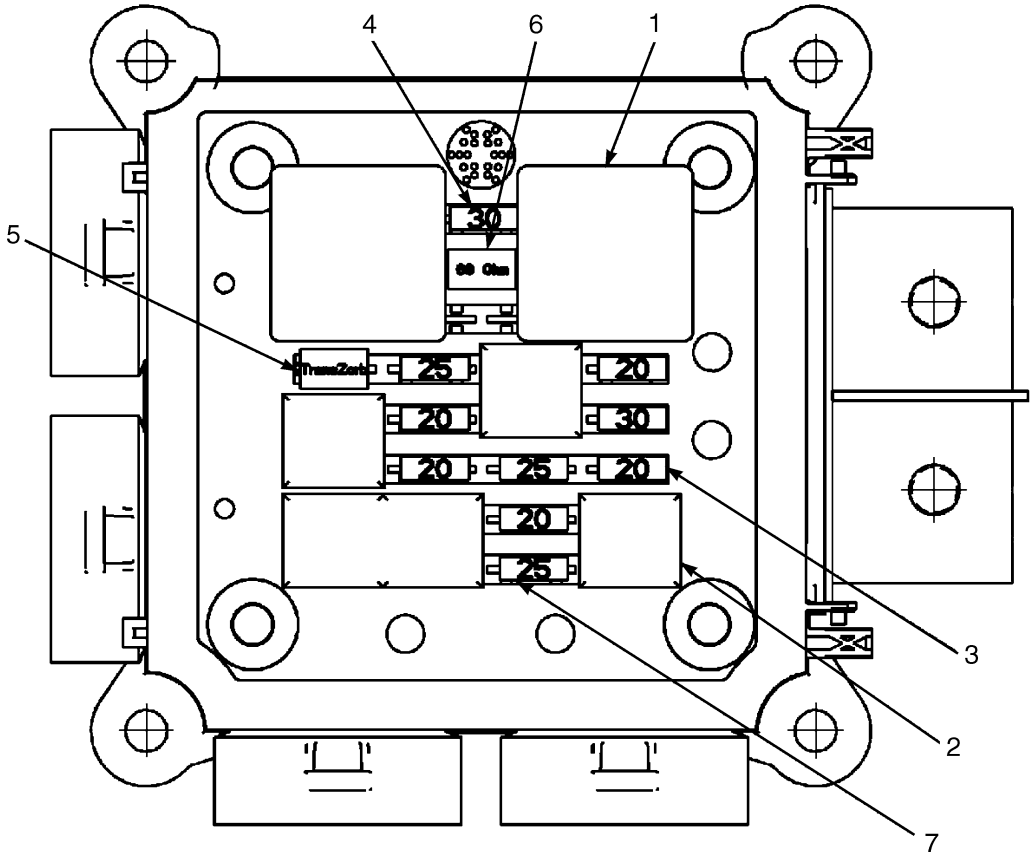

BP080278

ITEM	PART NO.	DESCRIPTION	QTY
	2063093	Power Distribution Module	1
1	2044712	Relay (30 Amp)	2
2	1528315	Relay (20 Amp)	5
3	1528132	Fuse (20 Amp)	5
4	1528133	Fuse (30 Amp)	2
5	1528630	Semiconductor	1
6	1528631	Resistor (68 Ohm, 5 Watt)	1
7	1544255	Fuse (25 Amp)	3

©2006 HYSTER COMPANY

POWER DISTRIBUTION MODULE (Figure 4-8)
(PENDING PER ECN 10419489⇒)

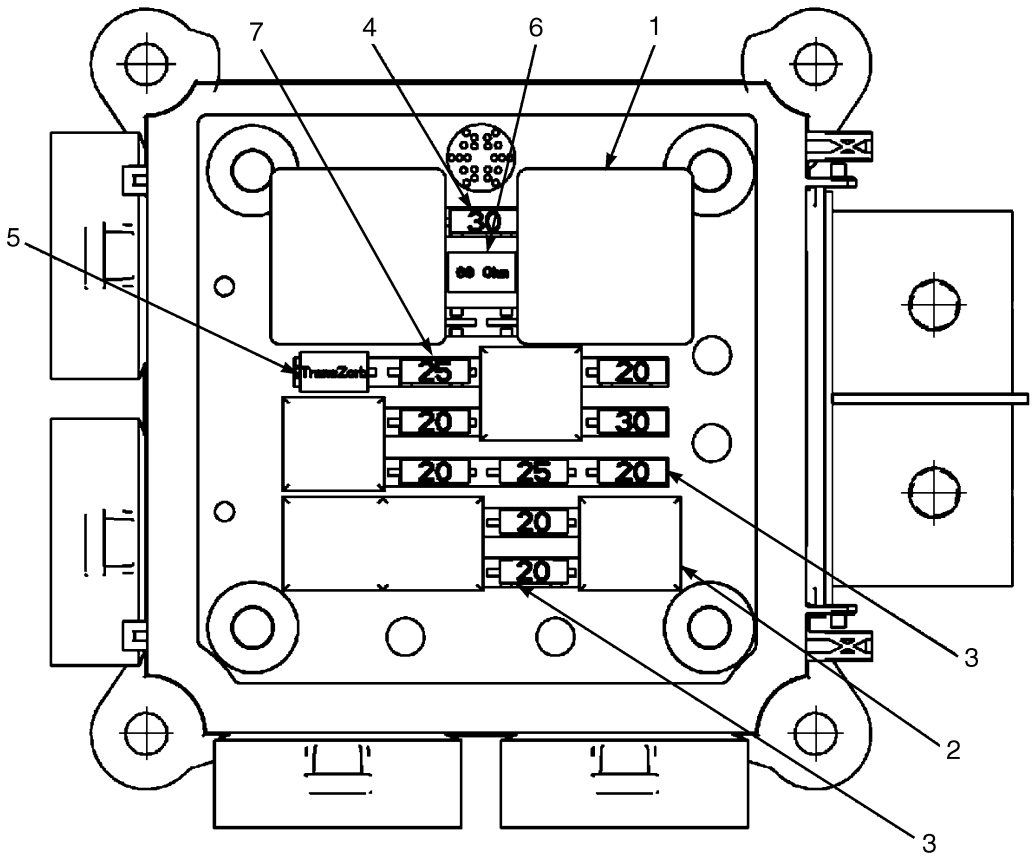

BP080485

ITEM	PART NO.	DESCRIPTION	QTY
	2090613	Power Distribution Module	1
1	2044712	Relay (30 Amp)	2
2	1528315	Relay (20 Amp)	5
3	1528132	Fuse (20 Amp)	6
4	1528133	Fuse (30 Amp)	2
5	1528630	Semiconductor	1
6	1528631	Resistor (68 Ohm, 5 Watt)	1
7	1544255	Fuse (25 Amp)	2

©2006 HYSTER COMPANY

INSTRUMENT CLUSTER (Figure 4-9)

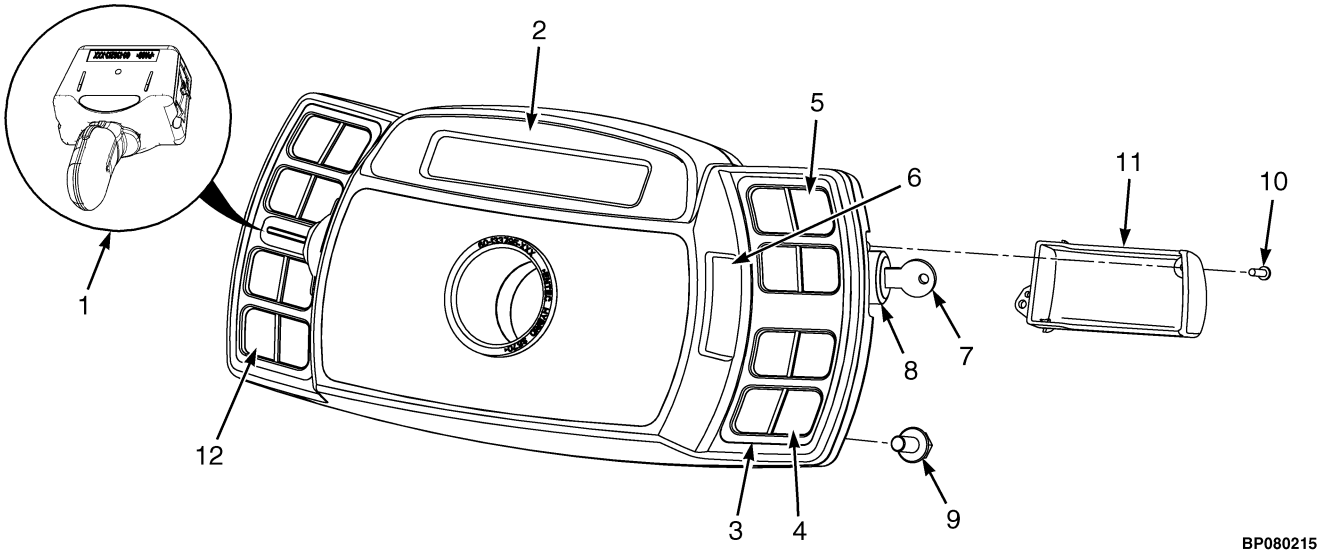

©2006 HYSTER COMPANY

INSTRUMENT CLUSTER

ITEM		PART NO.	DESCRIPTION	QTY
1	**b**	2060837	Display Lever (Detent Forward and Reverse)	1
1	**c**	2090110	Display Lever (Detent Forward and Reverse)	1
2		2076695	Instrument Cluster	1
2		2076696	Instrument Cluster (With Cab)	1
3		2066485	Bezel (Display Cluster)	2
4	**a**	2066482	Overlay (RH Display)	1
5		2066484	Decal (RH Display, All Options)	1
6		2060032	Cover (Display Lever)	1
6	**d**	2060838	Display Lever (Momentary) (Turn Signal)	1
6	**e**	2090111	Display Lever (Momentary) (Turn Signal)	1
7		1337197	Key Set	1
8		2057948	Ignition Switch	1
9		1527879	Capscrew	4
10		1554902	Screw	5
11		2060033	Cover (Keyswitch)	1
12		2069431	Decal (Blank) (LH Display)	1
12		2066483	Decal (LH Display with Cab)	1

FOOTNOTES:

a Remove Panels From Overlay as Required For Truck Configuration.
b ⇒ S/N F001B02588D
c S/N F001B02589D ⇒
d ⇒ S/N F001B02615D
e S/N F001B02616D ⇒

©2006 HYSTER COMPANY

JOY STICK AND ELECTRONIC CONTROL LEVERS (Figure 4-10)

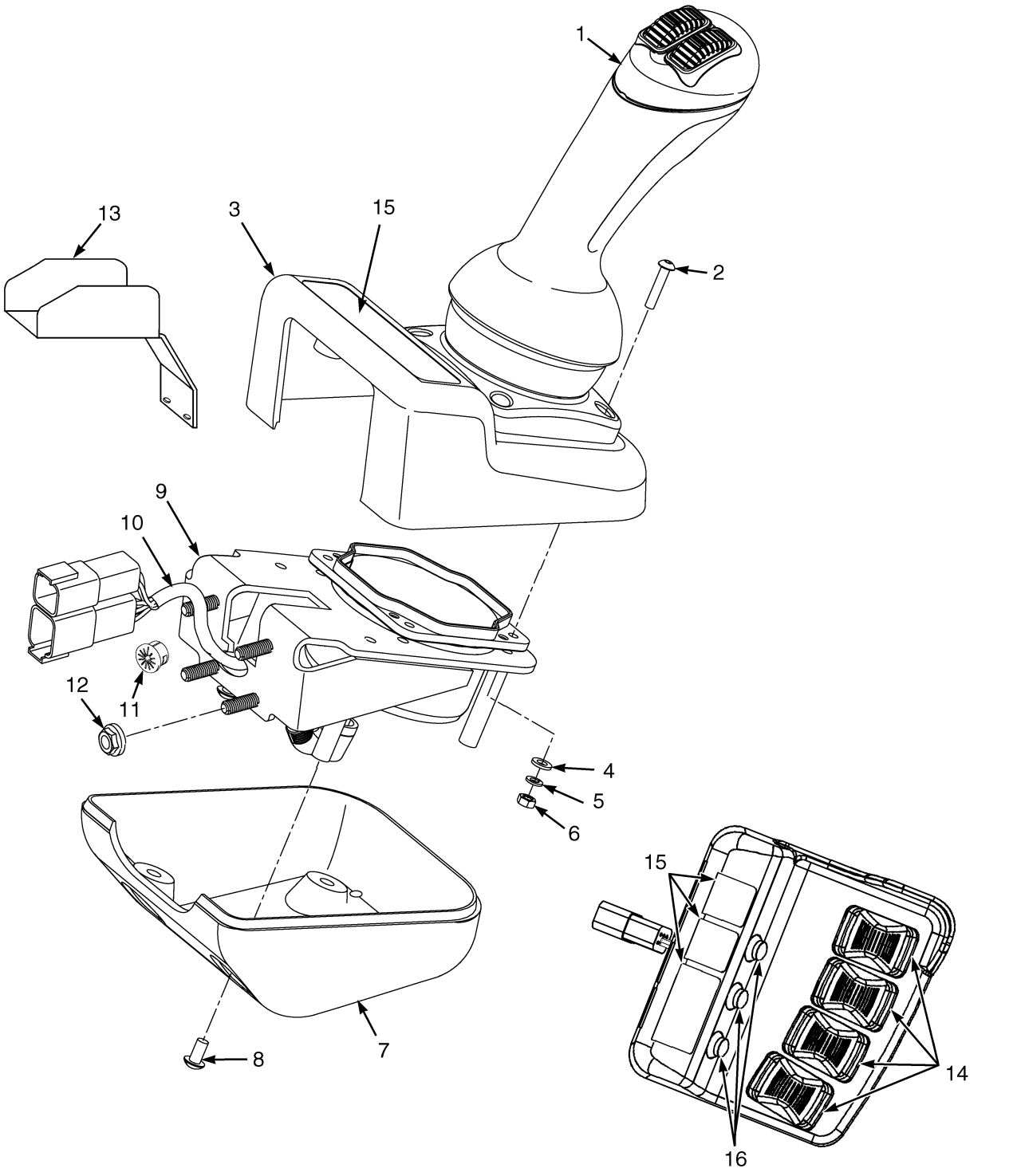

©2006 HYSTER COMPANY

JOY STICK AND ELECTRONIC CONTROL LEVERS

KEY:
A: Three Function
B: Four Function

ITEM		PART NO.	DESCRIPTION	QTY A	QTY B
	i	1585906	Joystick Control (Without Interlock)	1	..
	gh	2085179	Joystick Control (Without Interlock)	1	..
	f	2093801	Joystick Control (Without Interlock)	1	..
	i	1585907	Joystick Control (Without Interlock)	..	1
	gh	2085180	Joystick Control (Without Interlock)	..	1
	f	2093803	Joystick Control (Without Interlock)	..	1
	e	1585908	Joystick Control (With Interlock)	1	..
	f	2093804	Joystick Control (With Interlock)	1	..
	e	1585909	Joystick Control (With Interlock)	..	1
	f	2093805	Joystick Control (With Interlock)	..	1
1	**i**	2075224	Joystick (Without Interlock)	1	..
1	**gh**	2085175	Joystick (Without Interlock)	1	..
1	**f**	2093806	Joystick (Without Interlock)	1	..
1	**i**	2075225	Joystick (Without Interlock)	..	1
1	**gh**	2085176	Joystick (Without Interlock)	..	1
1	**f**	2093807	Joystick (Without Interlock)	..	1
1	**e**	2075226	Joystick (With Interlock)	1	..
1	**f**	2093808	Joystick (With Interlock)	1	..
1	**e**	2075227	Joystick (With Interlock)	..	1
1	**f**	2093809	Joystick (With Interlock)	..	1
2		1598283	Screw	4	4
3		1550647	Housing (Upper)	1	1
4		320154	Washer	4	4
5		292678	Lockwasher	4	4
6		292667	Nut	4	4
7		1550646	Housing (Lower)	1	1
8		2062718	Capscrew	6	6
9		1552107	Bracket	1	1
10	**i**	2062070	Wire Harness (Joystick)	1	1
10	**j**	2084703	Wire Harness (Joystick)	1	1
11		1569995	Bushing	1	1
12		1514429	Nut (Flange)	4	4
13		1579847	Bracket	1	1
14		2064790	Mini-Levers (Without Clamping)	1	..
14		2075911	Mini-Levers (With Clamping)	1	..
14		2075913	Mini-Levers (With Return To Set Tilt)	1	..
14		2075916	Mini-Levers (With Clamping and Return To Set Tilt)	1	..
14		2064807	Mini-Levers (Without Clamping)	..	1
14		2075912	Mini-Levers (With Clamping)	..	1
14		2075914	Mini-Levers (With Return To Set Tilt)	..	1
14		2075917	Mini-Levers (With Clamping and Return To Set Tilt)	..	1
14	**a**	1555731	Lever Kit (Included With All Mini-Lever Options)	AR	AR
15		. . . . .	Label (☞ Figure 1-16)	1	1
16	**c**	1591185	Mini-Lever Interlock Kit (Included With All Clamping and/or Return To Set Tilt)	AR	AR
16	**d**	1598222	Mini-Lever Plug Kit (Not Used With 2075916)	AR	..

©2006 HYSTER COMPANY

JOY STICK AND ELECTRONIC CONTROL LEVERS

ITEM		PART NO.	DESCRIPTION	QTY A	QTY B
16	**b**	1598221	Mini-Lever Interlock Switch Kit (Clamping With Return To Set Tilt)	AR	AR
16	**d**	1598223	Momentary Switch Plug Kit (Included With All Clamping and/or Return To Set Tilt)	AR	AR

FOOTNOTES:

a Contains One Lever and Hardware
b Contains One Momentary Switch and Hardware
c Contains One Rocker and Hardware
d Contains Plug and Gasket
e ⇒ PENDING PER ECN 10431564
f PENDING PER ECN 10431564 ⇒
g D/B 11/2006 ⇒ PENDING PER ECN 10431564
h D/B 11/2006 ⇒ PENDING PER ECN 10431564
i ⇒ D/B 11/2006
j D/B 11/2006 ⇒

©2006 HYSTER COMPANY

NOTES

WORK, REAR DRIVE, AND BRAKE/TAIL LIGHTS (Figure 4-11)

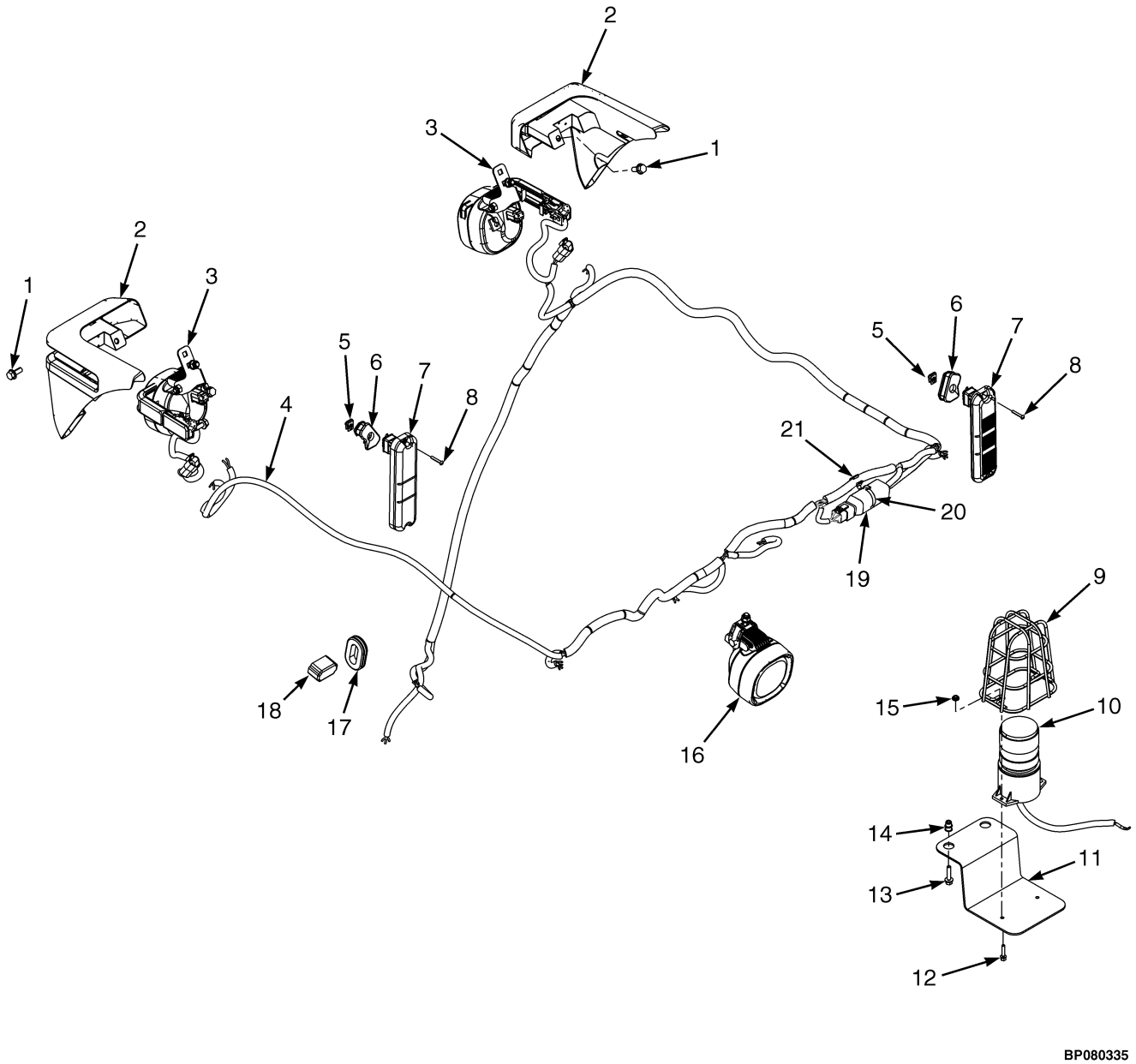

©2006 HYSTER COMPANY

WORK, REAR DRIVE, AND BRAKE/TAIL LIGHTS

ITEM		PART NO.	DESCRIPTION	QTY
1		1527880	Capscrew	4
2		2070561	Turn Signal (RH Front)	1
2		2070563	Cap (Black Plastic)	2
2		1493466	Connector	1
2		1330415	Secondary Lock	1
2		1330437	Terminal (Pin)	3
2		2070562	Turn Signal (LH Front)	1
2		2070563	Cap (Black Plastic)	2
2		1493466	Connector	1
2		1330415	Secondary Lock	1
2		1330437	Terminal (Pin)	3
3		2070553	Work Light (RH Front)	1
3		1495122	Bulb	1
3		2070554	Work Light (LH Front)	1
3		1495122	Bulb	1
4	**a**	2074737	Wire Harness (Lights) (☞ Figure 4-31)	1
4	**b**	2090087	Wire Harness (Lights) (☞ Figure 4-32)	1
5		1537551	Clip Nut	2
6		1560447	Grommet (RH)	1
7		2056824	Light (Stop,Turn,Tail, And Back-Up)	2
7		2056826	Reflector (Tail)	2
7		. . . . .	Bracket (☞ Figure 1-2)	2
8		1565125	Screw	4
9		1302024	Guard	1
10		1581670	Strobe Light Assembly	1
10		1382130	Strobe Light	1
10		1526082	Lens (Amber)	1
10		1309775	Bulb	1
10		1561559	Connector	1
10		1561755	Secondary Lock	1
10		1463138	Pin	2
10		275493	Conduit	AR
11		1565076	Bracket	1
12		1586759	Capscrew	2
13		1586495	Capscrew	2
14		1531001	Insert	2
15		1586428	Nut	2
16		2064836	Work Light (Rear)	1
17		1539584	Grommet (Oval)	1
18		1563841	Connector	1
19	**b**	2090645	Resistor Assembly	1
20	**b**	1644398	Swivel Tie	1
21	**b**	1606544	Clamp	1

FOOTNOTES:

a ⇒ PENDING PER ECN 10419449

b PENDING PER ECN 10419449 ⇒

©2006 HYSTER COMPANY

TRANSMISSION ELECTRICAL SYSTEM (Figure 4-12)

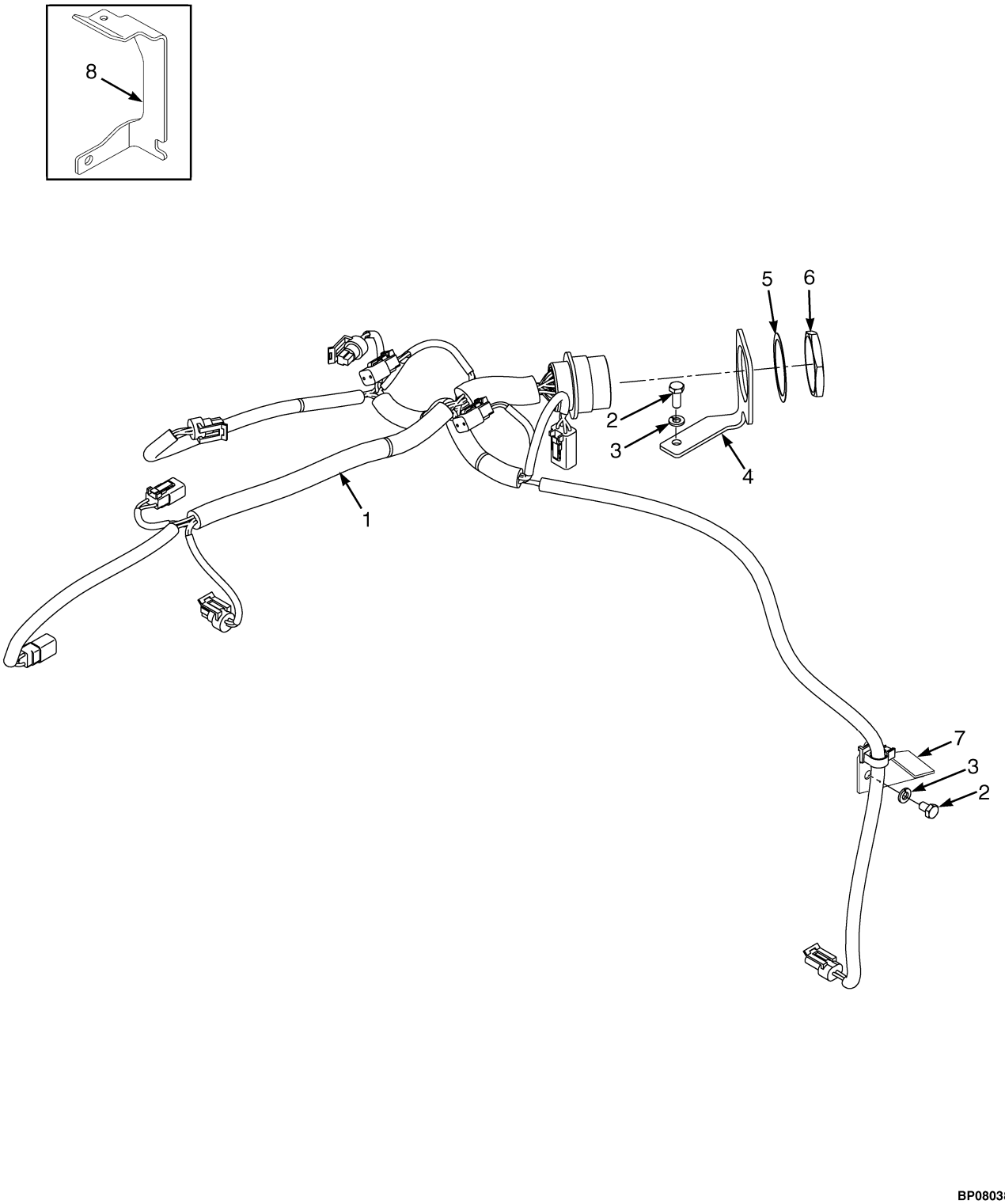

©2006 HYSTER COMPANY

TRANSMISSION ELECTRICAL SYSTEM

ITEM		PART NO.	DESCRIPTION	QTY
1	**c**	2070731	Wire Harness (Transmission) (☞ Figure 4-29)	1
1	**d**	2082323	Wire Harness (Transmission) (☞ Figure 4-29)	1
1	**b**	2085943	Wire Harness (Transmision) (☞ Figure 4-30)	1
2		287851	Capscrew	2
3		292681	Lockwasher	2
4	**a**	. . . . .	Bracket	1
5	**a**	1539086	Lockwasher	1
6	**a**	1539085	Nut	1
7	**a**	1531519	Bracket	1
7	**b**	1612223	Bracket	1
8		1616222	Bracket	1

FOOTNOTES:
a ⇒ D/B 08/2006
b D/B 08/2006 ⇒
c ⇒ D/B 09/2005
d D/B 09/2005⇔D/B 08/2006

©2006 HYSTER COMPANY

MAST ELECTRICAL (Figure 4-13)
TILT SENSOR

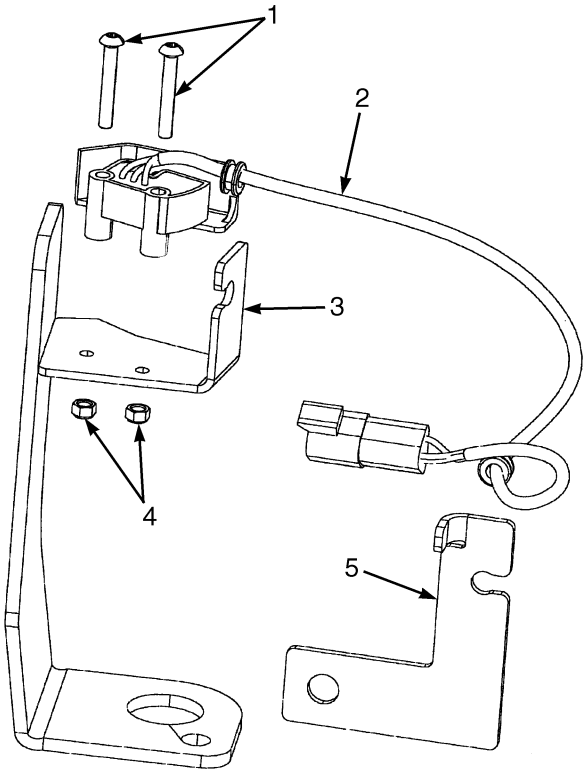

BP080317

ITEM	PART NO.	DESCRIPTION	QTY
1	1553897	Capscrew	2
2	1589621	Sensor (Mast)	1
2	1493466	Connector	1
2	1330415	Secondary Lock	1
2	1330437	Terminal (Pin)	3
2	98644	Grommet	2
2	175944	Heat Shrink Tube	AR
3	1587839	Bracket (Sensor)	1
4	302398	Nut	2
5	1595731	Bracket (Harness)	1

©2006 HYSTER COMPANY

NOTES

LOAD WEIGH ELECTRICAL (Figure 4-14)

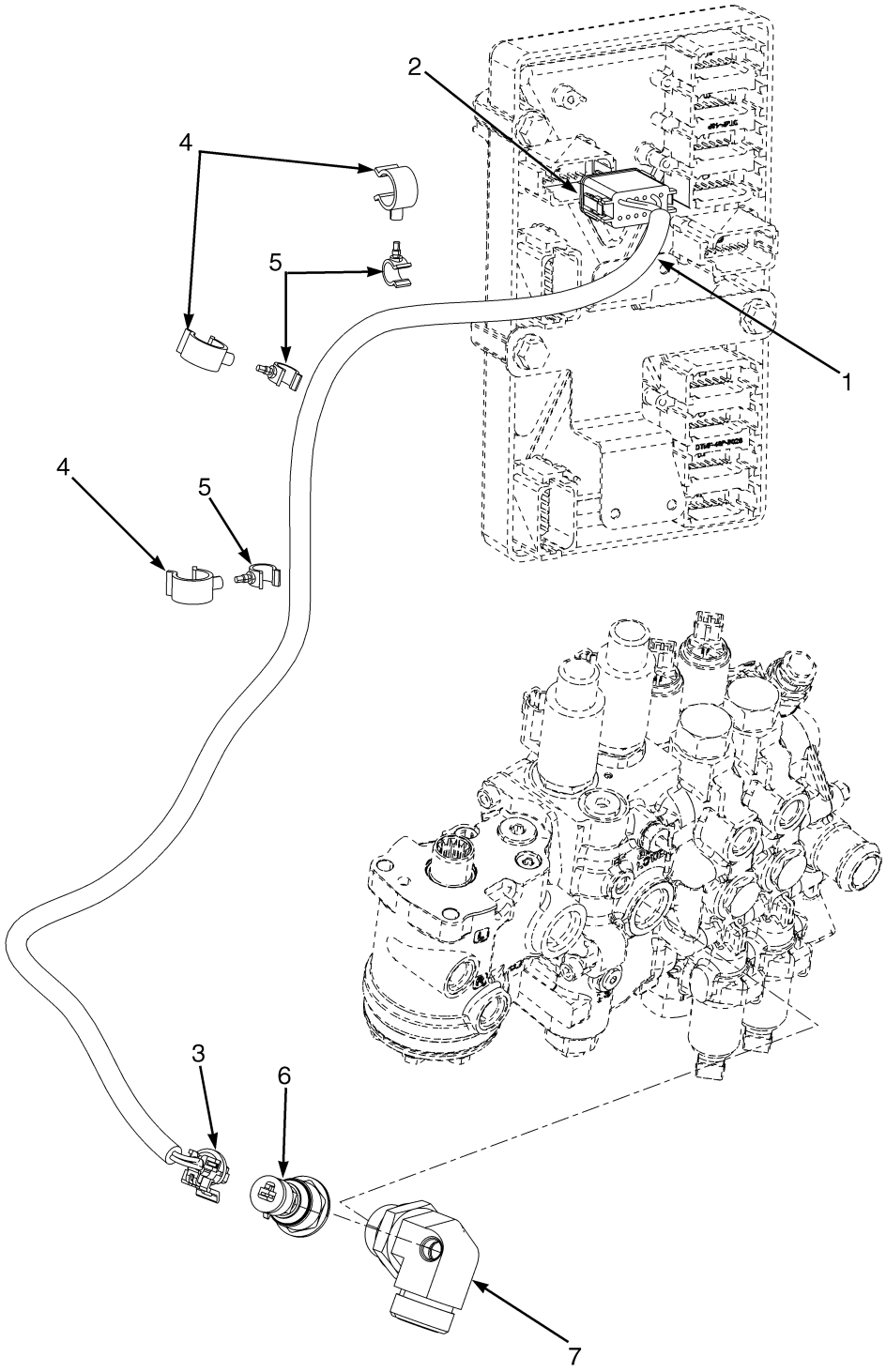

BP080413

©2006 HYSTER COMPANY

LOAD WEIGH ELECTRICAL

ITEM	PART NO.	DESCRIPTION	QTY
1	2079326	Wire Harness (Load Weigh)	1
2	1525565	Connector	1
2	1500913	Secondary Lock	1
2	1330438	Terminal (Socket)	3
2	1484377	Terminal (Plug)	9
3	1603021	Connector	1
3	1603236	Secondary Lock	1
3	1548517	Terminal (Socket)	3
3	1548519	Seal	3
4	1606544	Clamp	3
5	1573549	Clamp	3
6	1606735	Sensor	1
7	1648259	Fitting	1

©2006 HYSTER COMPANY

DISTRIBUTER (Figure 4-15)
MAZDA 2.0L

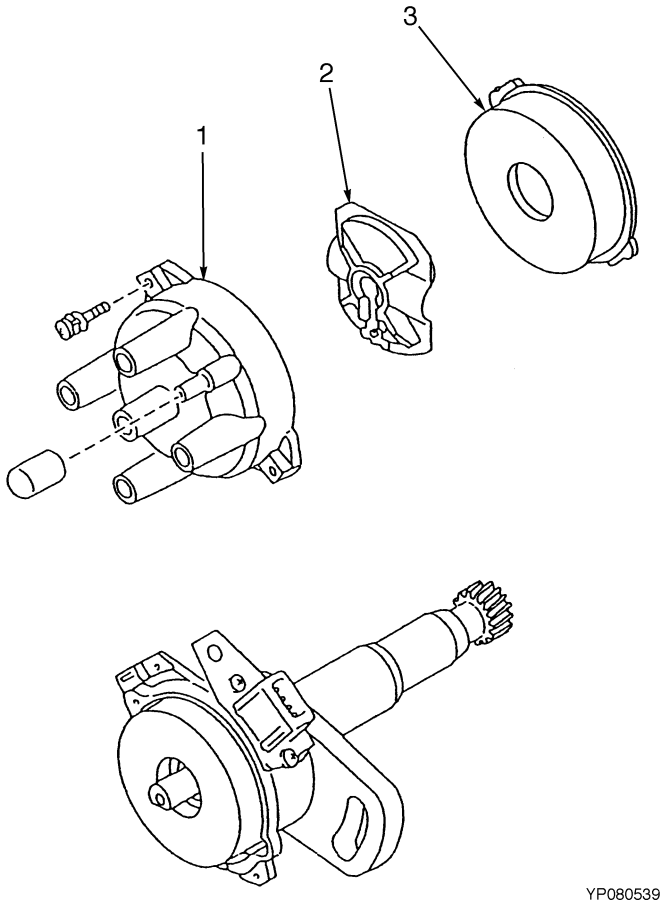

ITEM	PART NO.	DESCRIPTION	QTY
	1554030	Distributor	1
1	1554033	Cap	1
2	1554034	Rotor	1
3	1554032	Cover	1

©2006 HYSTER COMPANY

ALTERNATOR AND MOUNTING (Figure 4-16)
YANMAR 2.6L DIESEL

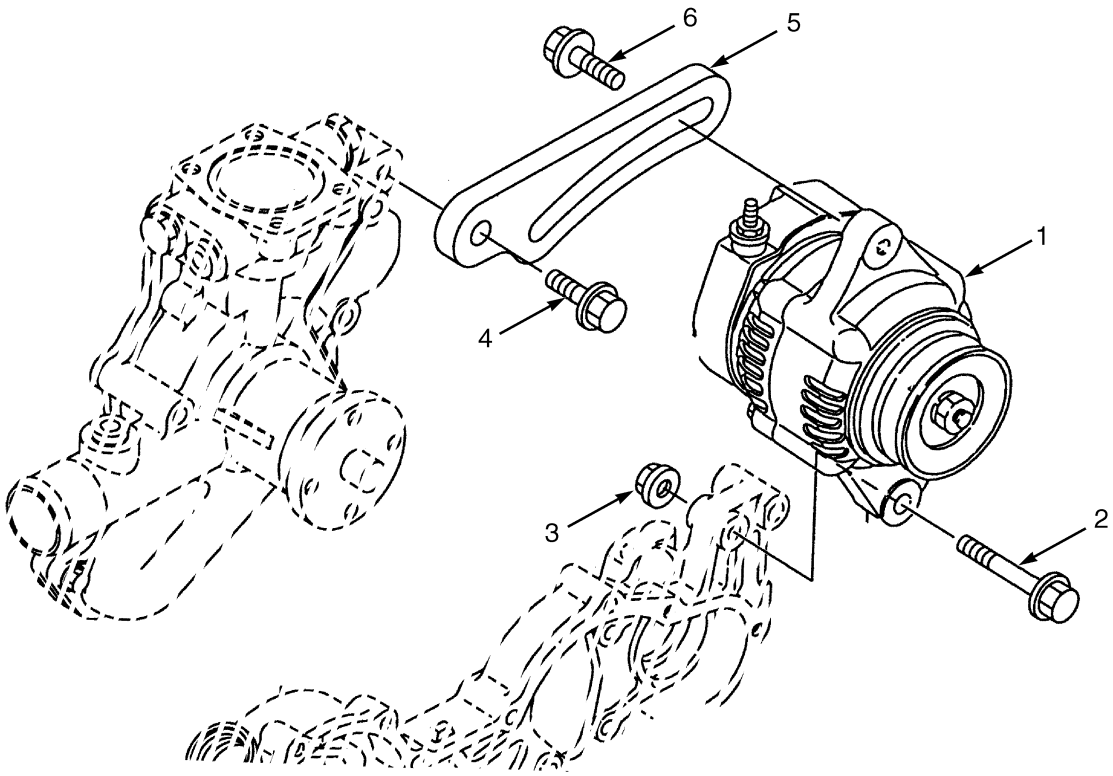

BP080337

ITEM	PART NO.	DESCRIPTION	QTY
1	1599869	Alternator	1
1	1599873	Ball Bearing	1
1	1599874	Plate	1
1	1599875	Screw	4
1	1599876	Stud	2
1	1599878	Ball Bearing	1
1	1599879	Cover	1
2	1599893	Bolt	1
3	1599894	Nut	1
4	1599897	Bolt	1
5	1599895	Belt Adjuster Bracket	1
6	1599896	Bolt	1

©2006 HYSTER COMPANY

WIRE HARNESS (Figure 4-17)
CHASSIS
MAZDA 2.0L
(⇒D/B 08/2006)

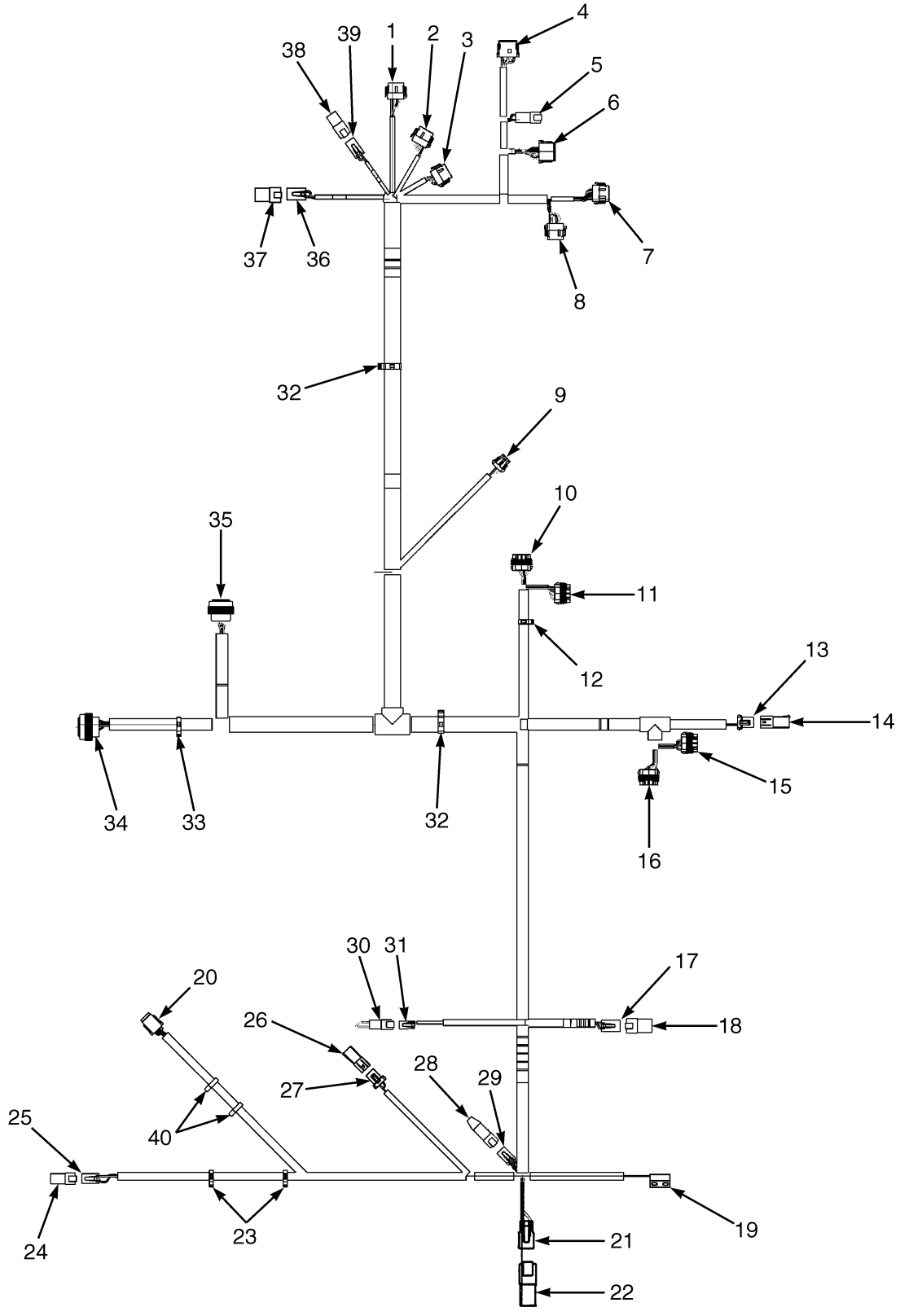

©2006 HYSTER COMPANY

WIRE HARNESS
CHASSIS
MAZDA 2.0L
(⇒D/B 08/2006)

ITEM	PART NO.	DESCRIPTION	QTY
	2078876	Wire Harness (RH Chassis)	1
1	. . . . .	Connector Assembly (Vehicle System Manager)	1
1	1525570	Connector	1
1	1463139	Terminal	8
1	1484377	Terminal (Plug)	4
1	1530037	Secondary Lock	1
2	. . . . .	Connector Assembly (Vehicle System Manager)	1
2	1525568	Connector	1
2	1463139	Terminal	7
2	1484377	Terminal (Plug)	5
2	1530037	Secondary Lock	1
3	. . . . .	Connector Assembly (Vehicle System Manager)	1
3	1525567	Connector	1
3	1530037	Secondary Lock	1
3	1463139	Terminal	3
3	1484377	Terminal (Plug)	9
4	. . . . .	Connector Assembly (Vehicle System Manager)	1
4	1525563	Connector	1
4	1500913	Secondary Lock	1
4	1330438	Terminal (Socket)	8
4	1363886	Terminal (Socket)	4
5	. . . . .	Connector Assembly (Cowl Harness)	1
5	1489655	Connector (4 Way)	1
5	1330416	Secondary Lock	1
5	1330437	Terminal (Pin)	4
6	. . . . .	Connector Assembly (Cowl Harness)	1
6	1493428	Connector (12-Way)	1
6	1330438	Terminal (Socket)	9
6	1484377	Terminal (Plug)	3
6	1500913	Secondary Lock	1
7	. . . . .	Connector Assembly (Vehicle System Manager)	1
7	1525567	Connector	1
7	1529046	Secondary Lock	1
7	1463139	Terminal	9
7	1484377	Terminal (Plug)	3
8	. . . . .	Connector Assembly (Vehicle System Manager)	1
8	1525569	Connector	1
8	1529046	Secondary Lock	1
8	1463139	Terminal	9
8	1484377	Terminal (Plug)	3
9	. . . . .	Connector Assembly (Horn)	1
9	1476064	Connector	1
9	1476109	Secondary Lock	1
9	1330356	Seal	2
9	1330355	Terminal	3
9	1476108	Seal	1
10	. . . . .	Connector Assembly (Power Distribution Module)	1
10	1521184	Connector	1
10	1521188	Secondary Lock	1

©2006 HYSTER COMPANY

WIRE HARNESS
CHASSIS
MAZDA 2.0L
(⇒D/B 08/2006)

ITEM	PART NO.	DESCRIPTION	QTY
10	1323579	Seal	5
10	1327164	Plug	2
10	1330281	Terminal	5
10	1521989	Terminal	1
10	1402888	Seal	1
11	. . . . .	Connector Assembly (Power Distribution Module)	1
11	1521183	Connector	1
11	1521188	Secondary Lock	1
11	1323579	Seal	7
11	1327164	Plug	1
11	1330281	Terminal	4
11	1521989	Terminal	3
12	1534828	Clip	1
13	. . . . .	Connector Assembly (Hydraulic Filter)	1
13	1329152	Connector	1
13	1329151	Secondary Lock	1
13	1330281	Terminal	2
13	1402888	Seal	2
14	. . . . .	Connector Assembly (End Cap)	1
14	1329150	Connector	1
14	1327164	Plug	2
14	1329151	Secondary Lock	1
15	. . . . .	Connector Assembly (Power Distribution Module)	1
15	1521185	Connector	1
15	1521188	Secondary Lock	1
15	1323579	Seal	7
15	1327164	Plug	1
15	1330281	Terminal	5
15	1521989	Terminal	2
16	. . . . .	Connector Assembly (Power Distribution Module)	1
16	1521186	Connector	1
16	1521188	Secondary Lock	1
16	1323579	Seal	7
16	1327164	Plug	1
16	1521989	Terminal	7
17	. . . . .	Connector Assembly (Accessory 2)	1
17	1514602	Connector	1
17	1514603	Secondary Lock	1
17	1554359	Terminal	4
18	. . . . .	Connector Assembly (End Cap)	1
18	1514597	Connector	1
18	1330439	Insulator	4
19	1572588	Hood Switch	1
20	. . . . .	Connector Assembly (Seat Harness)	1
20	1541991	Connector	1
20	1541992	Secondary Lock	1
20	1463139	Terminal	8
21	. . . . .	Connector Assembly (Alternate Horn Button)	1
21	1490242	Connector	1

©2006 HYSTER COMPANY

WIRE HARNESS
CHASSIS
MAZDA 2.0L
(⇒D/B 08/2006)

ITEM	PART NO.	DESCRIPTION	QTY
21	1402813	Clip	1
21	1330438	Terminal (Socket)	2
22	1351681	Connector	1
23	1509888	Clip	2
24	1351681	Connector	1
25	. . . . .	Connector Assembly (Back-Up Alarm)	1
25	1490242	Connector	1
25	1402813	Clip	1
25	1330438	Terminal (Socket)	2
26	. . . . .	Connector (End Cap)	1
26	1329150	Connector	1
26	1329151	Secondary Lock	1
26	1327164	Plug	2
27	. . . . .	Connector (Coolant Level)	1
27	1329152	Connector	1
27	1329151	Secondary Lock	1
27	1330281	Terminal	2
27	1402888	Seal	2
28	1525577	Connector (With Resistor) (End Cap)	1
29	. . . . .	Connector Assembly (Bus Terminal)	1
29	1489656	Connector (4-Way)	1
29	1489657	Secondary Lock	1
29	1330438	Terminal (Socket)	4
30	. . . . .	Connector Assembly (Keyswitch)	1
30	1493465	Connector	1
30	1330414	Secondary Lock	1
30	1330437	Terminal (Pin)	2
31	. . . . .	Connector Assembly (Keyswitch)	1
31	1490242	Connector	1
31	1402813	Clip	1
31	1330438	Terminal (Socket)	2
32	1534282	Clip	2
33	1500899	Clip	1
34	. . . . .	Connector Assembly (Transmission Harness)	1
34	1502627	Connector (Socket)	1
34	1330438	Terminal (Socket)	17
34	1484377	Terminal (Plug)	6
35	. . . . .	Connector Assembly (Engine Harness)	1
35	1531501	Connector	1
35	1330438	Terminal (Socket)	8
35	1330439	Insulator	1
35	1484377	Terminal (Plug)	17
35	1554359	Terminal	3
36	. . . . .	Connector Assembly (Lights/Cab Harness)	1
36	1514602	Connector	1
36	1514603	Secondary Lock	1
36	1554359	Terminal	4
37	. . . . .	Connector Assembly (End Cap)	1
37	1514597	Connector	1

©2006 HYSTER COMPANY

WIRE HARNESS
CHASSIS
MAZDA 2.0L
(⇒D/B 08/2006)

ITEM	PART NO.	DESCRIPTION	QTY
37	1330439	Insulator	4
38	. . . . .	Connector Assembly (End Cap)	1
38	1480187	Connector	1
38	1330439	Insulator	2
39	. . . . .	Connector Assembly (Accessory 1)	1
39	1545202	Connector	1
39	1554359	Terminal	2
39	1546697	Secondary Lock	1
40	1402815	Clip	2

©2006 HYSTER COMPANY

NOTES

WIRE HARNESS (Figure 4-18)
CHASSIS
MAZDA 2.0L
(D/B 08/2006⇒)

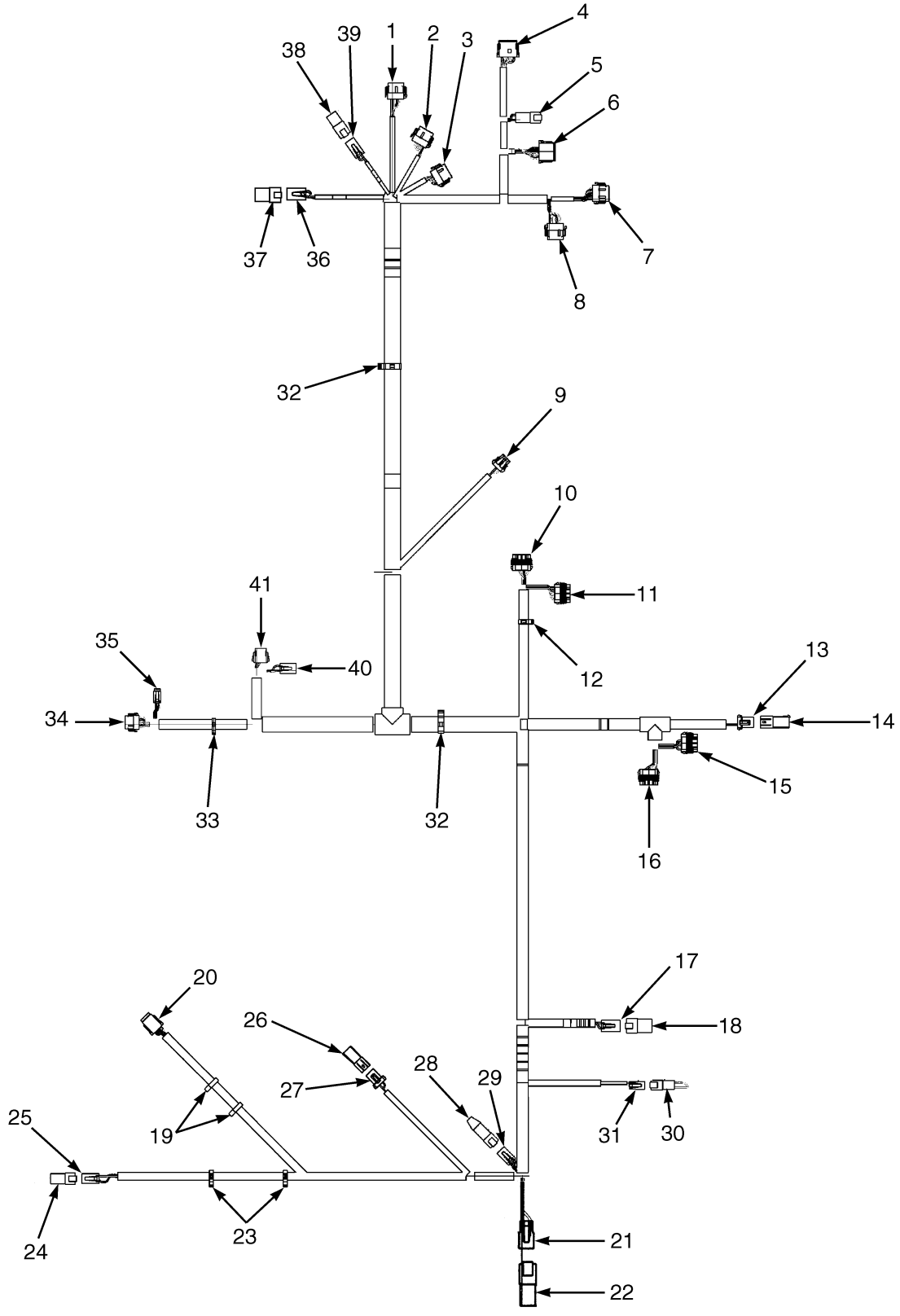

©2006 HYSTER COMPANY

WIRE HARNESS
CHASSIS
MAZDA 2.0L
(D/B 08/2006⇒)

ITEM	PART NO.	DESCRIPTION	QTY
	2085948	Wire Harness (RH Chassis)	1
1	. . . . .	Connector Assembly (Vehicle System Manager)	1
1	1525570	Connector	1
1	1463139	Terminal	8
1	1484377	Terminal (Plug)	4
1	1530037	Secondary Lock	1
2	. . . . .	Connector Assembly (Vehicle System Manager)	1
2	1525568	Connector	1
2	1463139	Terminal	7
2	1484377	Terminal (Plug)	5
2	1530037	Secondary Lock	1
3	. . . . .	Connector Assembly (Vehicle System Manager)	1
3	1525567	Connector	1
3	1530037	Secondary Lock	1
3	1463139	Terminal	3
3	1484377	Terminal (Plug)	9
4	. . . . .	Connector Assembly (Vehicle System Manager)	1
4	1525563	Connector	1
4	1500913	Secondary Lock	1
4	1330438	Terminal (Socket)	8
4	1363886	Terminal (Socket)	4
5	. . . . .	Connector Assembly (Cowl Harness)	1
5	1489655	Connector (4 Way)	1
5	1330416	Secondary Lock	1
5	1330437	Terminal (Pin)	4
6	. . . . .	Connector Assembly (Cowl Harness)	1
6	1493428	Connector (12-Way)	1
6	1330438	Terminal (Socket)	9
6	1484377	Terminal (Plug)	3
6	1500913	Secondary Lock	1
7	. . . . .	Connector Assembly (Vehicle System Manager)	1
7	1525567	Connector	1
7	1529046	Secondary Lock	1
7	1463139	Terminal	9
7	1484377	Terminal (Plug)	3
8	. . . . .	Connector Assembly (Vehicle System Manager)	1
8	1525569	Connector	1
8	1529046	Secondary Lock	1
8	1463139	Terminal	9
8	1484377	Terminal (Plug)	3
9	. . . . .	Connector Assembly (Horn)	1
9	1476064	Connector	1
9	1476109	Secondary Lock	1
9	1330356	Seal	2
9	1330355	Terminal	3
9	1476108	Seal	1
10	. . . . .	Connector Assembly (Power Distribution Module)	1
10	1521184	Connector	1
10	1521188	Secondary Lock	1

©2006 HYSTER COMPANY

WIRE HARNESS
CHASSIS
MAZDA 2.0L
(D/B 08/2006⇒)

ITEM	PART NO.	DESCRIPTION	QTY
10	1323579	Seal	5
10	1327164	Plug	2
10	1330281	Terminal	5
10	1521989	Terminal	1
10	1402888	Seal	1
11	. . . . .	Connector Assembly (Power Distribution Module)	1
11	1521183	Connector	1
11	1521188	Secondary Lock	1
11	1323579	Seal	7
11	1327164	Plug	1
11	1330281	Terminal	4
11	1521989	Terminal	3
12	1534828	Clip	1
13	. . . . .	Connector Assembly (Hydraulic Filter)	1
13	1329152	Connector	1
13	1329151	Secondary Lock	1
13	1330281	Terminal	2
13	1402888	Seal	2
14	. . . . .	Connector Assembly (End Cap)	1
14	1329150	Connector	1
14	1327164	Plug	2
14	1329151	Secondary Lock	1
15	. . . . .	Connector Assembly (Power Distribution Module)	1
15	1521185	Connector	1
15	1521188	Secondary Lock	1
15	1323579	Seal	7
15	1327164	Plug	1
15	1330281	Terminal	5
15	1521989	Terminal	2
16	. . . . .	Connector Assembly (Power Distribution Module)	1
16	1521186	Connector	1
16	1521188	Secondary Lock	1
16	1323579	Seal	7
16	1327164	Plug	1
16	1521989	Terminal	7
17	. . . . .	Connector Assembly (Accessory 2)	1
17	1514602	Connector	1
17	1514603	Secondary Lock	1
17	1554359	Terminal	4
18	. . . . .	Connector Assembly (End Cap)	1
18	1514597	Connector	1
18	1330439	Insulator	4
19	1402815	Clip	2
20	. . . . .	Connector Assembly (Seat Harness)	1
20	1541991	Connector	1
20	1541992	Secondary Lock	1
20	1463139	Terminal	8
21	. . . . .	Connector Assembly (Alternate Horn Button)	1
21	1490242	Connector	1

©2006 HYSTER COMPANY

WIRE HARNESS
CHASSIS
MAZDA 2.0L
(D/B 08/2006⇒)

ITEM	PART NO.	DESCRIPTION	QTY
21	1402813	Clip	1
21	1330438	Terminal (Socket)	2
22	1351681	Connector	1
23	1509888	Clip	2
24	1351681	Connector	1
25	. . . . .	Connector Assembly (Back-Up Alarm)	1
25	1490242	Connector	1
25	1402813	Clip	1
25	1330438	Terminal (Socket)	2
26	. . . . .	Connector (End Cap)	1
26	1329150	Connector	1
26	1329151	Secondary Lock	1
26	1327164	Plug	2
27	. . . . .	Connector (Coolant Level)	1
27	1329152	Connector	1
27	1329151	Secondary Lock	1
27	1330281	Terminal	2
27	1402888	Seal	2
28	1525577	Connector (With Resistor) (End Cap)	1
29	. . . . .	Connector Assembly (Bus Terminal)	1
29	1489656	Connector (4-Way)	1
29	1489657	Secondary Lock	1
29	1330438	Terminal (Socket)	4
30	. . . . .	Connector Assembly (Keyswitch)	1
30	1493465	Connector	1
30	1330414	Secondary Lock	1
30	1330437	Terminal (Pin)	2
31	. . . . .	Connector Assembly (Keyswitch)	1
31	1490242	Connector	1
31	1402813	Clip	1
31	1330438	Terminal (Socket)	2
32	1534282	Clip	2
33	1500899	Clip	1
34	. . . . .	Connector Assembly (Transmission Harness)	1
34	1525567	Connector	1
34	1529046	Secondary Lock	1
34	1484377	Terminal (Plug)	1
34	1463139	Terminal	11
35	. . . . .	Connector Assembly (Transmission Harness)	1
35	1531973	Connector	1
35	1531974	Secondary Lock	1
35	1463139	Terminal	6
36	. . . . .	Connector Assembly (Lights/Cab Harness)	1
36	1514602	Connector	1
36	1514603	Secondary Lock	1
36	1554359	Terminal	4
37	. . . . .	Connector Assembly (End Cap)	1
37	1514597	Connector	1
37	1330439	Insulator	4

©2006 HYSTER COMPANY

WIRE HARNESS
CHASSIS
MAZDA 2.0L
(D/B 08/2006⇒)

ITEM	PART NO.	DESCRIPTION	QTY
38	. . . . .	Connector Assembly (End Cap)	1
38	1480187	Connector	1
38	1330439	Insulator	2
39	. . . . .	Connector Assembly (Accessory 1)	1
39	1545202	Connector	1
39	1554359	Terminal	2
39	1546697	Secondary Lock	1
40	. . . . .	Connector Assembly (Engine Harness)	1
40	1514602	Connector	1
40	1514603	Secondary Lock	1
40	1330439	Insulator	12
40	1554359	Terminal	12
41	. . . . .	Connector Assembly (Engine Harness)	1
41	1502625	Connector	1
41	1502626	Secondary Lock	1
41	1330438	Terminal (Socket)	8

©2006 HYSTER COMPANY

NOTES

WIRE HARNESS (Figure 4-19)
CHASSIS
YANMAR DIESEL 2.6L
(⇒D/B 08/2006)

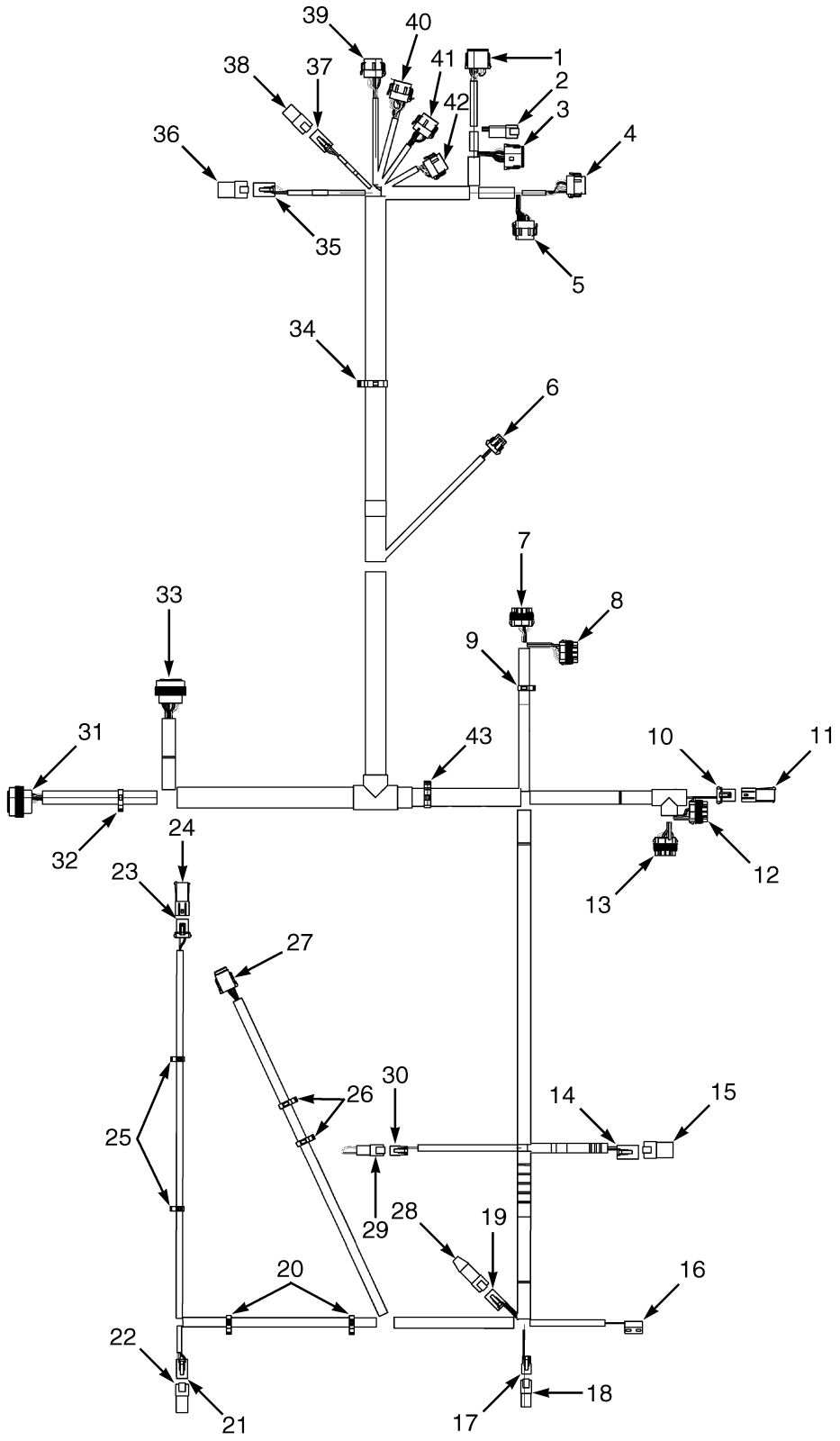

BP080338

©2006 HYSTER COMPANY

WIRE HARNESS
CHASSIS
YANMAR DIESEL 2.6L
(⇒D/B 08/2006)

ITEM	PART NO.	DESCRIPTION	QTY
	2078877	Wire Harness (Chassis)	1
1	. . . . .	Connector Assembly (Vehicle System Manager)	1
1	1525569	Connector	1
1	1500913	Secondary Lock	1
1	1330438	Terminal (Socket)	8
1	1363886	Terminal (Socket)	4
2	. . . . .	Connector Assembly (To Cowl Harness)	1
2	1489655	Connector (4 Way)	1
2	1330416	Secondary Lock	1
2	1330437	Terminal (Pin)	4
3	. . . . .	Connector Assembly (To Cowl Harness)	1
3	1493428	Connector (12-Way)	1
3	1500913	Secondary Lock	1
3	1330438	Terminal (Socket)	9
3	1484377	Terminal (Plug)	3
4	. . . . .	Connector Assembly (Vehicle System Manager)	1
4	1525567	Connector	1
4	1529046	Secondary Lock	1
4	1463139	Terminal	3
4	1484377	Terminal (Plug)	9
5	. . . . .	Connector Assembly (Vehicle System Manager)	1
5	1525569	Connector	1
5	1529046	Secondary Lock	1
5	1463139	Terminal	9
5	1484377	Terminal (Plug)	3
6	. . . . .	Connector Assembly (Horn)	1
6	1476064	Connector	1
6	1476109	Secondary Lock	1
6	1330356	Seal	2
6	1330355	Terminal	3
6	1476108	Seal	1
7	. . . . .	Connector Assembly (Power Distribution Manager)	1
7	1521184	Connector	1
7	1521188	Secondary Lock	1
7	1323579	Seal	5
7	1327164	Plug	2
7	1521989	Terminal	1
7	1402888	Seal	1
8	. . . . .	Connector Assembly (Power Distribution Manager)	1
8	1521183	Connector	1
8	1521188	Secondary Lock	1
8	1323579	Seal	7
8	1327164	Plug	1
8	1330281	Terminal	4
8	1521989	Terminal	3
9	1534828	Clip	1
10	. . . . .	Connector Assembly (Hydraulic Filter)	1
10	1329152	Connector	1
10	1329151	Secondary Lock	1

©2006 HYSTER COMPANY

WIRE HARNESS
CHASSIS
YANMAR DIESEL 2.6L
(⇒D/B 08/2006)

ITEM	PART NO.	DESCRIPTION	QTY
10	1330281	Terminal	2
10	1402888	Seal	2
11	1329150	Connector (End Cap)	1
11	1329151	Secondary Lock	1
11	1327164	Plug	2
12	. . . . .	Connector Assembly (Power Distribution Module)	1
12	1521185	Connector	1
12	1521188	Secondary Lock	1
12	1323579	Seal	8
12	1330281	Terminal	6
12	1521989	Terminal	2
13	. . . . .	Connector Assembly (Power Distribution Module)	1
13	1521186	Connector	1
13	1521188	Secondary Lock	1
13	1323579	Seal	7
13	1327164	Plug	1
13	1521989	Terminal	7
14	. . . . .	Connector Assembly (Accessory 2)	1
14	1514602	Connector	1
14	1514603	Secondary Lock	1
14	1330439	Insulator	1
14	1554359	Terminal	3
15	1514597	Connector (End Cap)	1
15	1330439	Insulator	4
16	1572588	Hood Switch	1
17	. . . . .	Connector Assembly (Alternate Horn Button)	1
17	1490242	Connector	1
17	1490243	Secondary Lock	1
17	1330438	Terminal (Socket)	2
18	1351681	Connector (End Cap)	1
19	. . . . .	Connector Assembly (Buss Terminal 2)	1
19	1489656	Connector (4-Way)	1
19	1489657	Secondary Lock	1
19	1330438	Terminal (Socket)	5
20	1509890	Clip	2
21	. . . . .	Connector Assembly (To Backup Harness)	1
21	1490242	Connector	1
21	1490243	Secondary Lock	1
21	1330438	Terminal (Socket)	2
22	1351681	Connector (End Cap)	1
23	. . . . .	Connector Assembly (Coolant Level)	1
23	1329152	Connector	1
23	1329151	Secondary Lock	1
23	1330281	Terminal	2
23	1402888	Seal	2
24	1329150	Connector (End Cap)	1
24	1329151	Secondary Lock	1
24	1327164	Plug	2
25	1509888	Clip	2

©2006 HYSTER COMPANY

WIRE HARNESS
CHASSIS
YANMAR DIESEL 2.6L
(⇒D/B 08/2006)

ITEM	PART NO.	DESCRIPTION	QTY
26	1402815	Clip	2
27	. . . . .	Connector Assembly (To Seat Harness)	1
27	1541991	Connector	1
27	1541992	Secondary Lock	1
27	1463139	Terminal	8
28	1525577	Connector (With Resistor) (End Cap)	1
29	1493465	Connector (End Cap)	1
29	1330414	Secondary Lock	1
29	1330437	Terminal (Pin)	2
30	. . . . .	Connector Assembly (Keyswitch)	1
30	1490242	Connector	1
30	1490243	Secondary Lock	1
30	1330438	Terminal (Socket)	2
31	. . . . .	Connector Assembly (To Transmission Harness)	1
31	1502627	Connector (Socket)	1
31	1484377	Terminal (Plug)	14
31	1330439	Insulator	9
32	1500899	Clip	1
33	. . . . .	Connector Assembly (To Engine Harness)	1
33	1531501	Connector	1
33	1330438	Terminal (Socket)	13
33	1330439	Insulator	1
33	1463139	Terminal	6
33	1484377	Terminal (Plug)	6
33	1554359	Terminal	3
34	1540944	Clip	1
35	. . . . .	Connector Assembly (To Light/Cab Harness)	1
35	1514602	Connector	1
35	1514603	Secondary Lock	1
35	1554359	Terminal	4
36	1514597	Connector (End Cap)	1
36	1330439	Insulator	4
37	. . . . .	Connector Assembly (Accessory 1)	1
37	1545202	Connector	1
37	1546697	Secondary Lock	1
37	1554359	Terminal	2
38	1480187	Connector (End Cap)	1
38	1330439	Insulator	2
39	. . . . .	Connector Assembly (Vehicle System Manager)	1
39	1525570	Connector	1
39	1530037	Secondary Lock	1
39	1463139	Terminal	7
39	1484377	Terminal (Plug)	5
40	. . . . .	Connector Assembly (Vehicle System Manager)	1
40	1525569	Connector	1
40	1530037	Secondary Lock	1
40	1463139	Terminal	11
40	1484377	Terminal (Plug)	1
41	. . . . .	Connector Assembly (Vehicle System Manager)	1

©2006 HYSTER COMPANY

WIRE HARNESS
CHASSIS
YANMAR DIESEL 2.6L
(⇒D/B 08/2006)

ITEM	PART NO.	DESCRIPTION	QTY
41	1525568	Connector	1
41	1530037	Secondary Lock	1
41	1463139	Terminal	7
41	1484377	Terminal (Plug)	5
42	. . . . .	Connector Assembly (Vehicle System Manager)	1
42	1525567	Connector	1
42	1530037	Secondary Lock	1
42	1463139	Terminal	9
42	1484377	Terminal (Plug)	3
43	1534282	Clip	1

©2006 HYSTER COMPANY

NOTES

WIRE HARNESS (Figure 4-20)
CHASSIS
YANMAR 2.6L DIESEL
(D/B 08/2006⇒)

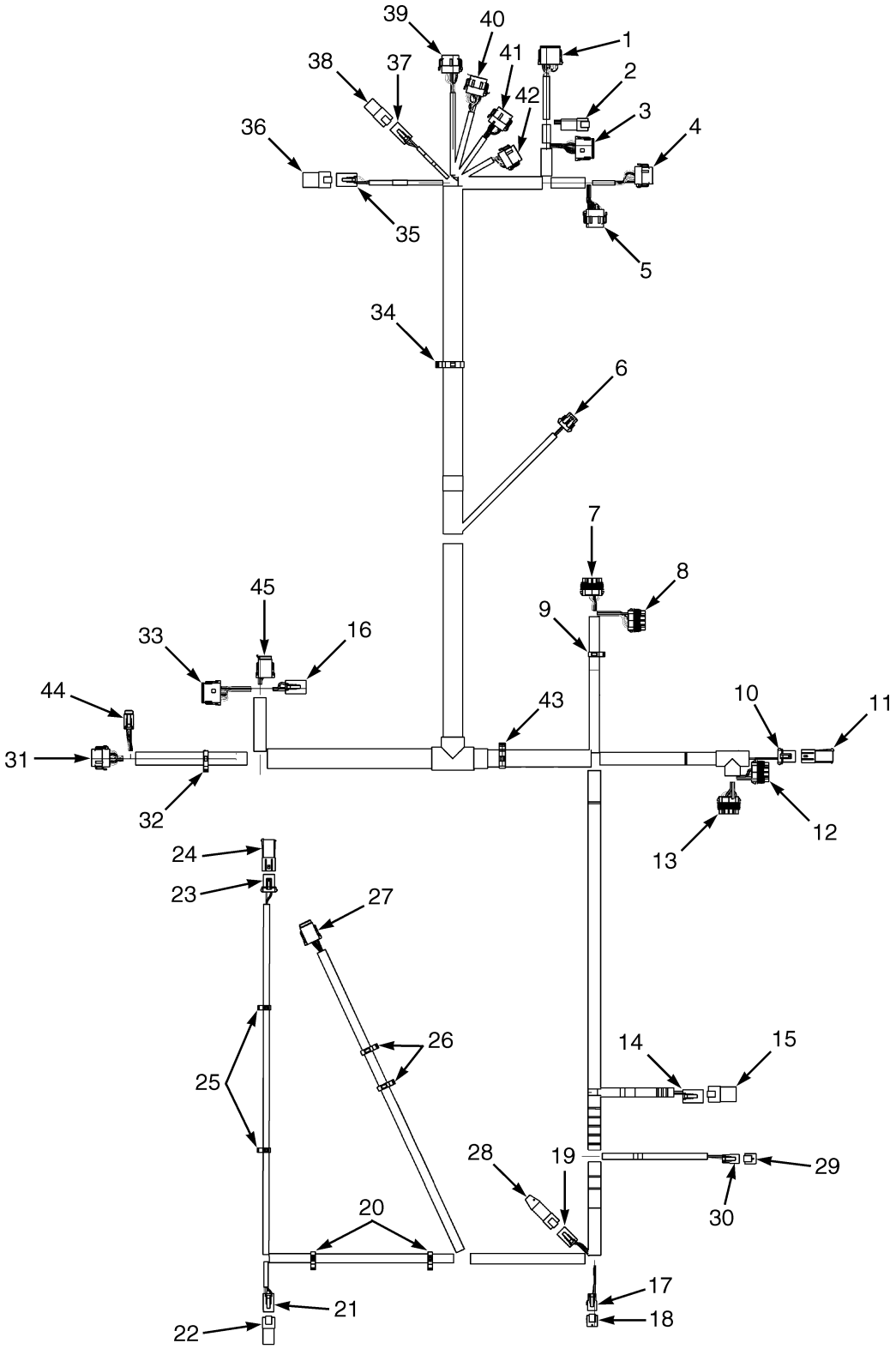

BP080506

©2006 HYSTER COMPANY

WIRE HARNESS
CHASSIS
YANMAR 2.6L DIESEL
(D/B 08/2006⇒)

ITEM	PART NO.	DESCRIPTION	QTY
	2085950	Wire Harness (Chassis)	1
1	. . . . .	Connector Assembly (Vehicle System Manager)	1
1	1525569	Connector	1
1	1500913	Secondary Lock	1
1	1330438	Terminal (Socket)	8
1	1363886	Terminal (Socket)	4
2	. . . . .	Connector Assembly (To Cowl Harness)	1
2	1489655	Connector (4 Way)	1
2	1330416	Secondary Lock	1
2	1330437	Terminal (Pin)	4
3	. . . . .	Connector Assembly (To Cowl Harness)	1
3	1493428	Connector (12-Way)	1
3	1500913	Secondary Lock	1
3	1330438	Terminal (Socket)	9
3	1484377	Terminal (Plug)	3
4	. . . . .	Connector Assembly (Vehicle System Manager)	1
4	1525567	Connector	1
4	1529046	Secondary Lock	1
4	1463139	Terminal	3
4	1484377	Terminal (Plug)	9
5	. . . . .	Connector Assembly (Vehicle System Manager)	1
5	1525569	Connector	1
5	1529046	Secondary Lock	1
5	1463139	Terminal	9
5	1484377	Terminal (Plug)	3
6	. . . . .	Connector Assembly (Horn)	1
6	1476064	Connector	1
6	1476109	Secondary Lock	1
6	1330356	Seal	2
6	1330355	Terminal	3
6	1476108	Seal	1
7	. . . . .	Connector Assembly (Power Distribution Manager)	1
7	1521184	Connector	1
7	1521188	Secondary Lock	1
7	1323579	Seal	5
7	1327164	Plug	2
7	1521989	Terminal	1
7	1402888	Seal	1
8	. . . . .	Connector Assembly (Power Distribution Manager)	1
8	1521183	Connector	1
8	1521188	Secondary Lock	1
8	1323579	Seal	7
8	1327164	Plug	1
8	1330281	Terminal	4
8	1521989	Terminal	3
9	1534828	Clip	1
10	. . . . .	Connector Assembly (Hydraulic Filter)	1
10	1329152	Connector	1
10	1329151	Secondary Lock	1

©2006 HYSTER COMPANY

WIRE HARNESS
CHASSIS
YANMAR 2.6L DIESEL
(D/B 08/2006⇒)

ITEM	PART NO.	DESCRIPTION	QTY
10	1330281	Terminal	2
10	1402888	Seal	2
11	1329150	Connector (End Cap)	1
11	1329151	Secondary Lock	1
11	1327164	Plug	2
12	. . . . .	Connector Assembly (Power Distribution Module)	1
12	1521185	Connector	1
12	1521188	Secondary Lock	1
12	1323579	Seal	8
12	1330281	Terminal	6
12	1521989	Terminal	2
13	. . . . .	Connector Assembly (Power Distribution Module)	1
13	1521186	Connector	1
13	1521188	Secondary Lock	1
13	1323579	Seal	7
13	1327164	Plug	1
13	1521989	Terminal	7
14	. . . . .	Connector Assembly (Accessory 2)	1
14	1514602	Connector	1
14	1514603	Secondary Lock	1
14	1330439	Insulator	1
14	1554359	Terminal	3
15	1514597	Connector (End Cap)	1
15	1330439	Insulator	4
16	. . . . .	Connector Assembly (Engine Harness)	1
16	1514602	Connector	1
16	1514603	Secondary Lock	1
16	1330439	Insulator	1
16	1554359	Terminal	3
17	. . . . .	Connector Assembly (Alternate Horn Button)	1
17	1490242	Connector	1
17	1490243	Secondary Lock	1
17	1330438	Terminal (Socket)	2
18	1351681	Connector (End Cap)	1
19	. . . . .	Connector Assembly (Buss Terminal 2)	1
19	1489656	Connector (4-Way)	1
19	1489657	Secondary Lock	1
19	1330438	Terminal (Socket)	5
20	1509890	Clip	2
21	. . . . .	Connector Assembly (To Backup Harness)	1
21	1490242	Connector	1
21	1490243	Secondary Lock	1
21	1330438	Terminal (Socket)	2
22	1351681	Connector (End Cap)	1
23	. . . . .	Connector Assembly (Coolant Level)	1
23	1329152	Connector	1
23	1329151	Secondary Lock	1
23	1330281	Terminal	2
23	1402888	Seal	2

©2006 HYSTER COMPANY

WIRE HARNESS
CHASSIS
YANMAR 2.6L DIESEL
(D/B 08/2006⇒)

ITEM	PART NO.	DESCRIPTION	QTY
24	1329150	Connector (End Cap)	1
24	1329151	Secondary Lock	1
24	1327164	Plug	2
25	1509888	Clip	2
26	1402815	Clip	2
27	. . . . .	Connector Assembly (To Seat Harness)	1
27	1541991	Connector	1
27	1541992	Secondary Lock	1
27	1463139	Terminal	8
28	1525577	Connector (With Resistor) (End Cap)	1
29	1626727	Connector (End Cap)	1
30	. . . . .	Connector Assembly (Keyswitch)	1
30	1490242	Connector	1
30	1490243	Secondary Lock	1
30	1330438	Terminal (Socket)	2
31	. . . . .	Connector Assembly (To Transmission Harness)	1
31	1525567	Connector	1
31	1529046	Secondary Lock	1
31	1463139	Terminal	10
31	1484377	Terminal (Plug)	2
32	1500899	Clip	2
33	. . . . .	Connector Assembly (To Engine Harness)	1
33	1493428	Connector (12-Way)	1
33	1500913	Secondary Lock	1
33	1330438	Terminal (Socket)	11
33	1484377	Terminal (Plug)	1
34	1540944	Clip	1
35	. . . . .	Connector Assembly (To Light/Cab Harness)	1
35	1514602	Connector	1
35	1514603	Secondary Lock	1
35	1554359	Terminal	4
36	1514597	Connector (End Cap)	1
36	1330439	Insulator	4
37	. . . . .	Connector Assembly (Accessory 1)	1
37	1545202	Connector	1
37	1546697	Secondary Lock	1
37	1554359	Terminal	2
38	1480187	Connector (End Cap)	1
38	1330439	Insulator	2
39	. . . . .	Connector Assembly (Vehicle System Manager)	1
39	1525570	Connector	1
39	1530037	Secondary Lock	1
39	1463139	Terminal	7
39	1484377	Terminal (Plug)	5
40	. . . . .	Connector Assembly (Vehicle System Manager)	1
40	1525569	Connector	1
40	1530037	Secondary Lock	1
40	1463139	Terminal	11
40	1484377	Terminal (Plug)	1

©2006 HYSTER COMPANY

WIRE HARNESS
CHASSIS
YANMAR 2.6L DIESEL
(D/B 08/2006⇒)

ITEM	PART NO.	DESCRIPTION	QTY
41	. . . . .	Connector Assembly (Vehicle System Manager)	1
41	1525568	Connector	1
41	1530037	Secondary Lock	1
41	1463139	Terminal	7
41	1484377	Terminal (Plug)	5
42	. . . . .	Connector Assembly (Vehicle System Manager)	1
42	1525567	Connector	1
42	1530037	Secondary Lock	1
42	1463139	Terminal	9
42	1484377	Terminal (Plug)	3
43	1534282	Clip	1
44	. . . . .	Connector Assembly (Transmission Harness)	1
44	1531973	Connector	1
44	1531974	Secondary Lock	1
44	1463139	Terminal	4
44	1484377	Terminal (Plug)	2
45	. . . . .	Connector Assembly (Engine Harness)	1
45	1541991	Connector	1
45	1541992	Secondary Lock	1
45	1463139	Terminal	8

©2006 HYSTER COMPANY

NOTES

WIRE HARNESS (Figure 4-21)
COWL WITH MONOTROL PEDAL WITH RETURN TO SET TILT

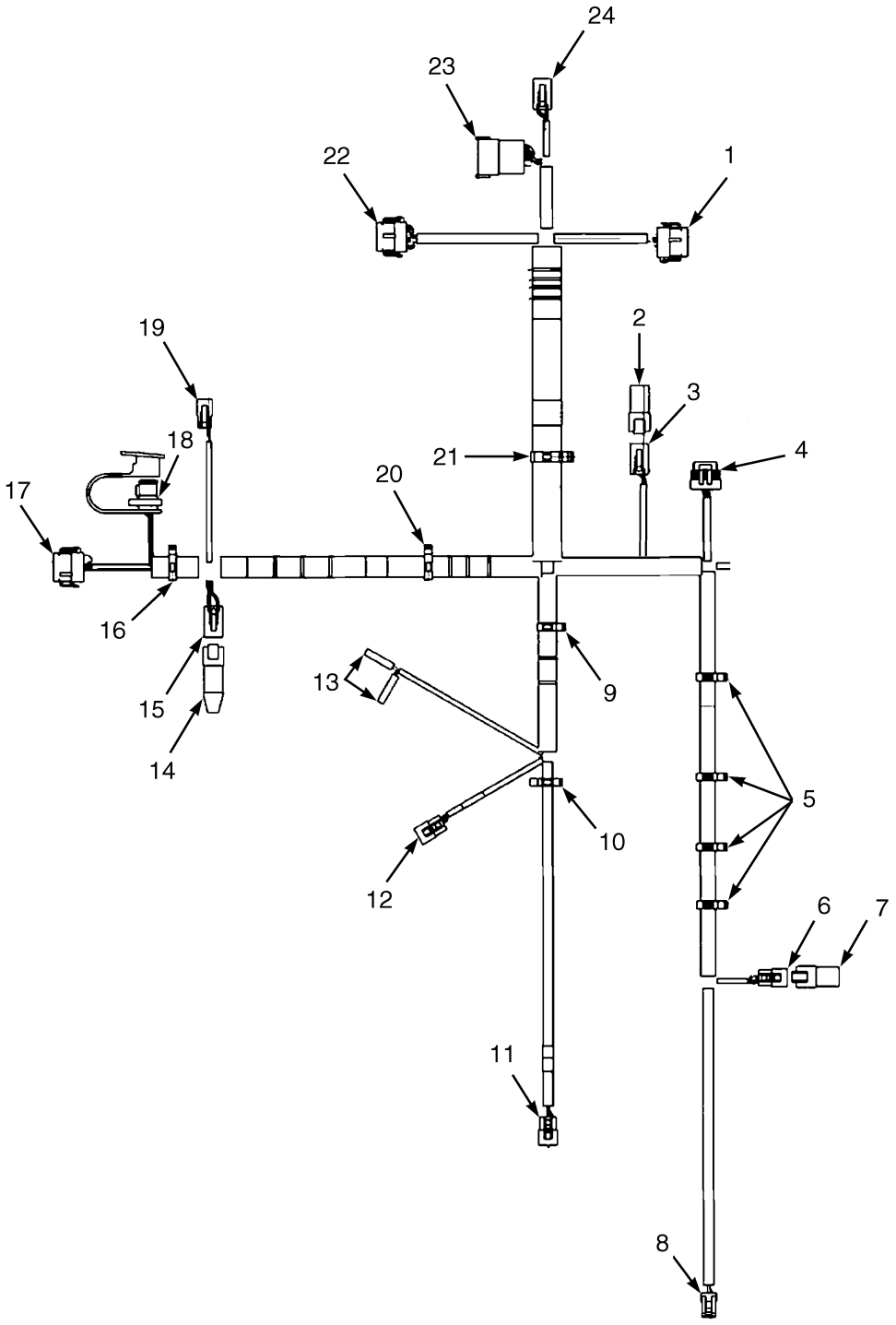

HP081564

©2006 HYSTER COMPANY

WIRE HARNESS
COWL WITH MONOTROL PEDAL
WITH RETURN TO SET TILT

ITEM	PART NO.	DESCRIPTION	QTY
	2070269	Wire Harness	1
1	1525568	Connector (Vehicle System Manager)	1
1	1463139	Terminal	10
1	1484377	Terminal (Plug)	2
2	1529046	Secondary Lock	1
3	1525584	Connector (Accelerator Pedal)	1
3	1532571	Terminal	6
4	1525573	Connector (End Cap) (End Cap)	1
4	1324309	Connector	1
5	1489656	Connector (4-Way) (To Monotrol Harness)	1
5	1330438	Terminal (Socket)	4
6	1489657	Secondary Lock	1
7	1509890	Clip	4
8	1484397	Connector (3-Way) (To Mast)	1
8	1330438	Terminal (Socket)	3
9	1463194	Secondary Lock	3
10	1351682	Connector (End Cap)	1
11	1327957	Connector (Brake Pressure)	1
11	1532571	Terminal	3
11	1330438	Terminal (Socket)	3
11	1490242	Connector	1
12	1484397	Connector (3-Way) (Brake Pedal)	1
12	1330438	Terminal (Socket)	3
13	1463194	Secondary Lock	1
14	1402816	Clip	1
15	1484397	Connector (3-Way) (Park Brake)	1
15	1324309	Connector	1
15	1330438	Terminal (Socket)	3
16	1463194	Secondary Lock	3
17	1324310	Connector (Brake Fluid)	1
17	1566227	Terminal	1
18	1324310	Connector (Brake Fluid)	1
18	1566227	Terminal	1
19	1534828	Clip	1
20	1525577	Connector (With Resistor) (End Cap)	1
21	1489656	Connector (4-Way) (Buss Terminal)	1
21	1330438	Terminal (Socket)	4
22	1489657	Secondary Lock	3
23	1525567	Connector (Display)	1
23	1463139	Terminal	5
23	1484377	Terminal (Plug)	7
24	1529046	Secondary Lock	1
25	1566116	Connector (J1939 Diag)	1
25	1330438	Terminal (Socket)	3
26	1532664	Secondary Lock	1
27	1566117	Dust Cap	1
28	1500899	Clip	2
29	1490242	Connector (Horn button)	1
29	1330438	Terminal (Socket)	2
30	1490243	Secondary Lock	1

©2006 HYSTER COMPANY

WIRE HARNESS
COWL WITH MONOTROL PEDAL
WITH RETURN TO SET TILT

ITEM	PART NO.	DESCRIPTION	QTY
31	1534282	Clip	1
32	1525570	Connector (Vehicle System Manager)	1
32	1463139	Terminal	7
32	1484377	Terminal (Plug)	5
33	1529046	Secondary Lock	1
34	1500925	Connector (RH Chassis)	1
34	1330437	Terminal (Pin)	9
34	1330439	Insulator	3
35	1352603	Secondary Lock	1
36	1489656	Connector (4-Way) (To RH Chassis)	1
36	1330438	Terminal (Socket)	4
37	1489657	Secondary Lock	1

©2006 HYSTER COMPANY

NOTES

WIRE HARNESS (Figure 4-22)
COWL WITH FORWARD/REVERSE LEVER
WITHOUT RETURN TO SET TILT

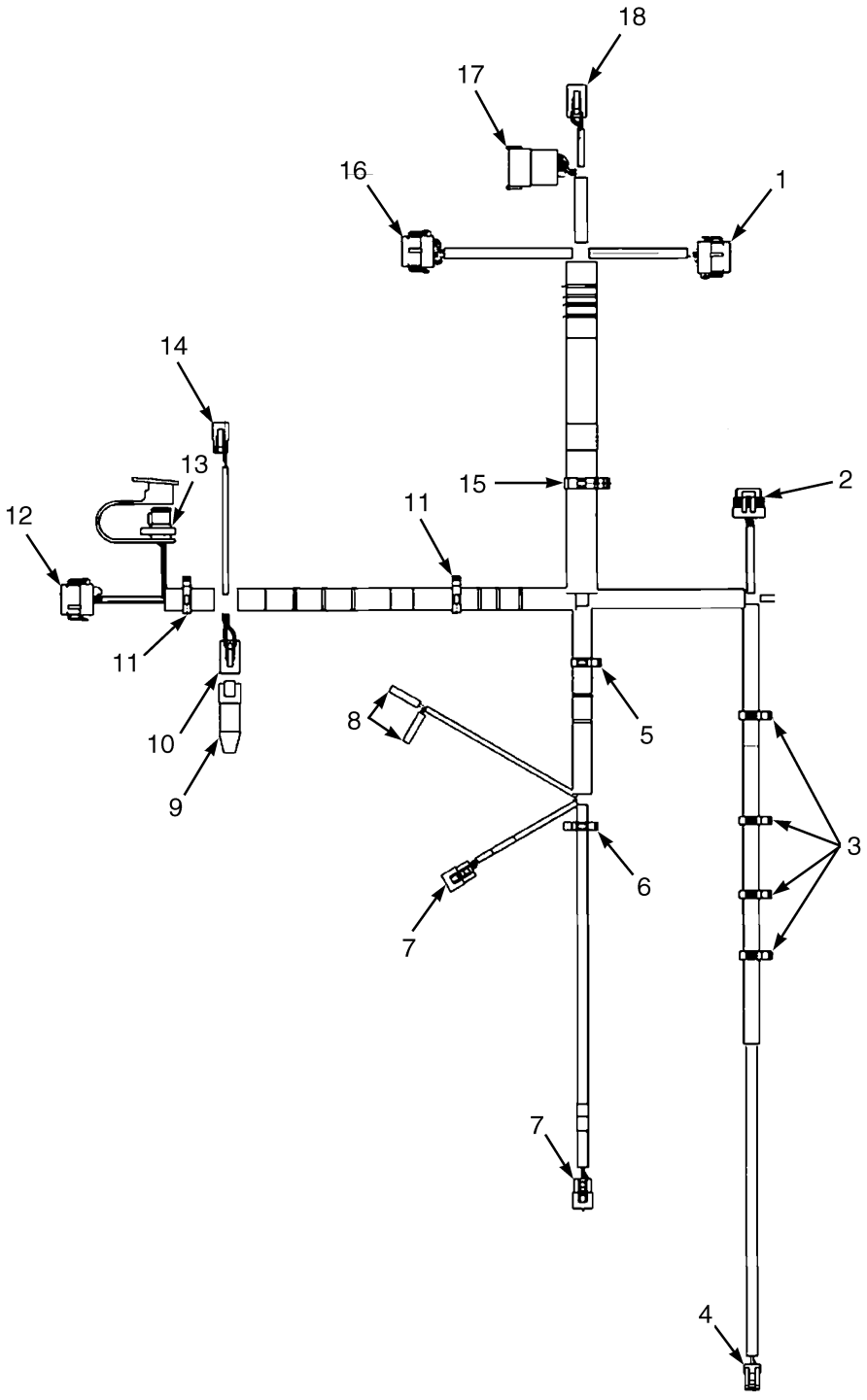

BP080443

©2006 HYSTER COMPANY

WIRE HARNESS
COWL WITH FORWARD/REVERSE LEVER
WITHOUT RETURN TO SET TILT

ITEM	PART NO.	DESCRIPTION	QTY
	2084829	Wire Harness (Cowl)	1
1	. . . . .	Connector Assembly (Vehicle System Manager)	1
1	1525568	Connector	1
1	1463139	Terminal	6
1	1484377	Terminal (Plug)	6
1	1529046	Secondary Lock	1
2	. . . . .	Connector Assembly (Accelerator Pedal Sensor)	1
2	1525584	Connector	1
2	1532571	Terminal	6
3	1509888	Clip	4
4	. . . . .	Connector Assembly (Brake Pressure)	1
4	1603021	Connector	1
4	1603236	Secondary Lock	1
4	1548517	Terminal (Socket)	3
4	1548519	Seal	3
5	1534828	Clip	1
6	1402816	Clip	1
7	. . . . .	Connector Assembly (Park Brake)	2
7	1484397	Connector (3-Way)	1
7	1463194	Secondary Lock	1
7	1330438	Terminal (Socket)	3
8	. . . . .	Connector Assembly (Brake Fluid)	2
8	1324309	Connector	1
8	1324310	Connector	1
9	1525577	Connector (With Resistor) (End Cap)	1
10	. . . . .	Connector Assembly	1
10	1489656	Connector (4-Way)	1
10	1489657	Secondary Lock	1
10	1330438	Terminal (Socket)	4
11	1500899	Clip	2
12	. . . . .	Connector Assembly (Display)	1
12	1525567	Connector	1
12	1529046	Secondary Lock	1
12	1463139	Terminal	5
12	1484377	Terminal (Plug)	7
13	. . . . .	Connector Assembly (J1939 Diagnostic)	1
13	1566116	Connector	1
13	1532664	Secondary Lock	1
13	1330438	Terminal (Socket)	3
13	1566117	Dust Cap	1
14	. . . . .	Connector Assembly (Horn Button)	1
14	1490242	Connector	1
14	1402813	Clip	1
14	1330438	Terminal (Socket)	2
15	1534282	Clip	1
16	. . . . .	Connector Assembly (Vehicle System Manager)	1
16	1525570	Connector	1
16	1529046	Secondary Lock	1
16	1463139	Terminal	7
16	1484377	Terminal (Plug)	5

©2006 HYSTER COMPANY

WIRE HARNESS
COWL WITH FORWARD/REVERSE LEVER
WITHOUT RETURN TO SET TILT

ITEM	PART NO.	DESCRIPTION	QTY
17	. . . . .	Connector Assembly (To RH Chassis)	1
17	1500925	Connector	1
17	1352603	Secondary Lock	1
17	1330437	Terminal (Pin)	6
17	1484377	Terminal (Plug)	6
18	. . . . .	Connector Assembly (To RH Chassis)	1
18	1489656	Connector (4-Way)	1
18	1489657	Secondary Lock	1
18	1330438	Terminal (Socket)	4

©2006 HYSTER COMPANY

NOTES

WIRE HARNESS (Figure 4-23)
LPG ENGINE
MAZDA 2.0L
(⇒D/B 08/2006)

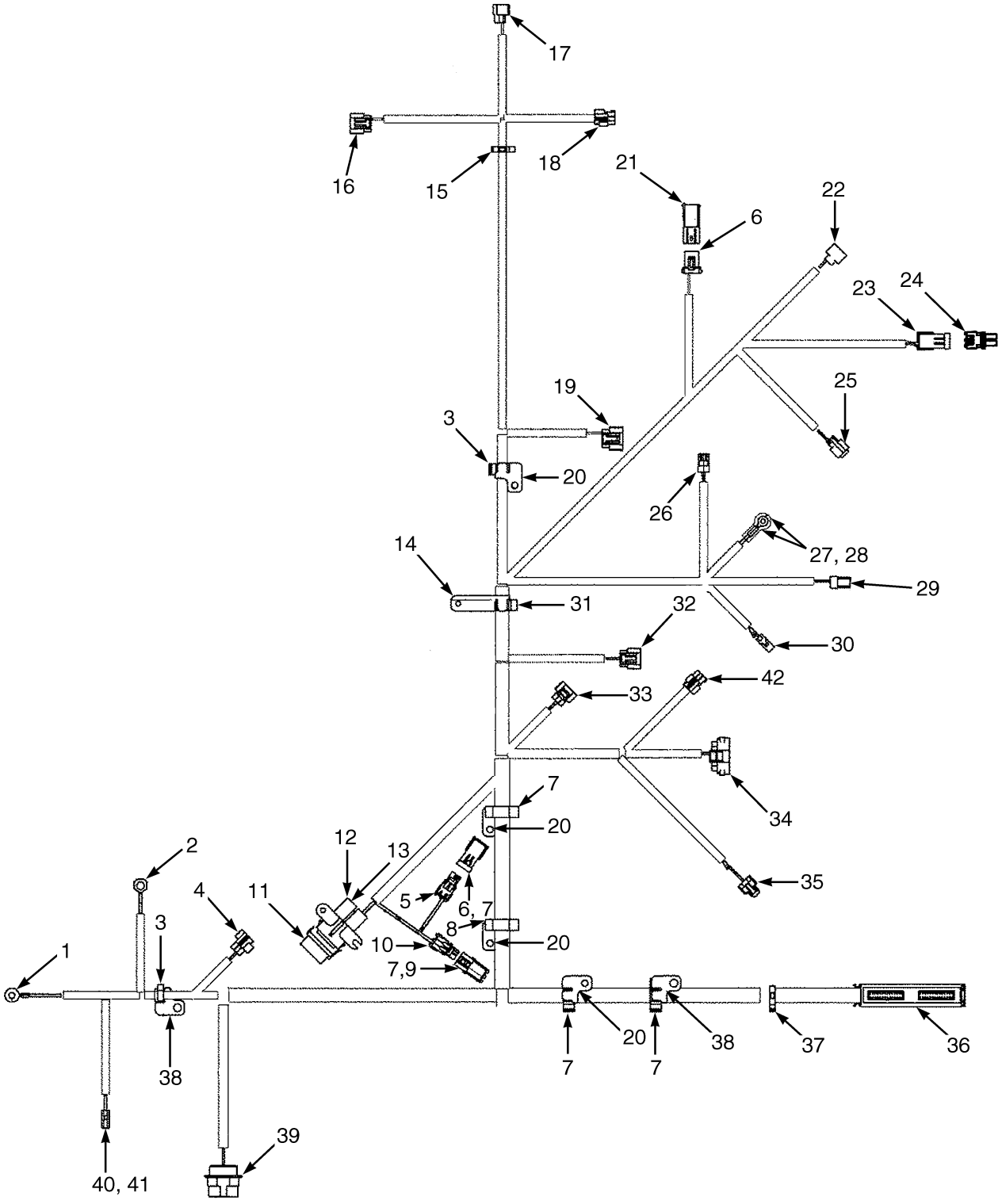

HP081563

©2006 HYSTER COMPANY

WIRE HARNESS
LPG ENGINE
MAZDA 2.0L
(⇒D/B 08/2006)

ITEM	PART NO.	DESCRIPTION	QTY
	2065855	Wire Harness (LPG Engine)	1
1	1493458	E-Ring	1
2	1402890	Terminal (Block Ground)	1
3	1532775	Clip	2
4	1561518	Connector (Oxygen Sensor)	1
5	1465468	Connector	2
6	1547482	Connector	2
7	1567333	Clip	2
8	1532777	Clip	4
9	1547482	Connector	1
10	1378652	Connector Body	1
11	1454862	Cover (With Seal) (Alternator)	1
12	1378418	Fuse (50 Amp)	1
13	1543553	Fuse Holder	1
14	1558226	Bracket	1
15	1402816	Clip	1
16	1531237	Connector Body (Igniter)	1
17	1531239	Connector (Coil)	1
18	1482651	Connector (Condenser)	1
19	1531240	Connector Body (Distributor)	1
20	1532761	Bracket	4
21	1329150	Connector (LPG Low Pressure Switch)	1
22	1474764	Connector (LPG Idle Solenoid)	1
23	1465469	Connector (Air Filter Restriction)	1
24	1465468	Connector (Air Filter Restriction Sensor)	1
25	1474763	Connector (Main LPG Solenoid)	1
26	1327957	Connector (Oil Pressure Sensor)	1
27	1520864	Boot (Alternator)	1
28	129888	Terminal	1
29	1323586	Connector (Coolant Temperature)	1
30	1308259	Connector Body (Alternator)	1
31	1532776	Clip	1
32	1560441	Connector (MAP)	1
33	1531991	Connector (TPS)	1
34	1531231	Connector (Governor)	1
35	1482654	Connector (Injector)	1
36	1547479	Housing	1
37	1500899	Clip	1
38	1558228	Bracket	2
39	1531502	Connector (Chassis Harness)	1
40	1581313	Connector (Starter)	1
41	1581315	Terminal	1
42	1482651	Connector (Intake Air Tempertor Sensor)	1

©2006 HYSTER COMPANY

WIRE HARNESS (Figure 4-24)
LPG ENGINE
MAZDA 2.0L
(D/B 08/2006⇒)

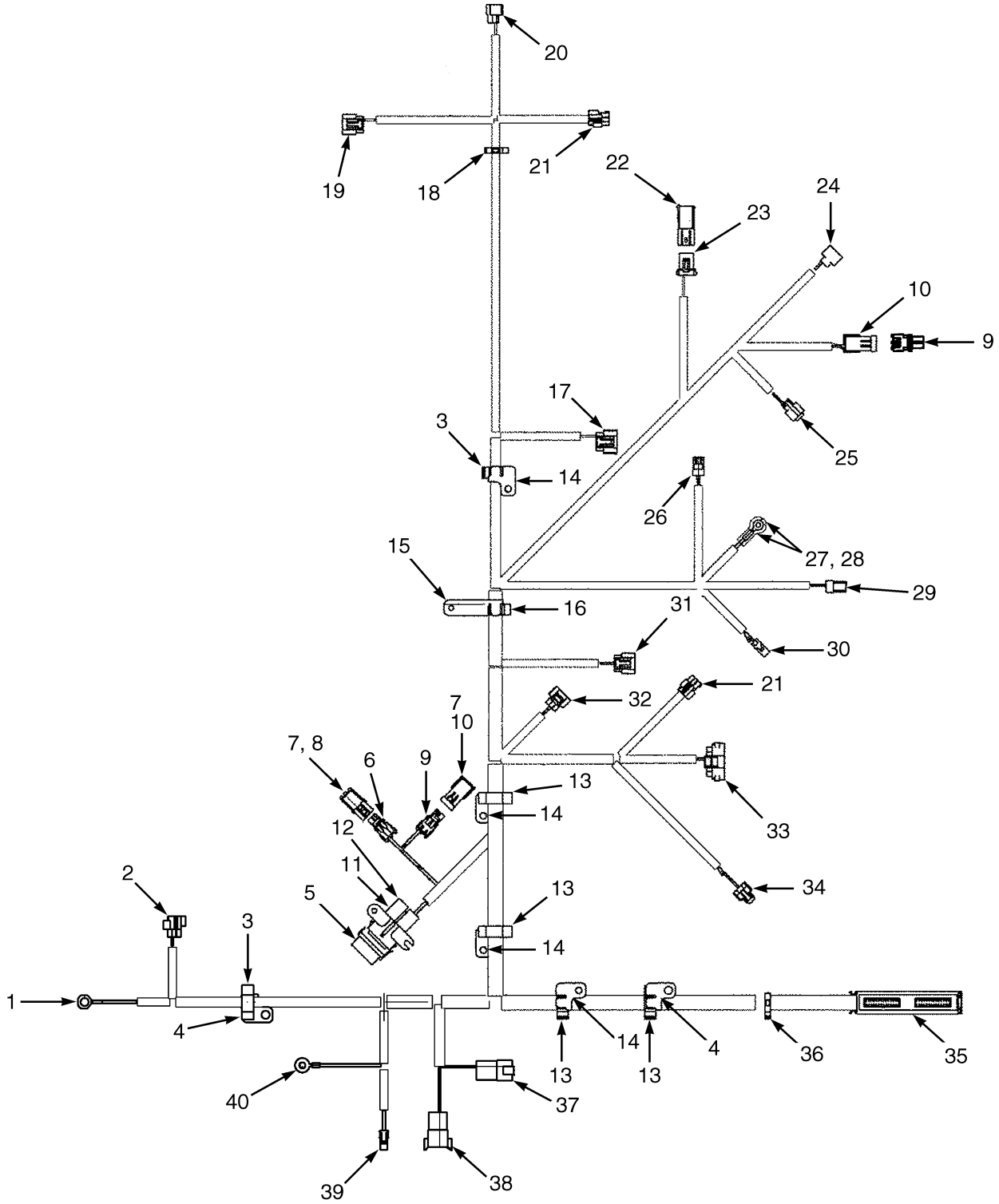

BP080503

©2006 HYSTER COMPANY

WIRE HARNESS
LPG ENGINE
MAZDA 2.0L
(D/B 08/2006⇒)

ITEM	PART NO.	DESCRIPTION	QTY
	2087189	Wire Harness (LPG Engine)	1
1	1402890	Terminal	1
2	1561518	Connector (Oxygen Sensor)	1
3	1532775	Clip	2
4	1558228	Bracket	2
5	1454862	Cover (With Seal) (Alternator)	1
6	1378652	Connector Body	1
7	1567333	Clip	2
8	1547482	Connector	1
9	1465468	Connector (Air Filter Restriction Sensor)	2
10	1465469	Connector (Air Filter Restriction)	2
11	1378418	Fuse (50 Amp)	1
12	1543553	Fuse Holder	1
13	1532777	Clip	4
14	1532761	Bracket	4
15	1558226	Bracket	1
16	1532776	Clip	1
17	1531240	Connector Body (Distributor)	1
18	1402816	Clip	1
19	1531237	Connector Body (Igniter)	1
20	1531239	Connector (Coil)	1
21	1482651	Connector (Condenser)	2
22	1329150	Connector (LPG Low Pressure Switch)	1
23	1329152	Connector	1
24	1474764	Connector (Idle LPG Solenoid)	1
25	1474763	Connector (Main LPG Solenoid)	1
26	1327957	Connector (Oil Pressure Sensor)	1
27	1520864	Boot (Alternator)	1
28	129888	Terminal	1
29	1323586	Connector (Coolant Temperature)	1
30	1308259	Connector Body (Alternator)	1
31	1560441	Connector (MAP Sensor)	1
32	1531991	Connector (Throttle Position Sensor)	1
33	1531231	Connector (Governor)	1
34	1482654	Connector (Injector)	1
35	1547479	Housing	1
36	1500899	Clip	1
37	1514597	Connector (Chassis Harness)	1
37	1514598	Secondary Lock	1
38	1330413	Connector (Chassis Harness)	1
38	1330418	Secondary Lock	1
39	1581313	Connector (Starter)	1
40	1493458	E-Ring	1

©2006 HYSTER COMPANY

WIRE HARNESS (Figure 4-25)
DIESEL ENGINE
YANMAR 2.6L
(⇒D/B 08/2006)

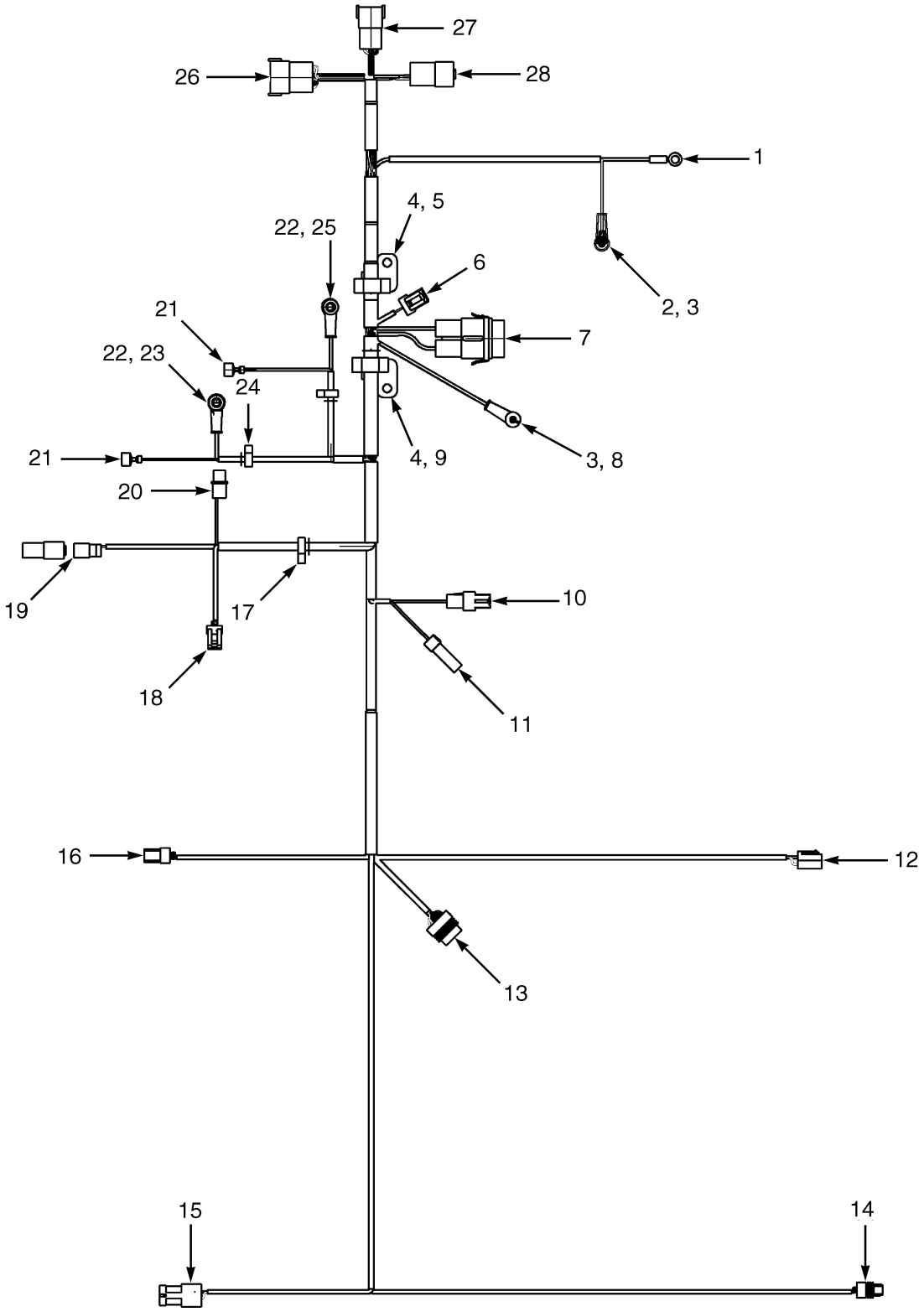

HP081650

©2006 HYSTER COMPANY

WIRE HARNESS
DIESEL ENGINE
YANMAR 2.6L
(⇒D/B 08/2006)

ITEM	PART NO.	DESCRIPTION	QTY
	2060844	Wire Harness (Engine)	1
1	1559049	Terminal (Glow Plug)	1
1	190382	Boot	1
2	1454860	Connector (Fuse)	1
2	1382695	Connector	2
2	1382694	Fuse Connector	2
2	1454829	Fuse (60 Amp)	1
2	1454862	Cover (With Seal)	1
3	1546673	Connector (Engine RPM Sensor)	1
3	1323576	Terminal	3
4	1559049	Terminal (Starter Solenoid)	1
4	190382	Boot	1
5	148611	Terminal (Starter Stud)	1
6	1547368	Connector (Alternator)	1
6	1565098	Fitting	2
7	1582484	Connector (Fuel Shut-off Solenoid)	1
8	1582486	Connector (Cold Start Aid)	1
9	1521328	Terminal (Relay Power To Glow Plugs)	1
9	190383	Boot	1
10	325789	Fitting (Relay Ground)	1
11	1521328	Terminal (Fused Power Positive)	1
11	190383	Boot	1
12	325789	Fitting (Relay Signal)	1
13	1547369	Connector (Fuel Filter/Water Separator)	1
14	1476077	Connector (Fuel Level Sensor)	1
14	1323576	Terminal	2
15	1525584	Connector (Throttle Position Sensor)	1
15	1532571	Terminal	6
16	1323586	Connector (Water Temperature Sensor)	1
16	1323576	Terminal	2
17	1465469	Connector (Air Filter Sensor)	1
17	1323578	Pin	2
17	1402888	Seal	2
17	1498416	Terminal	2
18	1327957	Connector (Low Engine Oil Pressure Switch)	1
18	1532571	Terminal	3
19	1330419	Connector (Pull Actuator)	1
19	1330436	Terminal	2
19	1330424	Secondary Lock	1
19	1351681	Connector	1
20	1531502	Connector (Engine To Chassis)	1
20	1484709	Terminal (Pin)	3
20	1330437	Terminal (Pin)	19
20	1330439	Insulator	7
21	1500901	Clip	1
22	1509888	Clip	2
23	1532776	Clip	2
24	1532761	Bracket	2

©2006 HYSTER COMPANY

WIRE HARNESS (Figure 4-26)
DIESEL ENGINE
YANMAR 2.6L
(D/B 08/2006⇒)

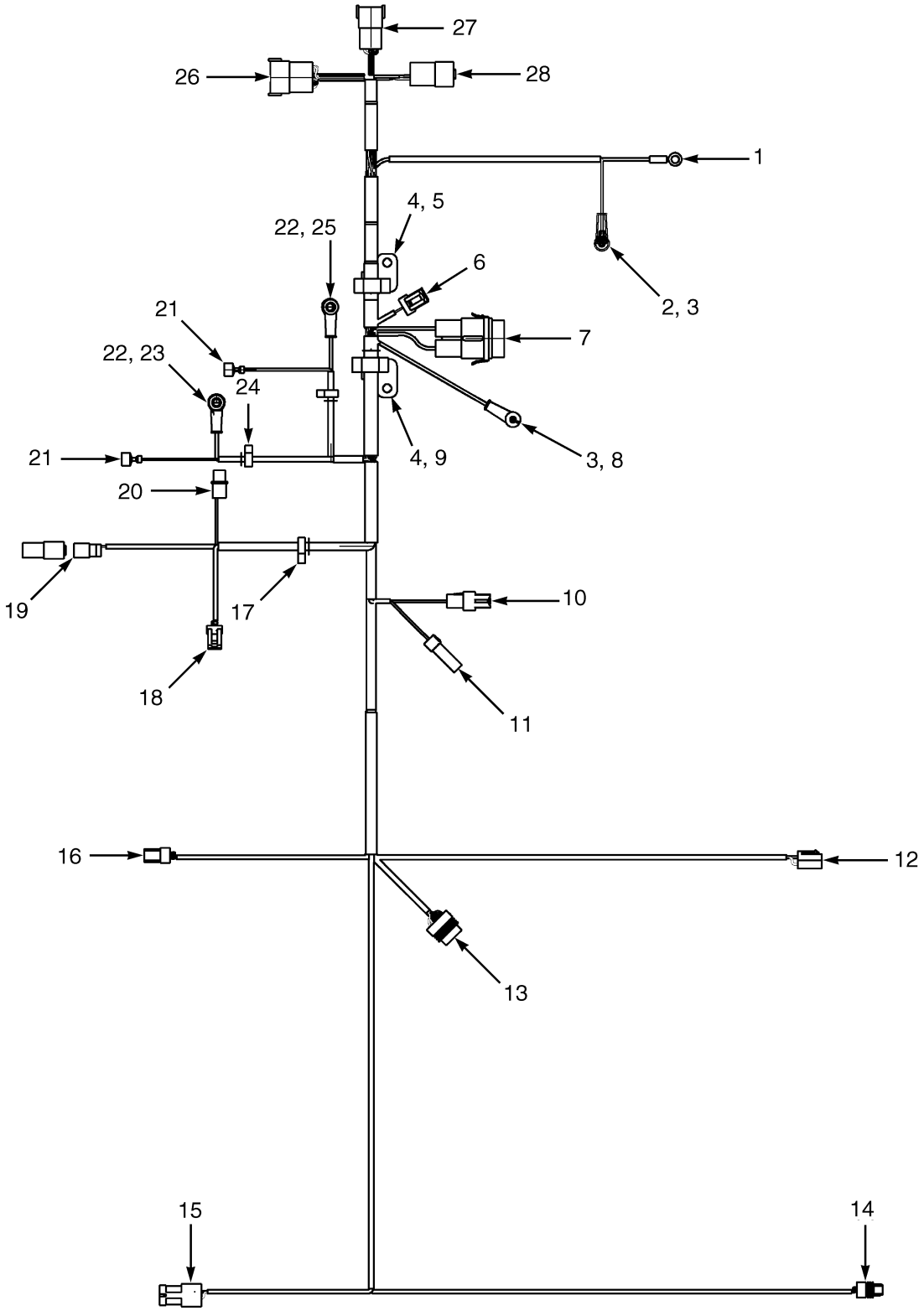

HP081650

©2006 HYSTER COMPANY

WIRE HARNESS
DIESEL ENGINE
YANMAR 2.6L
(D/B 08/2006⇒)

ITEM	PART NO.	DESCRIPTION	QTY
	2087191	Wire Harness	1
1	1559049	Terminal (Glow Plug)	1
1	190382	Boot	1
2	1454860	Connector (Fuse)	1
2	1382695	Connector	2
2	1382694	Fuse Connector	2
2	1454829	Fuse (60 Amp)	1
2	1454862	Cover (With Seal)	1
3	1546673	Connector (Engine RPM Sensor)	1
3	1323576	Terminal	3
4	1559049	Terminal (Starter Solenoid)	1
4	190382	Boot	1
5	148611	Terminal (Starter Stud)	1
6	1547368	Connector (Alternator)	1
6	1565098	Fitting	2
7	1582484	Connector (Fuel Shut-off Solenoid)	1
8	1582486	Connector (Cold Start Aid)	1
9	1521328	Terminal (Relay Power To Glow Plugs)	1
9	190383	Boot	1
10	325789	Fitting (Relay Ground)	1
11	1521328	Terminal (Fused Power Positive)	1
11	190383	Boot	1
12	325789	Fitting (Relay Signal)	1
13	1547369	Connector (Fuel Filter/Water Separator)	1
14	1476077	Connector (Fuel Level Sensor)	1
14	1323576	Terminal	2
15	1525584	Connector (Throttle Position Sensor)	1
15	1532571	Terminal	6
16	1323586	Connector (Water Temperature Sensor)	1
16	1323576	Terminal	2
17	1465469	Connector (Air Filter Sensor)	1
17	1323578	Pin	2
17	1402888	Seal	2
17	1498416	Terminal	2
18	1327957	Connector (Low Engine Oil Pressure Switch)	1
18	1532571	Terminal	3
19	1330419	Connector (Pull Actuator)	1
19	1330436	Terminal	2
19	1330424	Secondary Lock	1
19	1351681	Connector	1
20	1531502	Connector (Engine To Chassis)	1
20	1484709	Terminal (Pin)	3
20	1330437	Terminal (Pin)	19
20	1330439	Insulator	7
21	1500901	Clip	1
22	1509888	Clip	2
23	1532776	Clip	2
24	1532761	Bracket	2

©2006 HYSTER COMPANY

WIRE HARNESS (Figure 4-27)
ELECTRONIC CONTROL VALVE
3 FUNCTION

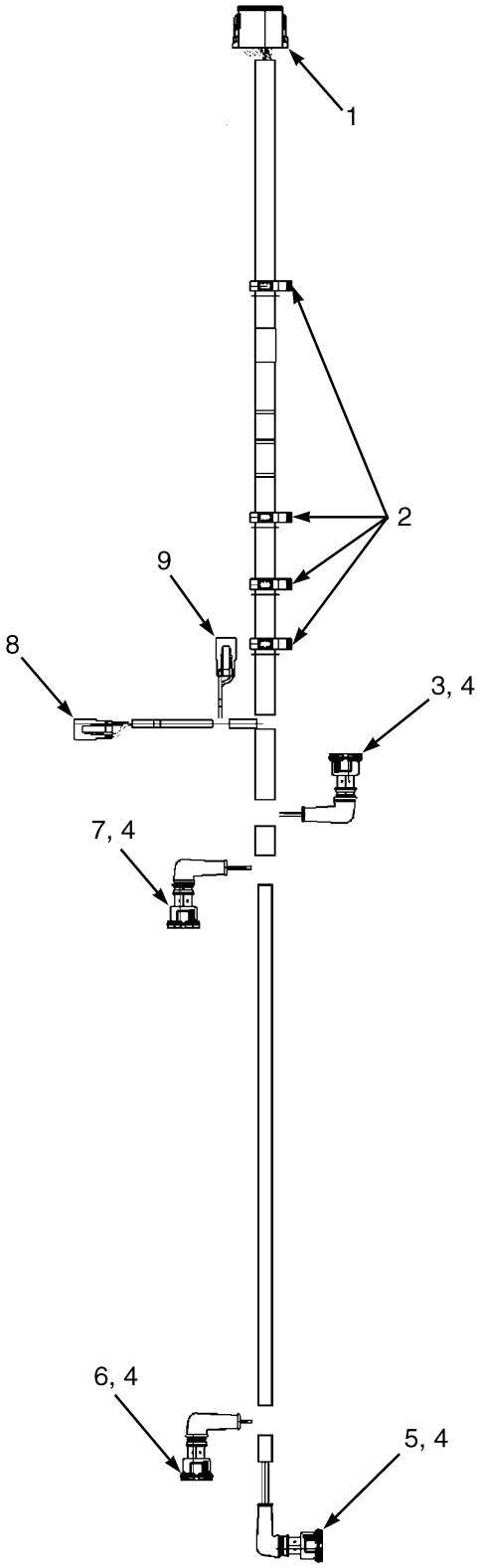

HP081569

©2006 HYSTER COMPANY

WIRE HARNESS
ELECTRONIC CONTROL VALVE
3 FUNCTION

ITEM	PART NO.	DESCRIPTION	QTY
	2060198	Wire Harness (Electronic Control Valve)	1
1	1525564	Connector (Vehicle System Management)	1
1	1330438	Terminal (Socket)	9
1	1330439	Insulator	3
1	1525564	Connector	1
1	1500913	Secondary Lock	1
2	1402815	Clip	4
3	1531162	Connector (2A Tilt)	1
3	1562649	Seal	2
3	1402814	Terminal	2
4	190383	Boot	4
5	1531162	Connector (2B Tilt)	1
5	1402814	Terminal	2
5	1562649	Seal	2
6	1493435	Connector (2-Way) (3B Auxiliary 1)	1
6	1562649	Seal	2
6	1402814	Terminal	2
7	1493435	Connector (2-Way) (3A Auxiliary 1)	1
7	1562649	Seal	2
7	1402814	Terminal	2
8	1490242	Connector	1
8	1330438	Terminal (Socket)	2
8	1490243	Secondary Lock	2
9	1490242	Connector	1
9	1330438	Terminal (Socket)	2
9	1490243	Secondary Lock	2

©2006 HYSTER COMPANY

WIRE HARNESS (Figure 4-28)
ELECTRONIC CONTROL VALVE
4 FUNCTION

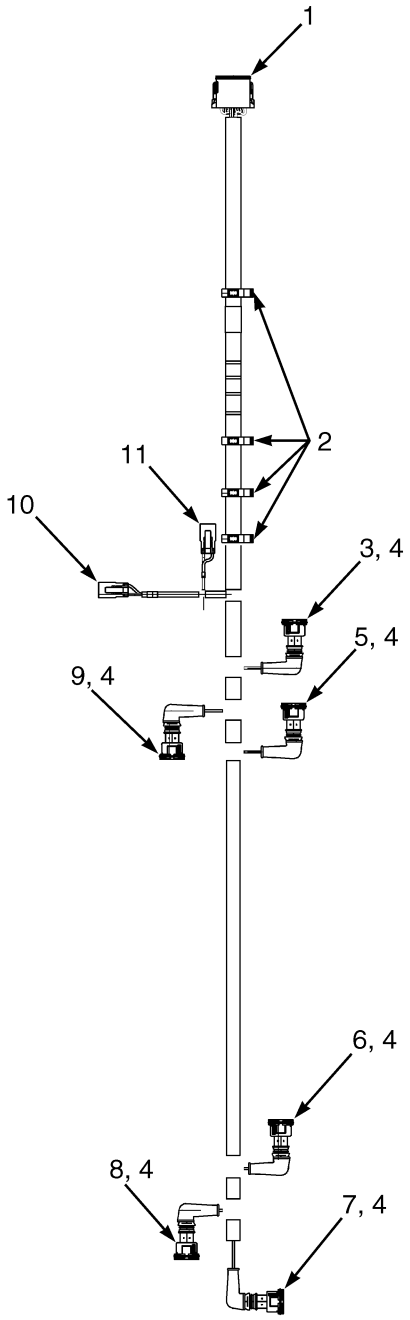

HP081568

©2006 HYSTER COMPANY

WIRE HARNESS
ELECTRONIC CONTROL VALVE
4 FUNCTION

ITEM	PART NO.	DESCRIPTION	QTY
	2058909	Wire Harness (Electronic Control Valve)	1
1	1525564	Connector (Vehicle System Mangement)	1
1	1330438	Terminal (Socket)	12
1	1500913	Secondary Lock	1
2	1402815	Clip	4
3	1531162	Connector (2A Tilt)	1
3	1562649	Seal	2
3	1402814	Terminal	2
4	190383	Boot	6
5	1493447	Connector (4A Auxiliary 2)	1
5	1562649	Seal	2
5	1402814	Terminal	2
6	1493447	Connector (4B Auxiliary 2)	1
6	1562649	Seal	2
6	1402814	Terminal	2
7	1493435	Connector (2-Way) (2B Tilt)	1
7	1562649	Seal	2
7	1402814	Terminal	2
8	1493447	Connector (3B Auxiliary 1)	1
8	1562649	Seal	2
8	1402814	Terminal	2
9	1493435	Connector (2-Way) (3A Auxiliary 1)	1
9	1562649	Seal	2
9	1402814	Terminal	2
10	1490242	Connector (Lift)	1
10	1330438	Terminal (Socket)	2
10	1490243	Secondary Lock	1
11	1490242	Connector (Lower)	1
11	1330438	Terminal (Socket)	2
11	1490243	Secondary Lock	1

©2006 HYSTER COMPANY

WIRE HARNESS (Figure 4-29)
TRANSMISSION
SINGLE SPEED
(⇒D/B 08/2006)

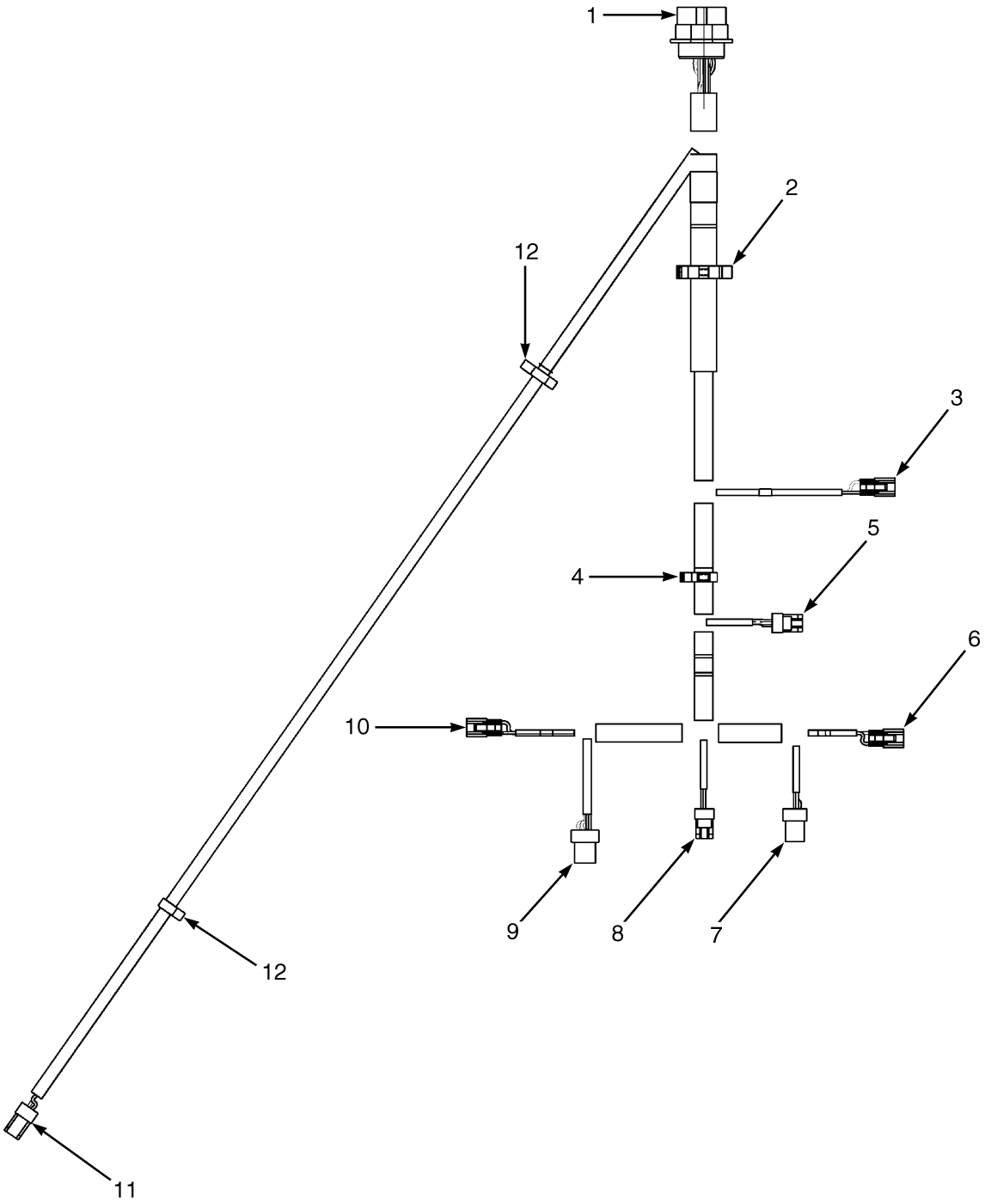

HP081570

©2006 HYSTER COMPANY

WIRE HARNESS
TRANSMISSION
SINGLE SPEED
(⇒D/B 08/2006)

ITEM		PART NO.	DESCRIPTION	QTY
	a	2070731	Wire Harness (Transmission)	1
	b	2082323	Wire Harness (Transmission)	1
1		1500919	Connector (To Chassis)	1
1		1330437	Terminal (Pin)	14
1	**a**	1330439	Insulator	9
1	**b**	1484377	Terminal (Plug)	9
2	**a**	1402813	Clip	1
2	**b**	1509890	Clip	1
3	**a**	1490242	Connector (Forward Clutch 1)	1
3	**a**	1330438	Terminal (Socket)	2
3	**a**	1490243	Secondary Lock	1
3	**b**	1603021	Connector (Forward Clutch 1)	1
3	**b**	1603236	Secondary Lock	1
3	**b**	1548517	Terminal (Socket)	3
3	**b**	1548519	Seal	3
4		1402815	Clip	1
5		1327957	Connector (Forward Pressure 1)	1
5		1532571	Terminal	3
6		1490242	Connector (Reverse Clutch 1)	1
6		1330438	Terminal (Socket)	2
6		1490243	Secondary Lock	1
7		1546673	Connector (Shaft RPM)	1
7		1323576	Terminal	3
8	**a**	1327957	Connector (Reverse Pressure 1)	1
8	**a**	1532571	Terminal	3
9	**b**	1548517	Terminal (Socket)	3
9	**b**	1548519	Seal	3
9	**b**	1603021	Connector (Reverse Pressure 1)	1
9	**b**	1603236	Secondary Lock	1
9		1558156	Connector (Tail Shaft RPM)	1
9		1323576	Terminal	4
10		1490242	Connector (Transmission Check Valve)	1
10		1490243	Secondary Lock	1
10		1330438	Terminal (Socket)	2
11		1402868	Connector (Transmission Temperature)	1
11		1323576	Terminal	2
12		1509888	Clip	2

FOOTNOTES:
a ⇒ D/B 09/2005
b D/B 09/2005 ⇒

©2006 HYSTER COMPANY

WIRE HARNESS (Figure 4-30)
TRANSMISSION
SINGLE SPEED
(D/B 08/2006⇒)

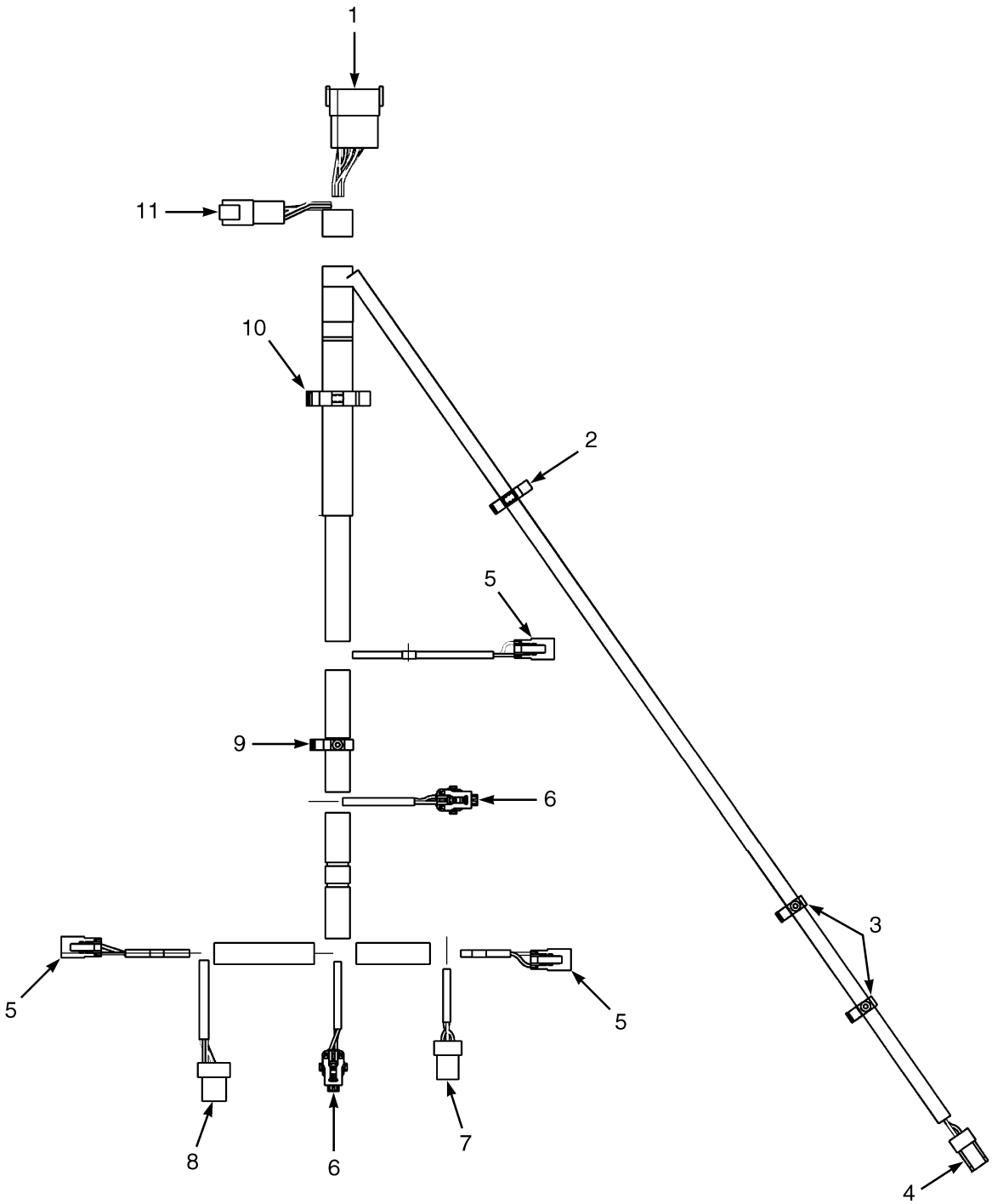

BP080478

©2006 HYSTER COMPANY

WIRE HARNESS
TRANSMISSION
SINGLE SPEED
(D/B 08/2006⇒)

ITEM	PART NO.	DESCRIPTION	QTY
	2085943	Wire Harness	1
1	. . . . .	Connector Assembly (To RH Chassis Harness)	1
1	1623280	Connector	1
1	1623281	Secondary Lock	1
1	1463138	Pin	10
1	1484377	Terminal (Plug)	2
2	1402816	Clip	1
3	1509888	Clip	2
4	. . . . .	Connector Assembly (Temperature)	1
4	1402868	Connector	1
4	1323576	Terminal	2
5	. . . . .	Connector Assembly (Clutch Forward/Reverse 1)	1
5	1490242	Connector	1
5	1490243	Secondary Lock	1
5	1330438	Terminal (Socket)	2
6	. . . . .	Connector Assembly (Forward/Reverse 1 Pressure)	1
6	1603021	Connector	1
6	1603236	Secondary Lock	1
6	1548517	Terminal (Socket)	3
6	1548519	Seal	3
7	. . . . .	Connector Assembly (Turbine Shaft RPM)	1
7	1546673	Connector	1
7	1323576	Terminal	3
8	. . . . .	Connector Assembly (Tail Shaft RPM)	1
8	1558156	Connector	1
8	1323576	Terminal	4
9	1509890	Clip	1
10	1402813	Clip	1
11	. . . . .	Connector Assembly (To RH Chassis Harness)	1
11	1530960	Connector	1
11	1530961	Secondary Lock	1
11	1463138	Pin	4
11	1484377	Terminal (Plug)	2

©2006 HYSTER COMPANY

WIRE HARNESS (Figure 4-31)
LIGHTS
(⇒PENDING PER ECN 10419449)

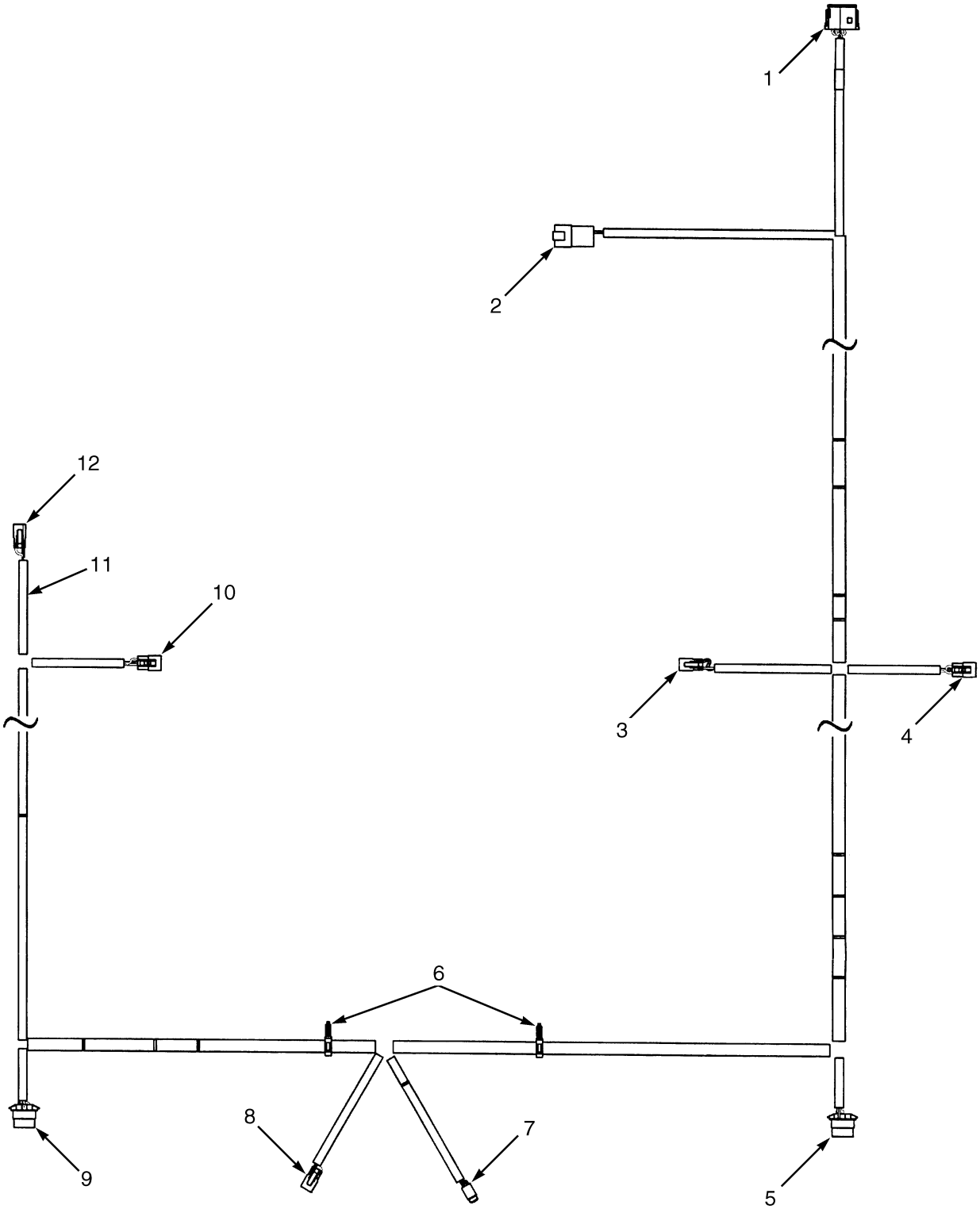

BP080332

©2006 HYSTER COMPANY

WIRE HARNESS
LIGHTS
(⇒PENDING PER ECN 10419449)

ITEM	PART NO.	DESCRIPTION	QTY
	2074737	Wire Harness (Lights)	1
1	. . . . .	Connector Assembly (Vehicle System Mangement)	1
1	1525566	Connector	1
1	1500913	Secondary Lock	1
1	1330438	Terminal (Socket)	5
1	1330439	Insulator	7
2	. . . . .	Connector Assembly (Chassis Harness)	1
2	1514597	Connector	1
2	1514598	Secondary Lock	1
2	1484709	Terminal (Pin)	4
3	. . . . .	Connector Assembly (RH Front Work Light)	1
3	1490242	Connector	1
3	1490243	Secondary Lock	1
3	1363886	Terminal (Socket)	2
4	. . . . .	Connector Assembly (RH Front Signal Light)	1
4	1484397	Connector (3-Way)	1
4	1463194	Secondary Lock	1
4	1330438	Terminal (Socket)	3
5	. . . . .	Connector Assembly (RH Rear Signal)	1
5	1531486	Connector	1
5	930591	Secondary Lock	1
5	1330355	Terminal	5
5	1330356	Seal	1
5	1482668	Plug	1
5	1476108	Seal	4
6	1509890	Clip	2
7	. . . . .	Connector Assembly (Strobe Light)	1
7	1484557	Connector	1
7	1484558	Secondary Lock	1
7	1463139	Terminal	2
8	. . . . .	Connector Assembly (Rear Work Light)	1
8	1490242	Connector	1
8	1490243	Secondary Lock	1
8	1363886	Terminal (Socket)	2
9	. . . . .	Connector Assembly (LH Rear Signal Light)	1
9	1531486	Connector	1
9	930591	Secondary Lock	1
9	1330355	Terminal	5
9	1330356	Seal	1
9	1482668	Plug	1
9	1476108	Seal	4
10	. . . . .	Connector Assembly (LH Front Signal Light)	1
10	1484397	Connector (3-Way)	1
10	1463194	Secondary Lock	1
10	1330438	Terminal (Socket)	3
11	175944	Heat Shrink Tube	AR
12	. . . . .	Connector Assembly (LH Front Work Light)	1
12	1490242	Connector	1
12	1490243	Secondary Lock	1
12	1363886	Terminal (Socket)	2

©2006 HYSTER COMPANY

WIRE HARNESS (Figure 4-32)
LIGHTS
(PENDING PER ECN 10419449⇒)

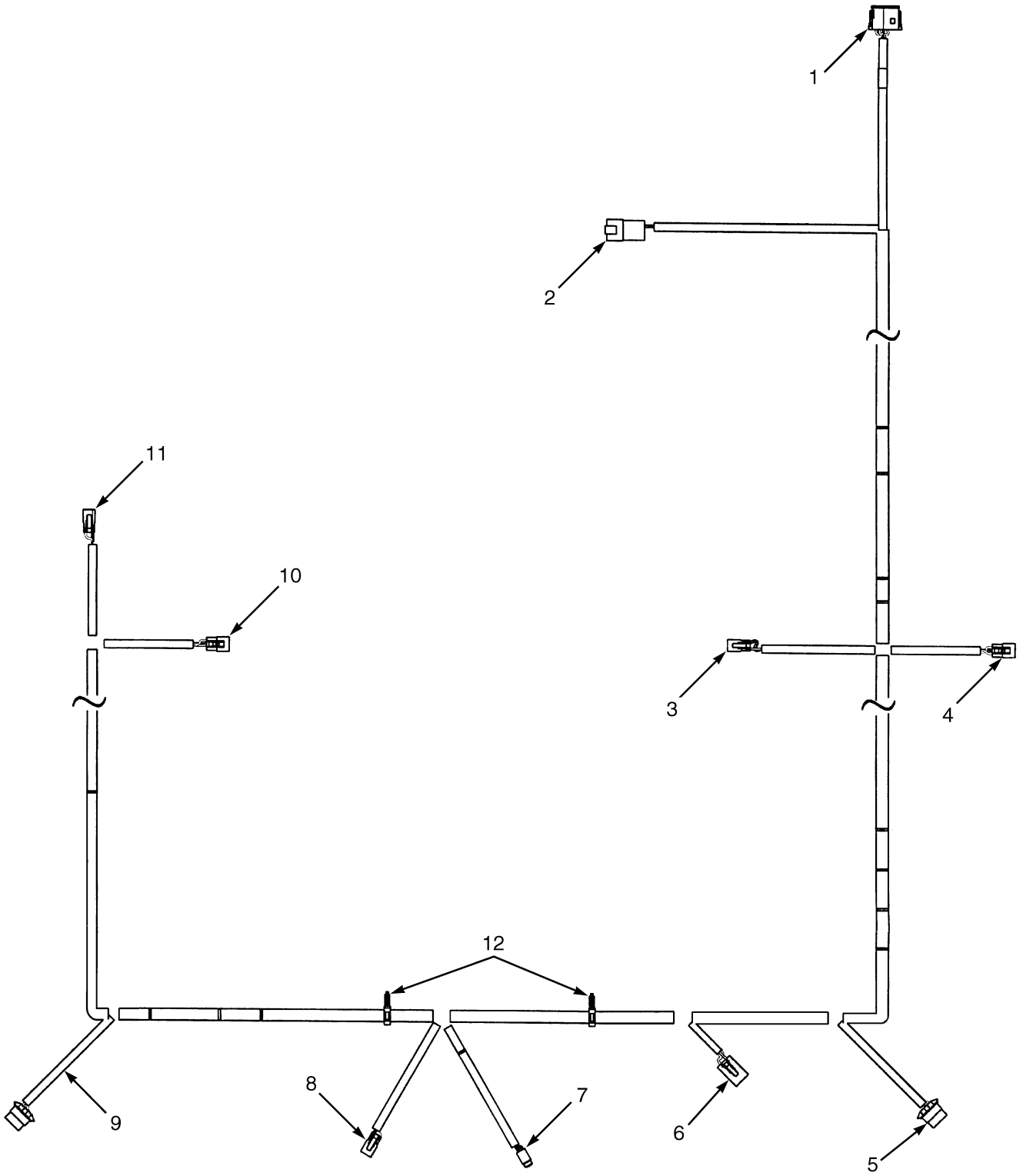

BP080521

©2006 HYSTER COMPANY

WIRE HARNESS
LIGHTS
(PENDING PER ECN 10419449⇒)

ITEM	PART NO.	DESCRIPTION	QTY
	2090087	Wire Harness (Lights)	1
1	. . . . .	Connector Assembly (Vehicle System Mangement)	1
1	1525566	Connector	1
1	1500913	Secondary Lock	1
1	1330438	Terminal (Socket)	5
1	1330439	Insulator	7
2	. . . . .	Connector Assembly (Chassis Harness)	1
2	1514597	Connector	1
2	1514598	Secondary Lock	1
2	1484709	Terminal (Pin)	4
3	. . . . .	Connector Assembly (RH Front Work Light)	1
3	1490242	Connector	1
3	1402813	Clip	1
3	1363886	Terminal (Socket)	2
4	. . . . .	Connector Assembly (RH Front Signal Light)	1
4	1484397	Connector (3-Way)	1
4	1463194	Secondary Lock	1
4	1330438	Terminal (Socket)	3
5	. . . . .	Connector Assembly (RH Rear Signal)	1
5	1531486	Connector	1
5	930591	Secondary Lock	1
5	1330355	Terminal	5
5	1330356	Seal	1
5	1482668	Plug	1
5	1476108	Seal	4
6	. . . . .	Connector Assembly (Work Light Redistor)	1
6	1514602	Connector	1
6	1514603	Secondary Lock	1
6	1554359	Terminal	4
7	. . . . .	Connector Assembly (Strobe Light)	1
7	1484557	Connector	1
7	1484558	Secondary Lock	1
7	1463139	Terminal	2
8	. . . . .	Connector Assembly (Rear Work Light)	1
8	1490242	Connector	1
8	1402813	Clip	1
8	1363886	Terminal (Socket)	2
9	. . . . .	Connector Assembly (LH Rear Signal Light)	1
9	1531486	Connector	1
9	930591	Secondary Lock	1
9	1330355	Terminal	5
9	1330356	Seal	1
9	1482668	Plug	1
9	1476108	Seal	4
10	. . . . .	Connector Assembly (LH Front Signal Light)	1
10	1484397	Connector (3-Way)	1
10	1463194	Secondary Lock	1
10	1330438	Terminal (Socket)	3
11	175944	Heat Shrink Tube	AR
12	1509890	Clip	2

©2006 HYSTER COMPANY

WIRE HARNESS
LIGHTS
(PENDING PER ECN 10419449⇒)

ITEM	PART NO.	DESCRIPTION	QTY
12	. . . . .	Connector Assembly (LH Front Work Light)	1
12	1490242	Connector	1
12	1402813	Clip	1
12	1363886	Terminal (Socket)	2

©2006 HYSTER COMPANY

5 TRANSMISSION

SECTION 5
TRANSMISSION

DESCRIPTION	PAGE
CONTROL VALVE	
TRANSMISSION	5-34
FORWARD CLUTCH	
INPUT	
⇒PENDING PER ECN 10402574	5-20
FORWARD CLUTCH (INPUT)	
PENDING PER ECN 10402574⇒	5-30
REVERSE CLUTCH	
COUNTER	
⇒PENDING PER ECN 10402574	5-22
REVERSE CLUTCH (COUNTER)	
PENDING PER ECN 10402574⇒	5-32
TORQUE CONVERTER	5-3
TRANSMISSION	
SINGLE SPEED	
SHEET 1 OF 2	
PENDING PER ECN 10402574⇒	5-24
⇒S/N T117M016844 ⇒D/B 09/2006	5-8
S/N T117M016845⇒ S/N PENDING PER ECN 10402574 D/B 09/2006⇒	5-14
SHEET 2 OF 2	
PENDING PER ECN 10402574⇒	5-26
⇒S/N T117M016844 ⇒D/B 09/2006	5-12
S/N T117M016845⇒ S/N PENDING PER ECN 10402574 D/B 09/2006⇒	5-17
TRANSMISSION COOLING	
MAZDA 2.0L	5-4
YANMAR 2.6L DIESEL	5-6
TRANSMISSION MOUNT	5-2

©2006 HYSTER COMPANY

TRANSMISSION MOUNT (Figure 5-1)

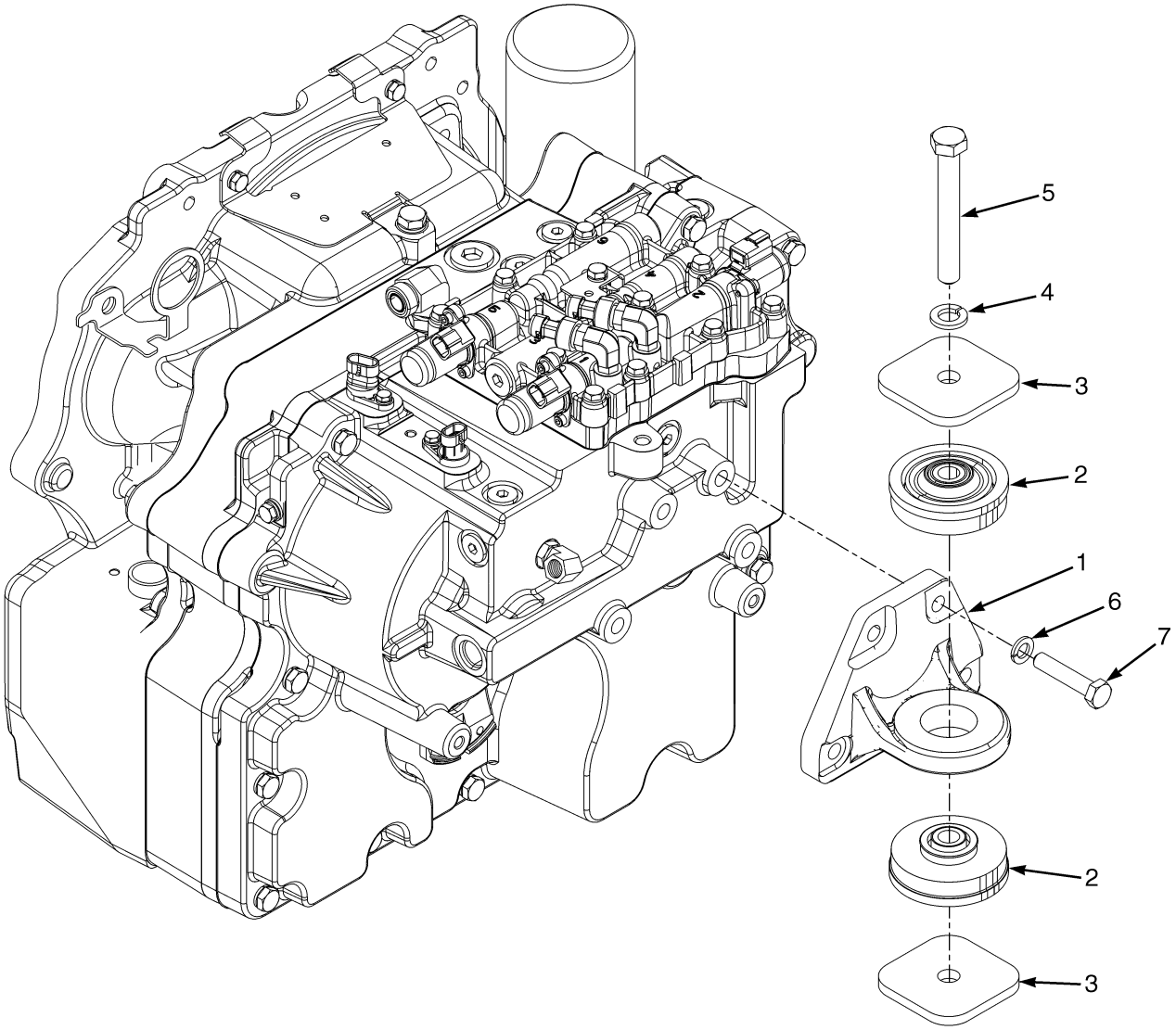

BP240059

ITEM		PART NO.	DESCRIPTION	QTY
1		1501275	Bracket	1
2		2070147	Isolator	2
3		1566329	Washer	2
4		292685	Lockwasher	1
5		293697	Capscrew	1
6		292683	Lockwasher	4
7		292531	Capscrew	4
8	**a**	1550565	Transmission Assembly (Single Speed)	1
8	**b**	1632260	Transmission Assembly (Single Speed)	1
8	**c**	1646871	Transmission Assembly (Single Speed)	1

FOOTNOTES:

a ⇒ S/N T117M016844

b S/N T117M016845 ⇒ S/N PENDING PER ECN 10402574

c PENDING PER ECN 10402574 ⇒

©2006 HYSTER COMPANY

TORQUE CONVERTER (Figure 5-2)

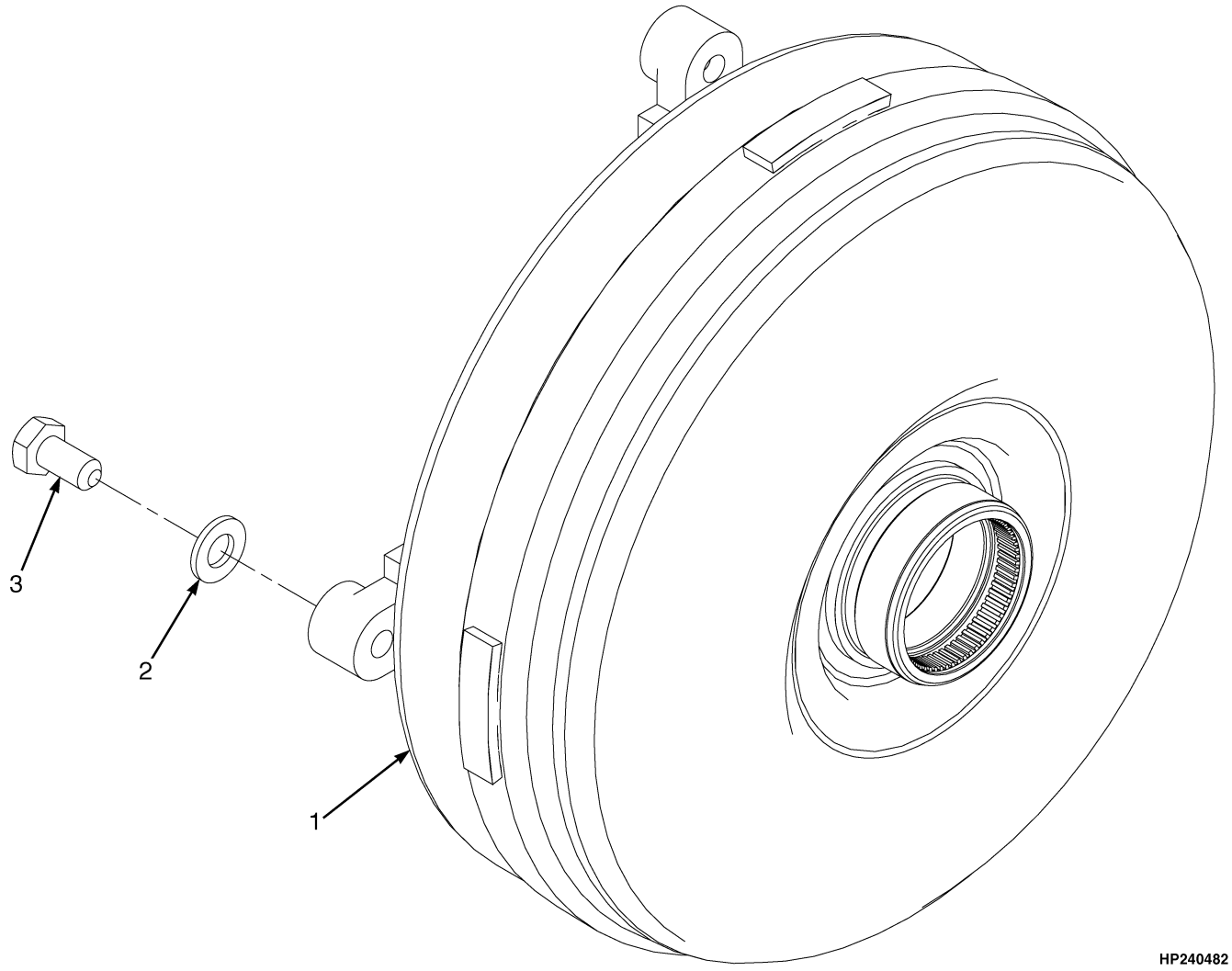

KEY:
A: For Use With Mazda Engine
B: For Use With Yanmar Diesel Engine

ITEM	PART NO.	DESCRIPTION	QTY A	QTY B
1	1553122	Torque Converter	1	..
1	1553123	Torque Converter	..	1
2	296420	Washer	4	4
3	1541921	Capscew	4	4

TRANSMISSION COOLING (Figure 5-3)
MAZDA 2.0L

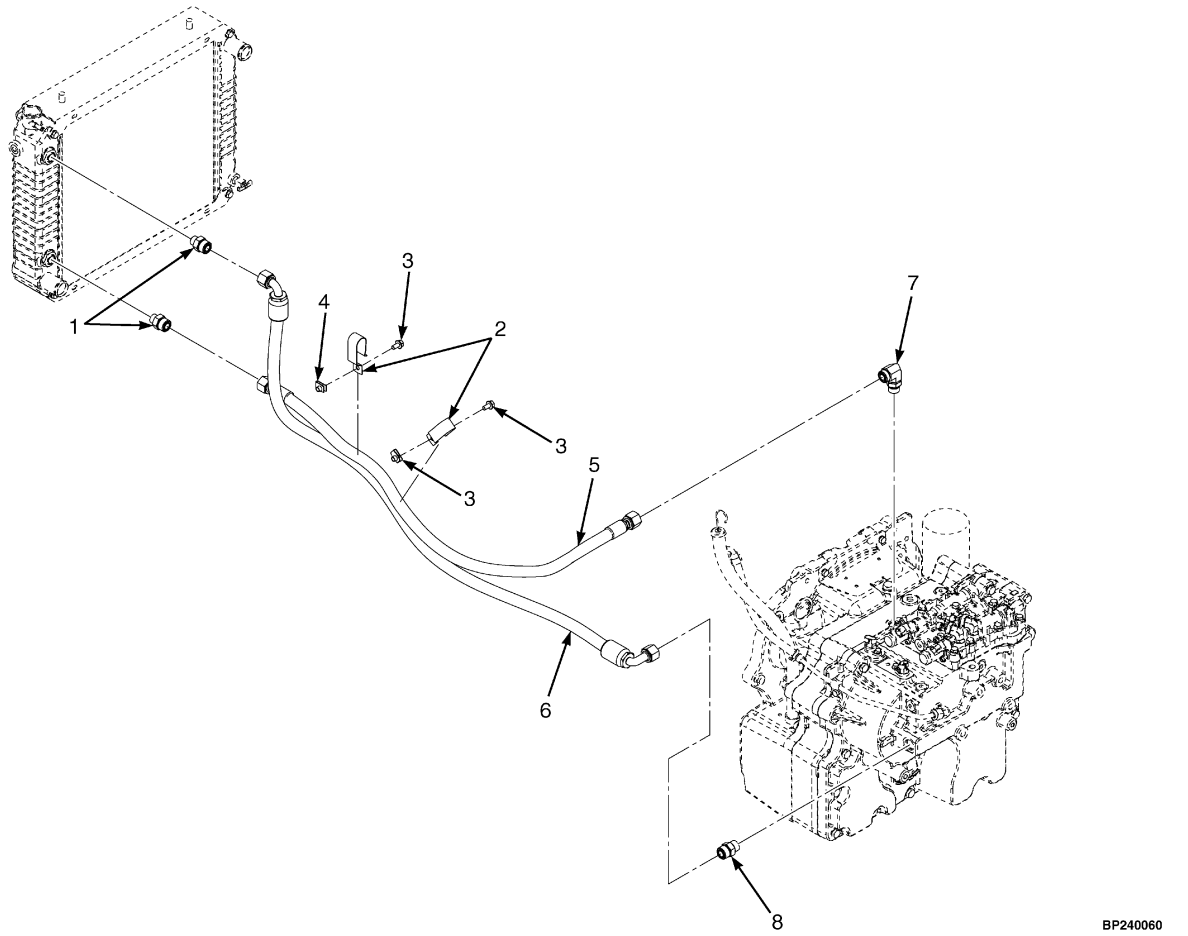

ITEM		PART NO.	DESCRIPTION	QTY
1	**a**	1565127	Fitting	2
1		252729	O-Ring	1
2		1562648	Clip	2
3		1527879	Capscrew	2
4		1480237	Clip Nut	2
5	**b**	2067594	Hose	1
5	**c**	2095645	Hose	1
6	**b**	2067595	Hose	1
6	**c**	2095646	Hose	1
7		1487067	Fitting	1
7		16485	O-Ring	1
7		1527818	O-Ring	1
8		1486749	Fitting	1
8		16485	O-Ring	1
8		1527818	O-Ring	1

FOOTNOTES:

a Supplied with Serpentine Radiator Only

b ⇒ PENDING PER ECN 10402574

c PENDING PER ECN 10402574 ⇒

©2006 HYSTER COMPANY

NOTES

TRANSMISSION COOLING (Figure 5-4)
YANMAR 2.6L DIESEL

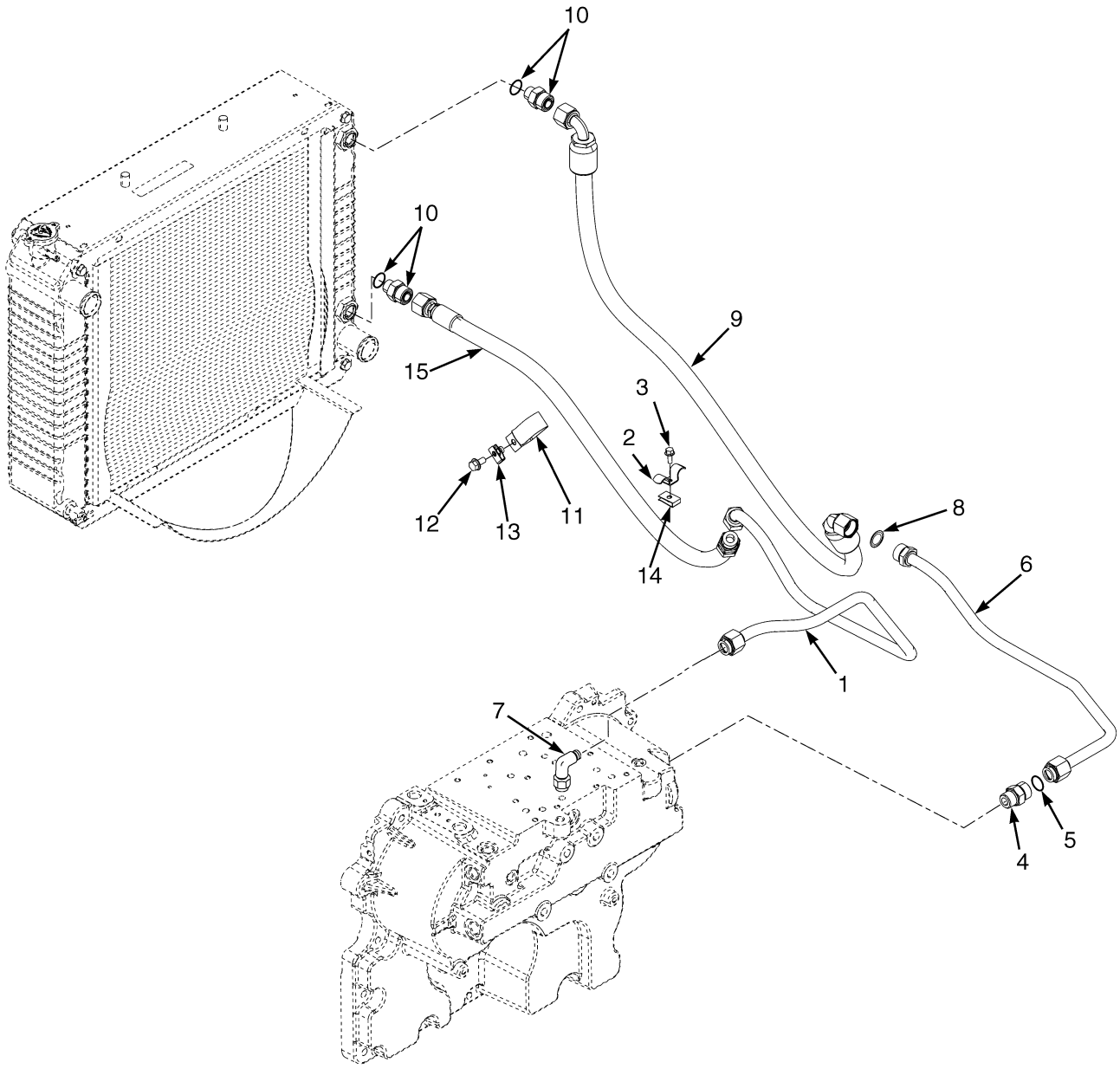

HP240483

©2006 HYSTER COMPANY

TRANSMISSION COOLING
YANMAR 2.6L DIESEL

ITEM		PART NO.	DESCRIPTION	QTY
1	**a**	2067598	Tube	1
1	**b**	2095262	Tube	1
2		1561780	Clip	1
3		1527876	Capscrew	1
4		1486749	Fitting	1
5		16485	O-Ring	1
6		2067597	Tube	1
7		1487067	Fitting	1
7		252729	O-Ring	1
7		16485	O-Ring	1
8		1582449	Flange Seal	1
9	**a**	2075551	Hose	1
9	**b**	2095648	Hose	1
10		1565127	Fitting	2
11		1562648	Clip	1
12		1527879	Capscrew	1
13		1480237	Clip Nut	1
14		1350215	Nut (Foldover)	1
15	**a**	2079032	Hose	1
15	**b**	2095649	Hose	1

FOOTNOTES:
a ⇒ PENDING PER ECN 10402574
b PENDING PER ECN 10402574 ⇒

©2006 HYSTER COMPANY

TRANSMISSION (Figure 5-5)
SINGLE SPEED
SHEET 1 OF 2
(⇒S/N T117M016844 ⇒D/B 09/2006)

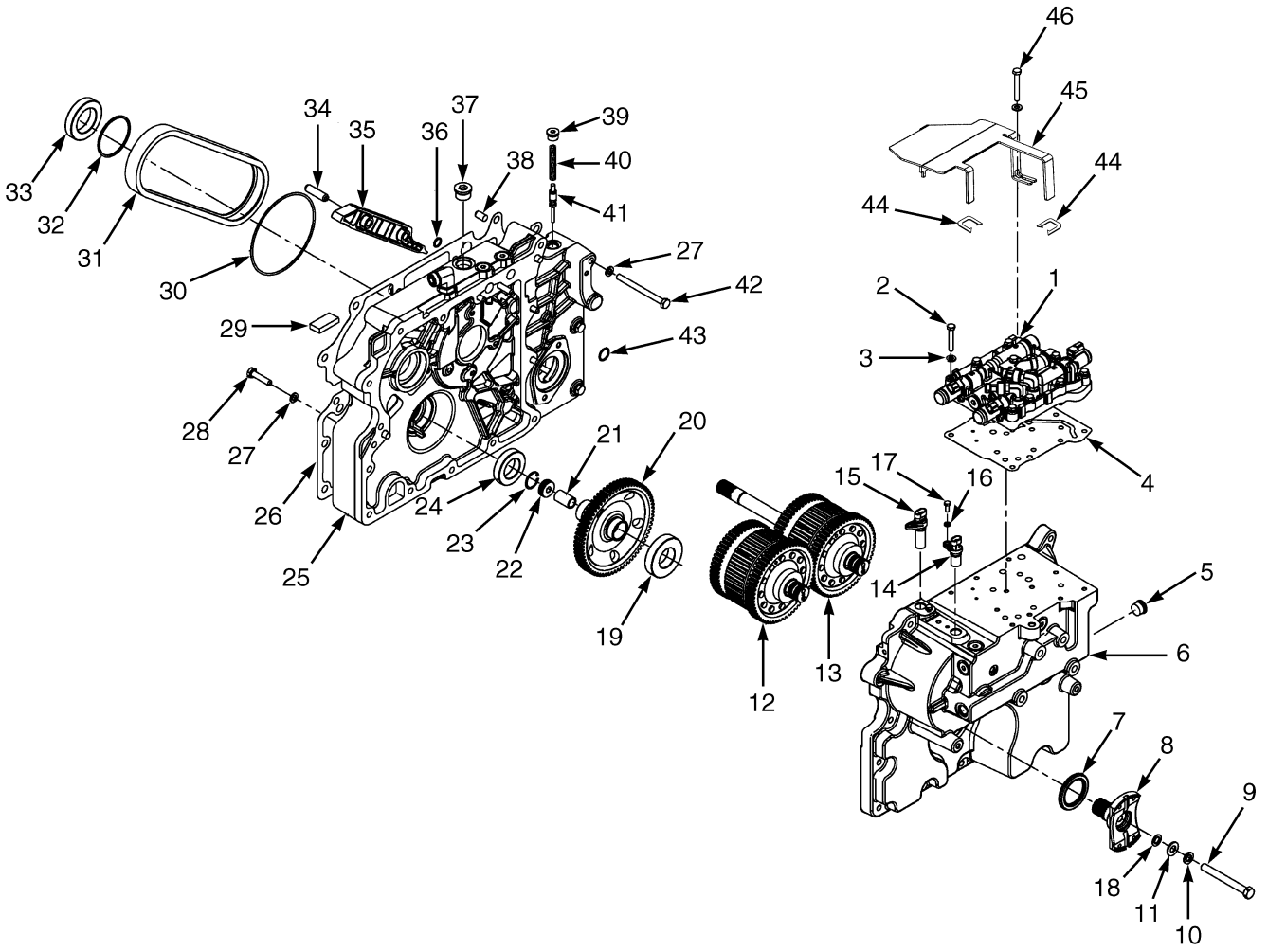

BP240042

©2006 HYSTER COMPANY

TRANSMISSION
SINGLE SPEED
SHEET 1 OF 2
(⇒S/N T117M016844 ⇒D/B 09/2006)

ITEM	PART NO.	DESCRIPTION	QTY
	1550565	Transmission Assembly (Single Speed)	1
1	1613695	Control Valve (☞ Figure 5-15)	1
2	292509	Capscrew	11
3	320157	Washer	11
4	1570360	Gasket	1
5	233693	Fitting	1
5	16485	O-Ring	1
6	1550577	Housing (Transmission)	1
6	1550576	Gasket (Cover to Transmission Housing)	1
7	1547447	Oil Seal	1
8	1550578	Yoke (24 Teeth)	1
9	18595	Capscrew	1
10	15158	Lockwasher	1
11	15135	Washer	1
12	1595420	Clutch Pack Assembly (Input/Forward) (☞ Figure 5-9)	1
13	1595421	Clutch Pack Assembly (Counter/Reverse) (☞ Figure 5-10)	1
14	1541231	Speed Sensor (Input Speed)	1
15	1541232	Speed Sensor (Output Speed)	1
16	292680	Lockwasher	2
17	292500	Capscrew	2
18	86229	Stato Seal Washer	1
19	43208	Bearing	1
20	1585745	Gear (Output)	1
21	1516851	Spacer	1
22	1516849	Nut	1
23	58916	Snap Ring	1
24	44308	Ball Bearing	1
25	1550575	Housing (Front Cover)	1
26	1550573	Gasket (Torque Converter Housing to Cover)	1
27	292682	Lockwasher	20
28	292516	Capscrew	4
29	334560	Magnet	1
30	16682	O-Ring	1
31	1494750	Chain (Drive Pump)	1
32	1544218	Sealing Ring	1
33	44310	Ball Bearing	1
34	303100	Pin	4
35	1553270	Snubber	2
36	1553475	O-Ring	1
37	222444	Fitting	1
38	303150	Pin	4
39	235691	Fitting	1
40	1612918	Compression Spring (Regulator)	1
41	1612916	Spool (Regulator)	1
42	1359458	Capscrew	16
43	1553403	O-Ring	4
44	1380849	Trim	2
45	1569768	Shield	1

©2006 HYSTER COMPANY

TRANSMISSION
SINGLE SPEED
SHEET 1 OF 2
(⇒S/N T117M016844 ⇒D/B 09/2006)

ITEM	PART NO.	DESCRIPTION	QTY
46	1527879	Capscrew	1
	1566457	Baffle (Not Illustrated)	1

©2006 HYSTER COMPANY

NOTES

TRANSMISSION (Figure 5-6)
SINGLE SPEED
SHEET 2 OF 2
(⇒S/N T117M016844 ⇒D/B 09/2006)

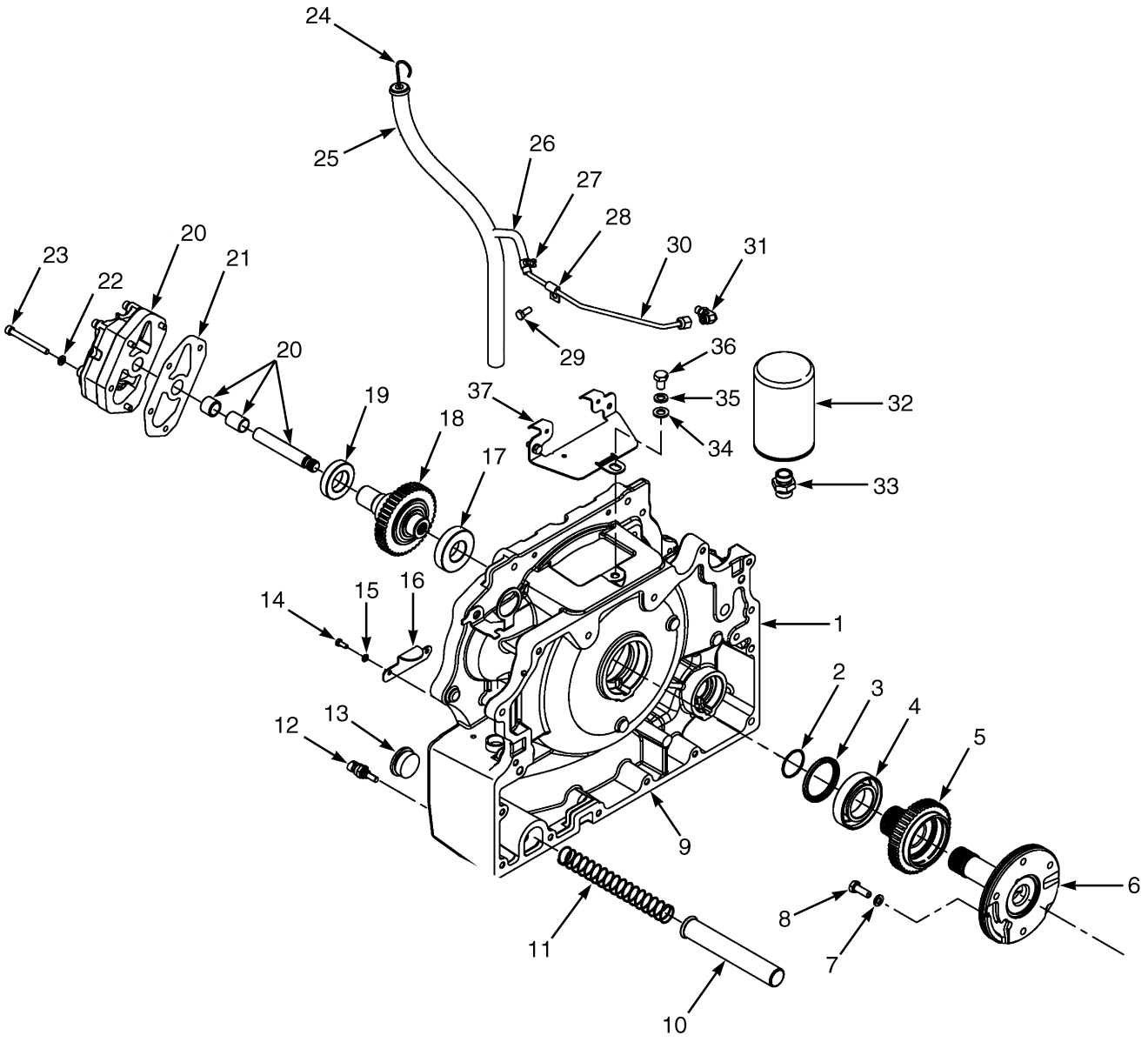

BP240043

©2006 HYSTER COMPANY

TRANSMISSION
SINGLE SPEED
SHEET 2 OF 2
(⇒S/N T117M016844 ⇒D/B 09/2006)

ITEM	PART NO.	DESCRIPTION	QTY
	1550565	Transmission Assembly (Single Speed)	1
1	1550566	Housing (Torque Convertor)	1
2	145481	O-Ring	1
3	1544217	Oil Seal (Torque Converter)	1
4	1544216	Bearing	1
5	1541556	Sprocket	1
6	1550585	Stator Assembly	1
6	1516826	Bushing	1
6	. . . . .	Stator	1
7	292682	Lockwasher	4
8	136985	Capscrew	4
9	1550573	Gasket (Torque Converter Housing to Cover)	1
10	1550571	Screen (Suction)	1
11	1550572	Spring (Suction Screen)	1
12	1515654	Sensor (Coolant Temperature)	1
13	188210	Fitting	1
14	292500	Capscrew	2
15	292680	Lockwasher	2
16	1550567	Cover Plate (Torque Convertor Housing)	1
17	43207	Ball Bearing	1
18	1550574	Sprocket (Driven)	1
19	44307	Bearing	1
20	1529894	Charge Pump	1
21	1525696	Gasket (Charge Pump)	1
22	292681	Lockwasher	7
23	296022	Capscrew	4
24	1516818	Dipstick	1
25	1566166	Tube (Dipstick)	1
26	169690	Hose	1
27	1569616	Clamp	2
28	164488	Clamp	1
29	136681	Capscrew	3
30	1566168	Tube	1
31	1487063	Fitting	1
32	2075558	Filter (Transmission)	1
32	320157	Washer	1
33	136681	Capscrew	3
33	1558515	Fitting (Transmission Filter)	1
34	320161	Washer	1
35	292683	Lockwasher	1
36	292526	Capscrew	1
37	1566169	Cover	1

©2006 HYSTER COMPANY

TRANSMISSION (Figure 5-7)
SINGLE SPEED
SHEET 1 OF 2
(S/N T117M016845⇒ S/N PENDING PER ECN 10402574 D/B 09/2006⇒)

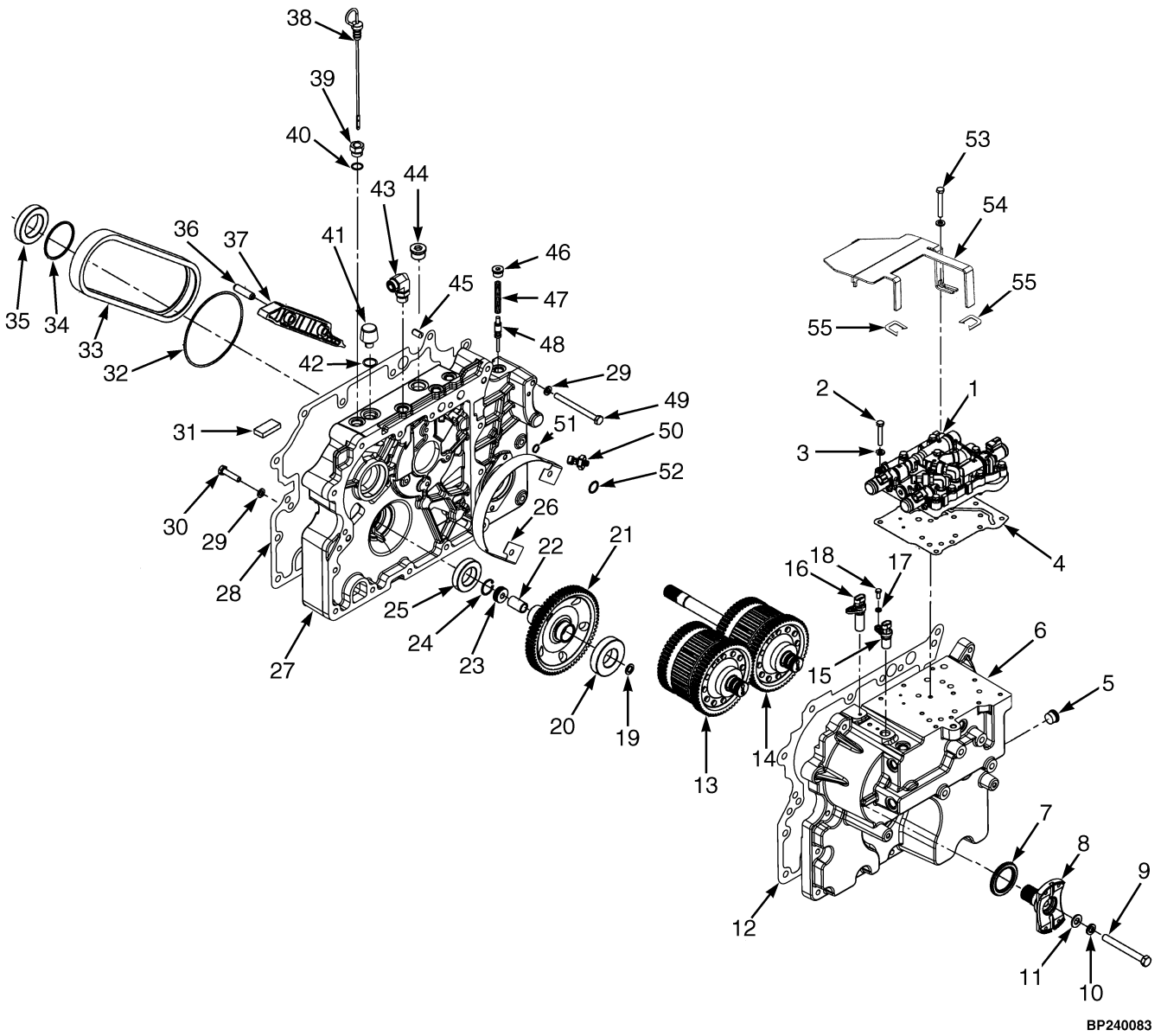

©2006 HYSTER COMPANY

TRANSMISSION
SINGLE SPEED
SHEET 1 OF 2
(S/N T117M016845⇒ S/N PENDING PER ECN 10402574 D/B 09/2006⇒)

ITEM	PART NO.	DESCRIPTION	QTY
	1632260	Transmission Assembly (Single Speed)	1
1	1613695	Control Valve (☞ Figure 5-15)	1
2	292509	Capscrew	11
3	320157	Washer	11
4	1570360	Gasket	1
5	233693	Fitting	1
5	16485	O-Ring	1
6	1624509	Housing (Transmission)	1
7	1547447	Oil Seal	1
8	1550578	Yoke (24 Teeth)	1
9	18595	Capscrew	1
10	15158	Lockwasher	1
11	15135	Washer	1
12	1550576	Gasket (Cover to Transmission Housing)	1
13	1595421	Clutch Pack Assembly (Counter/Reverse) (☞ Figure 5-10)	1
14	1595420	Clutch Pack Assembly (Input/Forward) (☞ Figure 5-9)	1
15	1541231	Speed Sensor (Input Speed)	1
16	1541232	Speed Sensor (Output Speed)	1
17	292680	Lockwasher	2
18	292500	Capscrew	2
19	86229	Stato Seal Washer	1
20	43208	Bearing	1
21	1585745	Gear (Output)	1
22	1516851	Spacer	1
23	1516849	Nut	1
24	58916	Snap Ring	1
25	44308	Ball Bearing	1
26	1624415	Cover (Pump Drive)	1
27	1624503	Housing (Front Cover)	1
28	1550573	Gasket (Torque Converter Housing to Cover)	1
29	292682	Lockwasher	20
30	292516	Capscrew	4
31	334560	Magnet	1
32	16682	O-Ring	1
33	1494750	Chain (Drive Pump)	1
34	1544218	Sealing Ring	1
35	44310	Ball Bearing	1
36	303100	Pin	4
37	1553270	Snubber	2
38	1624401	Dipstick	1
39	1624405	Fitting	1
40	16485	O-Ring	1
41	1632741	Breather Assembly	1
42	16486	O-Ring	1
43	1634651	Fitting	1
44	222444	Fitting	1
44	16486	O-Ring	1
45	303150	Pin	4
46	235691	Fitting	1

©2006 HYSTER COMPANY

TRANSMISSION
SINGLE SPEED
SHEET 1 OF 2
(S/N T117M016845⇒ S/N PENDING PER ECN 10402574 D/B 09/2006⇒)

ITEM	PART NO.	DESCRIPTION	QTY
46	16484	O-Ring	1
47	1612918	Compression Spring (Regulator)	1
48	1612916	Spool (Regulator)	1
49	1359458	Capscrew	16
50	2070263	Transducer	1
51	1553475	O-Ring	1
52	1553403	O-Ring	4
53	1527879	Capscrew	1
54	1569768	Shield	1
55	1380849	Trim	2

©2006 HYSTER COMPANY

TRANSMISSION (Figure 5-8)
SINGLE SPEED
SHEET 2 OF 2
(S/N T117M016845⇒ S/N PENDING PER ECN 10402574 D/B 09/2006⇒)

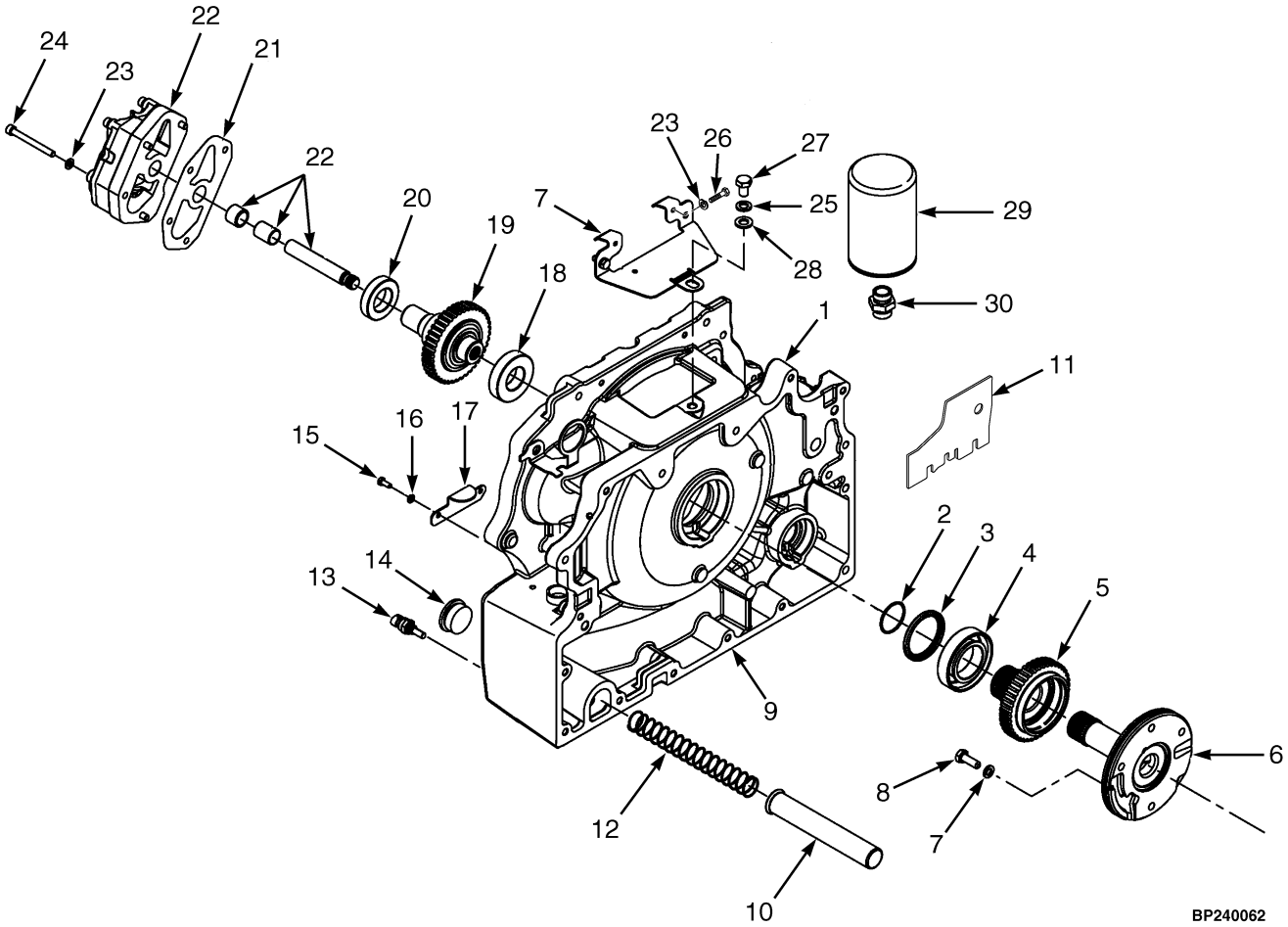

TRANSMISSION
SINGLE SPEED
SHEET 2 OF 2
(S/N T117M016845⇒ S/N PENDING PER ECN 10402574 D/B 09/2006⇒)

ITEM	PART NO.	DESCRIPTION	QTY
	1632260	Transmission Assembly (Single Speed)	1
1	1624504	Housing (Torque Convertor)	1
2	145481	O-Ring	1
3	1544217	Oil Seal (Torque Converter)	1
4	1544216	Bearing	1
5	1541556	Sprocket	1
6	1550585	Stator Assembly	1
6	1516826	Bushing	1
6	. . . . .	Stator	1
7	1566169	Cover	1
8	136985	Capscrew	4
9	1636640	Gasket (Torque Convertor Housing To Cover)	1
10	1550571	Screen (Suction)	1
11	1624414	Baffle	1
12	1550572	Spring (Suction Screen)	1
13	1515654	Sensor (Coolant Temperature)	1
14	188210	Fitting	1
15	292500	Capscrew	2
16	292680	Lockwasher	2
17	1550567	Cover Plate (Torque Convertor Housing)	1
18	43207	Ball Bearing	1
19	1550574	Sprocket (Driven)	1
20	44307	Bearing	1
21	1525696	Gasket (Charge Pump)	1
22	1529894	Charge Pump	1
22	1623836	O-Ring	1
23	292681	Lockwasher	7
24	296022	Capscrew	4
25	292683	Lockwasher	1
26	136681	Capscrew	3
27	292526	Capscrew	1
28	320161	Washer	1
29	2075558	Filter (Transmission)	1
30	1558515	Fitting (Transmission Filter)	1

©2006 HYSTER COMPANY

NOTES

FORWARD CLUTCH (Figure 5-9)
INPUT
(⇒PENDING PER ECN 10402574)

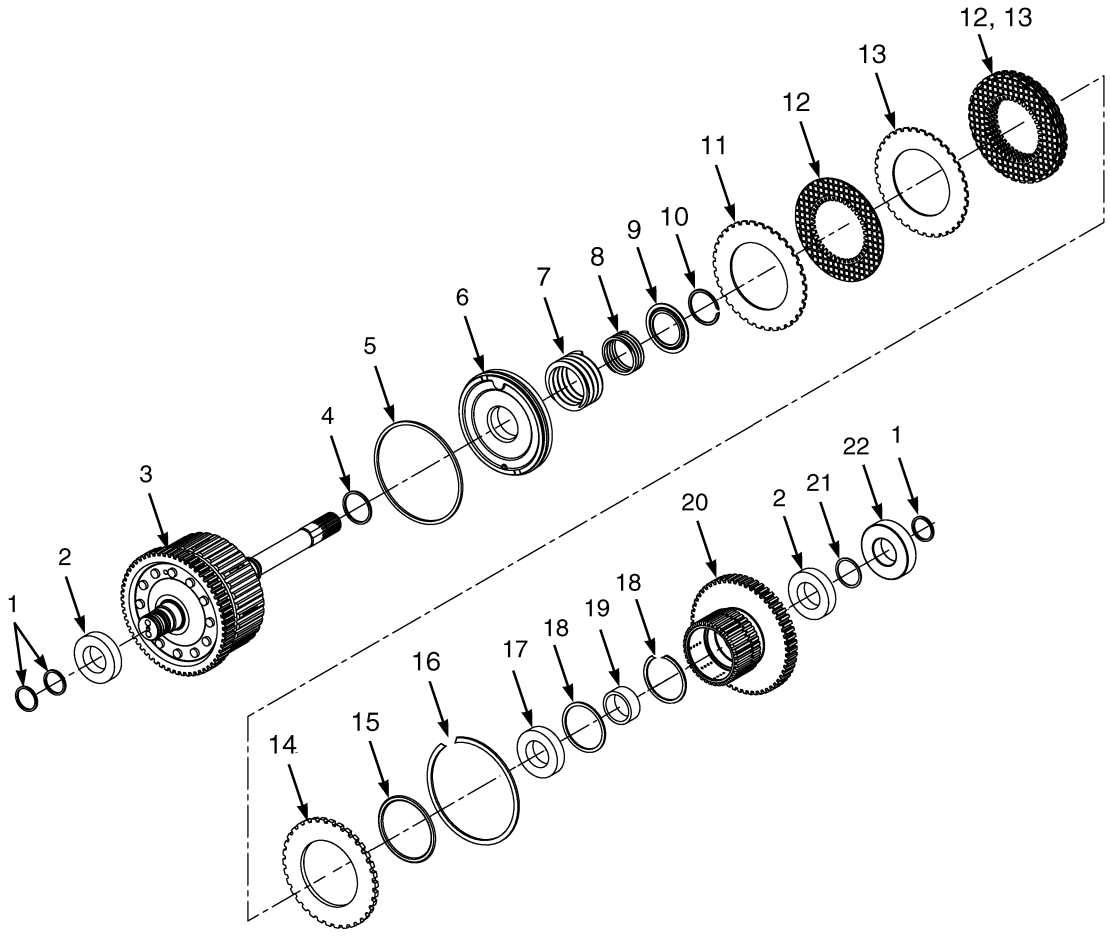

BP240049

©2006 HYSTER COMPANY

FORWARD CLUTCH
INPUT
(⇒PENDING PER ECN 10402574)

ITEM	PART NO.	DESCRIPTION	QTY
	1595420	Clutch Pack Assembly (Input/Forward)	1
1	. . . . .	Ring Seal	3
2	1581116	Bearing	2
3	1581104	Gear and Shaft Assembly	1
4	. . . . .	Ring Seal	1
5	. . . . .	Ring Seal	1
6	1552525	Piston	1
7	1581108	Spring	1
8	1581098	Spring	1
9	1581099	Spring Guide	1
10	1581100	Snap Ring	1
11	. . . . .	Conical Plate	1
12	. . . . .	Friction Plate	5
13	. . . . .	Separator Plate	4
14	1543094	Pressure Plate (5.8 mm)	1
14	1537449	Pressure Plate (6.0 mm)	1
14	1543096	Pressure Plate (5.6 mm)	1
14	1543097	Pressure Plate (5.4 mm)	1
14	1543098	Pressure Plate (5.2 mm)	1
15	. . . . .	O-Ring	1
16	1537450	Snap Ring	1
17	124603	Bearing	1
18	1581107	Snap Ring	2
19	1581117	Spacer	1
20	1595427	Clutch Gear	1
21	1581106	Snap Ring	1
22	43207	Ball Bearing	1
	1543105	Clutch Plates and Seals Kit (Includes Items 1, 4-5, 11-13, 15)	1
	1543102	Clutch Pack Plates Kit (Includes Items 11-13)	1
	1595425	Clutch Pack Seals Kit (Includes Items 1, 4-5, 15)	1

©2006 HYSTER COMPANY

REVERSE CLUTCH (Figure 5-10)
COUNTER
(⇒PENDING PER ECN 10402574)

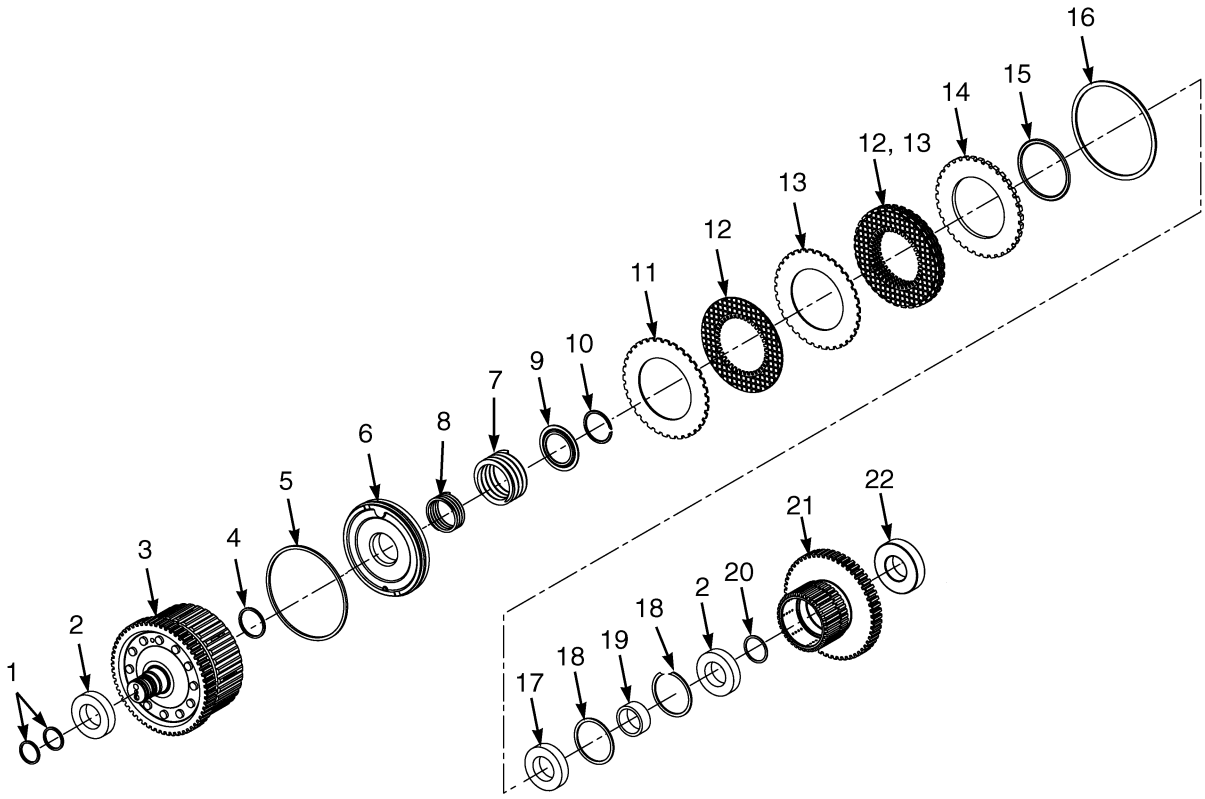

BP240051

©2006 HYSTER COMPANY

REVERSE CLUTCH
COUNTER
(⇒PENDING PER ECN 10402574)

ITEM	PART NO.	DESCRIPTION	QTY
	1595421	Clutch Pack Assembly (Counter/Reverse)	1
1	. . . . .	Seal	2
2	1581116	Bearing	2
3	1581114	Gear and Shaft Assembly	1
4	. . . . .	Seal	1
5	. . . . .	Seal	1
6	1552525	Piston	1
7	1581108	Spring	1
8	1581098	Spring	1
9	1581099	Spring Guide	1
10	1581100	Snap Ring	1
11	. . . . .	Conical Plate	1
12	. . . . .	Friction Plate	5
13	. . . . .	Separator Plate	4
14	1543094	Pressure Plate (5.8 mm)	1
14	1537449	Pressure Plate (6.0 mm)	1
14	1543096	Pressure Plate (5.6 mm)	1
14	1543097	Pressure Plate (5.4 mm)	1
14	1543098	Pressure Plate (5.2 mm)	1
15	. . . . .	O-Ring	1
16	1537450	Snap Ring	1
17	124603	Bearing	1
18	1581107	Snap Ring	1
19	1581117	Spacer	1
20	1581106	Snap Ring	1
21	1595427	Clutch Gear	1
22	43207	Ball Bearing	1
	1543105	Clutch Plates and Seals Kit (Includes Items 1, 4-5, 11-13, 15)	1
	1543102	Clutch Pack Plates Kit (Includes Items 11-13)	1
	1595425	Clutch Pack Seals Kit (Includes Items 1, 4-5, 15)	1

©2006 HYSTER COMPANY

TRANSMISSION (Figure 5-11)
SINGLE SPEED
SHEET 1 OF 2
(PENDING PER ECN 10402574⇒)

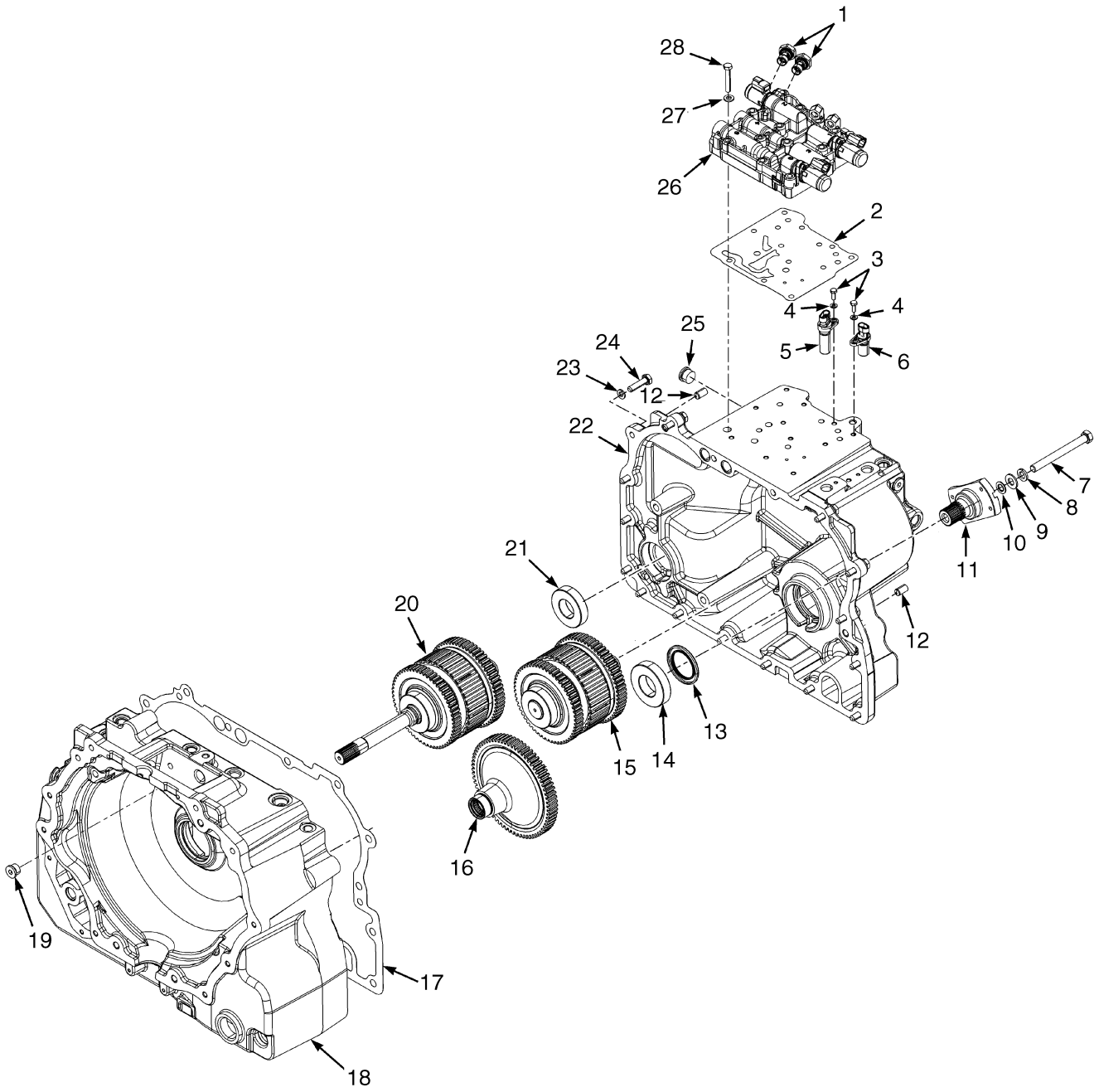

©2006 HYSTER COMPANY

TRANSMISSION
SINGLE SPEED
SHEET 1 OF 2
(PENDING PER ECN 10402574⇒)

ITEM	PART NO.	DESCRIPTION	QTY
	1646871	Transmission Assembly	1
1	2070263	Transducer	2
2	1570360	Gasket	1
3	292500	Capscrew	4
4	292680	Lockwasher	4
5	1541231	Speed Sensor (Transmission Input Sensor)	1
6	1541232	Speed Sensor (Transmission Output Sensor)	1
7	18596	Capscrew	1
8	15158	Lockwasher	1
9	15135	Washer	1
10	86229	Stato Seal Washer	1
11	1550578	Yoke	1
12	303150	Pin	2
13	1547447	Oil Seal	1
14	43208	Bearing	1
15	1646879	Clutch Pack Assembly (Counter/Reverse) (☞ Figure 5-14)	1
16	1638791	Output Gear	1
17	1636640	Gasket	1
18	1615602	Torque Converter Housing	1
19	235691	Fitting	8
19	16484	O-Ring	1
20	1646880	Clutch Pack Assembly (Input/Forward) (☞ Figure 5-13)	1
21	43207	Ball Bearing	1
22	1615601	Transmission Housing	1
23	292682	Lockwasher	25
24	292515	Capscrew	15
25	233693	Fitting	2
25	16485	O-Ring	1
26	1613695	Control Valve (☞ Figure 5-15)	1
27	320157	Washer	11
28	292509	Capscrew	11

©2006 HYSTER COMPANY

TRANSMISSION (Figure 5-12)
SINGLE SPEED
SHEET 2 OF 2
(PENDING PER ECN 10402574⇒)

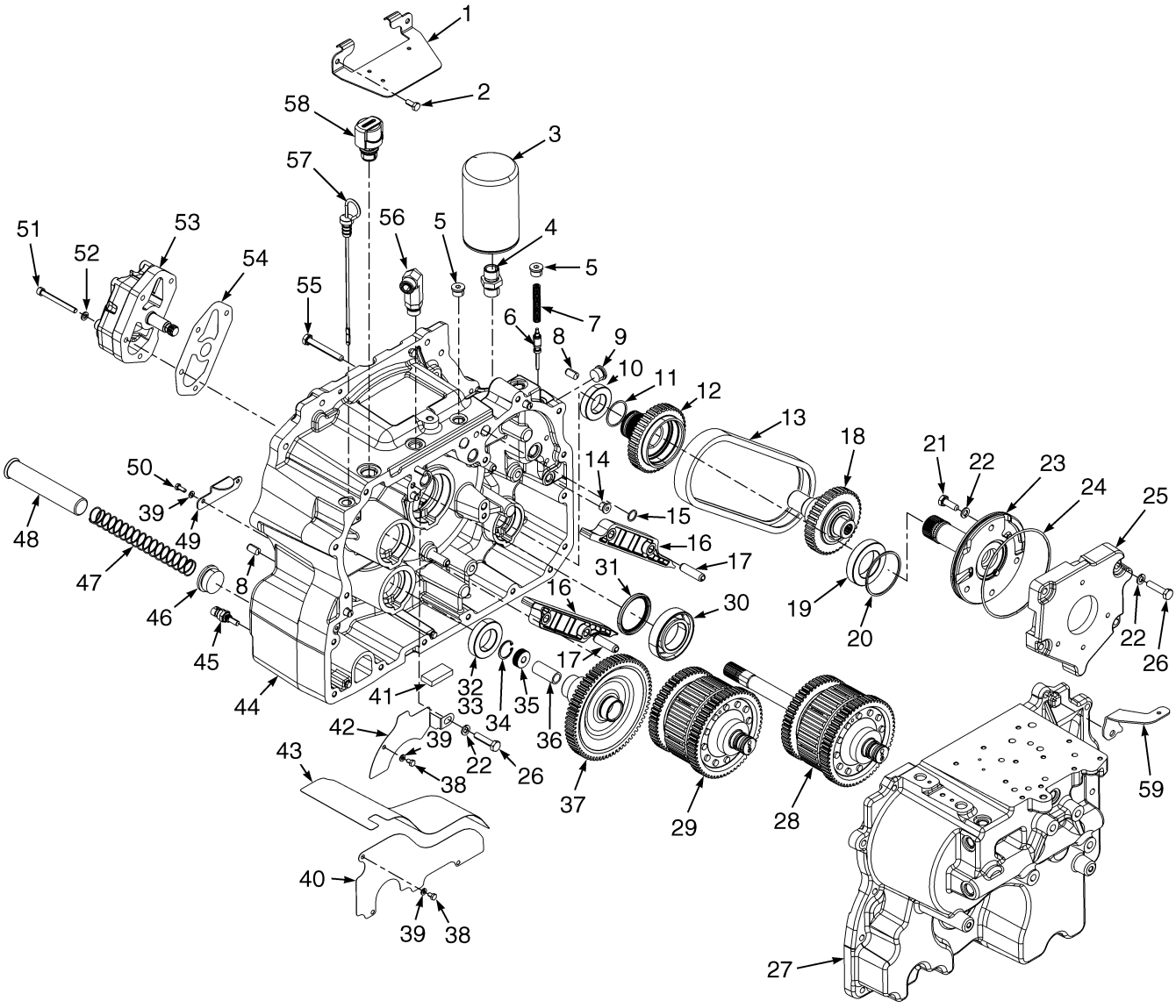

BP240097

©2006 HYSTER COMPANY

TRANSMISSION
SINGLE SPEED
SHEET 2 OF 2
(PENDING PER ECN 10402574⇒)

ITEM	PART NO.	DESCRIPTION	QTY
	1646871	Transmission Assembly	1
1	1622888	Cover (Converter Housing)	1
2	136681	Capscrew	2
3	2075558	Filter	1
4	1558515	Fitting	1
5	235691	Fitting	8
5	16484	O-Ring	1
6	1612916	Spool	1
7	1612918	Compression Spring	1
8	303150	Pin	2
9	233693	Fitting	2
9	16485	O-Ring	1
10	44307	Bearing	1
11	145481	O-Ring	1
12	1541556	Sprocket	1
13	1494750	Chain (Drive Pump)	1
14	222443	Fitting	1
14	16483	O-Ring	1
15	1553403	O-Ring	4
16	1615804	Snubber	2
17	303100	Pin	4
18	1550574	Sprocket	1
19	44310	Ball Bearing	1
20	1544218	Sealing Ring	1
21	136985	Capscrew	4
22	292682	Lockwasher	4
23	1550585	Stator Assembly	1
24	16682	O-Ring	1
25	1615603	Carrier	1
26	292516	Capscrew	4
27	1615601	Transmission Housing	1
28	1646880	Clutch Pack Assembly (Input/Forward) (☞ Figure 5-13)	1
29	1646879	Clutch Pack Assembly (Counter/Reverse) (☞ Figure 5-14)	1
30	1544216	Bearing	1
31	1544217	Oil Seal (Torque Converter)	1
32	44308	Ball Bearing	1
33	264159	Adhesive	AR
34	58916	Snap Ring	1
35	1516849	Nut	1
36	1636645	Spacer	1
37	1638791	Output Gear	1
38	148962	Capscrew	4
39	292680	Lockwasher	8
40	1627453	Shield (Lower)	1
41	334560	Magnet	1
42	1624408	Shield (Upper)	1
43	1622887	Baffle	1
44	1615602	Torque Converter Housing	1
45	1515654	Sensor (Coolant Temperature)	1

©2006 HYSTER COMPANY

TRANSMISSION
SINGLE SPEED
SHEET 2 OF 2
(PENDING PER ECN 10402574⇒)

ITEM	PART NO.	DESCRIPTION	QTY
46	188210	Fitting	1
46	16983	O-Ring	1
47	1550572	Spring	1
48	1627465	Screen	1
49	1550567	Cover Plate	1
50	292500	Capscrew	4
51	296022	Capscrew	4
52	292681	Lockwasher	6
53	1529894	Charge Pump	1
54	1525696	Gasket	1
55	292522	Capscrew	2
56	1487067	Fitting	1
57	1624401	Dipstick	1
58	1632741	Breather Assembly	1
59	1652575	Bracket	1

©2006 HYSTER COMPANY

NOTES

FORWARD CLUTCH (INPUT) (Figure 5-13)
(PENDING PER ECN 10402574⇒)

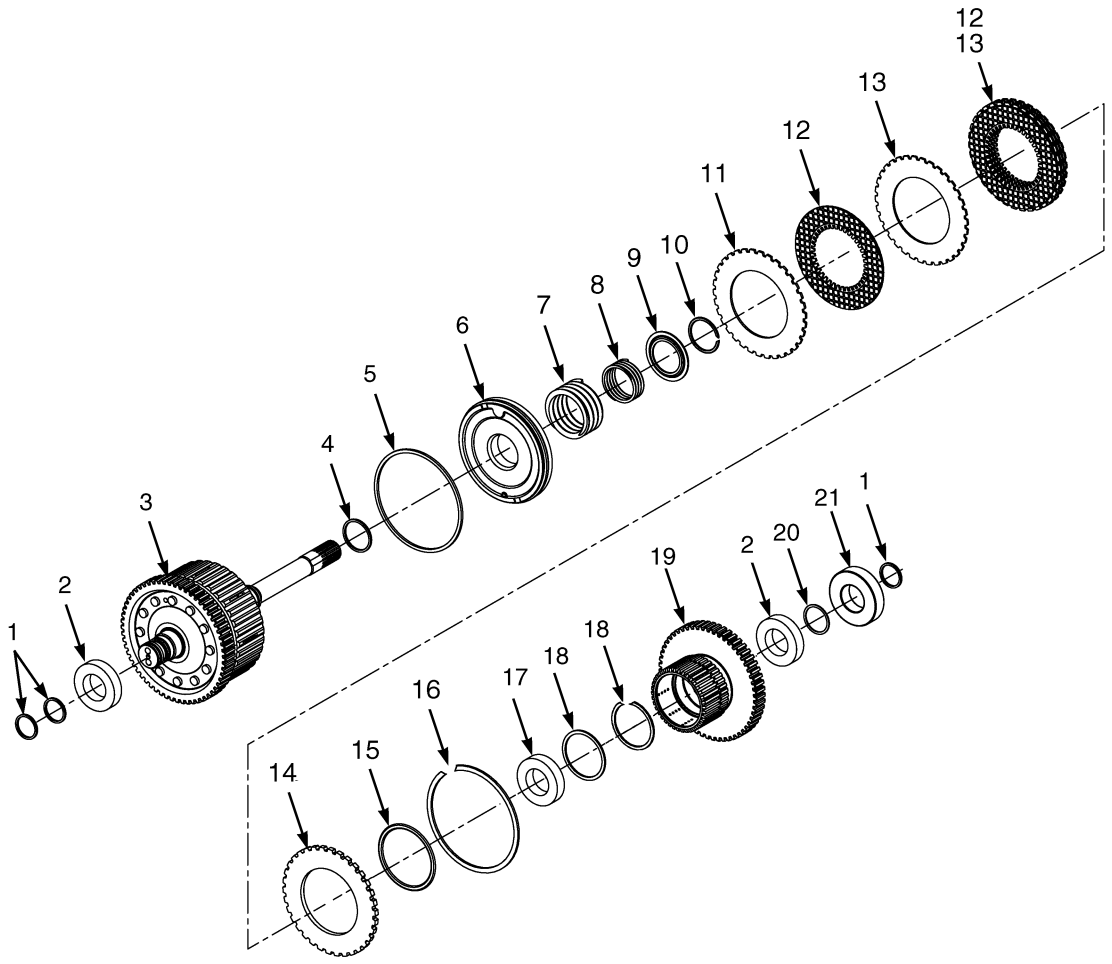

BP240098

©2006 HYSTER COMPANY

FORWARD CLUTCH (INPUT)
(PENDING PER ECN 10402574⇒)

ITEM	PART NO.	DESCRIPTION	QTY
	1646880	Clutch Pack Assembly (Input/Forward)	1
1	. . . . .	Ring Seal	3
2	1581116	Bearing	2
3	1581104	Gear and Shaft Assembly	1
4	. . . . .	Ring Seal	1
5	. . . . .	Ring Seal	1
6	2085129	Piston	1
7	1581108	Spring	1
8	1581098	Spring	1
9	1581099	Spring Guide	1
10	1581100	Snap Ring	1
11	. . . . .	Conical Plate	1
12	. . . . .	Friction Plate	5
13	. . . . .	Separator Plate	4
14	1537449	Pressure Plate (6.0 mm)	1
15	. . . . .	O-Ring	1
16	1537450	Snap Ring	1
17	124603	Bearing	1
18	1581107	Snap Ring	2
19	1595427	Clutch Gear	1
20	1581106	Snap Ring	1
21	43207	Ball Bearing	1
	1543102	Clutch Pack Plates Kit (Includes Items 11-13)	1
	1595425	Clutch Pack Seals Kit (Includes Items 1, 4-5, 15)	1

©2006 HYSTER COMPANY

REVERSE CLUTCH (COUNTER) (Figure 5-14)
(PENDING PER ECN 10402574⇒)

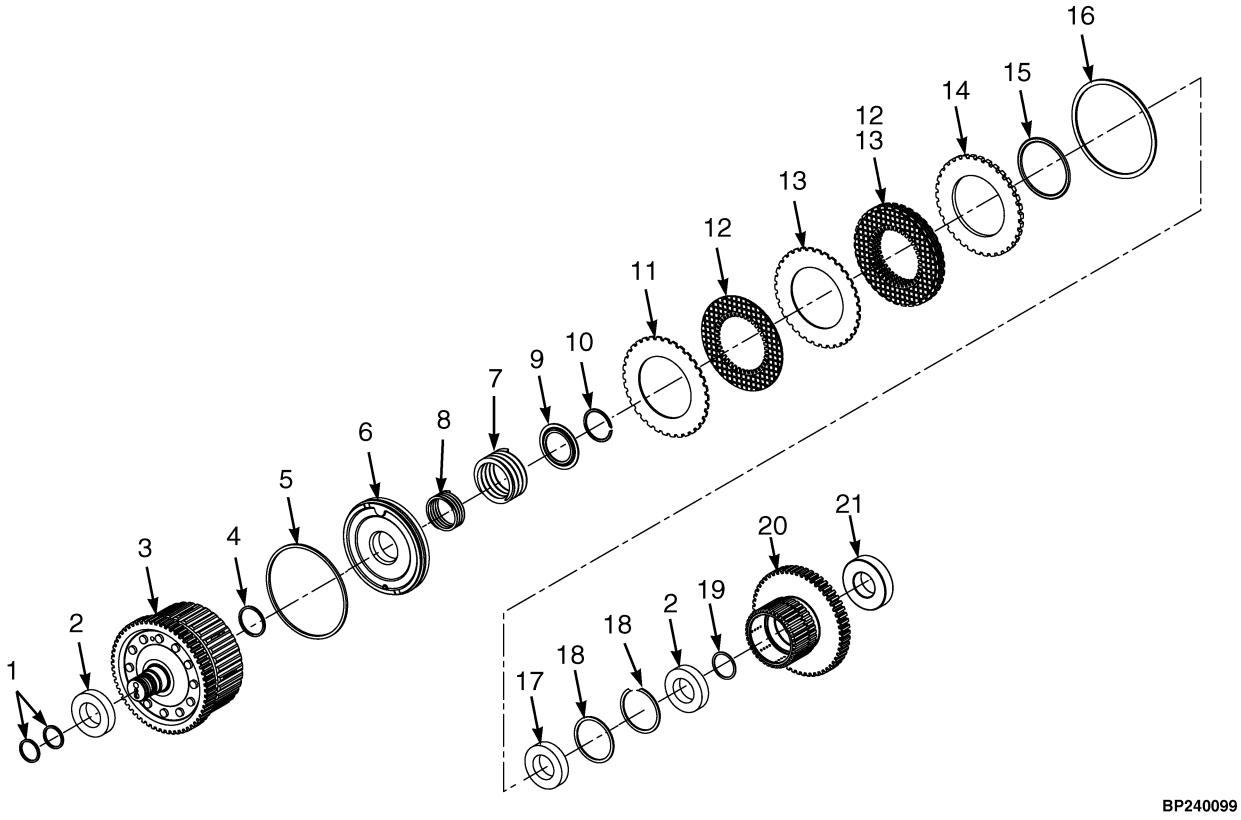

©2006 HYSTER COMPANY

REVERSE CLUTCH (COUNTER)
(PENDING PER ECN 10402574⇒)

ITEM	PART NO.	DESCRIPTION	QTY
	1646879	Clutch Pack Assembly (Counter/Reverse)	1
1	. . . . .	Seal	2
2	1581116	Bearing	2
3	1581114	Gear and Shaft Assembly	1
4	. . . . .	Seal	1
5	. . . . .	Seal	1
6	2085129	Piston	1
7	1581108	Spring	1
8	1581098	Spring	1
9	1581099	Spring Guide	1
10	1581100	Snap Ring	1
11	. . . . .	Conical Plate	1
12	. . . . .	Friction Plate	5
13	. . . . .	Separator Plate	4
14	1537449	Pressure Plate (6.0 mm)	1
15	. . . . .	O-Ring	1
16	1537450	Snap Ring	1
17	124603	Bearing	1
18	1581107	Snap Ring	1
19	1581106	Snap Ring	1
20	1595427	Clutch Gear	1
21	43207	Ball Bearing	1
	1543102	Clutch Pack Plates Kit (Includes Items 11-13)	1
	1595425	Clutch Pack Seals Kit (Includes Items 1, 4-5, 15)	1

©2006 HYSTER COMPANY

CONTROL VALVE (Figure 5-15)
TRANSMISSION

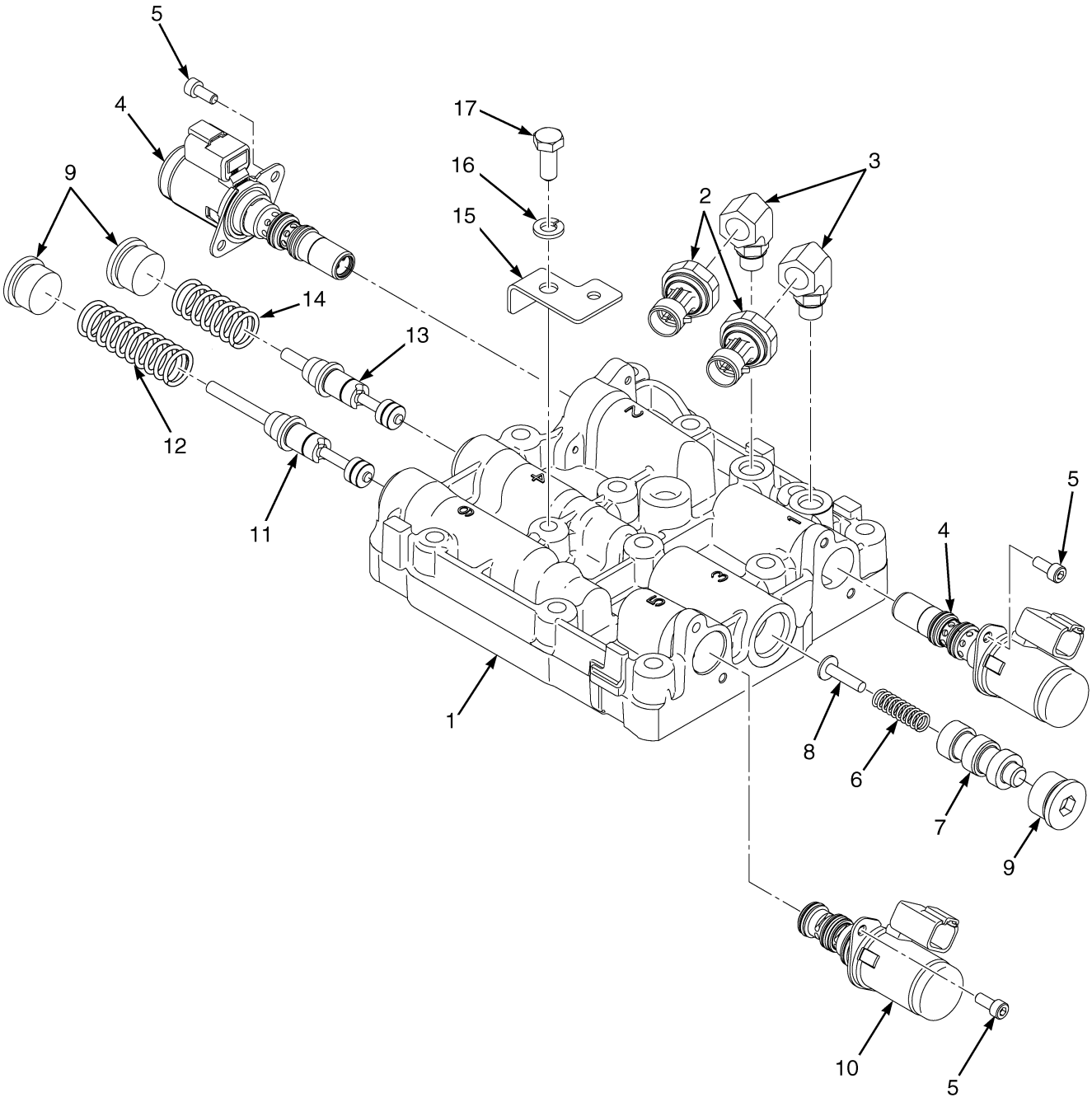

©2006 HYSTER COMPANY

CONTROL VALVE
TRANSMISSION

ITEM		PART NO.	DESCRIPTION	QTY
	a	1570361	Control Valve	1
	b	1613695	Control Valve	1
1		. . . . .	Body	1
2		2070263	Transducer	2
3		1545546	Fitting	2
3		16481	O-Ring	2
4		1530722	Proportional Valve	2
4		1650819	Seal Kit	1
5		293742	Capscrew	6
6		1590866	Spring (Return)	1
7		1590865	Spool (Cut-Off)	1
8		1590839	Spool (Stop)	1
9		233693	Fitting	3
10		1520660	Solenoid Valve	1
11	**a**	1544758	Spool (Regulator)	1
11	**b**	1610746	Spool (Regulator)	1
12		1550561	Spring (Regulator)	1
13		1544759	Spool (Torque Converter Regulator)	1
14		1514138	Spring (Torque Converter Regulator)	1
15		1562310	Clip	1
16		292681	Lockwasher	1
17		136681	Capscrew	1

FOOTNOTES:
a ⇒ S/N T117M0014014
b S/N T117M0014015 ⇒

NOTES

6 DRIVE AXLE

SECTION 6
DRIVE AXLE

DESCRIPTION **PAGE**

DRIVE AXLE 6-2
DRIVE TIRES AND WHEELS 6-5
PNEUMATIC RADIAL 6-6

©2006 HYSTER COMPANY

DRIVE AXLE (Figure 6-1)

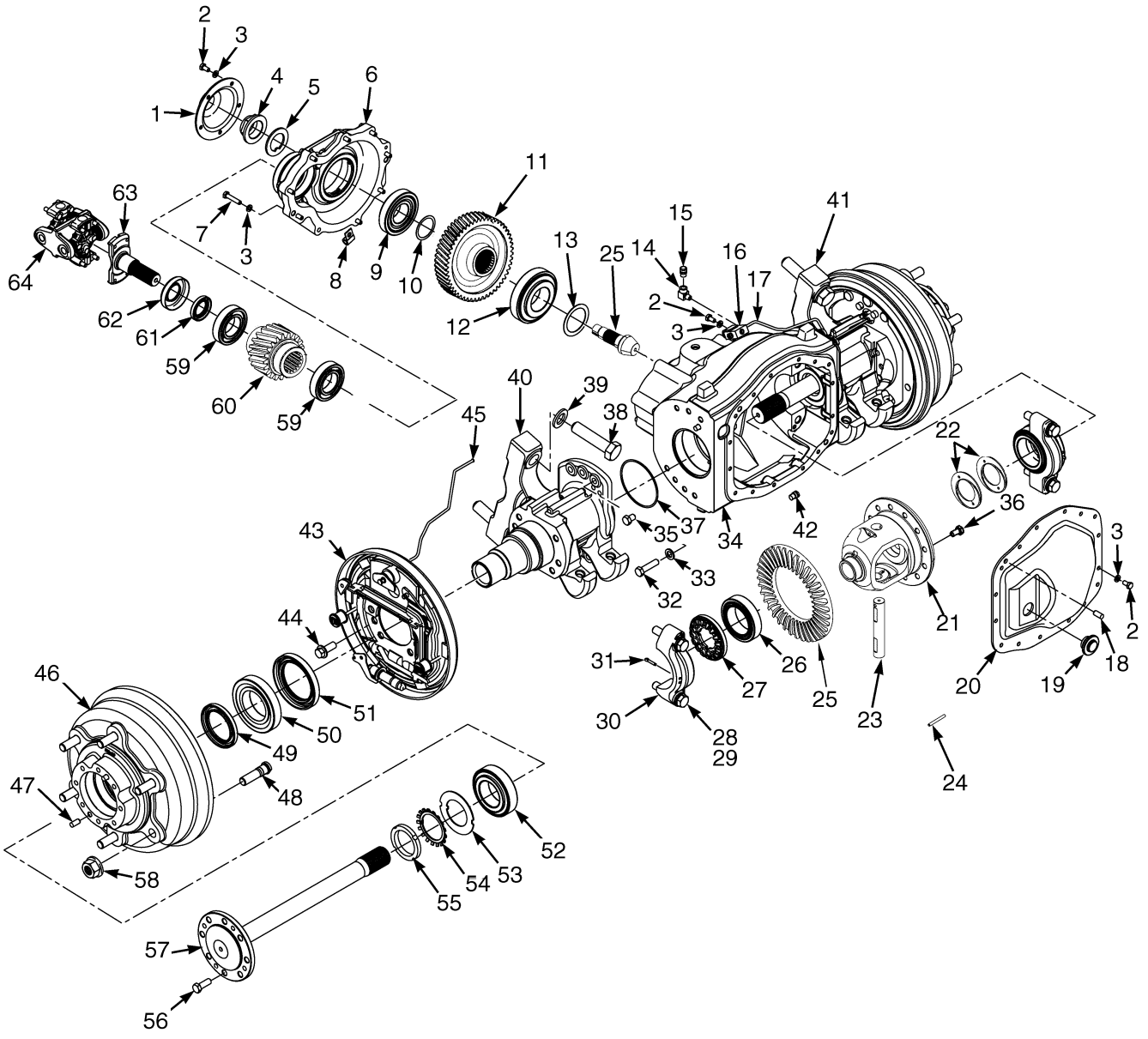

©2006 HYSTER COMPANY

DRIVE AXLE

ITEM		PART NO.	DESCRIPTION	QTY
		1529379	Drive Axle Assembly	1
1		1516536	Cover (Pinion)	1
2		287851	Capscrew	18
3		292681	Lockwasher	27
4		2026861	Nut	1
5		1530588	Washer	1
6		1516535	Housing (Drop Box)	1
7		292508	Capscrew	9
8		2075120	Clamp	1
9		2022352	Roller Bearing	1
10		1516335	Shim (0.50 mm)	AR
10		1516331	Shim (0.12 mm)	AR
10		1516332	Shim (0.15 mm)	AR
10		1516333	Shim (0.18 mm)	AR
10		1516334	Shim (0.25 mm)	AR
11		1517575	Gear	1
12		2028862	Roller Bearing	1
13		1520755	Shim	AR
13		1520752	Shim	AR
13		1569912	Shim	AR
13		1569913	Shim	AR
13		1569914	Shim	AR
13		1520753	Shim	AR
13		1569915	Shim	AR
13		1520754	Shim	AR
14		16151	Fitting	1
15		21420	Breather	1
16		1641351	Tee Fitting	1
16		1618311	Bracket	1
17		2059935	Tube (LH)	1
18		302385	Pin	5
19		1516075	Plug	1
20		1532734	Cover (Center Section)	1
21		2054381	Differential	1
21		1598536	Gear Kit	1
22		1565325	Washer (Side Gear)	2
23		1593763	Shaft	1
24		1593694	Split Pin	1
25		2054792	Hypoid Gear Set	1
26		2021288	Bearing	2
27		1531148	Retainer	2
28	**a**	293692	Capscrew	4
29	**a**	296434	Washer	4
30	**a**	. . . . .	Bearing Cap	2
31		15241	Cotter Pin	2
32		287837	Capscrew	12
33		296422	Washer	12
34		1542864	Housing Assembly (Center)	1
34		234038	Dowel Pin	4
34		296426	Washer (Hardened)	4
34		293692	Capscrew	4

©2006 HYSTER COMPANY

DRIVE AXLE

ITEM	PART NO.	DESCRIPTION	QTY
35	1521809	Drain Plug	1
36	2021286	Bolt	12
37	2027828	O-Ring	2
38	226430	Capscrew	4
39	296434	Washer	4
40	1506876	Hanger (RH) (Assembly)	1
41	1506875	Hanger (LH) (Assembly)	1
42	234038	Dowel Pin	4
43	1552768	Brake Assembly (LH) (☞ Figure 8-3)	1
43	1552769	Brake Assembly (RH) (☞ Figure 8-3)	1
44	2021286	Bolt	16
45	2059936	Tube (RH)	1
46	1509835	Hub Assembly	2
46	1509847	Hub	1
47	302385	Pin	2
48	1509870	Bolt (Hub)	6
49	2021557	Oil Seal	1
50	1525632	Roller Bearing	1
51	2021554	Oil Seal	1
52	2021555	Bearing	1
53	2021592	Washer (Wheel Bearing)	2
54	2021588	Lockwasher	2
55	2021918	Nut	2
56	293630	Capscrew	16
57	1536309	Axle Shaft	2
58	1517836	Wheel Nut	12
59	1523479	Ball Bearing	2
60	1517577	Drive Gear	1
61	1522377	Oil Seal	1
62	1516534	Dust Cover	1
63	1517673	Input Shaft	1
64	1547757	Drive Shaft Assembly	1
64	1566461	Coupling	1
64	1566462	U-Joint	2

FOOTNOTES:

a Included With Center Housing

©2006 HYSTER COMPANY

DRIVE TIRES AND WHEELS (Figure 6-2)

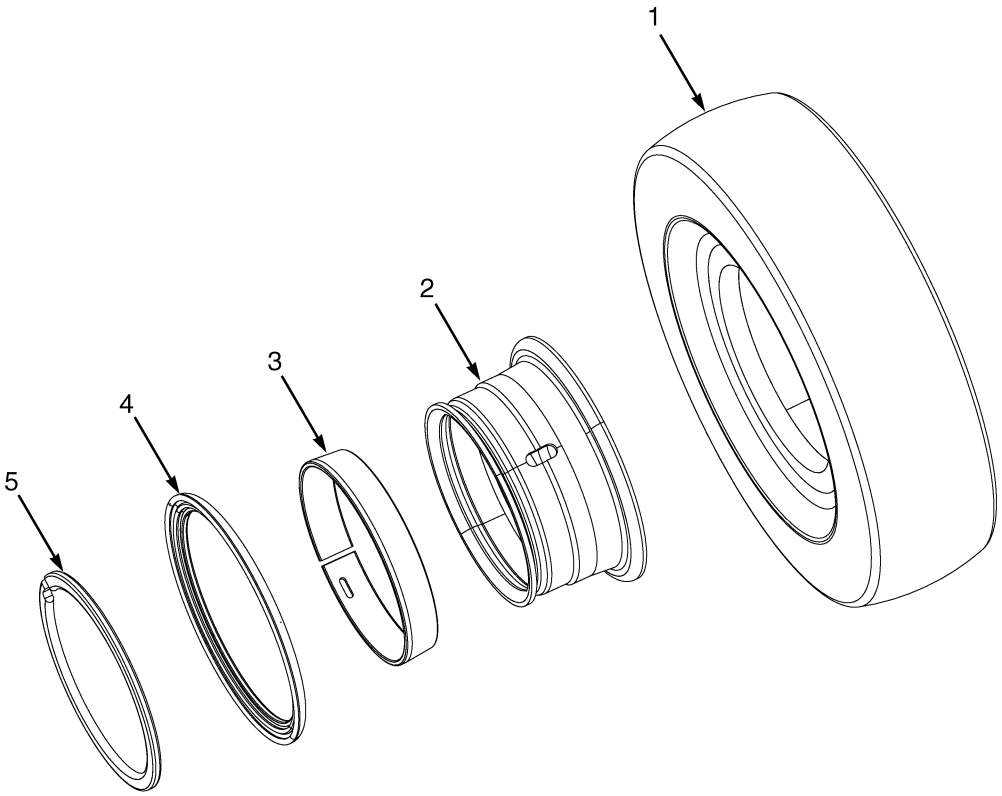

BP070018

KEY:
A: Narrow Tread
B: Intermediate Tread
C: Wide Tread

ITEM		PART NO.	DESCRIPTION	QTY A	QTY B	QTY C
1	**a**	1544232	Tire (6.50 x 10-12PR)	2	2	..
1	**b**	1539639	Tire	2	2	2
1	**b**	1603493	Tire (Non-Marking)	2	2	2
2		2067044	Wheel	2	..	..
2		2067046	Wheel	..	2	..
2	**b**	2067045	Wheel	2	..	..
2	**b**	2067047	Wheel	..	2	..
2	**b**	2067048	Wheel (H1.60-1.8FT)	..	..	2
3		1580426	Side Ring	1	1	1
4		1580427	Tapered Bead Seal Ring	1	1	1
5		161894	Locking Ring	1	1	1

FOOTNOTES:
a Pneumatic
b Snap On Tire

DRIVE TIRES AND WHEELS (Figure 6-3)
PNEUMATIC RADIAL

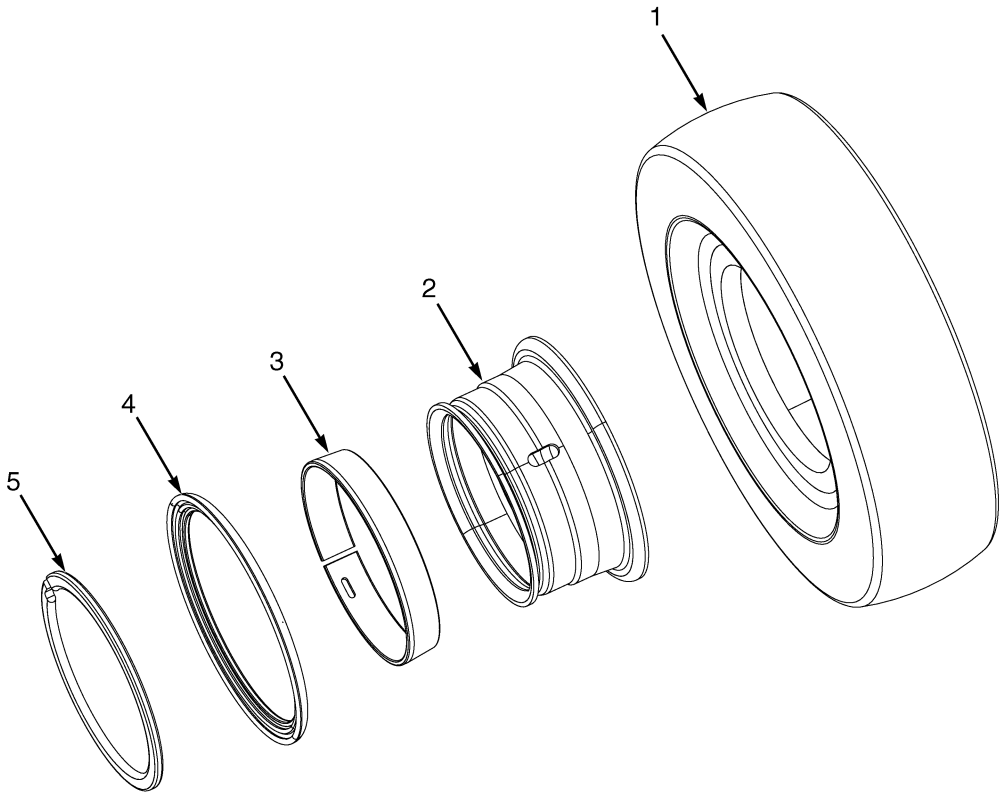

BP070018

KEY:
A: Narrow Tread
B: Intermediate Tread

ITEM	PART NO.	DESCRIPTION	QTY A	QTY B
1	1471832	Tire Assembly	2	2
1	1462616	Tubeless Bead Seal	1	1
1	1358178	Tire (Michelin XZM)	1	1
1	1471922	Bead Seal Valve	1	1
2	2067044	Wheel	2	..
2	2067046	Wheel	..	2
3	1580426	Side Ring	1	1
4	1580427	Tapered Bead Seal Ring	1	1
5	161894	Locking Ring	1	1

©2006 HYSTER COMPANY

7 STEERING SYSTEM

SECTION 7
STEERING SYSTEM

DESCRIPTION **PAGE**

STEER TIRES AND WHEELS 7-11
STEERING AXLE 7-8
STEERING COLUMN ASSEMBLY 7-4
STEERING CONTROL UNIT 7-6
STEERING CYLINDER 7-10
STEERING SYSTEM 7-2

©2006 HYSTER COMPANY

STEERING SYSTEM (Figure 7-1)

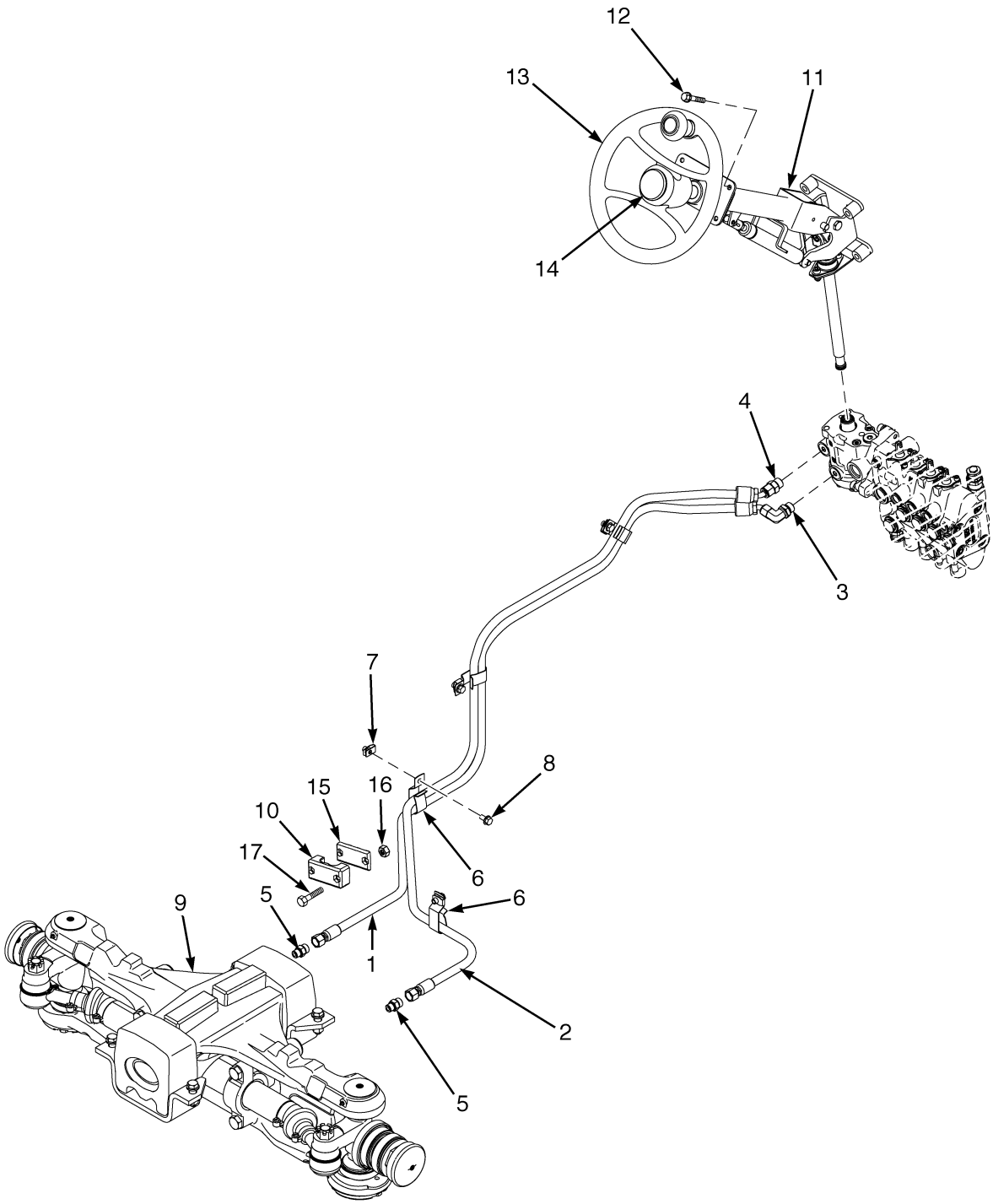

©2006 HYSTER COMPANY

STEERING SYSTEM

ITEM		PART NO.	DESCRIPTION	QTY
1		2092645	Hose	1
2		2092644	Hose	1
3		1516201	Fitting	1
4		1486742	Fitting	1
5		1486740	Fitting	2
6		1544157	Clamp	5
7		1480237	Clip Nut	5
8		1527879	Capscrew	5
9		1534420	Steer Axle Assembly (☞ Figure 7-4)	1
10		1360386	Clamp	1
11	**b**	1544566	Steering Column Assembly (☞ Figure 7-2)	1
11	**c**	1640589	Steering Column Assembly	1
12		1512403	Capscrew	4
13		1531563	Steering Wheel (With Spinner Knob)	1
13		1551839	Steering Wheel (Without Spinner Knob)	1
14	**a**	1450503	Horn Button	1
15		1645074	Plate	1
16		313805	Nut	2
17		287816	Capscrew	2

FOOTNOTES:

a Service with Horn Replacemet Kit 1642089

b ⇒ D/B 01/2007

c D/B 02/2007 ⇒

©2006 HYSTER COMPANY

STEERING COLUMN ASSEMBLY (Figure 7-2)

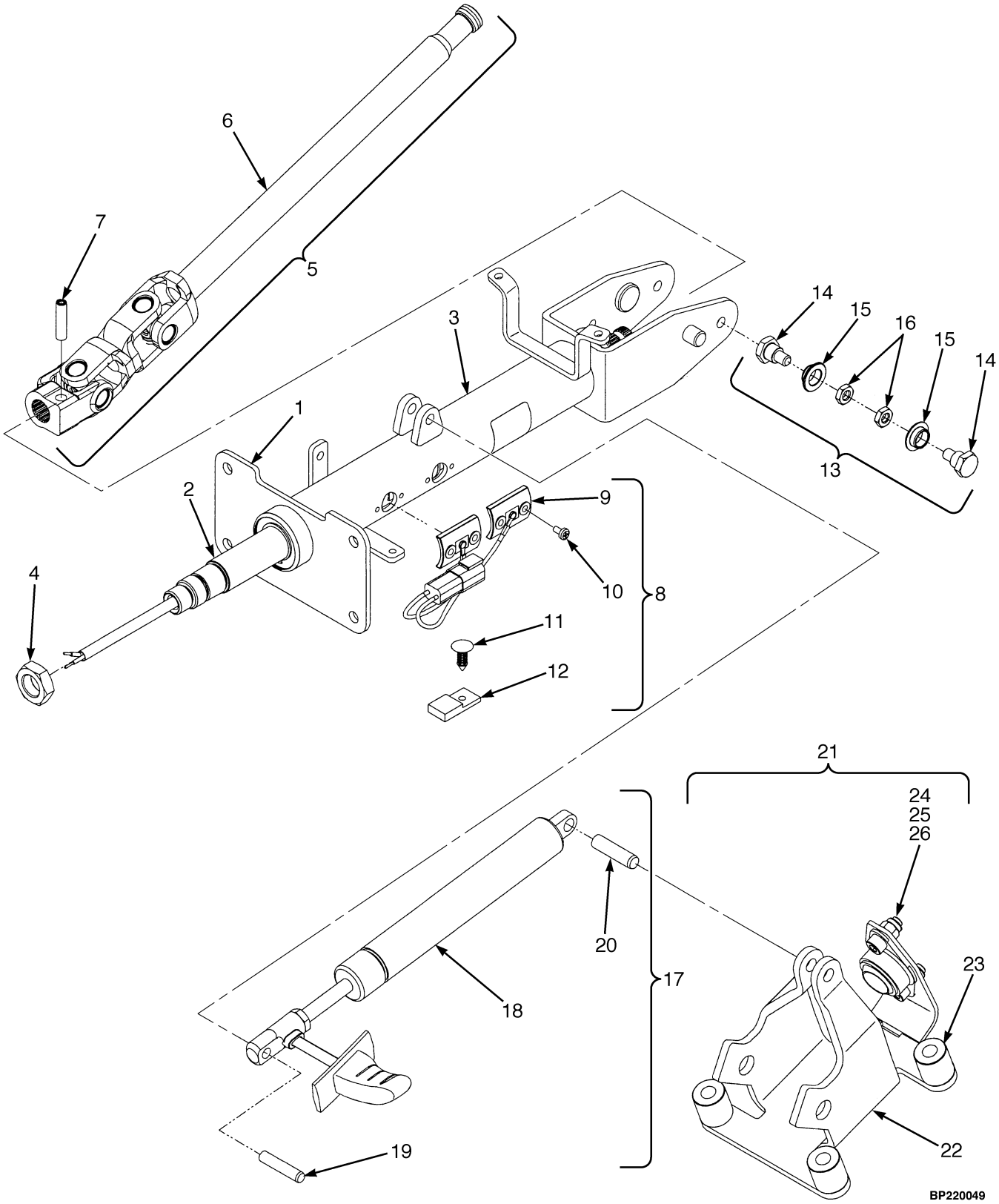

©2006 HYSTER COMPANY

STEERING COLUMN ASSEMBLY

ITEM		PART NO.	DESCRIPTION	QTY
	a	1544566	Steering Column Assembly	1
	b	1640589	Steering Column Assembly	1
1	**a**	1562489	Shaft Kit (Upper)	1
1	**b**	1647528	Shaft Kit (Upper)	1
2		. . . . .	Shaft Assembly (Upper)	1
3		. . . . .	Housing	1
4		1562492	Nut Kit	1
4		. . . . .	Nut	2
5		1562493	Shaft Kit (Lower)	1
6		. . . . .	Shaft Assembly (Lower)	1
7		. . . . .	Pin	1
8		1562496	Contact Kit	1
9		. . . . .	Contact Assembly (Horn)	1
10		. . . . .	Screw	4
11		. . . . .	Fastener	1
12		. . . . .	Connector	1
13		1562501	Pivot Kit (Lower)	1
14		. . . . .	Bolt (Pivot)	2
15		. . . . .	Bushing	2
16		. . . . .	Nut	2
17		1562505	Gas Spring Kit	1
18		. . . . .	Gas Spring	1
19		. . . . .	Pin	1
20		. . . . .	Pin	1
21		1562509	Support Kit	1
22		. . . . .	Support	1
23		. . . . .	Spacer	4
24		. . . . .	Nut	2
25		. . . . .	Washer	2
26		. . . . .	Screw	2

FOOTNOTES:
a ⇒ D/B 01/2007
b D/B 02/2007 ⇒

©2006 HYSTER COMPANY

STEERING CONTROL UNIT (Figure 7-3)

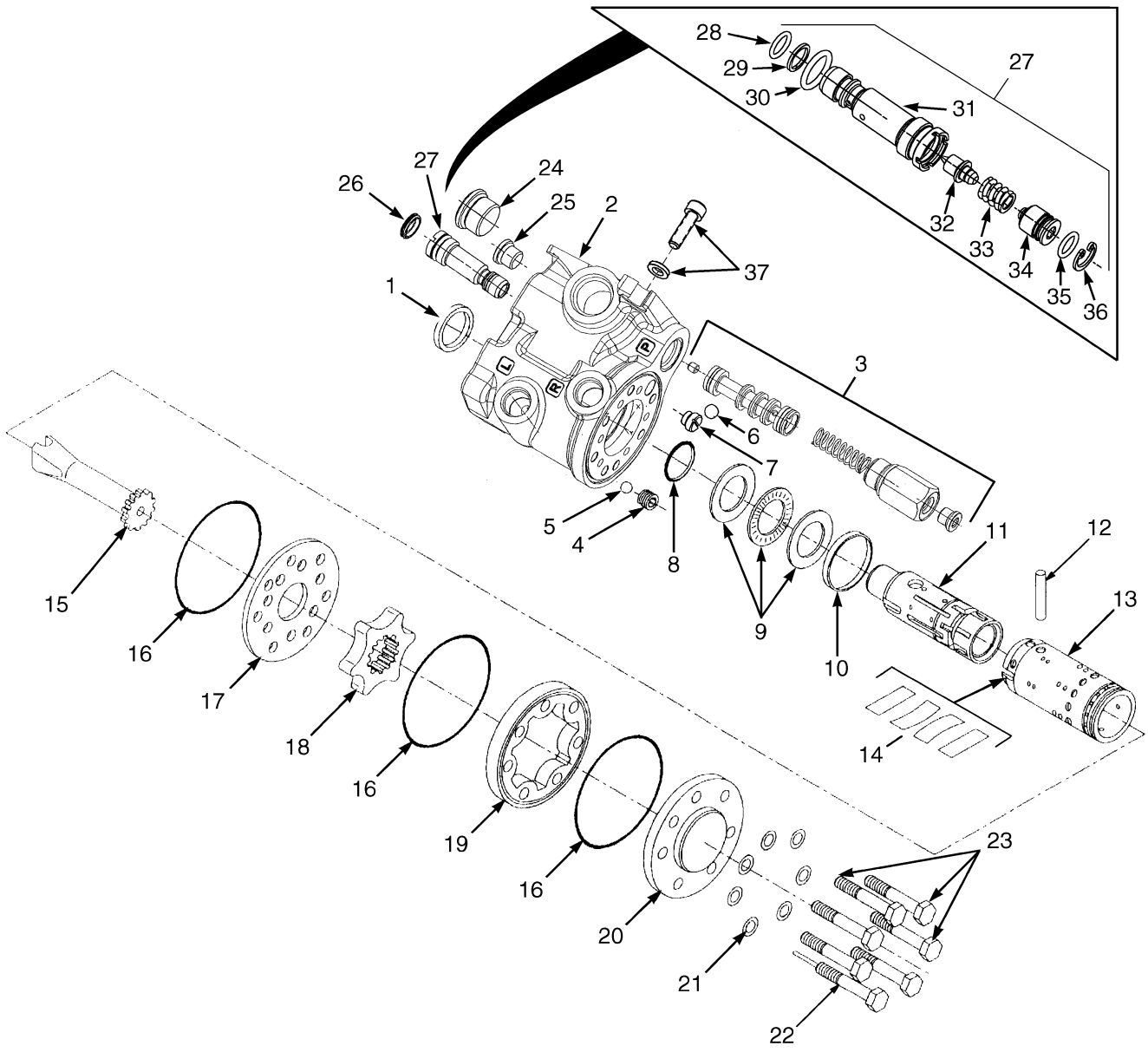

©2006 HYSTER COMPANY

STEERING CONTROL UNIT

ITEM	PART NO.	DESCRIPTION	QTY
	2060863	Steering Control Unit	1
1	. . . . .	Dust Seal	1
2	. . . . .	Housing	1
3	. . . . .	Relief Valve	1
4	. . . . .	Bushing	1
5	. . . . .	Check Ball	1
6	. . . . .	Check Ball	1
7	. . . . .	Seat	1
8	. . . . .	O-Ring	1
9	. . . . .	Bearing Set	1
10	. . . . .	Ring	1
11	. . . . .	Spool	1
12	. . . . .	Pin	1
13	. . . . .	Sleeve	1
14	. . . . .	Spring Set	1
15	. . . . .	Shaft	1
16	. . . . .	O-Ring	3
17	. . . . .	Plate	1
18	. . . . .	Gear Set	1
19	. . . . .	Gear Ring	1
20	. . . . .	Cover	1
21	. . . . .	Washer	7
22	. . . . .	Special Screw	2
23	. . . . .	Capscrew	5
24	. . . . .	Priority Valve Plug	1
25	. . . . .	Diagnostic Plug (Supply Pressure)	1
26	. . . . .	Cap	1
27	. . . . .	System Relief Valve	1
28	. . . . .	O-Ring	1
29	. . . . .	Back-Up Ring	1
30	. . . . .	O-Ring	1
31	. . . . .	Cartridge	1
32	. . . . .	Seat	1
33	. . . . .	Spring	1
34	. . . . .	Plug	1
35	. . . . .	Anti Tamper Ring	1
36	. . . . .	Snap Ring	1
37	1581858	Steering Control Unit Bolt Kit	1
	1579908	Seal Kit (Includes Items 1, 8, 16, 21, 28-30, 34)	1

©2006 HYSTER COMPANY

STEERING AXLE (Figure 7-4)

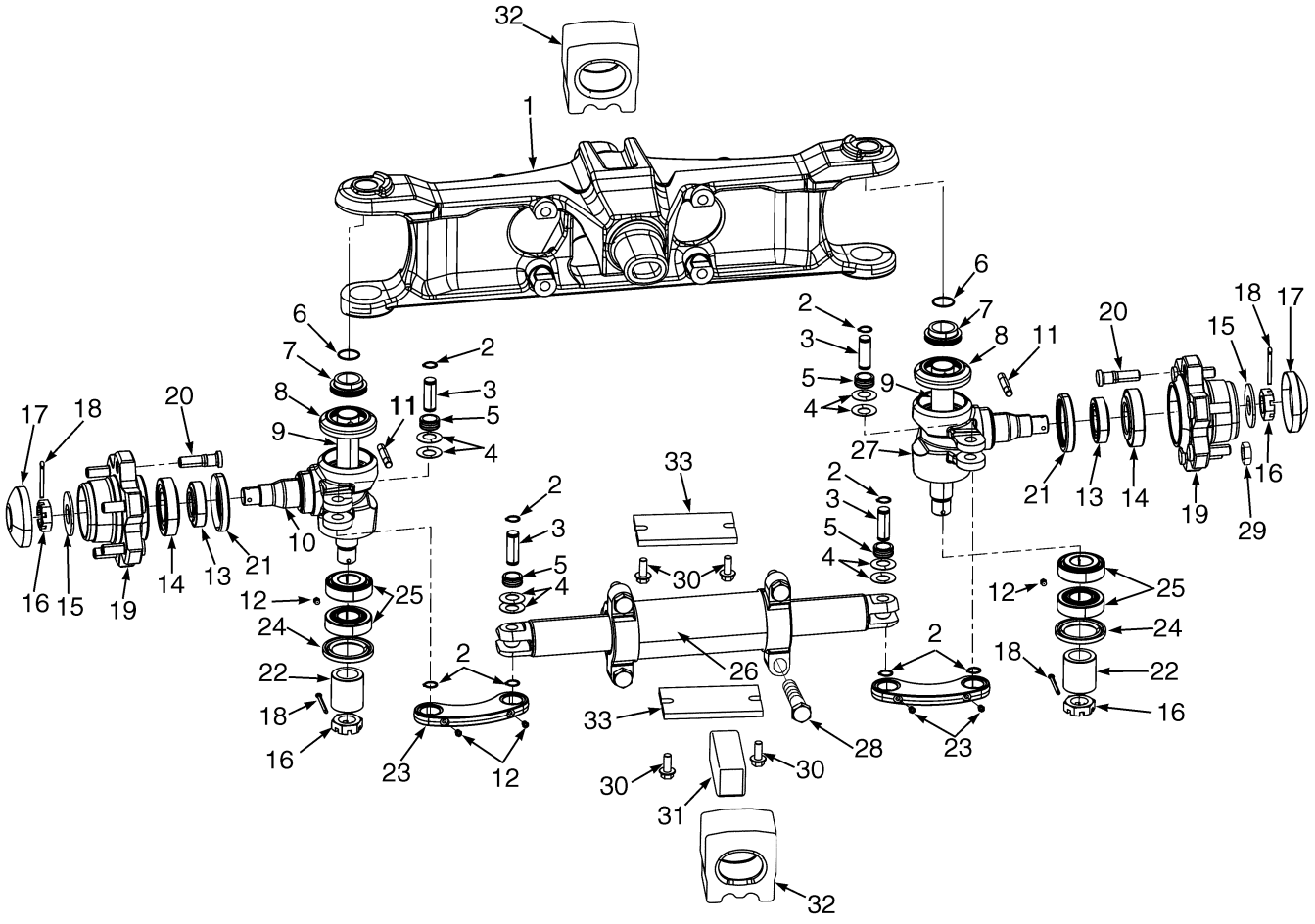

BP220068

©2006 HYSTER COMPANY

STEERING AXLE

ITEM	PART NO.	DESCRIPTION	QTY
1	1524921	Steer Axle Frame	1
2	58903	Snap Ring	8
3	1568271	Pin	4
4	300752	Washer	8
5	300751	Bushing	4
6	39352	O-Ring	2
7	300767	Spacer	2
8	264973	Seal	2
9	1502277	King Pin	2
10	1524916	Spindle (LH)	1
11	226986	Pin	2
12	13957	Lube Fitting	6
13	1531171	Roller Bearing	2
14	1375472	Roller Bearing	2
15	1536250	Washer	2
16	249289	Nut	4
17	2021800	Cap	2
18	15245	Cotter Pin	4
19	1525238	Hub Assembly	2
20	1502276	Bolt	6
21	2021898	Oil Seal	2
22	300766	Sleeve	2
23	1524923	Tie Rod	2
24	98525	Oil Seal	2
25	156195	Bearing Cone	4
25	156194	Bearing Cup	4
26	2055917	Steer Cylinder Assembly (☞ Figure 7-3)	1
27	1524914	Spindle (RH)	1
28	293686	Capscrew	4
29	1517836	Wheel Nut	12
30	1586013	Capscrew	4
31	1388838	Mount	1
32	2060696	Mount	2
33	2021900	Cover	2

©2006 HYSTER COMPANY

STEERING CYLINDER (Figure 7-5)

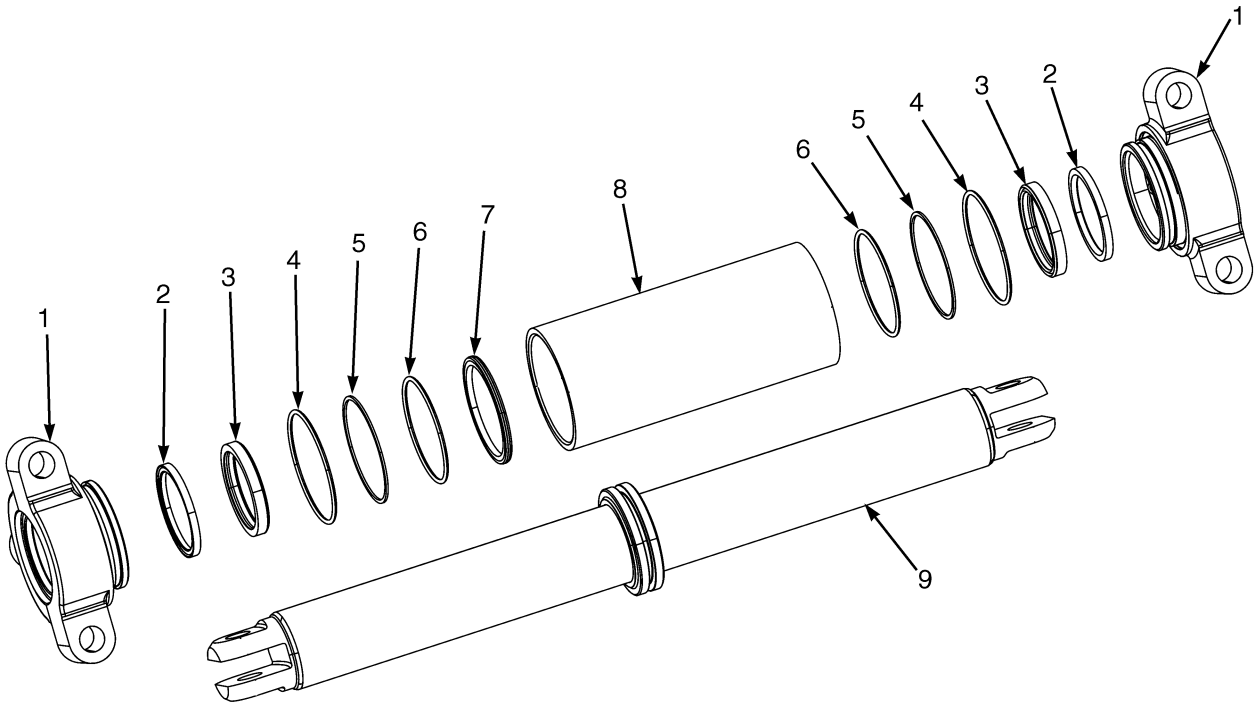

BP220064

ITEM	PART NO.	DESCRIPTION	QTY
	2055917	Steer Cylinder Assembly	1
1	1533741	Cap	2
2	163307	Rod Wiper	2
3	1381099	Rod Seal	2
4	14191	O-Ring	2
5	1310391	Back-Up Ring	2
6	1310389	O-Ring	2
7	2044370	Piston Seal	1
8	1530211	Cylinder Shell	1
9	1533747	Piston Rod	1
	1534252	Seal Kit (Includes Items 2-7)	1

©2006 HYSTER COMPANY

STEER TIRES AND WHEELS (Figure 7-6)

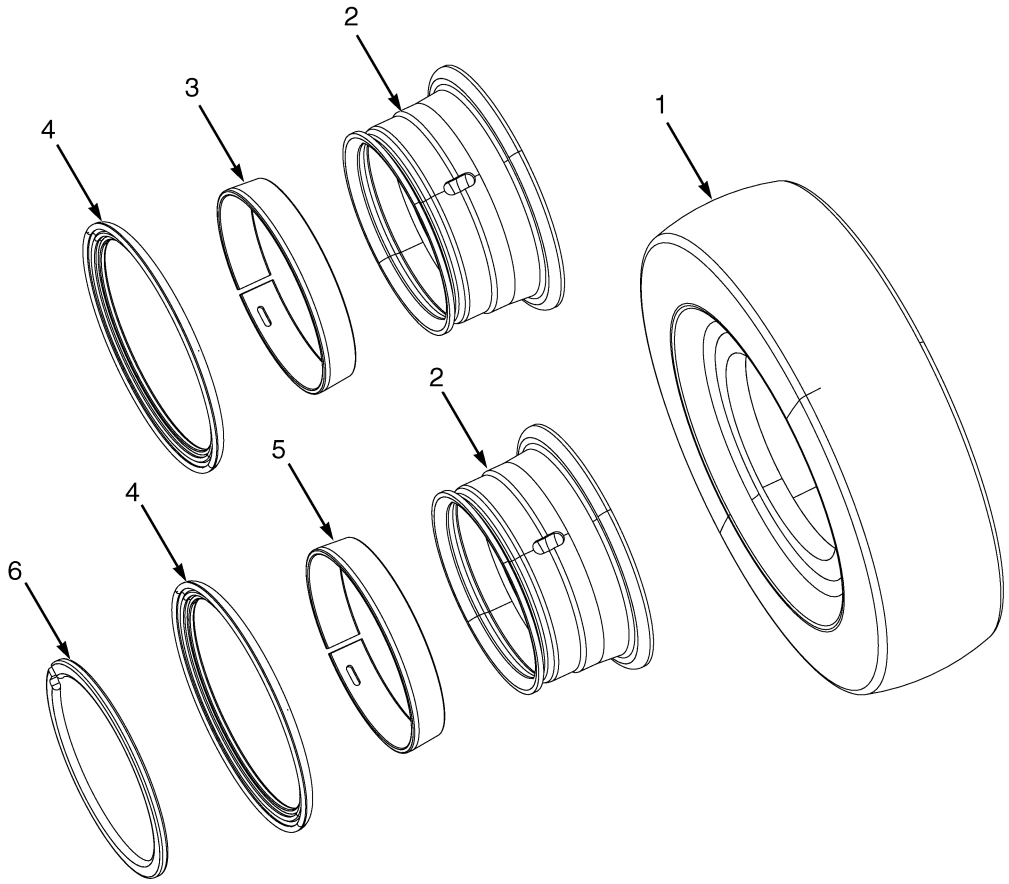

BP220090

STEER TIRES AND WHEELS

KEY:
A: 5.00 R8 Pneumatic Radial
B: 5.00 x 8-10PR Pneumatic
C: 5.00 x 8 Snap On Tire
D: 18 x 7-8 Snap On Tire

ITEM	PART NO.	DESCRIPTION	QTY A	B	C	D
1	1471833	Tire Assembly	2	..	..	..
1	1358176	Tire	1	..	..	..
1	1462614	Tubeless Bead Seal	1	..	..	..
1	1471921	Valve	1	..	..	..
1	1544233	Tire	..	2	..	..
1	1539637	Tire (H1.6-1.8FT)	..	..	2	..
1	1539638	Tire (H2.0FT)	..	..	..	2
1	1603498	Tire (Non-Marking) (H1.6-1.8FT)	..	..	2	..
1	1603499	Tire (Non Marking) (H2.0FT)	..	..	..	2
2	2067051	Wheel (3.00 x8)	2	2	..	..
2	2067053	Wheel (4.33 x 8) (H2.0FT)	..	..	..	2
2	2067052	Wheel (3.00 x8) (H1.6-1.8FT)	..	..	2	..
3	1580428	Side Ring	1	1	..	..
4	1580429	Tapered Bead Seat Ring	1	1	..	..
5	1580430	Lock Ring	1	1	..	..

©2006 HYSTER COMPANY

8 BRAKE SYSTEM

SECTION 8
BRAKE SYSTEM

DESCRIPTION	PAGE
BRAKE ASSEMBLY	8-6
BRAKE LINKAGE	
DUAL PEDAL	8-4
SINGLE PEDAL	8-2
PARK BRAKE	8-8

©2006 HYSTER COMPANY

BRAKE LINKAGE (Figure 8-1)
SINGLE PEDAL

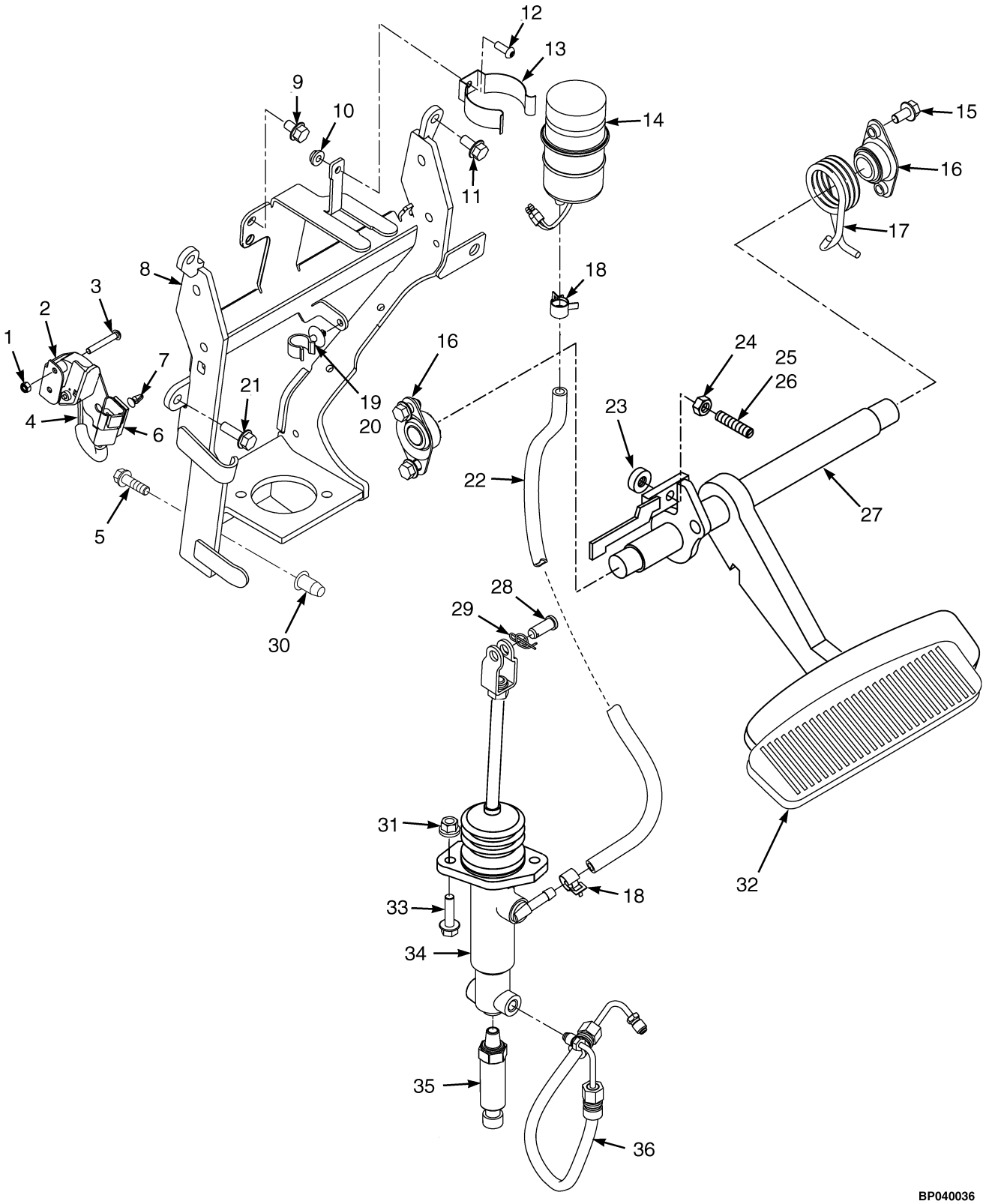

©2006 HYSTER COMPANY

BRAKE LINKAGE
SINGLE PEDAL

ITEM	PART NO.	DESCRIPTION	QTY
1	302398	Nut	2
2	1531567	Bracket (Inching Sensor)	1
3	1553897	Capscrew	2
4	1547849	Sensor	1
5	1583611	Capscrew	2
6	1500912	Clip	1
7	1564526	Clip	1
8	1570290	Bracket	1
9	1529366	Capscrew	1
10	1514429	Nut (Flange)	1
11	1527879	Capscrew	2
12	1510126	Capscrew (Button Head)	1
13	2021353	Bracket	1
14	2314223	Reservoir Assembly	1
14	2021341	Cap	1
15	1527879	Capscrew	4
16	1585575	Bushing	2
17	1568075	Spring (RH)	1
18	1543698	Clamp (Swivel)	1
19	1543842	Base (Clamp)	1
20	1502003	Clamp	2
21	1586627	Capscrew	2
22	1531569	Hose (Brake Feed)	1
23	1556475	Bumper	1
24	239503	Nut	1
25	1534871	Bolt	1
26	2064554	Thread Sealer	AR
27	1568243	Bracket (Pedal)	1
28	1375391	Pin (Rod End)	1
29	1351689	Cotter Pin	1
30	1530243	Insert	2
31	1544153	Lock Nut	2
32	1570298	Rubber Pad	1
33	1527881	Capscrew	2
34	1536724	Master Cylinder	1
34	1566141	Push Rod	1
34	2041520	Yoke	1
34	1566142	Nut	2
34	1566143	Fitting	1
34	1566144	Gasket	1
34	1566131	Repair Kit	1
35	1590033	Transducer	1
36	2059937	Hose (Brake)	1

©2006 HYSTER COMPANY

BRAKE LINKAGE (Figure 8-2)
DUAL PEDAL

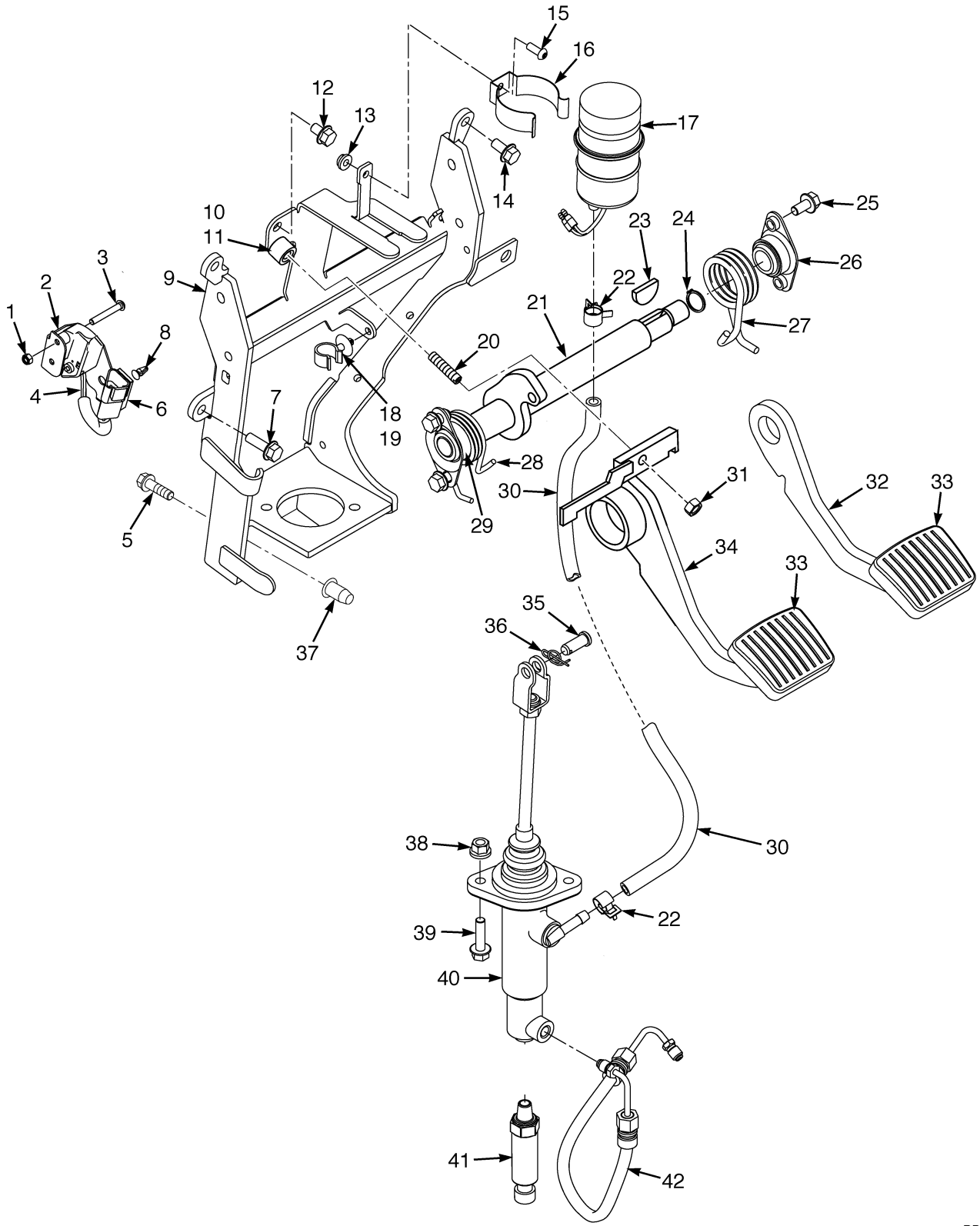

BP040035

©2006 HYSTER COMPANY

BRAKE LINKAGE
DUAL PEDAL

ITEM	PART NO.	DESCRIPTION	QTY
1	302398	Nut	2
2	1531567	Bracket (Inching Sensor)	1
3	1553897	Capscrew	2
4	1547849	Sensor	1
5	1586627	Capscrew	2
6	1500912	Clip (Connector)	1
7	1583611	Capscrew	2
8	1564526	Clip (Key-Hole)	1
9	1570290	Bracket	1
10	1556475	Bumper	1
11	2064554	Thread Sealer	AR
12	1529366	Capscrew	1
13	1514429	Nut (Flange)	1
14	1527879	Capscrew	2
15	1510126	Capscrew (Button Head)	1
16	2021353	Bracket	1
17	2314223	Reservoir Assembly	1
17	2021341	Cap	1
18	1543698	Clamp (Swivel)	1
19	1543842	Base (Clamp)	1
20	1534871	Bolt (Upstop)	1
21	1568253	Crank	1
22	1502003	Clamp	2
23	206	Woodruff Key	1
24	12929	Snap Ring	1
25	1527879	Capscrew	4
26	1585575	Bushing	2
27	1568076	Spring (RH)	1
28	1568077	Spring (LH)	1
29	244540	Bushing	2
30	1531569	Hose (Brake Feed)	1
31	239503	Nut	1
32	1568256	Brake Pedal (RH)	1
33	1570300	Pad	2
34	1568245	Brake Pedal (LH)	1
35	1375391	Pin (Rod End)	1
36	1351689	Cotter Pin	1
37	1530243	Insert	2
38	1544153	Lock Nut	2
39	1527881	Capscrew	2
40	1536724	Master Cylinder	1
40	1566141	Push Rod	1
40	2041520	Yoke	1
40	1566142	Nut	2
40	1566144	Gasket	1
40	1566143	Fitting	1
40	1566131	Repair Kit	1
41	1590033	Transducer	1
42	2059937	Hose (Brake)	1

©2006 HYSTER COMPANY

BRAKE ASSEMBLY (Figure 8-3)

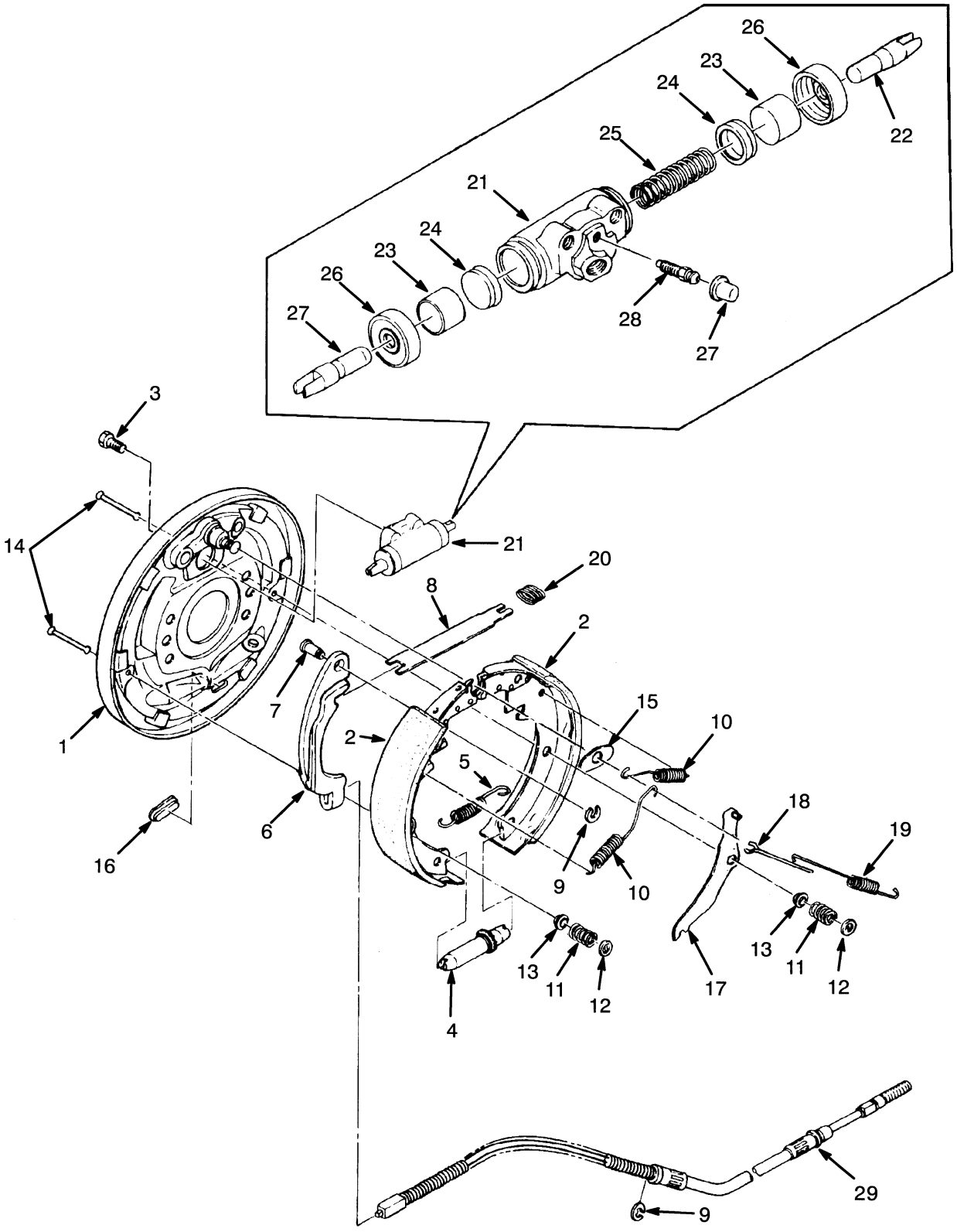

HP040455

©2006 HYSTER COMPANY

BRAKE ASSEMBLY

KEY:
A: Left Hand
B: Right Hand

ITEM	PART NO.	DESCRIPTION	QTY A	QTY B
	1552768	Brake Assembly (LH)	..	1
	1552769	Brake Assembly (RH)	1	..
	1593917	Brake (LH)	1	..
	1593918	Brake (RH)	..	1
1	2026773	Backing Plate	..	1
1	2026774	Backing Plate	1	..
2	. . . . .	Brake Shoe	2	2
3	2026776	Bolt	2	2
4	. . . . .	Adjuster Assembly	..	1
4	. . . . .	Adjuster Assembly	1	..
5	. . . . .	Spring (Adjuster)	1	1
6	2026777	Lever	..	1
6	2026778	Lever	1	..
7	. . . . .	Pin	1	1
8	2026780	Strut	1	1
9	2026781	Snap Ring	2	2
10	2026782	Spring	2	2
11	. . . . .	Spring (Shoe Hold Down)	2	2
12	. . . . .	Washer	2	2
13	. . . . .	Washer (Lower)	1	1
14	. . . . .	Pin	2	2
15	1593919	Plate	1	1
16	1367855	Plug	1	1
17	. . . . .	Lever	..	1
17	. . . . .	Lever	1	..
18	. . . . .	Stop (Lever)	1	1
19	. . . . .	Spring	1	1
20	2026783	Spring	1	1
21	2026775	Wheel Cylinder	1	1
22	2045884	Piston Rod	2	2
23	. . . . .	Piston	2	2
24	. . . . .	Cup	2	2
25	. . . . .	Spring	1	1
26	. . . . .	Boot	2	2
27	1367871	Cup	1	1
28	1367870	Bleeder Screw	1	1
29	1552770	Cable Assembly (LH)	1	..
29	1552771	Cable Assembly (RH)	..	1
	2026787	Shoe and Lining Kit (Includes Items 2, 7, 9)	1	1
	2026784	Auto Adjuster Kit (LH) (Includes Items 4-5, 17-19)	1	..
	2026785	Auto Adjuster Kit (RH) (Includes Items 4-5, 17-19)	..	1
	2026786	Shoe Hold Down Kit (Includes Items 11-14)	1	1
	1367876	Wheel Cylinder Kit (Includes Items 23-26)	1	1
	2040957	Cup and Boot Kit (Includes Items 24, 26)	1	1

©2006 HYSTER COMPANY

PARK BRAKE (Figure 8-4)

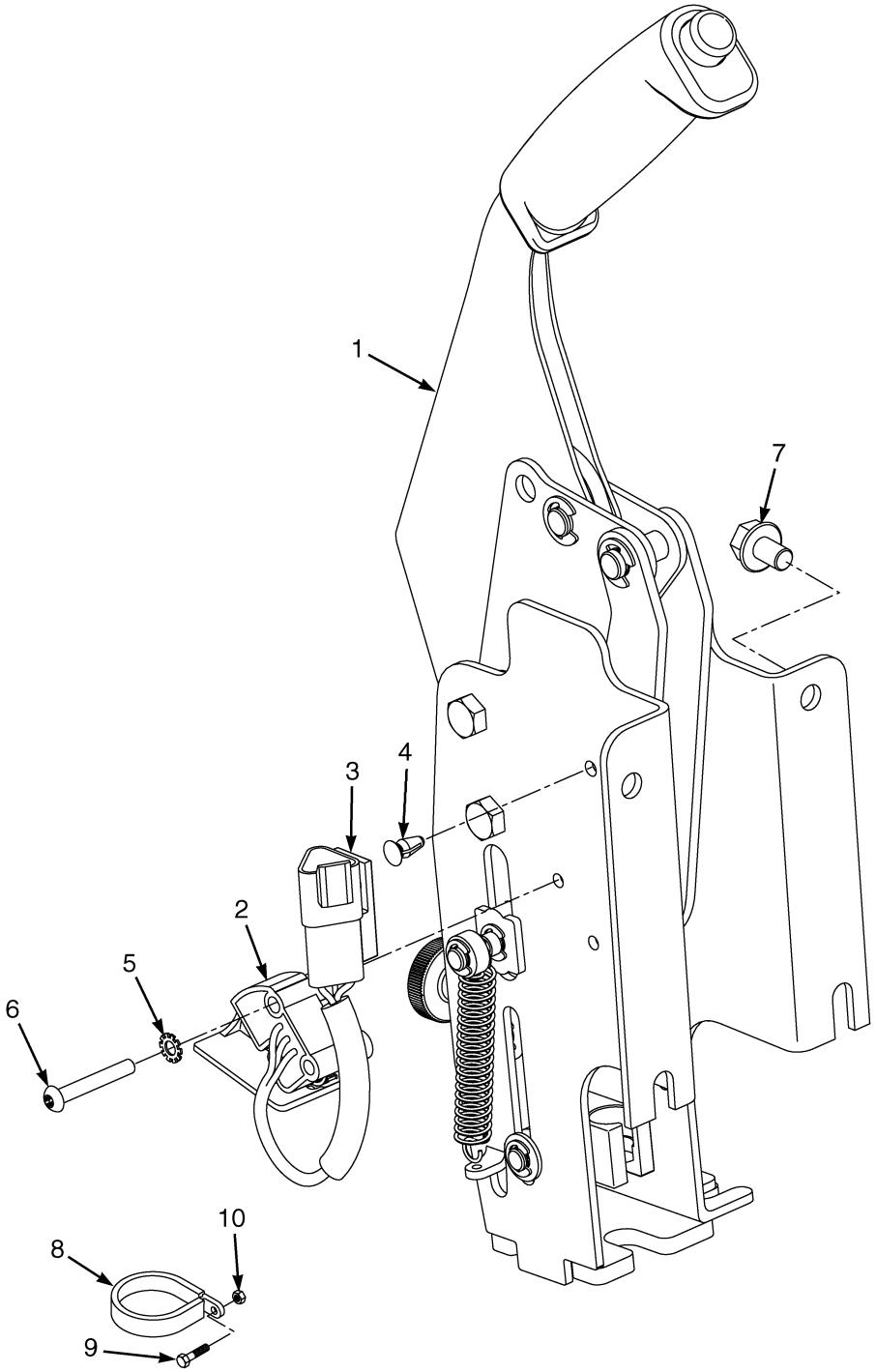

ITEM	PART NO.	DESCRIPTION	QTY
	1544466	Park Brake Assembly	1
1	1528799	Park Brake	1
2	1547849	Sensor	1
2	1493466	Connector	1
2	1330415	Secondary Lock	1
2	1330437	Terminal (Pin)	3
3	1500912	Clip	1
4	1530286	Clip	1

©2006 HYSTER COMPANY

PARK BRAKE

ITEM	PART NO.	DESCRIPTION	QTY
5	296378	Washer	2
6	1553897	Capscrew	2
7	1529366	Capscrew	4
8	1551377	Clamp	1
9	1527880	Capscrew	1
10	1544153	Lock Nut	1

©2006 HYSTER COMPANY

NOTES

9 HYDRAULIC SYSTEM

SECTION 9
HYDRAULIC SYSTEM

DESCRIPTION	PAGE
AUXILIARY ONE SECTION	
ELECTRONIC CONTROL	
THREE AND FOUR FUNCTION	9-34
AUXILIARY SECTIONS, ONE AND TWO	
MANUAL CONTROL VALVE	
THREE AND FOUR FUNCTION	9-22
AUXILIARY TWO SECTION	
ELECTRONIC CONTROL	
FOUR FUNCTION	9-36
CONTROL VALVE ASSEMBLY	
ELECTRONIC CONTROL	
THREE AND FOUR FUNCTION	9-25
MANUAL CONTROL	
THREE AND FOUR FUNCTION	9-18
ELECTRO HYDRAULIC POPPET VALVE	
ELECTRONIC CONTROL	
HOIST AND LOWER	9-32
GEAR PUMP	
MAZDA 2.0L	9-4
YANMAR DIESEL	9-5
HAND LEVERS	
FOUR FUNCTION	
WITH DETENTED LEVERS	9-16
WITHOUT DETENTED LEVERS	9-14
THREE FUNCTION	
WITH DETENTED LEVERS	9-12
WITHOUT DETENTED LEVERS	9-10
HYDRAULIC FILTER	9-6
HYDRAULIC SUPPLY AND RETURN	9-2
MAST INSTALLATION	9-40
OUTLET SECTION	
ELECTRONIC CONTROL;	
THREE AND FOUR FUNCTION	9-38
MANUAL CONTROL VALVE	
THREE AND FOUR FUNCTION	9-24
TILT AND AUXILIARY HOSES	9-8
TILT CYLINDERS	
LEFT HAND	9-44
RIGHT HAND	9-42
TILT SECTION	
ELECTRONIC CONTROL	
THREE AND FOUR FUNCTION	9-30
VALVE ASSEMBLY, LIFT AND LOWER	
ELECTRONIC CONTROL VALVE	
THREE AND FOUR FUNCTION	9-28
VALVE ASSEMBLY, LIFT AND TILT	
MANUAL CONTROL VALVE	
THREE AND FOUR FUNCTION	9-20

©2006 HYSTER COMPANY

HYDRAULIC SUPPLY AND RETURN (Figure 9-1)

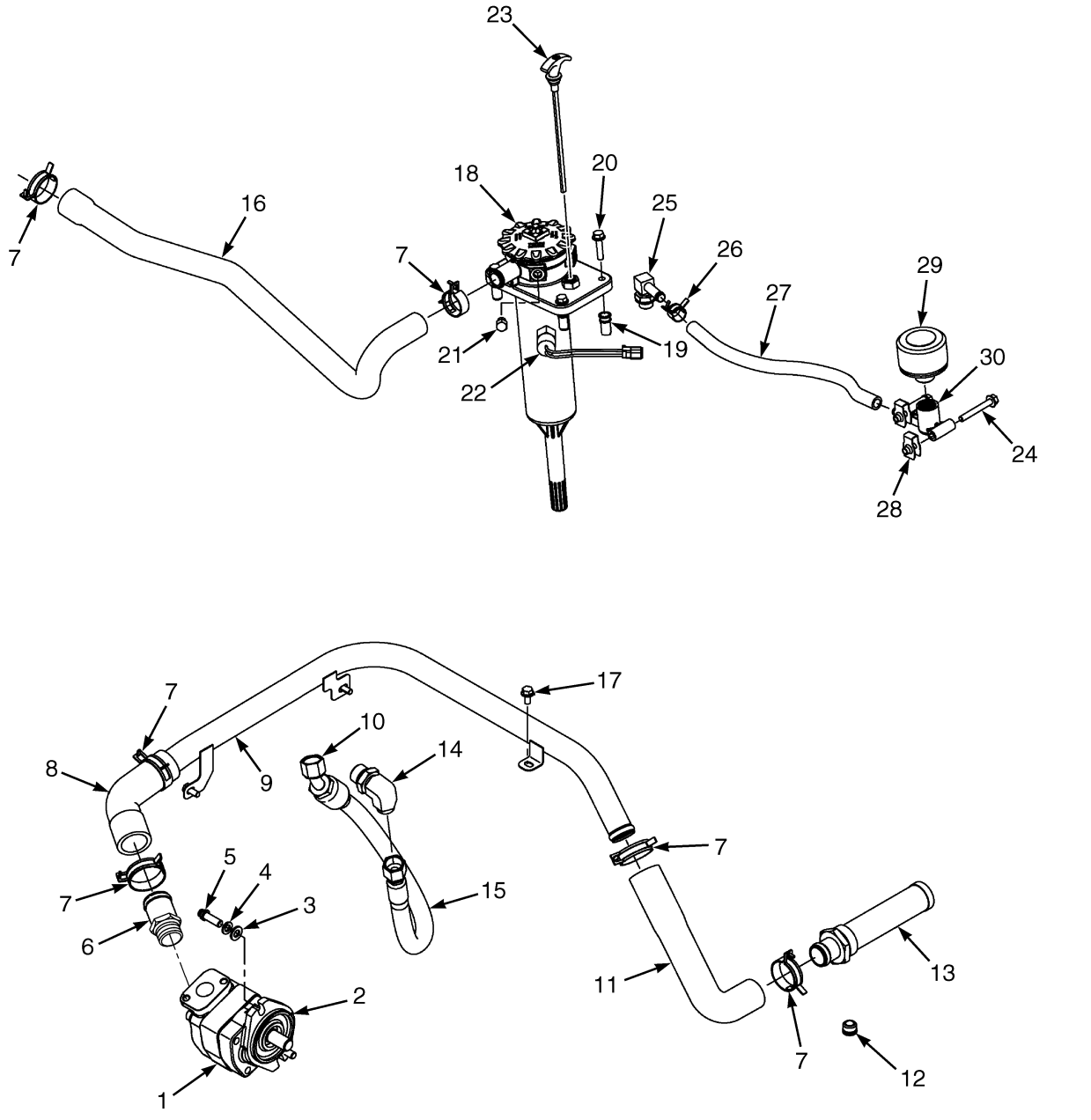

©2006 HYSTER COMPANY

HYDRAULIC SUPPLY AND RETURN

ITEM	PART NO.	DESCRIPTION	QTY
1	2067800	Gear Pump (Mazda 2.0L) (☞ Figure 9-2)	1
1	2067802	Gear Pump (Yanmar 2.6L Diesel)	1
2	264159	Adhesive	AR
3	320159	Washer	2
4	292682	Lockwasher	2
5	1564515	Capscrew	2
6	1568199	Adapter	1
7	1501992	Clamp	2
8	2069005	Hose (Pump Suction)	1
9	2068947	Tube (Suction)	1
10	1516205	Fitting	1
11	2061778	Hose (Tank Suction)	1
12	1527982	Clamp	1
13	1624904	Suction Strainer	1
13	16984	O-Ring	1
14	1487069	Fitting	1
15	2074969	Hose	1
16	2067452	Hose (Three Function)	1
16	2067453	Hose (Four Function)	1
17	369804	Clamp	2
18	1544975	Filter Assembly (☞ Figure 9-4)	1
19	1529065	Insert	4
20	1586627	Capscrew	4
21	14591	Fitting	1
22	2068337	Pressure Switch	1
23	2060808	Dipstick	1
24	1528481	Magnetic Plug (With O-Ring)	1
25	222510	Fitting	1
26	1502007	Clamp	1
27	127918	Hose	1
28	1527395	Grommet	1
29	1582161	Breather	1
30	1582160	Adapter (Breather)	1
31	1510116	Capscrew	2
32	1393879	Clip Nut	2
33	1527879	Capscrew	3

©2006 HYSTER COMPANY

GEAR PUMP (Figure 9-2)
MAZDA 2.0L

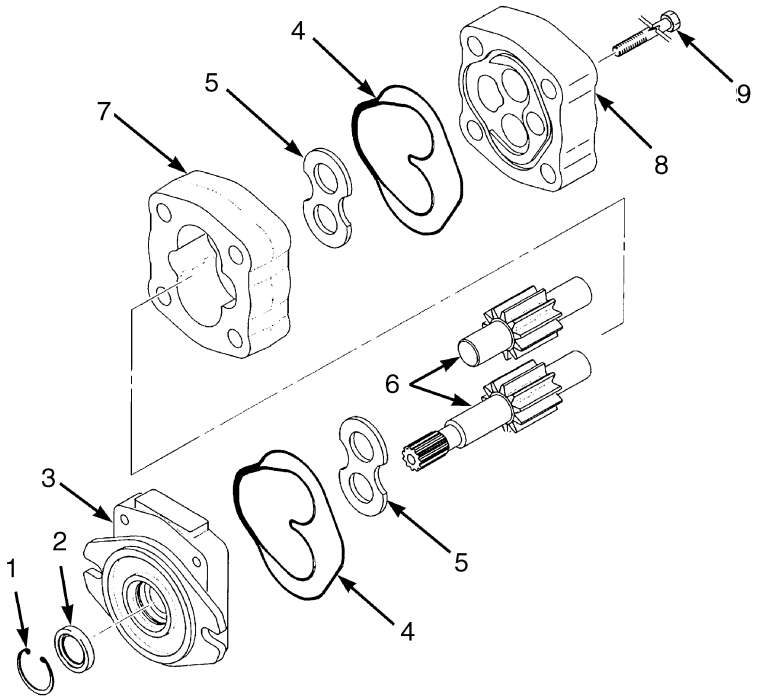

BP1500983

ITEM	PART NO.	DESCRIPTION	QTY
	2067800	Gear Pump	1
1	. . . . .	Snap Ring	1
2	. . . . .	Oil Seal	1
3	1581536	Flange Mounting	1
4	. . . . .	Seal Plate and Back-Up Ring	2
5	1578673	Side Plate	2
6	1581537	Gear Set	1
7	. . . . .	Gear Plate	1
8	1581535	Cover	1
9	1578671	Screw	4
	1578672	Dowel Pin (Not illustrated)	4
	1465140	Seal Kit (Includes Items 1-2, 4)	1

©2006 HYSTER COMPANY

GEAR PUMP (Figure 9-3)
YANMAR DIESEL

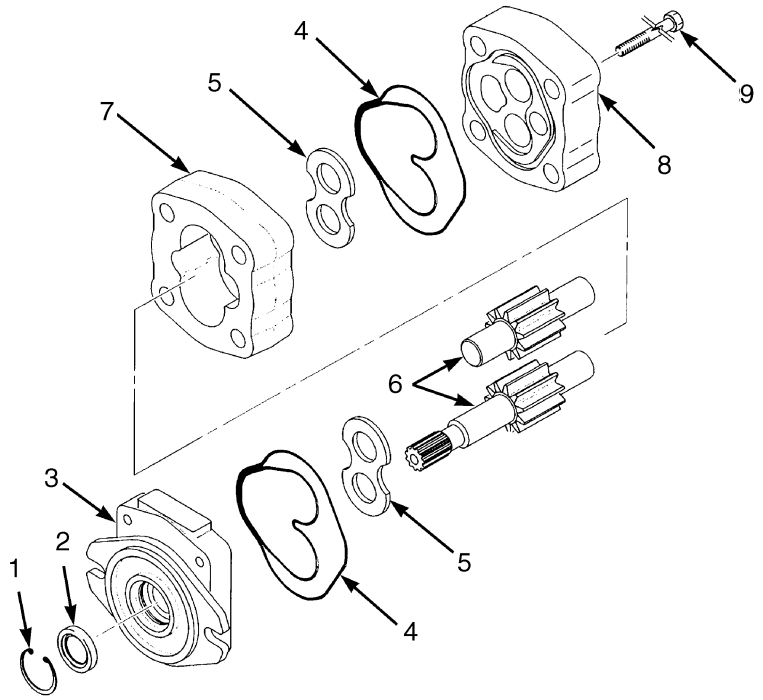

BP1500983

ITEM	PART NO.	DESCRIPTION	QTY
	2067802	Gear Pump	1
1	. . . . .	Snap Ring	1
2	. . . . .	Oil Seal	1
3	1581536	Flange Mounting	1
4	. . . . .	Seal Plate and Back-Up Ring	2
5	1578673	Side Plate	2
6	1581534	Gear Set	1
7	. . . . .	Gear Plate	1
8	1581535	Cover	1
9	1578693	Screw	4
	1578672	Dowel Pin (Not illustrated)	4
	1465140	Seal Kit (Includes Items 1-2, 4)	1

HYDRAULIC FILTER (Figure 9-4)

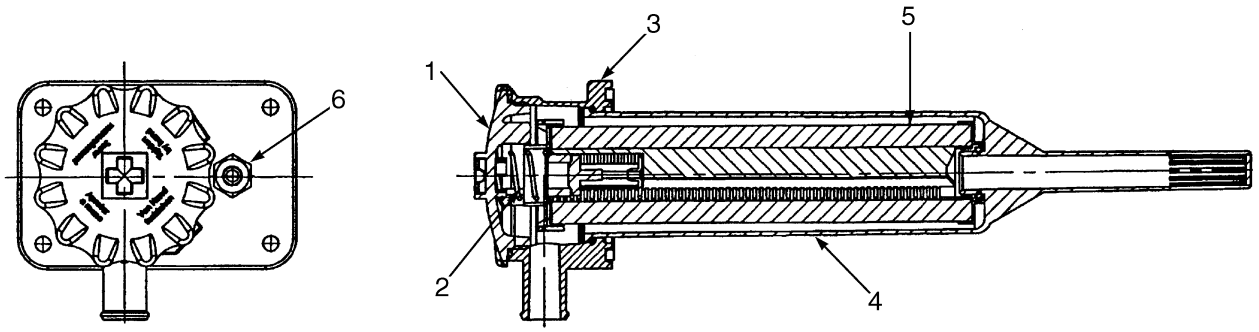

BP150095

ITEM	PART NO.	DESCRIPTION	QTY
	1544975	Filter Assembly	1
1	1570338	Filter Lid	1
1	1570341	Gasket (Filter Lid)	1
2	1570340	Spring	1
3	1570342	Filter Head	1
3	209457	Quad Ring	1
3	14591	Fitting	1
3	16481	O-Ring	1
4	1570346	Filter Canister	1
4	. . . . .	O-Ring	1
5	2070611	Element	1
5	. . . . .	O-Ring	1
6	1568182	Dipstick Assembly	1
6	. . . . .	O-Ring	1
	1570337	Seal Kit (Includes Items 1, 3-6)	1

©2006 HYSTER COMPANY

NOTES

TILT AND AUXILIARY HOSES (Figure 9-5)

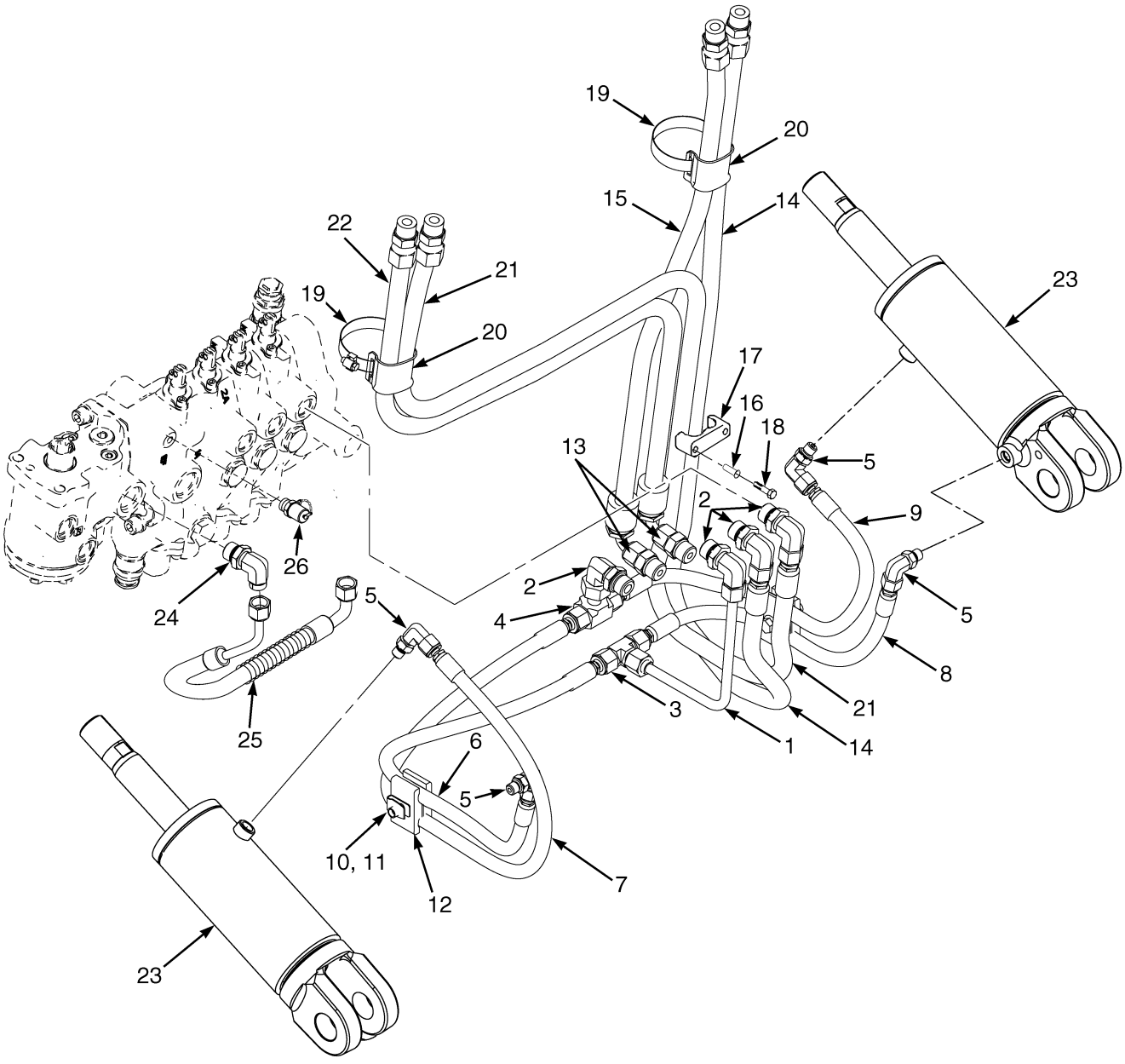

©2006 HYSTER COMPANY

TILT AND AUXILIARY HOSES

KEY:
A: Three Function
B: Four Function

ITEM	PART NO.	DESCRIPTION	QTY A	QTY B
1	2066045	Tube	1	..
2	1487061	Fitting	3	4
2	1527816	O-Ring	1	1
2	16484	O-Ring	1	1
3	1522425	Fitting	1	..
4	1488464	Fitting	1	..
5	1487058	Fitting	4	..
6	2075277	Hose	1	..
7	2066041	Hose	1	..
8	2066782	Hose	1	..
9	2066783	Hose	1	..
10	1480237	Clip Nut	2	..
11	1586627	Capscrew	2	..
12	1359620	Clamp	2	..
13	1486742	Fitting	1	1
14	2073495	Hose	1	..
15	2065051	Hose	1	..
16	1531558	Insert	2	..
17	1360386	Clamp	1	..
18	293796	Capscrew	2	..
19	1477996	Clamp	1	1
20	1481229	Clamp	1	1
21	2073496	Hose	..	1
22	2065052	Hose	..	1
23	. . . . .	Tilt Cylinder (RH) (☞ Figure 9-22)	1	1
23	. . . . .	Tilt Cylinder (LH) (☞ Figure 9-23)	1	1
24	1487069	Fitting	1	1
25	2075235	Hose	1	1
26	2061646	Fitting (Diagnostic)	1	1

©2006 HYSTER COMPANY

HAND LEVERS (Figure 9-6)
THREE FUNCTION
WITHOUT DETENTED LEVERS

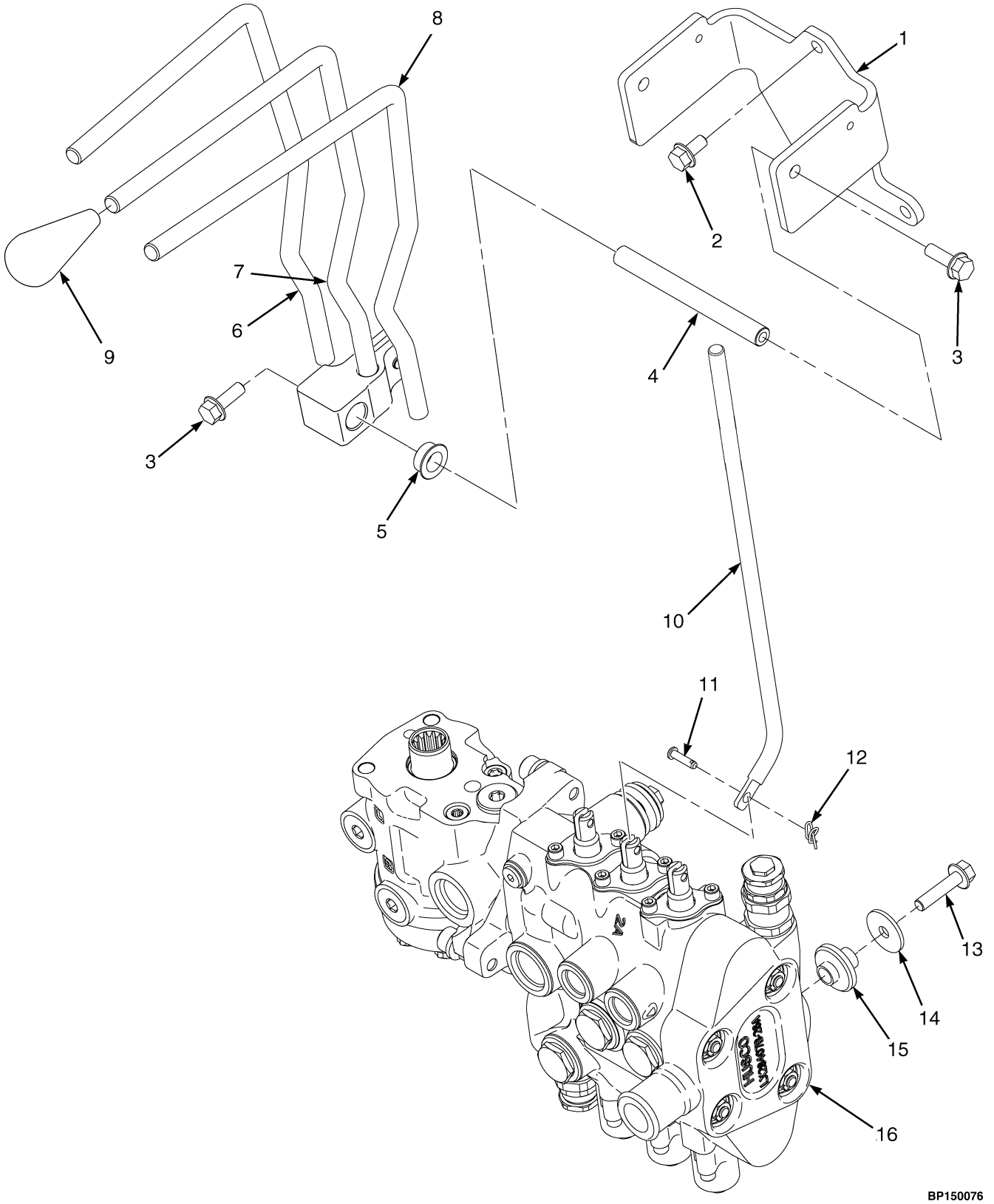

©2006 HYSTER COMPANY

HAND LEVERS
THREE FUNCTION
WITHOUT DETENTED LEVERS

ITEM	PART NO.	DESCRIPTION	QTY
1	1578453	Bracket	1
2	1527879	Capscrew	3
3	1583611	Capscrew	2
4	1528327	Pivot Shaft	1
5	1564747	Bushing	6
6	2083701	Hand Lever (Lift)	1
7	2083702	Hand Lever (Tilt)	1
8	2083703	Hand Lever (Auxiliary One)	1
9	1517395	Knob	3
10	1517394	Link	3
11	309109	Rod End Pin	6
12	1517361	Lock Ring	6
13	1586627	Capscrew	3
14	1346752	Washer	3
15	2063991	Isolator	3
16	2064892	Control Valve Assembly (Manual) (☞ Figure 9-10)	1

©2006 HYSTER COMPANY

HAND LEVERS (Figure 9-7)
THREE FUNCTION
WITH DETENTED LEVERS

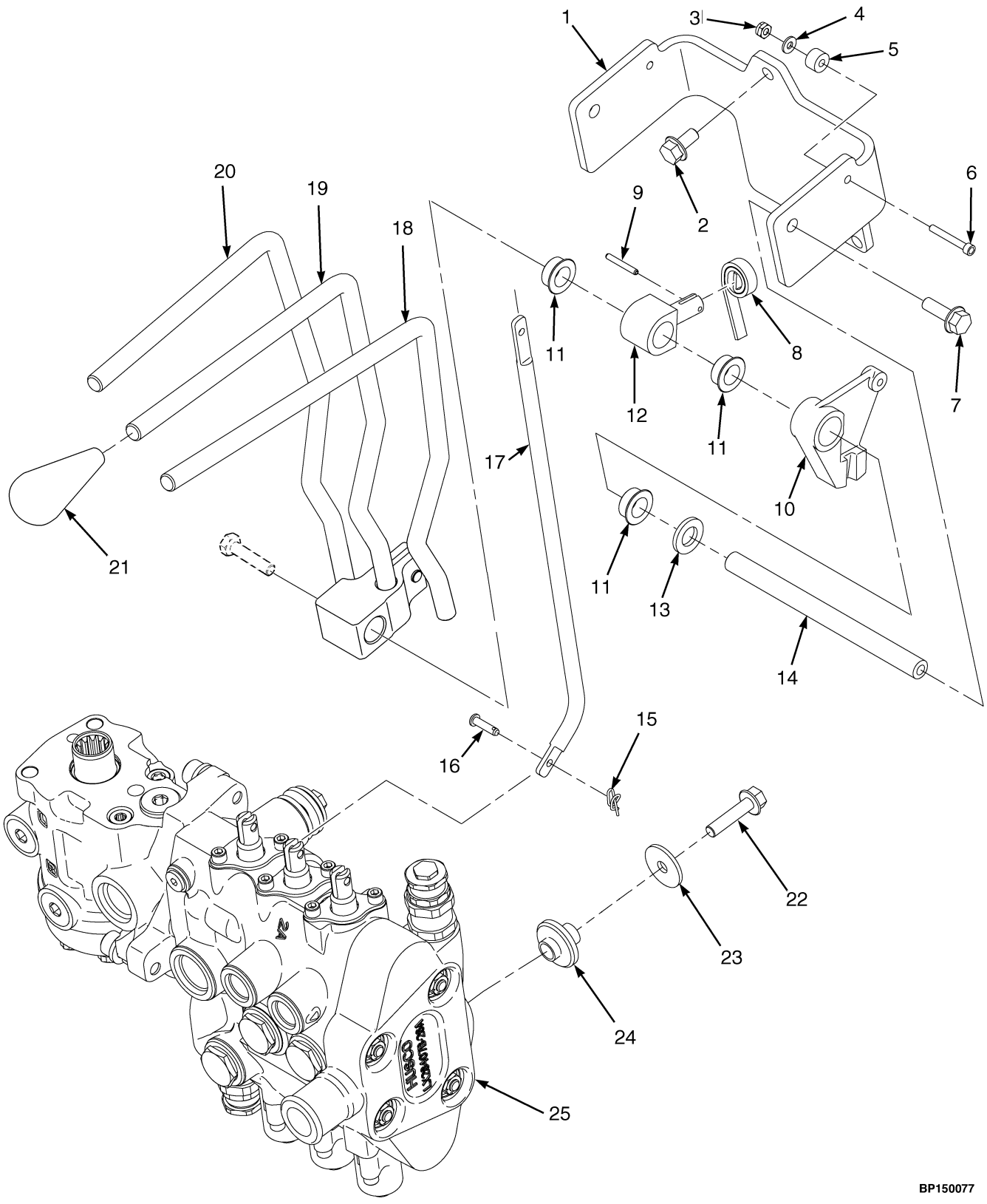

©2006 HYSTER COMPANY

HAND LEVERS
THREE FUNCTION
WITH DETENTED LEVERS

ITEM	PART NO.	DESCRIPTION	QTY
1	1578454	Bracket	1
2	1527879	Capscrew	3
3	230881	Nut	1
4	197066	Washer	2
5	1528339	Spacer	1
6	18086	Capscrew	1
7	1510113	Capscrew	2
8	175861	Spring	1
9	302428	Pin	1
10	1542546	Pivot	2
11	1564747	Bushing	10
12	306113	Pin (Selector)	1
13	320161	Washer	2
14	1528328	Pivot Shaft	1
15	1517361	Lock Ring	6
16	309109	Rod End Pin	6
17	1517394	Link	3
18	2083706	Hand Lever (Auxiliary One and Two)	1
19	2083702	Hand Lever (Tilt)	1
20	2083701	Hand Lever (Lift)	1
21	1517395	Knob	3
22	1586629	Capscrew	3
23	1346752	Washer	3
24	2063991	Isolator	3
25	2064892	Control Valve Assembly (Manual) (☞ Figure 9-10)	1

©2006 HYSTER COMPANY

HAND LEVERS (Figure 9-8)
FOUR FUNCTION
WITHOUT DETENTED LEVERS

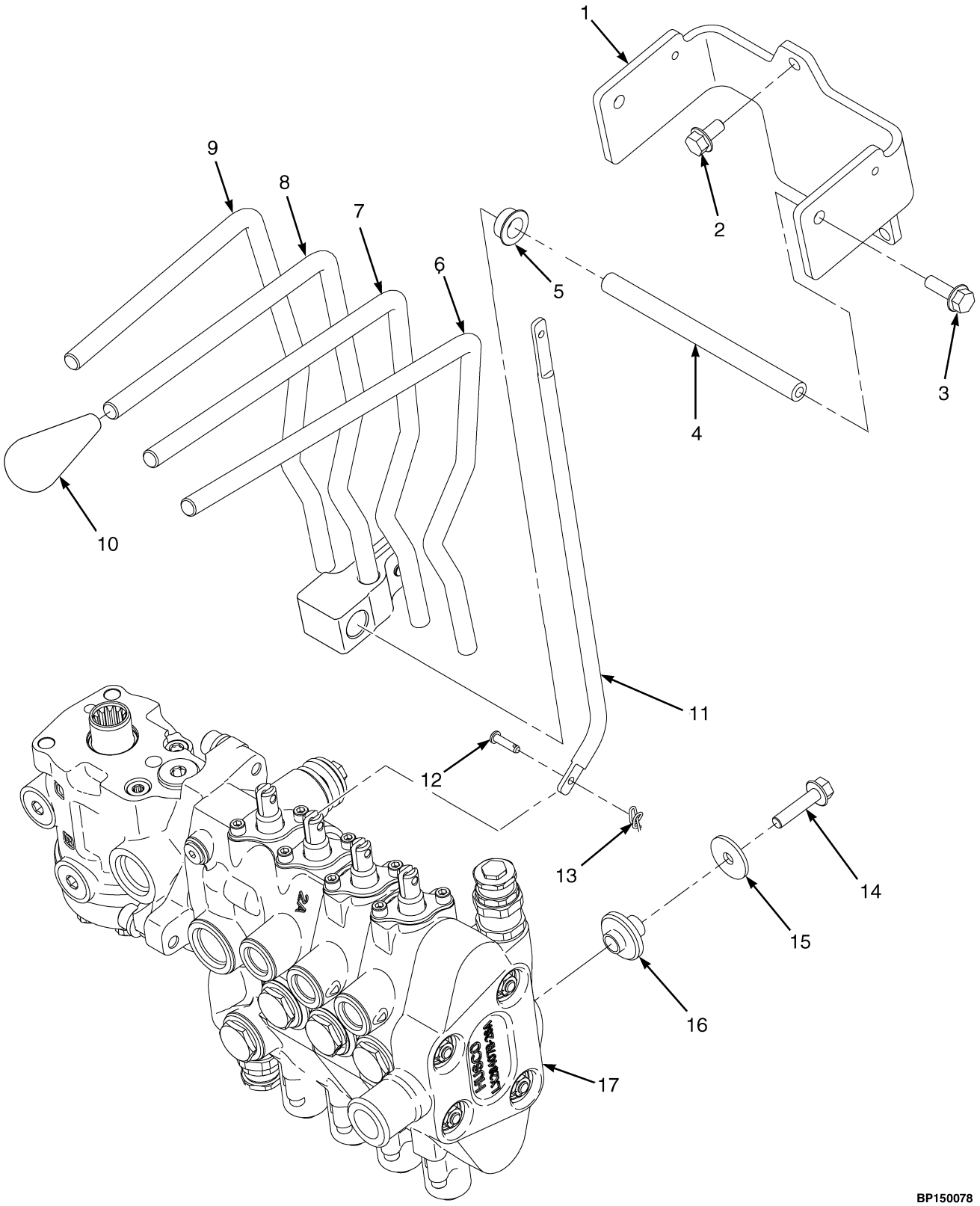

©2006 HYSTER COMPANY

HAND LEVERS
FOUR FUNCTION
WITHOUT DETENTED LEVERS

ITEM	PART NO.	DESCRIPTION	QTY
1	1578454	Bracket	1
2	1527879	Capscrew	3
3	1583611	Capscrew	2
4	1528328	Pivot Shaft	1
5	1564747	Bushing	8
6	2083704	Hand Lever (Auxiliary Two)	1
7	2083703	Hand Lever (Auxiliary One)	1
8	2083702	Hand Lever (Tilt)	1
9	2083701	Hand Lever (Lift)	1
10	1517395	Knob	4
11	1517394	Link	4
12	309109	Rod End Pin	8
13	1517361	Lock Ring	8
14	1586627	Capscrew	3
15	1346752	Washer	3
16	2063991	Isolator	3
17	2064893	Control Valve Assembly (Manual) (☞ Figure 9-10)	1

©2006 HYSTER COMPANY

HAND LEVERS (Figure 9-9)
FOUR FUNCTION
WITH DETENTED LEVERS

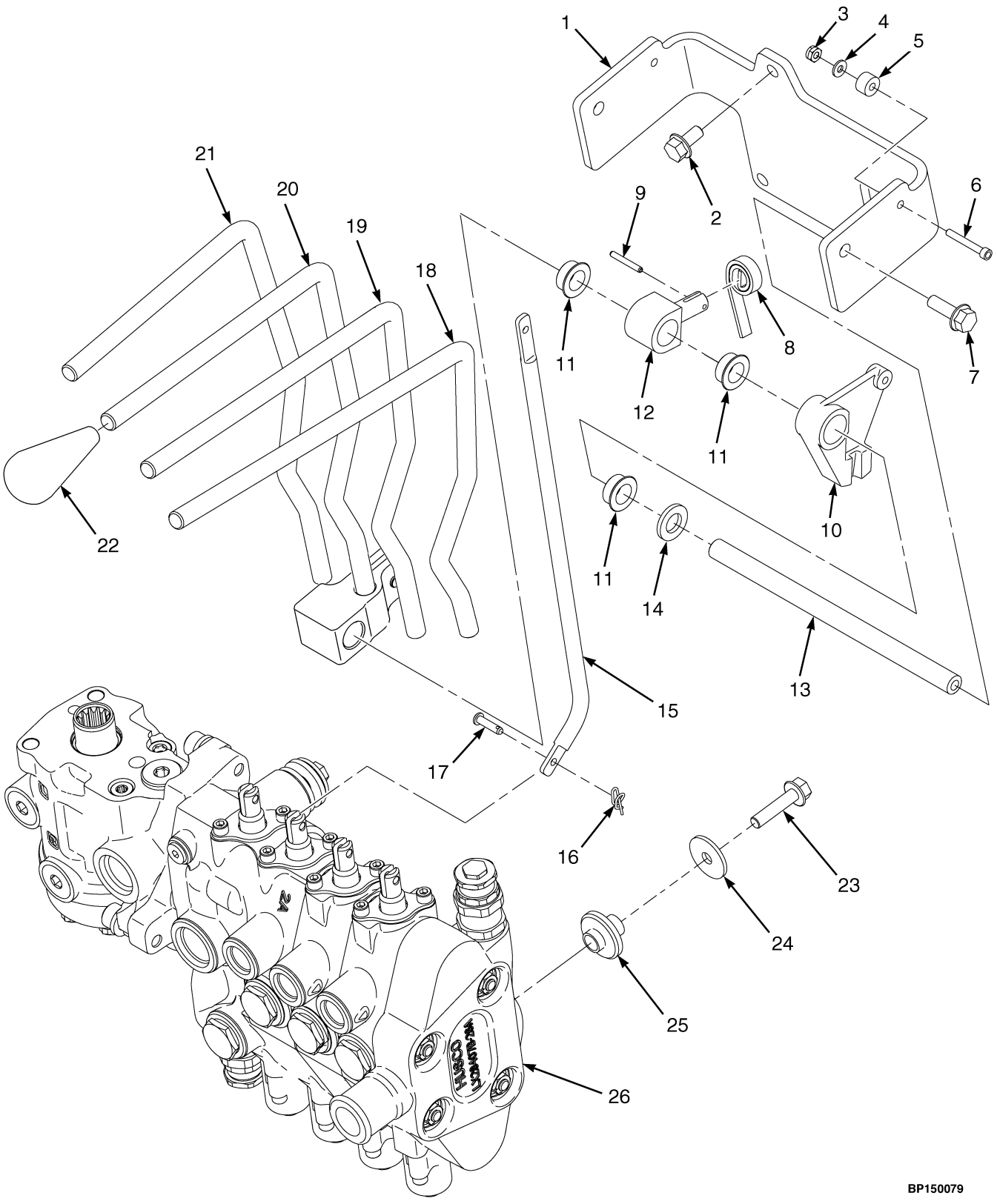

©2006 HYSTER COMPANY

HAND LEVERS
FOUR FUNCTION
WITH DETENTED LEVERS

ITEM	PART NO.	DESCRIPTION	QTY
1	1578455	Bracket	1
2	1527879	Capscrew	3
3	230881	Nut	1
4	197066	Washer	2
5	1528339	Spacer	1
6	18086	Capscrew	1
7	1583611	Capscrew	2
8	175861	Spring	1
9	302428	Pin	1
10	1542546	Pivot	2
11	1564747	Bushing	12
12	306113	Pin (Selector)	1
13	1528329	Pivot Shaft	1
14	320161	Washer	2
15	1517394	Link	4
16	1517361	Lock Ring	8
17	309109	Rod End Pin	8
18	2083705	Hand Lever (Auxiliary Two and Three)	1
19	2083703	Hand Lever (Auxiliary One)	1
20	2083702	Hand Lever (Tilt)	1
21	2083701	Hand Lever (Lift)	1
22	1517395	Knob	4
23	1586627	Capscrew	3
24	1346752	Washer	3
25	2063991	Isolator	3
26	2064893	Control Valve Assembly (Manual) (☞ Figure 9-10)	1

©2006 HYSTER COMPANY

CONTROL VALVE ASSEMBLY (Figure 9-10)
MANUAL CONTROL
THREE AND FOUR FUNCTION

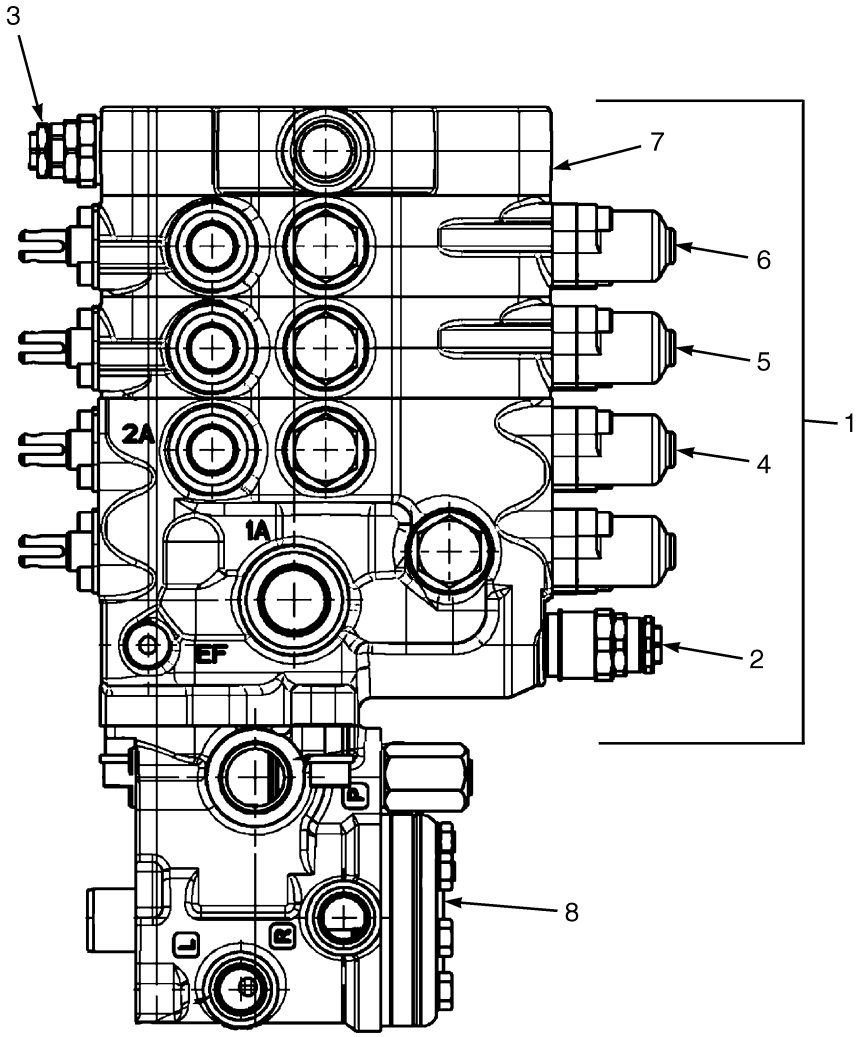

©2006 HYSTER COMPANY

CONTROL VALVE ASSEMBLY
MANUAL CONTROL
THREE AND FOUR FUNCTION

KEY:
A: Three Function
B: Four Function

ITEM	PART NO.	DESCRIPTION	QTY A	QTY B
	2064892	Control Valve Assembly (Manual)	1	..
	2064893	Control Valve Assembly (Manual)	..	1
1	2064883	Hydraulic Control Valve	1	..
1	2064884	Hydraulic Control Valve	..	1
2	1578816	Relief Valve (2600 PSI Main Relief)	1	1
3	1578707	Valve (Secondary Relief)	1	1
4	1578814	Valve Assembly (Lift And Tilt) (☞ Figure 9-11)	1	1
5	1578744	Auxiliary One Section (☞ Figure 9-12)	1	1
6	1578745	Auxiliary Two Section (☞ Figure 9-12)	..	1
7	1578746	Outlet Section (☞ Figure 9-13)	1	1
8	2060863	Steering Control Unit (☞ Figure 7-3)	1	1
	1580146	Seal Kit (Three Function)	1	1
	1580148	Seal Kit (Four Function)	..	1

©2006 HYSTER COMPANY

VALVE ASSEMBLY, LIFT AND TILT (Figure 9-11)
MANUAL CONTROL VALVE
THREE AND FOUR FUNCTION

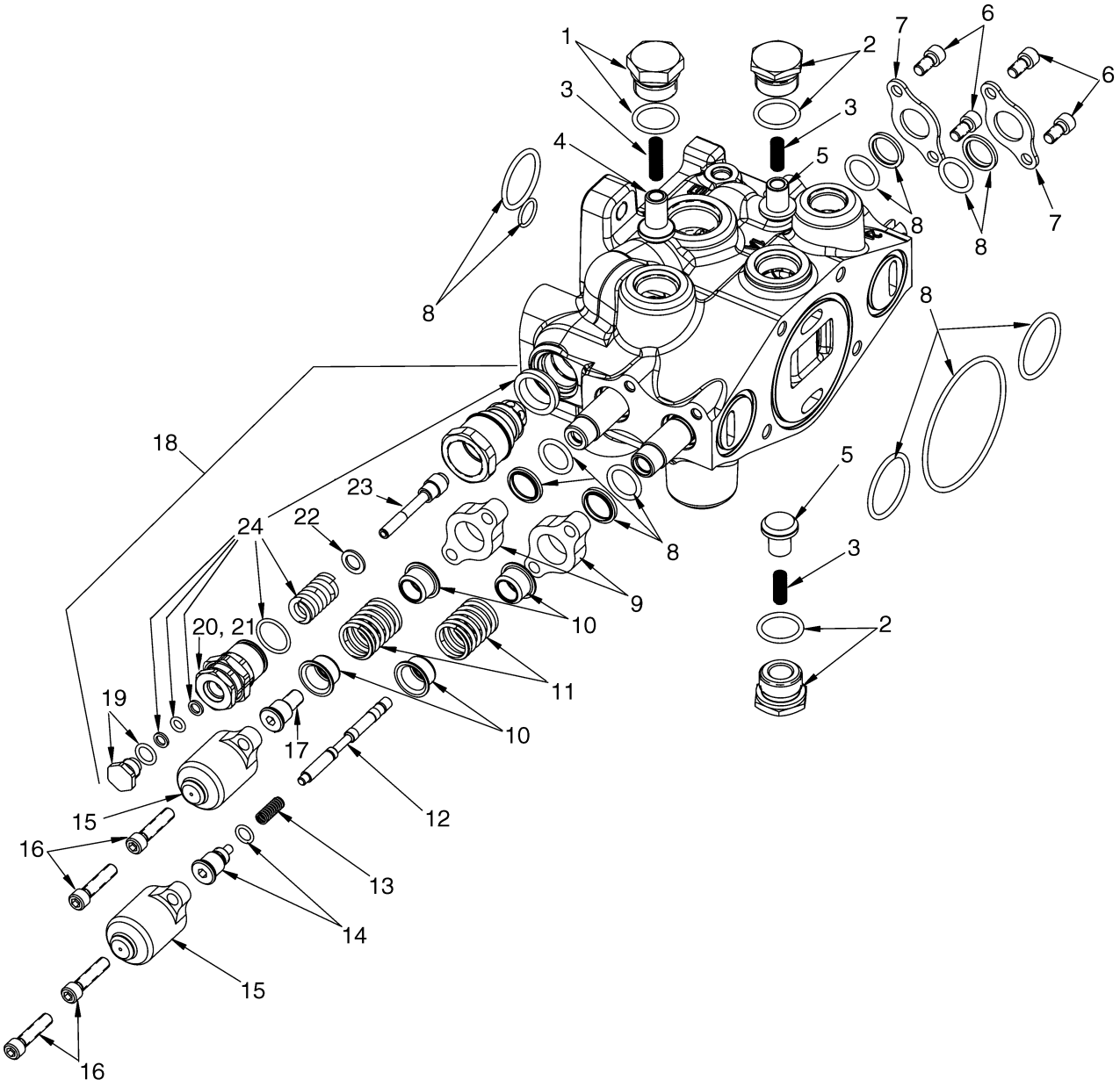

©2006 HYSTER COMPANY

VALVE ASSEMBLY, LIFT AND TILT
MANUAL CONTROL VALVE
THREE AND FOUR FUNCTION

ITEM	PART NO.	DESCRIPTION	QTY
	1578814	Valve Assembly (Lift And Tilt)	1
1	1578713	Plug Set	1
2	1578940	Plug	2
3	77442	Spring	3
4	1578943	Poppet	1
5	77443	Poppet	2
6	16706	Screw	4
7	188515	Seal Plate	2
8	1580133	Seal Kit	1
9	1560682	Seal Plate	2
10	320289	Spring Seat	2
11	1581860	Spring	2
12	1581861	Piston	2
13	341462	Spring	1
14	386015	Spool End	1
15	1560681	Cap	2
16	1578705	Capscrew	4
17	1581859	Spool End	1
18	1578816	Relief Valve (2600 PSI Main Relief)	1
18	1578748	Relief Valve (3400 PSI Main Relief)	1
19	. . . . .	Plug	1
20	. . . . .	Adjusting Screw	1
21	. . . . .	Nut (Special)	1
22	. . . . .	Washer	1
23	. . . . .	Poppet	1
24	1580097	Seal and Spring Kit	1

©2006 HYSTER COMPANY

AUXILIARY SECTIONS, ONE AND TWO (Figure 9-12)
MANUAL CONTROL VALVE
THREE AND FOUR FUNCTION

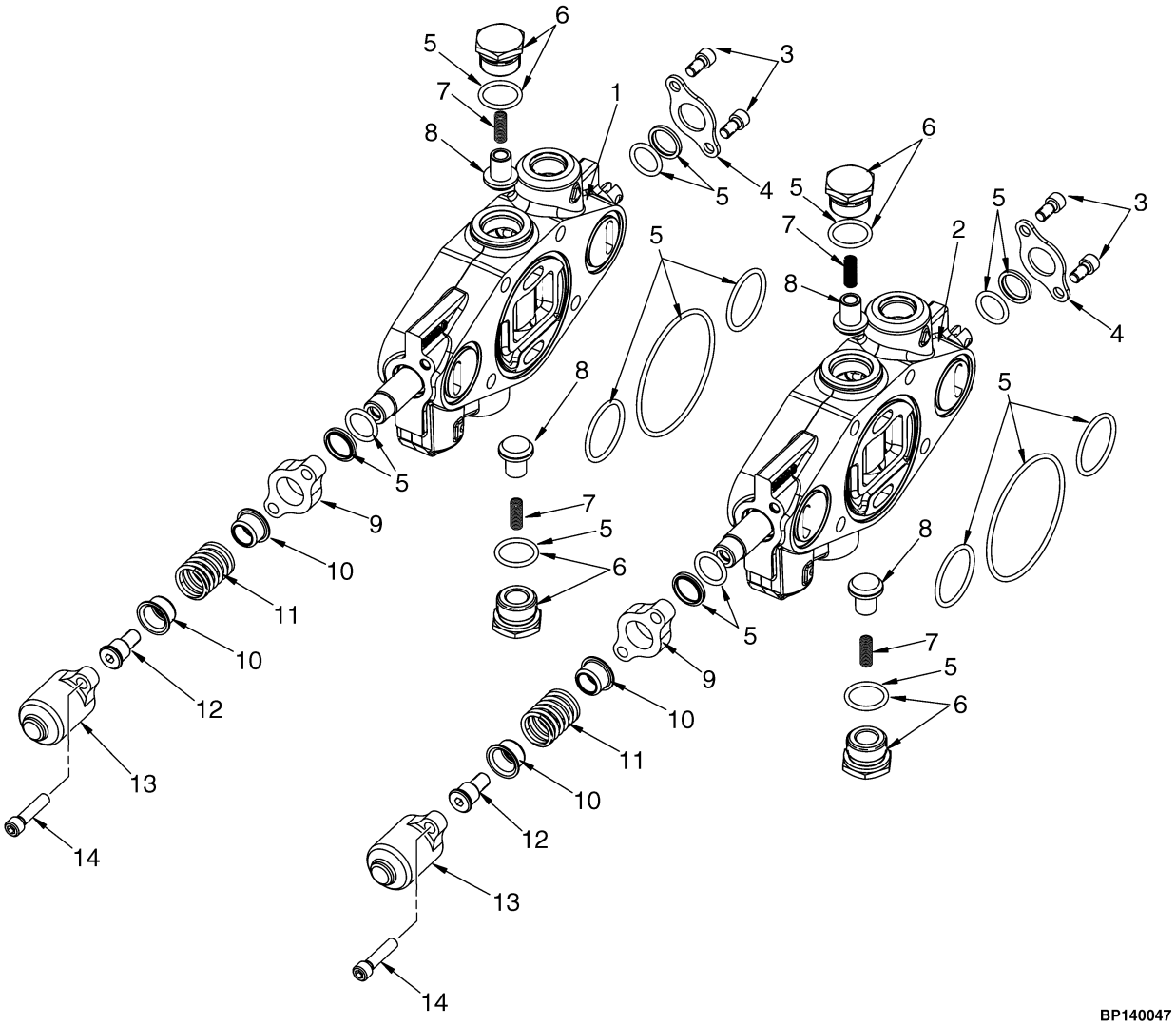

©2006 HYSTER COMPANY

AUXILIARY SECTIONS, ONE AND TWO
MANUAL CONTROL VALVE
THREE AND FOUR FUNCTION

KEY:
A: 3 Function
B: 4 Function

ITEM	PART NO.	DESCRIPTION	QTY A	QTY B
1	1578744	Auxiliary One Section	1	1
2	1578745	Auxiliary Two Section	..	1
3	16706	Screw	2	2
4	188515	Seal Plate	1	1
5	1580147	Seal Kit	1	1
6	1578713	Plug Set	2	2
7	77442	Spring	2	2
8	77443	Poppet	2	2
9	. . . . .	Seal Plate	1	1
10	320289	Spring Seat	1	1
11	1581860	Spring	1	1
12	1581859	Spool End	1	1
13	1560681	Cap	1	1
14	1578705	Capscrew	2	2

©2006 HYSTER COMPANY

OUTLET SECTION (Figure 9-13)
MANUAL CONTROL VALVE
THREE AND FOUR FUNCTION

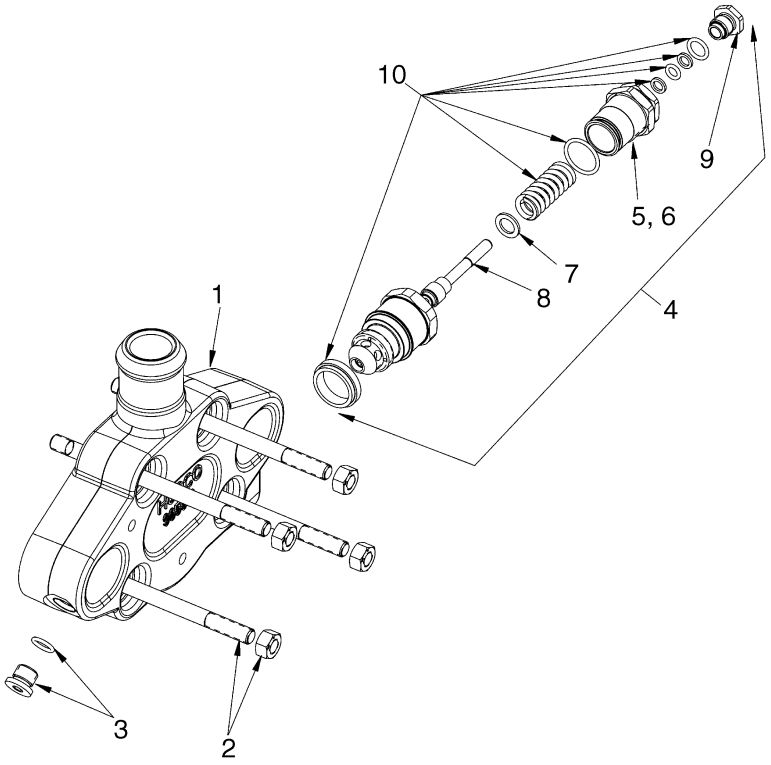

BP140048

ITEM	PART NO.	DESCRIPTION	QTY
1	1578746	Outlet Section	1
2	1580155	Tie Rod Kit (Three Function)	1
2	1580156	Tie Rod Kit (Four Function)	1
3	1578712	Plug Assembly	1
4	1578707	Valve (Secondary Relief)	1
5	. . . . .	Nut	1
6	. . . . .	Screw	1
7	. . . . .	Washer	1
8	. . . . .	Poppet	1
9	. . . . .	Plug	1
10	1580131	Seal and Spring Kit	1

©2006 HYSTER COMPANY

CONTROL VALVE ASSEMBLY (Figure 9-14)
ELECTRONIC CONTROL
THREE AND FOUR FUNCTION

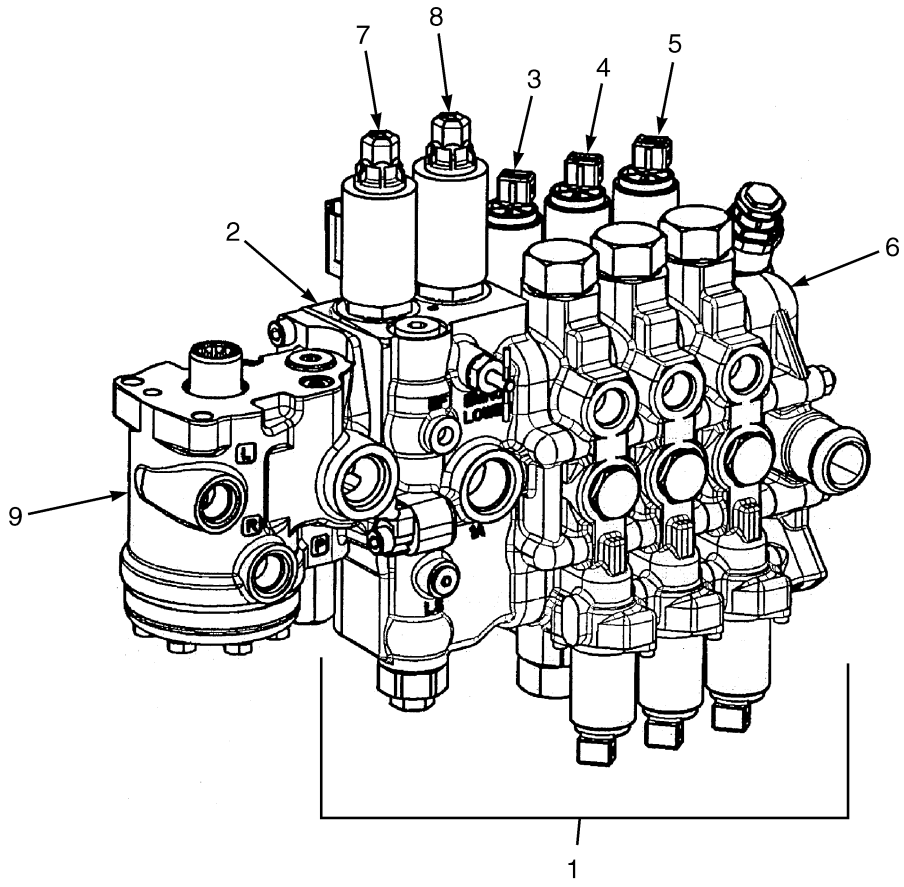

BP140053

CONTROL VALVE ASSEMBLY
ELECTRONIC CONTROL
THREE AND FOUR FUNCTION

KEY:
A: Three Function
B: Four Function

ITEM	PART NO.	DESCRIPTION	QTY A	QTY B
	2064844	Control Valve Assembly (Electronic)	1	..
	2064856	Control Vlave Assembly (Electronic)	..	1
1	2064827	Hydraulic Control Valve	1	..
1	2064855	Hydraulic Control Valve	..	1
2	1594426	Valve Assembly (Lift And Lower) (☞ Figure 9-15)	1	1
3	1594427	Tilt Section (☞ Figure 9-16)	1	1
4	1578703	Auxiliary One Section (☞ Figure 9-18)	1	1
5	1578741	Auxiliary Two Section (☞ Figure 9-19)	..	1
6	1578704	Outlet Section (☞ Figure 9-20)	1	1
7	1590113	Poppet Valve Assembly (Lift) (☞ Figure 9-17)	1	1
8	1590114	Poppet Valve Assembly (Lower) (☞ Figure 9-17)	1	1
9	2060863	Steering Control Unit (☞ Figure 7-3)	1	1
	1578911	Seal Kit (Steering Control Unit Interface)	1	..
	1578908	Seal Kit	..	1

©2006 HYSTER COMPANY

NOTES

VALVE ASSEMBLY, LIFT AND LOWER (Figure 9-15)
ELECTRONIC CONTROL VALVE
THREE AND FOUR FUNCTION

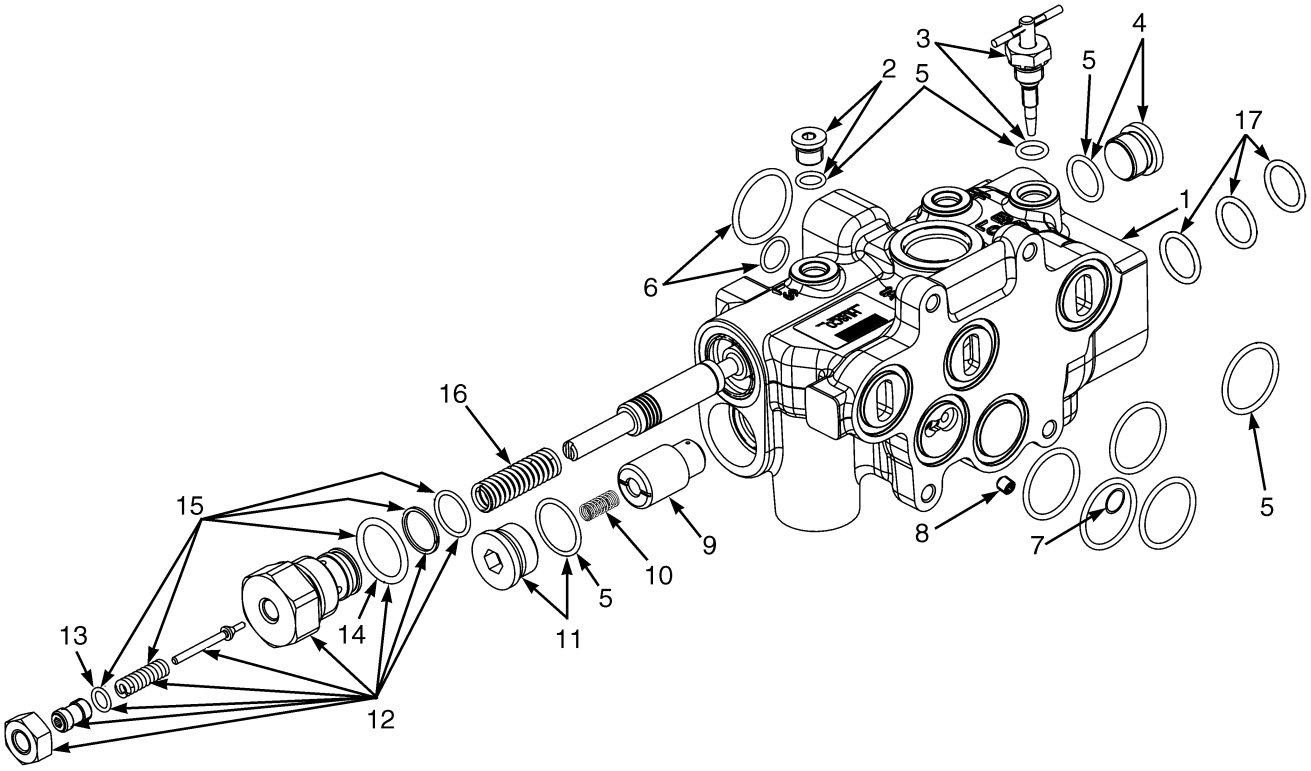

BP140052

©2006 HYSTER COMPANY

VALVE ASSEMBLY, LIFT AND LOWER
ELECTRONIC CONTROL VALVE
THREE AND FOUR FUNCTION

ITEM	PART NO.	DESCRIPTION	QTY
1	1594426	Valve Assembly (Lift And Lower)	1
2	1578712	Plug Assembly	1
3	1581862	Manual Lower Assembly Kit	1
4	1569602	Plug	1
5	1578904	Seal Kit	1
6	1578911	Seal Kit (Steering Control Unit Interface)	1
7	1578875	Shuttle	1
8	1578888	Set Screw	1
9	1586280	Poppet	1
10	1578876	Spring	1
11	1578714	Plug	1
12	1594428	Relief Valve (Main)	1
12	1580749	Adjusting Screw	1
13	16480	O-Ring	1
14	. . . . .	O-Ring	1
15	1580132	Seal and Spring Kit	1
16	1578881	Spring	1
17	1586279	Seal Kit	AR
	1580445	Washer (Not Illustrated)	1

©2006 HYSTER COMPANY

TILT SECTION (Figure 9-16)
ELECTRONIC CONTROL
THREE AND FOUR FUNCTION

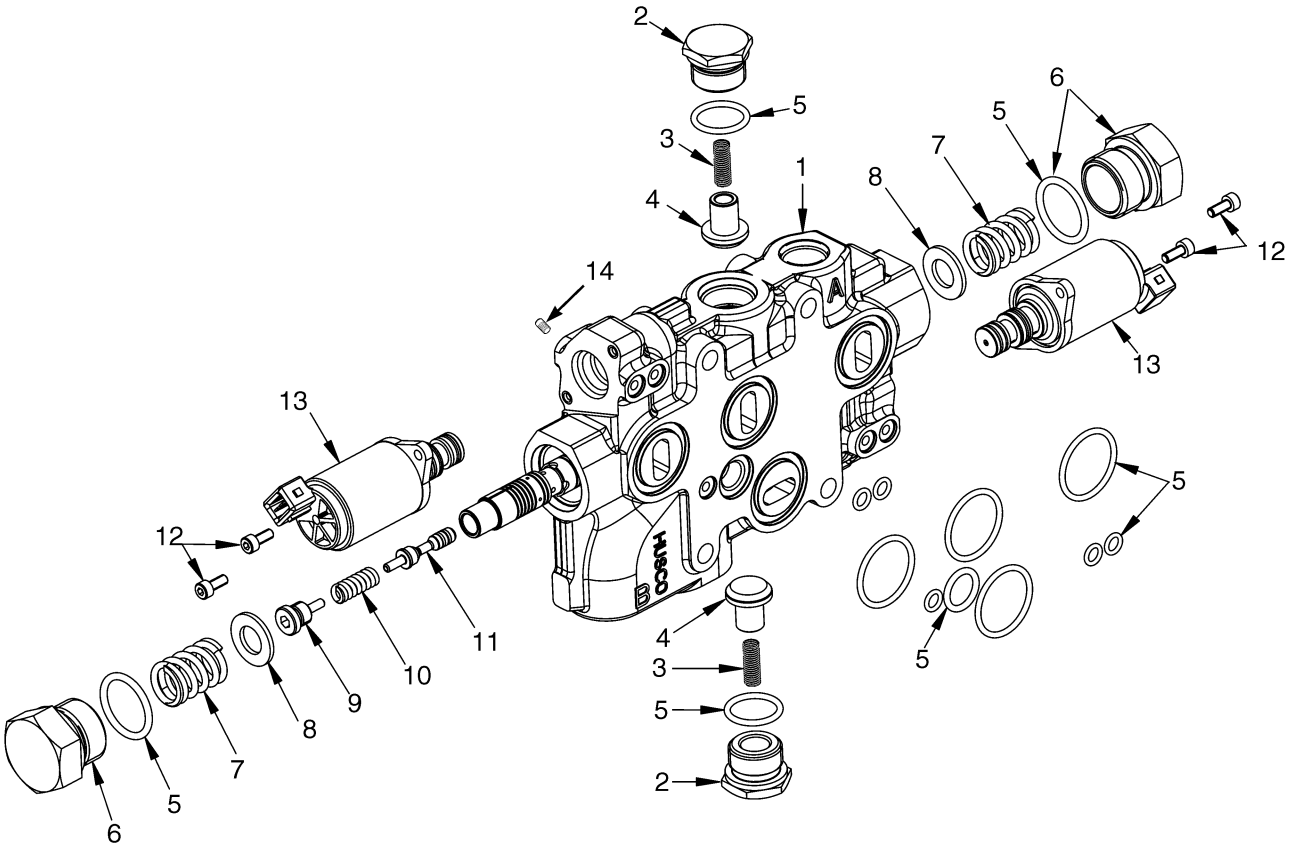

BP140054

©2006 HYSTER COMPANY

TILT SECTION
ELECTRONIC CONTROL
THREE AND FOUR FUNCTION

ITEM	PART NO.	DESCRIPTION	QTY
1	1594427	Tilt Section	1
2	1578713	Plug Set	2
3	77442	Spring	2
4	77443	Poppet	2
5	1578905	Seal Kit	1
6	1578889	Plug Set	2
7	1578882	Spring	2
8	1578883	Washer	2
9	1580760	Spool End	1
10	1580759	Spring	1
11	1580099	Piston	1
12	1578878	Capscrew	4
13	1578711	Solenoid	2
13	1578912	Seal Kit	1
14	1578887	Set Screw	1

©2006 HYSTER COMPANY

ELECTRO HYDRAULIC POPPET VALVE (Figure 9-17)
ELECTRONIC CONTROL
HOIST AND LOWER

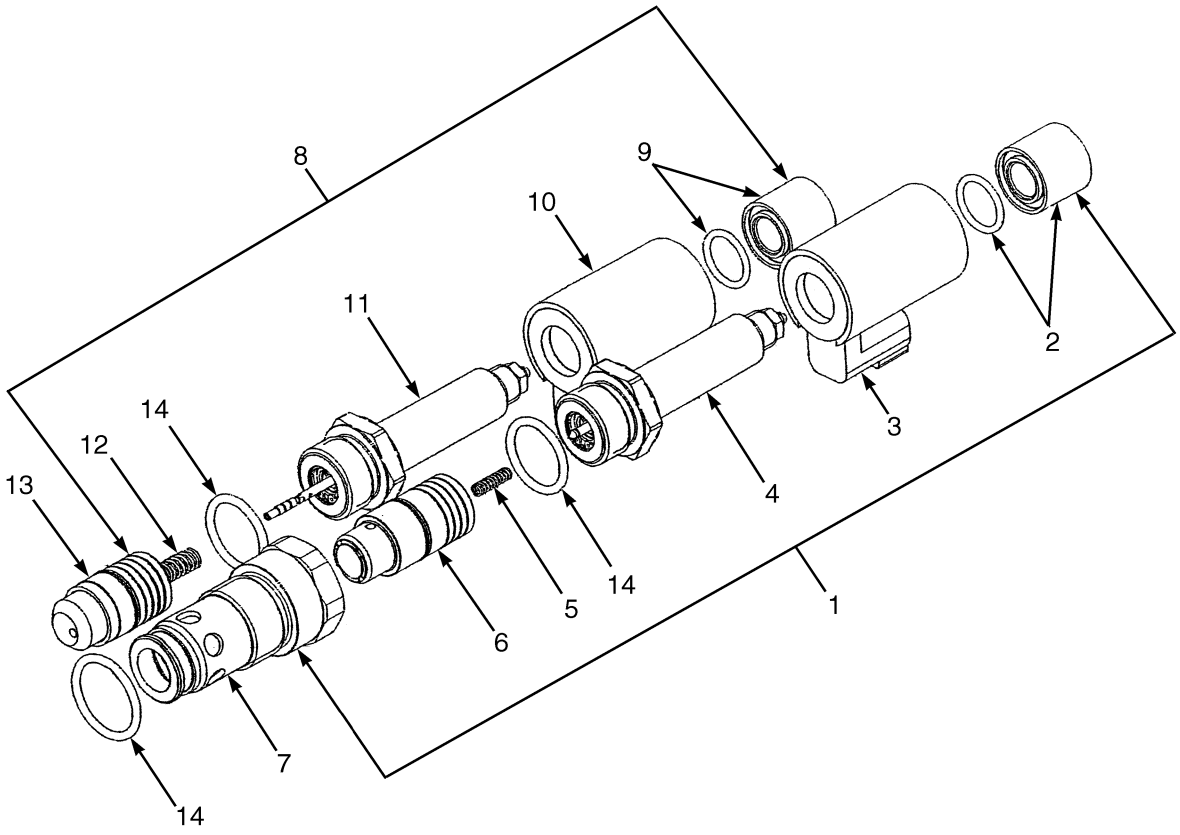

BP140055

©2006 HYSTER COMPANY

ELECTRO HYDRAULIC POPPET VALVE
ELECTRONIC CONTROL
HOIST AND LOWER

ITEM	PART NO.	DESCRIPTION	QTY
1	1590114	Poppet Valve Assembly (Lower)	1
2	1586018	Coil Nut	1
3	1578710	Coil	1
4	1578918	Tube (Solenoid)	1
5	1578934	Spring	1
6	1586021	Poppet	1
7	1586020	Sleeve	1
8	1590113	Poppet Valve Assembly (Hoist)	1
9	1586018	Coil Nut	1
10	1578710	Coil	1
11	1586019	Tube (Solenoid)	1
12	1586017	Spring	1
13	1586016	Poppet	1
14	1586279	Seal Kit	1

©2006 HYSTER COMPANY

AUXILIARY ONE SECTION (Figure 9-18)
ELECTRONIC CONTROL
THREE AND FOUR FUNCTION

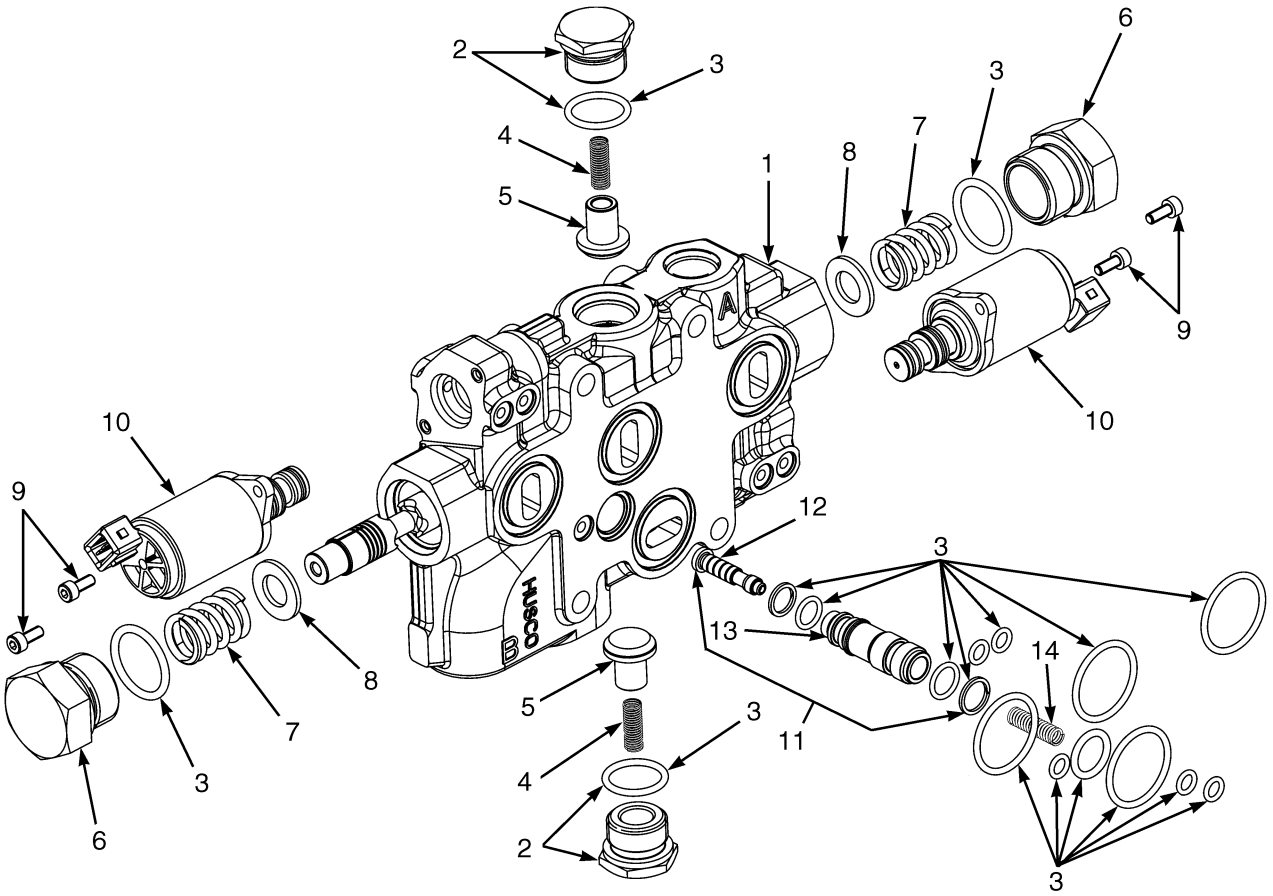

BP140062

©2006 HYSTER COMPANY

AUXILIARY ONE SECTION
ELECTRONIC CONTROL
THREE AND FOUR FUNCTION

ITEM	PART NO.	DESCRIPTION	QTY
1	1578703	Auxiliary One Section	1
2	1578713	Plug Set	2
3	1578906	Seal Kit (Auxiliary One Section)	1
4	77442	Spring	2
5	77443	Poppet	2
6	1578889	Plug Set	2
7	1578882	Spring	2
8	1578883	Washer	2
9	1578878	Capscrew	4
10	1578711	Solenoid	2
10	1578912	Seal Kit	1
11	1578718	Anti-Stall Valve Kit	1
12	. . . . .	Spool	1
13	. . . . .	Sleeve	1
14	1578886	Spring	1

©2006 HYSTER COMPANY

AUXILIARY TWO SECTION (Figure 9-19)
ELECTRONIC CONTROL
FOUR FUNCTION

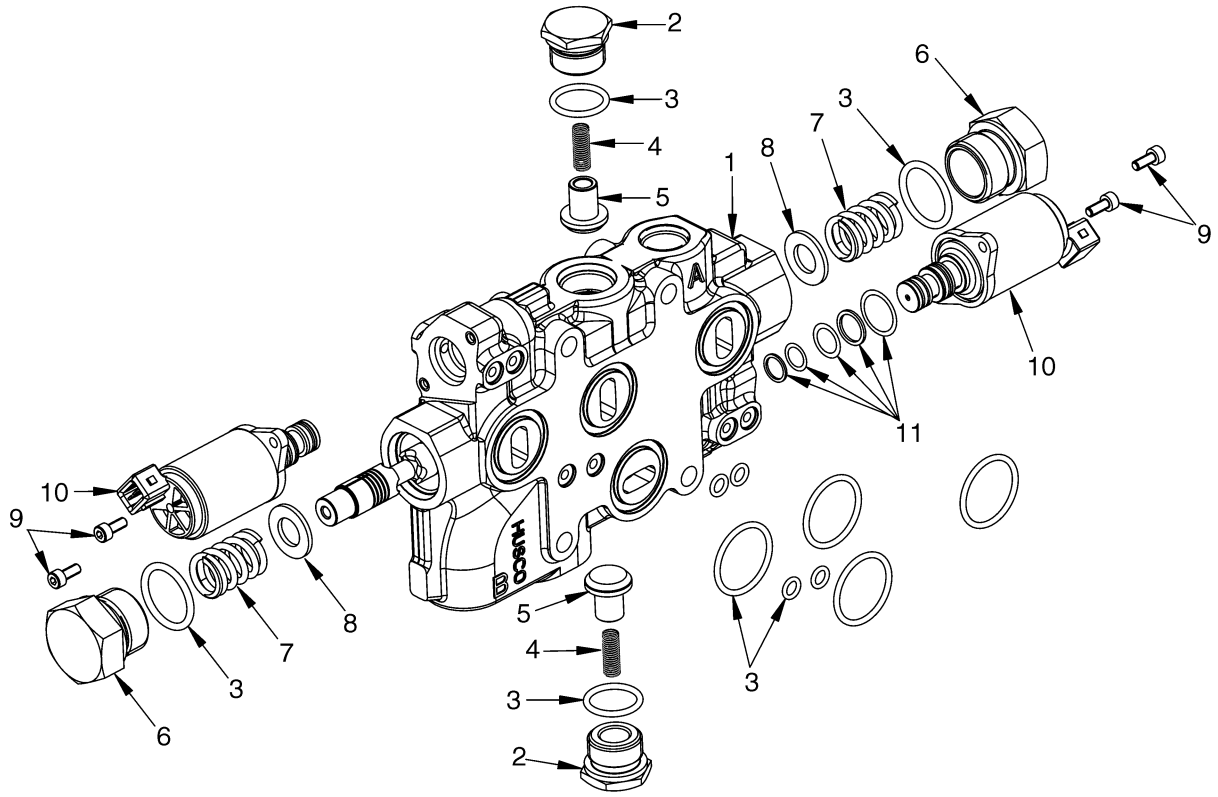

©2006 HYSTER COMPANY

AUXILIARY TWO SECTION
ELECTRONIC CONTROL
FOUR FUNCTION

ITEM	PART NO.	DESCRIPTION	QTY
1	1578741	Auxiliary Two Section	1
2	1578713	Plug Set	2
3	1578907	Seal Kit	1
4	77442	Spring	2
5	77443	Poppet	2
6	1578889	Plug Set	2
7	1578882	Spring	2
8	1578883	Washer	2
9	1578878	Capscrew	4
10	1578711	Solenoid	2
11	1578912	Seal Kit	1

©2006 HYSTER COMPANY

OUTLET SECTION (Figure 9-20)
ELECTRONIC CONTROL;
THREE AND FOUR FUNCTION

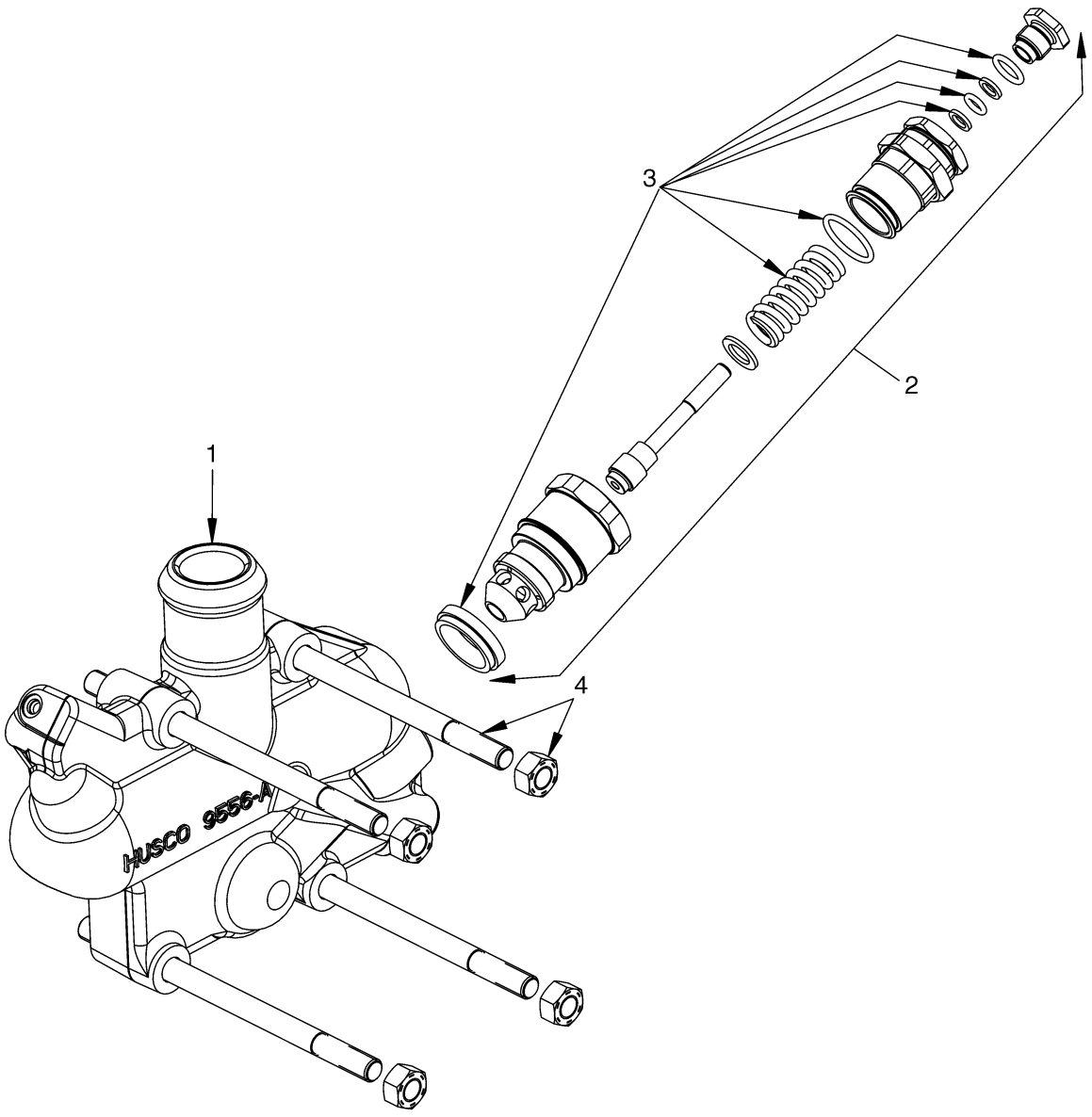

BP140075

©2006 HYSTER COMPANY

OUTLET SECTION
ELECTRONIC CONTROL; THREE AND FOUR FUNCTION

ITEM	PART NO.	DESCRIPTION	QTY
1	1578704	Outlet Section	1
2	1578707	Valve (Secondary Relief)	1
3	1580131	Seal and Spring Kit	1
4	1578715	Tie Rod Kit (3 Function)	1
4	1580151	Tie Rod Kit (4 Function)	1

©2006 HYSTER COMPANY

MAST INSTALLATION (Figure 9-21)

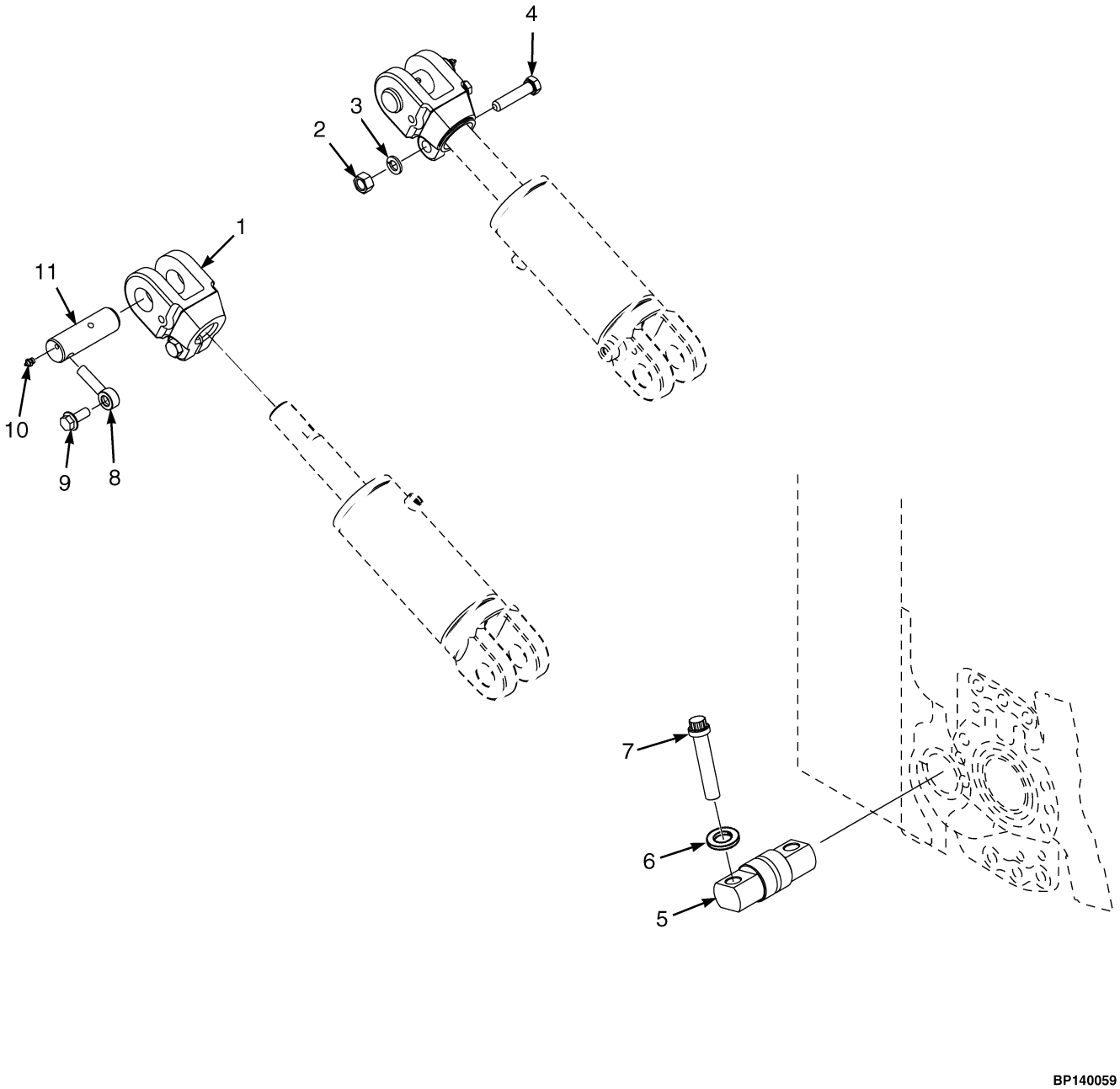

©2006 HYSTER COMPANY

MAST INSTALLATION

ITEM	PART NO.	DESCRIPTION	QTY
1	1363260	Rod End	2
2	1581848	Nut	2
3	1581564	Lockwasher	2
4	1597381	Capscrew	2
5	1502819	Pin	2
6	296422	Washer	4
7	1503858	Bolt	4
8	1533494	Anchor Pin	4
9	1586013	Capscrew	4
10	16041	Lube Fitting	2
11	1536805	Pin (Mast Pivot)	2

©2006 HYSTER COMPANY

TILT CYLINDERS (Figure 9-22)
RIGHT HAND

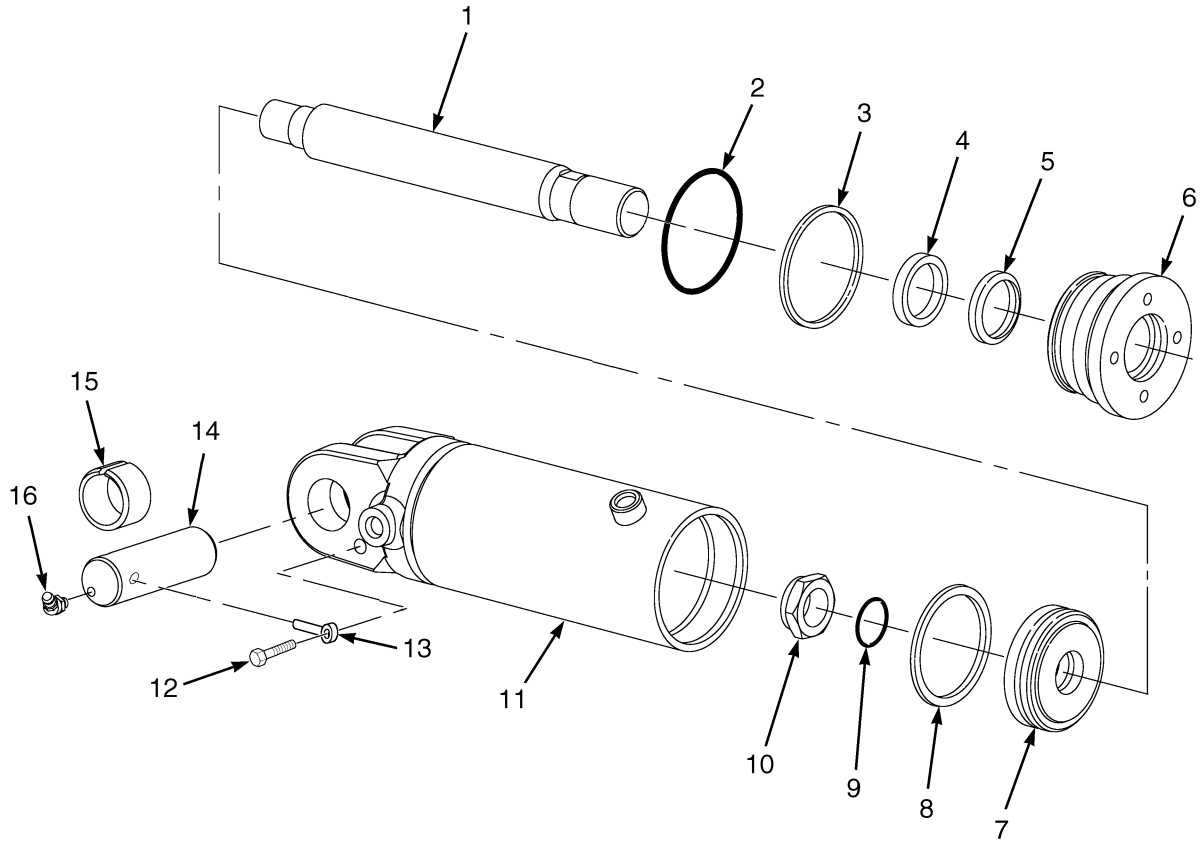

BP150112

©2006 HYSTER COMPANY

TILT CYLINDERS
RIGHT HAND

ITEM	PART NO.	DESCRIPTION	QTY
	2076677	Tilt Cylinder (6° Forward/5° Back)	1
	2076678	Tilt Cylinder (6° Forward/3° Back)	1
	2076679	Tilt Cylinder (10° Forward/6° Back)	1
1	2059413	Rod (6° Forward/5° Back)	1
1	2059414	Rod (6° Forward/3° Back)	1
1	2059412	Rod (10° Forward/6° Back)	1
2	57664	O-Ring	1
3	166659	Back-Up Ring	1
4	1381094	Seal (Rod)	1
5	1383061	Wiper (Rod)	1
6	2047064	Gland	1
7	2304677	Piston	1
8	2044379	Seal (Piston)	1
9	39374	O-Ring	1
10	2302899	Nut	1
11	2076681	Shell (6° Forward/5° Back)	1
11	2076682	Shell (6° Forward/3° Back)	1
11	2076680	Shell (10° Forward/6° Back)	1
12	1586013	Capscrew	1
13	1533494	Anchor Pin	1
14	1533493	Pin	1
15	300982	Bushing	1
16	16040	Lube Fitting	1
	1494719	Seal Kit (Includes Items 2-5, 8-9)	1

©2006 HYSTER COMPANY

TILT CYLINDERS (Figure 9-23)
LEFT HAND

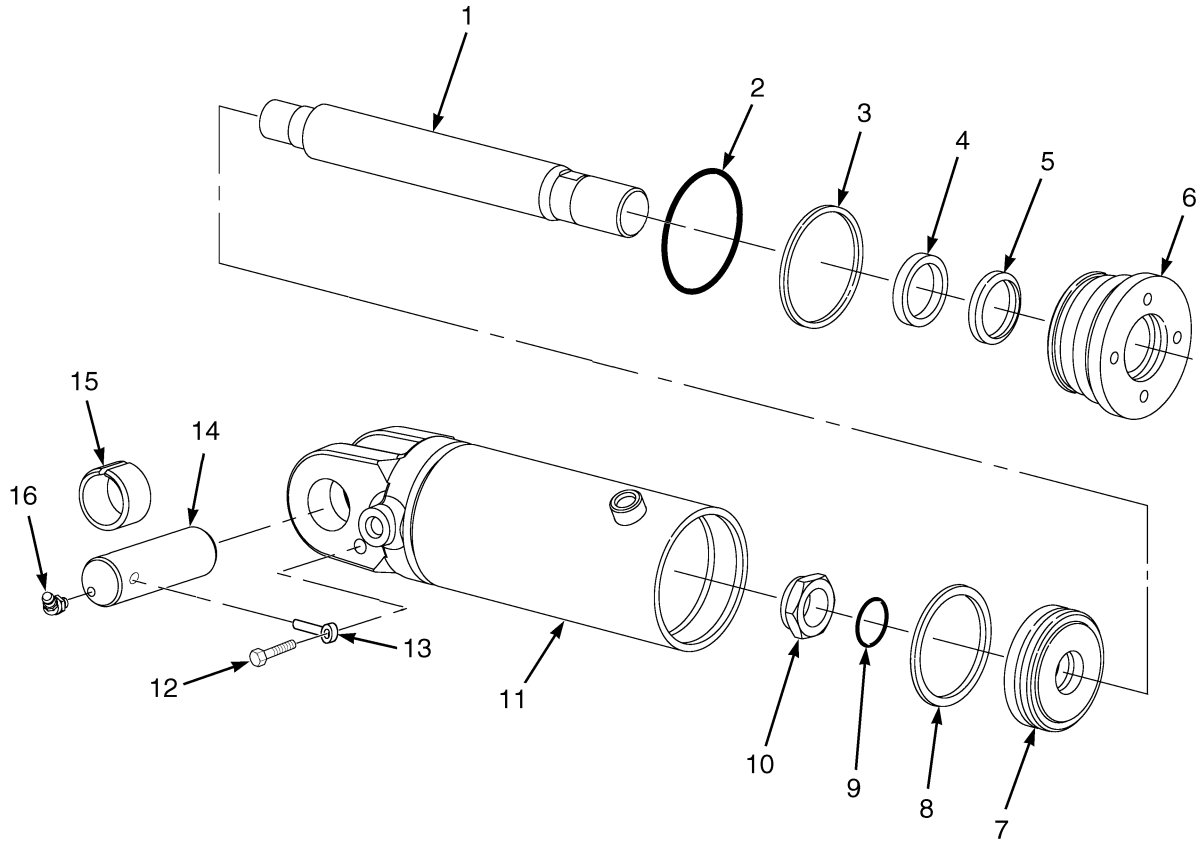

BP150112

©2006 HYSTER COMPANY

TILT CYLINDERS
LEFT HAND

ITEM	PART NO.	DESCRIPTION	QTY
	2076687	Tilt Cylinder (6° Forward/5° Back)	1
	2076688	Tilt Cylinder (6° Forward/3° Back)	1
	2076689	Tilt Cylinder (10° Forward/6° Back)	1
1	2059413	Rod (6° Forward/5° Back)	1
1	2059414	Rod (6° Forward/3° Back)	1
1	2059412	Rod (10° Forward/6° Back)	1
2	57664	O-Ring	1
3	166659	Back-Up Ring	1
4	1381094	Seal (Rod)	1
5	1383061	Wiper (Rod)	1
6	2047064	Gland	1
7	2304677	Piston	1
8	2044379	Seal (Piston)	1
9	39374	O-Ring	1
10	2302899	Nut	1
11	2076684	Shell (6° Forward/5° Back)	1
11	2076685	Shell (6° Forward/3° Back)	1
11	2076683	Shell (10° Forward/6° Back)	1
12	1586013	Capscrew	1
13	1533494	Anchor Pin	1
14	1533493	Pin	1
15	300982	Bushing	1
16	16040	Lube Fitting	1
	1494719	Seal Kit (Includes Items 2-5, 8-9)	1

©2006 HYSTER COMPANY

NOTES

10 MAST-TWO STAGE LIMITED FREE-LIFT

SECTION 10
MAST-TWO STAGE LIMITED FREE-LIFT

DESCRIPTION	PAGE
CARRIAGE	
TWO STAGE LIMITED FREE-LIFT	10-12
HEADER HOSES	
TWO STAGE LIMITED FREE-LIFT	10-14
INNER MAST	
TWO STAGE LIMITED FREE-LIFT	10-4
MAIN LIFT	
TWO STAGE LIMITED FREE-LIFT	10-6
MAIN LIFT CYLINDER	
LEFT HAND	
TWO STAGE LIMITED FREE-LIFT	10-10
RIGHT HAND	
TWO STAGE LIMITED FREE-LIFT	10-8
OUTER MAST	
TWO STAGE LIMITED FREE-LIFT	10-2

©2006 HYSTER COMPANY

OUTER MAST (Figure 10-1)
TWO STAGE LIMITED FREE-LIFT

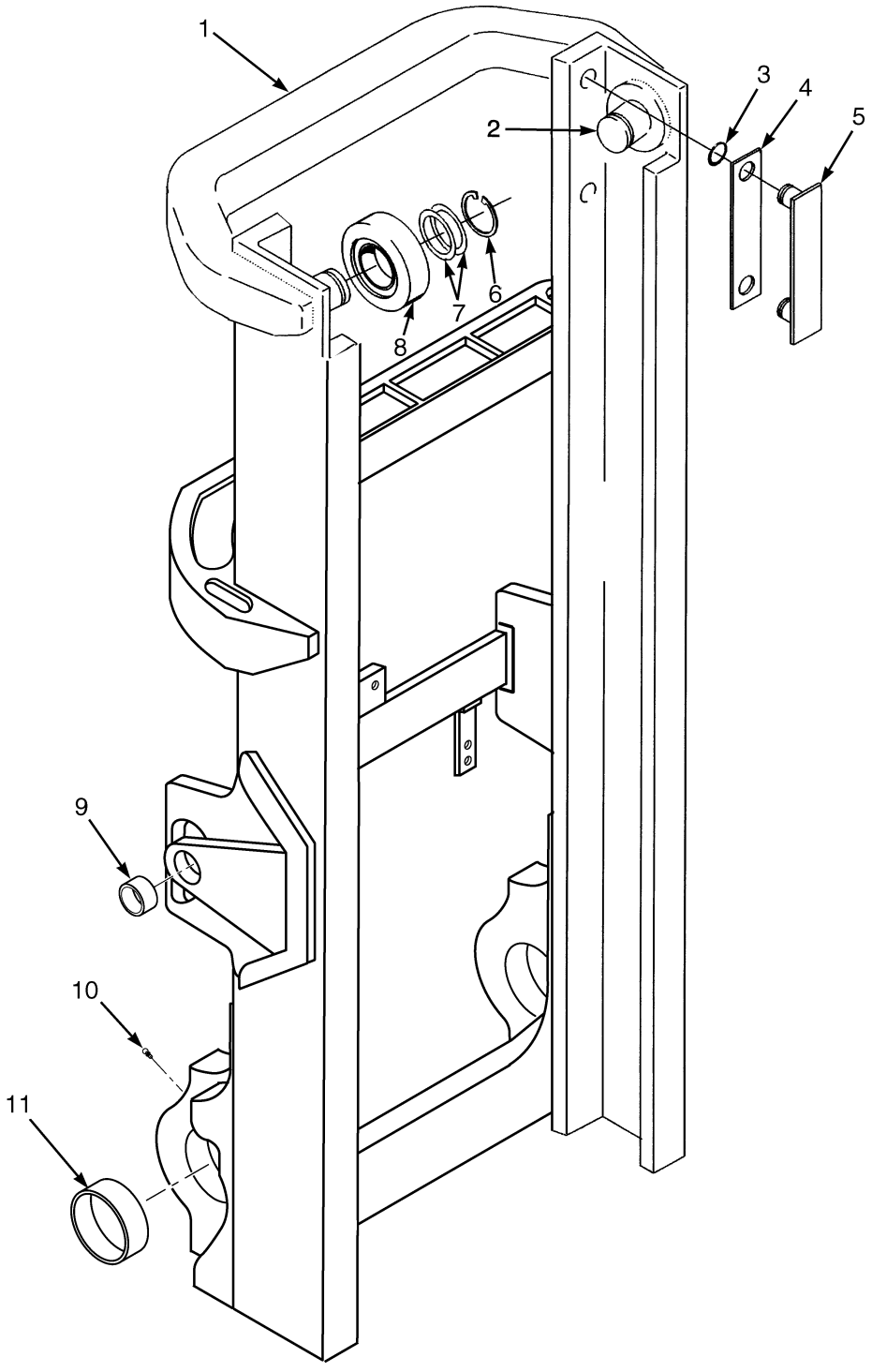

BP170184

©2006 HYSTER COMPANY

OUTER MAST
TWO STAGE LIMITED FREE-LIFT

ITEM	DESCRIPTION 1 2 3 4	LIFT HEIGHT TO BOTTOM OF FORKS		
		3292 mm	3792 mm	4292 mm
	Mast Group Number	B551 3292	B551 3792	B551 4292
	Mast Assembly	2060107	2060112	2060117
1	Outer Mast	1531668	1531673	1531679

ITEM		PART NO.	DESCRIPTION	QTY
	a	. . . . .	Mast Assembly	1
1	**a**	. . . . .	Outer Mast	1
2		1345264	Stubshaft	2
3		104506	O-Ring	4
4		131716	Shim (0,508 mm)	4
5		215212	Bearing Strip	2
6		58901	Snap Ring	2
7		1333399	Load Roller	2
8		129387	Shim (0.508 mm)	AR
9		1348185	Bushing	2
10		16001	Lube Fitting	2
11	**b**	1536287	Bushing (Mast Mounting)	2
11	**c**	1617575	Bushing	2

FOOTNOTES:
a Refer to Table
b ⇒ PENDING PER ECN 10402508
c PENDING PER ECN 10402508 ⇒

©2006 HYSTER COMPANY

INNER MAST (Figure 10-2)
TWO STAGE LIMITED FREE-LIFT

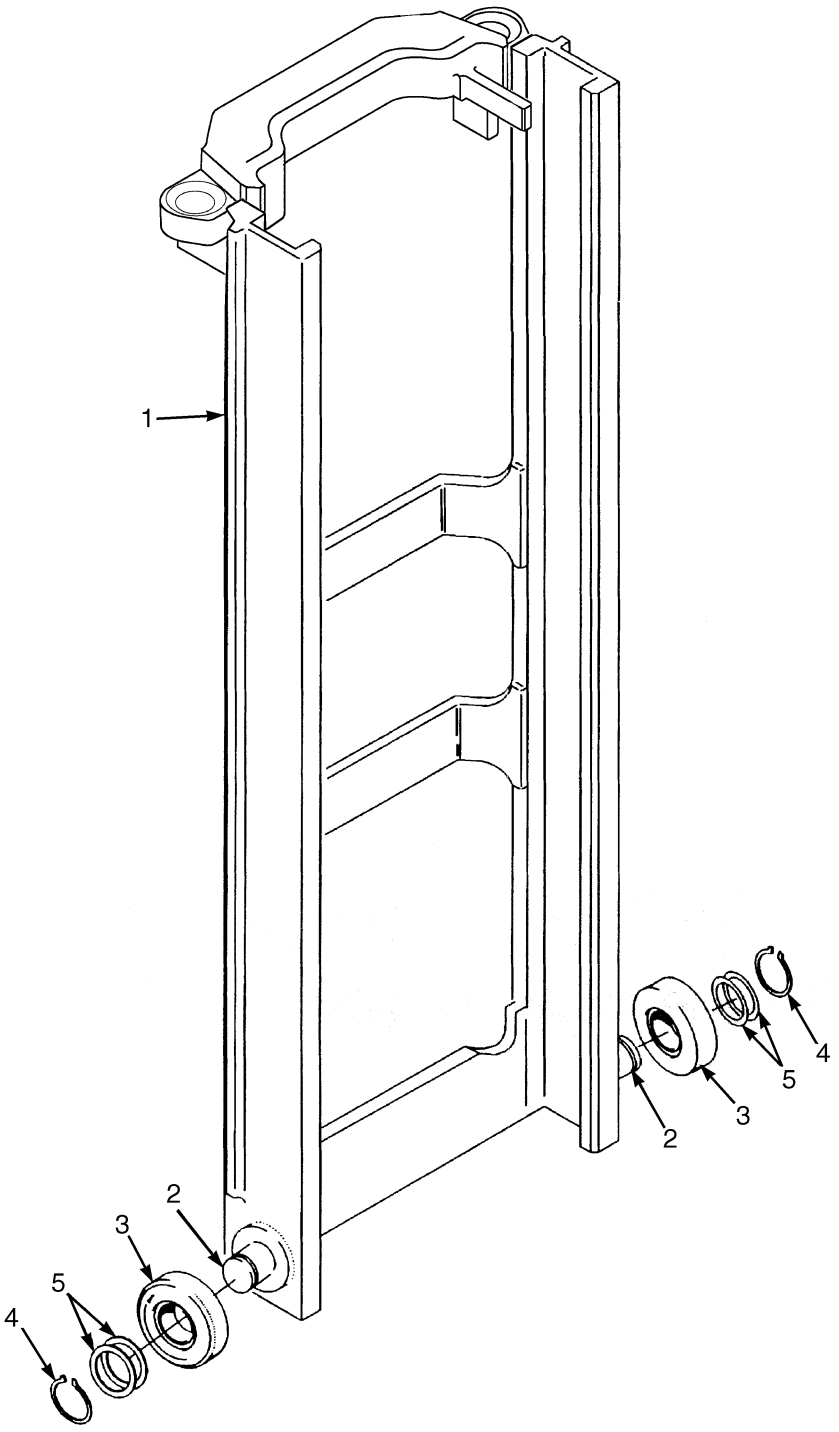

BP170156

©2006 HYSTER COMPANY

INNER MAST
TWO STAGE LIMITED FREE-LIFT

ITEM	DESCRIPTION 1 2 3 4	LIFT HEIGHT TO BOTTOM OF FORKS		
		3292 mm	3792 mm	4292 mm
	Mast Group Number	B551 3292	B551 3792	B551 4292
	Mast Assembly	2060107	2060112	2060117
1	Inner Mast	1348459	1348464	1348469

ITEM	PART NO.	DESCRIPTION	QTY
	a	Mast Assembly	1
1	**a**	Inner Mast	1
2	1345264	Stubshaft	2
3	1333399	Load Roller	2
4	58901	Snap Ring	2
5	129387	Shim (0.508 mm)	AR

FOOTNOTES:
a Refer to Table

©2006 HYSTER COMPANY

MAIN LIFT (Figure 10-3)
TWO STAGE LIMITED FREE-LIFT

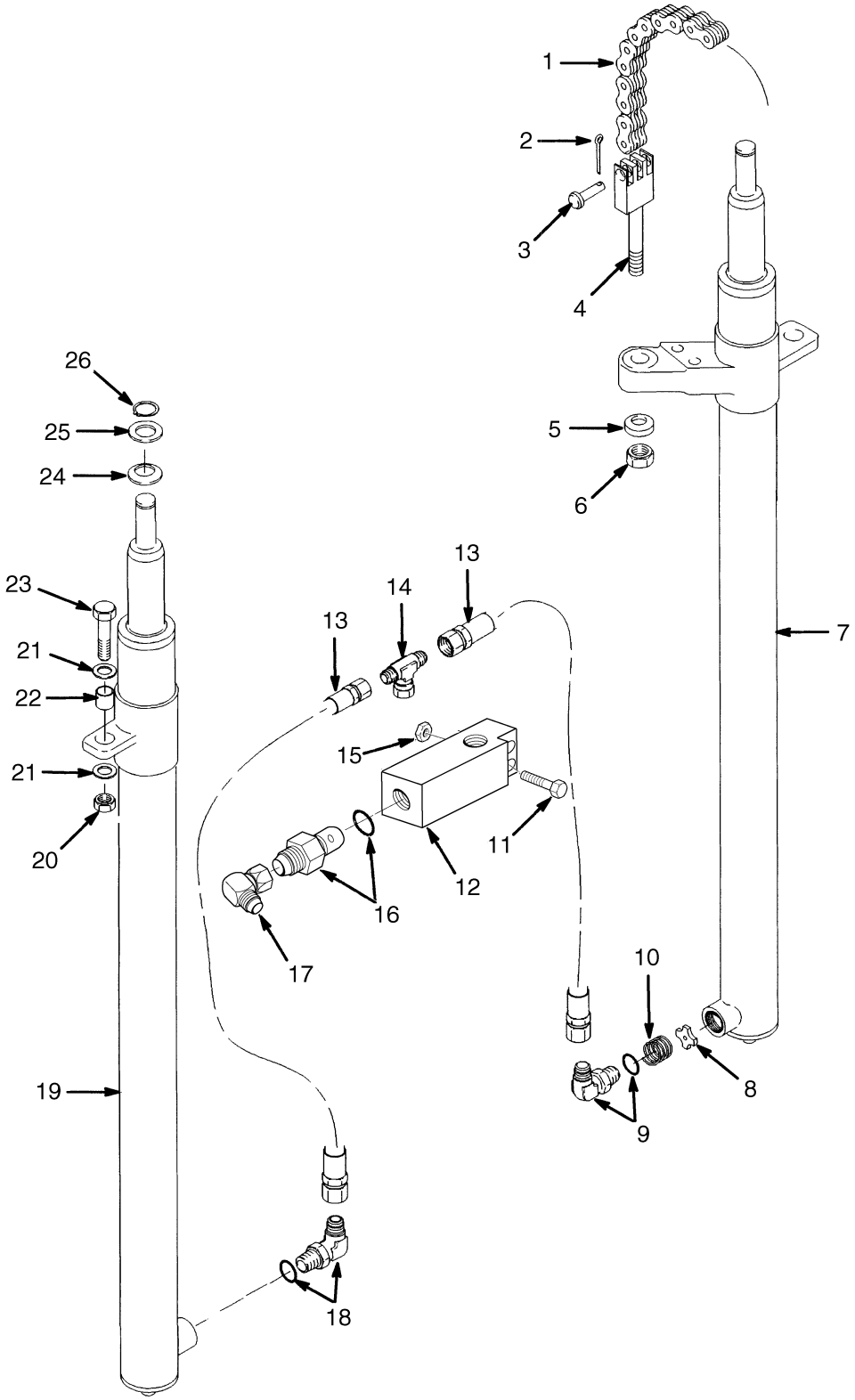

BP170157

©2006 HYSTER COMPANY

MAIN LIFT
TWO STAGE LIMITED FREE-LIFT

ITEM	DESCRIPTION 1 2 3 4	LIFT HEIGHT TO BOTTOM OF FORKS		
		3292 mm	3792 mm	4292 mm
	Mast Group Number	B551 3292	B551 3792	B551 4292
1	Chain	135634	177352	336391

ITEM		PART NO.	DESCRIPTION	QTY
1	**a**	. . . . .	Chain	2
2		15211	Cotter Pin	2
3		1514866	Pin	2
4		1369357	Chain Anchor	2
5		297649	Base Ring	2
6		161003	Nut	2
7		. . . . .	Main Lift Cylinder (LH) (☞ Figure 10-5)	1
8		323160	Washer	1
9		1481344	Fitting	1
9		252729	O-Ring	1
9		16485	O-Ring	1
10		120938	Spring	1
11		292509	Capscrew	2
12		1379687	Housing (Lowering Control)	1
13		1481097	Hose	2
14		1532650	Fitting	1
14		252729	O-Ring	1
14		16485	O-Ring	1
15		313828	Nut	2
16		1481348	Lowering Control Valve	1
16		280154	O-Ring	1
16		16486	O-Ring	1
17		1486773	Fitting	1
17		252729	O-Ring	1
17		16485	O-Ring	1
18		1487067	Fitting	1
18		252729	O-Ring	1
18		16485	O-Ring	1
19		. . . . .	Main Lift Cylinder (RH) (☞ Figure 10-4)	1
20		300937	Locknut	2
21		296422	Washer	4
22		323090	Spacer	2
23		292532	Capscrew	2
24		1354915	Washer (0.254 mm)	AR
24		1354916	Washer (0.762 mm)	AR
24		1354917	Washer (1.524 mm)	AR
25		1333382	Washer (1.500 mm)	2
26		131358	Snap Ring	2

FOOTNOTES:
a Refer to Table

©2006 HYSTER COMPANY

MAIN LIFT CYLINDER (Figure 10-4)
RIGHT HAND
TWO STAGE LIMITED FREE-LIFT

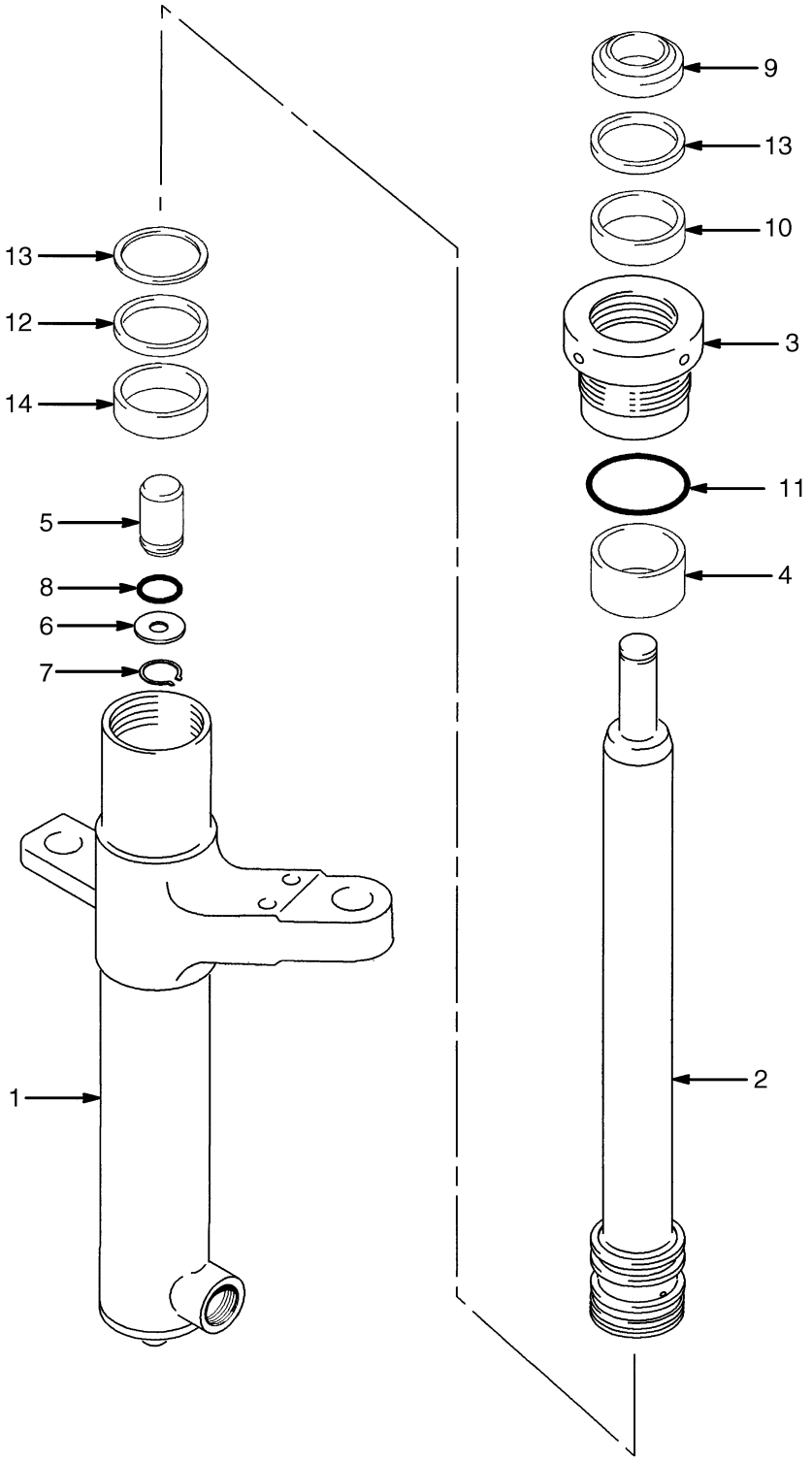

HP171198

©2006 HYSTER COMPANY

MAIN LIFT CYLINDER
RIGHT HAND
TWO STAGE LIMITED FREE-LIFT

ITEM	DESCRIPTION 1 2 3 4	LIFT HEIGHT TO BOTTOM OF FORKS		
		3292 mm	3792 mm	4292 mm
	Mast Group Number	B551 3292	B551 3792	B551 4292
	Cylinder Group Number	8601659	8601664	8601669
	Main Lift Cylinder	1361376	1362531	1362561
1	Shell	1361377	1362532	1362562
2	Rod	1361374	1362529	1362559

ITEM		PART NO.	DESCRIPTION	QTY
	a	. . . . .	Main Lift Cylinder	1
1	**a**	. . . . .	Shell	1
2	**a**	. . . . .	Rod	1
3		1371653	Gland	1
4		322902	Wear Ring	1
5		257913	Check Valve	1
6		297531	Washer	1
7		187388	Snap Ring	1
8		190580	O-Ring	1
9		1319668	Wiper Ring	1
10		1381095	Rod Seal	1
11		55407	O-Ring	1
12		330692	Seal	2
13		322824	Back-Up Ring	1
14		1362871	Wear Ring	1
		1360140	Seal Kit (Includes Items 4, 8-14)	1

FOOTNOTES:
a Refer to Table

©2006 HYSTER COMPANY

MAIN LIFT CYLINDER (Figure 10-5)
LEFT HAND
TWO STAGE LIMITED FREE-LIFT

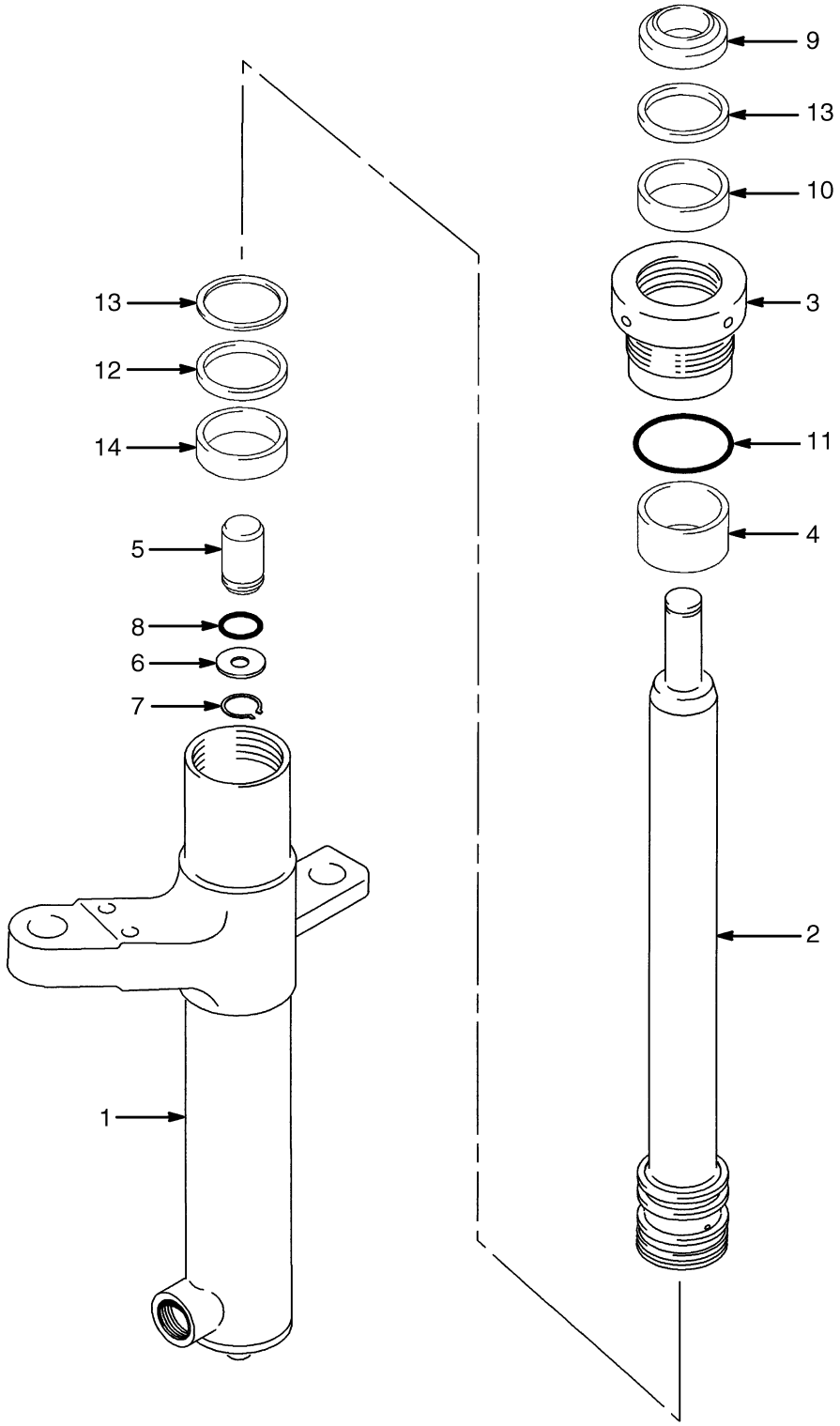

HP171197

©2006 HYSTER COMPANY

MAIN LIFT CYLINDER
LEFT HAND
TWO STAGE LIMITED FREE-LIFT

ITEM	DESCRIPTION 1 2 3 4	LIFT HEIGHT TO BOTTOM OF FORKS		
		3292 mm	3792 mm	4292 mm
	Mast Group Number	B551 3292	B551 3792	B551 4292
	Cylinder Group Number	8601609	8601614	8601619
	Main Lift Cylinder	1361372	1362527	1362557
1	Shell	1361373	1362528	1362558
2	Rod	1361374	1362529	1362559

ITEM	PART NO.	DESCRIPTION	QTY
	a	Main Lift Cylinder	1
1	**a**	Shell	1
2	**a**	Rod	1
3	1371653	Gland	1
4	322902	Wear Ring	1
5	257913	Check Valve	1
6	297531	Washer	1
7	187388	Snap Ring	1
8	190580	O-Ring	1
9	1319668	Wiper Ring	1
10	1381095	Rod Seal	1
11	55407	O-Ring	1
12	330692	Seal	1
13	322824	Back-Up Ring	2
14	1362871	Wear Ring	1
	1360140	Seal Kit (Includes Items 4, 8-14)	1

FOOTNOTES:
a Refer to Table

CARRIAGE (Figure 10-6)
TWO STAGE LIMITED FREE-LIFT

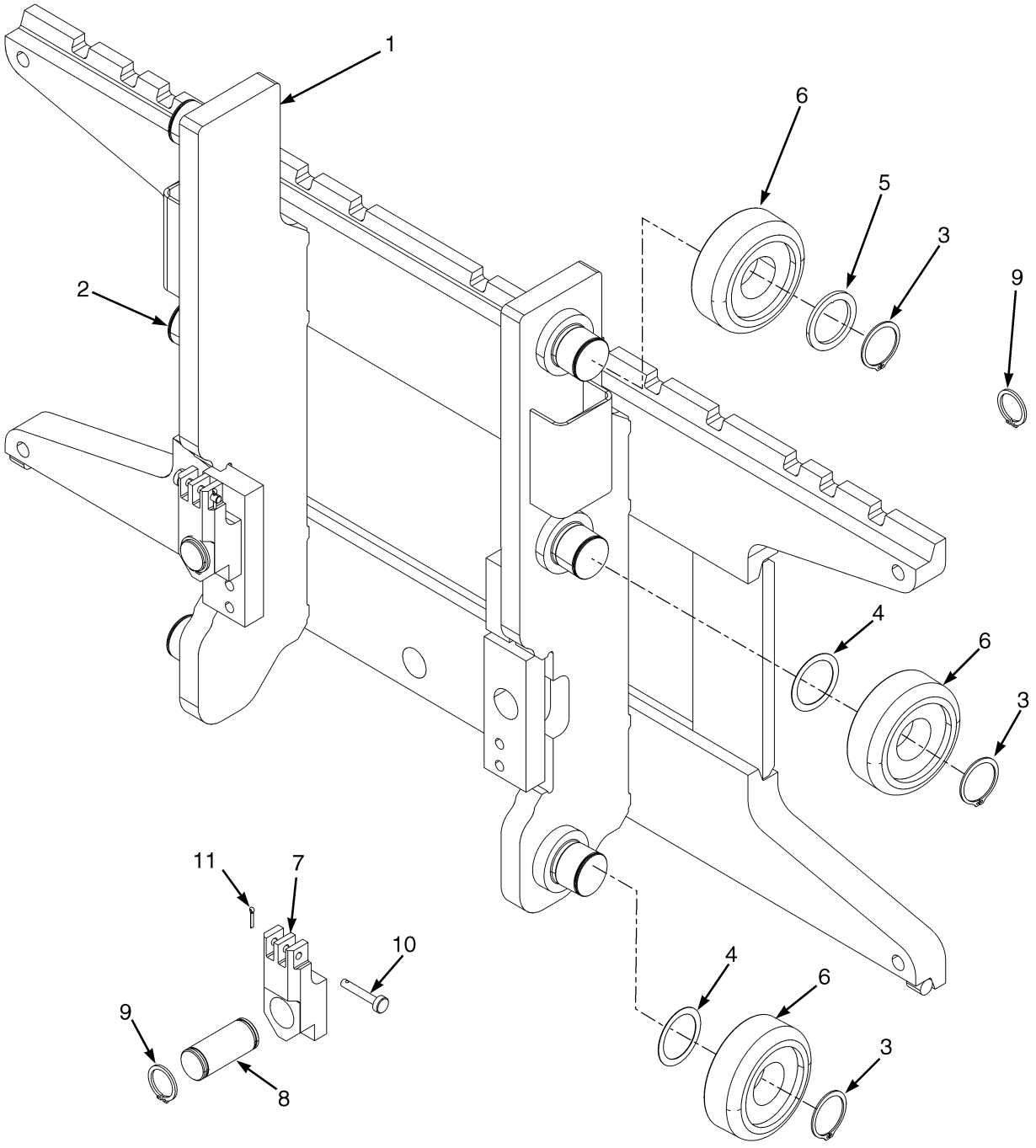

©2006 HYSTER COMPANY

CARRIAGE
TWO STAGE LIMITED FREE-LIFT

ITEM	PART NO.	DESCRIPTION	QTY
	1482297	Carriage Assembly	1
1	1526274	Frame	1
2	1345216	Stubshaft	6
3	58901	Snap Ring	6
4	129387	Shim (0.508 mm)	AR
5	366115	Spacer	2
6	1333399	Load Roller	6
7	1481288	Chain Anchor	2
8	1353408	Pin	2
9	131358	Snap Ring	4
10	1514866	Pin	2
11	15200	Cotter Pin	2

©2006 HYSTER COMPANY

HEADER HOSES (Figure 10-7)
TWO STAGE LIMITED FREE-LIFT

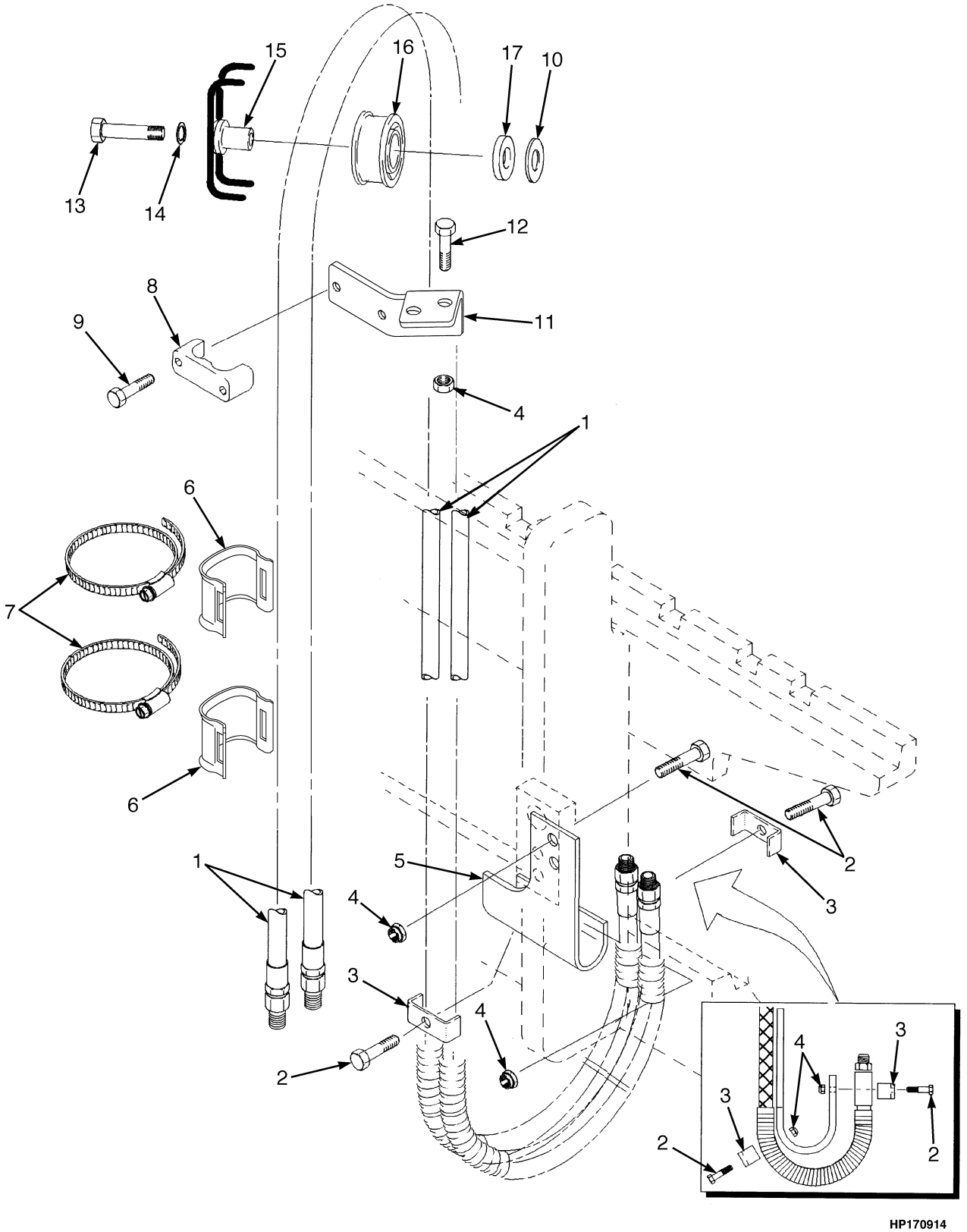

©2006 HYSTER COMPANY

HEADER HOSES
TWO STAGE LIMITED FREE-LIFT

ITEM	DESCRIPTION 1 2 3 4	LIFT HEIGHT TO BOTTOM OF FORKS		
		3292 mm	3792 mm	4292 mm
	Mast Group Number	B551 3292	B551 3792	B551 4292
1	Hose	1482249	1482254	1482259

KEY:
A: Three Functions
B: Four Functions

ITEM		PART NO.	DESCRIPTION	QTY A	QTY B
1	**a**	. . . . .	Hose	2	4
2		1581582	Capscrew	4	8
3		1345348	Clamp	2	4
4		1581566	Nut	6	6
5		1345412	Bracket (RH)	1	1
5		1345413	Bracket (LH)	..	1
6		1477996	Clamp	2	4
7		1481229	Clamp	4	8
8		1360386	Clamp	1	2
9		1581842	Capscrew	2	4
10		1345190	Washer	2	4
11		1610939	Bracket	1	2
12		1581836	Capscrew	2	4
13		1581830	Capscrew	1	2
14		1581564	Lockwasher	1	2
15		1360548	Stubshaft	1	2
16		1494017	Sheave	1	2
17		1360549	Spacer	1	2

FOOTNOTES:
a Refer to Table

©2006 HYSTER COMPANY

NOTES

11 MAST-TWO STAGE FULL FREE-LIFT

SECTION 11
MAST-TWO STAGE FULL FREE-LIFT

DESCRIPTION	PAGE
CARRIAGE	
TWO STAGE FULL FREE-LIFT	11-16
FREE LIFT CYLINDER	
TWO STAGE FULL FREE-LIFT	11-14
FREE-LIFT	
TWO STAGE FULL FREE-LIFT	11-12
HEADER HOSE	
TWO STAGE FULL FREE-LIFT	11-18
INNER MAST	
TWO STAGE FULL FREE-LIFT	11-4
MAIN LIFT	
TWO STAGE FULL FREE-LIFT	11-6
MAIN LIFT CYLINDER	
LEFT HAND	
TWO STAGE FULL FREE-LIFT	11-10
RIGHT HAND	
TWO STAGE FULL FREE-LIFT	11-8
OUTER MAST	
TWO STAGE FULL FREE-LIFT	11-2

©2006 HYSTER COMPANY

OUTER MAST (Figure 11-1)
TWO STAGE FULL FREE-LIFT

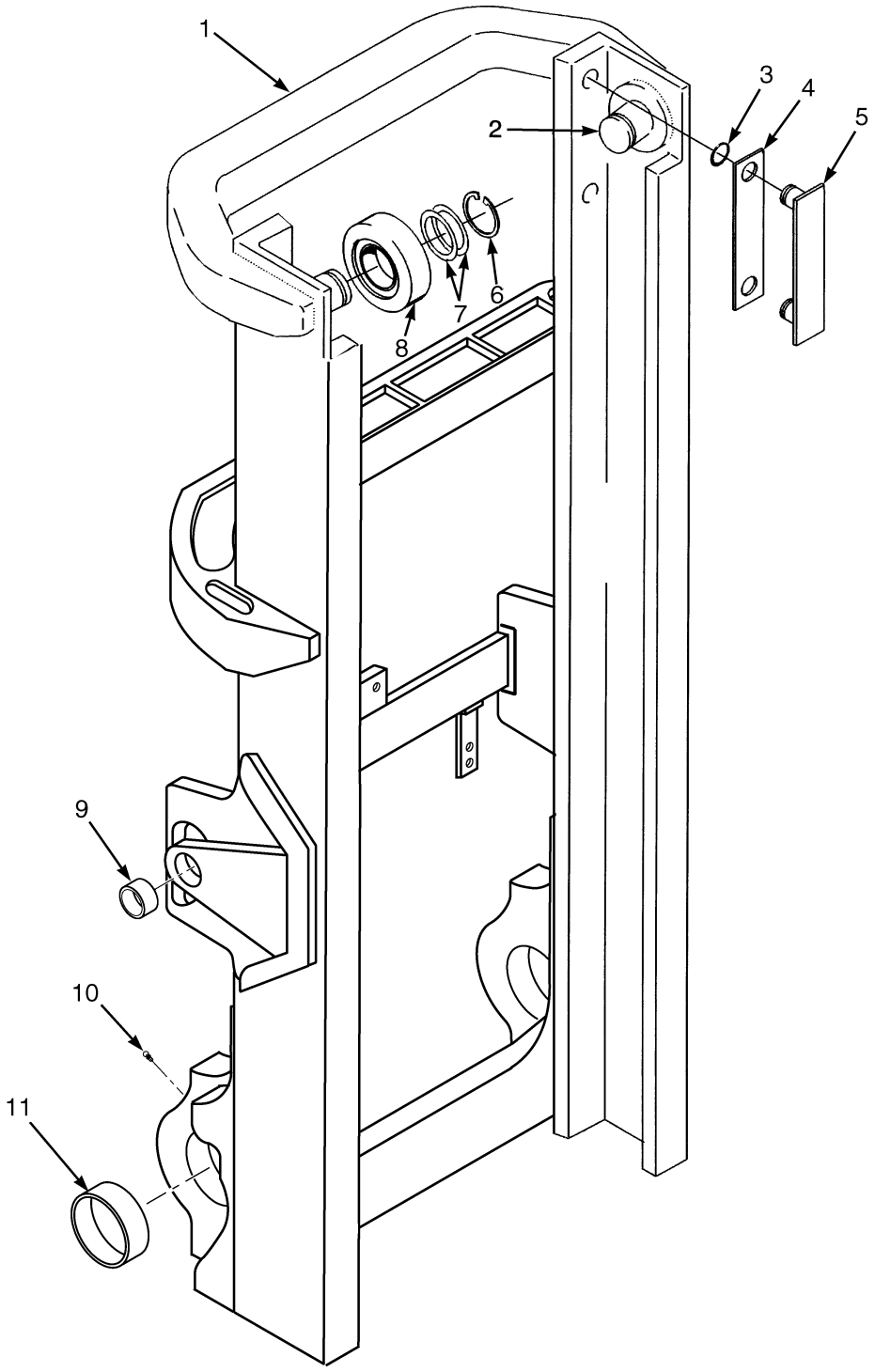

BP170184

©2006 HYSTER COMPANY

OUTER MAST
TWO STAGE FULL FREE-LIFT

ITEM	DESCRIPTION 1 2 3 4	LIFT HEIGHT TO BOTTOM OF FORKS	
		2878 mm	3178 mm
	Mast Group Number	B559 2878	B559 3178
	Mast Assembly	2072424	2072427
1	Outer Mast	1531664	1531667

ITEM		PART NO.	DESCRIPTION	QTY
	a	. . . . .	Mast Assembly	1
1	**a**	. . . . .	Outer Mast	1
2		1345216	Stubshaft	2
3		104506	O-Ring	4
4		131716	Shim (0,508 mm)	4
5		215212	Bearing Strip	2
6		58901	Snap Ring	2
7		129387	Shim (0.508 mm)	AR
8		1333399	Load Roller	2
9		1348185	Bushing	2
10		16001	Lube Fitting	2
11	**b**	1536287	Bushing (Mast Mounting)	2
11	**c**	1617575	Bushing	2

FOOTNOTES:
a Refer to Table
b ⇒ PENDING PER ECN 10402508
c PENDING PER ECN 10402508 ⇒

©2006 HYSTER COMPANY

INNER MAST (Figure 11-2)
TWO STAGE FULL FREE-LIFT

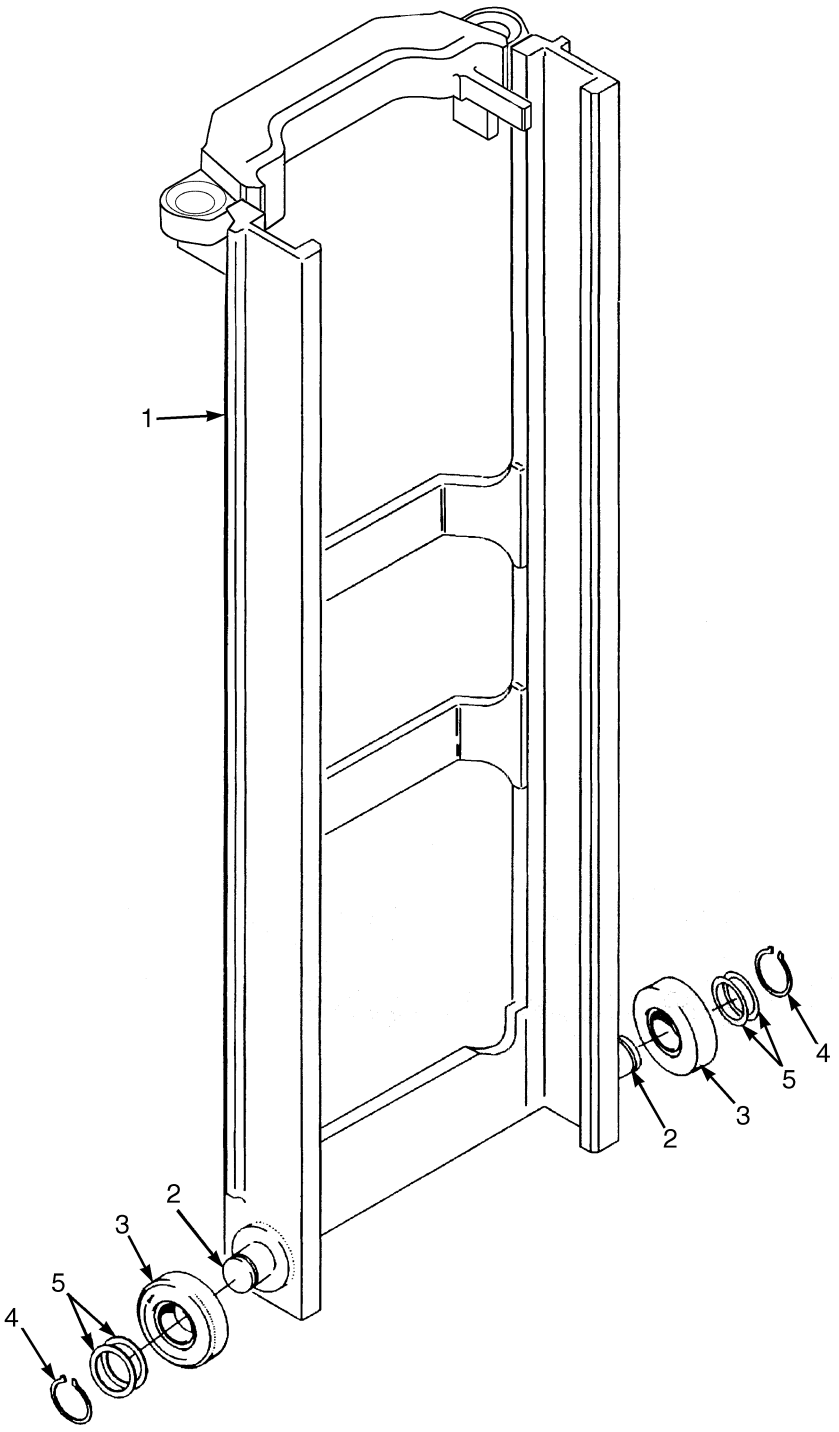

BP170156

©2006 HYSTER COMPANY

INNER MAST
TWO STAGE FULL FREE-LIFT

ITEM	DESCRIPTION 1 2 3 4	LIFT HEIGHT TO BOTTOM OF FORKS	
		2878 mm	3178 mm
	Mast Group Number	B559 2878	B559 3178
	Mast Assembly	2072424	2072427
1	Inner Mast	1550075	1550078

ITEM		PART NO.	DESCRIPTION	QTY
	a	. . . . .	Mast Assembly	1
1	**a**	. . . . .	Inner Mast	1
2		1345216	Stubshaft	2
3		1333399	Load Roller	2
4		58901	Snap Ring	2
5		129387	Shim (0.508 mm)	AR

FOOTNOTES:
a Refer to Table

MAIN LIFT (Figure 11-3)
TWO STAGE FULL FREE-LIFT

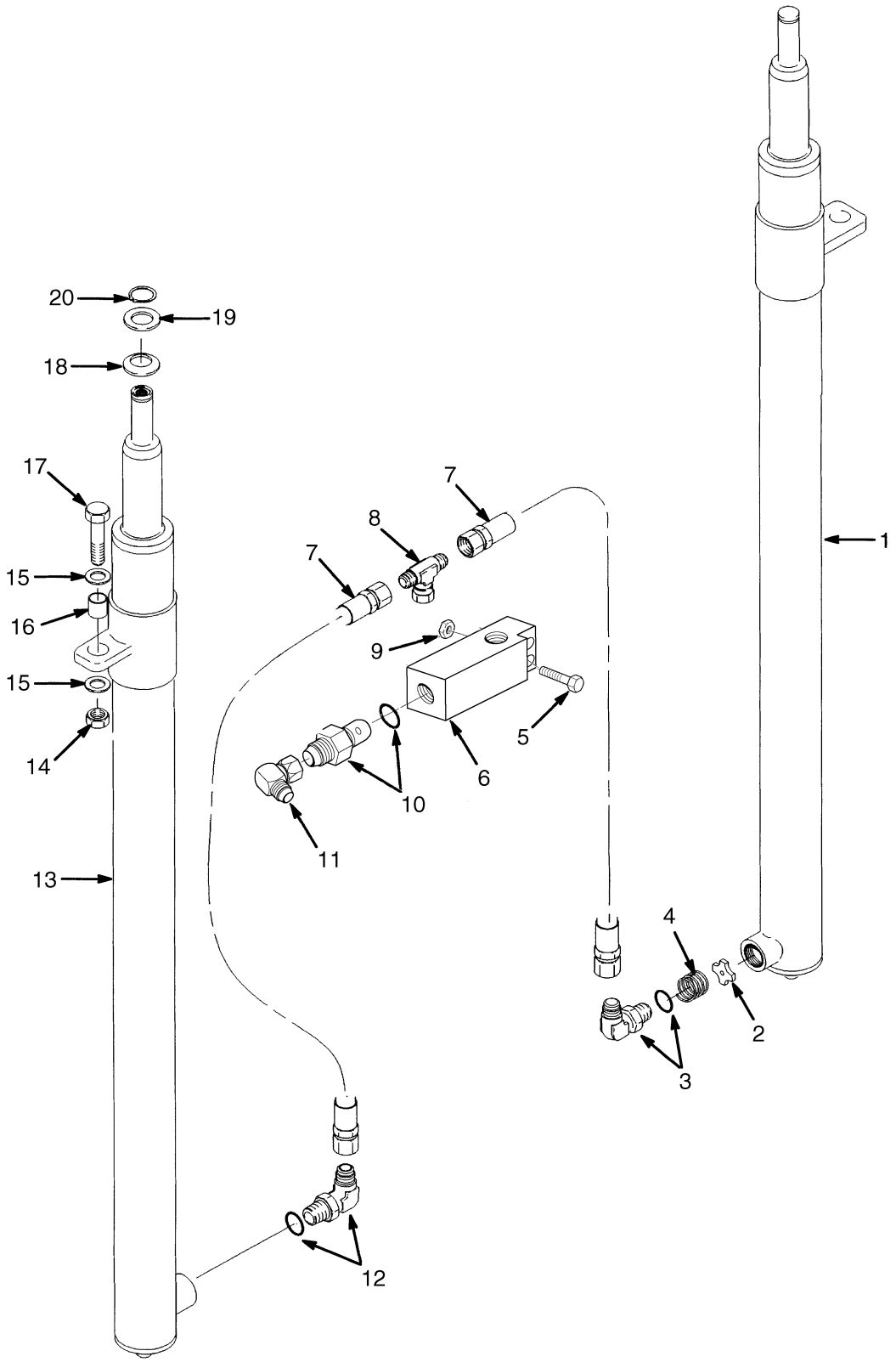

©2006 HYSTER COMPANY

MAIN LIFT
TWO STAGE FULL FREE-LIFT

ITEM	PART NO.	DESCRIPTION	QTY
1	. . . . .	Main Lift Cylinder (LH) (☞ Figure 11-5)	1
2	323160	Washer	1
3	1481344	Fitting	1
3	16485	O-Ring	1
3	252729	O-Ring	1
4	120938	Spring	1
5	292509	Capscrew	2
6	1379687	Housing (Lowering Control)	1
7	1481097	Hose	2
8	1532650	Fitting	1
8	252729	O-Ring	1
8	16485	O-Ring	1
9	313828	Nut	2
10	1481348	Lowering Control Valve	1
10	252729	O-Ring	1
10	16485	O-Ring	1
11	1486773	Fitting	1
11	252729	O-Ring	1
11	16485	O-Ring	1
12	1487067	Fitting	2
12	16485	O-Ring	1
12	252729	O-Ring	1
13	. . . . .	Main Lift Cylinder (RH) (☞ Figure 11-4)	1
14	300937	Locknut	2
15	296422	Washer	4
16	323090	Spacer	2
17	292532	Capscrew	2
18	1354915	Washer (0.254 mm)	AR
18	1354916	Washer (0.762 mm)	AR
18	1354917	Washer (1.524 mm)	AR
19	1333382	Washer (1.500 mm)	2
20	131358	Snap Ring	3

©2006 HYSTER COMPANY

MAIN LIFT CYLINDER (Figure 11-4)
RIGHT HAND
TWO STAGE FULL FREE-LIFT

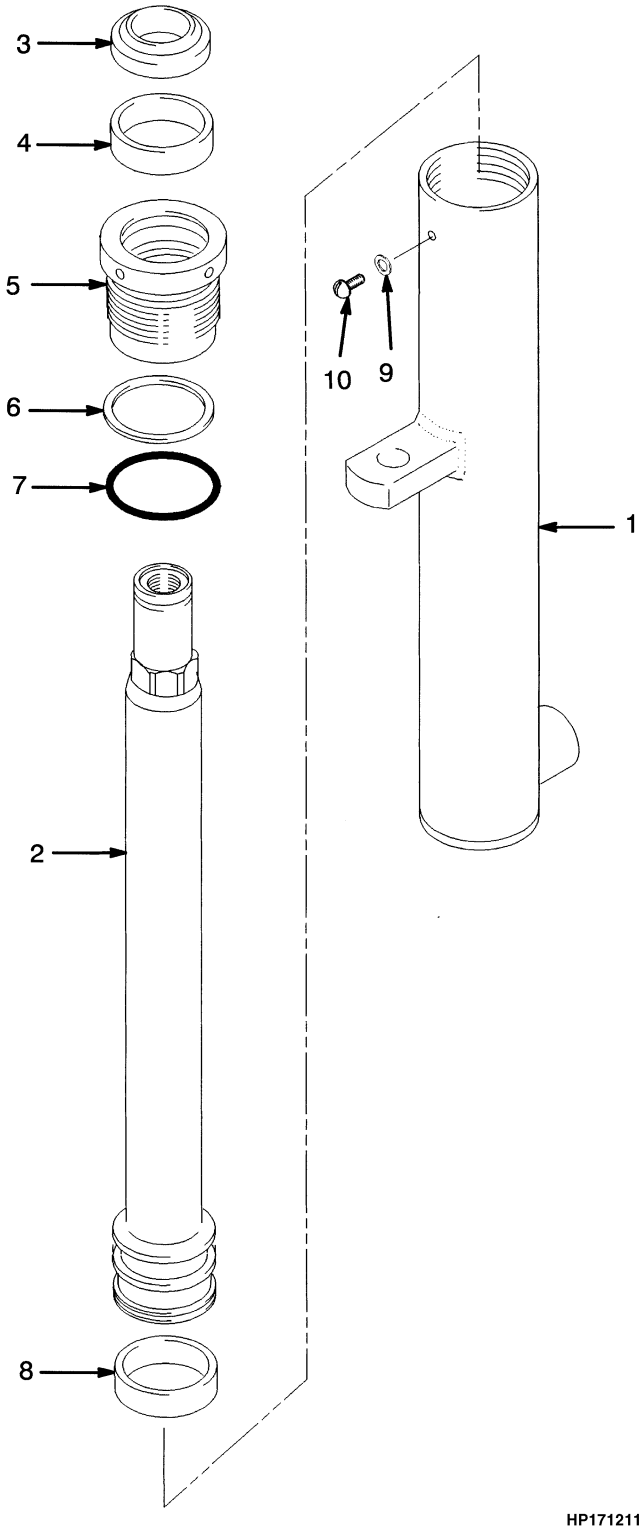

©2006 HYSTER COMPANY

MAIN LIFT CYLINDER
RIGHT HAND
TWO STAGE FULL FREE-LIFT

ITEM		PART NO.	DESCRIPTION	QTY
	a	2046336	Main Lift Cylinder (B559-3178-8510208)	1
	b	2069306	Main Lift Cylinder (B559-3178-8501808)	1
1	**a**	1365605	Shell	1
1	**b**	2069276	Shell	1
2		1365637	Rod	1
3		1310369	Wiper Ring	1
4		1381082	Rod Seal	1
5	**a**	1498116	Gland	1
5	**b**	1563591	Gland	1
6		132834	Back-Up Ring	1
7		55407	O-Ring	1
8		1374802	Wear Ring	1
9		190887	Seal	1
10		295649	Screw	1
		1498115	Seal Kit (Includes Items 3-4, 6-8)	1

FOOTNOTES:

a ⇒ PENDING PER ECN 10431510

b PENDING PER ECN 10431510 ⇒

©2006 HYSTER COMPANY

MAIN LIFT CYLINDER (Figure 11-5)
LEFT HAND
TWO STAGE FULL FREE-LIFT

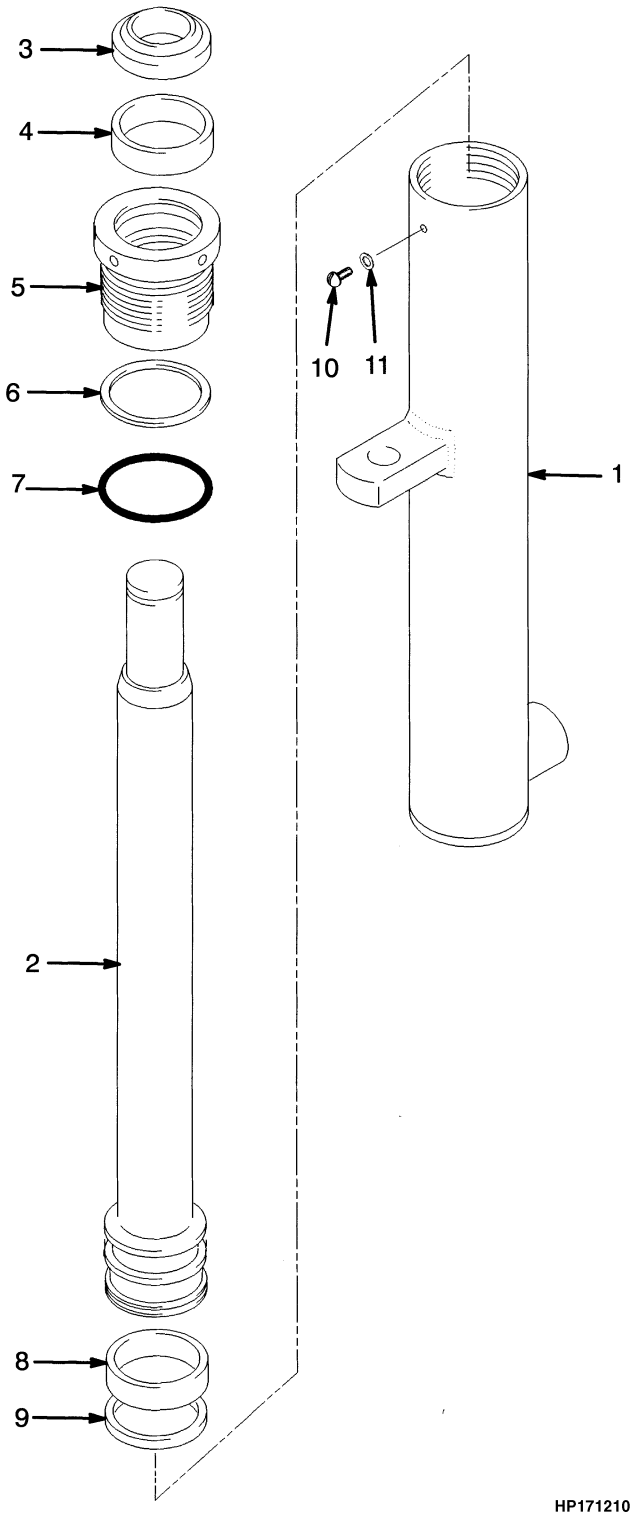

©2006 HYSTER COMPANY

MAIN LIFT CYLINDER
LEFT HAND
TWO STAGE FULL FREE-LIFT

ITEM		PART NO.	DESCRIPTION	QTY
	a	2046367	Main Lift Cylinder (B559-3178-8510258)	1
	b	2069334	Main Lift Cylinder (B559-3178-8501908)	1
1	**a**	1365607	Shell	1
1	**b**	2069276	Shell	1
2		1365666	Rod	1
3		1310369	Wiper Ring	1
4		1381082	Rod Seal	1
5	**a**	1498116	Gland	1
5	**b**	1563591	Gland	1
6		132834	Back-Up Ring	1
7		55407	O-Ring	1
8		1374802	Wear Ring	1
9		1362875	Piston Ring	1
10		295649	Screw	1
11		190887	Seal	1
		1498115	Seal Kit (Includes Items 3-4, 6-8, 11)	1

FOOTNOTES:
a ⇒ PENDING PER ECN 10431510
b PENDING PER ECN 10431510 ⇒

©2006 HYSTER COMPANY

FREE-LIFT (Figure 11-6)
TWO STAGE FULL FREE-LIFT

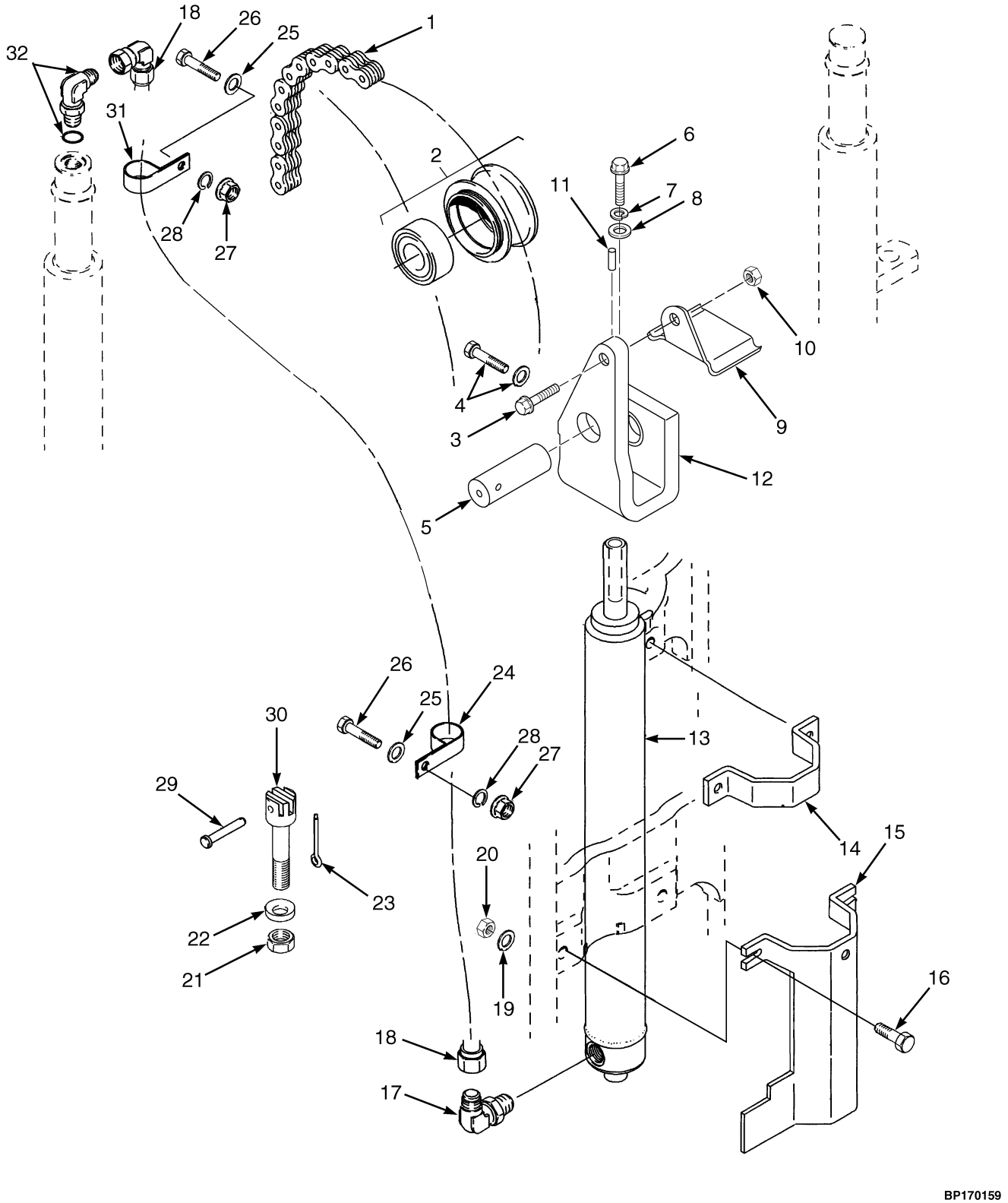

©2006 HYSTER COMPANY

FREE-LIFT
TWO STAGE FULL FREE-LIFT

ITEM	PART NO.	DESCRIPTION	QTY
1	1550128	Chain	1
2	1481054	Chain Sheave Assembly	1
2	1481053	Chain Sheave	1
2	1378699	Bearing	2
3	246001	Capscrew	1
4	1481230	Capscrew	2
4	292681	Lockwasher	1
5	1481052	Crosshead Pin	1
6	293706	Capscrew	1
7	292687	Lockwasher	1
8	320169	Washer	1
9	1481055	Chain Guard	1
10	300937	Locknut	1
11	310549	Pin	1
12	1481009	Crosshead	2
13	. . . . .	Free-Lift Cylinder (☞ Figure 11-7)	1
14	1489972	Guard	1
15	1573676	Bracket (Cylinder Guard)	1
16	292528	Capscrew	4
17	1379496	Valve	1
17	16485	O-Ring	1
18	2085024	Hose	1
19	296422	Washer	4
20	300937	Locknut	4
21	161003	Nut	2
22	296426	Washer (Hardened)	2
23	15211	Cotter Pin	2
24	178119	Clamp	1
25	320158	Washer	2
26	132861	Capscrew	2
27	239503	Nut	2
28	292681	Lockwasher	2
29	1514866	Pin	2
30	1605676	Chain Anchor	2
31	166112	Clamp	1
32	1481345	Fitting	1
32	16484	O-Ring	1
32	252729	O-Ring	1

©2006 HYSTER COMPANY

FREE LIFT CYLINDER (Figure 11-7)
TWO STAGE FULL FREE-LIFT

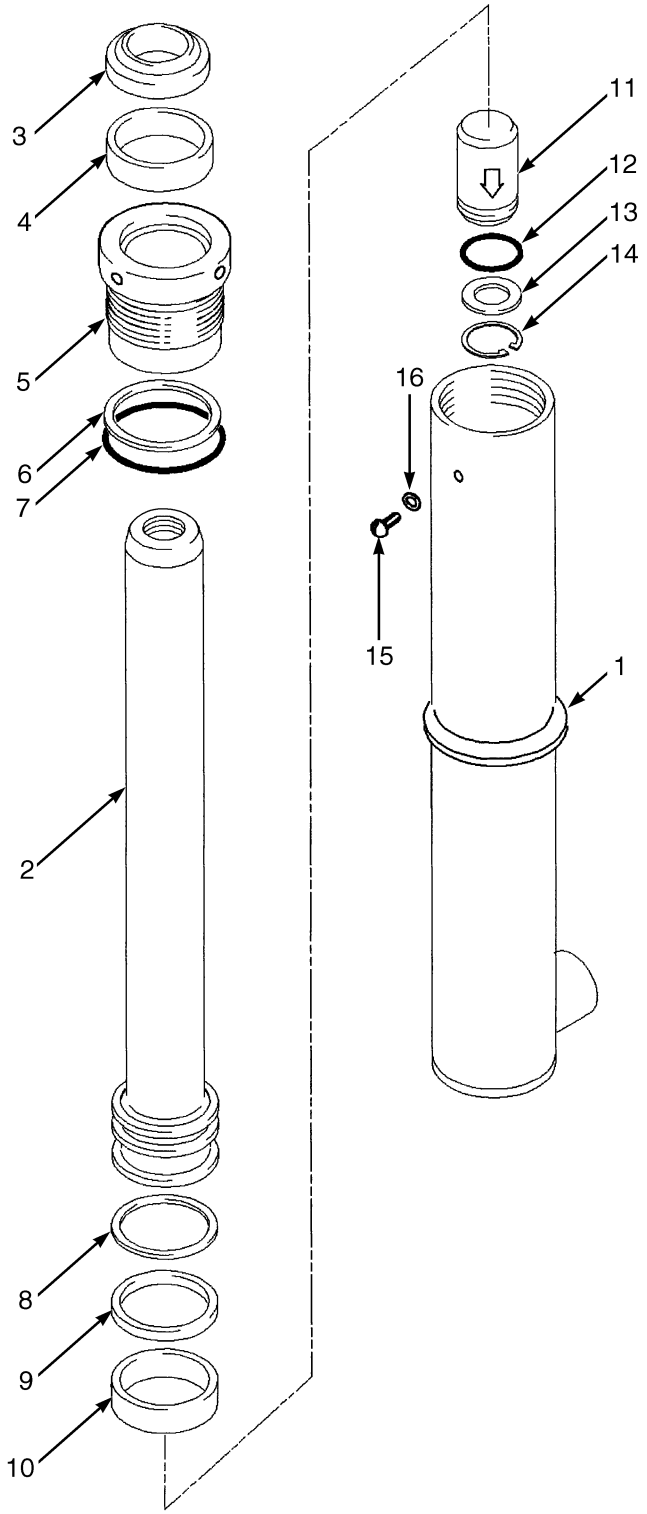

BP170160

©2006 HYSTER COMPANY

FREE LIFT CYLINDER
TWO STAGE FULL FREE-LIFT

ITEM	PART NO.	DESCRIPTION	QTY
	2068200	Free-Lift Cylinder	1
1	1362924	Shell	1
2	2068160	Rod	1
3	2013099	Wiper Ring	1
4	1358970	Seal	1
5	1362880	Gland	1
6	615135	Back-Up Ring	1
7	55146	O-Ring	1
8	638250	Back-Up Ring	1
9	201829	Rod Seal	1
10	1362881	Wear Ring	1
11	257913	Check Valve	1
12	39348	O-Ring	1
13	297531	Washer	1
14	187388	Snap Ring	1
15	1361302	Screw	1
16	190887	Seal	1
	1360141	Seal Kit (Includes Items 3-4, 6-10, 12, 16)	1

©2006 HYSTER COMPANY

CARRIAGE (Figure 11-8)
TWO STAGE FULL FREE-LIFT

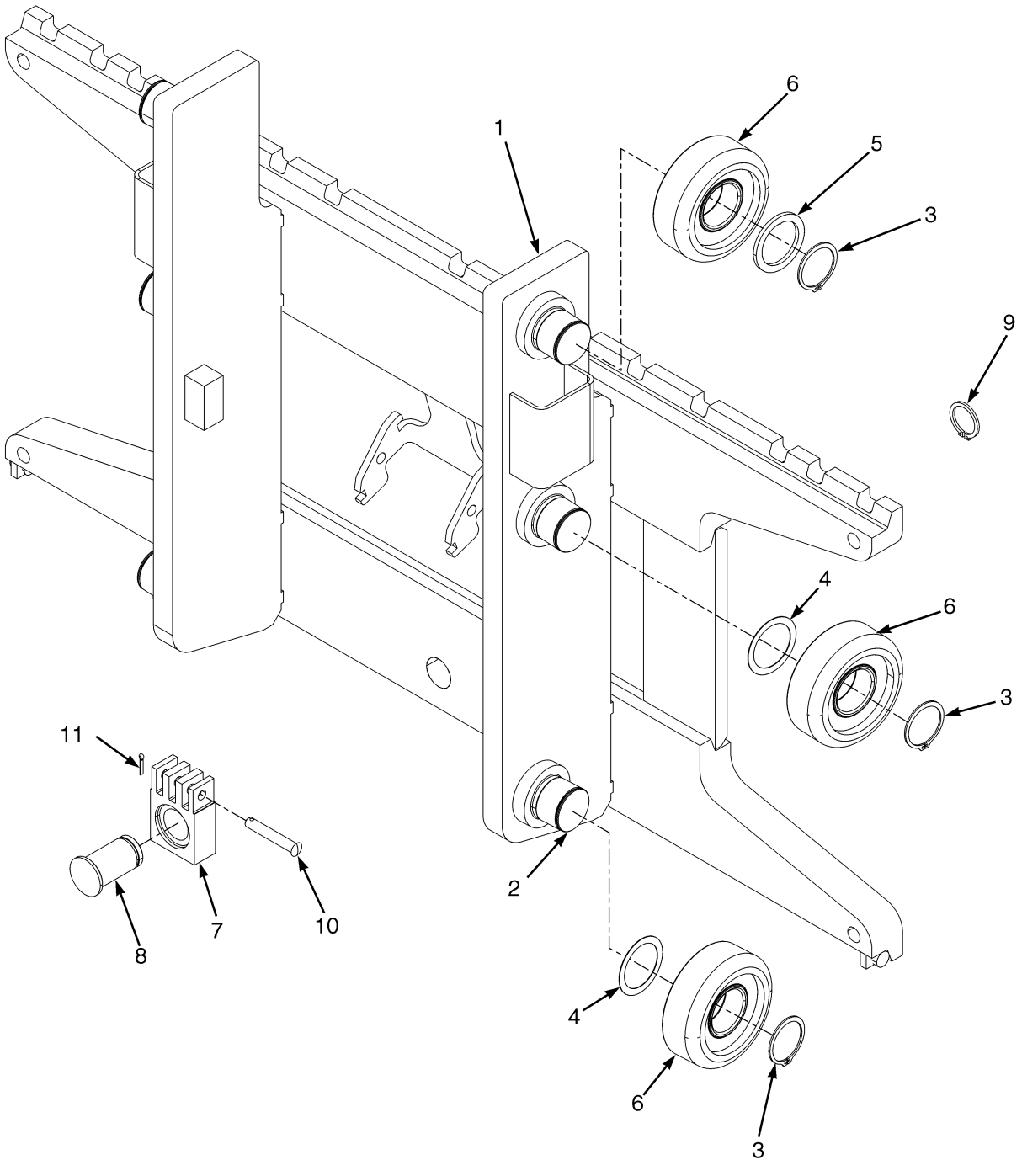

©2006 HYSTER COMPANY

CARRIAGE
TWO STAGE FULL FREE-LIFT

ITEM	PART NO.	DESCRIPTION	QTY
	1549691	Carriage Assembly	1
1	1549681	Frame	1
2	1345216	Stubshaft	6
3	58901	Snap Ring	6
4	129387	Shim (0.508 mm)	AR
5	366115	Spacer	2
6	1333399	Load Roller	6
7	1549685	Chain Anchor	1
8	185597	Pin	1
9	131358	Snap Ring	2
10	1340687	Chain Anchor Pin	1
11	15211	Cotter Pin	1

©2006 HYSTER COMPANY

HEADER HOSE (Figure 11-9)
TWO STAGE FULL FREE-LIFT

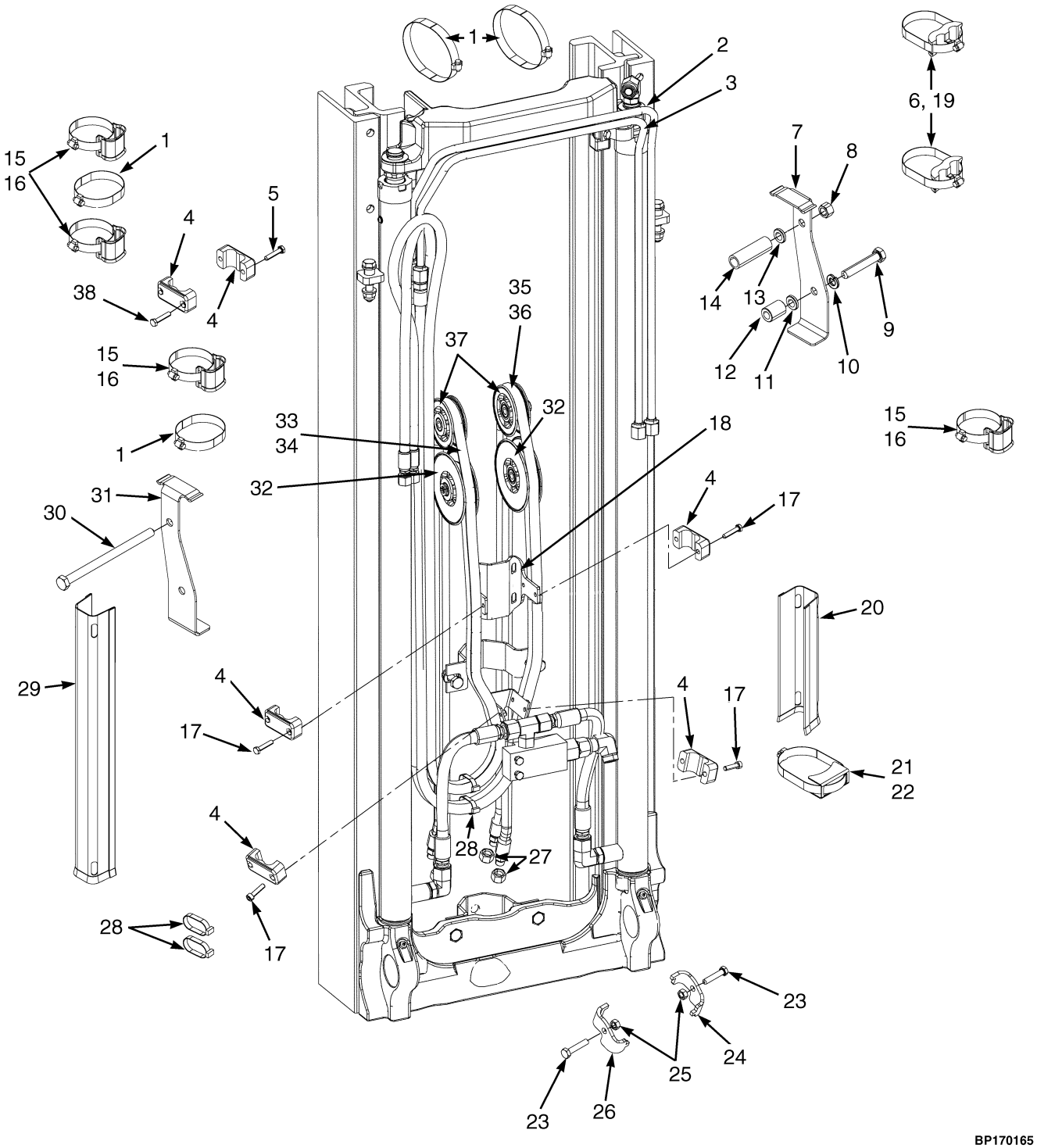

©2006 HYSTER COMPANY

HEADER HOSE
TWO STAGE FULL FREE-LIFT

ITEM	DESCRIPTION 1 2 3 4	LIFT HEIGHT TO BOTTOM OF FORKS	
		2878 mm	3178 mm
	Mast Group Number	B559 2878	B559 3178
2	Tube	1549995	1549998
3	Tube	1549965	1549968
29	Channel	1365512	1619744
33	Hose	2075628	2073828
34	Hose	1481944	1481947
35	Hose	2073796	2073799
36	Hose	1481884	1481887

KEY:
A: Three Function
B: Four Function

ITEM		PART NO.	DESCRIPTION	QTY A	QTY B
1		1360507	Clamp	7	9
2	a	. . . . .	Tube	1	1
3	a	. . . . .	Tube	1	1
4		1360386	Clamp	3	6
5		1581842	Capscrew	2	..
6		1617658	Clamp	2	2
7		1481253	Bracket (RH)	1	1
8		1581849	Nut	1	1
9		1581592	Capscrew (Lower)	1	2
10		1581564	Lockwasher	1	2
11		1581560	Washer	2	4
12		1481255	Stub Shaft	1	2
13		1581559	Washer	..	1
14		1550020	Spacer	..	1
15		1617657	Clamp	2	4
16		1477996	Clamp	2	4
17		1581741	Capscrew	4	8
18		1610914	Bracket	1	1
19		1606855	Tube Spacer	2	2
20		1605688	Channel	1	1
21		1345423	Clamp	1	1
22		1360508	Clamp	1	1
23		1581582	Capscrew	1	2
24		1481765	Clamp	1	1
25		1581566	Nut	1	2
26		1481766	Clamp	..	1
27		1529015	Cap	2	4
28		137852	Strap Clamp	1	2
29	a	. . . . .	Channel	1	1
30		1581830	Capscrew (Upper RH)	1	..
30		1597560	Capscrew (Upper LH)	..	1

©2006 HYSTER COMPANY

HEADER HOSE
TWO STAGE FULL FREE-LIFT

ITEM		PART NO.	DESCRIPTION	QTY A	QTY B
31		1481252	Bracket (LH)	..	1
32		1481249	Hose Sheave	1	2
32		1353521	Bushing	1	1
33	**a**	. . . . .	Hose	..	1
34	**a**	. . . . .	Hose	..	1
35	**a**	. . . . .	Hose	1	1
36	**a**	. . . . .	Hose	1	1
37		1481248	Hose Sheave	1	2
37		1353521	Bushing	1	1
38		1581843	Capscrew	..	2

FOOTNOTES:
a Refer to Table

See Service Manual for service procedures.
©2006 HYSTER COMPANY

12 MAST-THREE STAGE FULL FREE-LIFT

SECTION 12
MAST-THREE STAGE FULL FREE-LIFT

DESCRIPTION	PAGE
CARRIAGE	
THREE STAGE FULL FREE-LIFT	12-20
FREE-LIFT	
THREE STAGE FULL FREE-LIFT	12-16
FREE-LIFT CYLINDER	
THREE STAGE FULL FREE-LIFT	12-18
HEADER HOSE	
THREE STAGE FULL FREE-LIFT	12-22
INNER MAST	
THREE STAGE FULL FREE-LIFT	12-6
INTERMEDIATE MAST	
THREE STAGE FULL FREE-LIFT	12-4
MAIN LIFT	
THREE STAGE FULL FREE-LIFT	12-8
MAIN LIFT CYLINDER	
LEFT HAND	
THREE STAGE FULL FREE-LIFT	12-14
RIGHT HAND	
THREE STAGE FULL FREE-LIFT	12-12
OUTER MAST	
THREE STAGE FULL FREE-LIFT	12-2

©2006 HYSTER COMPANY

OUTER MAST (Figure 12-1)
THREE STAGE FULL FREE-LIFT

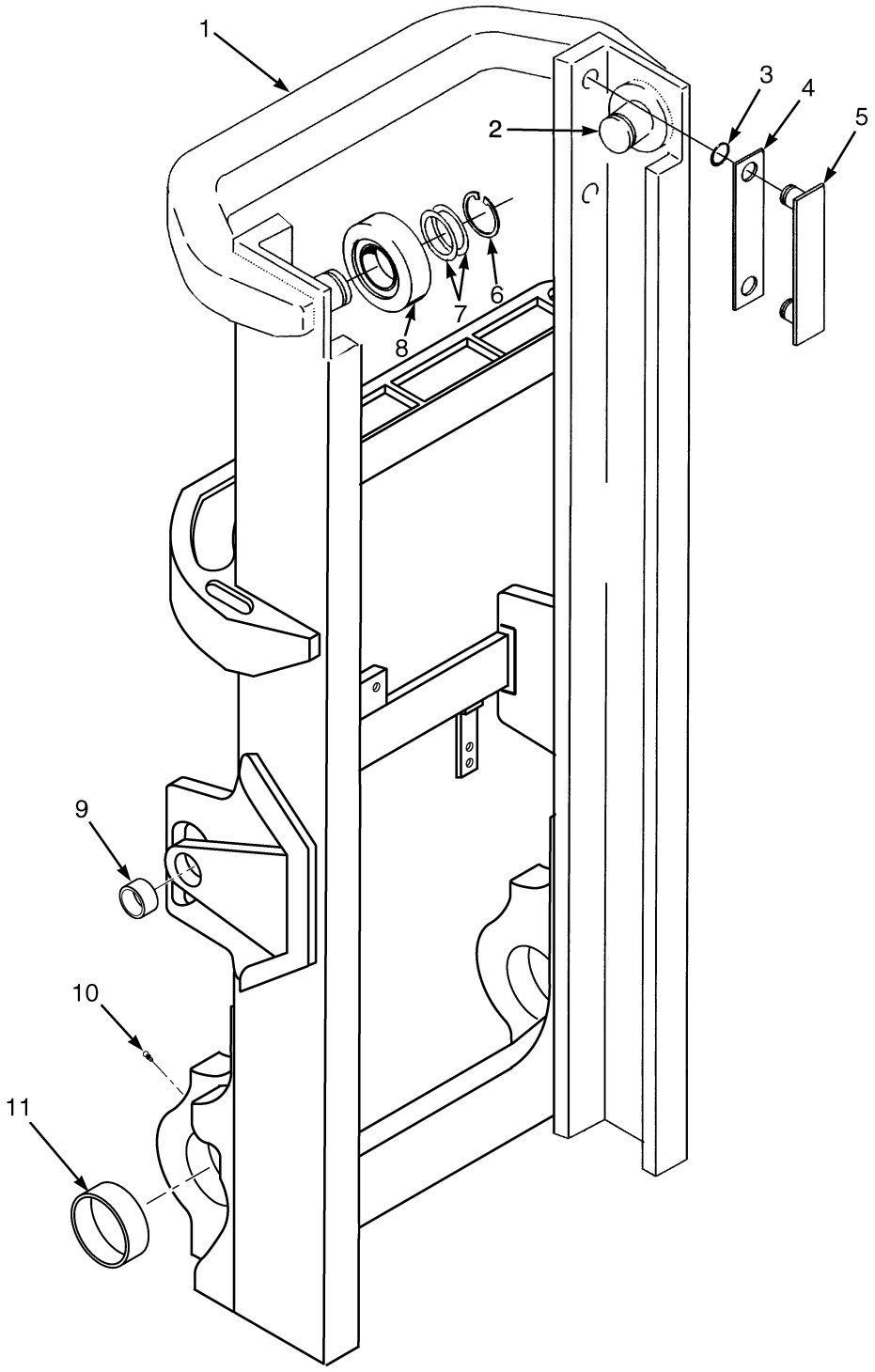

BP170184

©2006 HYSTER COMPANY

OUTER MAST
THREE STAGE FULL FREE-LIFT

ITEM	DESCRIPTION 1 2 3 4	LIFT HEIGHT TO BOTTOM OF FORKS		
		4410 mm	4710 mm	5460 mm
	Mast Group Number	B555 4410	B555 4710	B555 5460
	Mast Assembly	2072392	2072394	2072399
1	Outer Mast	1531665	1531667	1531673

ITEM		PART NO.	DESCRIPTION	QTY
	a	. . . . .	Mast Assembly	1
1	**a**	. . . . .	Outer Mast	1
2		1345216	Stubshaft	2
3		104506	O-Ring	4
4		131716	Shim (0,508 mm)	4
5		215212	Bearing Strip	2
6		58901	Snap Ring	2
7		129387	Shim (0.508 mm)	AR
8		1333399	Load Roller	2
9		1348185	Bushing	2
10		16001	Lube Fitting	2
11	**b**	1536287	Bushing (Mast Mounting)	2
11	**c**	1617575	Bushing	2

FOOTNOTES:
a Refer to Table
b ⇒ PENDING PER ECN 10402508
c PENDING PER ECN 10402508 ⇒

©2006 HYSTER COMPANY

INTERMEDIATE MAST (Figure 12-2)
THREE STAGE FULL FREE-LIFT

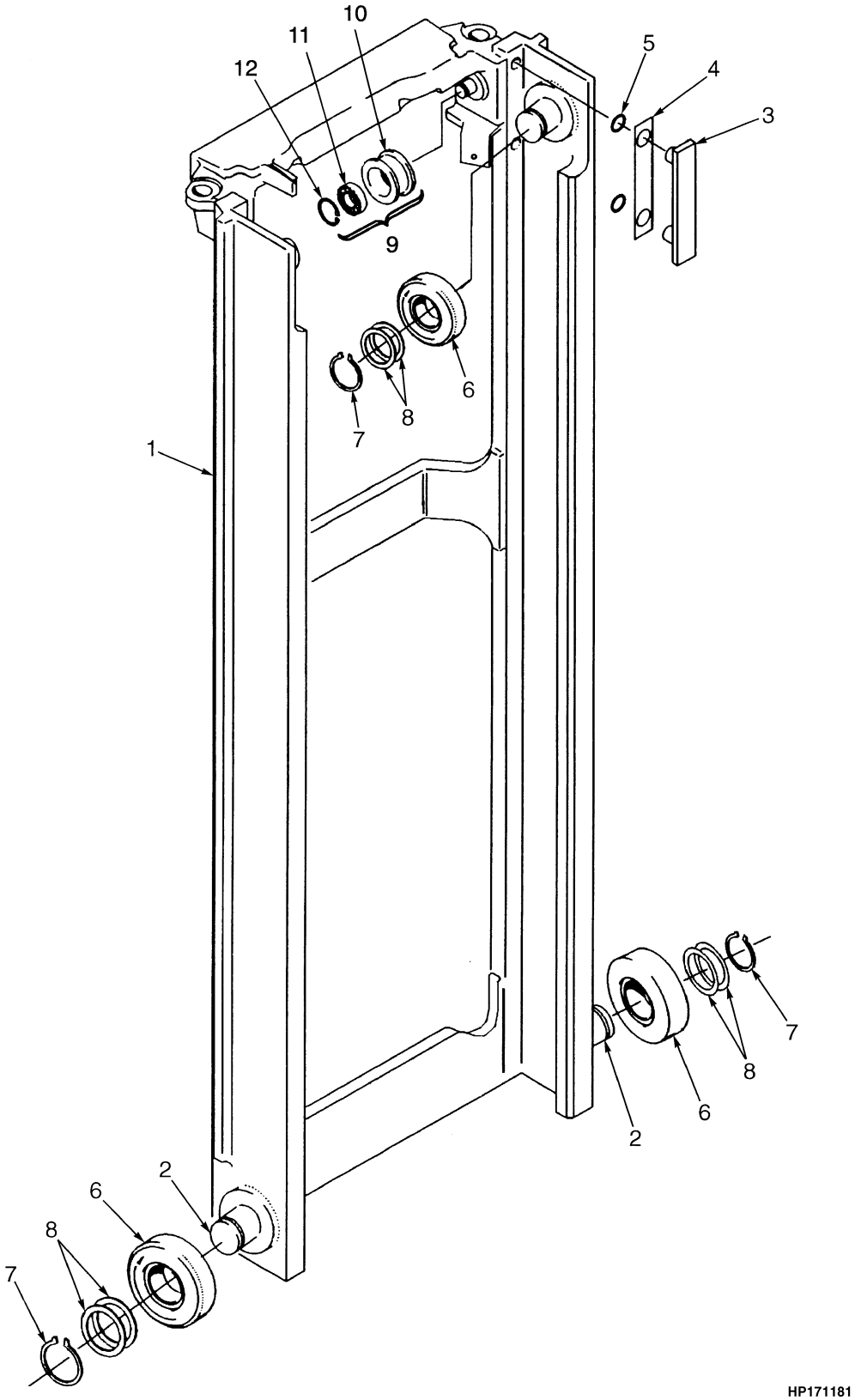

©2006 HYSTER COMPANY

INTERMEDIATE MAST
THREE STAGE FULL FREE-LIFT

ITEM	DESCRIPTION 1 2 3 4	LIFT HEIGHT TO BOTTOM OF FORKS		
		4410 mm	4710 mm	5460 mm
	Mast Group Number	B555 4410	B555 4710	B555 5460
	Mast Assembly	2072392	2072394	2072399
1	Intermediate Mast	1353006	1353008	1353013

ITEM	PART NO.	DESCRIPTION	QTY
	a	Mast Assembly	1
1	**a**	Intermediate Mast	1
2	1345216	Stubshaft	4
3	215212	Bearing Strip	2
4	131716	Shim (0,508 mm)	4
5	104506	O-Ring	4
6	1333399	Load Roller (Standard)	2
7	58901	Snap Ring	4
8	129387	Shim (0.508 mm)	AR
9	1379685	Chain Sheave Assembly	2
10	1378698	Chain Sheave	1
11	1378699	Bearing	1
12	37752	Snap Ring	1

FOOTNOTES:
a Refer to Table

INNER MAST (Figure 12-3)
THREE STAGE FULL FREE-LIFT

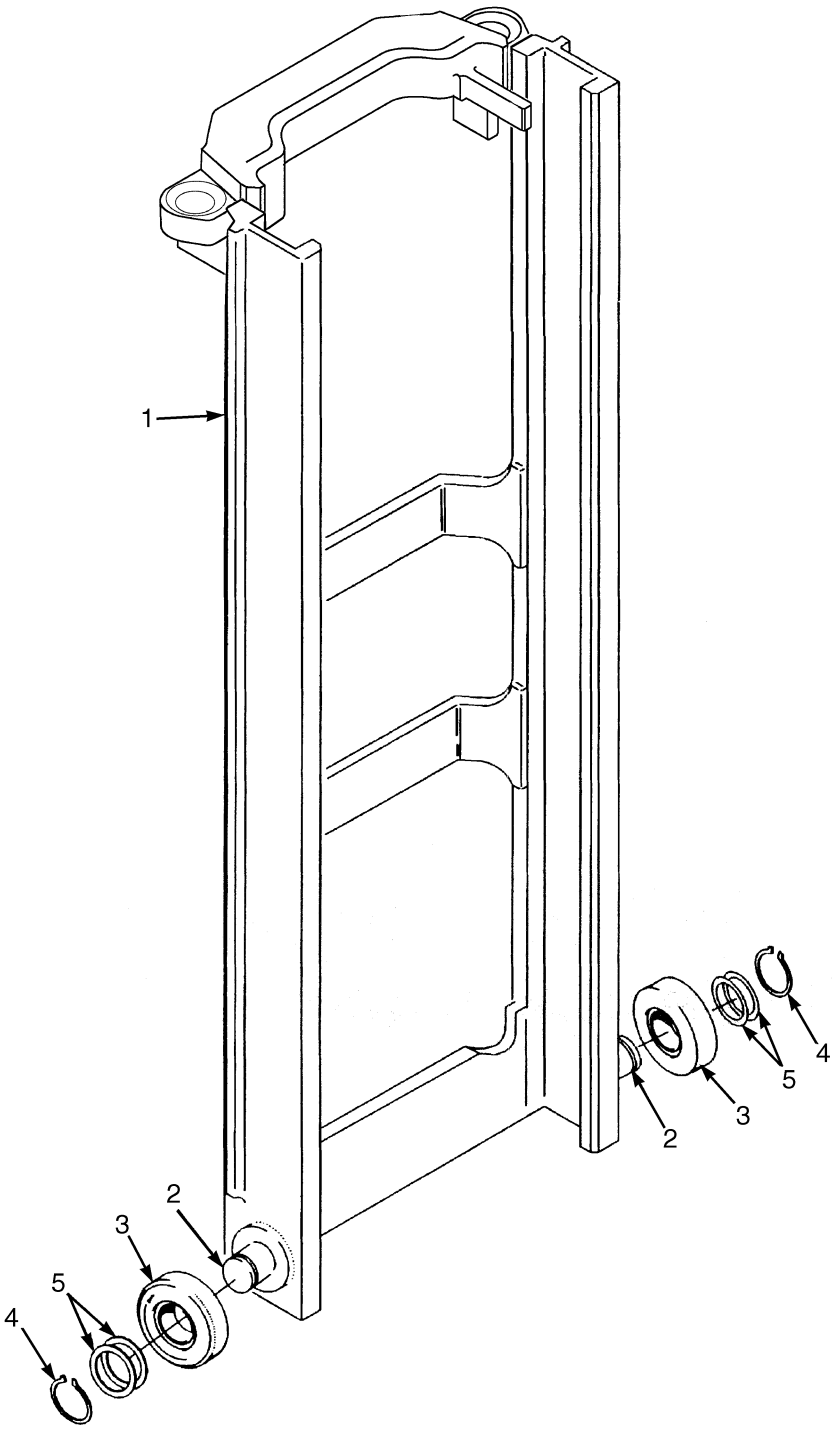

BP170156

©2006 HYSTER COMPANY

INNER MAST
THREE STAGE FULL FREE-LIFT

ITEM	DESCRIPTION 1 2 3 4	LIFT HEIGHT TO BOTTOM OF FORKS		
		4410 mm	4710 mm	5460 mm
	Mast Group Number	B555 4410	B555 4710	B555 5460
	Mast Assembly	2072392	2072394	2072399
1	Inner Mast	1481806	1481808	1481813

ITEM		PART NO.	DESCRIPTION	QTY
	a	. . . . .	Mast Assembly	1
1	**a**	. . . . .	Inner Mast	1
2		1345216	Stubshaft	2
3		1333399	Load Roller	2
4		58901	Snap Ring	2
5		129387	Shim (0.508 mm)	AR

FOOTNOTES:
a Refer to Table

MAIN LIFT (Figure 12-4)
THREE STAGE FULL FREE-LIFT

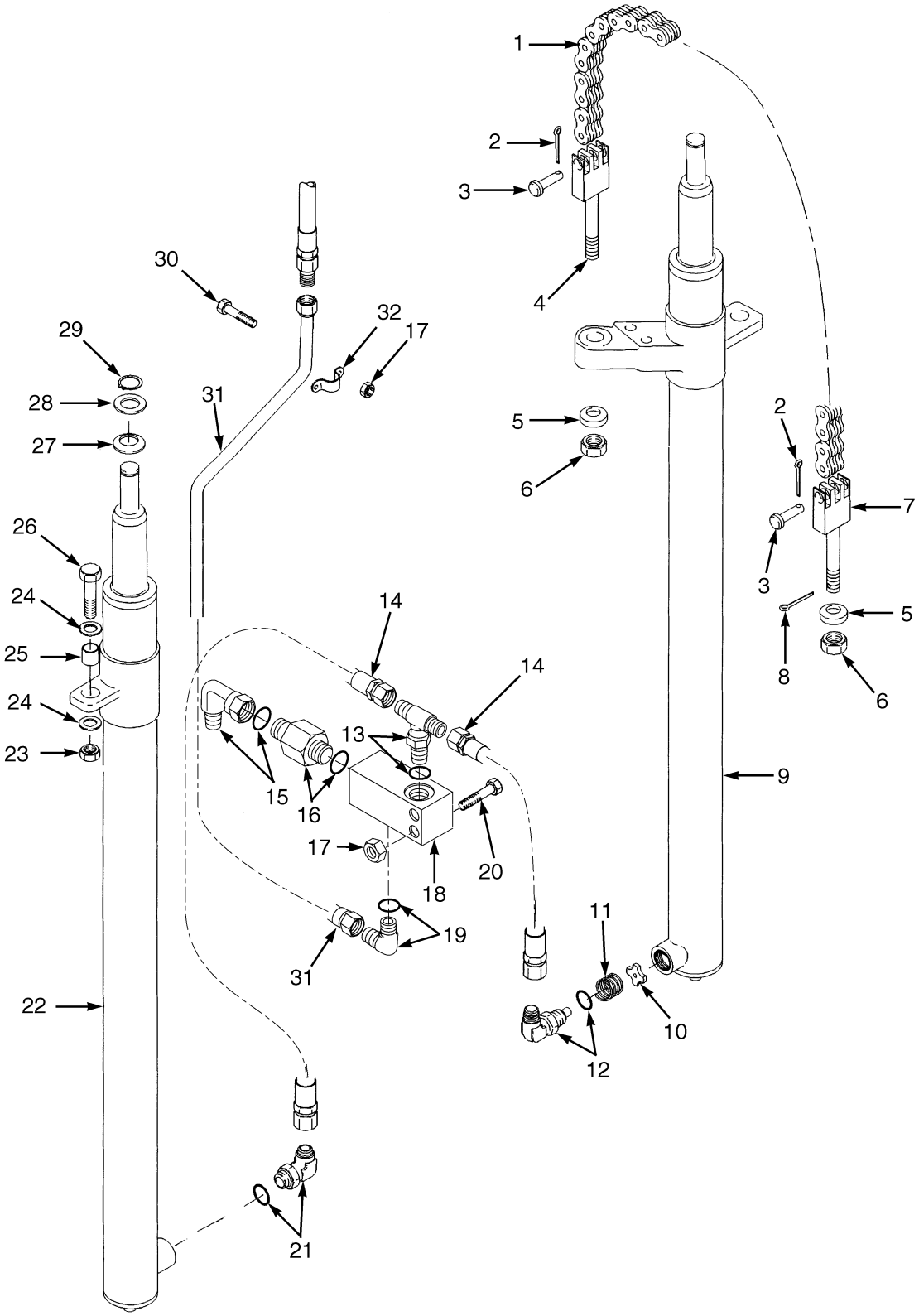

©2006 HYSTER COMPANY

MAIN LIFT
THREE STAGE FULL FREE-LIFT

ITEM	DESCRIPTION 1 2 3 4	LIFT HEIGHT TO BOTTOM OF FORKS		
		4410 mm	4710 mm	5460 mm
	Mast Group Number	B555 4410	B555 4710	B555 5460
1	Chain	164474	88441	177352

ITEM		PART NO.	DESCRIPTION	QTY
1	**a**	. . . . .	Chain	2
2		15211	Cotter Pin	4
3		1514866	Pin	4
4		1369357	Chain Anchor	2
5		297649	Base Ring	4
6		161003	Nut	4
7		1365140	Chain Anchor	2
8		15223	Cotter Pin	2
9		. . . . .	Main Lift Cylinder (LH) (☞ Figure 12-6)	1
10		323160	Washer	1
11		120938	Spring	1
12		1481344	Fitting	1
12		16485	O-Ring	1
12		252729	O-Ring	1
13		252729	O-Ring	1
13		1532650	Fitting	1
13		16485	O-Ring	1
14		1481097	Hose	2
15		1486773	Fitting	1
15		252729	O-Ring	1
16		1481348	Lowering Control Valve	1
17		313828	Nut	4
18		1333392	Housing	1
19		1473898	Fitting	1
19		16486	O-Ring	1
20		292509	Capscrew	2
21		1487067	Fitting	1
21		16485	O-Ring	1
21		252729	O-Ring	1
22		. . . . .	Main Lift Cylinder (RH) (☞ Figure 12-5)	1
23		1581849	Nut	2
24		1581852	Washer	4
25		323090	Spacer	2
26		1581829	Capscrew	2
27		1354915	Washer (0.254 mm)	AR
27		1354917	Washer (1.524 mm)	AR
27		1354916	Washer (0.762 mm)	AR
28		1333382	Washer (1.500 mm)	2
29		131358	Snap Ring	3
30		1581580	Capscrew	4

©2006 HYSTER COMPANY

MAIN LIFT
THREE STAGE FULL FREE-LIFT

ITEM	PART NO.	DESCRIPTION	QTY
31	2075629	Tube	1
32	1363251	Clamp	1

FOOTNOTES:
a Refer to Table

©2006 HYSTER COMPANY

NOTES

MAIN LIFT CYLINDER (Figure 12-5)
RIGHT HAND
THREE STAGE FULL FREE-LIFT

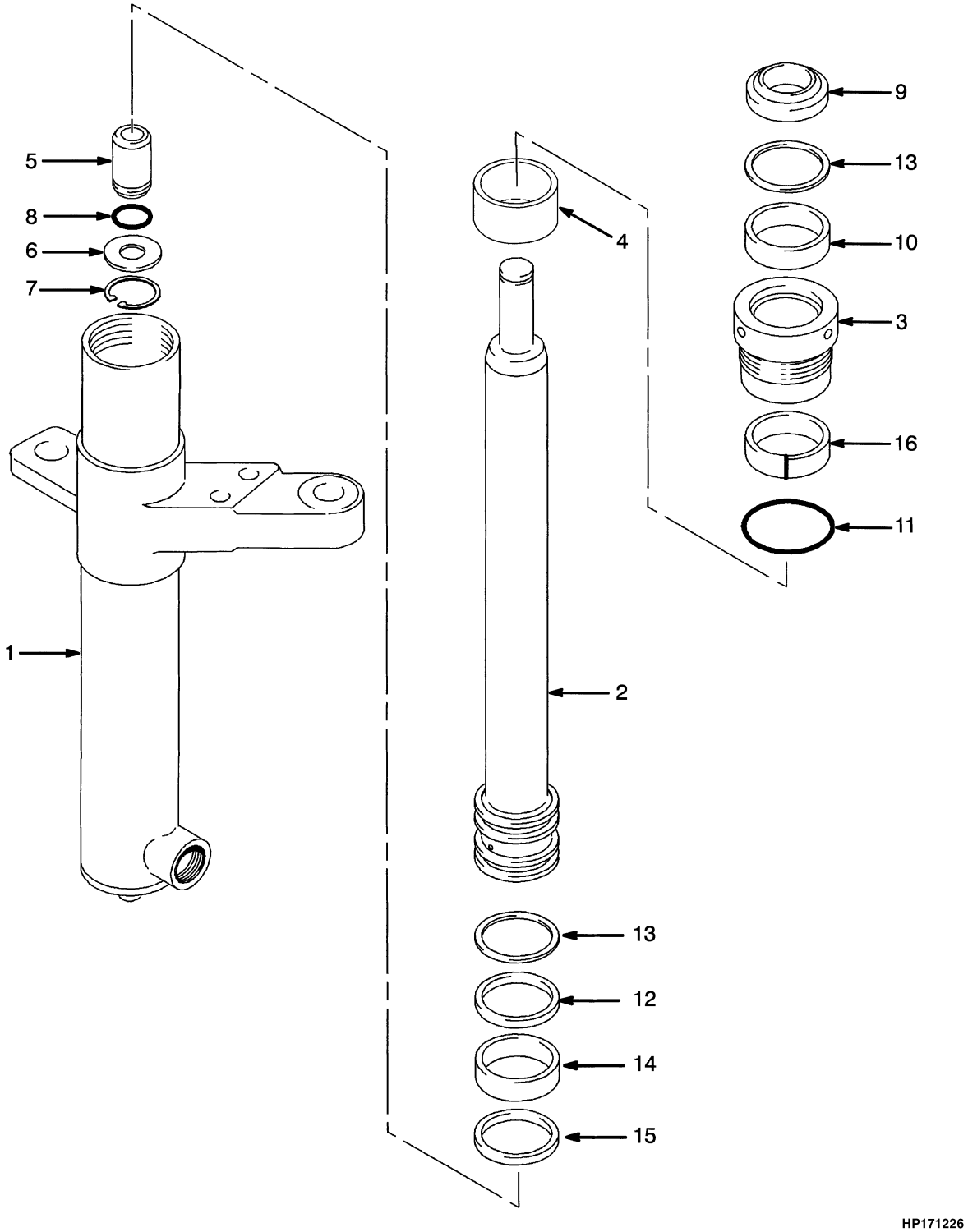

©2006 HYSTER COMPANY

MAIN LIFT CYLINDER
RIGHT HAND
THREE STAGE FULL FREE-LIFT

ITEM	DESCRIPTION 1 2 3 4	LIFT HEIGHT TO BOTTOM OF FORKS		
		4410 mm	4710 mm	5460 mm
	Mast Group Number	B555 4410	B555 4710	B555 5460
	Cylinder Group Number	8601756	8601758	8601763
	Main Lift Cylinder	1362706	1362719	1362749
1	Shell	1362713	1362726	1362756
2	Rod	1362704	1362717	1362746
4	Spacer	----	----	1355610

ITEM		PART NO.	DESCRIPTION	QTY
	a	. . . . .	Main Lift Cylinder	1
1	**a**	. . . . .	Shell	1
2	**a**	. . . . .	Rod	1
3		1371653	Gland	1
4	**a**	. . . . .	Spacer	1
5		257913	Check Valve	1
6		297531	Washer	1
7		187388	Snap Ring	1
8		190580	O-Ring	1
9		1319668	Wiper Ring	1
10		1381095	Rod Seal	1
11		55407	O-Ring	1
12		330692	Seal	1
13		322824	Back-Up Ring	2
14		1362871	Wear Ring	1
15		1362875	Piston Ring	1
16		322902	Wear Ring	1
		1360139	Seal Kit (Includes Items 8-16)	1

FOOTNOTES:
a Refer to Table

©2006 HYSTER COMPANY

MAIN LIFT CYLINDER (Figure 12-6)
LEFT HAND
THREE STAGE FULL FREE-LIFT

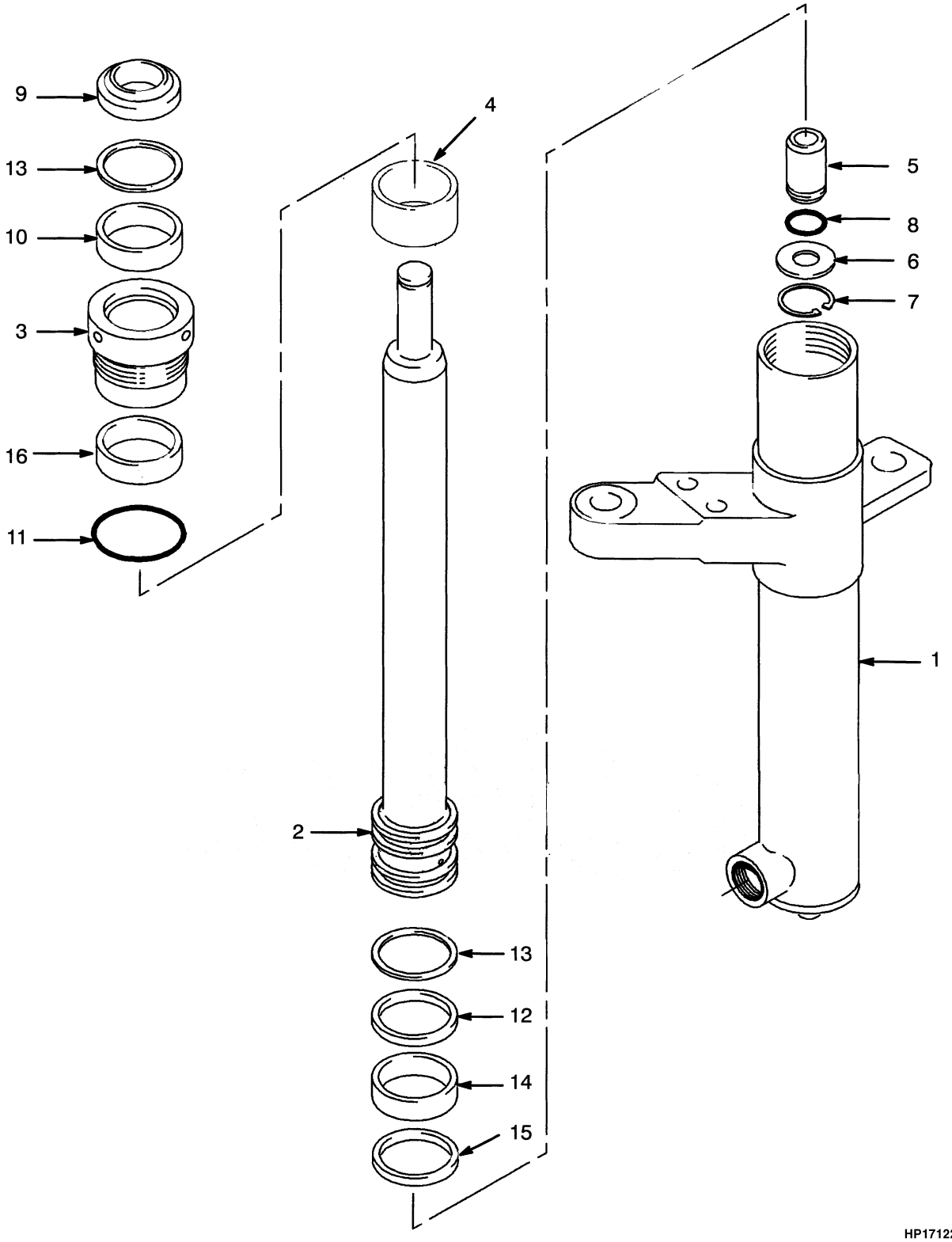

©2006 HYSTER COMPANY

MAIN LIFT CYLINDER
LEFT HAND
THREE STAGE FULL FREE-LIFT

ITEM	DESCRIPTION 1 2 3 4	LIFT HEIGHT TO BOTTOM OF FORKS		
		4410 mm	4710 mm	5460 mm
	Mast Group Number	B555 4410	B555 4710	B555 5460
	Cylinder Group Number	8601706	8601708	8601713
	Main Lift Cylinder	1362702	1362715	1362745
1	Shell	1362703	1362716	1366057
2	Rod	1362704	1362717	1362746
4	Spacer	----	----	1355610

ITEM	PART NO.	DESCRIPTION	QTY
	a	Main Lift Cylinder	1
1	**a**	Shell	1
2	**a**	Rod	1
3	1371653	Gland	1
4	**a**	Spacer	1
5	257913	Check Valve	1
6	297531	Washer	1
7	187388	Snap Ring	1
8	190580	O-Ring	1
9	1319668	Wiper Ring	1
10	1381095	Rod Seal	1
11	55407	O-Ring	1
12	330692	Seal	1
13	322824	Back-Up Ring	2
14	1362871	Wear Ring	1
15	1362875	Piston Ring	1
16	322902	Wear Ring	1
	1360139	Seal Kit (Includes Items 8-16)	1

FOOTNOTES:
a Refer to Table

FREE-LIFT (Figure 12-7)
THREE STAGE FULL FREE-LIFT

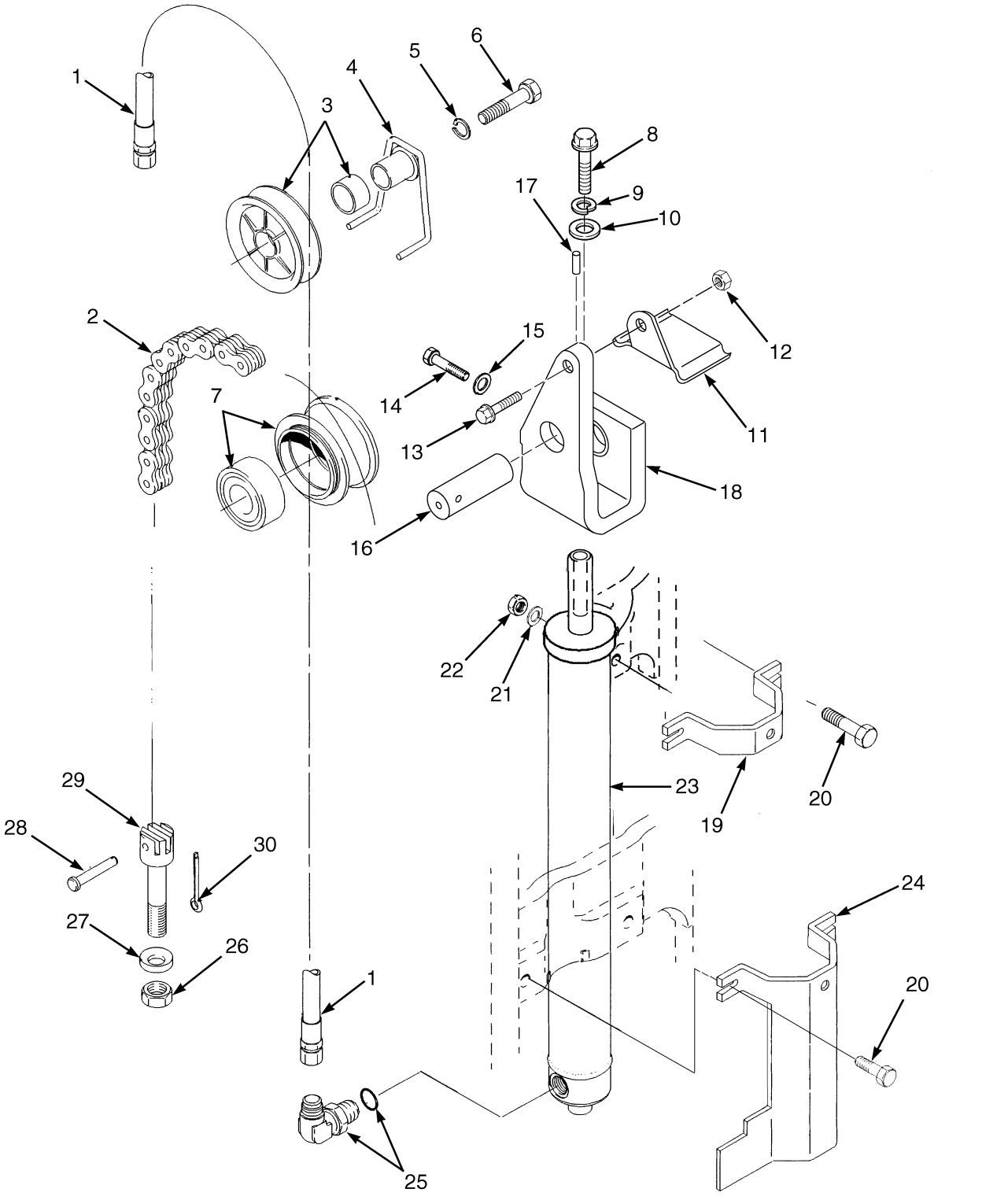

©2006 HYSTER COMPANY

FREE-LIFT
THREE STAGE FULL FREE-LIFT

ITEM	DESCRIPTION 1 2 3 4	LIFT HEIGHT TO BOTTOM OF FORKS		
		4410 mm	4710 mm	5460 mm
	Mast Group Number	B555 4410	B555 4710	B555 5460
1	Hose	2085048	2085050	2085055
2	Chain	1550126	1550128	1550135

ITEM		PART NO.	DESCRIPTION	QTY
1	**a**	. . . . .	Hose	1
2	**a**	. . . . .	Chain	1
3		1343989	Hose Sheave	1
3		1354901	Bushing	1
4		1360534	Stubshaft	1
5		1581564	Lockwasher	1
6		1581829	Capscrew	1
7		1481054	Chain Sheave Assembly	1
7		1378699	Bearing	2
8		1596406	Capscrew	1
9		1596407	Lockwasher	1
10		1596408	Washer	1
11		1481055	Chain Guard	1
12		1581849	Nut	1
13		1581591	Capscrew	1
14		1481230	Capscrew	1
15		1581562	Washer	1
16		1481052	Crosshead Pin	1
17		310549	Pin	1
18		1481009	Crosshead	1
19		1489972	Guard	1
20		1596404	Capscrew	4
21		1581852	Washer	4
22		1581849	Nut	4
23		. . . . .	Free-Lift Cylinder (☞ Figure 12-8)	1
24		1573677	Guard	1
25		1481346	Flow Valve	1
26		182377	Nut	1
27		182376	Base Ring	1
28		1514866	Pin	1
29		1605676	Chain Anchor	1
30		15211	Cotter Pin	1

FOOTNOTES:
a Refer to Table

FREE-LIFT CYLINDER (Figure 12-8)
THREE STAGE FULL FREE-LIFT

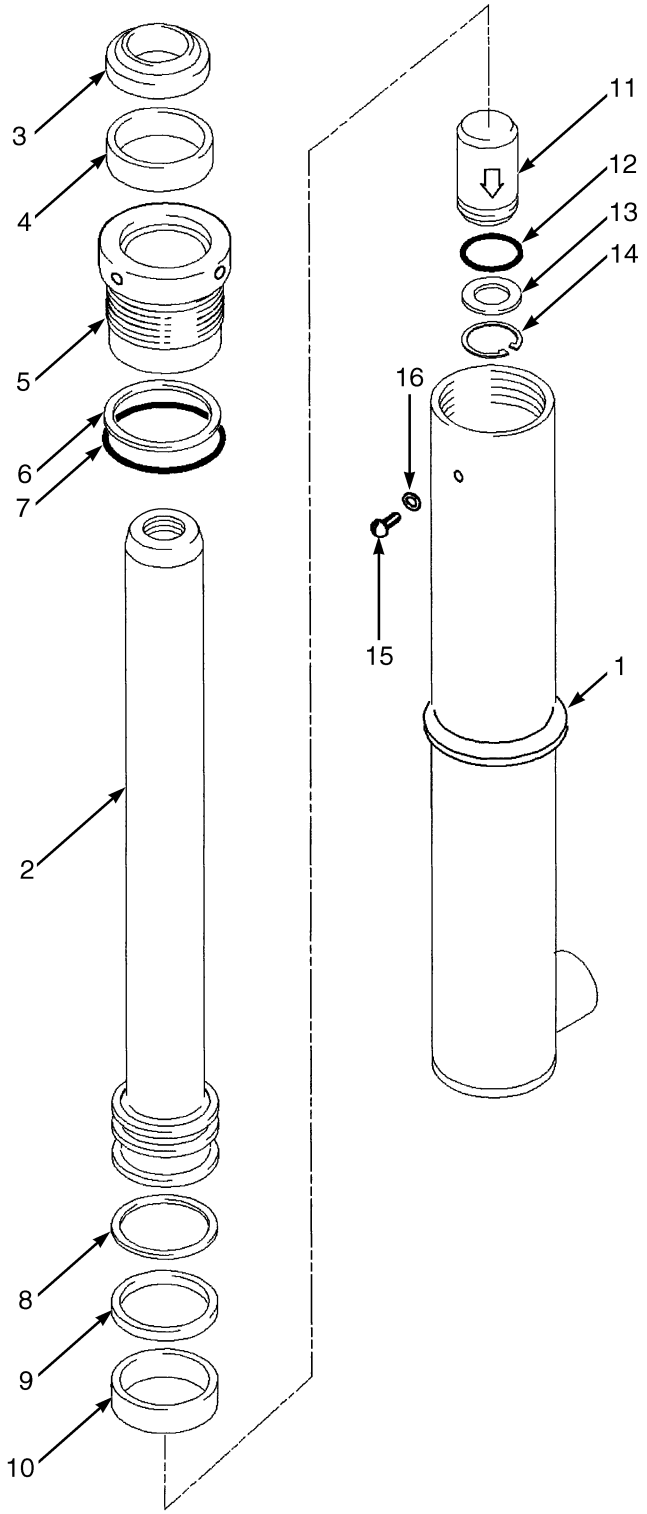

BP170160

©2006 HYSTER COMPANY

FREE-LIFT CYLINDER
THREE STAGE FULL FREE-LIFT

ITEM	DESCRIPTION 1 2 3 4	LIFT HEIGHT TO BOTTOM OF FORKS		
		4410 mm	4710 mm	5450 mm
	Mast Group Number	B555 4410	B555 4710	B555 5460
	Cylinder Group Number	8500306	8500308	8500314
	Free-Lift Cylinder	2068198	2068200	2068206
1	Shell	1362922	1362924	1362930
2	Rod	2068158	2068160	2068166

ITEM	PART NO.	DESCRIPTION	QTY
	a	Free-Lift Cylinder	1
1	**a**	Shell	1
2	**a**	Rod	1
3	2013099	Wiper Ring	1
4	1358970	Seal	1
5	1362880	Gland	1
6	615135	Back-Up Ring	1
7	55146	O-Ring	1
8	638250	Back-Up Ring	1
9	201829	Rod Seal	1
10	1362881	Wear Ring	1
11	257913	Check Valve	1
12	39348	O-Ring	1
13	297531	Washer	1
14	187388	Snap Ring	1
15	1361302	Screw	1
16	190887	Seal	1
	1360141	Seal Kit (Includes Items 3-4, 6-10, 12, 16)	1

FOOTNOTES:
a Refer to Table

©2006 HYSTER COMPANY

CARRIAGE (Figure 12-9)
THREE STAGE FULL FREE-LIFT

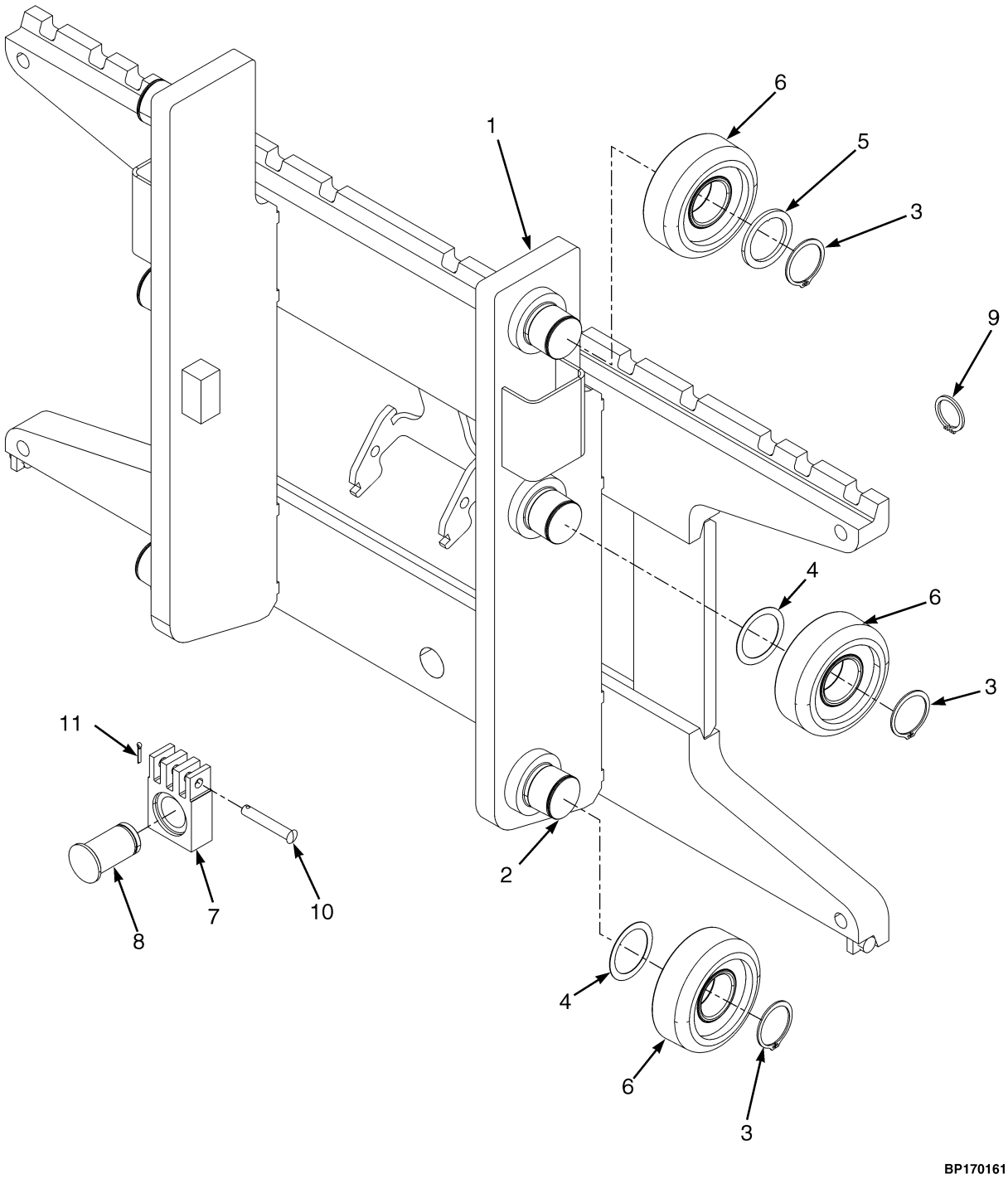

©2006 HYSTER COMPANY

CARRIAGE
THREE STAGE FULL FREE-LIFT

ITEM	PART NO.	DESCRIPTION	QTY
	1481767	Carriage Assembly	1
1	1481342	Frame	1
2	1345216	Stubshaft	6
3	58901	Snap Ring	6
4	129387	Shim (0.508 mm)	AR
5	366115	Spacer	2
6	1363272	Load Roller	6
7	1549685	Chain Anchor	1
8	185597	Pin	1
9	131358	Snap Ring	2
10	1340687	Chain Anchor Pin	1
11	15211	Cotter Pin	1

©2006 HYSTER COMPANY

HEADER HOSE (Figure 12-10)
THREE STAGE FULL FREE-LIFT

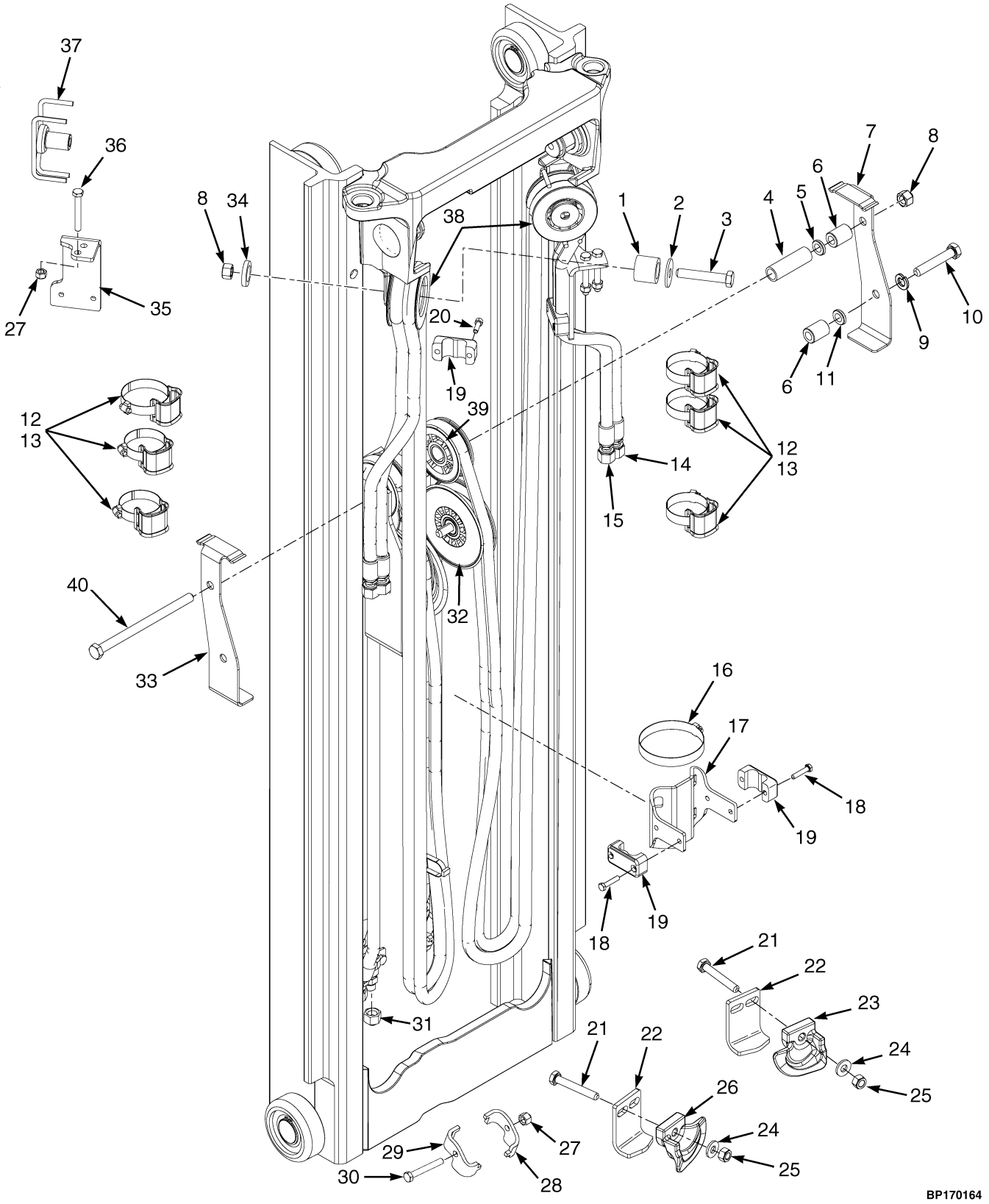

©2006 HYSTER COMPANY

HEADER HOSE
THREE STAGE FULL FREE-LIFT

ITEM	DESCRIPTION 1 2 3 4	LIFT HEIGHT TO BOTTOM OF FORKS		
		4410 mm	4710 mm	5460 mm
	Mast Group Number	B555 4410	B555 4710	B555 5460
14	Hose	2073563	2073565	2073573
15	Hose	1481845	1481847	1481852

KEY:
A: Three Function
B: Four Function

ITEM		PART NO.	DESCRIPTION	QTY A	QTY B
1		1360549	Spacer	1	2
2		1345190	Washer	1	2
3		1581830	Capscrew	2	2
4		1550020	Spacer	..	1
5		1598303	Washer	..	1
6		1481255	Stub Shaft	1	2
7		1481253	Bracket (RH)	1	1
8		1581849	Nut	2	4
9		1581564	Lockwasher	1	2
10		1581592	Capscrew	1	2
11		1581560	Washer	2	4
12		1477996	Clamp	3	6
13		1617657	Clamp	3	6
14	**a**	. . . . .	Hose	1	2
15	**a**	. . . . .	Hose	1	2
16		1360507	Clamp	2	2
17		1610914	Bracket	1	1
18		1581841	Capscrew	2	4
19		1360386	Clamp	2	4
20		1581842	Capscrew	2	4
21		1597565	Capscrew	1	2
22		1363253	Bracket	1	2
23		1348247	Hose Guide	1	1
24		1581558	Washer	2	4
25		1581567	Nut	1	2
26		1348246	Hose Guide	..	1
27		1581566	Nut	3	6
28		1481765	Clamp	1	1
29		1481766	Clamp	..	1
30		1581582	Capscrew	1	2
31		1529015	Cap	2	4
32		1481249	Hose Sheave	1	2
32		1353521	Bushing	1	1
33		1481252	Bracket (LH)	..	1
34		1581559	Washer	1	2
35		1381598	Bracket	1	1
35		1381599	Bracket	..	1

©2006 HYSTER COMPANY

HEADER HOSE
THREE STAGE FULL FREE-LIFT

ITEM	PART NO.	DESCRIPTION	QTY A	QTY B
36	1581836	Capscrew	2	4
37	1381642	Stub Shaft	1	1
37	1381641	Stub Shaft	..	1
38	1494017	Sheave	1	2
39	1481248	Hose Sheave	1	2
39	1353521	Bushing	1	1
40	1597560	Capscrew	1	1

FOOTNOTES:
a Refer to Table

©2006 HYSTER COMPANY

13 OPTIONS

SECTION 13
OPTIONS

DESCRIPTION **PAGE**

AUXILARY TUBE EXTENSIONS
TWO STAGE FULL FREE-LIFT AND THREE STAGE FULL FREE-LIFT 13-16
TWO STAGE LIMITED FREE-LIFT 13-14
BACK-UP ALARM 13-2
INTEGRAL SIDE-SHIFT ASSEMBLY
TWO AND THREE STAGE FULL FREE-LIFT 13-8
TWO STAGE LIMITED FREE-LIFT 13-6
INTEGRAL SIDE-SHIFT CYLINDER 13-10
INTEGRAL SIDE-SHIFT HYDRAULIC HOSES
TWO AND THREE STAGE FULL FREE-LIFT 13-12
TWO STAGE LIMITED FREE-LIFT 13-11
MIRRORS 13-4
WIRE HARNESS
BACK-UP ALARM 13-5

©2006 HYSTER COMPANY

BACK-UP ALARM (Figure 13-1)

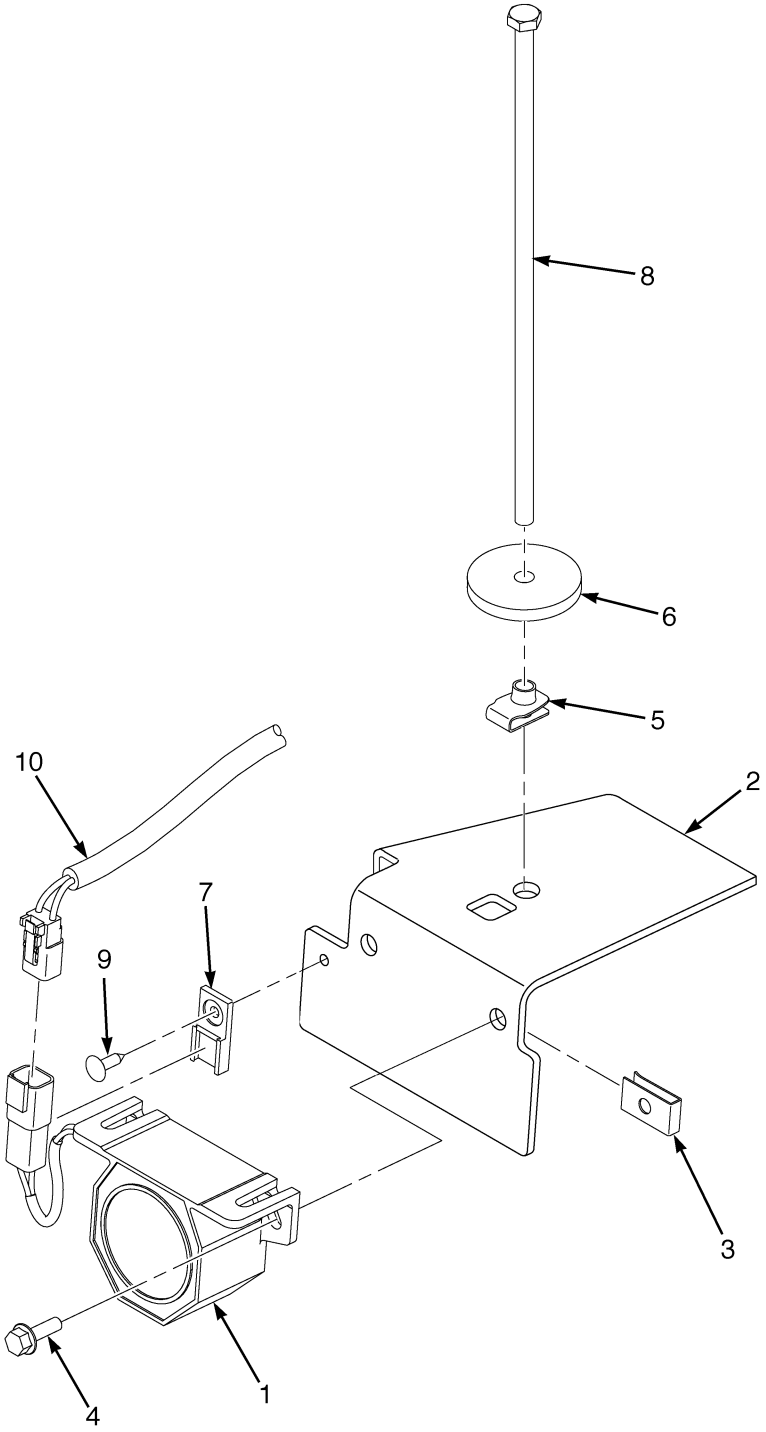

BP000195

©2006 HYSTER COMPANY

BACK-UP ALARM

ITEM		PART NO.	DESCRIPTION	QTY
1		2064929	Back-Up Alarm (82-102 dbA)	1
2		1585235	Bracket	1
3		1350215	Nut (Foldover)	2
4		1527877	Capscrew	2
5		1480237	Clip Nut	1
6		1547756	Washer	1
7		1500912	Clip	1
8		1543982	Capscrew	1
9		1344124	Fastener	1
10	**a**	2070771	Wire Harness (Back-Up Alarm)	1
10	**b**	2078882	Wire Harness (Back-Up Alarm) (☞ Figure 13-3)	1

FOOTNOTES:
a ⇒ S/N F001V01720D
b S/N F001V01721D ⇒

MIRRORS (Figure 13-2)

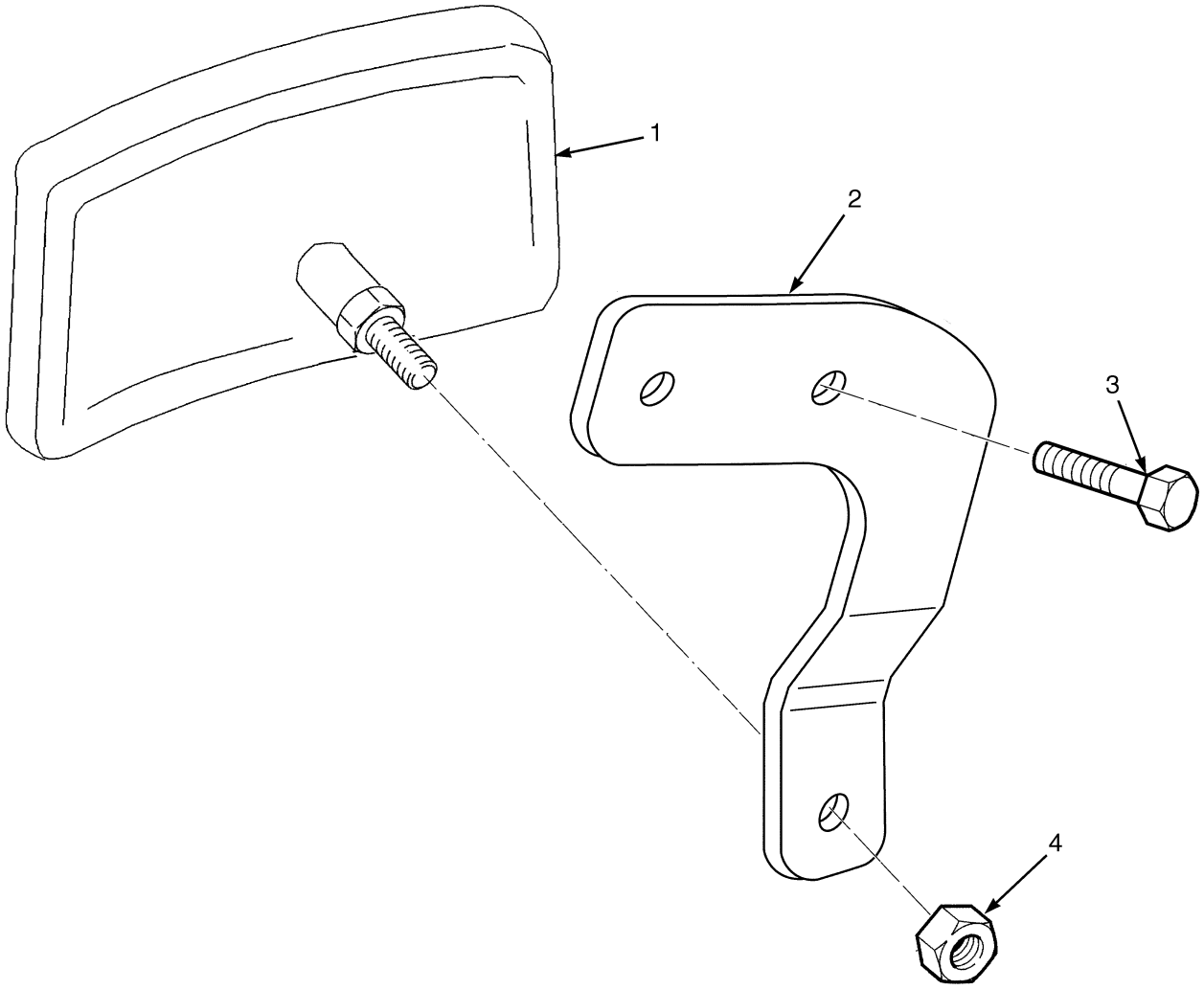

BP000247

ITEM	PART NO.	DESCRIPTION	QTY
1	1301286	Mirror	2
2	1569277	Bracket (RH)	1
2	1569278	Bracket (LH)	1
3	1583611	Capscrew	4
4	1586430	Nut	4

©2006 HYSTER COMPANY

WIRE HARNESS (Figure 13-3)
BACK-UP ALARM

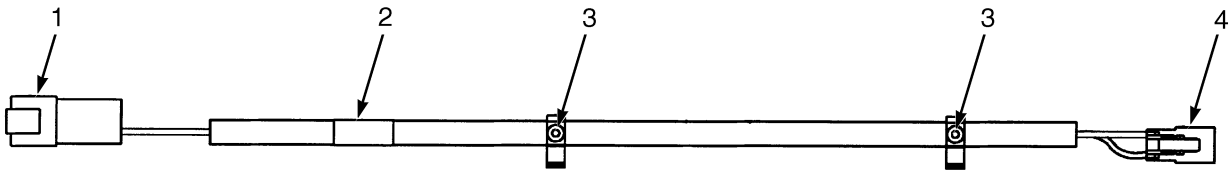

BP000276

ITEM		PART NO.	DESCRIPTION	QTY
	a	2070771	Wire Harness (Back-Up Alarm)	1
	b	2078881	Wire Harness (Back-Up Alarm)	1
1		. . . . .	Connector Assembly	1
1		1402903	Electrical Terminal	1
1	**b**	1493465	Connector	1
1		1330417	Secondary Lock	1
1	**b**	1330414	Secondary Lock	1
1		1330437	Terminal (Pin)	2
2		. . . . .	Label	1
3		1509888	Clip	2
4		. . . . .	Connector Assembly	1
4		1490242	Connector	1
4		1402813	Clip	1
4		1330438	Terminal (Socket)	2

FOOTNOTES:
a ⇒ S/N F001V01720D
b S/N F001V01721D ⇒

INTEGRAL SIDE-SHIFT ASSEMBLY (Figure 13-4)
TWO STAGE LIMITED FREE-LIFT

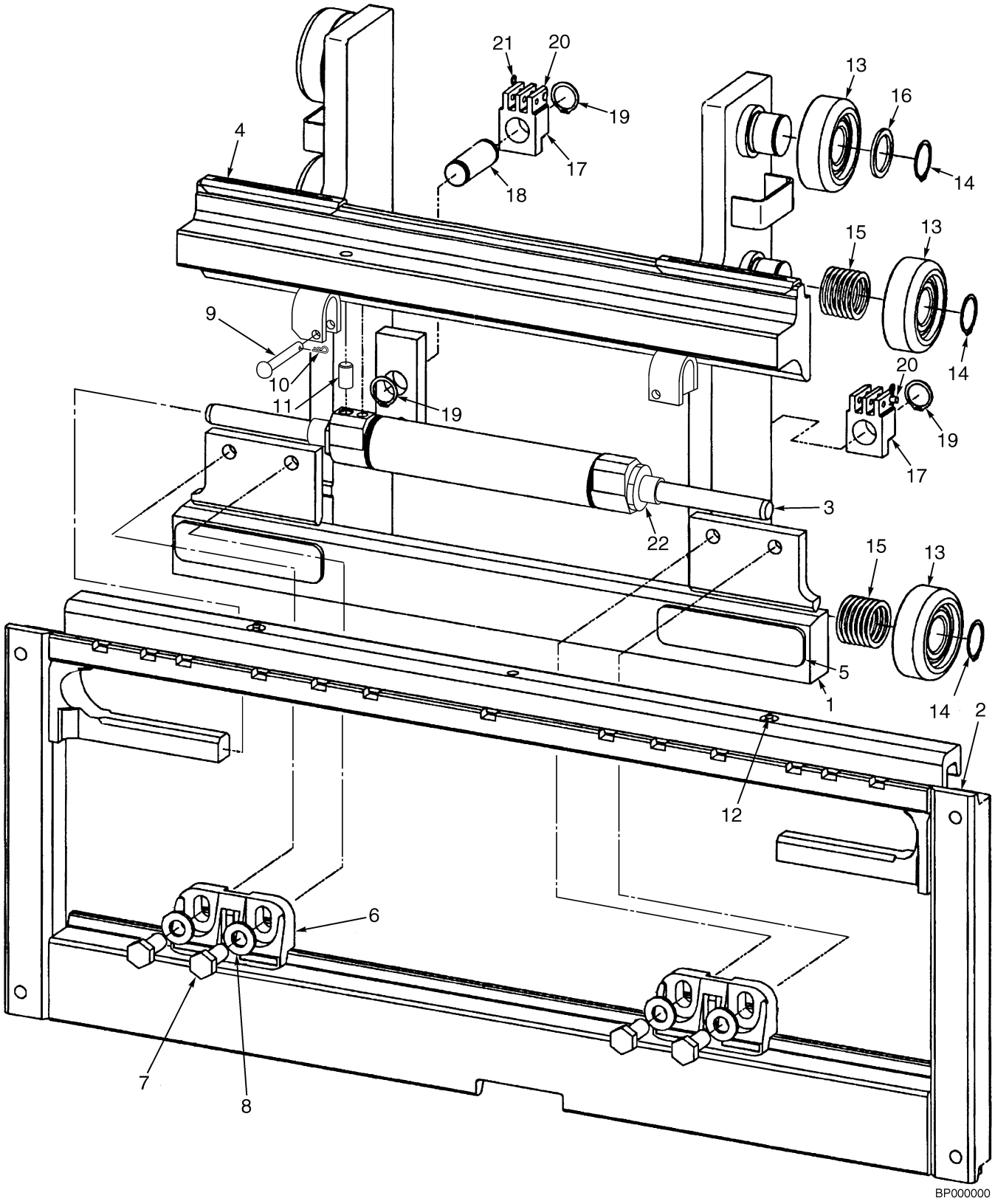

©2006 HYSTER COMPANY

INTEGRAL SIDE-SHIFT ASSEMBLY
TWO STAGE LIMITED FREE-LIFT

ITEM	PART NO.	DESCRIPTION	QTY
	1482296	Side-Shift Carriage Assembly	1
1	1529598	Frame (Inner)	1
2	1489010	Frame (977 mm) (Outer)	1
3	2043528	Cylinder Assembly (☞ Figure 13-6)	1
4	2043531	Bearing (Upper)	2
5	2043533	Bearing (Lower)	2
6	2043530	Hook (Lower)	2
7	226458	Capscrew	4
8	296426	Washer (Hardened)	4
9	1401746	Pin	2
10	18832	Cotter Pin	2
11	302397	Pin	1
12	16041	Lube Fitting	2
13	1333399	Load Roller	6
14	58901	Snap Ring	6
15	129387	Shim (0.508 mm)	28
16	366115	Spacer	6
17	1481288	Chain Anchor	2
18	1353408	Pin	2
19	131358	Snap Ring	4
20	1514866	Pin	2
21	15211	Cotter Pin	2
22	1498326	Shim	AR

©2006 HYSTER COMPANY

INTEGRAL SIDE-SHIFT ASSEMBLY (Figure 13-5)
TWO AND THREE STAGE FULL FREE-LIFT

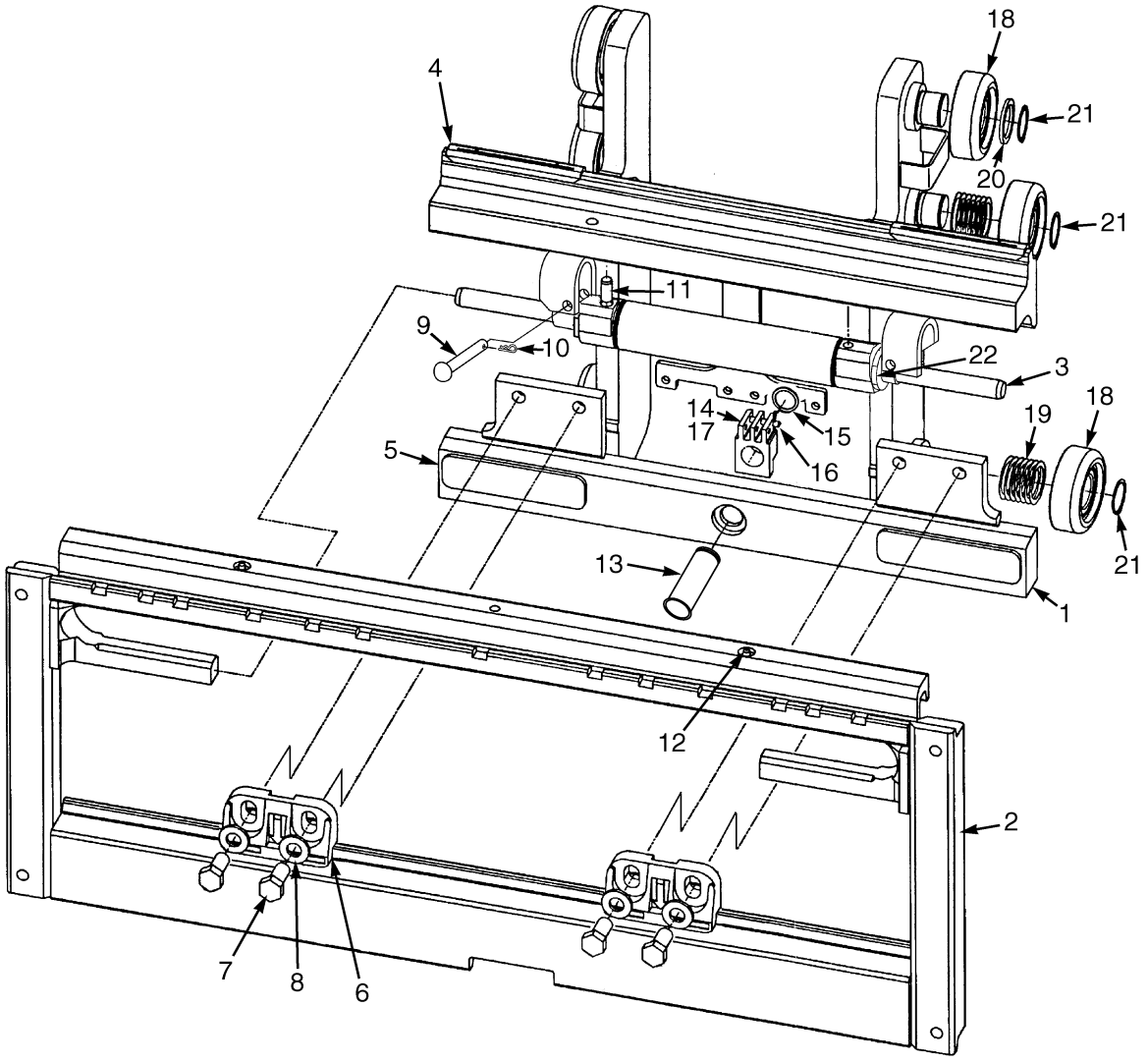

BP000277

©2006 HYSTER COMPANY

INTEGRAL SIDE-SHIFT ASSEMBLY
TWO AND THREE STAGE FULL FREE-LIFT

KEY:
A: Two Stage Full Free-Lift
B: Three Stage Full Free-Lift

ITEM	PART NO.	DESCRIPTION	QTY A	QTY B
	2074358	Integral Side-Shift Assembly	1	..
	2074359	Integral Side-Shift Assembly	..	1
1	1549702	Carriage (Inner)	1	..
1	1549704	Carriage (Inner)	..	1
2	1489010	Frame (977 mm) (Outer)	1	1
3	2043528	Cylinder Assembly (☞ Figure 13-6)	1	1
4	2043531	Bearing (Upper)	2	2
5	2043533	Bearing (Lower)	2	2
6	2043530	Hook (Lower)	2	2
7	226458	Capscrew	4	4
8	296426	Washer (Hardened)	4	4
9	1401746	Pin	2	2
10	18832	Cotter Pin	2	2
11	302397	Pin	1	1
12	16041	Lube Fitting	2	2
13	321205	Pin	1	1
14	1340687	Chain Anchor Pin	1	1
15	131358	Snap Ring	1	1
16	1549685	Chain Anchor	1	1
17	15211	Cotter Pin	1	1
18	1333399	Load Roller	6	..
18	1363272	Load Roller	..	6
19	129387	Shim (0.508 mm)	AR	AR
20	366115	Spacer	2	2
21	58901	Snap Ring	6	6
22	1498326	Shim	AR	AR

©2006 HYSTER COMPANY

INTEGRAL SIDE-SHIFT CYLINDER (Figure 13-6)

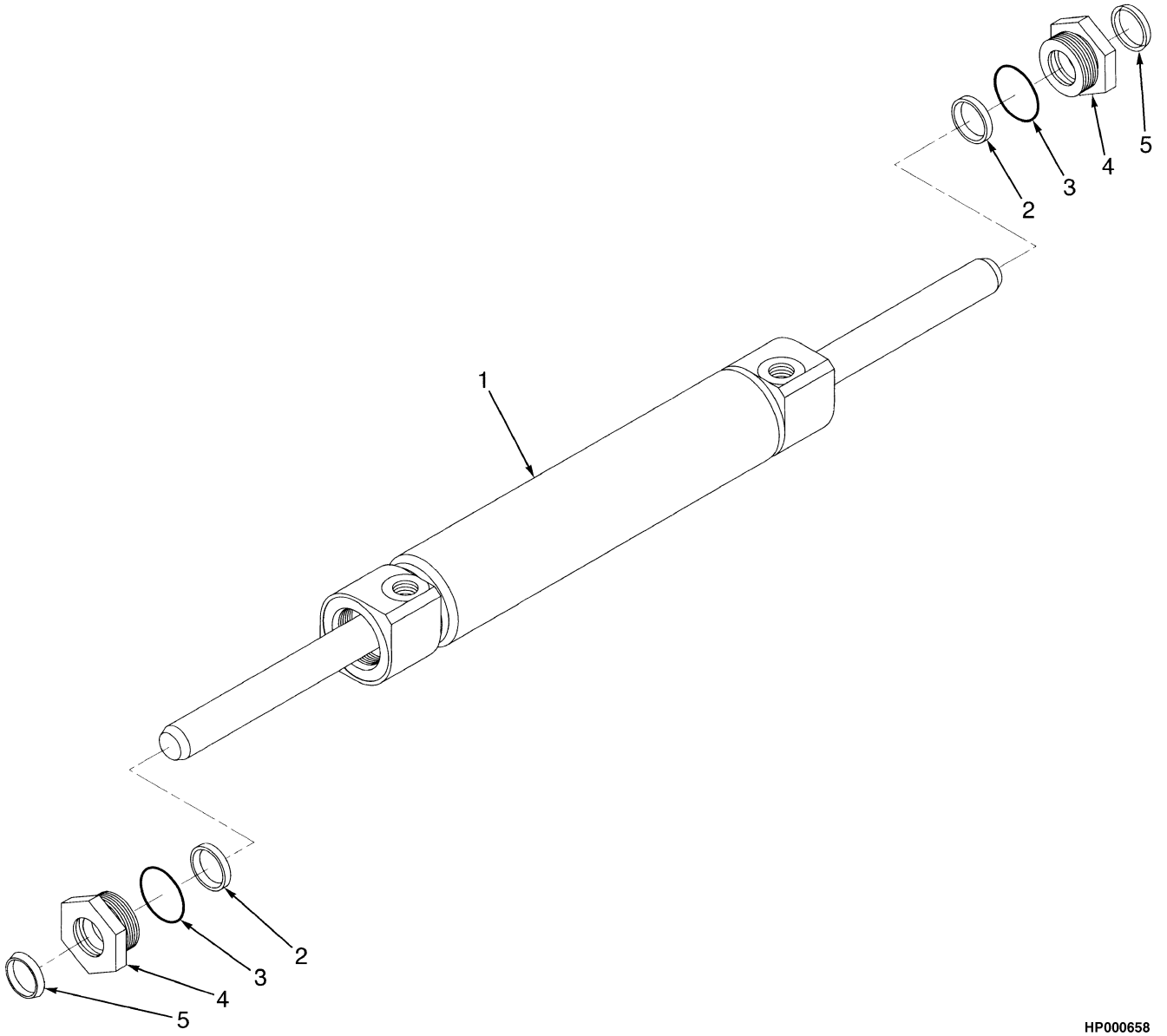

ITEM	PART NO.	DESCRIPTION	QTY
	2043528	Cylinder Assembly	1
1	1489016	Cylinder Shell	1
2	1489037	Rod Seal	2
3	1489035	O-Ring	2
4	1498325	Retainer	2
5	1489039	Rod Wiper	2
	1503096	Seal Kit (Includes Items 2-3, 5)	1

©2006 HYSTER COMPANY

INTEGRAL SIDE-SHIFT HYDRAULIC HOSES (Figure 13-7)
TWO STAGE LIMITED FREE-LIFT

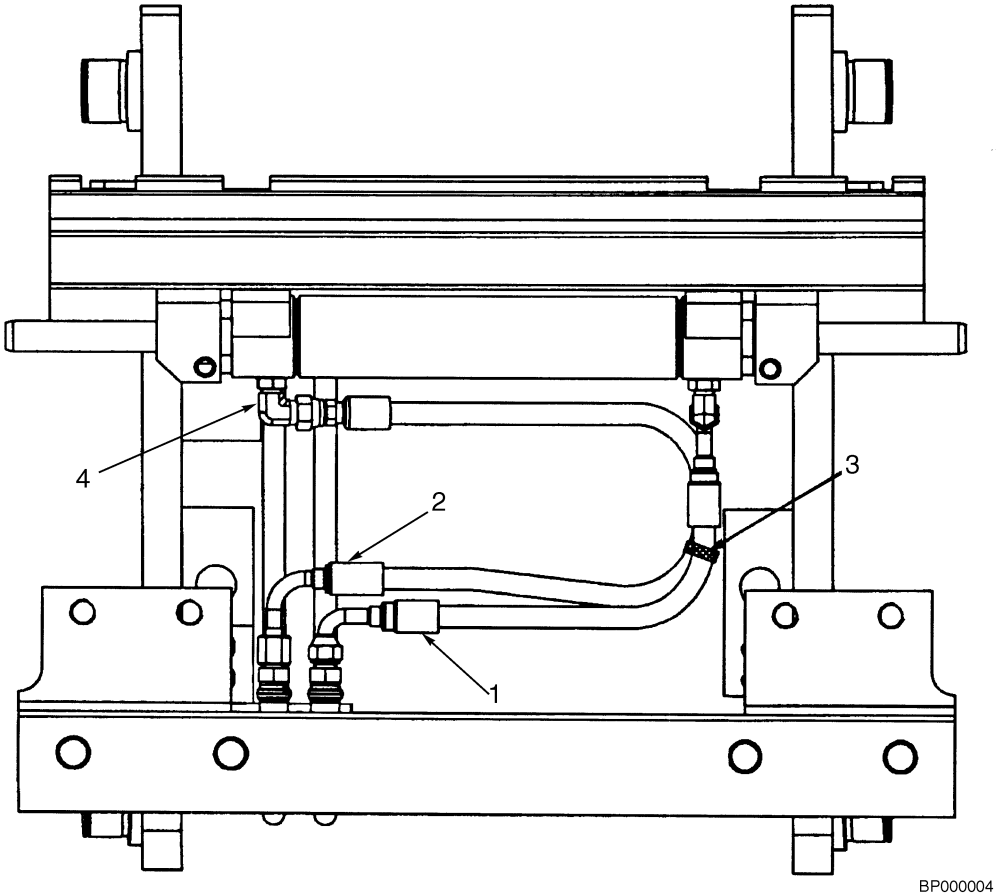

ITEM	PART NO.	DESCRIPTION	QTY
1	2067822	Hose	1
2	2065670	Hose	1
3	114312	Strap Clamp	1
4	1487063	Fitting	2
4	16483	O-Ring	1
4	265787	O-Ring	1

INTEGRAL SIDE-SHIFT HYDRAULIC HOSES (Figure 13-8)
TWO AND THREE STAGE FULL FREE-LIFT

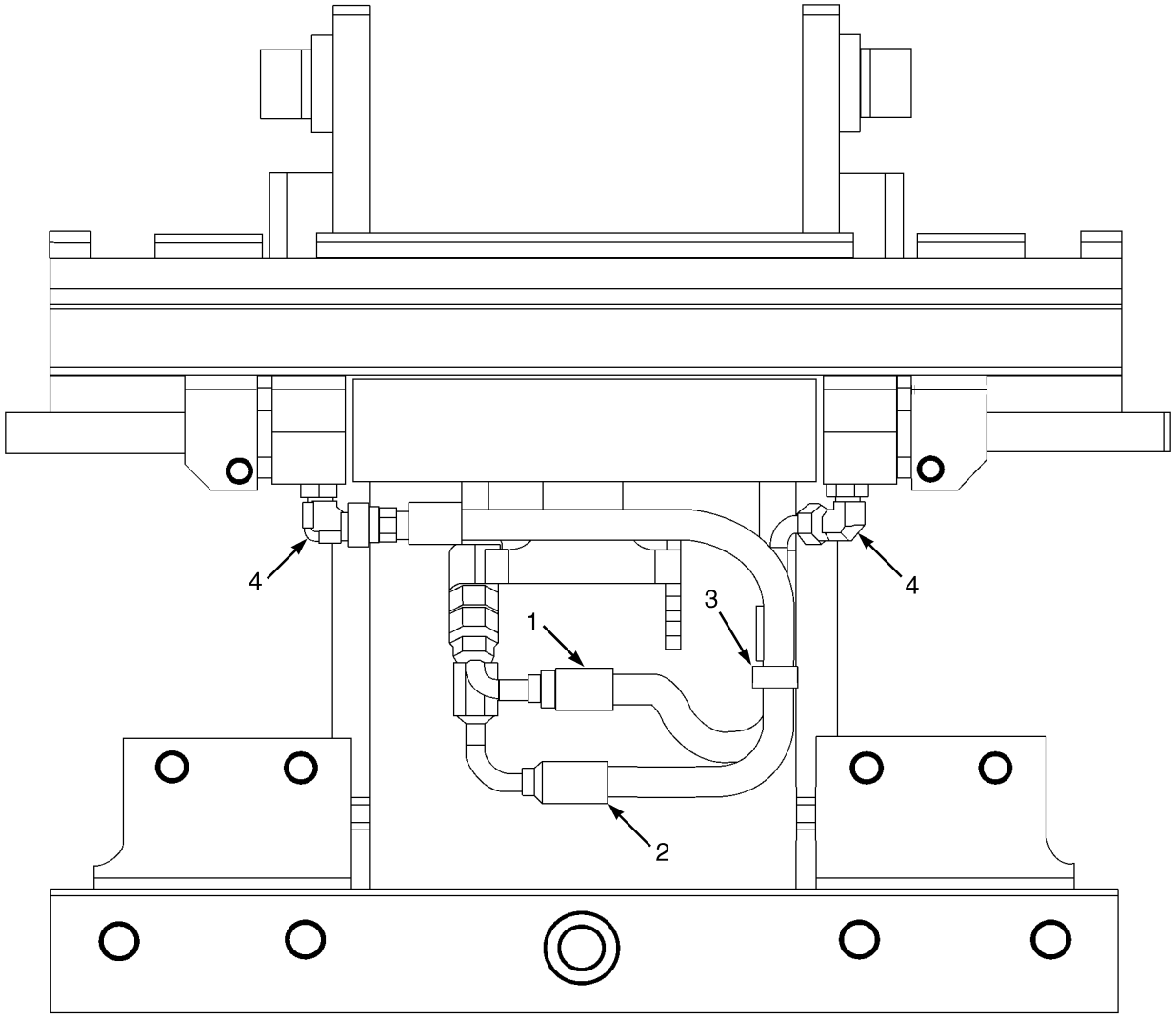

BP000278

©2006 HYSTER COMPANY

INTEGRAL SIDE-SHIFT HYDRAULIC HOSES
TWO AND THREE STAGE FULL FREE-LIFT

KEY:
A: Two Stage Full Free-Lift
B: Three Stage Full Free-Lift

ITEM	PART NO.	DESCRIPTION	QTY A	QTY B
1	2065674	Hose	1	..
1	2067141	Hose	..	1
2	1549706	Hose	1	..
2	2067140	Hose	..	1
3	114312	Strap Clamp	1	1
4	1487063	Fitting	2	2
4	16483	O-Ring	1	1
4	265787	O-Ring	1	1

©2006 HYSTER COMPANY

AUXILARY TUBE EXTENSIONS (Figure 13-9)
TWO STAGE LIMITED FREE-LIFT

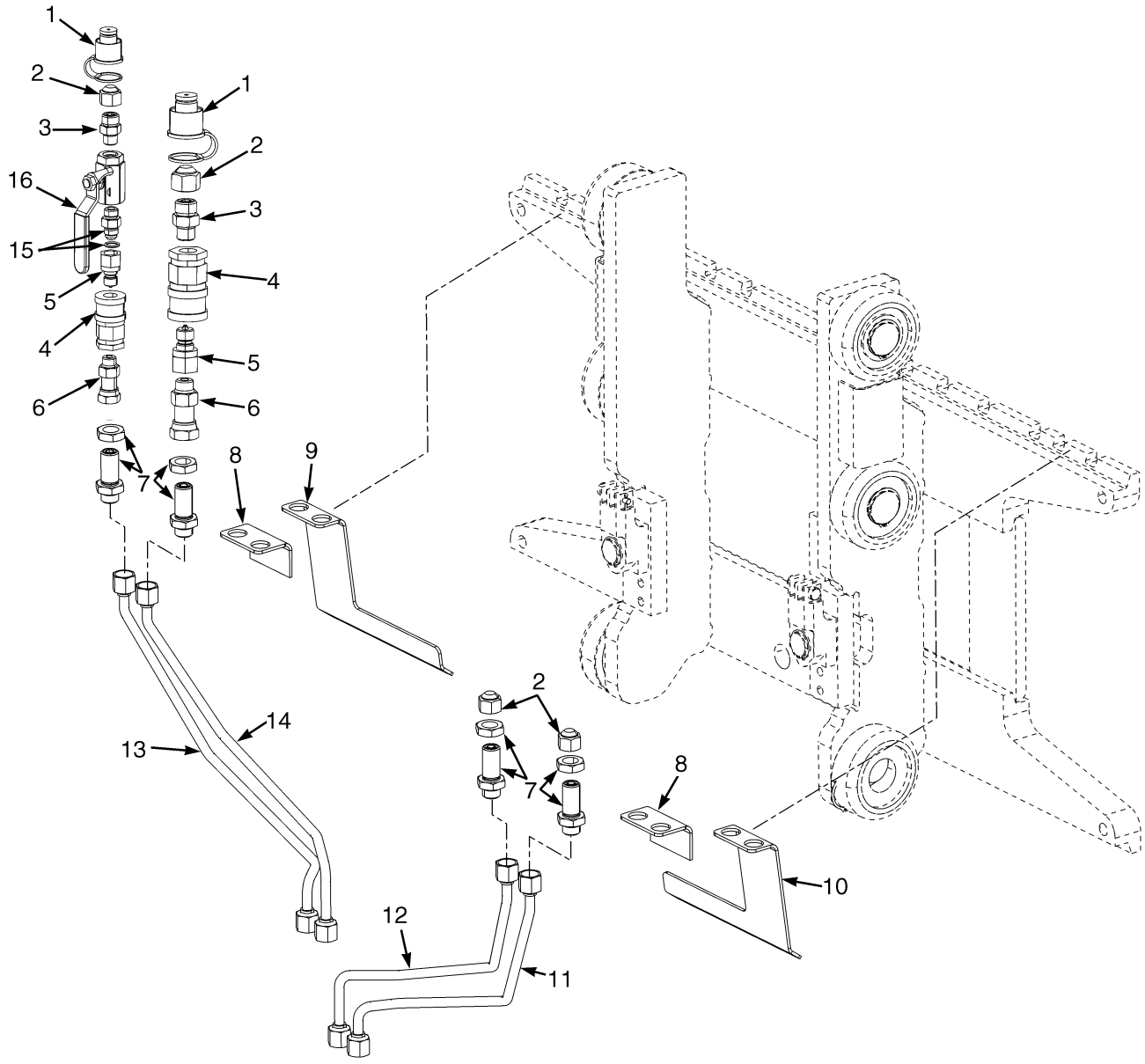

BP000294

©2006 HYSTER COMPANY

AUXILARY TUBE EXTENSIONS
TWO STAGE LIMITED FREE-LIFT

KEY:
A: Three Function
B: Four Function

ITEM		PART NO.	DESCRIPTION	QTY A	QTY B
1		1483661	Dust Cap	2	2
2		1529015	Cap	2	4
3		1486740	Fitting	2	2
3		1527813	O-Ring	1	1
3		265787	O-Ring	1	1
4		1483663	Quick Disconnect Socket	2	2
5		1483664	Quick Disconnect Nipple	2	2
6		1549715	Fitting	2	2
6		265787	O-Ring	1	1
6		1527813	O-Ring	1	1
7		1528573	Fitting	2	4
7		265787	O-Ring	1	1
8	**b**	1550070	Bracket	1	2
9	**a**	1549717	Bracket (RH)	1	1
10	**a**	1549718	Bracket (LH)	..	1
11		1603277	Tube	..	1
12		1603276	Tube	..	1
13		1603274	Tube	1	1
14		1603275	Tube	1	1
15		16540	Fitting	1	1
15		16483	O-Ring	1	1
16		2081418	Ball Valve	1	1

FOOTNOTES:
a Integrated Side-Shift
b Standard Side-Shift

©2006 HYSTER COMPANY

AUXILARY TUBE EXTENSIONS (Figure 13-10)
TWO STAGE FULL FREE-LIFT AND THREE STAGE FULL FREE-LIFT

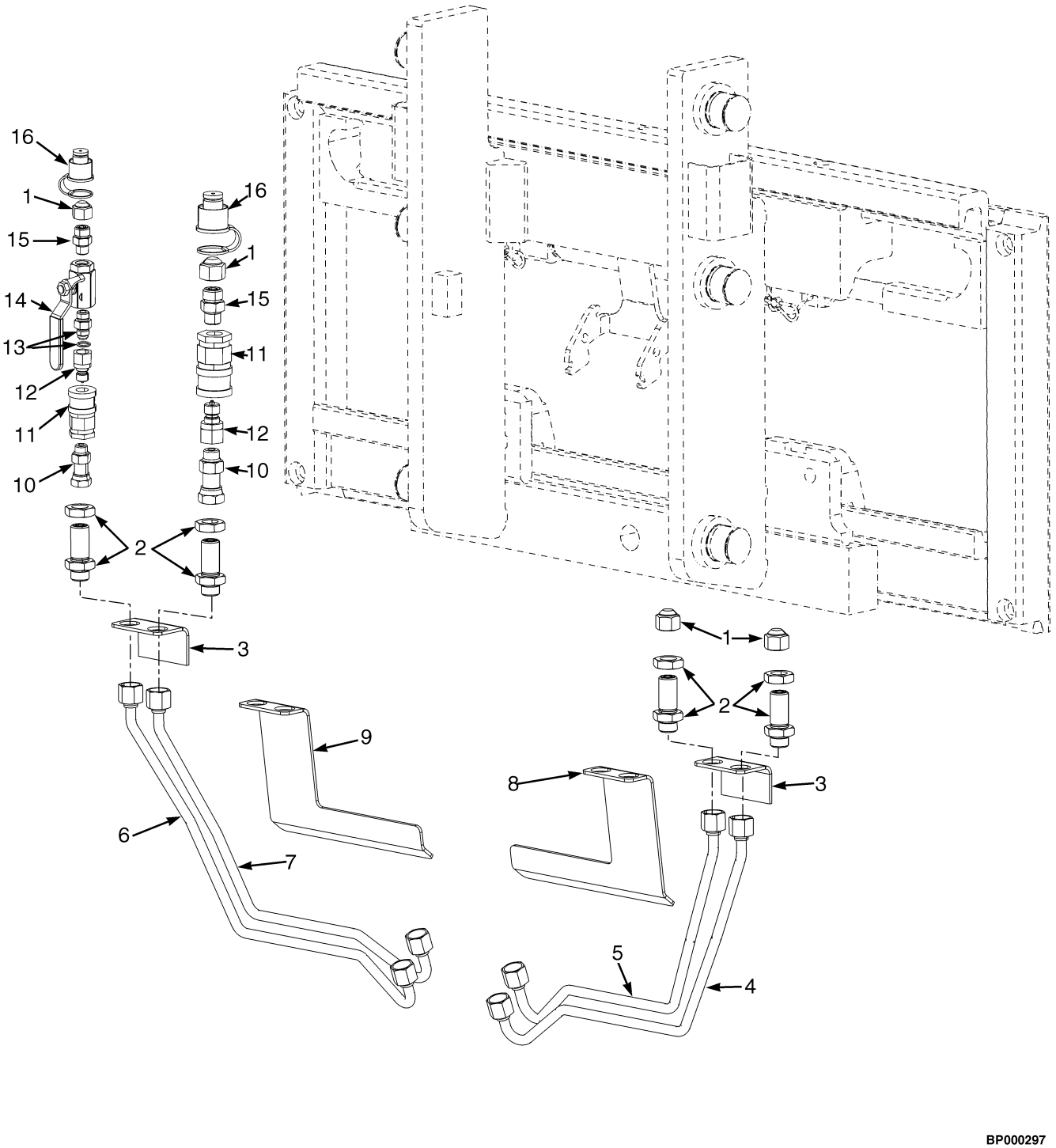

BP000297

©2006 HYSTER COMPANY

AUXILARY TUBE EXTENSIONS
TWO STAGE FULL FREE-LIFT AND THREE STAGE FULL FREE-LIFT

KEY:
A: Three Function
B: Four Function

ITEM		PART NO.	DESCRIPTION	QTY A	QTY B
1		1529015	Cap	2	4
2		1528573	Fitting	2	4
2		265787	O-Ring	2	4
2		265787	O-Ring	2	4
3	**b**	1550070	Bracket	1	2
4		1606416	Tube	..	1
5		1606415	Tube	..	1
6		1606413	Tube	1	1
7		1606414	Tube	1	1
8	**a**	1549718	Bracket (LH)	..	1
9	**a**	1549717	Bracket (RH)	1	1
10		1549715	Fitting	2	2
10		265787	O-Ring	2	2
10		1527813	O-Ring	2	2
11		1483663	Quick Disconnect Socket	2	2
12		1483664	Quick Disconnect Nipple	2	2
13		16540	Fitting	1	1
13		16483	O-Ring	1	1
14		2081418	Ball Valve	1	1
15		1486740	Fitting	2	2
15		1527813	O-Ring	2	2
15		265787	O-Ring	2	2
16		1483661	Dust Cap	2	2

FOOTNOTES:
a Integrated Side-Shift
b Standard Side-Shift

©2006 HYSTER COMPANY

NOTES

14 NUMERICAL INDEX

SECTION 14
NUMERICAL INDEX

PART NO.	PG	ITEM
126	3-35	25
	3-37	12
206	8-5	23
12929	8-5	24
13957	7-9	12
14191	7-10	4
14385	2-9	16
	2-43	15
14591	9-3	21
	9-6	3
15135	5-9	11
	5-15	11
	5-25	9
15158	5-9	10
	5-15	10
	5-25	8
15200	10-13	11
15211	10-7	2
	11-13	23
	11-17	11
	12-9	2
	12-17	30
	12-21	11
	13-7	21
	13-9	17
15223	12-9	8
15241	6-3	31
15245	7-9	18
15931	3-40	9
15971	3-13	42
16001	10-3	10
	11-3	10
	12-3	10
16040	9-43	16
	9-45	16
16041	9-41	10
	13-7	12
	13-9	12
16079	4-11	9
	4-15	29
	4-15	30
16134	3-13	4
	3-13	44
	3-17	18
	3-19	36
	3-25	46
	3-26	51
16151	3-29	6
	6-3	14
16168	3-13	33
16199	3-13	34
16480	9-29	13
16481	5-35	3
	9-6	3
16483	5-27	14
	13-11	4
	13-13	4
	13-15	15
	13-17	13
16484	5-15	46
	5-25	19
	5-27	5
	9-9	2
	11-13	32
16485	5-4	7
	5-4	8
	5-7	5
	5-7	7
	5-9	5
	5-15	5
	5-15	40
	5-25	25
	5-27	9
	10-7	9
	10-7	14
	10-7	17
	10-7	18
	11-7	3
	11-7	8
	11-7	10
	11-7	11
	11-7	12
	11-13	17
	12-9	12
	12-9	13
	12-9	21
16486	5-15	42
	5-15	44
	10-7	16
	12-9	19
16540	13-15	15
	13-17	13
16682	5-9	30
	5-15	32
	5-27	24
16706	9-21	6
	9-23	3
16708	3-40	7
16788	3-13	16
16863	3-13	44
	3-17	39
	3-19	39
	3-26	51
16865	3-40	14
16983	5-28	46
16984	9-3	13
17353	3-13	18
17650	3-29	3
18086	9-13	6
	9-17	6
18497	1-47	8
	1-55	11
18515	1-47	10
	1-55	12
18595	5-9	9
	5-15	9
18596	5-25	7
18832	13-7	10
	13-9	10
21420	6-3	15
34507	3-17	36
	3-19	31
	3-21	2
	3-25	2
37752	12-5	12
39348	11-15	12
	12-19	12
39352	7-9	6
39374	9-43	9
	9-45	9
43207	5-13	17
	5-18	18
	5-21	22
	5-23	22
	5-25	21
	5-31	21
	5-33	21
43208	5-9	19
	5-15	20
	5-25	14
44307	5-13	19
	5-18	20
	5-27	10
44308	5-9	24
	5-15	25
	5-27	32
44310	5-9	33
	5-15	35
	5-27	19
53162	3-40	13
55146	11-15	7
	12-19	7
55407	10-9	11
	10-11	11
	11-9	7
	11-11	7
	12-13	11
	12-15	11
57664	9-43	2
	9-45	2
58901	10-3	6
	10-5	4
	10-13	3
	11-3	6
	11-5	4
	11-17	3
	12-3	6
	12-5	7
	12-7	4
	12-21	3
	13-7	14
	13-9	21
58903	7-9	2
58916	5-9	23
	5-15	24
	5-27	34
63108	3-13	15
68968	2-11	7
	2-13	8
	2-15	8
	2-17	7
	2-45	16
	2-47	4
77442	9-21	3
	9-23	7
	9-31	3
	9-35	4
	9-37	4
77443	9-21	5
	9-23	8
	9-31	4
	9-35	5
	9-37	5
86229	5-9	18
	5-15	19
	5-25	10
87446	3-29	4
88441	12-9	1
97999	3-13	5
	3-17	41
	3-19	41
	3-25	49
98525	7-9	24
98644	4-32	2
101809	3-17	6
	3-19	24
	3-21	25
	3-25	37

©2006 HYSTER COMPANY

NUMERICAL INDEX (Continued)

PART NO.	PG	ITEM
104506	10-3	3
	11-3	3
	12-3	3
	12-5	5
112989	3-3	14
	3-5	5
	3-7	5
114312	13-11	3
	13-13	3
115696	3-3	4
119236	3-3	7
120938	10-7	10
	11-7	4
	12-9	11
124603	5-21	17
	5-23	17
	5-31	17
	5-33	17
127918	9-3	27
128263	3-37	14
128408	4-15	30
129387	10-3	8
	10-5	5
	10-13	4
	11-3	7
	11-5	5
	11-17	4
	12-3	7
	12-5	8
	12-7	5
	12-21	4
	13-7	15
	13-9	19
129888	4-71	28
	4-73	28
131358	10-7	26
	10-13	9
	11-7	20
	11-17	9
	12-9	29
	12-21	9
	13-7	19
	13-9	15
131716	10-3	4
	11-3	4
	12-3	4
	12-5	4
132834	11-9	6
	11-11	6
132861	11-13	26
135634	10-7	1
136681	1-45	13
	1-59	3
	5-13	29
	5-13	33
	5-18	26
	5-27	2
	5-35	17
136687	1-45	6
	1-45	15
	4-15	28
136749	1-45	28
136985	2-51	6
	5-13	8
	5-18	8
	5-27	21
137852	11-19	28
141259	4-11	34
141331	3-11	5
141776	3-13	19
145481	5-13	2
	5-18	2
	5-27	11
145639	1-15	9
148611	4-75	5
	4-77	5
148789	4-11	4
	4-15	30
148792	4-11	9
	4-15	29
148962	5-27	38
156194	7-9	25
156195	7-9	25
161003	10-7	6
	11-13	21
	12-9	6
161894	6-5	5
	6-6	5
163307	7-10	2
164474	12-9	1
164488	5-13	28
166112	11-13	31
166659	9-43	3
	9-45	3
168718	3-29	9
169690	5-13	26
170658	1-27	6
	1-29	7
175861	9-13	8
	9-17	8
175944	4-32	2
	4-87	11
	4-89	11
177352	10-7	1
	12-9	1
178119	11-13	24
182118	3-17	30
	3-19	11
	3-21	30
	3-25	20
182376	12-17	27
182377	12-17	26
184451	3-17	24
	3-19	4
	3-21	4
	3-25	4
185597	11-17	8
	12-21	8
187388	10-9	7
	10-11	7
	11-15	14
	12-13	7
	12-15	7
	12-19	14
188210	5-13	13
	5-18	14
	5-27	46
188515	9-21	7
	9-23	4
190382	4-75	1
	4-75	4
	4-77	1
	4-77	4
190383	4-75	9
	4-75	11
	4-77	9
	4-77	11
	4-79	4
	4-81	4
190580	10-9	8
	10-11	8
	12-13	8
	12-15	8
190887	11-9	9
	11-11	11
	11-15	16
	12-19	16
191941	1-17	9
	1-19	8
	1-21	7
	1-23	2
	1-25	2
	1-47	11
	1-55	14
197066	9-13	4
	9-17	4
201829	11-15	9
	12-19	9
209457	9-6	3
215212	10-3	5
	11-3	5
	12-3	5
	12-5	3
220428	3-40	12
221771	1-43	3
222443	5-27	14
222444	5-9	37
	5-15	44
222510	9-3	25
226430	6-4	38
226458	13-7	7
	13-9	7
226986	7-9	11
230881	9-13	3
	9-17	3
233693	5-9	5
	5-15	5
	5-25	25
	5-27	9
	5-35	9
234038	6-3	34
	6-4	42
235691	5-9	39
	5-15	46
	5-25	19
	5-27	5
239503	1-49	7
	1-61	10
	8-3	24
	8-5	31
	11-13	27
240072	2-27	17
244540	8-5	29
246001	11-13	3
246108	2-9	16
	2-43	15
	3-17	6
	3-17	10
	3-17	18
	3-21	23
	3-21	38
249289	7-9	16
251099	3-35	5
252729	5-4	1
	5-7	7
	10-7	9
	10-7	14
	10-7	17

©2006 HYSTER COMPANY

NUMERICAL INDEX (Continued)

PART NO.	PG	ITEM
	10-7	18
	11-7	3
	11-7	8
	11-7	10
	11-7	11
	11-7	12
	11-13	32
	12-9	12
	12-9	13
	12-9	15
	12-9	21
257913	10-9	5
	10-11	5
	11-15	11
	12-13	5
	12-15	5
	12-19	11
260878	3-13	13
264134	3-17	8
	3-17	11
	3-21	16
	3-21	25
264159	5-27	33
	9-3	2
264973	7-9	8
265787	13-11	4
	13-13	4
	13-15	3
	13-15	6
	13-15	7
	13-17	2
	13-17	2
	13-17	10
	13-17	15
275493	4-29	10
280154	10-7	16
287816	7-3	17
287837	6-3	32
287851	2-51	4
	4-31	2
	6-3	2
292500	5-9	17
	5-13	14
	5-15	18
	5-18	15
	5-25	3
	5-28	50
292508	6-3	7
292509	5-9	2
	5-15	2
	5-25	28
	10-7	11
	11-7	5
	12-9	20
292515	5-25	24
292516	5-9	28
	5-15	30
	5-27	26
292517	2-27	5
	2-51	7
292522	5-28	55
292526	5-13	36
	5-18	27
292528	11-13	16
292531	5-2	7
292532	10-7	23
	11-7	17
292608	1-11	7
292656	3-21	38
292667	4-25	6
292676	4-15	15
292678	4-25	5
292680	5-9	16
	5-13	15
	5-15	17
	5-18	16
	5-25	4
	5-27	39
292681	2-51	3
	4-31	3
	5-13	22
	5-18	23
	5-28	52
	5-35	16
	6-3	3
	11-13	4
	11-13	28
292682	2-27	4
	2-51	5
	5-9	27
	5-13	7
	5-15	29
	5-25	23
	5-27	22
	9-3	4
292683	2-11	10
	2-17	10
	5-2	6
	5-13	35
	5-18	25
292685	5-2	4
292687	11-13	7
292689	1-11	6
293612	3-21	12
293619	2-6	3
	2-29	1
293626	2-51	14
293630	6-4	56
293686	7-9	28
293692	6-3	28
	6-3	34
293697	5-2	5
293698	2-5	3
293706	11-13	6
293742	5-35	5
293774	3-39	4
293779	3-39	17
293796	9-9	18
295649	11-9	10
	11-11	10
296022	5-13	23
	5-18	24
	5-28	51
296030	1-3	16
296149	1-15	6
	1-23	6
	1-25	5
296150	4-11	19
296151	3-21	18
296158	3-39	16
296229	1-49	14
	1-53	7
296378	3-35	2
	3-39	9
	8-8	5
296379	4-15	17
296380	4-11	13
	4-15	31
296418	2-6	4
	2-29	2
296420	2-51	13
	5-3	2
296422	2-27	7
	6-3	33
	9-41	6
	10-7	21
	11-7	15
	11-13	19
296423	1-43	3
296424	2-27	13
	2-51	15
296426	6-3	34
	11-13	22
	13-7	8
	13-9	8
296434	6-3	29
	6-4	39
297531	10-9	6
	10-11	6
	11-15	13
	12-13	6
	12-15	6
	12-19	13
297649	10-7	5
	12-9	5
300751	7-9	5
300752	7-9	4
300766	7-9	22
300767	7-9	7
300937	1-43	4
	10-7	20
	11-7	14
	11-13	10
	11-13	20
300982	9-43	15
	9-45	15
302010	1-3	26
302015	4-15	16
302023	2-9	13
	2-43	12
302027	4-15	27
302047	1-49	12
	1-53	9
302363	3-21	6
302385	6-3	18
	6-4	47
302397	13-7	11
	13-9	11
302398	4-32	4
	8-3	1
	8-5	1
302400	3-35	22
	3-37	10
302428	9-13	9
	9-17	9
302437	3-35	34
302443	3-35	16
302468	3-25	14
302491	1-11	3
303100	5-9	34
	5-15	36
	5-27	17
303150	2-27	12
	2-51	8
	5-9	38
	5-15	45
	5-25	12
	5-27	8

©2006 HYSTER COMPANY

NUMERICAL INDEX (Continued)

PART NO.	PG	ITEM
306113	9-13	12
	9-17	12
309109	9-11	11
	9-13	16
	9-15	12
	9-17	17
309651	3-29	5
310549	11-13	11
	12-17	17
313805	3-39	15
	7-3	16
313828	10-7	15
	11-7	9
	12-9	17
316835	1-49	19
	1-53	14
	1-61	17
320150	1-61	11
320152	1-3	27
	4-15	14
320154	2-9	12
	2-43	11
	4-15	25
	4-25	4
320156	1-45	5
	1-45	16
	1-49	13
	1-53	11
	3-35	15
320157	3-21	14
	5-9	3
	5-13	32
	5-15	3
	5-25	27
320158	1-15	8
	1-45	14
	1-45	27
	1-49	5
	1-59	2
	11-13	25
320159	2-13	11
	2-15	11
	2-17	28
	2-47	3
	9-3	3
320161	5-13	34
	5-18	28
	9-13	13
	9-17	14
320169	11-13	8
320289	9-21	10
	9-23	10
321205	13-9	13
322824	10-9	13
	10-11	13
	12-13	13
	12-15	13
322902	10-9	4
	10-11	4
	12-13	16
	12-15	16
323090	10-7	22
	11-7	16
	12-9	25
323160	10-7	8
	11-7	2
	12-9	10
325182	4-11	29
325699	3-40	11
325789	4-75	10
	4-75	12
	4-77	10
	4-77	12
326504	2-19	17
	2-21	5
	2-29	11
	2-31	8
326608	2-29	36
326612	2-37	10
326748	2-33	5
326749	2-33	6
326898	4-9	16
329069	1-3	25
	3-35	13
330692	10-9	12
	10-11	12
	12-13	12
	12-15	12
333642	2-33	15
334560	5-9	29
	5-15	31
	5-27	41
336391	10-7	1
336550	2-9	23
	2-43	22
339735	2-9	23
	2-43	22
341462	9-21	13
345453	2-9	23
	2-43	22
345454	2-9	23
	2-43	22
345455	2-9	23
	2-43	22
353000	3-29	7
360387	2-27	9
	2-51	14
	3-40	8
362036	3-40	10
366115	10-13	5
	11-17	5
	12-21	5
	13-7	16
	13-9	20
367224	4-11	28
	4-15	5
369804	9-3	17
369815	2-9	19
	2-43	18
	3-13	36
374923	3-11	1
386015	9-21	14
389688	1-29	2
615135	11-15	6
	12-19	6
638250	11-15	8
	12-19	8
806426	4-11	4
	4-11	9
	4-15	29
	4-15	30
878258	2-45	14
878758	3-13	5
	3-25	49
895603	3-13	7
	3-26	50
930591	4-87	5
	4-87	9
	4-89	5
	4-89	9
1300094	1-27	12
1301286	13-4	1
1302024	4-29	9
1304950	3-29	11
1304971	1-3	9
1308259	4-71	30
	4-73	30
1309775	4-29	10
1310369	11-9	3
	11-11	3
1310389	7-10	6
1310391	7-10	5
1319668	10-9	9
	10-11	9
	12-13	9
	12-15	9
1323576	4-75	3
	4-75	14
	4-75	16
	4-77	3
	4-77	14
	4-77	16
	4-83	7
	4-83	9
	4-83	11
	4-85	4
	4-85	7
	4-85	8
1323578	4-75	17
	4-77	17
1323579	4-39	10
	4-40	11
	4-40	15
	4-40	16
	4-45	10
	4-46	11
	4-46	15
	4-46	16
	4-51	7
	4-51	8
	4-52	12
	4-52	13
	4-57	7
	4-57	8
	4-58	12
	4-58	13
1323586	4-71	29
	4-73	29
	4-75	16
	4-77	16
1324309	4-63	4
	4-63	15
	4-67	8
1324310	4-63	17
	4-63	18
	4-67	8
1324480	1-29	11
1327021	1-40	1
1327022	1-40	1
1327023	1-40	1
1327164	4-40	10
	4-40	11
	4-40	14
	4-40	15
	4-40	16
	4-41	26
	4-46	10
	4-46	11

©2006 HYSTER COMPANY

NUMERICAL INDEX (Continued)

PART NO.	PG	ITEM
	4-46	14
	4-46	15
	4-46	16
	4-47	26
	4-51	7
	4-51	8
	4-52	11
	4-52	13
	4-52	24
	4-57	7
	4-57	8
	4-58	11
	4-58	13
	4-59	24
1327957	4-63	11
	4-71	26
	4-73	26
	4-75	18
	4-77	18
	4-83	5
	4-83	8
1329150	4-40	14
	4-41	26
	4-46	14
	4-47	26
	4-52	11
	4-52	24
	4-58	11
	4-58	24
	4-71	21
	4-73	22
1329151	4-40	13
	4-40	14
	4-41	26
	4-41	27
	4-46	13
	4-46	14
	4-47	26
	4-47	27
	4-51	10
	4-52	11
	4-52	23
	4-52	24
	4-57	10
	4-58	11
	4-58	23
	4-59	24
1329152	4-40	13
	4-41	27
	4-46	13
	4-47	27
	4-51	10
	4-52	23
	4-57	10
	4-58	23
	4-73	23
1329240	2-9	17
	2-43	16
1329271	2-9	14
	2-43	13
1330033	3-31	6
1330281	4-40	10
	4-40	11
	4-40	13
	4-40	15
	4-41	27
	4-46	10
	4-46	11
	4-46	13
	4-46	15
	4-47	27
	4-51	8
	4-51	10
	4-52	12
	4-52	23
	4-57	8
	4-57	10
	4-58	12
	4-58	23
1330355	4-39	9
	4-45	9
	4-51	6
	4-57	6
	4-87	5
	4-87	9
	4-89	5
	4-89	9
1330356	4-39	9
	4-45	9
	4-51	6
	4-57	6
	4-87	5
	4-87	9
	4-89	5
	4-89	9
1330413	4-73	38
1330414	1-13	9
	4-41	30
	4-47	30
	4-53	29
	13-5	1
1330415	4-29	2
	4-29	2
	4-32	2
	8-8	2
1330416	3-40	3
	4-7	6
	4-7	17
	4-39	5
	4-45	5
	4-51	2
	4-57	2
1330417	13-5	1
1330418	4-73	38
1330419	4-75	19
	4-77	19
1330424	4-75	19
	4-77	19
1330433	4-7	18
1330436	4-75	19
	4-77	19
1330437	1-13	10
	4-7	7
	4-29	2
	4-29	2
	4-32	2
	4-39	5
	4-41	30
	4-45	5
	4-47	30
	4-51	2
	4-53	29
	4-57	2
	4-64	34
	4-68	17
	4-75	20
	4-77	20
	4-83	1
	8-8	2
	13-5	1
1330438	4-7	10
	4-35	2
	4-39	4
	4-39	6
	4-41	21
	4-41	25
	4-41	29
	4-41	31
	4-41	34
	4-41	35
	4-45	4
	4-45	6
	4-47	21
	4-47	25
	4-47	29
	4-47	31
	4-48	41
	4-51	1
	4-51	3
	4-52	17
	4-52	19
	4-52	21
	4-53	30
	4-53	33
	4-57	1
	4-57	3
	4-58	17
	4-58	19
	4-58	21
	4-59	30
	4-59	33
	4-63	5
	4-63	8
	4-63	11
	4-63	12
	4-63	15
	4-63	21
	4-63	25
	4-63	29
	4-64	36
	4-67	7
	4-67	10
	4-67	13
	4-67	14
	4-68	18
	4-79	1
	4-79	8
	4-79	9
	4-81	1
	4-81	10
	4-81	11
	4-83	3
	4-83	6
	4-83	10
	4-85	5
	4-87	1
	4-87	4
	4-87	10
	4-89	1
	4-89	4
	4-89	10
	13-5	4
1330439	4-40	18
	4-41	35
	4-41	37
	4-42	38
	4-46	18
	4-47	37

NUMERICAL INDEX (Continued)

PART NO.	PG	ITEM
	4-48	38
	4-48	40
	4-52	14
	4-52	15
	4-53	31
	4-53	33
	4-53	36
	4-53	38
	4-58	14
	4-58	15
	4-58	16
	4-59	36
	4-59	38
	4-64	34
	4-75	20
	4-77	20
	4-79	1
	4-83	1
	4-87	1
	4-89	1
1333043	1-40	1
1333044	1-40	1
1333045	1-40	1
1333382	10-7	25
	11-7	19
	12-9	28
1333392	12-9	18
1333399	10-3	7
	10-5	3
	10-13	6
	11-3	8
	11-5	3
	11-17	6
	12-3	8
	12-5	6
	12-7	3
	13-7	13
	13-9	18
1337197	4-23	7
1338308	2-19	9
1339452	3-13	22
1339828	1-27	17
1339832	1-27	18
1340470	3-35	33
	3-40	1
1340687	11-17	10
	12-21	10
	13-9	14
1343276	1-27	1
1343989	12-17	3
1343990	1-43	2
1344124	3-39	6
	13-3	9
1345190	10-15	10
	12-23	2
1345216	10-13	2
	11-3	2
	11-5	2
	11-17	2
	12-3	2
	12-5	2
	12-7	2
	12-21	2
1345264	10-3	2
	10-5	2
1345348	10-15	3
1345412	10-15	5
1345413	10-15	5
1345423	11-19	21
1346752	9-11	14
	9-13	23
	9-15	15
	9-17	24
1347026	2-9	20
	2-43	19
1347045	1-3	35
	2-11	27
	2-45	2
1348185	10-3	9
	11-3	9
	12-3	9
1348246	12-23	26
1348247	12-23	23
1348459	10-5	1
1348464	10-5	1
1348469	10-5	1
1349446	1-43	1
1350215	1-5	22
	5-7	14
	13-3	3
1351681	4-41	22
	4-41	24
	4-47	22
	4-47	24
	4-52	18
	4-52	22
	4-58	18
	4-58	22
	4-75	19
	4-77	19
1351682	4-63	10
1351689	8-3	29
	8-5	36
1352140	2-9	4
	2-43	4
1352603	4-64	35
	4-68	17
1353006	12-5	1
1353008	12-5	1
1353013	12-5	1
1353408	10-13	8
	13-7	18
1353521	11-20	32
	11-20	37
	12-23	32
	12-24	39
1354165	1-27	13
1354172	1-27	7
1354901	12-17	3
1354915	10-7	24
	11-7	18
	12-9	27
1354916	10-7	24
	11-7	18
	12-9	27
1354917	10-7	24
	11-7	18
	12-9	27
1355610	12-13	4
	12-15	4
1358176	7-12	1
1358178	6-6	1
1358970	11-15	4
	12-19	4
1359458	5-9	42
	5-16	49
1359588	1-27	2
1359620	9-9	12
1360139	12-13	17
	12-15	17
1360140	10-9	15
	10-11	15
1360141	11-15	17
	12-19	17
1360386	7-3	10
	9-9	17
	10-15	8
	11-19	4
	12-23	19
1360507	11-19	1
	12-23	16
1360508	11-19	22
1360534	12-17	4
1360548	10-15	15
1360549	10-15	17
	12-23	1
1360878	2-35	13
1360879	2-35	16
1360880	2-35	20
1360881	2-35	21
1360882	2-35	22
1360883	2-35	1
1360884	2-35	2
1360885	2-35	11
1360886	2-35	3
1360887	2-35	7
1360888	2-35	8
1360889	2-35	26
1360890	2-35	28
1360892	2-35	6
1360893	2-35	5
1360895	2-35	15
1360896	2-41	7
1360898	2-41	5
1360899	2-41	8
1361302	11-15	15
	12-19	15
1361372	10-11	
1361373	10-11	1
1361374	10-9	2
	10-11	2
1361376	10-9	
1361377	10-9	1
1361675	2-41	3
1361676	2-41	11
1361677	2-41	12
1361679	2-31	9
1361680	2-31	16
1361681	2-31	18
1361682	2-31	20
1361688	2-31	5
	2-33	3
1361689	2-31	10
1361690	2-31	15
1361691	2-31	11
1361692	2-31	6
1361694	2-39	1
1361695	2-39	2
1361696	2-39	12
1361697	2-39	11
1361700	2-39	6
1361701	2-39	8
1361703	2-39	3
1361704	2-39	3
1361705	2-39	3
1361706	2-39	3
1361710	2-39	13
1361711	2-39	13

©2006 HYSTER COMPANY

NUMERICAL INDEX (Continued)

PART NO.	PG	ITEM
1361712	2-39	13
1361713	2-39	13
1361714	2-39	4
1361715	2-39	4
1361716	2-39	4
1361717	2-37	20
1361718	2-35	17
	2-37	5
1361719	2-35	17
	2-37	22
1361720	2-37	4
1361721	2-37	9
1361722	2-37	8
1361723	2-37	7
1361724	2-37	6
1361725	2-37	23
1361726	2-37	11
1361727	2-37	13
	2-37	16
1361728	2-37	12
	2-37	17
1361729	2-37	15
1361730	2-37	18
1361731	2-37	14
1361732	2-37	21
1361734	2-37	19
1361736	2-37	1
1361737	2-37	2
1361745	2-19	8
1361746	2-19	6
1361747	2-19	3
1361790	2-29	42
1361798	2-33	2
1361801	2-33	17
1361806	2-33	13
1361807	2-33	14
1361813	2-29	6
1361821	2-29	12
1361825	2-29	15
1361826	2-29	20
1361827	2-29	24
1361837	4-9	10
1361838	4-9	11
1361840	4-9	9
1361841	4-9	9
1361842	4-9	9
1361843	4-9	9
1361845	4-9	14
1361846	4-9	4
1361868	2-33	19
1361871	2-21	4
1361873	2-29	16
1361875	2-29	25
1361878	2-21	23
	2-33	18
1361879	2-33	7
1361881	4-9	15
1361884	2-37	26
1361885	2-19	11
1361886	2-29	19
1361888	4-9	5
1361890	4-9	2
1361891	4-9	3
1361894	2-35	18
1361895	4-9	25
1361897	2-35	24
1361898	2-19	1
	2-21	18
	2-29	21
	2-35	23
1361899	2-35	27
1362000	2-35	10
1362001	2-31	1
	2-35	12
1362002	2-35	14
1362003	2-35	19
	2-41	6
1362005	2-41	4
1362007	2-41	10
1362008	2-41	9
1362009	2-41	2
1362010	2-31	12
1362011	2-31	13
1362012	2-31	7
1362015	2-31	17
1362016	2-37	29
1362049	1-17	10
1362113	4-9	9
1362527	10-11	
1362528	10-11	1
1362529	10-9	2
	10-11	2
1362531	10-9	
1362532	10-9	1
1362557	10-11	
1362558	10-11	1
1362559	10-9	2
	10-11	2
1362561	10-9	
1362562	10-9	1
1362702	12-15	
1362703	12-15	1
1362704	12-13	2
	12-15	2
1362706	12-13	
1362713	12-13	1
1362715	12-15	
1362716	12-15	1
1362717	12-13	2
	12-15	2
1362719	12-13	
1362726	12-13	1
1362745	12-15	
1362746	12-13	2
	12-15	2
1362749	12-13	
1362756	12-13	1
1362871	10-9	14
	10-11	14
	12-13	14
	12-15	14
1362875	11-11	9
	12-13	15
	12-15	15
1362880	11-15	5
	12-19	5
1362881	11-15	10
	12-19	10
1362922	12-19	1
1362924	11-15	1
	12-19	1
1362930	12-19	1
1363251	12-10	32
1363253	12-23	22
1363260	9-41	1
1363272	12-21	6
	13-9	18
1363886	4-39	4
	4-45	4
	4-51	1
	4-57	1
	4-87	3
	4-87	8
	4-87	12
	4-89	3
	4-89	8
	4-90	12
1365140	12-9	7
1365512	11-19	29
1365605	11-9	1
1365607	11-11	1
1365637	11-9	2
1365666	11-11	2
1365830	1-29	9
1365843	1-29	12
1366057	12-15	1
1366902	2-19	14
1366933	2-21	16
1367191	2-29	14
1367855	8-7	16
1367870	8-7	28
1367871	8-7	27
1367876	8-7	34
1368743	2-19	13
	4-9	29
1368841	4-9	13
1368844	4-9	6
1368886	2-19	15
	4-9	8
1369357	10-7	4
	12-9	4
1369914	2-29	38
1369993	2-31	25
1370688	2-19	7
1370689	2-19	4
1370690	2-19	5
1370691	2-19	2
1370736	2-31	19
1370737	2-31	21
1371652	2-31	14
1371653	10-9	3
	10-11	3
	12-13	3
	12-15	3
1374775	1-29	8
1374788	2-21	25
	2-25	1
1374802	11-9	8
	11-11	8
1375214	1-11	5
1375391	8-3	28
	8-5	35
1375472	7-9	14
1375642	2-6	1
	2-29	3
1375676	1-27	11
1377781	2-6	2
1378418	4-71	12
	4-73	11
1378652	4-71	10
	4-73	6
1378698	12-5	10
1378699	11-13	2
	12-5	11
	12-17	7
1379455	3-17	1
	3-19	43
	3-21	11

©2006 HYSTER COMPANY

NUMERICAL INDEX (Continued)

PART NO.	PG	ITEM
	3-25	48
1379496	11-13	17
1379685	12-5	9
1379687	10-7	12
	11-7	6
1380849	5-9	44
	5-16	55
1381082	11-9	4
	11-11	4
1381094	9-43	4
	9-45	4
1381095	10-9	10
	10-11	10
	12-13	10
	12-15	10
1381099	7-10	3
1381598	12-23	35
1381599	12-23	35
1381641	12-24	37
1381642	12-24	37
1382111	1-17	3
1382112	1-17	7
1382113	1-17	3
1382114	1-17	7
1382130	4-29	10
1382694	4-75	2
	4-77	2
1382695	4-75	2
	4-77	2
1383061	9-43	5
	9-45	5
1383331	4-5	16
1388838	7-9	31
1391757	2-45	14
1391758	2-45	14
1393458	1-45	21
1393463	1-49	21
	1-53	13
1393465	1-45	8
1393466	1-45	9
1393472	1-49	20
	1-53	16
	1-61	18
1393479	1-53	12
1393488	1-61	21
1393495	1-59	10
1393499	1-49	23
	1-59	5
1393509	1-59	14
1393527	1-45	24
1393528	1-45	25
1393541	1-61	20
1393879	9-3	32
1394008	3-5	3
	3-7	3
1396518	2-11	24
	2-13	17
	2-15	17
	2-17	24
1398099	3-17	34
	3-19	32
	3-21	19
	3-25	26
1399802	3-35	18
	3-37	9
1401746	13-7	9
	13-9	9
1402414	3-22	42
	3-25	10
1402813	4-40	21
	4-41	25
	4-41	31
	4-46	21
	4-47	25
	4-47	31
	4-67	14
	4-83	2
	4-85	10
	4-89	3
	4-89	8
	4-90	12
	13-5	4
1402814	4-79	3
	4-79	5
	4-79	6
	4-79	7
	4-81	3
	4-81	5
	4-81	6
	4-81	7
	4-81	8
	4-81	9
1402815	4-42	40
	4-46	19
	4-52	26
	4-59	26
	4-79	2
	4-81	2
	4-83	4
1402816	4-63	14
	4-67	6
	4-71	15
	4-73	18
	4-85	2
1402868	4-83	11
	4-85	4
1402883	4-5	6
1402888	4-40	10
	4-40	13
	4-41	27
	4-46	10
	4-46	13
	4-47	27
	4-51	7
	4-52	10
	4-52	23
	4-57	7
	4-58	10
	4-58	23
	4-75	17
	4-77	17
1402890	4-71	2
	4-73	1
1402903	13-5	1
1450503	7-3	14
1450928	4-9	1
1453882	1-17	1
1453883	1-17	1
1454827	4-15	24
1454828	4-15	24
1454829	4-15	24
	4-75	2
	4-77	2
1454860	4-15	24
	4-75	2
	4-77	2
1454862	4-15	24
	4-71	11
	4-73	5
	4-75	2
	4-77	2
1454967	4-15	12
1455674	2-33	4
1455676	2-33	1
1455677	2-33	10
1459173	1-15	3
	1-17	5
1460477	1-3	17
	2-11	16
	2-17	16
	2-27	18
1462614	7-12	1
1462616	6-6	1
1463138	4-29	10
	4-85	1
	4-85	11
1463139	4-39	1
	4-39	2
	4-39	3
	4-39	7
	4-39	8
	4-40	20
	4-45	1
	4-45	2
	4-45	3
	4-45	7
	4-45	8
	4-46	20
	4-47	34
	4-47	35
	4-51	4
	4-51	5
	4-53	27
	4-53	33
	4-53	39
	4-53	40
	4-54	41
	4-54	42
	4-57	4
	4-57	5
	4-59	27
	4-59	31
	4-59	39
	4-59	40
	4-60	41
	4-60	42
	4-60	44
	4-60	45
	4-63	1
	4-63	23
	4-64	32
	4-67	1
	4-67	12
	4-67	16
	4-87	7
	4-89	7
1463194	4-63	9
	4-63	13
	4-63	16
	4-67	7
	4-87	4
	4-87	10
	4-89	4
	4-89	10
1465140	9-4	11
	9-5	11
1465468	4-71	5
	4-71	24

©2006 HYSTER COMPANY

NUMERICAL INDEX (Continued)

PART NO.	PG	ITEM
	4-73	9
1465469	4-71	23
	4-73	10
	4-75	17
	4-77	17
1468312	1-45	11
1468314	1-61	16
1468315	1-61	15
1468316	1-61	14
1468317	1-61	13
1468318	1-49	27
1468319	1-45	23
1469379	2-11	11
	2-17	11
1469405	2-11	9
	2-17	9
1470152	1-19	4
	1-21	2
1470153	1-19	4
	1-21	2
1470161	1-19	6
	1-21	8
1470163	1-19	7
	1-21	6
1471694	3-13	25
1471832	6-6	1
1471833	7-12	1
1471921	7-12	1
1471922	6-6	1
1473898	12-9	19
1474763	4-71	25
	4-73	25
1474764	4-71	22
	4-73	24
1475409	3-13	24
1476064	4-39	9
	4-45	9
	4-51	6
	4-57	6
1476077	4-75	14
	4-77	14
1476108	4-39	9
	4-45	9
	4-51	6
	4-57	6
	4-87	5
	4-87	9
	4-89	5
	4-89	9
1476109	4-39	9
	4-45	9
	4-51	6
	4-57	6
1477166	1-40	4
1477237	1-40	3
1477996	9-9	19
	10-15	6
	11-19	16
	12-23	12
1480187	4-42	38
	4-48	38
	4-53	38
	4-59	38
1480237	2-9	18
	2-43	17
	3-13	23
	3-35	21
	3-37	15
	4-5	14
	4-11	7
	5-4	4
	5-7	13
	7-3	7
	9-9	10
	13-3	5
1481009	11-13	12
	12-17	18
1481052	11-13	5
	12-17	16
1481053	11-13	2
1481054	11-13	2
	12-17	7
1481055	11-13	9
	12-17	11
1481097	10-7	13
	11-7	7
	12-9	14
1481229	9-9	20
	10-15	7
1481230	11-13	4
	12-17	14
1481248	11-20	37
	12-24	39
1481249	11-20	32
	12-23	32
1481252	11-19	31
	12-23	33
1481253	11-19	7
	12-23	7
1481255	11-19	12
	12-23	6
1481288	10-13	7
	13-7	17
1481342	12-21	1
1481344	10-7	9
	11-7	3
	12-9	12
1481345	11-13	32
1481346	12-17	25
1481348	10-7	16
	11-7	10
	12-9	16
1481765	11-19	24
	12-23	28
1481766	11-19	26
	12-23	29
1481767	12-21	
1481806	12-7	1
1481808	12-7	1
1481813	12-7	1
1481845	12-23	15
1481847	12-23	15
1481852	12-23	15
1481884	11-20	36
1481887	11-20	36
1481944	11-20	34
1481947	11-20	34
1482249	10-15	1
1482254	10-15	1
1482259	10-15	1
1482296	13-7	
1482297	10-13	
1482651	4-71	18
	4-71	42
	4-73	21
1482654	4-71	35
	4-73	34
1482668	4-87	5
	4-87	9
	4-89	5
	4-89	9
1483661	13-15	1
	13-17	16
1483663	13-15	4
	13-17	11
1483664	13-15	5
	13-17	12
1483828	1-19	9
	1-21	13
1484377	4-35	2
	4-39	1
	4-39	2
	4-39	3
	4-39	6
	4-39	7
	4-39	8
	4-41	34
	4-41	35
	4-45	1
	4-45	2
	4-45	3
	4-45	6
	4-45	7
	4-45	8
	4-47	34
	4-51	3
	4-51	4
	4-51	5
	4-53	31
	4-53	33
	4-53	39
	4-53	40
	4-54	41
	4-54	42
	4-57	3
	4-57	4
	4-57	5
	4-59	31
	4-59	33
	4-59	39
	4-59	40
	4-60	41
	4-60	42
	4-60	44
	4-63	1
	4-63	23
	4-64	32
	4-67	1
	4-67	12
	4-67	16
	4-68	17
	4-83	1
	4-85	1
	4-85	11
1484397	4-63	8
	4-63	12
	4-63	15
	4-67	7
	4-87	4
	4-87	10
	4-89	4
	4-89	10
1484557	4-87	7
	4-89	7
1484558	4-87	7
	4-89	7
1484709	4-75	20
	4-77	20

©2006 HYSTER COMPANY

NUMERICAL INDEX (Continued)

PART NO.	PG	ITEM
	4-87	2
	4-89	2
1486740	7-3	5
	13-15	3
	13-17	15
1486742	7-3	4
	9-9	13
1486749	5-4	8
	5-7	4
1486773	10-7	17
	11-7	11
	12-9	15
1487058	9-9	5
1487061	9-9	2
1487063	5-13	31
	13-11	4
	13-13	4
1487067	5-4	7
	5-7	7
	5-28	56
	10-7	18
	11-7	12
	12-9	21
1487069	9-3	14
	9-9	24
1488464	9-9	4
1489010	13-7	2
	13-9	2
1489016	13-10	1
1489035	13-10	3
1489037	13-10	2
1489039	13-10	5
1489655	3-40	3
	4-7	5
	4-7	16
	4-39	5
	4-45	5
	4-51	2
	4-57	2
1489656	4-7	8
	4-41	29
	4-47	29
	4-52	19
	4-58	19
	4-63	5
	4-63	21
	4-64	36
	4-67	10
	4-68	18
1489657	4-7	9
	4-41	29
	4-47	29
	4-52	19
	4-58	19
	4-63	6
	4-63	22
	4-64	37
	4-67	10
	4-68	18
1489972	11-13	14
	12-17	19
1490242	4-40	21
	4-41	25
	4-41	31
	4-46	21
	4-47	25
	4-47	31
	4-52	17
	4-52	21
	4-53	30
	4-58	17
	4-58	21
	4-59	30
	4-63	11
	4-63	29
	4-67	14
	4-79	8
	4-79	9
	4-81	10
	4-81	11
	4-83	3
	4-83	6
	4-83	10
	4-85	5
	4-87	3
	4-87	3
	4-87	8
	4-89	3
	4-89	8
	4-90	12
	13-5	4
1490243	4-52	17
	4-52	21
	4-53	30
	4-58	17
	4-58	21
	4-59	30
	4-63	30
	4-79	8
	4-79	9
	4-81	10
	4-81	11
	4-83	3
	4-83	6
	4-83	10
	4-85	5
	4-87	3
	4-87	8
	4-87	12
1492167	1-59	8
1493308	1-59	9
1493336	1-61	29
1493428	4-39	6
	4-45	6
	4-51	3
	4-57	3
	4-59	33
1493435	4-79	6
	4-79	7
	4-81	7
	4-81	9
1493447	4-81	5
	4-81	6
	4-81	8
1493458	4-71	1
	4-73	40
1493465	1-13	8
	4-41	30
	4-47	30
	4-53	29
	13-5	1
1493466	4-29	2
	4-29	2
	4-32	2
	8-8	2
1494017	10-15	16
	12-24	38
1494719	9-43	17
	9-45	17
1494750	5-9	31
	5-15	33
	5-27	13
1494888	1-13	11
	1-47	3
	1-55	2
1495122	4-29	3
	4-29	3
1495413	2-21	9
	4-9	23
1495426	2-33	8
1495427	2-33	20
1495428	2-29	13
1495429	2-29	41
1495441	1-61	3
	1-61	22
1495472	2-39	7
1495473	2-39	5
1495474	2-39	5
1495475	2-39	5
1495501	2-11	13
	2-17	13
1495502	2-11	14
	2-17	14
1498115	11-9	11
	11-11	12
1498116	11-9	5
	11-11	5
1498325	13-10	4
1498326	13-7	22
	13-9	22
1498416	4-75	17
	4-77	17
1499666	4-9	32
1500113	1-3	7
1500782	1-40	5
1500899	4-41	33
	4-47	33
	4-53	32
	4-59	32
	4-63	28
	4-67	11
	4-71	37
	4-73	36
1500901	1-15	7
	1-23	3
	4-75	21
	4-77	21
1500912	1-23	5
	1-25	4
	3-39	7
	3-40	5
	4-5	10
	4-7	2
	4-11	11
	4-15	2
	4-19	6
	8-3	6
	8-5	6
	8-8	3
	13-3	7
1500913	4-35	2
	4-39	4
	4-39	6
	4-45	4
	4-45	6
	4-51	1
	4-51	3
	4-57	1

©2006 HYSTER COMPANY

NUMERICAL INDEX (Continued)

PART NO.	PG	ITEM
	4-57	3
	4-59	33
	4-79	1
	4-81	1
	4-87	1
	4-89	1
1500919	4-83	1
1500925	4-64	34
	4-68	17
1501258	1-27	5
1501275	5-2	1
1501811	3-29	2
1501848	3-3	9
1501849	3-5	15
	3-7	10
1501855	3-5	10
	3-7	8
	3-11	
1501888	3-8	1
1501970	4-11	33
1501992	9-3	7
1501995	3-13	28
1501999	2-9	9
1502001	2-43	7
1502003	3-13	20
	8-3	20
	8-5	22
1502005	3-13	27
1502007	3-13	17
	9-3	26
1502015	3-13	29
1502027	3-13	35
1502032	3-3	13
1502034	3-3	6
1502046	3-13	40
1502047	3-13	37
1502048	3-13	38
1502049	3-13	11
1502053	3-13	39
	4-7	19
1502054	3-13	32
1502055	3-13	31
	4-7	13
1502058	3-13	14
1502061	4-11	2
	4-16	33
1502066	3-13	30
1502079	3-3	3
	3-5	2
	3-7	2
1502276	7-9	20
1502277	7-9	9
1502543	3-13	12
	3-39	3
	4-5	8
	4-5	18
	4-11	16
1502625	4-48	41
1502626	4-48	41
1502627	4-41	34
	4-53	31
1502819	9-41	5
1503096	13-10	6
1503858	9-41	7
1503958	1-45	17
1503959	1-45	31
1504075	2-5	4
1504941	1-45	19
1506572	2-27	6
1506738	3-8	4
1506825	1-50	42
1506875	6-4	41
1506876	6-4	40
1509103	2-11	25
	2-13	17
	2-15	17
	2-17	25
1509754	1-5	34
1509835	6-4	46
1509847	6-4	46
1509870	6-4	48
1509888	4-41	23
	4-47	23
	4-52	25
	4-59	25
	4-67	3
	4-75	22
	4-77	22
	4-83	12
	4-85	3
	13-5	3
1509890	4-52	20
	4-58	20
	4-63	7
	4-83	2
	4-85	9
	4-87	6
	4-89	12
1510113	1-13	16
	9-13	7
1510115	2-11	1
	2-13	6
	2-15	6
	2-17	1
	2-45	4
	2-47	6
	3-13	8
	4-19	9
1510116	9-3	31
1510117	2-15	10
	2-17	27
1510126	8-3	12
	8-5	15
1512403	7-3	12
1514138	5-35	14
1514429	1-5	21
	3-35	11
	3-37	11
	4-11	22
	4-15	13
	4-25	12
	8-3	10
	8-5	13
1514597	4-40	18
	4-41	37
	4-46	18
	4-47	37
	4-52	15
	4-53	36
	4-58	15
	4-59	36
	4-73	37
	4-87	2
	4-89	2
1514598	4-73	37
	4-87	2
	4-89	2
1514602	4-40	17
	4-41	36
	4-46	17
	4-47	36
	4-48	40
	4-52	14
	4-53	35
	4-58	14
	4-58	16
	4-59	35
	4-89	6
1514603	4-40	17
	4-41	36
	4-46	17
	4-47	36
	4-48	40
	4-52	14
	4-53	35
	4-58	14
	4-58	16
	4-59	35
	4-89	6
1514866	10-7	3
	10-13	10
	11-13	29
	12-9	3
	12-17	28
	13-7	20
1515337	1-59	6
1515654	4-11	32
	4-15	19
	5-13	12
	5-18	13
	5-27	45
1516075	6-3	19
1516201	7-3	3
1516205	9-3	10
1516331	6-3	10
1516332	6-3	10
1516333	6-3	10
1516334	6-3	10
1516335	6-3	10
1516534	6-4	62
1516535	6-3	6
1516536	6-3	1
1516818	5-13	24
1516826	5-13	6
	5-18	6
1516849	5-9	22
	5-15	23
	5-27	35
1516851	5-9	21
	5-15	22
1517361	3-35	24
	3-37	13
	9-11	12
	9-13	15
	9-15	13
	9-17	16
1517394	9-11	10
	9-13	17
	9-15	11
	9-17	15
1517395	9-11	9
	9-13	21
	9-15	10
	9-17	22
1517405	3-17	2
	3-19	28
	3-21	10
	3-25	35

©2006 HYSTER COMPANY

NUMERICAL INDEX (Continued)

PART NO.	PG	ITEM
1517418	1-5	12
1517419	1-5	12
1517437	3-21	1
1517575	6-3	11
1517577	6-4	60
1517673	6-4	63
1517836	6-4	58
	7-9	29
1519787	1-5	25
1519788	1-5	29
1520660	5-35	10
1520752	6-3	13
1520753	6-3	13
1520754	6-3	13
1520755	6-3	13
1520864	4-71	27
	4-73	27
1521005	3-35	6
1521183	4-40	11
	4-46	11
	4-51	8
	4-57	8
1521184	4-39	10
	4-45	10
	4-51	7
	4-57	7
1521185	4-40	15
	4-46	15
	4-52	12
	4-58	12
1521186	4-40	16
	4-46	16
	4-52	13
	4-58	13
1521188	4-39	10
	4-40	11
	4-40	15
	4-40	16
	4-45	10
	4-46	11
	4-46	15
	4-46	16
	4-51	7
	4-51	8
	4-52	12
	4-52	13
	4-57	7
	4-57	8
	4-58	12
	4-58	13
1521190	1-11	2
1521328	4-75	9
	4-75	11
	4-77	9
	4-77	11
1521809	6-3	35
1521989	4-40	10
	4-40	11
	4-40	15
	4-40	16
	4-46	10
	4-46	11
	4-46	16
	4-51	8
	4-52	12
	4-57	7
	4-57	8
	4-58	12
	4-58	13
1522363	2-51	2
1522377	6-4	61
1522425	9-9	3
1523479	6-4	59
1523732	1-40	2
1523733	1-40	6
1523734	1-40	7
1523735	1-40	8
1524914	7-9	27
1524916	7-9	10
1524921	7-9	1
1524923	7-9	23
1525238	7-9	19
1525442	3-21	41
	3-25	11
1525451	3-17	21
	3-19	34
	3-21	31
	3-25	15
1525478	3-21	37
	3-25	13
1525563	4-39	4
	4-45	4
1525564	4-79	1
	4-79	1
	4-81	1
1525565	4-35	2
1525566	4-87	1
	4-89	1
1525567	4-39	3
	4-39	7
	4-45	3
	4-45	7
	4-47	34
	4-51	4
	4-54	42
	4-57	4
	4-59	31
	4-60	42
	4-63	23
	4-67	12
1525568	4-39	2
	4-45	2
	4-53	41
	4-60	41
	4-63	1
	4-67	1
1525569	4-39	8
	4-45	8
	4-51	1
	4-51	5
	4-53	40
	4-57	1
	4-57	5
	4-59	40
1525570	4-39	1
	4-45	1
	4-53	39
	4-59	39
	4-64	32
	4-67	16
1525573	4-63	4
1525577	4-41	28
	4-47	28
	4-53	28
	4-59	28
	4-63	20
	4-67	9
1525584	4-63	3
	4-67	2
	4-75	15
	4-77	15
1525632	6-4	50
1525696	5-13	21
	5-18	21
	5-28	54
1526082	4-29	10
1526274	10-13	1
1527228	1-3	30
1527264	4-5	12
1527395	1-13	17
	9-3	28
1527562	4-15	11
1527571	4-9	17
	4-11	25
1527813	13-15	3
	13-15	6
	13-17	10
	13-17	15
1527816	9-9	2
1527818	5-4	7
	5-4	8
1527876	1-3	13
	3-5	7
	5-7	3
1527877	3-39	14
	13-3	4
1527878	1-3	12
	4-15	21
1527879	2-9	22
	2-43	21
	3-35	4
	3-37	17
	4-5	13
	4-7	14
	4-11	5
	4-11	18
	4-23	9
	5-4	3
	5-7	12
	5-9	46
	5-16	53
	7-3	8
	8-3	11
	8-3	15
	8-5	14
	8-5	25
	9-3	33
	9-11	2
	9-13	2
	9-15	2
	9-17	2
1527880	3-3	11
	3-5	14
	3-7	11
	3-13	21
	3-35	20
	3-37	16
	3-39	2
	4-29	1
	8-9	9
1527881	1-3	18
	3-13	10
	3-29	8
	8-3	33
	8-5	39

©2006 HYSTER COMPANY

NUMERICAL INDEX (Continued)

PART NO.	PG	ITEM
1527884	2-27	2
1527888	1-13	12
	1-47	5
	1-55	6
1527939	1-5	17
1527940	1-5	17
1527946	1-5	32
1527982	2-9	7
	9-3	12
1528132	4-20	3
	4-21	3
1528133	4-20	4
	4-21	4
1528140	2-6	2
	2-29	4
1528314	3-29	21
1528315	4-20	2
	4-21	2
1528327	9-11	4
1528328	9-13	14
	9-15	4
1528329	9-17	13
1528339	9-13	5
	9-17	5
1528415	2-27	8
1528481	9-3	24
1528573	13-15	7
	13-17	2
1528595	2-9	6
1528608	3-29	19
1528630	4-20	5
	4-21	5
1528631	4-20	6
	4-21	6
1528754	1-11	1
1528755	1-11	1
1528799	8-8	1
1528888	1-13	13
	1-47	14
	1-55	18
1528889	2-51	9
	4-16	35
1528893	3-29	10
1528899	3-17	31
	3-19	12
	3-21	29
	3-25	19
1528903	3-17	29
	3-19	2
	3-21	35
	3-25	8
1528930	2-11	3
	2-13	3
	2-15	3
	2-17	3
	2-45	6
	2-47	8
1528934	2-11	4
	2-13	5
	2-15	5
	2-17	4
	2-45	8
	2-47	10
1528937	2-11	21
	2-13	16
	2-15	16
	2-17	21
1528938	2-11	2
	2-13	2
	2-15	2
	2-17	2
	2-45	5
	2-47	7
1529015	11-19	27
	12-23	31
	13-15	2
	13-17	1
1529046	4-39	7
	4-39	8
	4-45	7
	4-45	8
	4-47	34
	4-51	4
	4-51	5
	4-57	4
	4-57	5
	4-59	31
	4-63	2
	4-63	24
	4-64	33
	4-67	1
	4-67	12
	4-67	16
1529065	9-3	19
1529257	4-11	35
	4-15	4
1529366	3-29	22
	4-5	4
	4-11	12
	4-11	17
	4-15	9
	4-16	32
	4-19	4
	8-3	9
	8-5	12
	8-9	7
1529379	6-3	
1529426	1-5	26
1529598	13-7	1
1529787	2-9	5
	2-43	5
1529894	5-13	20
	5-18	22
	5-28	53
1530019	1-5	19
	1-5	35
1530037	4-39	1
	4-39	2
	4-39	3
	4-45	1
	4-45	2
	4-45	3
	4-53	39
	4-53	40
	4-54	41
	4-54	42
	4-59	39
	4-59	40
	4-60	41
	4-60	42
1530135	1-5	15
1530211	7-10	8
1530243	1-3	20
	1-8	3
	2-9	2
	2-43	2
	3-3	10
	3-5	13
	3-7	12
	3-13	9
	3-35	28
	3-37	19
	8-3	30
	8-5	37
1530286	8-8	4
1530311	3-35	14
1530588	6-3	5
1530722	5-35	4
1530960	4-85	11
1530961	4-85	11
1530971	3-35	7
1531001	1-5	5
	4-29	14
1531148	6-3	27
1531162	4-79	3
	4-79	5
	4-81	3
1531167	2-9	21
	2-43	20
1531171	7-9	13
1531231	4-71	34
	4-73	33
1531237	4-71	16
	4-73	19
1531239	4-71	17
	4-73	20
1531240	4-71	19
	4-73	17
1531312	3-40	3
1531404	2-9	16
	2-43	15
1531480	4-12	36
1531486	4-87	5
	4-87	9
	4-89	5
	4-89	9
1531501	4-41	35
	4-53	33
1531502	4-71	39
	4-75	20
	4-77	20
1531519	4-31	7
1531557	1-3	31
	1-13	14
1531558	1-5	36
	1-13	3
	3-8	5
	9-9	16
1531563	7-3	13
1531567	8-3	2
	8-5	2
1531569	8-3	22
	8-5	30
1531664	11-3	1
1531665	12-3	1
1531667	11-3	1
	12-3	1
1531668	10-3	1
1531673	10-3	1
	12-3	1
1531679	10-3	1
1531806	2-51	12
1531829	2-13	7
	2-17	18
1531973	4-47	35
	4-60	44
1531974	4-47	35
	4-60	44

©2006 HYSTER COMPANY

NUMERICAL INDEX (Continued)

PART NO.	PG	ITEM
1531975	4-19	5
1531991	4-71	33
	4-73	32
1532363	2-45	11
	2-47	13
1532523	2-11	17
	2-17	17
1532532	3-29	1
1532571	4-63	3
	4-63	11
	4-67	2
	4-75	15
	4-75	18
	4-77	15
	4-77	18
	4-83	5
	4-83	8
1532585	2-11	5
	2-13	4
	2-15	4
	2-17	5
	2-45	7
	2-47	9
1532650	10-7	14
	11-7	8
	12-9	13
1532664	4-63	26
	4-67	13
1532734	6-3	20
1532761	4-71	20
	4-73	14
	4-75	24
	4-77	24
1532775	4-71	3
	4-73	3
1532776	4-71	31
	4-73	16
	4-75	23
	4-77	23
1532777	4-71	8
	4-73	13
1533493	9-43	14
	9-45	14
1533494	9-41	8
	9-43	13
	9-45	13
1533637	2-45	12
1533638	2-45	15
1533639	2-11	26
	2-45	1
1533741	7-10	1
1533747	7-10	9
1534174	2-11	8
	2-17	8
1534252	7-10	10
1534282	4-41	32
	4-47	32
	4-54	43
	4-60	43
	4-63	31
	4-67	15
1534355	2-9	1
1534356	2-9	1
1534417	1-3	11
	1-47	7
	1-55	8
	2-27	1
	4-5	7
	4-11	3
1534420	7-3	9
1534424	4-9	31
1534649	3-17	17
	3-19	8
	3-21	13
	3-25	32
1534660	1-29	6
1534671	3-17	26
	3-19	7
	3-21	33
	3-25	7
1534672	3-17	28
	3-19	3
	3-21	34
	3-25	9
1534674	3-17	3
	3-19	27
	3-21	15
	3-25	31
1534675	3-17	7
	3-19	14
	3-21	26
	3-25	42
1534677	3-17	9
	3-19	19
	3-21	20
	3-25	36
1534679	3-17	42
	3-19	23
	3-21	24
	3-25	39
1534828	4-40	12
	4-46	12
	4-51	9
	4-57	9
	4-63	19
	4-67	5
1534871	8-3	25
	8-5	20
1535166	4-7	1
1535257	2-9	11
	2-43	10
1536250	7-9	15
1536287	10-3	11
	11-3	11
	12-3	11
1536304	4-11	9
	4-15	29
1536309	6-4	57
1536724	8-3	34
	8-5	40
1536725	2-49	
	2-53	
	2-55	
	2-57	
	2-59	
	2-61	
	2-63	
	2-65	
	2-67	
	3-31	
	3-33	
1536805	9-41	11
1536813	1-13	15
	1-47	20
	1-55	9
1537449	5-21	14
	5-23	14
	5-31	14
	5-33	14
1537450	5-21	16
	5-23	16
	5-31	16
	5-33	16
1537551	1-15	5
	1-23	4
	1-25	3
	4-15	26
	4-29	5
1538162	3-35	19
	3-37	2
1538488	3-35	8
1538490	3-35	17
	3-37	5
1538782	3-35	17
	3-37	3
1539085	4-11	10
	4-15	3
	4-31	6
1539086	4-11	11
	4-15	2
	4-31	5
1539418	3-40	6
1539584	4-29	17
1539637	7-12	1
1539638	7-12	1
1539639	6-5	1
1539815	2-47	14
1539962	2-19	16
	4-9	30
1540643	1-5	4
1540805	4-5	19
1540859	1-5	23
1540869	1-5	30
1540944	4-53	34
	4-59	34
1541231	4-15	17
	5-9	14
	5-15	15
	5-25	5
1541232	5-9	15
	5-15	16
	5-25	6
1541556	5-13	5
	5-18	5
	5-27	12
1541921	5-3	3
1541991	4-40	20
	4-46	20
	4-53	27
	4-59	27
	4-60	45
1541992	4-40	20
	4-46	20
	4-53	27
	4-59	27
	4-60	45
1542082	3-35	27
	3-37	18
1542439	4-7	12
	4-11	1
	4-15	22
1542440	3-35	30
	3-37	21
1542500	3-37	8
1542546	9-13	10
	9-17	10
1542772	3-39	5
1542773	3-39	8

©2006 HYSTER COMPANY

NUMERICAL INDEX (Continued)

PART NO.	PG	ITEM
1542864	6-3	34
1543094	5-21	14
	5-23	14
1543096	5-21	14
	5-23	14
1543097	5-21	14
	5-23	14
1543098	5-21	14
	5-23	14
1543102	5-21	24
	5-23	24
	5-31	22
	5-33	22
1543105	5-21	23
	5-23	23
1543553	4-71	13
	4-73	12
1543691	3-13	41
	3-35	29
	3-37	22
1543698	8-3	18
	8-5	18
1543842	8-3	19
	8-5	19
1543982	13-3	8
1544153	1-7	2
	8-3	31
	8-5	38
	8-9	10
1544157	7-3	6
1544216	5-13	4
	5-18	4
	5-27	30
1544217	5-13	3
	5-18	3
	5-27	31
1544218	5-9	32
	5-15	34
	5-27	20
1544232	6-5	1
1544233	7-12	1
1544255	4-20	7
	4-21	7
1544466	8-8	
1544566	7-3	11
	7-5	
1544758	5-35	11
1544759	5-35	13
1544975	9-3	18
	9-6	
1545202	4-42	39
	4-48	39
	4-53	37
	4-59	37
1545443	4-9	21
	4-11	27
1545444	4-9	22
	4-11	26
1545546	5-35	3
1546673	4-75	3
	4-77	3
	4-83	7
	4-85	7
1546697	4-42	39
	4-48	39
	4-53	37
	4-59	37
1547368	4-75	6
	4-77	6
1547369	4-75	13
	4-77	13
1547447	5-9	7
	5-15	7
	5-25	13
1547460	1-5	37
1547467	1-5	37
1547468	1-5	37
1547479	4-71	36
	4-73	35
1547482	4-71	6
	4-71	9
	4-73	8
1547550	3-39	1
1547712	2-11	15
	2-17	15
1547756	13-3	6
1547757	6-4	64
1547849	8-3	4
	8-5	4
	8-8	2
1548352	2-21	12
	4-9	24
1548517	4-35	3
	4-67	4
	4-83	3
	4-83	9
	4-85	6
1548519	4-35	3
	4-67	4
	4-83	3
	4-83	9
	4-85	6
1548756	1-11	1
1549398	4-11	20
1549681	11-17	1
1549685	11-17	7
	12-21	7
	13-9	16
1549691	11-17	
1549702	13-9	1
1549704	13-9	1
1549706	13-13	2
1549715	13-15	6
	13-17	10
1549717	13-15	9
	13-17	9
1549718	13-15	10
	13-17	8
1549965	11-19	3
1549968	11-19	3
1549995	11-19	2
1549998	11-19	2
1550020	11-19	14
	12-23	4
1550070	13-15	8
	13-17	3
1550075	11-5	1
1550078	11-5	1
1550126	12-17	2
1550128	11-13	1
	12-17	2
1550135	12-17	2
1550561	5-35	12
1550565	5-2	8
	5-9	
	5-13	
1550566	5-13	1
1550567	5-13	16
	5-18	17
	5-28	49
1550571	5-13	10
	5-18	10
1550572	5-13	11
	5-18	12
	5-28	47
1550573	5-9	26
	5-13	9
	5-15	28
1550574	5-13	18
	5-18	19
	5-27	18
1550575	5-9	25
1550576	5-9	6
	5-15	12
1550577	5-9	6
1550578	5-9	8
	5-15	8
	5-25	11
1550585	5-13	6
	5-18	6
	5-27	23
1550646	4-25	7
1550647	4-25	3
1550747	2-51	16
1551377	8-9	8
1551452	3-29	13
1551839	7-3	13
1552107	4-25	9
1552525	5-21	6
	5-23	6
1552768	6-4	43
	8-7	
1552769	6-4	43
	8-7	
1552770	8-7	29
1552771	8-7	29
1553122	5-3	1
1553123	5-3	1
1553265	2-51	1
1553266	2-27	14
1553270	5-9	35
	5-15	37
1553403	5-9	43
	5-16	52
	5-27	15
1553475	5-9	36
	5-16	51
1553710	2-41	1
1553715	2-31	4
1553716	2-31	2
1553717	2-31	3
1553762	2-37	24
1553763	2-37	27
1553774	2-21	8
1553776	2-19	10
1553799	2-21	21
1553832	2-21	15
1553838	2-21	14
1553878	2-33	16
1553897	3-39	10
	4-32	1
	8-3	3
	8-5	3
	8-9	6
1553943	2-29	23
1553945	2-29	17
1553984	4-9	12
1553985	4-9	27

©2006 HYSTER COMPANY

NUMERICAL INDEX (Continued)

PART NO.	PG	ITEM
1553996	4-9	19
1553997	4-9	18
1554030	4-9	26
	4-36	
1554032	4-36	3
1554033	4-36	1
1554034	4-36	2
1554125	1-61	7
1554359	4-40	17
	4-41	35
	4-41	36
	4-42	39
	4-46	17
	4-47	36
	4-48	39
	4-48	40
	4-52	14
	4-53	33
	4-53	35
	4-53	37
	4-58	14
	4-58	16
	4-59	35
	4-59	37
	4-89	6
1554902	4-19	3
	4-23	10
1555731	4-25	14
1555755	1-7	8
1555786	1-7	4
1556342	4-9	7
	4-11	15
1556475	8-3	23
	8-5	10
1556623	4-11	14
1556838	4-11	24
1556962	3-35	6
1557478	2-5	1
1557479	2-5	1
1557697	1-3	6
1557737	2-5	5
1557767	2-5	2
1558025	1-61	6
1558034	1-49	26
	1-53	15
1558036	1-59	4
1558156	4-83	9
	4-85	8
1558219	1-13	2
1558226	4-71	14
	4-73	15
1558228	4-71	38
	4-73	4
1558294	1-49	1
	1-53	1
1558515	5-13	33
	5-18	30
	5-27	4
1559049	4-75	1
	4-75	4
	4-77	1
	4-77	4
1559418	3-11	3
1559419	3-11	2
1559420	3-11	4
1559928	4-5	9
1560015	4-15	24
1560091	4-11	9
	4-15	29
1560121	4-11	8
1560278	2-11	12
	2-17	12
1560441	4-71	32
	4-73	31
1560447	4-29	6
1560647	1-3	23
1560678	4-15	7
1560681	9-21	15
	9-23	13
1560682	9-21	9
1561015	1-3	36
1561518	4-71	4
	4-73	2
1561559	4-29	10
1561737	2-43	1
1561755	4-29	10
1561759	4-7	11
1561780	5-7	2
1562088	3-35	26
	3-37	20
1562310	5-35	15
1562353	1-27	23
1562489	7-5	1
1562492	7-5	4
1562493	7-5	5
1562496	7-5	8
1562501	7-5	13
1562505	7-5	17
1562509	7-5	21
1562648	5-4	2
	5-7	11
1562649	4-79	3
	4-79	5
	4-79	6
	4-79	7
	4-81	3
	4-81	5
	4-81	6
	4-81	7
	4-81	8
	4-81	9
1563207	1-19	1
	1-21	5
1563208	1-19	12
	1-21	14
1563210	1-17	2
	1-19	10
	1-21	11
1563211	1-17	2
	1-19	11
	1-21	10
1563215	1-15	10
	1-17	11
1563227	1-17	6
1563230	1-19	3
	1-21	3
1563231	1-19	3
	1-21	12
1563351	1-15	1
1563369	1-3	24
	1-3	24
	1-3	24
1563497	1-3	23
1563591	11-9	5
	11-11	5
1563836	1-3	23
1563841	4-19	12
	4-29	18
1563895	1-17	5
1564009	1-3	3
1564026	1-5	20
1564028	1-5	27
1564044	4-11	4
	4-15	30
1564061	3-17	25
	3-19	37
1564392	3-29	20
1564396	1-5	26
1564515	9-3	5
1564526	3-40	4
	8-3	7
	8-5	8
1564529	1-5	33
1564747	9-11	5
	9-13	11
	9-15	5
	9-17	11
1564752	3-35	1
1565076	4-29	11
1565084	1-11	4
1565098	4-75	6
	4-77	6
1565125	4-29	8
1565127	5-4	1
	5-7	10
1565150	2-5	8
1565199	3-5	9
1565201	3-8	2
1565211	3-5	6
1565212	3-5	4
	3-7	4
1565325	6-3	22
1565453	2-5	7
1565545	1-3	29
1565832	2-27	15
1565917	2-45	10
	2-47	12
1565946	2-13	15
1566116	4-63	25
	4-67	13
1566117	4-63	27
	4-67	13
1566131	8-3	34
	8-5	40
1566141	8-3	34
	8-5	40
1566142	8-3	34
	8-5	40
1566143	8-3	34
	8-5	40
1566144	8-3	34
	8-5	40
1566145	4-15	24
1566146	4-15	24
1566166	5-13	25
1566168	5-13	30
1566169	5-13	37
	5-18	7
1566227	4-63	17
	4-63	18
1566324	2-15	7
	2-45	17
	2-47	15
1566329	5-2	3
1566420	3-5	8
1566453	1-19	1
	1-21	5
1566457	5-10	50

©2006 HYSTER COMPANY

NUMERICAL INDEX (Continued)

PART NO.	PG	ITEM
1566461	6-4	64
1566462	6-4	64
1566545	1-8	2
1566654	4-11	23
	4-15	6
1566726	1-13	7
1566767	1-45	26
1566951	1-27	10
1566953	1-27	9
1567333	4-71	7
	4-73	7
1568075	8-3	17
1568076	8-5	27
1568077	8-5	28
1568082	3-5	16
	3-7	13
1568182	9-6	6
1568199	9-3	6
1568243	8-3	27
1568245	8-5	34
1568253	8-5	21
1568256	8-5	32
1568271	7-9	3
1568839	3-17	35
	3-19	30
	3-21	3
	3-25	3
1568844	3-17	22
	3-19	6
	3-21	36
	3-25	6
1568853	3-17	23
	3-19	5
	3-21	5
	3-25	5
1569079	2-43	6
1569277	13-4	2
1569278	13-4	2
1569544	3-35	31
1569602	9-29	4
1569616	5-13	27
1569768	5-9	45
	5-16	54
1569912	6-3	13
1569913	6-3	13
1569914	6-3	13
1569915	6-3	13
1569995	4-25	11
1570290	8-3	8
	8-5	9
1570298	8-3	32
1570300	8-5	33
1570337	9-6	7
1570338	9-6	1
1570340	9-6	2
1570341	9-6	1
1570342	9-6	3
1570346	9-6	4
1570360	5-9	4
	5-15	4
	5-25	2
1570361	5-35	
1572387	2-41	
1572588	4-40	19
	4-52	16
1572593	2-39	4
1572595	2-39	4
1572597	2-39	4
1573015	2-19	12
1573021	2-21	19
1573117	2-21	7
1573118	2-21	2
1573119	2-21	11
	2-23	
	2-25	2
1573120	2-21	22
1573176	2-29	7
1573179	2-29	5
1573549	4-35	5
1573562	2-21	3
1573564	2-21	17
1573676	11-13	15
1573677	12-17	24
1574111	3-11	3
1574131	3-11	4
1574260	3-11	2
1574271	1-5	24
1574273	1-5	31
1574301	1-47	21
	1-55	22
1578453	9-11	1
1578454	9-13	1
	9-15	1
1578455	9-17	1
1578553	3-13	43
1578671	9-4	9
1578672	9-4	10
	9-5	10
1578673	9-4	5
	9-5	5
1578693	9-5	9
1578698	1-3	2
1578703	9-26	4
	9-35	1
1578704	9-26	6
	9-39	1
1578705	9-21	16
	9-23	14
1578707	9-19	3
	9-24	4
	9-39	2
1578710	9-33	3
	9-33	10
1578711	9-31	13
	9-35	10
	9-37	10
1578712	9-24	3
	9-29	2
1578713	9-21	1
	9-23	6
	9-31	2
	9-35	2
	9-37	2
1578714	9-29	11
1578715	9-39	4
1578718	9-35	11
1578741	9-26	5
	9-37	1
1578744	9-19	5
	9-23	1
1578745	9-19	6
	9-23	2
1578746	9-19	7
	9-24	1
1578748	9-21	18
1578814	9-19	4
	9-21	
1578816	9-19	2
	9-21	18
1578875	9-29	7
1578876	9-29	10
1578878	9-31	12
	9-35	9
	9-37	9
1578881	9-29	16
1578882	9-31	7
	9-35	7
	9-37	7
1578883	9-31	8
	9-35	8
	9-37	8
1578886	9-35	14
1578887	9-31	14
1578888	9-29	8
1578889	9-31	6
	9-35	6
	9-37	6
1578904	9-29	5
1578905	9-31	5
1578906	9-35	3
1578907	9-37	3
1578908	9-26	11
1578911	9-26	10
	9-29	6
1578912	9-31	13
	9-35	10
	9-37	11
1578918	9-33	4
1578934	9-33	5
1578940	9-21	2
1578943	9-21	4
1579677	3-29	15
1579847	4-25	13
1579908	7-7	38
1580097	9-21	24
1580099	9-31	11
1580131	9-24	10
	9-39	3
1580132	9-29	15
1580133	9-21	8
1580146	9-19	9
1580147	9-23	5
1580148	9-19	10
1580151	9-39	4
1580155	9-24	2
1580156	9-24	2
1580293	1-3	5
1580426	6-5	3
	6-6	3
1580427	6-5	4
	6-6	4
1580428	7-12	3
1580429	7-12	4
1580430	7-12	5
1580445	9-29	18
1580749	9-29	12
1580759	9-31	10
1580760	9-31	9
1580794	1-3	19
1581048	2-21	20
1581051	2-21	20
1581052	2-21	20
1581055	1-33	1
1581098	5-21	8
	5-23	8
	5-31	8
	5-33	8
1581099	5-21	9

©2006 HYSTER COMPANY

NUMERICAL INDEX (Continued)

PART NO.	PG	ITEM
	5-23	9
	5-31	9
	5-33	9
1581100	5-21	10
	5-23	10
	5-31	10
	5-33	10
1581104	5-21	3
	5-31	3
1581106	5-21	21
	5-23	20
	5-31	20
	5-33	19
1581107	5-21	18
	5-23	18
	5-31	18
	5-33	18
1581108	5-21	7
	5-23	7
	5-31	7
	5-33	7
1581114	5-23	3
	5-33	3
1581116	5-21	2
	5-23	2
	5-31	2
	5-33	2
1581117	5-21	19
	5-23	19
1581313	4-71	40
	4-73	39
1581315	4-71	41
1581391	2-9	10
1581392	2-9	10
	2-43	9
1581438	3-3	1
	3-5	1
	3-7	1
1581439	3-3	2
	3-5	17
	3-7	14
1581526	4-11	31
1581534	9-5	6
1581535	9-4	8
	9-5	8
1581536	9-4	3
	9-5	3
1581537	9-4	6
1581556	3-17	16
	3-19	9
	3-25	34
1581557	3-21	40
	3-25	12
1581558	12-23	24
1581559	3-17	32
	3-19	13
	3-21	28
	3-25	18
	11-19	13
	12-23	34
1581560	11-19	11
	12-23	11
1581562	12-17	15
1581564	9-41	3
	10-15	14
	11-19	10
	12-17	5
	12-23	9
1581566	10-15	4
	11-19	25
	12-23	27
1581567	12-23	25
1581569	1-5	16
1581579	3-17	20
	3-19	33
	3-21	32
	3-25	16
1581580	12-9	30
1581582	10-15	2
	11-19	23
	12-23	30
1581583	3-17	11
	3-19	17
	3-21	23
1581591	12-17	13
1581592	11-19	9
	12-23	10
1581593	3-25	40
1581670	4-29	10
1581739	3-17	5
	3-17	13
	3-19	15
	3-19	25
	3-21	17
	3-25	29
1581740	3-17	8
	3-19	20
	3-25	30
1581741	11-19	17
1581829	12-9	26
	12-17	6
1581830	10-15	13
	11-19	30
	12-23	3
1581836	10-15	12
	12-23	36
1581841	12-23	18
1581842	10-15	9
	11-19	5
	12-23	20
1581843	11-20	38
1581848	3-25	22
	9-41	2
1581849	11-19	8
	12-9	23
	12-17	12
	12-17	22
	12-23	8
1581852	12-9	24
	12-17	21
1581858	7-7	37
1581859	9-21	17
	9-23	12
1581860	9-21	11
	9-23	11
1581861	9-21	12
1581862	9-29	3
1581885	3-17	15
	3-19	10
	3-25	33
1581887	3-21	7
	3-25	23
1581888	3-21	8
	3-25	24
1581898	3-17	12
	3-19	16
	3-21	21
	3-25	41
1581899	3-17	4
	3-19	26
	3-21	16
	3-25	43
1582150	4-15	8
1582151	4-15	10
1582160	9-3	30
1582161	9-3	29
1582222	2-11	6
	2-11	23
	2-13	1
	2-15	1
	2-17	6
	2-17	23
	2-45	9
	2-45	13
	2-47	11
1582286	1-3	15
1582287	1-3	14
1582302	3-35	10
1582303	3-35	9
1582321	2-21	10
1582323	2-21	6
1582324	2-21	13
	4-9	20
1582412	3-13	2
	3-17	
1582413	3-17	33
1582442	4-5	2
1582449	5-7	8
1582464	4-5	1
	4-7	3
	4-11	10
	4-15	3
	4-19	7
1582465	4-19	8
1582484	4-75	7
	4-77	7
1582486	4-75	8
	4-77	8
1583593	2-21	20
1583611	1-3	22
	1-5	18
	1-8	1
	1-47	19
	1-55	10
	2-9	3
	2-43	3
	3-3	8
	3-5	11
	3-7	9
	3-19	22
	3-25	28
	8-3	5
	8-5	7
	9-11	3
	9-15	3
	9-17	7
	13-4	3
1584269	3-13	2
	3-21	
1584270	3-21	9
1585212	2-45	17
	2-47	15
1585235	13-3	2
1585436	4-5	3
1585483	2-11	22
	2-17	22
1585575	8-3	16
	8-5	26

©2006 HYSTER COMPANY

NUMERICAL INDEX (Continued)

PART NO.	PG	ITEM
1585581	1-3	10
1585595	2-11	20
	2-13	14
	2-15	14
	2-17	20
1585745	5-9	20
	5-15	21
1585765	1-3	28
1585835	3-17	10
	3-19	18
	3-21	22
	3-25	38
1585906	4-25	
1585907	4-25	
1585908	4-25	
1585909	4-25	
1586013	2-13	10
	2-27	16
	2-47	2
	3-13	3
	3-17	14
	3-17	27
	3-19	38
	3-21	39
	3-25	44
	7-9	30
	9-41	9
	9-43	12
	9-45	12
1586016	9-33	13
1586017	9-33	12
1586018	9-33	2
	9-33	9
1586019	9-33	11
1586020	9-33	7
1586021	9-33	6
1586022	3-25	21
1586279	9-29	17
	9-33	14
1586280	9-29	9
1586428	4-29	15
1586430	13-4	4
1586432	1-7	6
1586440	1-27	16
1586495	1-5	2
	1-13	4
	4-11	30
	4-29	13
1586627	8-3	21
	8-5	5
	9-3	20
	9-9	11
	9-11	13
	9-15	14
	9-17	23
1586629	9-13	22
1586630	1-7	9
1586759	4-29	12
1587839	4-32	3
1587843	2-29	
	2-31	1
	2-33	
	2-35	
	2-37	
	2-39	
1589312	2-11	18
1589377	1-29	4
1589397	1-29	5
1589621	4-32	2
1589787	1-47	15
	1-55	17
1590033	8-3	35
	8-5	41
1590113	9-26	7
	9-33	8
1590114	9-26	8
	9-33	1
1590839	5-35	8
1590865	5-35	7
1590866	5-35	6
1591185	4-25	16
1591454	4-15	23
1591652	1-15	4
1593331	4-5	11
1593409	1-15	
1593411	1-17	
1593412	1-17	
1593413	1-19	
1593414	1-19	
1593415	1-17	
1593416	1-17	
1593417	1-19	
1593418	1-19	
1593421	1-21	1
1593422	1-21	1
1593423	1-21	1
1593424	1-21	1
1593629	1-50	41
	1-53	20
1593694	6-3	24
1593763	6-3	23
1593917	8-7	
1593918	8-7	
1593919	8-7	15
1594055	4-15	20
1594144	2-21	24
	3-13	43
1594426	9-26	2
	9-29	1
1594427	9-26	3
	9-31	1
1594428	9-29	12
1595420	5-9	12
	5-15	14
	5-21	
1595421	5-9	13
	5-15	13
	5-23	
1595425	5-21	25
	5-23	25
	5-31	23
	5-33	23
1595427	5-21	20
	5-23	21
	5-31	19
	5-33	20
1595731	4-32	5
1595826	1-3	21
1596404	12-17	20
1596406	12-17	8
1596407	12-17	9
1596408	12-17	10
1597381	9-41	4
1597560	11-19	30
	12-24	40
1597565	12-23	21
1597644	3-33	1
1597709	2-65	6
1597710	2-65	8
1598210	1-61	25
1598211	1-61	12
1598221	4-25	16
1598222	4-25	16
1598223	4-26	16
1598283	4-25	2
1598294	1-61	26
1598298	1-61	27
1598299	1-61	28
1598303	12-23	5
1598305	1-27	14
1598330	1-27	14
1598331	1-27	14
1598332	1-59	13
1598389	1-50	40
	1-53	6
	1-53	17
1598390	1-49	30
1598392	1-53	5
1598393	1-49	17
	1-53	3
1598394	1-49	16
	1-53	4
1598395	1-53	19
1598397	1-53	16
1598398	1-49	3
1598399	1-49	9
1598400	1-49	11
1598401	1-49	10
1598404	1-49	31
1598406	1-49	36
1598408	1-49	33
1598409	1-49	38
1598410	1-49	39
1598411	1-49	15
1598412	1-49	32
1598414	1-49	20
1598504	1-15	2
	1-17	8
	1-19	2
	1-21	4
1598536	6-3	21
1598669	1-49	29
1598670	1-49	24
	1-49	31
1598671	1-49	31
1598672	1-49	31
1598673	1-49	31
1598674	1-49	31
1598675	1-49	31
1599203	1-13	1
1599209	1-13	1
1599415	1-47	22
	1-55	3
1599440	2-63	1
1599441	2-57	13
	2-63	2
1599442	2-63	3
1599443	2-63	12
1599444	2-63	5
1599445	2-63	8
	2-67	12
1599446	2-63	6
1599448	2-55	4
	2-63	9
	2-65	4
	2-67	11
1599449	2-63	7
1599451	2-63	4

©2006 HYSTER COMPANY

NUMERICAL INDEX (Continued)

PART NO.	PG	ITEM
1599454	2-63	13
1599455	2-63	14
1599458	2-53	9
	2-55	7
	2-63	15
1599459	2-53	1
1599460	2-53	2
1599461	2-53	3
1599462	2-53	15
1599463	2-53	16
	2-57	6
1599464	2-53	17
	2-57	7
1599465	2-53	12
1599466	2-53	10
1599467	2-53	13
1599468	2-63	16
	2-67	8
1599469	2-63	17
1599470	2-53	5
	2-57	46
	2-59	7
	2-67	5
1599471	2-53	8
1599472	2-53	7
1599473	2-53	4
1599475	2-49	3
	2-53	11
1599476	2-53	6
1599478	2-53	18
	2-55	9
1599479	2-55	1
1599480	2-55	2
1599481	2-55	3
1599483	2-55	5
1599484	2-55	6
1599485	2-55	8
1599486	2-57	45
1599487	2-57	44
1599488	2-57	10
1599489	2-57	15
1599516	2-57	16
1599517	2-57	17
1599518	2-57	18
1599519	2-57	19
1599520	2-57	20
1599521	2-57	21
1599522	2-57	43
1599523	2-57	42
1599524	2-57	10
1599525	2-57	11
1599526	2-57	12
1599528	2-57	14
1599529	2-57	22
1599530	2-57	23
1599531	2-57	24
1599532	2-57	25
1599533	2-57	26
1599534	2-57	27
1599535	2-57	28
1599536	2-57	29
	2-57	32
1599537	2-57	30
	2-57	33
1599538	2-57	31
1599539	2-57	34
1599540	2-57	35
1599541	2-57	36
1599543	2-49	2
1599544	2-57	8
1599545	2-57	1
1599546	2-57	2
1599547	2-57	3
1599548	2-57	4
1599549	2-57	5
1599550	2-57	9
1599552	2-57	40
1599553	2-57	38
1599555	2-57	47
1599556	2-49	1
1599557	2-57	39
1599559	2-49	4
1599560	2-49	5
1599561	2-49	6
1599562	2-49	7
1599563	2-49	8
1599565	2-49	10
1599567	2-49	11
1599568	2-49	12
1599569	2-59	1
1599570	2-59	2
1599571	2-59	3
1599572	2-59	4
1599573	2-59	5
1599574	2-59	6
	2-61	11
1599576	2-59	9
1599577	2-59	10
1599578	2-59	11
1599579	2-59	8
	2-65	5
1599580	2-59	14
1599581	2-59	13
1599582	2-59	12
1599583	2-61	9
1599584	2-61	10
1599585	2-61	12
1599586	2-61	13
1599588	2-61	16
1599589	2-61	15
1599590	2-61	14
1599591	2-61	18
1599592	2-61	1
1599593	2-61	2
1599594	2-61	4
1599595	2-61	3
1599596	2-61	5
1599597	2-61	6
1599598	2-61	8
1599600	2-61	1
1599601	2-61	2
1599604	2-67	1
1599605	2-67	3
1599606	2-67	2
1599607	2-67	4
1599610	2-67	7
1599611	2-67	9
1599612	2-67	10
1599613	2-67	13
1599616	2-67	14
1599793	2-67	15
1599795	2-65	3
1599796	2-65	2
1599798	2-65	9
1599800	2-65	7
1599801	2-65	10
	3-31	8
1599802	2-65	12
1599803	2-65	11
1599805	2-65	1
1599818	2-57	41
	3-33	2
1599819	3-33	4
1599820	3-33	3
1599821	3-33	14
1599822	3-33	15
	3-33	17
1599823	3-33	16
1599824	3-33	13
1599825	3-33	12
1599826	3-33	11
1599827	3-33	10
1599828	3-33	5
1599829	3-33	6
1599830	3-33	9
1599831	3-33	8
1599832	3-33	7
1599833	3-31	1
1599834	3-31	2
1599835	3-31	3
1599836	3-31	4
1599837	3-31	5
1599839	3-31	7
1599841	3-31	9
1599842	3-31	10
1599843	3-31	11
	4-16	36
1599845	4-16	34
1599847	4-16	34
1599848	4-16	34
1599850	4-16	34
1599851	4-16	34
1599853	4-16	34
1599860	4-16	34
1599867	4-16	34
1599869	4-37	1
1599873	4-37	1
1599874	4-37	1
1599875	4-37	1
1599876	4-37	1
1599878	4-37	1
1599879	4-37	1
1599893	4-37	2
1599894	4-37	3
1599895	4-37	5
1599896	4-37	6
1599897	4-37	4
1599898	2-49	13
	2-53	19
	2-55	10
	2-57	48
	2-63	18
	2-65	13
	2-67	16
	3-33	25
1599907	3-33	19
1599908	3-33	18
1599909	3-33	21
1599910	3-33	23
1599911	3-33	22
1599912	3-33	20
1599913	3-33	24
1599914	2-59	15
	3-33	1
1600093	3-33	1
1600190	4-19	2
1601748	1-27	15
1603021	4-35	3

©2006 HYSTER COMPANY

NUMERICAL INDEX (Continued)

PART NO.	PG	ITEM
	4-67	4
	4-83	3
	4-83	9
	4-85	6
1603236	4-35	3
	4-67	4
	4-83	3
	4-83	9
	4-85	6
1603274	13-15	13
1603275	13-15	14
1603276	13-15	12
1603277	13-15	11
1603493	6-5	1
1603498	7-12	1
1603499	7-12	1
1605467	2-27	10
1605676	11-13	30
	12-17	29
1605688	11-19	20
1605990	1-8	5
1606413	13-17	6
1606414	13-17	7
1606415	13-17	5
1606416	13-17	4
1606544	4-29	21
	4-35	4
1606659	1-3	24
1606735	4-35	6
1606855	11-19	19
1608412	3-35	33
	3-40	
1608616	3-33	1
1608875	1-3	4
1609374	3-35	23
	3-37	1
1610746	5-35	11
1610914	11-19	18
	12-23	17
1610939	10-15	11
1610940	2-13	9
	2-15	9
	2-17	26
	2-47	1
1612223	4-31	7
1612916	5-9	41
	5-16	48
	5-27	6
1612918	5-9	40
	5-16	47
	5-27	7
1613695	5-9	1
	5-15	1
	5-25	26
	5-35	
1615601	5-25	22
	5-27	27
1615602	5-25	18
	5-27	44
1615603	5-27	25
1615671	3-21	1
	3-25	1
1615800	2-51	11
	2-61	17
1615804	5-27	16
1616222	4-31	8
1616232	3-13	43
1616236	2-21	11
	2-23	6
1616246	1-3	1
1616491	3-39	12
1616981	4-5	5
1617080	4-5	3
1617575	10-3	11
	11-3	11
	12-3	11
1617657	11-19	15
	12-23	13
1617658	11-19	6
1618311	6-3	16
1619744	11-19	29
1620009	2-21	11
	2-23	7
1622886	2-51	10
1622887	5-27	43
1622888	5-27	1
1622977	1-3	37
1623093	2-27	19
	2-51	17
1623280	4-85	1
1623281	4-85	1
1623364	1-61	24
1623377	1-61	2
1623382	1-47	18
	1-55	21
	1-59	20
1623391	1-49	8
	1-53	8
1623393	1-49	37
	1-53	10
1623395	1-49	4
1623397	1-49	34
1623400	1-45	33
	1-49	25
1623402	1-49	22
1623403	1-49	28
1623836	5-18	22
1624019	1-3	8
1624401	5-15	38
	5-28	57
1624405	5-15	39
1624408	5-27	42
1624414	5-18	11
1624415	5-15	26
1624503	5-15	27
1624504	5-18	1
1624509	5-15	6
1624727	2-27	3
1624904	9-3	13
1625312	3-13	26
1625659	2-15	15
1625999	2-27	20
	2-51	18
1626727	4-59	29
1627172	1-57	5
1627173	1-57	4
1627174	1-57	3
1627177	1-57	4
1627178	1-57	3
1627453	5-27	40
1627465	5-28	48
1627835	1-3	32
1628164	3-21	9
1629124	3-21	
1632260	5-2	8
	5-15	
	5-18	
1632741	5-15	41
	5-28	58
1634651	5-15	43
1634941	1-47	9
	1-55	13
1635509	1-47	13
	1-55	16
1636610	1-47	17
	1-55	19
1636611	1-47	16
	1-55	20
1636640	5-18	9
	5-25	17
1636645	5-27	36
1636706	1-3	1
1636797	3-5	12
	3-7	7
1636853	1-47	4
	1-55	5
1637307	1-47	12
	1-55	15
1637661	3-19	21
	3-25	27
1638706	4-5	20
1638791	5-25	16
	5-27	37
1639489	1-49	18
	1-53	2
1639791	2-23	2
1640178	3-25	25
1640179	3-19	1
1640249	3-19	
1640406	3-25	
1640589	7-3	11
	7-5	
1640776	1-8	4
1640800	1-49	31
1641351	6-3	16
1641683	1-61	5
1641684	1-61	1
1641685	1-61	8
1641686	1-61	23
1641687	1-61	9
1641688	1-61	4
1641870	1-45	32
1641871	1-45	33
1642135	1-45	
	1-47	
	1-49	
	1-53	
	1-59	
	1-61	
1642136	1-55	
	1-59	
	1-61	
1642137	1-47	1
1642138	1-55	1
1642429	1-57	
1644398	4-29	20
1644862	1-45	33
1645074	7-3	15
1646724	1-59	15
1646726	1-59	18
1646727	1-59	12
1646728	1-45	30
	1-59	19
1646729	1-49	35
	1-59	17
1646871	5-2	8
	5-25	
	5-27	

©2006 HYSTER COMPANY

NUMERICAL INDEX (Continued)

PART NO.	PG	ITEM
1646879	5-25	15
	5-27	29
	5-33	
1646880	5-25	20
	5-27	28
	5-31	
1647528	7-5	1
1648259	4-35	7
1650819	5-35	4
1650878	1-47	6
	1-55	7
1651119	3-17	37
	3-19	29
	3-21	27
	3-25	17
1651721	1-59	7
1651723	1-59	1
1651725	1-45	22
1651727	1-45	20
1651729	1-45	18
1651735	1-45	10
1651739	1-47	1
	1-49	2
	1-55	1
1651741	1-45	32
	1-53	
1651795	1-45	32
	1-45	33
1651798	1-45	33
	1-49	
1651831	1-45	32
	1-45	33
1652215	2-23	9
1652216	2-23	1
1652217	2-23	5
1652430	1-57	
1652433	1-57	2
1652434	1-57	1
1652436	1-57	2
1652437	1-57	1
1652575	5-28	59
1653576	1-45	2
	1-47	2
	1-55	4
1653577	1-45	1
1653578	1-45	4
1653630	1-61	19
1653631	1-59	16
1653632	1-59	11
1653633	1-45	3
1653634	1-45	12
1653635	1-45	7
1653642	1-45	29
1653644	1-55	1
1653645	1-47	1
	1-55	1
1653646	1-47	1
	1-55	1
1653648	1-47	1
1653936	1-49	18
1653967	1-53	2
1653969	1-53	2
1653970	1-49	18
1653971	1-49	6
1653973	1-53	18
1654298	1-49	31
2013099	11-15	3
	12-19	3
2021286	6-4	36
	6-4	44
2021288	6-3	26
2021341	8-3	14
	8-5	17
2021353	8-3	13
	8-5	16
2021394	2-13	12
	2-15	12
	2-17	29
	2-47	16
2021438	2-39	15
2021442	2-39	14
2021554	6-4	51
2021555	6-4	52
2021557	6-4	49
2021588	6-4	54
2021592	6-4	53
2021683	3-29	18
2021685	3-29	16
2021800	7-9	17
2021898	7-9	21
2021900	7-9	33
2021918	6-4	55
2022309	2-29	22
2022352	6-3	9
2022655	2-35	4
2026608	4-9	28
2026773	8-7	1
2026774	8-7	1
2026775	8-7	21
2026776	8-7	3
2026777	8-7	6
2026778	8-7	6
2026780	8-7	8
2026781	8-7	9
2026782	8-7	10
2026783	8-7	20
2026784	8-7	31
2026785	8-7	32
2026786	8-7	33
2026787	8-7	30
2026861	6-3	4
2027655	1-5	9
2027828	6-4	37
2027949	3-35	17
	3-37	4
2028644	2-29	28
2028645	2-29	30
2028853	2-31	23
2028862	6-3	12
2028927	2-41	13
2029081	2-41	14
2029086	2-31	24
2029095	2-37	3
2029097	2-37	28
2029098	2-37	25
2029100	2-33	9
2029101	2-33	11
2029102	2-33	12
2029103	2-33	21
2029108	2-29	18
2029112	2-29	26
2029116	2-29	10
2029120	2-29	27
2034460	1-27	4
2038100	1-29	3
2040957	8-7	35
2041520	8-3	34
	8-5	40
2043528	13-7	3
	13-9	3
	13-10	
2043530	13-7	6
	13-9	6
2043531	13-7	4
	13-9	4
2043533	13-7	5
	13-9	5
2044370	7-10	7
2044379	9-43	8
	9-45	8
2044712	4-20	1
	4-21	1
2045025	2-29	9
2045026	2-29	8
2045030	2-39	10
2045033	2-39	9
2045036	2-29	43
	2-31	28
2045884	8-7	22
2046336	11-9	
2046367	11-11	
2047064	9-43	6
	9-45	6
2051128	2-31	22
2051834	2-23	10
2051835	2-23	11
2051836	2-23	8
2051839	2-23	4
2054381	6-3	21
2054792	6-3	25
2055193	3-3	12
	3-11	
2055917	7-9	26
	7-10	
2056524	2-11	19
	2-17	19
2056822	1-5	6
2056823	1-5	1
2056824	4-29	7
2056826	4-29	7
2057948	4-23	8
2058863	2-9	8
2058909	4-19	11
	4-81	
2059211	2-9	15
2059412	9-43	1
	9-45	1
2059413	9-43	1
	9-45	1
2059414	9-43	1
	9-45	1
2059935	6-3	17
2059936	6-4	45
2059937	8-3	36
	8-5	42
2060012	2-9	6
2060015	2-9	6
2060032	4-23	6
2060033	4-23	11
2060107	10-3	
	10-5	
2060112	10-3	
	10-5	
2060117	10-3	
	10-5	
2060198	4-19	11
	4-79	
2060696	7-9	32

©2006 HYSTER COMPANY

NUMERICAL INDEX (Continued)

PART NO.	PG	ITEM
2060808	9-3	23
2060837	4-23	1
2060838	4-23	6
2060844	4-15	1
	4-75	
2060863	7-7	
	9-19	8
	9-26	9
2060957	2-11	19
	2-13	13
	2-17	19
2061383	4-11	9
2061646	9-9	26
2061778	9-3	11
2062070	4-25	10
2062589	3-29	14
2062718	4-25	8
2063093	4-5	9
	4-20	
2063842	3-35	3
	3-39	11
2063991	9-11	15
	9-13	24
	9-15	16
	9-17	25
2064554	8-3	26
	8-5	11
2064790	4-25	14
2064807	4-25	14
2064827	9-26	1
2064836	4-29	16
2064844	9-26	
2064855	9-26	1
2064856	9-26	
2064883	9-19	1
2064884	9-19	1
2064892	9-11	16
	9-13	25
	9-19	
2064893	9-15	17
	9-17	26
	9-19	
2064929	13-3	1
2065051	9-9	15
2065052	9-9	22
2065098	4-15	24
2065666	1-5	7
2065667	1-5	11
	1-5	13
2065668	1-5	8
2065670	13-11	2
2065674	13-13	1
2065745	4-5	17
2065855	4-11	6
	4-71	1
2066041	9-9	7
2066045	9-9	1
2066344	4-15	29
2066482	4-23	4
2066483	4-23	12
2066484	4-23	5
2066485	4-23	3
2066629	2-21	1
2066782	9-9	8
2066783	9-9	9
2067044	6-5	2
	6-6	2
2067045	6-5	2
2067046	6-5	2
	6-6	2
2067047	6-5	2
2067048	6-5	2
2067051	7-12	2
2067052	7-12	2
2067053	7-12	2
2067140	13-13	2
2067141	13-13	1
2067391	3-35	32
2067396	3-37	7
2067452	9-3	16
2067453	9-3	16
2067455	1-5	3
2067476	3-3	5
2067594	5-4	5
2067595	5-4	6
2067597	5-7	6
2067598	5-7	1
2067800	9-3	1
	9-4	
2067802	9-3	1
	9-5	
2067822	13-11	1
2068062	4-11	21
2068098	2-43	14
2068099	2-43	8
2068158	12-19	2
2068160	11-15	2
	12-19	2
2068166	12-19	2
2068198	12-19	
2068200	11-15	
	12-19	
2068206	12-19	
2068337	9-3	22
2068342	4-19	10
2068343	4-19	10
2068378	2-49	9
	2-53	14
2068441	2-43	6
2068947	9-3	9
2069005	9-3	8
2069008	1-7	3
2069225	4-11	4
2069226	4-15	30
2069276	11-9	1
	11-11	1
2069306	11-9	
2069334	11-11	
2069431	4-23	12
2069454	1-13	6
2069544	1-7	7
2069545	1-7	1
2069951	2-5	6
2070070	2-15	13
	2-45	3
	2-47	5
2070147	5-2	2
2070223	1-13	5
2070263	5-16	50
	5-25	1
	5-35	2
2070269	4-19	1
	4-63	
2070296	1-31	1
2070297	1-31	2
2070298	1-31	3
2070299	1-31	3
2070300	1-31	3
2070301	1-31	3
2070302	1-31	3
2070303	1-31	3
2070304	1-31	3
2070305	1-31	3
2070306	1-31	3
2070307	1-31	3
2070392	1-15	4
2070553	4-29	3
2070554	4-29	3
2070561	4-29	2
2070562	4-29	2
2070563	4-29	2
	4-29	2
2070611	9-6	5
2070676	3-14	45
2070731	4-31	1
	4-83	
2070771	13-3	10
	13-5	1
2070975	1-5	12
	1-5	12
2070996	1-47	23
	1-55	23
2071181	3-35	12
2071261	1-5	10
	3-8	3
2071508	1-5	39
2071517	3-13	7
	3-17	40
	3-19	40
	3-26	50
2071593	1-5	14
2071594	1-5	14
2072213	1-5	28
2072298	3-13	1
	3-17	19
	3-19	35
	3-25	45
2072392	12-3	
	12-5	
	12-7	
2072394	12-3	
	12-5	
	12-7	
2072399	12-3	
	12-5	
	12-7	
2072424	11-3	
	11-5	
2072427	11-3	
	11-5	
2072664	1-7	5
2072782	3-40	3
2072802	1-5	38
2072918	2-27	11
2073114	1-33	3
2073115	1-33	2
2073116	1-33	6
2073117	1-33	7
2073118	1-33	4
2073119	1-33	8
2073121	1-33	9
2073122	1-33	10
2073123	1-33	11
2073198	1-27	3
2073495	9-9	14
2073496	9-9	21
2073563	12-23	14
2073565	12-23	14

©2006 HYSTER COMPANY

NUMERICAL INDEX (Continued)

PART NO.	PG	ITEM
2073573	12-23	14
2073796	11-20	35
2073799	11-20	35
2073828	11-20	33
2074210	1-29	10
2074256	1-27	8
2074358	13-9	
2074359	13-9	
2074702	3-40	2
2074736	4-5	15
2074737	4-29	4
	4-87	
2074740	1-27	21
2074969	9-3	15
2075026	4-5	15
2075120	6-3	8
2075224	4-25	1
2075225	4-25	1
2075226	4-25	1
2075227	4-25	1
2075235	9-9	25
2075277	9-9	6
2075417	1-27	20
2075428	1-17	4
	1-19	5
	1-21	9
2075551	5-7	9
2075558	5-13	32
	5-18	29
	5-27	3
2075614	1-27	22
2075628	11-20	33
2075629	12-9	31
2075655	1-27	19
2075911	4-25	14
2075912	4-25	14
2075913	4-25	14
2075914	4-25	14
2075916	4-25	14
2075917	4-25	14
2076677	9-43	
2076678	9-43	
2076679	9-43	
2076680	9-43	11
2076681	9-43	11
2076682	9-43	11
2076683	9-45	11
2076684	9-45	11
2076685	9-45	11
2076687	9-45	
2076688	9-45	
2076689	9-45	
2076695	4-23	2
2076696	4-23	2
2077983	2-67	6
2078335	3-39	13
2078876	4-39	
2078877	4-51	1
2078881	13-5	1
2078882	13-3	10
2079032	5-7	15
2079281	4-7	4
2079326	4-35	1
2079843	4-7	15
2081229	1-35	1
2081230	1-35	2
2081231	1-35	3
2081232	1-35	4
2081233	1-35	5
2081234	1-35	6
2081235	1-35	7
2081236	1-35	8
2081237	1-35	9
2081238	1-35	10
2081239	1-35	11
2081240	1-35	12
2081241	1-35	13
2081242	1-35	14
2081243	1-35	15
2081244	1-35	16
2081245	1-35	17
2081246	1-35	18
2081247	1-35	19
2081248	1-35	20
2081249	1-35	21
2081250	1-35	22
2081251	1-35	23
2081252	1-35	24
2081418	13-15	16
	13-17	14
2081840	3-29	17
2081870	3-29	12
2082323	4-31	1
	4-83	
2083701	9-11	6
	9-13	20
	9-15	9
	9-17	21
2083702	9-11	7
	9-13	19
	9-15	8
	9-17	20
2083703	9-11	8
	9-15	7
	9-17	19
2083704	9-15	6
2083705	9-17	18
2083706	9-13	18
2084703	4-25	10
2084829	4-67	
2085024	11-13	18
2085048	12-17	1
2085050	12-17	1
2085055	12-17	1
2085129	5-31	6
	5-33	6
2085175	4-25	1
2085176	4-25	1
2085179	4-25	
2085180	4-25	
2085875	1-33	12
2085877	1-33	5
2085878	1-37	4
2085879	1-37	8
2085880	1-37	9
2085881	1-37	10
2085882	1-39	1
2085885	1-39	2
2085886	1-39	3
2085887	1-39	8
2085888	1-39	5
2085889	1-39	4
2085890	1-39	10
2085891	1-39	6
2085892	1-39	9
2085893	1-39	7
2085908	3-13	6
	3-17	38
	3-19	42
	3-25	47
2085943	4-31	1
	4-85	
2085948	4-5	15
	4-45	
2085950	4-5	15
	4-57	1
2086294	1-23	1
2086295	1-23	1
2086296	1-23	1
2086297	1-23	1
2086302	1-25	1
2086303	1-25	1
2086304	1-25	1
2086305	1-25	1
2086556	1-37	1
2086557	1-37	2
2086558	1-37	3
2086559	1-37	7
2086560	1-37	5
2086561	1-37	6
2087115	3-5	6
2087189	4-11	6
	4-73	
2087191	4-15	1
	4-77	
2089673	1-15	4
	1-17	4
	1-19	5
	1-21	9
2090086	3-7	6
2090087	4-29	4
	4-89	
2090110	4-23	1
2090111	4-23	6
2090613	4-5	9
	4-21	
2090645	4-29	19
2092548	2-57	37
	2-63	10
2092549	2-63	10
2092550	2-61	7
2092551	2-61	7
2092552	2-63	11
2092553	2-63	11
2092644	7-3	2
2092645	7-3	1
2093801	4-25	
2093803	4-25	
2093804	4-25	
2093805	4-25	
2093806	4-25	1
2093807	4-25	1
2093808	4-25	1
2093809	4-25	1
2095262	5-7	1
2095645	5-4	5
2095646	5-4	6
2095648	5-7	9
2095649	5-7	15
2302899	9-43	10
	9-45	10
2304677	9-43	7
	9-45	7
2308541	3-35	17
	3-37	6
2314223	8-3	14
	8-5	17
2314973	2-35	25

©2006 HYSTER COMPANY

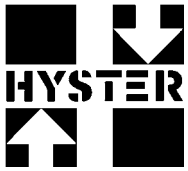
HYSTER