RUTHZIL TRATOR COMERCIAL DE PEÇAS LTDA 11 97083-6812 ROLANDO

PARTS MANUAL

HYSTER

CHALLENGER H2.00-H3.20XM (H177)

CUSTOMER EDITION

HYSTER

1458510
10/2009

©2009 HYSTER COMPANY

SECTIONS

1	FRAME
2	ENGINES
3	FUEL SYSTEM
4	ELECTRICAL SYSTEM
5	TRANSMISSION
6	STEERING SYSTEM
7	BRAKE SYSTEM
8	HYDRAULIC SYSTEM
9	MAST-TWO STAGE LIMITED FREE-LIFT
10	MAST-TWO STAGE FULL FREE-LIFT
11	MAST-THREE STAGE FULL FREE-LIFT
12	OPTIONS
13	NUMERICAL INDEX

This Parts Manual is divided into 13 major sections which are listed above. Quick reference to these sections can be made by placing the right thumb on the tab of the desired section, bending the book back and thumbing the pages to the corresponding tab.

TABLE OF CONTENTS

DESCRIPTION **PAGE**

A

AIR FILTER
- 2,0L ENGINE (→ S/N H177B23393) ... 3-4
- 2,0L ENGINE (S/N H177B23394 →) ... 3-6
- 2,6L ENGINE - DIESEL (→ S/N H177B26621) ... 3-68
- 2,6L ENGINE - DIESEL (S/N HP177B26622 →) ... 3-70
- LPG - EPA COMPLIANT 2.0L ... 3-8

AIR FILTER AND BREATHER
- 3.0L LPG - EPA COMPLIANT ... 3-52
- HYDROSTATIC TRANSMISSION (→ S/N H177B26621) ... 3-32
- POWERSHIFT (S/N H177B26622 →) ... 3-50

ALTERNATOR
- 2,6L ENGINE - DIESEL ... 4-44
- 3,0L ENGINE - LPG (→ S/N H177B32018Z) ... 4-46
- GASOLINE AND LPG - 2.0L MAZDA ... 4-42

ALTERNATOR MOUNTING
- 3.0L GM ... 4-48
- SERPENTINE BELT - GM 3.0L ... 4-50

AUXILIARY DRIVE
- DIESEL - 2,6L ENGINE ... 2-128

AUXILIARY TUBES
- TWO AND THREE STAGE FULL FREE-LIFT - STANDARD SIDE-SIFT ... 12-34
- TWO AND THREE STAGE FULL FREE-LIFT - INTEGRAL SIDE-SHIFT ... 12-36
- TWO STAGE LIMITED FREE-LIFT ... 12-32

B

BACK-UP ALARM
- → S/N H177B40524A ... 12-92
- S/N H177B40525A → ... 12-94

BRAKE ... 7-4

BRAKE FITTINGS
- HYDOSTATIC TRANSMISSION ... 7-10

BRAKE LINES ... 7-8

BRAKE PEDAL LINKAGE ... 7-2

C

CAB
- EXTERNAL DOOR ... 12-68
- PVC ... 12-72

CAMSHAFT AND OIL SUMP
- LPG 3,0L - 2002-2005 SERIES ENGINE ... 2-110
- LPG 3,0L ENGINE - 1998 AND 1999 SERIES ENGINE ... 2-102
- LPG 3,0L ENGINE - 2000 AND 2001 SERIES ENGINE ... 2-106

CAMSHAFT AND TIMING GEAR
- DIESEL - 2,6L ENGINE ... 2-124

CAMSHAFT AND VALVES
- LPG - 2,0L ENGINE ... 2-48

©2009 HYSTER COMPANY

TABLE OF CONTENTS (continued)

DESCRIPTION	PAGE
CARBURETOR	
2,0L ENGINE - LPG (→ S/N H177B09724)	3-24
LPG 2,0L - HYDROSTATIC TRANSMISSION (→ S/N H177B09725)	3-26
LPG 2,0L - OPEN LOOP (S/N H177B23394 →)	3-28
LPG 2,0L - CLOSED LOOP (S/N H177B30074Y ↔ S/N H177B47507B)	3-30
LPG 3,0L (S/N H177B20722 ↔ S/N H177B30073 WITH POWERSHIFT TRANSMISSION)	3-60
LPG 3,0L (S/N H177B30074 → WITH POWERSHIFT TRANSMISSION)	3-62
LPG 3.0L (→ S/N H177B20721 WITH POWERSHIFT TRANSMISSION)	3-58
CARRIAGE	
THREE STAGE FULL FREE-LIFT - SIX ROLLER	11-28
TWO STAGE FULL FREE-LIFT - SIX ROLLER	10-32
TWO STAGE LIMITED FREE-LIFT - SIX ROLLER	9-22
CONTROL VALVE	
FOUR FUNCTION	8-68
T078 AND T080 POWERSHIFT (→ S/N H177B09189W)	5-26
T080 POWERSHIFT (S/N H177B09190W →)	5-30
THREE FUNCTION	8-64
CONVERTER	
LPG (→ S/N H177B01786)	3-64
LPG (S/N H177B01787 → HYDROSTATIC) (S/N H177B01787 ↔ S/N H177B023393 POWERSHIFT)	3-66
COOLING	
DIESEL - 2,6L ENGINE	2-138
LPG 3,0L - 2003 THRU 2005 SERIES WITH SERPENTINE BELT	2-100
LPG 3.0L - 1998 THRU 2003 SERIES WITH V-BELT	2-96
COUNTERWEIGHT	1-12
CRANKSHAFT AND PISTON	
DIESEL - 2,6L ENGINE	2-120
LPG - 2,0L ENGINE	2-46
LPG 3,0L - 1998 THRU 2000 ENGINE	2-76
LPG 3,0L - 2001-2005 SERIES ENGINE	2-80
CYLINDER BLOCK	
DIESEL - 2,6L ENGINE	2-114
LPG - 2,0L	2-42
CYLINDER HEAD	
DIESEL - 2,6L ENGINE	2-116
LPG - 2,0L ENGINE	2-44
LPG 3,0L ENGINE - 1998 THRU 1999 SERIES ENGINE	2-84
LPG 3,0L ENGINE - 2000 THRU 2005 SERIES ENGINE	2-88
D	
DIFFERENTIAL	
T078 AND T080 POWERSHIFT (→ 7/1998)	5-34
DIFFERENTIAL AND HYPOID ASSEMBLY	
T080 POWERSHIFT (7/1998 →)	5-36
DISTRIBUTOR	
2,0L ENGINE - LPG	4-38
3,0L ENGINE - LPG	4-40

©2009 HYSTER COMPANY

TABLE OF CONTENTS (continued)

DESCRIPTION	PAGE
DRIVE AND TURN LIGHTS	
S/N H177B48921B →	12-64
DRIVE AXLE	
HYDROSTATIC	5-52
POWERSHIFT	5-40
DRIVE, TURN, AND REAR LIGHTS	
→ S/N H177B43094A	12-60
S/N H177B43095A ↔ S/N H177B48920B	12-62
E	
ELECTRICAL	
2,0L ENGINE - LPG	4-8
2,6L ENGINE - DIESEL	4-16
3,0L ENGINE - LPG (→ 1/1998)	4-20
3,0L ENGINE - LPG (S/N H177B30074Y ↔ S/N H177B47640B)	4-28
3.0L ENGINE - LPG (1/1998 ↔ S/N H177B30073Y)	4-24
COWL	4-4
HYDROSTATIC TRANSMISSION	4-36
LPG - 2,0L ENGINE	2-58
LPG 3,0L ENGINE - 1998 AND 1999 SERIES ENGINE	2-92
LPG 3,0L ENGINE - 2000 THRU 2005 SERIES ENGINE	2-94
ELECTRICAL SYSTEM	
3,0L ENGINE - LOW EMISSIONS (S/N H177B47641B →)	4-32
CAB	12-74
CLOSED LOOP - 2.0L	4-12
ENGINE ASSEMBLY	
LPG - 3.0L ELECTRONIC CONTROLS	2-70
ENGINE FUEL SYSTEM	
LOW EMISSIONS - 3,0L ENGINE	3-42
ENGINE MOUNT	
HYDROSTATIC TRANSMISSION - DIESEL	2-10
LPG - 2,0L ENGINE	2-4
LPG - 3,0L ENGINE	2-6
POWERSHIFT TRANSMISSION - DIESEL	2-8
EXHAUST	
2.0L LPG - TWO-WAY	2-16
DIESEL	2-24
LPG - STANDARD	2-12
LPG 2,0L - WITH ELECTRONIC CONTROLS	2-18
LPG 3.0L - WITH ELECTRONIC CONTROLS	2-20
LPG CLOSED LOOP - 2.0L	2-14
OVERHEAD	2-22
F	
FENDER	12-6
FILTER AND LOCK-OFF VALVE	
LPG - HYDROSTATIC (→ S/N H177B23393)	3-67
FIRE EXTINGUISHER	12-90

©2009 HYSTER COMPANY

TABLE OF CONTENTS (continued)

DESCRIPTION	PAGE
FLOW VALVE	
POWERSHIFT TRANSMISSION (→ S/N H177B14209 3.0L LPG) (→ S/N H177B13286 3.0L LPG) (→ S/N H177B13960 SINGLE GEAR) (→ S/N H177B13826 DOUBLE GEAR)	8-40
FLYWHEEL AND TORQUE CONVERTER	
DIESEL - 2,6L ENGINE	2-134
LPG	2-74
FORKS	
H2.00-.250XM	1-30
H3.00-3.20XM	1-31
FRAME AND FLOORPLATES	1-8
FREE-LIFT	
THREE STAGE FULL FREE-LIFT	11-14
TWO STAGE FULL FREE-LIFT	10-8
FREE-LIFT CYLINDER	
THREE STAGE FULL FREE-LIFT (→ 3/1998)	11-22
THREE STAGE FULL FREE-LIFT (→ S/N B508B05149) (→ S/N B563B03058)	11-24
THREE STAGE FULL FREE-LIFT (S/N B508B05150 →) (S/N B563B03059 →)	11-26
TWO STAGE FULL FREE-LIFT (→ 3/2003)	10-27
TWO STAGE FULL FREE-LIFT (3/2003 →)	10-29
FUEL	
2,6L ENGINE - DIESEL	3-72
LPG - 2.0L ENGINE (→ S/N H177B23393)	2-60
LPG 2,0L (S/N H177B23394 →)	2-62
FUEL AND EMISSION CONTROL SYSTEM	
2.0L LPG (S/N H177B47508B →)	2-64
FUEL FILTER AND LIFT PUMP	
2,6L ENGINE - DIESEL	3-76
FUEL FILTERING AND LOCK-OFF SYSTEM	
3.0L LPG - LOW EMISSIONS	3-44
FUEL INJECTION	
DIESEL - 2,6L ENGINE	2-136
FUEL PUMP	
2,6L ENGINE - DIESEL	3-80
FUEL SYSTEM	
CLOSED LOOP (S/N H177B26764Y →)	3-18
LPG 2,0L (→ S/N H177B23393X)	3-14
LPG 2,0L - OPEN LOOP (S/N H177B23394X →)	3-16
LPG 3,0L - HYDROSTATIC, POWERSHIFT (→ S/N H177B30073)	3-34
LPG 3,0L - POWERSHIFT (S/N H177B30074 →)	3-38
G	
GOVERNOR	
2,0L ENGINE (→ S/N H177B23393)	3-20
LPG 2,0L (S/N H177B23394 →)	3-22

©2009 HYSTER COMPANY

TABLE OF CONTENTS (continued)

DESCRIPTION	PAGE
H	
HEADER HOSE	
THREE STAGE FULL FREE-LIFT	11-30
TWO STAGE FULL FREE-LIFT	10-34
TWO STAGE LIMITED FREE-LIFT	9-24
HEATER	
CAB	12-78
HOOD	1-2
HOOD SOUND LINER	
CAB - DIESEL	1-6
HYDRAULIC PUMP	
HYDROSTATIC TRANSMISSION	8-42
POWERSHIFT - SINGLE GEAR (→ S/N H177B14209 3.0L LPG) (→ S/N H177B13960)	8-28
POWERSHIFT - SINGLE GEAR (S/N H177B14210 ↔ S/N H177B50926B 3.0L LPG) (S/N H177B13961 ↔ S/N H177B51421B)	8-30
POWERSHIFT - SINGLE GEAR (S/N H177B51422B → (2.0L, 2.6L)) (S/N H177B50927B → (3.0L))	8-32
POWERSHIFT - DOUBLE GEAR (→ S/N H177B13286 3.0L LPG) (→ S/N H177B13826)	8-34
POWERSHIFT - DOUBLE GEAR (S/N H177B14210 ↔ S/N H177B51469B 3.0L LPG) (S/N H177B13827 ↔ S/N H177B50608B)	8-36
POWERSHIFT - SINGLE GEAR (S/N H177B50608B → (2.0L, 2.6L)) (S/N H177B51470B → (3.0L))	8-38
HYDRAULIC SUPPLY AND RETURN	
HYDROSTATIC TRANSMISSION - WITH THROTTLE-UP	8-26
HYDRAULIC SYSTEM	
HYDOSTATIC TRANSMISSION - WITH THROTTLE UP (→ S/N H177B23563)	8-14
HYDROSTATIC TRANSMISSION (→ S/N H177B23563)	8-10
HYDROSTATIC TRANSMISSION (S/N H177B23564 →)	8-18
POWERSHIFT TRANSMISSION (→ S/N H177B23563)	8-2
POWERSHIFT TRANSMISSION (S/N H177B23564 →)	8-6
HYDRAULICS	
WITH HYDROSTATIC PUMP - AND ATTACHING PARTS	8-22
I	
INNER MAST	
THREE STAGE FULL FREE-LIFT	11-8
TWO STAGE FULL FREE-LIFT	10-4
TWO STAGE LIMITED FREE-LIFT	9-6
INPUT AND COUNTER CLUTCH	
T080 POWERSHIFT (→ T080B-34673)	5-18
T080 POWERSHIFT (→ S/N H177B30180Y EXC. 30117, 30175, 30179) (T080B-34674 →)	5-20
T080 POWERSHIFT (S/N H177B30181Y ↔ 1/2003 INC. 30117, 30173, 30179)	5-22
T109 POWERSHIFT (1/2003 →)	5-24
INSTRUMENT CLUSTER	
→ S/N H177B45825A EXC. 43284, 43390, 43539, 43733, 45443, 45510	4-58
S/N H177B45826A →	4-62
INSTRUMENT PANEL	4-56
INTEGRAL SIDE-SHIFT	
HYDRAULIC HOSES - TWO STAGE LIMITED FREE-LIFT	12-28
HYDRAULIC HOSES - THREE STAGE FULL FREE-LIFT	12-29
HYDRAULIC HOSES - TWO STAGE FULL FREE-LIFT	12-30

©2009 HYSTER COMPANY

TABLE OF CONTENTS (continued)

DESCRIPTION	PAGE
INTEGRAL SIDE-SHIFT CARRIAGE	
THREE STAGE FULL FREE-LIFT	12-18
TWO STAGE FULL FREE-LIFT	12-22
TWO STAGE LIMITED FREE-LIFT	12-14
INTEGRAL SIDE-SHIFT CYLINDER	12-26
INTERMEDIATE MAST	
THREE STAGE FULL FREE-LIFT	11-4
L	
LABELS	1-22
LIFT	
TWO STAGE LIMITED FREE-LIFT	9-10
LIFT CYLINDER	
TWO STAGE LIMITED FREE-LIFT - H2.00-2.50XM	9-14
TWO STAGE LIMITED FREE-LIFT - H3.00-3.20XM (→ S/N B562B16063)	9-17
TWO STAGE LIMITED FREE-LIFT - H3.00-3.20XM (S/N B562B16064 →)	9-19
LIFTING EYE	12-4
LIGHTS	4-64
LOAD BACKREST EXTENSION	1-28
48 IN. (1220 MM) - H2.00-2.50 XM	12-40
LPG REGULATOR	
LOW EMISSIONS - 3.0L ENGINE	3-48
LPG TANK MOUNTING	
SWING OUT/DROP DOWN	3-12
M	
MAIN CYLINDER	
THREE STAGE FULL FREE-LIFT	11-18
MAIN CYLINDER (H2.00-2.50XM)	
TWO STAGE FULL FREE-LIFT - LEFT HAND (→ S/N B509A2090Z) (→ S/N B509B4939)	10-11
TWO STAGE FULL FREE-LIFT - LEFT HAND (S/N B509A2091Z →) (S/N B509B4940 →)	10-13
TWO STAGE FULL FREE-LIFT - RIGHT HAND (→ S/N B509A2090Z) (→ S/N B509B4939)	10-15
TWO STAGE FULL FREE-LIFT - RIGHT HAND (S/N B509A2091Z →) (S/N B509B4940 →)	10-17
MAIN CYLINDER (H3.00-3.20XM)	
TWO STAGE FULL FREE-LIFT - LEFT HAND (→ S/N B564A2046Z) (→ S/N B564B03936)	10-19
TWO STAGE FULL FREE-LIFT - LEFT HAND (S/N B564A2047Z →) (S/N B564B03937 →)	10-21
TWO STAGE FULL FREE-LIFT - RIGHT HAND (→ S/N B564A2046Z) (→ S/N B564B03936)	10-23
TWO STAGE FULL FREE-LIFT - RIGHT HAND	10-25
MAIN LIFT	
THREE STAGE FULL FREE-LIFT	11-10
TWO STAGE FULL FREE-LIFT	10-6
MANIFOLD	
DIESEL - 2,6L ENGINE	2-130
LPG	2-52
LPG WITH ELECTRONIC CONTROLS	2-54
MANIFOLD VALVE	
T080 POWERSHIFT (S/N H177B30181Y → INC. 30117, 30173, 30179)	5-33
MAST INSTALLATION	8-44
MASTER CYLINDER	7-14

©2009 HYSTER COMPANY

TABLE OF CONTENTS (continued)

DESCRIPTION	PAGE
MIRROR	12-88
MONOTROL PEDAL	3-106
N	
NOISE ABATEMENT	
HYDROSTATIC TRANSMISSION - DIESEL	1-26
O	
OIL PUMP AND FILTER	
LPG - 2,0L ENGINE	2-56
OIL SUMP, PUMP, AND FILTER	
DIESEL - 2,6L ENGINE	2-132
OPTIONAL EQUIPMENT	
CAB	12-76
OUTER MAST	
THREE STAGE FULL FREE-LIFT	11-2
TWO STAGE FULL FREE-LIFT	10-2
TWO STAGE LIMITED FREE-LIFT	9-2
P	
PARK BRAKE	7-12
PEDAL LINKAGE	
2,6L ENGINE - HYDROSTATIC WITHOUT THROTTLE UP	3-98
2,6L ENGINE - HYDROSTATIC WITH THROTTLE UP	3-102
3,0L - HYDROSTATIC	3-94
POWERSHIFT	3-90
POWERTRAIN PROTECTIVE SYSTEM	12-96
PUMP	
HYDROSTATIC	5-50
PUMP DRIVE	
POWERSHIFT	5-38
R	
RADIATOR AND HOSES	
DIESEL - 2.6L (S/N H177B40927A →)	2-40
HYDROSTATIC TRANSMISSION	2-32
LPG - 3.0L (S/N H177B40525A →)	2-34
LPG - 2.0L (S/N H177B41040A →)	2-38
LPG 3.0L - WITH ELECTRONIC CONTROLS	2-36
POWERSHIFT TRANSMISSION (→ S/N H177B18577X)	2-26
POWERSHIFT TRANSMISSION (→ S/N H177B40524A 3.0L) (→ S/N H177B40926A 2.6L) (S/N H177B18578X ↔ S/N H177B41039A (2.0L-2.2L))	2-30
REAR WORK LIGHT	
S/N H177B43095A →	12-66
REGULATOR	
LPG 2,0 AND 3,0L - OPEN LOOP (S/N H177B23394 →)	3-54
LPG 2,0 AND 3,0L - CLOSED LOOP (S/N H177B23394Y →)	3-56
ROCKER ARM SHAFT	
DIESEL - 2,6L ENGINE	2-122
ROTATING BEACON	12-58

©2009 HYSTER COMPANY

TABLE OF CONTENTS (continued)

DESCRIPTION	PAGE
ROTATOR AUXILIARY TUBES	
TWO AND THREE STAGE FULL FREE-LIFT	12-38
S	
SEAT	
FULL SUSPENSION - SHEET 1 OF 2 (1/2000 →)	1-16
FULL SUSPENSION - SHEET 2 OF 2 (1/2000 →)	1-18
NON-SUSPENSION (11/1998 →)	1-20
SHIFT LEVER	6-12
SIDE-SHIFT CARRIAGE	12-8
SIDE-SHIFT CYLINDER	12-12
SIT TIRES	
STEER WHEEL - SOLID PNEUMATIC	12-52
SOUND LINERS	
CAB	12-80
STARTER MOTOR	
2,0L ENGINE (→ S/N H177B13244 LPG)	4-52
2,0L ENGINE (S/N H177B13245 → LPG)	4-54
STEERING CYLINDER	
→ 8/2005	6-8
8/2005 →	6-10
STEERING POD	6-2
STEERING PUMP	6-6
STROBE LIGHT	
→ S/N H177B48920B	12-54
S/N H177B48921B →	12-56
SUSPENSION SEAT	
→ 1/2000	1-14
T	
TAIL, BRAKE, AND BACK-UP LIGHTS	
INCANDESCENT (S/N H177B48921B →)	4-66
TANK	
LPG	3-10
THROTTLE BODY AND LPG MIXER	
LOW EMISSIONS - 3.0L ENGINE	3-46
THROTTLE LINKAGE	
2,0L LPG AND 2,6L DIESEL (S/N H177B23394 → LPG)	3-88
3,0L ENGINE (→ S/N H177B30073)	3-82
3,0L ENGINE - GASOLINE AND LPG (S/N H177B30074 →)	3-84
LPG (→ S/N H177B23393)	3-86
LPG AND DIESEL - EPA COMPLIANT	3-92
TILT CYLINDER	8-46
TIMING GEAR COVER AND OIL SUMP	
LPG - 2,0L ENGINE	2-50
TIRE	
DRIVE WHEEL - SOLID PNEUMATIC	12-46

©2009 HYSTER COMPANY

TABLE OF CONTENTS (continued)

DESCRIPTION	PAGE
TIRE AND WHEEL	
DRIVE WHEEL - 5-IN. RIM	12-42
DRIVE WHEEL - 7-IN. RIM	12-44
STEER WHEEL 6.00 X 9 - H2.00-2.50XM	12-48
STEER WHEEL 6.50 X 10 - H2.50XMX, H3.00-3.20XM	12-50
TRAIL AXLE	6-4
TRANSMISSION	
HYDROSTATIC	5-48
SHEET 1 OF 2 - T078 POWERSHIFT	5-2
T078 POWERSHIFT (INPUT AND COUNTER CLUTCH - SHEET 2 OF 2	5-6
T080 POWERSHIFT - SHEET 1 OF 2	5-8
T080 POWERSHIFT - SHEET 2 OF 2	5-12
T109 POWERSHIFT - SHEET 1 OF 2	5-14
T109 POWERSHIFT - SHEET 2 OF 2	5-17
TRANSMISSION COOLING	
HYDROSTATIC	5-54
POWERSHIFT (→ S/N H177B36823Z)	5-44
POWERSHIFT (S/N H177B36824Z →)	5-46
V	
VALVE ATTACHING PARTS	
WITH DETENT LEVERS (→ S/N H177B23563)	8-48
WITH DETENT LEVERS (S/N H177B23564 →)	8-56
WITHOUT DETENT LEVERS - THREE FUNCTION (→ S/N H177B23563)	8-52
WITHOUT DETENT LEVERS - THREE FUNCTION (S/N H177B23564 →)	8-60
VALVE COVER	
DIESEL - 2,6L ENGINE	2-118
W	
WATER PUMP	
LPG - 2,0L ENGINE	2-66
WATER SEPARATOR	3-78

©2009 HYSTER COMPANY

TABLE OF CONTENTS (continued)

DESCRIPTION	PAGE
WIRE HARNESS	
2,6L ENGINE - DIESEL (→ S/N H177B19415)	4-118
2,6L ENGINE - DIESEL (S/N H177B19416X ↔ S/N H177B34913Z)	4-120
2,6L ENGINE - DIESEL (S/N H177B34914Z →)	4-124
3,0L ENGINE WITH MSTS - LPG (→ 4/1998)	4-104
3,0L ENGINE WITH MSTS - LPG (S/N H177B30074Y →)	4-110
3,0L ENGINE WITH MSTS (8/1997 →)	4-114
3,0L ENGINE WITHOUT MSTS - LPG (→ S/N H177B30072Y)	4-98
3,0L ENGINE WITHOUT MSTS - LPG (S/N H177B30073Y →)	4-100
3,0L ENGINE WITHOUT MSTS - LPG (8/2002 →)	4-102
3,0L LPG WITH MSTS - (4/1998 ↔ S/N H177B30073Y)	4-106
CAB	12-84
CAB REAR	12-83
CHASSIS (→ S/N H177B13698)	4-78
CHASSIS (S/N H177B13699 ↔ S/N H177B23394W)	4-80
CHASSIS (S/N H177B23395W ↔ S/N H177B48921B)	4-82
CHASSIS (S/N H177B48921B →)	4-84
CHASSIS - REAR	12-86
COWL (→ S/N H177B26763Y)	4-68
COWL (S/N H177B26764Y ↔ S/N H177B301181Y)	4-70
COWL (S/N H177B301181Y →)	4-72
FORWARD AND REVERSE	4-76
HYDROSTATIC TRANSMISSION (→ S/N H177B30180Y)	4-126
HYDROSTATIC TRANSMISSION (S/N H177B30181Y →)	4-128
INSTRUMENT PANEL	4-74
LPG - 2,0L ENGINE (→ S/N H177B23394W)	4-88
LPG - 2,0L ENGINE (S/N H177B09725 ↔ S/N H177B23394W)	4-90
LPG 2,0L (S/N H177B23395W →)	4-91
LPG 2,0L - CLOSED LOOP (S/N H177B26764Y →)	4-92
NEUTRAL START	4-86
POWERTRAIN PROTECTIVE SYSTEM	12-98
WIPER	12-82
WITH THROTTLE UP - DIESEL	4-132
WITH THROTTLE-UP - 3,0L ENGINE	4-130
WIRE HARNESS (MAIN)	
LPG 3.0L - SHEET 1 0F 2	4-94
LPG 3.0L - SHEET 2 OF 2	4-96

©2009 HYSTER COMPANY

ABBREVIATIONS QUICK REFERENCE SHEET

Listed below are abbreviations used in parts manuals to denote the following expressions:

TERM	DEFINITION
Amp	Amperes
AR	As Required
BDI	Battery Discharge Indicators
BWI	Brush Wear Indicator
CE	Communicator End
CRE	Corrosive Environment
D/B	Date Break
dbA	Decibel "A" Scale
DE	Drive End
ECH	Empty Container Handler
ECH-3	Empty Container Handler - 3 High Stacking
ECH-4	Empty Container Handler - 4 High Stacking
ECH-5	Empty Container Handler - 5 High Stacking
ECH-6	Empty Container Handler - 6 High Stacking
ECH-7	Empty Container Handler - 7 High Stacking
ECM	Electronic Control Module
ECN	Engineering Change Notice
EEPROM	Electrically Erasable Programmable Read Only Memory
EPA	US Environmental Protection Agency
EPROM	Electrically Programmable Read Only Memory

TERM	DEFINITION
FRE	Freezer Environment
in.	inches
LPG	Liquefied Petroleum Gas
MAP	Manifold Absolute Pressure
mm	millimeters
MSTS	Microprocessor Spark Timing System
NPT	National Pipe Threads
O/S	Oversize
PTO	Power Take Off
RPM	Revolutions per Minute
S/N	Serial Number
TMM	Truck Management Module
UL Type D	Diesel-Powered Safety Rating
UL Type DS	Diesel-Powered Safety Rating
UL Type E	Battery-Powered Safety Rating
UL Type EE	Battery-Powered Safety Rating
UL Type ES	Battery-Powered Safety Rating
UL Type G	Gasoline-Powered Safety Rating
UL Type GS	Gasoline-Powered Safety Rating
UL Type LP	Gas-Powered Safety Rating
UL Type LPS	LP Gas-Powered Safety Rating
U/S	Undersize
UL	Underwriters Laboratory
V	Volts

©2009 HYSTER COMPANY

HOW TO USE THE ILLUSTRATED PARTS MANUAL

This parts manual describes and illustrates assemblies, subassemblies, and detail parts needed for service replacement.

The different constructions are indicated by keys and footnotes. The callouts correspond to descriptions found on the next page.

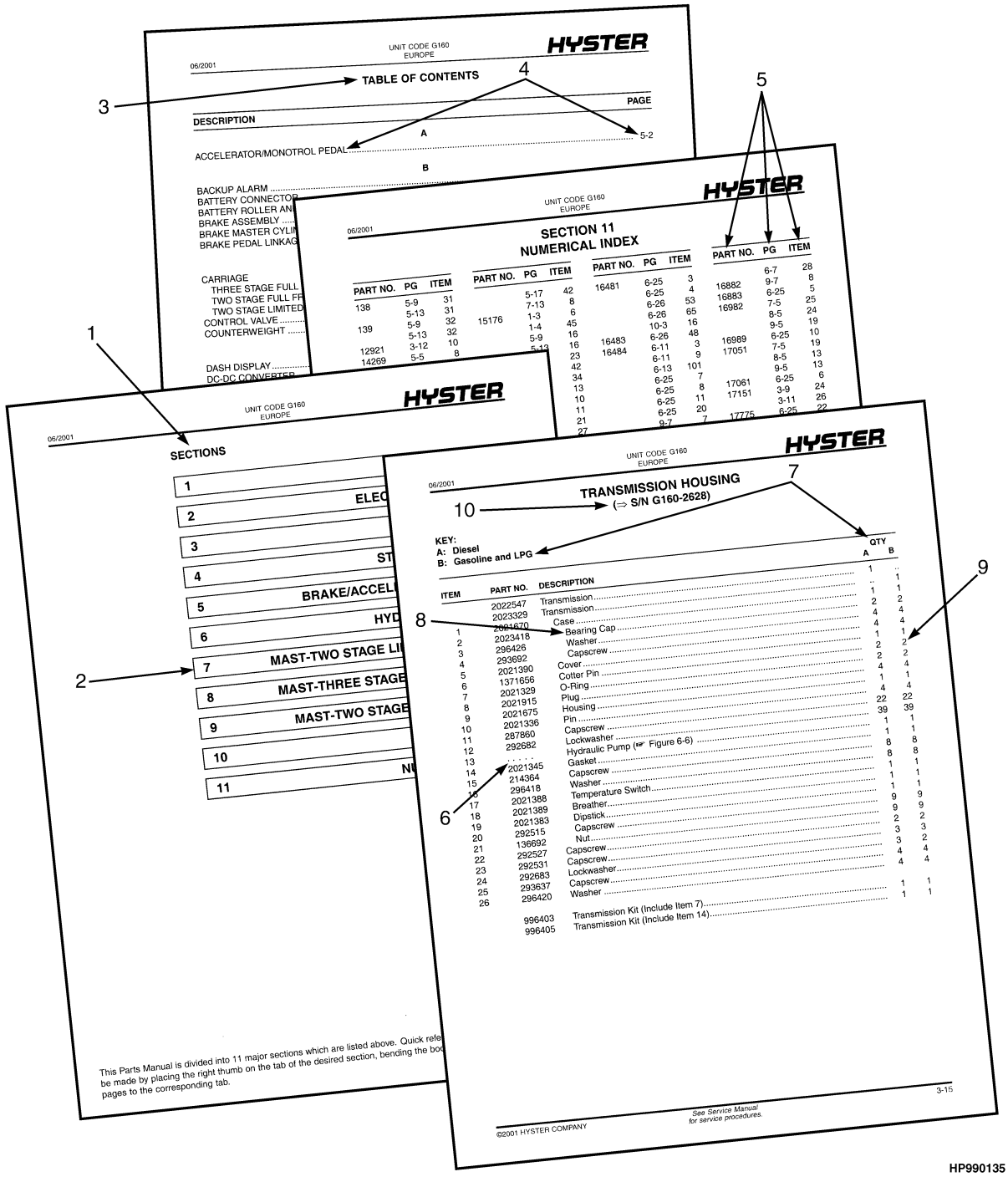

©2009 HYSTER COMPANY

HOW TO FIND THE DESIRED PART NUMBER

WHEN THE PART NUMBER AND THE NEXT HIGHER ASSEMBLY IS NOT KNOWN:

1. Determine the function and application of the part required. Turn to the Sections Page. Choose the general area of reference most likely to include the part.

2. Turn to the section you chose. Use the Section Table of Contents to determine the assembly which would normally contain the part required. Then locate the part on the assembly breakdown page.

WHEN THE PART NUMBER IS NOT KNOWN AND THE NEXT HIGHER ASSEMBLY IS KNOWN:

3. Determine the assembly the required part is used on. Turn to the Table of Contents (Page i).

4. Locate the assembly the required part is used on and turn to the page indicated for that assembly. Then locate the part on the assembly breakdown page.

WHEN THE PART NUMBER IS KNOWN:

5. Use the Numerical Index (Page 13-1) to find the part number. Turn to the page listed and locate the part as indicated by the item number.

GENERAL:

The assembly breakdowns include part numbers, descriptions, quantities required, keys and footnotes to help in selecting correct parts.

6. Five periods in the PART NO. column (. . . . .) indicate that the part is either *Not Serviced Separately* or there is a reference to another figure. A figure reference is denoted by a pointing hand followed by a figure number in the DESCRIPTION column (☞Figure 10)

7. Keys are used to show two or more similar assemblies, RH and LH assembly parts, etc. Select the appropriate key, "A", "B", "C", "D", or "E" and the corresponding quantity column to find the required parts. Two periods in the QTY column (..) indicate that the part is not used for that assembly.

8. Indented descriptions under the DESCRIPTION column are used to indicate assemblies and subparts of assemblies. In the example on the previous page, *BEARING CAP* (Item 2) is a subpart of the major assembly *CASE*.

9. Quantities shown are for one assembly. The quantities of the subpart *BEARING CAP* are indicated as two and two. This means two per *CASE* assembly.

10. Serial number breaks identify the most current parts information and are shown as follows:
    → **S/N D001H2628**
    Indicates last serial number affected.
    S/N D001H2629 →
    Indicates the first serial number affected.
    S/N D001H1553 ↔ S/N D001H3291
    Indicates a range of serial numbers affected.

    ECN numbers for pending serial numbers are shown to allow for the inclusion of the most current parts information and are identified as follows:
    → **S/N Pending Per ECN 63243**
    Indicates a pending serial number for last unit affected.
    S/N Pending Per ECN 63243 →
    Indicates a pending serial number for first unit affected.

    Date breaks are used to indicate when a change occurred but a subsequent serial number break was not recorded. This is an arbitrary date usually based on the ECN release and are identified as follows:
    → **D/B 3/00**
    Indicates that a change occurred sometime within that month for the item affected.
    D/B 3/00 →
    Indicates that a change occurred sometime within that month for the item affected.
    D/B 3/00 ↔ D/B 4/00
    Indicates a range of production dates of the item affected.

    Contact your local dealer for Hyster lift trucks for serial number information for items with a ECN or a date break.

ORDERING PARTS:

When ordering replacement parts, give the unit serial number, part number, name of part and quantity required.

For any further information on parts, service, or ordering, consult your local dealer for Hyster lift trucks.

©2009 HYSTER COMPANY

IDENTIFICATION OF TRUCK SERIAL NUMBERS

X OOO X OOOO X

(1) (2) (3) (4) (5)

(1) and (2) The first letter and three numbers indicate the truck unit code.

(3) The second letter indicates the plant of manufacture.

(4) The four or five digit number indicates the production sequence number of the truck.

(5) The final letter indicates the year of manufacture starting with "A" in 1957, 1980, and 2003. The letters "I", "O", and "Q" will not be used.

For pending serial numbers contact your local dealer for Hyster lift trucks.

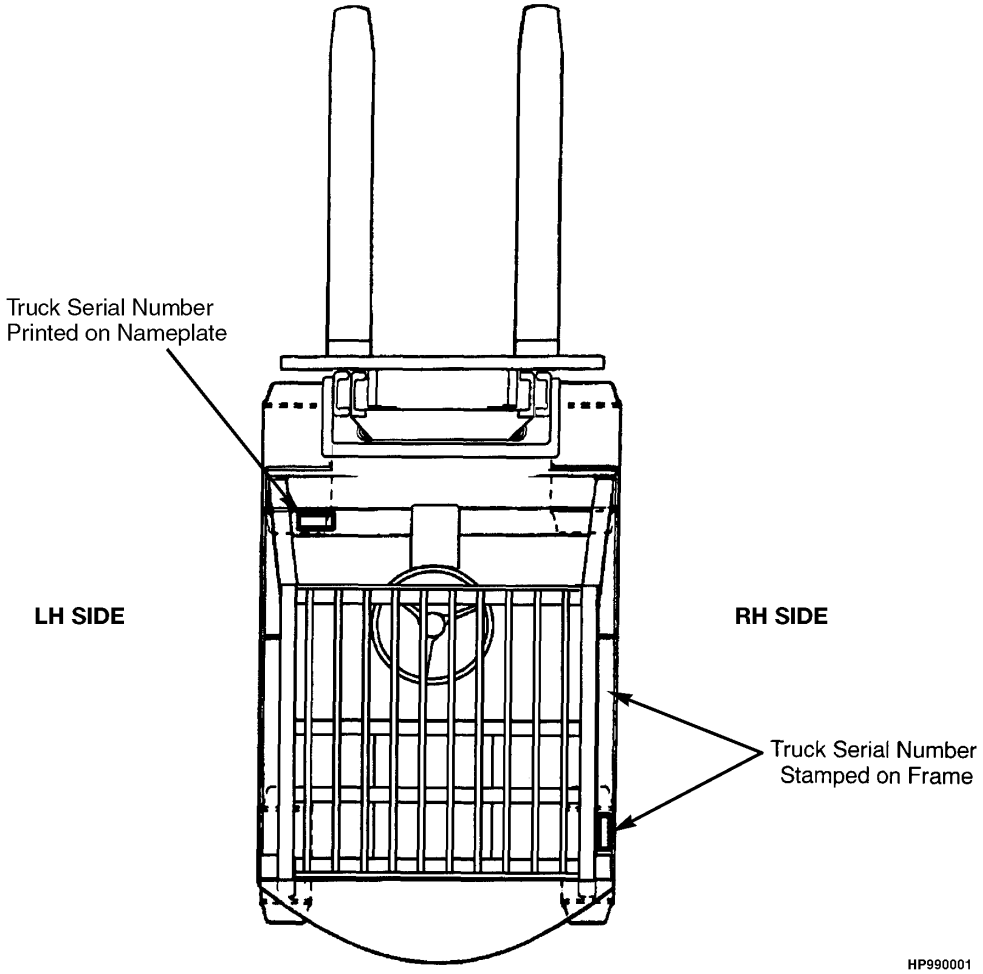

Parts referred to in this book as right or left hand parts are in accordance with the illustration above.

©2009 HYSTER COMPANY

IDENTIFICATION OF MAST SERIAL NUMBERS

X OOO X OOOO

(1) (2) (3) (4)

OOOO

(5)

(1) and (2) The first letter and number indicates the mast unit code.

(3) The second letter indicates the plant of manufacture.

(4) The four or five digit number indicates the production sequence number of the mast.

(5) Carriage travel in millimeters stamped just below the serial number.

Mast Group identification consists of mast unit code (1) and (2) plus carriage travel (5).

For pending production sequence numbers contact your local dealer for Hyster lift trucks.

LIFT EQUIPMENT IDENTIFICATION

1. Fork part number, capacity rating, plant code letter, and date of manufacture are stamped approximately six inches below the top of most forks.

2. The carriage group number is stamped on the right hand side of the top crossmember (pin type) or on the back of the right hand end of the bottom crossmember (hook type). A date code has two letters in line with or below the carriage group number.

3. The mast identification number has a unit code, a letter indicating the plant of manufacture, and a serial number. Underneath the production sequence number is a four digit number that indicates the carriage travel in millimeters.

4. Tilt and lift cylinder group numbers are stamped on the cylinder shell.

   Always refer to the group, serial, or part number when ordering service parts.

   Modification of masts and carriages by SPED (Special Products Engineering Department) are identified by a model prefix code beginning with the letter "S". contact your dealer for Hyster lift trucks for information on these assemblies.

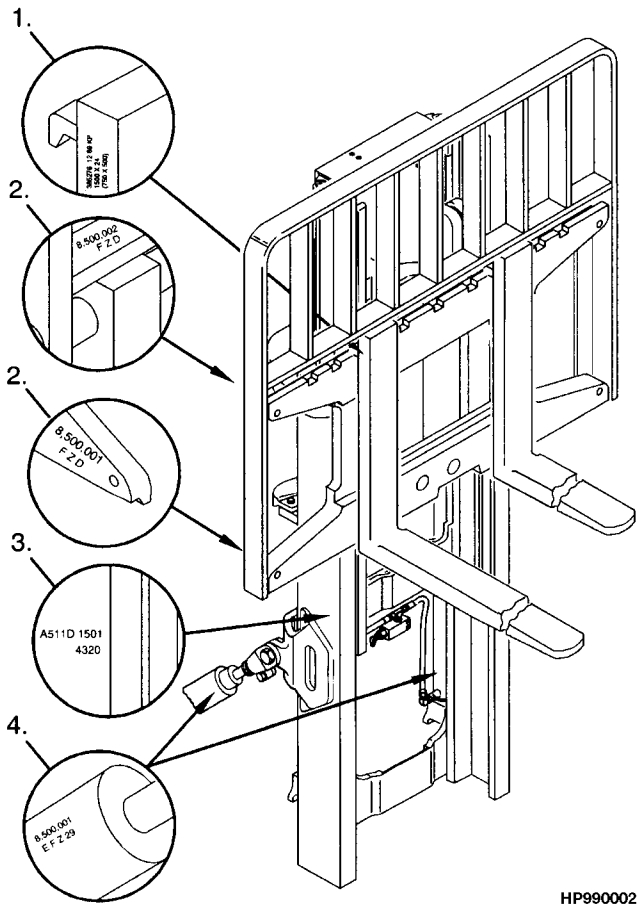

©2009 HYSTER COMPANY

IDENTIFICATION OF ATTACHMENT AND SIDE-SHIFT CARRIAGE SERIAL NUMBERS

X OOO X OOOO

(1) (2) (3) (4)

(1) and (2) The first letter and three numbers indicate the attachment unit code.

(3) The second letter indicates the plant of manufacture.

(4) The four or five digit number indicates the production sequence number.

For pending production sequence numbers contact your local dealer for Hyster lift trucks.

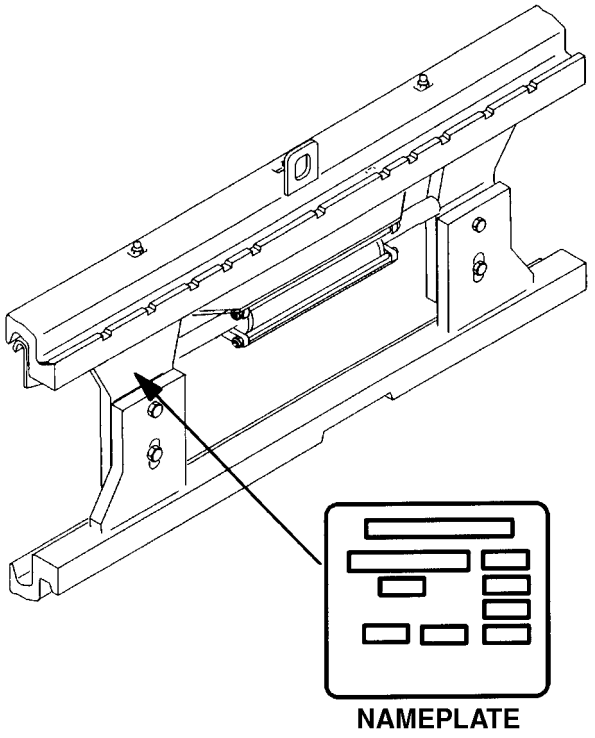

Side-shift carriages and attachments have nameplates. Use the serial number found on the nameplate to identify the attachment.

Always refer to the group, serial, or part number when ordering service parts.

Modifications of attachments and side-shift carriages by SPED (Special Products Engineering Department) are identified by a model prefix code beginning with the letter "S". Contact your dealer for Hyster lift trucks for information on these assemblies.

©2009 HYSTER COMPANY

PUBLICATIONS

Every new lift truck is provided with an OPERATING MANUAL. This manual has information that the operator must know for inspection and operation of the lift truck.

SERVICE MAINTENANCE MANUALS, which provide service and overhaul procedures, and PARTS MANUALS with complete replacement part identification, are available at a nominal fee from your Hyster dealer to assist users in effectively maintaining Hyster lift trucks in a safe, useful condition. See the list below for information on ordering specific publications for this model lift truck.

PUBLICATION	HYSTER PART NUMBER
Operating Manual	1458518
Service Manual (Complete)	1529968
Parts Manual	1458510

©2009 HYSTER COMPANY

NOTES

©2009 HYSTER COMPANY

1 FRAME

SECTION 1
FRAME

DESCRIPTION	PAGE
COUNTERWEIGHT	1-12
FORKS	
H2.00-.250XM	1-30
H3.00-3.20XM	1-31
FRAME AND FLOORPLATES	1-8
HOOD	1-2
HOOD SOUND LINER	
CAB - DIESEL	1-6
LABELS	1-22
LOAD BACKREST EXTENSION	1-28
NOISE ABATEMENT	
HYDROSTATIC TRANSMISSION - DIESEL	1-26
SEAT	
FULL SUSPENSION - SHEET 1 OF 2 (1/2000 →)	1-16
FULL SUSPENSION - SHEET 2 OF 2 (1/2000 →)	1-18
NON-SUSPENSION (11/1998 →)	1-20
SUSPENSION SEAT	
→ 1/2000	1-14

©2009 HYSTER COMPANY

HOOD (FIGURE 1-1)

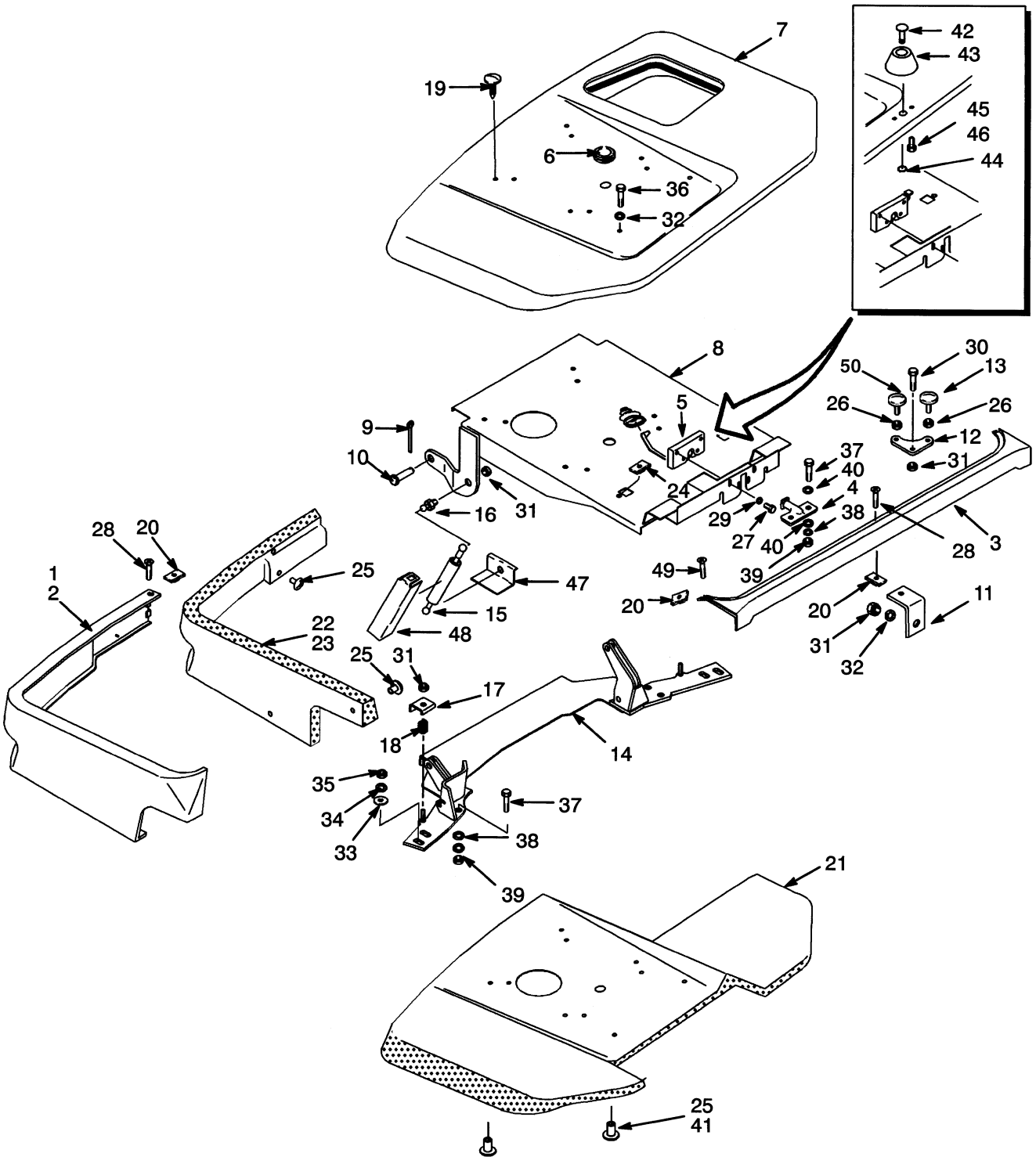

HP120662

©2009 HYSTER COMPANY

HOOD

ITEM	PART NO.	DESCRIPTION	QTY
1	**eg** 1343458	Panel (Lower LH)	1
1	**ek** 1485328	Cover (Lower LH)	1
1	**cg** 1347096	Panel (Lower LH)	1
1	**ck** 1483881	Panel (Lower LH)	1
2	**g** 1343473	Cover (Lower RH)	1
2	**bg** 1373801	Kit-Hood Latch	1
2	**k** 1483882	Cover (Lower RH)	1
2	**k** 1392718	Latch	1
3	**g** 1332670	Panel	1
3	**k** 1483884	Panel	1
4	1337148	Striker Plate	1
5	**f** 1386216	Latch	1
5	**j** 1483250	Latch	1
6	1359587	Grommet	1
7	**h** 1386217	Hood	1
7	**l** 1485343	Hood	1
8	**f** 1460367	Seat Pan	1
8	**j** 1466709	Seat Pan	1
9	1362714	Cotter Pin	2
10	237947	Pin	2
11	1351008	Mounting Plate	1
12	1347110	Plate	2
13	**i** 1347088	Screw	4
13	**m** 1347088	Screw	2
14	**f** 1454096	Crossmember	1
14	**j** 1492342	Crossmember	1
15	**af** 1338569	Gas Spring (RH)	1
15	**af** 1377992	Gas Spring (LH)	1
15	**aj** 1513906	Gas Spring (RH)	1
15	**cdf** 1377992	Gas Spring	2
15	**cdj** 1513906	Gas Spring	2
16	1350285	Ball Stud	4
17	1347018	Clamp	6
18	1350241	Spring	6
19	1347045	Fastener	4
20	1350215	Nut	4
21	1352124	Hood Liner	1
22	1352125	Hood Liner (RH)	1
23	1352126	Sound Liner (LH)	1
24	1350282	Retainer	2
25	280644	Button	12
26	15001	Nut	4
27	199563	Capscrew	4
28	1339793	Screw	2
29	320156	Washer	4
30	136749	Screw	4
31	313828	Nut	13
32	320158	Washer	3
33	1300117	Washer	4
34	292681	Lockwasher	4

©2009 HYSTER COMPANY

HOOD

ITEM	PART NO.	DESCRIPTION	QTY
35	239503	Nut	4
36	1354380	Capscrew	2
37	292515	Capscrew	6
38	292682	Lockwasher	6
39	136692	Nut	6
40	320159	Washer	4
41	**a** 1382306	Washer (Nylon)	2
42	1386221	Button	1
43	1386220	Guard	1
44	12898	Snap Ring	1
45	227155	Screw	2
46	15931	Lockwasher	2
47	**a** 1454655	Heat Shield	2
48	**a** 1455464	Heat Shield	2
49	1456546	Screw	2
50	**m** 1528948	Screw	2

FOOTNOTES:

a Diesel
b Includes Part Number 1373803 Qty 4 and 924012 Qty 1
c LPG
d Petrol
e Petrol and Diesel
f → S/N H177B23563X
g → S/N H177B24940Y
h → S/N H177B25059Y
i → S/N H177B40524A
j S/N H177B23564X →
k S/N H177B24941Y →
l S/N H177B25060Y →
m S/N H177B40525A →

©2009 HYSTER COMPANY

NOTES

©2009 HYSTER COMPANY

HOOD SOUND LINER (FIGURE 1-2)

CAB — DIESEL

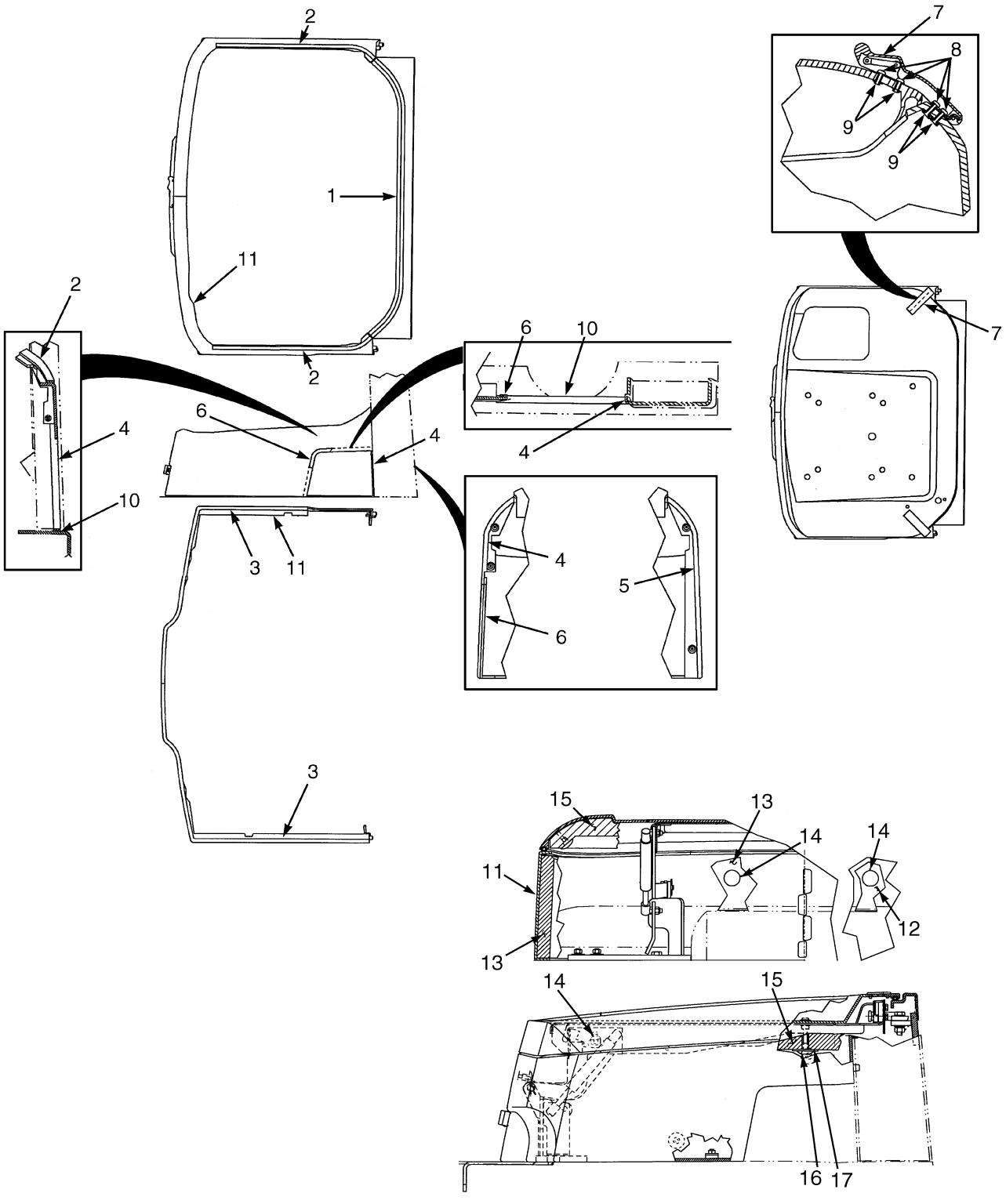

HP120825

©2009 HYSTER COMPANY

HOOD SOUND LINER
CAB – DIESEL

ITEM	PART NO.	DESCRIPTION	QTY
1	1502777	Strip Seal	1
2	1502776	Strip Seal	2
3	1502778	Strip Seal	2
4	1502779	Strip Seal	2
5	1502780	Strip Seal	1
6	1502781	Strip Seal	1
7	1392718	Latch	2
8	222024	Rivet	8
9	197066	Washer	8
10	1502793	Strip Seal	1
11	1485328	Cover (Lower LH)	1
12	1371102	Hood Liner (RH Panel)	1
13	1371103	Hood Liner (LH Panel)	1
14	280644	Button	10
15	1371100	Hood Liner	1
16	1361087	Button	4
17	1382306	Washer	2

©2009 HYSTER COMPANY

FRAME AND FLOORPLATES (FIGURE 1-3)

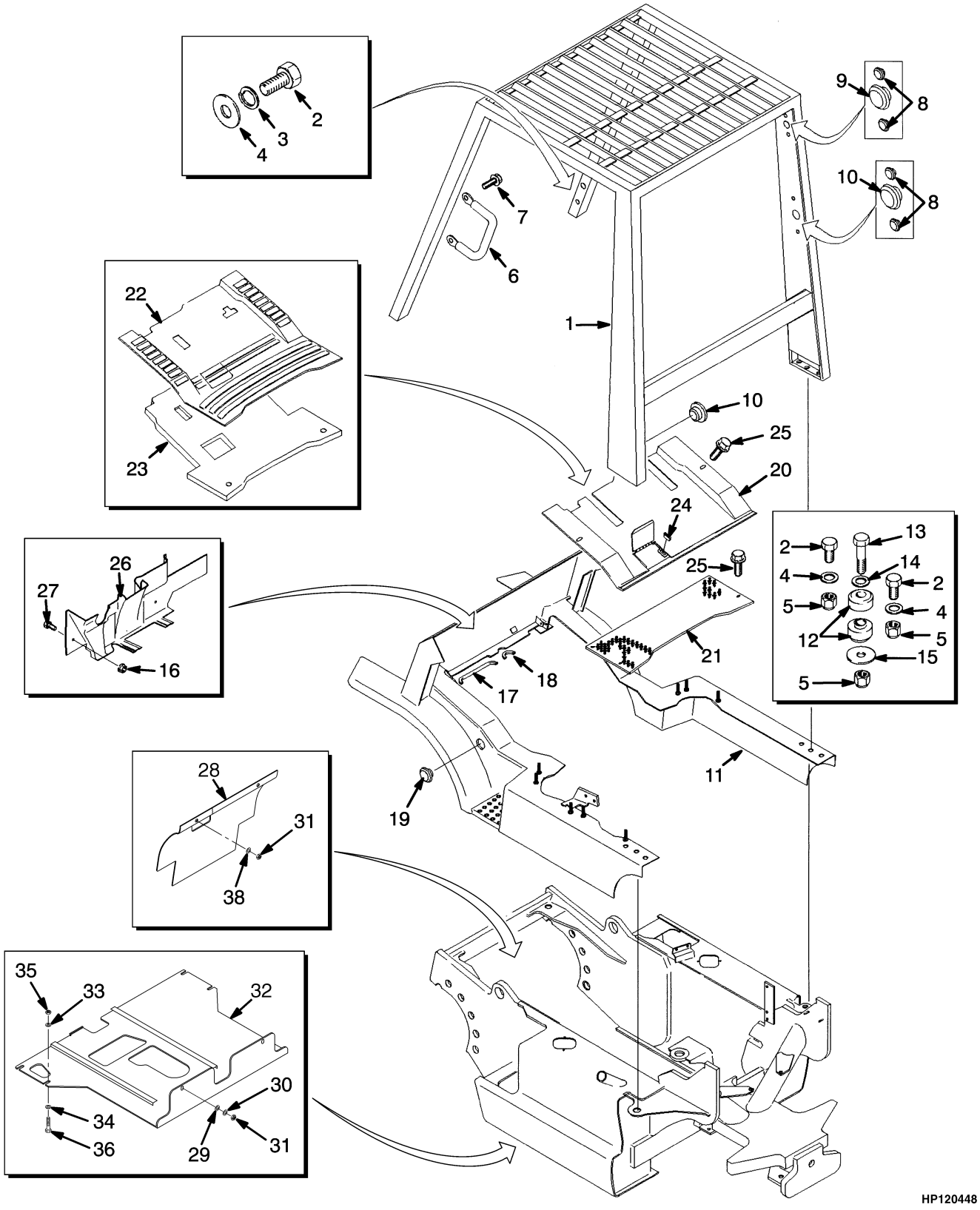

©2009 HYSTER COMPANY

FRAME AND FLOORPLATES

ITEM	PART NO.	DESCRIPTION	QTY
1	**c** 1337179	Overhead Guard (Standard)	1
1	**e** 1485864	Overhead Guard (Standard)	1
1	**c** 1352608	Overhead Guard (Raised Height)	1
1	**e** 1485866	Overhead Guard (Raised Height)	1
2	292528	Capscrew	8
3	292683	Lockwasher	4
4	296423	Washer	8
5	1390182	Nut	8
6	1343647	Handle	1
7	329067	Screw	2
8	1363916	Plug	12
9	1363917	Plug	5
10	1363918	Plug	2
11	**c** 1360718	Frame	1
11	**d** 1483917	Frame	1
11	**f** 1488554	Operator Module	1
12	1461802	Rubber Mount	4
13	292536	Capscrew	4
14	320161	Washer	4
15	300939	Washer	4
16	1359600	Nut	2
17	1323052	Trim	1
18	2007856	Trim	1
19	1350231	Plug	2
20	**bc** 1339777	Floorplate (Front)	1
20	**bd** 1483338	Floorplate (Front)	1
20	**a** 1359534	Floorplate (Front)	1
21	**bc** 1339773	Floorplate (Rear)	1
21	**bd** 1483117	Floorplate (Rear)	1
21	**a** 1359535	Floorplate (Rear)	1
22	1354090	Floormat	1
23	**a** 1390611	Barrier	1
24	1339776	Catch	1
25	**c** 1356100	Capscrew	4
26	1390607	Cover	1
27	292501	Capscrew	2
28	1356525	Sound Liner	1
29	320158	Washer	2
30	292681	Lockwasher	2
31	302400	Nut	3
32	1359632	Pan	1
33	320160	Washer	2
34	292682	Lockwasher	2
35	136692	Nut	2
36	287854	Capscrew	2
37	1359631	Mat	1
38	332755	Washer	1
	1365827	Kit-Noise Reduction	1

©2009 HYSTER COMPANY

FOOTNOTES:

a With Low Noise
b Without Low Noise
c → S/N H177B24940Y
d S/N H177B24941Y ↔ S/N H177B26622Y
e S/N H177B24941Y →
f S/N H177B26622Y →

©2009 HYSTER COMPANY

NOTES

©2009 HYSTER COMPANY

COUNTERWEIGHT (FIGURE 1-4)

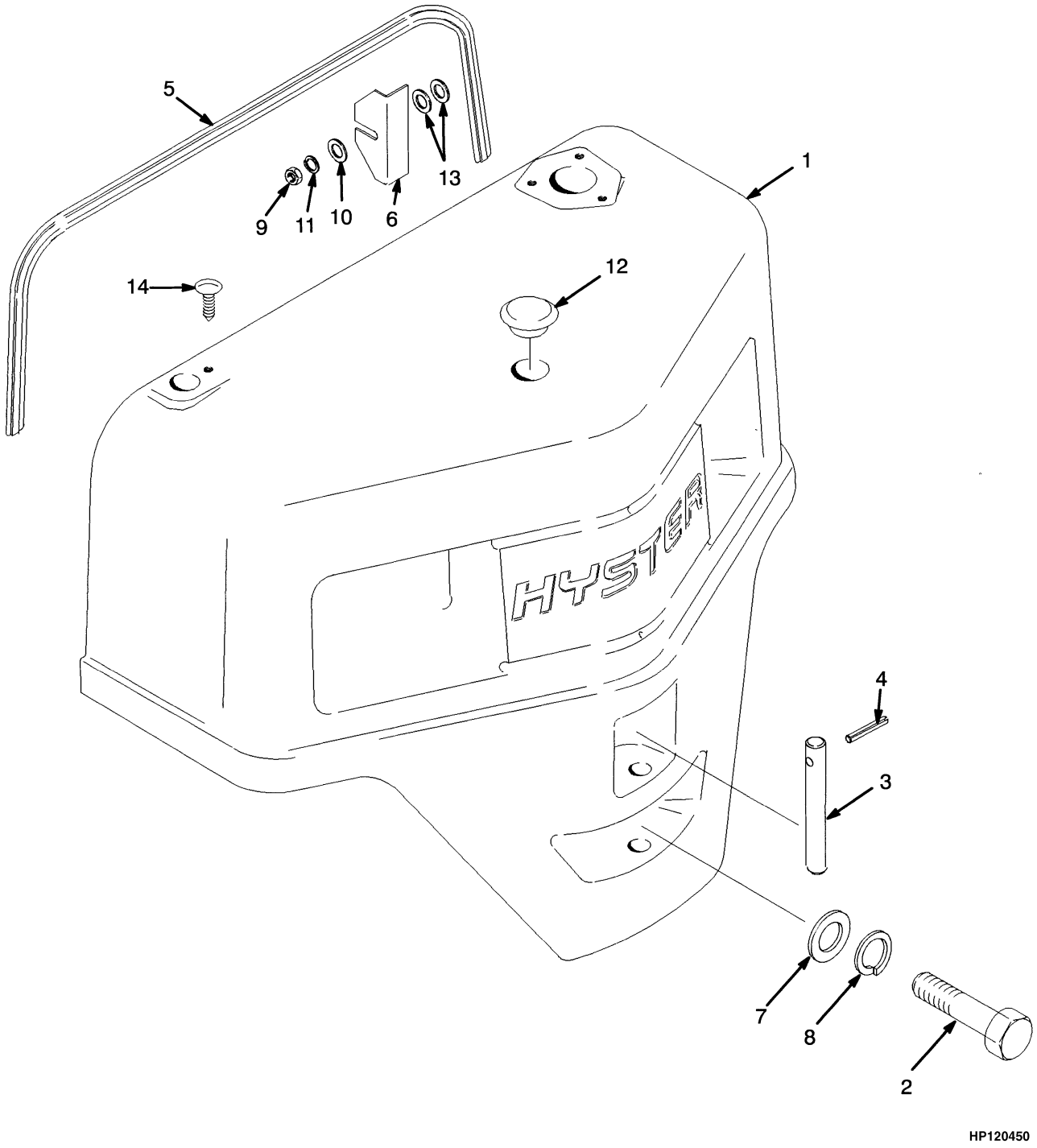

©2009 HYSTER COMPANY

COUNTERWEIGHT

ITEM	PART NO.	DESCRIPTION	QTY
1	**a** 1335751	Counterweight (1623 mm)	1
1	**b** 1351014	Counterweight (1623 mm)	1
1	**c** 1335752	Counterweight (1623 mm)	1
1	**c** 1335753	Counterweight (1700 mm)	1
1	**d** 1351016	Counterweight (1623 mm)	1
1	**e** 1335754	Counterweight (1623 mm)	1
1	**e** 1335755	Counterweight (1700 mm)	1
1	**f** 1335756	Counterweight (1700 mm)	1
2	**b** 292607	Capscrew (76,2 mm) (1623 mm)	1
2	**c** 292612	Capscrew (127 mm) (1623 mm)	1
2	**c** 292608	Capscrew (1700 mm)	1
2	**d** 292613	Capscrew (152,4 mm) (1623 mm)	1
2	**e** 292616	Capscrew (178 mm) (1623 mm)	1
2	**e** 292611	Capscrew (127 mm) (1700 mm)	1
2	**f** 292613	Capscrew (152,4 mm) (1700 mm)	1
3	1335761	Tow Pin	1
4	1527470	Pin	1
5	2053730	Seal	1
6	1335763	Shim (2,769 mm)	AR
6	1351693	Shim (1,499 mm)	AR
7	1375214	Washer	1
8	292689	Washer	1
9	239503	Nut	4
10	320158	Washer	4
11	292681	Lockwasher	4
12	1350231	Plug	1
13	320159	Washer	8
14	**g** 1347045	Fastener	1

FOOTNOTES:

a H2.00
b H2.25
c H2.50
d H2.50-3.00
e H3.00
f H3.20
g Petrol and Diesel

©2009 HYSTER COMPANY

SUSPENSION SEAT (FIGURE 1-5)

(→ 1/2000)

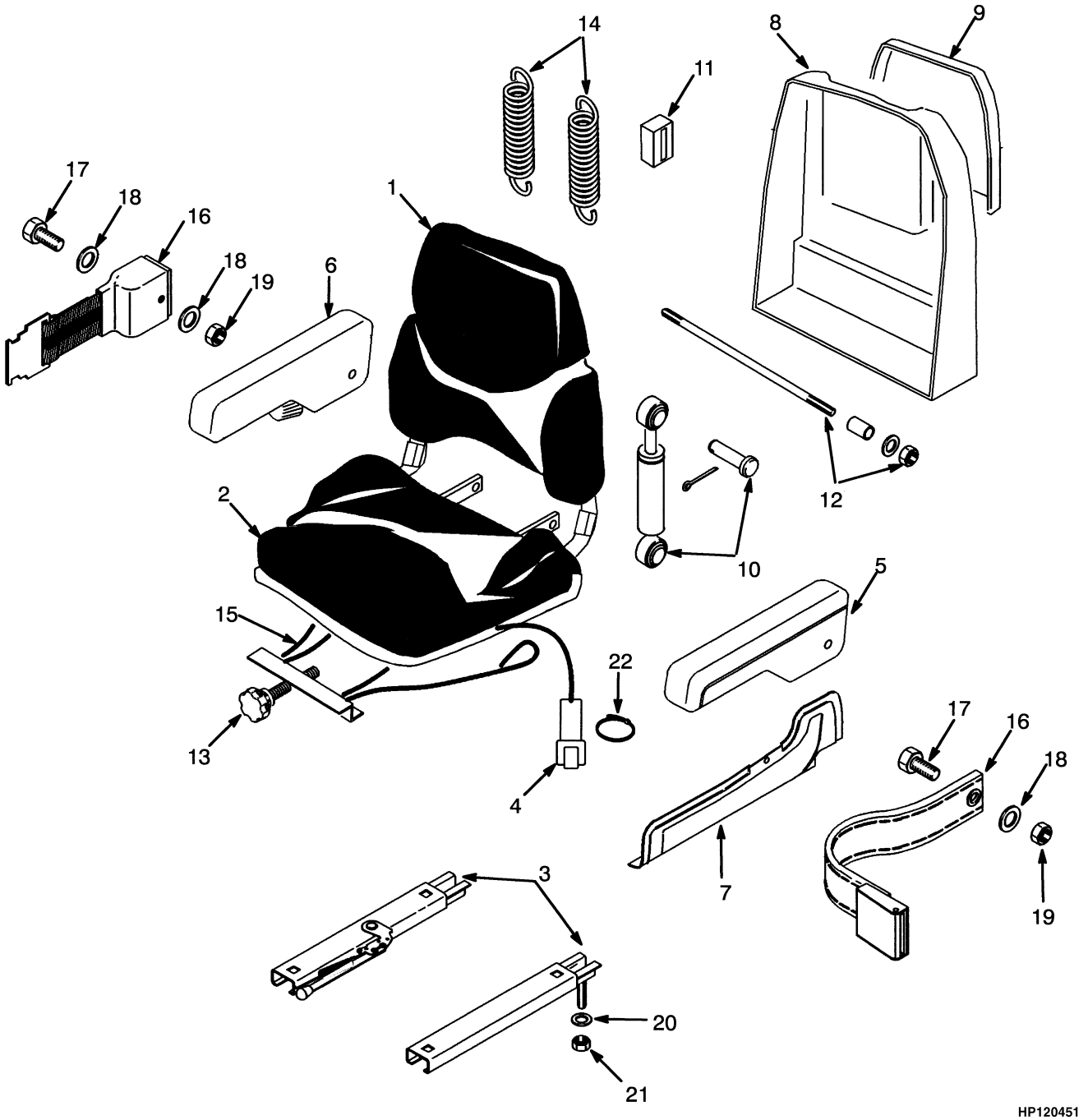

©2009 HYSTER COMPANY

SUSPENSION SEAT

(→ 1/2000)

ITEM	PART NO.	DESCRIPTION	QTY
	1450203	Seat-Semi Suspension (Vinyl)	1
	1450204	Seat-Semi Suspension (Fabric)	1
1	**a** 1382111	Seat Cushion (Back Cushion) (Vinyl)	1
1	**a** 1382113	Seat Cushion (Back Cushion) (Fabric)	1
1	1454511	Seat Cushion (Vinyl)	1
1	1454513	Seat Cushion (Fabric)	1
2	**a** 1382112	Seat Cushion (Vinyl)	1
2	**a** 1382114	Seat Cushion (Fabric)	1
2	1454512	Seat Cushion (Vinyl)	1
2	1454514	Seat Cushion (Fabric)	1
3	1459173	Kit-Seat Rail	1
4	1354140	Switch	1
5	1453882	Armrest (LH)	1
6	1453883	Armrest (RH)	1
7	1453884	Cover (LH)	1
7	1453885	Cover (RH)	1
8	1453886	Seat Panel (Back)	1
9	1453887	Holder (Operator Manual)	1
10	1362049	Kit-Shock Absorber	1
11	1362052	Block	1
12	1362053	Kit-Shaft	1
13	1362061	Kit-Weight Adjuster	1
14	1367137	Kit-Spring	1
15	1378307	Kit-Suspension Cable	1
16	**b** 1374750	Seat Belt	1
16	**c** 1460495	Seat Belt	1
17	**b** 133503	Capscrew	2
18	**b** 15129	Lockwasher	3
19	379698	Nut	2
20	15175	Lockwasher	4
21	145639	Locknut	4
22	. . . . .	Strap Clamp	AR

FOOTNOTES:

a Optional
b → 11/1998
c 11/1998 →

©2009 HYSTER COMPANY

SEAT (FIGURE 1-6)

FULL SUSPENSION — SHEET 1 OF 2 (1/2000 →)

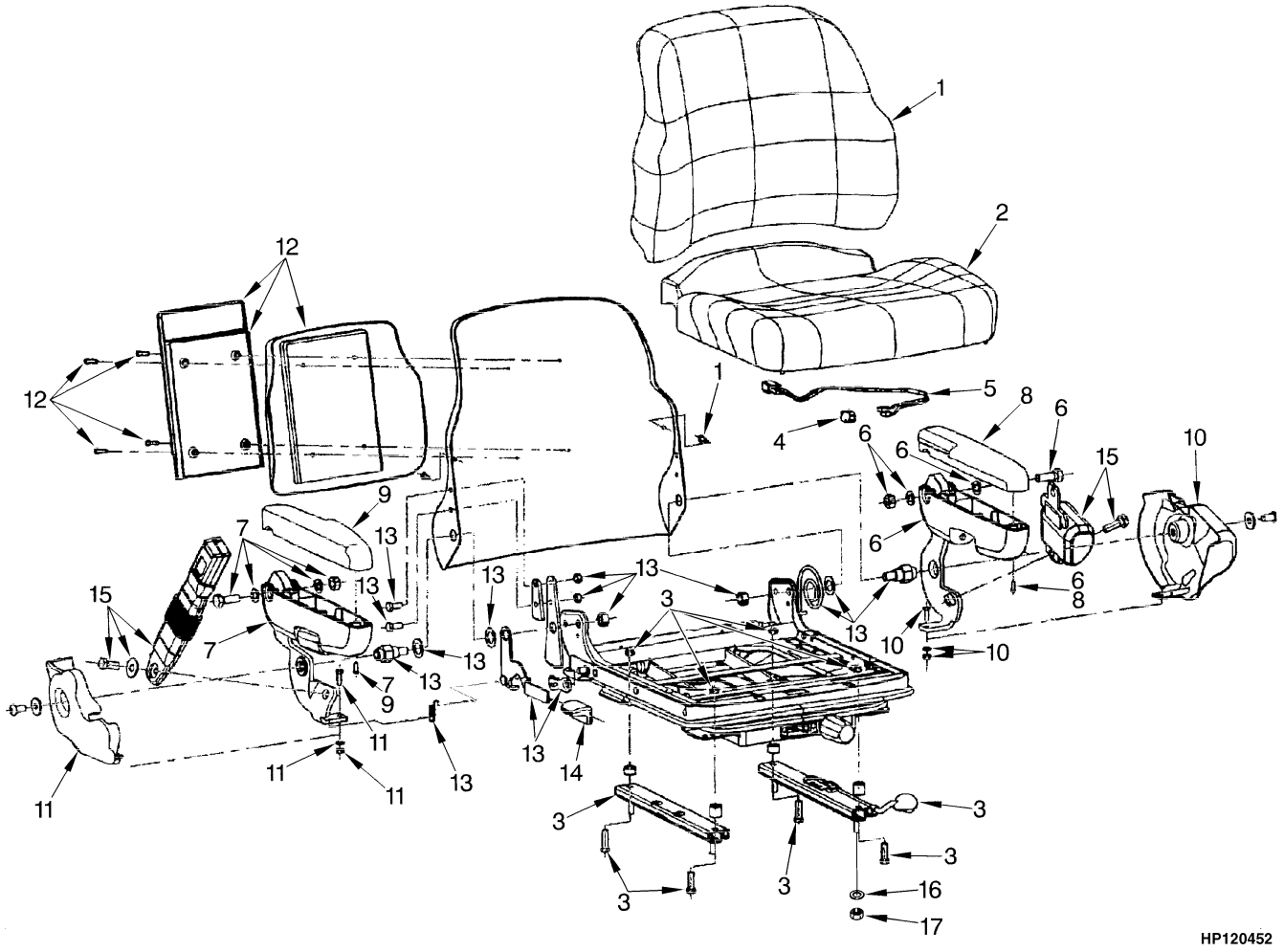

©2009 HYSTER COMPANY

SEAT

FULL SUSPENSION – SHEET 1 OF 2 (1/2000 →)

ITEM	PART NO.	DESCRIPTION	QTY
	1466006	Seat-Full Suspension (Vinyl)	1
	1466007	Seat-Full Suspension (Fabric)	1
1	1467533	Seat Cushion (Vinyl)	1
1	1467535	Seat Cushion (Fabric)	1
2	1467536	Seat Cushion (Fabric)	1
2	1494076	Seat Cushion (Vinyl)	1
3	1467513	Kit-Seat Rail	1
4	1467514	Switch (Seat)	1
5	1467515	Wire Harness	1
6	1467516	Armrest (LH) (LH)	1
7	1467517	Operator Restraint (RH) (RH)	1
8	1467518	Armrest (LH)	1
9	1467519	Armrest (RH)	1
10	1467520	Kit-Cover (LH)	1
11	1467521	Kit-Cover (RH)	1
12	1467522	Information Case	1
13	1467530	Kit-Recliner	1
14	1467531	Knob	1
15	1467532	Kit-Seat Belt	1
16	15175	Lockwasher	4
17	145639	Locknut	4

©2009 HYSTER COMPANY

SEAT (FIGURE 1-7)
FULL SUSPENSION — SHEET 2 OF 2 (1/2000 →)

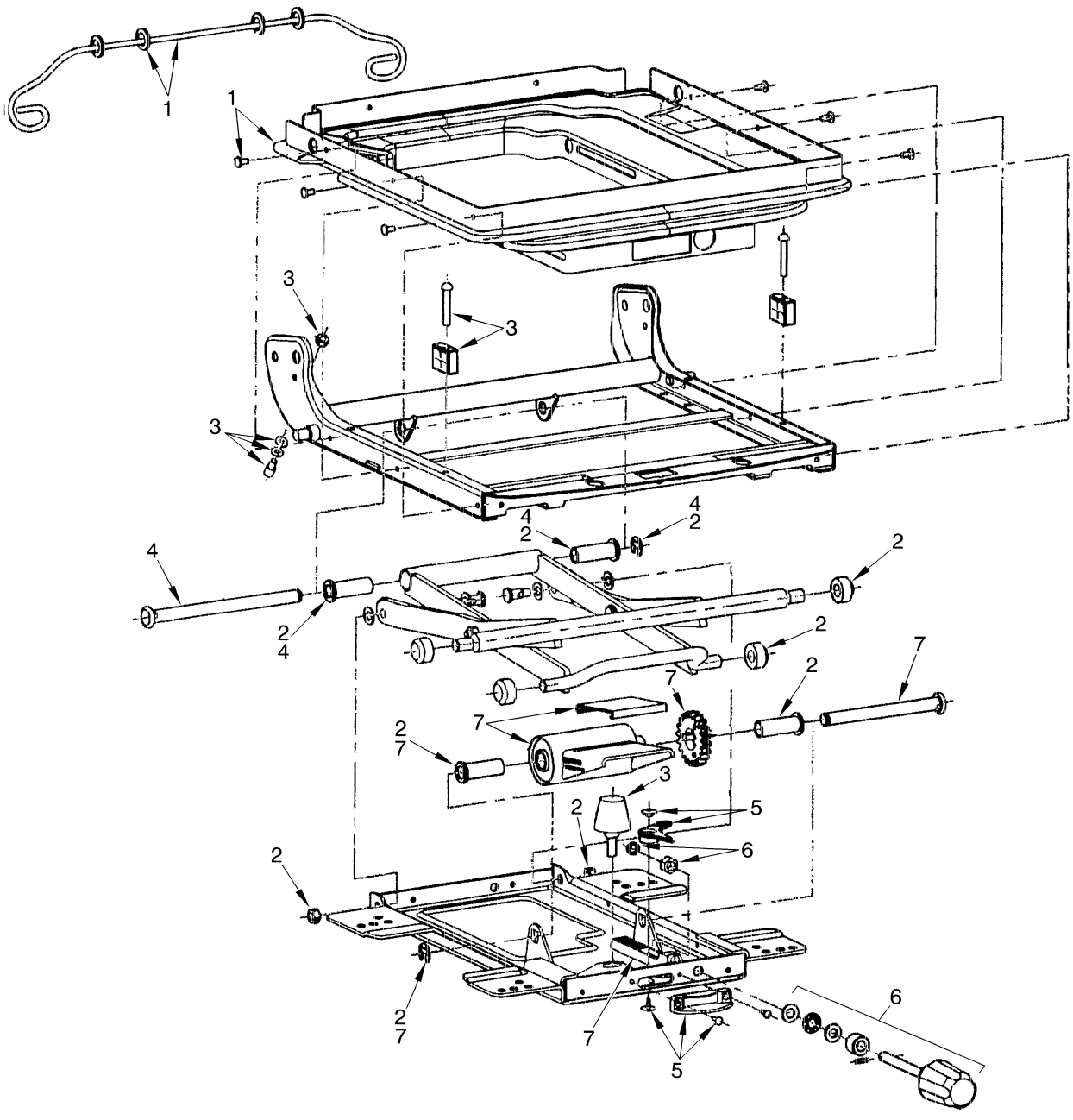

©2009 HYSTER COMPANY

SEAT

FULL SUSPENSION – SHEET 2 OF 2 (1/2000 →)

ITEM	PART NO.	DESCRIPTION	QTY
	1466006	Seat-Full Suspension (Vinyl)	1
	1466007	Seat-Full Suspension (Fabric)	1
1	1467523	Kit-Boot	1
2	1467524	Kit-Bearing	1
3	1467525	Kit-Bumper	1
4	1467526	Kit-Shaft and Bearing	1
5	1467527	Kit-Weight Adjuster Indicator	1
6	1467528	Kit-Knob	1
7	1467529	Kit-Spring	1

©2009 HYSTER COMPANY

SEAT (FIGURE 1-8)
NON-SUSPENSION (11/1998 →)

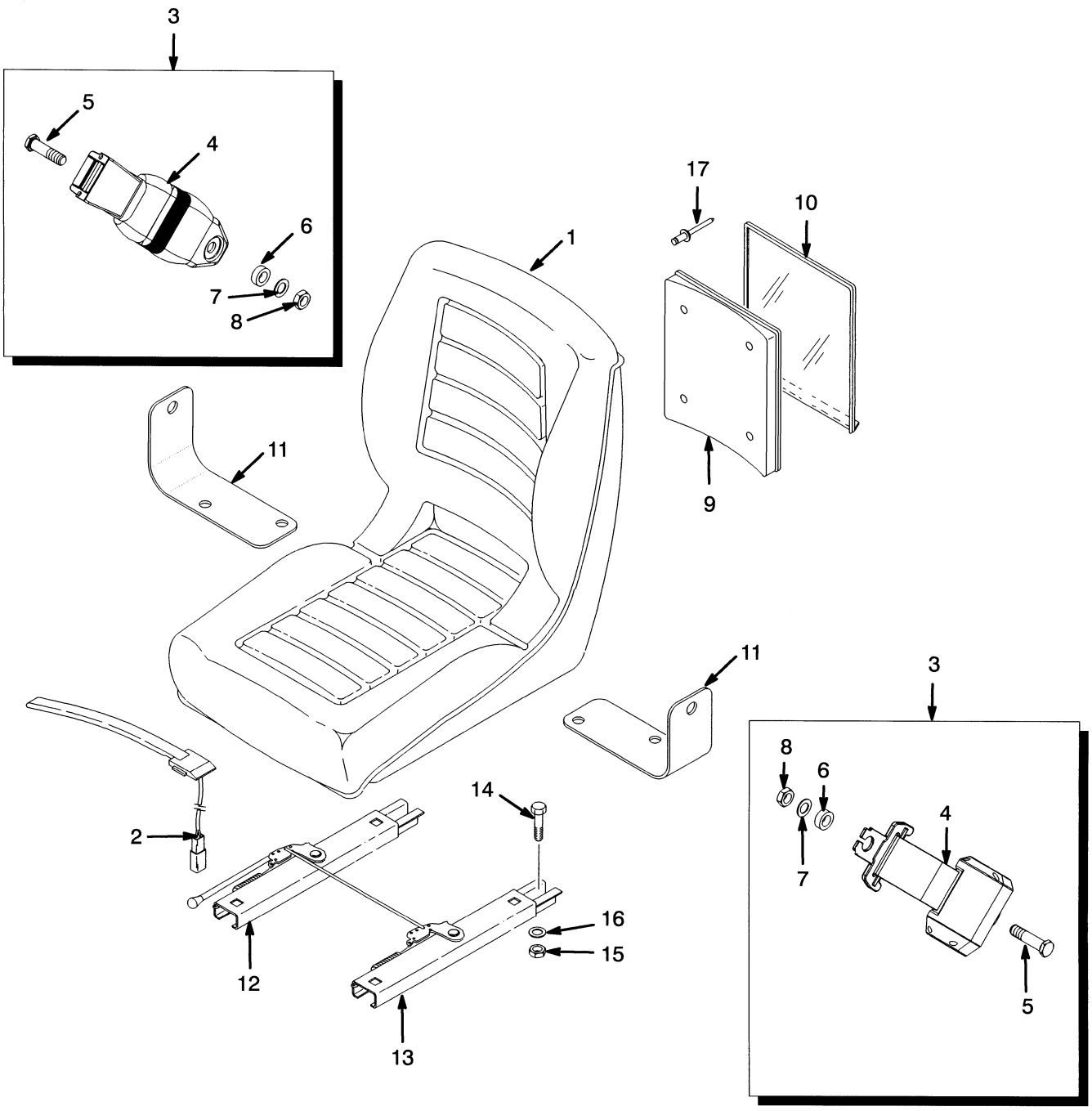

HP120453

©2009 HYSTER COMPANY

SEAT

NON-SUSPENSION (11/1998 →)

ITEM	PART NO.	DESCRIPTION	QTY
	1460231	Seat-Non Suspension	1
1	364911	Seat-Non Suspension	1
2	2037311	Switch	1
3	1461081	Kit-Seat Belt	1
4	. . . . .	Seat Belt	1
5	. . . . .	Screw	2
6	. . . . .	Washer	2
7	. . . . .	Washer	2
8	. . . . .	Nut	2
9	335988	Information Case	1
10	335991	Cover (Information Case)	1
11	1470175	Bracket	1
12	1470176	Seat Rail	1
13	1470177	Seat Rail	1
14	18496	Capscrew (Rear)	2
14	18498	Capscrew (Front)	2
15	145639	Locknut	4
16	15175	Lockwasher	4
17	. . . . .	Rivet	4

©2009 HYSTER COMPANY

LABELS (FIGURE 1-9)

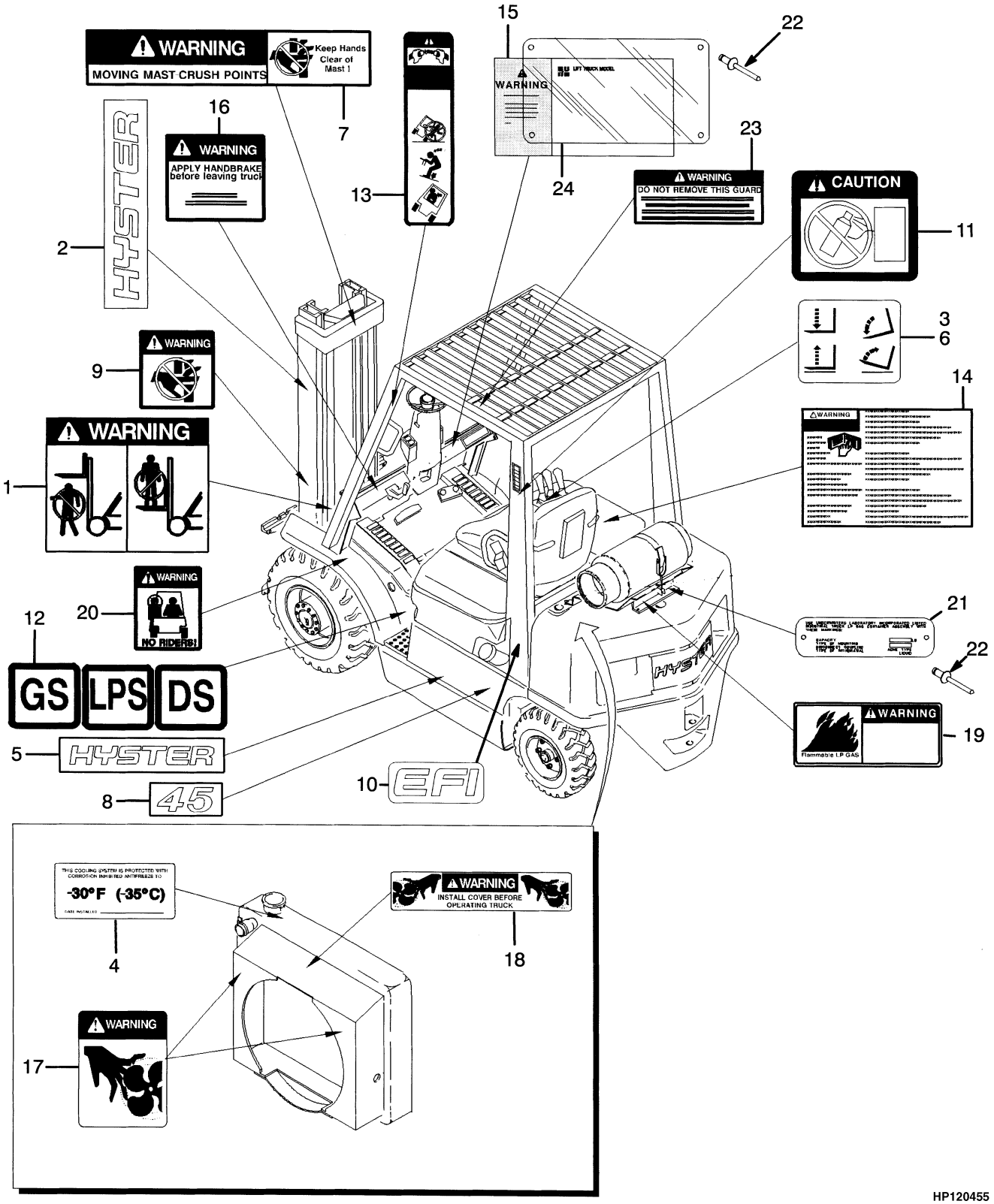

HP120455

©2009 HYSTER COMPANY

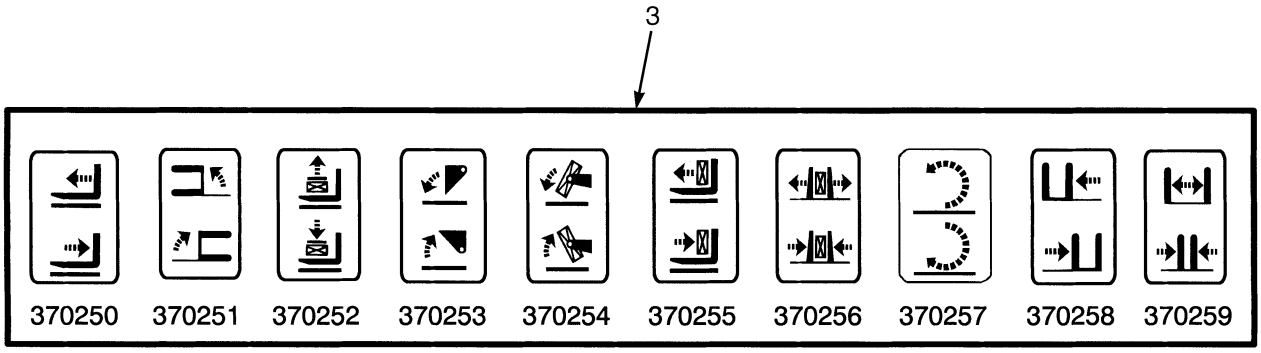

HP120627

LABELS

ITEM	PART NO.	DESCRIPTION	QTY
1	2075656	Label (Mast Warning)	2
2	1339672	Label (Hyster)	2
3	370250	Label (Auxiliary Function - Reach)	1
3	370251	Label (Auxiliary Function - Swing)	1
3	370252	Label (Auxiliary Function - Stabilizer)	1
3	370253	Label (Auxiliary Function - Dump/Scoop)	1
3	370254	Label (Auxiliary Function - Upender)	1
3	370255	Label (Auxiliary Function - Push/Pull)	1
3	370256	Label (Auxiliary Function, Clamp)	1
3	370257	Label (Auxiliary Function, Rotate)	1
3	370258	Label (Auxiliary Function, Side-Shift)	1
3	370259	Label (Auxiliary Function - Fork Spreader)	1
4	1354165	Label (Antifreeze)	1
5	1339674	Label (Hyster)	2
6	1356137	Label (Lift and Tilt)	1
7	1330919	Label (Mast Warning)	1
8	1339667	Label (Model 2.00)	2
8	1368056	Label (Model 2.25)	2
8	1339668	Label (Model 2.50)	2
8	1339669	Label (Model 3.00)	2
8	1339670	Label (Model 3.20)	2
9	1335129	Label (Pinch Point)	2
10	1345998	Label (EFI) (Hood Latch)	2
11	1354163	Label (Ether Caution)	1
12	154065	Label (Type GS)	2
12	154066	Label (Type LPS)	2
12	154067	Label (Type DS)	2
13	1330917	Label (Operator Restraint) (Warning)	2
14	1336605	Label (Operator Warning)	1
15	**a**	Nameplate	1
16	2309799	Label (Parking Brake)	1
17	1345939	Label (Fan Warning)	2
18	1325271	Label (Fan Warning)	1
19	1354171	Label (Flammable LPG)	1
20	1330920	Label (No Riders)	2
21	1501259	Nameplate (LP Tank)	1
22	170658	Rivet	AR
23	**b**	Label- Overhead Guard Impact Rating	1
24	389688	Nameplate (Nameplate)	1

©2009 HYSTER COMPANY

LABELS

ITEM	PART NO.	DESCRIPTION	QTY
	996414	Kit-Label	1
	cd 1503879	Label (Noise Level)	1
	cd 1503882	Label (Noise Level)	1
	1534660	Label (Patents and Trademarks)	1

FOOTNOTES:

a Contact Your Local Hyster Dealer
b Contact Your Local Yale Dealer
c Not Illustrated
d S/N H177B31565Z →

©2009 HYSTER COMPANY

NOTES

©2009 HYSTER COMPANY

NOISE ABATEMENT (FIGURE 1-10)
HYDROSTATIC TRANSMISSION — DIESEL

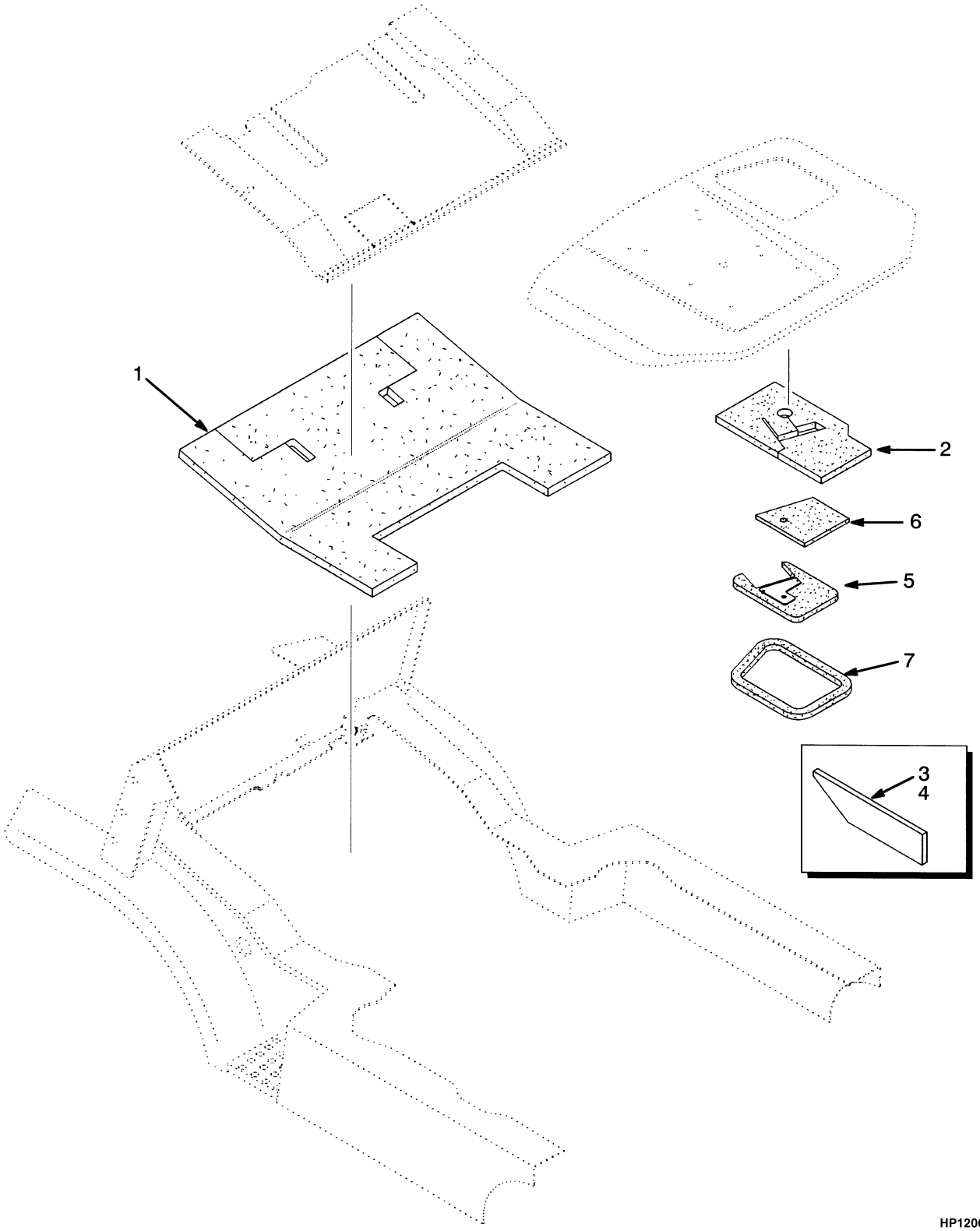

©2009 HYSTER COMPANY

NOISE ABATEMENT
HYDROSTATIC TRANSMISSION – DIESEL

ITEM	PART NO.	DESCRIPTION	QTY
1	1465277	Liner (Floorplate)	1
1	893209	Liner (Floorplate without Cab)	1
2	1465252	Liner (Control Valve)	1
3	893210	Liner (LH Door)	1
4	. . . . .	Liner (RH Door)	1
5	. . . . .	Cover Assembly	1
6	1465253	Liner	1
7	1465331	Liner	1

©2009 HYSTER COMPANY

LOAD BACKREST EXTENSION (FIGURE 1-11)

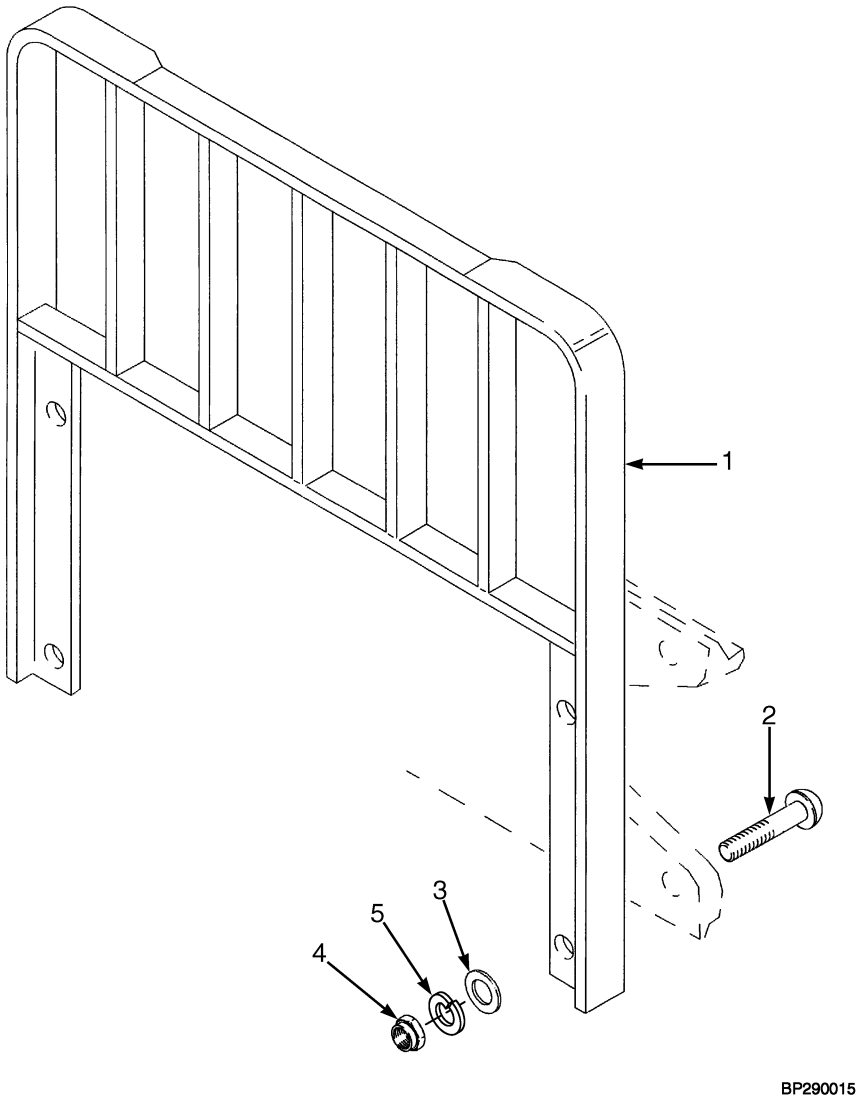

©2009 HYSTER COMPANY

LOAD BACKREST EXTENSION

ITEM	PART NO.	DESCRIPTION	QTY
1	1338642	Load Backrest (1067 mm) (H2.00-2.50 XM)	1
1	1338645	Load Backrest (1067 mm) (H3.00-3.20 XM)	..
1	**b** 1345267	Load Backrest (1067 mm)	..
2	1343990	Capscrew (H2.00-2.50 XM)	4
2	1354923	Capscrew (H3.00-3.20 XM)	4
3	221771	Washer	4
3	**a** 296423	Washer	4
4	292656	Nut	4
5	292683	Lockwasher	4

FOOTNOTES:

a Optional

b Polished Fork with Full Bottom Taper

©2009 HYSTER COMPANY

FORKS (FIGURE 1-12)
H2.00-.250XM

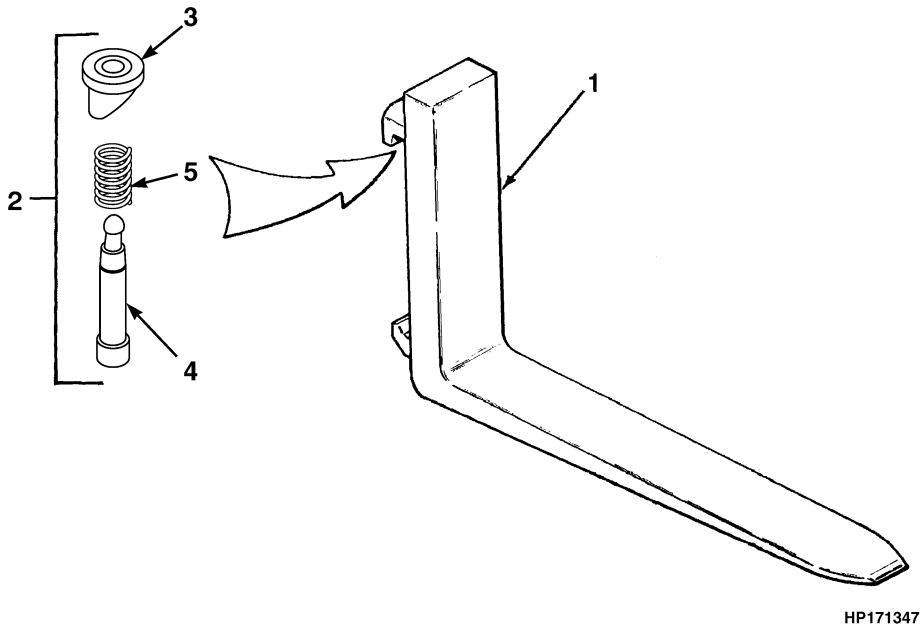

KEY:
A: Standard Taper (125 mm x 40 mm)
B: Standard Taper (100 mm x 40 mm)
C: Full Bottom Taper (125 mm x 40 mm)

ITEM	PART NO.	DESCRIPTION	QTY A	QTY B	QTY C
1	1326660	Fork (762 mm)	2	..	..
1	1326661	Fork (914 mm)	2	..	..
1	1326663	Fork (1067 mm)	2	..	..
1	1326664	Fork (1219 mm)	2	..	..
1	1326665	Fork (1372 mm)	2	..	..
1	1326666	Fork (1524 mm)	2	..	..
1	384210	Fork (762 mm)	..	2	..
1	384211	Fork (914 mm)	..	2	..
1	384213	Fork (1067 mm)	..	2	..
1	384214	Fork (1219 mm)	..	2	..
1	384215	Fork (1372 mm)	..	2	..
1	384216	Fork (1524 mm)	..	2	..
1	1338087	Fork (914 mm)	..	..	2
1	1338088	Fork (1067 mm)	..	..	2
1	1338089	Fork (1219 mm)	..	..	2
2	1523735	Kit-Latch	2	2	2
3	1523732	Knob	1	1	1
4	1523733	Pin	1	1	1
5	1500782	Spring	1	1	1

©2009 HYSTER COMPANY

FORKS (FIGURE 1-13)
H3.00-3.20XM

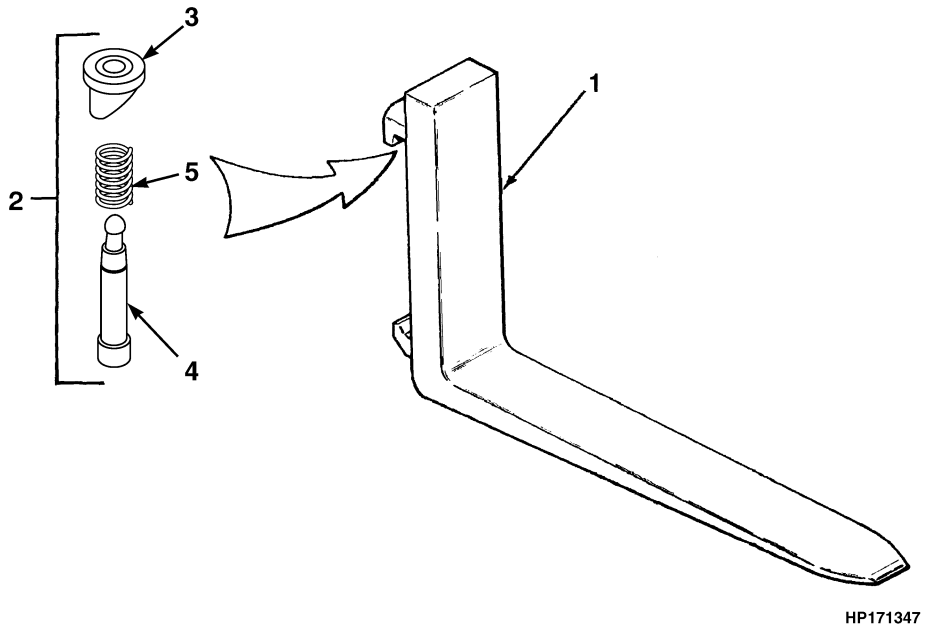

KEY:
A: Standard Taper (100 mm x 45 mm)
B: Standard Taper (125 mm x 45 mm)
C: Full Bottom Taper (180 mm x 45 mm)

ITEM	PART NO.	DESCRIPTION	QTY A	QTY B	QTY C
1	1333018	Fork (914 mm)	2	..	..
1	1333020	Fork (1067 mm)	2	..	..
1	1333021	Fork (1219 mm)	2	..	..
1	1333022	Fork (1372 mm)	2	..	..
1	1333023	Fork (1524 mm)	2	..	..
1	1333024	Fork (1829 mm)	2	..	..
1	367419	Fork (914 mm)	..	2	..
1	367420	Fork (1067 mm)	..	2	..
1	367421	Fork (1219 mm)	..	2	..
1	367422	Fork (1372 mm)	..	2	..
1	367423	Fork (1524 mm)	..	2	..
1	367424	Fork (1829 mm)	..	2	..
1	1338098	Fork (1219 mm)	..	..	2
1	1332745	Fork (1372 mm)	..	..	2
2	1523739	Kit-Latch	2	2	2
3	1523732	Knob	1	1	1
4	1523737	Pin	1	1	1
5	1500784	Spring	1	1	1

©2009 HYSTER COMPANY

NOTES

©2009 HYSTER COMPANY

2 ENGINES

SECTION 2
ENGINES

DESCRIPTION **PAGE**

AUXILIARY DRIVE
DIESEL - 2,6L ENGINE 2-128
CAMSHAFT AND OIL SUMP
LPG 3,0L - 2002-2005 SERIES ENGINE 2-110
LPG 3,0L ENGINE - 1998 AND 1999 SERIES ENGINE 2-102
LPG 3,0L ENGINE - 2000 AND 2001 SERIES ENGINE 2-106
CAMSHAFT AND TIMING GEAR
DIESEL - 2,6L ENGINE 2-124
CAMSHAFT AND VALVES
LPG - 2,0L ENGINE 2-48
COOLING
DIESEL - 2,6L ENGINE 2-138
LPG 3,0L - 2003 THRU 2005 SERIES WITH SERPENTINE BELT 2-100
LPG 3.0L - 1998 THRU 2003 SERIES WITH V-BELT 2-96
CRANKSHAFT AND PISTON
DIESEL - 2,6L ENGINE 2-120
LPG - 2,0L ENGINE 2-46
LPG 3,0L - 1998 THRU 2000 ENGINE 2-76
LPG 3,0L - 2001-2005 SERIES ENGINE 2-80
CYLINDER BLOCK
DIESEL - 2,6L ENGINE 2-114
LPG - 2,0L 2-42
CYLINDER HEAD
DIESEL - 2,6L ENGINE 2-116
LPG - 2,0L ENGINE 2-44
LPG 3,0L ENGINE - 1998 THRU 1999 SERIES ENGINE 2-84
LPG 3,0L ENGINE - 2000 THRU 2005 SERIES ENGINE 2-88
ELECTRICAL
LPG - 2,0L ENGINE 2-58
LPG 3,0L ENGINE - 1998 AND 1999 SERIES ENGINE 2-92
LPG 3,0L ENGINE - 2000 THRU 2005 SERIES ENGINE 2-94
ENGINE ASSEMBLY
LPG - 3.0L ELECTRONIC CONTROLS 2-70
ENGINE MOUNT
HYDROSTATIC TRANSMISSION - DIESEL 2-10
LPG - 2,0L ENGINE 2-4
LPG - 3,0L ENGINE 2-6
POWERSHIFT TRANSMISSION - DIESEL 2-8
EXHAUST
2.0L LPG - TWO-WAY 2-16
DIESEL 2-24
LPG - STANDARD 2-12
LPG 2,0L - WITH ELECTRONIC CONTROLS 2-18
LPG 3.0L - WITH ELECTRONIC CONTROLS 2-20
LPG CLOSED LOOP - 2.0L 2-14
OVERHEAD 2-22
FLYWHEEL AND TORQUE CONVERTER
DIESEL - 2,6L ENGINE 2-134
LPG 2-74

©2009 HYSTER COMPANY

SECTION 2
ENGINES

DESCRIPTION **PAGE**

FUEL
LPG - 2.0L ENGINE (→ S/N H177B23393) 2-60
LPG 2,0L (S/N H177B23394 →) 2-62
FUEL AND EMISSION CONTROL SYSTEM
2.0L LPG (S/N H177B47508B →) 2-64
FUEL INJECTION
DIESEL - 2,6L ENGINE 2-136
MANIFOLD
DIESEL - 2,6L ENGINE 2-130
LPG 2-52
LPG WITH ELECTRONIC CONTROLS 2-54
OIL PUMP AND FILTER
LPG - 2,0L ENGINE 2-56
OIL SUMP, PUMP, AND FILTER
DIESEL - 2,6L ENGINE 2-132
RADIATOR AND HOSES
DIESEL - 2.6L (S/N H177B40927A →) 2-40
HYDROSTATIC TRANSMISSION 2-32
LPG - 3.0L (S/N H177B40525A →) 2-34
LPG - 2.0L (S/N H177B41040A →) 2-38
LPG 3.0L - WITH ELECTRONIC CONTROLS 2-36
POWERSHIFT TRANSMISSION (→ S/N H177B18577X) 2-26
POWERSHIFT TRANSMISSION (→ S/N H177B40524A 3.0L) (→ S/N H177B40926A 2.6L)
(S/N H177B18578X ↔ S/N H177B41039A (2.0L-2.2L)) 2-30
ROCKER ARM SHAFT
DIESEL - 2,6L ENGINE 2-122
TIMING GEAR COVER AND OIL SUMP
LPG - 2,0L ENGINE 2-50
VALVE COVER
DIESEL - 2,6L ENGINE 2-118
WATER PUMP
LPG - 2,0L ENGINE 2-66

©2009 HYSTER COMPANY

NOTES

©2009 HYSTER COMPANY

ENGINE MOUNT (FIGURE 2-1)

LPG — 2,0L ENGINE

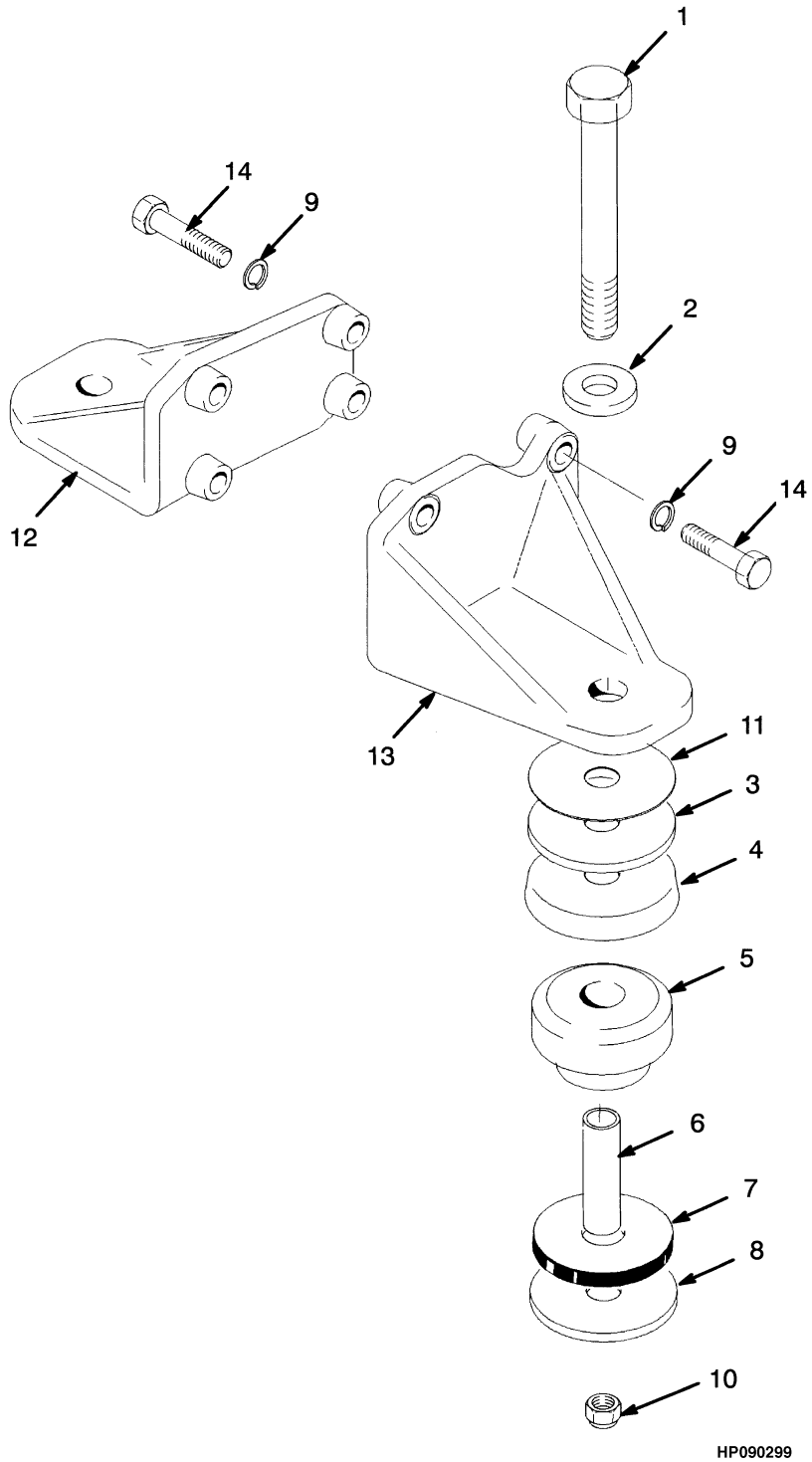

©2009 HYSTER COMPANY

ENGINE MOUNT
LPG – 2,0L ENGINE

ITEM	PART NO.	DESCRIPTION	QTY
1	293658	Capscrew	2
2	300932	Washer	2
3	340796	Washer	2
4	1351098	Cup	2
5	1351096	Isolator	2
6	1351061	Spacer	2
7	1351060	Bumper	2
8	300939	Washer	2
9	292682	Lockwasher	8
10	300937	Nut	2
11	1351017	Spacer	AR
12	1337014	Bracket (LH)	1
13	1337012	Bracket (RH)	1
14	1329286	Capscrew	8

©2009 HYSTER COMPANY

ENGINE MOUNT (FIGURE 2-2)

LPG — 3,0L ENGINE

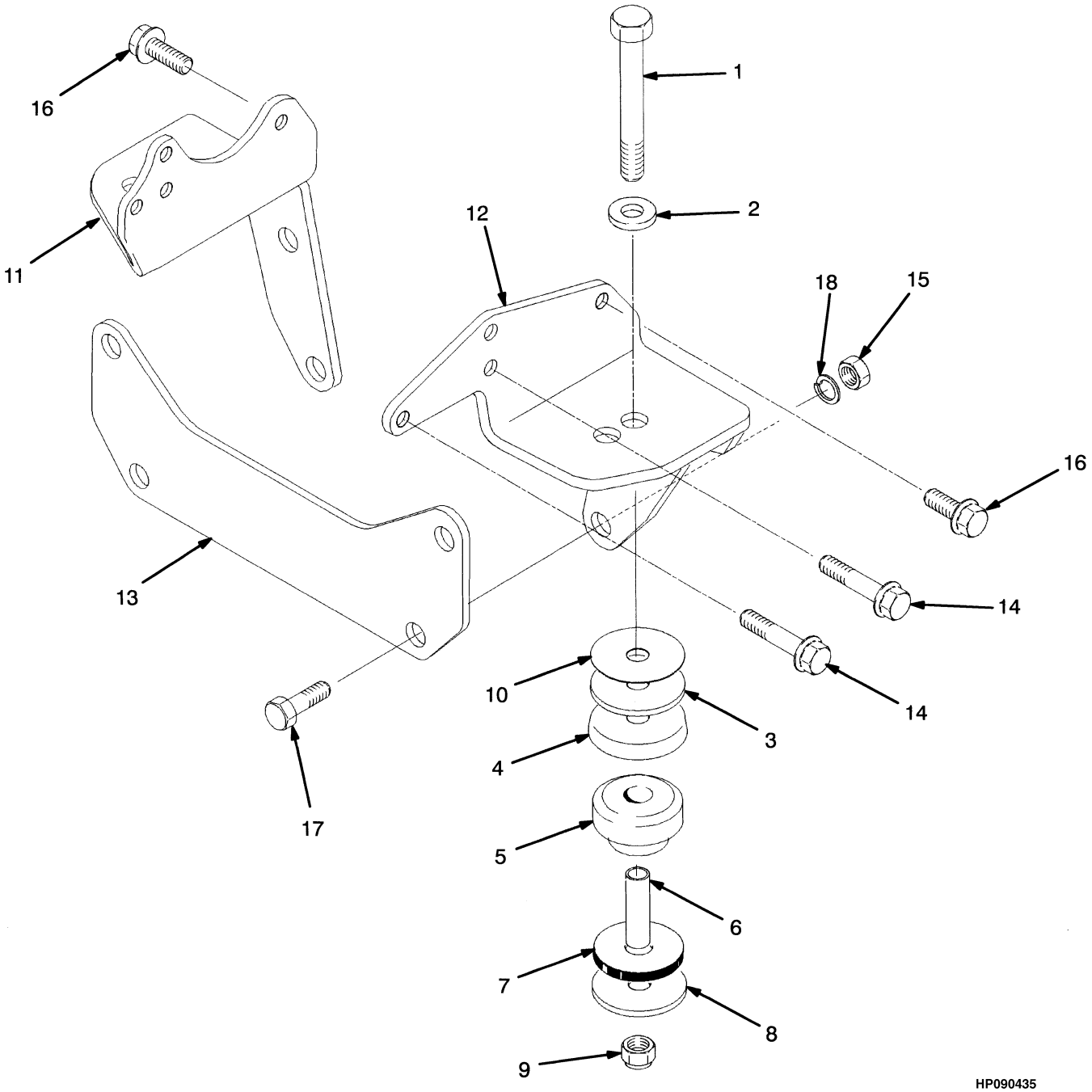

©2009 HYSTER COMPANY

ENGINE MOUNT
LPG – 3,0L ENGINE

KEY:
A: Powershift Transmission
B: Hydrostatic Transmission

ITEM	PART NO.	DESCRIPTION	QTY A	QTY B
1	293658	Capscrew	2	2
2	300932	Washer	2	2
3	340796	Washer	2	2
4	1351098	Cup	2	2
5	1351096	Isolator	2	..
5	1384357	Isolator	..	2
6	1351061	Spacer	2	2
7	1351060	Bumper	2	2
8	300939	Washer	2	2
9	300937	Nut	2	2
10	1351017	Spacer	AR	..
11	1375125	Bracket Wldmt (LH)	1	1
12	1375129	Bracket Wldmt (RH)	1	1
13	1375128	Plate	1	1
14	1508234	Screw	2	2
15	316828	Nut	4	4
16	174413	Screw	6	6
17	293686	Capscrew	4	4
18	296426	Washer	4	4

©2009 HYSTER COMPANY

ENGINE MOUNT (FIGURE 2-3)
POWERSHIFT TRANSMISSION — DIESEL

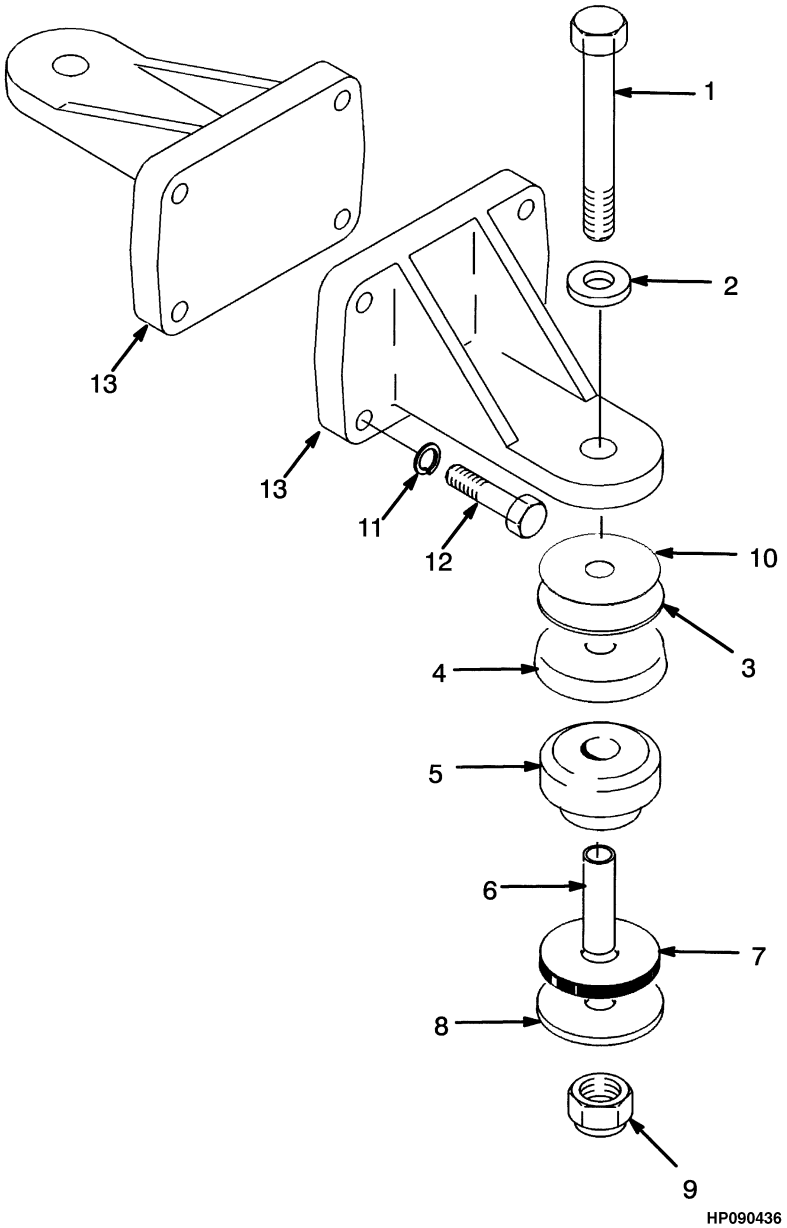

©2009 HYSTER COMPANY

ENGINE MOUNT
POWERSHIFT TRANSMISSION – DIESEL

ITEM	PART NO.	DESCRIPTION	QTY
1	293658	Capscrew	2
2	300932	Washer	2
3	340796	Washer	2
4	1351098	Cup	2
5	1351096	Isolator	2
6	1351061	Spacer	2
7	1351060	Bumper	2
8	300939	Washer	2
9	300937	Nut	2
10	. . . . .	Capscrew	2
10	1351017	Spacer	AR
11	1458049	Washer (Standard)	8
11	292684	Lockwasher (Heavy Duty)	8
12	1457909	Screw	8
13	1457908	Bracket (LH) (Standard)	1
13	1536999	Bracket (LH) (Heavy Duty)	1
13	1457910	Bracket (RH) (Standard)	1
13	1536998	Bracket (RH) (Heavy Duty)	1

NOTE: Engine Brackets Included with Engine

©2009 HYSTER COMPANY

ENGINE MOUNT (FIGURE 2-4)
HYDROSTATIC TRANSMISSION — DIESEL

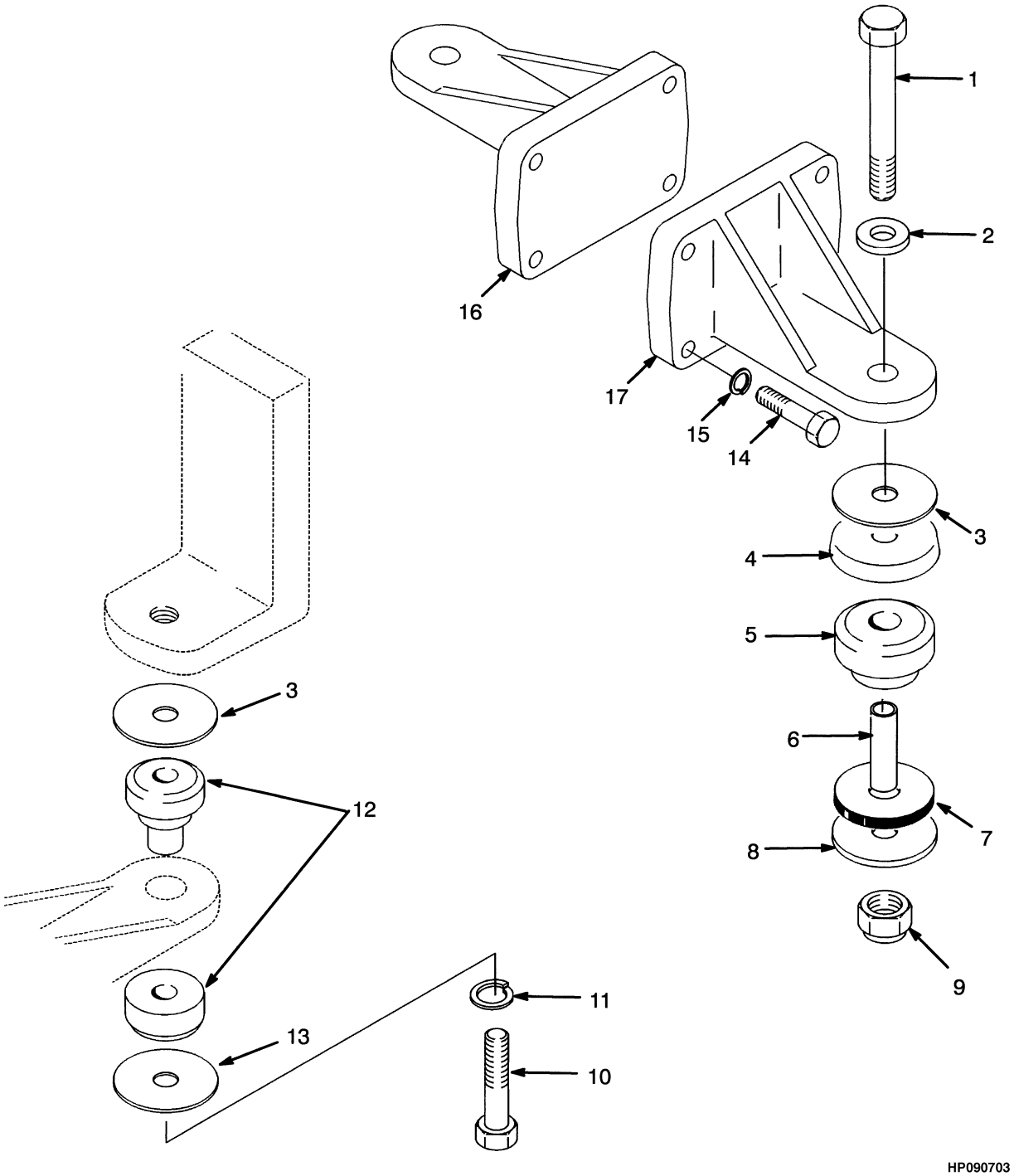

©2009 HYSTER COMPANY

ENGINE MOUNT
HYDROSTATIC TRANSMISSION – DIESEL

ITEM	PART NO.	DESCRIPTION	QTY
1	293659	Capscrew	2
2	300932	Washer	2
3	1377811	Spacer	3
4	1351098	Cup	2
5	1384357	Isolator	2
6	1351061	Spacer	2
7	1351060	Bumper	2
8	300939	Washer	2
9	300937	Nut	2
10	293657	Capscrew	2
11	292683	Lockwasher	9
12	1384365	Isolator	1
13	1384366	Washer (Snubbing)	1
14	1457909	Screw	8
15	1458049	Washer	8
16	1457908	Bracket (LH) (LH)	1
17	1457910	Bracket (RH) (RH)	1

©2009 HYSTER COMPANY

EXHAUST (FIGURE 2-5)
LPG — STANDARD

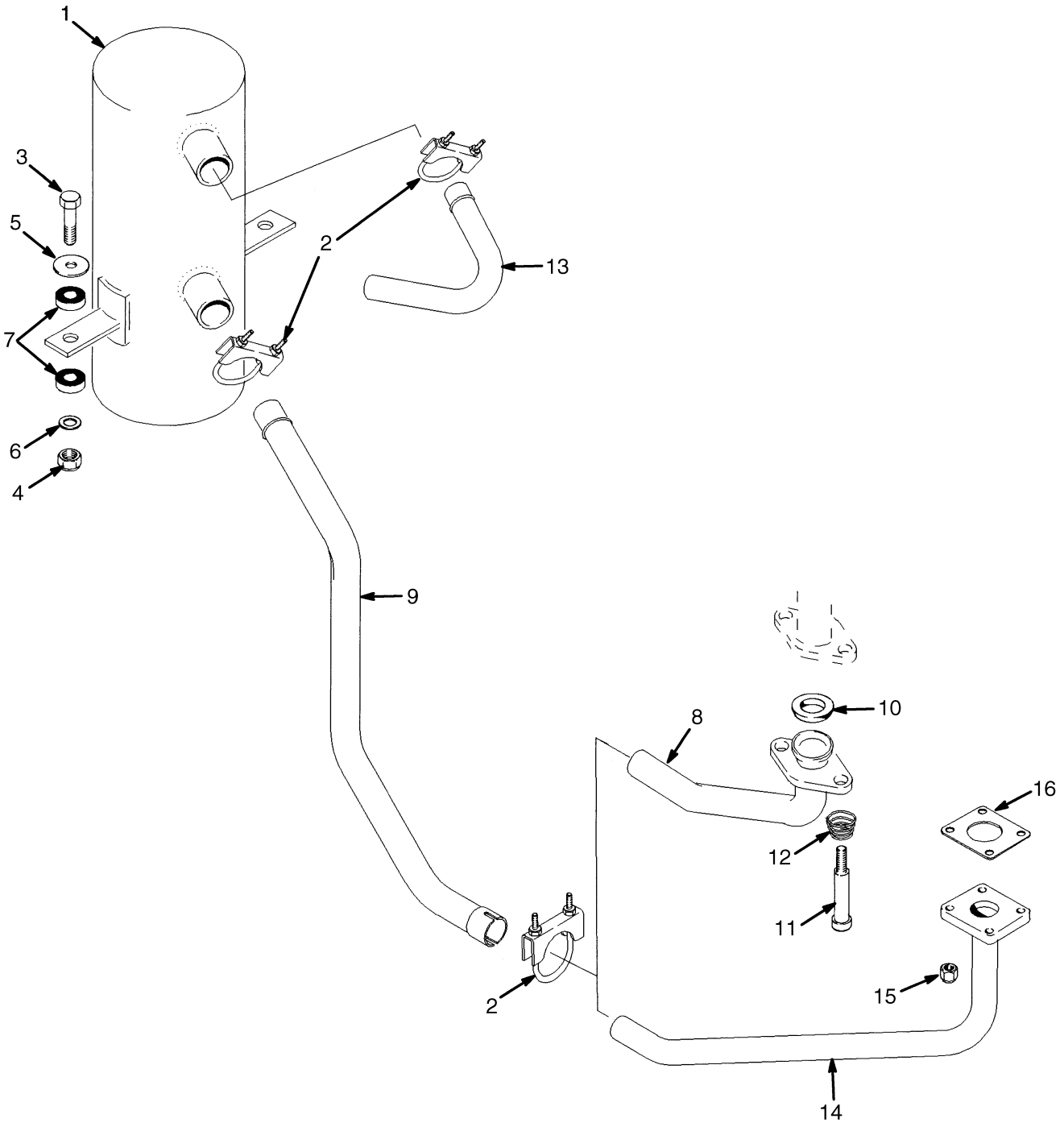

©2009 HYSTER COMPANY

EXHAUST
LPG – STANDARD

KEY:
A: 2,0L Engine
B: 3,0L Engine

ITEM	PART NO.	DESCRIPTION	QTY A	QTY B
1	**a** 1338282	Muffler	1	1
1	**b** 2076740	Muffler	1	1
2	63117	Clamp	3	3
3	292517	Capscrew	2	2
4	316826	Nut	2	2
5	1351176	Washer	2	2
6	320159	Washer	2	2
7	1351177	Rubber Cushion	4	4
8	1553745	Exhaust Pipe	..	1
9	1347126	Exhaust Pipe	1	..
9	1383012	Exhaust Pipe	..	1
10	1338258	Seal	..	1
11	1376766	Bolt	..	2
12	1335898	Spring	..	2
13	1338276	Exhaust Pipe	1	1
14	1338300	Exhaust Pipe	1	1
15	1502543	Nut (Flange)	4	..
16	1338308	Gasket	1	..

FOOTNOTES:

a → S/N H177B58436C

b S/N H177B58437C →

©2009 HYSTER COMPANY

EXHAUST (FIGURE 2-6)
LPG CLOSED LOOP — 2.0L

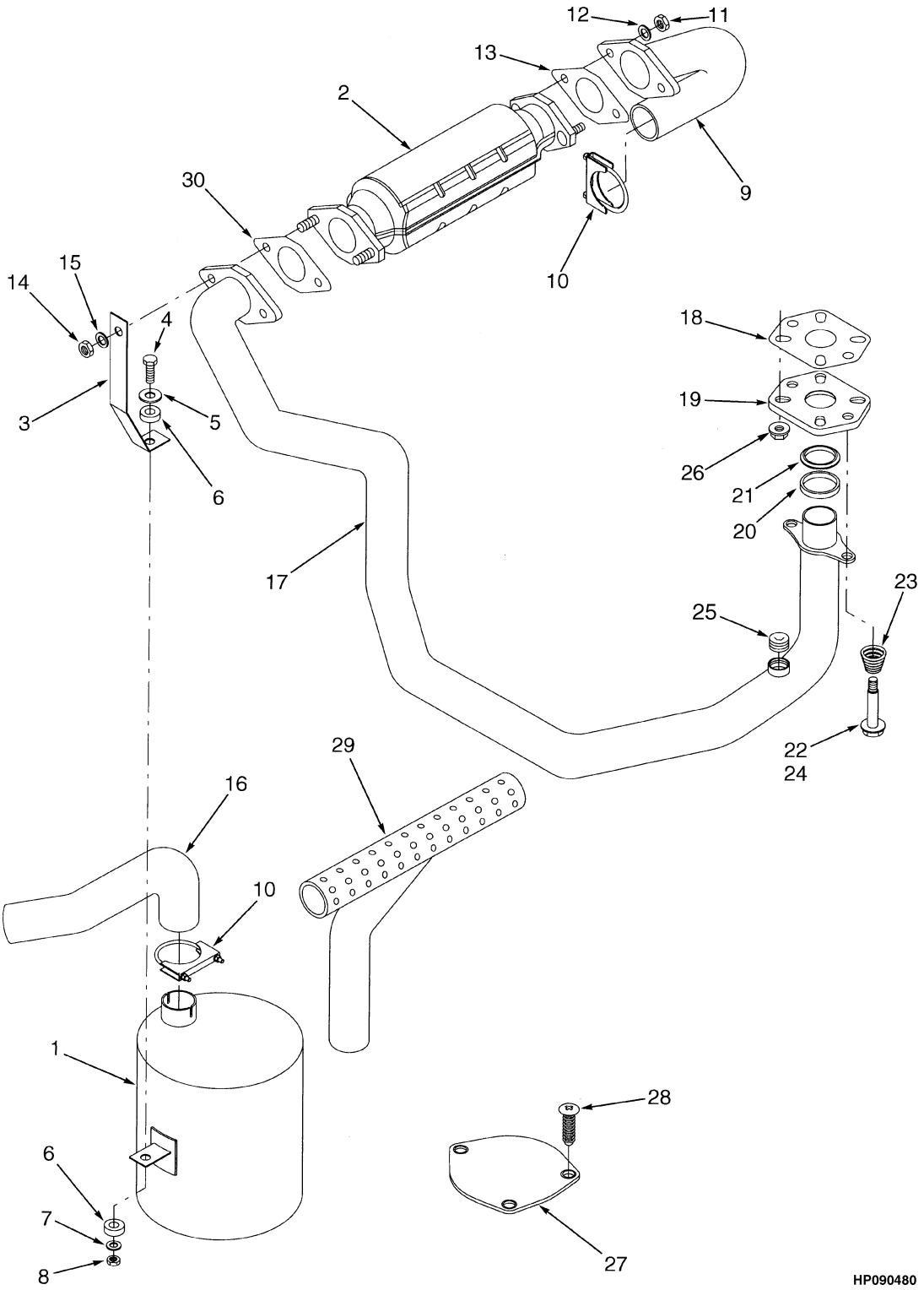

©2009 HYSTER COMPANY

EXHAUST
LPG CLOSED LOOP – 2.0L

ITEM	PART NO.	DESCRIPTION	QTY
1	2040523	Muffler	1
2	1469342	Converter	1
3	1469364	Bracket	1
4	292517	Capscrew	2
5	1351176	Washer	2
6	1351177	Rubber Cushion	4
7	320159	Washer	2
8	316826	Nut	2
9	1469375	Tube Wldmt-Cylinder	1
10	63117	Clamp	2
11	1469405	Nut	2
12	292683	Lockwasher	2
13	1469379	Gasket	1
14	136692	Nut	2
15	292682	Lockwasher	2
16	1469363	Tube	1
17	1469390	Tube Assy	1
18	1338308	Gasket	1
19	1488874	Adapter	1
20	1338264	Spacer	1
21	1338268	Seal	1
22	251979	Lubricant	AR
23	1335898	Spring	2
24	1337118	Capscrew	2
25	1396518	Plug	1
26	1502543	Nut (Flange)	4
27	1347043	Cover (Counterweight)	1
28	1347045	Fastener	3
29	1469406	Diffuser (Type LPS)	1
30	1469378	Gasket	1

©2009 HYSTER COMPANY

EXHAUST (FIGURE 2-7)
2.0L LPG — TWO-WAY

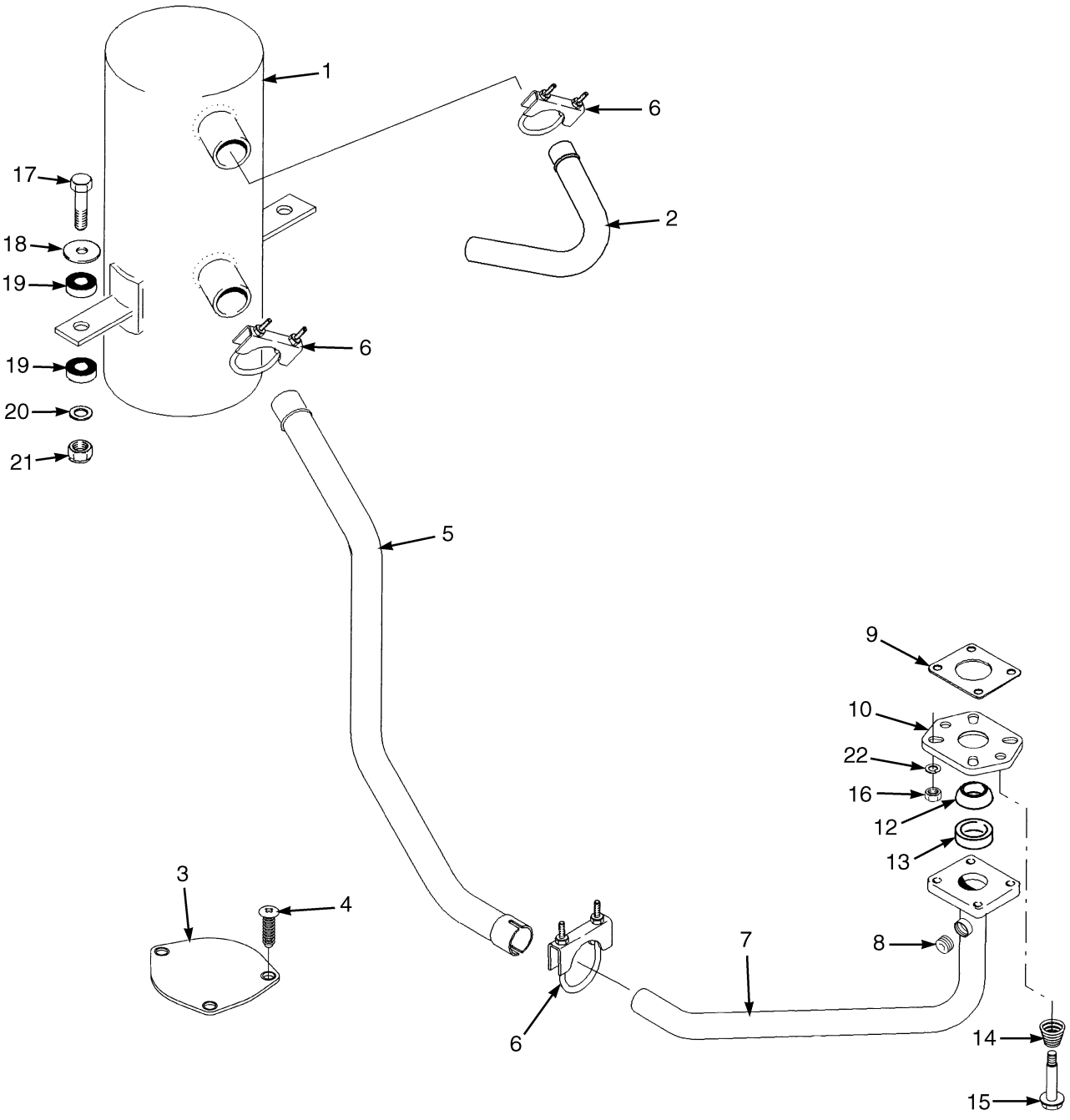

©2009 HYSTER COMPANY

EXHAUST
2.0L LPG – TWO-WAY

ITEM	PART NO.	DESCRIPTION	QTY
1	1578690	Muffler	1
2	1338276	Exhaust Pipe	1
3	1347043	Cover	1
4	1347045	Fastener	3
5	1347127	Tube	1
6	63117	Clamp	3
7	1361093	Tube Wldmt-Cylinder	1
8	1396518	Plug	1
9	1338308	Gasket	1
10	1488874	Adapter	1
10	1338263	Adapter (Optional)	1
11	251979	Lubricant	AR
12	1338268	Seal	1
13	1338264	Spacer	1
14	1335898	Spring	2
15	1337118	Capscrew	2
16	239503	Nut	4
17	292517	Capscrew	2
18	1351176	Washer	2
19	1351177	Rubber Cushion	4
20	320159	Washer	2
21	316826	Nut	2
22	292681	Lockwasher	4

©2009 HYSTER COMPANY

EXHAUST (FIGURE 2-8)
LPG 2,0L — WITH ELECTRONIC CONTROLS

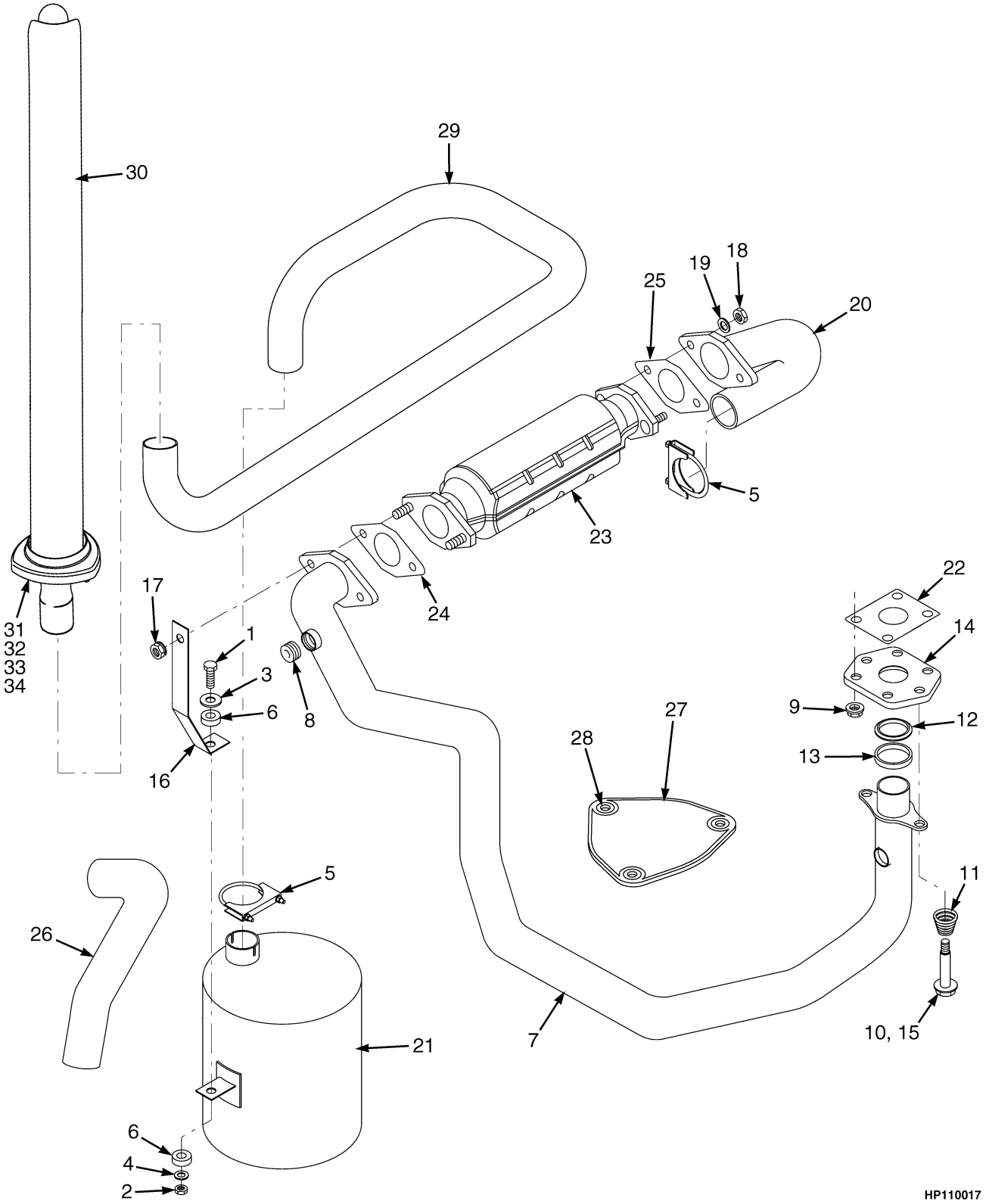

©2009 HYSTER COMPANY

EXHAUST
LPG 2,0L – WITH ELECTRONIC CONTROLS

ITEM	PART NO.	DESCRIPTION	QTY
1	292517	Capscrew	2
2	316826	Nut	2
3	1351176	Washer	2
4	320159	Washer	2
4	**b** 320159	Washer	3
5	63117	Clamp	2
6	1351177	Rubber Cushion	4
7	1469390	Tube Assy	1
8	1396518	Plug	1
9	1502543	Nut (Flange)	4
10	1337118	Capscrew	2
11	1335898	Spring	2
12	1338268	Seal	1
13	1338264	Spacer	1
14	1488874	Adapter	1
14	1338263	Adapter (Optional)	1
15	251979	Lubricant	AR
16	1469364	Bracket	1
17	1460477	Nut	2
18	1469405	Nut	2
19	292683	Lockwasher	2
20	1469375	Tube Wldmt-Cylinder	1
21	2040523	Muffler	1
22	1338308	Gasket	1
23	1469342	Converter	1
24	1487172	Gasket	1
25	1487189	Gasket	1
26	**a** 1469363	Tube	1
27	**a** 1347043	Cover	1
28	**a** 1347045	Fastener	3
29	**b** 1469365	Tube (Exhaust)	1
30	**b** 1335765	Tail Pipe	1
31	**b** 287854	Capscrew	3
32	**b** 292682	Lockwasher	3
33	**b** 1365887	Cover	1

FOOTNOTES:

a Counterweight

b Overhead

©2009 HYSTER COMPANY

EXHAUST (FIGURE 2-9)
LPG 3.0L — WITH ELECTRONIC CONTROLS

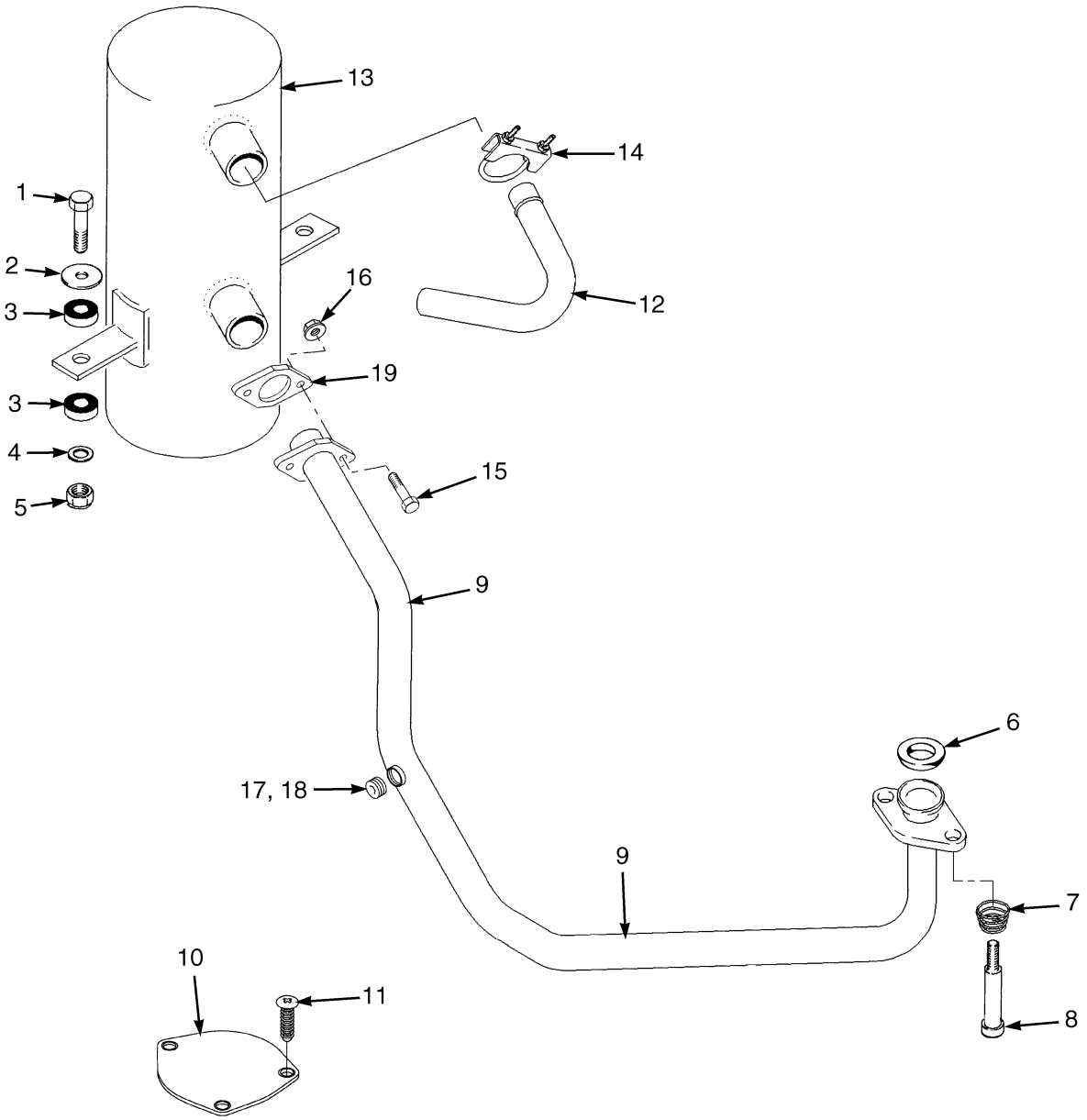

HP110013

©2009 HYSTER COMPANY

EXHAUST
LPG 3.0L – WITH ELECTRONIC CONTROLS

ITEM	PART NO.	DESCRIPTION	QTY
1	292517	Capscrew	2
2	1351176	Washer	2
3	1351177	Rubber Cushion	4
4	320159	Washer	2
5	316826	Nut	2
6	1338258	Seal	1
7	1335898	Spring	2
8	1376766	Bolt	2
9	1544114	Exhaust Pipe	1
10	1347043	Cover	1
11	1347045	Fastener	1
12	1546688	Exhaust Pipe	1
13	2062954	Catalytic Converter (3-Way)	1
14	63117	Clamp	1
15	1512403	Capscrew	2
16	1460477	Nut	2
17	251979	Lubricant	AR
18	1396518	Plug	1
19	1402189	Gasket	1

©2009 HYSTER COMPANY

EXHAUST (FIGURE 2-10)
OVERHEAD

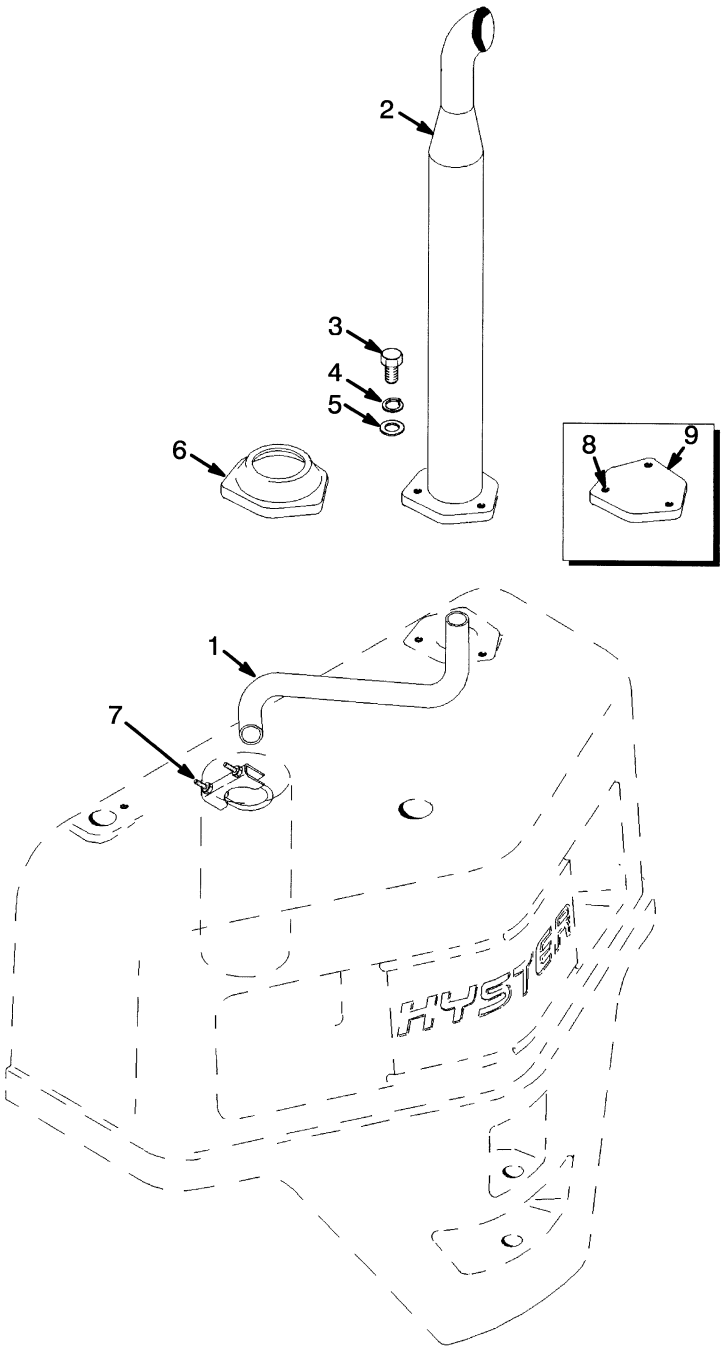

©2009 HYSTER COMPANY

EXHAUST
OVERHEAD

ITEM	PART NO.	DESCRIPTION	QTY
1	1335764	Exhaust Pipe	1
2	1335765	Tail Pipe	1
3	287854	Capscrew	3
4	292682	Lockwasher	3
5	320159	Washer	3
6	1351178	Cover	1
6	**a** 1365887	Cover	1
7	68968	Clamp	1
8	**b** 1347045	Fastener	3
9	**b** 1347043	Cover	1

FOOTNOTES:

a 2,0L LPG

b Use with Counterweight Exhaust

©2009 HYSTER COMPANY

EXHAUST (FIGURE 2-11)
DIESEL

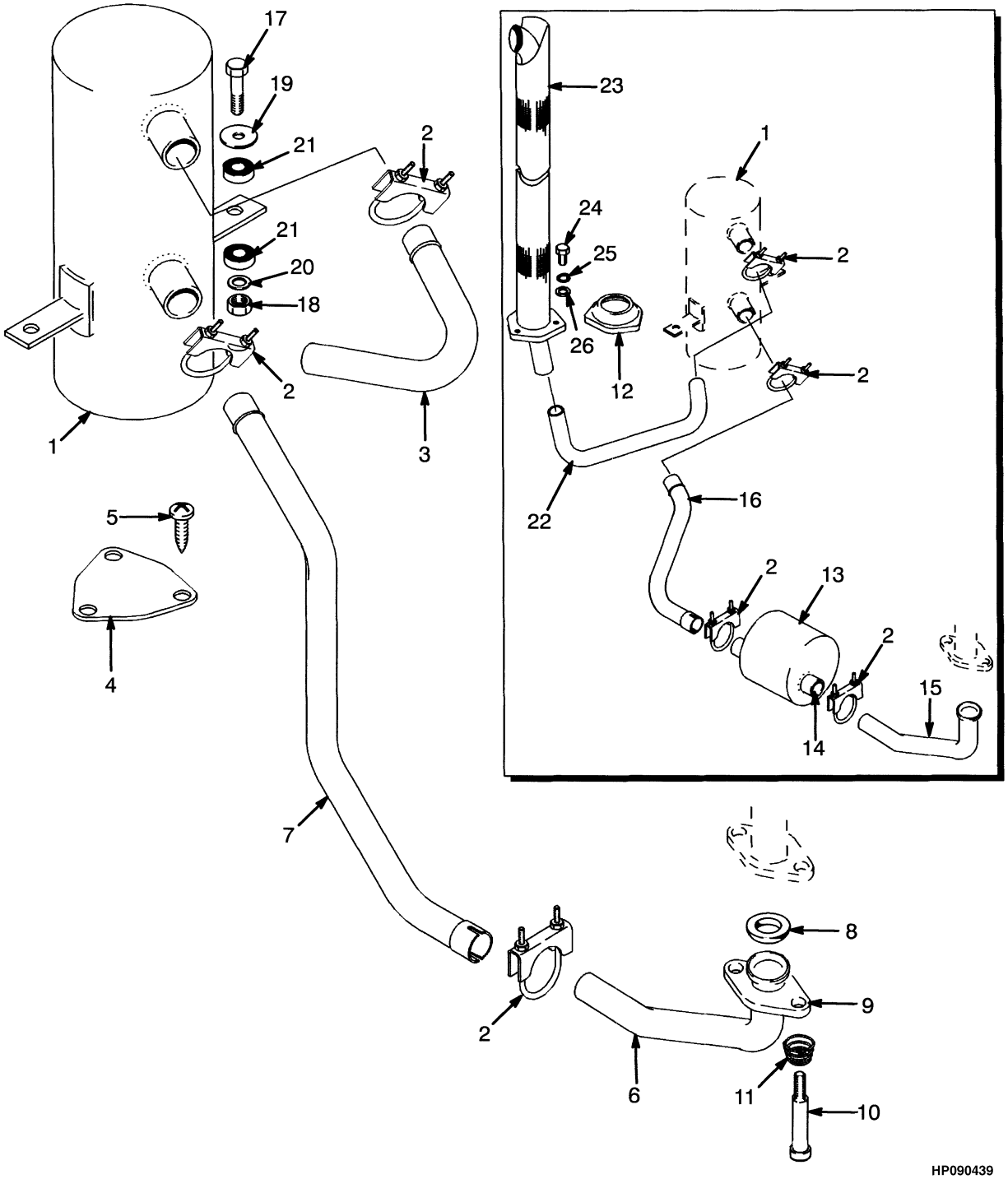

©2009 HYSTER COMPANY

EXHAUST
DIESEL

ITEM	PART NO.	DESCRIPTION	QTY
1	**b** 1338282	Muffler	1
1	**c** 2076740	Muffler	1
2	68968	Clamp	3
3	1338276	Exhaust Pipe	1
4	1347043	Cover	1
5	1347045	Fastener	3
6	1396273	Tube	1
7	1383012	Exhaust Pipe	1
8	1338258	Seal	1
9	1396272	Flange	1
10	1337118	Capscrew	3
11	1335898	Spring	3
12	**a** 1351178	Cover	1
13	**a** 878258	Catalytic Converter (Exhaust) (Catalytic Purifier)	1
14	**a** 14386	Fitting (Catalytic Purifier)	1
15	**a** 1396274	Tube (Catalytic Purifier)	1
16	**a** 1396270	Tube (Catalytic Purifier)	1
17	292517	Capscrew	2
18	316826	Nut	2
19	1351176	Washer	2
20	320159	Washer	2
21	1351177	Rubber Cushion	4
22	**a** 1335764	Exhaust Pipe	1
23	**a** 1335765	Tail Pipe	1
24	**a** 287854	Capscrew	3
25	**a** 292682	Lockwasher	3
26	**a** 320159	Washer	3

FOOTNOTES:

a Upswept Exhaust
b → S/N H177B58436C
c S/N H177B58437C →

©2009 HYSTER COMPANY

RADIATOR AND HOSES (FIGURE 2-12)

POWERSHIFT TRANSMISSION (→ S/N H177B18577X)

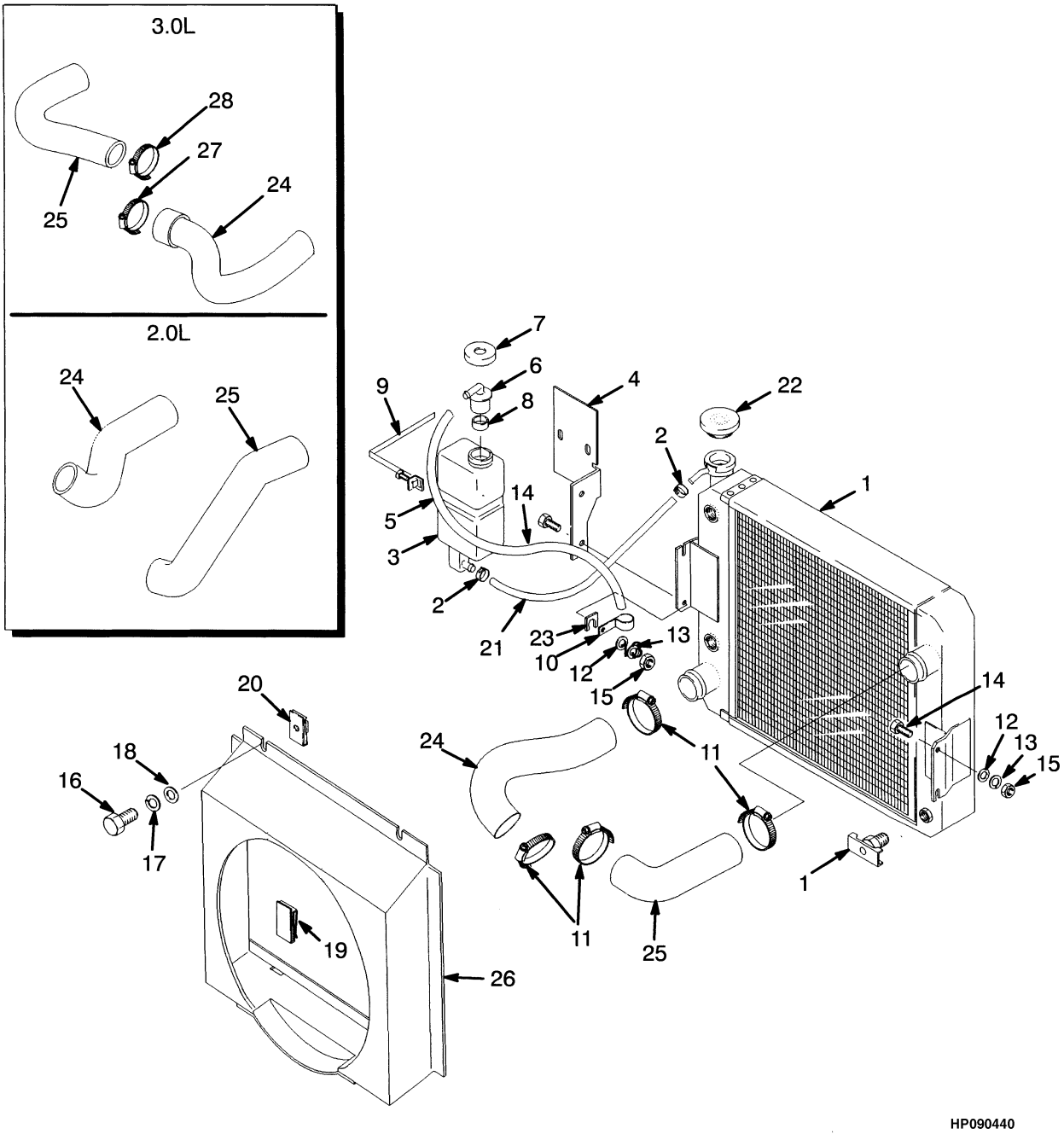

©2009 HYSTER COMPANY

RADIATOR AND HOSES

POWERSHIFT TRANSMISSION (→ S/N H177B18577X)

KEY:
A: 2,0L Engine Petrol and LPG
B: 3,0L Engine Petrol and LPG
C: 2,6L Engine Diesel

ITEM	PART NO.	DESCRIPTION	QTY A	QTY B	QTY C
1	1337002	Radiator (10 Fins/in.)	..	1	1
1	1338328	Radiator (10 Flins/in.)	1	..	..
1	**a** 1343618	Radiator (6.5 Fins/in.)	..	1	1
1	**a** 1343623	Radiator (6.5 Fins/in.)	1	..	..
1	1357716	Cooler	1	..	1
1	1357717	Tank	..	1	1
1	1357721	Drain Valve	1	1	1
2	168718	Clamp	2	2	2
3	1347026	Reservoir	1	1	1
4	1347072	Bracket	1	1	1
5	1359581	Outlet	1	1	1
5	345453	Outlet (Reservoir)	1	1	1
6	1457312	Hose	1	1	1
7	345454	Cap	1	1	1
8	336550	Bushing	1	1	1
9	1345825	Strap	1	1	1
10	173247	Clamp	1	1	1
11	127045	Clamp (Hose)	4	2	2
12	292682	Lockwasher	3	3	3
13	320159	Washer	3	3	3
14	136985	Capscrew	3	3	3
15	136692	Nut	3	3	3
16	302235	Screw	2	2	2
17	1347076	Washer	2	2	2
18	292678	Lockwasher	2	2	2
19	1329271	Clip	2	2	2
20	1329272	Nut	2	2	2
21	1359580	Hose	1	1	1
22	1352140	Radiator Cap	1	1	1
23	1331152	Shim	AR	AR	AR
24	1339651	Radiator Hose (Lower)	1	..	..
24	1376722	Radiator Hose (Lower)	..	1	..
24	1396212	Radiator Hose (Lower)	..	..	1
25	1368949	Hose (Upper)	1	..	..
25	1375132	Radiator Hose (Upper)	..	1	..
25	1396211	Radiator Hose (Upper)	..	..	1
26	1339635	Shroud	1	..	..
26	1375134	Shroud	..	1	..
26	1396221	Shroud	..	..	1
27	119236	Clamp	..	1	1
28	369804	Clamp	..	1	1

©2009 HYSTER COMPANY

FOOTNOTES:

a Optional

©2009 HYSTER COMPANY

NOTES

©2009 HYSTER COMPANY

RADIATOR AND HOSES (FIGURE 2-13)

POWERSHIFT TRANSMISSION (→ S/N H177B40524A 3.0L) (→ S/N H177B40926A 2.6L)
(S/N H177B18578X ↔ S/N H177B41039A (2.0L-2.2L))

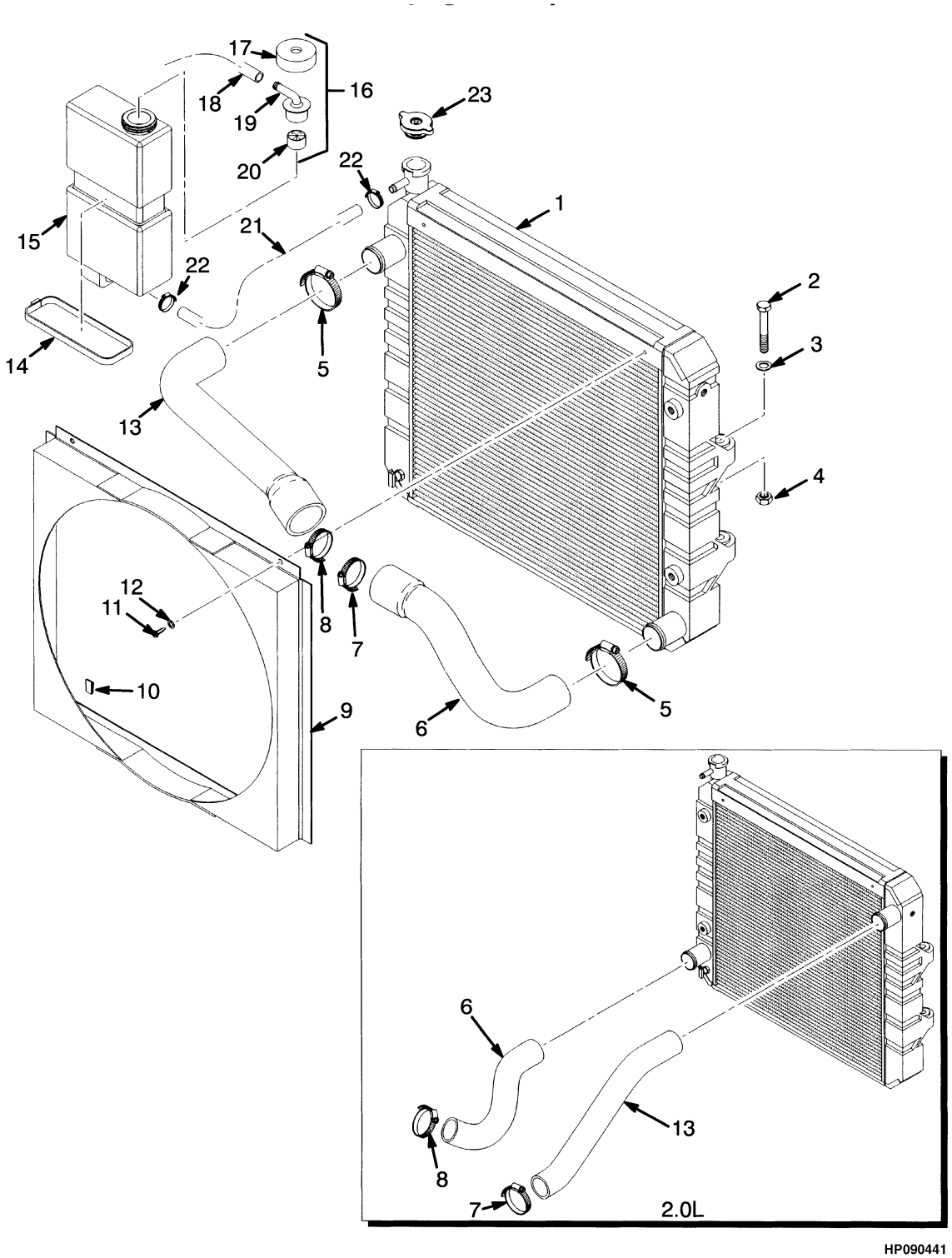

HP090441

©2009 HYSTER COMPANY

RADIATOR AND HOSES

POWERSHIFT TRANSMISSION (→ S/N H177B40524A 3.0L) (→ S/N H177B40926A 2.6L) (S/N H177B18578X ↔ S/N H177B41039A (2.0L-2.2L))

KEY:
A: 2,0L Engine Petrol and LPG
B: 3,0L Engine Petrol and LPG
C: 2,6L Engine Diesel

ITEM	PART NO.	DESCRIPTION	QTY A	QTY B	QTY C
1	2037936	Radiator	..	1	1
1	2039172	Radiator	1	..	..
1	2041822	Drain Plug	1	1	1
2	292509	Capscrew	4	4	4
2	2041823	Kit-Isolator	1	1	1
3	320157	Washer	4	4	4
4	239503	Nut	4	4	4
5	127045	Clamp (Hose)	2	2	2
6	1339651	Radiator Hose (Lower)	1	..	..
6	1376722	Radiator Hose (Lower)	..	1	..
6	1396212	Radiator Hose (Lower)	..	..	1
7	119236	Clamp	..	1	..
7	127045	Clamp (Hose)	1	..	..
7	130845	Clamp	..	..	1
8	127045	Clamp (Hose)	1	..	..
8	130845	Clamp	..	1	1
9	2039173	Shroud	..	..	1
9	2039174	Shroud	..	1	..
9	2039175	Shroud	1	..	..
10	1329271	Clip	2	2	2
11	2027655	Screw	2	2	2
12	18500	Washer	2	2	2
13	1368949	Hose (Upper)	1	..	..
13	1375132	Radiator Hose (Upper)	..	1	..
13	1396211	Radiator Hose (Upper)	..	..	1
14	1345825	Strap	1	1	1
15	1347026	Reservoir	1	1	1
16	1359581	Outlet	1	1	1
17	345454	Cap	1	1	1
18	1457312	Hose	1	1	1
19	345453	Outlet (Reservoir)	1	1	1
20	336550	Bushing	1	1	1
21	1359580	Hose	1	1	1
22	168718	Clamp	2	2	2
23	1352140	Radiator Cap	1	1	1

©2009 HYSTER COMPANY

RADIATOR AND HOSES (FIGURE 2-14)
HYDROSTATIC TRANSMISSION

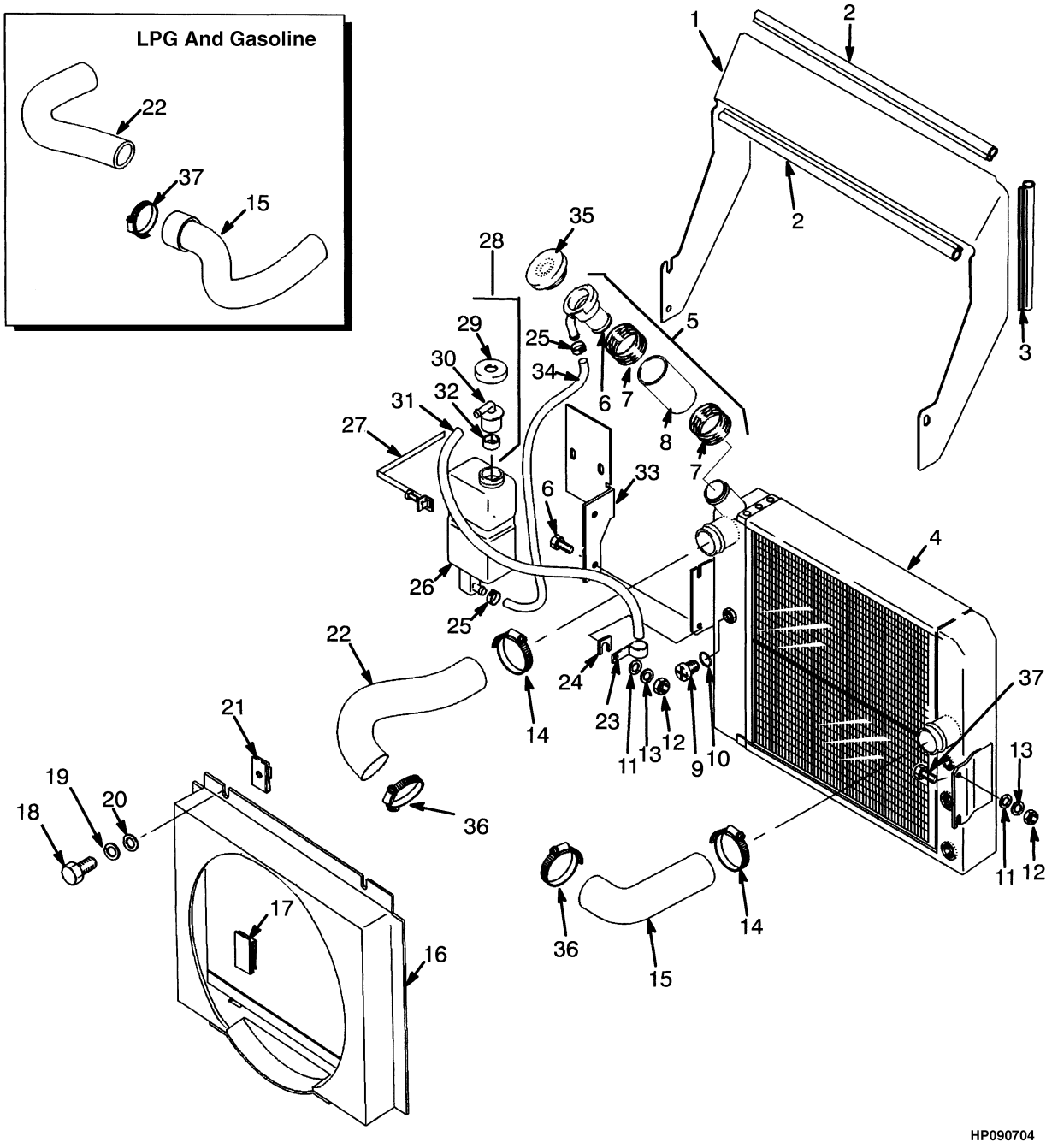

©2009 HYSTER COMPANY

RADIATOR AND HOSES
HYDROSTATIC TRANSMISSION

KEY:
A: Petrol and LPG
B: Diesel

ITEM	PART NO.	DESCRIPTION	QTY A	QTY B
1	2034461	Baffle	1	1
2	1451891	Edge Protector	2	2
3	1451892	Edge Protector	2	2
4	2034109	Radiator	1	1
5	1484657	Tube	1	1
6	1458792	Filler Neck	1	1
7	1458793	Band	2	2
8	1458791	Hose	1	1
9	1458794	Plug	1	1
10	1458795	O-Ring	1	1
11	320159	Washer	3	3
12	137702	Base	3	3
13	292682	Lockwasher	3	3
14	127045	Clamp (Hose)	2	..
15	1382990	Radiator Hose (Lower)	1	..
15	1396264	Radiator Hose (Lower)	..	1
16	1382819	Shroud	1	..
16	1396223	Shroud	..	1
17	1329271	Clip	2	2
18	302244	Capscrew	2	2
19	292679	Washer	2	2
20	18500	Washer	2	2
21	292668	Nut	2	2
22	1375132	Radiator Hose (Upper)	1	..
22	1396263	Radiator Hose (Upper)	..	1
23	1397326	Clamp	1	1
24	1331152	Shim	AR	AR
25	168718	Clamp	2	2
26	1347026	Reservoir (Coolant)	1	1
27	1345825	Strap	1	1
28	1359581	Outlet	1	1
29	345454	Cap	1	1
30	345453	Outlet (Reservoir)	1	1
31	1347312	Hose Assy	1	1
32	336550	Bushing	1	1
33	1347072	Bracket	1	1
34	1359580	Hose	1	1
35	1352140	Radiator Cap	1	1
36	130845	Clamp	1	2
37	287860	Capscrew	3	3

©2009 HYSTER COMPANY

RADIATOR AND HOSES (FIGURE 2-15)

LPG — 3.0L (S/N H177B40525A →)

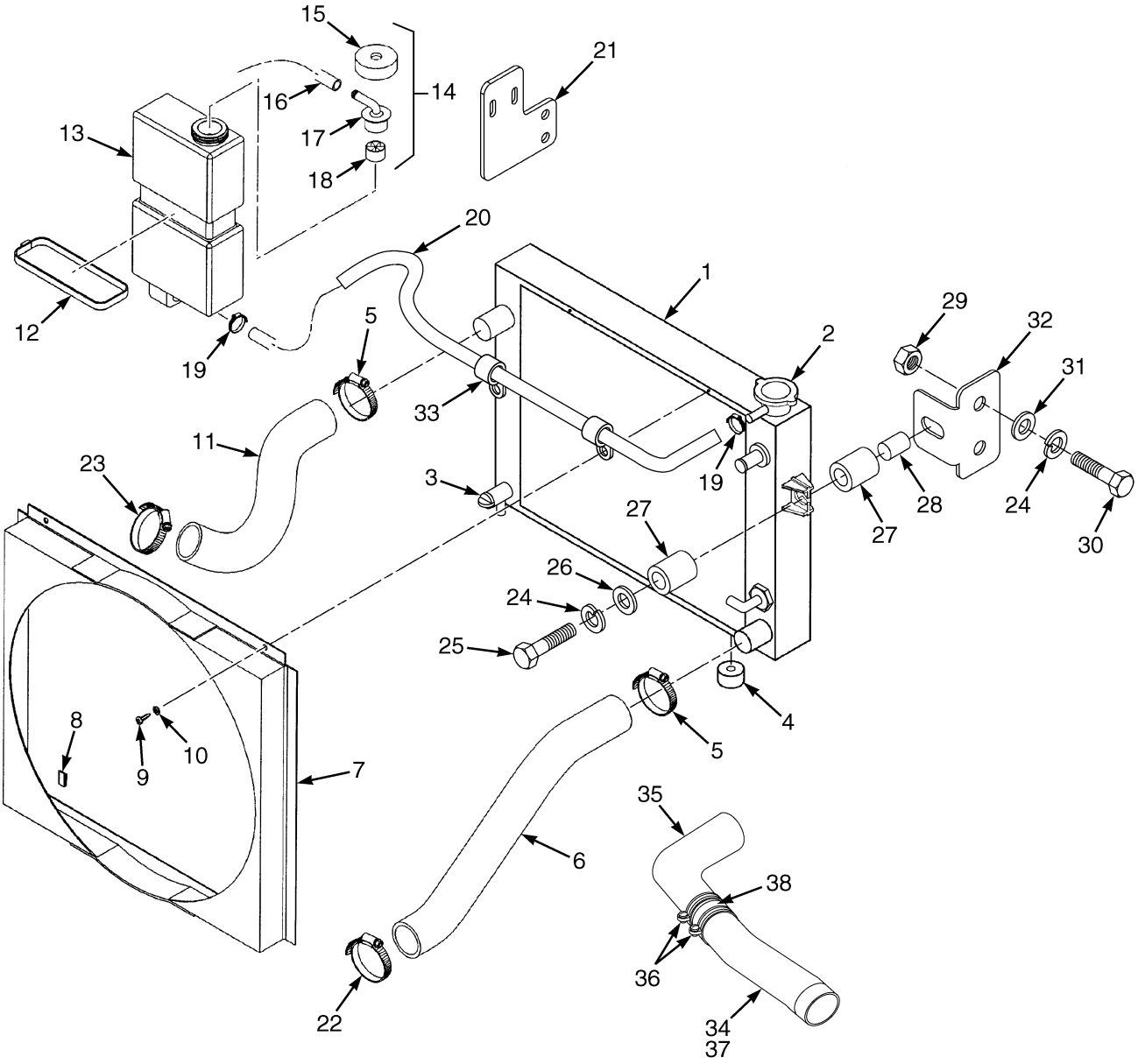

BP090035

©2009 HYSTER COMPANY

RADIATOR AND HOSES

LPG – 3.0L (S/N H177B40525A →)

ITEM	PART NO.	DESCRIPTION	QTY
1	2054531	Radiator (Standard Core)	1
1	2055338	Radiator (Open Core)	1
2	1352140	Radiator Cap	1
3	1528495	Drain Plug	1
4	2029170	Rubber Mount (Rubber)	2
5	127045	Clamp (Hose)	2
6	1376722	Radiator Hose (Lower)	1
7	1527836	Shroud (Fan)	1
8	1329271	Clip	2
9	2027655	Screw	2
10	18500	Washer	2
11	**a** 1375132	Radiator Hose (Upper)	1
12	1345825	Strap	1
13	1347026	Reservoir	1
14	1359581	Outlet	1
15	345454	Cap	1
16	1457312	Hose	AR
17	345453	Outlet (Reservoir)	1
18	336550	Bushing	1
19	353310	Clamp	2
20	1305436	Hose	1
21	1528492	Bracket	2
22	119236	Clamp	1
23	130845	Clamp	1
24	292681	Lockwasher	6
25	346656	Capscrew	2
26	1485805	Washer	2
27	2021512	Rubber Cushion	4
28	2029227	Spacer	2
29	239503	Nut	6
30	136749	Screw	4
31	320157	Washer	6
32	1526168	Bracket	2
33	1360146	Clamp	2
34	**a** 1530592	Hose Assy (Upper)	1
34	**b** 1542466	Hose Assy (Upper)	1
35	**b** 1542467	Hose	1
36	**b** 127045	Clamp (Hose)	2
37	**b** 1542468	Hose	1
38	**b** 1530544	Fitting	1
38	1535196	Sensor	1

FOOTNOTES:

a → S/N H177B42138A

b S/N H177B42139A →

©2009 HYSTER COMPANY

RADIATOR AND HOSES (FIGURE 2-16)
LPG 3.0L — WITH ELECTRONIC CONTROLS

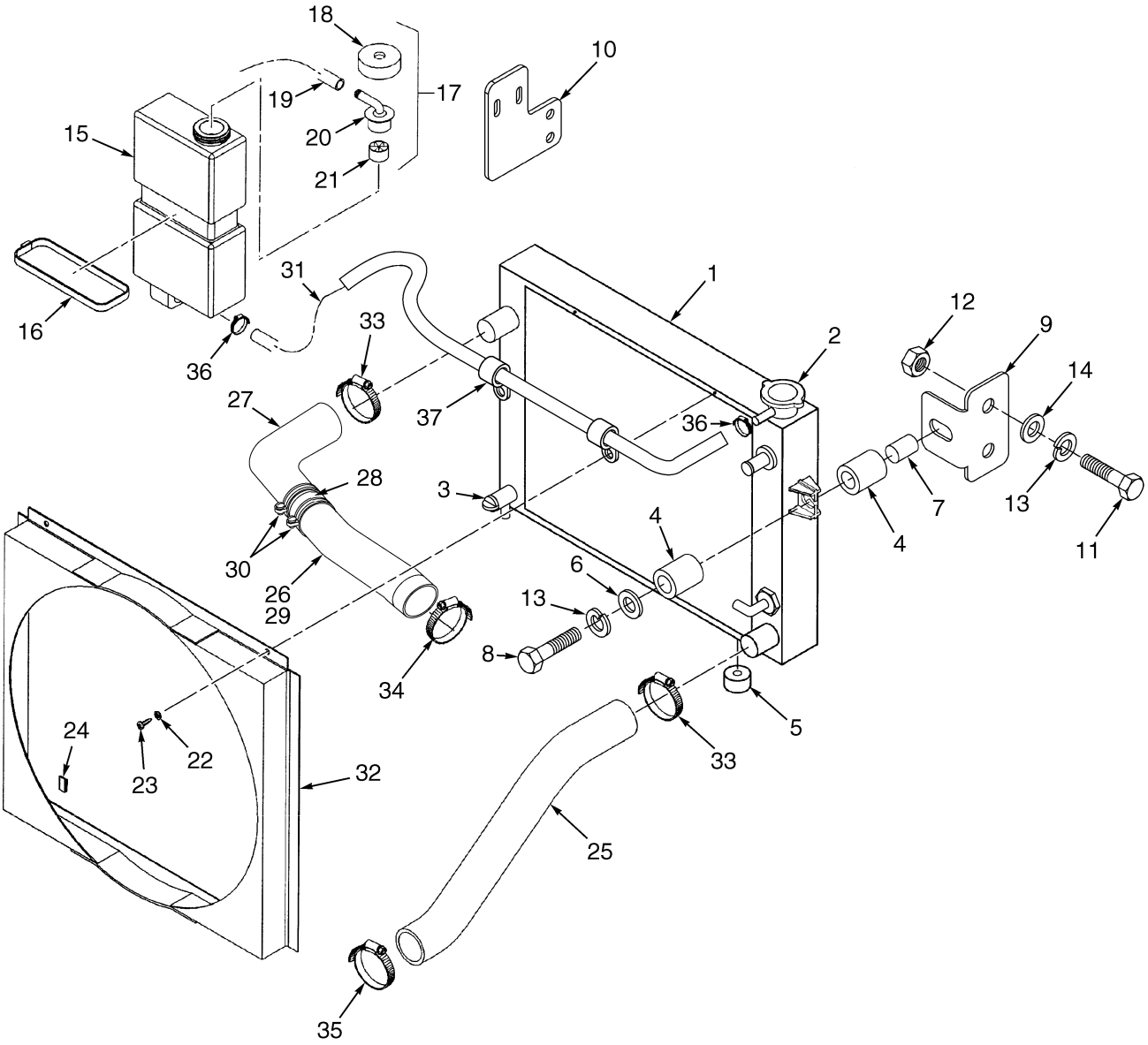

BP060018

©2009 HYSTER COMPANY

RADIATOR AND HOSES

LPG 3.0L – WITH ELECTRONIC CONTROLS

ITEM	PART NO.	DESCRIPTION	QTY
1	2054531	Radiator (Standard Core)	1
1	2055338	Radiator (Open Core)	1
2	1352140	Radiator Cap	1
3	1528495	Drain Plug	1
4	2021512	Rubber Cushion	4
5	2029170	Rubber Mount (Rubber)	2
6	1485805	Washer	2
7	2029227	Spacer	2
8	346656	Capscrew	2
9	1526168	Bracket	2
10	1528492	Bracket	1
11	136749	Screw	4
12	239503	Nut	6
13	292681	Lockwasher	6
14	320157	Washer	6
15	1347026	Reservoir	1
16	1345825	Strap	1
17	1359581	Outlet	1
18	345454	Cap	1
19	1457312	Hose	AR
20	345453	Outlet (Reservoir)	1
21	336550	Bushing	1
22	18500	Washer	2
23	2027655	Screw	2
24	1329271	Clip	2
25	1376722	Radiator Hose (Lower)	1
26	1542466	Hose Assy (Upper) (Upper)	1
27	1542467	Hose	1
28	1530544	Fitting	1
29	1542468	Hose	1
30	127045	Clamp (Hose)	2
31	1305436	Hose	1
32	1527836	Shroud (Fan)	1
33	127045	Clamp (Hose)	2
34	369804	Clamp	1
35	119236	Clamp	1
36	353310	Clamp	2
37	1360146	Clamp	2

©2009 HYSTER COMPANY

RADIATOR AND HOSES (FIGURE 2-17)

LPG — 2.0L (S/N H177B41040A →)

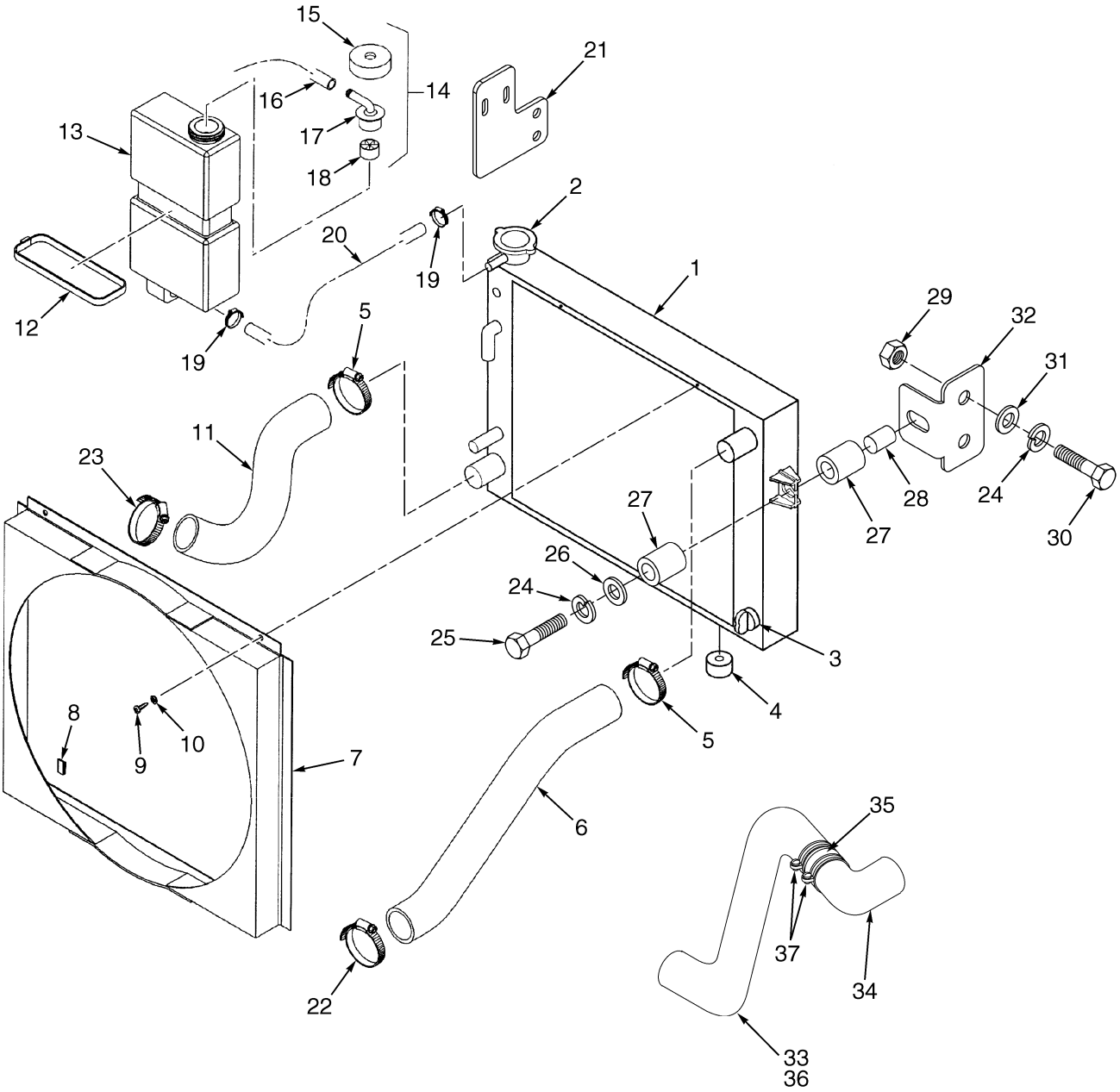

YP090205

©2009 HYSTER COMPANY

RADIATOR AND HOSES

LPG – 2.0L (S/N H177B41040A →)

ITEM	PART NO.	DESCRIPTION	QTY
1	2054530	Radiator (Standard Core)	1
1	2055337	Radiator (Open Core)	1
2	1352140	Radiator Cap	1
3	1528495	Drain Plug	1
4	2029170	Rubber Mount (Rubber)	2
5	127045	Clamp (Hose)	2
6	**a** 1526995	Radiator Hose (Upper)	1
7	1527837	Shroud (Fan)	1
8	1329271	Clip	2
9	2027655	Screw	2
10	18500	Washer	2
11	1339651	Radiator Hose (Lower)	1
12	1345825	Strap	1
13	1347026	Reservoir	1
14	1359581	Outlet	1
15	345454	Cap	1
16	1457312	Hose	AR
17	345453	Outlet (Reservoir)	1
18	336550	Bushing	1
19	353310	Clamp	2
20	1359580	Hose	1
21	1528492	Bracket	2
22	369804	Clamp	1
23	369804	Clamp	1
24	292681	Lockwasher	6
25	346656	Capscrew	2
26	1485805	Washer	2
27	2021512	Rubber Cushion	4
28	2029227	Spacer	2
29	239503	Nut	6
30	136749	Screw	4
31	320157	Washer	6
32	1526168	Bracket	2
33	**b** 1530546	Hose Assy (Upper)	1
34	**b** 1530594	Hose	1
35	**b** 1530544	Fitting	1
36	**b** 1530591	Hose	1
37	**b** 127045	Clamp (Hose)	2

FOOTNOTES:

a → S/N H177B42138A

b S/N H177B42139A →

©2009 HYSTER COMPANY

RADIATOR AND HOSES (FIGURE 2-18)

DIESEL — 2.6L (S/N H177B40927A →)

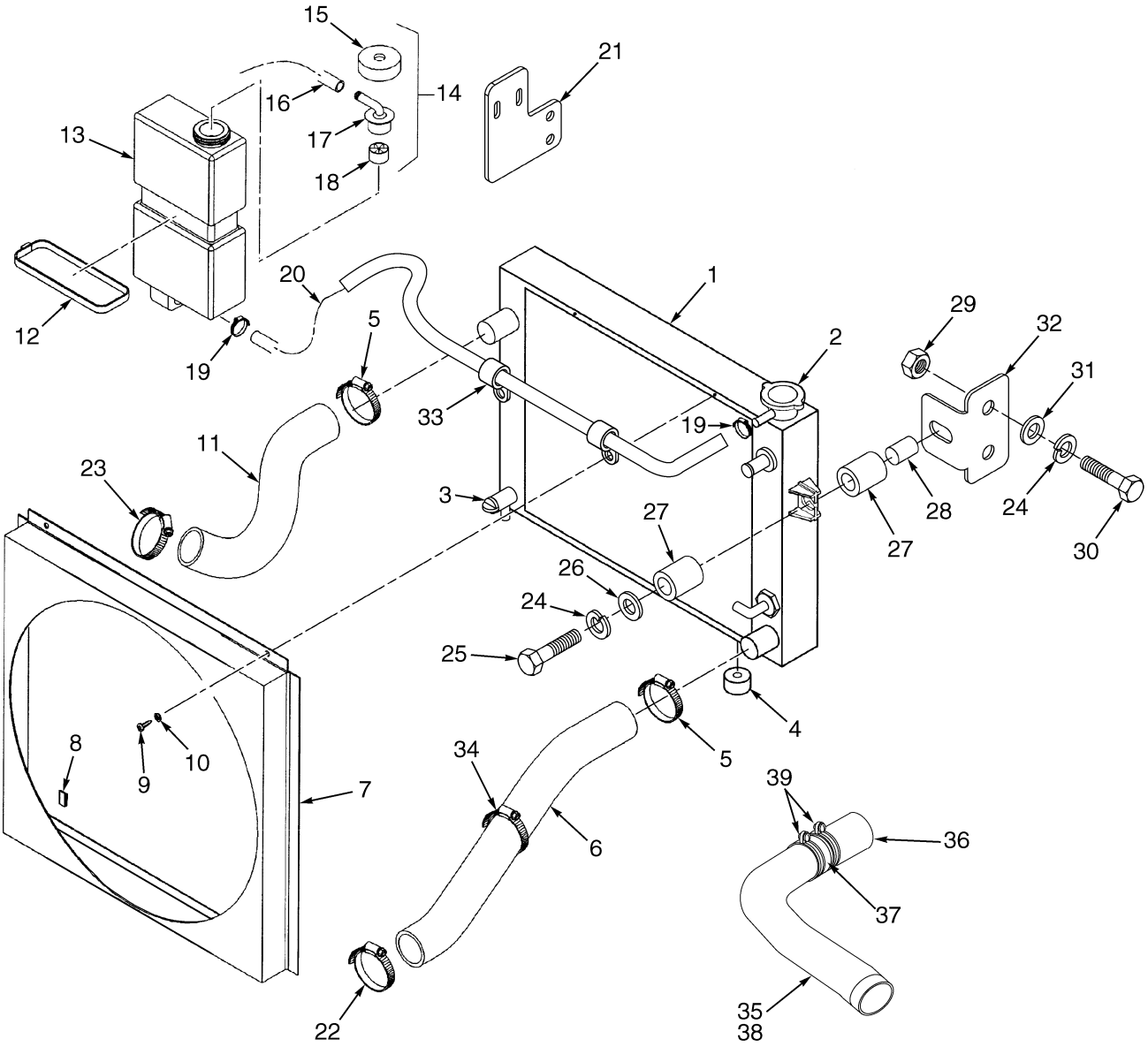

HP091022

©2009 HYSTER COMPANY

RADIATOR AND HOSES

DIESEL – 2.6L (S/N H177B40927A →)

ITEM	PART NO.	DESCRIPTION	QTY
1	2054531	Radiator (Standard Core)	1
1	2055338	Radiator (Open Core)	1
2	1352140	Radiator Cap	1
3	1528495	Drain Plug	1
4	2029170	Rubber Mount (Rubber)	2
5	127045	Clamp (Hose)	2
6	1396212	Radiator Hose (Lower)	1
7	1527835	Shroud (Fan)	1
8	1329271	Clip	2
9	2027655	Screw	2
10	18500	Washer	2
11	**a** 1396211	Radiator Hose (Upper)	1
12	1345825	Strap	1
13	1347026	Reservoir	1
14	1359581	Outlet	1
15	345454	Cap	1
16	1457312	Hose	AR
17	345453	Outlet (Reservoir)	1
18	336550	Bushing	1
19	353310	Clamp	2
20	1305436	Hose	1
21	1528492	Bracket	2
22	119236	Clamp	1
23	130845	Clamp	1
24	292681	Lockwasher	6
25	346656	Capscrew	2
26	1485805	Washer	2
27	2021512	Rubber Cushion	4
28	2029227	Spacer	2
29	239503	Nut	6
30	136749	Screw	4
31	320157	Washer	6
32	1526168	Bracket	2
33	1360146	Clamp	2
34	129563	Strap Clamp	1
35	**b** 1530543	Hose Assy (Upper)	1
36	**b** 1530541	Hose	1
37	**b** 1530544	Fitting	1
38	**b** 1530542	Hose	1
39	**b** 127045	Clamp (Hose)	2

FOOTNOTES:

a → S/N H177B42138A

b S/N H177B42139A →

©2009 HYSTER COMPANY

CYLINDER BLOCK (FIGURE 2-19)

LPG — 2,0L

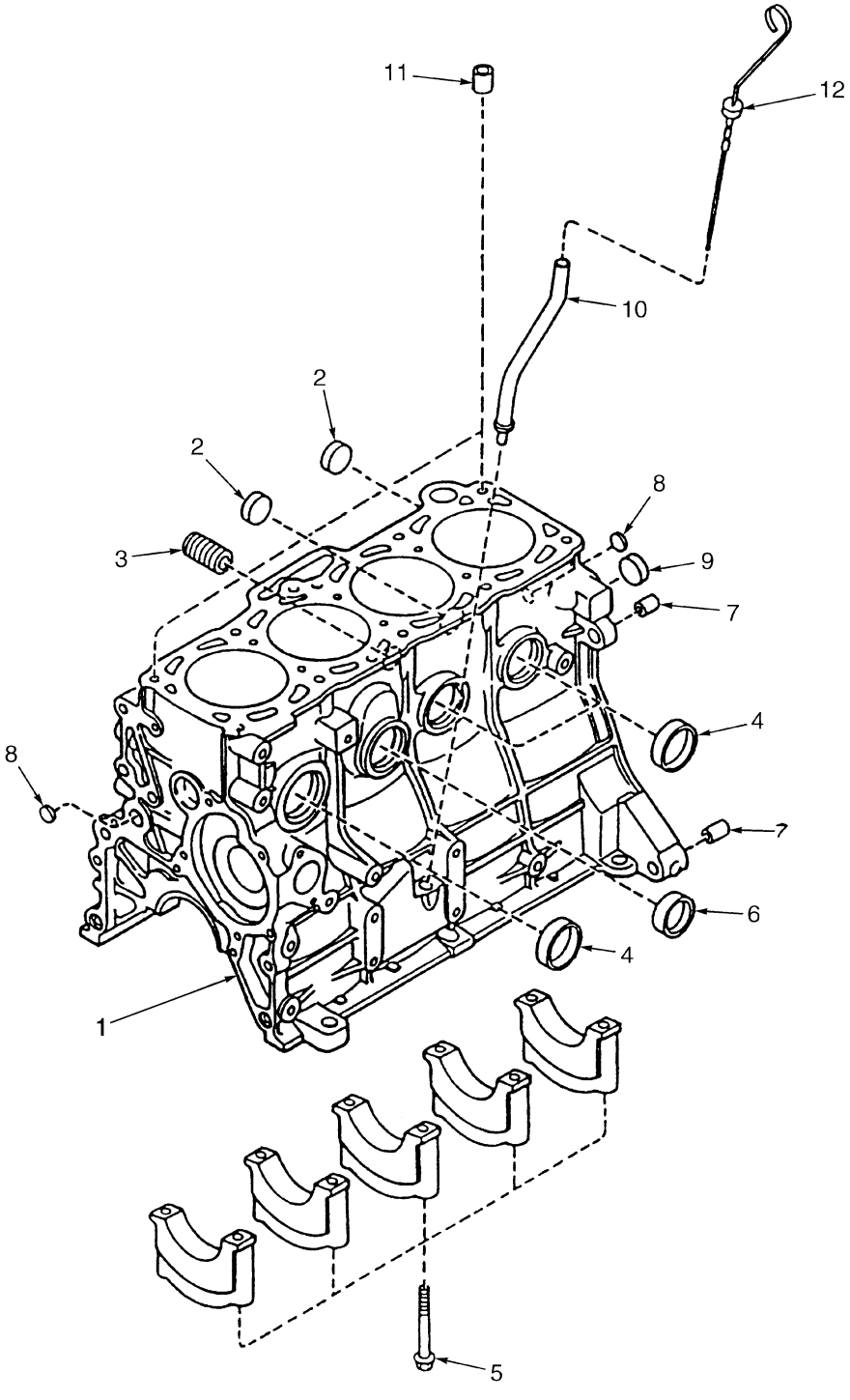

©2009 HYSTER COMPANY

CYLINDER BLOCK
LPG – 2,0L

ITEM	PART NO.	DESCRIPTION	QTY
	a 1382680	Engine Assy-Lpg (LPG)	1
	b 1469382	Engine Assy-Lpg (LPG) (Open Loop)	1
	c 1402735	Long Block (Closed Loop)	1
	d 1562285	Engine Assy-Lpg (LPG)	1
1	1360897	Cylinder Block	1
2	1362005	Plug	2
3	1360898	Gasket	1
4	1362003	Plug	4
5	1361676	Bolt	10
6	1362007	Plug	2
7	1362008	Pin	2
8	1361675	Plug	2
9	1362009	Plug	1
10	1360899	Tube Assy	1
11	1360896	Pin	2
12	1361677	Dipstick	1

FOOTNOTES:

a → S/N H177B23393
b S/N H177B23394 →
c S/N H177B26764Y →
d S/N H177B47508B →

©2009 HYSTER COMPANY

CYLINDER HEAD (FIGURE 2-20)
LPG — 2,0L ENGINE

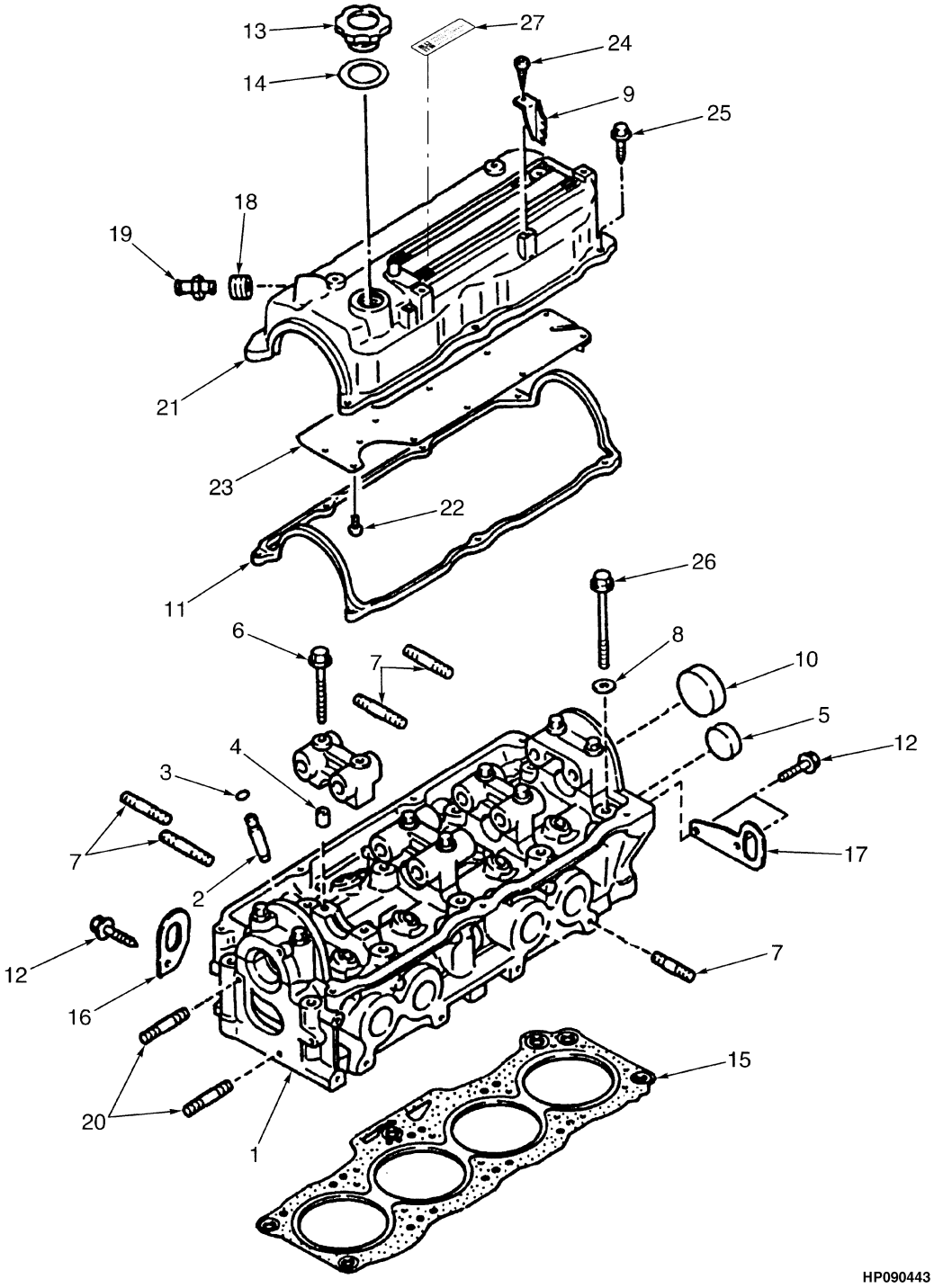

©2009 HYSTER COMPANY

CYLINDER HEAD
LPG – 2,0L ENGINE

ITEM	PART NO.	DESCRIPTION	QTY
	a 1382680	Engine Assy-Lpg (LPG)	1
	b 1469382	Engine Assy-Lpg (LPG)	1
	c 1402735	Long Block	1
	d 1562285	Engine Assy-Lpg (LPG)	1
1	1360878	Cylinder Head	1
2	1360895	Guide	8
3	1360879	Clip	8
4	1362002	Pin	10
5	1362003	Plug	1
6	1361894	Bolt	10
7	1361897	Stud	8
8	1360881	Washer	10
9	1360885	Bracket	2
10	1360882	Cap	8
11	1360886	Gasket	1
12	1361898	Bolt	3
13	1360887	Cap	1
14	1360888	Gasket	1
15	1360889	Cylinder Head Gasket	1
16	1360890	Bracket (Front)	1
17	**a** 1360891	Bracket (Rear)	1
17	**b** 2314973	Hanger (Rear)	1
18	1360892	Seal	1
19	1360893	PCV Valve	1
20	1361889	Screw	4
21	1360883	Engine Cover	1
22	**a** 1361896	Screw	12
22	**b** 2022655	Screw	12
23	1360884	Plate	1
24	1362000	Screw	2
25	1362001	Bolt	7
26	1360880	Bolt	10
27	**b** 1469385	Label (Engine)	10
	1367190	Kit-Gasket	1
	1379425	Kit-Cylinder Head	1

FOOTNOTES:

a → S/N H177B23393
b S/N H177B23394 →
c S/N H177B26764Y →
d S/N H177B47508B →

©2009 HYSTER COMPANY

CRANKSHAFT AND PISTON (FIGURE 2-21)

LPG — 2,0L ENGINE

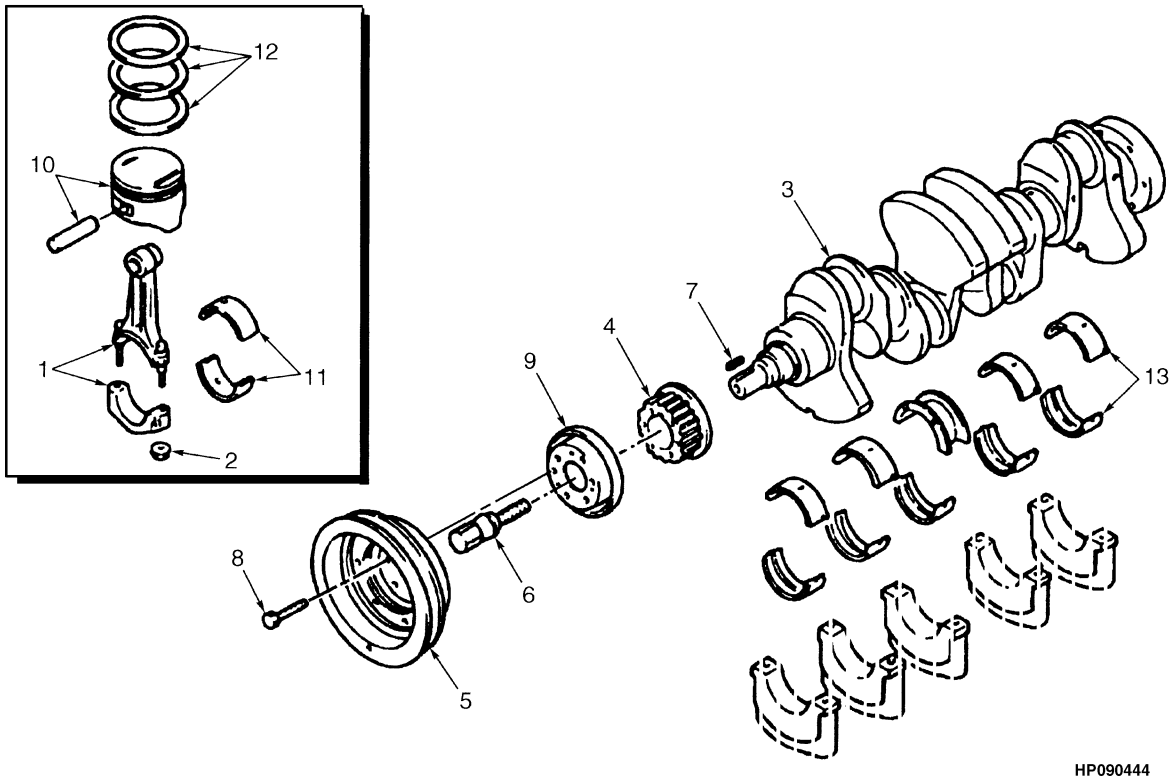

©2009 HYSTER COMPANY

CRANKSHAFT AND PISTON
LPG – 2,0L ENGINE

ITEM	PART NO.	DESCRIPTION	QTY
	a 1382680	Engine Assy-Lpg (LPG)	1
	c 1469382	Engine Assy-Lpg (LPG)	1
	b 1402735	Long Block	1
	d 1562285	Engine Assy-Lpg (LPG)	1
1	1361694	Rod Assy	4
2	1361695	Nut	8
3	1361696	Crankshaft	1
4	1361698	Pulley	1
5	1361699	Pulley	1
6	1361701	Bolt	1
7	1361697	Key	1
8	1361700	Bolt	6
9	1361702	Plate	1
10	1361714	Piston and Rod (Standard)	4
10	1361715	Piston (0,25 mm O/S)	4
10	1361716	Piston (0,50 mm O/S)	4
11	1361703	Piston Rod Bearing (Standard)	1
11	1361704	Piston Rod Bearing (0,25 mm O/S)	1
11	1361705	Piston Rod Bearing (0,50 mm O/S)	1
11	1361706	Piston Rod Bearing (0,75 mm O/S)	1
12	**a** 1361707	Kit-Piston Ring (Standard)	1
12	**a** 1361708	Kit-Piston Ring (0,50 mm O/S)	1
12	**a** 1361709	Kit-Piston Ring (0,25 mm O/S)	1
12	**c** 1495473	Kit-Piston Ring (Standard)	1
12	**c** 1495474	Kit-Piston Ring (0,50 mm O/S)	1
12	**c** 1495475	Kit-Piston Ring (0,25 mm O/S)	1
13	1361710	Kit-Crankshaft Bearing (Standard)	1
13	1361711	Crankshaft Bearing (0,50 mm O/S)	1
13	1361712	Crankshaft Bearing (0,75 mm O/S)	1
13	1361713	Crankshaft Bearing (0,25 mm O/S)	1

FOOTNOTES:

a → S/N H177B23393
b S/N H177B026764Y →
c S/N H177B23394 →
d S/N H177B47508B →

©2009 HYSTER COMPANY

CAMSHAFT AND VALVES (FIGURE 2-22)

LPG — 2,0L ENGINE

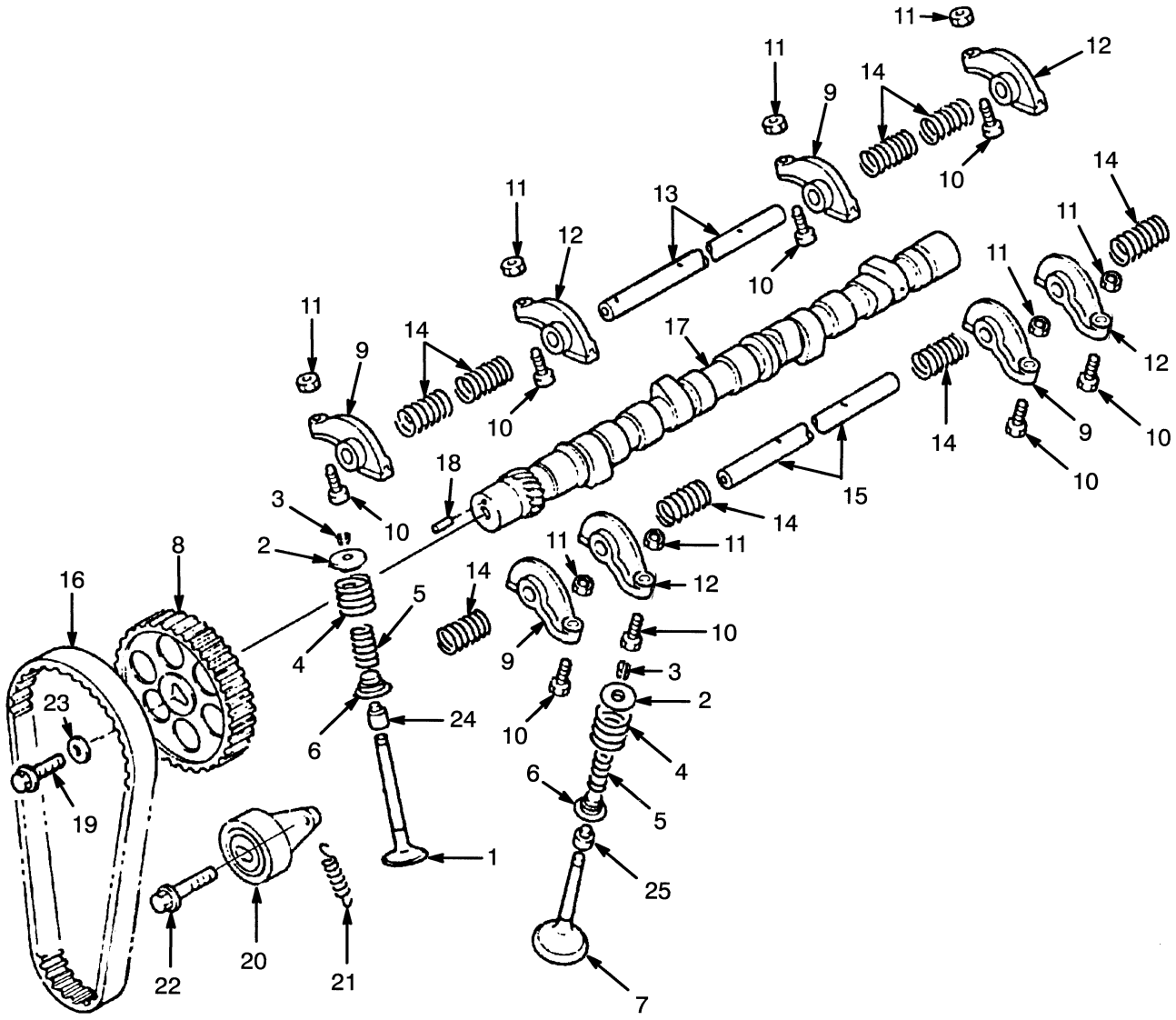

©2009 HYSTER COMPANY

CAMSHAFT AND VALVES
LPG – 2,0L ENGINE

ITEM	PART NO.	DESCRIPTION	QTY
	a 1382680	Engine Assy-Lpg (LPG)	1
	c 1469382	Engine Assy-Lpg (LPG)	1
	d 1402735	Long Block (LPG)	1
	e 1402735	Long Block	1
	bf 1517850	Long Block (LPG)	1
1	1361720	Inlet Valve (Intake)	4
2	1361721	Valve Seat	8
3	326612	Keeper	16
4	1361722	Spring	8
5	1361723	Spring	8
6	1361724	Valve Seat	8
7	1361725	Exhaust Valve	4
8	1361735	Pulley (Cam)	1
9	1361726	Rocker Arm	4
10	1361727	Screw	8
11	1361728	Nut	8
12	1361729	Rocker Arm	4
13	1361730	Shaft	1
14	1361731	Spring	8
15	1361732	Shaft	1
16	1361733	Timing Belt	1
17	1361734	Camshaft	1
18	1361717	Pin	1
19	1361736	Bolt	1
20	1361738	Tensioner	1
21	1361739	Spring	1
22	1362016	Bolt	1
23	1361737	Washer	1
24	1361718	Seal	4
25	1361719	Seal	4
	1367190	Kit-Gasket	1
	1379425	Kit-Cylinder Head	1

FOOTNOTES:

a → S/N H177B23393
b 338078 →
c S/N H177B23394 →
d S/N H177B26764Y →
e S/N H177B47508B →
f S/N H177B56549C →

©2009 HYSTER COMPANY

TIMING GEAR COVER AND OIL SUMP (FIGURE 2-23)

LPG — 2,0L ENGINE

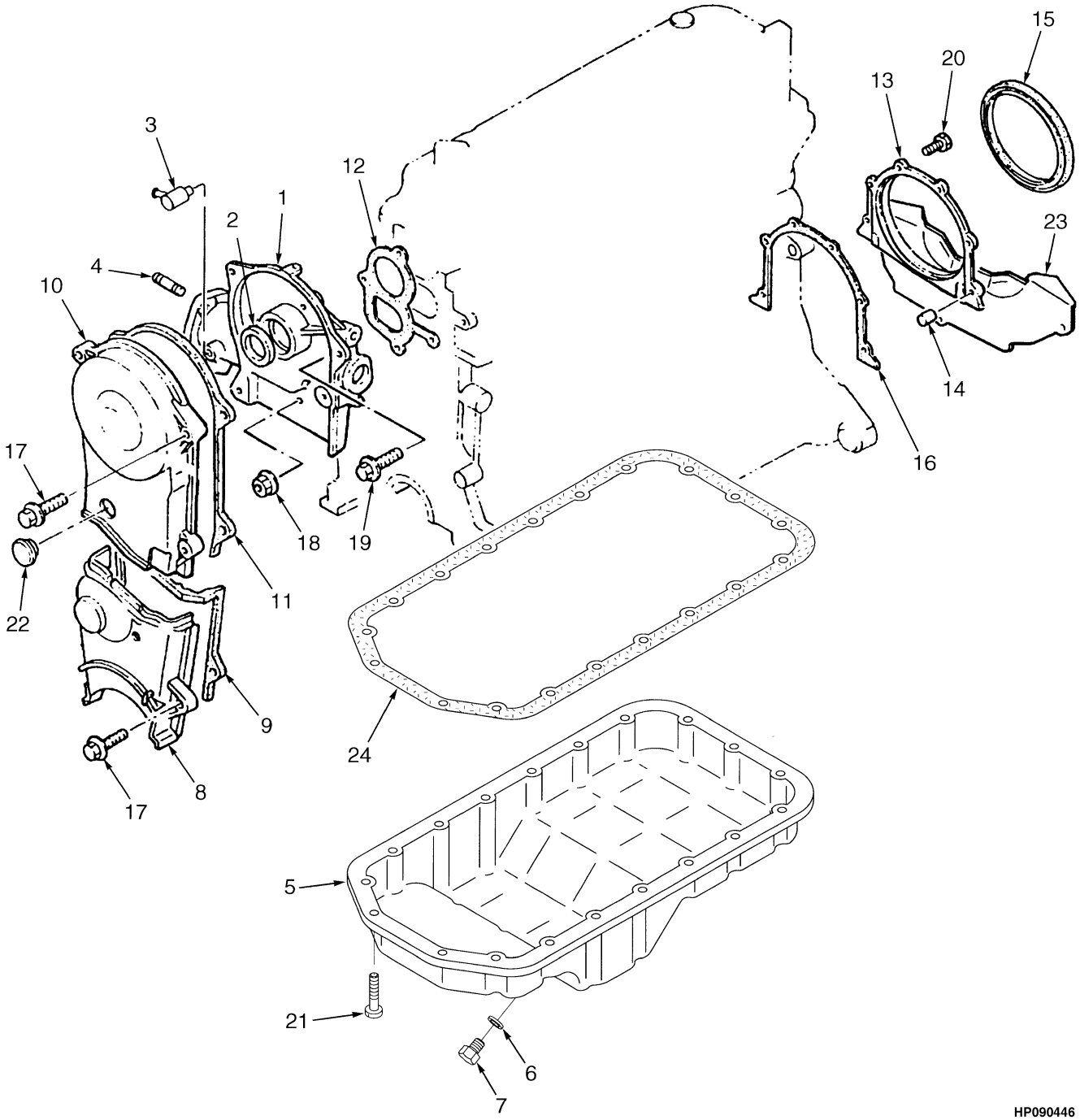

©2009 HYSTER COMPANY

TIMING GEAR COVER AND OIL SUMP
LPG – 2,0L ENGINE

ITEM	PART NO.	DESCRIPTION	QTY
	a 1382680	Engine Assy-Lpg (LPG)	1
	b 1469382	Engine Assy-Lpg (LPG)	1
	c 1402735	Long Block	1
	d 1562285	Engine Assy-Lpg (LPG)	1
1	1361678	Housing	1
2	1361688	Oil Seal	1
3	1361692	Connector	1
4	1362012	Stud	2
5	1361680	Oil Pan	1
6	1362015	Gasket	1
7	1361681	Drain Plug	1
8	1361683	Cover	1
9	1361684	Gasket	1
10	1361686	Cover	1
11	1361687	Gasket	1
12	1361679	Gasket	1
13	1361689	Cover	1
14	1362010	Pin	2
15	1361691	Oil Seal (Rear)	1
16	1361690	Gasket	1
17	1362001	Bolt	6
18	326504	Nut	2
19	**b** 1361898	Bolt	2
19	**a** 1362013	Capscrew	2
20	1362011	Bolt	6
21	1370736	Capscrew	19
22	1361685	Cap	1
23	1371652	Cover	1
24	1361682	Gasket	1
	1367190	Kit-Gasket	1

FOOTNOTES:

a → S/N H177B23393
b S/N H177B23394 →
c S/N H177B26764Y →
d S/N H177B47508B →

©2009 HYSTER COMPANY

MANIFOLD (FIGURE 2-24)
LPG

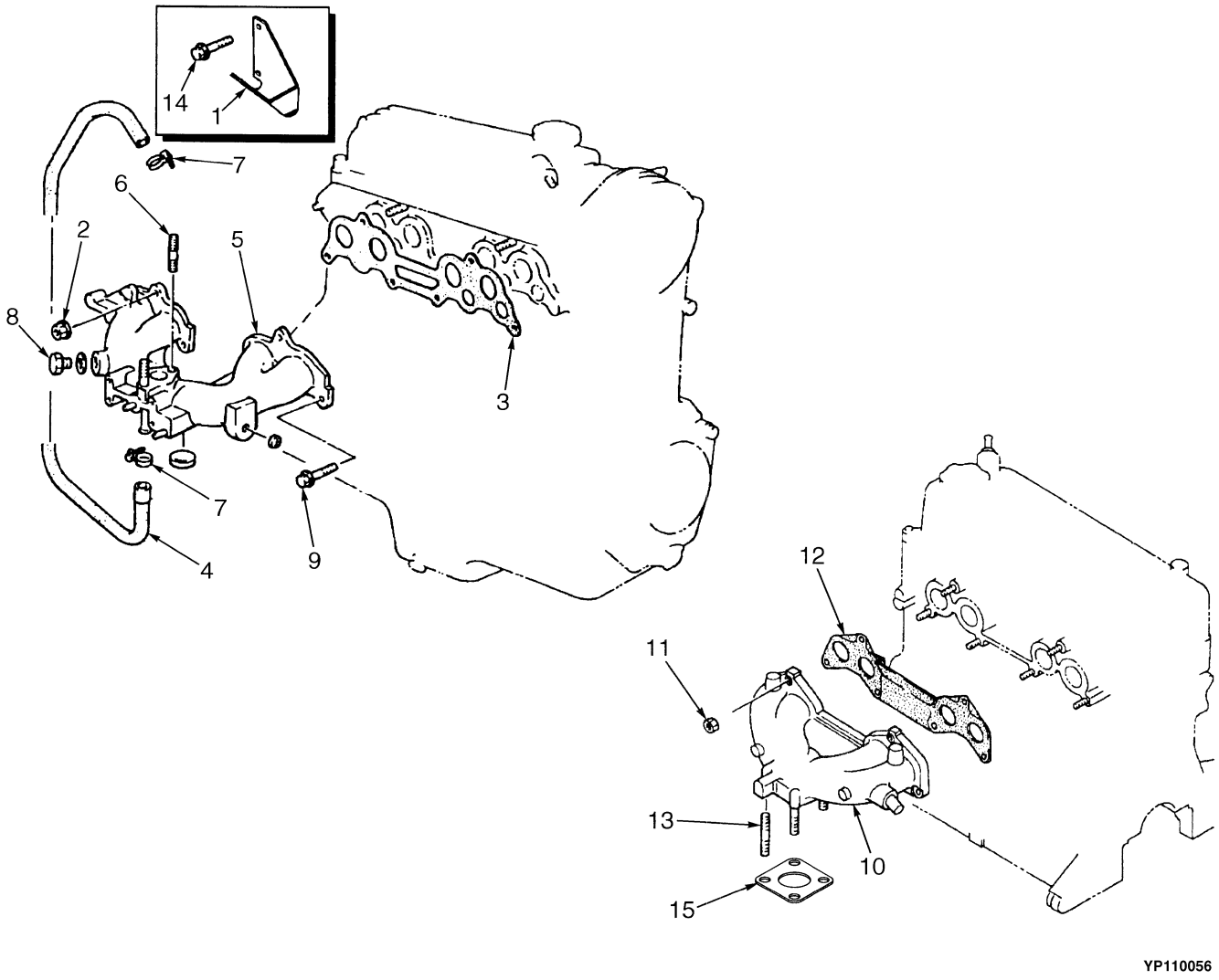

©2009 HYSTER COMPANY

MANIFOLD
LPG

ITEM	PART NO.	DESCRIPTION	QTY
	b 1382680	Engine Assy-Lpg (LPG)	1
	c 1469382	Engine Assy-Lpg (LPG)	1
	d 1402735	Long Block	1
1	**b** 1376620	Bracket (LPG)	1
1	**c** 1490806	Bracket (LPG)	1
2	326504	Nut	4
3	1361742	Gasket	1
4	**a** 1361791	Radiator Hose	1
5	**b** 1361740	Manifold (Intake)	1
5	**c** 2045027	Intake Manifold (Intake)	1
6	**b** 1362017	Stud	2
6	**c** 2045028	Stud	2
7	1361873	Clamp	2
8	1361741	Cap	1
9	1361885	Bolt	4
10	1361744	Exhaust Manifold (Exhaust)	1
11	1361745	Stud	4
12	1361746	Nut	6
13	1361747	Gasket	1
14	1361898	Bolt	2
15	**c** 1338308	Gasket	1
16	1362005	Plug	1
17	1370683	Plug	1

FOOTNOTES:

a Petrol
b → S/N H177B23393
c S/N H177B23394 →
d S/N H177B26764Y →

©2009 HYSTER COMPANY

MANIFOLD (FIGURE 2-25)
LPG WITH ELECTRONIC CONTROLS

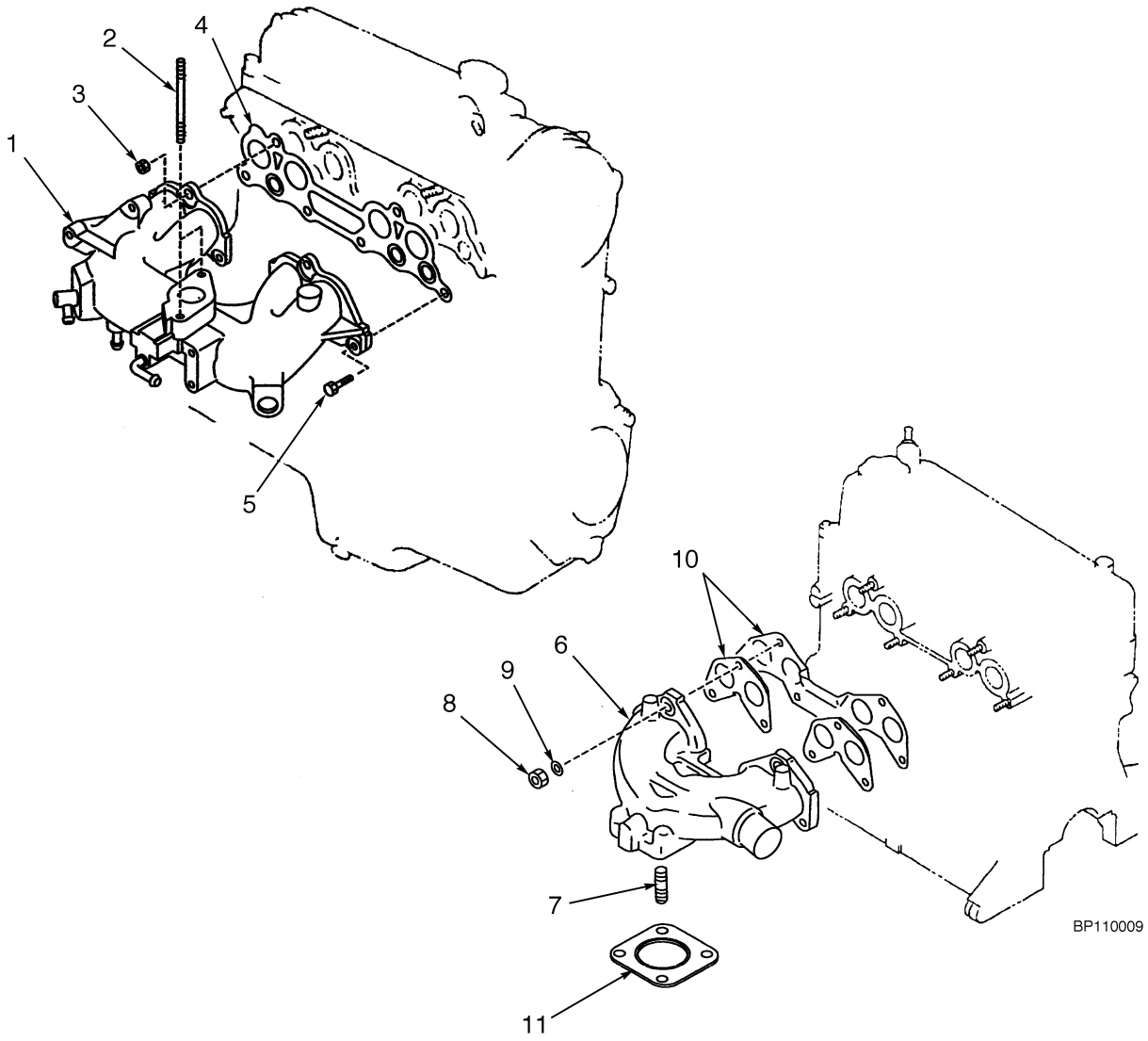

©2009 HYSTER COMPANY

MANIFOLD
LPG WITH ELECTRONIC CONTROLS

ITEM	PART NO.	DESCRIPTION	QTY
	1562285	Engine Assy-Lpg (LPG)	1
1	1553766	Manifold (Intake)	1
2	2045028	Stud	2
3	326504	Nut	4
4	1361742	Gasket	1
5	1369999	Bolt	2
6	1361744	Exhaust Manifold (Exhaust)	1
7	1361745	Stud	4
8	1370690	Washer	6
9	1361746	Nut	6
10	1361747	Gasket	1
11	1338308	Gasket	1

©2009 HYSTER COMPANY

OIL PUMP AND FILTER (FIGURE 2-26)

LPG — 2,0L ENGINE

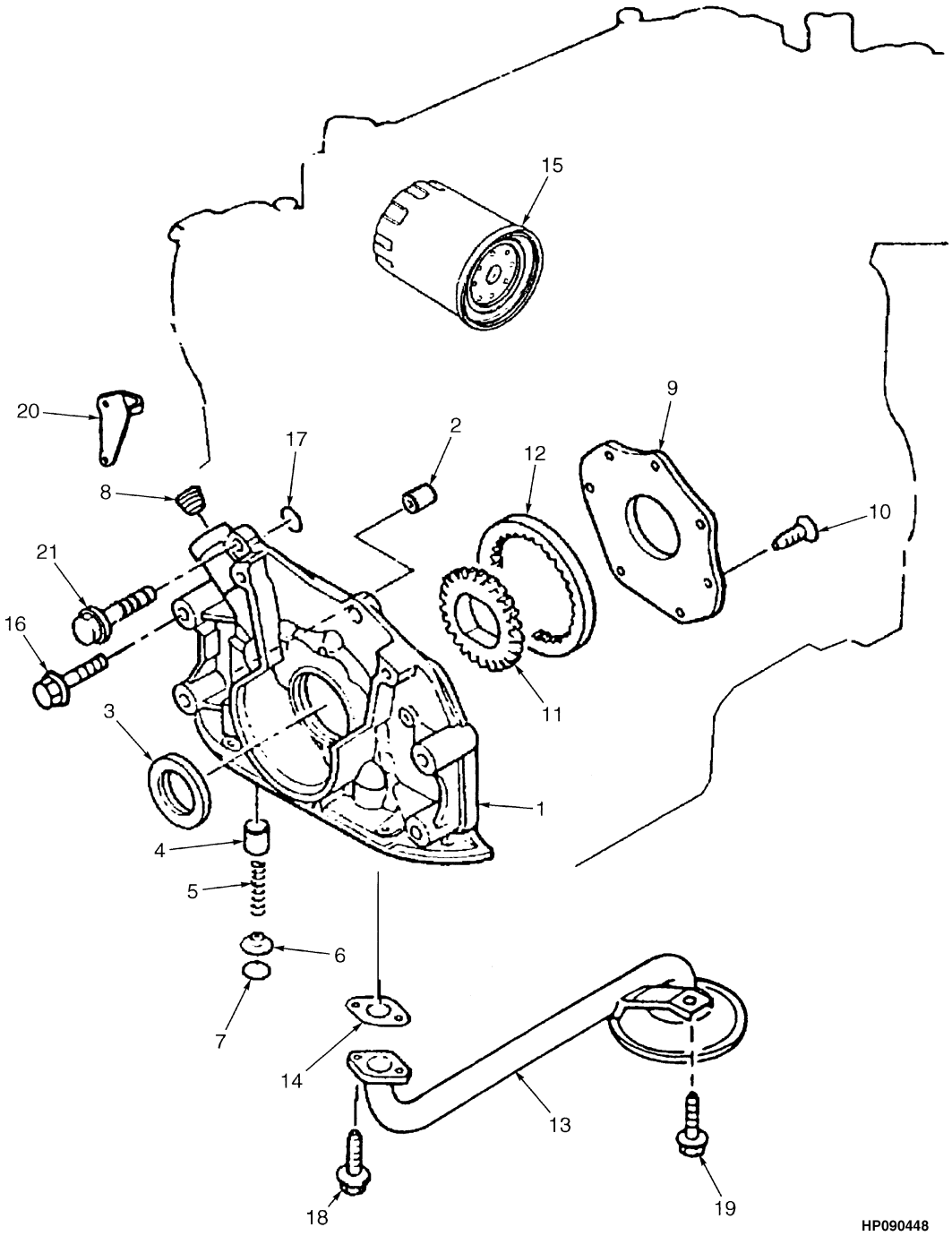

©2009 HYSTER COMPANY

OIL PUMP AND FILTER
LPG – 2,0L ENGINE

ITEM	PART NO.	DESCRIPTION	QTY
	a 1382680	Engine Assy-Lpg (LPG)	1
	b 1469382	Engine Assy-Lpg (LPG)	1
	c 1402735	Long Block	1
	d 1562285	Engine Assy-Lpg (LPG)	1
1	1455675	Engine Oil Pump	1
2	1361798	Pin (Timing Indicator)	2
3	1361688	Oil Seal	1
4	1455674	Plunger	1
5	326748	Spring	1
6	326749	Spring Seat	1
7	1361879	Snap Ring	1
8	1368790	Plug	1
9	1361802	Cover	1
10	1455677	Screw	7
11	1361804	Gear (Inner)	1
12	1361805	Gear (Outer)	1
13	1361806	Strainer	1
14	1361807	Gasket	1
15	324692	Oil Filter	1
16	1361875	Screw	2
17	1361801	O-Ring	1
18	1361878	Screw	2
19	1361868	Screw	1
20	**b** 1495427	Pin (Top Indicator)	1
21	**b** 1553878	Bolt	2
21	**a** 1369914	Bolt	2
	1367190	Kit-Gasket	1

FOOTNOTES:

a → S/N H177B23393
b S/N H177B23394 →
c S/N H177B26764Y →
d S/N H177B47508B →

©2009 HYSTER COMPANY

ELECTRICAL (FIGURE 2-27)
LPG — 2,0L ENGINE

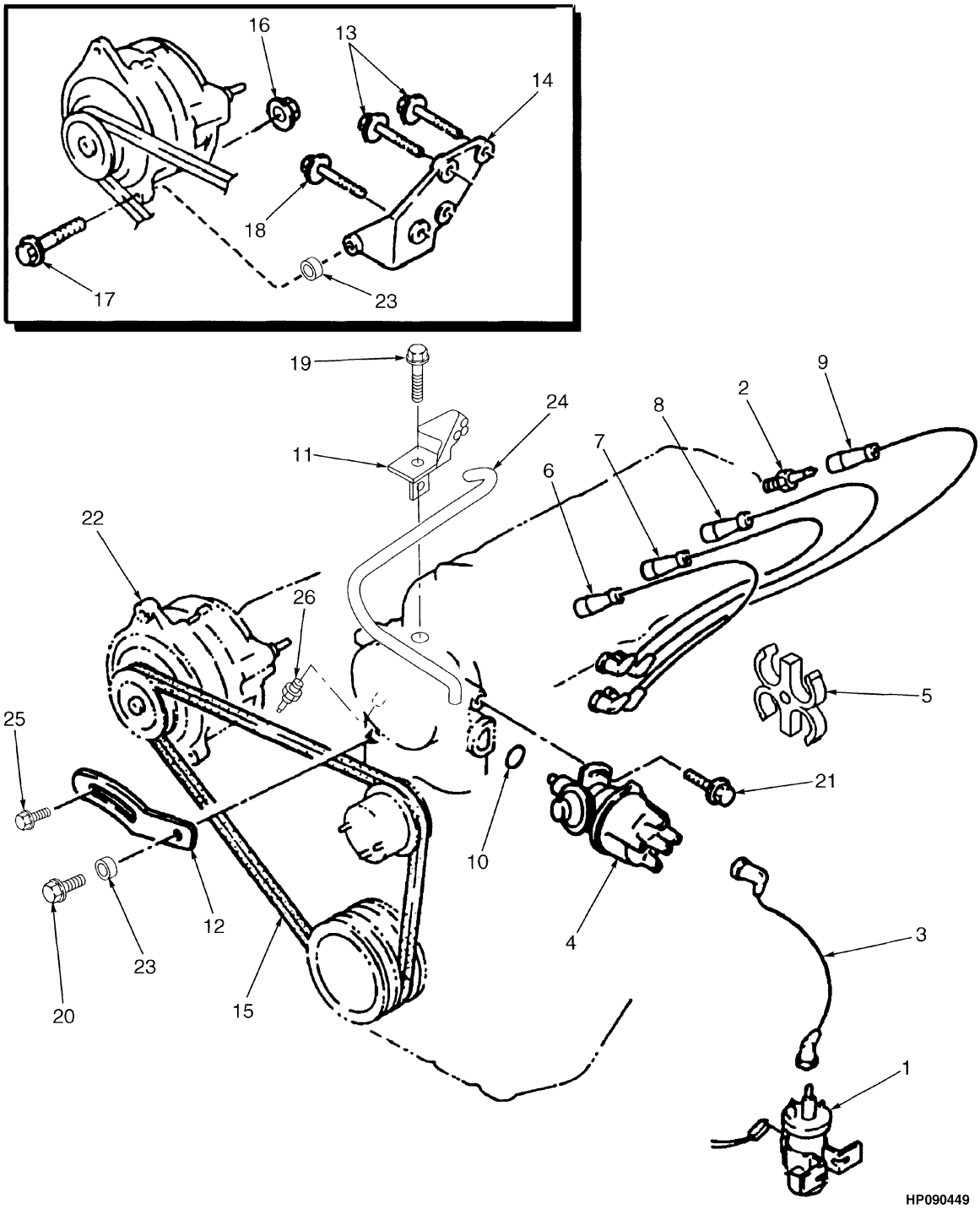

©2009 HYSTER COMPANY

ELECTRICAL
LPG – 2,0L ENGINE

ITEM	PART NO.	DESCRIPTION	QTY
	a 1382680	Engine Assy-Lpg (LPG)	1
	b 1469382	Engine Assy-Lpg (LPG)	1
	c 1402735	Long Block	1
	d 1562285	Engine Assy-Lpg (LPG)	1
1	1324278	Ignition Coil	1
2	1361837	Spark Plug	4
3	1361839	Ignition Cable	1
4	1453562	Distributor	1
5	1361838	Support	1
6	1361840	Cable (Spark Plug) (No. 1)	1
7	1361841	Cable (Spark Plug) (No. 2)	1
8	1361842	Cable (Spark Plug) (No. 3)	1
9	1361843	Cable (Spark Plug) (No. 4)	1
10	326850	O-Ring	1
11	1361844	Protector	1
12	1361845	Strap	1
13	1361891	Bolt	2
14	1361846	Bracket	1
15	**a** 1384008	V-Belt	1
15	**b** 1495412	V-Belt	1
16	1361890	Nut	1
17	1361889	Screw	1
18	1361888	Bolt	2
19	1361893	Screw	1
20	1361881	Bolt	2
21	1361895	Bolt	1
22	1450928	Alternator	1
23	**b** 2045320	Spacer	2
24	**b** 1495413	Hose	1
25	**b** 326898	Bolt	1
26	**b** 1361867	Temperature Sender	1
	1367190	Kit-Gasket	1
	1362113	Kit-Ignition Cable	1

FOOTNOTES:

a → S/N H177B23393
b S/N H177B23394 →
c S/N H177B26764Y →
d S/N H177B47508B →

©2009 HYSTER COMPANY

FUEL (FIGURE 2-28)

LPG — 2.0L ENGINE (→ S/N H177B23393)

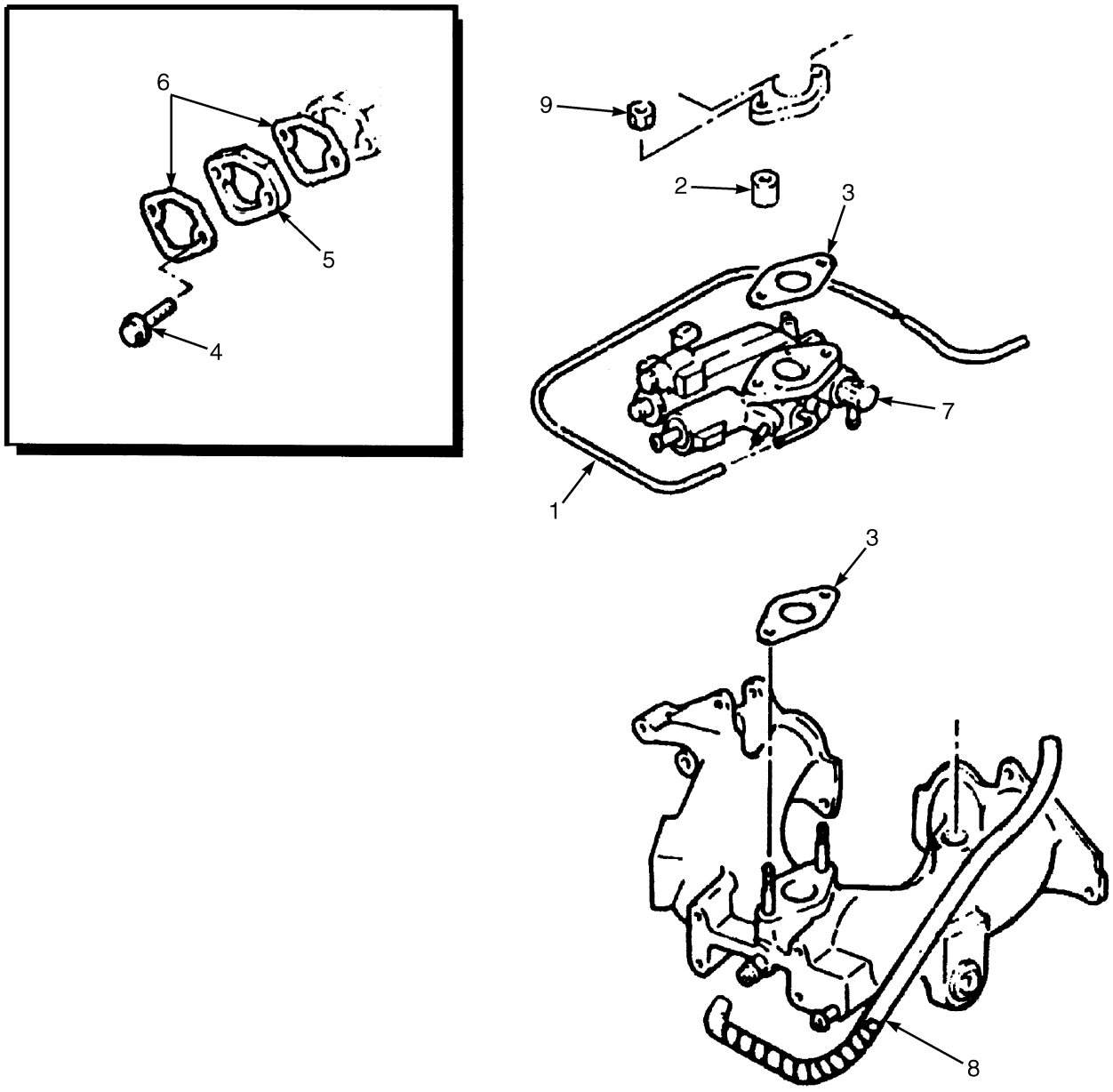

HP091072

©2009 HYSTER COMPANY

FUEL

LPG – 2.0L ENGINE (→ S/N H177B23393)

ITEM	PART NO.	DESCRIPTION	QTY
	1382680	Engine Assy-Lpg (LPG)	1
1	1361773	Hose	1
2	1361761	Spacer	2
3	1361752	Gasket	2
4	1361898	Bolt	2
5	1361749	Cover	1
6	1361756	Gasket	2
7	1361751	Governor	1
8	1360894	Hose (PCV)	1
9	326504	Nut	2

©2009 HYSTER COMPANY

FUEL (FIGURE 2-29)

LPG 2,0L (S/N H177B23394 →)

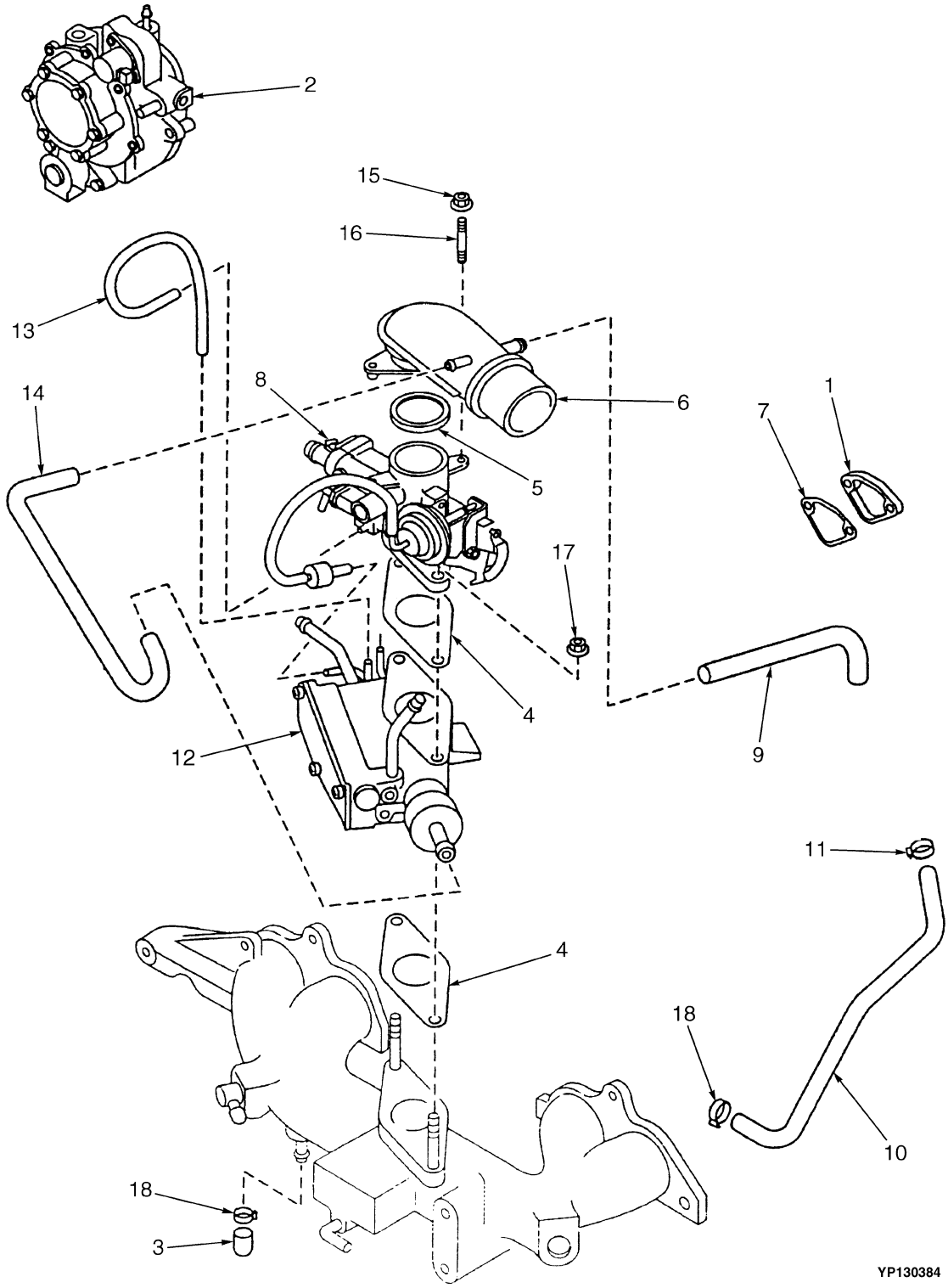

©2009 HYSTER COMPANY

FUEL

LPG 2,0L (S/N H177B23394 →)

ITEM	PART NO.	DESCRIPTION	QTY
	1469382	Engine Assy-Lpg (LPG)	1
1	1361749	Cover	1
2	1469346	Lpg Converter (☞Figure 3-24)	1
2	1493620	Regulator (☞Figure 3-24)	1
3	1361741	Cap	1
4	1361752	Gasket	2
5	1475156	Seal	1
6	1361766	Air Duct	1
7	1361756	Gasket	1
8	1493246	Lpg Carburetor (☞Figure 3-13)	1
9	1361794	Hose	1
10	1360894	Hose (PCV)	1
11	1495429	Hose Clamp	1
12	1495422	Governor (☞Figure 3-10)	1
13	1361796	Hose	1
14	1361797	Hose	1
15	1361869	Nut	2
16	1361870	Stud	2
17	326504	Nut	2
18	1361873	Clamp	2

©2009 HYSTER COMPANY

FUEL AND EMISSION CONTROL SYSTEM (FIGURE 2-30)

2.0L LPG (S/N H177B47508B →)

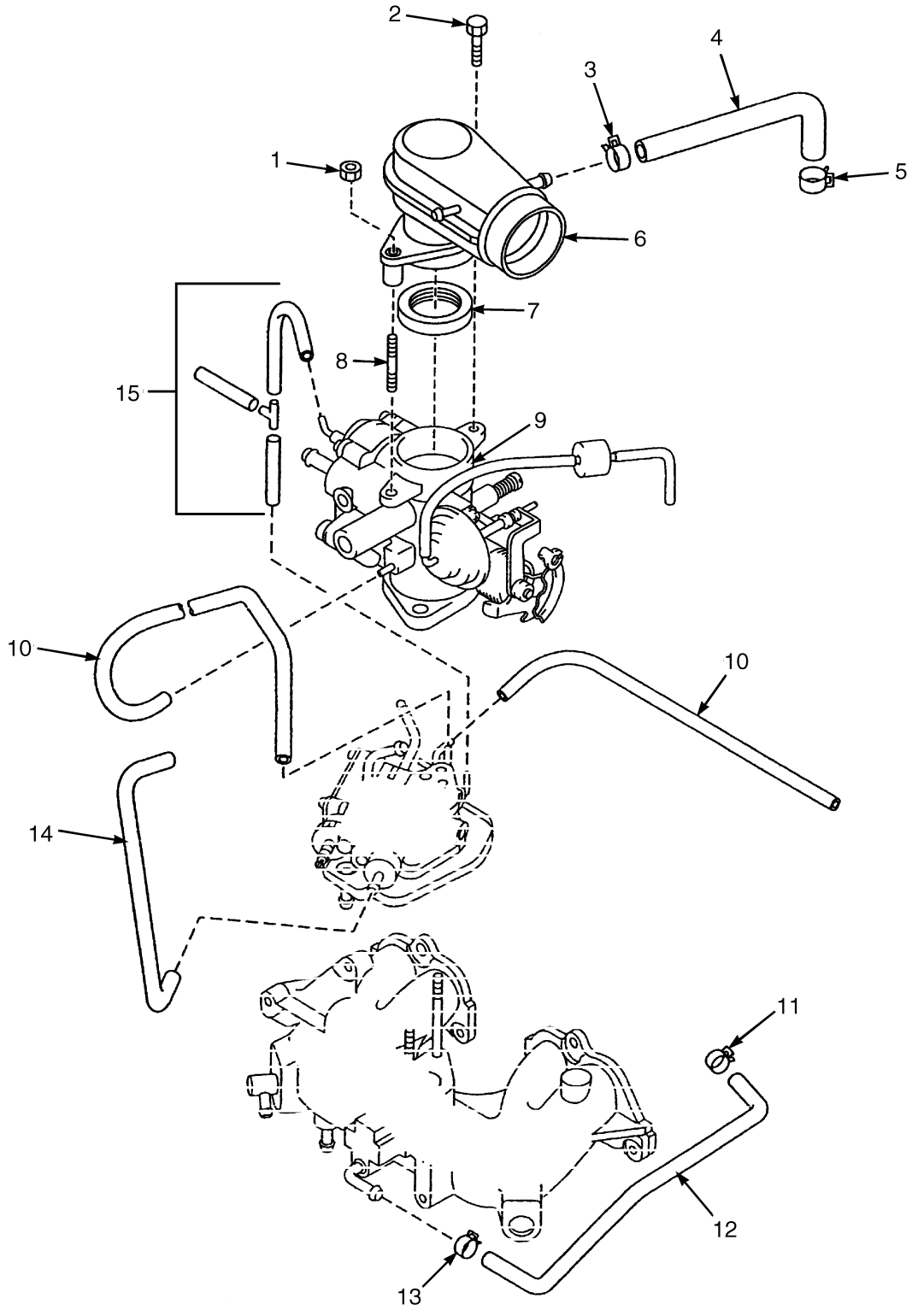

BP110010

©2009 HYSTER COMPANY

FUEL AND EMISSION CONTROL SYSTEM

2.0L LPG (S/N H177B47508B →)

ITEM	PART NO.	DESCRIPTION	QTY
	1562285	Engine Assy-Lpg (LPG)	1
1	1361869	Nut	1
2	1495500	Bolt	1
3	1361871	Clamp	1
4	1361794	Hose	1
5	1361871	Clamp	1
6	1361766	Air Duct	1
7	1475156	Seal	1
8	1361870	Stud	1
9	1553793	Carburetor	1
9	1619123	Injector	1
10	1361796	Hose	2
11	1495429	Hose Clamp	1
12	1360894	Hose (PCV)	1
13	1361873	Clamp	1
14	2045308	Hose	1
15	1553856	Tube Assy	1

©2009 HYSTER COMPANY

WATER PUMP (FIGURE 2-31)

LPG — 2,0L ENGINE

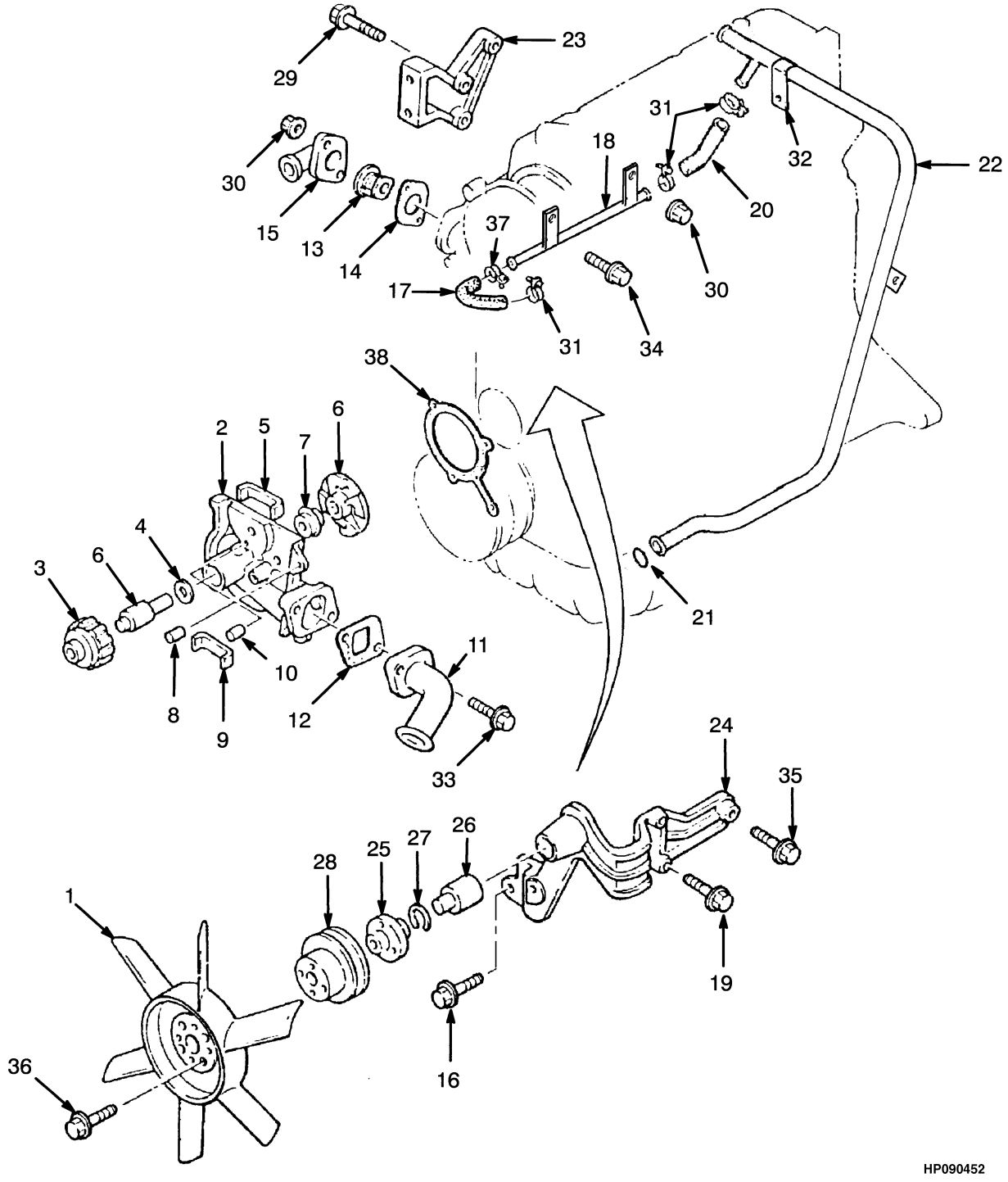

©2009 HYSTER COMPANY

WATER PUMP
LPG – 2,0L ENGINE

ITEM	PART NO.	DESCRIPTION	QTY
	a 1382680	Engine Assy-Lpg (LPG)	1
	c 1469382	Engine Assy-Lpg (LPG)	1
	d 1402735	Long Block (LPG)	1
	e 1402735	Long Block	1
	bf 1517850	Long Block (LPG)	1
1	1361817	Fan	1
2	1361811	Water Pump	1
3	1361816	Pulley	1
4	1361815	Baffle	1
5	1361810	Seal	1
6	. . . . .	Shaft (and Impeller)	1
7	1361814	Seal	1
8	1361880	Stud	1
9	1361809	Seal	1
10	1361834	Pin	1
11	1361818	Pipe	1
12	1361819	Gasket	1
13	**a** 1495428	Thermostat (82° C)	1
13	**c** 1495428	Thermostat	1
14	1367191	Gasket	1
15	1361821	Cover (Outlet)	1
16	324707	Bolt	2
17	1361825	Radiator Hose	1
18	1361823	Pipe (Water Bypass)	1
19	1361884	Bolt	3
20	1361824	Radiator Hose	1
21	1361827	O-Ring	1
22	1361828	Pipe	1
23	1361829	Bracket	1
24	1361830	Bracket	1
25	1361813	Hub	1
26	1361832	Shaft -Bearing Fan	1
27	1361835	Ring	1
28	1384006	Fan Pulley	1
29	**c** 1361882	Bolt	2
29	**a** 1361885	Bolt	3
30	326504	Nut	3
31	1361873	Clamp	3
32	1361826	Clip	1
33	1361881	Bolt	2
34	1361885	Bolt	1
35	1361882	Bolt	1
36	1361878	Screw	1
37	1361833	Hose Clamp	1
38	1361812	Gasket	1
	1367190	Kit-Gasket	1

©2009 HYSTER COMPANY

FOOTNOTES:

a → S/N H177B23393
b 338078 →
c S/N H177B23394 →
d S/N H177B26764Y →
e S/N H177B47508B →
f S/N H177B56549C →

©2009 HYSTER COMPANY

NOTES

©2009 HYSTER COMPANY

ENGINE ASSEMBLY (FIGURE 2-32)
LPG — 3.0L ELECTRONIC CONTROLS

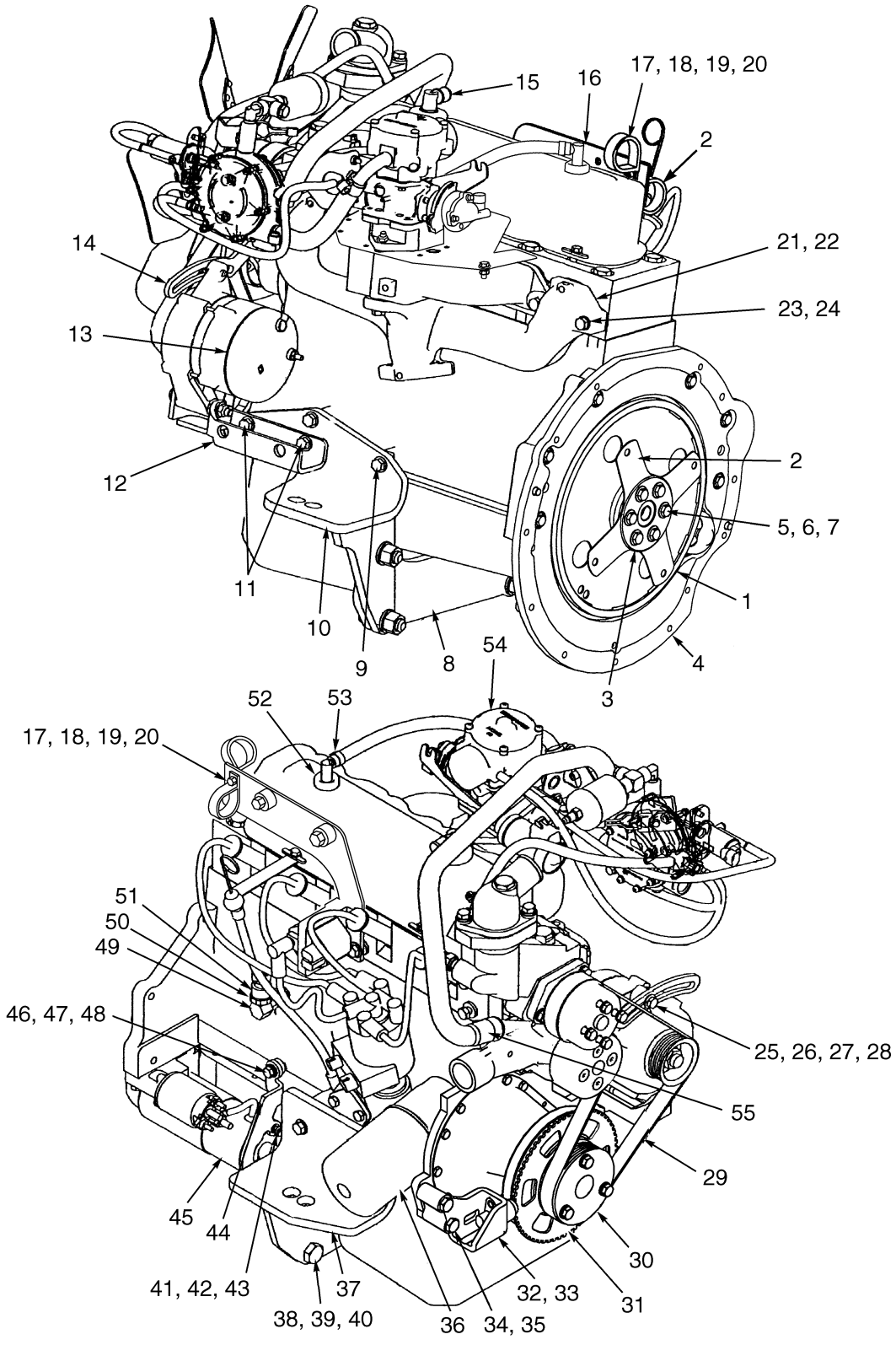

©2009 HYSTER COMPANY

ENGINE ASSEMBLY
LPG – 3.0L ELECTRONIC CONTROLS

ITEM	PART NO.	DESCRIPTION	QTY
	1465390	Engine Assy-Lpg (3.0L 0RS 2000 Series Engine)	1
	1484444	Engine Assy-Gas (3.0L 2001 Series Engine)	1
	1506841	Engine Assy (Gas and LPG 3.0L 2002 Series Engine)	1
	1524201	Engine Assy-Lpg (3.0L 2003 Series Engine)	1
	1528527	Engine Assy-Lpg (3.0L 2003 Series Engine)	1
	1538871	Engine Assy-Lpg (3.0L 2004 Series Engine)	1
	1583928	Engine Assy-Gas and LPG (3.0L 2005 Series Engine)	1
1	1389359	Flywheel (With Welded Ring Gear)	1
2	1394915	Flex Plate	1
3	1375144	Washer (Flexplate)	1
4	1375145	Flywheel Housing	1
5	221769	Washer	6
6	221544	Capscrew	6
7	360387	Loctite	AR
8	1375128	Plate	1
9	174413	Screw	6
10	1375129	Bracket Wldmt (RH)	1
11	1508234	Screw	2
12	1527018	Bracket	1
13	**a** 1469597	Alternator	1
13	**b** 2074390	Alternator	1
14	1520828	Bracket Wldmt	1
15	379407	Fitting	1
16	1543568	Bracket	1
17	320156	Washer	4
18	136687	Nut	4
19	292680	Washer	3
20	287816	Capscrew	1
21	1500880	Exhaust Manifold	1
22	1507692	Gasket	1
23	15156	Lockwasher	10
24	1566645	Capscrew	2
25	350818	Washer	1
26	176640	Bolt	1
27	320157	Washer	1
28	264159	Adhesive	AR
29	2053666	V-Belt (Serpentine)	1
30	2066205	Pulley	1
31	1562045	Timing Wheel	1
32	1562046	Bracket	1
33	1562047	Sensor (Crankshaft)	1
34	16379	Capscrew	2
35	15134	Washer	2
36	2033682	Oil Filter	1
37	1375125	Bracket Wldmt (LH)	1
38	293686	Capscrew	4
39	296426	Washer	4
40	316828	Nut	4
41	197067	Washer	2
42	15152	Lockwasher	5

©2009 HYSTER COMPANY

ENGINE ASSEMBLY
LPG – 3.0L ELECTRONIC CONTROLS

ITEM	PART NO.	DESCRIPTION	QTY
43	15052	Nut	2
44	1469602	Bracket	1
45	1469603	Starter	1
45	1490407	Switch	1
46	18515	Washer	2
47	15155	Lockwasher	7
48	18496	Capscrew	1
49	1376767	Fitting	1
50	16187	Fitting	1
51	1545857	Pressure Switch	1
52	164050	Grommet	1
53	353198	Clamp	2
54	2062877	Lpg Fuel System (IMPCO)	1
55	130845	Clamp	6

FOOTNOTES:

a → S/N H177B55183

b S/N H177B55184 →

©2009 HYSTER COMPANY

NOTES

©2009 HYSTER COMPANY

FLYWHEEL AND TORQUE CONVERTER (FIGURE 2-33)

LPG

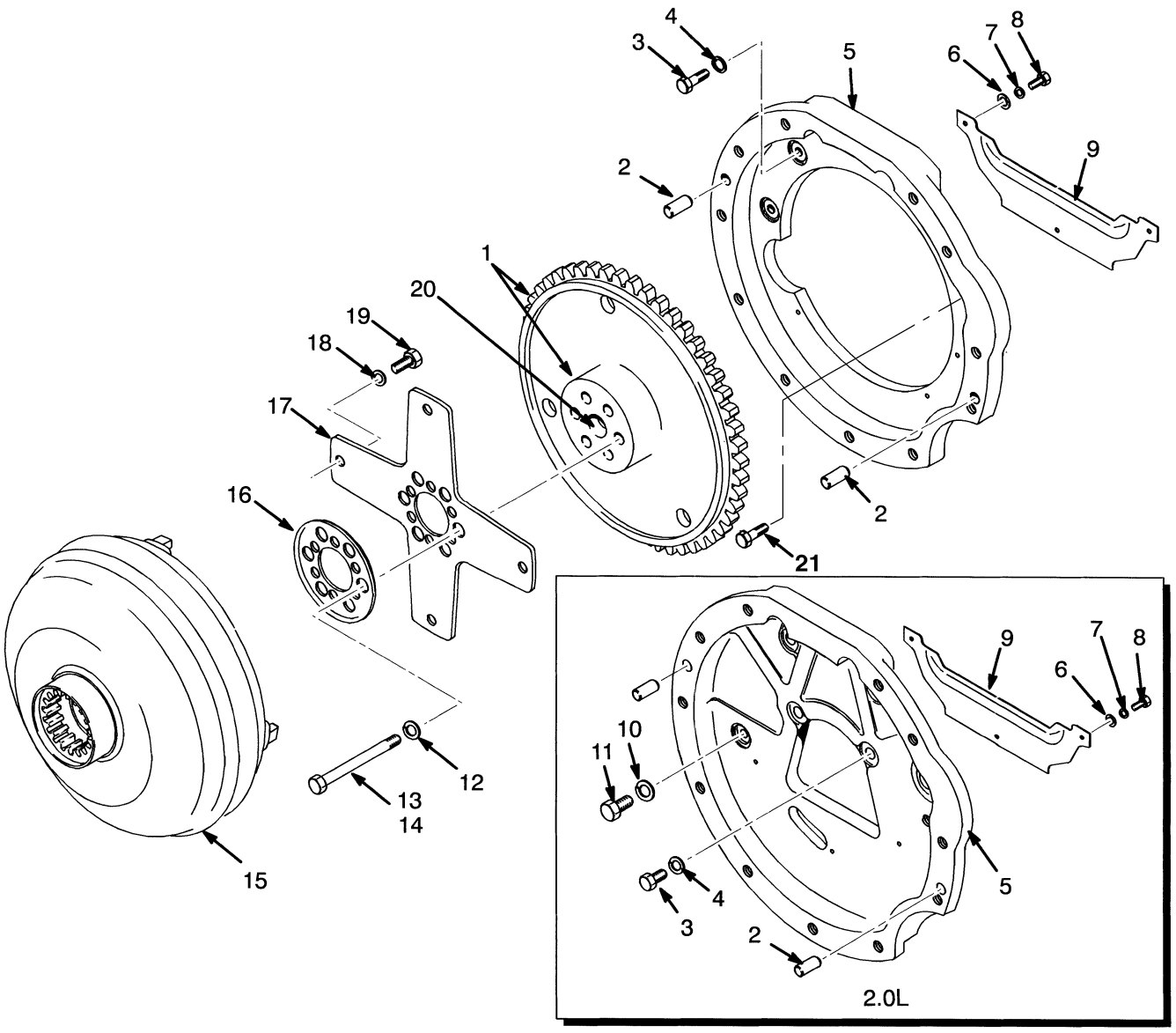

HP090453

©2009 HYSTER COMPANY

FLYWHEEL AND TORQUE CONVERTER
LPG

KEY:
A: Mazda 2.0L and 2.2L
B: GM 3.0L
C: 3,0L Engine (Hydrostatic Transmission)

ITEM	PART NO.	DESCRIPTION	QTY A	QTY B	QTY C
1	1378558	Flywheel (With Welded Ring Gear)	1	..	..
1	1382810	Flywheel	..	..	1
1	1371595	Ring Gear	..	..	1
1	1386799	Spacer	..	1	..
1	1386800	Spacer	1	..	..
1	1389359	Flywheel (With Welded Ring Gear)	..	1	..
2	302385	Dowel	2	2	2
3	177461	Capscrew	..	5	5
3	305371	Capscrew	6	..	..
4	221767	Washer	..	6	6
4	296424	Washer	6	..	..
5	1335937	Flywheel Housing	1	..	..
5	1375145	Flywheel Housing	..	1	1
6	18500	Washer	2	2	..
7	292680	Washer	5	..	..
7	292682	Lockwasher	..	3	3
8	148962	Capscrew	5	..	..
8	292513	Capscrew	..	3	3
9	1371584	Cover	..	1	1
9	1371652	Cover	1	..	..
10	296418	Washer	1	..	..
11	293614	Capscrew	1	..	..
12	221769	Washer	..	6	6
12	296422	Washer	6	..	..
13	1347157	Capscrew	6	..	..
13	221539	Capscrew	..	..	6
13	221544	Capscrew	..	6	..
14	360387	Loctite	AR	AR	AR
15	**a** 1386795	Torque Converter (No. 3,15)	1	1	..
15	**b** 1386815	Torque Converter (No. 3,15)	1	1	..
16	1337093	Washer	1	..	..
16	1375144	Washer (Flexplate)	..	1	..
17	1394915	Flex Plate	1	1	..
18	261379	Washer	4	4	4
19	15942	Bolt	4	4	4
20	251979	Lubricant	AR	AR	..
21	221510	Capscrew (50.8 mm)	..	1	1

FOOTNOTES:

a → T80B36193

b T80B36194 →

©2009 HYSTER COMPANY

CRANKSHAFT AND PISTON (FIGURE 2-34)

LPG 3,0L — 1998 THRU 2000 ENGINE

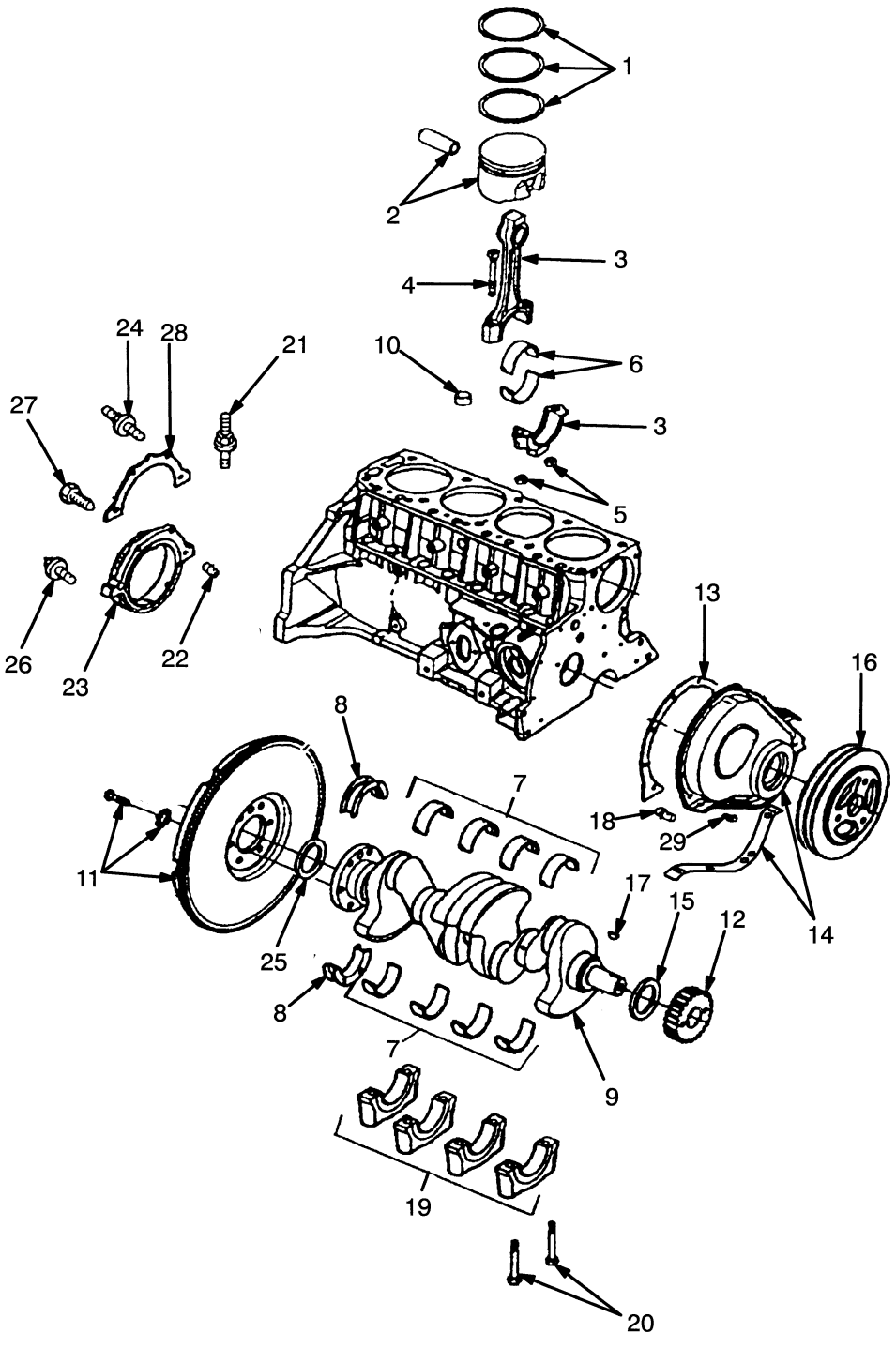

©2009 HYSTER COMPANY

CRANKSHAFT AND PISTON
LPG 3,0L – 1998 THRU 2000 ENGINE

KEY:
A: 8RS 1998 Series Engine
B: 9RS 1999 Series Engine
C: 0RS 2000 Series Engine

ITEM	PART NO.	DESCRIPTION	QTY A	QTY B	QTY C
	1453580	Engine Assy-Gas (3.0L 8RS 1998 Series Engine)	1	..	..
	1459493	Engine Assy-Lpg (3.0L 9RS 1999 Series Engine)	..	1	..
	1465390	Engine Assy-Lpg (3.0L 0RS 2000 Series Engine)	..	..	1
1	1504424	Kit-Piston Ring (0,508 mm O/S)	4	4	4
1	306774	Kit-Piston Ring (Standard)	4	4	4
2	304619	Piston (Standard) (With Pin)	4	4	4
2	304620	Piston (0,508 mm O/S) (With PIn)	4	4	4
3	301190	Piston Rod	4	4	4
4	289344	Bolt	2	2	2
5	1330450	Nut	2	2	2
6	169964	Bearing (Standard)	8	8	8
6	169965	Piston Rod Bearing (0,025 mm U/S)	8	8	8
6	169966	Bearing (0,051 mm U/S)	8	8	8
6	169967	Piston Rod Bearing (0,254 mm U/S)	8	8	8
6	169752	Bearing (0,508 mm U/S)	8	8	8
7	1331335	Kit-Crankshaft Bearing (Standard)	4	4	4
7	1331336	Kit-Crankshaft Bearing (0,025 mm U/S)	4	4	4
7	149814	Crankshaft Bearing (0,254 mm U/S)	4	4	4
7	160602	Bearing (0,508 mm U/S)	4	4	4
7	149816	Bearing (0,762 mm U/S)	4	4	4
8	149805	Crankshaft Bearing (Standard)	1	1	1
8	1331325	Kit-Crankshaft Bearing (0,025 mm U/S)	1	1	1
9	1455601	Crankshaft	1	1	1
10	164022	Plug	1	1	1
11	1382810	Flywheel (3.0L Hydrostatic Transmission) (☞Figure 2-33)	1	1	1
11	1389359	Flywheel (With Welded Ring Gear) (3.0L Powershift Transmission) (☞Figure 2-33)	1	1	1
12	265509	Gear	1	1	1
13	388321	Gasket	1	1	1
14	189609	Cover	1	1	1
15	1374107	Seal (Front)	2	2	2
16	169942	Damper (Double Belt)	1	1	1
17	7882	Woodruff Key	1	1	1
18	148827	Nozzle	1	1	1
19	244903	Cap	4	4	4
20	159973	Bolt	10	10	10
21	164023	Stud	1	1	1
22	375601	Pin (CR/SHF RR Seal Retainer)	1	1	1
23	375572	Retainer	1	1	1
24	388364	Stud	2	2	2
25	1335228	Seal	..	..	1
25	375555	Seal	1	1	..
26	1358150	Bolt	..	..	1
26	1375953	Bolt	1	1	..

©2009 HYSTER COMPANY

CRANKSHAFT AND PISTON

LPG 3,0L – 1998 THRU 2000 ENGINE

KEY:
A: 8RS 1998 Series Engine
B: 9RS 1999 Series Engine
C: 0RS 2000 Series Engine

ITEM	PART NO.	DESCRIPTION	QTY A	QTY B	QTY C
27	1330459	Bolt	2	2	2
28	1335212	Gasket	1	1	1
29	1374108	Bolt	..	..	12
29	370169	Kit-Screw	8	8	..
	1393427	Block	1	1	1

©2009 HYSTER COMPANY

NOTES

©2009 HYSTER COMPANY

CRANKSHAFT AND PISTON (FIGURE 2-35)

LPG 3,0L — 2001-2005 SERIES ENGINE

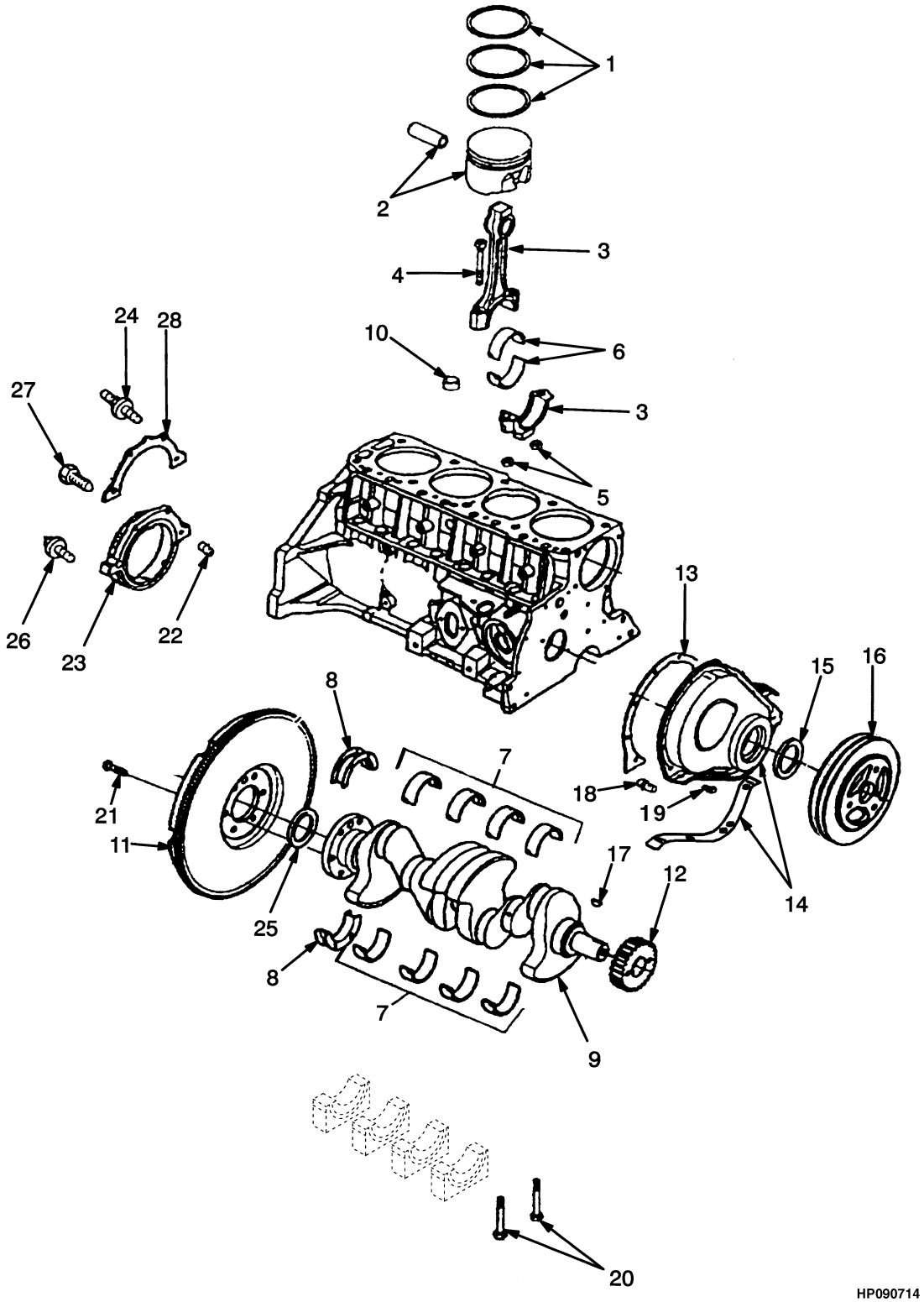

©2009 HYSTER COMPANY

CRANKSHAFT AND PISTON
LPG 3,0L – 2001-2005 SERIES ENGINE

KEY:
A: 1RS 2001 Series Engine
B: 2RS 2002 Series Engine
C: 3RS 2003 Series Engine
D: 2004-2005 Series Engines

ITEM	PART NO.	DESCRIPTION	QTY A	B	C	D
	c 1484444	Engine Assy-Gas (3.0L 2001 Series Engine)	1	..	..	..
	e 1506841	Engine Assy (Gas and LPG 3.0L 2002 Series Engine)	..	1	..	..
	f 1524201	Engine Assy-Lpg (3.0L 2003 Series Engine)	..	..	1	..
	d 1528527	Engine Assy-Lpg (3.0L 2003 Series Engine) (With Serpentine Belt)	..	..	1	..
	g 1538871	Engine Assy-Lpg (3.0L 2004 Series Engine) (With Serpentine Belt)	..	..	..	1
	h 1583928	Engine Assy-Gas and LPG (3.0L 2005 Series Engine) (With Serpentine Belt)	..	..	..	1
1	306774	Kit-Piston Ring (Standard)	4	4	4	4
1	1504424	Kit-Piston Ring (0,508 mm O/S)	4	4	4	4
2	304619	Piston (Standard)	4	4	4	4
2	304620	Piston (0,508 mm O/S)	4	4	4	4
3	324052	Piston Rod	4	4	4	4
4	289344	Bolt	8	8	8	8
5	1330450	Nut	8	8	8	8
6	1467581	Bearing (Standard) (Standard)	4	4	4	4
6	1467582	Piston Rod Bearing (0,025 mm U/S)	4	4	4	4
7	1331335	Kit-Crankshaft Bearing (Standard)	4	4	4	4
7	1331336	Kit-Crankshaft Bearing (0,025 mm U/S)	4	4	4	4
7	149814	Crankshaft Bearing (0,254 mm U/S)	4	4	4	4
7	149816	Bearing (0,762 mm U/S)	4	4	4	4
7	160602	Bearing (0,508 mm U/S)	4	4	4	4
8	1331325	Kit-Crankshaft Bearing (0,025 mm U/S)	1	1	1	1
8	149805	Crankshaft Bearing (Standard)	1	1	1	1
9	1467583	Crankshaft	1	1	1	1
10	164022	Plug	1	1	1	1
11	1389359	Flywheel (With Welded Ring Gear) (Powershift Transmission)	1	1	1	1
11	1382810	Flywheel (Hydrostatic Transmission)	1	1	1	1
12	265509	Gear	1	1	1	1
13	388321	Gasket	1	1	1	..
14	**b** 189609	Cover	1	1	1	1
15	1374107	Seal (Front)	2	2	2	2
16	**a** 159991	Damper (Single Belt)	..	..	..	1
16	169942	Damper (Double Belt)	1	1	1	..
17	7882	Woodruff Key	1	1	1	1
18	148827	Nozzle	1	1	1	1
19	1374108	Bolt	12	12	12	12
20	159973	Bolt	10	10	10	10
21	221533	Capscrew	1	1	1	1
22	375601	Pin (CR/SHF RR Seal Retainer)	1	1	1	1
23	375572	Retainer	1	1	1	1

©2009 HYSTER COMPANY

CRANKSHAFT AND PISTON

LPG 3,0L – 2001-2005 SERIES ENGINE

KEY:
A: 1RS 2001 Series Engine
B: 2RS 2002 Series Engine
C: 3RS 2003 Series Engine
D: 2004-2005 Series Engines

ITEM	PART NO.	DESCRIPTION	QTY A	B	C	D
24	388364	Stud	2	2	2	2
25	1335228	Seal	1	1	1	1
26	1375953	Bolt	1	1	1	1
27	1330459	Bolt	2	2	2	2
28	1500884	Gasket	1	1	1	1
	1472696	Block	1	1	1	1

FOOTNOTES:

a 2004-2005 Series Engine
b Use Sealer 1451264
c → S/N H177B31432Y
d → S/N H177B43851
e S/N H177B31433Y ↔ S/N H177B35858Z
f S/N H177B35859Z ↔ S/N H177B43850A
g S/N H177B43852 ↔ 1/2005
h 1/2005 →

©2009 HYSTER COMPANY

NOTES

©2009 HYSTER COMPANY

CYLINDER HEAD (FIGURE 2-36)

LPG 3,0L ENGINE — 1998 THRU 1999 SERIES ENGINE

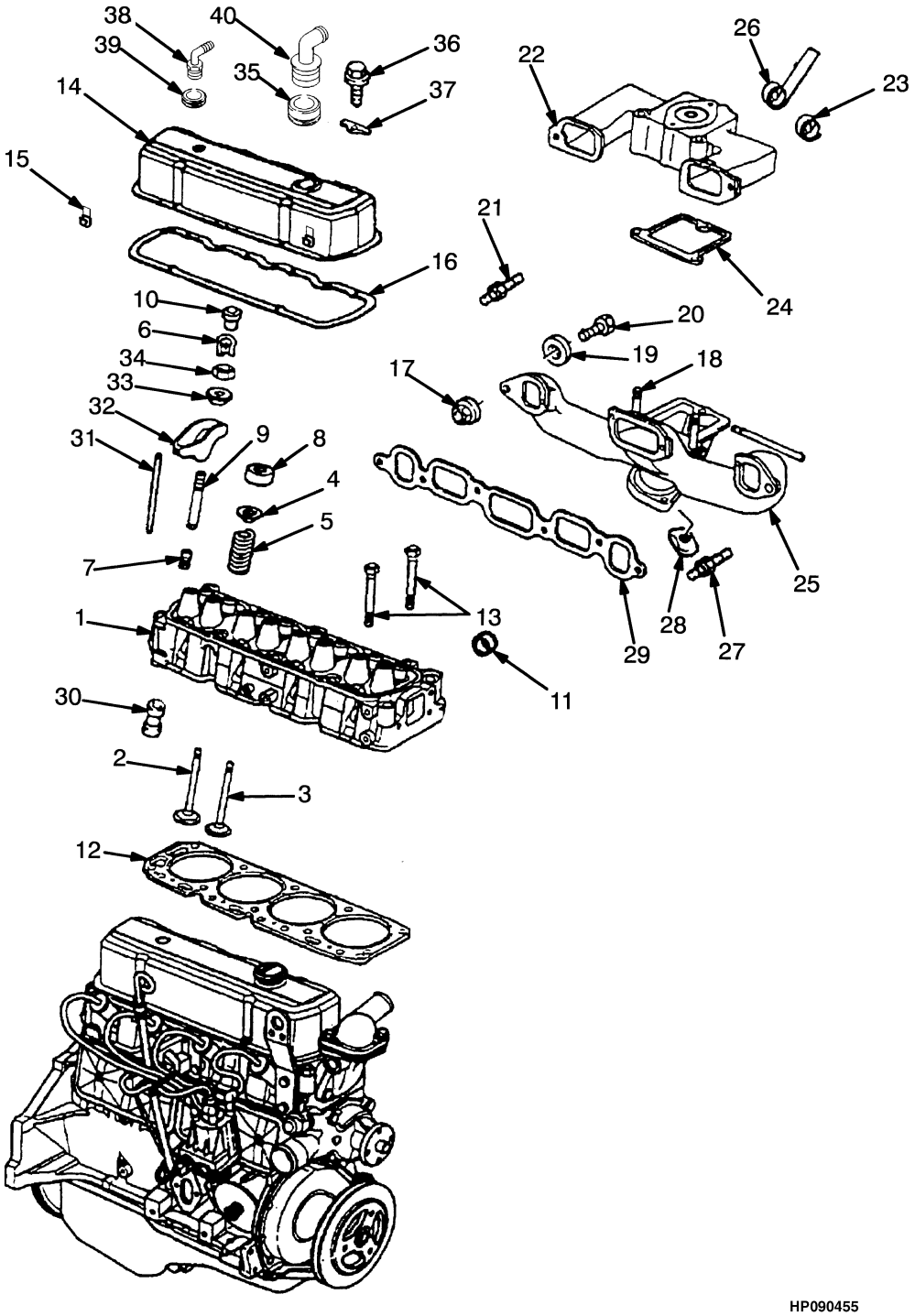

©2009 HYSTER COMPANY

CYLINDER HEAD

LPG 3,0L ENGINE – 1998 THRU 1999 SERIES ENGINE

KEY:
A: 8RS 1998 Series Engine
B: 9RS 1999 Series Engine

ITEM	PART NO.	DESCRIPTION	QTY A	QTY B
	1453580	Engine Assy-Gas (3.0L 8RS 1998 Series Engine)	1	..
	1459493	Engine Assy-Lpg (3.0L 9RS 1999 Series Engine)	..	1
1	1378317	Cylinder Head	1	1
2	244909	Inlet Valve (Standard)	4	4
2	149864	Valve (0,076 mm O/S)	4	4
2	244910	Valve (0,381 mm O/S)	4	4
2	244911	Inlet Valve (0,762 mm O/S)	4	4
3	381250	Exhaust Valve (Standard)	4	4
3	381270	Exhaust Valve (0,076 mm O/S)	4	4
3	381271	Exhaust Valve (0,381 mm O/S)	4	4
4	149868	Cap	8	8
5	145172	Spring (Valve)	8	8
6	1377110	Valve Stop	16	16
7	145173	Seal (Valve)	8	8
8	314539	Oil Shield	8	8
9	149857	Stud	8	8
9	**a** 149858	Stud	8	8
10	149867	Exhaust Valve	4	4
11	160361	Plug	2	2
12	1331343	Cylinder Head Gasket	1	1
13	149977	Bolt	10	10
14	1331344	Cover	1	1
15	1335825	Clip	1	1
16	388323	Gasket	1	1
17	1375954	Nut	8	8
18	1300295	Stud	2	2
19	1335219	Washer	6	6
20	1331349	Bolt	6	6
21	254686	Stud (INT TO EXH)	1	1
22	244922	Intake Manifold (Intake)	1	1
23	244925	Spring	1	1
24	1330772	Gasket	1	1
25	271949	Exhaust Manifold	1	1
26	160377	Spring	1	1
27	149889	Stud	2	2
28	149888	Clamp	4	4
29	1354046	Gasket	1	1
30	263839	Valve Lifter	8	8
31	1354047	Rod	8	8
32	245202	Rocker Arm	8	8
33	189614	Ball	8	8
34	301195	Nut	8	8
35	1376789	Grommet	1	1
36	1374108	Bolt	4	4
37	149978	Retainer	5	5

©2009 HYSTER COMPANY

CYLINDER HEAD

LPG 3,0L ENGINE – 1998 THRU 1999 SERIES ENGINE

KEY:
A: 8RS 1998 Series Engine
B: 9RS 1999 Series Engine

ITEM	PART NO.	DESCRIPTION	QTY A	QTY B
38	321734	Pcv Valve	1	1
39	164050	Grommet	1	1
40	379407	Fitting	1	1

FOOTNOTES:

a Optional

©2009 HYSTER COMPANY

NOTES

©2009 HYSTER COMPANY

CYLINDER HEAD (FIGURE 2-37)

LPG 3,0L ENGINE — 2000 THRU 2005 SERIES ENGINE

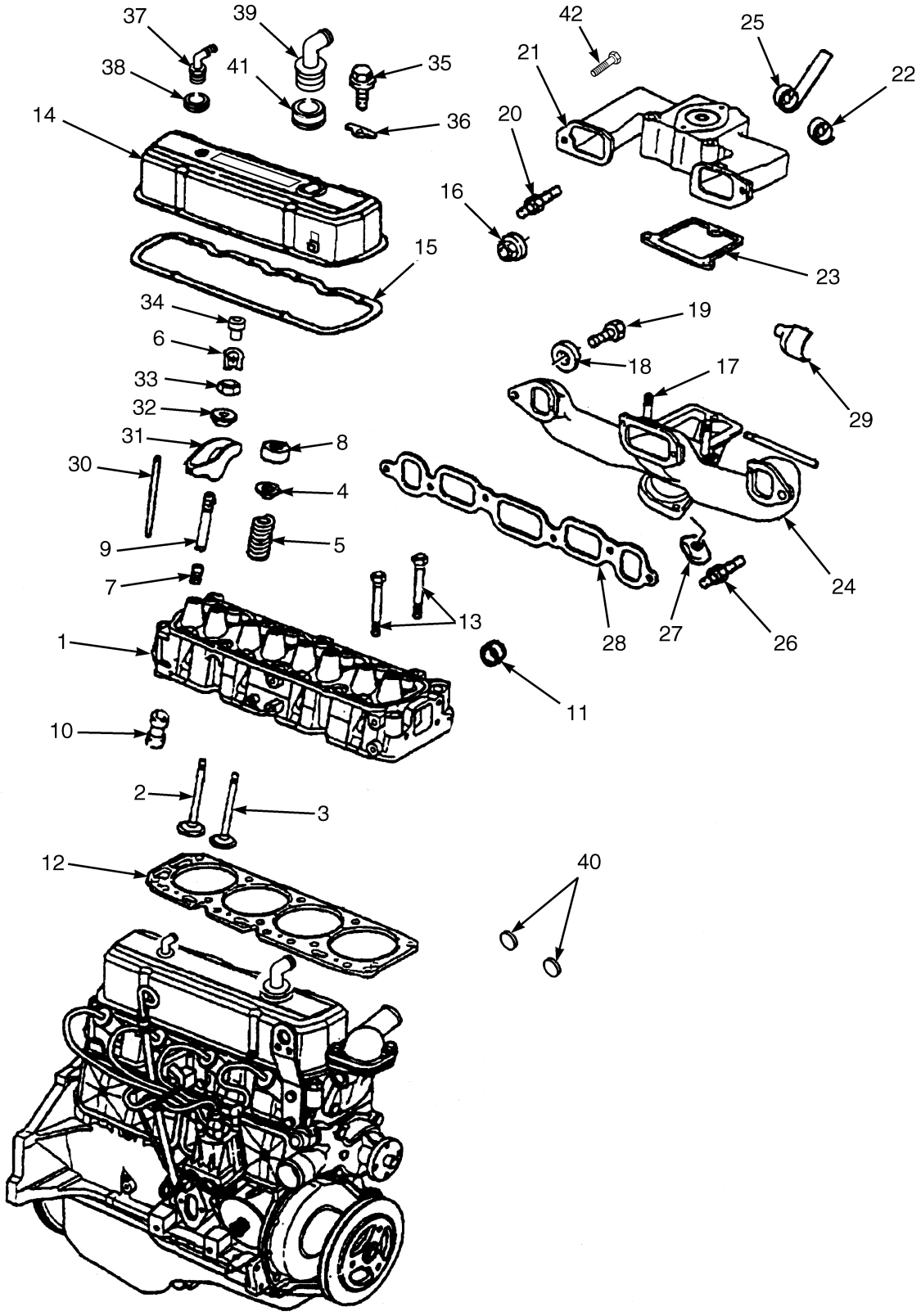

©2009 HYSTER COMPANY

CYLINDER HEAD

LPG 3,0L ENGINE – 2000 THRU 2005 SERIES ENGINE

KEY:
A: 0RS 2000 Series Engine
B: 1RS 2001 Series Engine
C: 2RS 2002 Series Engine
D: 2003-2005 Series Engine

ITEM	PART NO.	DESCRIPTION	QTY A	QTY B	QTY C	QTY D
	1465390	Engine Assy-Lpg (3.0L 0RS 2000 Series Engine)	1	..	..	..
	1484444	Engine Assy-Gas (3.0L 2001 Series Engine)	..	1	..	..
	1506841	Engine Assy (Gas and LPG 3.0L 2002 Series Engine)	..	..	1	..
	1524201	Engine Assy-Lpg (3.0L 2003 Series Engine)	..	..	..	1
	d 1528527	Engine Assy-Lpg (3.0L 2003 Series Engine) (With Serpentine Belt)	..	..	..	1
	e 1538871	Engine Assy-Lpg (3.0L 2004 Series Engine) (With Serpentine Belt)	..	..	..	1
	f 1583928	Engine Assy-Gas and LPG (3.0L 2005 Series Engine) (With Serpentine Belt)	..	..	..	1
1	1378317	Cylinder Head	1	1	1	1
2	149864	Valve (0,076 mm O/S) (Inlet)	4	4	4	4
2	244909	Inlet Valve (Standard) (Inlet)	4	4	4	4
2	244910	Valve (0,381 mm O/S) (Inlet)	4	4	4	4
3	381250	Exhaust Valve (Standard) (Exhaust)	4	4	4	4
4	149868	Cap	8	8	8	8
5	145172	Spring (Valve)	8	8	8	8
6	1377110	Valve Stop	16	16	16	16
7	145173	Seal (Valve)	8	8	8	8
8	314539	Oil Shield	8	8	8	8
9	149857	Stud	8	8	8	8
9	**c** 149858	Stud	8	8	8	8
10	263839	Valve Lifter	8	8	8	8
11	160361	Plug	2	2	2	2
12	1331343	Cylinder Head Gasket	1	1	1	1
13	149977	Bolt	10	10	10	10
14	1331344	Cover	1	1	1	1
15	388323	Gasket	1	1	1	1
16	1375954	Nut	8	8	8	8
17	254686	Stud (INT TO EXH)	2	2	2	2
18	15156	Lockwasher	4	4	4	4
19	16805	Capscrew	4	4	4	4
20	254686	Stud (INT TO EXH)	1	1	1	1
21	244922	Intake Manifold	1	1	1	1
22	244925	Spring	1	1	1	1
23	1330772	Gasket (Gasoline)	1	1	1	1
24	1500880	Exhaust Manifold (LPG)	1	1	1	1
24	271949	Exhaust Manifold (Gasoline)	1	1	1	1
24	1566561	Exhaust Manifold (Gasoline, 2005 Engine Series)	..	..	..	1
25	160377	Spring	1	1	1	1
26	1559959	Stud	2	2	2	2
27	149888	Clamp	4	4	4	4
28	1354046	Gasket (Gasoline)	1	1	1	1

©2009 HYSTER COMPANY

CYLINDER HEAD

LPG 3,0L ENGINE – 2000 THRU 2005 SERIES ENGINE

KEY:
A: 0RS 2000 Series Engine
B: 1RS 2001 Series Engine
C: 2RS 2002 Series Engine
D: 2003-2005 Series Engine

ITEM	PART NO.	DESCRIPTION	QTY A	QTY B	QTY C	QTY D
28	1507692	Gasket (LPG)	1	1	1	1
29	160376	Bushing	2	2	2	2
30	1354047	Rod	8	8	8	8
31	245202	Rocker Arm	8	8	8	8
32	189614	Ball	8	8	8	8
33	301195	Nut	8	8	8	8
34	149867	Exhaust Valve	1	1	1	1
35	370169	Kit-Screw	6	6	6	6
36	149978	Retainer	5	5	5	5
37	**b** 1558196	Pcv Valve (PCV)	..	..	..	1
37	**a** 321734	Pcv Valve	1	1	1	1
38	164050	Grommet	1	1	1	1
39	379407	Fitting	1	1	1	1
40	159971	Plug	2	2	2	2
41	1376789	Grommet	1	1	1	1
42	1307967	Bolt	AR	AR	AR	AR

FOOTNOTES:

a 2000-2003 Series Engine
b 2004-2005 Series Engine
c Optional
d → S/N H177B43851
e S/N H177B43852 ↔ 1/2005
f 1/2005 →

©2009 HYSTER COMPANY

NOTES

©2009 HYSTER COMPANY

ELECTRICAL (FIGURE 2-38)

LPG 3,0L ENGINE — 1998 AND 1999 SERIES ENGINE

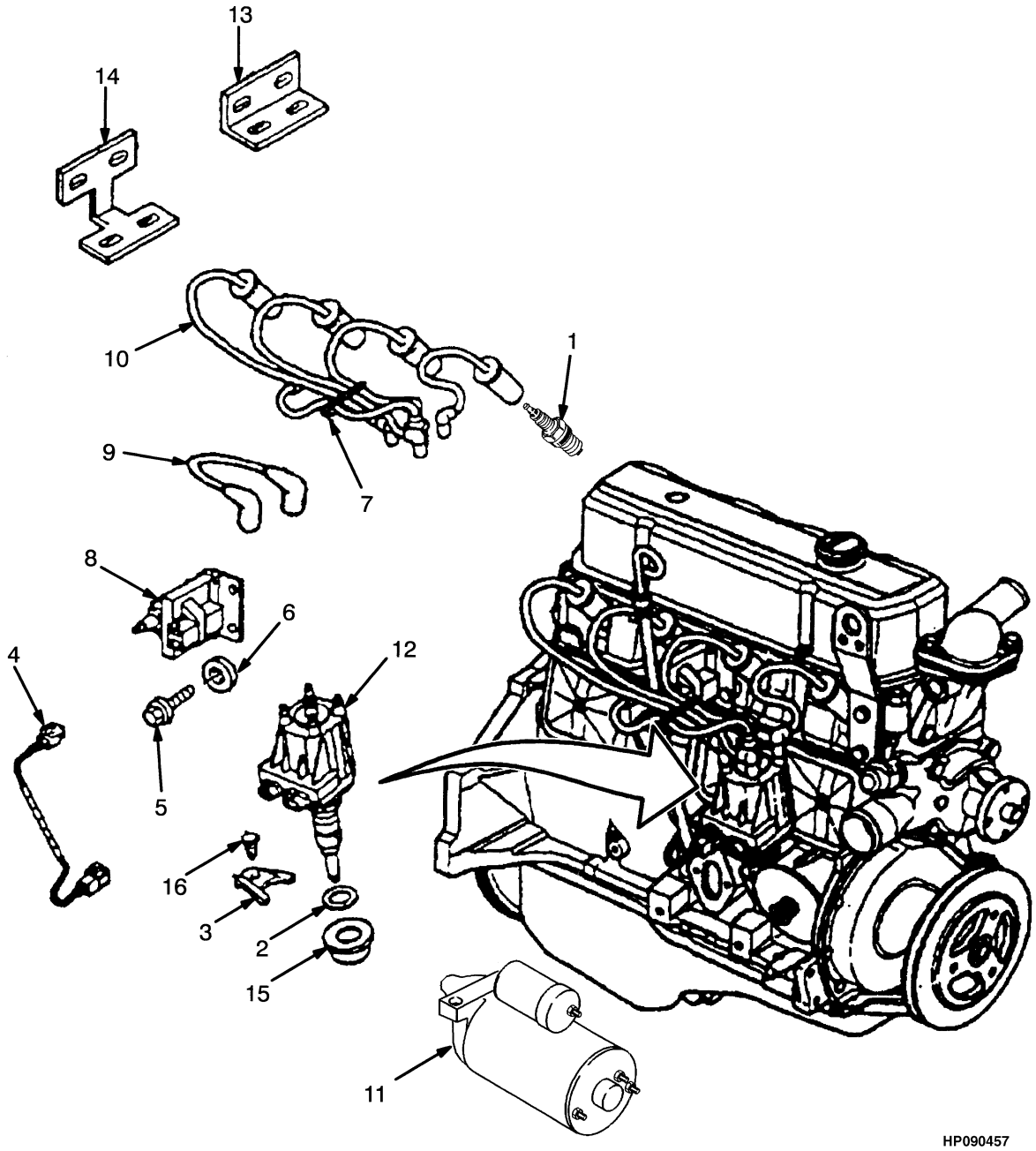

©2009 HYSTER COMPANY

ELECTRICAL

LPG 3,0L ENGINE – 1998 AND 1999 SERIES ENGINE

KEY:
A: 8RS 1998 Series Engine
B: 9RS 1999 Series Engine

ITEM	PART NO.	DESCRIPTION	QTY A	QTY B
	1453580	Engine Assy-Gas (3.0L 8RS 1998 Series Engine)	1	..
	1459493	Engine Assy-Lpg (3.0L 9RS 1999 Series Engine)	..	1
1	281844	Spark Plug	4	4
2	1330467	Gasket	1	1
3	274247	Clamp	1	1
4	1331329	Ignition Cable	1	1
5	1455602	Bolt	2	2
6	15134	Washer	2	2
7	1335828	Retainer	1	1
8	1331331	Ignition Coil	1	1
9	1337665	Ignition Cable	1	..
9	1461082	Wire	..	1
10	1337666	Wire Harness	1	..
10	1461083	Kit-Ignition Cable	..	1
11	. . . . .	Starter Motor	1	1
12	1331330	Distributor	1	1
13	1378318	Bracket (Top)	1	1
14	1378319	Bracket (Bottom)	1	1
15	159974	Washer	1	1
16	1331349	Bolt	1	1
	1393427	Block	1	1

©2009 HYSTER COMPANY

ELECTRICAL (FIGURE 2-39)
LPG 3,0L ENGINE — 2000 THRU 2005 SERIES ENGINE

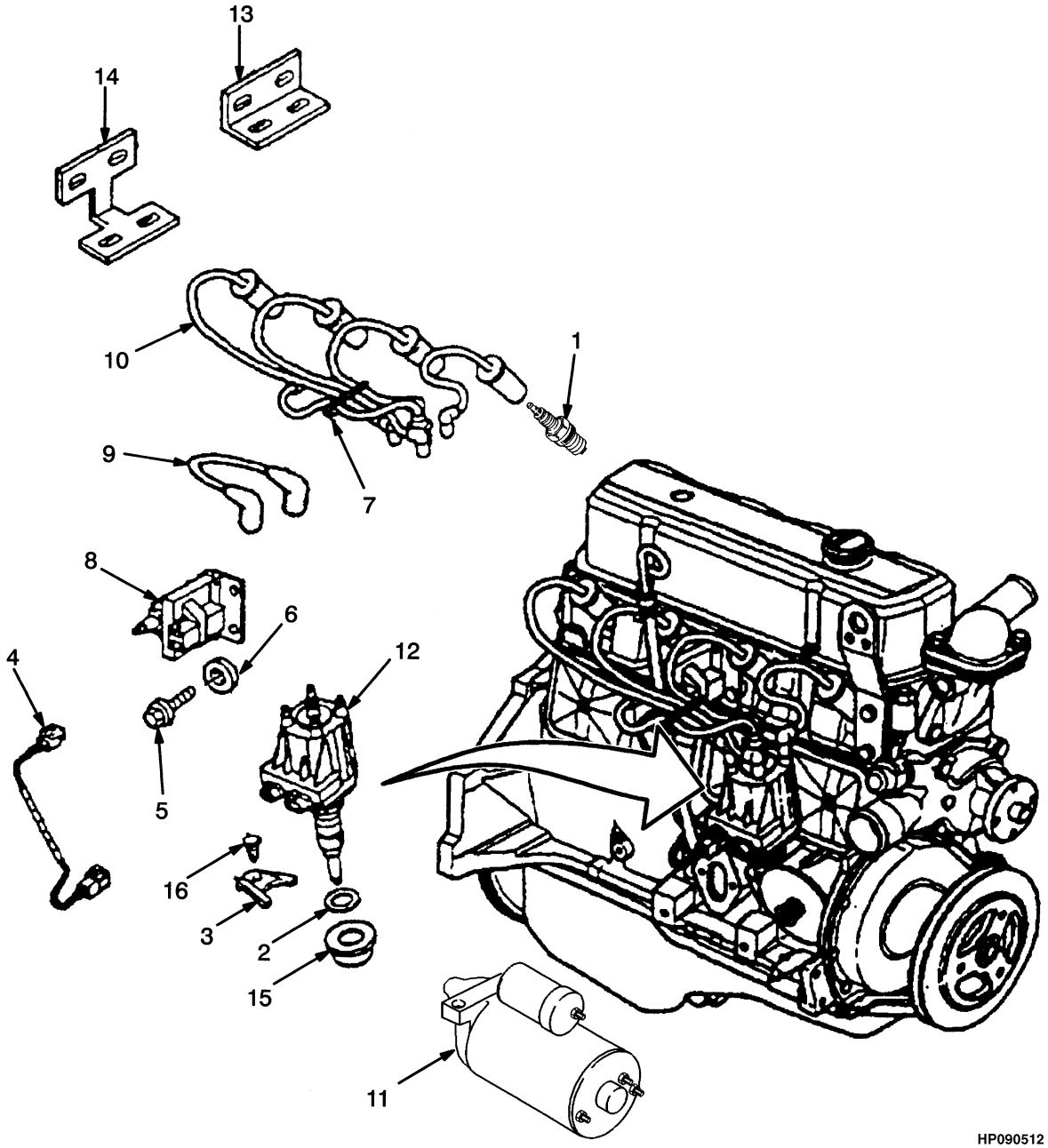

©2009 HYSTER COMPANY

ELECTRICAL

LPG 3,0L ENGINE – 2000 THRU 2005 SERIES ENGINE

KEY:
A: 0RS 2000 Series Engine
B: 1RS 2001 Series Engine
C: 2002-2005 Series Engine

ITEM	PART NO.	DESCRIPTION	QTY A	QTY B	QTY C
	1465390	Engine Assy-Lpg (3.0L 0RS 2000 Series Engine)	1	..	..
	1484444	Engine Assy-Gas (3.0L 2001 Series Engine)	..	1	..
	1506841	Engine Assy (Gas and LPG 3.0L 2002 Series Engine)	..	..	1
	1524201	Engine Assy-Lpg (3.0L 2003 Series Engine)	..	..	1
	d 1528527	Engine Assy-Lpg (3.0L 2003 Series Engine) (With Serpentine Belt)	..	..	1
	e 1538871	Engine Assy-Lpg (3.0L 2004 Series Engine) (With Serpentine Belt)	..	..	1
	f 1583928	Engine Assy-Gas and LPG (3.0L 2005 Series Engine) (With Serpentine Belt)	..	..	1
1	388361	Spark Plug	4	4	4
1	**g** 1650426	Starter	..	..	1
2	1330467	Gasket	1	1	1
3	274247	Clamp	1	1	1
4	**b** 2049385	Wire Harness (Distributor to Coil)	1	1	..
4	1331329	Ignition Cable (Ignition Coil)	..	..	1
5	1455602	Bolt	2	2	2
6	**a** 15134	Washer	2	2	2
7	1335828	Retainer	1	1	1
8	1331331	Ignition Coil	1	1	1
9	1461082	Wire	1	1	1
10	1461083	Kit-Ignition Cable	1	1	1
11	1486530	Starter	1	1	1
11	**c** 1469603	Starter	..	..	1
11	1490407	Switch	..	..	1
11	1507400	Bolt	..	..	2
12	1331330	Distributor	1	1	1
13	1378318	Bracket (Top)	1	1	1
14	1378319	Bracket (Bottom)	1	1	1
15	159974	Washer	1	1	1
16	1331349	Bolt	1	1	1
	1393427	Block	1	1	1

FOOTNOTES:

a 2000 Series Engine
b 2002-2005 Series Engines
c Replace with 1650426 and Bracket 1457120
d → S/N H177B43851
e S/N H177B43852 ↔ 1/2005
f 1/2005 →
g 10/2006 →

©2009 HYSTER COMPANY

COOLING (FIGURE 2-40)

LPG 3.0L — 1998 THRU 2003 SERIES WITH V-BELT

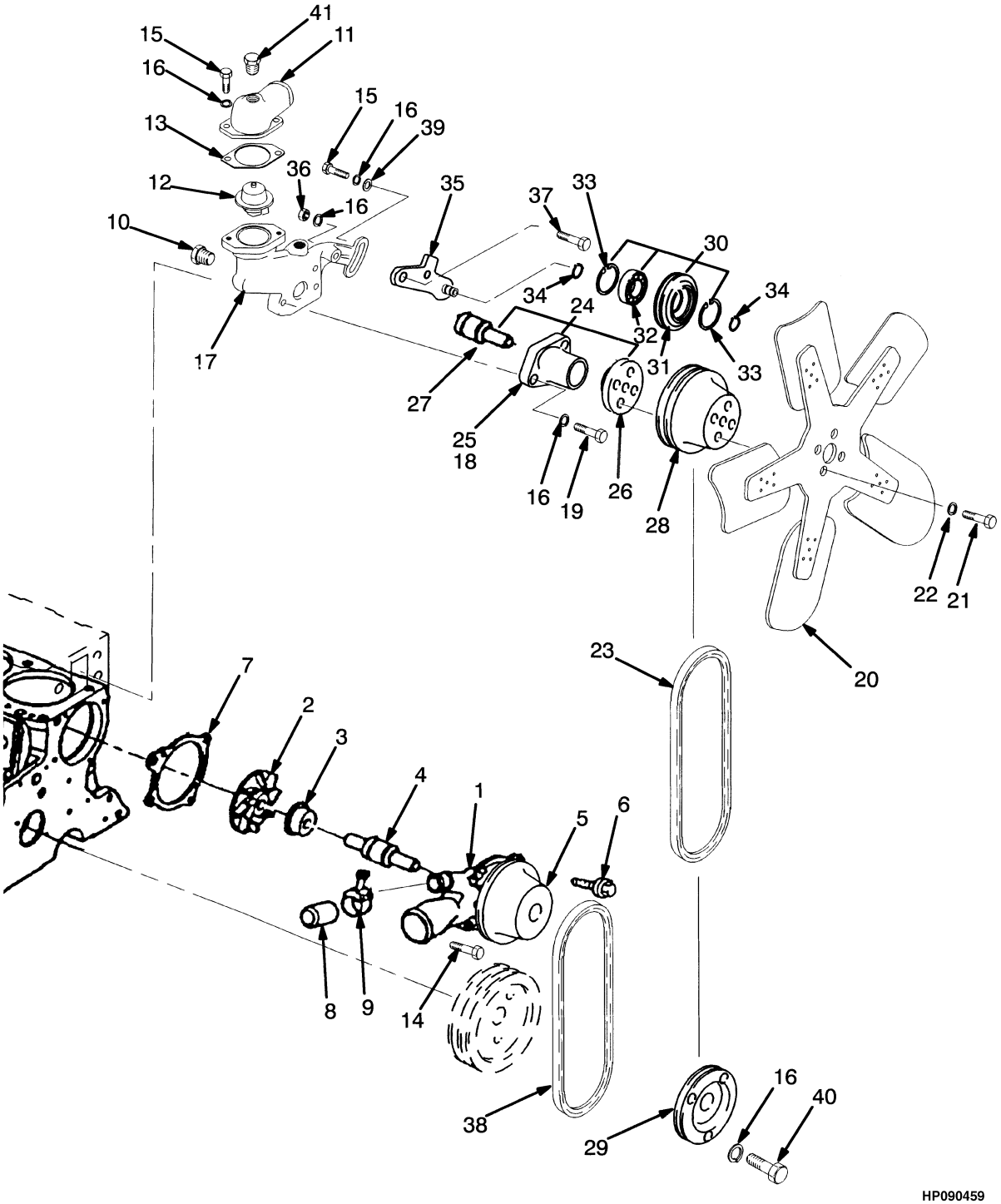

©2009 HYSTER COMPANY

COOLING

LPG 3.0L – 1998 THRU 2003 SERIES WITH V-BELT

KEY:
A: 8RS 1998 Series Engine
B: 9RS 1999 Series Engine
C: 0RS 2000 Series Engine
D: 1RS 2001 Series Engine
E: 2RS 2002 Series Engine

ITEM	PART NO.	DESCRIPTION	QTY A	B	C	D	E
	1453580	Engine Assy-Gas (3.0L 8RS 1998 Series Engine) (With V-Belts)	1	..	..	..	..
	1459493	Engine Assy-Lpg (3.0L 9RS 1999 Series Engine) (With V-Belts)	..	1	..	..	..
	1465390	Engine Assy-Lpg (3.0L 0RS 2000 Series Engine) (With V-Belts)	..	..	1	..	..
	1484444	Engine Assy-Gas (3.0L 2001 Series Engine) (With V-Belts)	..	..	..	1	..
	1506841	Engine Assy (Gas and LPG 3.0L 2002 Series Engine) (With V-Belts)	..	..	..	..	1
	a 1524201	Engine Assy-Lpg (3.0L 2003 Series Engine) (With V-Belts)	..	..	..	..	1
1	. . . . .	Water Pump	..	1	1	1	1
1	1383997	Water Pump	1	1	1	..	..
1	1498507	Water Pump (☞Figure 2-41)	..	..	..	1	1
1	2053667	Water Pump	..	..	..	..	1
2	. . . . .	Impeller	1	1	1	1	1
3	. . . . .	Seal	1	1	1	1	1
4	. . . . .	Bearing	1	1	1	1	1
5	. . . . .	Pulley	1	1	1	1	1
6	221455	Capscrew	2	2	2	2	2
7	1330456	Gasket	1	1	1	1	1
8	149929	Cap	1	1	1	1	1
9	1335224	Cap	1	1	1	1	1
10	14386	Fitting	1	1	1	1	1
11	1317468	Water Outlet	1	1	1	1	1
12	1450696	Thermostat (180° F)	1	1	1	1	1
13	1330725	Gasket	..	1	1	1	1
14	18508	Capscrew	2	2	2	2	2
15	16805	Capscrew	3	3	3	3	3
16	15156	Lockwasher	10	10	10	10	10
17	1371582	Thermostat Housing	1	1	1	1	1
18	264159	Adhesive	AR	AR	AR	AR	AR
19	18538	Capscrew	3	3	3	3	3
20	1458162	Fan (Pusher)	1	1	1	1	1
21	16825	Capscrew	4	4	4	4	4
22	15155	Lockwasher	4	4	4	4	4
23	1526079	V-Belt	1	1	1	1	1
24	1458164	Fan Drive (Fan)	1	1	1	1	1
24	1456071	Drive Gear (Fan)	1	1	1	1	1
25	. . . . .	Housing	1	1	1	1	1
26	1360215	Hub	1	1	1	1	1

©2009 HYSTER COMPANY

COOLING

LPG 3.0L – 1998 THRU 2003 SERIES WITH V-BELT

KEY:
A: 8RS 1998 Series Engine
B: 9RS 1999 Series Engine
C: 0RS 2000 Series Engine
D: 1RS 2001 Series Engine
E: 2RS 2002 Series Engine

ITEM	PART NO.	DESCRIPTION	QTY A	B	C	D	E
27	1458166	Bearing	1	1	1	1	1
28	1458163	Fan Pulley	1	1	1	1	1
29	1375196	Crankshaft Pulley	1	1	1	1	1
30	1359103	Idler Pulley	1	1	1	1	1
31	1359102	Pulley	1	1	1	1	1
32	1479128	Ball Bearing	1	1	1	1	1
33	12928	Snap Ring	2	2	2	2	2
34	54123	Snap Ring	2	2	2	2	2
35	1359100	Bracket	1	1	1	1	1
36	15056	Nut	1	1	1	1	1
37	16379	Capscrew	1	1	1	1	1
38	1526078	V-Belt (Water Pump and Alternator)	1	1	1	1	1
39	296421	Washer	1	1	1	1	1
40	16814	Capscrew	3	3	3	3	3
41	14387	Fitting	1	1	1	1	1
	1498507	Water Pump	..	1	1	1	1

FOOTNOTES:

a → S/N H177B43851A

©2009 HYSTER COMPANY

NOTES

©2009 HYSTER COMPANY

COOLING (FIGURE 2-41)

LPG 3,0L — 2003 THRU 2005 SERIES WITH SERPENTINE BELT

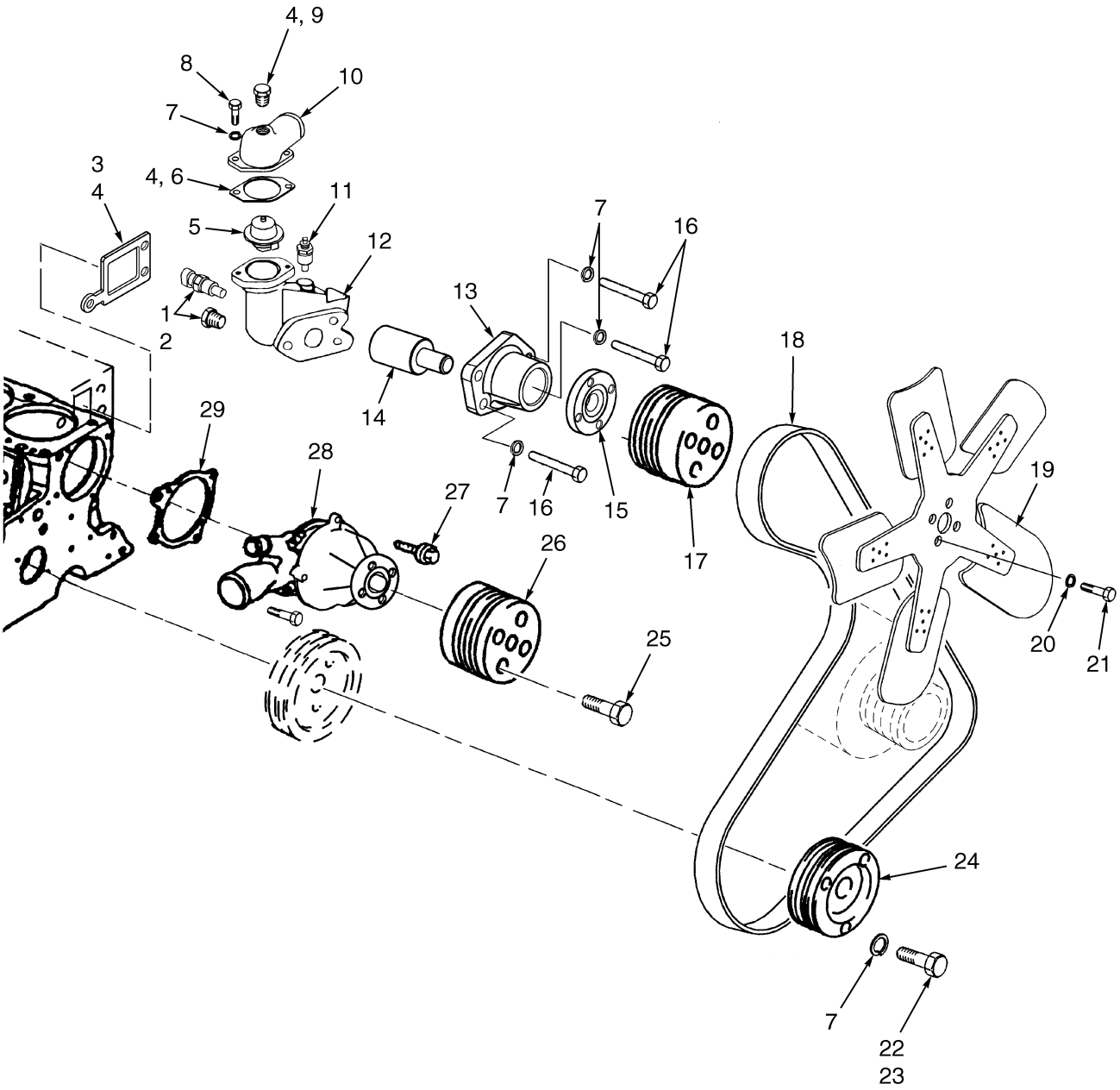

BP060008

©2009 HYSTER COMPANY

COOLING

LPG 3,0L – 2003 THRU 2005 SERIES WITH SERPENTINE BELT

ITEM	PART NO.	DESCRIPTION	QTY
	a 1528527	Engine Assy-Lpg (3.0L 2003 Series Engine) (With Serpentine Belt)	1
	b 1538871	Engine Assy-Lpg (3.0L 2004 Series Engine) (With Serpentine Belt)	1
	c 1583928	Engine Assy-Gas and LPG (3.0L 2005 Series Engine) (With Serpentine Belt)	1
1	14386	Fitting	1
1	1314381	Temperature Sender (Optional)	1
2	246108	Sealant	AR
3	1329567	Gasket	1
4	264159	Adhesive	AR
5	1450696	Thermostat	1
6	1330725	Gasket	1
7	15156	Lockwasher	8
8	16805	Capscrew	2
9	14387	Fitting	1
10	1317468	Water Outlet	1
11	1319190	Temperature Sender	1
12	1527353	Thermostat Housing	1
13	1579919	Fan Drive	1
13	1375602	Fan Drive	1
14	1458166	Bearing	1
15	1360215	Hub	1
16	18538	Capscrew	3
17	1579918	Fan Pulley	1
18	2053666	V-Belt (Serpentine)	1
19	1458162	Fan (Pusher)	1
20	15155	Lockwasher	6
21	18499	Capscrew	4
22	221511	Capscrew	3
23	360387	Loctite	AR
24	2043988	Pulley (Serpentine)	1
25	296225	Screw	4
26	1518983	Water Pump Pulley (Water Pump)	1
27	18508	Capscrew	1
28	1559958	Water Pump (3.0L 2004 Series Engine)	1
28	2053667	Water Pump	1
29	1330456	Gasket	1

FOOTNOTES:

a → S/N H177B43851A
b S/N H177B43852A ↔ 1/2005
c 1/2005 →

©2009 HYSTER COMPANY

CAMSHAFT AND OIL SUMP (FIGURE 2-42)

LPG 3,0L ENGINE — 1998 AND 1999 SERIES ENGINE

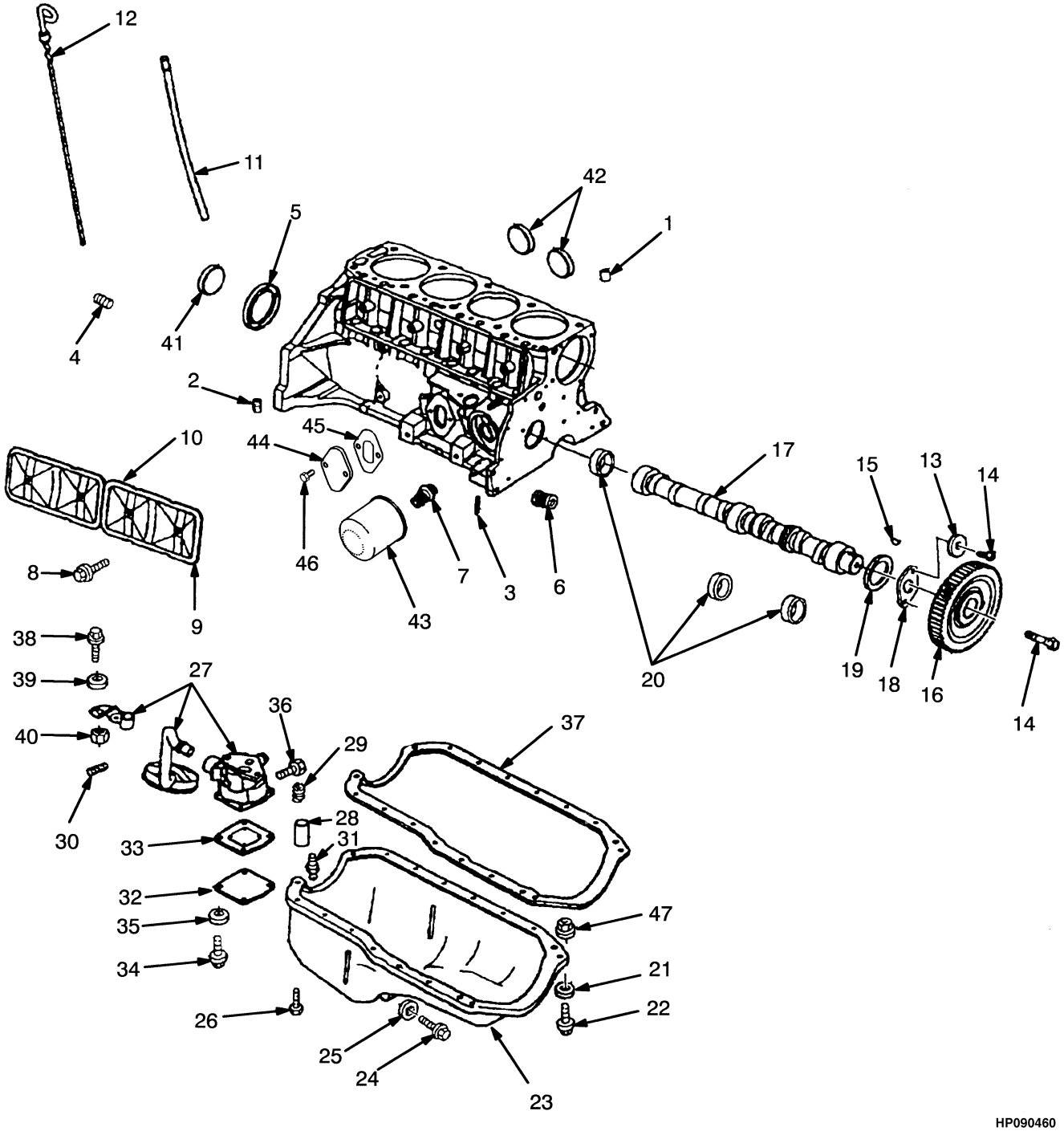

©2009 HYSTER COMPANY

CAMSHAFT AND OIL SUMP

LPG 3,0L ENGINE – 1998 AND 1999 SERIES ENGINE

KEY:
A: 8RS 1998 Series Engine
B: 9RS 1999 Series Engine

ITEM	PART NO.	DESCRIPTION	QTY A	QTY B
	1393580	Engine Assy-Lpg	1	..
	1459493	Engine Assy-Lpg (3.0L 9RS 1999 Series Engine)	..	1
1	1354814	Bearing	1	1
2	1331341	Plug	1	1
3	159977	Pin	8	8
4	1335499	Pin	2	2
5	164017	Plug	1	1
6	1375952	Valve	1	1
7	159942	Fitting	1	1
8	277450	Stud	4	4
9	244933	Cover	1	1
10	358674	Sealant	AR	AR
11	1458089	Dipstick Tube	1	1
12	1335222	Indicator	1	1
13	15923	Lockwasher	2	2
14	133469	Capscrew	3	3
15	7882	Woodruff Key	1	1
16	149898	Gear	1	1
17	1362070	Camshaft	1	1
18	1356838	Bearing	1	1
19	1324006	Ring	1	1
20	149819	Bearing	3	3
21	15154	Lockwasher	14	14
22	1376876	Bolt	14	14
23	1360759	Engine Oil Pan	1	1
24	308624	Screw	1	1
25	388305	Gasket	1	1
26	16374	Capscrew	2	2
27	1312813	Pump	1	1
28	145176	Valve	1	1
29	145177	Spring	1	1
30	1330453	Pin	1	1
31	177563	Plug	1	1
32	149846	Cover	1	1
33	149847	Gasket	1	1
34	16709	Screw	4	4
35	15154	Lockwasher	4	4
36	221453	Capscrew	3	3
37	1330452	Gasket	1	1
38	221420	Capscrew	1	1
39	388316	Washer	1	1
40	145641	Locknut (Prevailing Torque)	1	1
41	169719	Plug	1	1
42	169718	Plug	2	2
43	127644	Oil Filter	1	1

©2009 HYSTER COMPANY

CAMSHAFT AND OIL SUMP

LPG 3,0L ENGINE – 1998 AND 1999 SERIES ENGINE

KEY:
A: 8RS 1998 Series Engine
B: 9RS 1999 Series Engine

ITEM	PART NO.	DESCRIPTION	QTY A	QTY B
44	145949	Cover	1	1
45	149934	Gasket	1	1
46	199566	Capscrew	2	2
47	15055	Nut	2	2
	1393427	Block	1	1

©2009 HYSTER COMPANY

NOTES

©2009 HYSTER COMPANY

CAMSHAFT AND OIL SUMP (FIGURE 2-43)

LPG 3,0L ENGINE — 2000 AND 2001 SERIES ENGINE

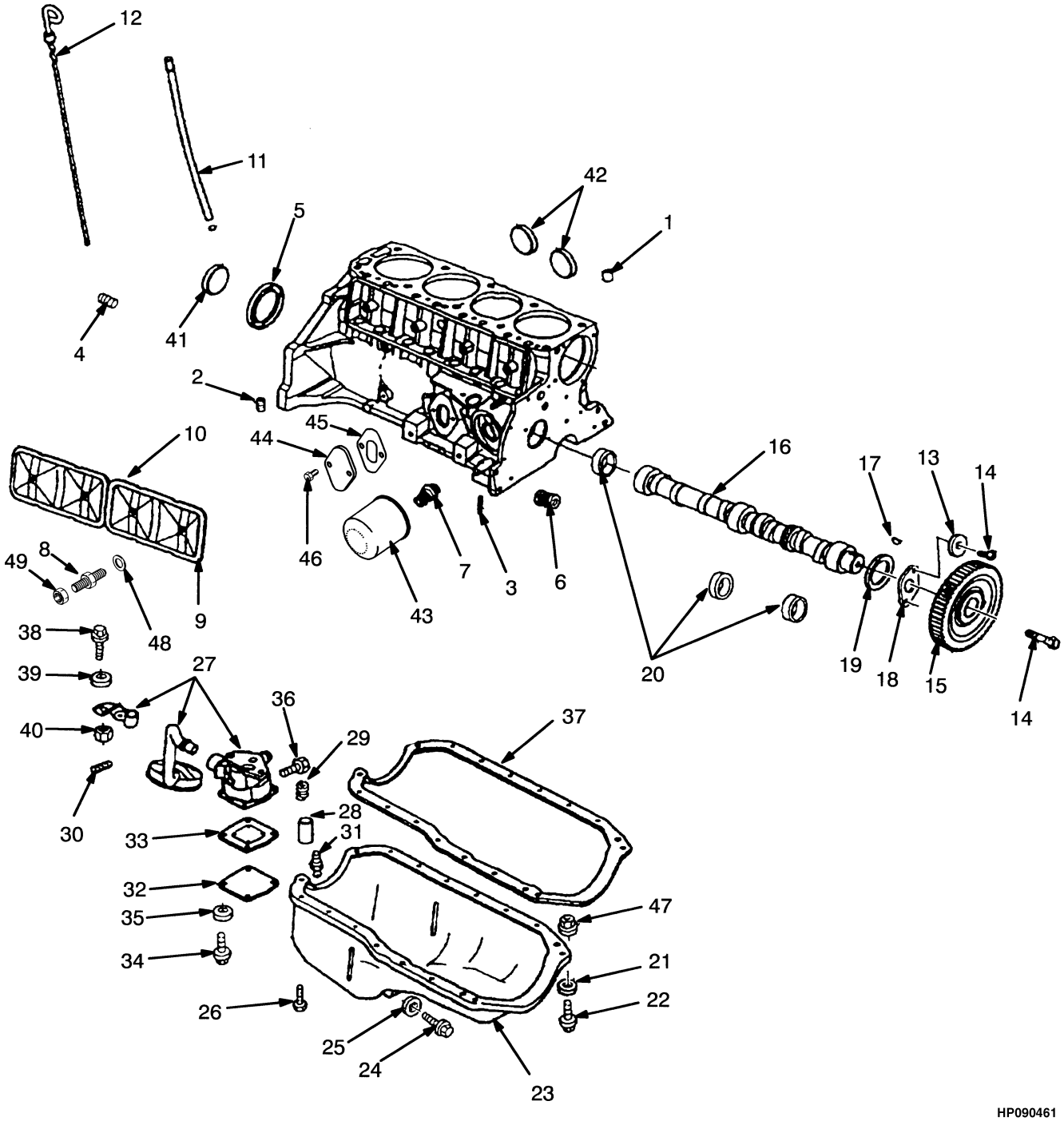

©2009 HYSTER COMPANY

CAMSHAFT AND OIL SUMP

LPG 3,0L ENGINE – 2000 AND 2001 SERIES ENGINE

KEY:
A: 0RS 2000 Series Engine
B: 1RS 2001 Series Engine

ITEM	PART NO.	DESCRIPTION	QTY A	QTY B
	1465390	Engine Assy-Lpg (3.0L 0RS 2000 Series Engine)	1	..
	1484444	Engine Assy-Gas (3.0L 2001 Series Engine)	..	1
1	1354814	Bearing	1	1
2	1331341	Plug	1	1
3	159977	Pin	8	8
4	1335499	Pin	2	2
5	1374313	Plug	1	1
6	1375952	Valve	1	1
7	159942	Fitting	1	1
8	277450	Stud	4	4
9	244933	Cover	1	..
9	1500885	Cover	1	1
10	358674	Sealant	AR	AR
11	1458089	Dipstick Tube	1	1
12	1335222	Indicator	1	1
13	15923	Lockwasher	2	2
14	133469	Capscrew	3	3
15	149898	Gear	1	1
16	1333484	Camshaft	1	1
17	7882	Woodruff Key	2	2
18	1356838	Bearing	1	1
19	1324006	Ring	1	1
20	149819	Bearing	3	3
21	15154	Lockwasher	AR	AR
22	1374108	Bolt	AR	AR
23	1360759	Engine Oil Pan	1	1
24	308624	Screw	1	1
25	388305	Gasket	1	1
26	16378	Capscrew	2	2
27	1312813	Pump	1	1
28	145176	Valve	1	1
29	145177	Spring	1	1
30	1330453	Pin	1	1
31	177563	Plug	1	1
32	149846	Cover	1	1
33	149847	Gasket	1	1
34	16709	Screw	4	4
35	15154	Lockwasher	4	4
36	221453	Capscrew	3	3
37	1330452	Gasket	1	1
38	221420	Capscrew	1	1
39	388316	Washer	1	1
40	145641	Locknut (Prevailing Torque)	1	1
41	159972	Plug	1	1
42	169718	Plug	2	2

©2009 HYSTER COMPANY

CAMSHAFT AND OIL SUMP

LPG 3,0L ENGINE – 2000 AND 2001 SERIES ENGINE

KEY:
A: 0RS 2000 Series Engine
B: 1RS 2001 Series Engine

ITEM	PART NO.	DESCRIPTION	QTY A	QTY B
43	127644	Oil Filter	1	1
44	145949	Cover	1	1
45	149934	Gasket	1	1
46	199566	Capscrew	2	2
47	375584	Nut	2	2
48	1467580	Washer	3	3
49	1458091	Nut	1	1
	1393427	Block	1	1

©2009 HYSTER COMPANY

NOTES

©2009 HYSTER COMPANY

CAMSHAFT AND OIL SUMP (FIGURE 2-44)

LPG 3,0L — 2002-2005 SERIES ENGINE

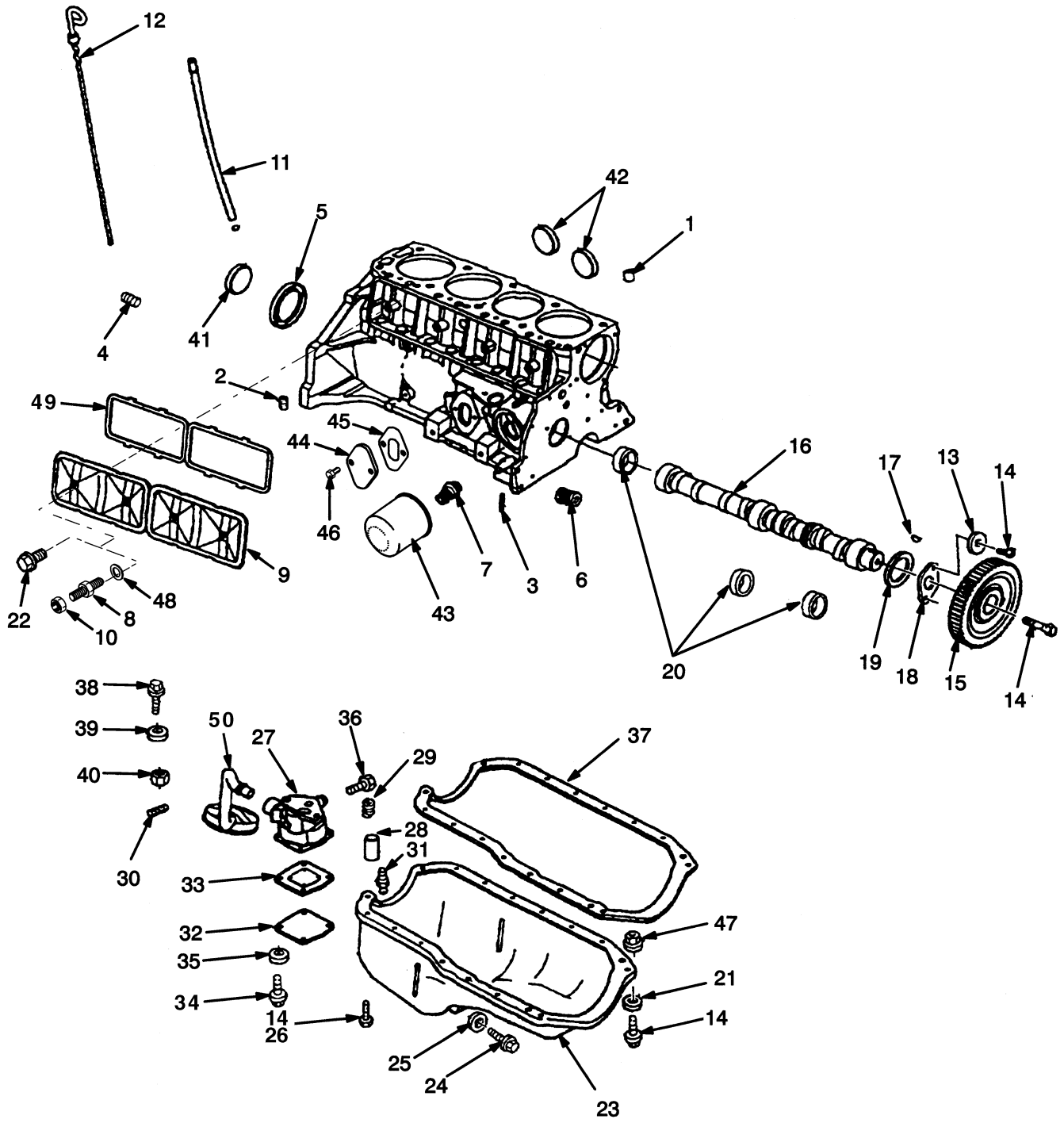

HP090713

©2009 HYSTER COMPANY

CAMSHAFT AND OIL SUMP
LPG 3,0L – 2002-2005 SERIES ENGINE

ITEM	PART NO.	DESCRIPTION	QTY
	1506841	Engine Assy (Gas and LPG 3.0L 2002 Series Engine)	1
	1524201	Engine Assy-Lpg (3.0L 2003 Series Engine)	1
	a 1528527	Engine Assy-Lpg (3.0L 2003 Series Engine) (With Serpentine Belt)	1
	b 1538871	Engine Assy-Lpg (3.0L 2004 Series Engine) (With Serpentine Belt)	1
	c 1583928	Engine Assy-Gas and LPG (3.0L 2005 Series Engine) (With Serpentine Belt)	1
1	1354814	Bearing	1
2	1331341	Plug	1
3	159977	Pin	8
4	1335499	Pin	2
5	1374313	Plug	1
6	1375952	Valve	1
7	159942	Fitting	1
8	277450	Stud	1
9	1500885	Cover	1
10	1458091	Nut	1
11	1458089	Dipstick Tube	1
12	1335222	Indicator	1
13	15923	Lockwasher	2
14	1374108	Bolt	19
15	149898	Gear	1
16	1362070	Camshaft	1
17	7882	Woodruff Key	2
18	1356838	Bearing	1
19	1324006	Ring	1
20	149819	Bearing	3
21	15154	Lockwasher	2
22	149976	Bolt	4
23	1360759	Engine Oil Pan	1
24	308624	Screw	1
25	388305	Gasket	1
26	16378	Capscrew	2
27	1312813	Pump	1
28	145176	Valve	1
29	145177	Spring	1
30	1330453	Pin	1
31	177563	Plug	1
32	149846	Cover	1
33	149847	Gasket	1
34	16709	Screw	4
35	15154	Lockwasher	4
36	221453	Capscrew	3
37	1330452	Gasket	1
38	221420	Capscrew	1
39	388316	Washer	1
40	145641	Locknut (Prevailing Torque)	1
41	159972	Plug	1
42	159971	Plug	2
43	127644	Oil Filter	1
44	145949	Cover	1

©2009 HYSTER COMPANY

CAMSHAFT AND OIL SUMP

LPG 3,0L – 2002-2005 SERIES ENGINE

ITEM	PART NO.	DESCRIPTION	QTY
45	149934	Gasket	1
46	199566	Capscrew	2
47	1360178	Nut	2
48	1467580	Washer	3
49	358674	Sealant	AR
50	253991	Tube Assy	1
	1393427	Block	1

FOOTNOTES:

a → S/N H177B43851A
b S/N H177B43852A ↔ 1/2005
c 1/2005 →

©2009 HYSTER COMPANY

NOTES

©2009 HYSTER COMPANY

CYLINDER BLOCK (FIGURE 2-45)

DIESEL — 2,6L ENGINE

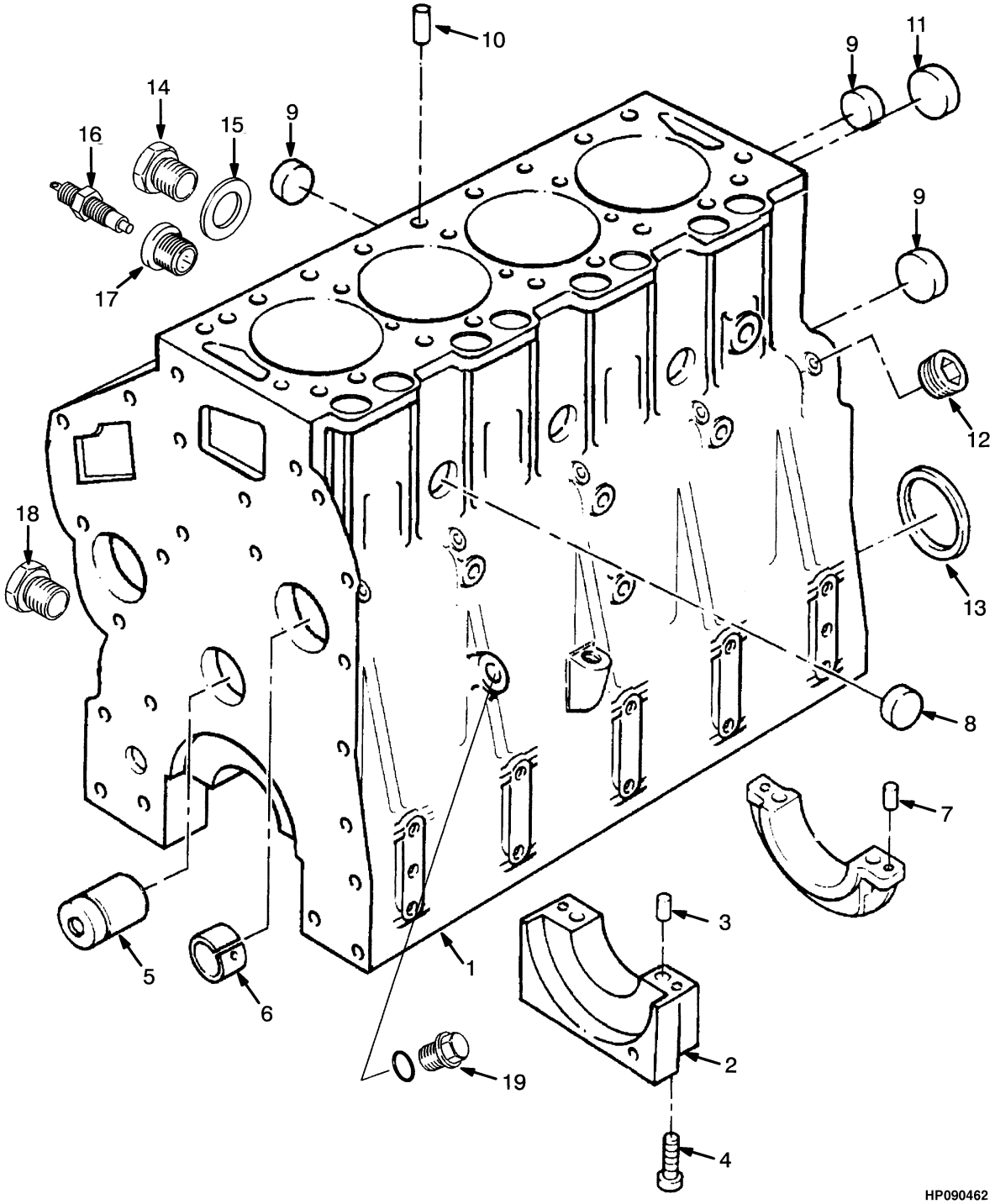

©2009 HYSTER COMPANY

CYLINDER BLOCK
DIESEL – 2,6L ENGINE

ITEM	PART NO.	DESCRIPTION	QTY
	bc 1453348	Engine Assy	1
	ac 1455381	Engine Assy	1
	bd 1497828	Engine Assy-Diesel	1
	ae 1497829	Engine Assy-Diesel	1
	bf 1555993	Engine Assy-Diesel	1
	ag 1555994	Engine Assy-Diesel	1
1	. . . . .	Cylinder Block	1
2	. . . . .	Cap	1
3	1457409	Seal	2
4	1457410	Screw	10
5	1457413	Shaft	1
6	1457414	Bushing	1
7	1457415	Seal	4
8	1457416	Plug	3
9	1388387	Plug	6
10	1457446	Dowel	2
11	982155	Plug	10
12	385531	Plug	1
13	1457447	Seal	1
14	349378	Plug	1
15	361338	Washer	1
16	842863	Switch (Oil Pressure)	1
17	1457911	Adapter	1
18	245800	Plug	1
19	1377908	Plug	1
	1457408	Kit-Cylinder Block	1

FOOTNOTES:

a Hydrostatic Transmission
b Powershift Transmission
c → S/N H177B29209Y
d S/N H177B29210Y ↔ S/N H177B47766B
e S/N H177B29210Y ↔ S/N H177B48215B
f S/N H177B47767B →
g S/N H177B48216B →

©2009 HYSTER COMPANY

CYLINDER HEAD (FIGURE 2-46)

DIESEL — 2,6L ENGINE

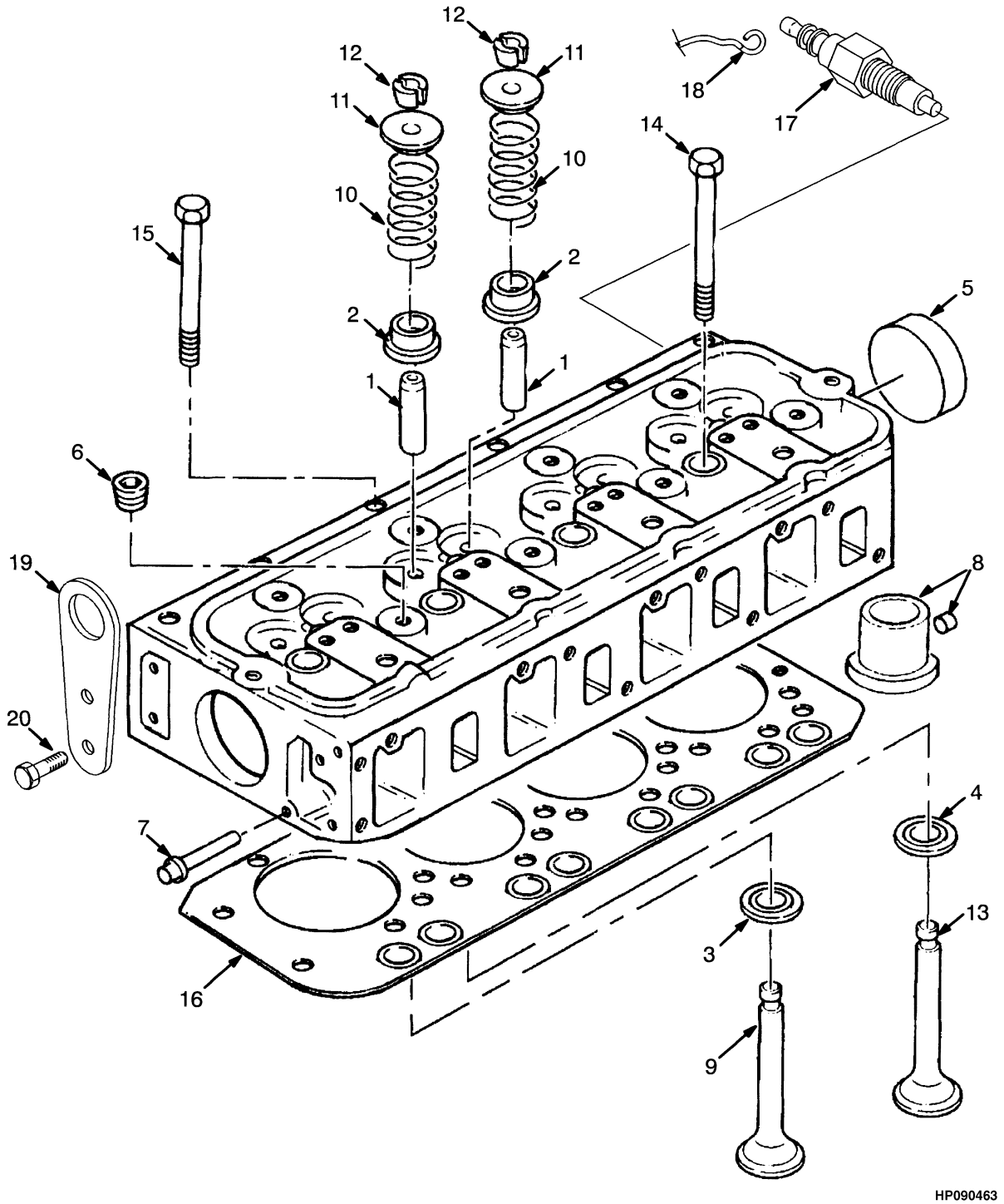

©2009 HYSTER COMPANY

CYLINDER HEAD
DIESEL – 2,6L ENGINE

ITEM	PART NO.	DESCRIPTION	QTY
	bc 1497828	Engine Assy-Diesel	1
	ad 1497829	Engine Assy-Diesel	1
	bf 1555993	Engine Assy-Diesel	1
	ag 1555994	Engine Assy-Diesel	1
	. . . . .	Cylinder Head	1
1	1457494	Guide	8
2	1457495	Seal	8
3	1457496	Insert	4
4	1457497	Insert	4
5	1388387	Plug	2
6	15962	Fitting	4
7	365854	Plug	1
8	1457498	Plug	4
9	1457499	Exhaust Valve (Exhaust)	4
10	1457500	Spring	8
11	1457501	Cap	8
12	1457502	Cotter Pin	16
13	1457503	Inlet Valve (Inlet)	4
14	1457504	Screw	14
15	1457505	Screw	4
16	1457506	Cylinder Head Gasket	1
17	**e** 1530956	Glow Plug	4
17	**h** 1461720	Glow Plug	4
18	1461721	Cable	4
19	1457905	Plate	2
20	1307881	Screw	4
	1457493	Kit-Cylinder Head	1
	1493165	Kit-Gasket	1

FOOTNOTES:

a Hydrostatic
b Powershift
c → S/N H177B47766B
d → S/N H177B48215B
e → U811075
f S/N H177B47767B →
g S/N H177B48216B →
h U811076 →

©2009 HYSTER COMPANY

VALVE COVER (FIGURE 2-47)
DIESEL — 2,6L ENGINE

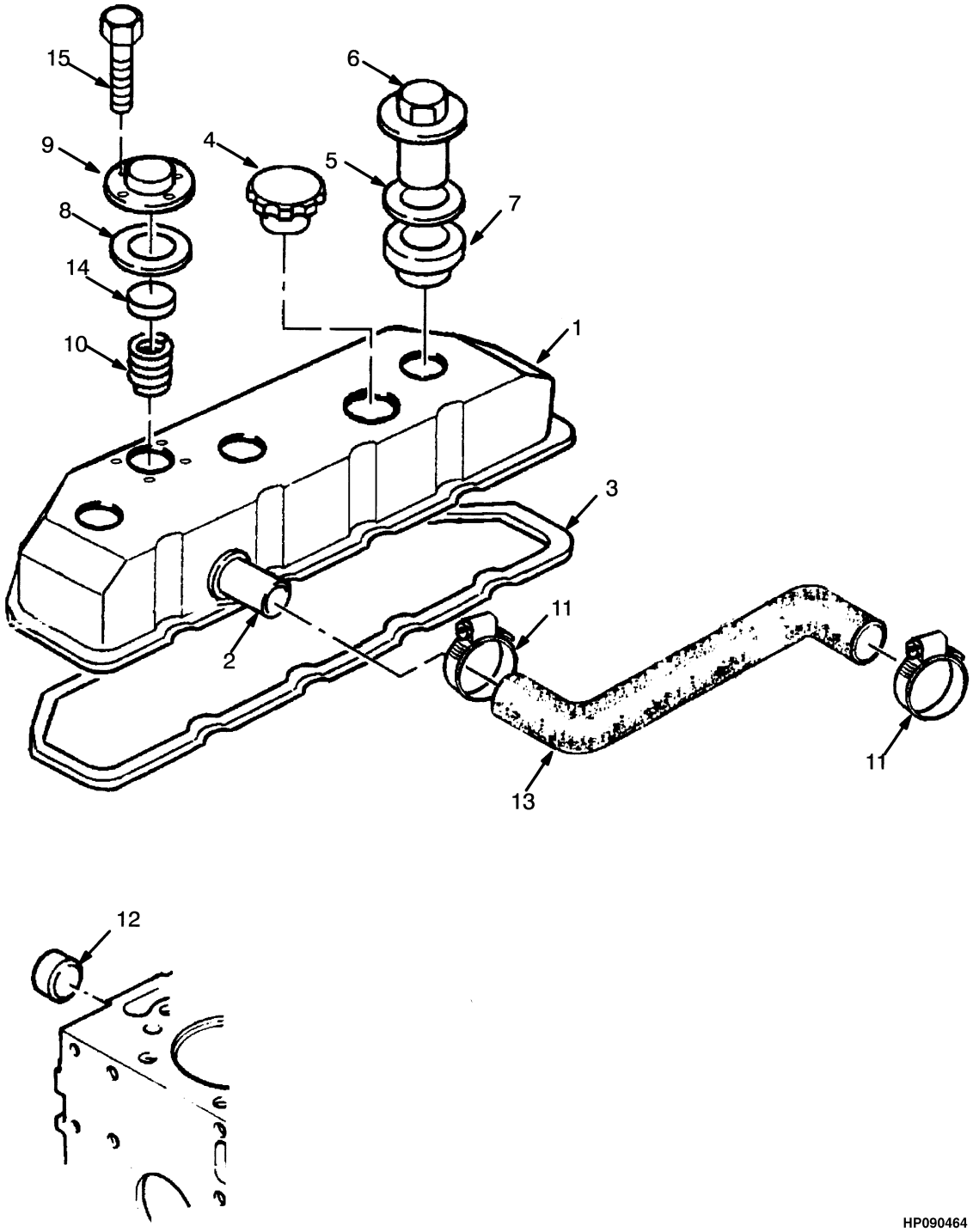

©2009 HYSTER COMPANY

VALVE COVER
DIESEL – 2,6L ENGINE

ITEM	PART NO.	DESCRIPTION	QTY
	bc 1497828	Engine Assy-Diesel	1
	ad 1497829	Engine Assy-Diesel	1
	be 1555993	Engine Assy-Diesel	1
	af 1555994	Engine Assy-Diesel	1
1	1457811	Engine Cover	1
2	. . . . .	Pipe	1
3	1457819	Gasket	1
4	1457821	Cap	1
5	15125	Washer	2
6	1457820	Nut	2
7	1380245	Seal	2
8	1457823	Seal	1
9	1457822	Cover	1
10	1457825	Spring	1
11	130845	Clamp	2
12	15304	Fitting	2
13	1457827	Hose Assy	1
14	1457824	Plate	1
15	1568397	Screw	4

FOOTNOTES:

a Hydrostatic
b Powershift
c → S/N H177B47766B
d → S/N H177B48215B
e S/N H177B47767B →
f S/N H177B48216B →

©2009 HYSTER COMPANY

CRANKSHAFT AND PISTON (FIGURE 2-48)

DIESEL — 2,6L ENGINE

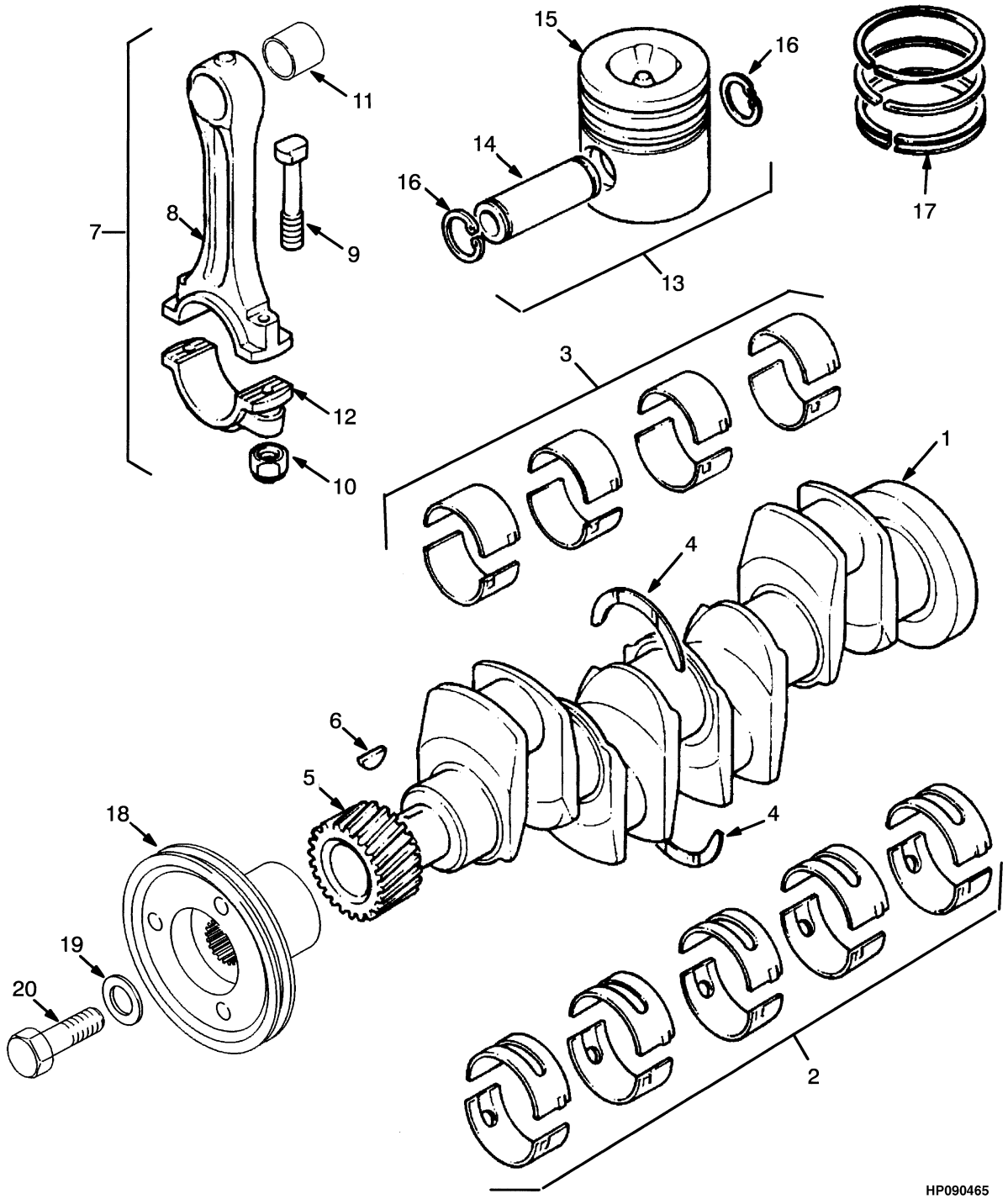

©2009 HYSTER COMPANY

CRANKSHAFT AND PISTON
DIESEL – 2,6L ENGINE

ITEM	PART NO.	DESCRIPTION	QTY
	bc 1497828	Engine Assy-Diesel	1
	ad 1497829	Engine Assy-Diesel	1
	be 1555993	Engine Assy-Diesel	1
	af 1555994	Engine Assy-Diesel	1
1	. . . . .	Crankshaft	1
2	1457449	Kit-Crankshaft Bearing (Main)	1
2	1457450	Kit-Crankshaft Bearing (0,25 mm)	1
2	1457451	Kit-Crankshaft Bearing (0,50 mm)	1
2	1457452	Kit-Crankshaft Bearing (0,75 mm)	1
3	1457453	Piston Rod Bearing	1
3	1457454	Piston Rod Bearing (0,25 mm)	1
3	1457478	Piston Rod Bearing (0,50 mm)	1
3	1457479	Piston Rod Bearing (0,75 mm)	1
4	1457480	Thrust Washer	2
4	1457481	Thrust Washer (0,2 mm)	1
5	1457482	Gear	1
6	99610	Key	1
7	. . . . .	Rod Assembly	4
8	. . . . .	Rod	1
9	1457484	Screw	2
10	1457485	Nut	2
11	1457486	Bushing	1
12	. . . . .	Cap	1
13	1457487	Kit-Piston	4
13	1457488	Kit-Piston (0,50 mm)	4
14	. . . . .	Pin	1
15	. . . . .	Piston	1
16	1457489	Clip	2
17	1457490	Kit-Piston Ring	4
17	1457491	Kit-Piston Ring (O/S)	4
18	1457844	Crankshaft Pulley	1
19	1457846	Washer	1
20	1457845	Screw	1
	1457448	Kit-Crankshaft	1
	1460210	Kit-Piston Rod (Grades A and B)	1
	1460211	Kit-Piston Rod (Grades C and D)	1
	1460212	Kit-Piston Rod (Grades E and F)	1

FOOTNOTES:

a Hydrostatic
b Powershift
c → S/N H177B47766B
d → S/N H177B48215B
e S/N H177B47767B →
f S/N H177B48216B →

©2009 HYSTER COMPANY

ROCKER ARM SHAFT (FIGURE 2-49)

DIESEL — 2,6L ENGINE

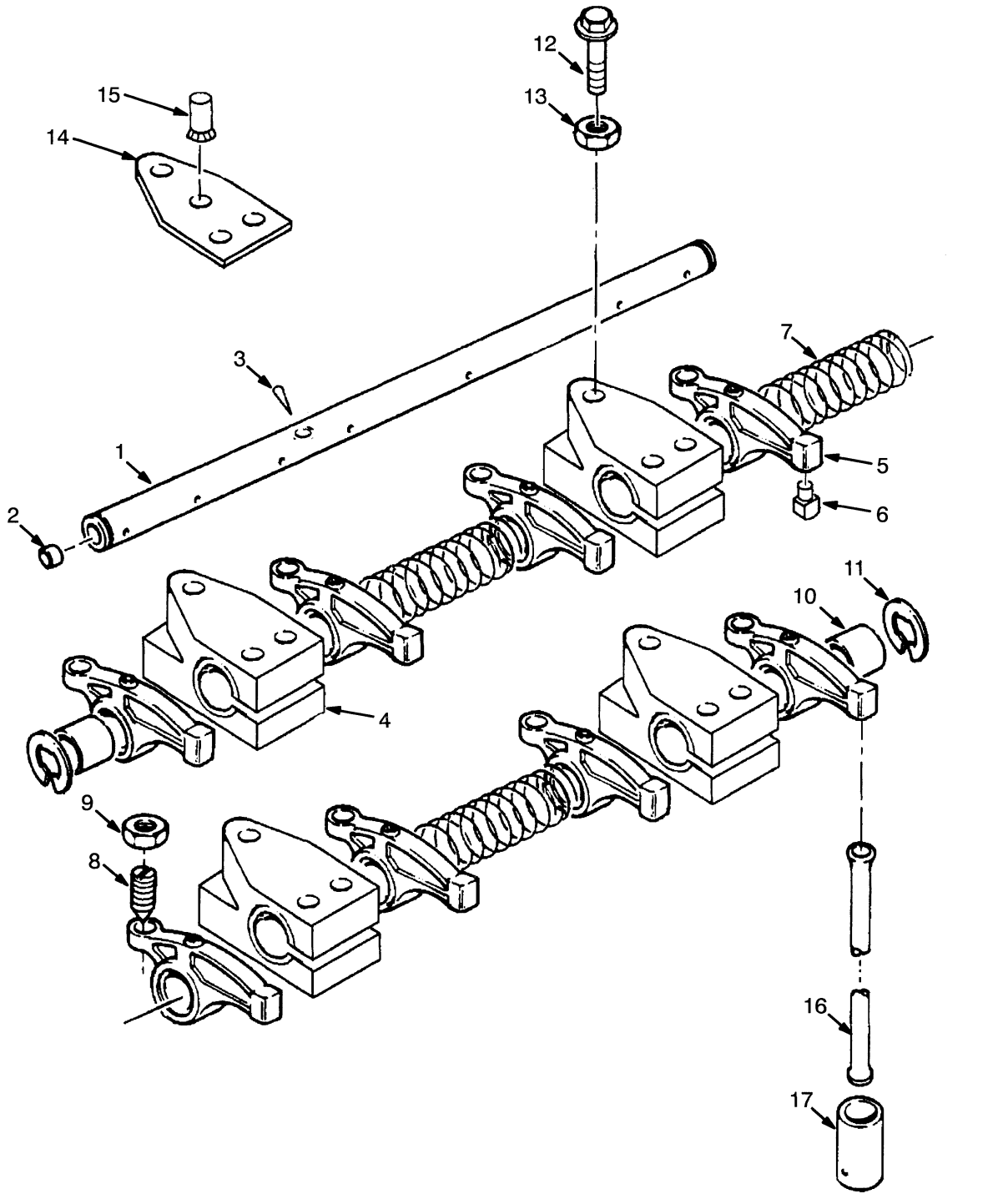

©2009 HYSTER COMPANY

ROCKER ARM SHAFT
DIESEL – 2,6L ENGINE

ITEM	PART NO.	DESCRIPTION	QTY
	1457508	Rocker Arm	1
1	1457509	Rocker Shaft	1
2	158017	Plug	2
3	1457510	Pin	1
4	1457511	Bracket	4
5	1457512	Rocker Arm	8
6	. . . . .	Pad	1
7	1457513	Spring	3
8	1457514	Screw	8
9	1307887	Nut	8
10	1457515	Spacer	2
11	385599	Snap Ring	2
12	1457517	Screw	8
13	1306359	Nut	4
14	1457518	Plate	3
15	. . . . .	Stud	1
16	1457520	Push Rod	8
17	1457521	Tappet	8

©2009 HYSTER COMPANY

CAMSHAFT AND TIMING GEAR (FIGURE 2-50)

DIESEL — 2,6L ENGINE

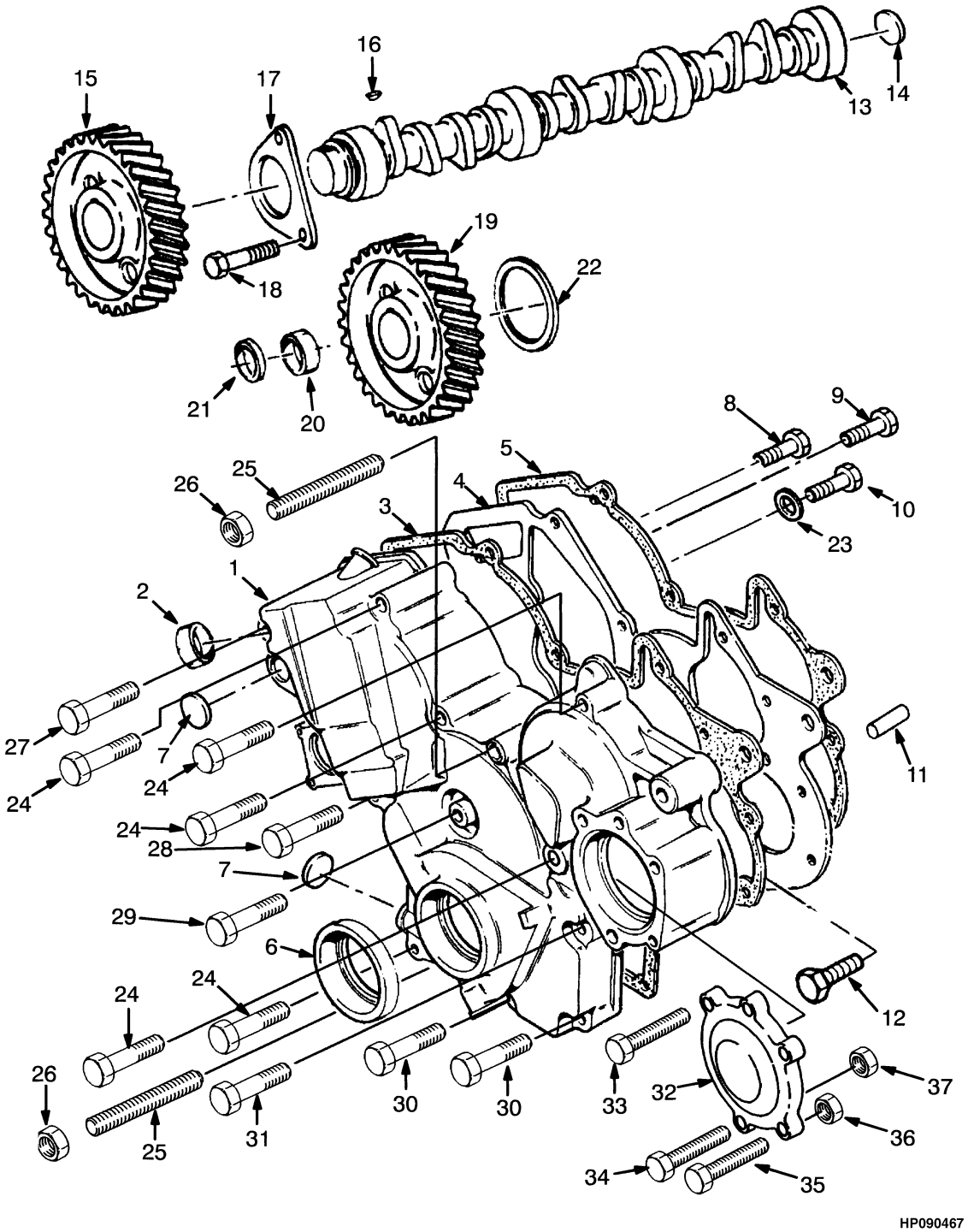

©2009 HYSTER COMPANY

CAMSHAFT AND TIMING GEAR
DIESEL – 2,6L ENGINE

ITEM	PART NO.	DESCRIPTION	QTY
	a 1453348	Engine Assy	1
	c 1497828	Engine Assy-Diesel	1
	e 1555993	Engine Assy-Diesel	1
1	**a** 1457646	Kit-Cover	1
1	**d** 1487623	Engine Cover	1
2	1457647	Sleeve	1
3	**ab** 1457648	Gasket	1
3	**df** 1487626	Gasket	1
4	**ab** 1457649	Plate	1
4	**df** 1487625	Plate	1
5	1457650	Gasket	1
6	1457651	Seal	1
7	**ab** 1306182	Plug	2
7	**df** 1487624	Plug	2
8	386459	Screw	1
9	1306362	Screw	3
10	1307909	Screw	1
11	**ab** 1457653	Dowel	2
11	**df** 1494684	Pin	2
12	**ab** 1307881	Screw	4
12	**df** 1507610	Screw	4
13	1457654	Camshaft	1
14	1457655	Plug	1
15	1457656	Gear	1
16	1457657	Woodruff Key	1
17	1457658	Plate	1
18	1382546	Screw	2
19	1457659	Idler Gear	1
20	1457660	Bushing	2
21	1457661	Washer	2
22	1457662	O-Ring	1
23	1315766	Washer	2
24	1306357	Screw	5
25	1307901	Stud	2
26	1306359	Nut	2
27	1457652	Screw	1
28	1307908	Screw	1
29	1306362	Screw	1
30	1307898	Screw	2
31	1318968	Screw	1
32	1457889	Cover	1
33	1307900	Screw	1
34	1318965	Screw	2
35	1308030	Screw	2
36	1307891	Nut	2
37	1306359	Nut	2
	1493166	Kit-Gasket	1

©2009 HYSTER COMPANY

FOOTNOTES:

a → S/N H177B29209Y
b → U831973
c S/N H177B29209Y ↔ S/N H177B47766B
d S/N H177B29210Y →
e S/N H177B47767B →
f U831974 →

©2009 HYSTER COMPANY

NOTES

©2009 HYSTER COMPANY

AUXILIARY DRIVE (FIGURE 2-51)

DIESEL — 2,6L ENGINE

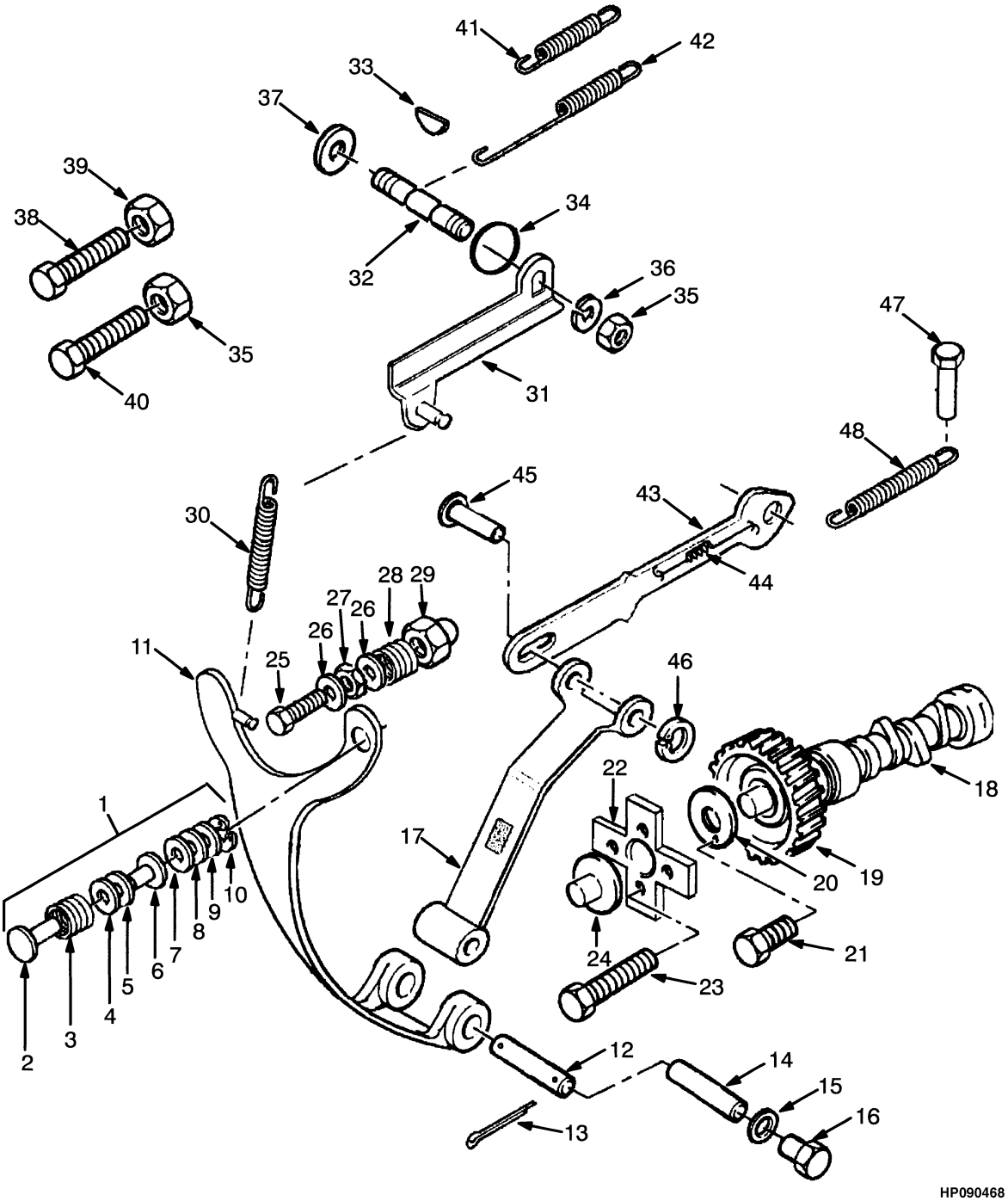

©2009 HYSTER COMPANY

AUXILIARY DRIVE
DIESEL – 2,6L ENGINE

ITEM	PART NO.	DESCRIPTION	QTY
1	1457667	Adjuster	1
2	1457669	Pin	1
3	1457670	Spring	1
4	1457671	Shim (0,102 mm)	1
5	1457672	Shim (1,016 mm)	1
6	1457673	Adapter	1
7	1457674	Shim (0,152 mm)	1
8	1457675	Shim (0,203 mm)	1
9	1457676	Shim (0,508 mm)	1
10	1457677	Snap Ring	1
11	1457678	Arm	1
12	1457679	Pin	1
13	1457680	Pin	2
14	1457681	Pin	1
15	1526612	Washer	1
16	1457683	Screw	1
17	1457684	Arm	1
18	. . . . .	Camshaft (Fuel Pump)	1
19	1457686	Gear Pump	1
20	1457687	Plate	1
21	1307883	Screw	1
22	1457688	Plate	1
23	1457689	Screw	4
24	1457690	Rail	1
25	1457692	Screw	1
26	1457693	Washer	2
27	1457694	Nut	1
28	1457695	Spring	1
29	1457696	Nut	1
30	1488775	Spring	1
31	1457698	Arm	1
32	1545445	Shaft	1
33	28269	Woodruff Key	1
34	1457700	O-Ring	2
35	1354733	Nut	2
36	1457702	Washer	1
37	1457703	Washer	1
38	1457704	Screw	1
39	1354733	Nut	1
40	1457706	Screw	1
41	1457707	Spring (1 7/8 in.)	1
42	1457708	Spring (1 9/16 in.)	1
43	1457709	Link	1
44	1457710	Spring (1 1/2 in.)	1
45	1457711	Pin	1
46	1457677	Snap Ring	1
47	1457713	Pin	1
48	1457714	Spring (1 1/8 in.)	1
49	1457657	Woodruff Key (Not Illustrated)	1

©2009 HYSTER COMPANY

MANIFOLD (FIGURE 2-52)
DIESEL — 2,6L ENGINE

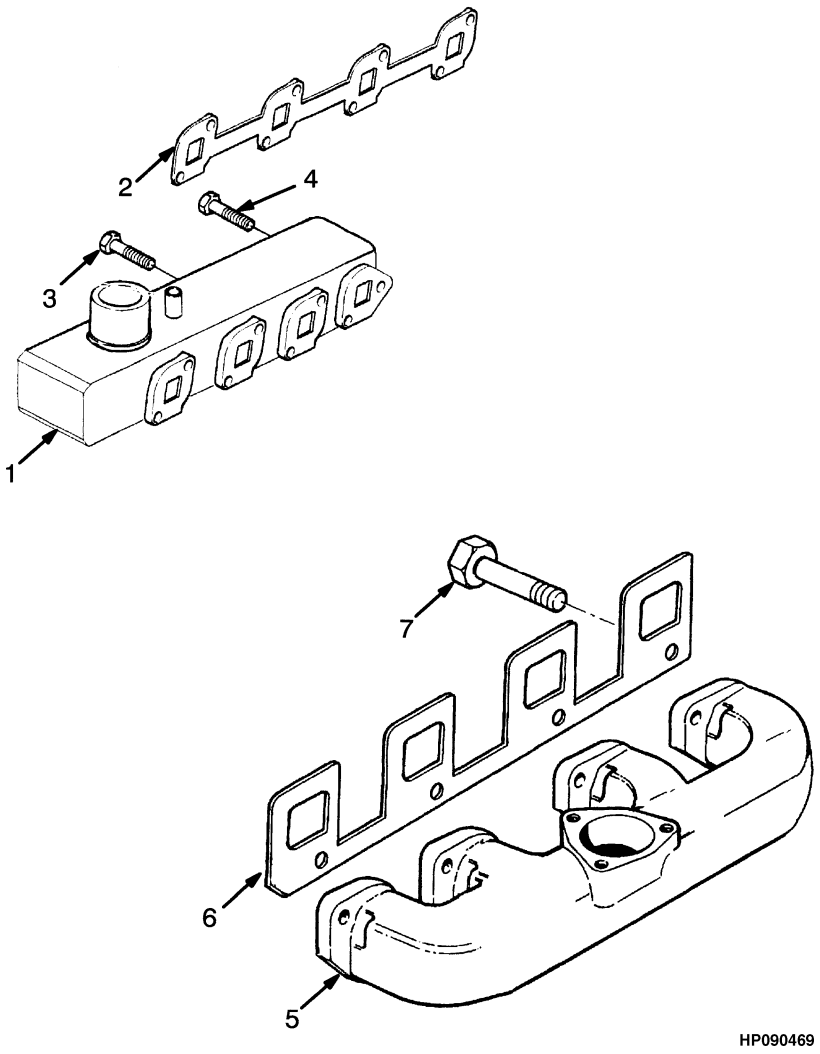

©2009 HYSTER COMPANY

MANIFOLD
DIESEL – 2,6L ENGINE

ITEM	PART NO.	DESCRIPTION	QTY
1	1457891	Manifold	1
2	1457890	Gasket	1
3	1307895	Screw	5
4	1318940	Screw	1
5	1457892	Exhaust Manifold	1
6	1457893	Gasket	1
7	1457894	Screw	8
	1457955	Kit-Gasket (Top)	1

©2009 HYSTER COMPANY

OIL SUMP, PUMP, AND FILTER (FIGURE 2-53)

DIESEL — 2,6L ENGINE

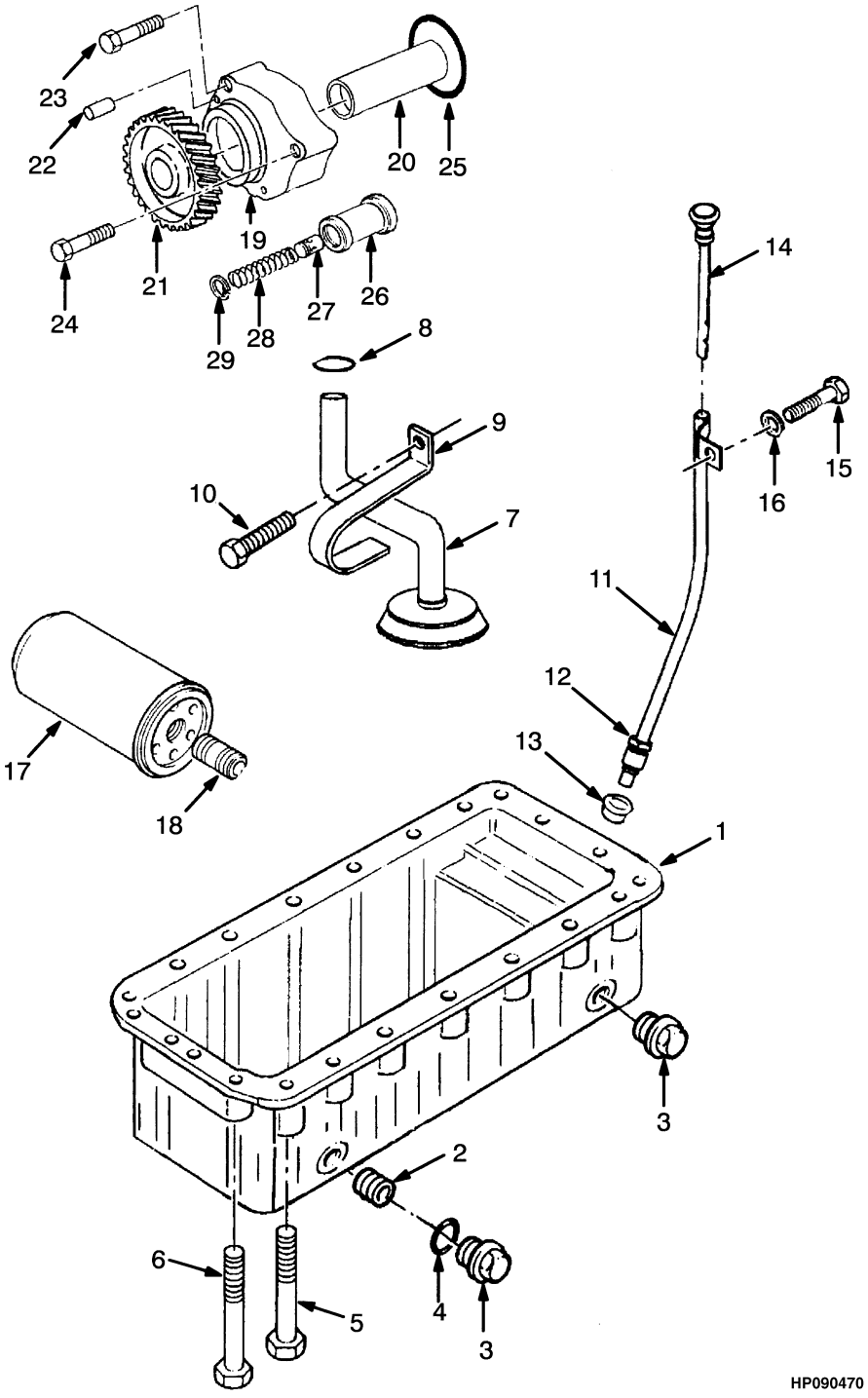

©2009 HYSTER COMPANY

OIL SUMP, PUMP, AND FILTER
DIESEL – 2,6L ENGINE

ITEM	PART NO.	DESCRIPTION	QTY
1	1457812	Oil Pan	1
2	266465	Insert	4
3	377976	Plug	4
4	1306374	O-Ring	4
5	1380261	Screw	2
6	386459	Screw	22
7	1457813	Tube Assy	1
8	1383621	O-Ring	1
9	1457814	Clip	1
10	1457815	Screw	1
11	1457816	Tube Assy	1
12	1307880	Nut	1
13	1306143	Olive	1
14	1457817	Dipstick	1
15	1318940	Screw	1
16	173981	Spacer	1
17	1457828	Oil Filter	1
18	1382954	Fitting	2
19	1457715	Oil Pump	1
19	. . . . .	Body	1
20	. . . . .	Shaft	1
21	1457701	Gear	1
22	1457749	Dowel	2
23	1307875	Screw	2
24	1457750	Screw	1
25	1457751	O-Ring	1
26	1457752	Valve	1
27	1457753	Plunger	1
28	1457754	Spring	1
29	1457755	Snap Ring	1
	1457956	Kit-Gasket (Bottom)	1

©2009 HYSTER COMPANY

FLYWHEEL AND TORQUE CONVERTER (FIGURE 2-54)

DIESEL — 2,6L ENGINE

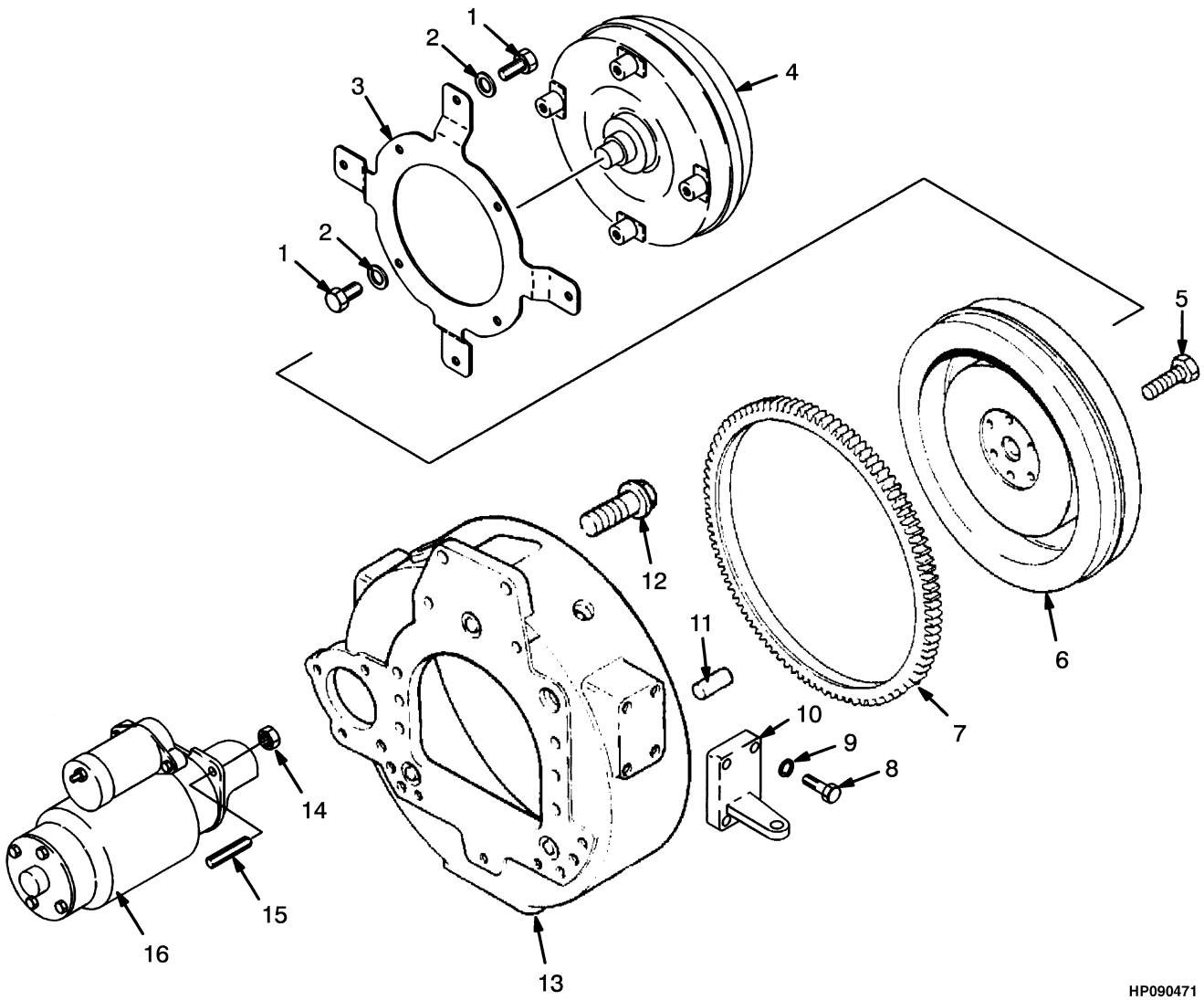

©2009 HYSTER COMPANY

FLYWHEEL AND TORQUE CONVERTER
DIESEL – 2,6L ENGINE

KEY:
A: Powershift Transmission
B: Hydrostatic Transmission

ITEM	PART NO.	DESCRIPTION	QTY A	QTY B
1	15942	Bolt	8	..
2	261379	Washer	8	..
3	**a** 1386785	Flex Plate	1	..
3	**c** 1580813	Flex Plate	1	..
4	**b** 1386795	Torque Converter (No. 3,15)	1	..
4	**d** 1386815	Torque Converter (No. 3,15)	1	..
5	1457808	Screw	8	8
6	1457806	Flywheel	1	..
6	1458673	Flywheel	..	1
7	1457807	Ring Gear	1	1
8	1457909	Screw	8	8
9	1458049	Washer	8	8
10	1457908	Bracket (LH) (RH)	1	1
10	1457910	Bracket (RH) (LH)	1	1
11	1457805	Dowel	2	2
12	1306355	Screw	8	8
13	1457803	Flywheel Housing	1	1
14	1370949	Nut	3	3
15	1457810	Stud	3	3
16	1519632	Starter	1	1

FOOTNOTES:

a → S/N H177B56641C
b → T081B0452523
c S/N H177B56642C →
d T081B0452524 →

©2009 HYSTER COMPANY

FUEL INJECTION (FIGURE 2-55)

DIESEL — 2,6L ENGINE

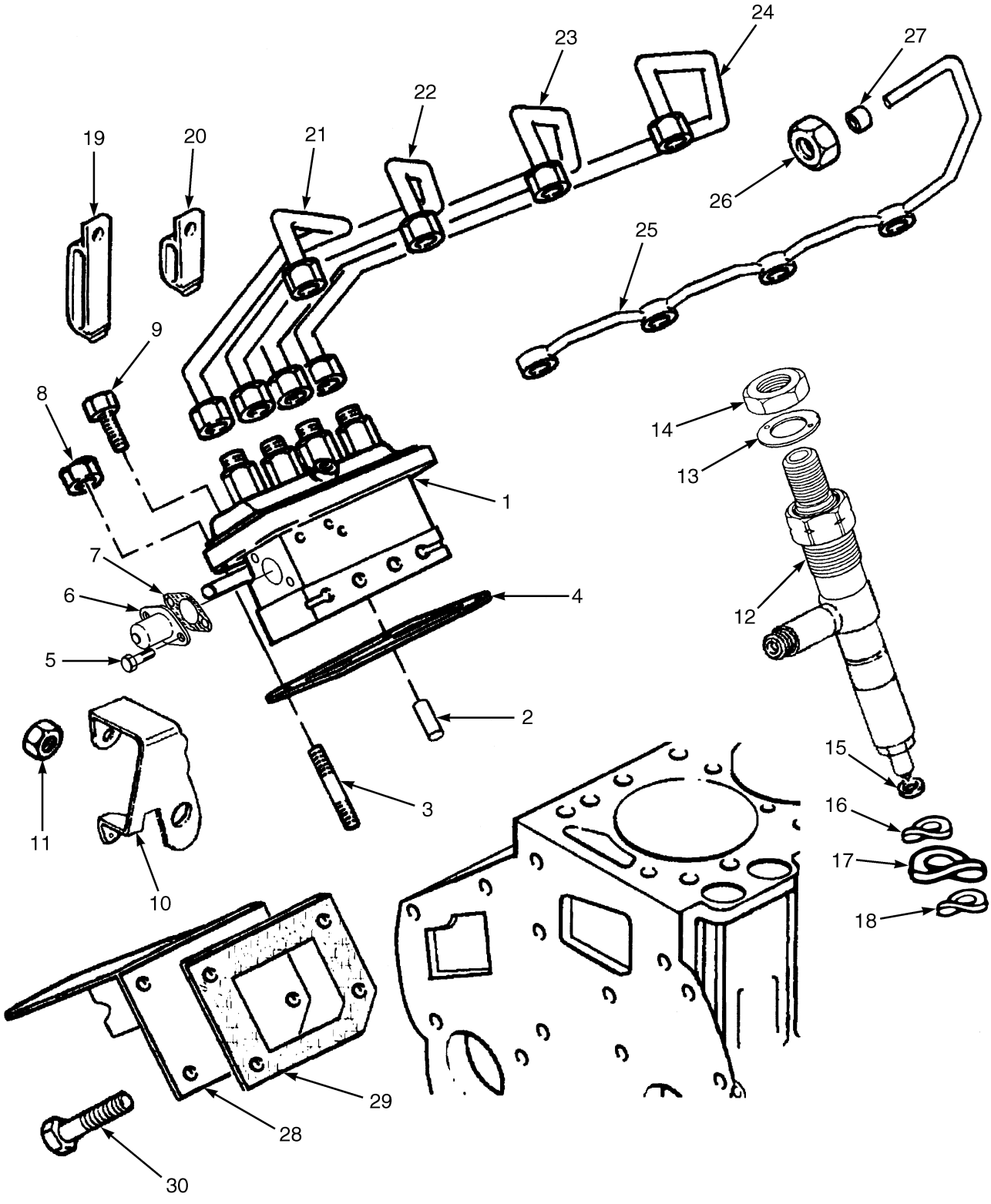

HP090526

©2009 HYSTER COMPANY

FUEL INJECTION
DIESEL – 2,6L ENGINE

ITEM	PART NO.	DESCRIPTION	QTY
	b 1453348	Engine Assy	1
	c 1497828	Engine Assy-Diesel	1
	e 1555993	Engine Assy-Diesel	1
1	1457756	Injection Pump	1
2	1451604	Dowel	2
3	1306033	Stud	2
4	1457759	Shim (0,102 mm)	1
4	**a** 1457760	Shim (0,203 mm)	1
4	**a** 1457761	Shim (0,305 mm)	1
4	**a** 1457762	Shim (0,406 mm)	1
4	**a** 1457763	Shim (0,508 mm)	1
5	1306361	Screw	2
6	**b** 1457906	Solenoid	1
6	**d** 1498114	Solenoid	1
7	1457907	Gasket	1
8	1306359	Nut	2
9	1307894	Screw	4
10	1457773	Lever	1
11	1457774	Nut	1
12	1457765	Atomizer	4
13	1493417	Washer	1
14	1608764	Nut	1
15	1457766	Washer	4
16	1457775	Washer	4
17	1457776	Heat Shield	4
18	1457777	Washer	4
19	1388386	Clip	1
20	1457771	Clip	1
21	1457767	Tube Assy	1
22	1457768	Tube Assy	1
23	1457769	Tube Assy	1
24	1457770	Tube Assy	1
25	1457772	Pipe	1
26	152609	Nut	1
27	152608	Olive	1
28	1460739	Cover	1
29	1457758	Gasket	1
30	1307883	Screw	4
	1493165	Kit-Gasket	1
	1493166	Kit-Gasket	1

FOOTNOTES:

a Optional
b → S/N H177B29209
c S/N H177B29210 ↔ S/N H177B47766
d S/N H177B29210 →
e S/N H177B47767 →

©2009 HYSTER COMPANY

COOLING (FIGURE 2-56)
DIESEL — 2,6L ENGINE

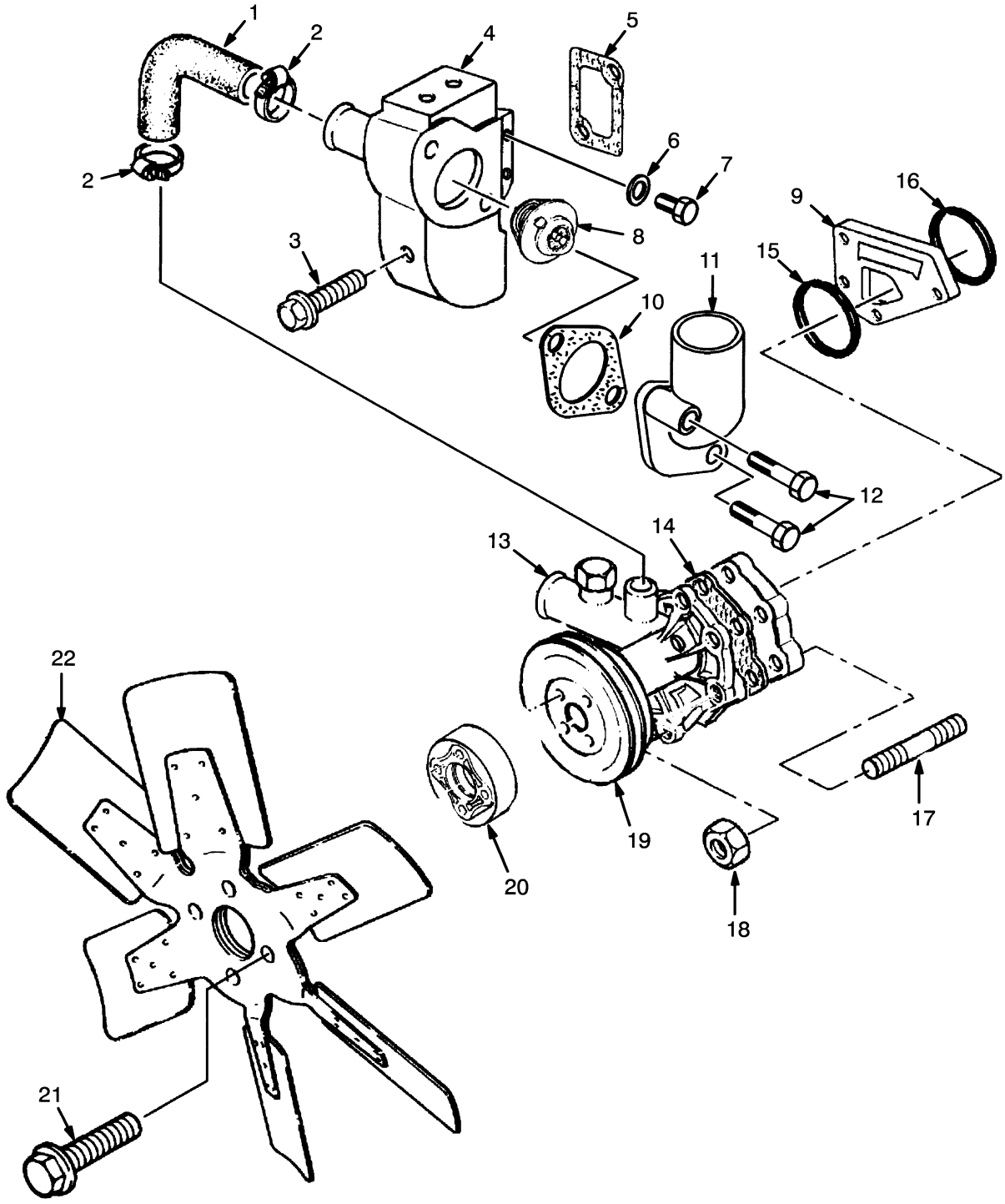

©2009 HYSTER COMPANY

COOLING
DIESEL – 2,6L ENGINE

ITEM	PART NO.	DESCRIPTION	QTY
1	1457861	Hose	1
2	1457862	Clip	2
3	1307881	Screw	1
4	1457863	Housing	1
5	1457864	Gasket	1
6	986475	Washer	1
7	992025	Plug	1
8	301793	Thermostat	1
9	1457858	Spacer	1
10	1457896	Gasket	1
11	158048	Fitting	1
12	1315499	Screw	1
13	1457847	Water Pump	1
14	1457866	Gasket	1
15	1457859	O-Ring	1
16	1457860	O-Ring	1
17	1384400	Stud	4
18	1306359	Nut	4
19	1457857	Pulley	1
20	1457872	Adapter	1
21	1457712	Screw	4
22	1461718	Fan	1
	1457955	Kit-Gasket (Top)	1

©2009 HYSTER COMPANY

NOTES

©2009 HYSTER COMPANY

3 FUEL SYSTEM

SECTION 3
FUEL SYSTEM

DESCRIPTION **PAGE**

AIR FILTER
2,0L ENGINE (→ S/N H177B23393) ... 3-4
2,0L ENGINE (S/N H177B23394 →) ... 3-6
2,6L ENGINE - DIESEL (→ S/N H177B26621) ... 3-68
2,6L ENGINE - DIESEL (S/N HP177B26622 →) ... 3-70
LPG - EPA COMPLIANT 2.0L ... 3-8
AIR FILTER AND BREATHER
3.0L LPG - EPA COMPLIANT ... 3-52
HYDROSTATIC TRANSMISSION (→ S/N H177B26621) ... 3-32
POWERSHIFT (S/N H177B26622 →) ... 3-50
CARBURETOR
2,0L ENGINE - LPG (→ S/N H177B09724) ... 3-24
LPG 2,0L - HYDROSTATIC TRANSMISSION (→ S/N H177B09725) ... 3-26
LPG 2,0L - OPEN LOOP (S/N H177B23394 →) ... 3-28
LPG 2,0L - CLOSED LOOP (S/N H177B30074Y ↔ S/N H177B47507B) ... 3-30
LPG 3,0L (S/N H177B20722 ↔ S/N H177B30073 WITH POWERSHIFT TRANSMISSION) ... 3-60
LPG 3,0L (S/N H177B30074 → WITH POWERSHIFT TRANSMISSION) ... 3-62
LPG 3.0L (→ S/N H177B20721 WITH POWERSHIFT TRANSMISSION) ... 3-58
CONVERTER
LPG (→ S/N H177B01786) ... 3-64
LPG (S/N H177B01787 → HYDROSTATIC) (S/N H177B01787 ↔ S/N H177B023393 POWERSHIFT) ... 3-66
ENGINE FUEL SYSTEM
LOW EMISSIONS - 3,0L ENGINE ... 3-42
FILTER AND LOCK-OFF VALVE
LPG - HYDROSTATIC (→ S/N H177B23393) ... 3-67
FUEL
2,6L ENGINE - DIESEL ... 3-72
FUEL FILTER AND LIFT PUMP
2,6L ENGINE - DIESEL ... 3-76
FUEL FILTERING AND LOCK-OFF SYSTEM
3.0L LPG - LOW EMISSIONS ... 3-44
FUEL PUMP
2,6L ENGINE - DIESEL ... 3-80
FUEL SYSTEM
CLOSED LOOP (S/N H177B26764Y →) ... 3-18
LPG 2,0L (→ S/N H177B23393X) ... 3-14
LPG 2,0L - OPEN LOOP (S/N H177B23394X →) ... 3-16
LPG 3,0L - HYDROSTATIC, POWERSHIFT (→ S/N H177B30073) ... 3-34
LPG 3,0L - POWERSHIFT (S/N H177B30074 →) ... 3-38
GOVERNOR
2,0L ENGINE (→ S/N H177B23393) ... 3-20
LPG 2,0L (S/N H177B23394 →) ... 3-22
LPG REGULATOR
LOW EMISSIONS - 3.0L ENGINE ... 3-48
LPG TANK MOUNTING
SWING OUT/DROP DOWN ... 3-12
MONOTROL PEDAL ... 3-106

©2009 HYSTER COMPANY

SECTION 3
FUEL SYSTEM

DESCRIPTION **PAGE**

PEDAL LINKAGE
2,6L ENGINE - HYDROSTATIC WITHOUT THROTTLE UP 3-98
2,6L ENGINE - HYDROSTATIC WITH THROTTLE UP 3-102
3,0L - HYDROSTATIC 3-94
POWERSHIFT 3-90
REGULATOR
LPG 2,0 AND 3,0L - OPEN LOOP (S/N H177B23394 →) 3-54
LPG 2,0 AND 3,0L - CLOSED LOOP (S/N H177B23394Y →) 3-56
TANK
LPG 3-10
THROTTLE BODY AND LPG MIXER
LOW EMISSIONS - 3.0L ENGINE 3-46
THROTTLE LINKAGE
2,0L LPG AND 2,6L DIESEL (S/N H177B23394 → LPG) 3-88
3,0L ENGINE (→ S/N H177B30073) 3-82
3,0L ENGINE - GASOLINE AND LPG (S/N H177B30074 →) 3-84
LPG (→ S/N H177B23393) 3-86
LPG AND DIESEL - EPA COMPLIANT 3-92
WATER SEPARATOR 3-78

©2009 HYSTER COMPANY

NOTES

©2009 HYSTER COMPANY

AIR FILTER (FIGURE 3-1)

2,0L ENGINE (→ S/N H177B23393)

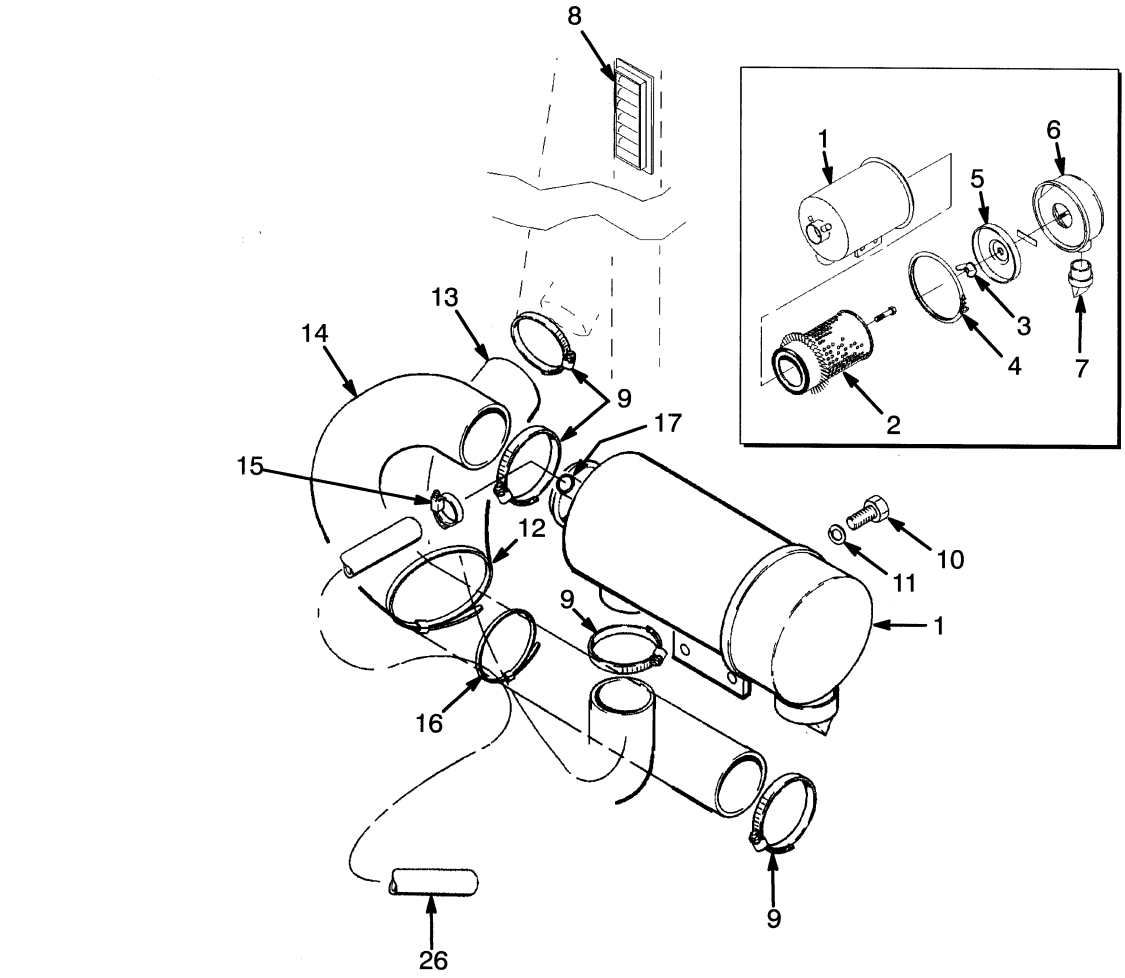

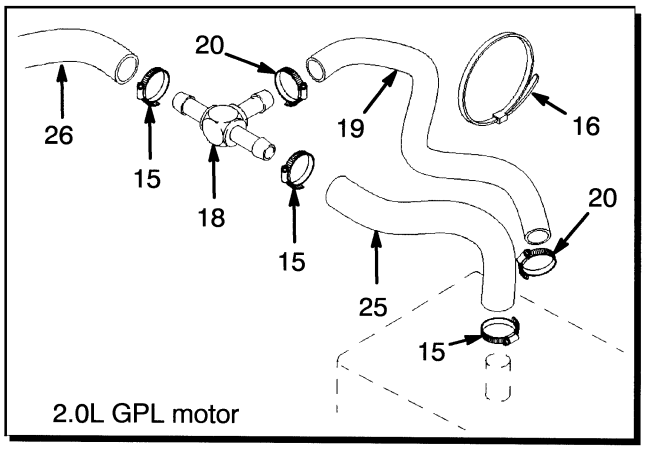

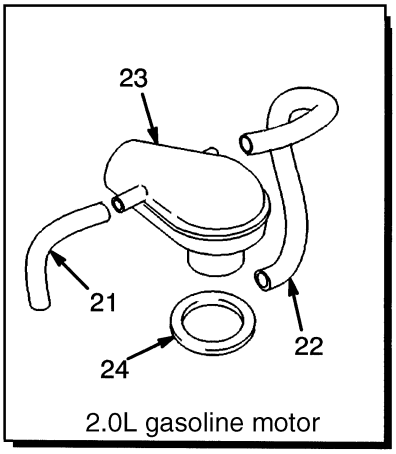

HP130729

©2009 HYSTER COMPANY

AIR FILTER

2,0L ENGINE (→ S/N H177B23393)

ITEM	PART NO.	DESCRIPTION	QTY
1	1343635	Air Filter	1
2	305080	Filter Element	1
3	125847	Gasket	1
4	290734	Clamp	1
5	290735	Baffle	1
6	374922	Cup	1
7	374923	Valve	1
8	1339265	Grill	1
9	112989	Hose Clamp	4
10	287854	Capscrew	2
11	292682	Lockwasher	2
12	273775	Strap Clamp	1
13	1343638	Hose	1
14	**b** 1368917	Hose	1
14	**a** 1368980	Hose	1
15	166857	Clamp	4
16	**a** 2004005	Strap Clamp	1
17	**b** 1359608	Plug	1
18	**a** 1374916	Fitting	1
19	**a** 193008	Hose	1
20	**a** 168718	Clamp	1
21	1361794	Hose	1
22	1361797	Hose	1
23	**b** 1361766	Air Duct	1
24	**b** 1361765	Seal	1
25	1365895	Hose	1
26	**a** 1374917	Hose	1
	996423	Kit-Periodic Maintenance	1

FOOTNOTES:

a LPG

b Petrol

©2009 HYSTER COMPANY

AIR FILTER (FIGURE 3-2)

2,0L ENGINE (S/N H177B23394 →)

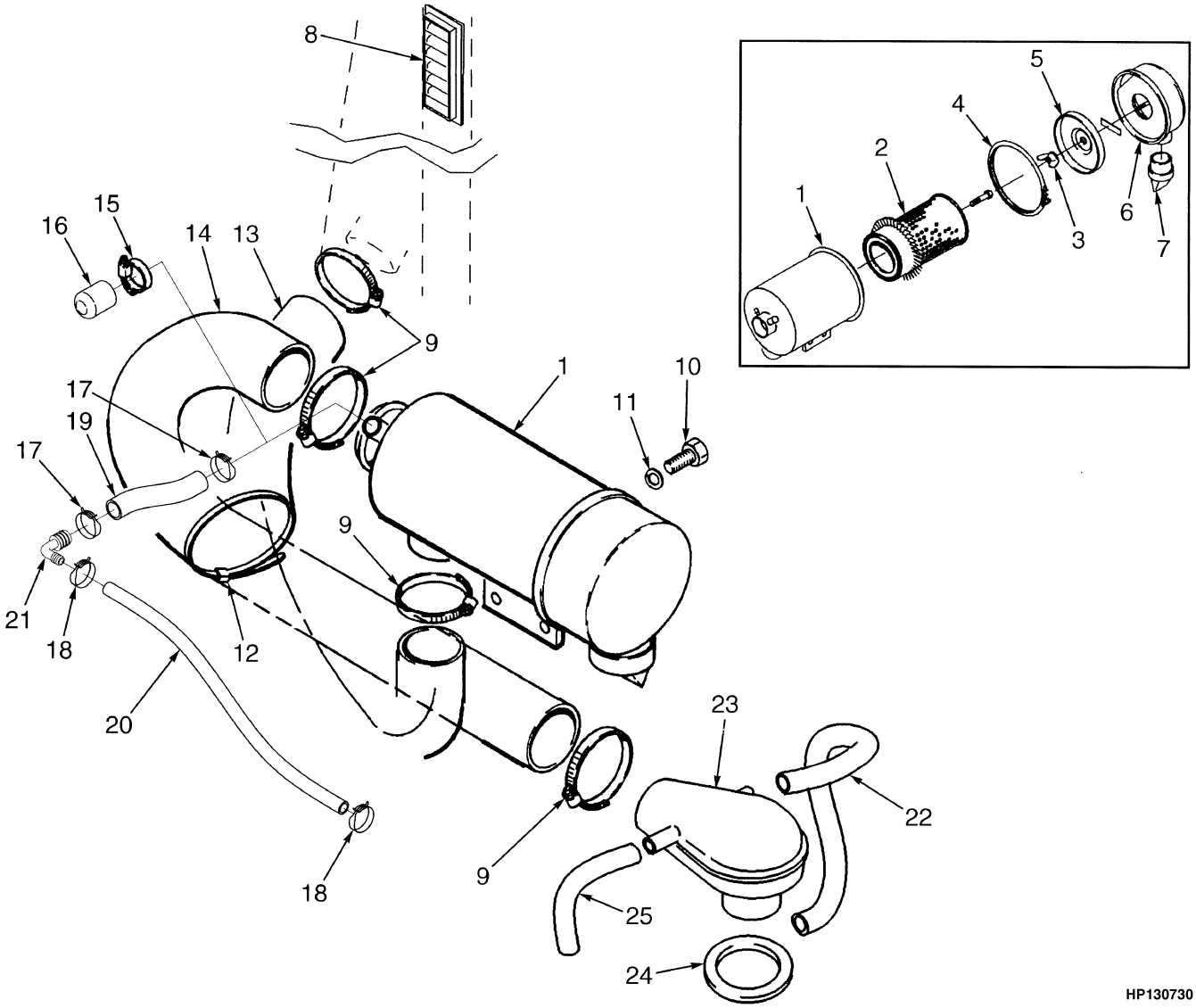

HP130730

©2009 HYSTER COMPANY

AIR FILTER

2,0L ENGINE (S/N H177B23394 →)

ITEM	PART NO.	DESCRIPTION	QTY
1	1343635	Air Filter	1
2	305080	Filter Element	1
3	125847	Gasket	1
4	290734	Clamp	1
5	290735	Baffle	1
6	374922	Cup	1
7	374923	Valve	1
8	1339265	Grill	1
9	112989	Hose Clamp	4
10	287854	Capscrew	2
11	292682	Lockwasher	2
12	323864	Strap Clamp	1
13	1343638	Hose	1
14	1469348	Hose	1
15	**b** 166857	Clamp	4
16	**b** 1359608	Plug	1
17	**a** 379405	Clamp	2
18	**a** 369815	Clamp	2
19	**a** 1490464	Hose	1
20	**a** 381938	Hose	1
21	**a** 1471701	Fitting	1
22	1361797	Hose	1
23	1361766	Air Duct	1
24	1361765	Seal	1
25	1361794	Hose	1

FOOTNOTES:

a LPG

b Petrol

©2009 HYSTER COMPANY

AIR FILTER (FIGURE 3-3)
LPG — EPA COMPLIANT 2.0L

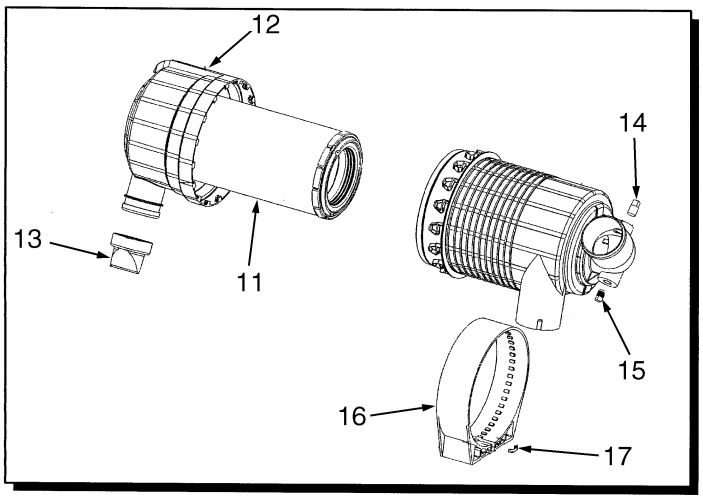

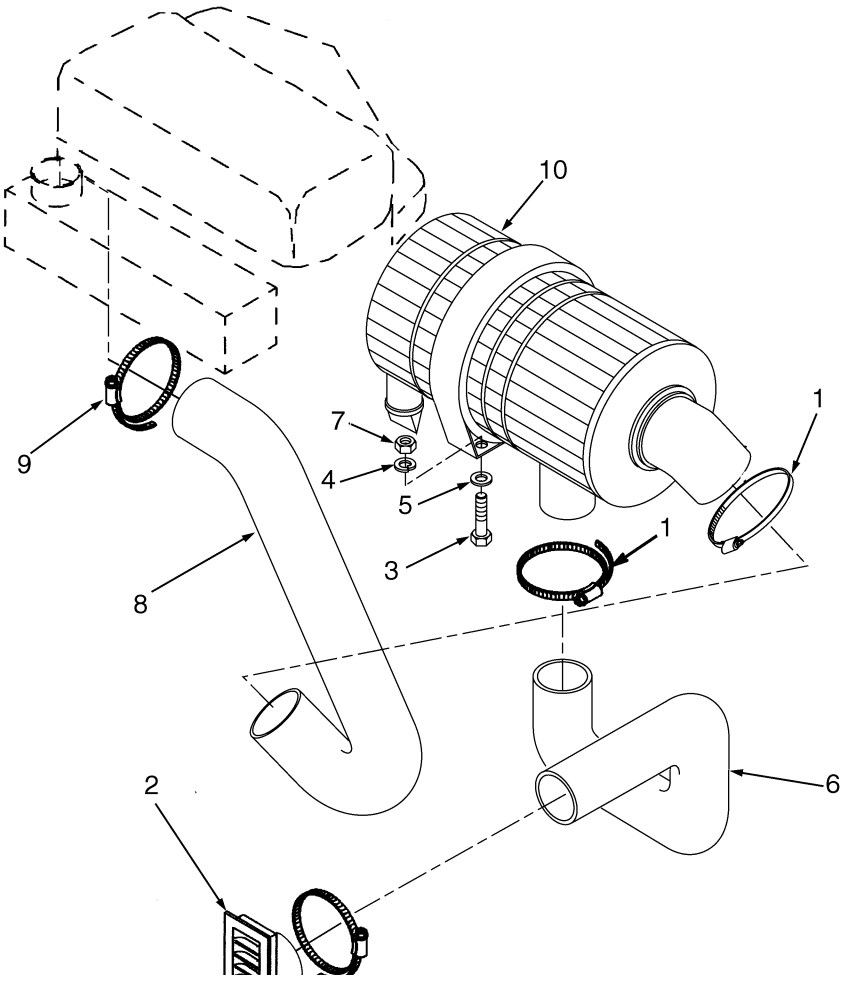

©2009 HYSTER COMPANY

AIR FILTER

LPG – EPA COMPLIANT 2.0L

ITEM	PART NO.	DESCRIPTION	QTY
1	1394008	Hose Clamp	3
2	1339265	Grill	1
3	1510786	Wheel Stud	2
4	292681	Lockwasher	2
5	320157	Washer	2
6	1484337	Hose	1
7	313828	Nut	2
8	1499511	Hose	1
9	119236	Clamp	1
10	1485320	Air Filter (Single Element)	1
10	1485321	Air Filter (Dual Element)	1
11	1377080	Filter Element (Single Element)	1
11	1452112	Filter Element (Dual Element)	1
12	1494023	Cover	1
13	1494024	Valve	1
14	1377083	Plug	1
15	1462442	Plug	1
16	1494029	Bracket	1
17	1494030	Clip	2

©2009 HYSTER COMPANY

TANK (FIGURE 3-4)
LPG

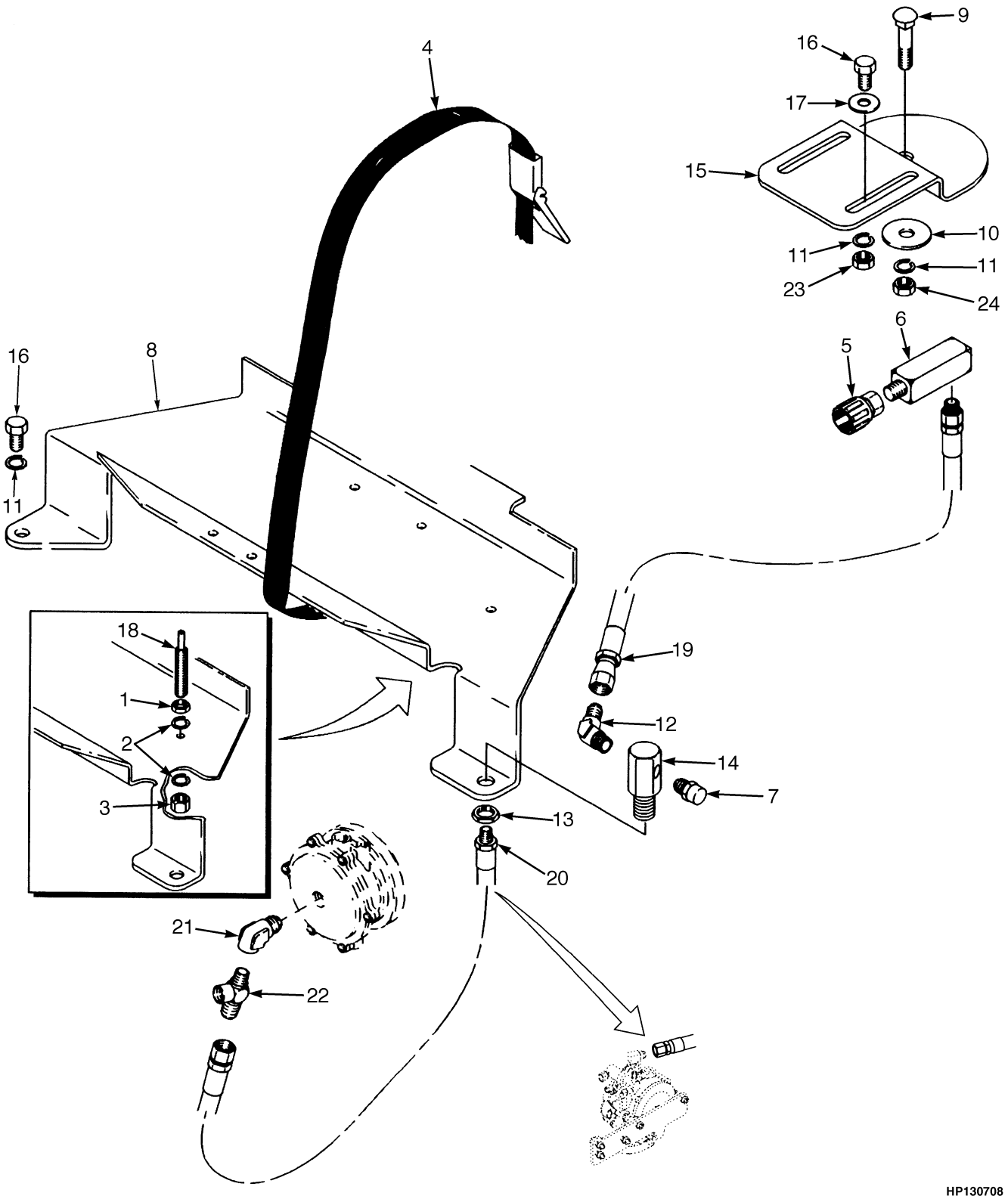

©2009 HYSTER COMPANY

TANK
LPG

ITEM	PART NO.	DESCRIPTION	QTY
1	296134	Nut	1
2	292685	Lockwasher	2
3	292600	Nut	1
4	1379455	Strap (Nylon)	1
5	97999	Fitting	1
6	1327554	Fitting	1
7	101809	Relief Valve	1
8	1376006	Lpg Tank Bracket	1
9	1339706	Bolt	1
10	300939	Washer	1
11	292682	Lockwasher	5
12	16863	Fitting	1
13	15034	Nut	1
14	1374601	Fitting	1
15	1375239	Bracket Wldmt	1
16	287854	Capscrew	4
17	320159	Washer	3
18	1376000	Pin	1
19	1319004	Hose Assy	1
20	**b** 1388579	Hose Assy	1
20	**c** 1496024	Hose Assy	1
21	**a** 1351145	Fitting	1
22	**a** 1351146	Fitting	1
23	316826	Nut	2
24	136692	Nut	2

FOOTNOTES:

a → S/N H177B23393
b → S/N H177B28688Y
c S/N H177B28689Y →

©2009 HYSTER COMPANY

LPG TANK MOUNTING (FIGURE 3-5)
SWING OUT/DROP DOWN

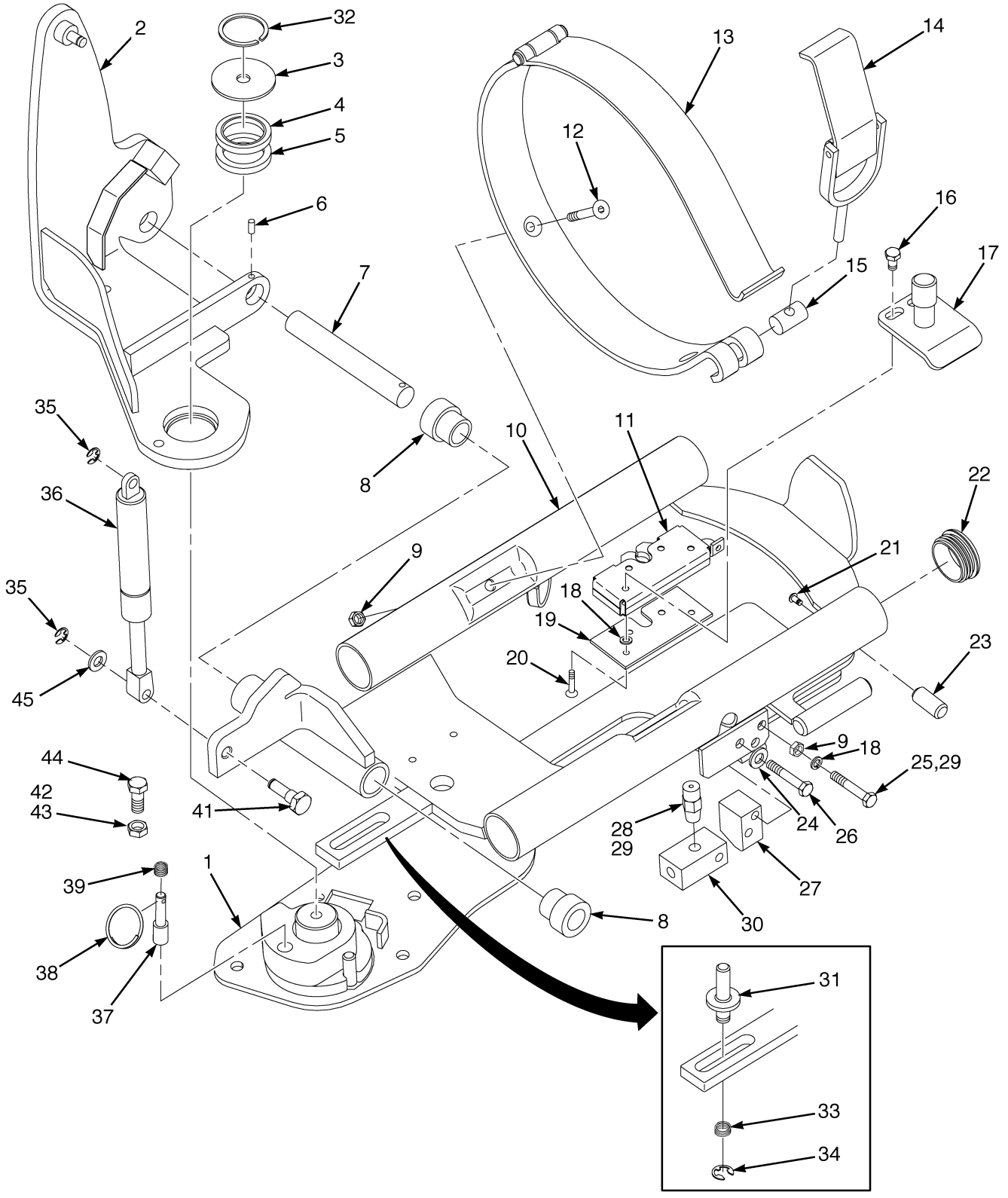

BP130146

©2009 HYSTER COMPANY

LPG TANK MOUNTING
SWING OUT/DROP DOWN

ITEM	PART NO.	DESCRIPTION	QTY
	1568834	Lpg Tank Bracket	1
1	1568844	Base Weldment	1
2	1517437	Pivot (Intermediate)	1
3	1568839	Washer (Pivot)	1
4	184451	Ball Bearing	2
5	1568853	Thrust Washer (Thrust)	1
6	302363	Dowel	1
7	1581887	Shaft	1
8	1581888	Bushing	2
9	302400	Nut	4
10	1517438	Support	1
11	1517405	Latch	1
12	296234	Capscrew	2
13	1525441	Strap	1
14	1383574	Latch	1
15	147294	Nut (Adjustment)	1
16	293612	Capscrew	2
17	1534649	Pin	1
18	320157	Washer	4
19	1534674	Plate	1
20	296207	Capscrew	4
21	296151	Capscrew	1
22	1398099	Plug	4
23	1534677	Pin	1
24	293780	Lockwasher	1
25	1510116	Capscrew	2
26	292509	Capscrew	1
27	1534679	Block (Anti-Rattle)	1
28	101809	Relief Valve	1
29	264134	Loctite	AR
30	1534675	Fitting	1
31	1525459	Pin (Alignment)	1
32	34507	Snap Ring	1
33	1528899	Spring	1
34	182118	Retaining Ring	1
35	1525442	E-Ring	2
36	1402414	Gas Spring	1
37	1534671	Pin	1
38	1534672	Ring	1
39	1528903	Spring	1
41	1525478	Pin	1
42	292656	Nut	1
43	246108	Sealant	AR
44	293645	Capscrew	1
45	320159	Washer	2

©2009 HYSTER COMPANY

FUEL SYSTEM (FIGURE 3-6)

LPG 2,0L (→ S/N H177B23393X)

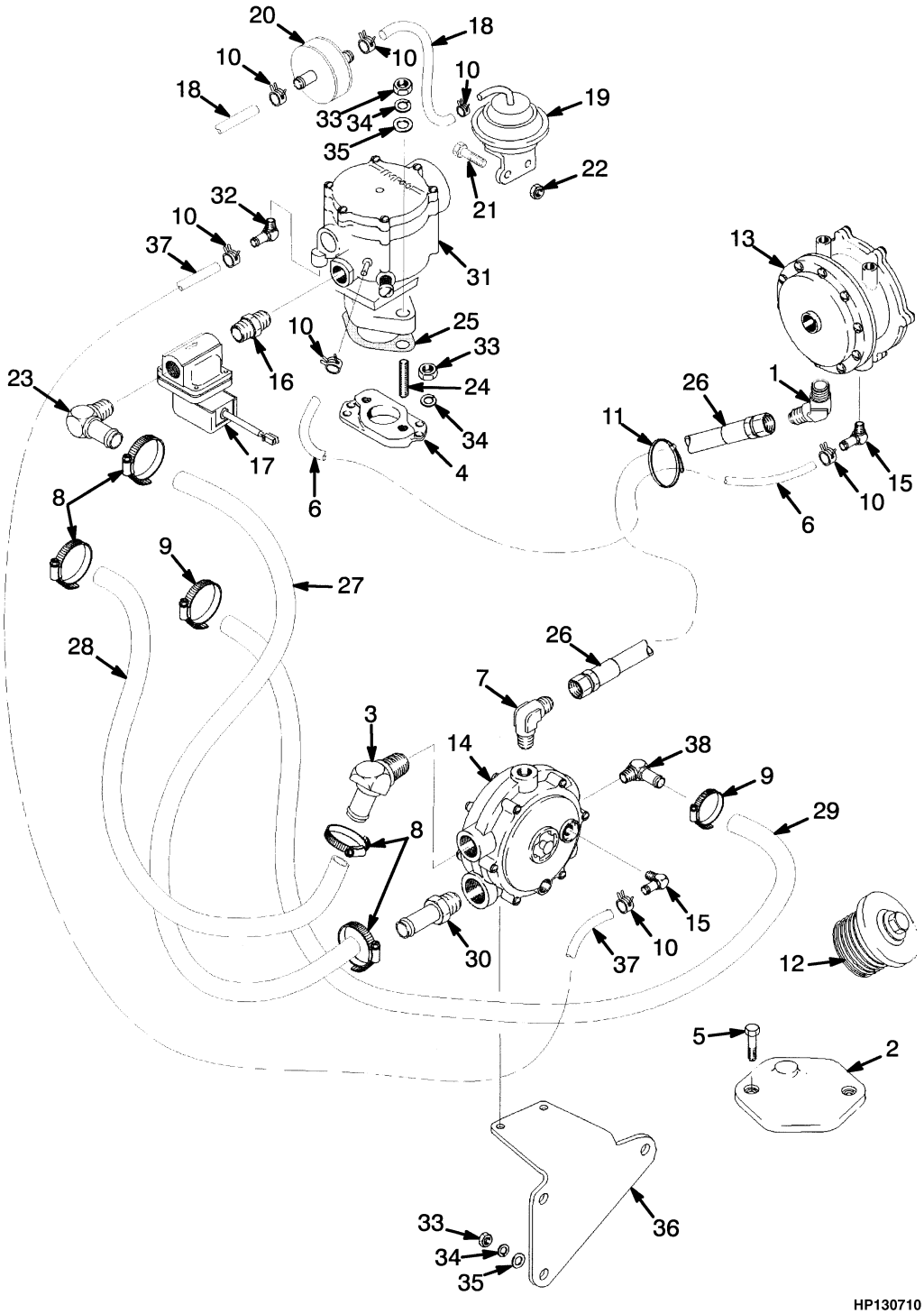

©2009 HYSTER COMPANY

FUEL SYSTEM

LPG 2,0L (→ S/N H177B23393X)

ITEM	PART NO.	DESCRIPTION	QTY
1	16863	Fitting	1
2	1451568	Cover Plate	1
3	1336135	Fitting	1
4	1356514	Spacer	1
5	329067	Screw	2
6	1347166	Hose	1
7	14358	Fitting	1
8	130845	Clamp	4
9	168718	Clamp	2
10	366473	Clamp	8
11	137852	Strap Clamp	6
12	1352123	Fuel Cap	1
13	258321	Kit-Filter and Lock-Off Valve (☞Figure 3-31)	1
14	1369572	LPG Regulator (LPG) (☞Figure 3-29)	1
14	1457964	LPG Regulator (☞Figure 3-30)	1
15	175347	Fitting	2
16	**a** 15351	Fitting	1
17	**a** 1354203	Solenoid Valve	1
17	1369456	Coil	1
17	1369457	Kit-Seal	1
18	372002	Hose	2
19	1346872	Actuator	1
20	1350400	Valve	1
21	293743	Capscrew	2
22	316825	Nut	2
23	201800	Fitting	1
24	1359460	Stud	2
25	1354336	Gasket	1
26	113011	Hose Assy	1
27	**a** 1336137	Hose	1
27	**b** 1460281	Hose	1
28	318375	Hose	1
29	85785	Hose	1
30	1376621	Lpg Carburetor (☞Figure 3-11)	1
30	1460684	Lpg Carburetor (☞Figure 3-12)	1
30	201797	Fitting	1
32	175347	Fitting	1
33	239503	Nut	7
34	292681	Lockwasher	7
35	296418	Washer	5
36	1356513	Bracket	1
37	243147	Hose	1
38	201808	Fitting	1

FOOTNOTES:

a → S/N H177B09724

b S/N H177B09725 →

©2009 HYSTER COMPANY

FUEL SYSTEM (FIGURE 3-7)

LPG 2,0L — OPEN LOOP (S/N H177B23394X →)

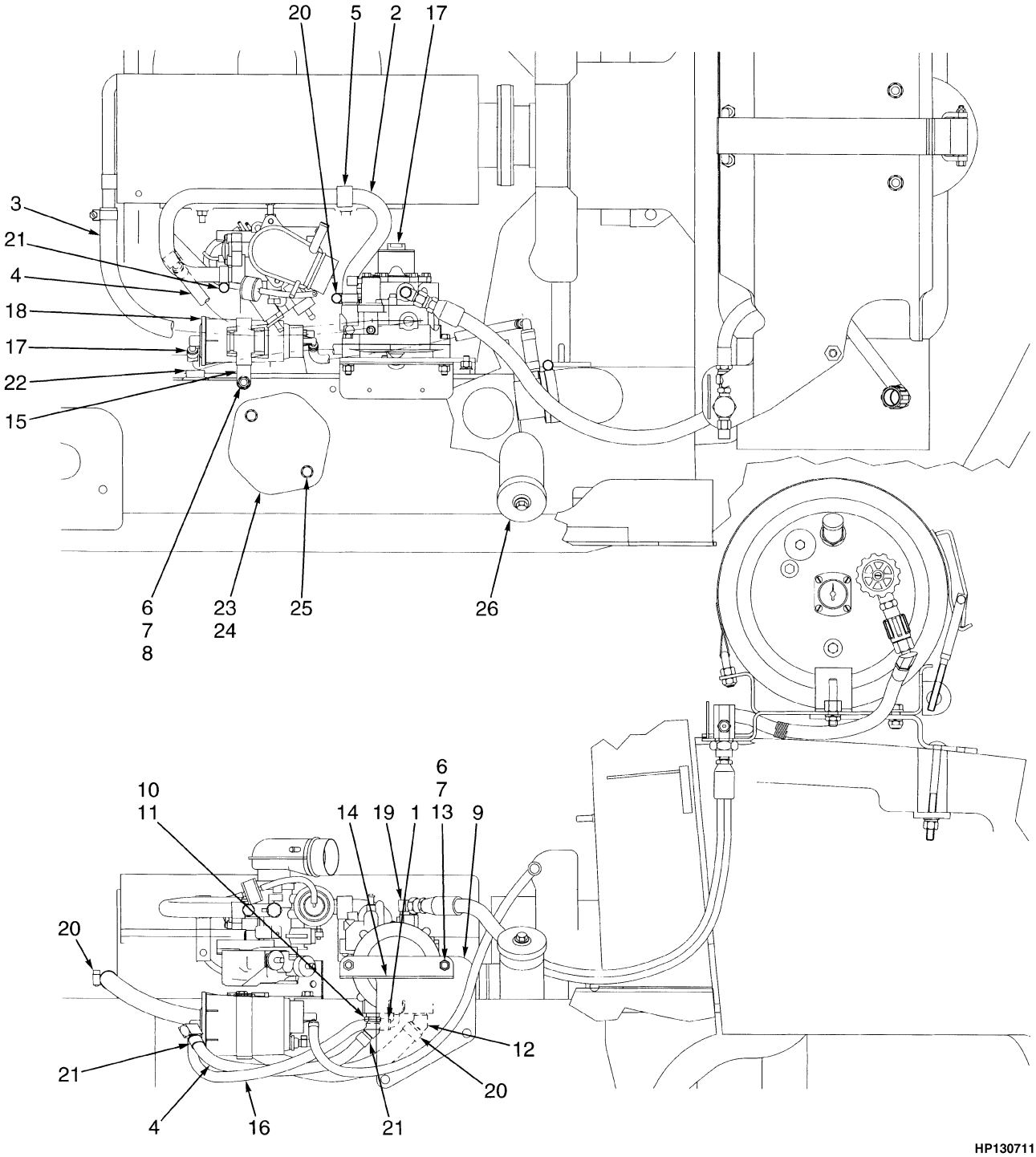

©2009 HYSTER COMPANY

FUEL SYSTEM

LPG 2,0L – OPEN LOOP (S/N H177B23394X →)

ITEM	PART NO.	DESCRIPTION	QTY
1	353311	Clamp	2
2	1474043	Hose (LPG Vapor)	1
3	183985	Hose	1
4	85766	Hose	1
5	1479091	Bracket	2
6	239503	Nut	6
7	292681	Lockwasher	6
8	296418	Washer	4
9	1469347	Bracket	1
10	63108	Fitting	1
11	16694	Fitting	1
12	1336135	Fitting	1
13	292509	Capscrew	2
14	1483891	Bracket	1
15	1475409	Clamp	1
16	260878	Hose	1
17	1469346	Lpg Converter (☞Figure 3-24)	1
17	1493620	Regulator (☞Figure 3-24)	1
18	1471694	Resonator	1
18	1479532	Plug	1
18	1479533	Clip	1
19	14358	Fitting	1
20	130845	Clamp	4
21	168718	Clamp	2
22	15964	Fitting	1
23	1451568	Cover Plate	1
24	280472	Sealant	AR
25	329067	Screw	2
26	1352123	Fuel Cap	1

©2009 HYSTER COMPANY

FUEL SYSTEM (FIGURE 3-8)
CLOSED LOOP (S/N H177B26764Y →)

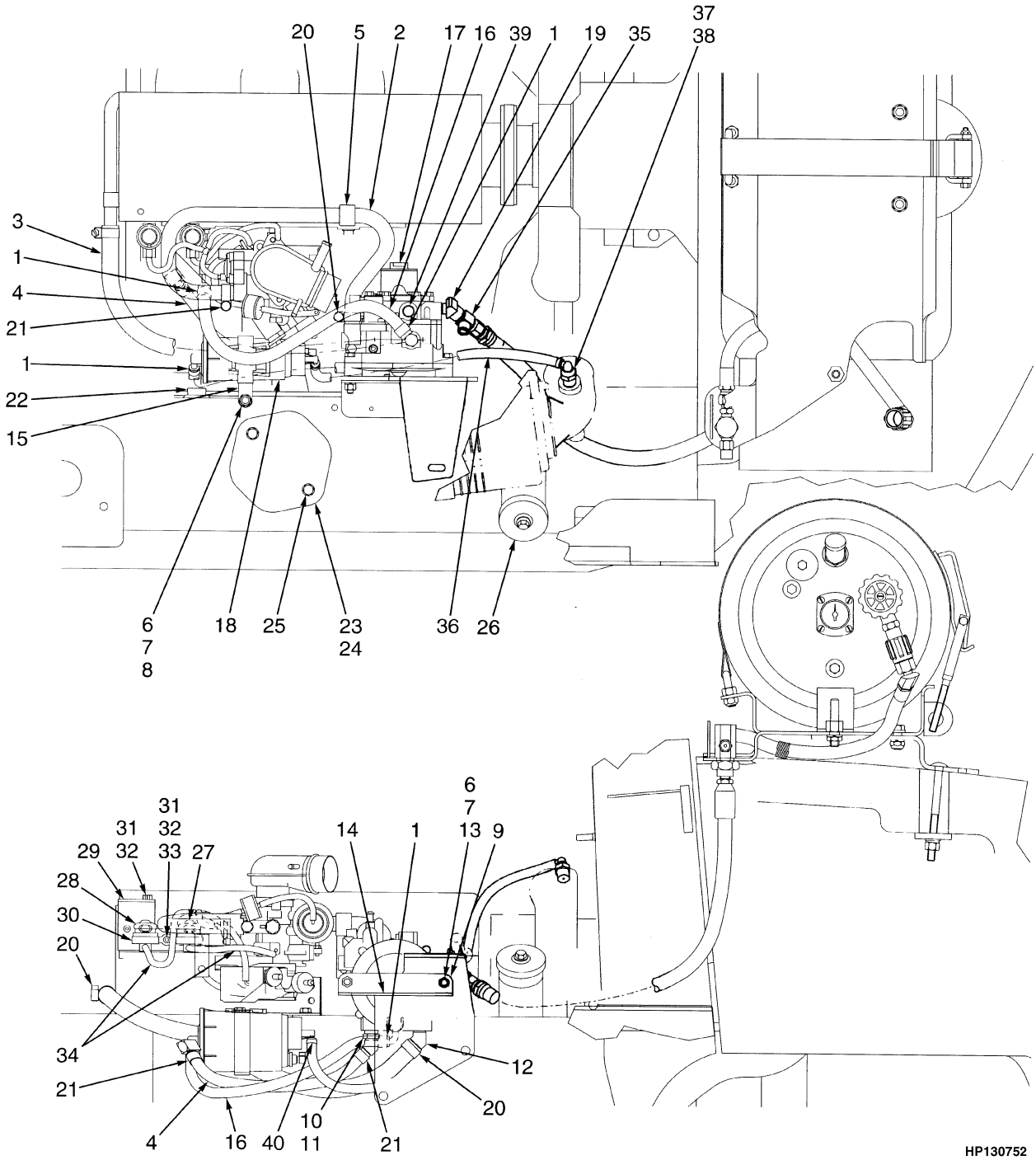

©2009 HYSTER COMPANY

FUEL SYSTEM

CLOSED LOOP (S/N H177B26764Y →)

ITEM	PART NO.	DESCRIPTION	QTY
1	353311	Clamp	4
2	1474043	Hose (LPG Vapor)	1
3	1490465	Hose	1
4	2042799	Fender	1
5	1479091	Bracket	2
6	239503	Nut	6
7	292681	Lockwasher	6
8	296418	Washer	4
9	1469347	Bracket	1
10	63108	Fitting	1
11	16694	Fitting	1
12	16764	Fitting	1
13	292509	Capscrew	2
14	1483891	Bracket	1
15	1475409	Clamp	1
16	260878	Hose	2
17	**a** 1487199	LPG Regulator (Closed Loop) (☞Figure 3-25)	1
17	**b** 1594144	LPG Regulator	1
18	1471694	Resonator	1
18	1479532	Plug	1
18	1479533	Clip	1
19	12822	Fitting	1
20	130845	Clamp	4
21	168718	Clamp	2
22	15964	Fitting	1
23	1451568	Cover Plate	1
24	280472	Sealant	AR
25	329067	Screw	2
26	1352123	Fuel Cap	1
27	1487190	Switch (Idle)	1
28	1487192	Switch (Wide Open Throttle)	1
29	1487968	Bracket	1
30	1487969	Clamp	1
31	287817	Capscrew	2
32	292680	Washer	2
33	136687	Nut	1
34	377209	Hose	2
35	1351146	Fitting	1
36	381938	Hose	1
37	1476419	Fitting	1
38	1479539	Fitting	1
39	14385	Fitting	1
40	369815	Clamp	1

FOOTNOTES:

a → S/N H177B47507B

b S/N H177B47508B →

©2009 HYSTER COMPANY

GOVERNOR (FIGURE 3-9)
2,0L ENGINE (→ S/N H177B23393)

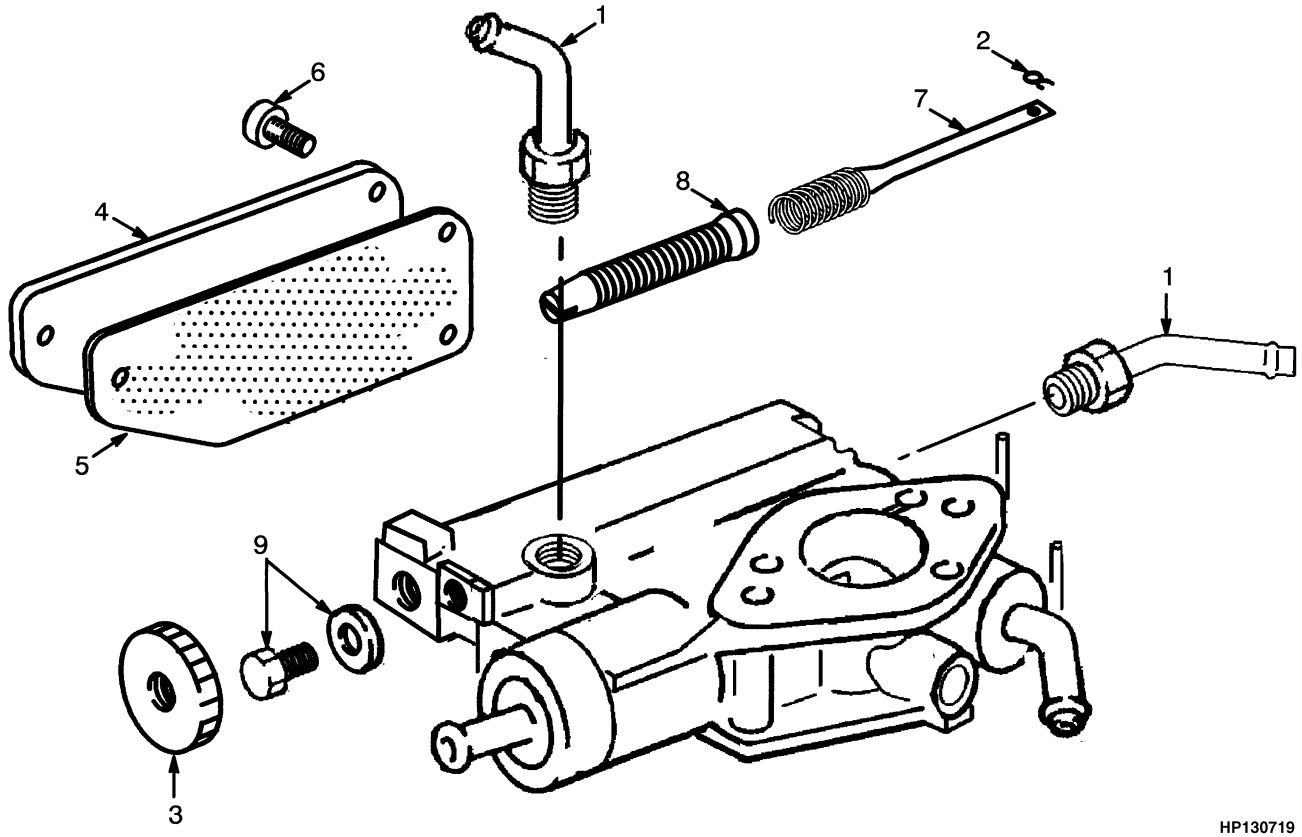

HP130719

ITEM	PART NO.	DESCRIPTION	QTY
	1361751	Governor (Petrol)	1
	1495422	Governor (LPG)	1
1	1367517	Connector	2
2	1367519	Snap Ring	1
3	1367520	Bushing	1
4	1367522	Cover	1
5	1367523	Gasket	1
6	1367524	Screw	3
7	1367525	Spring	1
8	1367526	Screw	1
9	1367527	Bolt	1

©2009 HYSTER COMPANY

NOTES

©2009 HYSTER COMPANY

GOVERNOR (FIGURE 3-10)

LPG 2,0L (S/N H177B23394 →)

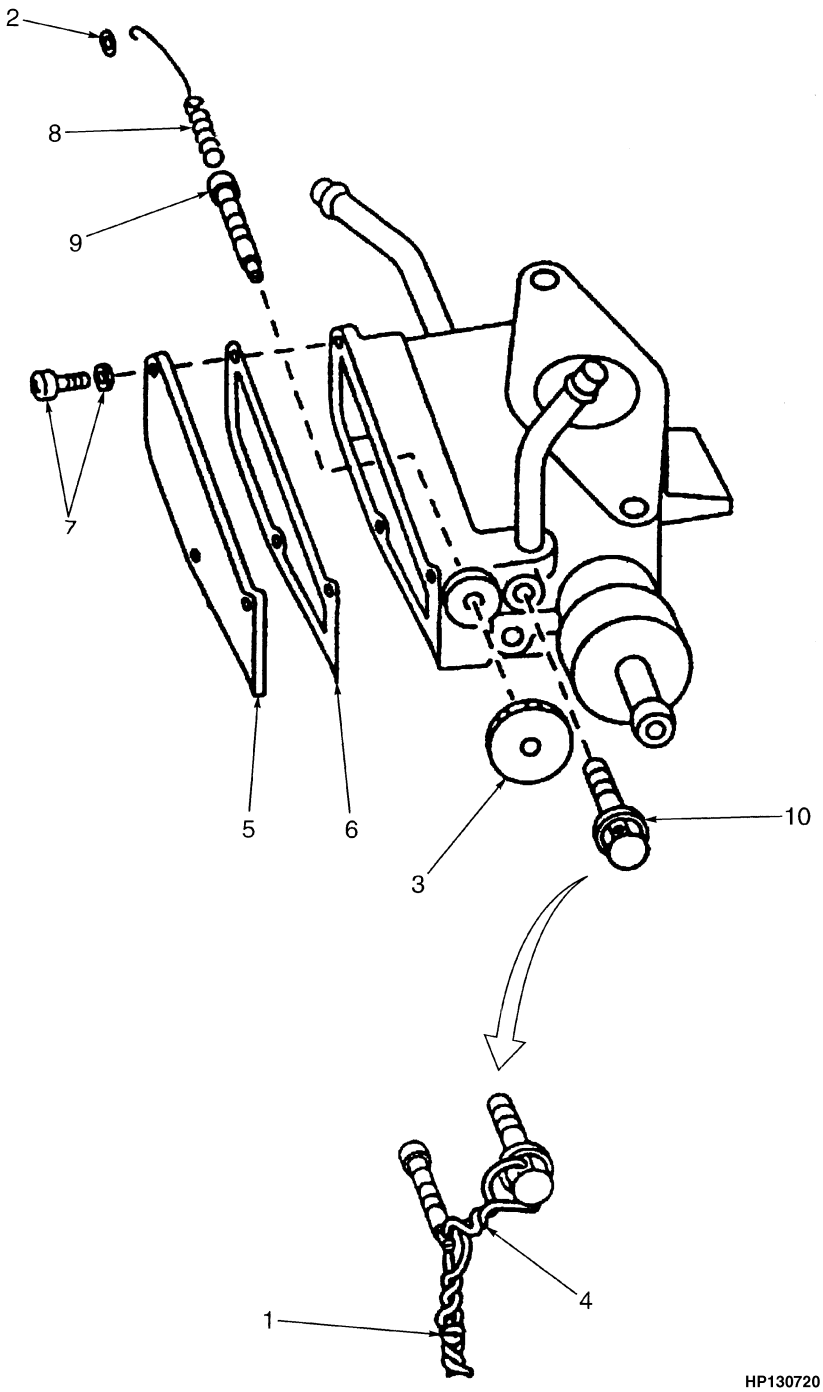

©2009 HYSTER COMPANY

GOVERNOR

LPG 2,0L (S/N H177B23394 →)

ITEM	PART NO.	DESCRIPTION	QTY
	1495422	Governor	1
1	1367518	Seal	1
2	1367519	Snap Ring	1
3	1367520	Bushing	1
4	1367521	Wire	1
5	1367522	Cover	1
6	1367523	Gasket	1
7	1367524	Screw	3
8	1367525	Spring	1
9	1367526	Screw	1
10	1367527	Bolt	1

©2009 HYSTER COMPANY

CARBURETOR (FIGURE 3-11)

2,0L ENGINE — LPG (→ S/N H177B09724)

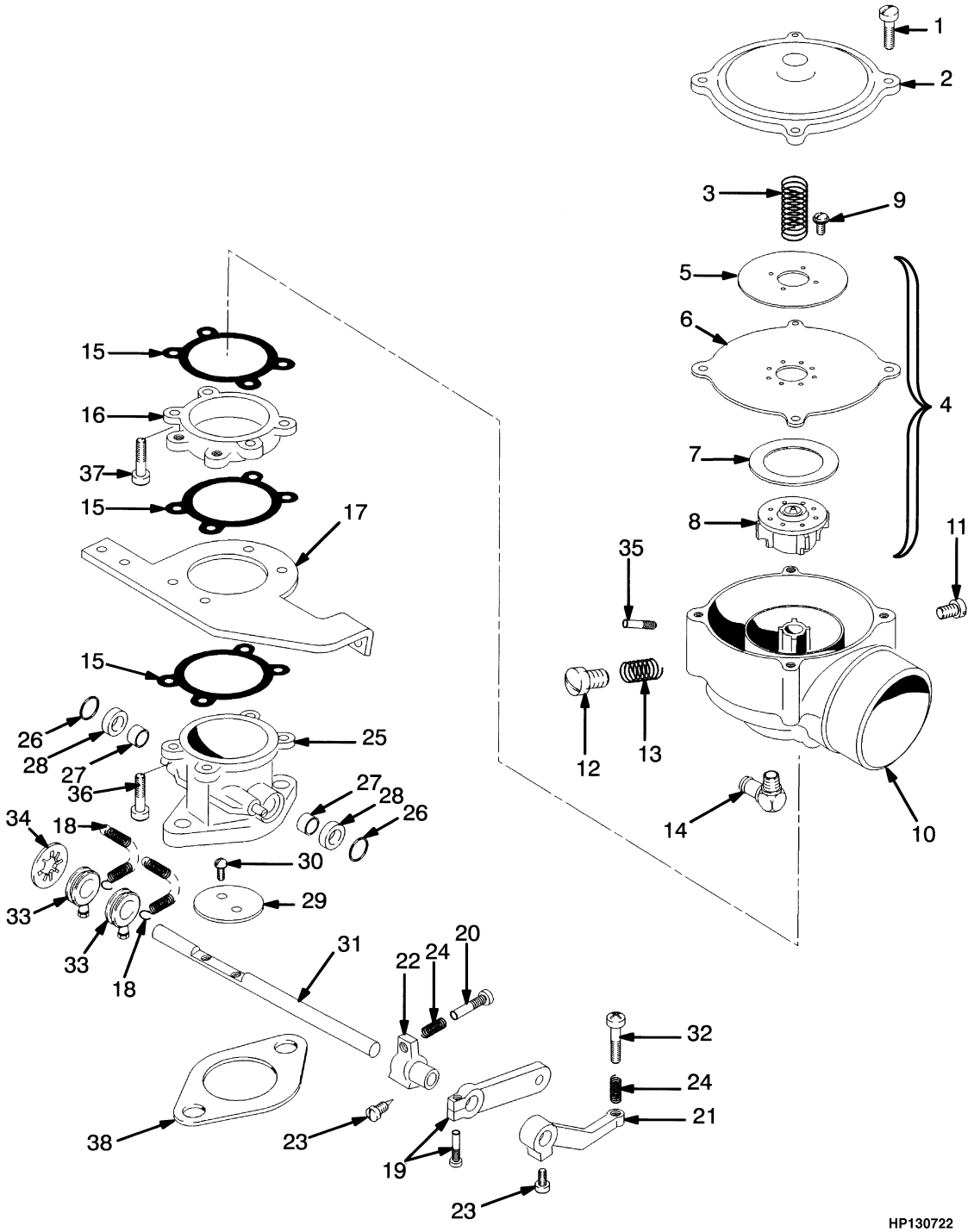

©2009 HYSTER COMPANY

CARBURETOR

2,0L ENGINE – LPG (→ S/N H177B09724)

ITEM	PART NO.	DESCRIPTION	QTY
	1376621	Lpg Carburetor	1
1	132473	Screw	4
2	204780	Cover	1
3	374713	Spring	1
4	1453779	Kit-Valve and Diaphragm	1
5	. . . . .	Back-Up Plate	1
6	1369038	Diaphragm	1
7	204858	Ring	1
8	. . . . .	Valve	1
9	220283	Screw	4
10	250371	Housing	1
11	326926	Screw	1
12	326516	Screw	1
13	332277	Spring	1
14	1361164	Fitting	1
15	204787	Gasket	3
16	303072	Spacer	1
17	1358239	Bracket	1
18	1358245	Spring	2
19	1375905	Throttle Arm	1
20	16751	Screw	1
21	1358241	Lever	1
22	1358242	Lever	1
23	1358243	Pin	4
24	204824	Spring	2
25	1358240	Throttle Body	1
26	204797	Seal	2
27	1382059	Seal	2
28	214121	Needle Bearing	2
29	241074	Throttle Plate	1
30	12490	Screw	2
31	. . . . .	Shaft	1
32	1374057	Screw	1
33	387478	Bushing	2
34	387480	Nut	1
35	323541	Fitting	1
36	204790	Screw	4
37	387481	Screw	4
38	195771	Gasket	1

©2009 HYSTER COMPANY

CARBURETOR (FIGURE 3-12)

LPG 2,0L — HYDROSTATIC TRANSMISSION (→ S/N H177B09725)

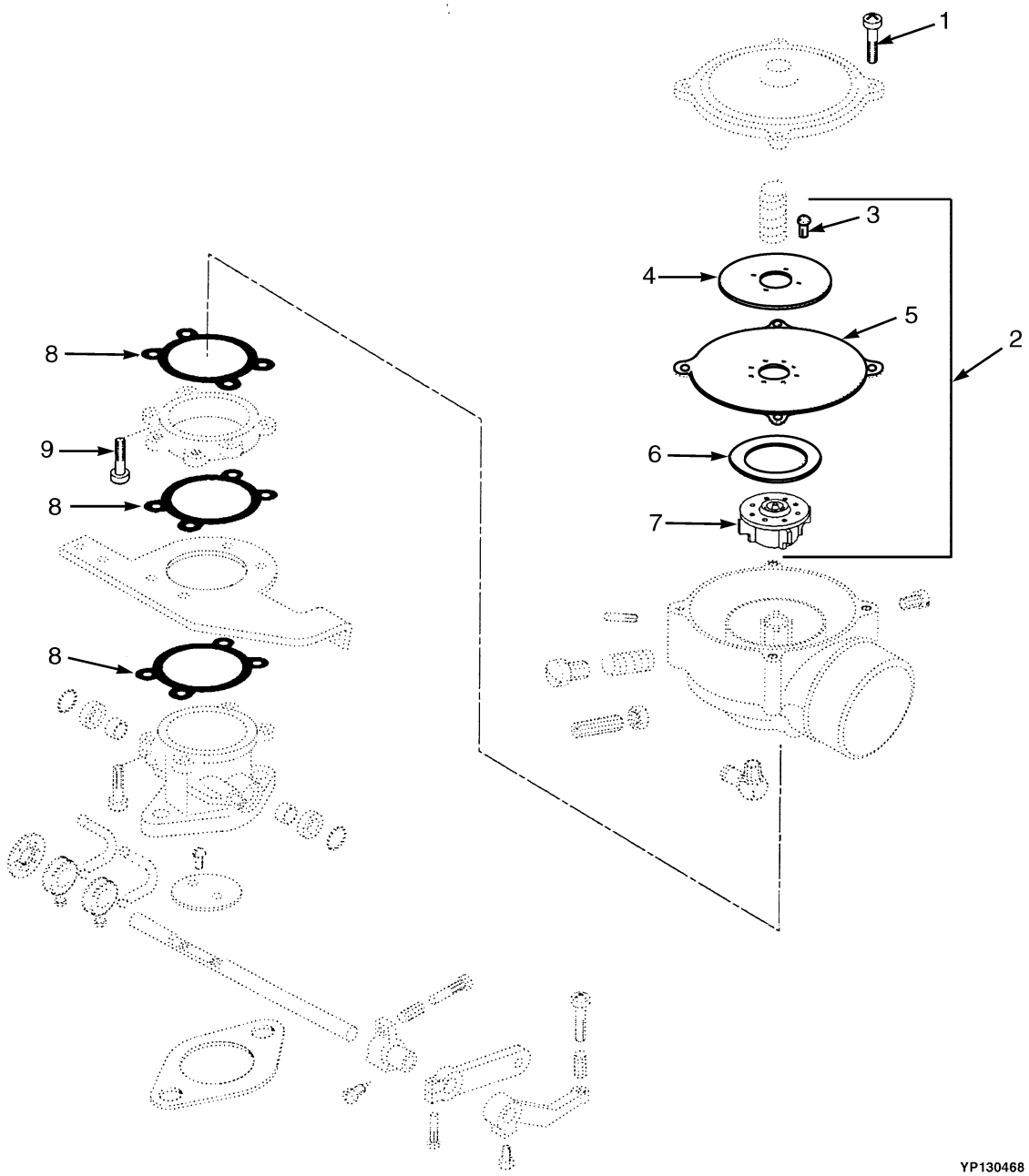

©2009 HYSTER COMPANY

CARBURETOR

LPG 2,0L – HYDROSTATIC TRANSMISSION (→ S/N H177B09725)

ITEM	PART NO.	DESCRIPTION	QTY
	1460684	Lpg Carburetor	1
1	132473	Screw	4
2	1463249	Kit-Valve and Diaphragm	1
3	220283	Screw	4
4	. . . . .	Back-Up Plate	1
5	1369038	Diaphragm	1
6	204858	Ring	1
7	. . . . .	Valve Gas	1
8	204787	Gasket	3
9	204790	Screw	4

©2009 HYSTER COMPANY

CARBURETOR (FIGURE 3-13)
LPG 2,0L — OPEN LOOP (S/N H177B23394 →)

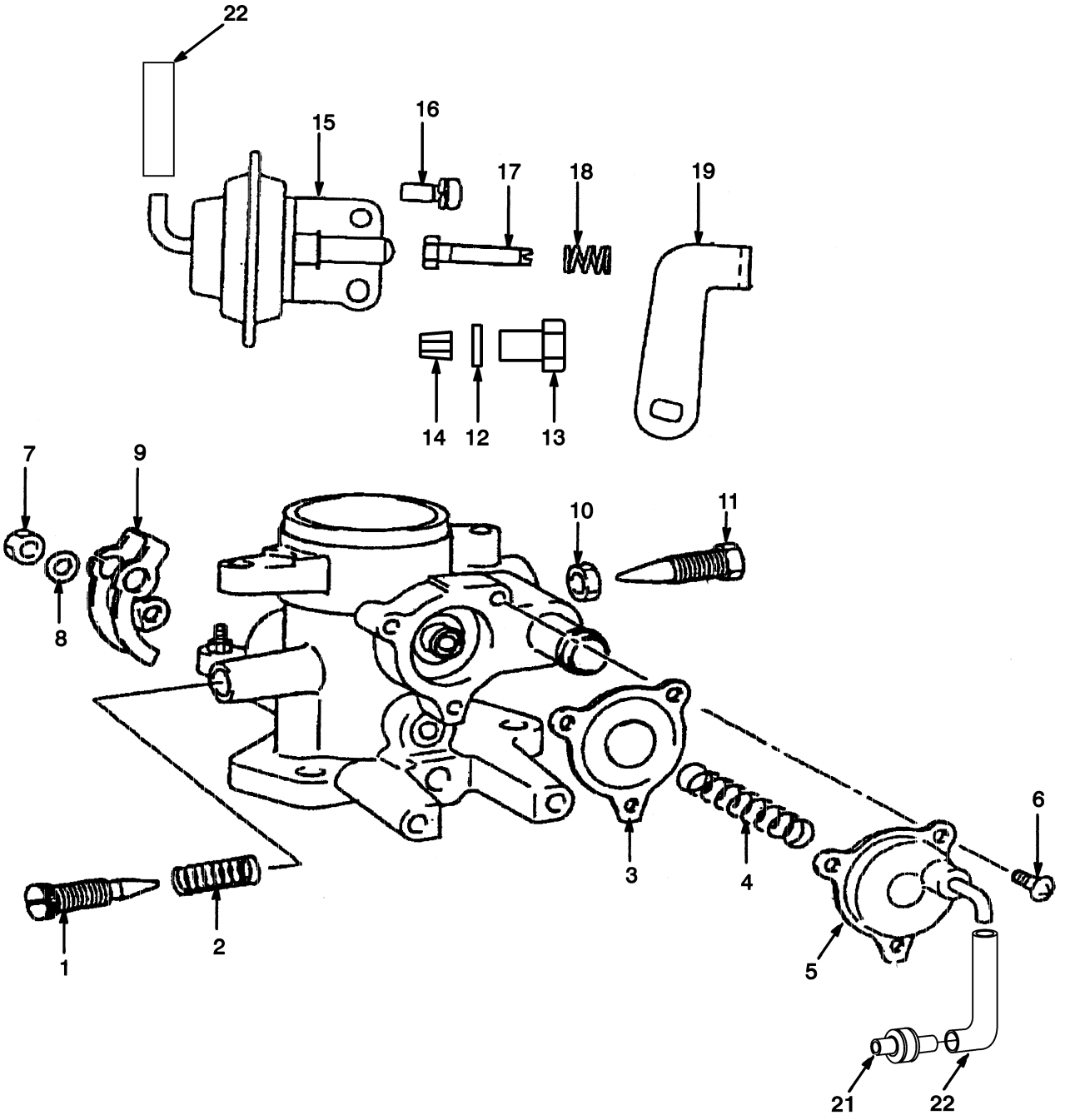

©2009 HYSTER COMPANY

CARBURETOR

LPG 2,0L – OPEN LOOP (S/N H177B23394 →)

ITEM	PART NO.	DESCRIPTION	QTY
	1493246	Lpg Carburetor	1
1	1493247	Screw	1
2	1493248	Spring	1
3	1493249	Diaphragm	1
4	1493250	Spring	1
5	1493251	Cover	1
6	1493252	Screw	3
7	1493253	Nut	1
8	1493254	Spring Washer	1
9	1493255	Lever	1
10	1493256	Nut (Power Adjustment)	1
11	1493257	Screw (Adjustment)	1
12	1493258	Gasket	1
13	1493259	Plug (Main Passage)	1
14	1493260	Jet (Power)	1
15	1493261	Diaphragm	1
16	1493262	Screw	2
17	1493263	Bolt	1
18	1493264	Spring (Idle Adjustment)	1
19	1493265	Lever	1
20	1493266	Hose	1
21	1350400	Valve	1
22	1493267	Hose	1

©2009 HYSTER COMPANY

CARBURETOR (FIGURE 3-14)

LPG 2,0L — CLOSED LOOP (S/N H177B30074Y ↔ S/N H177B47507B)

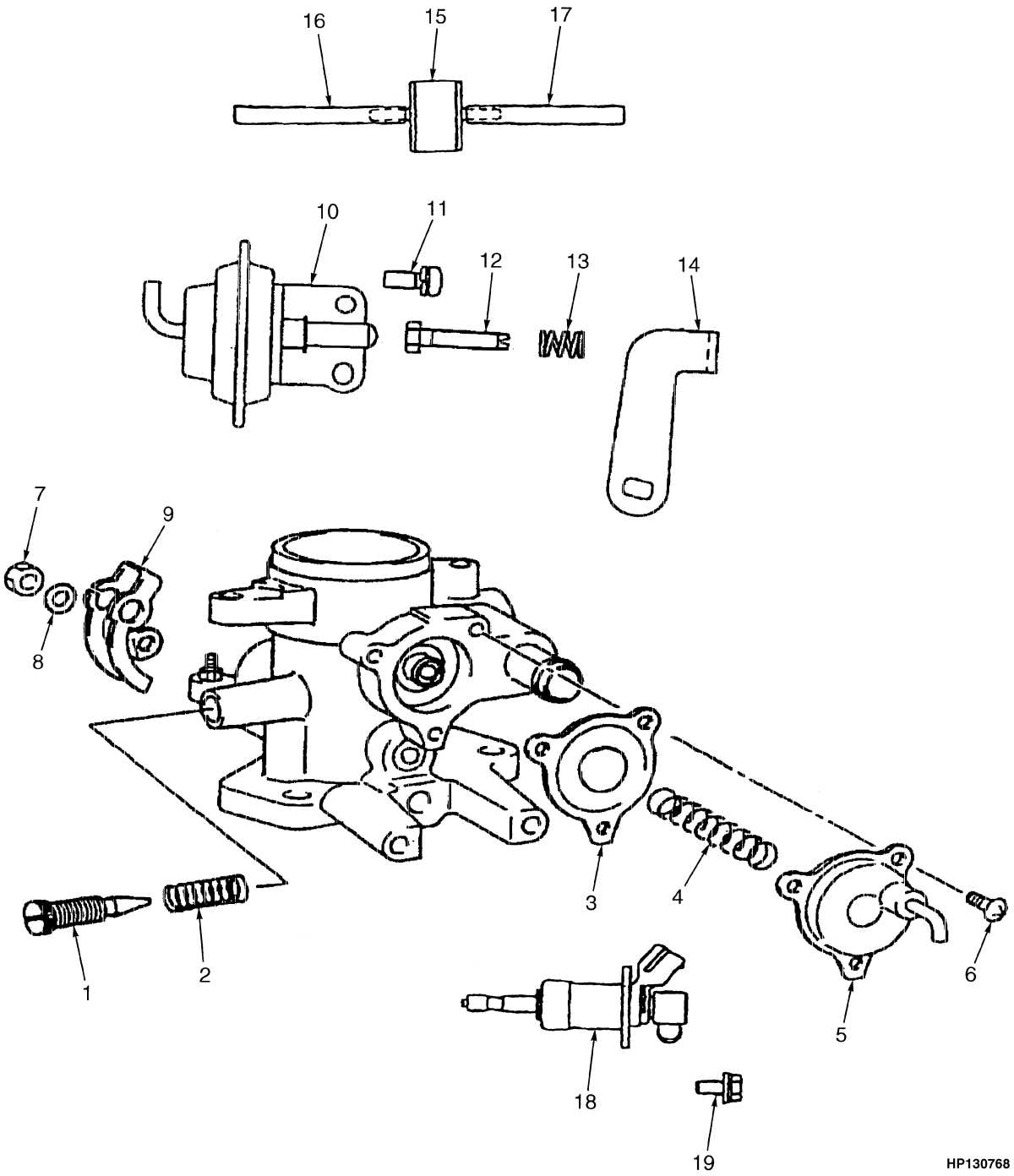

©2009 HYSTER COMPANY

CARBURETOR

LPG 2,0L – CLOSED LOOP (S/N H177B30074Y ↔ S/N H177B47507B)

ITEM	PART NO.	DESCRIPTION	QTY
	a 1493299	Lpg Carburetor	1
1	1493247	Screw (Adjust)	1
2	1493248	Spring	1
3	1493249	Diaphragm	1
4	1493250	Spring	1
5	1493251	Cover	1
6	1493252	Screw	3
7	1493253	Nut	1
8	1493254	Spring Washer	1
9	1493255	Lever	1
10	1493261	Diaphragm	1
11	1493262	Screw	2
12	1493263	Bolt	1
13	1493264	Spring (Idle Adjust)	1
14	1493265	Lever	1
15	1350400	Valve	1
16	1493266	Hose (Vacuum)	1
17	1493267	Hose (Vacuum)	1
18	1495124	Injector	1
19	1495125	Bolt	1
	b 1553793	Carburetor (☞Figure 2-30)	1

FOOTNOTES:

a → S/N H177B47507B

b S/N H177B47508B →

AIR FILTER AND BREATHER (FIGURE 3-15)

HYDROSTATIC TRANSMISSION (→ S/N H177B26621)

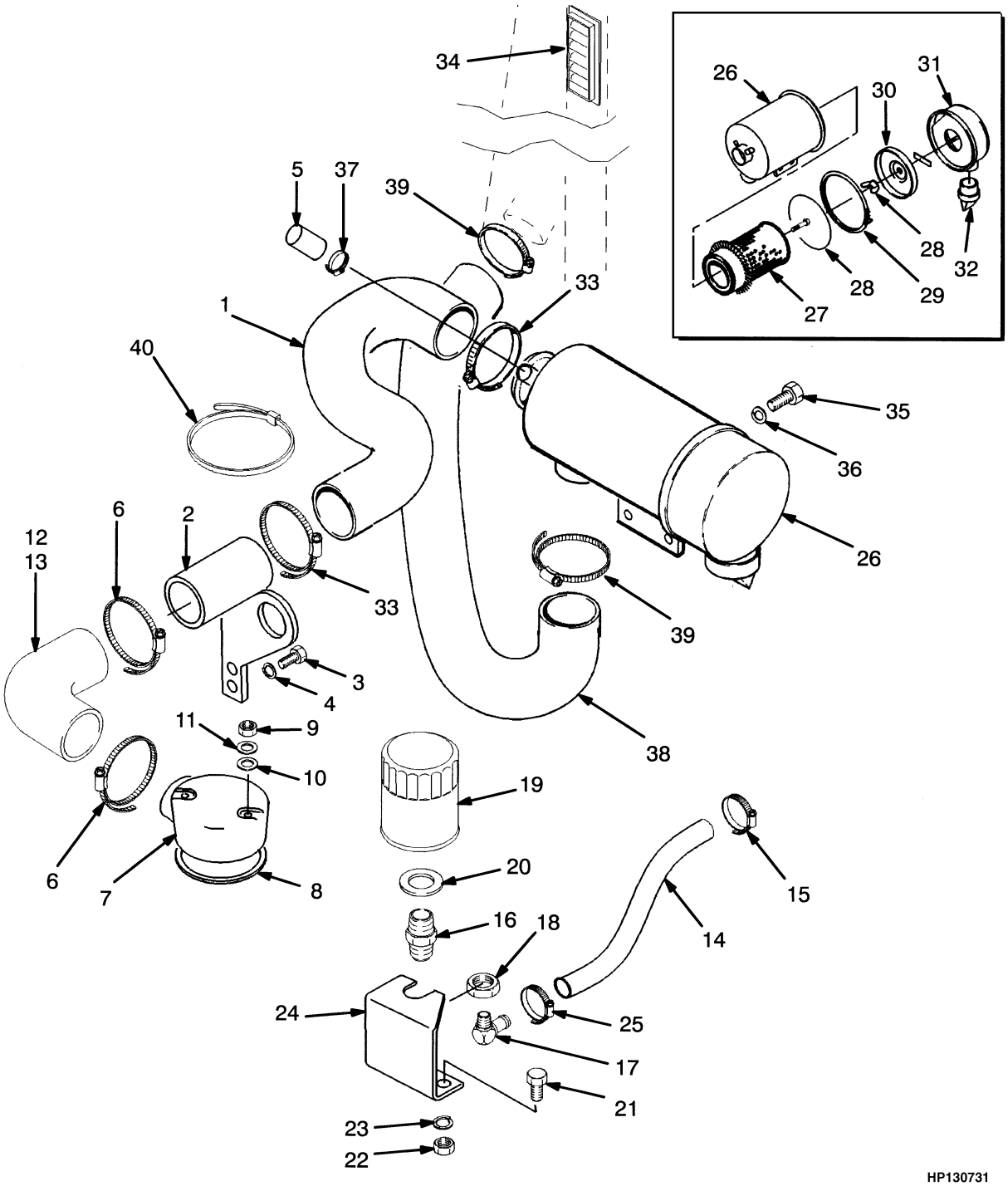

©2009 HYSTER COMPANY

AIR FILTER AND BREATHER

HYDROSTATIC TRANSMISSION (→ S/N H177B26621)

ITEM	PART NO.	DESCRIPTION	QTY
1	1375174	Hose (Intake)	1
2	1375696	Tube	1
3	16598	Capscrew	2
4	15156	Lockwasher	2
5	1359608	Plug	1
6	112989	Hose Clamp	2
7	1375722	Hood	1
8	1347021	Gasket	1
9	313828	Nut	2
10	109919	Seal	2
11	320157	Washer	2
12	**a** 1375744	Hose	1
13	**a** 1375693	Hose	..
14	1376726	Hose	1
15	130845	Clamp	1
16	1350042	Adapter	1
17	16788	Fitting	1
18	14761	Fitting	1
19	1350036	Oil Filter	1
20	1300152	Washer	1
21	292500	Capscrew	2
22	136687	Nut	2
23	292680	Washer	2
24	1376576	Bracket	1
25	166857	Clamp	1
26	1343635	Air Filter	1
27	305080	Filter Element	1
28	125847	Gasket	1
29	290734	Clamp	1
30	290735	Baffle	1
31	374922	Cup	1
32	374923	Valve	1
33	1394008	Hose Clamp	2
34	1339265	Grill	1
35	287854	Capscrew	2
36	292682	Lockwasher	2
37	166857	Clamp	1
38	1343638	Hose	1
39	112989	Hose Clamp	2
40	1323864	Tube	1
	996423	Kit-Periodic Maintenance	1

FOOTNOTES:

a Not used with Dual Fuel System

©2009 HYSTER COMPANY

FUEL SYSTEM (FIGURE 3-16)

LPG 3,0L — HYDROSTATIC, POWERSHIFT (→ S/N H177B30073)

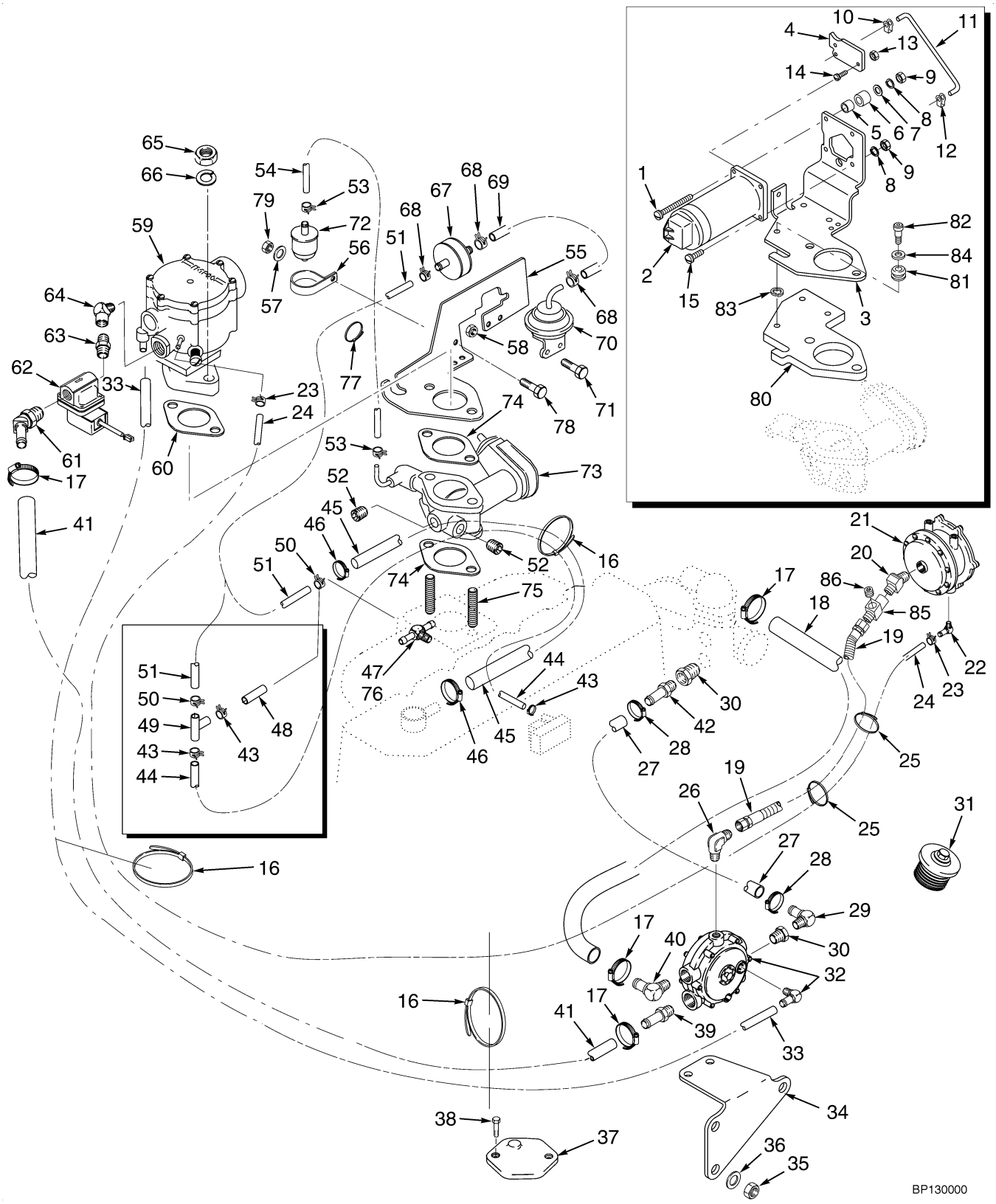

©2009 HYSTER COMPANY

FUEL SYSTEM

LPG 3,0L – HYDROSTATIC, POWERSHIFT (→ S/N H177B30073)

ITEM	PART NO.	DESCRIPTION	QTY
1	**a** 302027	Screw	1
2	**a** 1396573	Motor	1
3	**a** 1387148	Bracket	1
4	**a** 1338573	Plate	1
5	**a** 1386833	Cushion	1
6	**a** 1386834	Spacer	1
7	**a** 296415	Washer	1
8	**a** 292678	Lockwasher	4
9	**a** 292667	Nut	4
10	**a** 173710	Clip	1
11	**a** 1397325	Rod	1
12	**a** 203009	Clip	1
13	**a** 316833	Nut	2
14	**a** 1378550	Capscrew	2
15	**a** 302023	Screw	3
16	137852	Strap Clamp	5
17	130845	Clamp	4
18	893320	Hose	1
19	113011	Hose Assy	1
20	16863	Fitting	1
21	258321	Kit-Filter and Lock-Off Valve	1
22	175347	Fitting	1
23	366473	Clamp	1
24	1375713	Hose	1
25	137852	Strap Clamp	5
26	14358	Fitting	1
27	893308	Hose	1
28	168718	Clamp	2
29	17215	Fitting	1
30	63108	Fitting	2
31	1352123	Fuel Cap	1
32	1369572	LPG Regulator (LPG) (☞Figure 3-29)	1
32	1457964	LPG Regulator (☞Figure 3-30)	1
33	**eag** 1375711	Hose	1
33	**aefh** 260878	Hose	1
34	**a** 1356513	Bracket	1
34	**b** 1489711	Bracket	1
35	313828	Nut	3
36	320158	Washer	3
37	1451568	Cover Plate	1
38	329067	Screw	2
39	201797	Fitting	1
40	125305	Fitting	1
41	1376568	Hose	1
42	17217	Fitting	1
43	**bc** 369815	Clamp	4
43	**ac** 369815	Clamp	4
44	**abc** 1376571	Hose	1
45	1378537	Hose	1
46	353198	Clamp	2

©2009 HYSTER COMPANY

FUEL SYSTEM

LPG 3,0L – HYDROSTATIC, POWERSHIFT (→ S/N H177B30073)

ITEM	PART NO.	DESCRIPTION	QTY
47	**ac** 1358515	Fitting	1
48	**efbc** 1356454	Hose	1
49	**efbc** 2034520	Fitting	1
50	**f** 1333840	Clamp	1
51	**ef** 1360841	Hose	1
52	14349	Fitting (Pipe Plug)	2
53	369815	Clamp	2
54	**bdh** 1354114	Hose	1
54	**g** 1354117	Hose	1
54	**ah** 1354117	Hose	1
55	**bdh** 1371599	Bracket	1
55	**bdg** 1389497	Bracket	1
56	1334845	Clamp	1
57	197067	Washer	1
58	**ef** 316825	Nut	2
59	**bd** 1387239	Carburetor (☞Figure 3-26)	1
59	**a** 1468570	Lpg Carburetor (☞Figure 3-27)	1
59	1389498	Lpg Carburetor (☞Figure 3-26)	1
60	195771	Gasket	1
61	349366	Fitting	1
62	1354203	Solenoid Valve	1
62	1369456	Coil	1
62	1495986	Kit-Seal	1
63	15351	Fitting	1
64	12824	Fitting	1
65	15006	Nut	2
66	15920	Lockwasher	2
67	**f** 1350400	Valve	1
68	**f** 366473	Clamp	2
69	**f** 377209	Hose	1
70	**ef** 1346872	Actuator	1
71	**ef** 293743	Capscrew	2
72	1334847	Fuel Filter	1
73	340405	Governor	1
74	181763	Gasket	2
75	**bcd** 175323	Stud	2
75	**a** 182942	Stud	2
76	**f** 1358515	Fitting	1
76	**ad** 201808	Fitting	1
77	**ef** 137852	Strap Clamp	1
78	293743	Capscrew	1
79	316825	Nut	1
80	**a** 1387149	Plate	1
81	**a** 1300757	Grommet	3
82	**a** 85749	Bolt	3
83	**a** 292680	Washer	3
84	**a** 221765	Washer	3
85	1351146	Fitting	1
86	15483	Fitting	1

©2009 HYSTER COMPANY

FOOTNOTES:

a With Hydrostatic Transmission with Throttle-Up
b With Hydrostatic Transmission without Throttle-Up
c With MSTS
d Without MSTS
e Hydrostatic Transmission
f Powershift Transmission
g → S/N H177B20721
h S/N H177B20722 →

©2009 HYSTER COMPANY

FUEL SYSTEM (FIGURE 3-17)

LPG 3,0L — POWERSHIFT (S/N H177B30074 →)

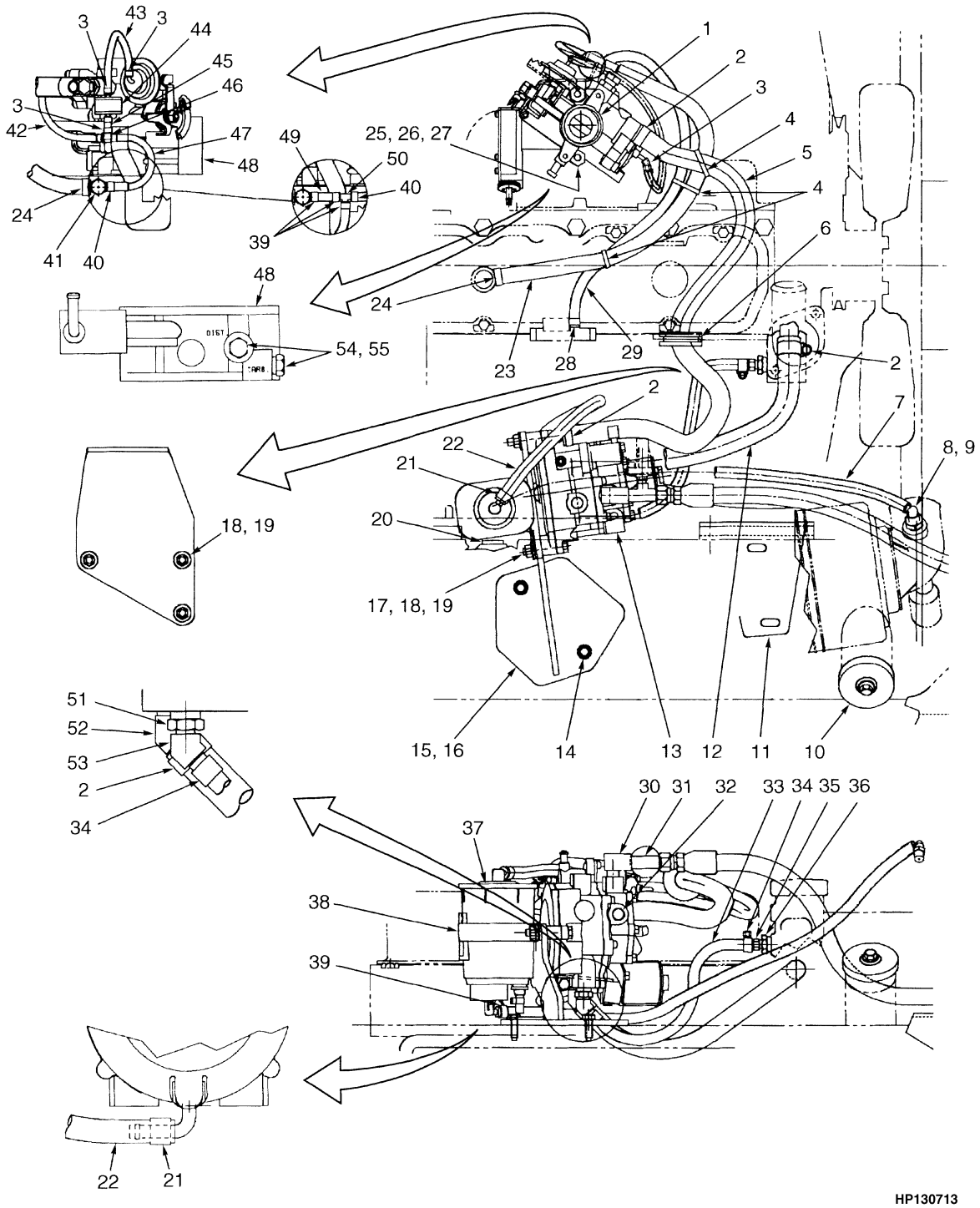

©2009 HYSTER COMPANY

FUEL SYSTEM

LPG 3,0L – POWERSHIFT (S/N H177B30074 →)

ITEM	PART NO.	DESCRIPTION	QTY
1	1469350	Lpg Carburetor (☞Figure 3-28)	1
2	130845	Clamp	4
3	366473	Clamp	7
4	137852	Strap Clamp	3
5	**b** 1475159	Hose (LPG Vapor)	1
5	**c** 1478908	Hose Assy (LPG Vapor)	1
6	239242	Grommet	1
7	381938	Hose	1
8	1479539	Fitting	1
9	1479862	Fitting	1
10	1352123	Fuel Cap	1
11	1474341	Plate (LH)	1
12	1363896	Hose	1
13	1469346	Lpg Converter (☞Figure 3-24)	1
13	1493620	Regulator (☞Figure 3-24)	1
14	329067	Screw	2
15	280472	Sealant	AR
16	1474020	Bracket Wldmt	1
17	292509	Capscrew	2
18	313828	Nut	5
19	320158	Washer	5
20	15964	Fitting	1
21	353311	Clamp	2
22	260878	Hose	1
23	1378537	Hose	1
24	353198	Clamp	2
25	1475162	Stud	2
26	15055	Nut	2
27	15918	Lockwasher	2
28	369815	Clamp	4
29	**a** 1376571	Hose	1
30	17314	Fitting	1
31	1351146	Fitting	1
32	14385	Fitting	2
33	114586	Hose	1
34	168718	Clamp	2
35	17217	Fitting	1
36	63108	Fitting	2
37	1471694	Resonator	1
38	1475409	Clamp	1
39	369815	Clamp	5
40	1333840	Clamp	1
41	1358515	Fitting	1
42	372003	Hose	1
43	1333808	Hose	1
44	1350400	Valve	1
45	1472454	Hose	1
46	1351169	Fitting	1
47	1360841	Hose	1
48	340405	Governor	1

©2009 HYSTER COMPANY

FUEL SYSTEM

LPG 3,0L – POWERSHIFT (S/N H177B30074 →)

ITEM	PART NO.	DESCRIPTION	QTY
48	181763	Gasket	2
49	**a** 1356454	Hose	1
50	**a** 2034520	Fitting	1
51	12843	Fitting	1
52	1336135	Fitting	1
53	174374	Fitting	1
54	14349	Fitting (Pipe Plug)	2
55	246108	Sealant	AR

FOOTNOTES:

a With MSTS
b → S/N H177B11463W
c S/N H177B11464W →

©2009 HYSTER COMPANY

NOTES

©2009 HYSTER COMPANY

ENGINE FUEL SYSTEM (FIGURE 3-18)
LOW EMISSIONS — 3,0L ENGINE

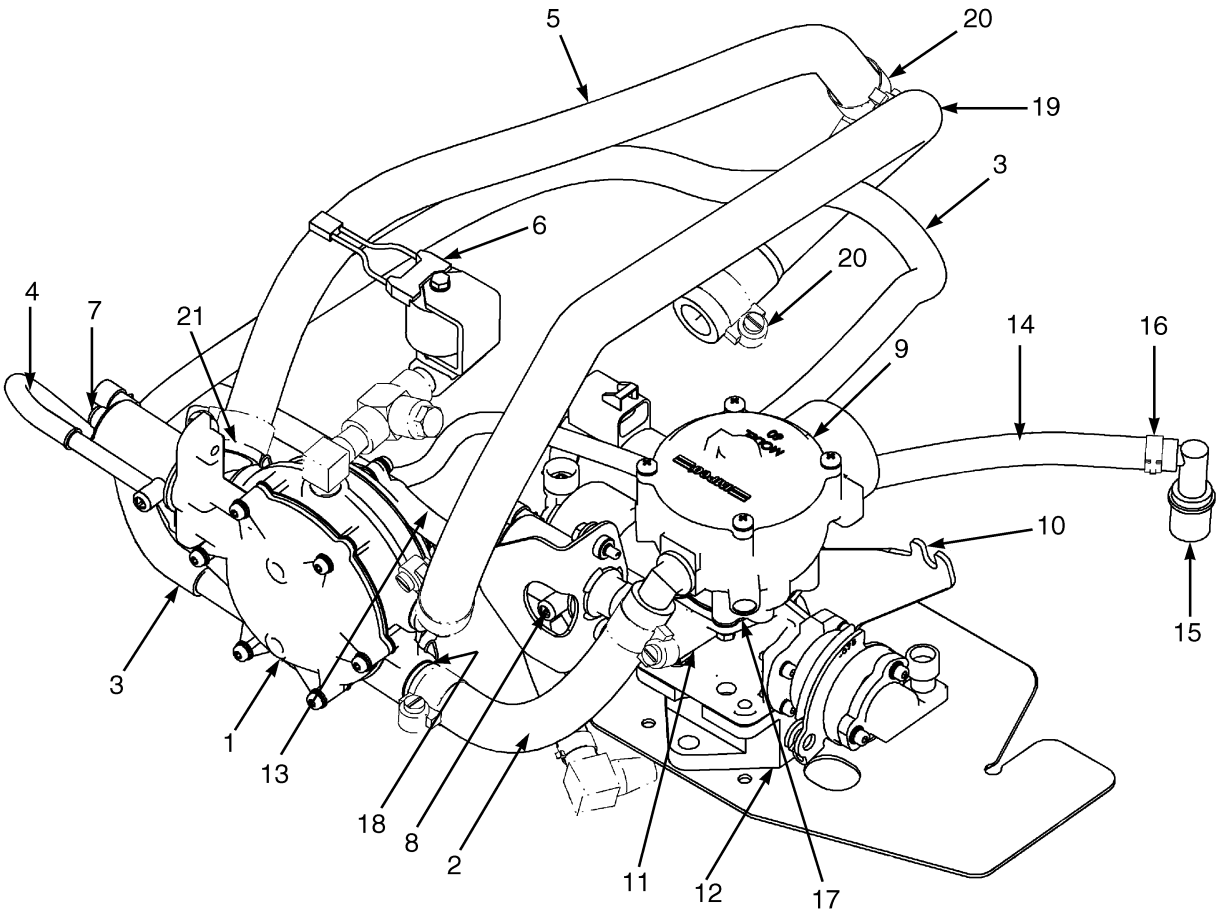

BP130049

©2009 HYSTER COMPANY

ENGINE FUEL SYSTEM
LOW EMISSIONS – 3,0L ENGINE

ITEM	PART NO.	DESCRIPTION	QTY
1	1558190	Regulator	1
2	1558202	Hose Assy (Dry Gas Supply)	1
2	1582386	Hose Clamp (Pinch Type)	2
3	1558542	Hose Assy (Balance)	1
3	1558198	Hose Clamp	1
4	1558540	Hose Assy (Pressure Trim Valve)	1
4	1558198	Hose Clamp	1
5	1582514	Hose Assy (Return)	1
5	1582385	Hose Clamp (Worm Type)	1
5	1582386	Hose Clamp (Pinch Type)	1
6	1558187	Lpg Lock-Off	1
7	1558191	Valve	1
8	1558175	Fuel Trim Valve	1
8	1558541	Hose Assy (Fuel Trim Valve)	1
8	1558198	Hose Clamp	2
9	1558532	Mixer	1
9	1650223	Kit-Repair Lpg Converter	1
10	1558163	Bracket	1
11	1558164	Throttle Body	1
12	1558535	Adapter	1
13	1558543	Balance Valve	1
13	1558198	Hose Clamp	2
14	1558539	Hose Assy (PCV)	1
15	1558196	Pcv Valve (PCV)	1
16	1558198	Hose Clamp	1
17	1558536	Heat Shield	1
18	130845	Clamp	6
19	1582515	Hose Assy (Supply)	1
20	1582385	Hose Clamp (Worm Type)	1
21	1582386	Hose Clamp (Pinch Type)	1
	a 1561870	Sensor (Oxygen)	1
	1570604	Check Valve	1

FOOTNOTES:

a Not Illustrated

©2009 HYSTER COMPANY

FUEL FILTERING AND LOCK-OFF SYSTEM (FIGURE 3-19)

3.0L LPG — LOW EMISSIONS

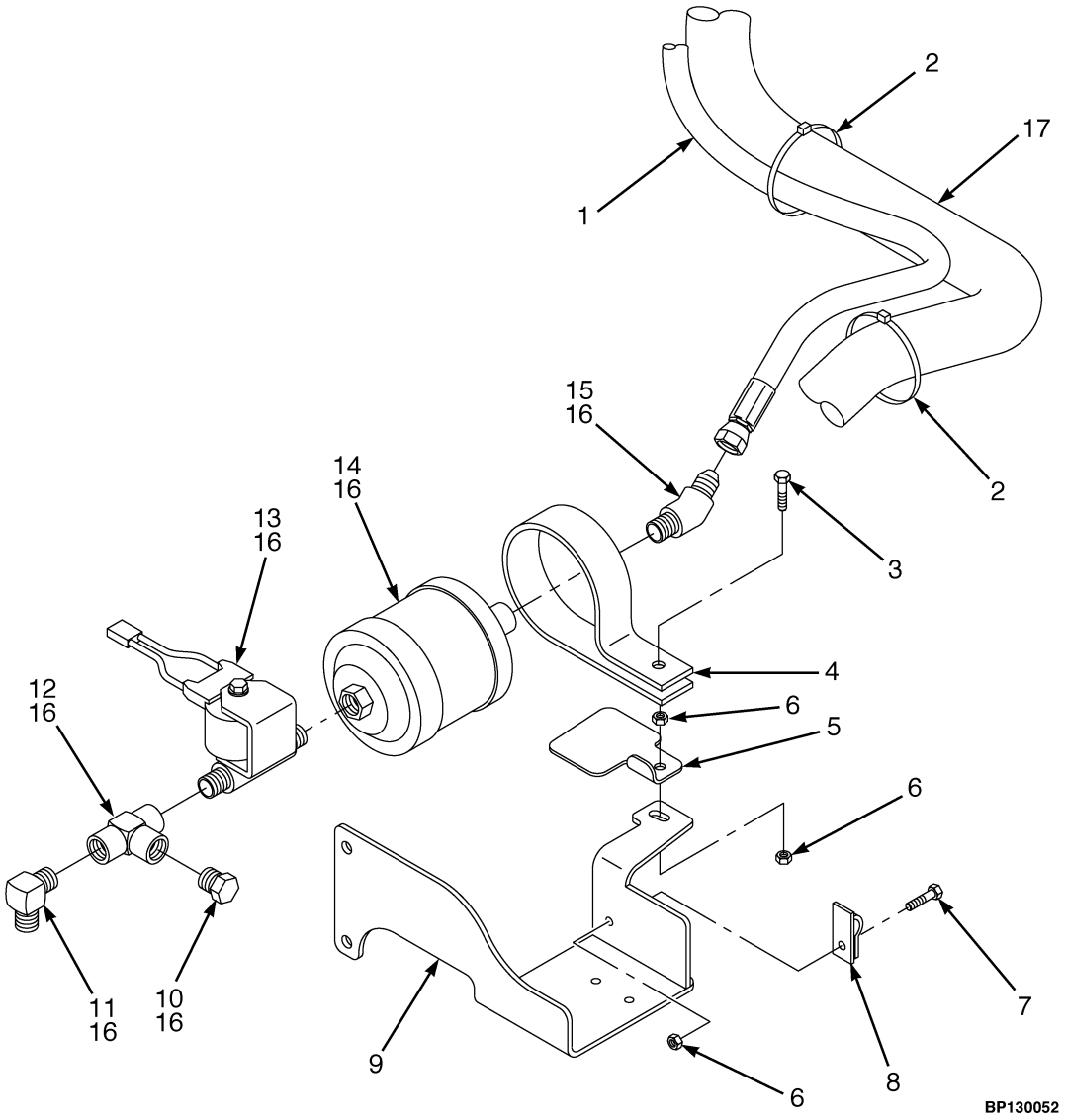

©2009 HYSTER COMPANY

FUEL FILTERING AND LOCK-OFF SYSTEM

3.0L LPG – LOW EMISSIONS

ITEM	PART NO.	DESCRIPTION	QTY
1	2067529	Hose Assy	1
2	273775	Strap Clamp	3
3	1528482	Capscrew	1
4	1545418	Clamp (Insulated)	1
5	1549461	Heat Shield	1
6	1502543	Nut (Flange)	3
7	1527880	Capscrew	1
8	110322	Clamp	1
9	. . . . .	Bracket	1
10	14385	Fitting	1
11	16841	Fitting	1
12	63111	Fitting	1
13	1558187	Lpg Lock-Off (Low Pressure)	1
14	1544792	Fuel Filter	1
15	16863	Fitting	1
16	246108	Sealant	AR
17	2062421	Hose	1

©2009 HYSTER COMPANY

THROTTLE BODY AND LPG MIXER (FIGURE 3-20)

LOW EMISSIONS — 3.0L ENGINE

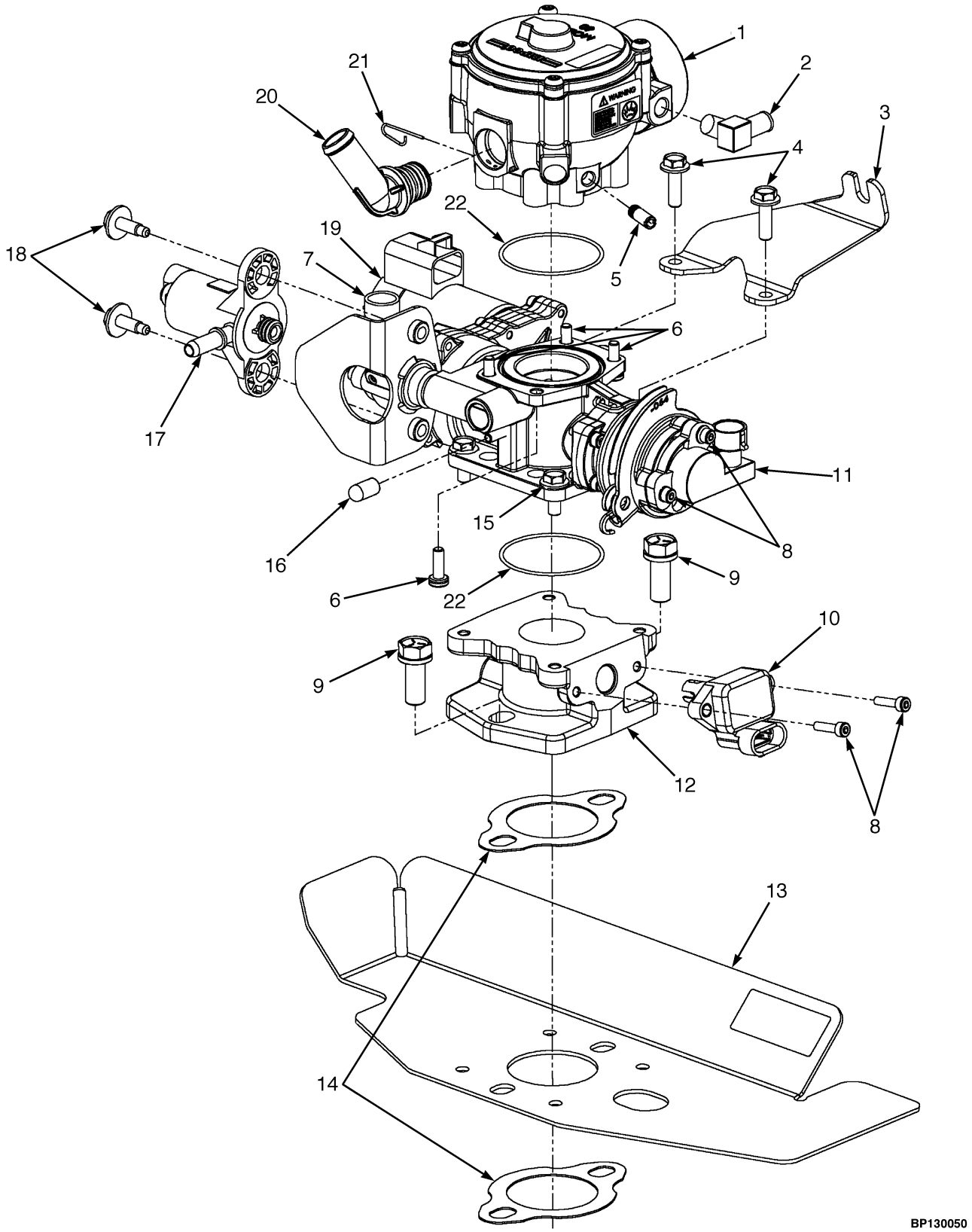

©2009 HYSTER COMPANY

THROTTLE BODY AND LPG MIXER

LOW EMISSIONS – 3.0L ENGINE

ITEM	PART NO.	DESCRIPTION	QTY
1	1558532	Mixer	1
1	1650223	Kit-Repair Lpg Converter	1
2	1361164	Fitting	1
3	1558163	Bracket	1
4	1558533	Bolt	2
5	323541	Fitting	1
6	1558435	Screw	4
7	1572857	Sensor (Throttle Position)	1
8	1558170	Screw	2
9	1558534	Bolt	2
10	1558171	Sensor (Temperature manifold absolute pressure)	1
11	1558165	Sensor (Foot Pedal Position)	1
12	1558535	Adapter	1
13	1558536	Heat Shield	1
14	204866	Gasket	2
15	1558432	Bolt	2
16	1558537	Cap	1
17	1558175	Fuel Trim Valve	1
17	1558541	Hose Assy	1
18	1558168	Bolt	2
19	1558164	Throttle Body	1
20	1558176	Fitting	1
21	1558161	Pin	1
22	1558177	O-Ring	2

©2009 HYSTER COMPANY

LPG REGULATOR (FIGURE 3-21)
LOW EMISSIONS — 3.0L ENGINE

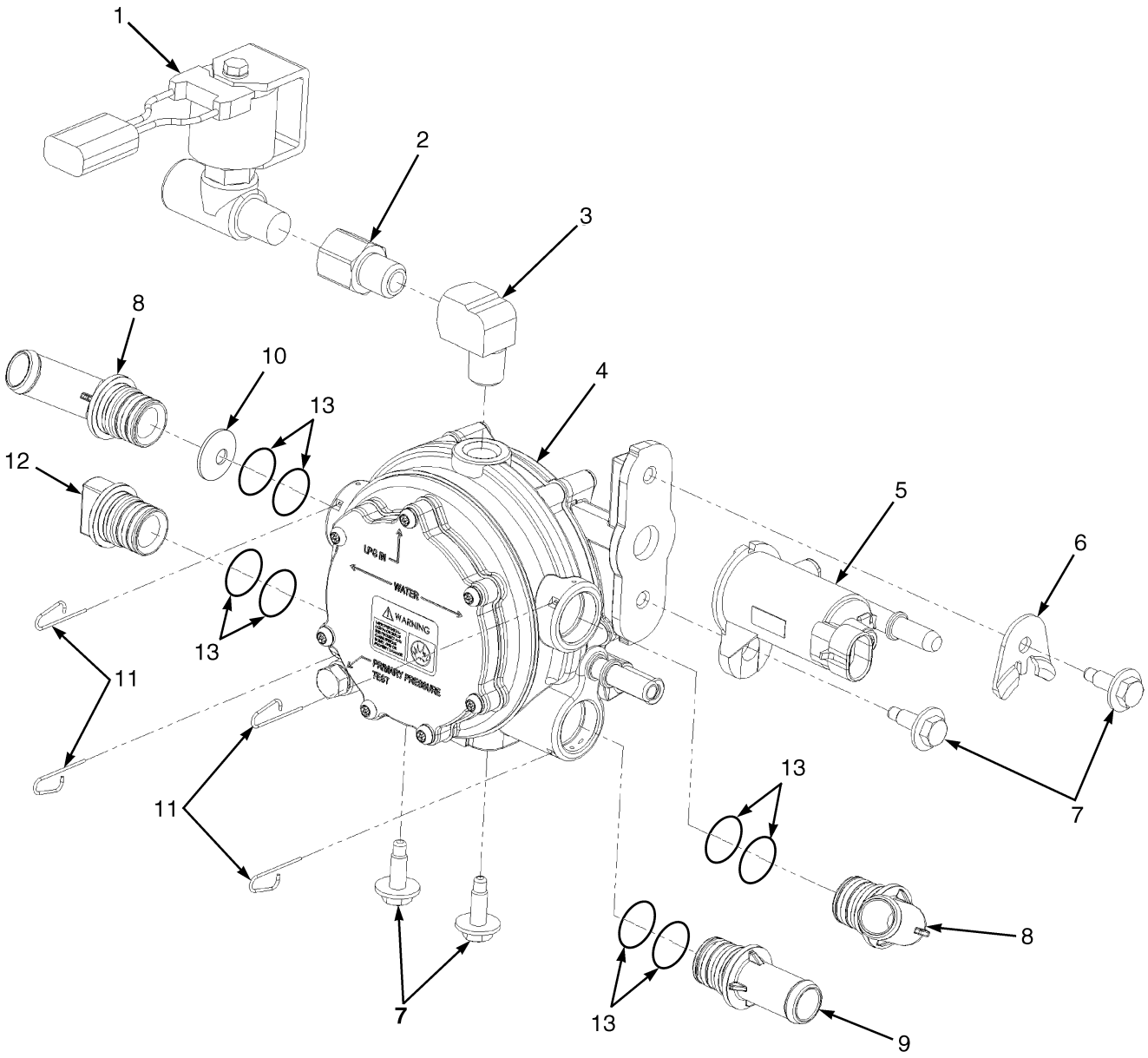

BP130051

©2009 HYSTER COMPANY

LPG REGULATOR
LOW EMISSIONS – 3.0L ENGINE

ITEM	PART NO.	DESCRIPTION	QTY
1	1558187	Lpg Lock-Off	1
2	1558188	Fitting	1
3	1558189	Fitting	1
4	1558190	Regulator	1
5	1558191	Valve	1
6	1558192	Clamp	1
7	1558168	Bolt	4
8	1558176	Fitting	2
9	1558193	Fitting	1
10	1558538	Jet (Coolant Restrictor)	1
11	1558161	Pin	4
12	1558194	Cap	1
13	1603857	O-Ring	8

©2009 HYSTER COMPANY

AIR FILTER AND BREATHER (FIGURE 3-22)

POWERSHIFT (S/N H177B26622 →)

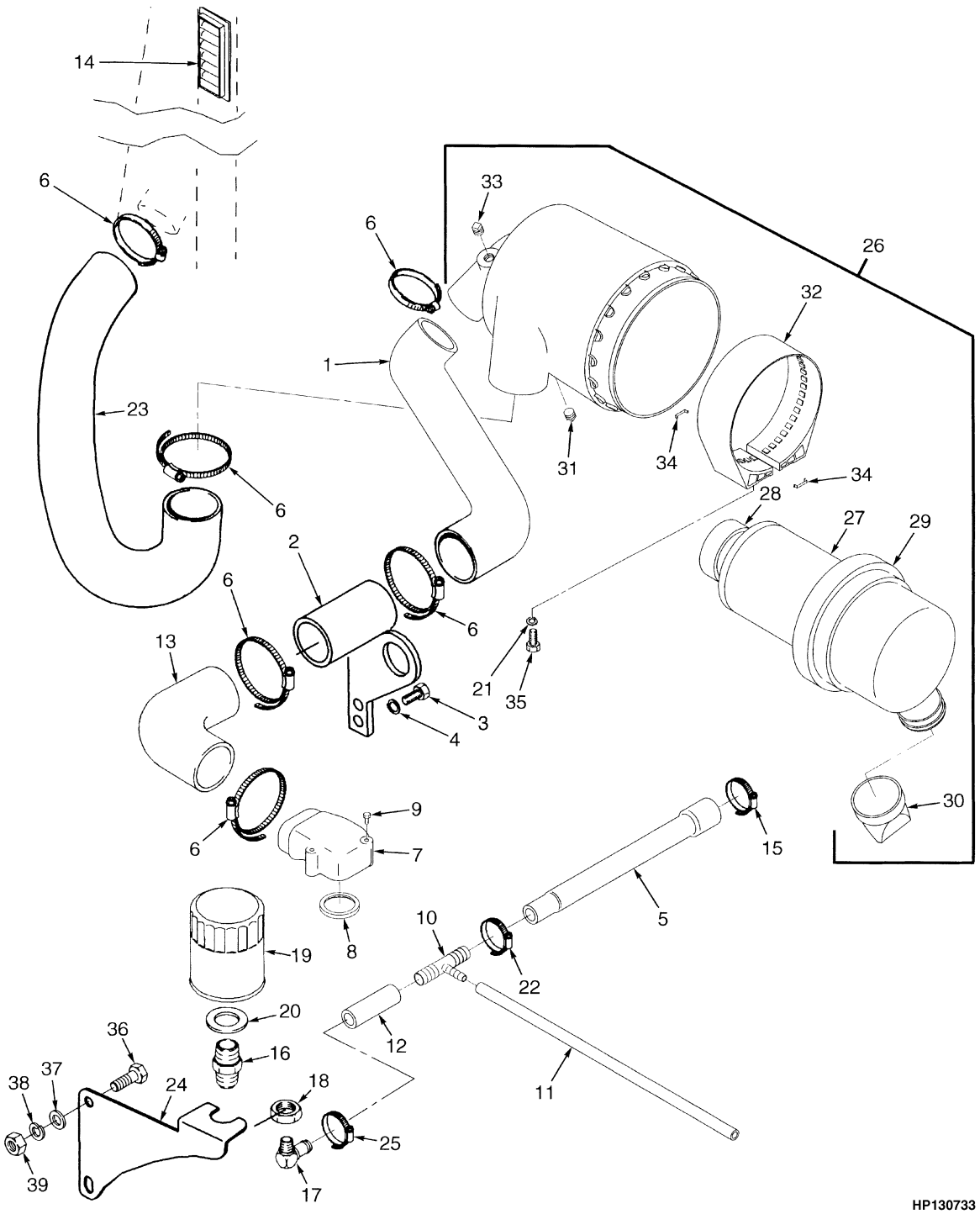

©2009 HYSTER COMPANY

AIR FILTER AND BREATHER
POWERSHIFT (S/N H177B26622 →)

KEY:
A: Petrol
B: LPG

ITEM	PART NO.	DESCRIPTION	QTY A	QTY B
1	1484338	Hose (Intake)	1	..
2	1479246	Tube	1	..
3	16598	Capscrew	2	..
4	15156	Lockwasher	2	..
5	1471613	Hose	1	..
6	112989	Hose Clamp	6	..
7	1473806	Air Inlet	1	..
8	1475156	Seal	1	..
9	302053	Screw	2	..
10	1374916	Fitting	1	..
11	1333807	Hose	1	..
12	931586	Hose	1	..
13	1469351	Hose (Inlet)	1	..
14	1339265	Grill	1	..
15	353199	Clamp	1	..
16	1350042	Adapter	1	..
17	16788	Fitting	1	..
18	14761	Fitting	1	..
19	1350036	Oil Filter	1	..
20	1300152	Washer	1	..
21	292682	Lockwasher	2	..
22	166857	Clamp	1	..
23	1486707	Hose	1	..
24	1525916	Bracket Wldmt	1	..
25	166857	Clamp	1	..
26	**b** 1485320	Air Filter	1	..
26	**a** 1485321	Air Filter	1	..
27	1377080	Filter Element	1	..
28	**a** 1452112	Filter Element	1	..
29	1494023	Cover	1	..
30	1494024	Valve	1	..
31	1462442	Plug	1	..
32	1494029	Bracket	1	..
33	1377083	Plug	1	..
34	1494030	Clip	1	..
35	136681	Capscrew	2	..
36	136985	Capscrew	2	..
37	320159	Washer	2	..
38	292682	Lockwasher	2	..
39	136692	Nut	2	..

FOOTNOTES:

a With Dual Element

b With Single Element

©2009 HYSTER COMPANY

AIR FILTER AND BREATHER (FIGURE 3-23)

3.0L LPG — EPA COMPLIANT

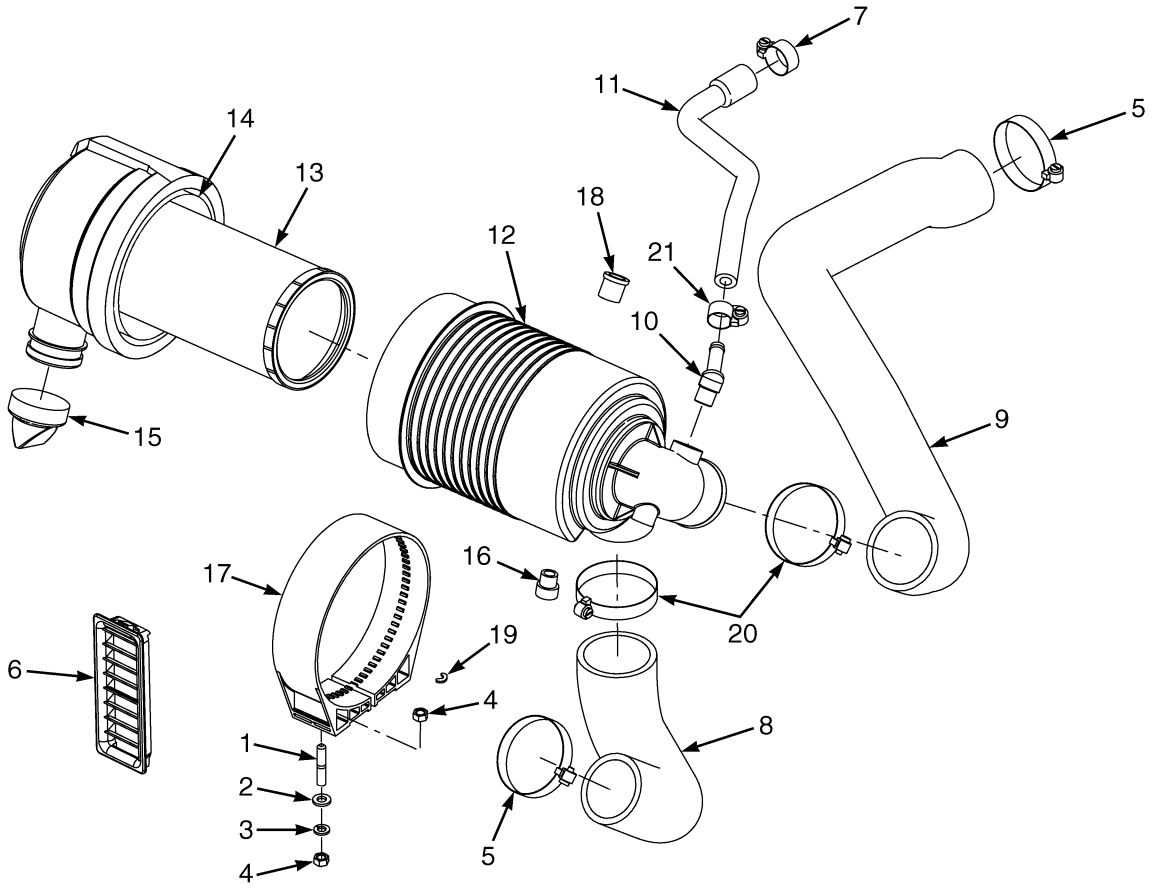

HP130345

©2009 HYSTER COMPANY

AIR FILTER AND BREATHER
3.0L LPG – EPA COMPLIANT

ITEM	PART NO.	DESCRIPTION	QTY
1	1510786	Wheel Stud	2
2	320157	Washer	2
3	292681	Lockwasher	2
4	313828	Nut	2
5	1394008	Hose Clamp	2
6	1339265	Grill	1
7	130845	Clamp	1
8	1484337	Hose (Intake)	1
9	2062462	Hose (Intake)	1
10	16764	Fitting	1
11	1542479	Hose	1
12	**b** 1485320	Air Filter	1
12	**a** 1485321	Air Filter	1
13	**b** 1377080	Filter Element	1
13	**a** 1452112	Filter Element	1
14	1494023	Cover	1
15	1494024	Valve	1
16	1462442	Plug	1
17	1494029	Bracket	1
18	1377083	Plug	1
19	1494030	Clip	1
20	1394008	Hose Clamp	2
21	166857	Clamp	1

FOOTNOTES:

a Dual Element

b Single Element

©2009 HYSTER COMPANY

REGULATOR (FIGURE 3-24)

LPG 2,0 AND 3,0L — OPEN LOOP (S/N H177B23394 →)

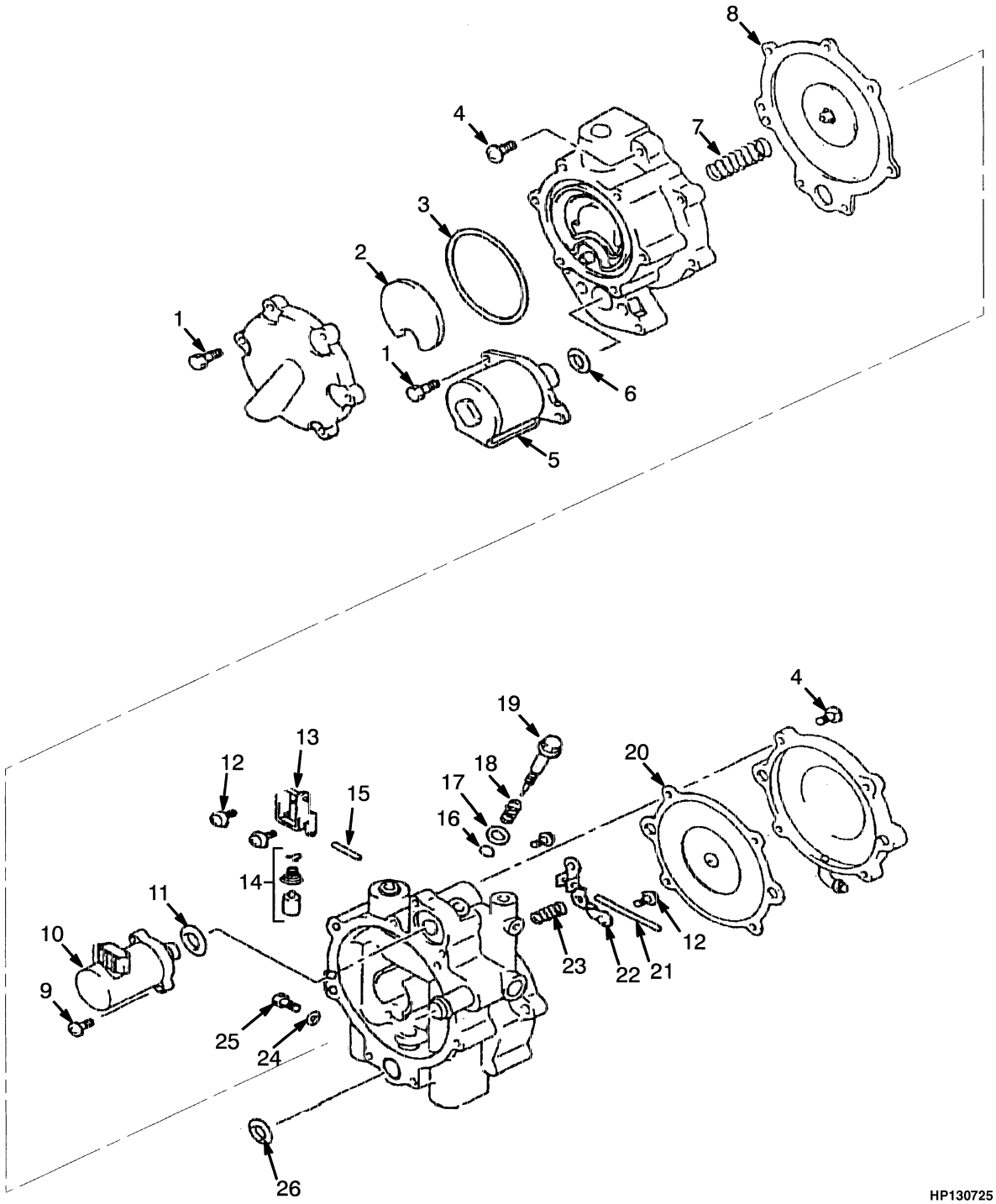

©2009 HYSTER COMPANY

REGULATOR

LPG 2,0 AND 3,0L – OPEN LOOP (S/N H177B23394 →)

ITEM	PART NO.	DESCRIPTION	QTY
	1469346	Lpg Converter (Open Loop)	1
1	1479503	Bolt (and Washer)	8
2	1479504	Filter	1
3	1479505	O-Ring	1
4	1479507	Screw	11
5	1479508	Solenoid Valve (Main Fuel Lockoff)	1
6	1479509	O-Ring	1
7	1479510	Spring (First Regulator)	1
8	1479511	Diaphragm (First Regulator)	1
9	1479513	Screw	2
10	1479512	Solenoid Valve	1
11	1479514	O-Ring	1
12	1479515	Screw	4
13	1479516	Lever	1
14	1479517	Valve	1
15	1479518	Pin	1
16	1479522	O-Ring	1
17	1479523	Washer	1
18	1479524	Spring	1
19	1479525	Screw	1
20	1479529	Diaphragm (Second Regulator)	1
21	1479528	Pin	1
22	1479527	Valve	1
23	1479526	Spring (Second Regulator)	1
24	1479520	Gasket	1
25	1479519	Plug	1
26	1479521	O-Ring	1
	1479530	Kit-Repair Valve	1
	1479531	Kit-Diaphragm	1

©2009 HYSTER COMPANY

REGULATOR (FIGURE 3-25)

LPG 2,0 AND 3,0L — CLOSED LOOP (S/N H177B23394Y →)

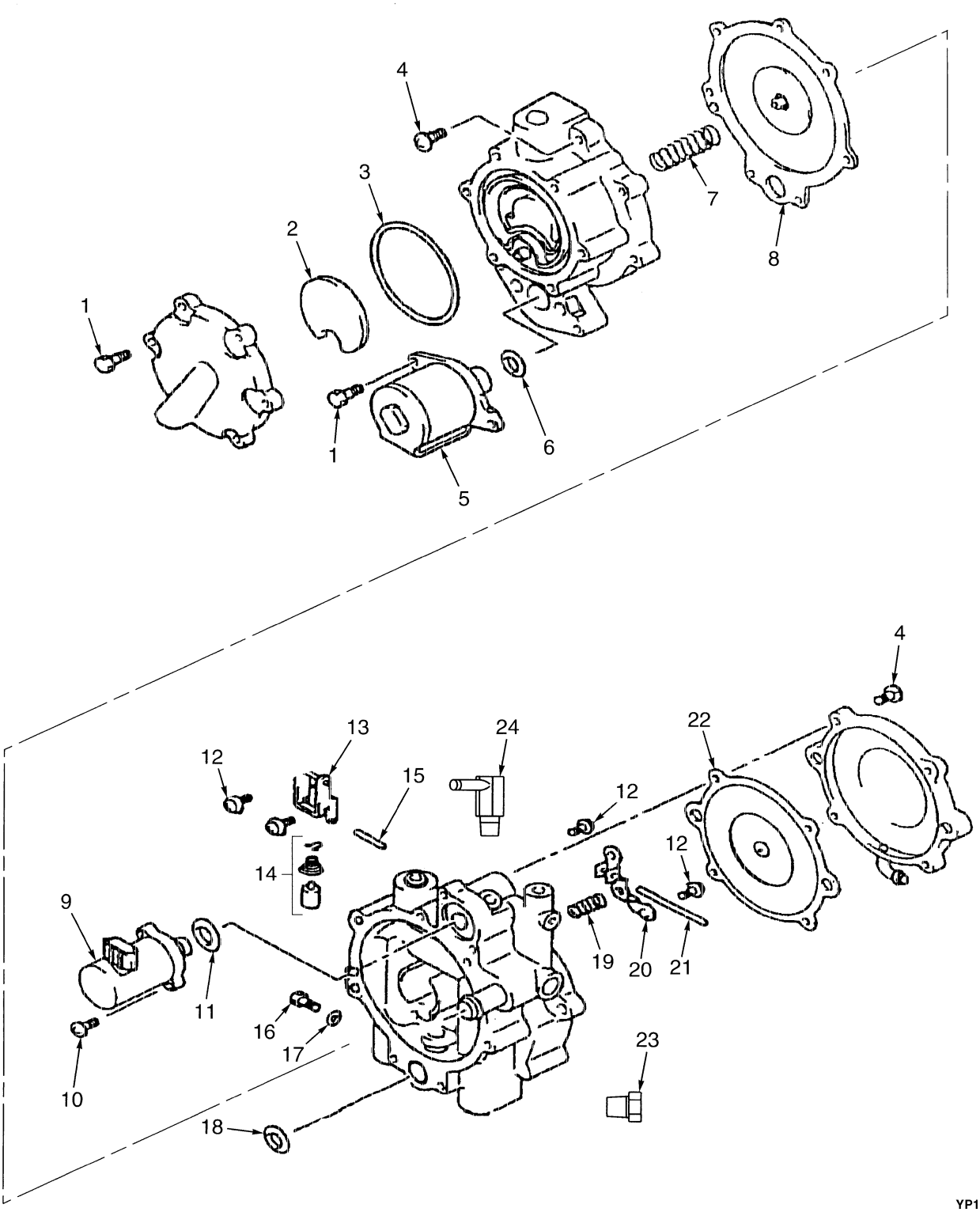

©2009 HYSTER COMPANY

REGULATOR

LPG 2,0 AND 3,0L – CLOSED LOOP (S/N H177B23394Y →)

ITEM	PART NO.	DESCRIPTION	QTY
	1487199	LPG Regulator (Closed Loop)	1
1	1479503	Bolt (With Washer)	8
2	1479504	Filter	1
3	1479505	O-Ring	1
4	1479507	Screw	11
5	1479508	Solenoid Valve (Main Fuel Lockoff)	1
6	1479509	O-Ring	1
7	1479510	Spring (First Regulator)	1
8	1479511	Diaphragm (First Regulator)	1
9	1496172	Solenoid Valve (Idle)	1
10	1479513	Screw	2
11	1479514	O-Ring	1
12	1479515	Screw	4
13	1479516	Lever	1
14	1479517	Valve	1
15	1479518	Pin	1
16	1479519	Plug	1
17	1479520	Gasket	1
18	1479521	O-Ring	1
19	1479526	Spring (Second Regulator)	1
20	1479527	Valve	1
21	1479528	Pin	1
22	1479529	Diaphragm (Second Regulator)	1
23	1493624	Plug	1
24	1495121	Fitting	1
	1479530	Kit-Repair Valve	1
	1479531	Kit-Diaphragm	1

©2009 HYSTER COMPANY

CARBURETOR (FIGURE 3-26)

LPG 3.0L (→ S/N H177B20721 WITH POWERSHIFT TRANSMISSION)

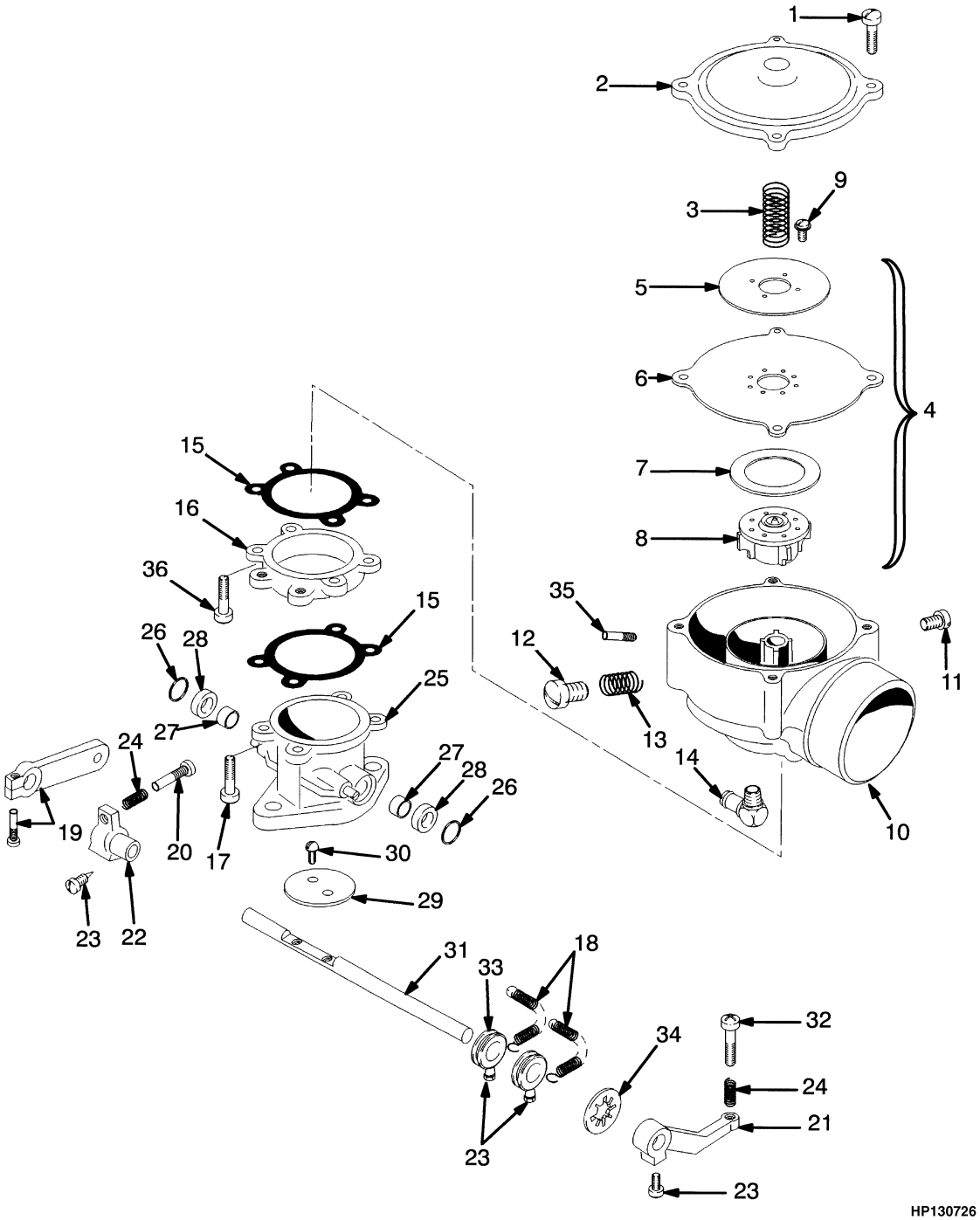

©2009 HYSTER COMPANY

CARBURETOR

LPG 3.0L (→ S/N H177B20721 WITH POWERSHIFT TRANSMISSION)

KEY:
A: Powershift and Hydrostatic without Power-Up
B: Hydrostatic Transmission with Throttle-Up

ITEM	PART NO.	DESCRIPTION	QTY A	QTY B
	a 1387239	Carburetor	..	1
	1389498	Lpg Carburetor	1	..
1	**a** 132473	Screw	4	4
2	204780	Cover	1	..
3	374713	Spring	1	..
4	**a** 1452798	Valve	1	1
5	**a**	Back-Up Plate	1	1
6	**a** 1369450	Diaphragm	1	1
7	**a** 204858	Ring	1	1
8	**a**	Valve	1	1
9	**a** 220283	Screw	4	4
10	250371	Housing	1	..
11	326926	Screw	1	..
12	326516	Screw	1	..
13	332277	Spring	1	..
14	1361164	Fitting	1	..
15	**a** 204787	Gasket	2	2
16	303072	Spacer	1	..
17	387481	Screw	4	..
18	1358245	Spring	2	..
19	1380268	Throttle Arm	1	..
20	16751	Screw	1	..
21	1358241	Lever	1	..
22	1358242	Lever	1	..
23	1358243	Pin	4	..
24	204824	Spring	2	..
25	1455262	Throttle Body	1	..
26	. . . . .	Retainer	2	..
27	. . . . .	Seal	2	..
28	. . . . .	Bearing	2	..
29	. . . . .	Float	1	..
30	. . . . .	Screw	2	..
31	. . . . .	Shaft	1	..
32	1374057	Screw	1	..
33	387478	Bushing	2	..
34	387480	Nut	1	..
35	323541	Fitting	1	..
36	**a** 204790	Screw	4	8

FOOTNOTES:

a → S/N H177B20721X

©2009 HYSTER COMPANY

CARBURETOR (FIGURE 3-27)

LPG 3,0L (S/N H177B20722 ↔ S/N H177B30073 WITH POWERSHIFT TRANSMISSION)

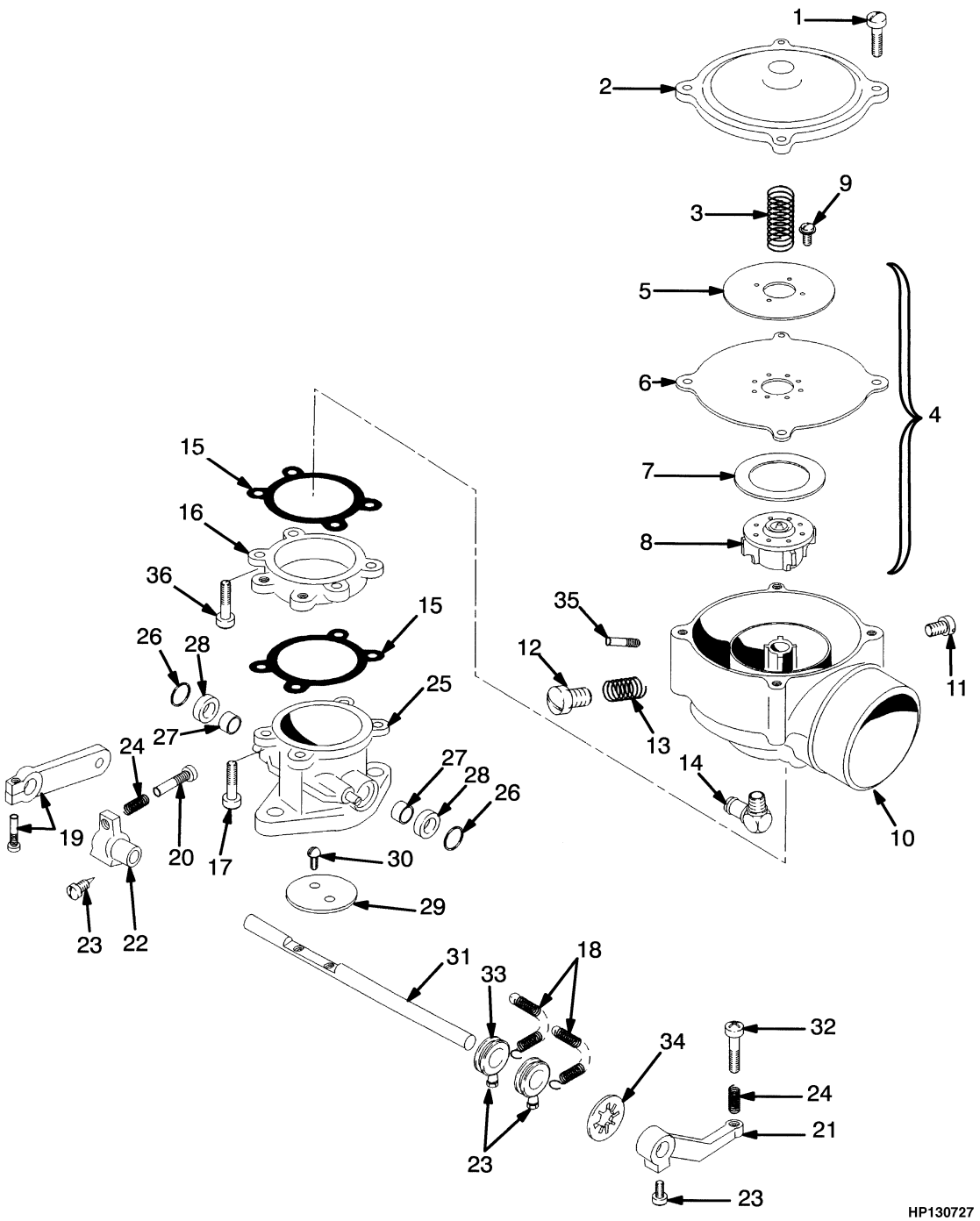

©2009 HYSTER COMPANY

CARBURETOR

LPG 3,0L (S/N H177B20722 ↔ S/N H177B30073 WITH POWERSHIFT TRANSMISSION)

ITEM	PART NO.	DESCRIPTION	QTY
	1468570	Lpg Carburetor	1
1	132473	Screw	4
2	204780	Cover	1
3	374713	Spring	1
4	1452798	Valve	1
5	. . . . .	Back-Up Plate	1
6	1369450	Diaphragm	1
7	204858	Ring	1
8	. . . . .	Valve	1
9	220283	Screw	4
10	250371	Housing	1
11	326926	Screw	1
12	326516	Screw	1
13	332277	Spring	1
14	14349	Fitting (Pipe Plug)	1
15	204787	Gasket	2
16	303072	Spacer	1
17	387481	Screw	4
18	1358245	Spring	2
19	1380268	Throttle Arm	1
20	16751	Screw	1
21	1358241	Lever	1
22	1358242	Lever (Stop)	1
23	1358243	Pin	4
24	204824	Spring	2
25	1471521	Throttle Body	1
26	. . . . .	Retainer	2
27	. . . . .	Seal	2
28	. . . . .	Bearing	2
29	. . . . .	Back-Up Plate	1
30	. . . . .	Screw	2
31	. . . . .	Shaft	1
32	1374057	Screw	1
33	387478	Bushing	2
34	387480	Nut	1
35	323541	Fitting	1
36	204790	Screw	4

©2009 HYSTER COMPANY

CARBURETOR (FIGURE 3-28)

LPG 3,0L (S/N H177B30074 → WITH POWERSHIFT TRANSMISSION)

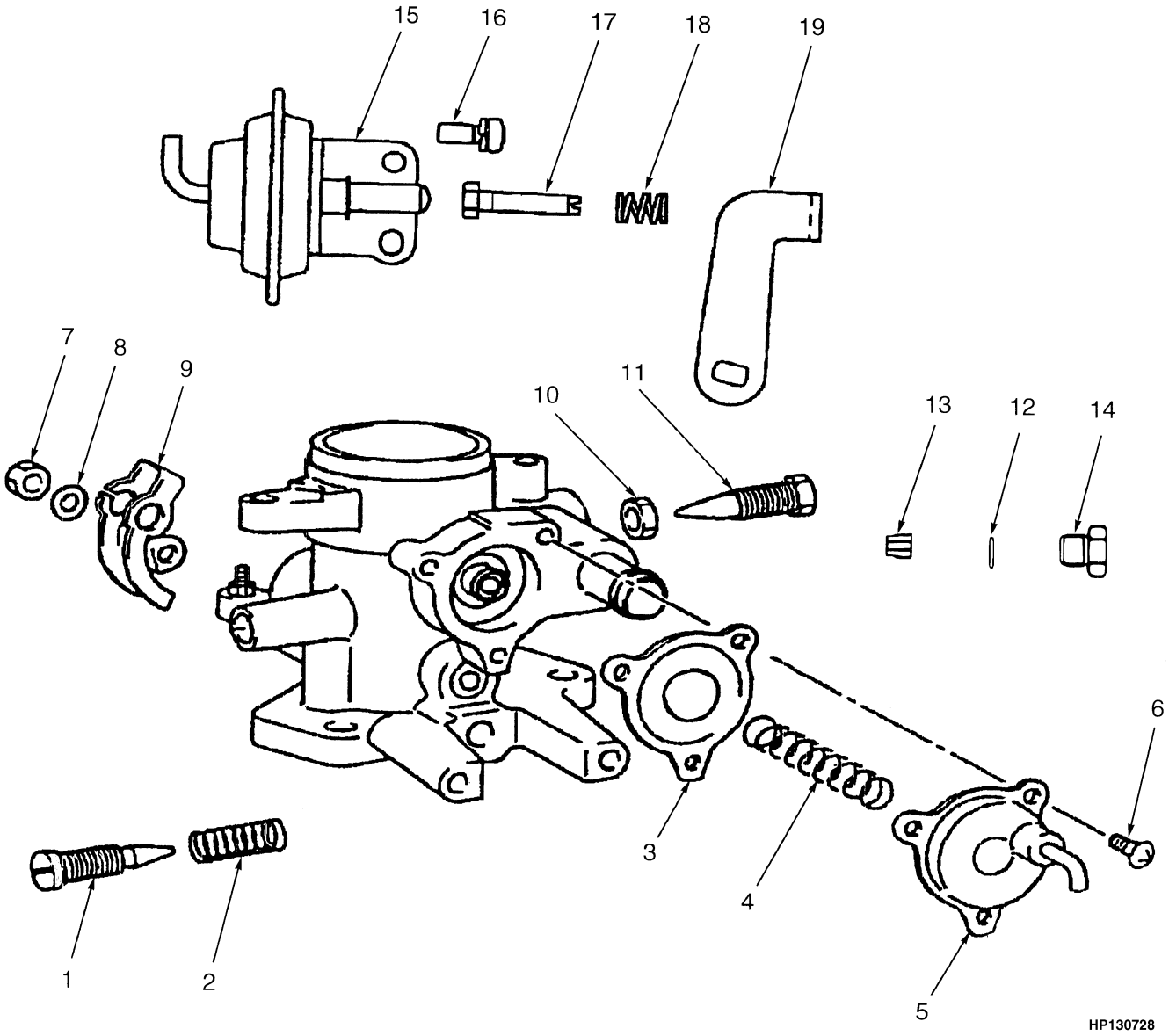

©2009 HYSTER COMPANY

CARBURETOR

LPG 3,0L (S/N H177B30074 → WITH POWERSHIFT TRANSMISSION)

ITEM	PART NO.	DESCRIPTION	QTY
	1469350	Lpg Carburetor	1
1	1493247	Screw	1
2	1493248	Spring	1
3	1493249	Diaphragm	1
4	1493250	Spring	1
5	1493251	Cover	1
6	1493252	Screw	3
7	1493253	Nut	1
8	1493254	Spring Washer	1
9	1493255	Lever	1
10	1493256	Nut	1
11	1493257	Screw	1
12	1493258	Gasket	1
13	1493259	Plug (Main Passage)	1
14	1494102	Jet	1
15	1493261	Diaphragm	1
16	1493262	Screw	2
17	1493263	Bolt	1
18	1493264	Spring	1
19	1493265	Lever	1

©2009 HYSTER COMPANY

CONVERTER (FIGURE 3-29)
LPG (→ S/N H177B01786)

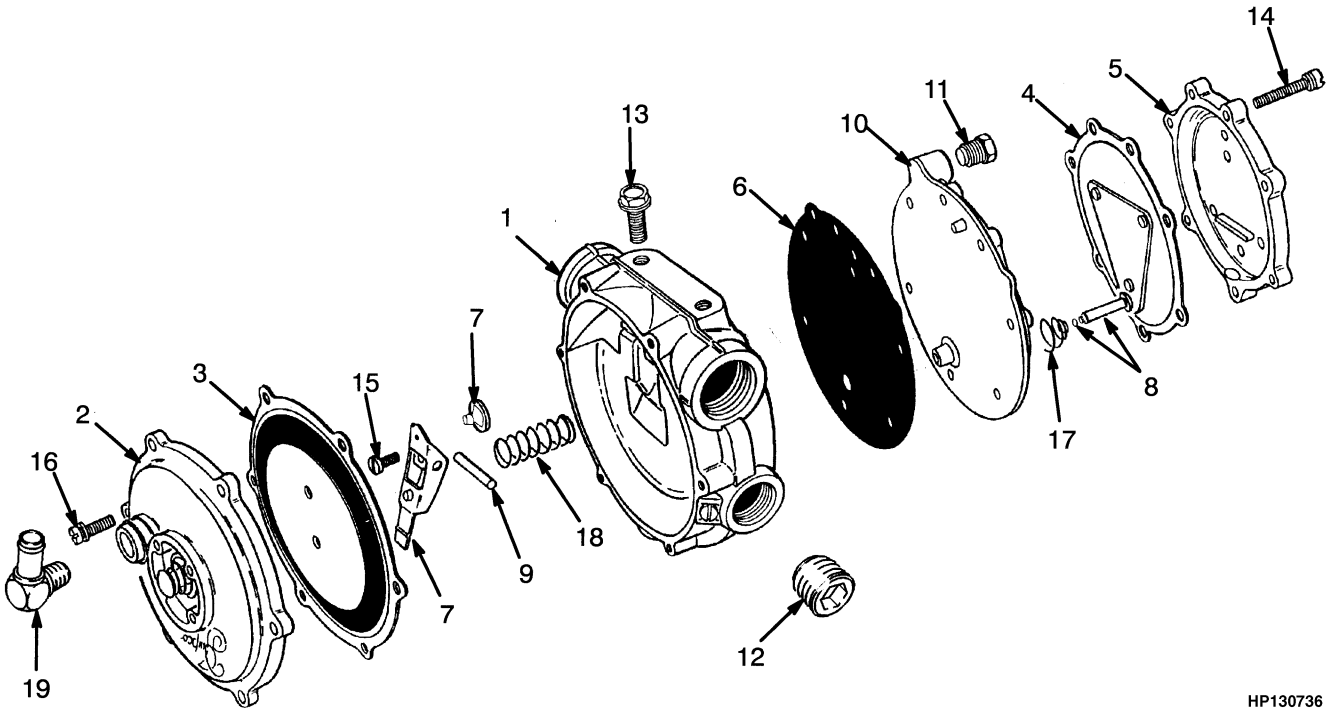

©2009 HYSTER COMPANY

CONVERTER

LPG (→ S/N H177B01786)

ITEM	PART NO.	DESCRIPTION	QTY
	1369572	LPG Regulator	1
1	1455310	Body	1
2	. . . . .	Cover	1
3	1375047	Diaphragm (Secondary)	1
4	. . . . .	Diaphragm (Primary)	1
5	1375037	Cover (Primary)	1
6	. . . . .	Gasket	1
7	. . . . .	Seat	1
7	204829	Lever (Secondary)	1
8	1376429	Pin	1
9	204830	Pin	1
10	1375029	Plate	1
11	1357749	Plug	1
12	1357707	Plug	1
13	1369065	Kit-Screw	2
14	1450126	Screw	2
15	1455306	Screw	1
16	1450126	Screw	2
17	1375030	Spring	1
18	204831	Spring	1
19	1369066	Check Valve	1
	1459717	Kit-Repair Lpg Converter	1

©2009 HYSTER COMPANY

CONVERTER (FIGURE 3-30)

LPG (S/N H177B01787 → HYDROSTATIC) (S/N H177B01787 ↔ S/N H177B023393 POWERSHIFT)

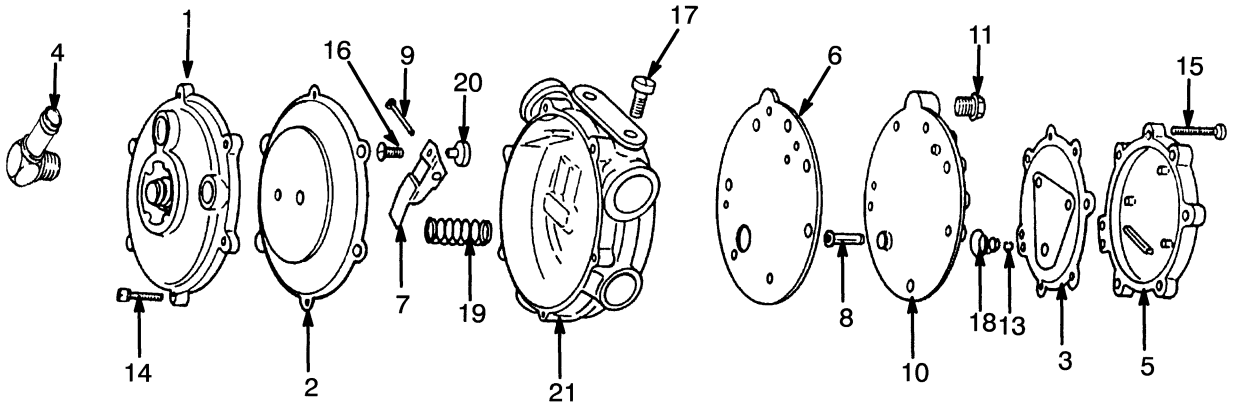

HP130737

ITEM	PART NO.	DESCRIPTION	QTY
	1457964	LPG Regulator	1
1	1455309	Cover	1
2	. . . . .	Diaphragm (Assembly)	1
3	. . . . .	Diaphragm	1
4	1369066	Check Valve	1
5	1375037	Cover	1
6	. . . . .	Gasket	1
7	. . . . .	Lever	1
8	. . . . .	Pin	1
9	204830	Pin	1
10	1375029	Plate	1
11	1357749	Plug	1
	a 1357707	Plug	1
13	. . . . .	E-Ring	1
14	1450126	Screw	6
15	1455307	Capscrew	7
16	1455306	Screw	1
17	1369065	Kit-Screw	2
18	1455305	Spring	1
19	204831	Spring	1
20	. . . . .	Seat	1
21	1455310	Body	1
	1459717	Kit-Repair Lpg Converter	1

FOOTNOTES:

a Not Illustrated

©2009 HYSTER COMPANY

FILTER AND LOCK-OFF VALVE (FIGURE 3-31)

LPG — HYDROSTATIC (→ S/N H177B23393)

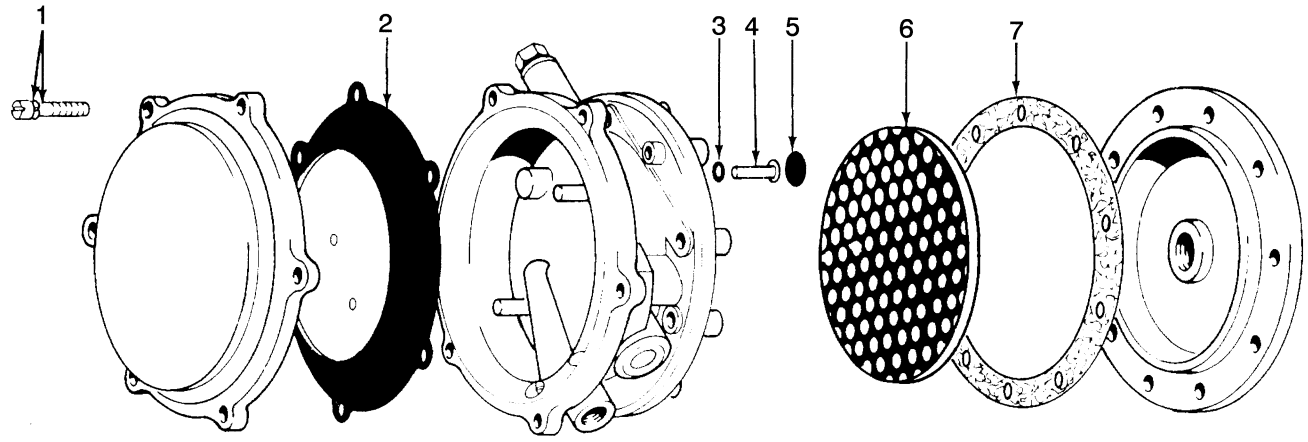

HP130735

ITEM	PART NO.	DESCRIPTION	QTY
	258321	Kit-Filter and Lock-Off Valve	1
1	. . . . .	Screw	2
1	. . . . .	Washer	2
2	. . . . .	Diaphragm	1
3	. . . . .	O-Ring	1
4	. . . . .	Screw	1
5	. . . . .	Valve Seat	1
6	263962	Fuel Filter	1
7	. . . . .	Gasket	1
	263958	Kit-Repair Lpg Converter	1

©2009 HYSTER COMPANY

AIR FILTER (FIGURE 3-32)

2,6L ENGINE — DIESEL (→ S/N H177B26621)

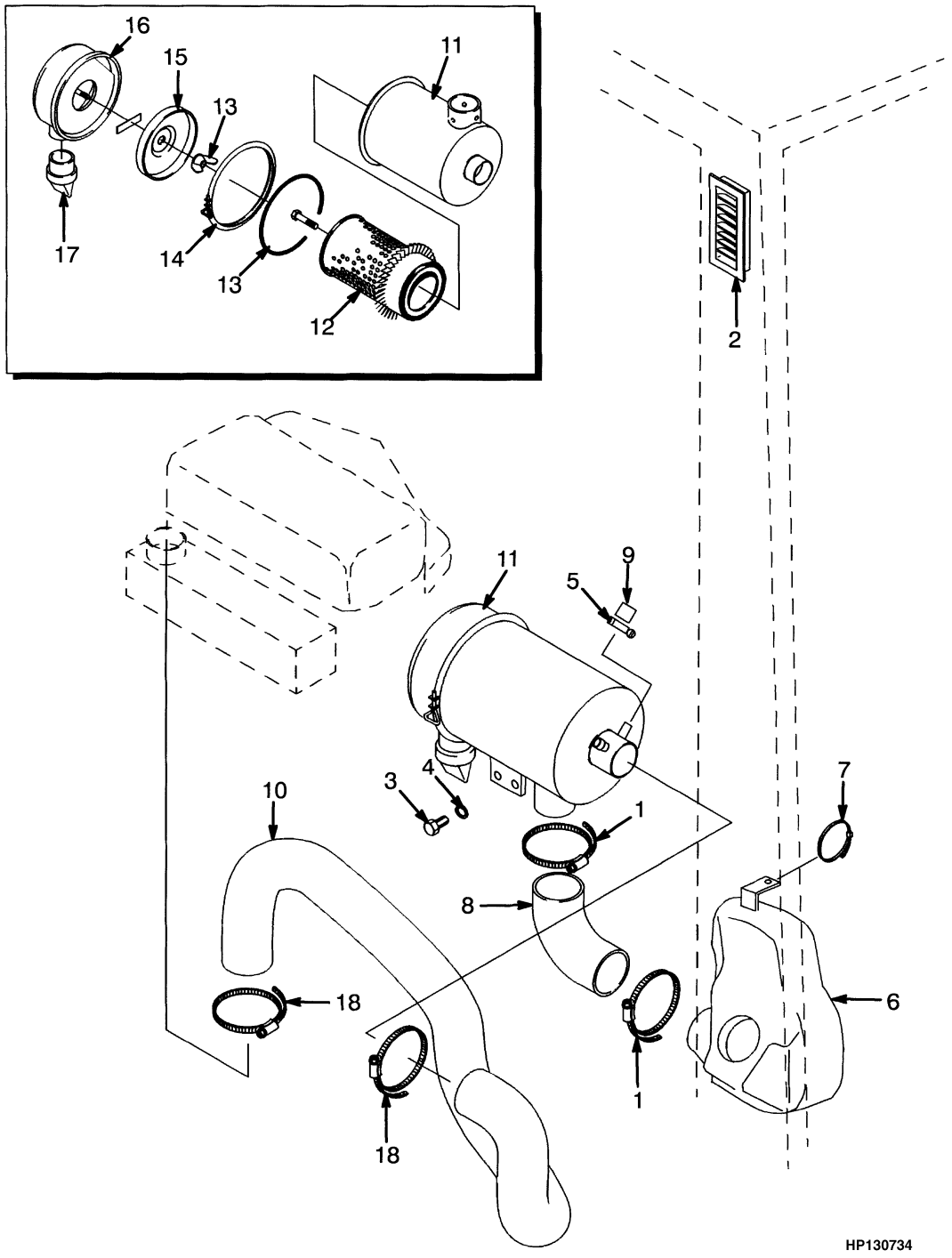

©2009 HYSTER COMPANY

AIR FILTER

2,6L ENGINE – DIESEL (→ S/N H177B26621)

ITEM	PART NO.	DESCRIPTION	QTY
1	112989	Hose Clamp	2
2	1339265	Grill	1
3	287854	Capscrew	2
4	292682	Lockwasher	2
5	166857	Clamp	1
6	1383783	Silencer	1
7	114312	Strap Clamp	1
8	1383784	Hose (Elbow)	1
9	1359608	Plug	1
10	1396255	Hose (Intake)	1
11	1343635	Air Filter	1
12	305080	Filter Element	1
13	125847	Gasket	1
14	290734	Clamp	1
15	290735	Baffle	1
16	374922	Cup	1
17	374923	Valve	1
18	1394008	Hose Clamp	2

©2009 HYSTER COMPANY

AIR FILTER (FIGURE 3-33)

2,6L ENGINE — DIESEL (S/N HP177B26622 →)

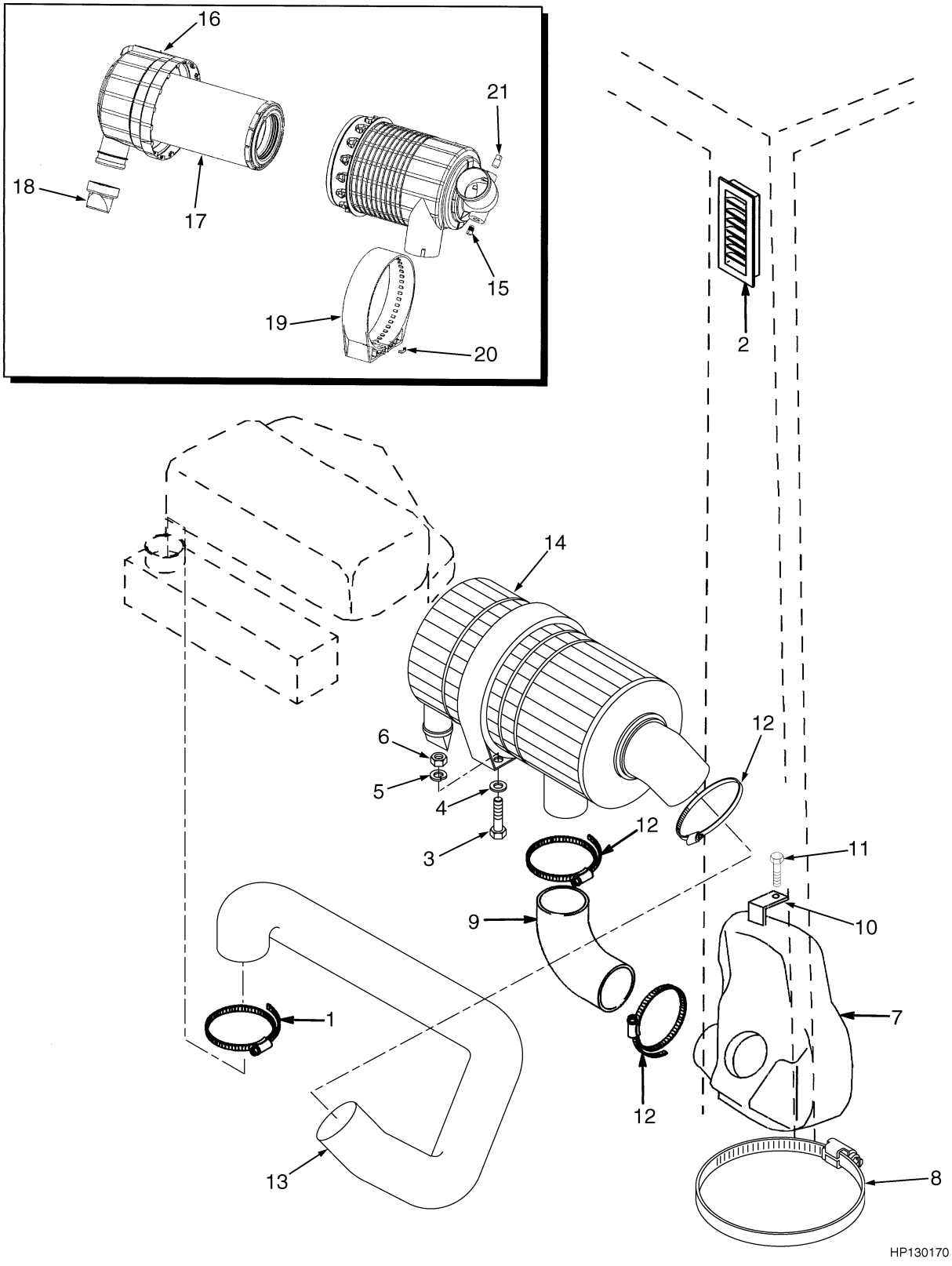

©2009 HYSTER COMPANY

AIR FILTER

2,6L ENGINE – DIESEL (S/N HP177B26622 →)

ITEM	PART NO.	DESCRIPTION	QTY
1	1394008	Hose Clamp	1
2	1339265	Grill	1
3	1510786	Wheel Stud	2
4	320157	Washer	2
5	292681	Lockwasher	2
6	313828	Nut	2
7	1383783	Silencer	1
8	273775	Strap Clamp	1
9	**b** 1484336	Hose	1
9	**c** 1502808	Hose	1
10	1350215	Nut	1
11	292501	Capscrew	1
12	112989	Hose Clamp	2
13	1484339	Hose	1
14	1485320	Air Filter (Single Element)	1
14	1485321	Air Filter (Dual Element)	1
15	1462442	Plug	1
16	1494023	Cover	1
17	1377080	Filter Element (Single)	1
17	**a** 1452112	Filter Element	1
18	1494024	Valve	1
19	1494029	Bracket	1
20	1494030	Clip	1
21	1377083	Plug	1

FOOTNOTES:

a Only Used in Air Filter With Dual Element
b → S/N H177B30131Y
c S/N H177B30132Y →

©2009 HYSTER COMPANY

FUEL (FIGURE 3-34)
2,6L ENGINE — DIESEL

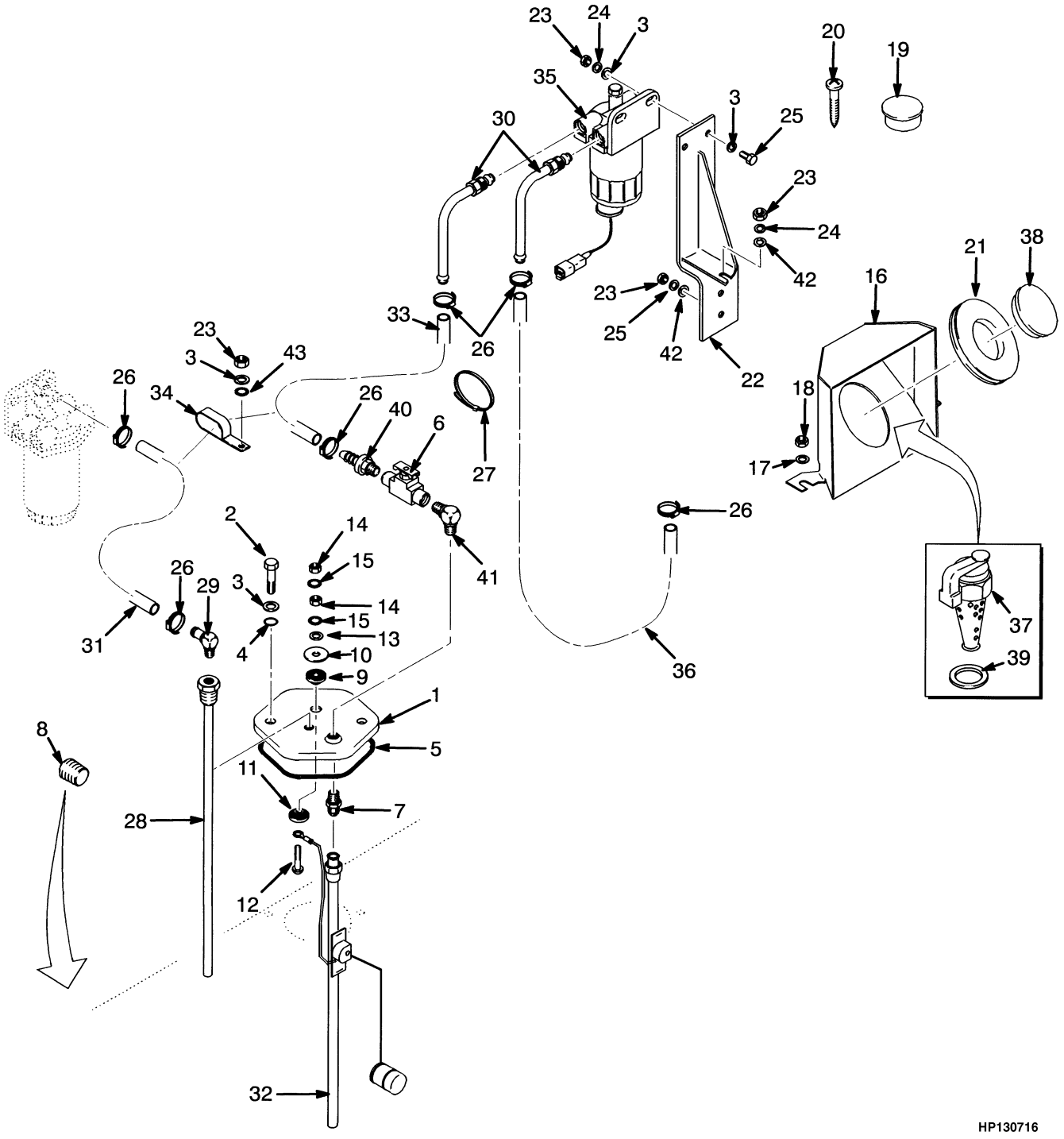

©2009 HYSTER COMPANY

FUEL
2,6L ENGINE – DIESEL

ITEM	PART NO.	DESCRIPTION	QTY
1	**b** 1343448	Cover	1
2	329067	Screw	2
3	320157	Washer	7
4	353000	O-Ring	2
5	1343449	Seal	1
6	**a** 1350286	Drain Valve (Shut Off)	1
6	**c** 87446	Drain Valve (Shut-Off)	1
7	**b** 14303	Fitting	1
8	15964	Fitting	1
9	**b** 1350291	Washer	1
10	**b** 1350290	Washer	1
11	**b** 1351000	Washer	1
12	**b** 1356459	Screw	1
13	**b** 197067	Washer	1
14	**b** 1350298	Nut	2
15	**b** 1350299	Lockwasher	2
16	1376746	Shield	1
17	320158	Washer	2
18	313828	Nut	2
19	1350231	Plug	1
20	1347045	Fastener	1
21	1339720	Grommet	1
22	1396257	Bracket Wldmt (Filter)	1
23	239503	Nut	6
24	292681	Lockwasher	5
25	176640	Bolt	2
26	168718	Clamp	5
27	137852	Strap Clamp	AR
28	**b** 1350292	Tube Assy	1
29	**b** 222480	Fitting	1
30	1396342	Tube Assy	2
31	193653	Hose	1
32	**b** 1347153	Fuel Sender	1
32	**e** 1465336	Fuel Sender	1
32	**f** 1371117	Kit-Fuel Sender Diesel	1
33	**d** 1301601	Hose	1
33	**a** 1359437	Hose Assy	1
34	203230	Clamp	1
35	1396256	Water Separator (☞Figure 3-36)	1
36	309656	Hose	1
37	63899	Fuel Cap	1
38	157704	Cap	1
39	138880	Shim (0,508 mm)	AR
40	**d** 309651	Fitting	1
41	**d** 17650	Fitting	1
42	**d** 320157	Washer	3
43	1375848	Spacer	1
44	**f** 1371166	Wire Harness (Not Illustrated)	1

©2009 HYSTER COMPANY

FOOTNOTES:

a → S/N H177B08241
b → S/N H177B14409
c S/N H177B08242 ↔ S/N H177B014409
d S/N H177B08242 →
e S/N H177B14410 →
f S/N H177B44745A →

©2009 HYSTER COMPANY

NOTES

©2009 HYSTER COMPANY

FUEL FILTER AND LIFT PUMP (FIGURE 3-35)

2,6L ENGINE — DIESEL

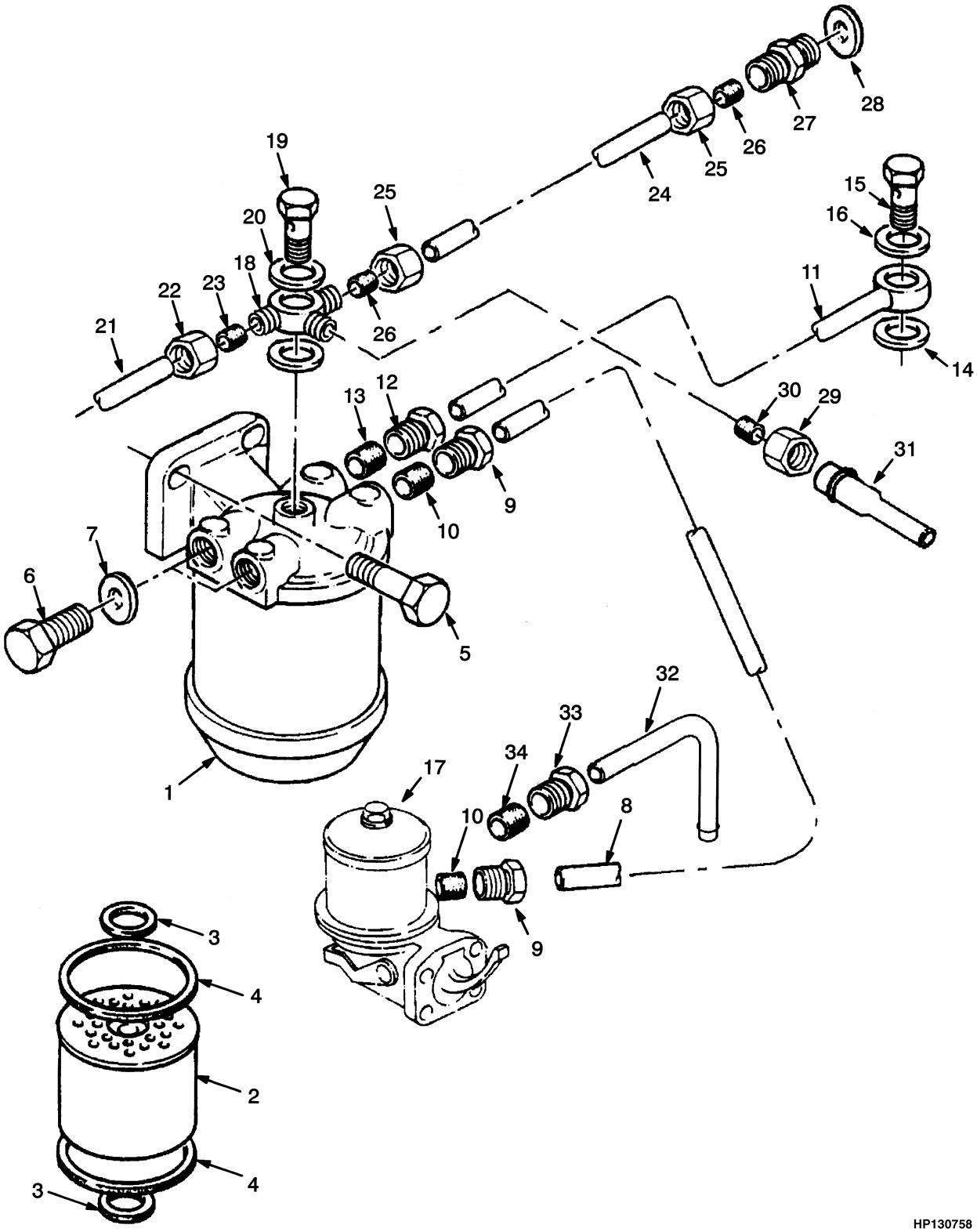

©2009 HYSTER COMPANY

FUEL FILTER AND LIFT PUMP
2,6L ENGINE – DIESEL

ITEM	PART NO.	DESCRIPTION	QTY
1	173944	Fuel Filter	1
2	. . . . .	Element	1
3	124218	Ring	2
4	124239	Seal	2
5	1307910	Capscrew	2
6	173941	Plug	2
7	981260	Washer	2
8	1457920	Tube Assy	1
9	158186	Nut	2
10	158187	Olive	2
11	1457897	Tube Assy	1
12	158186	Nut	2
13	158187	Olive	2
14	1501333	Washer	1
15	1501332	Fitting	1
16	1501333	Washer	1
17	1457895	Lift Pump (☞Figure 3-37)	1
18	1457898	Fitting	1
19	1456522	Bolt	1
20	1456524	Washer	2
21	1457772	Pipe	1
22	152609	Nut	1
23	152608	Olive	1
24	1457899	Tube Assy	1
25	167507	Nut	2
26	167508	Olive	2
27	1457901	Fitting	1
28	983322	Washer	1
29	16118	Fitting	1
30	16114	Fitting	1
31	1457902	Tube Assy	1
32	1396342	Tube Assy	1
33	16100	Fitting	2
34	16177	Fitting	2
	124217	Fuel Filter	1
	1493165	Kit-Gasket	1

©2009 HYSTER COMPANY

WATER SEPARATOR (FIGURE 3-36)

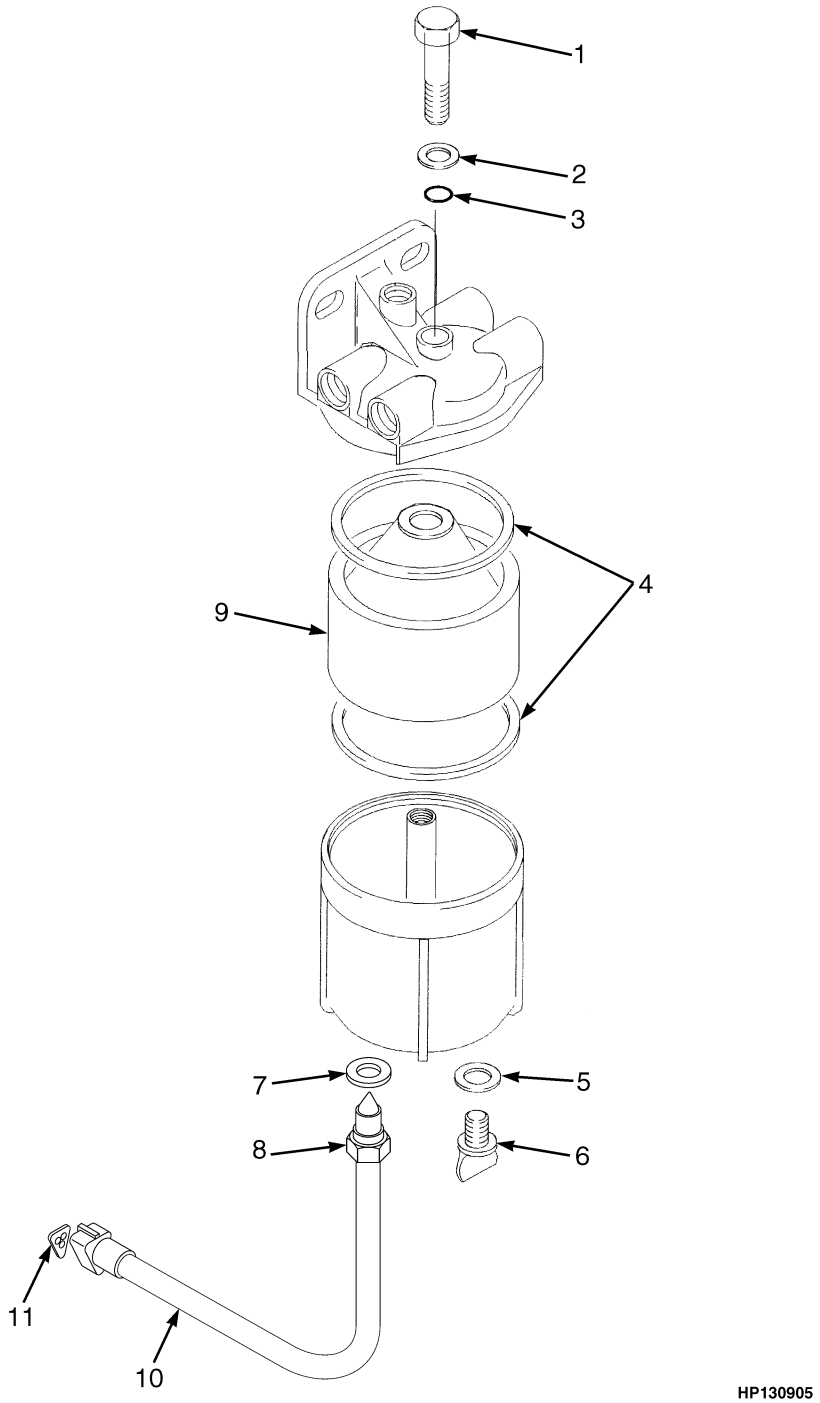

©2009 HYSTER COMPANY

WATER SEPARATOR

ITEM	PART NO.	DESCRIPTION	QTY
	1396256	Water Separator	1
1	1464543	Bolt	1
2	1464541	Washer	1
3	1464540	Sealing Ring	1
4	256160	Gasket	2
5	1308006	Washer	1
6	1464544	Drain Plug	1
7	1464545	Washer	1
8	1464546	Sensor (Water)	1
9	. . . . .	Element	1
10	1330410	Connector	1
11	1363885	Terminal (Pin)	3

©2009 HYSTER COMPANY

FUEL PUMP (FIGURE 3-37)
2,6L ENGINE — DIESEL

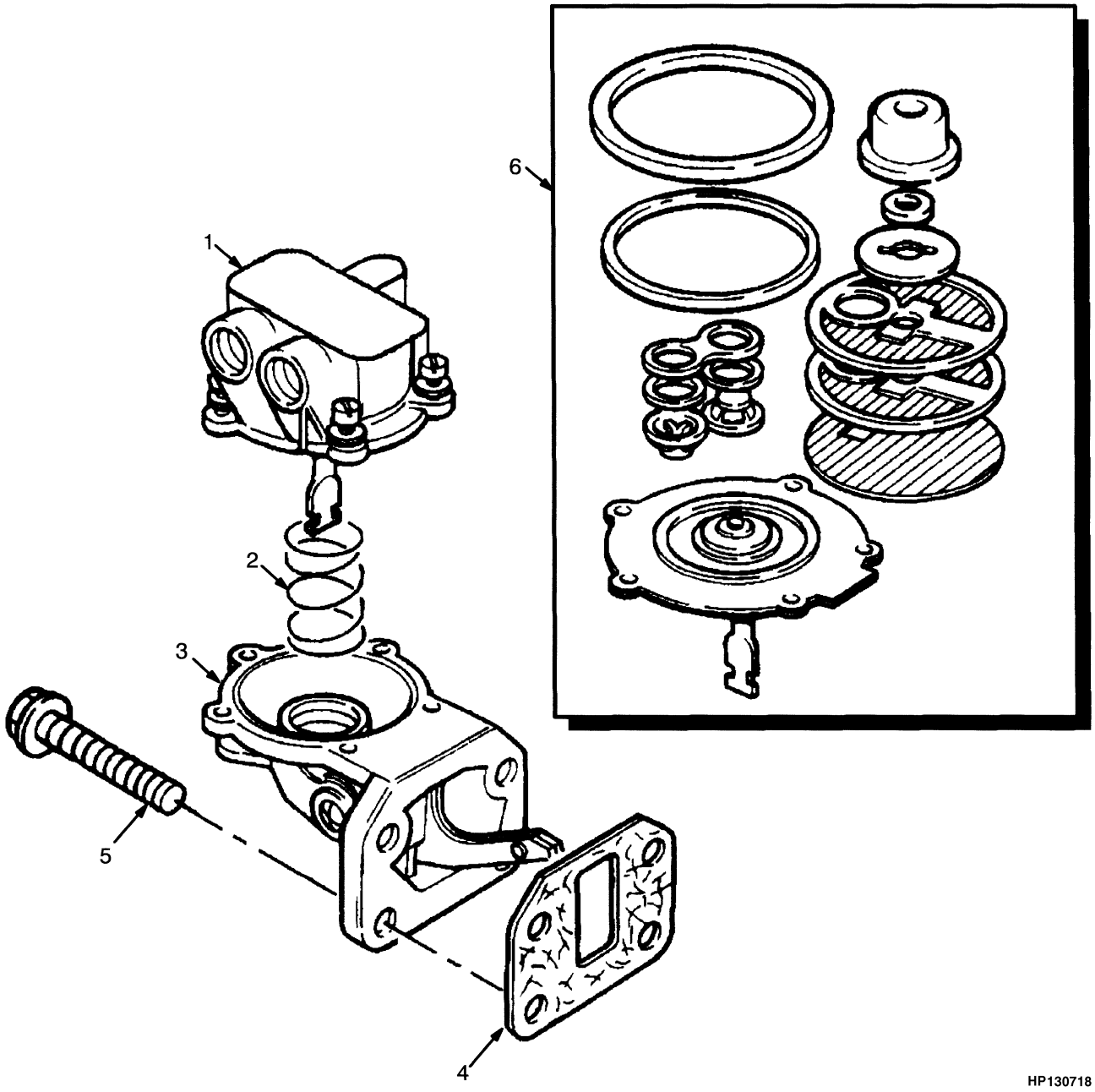

©2009 HYSTER COMPANY

FUEL PUMP
2,6L ENGINE – DIESEL

ITEM	PART NO.	DESCRIPTION	QTY
	1457895	Lift Pump	1
1	. . . . .	Body	1
2	. . . . .	Spring	1
3	. . . . .	Body	1
4	1382562	Gasket	1
5	1306349	Screw	4
6	1456518	Kit-Repair Lift Pump	1
	1457956	Kit-Gasket (Bottom)	1

©2009 HYSTER COMPANY

THROTTLE LINKAGE (FIGURE 3-38)

3,0L ENGINE (→ S/N H177B30073)

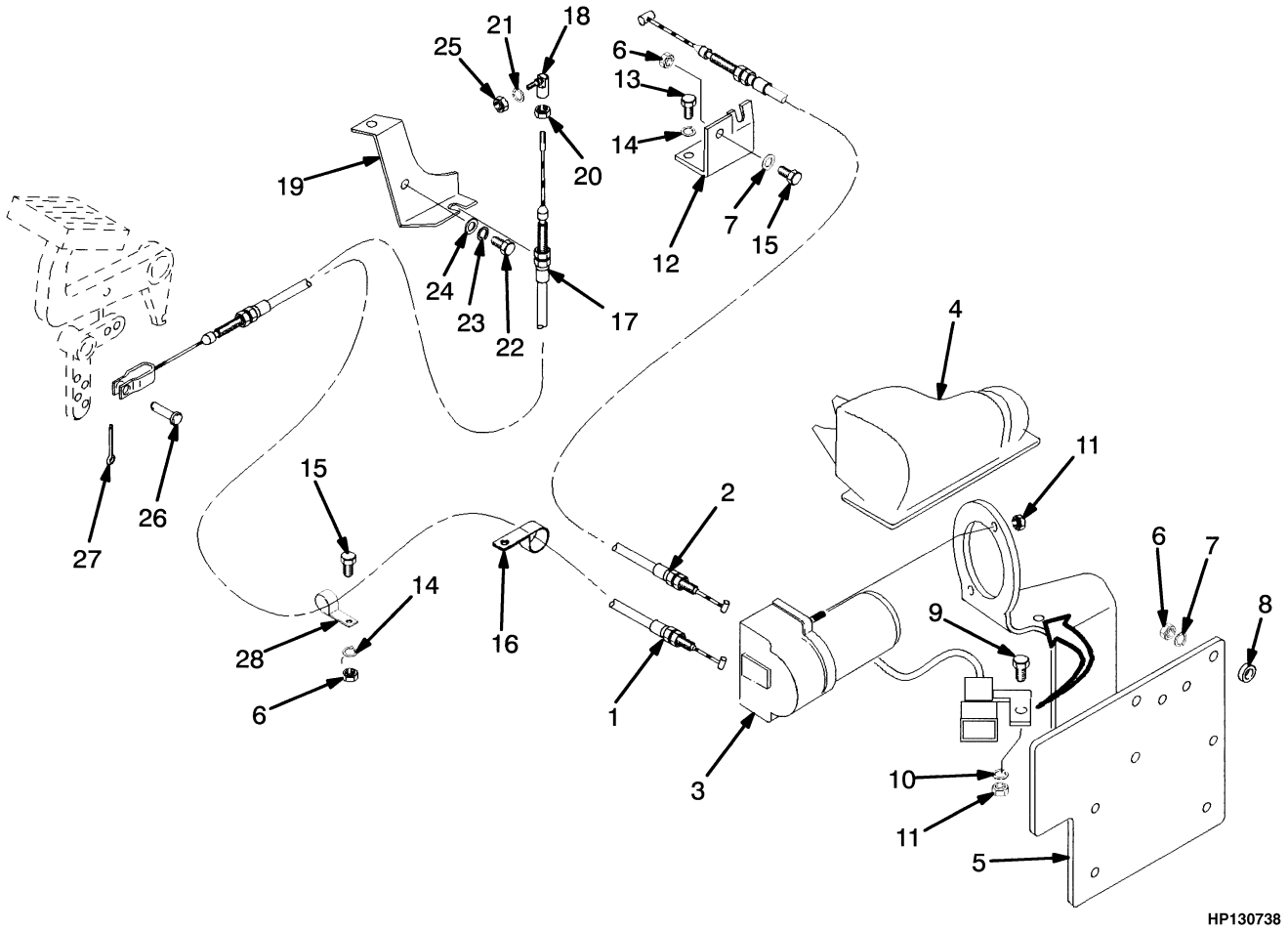

©2009 HYSTER COMPANY

THROTTLE LINKAGE

3,0L ENGINE (→ S/N H177B30073)

KEY:
A: Petrol
B: LPG

ITEM	PART NO.	DESCRIPTION	QTY A	QTY B
1	1375834	Throttle Cable	1	..
2	1375835	Throttle Cable (Monotrol Pedal)	1	..
3	1359450	Actuator	1	..
4	1356437	Cover	1	..
5	**a** 1375826	Bracket	1	..
5	**b** 1461044	Bracket	1	..
6	313828	Nut	5	..
7	320158	Washer	4	..
8	1375848	Spacer	3	..
9	287816	Capscrew	1	..
10	320156	Washer	1	..
11	313805	Nut	3	..
12	1375786	Bracket	1	..
13	136749	Screw	1	..
14	292681	Lockwasher	2	..
15	136681	Capscrew	2	..
16	1376782	Clamp	1	..
17	1339632	Throttle Cable	..	1
18	161252	Ball Joint	..	1
19	1389499	Bracket	..	1
20	15002	Nut	..	1
21	15154	Lockwasher	..	1
22	16836	Capscrew	..	1
23	15155	Lockwasher	..	1
24	18515	Washer	..	1
25	15004	Nut	..	1
26	162836	Pin	1	1
27	15212	Cotter Pin	1	1
28	1376727	Clamp	1	..

FOOTNOTES:

a → S/N H177B11463W

b S/N H177B11464W →

©2009 HYSTER COMPANY

THROTTLE LINKAGE (FIGURE 3-39)

3,0L ENGINE — GASOLINE AND LPG (S/N H177B30074 →)

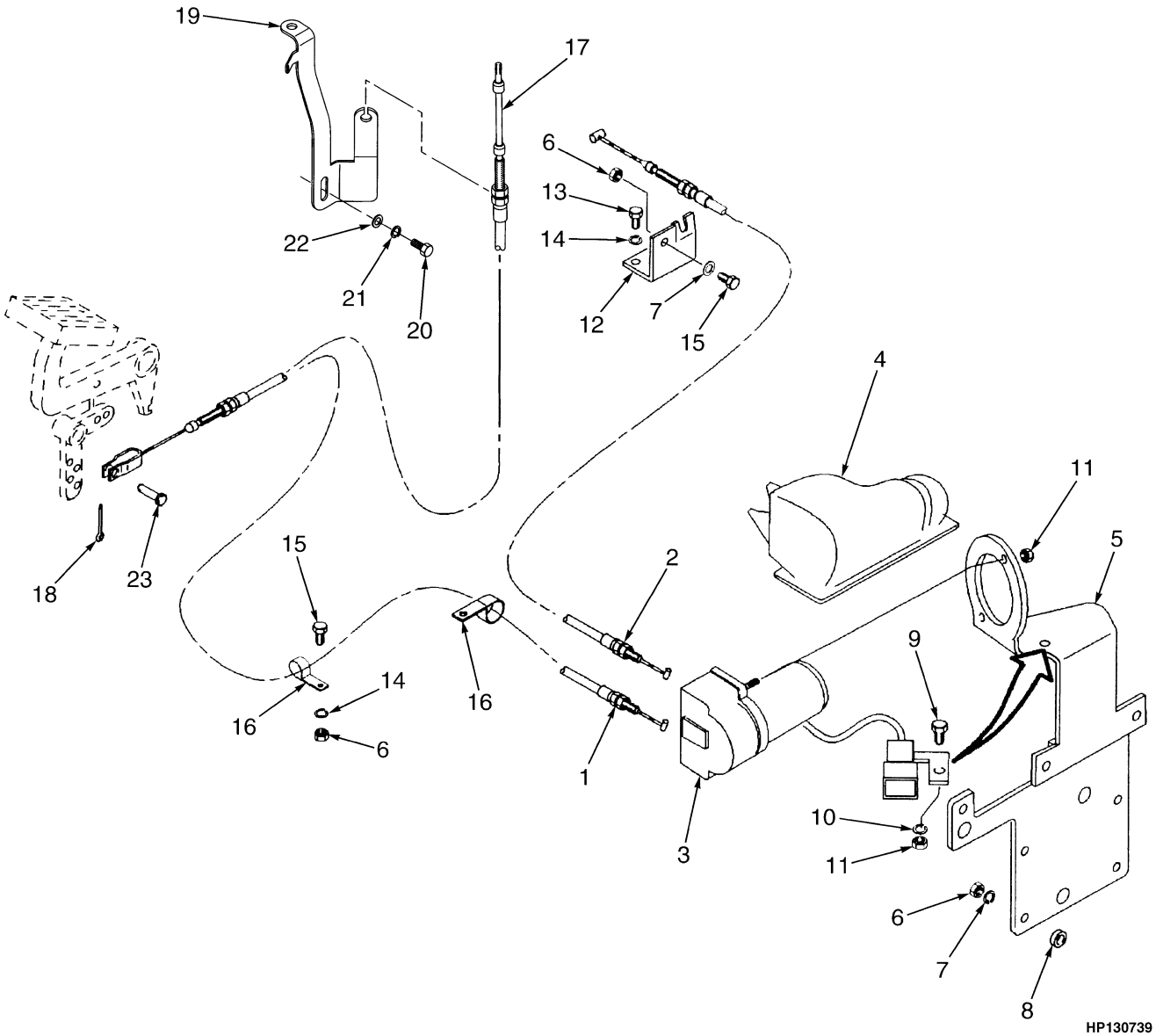

©2009 HYSTER COMPANY

THROTTLE LINKAGE

3,0L ENGINE – GASOLINE AND LPG (S/N H177B30074 →)

KEY:
A: Petrol
B: LPG

ITEM	PART NO.	DESCRIPTION	QTY A	QTY B
1	1375834	Throttle Cable	1	..
2	1375835	Throttle Cable (Monotrol Pedal)	1	..
3	1359450	Actuator	1	..
4	1356437	Cover	1	..
5	1461044	Bracket	1	..
6	313828	Nut	5	..
7	320158	Washer	4	..
8	1375848	Spacer	3	..
9	287816	Capscrew	1	..
10	320156	Washer	1	..
11	313805	Nut	3	..
12	1375786	Bracket	1	..
13	136749	Screw	1	..
14	292681	Lockwasher	2	..
15	136681	Capscrew	2	..
16	1376782	Clamp	1	..
17	1339632	Throttle Cable (Hydrostatic Transmission)	..	1
17	**b** 1498198	Throttle Cable	..	1
17	**d** 1556407	Throttle Cable	..	1
18	15212	Cotter Pin	1	1
19	**a** 1471862	Bracket	..	1
19	**c** 1537474	Bracket	..	1
20	16836	Capscrew	..	1
21	15155	Lockwasher	..	1
22	18515	Washer	..	1
23	162836	Pin	1	1
24	1376727	Clamp	1	..

FOOTNOTES:

a → S/N H177B34155Z
b → S/N H177B45433A
c S/N H177B34156Z →
d S/N H177B45434A →

©2009 HYSTER COMPANY

THROTTLE LINKAGE (FIGURE 3-40)

LPG (→ S/N H177B23393)

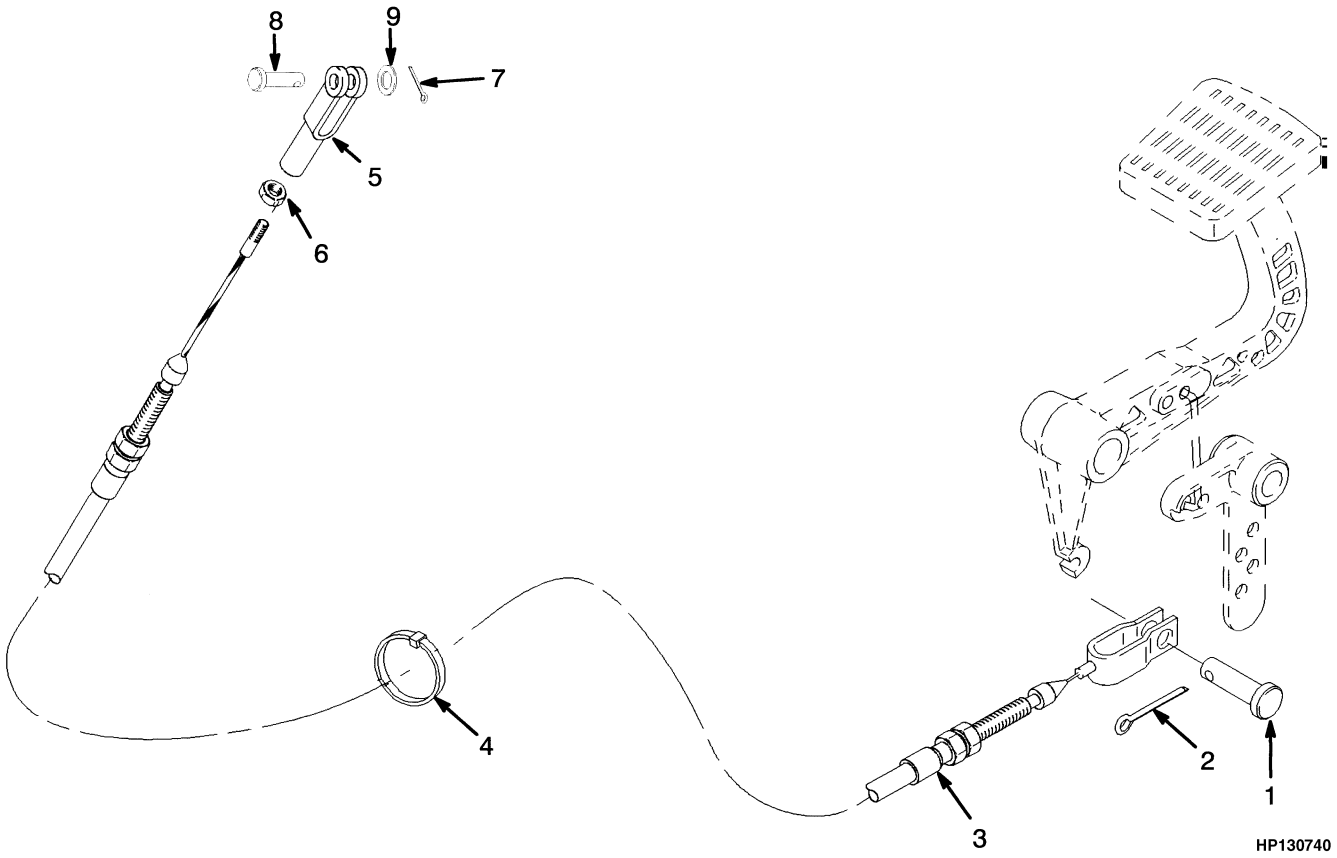

©2009 HYSTER COMPANY

THROTTLE LINKAGE

LPG (→ S/N H177B23393)

ITEM	PART NO.	DESCRIPTION	QTY
1	162836	Pin	1
2	15212	Cotter Pin	1
3	1356522	Throttle Cable	1
5	161617	Rod End	1
6	15002	Nut	1
7	15211	Cotter Pin	1
8	1458427	Pin	..
8	309109	Pin	1
9	320155	Washer	1

©2009 HYSTER COMPANY

THROTTLE LINKAGE (FIGURE 3-41)

2,0L LPG AND 2,6L DIESEL (S/N H177B23394 → LPG)

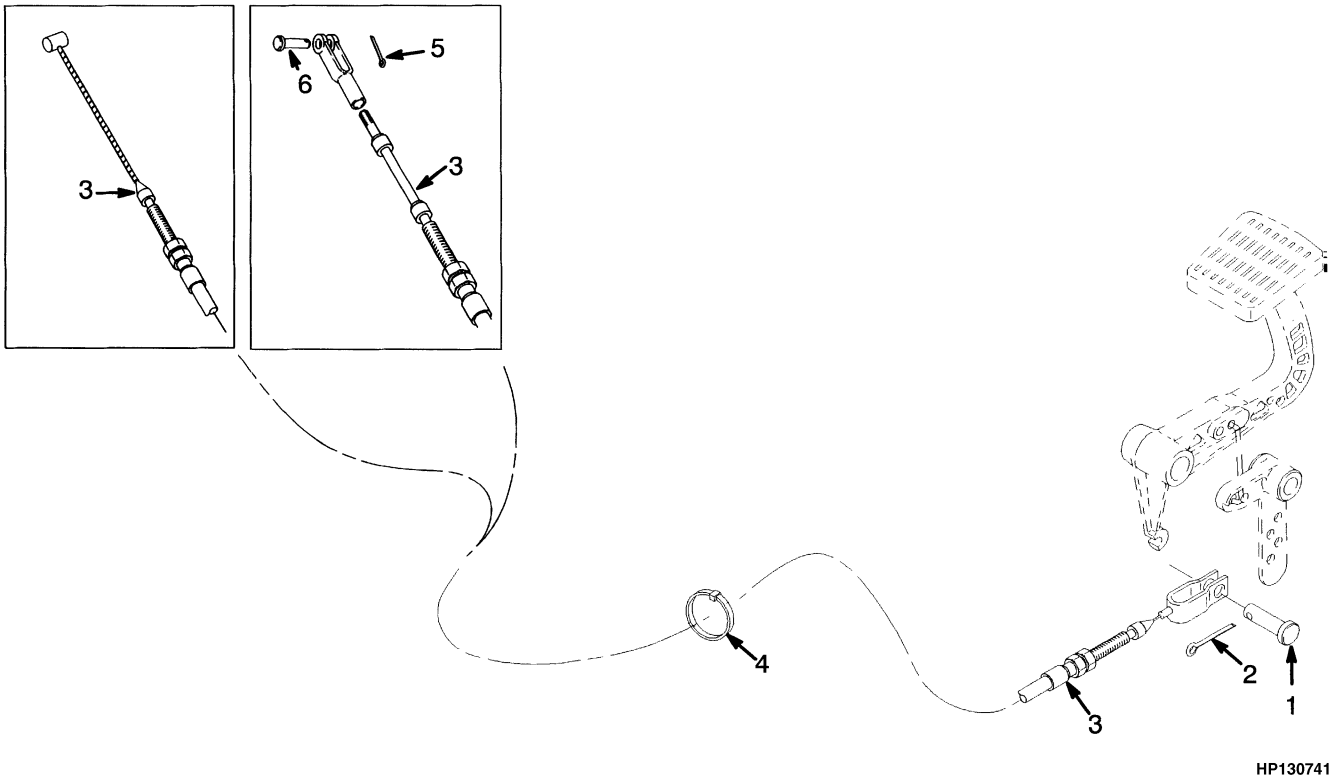

KEY:
A: Petrol and LPG
B: Diesel

ITEM	PART NO.	DESCRIPTION	QTY A	QTY B
1	162836	Pin	1	1
2	15212	Cotter Pin	1	1
3	1339626	Throttle Cable	1	..
3	1461427	Throttle Cable	..	1
4	137852	Strap Clamp	1	1
5	221877	Cotter Pin	..	1
6	1458427	Pin	..	1

©2009 HYSTER COMPANY

NOTES

©2009 HYSTER COMPANY

PEDAL LINKAGE (FIGURE 3-42)
POWERSHIFT

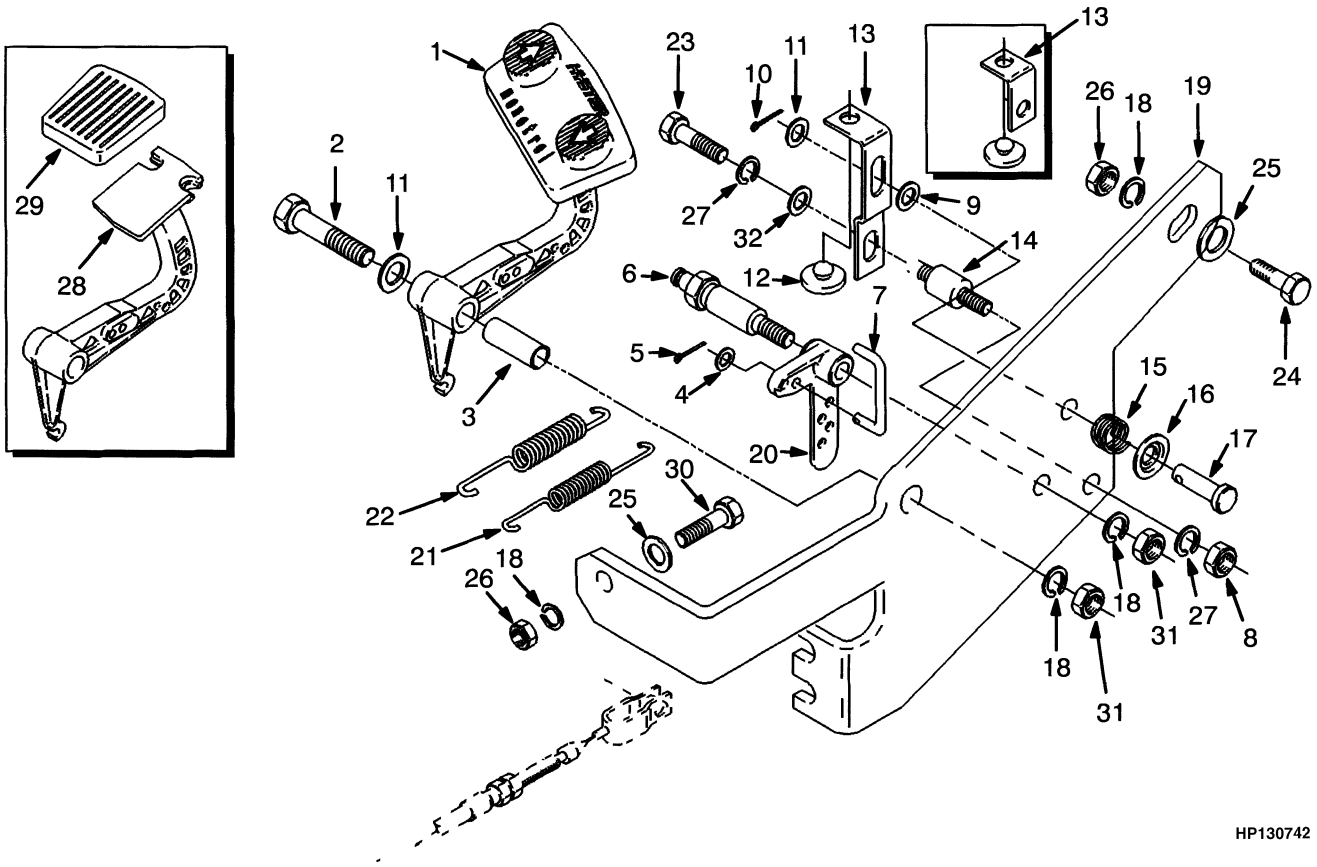

©2009 HYSTER COMPANY

PEDAL LINKAGE
POWERSHIFT

KEY:
A: Monotrol Pedal
B: Forward/Reverse Lever

ITEM	PART NO.	DESCRIPTION	QTY A	QTY B
	1343526	Pedal (Monotrol) (Gasoline 2.0L) (Diesel 2.6L)	1	..
	1343530	Accelerator Pedal (Throttle) (Gasoline 2.0L) (Diesel 2.6L)	..	1
	1356478	Pedal (Monotrol) (LPG 2.0L) (Gasoline/LPG 3.0L)	1	..
	1356479	Accelerator Pedal (Throttle) (LPG 2.0L) (Gasoline/LPG 3.0L)	..	1
1	. . . . .	Monotrol Pedal (☞Figure 3-47)	1	..
2	292521	Capscrew	..	1
2	292523	Capscrew	1	..
3	325708	Tube Assy	..	1
3	353141	Tube Assy	1	..
4	320156	Washer	1	1
5	15200	Cotter Pin	1	1
6	352485	Shaft	1	1
7	1347159	Rod	1	1
8	239503	Nut	1	..
8	296128	Nut	..	1
9	320158	Washer	1	..
10	15212	Cotter Pin	1	..
11	320160	Washer	3	2
12	353195	Bumper	1	1
13	352950	Bracket	1	..
13	353159	Bracket	..	1
14	353453	Mount	1	..
15	353172	Spring	1	..
16	353230	Cap	1	..
17	142	Pin	1	..
18	292682	Lockwasher	4	4
19	1339717	Bracket	1	1
20	353164	Crank	1	1
21	353142	Spring	1	1
22	353143	Spring	1	1
23	287851	Capscrew	1	..
23	287854	Capscrew	..	1
24	136985	Capscrew	1	1
25	320159	Washer	1	1
26	136692	Nut	1	1
27	292682	Lockwasher	..	2
28	352499	Pedal	..	1
29	352885	Rubber Pad	..	1
30	287860	Capscrew	1	1
31	136692	Nut	2	2
32	292681	Lockwasher	2	..

©2009 HYSTER COMPANY

THROTTLE LINKAGE (FIGURE 3-43)
LPG AND DIESEL — EPA COMPLIANT

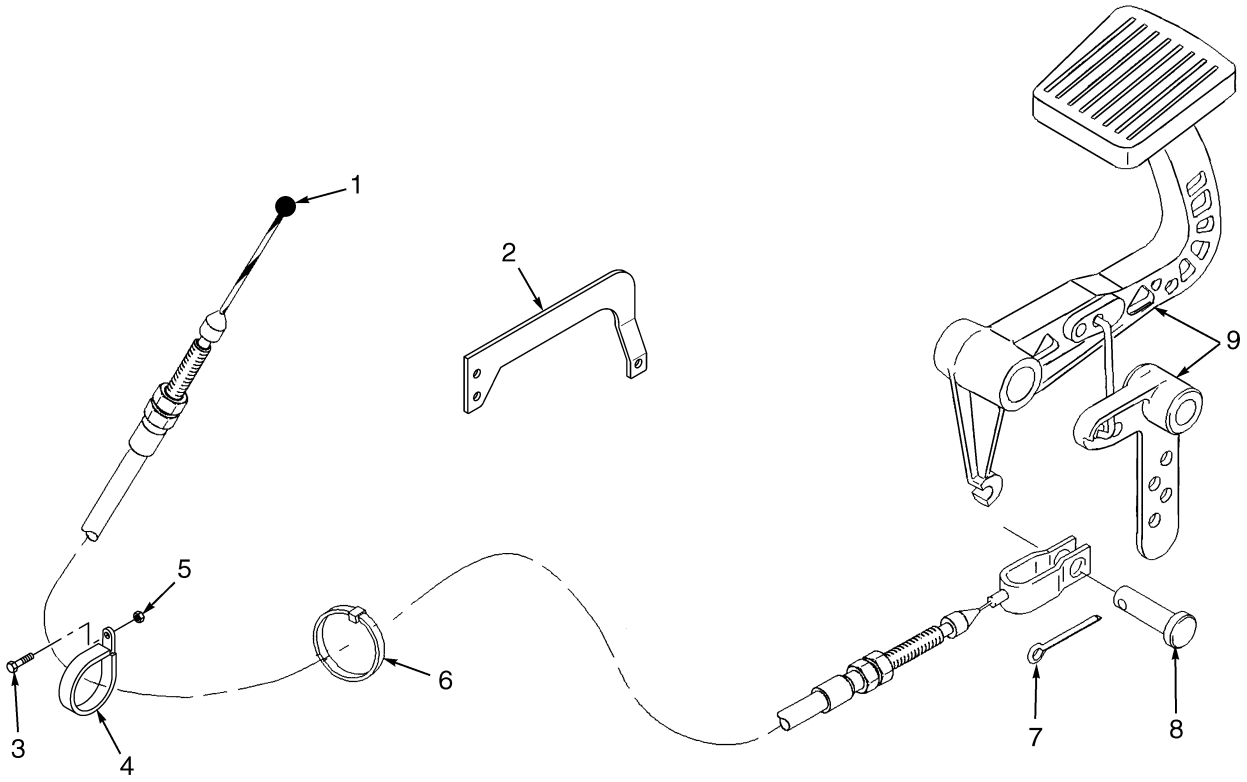

BP130047

©2009 HYSTER COMPANY

KEY:
A: 2.0L LPG
B: 2.6 Diesel
C: 3.0L LPG

ITEM	PART NO.	DESCRIPTION	QTY A	QTY B	QTY C
1	1547239	Throttle Cable	1	..	..
1	2065705	Throttle Cable	..	..	1
1	1461427	Throttle Cable	..	1	..
2	1548351	Bracket	..	1	..
3	1527876	Capscrew	..	1	..
4	1486566	Clamp	..	1	..
5	1514429	Nut	..	1	..
6	137852	Strap Clamp	1	1	1
7	15212	Cotter Pin	1	1	1
8	162836	Pin	1	1	1
9	1356479	Accelerator Pedal (Throttle)	1	1	1
9	1356478	Pedal (Monotrol)	1	1	1

©2009 HYSTER COMPANY

PEDAL LINKAGE (FIGURE 3-44)

3,0L — HYDROSTATIC

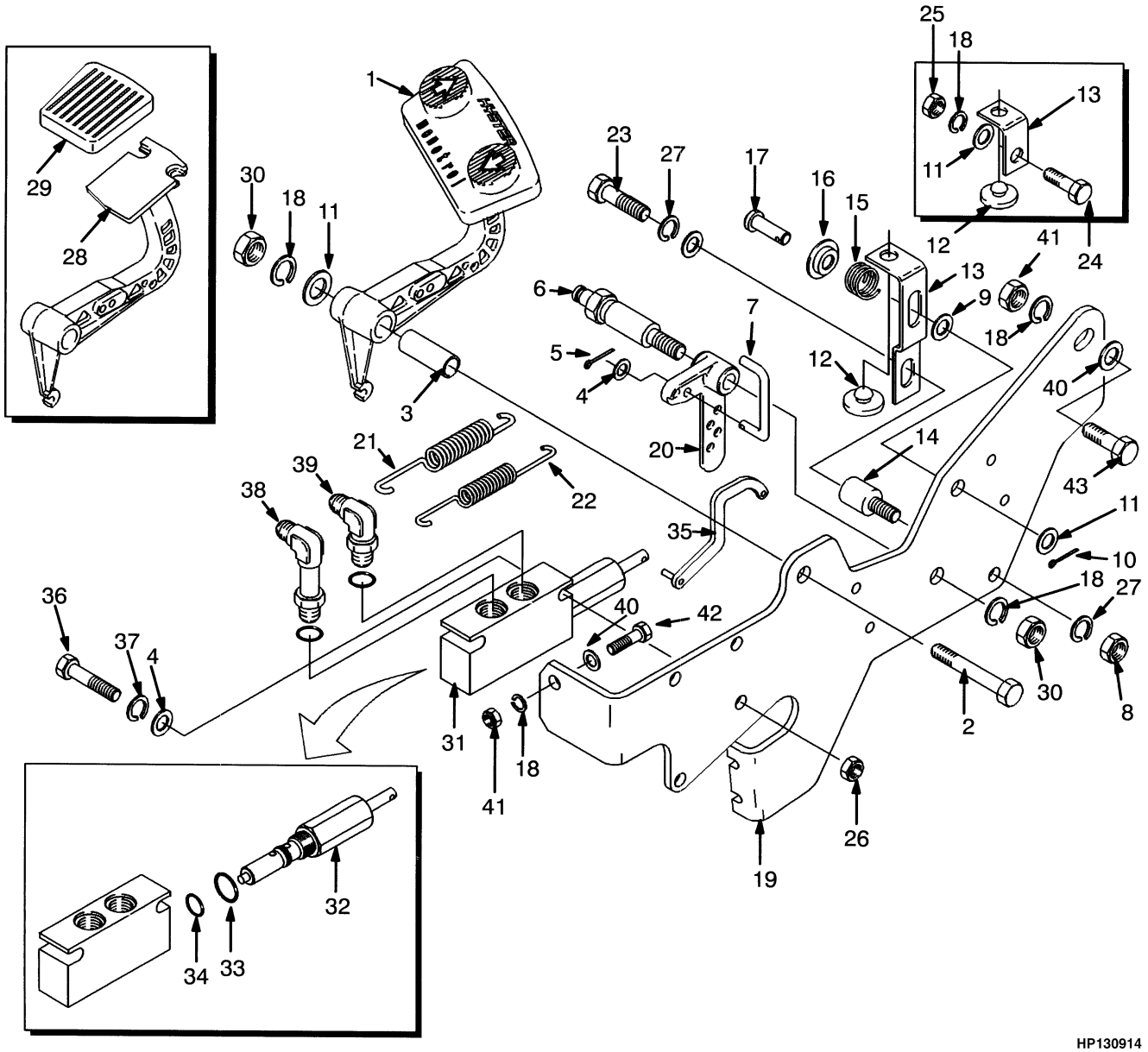

©2009 HYSTER COMPANY

PEDAL LINKAGE
3,0L – HYDROSTATIC

KEY:
A: Monotrol Pedal with Throttle Up
B: Forward/Reverse Lever with Throttle Up
C: Monotrol Pedal without Throttle Up
D: Forward/Reverse without Throttle Up

ITEM	PART NO.	DESCRIPTION	QTY A	QTY B	QTY C	QTY D
1	1352575	Monotrol Pedal (☞Figure 3-47)	1	..	1	..
1	1394021	Monotrol Pedal (☞Figure 3-47)	1	..	1	..
2	292521	Capscrew	..	1	..	1
2	292523	Capscrew	1	..	1	..
3	325708	Tube Assy	..	1	..	1
3	353141	Tube Assy	1	..	1	..
4	320156	Washer	1	3	1	3
5	15211	Cotter Pin	1	1	1	1
6	352485	Shaft	1	1	1	1
7	1347159	Rod	1	1	1	1
8	239503	Nut	1	..	1	..
9	320158	Washer	1	..	1	..
10	15212	Cotter Pin	1	..	1	..
11	320160	Washer	3	2	3	2
12	353195	Bumper	1	1	1	1
13	1461062	Bracket	1	..	1	..
13	353159	Bracket	..	1	..	1
14	353453	Mount	1	..	1	..
15	353172	Spring	1	..	1	..
16	353230	Cap	1	..	1	..
17	142	Pin	1	..	1	..
18	292682	Lockwasher	4	4	4	4
19	1461801	Bracket Wldmt	1	1	1	1
20	353164	Crank	1	1	1	1
21	353142	Spring	1	1	1	1
22	353143	Spring	1	1	1	1
23	287851	Capscrew	1	..	1	..
24	287854	Capscrew	1	1	1	1
25	296128	Nut	..	1	..	1
26	136692	Nut	2	2	2	2
27	292681	Lockwasher	..	2	..	2
28	1385028	Accelerator Pedal	..	1	..	1
29	352885	Rubber Pad	..	1	..	1
30	136692	Nut	1	1	1	1
31	2033547	Valve	1	1	1	1
32	1459216	Cartridge	1	1	1	1
33	1450256	O-Ring	1	1	1	1
34	1355314	O-Ring	1	1	1	1
35	1385029	Link	1	1	1	1
36	292505	Capscrew	2	2	2	2
37	292680	Washer	2	2	2	2
38	16558	Fitting	1	1	1	1
39	17222	Fitting	1	1	1	1

©2009 HYSTER COMPANY

PEDAL LINKAGE
3,0L – HYDROSTATIC

KEY:
A: Monotrol Pedal with Throttle Up
B: Forward/Reverse Lever with Throttle Up
C: Monotrol Pedal without Throttle Up
D: Forward/Reverse without Throttle Up

ITEM	PART NO.	DESCRIPTION	QTY A	B	C	D
40	320159	Washer	2	2	2	2
41	136692	Nut	2	2	2	2
42	287860	Capscrew	1	1	1	1
43	136985	Capscrew	1	1	1	1

©2009 HYSTER COMPANY

NOTES

©2009 HYSTER COMPANY

PEDAL LINKAGE (FIGURE 3-45)

2,6L ENGINE — HYDROSTATIC WITHOUT THROTTLE UP

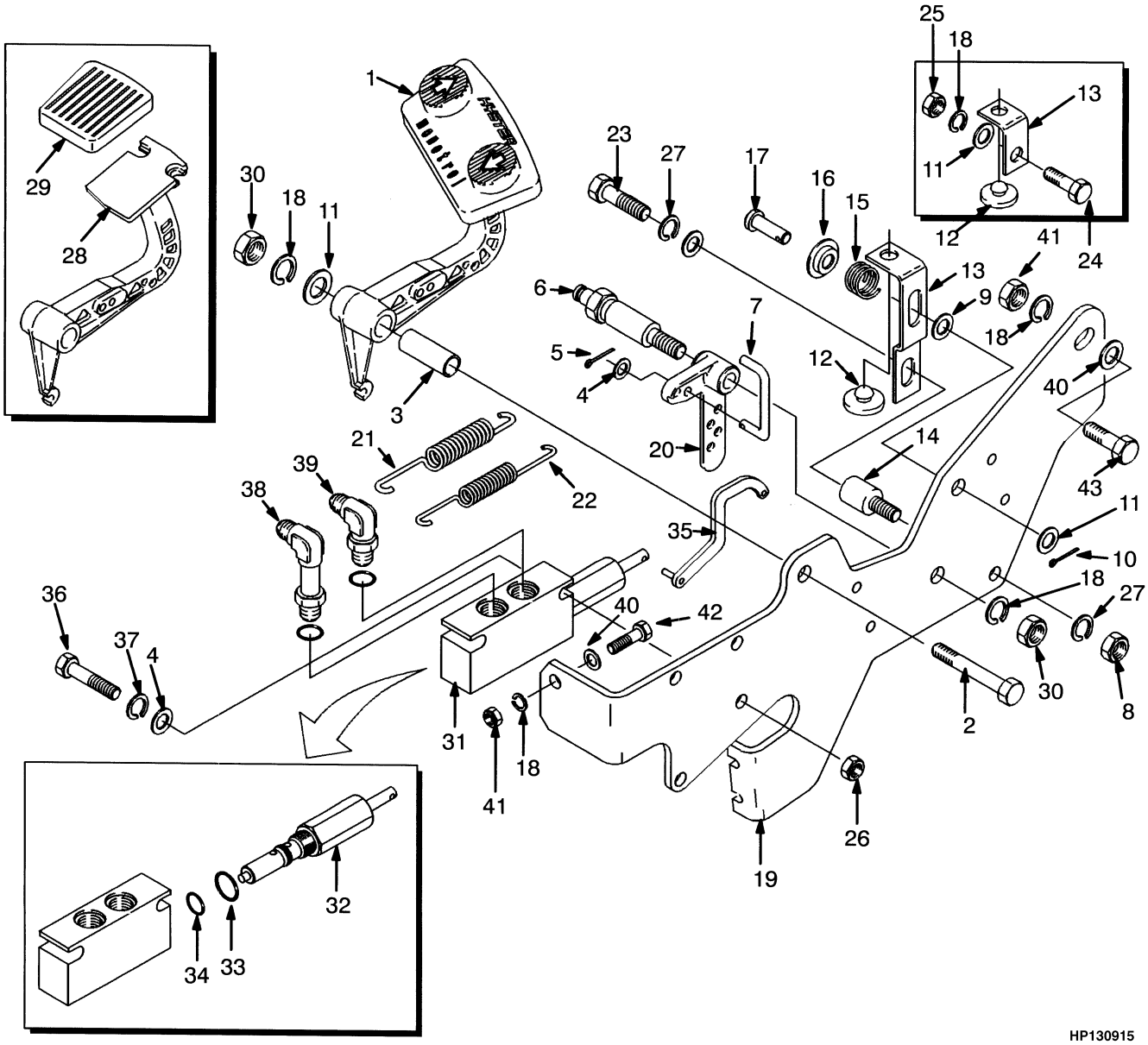

©2009 HYSTER COMPANY

PEDAL LINKAGE

2,6L ENGINE – HYDROSTATIC WITHOUT THROTTLE UP

KEY:
A: Monotrol Pedal
B: Forward/Reverse Lever

ITEM	PART NO.	DESCRIPTION	QTY A	QTY B
1	1352575	Monotrol Pedal (☞Figure 3-47)	1	..
1	1394021	Monotrol Pedal (☞Figure 3-47)	1	..
2	292521	Capscrew	..	1
2	292523	Capscrew	1	..
3	325708	Tube Assy	..	1
3	325708	Tube Assy	1	..
4	320156	Washer	1	3
5	15211	Cotter Pin	1	1
6	352485	Shaft	1	1
7	1347159	Rod	1	1
8	239503	Nut	1	..
9	320158	Washer	1	..
10	15212	Cotter Pin	1	..
11	320160	Washer	3	2
12	353195	Bumper	1	1
13	1461062	Bracket	1	..
13	353159	Bracket	..	1
14	353453	Mount	1	..
15	353172	Spring	1	..
16	353230	Cap	1	..
17	142	Pin	1	..
18	292682	Lockwasher	4	4
19	1461801	Bracket Wldmt	1	1
20	353164	Crank	1	1
21	353142	Spring	1	1
22	353143	Spring	1	1
23	287851	Capscrew	1	..
24	287854	Capscrew	1	1
25	296128	Nut	..	1
26	136692	Nut	2	2
27	292681	Lockwasher	..	2
28	1385028	Accelerator Pedal	..	1
29	352885	Rubber Pad	..	1
30	136692	Nut	1	1
31	2033547	Valve	1	1
32	1459216	Cartridge	1	1
33	1450256	O-Ring	1	1
34	1355314	O-Ring	1	1
35	1385029	Link	1	1
36	292505	Capscrew	2	2
37	292680	Washer	2	2
38	16558	Fitting	1	1
39	17222	Fitting	1	1
40	320159	Washer	2	2
41	136692	Nut	2	2

©2009 HYSTER COMPANY

PEDAL LINKAGE

2,6L ENGINE – HYDROSTATIC WITHOUT THROTTLE UP

KEY:
A: Monotrol Pedal
B: Forward/Reverse Lever

ITEM	PART NO.	DESCRIPTION	QTY A	QTY B
42	287860	Capscrew	1	1
43	136985	Capscrew	1	1

©2009 HYSTER COMPANY

NOTES

©2009 HYSTER COMPANY

PEDAL LINKAGE (FIGURE 3-46)
2,6L ENGINE — HYDROSTATIC WITH THROTTLE UP

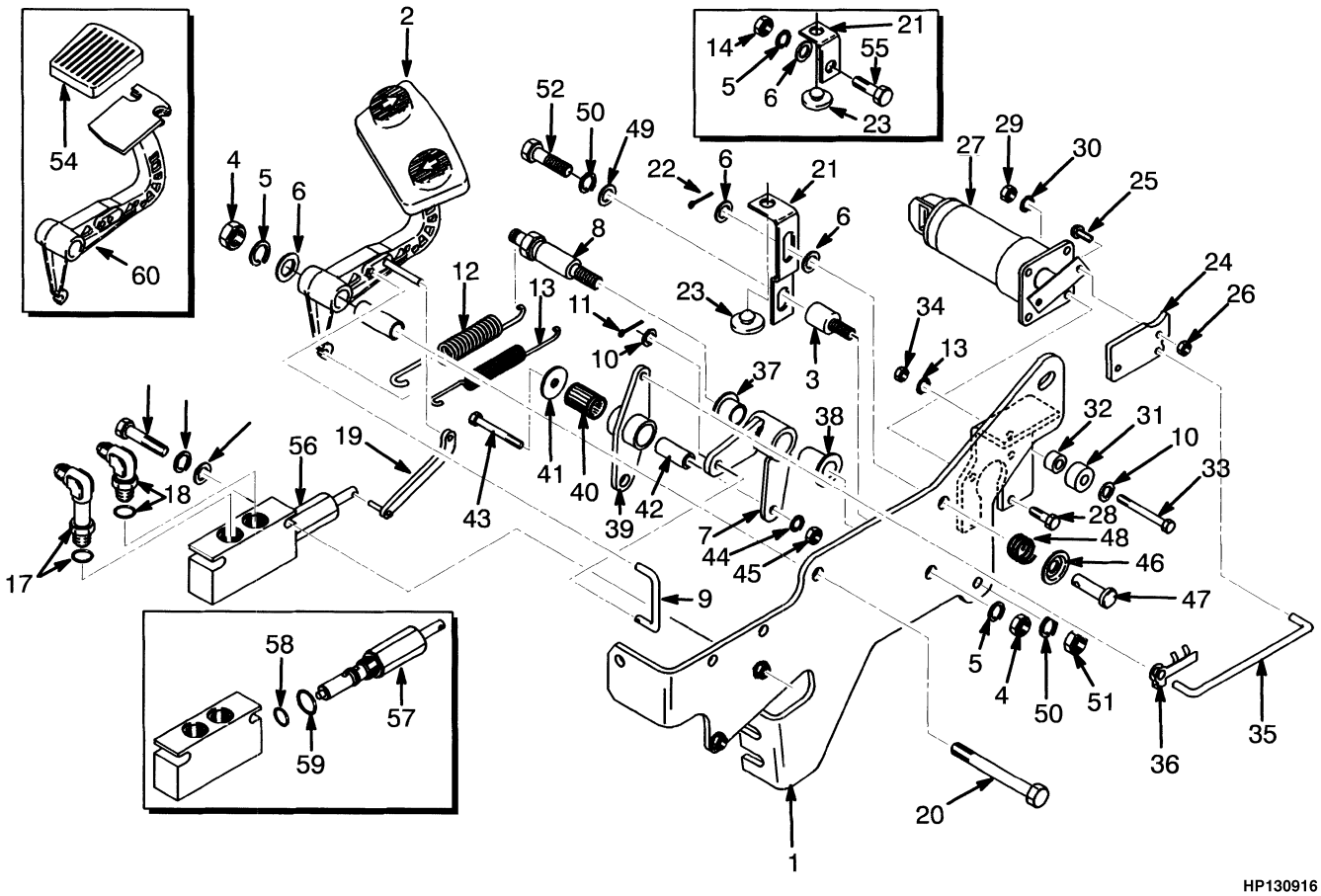

©2009 HYSTER COMPANY

PEDAL LINKAGE

2,6L ENGINE – HYDROSTATIC WITH THROTTLE UP

KEY:
A: Monotrol Pedal
B: Forward/Reverse Lever

ITEM	PART NO.	DESCRIPTION	QTY A	QTY B
1	1461066	Bracket Wldmt	1	1
2	1394021	Monotrol Pedal (☞Figure 3-47)	1	..
3	353453	Mount	1	..
4	136692	Nut	2	2
5	292682	Lockwasher	2	3
6	320160	Washer	3	2
7	1460950	Crank	1	1
8	352485	Shaft	1	1
9	1347159	Rod	1	1
10	320156	Washer	4	4
11	15211	Cotter Pin	1	1
12	353142	Spring	1	1
13	353143	Spring	1	1
14	296128	Nut	..	1
15	292680	Washer	3	3
16	292505	Capscrew	2	2
17	17222	Fitting	1	1
18	16558	Fitting	1	1
19	1461752	Link	1	1
20	292521	Capscrew	1	1
21	1461062	Bracket (Stop)	1	..
21	353159	Bracket (Stop)	..	1
22	15212	Cotter Pin	1	..
23	353195	Bumper	1	1
24	1460788	Plate	1	1
25	1378550	Capscrew	2	2
26	316833	Nut	2	2
27	1396573	Motor	1	1
28	302023	Screw	4	4
29	292667	Nut	4	4
30	292678	Lockwasher	4	4
31	1461092	Cushion	1	1
32	1461090	Spacer	1	1
33	287844	Capscrew	1	1
34	136687	Nut	1	1
35	1461038	Rod	1	1
36	203009	Clip	2	2
37	196480	Bearing	1	1
38	1113570	Bearing	1	1
39	1460993	Crank	1	1
40	213892	Needle Bearing	1	1
41	362036	Washer	1	1
42	1461042	Tube Assy	1	1
43	302252	Capscrew	1	1
44	292679	Washer	1	1

©2009 HYSTER COMPANY

PEDAL LINKAGE

2,6L ENGINE – HYDROSTATIC WITH THROTTLE UP

KEY:
A: Monotrol Pedal
B: Forward/Reverse Lever

ITEM	PART NO.	DESCRIPTION	QTY A	QTY B
45	292668	Nut	1	1
46	353230	Cap	1	..
47	142	Pin (Rod End)	1	..
48	353172	Spring	1	..
49	320158	Washer	1	..
50	292681	Lockwasher	2	..
51	239503	Nut	1	..
52	287851	Capscrew	1	..
53	325708	Tube Assy	1	1
54	352885	Rubber Pad	..	1
55	287854	Capscrew	..	1
56	2033547	Valve	1	1
57	1459216	Cartridge	1	1
58	1450256	O-Ring	1	1
59	1355314	O-Ring	1	1
60	1385028	Accelerator Pedal	..	1

©2009 HYSTER COMPANY

NOTES

©2009 HYSTER COMPANY

MONOTROL PEDAL (FIGURE 3-47)

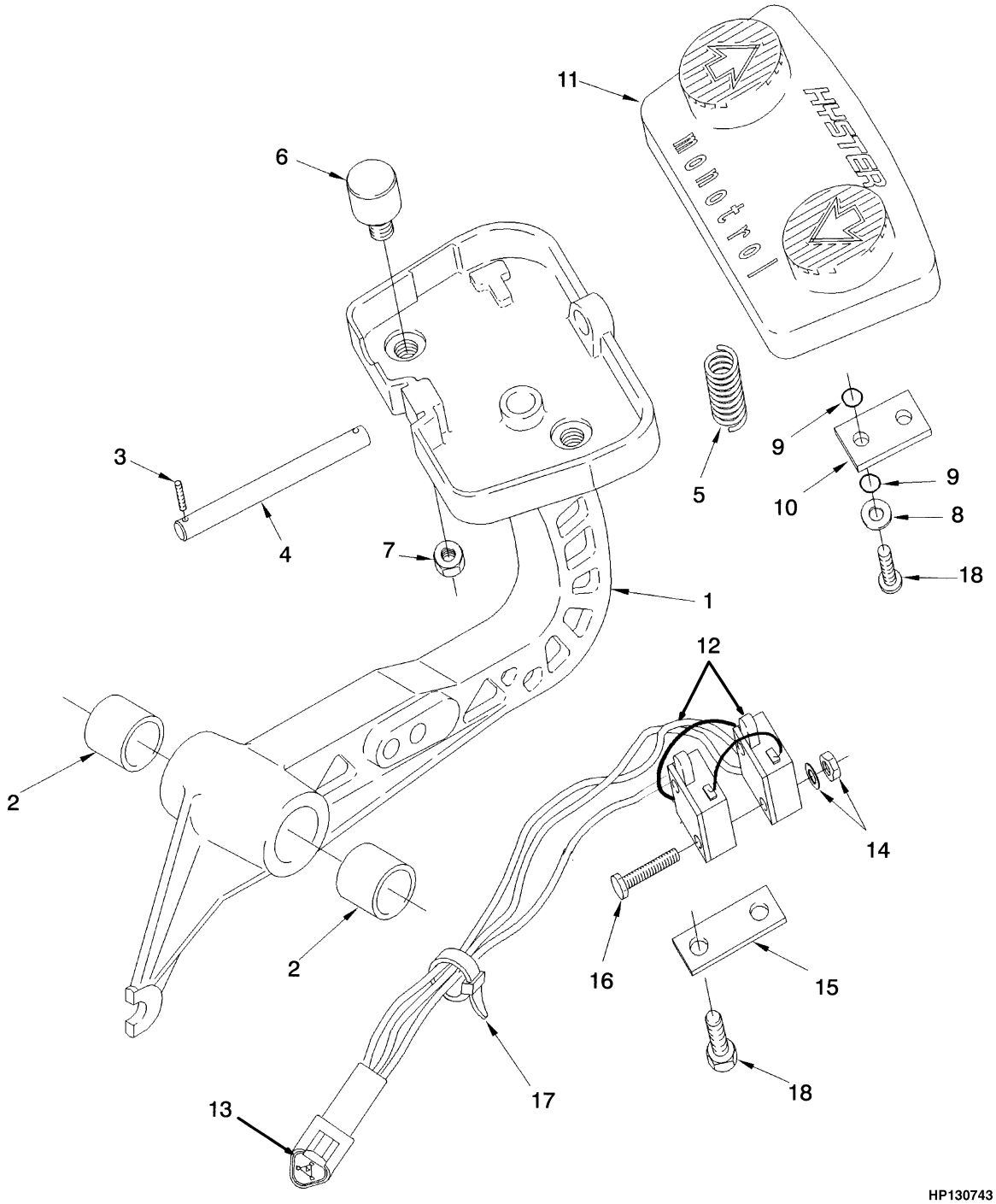

©2009 HYSTER COMPANY

MONOTROL PEDAL

KEY:
A: Without Throttle Up
B: With Throttle Up

ITEM	PART NO.	DESCRIPTION	QTY A	QTY B
	1352575	Monotrol Pedal	1	..
	1394021	Monotrol Pedal	..	1
1	1385027	Pedal	..	1
1	353397	Pedal	1	..
2	135685	Bushing	2	2
3	220932	Setscrew	2	2
3	360387	Loctite	AR	AR
4	353154	Pin	1	1
5	353168	Spring	1	1
6	353422	Magnet	2	..
6	353441	Magnet	..	2
7	353432	Nut	2	2
8	353448	Washer	4	4
9	57568	O-Ring	8	8
10	359207	Plate	2	2
11	353175	Pad	1	1
12	1352090	Switch	1	1
12	. . . . .	Wire Harness	1	1
13	1330410	Connector	1	1
13	1330415	Connector	1	1
13	1330435	Terminal	3	3
14	16865	Nut	2	2
14	53162	Lockwasher	2	2
15	353165	Retainer	1	1
16	220434	Screw	2	2
17	114312	Strap Clamp	3	3
18	352969	Screw	6	6

©2009 HYSTER COMPANY

NOTES

©2009 HYSTER COMPANY

4 ELECTRICAL SYSTEM

SECTION 4
ELECTRICAL SYSTEM

DESCRIPTION **PAGE**

ALTERNATOR
2,6L ENGINE - DIESEL 4-44
3,0L ENGINE - LPG (→ S/N H177B32018Z) 4-46
GASOLINE AND LPG - 2.0L MAZDA 4-42
ALTERNATOR MOUNTING
3.0L GM 4-48
SERPENTINE BELT - GM 3.0L 4-50
DISTRIBUTOR
2,0L ENGINE - LPG 4-38
3,0L ENGINE - LPG 4-40
ELECTRICAL
2,0L ENGINE - LPG 4-8
2,6L ENGINE - DIESEL 4-16
3,0L ENGINE - LPG (→ 1/1998) 4-20
3,0L ENGINE - LPG (S/N H177B30074Y ↔ S/N H177B47640B) 4-28
3.0L ENGINE - LPG (1/1998 ↔ S/N H177B30073Y) 4-24
COWL 4-4
HYDROSTATIC TRANSMISSION 4-36
ELECTRICAL SYSTEM
3,0L ENGINE - LOW EMISSIONS (S/N H177B47641B →) 4-32
CLOSED LOOP - 2.0L 4-12
INSTRUMENT CLUSTER
→ S/N H177B45825A EXC. 43284, 43390, 43539, 43733, 45443, 45510 4-58
S/N H177B45826A → 4-62
INSTRUMENT PANEL 4-56
LIGHTS 4-64
STARTER MOTOR
2,0L ENGINE (→ S/N H177B13244 LPG) 4-52
2,0L ENGINE (S/N H177B13245 → LPG) 4-54
TAIL, BRAKE, AND BACK-UP LIGHTS
INCANDESCENT (S/N H177B48921B →) 4-66
WIRE HARNESS
2,6L ENGINE - DIESEL (→ S/N H177B19415) 4-118
2,6L ENGINE - DIESEL (S/N H177B19416X ↔ S/N H177B34913Z) 4-120
2,6L ENGINE - DIESEL (S/N H177B34914Z →) 4-124
3,0L ENGINE WITH MSTS - LPG (→ 4/1998) 4-104
3,0L ENGINE WITH MSTS - LPG (S/N H177B30074Y →) 4-110
3,0L ENGINE WITH MSTS (8/1997 →) 4-114
3,0L ENGINE WITHOUT MSTS - LPG (→ S/N H177B30072Y) 4-98
3,0L ENGINE WITHOUT MSTS - LPG (S/N H177B30073Y →) 4-100
3,0L ENGINE WITHOUT MSTS - LPG (8/2002 →) 4-102
3,0L LPG WITH MSTS - (4/1998 ↔ S/N H177B30073Y) 4-106
CHASSIS (→ S/N H177B13698) 4-78
CHASSIS (S/N H177B13699 ↔ S/N H177B23394W) 4-80
CHASSIS (S/N H177B23395W ↔ S/N H177B48921B) 4-82
CHASSIS (S/N H177B48921B →) 4-84
COWL (→ S/N H177B26763Y) 4-68
COWL (S/N H177B26764Y ↔ S/N H177B301181Y) 4-70
COWL (S/N H177B301181Y →) 4-72

©2009 HYSTER COMPANY

SECTION 4
ELECTRICAL SYSTEM

DESCRIPTION **PAGE**

FORWARD AND REVERSE 4-76
HYDROSTATIC TRANSMISSION (→ S/N H177B30180Y) 4-126
HYDROSTATIC TRANSMISSION (S/N H177B30181Y →) 4-128
INSTRUMENT PANEL 4-74
LPG - 2,0L ENGINE (→ S/N H177B23394W) 4-88
LPG - 2,0L ENGINE (S/N H177B09725 ↔ S/N H177B23394W) 4-90
LPG 2,0L (S/N H177B23395W →) 4-91
LPG 2,0L - CLOSED LOOP (S/N H177B26764Y →) 4-92
NEUTRAL START 4-86
WITH THROTTLE UP - DIESEL 4-132
WITH THROTTLE-UP - 3,0L ENGINE 4-130
WIRE HARNESS (MAIN)
LPG 3.0L - SHEET 1 0F 2 4-94
LPG 3.0L - SHEET 2 OF 2 4-96

©2009 HYSTER COMPANY

NOTES

©2009 HYSTER COMPANY

ELECTRICAL (FIGURE 4-1)
COWL

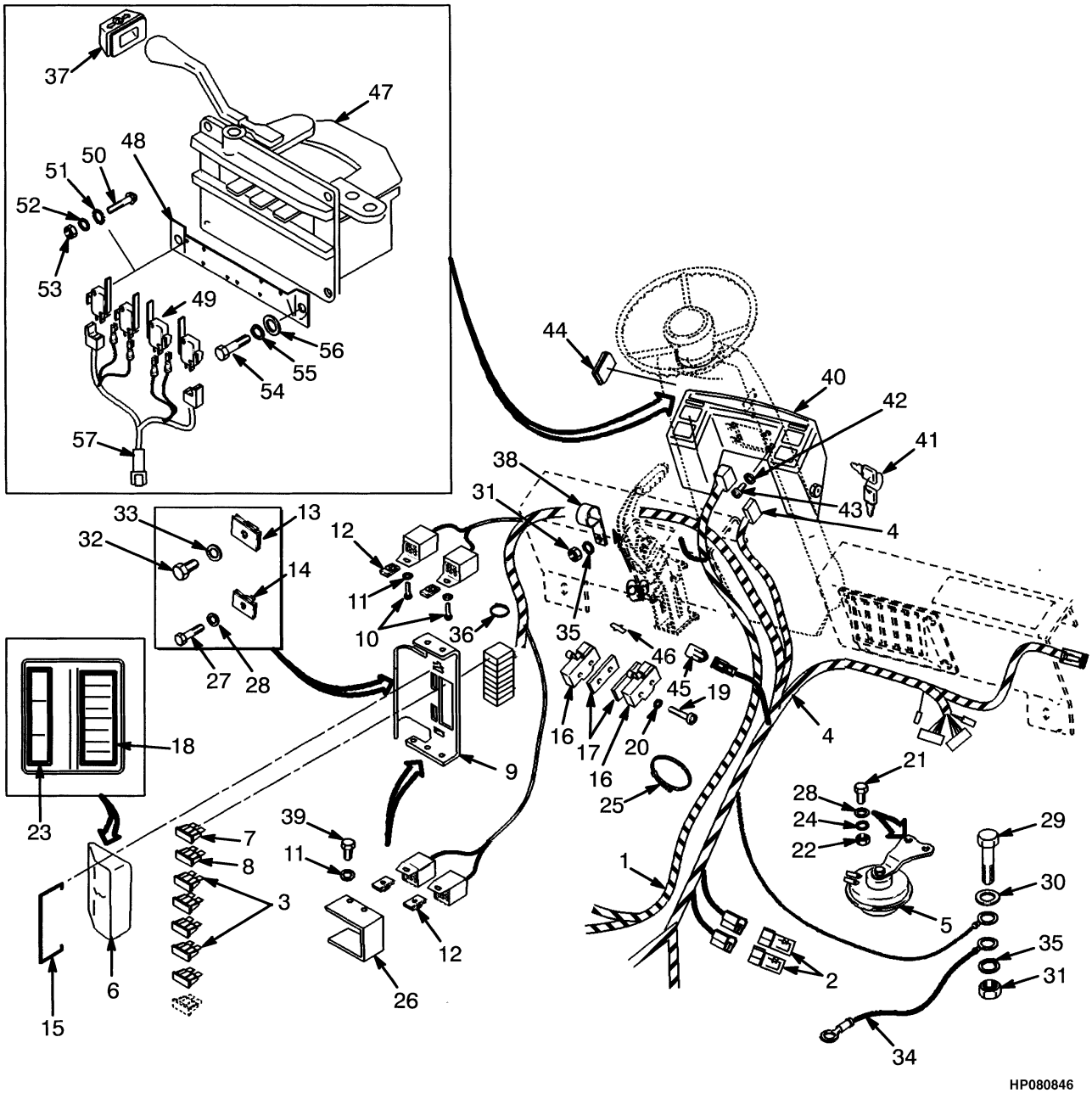

©2009 HYSTER COMPANY

ELECTRICAL
COWL

ITEM	PART NO.	DESCRIPTION	QTY
1	1375703	Wire Harness (Cluster) (☞Figure 4-27)	1
2	1361305	Diode	2
3	1320669	Fuse (30 Amp)	1
4	**c** 1376732	Wire Harness (Cowl) (☞Figure 4-24)	1
4	**d** 1486766	Wire Harness (Cowl) (☞Figure 4-25)	1
4	**e** 1494358	Wire Harness (Cowl) (☞Figure 4-26)	1
5	1495185	Horn	1
6	370863	Cover	1
7	370646	Fuse (5 Amp)	1
8	370647	Fuse (10 Amp)	1
9	1376748	Bracket	1
10	302244	Capscrew	2
11	320155	Washer	4
12	1376581	Nut	4
13	1350282	Retainer	1
14	1354323	Nut (Foldover)	1
15	370864	Cover (Cover)	1
16	370868	Switch (Park Brake)	1
16	**b** 370868	Switch (Park Brake)	2
17	316132	Spacer	1
17	**b** 316132	Spacer	2
18	1389485	Label (Fuse Panel)	1
19	86510	Screw	2
19	**b** 86510	Screw	4
20	138573	Washer	2
20	**b** 138573	Washer	2
21	**b** 292500	Capscrew	2
22	316834	Nut	2
23	1365860	Label (Accessory Fuse)	1
24	292680	Washer	2
25	129563	Strap Clamp	AR
26	1389475	Bracket	1
27	292501	Capscrew	1
28	320156	Washer	3
29	176640	Bolt	1
30	320158	Washer	1
31	292654	Nut	3
32	136681	Capscrew	1
33	320157	Washer	1
34	387892	Wire	1
35	292681	Lockwasher	3
36	137852	Strap Clamp	1
37	322784	Lubricant (Corrosion Preventive)	AR
38	196395	Clamp	2
39	302245	Capscrew	2
40	. . . . .	Instrument Cluster (☞Figure 4-20, ☞Figure 4-21)	1
41	1337197	Key Set	1
42	292680	Washer	4
43	292500	Capscrew	4
44	**b** 1343597	Plug	1

©2009 HYSTER COMPANY

ELECTRICAL
COWL

ITEM	PART NO.	DESCRIPTION	QTY
45	**b** 1351683	Connector	1
46	**a** 1361121	Connector	1
47	**a** 1347004	Lever Assembly	1
48	**a** 1343595	Plate	1
49	**a** 1343636	Switch	4
50	**a** 220426	Screw	8
51	**a** 53162	Lockwasher	8
52	**a** 18419	Lockwasher	8
53	**a** 16865	Nut	8
54	**a** 292500	Capscrew	4
55	**a** 292680	Washer	4
56	**a** 320156	Washer	4
57	**a** 1352088	Wire Harness	1
58	**a** 1343596	Bracket	1

FOOTNOTES:

a Forward and Reverse Lever
b Monotrol Pedal
c → S/N H177B26763Y
d S/N H177B26764Y ↔ S/N H177B301180Y
e S/N H177B301181Y →

©2009 HYSTER COMPANY

NOTES

©2009 HYSTER COMPANY

ELECTRICAL (FIGURE 4-2)

2,0L ENGINE — LPG

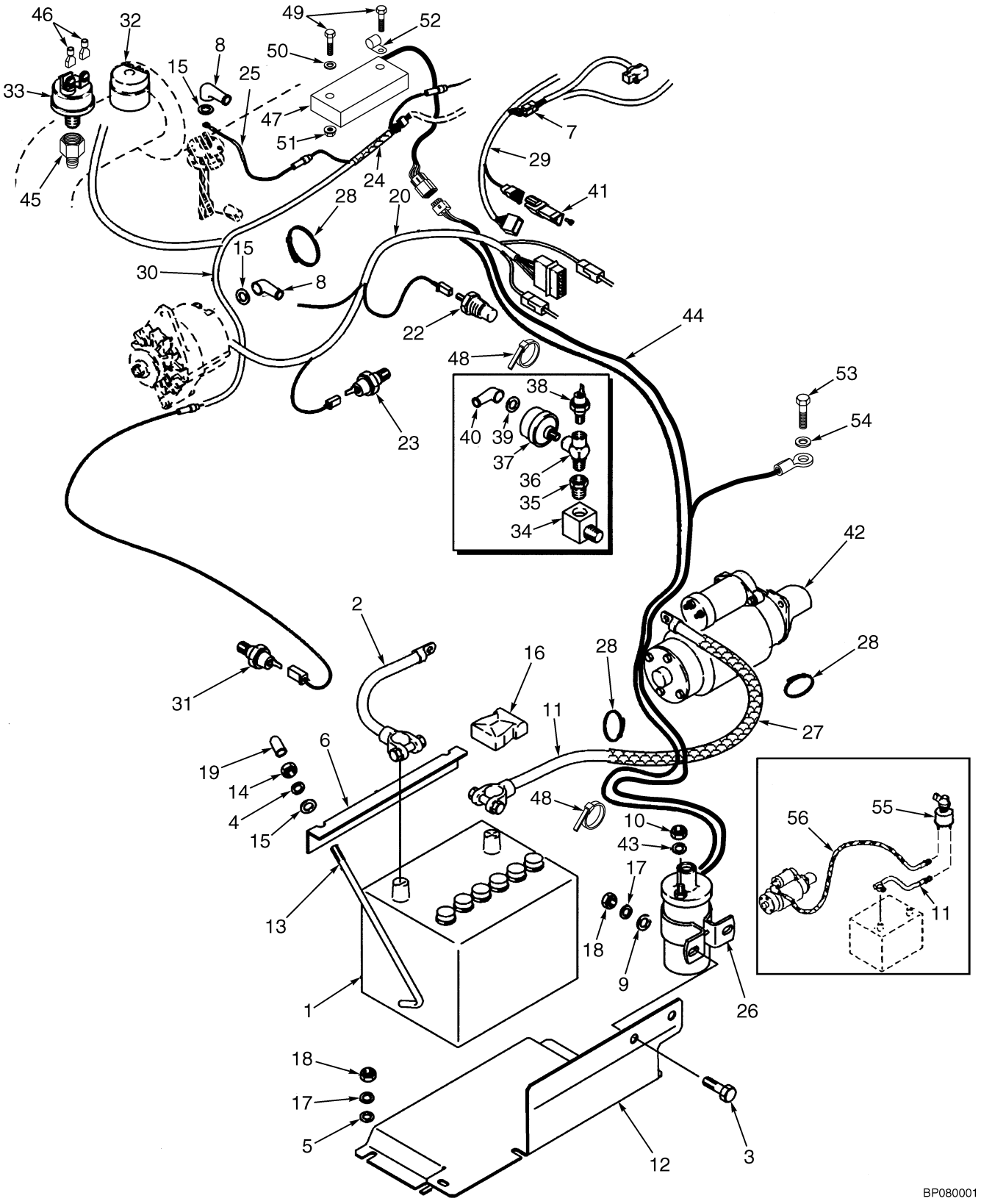

©2009 HYSTER COMPANY

ELECTRICAL
2,0L ENGINE – LPG

ITEM	PART NO.	DESCRIPTION	QTY
1	1383331	Start Battery Wet	1
1	**c** 177894	Start Battery Dry (Dry)	1
2	153931	Battery Cable (Negative)	1
3	136681	Capscrew	2
4	292680	Washer	2
5	320158	Washer	3
6	1354379	Battery Hold Down (Battery)	1
7	1351681	Connector	1
8	190383	Boot	2
9	320157	Washer	2
10	292668	Nut	2
11	1450104	Battery Cable (Positive)	1
11	1368061	Battery Cable (EEC)	1
12	**i** 1458009	Battery Tray	1
12	**m** 1483207	Battery Tray	1
13	309124	Battery Hold Down (Battery Hold Down)	2
14	136687	Nut	2
15	18500	Washer	2
16	257241	Boot	1
17	292681	Lockwasher	3
18	239503	Nut	5
19	1326939	Cap	2
20	**h** 1385862	Wire Harness (Engine) (☞Figure 4-34)	1
20	**o** 2036169	Wire Harness (Engine) (☞Figure 4-35)	1
21	1360146	Clamp	2
22	1360086	Switch (Oil Pressure)	1
22	**c** 2026608	Pressure Switch (Oil)	1
23	1367633	Temperature Sender (Water)	1
24	275498	Conduit (15 in.)	1
25	**g** 1356131	Wire Harness (Fuel Probe)	1
26	1324278	Ignition Coil	1
27	275496	Conduit (51 in.)	1
28	129563	Strap Clamp	AR
29	**b** 1352066	Wire Harness (Neutral Start) (☞Figure 4-33)	1
30	**f** 1376747	Wire Harness (Chassis) (☞Figure 4-29)	1
30	**k** 1466043	Wire Harness (Chassis) (☞Figure 4-30)	1
30	**l** 1476759	Wire Harness (Chassis) (☞Figure 4-31)	1
30	**n** 1556850	Wire Harness (Chassis) (☞Figure 4-32)	1
31	**j** 1356105	Low Coolant Sender	1
31	1535196	Sensor	1
31	190383	Boot (Not Illustrated)	1
32	1347067	Switch (Restriction) (On Air Filter Housing)	1
33	1351133	Pressure Switch (Fuel Low)	1
34	**c** 16151	Fitting	1
35	**c** 367224	Adapter	1
36	**c** 16186	Fitting	1
37	**ce** 1356108	Pressure Sender	1
37	**cp** 1514215	Pressure Sender	1
38	**c** 1368983	Pressure Switch (Pressure)	1
39	**c** 18500	Washer	1

©2009 HYSTER COMPANY

ELECTRICAL
2,0L ENGINE – LPG

ITEM	PART NO.	DESCRIPTION	QTY
40	**c** 190383	Boot	1
41	**a** 1351682	Connector (End Cap) (Body)	1
42	1362069	Starter (☞Figure 4-17)	1
42	2314322	Starter (☞Figure 4-18)	1
43	292679	Washer	2
44	**o** 1476595	Wire Harness (☞Figure 4-36)	1
45	**o** 16187	Fitting	1
46	**o** 190380	Boot	2
47	**o** 2039306	Switch (Revolution)	1
48	**o** 129563	Strap Clamp	2
49	**o** 302242	Capscrew	2
50	**o** 320154	Washer	2
51	**o** 815597	Nut	2
52	**o** 1479687	Side Plate Wldmt	1
53	**o** 148962	Capscrew	1
54	**o** 296379	Washer	1
55	1504946	Switch (Disconnect) (EEC)	1
55	86376	Battery Cable (EEC)	1
56	**d** 14349	Fitting (Pipe Plug) (Not Illustrated)	1

FOOTNOTES:

a Forward and Reverse Lever
b Monotrol Pedal
c Premium Option
d Use when Item 31 (Coolant Sender) not installed
e → 5/2002
f → S/N H177B13698
g → S/N H177B14409
h → S/N H177B23994W
i → S/N H177B30073Y
j → S/N H177B41039A
k S/N H177B13699 ↔ S/N H177B23393W
l S/N H177B23994W ↔ S/N H177B48920B
m S/N H177B30074Y →
n S/N H177B48921B →
o S/N H177B23395W →
p 5/2002 →

©2009 HYSTER COMPANY

NOTES

©2009 HYSTER COMPANY

ELECTRICAL SYSTEM (FIGURE 4-3)
CLOSED LOOP — 2.0L

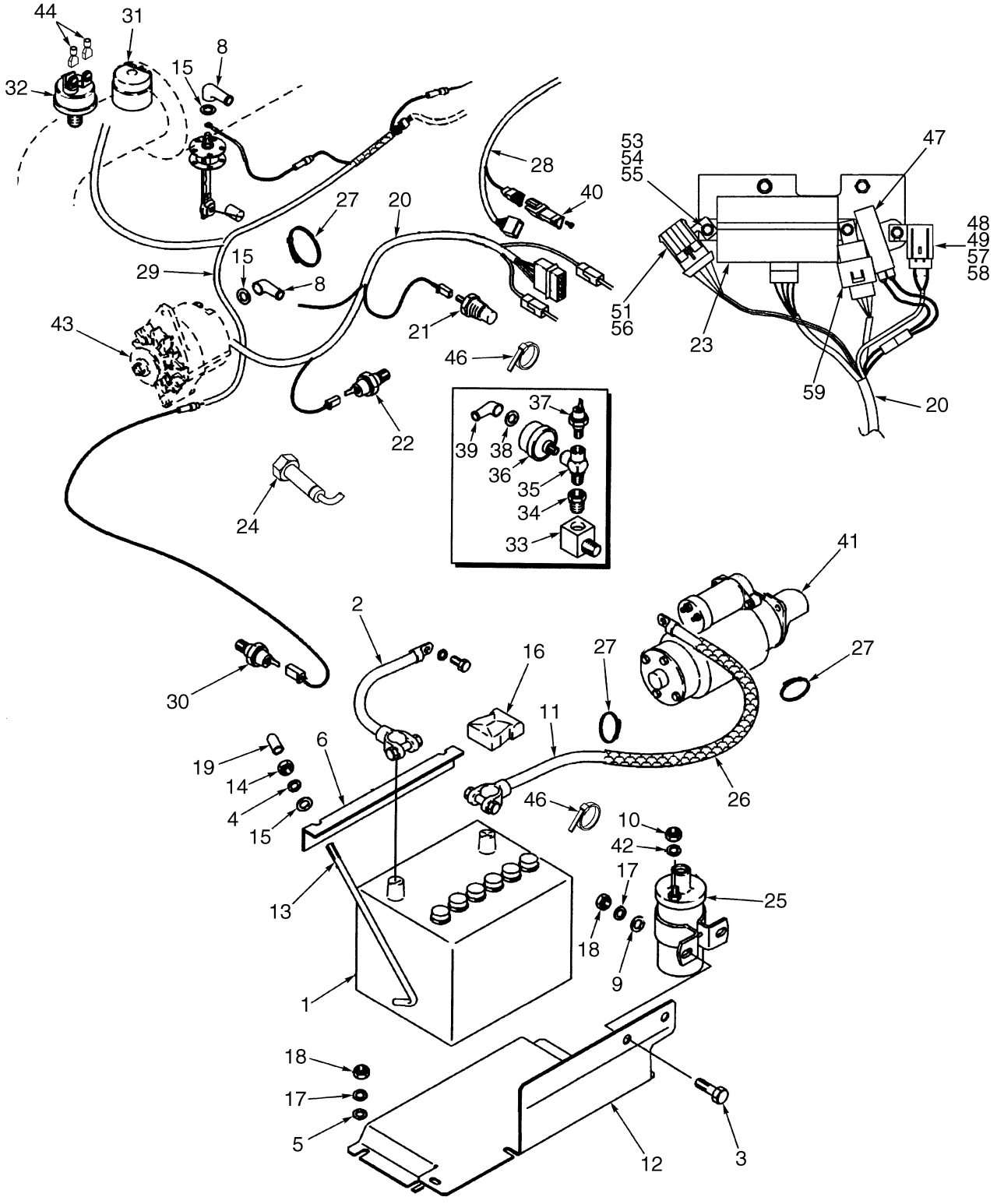

HP080947

©2009 HYSTER COMPANY

ELECTRICAL SYSTEM
CLOSED LOOP – 2.0L

ITEM	PART NO.	DESCRIPTION	QTY
1	1383331	Start Battery Wet	1
2	153931	Battery Cable (Negative)	1
3	136681	Capscrew	2
4	292680	Washer	2
5	320158	Washer	3
6	1354379	Battery Hold Down	1
7	**a** 1351681	Connector	1
8	190383	Boot	1
9	320157	Washer	2
10	292668	Nut	2
11	1450104	Battery Cable (Positive)	1
12	**d** 1458009	Battery Tray	1
12	**f** 1483207	Battery Tray	1
13	309124	Battery Hold Down (Battery Hold Down)	2
14	136687	Nut	2
15	18500	Washer	4
16	257241	Boot	1
17	292681	Lockwasher	3
18	239503	Nut	5
19	1326939	Cap	2
20	1486374	Wire Harness (Engine) (☞Figure 4-37)	1
21	1360086	Switch (Oil Pressure)	1
21	**b** 2026608	Pressure Switch (Oil)	1
22	1367633	Temperature Sender (Water)	1
23	1482459	Engine Control Module	1
24	1487191	Oxygen Sensor	1
25	1324278	Ignition Coil	1
26	275496	Conduit	AR
27	129563	Strap Clamp	AR
28	1352066	Wire Harness (Neutral Start) (Monotrol Pedal)	1
29	**f** 1476759	Wire Harness (Chassis) (Low Emission)	1
30	**e** 1356105	Low Coolant Sender	1
30	**g** 190383	Boot (Not Illustrated)	1
31	1347067	Switch (Restriction)	1
32	1351133	Pressure Switch	1
33	**b** 16151	Fitting	1
34	**b** 367224	Adapter	1
35	**b** 16186	Fitting	1
36	**b** 1514215	Pressure Sender	1
37	**b** 1368983	Pressure Switch (Pressure)	1
38	**b** 18500	Washer	1
39	**b** 190383	Boot	1
40	**a** 1351682	Connector (End Cap)	1
41	2314322	Starter	1
42	292679	Washer	2
43	1450928	Alternator	1
44	190380	Boot	2
45	239503	Nut	2
46	129563	Strap Clamp	2
47	1482460	Resistor	1

©2009 HYSTER COMPANY

ELECTRICAL SYSTEM
CLOSED LOOP – 2.0L

ITEM	PART NO.	DESCRIPTION	QTY
48	1378661	Fuse (1 Amp)	1
49	1469529	Label (1A)	1
50	153069	Clamp	1
51	1482668	Plug	4
52	1483916	Bracket	1
53	287816	Capscrew	3
54	136687	Nut	3
55	292680	Washer	4
56	1482662	Connector Body	1
57	1482699	Clip	1
58	1330293	Cover (Fuse)	1
59	1654577	Relay (Shrouded 4 Pin)	1
	c 14349	Fitting (Pipe Plug) (Not Illustrated)	1

FOOTNOTES:

a Forward and Reverse Lever
b Premium Option
c Use when Item 31 (1535196) not installed
d → S/N H177B30073
e → S/N H177B42138
f S/N H177B30074 →
g S/N H177B42139 →

©2009 HYSTER COMPANY

NOTES

©2009 HYSTER COMPANY

ELECTRICAL (FIGURE 4-4)
2,6L ENGINE — DIESEL

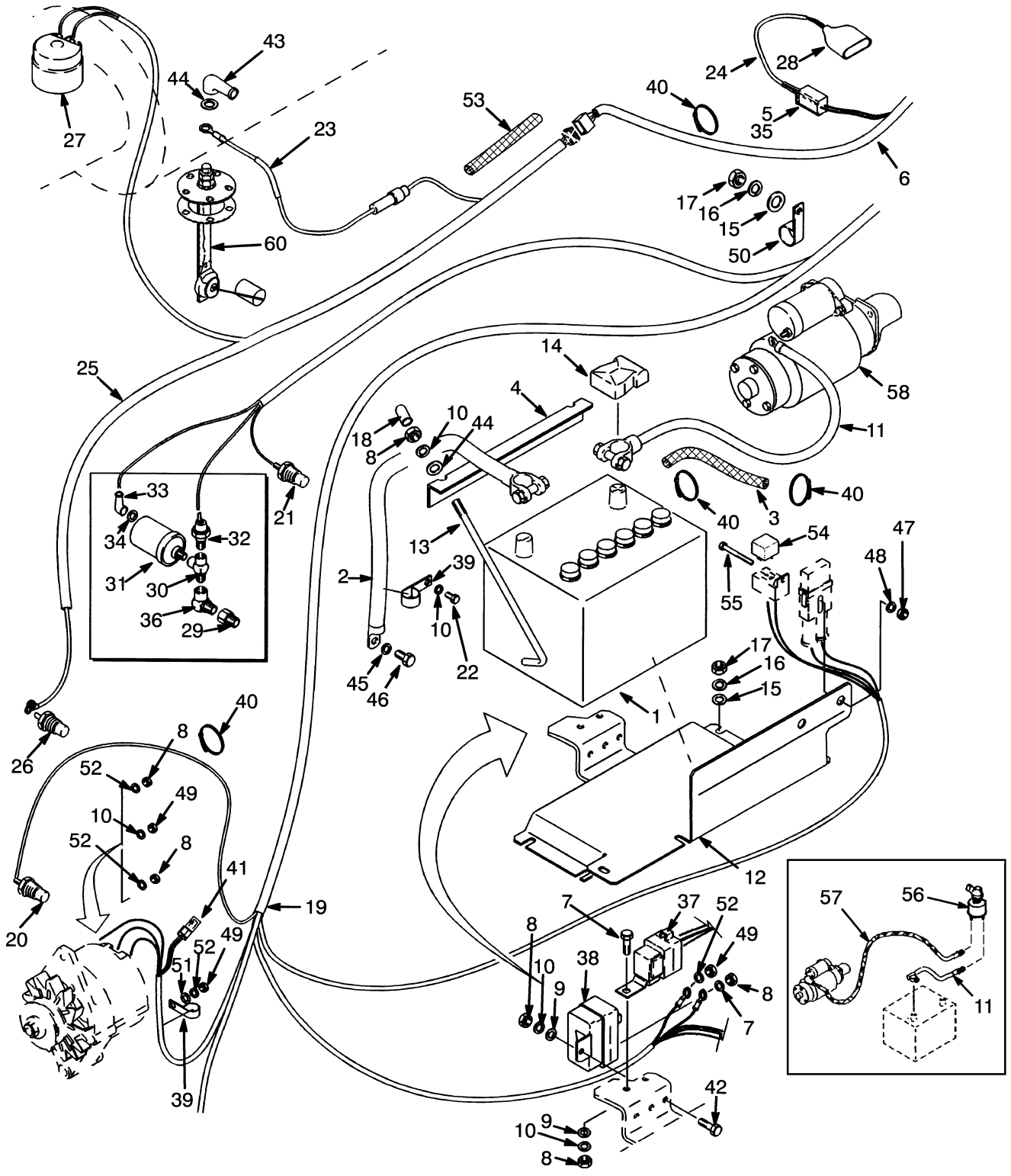

©2009 HYSTER COMPANY

ELECTRICAL
2,6L ENGINE – DIESEL

ITEM	PART NO.	DESCRIPTION	QTY
1	1377998	Start Battery Wet (Wet)	1
2	1396341	Battery Cable	1
3	275496	Conduit	AR
4	1354379	Battery Hold Down	1
5	**a** 1351681	Connector	1
6	1359624	Wire Harness (Chassis Lighting)	1
7	292501	Capscrew	3
8	136687	Nut	6
9	320156	Washer	3
10	292680	Washer	7
11	246855	Battery Cable	1
11	86377	Battery Cable (EEC)	1
12	1458009	Battery Tray	1
13	309124	Battery Hold Down (Battery Hold Down)	2
14	257241	Boot	1
15	320158	Washer	4
16	292681	Lockwasher	4
17	239503	Nut	4
18	1326939	Cap	2
19	**f** 1396259	Wire Harness (Engine) (☞Figure 4-47)	1
19	**l** 1485873	Wire Harness (Engine) (☞Figure 4-48)	1
19	**o** 1496740	Wire Harness (Engine) (☞Figure 4-48)	1
19	**q** 1514911	Wire Harness (Engine) (☞Figure 4-49)	1
20	1319175	Temperature Sender (Coolant)	1
21	1360086	Switch (Oil Pressure)	1
21	**b** 2026608	Pressure Switch (Oil)	1
22	293600	Capscrew	1
23	**h** 1356131	Wire Harness (Fuel Probe)	1
23	**s** 1371166	Wire Harness	1
24	1352066	Wire Harness (Neutral Start) (Monotrol Pedal) (☞Figure 4-33)	1
25	**e** 1376747	Wire Harness (Chassis) (☞Figure 4-29)	1
25	**k** 1466043	Wire Harness (Chassis) (☞Figure 4-30)	1
25	**nj** 1476759	Wire Harness (Chassis) (☞Figure 4-31)	1
25	**i** 1528353	Wire Harness (Chassis)	1
25	**t** 1556850	Wire Harness (Chassis) (☞Figure 4-32)	1
26	**g** 1356105	Low Coolant Sender	1
26	**r** 1535196	Sensor	1
26	**r** 190383	Boot (Not Illustrated)	1
27	1347067	Switch (Restriction)	1
28	190380	Boot	1
29	**b** 367224	Adapter	1
30	**b** 16186	Fitting	1
31	**bd** 1356108	Pressure Sender	1
31	**bu** 1514215	Pressure Sender	1
32	**b** 1368983	Pressure Switch (Pressure)	1
33	**b** 190383	Boot	2
34	**b** 18500	Washer	1
35	1351682	Connector (End Cap) (Forward/Reverse Lever)	1
36	**b** 16151	Fitting	1
37	**f** 1654577	Relay (Shrouded 4 Pin)	1

©2009 HYSTER COMPANY

ELECTRICAL
2,6L ENGINE – DIESEL

ITEM	PART NO.	DESCRIPTION	QTY
37	**m** 1375844	Relay (60 Amp)	1
37	**p** 1506840	Relay (70 Amp)	2
38	1396335	Module (Glow Plug)	1
39	132972	Clamp	3
40	137852	Strap Clamp	AR
41	1361305	Diode	1
42	292500	Capscrew	1
43	190383	Boot	1
44	18500	Washer	1
45	292684	Lockwasher	1
46	293661	Capscrew	1
47	292667	Nut	2
48	197066	Washer	4
49	292668	Nut	3
50	173247	Clamp	1
51	320155	Washer	1
52	292679	Washer	4
53	275498	Conduit (15 in.)	1
54	1456464	Relay	1
55	302027	Screw	2
56	1504946	Switch (Disconnect) (EEC)	1
57	88993	Battery Cable (Positive) (EEC)	1
58	1519632	Starter	1
59	**cr** 14349	Fitting (Pipe Plug) (Not Illustrated)	1
60	**s** 1548752	Kit-Fuel Sender Diesel (☞Figure 3-34)	1

FOOTNOTES:

a Forward and Reverse Lever
b Premium Option
c Use when Item 26 (Coolant Sender) not installed
d → 5/2002
e → S/N H177B13698
f → S/N H177B19415X
g → S/N H177B41039A
h → S/N H177B44744A
i S/N H177B40927A ↔ S/N H177B42138A
j S/N H177B42139A ↔ S/N H177B48920B
k S/N H177B13699 ↔ S/N H177B23393
l S/N H177B19416X ↔ S/N H177B29209Y
m S/N H177B19416X ↔ S/N H177B29369Y
n S/N H177B23394W ↔ S/N H177B40925A
o S/N H177B29210Y ↔ S/N H177B34913Z
p S/N H177B29370Y →
q S/N H177B34914Z →
r S/N H177B42139A →
s S/N H177B44745A →
t S/N H177B48921B →
u 5/2002 →

©2009 HYSTER COMPANY

NOTES

©2009 HYSTER COMPANY

ELECTRICAL (FIGURE 4-5)

3,0L ENGINE — LPG (→ 1/1998)

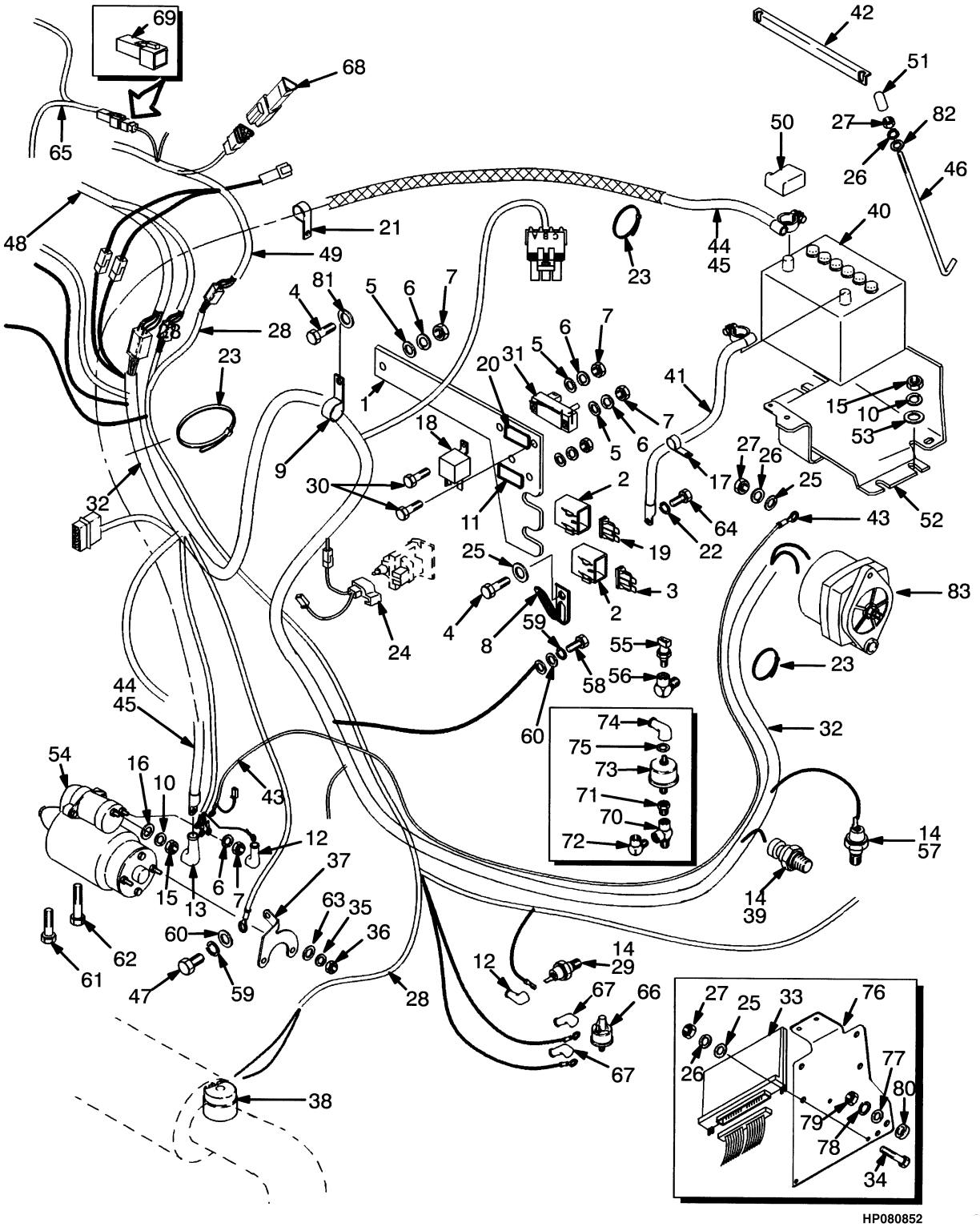

HP080852

©2009 HYSTER COMPANY

ELECTRICAL

3,0L ENGINE – LPG (→ 1/1998)

ITEM	PART NO.	DESCRIPTION	QTY
1	1375847	Bracket	1
2	1330293	Cover (Fuse)	2
3	370647	Fuse (10 Amp)	1
4	302246	Capscrew	3
5	320155	Washer	2
6	292679	Washer	6
7	292668	Nut	6
8	1360146	Clamp	2
9	**c** 136516	Clamp	1
9	**b** 89220	Clamp	1
10	292681	Lockwasher	4
11	1352612	Label	1
12	190383	Boot	2
13	204223	Boot	1
14	246108	Sealant	AR
15	239503	Nut	4
16	320157	Washer	1
17	122175	Clamp	1
18	1375844	Relay (60 Amp)	1
19	1320669	Fuse (30 Amp)	1
20	1367640	Label	1
21	325897	Clamp	1
22	15156	Lockwasher	1
23	129563	Strap Clamp	AR
24	1314392	Wire	1
25	320156	Washer	1
26	292680	Washer	6
27	136687	Nut	6
28	1376747	Wire Harness (Chassis) (☞Figure 4-29)	1
29	1356105	Low Coolant Sender	1
30	**c** 302245	Capscrew	2
30	**b** 302250	Capscrew	2
31	**b** 1520644	Sensor	1
32	**bd** 1383421	Wire Harness (Engine) (☞Figure 4-43)	1
32	**ce** 1383401	Wire Harness (Engine) (☞Figure 4-40)	1
33	1376667	Controller	1
33	1376750	Msts Controller	1
33	1376624	Label (Electronic Control Module)	1
34	292501	Capscrew	3
35	15152	Lockwasher	2
36	15052	Nut	2
37	1457120	Bracket	1
38	**a** 1347067	Switch (Restriction)	1
39	**b** 1314381	Temperature Sender	1
39	**c** 14386	Fitting	1
40	1383331	Start Battery Wet (Wet)	1
41	1379481	Battery Cable (-)	1
42	1354379	Battery Hold Down	1
43	1385863	Wire Harness (Starter Motor/Alternator)	1
44	119388	Battery Cable (+)	1

©2009 HYSTER COMPANY

ELECTRICAL

3,0L ENGINE – LPG (→ 1/1998)

ITEM	PART NO.	DESCRIPTION	QTY
45	275496	Conduit	AR
46	309124	Battery Hold Down (Battery Hold Down)	2
47	18496	Capscrew	1
48	1375703	Wire Harness (Cluster) (☞Figure 4-27)	1
49	1376732	Wire Harness (Cowl) (☞Figure 4-24)	1
50	257241	Boot	1
51	1326939	Cap	2
52	878778	Battery Tray	1
53	320158	Washer	3
54	1391321	Starter	1
55	1375878	Pressure Switch	1
56	1376767	Fitting	1
57	1319190	Temperature Sender	1
58	16836	Capscrew	1
59	15155	Lockwasher	1
60	18515	Washer	2
61	1375157	Bolt (Starter)	1
62	1375158	Bolt (Starter)	1
63	197067	Washer	2
64	18535	Capscrew	1
65	1352066	Wire Harness (Neutral Start) (Monotrol Pedal) (☞Figure 4-33)	1
66	1351133	Pressure Switch	1
67	190383	Boot	1
68	1351682	Connector (End Cap) (Forward/Reverse Lever)	1
69	1351681	Connector (Forward/Reverse Lever)	1
70	**a** 17216	Fitting	1
71	**a** 16187	Fitting	1
72	**a** 17314	Fitting	1
73	**a** 1356108	Pressure Sender (Oil Pressure)	1
74	190383	Boot	1
75	197067	Washer	1
76	1376655	Bracket	1
77	320158	Washer	3
78	292681	Lockwasher	3
79	239503	Nut	3
80	1375848	Spacer	3
81	197067	Washer	3
82	18500	Washer	2
83	1358911	Alternator (☞Figure 4-14)	1

FOOTNOTES:

a Premium Option
b With MSTS
c Without MSTS
d → 4/1998
e → S/N H177B30073Y

©2009 HYSTER COMPANY

NOTES

©2009 HYSTER COMPANY

ELECTRICAL (FIGURE 4-6)

3.0L ENGINE — LPG (1/1998 ↔ S/N H177B30073Y)

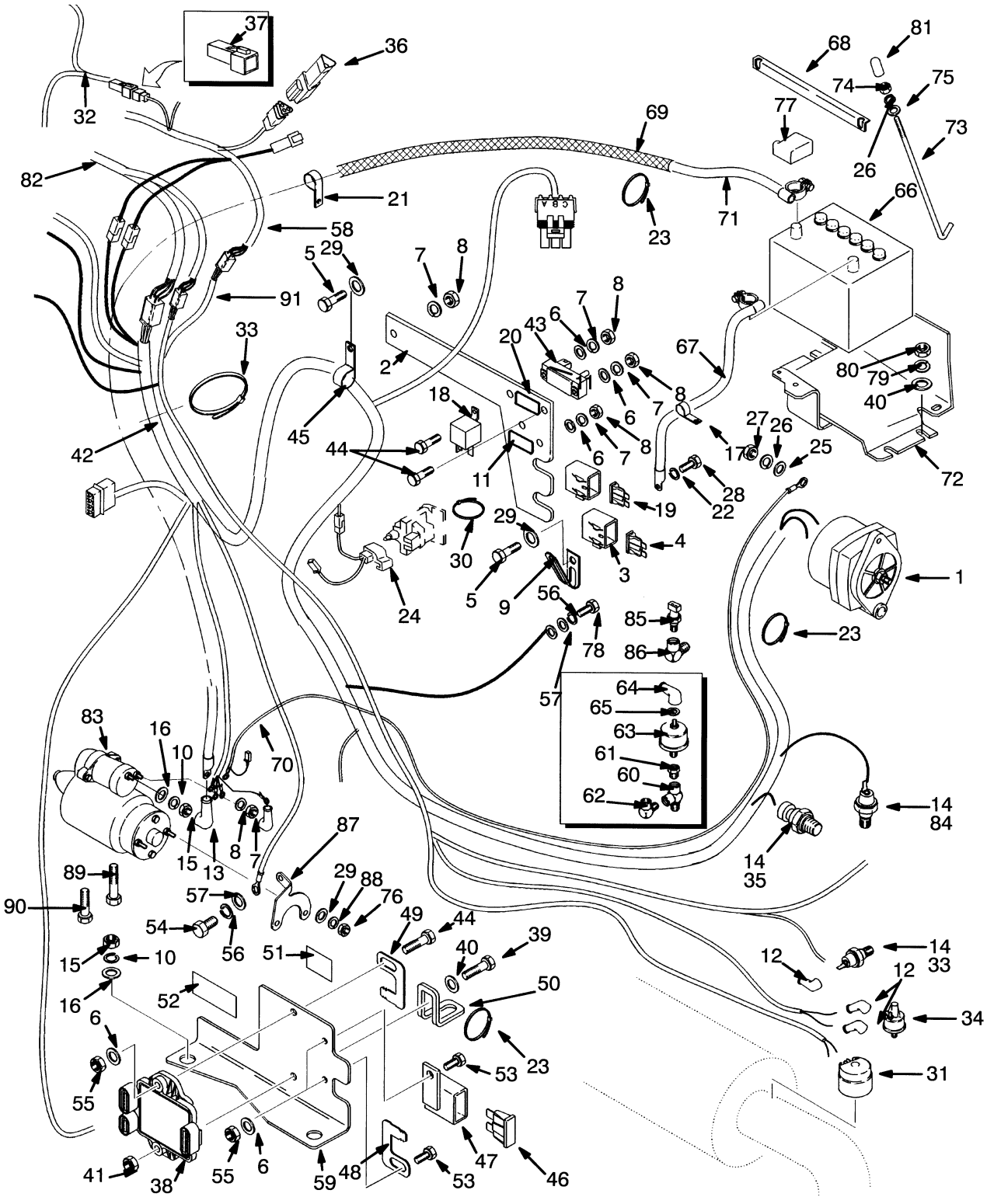

©2009 HYSTER COMPANY

ELECTRICAL

3.0L ENGINE – LPG (1/1998 ↔ S/N H177B30073Y)

KEY:
A: With MSTS
B: Without MSTS

ITEM	PART NO.	DESCRIPTION	QTY A	QTY B
1	1358911	Alternator (☞Figure 4-14)	1	1
2	1375847	Bracket	1	1
3	1330293	Cover (Fuse)	2	2
4	370647	Fuse (10 Amp)	1	1
5	302246	Capscrew	3	3
6	320155	Washer	5	2
7	292679	Washer	6	6
8	292668	Nut	6	6
9	1360146	Clamp	2	2
10	292681	Lockwasher	3	1
11	1352612	Label	1	1
12	190383	Boot	3	3
13	204223	Boot	1	1
14	246108	Sealant	AR	AR
15	239503	Nut	1	1
16	320157	Washer	3	1
17	122175	Clamp	1	1
18	1375844	Relay (60 Amp)	1	1
19	1320669	Fuse (30 Amp)	1	1
20	1367640	Label	1	1
21	325897	Clamp	1	1
22	15156	Lockwasher	1	1
23	129563	Strap Clamp	AR	AR
24	1314392	Wire	1	1
25	320156	Washer	1	1
26	292680	Washer	3	3
27	136687	Nut	1	1
28	18535	Capscrew	2	2
29	197067	Washer	5	5
30	114312	Strap Clamp	AR	AR
31	1347067	Switch (Restriction) (Air Filter Restrictor)	1	1
32	1352066	Wire Harness (Neutral Start) (Monotrol) (☞Figure 4-33)	1	1
33	1356105	Low Coolant Sender	1	1
34	1351133	Pressure Switch	1	1
35	14386	Fitting	..	1
36	1351682	Connector (End Cap) (Forward/Reverse Lever)	1	1
37	1351681	Connector (Forward/Reverse Lever)	1	1
38	1460764	Kit-Msts Module	1	..
38	2035531	Msts Controller (MSTS)	1	..
38	1459037	Label (MSTS)	1	..
38	2036234	Wire Harness (MSTS Adapter)	1	..
38	2036646	Kit-Hardware	1	..
39	292503	Capscrew	1	..
40	320158	Washer	4	3
41	302399	Nut	1	..

©2009 HYSTER COMPANY

ELECTRICAL

3.0L ENGINE – LPG (1/1998 ↔ S/N H177B30073Y)

KEY:
A: With MSTS
B: Without MSTS

ITEM	PART NO.	DESCRIPTION	QTY A	QTY B
42	2035711	Wire Harness (Engine) (☞Figure 4-44)	1	..
42	1383401	Wire Harness (Engine)	..	1
43	1520644	Sensor	1	..
44	302245	Capscrew	..	2
44	302245	Capscrew	..	2
44	302250	Capscrew	3	..
45	136516	Clamp	..	1
45	89220	Clamp	1	..
46	370647	Fuse (10 Amp)	1	..
47	1330293	Cover (Fuse)	1	..
48	1339444	Clip	1	..
49	1376661	Clip	1	..
50	1385873	Strap	1	..
51	1339461	Label	1	..
52	1339459	Label	1	..
53	302246	Capscrew	2	..
54	18496	Capscrew	1	1
55	302398	Locknut	3	..
56	15155	Lockwasher	2	2
57	18515	Washer	2	2
58	1486766	Wire Harness (Cowl) (☞Figure 4-25)	1	1
59	1459383	Bracket	1	..
60	**a** 17216	Fitting	1	1
61	**a** 16187	Fitting	1	1
62	**a** 17314	Fitting	1	1
63	**a** 1356108	Pressure Sender	1	1
64	**a** 190383	Boot	1	1
65	**a** 197067	Washer	1	1
66	1383331	Start Battery Wet (Wet)	1	1
67	1379481	Battery Cable (-)	1	1
68	1354379	Battery Hold Down	1	1
69	275496	Conduit	AR	AR
70	1385863	Wire Harness (Starter Motor)	1	1
71	119388	Battery Cable (+)	1	1
72	1458009	Battery Tray	1	1
73	309124	Battery Hold Down (Battery Hold Down)	2	2
74	136687	Nut	2	2
75	18500	Washer	2	2
76	15052	Nut	2	2
77	257241	Boot	1	1
78	16836	Capscrew	1	1
79	292681	Lockwasher	3	3
80	239503	Nut	3	3
81	1326939	Cap	2	2
82	1375703	Wire Harness (Cluster) (☞Figure 4-27)	1	1

©2009 HYSTER COMPANY

ELECTRICAL

3.0L ENGINE – LPG (1/1998 ↔ S/N H177B30073Y)

KEY:
A: With MSTS
B: Without MSTS

ITEM	PART NO.	DESCRIPTION	QTY A	QTY B
83	**b** 1391321	Starter	1	1
83	**c** 1486530	Starter	1	1
84	1319190	Temperature Sender	1	1
85	1375878	Pressure Switch (Oil Pressure)	1	1
86	1376767	Fitting (OIl Pressure)	1	1
87	1457120	Bracket	1	1
88	15152	Lockwasher	2	2
89	1375158	Bolt (Starter)	1	1
90	1375157	Bolt (Starter)	1	1
91	1466043	Wire Harness (Chassis) (☞Figure 4-30)	1	1

FOOTNOTES:

a Premium Option
b → S/N H177B01938
c S/N H177B01939 →

ELECTRICAL (FIGURE 4-7)

3,0L ENGINE — LPG (S/N H177B30074Y ↔ S/N H177B47640B)

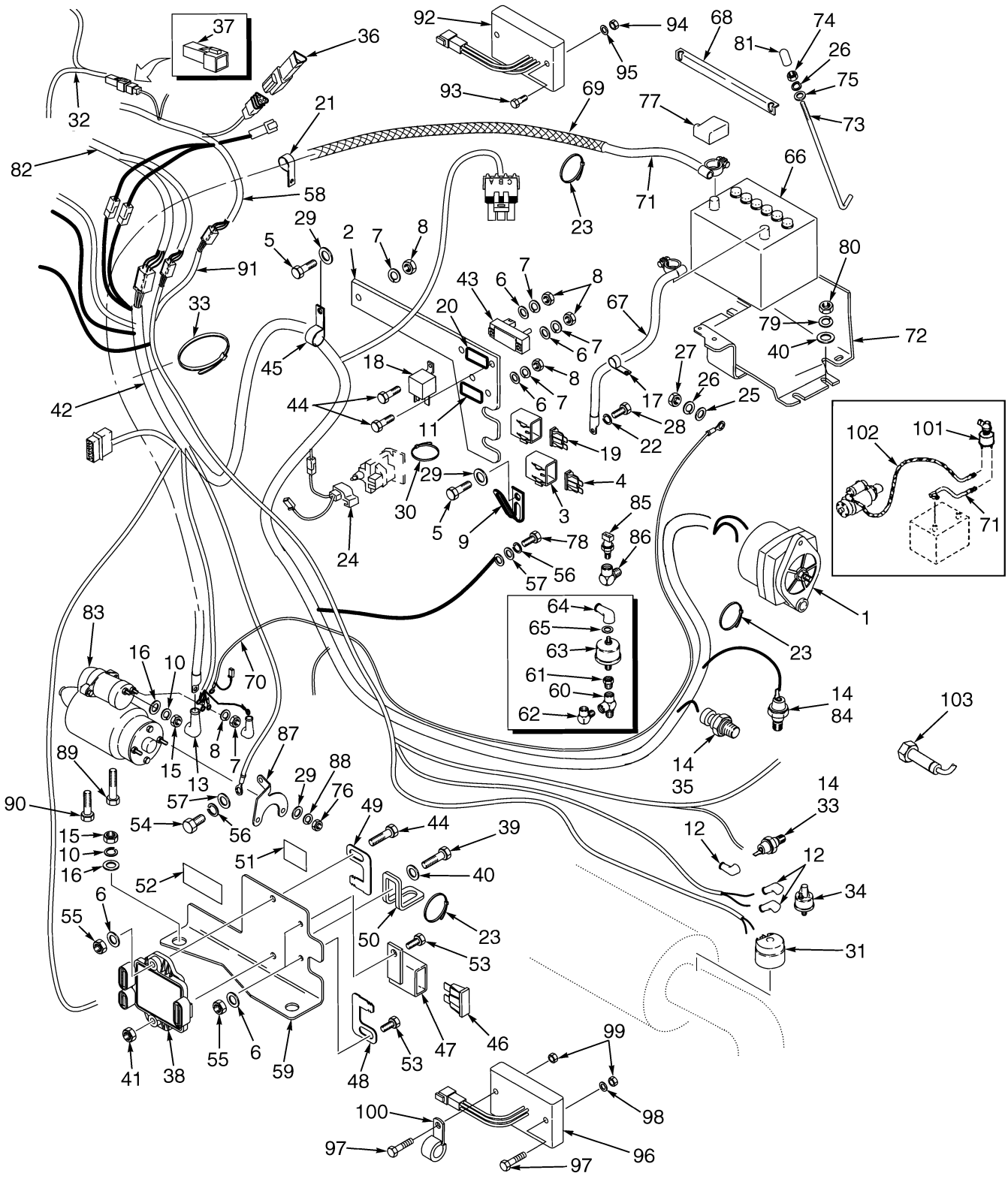

©2009 HYSTER COMPANY

ELECTRICAL

3,0L ENGINE – LPG (S/N H177B30074Y ↔ S/N H177B47640B)

KEY:
A: With MSTS
B: Without MSTS

ITEM	PART NO.	DESCRIPTION	QTY A	QTY B
1	**e** 1358911	Alternator (☞Figure 4-14)	1	1
1	**g** 1469597	Alternator (With Serpentine Belt)	1	1
1	**h** 2074390	Alternator	1	1
1	1469599	Alternator (With V-Belt)	1	1
2	1375847	Bracket	1	1
3	1330293	Cover (Fuse)	2	2
4	370647	Fuse (10 Amp)	1	1
5	302246	Capscrew	3	3
6	320155	Washer	5	2
7	292679	Washer	6	6
8	292668	Nut	6	6
9	1360146	Clamp	2	2
10	292681	Lockwasher	3	1
11	1352612	Label	1	1
12	190383	Boot	3	3
13	204223	Boot	1	1
14	246108	Sealant	AR	AR
15	239503	Nut	1	1
16	320157	Washer	3	1
17	122175	Clamp	1	1
18	1375844	Relay (60 Amp)	1	1
19	1320669	Fuse (30 Amp)	1	1
20	1367640	Label	1	1
21	325897	Clamp	1	1
22	15156	Lockwasher	1	1
23	129563	Strap Clamp	AR	AR
24	1314392	Wire	1	1
25	320156	Washer	1	1
26	292680	Washer	3	3
27	136687	Nut	1	1
28	18535	Capscrew	2	2
29	197067	Washer	5	5
30	114312	Strap Clamp	AR	AR
31	1347067	Switch (Restriction) (Air Filter)	1	1
32	1352066	Wire Harness (Neutral Start) (Monotrol) (☞Figure 4-33)	1	1
33	**f** 1356105	Low Coolant Sender	1	1
34	1351133	Pressure Switch	1	1
35	14386	Fitting	..	1
36	1351682	Connector (End Cap) (Forward/Reverse Lever)	1	1
37	1351681	Connector (Forward/Reverse Lever)	1	1
38	1460764	Kit-Msts Module	1	..
38	2035531	Msts Controller (MSTS)	1	..
38	1459037	Label (MSTS)	1	..
38	2036234	Wire Harness (MSTS Adapter)	1	..
38	2036646	Kit-Hardware	1	..

©2009 HYSTER COMPANY

ELECTRICAL

3,0L ENGINE – LPG (S/N H177B30074Y ↔ S/N H177B47640B)

KEY:
A: With MSTS
B: Without MSTS

ITEM	PART NO.	DESCRIPTION	QTY A	QTY B
39	292503	Capscrew	1	..
40	320158	Washer	4	3
41	302399	Nut	1	..
42	**c** 1476727	Wire Harness (LPG Engine) (☞Figure 4-45)	1	..
42	**c** 1476728	Wire Harness (LPG Engine) (☞Figure 4-40)	..	1
42	**k** 2053671	Wire Harness (LPG Engine) (☞Figure 4-46)	1	..
42	**k** 2053670	Wire Harness (LPG Engine) (☞Figure 4-42)	..	1
43	1520644	Sensor	1	..
44	3022445	Control Card	..	2
44	302250	Capscrew	3	..
45	136516	Clamp	..	1
45	89220	Clamp	1	..
46	370647	Fuse (10 Amp)	1	..
47	1330293	Cover (Fuse)	1	..
48	1339444	Clip	1	..
49	1376661	Clip	1	..
50	1385873	Strap	1	..
51	1339461	Label	1	..
52	1339459	Label	1	..
53	302246	Capscrew	2	..
54	18496	Capscrew	1	1
55	302398	Locknut	3	..
56	15155	Lockwasher	2	2
57	18515	Washer	2	2
58	1486766	Wire Harness (Cowl) (☞Figure 4-25)	1	1
59	1459383	Bracket	1	..
60	**a** 17216	Fitting	1	1
61	**a** 16187	Fitting	1	1
62	**a** 17314	Fitting	1	1
63	**a** 1514215	Pressure Sender	1	1
64	**a** 190383	Boot	1	1
65	**a** 197067	Washer	1	1
66	1383331	Start Battery Wet	1	1
67	1379481	Battery Cable (-)	1	1
68	1354379	Battery Hold Down	1	1
69	275496	Conduit	AR	AR
70	1385863	Wire Harness (Starter/Alternator)	1	1
71	119388	Battery Cable (+)	1	1
72	1483207	Battery Tray	1	1
73	309124	Battery Hold Down (Battery Hold Down)	2	2
74	136687	Nut	2	2
75	18500	Washer	2	2
76	15052	Nut	2	2
77	257241	Boot	1	1
78	16836	Capscrew	1	1

©2009 HYSTER COMPANY

ELECTRICAL

3,0L ENGINE – LPG (S/N H177B30074Y ↔ S/N H177B47640B)

KEY:
A: With MSTS
B: Without MSTS

ITEM	PART NO.	DESCRIPTION	QTY A	QTY B
79	292681	Lockwasher	3	3
80	239503	Nut	3	3
81	1326939	Cap	2	2
82	1375703	Wire Harness (Cluster) (☞Figure 4-27)	1	1
83	**d** 1486530	Starter	1	1
83	**bi** 1469603	Starter	1	1
83	**j** 1650426	Starter	1	1
83	1490407	Switch	1	1
83	1507400	Bolt	2	2
84	1319190	Temperature Sender	1	1
85	1375878	Pressure Switch	1	1
86	1376767	Fitting	1	1
87	1457120	Bracket	1	1
88	15152	Lockwasher	2	2
89	1375158	Bolt (Starter)	1	1
90	1375157	Bolt (Starter)	1	1
91	1466043	Wire Harness (Chassis) (☞Figure 4-30)	1	1
92	1489065	Printed Circuit Board	..	1
93	292502	Capscrew	..	2
94	316834	Nut	..	2
95	320156	Washer	..	2
96	2039306	Switch (Revolution)	1	1
97	302224	Setscrew	2	2
98	320154	Washer	1	1
99	815597	Nut	2	2
100	1470687	Clamp	1	1
101	1504946	Switch (Disconnect)	1	1
102	1375867	Wire Harness	1	1
103	1487191	Oxygen Sensor	1	1

FOOTNOTES:

a Premium Option
b Replace with 1650426 and Bracket 1457120
c → 8/2002
d → S/N H177B31870Z
e → S/N H177B32018Z
f → S/N H177B40524A
g S/N H177B32019Z ↔ S/N H177B55183C
h S/N H177B55184C →
i S/N H177B31871Z →
j 10/2006 →
k 8/2002 →

©2009 HYSTER COMPANY

ELECTRICAL SYSTEM (FIGURE 4-8)

3,0L ENGINE — LOW EMISSIONS (S/N H177B47641B →)

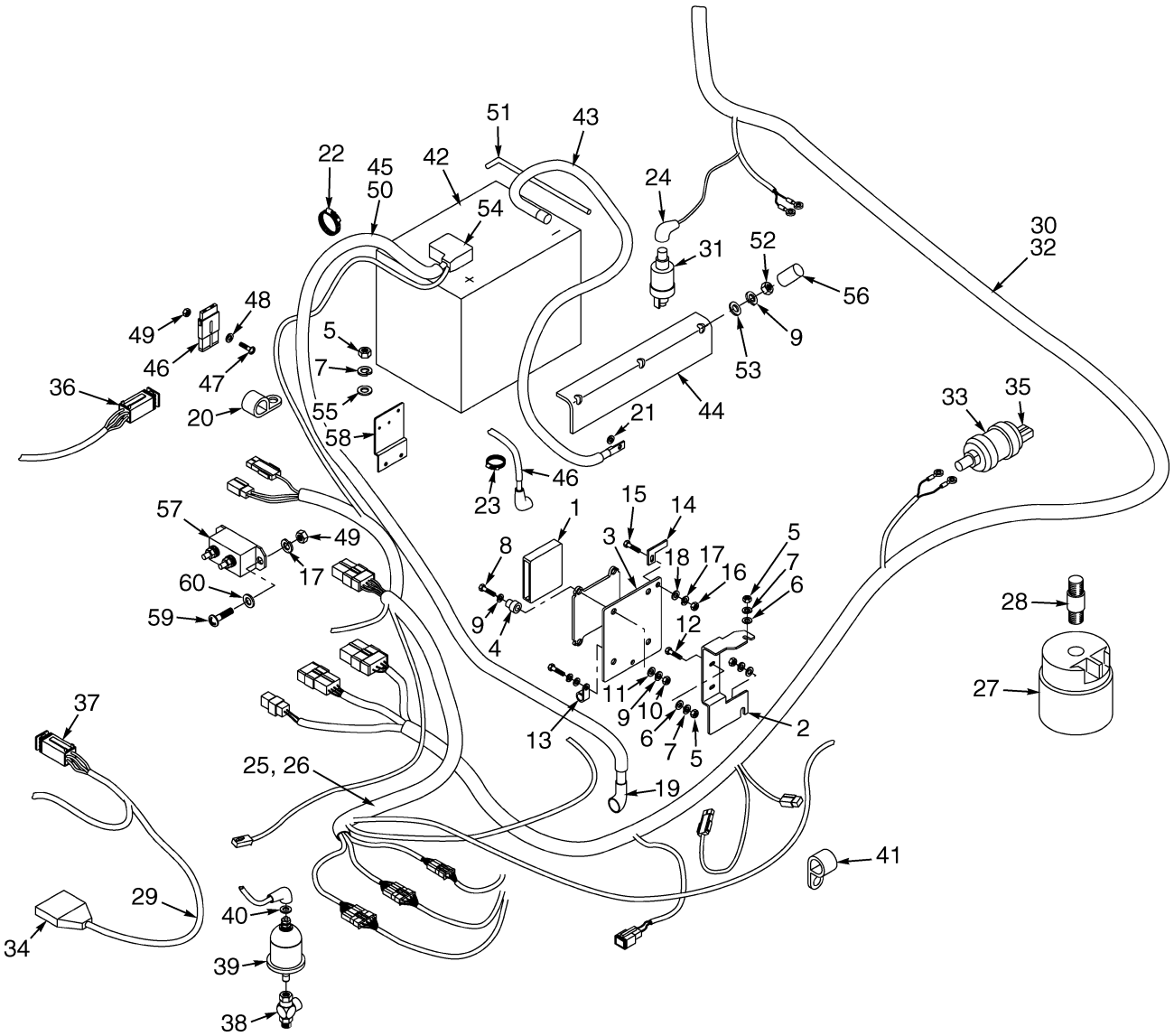

YP080553

©2009 HYSTER COMPANY

ELECTRICAL SYSTEM

3,0L ENGINE – LOW EMISSIONS (S/N H177B47641B →)

ITEM	PART NO.	DESCRIPTION	QTY
1	2067796	Engine Control Module	1
2	1544577	Bracket (ECM Mounting)	1
3	1545116	Plate (ECM Mounting)	1
4	1544934	Isolator	4
5	239503	Nut	9
6	320157	Washer	5
7	292681	Lockwasher	9
8	287816	Capscrew	6
9	292680	Washer	12
10	136687	Nut	4
11	320156	Washer	6
12	136749	Screw	2
13	147006	Clamp	2
14	1339444	Clip	1
15	2062262	Capscrew	1
16	1463912	Nut	1
17	292678	Lockwasher	3
18	320154	Washer	1
19	204223	Boot	1
20	325897	Clamp	1
21	15908	Lockwasher	1
22	2033612	Strap Clamp	AR
23	114312	Strap Clamp	1
24	190383	Boot	1
26	2063066	Wire Harness (Interface) (LPG)	1
27	1347067	Switch (Restriction)	1
28	16150	Fitting	1
29	1352066	Wire Harness (Neutral Start) (Monotrol)	1
30	1549375	Wire Harness (Chassis)	1
31	1535196	Sensor	1
32	275498	Conduit (15 in.)	1
33	1351133	Pressure Switch	1
34	190380	Boot	2
35	12856	Fitting	1
36	1351682	Connector (End Cap)	1
37	1351681	Connector	1
38	16186	Fitting	1
39	1514215	Pressure Sender	1
40	197067	Washer	1
41	101625	Clamp	1
42	1383331	Start Battery Wet	1
43	1379481	Battery Cable (Negative)	1
44	1354379	Battery Hold Down	1
45	275496	Conduit (55 in.)	1
46	1549399	Wire Harness (Alternator To Circuit Breaker, Fused)	1
46	1454829	Fuse (60 Amp)	1
46	1454862	Cover (With Seal)	1
47	302026	Screw	1
48	197066	Washer	1
49	292667	Nut	1

©2009 HYSTER COMPANY

ELECTRICAL SYSTEM

3,0L ENGINE – LOW EMISSIONS (S/N H177B47641B →)

ITEM	PART NO.	DESCRIPTION	QTY
50	1567685	Battery Cable (Positive)	1
51	309124	Battery Hold Down (Battery Hold Down)	2
52	136687	Nut	2
53	18500	Washer	2
54	257241	Boot (Battery Terminal)	1
55	320158	Washer	3
56	1326939	Cap	2
57	2044948	Breaker (50 Amp)	1
57	15152	Lockwasher	2
57	15002	Nut	2
58	1545408	Bracket (Circuit Breaker)	1
59	302021	Screw	2
60	320154	Washer	2

©2009 HYSTER COMPANY

NOTES

©2009 HYSTER COMPANY

ELECTRICAL (FIGURE 4-9)
HYDROSTATIC TRANSMISSION

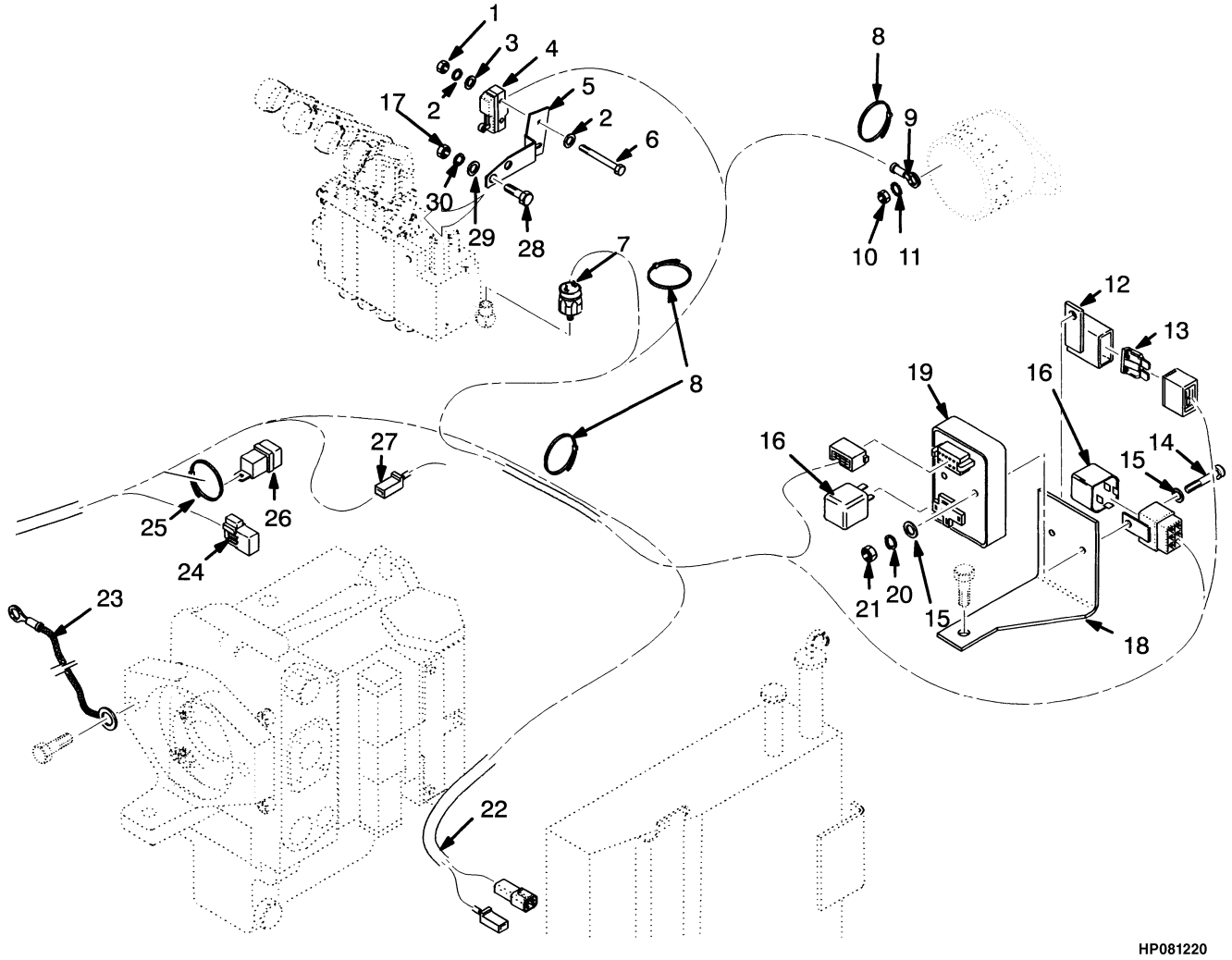

©2009 HYSTER COMPANY

ELECTRICAL
HYDROSTATIC TRANSMISSION

KEY:
A: 3,0L Engine
B: 2,6L Engine

ITEM	PART NO.	DESCRIPTION	QTY A	QTY B
1	15049	Nut	2	2
2	16743	Lockwasher	4	4
3	197065	Washer	1	1
4	1320893	Microswitch	1	1
5	1461193	Bracket	1	1
6	86510	Screw	2	2
7	1461261	Pressure Switch	1	1
8	129563	Strap Clamp	5	5
9	1396347	Wire Harness (Throttle-Up 3.0L) (☞Figure 4-52)	1	..
9	1396348	Wire Harness (Throttle-Up 2,6L) (☞Figure 4-53)	..	1
10	292668	Nut	1	1
11	296378	Washer	1	1
12	1330293	Cover (Fuse)	1	1
13	370647	Fuse (10 Amp)	1	1
14	302027	Screw	2	2
15	320154	Washer	2	2
16	**f** 1347114	Relay	1	1
16	**c** 1523456	Relay	1	1
16	**d** 1347114	Relay	2	2
17	239503	Nut	2	2
18	1461194	Bracket	1	1
19	**b** 2038501	Controller	1	1
19	**d** 2062450	Controller	1	1
20	292678	Lockwasher	2	2
21	292667	Nut	2	2
22	**a** 1463575	Wire Harness (☞Figure 4-50)	1	1
22	**e** 1494796	Wire Harness (☞Figure 4-51)	1	1
23	1452828	Wire (Ground)	1	1
24	1361305	Diode	1	1
25	137852	Strap Clamp	AR	AR
26	1654577	Relay (Shrouded 4 Pin)	1	1
27	181046	Connector Body	1	1
28	136681	Capscrew	2	2
29	320157	Washer	2	2
30	292681	Lockwasher	2	2

FOOTNOTES:

a → S/N H177B30180Y
b → S/N H177B41082A
c S/N H177B33385Z ↔ S/N H177B41082A
d S/N H177B41083A →
e S/N H177B30181Y →
f S/N H177B33384Z →

©2009 HYSTER COMPANY

DISTRIBUTOR (FIGURE 4-10)

2,0L ENGINE — LPG

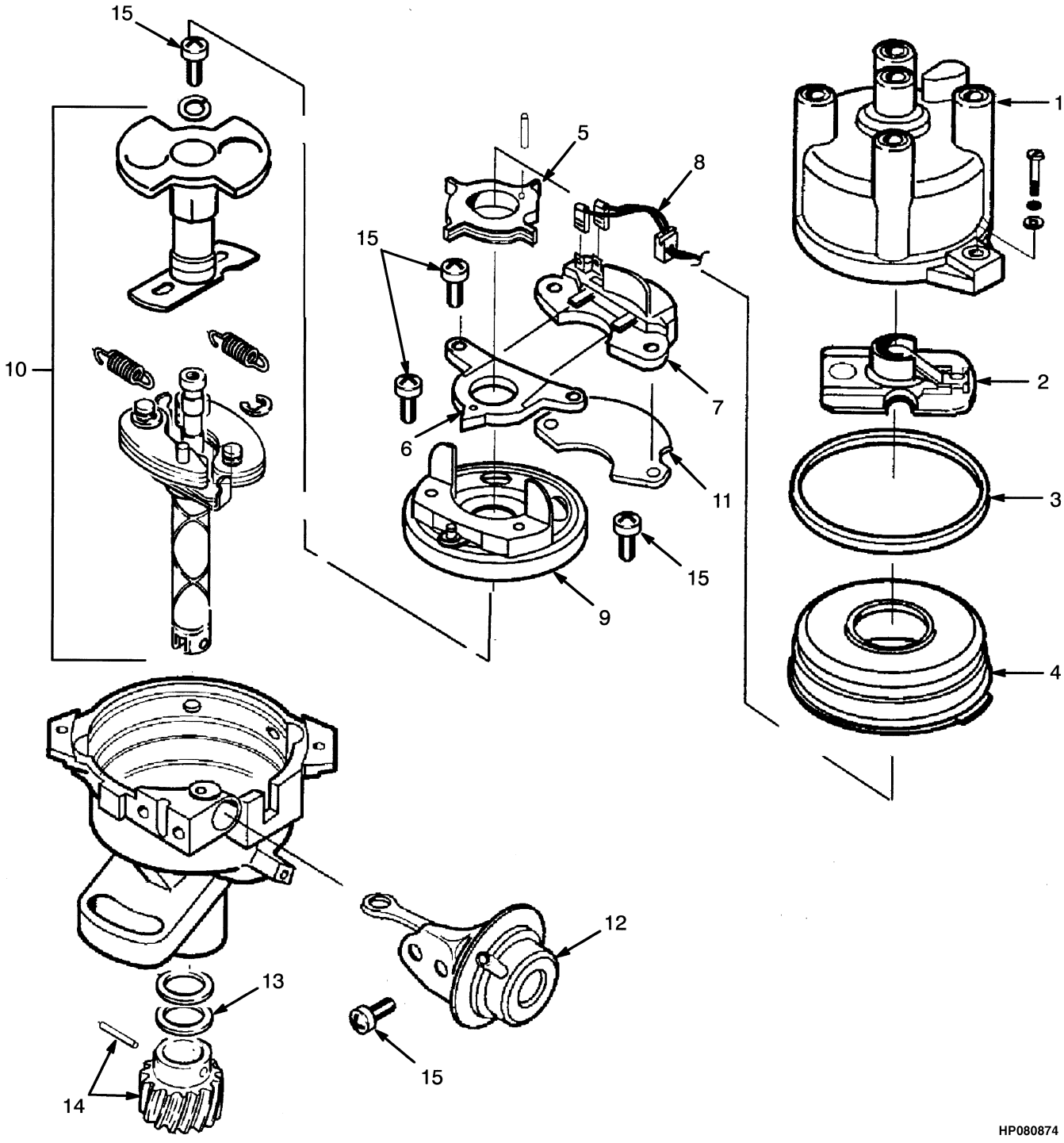

©2009 HYSTER COMPANY

DISTRIBUTOR
2,0L ENGINE – LPG

ITEM	PART NO.	DESCRIPTION	QTY
	1453562	Distributor	1
1	1326394	Distributor Cap	1
2	1326395	Rotor	1
3	1326396	Packing	1
4	1326397	Cover	1
5	1326398	Rotor	1
6	1326399	Pick-Up Set	1
7	1326536	Igniter	1
8	1362037	Wire	1
9	1326537	Breaker	1
10	1362036	Governor	1
11	1326538	Heatsink	1
12	2026798	Vacuum Control	1
13	1362039	Oil Seal	1
14	1362042	Coupling	1
15	1362040	Setscrew	1

©2009 HYSTER COMPANY

DISTRIBUTOR (FIGURE 4-11)

3,0L ENGINE — LPG

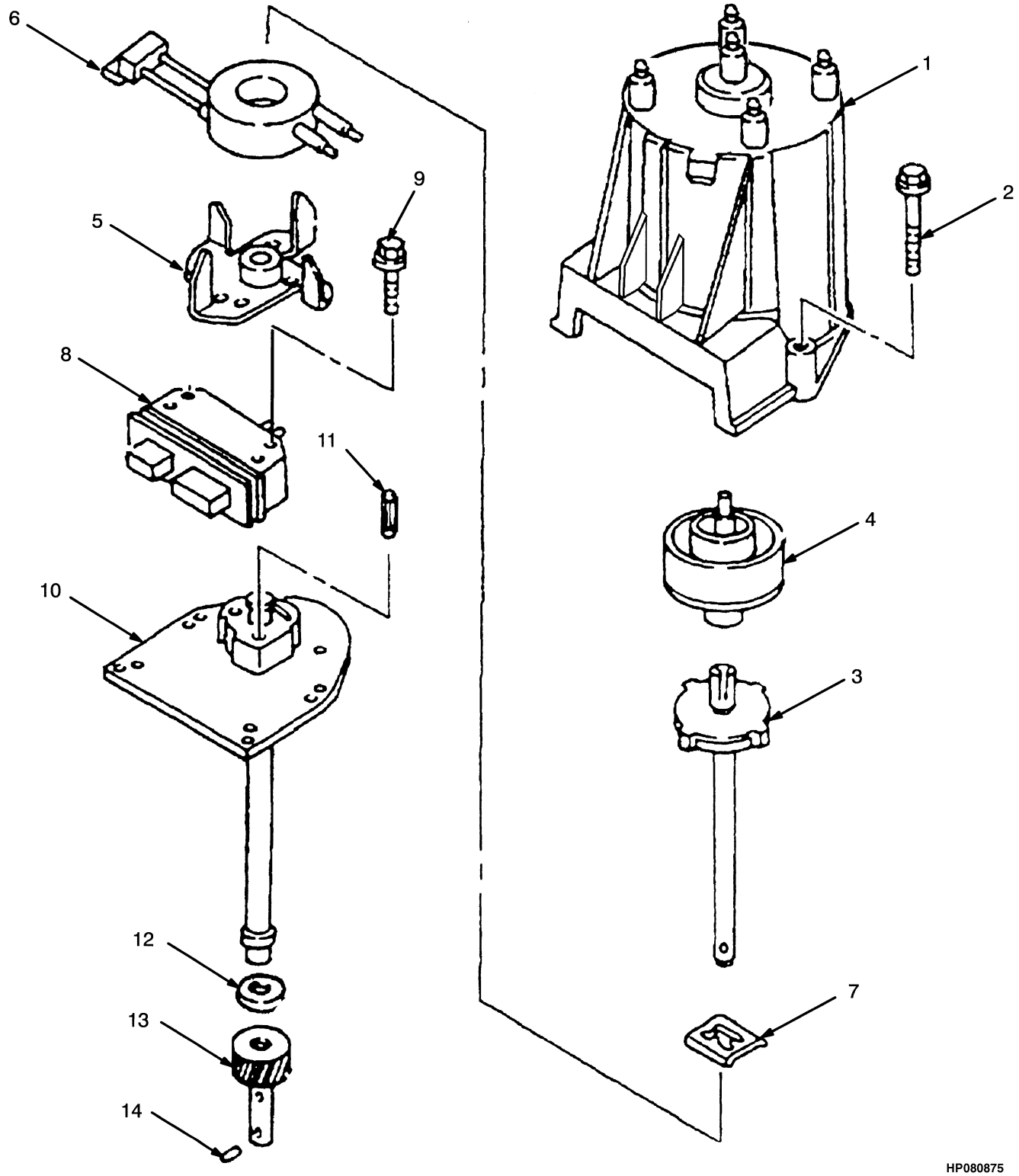

©2009 HYSTER COMPANY

DISTRIBUTOR
3,0L ENGINE – LPG

ITEM	PART NO.	DESCRIPTION	QTY
	1331330	Distributor	1
1	1334400	Distributor Cap	1
2	1334401	Screw	2
3	1334402	Shaft	1
4	1334403	Rotor	1
5	1334404	Pole Shoe	1
6	1334405	Coil	1
7	1334406	Retainer	1
8	**a** 1334407	Module	1
8	**b** 1460387	Module	1
9	1334408	Bolt	2
10	1334409	Housing	1
11	1334410	Pin	1
12	1334411	Seal	1
13	1334412	Gear	1
14	1334413	Pin	1
	996336	Kit-Tune-Up	1

FOOTNOTES:

a 1998 Series Engine

b 1999 to 2001 Series Engine

©2009 HYSTER COMPANY

ALTERNATOR (FIGURE 4-12)
GASOLINE AND LPG — 2.0L MAZDA

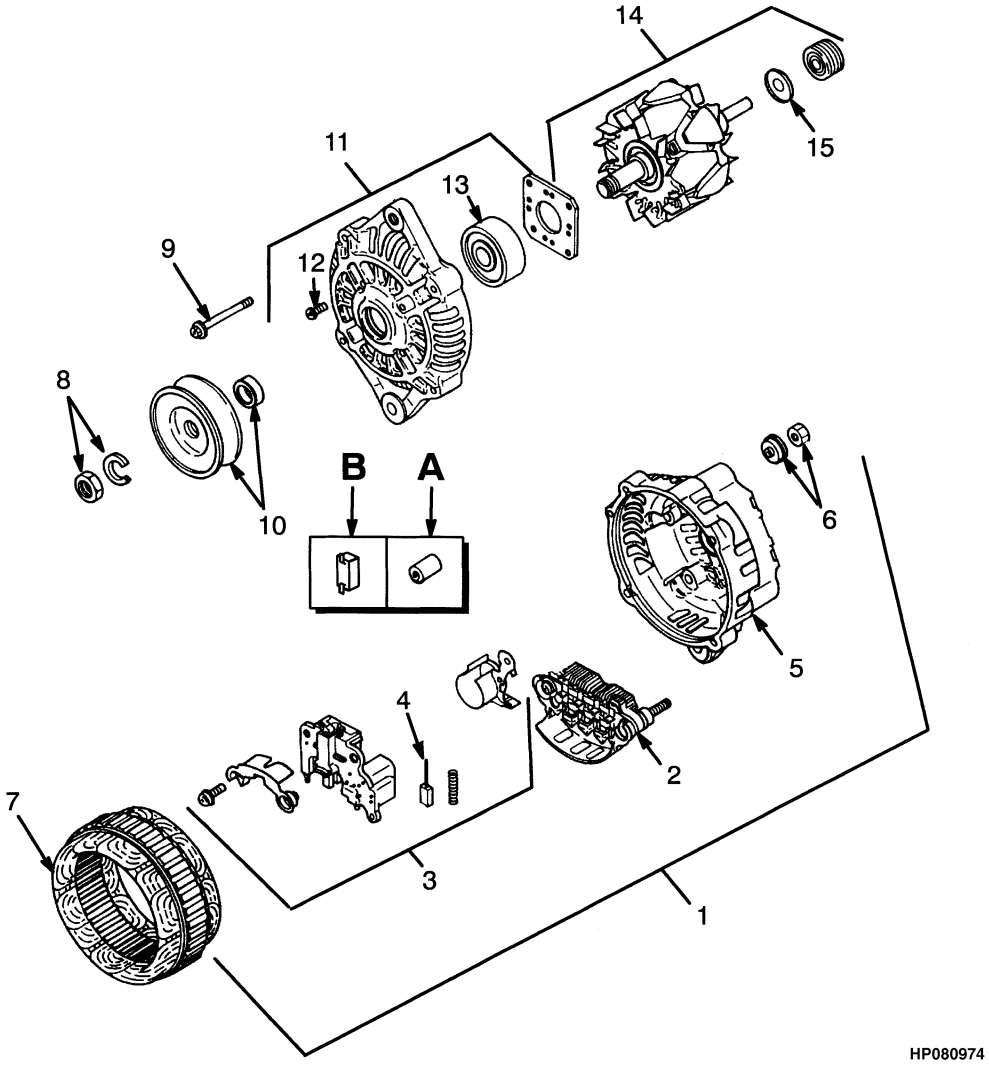

©2009 HYSTER COMPANY

ALTERNATOR
GASOLINE AND LPG – 2.0L MAZDA

KEY:
A: Canister Condensor
B: Resin Condensor

ITEM	PART NO.	DESCRIPTION	QTY A	QTY B
	1361853	Alternator	1	..
	1450928	Alternator	..	1
1	. . . . .	Cover Assembly	1	1
2	. . . . .	Recetifier	1	1
3	. . . . .	Regulator	1	1
4	. . . . .	Brush	2	2
5	. . . . .	Cover	1	1
6	. . . . .	Nut Set	1	1
7	. . . . .	Stator	1	1
8	. . . . .	Nut Set	1	1
9	. . . . .	Screw Set	1	1
10	. . . . .	Pulley	1	1
11	. . . . .	Cover Assembly	1	1
12	. . . . .	Screw Set	1	1
13	. . . . .	Bearing	1	1
14	. . . . .	Rotor Assembly	1	1
15	. . . . .	Bearing	1	1

©2009 HYSTER COMPANY

ALTERNATOR (FIGURE 4-13)

2,6L ENGINE — DIESEL

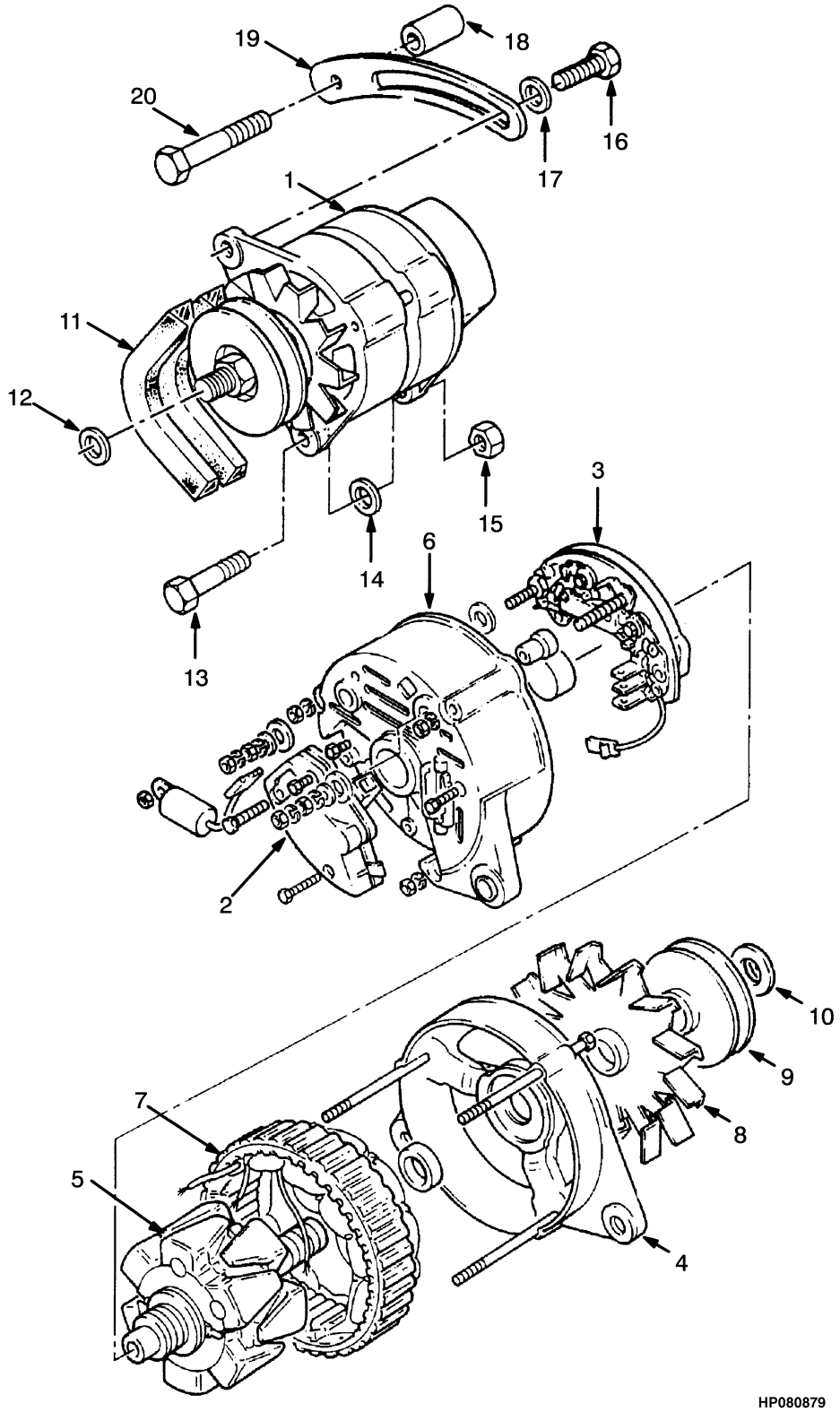

©2009 HYSTER COMPANY

ALTERNATOR
2,6L ENGINE – DIESEL

ITEM	PART NO.	DESCRIPTION	QTY
1	1457874	Alternator	1
2	1457880	Regulator	1
3	1457881	Rectifier	1
4	1457882	Bracket	1
5	1457883	Rotor	1
6	1457884	Bracket (Assembly)	1
7	1457885	Stator	1
8	1457886	Fan	1
9	1457887	Pulley	1
10	1457888	Spacer	1
11	1457875	V-Belt	1
12	1457876	Spacer	1
13	1457877	Screw	1
14	1318306	Washer	1
15	1307891	Nut	1
16	1306358	Screw	1
17	983255	Washer	1
18	1457879	Spacer	1
19	1451743	Lever	1
20	1457878	Screw	1

©2009 HYSTER COMPANY

ALTERNATOR (FIGURE 4-14)

3,0L ENGINE — LPG (→ S/N H177B32018Z)

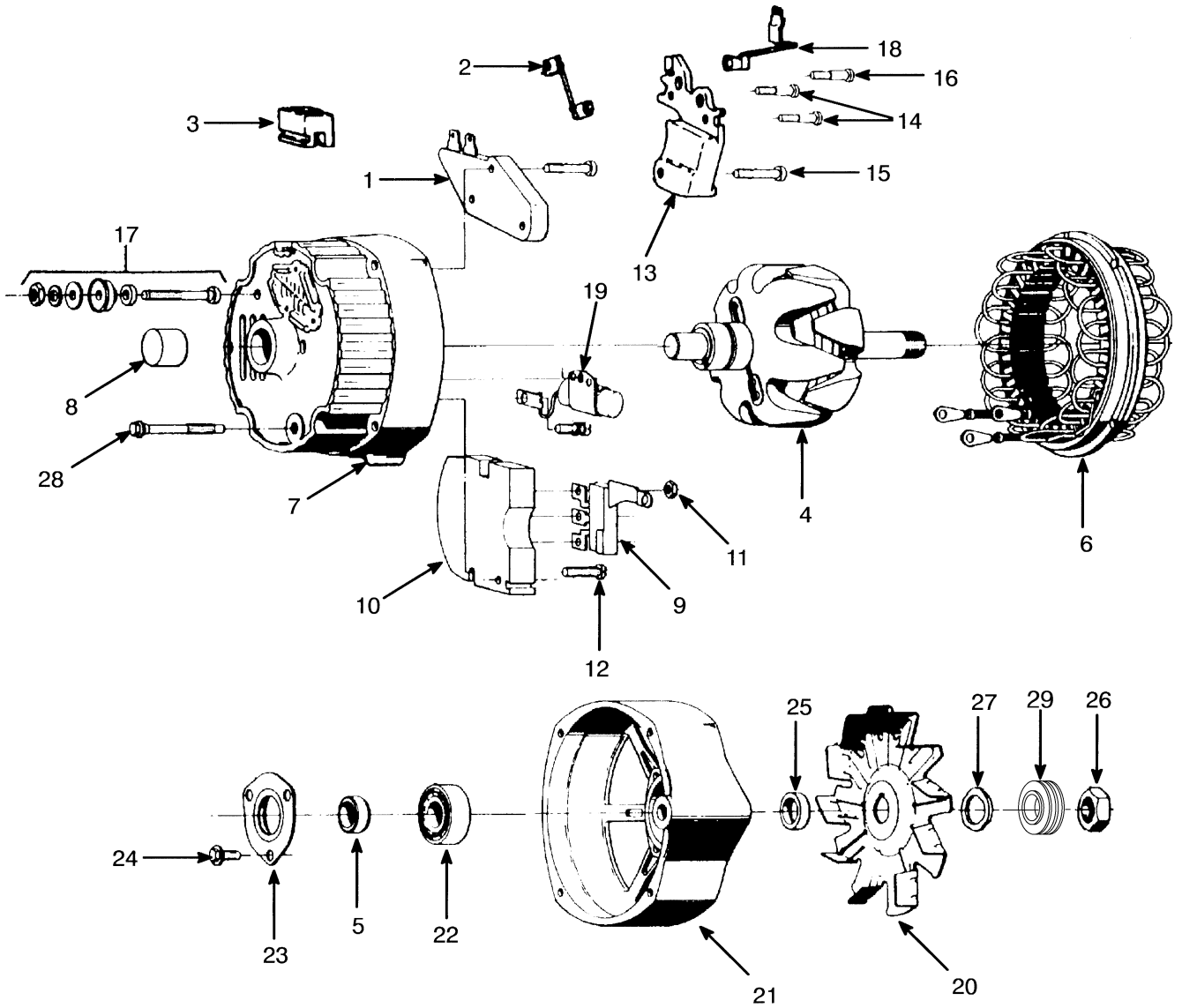

HP081359

©2009 HYSTER COMPANY

ALTERNATOR

3,0L ENGINE – LPG (→ S/N H177B32018Z)

ITEM	PART NO.	DESCRIPTION	QTY
	1358911	Alternator	1
1	290303	Regulator	1
2	1377067	Resistor	1
3	274648	Boot	1
4	1377047	Rotor	1
5	343029	Collar	1
6	1377048	Stator	1
7	310085	Frame (SRE)	1
8	290508	Bearing (SRE)	1
9	223095	Diode	1
10	343031	Rectifier	1
11	1344274	Nut	3
12	343032	Screw	1
13	290300	Brush Holder	1
13	1377050	Brush Spring	1
14	268356	Screw (Brush)	2
15	290369	Screw (Brush Holder)	1
16	290370	Screw (Brush Holder)	1
17	310081	Kit-Terminal	1
18	344233	Terminal	1
19	1377052	Capacitor	1
20	1377051	Fan	1
21	1377049	End Head (DE)	1
22	290509	Bearing	1
23	1377053	Plate	1
24	344234	Screw	3
25	310088	Collar (DE)	1
26	55580	Nut	1
27	128835	Lockwasher	1
28	128852	Bolt	4
29	208483	Pulley	1
	198410	Screw (Battery Terminal Connector)	1

©2009 HYSTER COMPANY

ALTERNATOR MOUNTING (FIGURE 4-15)

3.0L GM

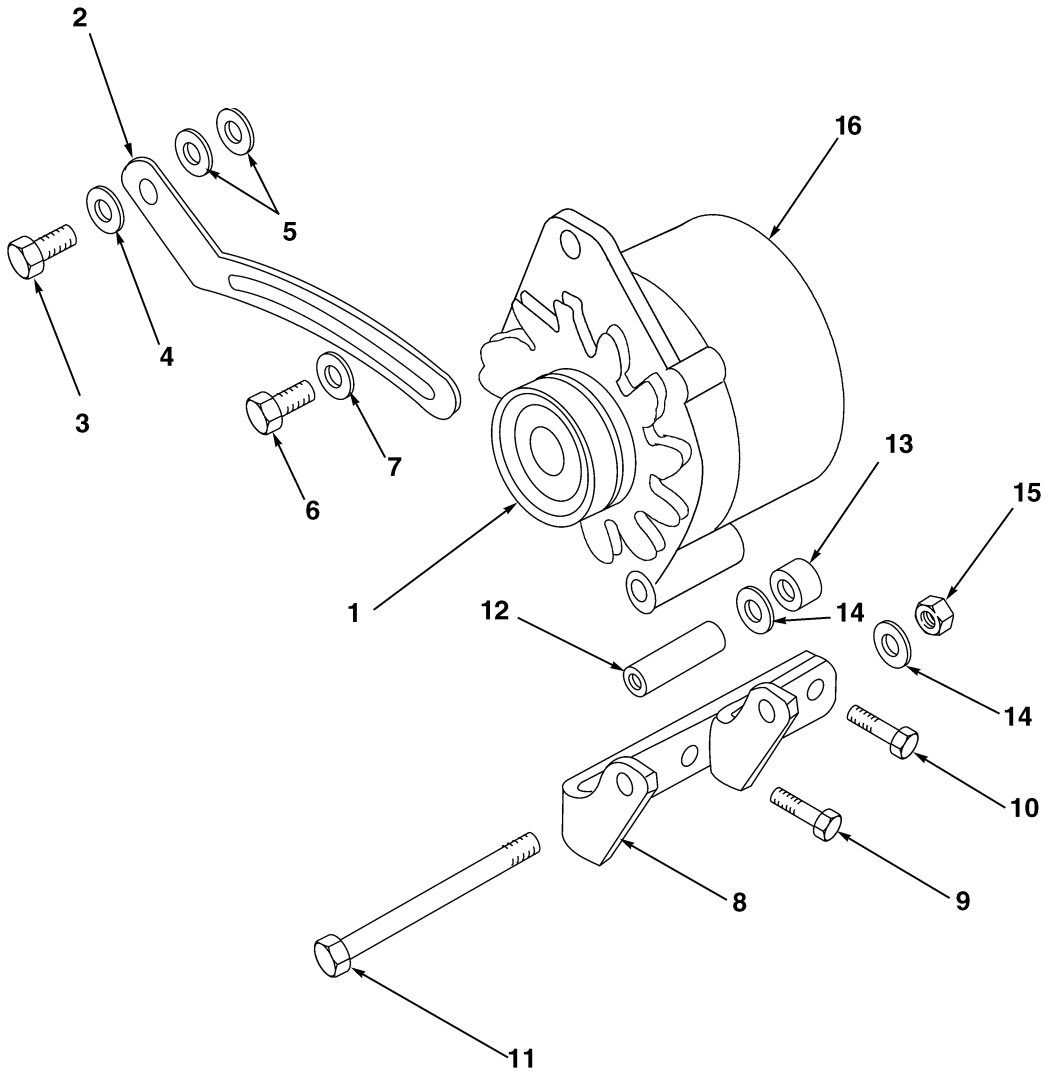

HP081236

©2009 HYSTER COMPANY

ALTERNATOR MOUNTING

3.0L GM

ITEM	PART NO.	DESCRIPTION	QTY
1	1452143	Pulley	1
2	1326931	Strap	1
3	18498	Capscrew	1
4	15155	Lockwasher	1
5	18515	Washer	2
6	176640	Bolt	1
7	320157	Washer	1
8	1490274	Bracket Wldmt	1
9	16598	Capscrew	1
10	1508234	Screw	2
11	18546	Capscrew	1
12	305100	Sleeve	1
13	189338	Spacer	1
14	261379	Washer	2
15	139743	Locknut	1

©2009 HYSTER COMPANY

ALTERNATOR MOUNTING (FIGURE 4-16)

SERPENTINE BELT — GM 3.0L

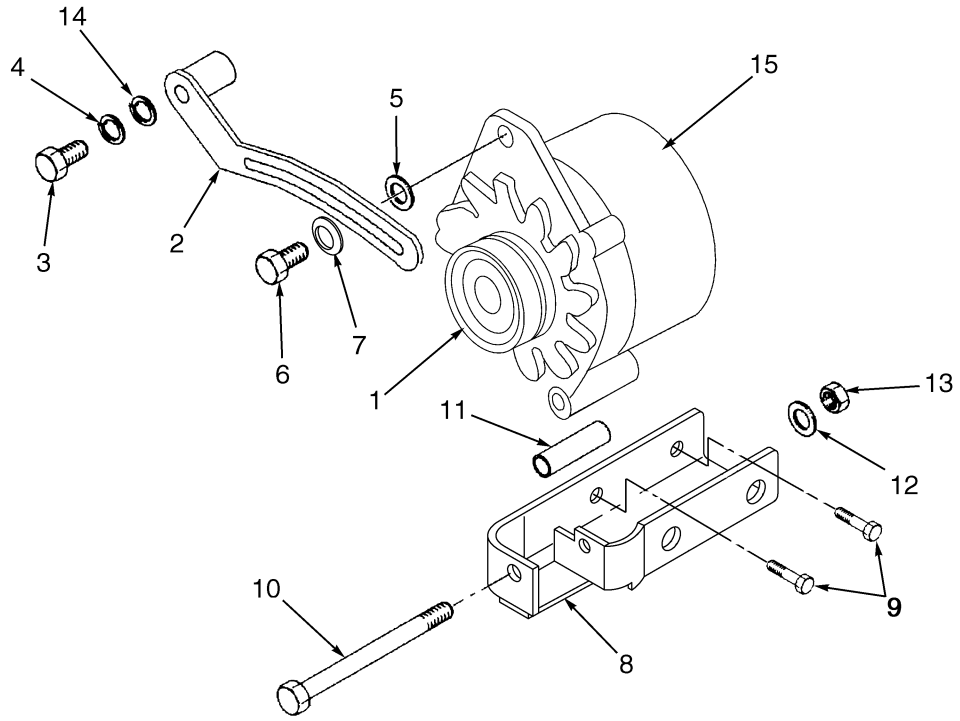

HP081357

©2009 HYSTER COMPANY

ALTERNATOR MOUNTING
SERPENTINE BELT – GM 3.0L

ITEM	PART NO.	DESCRIPTION	QTY
1	1377751	Pulley	1
2	1520828	Bracket Wldmt	1
3	18516	Capscrew	1
4	15155	Lockwasher	1
5	320157	Washer	1
6	176640	Bolt	1
7	350818	Washer	1
8	1527018	Bracket	1
9	16598	Capscrew	2
10	221519	Capscrew	1
11	305100	Sleeve	1
12	261379	Washer	1
13	139743	Locknut	1
14	18515	Washer	1
15	**a** 1469597	Alternator	1
15	**b** 2074390	Alternator	1

FOOTNOTES:

a → S/N H177B55183C

b S/N H177B55184C →

STARTER MOTOR (FIGURE 4-17)

2,0L ENGINE (→ S/N H177B13244 LPG)

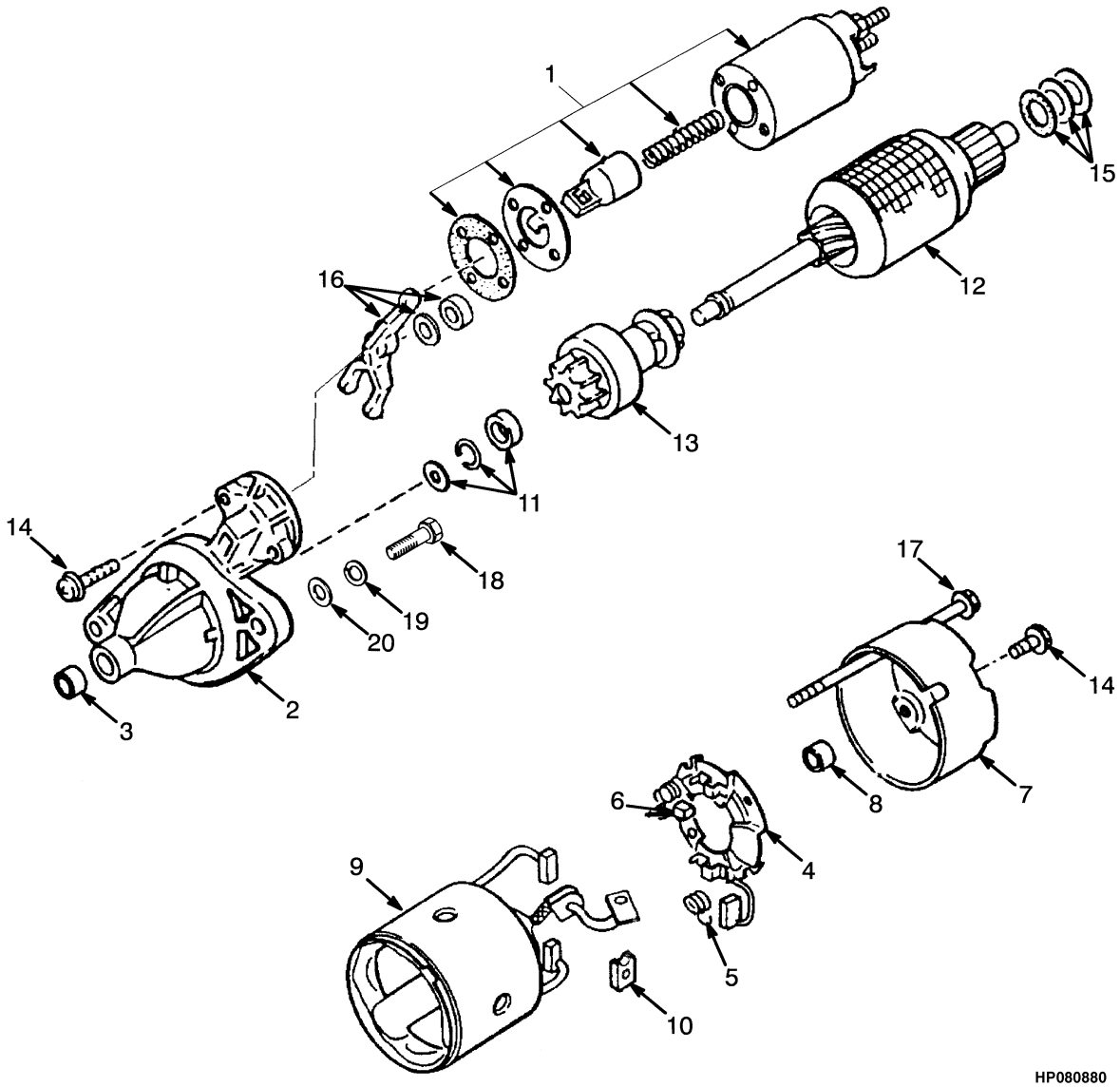

©2009 HYSTER COMPANY

STARTER MOTOR

2,0L ENGINE (→ S/N H177B13244 LPG)

ITEM	PART NO.	DESCRIPTION	QTY
	1362069	Starter	1
1	1368862	Switch	1
2	1368849	Bracket	1
3	1368858	Sleeve	1
4	1368860	Brush Holder	1
5	326889	Brush Spring	3
6	1368861	Brush	1
7	1368857	Bracket	1
8	1368859	Sleeve	1
9	1368848	Yoke	1
10	1368863	Brush	2
11	1368850	Stopper Set	1
12	1368851	Armature	1
13	1368852	Clutch Assy	1
14	1368853	Setscrew	1
15	1368854	Kit-Washer	1
16	1368855	Lever	1
17	1368856	Kit-Capscrew	2
18	1356103	Capscrew	2
19	292682	Lockwasher	2
20	320159	Washer	2

©2009 HYSTER COMPANY

STARTER MOTOR (FIGURE 4-18)

2,0L ENGINE (S/N H177B13245 → LPG)

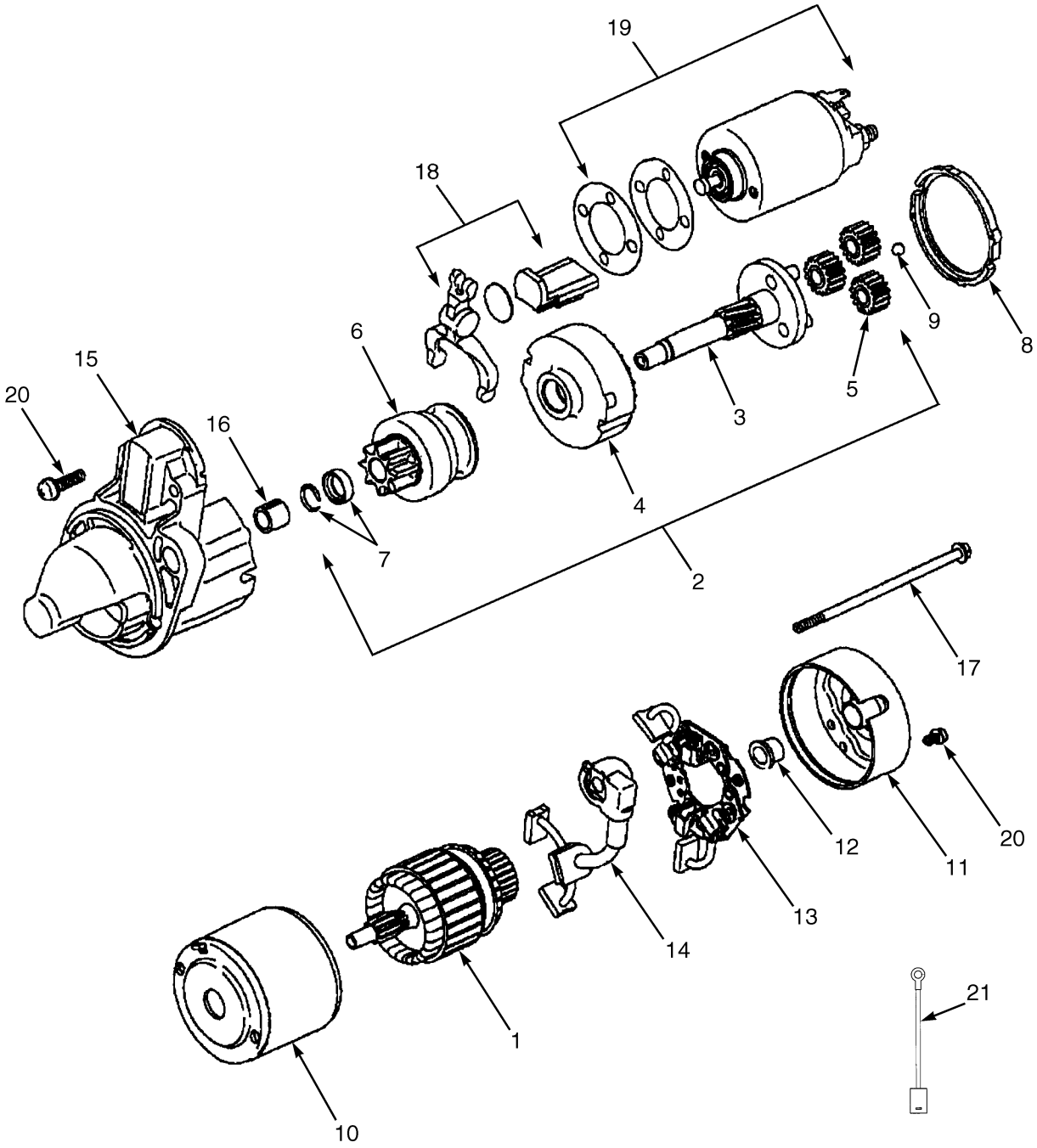

YP080005

©2009 HYSTER COMPANY

STARTER MOTOR

2,0L ENGINE (S/N H177B13245 → LPG)

ITEM	PART NO.	DESCRIPTION	QTY
	2314322	Starter	1
1	. . . . .	Armature Shaft	1
2	. . . . .	Shaft Assembly	1
3	. . . . .	Shaft	1
4	. . . . .	Gear	1
5	. . . . .	Gear	3
6	. . . . .	Pinion Set	1
7	. . . . .	Stopper Set	1
8	. . . . .	Packing	1
9	. . . . .	Ball	1
10	. . . . .	Yoke	1
11	. . . . .	Bracket	1
12	. . . . .	Bearing	1
13	. . . . .	Brush Holder	1
14	. . . . .	Brush	1
15	. . . . .	Bracket	1
16	. . . . .	Sleeve	1
17	. . . . .	Bolt	2
18	. . . . .	Lever Set	1
19	. . . . .	Switch	1
20	. . . . .	Screw Set	1

©2009 HYSTER COMPANY

INSTRUMENT PANEL (FIGURE 4-19)

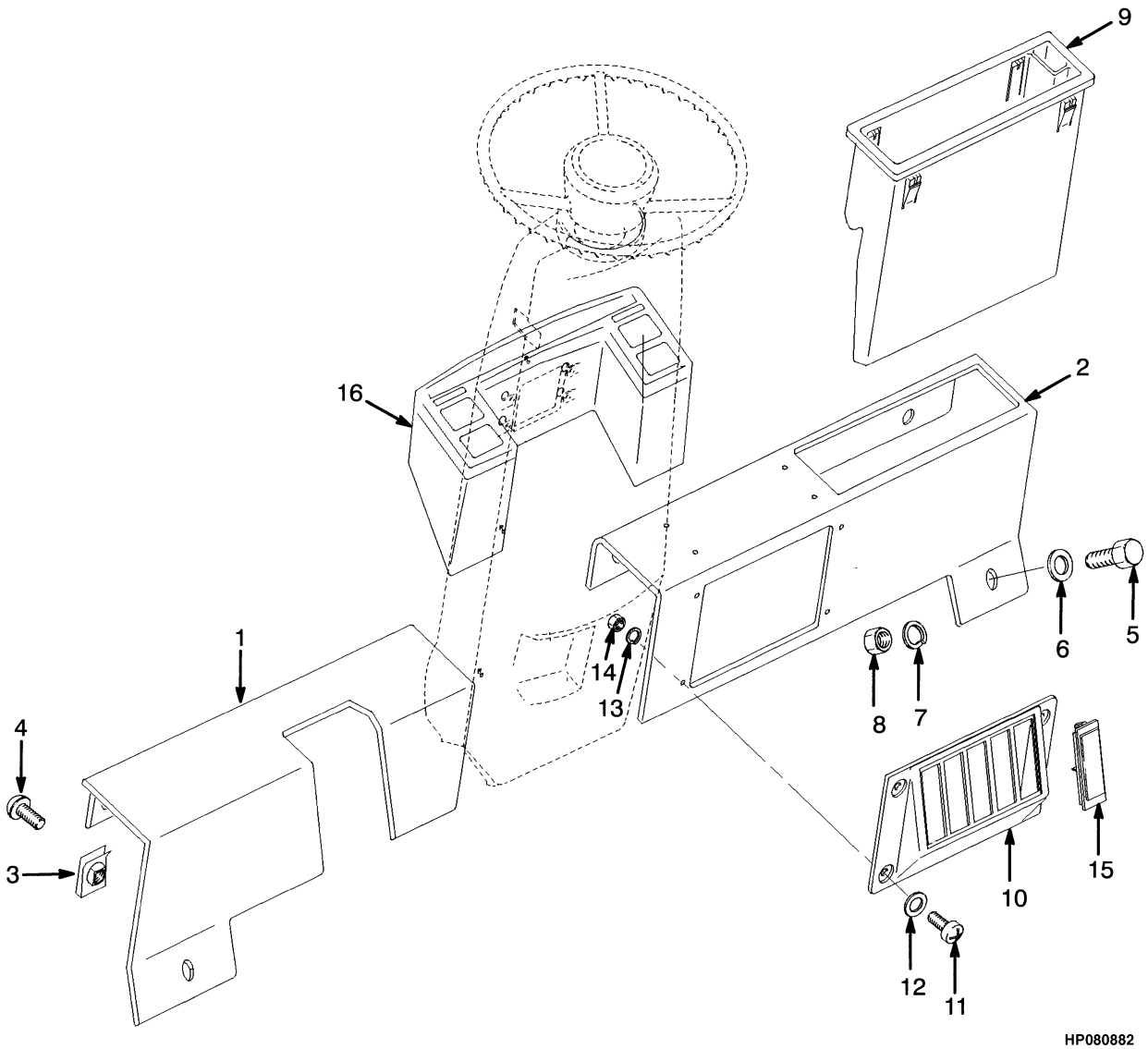

©2009 HYSTER COMPANY

INSTRUMENT PANEL

ITEM	PART NO.	DESCRIPTION	QTY
1	1365876	Instrument Panel (LH)	1
2	1365877	Instrument Panel (RH)	1
3	1350282	Retainer	4
4	369242	Capscrew	4
5	136681	Capscrew	1
6	320157	Washer	1
7	292681	Lockwasher	1
8	239503	Nut	1
9	1338286	Storage Box (Case)	1
10	1339637	Bezel	1
11	1337196	Screw	4
12	320154	Washer	4
13	292678	Lockwasher	4
14	292667	Nut	4
15	376949	Cover	5
16	**a**	Instrument Cluster (☞Figure 4-20)	1
16	**b**	Instrument Cluster (☞Figure 4-21)	1

FOOTNOTES:

a → S/N H177B45825A

b S/N H177B45826A →

INSTRUMENT CLUSTER (FIGURE 4-20)

(→ S/N H177B45825A EXC. 43284, 43390, 43539, 43733, 45443, 45510)

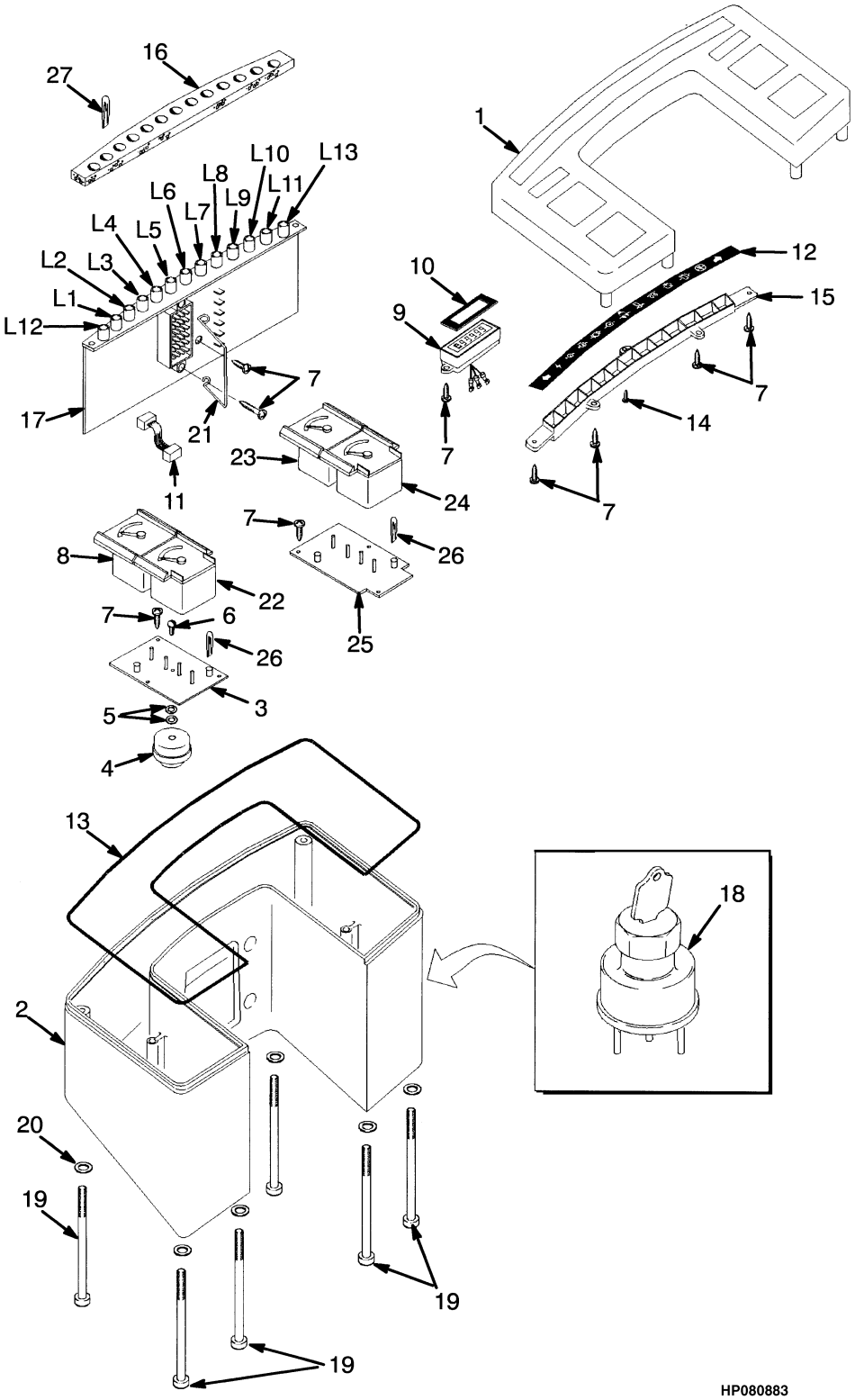

©2009 HYSTER COMPANY

INSTRUMENT CLUSTER

(→ S/N H177B45825A EXC. 43284, 43390, 43539, 43733, 45443, 45510)

KEY:
A: Optional Gauges
B: Standard Gauges

ITEM	PART NO.	DESCRIPTION	QTY A	QTY B
	a 1335976	Instrument Cluster (LPG)	..	1
	b 1335977	Instrument Cluster (Diesel)	..	1
	a 1335979	Instrument Cluster (LPG)	1	..
	c 1335980	Instrument Cluster (Diesel)	1	..
	a 1343613	Instrument Cluster (LPG)	..	1
	b 1343614	Instrument Cluster (Diesel)	..	1
1	1354775	Cover (Top)	1	1
2	1354776	Case	1	1
3	1354049	Printed Circuit Board (LH)	1	1
4	1354804	Buzzer	1	1
5	1354780	Washer	1	1
6	1371203	Screw	1	1
7	227131	Screw	17	14
8	1354778	Temperature Gauge (Water)	1	1
9	1354783	Hourmeter	1	1
9	1367574	Cable Assy	1	1
10	1354782	Gasket	1	1
11	1354805	Wire Harness	1	1
12	1354784	Indicator Light	1	1
13	1354785	Gasket	1	1
14	1354786	Screw	1	1
15	1354787	Housing	1	1
16	1354788	Gasket	1	1
17	1354806	Printed Circuit Board	1	1
18	1337114	Ignition Switch	1	1
19	1453153	Kit-Screw	1	1
20	320154	Washer	8	8
21	1358858	Clip	1	1
22	1354777	Fuel Gauge	1	1
23	1354792	Oil Pressure Gauge	1	1
24	1354793	Gauge	1	1
25	1354807	Printed Circuit Board (RH)	1	1
26	**f** 1354796	Lamp	1	1
26	**e** 1354796	Lamp	2	2
26	**j** 1354796	Lamp	3	3
26	**i** 1354796	Lamp	4	4
27	**d** 1357367	Lamp	7	7
27	**g** 1357367	Lamp	8	8
27	**l** 1357367	Lamp	9	9
27	**h** 1357367	Lamp	10	10
27	**k** 1357367	Lamp	11	11

©2009 HYSTER COMPANY

FOOTNOTES:

a Includes Items 1-21, 26, 27
b Includes Items 1-22, 26, 27
c Includes Items 1-27
d Used with Part Number 13355975 and 1335976
e Used with Part Number 1335975, 1335977, 1343612 and 1343614
f Used with Part Number 1335976 and 1343613
g Used with Part Number 1335977, 1343612 and 1343613
h Used with Part Number 1335978 and 1335979
i Used with Part Number 1335978 and 1335980
j Used with Part Number 1335979
k Used with Part Number 1335980
l Used with Part Number 1343614

©2009 HYSTER COMPANY

NOTES

©2009 HYSTER COMPANY

INSTRUMENT CLUSTER (FIGURE 4-21)

(S/N H177B45826A →)

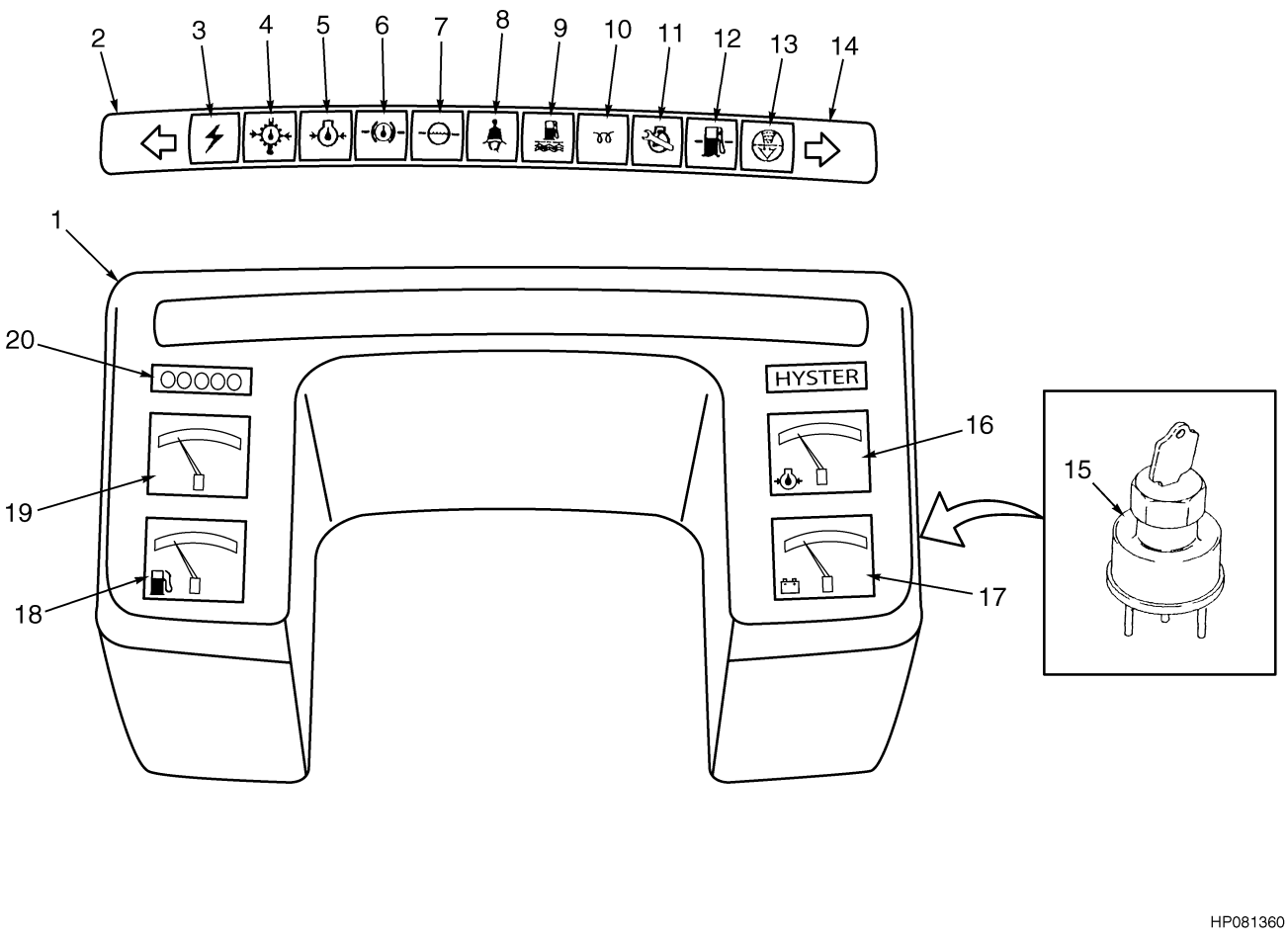

HP081360

©2009 HYSTER COMPANY

INSTRUMENT CLUSTER

(S/N H177B45826A →)

ITEM	PART NO.	DESCRIPTION	QTY
1	**dij** 1510314	Instrument Cluster (Diesel 2 Gauge)	1
1	**g** 1510318	Instrument Cluster (Diesel 4 Gauge)	1
1	**ch** 1510315	Instrument Cluster (LPG 1 Gauge)	1
1	**ef** 1510317	Instrument Cluster (LPG Premium 3 Gauge)	1
2	. . . . .	Circuit (LH Turn Signal)	1
3	. . . . .	Circuit (Charge)	1
4	. . . . .	Circuit (Transmission Oil Temperature/Pressure)	1
5	. . . . .	Circuit (Engine Oil Pressure)	1
6	. . . . .	Circuit (Brake Fluid Level)	1
7	. . . . .	Circuit (Radiator Coolant Level)	1
8	. . . . .	Circuit (Fasten Seat Belt)	1
9	**a**	Circuit (Water Seperator)	1
10	**a**	Circuit (Glow Plug Indicator)	1
11	. . . . .	Circuit (Service Engine)	1
12	**b**	Circuit (Low Fuel Level)	1
13	. . . . .	Circuit (Air Cleaner Restriction)	1
14	. . . . .	Circuit (RH Turn Signal)	1
15	1530583	Ignition Switch	1
15	1337197	Key Set	1
16	. . . . .	Gauge (Engine Oil Pressure)	1
17	. . . . .	Gauge (Voltmeter)	1
18	. . . . .	Gauge (Fuel Level)	1
19	. . . . .	Gauge (Coolant Temperature)	1
20	. . . . .	Hourmeter	1

FOOTNOTES:

a Diesel
b LPG
c S/N H177B43284A →
d S/N H177B43390A →
e S/N H177B43539A →
f S/N H177B43733A →
g S/N H177B45443A →
h S/N H177B45510A →
i S/N H177B45684A →
j S/N H177B45826A →

©2009 HYSTER COMPANY

LIGHTS (FIGURE 4-22)

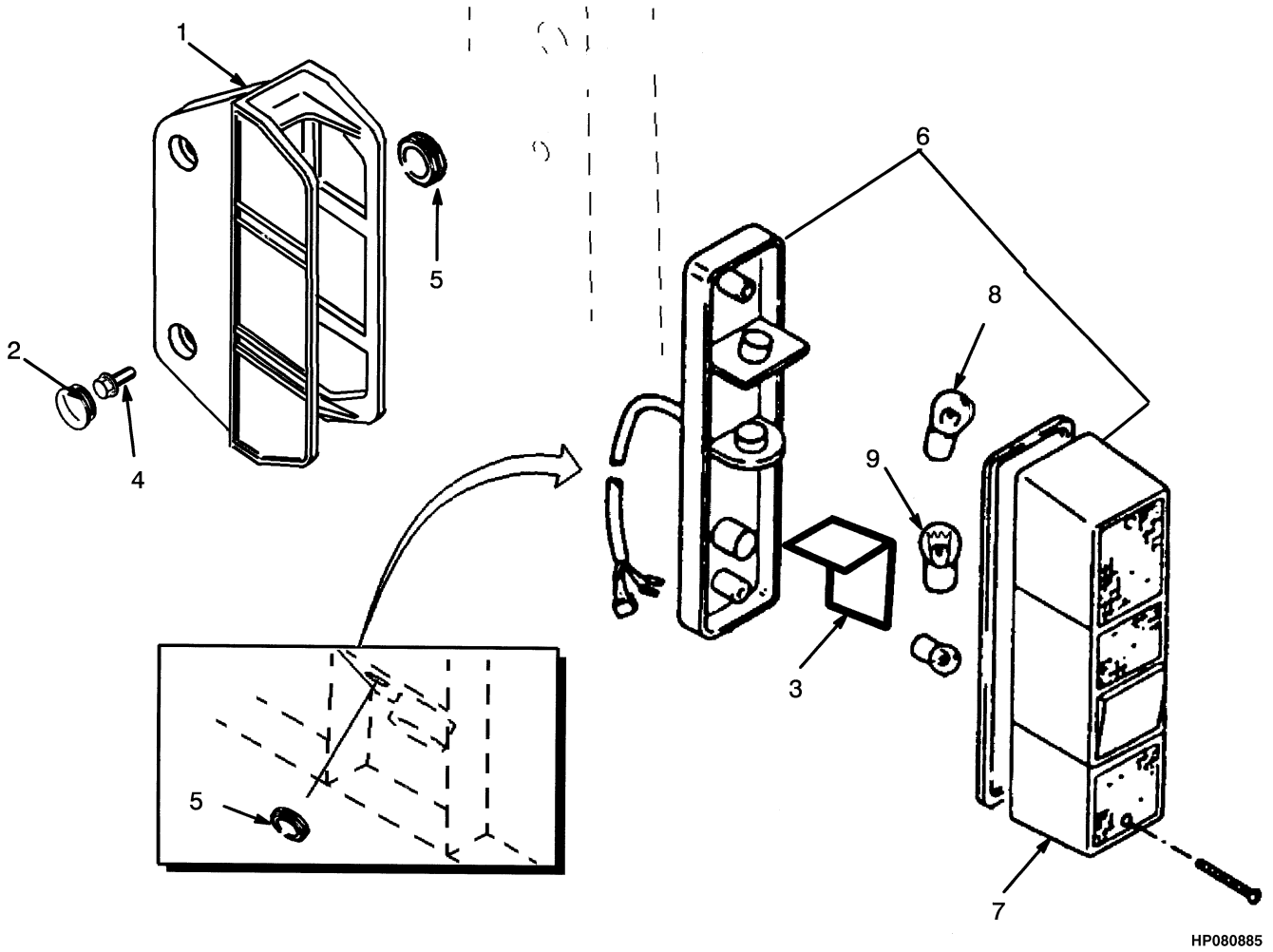

©2009 HYSTER COMPANY

LIGHTS

ITEM	PART NO.	DESCRIPTION	QTY
1	1450293	Bracket	2
1	878152	Bracket	2
2	1450356	Plug	4
3	1375173	Shield	2
4	329067	Screw	4
5	1367639	Grommet	3
6	1376749	Brake/Backup Light	2
7	1376439	Lens (Clear) (Clear)	1
7	1376440	Lens (Red) (Red)	1
7	1380757	Lens (Amber) (Amber)	1
8	1302258	Bulb	2
9	177521	Bulb (12 Volt)	1

©2009 HYSTER COMPANY

TAIL, BRAKE, AND BACK-UP LIGHTS (FIGURE 4-23)

INCANDESCENT (S/N H177B48921B →)

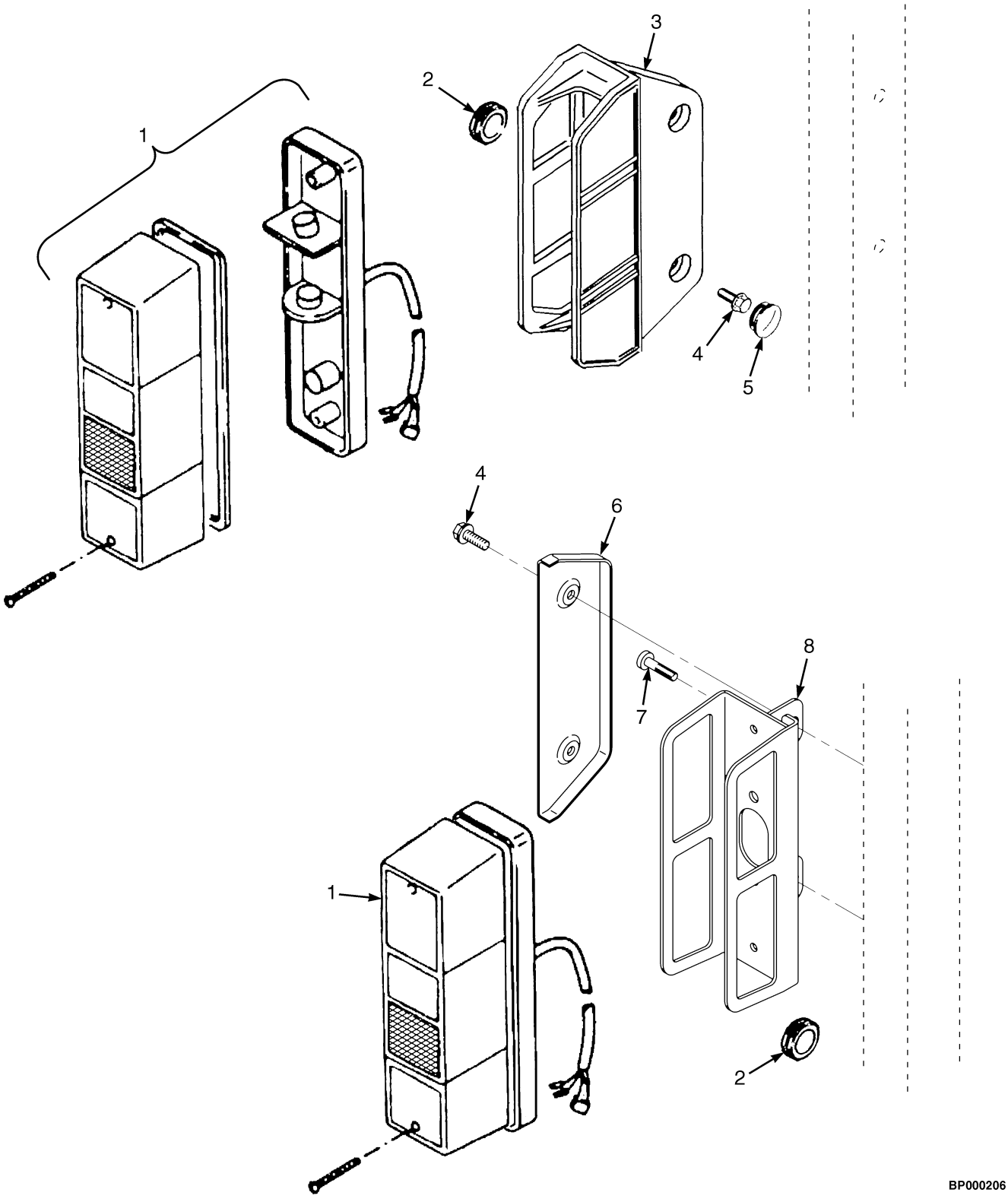

©2009 HYSTER COMPANY

TAIL, BRAKE, AND BACK-UP LIGHTS

INCANDESCENT (S/N H177B48921B →)

ITEM	PART NO.	DESCRIPTION	QTY
1	1553084	Brake/Backup Light	2
1	177521	Bulb (12 Volt)	1
1	1302258	Bulb	2
1	1376439	Lens (Clear)	1
1	1376440	Lens (Red)	1
1	1380757	Lens (Amber)	1
1	1376446	Screw	2
2	1367639	Grommet	1
3	1450293	Bracket	2
4	329067	Screw	4
5	1450356	Plug	4
6	1354106	Cover	2
7	1356126	Capscrew	4
8	1361595	Bracket Wldmt (With Cab)	2
9	1300134	Fuse (25 Amp) (Not Illustrated)	1
10	1320669	Fuse (30 Amp) (Not Illustrated)	1
11	1347114	Relay (Not Illustrated)	2

©2009 HYSTER COMPANY

WIRE HARNESS (FIGURE 4-24)

COWL (→ S/N H177B26763Y)

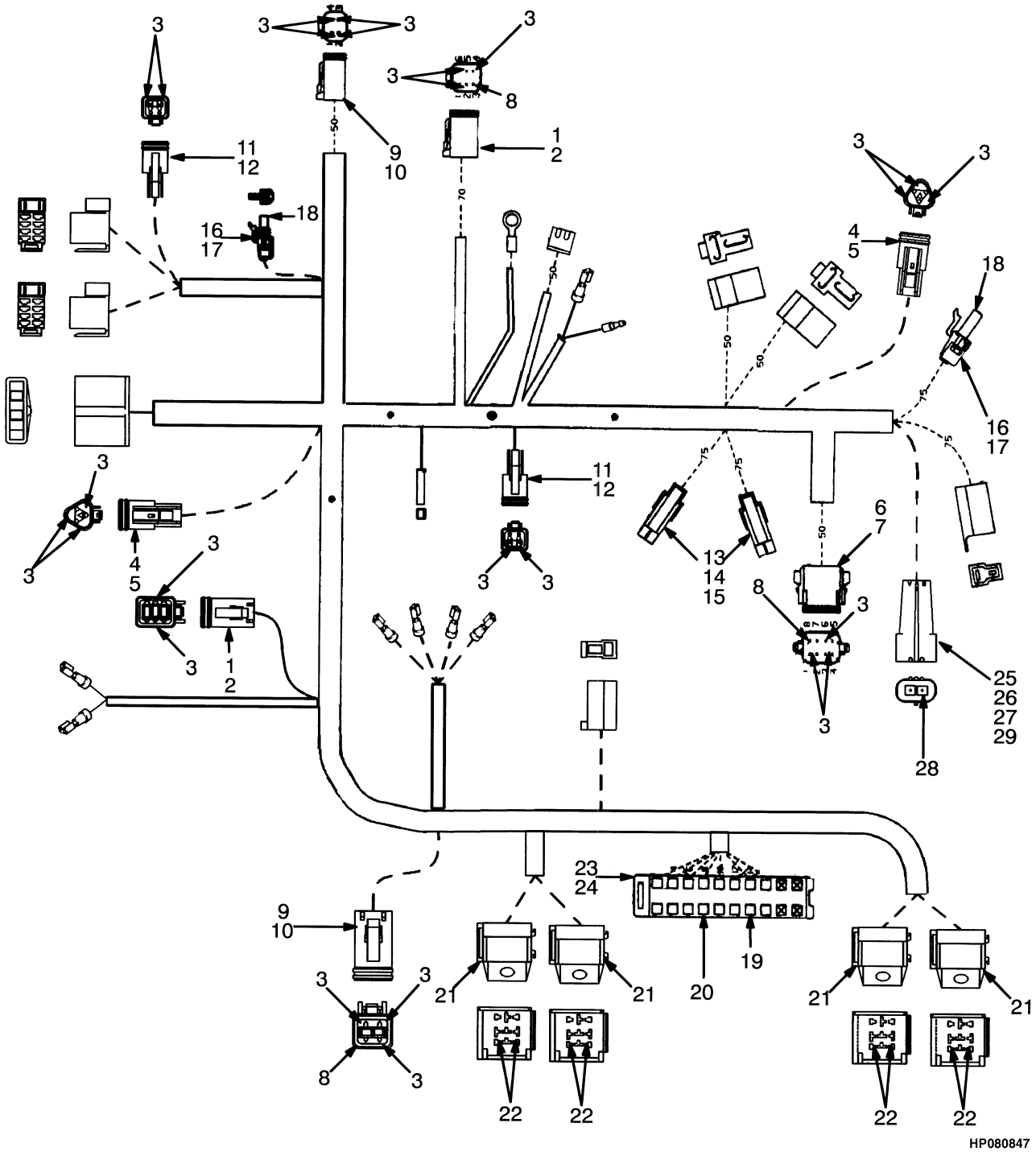

©2009 HYSTER COMPANY

WIRE HARNESS

COWL (→ S/N H177B26763Y)

ITEM	PART NO.	DESCRIPTION	QTY
	1376732	Wire Harness (Cowl)	1
1	1330422	Connector	2
2	1330428	Connector	2
3	1330438	Terminal (Socket)	35
4	1330420	Connector	2
5	1330426	Connector	2
6	1330423	Connector	1
7	1330429	Connector	1
8	1330439	Plug	3
9	1330421	Connector	2
10	1330427	Connector	2
11	1330419	Connector	2
12	1330424	Connector	2
13	1330298	Connector	2
14	1334999	Terminal	2
15	1329147	Seal	2
16	1330299	Connector	2
17	1329147	Seal	2
18	1336173	Terminal	2
19	1389479	Terminal	14
20	1389480	Terminal	2
21	1347224	Socket	4
22	1331233	Terminal	18
23	1389476	Fuse Holder	1
24	1389477	Lock	1
25	1336870	Connector	1
26	1336871	Lock	1
27	1336874	Seal	1
28	1337393	Fitting	1
29	1323581	Plug	1

©2009 HYSTER COMPANY

WIRE HARNESS (FIGURE 4-25)

COWL (S/N H177B26764Y ↔ S/N H177B301181Y)

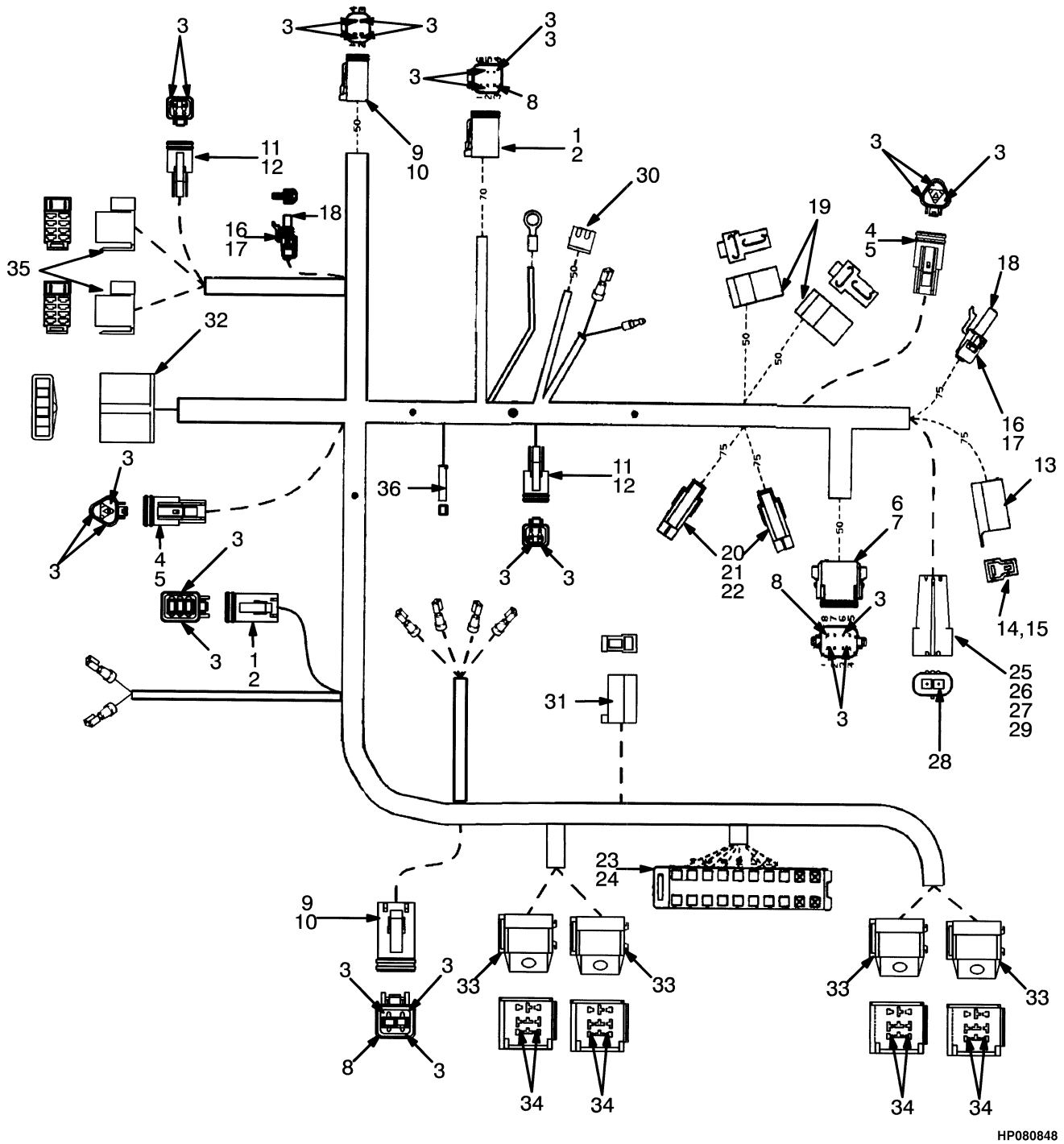

©2009 HYSTER COMPANY

WIRE HARNESS

COWL (S/N H177B26764Y ↔ S/N H177B301181Y)

ITEM	PART NO.	DESCRIPTION	QTY
	1486766	Wire Harness (Cowl)	1
1	1330422	Connector	2
2	1330428	Connector	2
3	1330428	Connector	35
4	1330420	Connector	2
5	1330426	Connector	2
6	1330423	Connector	1
7	1330429	Connector	1
8	1330439	Plug	3
9	1330421	Connector	2
10	1330427	Connector	2
11	1330419	Connector	2
12	1330424	Connector	2
13	181047	Connector Body	1
14	134810	Terminal	1
15	199099	Terminal	1
16	1330299	Connector	2
17	1329147	Seal	2
18	1336173	Terminal	2
19	1308259	Connector Body	2
20	1330298	Connector	2
21	1334999	Terminal	2
22	1329147	Seal	2
23	1389476	Fuse Holder	1
24	1389477	Lock	1
25	1336870	Connector	1
26	1336871	Lock	1
27	1336874	Seal	1
28	1337393	Fitting	1
29	1323581	Plug	1
30	346330	Connector Body	1
31	181048	Connector Body	1
32	154475	Connector	1
33	1347224	Socket	4
34	1331233	Terminal	18
35	878219	Socket	2
36	129889	Connector Body	1

©2009 HYSTER COMPANY

WIRE HARNESS (FIGURE 4-26)

COWL (S/N H177B301181Y →)

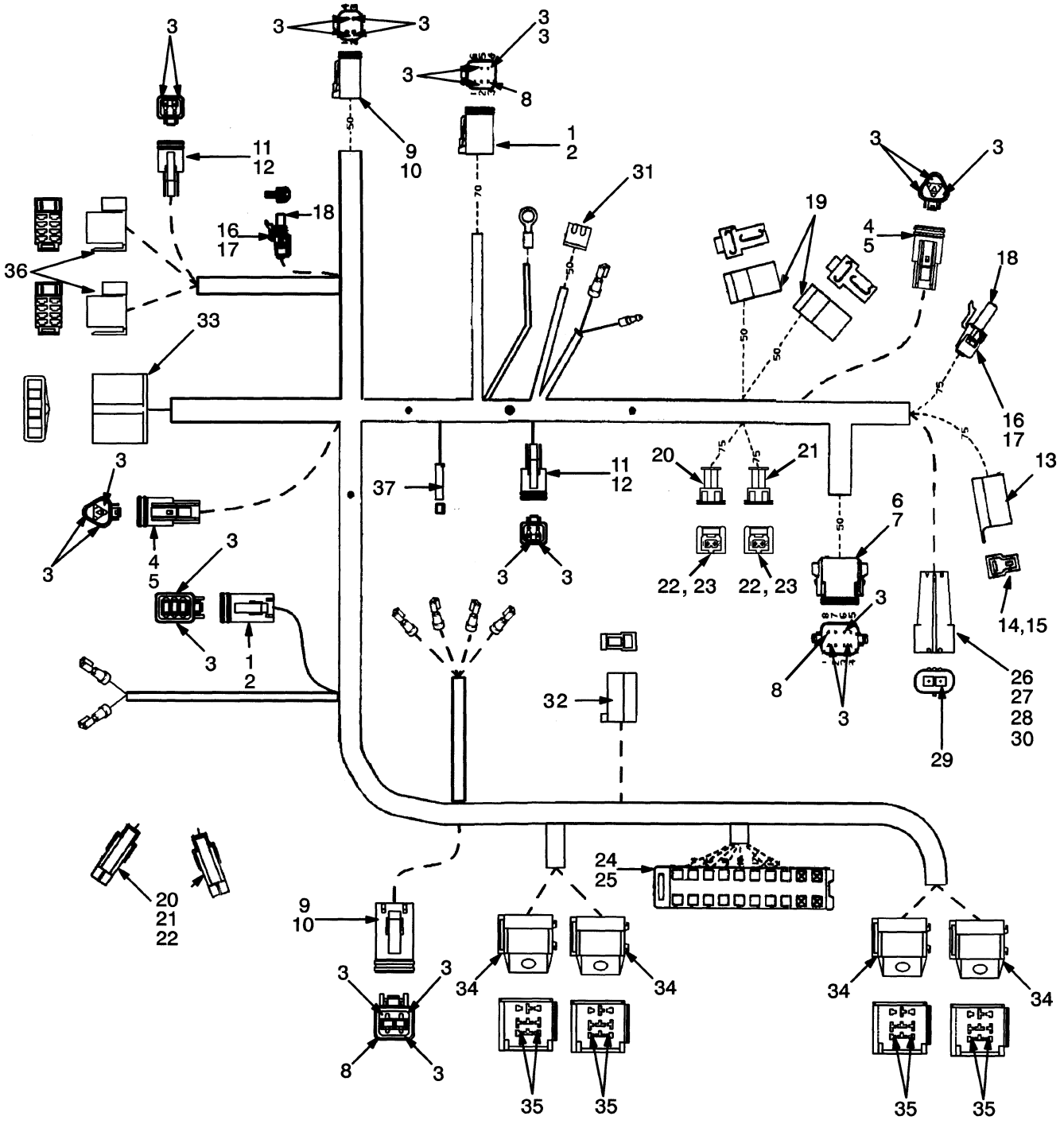

HP081388

©2009 HYSTER COMPANY

WIRE HARNESS

COWL (S/N H177B301181Y →)

ITEM	PART NO.	DESCRIPTION	QTY
	1494358	Wire Harness (Cowl)	1
1	1330422	Connector	2
2	1330428	Connector	2
3	1330438	Terminal (Socket)	35
4	1330420	Connector	2
5	1330426	Connector	2
6	1330423	Connector	1
7	1330429	Connector	1
8	1330439	Plug	3
9	1330421	Connector	2
10	1330427	Connector	2
11	1330419	Connector	2
12	1330424	Connector	2
13	181047	Connector Body	1
14	134810	Terminal	1
15	199099	Terminal	1
16	1330299	Connector	2
17	1329147	Seal	2
18	1336173	Terminal	2
19	1308259	Connector Body	2
20	1493446	Connector	1
21	1493447	Connector	1
22	1493436	Terminal (Socket)	4
23	1479109	Seal	4
24	1389476	Fuse Holder	1
25	1389477	Lock	1
26	1336870	Connector	1
27	1336871	Lock	1
28	1336874	Seal	1
29	1337393	Fitting	1
30	1323581	Plug	1
31	346330	Connector Body	1
32	181048	Connector Body	1
33	154475	Connector	1
34	1347224	Socket	4
35	1331233	Terminal	18
36	878219	Socket	2
37	129889	Connector Body	1

©2009 HYSTER COMPANY

WIRE HARNESS (FIGURE 4-27)
INSTRUMENT PANEL

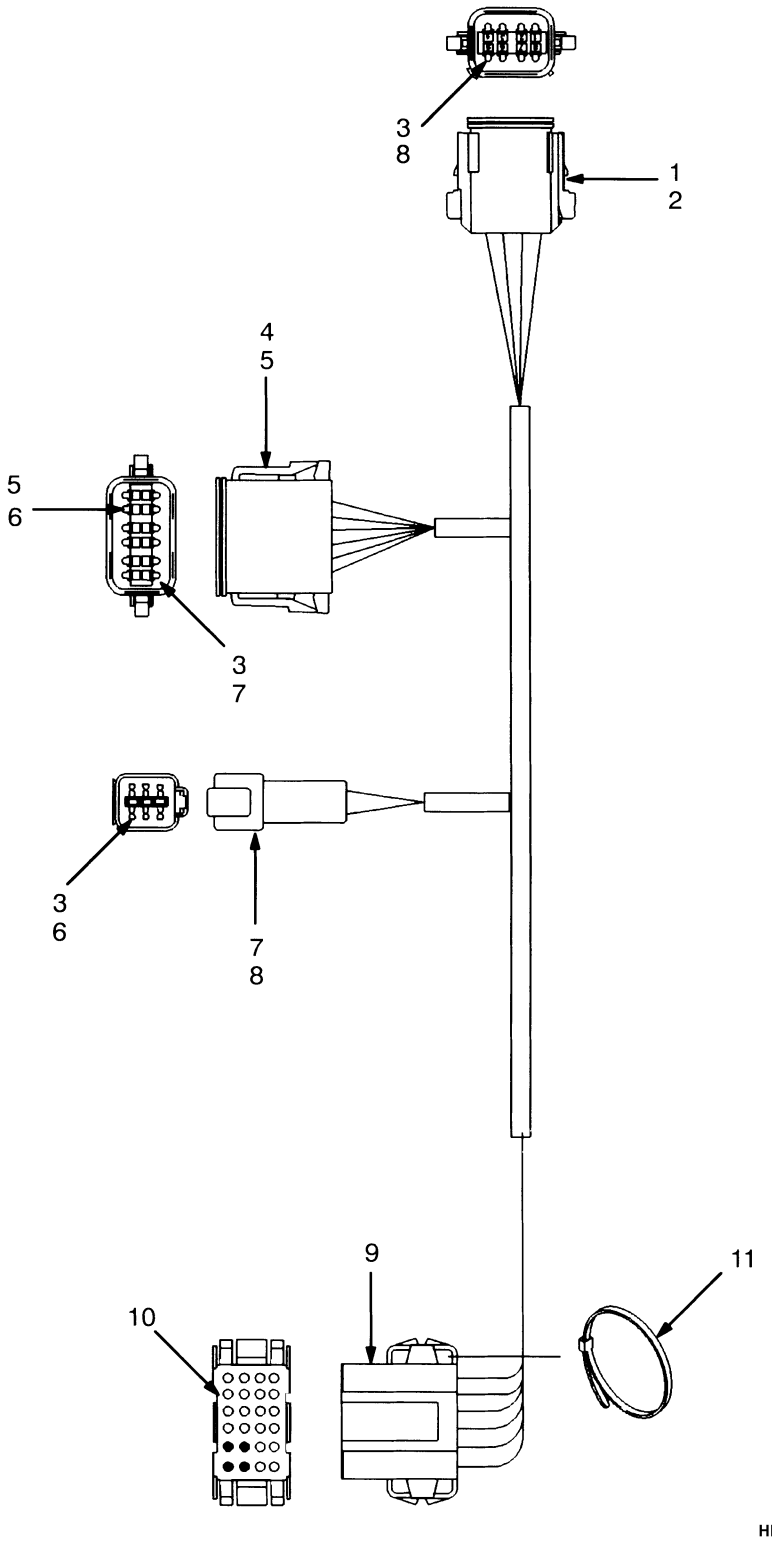

©2009 HYSTER COMPANY

WIRE HARNESS
INSTRUMENT PANEL

ITEM	PART NO.	DESCRIPTION	QTY
	1375703	Wire Harness	1
1	1330413	Connector	1
2	1330418	Connector	1
3	1330433	Terminal	21
4	1352602	Connector	1
5	1352603	Connector	1
6	1330439	Plug	5
7	1330412	Connector	1
8	1330417	Connector	1
9	1352599	Connector Body	1
10	1340958	Terminal	20
11	1352606	Strap Clamp	1

©2009 HYSTER COMPANY

WIRE HARNESS (FIGURE 4-28)
FORWARD AND REVERSE

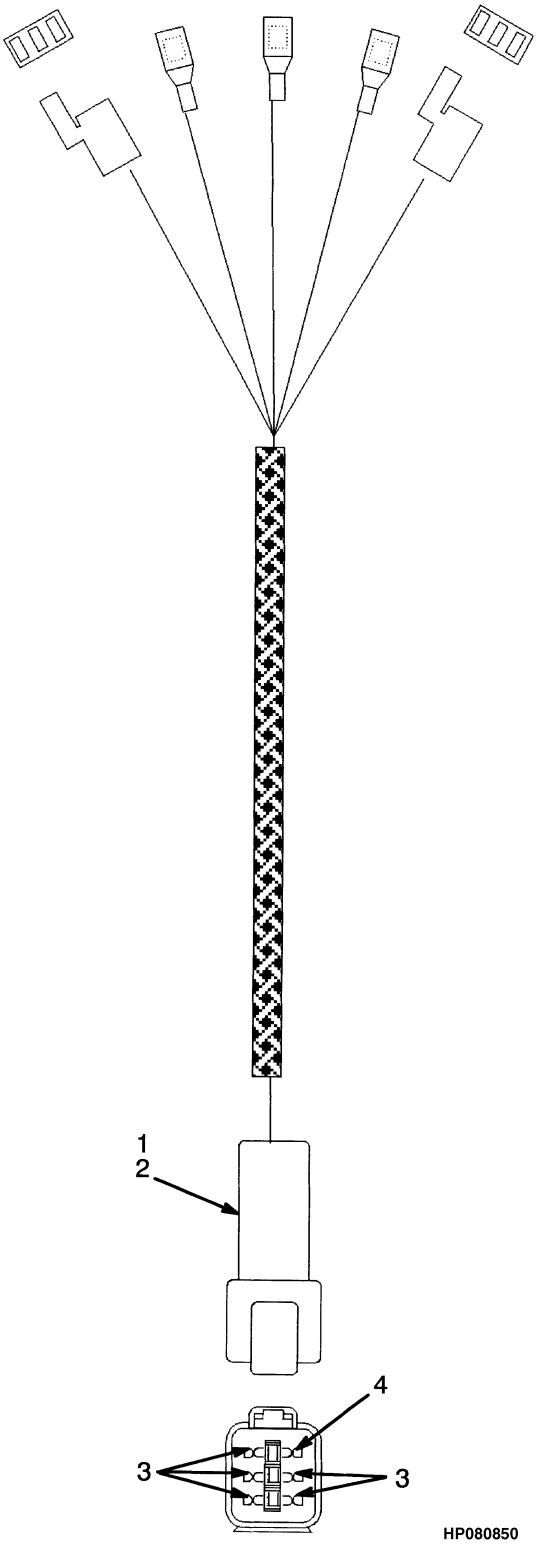

©2009 HYSTER COMPANY

WIRE HARNESS
FORWARD AND REVERSE

ITEM	PART NO.	DESCRIPTION	QTY
	1352088	Wire Harness (Forward/Reverse)	1
1	1330412	Connector	1
2	1330417	Connector	1
3	1330435	Terminal	5
4	1330439	Plug	1

©2009 HYSTER COMPANY

WIRE HARNESS (FIGURE 4-29)

CHASSIS (→ S/N H177B13698)

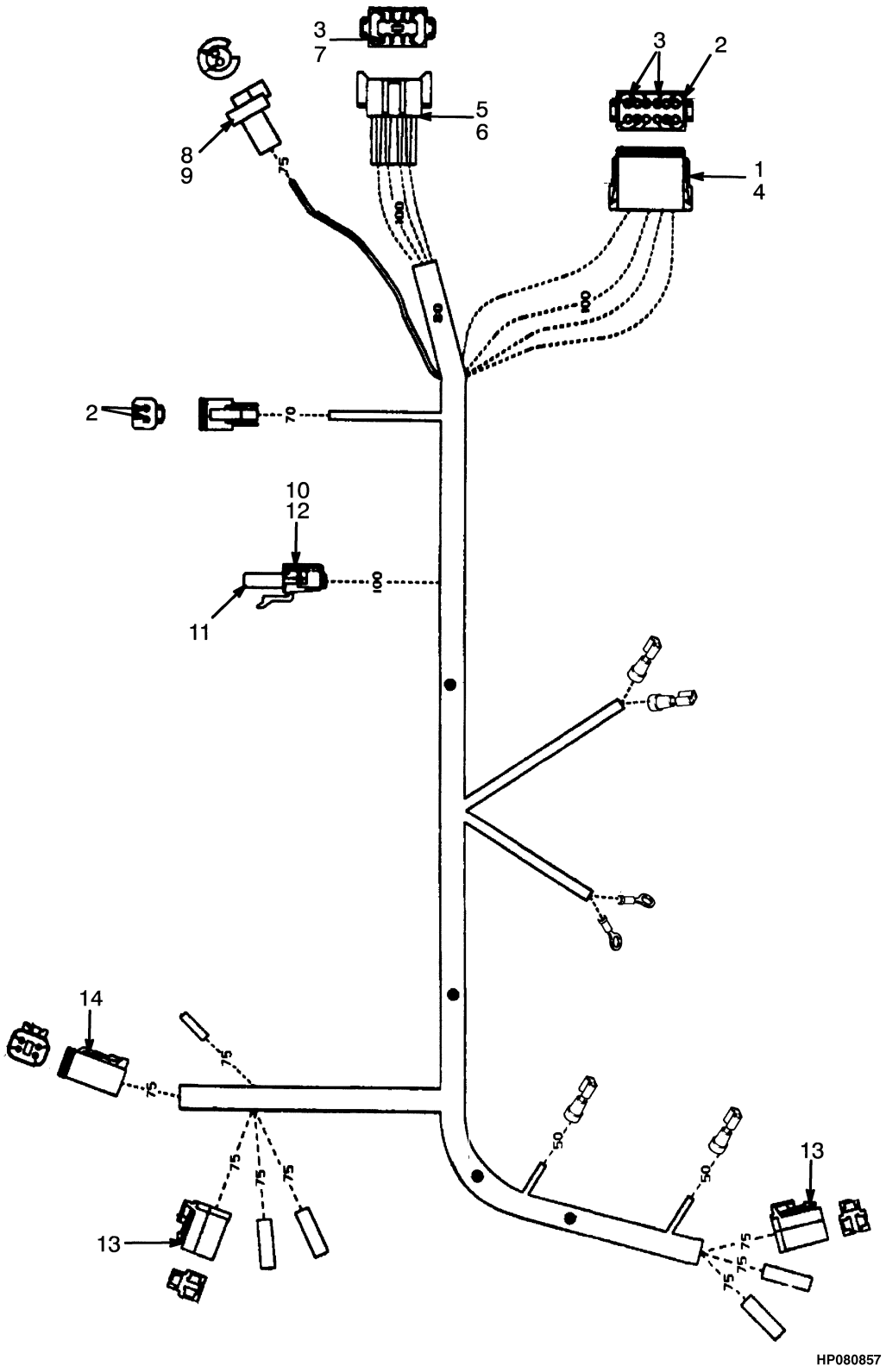

©2009 HYSTER COMPANY

WIRE HARNESS

CHASSIS (→ S/N H177B13698)

ITEM	PART NO.	DESCRIPTION	QTY
	1376747	Wire Harness (Chassis)	1
1	1351068	Connector	1
2	1330438	Terminal (Socket)	11
3	1330439	Plug	8
4	1351069	Connector	1
5	1330413	Connector	1
6	1330418	Connector	1
7	1330437	Terminal (Pin)	7
8	1351070	Connector Body	1
9	1351076	Seal	1
10	1330299	Connector	1
11	1323583	Terminal	1
12	1323579	Seal	1
13	1351099	Connector Body	1
14	1330421	Connector	1

©2009 HYSTER COMPANY

WIRE HARNESS (FIGURE 4-30)

CHASSIS (S/N H177B13699 ↔ S/N H177B23394W)

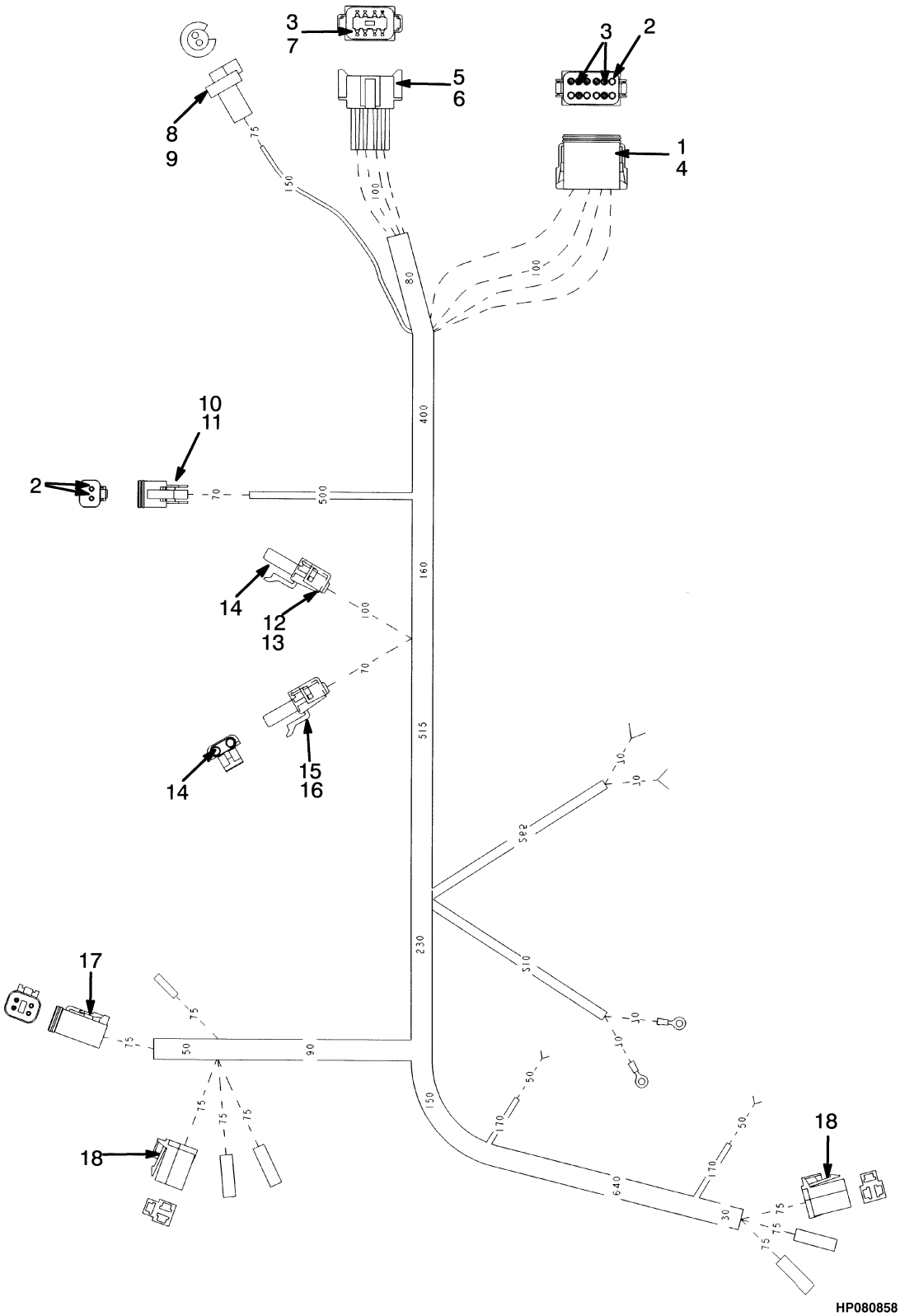

©2009 HYSTER COMPANY

WIRE HARNESS

CHASSIS (S/N H177B13699 ↔ S/N H177B23394W)

ITEM	PART NO.	DESCRIPTION	QTY
	1466043	Wire Harness (Chassis)	1
1	1351068	Connector	1
2	1330438	Terminal (Socket)	11
3	1330439	Plug	8
4	1351069	Connector	1
5	1330413	Connector	1
6	1330418	Connector	1
7	1330437	Terminal (Pin)	7
8	1351070	Connector Body	1
9	1351076	Seal	1
10	1330419	Connector	1
11	1330424	Connector	1
12	1330299	Connector	1
13	1323583	Terminal	1
14	1323579	Seal	1
15	1465468	Connector	1
16	1465702	Seal	1
17	1330421	Connector	1
18	1351099	Connector Body	2

©2009 HYSTER COMPANY

WIRE HARNESS (FIGURE 4-31)

CHASSIS (S/N H177B23395W ↔ S/N H177B48921B)

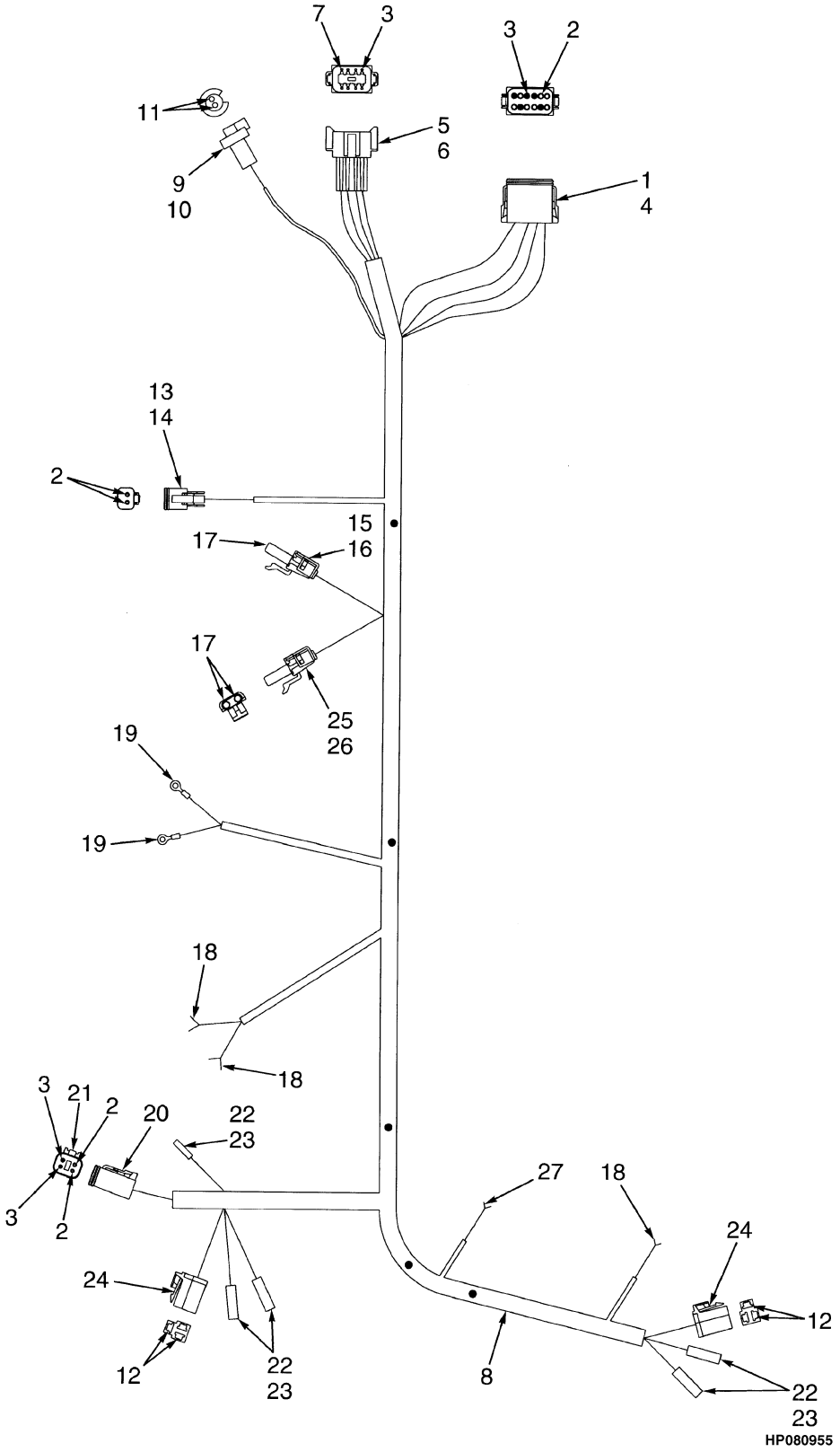

©2009 HYSTER COMPANY

WIRE HARNESS

CHASSIS (S/N H177B23395W ↔ S/N H177B48921B)

ITEM	PART NO.	DESCRIPTION	QTY
	1476759	Wire Harness (Chassis)	1
1	1351068	Connector	1
2	1330438	Terminal (Socket)	11
3	1330439	Plug	8
4	1351069	Connector	1
5	1330413	Connector	1
6	1330418	Connector	1
7	1330437	Terminal (Pin)	7
8	381919	Braiding	AR
9	1351070	Connector Body	1
10	1351076	Seal	1
11	1351071	Terminal	2
12	1351100	Terminal	6
13	1330419	Connector	1
14	1330424	Connector	1
15	1330299	Connector	1
16	1323579	Seal	1
17	1323583	Terminal	1
18	1306270	Terminal	3
19	1301783	Ring Terminal	2
20	1330421	Connector	1
21	1330427	Connector	1
22	1324309	Sleeve	5
23	1324310	Terminal	5
24	1351099	Connector Body	2
25	1465468	Connector	1
26	1465702	Seal	1
27	1310142	Terminal	1

©2009 HYSTER COMPANY

WIRE HARNESS (FIGURE 4-32)

CHASSIS (S/N H177B48921B →)

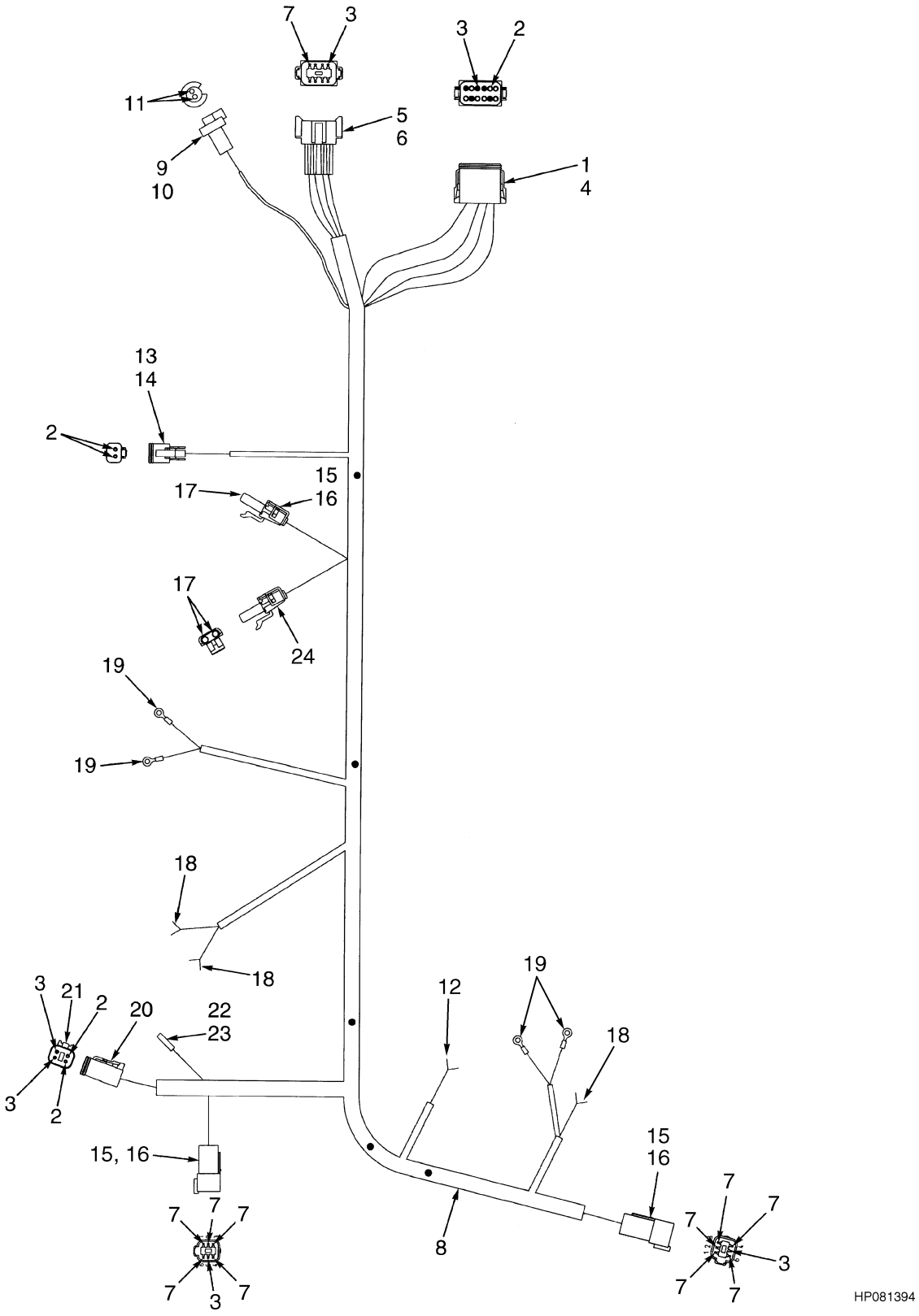

©2009 HYSTER COMPANY

WIRE HARNESS

CHASSIS (S/N H177B48921B →)

ITEM	PART NO.	DESCRIPTION	QTY
	1556851	Wire Harness (Chassis)	1
1	1351068	Connector (Cluster Harness)	1
2	1330438	Terminal (Socket)	11
3	1330439	Plug	10
4	1351069	Connector	1
5	1330413	Connector (Cowl Harness)	1
6	1330418	Connector	1
7	1330437	Terminal (Pin)	17
8	381919	Braiding	AR
9	1351070	Connector Body	1
10	1351076	Seal	1
11	1351071	Terminal	2
12	1310142	Terminal	6
13	1330419	Connector (Seat Switch)	1
14	1330424	Connector	1
15	1330412	Connector (Tail Light Cluster)	1
16	1330417	Connector	1
17	1323583	Terminal	3
18	1306270	Terminal	2
19	1301783	Ring Terminal	2
20	1330421	Connector	1
21	1330427	Connector	1
22	1324309	Sleeve	1
23	1324310	Terminal	1
24	1465702	Seal	2
25	1465468	Connector	1

©2009 HYSTER COMPANY

WIRE HARNESS (FIGURE 4-33)
NEUTRAL START

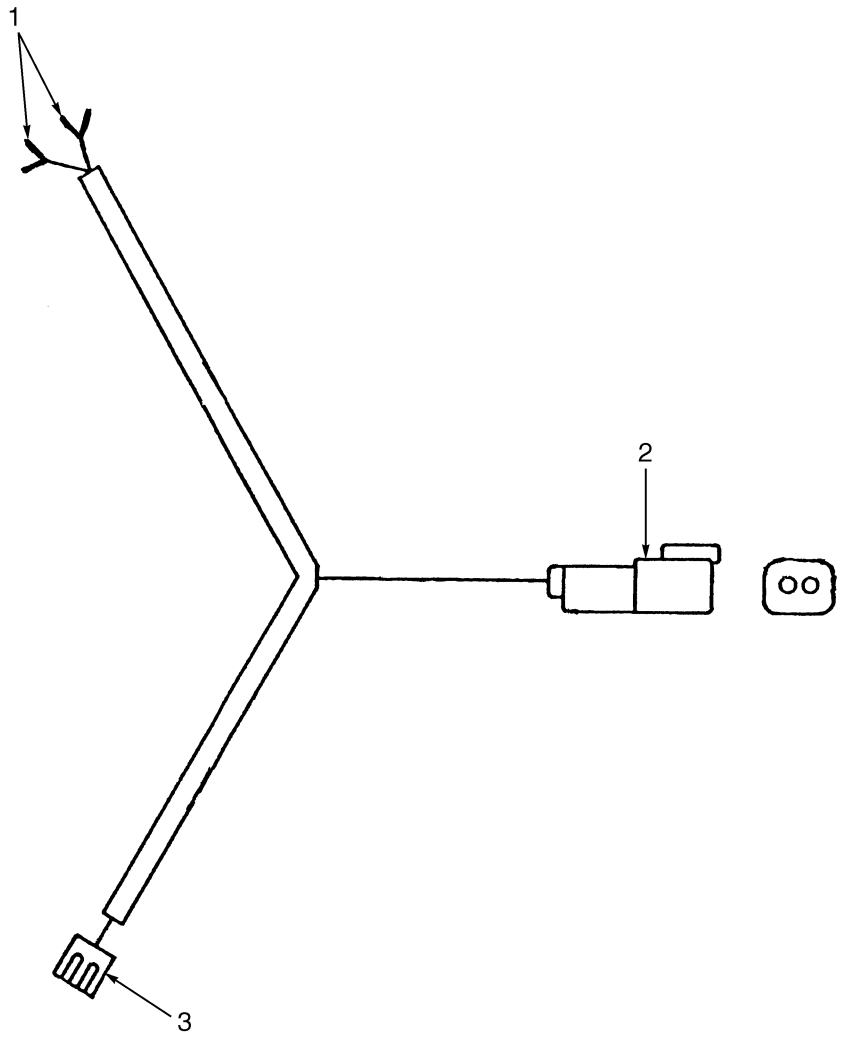

BP080141

ITEM	PART NO.	DESCRIPTION	QTY
	1352066	Wire Harness (Neutral Start)	1
1	325789	Terminal (Transmission Switch)	2
2	. . . . .	Connector Assembly (Cowl Harness)	1
2	1330409	Connector	1
2	1330414	Connector (Secondary Lock)	1
2	1330435	Terminal	2
3	. . . . .	Connector Assembly (Brake Pressure Switch)	1
3	346330	Connector Body	1
3	370730	Terminal	2

©2009 HYSTER COMPANY

NOTES

©2009 HYSTER COMPANY

WIRE HARNESS (FIGURE 4-34)
LPG — 2,0L ENGINE (→ S/N H177B23394W)

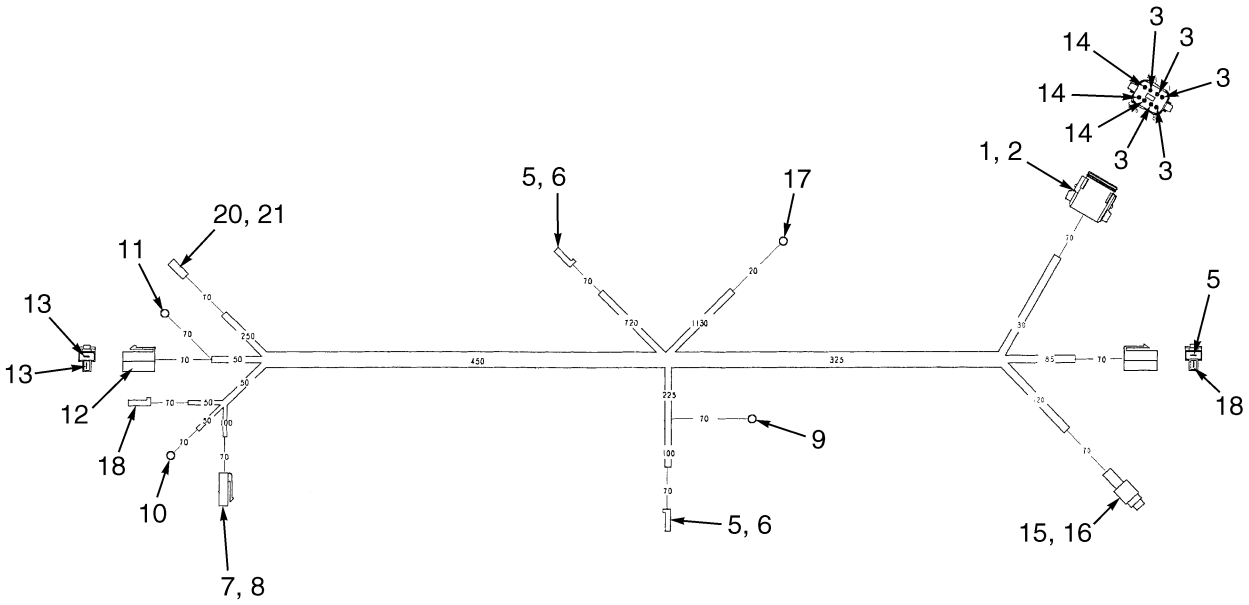

HP081400

©2009 HYSTER COMPANY

WIRE HARNESS

LPG – 2,0L ENGINE (→ S/N H177B23394W)

ITEM	PART NO.	DESCRIPTION	QTY
	1385862	Wire Harness (Engine)	1
1	1330423	Connector	1
2	1330429	Connector	1
3	1330438	Terminal (Socket)	5
4	181048	Connector Body	1
5	370730	Terminal	3
6	181046	Connector Body	3
7	1324311	Terminal	1
8	1324312	Terminal	1
9	148615	E-Ring	1
10	1301783	Ring Terminal	1
11	129888	E-Ring	1
12	1308259	Connector Body	1
13	314775	Terminal	2
14	1330439	Plug	3
15	1330298	Connector	1
16	1334999	Terminal	1
17	129887	E-Ring	1
18	141462	Terminal	1
19	236900	Terminal	1
20	2043859	Sleeve	1
21	1324310	Terminal	1

©2009 HYSTER COMPANY

WIRE HARNESS (FIGURE 4-35)

LPG — 2,0L ENGINE (S/N H177B09725 ↔ S/N H177B23394W)

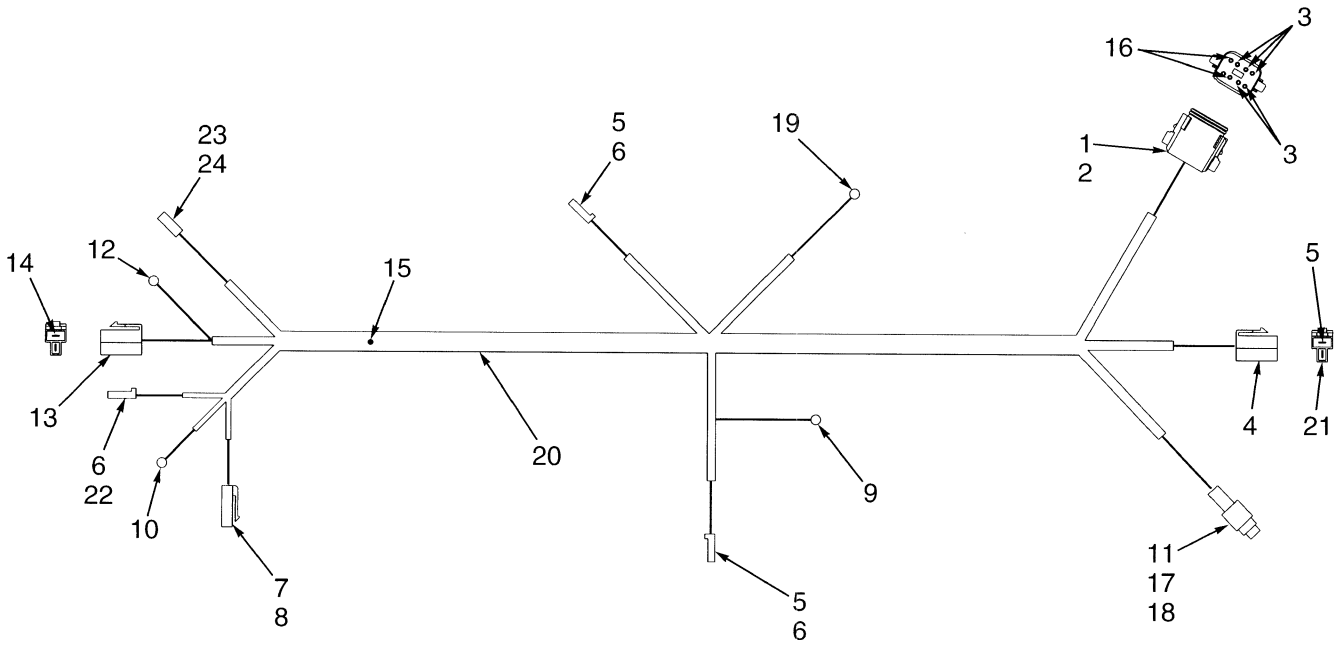

HP080861

ITEM	PART NO.	DESCRIPTION	QTY
	2036169	Wire Harness (Engine)	1
1	1330423	Connector	1
2	1330429	Connector	1
3	1330438	Terminal (Socket)	5
4	181048	Connector Body	1
5	370730	Terminal	3
6	181046	Connector Body	3
7	1324311	Terminal	1
8	1324312	Terminal	1
9	148615	E-Ring	1
10	1301783	Ring Terminal	1
11	1329147	Seal	1
12	129888	E-Ring	1
13	1308259	Connector Body	1
14	314775	Terminal	2
15	1345029	Splice	1
16	1330439	Plug	3
17	1330298	Connector	1
18	1334999	Terminal	1
19	129887	E-Ring	1
20	381919	Braiding	AR
21	141462	Terminal	1
22	236900	Terminal	1
23	2043859	Sleeve	1
24	1324310	Terminal	1

©2009 HYSTER COMPANY

WIRE HARNESS (FIGURE 4-36)

LPG 2,0L (S/N H177B23395W →)

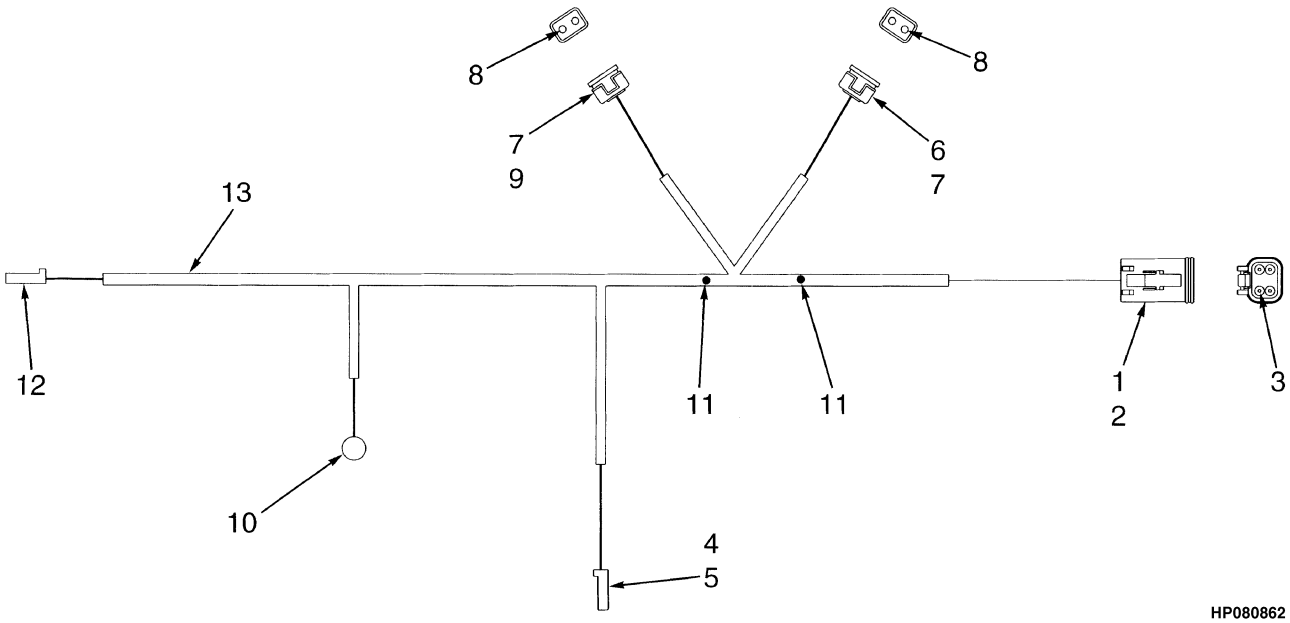

ITEM	PART NO.	DESCRIPTION	QTY
	1476595	Wire Harness	1
1	1330421	Connector	1
2	1330427	Connector	1
3	1330438	Terminal (Socket)	4
4	1375950	Connector Body	1
5	314773	Terminal	1
6	1474763	Connector Body	1
7	1476599	Seal	4
8	1476598	Terminal	4
9	1474764	Connector Body	1
10	129894	E-Ring	1
11	1345027	Splice	2
12	148648	Terminal	1
13	381919	Braiding	AR

©2009 HYSTER COMPANY

WIRE HARNESS (FIGURE 4-37)

LPG 2,0L — CLOSED LOOP (S/N H177B26764Y →)

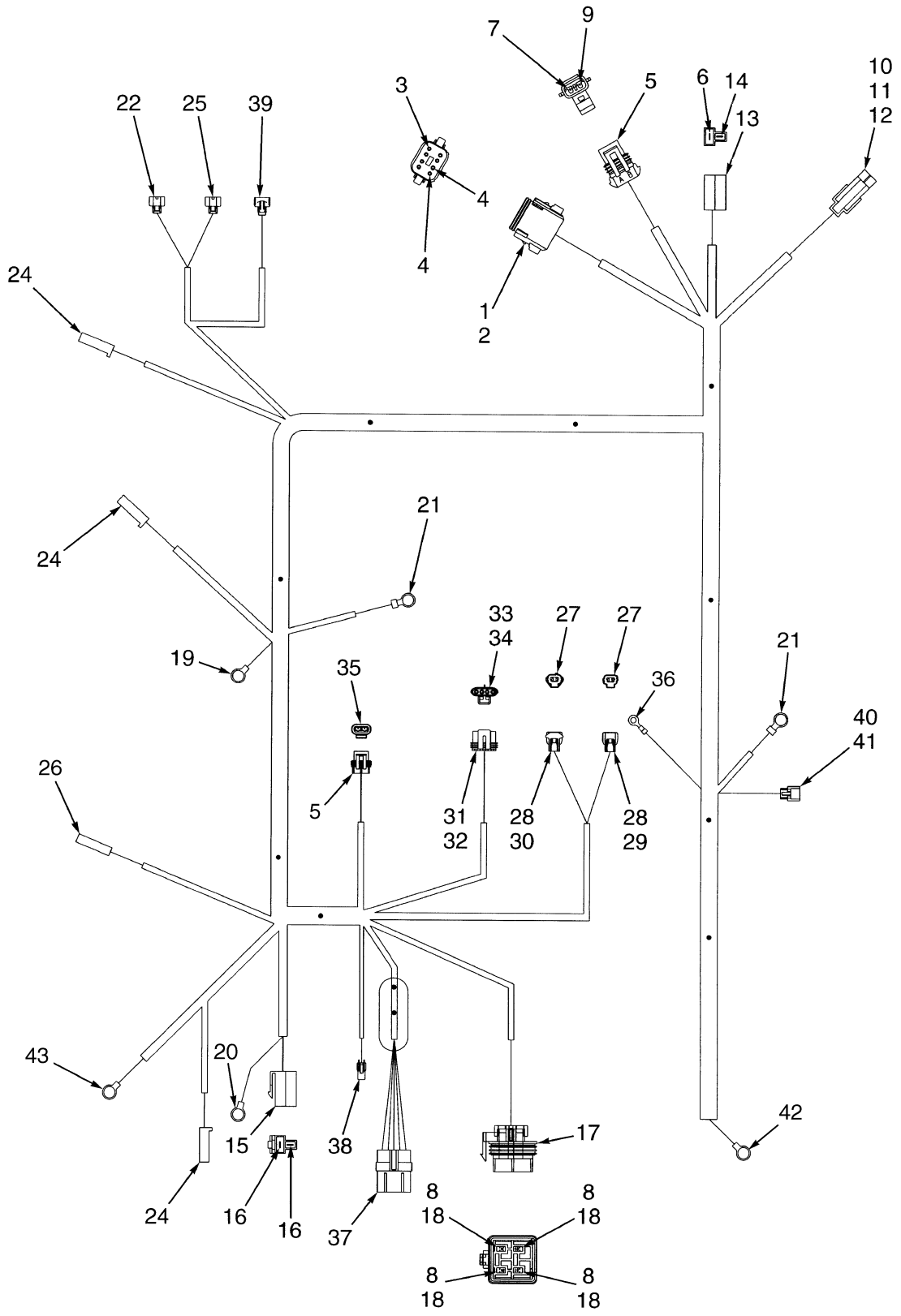

©2009 HYSTER COMPANY

WIRE HARNESS

LPG 2,0L – CLOSED LOOP (S/N H177B26764Y →)

ITEM	PART NO.	DESCRIPTION	QTY
	1486374	Wire Harness (Engine)	1
1	1330423	Connector (Cluster Harness)	1
2	1330429	Connector	1
3	1330438	Terminal (Socket)	6
4	1330439	Plug	2
5	1330292	Connector	2
6	370730	Terminal	3
7	1330283	Terminal	1
8	1329147	Seal	4
9	1323581	Plug	1
10	1330298	Connector	1
11	1334999	Terminal	1
12	1329147	Seal	1
13	181048	Connector Body	1
14	141462	Terminal	1
15	1308259	Connector Body	1
16	314775	Terminal	2
17	1375795	Connector Body	1
17	1375796	Terminal	4
18	1375797	Terminal	4
19	148615	E-Ring	1
20	129888	E-Ring	1
21	1337350	Terminal	2
22	1482660	Connector Body	1
23	2043859	Sleeve	1
24	181046	Connector Body	3
25	1488776	Connector Body	1
26	1324310	Terminal	1
27	1476598	Terminal	4
28	1476599	Seal	2
29	1474764	Connector Body	1
30	1474763	Connector Body	1
31	1482667	Connector Body	1
32	1482663	Connector	1
33	1482665	Seal	4
34	1482664	Connector Body	4
35	1354204	Terminal	2
36	252293	E-Ring	1
37	1482648	Connector Body	1
38	1482657	Connector Body	1
39	1482654	Connector Body	1
40	1482651	Connector Body	1
41	1484154	Lockplate	1
42	129887	E-Ring	1
43	1301783	Ring Terminal	1

©2009 HYSTER COMPANY

WIRE HARNESS (MAIN) (FIGURE 4-38)

LPG 3.0L — SHEET 1 0F 2

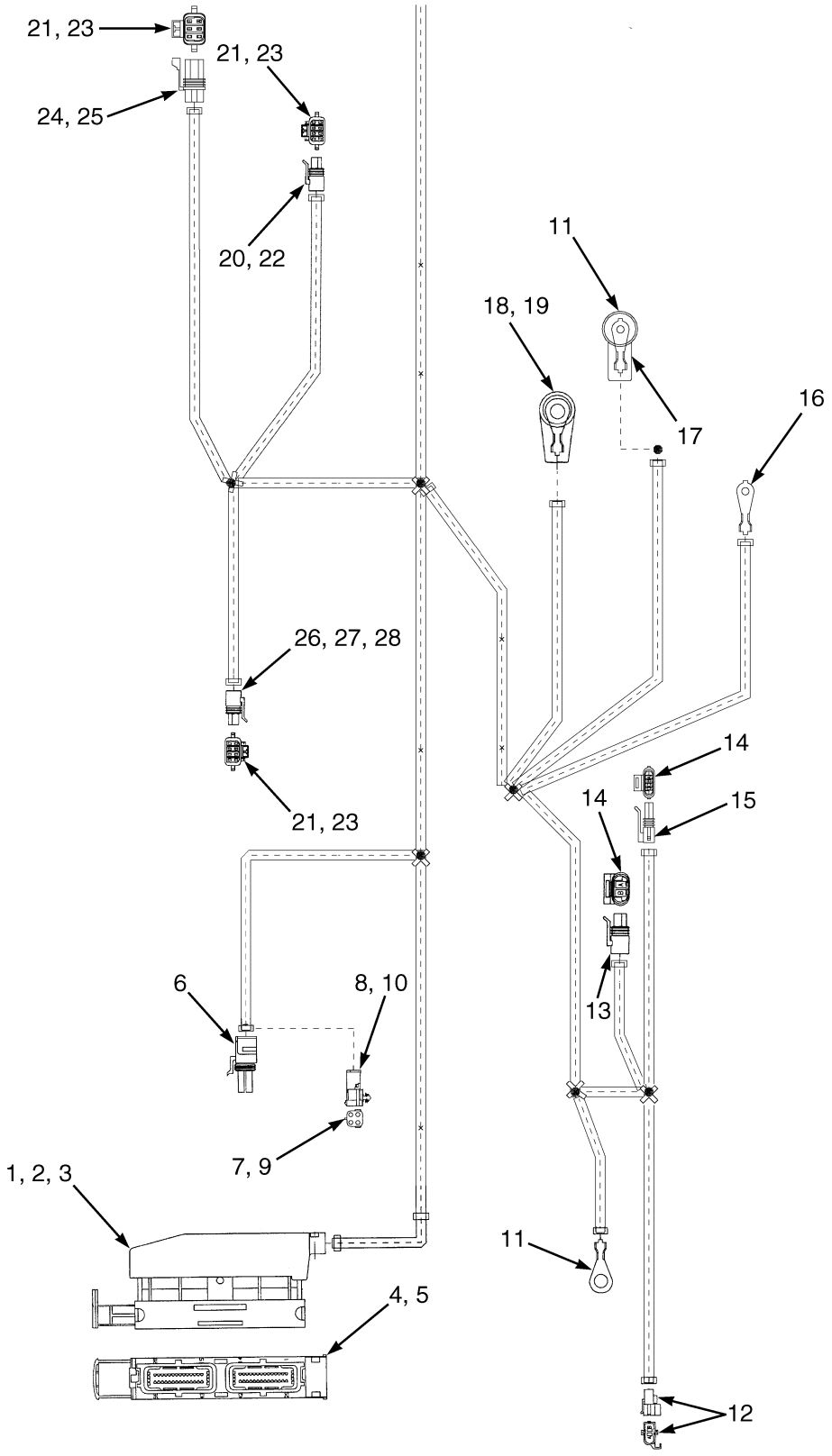

©2009 HYSTER COMPANY

WIRE HARNESS (MAIN)

LPG 3.0L – SHEET 1 0F 2

ITEM	PART NO.	DESCRIPTION	QTY
	2068094	Wire Harness (Main Engine)	1
1	1547479	Housing	1
2	1587016	Strap Clamp	1
3	1561145	Cover	1
4	1561147	Plug	1
5	1561148	Cam	1
6	1378652	Connector	1
7	1323579	Seal	5
8	1547482	Connector	1
9	1327164	Seal	3
10	1567333	Clip	1
11	1402890	Ring Terminal	2
12	1595781	Connector	1
13	1323586	Connector	1
14	1323576	Terminal	6
15	1547483	Connector	1
16	1567695	Boot	1
17	1493442	Boot	1
18	1567696	Ring Terminal	1
19	1547484	Connector	1
20	1547484	Connector	1
21	1330356	Seal	20
22	1567312	Spacer	1
23	1330355	Terminal	20
24	1531486	Connector	1
25	930591	Connector	1
26	1376617	Plug	1
27	1482668	Plug	3
28	1402907	Lock	1

©2009 HYSTER COMPANY

WIRE HARNESS (MAIN) (FIGURE 4-39)

LPG 3.0L — SHEET 2 OF 2

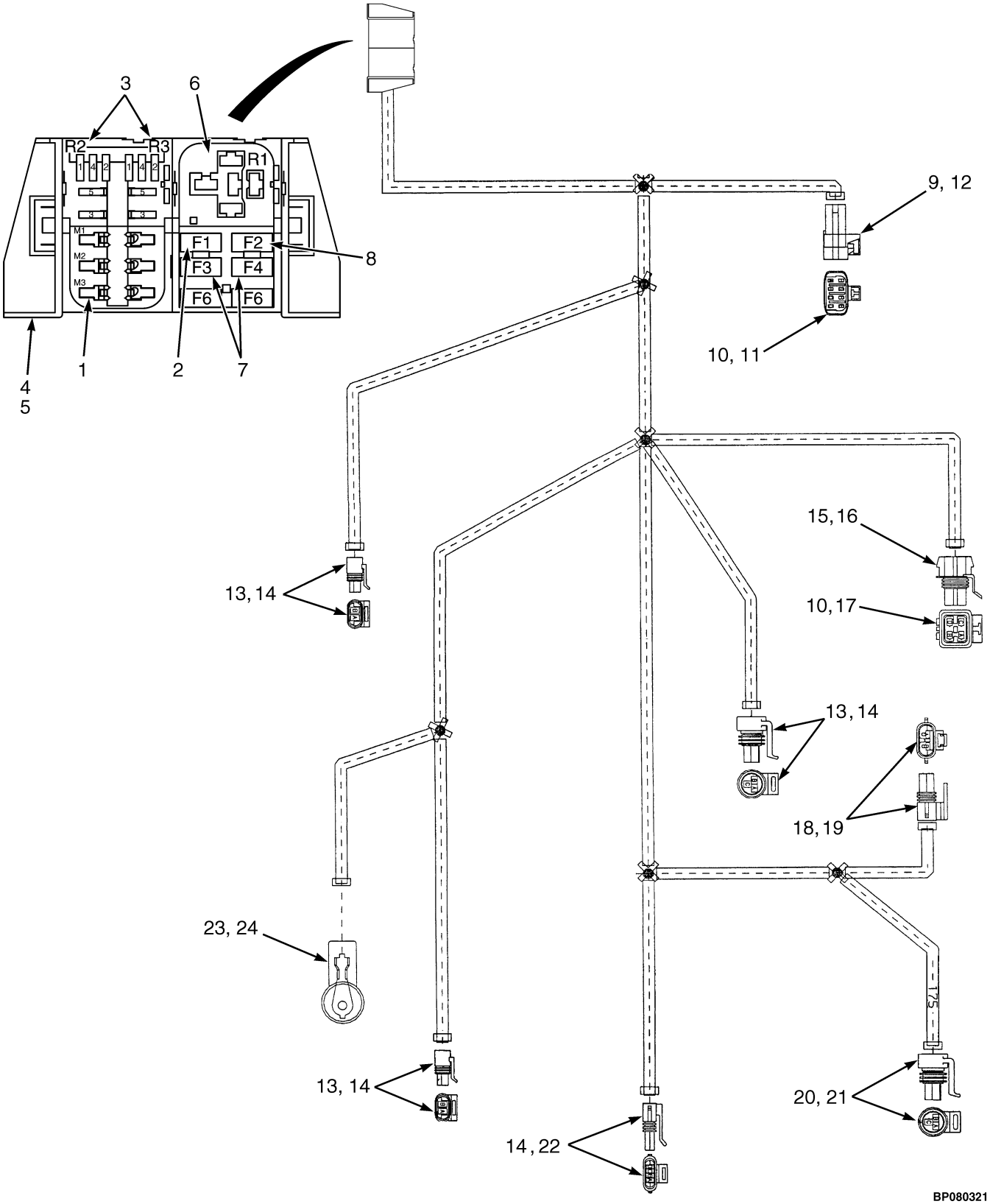

©2009 HYSTER COMPANY

WIRE HARNESS (MAIN)
LPG 3.0L – SHEET 2 OF 2

ITEM	PART NO.	DESCRIPTION	QTY
	2068094	Wire Harness (Main Engine)	1
1	1378418	Fuse (50 Amp)	1
2	1498044	Fuse (5 Amp)	1
3	1567317	Relay (Power and Fuel Pump)	2
4	1567320	Cover (Fuse Box Bottom)	1
5	1567319	Cover (Fuse Box Top)	1
6	1567316	Relay (Starter)	1
7	1498047	Fuse (15 Amp)	2
8	1528132	Fuse (20 Amp)	1
9	1541607	Connector	1
10	1330356	Seal	11
11	1482668	Plug	1
12	1541608	Lock	1
13	1323586	Connector	2
14	1323576	Terminal	8
15	1531486	Connector	1
16	1487441	Housing	1
17	1330355	Terminal	4
18	1567310	Connector	1
19	1567311	Lock	1
20	1327957	Connector	2
21	1532571	Terminal	6
22	1547483	Connector	1
23	1567694	Ring Terminal	1
24	1567695	Boot	1

©2009 HYSTER COMPANY

WIRE HARNESS (FIGURE 4-40)

3,0L ENGINE WITHOUT MSTS — LPG (→ S/N H177B30072Y)

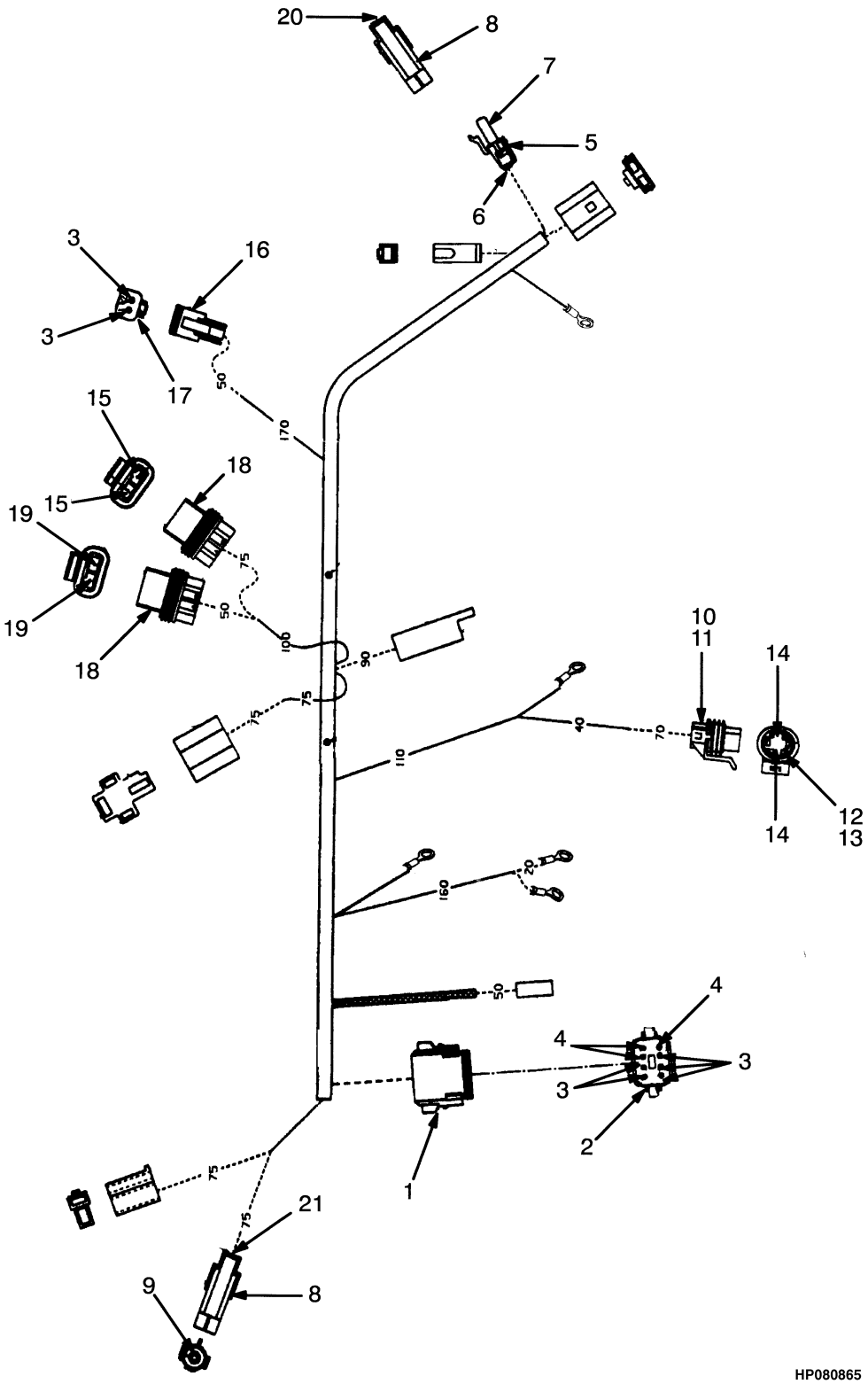

©2009 HYSTER COMPANY

WIRE HARNESS

3,0L ENGINE WITHOUT MSTS – LPG (→ S/N H177B30072Y)

ITEM	PART NO.	DESCRIPTION	QTY
	1383401	Wire Harness	1
1	1330423	Connector	1
2	1330429	Connector	1
3	1330438	Terminal (Socket)	7
4	1330439	Plug	3
5	1330299	Connector	1
6	1323579	Seal	1
7	1336173	Terminal	1
8	1330298	Connector	2
9	1334999	Terminal	1
10	1347210	Battery Connector and Cable	1
11	1330357	Terminal	1
12	1330355	Terminal	1
13	1330356	Seal	1
14	1323581	Plug	2
15	1330283	Terminal	2
16	1330419	Connector	1
17	1330424	Connector	1
18	1330292	Connector	2
19	1336171	Terminal	2
20	1327164	Seal	1
21	1329147	Seal	1

©2009 HYSTER COMPANY

WIRE HARNESS (FIGURE 4-41)

3,0L ENGINE WITHOUT MSTS — LPG (S/N H177B30073Y →)

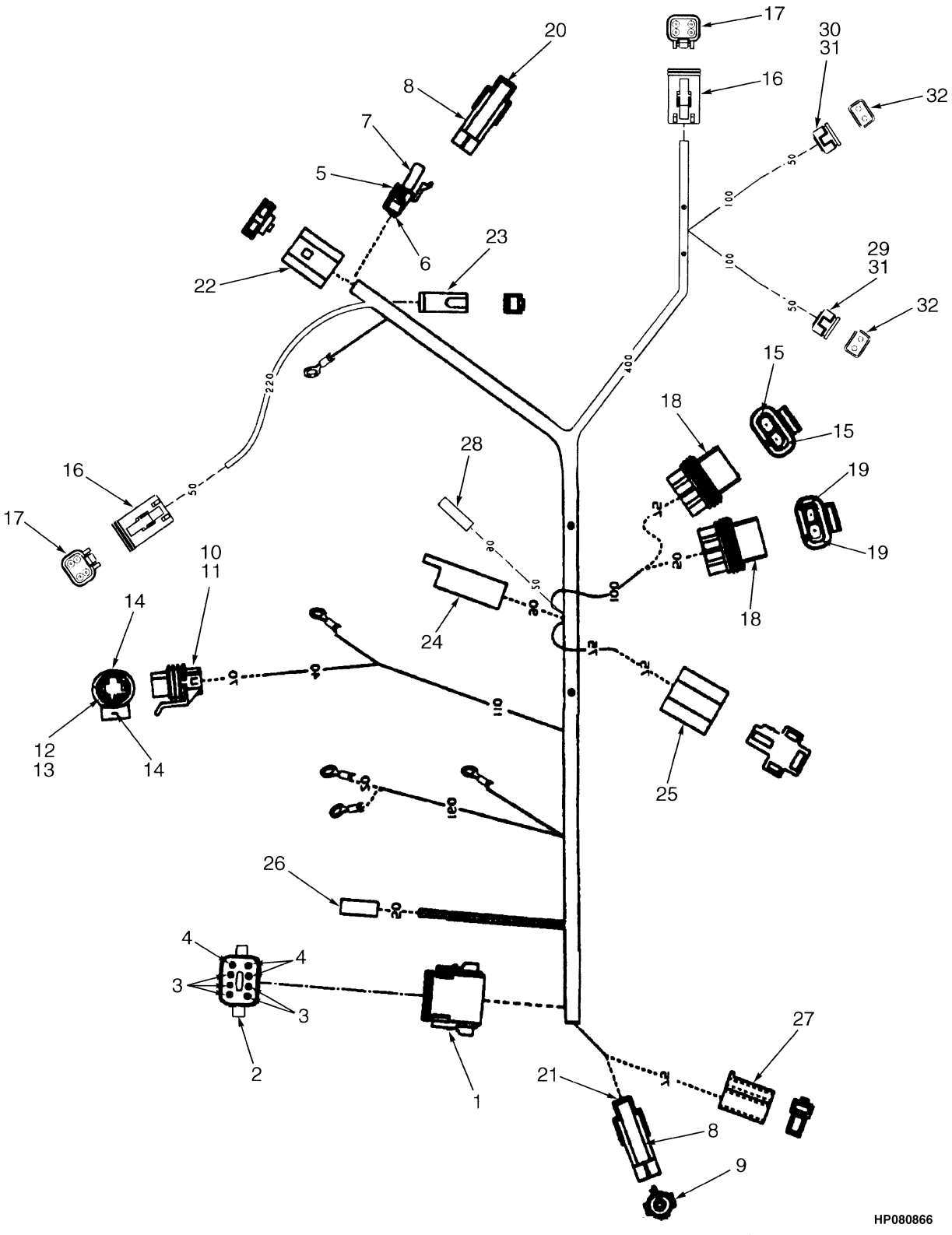

©2009 HYSTER COMPANY

WIRE HARNESS

3,0L ENGINE WITHOUT MSTS – LPG (S/N H177B30073Y →)

ITEM	PART NO.	DESCRIPTION	QTY
	1493407	Wire Harness	1
1	1330423	Connector	1
2	1330429	Connector	1
3	1330438	Terminal (Socket)	13
4	1330439	Plug	3
5	1330299	Connector	1
6	1323579	Seal	1
7	1336173	Terminal	1
8	1330298	Connector	2
9	1334999	Terminal	1
10	1347210	Battery Connector and Cable	1
11	1330357	Terminal	1
12	1330355	Terminal	1
13	1330356	Seal	1
14	1323581	Plug	2
15	1330283	Terminal	2
16	1330421	Connector	2
17	1330427	Connector	2
18	1330292	Connector	2
19	1336171	Terminal	2
20	1327164	Seal	1
21	1329147	Seal	1
22	245996	Connector Body	1
23	1301720	Connector Body	1
24	181045	Connector Body	1
25	1377860	Connector	1
26	277446	Connector Body	1
27	181048	Connector Body	1
28	181046	Connector Body	1
29	1474763	Connector Body	1
30	1474764	Connector Body	1
31	1476599	Seal	4
32	1476598	Terminal	4

©2009 HYSTER COMPANY

WIRE HARNESS (FIGURE 4-42)

3,0L ENGINE WITHOUT MSTS — LPG (8/2002 →)

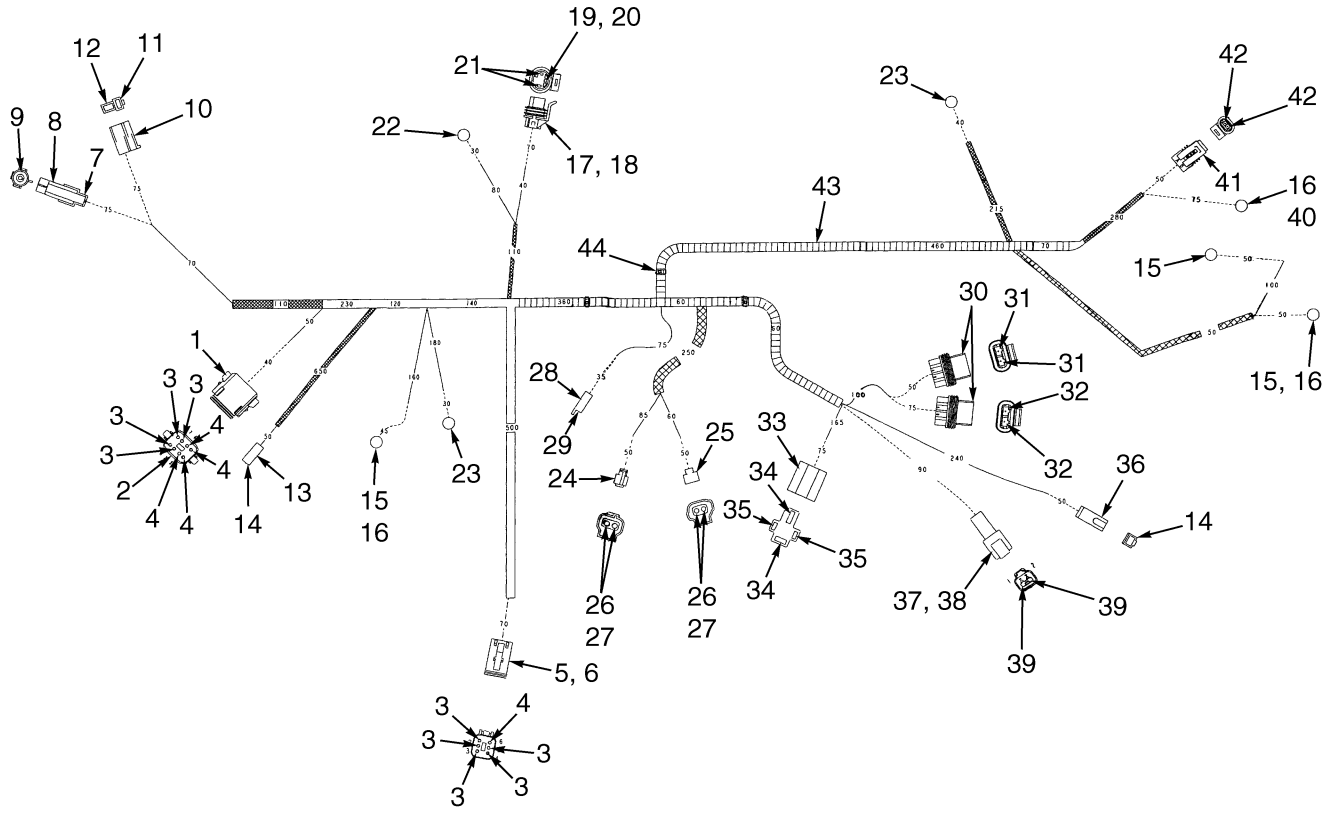

BP080163

©2009 HYSTER COMPANY

WIRE HARNESS

3,0L ENGINE WITHOUT MSTS – LPG (8/2002 →)

ITEM	PART NO.	DESCRIPTION	QTY
	2053670	Wire Harness	1
1	1330423	Connector	1
2	1330429	Connector	1
3	1330438	Terminal (Socket)	10
4	1330439	Plug	4
5	1330422	Connector	1
6	1330428	Connector	1
7	370730	Terminal	1
8	1330298	Connector	1
9	1334999	Terminal	1
10	181048	Connector Body	1
11	134812	Terminal	1
12	141462	Terminal	1
13	277446	Connector Body	1
14	236900	Terminal	2
15	1519025	Ring Terminal	3
16	190383	Boot	3
17	1347210	Battery Connector and Cable	1
18	1330357	Terminal	1
19	1330355	Terminal	1
20	1330356	Seal	1
21	1323581	Plug	2
22	1402942	Ring Terminal	1
23	1380745	Ring Terminal	2
24	1474764	Connector Body	1
25	1474763	Connector Body	1
26	1476599	Seal	4
27	1476598	Terminal	4
28	181045	Connector Body	1
29	256674	Terminal	1
30	1330292	Connector	2
31	1336171	Terminal	2
32	1330283	Terminal	2
33	1377860	Connector	1
34	1377868	Receptacle	2
35	1331233	Terminal	2
36	1301720	Connector Body	1
37	1330409	Connector	1
38	1330414	Connector (Secondary Lock)	1
39	1330437	Terminal (Pin)	2
40	1519099	Ring Terminal	1
41	1323586	Connector	1
42	1323576	Terminal	2
43	275497	Conduit	AR
43	275498	Conduit (Optional)	AR
44	1500899	Clip	3
44	1402817	Clip (Optional)	3

©2009 HYSTER COMPANY

WIRE HARNESS (FIGURE 4-43)

3,0L ENGINE WITH MSTS — LPG (→ 4/1998)

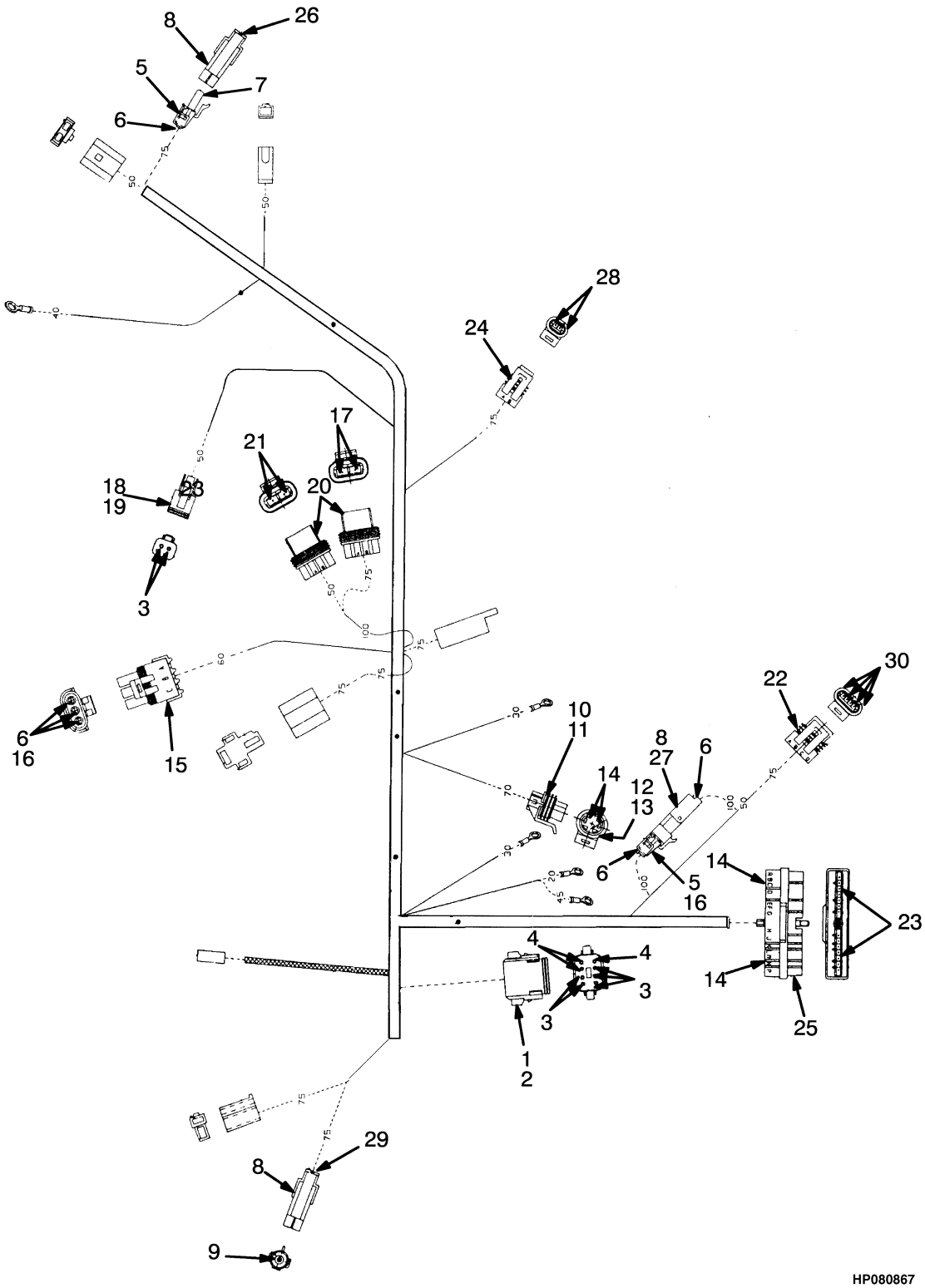

©2009 HYSTER COMPANY

WIRE HARNESS

3,0L ENGINE WITH MSTS – LPG (→ 4/1998)

ITEM	PART NO.	DESCRIPTION	QTY
	1383421	Wire Harness	1
1	1330423	Connector	1
2	1330429	Connector	1
3	1330438	Terminal (Socket)	7
4	1330439	Plug	3
5	1330299	Connector	2
6	1323579	Seal	6
7	1336173	Terminal	1
8	1330298	Connector	3
9	1334999	Terminal	1
10	1347210	Battery Connector and Cable	1
11	1330357	Terminal	1
12	1330355	Terminal	1
13	1330356	Seal	1
14	1323581	Plug	6
15	1327958	Connector	1
16	1323578	Terminal	4
17	1330283	Terminal	2
18	1330419	Connector	1
19	1330424	Connector	1
20	1330292	Connector	2
21	1336171	Terminal	2
22	1323575	Connector	1
23	1323576	Terminal	10
24	1323586	Connector	1
25	1323580	Connector	1
26	1327164	Seal	1
27	1323583	Terminal	1
28	1354237	Terminal	2
29	1329147	Seal	1
30	1352142	Terminal	4
30	1354237	Terminal (Optional)	4

©2009 HYSTER COMPANY

WIRE HARNESS (FIGURE 4-44)

3,0L LPG WITH MSTS — (4/1998 ↔ S/N H177B30073Y)

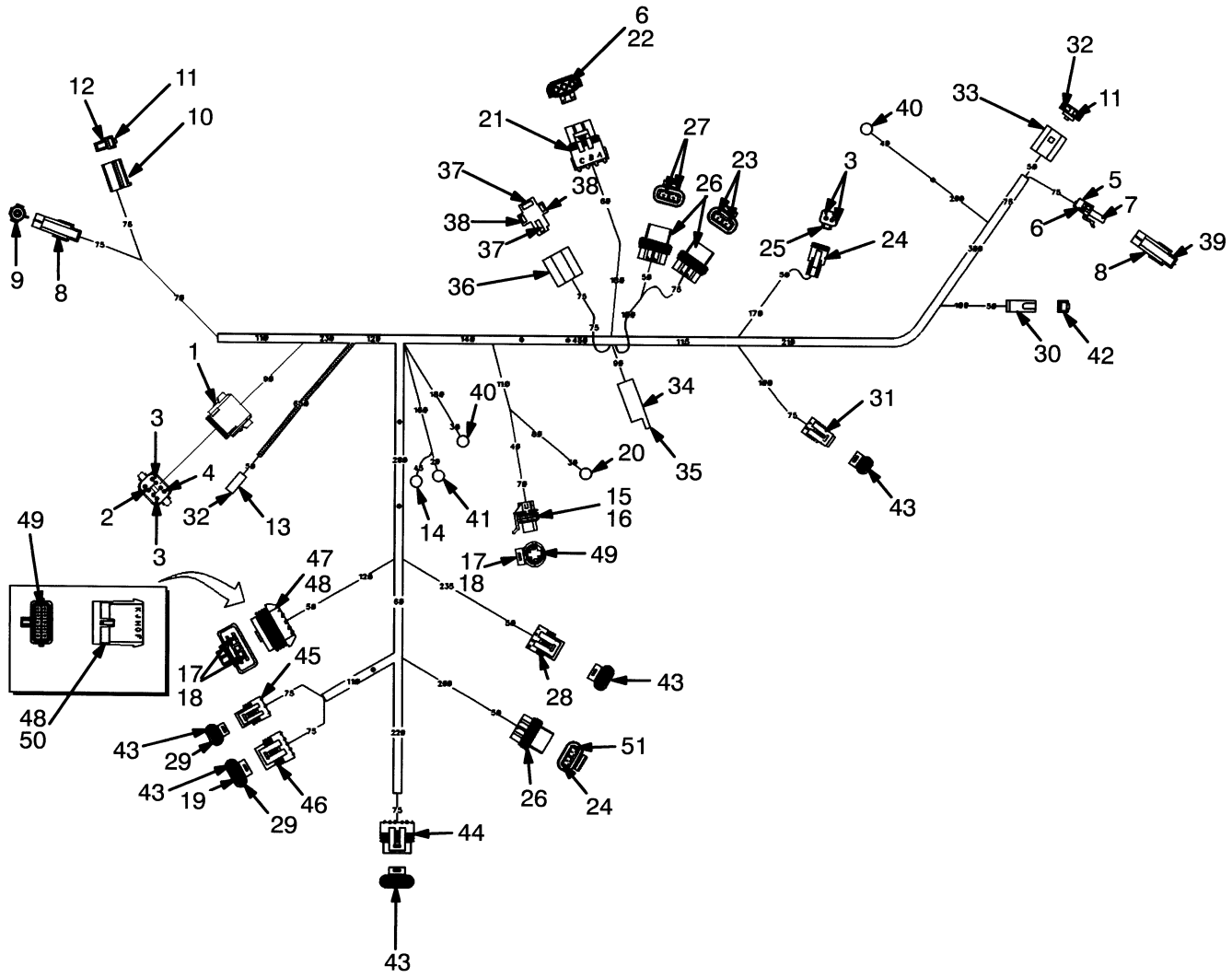

©2009 HYSTER COMPANY

WIRE HARNESS

3,0L LPG WITH MSTS – (4/1998 ↔ S/N H177B30073Y)

ITEM	PART NO.	DESCRIPTION	QTY
	2035711	Wire Harness	1
1	1330423	Connector	1
2	1330429	Connector	1
3	1330438	Terminal (Socket)	7
4	1330439	Plug	3
5	1330299	Connector	2
6	1323579	Seal	6
7	1336173	Terminal	1
8	1330298	Connector	3
9	1334999	Terminal	1
10	181048	Connector Body	1
11	134812	Terminal	1
12	141462	Terminal	1
13	277446	Connector Body	1
14	148610	E-Ring	1
15	1347210	Battery Connector and Cable	1
16	1330357	Terminal	6
17	1330355	Terminal	1
18	1330356	Seal	6
19	1323581	Plug	1
20	1301783	Ring Terminal	1
21	1327958	Connector	1
22	1323578	Terminal	3
23	1330283	Terminal	3
24	1330419	Connector	1
25	1330424	Connector	1
26	1330292	Connector	3
27	1336171	Terminal	2
28	1323575	Connector	1
29	1323576	Terminal	3
30	1301720	Connector Body	1
31	1323586	Connector	1
32	236900	Terminal	2
33	245996	Connector Body	1
34	181045	Connector Body	1
35	256674	Terminal	1
36	1377860	Connector	1
37	1377868	Receptacle	2
38	1331233	Terminal	2
39	1327164	Seal	1
40	1380744	Ring Terminal	2
41	1380745	Ring Terminal	1
42	370730	Terminal	1
43	1354237	Terminal	15
44	1459270	Connector	1
45	1459168	Connector	1
46	1459167	Connector	1
47	1376617	Plug	1
48	1376619	Lock	2
49	1351139	Seal	17

©2009 HYSTER COMPANY

WIRE HARNESS

3,0L LPG WITH MSTS – (4/1998 ↔ S/N H177B30073Y)

ITEM	PART NO.	DESCRIPTION	QTY
50	1376618	Receptacle	1
51	1354204	Terminal	1

©2009 HYSTER COMPANY

NOTES

©2009 HYSTER COMPANY

WIRE HARNESS (FIGURE 4-45)

3,0L ENGINE WITH MSTS — LPG (S/N H177B30074Y →)

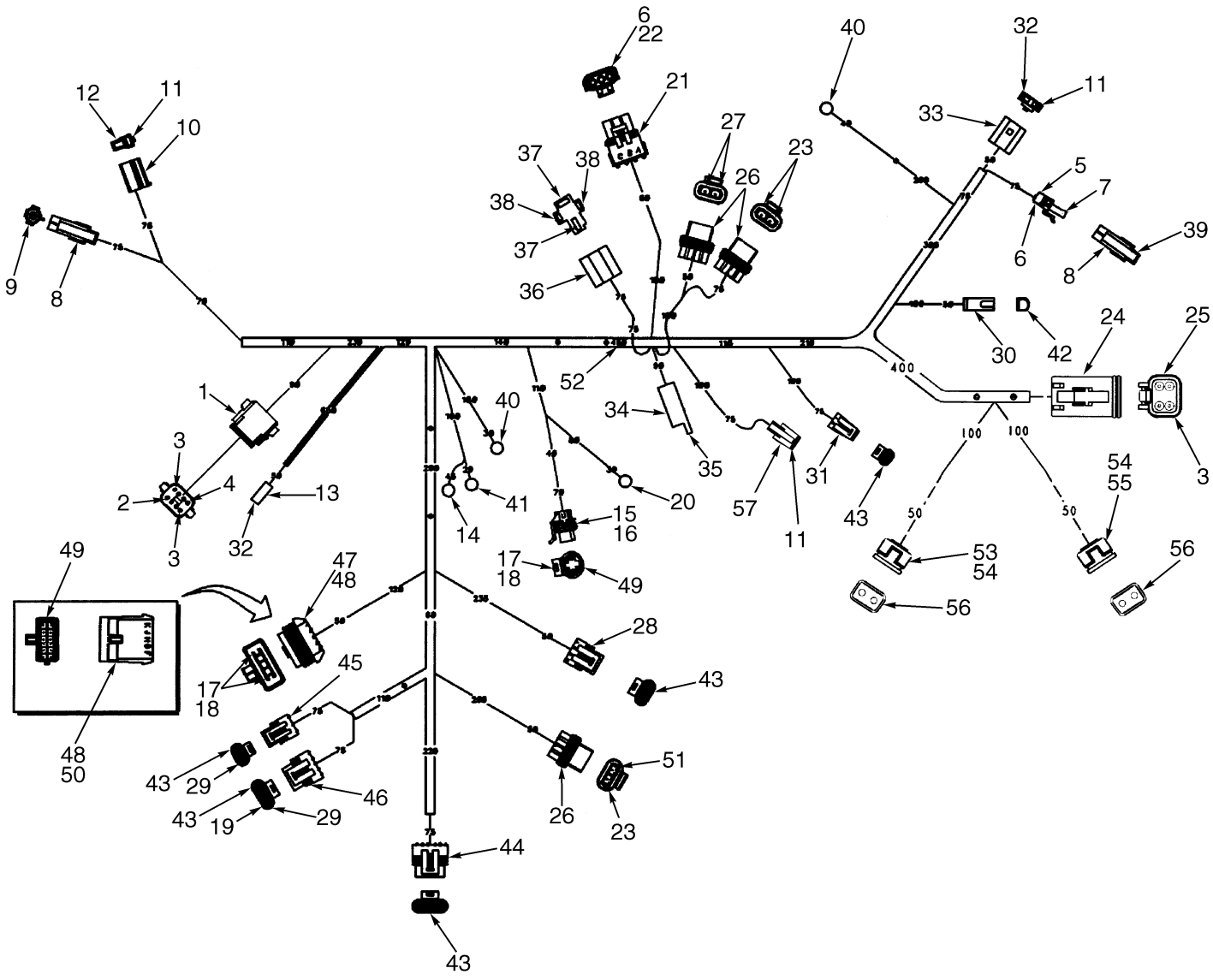

©2009 HYSTER COMPANY

WIRE HARNESS

3,0L ENGINE WITH MSTS – LPG (S/N H177B30074Y →)

ITEM	PART NO.	DESCRIPTION	QTY
	1476727	Wire Harness	1
1	1330423	Connector (Cluster Harness)	1
2	1330429	Connector	1
3	1330438	Terminal (Socket)	10
4	1330439	Plug	2
5	1330299	Connector	2
6	1323579	Seal	4
7	1336173	Terminal	1
8	1330298	Connector (Cowl Harness)	2
9	1334999	Terminal	1
10	181048	Connector Body	1
11	134812	Terminal	3
12	141462	Terminal	1
13	277446	Connector Body (Temperature Sender)	1
14	148610	E-Ring	1
15	1347210	Battery Connector and Cable (Oil Pressure Switch)	1
16	1330357	Terminal	1
17	1330355	Terminal	6
18	1330356	Seal	6
19	1323581	Plug	2
20	1301783	Ring Terminal	1
21	1327958	Connector (MAP Sensor)	1
22	1323578	Terminal	3
23	1330283	Terminal	3
24	1330421	Connector (Solenoid Valve)	1
25	1330427	Connector	1
26	1330292	Connector (Fuse)	3
27	1336171	Terminal	2
28	1323575	Connector (Distributor)	1
29	1323576	Terminal	3
30	1301720	Connector Body (Temperature Sender)	1
31	1323586	Connector (Temperature Sender with MSTS)	1
32	236900	Terminal	2
33	245996	Connector Body (Alternator)	1
34	181045	Connector Body (Coil)	1
35	256674	Terminal	1
36	1377860	Connector (Starter Motor Relay)	1
37	1377868	Receptacle	2
38	1331233	Terminal	2
39	1327164	Seal	1
40	1380744	Ring Terminal	2
41	1380745	Ring Terminal	1
42	370730	Terminal	1
43	1354237	Terminal	15
44	1459270	Connector (6 Pin MSTS)	1
45	1459168	Connector (3 Pin MSTS)	1
46	1459167	Connector (5 Pin MSTS)	1
47	1376617	Plug	1
48	1376619	Lock	2
49	1351139	Seal	17

©2009 HYSTER COMPANY

WIRE HARNESS

3,0L ENGINE WITH MSTS – LPG (S/N H177B30074Y →)

ITEM	PART NO.	DESCRIPTION	QTY
50	1376618	Receptacle	1
51	1354204	Terminal	1
52	222523	Heat Shrink	AR
53	1474763	Connector Body	1
54	1476599	Seal	4
55	1474764	Connector Body	1
56	1476398	Lock (RH)	4
57	181046	Connector Body	1

©2009 HYSTER COMPANY

NOTES

©2009 HYSTER COMPANY

WIRE HARNESS (FIGURE 4-46)

3,0L ENGINE WITH MSTS (8/1997 →)

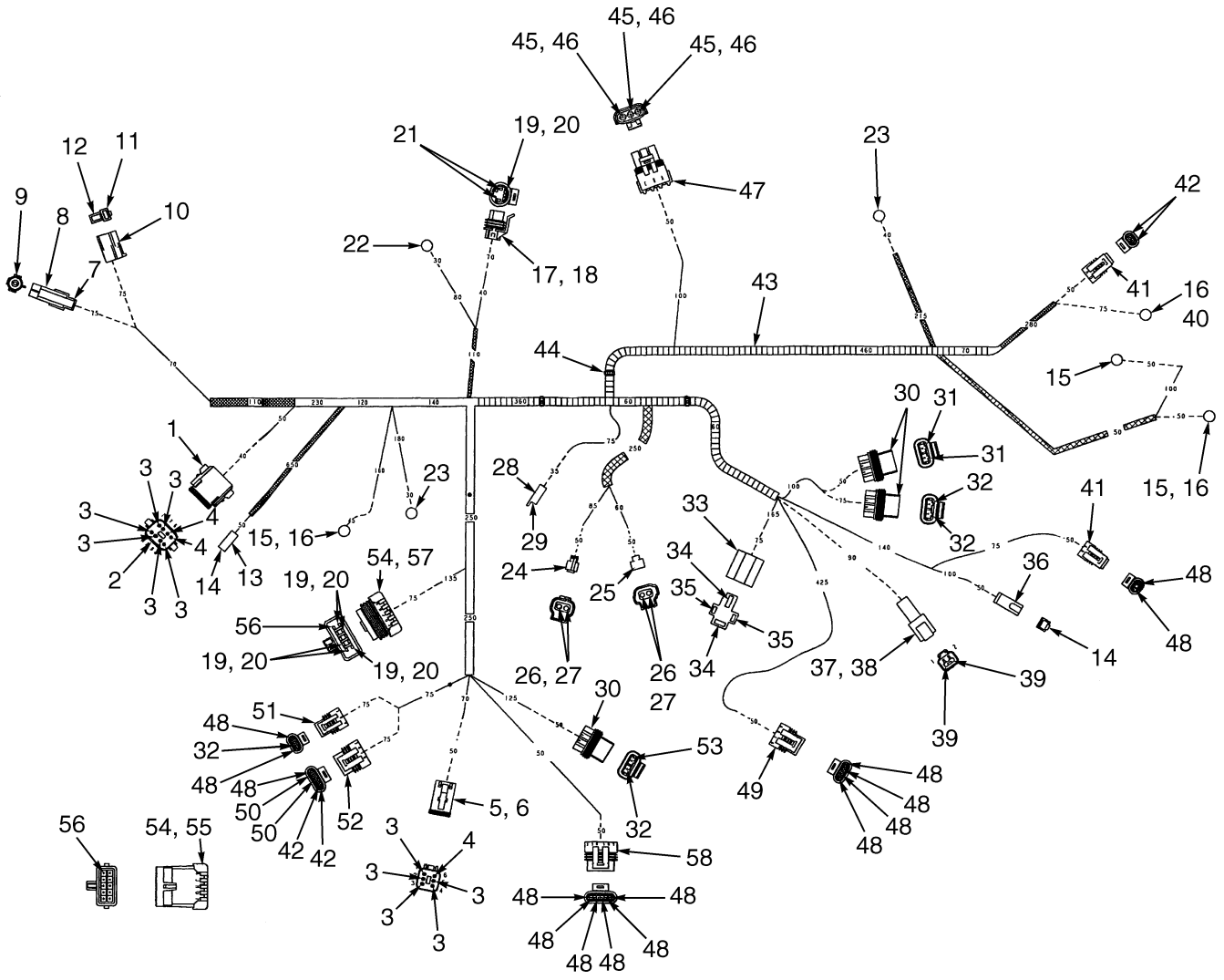

BP080162

©2009 HYSTER COMPANY

WIRE HARNESS

3,0L ENGINE WITH MSTS (8/1997 →)

ITEM	PART NO.	DESCRIPTION	QTY
	2053671	Wire Harness	1
1	1330423	Connector	1
2	1330429	Connector	1
3	1330438	Terminal (Socket)	11
4	1330439	Plug	3
5	1330422	Connector	1
6	1330428	Connector	1
7	370730	Terminal	1
8	1330298	Connector	1
9	1334999	Terminal	1
10	181048	Connector Body	1
11	134812	Terminal	1
12	141462	Terminal	1
13	277446	Connector Body	1
14	236900	Terminal	2
15	1519025	Ring Terminal	3
16	190383	Boot	3
17	1347210	Battery Connector and Cable	1
18	1330357	Terminal	1
19	1330355	Terminal	6
20	1330356	Seal	6
21	1323581	Plug	2
22	1402942	Ring Terminal	1
23	1380745	Ring Terminal	2
24	1474764	Connector Body	1
25	1474763	Connector Body	1
26	1476599	Seal	4
27	1476598	Terminal	4
28	181045	Connector Body	1
29	256674	Terminal	1
30	1330292	Connector	3
31	1336171	Terminal	2
32	1330283	Terminal	3
33	1377860	Connector	1
34	1377868	Receptacle	2
35	1331233	Terminal	2
36	1301720	Connector Body	1
37	1330409	Connector	1
38	1330414	Connector (Secondary Lock)	1
39	1330437	Terminal (Pin)	2
40	1519099	Ring Terminal	1
41	1323586	Connector	2
42	1323576	Terminal	5
43	275497	Conduit	AR
43	275498	Conduit (Optional)	AR
44	1500899	Clip	3
44	1402817	Clip (Optional)	3
45	1323578	Terminal	3
46	1323579	Seal	3
47	1327958	Connector	1

©2009 HYSTER COMPANY

WIRE HARNESS

3,0L ENGINE WITH MSTS (8/1997 →)

ITEM	PART NO.	DESCRIPTION	QTY
48	1354237	Terminal	15
49	1323575	Connector	1
50	1323581	Plug	2
51	1459168	Connector	1
52	1459167	Connector	1
53	1329147	Seal	1
54	1376619	Lock	1
55	1376618	Receptacle	1
56	1351139	Seal	1
57	1376617	Plug	1
58	1459270	Connector	1

©2009 HYSTER COMPANY

NOTES

©2009 HYSTER COMPANY

WIRE HARNESS (FIGURE 4-47)

2,6L ENGINE — DIESEL (→ S/N H177B19415)

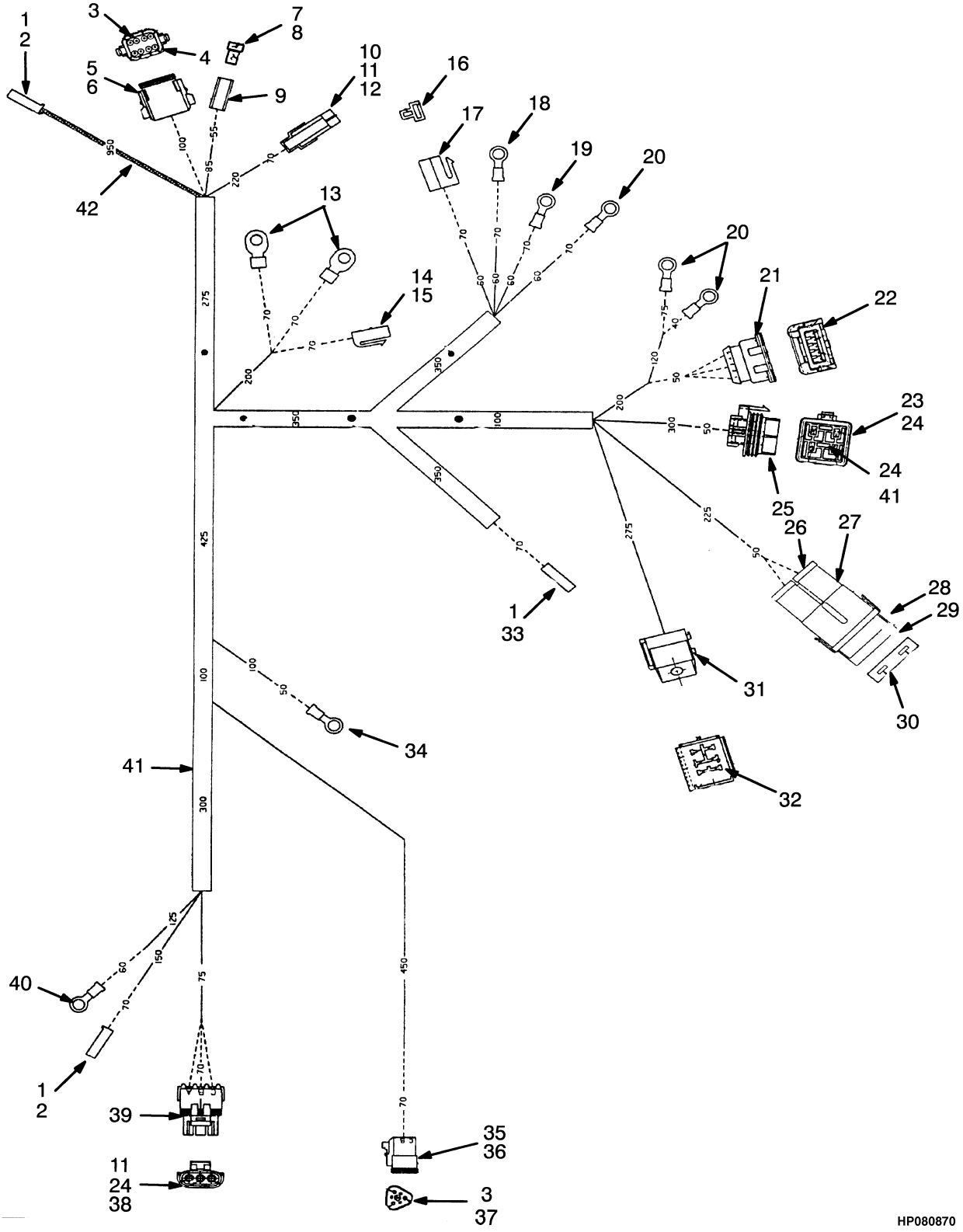

©2009 HYSTER COMPANY

WIRE HARNESS

2,6L ENGINE – DIESEL (→ S/N H177B19415)

ITEM	PART NO.	DESCRIPTION	QTY
	1396259	Wire Harness (Engine)	1
1	370730	Terminal	3
2	181046	Connector Body	2
3	1330438	Terminal (Socket)	8
4	1330439	Plug	1
5	1330429	Connector	1
6	1330423	Connector	1
7	134812	Terminal	1
8	141462	Terminal	1
9	181048	Connector Body	1
10	1334999	Terminal	1
11	1329147	Seal	5
12	1330298	Connector	1
13	148615	E-Ring	2
14	1324312	Terminal	1
15	1324311	Terminal	1
16	314775	Terminal	2
17	1308259	Connector Body	1
18	252293	E-Ring	1
19	129894	E-Ring	1
20	129888	E-Ring	1
21	1454663	Connector Body	1
22	1378671	Terminal	4
23	1375797	Terminal	2
24	1323579	Seal	3
25	1375795	Connector Body	1
25	1375796	Terminal	4
26	1454827	Seal	2
27	1454860	Connector Body	1
28	1454829	Fuse (60 Amp)	1
29	1454862	Cover (With Seal)	1
30	1454828	Terminal	2
31	1347224	Socket	1
32	1331233	Terminal	4
33	1301720	Connector Body	1
34	148609	E-Ring	1
35	1330420	Connector	1
36	1330426	Connector	1
37	1363886	Terminal (Socket)	2
38	1336173	Terminal	3
39	1323577	Connector	1
40	1301783	Ring Terminal	1
41	381919	Braiding	AR
42	16906	Conduit	AR
43	1375796	Terminal	2

©2009 HYSTER COMPANY

WIRE HARNESS (FIGURE 4-48)

2,6L ENGINE — DIESEL (S/N H177B19416X ↔ S/N H177B34913Z)

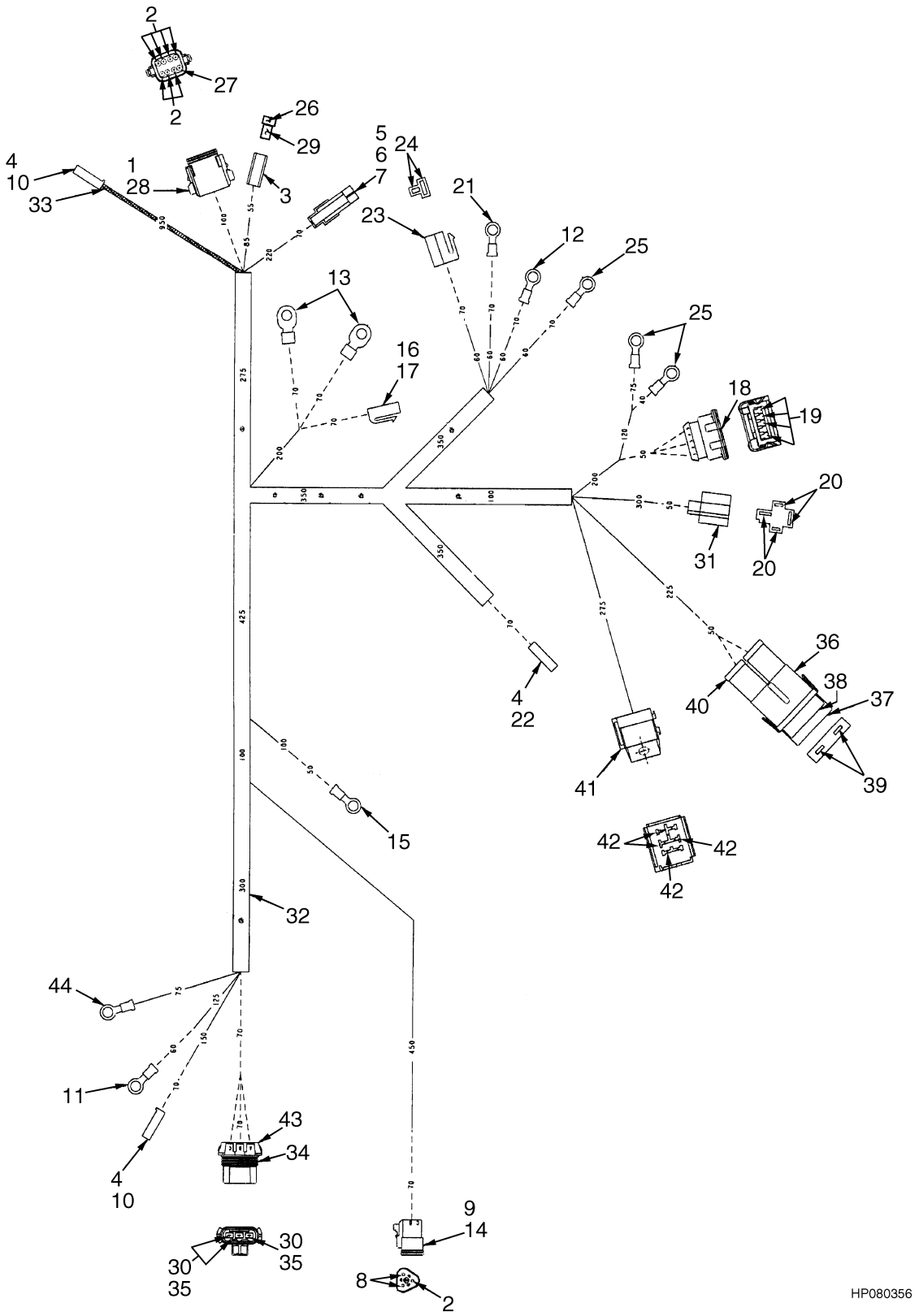

©2009 HYSTER COMPANY

WIRE HARNESS

2,6L ENGINE – DIESEL (S/N H177B19416X ↔ S/N H177B34913Z)

KEY:
A: 1485873
B: 1496740

ITEM	PART NO.	DESCRIPTION	QTY A	QTY B
	a 1485873	Wire Harness (Engine)	1	..
	b 1496740	Wire Harness (Engine)	..	1
1	1330423	Connector	1	1
2	1330438	Terminal (Socket)	8	8
3	181048	Connector Body	1	8
4	370730	Terminal	3	3
5	1330298	Connector	1	1
6	1334999	Terminal	1	1
7	1329147	Seal	3	1
8	1363886	Terminal (Socket)	2	2
9	1330420	Connector	1	1
10	181046	Connector Body	2	2
11	1301783	Ring Terminal	1	1
12	129894	E-Ring	1	1
13	148615	E-Ring	2	2
14	1330426	Connector	1	1
15	148609	E-Ring	1	1
16	1324311	Terminal	1	1
17	1324312	Terminal	1	1
18	1454663	Connector Body	1	1
19	1378671	Terminal	4	4
20	1377868	Receptacle	2	2
21	252293	E-Ring	1	1
22	1301720	Connector Body	1	1
23	1308259	Connector Body	1	1
24	314775	Terminal	2	2
25	129888	E-Ring	3	3
26	134812	Terminal	1	1
27	1330439	Plug	1	1
28	1330429	Connector	1	1
29	141462	Terminal	1	1
30	1323579	Seal	1	..
30	1337386	Seal	..	3
31	1377860	Connector	1	1
32	381919	Braiding	AR	AR
33	16906	Conduit	AR	AR
34	1323577	Connector	1	..
34	1337389	Connector	..	1
35	1336173	Terminal	3	..
35	1337390	Terminal	..	3
36	1454860	Connector Body	1	1
37	1454862	Cover (With Seal)	1	1
38	1454829	Fuse (60 Amp)	1	1
39	1454828	Terminal	2	2
40	1454827	Seal	2	2

©2009 HYSTER COMPANY

WIRE HARNESS

2,6L ENGINE – DIESEL (S/N H177B19416X ↔ S/N H177B34913Z)

KEY:
A: 1485873
B: 1496740

ITEM	PART NO.	DESCRIPTION	QTY A	QTY B
41	1347224	Socket	1	1
42	1331233	Terminal	6	6
43	1337384	Terminal	..	1
44	129886	E-Ring	..	1

FOOTNOTES:

a → S/N H177B29209Y

b S/N H177B29210Y →

©2009 HYSTER COMPANY

NOTES

©2009 HYSTER COMPANY

WIRE HARNESS (FIGURE 4-49)

2,6L ENGINE — DIESEL (S/N H177B34914Z →)

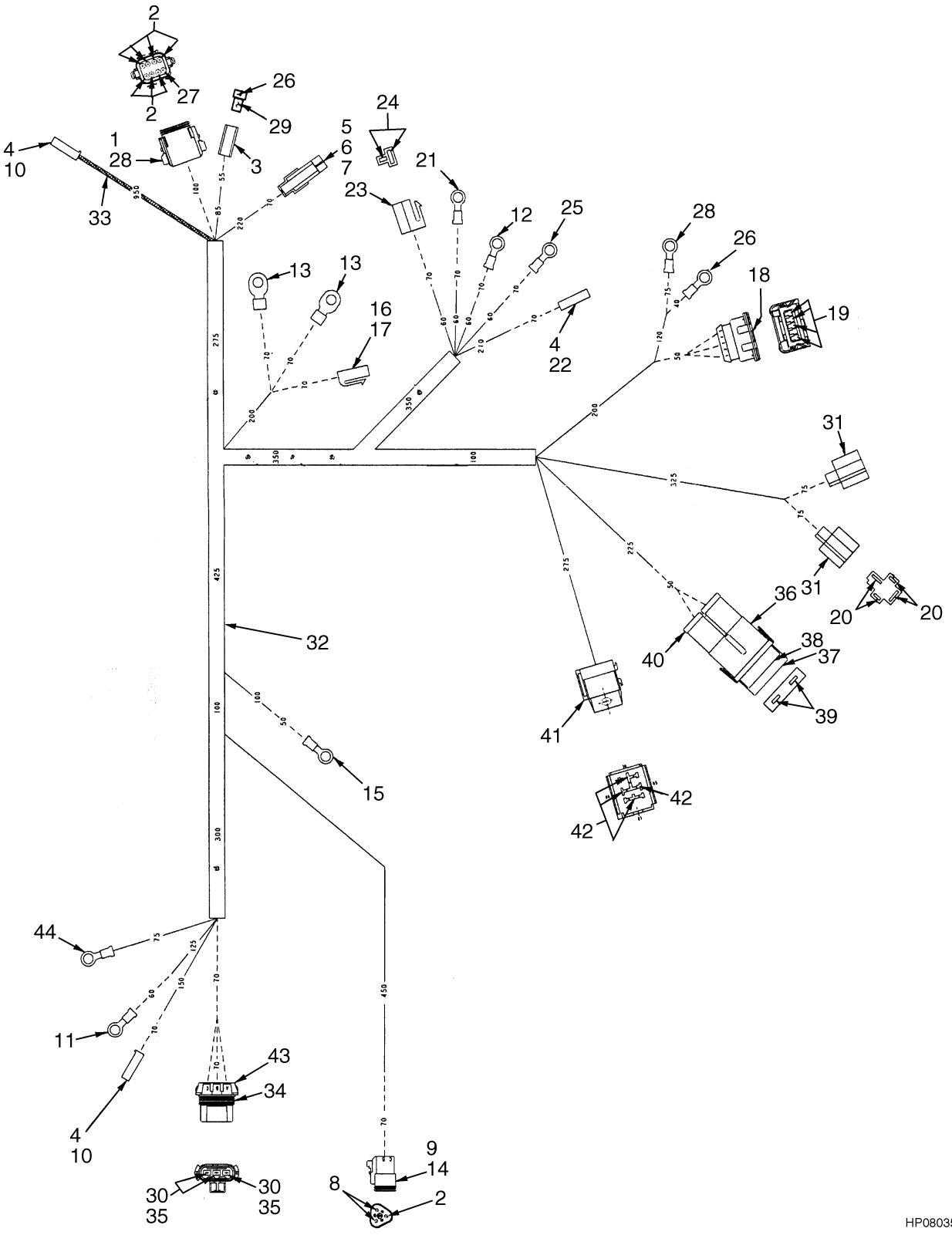

©2009 HYSTER COMPANY

WIRE HARNESS

2,6L ENGINE – DIESEL (S/N H177B34914Z →)

ITEM	PART NO.	DESCRIPTION	QTY
	1514911	Wire Harness (Engine)	1
1	1330423	Connector	1
2	1330438	Terminal (Socket)	8
3	181048	Connector Body	1
4	370730	Terminal	3
5	1330298	Connector	1
6	1334999	Terminal	1
7	1329147	Seal	1
8	1363886	Terminal (Socket)	2
9	1330420	Connector	1
10	181046	Connector Body	2
11	1301783	Ring Terminal	1
12	129894	E-Ring	1
13	148615	E-Ring	2
14	1330426	Connector	1
15	148609	E-Ring	1
16	1324311	Terminal	1
17	1324312	Terminal	1
18	1454663	Connector Body	1
19	1378671	Terminal	4
20	1377868	Receptacle	4
21	252293	E-Ring	1
22	1301720	Connector Body	1
23	1308259	Connector Body	1
24	314775	Terminal	2
25	129888	E-Ring	3
26	134812	Terminal	1
27	1330439	Plug	1
28	1330429	Connector	1
29	141462	Terminal	1
30	1337386	Seal	3
31	1377860	Connector	2
32	381919	Braiding	AR
33	16906	Conduit	AR
34	1337389	Connector	1
35	1337390	Terminal	3
36	1454860	Connector Body	1
37	1454862	Cover (With Seal)	1
38	1454829	Fuse (60 Amp)	1
39	1454828	Terminal	2
40	1454827	Seal	2
41	1347224	Socket	1
42	1331233	Terminal	8
43	1337384	Terminal	1
44	129886	E-Ring	1

©2009 HYSTER COMPANY

WIRE HARNESS (FIGURE 4-50)
HYDROSTATIC TRANSMISSION (→ S/N H177B30180Y)

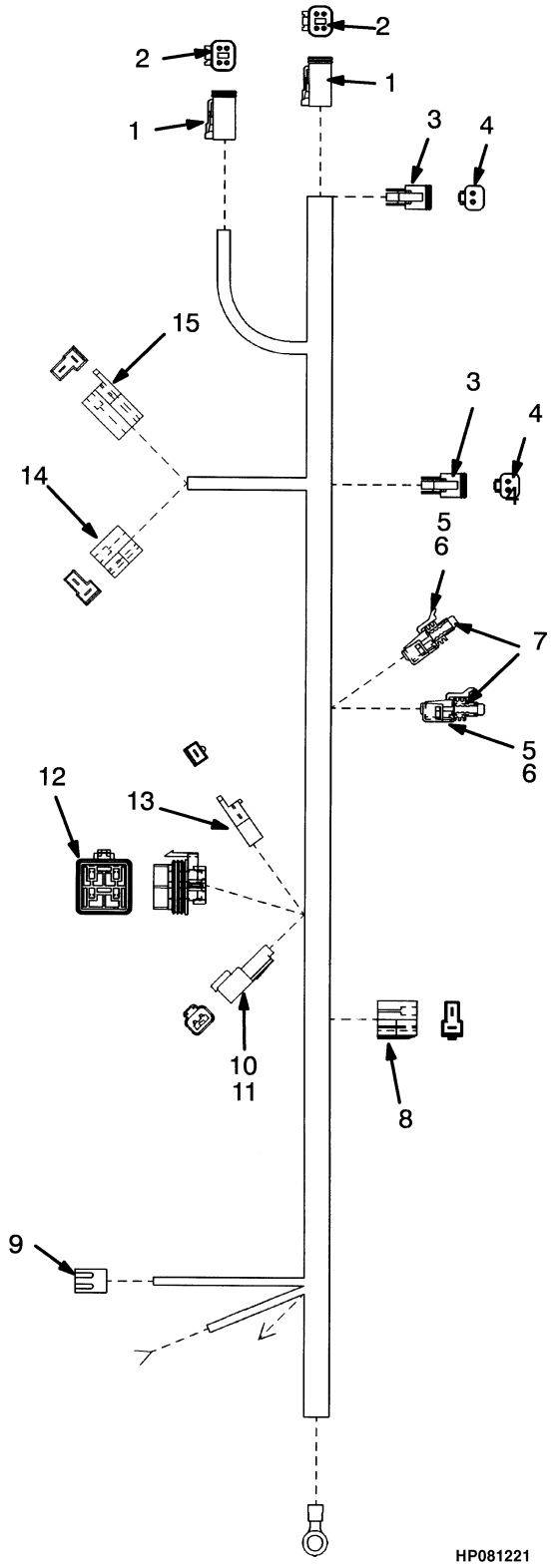

©2009 HYSTER COMPANY

WIRE HARNESS

HYDROSTATIC TRANSMISSION (→ S/N H177B30180Y)

ITEM	PART NO.	DESCRIPTION	QTY
	1463575	Wire Harness	1
1	1330421	Connector	2
2	1330427	Connector	2
3	1330419	Connector	2
4	1330424	Connector	2
5	1330299	Connector	2
6	1336173	Terminal	2
7	1329147	Seal	2
8	1308259	Connector Body	1
9	346330	Connector Body	1
10	1330409	Connector	1
11	1330414	Connector (Secondary Lock)	1
12	1375795	Connector Body (With Lock and Seal)	1
12	1375796	Terminal	4
13	181045	Connector Body	1
14	181048	Connector Body	1
15	181047	Connector Body	1

©2009 HYSTER COMPANY

WIRE HARNESS (FIGURE 4-51)
HYDROSTATIC TRANSMISSION (S/N H177B30181Y →)

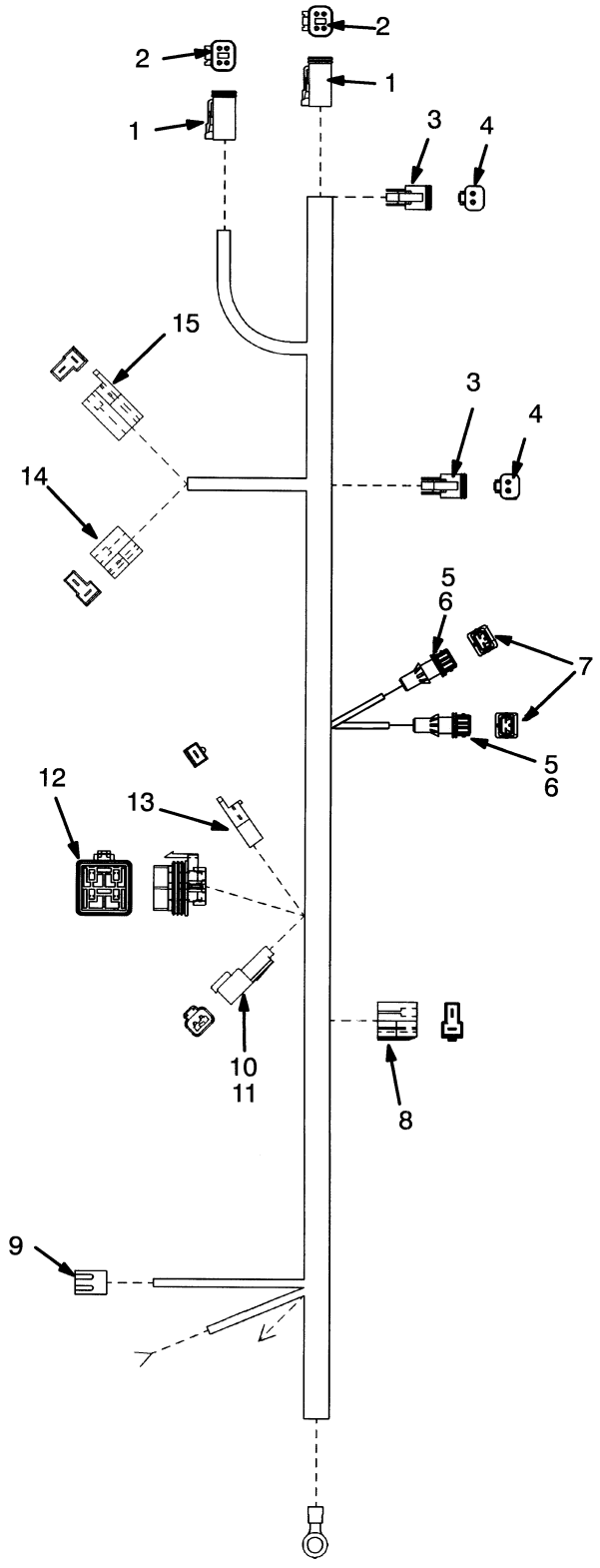

©2009 HYSTER COMPANY

WIRE HARNESS

HYDROSTATIC TRANSMISSION (S/N H177B30181Y →)

ITEM	PART NO.	DESCRIPTION	QTY
	1494796	Wire Harness	1
1	1330421	Connector	2
2	1330427	Connector	2
3	1330419	Connector	2
4	1330424	Connector	2
5	1494863	Connector	2
6	1494864	Pin	4
7	1479109	Seal	4
8	1308259	Connector Body	1
9	346330	Connector Body	1
10	1330409	Connector	1
11	1330414	Connector (Secondary Lock)	1
12	1375795	Connector Body	1
12	1375796	Terminal	4
13	181045	Connector Body	1
14	181048	Connector Body	1
15	181047	Connector Body	1

©2009 HYSTER COMPANY

WIRE HARNESS (FIGURE 4-52)
WITH THROTTLE-UP — 3,0L ENGINE

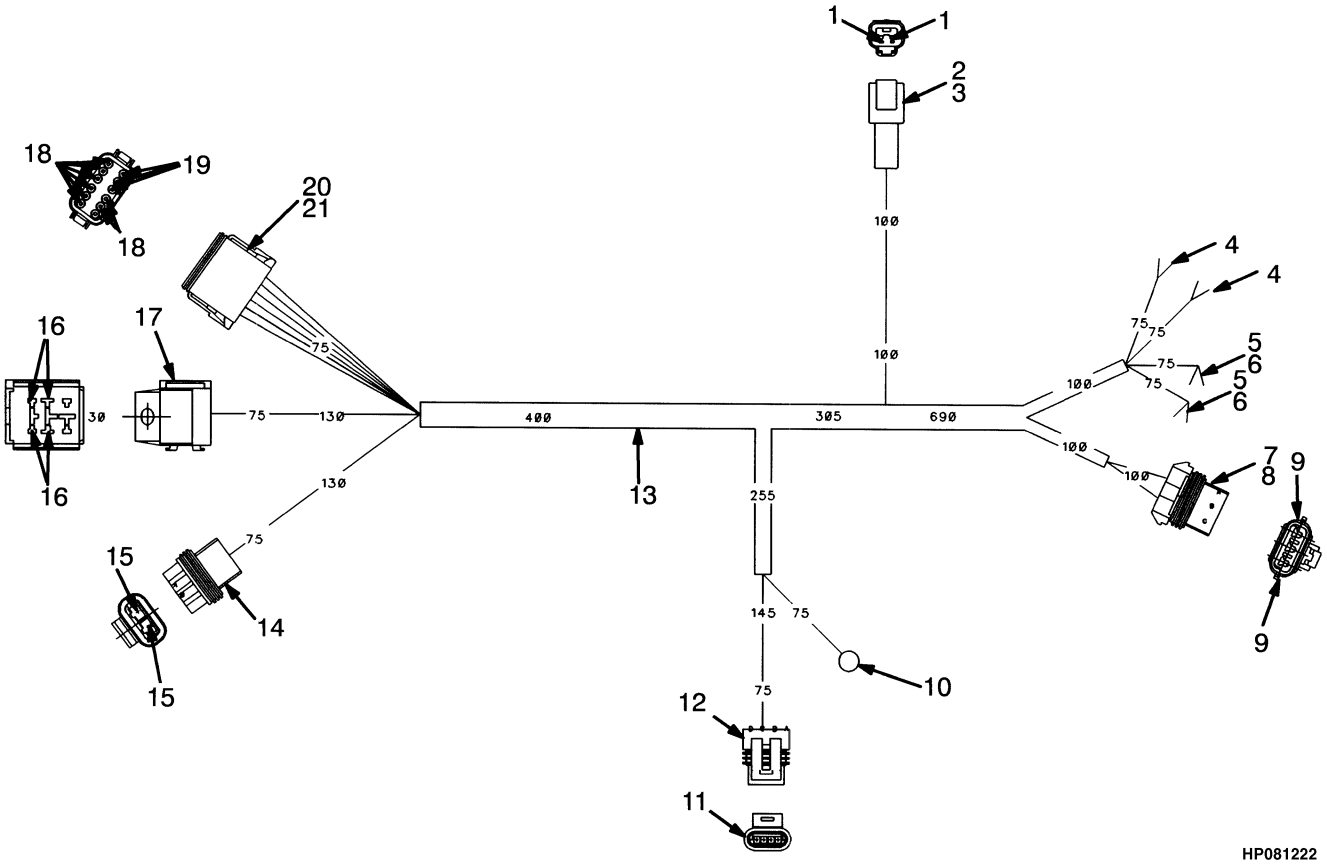

©2009 HYSTER COMPANY

WIRE HARNESS
WITH THROTTLE-UP – 3,0L ENGINE

ITEM	PART NO.	DESCRIPTION	QTY
	1396347	Wire Harness	1
1	1330435	Terminal	2
2	1330409	Connector	1
3	1330414	Connector (Secondary Lock)	1
4	325789	Terminal	2
5	1350904	Terminal	2
6	222523	Heat Shrink	AR
7	1330284	Connector	1
8	1330295	Lock	1
9	1329148	Terminal	2
10	1380744	Ring Terminal	1
11	1323576	Terminal	1
12	1323575	Connector	1
13	381919	Braiding	AR
14	1330292	Connector	1
15	1330283	Terminal	2
16	1331233	Terminal	4
17	1347224	Socket	1
18	1330438	Terminal (Socket)	2
19	1330439	Plug	3
20	1351068	Connector	1
21	1351069	Connector	1

©2009 HYSTER COMPANY

WIRE HARNESS (FIGURE 4-53)
WITH THROTTLE UP — DIESEL

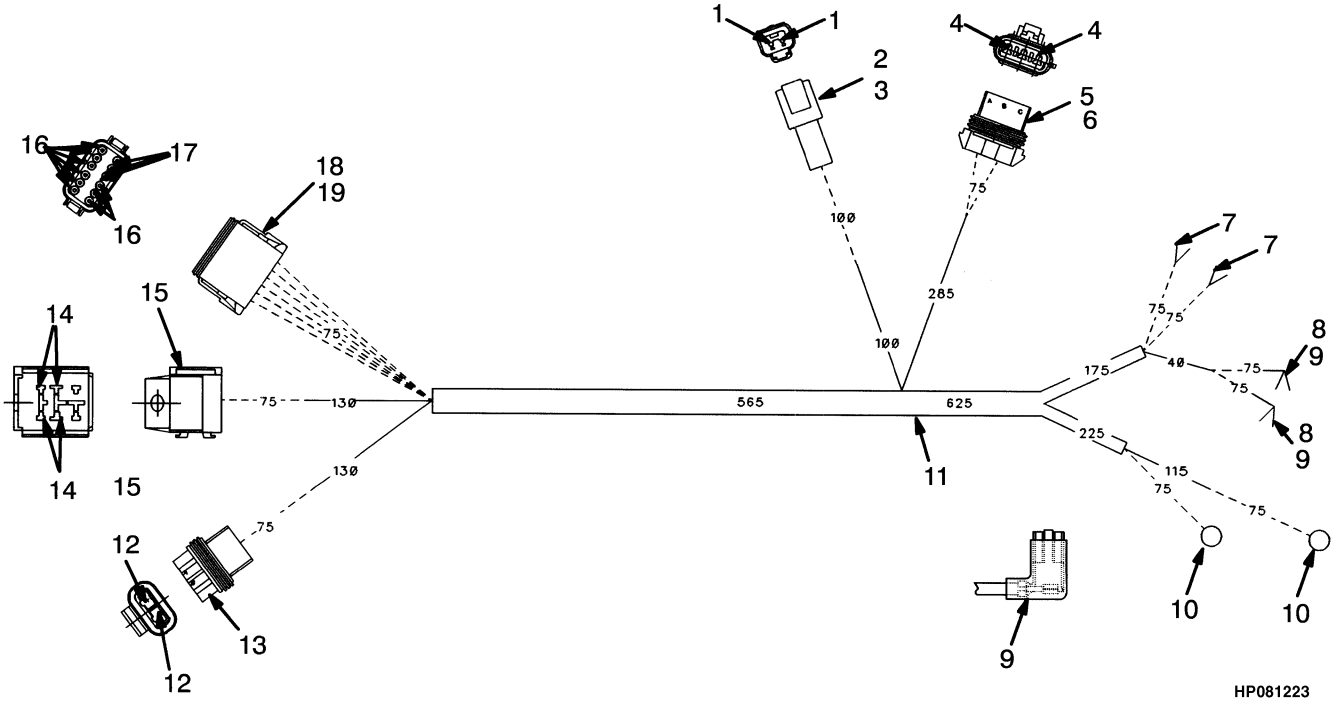

HP081223

ITEM	PART NO.	DESCRIPTION	QTY
	1396348	Wire Harness	1
1	1330435	Terminal	2
2	1330409	Connector	1
3	1330414	Connector (Secondary Lock)	1
4	1329148	Terminal	2
5	1330284	Connector	1
6	1330295	Lock	1
7	325789	Terminal	2
8	1350904	Terminal	2
9	222523	Heat Shrink	AR
10	252293	E-Ring	2
11	381919	Braiding	AR
12	1330283	Terminal	2
13	1330292	Connector	1
14	1331233	Terminal	4
15	1347224	Socket	1
16	1330438	Terminal (Socket)	9
17	1330439	Plug	3
18	1351068	Connector	1
19	1351069	Connector	1

©2009 HYSTER COMPANY

5 TRANSMISSION

SECTION 5
TRANSMISSION

DESCRIPTION	PAGE
CONTROL VALVE	
T078 AND T080 POWERSHIFT (→ S/N H177B09189W)	5-26
T080 POWERSHIFT (S/N H177B09190W →)	5-30
DIFFERENTIAL	
T078 AND T080 POWERSHIFT (→ 7/1998)	5-34
DIFFERENTIAL AND HYPOID ASSEMBLY	
T080 POWERSHIFT (7/1998 →)	5-36
DRIVE AXLE	
HYDROSTATIC	5-52
POWERSHIFT	5-40
INPUT AND COUNTER CLUTCH	
T080 POWERSHIFT (→ T080B-34673)	5-18
T080 POWERSHIFT (→ S/N H177B30180Y EXC. 30117, 30175, 30179) (T080B-34674 →)	5-20
T080 POWERSHIFT (S/N H177B30181Y ↔ 1/2003 INC. 30117, 30173, 30179)	5-22
T109 POWERSHIFT (1/2003 →)	5-24
MANIFOLD VALVE	
T080 POWERSHIFT (S/N H177B30181Y → INC. 30117, 30173, 30179)	5-33
PUMP	
HYDROSTATIC	5-50
PUMP DRIVE	
POWERSHIFT	5-38
TRANSMISSION	
HYDROSTATIC	5-48
SHEET 1 OF 2 - T078 POWERSHIFT	5-2
T078 POWERSHIFT (INPUT AND COUNTER CLUTCH - SHEET 2 OF 2	5-6
T080 POWERSHIFT - SHEET 1 OF 2	5-8
T080 POWERSHIFT - SHEET 2 OF 2	5-12
T109 POWERSHIFT - SHEET 1 OF 2	5-14
T109 POWERSHIFT - SHEET 2 OF 2	5-17
TRANSMISSION COOLING	
HYDROSTATIC	5-54
POWERSHIFT (→ S/N H177B36823Z)	5-44
POWERSHIFT (S/N H177B36824Z →)	5-46

©2009 HYSTER COMPANY

TRANSMISSION (FIGURE 5-1)

SHEET 1 OF 2 — T078 POWERSHIFT

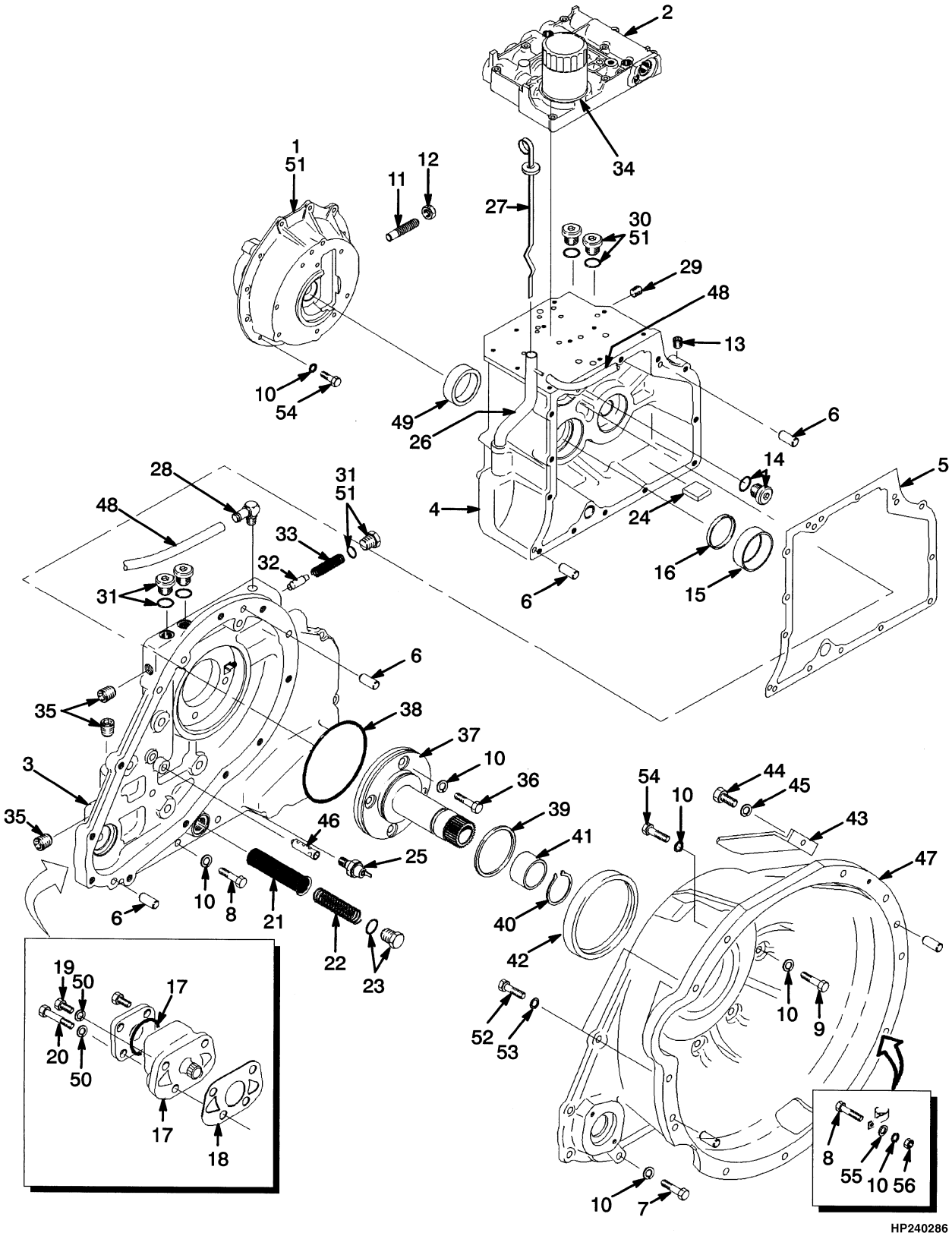

©2009 HYSTER COMPANY

TRANSMISSION

SHEET 1 OF 2 – T078 POWERSHIFT

ITEM	PART NO.	DESCRIPTION	QTY
	1394930	Transmission Assy	1
1	380478	Differential (☞Figure 5-14)	1
2	1391377	Valve (☞Figure 5-11)	1
3	1367430	Cover	1
4	1334717	Transmission Housing	1
5	1334772	Gasket	1
6	302385	Dowel	4
7	292516	Capscrew	16
8	292519	Capscrew	3
8	**a** 292519	Capscrew	4
9	292524	Capscrew	4
10	292682	Lockwasher	48
11	334571	Screw	1
12	15032	Nut	1
13	15483	Fitting	1
14	222443	Fitting	1
14	16483	O-Ring	1
15	137282	Bearing Cup	1
16	286788	Seal	1
17	1335921	Pump	1
17	1355348	Seal	1
18	1334771	Gasket	1
19	176640	Bolt	2
20	136703	Capscrew	2
21	334450	Screen	1
22	334452	Spring	1
23	14604	Plug	1
23	16487	O-Ring	1
24	334560	Magnet	1
25	1322627	Switch (Oil Temperature Warning)	1
26	1338259	Tube Assy	1
27	1343533	Dipstick	1
28	1316809	Fitting	1
29	15347	Fitting	1
30	134436	Fitting	2
30	16482	O-Ring	1
31	235691	Fitting	3
31	16484	O-Ring	1
32	287472	Spool	1
33	1334786	Spring	1
34	1328692	Transmission Filter	1
35	150879	Fitting	3
36	136985	Capscrew	4
37	1394923	Stator	1
38	1337051	O-Ring	1
39	1339332	Sealing Ring	1
40	12891	Snap Ring	1
41	1339334	Spacer	1
42	1337052	Seal	1
43	1375148	Cover	2

©2009 HYSTER COMPANY

TRANSMISSION

SHEET 1 OF 2 – T078 POWERSHIFT

ITEM	PART NO.	DESCRIPTION	QTY
44	287817	Capscrew	2
45	292680	Washer	2
46	1343557	Tube Assy	1
47	1375183	Converter Housing	1
48	193772	Hose	1
48	1389608	Hose (Optional)	1
49	230419	Bearing Cup	1
50	292681	Lockwasher	4
51	313022	Sealant	AR
52	292528	Capscrew	2
53	292683	Lockwasher	2
54	287860	Capscrew	20
54	**a** 287860	Capscrew	21
55	**a** 320159	Washer	1
56	**a** 136692	Nut	1
	996297	Kit-Transmission Overhaul	1

FOOTNOTES:

a Diesel Only

©2009 HYSTER COMPANY

NOTES

©2009 HYSTER COMPANY

TRANSMISSION (FIGURE 5-2)

T078 POWERSHIFT (INPUT AND COUNTER CLUTCH — SHEET 2 OF 2

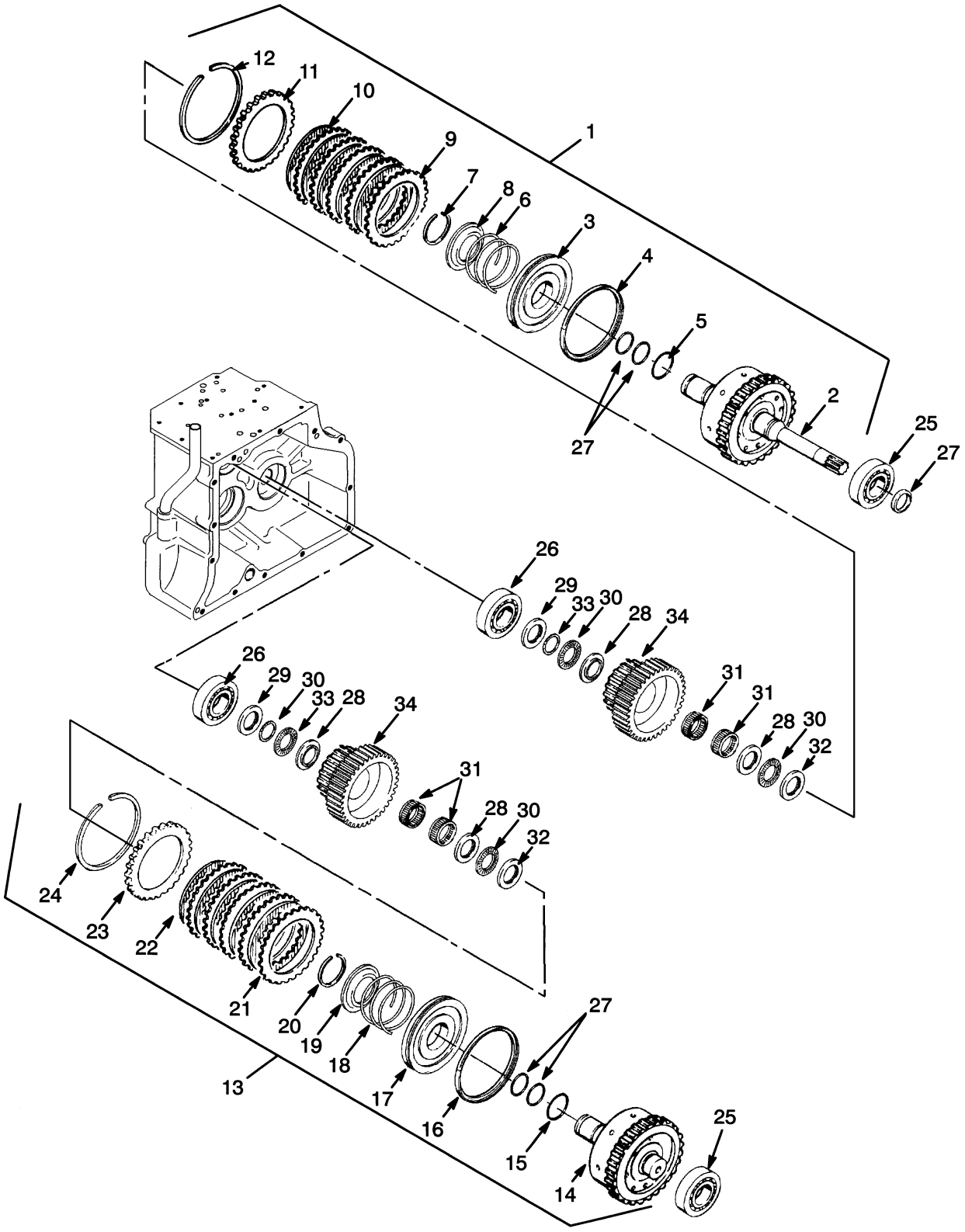

©2009 HYSTER COMPANY

TRANSMISSION

T078 POWERSHIFT (INPUT AND COUNTER CLUTCH – SHEET 2 OF 2

ITEM	PART NO.	DESCRIPTION	QTY
1	1394932	Clutch Assy (Input) (Forward)	1
2	1394931	Shaft	1
3	334439	Piston	1
4	334402	Seal	1
5	346795	O-Ring	1
6	334595	Spring	1
7	334480	Snap Ring	1
8	334449	Spring Guide	1
9	1387235	Separator Plate (Separator)	5
9	334417	Separator Plate (Separator)	5
10	1469300	Plate (Friction)	5
10	1469301	Friction Disk (Friction)	5
11	334442	Pressure Plate (Pressure)	1
12	334475	Snap Ring	1
13	361895	Clutch Assy (Counter) (Reverse)	1
14	361893	Shaft	1
15	346795	O-Ring	1
16	334402	Seal	1
17	334439	Piston	1
18	334595	Spring	1
19	334449	Spring Guide	1
20	334480	Snap Ring	1
21	334417	Separator Plate (Separator)	5
22	1469300	Plate (Friction)	5
23	334442	Pressure Plate (Pressure)	1
24	334475	Snap Ring	1
25	43207	Ball Bearing	2
26	43307	Bearing	2
27	334429	Sealing Ring (Seal)	5
28	347767	Thrust Washer	4
29	347768	Thrust Washer	2
30	78826	Needle Bearing	4
31	334454	Needle Bearing (Thrust)	4
32	347770	Thrust Washer	2
33	347773	Snap Ring	2
34	360318	Gear (Clutch Output)	2
	352075	Kit-Seal	1
	996297	Kit-Transmission Overhaul	1

©2009 HYSTER COMPANY

TRANSMISSION (FIGURE 5-3)
T080 POWERSHIFT — SHEET 1 OF 2

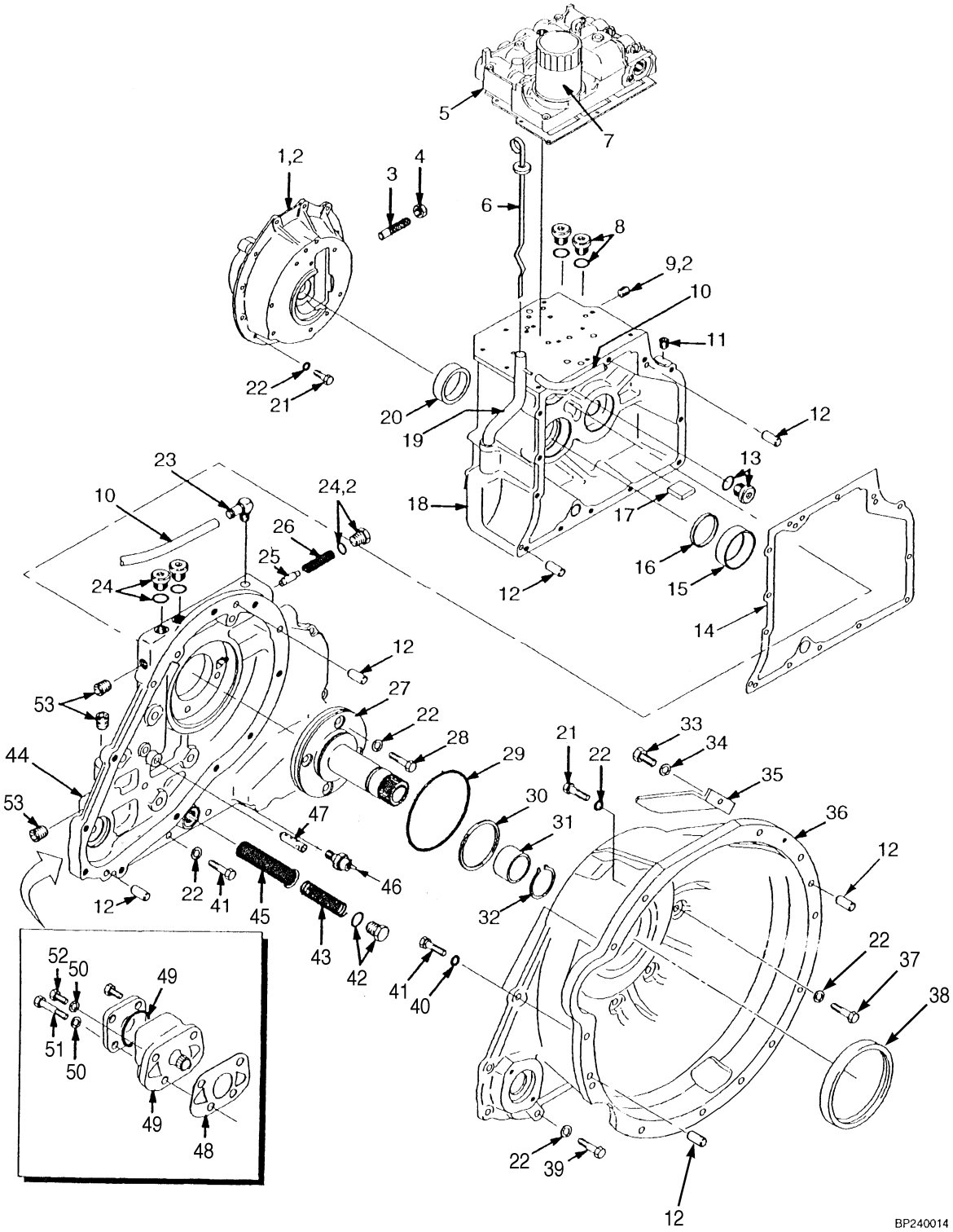

©2009 HYSTER COMPANY

TRANSMISSION
T080 POWERSHIFT – SHEET 1 OF 2

ITEM	PART NO.	DESCRIPTION	QTY
	b 1394942	Transmission Assy	1
	e 1460975	Transmission Assy	1
	cf 1486349	Transmission Assy	1
	gh 2045461	Transmission Assy	1
1	**a** 380478	Differential (☞Figure 5-14)	1
1	**j** 1383450	Differential (☞Figure 5-15)	1
2	264159	Adhesive	AR
3	334571	Screw	1
4	15032	Nut	1
5	1391377	Valve (☞Figure 5-11)	1
5	1460959	Valve (☞Figure 5-12)	1
6	1343533	Dipstick	1
7	1328692	Transmission Filter	1
8	134436	Fitting	2
8	16482	O-Ring	2
9	15347	Fitting	1
10	193772	Hose	1
10	1389608	Hose (Optional)	1
11	15483	Fitting	1
12	302385	Dowel	4
13	222443	Fitting	1
13	16483	O-Ring	1
14	1334772	Gasket	1
15	137282	Bearing Cup	1
16	1526166	Seal (Double Lip)	1
17	334560	Magnet	1
18	1334717	Transmission Housing	1
19	1338259	Tube Assy	1
20	230419	Bearing Cup	1
21	287860	Capscrew	21
22	292682	Lockwasher	21
23	1316809	Fitting	1
24	235691	Fitting	3
24	16484	O-Ring	3
25	287472	Spool	1
26	1460948	Spring (Main Relief)	1
27	1394923	Stator	1
28	136985	Capscrew	4
29	1337051	O-Ring	1
30	1339332	Sealing Ring	1
31	1339334	Spacer	1
32	12891	Snap Ring	1
33	287817	Capscrew	2
34	292680	Washer	2
35	1375148	Cover	2
36	1375183	Converter Housing (Torque Converter)	1
37	292519	Capscrew	2
38	**d** 1337052	Seal	1
38	**i** 1498636	Seal	1
39	292516	Capscrew	16

©2009 HYSTER COMPANY

TRANSMISSION

T080 POWERSHIFT – SHEET 1 OF 2

ITEM	PART NO.	DESCRIPTION	QTY
40	292683	Lockwasher	2
41	292524	Capscrew	4
42	14604	Plug	1
42	16487	O-Ring	1
43	334452	Spring	1
44	1367430	Cover	1
45	334450	Screen	1
46	1322627	Switch (Oil Temperature Warning)	1
47	1343557	Tube Assy	1
48	1334771	Gasket	1
49	1335921	Pump	1
49	1355348	Seal	1
50	292681	Lockwasher	4
51	136703	Capscrew	2
52	176640	Bolt	2
53	150879	Fitting	3

FOOTNOTES:

a → 7/1998
b → S/N H177B09189
c → T080M-04775
d → T080M-4189
e S/N H177B09189 ↔ S/N H177B30180
f S/N H177B30181 →
g S/N H177B30181Y →
h T080M-04776 →
i T080M-4190 →
j 7/1998 →

©2009 HYSTER COMPANY

NOTES

©2009 HYSTER COMPANY

TRANSMISSION (FIGURE 5-4)
T080 POWERSHIFT — SHEET 2 OF 2

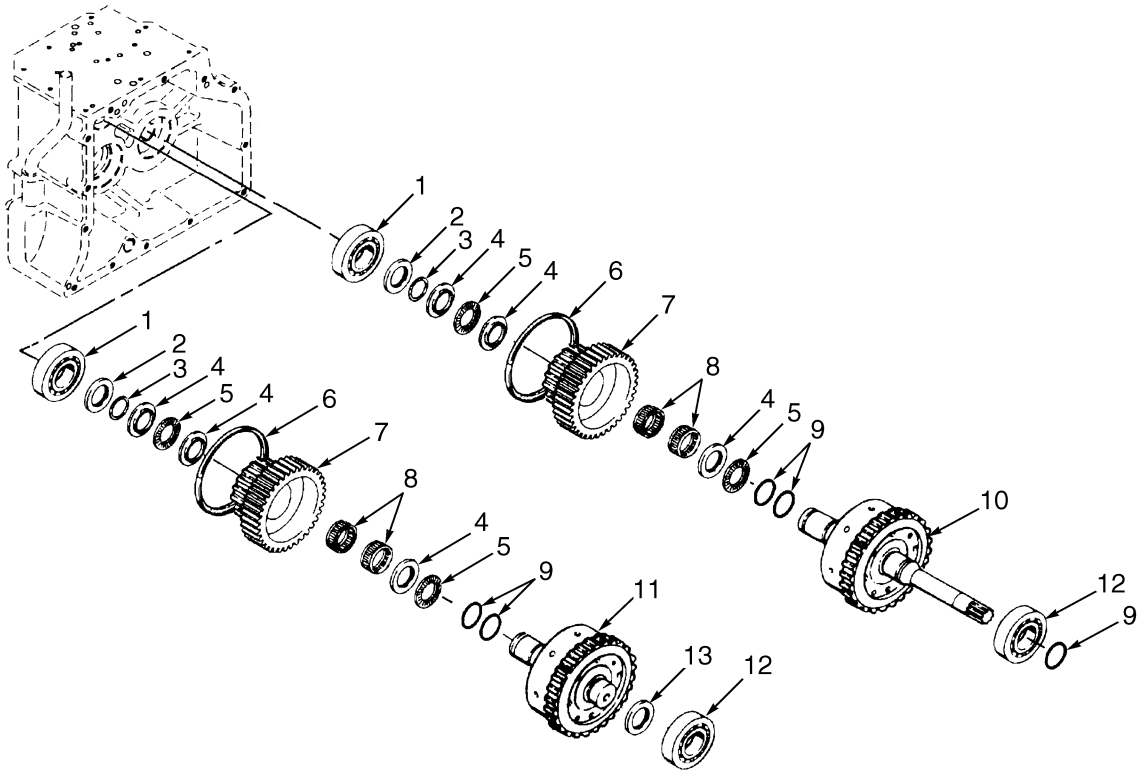

BP240015

©2009 HYSTER COMPANY

TRANSMISSION

T080 POWERSHIFT – SHEET 2 OF 2

ITEM	PART NO.	DESCRIPTION	QTY
	a 1394942	Transmission Assy	1
	h 1460975	Transmission Assy	1
	bd 1486349	Transmission Assy	1
	ig 2045461	Transmission Assy	1
1	43307	Bearing	1
2	1394894	Washer	1
3	347773	Snap Ring	1
4	1394888	Thrust Washer	3
5	1394887	Needle Bearing (Thrust)	2
6	1386958	O-Ring	1
7	**c** 1394884	Gear (Clutch Output)	1
7	**f** 1485882	Gear (Clutch Output)	1
8	1394886	Needle Bearing	2
9	334429	Sealing Ring (Input)	3
9	334429	Sealing Ring (Counter)	2
10	**c** 1394902	Clutch Pack (Input) (Forward)	1
10	**e** 1486367	Clutch Pack (Input) (Forward)	1
10	**i** 1495767	Clutch Pack (Input) (Forward)	1
11	**c** 1394903	Clutch Pack (Counter) (Reverse)	1
11	**e** 1486368	Clutch Pack (Counter) (Reverse)	1
11	**i** 1495768	Clutch Pack (Counter) (Reverse)	1
12	43207	Ball Bearing	1
13	1394895	Spacer (Counter Clutch Only)	1

FOOTNOTES:

a → S/N H177B09189W
b → S/N H177B30180Y
c → T080B-34673
d → T080B-34674
e S/N T080B34674 ↔ S/N H177B30180Y
f T080B-34674 →
g T080M-04776 →
h S/N H177B09190W →
i S/N H177B30181Y →

©2009 HYSTER COMPANY

TRANSMISSION (FIGURE 5-5)
T109 POWERSHIFT — SHEET 1 OF 2

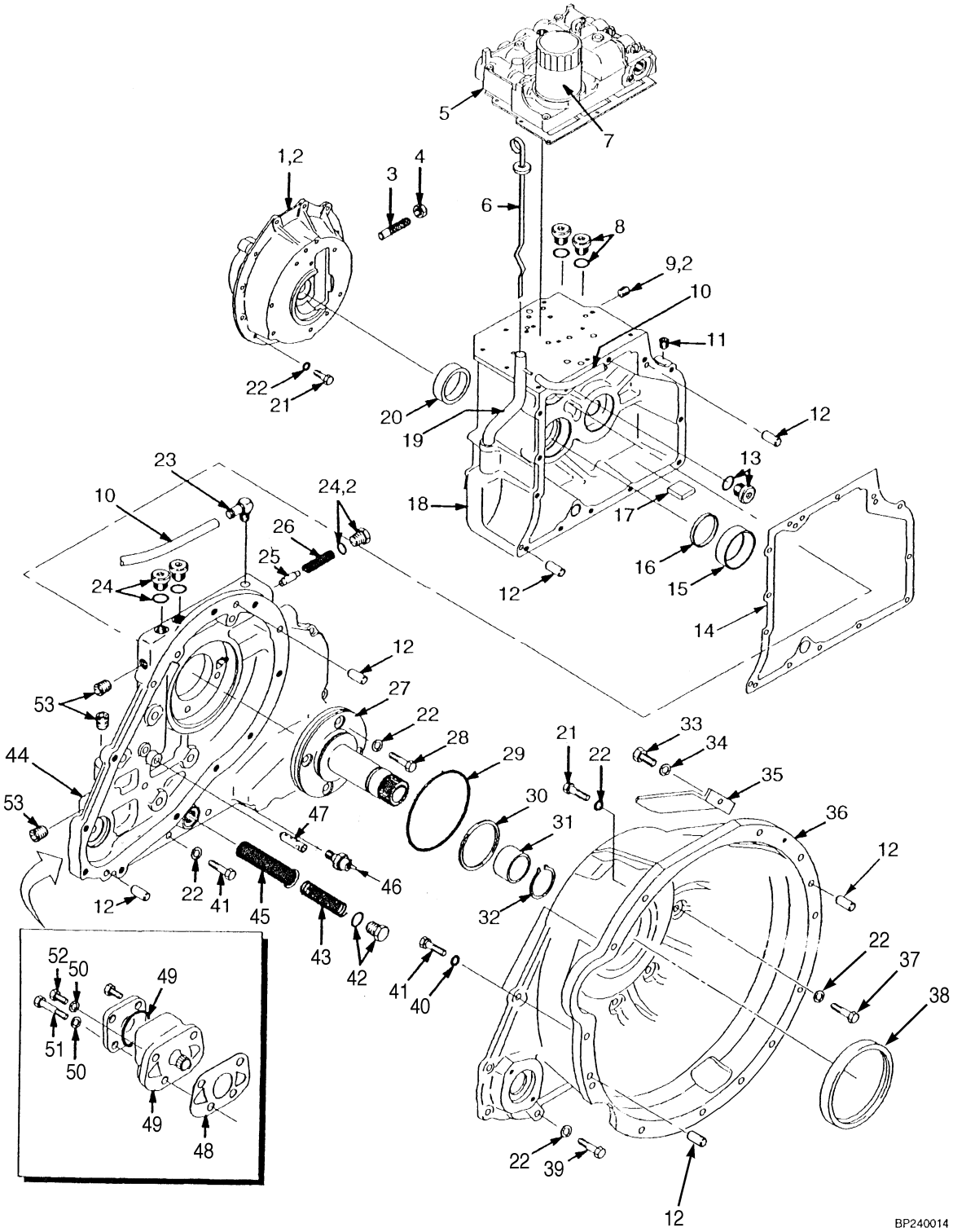

©2009 HYSTER COMPANY

TRANSMISSION

T109 POWERSHIFT – SHEET 1 OF 2

ITEM	PART NO.	DESCRIPTION	QTY
	2060653	Transmission Assy	1
1	1383450	Differential (☞Figure 5-15)	1
2	264159	Adhesive	AR
3	334571	Screw	1
4	15032	Nut	1
5	1460959	Valve (☞Figure 5-12)	1
6	1343533	Dipstick	1
7	1328692	Transmission Filter	1
8	134436	Fitting	2
8	16482	O-Ring	2
9	15347	Fitting	1
10	193772	Hose	1
10	1389608	Hose (Optional)	1
11	15483	Fitting	1
12	302385	Dowel	4
13	222443	Fitting	1
13	16483	O-Ring	1
14	1334772	Gasket	1
15	137282	Bearing Cup	1
16	1526166	Seal (Double Lip)	1
17	334560	Magnet	1
18	1334717	Transmission Housing	1
19	1338259	Tube Assy	1
20	230419	Bearing Cup	1
21	287860	Capscrew	21
22	292682	Lockwasher	21
23	1316809	Fitting	1
24	235691	Fitting	3
24	16484	O-Ring	3
25	287472	Spool	1
26	1460948	Spring (Main Relief)	1
27	1394923	Stator	1
28	136985	Capscrew	4
29	1337051	O-Ring	1
30	1339332	Sealing Ring	1
31	1339334	Spacer	1
32	12891	Snap Ring	1
33	287817	Capscrew	2
34	292680	Washer	2
35	1375148	Cover	2
36	1375183	Converter Housing (Torque Converter)	1
37	292519	Capscrew	2
38	1498636	Seal	1
39	292516	Capscrew	16
40	292683	Lockwasher	2
41	292524	Capscrew	2
42	14604	Plug	1
42	16487	O-Ring	1
43	334452	Spring	1
44	1367430	Cover	1

©2009 HYSTER COMPANY

TRANSMISSION

T109 POWERSHIFT – SHEET 1 OF 2

ITEM	PART NO.	DESCRIPTION	QTY
45	334450	Screen	1
46	1322627	Switch (Oil Temperature Warning)	1
47	1343557	Tube Assy	1
48	1334771	Gasket	1
49	1335921	Pump	1
49	1355348	Seal	1
50	292681	Lockwasher	4
51	136703	Capscrew	2
52	176640	Bolt	2
53	150879	Fitting	3

©2009 HYSTER COMPANY

TRANSMISSION (FIGURE 5-6)
T109 POWERSHIFT — SHEET 2 OF 2

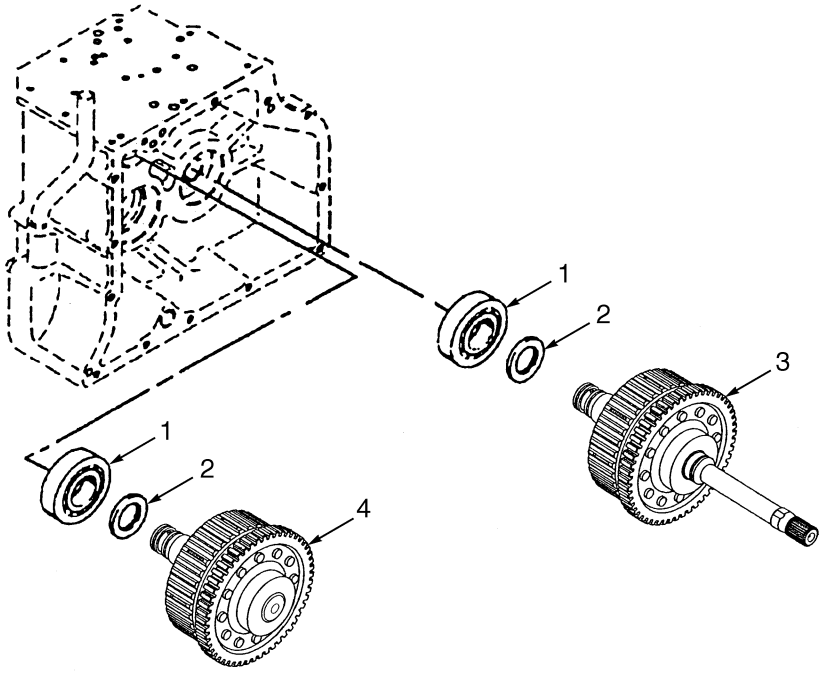

BP240021

ITEM	PART NO.	DESCRIPTION	QTY
	2060653	Transmission Assy	1
1	2029344	Ball Bearing	2
2	1538089	Washer (Stepped)	2
3	1522243	Clutch Pack (Input) (Forward) (☞Figure 5-10)	1
4	1522294	Clutch Pack (Counter) (Reverse) (☞Figure 5-10)	1

©2009 HYSTER COMPANY

INPUT AND COUNTER CLUTCH (FIGURE 5-7)

T080 POWERSHIFT (→ T080B-34673)

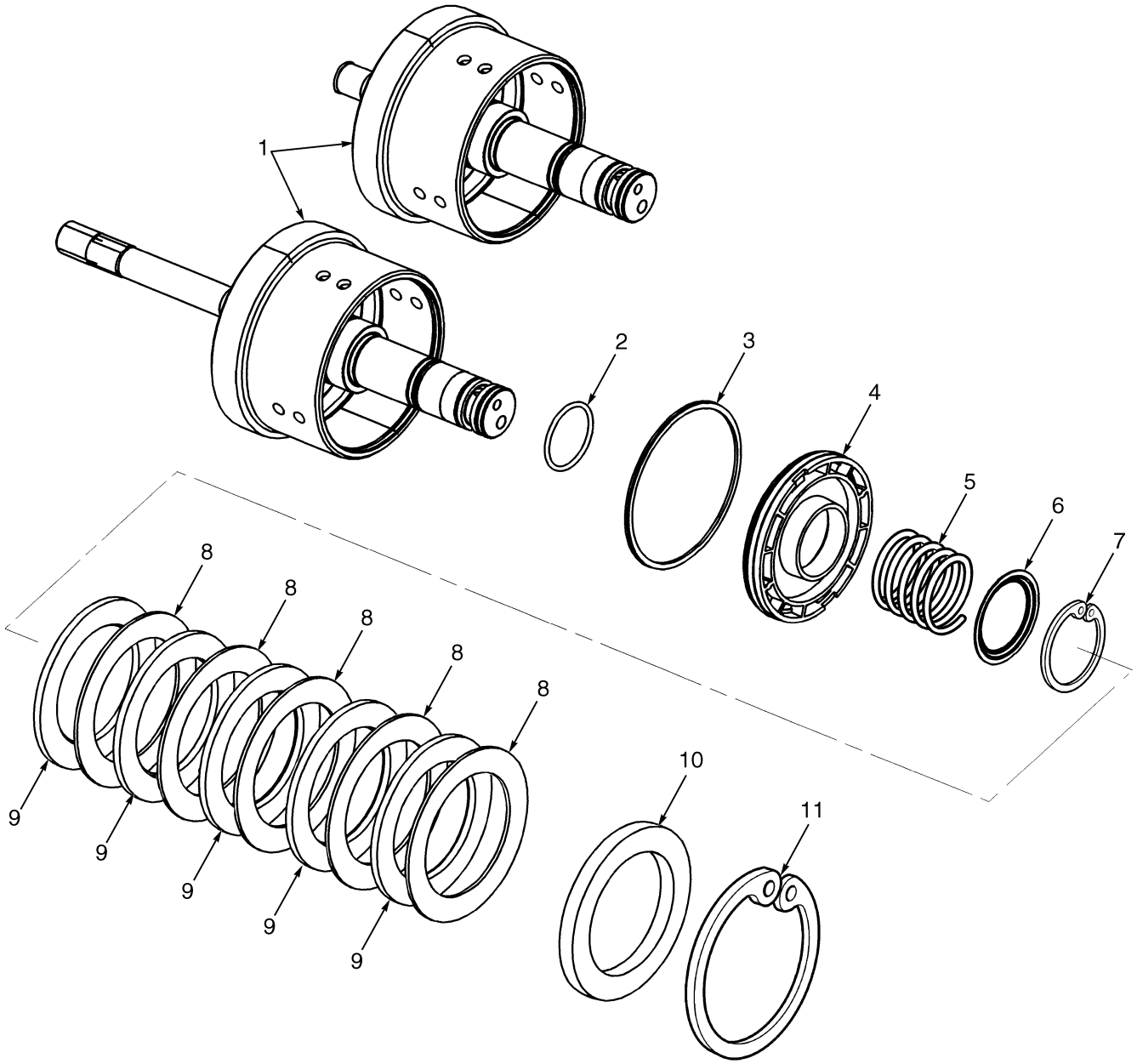

BP240013

©2009 HYSTER COMPANY

INPUT AND COUNTER CLUTCH

T080 POWERSHIFT (→ T080B-34673)

ITEM	PART NO.	DESCRIPTION	QTY
	1394902	Clutch Pack (Input) (Forward)	1
	1394903	Clutch Pack (Counter) (Reverse)	1
1	1394908	Shaft (Input) (Long Shaft)	1
1	1394909	Shaft (Counter) (Short Shaft)	1
2	1394879	O-Ring	1
3	334402	Seal	1
4	1394885	Piston	1
5	1394882	Spring	1
6	1394893	Guide	1
7	1394912	Snap Ring	1
8	334417	Separator Plate (Separator)	5
9	346796	Plate (Friction)	5
9	1469301	Friction Disk (Friction)	1
10	1394881	Pressure Plate (6,30-6,40 mm)	1
11	334475	Snap Ring	1

©2009 HYSTER COMPANY

INPUT AND COUNTER CLUTCH (FIGURE 5-8)

T080 POWERSHIFT (→ S/N H177B30180Y EXC. 30117, 30175, 30179) (T080B-34674 →)

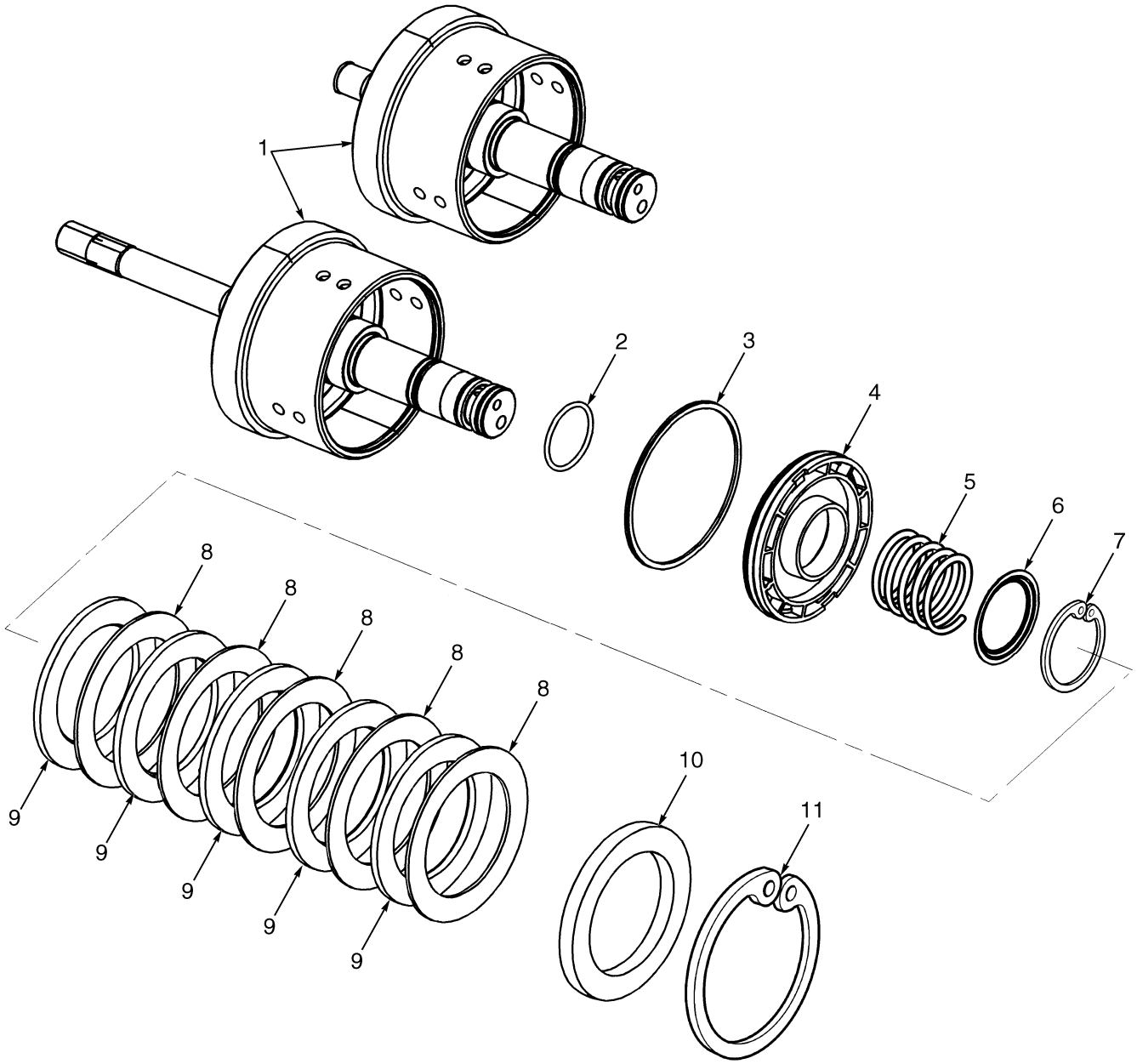

BP240013

©2009 HYSTER COMPANY

INPUT AND COUNTER CLUTCH

T080 POWERSHIFT (→ S/N H177B30180Y EXC. 30117, 30175, 30179) (T080B-34674 →)

ITEM	PART NO.	DESCRIPTION	QTY
	1486367	Clutch Pack (Input) (Forward)	1
	1486368	Clutch Pack (Counter) (Reverse)	1
1	1394908	Shaft (Input) (Long Shaft)	1
1	1394909	Shaft (Counter) (Short Shaft)	1
2	1394879	O-Ring	1
3	334402	Seal	1
4	1394885	Piston	1
5	1394882	Spring	1
6	1394893	Guide	1
7	1394912	Snap Ring	1
8	1387235	Separator Plate (Separator)	5
9	1469301	Friction Disk (Friction)	5
10	1394881	Pressure Plate (6,30-6,40 mm)	1
11	334475	Snap Ring	1

©2009 HYSTER COMPANY

INPUT AND COUNTER CLUTCH (FIGURE 5-9)

T080 POWERSHIFT (S/N H177B30181Y ↔ 1/2003 INC. 30117, 30173, 30179)

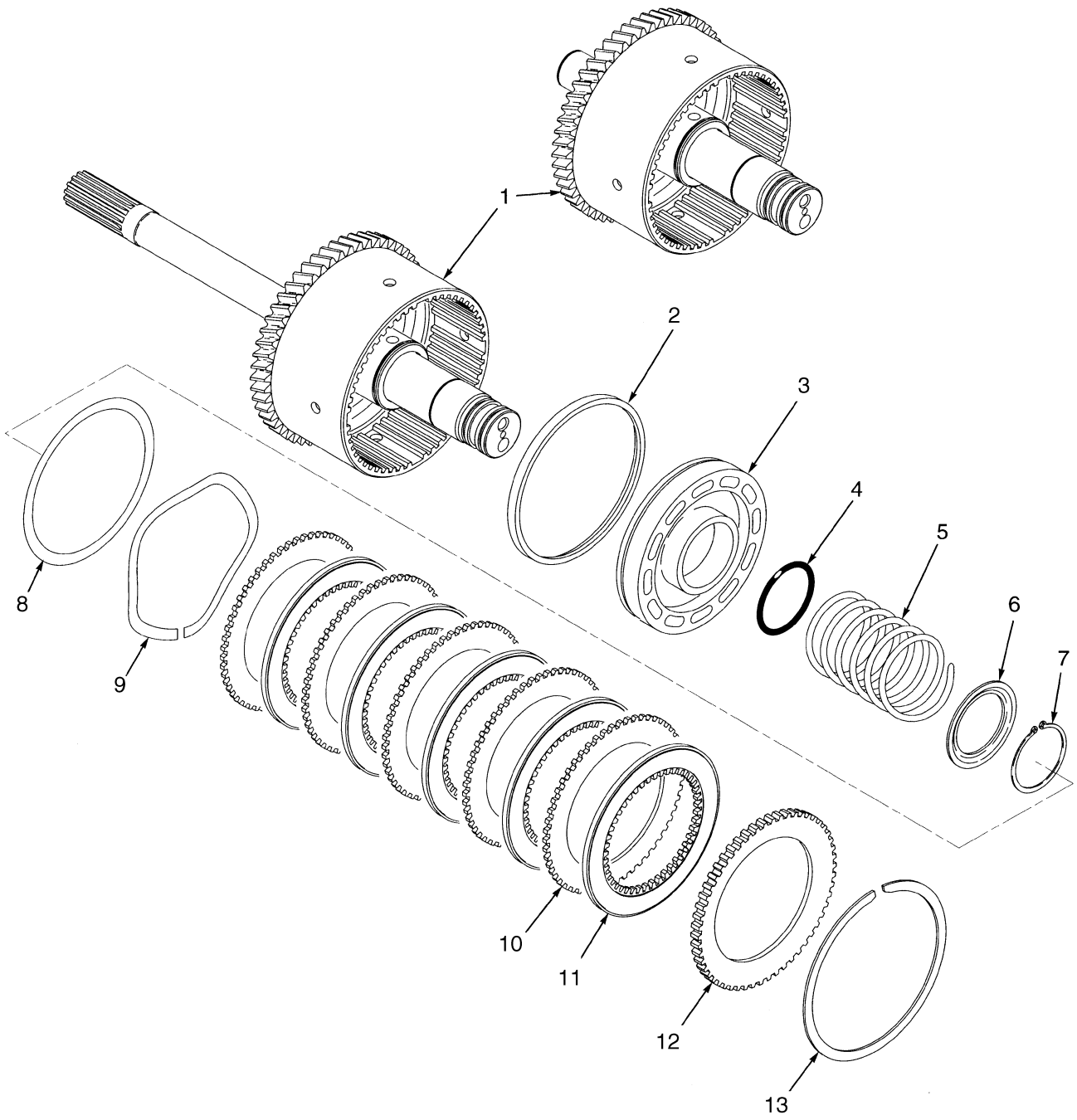

©2009 HYSTER COMPANY

INPUT AND COUNTER CLUTCH

T080 POWERSHIFT (S/N H177B30181Y ↔ 1/2003 INC. 30117, 30173, 30179)

ITEM	PART NO.	DESCRIPTION	QTY
	1495767	Clutch Pack (Input) (Forward)	1
	1495768	Clutch Pack (Counter) (Reverse)	1
1	1486546	Shaft (Input) (Long Shaft)	1
1	1486547	Shaft (Counter) (Short Shaft)	1
2	334402	Seal	1
3	**a** 2043322	Piston	1
3	**b** 1523953	Piston	1
4	1394879	O-Ring	1
5	1394882	Spring	1
6	1394893	Guide	1
7	1394912	Snap Ring	1
8	**a** 1473594	Washer	1
8	**b** 1515680	Washer	1
9	**a** 1473595	Spring	1
9	**b** 1523551	Spring	1
10	1387235	Separator Plate (Separator)	5
11	1469301	Friction Disk (Friction)	5
12	1394881	Pressure Plate (6,30-6,40 mm)	1
12	1487201	Pressure Plate (Shimming) (6,91-7,01 mm) (Optional)	1
12	1545871	Pressure Plate (Shimming, Stepped) (5,11-5,21 mm) (Optional)	1
12	1487202	Pressure Plate (Shimming, Stepped) (5,59-5,69 mm) (Optional)	1
13	334475	Snap Ring	1

FOOTNOTES:

a → T080B50876

b T080B50877 →

©2009 HYSTER COMPANY

INPUT AND COUNTER CLUTCH (FIGURE 5-10)

T109 POWERSHIFT (1/2003 →)

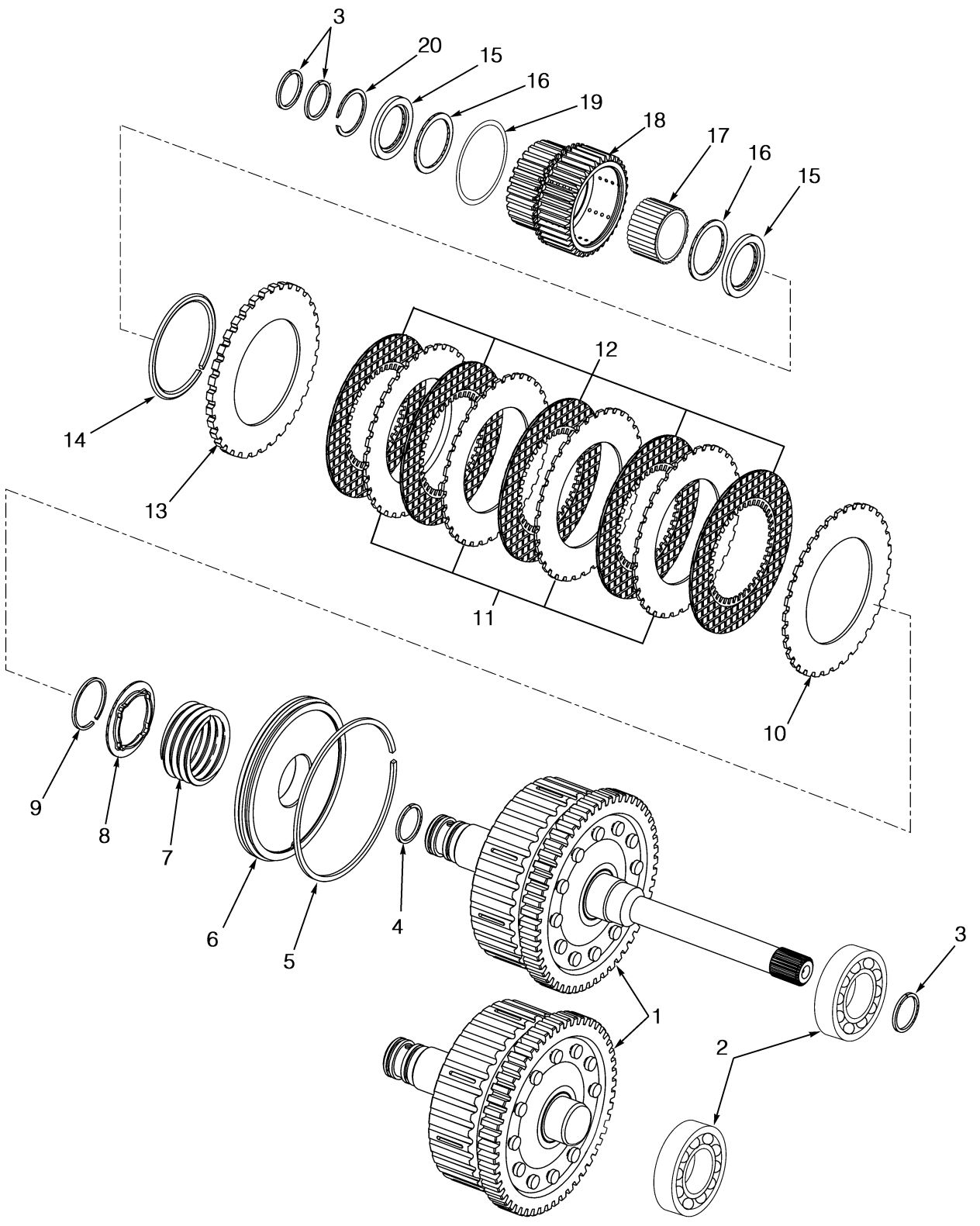

©2009 HYSTER COMPANY

INPUT AND COUNTER CLUTCH

T109 POWERSHIFT (1/2003 →)

ITEM	PART NO.	DESCRIPTION	QTY
	1522243	Clutch Pack (Input) (Forward)	1
	1522294	Clutch Pack (Counter) (Reverse)	1
1	. . . . .	Input Shaft (Long Shaft)	1
1	. . . . .	Countershaft (Short)	1
2	1537455	Ball Bearing	1
3	. . . . .	Seal Ring	3
4	. . . . .	Seal Ring	1
5	. . . . .	Seal Ring	1
6	1537441	Piston	1
7	1537444	Spring	1
8	1537445	Spring Guide	1
9	1537446	Snap Ring	1
10	. . . . .	Plate (Conical)	1
11	. . . . .	Plate (Separator)	4
12	. . . . .	Plate (Friction)	1
13	**a** 1543098	Pressure Plate (5.2 mm)	1
13	**a** 1543097	Pressure Plate (5.4 mm)	1
13	**a** 1543096	Pressure Plate (5.6 mm)	1
13	**a** 1543094	Pressure Plate (5.8 mm)	1
13	**a** 1537449	Pressure Plate (6.0 mm)	1
14	1537450	Snap Ring	1
15	. . . . .	Washer (Thrust)	2
16	. . . . .	Bearing (Needle Thrust)	2
17	2043440	Needle Bearing (Needle)	1
18	1537451	Gear (Output)	1
19	. . . . .	Seal (D-Ring)	1
20	1537459	Snap Ring	1
	1543102	Kit-Clutch Pack Plates	1
	1543104	Kit-Clutch Pack Seals	1
	1543105	Kit-Clutch Pack Plates/Seals (Plates and Seals)	1
	1543106	Kit-Clutch Pack	1

FOOTNOTES:

a Refer to the service manual to determine the correct pressure plate

©2009 HYSTER COMPANY

CONTROL VALVE (FIGURE 5-11)

T078 AND T080 POWERSHIFT (→ S/N H177B09189W)

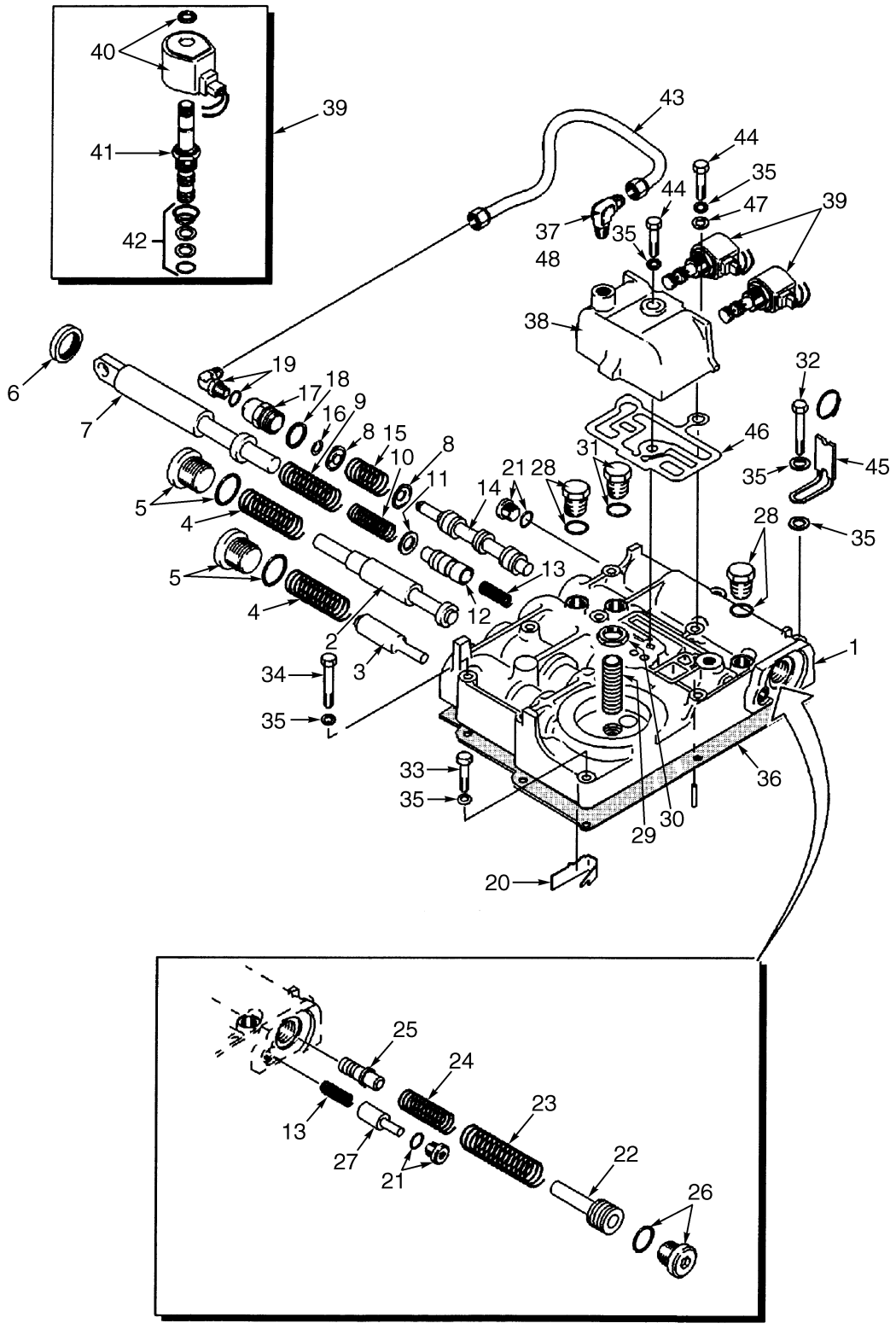

BP240017

©2009 HYSTER COMPANY

CONTROL VALVE

T078 AND T080 POWERSHIFT (→ S/N H177B09189W)

ITEM	PART NO.	DESCRIPTION	QTY
	1391377	Valve	1
1	1388559	Body	1
2	359223	Spool	1
3	334524	Spool	1
4	334525	Spring	2
5	235691	Fitting	2
5	16484	O-Ring	1
6	334500	Seal	1
7	1337817	Plunger	1
8	346648	Cap	2
9	334531	Spring	1
10	1347300	Spring	1
11	296418	Washer	1
12	334532	Spool (Inching)	1
13	334543	Spring	2
14	369922	Spool	1
15	346645	Spring	1
16	346650	Snap Ring	1
17	375986	Cap	1
18	367945	Gasket	1
19	16556	Fitting	1
19	16481	O-Ring	1
20	350484	Plate (Inching)	1
21	222443	Fitting	2
21	16483	O-Ring	1
22	334582	Spool (Trimmer)	1
23	361877	Spring	1
24	361876	Spring	1
25	359221	Spool (Accumulator)	1
26	200659	Fitting	1
26	16982	O-Ring	1
27	334542	Spool (Dump)	1
28	14592	Plug	2
28	16482	O-Ring	1
29	181766	Fitting	1
30	15032	Nut	1
31	134436	Fitting	1
31	16482	O-Ring	1
32	136704	Capscrew	3
33	292508	Capscrew	1
34	292509	Capscrew	3
35	320157	Washer	11
36	1386940	Gasket	1
37	14500	Fitting	1
38	1391375	Valve	1
39	1390609	Solenoid Valve	2
40	1393164	Nut	1
40	1357036	Coil	1
41	1312331	Cartridge	1
42	**a** 1393160	Kit-Seal	1

©2009 HYSTER COMPANY

CONTROL VALVE

T078 AND T080 POWERSHIFT (→ S/N H177B09189W)

ITEM	PART NO.	DESCRIPTION	QTY
43	1302973	Tube Assy	1
44	346656	Capscrew	4
45	325897	Clamp	1
46	1302972	Gasket	1
47	15932	Lockwasher	1
48	246108	Sealant	AR
	373833	Kit-Seal	1

FOOTNOTES:

a Services One Solenoid Valve

©2009 HYSTER COMPANY

NOTES

©2009 HYSTER COMPANY

CONTROL VALVE (FIGURE 5-12)

T080 POWERSHIFT (S/N H177B09190W →)

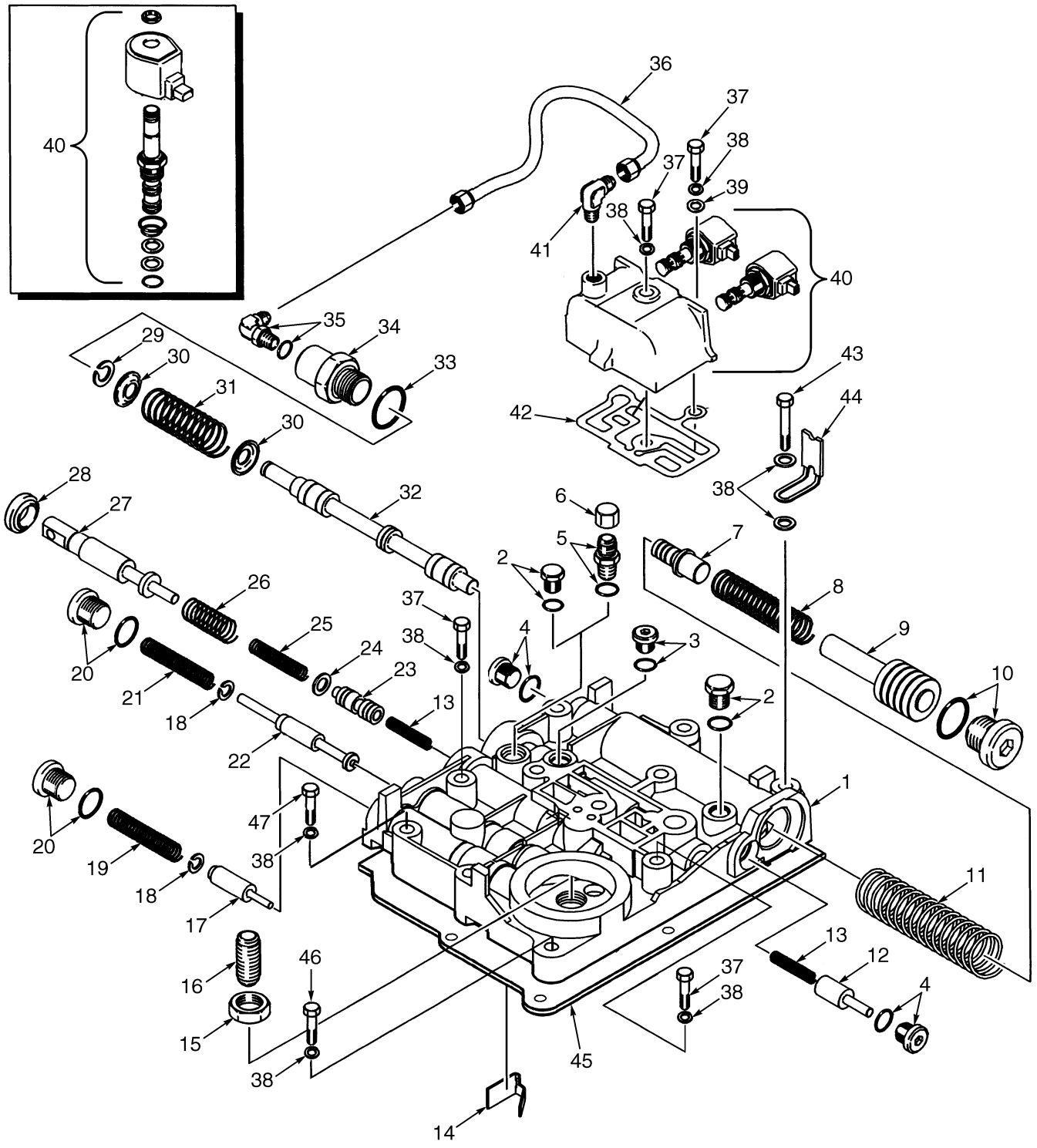

BP140009

©2009 HYSTER COMPANY

CONTROL VALVE

T080 POWERSHIFT (S/N H177B09190W →)

ITEM	PART NO.	DESCRIPTION	QTY
	1460959	Valve	1
1	1396637	Body	1
2	14592	Plug	1
2	16482	O-Ring	1
3	134436	Fitting	2
3	16482	O-Ring	1
4	222443	Fitting	2
4	16483	O-Ring	1
5	222380	Fitting	1
5	16482	O-Ring	1
6	16923	Nut	1
7	334582	Spool (Trimmer)	1
8	361877	Spring	2
9	359221	Spool (Accumulator)	1
10	200659	Fitting	1
10	16482	O-Ring	1
11	361876	Spring	1
12	334542	Spool (Dump)	1
13	334543	Spring	1
14	350484	Plate (Inching)	2
15	15032	Nut	1
16	181766	Fitting	1
17	1394710	Spool (Regulator)	1
18	1394714	Snap Ring	1
19	1394711	Spring	1
20	235691	Fitting	1
20	16484	O-Ring	1
21	1461077	Spring	2
22	1388924	Spool (Pack Regulator)	1
23	1483109	Spool (Inching)	1
24	296418	Washer	1
25	1387230	Spring	1
26	334531	Spring	1
27	1337817	Plunger	1
28	334500	Seal	1
29	346650	Snap Ring	1
29	58936	Snap Ring	1
30	346648	Cap	1
31	346645	Spring	1
32	1490391	Spool (Forward/Reverse)	1
33	367945	Gasket	1
34	375986	Cap	1
35	16556	Fitting	1
35	16481	O-Ring	1
36	1302973	Tube Assy	1
37	292522	Capscrew	4
38	320157	Washer	12
39	15932	Lockwasher	1
40	**a** 1391375	Valve	1
40	1390610	Solenoid Valve	2

©2009 HYSTER COMPANY

CONTROL VALVE

T080 POWERSHIFT (S/N H177B09190W →)

ITEM	PART NO.	DESCRIPTION	QTY
40	1393164	Nut	1
40	1452595	Coil	1
40	1452596	Cartridge	1
40	1393160	Kit-Seal	1
40	**b** 1400159	Valve (☞Figure 5-13)	1
41	14500	Fitting	1
42	1388573	Gasket	1
43	136704	Capscrew	3
44	1385873	Strap	1
45	1386940	Gasket	1
46	292508	Capscrew	1
47	292509	Capscrew	3
	373833	Kit-Seal	1

FOOTNOTES:

a → S/N H177B30180Y

b S/N H177B30181Y →

©2009 HYSTER COMPANY

MANIFOLD VALVE (FIGURE 5-13)

T080 POWERSHIFT (S/N H177B30181Y → INC. 30117, 30173, 30179)

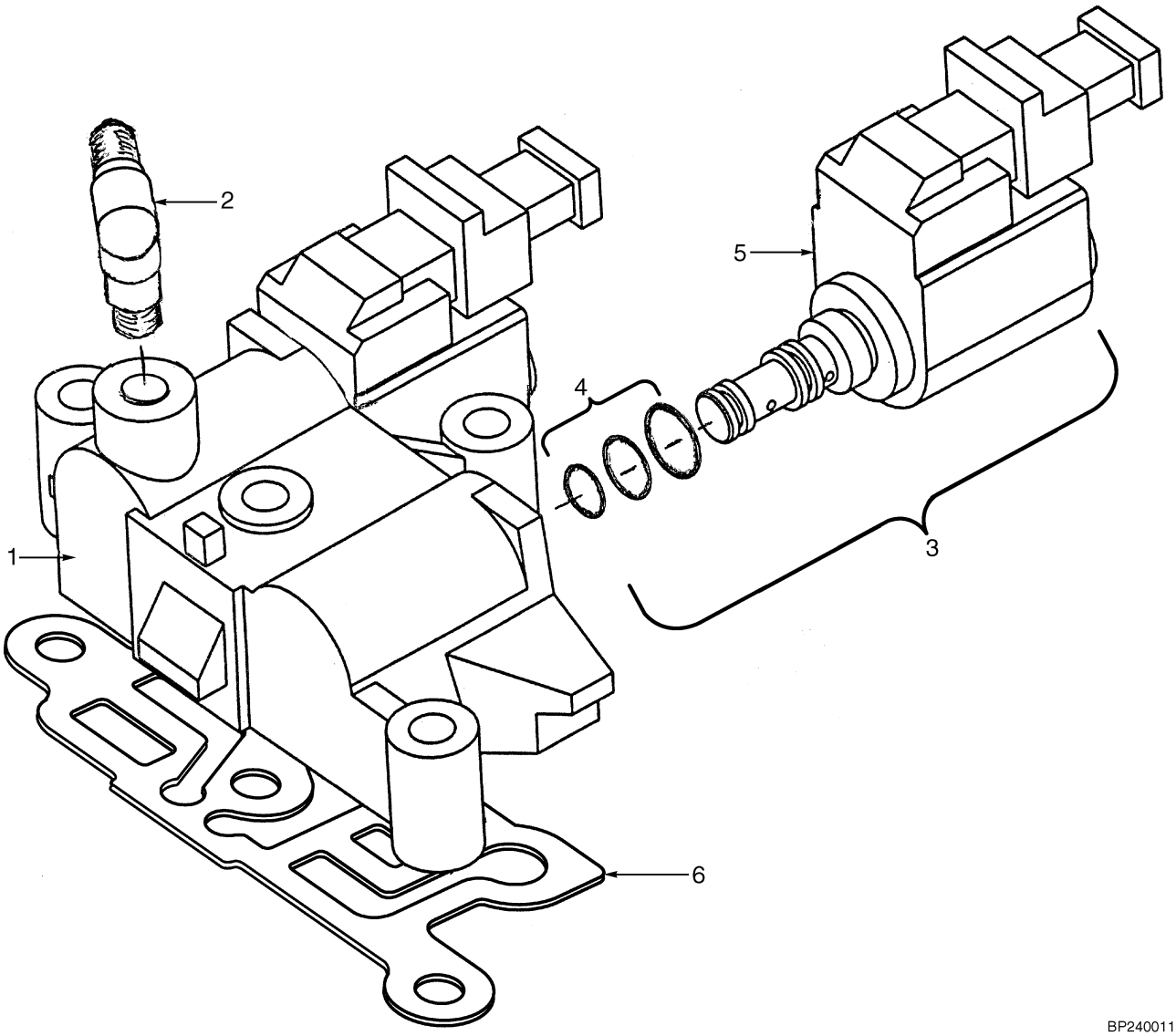

BP240011

ITEM	PART NO.	DESCRIPTION	QTY
	1400159	Valve	1
1	. . . . .	Manifold	1
2	14500	Fitting	1
2	246108	Sealant	AR
3	1400158	Solenoid	2
4	**a** 1393160	Kit-Seal	1
5	1464144	Coil	1
6	1388573	Gasket	1

FOOTNOTES:

a Services One Solenoid Valve

©2009 HYSTER COMPANY

DIFFERENTIAL (FIGURE 5-14)

T078 AND T080 POWERSHIFT (→ 7/1998)

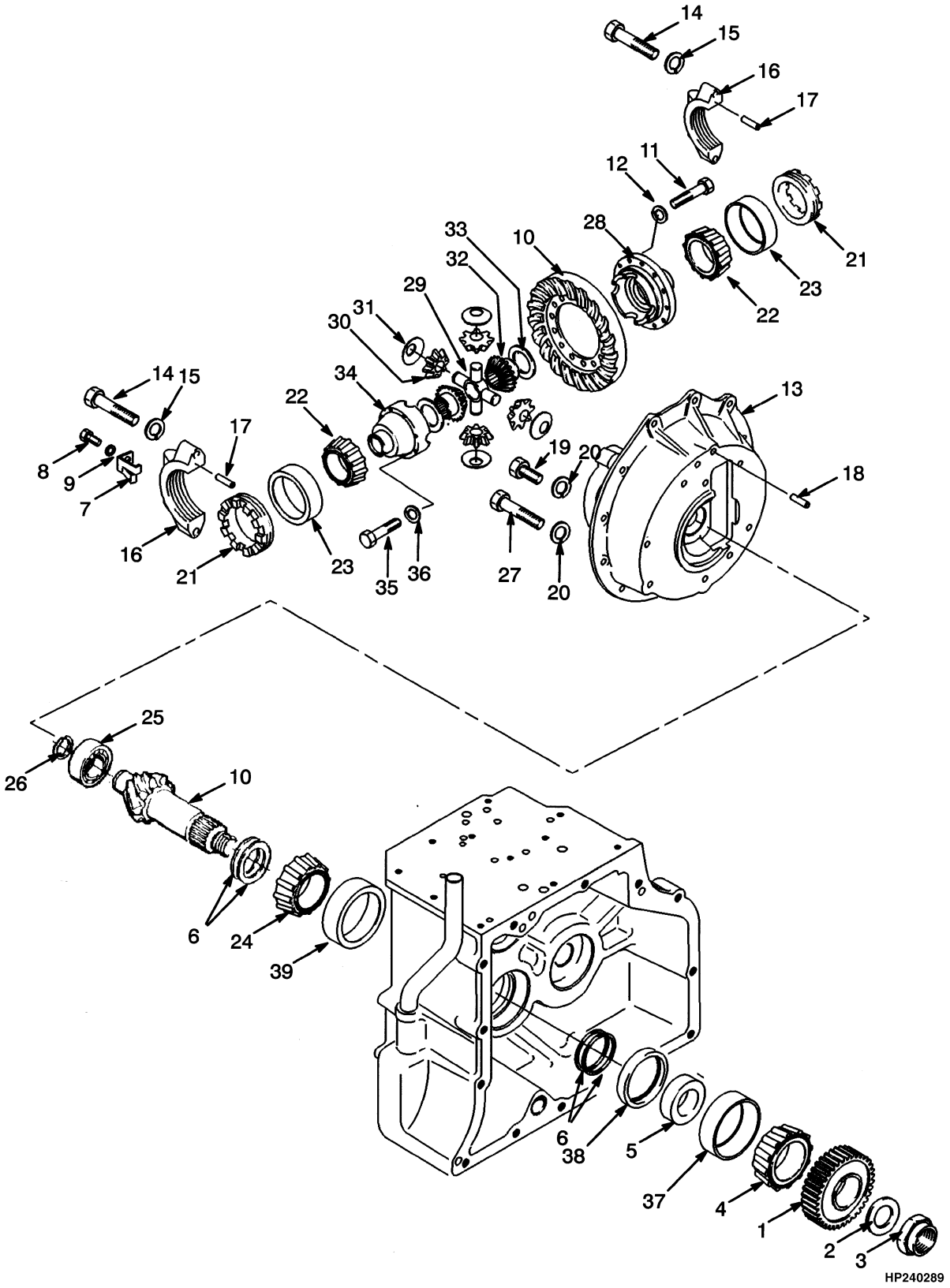

©2009 HYSTER COMPANY

DIFFERENTIAL

T078 AND T080 POWERSHIFT (→ 7/1998)

ITEM	PART NO.	DESCRIPTION	QTY
1	1386806	Gear (Output)	1
2	334587	Washer	1
3	304406	Nut	1
4	137283	Bearing Cone	1
5	334453	Spacer	1
6	346842	Shim (0,356 mm)	2
6	346843	Shim (0,381 mm)	2
6	346844	Shim (0,406 mm)	4
6	346845	Shim (0,508 mm)	4
6	346846	Shim (0,559 mm)	3
6	346847	Shim (0,635 mm)	3
7	334447	Lockplate	2
8	287851	Capscrew	2
9	292681	Lockwasher	2
10	**a** 1343219	Gear Set (Hypoid)	1
10	**b** 1483113	Gear and Pinion (Hypoid)	1
11	97577	Bolt	12
12	1474231	Washer	12
13	1334796	Housing	1
14	218599	Capscrew	4
15	221773	Washer	4
16	. . . . .	Bearing Cap	2
17	234038	Dowel	4
18	309831	Roll Pin	1
19	136985	Capscrew	8
20	292682	Lockwasher	10
21	347746	Nut	2
22	78584	Bearing Cone	2
23	45733	Bearing Cup	2
24	342734	Bearing Cone	1
25	135158	Bearing	1
26	320264	Snap Ring	1
27	292519	Capscrew	2
28	380478	Differential	1
28	380479	Housing (Flanged)	1
29	380489	Spider	1
30	380486	Pinion	4
31	380488	Washer	4
32	380483	Gear (Side)	2
33	380485	Washer	2
34	380481	Housing	1
35	221550	Capscrew	8
36	334580	Washer	8
37	137282	Bearing Cup	1
38	1526166	Seal (Double Lip)	1
39	230419	Bearing Cup	1

FOOTNOTES:

a → 4/2000

b 4/2000 →

©2009 HYSTER COMPANY

DIFFERENTIAL AND HYPOID ASSEMBLY (FIGURE 5-15)

T080 POWERSHIFT (7/1998 →)

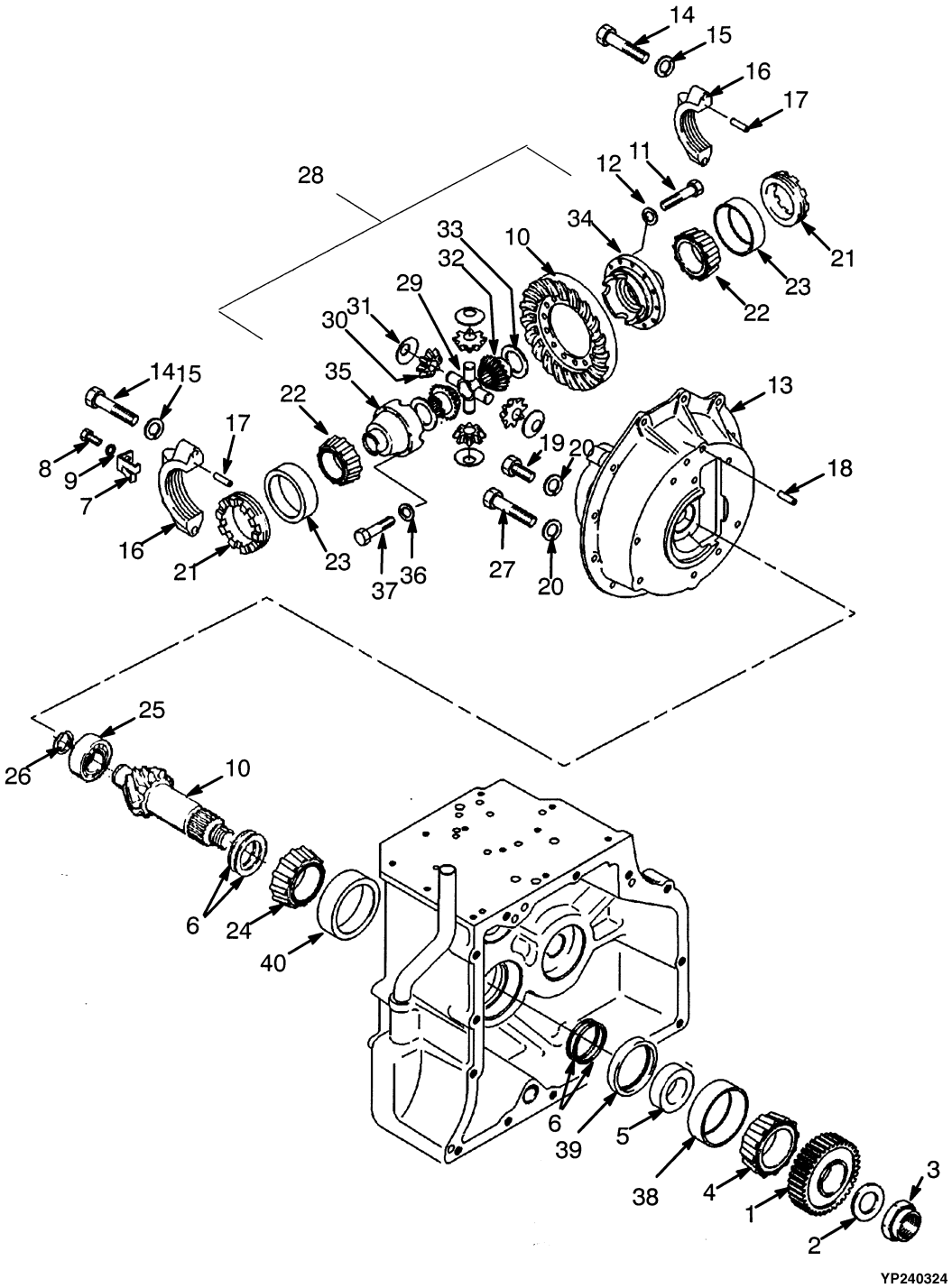

©2009 HYSTER COMPANY

DIFFERENTIAL AND HYPOID ASSEMBLY

T080 POWERSHIFT (7/1998 →)

ITEM	PART NO.	DESCRIPTION	QTY
1	1386806	Gear (Output)	1
2	334587	Washer	1
3	304406	Nut	1
4	137283	Bearing Cone	1
5	334453	Spacer	1
6	346846	Shim (0,559 mm)	3
6	346847	Shim (0,635 mm)	3
6	346842	Shim (0,356 mm)	2
6	346844	Shim (0,406 mm)	4
6	346845	Shim (0,508 mm)	4
6	346843	Shim (0,381 mm)	2
7	334447	Lockplate	2
8	287851	Capscrew	2
9	292681	Lockwasher	2
10	1483113	Gear and Pinion (Hypoid)	1
11	97577	Bolt	12
12	1474231	Washer	12
13	1334796	Housing	1
14	218599	Capscrew	4
15	221773	Washer	4
16	. . . . .	Bearing Cap	2
17	234038	Dowel	4
18	309831	Roll Pin	1
19	136985	Capscrew	8
20	292682	Lockwasher	10
21	347746	Nut	2
22	78584	Bearing Cone	2
23	45733	Bearing Cup	2
24	342734	Bearing Cone	1
25	135158	Bearing	1
26	320264	Snap Ring	1
27	292519	Capscrew	2
28	1383450	Differential	1
29	1383461	Spider	2
30	1383458	Pinion	4
31	1383460	Washer	4
32	1383455	Gear	2
33	1383457	Washer	2
34	. . . . .	Case (Flanged)	1
35	. . . . .	Case	1
36	1383466	Washer	8
37	293657	Capscrew	8
38	137282	Bearing Cup	1
39	1526166	Seal (Double Lip)	1
40	230419	Bearing Cup	1

©2009 HYSTER COMPANY

PUMP DRIVE (FIGURE 5-16)
POWERSHIFT

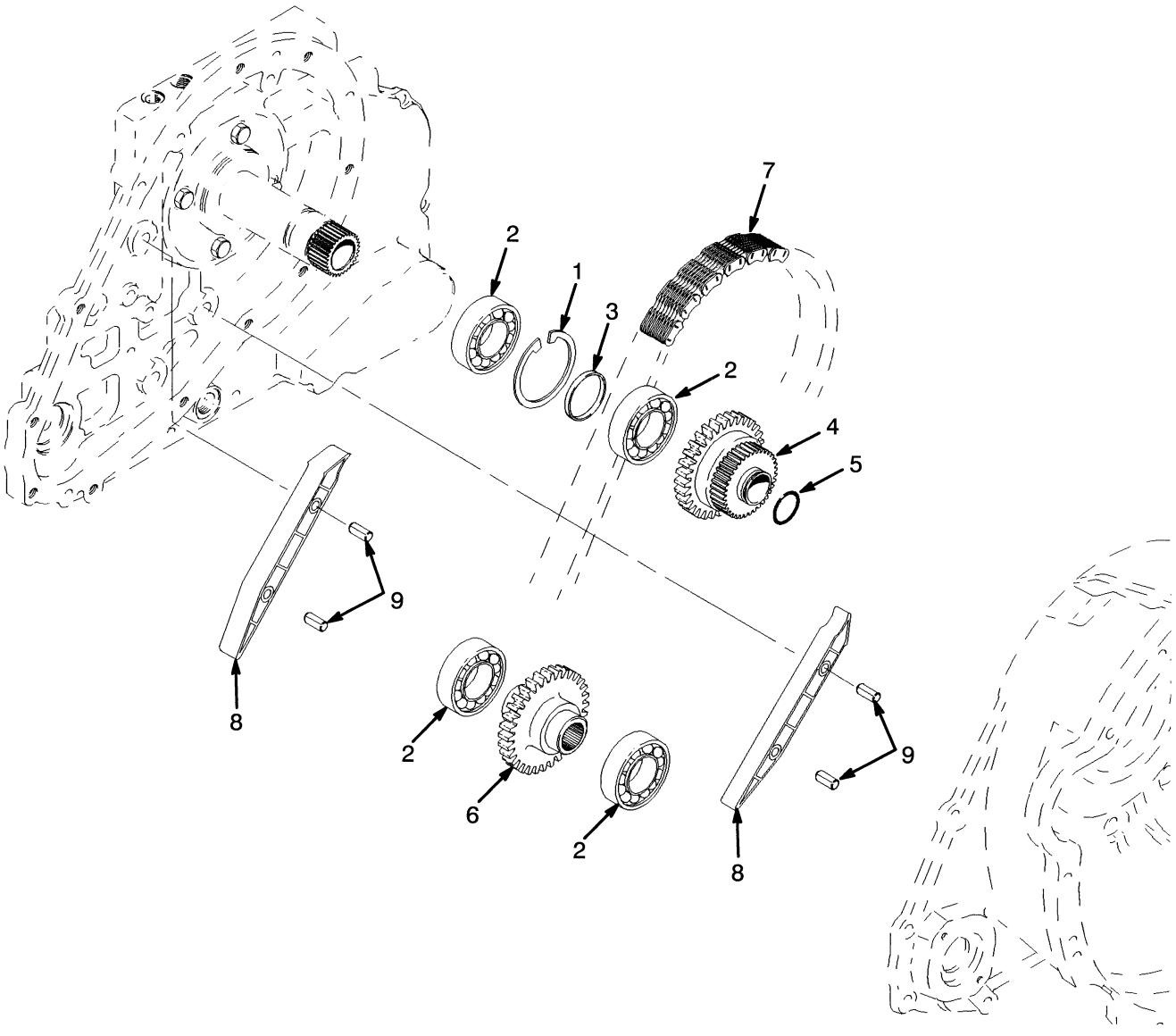

HP240258

©2009 HYSTER COMPANY

PUMP DRIVE
POWERSHIFT

ITEM	PART NO.	DESCRIPTION	QTY
1	12894	Snap Ring	1
2	44308	Ball Bearing	4
3	1394904	Spacer	1
4	**a** 1343479	Sprocket	1
4	**b** 1386813	Sprocket	1
5	1338296	O-Ring	1
6	1343480	Sprocket	1
7	1343478	Chain	1
8	1347158	Snubber	2
9	80952	Roll Pin	4

FOOTNOTES:

a → T080B33815

b T080B033816 →

©2009 HYSTER COMPANY

DRIVE AXLE (FIGURE 5-17)
POWERSHIFT

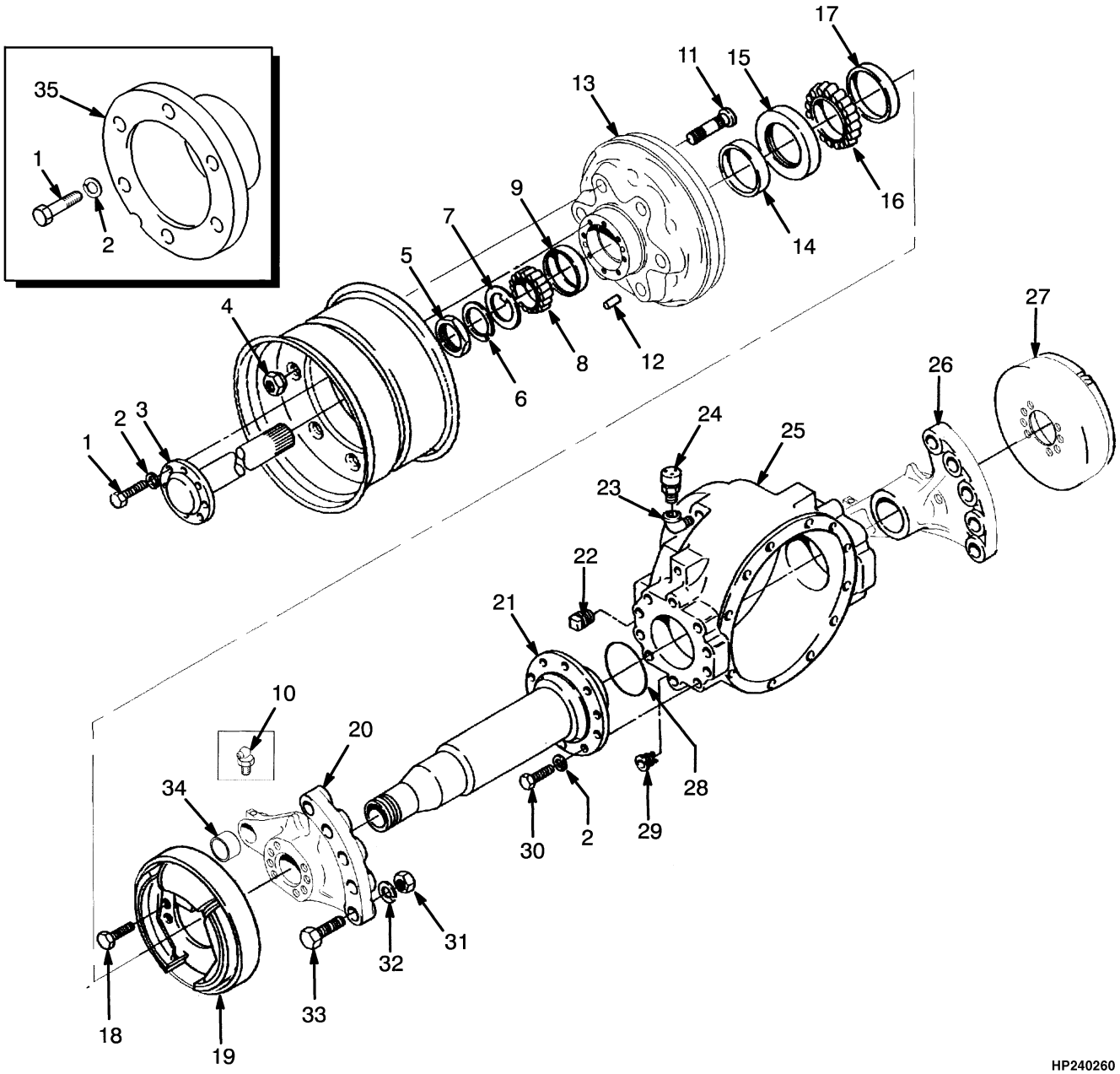

HP240260

©2009 HYSTER COMPANY

DRIVE AXLE
POWERSHIFT

ITEM	PART NO.	DESCRIPTION	QTY
1	**a** 326488	Capscrew	16
1	300794	Capscrew	16
2	292683	Lockwasher	36
2	**a** 292683	Lockwasher	52
3	313022	Sealant	AR
3	317679	Shaft	2
4	**b** 11276	Wheel Nut	12
4	**c** 1516142	Wheel Nut	12
4	**ab** 11276	Wheel Nut	24
4	**ac** 1516142	Wheel Nut	24
5	33657	Locknut	2
6	145978	Lockwasher	2
7	85885	Washer	2
8	264892	Bearing Cone	2
9	264893	Bearing Cup	2
10	16009	Grease Fitting	2
11	137154	Wheel Stud	12
11	**a** 137154	Wheel Stud	24
12	328390	Dowel	4
13	1335986	Brake Drum	2
14	300800	Seal	2
15	224571	Bearing Cup	2
16	224570	Bearing Cone	2
17	300801	Seal	2
18	1327246	Bolt	16
19	1338256	Brake Assembly (LH)	1
19	1504038	Brake Assembly (LH)	1
20	1335502	Bracket (LH)	1
21	251979	Lubricant	AR
21	300758	Spindle	2
22	15303	Plug	1
23	16151	Fitting	1
24	21420	Breather	1
25	264159	Adhesive	AR
25	1334791	Drive Axle Housing	1
26	1335503	Bracket (RH)	1
27	1338255	Brake Assembly (RH)	1
27	1504039	Brake Assembly (RH)	1
28	39714	O-Ring	2
29	15290	Fitting	1
30	292528	Capscrew	20
31	292620	Nut	10
32	292687	Lockwasher	10
33	292588	Capscrew	10
34	1333385	Bushing	2
35	**a** 1347020	Spacer	2

©2009 HYSTER COMPANY

FOOTNOTES:

a Dual Wheel Application
b → S/N H177B32994Z
c S/N H177B32995Z →

©2009 HYSTER COMPANY

NOTES

©2009 HYSTER COMPANY

TRANSMISSION COOLING (FIGURE 5-18)

POWERSHIFT (→ S/N H177B36823Z)

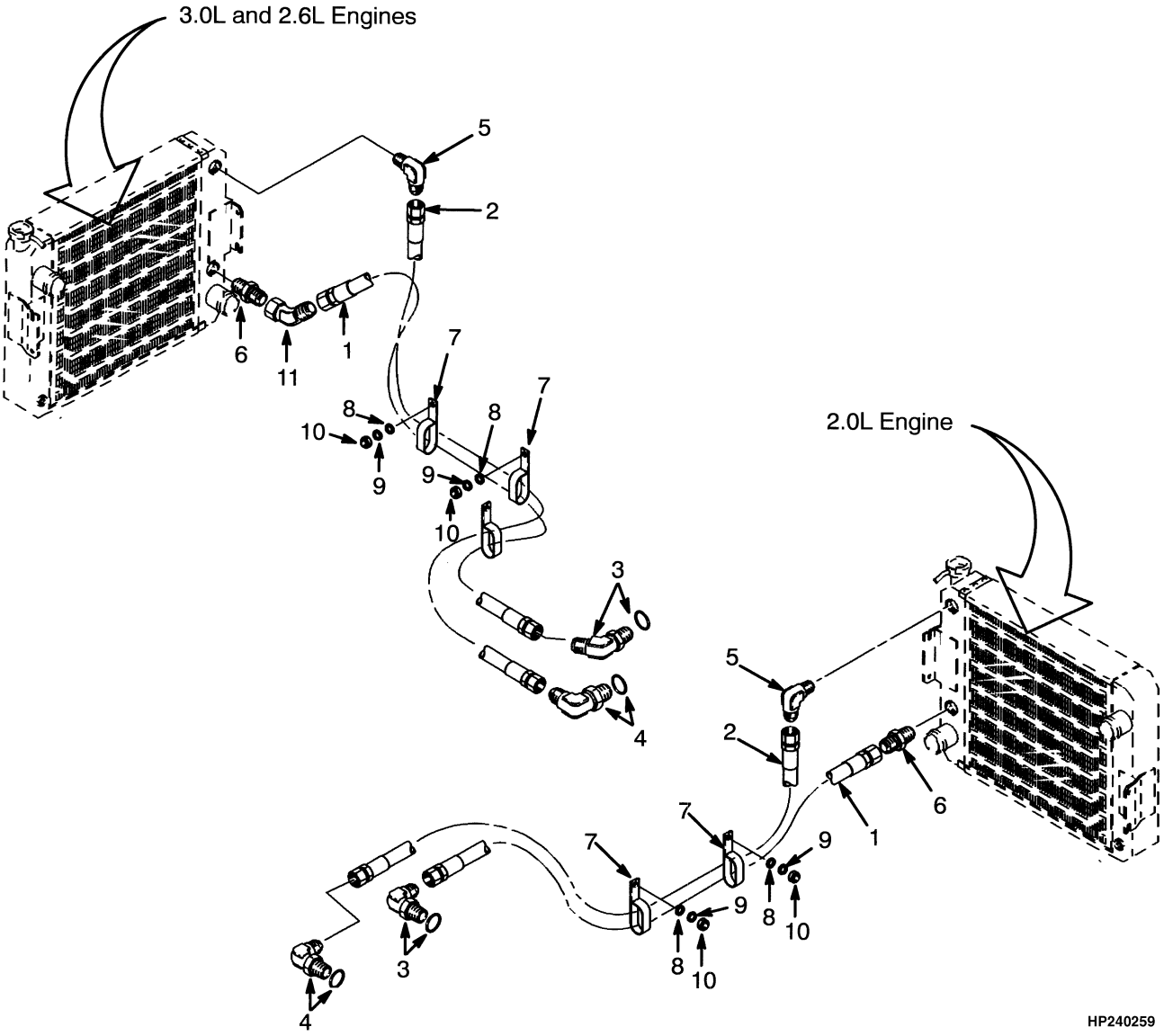

©2009 HYSTER COMPANY

TRANSMISSION COOLING

POWERSHIFT (→ S/N H177B36823Z)

KEY:
A: 2,0L Engine
B: 2,6L/3,0L

ITEM	PART NO.	DESCRIPTION	QTY A	QTY B
1	1351134	Hose Assy	..	1
1	1382320	Hose Assy	1	..
2	1351135	Hose Assy	..	1
2	1371429	Hose Assy	1	..
3	16568	Fitting	1	..
3	17167	Fitting	..	1
3	16484	O-Ring	1	1
4	14506	Fitting	1	1
5	17309	Fitting	1	1
6	17315	Fitting	1	1
7	140660	Clamp	2	2
8	320157	Washer	2	2
9	292681	Lockwasher	2	2
10	239503	Nut	2	2
11	17038	Fitting (Diesel)	..	1

©2009 HYSTER COMPANY

TRANSMISSION COOLING (FIGURE 5-19)

POWERSHIFT (S/N H177B36824Z →)

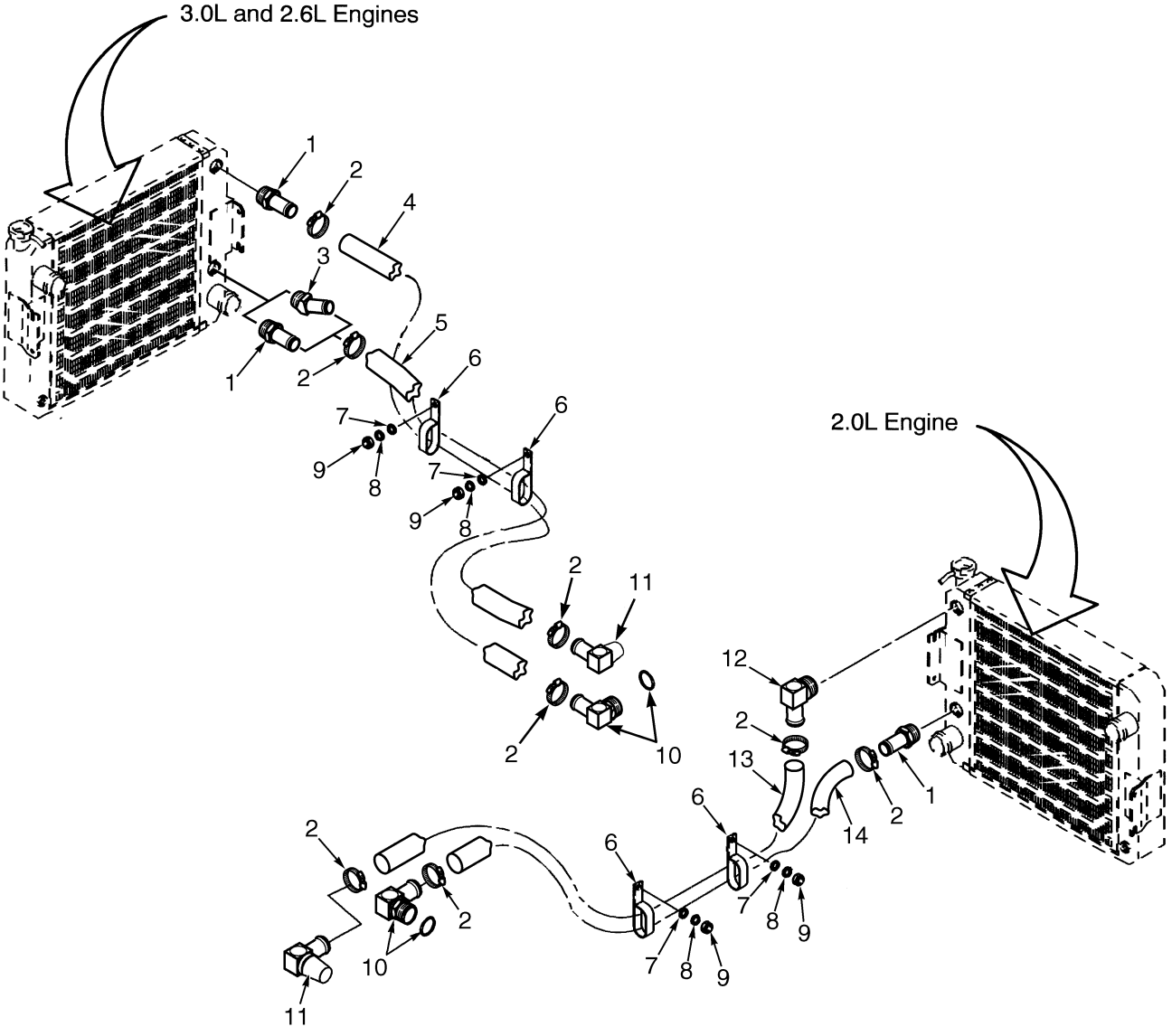

BP240006

©2009 HYSTER COMPANY

TRANSMISSION COOLING

POWERSHIFT (S/N H177B36824Z →)

KEY:
A: Gasoline and LPG 2.0L
B: Gasoline and LPG 3.0L
C: Diesel 2.6L

ITEM	PART NO.	DESCRIPTION	QTY A	QTY B	QTY C
1	**abc** 102919	Fitting	1	2	1
2	130845	Clamp	4	4	4
3	**abc** 16764	Fitting	..	..	1
4	1519131	Hose (XMSN Cooling) (Upper)	..	..	1
4	1519132	Hose (XMSN Cooling) (Upper)	..	1	..
5	1519131	Hose (XMSN Cooling) (Lower)	..	1	..
5	1519132	Hose (XMSN Cooling) (Lower)	..	..	1
6	140660	Clamp	2	2	2
7	320157	Washer	2	2	2
8	292681	Lockwasher	2	2	2
9	239503	Nut	2	2	2
10	222502	Fitting	1	..	..
10	16484	O-Ring	1	..	..
10	1528866	Fitting	..	1	1
10	16484	O-Ring	..	1	1
11	**d** 16788	Fitting	1	1	1
11	**d** 16484	O-Ring	1	..	..
11	**e** 1564058	Fitting	1	1	1
12	**abc** 102898	Fitting	1	1	1
13	1519133	Hose (XMSN Cooling) (Upper)	1	..	..
14	1519134	Hose (XMSN Cooling) (Lower)	1	..	..

FOOTNOTES:

a → S/N H177B40524A 3.0L
b → S/N H177B40926A Diesel
c → S/N H177B41039A 2.0L
d S/N H177B36824Z ↔ S/N H177B50589B
e S/N H177B50590B →

©2009 HYSTER COMPANY

TRANSMISSION (FIGURE 5-20)
HYDROSTATIC

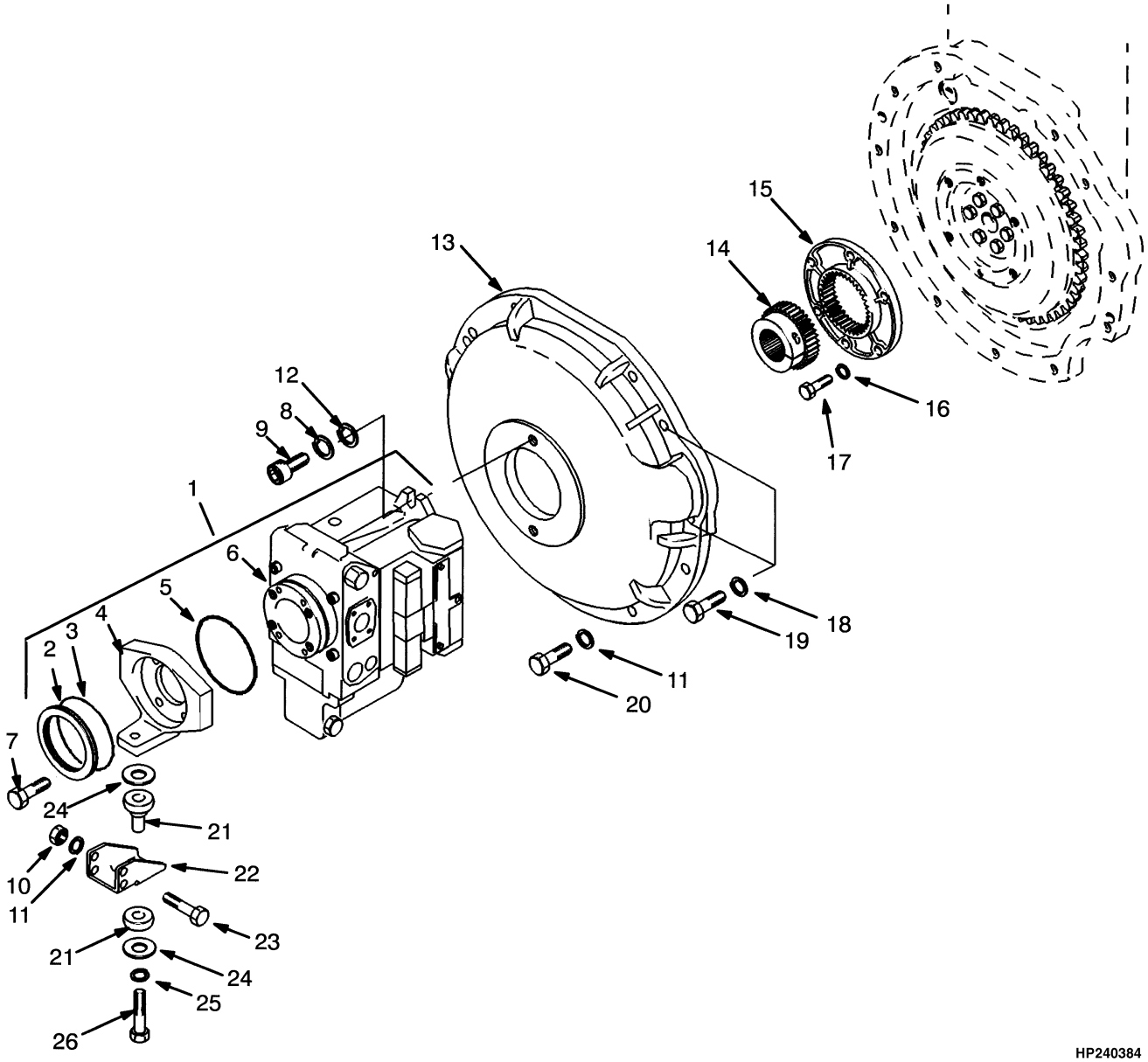

©2009 HYSTER COMPANY

TRANSMISSION
HYDROSTATIC

ITEM	PART NO.	DESCRIPTION	QTY
1	**a** 1470287	Hydraulic Pump	1
1	**b** 1503337	Hydraulic Pump	1
2	1384369	Ring	1
3	39748	O-Ring	1
4	1384355	Flange (Petrol and LPG)	1
5	39744	O-Ring	1
6	**a** 1469643	LPG Regulator	1
6	**b** 1503336	Pump	1
7	1384373	Capscrew	4
8	292685	Lockwasher	2
9	296075	Capscrew	2
10	136692	Nut	2
11	292682	Lockwasher	9
12	296426	Washer	2
13	1385037	Cover (Flywheel)	1
14	1377804	Hub (Coupling)	1
15	1377803	Flange (Coupling)	1
16	293782	Lockwasher	6
17	292527	Capscrew	6
18	292683	Lockwasher	2
19	292528	Capscrew	2
20	287860	Capscrew	9
21	1384357	Isolator	2
21	1384365	Isolator	1
22	1384368	Mount	1
23	293642	Capscrew	2
24	1384366	Washer (Snubbing)	2
25	292683	Lockwasher	1
26	293655	Capscrew	1

FOOTNOTES:

a → S/N H177B37405Z

b S/N H177B37406Z →

©2009 HYSTER COMPANY

PUMP (FIGURE 5-21)
HYDROSTATIC

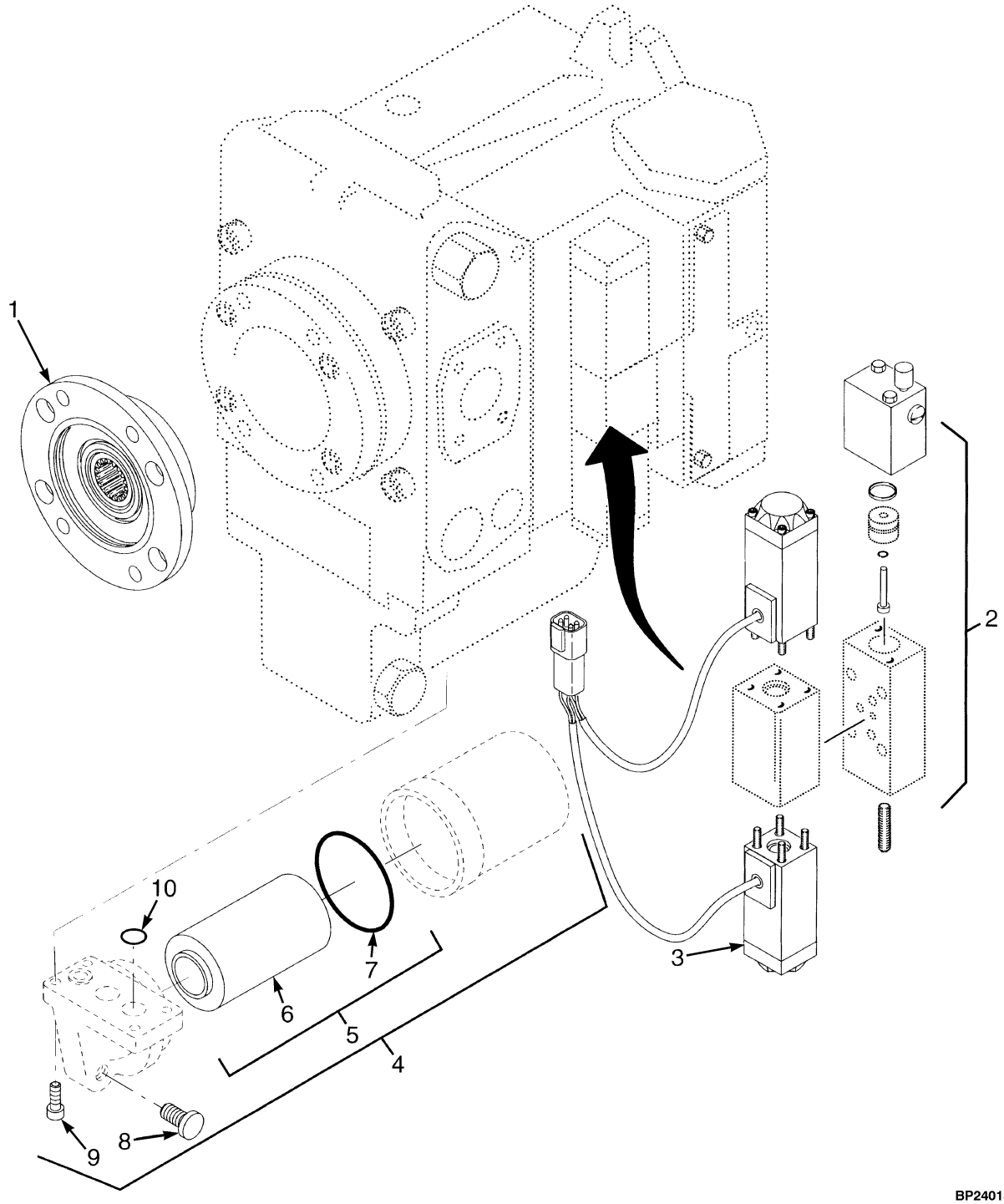

©2009 HYSTER COMPANY

PUMP
HYDROSTATIC

ITEM	PART NO.	DESCRIPTION	QTY
	b 1469643	LPG Regulator	1
	b 1503336	Pump	1
1	1462523	Gear Pump	1
2	**a** 1464641	Inching Valve	1
2	**b** 1507772	Inching Valve	1
2	1462593	O-Ring	1
2	1462594	Seal	1
3	**a** 1462598	Solenoid	1
3	**b** 1483818	Solenoid	1
4	1475206	Filter Head	1
5	. . . . .	Filter	1
6	1483514	Oil Filter	1
7	1483515	O-Ring	1
8	1483511	Screw	1
9	296010	Capscrew	4
10	1483512	O-Ring	3

FOOTNOTES:

a → S/N H177B37405Z

b S/N H177B37406Z →

©2009 HYSTER COMPANY

DRIVE AXLE (FIGURE 5-22)
HYDROSTATIC

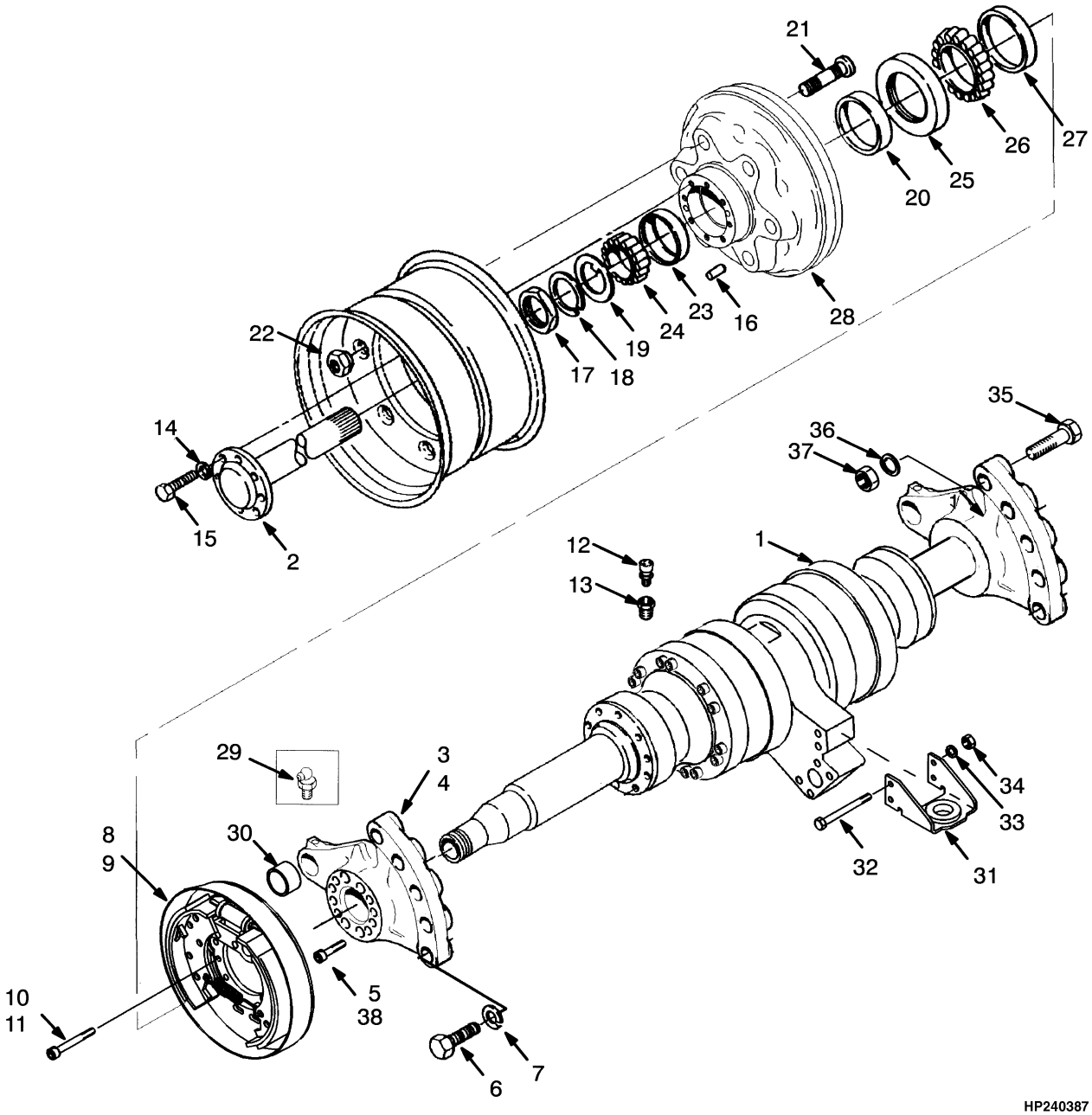

©2009 HYSTER COMPANY

DRIVE AXLE
HYDROSTATIC

ITEM	PART NO.	DESCRIPTION	QTY
1	1385032	Drive Axle	1
2	1377825	Axle Shaft	2
3	1385033	Bracket (LH)	1
4	1385034	Bracket (RH)	1
5	296066	Capscrew	8
6	1385019	Capscrew	5
7	296430	Washer	5
8	**a** 1385023	Brake Assembly (LH) (☞Figure 7-2)	1
8	**b** 1504040	Brake Assembly (LH) (☞Figure 7-2)	1
8	**a** 1338256	Brake Assembly (LH) (☞Figure 7-2)	1
8	**b** 1504038	Brake Assembly (LH) (☞Figure 7-2)	1
9	**a** 1338255	Brake Assembly (RH) (☞Figure 7-2)	1
9	**b** 1504039	Brake Assembly (RH) (☞Figure 7-2)	1
10	**a** 1377828	Bolt (LH)	8
11	**b** 1327246	Bolt (RH)	8
12	21420	Breather	2
13	16187	Fitting	2
14	292683	Lockwasher	16
15	300794	Capscrew	16
16	328390	Dowel	4
17	33657	Locknut	2
18	145978	Lockwasher	2
19	85885	Washer	2
20	300800	Seal	2
21	137154	Wheel Stud	12
22	11276	Wheel Nut	12
23	264893	Bearing Cup	2
24	264892	Bearing Cone	2
25	224571	Bearing Cup	2
26	224570	Bearing Cone	2
27	300801	Seal	2
28	1335986	Brake Drum	2
29	16009	Grease Fitting	2
30	1333385	Bushing	2
30	1380115	Bushing (Optional)	2
31	1384368	Mount	1
32	293642	Capscrew	2
33	292682	Lockwasher	2
34	136692	Nut	2
35	292588	Capscrew	5
36	292687	Lockwasher	5
37	292620	Nut	5
38	264159	Adhesive	AR

FOOTNOTES:

a → S/N T056M04847

b S/N T056M04848 →

©2009 HYSTER COMPANY

TRANSMISSION COOLING (FIGURE 5-23)
HYDROSTATIC

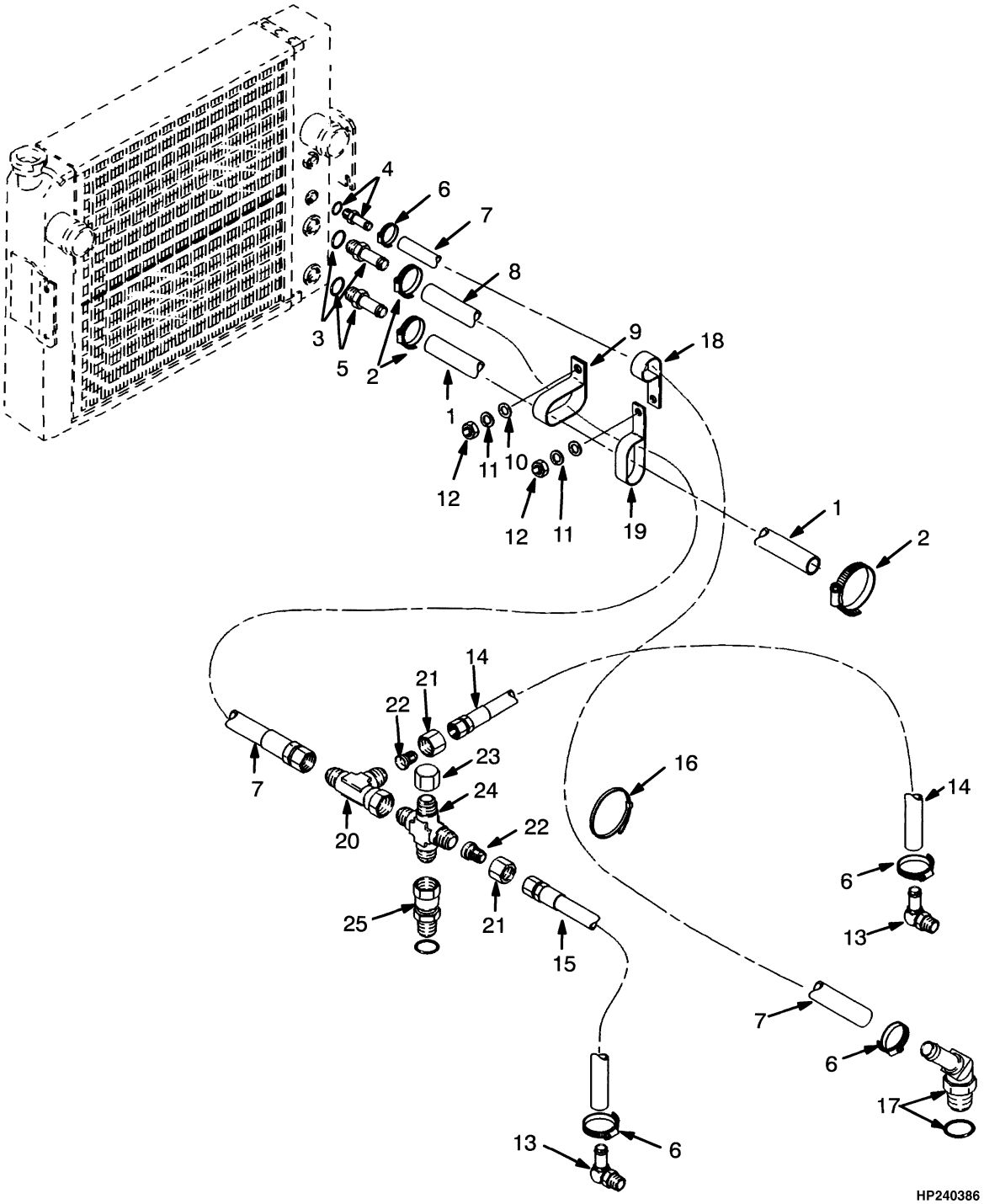

©2009 HYSTER COMPANY

TRANSMISSION COOLING
HYDROSTATIC

ITEM	PART NO.	DESCRIPTION	QTY
1	1338558	Hose Assy	1
2	130845	Clamp	3
3	1392184	Check Valve	1
4	1151378	Fitting	1
5	17758	Fitting	1
6	166857	Clamp	3
7	1338557	Hose	1
8	1338559	Hose Assy	1
9	1396346	Clamp	1
10	292681	Lockwasher	2
11	320157	Washer	2
12	239503	Nut	2
13	17221	Fitting	2
14	1392183	Hose Assy	1
15	1463941	Hose Assy	1
16	129563	Strap Clamp	1
17	222502	Fitting	1
17	16484	O-Ring	1
18	173247	Clamp	1
19	166112	Clamp	1
20	17064	Fitting	1
21	167261	Sleeve	2
22	17780	Fitting	2
23	16926	Nut	1
24	17574	Fitting	1
25	1396344	Fitting	1

©2009 HYSTER COMPANY

NOTES

©2009 HYSTER COMPANY

6 STEERING SYSTEM

SECTION 6
STEERING SYSTEM

DESCRIPTION	PAGE
SHIFT LEVER	6-12
STEERING CYLINDER	
→ 8/2005	6-8
8/2005 →	6-10
STEERING POD	6-2
STEERING PUMP	6-6
TRAIL AXLE	6-4

©2009 HYSTER COMPANY

STEERING POD (FIGURE 6-1)

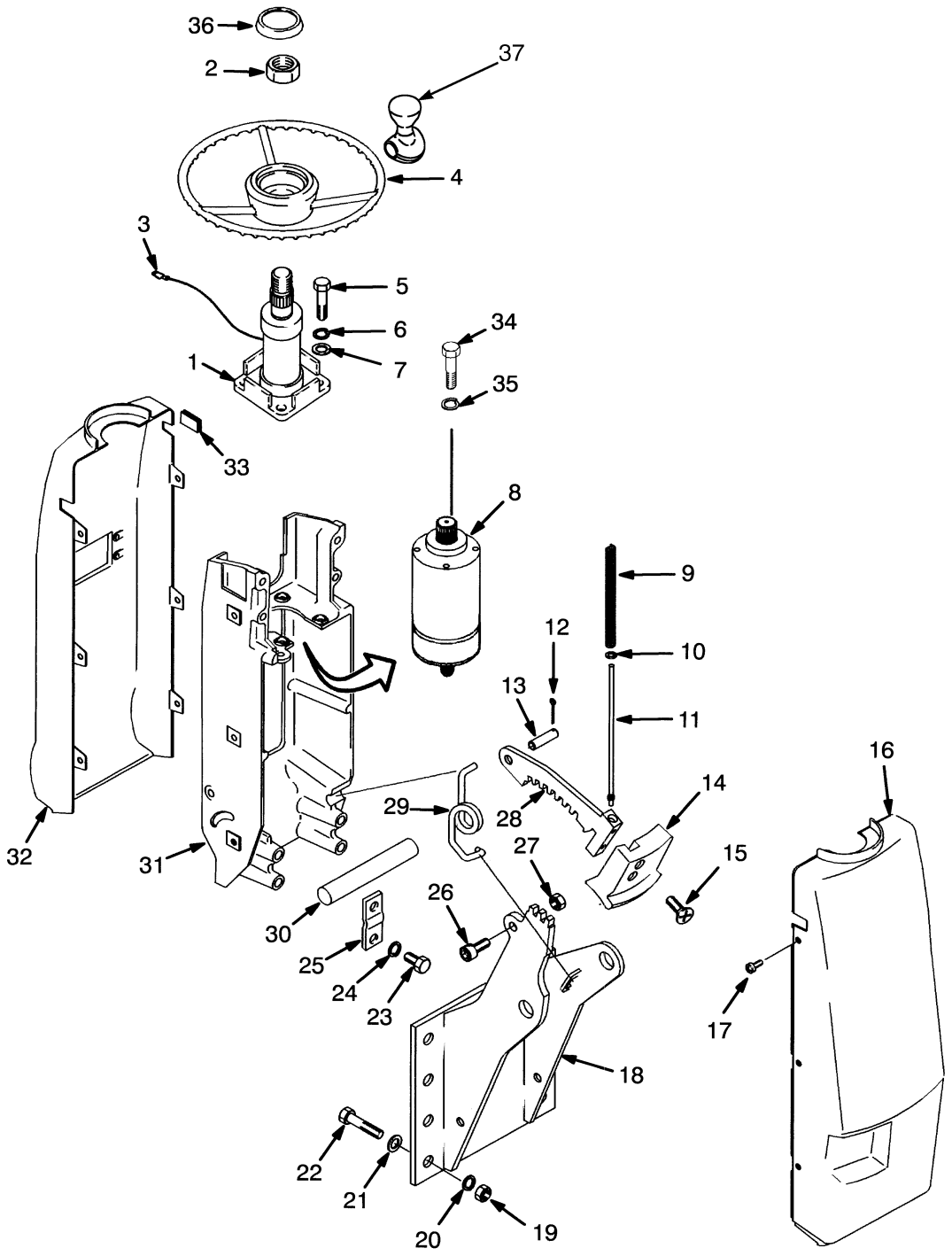

HP220257

©2009 HYSTER COMPANY

STEERING POD

ITEM	PART NO.	DESCRIPTION	QTY
1	1453687	Steering Column	1
2	345423	Nut	1
3	1382556	Kit-Terminal (Contact Rivets) (Contact Terminal)	1
4	1329250	Steering Wheel	1
5	16815	Capscrew	4
6	15156	Lockwasher	4
7	15134	Washer	4
8	1453538	Steering Pump (☞Figure 6-3)	1
9	1343537	Spring	1
10	320155	Washer	1
11	1343572	Rod	1
12	15212	Cotter Pin	1
13	1343607	Pin	1
14	1343574	Handle Grip (Latch)	1
15	296472	Screw	2
16	1376745	Cover (Lower)	1
17	1337196	Screw	6
18	1337043	Bracket Wldmt	1
19	136692	Nut	4
20	292682	Lockwasher	4
21	320156	Washer	1
22	136985	Capscrew	4
23	136749	Screw	4
24	292681	Lockwasher	4
25	1335967	Plate	2
26	296010	Capscrew	1
27	302400	Nut	1
28	1364271	Latch	1
29	1378600	Spring	1
30	1335987	Shaft	1
31	1343573	Bracket	1
32	1376744	Cover (Upper)	1
33	**b** 1376743	Plug	1
34	293762	Capscrew	4
35	293779	Lockwasher	4
36	**a** 1347135	Horn Button	1
37	895468	Wheelspinner	1

FOOTNOTES:

a Service with Horn Replacement Kit 1642090

b Without Turn Signals

©2009 HYSTER COMPANY

TRAIL AXLE (FIGURE 6-2)

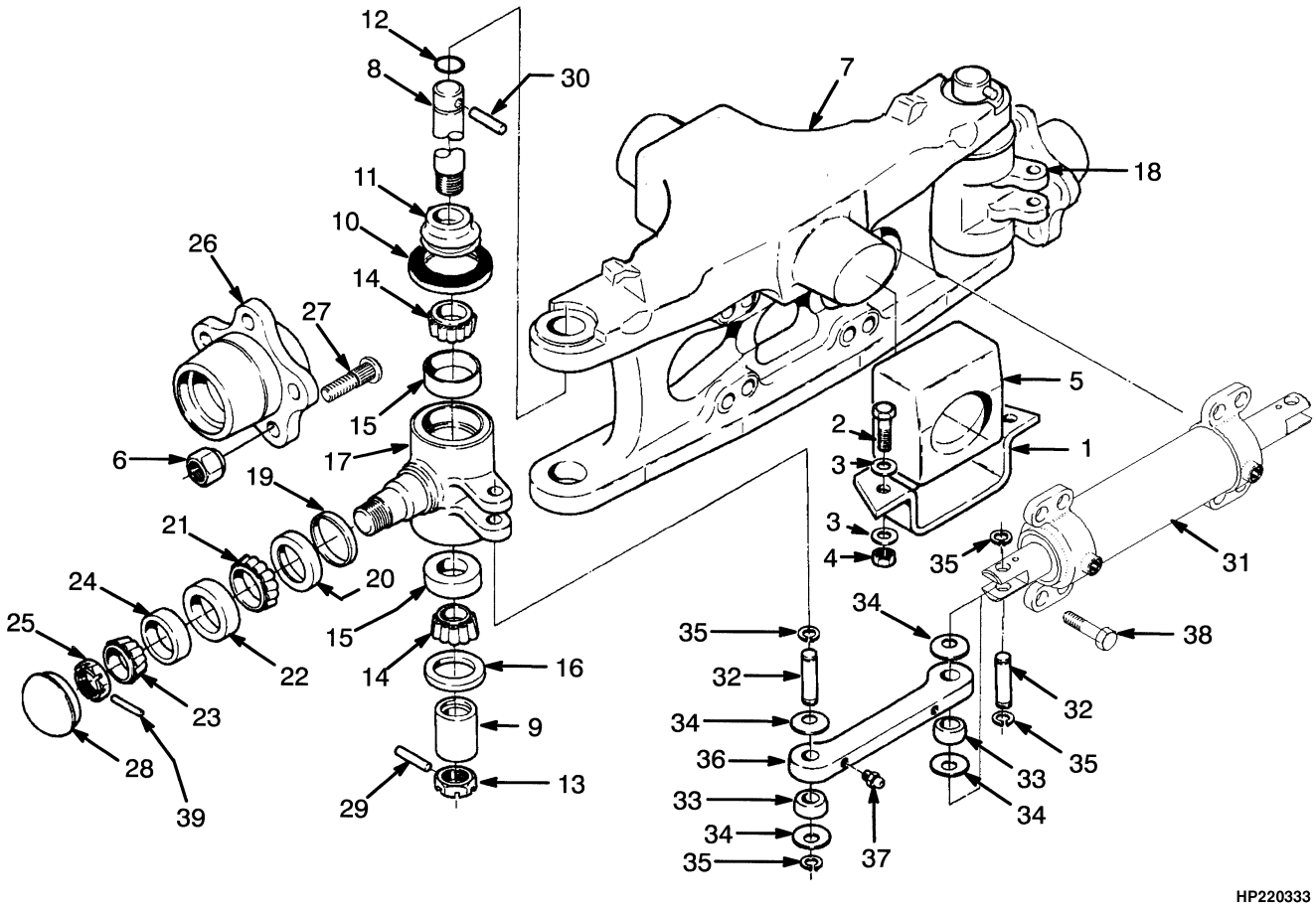

©2009 HYSTER COMPANY

TRAIL AXLE

ITEM	PART NO.	DESCRIPTION	QTY
1	1334723	Plate	2
2	293648	Capscrew	4
3	320161	Washer	8
4	300937	Nut	4
5	324864	Rubber Mount	2
6	60949	Wheel Nut	10
7	1334718	Steering Axle	1
8	300765	King Pin	2
9	300766	Sleeve	2
10	264973	Seal	2
11	300767	Spacer	2
12	39352	O-Ring	2
13	249289	Nut	2
14	156195	Bearing Cone	4
15	156194	Bearing Cup	4
16	98525	Oil Seal	2
17	1310599	Spindle (LH)	1
18	1315425	Spindle (RH)	1
19	44542	Seal	2
20	164639	Wear Sleeve	2
21	30273	Bearing Cone	2
22	163970	Bearing Cup	2
23	317076	Bearing Cone	2
24	317075	Bearing Cup	2
25	1383777	Nut	2
26	300738	Hub	2
27	339529	Wheel Stud	10
28	69029	Cap	2
29	15225	Cotter Pin	2
30	226986	Pin	2
31	1321174	Steering Cylinder (☞Figure 6-4)	1
31	2071096	Steering Cylinder (☞Figure 6-5)	1
32	1568271	Pin	4
33	300751	Bushing	4
34	300752	Spherical Washer	8
35	58903	Snap Ring	8
36	381298	Tie Rod	2
37	13957	Grease Fitting	6
38	293686	Capscrew	8
39	15227	Cotter Pin	2
	334717	Kit-King Pin	1

©2009 HYSTER COMPANY

STEERING PUMP (FIGURE 6-3)

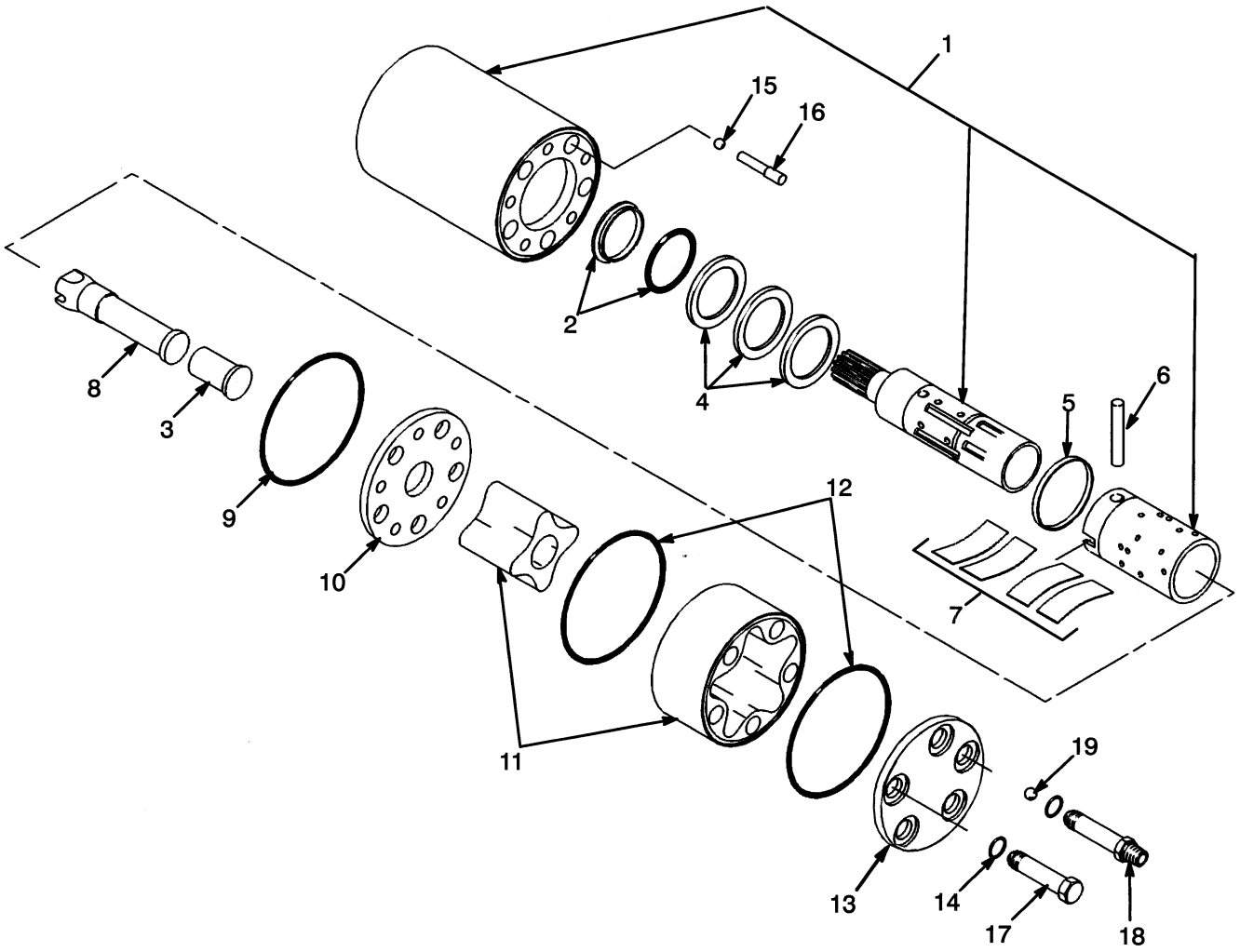

HP220251

©2009 HYSTER COMPANY

STEERING PUMP

ITEM	PART NO.	DESCRIPTION	QTY
	1453538	Steering Pump	1
1	. . . . .	Housing	1
1	. . . . .	Spool	1
1	. . . . .	Sleeve	1
2	. . . . .	Seal	1
3	1451710	Screw	1
4	1451697	Bearing	1
5	1455770	Ring	1
6	1451698	Pin (Cross)	1
7	1455771	Kit-Spring	1
8	1451700	Shaft	1
9	. . . . .	O-Ring	1
10	1451703	Plate	1
11	. . . . .	Gear Set	1
12	. . . . .	O-Ring	2
13	. . . . .	End Cover	1
14	. . . . .	O-Ring	5
15	1355335	Ball	1
16	1451696	Stop (Stop)	1
17	1455780	Screw	1
17	. . . . .	O-Ring	1
18	1451712	Screw	4
18	. . . . .	O-Ring	4
19	1451707	Ball	1
	1467430	Kit-Seal	1

©2009 HYSTER COMPANY

STEERING CYLINDER (FIGURE 6-4)

(→ 8/2005)

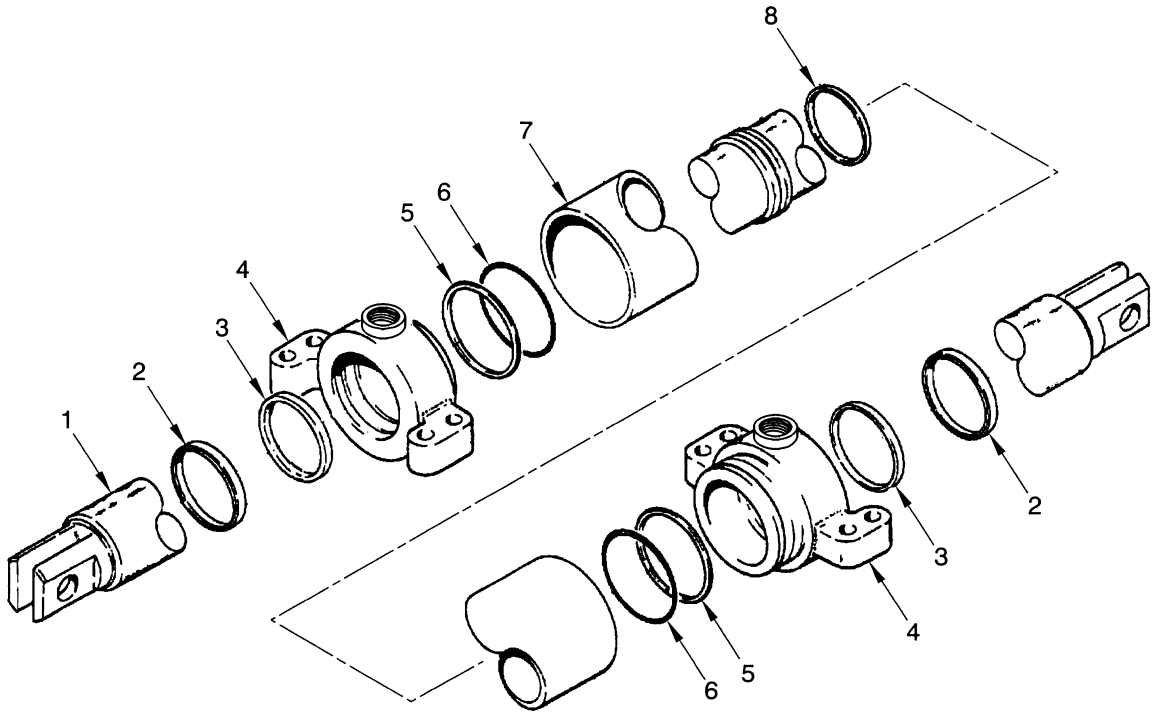

©2009 HYSTER COMPANY

STEERING CYLINDER

(→ 8/2005)

ITEM	PART NO.	DESCRIPTION	QTY
	1321174	Steering Cylinder (Group No. 8602201)	1
1	375634	Cylinder Rod	1
2	203071	Rod Wiper	2
3	2032490	Seal	2
4	1321149	End Cap	2
5	147973	Back-Up Ring	2
6	130825	O-Ring	2
7	375635	Tube Wldmt-Cylinder	1
8	2044371	Piston Seal	1
	1501413	Kit-Seal	1

©2009 HYSTER COMPANY

STEERING CYLINDER (FIGURE 6-5)

(8/2005 →)

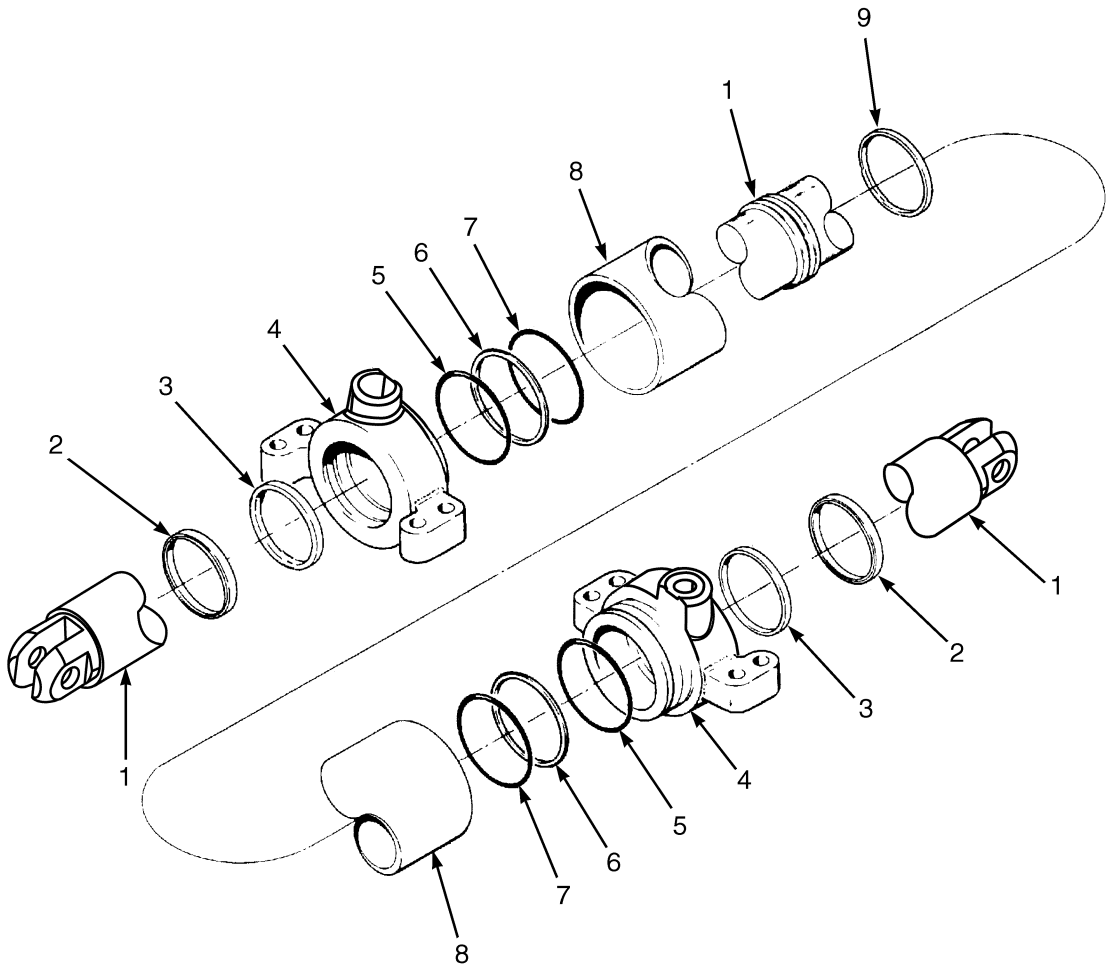

BP220070

©2009 HYSTER COMPANY

STEERING CYLINDER

(8/2005 →)

ITEM	PART NO.	DESCRIPTION	QTY
	2071096	Steering Cylinder	1
1	375634	Cylinder Rod	1
2	2071094	Rod Wiper	2
3	1380092	Rod Seal	2
4	1561008	End Cap	2
5	268619	O-Ring	2
6	147973	Back-Up Ring	2
7	118358	O-Ring	2
8	375635	Tube Wldmt-Cylinder	1
9	2044371	Piston Seal	1
	1566700	Kit-Seal	1

©2009 HYSTER COMPANY

SHIFT LEVER (FIGURE 6-6)

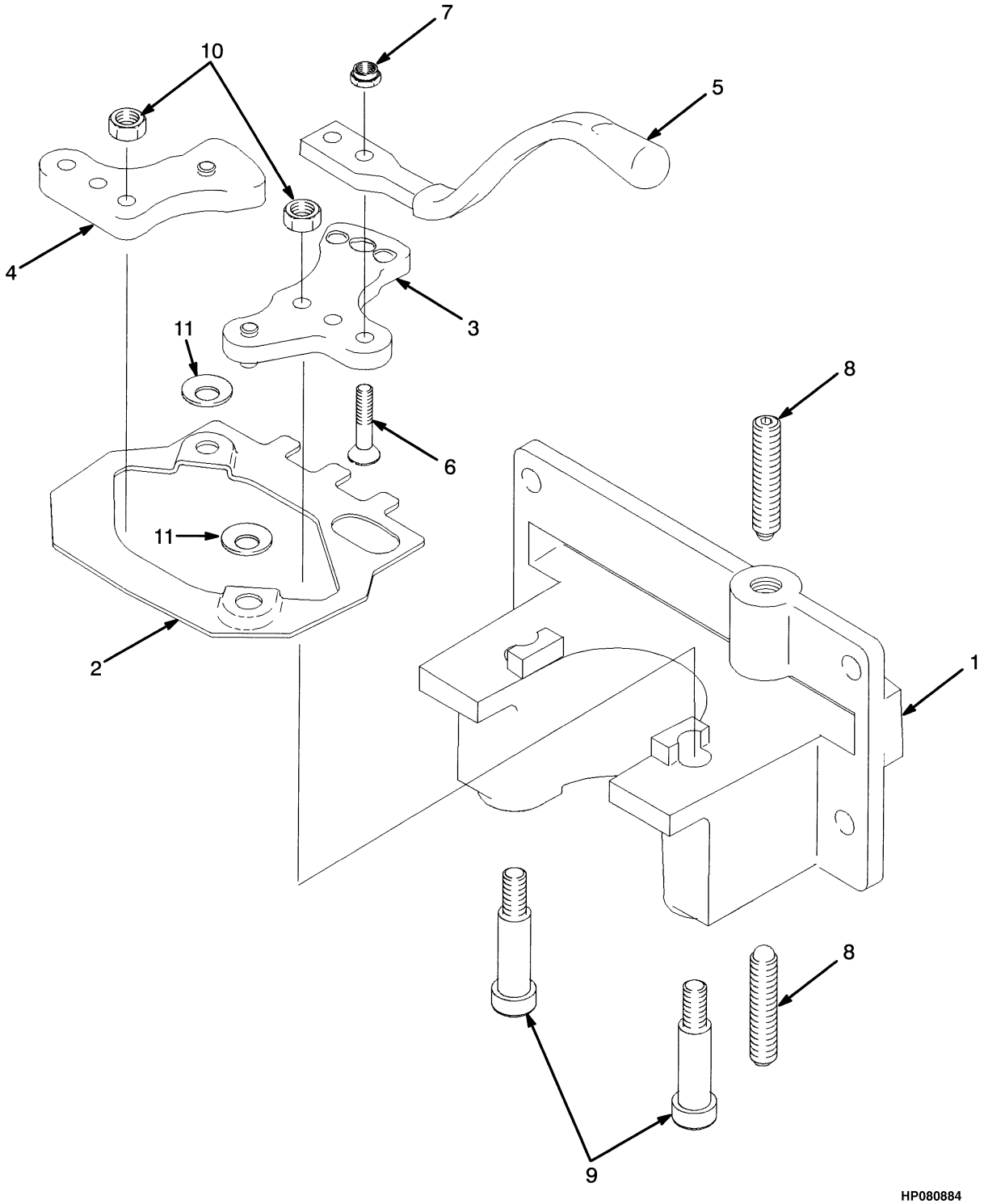

©2009 HYSTER COMPANY

SHIFT LEVER

ITEM	PART NO.	DESCRIPTION	QTY
	1347004	Lever Assembly	1
1	1343577	Base	1
2	1343578	Link	1
3	1343579	Crank	1
4	1343598	Crank	1
5	1343593	Lever	1
6	296205	Screw	2
7	302398	Locknut	2
8	**a** 1338291	Spring	2
8	**b** 1491830	Spring	2
9	1343594	Bolt	2
10	136687	Nut	2
11	1354300	Spring Washer	4

FOOTNOTES:

a → S/N H177B24622

b S/N H177B24623 →

©2009 HYSTER COMPANY

NOTES

©2009 HYSTER COMPANY

7 BRAKE SYSTEM

SECTION 7
BRAKE SYSTEM

DESCRIPTION	PAGE
BRAKE	7-4
BRAKE FITTINGS	
HYDOSTATIC TRANSMISSION	7-10
BRAKE LINES	7-8
BRAKE PEDAL LINKAGE	7-2
MASTER CYLINDER	7-14
PARK BRAKE	7-12

©2009 HYSTER COMPANY

BRAKE PEDAL LINKAGE (FIGURE 7-1)

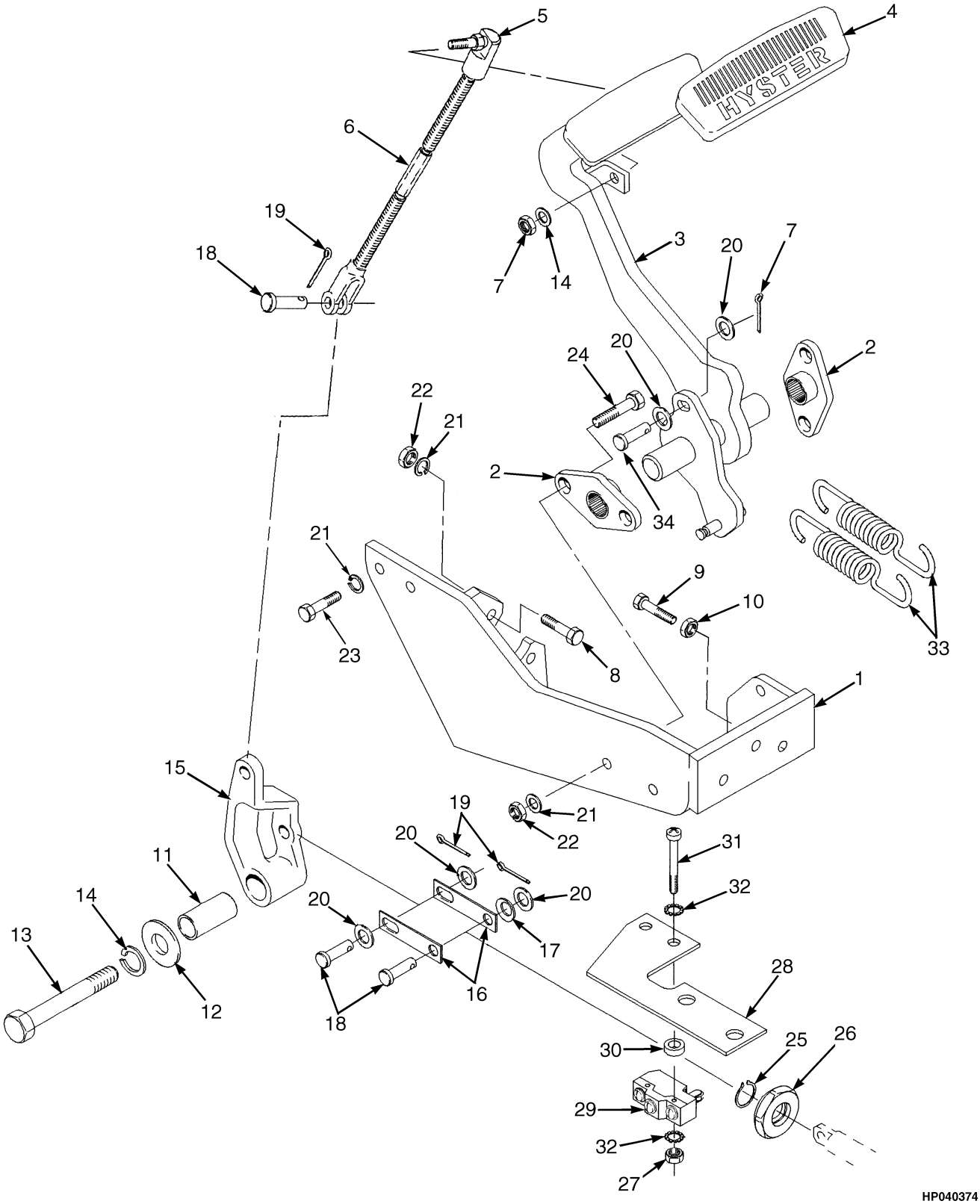

©2009 HYSTER COMPANY

BRAKE PEDAL LINKAGE

ITEM	PART NO.	DESCRIPTION	QTY
1	1343541	Bracket-Wldmt (Master Cylinder)	1
2	1327161	Bushing	2
3	1343540	Pedal	1
4	1343630	Rubber Pad	1
5	1515588	Inching Linkage	1
5	1338260	Ball Joint	1
5	15025	Nut	1
5	1338262	Rod End	1
5	16897	Nut	1
6	2033602	Link	1
7	15212	Cotter Pin	1
8	287860	Capscrew	2
9	292533	Capscrew	1
10	296130	Nut	1
11	1337108	Spacer	1
12	332755	Washer	1
13	136703	Capscrew	1
14	292681	Lockwasher	2
15	1343553	Crank (Inching)	1
16	1337091	Link	2
17	375984	Spring Washer	1
18	142	Pin	4
19	15212	Cotter Pin	4
20	320159	Washer	7
21	292682	Lockwasher	6
22	136692	Nut	4
23	287854	Capscrew	6
24	136985	Capscrew	2
25	209417	Snap Ring	1
26	387455	Ring (Neutral Start)	1
27	15049	Nut	2
28	1324557	Bracket	1
29	1320893	Microswitch	1
30	316132	Spacer	1
31	86510	Screw	2
32	16743	Lockwasher	4
33	1343508	Spring	2
34	142	Pin	1

©2009 HYSTER COMPANY

BRAKE (FIGURE 7-2)

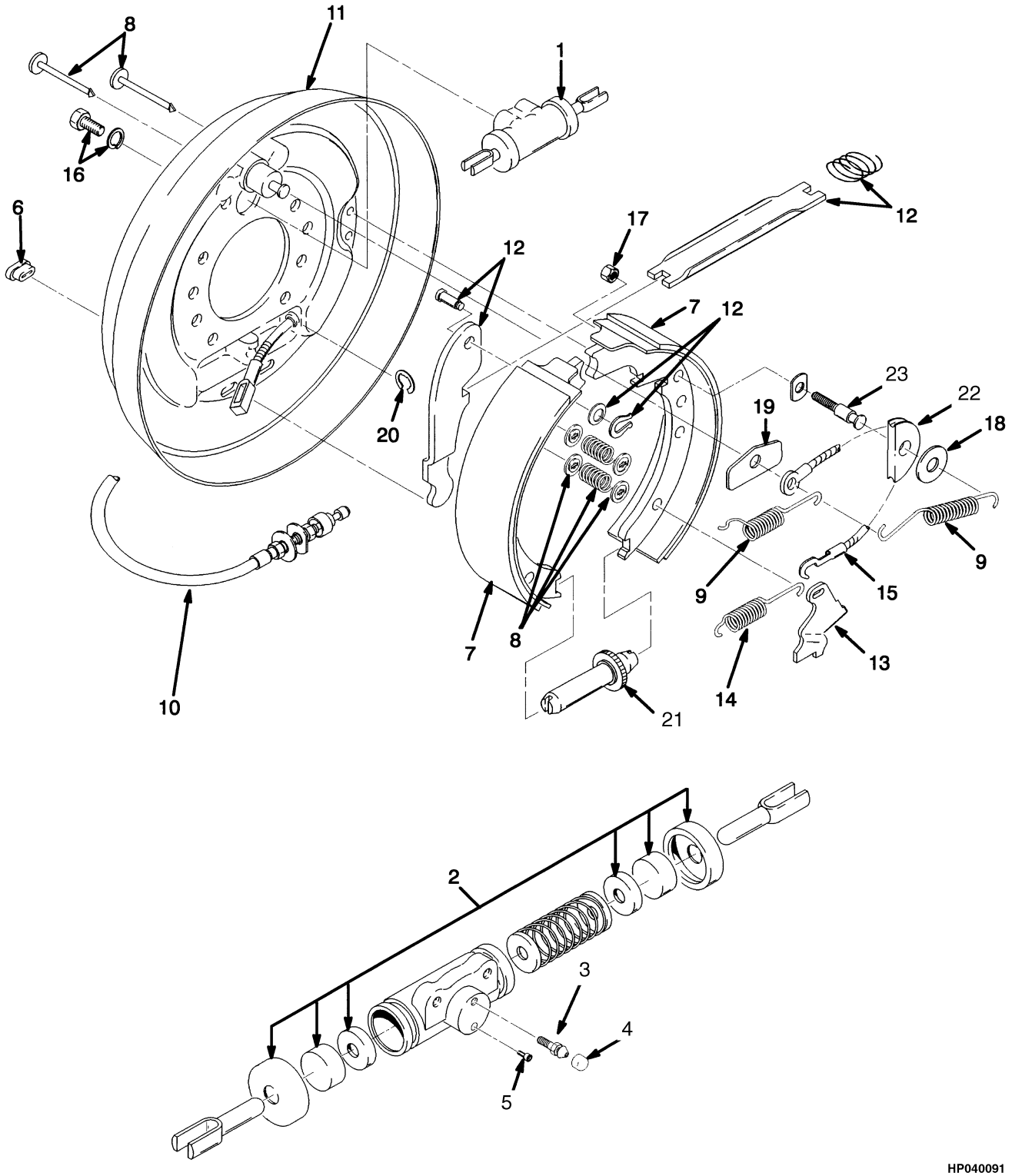

©2009 HYSTER COMPANY

BRAKE

ITEM	PART NO.	DESCRIPTION	QTY
	b 1385023	Brake Assembly (LH) (Hydrostatic)	1
	d 1504040	Brake Assembly (LH) (Hydrostatic)	1
	a 1338256	Brake Assembly (LH) (Powershift)	1
	c 1504038	Brake Assembly (LH) (Powershift)	1
	ab 1338255	Brake Assembly (RH) (Hydrostatic and Powershift)	1
	cd 1504039	Brake Assembly (RH) (Hydrostatic and Powershift)	1
1	1334648	Wheel Cylinder	1
2	1334647	Kit-Repair Wheel Cylinder	1
2	2040959	Kit-Repair Wheel Cylinder	1
2	. . . . .	Piston	2
2	. . . . .	Spring	2
3	1361503	Bleeder Screw	1
4	1361504	Cap	1
5	. . . . .	Plug	1
6	1334642	Cover	1
7	1591664	Kit-Brake Shoe (LH)	1
7	1591665	Kit-Brake Shoe (RH)	1
8	1334639	Kit-Hold Down	1
9	1334638	Kit-Spring	1
10	1358224	Parking Brake Cable (LH and RH) (Hydrostatic)	2
10	1358225	Parking Brake Cable (LH) (Powershift)	1
10	1358224	Parking Brake Cable (RH Powershift)	1
11	**ab** 1347970	Backplate (LH)	1
11	**cd** 1508072	Backplate (LH)	1
11	**ab** 1347971	Backplate (RH)	1
11	**cd** 1508073	Backplate (RH)	1
12	1375048	Parking Brake (LH)	1
12	1375049	Kit-Park Brake (RH)	1
12	1338917	Washer	1
12	1338916	Retainer	1
12	1361507	Strut (LH)	1
12	1360796	Bracket (RH)	1
12	1360797	Spring	1
12	1361506	Parking Brake Lever (LH)	1
12	1360795	Parking Brake Lever (RH)	1
13	1361505	Lever (LH)	1
13	1360794	Lever (RH)	1
14	1360793	Spring	1
15	1360792	Cable Assy	1
16	1360798	Bolt	2
17	. . . . .	Nut	1
18	. . . . .	Washer	1
19	1361501	Wear Plate	1
20	1361502	Snap Ring	1
21	1334646	Adjuster (LH)	1
21	1334645	Adjuster Assembly (RH) (RH)	1
22	. . . . .	Sheave	1
23	. . . . .	Pin	1
24	**cd** 1361507	Strut (LH)	1
24	**cd** 1360796	Bracket (RH)	1

©2009 HYSTER COMPANY

BRAKE

ITEM	PART NO.	DESCRIPTION	QTY
	1379758	Kit-Sheave	1

FOOTNOTES:

a → S/N H177B31501Y
b → S/N H177B34646Z
c S/N H177B31502Y →
d S/N H177B34647Z →

©2009 HYSTER COMPANY

NOTES

©2009 HYSTER COMPANY

BRAKE LINES (FIGURE 7-3)

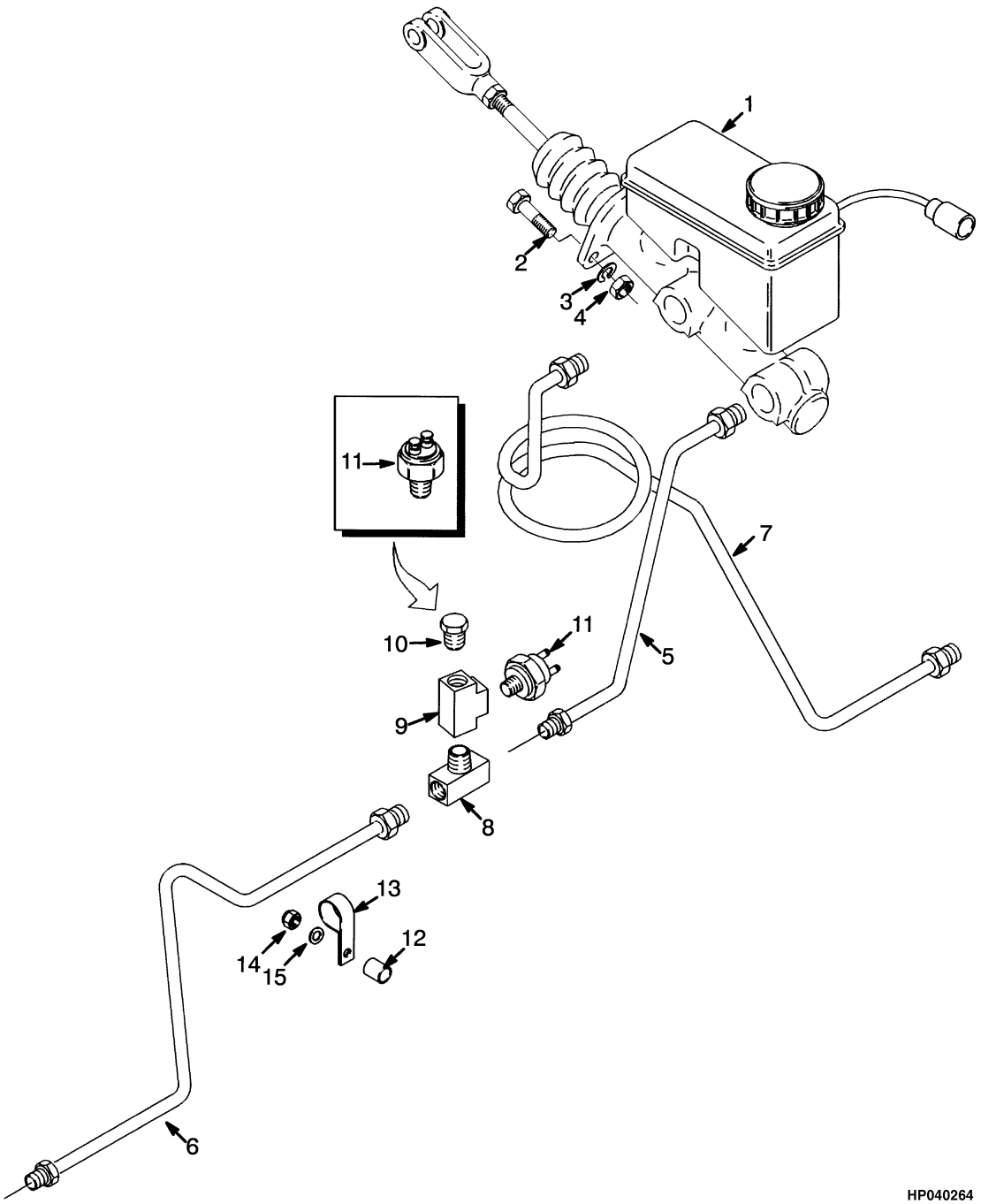

©2009 HYSTER COMPANY

BRAKE LINES

ITEM	PART NO.	DESCRIPTION	QTY
1	1347048	Master Cylinder (☞Figure 7-6)	1
2	287860	Capscrew	2
3	292682	Lockwasher	2
4	136692	Nut	2
5	1381923	Hose Assy (RH)	1
6	1347091	Tube Assy (RH)	1
7	1455550	Tube Assy (LH)	1
8	14899	Fitting	1
9	12838	Fitting	1
10	**a** 14349	Fitting (Pipe Plug)	1
11	**a** 387867	Pressure Switch	1
11	**b** 387867	Pressure Switch	2
12	1361559	Spacer	1
13	1347116	Clamp	1
14	302400	Nut	1
15	320158	Washer	1

FOOTNOTES:

a Forward and Reverse Lever

b Monotrol Pedal

©2009 HYSTER COMPANY

BRAKE FITTINGS (FIGURE 7-4)
HYDOSTATIC TRANSMISSION

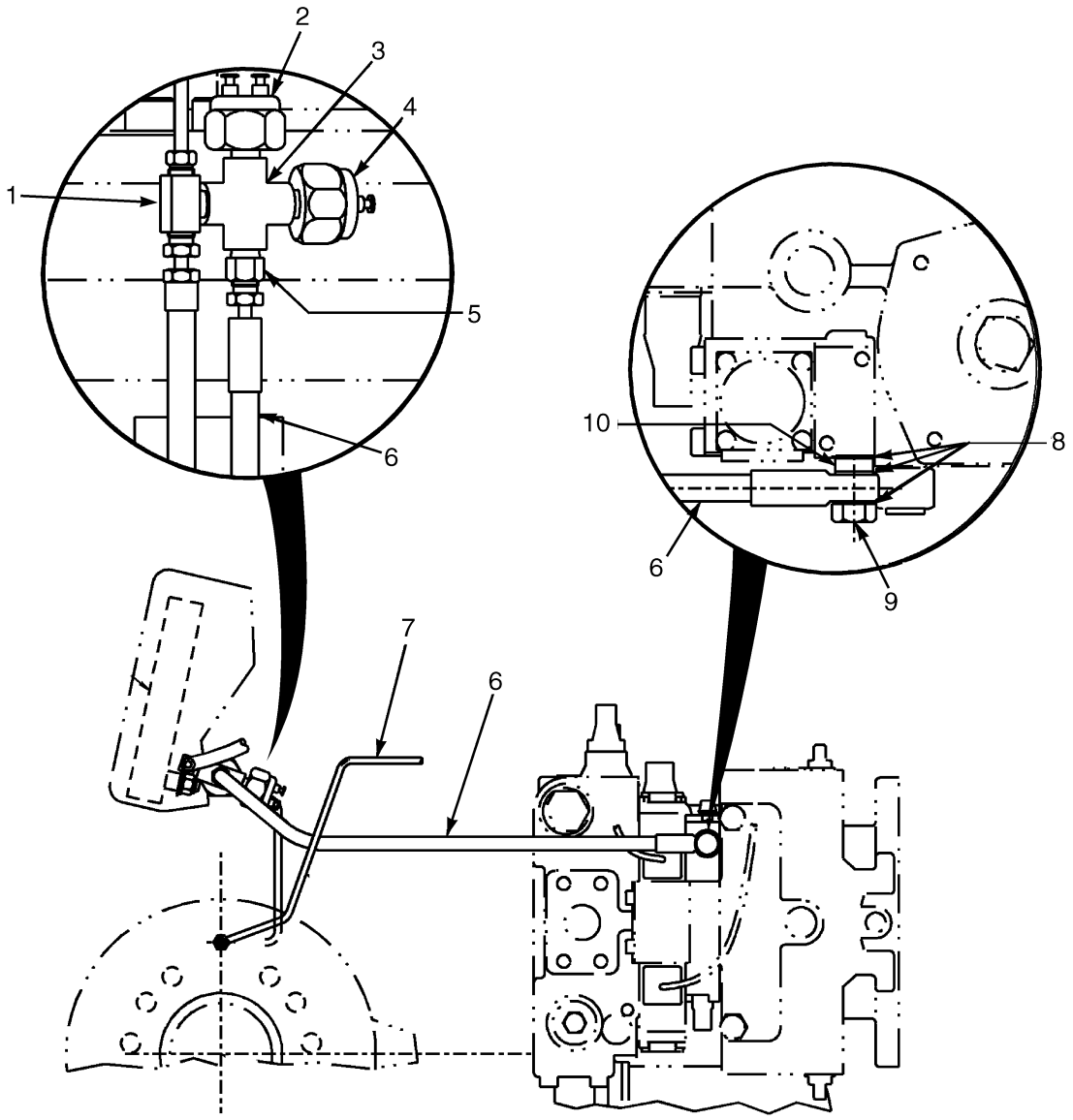

BP040068

ITEM	PART NO.	DESCRIPTION	QTY
1	14899	Fitting	1
2	387867	Pressure Switch	1
3	12870	Fitting	1
4	387867	Pressure Switch (Monotrol Pedal)	1
5	14209	Fitting	1
6	1396250	Hose	1
7	1455550	Tube Assy (LH)	1
8	1396253	Washer (Copper)	3
9	1396251	Capscrew	1
10	1396252	Spacer	1

©2009 HYSTER COMPANY

NOTES

©2009 HYSTER COMPANY

PARK BRAKE (FIGURE 7-5)

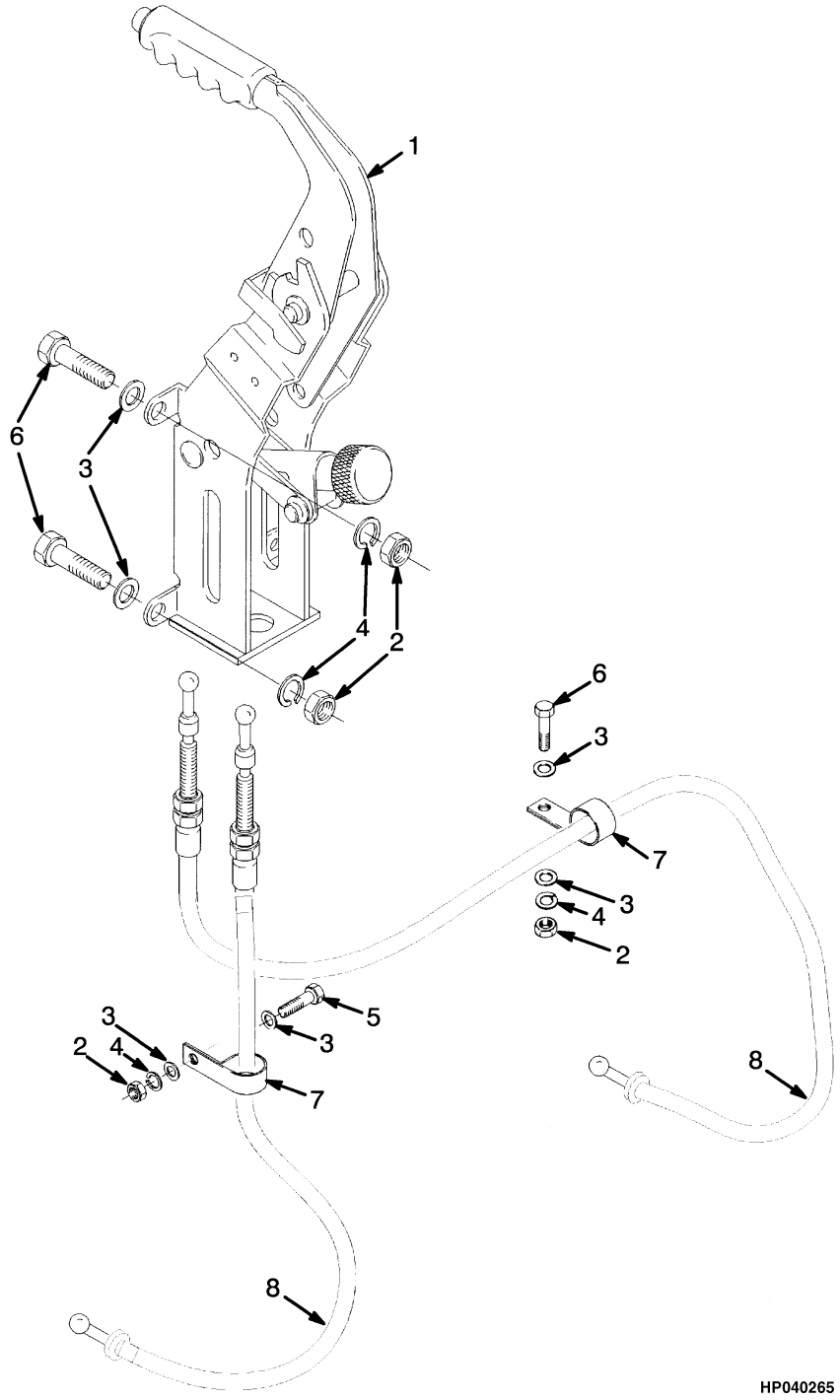

©2009 HYSTER COMPANY

PARK BRAKE

ITEM	PART NO.	DESCRIPTION	QTY
1	1376557	Parking Brake Lever	1
2	239503	Nut	6
3	320157	Washer	8
4	292681	Lockwasher	6
5	176640	Bolt	1
6	136749	Screw	5
7	113341	Clamp	2
8	**a**	Cable	2

FOOTNOTES:

a Cables are included with Brake Assembly

©2009 HYSTER COMPANY

MASTER CYLINDER (FIGURE 7-6)

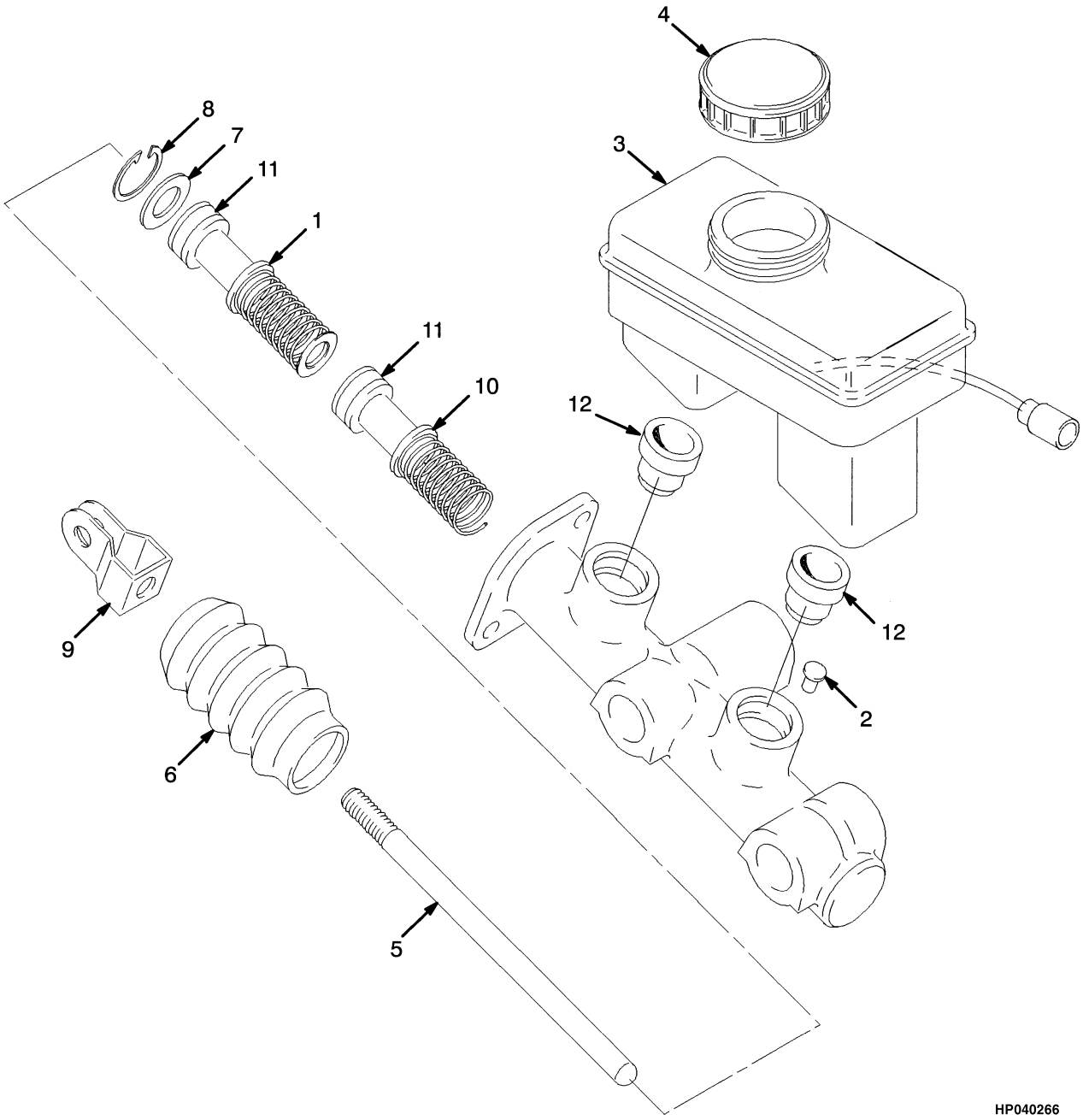

©2009 HYSTER COMPANY

MASTER CYLINDER

ITEM	PART NO.	DESCRIPTION	QTY
	1347048	Master Cylinder	1
1	1357197	Piston	1
2	1324029	Pin	1
3	1357199	Reservoir	1
4	1324048	Cap	1
5	1357201	Push Rod	1
6	1324040	Dust Cover	1
7	1324041	Lockwasher	1
8	1324042	Snap Ring	1
9	1324035	Clevis	1
10	1357196	Piston	1
11	. . . . .	Seal	2
12	. . . . .	Seal	2
	1355305	Kit-Seal	1

©2009 HYSTER COMPANY

NOTES

©2009 HYSTER COMPANY

8 HYDRAULIC SYSTEM

SECTION 8
HYDRAULIC SYSTEM

DESCRIPTION	PAGE
CONTROL VALVE	
FOUR FUNCTION	8-68
THREE FUNCTION	8-64
FLOW VALVE	
POWERSHIFT TRANSMISSION (→ S/N H177B14209 3.0L LPG) (→ S/N H177B13286 3.0L LPG) (→ S/N H177B13960 SINGLE GEAR) (→ S/N H177B13826 DOUBLE GEAR)	8-40
HYDRAULIC PUMP	
HYDROSTATIC TRANSMISSION	8-42
POWERSHIFT - SINGLE GEAR (→ S/N H177B14209 3.0L LPG) (→ S/N H177B13960)	8-28
POWERSHIFT - SINGLE GEAR (S/N H177B14210 ↔ S/N H177B50926B 3.0L LPG) (S/N H177B13961 ↔ S/N H177B51421B)	8-30
POWERSHIFT - SINGLE GEAR (S/N H177B51422B → (2.0L, 2.6L)) (S/N H177B50927B → (3.0L))	8-32
POWERSHIFT - DOUBLE GEAR (→ S/N H177B13286 3.0L LPG) (→ S/N H177B13826)	8-34
POWERSHIFT - DOUBLE GEAR (S/N H177B14210 ↔ S/N H177B51469B 3.0L LPG) (S/N H177B13827 ↔ S/N H177B50608B)	8-36
POWERSHIFT - SINGLE GEAR (S/N H177B50608B → (2.0L, 2.6L)) (S/N H177B51470B → (3.0L))	8-38
HYDRAULIC SUPPLY AND RETURN	
HYDROSTATIC TRANSMISSION - WITH THROTTLE-UP	8-26
HYDRAULIC SYSTEM	
HYDOSTATIC TRANSMISSION - WITH THROTTLE UP (→ S/N H177B23563)	8-14
HYDROSTATIC TRANSMISSION (→ S/N H177B23563)	8-10
HYDROSTATIC TRANSMISSION (S/N H177B23564 →)	8-18
POWERSHIFT TRANSMISSION (→ S/N H177B23563)	8-2
POWERSHIFT TRANSMISSION (S/N H177B23564 →)	8-6
HYDRAULICS	
WITH HYDROSTATIC PUMP - AND ATTACHING PARTS	8-22
MAST INSTALLATION	8-44
TILT CYLINDER	8-46
VALVE ATTACHING PARTS	
WITH DETENT LEVERS (→ S/N H177B23563)	8-48
WITH DETENT LEVERS (S/N H177B23564 →)	8-56
WITHOUT DETENT LEVERS - THREE FUNCTION (→ S/N H177B23563)	8-52
WITHOUT DETENT LEVERS - THREE FUNCTION (S/N H177B23564 →)	8-60

©2009 HYSTER COMPANY

HYDRAULIC SYSTEM (FIGURE 8-1)
POWERSHIFT TRANSMISSION (→ S/N H177B23563)

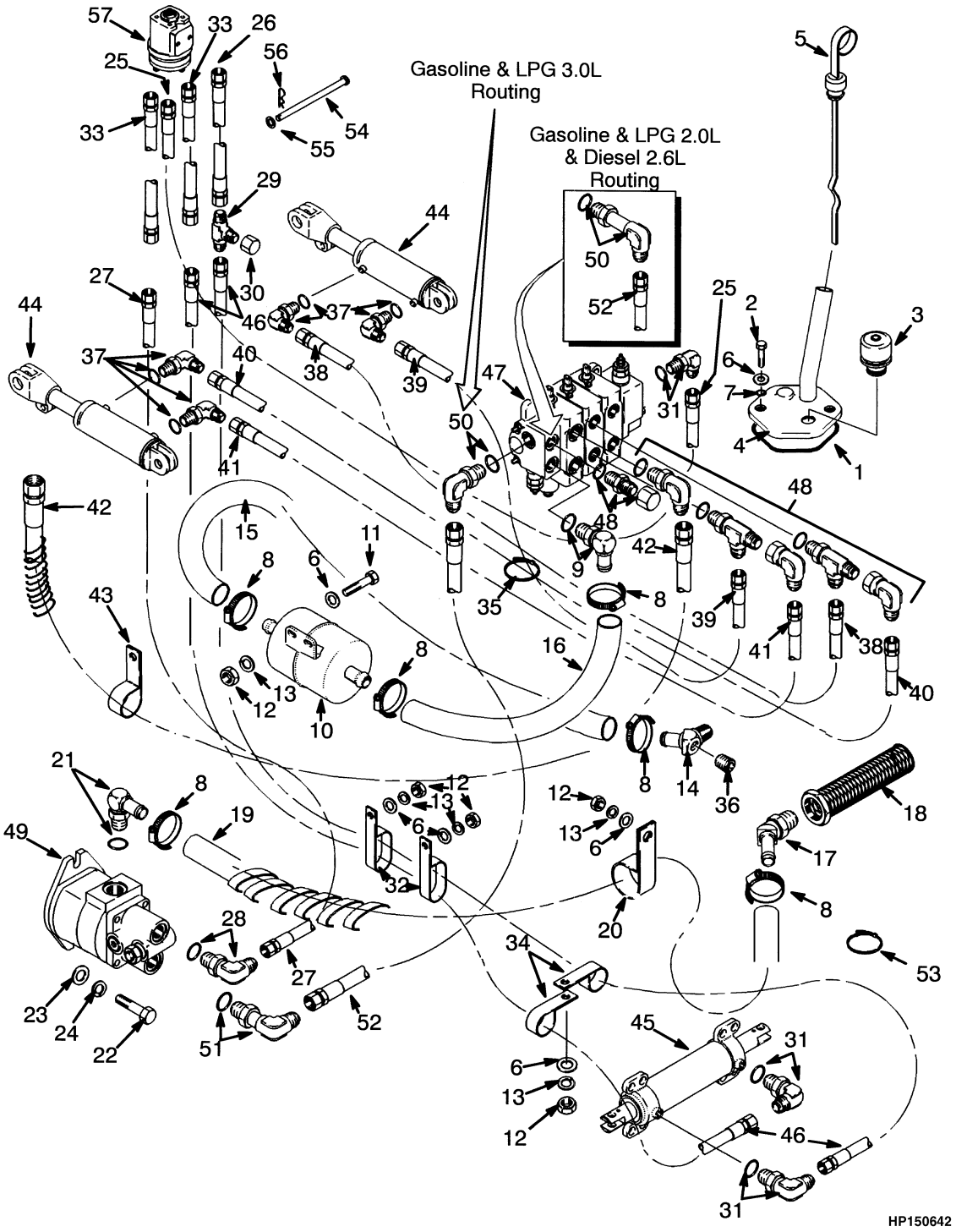

©2009 HYSTER COMPANY

HYDRAULIC SYSTEM

POWERSHIFT TRANSMISSION (→ S/N H177B23563)

ITEM	PART NO.	DESCRIPTION	QTY
1	1343449	Seal	1
2	329067	Screw	2
3	1356393	Breather (40 Micron)	1
4	1339700	Cover	1
5	1339647	Dipstick	1
5	1553758	Dipstick (Optional)	1
6	320157	Washer	12
7	353000	O-Ring	2
8	127045	Clamp (Hose)	6
9	1343452	Fitting	1
10	1337159	Hydraulic Filter	1
11	136749	Screw	2
12	239503	Nut	8
13	292681	Lockwasher	8
14	1343560	Fitting	1
15	1367431	Hose	1
16	878574	Hose	1
17	**f** 1468538	Screen	1
17	**e** 222477	Fitting	1
18	**e** 1328680	Screen	1
19	878782	Hose	1
20	335047	Clamp	1
21	1350273	Fitting	1
22	1356103	Capscrew	2
23	292682	Lockwasher	2
23	292682	Lockwasher	2
24	320159	Washer	2
25	1453620	Hose Assy	1
26	69238	Hose Assy	1
27	168389	Hose Assy	1
28	110174	Fitting	1
29	1347212	Fitting	1
30	16923	Nut	1
31	16558	Fitting	3
32	110322	Clamp	2
33	1458752	Hose Assy	2
34	101625	Clamp	2
35	137852	Strap Clamp	3
36	15347	Fitting	1
37	16556	Fitting	4
37	16481	O-Ring	4
38	1347027	Hose Assy	1
39	1347028	Hose Assy	1
40	1347029	Hose Assy	1
41	1347030	Hose Assy	1
42	1351077	Hose Assy	1
43	176452	Clamp	1
44	1338742	Tilt Cylinder (☞Figure 8-17)	2
45	1321174	Steering Cylinder (☞Figure 6-4)	1
46	1382316	Hose Assy	2

©2009 HYSTER COMPANY

HYDRAULIC SYSTEM

POWERSHIFT TRANSMISSION (→ S/N H177B23563)

ITEM	PART NO.	DESCRIPTION	QTY
47	2033502	Hydraulic Control Valve (Control) (☞Figure 8-22)	1
47	2042619	Hydraulic Control Valve (☞Figure 8-22)	1
47	2033503	Hydraulic Control Valve (☞Figure 8-23)	1
47	2040357	Hydraulic Control Valve (☞Figure 8-23)	1
48	. . . . .	Fitting (☞Figure 8-18, ☞Figure 8-19)	AR
49	1455404	Hydraulic Pump (☞Figure 8-8)	1
49	2037189	Hydraulic Pump (☞Figure 8-9)	1
49	2037190	Hydraulic Pump (☞Figure 8-9)	1
49	1456472	Hydraulic Pump (☞Figure 8-11)	1
49	1456473	Hydraulic Pump (☞Figure 8-11)	1
49	2037192	Hydraulic Pump (☞Figure 8-12)	1
49	2037193	Hydraulic Pump (☞Figure 8-12)	1
50	**d** 1352157	Fitting	1
50	**c** 16560	Fitting	1
50	**c** 16485	O-Ring	1
51	**b** 222413	Fitting	1
51	16485	O-Ring	1
51	**a** 16560	Fitting	1
51	16485	O-Ring	1
52	1351140	Hose Assy (Petrol and LPG)	1
52	1361584	Hose Assy (Diesel)	1
53	129563	Strap Clamp	2
54	1352616	Pin	1
55	320156	Washer	1
56	18824	Cotter Pin	1
57	1453538	Steering Pump (☞Figure 6-3)	1

FOOTNOTES:

a Use with all Gasoline and LPG Double Gear Pump and all Diesel

b Use with all Petrol and LPG 3,0L Engine Single Gear Pump

c Use with Petrol 3,0L Engine

d Use with Petrol and LPG 2,0L and Perkins 2,6L

e → S/N H177B19369X

f S/N H177B19370X →

©2009 HYSTER COMPANY

NOTES

©2009 HYSTER COMPANY

HYDRAULIC SYSTEM (FIGURE 8-2)

POWERSHIFT TRANSMISSION (S/N H177B23564 →)

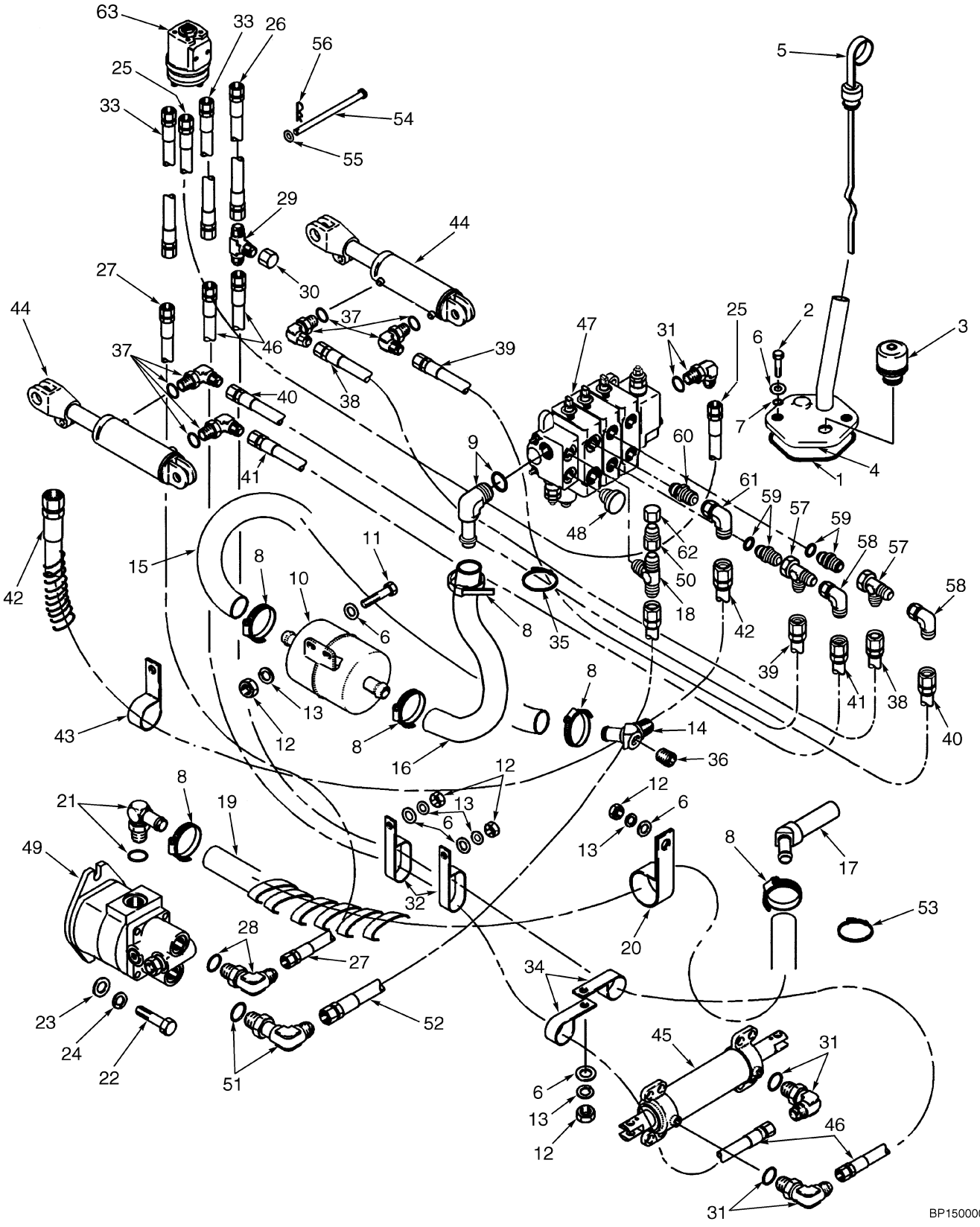

©2009 HYSTER COMPANY

HYDRAULIC SYSTEM

POWERSHIFT TRANSMISSION (S/N H177B23564 →)

ITEM	PART NO.	DESCRIPTION	QTY
1	1343449	Seal	1
2	329067	Screw	2
3	1356393	Breather (40 Micron)	1
4	1339700	Cover	1
5	1339647	Dipstick	1
6	320157	Washer	12
7	353000	O-Ring	2
8	127045	Clamp (Hose)	6
9	1343452	Fitting	1
10	1337159	Hydraulic Filter	1
11	136749	Screw	2
12	239503	Nut	8
13	292681	Lockwasher	8
14	1343560	Fitting	1
15	1367431	Hose	1
16	878574	Hose	1
17	**g** 1468538	Screen	1
17	**m** 1624904	Strainer	1
17	16984	O-Ring	1
18	16578	Fitting	1
19	**g** 878782	Hose	1
19	**m** 1555006	Hose	1
20	335047	Clamp	1
21	1350273	Fitting	1
22	1356103	Capscrew	2
23	292682	Lockwasher	2
24	320159	Washer	2
25	1453620	Hose Assy	1
26	69238	Hose Assy	1
27	168389	Hose Assy	1
28	110174	Fitting	1
29	1347212	Fitting	1
30	16923	Nut	1
31	16558	Fitting	1
32	110322	Clamp	2
33	1458752	Hose Assy	2
34	101625	Clamp	2
35	137852	Strap Clamp	3
36	15347	Fitting	1
37	16556	Fitting	4
37	16481	O-Ring	1
38	1347027	Hose Assy	1
39	1347028	Hose Assy	1
40	1347029	Hose Assy	1
41	1347030	Hose Assy	1
42	1351077	Hose Assy	1
43	176452	Clamp	1
44	1338742	Tilt Cylinder (☞Figure 8-17)	2
45	**c** 1321174	Steering Cylinder (☞Figure 6-4)	1
45	**r** 2071096	Steering Cylinder (☞Figure 6-5)	1

©2009 HYSTER COMPANY

HYDRAULIC SYSTEM

POWERSHIFT TRANSMISSION (S/N H177B23564 →)

ITEM	PART NO.	DESCRIPTION	QTY
46	1382316	Hose Assy	2
47	2033502	Hydraulic Control Valve (☞Figure 8-22)	1
47	2042619	Hydraulic Control Valve (☞Figure 8-22)	1
47	2033503	Hydraulic Control Valve (☞Figure 8-23)	1
47	2040357	Hydraulic Control Valve (☞Figure 8-23)	1
48	233693	Fitting	1
49	**d** 1455404	Hydraulic Pump (☞Figure 8-8)	1
49	**i** 2037189	Hydraulic Pump (☞Figure 8-9)	1
49	**p** 2069689	Hydraulic Pump (☞Figure 8-10)	1
49	**j** 2037190	Hydraulic Pump (☞Figure 8-9)	1
49	**o** 2069690	Hydraulic Pump (☞Figure 8-10)	1
49	**d** 1456472	Hydraulic Pump (☞Figure 8-11)	1
49	**h** 2037192	Hydraulic Pump (☞Figure 8-12)	1
49	**n** 2069692	Hydraulic Pump (☞Figure 8-13)	1
49	**e** 1456473	Hydraulic Pump (☞Figure 8-11)	1
49	**k** 2037193	Hydraulic Pump (☞Figure 8-12)	1
49	**q** 2069693	Hydraulic Pump (☞Figure 8-13)	1
50	222365	Fitting	1
51	**b** 222413	Fitting	1
51	16485	O-Ring	1
51	**a** 16560	Fitting	1
51	16485	O-Ring	1
52	**f** 1361584	Hose Assy	1
52	**l** 1351140	Hose Assy	1
53	129563	Strap Clamp	1
54	1352616	Pin	1
55	320156	Washer	1
56	18824	Cotter Pin	1
57	17059	Fitting	2
58	16987	Fitting	2
59	222381	Fitting	2
60	206150	Fitting	1
61	16882	Fitting	1
62	16923	Nut	1

FOOTNOTES:

a Used on 2,0L Engine Double Gear Pump Diesel 2,6L and Petrol and LPG 3,0L
b Used on 2,0L Engine Single Gear Pump
c → 8/2005
d → S/N H177B13960
e → S/N H177B14209
f → S/N H177B28688Y
g → S/N H177B47924B
h S/N H177B13961 ↔ S/N H177B50608B
i S/N H177B13961 ↔ S/N H177B51422B
j S/N H177B14210 ↔ S/N H177B50926B
k S/N H177B14210 ↔ S/N H177B51469B
l S/N H177B28689Y →
m S/N H177B47925B →
n S/N H177B50609B →
o S/N H177B50927B →
p S/N H177B51422B →
q S/N H177B51470B →
r 8/2005 →

©2009 HYSTER COMPANY

NOTES

©2009 HYSTER COMPANY

HYDRAULIC SYSTEM (FIGURE 8-3)

HYDROSTATIC TRANSMISSION (→ S/N H177B23563)

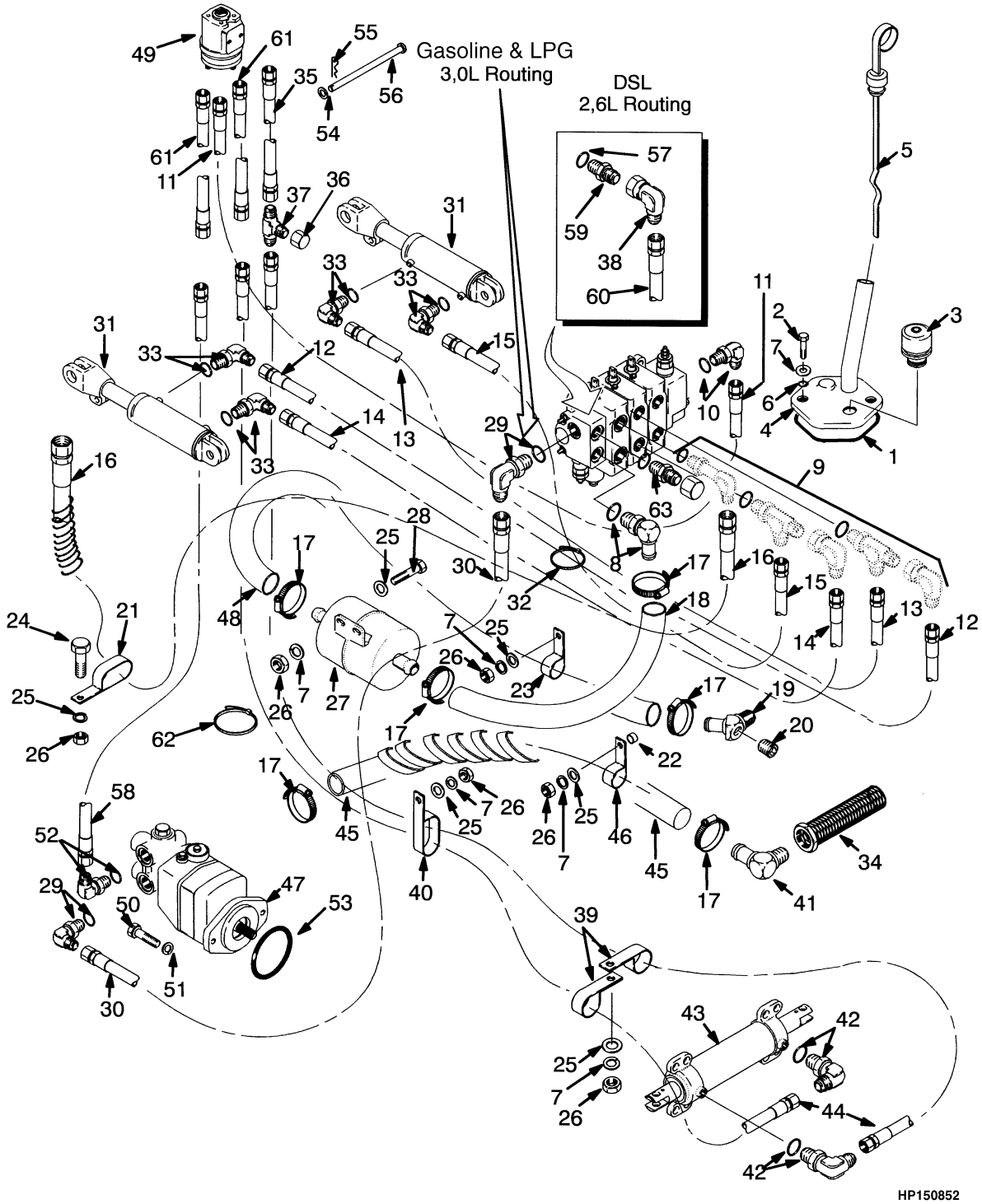

©2009 HYSTER COMPANY

HYDRAULIC SYSTEM

HYDROSTATIC TRANSMISSION (→ S/N H177B23563)

ITEM	PART NO.	DESCRIPTION	QTY
1	1343449	Seal	1
2	329067	Screw	2
3	1356393	Breather (40 Micron)	1
4	1339700	Cover	1
5	1339647	Dipstick	1
6	353000	O-Ring	2
7	320157	Washer	3
8	1343452	Fitting	1
9	. . . . .	Fitting (☞Figure 8-18, ☞Figure 8-19)	1
10	16558	Fitting	1
10	16483	O-Ring	1
11	1453620	Hose Assy	1
12	1347029	Hose Assy	1
13	1347027	Hose Assy	1
14	1347030	Hose Assy	1
15	1347028	Hose Assy	1
16	1351077	Hose Assy	1
17	127045	Clamp (Hose)	6
18	878574	Hose	1
19	1343560	Fitting	1
20	15347	Fitting	1
21	339530	Clamp	1
22	1333835	Spacer	1
23	210403	Clamp	1
24	296010	Capscrew	1
25	292681	Lockwasher	7
26	239503	Nut	7
27	1337159	Hydraulic Filter	1
28	136749	Screw	2
29	16560	Fitting	2
29	16485	O-Ring	1
30	1385048	Hose Assy	1
31	1338742	Tilt Cylinder (☞Figure 8-17)	2
32	137852	Strap Clamp	3
33	16556	Fitting	4
33	16481	O-Ring	1
34	1328680	Screen	1
35	69238	Hose Assy	1
36	1347212	Fitting	1
37	16923	Nut	1
38	1461258	Fitting	1
39	101625	Clamp	2
40	110322	Clamp	2
41	17120	Fitting	1
42	16558	Fitting	1
42	16483	O-Ring	1
43	1321174	Steering Cylinder (☞Figure 6-4)	1
44	1382316	Hose Assy	2
45	1392194	Hose	1
46	335047	Clamp	1

©2009 HYSTER COMPANY

HYDRAULIC SYSTEM

HYDROSTATIC TRANSMISSION (→ S/N H177B23563)

ITEM	PART NO.	DESCRIPTION	QTY
47	1384939	Hydraulic Pump (☞Figure 8-15)	1
48	1392180	Hose	1
49	1453538	Steering Pump (☞Figure 6-3)	1
50	292528	Capscrew	2
51	292683	Lockwasher	2
52	110174	Fitting	1
53	39742	O-Ring	1
54	320156	Washer	1
55	18824	Cotter Pin	1
56	1352616	Pin	1
57	17756	Fitting	1
58	1392248	Hose Assy	1
59	1352157	Fitting	1
60	1461951	Hose Assy	1
61	1458752	Hose Assy	2
62	129563	Strap Clamp	2
63	16923	Nut	1

©2009 HYSTER COMPANY

NOTES

©2009 HYSTER COMPANY

HYDRAULIC SYSTEM (FIGURE 8-4)

HYDOSTATIC TRANSMISSION — WITH THROTTLE UP (→ S/N H177B23563)

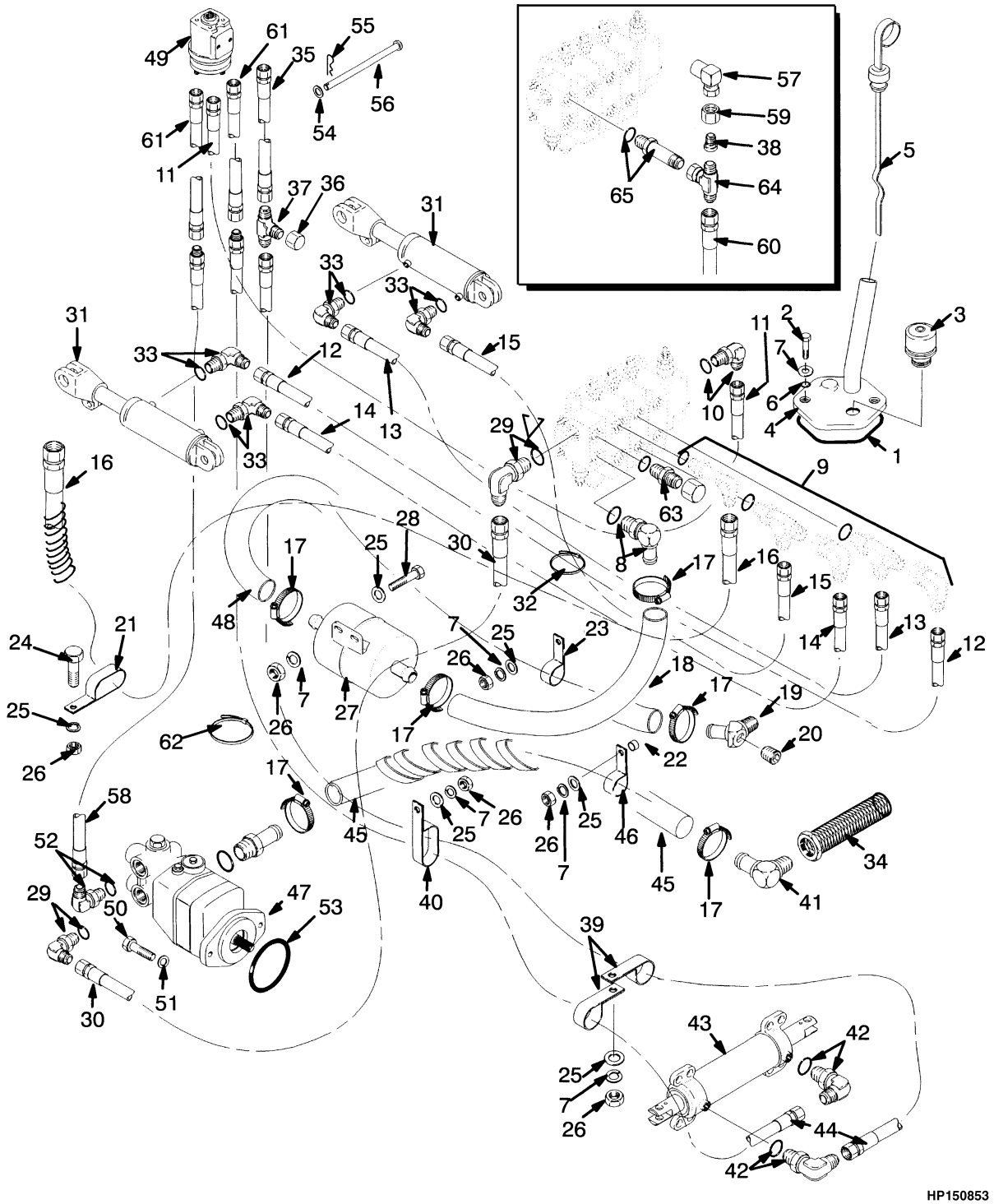

©2009 HYSTER COMPANY

HYDRAULIC SYSTEM

HYDOSTATIC TRANSMISSION – WITH THROTTLE UP (→ S/N H177B23563)

ITEM	PART NO.	DESCRIPTION	QTY
1	1343449	Seal	1
2	329067	Screw	2
3	1356393	Breather (40 Micron)	1
4	1339700	Cover	1
5	1339647	Dipstick	1
6	353000	O-Ring	2
7	320157	Washer	6
8	1343452	Fitting	1
9	. . . . .	Fitting (☞Figure 8-18, ☞Figure 8-19)	1
10	16558	Fitting	1
10	16483	O-Ring	1
11	1453620	Hose Assy	1
12	1347029	Hose Assy	1
13	1347027	Hose Assy	1
14	1347030	Hose Assy	1
15	1347028	Hose Assy	1
16	1351077	Hose Assy	1
17	127045	Clamp (Hose)	6
18	878574	Hose	1
19	1343560	Fitting	1
20	15347	Fitting	1
21	339530	Clamp	1
22	1333835	Spacer	2
23	210403	Clamp	1
24	296010	Capscrew	1
25	292681	Lockwasher	7
26	239503	Nut	7
27	1337159	Hydraulic Filter	1
28	136749	Screw	2
29	16560	Fitting	2
29	16485	O-Ring	1
30	1385048	Hose Assy	1
31	1338742	Tilt Cylinder (☞Figure 8-17)	2
32	137852	Strap Clamp	3
33	16556	Fitting	4
33	16481	O-Ring	1
34	1328680	Screen	1
35	69238	Hose Assy	1
36	1347212	Fitting	1
37	16923	Nut	1
38	222365	Fitting	1
39	101625	Clamp	2
40	110322	Clamp	2
41	17120	Fitting	1
42	16558	Fitting	2
42	16483	O-Ring	1
43	1321174	Steering Cylinder (☞Figure 6-4)	1
44	1382316	Hose Assy	2
45	1392194	Hose	1
46	335047	Clamp	1

©2009 HYSTER COMPANY

HYDRAULIC SYSTEM

HYDOSTATIC TRANSMISSION – WITH THROTTLE UP (→ S/N H177B23563)

ITEM	PART NO.	DESCRIPTION	QTY
47	1384939	Hydraulic Pump (☞Figure 8-15)	1
48	1392180	Hose	1
49	1453538	Steering Pump (☞Figure 6-3)	1
50	292528	Capscrew	2
51	292683	Lockwasher	2
52	110174	Fitting	1
52	16484	O-Ring	1
53	39742	O-Ring	1
54	320156	Washer	1
55	18824	Cotter Pin	1
56	1352616	Pin	1
57	1461258	Fitting	1
58	1392248	Hose Assy	1
59	14491	Sleeve	1
60	1461951	Hose Assy	1
61	1458752	Hose Assy	2
62	129563	Strap Clamp	2
63	16923	Nut	1
64	17051	Fitting	1
65	16551	Fitting	1
65	16485	O-Ring	1

©2009 HYSTER COMPANY

NOTES

©2009 HYSTER COMPANY

HYDRAULIC SYSTEM (FIGURE 8-5)

HYDROSTATIC TRANSMISSION (S/N H177B23564 →)

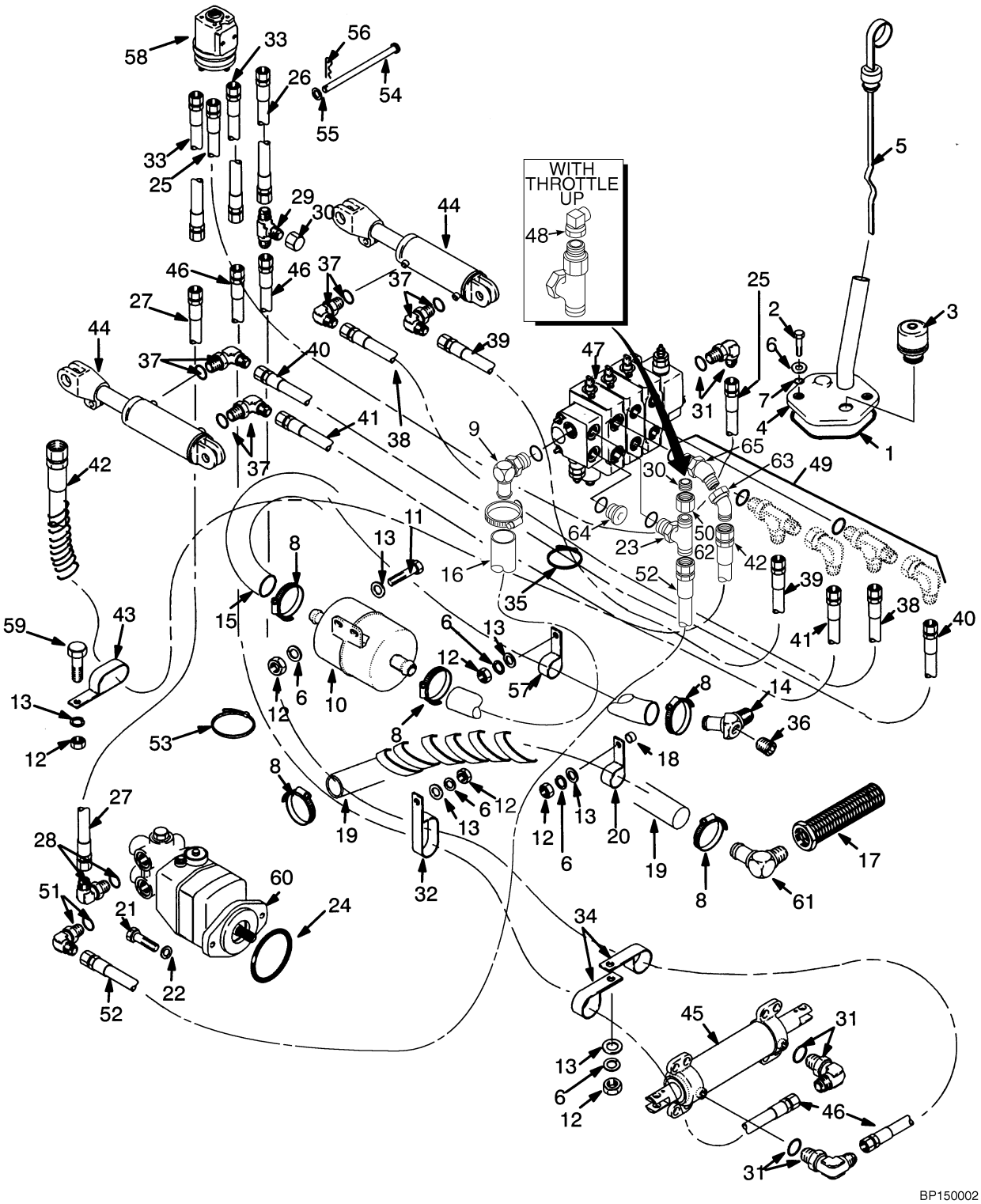

©2009 HYSTER COMPANY

HYDRAULIC SYSTEM

HYDROSTATIC TRANSMISSION (S/N H177B23564 →)

ITEM	PART NO.	DESCRIPTION	QTY
1	1343449	Seal	1
2	329067	Screw	2
3	1356393	Breather (40 Micron)	1
4	1339700	Cover	1
5	1339647	Dipstick	1
6	320157	Washer	3
7	353000	O-Ring	2
8	127045	Clamp (Hose)	6
9	1343452	Fitting	1
10	1337159	Hydraulic Filter	1
11	136749	Screw	2
12	239503	Nut	7
13	292681	Lockwasher	7
14	1343560	Fitting	1
15	1392180	Hose	1
16	878574	Hose	1
17	1328680	Screen	1
18	1333835	Spacer	1
19	1392194	Hose	1
20	335047	Clamp	1
21	292528	Capscrew	2
22	292683	Lockwasher	2
23	16578	Fitting	1
23	16485	O-Ring	1
24	39742	O-Ring	1
25	1453620	Hose Assy	1
26	69238	Hose Assy	1
27	1392248	Hose Assy	1
28	110174	Fitting	1
28	16484	O-Ring	1
29	1347212	Fitting	1
30	**b** 16923	Nut	2
31	16558	Fitting	3
31	16483	O-Ring	1
32	110322	Clamp	3
33	1458752	Hose Assy	2
34	110322	Clamp	2
35	137852	Strap Clamp	3
36	15347	Fitting	1
37	16556	Fitting	4
37	16481	O-Ring	1
38	1347027	Hose Assy	1
39	1347028	Hose Assy	1
40	1347029	Hose Assy	1
41	1347030	Hose Assy	1
42	1351077	Hose Assy	1
43	339530	Clamp	1
44	1338742	Tilt Cylinder (☞Figure 8-17)	2
45	**c** 1321174	Steering Cylinder (☞Figure 6-4)	1
45	**d** 2071096	Steering Cylinder (☞Figure 6-5)	1

©2009 HYSTER COMPANY

HYDRAULIC SYSTEM

HYDROSTATIC TRANSMISSION (S/N H177B23564 →)

ITEM	PART NO.	DESCRIPTION	QTY
46	1382316	Hose Assy	2
47	2033502	Hydraulic Control Valve (☞Figure 8-22)	1
47	2042619	Hydraulic Control Valve (☞Figure 8-22)	1
47	2033503	Hydraulic Control Valve (☞Figure 8-23)	1
47	2040357	Hydraulic Control Valve (☞Figure 8-23)	1
48	**a** 1461258	Fitting	1
49	. . . . .	Fitting (☞Figure 8-20, ☞Figure 8-21)	AR
50	222365	Fitting	1
51	16560	Fitting	1
51	16484	O-Ring	1
52	1461951	Hose Assy (Diesel)	1
52	1484092	Hose Assy (LPG)	1
53	129563	Strap Clamp	1
54	1352616	Pin	1
55	320156	Washer	1
56	18824	Cotter Pin	1
57	210403	Clamp	1
58	1453538	Steering Pump (☞Figure 6-3)	1
59	296010	Capscrew	1
60	1384939	Hydraulic Pump (☞Figure 8-15)	1
61	17120	Fitting	1
62	14491	Sleeve	1
63	17039	Fitting	1
64	233693	Fitting	1
64	16485	O-Ring	1
65	134680	Fitting	1
65	16485	O-Ring	1

FOOTNOTES:

a With Throttle-Up
b Without Throttle-Up
c → 8/2005
d 8/2005 →

©2009 HYSTER COMPANY

NOTES

©2009 HYSTER COMPANY

HYDRAULICS (FIGURE 8-6)
WITH HYDROSTATIC PUMP — AND ATTACHING PARTS

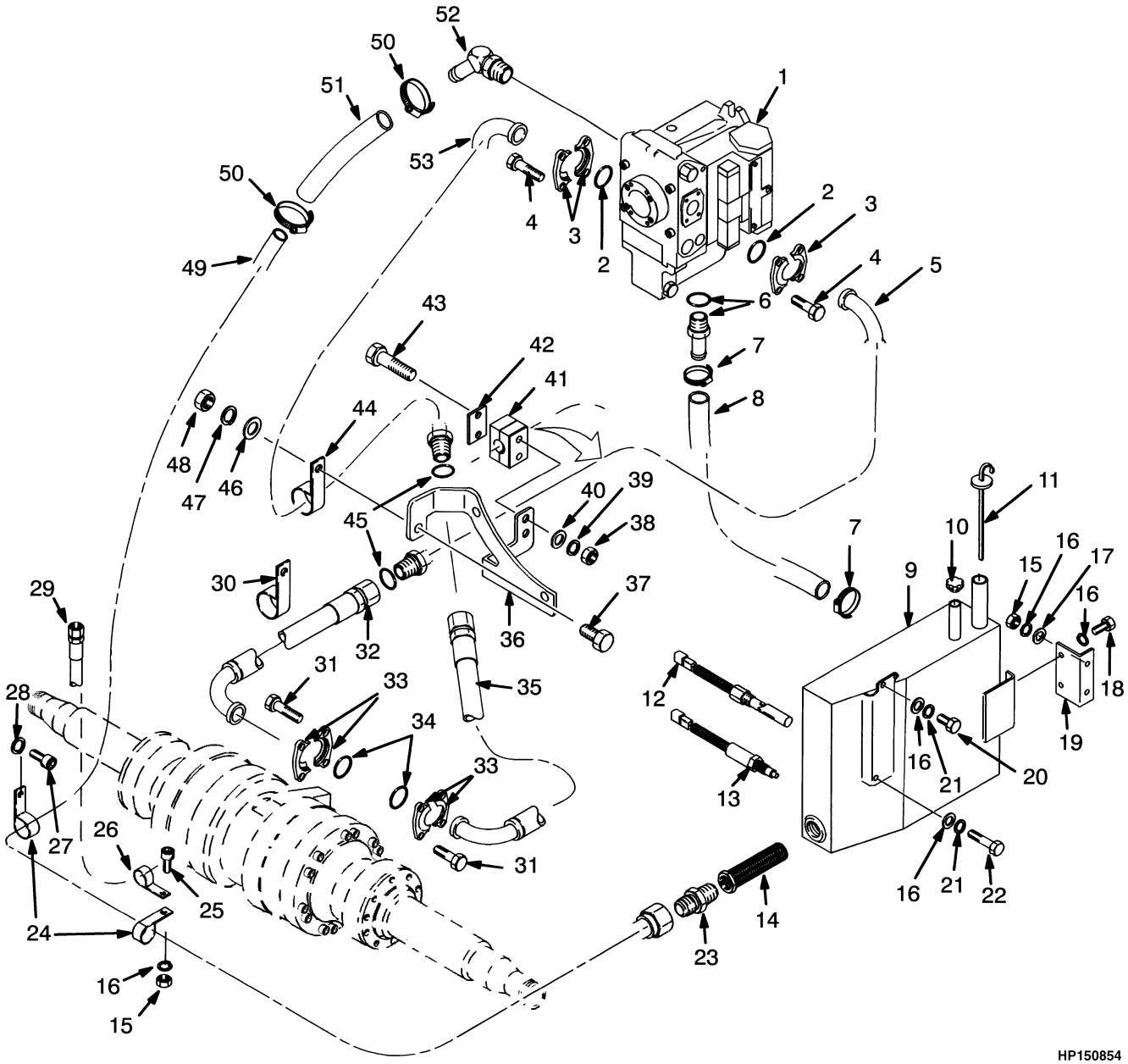

©2009 HYSTER COMPANY

HYDRAULICS
WITH HYDROSTATIC PUMP – AND ATTACHING PARTS

KEY:
A: Petrol and LPG
B: Diesel

ITEM	PART NO.	DESCRIPTION	QTY A	QTY B
1	1462217	Hydraulic Pump	1	1
2	1392192	O-Ring	2	2
3	222535	Fitting	4	4
4	177461	Capscrew	8	8
5	1384377	Tube (LH)	1	..
5	1397335	Exhaust Pipe (LH)	..	1
6	1385015	Valve (By-Pass)	1	1
7	130845	Clamp	5	5
8	1384384	Hose	1	1
9	1384382	Hydraulic Tank (Assembly)	1	1
9	1384949	Hydraulic Tank	1	1
10	1384389	Breather	1	1
11	1384393	Dipstick	1	1
12	1392240	Switch (Tank Level)	1	1
13	1463326	Switch	1	1
14	1384372	Screen	1	1
15	239503	Nut	2	2
16	292681	Lockwasher	2	2
17	320158	Washer	2	2
18	136681	Capscrew	2	2
19	1385036	Bracket	1	1
20	136749	Screw	1	1
21	320157	Washer	2	2
22	214364	Capscrew	1	1
23	14685	Fitting	1	1
24	140612	Hose Clamp	2	2
25	296010	Capscrew	1	1
26	339530	Clamp	1	1
27	296009	Capscrew	1	1
28	296380	Washer	1	1
29	1351077	Hose Assy	1	1
30	144067	Clamp	1	1
31	134328	Capscrew	8	8
32	1385016	Hose Assy (RH)	1	1
33	213617	Flange (Split Half)	4	4
34	1392193	O-Ring	2	2
35	1385017	Hose Assy (LH)	1	1
36	1383004	Bracket	1	1
37	136985	Capscrew	1	1
38	136687	Nut	2	2
39	292680	Washer	2	2
40	296417	Washer	2	2
41	1338570	Clamp	1	1
42	1396345	Plate	AR	AR
43	292507	Capscrew	2	2

©2009 HYSTER COMPANY

HYDRAULICS
WITH HYDROSTATIC PUMP – AND ATTACHING PARTS

KEY:
A: Petrol and LPG
B: Diesel

ITEM	PART NO.	DESCRIPTION	QTY A	QTY B
44	1310611	Clamp	1	1
45	1392191	O-Ring	2	2
46	292682	Lockwasher	1	1
47	320159	Washer	1	1
48	136692	Nut	1	1
49	1384390	Tube Assy	1	1
50	127045	Clamp (Hose)	2	2
51	1384396	Hose	1	1
52	141908	Fitting	1	1
53	1384378	Tube Assy (RH)	1	1

©2009 HYSTER COMPANY

NOTES

©2009 HYSTER COMPANY

HYDRAULIC SUPPLY AND RETURN (FIGURE 8-7)
HYDROSTATIC TRANSMISSION — WITH THROTTLE-UP

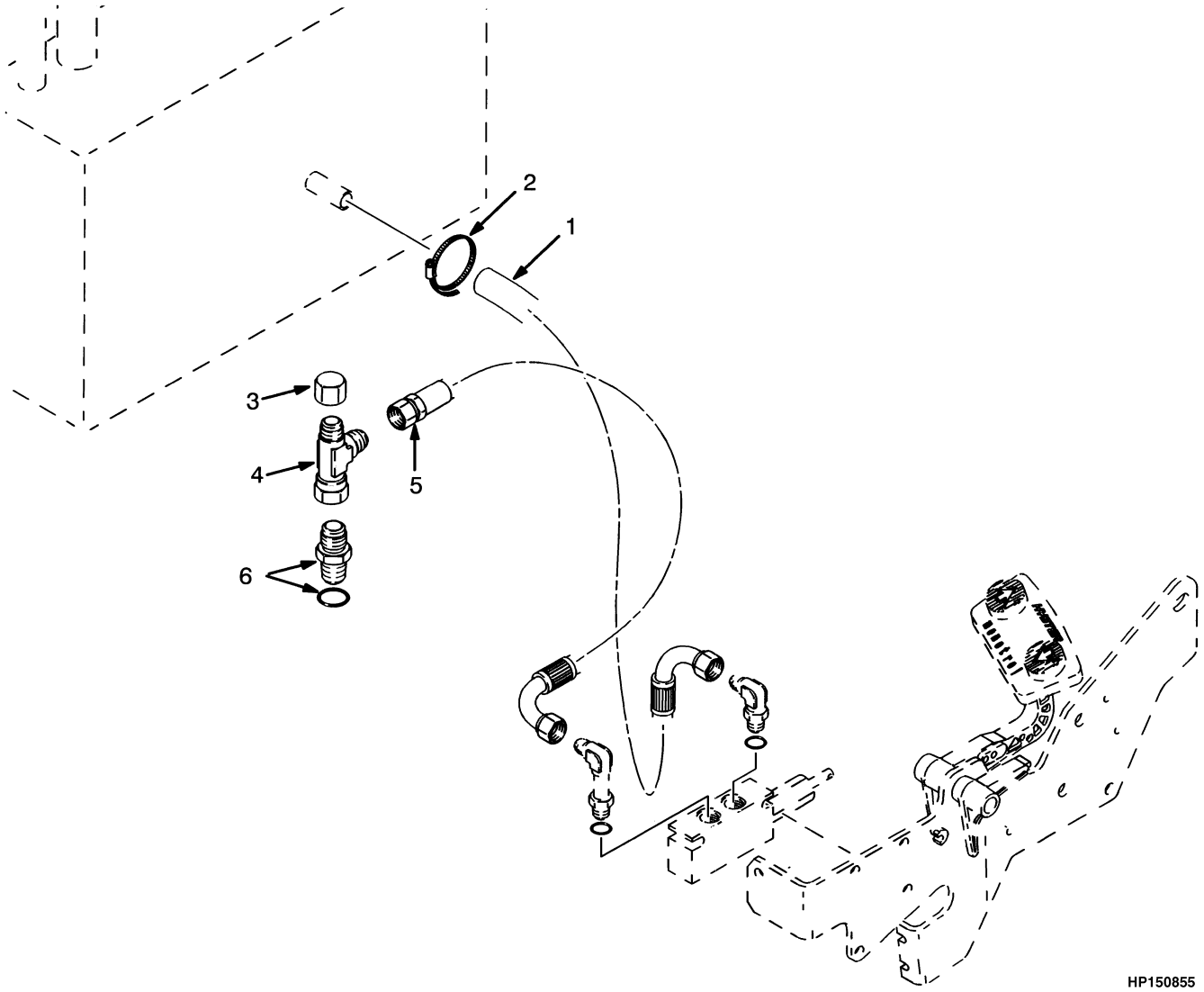

©2009 HYSTER COMPANY

HYDRAULIC SUPPLY AND RETURN
HYDROSTATIC TRANSMISSION – WITH THROTTLE-UP

ITEM	PART NO.	DESCRIPTION	QTY
1	1394010	Hose Assy	1
2	166857	Clamp	1
3	16693	Nut	1
4	17061	Fitting	1
5	1456275	Hose Assy	1
6	16540	Connector	1
6	16483	O-Ring	1

©2009 HYSTER COMPANY

HYDRAULIC PUMP (FIGURE 8-8)

POWERSHIFT — SINGLE GEAR (→ S/N H177B14209 3.0L LPG) (→ S/N H177B13960)

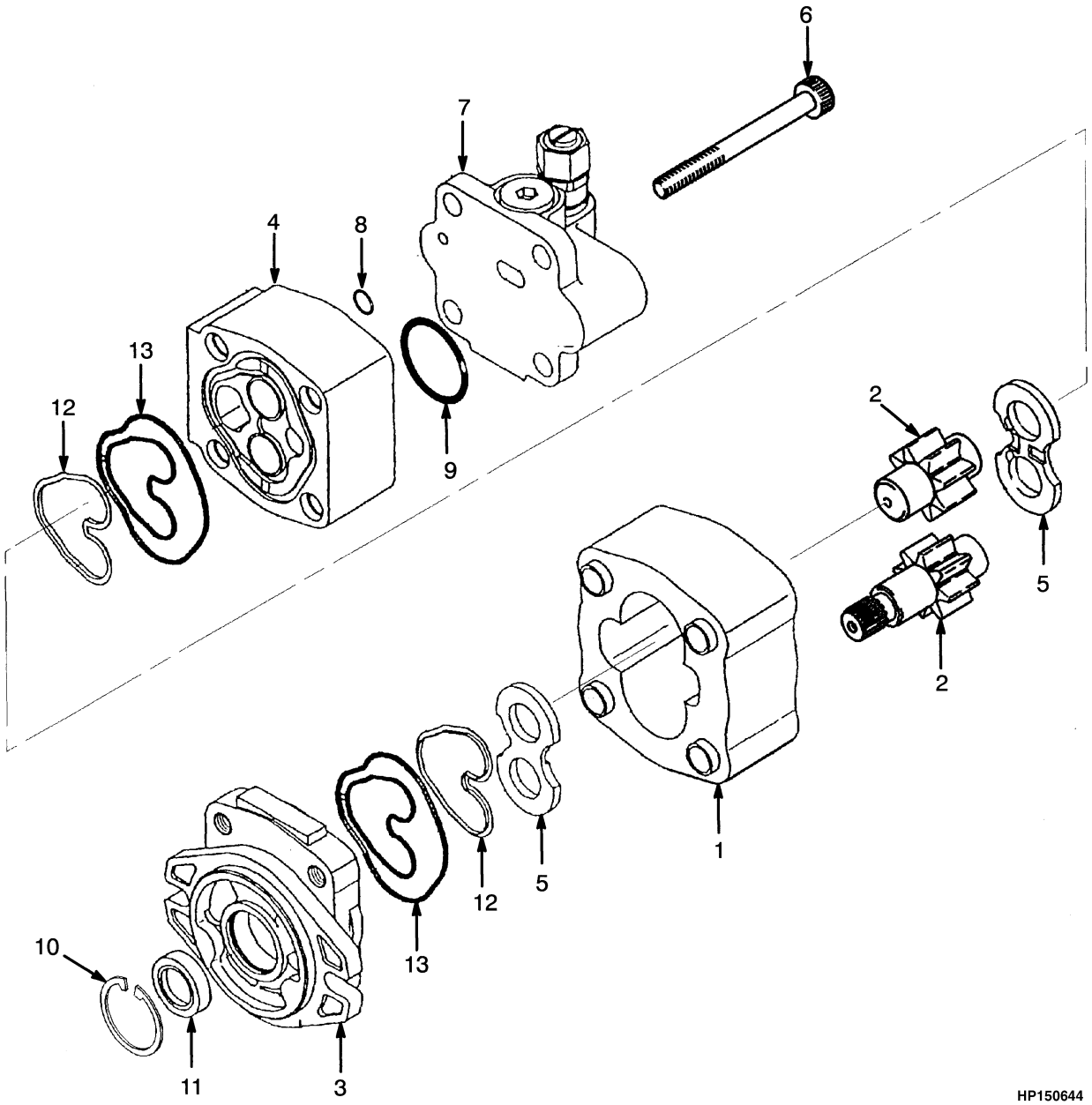

©2009 HYSTER COMPANY

HYDRAULIC PUMP

POWERSHIFT – SINGLE GEAR (→ S/N H177B14209 3.0L LPG) (→ S/N H177B13960)

KEY:
A: 2,0L/2,6L/3,0L
B: LPG 3,OL

ITEM	PART NO.	DESCRIPTION	QTY A	QTY B
	1455404	Hydraulic Pump	1	..
1	. . . . .	Gear Plate	1	1
2	1377264	Gear Set	..	1
2	1377266	Gear Set	1	..
3	1458802	Flange	1	1
4	1458803	Cover	1	1
5	1458804	Pressure Plate	2	2
6	1458805	Screw	..	1
6	1458813	Screw	4	..
7	1377255	Flow Valve (☞Figure 8-14)	1	1
8	. . . . .	O-Ring	1	1
9	. . . . .	O-Ring	1	1
10	. . . . .	Snap Ring	1	1
11	. . . . .	Seal (Oil)	1	1
12	. . . . .	Back-Up Ring	2	2
13	. . . . .	Seal	2	2
	1352463	Kit-Seal	1	1

©2009 HYSTER COMPANY

HYDRAULIC PUMP (FIGURE 8-9)

POWERSHIFT — SINGLE GEAR (S/N H177B14210 ↔ S/N H177B50926B 3.0L LPG)
(S/N H177B13961 ↔ S/N H177B51421B)

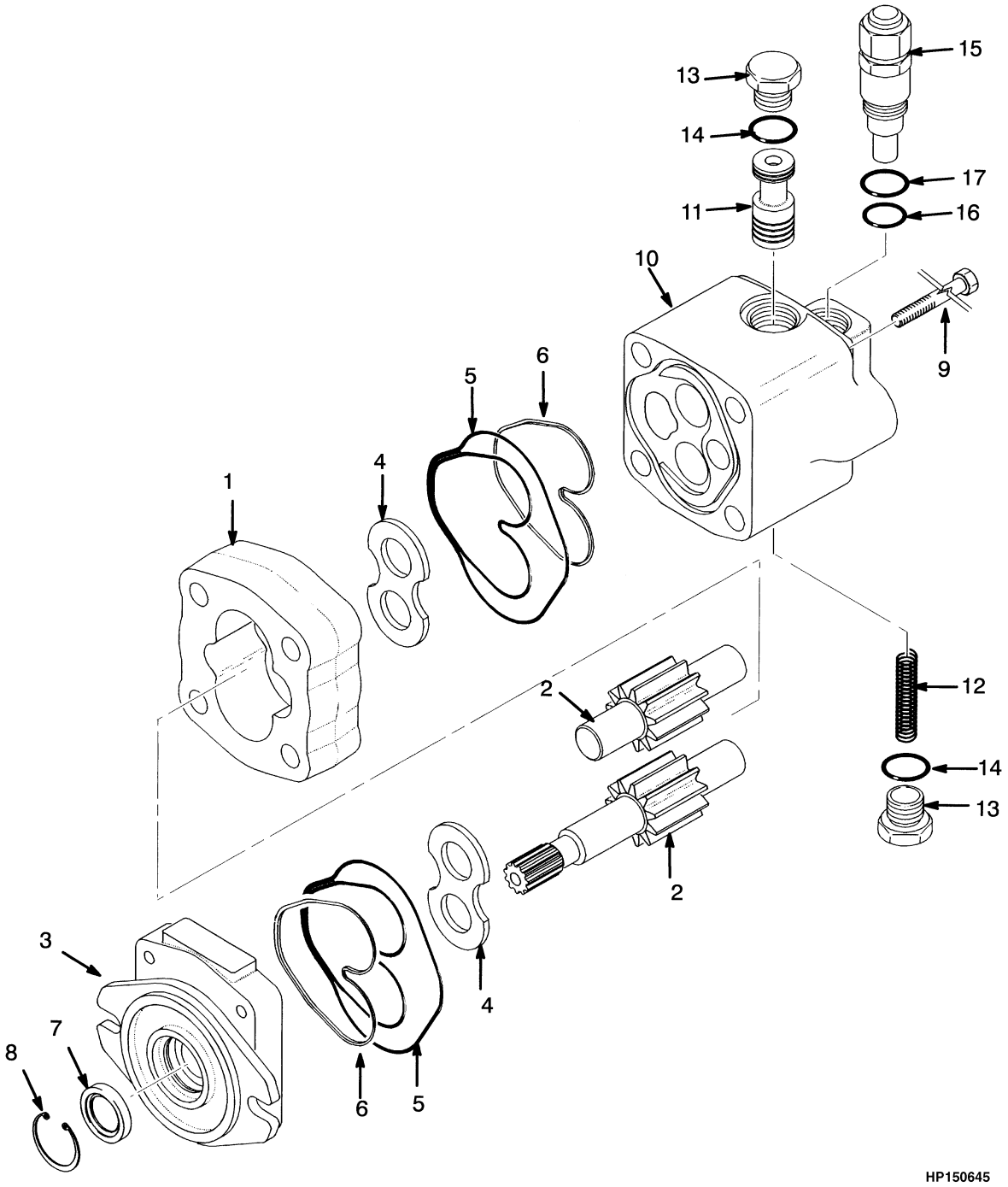

©2009 HYSTER COMPANY

HYDRAULIC PUMP

POWERSHIFT – SINGLE GEAR (S/N H177B14210 ↔ S/N H177B50926B 3.0L LPG) (S/N H177B13961 ↔ S/N H177B51421B)

KEY:
A: 2,0L/2,6/3,0L
B: 3,0L LPG

ITEM	PART NO.	DESCRIPTION	QTY A	QTY B
	2037189	Hydraulic Pump	1	..
	2037190	Hydraulic Pump	..	1
1	. . . . .	Plate	1	1
2	1377264	Gear Set	..	1
2	1377266	Gear Set	1	..
3	1458802	Flange	1	1
4	1458804	Pressure Plate	2	2
5	. . . . .	Seal	2	2
6	. . . . .	Back-Up Ring	2	2
7	. . . . .	Oil Seal	1	1
8	. . . . .	Snap Ring	1	1
9	1465130	Screw	4	..
9	1465135	Screw	..	4
10	. . . . .	Body (VPF)	1	1
11	. . . . .	Plunger	1	1
12	. . . . .	Spring	1	1
13	1465133	Plug	2	2
14	. . . . .	O-Ring	2	2
15	1465139	Kit-Relief Valve	1	1
16	1328828	O-Ring	1	1
17	. . . . .	O-Ring	1	1
	1465140	Kit-Seal	1	1
	1465141	Kit-Seal	1	1
	1465142	Kit-Pump	1	1

©2009 HYSTER COMPANY

HYDRAULIC PUMP (FIGURE 8-10)

POWERSHIFT — SINGLE GEAR (S/N H177B51422B → (2.0L, 2.6L)) (S/N H177B50927B → (3.0L))

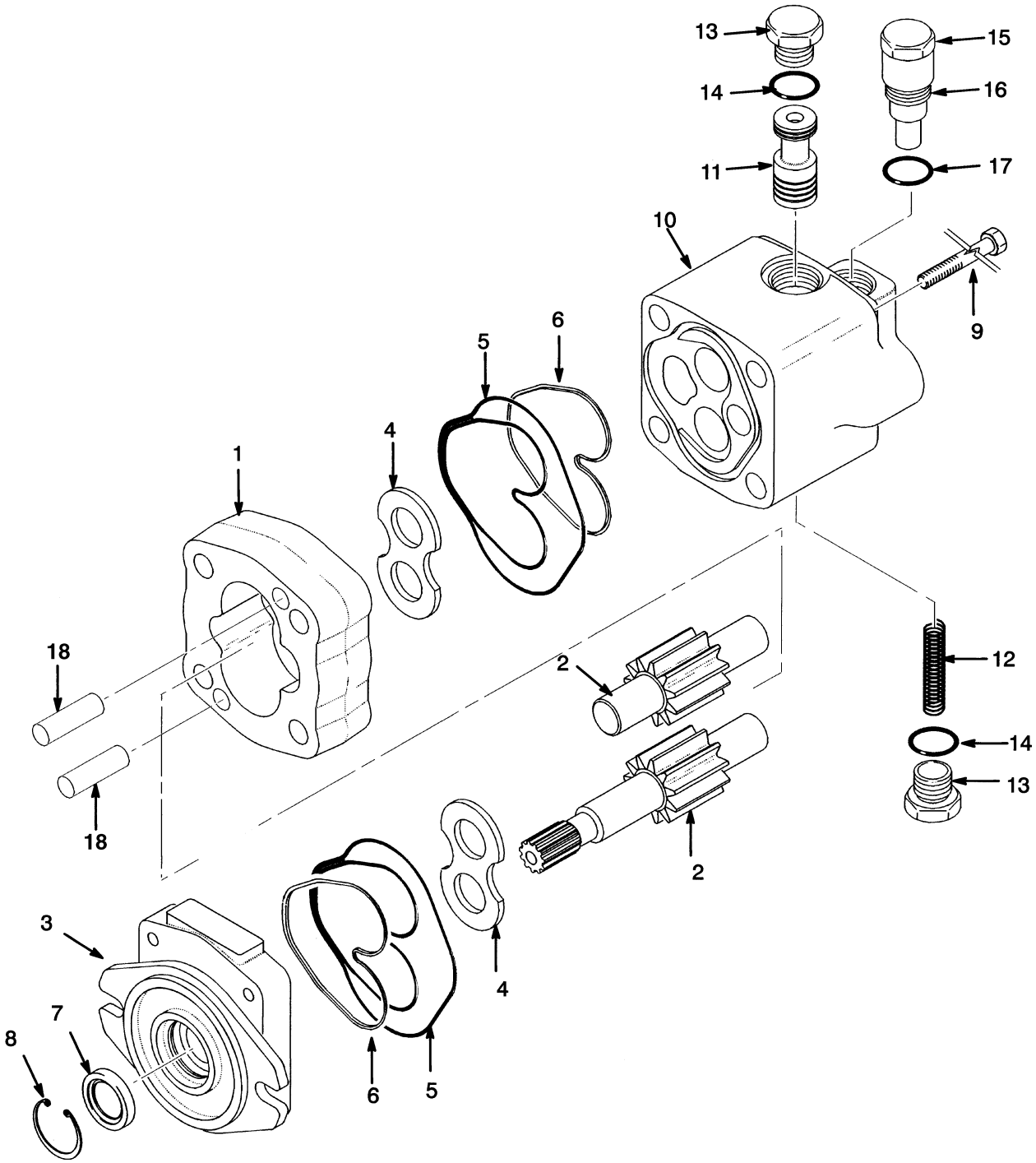

BP150097

©2009 HYSTER COMPANY

KEY:
A: LPG 2.0, Diesel 2.6L
B: LPG 3.0L

ITEM	PART NO.	DESCRIPTION	QTY A	QTY B
	2069689	Hydraulic Pump	1	..
	2069690	Hydraulic Pump	..	1
1	. . . . .	Gear Plate	1	1
2	1581692	Gear Set	1	..
2	1581698	Gear Set	..	1
3	1581686	Flange	1	1
4	1581694	Side Plate	2	2
5	. . . . .	Seal Plate	2	2
6	. . . . .	Back-Up Ring	2	2
7	. . . . .	Oil Seal	2	2
8	. . . . .	Snap Ring	2	2
9	1578693	Screw	4	4
10	1581684	Body	1	1
11	. . . . .	Plunger	1	1
12	321797	Spring	1	1
13	1465133	Plug	2	2
14	16485	O-Ring	2	2
15	1581683	Relief Valve	1	1
16	1581682	Plug	1	1
17	16485	O-Ring	1	1
18	1578672	Dowel	4	4
	1581678	Kit-Pump	1	1
	1465140	Kit-Seal	1	1

©2009 HYSTER COMPANY

HYDRAULIC PUMP (FIGURE 8-11)

POWERSHIFT — DOUBLE GEAR (→ S/N H177B13286 3.0L LPG) (→ S/N H177B13826)

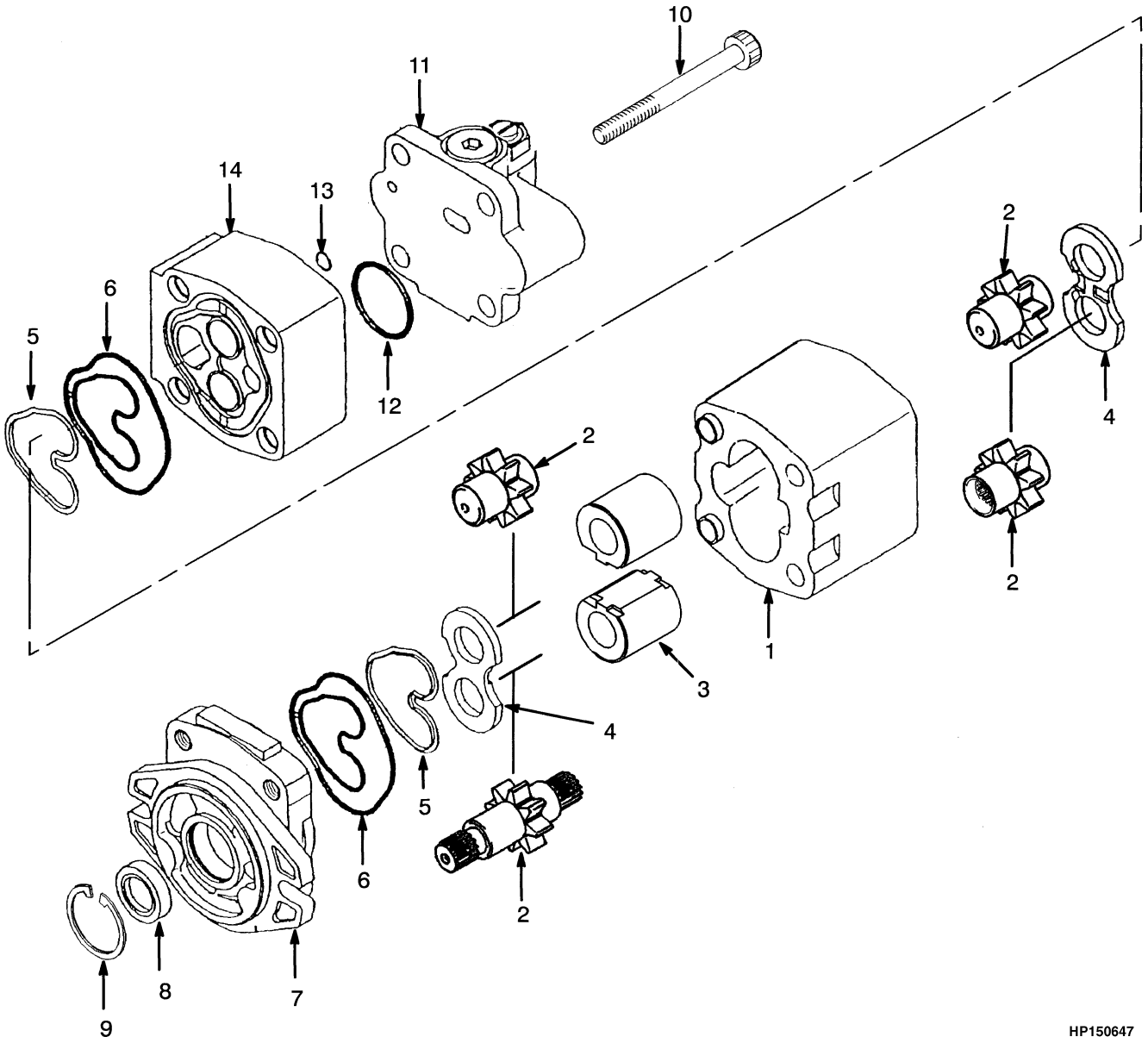

©2009 HYSTER COMPANY

HYDRAULIC PUMP

POWERSHIFT – DOUBLE GEAR (→ S/N H177B13286 3.0L LPG) (→ S/N H177B13826)

KEY:
A: 2,0L/2,6L/3,0L
B: LPG 3,0L

ITEM	PART NO.	DESCRIPTION	QTY A	QTY B
	1456472	Hydraulic Pump	1	..
	1456473	Hydraulic Pump	..	1
1	. . . . .	Gear Plate	1	1
2	1458806	Gear Set	..	1
2	1458814	Gear Set	1	..
3	. . . . .	Bush	2	2
4	1458804	Pressure Plate	2	2
5	. . . . .	Back-Up Ring	2	2
6	. . . . .	Seal	2	2
7	1458810	Flange	1	1
8	. . . . .	Oil Seal	1	1
9	. . . . .	Snap Ring	1	1
10	1458811	Screw	..	4
10	1458818	Screw	4	..
11	1377255	Flow Valve (☞Figure 8-14)	1	1
12	. . . . .	O-Ring	1	1
13	. . . . .	O-Ring	1	1
14	1458803	Cover	1	1
	1352463	Kit-Seal	1	1

©2009 HYSTER COMPANY

HYDRAULIC PUMP (FIGURE 8-12)

POWERSHIFT — DOUBLE GEAR (S/N H177B14210 ↔ S/N H177B51469B 3.0L LPG) (S/N H177B13827 ↔ S/N H177B50608B)

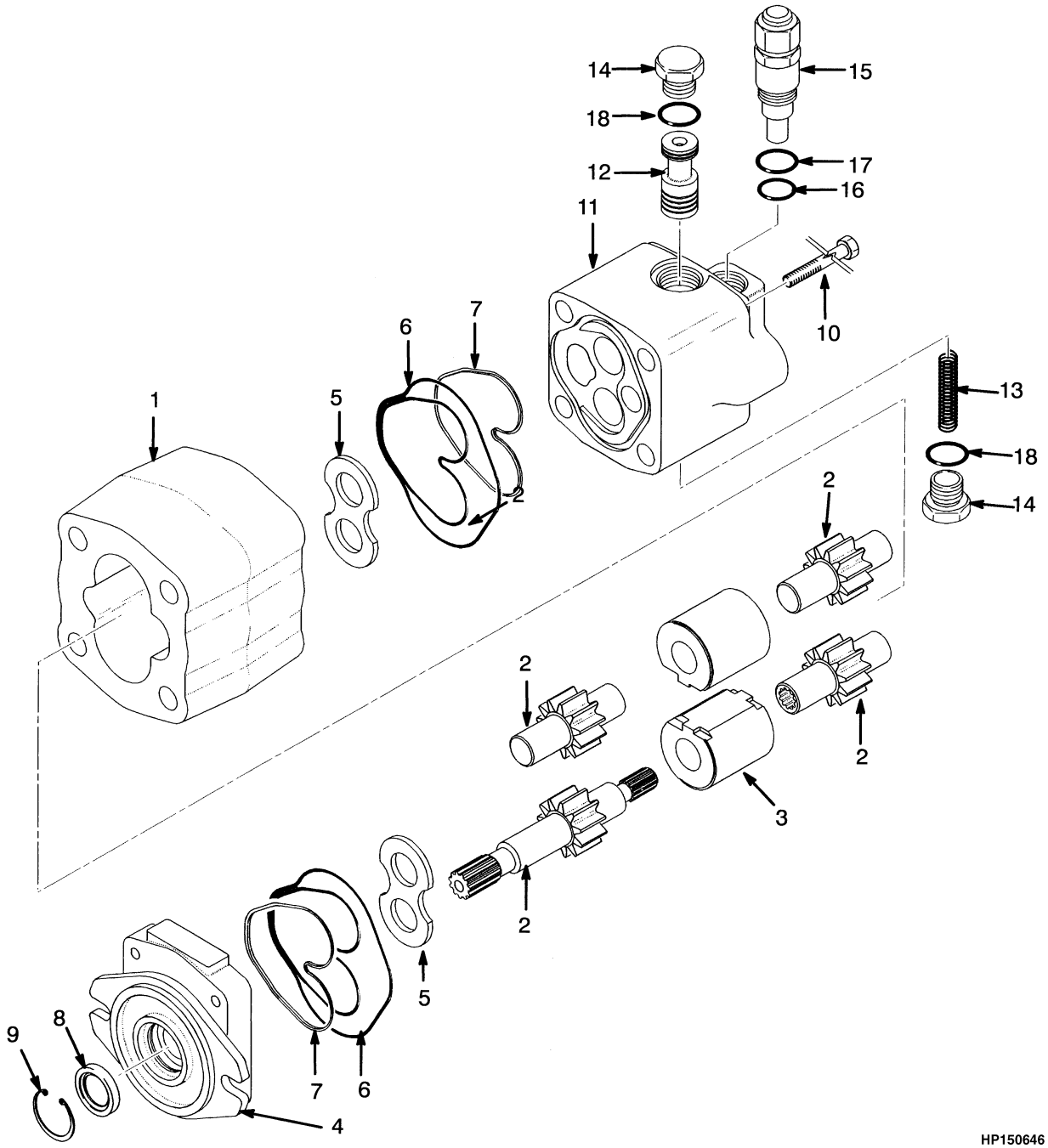

©2009 HYSTER COMPANY

HYDRAULIC PUMP

POWERSHIFT – DOUBLE GEAR (S/N H177B14210 ↔ S/N H177B51469B 3.0L LPG) (S/N H177B13827 ↔ S/N H177B50608B)

KEY:
A: Mazda 2.0L LPG/2.6L
B: GM 3.0L LPG

ITEM	PART NO.	DESCRIPTION	QTY A	QTY B
	2037192	Hydraulic Pump	1	..
	2037193	Hydraulic Pump	..	1
1	. . . . .	Body	1	1
2	1458806	Gear Set	..	1
2	1458814	Gear Set	1	..
3	. . . . .	Bush	2	2
4	1458810	Flange	1	1
5	1458804	Pressure Plate	1	1
6	. . . . .	Seal	2	2
7	. . . . .	Back-Up Ring	2	2
8	. . . . .	Oil Seal	1	1
9	. . . . .	Snap Ring	1	1
10	1458811	Screw	..	4
10	1458818	Screw	4	..
11	. . . . .	Body (VPF Assembly)	1	1
12	. . . . .	Plunger	1	1
13	. . . . .	Spring	1	1
14	. . . . .	Plug	2	2
15	1465139	Kit-Relief Valve	1	1
16	1328828	O-Ring	1	1
17	. . . . .	O-Ring	1	1
18	. . . . .	O-Ring	2	2
	1465140	Kit-Seal	1	1
	1465141	Kit-Seal	1	1
	1465142	Kit-Pump	1	1

©2009 HYSTER COMPANY

HYDRAULIC PUMP (FIGURE 8-13)

POWERSHIFT — SINGLE GEAR (S/N H177B50608B → (2.0L, 2.6L)) (S/N H177B51470B → (3.0L))

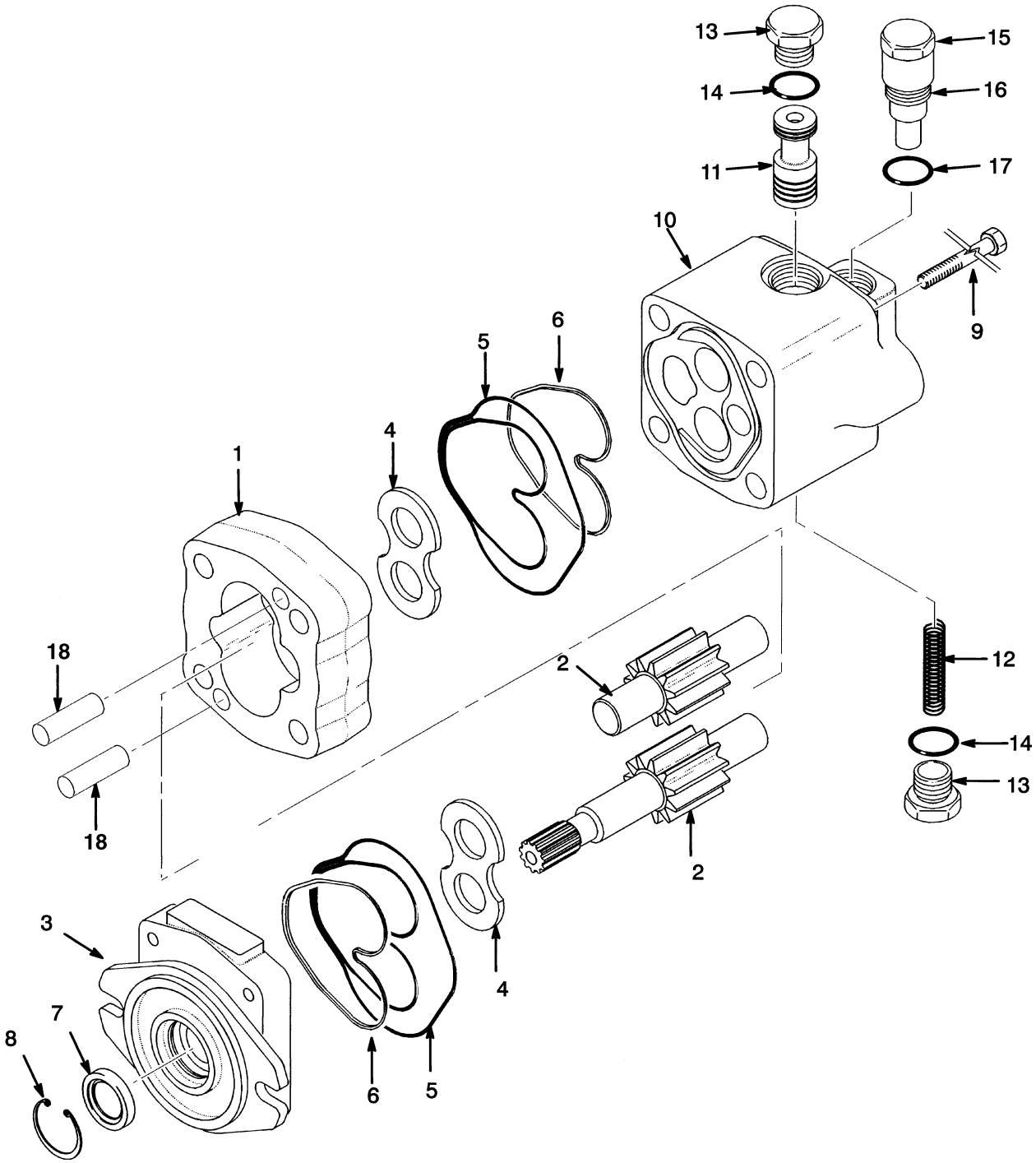

BP150097

©2009 HYSTER COMPANY

KEY:
A: Mazda 2.0L, GM 3.0L Gasoline
B: Mazda 2.2L, GM 3.0L LPG

ITEM	PART NO.	DESCRIPTION	QTY A	QTY B
	2069692	Hydraulic Pump	1	..
	2069693	Hydraulic Pump	..	1
1	. . . . .	Gear Plate	1	1
2	1581701	Gear Set	1	..
2	1581679	Gear Set	..	1
3	1581686	Flange	1	1
4	1578673	Side Plate	2	2
5	. . . . .	Plate Seal	2	2
6	. . . . .	Back-Up Ring	2	2
7	. . . . .	Oil Seal	1	1
8	. . . . .	Snap Ring	1	1
9	1578693	Screw	4	4
10	1581684	Body	1	1
11	. . . . .	Plunger	1	1
12	321797	Spring	1	1
13	1465133	Plug	2	2
14	16485	O-Ring	2	2
15	1581683	Relief Valve	1	1
16	1581682	Plug	1	1
17	16485	O-Ring	2	2
18	1578672	Dowel	4	4
	1465140	Kit-Seal	1	1
	1581678	Kit-Pump	1	1

©2009 HYSTER COMPANY

FLOW VALVE (FIGURE 8-14)

POWERSHIFT TRANSMISSION (→ S/N H177B14209 3.0L LPG) (→ S/N H177B13286 3.0L LPG) (→ S/N H177B13960 SINGLE GEAR) (→ S/N H177B13826 DOUBLE GEAR)

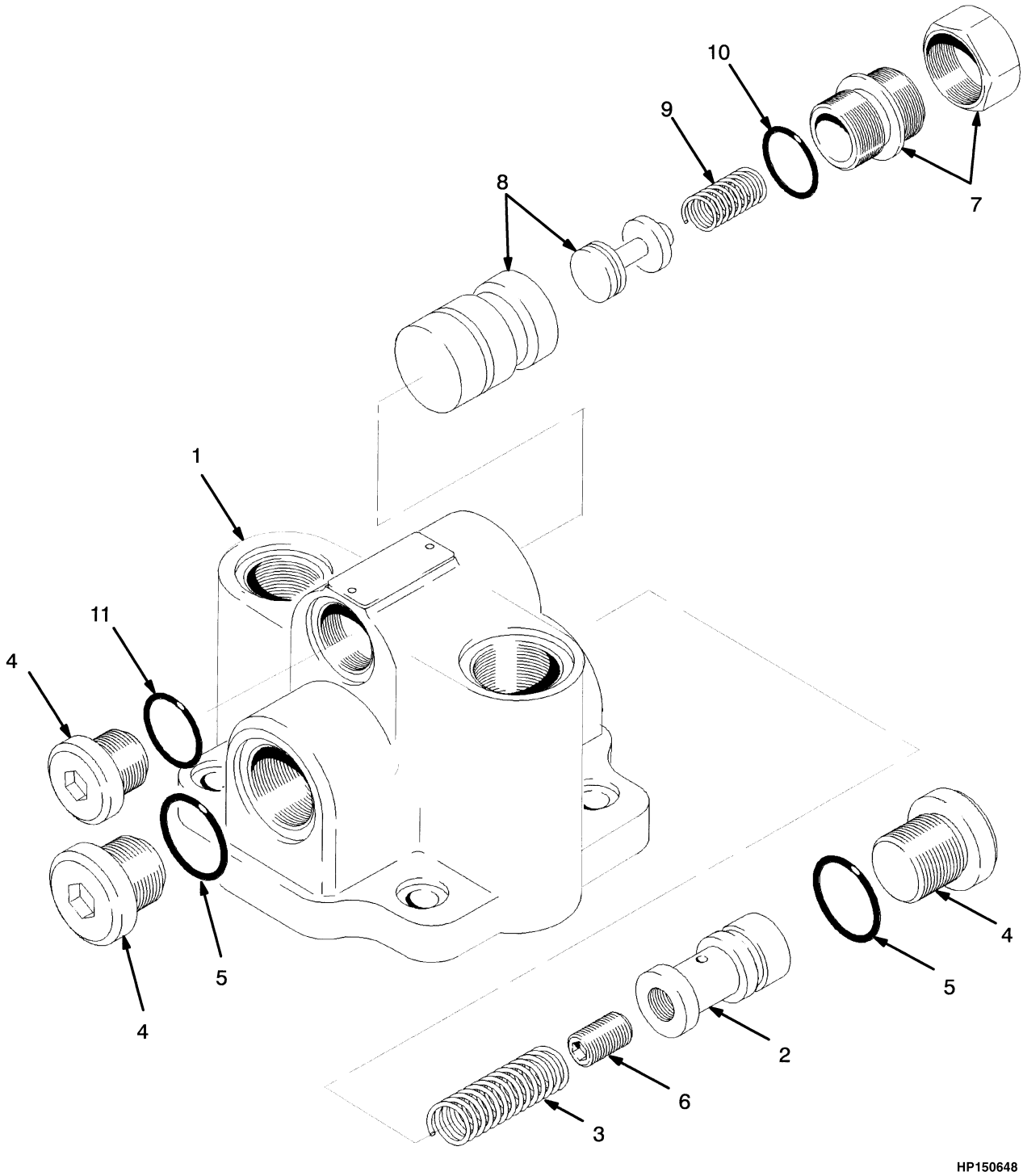

©2009 HYSTER COMPANY

FLOW VALVE

POWERSHIFT TRANSMISSION (→ S/N H177B14209 3.0L LPG) (→ S/N H177B13286 3.0L LPG) (→ S/N H177B13960 SINGLE GEAR) (→ S/N H177B13826 DOUBLE GEAR)

ITEM	PART NO.	DESCRIPTION	QTY
	1377255	Flow Valve	1
1	. . . . .	Body	1
2	. . . . .	Plunger	1
3	321797	Spring	1
4	321792	Plug	3
5	16485	O-Ring	2
6	1328822	Plug	1
7	1377256	Kit-Adjuster	1
8	1377261	Kit-Seal	1
8	. . . . .	Housing	1
8	. . . . .	Poppet	1
9	1377257	Spring	1
10	1377259	O-Ring	1
11	1377260	O-Ring	1
	1377258	Kit-Seal	1

©2009 HYSTER COMPANY

HYDRAULIC PUMP (FIGURE 8-15)
HYDROSTATIC TRANSMISSION

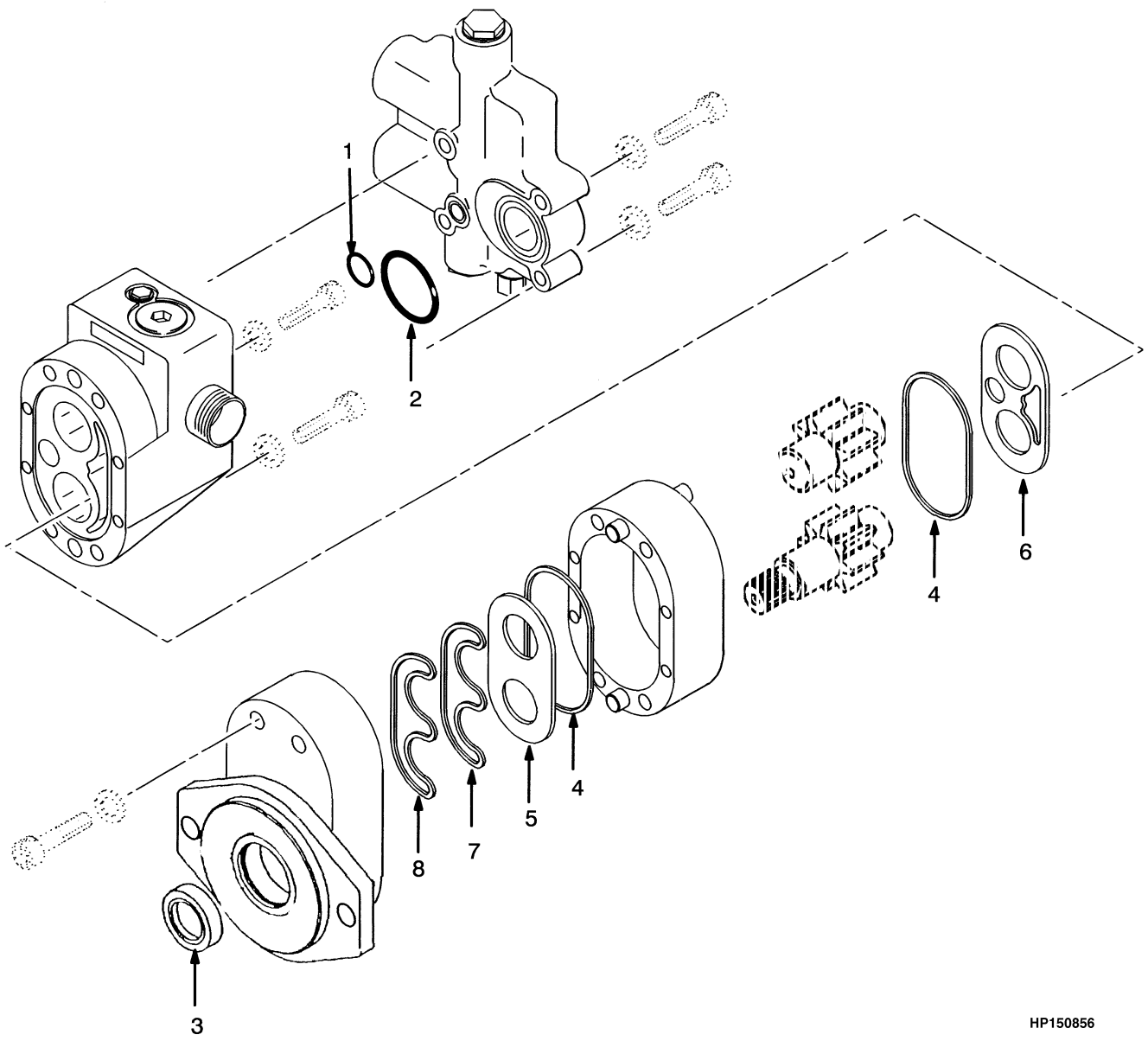

©2009 HYSTER COMPANY

HYDRAULIC PUMP
HYDROSTATIC TRANSMISSION

ITEM	PART NO.	DESCRIPTION	QTY
	1384939	Hydraulic Pump	1
1	. . . . .	O-Ring	1
2	. . . . .	O-Ring	1
3	. . . . .	Oil Seal	2
4	. . . . .	Seal Ring	2
5	. . . . .	Wear Plate	1
6	. . . . .	Wear Plate	1
7	. . . . .	Seal	1
8	. . . . .	Seal	1
	1596370	Kit-Seal	1

©2009 HYSTER COMPANY

MAST INSTALLATION (FIGURE 8-16)

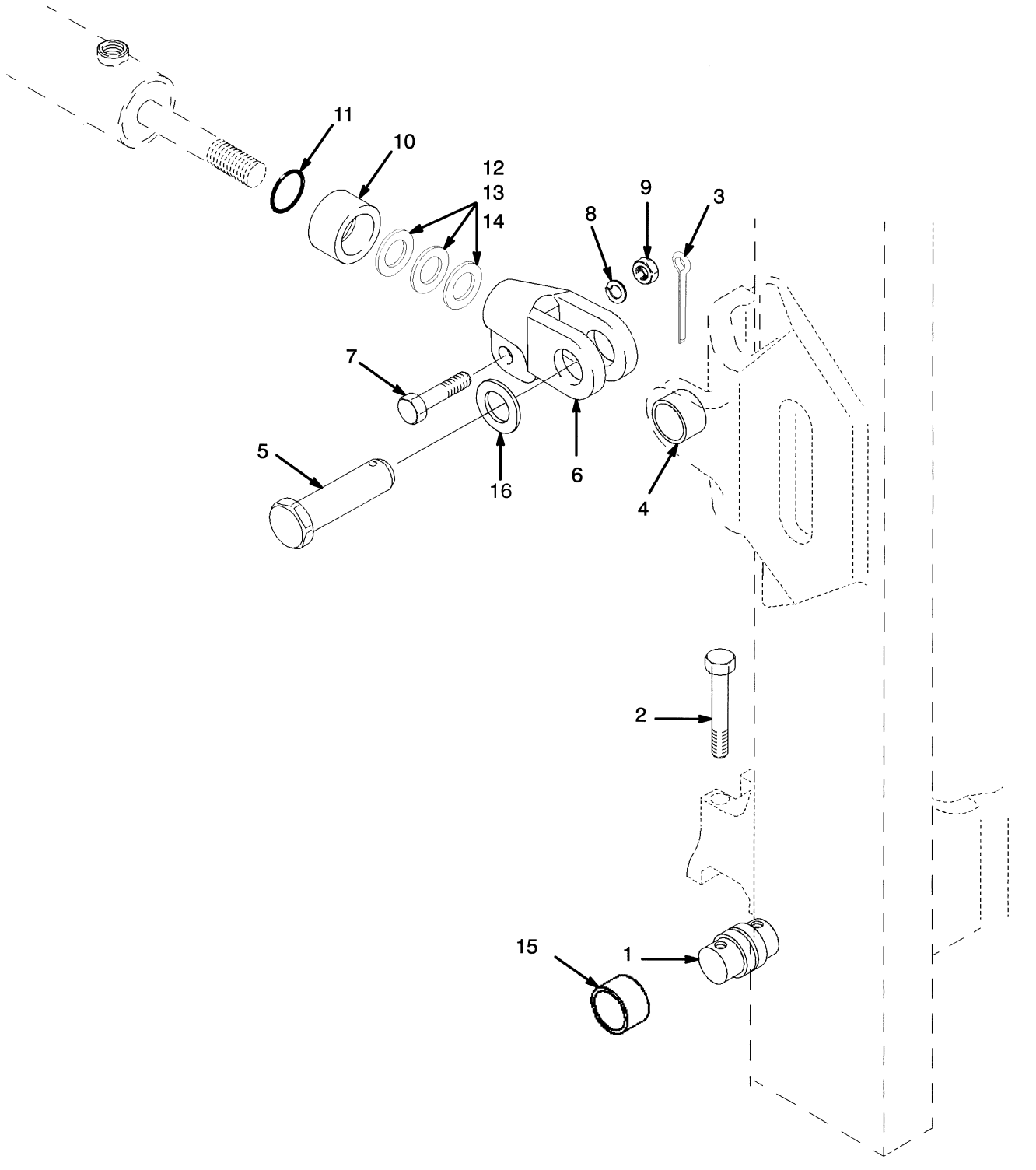

©2009 HYSTER COMPANY

MAST INSTALLATION

KEY:
A: 6° Forward/10° Back
B: 6° Forward/6° Back
C: 6° Forward/5° Back
D: 10° Forward/6° Back

ITEM	PART NO.	DESCRIPTION	QTY A	QTY B	QTY C	QTY D
1	1376424	Pin	2	2	2	2
2	1376423	Capscrew	4	4	4	4
2	1486836	Capscrew (12 Point Head) (Optional 12 point head)	4	4	4	4
3	15236	Cotter Pin	2	2	2	2
4	300982	Bushing	2	2	2	2
5	1345354	Pin	2	2	2	2
6	1307641	Rod End	2	2	2	..
6	1356318	Rod End	..	..	..	2
7	293650	Capscrew	2	2	2	2
8	292683	Lockwasher	2	2	2	2
9	292656	Nut	2	2	2	2
10	1451788	Spacer	..	2	..	..
10	384101	Spacer	..	..	2	..
11	55434	O-Ring	..	2	2	..
12	134675	Shim	..	AR	AR	..
13	1325119	Shim	..	AR	AR	..
14	1361948	Shim (2.75-3.25 mm)	..	AR	AR	..
15	1333385	Bushing	2	2	2	2
15	1380115	Bushing (Optional)	2	2	2	2
16	1495881	Washer	4	4	4	4

©2009 HYSTER COMPANY

TILT CYLINDER (FIGURE 8-17)

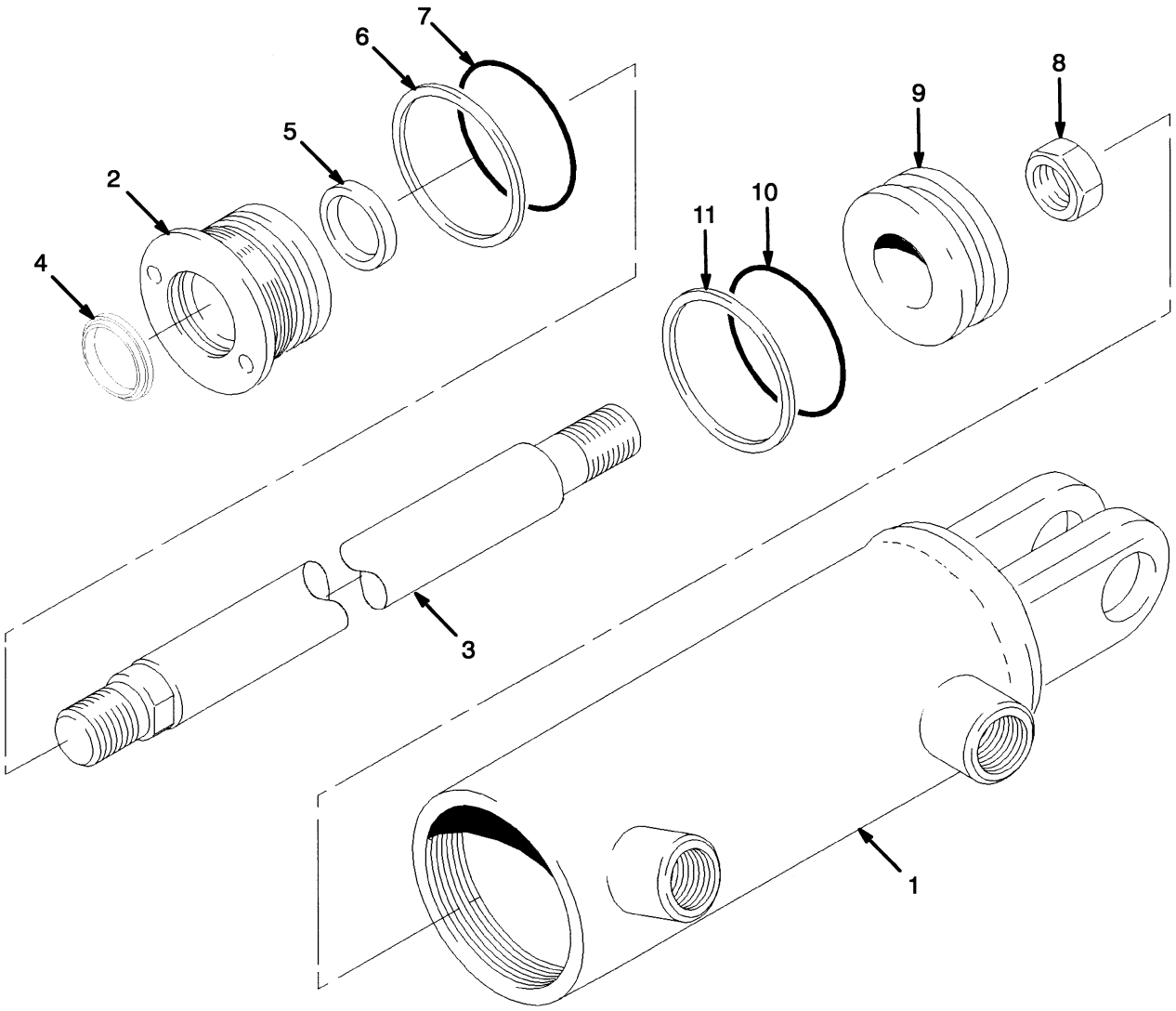

HP150350

©2009 HYSTER COMPANY

TILT CYLINDER

ITEM	PART NO.	DESCRIPTION	QTY
	1338742	Tilt Cylinder	1
1	1338743	Tube Wldmt-Cylinder	1
2	1338744	Gland	1
3	1338740	Cylinder Rod	1
4	1383062	Rod Wiper	1
5	1381082	Rod Seal	1
6	154375	Back-Up Ring	1
7	46388	O-Ring	1
8	2302899	Locknut	1
9	1338741	Piston	1
10	39374	O-Ring	1
11	2044370	Piston Seal	1
	300982	Bushing	2
	1345354	Pin	2
	15236	Cotter Pin	2
	1492644	Kit-Seal	1

©2009 HYSTER COMPANY

VALVE ATTACHING PARTS (FIGURE 8-18)

WITH DETENT LEVERS (→ S/N H177B23563)

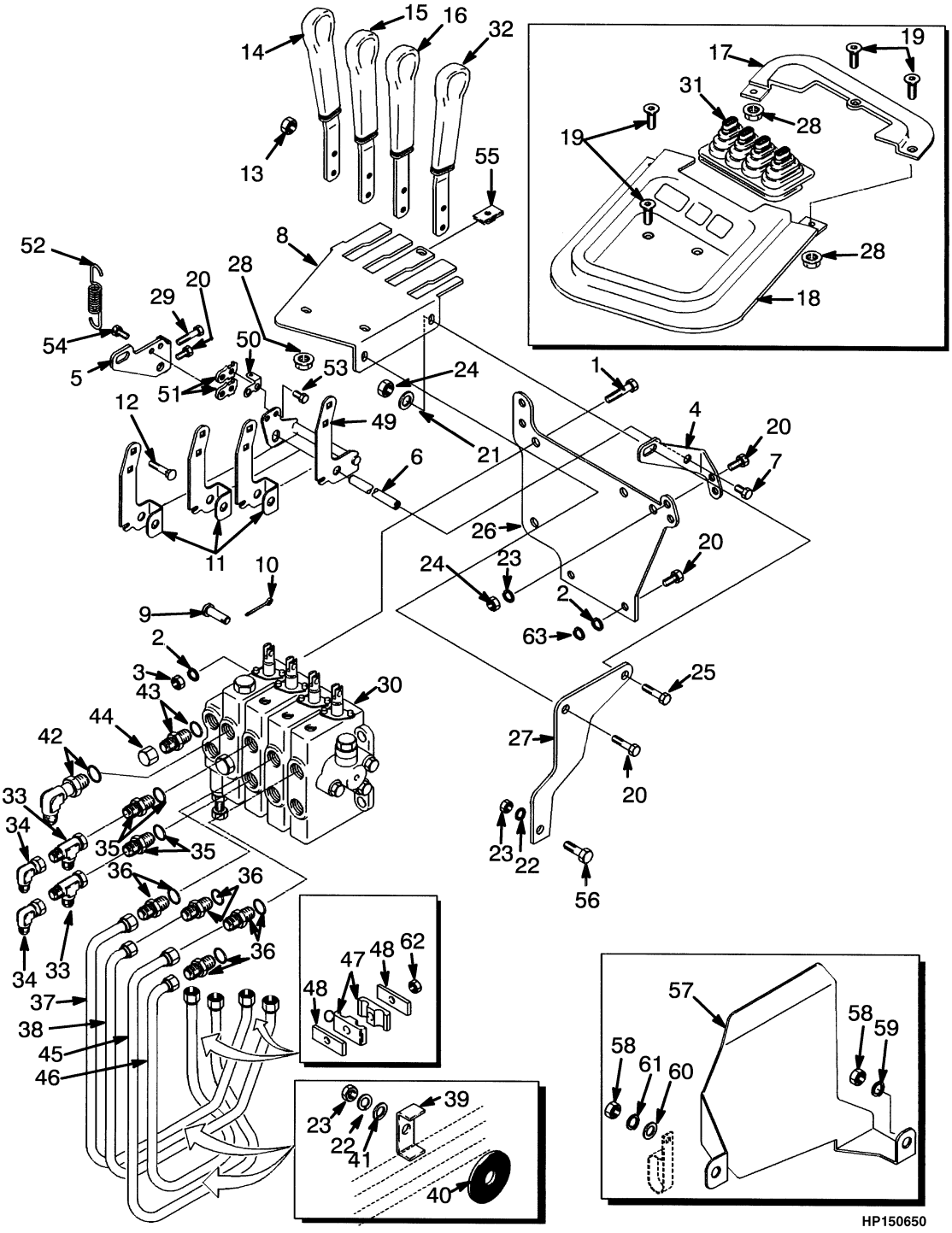

©2009 HYSTER COMPANY

VALVE ATTACHING PARTS
WITH DETENT LEVERS (→ S/N H177B23563)

KEY:
A: Three Function
B: Four Function

ITEM	PART NO.	DESCRIPTION	QTY A	QTY B
1	287860	Capscrew	3	3
2	292682	Lockwasher	3	3
3	136692	Nut	3	3
4	1339723	Bracket (RH)	1	1
5	1339724	Bracket (LH)	1	1
6	1343443	Pivot	1	1
7	1328930	Capscrew	2	2
8	1339702	Bracket	1	1
9	309109	Pin	3	4
10	15211	Cotter Pin	3	4
11	1339749	Crank	2	3
12	308980	Bolt	6	8
13	316834	Nut	6	8
14	1339725	Lever (Lift)	1	1
15	1339727	Lever (Tilt)	1	1
16	1339729	Lever (3rd Function)	1	1
17	1338292	Cover	1	1
18	1339300	Cover	1	1
19	1339793	Screw	5	5
20	136749	Screw	6	6
21	320158	Washer	6	6
22	292681	Lockwasher	7	7
23	239503	Nut	5	5
24	313828	Nut	3	3
25	176640	Bolt	1	1
26	1339737	Bracket	1	1
27	1339715	Strut	1	1
28	1452270	Nut	4	4
29	132861	Capscrew	4	4
30	2033502	Hydraulic Control Valve (☞Figure 8-22)	1	1
30	2042619	Hydraulic Control Valve (☞Figure 8-22)	1	1
30	2033503	Hydraulic Control Valve (☞Figure 8-23)	1	1
30	2040357	Hydraulic Control Valve (☞Figure 8-23)	1	1
31	1339636	Boot	..	1
31	1339799	Boot	1	..
32	1339731	Lever (4th Function)	..	1
33	17059	Fitting	2	2
34	16987	Fitting	2	2
35	222381	Fitting	2	2
35	16484	O-Ring	2	2
36	16541	Fitting	2	4
36	16484	O-Ring	2	4
37	1343461	Tube Assy	1	1
38	1343481	Tube Assy	1	1
39	1343531	Clamp	1	2

©2009 HYSTER COMPANY

VALVE ATTACHING PARTS
WITH DETENT LEVERS (→ S/N H177B23563)

KEY:
A: Three Function
B: Four Function

ITEM	PART NO.	DESCRIPTION	QTY A	QTY B
40	1347112	Washer (Rubber)	1	2
41	320157	Washer	2	4
42	17197	Fitting	1	1
42	16484	O-Ring	1	1
43	17756	Fitting	1	1
43	16485	O-Ring	1	1
44	16923	Nut	1	1
45	1379506	Tube Assy	..	1
46	1379507	Tube Assy	..	1
47	1359620	Clamp	2	4
48	1361142	Plate	2	4
49	1339748	Crank	..	1
49	1339770	Crank	1	..
50	1339746	Plate	1	1
51	1339745	Lock	2	2
52	1339713	Spring	1	1
53	293612	Capscrew	2	2
54	293611	Capscrew	2	2
55	1350215	Nut	1	1
56	136681	Capscrew	1	1
57	**a** 1373819	Heat Shield	1	1
58	**a** 239503	Nut	2	2
59	**a** 320157	Washer	1	1
60	**a** 320158	Washer	1	1
61	**a** 292681	Lockwasher	1	1
62	316835	Nut	1	2
63	221733	Washer	2	2

FOOTNOTES:

a Petrol and LPG (2,0L Engine)

©2009 HYSTER COMPANY

NOTES

©2009 HYSTER COMPANY

VALVE ATTACHING PARTS (FIGURE 8-19)

WITHOUT DETENT LEVERS — THREE FUNCTION (→ S/N H177B23563)

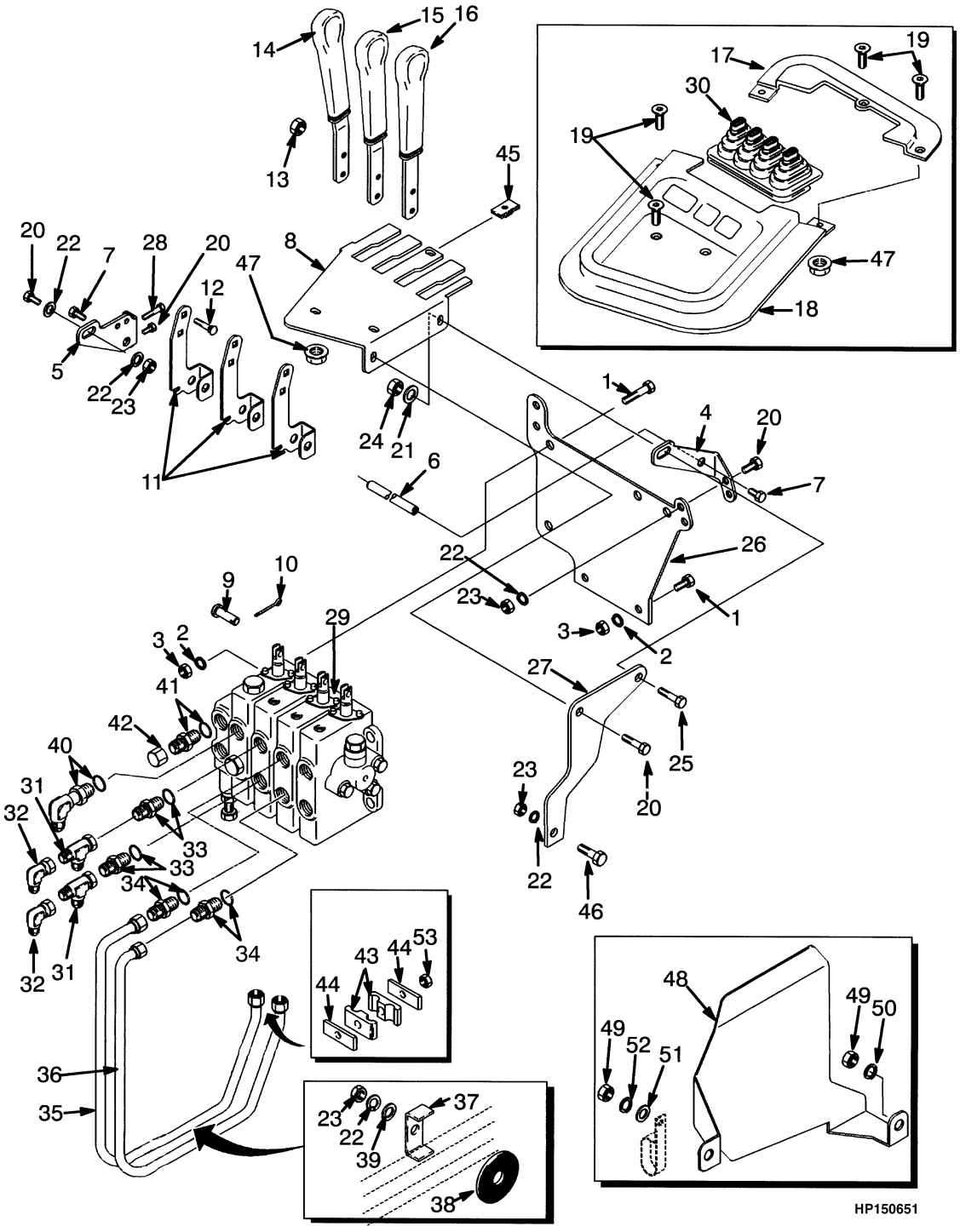

©2009 HYSTER COMPANY

VALVE ATTACHING PARTS

WITHOUT DETENT LEVERS – THREE FUNCTION (→ S/N H177B23563)

ITEM	PART NO.	DESCRIPTION	QTY
1	287860	Capscrew	3
2	292682	Lockwasher	3
3	136692	Nut	3
4	1339723	Bracket (RH)	1
5	1339724	Bracket (LH)	1
6	1343443	Pivot	1
7	1328930	Capscrew	2
8	1339702	Bracket	1
9	309109	Pin	3
10	15211	Cotter Pin	3
11	1339749	Crank	3
12	308980	Bolt	6
13	316834	Nut	6
14	1339725	Lever (Lift)	1
15	1339727	Lever (Tilt)	1
16	1339729	Lever (3rd Function)	1
17	1338292	Cover	1
18	1339300	Cover	1
19	1339793	Screw	5
20	136749	Screw	8
21	320158	Washer	8
22	292681	Lockwasher	9
23	239503	Nut	7
24	313828	Nut	3
25	176640	Bolt	1
26	1339737	Bracket	1
27	1339715	Strut	1
28	132861	Capscrew	3
29	2033502	Hydraulic Control Valve (☞Figure 8-22)	1
29	2042619	Hydraulic Control Valve (☞Figure 8-22)	1
30	1339799	Boot	1
31	17059	Fitting	2
32	16987	Fitting	2
33	222381	Fitting	2
33	16484	O-Ring	2
34	16541	Fitting	2
34	16484	O-Ring	2
35	1343461	Tube Assy	1
36	1343481	Tube Assy	1
37	1343531	Clamp	1
38	1347112	Washer (Rubber)	1
39	320157	Washer	2
40	17197	Fitting	1
40	16484	O-Ring	1
41	17756	Fitting	1
41	16485	O-Ring	1
42	16923	Nut	1
43	1359620	Clamp	2
44	1361142	Plate	2
45	1350215	Nut	1

©2009 HYSTER COMPANY

VALVE ATTACHING PARTS

WITHOUT DETENT LEVERS – THREE FUNCTION (→ S/N H177B23563)

ITEM	PART NO.	DESCRIPTION	QTY
46	136681	Capscrew	1
47	1452270	Nut	4
48	**a** 1373819	Heat Shield	1
49	**a** 239503	Nut	2
50	**a** 320157	Washer	1
51	320158	Washer	2
52	292681	Lockwasher	1
53	316835	Nut	1

FOOTNOTES:

a Petrol and LPG (2,0L Engine)

©2009 HYSTER COMPANY

NOTES

©2009 HYSTER COMPANY

VALVE ATTACHING PARTS (FIGURE 8-20)

WITH DETENT LEVERS (S/N H177B23564 →)

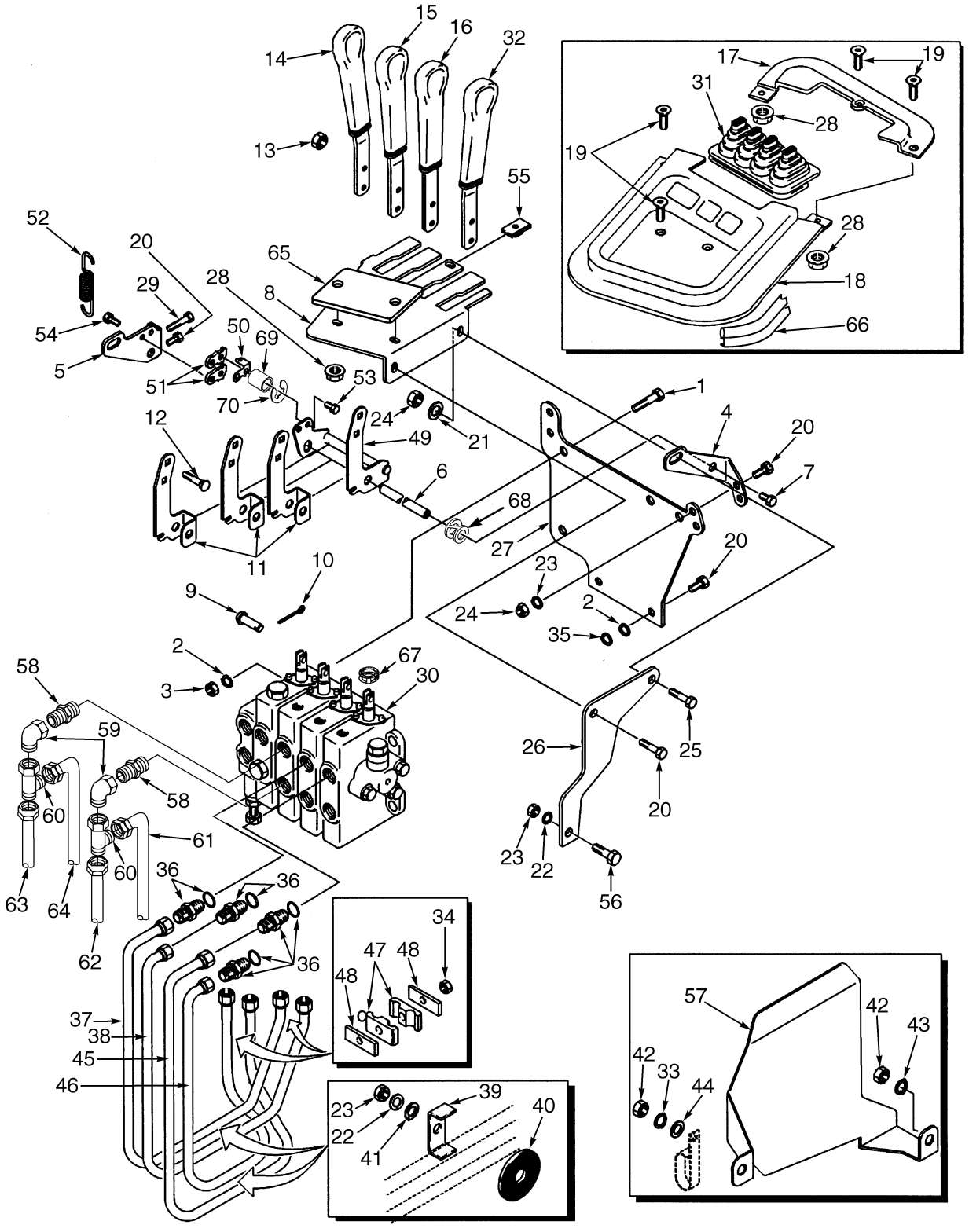

BP150031

©2009 HYSTER COMPANY

VALVE ATTACHING PARTS
WITH DETENT LEVERS (S/N H177B23564 →)

KEY:
A: Three Function
B: Four Function

ITEM	PART NO.	DESCRIPTION	QTY A	QTY B
1	287860	Capscrew	3	3
2	292682	Lockwasher	3	3
3	136692	Nut	3	3
4	1339723	Bracket (RH)	1	1
5	1339724	Bracket (LH)	1	1
6	1343443	Pivot	1	1
7	1328930	Capscrew	2	2
8	1339702	Bracket	1	1
8	**c** 1463942	Panel	1	1
9	309109	Pin	3	4
10	15211	Cotter Pin	3	4
11	1593985	Bracket (Crank)	2	3
12	308980	Bolt	6	8
13	316834	Nut	6	8
14	1339725	Lever (Lift)	1	1
15	1339727	Lever (Tilt)	1	1
16	1339729	Lever (3rd Function)	1	1
17	1338292	Cover	1	1
18	1339300	Cover	1	1
18	**c** 1361102	Cover	1	1
19	1339793	Screw	4	4
20	136749	Screw	7	7
21	320158	Washer	6	6
22	292681	Lockwasher	4	4
23	239503	Nut	4	4
24	313828	Nut	3	3
25	176640	Bolt	1	1
26	1339737	Bracket	1	1
27	**b** 1339715	Strut	1	1
27	**d** 1500537	Bracket	1	1
28	1452270	Nut	3	3
29	132861	Capscrew	4	4
30	2033502	Hydraulic Control Valve (☞Figure 8-22)	1	1
30	2042619	Hydraulic Control Valve (☞Figure 8-22)	1	1
30	2033503	Hydraulic Control Valve (☞Figure 8-23)	1	1
30	2040357	Hydraulic Control Valve (☞Figure 8-23)	1	1
31	1339636	Boot	..	1
31	1339799	Boot	1	..
32	1339731	Lever (4th Function)	..	1
33	**a** 292681	Lockwasher	1	1
34	316835	Nut	1	2
35	221733	Washer	3	3
36	16541	Fitting	2	4
36	16484	O-Ring	1	1
37	1343461	Tube Assy	1	1

©2009 HYSTER COMPANY

VALVE ATTACHING PARTS
WITH DETENT LEVERS (S/N H177B23564 →)

KEY:
A: Three Function
B: Four Function

ITEM	PART NO.	DESCRIPTION	QTY A	QTY B
38	1343481	Tube Assy	1	1
39	1343531	Clamp	1	2
40	1347112	Washer (Rubber)	1	2
41	320157	Washer	2	4
42	**a** 239503	Nut	1	1
43	**a** 320157	Washer	1	1
44	**a** 320158	Washer	2	2
45	1379506	Tube Assy	..	1
46	1379507	Tube Assy	..	1
47	1359620	Clamp	2	4
48	1361142	Plate	3	3
49	1593880	Bracket Wldmt	..	1
49	1593651	Bracket Wldmt	1	..
50	1339746	Plate	1	1
51	1339745	Lock	2	2
52	1339713	Spring	1	1
53	293612	Capscrew	2	2
54	293611	Capscrew	2	2
55	1350215	Nut	1	1
56	136681	Capscrew	1	1
57	**a** 1373819	Heat Shield	1	1
58	222381	Fitting	2	4
59	16987	Fitting	2	4
60	17059	Fitting	2	4
61	1347028	Hose Assy	1	1
62	1347030	Hose Assy	1	1
63	1347029	Hose Assy	1	1
64	1347027	Hose Assy	1	1
65	**cd** 1465259	Rubber Pad	1	1
66	**d** 1502194	Trim Seal	AR	AR
67	2076368	Bearing Clip	1	1
68	2076419	Bearing (Spherical)	1	1
69	2076356	Bearing (Polymer)	1	1
70	2076497	Clip	1	1

FOOTNOTES:

a Powershift (2,0L Engine)
b → S/N H177B30131Y
c 4/1999 →
d S/N H177B30132Y →

©2009 HYSTER COMPANY

NOTES

©2009 HYSTER COMPANY

VALVE ATTACHING PARTS (FIGURE 8-21)

WITHOUT DETENT LEVERS — THREE FUNCTION (S/N H177B23564 →)

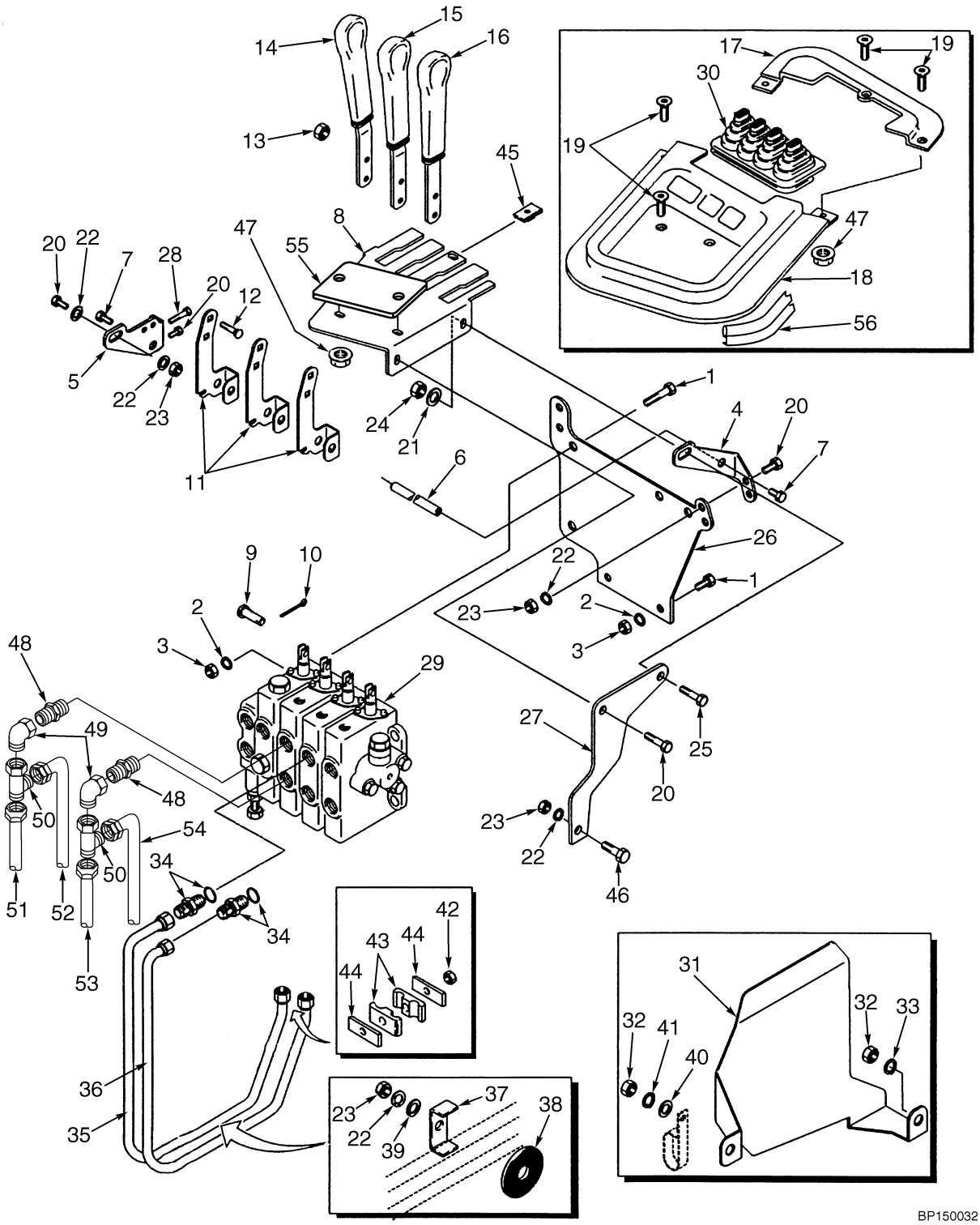

©2009 HYSTER COMPANY

VALVE ATTACHING PARTS

WITHOUT DETENT LEVERS – THREE FUNCTION (S/N H177B23564 →)

ITEM	PART NO.	DESCRIPTION	QTY
1	287860	Capscrew	3
2	292682	Lockwasher	3
3	136692	Nut	3
4	1339723	Bracket (RH)	1
5	1339724	Bracket (LH)	1
6	1343443	Pivot	1
7	1328930	Capscrew	2
8	1339702	Bracket	1
8	**c** 1463942	Panel	1
9	309109	Pin	3
10	15211	Cotter Pin	3
11	1339749	Crank	3
12	308980	Bolt	6
13	316834	Nut	6
14	1339725	Lever (Lift)	1
15	1339727	Lever (Tilt)	1
16	1339729	Lever (3rd Function)	1
17	1338292	Cover	1
18	1339300	Cover	1
18	**c** 1361102	Cover	1
19	1339793	Screw	6
20	136749	Screw	8
21	320158	Washer	6
22	292681	Lockwasher	4
23	239503	Nut	4
24	313828	Nut	3
25	176640	Bolt	1
26	1339737	Bracket	1
27	**b** 1339715	Strut	1
27	**d** 1500537	Bracket	1
28	132861	Capscrew	1
29	2033502	Hydraulic Control Valve (☞Figure 8-22)	1
29	2042619	Hydraulic Control Valve (☞Figure 8-22)	1
30	1339799	Boot	1
31	**a** 1373819	Heat Shield	1
32	**a** 239503	Nut	2
33	**a** 320157	Washer	2
34	16541	Fitting	2
34	16484	O-Ring	1
35	1343461	Tube Assy	1
36	1343481	Tube Assy	1
37	1343531	Clamp	1
38	1347112	Washer (Rubber)	1
39	320157	Washer	2
40	320158	Washer	2
41	292681	Lockwasher	1
42	316835	Nut	1
43	1359620	Clamp	2
44	1361142	Plate	3
45	1350215	Nut	1

©2009 HYSTER COMPANY

VALVE ATTACHING PARTS

WITHOUT DETENT LEVERS – THREE FUNCTION (S/N H177B23564 →)

ITEM	PART NO.	DESCRIPTION	QTY
46	136681	Capscrew	1
47	1452270	Nut	3
48	222381	Fitting	2
49	16987	Fitting	2
50	17059	Fitting	2
51	1347029	Hose Assy	1
52	1347027	Hose Assy	1
53	1347030	Hose Assy	1
54	1347028	Hose Assy	1
55	**c** 1465259	Rubber Pad	1
56	**d** 1502194	Trim Seal	AR

FOOTNOTES:

a Powershift (2,0L Engine)
b → S/N H177B30131Y
c 4/1999 →
d S/N H177B30132Y →

©2009 HYSTER COMPANY

NOTES

©2009 HYSTER COMPANY

CONTROL VALVE (FIGURE 8-22)
THREE FUNCTION

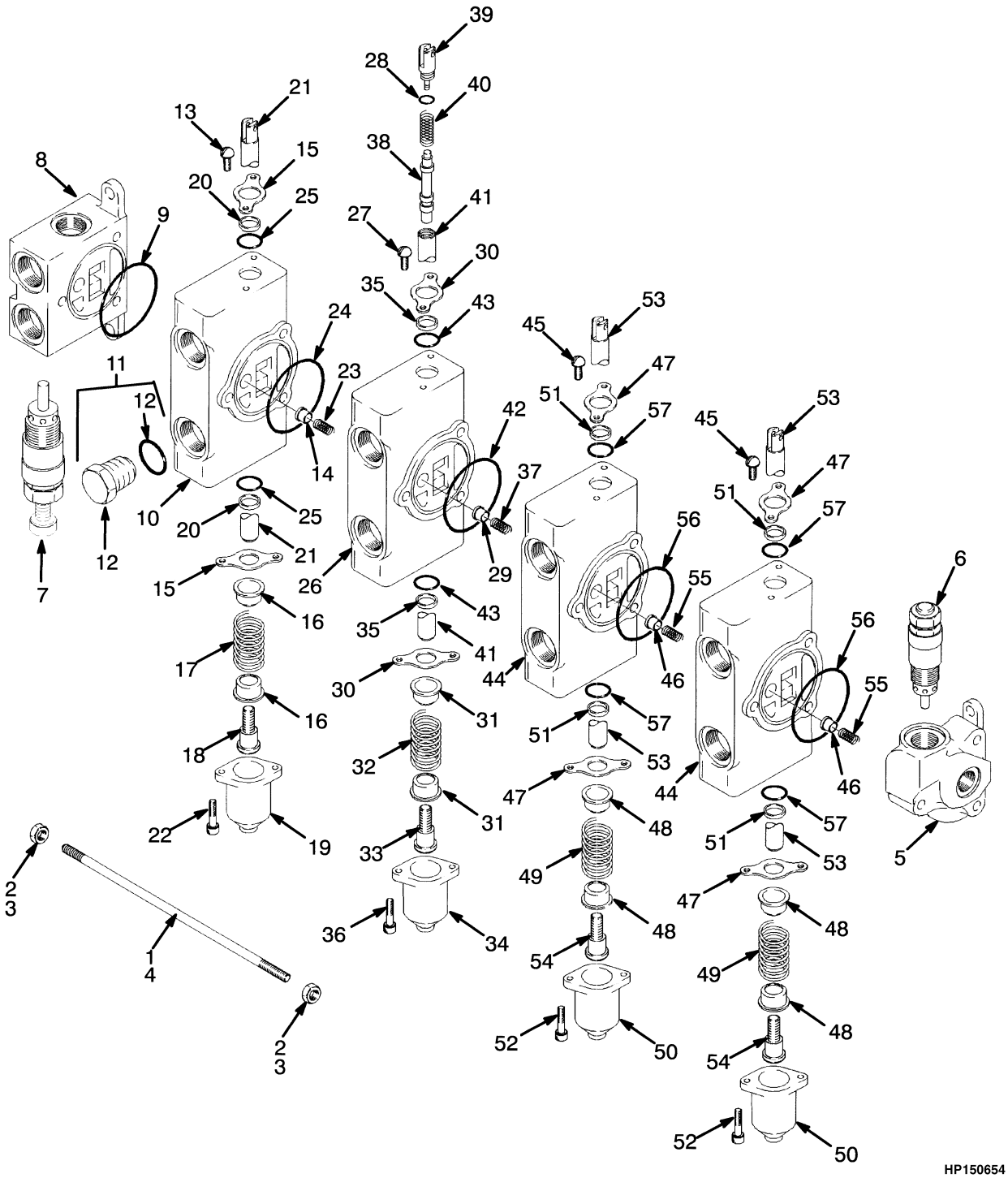

©2009 HYSTER COMPANY

CONTROL VALVE
THREE FUNCTION

ITEM	PART NO.	DESCRIPTION	QTY
	a 2033502	Hydraulic Control Valve	1
	b 2042619	Hydraulic Control Valve	1
1	1350707	Tie Rod	1
2	188534	Nut	2
3	15055	Nut	4
4	1350706	Tie Rod	2
5	1451092	Valve Section (Outlet)	1
6	378424	Relief Valve	1
6	1309419	Kit-Seal	1
7	350485	Relief Valve	1
7	1357369	Kit-Seal	1
8	385474	Valve Section (Inlet)	1
9	57664	O-Ring	1
10	1357354	Valve Section (Lift)	1
11	14595	Plug	1
12	16484	O-Ring	1
12	199524	Plug	1
13	16706	Screw	2
14	205120	Poppet	1
15	205121	Plate	2
16	188516	Spring Seat	2
17	385855	Spring	1
18	188518	Spool End	1
19	188519	Cap	1
20	205122	Wiper	2
21	. . . . .	Spool	1
22	12949	Capscrew	2
23	205123	Spring	1
24	57664	O-Ring	1
25	1357361	O-Ring	2
26	1357355	Valve Section (Tilt)	1
27	16706	Screw	2
28	16480	O-Ring	1
29	205120	Poppet	1
30	205121	Plate	2
31	188516	Spring Seat	2
32	385855	Spring	1
33	188518	Spool End	1
34	188519	Cap	1
35	205122	Wiper	2
36	12949	Capscrew	2
37	205123	Spring	1
38	. . . . .	Piston	1
39	1357364	Clevis	1
40	341462	Spring	1
41	. . . . .	Spool	1
42	57664	O-Ring	1
43	1357361	O-Ring	2
44	1357353	Valve Section (Auxiliary)	1
45	16706	Screw	2

©2009 HYSTER COMPANY

CONTROL VALVE
THREE FUNCTION

ITEM	PART NO.	DESCRIPTION	QTY
46	205120	Poppet	1
47	205121	Plate	2
48	188516	Spring Seat	2
49	385855	Spring	1
50	188519	Cap	1
51	205122	Wiper	2
52	12949	Capscrew	2
53	. . . . .	Spool	1
54	188518	Spool End	1
55	205123	Spring	1
56	57664	O-Ring	1
57	1357361	O-Ring	2

FOOTNOTES:

a → S/N H177B23563

b S/N H177B23564 →

©2009 HYSTER COMPANY

NOTES

©2009 HYSTER COMPANY

CONTROL VALVE (FIGURE 8-23)
FOUR FUNCTION

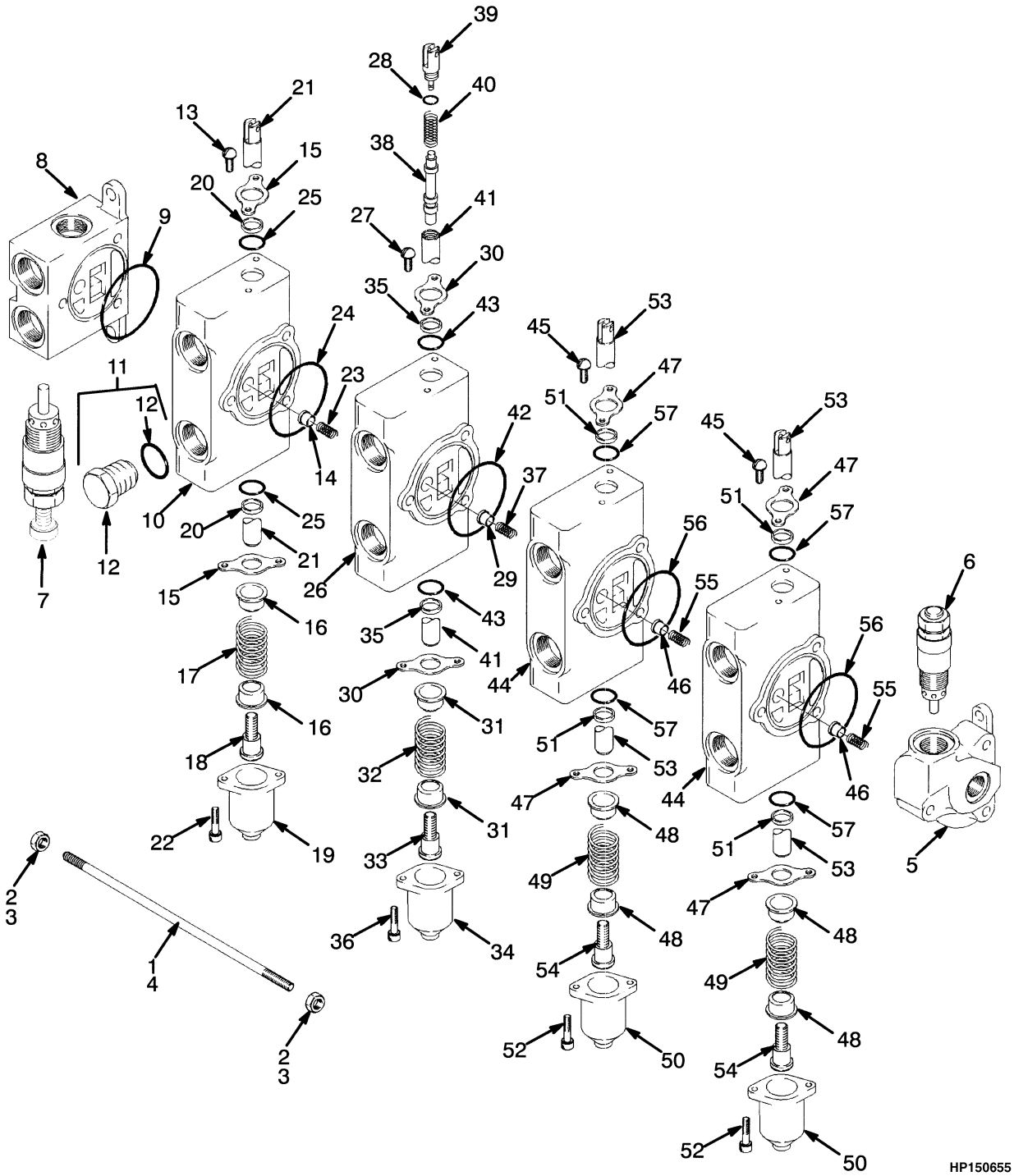

©2009 HYSTER COMPANY

CONTROL VALVE
FOUR FUNCTION

ITEM	PART NO.	DESCRIPTION	QTY
	a 2033503	Hydraulic Control Valve	1
	b 2040357	Hydraulic Control Valve	1
1	1327415	Tie Rod	1
2	188534	Nut	2
3	15055	Nut	4
4	1327414	Rod	2
5	1451092	Valve Section (Outlet)	1
6	378424	Relief Valve	1
6	1309419	Kit-Seal	1
7	350485	Relief Valve	1
7	1357369	Kit-Seal	1
8	385474	Valve Section (Inlet)	1
9	57664	O-Ring	1
10	1357354	Valve Section (Lift)	1
11	14595	Plug	1
12	16484	O-Ring	1
12	199524	Plug	1
13	16706	Screw	2
14	205120	Poppet	1
15	205121	Plate	2
16	188516	Spring Seat	2
17	385855	Spring	1
18	188518	Spool End	1
19	188519	Cap	1
20	205122	Wiper	2
21	. . . . .	Spool	1
22	12949	Capscrew	2
23	205123	Spring	1
24	57664	O-Ring	1
25	1357361	O-Ring	2
26	1357355	Valve Section (Tilt)	1
27	16706	Screw	2
28	16480	O-Ring	1
29	205120	Poppet	1
30	205121	Plate	2
31	188516	Spring Seat	2
32	385855	Spring	1
33	188518	Spool End	1
34	188519	Cap	1
35	205122	Wiper	2
36	12949	Capscrew	2
37	205123	Spring	1
38	. . . . .	Piston	1
39	1357364	Clevis	1
40	341462	Spring	1
41	. . . . .	Spool	1
42	57664	O-Ring	1
43	1357361	O-Ring	2
44	1357353	Valve Section (Auxiliary)	2
45	16706	Screw	2

©2009 HYSTER COMPANY

CONTROL VALVE
FOUR FUNCTION

ITEM	PART NO.	DESCRIPTION	QTY
46	205120	Poppet	1
47	205121	Plate	2
48	188516	Spring Seat	2
49	385855	Spring	1
50	188519	Cap	1
51	205122	Wiper	2
52	12949	Capscrew	2
53	. . . . .	Spool	1
54	188518	Spool End	1
55	205123	Spring	1
56	57664	O-Ring	1
57	1357361	O-Ring	2

FOOTNOTES:

a → S/N H177B23563

b S/N H177B23564 →

©2009 HYSTER COMPANY

9 MAST-TWO STAGE LIMITED FREE-LIFT

SECTION 9
MAST-TWO STAGE LIMITED FREE-LIFT

DESCRIPTION	PAGE
CARRIAGE	
TWO STAGE LIMITED FREE-LIFT - SIX ROLLER	9-22
HEADER HOSE	
TWO STAGE LIMITED FREE-LIFT	9-24
INNER MAST	
TWO STAGE LIMITED FREE-LIFT	9-6
LIFT	
TWO STAGE LIMITED FREE-LIFT	9-10
LIFT CYLINDER	
TWO STAGE LIMITED FREE-LIFT - H2.00-2.50XM	9-14
TWO STAGE LIMITED FREE-LIFT - H3.00-3.20XM (→ S/N B562B16063)	9-17
TWO STAGE LIMITED FREE-LIFT - H3.00-3.20XM (S/N B562B16064 →)	9-19
OUTER MAST	
TWO STAGE LIMITED FREE-LIFT	9-2

©2009 HYSTER COMPANY

OUTER MAST (FIGURE 9-1)
TWO STAGE LIMITED FREE-LIFT

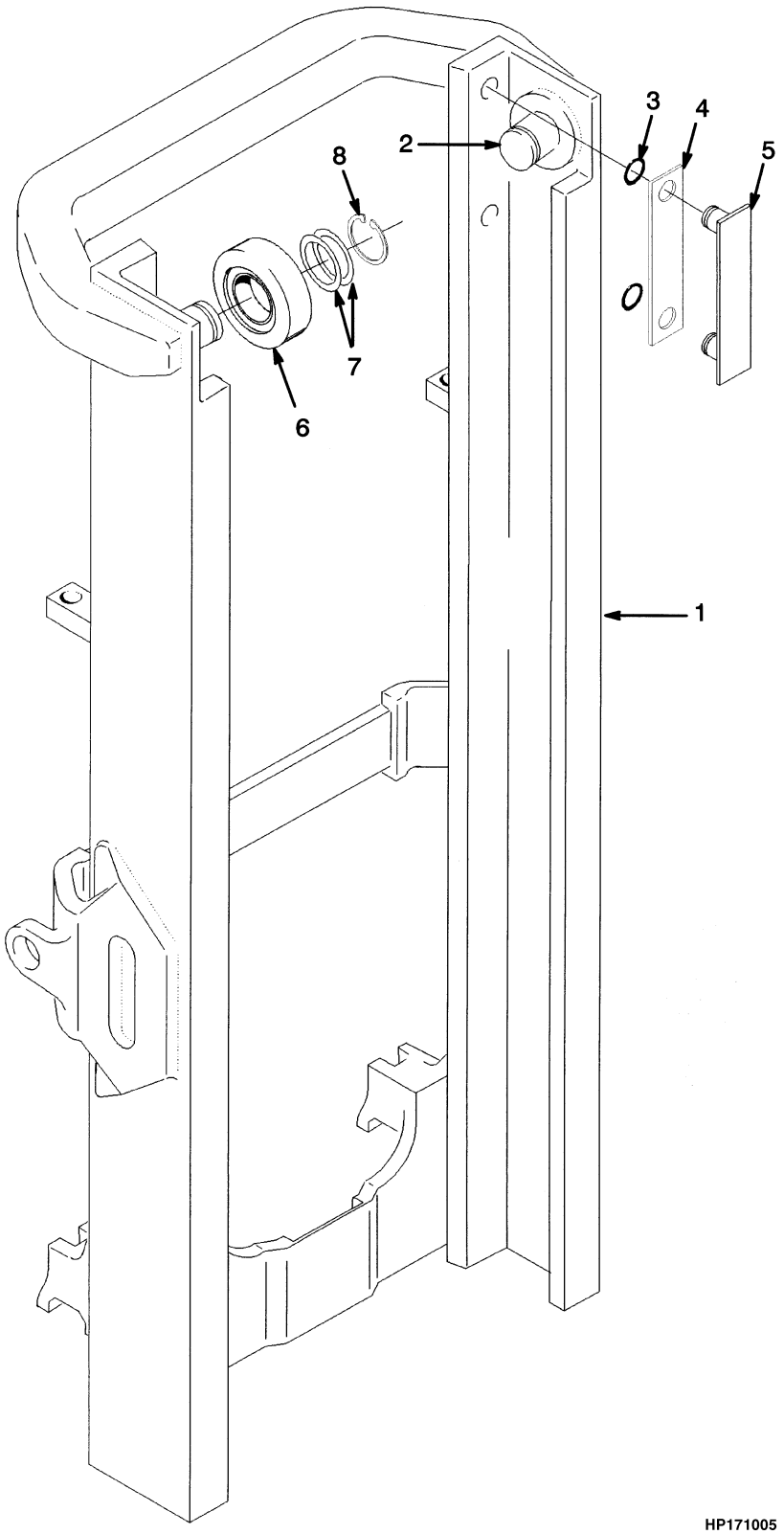

©2009 HYSTER COMPANY

OUTER MASS

TWO STAGE LIMITED FREE-LIFT

H2.00-2.50XM

ITEM	DESCRIPTION 1 2 3 4	LIFT HEIGHT TO BOTTOM OF FORKS			
		2492 mm (98.1 in.)	2592 mm (102.0 in.)	2992 mm (117.8 in.)	3292 mm (129.6 in.)
	Mast Group Number	B507 2492	B507 2592	B507 2992	B507 3292
	Mast Assy	2048107	2048109	2048113	2048116
1	Outer Mast	1341000	1341001	1341005	1341008

H2.00-2.50XM

ITEM	DESCRIPTION 1 2 3 4	LIFT HEIGHT TO BOTTOM OF FORKS		
		3792 mm (149.3 in.)	4292 mm (169.0 in.)	4792 mm (188.7 in.)
	Mast Group Number	B507 3792	B507 4292	B507 4792
	Mast Assy	2048121	2048128	2048133
1	Outer Mast	1341013	1341019	1341024

H3.00-3.50XM

ITEM	DESCRIPTION 1 2 3 4	LIFT HEIGHT TO BOTTOM OF FORKS			
		2359 mm (92.9 in.)	2459 mm (96.8 in.)	3159 mm (124.4 in.)	3659 mm (144.1 in.)
	Mast Group Number	B562 2359	B562 2459	B562 3159	B562 3659
	Mast Assy	2048147	2048148	2048155	2048160
1	Outer Mast	1341000	1341001	1341008	1341013

H3.00-3.50XM

ITEM	DESCRIPTION 1 2 3 4	LIFT HEIGHT TO BOTTOM OF FORKS	
		4159 mm (163.7 in.)	4659 mm (183.4 in.)
	Mast Group Number	B562 4159	B562 4659
	Mast Assy	2048165	2048170
1	Outer Mast	1341019	1341024

ITEM	PART NO.	DESCRIPTION	QTY
	a	Mast Assy	1
1	**a**	Outer Mast	1
2	1345216	Stubshaft	2
3	104506	O-Ring	4
4	131716	Shim (0.508 mm)	4
5	215211	Wear Strip	2

©2009 HYSTER COMPANY

OUTER MAST
TWO STAGE LIMITED FREE-LIFT

ITEM	PART NO.	DESCRIPTION	QTY
6	1333396	Load Roller (Standard)	2
6	1333397	Load Roller (1,52 mm)	2
7	129387	Shim (0.508 mm)	AR
8	58901	Snap Ring	2

FOOTNOTES:

a Refer to Table

©2009 HYSTER COMPANY

NOTES

©2009 HYSTER COMPANY

INNER MAST (FIGURE 9-2)
TWO STAGE LIMITED FREE-LIFT

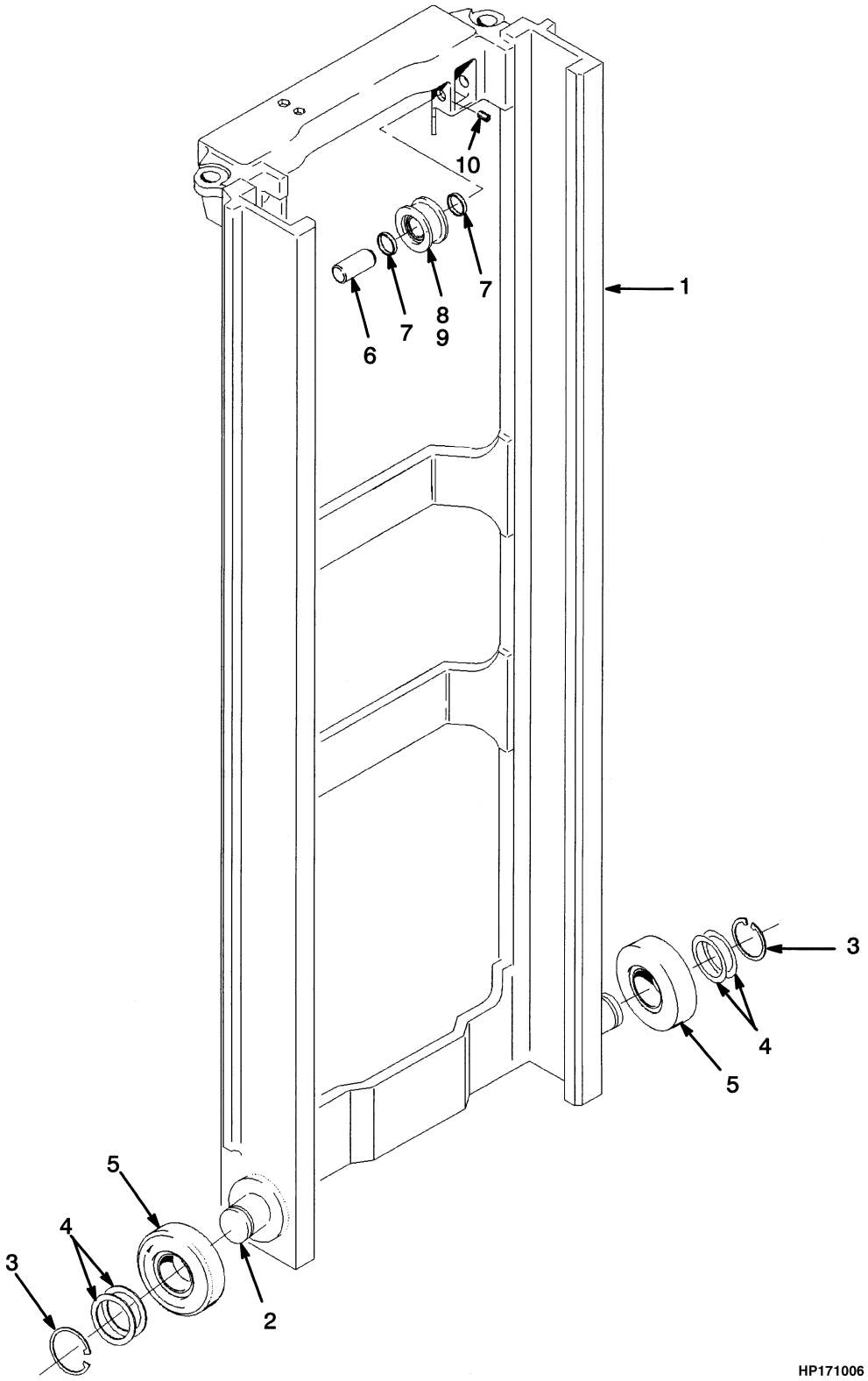

©2009 HYSTER COMPANY

INNER MAST
TWO STAGE LIMITED FREE-LIFT

H2.00-2.50XM

ITEM	DESCRIPTION 1 2 3 4	LIFT HEIGHT TO BOTTOM OF FORKS			
		2492 mm (98.1 in.)	2592 mm (102.0 in.)	2992 mm (117.8 in.)	3292 mm (129.6 in.)
	Mast Group Number	B507 2492	B507 2592	B507 2992	B507 3292
	Mast Assy	2048107	2048109	2048113	2048116
1	Inner Mast	1341205	1341206	1341210	1341213

H2.00-2.50XM

ITEM	DESCRIPTION 1 2 3 4	LIFT HEIGHT TO BOTTOM OF FORKS		
		3792 mm (149.3 in.)	4292 mm (169.0 in.)	4792 mm (188.7 in.)
	Mast Group Number	B507 3792	B507 4292	B507 4792
	Mast Assy	2048121	2048128	2048133
1	Inner Mast	1341218	1341223	1341228

H3.00-3.50XM

ITEM	DESCRIPTION 1 2 3 4	LIFT HEIGHT TO BOTTOM OF FORKS			
		2359 mm (92.9 in.)	2459 mm (96.8 in.)	3159 mm (124.4 in.)	3659 mm (144.1 in.)
	Mast Group Number	B562 2359	B562 2459	B562 3159	B562 3659
	Mast Assy	2048147	2048148	2048155	2048160
1	Inner Mast	1341205	1341206	1341213	1341218

H3.00-3.50XM

ITEM	DESCRIPTION 1 2 3 4	LIFT HEIGHT TO BOTTOM OF FORKS	
		4159 mm (163.7 in.)	4659 mm (183.4 in.)
	Mast Group Number	B562 4159	B562 4659
	Mast Assy	2048165	2048170
1	Inner Mast	1341223	1341228

ITEM	PART NO.	DESCRIPTION	QTY
	a	Mast Assy	1
1	**a**	Inner Mast	1
2	1345216	Stubshaft	2
3	58901	Snap Ring	2
4	129387	Shim (0.508 mm)	AR
5	1333396	Load Roller (Standard)	2

©2009 HYSTER COMPANY

INNER MAST
TWO STAGE LIMITED FREE-LIFT

ITEM	PART NO.	DESCRIPTION	QTY
5	1333397	Load Roller (1,52 mm)	2
6	1368656	Pin	2
7	1378691	Spacer	4
8	**bc** 1345183	Chain Sheave (H2.00-250XM)	2
8	**d** 1379685	Chain Sheave (H2.00-2.50XM)	2
8	1378698	Chain Sheave	1
8	37752	Snap Ring	1
8	1378699	Ball Bearing	1
9	**e** 1379684	Chain Sheave Assembly (H3.00-3.50XM)	2
9	1378694	Chain Sheave	1
9	37752	Snap Ring	1
9	1378699	Ball Bearing	1
10	302462	Roll Pin	2

FOOTNOTES:

a Refer to Table
b → S/N B507B07408
c → S/N B562B05197
d S/N B507B07409 →
e S/N B562B05198 →

©2009 HYSTER COMPANY

NOTES

©2009 HYSTER COMPANY

LIFT (FIGURE 9-3)
TWO STAGE LIMITED FREE-LIFT

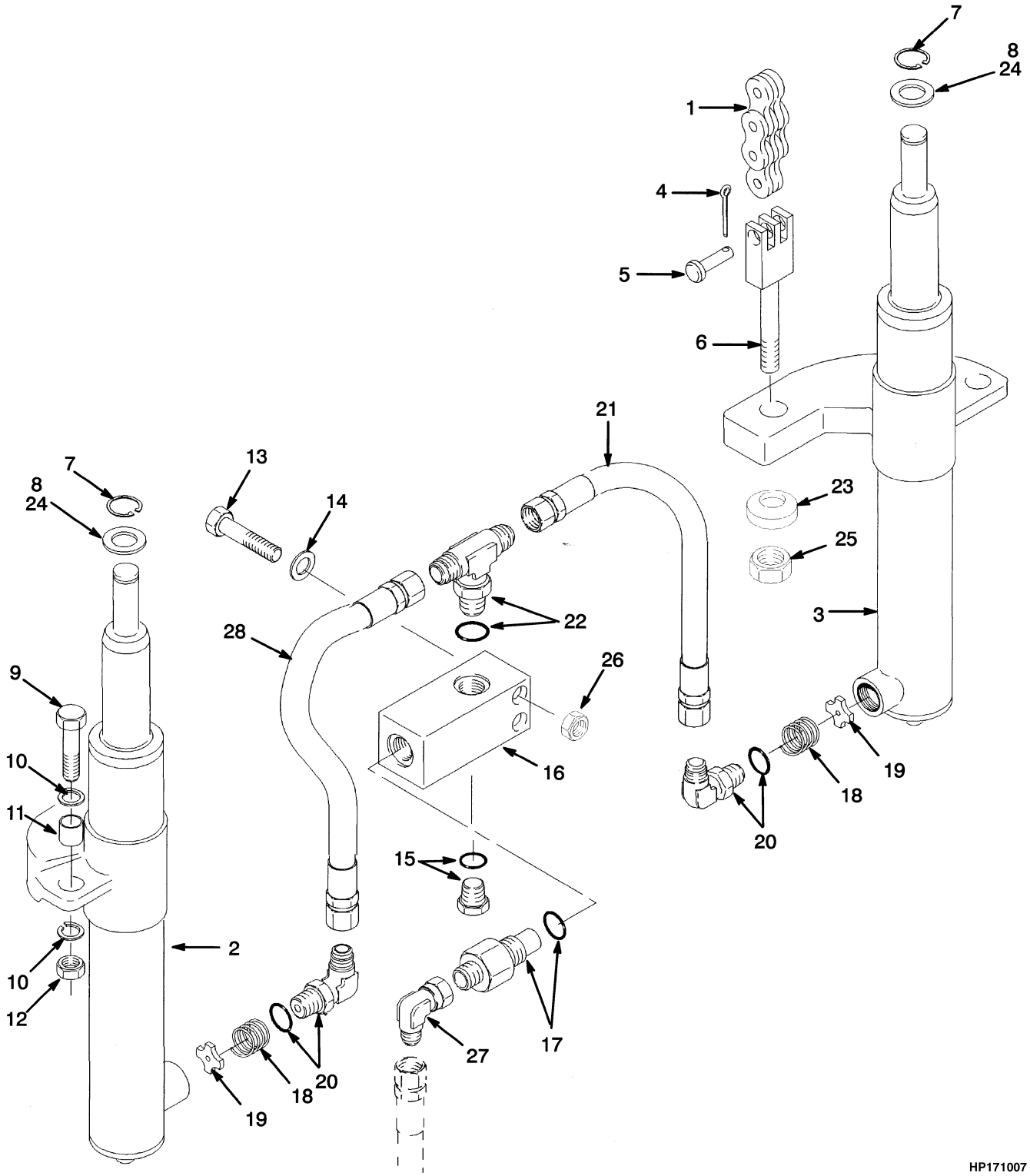

©2009 HYSTER COMPANY

LIFT

TWO STAGE LIMITED FREE-LIFT

H2.00-2.50XM

ITEM	DESCRIPTION 1 2 3 4	LIFT HEIGHT TO BOTTOM OF FORKS			
		2492 mm (98.1 in.)	2592 mm (102.0 in.)	2992 mm (117.8 in.)	3292 mm (129.6 in.)
	Mast Group Number	B507 2492	B507 2592	B507 2992	B507 3292
1	Chain	182332	135619	180057	223389

H2.00-2.50XM

ITEM	DESCRIPTION 1 2 3 4	LIFT HEIGHT TO BOTTOM OF FORKS		
		3792 mm (149.3 in.)	4292 mm (169.0 in.)	4792 mm (188.7 in.)
	Mast Group Number	B507 3792	B507 4292	B507 4792
1	Chain	1301870	246994	336393

H3.00-3.50XM

ITEM	DESCRIPTION 1 2 3 4	LIFT HEIGHT TO BOTTOM OF FORKS			
		2359 mm (92.9 in.)	2459 mm (96.8 in.)	3159 mm (124.4 in.)	3659 mm (144.1 in.)
	Mast Group Number	B562 2359	B562 2459	B562 3159	B562 3659
1	Chain	1342116	1342379	1342383	1342393

H3.00-3.50XM

ITEM	DESCRIPTION 1 2 3 4	LIFT HEIGHT TO BOTTOM OF FORKS	
		4159 mm (163.7 in.)	4659 mm (183.4 in.)
	Mast Group Number	B562 4159	B562 4659
1	Chain	1359234	1342392

ITEM	PART NO.	DESCRIPTION	QTY
1	**d**	Chain	2
2	. . . . .	Lift Cylinder (RH) (H2.00-2.50XM)	1
2	. . . . .	Lift Cylinder (RH) (H3.00-3.20XM =>S/N B562B16063) (☞Figure 9-5)	1
2	. . . . .	Lift Cylinder (RH) (H3.00-3.20XM S/N B562B16064=>)	1
3	. . . . .	Lift Cylinder (LH) (H2.00-2.50XM)	1
3	. . . . .	Lift Cylinder (LH) (H3.00-3.20XM =>S/N B562B16063) (☞Figure 9-5)	1
3	. . . . .	Lift Cylinder (LH) (H3.00-3.20XM S/N B562B16064=>)	1
4	15211	Cotter Pin	2
5	1514866	Pin	2
6	**b** 1369356	Chain Anchor	2
6	**a** 1369357	Chain Anchor	2

©2009 HYSTER COMPANY

LIFT
TWO STAGE LIMITED FREE-LIFT

ITEM	PART NO.	DESCRIPTION	QTY
7	131358	Snap Ring	2
8	1333382	Washer (1.500 mm)	AR
9	292532	Capscrew	2
10	296422	Washer	4
11	323090	Spacer	2
12	300937	Nut	2
13	136704	Capscrew	2
14	320157	Washer	2
15	**c** 14603	Plug (Used with optional item 16)	1
15	16486	O-Ring	1
16	1379687	Housing (Lowering Control)	1
16	**c** 1333392	Housing	1
17	2309766	Lowering Control Valve (H2.00-2.50XM)	1
17	316306	Lowering Control Valve (H3.00-3.50XM)	1
17	16982	O-Ring	1
18	337179	Spring	2
19	357749	Washer	2
20	189595	Fitting	2
20	16485	O-Ring	1
21	1345403	Hose Assy	1
22	16485	O-Ring	1
22	16578	Fitting	1
23	296426	Washer	2
24	**e** 1354915	Washer (0.254 mm)	AR
24	**e** 1354916	Washer (0.762 mm)	AR
24	**e** 1354917	Washer (1.524 mm)	AR
25	161003	Nut	2
26	313828	Nut	2
27	16882	Fitting	1
28	1462551	Hose Assy	1

FOOTNOTES:

a For Mast S/N B507
b For Mast S/N B562
c Optional
d Refer to Table
e Used with Part Number 1333382, between Cylinder Rod and Inner Mast as Required

See Service Manual for service procedures.
©2009 HYSTER COMPANY

NOTES

©2009 HYSTER COMPANY

LIFT CYLINDER (FIGURE 9-4)
TWO STAGE LIMITED FREE-LIFT — H2.00-2.50XM

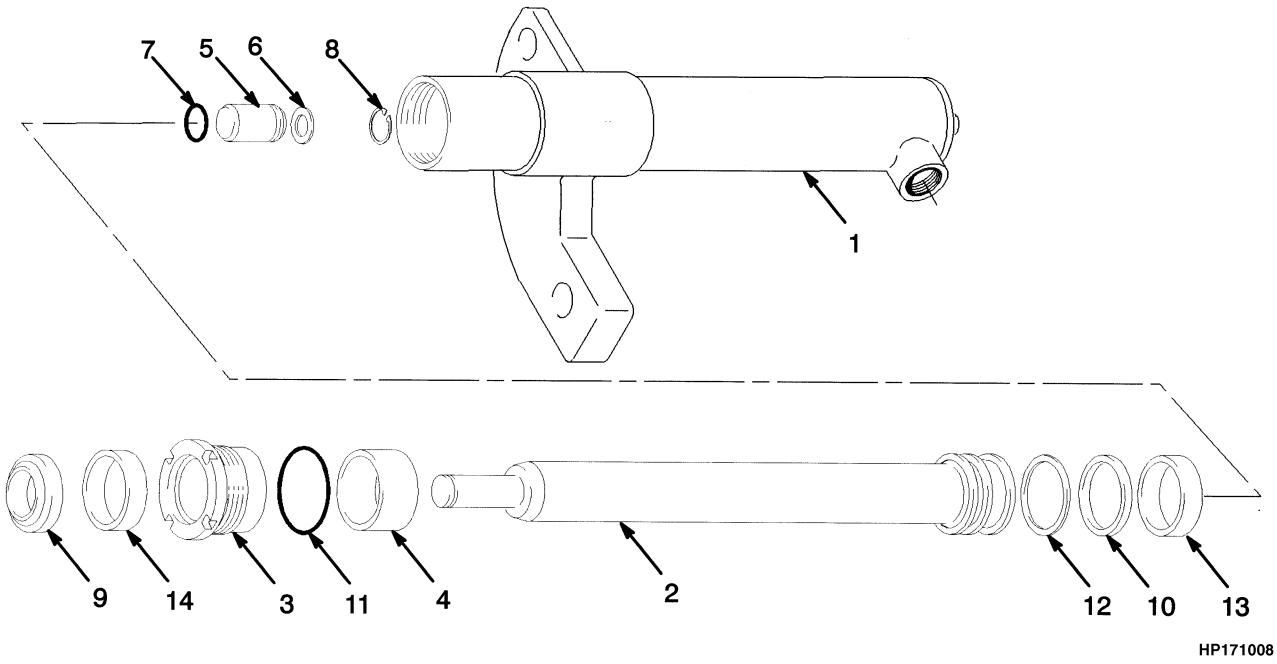

©2009 HYSTER COMPANY

LIFT CYLINDER

TWO STAGE LIMITED FREE-LIFT – H2.00-2.50XM

LEFT HAND

ITEM	DESCRIPTION 1 2 3 4	LIFT HEIGHT TO BOTTOM OF FORKS			
		2492 mm (98.1 in.)	2592 mm (102.0 in.)	2992 mm (117.8 in.)	3292 mm (129.6 in.)
	Mast Group Number	**B507 2492**	**B507 2592**	**B507 2992**	**B507 3292**
	Cylinder Group Number	**8600001**	**8600002**	**8600006**	**8600009**
	Cylinder Assy	1341427	1341428	1341432	1341435
1	Tube Wldmt-Cylinder	1354718	1355129	1355145	1355157
2	Cylinder Rod	1354724	1355130	1355146	1355158

LEFT HAND

ITEM	DESCRIPTION 1 2 3 4	LIFT HEIGHT TO BOTTOM OF FORKS		
		3792 mm (149.3 in.)	4292 mm (169.0 in.)	4792 mm (188.7 in.)
	Mast Group Number	**B507 3792**	**B507 4292**	**B507 4792**
	Cylinder Group Number	**8600014**	**8600020**	**8600101**
	Cylinder Assy	1341440	1341445	1341450
1	Tube Wldmt-Cylinder	1355177	1355198	1355219
2	Cylinder Rod	1355178	1355199	1355217

RIGHT HAND

ITEM	DESCRIPTION 1 2 3 4	LIFT HEIGHT TO BOTTOM OF FORKS			
		2492 mm (98.1 in.)	2592 mm (102.0 in.)	2992 mm (117.8 in.)	3292 mm (129.6 in.)
	Mast Group Number	**B507 2492**	**B507 2592**	**B507 2992**	**B507 3292**
	Cylinder Group Number	**8600051**	**8600052**	**8600056**	**8600059**
	Cylinder Assy	1341390	1341391	1341395	1341398
1	Tube Wldmt-Cylinder	1355128	1355132	1355148	1355160
2	Cylinder Rod	1354724	1355130	1355146	1355158

©2009 HYSTER COMPANY

LIFT CYLINDER

TWO STAGE LIMITED FREE-LIFT – H2.00-2.50XM

RIGHT HAND

ITEM	DESCRIPTION 1 2 3 4	LIFT HEIGHT TO BOTTOM OF FORKS		
		3792 mm (149.3 in.)	4292 mm (169.0 in.)	4792 mm (188.7 in.)
	Mast Group Number	**B507 3792**	**B507 4292**	**B507 4792**
	Cylinder Group Number	**8600064**	**8600070**	**8600151**
	Cylinder Assy	1341403	1341408	1341413
1	Tube Wldmt-Cylinder	1355180	1355200	1355222
2	Cylinder Rod	1355178	1355199	1355217

ITEM	PART NO.	DESCRIPTION	QTY
	a	Cylinder Assy	1
1	**a**	Tube Wldmt-Cylinder	1
2	**a**	Cylinder Rod	1
3	1355127	Gland	1
4	1355189	Spacer (8600070 and below)	1
4	1355221	Spacer (8600101and above)	1
5	257913	Check Valve	1
6	297531	Washer	1
7	39348	O-Ring	1
8	187388	Snap Ring	1
9	1319668	Rod Wiper	1
10	2013075	Rod Seal	1
11	92861	O-Ring	1
12	638246	Back-Up Ring	1
13	1356750	Wear Ring	1
14	1356749	Rod Seal	1
14	1356752	Rod Seal	1
	1355276	Kit-Seal (8600070 and below)	1
	1355277	Kit-Seal (8600101and above)	1

FOOTNOTES:

a Refer to Table

©2009 HYSTER COMPANY

LIFT CYLINDER (FIGURE 9-5)

TWO STAGE LIMITED FREE-LIFT — H3.00-3.20XM (→ S/N B562B16063)

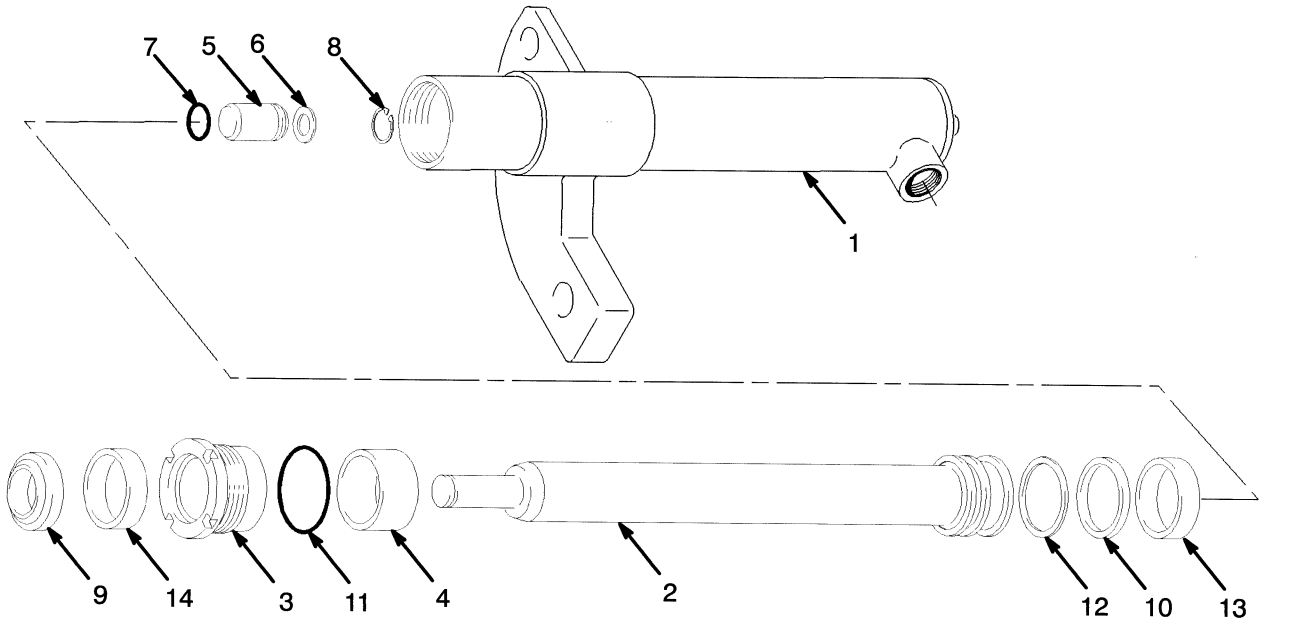

HP170968

LIFT CYLINDER

TWO STAGE LIMITED FREE-LIFT – H3.00-3.20XM (→ S/N B562B16063)

LEFT HAND

ITEM	DESCRIPTION 1 2 3 4	LIFT HEIGHT TO BOTTOM OF FORKS	
		2359 mm (92.9 in.)	2459 mm (96.8 in.)
	Mast Group Number	B562 2359	B562 2459
	Cylinder Group Number	8600201	8600202
	Cylinder Assy	1341501	1341502
1	Tube Wldmt-Cylinder	1355278	1355288
2	Cylinder Rod	1355281	1355289
4	Spacer	1355285	1355285

©2009 HYSTER COMPANY

LIFT CYLINDER

TWO STAGE LIMITED FREE-LIFT – H3.00-3.20XM (→ S/N B562B16063)

RIGHT HAND

ITEM	DESCRIPTION 1 2 3 4	LIFT HEIGHT TO BOTTOM OF FORKS	
		2359 mm (92.9 in.)	2459 mm (96.8 in.)
	Mast Group Number	B562 2359	B562 2459
	Cylinder Group Number	8600251	8510451
	Cylinder Assy	1341464	1341465
1	Tube Wldmt-Cylinder	1355287	1355291
2	Cylinder Rod	1355281	1355289
4	Spacer	1355285	1355285

ITEM	PART NO.	DESCRIPTION	QTY
	a	Cylinder Assy	1
1	**a**	Tube Wldmt-Cylinder	1
2	**a**	Cylinder Rod	1
3	1355284	Gland	1
4	**a**	Spacer	1
5	257913	Check Valve	1
6	297531	Washer	1
6	637635	Washer (Optional)	1
7	39348	O-Ring	1
8	187388	Snap Ring	1
9	1310370	Rod Wiper	1
10	334156	Rod Seal	1
11	59229	O-Ring	1
12	335012	Back-Up Ring	1
13	1356751	Wear Ring	1
14	1356749	Rod Seal	1
	1355286	Kit-Seal	1

FOOTNOTES:

a Refer to Table

©2009 HYSTER COMPANY

LIFT CYLINDER (FIGURE 9-6)

TWO STAGE LIMITED FREE-LIFT — H3.00-3.20XM (S/N B562B16064 →)

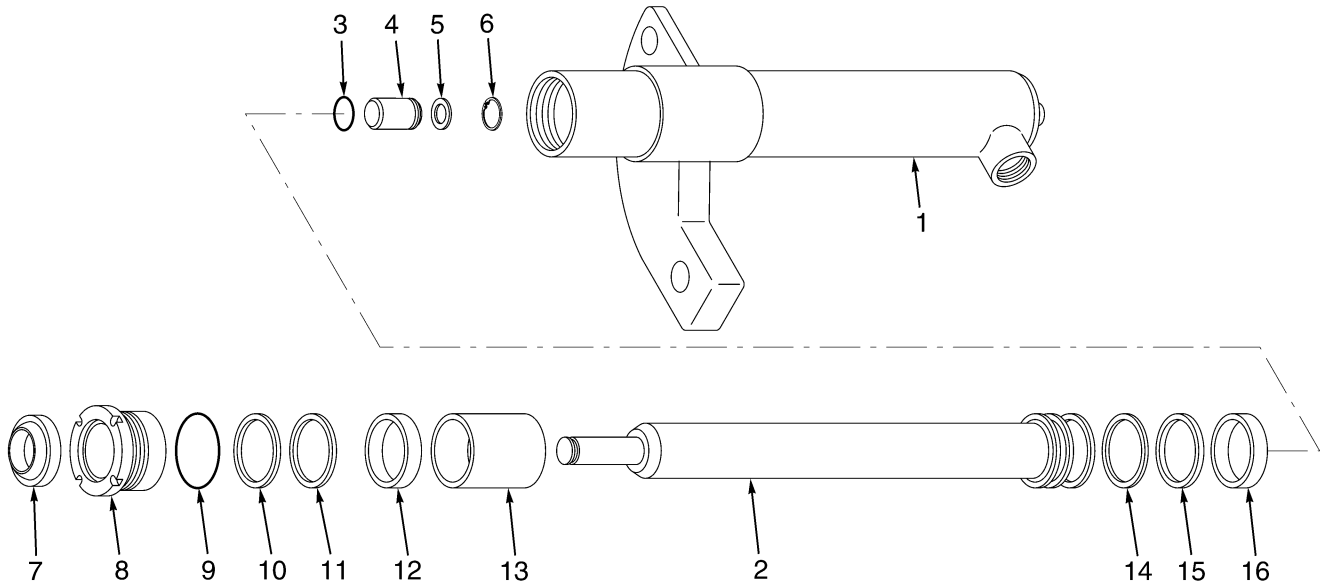

BP170002

LIFT CYLINDER

TWO STAGE LIMITED FREE-LIFT – H3.00-3.20XM (S/N B562B16064 →)

LEFT HAND

ITEM	DESCRIPTION 1 2 3 4	LIFT HEIGHT TO BOTTOM OF FORKS			
		2359 mm (92.9 in.)	2459 mm (96.8 in.)	3159 mm (124.4 in.)	3659 mm (144.1 in.)
	Mast Group Number	B562 2359	B562 2459	B562 3159	B562 3659
	Cylinder Group Number	8510401	8510402	8510409	8510414
	Cylinder Assy	2046279	2046185	2046174	2046179
1	Tube Wldmt-Cylinder	1355278	1355288	1355366	1355390
2	Cylinder Rod	1355281	1355289	1355367	1355391
13	Spacer	2046163	2046163	2046163	2046163

©2009 HYSTER COMPANY

LIFT CYLINDER

TWO STAGE LIMITED FREE-LIFT – H3.00-3.20XM (S/N B562B16064 →)

LEFT HAND

ITEM	DESCRIPTION 1 2 3 4	LIFT HEIGHT TO BOTTOM OF FORKS	
		4159 mm (163.7 in.)	4659 mm (183.4 in.)
	Mast Group Number	B562 4159	B562 4659
	Cylinder Group Number	8600302	8600307
	Cylinder Assy	1341519	1341524
1	Tube Wldmt-Cylinder	1355413	1355433
2	Cylinder Rod	1355414	1355434
13	Spacer	1355410	1355410

RIGHT HAND

ITEM	DESCRIPTION 1 2 3 4	LIFT HEIGHT TO BOTTOM OF FORKS			
		2359 mm (92.9 in.)	2459 mm (96.8 in.)	3159 mm (124.4 in.)	3659 mm (144.1 in.)
	Mast Group Number	B562 2359	B562 2459	B562 3159	B562 3659
	Cylinder Group Number	8510451	8510452	8510459	8510464
	Cylinder Assy	2046186	2046187	2046193	2046198
1	Tube Wldmt-Cylinder	1355287	1355291	1355369	1355393
2	Cylinder Rod	1355281	1355289	1355367	1355391
13	Spacer	2046163	2046163	2046163	2046163

RIGHT HAND

ITEM	DESCRIPTION 1 2 3 4	LIFT HEIGHT TO BOTTOM OF FORKS	
		4159 mm (163.7 in.)	4659 mm (183.4 in.)
	Mast Group Number	B562 4159	B562 4659
	Cylinder Group Number	8600352	8600357
	Cylinder Assy	1341482	1341487
1	Tube Wldmt-Cylinder	1355416	1355436
2	Cylinder Rod	1355414	1355434
13	Spacer	1355410	1355410

©2009 HYSTER COMPANY

LIFT CYLINDER

TWO STAGE LIMITED FREE-LIFT – H3.00-3.20XM (S/N B562B16064 →)

ITEM	PART NO.	DESCRIPTION	QTY
	a	Cylinder Assy	1
	a	Tube Wldmt-Cylinder	1
2	**a**	Cylinder Rod	1
3	39348	O-Ring	1
4	257913	Check Valve	1
5	297531	Washer	1
5	637635	Washer (Optional)	1
6	187388	Snap Ring	1
7	1319668	Rod Wiper (8510464 and below)	1
7	1310370	Rod Wiper (8600302 and above)	1
8	1380879	Gland	1
8	1355409	Gland (Only used on 4159mm and 4659mm)	1
9	59229	O-Ring	1
10	322824	Back-Up Ring	1
11	1356749	Rod Seal	1
12	322902	Wear Ring	1
13	**a**	Spacer	1
14	335012	Back-Up Ring	1
15	334156	Rod Seal	1
16	1356751	Wear Ring	1
	1499111	Kit-Seal (8510464 and below)	1
	1355411	Kit-Seal (8600302 and above)	1

FOOTNOTES:

a Refer to Table

©2009 HYSTER COMPANY

CARRIAGE (FIGURE 9-7)
TWO STAGE LIMITED FREE-LIFT — SIX ROLLER

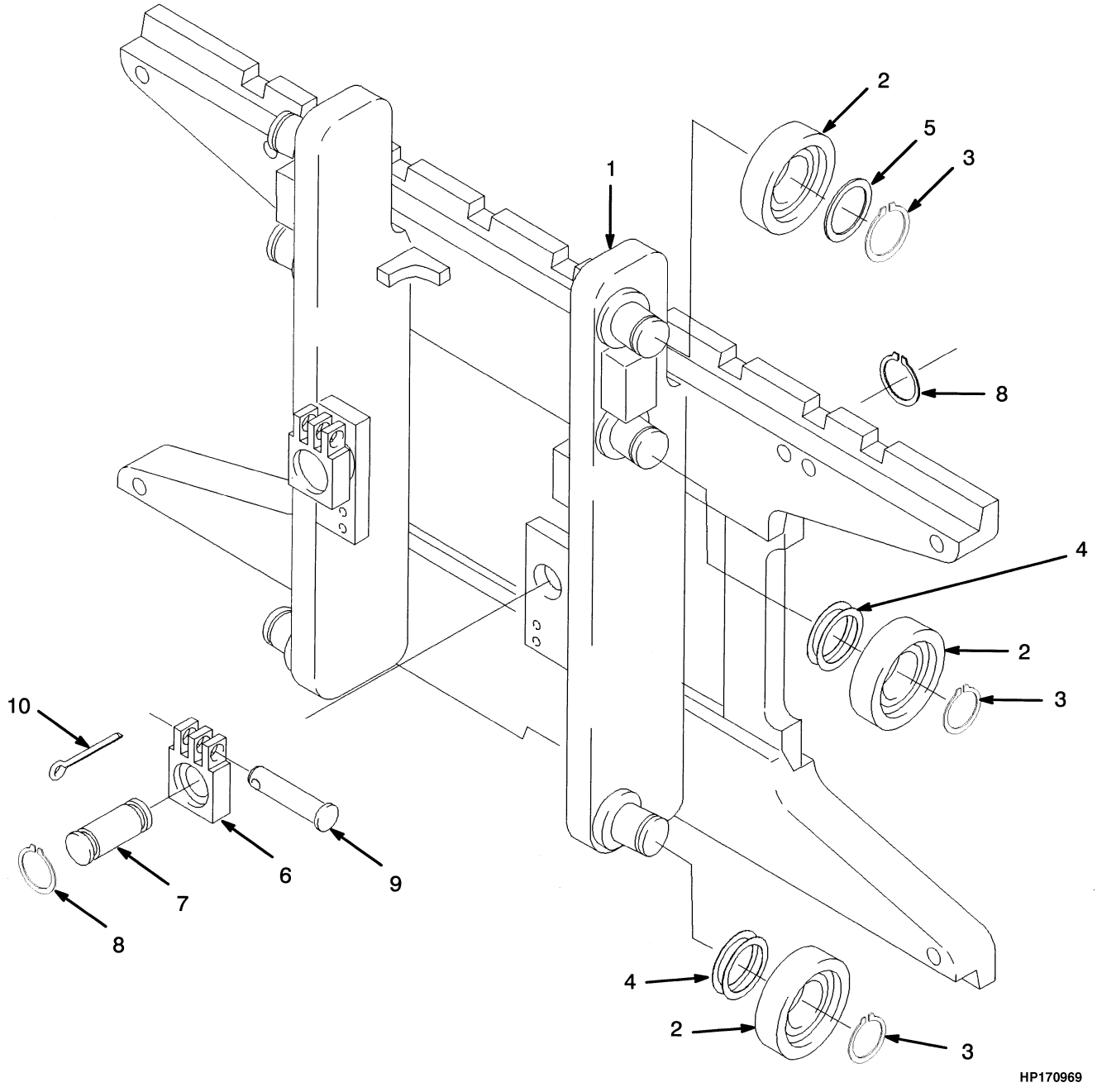

©2009 HYSTER COMPANY

CARRIAGE

TWO STAGE LIMITED FREE-LIFT – SIX ROLLER

KEY:
A: H2.00-2.50XM
B: H3.00-3.20XM

ITEM	PART NO.	DESCRIPTION	QTY A	QTY B
	1343846	Carriage	1	..
	1343847	Carriage	..	1
1	1338616	Carriage Wldmt	1	..
1	1338618	Carriage Wldmt	..	1
1	1345264	Stubshaft	6	6
2	1345219	Load Roller (110.5 mm)	6	6
2	1393132	Load Roller (Optional)	6	6
2	1395175	Load Roller (Optional)	6	6
3	12891	Snap Ring	6	6
4	1345263	Shim (0.508 mm)	AR	AR
5	366116	Spacer	2	2
6	1369344	Chain Anchor (Dual Hole)	..	2
6	1504011	Chain Anchor (Single Hole) (Optional)	..	2
6	1369345	Chain Anchor (Dual Hole)	2	..
6	1504010	Chain Anchor (Single Hole) (Optional)	2	..
7	1353408	Pin	2	2
8	131358	Snap Ring	4	4
9	1514866	Pin	2	2
10	15211	Cotter Pin	2	2

©2009 HYSTER COMPANY

HEADER HOSE (FIGURE 9-8)
TWO STAGE LIMITED FREE-LIFT

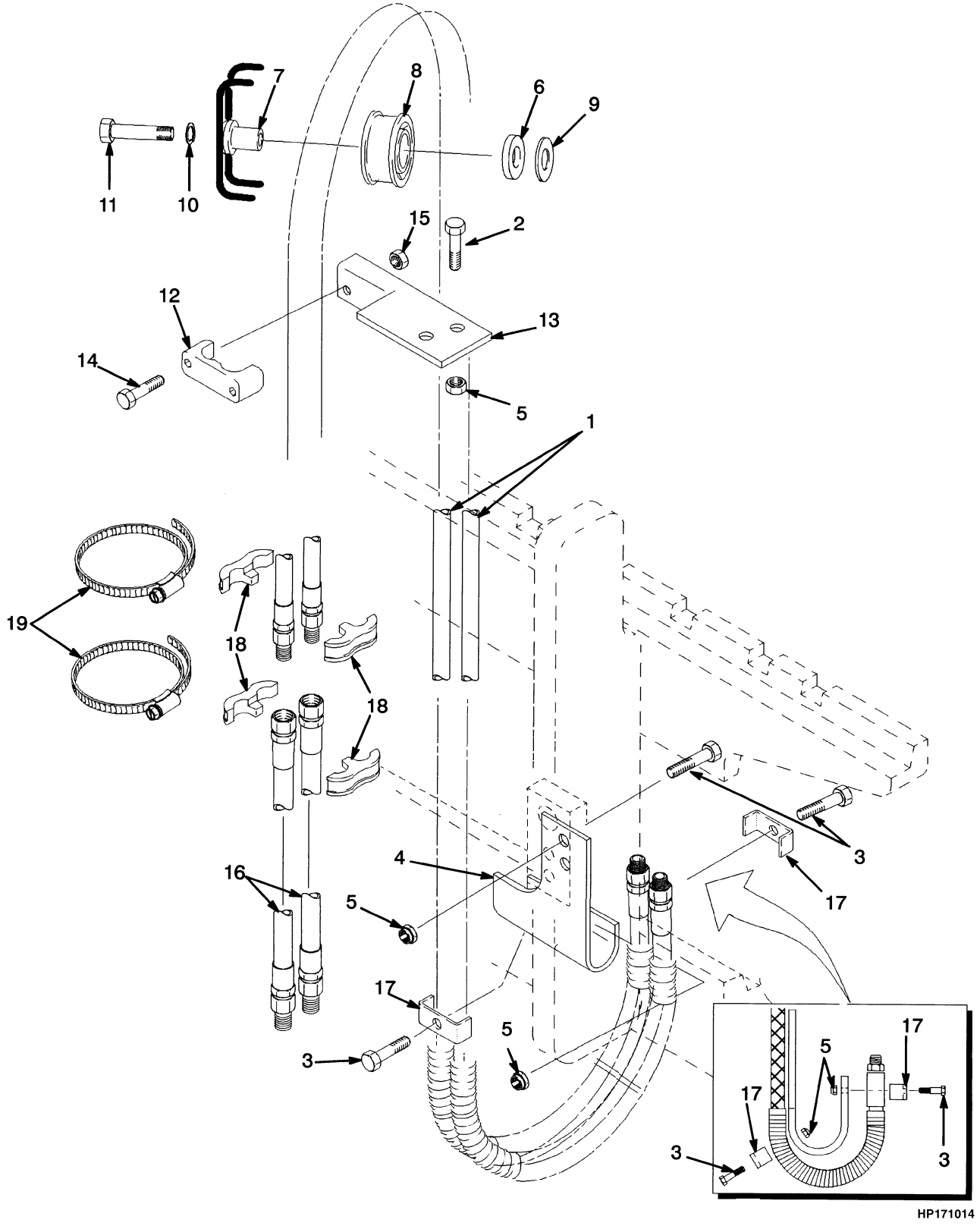

©2009 HYSTER COMPANY

HEADER HOSE
TWO STAGE LIMITED FREE-LIFT

H2.00-2.50XM

ITEM	DESCRIPTION 1 2 3 4	LIFT HEIGHT TO BOTTOM OF FORKS			
		2492 mm (98.1 in.)	2592 mm (102.0 in.)	2992 mm (117.8 in.)	3292 mm (129.6 in.)
	Mast Group Number	B507 2492	B507 2592	B507 2992	B507 3292
1	Hose Assy	**b**1345492 **d**1345500	**b**1345493 **d**1369602	1368313	1369606
20	Hose Assy	**e**1398479	**e**1366435	1398493	1368314

H2.00-2.50XM

ITEM	DESCRIPTION 1 2 3 4	LIFT HEIGHT TO BOTTOM OF FORKS		
		3792 mm (149.3 in.)	4292 mm (169.0 in.)	4792 mm (188.7 in.)
	Mast Group Number	B507 3792	B507 4292	B507 4792
1	Hose Assy	1369611	1345516	1369617
20	Hose Assy	1398512	1398645	1398541

H3.00-3.50XM

ITEM	DESCRIPTION 1 2 3 4	LIFT HEIGHT TO BOTTOM OF FORKS			
		2359 mm (92.9 in.)	2459 mm (96.8 in.)	3159 mm (124.4 in.)	3659 mm (144.1 in.)
	Mast Group Number	B562 2359	B562 2459	B562 3159	B562 3659
1	Hose Assy	**c**1345492 **e**1345500	**c**1345493 **e**1369602	1369606	1369611
20	Hose Assy	**e**1398479	**e**1366435	1368314	1398512

H3.00-3.50XM

ITEM	DESCRIPTION 1 2 3 4	LIFT HEIGHT TO BOTTOM OF FORKS	
		4159 mm (163.7 in.)	4659 mm (183.4 in.)
	Mast Group Number	B562 4159	B562 4659
1	Hose Assy	1345516	1369617
20	Hose Assy	1398645	1398541

©2009 HYSTER COMPANY

HEADER HOSE
TWO STAGE LIMITED FREE-LIFT

KEY:
A: Three Function
B: Four Function

ITEM	PART NO.	DESCRIPTION	QTY A	QTY B
1	**a**	Hose Assy	2	2
2	136704	Capscrew	2	4
3	292508	Capscrew	4	8
4	1345412	Bracket (RH)	1	1
4	1345413	Bracket (LH)	..	1
5	313828	Nut	6	12
6	1360549	Spacer	1	2
7	1360548	Stubshaft	1	2
8	1494017	Hose Sheave	1	2
9	1345190	Washer	1	2
10	292683	Lockwasher	1	2
11	292533	Capscrew	1	2
11	292533	Capscrew	1	2
12	1360386	Clamp	1	2
13	1354919	Bracket (RH)	1	1
13	1354921	Bracket (LH)	..	1
14	292502	Capscrew	2	4
15	313805	Nut	2	4
16	1354904	Hose Assy (LH)	..	2
16	1354922	Hose Assy (RH)	2	2
17	1345348	Clamp	2	4
18	1353530	Hose Clamp (Mast 3659 and above)	2	7
19	1360507	Clamp (Mast 3659 and above)	3	7
20	**a**	Hose Assy	..	2

FOOTNOTES:

a Refer to Table
b → S/N B507V3171
c → S/N B562V2417
d S/N B507V3172 →
e S/N B562V2418 →

©2009 HYSTER COMPANY

10 MAST-TWO STAGE FULL FREE-LIFT

SECTION 10
MAST-TWO STAGE FULL FREE-LIFT

DESCRIPTION	PAGE
CARRIAGE	
TWO STAGE FULL FREE-LIFT - SIX ROLLER	10-32
FREE-LIFT	
TWO STAGE FULL FREE-LIFT	10-8
FREE-LIFT CYLINDER	
TWO STAGE FULL FREE-LIFT (→ 3/2003)	10-27
TWO STAGE FULL FREE-LIFT (3/2003 →)	10-29
HEADER HOSE	
TWO STAGE FULL FREE-LIFT	10-34
INNER MAST	
TWO STAGE FULL FREE-LIFT	10-4
MAIN CYLINDER (H2.00-2.50XM)	
TWO STAGE FULL FREE-LIFT - LEFT HAND (→ S/N B509A2090Z) (→ S/N B509B4939)	10-11
TWO STAGE FULL FREE-LIFT - LEFT HAND (S/N B509A2091Z →) (S/N B509B4940 →)	10-13
TWO STAGE FULL FREE-LIFT - RIGHT HAND (→ S/N B509A2090Z) (→ S/N B509B4939)	10-15
TWO STAGE FULL FREE-LIFT - RIGHT HAND (S/N B509A2091Z →) (S/N B509B4940 →)	10-17
MAIN CYLINDER (H3.00-3.20XM)	
TWO STAGE FULL FREE-LIFT - LEFT HAND (→ S/N B564A2046Z) (→ S/N B564B03936)	10-19
TWO STAGE FULL FREE-LIFT - LEFT HAND (S/N B564A2047Z →) (S/N B564B03937 →)	10-21
TWO STAGE FULL FREE-LIFT - RIGHT HAND (→ S/N B564A2046Z) (→ S/N B564B03936)	10-23
TWO STAGE FULL FREE-LIFT - RIGHT HAND	10-25
MAIN LIFT	
TWO STAGE FULL FREE-LIFT	10-6
OUTER MAST	
TWO STAGE FULL FREE-LIFT	10-2

©2009 HYSTER COMPANY

OUTER MAST (FIGURE 10-1)
TWO STAGE FULL FREE-LIFT

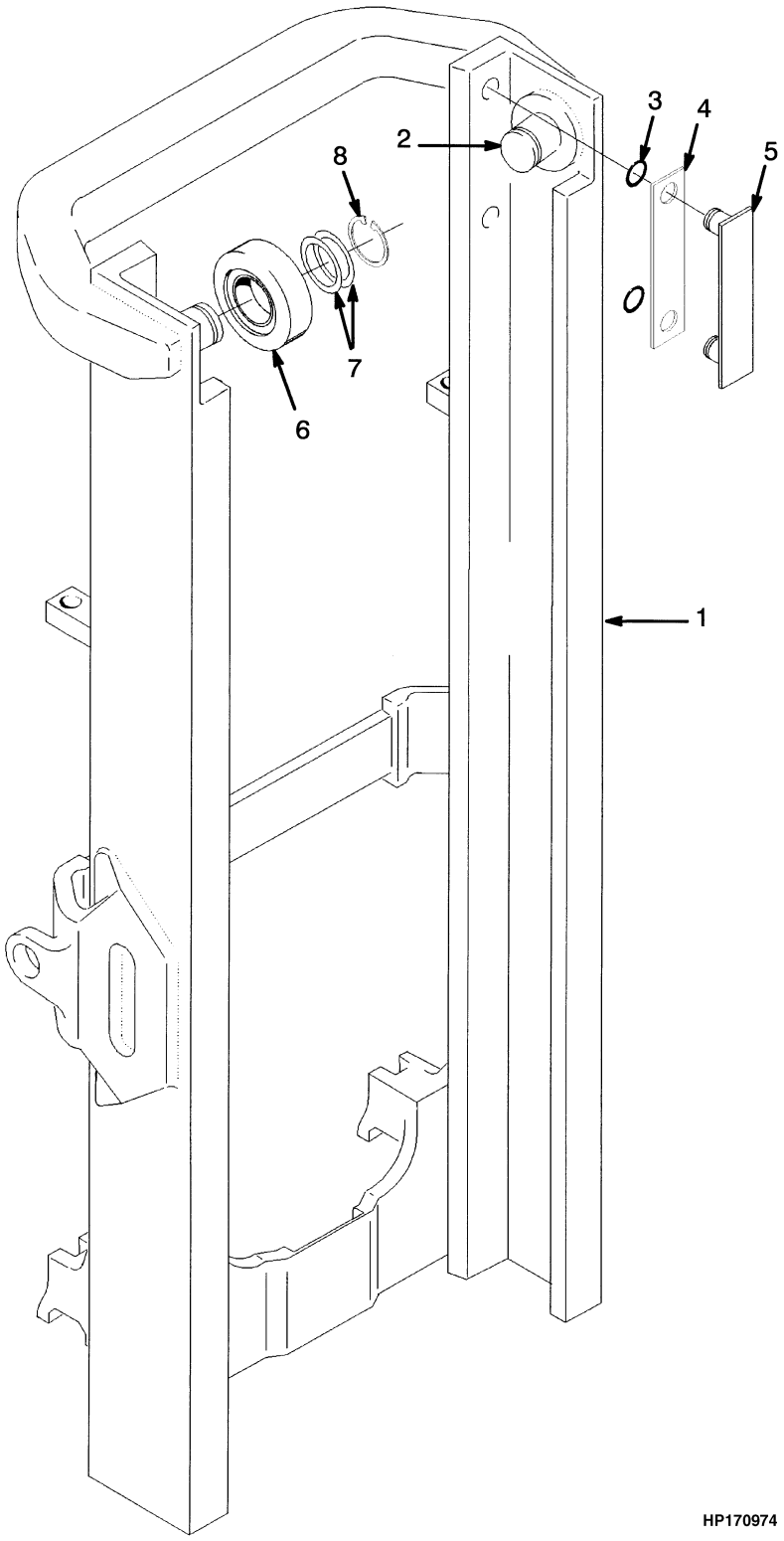

©2009 HYSTER COMPANY

OUTER MASK
TWO STAGE FULL FREE-LIFT

H2.00-2.50XM

ITEM	DESCRIPTION 1 2 3 4	LIFT HEIGHT TO BOTTOM OF FORKS			
		2462 mm (96.9 in.)	2562 mm (100.9 in.)	2962 mm (116.6 in.)	3262 mm (128.4 in.)
	Mast Group Number	B509 2462	B509 2562	B509 2962	B509 3262
	Mast Assy	2048379	2048381	2048391	2048399
1	Outer Mast	1341000	1341001	1341005	1341008

H3.00-3.20XM

ITEM	DESCRIPTION 1 2 3 4	LIFT HEIGHT TO BOTTOM OF FORKS		
		2360 mm (92.9 in.)	2460 mm (96.9 in.)	3160 mm (124.4 in.)
	Mast Group Number	B564 2360	B564 2460	B564 3160
	Mast Assy	2048457	2048460	2048477
1	Outer Mast	1341000	1341001	1341008

ITEM	PART NO.	DESCRIPTION	QTY
	a	Mast Assy	1
1	**a**	Outer Mast	1
2	1345216	Stubshaft	2
3	104506	O-Ring	4
4	131716	Shim (0.508 mm)	4
5	215211	Wear Strip	2
6	1333396	Load Roller	2
7	129387	Shim (0.508 mm)	AR
8	58901	Snap Ring	2

FOOTNOTES:

a Refer to Table

©2009 HYSTER COMPANY

INNER MAST (FIGURE 10-2)
TWO STAGE FULL FREE-LIFT

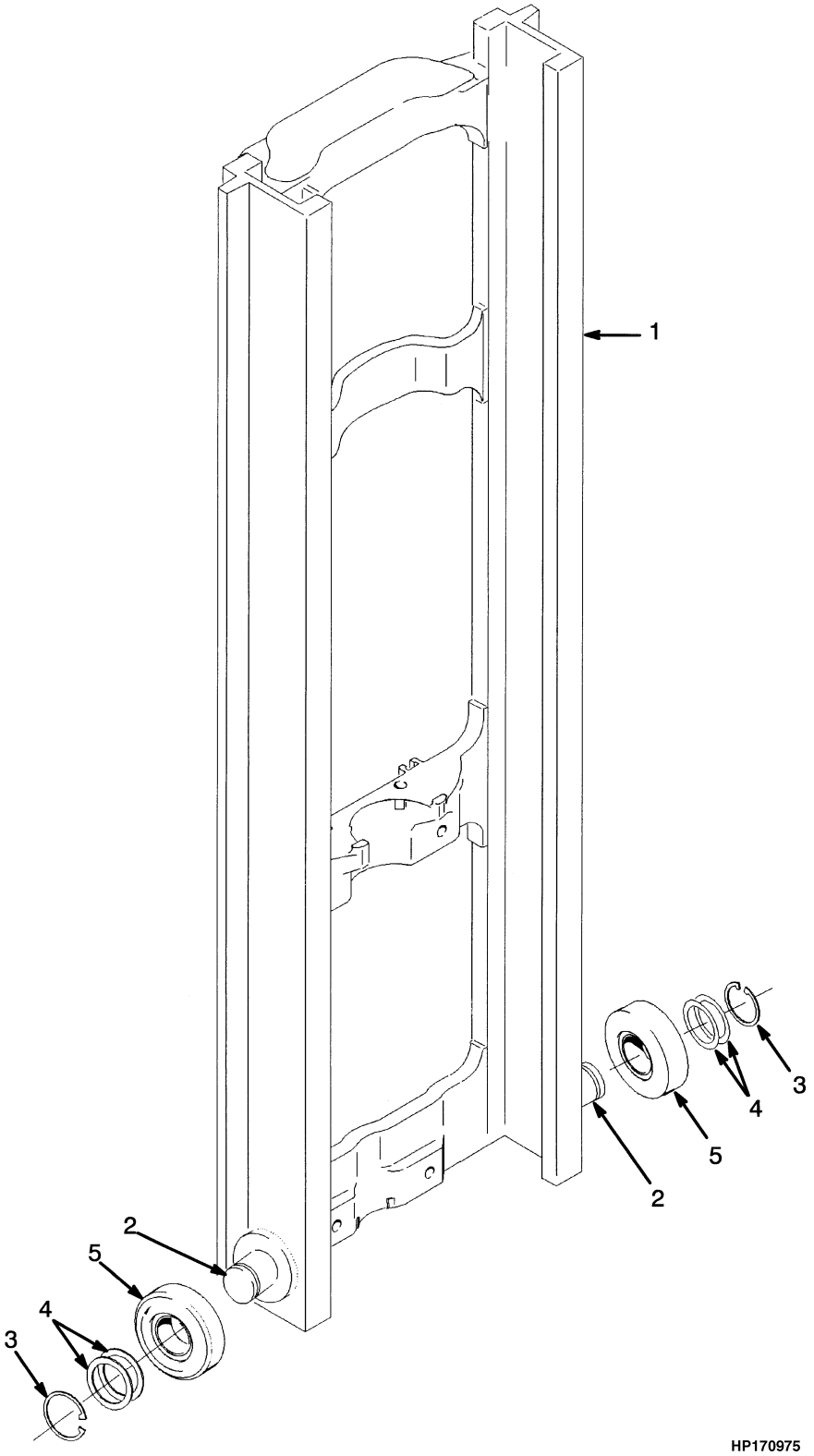

©2009 HYSTER COMPANY

INNER MAST
TWO STAGE FULL FREE-LIFT

H2.00-2.50XM

ITEM	DESCRIPTION 1 2 3 4	LIFT HEIGHT TO BOTTOM OF FORKS			
		2462 mm (96.9 in.)	2562 mm (100.9 in.)	2962 mm (116.6 in.)	3262 mm (128.4 in.)
	Mast Group Number	B509 2462	B509 2562	B509 2962	B509 3262
	Mast Assy	2048379	2048381	2048391	2048399
1	Inner Mast	1342469	1342470	1342474	1342477

H3.00-3.20XM

ITEM	DESCRIPTION 1 2 3 4	LIFT HEIGHT TO BOTTOM OF FORKS		
		2360 mm (92.9 in.)	2460 mm (96.9 in.)	3160 mm (124.4 in.)
	Mast Group Number	B564 2360	B564 2460	B564 3160
	Mast Assy	2048457	2048460	2048477
1	Inner Mast	1342469	1342470	1342477

ITEM	PART NO.	DESCRIPTION	QTY
	a	Mast Assy	1
1	**a**	Inner Mast	1
2	1345216	Stubshaft	2
3	58901	Snap Ring	2
4	129387	Shim (0.508 mm)	AR
5	1333396	Load Roller	2

FOOTNOTES:

a Refer to Table

©2009 HYSTER COMPANY

MAIN LIFT (FIGURE 10-3)
TWO STAGE FULL FREE-LIFT

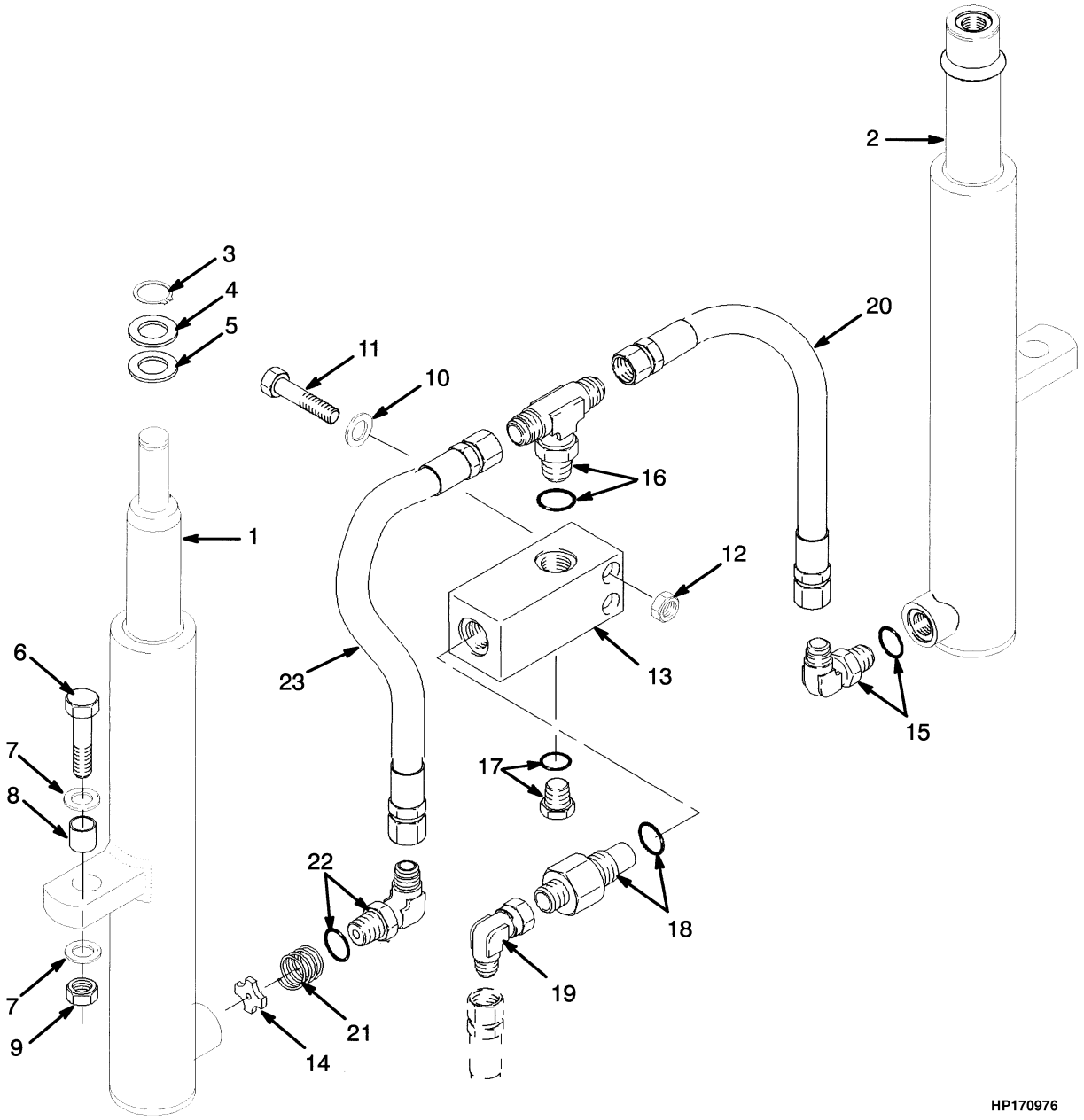

©2009 HYSTER COMPANY

MAIN LIFT
TWO STAGE FULL FREE-LIFT

KEY:
A: H2.00-2.50XM
B: H3.00-3.20XM

ITEM	PART NO.	DESCRIPTION	QTY A	QTY B
1	. . . . .	Lift Cylinder (RH)	1	1
2	. . . . .	Lift Cylinder (LH)	1	1
3	131358	Snap Ring	1	1
4	1333382	Washer (1.500 mm)	1	1
5	1354915	Washer (0.254 mm)	AR	AR
5	1354916	Washer (0.762 mm)	AR	AR
5	1354917	Washer (1.524 mm)	AR	AR
6	292532	Capscrew	2	2
7	296422	Washer	4	4
8	323090	Spacer	2	2
9	300937	Nut	2	2
10	320157	Washer	2	2
11	214364	Capscrew	2	2
12	313828	Nut	2	2
13	**a** 1333392	Housing	1	1
13	1379687	Housing (Lowering Control)	1	1
14	357749	Washer	1	1
15	16560	Fitting	1	1
15	16485	O-Ring	1	1
16	16578	Fitting	1	1
16	16485	O-Ring	1	1
17	**a** 14603	Plug	1	1
17	**a** 16486	O-Ring	1	1
18	2309766	Lowering Control Valve	1	..
18	316306	Lowering Control Valve	..	1
18	16982	O-Ring	1	1
19	16882	Fitting	1	1
20	1345403	Hose Assy	1	1
21	337179	Spring	1	1
22	189595	Fitting	1	1
22	16485	O-Ring	1	1
23	1462551	Hose Assy	1	1

FOOTNOTES:

a Optional

©2009 HYSTER COMPANY

FREE-LIFT (FIGURE 10-4)
TWO STAGE FULL FREE-LIFT

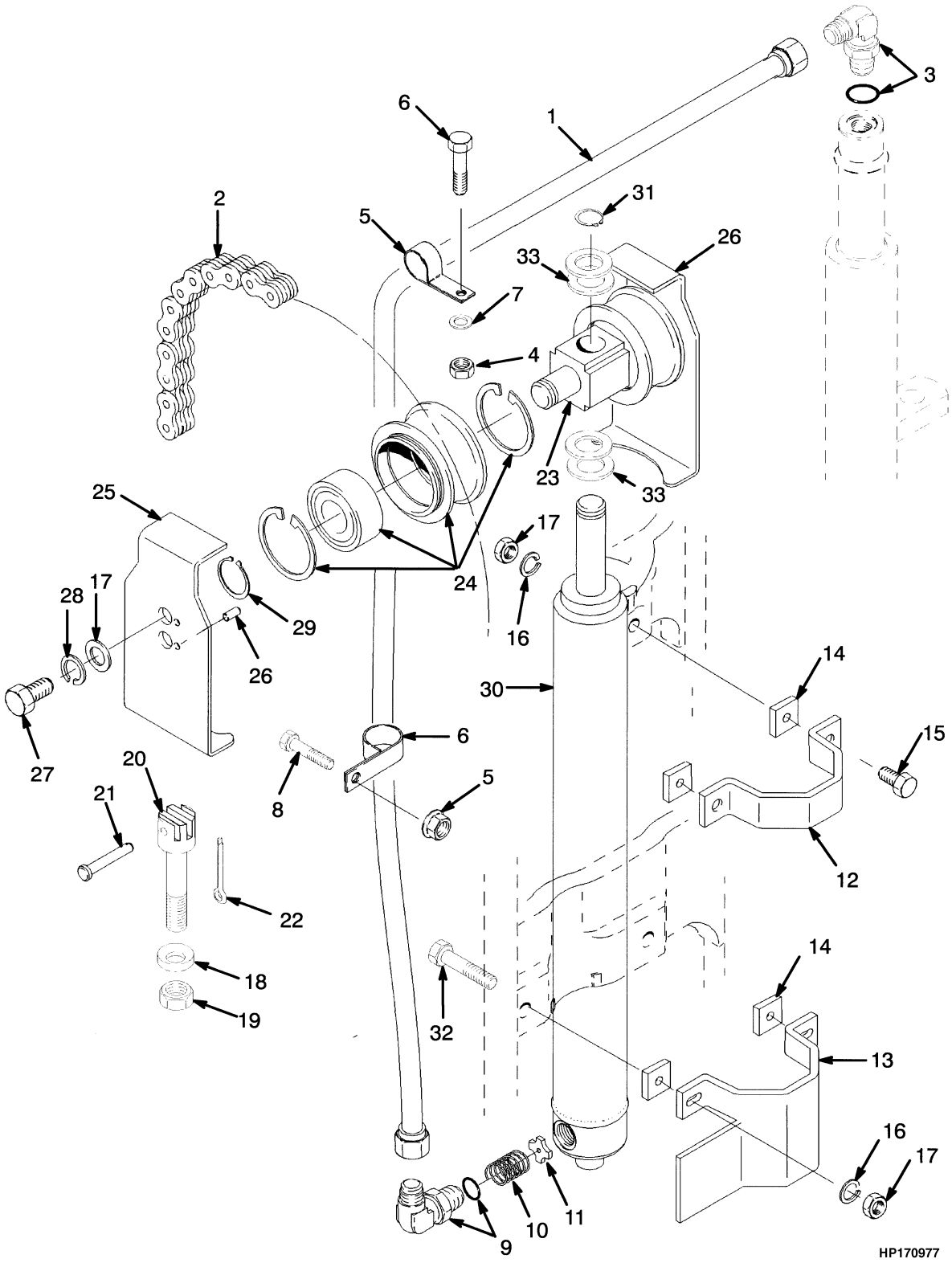

©2009 HYSTER COMPANY

FREE-LIFT
TWO STAGE FULL FREE-LIFT

H2.00-2.50XM

ITEM	DESCRIPTION 1 2 3 4	LIFT HEIGHT TO BOTTOM OF FORKS			
		2462 mm (96.9 in.)	2562 mm (100.9 in.)	2962 mm (116.6 in.)	3262 mm (128.4 in.)
	Mast Group Number	B509 2462	B509 2562	B509 2962	B509 3262
2	Chain	182333	180030	197345	180177

H3.00-3.20XM

ITEM	DESCRIPTION 1 2 3 4	LIFT HEIGHT TO BOTTOM OF FORKS		
		2360 mm (92.9 in.)	2460 mm (96.9 in.)	3160 mm (124.4 in.)
	Mast Group Number	B564 2360	B564 2460	B564 3160
2	Chain	1342390	1342370	1342377

KEY:
A: H2.00-2.50XM
B: H3.00-3.20XM

ITEM	PART NO.	DESCRIPTION	QTY A	QTY B
1	1345314	Tube Wldmt-Cylinder	1	1
2	**c**	Chain	2	2
3	1380036	Fitting	1	1
3	16485	O-Ring	1	1
4	316826	Nut	2	2
5	178119	Clamp	2	2
6	296028	Capscrew	1	1
7	320159	Washer	1	1
8	136985	Capscrew	1	1
9	1354956	Fitting	1	1
9	16485	O-Ring	1	1
10	154355	Spring	1	1
11	356505	Washer	1	1
12	1465504	Tie Down	1	1
13	1354967	Bracket Wldmt	1	1
14	1354902	Spacer	..	4
15	292529	Capscrew	2	2
16	320161	Washer	6	6
17	300937	Nut	4	4
18	296426	Washer	2	2
19	161003	Nut	2	2
20	1369357	Chain Anchor	2	2
21	1514866	Pin	2	2
22	15211	Cotter Pin	2	2
23	1378690	Crosshead	1	1
24	**a** 1379682	Chain Sheave Assembly	2	..

©2009 HYSTER COMPANY

FREE-LIFT
TWO STAGE FULL FREE-LIFT

KEY:
A: H2.00-2.50XM
B: H3.00-3.20XM

ITEM	PART NO.	DESCRIPTION	QTY A	QTY B
24	**b** 1379683	Chain Sheave Assembly	..	2
24	**a** 1378692	Chain Sheave	1	..
24	**b** 1378693	Chain Sheave	..	1
24	37752	Snap Ring	1	1
24	1378699	Ball Bearing	1	1
25	1395285	Chain Guard	2	2
26	302461	Roll Pin	2	2
27	132860	Capscrew	2	2
28	292683	Lockwasher	2	2
29	304526	Snap Ring	3	3
30	. . . . .	Free-Lift Cylinder	1	1
31	131358	Snap Ring	1	1
32	287837	Capscrew	2	2
33	1362433	Spacer	4	4

FOOTNOTES:

a Mast B509-3262
b Mast B564-3160
c Refer to Table

©2009 HYSTER COMPANY

MAIN CYLINDER (H2.00-2.50XM) (FIGURE 10-5)

TWO STAGE FULL FREE-LIFT — LEFT HAND (→ S/N B509A2090Z) (→ S/N B509B4939)

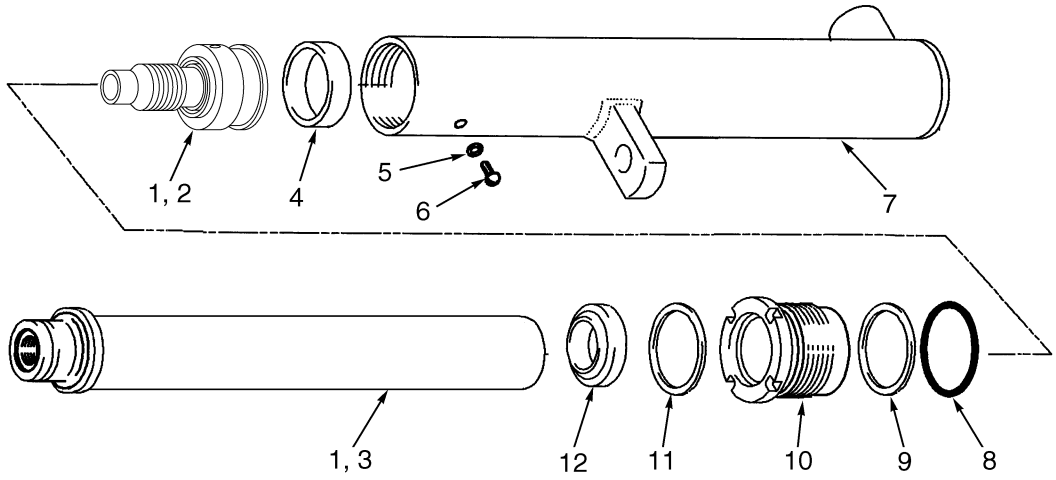

BP170064

MAIN CYLINDER (H2.00-2.50XM)

TWO STAGE FULL FREE-LIFT – LEFT HAND (→ S/N B509A2090Z) (→ S/N B509B4939)

B509

ITEM	DESCRIPTION 1 2 3 4	LIFT HEIGHT TO BOTTOM OF FORKS			
		2462 mm (96.9 in.)	2562 mm (100.9 in.)	2962 mm (116.6 in.)	3262 mm (128.4 in.)
	Mast Group Number	B509 2462	B509 2562	B509 2962	B509 3262
	Cylinder Group Number	8600701	8600702	8600706	8600709
	Cylinder Assy	1342217	1342218	1342222	1342225
1	Cylinder Rod (Assembly)	1355875	1355887	1355911	1355929
7	Tube Wldmt-Cylinder	1355874	1355886	1355910	1355928

ITEM	PART NO.	DESCRIPTION	QTY
	e	Cylinder Assy	1
1	**e**	Cylinder Rod (Assembly)	1
2	2064464	Piston	1
3	**a** 1355876	Cylinder Rod	1
3	**b** 1355888	Cylinder Rod	1
3	**c** 1355912	Cylinder Rod	1
3	**d** 1355930	Cylinder Rod	1
4	1356747	Wear Ring	1
5	190887	Sealing Ring	1
6	295649	Screw	1
7	**e**	Tube Wldmt-Cylinder	1
8	59229	O-Ring	1
9	147972	Back-Up Ring	1

©2009 HYSTER COMPANY

MAIN CYLINDER (H2.00-2.50XM)

TWO STAGE FULL FREE-LIFT – LEFT HAND (→ S/N B509A2090Z) (→ S/N B509B4939)

ITEM	PART NO.	DESCRIPTION	QTY
10	1355284	Gland	1
11	1356749	Rod Seal	1
12	1319668	Rod Wiper	1
	1358963	Kit-Seal	1

FOOTNOTES:

a B509-2462 (8600701)
b B509-2562 (8600702)
c B509-2962 (8600706)
d B509-3262 (8600709)
e Refer to Table

©2009 HYSTER COMPANY

MAIN CYLINDER (H2.00-2.50XM) (FIGURE 10-6)

TWO STAGE FULL FREE-LIFT — LEFT HAND (S/N B509A2091Z →) (S/N B509B4940 →)

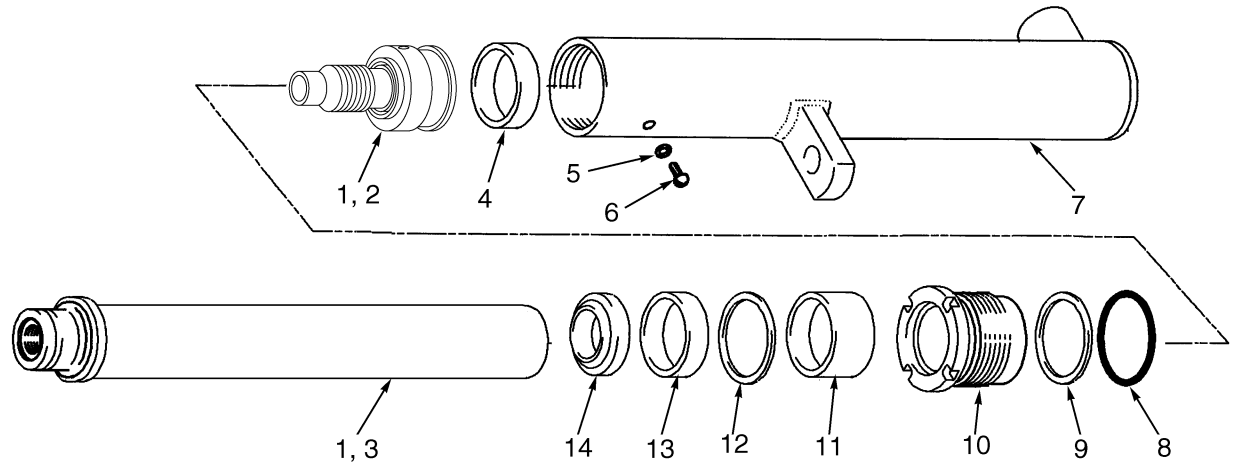

BP170065

MAIN CYLINDER (H2.00-2.50XM)

TWO STAGE FULL FREE-LIFT – LEFT HAND (S/N B509A2091Z →) (S/N B509B4940 →)

B509

ITEM	DESCRIPTION 1 2 3 4	LIFT HEIGHT TO BOTTOM OF FORKS			
		2462 mm (96.9 in.)	2562 mm (100.9 in.)	2962 mm (116.6 in.)	3262 mm (128.4 in.)
	Mast Group Number	B509 2462	B509 2562	B509 2962	B509 3262
	Cylinder Group Number	8509501	8509502	8509506	8509509
	Cylinder Assy	2045773	2045701	2045776	2045705
1	Cylinder Rod (Assembly)	1355875	1355887	1355911	1355929
7	Tube Wldmt-Cylinder	1355874	1355886	1355910	1355928

ITEM	PART NO.	DESCRIPTION	QTY
	e	Cylinder Assy	1
1	**e**	Cylinder Rod (Assembly)	1
2	2064464	Piston	1
3	**a** 1355876	Cylinder Rod	1
3	**b** 1355888	Cylinder Rod	1
3	**c** 1355912	Cylinder Rod	1
3	**d** 1355930	Cylinder Rod	1
4	1356747	Wear Ring	1
5	190887	Sealing Ring	1
6	295649	Screw	1
7	**e**	Tube Wldmt-Cylinder	1
8	59229	O-Ring	1
9	147972	Back-Up Ring	1

©2009 HYSTER COMPANY

MAIN CYLINDER (H2.00-2.50XM)

TWO STAGE FULL FREE-LIFT – LEFT HAND (S/N B509A2091Z →) (S/N B509B4940 →)

ITEM	PART NO.	DESCRIPTION	QTY
10	1380879	Gland	1
10	1380976	Gland	1
11	322902	Wear Ring	1
12	1356749	Rod Seal	1
13	322824	Back-Up Ring	1
14	1319668	Rod Wiper	1
	1496922	Kit-Seal	1

FOOTNOTES:

a B509-2462 (8509501)
b B509-2562 (8509502)
c B509-2962 (8509506)
d B509-3262 (8509509)
e Refer to Table

©2009 HYSTER COMPANY

MAIN CYLINDER (H2.00-2.50XM) (FIGURE 10-7)

TWO STAGE FULL FREE-LIFT — RIGHT HAND (→ S/N B509A2090Z) (→ S/N B509B4939)

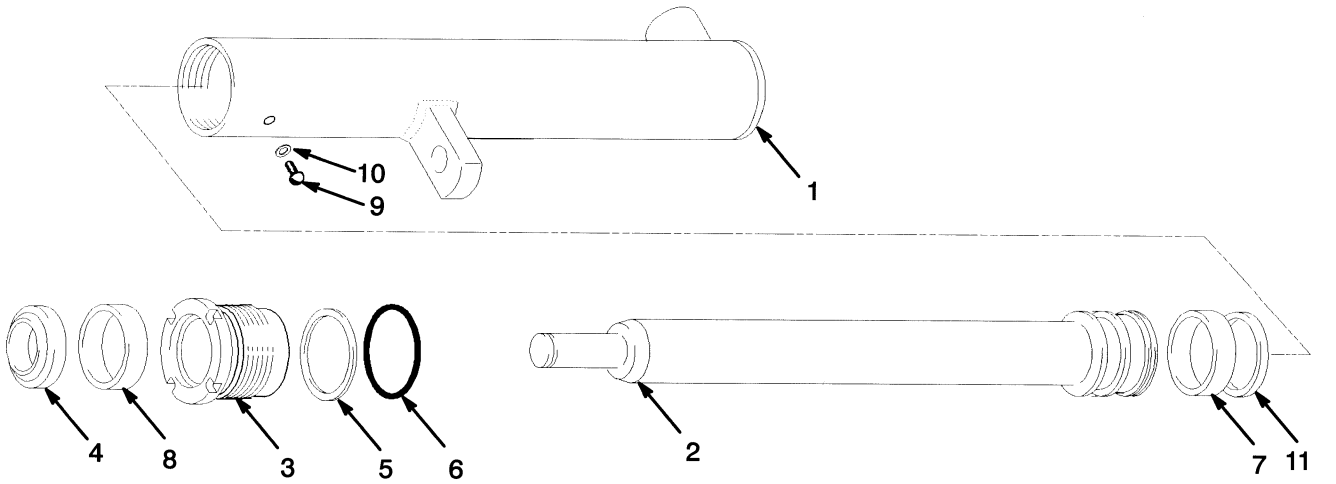

YP171081

MAIN CYLINDER (H2.00-2.50XM)

TWO STAGE FULL FREE-LIFT – RIGHT HAND (→ S/N B509A2090Z) (→ S/N B509B4939)

B509

ITEM	DESCRIPTION 1 2 3 4	LIFT HEIGHT TO BOTTOM OF FORKS			
		2462 mm (96.9 in.)	2562 mm (100.9 in.)	2962 mm (116.6 in.)	3262 mm (128.4 in.)
	Mast Group Number	B509 2462	B509 2562	B509 2962	B509 3262
	Cylinder Group Number	8600801	8600802	8600806	8600809
	Cylinder Assy	1356754	1356755	1356759	1356762
1	Tube Wldmt-Cylinder	1356778	1356779	1356783	1356786
2	Cylinder Rod	1358932	1358933	1358937	1358940

ITEM	PART NO.	DESCRIPTION	QTY
	a	Cylinder Assy	1
1	**a**	Tube Wldmt-Cylinder	1
2	**a**	Cylinder Rod	1
3	1355284	Gland	1
4	1319668	Rod Wiper	1
5	147972	Back-Up Ring	1
6	59229	O-Ring	1
7	1356747	Wear Ring	1
8	1356749	Rod Seal	1
9	295649	Screw	1
10	190887	Sealing Ring	1
11	1356748	Piston Ring	1
	1360142	Kit-Seal	1

©2009 HYSTER COMPANY

FOOTNOTES:

a Refer to Table

©2009 HYSTER COMPANY

MAIN CYLINDER (H2.00-2.50XM) (FIGURE 10-8)

TWO STAGE FULL FREE-LIFT — RIGHT HAND (S/N B509A2091Z →) (S/N B509B4940 →)

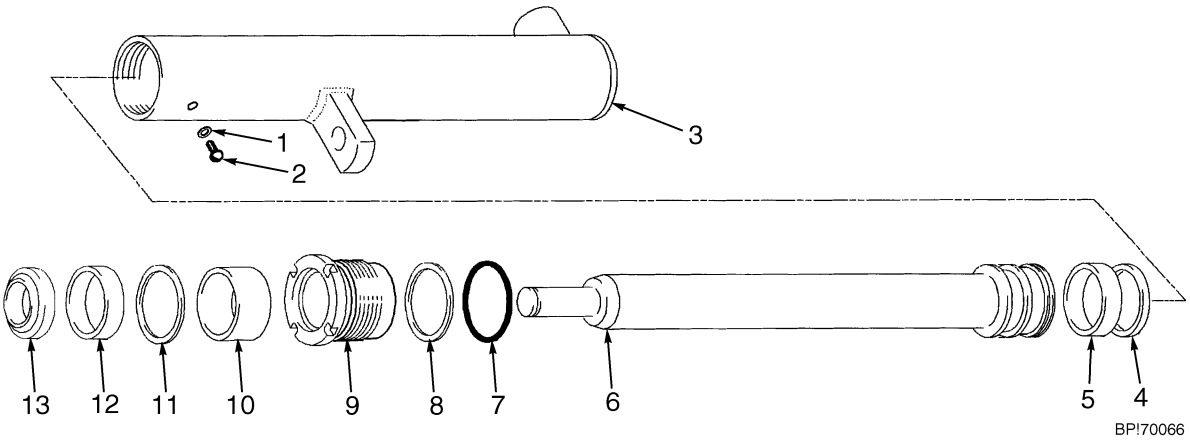

MAIN CYLINDER (H2.00-2.50XM)

TWO STAGE FULL FREE-LIFT – RIGHT HAND (S/N B509A2091Z →) (S/N B509B4940 →)

B509

ITEM	DESCRIPTION 1 2 3 4	LIFT HEIGHT TO BOTTOM OF FORKS			
		2462 mm (96.9 in.)	2562 mm (100.9 in.)	2962 mm (116.6 in.)	3262 mm (128.4 in.)
	Mast Group Number	B509 2462	B509 2562	B509 2962	B509 3262
	Cylinder Group Number	8509601	8509602	8509606	8509609
	Cylinder Assy	2045865	2045866	2045869	2045795
3	Tube Wldmt-Cylinder	1356778	1356779	1356783	1356786
6	Cylinder Rod	1358932	1358933	1358937	1358940

ITEM	PART NO.	DESCRIPTION	QTY
	a	Cylinder Assy	1
1	190887	Sealing Ring	1
2	295649	Screw	1
3	**a**	Tube Wldmt-Cylinder	1
4	1356748	Piston Ring	1
5	1356747	Wear Ring	1
6	**a**	Cylinder Rod	1
7	59229	O-Ring	1
8	147972	Back-Up Ring	1
9	1380879	Gland	1
9	1380976	Gland	1
10	322902	Wear Ring	1
11	322824	Back-Up Ring	1
12	1356749	Rod Seal	1
13	1319668	Rod Wiper	1
	1496922	Kit-Seal	1

©2009 HYSTER COMPANY

FOOTNOTES:

a Refer to Table

©2009 HYSTER COMPANY

MAIN CYLINDER (H3.00-3.20XM) (FIGURE 10-9)

TWO STAGE FULL FREE-LIFT — LEFT HAND (→ S/N B564A2046Z) (→ S/N B564B03936)

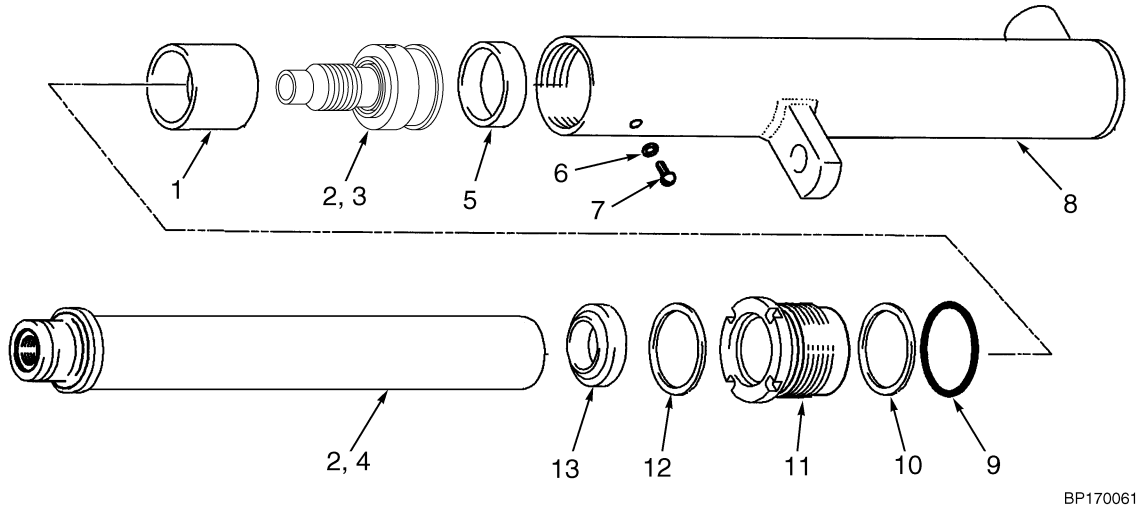

MAIN CYLINDER (H3.00-3.20XM)

TWO STAGE FULL FREE-LIFT – LEFT HAND (→ S/N B564A2046Z) (→ S/N B564B03936)

B564

ITEM	DESCRIPTION 1 2 3 4	LIFT HEIGHT TO BOTTOM OF FORKS		
		2360 mm (92.9 in.)	2460 mm (96.9 in.)	3160 mm (124.4 in.)
	Mast Group Number	B564 2360	B564 2460	B564 3160
	Cylinder Group Number	8600901	8600902	8600909
	Cylinder Assy	1342275	1342276	1342283
1	Spacer	1356058	1356058	1356058
2	Cylinder Rod (Assembly)	1355875	1355887	1355929
8	Tube Wldmt-Cylinder	1355874	1355886	1355928

ITEM	PART NO.	DESCRIPTION	QTY
	d	Cylinder Assy	1
1	**d**	Spacer	1
2	**d**	Cylinder Rod (Assembly)	1
3	2064464	Piston	1
4	**a** 1355876	Cylinder Rod	1
4	**b** 1355888	Cylinder Rod	1
4	**c** 1355930	Cylinder Rod	1
5	1356747	Wear Ring	1
6	190887	Sealing Ring	1
7	295649	Screw	1
8	**d**	Tube Wldmt-Cylinder	1
9	59229	O-Ring	1

©2009 HYSTER COMPANY

MAIN CYLINDER (H3.00-3.20XM)

TWO STAGE FULL FREE-LIFT – LEFT HAND (→ S/N B564A2046Z) (→ S/N B564B03936)

ITEM	PART NO.	DESCRIPTION	QTY
10	147972	Back-Up Ring	1
11	1355284	Gland	1
12	1356749	Rod Seal	1
13	1319668	Rod Wiper	1
	1358963	Kit-Seal	1

FOOTNOTES:

a B564-2360 (8600901)
b B564-2460 (8600902)
c B564-3160 (8600909)
d Refer to Table

©2009 HYSTER COMPANY

MAIN CYLINDER (H3.00-3.20XM) (FIGURE 10-10)

TWO STAGE FULL FREE-LIFT — LEFT HAND (S/N B564A2047Z →) (S/N B564B03937 →)

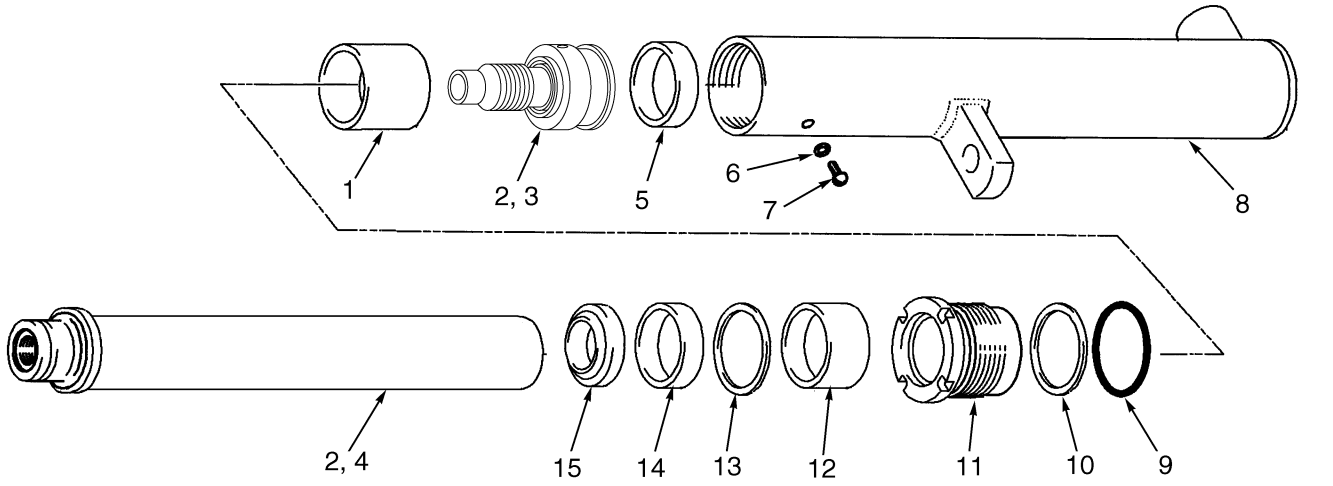

BP170062

MAIN CYLINDER (H3.00-3.20XM)

TWO STAGE FULL FREE-LIFT – LEFT HAND (S/N B564A2047Z →) (S/N B564B03937 →)

B564

ITEM	DESCRIPTION 1 2 3 4	LIFT HEIGHT TO BOTTOM OF FORKS		
		2360 mm (92.9 in.)	2460 mm (96.9 in.)	3160 mm (124.4 in.)
	Mast Group Number	B564 2360	B564 2460	B564 3160
	Cylinder Group Number	8509551	8509552	8509559
	Cylinder Assy	2045743	2045779	2045750
2	Cylinder Rod (Assembly)	1355875	1355887	1355929
8	Tube Wldmt-Cylinder	1355874	1355886	1355928

ITEM	PART NO.	DESCRIPTION	QTY
	d	Cylinder Assy	1
1	2046715	Spacer	1
2	**d**	Cylinder Rod (Assembly)	1
3	2064464	Piston	1
4	**a** 1355876	Cylinder Rod	1
4	**b** 1355888	Cylinder Rod	1
4	**c** 1355930	Cylinder Rod	1
5	1356747	Wear Ring	1
6	190887	Sealing Ring	1
7	295649	Screw	1
8	**d**	Tube Wldmt-Cylinder	1
9	59229	O-Ring	1
10	147972	Back-Up Ring	1

©2009 HYSTER COMPANY

MAIN CYLINDER (H3.00-3.20XM)

TWO STAGE FULL FREE-LIFT – LEFT HAND (S/N B564A2047Z →) (S/N B564B03937 →)

ITEM	PART NO.	DESCRIPTION	QTY
11	1380879	Gland	1
11	1380976	Gland	1
12	322902	Wear Ring	1
13	1356749	Rod Seal	1
14	322824	Back-Up Ring	1
15	1319668	Rod Wiper	1
	1496922	Kit-Seal	1

FOOTNOTES:

a B564-2360 (8509551)
b B564-2460 (8509552)
c B564-3160 (8509559)
d Refer to Table

©2009 HYSTER COMPANY

MAIN CYLINDER (H3.00-3.20XM) (FIGURE 10-11)

TWO STAGE FULL FREE-LIFT — RIGHT HAND (→ S/N B564A2046Z) (→ S/N B564B03936)

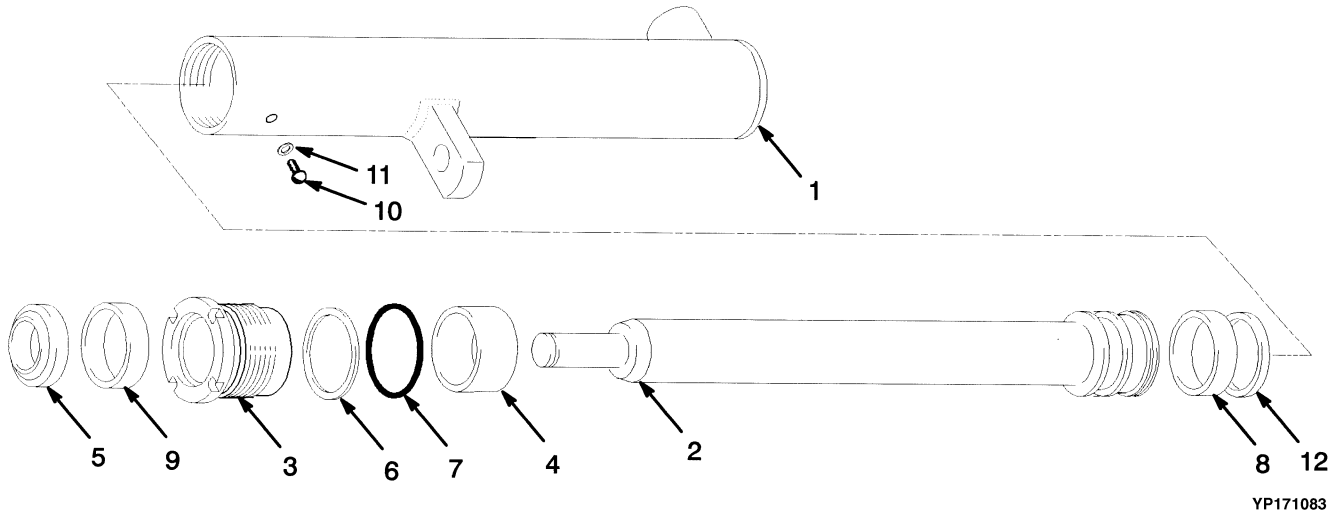

MAIN CYLINDER (H3.00-3.20XM)

TWO STAGE FULL FREE-LIFT – RIGHT HAND (→ S/N B564A2046Z) (→ S/N B564B03936)

B564

ITEM	DESCRIPTION 1 2 3 4	LIFT HEIGHT TO BOTTOM OF FORKS		
		2360 mm (92.9 in.)	2460 mm (96.9 in.)	3160 mm (124.4 in.)
	Mast Group Number	B564 2360	B564 2460	B564 3160
	Cylinder Group Number	8601001	8601002	8601009
	Cylinder Assy	1343893	1342247	1361276
1	Tube Wldmt-Cylinder	1356778	1356779	1356786
2	Cylinder Rod	1358932	1358933	1358940

ITEM	PART NO.	DESCRIPTION	QTY
	a	Cylinder Assy	1
1	**a**	Tube Wldmt-Cylinder	1
2	**a**	Cylinder Rod	1
3	1355284	Gland	1
4	1356058	Spacer	1
5	1319668	Rod Wiper	1
6	147972	Back-Up Ring	1
7	59229	O-Ring	1
8	1356747	Wear Ring	1
9	1356749	Rod Seal	1
10	295649	Screw	1
11	190887	Sealing Ring	1
12	1356748	Piston Ring	1

©2009 HYSTER COMPANY

MAIN CYLINDER (H3.00-3.20XM)

TWO STAGE FULL FREE-LIFT – RIGHT HAND (→ S/N B564A2046Z) (→ S/N B564B03936)

ITEM	PART NO.	DESCRIPTION	QTY
	1360142	Kit-Seal	1

FOOTNOTES:

a Refer to Table

©2009 HYSTER COMPANY

MAIN CYLINDER (H3.00-3.20XM) (FIGURE 10-12)
TWO STAGE FULL FREE-LIFT — RIGHT HAND

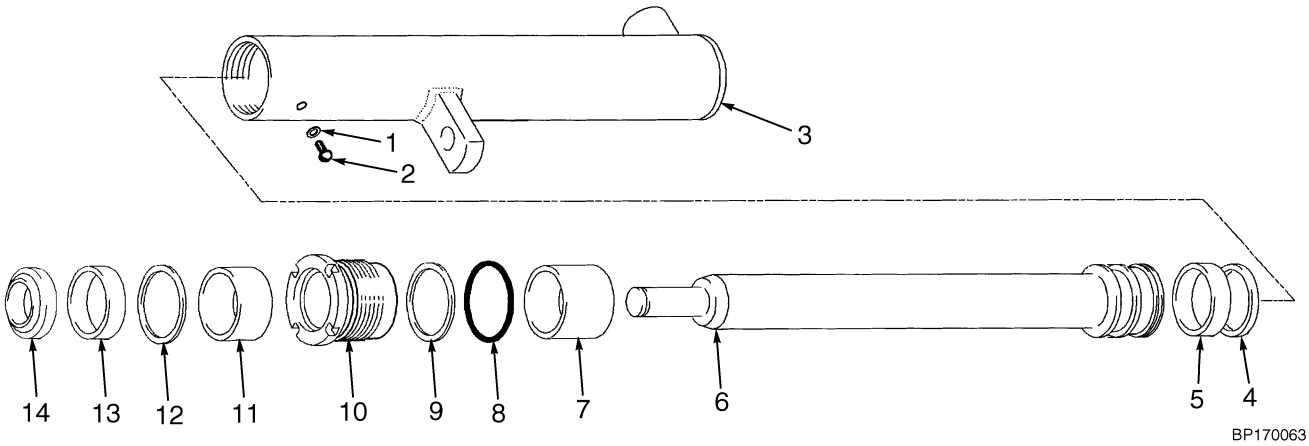

BP170063

MAIN CYLINDER (H3.00-3.20XM)
TWO STAGE FULL FREE-LIFT – RIGHT HAND

B564

ITEM	DESCRIPTION 1 2 3 4	LIFT HEIGHT TO BOTTOM OF FORKS		
		2360 mm (92.9 in.)	2460 mm (96.9 in.)	3160 mm (124.4 in.)
	Mast Group Number	B564 2360	B564 2460	B564 3160
	Cylinder Group Number	8509651	8509652	8509659
	Cylinder Assy	2045836	2045837	2045844
3	Tube Wldmt-Cylinder	1356778	1356779	1356786
6	Cylinder Rod	1358932	1358933	1358940

ITEM	PART NO.	DESCRIPTION	QTY
	a	Cylinder Assy	1
1	190887	Sealing Ring	1
2	295649	Screw	1
3	**a**	Tube Wldmt-Cylinder	1
4	1356748	Piston Ring	1
5	1356747	Wear Ring	1
6	**a**	Cylinder Rod	1
7	2046715	Spacer	1
8	59229	O-Ring	1
9	147972	Back-Up Ring	1
10	1380879	Gland	1
10	1380976	Gland	1
11	322902	Wear Ring	1
12	322824	Back-Up Ring	1
13	1356749	Rod Seal	1
14	1319668	Rod Wiper	1

©2009 HYSTER COMPANY

MAIN CYLINDER (H3.00-3.20XM)
TWO STAGE FULL FREE-LIFT – RIGHT HAND

ITEM	PART NO.	DESCRIPTION	QTY
	1496922	Kit-Seal	1

FOOTNOTES:

a Refer to Table

©2009 HYSTER COMPANY

FREE-LIFT CYLINDER (FIGURE 10-13)
TWO STAGE FULL FREE-LIFT (→ 3/2003)

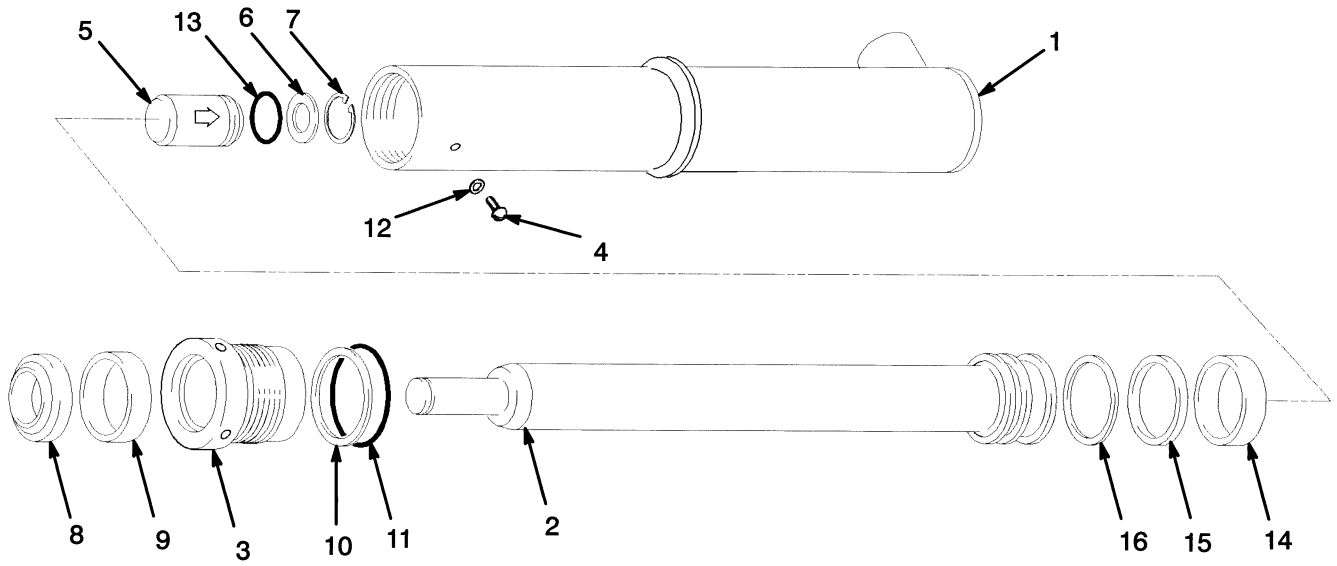

FREE-LIFT CYLINDER
TWO STAGE FULL FREE-LIFT (→ 3/2003)

H2.00-2.50XM

ITEM	DESCRIPTION 1 2 3 4	LIFT HEIGHT TO BOTTOM OF FORKS			
		2462 mm (96.9 in.)	2562 mm (100.9 in.)	2962 mm (116.6 in.)	3262 mm (128.4 in.)
	Mast Group Number	**B509 2462**	**B509 2562**	**B509 2962**	**B509 3262**
	Cylinder Group Number	**8602401**	**8602402**	**8602406**	**8602409**
	Cylinder Assy	1370749	1366729	1366733	1366736
1	Tube Wldmt-Cylinder	2307457	2308980	2303871	2311434
2	Cylinder Rod	1356295	1356298	1356560	1356569

©2009 HYSTER COMPANY

FREE-LIFT CYLINDER

TWO STAGE FULL FREE-LIFT (→ 3/2003)

H3.00-3.20XM

ITEM	DESCRIPTION 1 2 3 4	LIFT HEIGHT TO BOTTOM OF FORKS		
		2360 mm (92.9 in.)	2460 mm (96.9 in.)	3160 mm (124.4 in.)
	Mast Group Number	B564 2360	B564 2460	B564 3160
	Cylinder Group Number	8602501	8602502	8602509
	Cylinder Assy	1369543	1369544	1371601
1	Tube Wldmt-Cylinder	2309136	2307201	2304575
2	Cylinder Rod	1356658	1356667	1356688

KEY:
A: H2.00-2.50XM
B: H3.00-3.20XM

ITEM	PART NO.	DESCRIPTION	QTY A	QTY B
	a	Cylinder Assy	1	1
1	**a**	Tube Wldmt-Cylinder	1	1
2	**a**	Cylinder Rod	1	1
3	1356292	Gland	1	..
3	1356661	Gland	..	1
4	1361302	Screw	1	1
5	257913	Check Valve	1	1
6	297531	Washer	1	1
7	187388	Snap Ring	1	1
8	2013099	Rod Wiper	1	1
9	1358970	Rod Seal	1	1
10	147973	Back-Up Ring	1	..
10	164840	Back-Up Ring	..	1
11	15880	O-Ring	..	1
11	90263	O-Ring	1	..
12	190887	Sealing Ring	1	1
13	39348	O-Ring	1	1
14	1358972	Wear Ring	1	..
14	636941	Wear Ring	..	1
15	2013088	Rod Seal	1	..
15	309062	Rod Seal	..	1
16	2013089	Back-Up Ring	1	..
16	637565	Back-Up Ring	..	1
	1358969	Kit-Seal	1	..
	1356662	Kit-Seal	..	1

FOOTNOTES:

a Refer to Table

©2009 HYSTER COMPANY

FREE-LIFT CYLINDER (FIGURE 10-14)
TWO STAGE FULL FREE-LIFT (3/2003 →)

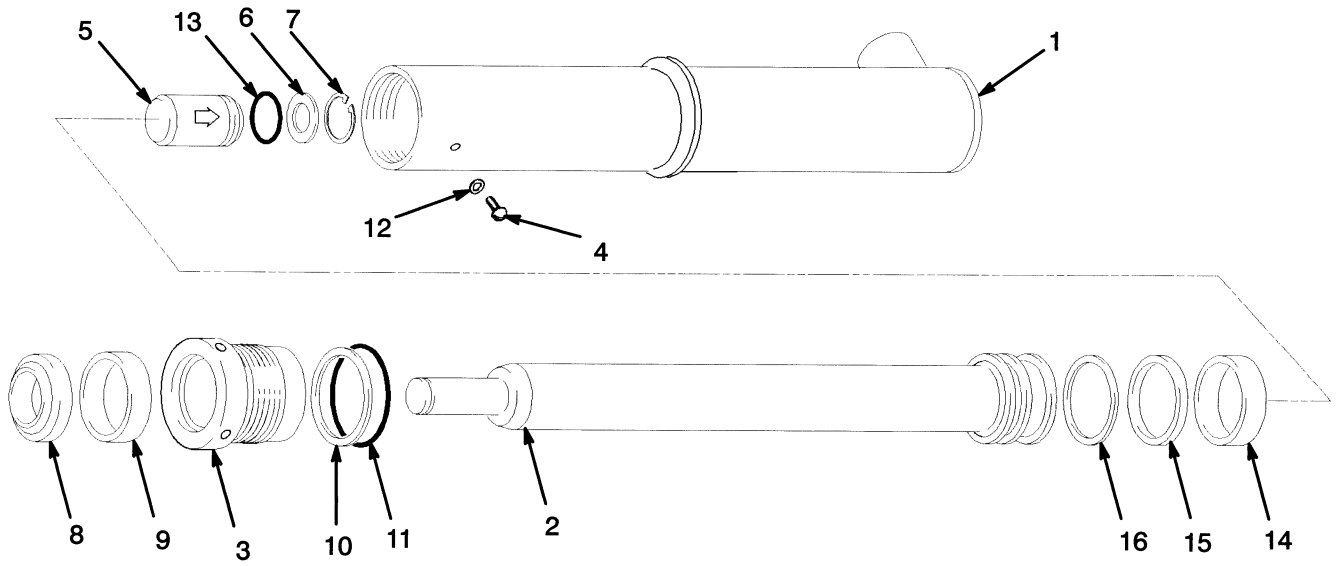

FREE-LIFT CYLINDER
TWO STAGE FULL FREE-LIFT (3/2003 →)

H2.00-2.50XM

ITEM	DESCRIPTION 1 2 3 4	LIFT HEIGHT TO BOTTOM OF FORKS			
		2462 mm (96.9 in.)	2562 mm (100.9 in.)	2962 mm (116.6 in.)	3262 mm (128.4 in.)
	Mast Group Number	**B509 2462**	**B509 2562**	**B509 2962**	**B509 3262**
	Cylinder Group Number	**8514551**	**8514552**	**8514556**	**8514559**
	Cylinder Assy	2058112	2058115	2053795	2053796
1	Tube Wldmt-Cylinder	2058205	2058206	2058210	2058213
2	Cylinder Rod	1356295	1356298	1356560	1356569

©2009 HYSTER COMPANY

FREE-LIFT CYLINDER

TWO STAGE FULL FREE-LIFT (3/2003 →)

H3.00-3.20XM

ITEM	DESCRIPTION 1 2 3 4	LIFT HEIGHT TO BOTTOM OF FORKS		
		2360 mm (92.9 in.)	2460 mm (96.9 in.)	3160 mm (124.4 in.)
	Mast Group Number	B564 2360	B564 2460	B564 3160
	Cylinder Group Number	8514501	8514502	8514509
	Cylinder Assy	2061861	2061862	2061868
1	Tube Wldmt-Cylinder	2058247	2058248	2058253
2	Cylinder Rod	1356658	1356667	1356688

KEY:
A: H2.00-2.50XM
B: H3.00-3.20XM

ITEM	PART NO.	DESCRIPTION	QTY A	QTY B
	a	Cylinder Assy	1	1
1	**a**	Tube Wldmt-Cylinder	1	1
2	**a**	Cylinder Rod	1	1
3	1356292	Gland	1	..
3	1356661	Gland	..	1
4	1361302	Screw	1	1
5	257913	Check Valve	1	1
6	297531	Washer	1	1
7	187388	Snap Ring	1	1
8	2013099	Rod Wiper	1	1
9	1358970	Rod Seal	1	1
10	147973	Back-Up Ring	1	..
10	164840	Back-Up Ring	..	1
11	15880	O-Ring	..	1
11	90263	O-Ring	1	..
12	190887	Sealing Ring	1	1
13	39348	O-Ring	1	1
14	1358972	Wear Ring	1	..
14	636941	Wear Ring	..	1
15	2013088	Rod Seal	1	..
15	309062	Rod Seal	..	1
16	2013089	Back-Up Ring	1	..
16	637565	Back-Up Ring	..	1
	1358969	Kit-Seal	1	..
	1356662	Kit-Seal	..	1

FOOTNOTES:

a Refer to Table

©2009 HYSTER COMPANY

NOTES

©2009 HYSTER COMPANY

CARRIAGE (FIGURE 10-15)
TWO STAGE FULL FREE-LIFT — SIX ROLLER

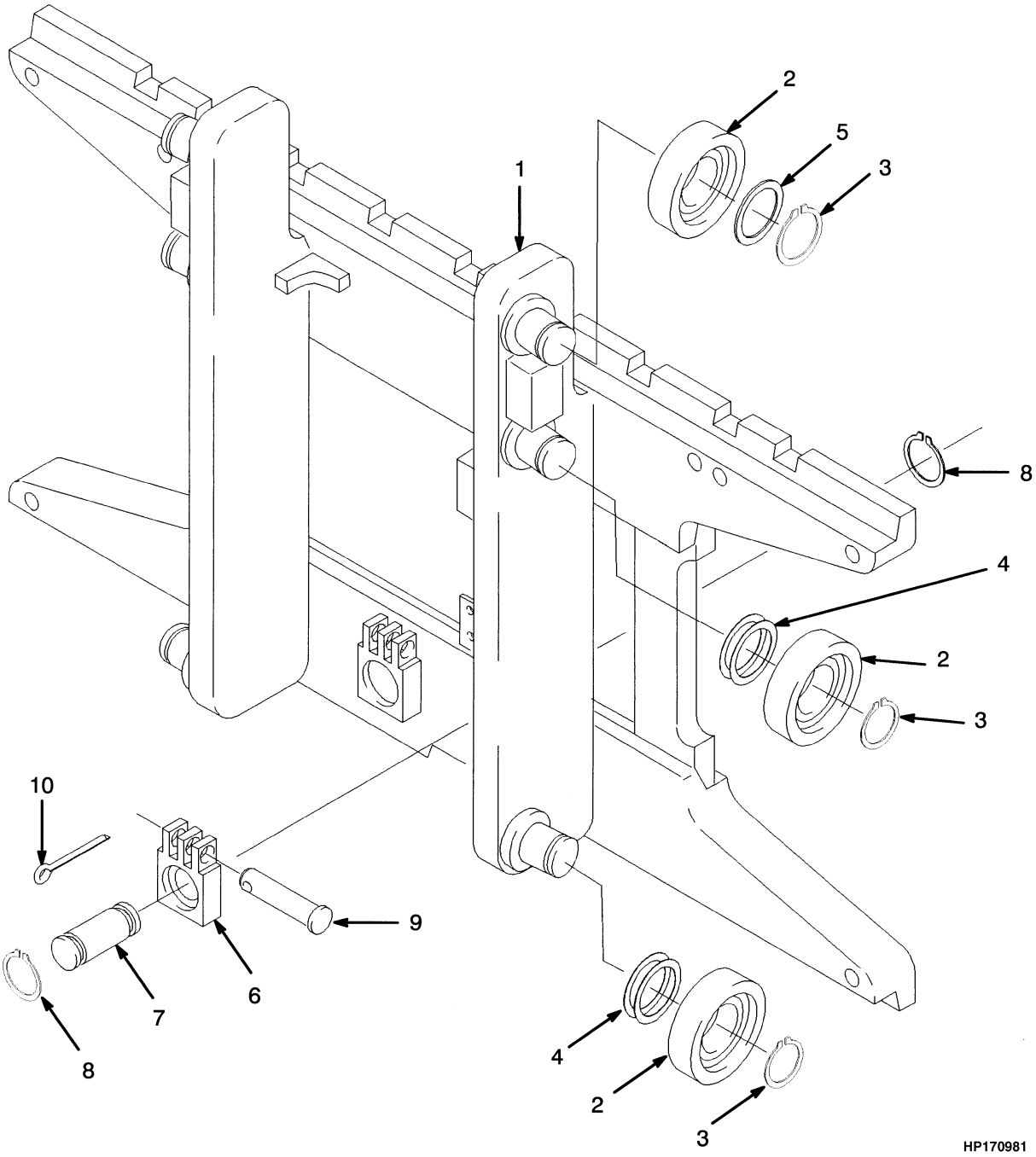

©2009 HYSTER COMPANY

CARRIAGE

TWO STAGE FULL FREE-LIFT – SIX ROLLER

KEY:
A: H2.00-2.50XM
B: H3.00-3.20XM

ITEM	PART NO.	DESCRIPTION	QTY A	QTY B
	1343844	Carriage	1	..
	1343845	Carriage (1067 mm)	..	1
	1360633	Carriage Wldmt (1219 mm)	..	1
	1360637	Carriage Wldmt (1219 mm)	1	..
1	1345239	Carriage Wldmt	1	..
1	1345240	Carriage Wldmt	..	1
1	1345216	Stubshaft	6	6
2	1345219	Load Roller (110.5 mm)	6	6
2	1345219	Load Roller (110.5 mm) (Optional)	6	6
2	1395175	Load Roller (Optional)	6	6
3	12891	Snap Ring	6	6
4	1345263	Shim (0.508 mm)	AR	AR
5	366116	Spacer	2	2
6	1369344	Chain Anchor (Dual Hole)	..	2
6	1504012	Chain Anchor (Single Hole) (Optional)	..	2
6	1369345	Chain Anchor (Dual Hole)	2	..
6	1504010	Chain Anchor (Single Hole) (Optional)	2	..
7	317735	Pin	2	2
8	131358	Snap Ring	4	4
9	1514866	Pin	2	2
10	15211	Cotter Pin	2	2

©2009 HYSTER COMPANY

HEADER HOSE (FIGURE 10-16)
TWO STAGE FULL FREE-LIFT

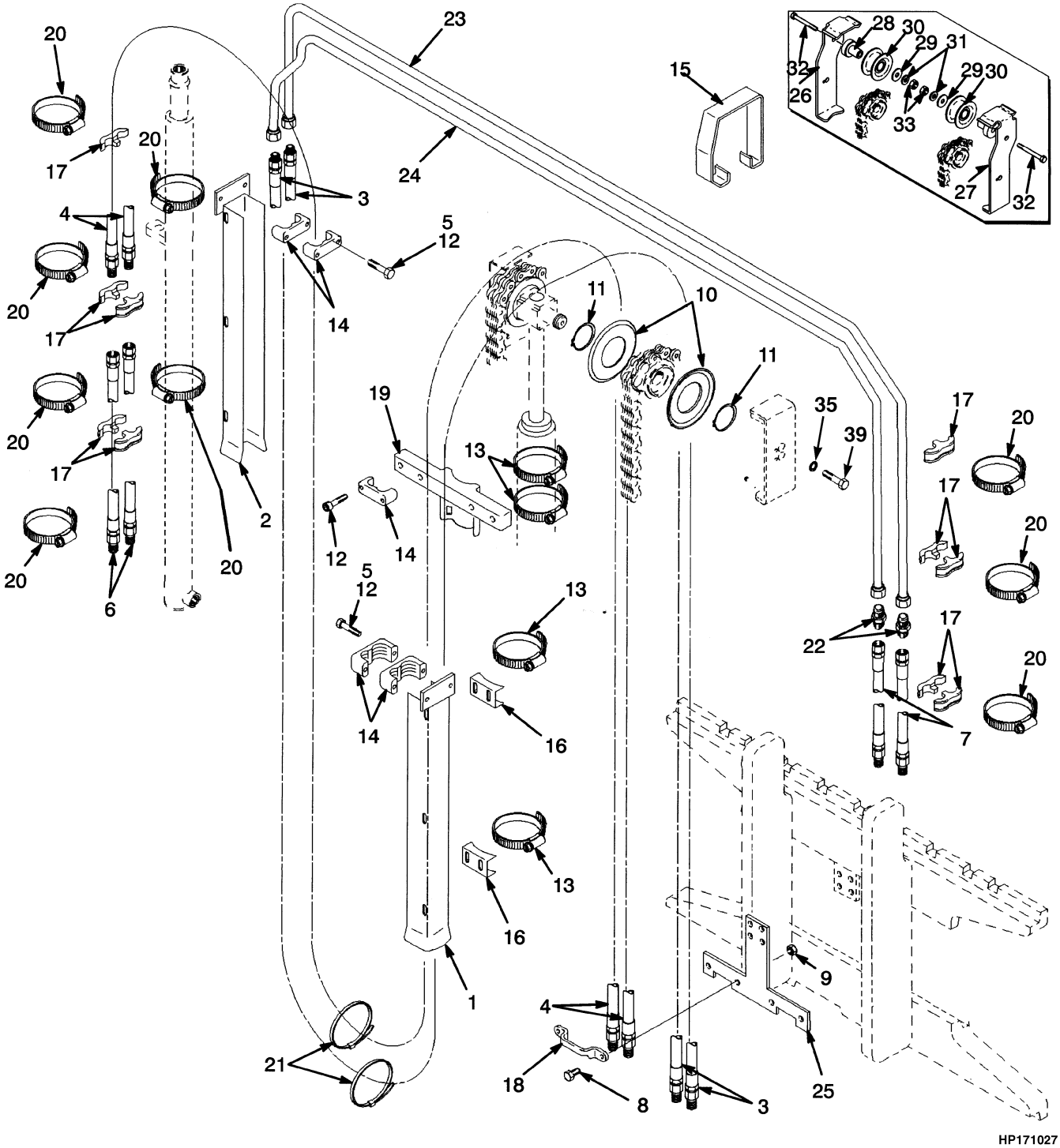

©2009 HYSTER COMPANY

HEADER HOSE
TWO STAGE FULL FREE-LIFT

H2.00-2.50XM

ITEM	DESCRIPTION 1 2 3 4	LIFT HEIGHT TO BOTTOM OF FORKS			
		2462 mm (96.9 in.)	2562 mm (100.9 in.)	2962 mm (116.6 in.)	3262 mm (128.4 in.)
	Mast Group Number	B509 2462	B509 2562	B509 2962	B509 3262
1	Hose Guard	1365500	1365500	1365500	1365502
2	Hose Guard	1365504	1365506	1365514	1365517
3	Hose Assy	**f**1390420 **h**1345566	**f**1390421 **h**1390422	1345571	1368400
4	Hose Assy	**f**1390426 **h**1368400	**f**1369633 **h**1376114	1368442	1376120
23	Tube Assy	1360326	1360327	1360331	1360334
24	Tube Assy	1360356	1360357	1360361	1360364

H3.00-3.20XM

ITEM	DESCRIPTION 1 2 3 4	LIFT HEIGHT TO BOTTOM OF FORKS		
		2360 mm (92.9 in.)	2460 mm (96.9 in.)	3160 mm (124.4 in.)
	Mast Group Number	B564 2360	B564 2460	B564 3160
1	Hose Guard	1365500	1365500	1365502
2	Hose Guard	1365504	1365506	1365517
3	Hose Assy	**g**1390420 **i**1345566	**g**1390421 **i**1390422	1368400
4	Hose Assy	**g**1390426 **i**1368400	**g**1369633 **i**1376114	1376120
23	Tube Assy	1360326	1360327	1360334
24	Tube Assy	1360356	1360357	1360364

KEY:
A: Three Function
B: Four Function

ITEM	PART NO.	DESCRIPTION	QTY A	QTY B
1	**e**	Hose Guard	1	1
2	**e**	Hose Guard	1	1
3	**e**	Hose Assy	2	2
4	**e**	Hose Assy	..	2
5	293799	Capscrew	..	4
6	1390411	Hose Assy	..	2
7	1390410	Hose Assy	2	2
8	136749	Screw	6	8

©2009 HYSTER COMPANY

HEADER HOSE
TWO STAGE FULL FREE-LIFT

KEY:
A: Three Function
B: Four Function

ITEM	PART NO.	DESCRIPTION	QTY A	QTY B
9	313828	Nut	6	8
10	1345199	Hose Guide	2	4
11	1345204	Snap Ring	2	4
12	293795	Capscrew	6	6
13	1360508	Clamp	2	2
14	1360386	Clamp	3	6
15	1365062	Clip	1	1
16	1345423	Clamp	2	2
17	1353530	Hose Clamp	5	10
18	1643405	Hose Clamp	1	2
19	1354918	Bracket	1	1
20	1360507	Clamp	8	8
21	2004005	Strap Clamp	1	2
22	14692	Fitting	2	2
23	**e**	Tube Assy	1	1
24	**e**	Tube Assy	1	1
25	**ab** 1381771	Bracket	1	1
25	**cd** 1381772	Bracket	1	1
26	1395291	Bracket	1	1
27	1395292	Bracket	..	1
28	**hi** 1396406	Stubshaft	1	2
29	**hi** 1396407	Spacer	1	2
30	**hi** 1494017	Hose Sheave	1	2
31	**hi** 1345190	Washer	1	2
32	**hi** 292533	Capscrew	1	2
33	**hi** 300937	Nut	1	2
34	292527	Capscrew	2	2
35	320161	Washer	2	2

FOOTNOTES:

a H2.00-2.50XM B509-2462
b H2.00-2.50XM B509-2562
c H3.00-3.50XM B564-2360
d H3.00-3.50XM B564-2460
e Refer to Table
f → S/N B509V3722
g → S/N B564V5761
h S/N B509V3723 →
i S/N B564V5762 →

©2009 HYSTER COMPANY

11 MAST-THREE STAGE FULL FREE-LIFT

SECTION 11
MAST-THREE STAGE FULL FREE-LIFT

DESCRIPTION	PAGE
CARRIAGE	
THREE STAGE FULL FREE-LIFT - SIX ROLLER	11-28
FREE-LIFT	
THREE STAGE FULL FREE-LIFT	11-14
FREE-LIFT CYLINDER	
THREE STAGE FULL FREE-LIFT (→ 3/1998)	11-22
THREE STAGE FULL FREE-LIFT (→ S/N B508B05149) (→ S/N B563B03058)	11-24
THREE STAGE FULL FREE-LIFT (S/N B508B05150 →) (S/N B563B03059 →)	11-26
HEADER HOSE	
THREE STAGE FULL FREE-LIFT	11-30
INNER MAST	
THREE STAGE FULL FREE-LIFT	11-8
INTERMEDIATE MAST	
THREE STAGE FULL FREE-LIFT	11-4
MAIN CYLINDER	
THREE STAGE FULL FREE-LIFT	11-18
MAIN LIFT	
THREE STAGE FULL FREE-LIFT	11-10
OUTER MAST	
THREE STAGE FULL FREE-LIFT	11-2

©2009 HYSTER COMPANY

OUTER MAST (FIGURE 11-1)
THREE STAGE FULL FREE-LIFT

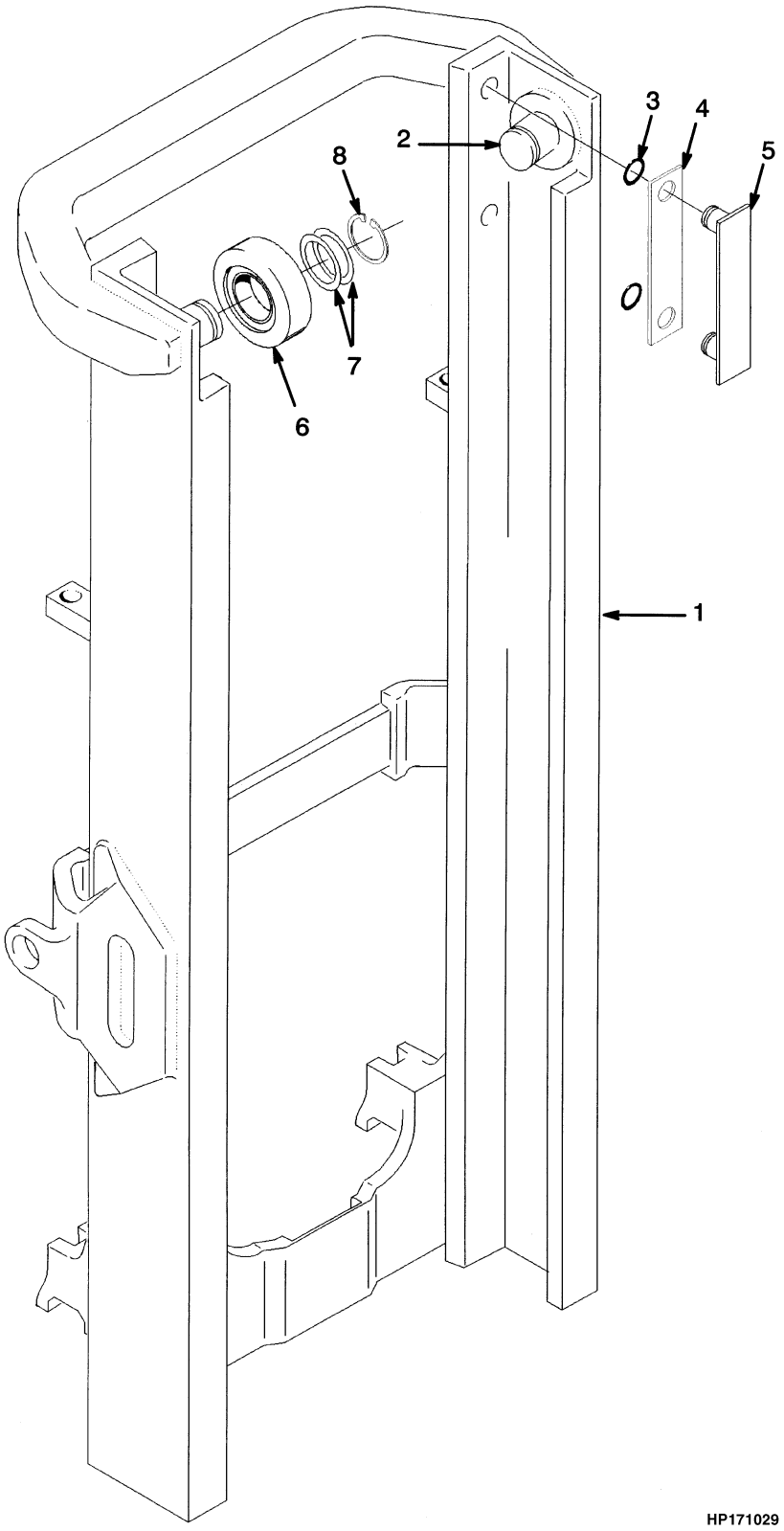

©2009 HYSTER COMPANY

OUTER MASS
THREE STAGE FULL FREE-LIFT

H2.00-2.50XM

ITEM	DESCRIPTION 1 2 3 4	LIFT HEIGHT TO BOTTOM OF FORKS			
		4310 mm (169.7 in.)	4760 mm (187.4 in.)	4910 mm (193.3 in.)	5510 mm (216.9 in.)
	Mast Group Number	B508 4310	B508 4760	B508 4910	B508 5510
	Mast Assy	2048194	2048197	2048198	2048202
1	Outer Mast	1341004	1341007	1341008	1341013

H3.00-3.50XM

ITEM	DESCRIPTION 1 2 3 4	LIFT HEIGHT TO BOTTOM OF FORKS			
		4118 mm (162.1 in.)	4568 mm (179.8 in.)	4718 mm (185.7 in.)	4868 mm (191.7 in.)
	Mast Group Number	B563 4118	B563 4568	B563 4718	B563 4868
	Mast Assy	2048282	2048286	2048288	2048290
1	Outer Mast	1341004	1341007	1341008	1341010

H3.00-3.50XM

ITEM	DESCRIPTION 1 2 3 4	LIFT HEIGHT TO BOTTOM OF FORKS	
		5318 mm (209.4 in.)	5918 mm (233.0 in.)
	Mast Group Number	B563 5318	B563 5918
	Mast Assy	2048295	2048303
1	Outer Mast	1341013	1341017

ITEM	PART NO.	DESCRIPTION	QTY
	a	Mast Assy	1
1	**a**	Outer Mast	1
2	1345216	Stubshaft	2
3	104506	O-Ring	4
4	131715	Shim (0.178 mm)	4
4	131716	Shim (0.508 mm)	4
5	215211	Wear Strip	2
6	1333396	Load Roller	2
7	129387	Shim (0.508 mm)	AR
8	58901	Snap Ring	2

FOOTNOTES:

a Refer to Table

©2009 HYSTER COMPANY

INTERMEDIATE MAST (FIGURE 11-2)
THREE STAGE FULL FREE-LIFT

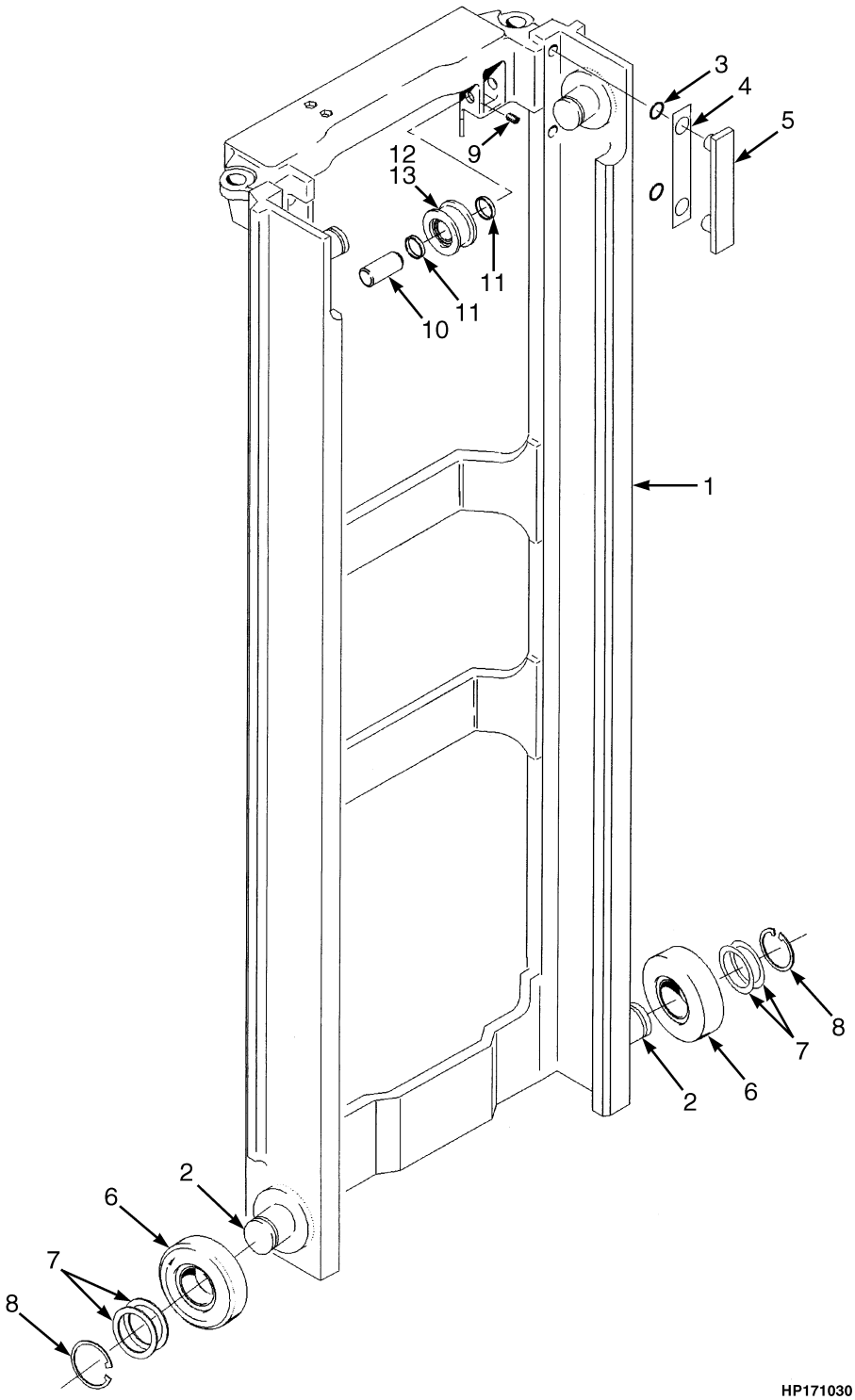

©2009 HYSTER COMPANY

INTERMEDIATE MAST
THREE STAGE FULL FREE-LIFT

H2.00-2.50XM

ITEM	DESCRIPTION 1 2 3 4	LIFT HEIGHT TO BOTTOM OF FORKS			
		4310 mm (169.7 in.)	4760 mm (187.4 in.)	4910 mm (193.3 in.)	5510 mm (216.9 in.)
	Mast Group Number	B508 4310	B508 4760	B508 4910	B508 5510
	Mast Assy	2048194	2048197	2048198	2048202
1	Intermediate Mast	1341714	1341717	1341718	1341722

H3.00-3.50XM

ITEM	DESCRIPTION 1 2 3 4	LIFT HEIGHT TO BOTTOM OF FORKS			
		4118 mm (162.1 in.)	4568 mm (179.8 in.)	4718 mm (185.7 in.)	4868 mm (191.7 in.)
	Mast Group Number	B563 4118	B563 4568	B563 4718	B563 4868
	Mast Assy	2048282	2048286	2048288	2048290
1	Intermediate Mast	1341714	1341717	1341718	1341719

H3.00-3.50XM

ITEM	DESCRIPTION 1 2 3 4	LIFT HEIGHT TO BOTTOM OF FORKS	
		5318 mm (209.4 in.)	5918 mm (233.0 in.)
	Mast Group Number	B563 5318	B563 5918
	Mast Assy	2048295	2048303
1	Intermediate Mast	1341722	1341726

KEY:
A: H2.00-2.50XM
B: H3.00-3.50XM

ITEM	PART NO.	DESCRIPTION	QTY A	QTY B
	a	Mast Assy	1	1
1	**a**	Intermediate Mast	1	1
2	1345216	Stubshaft	2	2
3	104506	O-Ring	4	4
4	131716	Shim (0.508 mm)	4	4
5	215211	Wear Strip	2	2
6	1333396	Load Roller	4	4
7	129387	Shim (0.508 mm)	AR	AR
8	58901	Snap Ring	4	4
9	302462	Roll Pin	2	2
10	1368656	Pin	2	2
11	1378691	Spacer	4	4

©2009 HYSTER COMPANY

INTERMEDIATE MAST
THREE STAGE FULL FREE-LIFT

KEY:
A: H2.00-2.50XM
B: H3.00-3.50XM

ITEM	PART NO.	DESCRIPTION	QTY A	QTY B
12	1345183	Chain Sheave	2	2
12	1379685	Chain Sheave	2	..
12	1378698	Chain Sheave	2	..
12	37752	Snap Ring	1	..
12	1378699	Ball Bearing	1	..
13	1379684	Chain Sheave Assembly	..	2
13	1378694	Chain Sheave	..	1
13	37752	Snap Ring	..	1
13	1378699	Ball Bearing	..	1

FOOTNOTES:

a Refer to Table

©2009 HYSTER COMPANY

NOTES

©2009 HYSTER COMPANY

INNER MAST (FIGURE 11-3)
THREE STAGE FULL FREE-LIFT

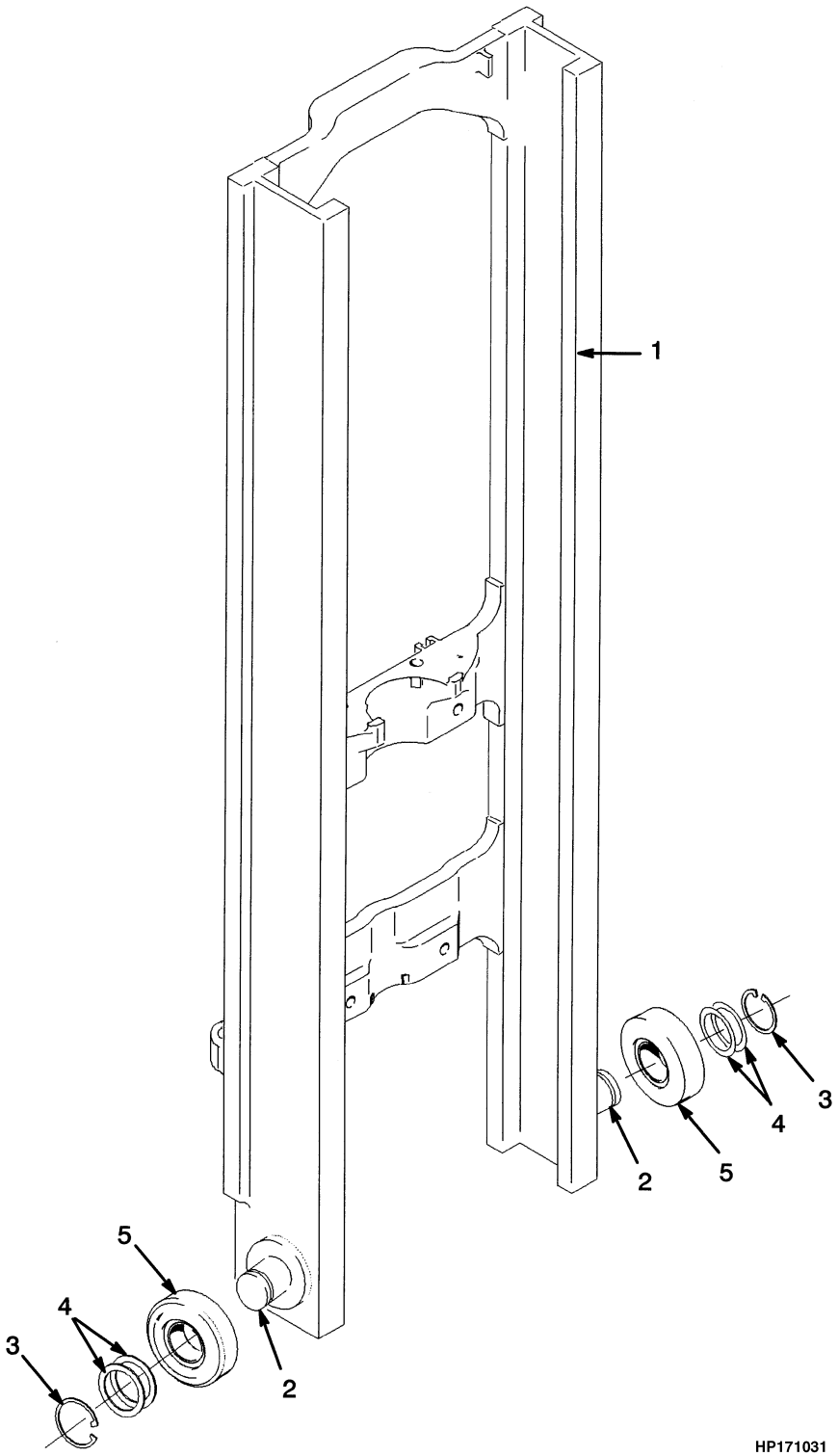

©2009 HYSTER COMPANY

INNER MAST
THREE STAGE FULL FREE-LIFT

H2.00-2.50XM

ITEM	DESCRIPTION 1 2 3 4	LIFT HEIGHT TO BOTTOM OF FORKS			
		4310 mm (169.7 in.)	4760 mm (187.4 in.)	4910 mm (193.3 in.)	5510 mm (216.9 in.)
	Mast Group Number	B508 4310	B508 4760	B508 4910	B508 5510
	Mast Assy	2048194	2048197	2048198	2048202
1	Inner Mast	1381354	1381357	1381358	1381362

H3.00-3.50XM

ITEM	DESCRIPTION 1 2 3 4	LIFT HEIGHT TO BOTTOM OF FORKS			
		4118 mm (162.1 in.)	4568 mm (179.8 in.)	4718 mm (185.7 in.)	4868 mm (191.7 in.)
	Mast Group Number	B563 4118	B563 4568	B563 4718	B563 4868
	Mast Assy	2048282	2048286	2048288	2048290
1	Inner Mast	1381354	1381357	1381358	1381359

H3.00-3.50XM

ITEM	DESCRIPTION 1 2 3 4	LIFT HEIGHT TO BOTTOM OF FORKS	
		5318 mm (209.4 in.)	5918 mm (233.0 in.)
	Mast Group Number	B563 5318	B563 5918
	Mast Assy	2048295	2048303
1	Inner Mast	1381362	1381366

ITEM	PART NO.	DESCRIPTION	QTY
	a	Mast Assy	1
1	**a**	Inner Mast	1
2	1345216	Stubshaft	2
3	58901	Snap Ring	2
4	129387	Shim (0.508 mm)	AR
5	1333396	Load Roller	2

FOOTNOTES:

a Refer to Table

©2009 HYSTER COMPANY

MAIN LIFT (FIGURE 11-4)
THREE STAGE FULL FREE-LIFT

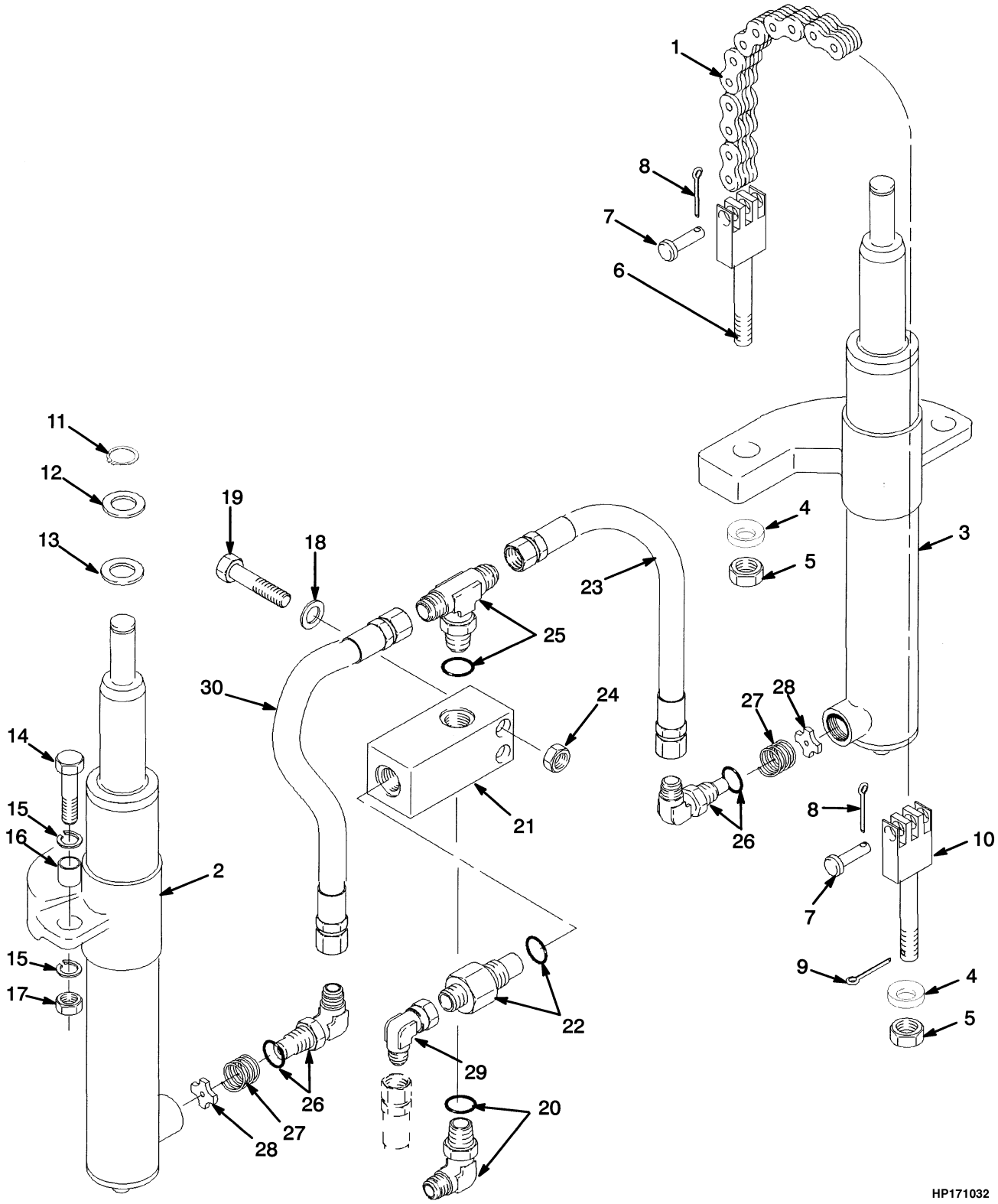

©2009 HYSTER COMPANY

MAIN LIFT
THREE STAGE FULL FREE-LIFT

H2.00-2.50XM

ITEM	DESCRIPTION 1 2 3 4	LIFT HEIGHT TO BOTTOM OF FORKS			
		4310 mm (169.7 in.)	4760 mm (187.4 in.)	4910 mm (193.3 in.)	5510 mm (216.9 in.)
	Mast Group Number	B508 4310	B508 4760	B508 4910	B508 5510
1	Chain	182343	135634	337174	135588

H3.00-3.50XM

ITEM	DESCRIPTION 1 2 3 4	LIFT HEIGHT TO BOTTOM OF FORKS			
		4118 mm (162.1 in.)	4568 mm (179.8 in.)	4718 mm (185.7 in.)	4868 mm (191.7 in.)
	Mast Group Number	B563 4118	B563 4568	B563 4718	B563 4868
1	Chain	1342120	1342123	1342124	1342126

H3.00-3.50XM

ITEM	DESCRIPTION 1 2 3 4	LIFT HEIGHT TO BOTTOM OF FORKS	
		5318 mm (209.4 in.)	5918 mm (233.0 in.)
	Mast Group Number	B563 5318	B563 5918
1	Chain	1342129	1342132

KEY:
A: H2.00-2.50XM
B: H3.00-3.50XM

ITEM	PART NO.	DESCRIPTION	QTY A	QTY B
1	**a**	Chain	2	2
2	. . . . .	Cylinder (RH)	1	1
3	. . . . .	Cylinder (LH)	1	1
4	296426	Washer	4	4
5	161003	Nut	4	4
6	1369356	Chain Anchor	..	2
6	1369357	Chain Anchor	2	..
7	1514866	Pin	4	4
8	15211	Cotter Pin	2	2
9	15223	Cotter Pin	2	2
10	1333329	Chain Anchor	..	2
10	1365140	Chain Anchor	2	..
11	131358	Snap Ring	2	2
12	1333382	Washer (1.500 mm)	2	2
13	1354915	Washer (0.254 mm)	AR	AR
13	1354916	Washer (0.762 mm)	AR	AR

©2009 HYSTER COMPANY

MAIN LIFT
THREE STAGE FULL FREE-LIFT

KEY:
A: H2.00-2.50XM
B: H3.00-3.50XM

ITEM	PART NO.	DESCRIPTION	QTY A	QTY B
13	1354917	Washer (1.524 mm)	AR	AR
14	292532	Capscrew	2	2
15	296422	Washer	4	4
16	323090	Spacer	2	2
17	300937	Nut	2	2
18	320157	Washer	2	2
19	214364	Capscrew	2	2
20	184761	Fitting	1	1
20	16486	O-Ring	1	1
21	1333392	Housing	1	1
22	2309766	Lowering Control Valve	1	..
22	316306	Lowering Control Valve	..	1
22	16982	O-Ring	1	1
23	1345403	Hose Assy	1	1
24	313828	Nut	2	2
25	16578	Fitting	1	1
25	16485	O-Ring	1	1
26	189595	Fitting	2	2
26	16485	O-Ring	1	1
27	337179	Spring	2	2
28	357749	Washer	2	2
29	16882	Fitting	1	1
30	1462551	Hose Assy	1	1

FOOTNOTES:

a Refer to Table

©2009 HYSTER COMPANY

NOTES

©2009 HYSTER COMPANY

FREE-LIFT (FIGURE 11-5)
THREE STAGE FULL FREE-LIFT

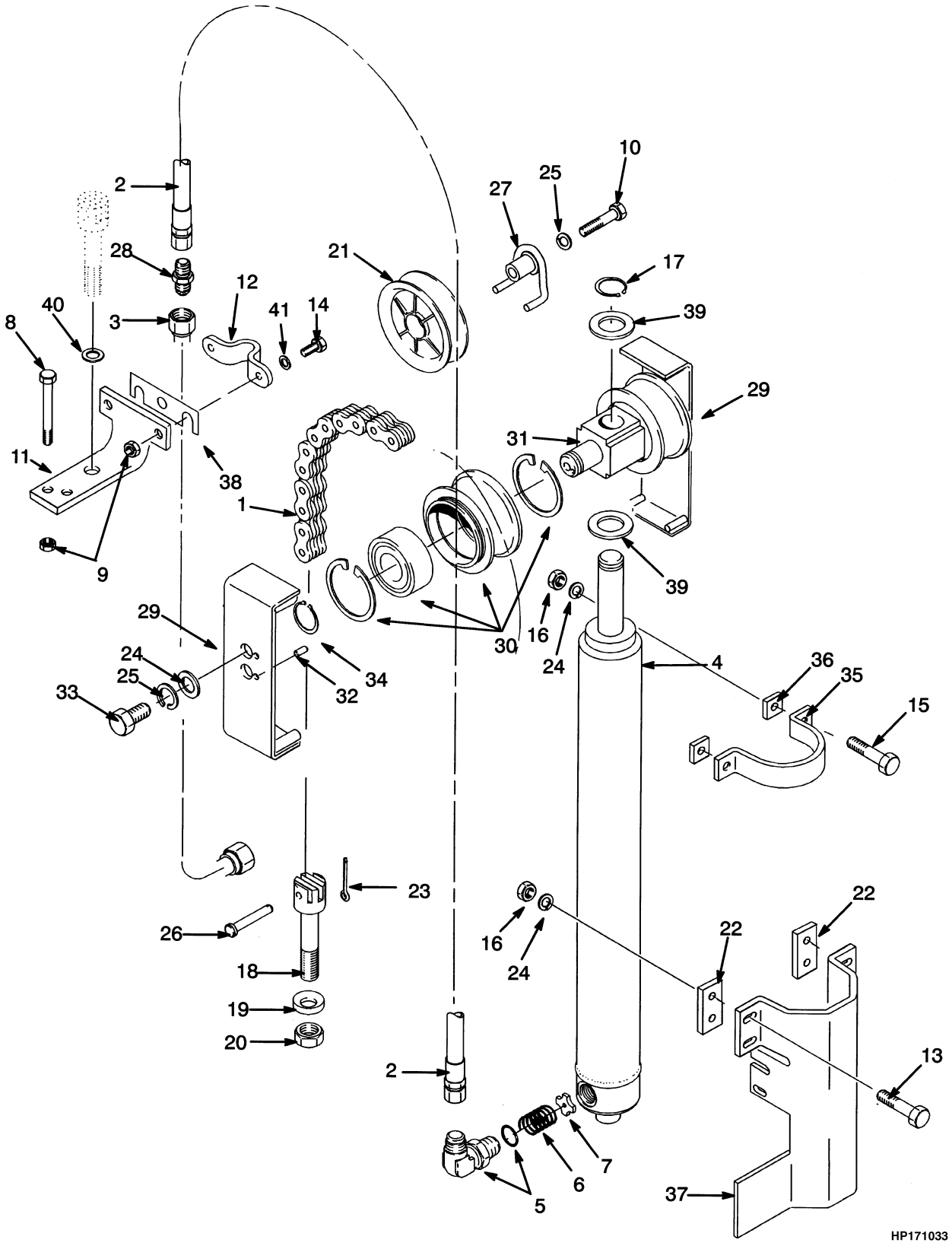

©2009 HYSTER COMPANY

FREE-LIFT
THREE STAGE FULL FREE-LIFT

H2.00-2.50XM

ITEM	DESCRIPTION 1 2 3 4	LIFT HEIGHT TO BOTTOM OF FORKS			
		4310 mm (169.7 in.)	4760 mm (187.4 in.)	4910 mm (193.3 in.)	5510 mm (216.9 in.)
	Mast Group Number	B508 4310	B508 4760	B508 4910	B508 5510
1	Chain	197345	180177	161029	180057
2	Hose Assy	1342407	1342410	1342411	1342415
3	Tube Assy	1345359	1345362	1345363	1345367

H3.00-3.50XM

ITEM	DESCRIPTION 1 2 3 4	LIFT HEIGHT TO BOTTOM OF FORKS			
		4118 mm (162.1 in.)	4568 mm (179.8 in.)	4718 mm (185.7 in.)	4868 mm (191.7 in.)
	Mast Group Number	B563 4118	B563 4568	B563 4718	B563 4868
1	Chain	1342391	1369328	1342116	1342118
2	Hose Assy	1342407	1342410	1342411	1342412
3	Tube Assy	1345359	1345362	1345363	1345364

H3.00-3.50XM

ITEM	DESCRIPTION 1 2 3 4	LIFT HEIGHT TO BOTTOM OF FORKS	
		5318 mm (209.4 in.)	5918 mm (233.0 in.)
	Mast Group Number	B563 5318	B563 5918
1	Chain	1342121	1342384
2	Hose Assy	1342415	1342419
3	Tube Assy	1345367	1345371

KEY:
A: H2.00-2.50XM
B: H3.00-3.50XM

ITEM	PART NO.	DESCRIPTION	QTY A	QTY B
1	**a**	Chain	2	2
2	**a**	Hose Assy	1	1
3	**a**	Tube Assy	1	1
4	. . . . .	Free-Lift Cylinder	1	1
5	238637	Fitting	1	1
5	16485	O-Ring	1	1
6	154355	Spring	1	1
7	356505	Washer	1	1

©2009 HYSTER COMPANY

FREE-LIFT
THREE STAGE FULL FREE-LIFT

KEY:
A: H2.00-2.50XM
B: H3.00-3.50XM

ITEM	PART NO.	DESCRIPTION	QTY A	QTY B
8	136704	Capscrew	2	2
9	313828	Nut	4	4
10	292532	Capscrew	1	1
11	1362390	Bracket	1	1
12	1345401	Clamp	1	1
13	287837	Capscrew	4	4
14	136681	Capscrew	2	..
14	136749	Screw	..	2
15	292529	Capscrew	2	..
15	292530	Capscrew	..	2
16	300937	Nut	6	6
17	131358	Snap Ring	1	1
18	1369357	Chain Anchor	2	..
18	1369356	Chain Anchor	..	2
19	297649	Ring	2	2
20	161003	Nut	2	2
21	1343989	Hose Sheave	1	1
21	1354901	Bushing	1	1
22	1354903	Spacer	2	2
23	15211	Cotter Pin	2	2
24	320161	Washer	8	8
25	292683	Lockwasher	3	3
26	1514866	Pin	2	2
27	1360534	Stubshaft	1	1
28	17635	Fitting	1	1
29	1395285	Chain Guard	2	2
30	1379682	Chain Sheave Assembly	2	..
30	1379683	Chain Sheave Assembly	..	2
30	1378692	Chain Sheave	1	..
30	1378693	Chain Sheave	..	1
30	37752	Snap Ring	1	1
30	1378699	Ball Bearing	1	1
31	1378690	Crosshead	1	1
32	302461	Roll Pin	2	2
33	292527	Capscrew	2	..
33	132860	Capscrew	..	2
34	304526	Snap Ring	2	2
35	1465504	Tie Down	1	1
36	1354902	Spacer	2	2
37	**b** 1354962	Bracket Wldmt	1	1
37	**c** 1702706	Bracket	1	1
38	325616	Spacer	AR	AR
39	1362433	Spacer	4	4
40	320165	Washer	1	1
41	320157	Washer	2	2

©2009 HYSTER COMPANY

FOOTNOTES:

a Refer to Table
b → PENDING PER ECN 105839
c PENDING PER ECN 105839 →

©2009 HYSTER COMPANY

MAIN CYLINDER (FIGURE 11-6)
THREE STAGE FULL FREE-LIFT

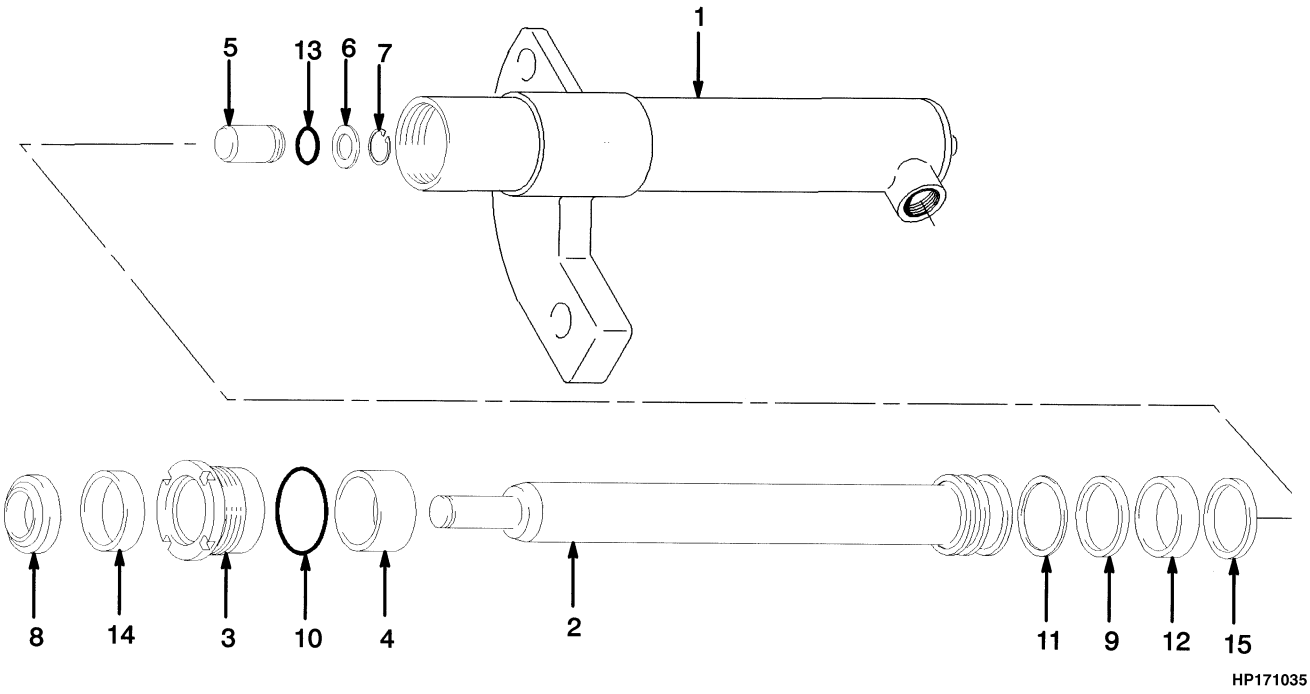

©2009 HYSTER COMPANY

MAIN CYLINDER
THREE STAGE FULL FREE-LIFT

H2.00-2.50XM LEFT HAND

ITEM	DESCRIPTION 1 2 3 4	LIFT HEIGHT TO BOTTOM OF FORKS			
		4310 mm (169.7 in.)	4760 mm (187.4 in.)	4910 mm (193.3 in.)	5510 mm (216.9 in.)
	Mast Group Number	**B508 4310**	**B508 4760**	**B508 4910**	**B508 5510**
	Cylinder Group Number	**8600405**	**8600408**	**8600409**	**8600413**
	Cylinder Assy	1341575	1341578	1341579	1341583
1	Tube Wldmt-Cylinder	1358973	1355598	1355602	1355619
2	Cylinder Rod	1355587	1355599	1355603	1355620
4	Spacer	----	----	----	1355610

H2.00-2.50XM RIGHT HAND

ITEM	DESCRIPTION 1 2 3 4	LIFT HEIGHT TO BOTTOM OF FORKS			
		4310 mm (169.7 in.)	4760 mm (187.4 in.)	4910 mm (193.3 in.)	5510 mm (216.9 in.)
	Mast Group Number	**B508 4310**	**B508 4760**	**B508 4910**	**B508 5510**
	Cylinder Group Number	**8600455**	**8600458**	**8600459**	**8600463**
	Cylinder Assy	1341542	1341545	1341546	1341550
1	Tube Wldmt-Cylinder	1355589	1355601	1355605	1355622
2	Cylinder Rod	1355587	1355599	1355603	1355620
4	Spacer	----	----	----	1355610

H3.00-3.50XM LEFT HAND

ITEM	DESCRIPTION 1 2 3 4	LIFT HEIGHT TO BOTTOM OF FORKS				
		4118 mm (162.1 in.)	4568 mm (179.8 in.)	4718 mm (185.7 in.)	4868 mm (191.7 in.)	5318 mm (209.4 in.)
	Mast Group Number	**B563 4118**	**B563 4568**	**B563 4718**	**B563 4868**	**B563 5318**
	Cylinder Group Number	**8600505**	**8600508**	**8600509**	**8600510**	**8600513**
	Cylinder Assy	1341641	1341644	1341645	1341646	1341649
1	Tube Wldmt-Cylinder	1355728	1355740	1355744	1355748	1355757
2	Cylinder Rod	1355729	1355741	1355745	1355749	1355758
4	Spacer	1355711	1355711	1355711	1355751	1355751

©2009 HYSTER COMPANY

MAIN CYLINDER
THREE STAGE FULL FREE-LIFT

H3.00-3.50XM RIGHT HAND

ITEM	DESCRIPTION 1 2 3 4	LIFT HEIGHT TO BOTTOM OF FORKS			
		4118 mm (162.1 in.)	4568 mm (179.8 in.)	4718 mm (185.7 in.)	4868 mm (191.7 in.)
	Mast Group Number	**B563 4118**	**B563 4568**	**B563 4718**	**B563 4868**
	Cylinder Group Number	**8600555**	**8600558**	**8600559**	**8600560**
	Cylinder Assy	1341608	1341611	1341612	1341613
1	Tube Wldmt-Cylinder	1355731	1355743	1355747	1355752
2	Cylinder Rod	1355729	1355741	1355745	1355749
4	Spacer	1355711	1355711	1355711	1355751

H3.00-3.50XM RIGHT HAND

ITEM	DESCRIPTION 1 2 3 4	LIFT HEIGHT TO BOTTOM OF FORKS	
		5318 mm (209.4 in.)	5918 mm (233.0 in.)
	Mast Group Number	**B563 5318**	**B563 5918**
	Cylinder Group Number	**8600563**	**8600567**
	Cylinder Assy	1341616	1341653 1341620
1	Tube Wldmt-Cylinder	1355760	1355777
2	Cylinder Rod	1355758	1355775
4	Spacer	1355751	1355765

KEY:
A: H2.00-2.50XM
B: H3.00-3.50XM

ITEM	PART NO.	DESCRIPTION	QTY A	QTY B
	a	Cylinder Assy	1	1
1	**a**	Tube Wldmt-Cylinder	1	1
2	**a**	Cylinder Rod	1	1
3	2091257	Gland	1	..
3	2091259	Gland	..	1
4	**a**	Spacer	1	1
5	257913	Check Valve	1	1
6	297531	Washer	1	1
7	187388	Snap Ring	1	1
8	1319668	Rod Wiper	1	1

©2009 HYSTER COMPANY

MAIN CYLINDER
THREE STAGE FULL FREE-LIFT

KEY:
A: H2.00-2.50XM
B: H3.00-3.50XM

ITEM	PART NO.	DESCRIPTION	QTY A	QTY B
9	2013075	Rod Seal	1	..
9	334156	Rod Seal	..	1
10	59229	O-Ring	..	1
10	92861	O-Ring	1	..
11	335012	Back-Up Ring	..	1
11	322824	Back-Up Ring	1	..
12	322902	Wear Ring	1	..
12	1356751	Wear Ring	..	1
13	190580	O-Ring	1	1
14	1356749	Rod Seal	1	1
15	1356748	Piston Ring	..	1
15	1360127	Piston Ring	1	1
	322824	Back-Up Ring	1	1
	322902	Wear Ring	1	1
	1355497	Kit-Seal	1	..
	1355714	Kit-Seal	..	1

FOOTNOTES:

a Refer to Table

©2009 HYSTER COMPANY

FREE-LIFT CYLINDER (FIGURE 11-7)
THREE STAGE FULL FREE-LIFT (→ 3/1998)

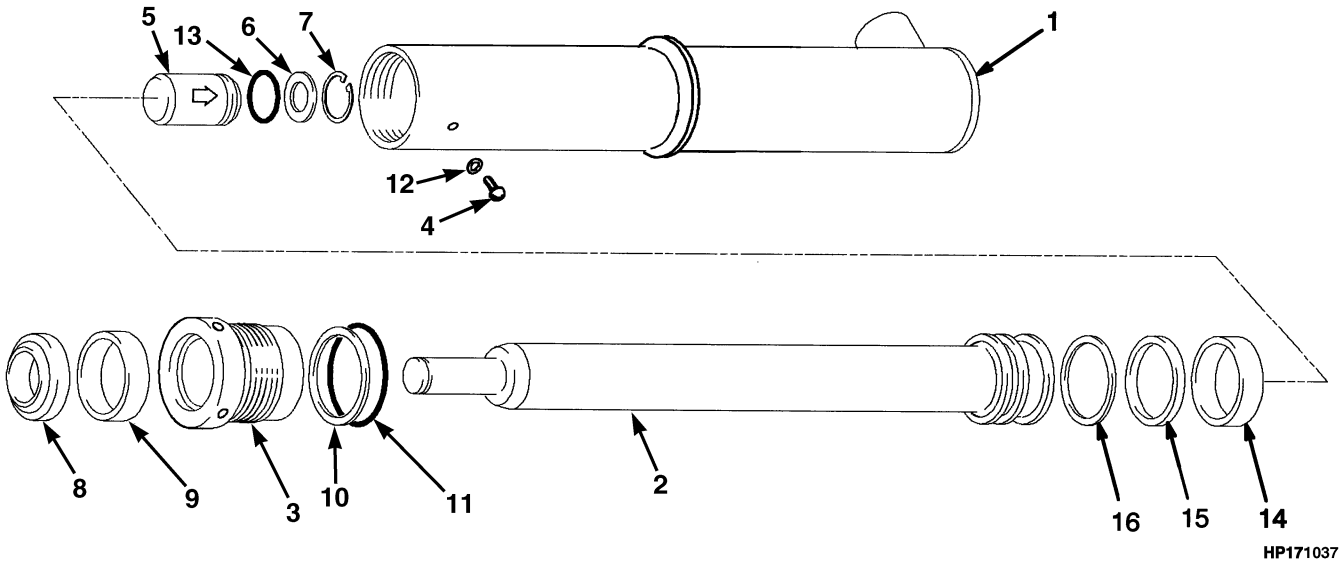

FREE-LIFT CYLINDER
THREE STAGE FULL FREE-LIFT (→ 3/1998)

H2.00-2.50XM

ITEM	DESCRIPTION 1 2 3 4	LIFT HEIGHT TO BOTTOM OF FORKS		
		4310 mm (169.7 in.)	**4760 mm (187.4 in.)**	**5510 mm (216.9 in.)**
	Mast Group Number	**B508 4310**	**B508 4760**	**B508 5510**
	Cylinder Group Number	**8603406**	**8603409**	**8603415**
	Cylinder Assy	2309480	2303951	2303489
1	Tube Wldmt-Cylinder	2303871	2311434	2309770
2	Cylinder Rod	2306774	2311141	2309044

©2009 HYSTER COMPANY

FREE-LIFT CYLINDER

THREE STAGE FULL FREE-LIFT (→ 3/1998)

H3.00-3.50XM

ITEM	DESCRIPTION 1 2 3 4	LIFT HEIGHT TO BOTTOM OF FORKS			
		4118 mm (162.1 in.)	4568 mm (179.8 in.)	4868 mm (191.7 in.)	5318 mm (209.4 in.)
	Mast Group Number	**B563 4118**	**B563 4568**	**B563 4868**	**B563 5318**
	Cylinder Group Number	**8603507**	**8603510**	**8603513**	**8603516**
	Cylinder Assy	2310270	2302410	2303532	2307773
1	Tube Wldmt-Cylinder	2311691	2305742	2309026	2309353
2	Cylinder Rod	2303824	2304216	2309410	2303899

KEY:
A: H2.00-2.50XM
B: H3.00-3.50XM

ITEM	PART NO.	DESCRIPTION	QTY A	QTY B
	a	Cylinder Assy	1	1
1	**a**	Tube Wldmt-Cylinder	1	1
2	**a**	Cylinder Rod	1	1
3	1356292	Gland	1	..
3	1356661	Gland	..	1
4	1361302	Screw	1	1
5	257913	Check Valve	1	1
6	297531	Washer	1	1
7	187388	Snap Ring	1	1
8	2013099	Rod Wiper	1	1
9	1358970	Rod Seal	1	1
10	147973	Back-Up Ring	1	..
10	164840	Back-Up Ring	..	1
11	15880	O-Ring	..	1
11	90263	O-Ring	1	..
12	190887	Sealing Ring	1	1
13	39348	O-Ring	1	1
14	1358972	Wear Ring	1	..
14	636941	Wear Ring	..	1
15	2013088	Rod Seal	1	..
15	309062	Rod Seal	..	1
16	2013089	Back-Up Ring	1	..
16	637565	Back-Up Ring	..	1
	1356662	Kit-Seal	..	1
	1358969	Kit-Seal	1	..

FOOTNOTES:

a Refer to Table

©2009 HYSTER COMPANY

FREE-LIFT CYLINDER (FIGURE 11-8)

THREE STAGE FULL FREE-LIFT (→ S/N B508B05149) (→ S/N B563B03058)

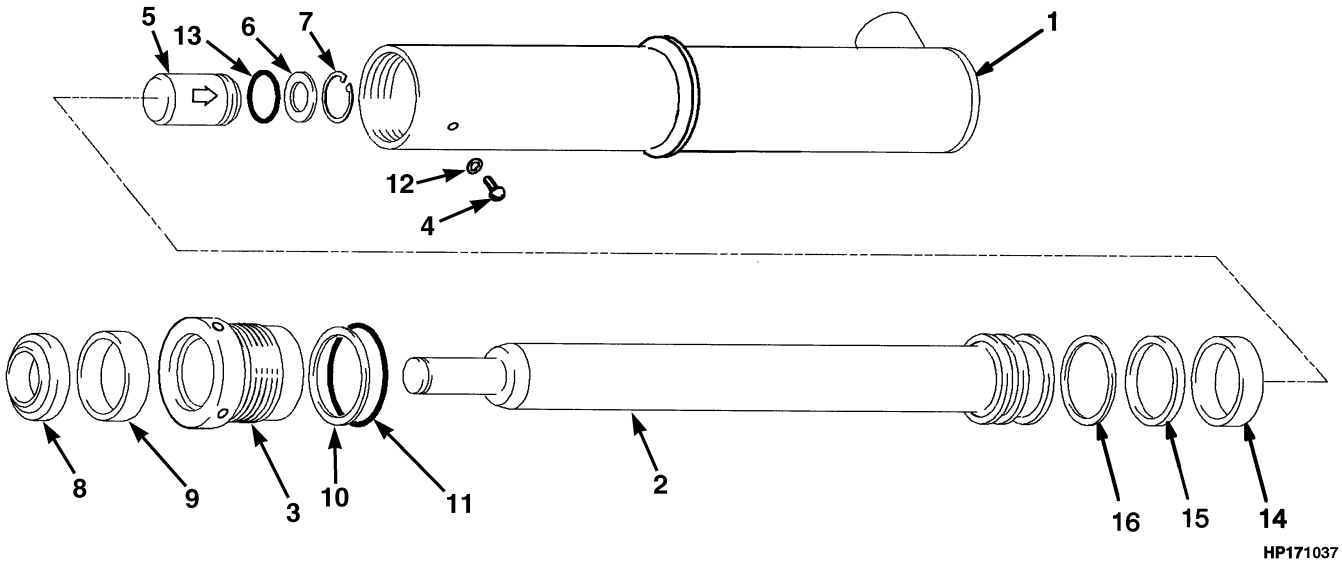

FREE-LIFT CYLINDER

THREE STAGE FULL FREE-LIFT (→ S/N B508B05149) (→ S/N B563B03058)

H2.00-2.50XM

ITEM	DESCRIPTION 1 2 3 4	LIFT HEIGHT TO BOTTOM OF FORKS			
		4310 mm (169.7 in.)	4760 mm (187.4 in.)	4910 mm (193.3 in.)	5510 mm (216.9 in.)
	Mast Group Number	B508 4310	B508 4760	B508 4910	B508 5510
	Cylinder Group Number	8602406	8602409	8602410	8602415
	Cylinder Assy	1366733	1366736	1366737	1366742
1	Tube Wldmt-Cylinder	2303871	2058213	2310340	2309770
2	Cylinder Rod	1356560	1356569	1356572	1356587

©2009 HYSTER COMPANY

FREE-LIFT CYLINDER

THREE STAGE FULL FREE-LIFT (→ S/N B508B05149) (→ S/N B563B03058)

H3.00-3.50XM

ITEM	DESCRIPTION 1 2 3 4	LIFT HEIGHT TO BOTTOM OF FORKS			
		4118 mm (162.1 in.)	4568 mm (179.8 in.)	4868 mm (191.7 in.)	5318 mm (209.4 in.)
	Mast Group Number	B563 4118	B563 4568	B563 4868	B563 5318
	Cylinder Group Number	8602507	8602510	8602513	8602516
	Cylinder Assy	1369549	1371602	1371605	1371608
1	Tube Wldmt-Cylinder	2311691	2305742	2309026	2309353
2	Cylinder Rod	1356682	1356691	1356065	1356074

KEY:
A: H2.00-2.50XM
B: H3.00-3.50XM

ITEM	PART NO.	DESCRIPTION	QTY A	QTY B
	a	Cylinder Assy	1	1
1	**a**	Tube Wldmt-Cylinder	1	1
2	**a**	Cylinder Rod	1	1
3	1356292	Gland	1	..
3	1356661	Gland	..	1
4	1361302	Screw	1	1
5	257913	Check Valve	1	1
6	297531	Washer	1	1
7	187388	Snap Ring	1	1
8	2013099	Rod Wiper	1	1
9	1358970	Rod Seal	1	1
10	147973	Back-Up Ring	1	..
10	164840	Back-Up Ring	..	1
11	15880	O-Ring	..	1
11	90263	O-Ring	1	..
12	190887	Sealing Ring	1	1
13	39348	O-Ring	1	1
14	1358972	Wear Ring	1	..
14	636941	Wear Ring	..	1
15	2013088	Rod Seal	1	..
15	309062	Rod Seal	..	1
16	2013089	Back-Up Ring	1	..
16	637565	Back-Up Ring	..	1
	1356662	Kit-Seal	..	1
	1358969	Kit-Seal	1	..

FOOTNOTES:

a Refer to Table

©2009 HYSTER COMPANY

FREE-LIFT CYLINDER (FIGURE 11-9)

THREE STAGE FULL FREE-LIFT (S/N B508B05150 →) (S/N B563B03059 →)

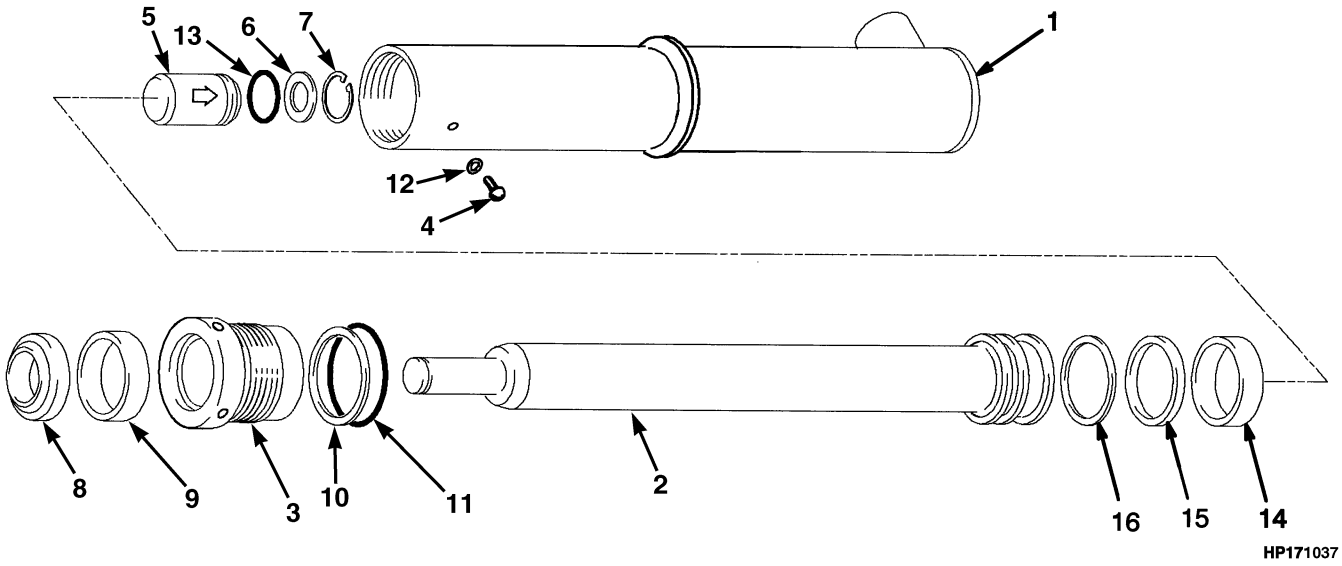

FREE-LIFT CYLINDER

THREE STAGE FULL FREE-LIFT (S/N B508B05150 →) (S/N B563B03059 →)

H2.00-2.50XM

ITEM	DESCRIPTION 1 2 3 4	LIFT HEIGHT TO BOTTOM OF FORKS			
		4310 mm (169.7 in.)	4760 mm (187.4 in.)	4910 mm (193.3 in.)	5510 mm (216.9 in.)
	Mast Group Number	B508 4310	B508 4760	B508 4910	B508 5510
	Cylinder Group Number	8514556	8514559	8514560	8514565
	Cylinder Assy	2053795	2053796	2053797	2053799
1	Tube Wldmt-Cylinder	2058210	2058213	2058214	2058219
2	Cylinder Rod	1356560	1356569	1356572	1371631

H3.00-3.50XM

ITEM	DESCRIPTION 1 2 3 4	LIFT HEIGHT TO BOTTOM OF FORKS			
		4118 mm (162.1 in.)	4568 mm (179.8 in.)	4718 mm (185.7 in.)	4868 mm (191.7 in.)
	Mast Group Number	B563 4118	B563 4568	B563 4718	B563 4868
	Cylinder Group Number	8514507	8514510	8514511	8514513
	Cylinder Assy	2053770	2053771	2053772	2053773
1	Tube Wldmt-Cylinder	2063690	2063691	2063645	2064046
2	Cylinder Rod	1356682	1356691	1356694	1356065

©2009 HYSTER COMPANY

FREE-LIFT CYLINDER

THREE STAGE FULL FREE-LIFT (S/N B508B05150 →) (S/N B563B03059 →)

H3.00-3.50XM

ITEM	DESCRIPTION 1 2 3 4	LIFT HEIGHT TO BOTTOM OF FORKS	
		5318 mm (209.4 in.)	5918 mm (233.0 in.)
	Mast Group Number	B563 5318	B563 5918
	Cylinder Group Number	8514516	8514521
	Cylinder Assy	2053775	2061875
1	Tube Wldmt-Cylinder	2063693	2058259
2	Cylinder Rod	1356074	1356089

KEY:
A: H2.00-2.50XM
B: H3.00-3.50XM

ITEM	PART NO.	DESCRIPTION	QTY A	QTY B
	a	Cylinder Assy	1	1
1	**a**	Tube Wldmt-Cylinder	1	1
2	**a**	Cylinder Rod	1	1
3	1356292	Gland	1	..
3	1356661	Gland	..	1
4	1361302	Screw	1	1
5	257913	Check Valve	1	1
6	297531	Washer	1	1
7	187388	Snap Ring	1	1
8	2013099	Rod Wiper	1	1
9	1358970	Rod Seal	1	1
10	147973	Back-Up Ring	1	..
10	164840	Back-Up Ring	..	1
11	90263	O-Ring	1	..
11	15880	O-Ring	..	1
12	190887	Sealing Ring	1	1
13	39348	O-Ring	1	1
14	1358972	Wear Ring	1	..
14	636941	Wear Ring	..	1
15	2013088	Rod Seal	1	..
15	309062	Rod Seal	..	1
16	2013089	Back-Up Ring	1	..
16	637565	Back-Up Ring	..	1
	1358969	Kit-Seal	1	..
	1356662	Kit-Seal	..	1

FOOTNOTES:

a Refer to Table

©2009 HYSTER COMPANY

CARRIAGE (FIGURE 11-10)
THREE STAGE FULL FREE-LIFT — SIX ROLLER

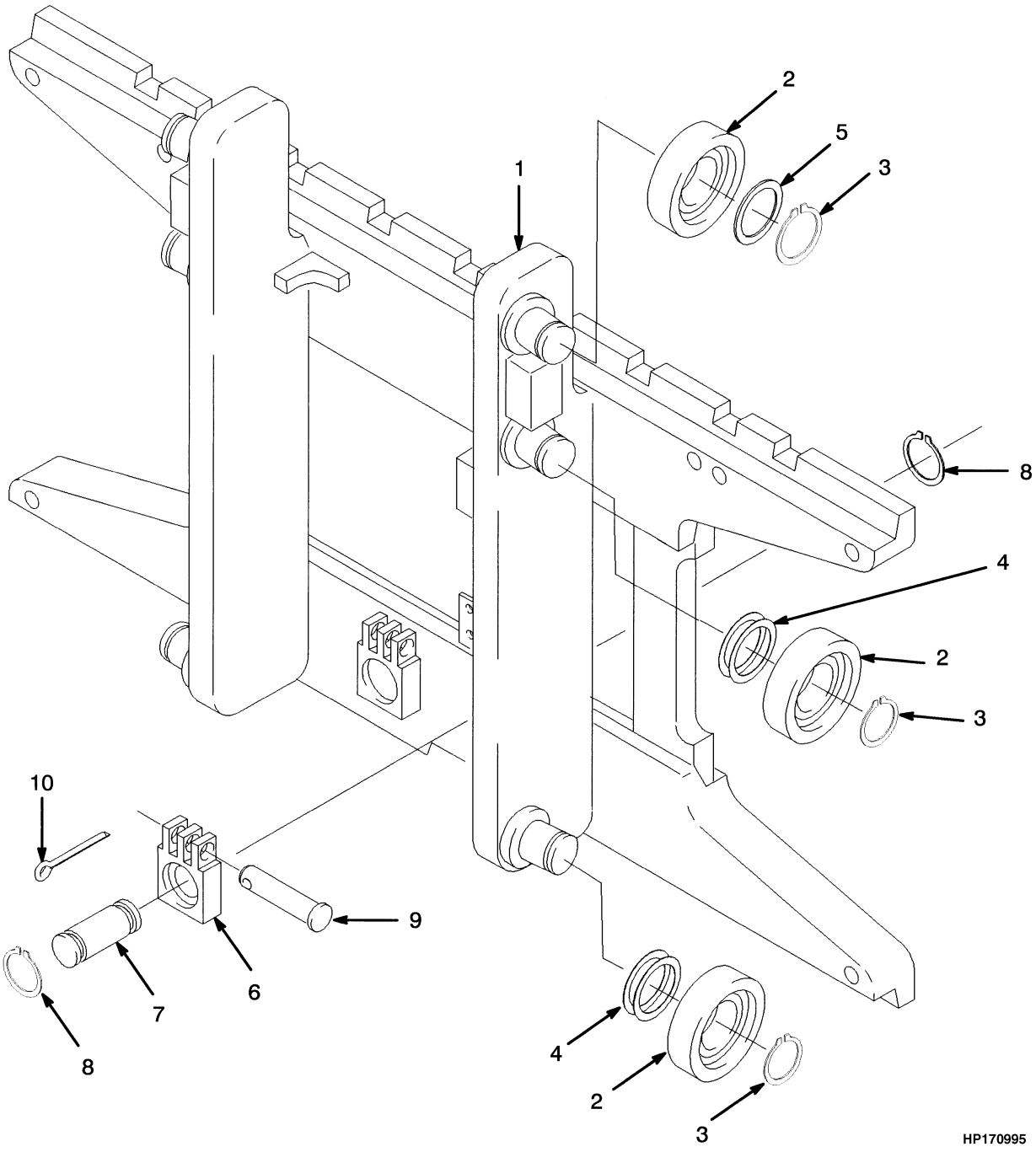

©2009 HYSTER COMPANY

CARRIAGE

THREE STAGE FULL FREE-LIFT – SIX ROLLER

KEY:
A: H2.00-2.50XM
B: H3.00-3.20XM

ITEM	PART NO.	DESCRIPTION	QTY A	QTY B
	1379459	Carriage (1067 mm)	1	..
	1379460	Carriage (1067 mm)	..	1
	1379463	Carriage (1219 mm)	1	..
1	1381560	Carriage Wldmt (1067 mm)	1	..
1	1381561	Carriage Wldmt (1067 mm)	..	1
1	1381564	Carriage Wldmt (1219 mm)	1	..
1	1345216	Stubshaft	6	6
2	1333399	Load Roller	6	6
2	1393142	Load Roller (Optional)	6	6
2	1395174	Load Roller (Optional)	6	6
2	1395176	Load Roller (Optional)	6	6
3	58901	Snap Ring	6	6
4	129387	Shim (0.508 mm)	AR	AR
5	366115	Spacer	2	2
6	1369344	Chain Anchor (Dual Hole)	..	2
6	1504012	Chain Anchor (Single Hole) (Optional)	..	2
6	1369345	Chain Anchor (Dual Hole)	2	..
6	1504010	Chain Anchor (Single Hole) (Optional)	2	..
7	317735	Pin	2	2
8	131358	Snap Ring	4	4
9	1514866	Pin	2	2
10	15211	Cotter Pin	2	2

©2009 HYSTER COMPANY

HEADER HOSE (FIGURE 11-11)
THREE STAGE FULL FREE-LIFT

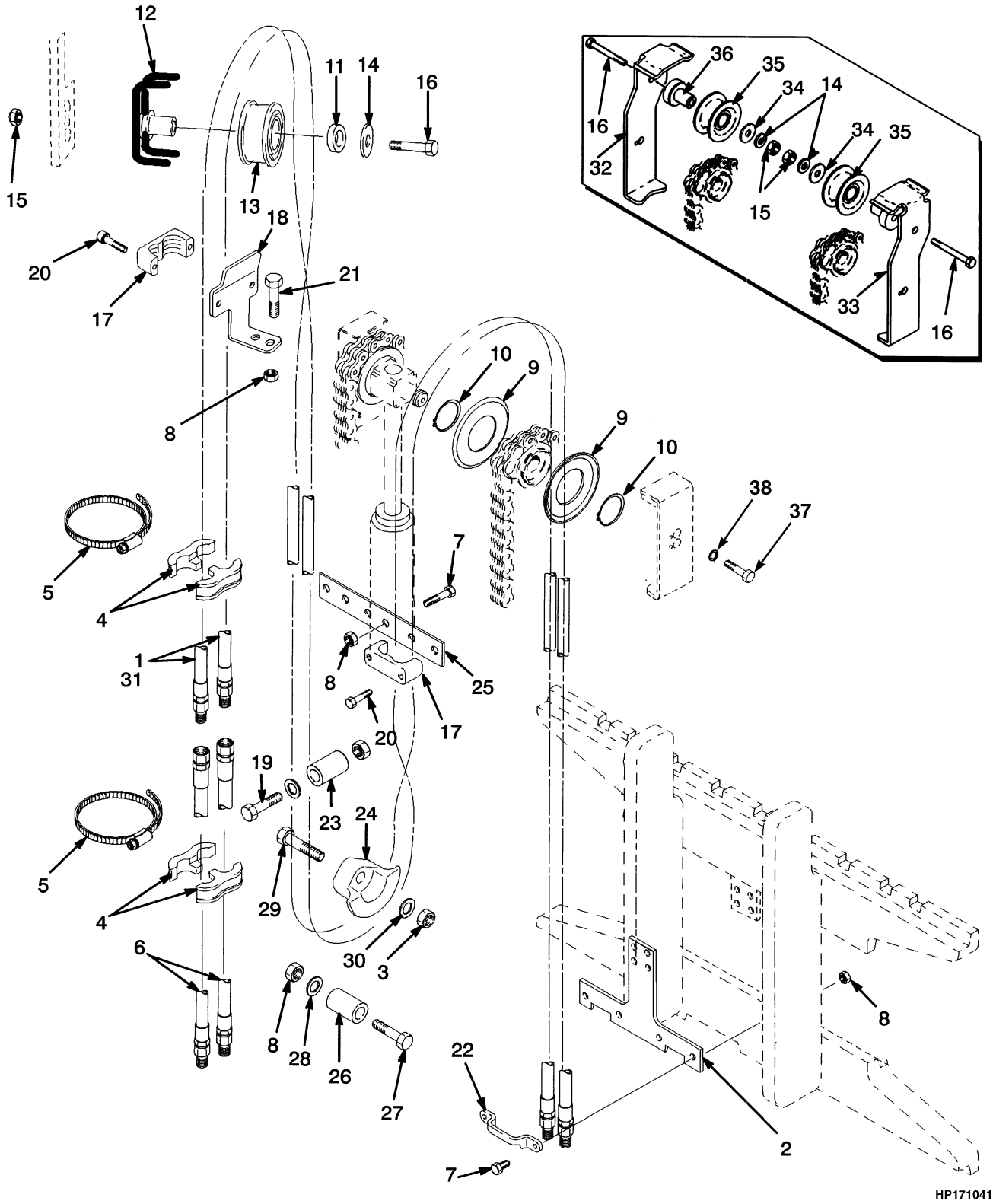

©2009 HYSTER COMPANY

HEADER HOSE
THREE STAGE FULL FREE-LIFT

H2.00-2.50XM

ITEM	DESCRIPTION 1 2 3 4	LIFT HEIGHT TO BOTTOM OF FORKS			
		4310 mm (169.7 in.)	4760 mm (187.4 in.)	4910 mm (193.3 in.)	5510 mm (216.9 in.)
	Mast Group Number	B508 4310	B508 4760	B508 4910	B508 5510
1	Hose Assy	**b**1358352 **d**1368411	**b**1369625 **d**1376131	**b**1358354 **d**1368414	**b**1369627 **d**1376164
31	Hose Assy	1368445	1398951	1376133	1398595

H3.00-3.50XM

ITEM	DESCRIPTION 1 2 3 4	LIFT HEIGHT TO BOTTOM OF FORKS			
		4118 mm (162.1 in.)	4568 mm (179.8 in.)	4718 mm (185.7 in.)	4868 mm (191.7 in.)
	Mast Group Number	B563 4118	B563 4568	B563 4718	B563 4868
1	Hose Assy	**c**1358352 **f**1368411	**c**1369625 **f**1376131	**c**1358354 **f**1368414	**c**1358355 **f**1376161
31	Hose Assy	1368445	1398951	1376133	1369643

H3.00-3.50XM

ITEM	DESCRIPTION 1 2 3 4	LIFT HEIGHT TO BOTTOM OF FORKS	
		5318 mm (209.4 in.)	5918 mm (233.0 in.)
	Mast Group Number	B563 5318	B563 5918
1	Hose Assy	**c**1369627 **f**1376164	**c**1358358 **f**1376167
31	Hose Assy	1398595	1398604

KEY:
A: Three Function
B: Four Function

ITEM	PART NO.	DESCRIPTION	QTY A	QTY B
1	**a**	Hose Assy	2	2
2	1381771	Bracket (H2.00-2.50XM)	1	1
2	1381772	Bracket (H3.00-3.50XM)	1	1
3	316826	Nut	1	2
4	1353530	Hose Clamp	4	8
5	1360507	Clamp	2	4
6	1354904	Hose Assy (LH)	..	2
6	1354922	Hose Assy (RH)	2	2
7	136749	Screw	8	10

©2009 HYSTER COMPANY

HEADER HOSE
THREE STAGE FULL FREE-LIFT

KEY:
A: Three Function
B: Four Function

ITEM	PART NO.	DESCRIPTION	QTY A	QTY B
8	313828	Nut	9	14
9	1345199	Hose Guide	2	4
10	1345204	Snap Ring	2	4
11	1360549	Spacer	1	2
12	1362387	Stubshaft	1	2
13	1494017	Hose Sheave	1	2
14	1345190	Washer	1	2
15	1390182	Nut	1	2
16	292533	Capscrew	1	2
17	1360386	Clamp	2	4
18	1354906	Bracket (RH)	1	1
18	1354907	Bracket (LH)	..	1
19	292534	Capscrew	1	2
20	293795	Capscrew	4	8
21	136704	Capscrew	2	4
22	1643405	Hose Clamp	1	2
23	1360538	Tube Assy	1	2
24	1348246	Hose Guide (RH)	1	1
24	1348247	Hose Guide (LH)	..	1
25	1353464	Plate	1	1
26	1354961	Spacer	1	2
27	214364	Capscrew	1	2
28	320158	Washer	1	2
29	287860	Capscrew	1	2
30	320160	Washer	1	2
31	**a**	Hose Assy	..	2
32	**defg** 1395292	Bracket (LH)	1	1
33	**defg** 1395291	Bracket (RH)	..	1
34	**defg** 1396407	Spacer	1	2
35	**defg** 1345194	Sheave	1	2
36	**defg** 1396406	Stubshaft	1	2
37	292527	Capscrew	2	2
38	320161	Washer	2	2
39	1566564	Cap (Not Illustrated)	1	1

FOOTNOTES:

a Refer to Table
b → S/N B508B35044
c → S/N B563B18426
d S/N B508B35045 →
e S/N B508V24130 →
f S/N B563B18427 →
g S/N B563V9116 →

©2009 HYSTER COMPANY

12 OPTIONS

SECTION 12
OPTIONS

DESCRIPTION **PAGE**

AUXILIARY TUBES
TWO AND THREE STAGE FULL FREE-LIFT - STANDARD SIDE-SIFT 12-34
TWO AND THREE STAGE FULL FREE-LIFT - INTEGRAL SIDE-SHIFT 12-36
TWO STAGE LIMITED FREE-LIFT 12-32
BACK-UP ALARM
→ S/N H177B40524A 12-92
S/N H177B40525A → 12-94
CAB
EXTERNAL DOOR 12-68
PVC 12-72
DRIVE AND TURN LIGHTS
S/N H177B48921B → 12-64
DRIVE, TURN, AND REAR LIGHTS
→ S/N H177B43094A 12-60
S/N H177B43095A ↔ S/N H177B48920B 12-62
ELECTRICAL SYSTEM
CAB 12-74
FENDER 12-6
FIRE EXTINGUISHER 12-90
HEATER
CAB 12-78
INTEGRAL SIDE-SHIFT
HYDRAULIC HOSES - TWO STAGE LIMITED FREE-LIFT 12-28
HYDRAULIC HOSES - THREE STAGE FULL FREE-LIFT 12-29
HYDRAULIC HOSES - TWO STAGE FULL FREE-LIFT 12-30
INTEGRAL SIDE-SHIFT CARRIAGE
THREE STAGE FULL FREE-LIFT 12-18
TWO STAGE FULL FREE-LIFT 12-22
TWO STAGE LIMITED FREE-LIFT 12-14
INTEGRAL SIDE-SHIFT CYLINDER 12-26
LIFTING EYE 12-4
LOAD BACKREST EXTENSION
48 IN. (1220 MM) - H2.00-2.50 XM 12-40
MIRROR 12-88
OPTIONAL EQUIPMENT
CAB 12-76
POWERTRAIN PROTECTIVE SYSTEM 12-96
REAR WORK LIGHT
S/N H177B43095A → 12-66
ROTATING BEACON 12-58
ROTATOR AUXILIARY TUBES
TWO AND THREE STAGE FULL FREE-LIFT 12-38
SIDE-SHIFT CARRIAGE 12-8
SIDE-SHIFT CYLINDER 12-12
SIT TIRES
STEER WHEEL - SOLID PNEUMATIC 12-52
SOUND LINERS
CAB 12-80

©2009 HYSTER COMPANY

SECTION 12
OPTIONS

DESCRIPTION **PAGE**

STROBE LIGHT
→ S/N H177B48920B 12-54
S/N H177B48921B → 12-56
TIRE
DRIVE WHEEL - SOLID PNEUMATIC 12-46
TIRE AND WHEEL
DRIVE WHEEL - 5-IN. RIM 12-42
DRIVE WHEEL - 7-IN. RIM 12-44
STEER WHEEL 6.00 X 9 - H2.00-2.50XM 12-48
STEER WHEEL 6.50 X 10 - H2.50XMX, H3.00-3.20XM 12-50
WIRE HARNESS
CAB 12-84
CAB REAR 12-83
CHASSIS - REAR 12-86
POWERTRAIN PROTECTIVE SYSTEM 12-98
WIPER 12-82

©2009 HYSTER COMPANY

NOTES

©2009 HYSTER COMPANY

LIFTING EYE (FIGURE 12-1)

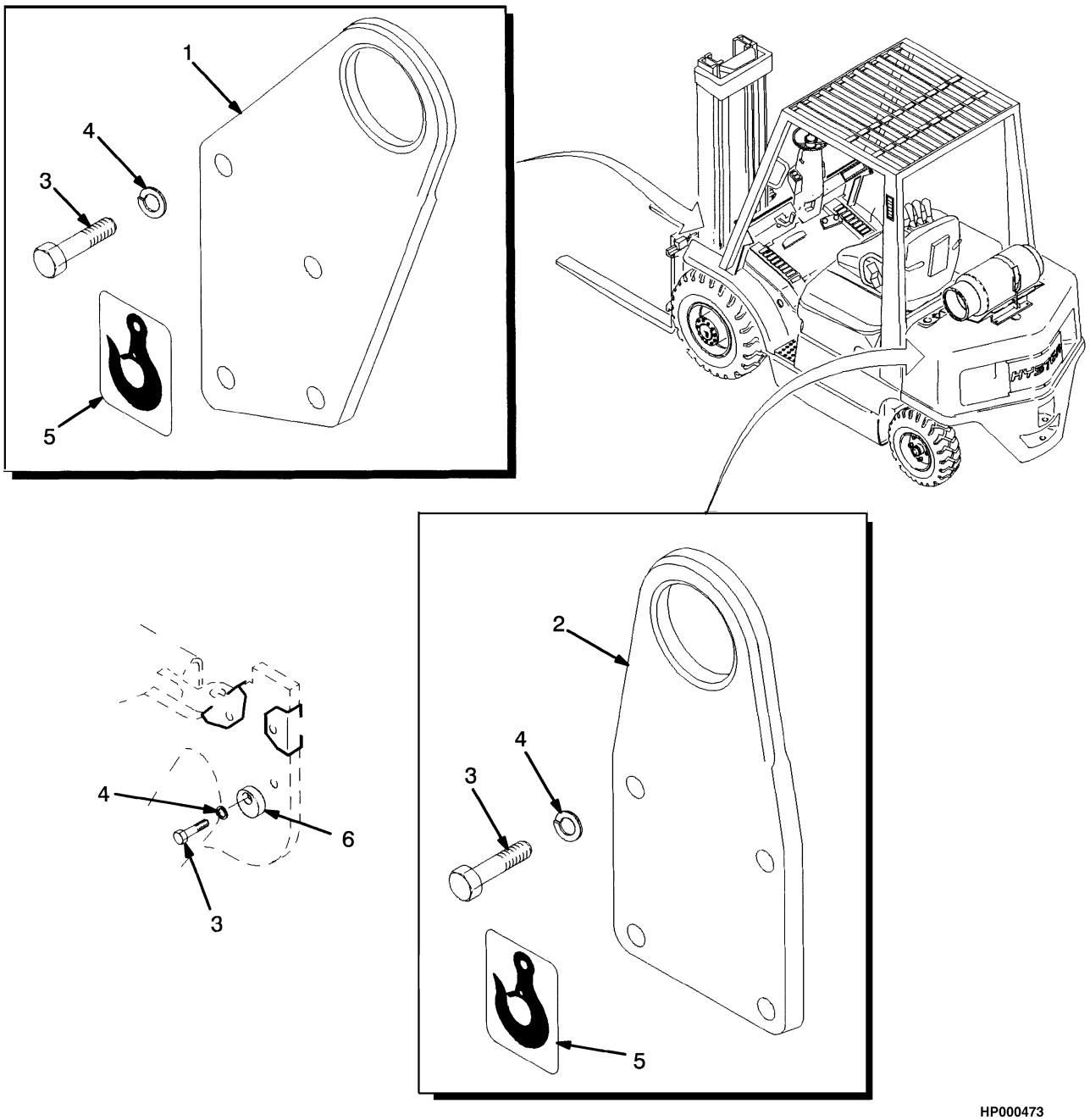

©2009 HYSTER COMPANY

LIFTING EYE

ITEM	PART NO.	DESCRIPTION	QTY
1	1356400	Lifting Eye	2
2	1356401	Lifting Eye	2
3	293647	Capscrew	18
4	292683	Lockwasher	18
5	316448	Label (Lifting Eye)	4
6	1369709	Cam	2

©2009 HYSTER COMPANY

FENDER (FIGURE 12-2)

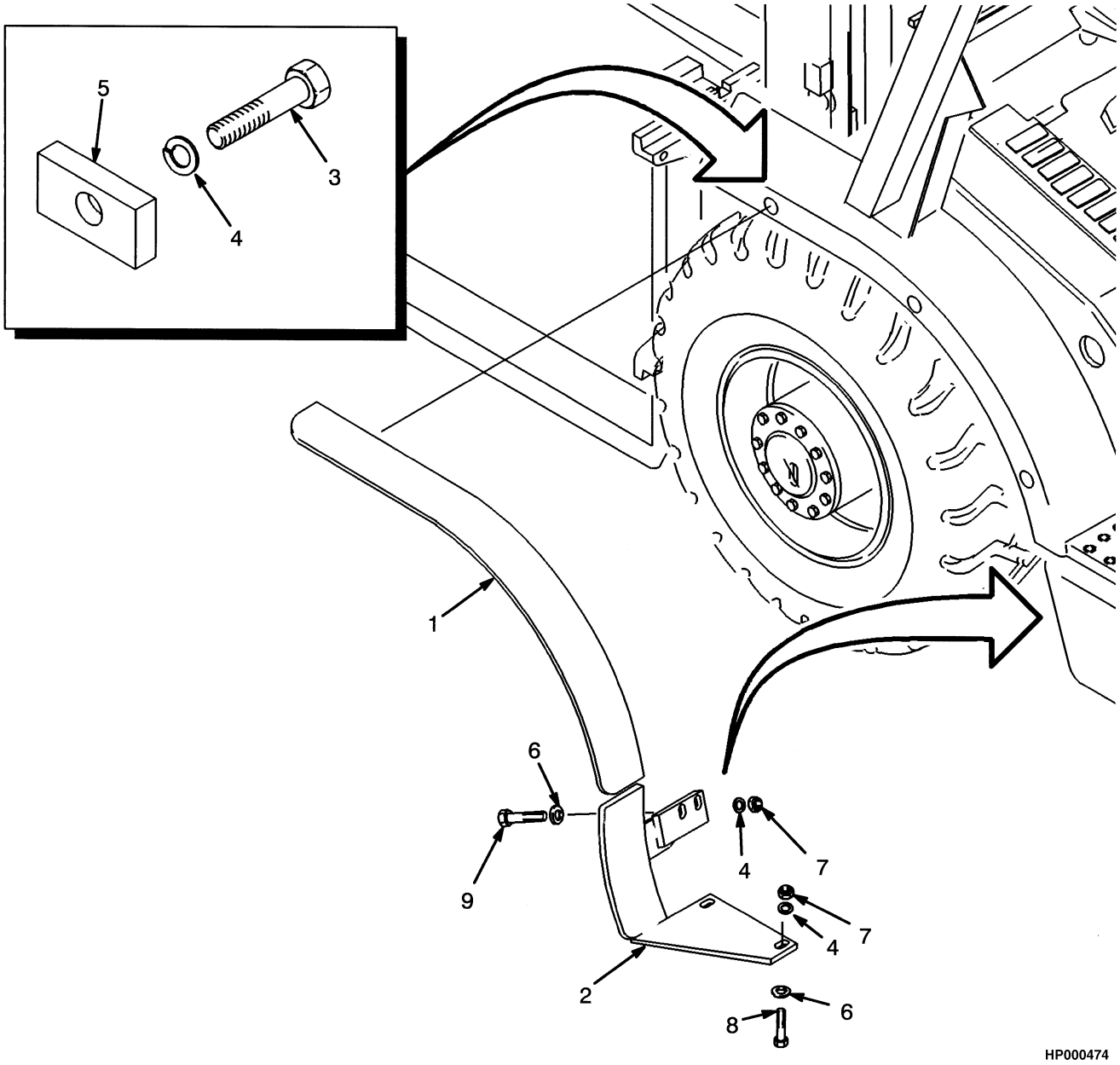

©2009 HYSTER COMPANY

FENDER

ITEM	PART NO.	DESCRIPTION	QTY
1	**b** 1347142	Fender (Wide) (LH)	1
1	**b** 1347143	Fender (Wide) (RH)	1
1	**b** 1347196	Fender (Dual) (LH)	1
1	**b** 1347197	Fender (Dual) (RH)	1
2	**a** 1347145	Fender (Wide) (LH)	1
2	**a** 1347146	Fender (Wide) (RH)	1
2	**a** 1347198	Fender (Dual) (LH)	1
2	**a** 1347201	Fender (Dual) (RH)	1
3	292515	Capscrew	10
4	292682	Lockwasher	14
5	1347144	Bar	6
6	320160	Washer	8
7	136692	Nut	8
8	287860	Capscrew	4

FOOTNOTES:

a Lower

b Upper

©2009 HYSTER COMPANY

SIDE-SHIFT CARRIAGE (FIGURE 12-3)

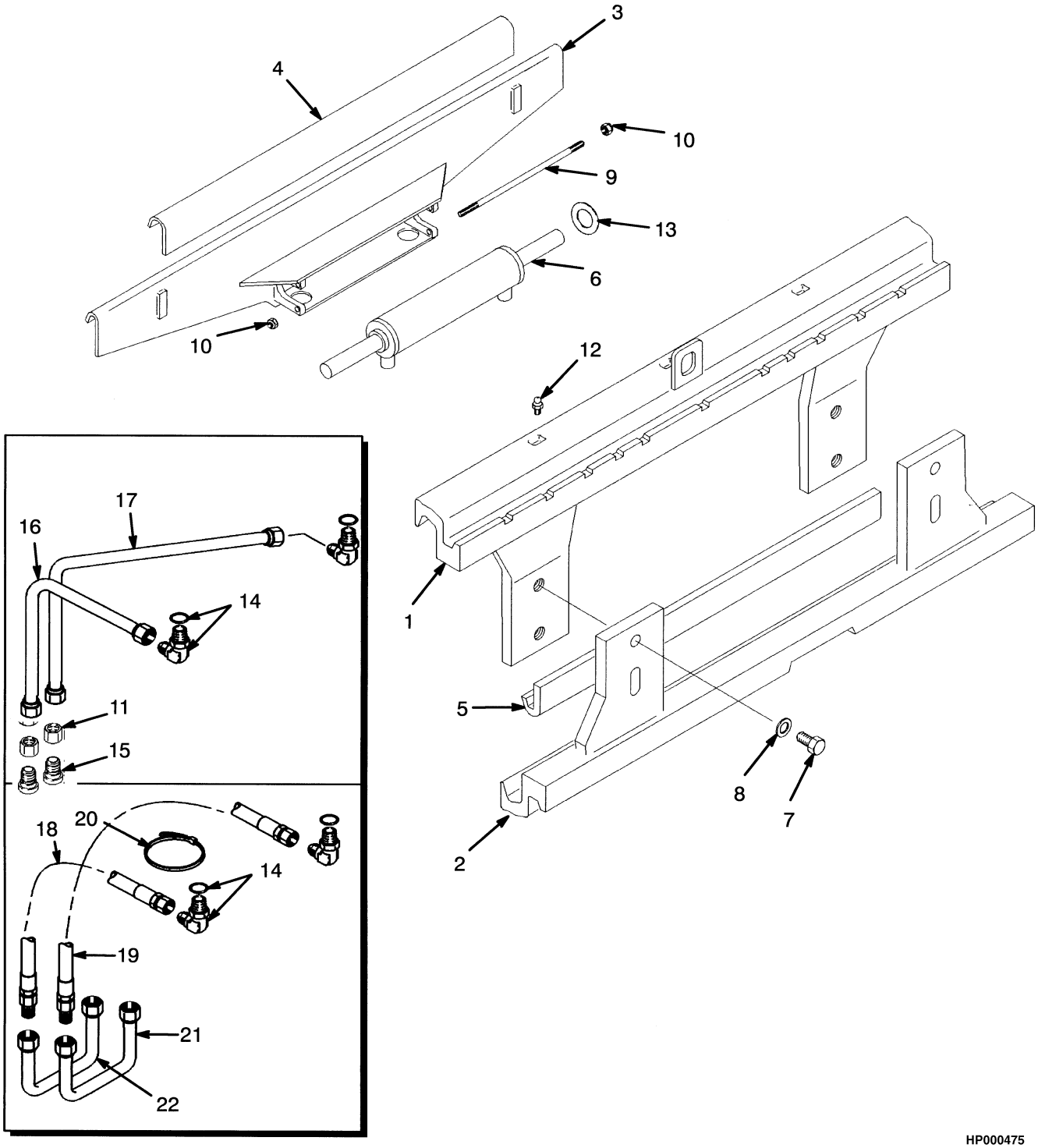

©2009 HYSTER COMPANY

SIDE-SHIFT CARRIAGE

KEY:
A: H2.00-2.50XM
B: H3.00-3.20XM

ITEM	PART NO.	DESCRIPTION	QTY A	QTY B
	def 1356918	Side-Shift Carriage (1067 mm)	1	..
	jkl 1399041	Side-Shift Carriage (1067 mm)	1	..
	def 1376340	Side-Shift Carriage (1219 mm)	1	..
	jkl 1399044	Side-Shift Carriage (1219 mm)	1	..
	ghi 1356882	Side-Shift Carriage (1067 mm)	..	1
	mno 1399048	Side-Shift Carriage (1067 mm)	..	1
1	1355523	Apron (Top) (1067 mm)	1	..
1	1376341	Carriage Wldmt (Top) (1219 mm)	1	..
1	1355547	Carriage Wldmt (Top) (1067 mm)	..	1
2	**def** 1378055	Carriage Wldmt (Lower) (1067 mm)	1	..
2	**jkl** 1396431	Shim (Lower Bearing) (1067 mm)	AR	..
2	**def** 1378057	Carriage Wldmt (Lower) (1219 mm)	1	..
2	**jkl** 1396434	Shim (Lower Bearing) (1219 mm)	AR	..
2	**ghi** 1378072	Carriage Wldmt (Lower) (1067 mm)	..	1
2	**mno** 1396431	Shim (Lower Bearing) (1067 mm)	..	AR
3	**def** 1356857	Support (1067 mm)	1	..
3	**kl** 1399006	Support (1067 mm)	1	..
3	1376343	Support (1219 mm)	1	..
3	**def** 1397267	Support (1219 mm)	1	..
3	**jkl** 1399008	Support (1219 mm)	1	..
3	**jkl** 1396434	Shim (Lower Bearing) (1219 mm)	AR	..
3	1356912	Support (1067 mm)	..	1
3	**ghi** 1397277	Support (1067 mm)	..	1
3	1399023	Support (1067 mm)	..	1
3	1399023	Support (1067 mm)	..	AR
4	**def** 1356867	Bearing (Top) (1067 mm)	1	..
4	1396460	Bearing (Top) (1067 mm)	1	..
4	**def** 1376344	Bearing (Top) (1219 mm)	1	..
4	1396462	Bearing (Top) (1219 mm)	1	..
4	1356902	Bearing (Top) (1067 mm)	..	1
4	1396472	Bearing (Top) (1067 mm)	..	1
5	1378065	Bearing (Lower) (1067 mm)	1	..
5	1356863	Bearing (Lower) (1219 mm)	1	..
5	1378082	Bearing (Lower) (1067 mm)	..	1
6	1360125	Cylinder Assy (☞Figure 12-4)	1	..
6	1360126	Sideshift Cylinder	..	1
7	293704	Capscrew	4	..
7	1360229	Capscrew	..	4
8	296431	Washer	4	..
8	296435	Washer	..	4
9	**a** 1358809	Rod	2	2
9	1371289	Capscrew	2	2
10	313828	Nut	2	2
10	**a** 313828	Nut	4	4
10	**a** 302400	Nut	2	2
11	17319	Sleeve (1067 mm)	2	2

©2009 HYSTER COMPANY

SIDE-SHIFT CARRIAGE

KEY:
A: H2.00-2.50XM
B: H3.00-3.20XM

ITEM	PART NO.	DESCRIPTION	QTY A	QTY B
12	16041	Grease Fitting	3	3
13	1358821	Shim (0,508 mm)	AR	AR
14	239784	Fitting	2	1
14	16481	O-Ring	1	1
15	17218	Fitting (1067 mm)	2	2
16	**c** 1358814	Tube Assy	1	..
16	**c** 1358816	Tube Assy	..	1
17	**c** 1358815	Tube Assy	1	..
17	**c** 1358817	Tube Assy	..	1
18	**b** 1390365	Hose Assy	1	..
18	**b** 1390367	Hose Assy	..	1
19	**b** 1390366	Hose Assy	1	..
19	**b** 1390368	Hose Assy	..	1
20	**b** 114312	Strap Clamp	1	1
21	**b** 1381765	Tube Assy	1	1
22	**b** 1381766	Tube Assy	1	1
23	**b** 16565	Fitting	..	1
23	**b** 16481	O-Ring	1	1

FOOTNOTES:

a Optional
b Two and Three Stage Full Free-Lift
c Two Stage Limited Free-Lift
d → S/N B507B16124
e → S/N B508B36393
f → S/N B509B04067
g → S/N B562B11879
h → S/N B563B19083
i → S/N B564B03320
j S/N B507B16124 →
k S/N B508B39364 →
l S/N B509B04068 →
m S/N B562B11880 →
n S/N B563B19084 →
o S/N B564B03321 →

©2009 HYSTER COMPANY

NOTES

©2009 HYSTER COMPANY

SIDE-SHIFT CYLINDER (FIGURE 12-4)

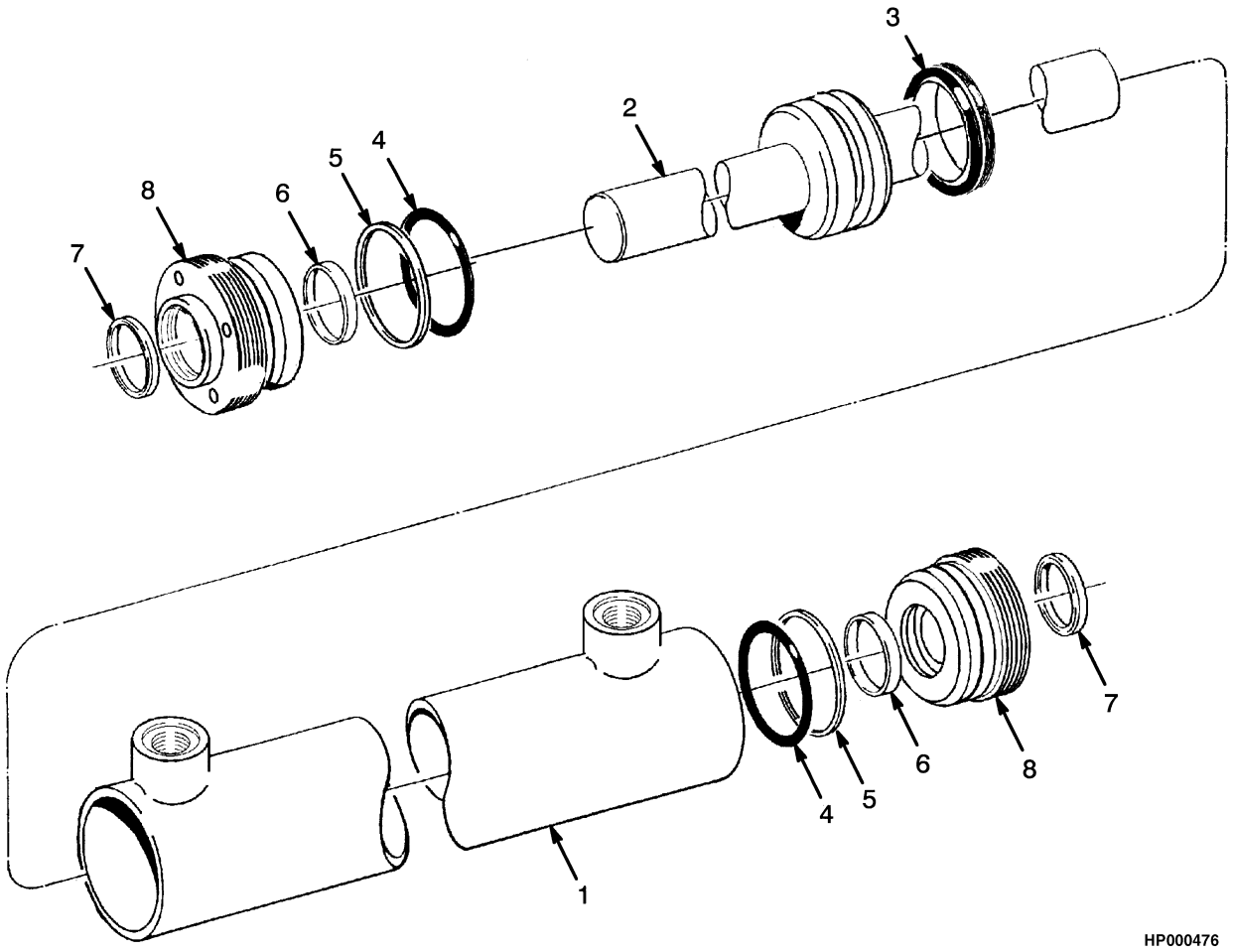

©2009 HYSTER COMPANY

SIDE-SHIFT CYLINDER

KEY:
A: H2.00-2.50XM
B: H3.00-3.20XM

ITEM	PART NO.	DESCRIPTION	QTY A	QTY B
	1360125	Cylinder Assy	1	..
	1360126	Sideshift Cylinder	..	1
1	2304345	Tube Wldmt-Cylinder	..	1
1	2311471	Tube Wldmt-Cylinder	1	..
2	2303634	Rod Assy	..	1
2	2309719	Rod Assy	1	..
3	1351184	Seal	..	1
3	2306755	Seal	1	..
4	55407	O-Ring	2	..
4	59229	O-Ring	..	2
5	153919	Back-Up Ring	2	..
5	615130	Back-Up Ring	..	2
6	1383037	Rod Seal	2	2
7	636851	Rod Wiper	2	2
8	2306283	Gland	..	2
8	2310768	Gland	2	..
	2311624	Kit-Seal	1	1
	2307647	Kit-Seal	1	1

©2009 HYSTER COMPANY

INTEGRAL SIDE-SHIFT CARRIAGE (FIGURE 12-5)
TWO STAGE LIMITED FREE-LIFT

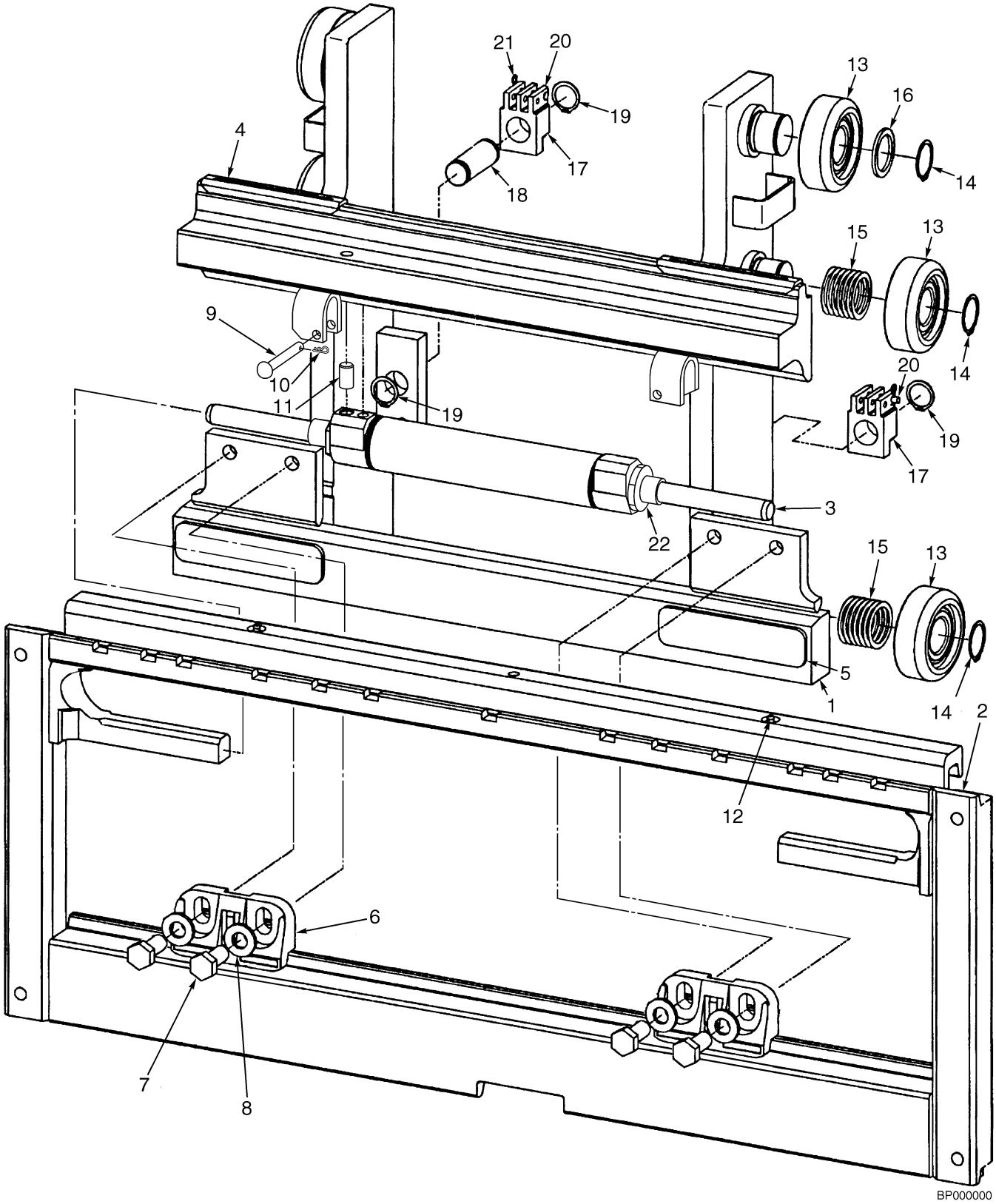

©2009 HYSTER COMPANY

INTEGRAL SIDE-SHIFT CARRIAGE
TWO STAGE LIMITED FREE-LIFT

KEY:
A: H2.00-2.50XM (B507)
B: H3.00-3.20XM (B562)

ITEM	PART NO.	DESCRIPTION	QTY A	QTY B
	1486178	Side-Shift Carriage (977 mm)	1	..
	1486182	Side-Shift Carriage (1067 mm)	1	..
	1486185	Side-Shift Carriage (1219 mm)	1	..
	1486188	Side-Shift Carriage (977 mm)	..	1
	1486191	Side-Shift Carriage (1067 mm)	..	1
	1486194	Side-Shift Carriage (1219 mm)	..	1
1	1488998	Carriage Wldmt (Inner) (977 mm)	1	..
1	1489002	Carriage Wldmt (Inner) (1067 mm, 1219 mm)	1	..
1	1488918	Carriage Wldmt (Inner) (977 mm)	..	1
1	1488967	Carriage Wldmt (Inner) (1067 mm, 1219 mm)	..	1
2	1489010	Carriage Wldmt (Outer) (977 mm)	1	..
2	1489011	Carriage Wldmt (Outer) (1067 mm)	1	..
2	1489012	Frame (Outer) (1219 mm)	1	..
2	1488974	Carriage Wldmt (Outer) (977 mm)	..	1
2	1488975	Carriage Wldmt (Outer) (1067 mm)	..	1
2	1488976	Carriage Wldmt (Outer) (1219 mm)	..	1
3	2043528	Sideshift Cylinder Assembly (☞Figure 12-8)	1	..
3	2043529	Sideshift Cylinder Assembly (☞Figure 12-8)	..	1
4	2043531	Bearing (Upper) (977 mm, 1067 mm, 1219 mm)	2	..
4	2046243	Bearing (Upper) (Bronze) (Service Option)	2	..
4	2043532	Bearing (Upper) (977 mm, 1067 mm, 1219 mm)	..	2
4	2046245	Bearing (Upper) (Bronze) (Service Option)	..	2
5	2043533	Bearing (Lower) (977 mm, 1067 mm, 1219 mm)	2	..
5	2046244	Bearing (Lower) (Bronze) (Service Option)	2	..
5	2043534	Bearing (Lower) (977 mm, 1067 mm, 1219 mm)	..	2
5	2046246	Bearing (Lower) (Bronze) (Service Option)	..	2
6	2043530	Hook (Lower)	2	2
6	2053668	Hook (Lower) (Bronze) (Service Option)	2	2
7	226458	Capscrew	4	4
8	296426	Washer	4	4
9	1401746	Pin	2	2
10	18832	Cotter Pin	2	2
10	18832	Cotter Pin	2	2
11	302487	Roll Pin	1	1
12	16041	Grease Fitting	2	2
13	1345219	Load Roller (110.5 mm)	6	6
14	12891	Snap Ring	6	6
15	1345263	Shim (0.508 mm)	28	28
16	366116	Spacer	6	6
17	1369344	Chain Anchor (Dual Hole)	..	2
17	1369345	Chain Anchor (Dual Hole)	2	..
17	1504010	Chain Anchor (Single Hole)	2	..
17	1504012	Chain Anchor (Single Hole)	..	2
18	1353408	Pin	2	2
18	317735	Pin (1219 mm)	2	..

©2009 HYSTER COMPANY

INTEGRAL SIDE-SHIFT CARRIAGE
TWO STAGE LIMITED FREE-LIFT

KEY:
A: H2.00-2.50XM (B507)
B: H3.00-3.20XM (B562)

ITEM	PART NO.	DESCRIPTION	QTY A	QTY B
19	131358	Snap Ring	4	4
20	1514866	Pin	2	2
21	15211	Cotter Pin	2	2
22	1498326	Shim	AR	AR

©2009 HYSTER COMPANY

NOTES

©2009 HYSTER COMPANY

INTEGRAL SIDE-SHIFT CARRIAGE (FIGURE 12-6)
THREE STAGE FULL FREE-LIFT

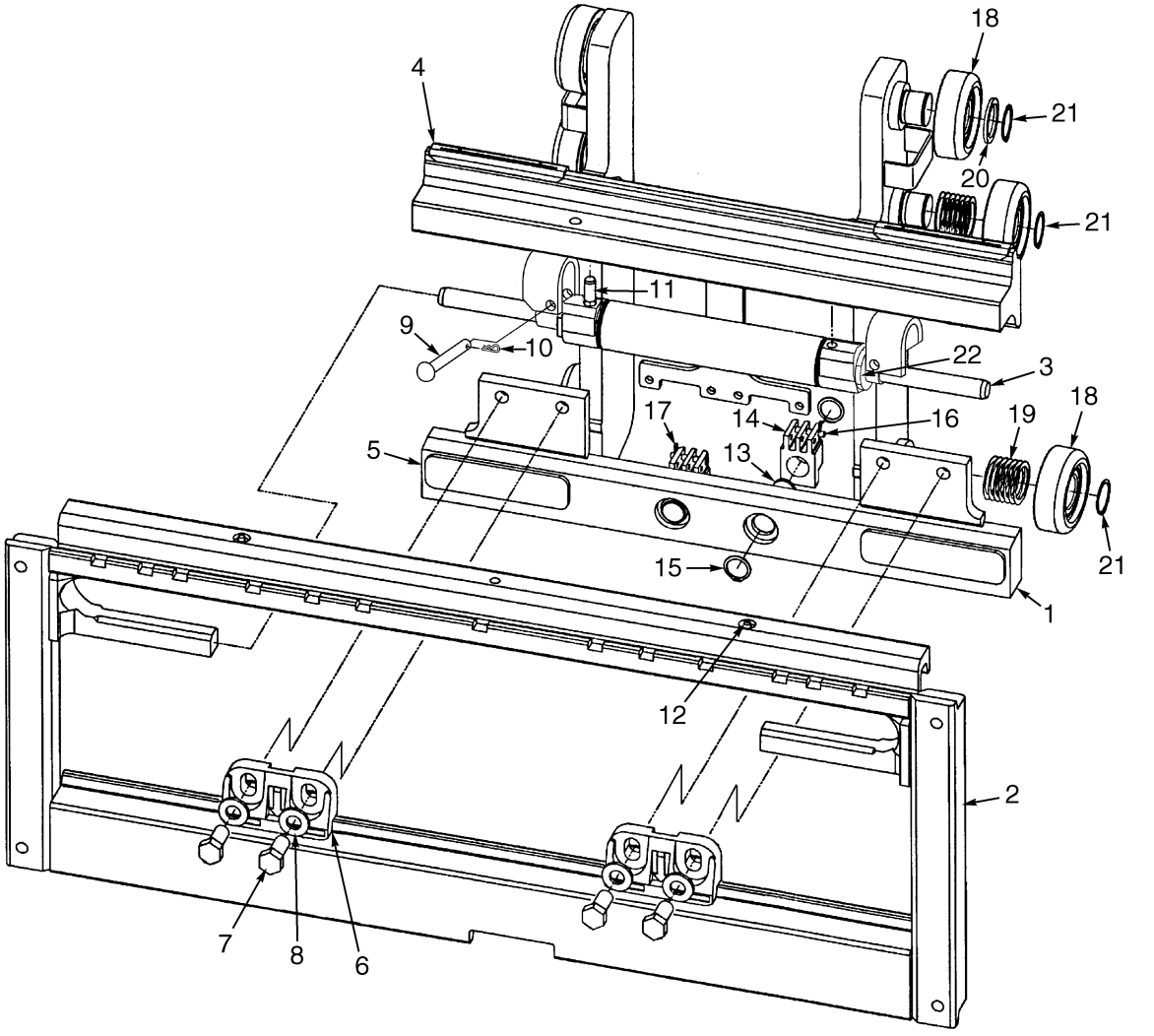

BP000001

©2009 HYSTER COMPANY

INTEGRAL SIDE-SHIFT CARRIAGE
THREE STAGE FULL FREE-LIFT

KEY:
A: H2.00-2.50XM (B508)
B: H3.00-3.20XM (B563)

ITEM	PART NO.	DESCRIPTION	QTY A	QTY B
	1486180	Side-Shift Carriage (977 mm)	1	..
	1486184	Side-Shift Carriage (1067 mm)	1	..
	1486187	Side-Shift Carriage (1219 mm)	1	..
	1486190	Side-Shift Carriage (977 mm)	..	1
	1486193	Side-Shift Carriage (1067 mm)	..	1
	1486196	Side-Shift Carriage (1219 mm)	..	1
1	1488966	Carriage Wldmt (Inner) (977 mm)	..	1
1	1488969	Carriage Wldmt (Inner) (1067 mm, 1219 mm)	..	1
1	1489000	Carriage Wldmt (Inner) (977 mm)	1	..
1	1489004	Carriage Wldmt (Inner) (1067 mm, 1219 mm)	1	..
2	1488974	Carriage Wldmt (Outer) (977 mm)	..	1
2	1488975	Carriage Wldmt (Outer) (1067 mm)	..	1
2	1488976	Carriage Wldmt (Outer) (1219 mm)	..	1
2	1489010	Carriage Wldmt (Outer) (977 mm)	1	..
2	1489011	Carriage Wldmt (Outer) (1067 mm)	1	..
2	1489012	Frame (Outer) (1219 mm)	1	..
3	2043528	Sideshift Cylinder Assembly (☞Figure 12-8)	1	..
3	2043529	Sideshift Cylinder Assembly (☞Figure 12-8)	..	1
4	2043531	Bearing (Upper) (977 mm, 1067 mm, 1219 mm)	2	..
4	2046243	Bearing (Upper) (Bronze) (Service Option)	2	..
4	2043532	Bearing (Upper) (977 mm, 1067 mm, 1219 mm)	..	2
4	2046245	Bearing (Upper) (Bronze) (Service Option)	..	2
5	2043533	Bearing (Lower) (977 mm, 1067 mm, 1219 mm)	2	..
5	2046244	Bearing (Lower) (Bronze) (Service Option)	2	..
5	2043534	Bearing (Lower) (977 mm, 1067 mm, 1219 mm)	..	2
5	2046246	Bearing (Lower) (Bronze) (Service Option)	..	2
6	2043530	Hook (Lower)	2	2
6	2053668	Hook (Lower) (Bronze) (Service Option)	2	2
7	226458	Capscrew	4	4
8	296426	Washer	4	4
9	1401746	Pin	2	2
10	18832	Cotter Pin	2	2
11	302487	Roll Pin	1	1
12	16041	Grease Fitting	2	2
13	317735	Pin	2	2
14	1369345	Chain Anchor (Dual Hole)	2	..
14	1369344	Chain Anchor (Dual Hole)	..	2
14	1504012	Chain Anchor (Single Hole)	..	2
14	1504010	Chain Anchor (Single Hole)	2	..
15	131358	Snap Ring	4	4
16	1514866	Pin	2	2
17	15211	Cotter Pin	2	2
18	1333399	Load Roller	6	6
19	129387	Shim (0.508 mm)	28	28
20	366115	Spacer	6	6

©2009 HYSTER COMPANY

INTEGRAL SIDE-SHIFT CARRIAGE
THREE STAGE FULL FREE-LIFT

KEY:
A: H2.00-2.50XM (B508)
B: H3.00-3.20XM (B563)

ITEM	PART NO.	DESCRIPTION	QTY A	QTY B
21	58901	Snap Ring	6	6
22	1498326	Shim	AR	AR

©2009 HYSTER COMPANY

NOTES

©2009 HYSTER COMPANY

INTEGRAL SIDE-SHIFT CARRIAGE (FIGURE 12-7)
TWO STAGE FULL FREE-LIFT

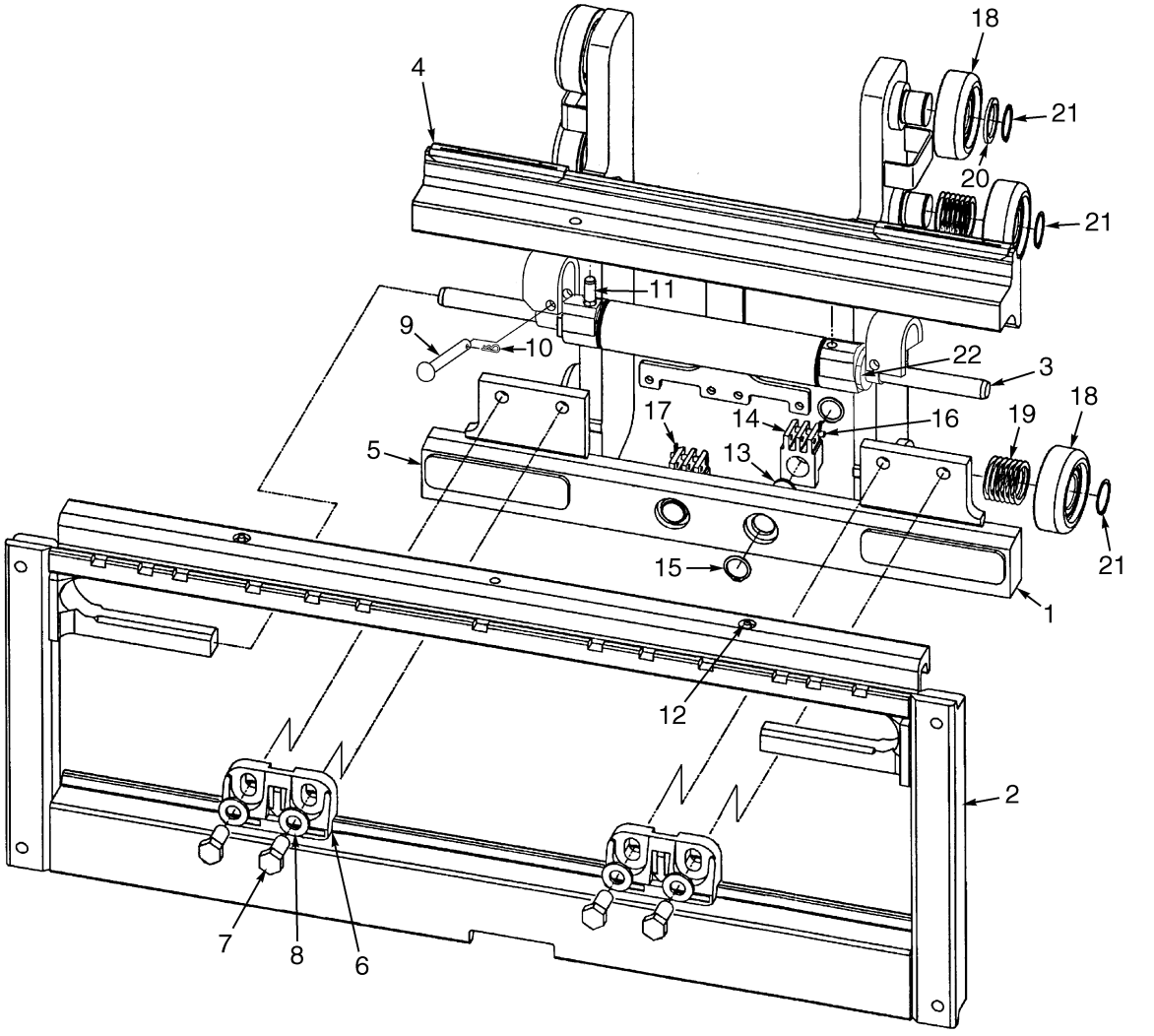

©2009 HYSTER COMPANY

INTEGRAL SIDE-SHIFT CARRIAGE
TWO STAGE FULL FREE-LIFT

KEY:
A: H2.00-2.50XM (B509)
B: H3.00-3.20XM (B564)

ITEM	PART NO.	DESCRIPTION	QTY A	QTY B
	1486179	Side-Shift Carriage (977 mm)	1	..
	1486183	Side-Shift Carriage (1067 mm)	1	..
	1486186	Side-Shift Carriage (1219 mm)	1	..
	1486189	Side-Shift Carriage (977mm)	..	1
	1486192	Side-Shift Carriage (1067 mm)	..	1
	1486195	Side-Shift Carriage (1219 mm)	..	1
1	1488965	Carriage Wldmt (Inner) (977 mm)	..	1
1	1488968	Carriage Wldmt (Inner) (1067 mm, 1219 mm)	..	1
1	1488999	Carriage Wldmt (Inner) (977 mm)	1	..
1	1489003	Carriage Wldmt (Inner) (1067 mm, 1219 mm)	1	..
2	1488974	Carriage Wldmt (Outer) (977 mm)	..	1
2	1488975	Carriage Wldmt (Outer) (1067 mm)	..	1
2	1488976	Carriage Wldmt (Outer) (1219 mm)	..	1
2	1489010	Carriage Wldmt (Outer) (977 mm)	1	..
2	1489011	Carriage Wldmt (Outer) (1067 mm)	1	..
2	1489012	Frame (Outer) (1219 mm)	1	..
3	2043528	Sideshift Cylinder Assembly (☞Figure 12-8)	1	..
3	2043529	Sideshift Cylinder Assembly (☞Figure 12-8)	..	1
4	2043531	Bearing (Upper)	2	..
4	2046243	Bearing (Upper) (Bronze) (Service Option)	2	..
4	2043532	Bearing (Upper)	..	2
4	2046245	Bearing (Upper) (Bronze) (Service Option)	..	2
5	2043533	Bearing (Lower)	2	..
5	2046244	Bearing (Lower) (Bronze) (Service Option)	2	..
5	2043534	Bearing (Lower)	..	2
5	2046246	Bearing (Lower) (Bronze) (Service Option)	..	2
6	2043530	Hook (Lower)	2	2
6	2053668	Hook (Lower) (Bronze) (Service Option)	2	2
7	226458	Capscrew	4	4
8	296426	Washer	4	4
9	1401746	Pin	2	2
10	18832	Cotter Pin	2	2
11	302487	Roll Pin	1	1
12	16041	Grease Fitting	2	2
13	317735	Pin	2	2
14	1369345	Chain Anchor (Dual Hole)	2	..
14	1369344	Chain Anchor (Dual Hole)	..	2
14	1504012	Chain Anchor (Single Hole)	..	2
14	1504010	Chain Anchor (Single Hole)	2	..
15	131358	Snap Ring	4	4
16	1514866	Pin	2	2
17	15229	Cotter Pin	2	2
18	1345219	Load Roller (110.5 mm)	6	6
19	1345263	Shim (0.508 mm)	28	28
20	366116	Spacer	6	6

©2009 HYSTER COMPANY

INTEGRAL SIDE-SHIFT CARRIAGE
TWO STAGE FULL FREE-LIFT

KEY:
A: H2.00-2.50XM (B509)
B: H3.00-3.20XM (B564)

ITEM	PART NO.	DESCRIPTION	QTY A	QTY B
21	12891	Snap Ring	6	6
22	1498326	Shim	AR	AR

©2009 HYSTER COMPANY

NOTES

©2009 HYSTER COMPANY

INTEGRAL SIDE-SHIFT CYLINDER (FIGURE 12-8)

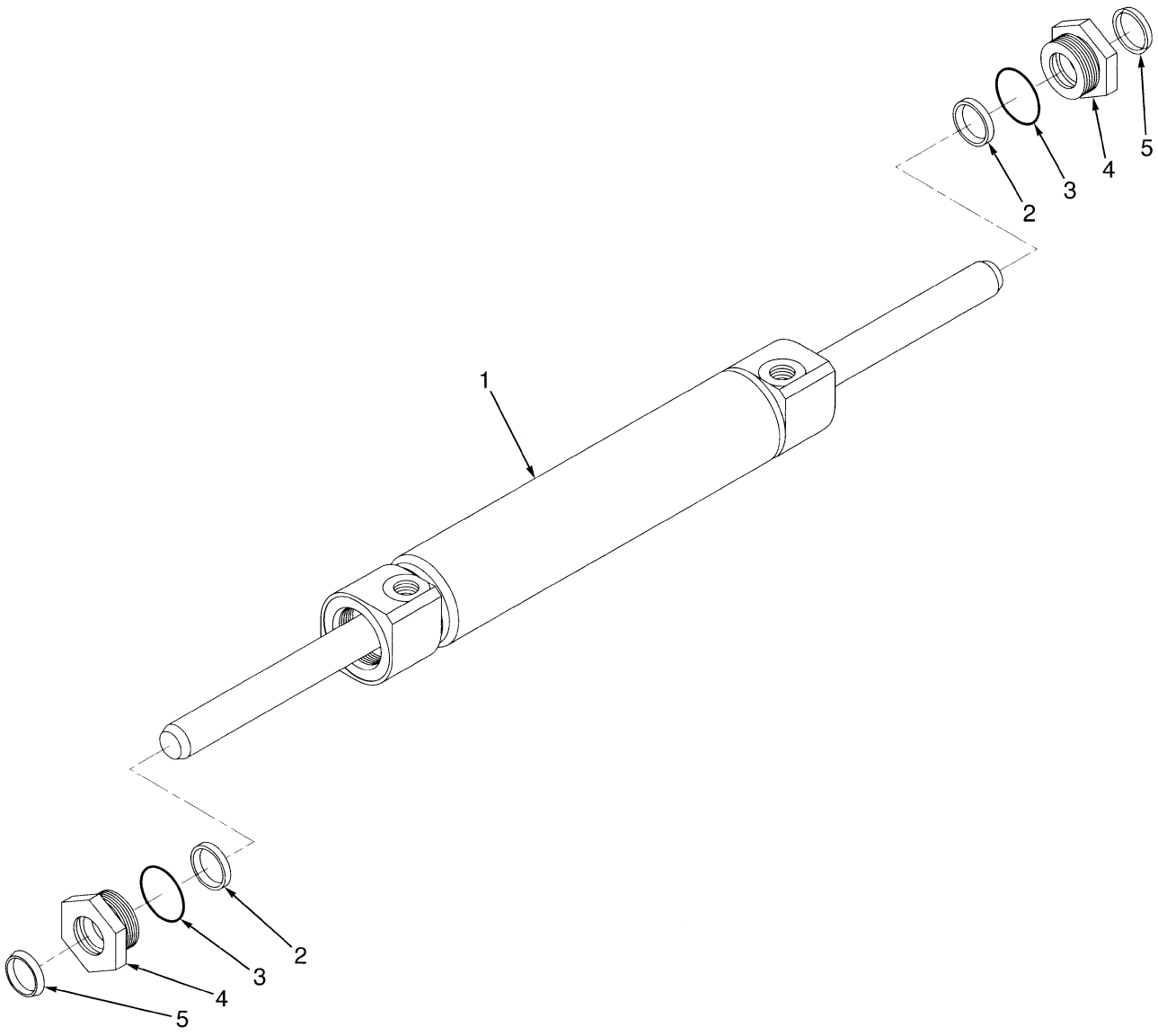

©2009 HYSTER COMPANY

INTEGRAL SIDE-SHIFT CYLINDER

KEY:
A: H2.00-2.50XM (B507, B508, B509)
B: H3.00-3.20XM (B562, B563, B564)

ITEM	PART NO.	DESCRIPTION	QTY A	QTY B
	2043528	Sideshift Cylinder Assembly	1	..
	2043529	Sideshift Cylinder Assembly	..	1
1	1489016	Sideshift Cylinder	1	..
1	1489017	Sideshift Cylinder	..	1
2	1489037	Rod Seal	2	2
3	1489035	O-Ring	2	2
4	1498325	Retainer	2	2
5	1489039	Rod Wiper	2	2
6	1503096	Kit-Seal	1	1

©2009 HYSTER COMPANY

INTEGRAL SIDE-SHIFT (FIGURE 12-9)
HYDRAULIC HOSES — TWO STAGE LIMITED FREE-LIFT

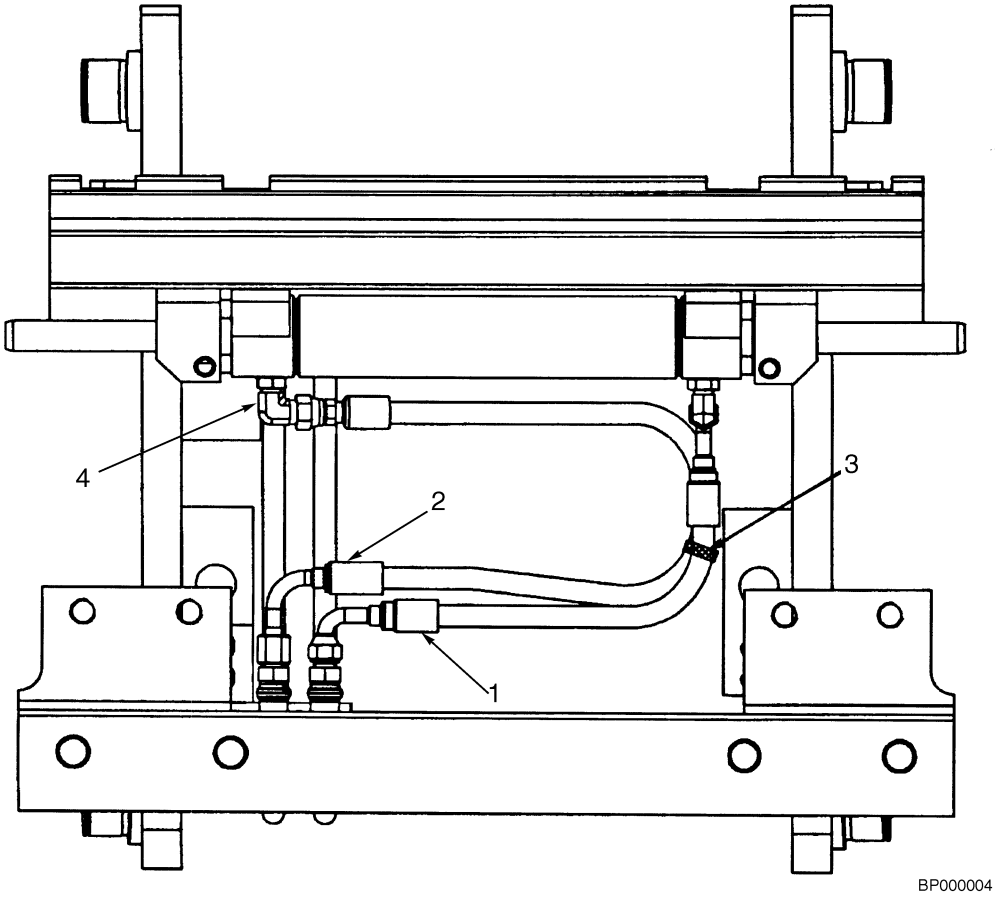

KEY:
A: 2.00-2.50XM (B507)
B: 3.00-3.20XM (B562)

ITEM	PART NO.	DESCRIPTION	QTY A	QTY B
	1486178	Side-Shift Carriage (977 mm)	1	..
	1486182	Side-Shift Carriage (1067 mm)	1	..
	1486185	Side-Shift Carriage (1219 mm)	1	..
	1486188	Side-Shift Carriage (977 mm)	..	1
	1486191	Side-Shift Carriage (1067 mm)	..	1
	1486194	Side-Shift Carriage (1219 mm)	..	1
1	1503478	Hose Assy	1	..
1	1503479	Hose Assy	..	1
2	1503476	Hose Assy	1	..
2	1489034	Hose Assy	..	1
3	114312	Strap Clamp	1	1
4	16558	Fitting	2	2
4	16483	O-Ring	1	1

©2009 HYSTER COMPANY

INTEGRAL SIDE-SHIFT (FIGURE 12-10)
HYDRAULIC HOSES — THREE STAGE FULL FREE-LIFT

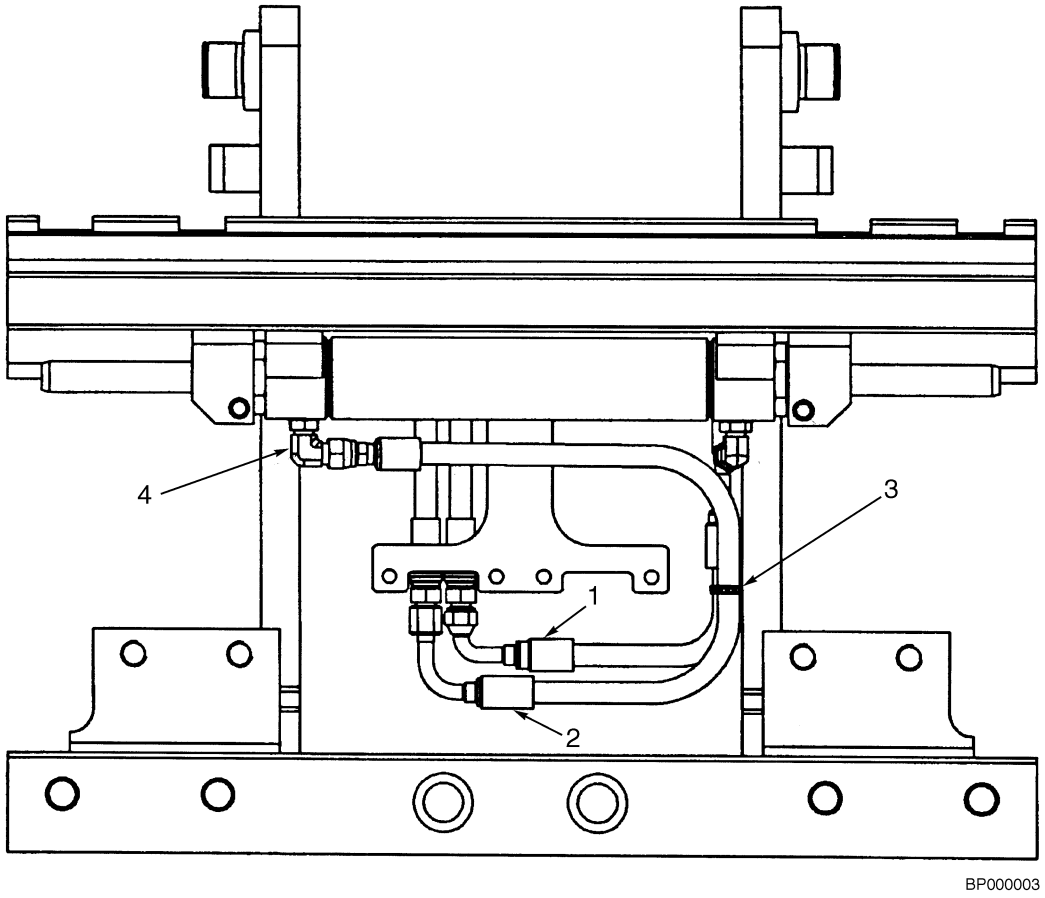

KEY:
A: H2.00-2.50XM (B508)
B: H3.00-3.20XM (B563)

ITEM	PART NO.	DESCRIPTION	QTY A	QTY B
	1486180	Side-Shift Carriage (977 mm)	1	..
	1486184	Side-Shift Carriage (1067 mm)	1	..
	1486187	Side-Shift Carriage (1219 mm)	1	..
	1486190	Side-Shift Carriage (977 mm)	..	1
	1486193	Side-Shift Carriage (1067 mm)	..	1
	1486196	Side-Shift Carriage (1219 mm)	..	1
1	1503481	Hose Assy	1	..
1	1503482	Hose Assy	..	1
2	1503474	Hose Assy	1	..
2	1503476	Hose Assy	..	1
3	114312	Strap Clamp	1	1
4	16558	Fitting	2	2
4	16483	O-Ring	1	1

©2009 HYSTER COMPANY

INTEGRAL SIDE-SHIFT (FIGURE 12-11)
HYDRAULIC HOSES — TWO STAGE FULL FREE-LIFT

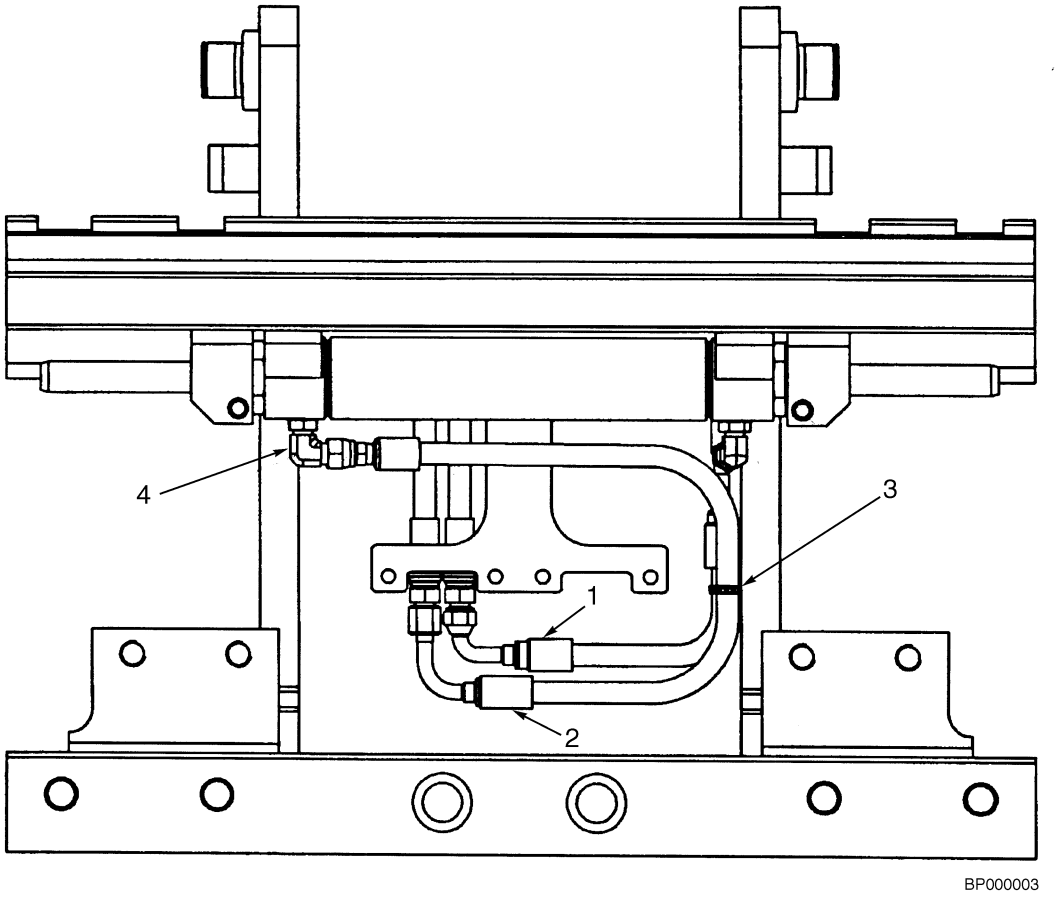

KEY:
A: H2.00-2.50XM (B509)
B: H3.00-3.20XM (B564)

ITEM	PART NO.	DESCRIPTION	QTY A	QTY B
	1486179	Side-Shift Carriage (977 mm)	1	..
	1486183	Side-Shift Carriage (1067 mm)	1	..
	1486186	Side-Shift Carriage (1219 mm)	1	..
	1486189	Side-Shift Carriage (977mm)	..	1
	1486192	Side-Shift Carriage (1067 mm)	..	1
	1486195	Side-Shift Carriage (1219 mm)	..	1
1	1503481	Hose Assy	1	..
1	1503482	Hose Assy	..	1
2	1489050	Hose Assy	1	..
2	1503476	Hose Assy	..	1
3	114312	Strap Clamp	1	1
4	16558	Fitting	2	2
4	16483	O-Ring	1	1

©2009 HYSTER COMPANY

NOTES

©2009 HYSTER COMPANY

AUXILIARY TUBES (FIGURE 12-12)
TWO STAGE LIMITED FREE-LIFT

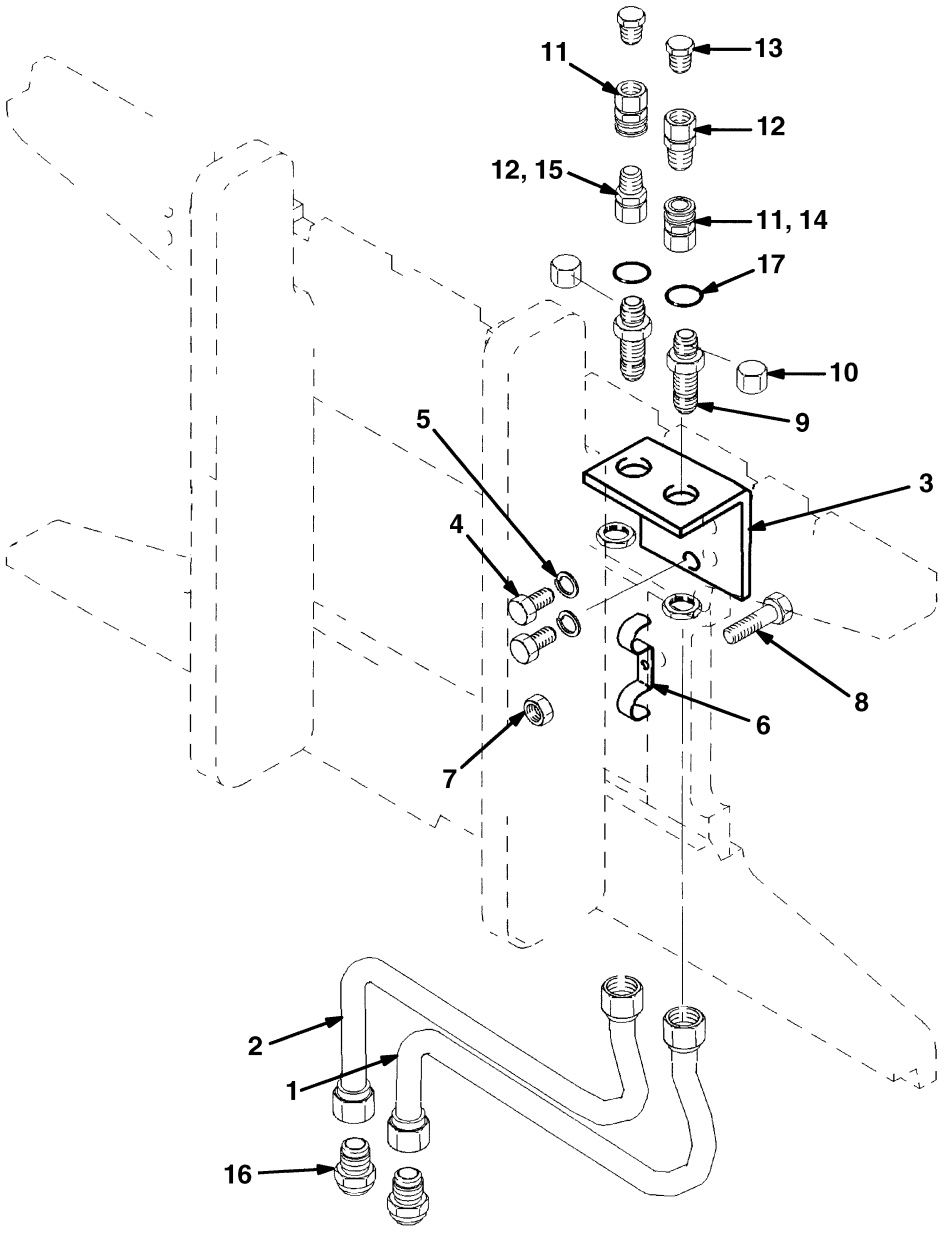

BP000080

©2009 HYSTER COMPANY

AUXILIARY TUBES
TWO STAGE LIMITED FREE-LIFT

KEY:
A: Three Function
B: Four Function

ITEM	PART NO.	DESCRIPTION	QTY A	QTY B
1	1370489	Tube Assy	1	..
1	**b** 1377935	Tube Assy	1	..
1	1370493	Tube Assy	1	..
1	**b** 1377937	Tube Assy	1	..
2	1370488	Tube Assy	1	..
2	**b** 1377936	Tube Assy	1	..
2	1370492	Tube Assy	1	..
2	**b** 1377938	Tube Assy	1	..
2	1370490	Tube Assy	..	1
2	1370495	Tube Assy	..	1
2	1370491	Tube Assy	..	1
2	1370494	Tube Assy	..	1
3	**a** 1370479	Bracket	1	1
3	**b** 1377925	Bracket	1	1
4	**a** 136681	Capscrew	2	2
5	**a** 292681	Lockwasher	2	2
6	**a** 114369	Clamp	1	1
6	**b** 1377928	Clamp	1	1
7	**a** 313828	Nut	1	1
8	**a** 296484	Screw	1	1
9	**a** 16447	Fitting	2	2
9	**b** 16448	Fitting	2	2
10	**a** 16693	Nut	2	2
10	**b** 16925	Fitting	2	2
11	1362422	Quick Disconnect Fitting	2	2
12	1362423	Fitting	2	2
13	16933	Fitting	2	2
14	229348	Dust Cap	1	1
15	229349	Plug	1	1
16	16483	O-Ring	2	2
16	**b** 1377945	Fitting	2	2
	1362416	Kit-Aux Tube Extension (B507)	1	1
	b 1377959	Kit-Aux Tube Extension (B507)	1	1
	1362417	Kit-Aux Tube Extension (B507)	1	1
	1362418	Kit-Aux Tube Extension (B562)	1	1
	b 1377960	Kit-Aux Tube Extension (B562)	1	1
	1362419	Kit-Aux Tube Extension (B562)	1	1
	1362426	Kit-Quick Disconnect Fitting	1	1

FOOTNOTES:

a Included in Kit

b With Rotator

©2009 HYSTER COMPANY

AUXILIARY TUBES (FIGURE 12-13)

TWO AND THREE STAGE FULL FREE-LIFT — STANDARD SIDE-SIFT

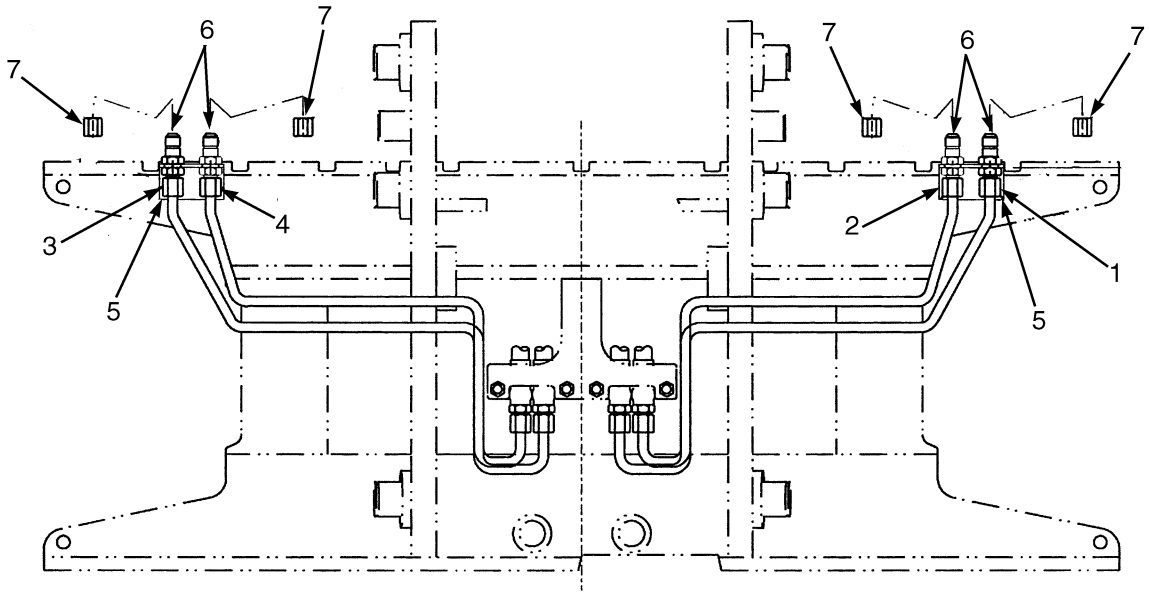

BP000450

©2009 HYSTER COMPANY

AUXILIARY TUBES

TWO AND THREE STAGE FULL FREE-LIFT – STANDARD SIDE-SIFT

KEY:
A: Three Function
B: Four Function

ITEM	PART NO.	DESCRIPTION	QTY A	QTY B
1	**ab** 1370483	Tube Assy	1	..
1	**ef** 1390350	Tube Assy	1	..
1	**ab** 1370481	Tube Assy	..	1
1	**ef** 1390352	Tube Assy	..	1
1	**cd** 1370486	Tube Assy	1	..
1	**gh** 1390355	Tube Assy	1	..
1	**cd** 1370487	Tube Assy	..	1
1	**gh** 1390356	Tube Assy	..	1
2	**ab** 1370482	Tube Assy	1	..
2	**ef** 1390351	Tube Assy	1	..
2	**ab** 1370480	Tube Assy	..	1
2	**ef** 1390353	Tube Assy	..	1
2	**cd** 1370484	Tube Assy	1	..
2	**gh** 1390354	Tube Assy	1	..
2	**cd** 1370487	Tube Assy	..	1
2	**gh** 1390357	Tube Assy	..	1
3	1462411	Bracket	1	1
4	16447	Fitting	2	2
5	16693	Nut	2	2
6	16483	O-Ring	4	4
7	1483663	Quick Disconnect Fitting	2	2
8	1483661	Dust Cap	1	1
9	16933	Fitting	2	2
9	1483664	Fitting	2	2
	ab 1362406	Kit-Aux Tube Extension	1	..
	ef 1381794	Kit-Aux Tube Extension	1	..
	ab 1362407	Kit-Aux Tube Extension	..	1
	ef 1381795	Kit-Aux Tube Extension	..	1
	cd 1362408	Kit-Aux Tube Extension	1	..
	cd 1381796	Kit-Aux Tube Extension	1	..
	cd 1362409	Kit-Aux Tube Extension	..	1
	gh 1381797	Kit-Aux Tube Extension	..	1
	1362426	Kit-Quick Disconnect Fitting	1	1

FOOTNOTES:

a → S/N B508B21470
b → S/N B509B03115
c → S/N B563B21450
d → S/N B564B02573
e S/N B508B21471 →
f S/N B509B03116 →
g S/N B563B21451 →
h S/N B564B02574 →

©2009 HYSTER COMPANY

AUXILIARY TUBES (FIGURE 12-14)

TWO AND THREE STAGE FULL FREE-LIFT — INTEGRAL SIDE-SHIFT

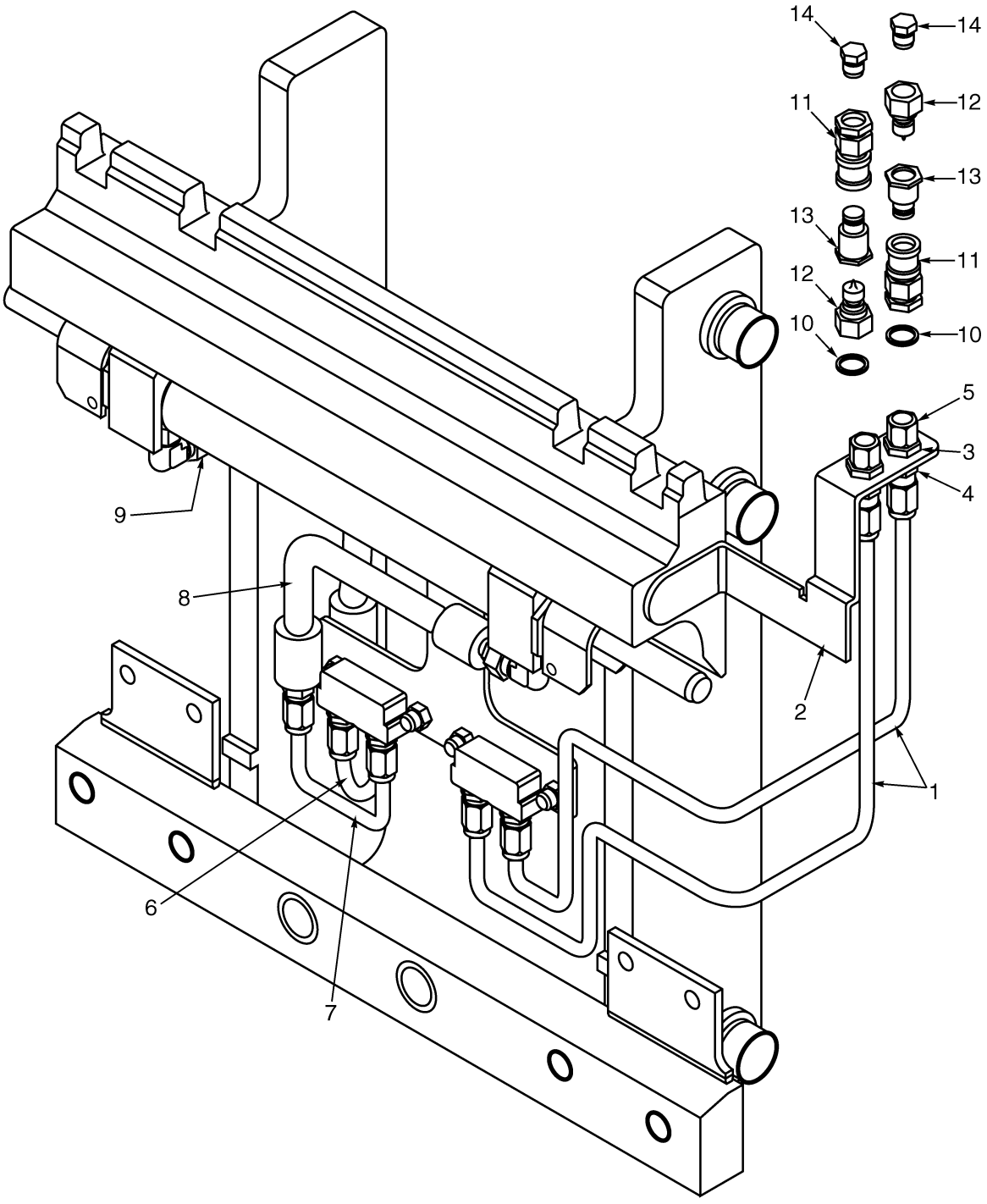

BP000076

©2009 HYSTER COMPANY

AUXILIARY TUBES

TWO AND THREE STAGE FULL FREE-LIFT – INTEGRAL SIDE-SHIFT

KEY:
A: Two Stage Full Free-Lift (B509, B564)
B: Three Stage Full Free-Lift (B508, B563)

ITEM	PART NO.	DESCRIPTION	QTY A	QTY B
	1518233	Kit-Side-Shift Carriage (Class II) (977 mm)	1	..
	1518234	Kit-Side-Shift Carriage (Class II) (977 mm)	..	1
	1518236	Kit-Side-Shift Carriage (Class II) (1067 mm)	1	..
	1518237	Kit-Side-Shift Carriage (Class II) (1067 mm)	..	1
	1518238	Kit-Side-Shift Carriage (Class III) (1219 mm)	1	..
	1518239	Kit-Side-Shift Carriage (Class III) (1219 mm)	..	1
	1518240	Kit-Side-Shift Carriage (Class III) (977 mm)	1	..
	1518241	Kit-Side-Shift Carriage (Class III) (977 mm)	..	1
	1518991	Kit-Side-Shift Carriage (Class III) (1372 mm)	1	..
	1518992	Kit-Side-Shift Carriage (Class III) (1372 mm)	..	1
1	**b** 1517448	Tube	1	1
1	**a** 1517452	Tube	1	1
1	**c** 1518249	Tube Assy	1	1
1	**e** 1518251	Tube Assy	1	1
1	**d** 1518253	Tube Assy	1	1
1	**b** 1517449	Tube	1	1
1	**a** 1517453	Tube	1	1
1	**c** 1518250	Tube Assy	1	1
1	**e** 1518252	Tube Assy	1	1
1	**d** 1518254	Tube Assy	1	1
2	1517441	Bracket	1	1
3	16447	Fitting	2	2
4	14760	Fitting	2	2
5	16693	Nut	2	2
6	1381765	Tube Assy	1	1
7	1381766	Tube Assy	1	1
8	1390365	Hose Assy	1	1
9	1390366	Hose Assy	2	2
10	16483	O-Ring	2	2
11	1483663	Quick Disconnect Fitting	2	2
12	1483664	Fitting	2	2
13	1483661	Dust Cap	2	2
14	16933	Fitting	2	2
	1518219	Kit-Quick Disconnect Fitting	2	2

FOOTNOTES:

a B508/B509 Class II, 1067 mm Carriage
b B508/B509 Class II, 977 mm Carriage
c B563/B564 Class III, 1219 mm Carriage
d B563/B564 Class III, 1372 mm Carriage
e B563/B564 Class III, 977 mm Carriage

©2009 HYSTER COMPANY

ROTATOR AUXILIARY TUBES (FIGURE 12-15)
TWO AND THREE STAGE FULL FREE-LIFT

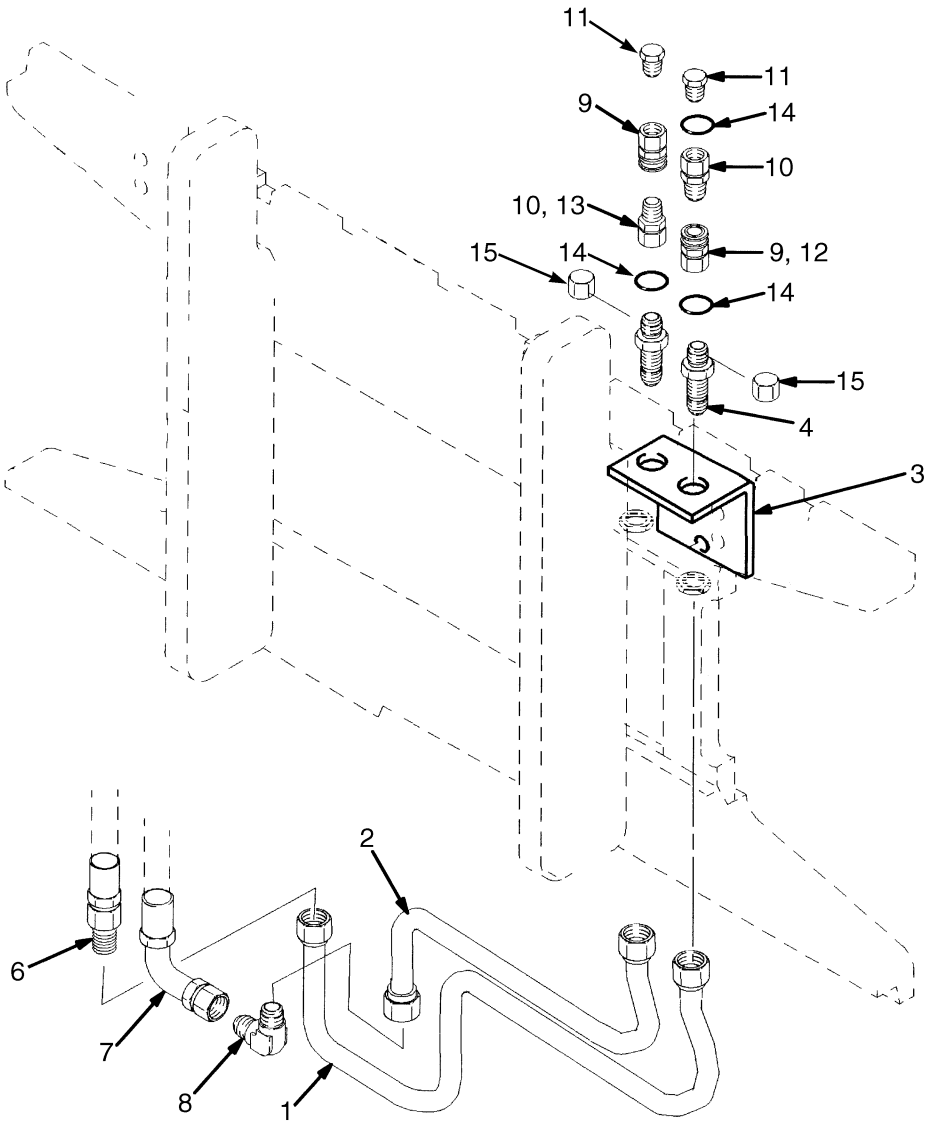

HP000861

©2009 HYSTER COMPANY

ROTATOR AUXILIARY TUBES
TWO AND THREE STAGE FULL FREE-LIFT

KEY:
A: Class II (B508/B509)
B: Class III (B563/B564)

ITEM	PART NO.	DESCRIPTION	QTY A	QTY B
1	1390358	Tube Assy	1	..
1	1390360	Tube Assy	..	1
2	1390359	Tube Assy	1	..
2	1390361	Tube Assy	..	1
3	1465875	Bracket	1	1
4	16448	Fitting	2	2
5	16925	Fitting	2	2
6	**a** 1483846	Fitting	1	1
6	**b** 316879	Fitting	1	1
7	**a** 1377949	Fitting	1	1
7	**b** 1377948	Fitting	1	1
8	14480	Fitting	1	1
9	1377953	Quick Disconnect Fitting	2	2
10	1377954	Fitting	2	2
11	17321	Fitting	2	2
12	181298	Dust Cap	1	1
13	181266	Dust Cap	1	1
14	16484	O-Ring	4	4
	cd 1381778	Kit-Aux Tube Extension	1	..
	gh 1381798	Kit-Aux Tube Extension	1	..
	ef 1381779	Kit-Aux Tube Extension	..	1
	ij 1381799	Kit-Aux Tube Extension	..	1
	1377952	Kit-Quick Disconnect Fitting	1	1

FOOTNOTES:

a Use With Parker Hoses
b Use With Synflex Hoses
c → S/N B508B21470
d → S/N B509B03115
e → S/N B563B21450
f → S/N B564B02573
g S/N B508B21471 →
h S/N B509B03116 →
i S/N B563B21451 →
j S/N B564B02574 →

©2009 HYSTER COMPANY

LOAD BACKREST EXTENSION (FIGURE 12-16)

48 IN. (1220 MM) — H2.00-2.50 XM

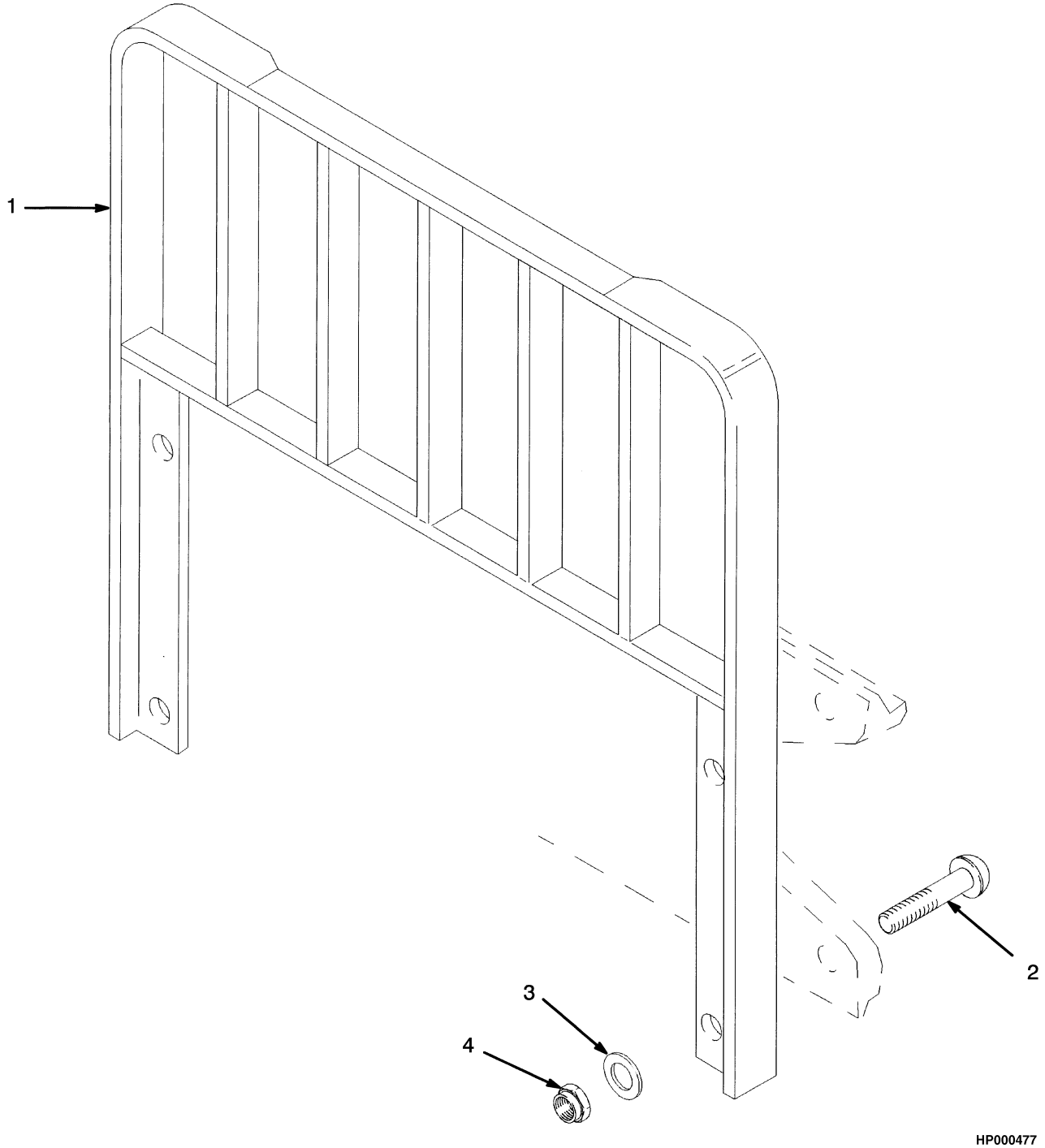

©2009 HYSTER COMPANY

LOAD BACKREST EXTENSION

48 IN. (1220 MM) – H2.00-2.50 XM

ITEM	PART NO.	DESCRIPTION	QTY
1	1376338	Load Backrest (1219 mm)	1
2	1343990	Capscrew	4
3	221771	Washer	4
3	**a** 296423	Washer	4
4	300937	Nut	4

FOOTNOTES:

a Optional

©2009 HYSTER COMPANY

TIRE AND WHEEL (FIGURE 12-17)

DRIVE WHEEL — 5-IN. RIM

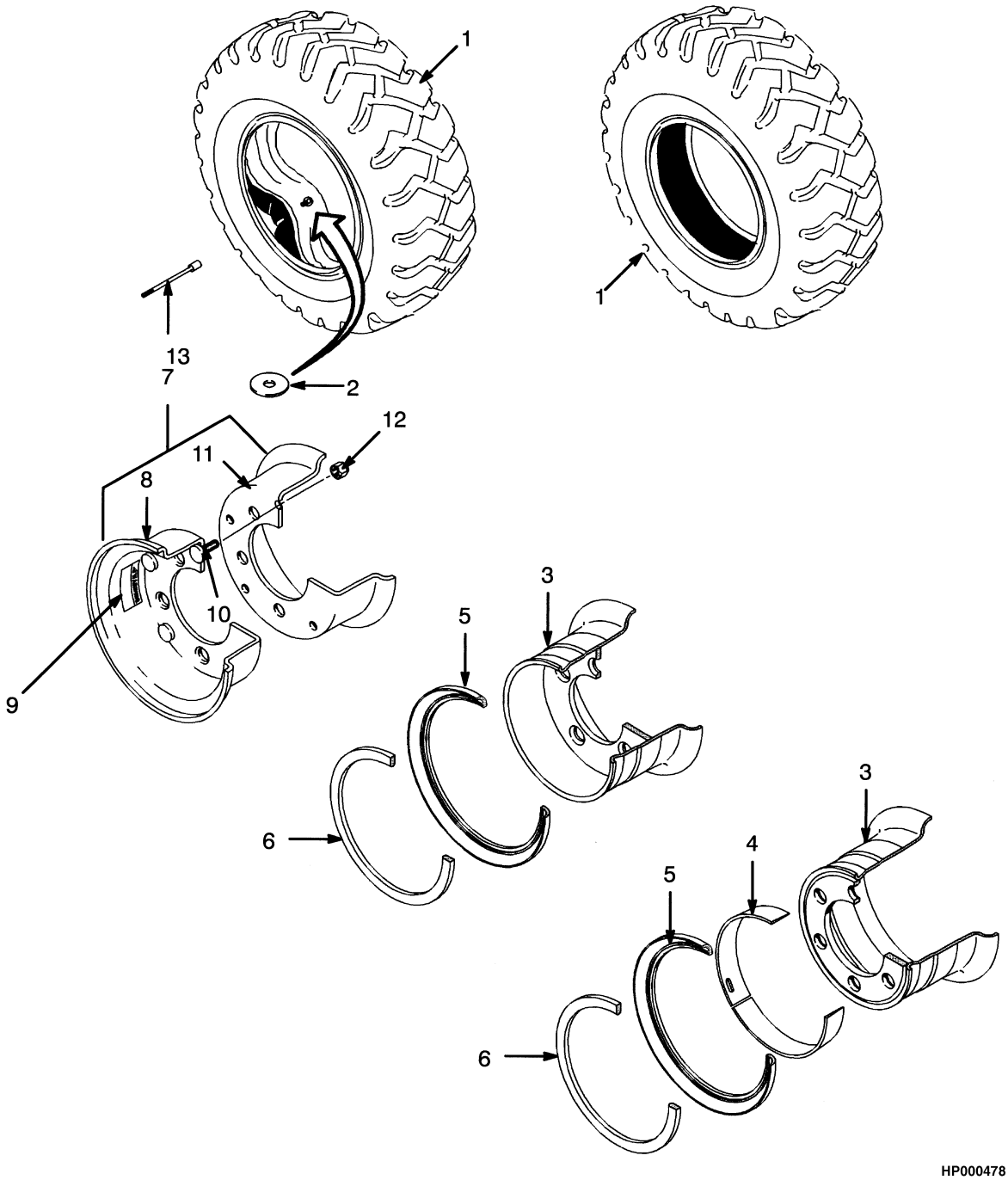

©2009 HYSTER COMPANY

TIRE AND WHEEL
DRIVE WHEEL – 5-IN. RIM

KEY:
A: H2.00-2.50XM (Single, 7.00 x 12)
B: H2.00-2.50XM (Wide, 7.00 x 12)
C: H2.00-3.20XM (Dual, 7.00 x 12)

ITEM	PART NO.	DESCRIPTION	QTY A	QTY B	QTY C
1	1511318	Wheel and Tire (Solid Pneumatic)	2	..	..
1	1511320	Wheel and Tire (Solid Pneumatic)	..	2	..
1	**a** 174209	Solid Pneumatic Tire	2	2	4
1	1511319	Wheel and Tire (12 PR)	..	2	..
1	130619	Tire Flap (Standard)	2	2	4
1	45736	Tire Flap (With Flap)	1	1	1
1	45737	Tire Flap	1	1	1
1	1367442	Tire Flap (Premium)	2	2	4
1	1367446	Tire Flap	1	1	1
1	45737	Tire Flap	1	1	1
1	1511910	Wheel and Tire (Radial)	..	2	..
1	1337743	Pneumatic Tire (Michelin XMZ) (Radial)	2	2	4
1	1358179	Pneumatic Tire	1	1	1
1	1358190	Tube	1	1	1
1	1511911	Wheel and Tire (Radial)	..	2	..
1	1511915	Wheel and Tire (Radial)	2	..	..
1	1471829	Pneumatic Tire (Michelin XZM) (Radial) (Tubeless) (Optional)	2	2	4
1	1471591	Tubeless Bead Seal	1	1	1
1	1358179	Pneumatic Tire	1	1	1
1	1471922	Tubeless Bead Seal Valve	1	1	1
2	**b** 1376007	Washer (Valve Stem)	2	2	4
3	**b** 1347190	Rim	2	..	4
3	**b** 329064	Rim	..	2	..
3	**c** 1347191	Rim	2	..	4
3	**c** 343829	Rim	..	2	..
4	806556	Shoulder Ring	1	1	1
5	**c** 161890	Wheel Side Ring	1	1	1
6	**c** 161889	Wheel Lock Ring	1	1	1
7	377846	Wheel Assy (2-Piece Rim)	2	..	4
8	377844	Rim (Outer)	1	..	1
9	1391295	Label (Warning)	2	..	2
10	377841	Bolt	6	..	6
11	377845	Wheel Assy (Inner)	1	..	1
12	53163	Locknut	6	..	6
13	326477	Extension (Extension)	..	..	1

FOOTNOTES:

a Do Not Use with 2-Piece Rims
b Required on Radial Tires
c Standard on Part Number 174209; Otherwise Optional

©2009 HYSTER COMPANY

TIRE AND WHEEL (FIGURE 12-18)

DRIVE WHEEL — 7-IN. RIM

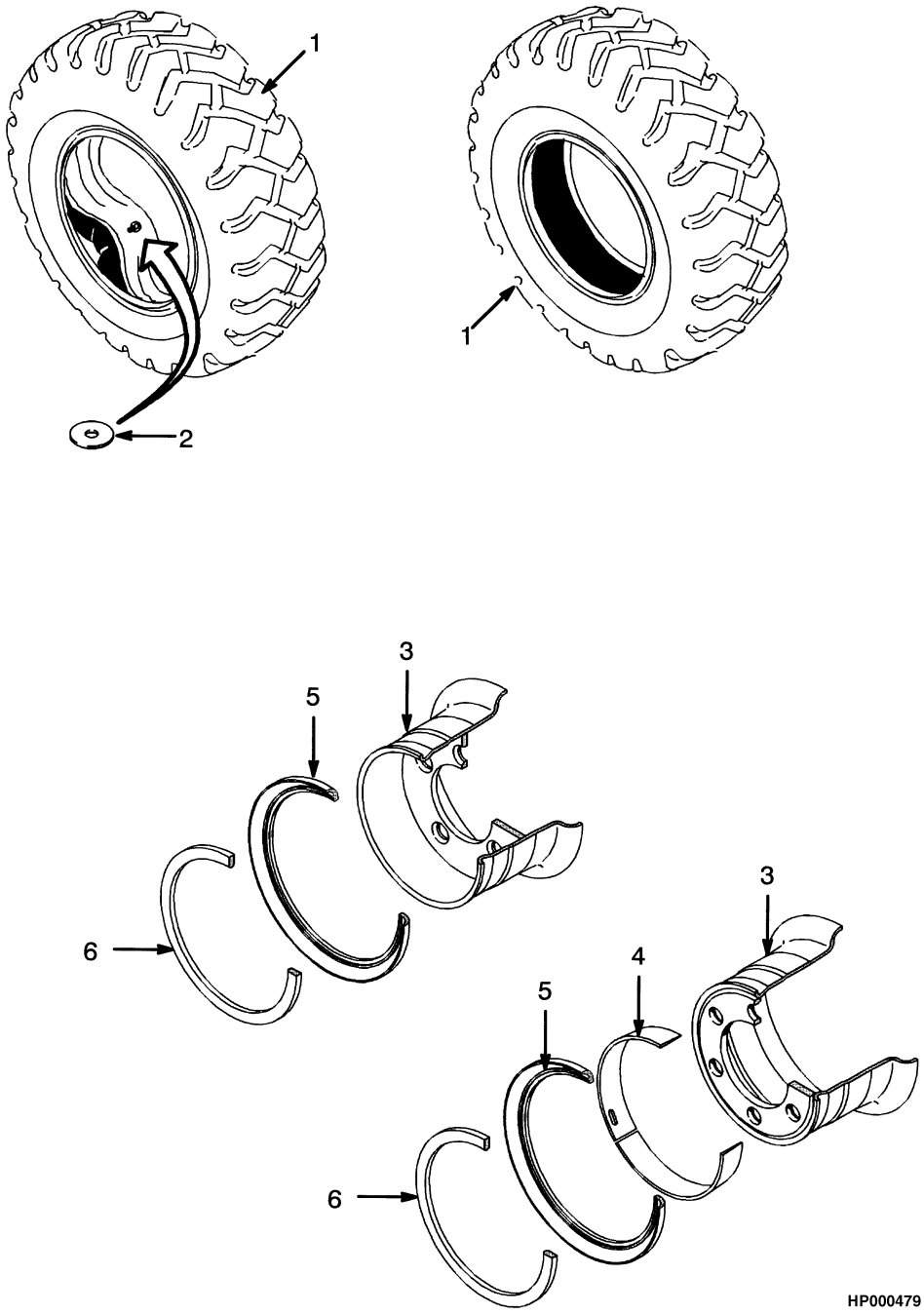

©2009 HYSTER COMPANY

TIRE AND WHEEL
DRIVE WHEEL – 7-IN. RIM

KEY:
A: H2.00-3.20XM (Single, 28 x 9-15)
B: H2.00-3.20XM (Wide, 28 x 9-15)

ITEM	PART NO.	DESCRIPTION	QTY A	QTY B
1	**c** 174211	Tire	2	2
1	145096	Tire Flap (Pneumatic) (12 PR)	2	2
1	145096	Tire Flap (Standard)	1	1
1	145097	Tire Flap	1	1
1	**a** 1367443	Tire Flap (Premium)	2	2
1	145157	Tire Flap	1	1
1	1367447	Tire Flap	2	2
1	145157	Tire Flap	1	1
1	**a** 1357300	Pneumatic Tire (Radial)	2	2
1	1358183	Pneumatic Tire (Michelin XZM)	1	1
1	1358194	Tube	1	1
1	1471835	Pneumatic Tire (Radial) (Optional)	1	1
1	1462617	Tire Flap	1	1
1	1358183	Pneumatic Tire (Michelin XZM)	2	2
1	1471922	Tubeless Bead Seal Valve	1	1
2	**b** 1376007	Washer (Valve Stem)	2	2
3	1334813	Wheel Assy	2	..
3	381002	Rim	..	2
3	**c** 1334815	Rim	2	..
3	**c** 381004	Wheel Assy	..	2
3	**d** 1334818	Wheel Assy	2	..
3	**d** 1320673	Wheel Assy	..	2
4	806557	Shoulder Ring	1	1
5	**ad** 160653	Wheel Side Ring	1	1
5	**c** 322637	Wheel Side Ring	1	1
6	**ad** 980542	Wheel Lock Ring	1	1
6	**c** 322638	Wheel Lock Ring	1	1

FOOTNOTES:

a Four-Piece Design (Required on Bergougnan Tire)
b Required on Radial Tires
c Three-Piece Design
d Used on Standard Hardness Solid Tire

©2009 HYSTER COMPANY

TIRE (FIGURE 12-19)
DRIVE WHEEL — SOLID PNEUMATIC

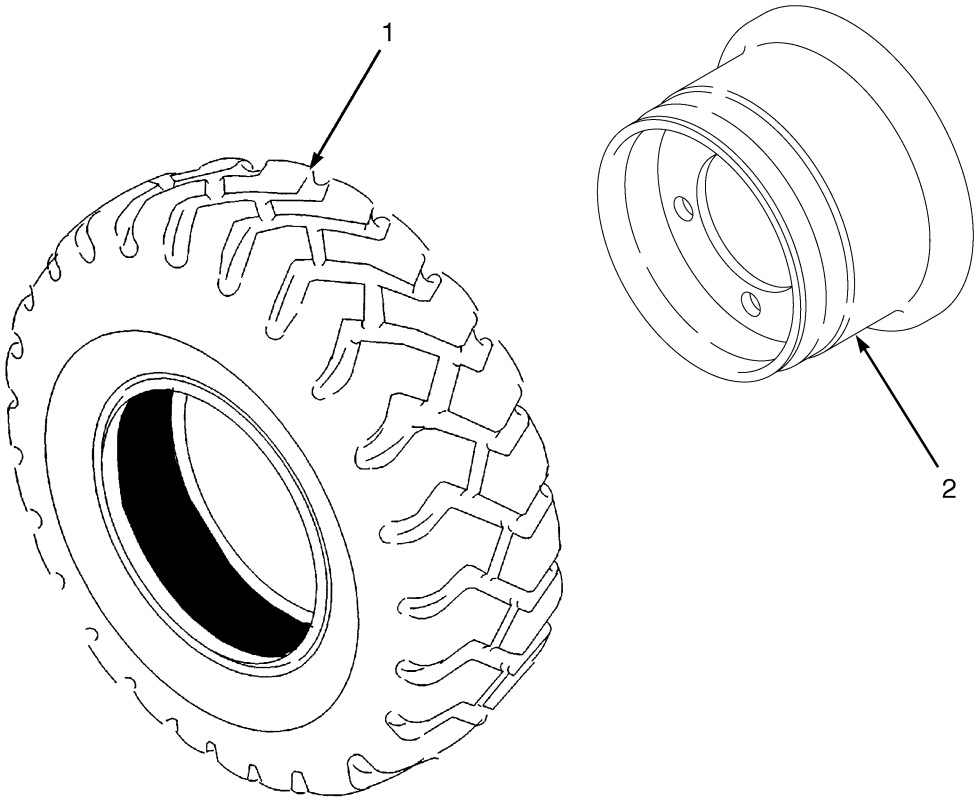

BP000223

©2009 HYSTER COMPANY

KEY:
A: 7.00 x 12 (Single)
B: 28 x 9-15 (Single)
C: 7.00 x 12 (Wide)
D: 28 x 9-15 (Wide)
E: 7.00 x 12 (Dual)

ITEM	PART NO.	DESCRIPTION	QTY A	B	C	D	E
1	2035600	Solid Pneumatic Tire (SIT)	2	..	..	..	..
1	2035603	Solid Pneumatic Tire (Solid)	..	2	..	..	..
1	2035600	Solid Pneumatic Tire (SIT)	..	..	2	..	..
1	2035603	Solid Pneumatic Tire (Solid)	..	..	..	2	..
1	2035600	Solid Pneumatic Tire (SIT)	..	..	..	..	4
2	1347189	Wheel	2	..	..	..	..
2	1334798	Wheel	..	2	..	..	..
2	329057	Wheel	..	..	2	..	..
2	381003	Wheel	..	..	..	2	..
2	1347189	Wheel	..	..	..	..	4

©2009 HYSTER COMPANY

TIRE AND WHEEL (FIGURE 12-20)

STEER WHEEL 6.00 X 9 — H2.00-2.50XM

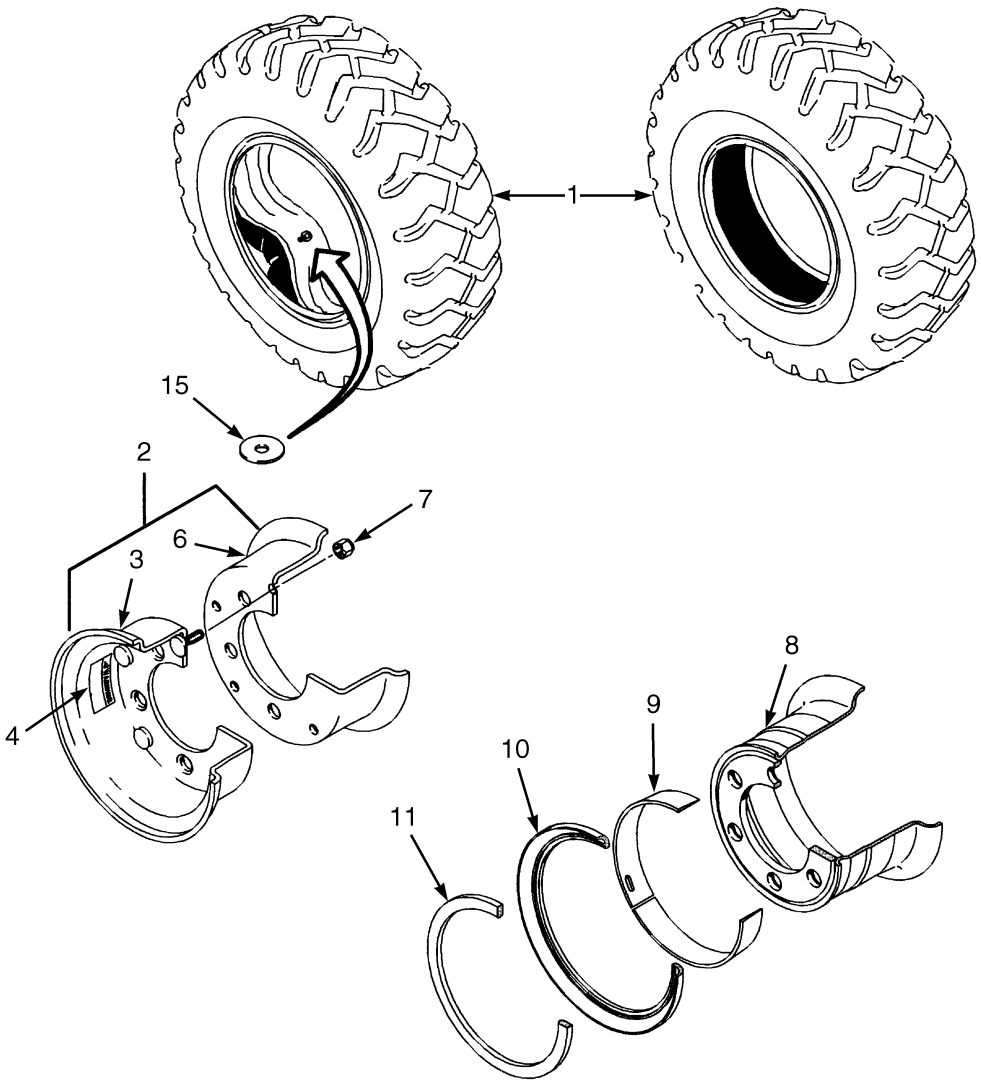

BP000287

©2009 HYSTER COMPANY

TIRE AND WHEEL

STEER WHEEL 6.00 X 9 – H2.00-2.50XM

KEY:
A: Solid
B: Standard/Premium
C: Radial

ITEM	PART NO.	DESCRIPTION	QTY A	QTY B	QTY C
1	195417	Tire (Solid)	2	..	..
1	306209	Tire Flap	..	2	..
1	29588	Tire Flap	..	1	..
1	306200	Tire Flap	..	1	..
1	1367440	Tire Flap	..	2	..
1	1367444	Tire Flap	..	1	..
1	306200	Tire Flap	..	1	..
1	1357302	Pneumatic Tire	..	..	2
1	1358177	Pneumatic Tire (Michelin XZM)	..	..	1
1	1358188	Tube	..	..	1
1	1471837	Pneumatic Tire (Optional)	..	..	2
1	1462615	Tubeless Bead Seal	..	..	1
1	1358177	Pneumatic Tire (Michelin XZM)	..	..	1
1	1471921	Tubeless Bead Seal Valve	..	..	1
2	61220	Wheel Assy	..	2	..
3	60948	Wheel Assy (Outer)	..	1	..
4	288638	Label (Warning)	..	2	..
5	377841	Bolt	..	5	..
6	291912	Wheel Assy (Inner)	..	1	..
7	53163	Locknut	..	5	..
8	359340	Rim (4 Piece Design)	2	..	2
9	359341	Shoulder Ring	1	..	1
10	161885	Wheel Side Ring	1	..	1
11	161884	Wheel Lock Ring	1	..	1

©2009 HYSTER COMPANY

TIRE AND WHEEL (FIGURE 12-21)

STEER WHEEL 6.50 X 10 — H2.50XMX, H3.00-3.20XM

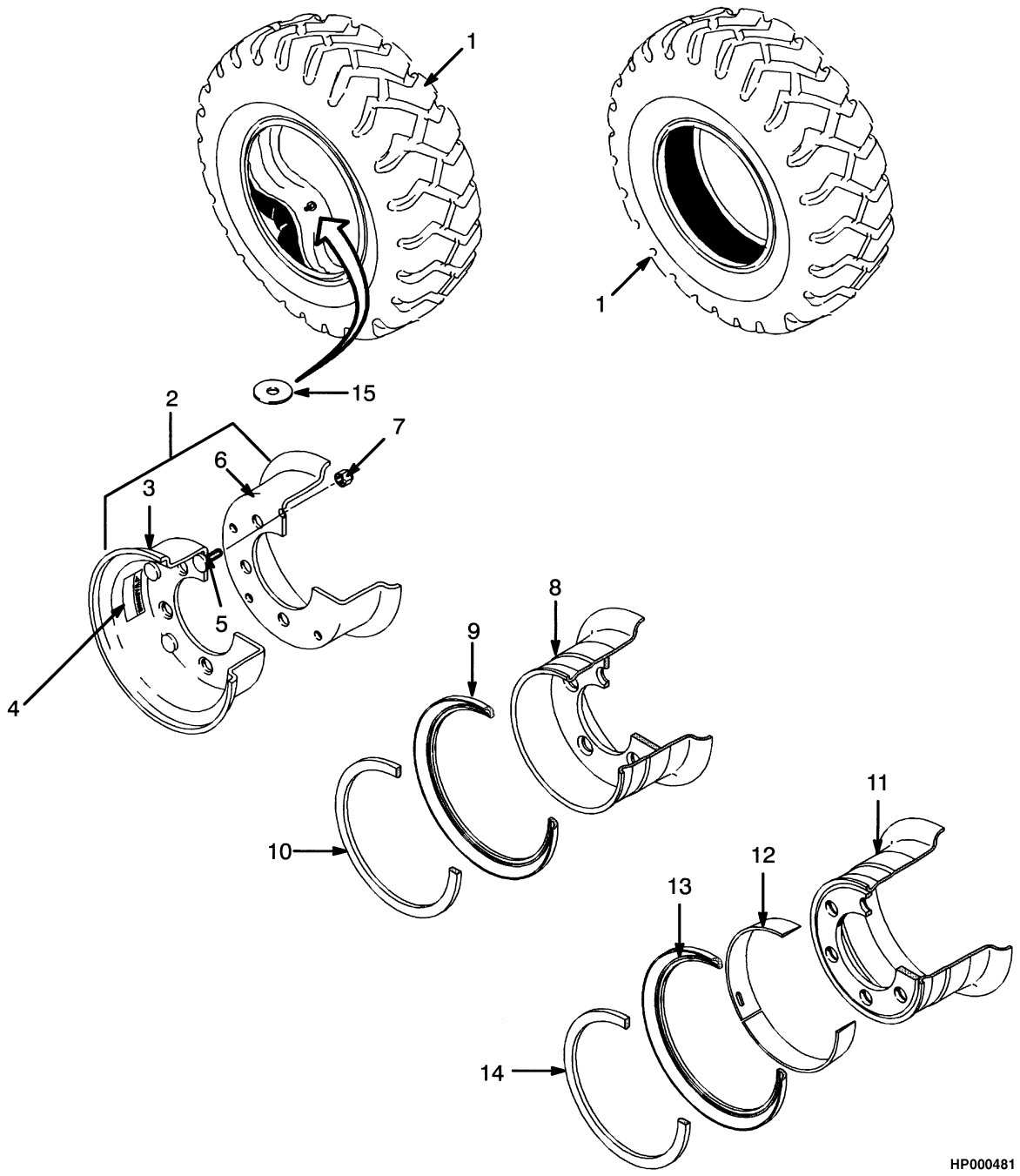

©2009 HYSTER COMPANY

TIRE AND WHEEL

STEER WHEEL 6.50 X 10 – H2.50XMX, H3.00-3.20XM

KEY:
A: Solid
B: Standard/Premium
C: Radial

ITEM	PART NO.	DESCRIPTION	QTY A	QTY B	QTY C
1	174208	Solid Pneumatic Tire (Solid)	2	..	..
1	137138	Tire Flap	..	2	..
1	137139	Tire Flap	..	1	..
1	135920	Tire Flap	..	1	..
1	1367441	Tire Flap	..	2	..
1	1367445	Tire Flap	..	1	..
1	135920	Tire Flap	..	1	..
1	1337746	Pneumatic Tire	..	..	2
1	1358178	Pneumatic Tire (Michelin XZM 6.50 R10)	..	..	1
1	1358189	Tube	..	..	1
1	1471832	Pneumatic Tire (6.5 R10 Pneu Radial) (Optional)	..	..	2
1	1462616	Tubeless Bead Seal	..	..	1
1	1358178	Pneumatic Tire (Michelin XZM 6.50 R10)	..	..	1
1	1471922	Tubeless Bead Seal Valve	..	..	1
2	236437	Wheel Assy	..	2	..
3	135915	Wheel Assy (Outer)	..	1	..
4	288638	Label (Warning)	..	2	..
5	135917	Bolt	..	10	..
6	291915	Wheel Assy (Inner)	..	1	..
7	221355	Locknut	..	10	..
8	323594	Rim (3 Piece Design)	2	..	2
9	323599	Wheel Side Ring	1	..	1
10	323598	Wheel Lock Ring	1	..	1
11	1360932	Rim (4 Piece Design)	..	2	..
12	806555	Shoulder Ring	..	1	..
13	161895	Wheel Side Ring	..	1	..
14	161894	Wheel Lock Ring	..	1	..
15	345897	Rim (4 Piece Design)	2	..	2
16	806555	Shoulder Ring	1	..	1
17	161895	Wheel Side Ring	1	..	1
18	161894	Wheel Lock Ring	1	..	1
19	1376007	Washer (Valve Stem)	..	..	1

©2009 HYSTER COMPANY

SIT TIRES (FIGURE 12-22)
STEER WHEEL — SOLID PNEUMATIC

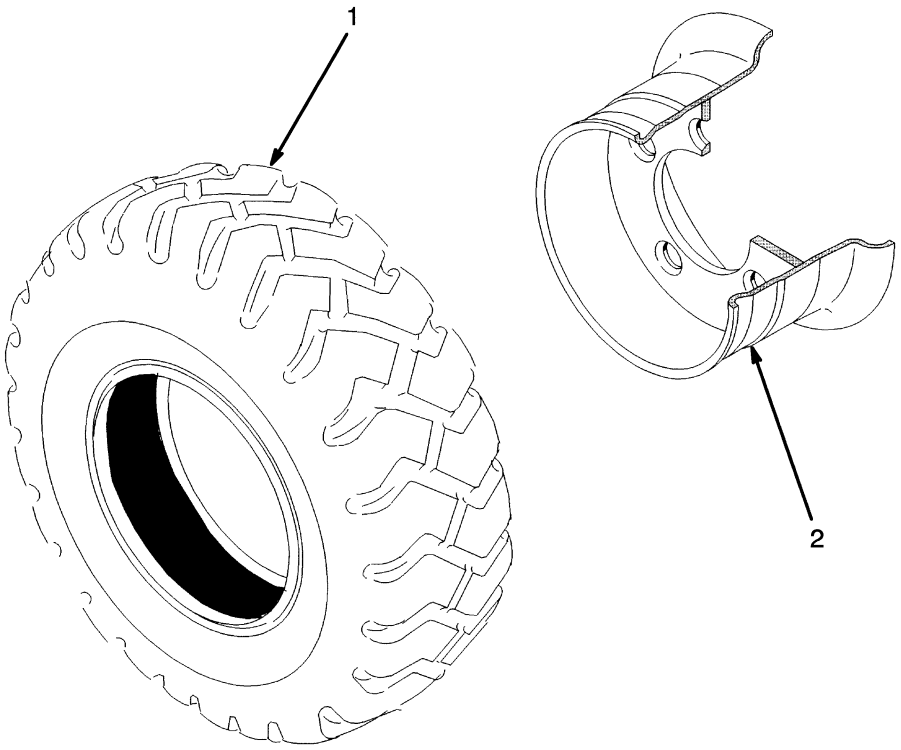

HP000482

KEY:
A: 6 x 9
B: 6.50 x 10

ITEM	PART NO.	DESCRIPTION	QTY A	QTY B
1	2035599	Solid Pneumatic Tire (Solid)	2	..
1	2035596	Solid Pneumatic Tire	..	2
2	362376	Rim	2	..
2	174202	Wheel	..	2

©2009 HYSTER COMPANY

NOTES

©2009 HYSTER COMPANY

STROBE LIGHT (FIGURE 12-23)

(→ S/N H177B48920B)

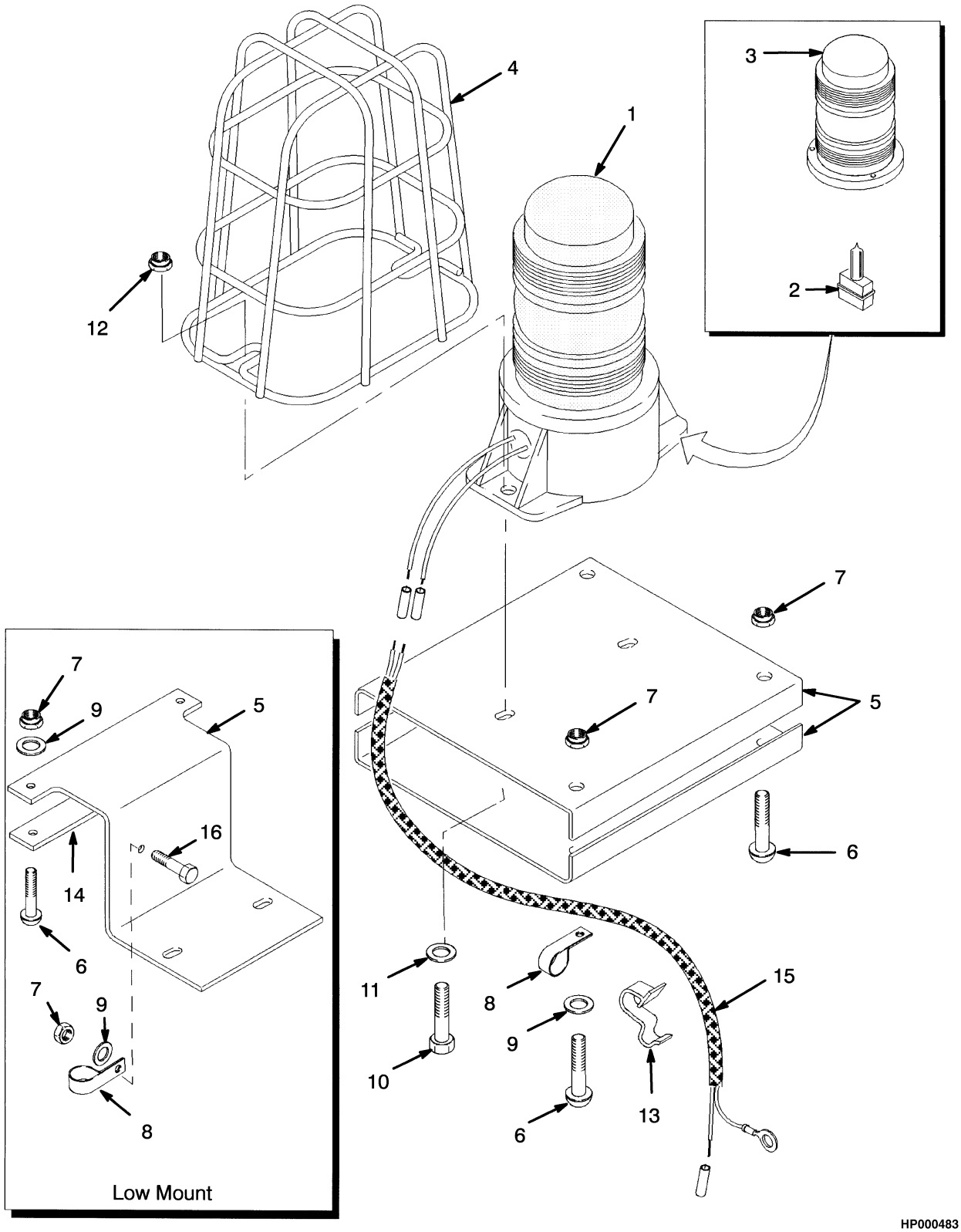

©2009 HYSTER COMPANY

STROBE LIGHT
(→ S/N H177B48920B)

KEY:
A: Low Mount
B: High Mount

ITEM	PART NO.	DESCRIPTION	QTY A	QTY B
1	1382130	Strobe Light	1	1
2	1309775	Strobe Light	1	1
3	1526082	Lens (Amber)	1	1
4	1302024	Guard	1	1
5	1356342	Bracket	..	2
5	1356541	Bracket	1	..
6	302054	Screw	2	4
7	313805	Nut	3	4
8	164488	Clamp	1	1
9	320156	Washer	3	1
10	220498	Screw	2	2
11	197067	Washer	2	2
12	230882	Locknut	2	2
13	1301727	Clamp	4	4
14	1356540	Bar	1	..
15	1356328	Wire Harness	1	1
16	302047	Screw	1	..

©2009 HYSTER COMPANY

STROBE LIGHT (FIGURE 12-24)
(S/N H177B48921B →)

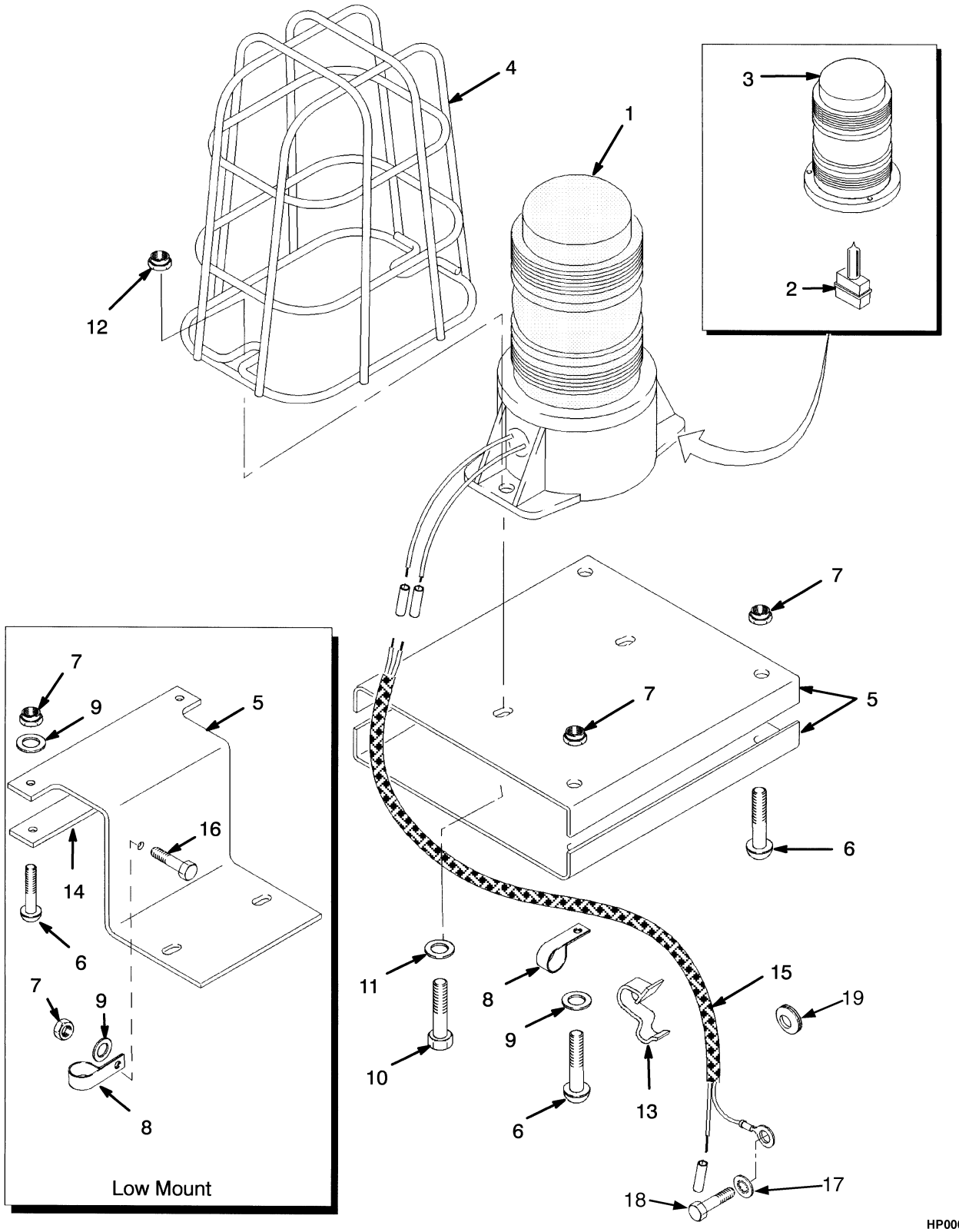

©2009 HYSTER COMPANY

STROBE LIGHT
(S/N H177B48921B →)

KEY:
A: Low Mount
B: High Mount

ITEM	PART NO.	DESCRIPTION	QTY A	QTY B
1	1382130	Strobe Light	1	1
2	1309775	Strobe Light	1	1
3	1526082	Lens (Amber)	1	1
4	1302024	Guard	1	1
5	1356342	Bracket	..	2
5	1356541	Bracket	1	..
6	302054	Screw	2	4
7	313805	Nut	3	4
8	164488	Clamp	1	1
9	320156	Washer	3	1
10	220498	Screw	2	2
11	197067	Washer	2	2
12	230882	Locknut	2	2
13	1301727	Clamp	4	4
14	1356540	Bar	1	..
15	1356328	Wire Harness	1	1
16	302047	Screw	1	..
17	296360	Washer	1	1
18	329067	Screw	1	1
19	1367645	Grommet	1	1

©2009 HYSTER COMPANY

ROTATING BEACON (FIGURE 12-25)

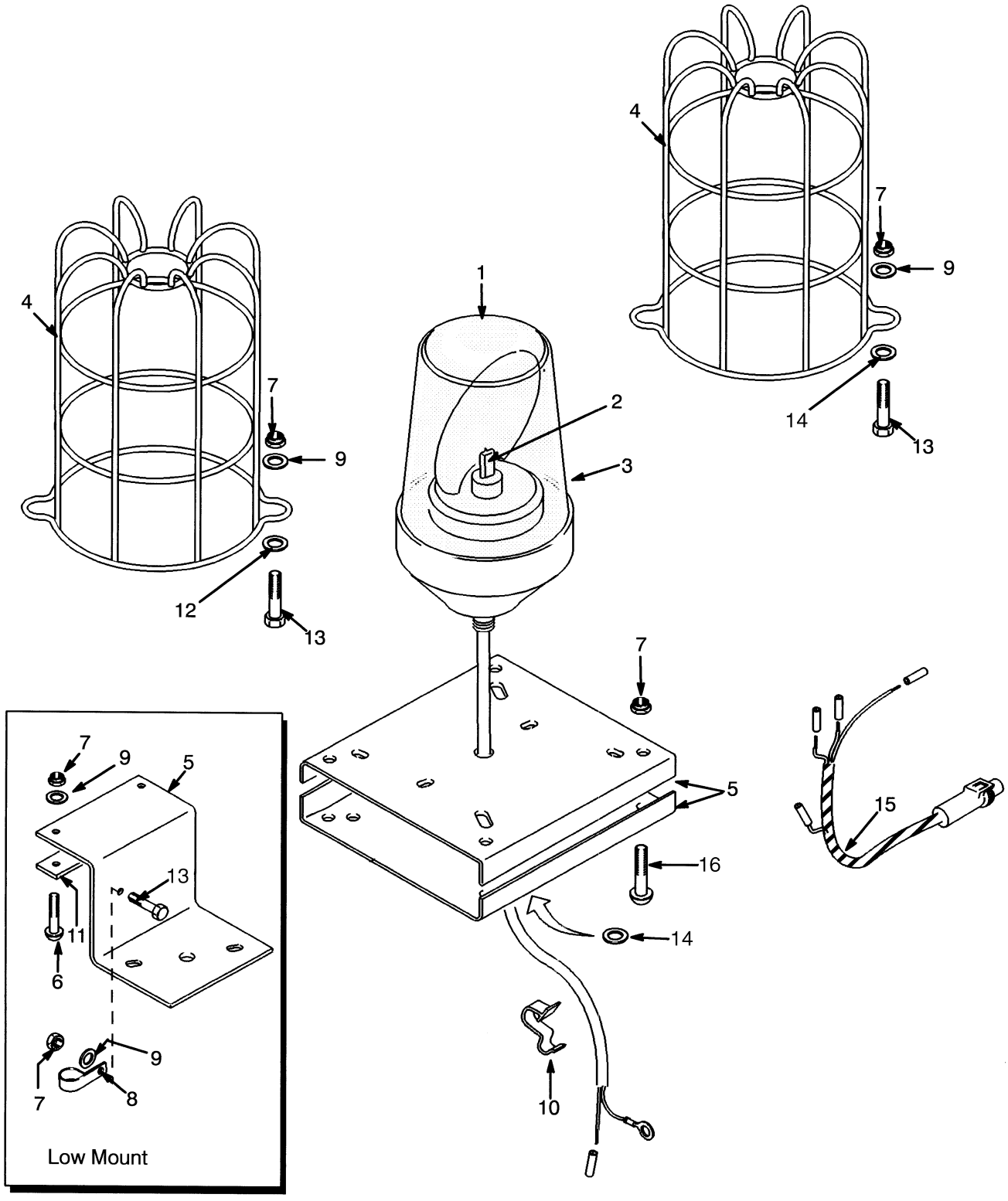

©2009 HYSTER COMPANY

ROTATING BEACON

KEY:
A: Low Mount
B: High Mount

ITEM	PART NO.	DESCRIPTION	QTY A	QTY B
1	1356347	Rotating Beacon	1	1
1	1343891	Rotating Beacon	1	1
1	1385522	Rotating Beacon (Optional)	1	1
1	. . . . .	Washer	..	1
1	. . . . .	Nut	..	1
2	1363013	Bulb	1	1
3	1363015	Lens	1	1
4	250095	Guard	1	1
5	1356342	Bracket	..	2
5	1518089	Bracket	1	..
6	302054	Screw	2	..
7	313805	Nut	5	6
8	164488	Clamp	1	..
9	320156	Washer	5	2
10	1301727	Clamp	4	4
11	1356540	Bar	1	..
12	320158	Washer	..	2
13	302048	Screw	3	2
14	320159	Washer	2	1
15	1356328	Wire Harness	1	1
16	302056	Screw	4	..

©2009 HYSTER COMPANY

DRIVE, TURN, AND REAR LIGHTS (FIGURE 12-26)

(→ S/N H177B43094A)

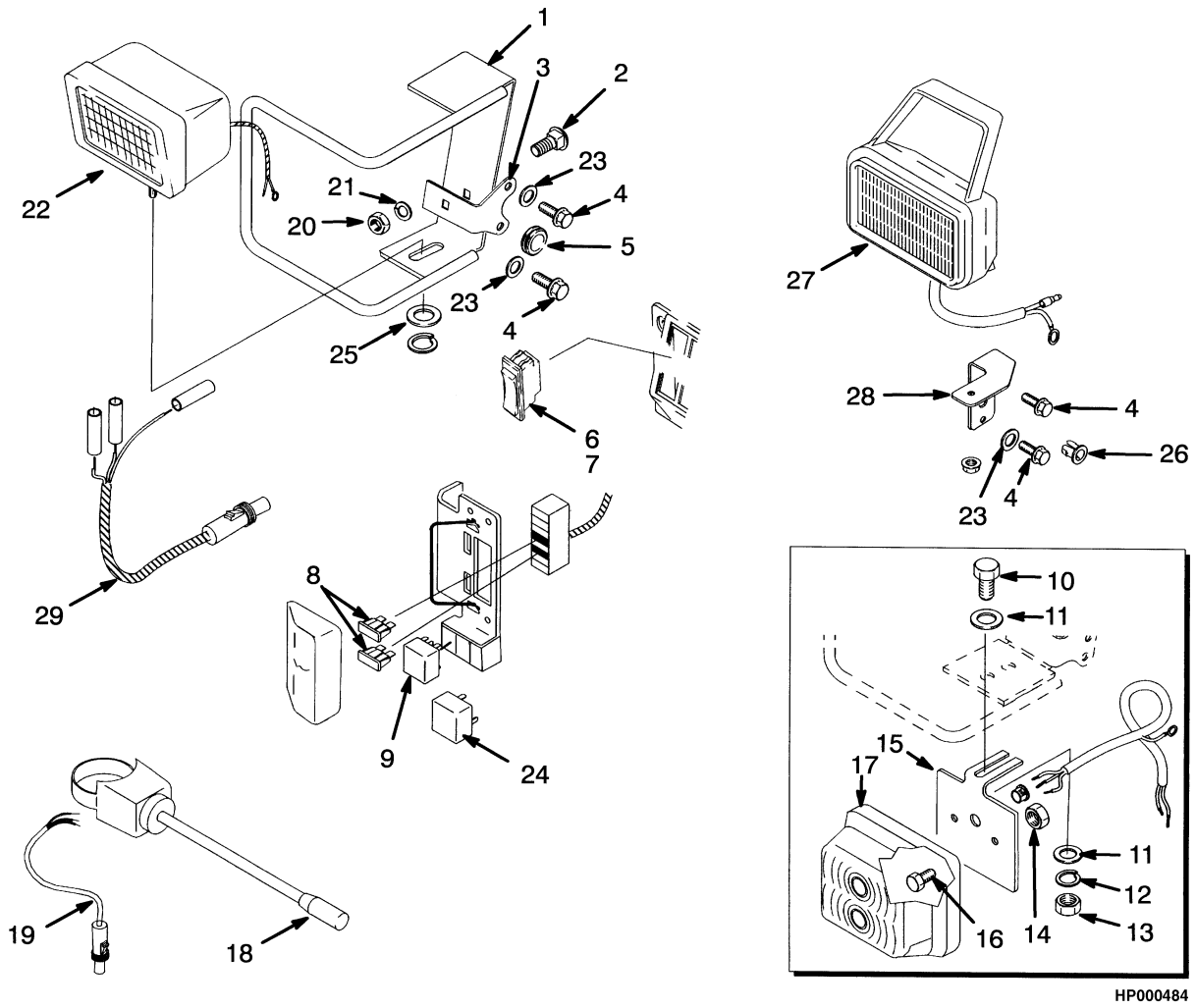

©2009 HYSTER COMPANY

DRIVE, TURN, AND REAR LIGHTS

(→ S/N H177B43094A)

KEY:
A: Drive Light With Spotlight
B: Spotlight without Drive Light
C: Rear Drive Light
D: Drive, Turn, and Spotlight

ITEM	PART NO.	DESCRIPTION	QTY A	B	C	D
1	1375171	Bracket Wldmt (RH)	1	..	..	1
1	1375172	Bracket Wldmt (LH)	1	..	..	1
1	1376579	Bracket Wldmt (Rear)	..	..	1	..
2	1375168	Bolt	2	..	1	2
3	1375169	Plate	2	..	1	2
3	878138	Bracket (Used with Cab Option)	2	..	1	2
4	329067	Screw	6	2	2	4
5	1367645	Grommet	2	..	1	2
6	1301156	Lens (Green) (Light)	1	..	1	1
7	1301160	Switch	1	..	1	1
8	1300134	Fuse (25 Amp)	2	1	2	2
9	1368924	Flasher	..	..	..	1
10	287854	Capscrew	..	..	..	2
11	296420	Washer	..	..	..	4
12	292682	Lockwasher	..	..	..	2
13	136692	Nut	..	..	..	2
14	230882	Locknut	..	..	..	4
15	1356117	Plate	..	..	..	2
15	878138	Bracket (Without Headlights)	..	..	..	2
16	185544	Screw	..	..	..	4
17	1455988	Side Light	..	..	..	2
17	1363010	Lens	..	..	..	1
17	1363011	Bulb	..	..	..	1
17	207495	Bulb (12 Volt) (Flasher)	..	..	..	1
18	1394100	Switch (Turn Signal) (Turn Signal)	..	..	..	1
19	1354200	Wire Harness	1	1	1	1
20	316835	Nut	2	..	1	2
21	296418	Washer	2	..	1	2
22	1356336	Headlight	2	..	1	2
22	1363016	Lens	1	..	1	1
22	1379799	Bulb	1	..	1	1
23	296360	Washer	5	1	1	5
24	1347114	Relay	1	1	..	1
25	332755	Washer	2	..	1	2
26	1356354	Bushing	1	1	..	1
27	1356351	Work Light	1	1	..	1
27	1362043	Light	1	1	..	1
27	1362044	Switch	1	1	..	1
27	1662409	Bulb	1	1	..	1
28	1356352	Bracket	1	1	..	1
29	1356328	Wire Harness	2	..	..	2

©2009 HYSTER COMPANY

DRIVE, TURN, AND REAR LIGHTS (FIGURE 12-27)

(S/N H177B43095A ↔ S/N H177B48920B)

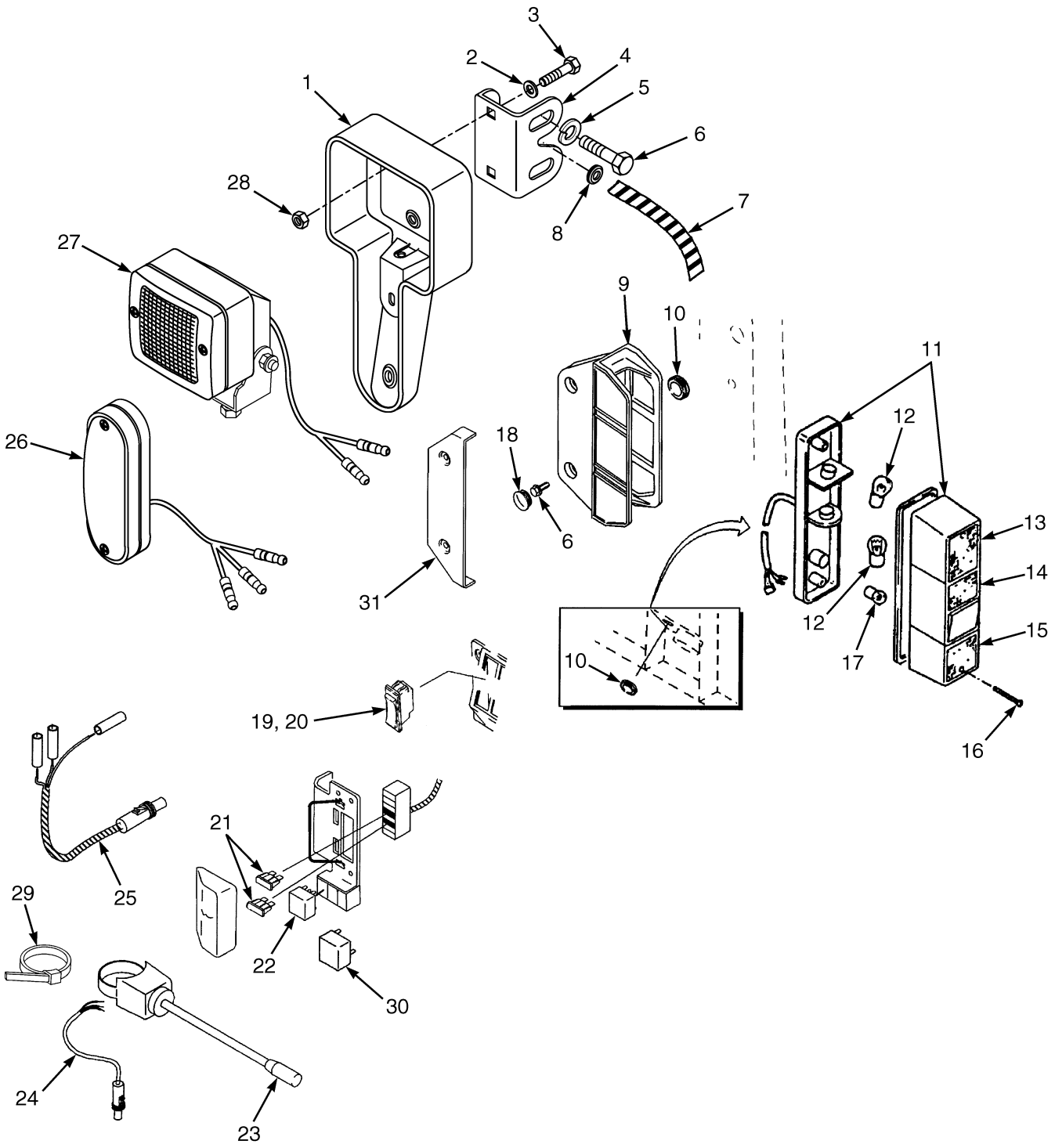

BP000190

©2009 HYSTER COMPANY

KEY:
A: Headlights and Indicator Lights
B: Headlights, Rear Lights and Side Lamps
C: Tail Light

ITEM	PART NO.	DESCRIPTION	QTY A	QTY B	QTY C
1	1518987	Guard (Light)	2	2	..
2	1476421	Washer	4	4	..
3	2060639	Bolt	4	4	..
4	1517960	Bracket (Light)	2	2	..
5	296360	Washer	4	4	..
6	329067	Screw	4	4	4
7	1531326	Conduit	2	2	..
8	1367645	Grommet	2	2	..
8	1534697	Plug (Without Light)	2	2	..
9	1450293	Bracket	..	2	2
9	1361595	Bracket Wldmt (With Cab)	..	2	2
10	1367639	Grommet	..	2	2
11	**a** 1376749	Brake/Backup Light	..	2	2
11	**b** 1553084	Brake/Backup Light	..	2	2
12	1302258	Bulb	..	2	2
13	1380757	Lens (Amber)	..	1	1
14	1376440	Lens (Red)	..	1	1
15	1376439	Lens (Clear)	..	1	1
16	1339127	Screw	..	2	2
17	177521	Bulb (12 Volt)	..	1	1
18	1450356	Plug	..	4	4
19	1301156	Lens (Green) (Light)	1	1	..
20	1301160	Switch	1	1	..
21	1320669	Fuse (30 Amp)	2	2	..
21	1310630	Fuse (15 Amp)	1	1	1
22	1368924	Flasher	1	..	..
23	1394100	Switch (Turn Signal) (Turn Signal)	1	..	..
24	1354200	Wire Harness (Turn Signal)	1	..	..
24	1330410	Connector	1	..	..
24	1330415	Connector	1	..	..
24	1330435	Terminal	3	..	..
25	1356328	Wire Harness	2	2	..
26	1517962	Indicator Light	2	2	..
26	1363011	Bulb (Clearance Light)	1	1	..
26	1547838	Bulb (Turn Signal)	1	1	..
26	1547839	Lens	1	1	..
27	1517961	Work Light	2	2	..
27	1662409	Bulb	1	1	..
28	316834	Nut	4	4	..
29	114312	Strap Clamp	1	1	..
30	1347114	Relay	1	1	1
31	1354106	Cover (With Cab)	..	..	1

FOOTNOTES:

a → S/N H177B28920B

b S/N A875B48921B →

©2009 HYSTER COMPANY

DRIVE AND TURN LIGHTS (FIGURE 12-28)

(S/N H177B48921B →)

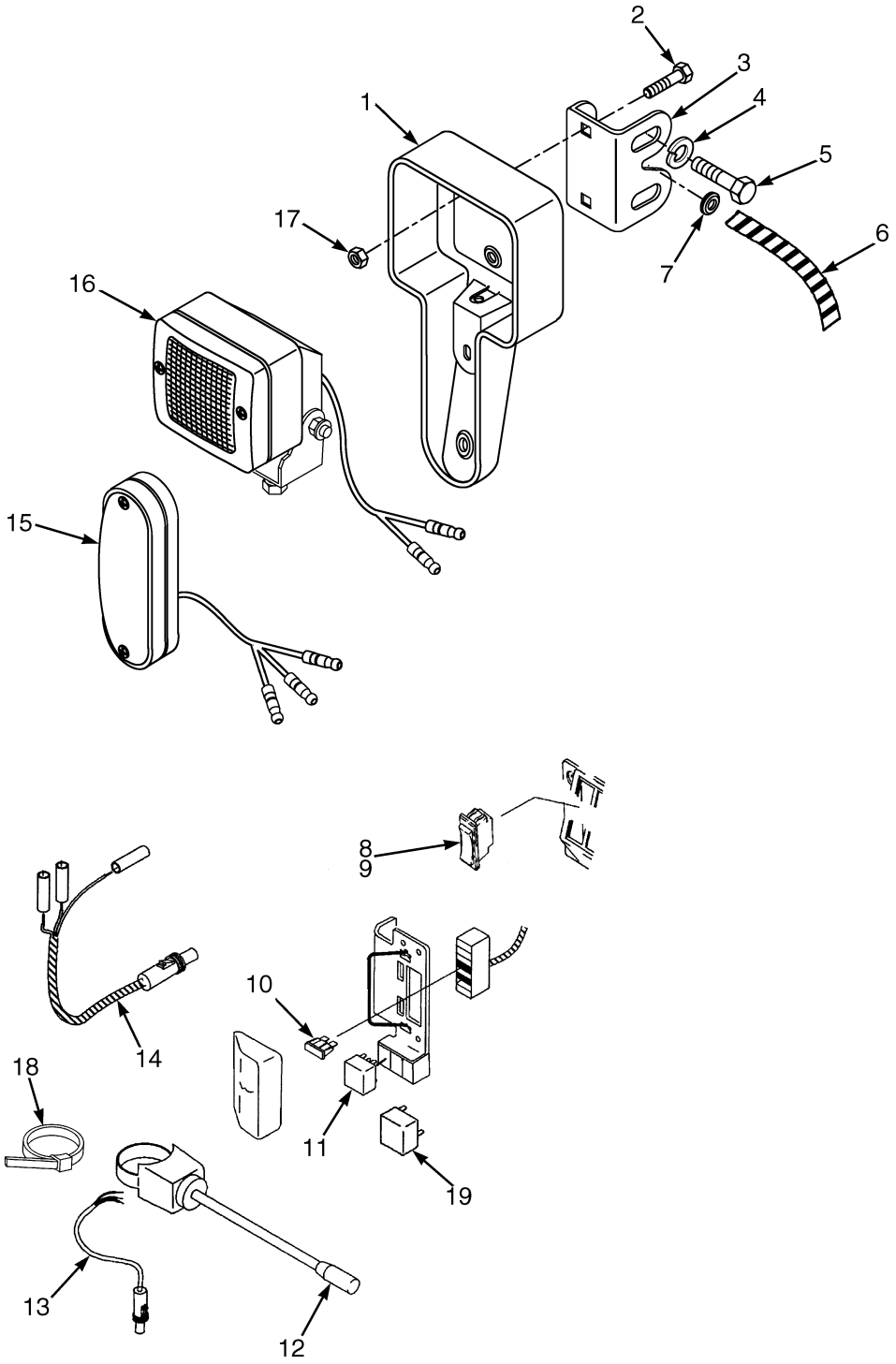

HP000844

©2009 HYSTER COMPANY

DRIVE AND TURN LIGHTS

(S/N H177B48921B →)

ITEM	PART NO.	DESCRIPTION	QTY
1	1518987	Guard (Light)	2
2	308980	Bolt	4
3	1517960	Bracket (Light)	2
4	296360	Washer	4
5	329067	Screw	4
6	1531326	Conduit	2
7	1367645	Grommet	2
7	1534697	Plug (Without Light)	2
8	1301156	Lens (Green) (Light)	1
9	1301160	Switch	1
10	**a** 1320669	Fuse (30 Amp)	1
10	**b** 1300134	Fuse (25 Amp)	1
11	1368924	Flasher	1
12	1394100	Switch (Turn Signal) (Turn Signal)	1
13	1354200	Wire Harness (Turn Signal)	1
13	1330410	Connector	1
13	1330415	Connector	1
13	1330435	Terminal	3
14	1356328	Wire Harness	2
15	1517962	Indicator Light	2
15	1363011	Bulb (Clearance Light)	1
15	1547838	Bulb (Turn Signal)	1
15	1547839	Lens	1
16	1517961	Work Light	2
16	1662409	Bulb	1
17	1359600	Nut	4
18	114312	Strap Clamp	1
19	1347114	Relay	1

FOOTNOTES:

a → S/N H177B48920B

b S/N H177B48921B →

©2009 HYSTER COMPANY

REAR WORK LIGHT (FIGURE 12-29)

(S/N H177B43095A →)

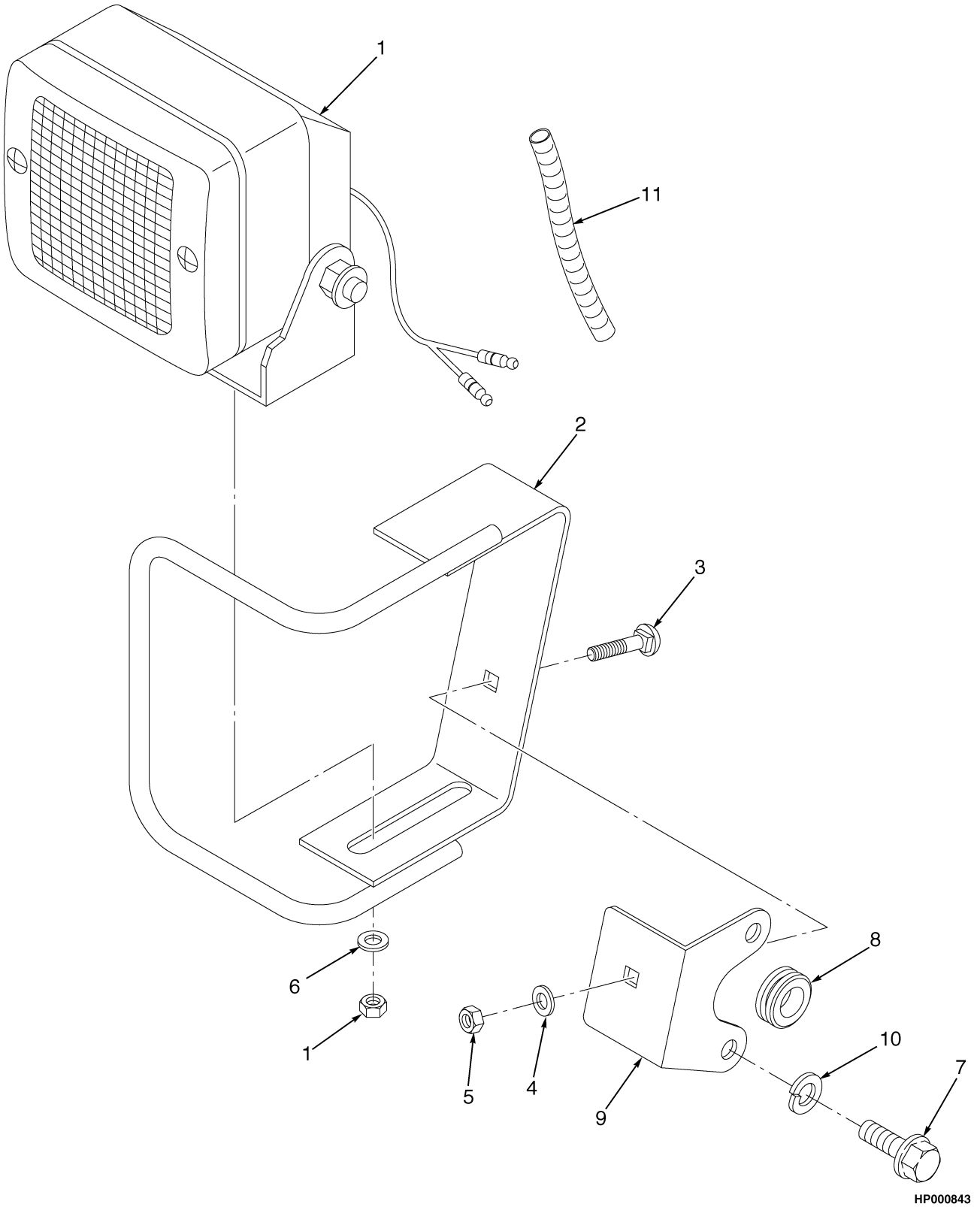

©2009 HYSTER COMPANY

REAR WORK LIGHT

(S/N H177B43095A →)

ITEM	PART NO.	DESCRIPTION	QTY
1	1517961	Work Light	1
1	. . . . .	Nut	1
2	1376579	Bracket Wldmt	1
3	1375168	Bolt	1
4	296418	Washer	1
5	316835	Nut	1
6	1324577	Washer	1
7	329067	Screw	2
8	1367645	Grommet	1
9	1375169	Plate	1
10	296360	Washer	1
11	1539261	Conduit	1
12	1301160	Switch	1
13	1301156	Lens (Green) (Light)	1
14	1310630	Fuse (15 Amp)	1

©2009 HYSTER COMPANY

CAB (FIGURE 12-30)
EXTERNAL DOOR

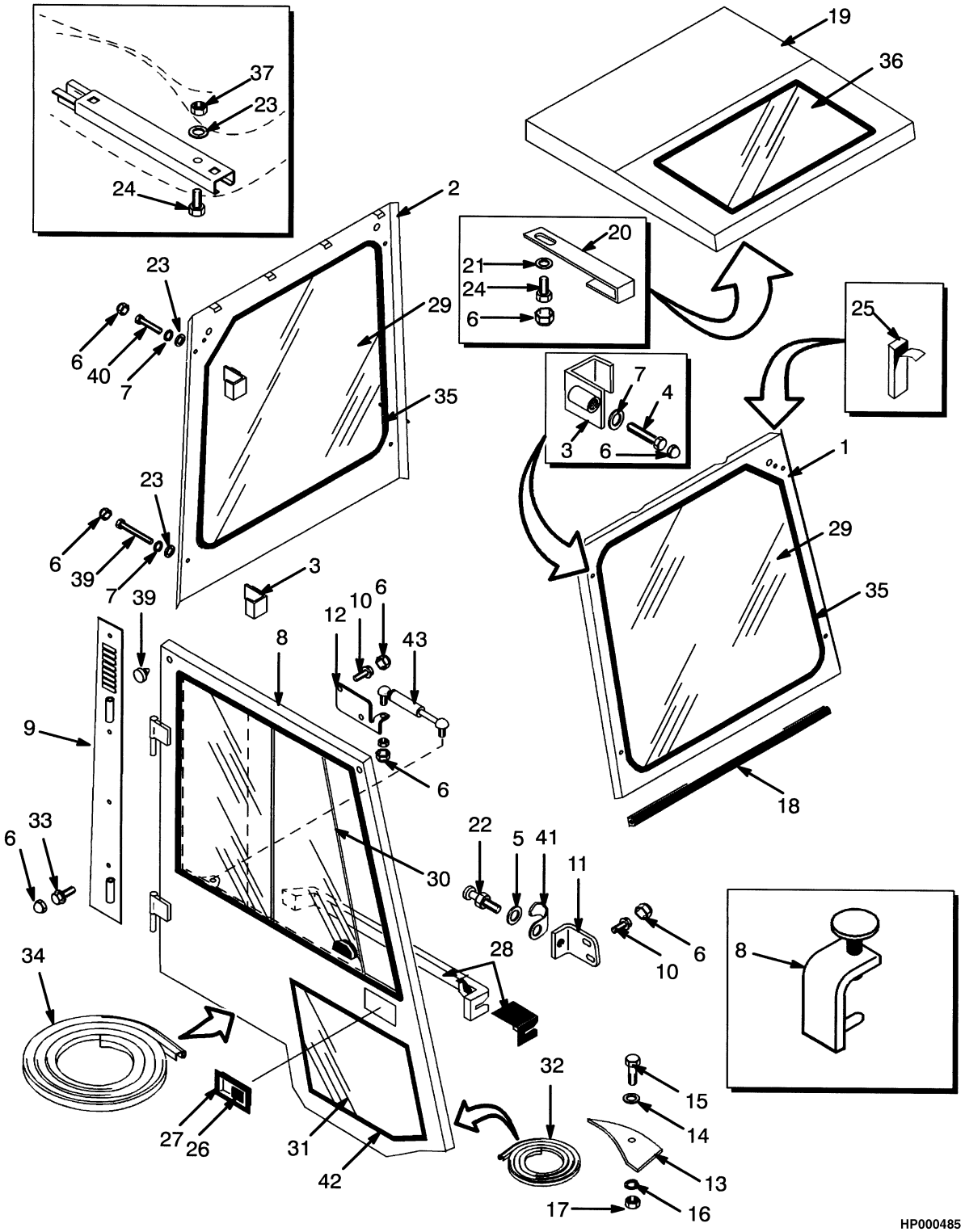

©2009 HYSTER COMPANY

CAB
EXTERNAL DOOR

ITEM	PART NO.	DESCRIPTION	QTY
1	1393168	Kit-Front Screen W Wiper (Front)	1
2	1393169	Panel (Rear)	1
3	878133	Clamp	4
4	1393167	Capscrew	4
5	878907	Washer	2
6	1365296	Cap	18
6	1365296	Cap	4
7	320157	Washer	4
8	878226	Door (RH)	1
8	878176	Door (Door)	1
8	878227	Door (LH)	1
8	878177	Door (Door)	1
9	878146	Mounting Plate (Door RH)	1
9	878149	Mounting Plate (Door LH)	1
10	1366624	Screw	6
11	878903	Striker Plate (RH)	1
11	878904	Striker Plate (LH)	1
12	878091	Plate (RH)	1
12	878092	Plate (LH)	1
13	1359509	Panel (RH)	1
13	1359510	Panel (LH)	1
14	1368957	Spacer	2
15	292509	Capscrew	2
16	320157	Washer	2
17	316835	Nut	2
18	878148	Seal	2
19	. . . . .	Top Panel	1
20	1366632	Bracket	4
21	320157	Washer	4
22	878908	Pin	2
23	292681	Lockwasher	4
23	292681	Lockwasher	5
24	136681	Capscrew	1
24	136681	Capscrew	4
25	1365292	Strip Seal	AR
26	878491	Door Handle (LH)	1
26	1450744	Lever (Plastic)	1
26	1367111	Key	2
26	1366620	Door Handle	1
26	1374066	Handle Grip (LH)	1
27	878906	Lockplate	2
27	878490	Handle (RH)	1
27	1367111	Key	2
27	1366620	Door Handle	1
27	1450744	Lever (Plastic)	1
27	878143	Handle Grip (RH)	1
28	1374066	Handle Grip (LH)	1
28	878143	Handle Grip (RH)	1
29	1369471	Front Window (Front)	1
29	1369472	Window (Rear)	1

©2009 HYSTER COMPANY

CAB
EXTERNAL DOOR

ITEM	PART NO.	DESCRIPTION	QTY
30	1369425	Sliding Window (RH) (Sliding)	1
30	1369427	Sliding Window (LH) (Sliding)	1
	a 1377274	Latch (Window)	1
31	1369426	Window (Bottom RH)	1
31	1369428	Window (Bottom LH)	1
32	878233	Seal (18 ft. each)	AR
33	1366624	Screw	18
34	1460936	Edge Protector	AR
35	1365290	Seal	1
36	1366627	Roof Panel	1
37	239503	Nut	1
38	1367639	Grommet	4
39	1334820	Capscrew	2
40	346656	Capscrew	2
41	878909	Hook	2
42	1382056	Seal	2
43	1366618	Gas Spring	2
	895972	Kit-Front Screen W Wiper (Front)	1
	895973	Kit-Rear Screen (Rear)	1
	895974	Kit-Door	1
	1356410	Kit-Top Screen	1
	1356411	Kit-Top Screen	1

FOOTNOTES:

a Not Illustrated

©2009 HYSTER COMPANY

NOTES

©2009 HYSTER COMPANY

CAB (FIGURE 12-31)
PVC

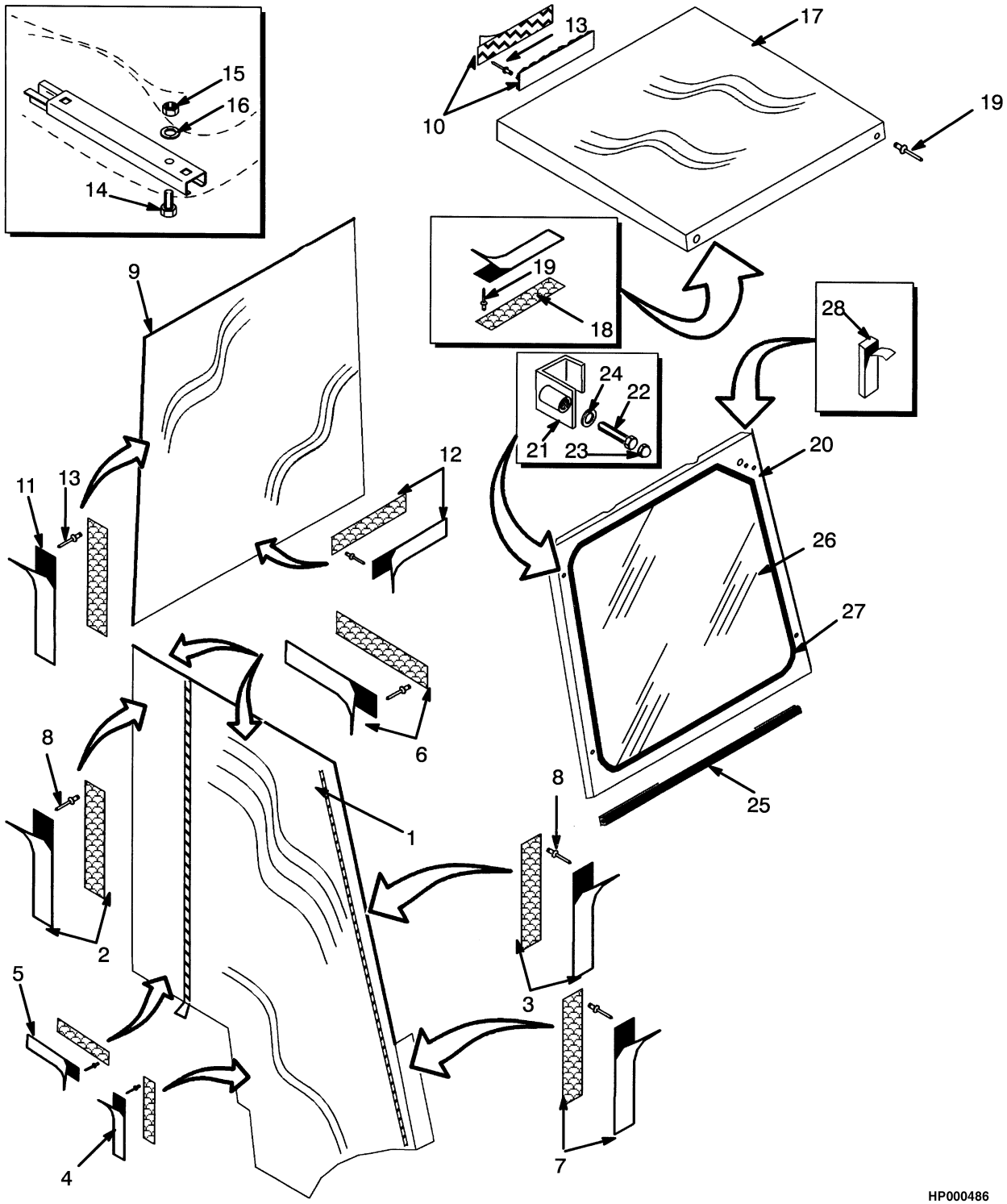

©2009 HYSTER COMPANY

CAB
PVC

ITEM	PART NO.	DESCRIPTION	QTY
	1356412	Kit-Door	1
1	1366625	Door Pvc (RH) (Side)	1
1	1366626	Door Pvc (LH) (Side)	1
2	1374068	Strip (40 mm X 900 mm)	1
3	1374072	Strip (20 mm X 1350 mm)	1
4	1374071	Strip (40 mm X 100 mm)	1
5	1374070	Strip (40 mm X 200 mm)	1
6	1374069	Strip (20 mm X 1229 mm)	1
7	1374073	Strip (40 mm X 410 mm)	1
8	1374074	Rivet	12
9	1356511	Kit-Rear Screen (Rear)	1
10	1374076	Strip (40 mm X 888 mm)	1
11	1374077	Strip (40 mm X 1125 mm)	1
12	1374070	Strip (40 mm X 200 mm)	1
13	1374074	Rivet	8
14	136681	Capscrew	1
15	239503	Nut	1
16	292681	Lockwasher	1
17	1356509	Kit-Top Screen (Standard Guard, PVC)	1
17	1356510	Kit-Top Screen (Raised Guard, PVC)	1
18	1374075	Strip (40 mm X 1010 mm)	1
19	1374074	Rivet	2
20	1393168	Kit-Front Screen W Wiper (Front)	1
20	895972	Kit-Front Screen W Wiper (Front)	1
21	878133	Clamp	4
22	1393167	Capscrew	4
23	1365296	Cap	4
24	320157	Washer	4
25	1460936	Edge Protector	1
26	1369471	Front Window (Front)	1
27	1365292	Strip Seal	1
28	1365290	Seal	1

©2009 HYSTER COMPANY

ELECTRICAL SYSTEM (FIGURE 12-32)
CAB

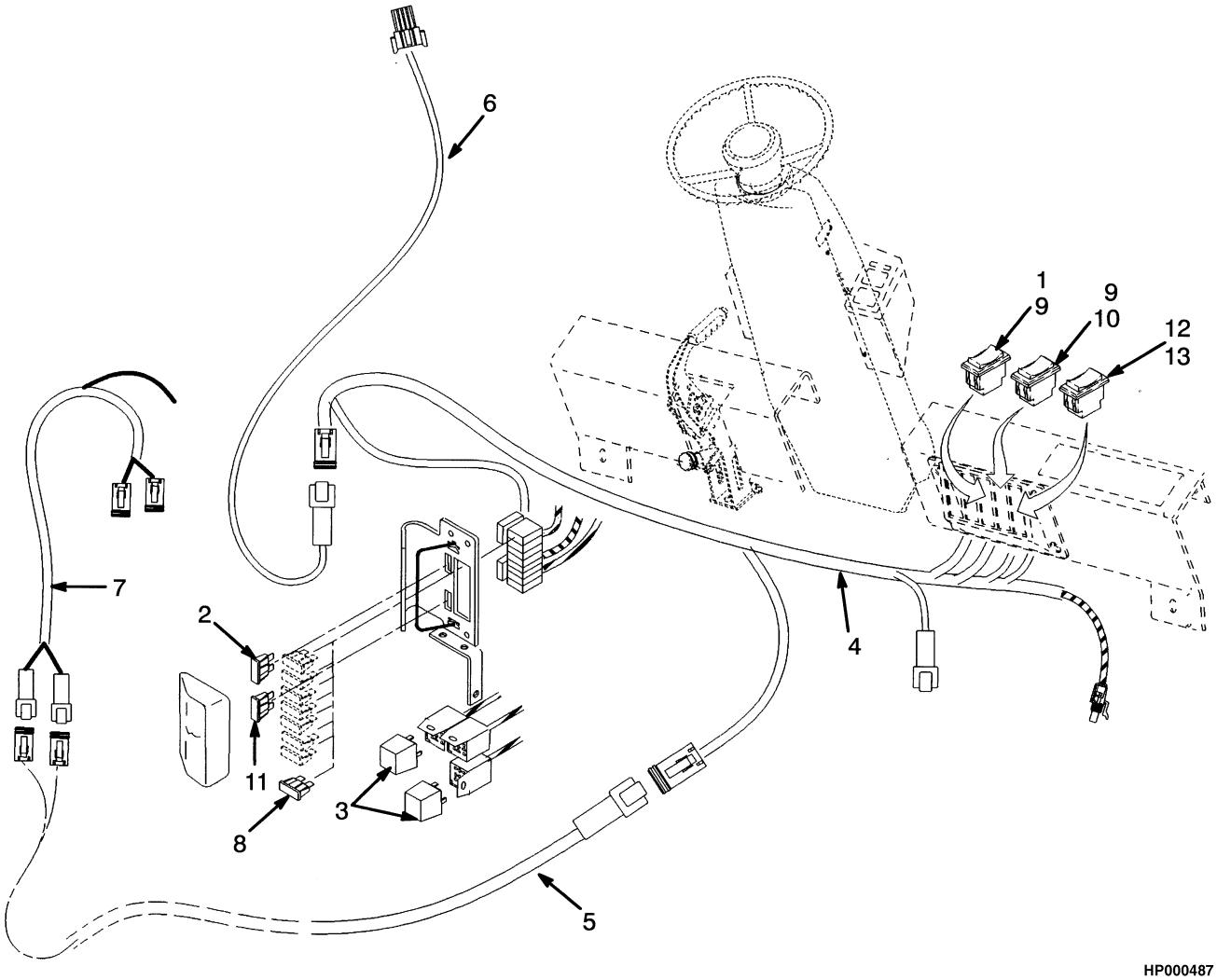

©2009 HYSTER COMPANY

ELECTRICAL SYSTEM
CAB

KEY:
A: Panel Kit (Front)
B: Panel Kit (Rear)
C: Heater Kit

ITEM	PART NO.	DESCRIPTION	QTY A	QTY B	QTY C
	1356414	Kit-Heater	..	..	1
	895972	Kit-Front Screen W Wiper (Front)	1	..	..
	895973	Kit-Rear Screen (Rear)	..	1	..
1	1301675	Lens (Windshield Wiper)	1	..	..
3	1301233	Relay	1	..	..
4	. . . . .	Wire Harness (Cowl) (☞Figure 12-38)	1	..	..
5	. . . . .	Wire Harness (Chassis) (☞Figure 12-39)	1	..	..
6	. . . . .	Wire Harness (Wiper) (☞Figure 12-36)	1	..	..
7	. . . . .	Wire Harness (Cab) (☞Figure 12-37)	1	..	..
8	1320669	Fuse (30 Amp)	1	..	..
9	1301150	Switch	1	1	..
10	1366607	Lens (Rear Wiper)	..	1	..
11	1310630	Fuse (15 Amp)	..	1	..
12	1331245	Switch	..	..	1
13	1366633	Lens (Heater)	..	..	1

©2009 HYSTER COMPANY

OPTIONAL EQUIPMENT (FIGURE 12-33)
CAB

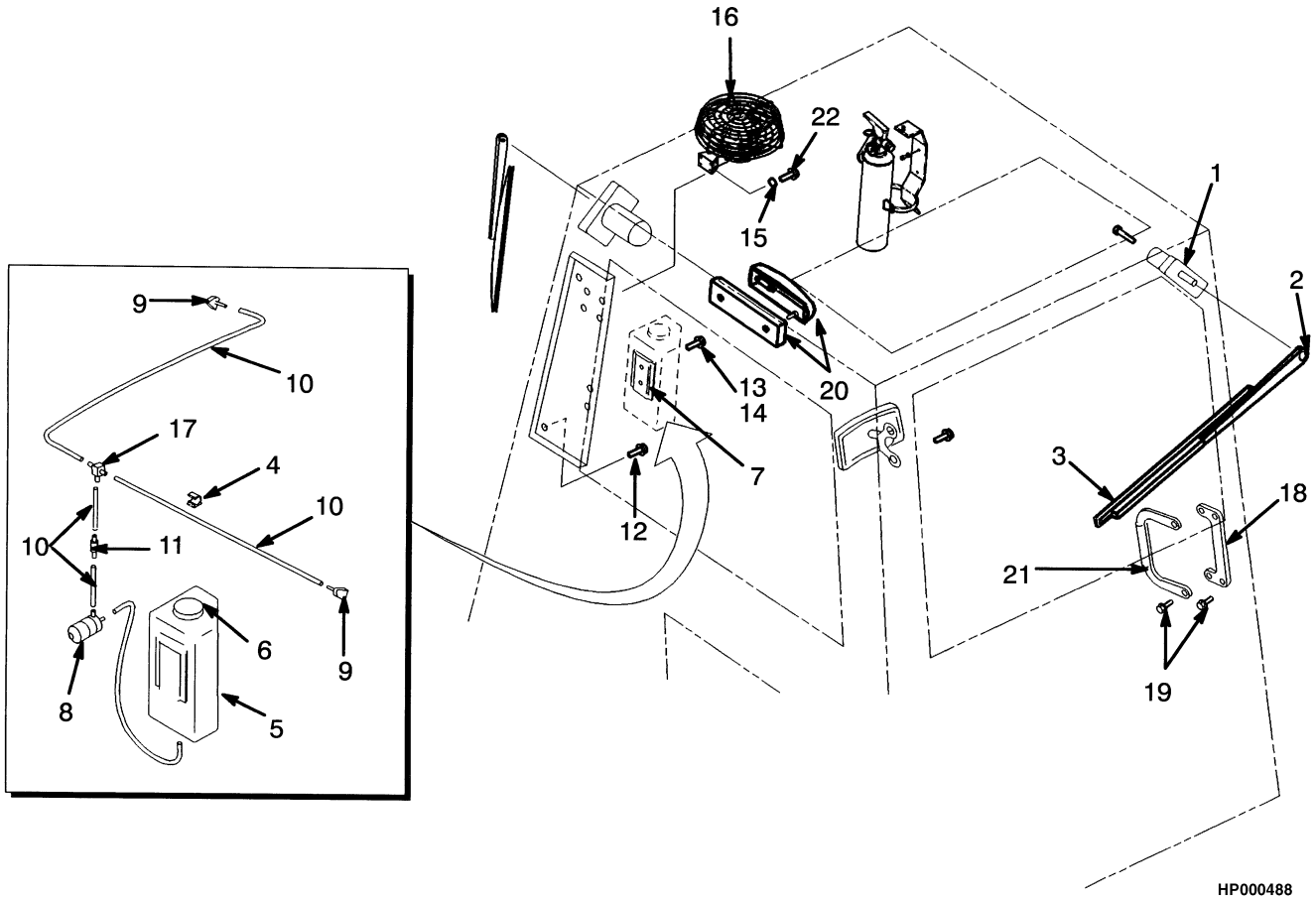

©2009 HYSTER COMPANY

OPTIONAL EQUIPMENT
CAB

ITEM	PART NO.	DESCRIPTION	QTY
1	1377854	Wiper Motor	2
2	1373949	Wiper Arm	2
3	1374050	Wiper Blade	2
4	1366603	Clamp	10
5	1365286	Reservoir	1
6	1368137	Cap	1
7	1365287	Holder	1
8	1365288	Pump	1
9	1365289	Nozzle	1
10	1366601	Hose	1
11	1365299	Check Valve	1
12	1368140	Bolt	1
13	320156	Washer	2
14	1368953	Screw	2
15	292679	Washer	4
16	1359562	Fan	1
17	1366600	Fitting	1
18	1366623	Bracket	1
19	1366624	Screw	2
19	1366624	Screw	4
20	1366622	Kit-Light (Inner)	1
20	878141	Bracket	1
21	1343647	Handle (Standard)	2
22	878163	Screw	4
	a 1555637	Plate (Seat Mounting)	1
	895978	Kit-Light	1
	895977	Kit-Fan	1
	895972	Kit-Front Screen W Wiper (Front)	1
	895973	Kit-Rear Screen (Rear)	1
	895976	Kit-Window Washer	1

FOOTNOTES:

a Not Illustrated

©2009 HYSTER COMPANY

HEATER (FIGURE 12-34)
CAB

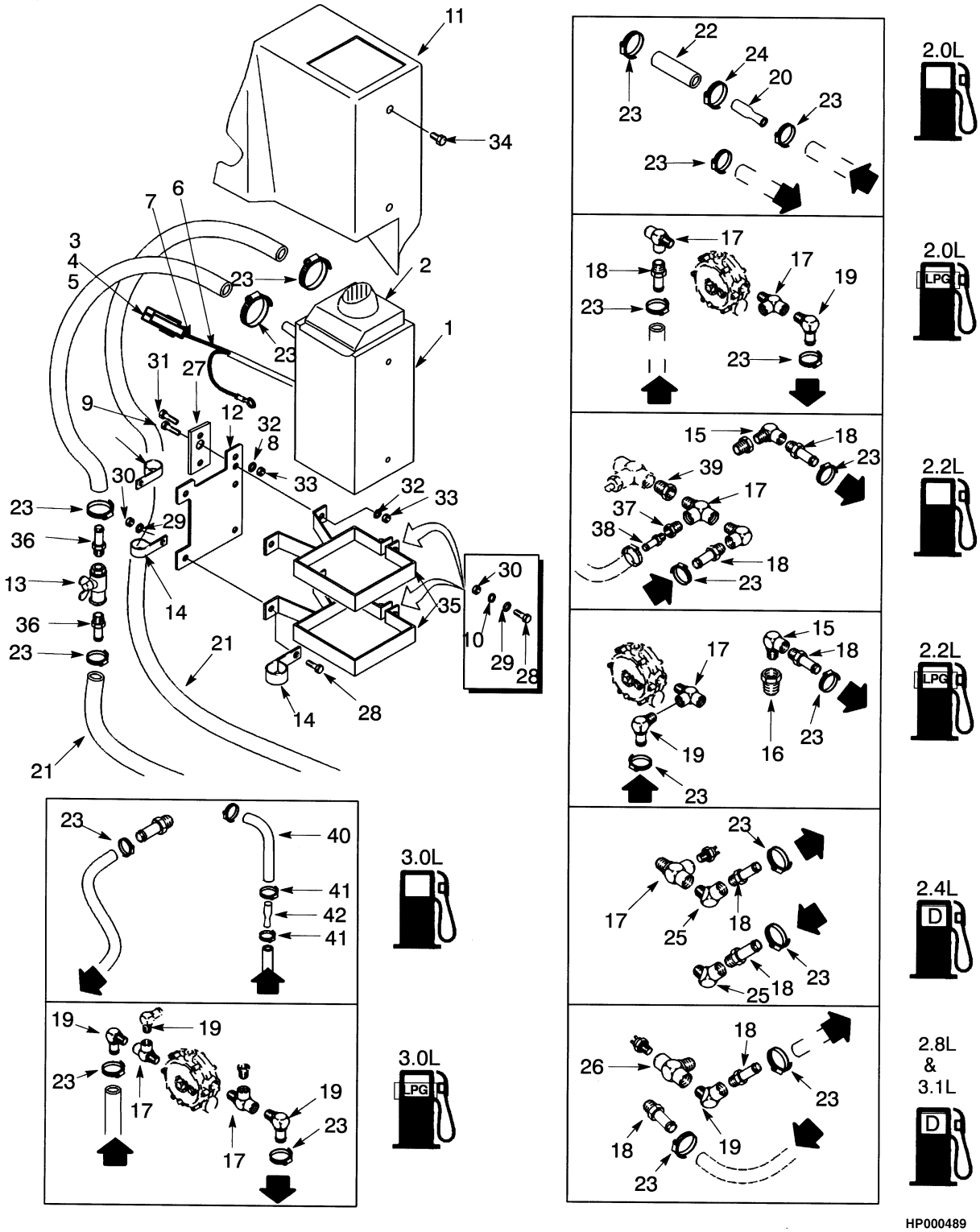

©2009 HYSTER COMPANY

HEATER
CAB

ITEM	PART NO.	DESCRIPTION	QTY
1	1359565	Heater	1
2	1359564	Heater	1
3	1330298	Connector	1
4	1334999	Terminal	1
5	1329147	Seal	1
6	16906	Conduit	AR
7	175944	Heat Shrink	1
8	320157	Washer	1
9	292502	Capscrew	1
10	292680	Washer	7
11	1359523	Cover	1
12	1368136	Mounting Plate	1
13	1368110	Valve	1
14	181089	Clamp	3
15	12837	Fitting	1
16	12817	Fitting	1
17	154452	Fitting	2
18	102919	Fitting	2
19	102898	Fitting	1
20	1368105	Adapter	1
21	114310	Hose	1
22	258344	Hose	1
23	166857	Clamp	6
24	130845	Clamp	2
25	12823	Fitting	2
26	17665	Fitting	1
27	1368952	Mounting Plate	1
28	287816	Capscrew	4
29	320156	Washer	4
30	136687	Nut	7
31	132861	Capscrew	1
32	292682	Lockwasher	1
33	239503	Nut	1
34	1368968	Capscrew	2
35	1368967	Bracket	2
36	1368955	Fitting	2
37	63108	Fitting	1
38	17217	Fitting	1
39	16116	Fitting	1
40	1376666	Hose	1
41	130845	Clamp	2
42	1368105	Adapter	1

©2009 HYSTER COMPANY

SOUND LINERS (FIGURE 12-35)
CAB

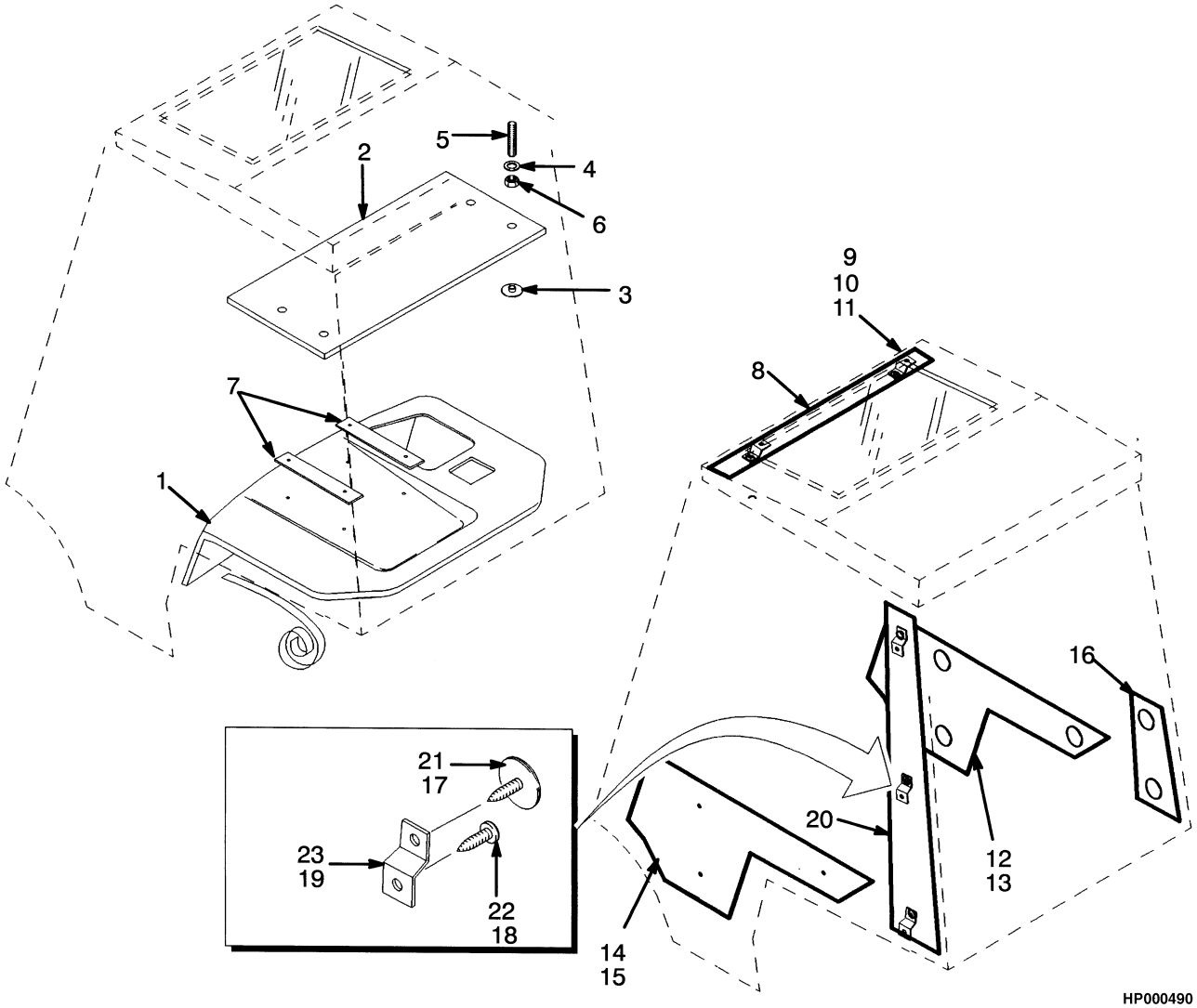

©2009 HYSTER COMPANY

SOUND LINERS
CAB

ITEM	PART NO.	DESCRIPTION	QTY
1	1475413	Cover	1
1	1475414	Cover (Top)	1
1	1475415	Cover (Front)	1
2	1475441	Headliner	1
3	1361087	Button	4
4	292681	Lockwasher	4
5	1475416	Setscrew	4
6	316835	Nut	4
7	1475417	Plate	2
8	1368145	Cover	1
9	1368100	Clip	2
10	1368956	Bracket	2
11	1365294	Screw	2
12	1368146	Cover (RH)	1
13	1368100	Clip	3
14	1368147	Cover (LH)	1
15	1368100	Clip	3
16	1368148	Cover (RH)	1
17	1368100	Clip	2
18	1365294	Screw	2
19	1370942	Bracket	2
20	1368149	Cover (LH)	1
21	1368100	Clip	3
22	1365294	Screw	3
23	1370942	Bracket	3
	1475410	Kit-Sound Liner	1

©2009 HYSTER COMPANY

WIRE HARNESS (FIGURE 12-36)
WIPER

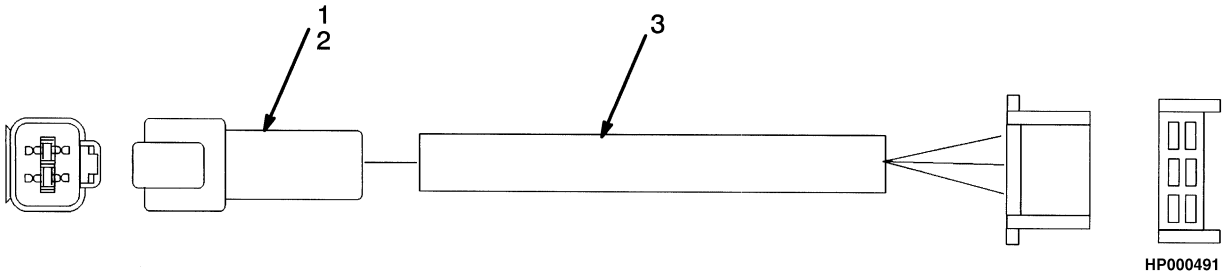

ITEM	PART NO.	DESCRIPTION	QTY
	1359559	Wire Harness (Wiper)	1
1	1330411	Connector	1
2	1330416	Connector	1
3	1359496	Wire Harness (Wiper)	1

©2009 HYSTER COMPANY

WIRE HARNESS (FIGURE 12-37)
CAB REAR

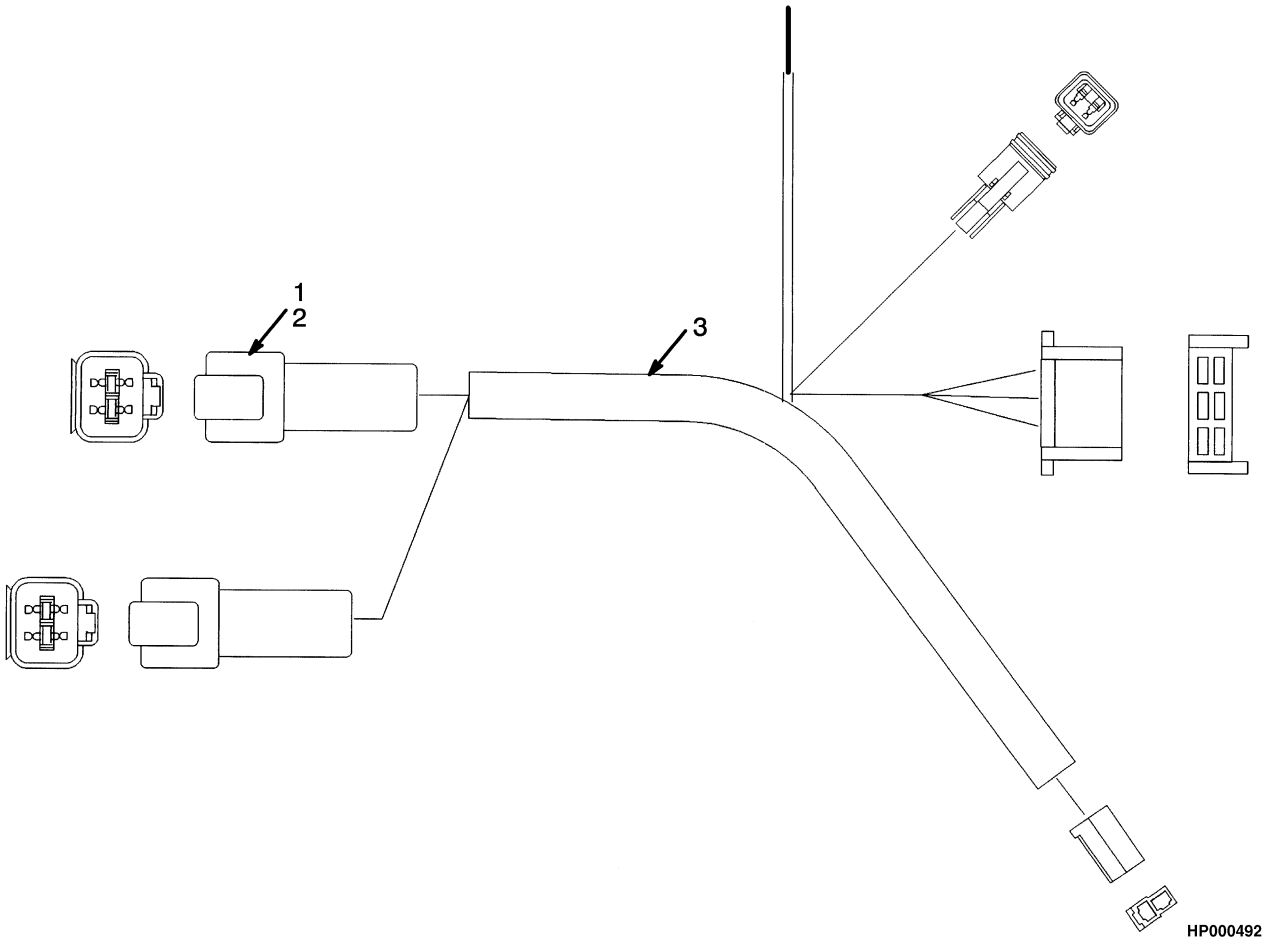

ITEM	PART NO.	DESCRIPTION	QTY
	1359560	Wire Harness (Cab)	1
1	1330411	Connector	1
2	1330416	Connector	1
3	1359497	Wire Harness (Rear)	1

WIRE HARNESS (FIGURE 12-38)
CAB

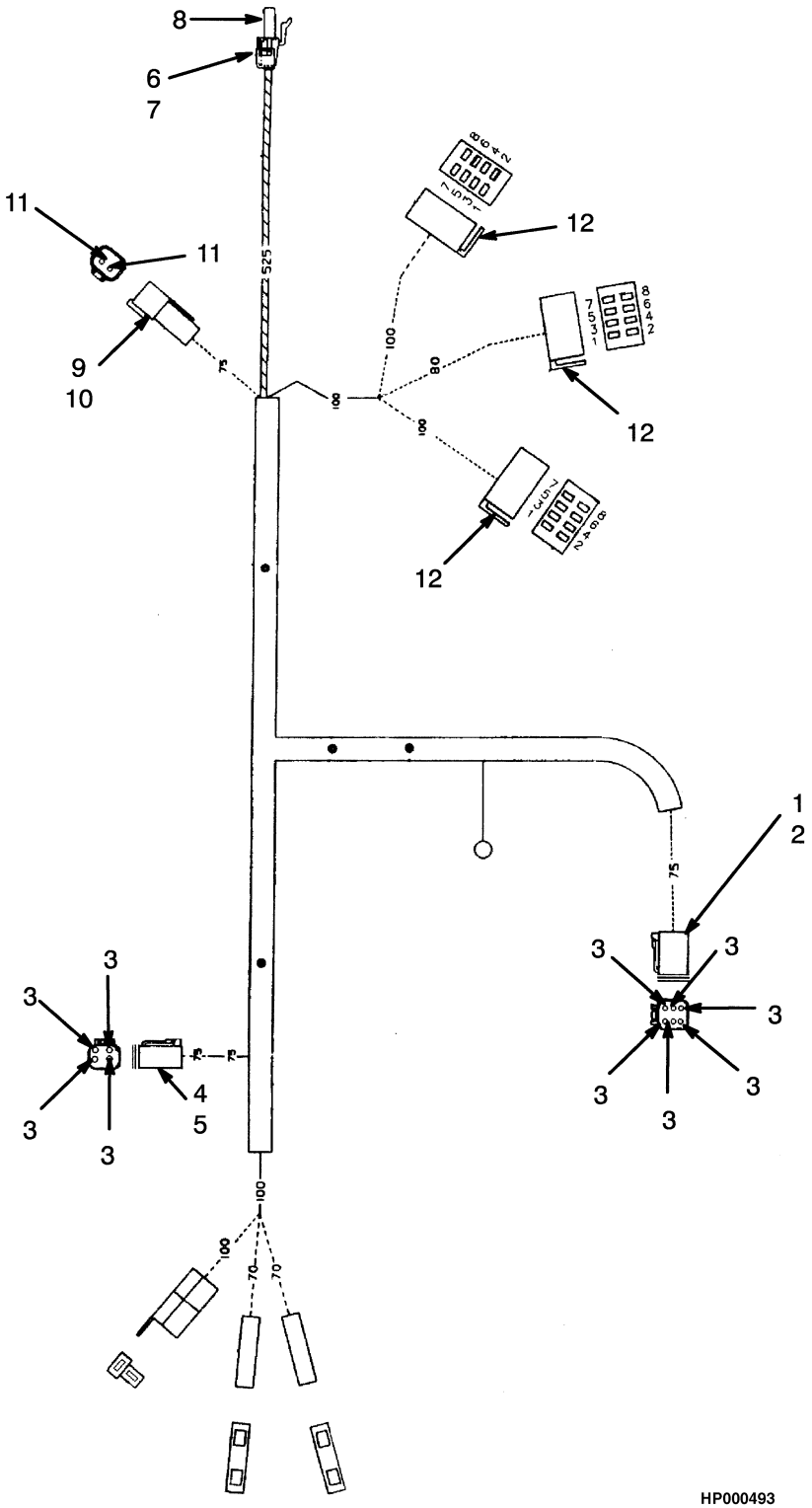

©2009 HYSTER COMPANY

WIRE HARNESS
CAB

ITEM	PART NO.	DESCRIPTION	QTY
	1455987	Wire Harness (Cowl)	1
1	1330422	Connector	1
2	1330428	Connector	1
3	1330438	Terminal (Socket)	10
4	1330421	Connector	1
5	1330427	Connector	1
6	1330299	Connector	1
7	1329147	Seal	1
8	1336173	Terminal	1
9	1330409	Connector	1
10	1330414	Connector (Secondary Lock)	1
11	1330437	Terminal (Pin)	2
12	878219	Socket	3

©2009 HYSTER COMPANY

WIRE HARNESS (FIGURE 12-39)

CHASSIS — REAR

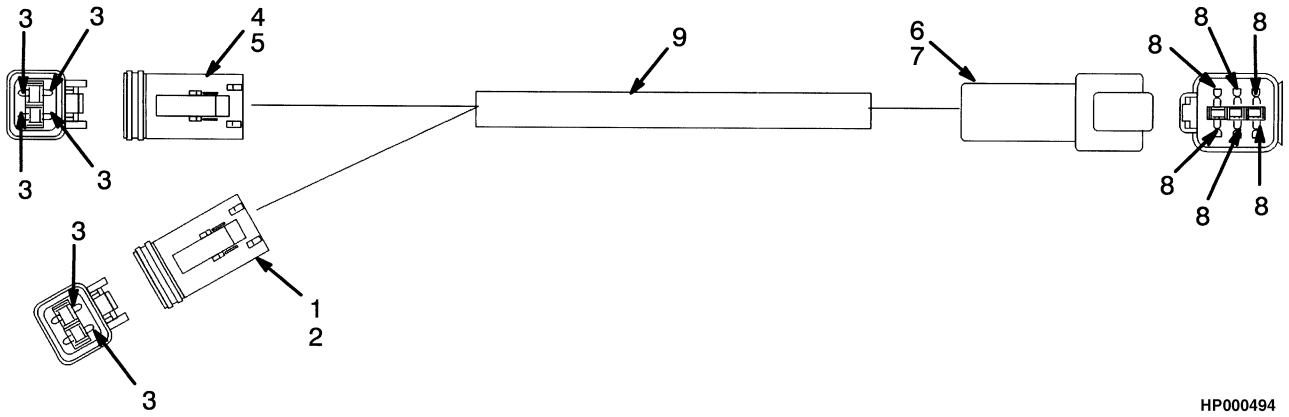

HP000494

ITEM	PART NO.	DESCRIPTION	QTY
	1361143	Wire Harness (Chassis)	1
1	1330419	Connector	1
2	1330424	Connector	1
3	1330438	Terminal (Socket)	6
4	1330421	Connector	1
5	1330427	Connector	1
6	1330412	Connector	1
7	1330417	Connector	1
8	1330437	Terminal (Pin)	6
9	381919	Braiding	AR

©2009 HYSTER COMPANY

NOTES

©2009 HYSTER COMPANY

MIRROR (FIGURE 12-40)

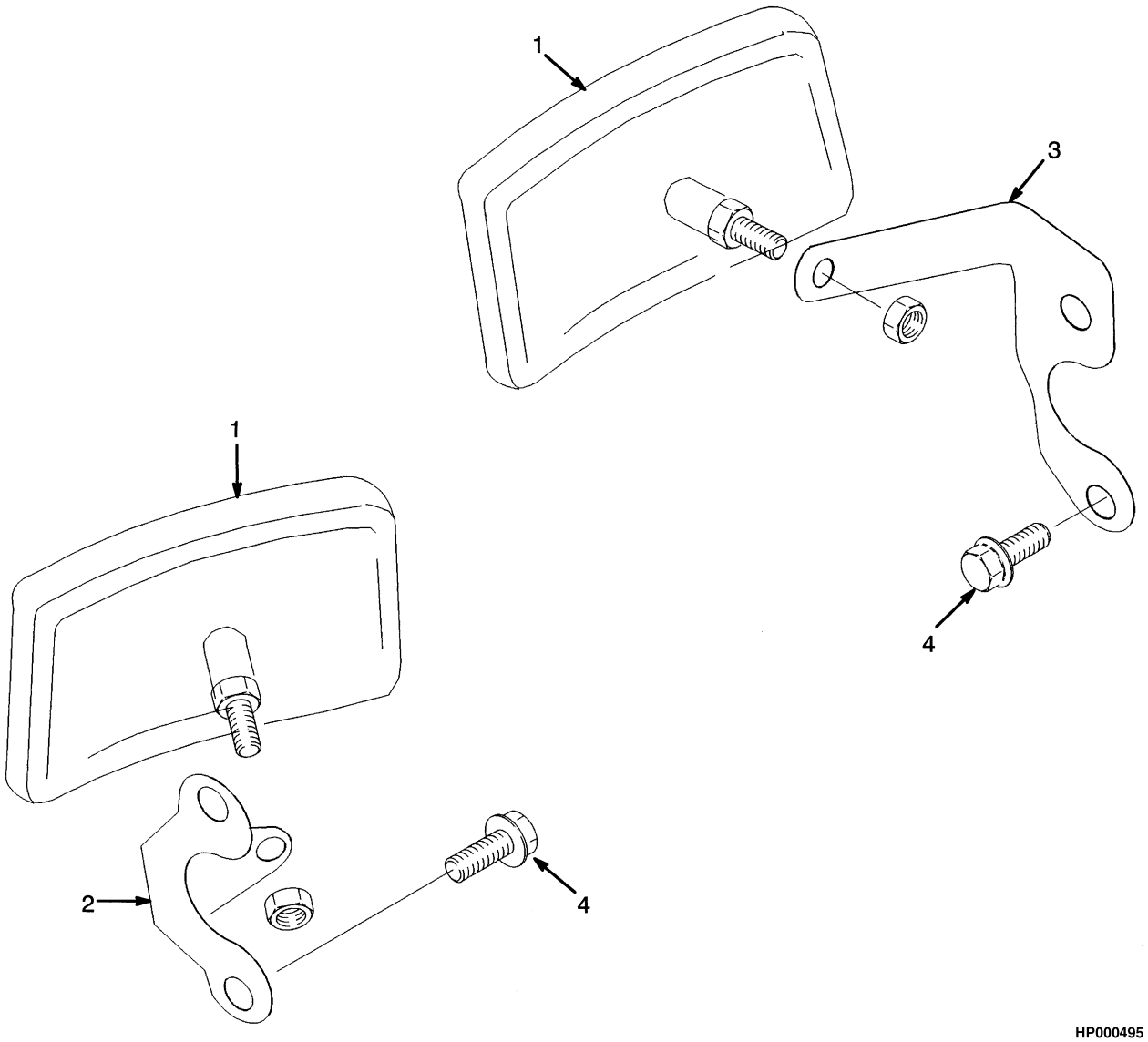

©2009 HYSTER COMPANY

MIRROR

ITEM	PART NO.	DESCRIPTION	QTY
1	1301286	Mirror	2
2	**b** 1356520	Bracket (LH and RH)	2
2	**a** 1356520	Bracket (RH)	1
3	**a** 1361561	Bracket (LH)	1
4	316678	Screw	4

FOOTNOTES:

a With Cab

b Without Cab

©2009 HYSTER COMPANY

FIRE EXTINGUISHER (FIGURE 12-41)

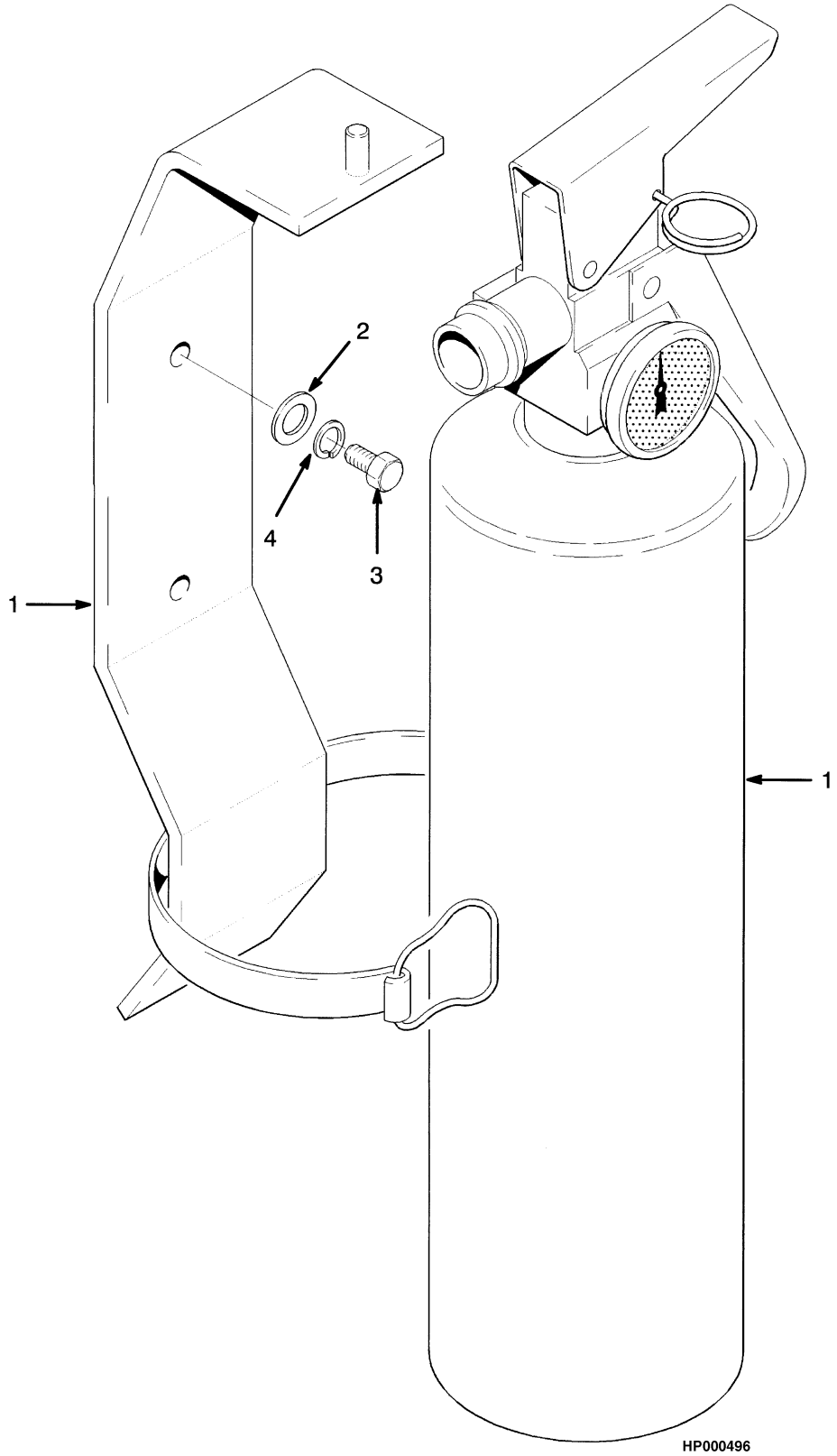

©2009 HYSTER COMPANY

FIRE EXTINGUISHER

ITEM	PART NO.	DESCRIPTION	QTY
1	146540	Fire Extinguisher	1
2	292679	Washer	2
3	296508	Screw	2
4	320155	Washer	2

©2009 HYSTER COMPANY

BACK-UP ALARM (FIGURE 12-42)

(→ S/N H177B40524A)

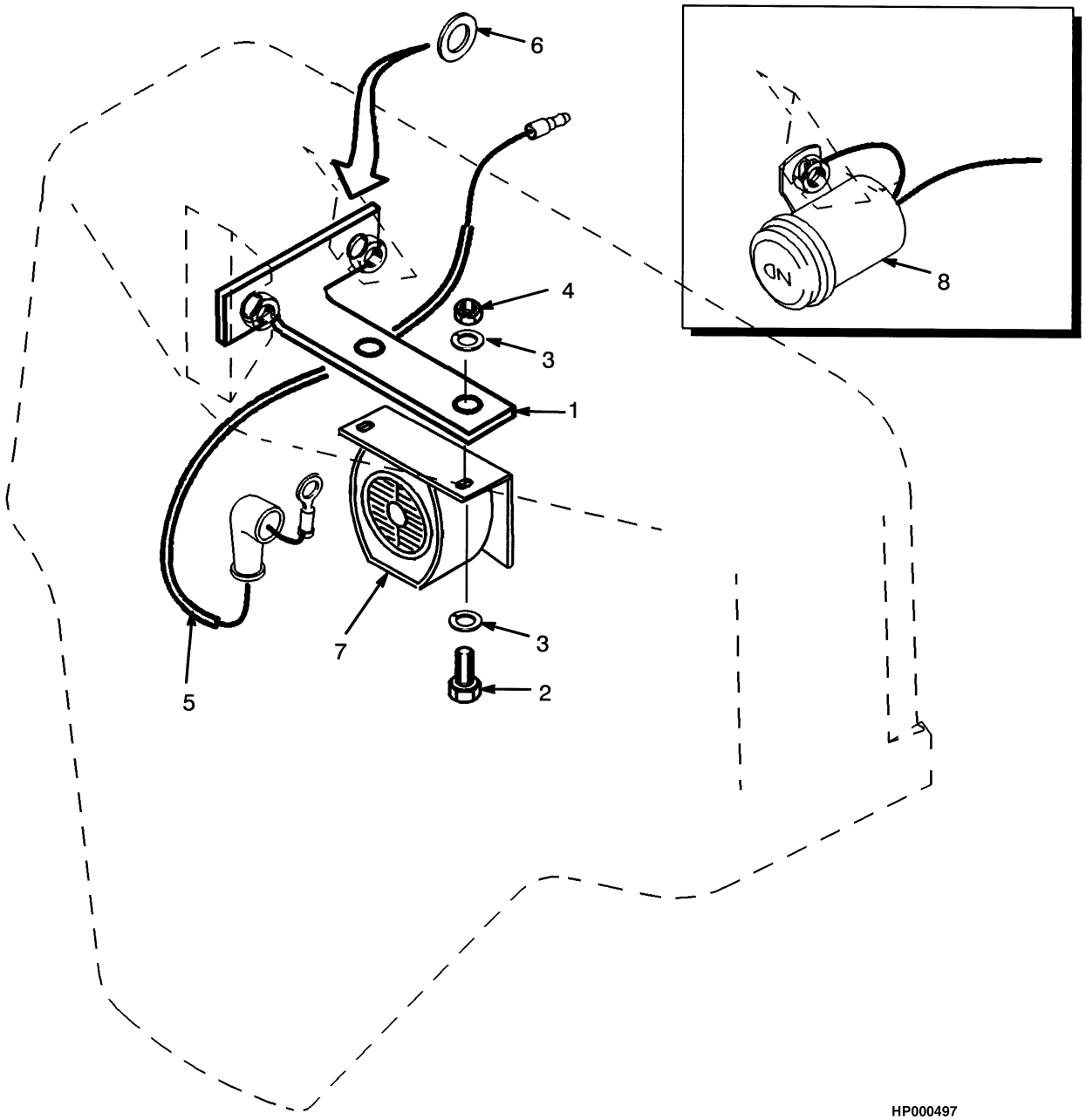

©2009 HYSTER COMPANY

BACK-UP ALARM

(→ S/N H177B40524A)

ITEM	PART NO.	DESCRIPTION	QTY
1	1361126	Bracket	1
2	292500	Capscrew	2
3	296417	Washer	4
4	316834	Nut	2
5	1361552	Wire Harness	1
6	320158	Washer	AR
7	1350733	Back-Up Alarm (87 dbA)	1
7	1350734	Back-Up Alarm (97 dbA)	1
7	1350735	Back-Up Alarm (102 dbA)	1
7	1350736	Back-Up Alarm (107 dbA)	1
7	1339947	Back-Up Alarm (82-102 dbA)	1
8	1343892	Back-Up Alarm (90 dbA)	1
	1375597	Kit-Back-Up Alarm	1

©2009 HYSTER COMPANY

BACK-UP ALARM (FIGURE 12-43)

(S/N H177B40525A →)

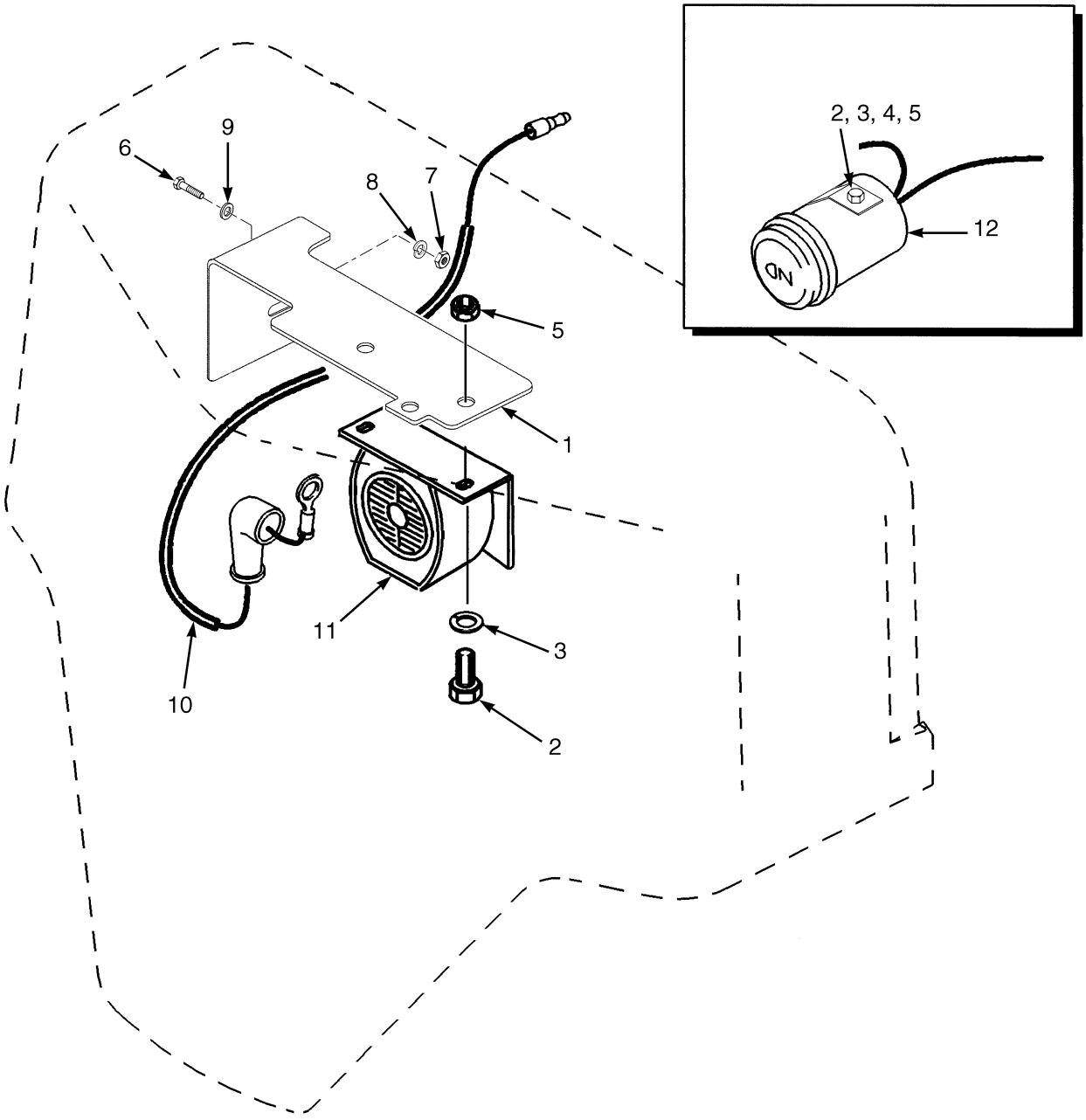

BP000290

©2009 HYSTER COMPANY

BACK-UP ALARM

(S/N H177B40525A →)

ITEM	PART NO.	DESCRIPTION	QTY
1	1533939	Bracket	1
2	292500	Capscrew	2
3	320156	Washer	2
4	296379	Washer	1
5	316834	Nut	2
6	136749	Screw	2
7	239503	Nut	2
8	292681	Lockwasher	2
9	320157	Washer	2
10	1361552	Wire Harness	1
11	1339947	Back-Up Alarm (82-102 dbA)	1
11	1350733	Back-Up Alarm (87 dbA)	1
11	1350734	Back-Up Alarm (97 dbA)	1
11	1350735	Back-Up Alarm (102 dbA)	1
11	1350736	Back-Up Alarm (107 dbA)	1
12	1343892	Back-Up Alarm (90 dbA)	1

©2009 HYSTER COMPANY

POWERTRAIN PROTECTIVE SYSTEM (FIGURE 12-44)

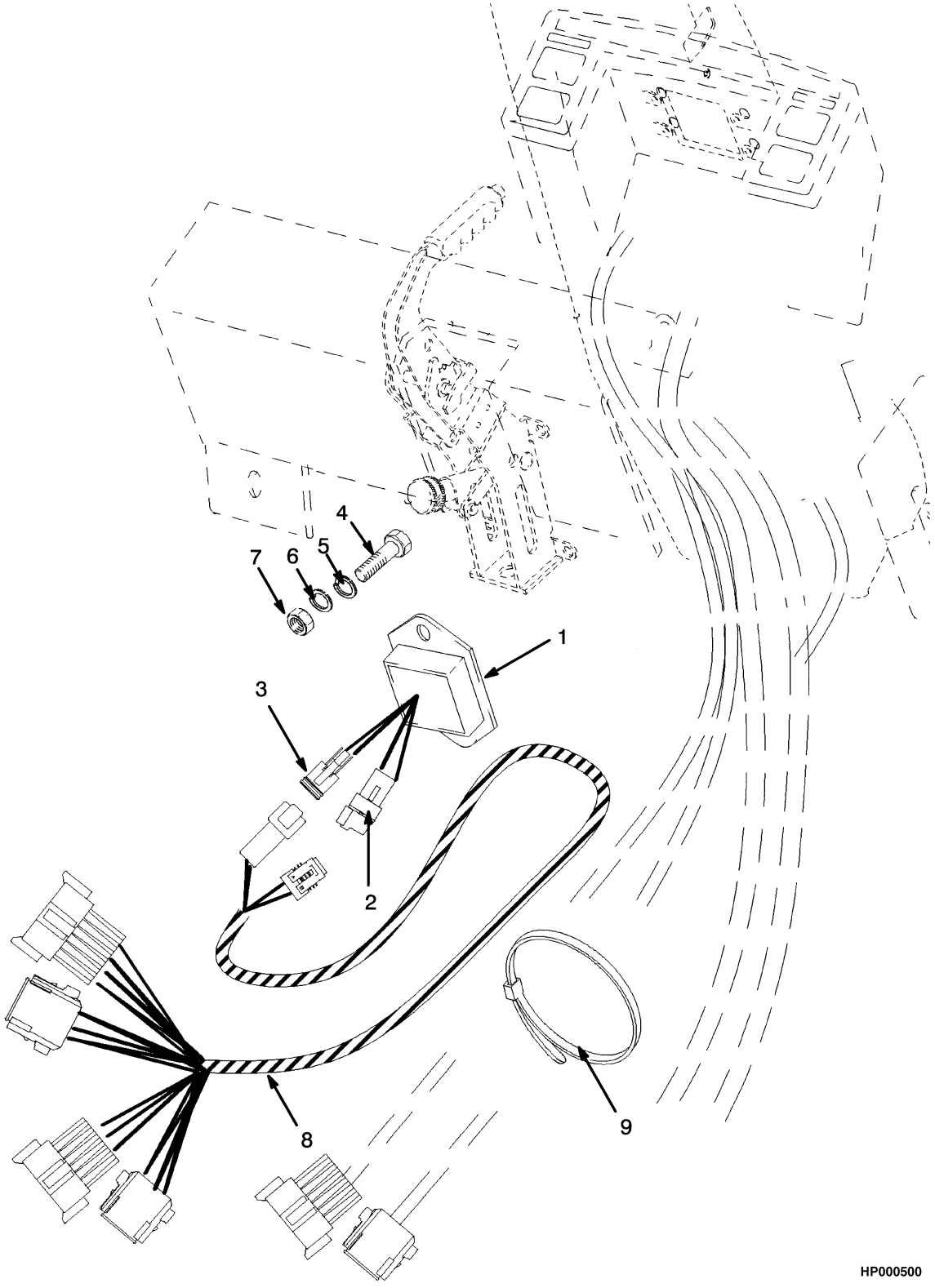

©2009 HYSTER COMPANY

POWERTRAIN PROTECTIVE SYSTEM

ITEM	PART NO.	DESCRIPTION	QTY
1	1375822	Module	1
2	1330411	Connector	1
3	1329150	Connector	1
4	302248	Capscrew	2
5	320155	Washer	2
6	292679	Washer	2
7	292668	Nut	2
8	1388304	Wire Harness (☞Figure 12-45)	1
9	1352606	Strap Clamp	AR
	1388305	Kit-Powertrain	1

©2009 HYSTER COMPANY

WIRE HARNESS (FIGURE 12-45)
POWERTRAIN PROTECTIVE SYSTEM

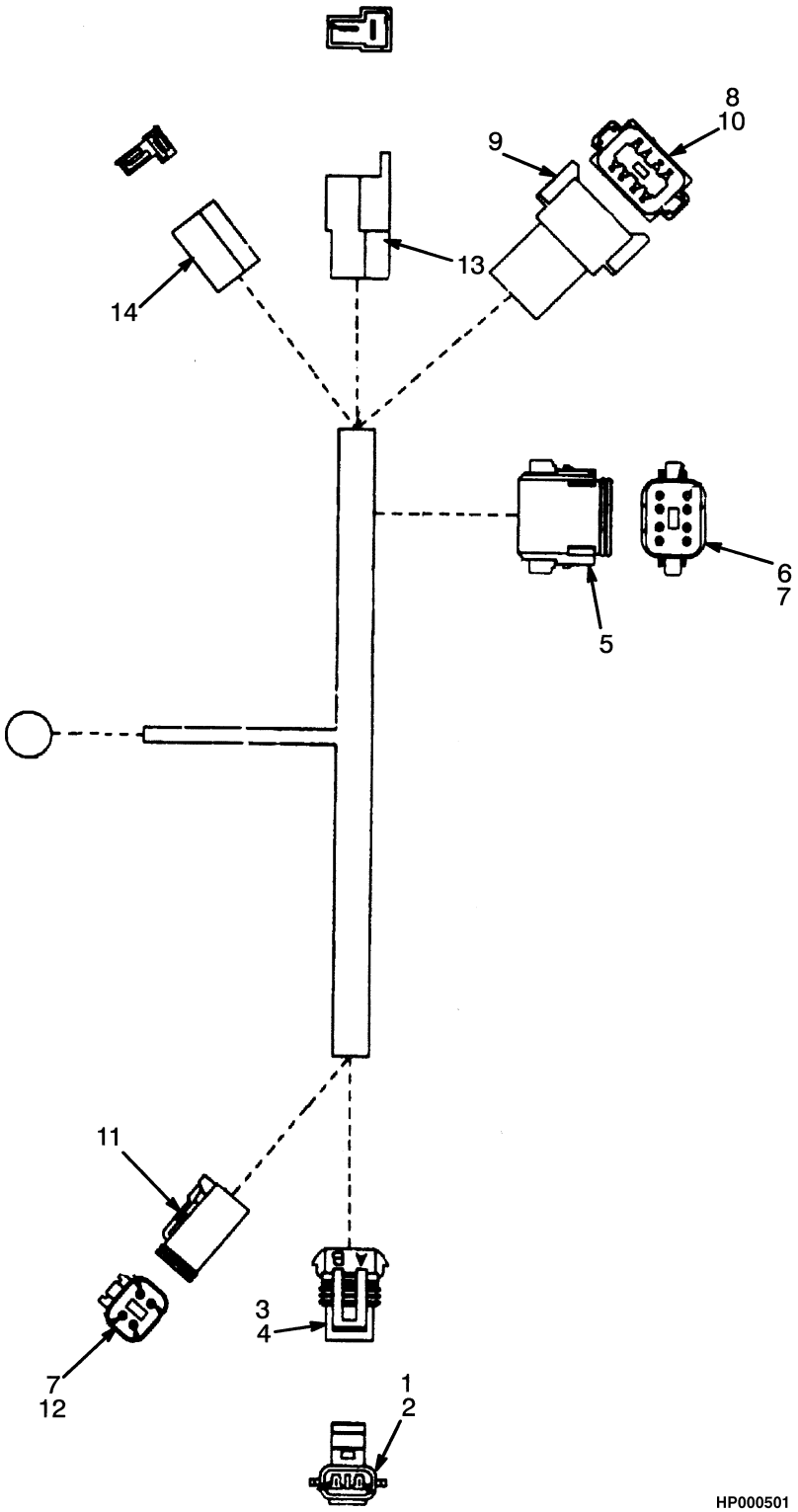

©2009 HYSTER COMPANY

WIRE HARNESS
POWERTRAIN PROTECTIVE SYSTEM

ITEM	PART NO.	DESCRIPTION	QTY
	1388304	Wire Harness	1
1	1329147	Seal	2
2	1329148	Terminal	2
3	1329152	Plug	1
4	1329151	Terminal	1
5	1330423	Connector	1
6	1330429	Connector	1
7	1330438	Terminal (Socket)	10
8	1330437	Terminal (Pin)	6
9	1330413	Connector	1
10	1330418	Connector	1
11	1330421	Connector	1
12	1330427	Connector	1
13	181047	Connector Body	1
14	181048	Connector Body	1

©2009 HYSTER COMPANY

NOTES

©2009 HYSTER COMPANY

13 NUMERICAL INDEX

SECTION 13
NUMERICAL INDEX

PART NO.	PAGE	ITEM
142	3-91	17
	3-95	17
	3-99	17
	3-104	47
	7-3	18
	7-3	34
7882	2-77	17
	2-81	17
	2-103	15
	2-107	17
	2-111	17
11276	5-41	4
	5-41	4
	5-53	22
12490	3-25	30
12817	12-79	16
12822	3-19	19
12823	12-79	25
12824	3-36	64
12837	12-79	15
12838	7-9	9
12843	3-40	51
12856	4-33	35
12870	7-10	3
12891	5-3	40
	5-9	32
	5-15	32
	9-23	3
	10-33	3
	12-15	14
	12-24	21
12894	5-39	1
12898	1-4	44
12928	2-98	33
12949	8-65	22
	8-65	36
	8-66	52
	8-69	22
	8-69	36
	8-70	52
13957	6-5	37
14209	7-10	5
14303	3-73	7
14349	3-36	52
	3-40	54
	3-61	14
	4-10	56
	4-14	
	4-18	59
	7-9	10
14358	3-15	7
	3-17	19
	3-35	26
14385	3-19	39
	3-39	32
	3-45	10
14386	2-25	14
	2-97	10
	2-101	1
	4-21	39
	4-25	35
	4-29	35
14387	2-98	41
	2-101	9
14480	12-39	8
14491	8-16	59
	8-20	62
14500	5-27	37
	5-32	41
	5-33	2
14506	5-45	4
14592	5-27	28
	5-31	2
14595	8-65	11
	8-69	11
14603	9-12	15
	10-7	17
14604	5-3	23
	5-10	42
	5-15	42
14685	8-23	23
14692	10-36	22
14760	12-37	4
14761	3-33	18
	3-51	18
14899	7-9	8
	7-10	1
15001	1-3	26
15002	3-83	20
	3-87	6
	4-34	57
15004	3-83	25
15006	3-36	65
15025	7-3	5
15032	5-3	12
	5-9	4
	5-15	4
	5-27	30
	5-31	15
15034	3-11	13
15049	4-37	1
	7-3	27
15052	2-72	43
	4-21	36
	4-26	76
	4-30	76
15055	2-104	47
	3-39	26
	8-65	3
	8-69	3
15056	2-98	36
15125	2-119	5
15129	1-15	18
15134	2-71	35
	2-93	6
	2-95	6
	6-3	7
15152	2-71	42
	4-21	35
	4-27	88
	4-31	88
	4-34	57
15154	2-103	21
	2-103	35
	2-107	21
	2-107	35
	2-111	21
	2-111	35
	3-83	21
15155	2-72	47
	2-97	22
	2-101	20
	3-83	23
	3-85	21
	4-22	59
	4-26	56
	4-30	56
	4-49	4
	4-51	4
15156	2-71	23
	2-89	18
	2-97	16
	2-101	7
	3-33	4
	3-51	4
	4-21	22
	4-25	22
	4-29	22
	6-3	6
15175	1-15	20
	1-17	16
	1-21	16
15200	3-91	5
15211	3-87	7
	3-95	5
	3-99	5
	3-103	11
	8-49	10
	8-53	10
	8-57	10
	8-61	10
	9-11	4
	9-23	10
	10-9	22
	10-33	10
	11-11	8
	11-16	23
	11-29	10
	12-16	21
	12-19	17
15212	3-83	27
	3-85	18
	3-87	2
	3-88	2
	3-91	10
	3-93	7
	3-95	10
	3-99	10
	3-103	22
	6-3	12
	7-3	7
	7-3	19
15223	11-11	9
15225	6-5	29
15227	6-5	39
15229	12-23	17
15236	8-45	3
	8-47	
15290	5-41	29
15303	5-41	22
15304	2-119	12
15347	5-3	29
	5-9	9
	5-15	9
	8-3	36
	8-7	36

©2009 HYSTER COMPANY

NUMERICAL INDEX (continued)

PART NO.	PAGE	ITEM
	8-11	20
	8-15	20
	8-19	36
15351	3-15	16
	3-36	63
15483	3-36	86
	5-3	13
	5-9	11
	5-15	11
15880	10-28	11
	10-30	11
	11-23	11
	11-25	11
	11-27	11
15908	4-33	21
15918	3-39	27
15920	3-36	66
15923	2-103	13
	2-107	13
	2-111	13
15931	1-4	46
15932	5-28	47
	5-31	39
15942	2-75	19
	2-135	1
15962	2-117	6
15964	3-17	22
	3-19	22
	3-39	20
	3-73	8
16009	5-41	10
	5-53	29
16041	12-10	12
	12-15	12
	12-19	12
	12-23	12
16100	3-77	33
16114	3-77	30
16116	12-79	39
16118	3-77	29
16150	4-33	28
16151	4-9	34
	4-13	33
	4-17	36
	5-41	23
16177	3-77	34
16186	4-9	36
	4-13	35
	4-17	30
	4-33	38
16187	2-72	50
	4-10	45
	4-22	71
	4-26	61
	4-30	61
	5-53	13
16374	2-103	26
16378	2-107	26
	2-111	26
16379	2-71	34
	2-98	37
16447	12-33	9
	12-35	4
	12-37	3
16448	12-33	9
	12-39	4
16480	8-65	28
	8-69	28
16481	5-27	19
	5-31	35
	8-3	37
	8-7	37
	8-11	33
	8-15	33
	8-19	37
	12-10	14
	12-10	23
16482	5-3	30
	5-9	8
	5-15	8
	5-27	28
	5-27	31
	5-31	2
	5-31	3
	5-31	5
	5-31	10
16483	5-3	14
	5-9	13
	5-15	13
	5-27	21
	5-31	4
	8-11	10
	8-11	42
	8-15	10
	8-15	42
	8-19	31
	8-27	6
	12-28	4
	12-29	4
	12-30	4
	12-33	16
	12-35	6
	12-37	10
16484	5-3	31
	5-9	24
	5-15	24
	5-27	5
	5-31	20
	5-45	3
	5-47	10
	5-47	10
	5-47	11
	5-55	17
	8-16	52
	8-19	28
	8-20	51
	8-49	35
	8-49	36
	8-50	42
	8-53	33
	8-53	34
	8-53	40
	8-57	36
	8-61	34
	8-65	12
	8-69	12
	12-39	14
16485	8-4	50
	8-4	51
	8-4	51
	8-8	51
	8-8	51
	8-11	29
	8-15	29
	8-16	65
	8-19	23
	8-20	64
	8-20	65
	8-33	14
	8-33	17
	8-39	14
	8-39	17
	8-41	5
	8-50	43
	8-53	41
	9-12	20
	9-12	22
	10-7	15
	10-7	16
	10-7	22
	10-9	3
	10-9	9
	11-12	25
	11-12	26
	11-15	5
16486	9-12	15
	10-7	17
	11-12	20
16487	5-3	23
	5-10	42
	5-15	42
16540	8-27	6
16541	8-49	36
	8-53	34
	8-57	36
	8-61	34
16551	8-16	65
16556	5-27	19
	5-31	35
	8-3	37
	8-7	37
	8-11	33
	8-15	33
	8-19	37
16558	3-95	38
	3-99	38
	3-103	18
	8-3	31
	8-7	31
	8-11	10
	8-11	42
	8-15	10
	8-15	42
	8-19	31
	12-28	4
	12-29	4
	12-30	4
16560	8-4	50
	8-4	51
	8-8	51
	8-11	29
	8-15	29
	8-20	51
	10-7	15
16565	12-10	23
16568	5-45	3
16578	8-7	18
	8-19	23
	9-12	22
	10-7	16
	11-12	25
16598	3-33	3
	3-51	3
	4-49	9
	4-51	9
16693	8-27	3
	12-33	10
	12-35	5

©2009 HYSTER COMPANY

NUMERICAL INDEX (continued)

PART NO.	PAGE	ITEM
	12-37	5
16694	3-17	11
	3-19	11
16706	8-65	13
	8-65	27
	8-65	45
	8-69	13
	8-69	27
	8-69	45
16709	2-103	34
	2-107	34
	2-111	34
16743	4-37	2
	7-3	32
16751	3-25	20
	3-59	20
	3-61	20
16764	3-19	12
	3-53	10
	5-47	3
16788	3-33	17
	3-51	17
	5-47	11
16805	2-89	19
	2-97	15
	2-101	8
16814	2-98	40
16815	6-3	5
16825	2-97	21
16836	3-83	22
	3-85	20
	4-22	58
	4-26	78
	4-30	78
16841	3-45	11
16863	3-11	12
	3-15	1
	3-35	20
	3-45	15
16865	3-107	14
	4-6	53
16882	8-8	61
	9-12	27
	10-7	19
	11-12	29
16897	7-3	5
16906	4-119	42
	4-121	33
	4-125	33
	12-79	6
16923	5-31	6
	8-3	30
	8-7	30
	8-8	62
	8-11	37
	8-12	63
	8-15	37
	8-16	63
	8-19	30
	8-50	44
	8-53	42
16925	12-33	10
	12-39	5
16926	5-55	23
16933	12-33	13
	12-35	9
	12-37	14
16982	5-27	26
	9-12	17
	10-7	18
	11-12	22
16984	8-7	17
16987	8-8	58
	8-49	34
	8-53	32
	8-58	59
	8-62	49
17038	5-45	11
17039	8-20	63
17051	8-16	64
17059	8-8	57
	8-49	33
	8-53	31
	8-58	60
	8-62	50
17061	8-27	4
17064	5-55	20
17120	8-11	41
	8-15	41
	8-20	61
17167	5-45	3
17197	8-50	42
	8-53	40
17215	3-35	29
17216	4-22	70
	4-26	60
	4-30	60
17217	3-35	42
	3-39	35
	12-79	38
17218	12-10	15
17221	5-55	13
17222	3-95	39
	3-99	39
	3-103	17
17309	5-45	5
17314	3-39	30
	4-22	72
	4-26	62
	4-30	62
17315	5-45	6
17319	12-9	11
17321	12-39	11
17574	5-55	24
17635	11-16	28
17650	3-73	41
17665	12-79	26
17756	8-12	57
	8-50	43
	8-53	41
17758	5-55	5
17780	5-55	22
18419	4-6	52
18496	1-21	14
	2-72	48
	4-22	47
	4-26	54
	4-30	54
18498	1-21	14
	4-49	3
18499	2-101	21
18500	2-31	12
	2-33	20
	2-35	10
	2-37	22
	2-39	10
	2-41	10
	2-75	6
	4-9	15
	4-9	39
	4-13	15
	4-13	38
	4-17	34
	4-18	44
	4-22	82
	4-26	75
	4-30	75
	4-34	53
18508	2-97	14
	2-101	27
18515	2-72	46
	3-83	24
	3-85	22
	4-22	60
	4-26	57
	4-30	57
	4-49	5
	4-51	14
18516	4-51	3
18535	4-22	64
	4-25	28
	4-29	28
18538	2-97	19
	2-101	16
18546	4-49	11
18824	8-4	56
	8-8	56
	8-12	55
	8-16	55
	8-20	56
18832	12-15	10
	12-15	10
	12-19	10
	12-23	10
21420	5-41	24
	5-53	12
28269	2-129	33
29588	12-49	1
30273	6-5	21
33657	5-41	5
	5-53	17
34507	3-13	32
37752	9-8	8
	9-8	9
	10-10	24
	11-6	12
	11-6	13
	11-16	30
39348	9-16	7
	9-18	7
	9-21	3
	10-28	13
	10-30	13
	11-23	13
	11-25	13
	11-27	13
39352	6-5	12
39374	8-47	10
39714	5-41	28
39742	8-12	53
	8-16	53
	8-19	24
39744	5-49	5
39748	5-49	3
43207	5-7	25
	5-13	12
43307	5-7	26
	5-13	1

©2009 HYSTER COMPANY

NUMERICAL INDEX (continued)

PART NO.	PAGE	ITEM
44308	5-39	2
44542	6-5	19
45733	5-35	23
	5-37	23
45736	12-43	1
45737	12-43	1
	12-43	1
46388	8-47	7
53162	3-107	14
	4-6	51
53163	12-43	12
	12-49	7
54123	2-98	34
55407	12-13	4
55434	8-45	11
55580	4-47	26
57568	3-107	9
57664	8-65	9
	8-65	24
	8-65	42
	8-66	56
	8-69	9
	8-69	24
	8-69	42
	8-70	56
58901	9-4	8
	9-7	3
	10-3	8
	10-5	3
	11-3	8
	11-5	8
	11-9	3
	11-29	3
	12-20	21
58903	6-5	35
58936	5-31	29
59229	9-18	11
	9-21	9
	10-11	8
	10-13	8
	10-15	6
	10-17	7
	10-19	9
	10-21	9
	10-23	7
	10-25	8
	11-21	10
	12-13	4
60948	12-49	3
60949	6-5	6
61220	12-49	2
63108	3-17	10
	3-19	10
	3-35	30
	3-39	36
	12-79	37
63111	3-45	12
63117	2-13	2
	2-15	10
	2-17	6
	2-19	5
	2-21	14
63899	3-73	37
68968	2-23	7
	2-25	2
69029	6-5	28
69238	8-3	26
	8-7	26
	8-11	35
	8-15	35
	8-19	26
78584	5-35	22
	5-37	22
78826	5-7	30
80952	5-39	9
85749	3-36	82
85766	3-17	4
85785	3-15	29
85885	5-41	7
	5-53	19
86376	4-10	55
86377	4-17	11
86510	4-5	19
	4-5	19
	4-37	6
	7-3	31
87446	3-73	6
88993	4-18	57
89220	4-21	9
	4-26	45
	4-30	45
90263	10-28	11
	10-30	11
	11-23	11
	11-25	11
	11-27	11
92861	9-16	11
	11-21	10
97577	5-35	11
	5-37	11
97999	3-11	5
98525	6-5	16
99610	2-121	6
101625	4-33	41
	8-3	34
	8-7	34
	8-11	39
	8-15	39
101809	3-11	7
	3-13	28
102898	5-47	12
	12-79	19
102919	5-47	1
	12-79	18
104506	9-3	3
	10-3	3
	11-3	3
	11-5	3
109919	3-33	10
110174	8-3	28
	8-7	28
	8-12	52
	8-16	52
	8-19	28
110322	3-45	8
	8-3	32
	8-7	32
	8-11	40
	8-15	40
	8-19	32
	8-19	34
112989	3-5	9
	3-7	9
	3-33	6
	3-33	39
	3-51	6
	3-69	1
	3-71	12
113011	3-15	26
	3-35	19
113341	7-13	7
114310	12-79	21
114312	3-69	7
	3-107	17
	4-25	30
	4-29	30
	4-33	23
	12-10	20
	12-28	3
	12-29	3
	12-30	3
	12-63	29
	12-65	18
114369	12-33	6
114586	3-39	33
118358	6-11	7
119236	2-27	27
	2-31	7
	2-35	22
	2-37	35
	2-41	22
	3-9	9
119388	4-21	44
	4-26	71
	4-30	71
122175	4-21	17
	4-25	17
	4-29	17
124217	3-77	
124218	3-77	3
124239	3-77	4
125305	3-35	40
125847	3-5	3
	3-7	3
	3-33	28
	3-69	13
127045	2-27	11
	2-31	5
	2-31	7
	2-31	8
	2-33	14
	2-35	5
	2-35	36
	2-37	30
	2-37	33
	2-39	5
	2-39	37
	2-41	5
	2-41	39
	8-3	8
	8-7	8
	8-11	17
	8-15	17
	8-19	8
	8-24	50
127644	2-103	43
	2-108	43
	2-111	43
128835	4-47	27
128852	4-47	28
129387	9-4	7
	9-7	4
	10-3	7
	10-5	4
	11-3	7
	11-5	7
	11-9	4
	11-29	4

©2009 HYSTER COMPANY

NUMERICAL INDEX (continued)

PART NO.	PAGE	ITEM
	12-19	19
129563	2-41	34
	4-5	25
	4-9	28
	4-10	48
	4-13	27
	4-13	46
	4-21	23
	4-25	23
	4-29	23
	4-37	8
	5-55	16
	8-4	53
	8-8	53
	8-12	62
	8-16	62
	8-20	53
129886	4-122	44
	4-125	44
129887	4-89	17
	4-90	19
	4-93	42
129888	4-89	11
	4-90	12
	4-93	20
	4-119	20
	4-121	25
	4-125	25
129889	4-71	36
	4-73	37
129894	4-91	10
	4-119	19
	4-121	12
	4-125	12
130619	12-43	1
130825	6-9	6
130845	2-31	7
	2-31	8
	2-33	36
	2-35	23
	2-41	23
	2-72	55
	2-119	11
	3-15	8
	3-17	20
	3-19	20
	3-33	15
	3-35	17
	3-39	2
	3-43	18
	3-53	7
	5-47	2
	5-55	2
	8-23	7
	12-79	24
	12-79	41
131358	9-12	7
	9-23	8
	10-7	3
	10-10	31
	10-33	8
	11-11	11
	11-16	17
	11-29	8
	12-16	19
	12-19	15
	12-23	15
131715	11-3	4
131716	9-3	4
	10-3	4
	11-3	4
	11-5	4
132473	3-25	1
	3-27	1
	3-59	1
	3-61	1
132860	10-10	27
	11-16	33
132861	8-49	29
	8-53	28
	8-57	29
	8-61	28
	12-79	31
132972	4-18	39
133469	2-103	14
	2-107	14
133503	1-15	17
134328	8-23	31
134436	5-3	30
	5-9	8
	5-15	8
	5-27	31
	5-31	3
134675	8-45	12
134680	8-20	65
134810	4-71	14
	4-73	14
134812	4-103	11
	4-107	11
	4-111	11
	4-115	11
	4-119	7
	4-121	26
	4-125	26
135158	5-35	25
	5-37	25
135588	11-11	1
135619	9-11	1
135634	11-11	1
135685	3-107	2
135915	12-51	3
135917	12-51	5
135920	12-51	1
	12-51	1
136516	4-21	9
	4-26	45
	4-30	45
136681	3-51	35
	3-83	15
	3-85	15
	4-5	32
	4-9	3
	4-13	3
	4-37	28
	4-57	5
	8-23	18
	8-50	56
	8-54	46
	8-58	56
	8-62	46
	11-16	14
	12-33	4
	12-69	24
	12-69	24
	12-73	14
136687	2-71	18
	3-19	33
	3-33	22
	3-103	34
	4-9	14
	4-13	14
	4-14	54
	4-17	8
	4-21	27
	4-25	27
	4-26	74
	4-29	27
	4-30	74
	4-33	10
	4-34	52
	6-13	10
	8-23	38
	12-79	30
136692	1-4	39
	1-9	35
	2-15	14
	2-27	15
	3-11	24
	3-51	39
	3-91	26
	3-91	31
	3-95	26
	3-95	30
	3-96	41
	3-99	26
	3-99	30
	3-99	41
	3-103	4
	5-4	56
	5-49	10
	5-53	34
	6-3	19
	7-3	22
	7-9	4
	8-24	48
	8-49	3
	8-53	3
	8-57	3
	8-61	3
	12-7	7
	12-61	13
136703	5-3	20
	5-10	51
	5-16	51
	7-3	13
136704	5-27	32
	5-32	43
	9-12	13
	9-26	2
	11-16	8
	11-32	21
136749	1-3	30
	2-35	30
	2-37	11
	2-39	30
	2-41	30
	3-83	13
	3-85	13
	4-33	12
	6-3	23
	7-13	6
	8-3	11
	8-7	11
	8-11	28
	8-15	28
	8-19	11
	8-23	20
	8-49	20

©2009 HYSTER COMPANY

NUMERICAL INDEX (continued)

PART NO.	PAGE	ITEM
	8-53	20
	8-57	20
	8-61	20
	10-35	8
	11-16	14
	11-31	7
	12-95	6
136985	2-27	14
	3-51	36
	3-91	24
	3-96	43
	3-100	43
	5-3	36
	5-9	28
	5-15	28
	5-35	19
	5-37	19
	6-3	22
	7-3	24
	8-23	37
	10-9	8
137138	12-51	1
137139	12-51	1
137154	5-41	11
	5-41	11
	5-53	21
137282	5-3	15
	5-9	15
	5-15	15
	5-35	37
	5-37	38
137283	5-35	4
	5-37	4
137702	2-33	12
137852	3-15	11
	3-35	16
	3-35	25
	3-36	77
	3-39	4
	3-73	27
	3-88	4
	3-93	6
	4-5	36
	4-18	40
	4-37	25
	8-3	35
	8-7	35
	8-11	32
	8-15	32
	8-19	35
138573	4-5	20
	4-5	20
138880	3-73	39
139743	4-49	15
	4-51	13
140612	8-23	24
140660	5-45	7
	5-47	6
141462	4-89	18
	4-90	21
	4-93	14
	4-103	12
	4-107	12
	4-111	12
	4-115	12
	4-119	8
	4-121	29
	4-125	29
141908	8-24	52
144067	8-23	30
145096	12-45	1
	12-45	1
145097	12-45	1
145157	12-45	1
	12-45	1
145172	2-85	5
	2-89	5
145173	2-85	7
	2-89	7
145176	2-103	28
	2-107	28
	2-111	28
145177	2-103	29
	2-107	29
	2-111	29
145639	1-15	21
	1-17	17
	1-21	15
145641	2-103	40
	2-107	40
	2-111	40
145949	2-104	44
	2-108	44
	2-111	44
145978	5-41	6
	5-53	18
146540	12-91	1
147006	4-33	13
147294	3-13	15
147972	10-11	9
	10-13	9
	10-15	5
	10-17	8
	10-20	10
	10-21	10
	10-23	6
	10-25	9
147973	6-9	5
	6-11	6
	10-28	10
	10-30	10
	11-23	10
	11-25	10
	11-27	10
148609	4-119	34
	4-121	15
	4-125	15
148610	4-107	14
	4-111	14
148615	4-89	9
	4-90	9
	4-93	19
	4-119	13
	4-121	13
	4-125	13
148648	4-91	12
148827	2-77	18
	2-81	18
148962	2-75	8
	4-10	53
149805	2-77	8
	2-81	8
149814	2-77	7
	2-81	7
149816	2-77	7
	2-81	7
149819	2-103	20
	2-107	20
	2-111	20
149846	2-103	32
	2-107	32
	2-111	32
149847	2-103	33
	2-107	33
	2-111	33
149857	2-85	9
	2-89	9
149858	2-85	9
	2-89	9
149864	2-85	2
	2-89	2
149867	2-85	10
	2-90	34
149868	2-85	4
	2-89	4
149888	2-85	28
	2-89	27
149889	2-85	27
149898	2-103	16
	2-107	15
	2-111	15
149929	2-97	8
149934	2-104	45
	2-108	45
	2-112	45
149976	2-111	22
149977	2-85	13
	2-89	13
149978	2-85	37
	2-90	36
150879	5-3	35
	5-10	53
	5-16	53
152608	2-137	27
	3-77	23
152609	2-137	26
	3-77	22
153069	4-14	50
153919	12-13	5
153931	4-9	2
	4-13	2
154065	1-23	12
154066	1-23	12
154067	1-23	12
154355	10-9	10
	11-15	6
154375	8-47	6
154452	12-79	17
154475	4-71	32
	4-73	33
156194	6-5	15
156195	6-5	14
157704	3-73	38
158017	2-123	2
158048	2-139	11
158186	3-77	9
	3-77	12
158187	3-77	10
	3-77	13
159942	2-103	7
	2-107	7
	2-111	7
159971	2-90	40
	2-111	42
159972	2-107	41
	2-111	41
159973	2-77	20
	2-81	20

©2009 HYSTER COMPANY

NUMERICAL INDEX (continued)

PART NO.	PAGE	ITEM
159974	2-93	15
	2-95	15
159977	2-103	3
	2-107	3
	2-111	3
159991	2-81	16
160361	2-85	11
	2-89	11
160376	2-90	29
160377	2-85	26
	2-89	25
160602	2-77	7
	2-81	7
160653	12-45	5
161003	9-12	25
	10-9	19
	11-11	5
	11-16	20
161029	11-15	1
161252	3-83	18
161617	3-87	5
161884	12-49	11
161885	12-49	10
161889	12-43	6
161890	12-43	5
161894	12-51	14
	12-51	18
161895	12-51	13
	12-51	17
162836	3-83	26
	3-85	23
	3-87	1
	3-88	1
	3-93	8
163970	6-5	22
164017	2-103	5
164022	2-77	10
	2-81	10
164023	2-77	21
164050	2-72	52
	2-86	39
	2-90	38
164488	12-55	8
	12-57	8
	12-59	8
164639	6-5	20
164840	10-28	10
	10-30	10
	11-23	10
	11-25	10
	11-27	10
166112	5-55	19
166857	3-5	15
	3-7	15
	3-33	25
	3-33	37
	3-51	22
	3-51	25
	3-53	21
	3-69	5
	5-55	6
	8-27	2
	12-79	23
167261	5-55	21
167507	3-77	25
167508	3-77	26
168389	8-3	27
	8-7	27
168718	2-27	2
	2-31	22
	2-33	25
	3-5	20
	3-15	9
	3-17	21
	3-19	21
	3-35	28
	3-39	34
	3-73	26
169718	2-103	42
	2-107	42
169719	2-103	41
169752	2-77	6
169942	2-77	16
	2-81	16
169964	2-77	6
169965	2-77	6
169966	2-77	6
169967	2-77	6
170658	1-23	22
173247	2-27	10
	4-18	50
	5-55	18
173710	3-35	10
173941	3-77	6
173944	3-77	1
173981	2-133	16
174202	12-52	2
174208	12-51	1
174209	12-43	1
174211	12-45	1
174374	3-40	53
174413	2-7	16
	2-71	9
175323	3-36	75
175347	3-15	15
	3-15	32
	3-35	22
175944	12-79	7
176452	8-3	43
	8-7	43
176640	2-71	26
	3-73	25
	4-5	29
	4-49	6
	4-51	6
	5-3	19
	5-10	52
	5-16	52
	7-13	5
	8-49	25
	8-53	25
	8-57	25
	8-61	25
177461	2-75	3
	8-23	4
177521	4-65	9
	4-67	1
	12-63	17
177563	2-103	31
	2-107	31
	2-111	31
177894	4-9	1
178119	10-9	5
180030	10-9	2
180057	9-11	1
	11-15	1
180177	10-9	2
	11-15	1
181045	4-101	24
	4-103	28
	4-107	34
	4-111	34
	4-115	28
	4-127	13
	4-129	13
181046	4-37	27
	4-89	6
	4-90	6
	4-93	24
	4-101	28
	4-112	57
	4-119	2
	4-121	10
	4-125	10
181047	4-71	13
	4-73	13
	4-127	15
	4-129	15
	12-99	13
181048	4-71	31
	4-73	32
	4-89	4
	4-90	4
	4-93	13
	4-101	27
	4-103	10
	4-107	10
	4-111	10
	4-115	10
	4-119	9
	4-121	3
	4-125	3
	4-127	14
	4-129	14
	12-99	14
181089	12-79	14
181266	12-39	13
181298	12-39	12
181763	3-36	74
	3-40	48
181766	5-27	29
	5-31	16
182118	3-13	34
182332	9-11	1
182333	10-9	2
182343	11-11	1
182942	3-36	75
183985	3-17	3
184451	3-13	4
184761	11-12	20
185544	12-61	16
187388	9-16	8
	9-18	8
	9-21	6
	10-28	7
	10-30	7
	11-20	7
	11-23	7
	11-25	7
	11-27	7
188516	8-65	16
	8-65	31
	8-66	48
	8-69	16
	8-69	31
	8-70	48
188518	8-65	18
	8-65	33

©2009 HYSTER COMPANY

NUMERICAL INDEX (continued)

PART NO.	PAGE	ITEM
	8-66	54
	8-69	18
	8-69	33
	8-70	54
188519	8-65	19
	8-65	34
	8-66	50
	8-69	19
	8-69	34
	8-70	50
188534	8-65	2
	8-69	2
189338	4-49	13
189595	9-12	20
	10-7	22
	11-12	26
189609	2-77	14
	2-81	14
189614	2-85	33
	2-90	32
190380	4-10	46
	4-13	44
	4-17	28
	4-33	34
190383	4-9	8
	4-9	31
	4-10	40
	4-13	8
	4-13	30
	4-13	39
	4-17	26
	4-17	33
	4-18	43
	4-21	12
	4-22	67
	4-22	74
	4-25	12
	4-26	64
	4-29	12
	4-30	64
	4-33	24
	4-103	16
	4-115	16
190580	11-21	13
190887	10-11	5
	10-13	5
	10-15	10
	10-17	1
	10-19	6
	10-21	6
	10-23	11
	10-25	1
	10-28	12
	10-30	12
	11-23	12
	11-25	12
	11-27	12
193008	3-5	19
193653	3-73	31
193772	5-4	48
	5-9	10
	5-15	10
195417	12-49	1
195771	3-25	38
	3-36	60
196395	4-5	38
196480	3-103	37
197065	4-37	3
197066	1-7	9
	4-18	48
	4-33	48
197067	2-71	41
	3-36	57
	3-73	13
	4-22	63
	4-22	75
	4-22	81
	4-25	29
	4-26	65
	4-29	29
	4-30	65
	4-33	40
	12-55	11
	12-57	11
197345	10-9	2
	11-15	1
198410	4-47	
199099	4-71	15
	4-73	15
199524	8-65	12
	8-69	12
199563	1-3	27
199566	2-104	46
	2-108	46
	2-112	46
200659	5-27	26
	5-31	10
201797	3-15	30
	3-35	39
201800	3-15	23
201808	3-15	38
	3-36	76
203009	3-35	12
	3-103	36
203071	6-9	2
203230	3-73	34
204223	4-21	13
	4-25	13
	4-29	13
	4-33	19
204780	3-25	2
	3-59	2
	3-61	2
204787	3-25	15
	3-27	8
	3-59	15
	3-61	15
204790	3-25	36
	3-27	9
	3-59	36
	3-61	36
204797	3-25	26
204824	3-25	24
	3-59	24
	3-61	24
204829	3-65	7
204830	3-65	9
	3-66	9
204831	3-65	18
	3-66	19
204858	3-25	7
	3-27	6
	3-59	7
	3-61	7
204866	3-47	14
205120	8-65	14
	8-65	29
	8-66	46
	8-69	14
	8-69	29
	8-70	46
205121	8-65	15
	8-65	30
	8-66	47
	8-69	15
	8-69	30
	8-70	47
205122	8-65	20
	8-65	35
	8-66	51
	8-69	20
	8-69	35
	8-70	51
205123	8-65	23
	8-65	37
	8-66	55
	8-69	23
	8-69	37
	8-70	55
206150	8-8	60
207495	12-61	17
208483	4-47	29
209417	7-3	25
210403	8-11	23
	8-15	23
	8-20	57
213617	8-23	33
213892	3-103	40
214121	3-25	28
214364	8-23	22
	10-7	11
	11-12	19
	11-32	27
215211	9-3	5
	10-3	5
	11-3	5
	11-5	5
218599	5-35	14
	5-37	14
220283	3-25	9
	3-27	3
	3-59	9
	3-61	9
220426	4-6	50
220434	3-107	16
220498	12-55	10
	12-57	10
220932	3-107	3
221355	12-51	7
221420	2-103	38
	2-107	38
	2-111	38
221453	2-103	36
	2-107	36
	2-111	36
221455	2-97	6
221510	2-75	21
221511	2-101	22
221519	4-51	10
221533	2-81	21
221539	2-75	13
221544	2-71	6
	2-75	13
221550	5-35	35
221733	8-50	63
	8-57	35
221765	3-36	84
221767	2-75	4

©2009 HYSTER COMPANY

NUMERICAL INDEX (continued)

PART NO.	PAGE	ITEM
221769	2-71	5
	2-75	12
221771	1-29	3
	12-41	3
221773	5-35	15
	5-37	15
221877	3-88	5
222024	1-7	8
222365	8-8	50
	8-15	38
	8-20	50
222380	5-31	5
222381	8-8	59
	8-49	35
	8-53	33
	8-58	58
	8-62	48
222413	8-4	51
	8-8	51
222443	5-3	14
	5-9	13
	5-15	13
	5-27	21
	5-31	4
222477	8-3	17
222480	3-73	29
222502	5-47	10
	5-55	17
222523	4-112	52
	4-131	6
	4-132	9
222535	8-23	3
223095	4-47	9
223389	9-11	1
224570	5-41	16
	5-53	26
224571	5-41	15
	5-53	25
226458	12-15	7
	12-19	7
	12-23	7
226986	6-5	30
227131	4-59	7
227155	1-4	45
229348	12-33	14
229349	12-33	15
230419	5-4	49
	5-9	20
	5-15	20
	5-35	39
	5-37	40
230882	12-55	12
	12-57	12
	12-61	14
233693	8-8	48
	8-20	64
234038	5-35	17
	5-37	17
235691	5-3	31
	5-9	24
	5-15	24
	5-27	5
	5-31	20
236437	12-51	2
236900	4-89	19
	4-90	22
	4-103	14
	4-107	32
	4-111	32
	4-115	14
237947	1-3	10
238637	11-15	5
239242	3-39	6
239503	1-4	35
	1-13	9
	2-17	16
	2-31	4
	2-35	29
	2-37	12
	2-39	29
	2-41	29
	3-15	33
	3-17	6
	3-19	6
	3-73	23
	3-91	8
	3-95	8
	3-99	8
	3-104	51
	4-9	18
	4-13	18
	4-13	45
	4-17	17
	4-21	15
	4-22	79
	4-25	15
	4-26	80
	4-29	15
	4-31	80
	4-33	5
	4-37	17
	4-57	8
	5-45	10
	5-47	9
	5-55	12
	7-13	2
	8-3	12
	8-7	12
	8-11	26
	8-15	26
	8-19	12
	8-23	15
	8-49	23
	8-50	58
	8-53	23
	8-54	49
	8-57	23
	8-58	42
	8-61	23
	8-61	32
	12-70	37
	12-73	15
	12-79	33
	12-95	7
239784	12-10	14
241074	3-25	29
243147	3-15	37
244903	2-77	19
244909	2-85	2
	2-89	2
244910	2-85	2
	2-89	2
244911	2-85	2
244922	2-85	22
	2-89	21
244925	2-85	23
	2-89	22
244933	2-103	9
	2-107	9
245202	2-85	32
	2-90	31
245800	2-115	18
245996	4-101	22
	4-107	33
	4-111	33
246108	2-101	2
	3-13	43
	3-40	55
	3-45	16
	4-21	14
	4-25	14
	4-29	14
	5-28	48
	5-33	2
246855	4-17	11
246994	9-11	1
249289	6-5	13
250095	12-59	4
250371	3-25	10
	3-59	10
	3-61	10
251979	2-15	22
	2-17	11
	2-19	15
	2-21	17
	2-75	20
	5-41	21
252293	4-93	36
	4-119	18
	4-121	21
	4-125	21
	4-132	10
253991	2-112	50
254686	2-85	21
	2-89	17
	2-89	20
256160	3-79	4
256674	4-103	29
	4-107	35
	4-111	35
	4-115	29
257241	4-9	16
	4-13	16
	4-17	14
	4-22	50
	4-26	77
	4-30	77
	4-34	54
257913	9-16	5
	9-18	5
	9-21	4
	10-28	5
	10-30	5
	11-20	5
	11-23	5
	11-25	5
	11-27	5
258321	3-15	13
	3-35	21
	3-67	
258344	12-79	22
260878	3-17	16
	3-19	16
	3-35	33
	3-39	22
261379	2-75	18
	2-135	2
	4-49	14

©2009 HYSTER COMPANY

NUMERICAL INDEX (continued)

PART NO.	PAGE	ITEM
	4-51	12
263839	2-85	30
	2-89	10
263958	3-67	
263962	3-67	6
264134	3-13	29
264159	2-71	28
	2-97	18
	2-101	4
	5-9	2
	5-15	2
	5-41	25
	5-53	38
264892	5-41	8
	5-53	24
264893	5-41	9
	5-53	23
264973	6-5	10
265509	2-77	12
	2-81	12
266465	2-133	2
268356	4-47	14
268619	6-11	5
271949	2-85	25
	2-89	24
273775	3-5	12
	3-45	2
	3-71	8
274247	2-93	3
	2-95	3
274648	4-47	3
275496	4-9	27
	4-13	26
	4-17	3
	4-22	45
	4-26	69
	4-30	69
	4-33	45
275497	4-103	43
	4-115	43
275498	4-9	24
	4-18	53
	4-33	32
	4-103	43
	4-115	43
277446	4-101	26
	4-103	13
	4-107	13
	4-111	13
	4-115	13
277450	2-103	8
	2-107	8
	2-111	8
280472	3-17	24
	3-19	24
	3-39	15
280644	1-3	25
	1-7	14
281844	2-93	1
286788	5-3	16
287472	5-3	32
	5-9	25
	5-15	25
287816	2-71	20
	3-83	9
	3-85	9
	4-14	53
	4-33	8
	12-79	28
287817	3-19	31
	5-4	44
	5-9	33
	5-15	33
287837	10-10	32
	11-16	13
287844	3-103	33
287851	3-91	23
	3-95	23
	3-99	23
	3-104	52
	5-35	8
	5-37	8
287854	1-9	36
	2-19	31
	2-23	3
	2-25	24
	3-5	10
	3-7	10
	3-11	16
	3-33	35
	3-69	3
	3-91	23
	3-95	24
	3-99	24
	3-104	55
	7-3	23
	12-61	10
287860	2-33	37
	3-91	30
	3-96	42
	3-100	42
	5-4	54
	5-4	54
	5-9	21
	5-15	21
	5-49	20
	7-3	8
	7-9	2
	8-49	1
	8-53	1
	8-57	1
	8-61	1
	11-32	29
	12-7	8
288638	12-49	4
	12-51	4
289344	2-77	4
	2-81	4
290300	4-47	13
290303	4-47	1
290369	4-47	15
290370	4-47	16
290508	4-47	8
290509	4-47	22
290734	3-5	4
	3-7	4
	3-33	29
	3-69	14
290735	3-5	5
	3-7	5
	3-33	30
	3-69	15
291912	12-49	6
291915	12-51	6
292500	3-33	21
	4-5	21
	4-5	43
	4-6	54
	4-18	42
	12-93	2
	12-95	2
292501	1-9	27
	3-71	11
	4-5	27
	4-17	7
	4-21	34
292502	4-31	93
	9-26	14
	12-79	9
292503	4-25	39
	4-30	39
292505	3-95	36
	3-99	36
	3-103	16
292507	8-23	43
292508	5-27	33
	5-32	46
	9-26	3
292509	2-31	2
	3-13	26
	3-17	13
	3-19	13
	3-39	17
	5-27	34
	5-32	47
	12-69	15
292513	2-75	8
292515	1-4	37
	12-7	3
292516	5-3	7
	5-9	39
	5-15	39
292517	2-13	3
	2-15	4
	2-17	17
	2-19	1
	2-21	1
	2-25	17
292519	5-3	8
	5-3	8
	5-9	37
	5-15	37
	5-35	27
	5-37	27
292521	3-91	2
	3-95	2
	3-99	2
	3-103	20
292522	5-31	37
292523	3-91	2
	3-95	2
	3-99	2
292524	5-3	9
	5-10	41
	5-15	41
292527	5-49	17
	10-36	34
	11-16	33
	11-32	37
292528	1-9	2
	5-4	52
	5-41	30
	5-49	19
	8-12	50
	8-16	50
	8-19	21
292529	10-9	15
	11-16	15

See Service Manual for service procedures.
©2009 HYSTER COMPANY

NUMERICAL INDEX (continued)

PART NO.	PAGE	ITEM
292530	11-16	15
292532	9-12	9
	10-7	6
	11-12	14
	11-16	10
292533	7-3	9
	9-26	11
	9-26	11
	10-36	32
	11-32	16
292534	11-32	19
292536	1-9	13
292588	5-41	33
	5-53	35
292600	3-11	3
292607	1-13	2
292608	1-13	2
292611	1-13	2
292612	1-13	2
292613	1-13	2
	1-13	2
292616	1-13	2
292620	5-41	31
	5-53	37
292654	4-5	31
292656	1-29	4
	3-13	42
	8-45	9
292667	3-35	9
	3-103	29
	4-18	47
	4-33	49
	4-37	21
	4-57	14
292668	2-33	21
	3-104	45
	4-9	10
	4-13	10
	4-18	49
	4-21	7
	4-25	8
	4-29	8
	4-37	10
	12-97	7
292678	2-27	18
	3-35	8
	3-103	30
	4-33	17
	4-37	20
	4-57	13
292679	2-33	19
	3-103	44
	4-10	43
	4-13	42
	4-18	52
	4-21	6
	4-25	7
	4-29	7
	12-77	15
	12-91	2
	12-97	6
292680	2-71	19
	2-75	7
	3-19	32
	3-33	23
	3-36	83
	3-95	37
	3-99	37
	3-103	15
	4-5	24
	4-5	42
	4-6	55
	4-9	4
	4-13	4
	4-14	55
	4-17	10
	4-21	26
	4-25	26
	4-29	26
	4-33	9
	5-4	45
	5-9	34
	5-15	34
	8-23	39
	12-79	10
292681	1-3	34
	1-9	30
	1-13	11
	2-17	22
	2-35	24
	2-37	13
	2-39	24
	2-41	24
	3-9	4
	3-15	34
	3-17	7
	3-19	7
	3-53	3
	3-71	5
	3-73	24
	3-83	14
	3-85	14
	3-91	32
	3-95	27
	3-99	27
	3-104	50
	4-5	35
	4-9	17
	4-13	17
	4-17	16
	4-21	10
	4-22	78
	4-25	10
	4-26	79
	4-29	10
	4-31	79
	4-33	7
	4-37	30
	4-57	7
	5-4	50
	5-10	50
	5-16	50
	5-35	9
	5-37	9
	5-45	9
	5-47	8
	5-55	10
	6-3	24
	7-3	14
	7-13	4
	8-3	13
	8-7	13
	8-11	25
	8-15	25
	8-19	13
	8-23	16
	8-49	22
	8-50	61
	8-53	22
	8-54	52
	8-57	22
	8-57	33
	8-61	22
	8-61	41
	12-33	5
	12-69	23
	12-69	23
	12-73	16
	12-81	4
	12-95	8
292682	1-4	38
	1-9	34
	2-5	9
	2-15	15
	2-19	32
	2-23	4
	2-25	25
	2-27	12
	2-33	13
	2-75	7
	3-5	11
	3-7	11
	3-11	11
	3-33	36
	3-51	21
	3-51	38
	3-69	4
	3-91	18
	3-91	27
	3-95	18
	3-99	18
	3-103	5
	4-53	19
	5-3	10
	5-9	22
	5-15	22
	5-35	20
	5-37	20
	5-49	11
	5-53	33
	6-3	20
	7-3	21
	7-9	3
	8-3	23
	8-3	23
	8-7	23
	8-24	46
	8-49	2
	8-53	2
	8-57	2
	8-61	2
	12-7	4
	12-61	12
	12-79	32
292683	1-9	3
	1-29	5
	2-11	11
	2-15	12
	2-19	19
	5-4	53
	5-10	40
	5-15	40
	5-41	2
	5-41	2
	5-49	18
	5-49	25
	5-53	14
	8-12	51

©2009 HYSTER COMPANY

NUMERICAL INDEX (continued)

PART NO.	PAGE	ITEM
	8-16	51
	8-19	22
	8-45	8
	9-26	10
	10-10	28
	11-16	25
	12-5	4
292684	2-9	11
	4-18	45
292685	3-11	2
	5-49	8
292687	5-41	32
	5-53	36
292689	1-13	8
293600	4-17	22
293611	8-50	54
	8-58	54
293612	3-13	16
	8-50	53
	8-58	53
293614	2-75	11
293642	5-49	23
	5-53	32
293645	3-13	44
293647	12-5	3
293648	6-5	2
293650	8-45	7
293655	5-49	26
293657	2-11	10
	5-37	37
293658	2-5	1
	2-7	1
	2-9	1
293659	2-11	1
293661	4-18	46
293686	2-7	17
	2-71	38
	6-5	38
293704	12-9	7
293743	3-15	21
	3-36	71
	3-36	78
293762	6-3	34
293779	6-3	35
293780	3-13	24
293782	5-49	16
293795	10-36	12
	11-32	20
293799	10-35	5
295649	10-11	6
	10-13	6
	10-15	9
	10-17	2
	10-19	7
	10-21	7
	10-23	10
	10-25	2
296009	8-23	27
296010	5-51	9
	6-3	26
	8-11	24
	8-15	24
	8-20	59
	8-23	25
296028	10-9	6
296066	5-53	5
296075	5-49	9
296128	3-91	8
	3-95	25
	3-99	25
	3-103	14
296130	7-3	10
296134	3-11	1
296151	3-13	21
296205	6-13	6
296207	3-13	20
296225	2-101	25
296234	3-13	12
296360	12-57	17
	12-61	23
	12-63	5
	12-65	4
	12-67	10
296378	4-37	11
296379	4-10	54
	12-95	4
296380	8-23	28
296415	3-35	7
296417	8-23	40
	12-93	3
296418	2-75	10
	3-15	35
	3-17	8
	3-19	8
	5-27	11
	5-31	24
	12-61	21
	12-67	4
296420	12-61	11
296421	2-98	39
296422	2-75	12
	9-12	10
	10-7	7
	11-12	15
296423	1-9	4
	1-29	3
	12-41	3
296424	2-75	4
296426	2-7	18
	2-71	39
	5-49	12
	9-12	23
	10-9	18
	11-11	4
	12-15	8
	12-19	8
	12-23	8
296430	5-53	7
296431	12-9	8
296435	12-9	8
296472	6-3	15
296484	12-33	8
296508	12-91	3
297531	9-16	6
	9-18	6
	9-21	5
	10-28	6
	10-30	6
	11-20	6
	11-23	6
	11-25	6
	11-27	6
297649	11-16	19
300738	6-5	26
300751	6-5	33
300752	6-5	34
300758	5-41	21
300765	6-5	8
300766	6-5	9
300767	6-5	11
300794	5-41	1
	5-53	15
300800	5-41	14
	5-53	20
300801	5-41	17
	5-53	27
300932	2-5	2
	2-7	2
	2-9	2
	2-11	2
300937	2-5	10
	2-7	9
	2-9	9
	2-11	9
	6-5	4
	9-12	12
	10-7	9
	10-9	17
	10-36	33
	11-12	17
	11-16	16
	12-41	4
300939	1-9	15
	2-5	8
	2-7	8
	2-9	8
	2-11	8
	3-11	10
300982	8-45	4
	8-47	
301190	2-77	3
301195	2-85	34
	2-90	33
301793	2-139	8
302021	4-34	59
302023	3-35	15
	3-103	28
302026	4-33	47
302027	3-35	1
	4-18	55
	4-37	14
302047	12-55	16
	12-57	16
302048	12-59	13
302053	3-51	9
302054	12-55	6
	12-57	6
	12-59	6
302056	12-59	16
302224	4-31	97
302235	2-27	16
302242	4-10	49
302244	2-33	18
	4-5	10
302245	4-5	39
	4-21	30
	4-26	44
	4-26	44
302246	4-21	4
	4-25	5
	4-26	53
	4-29	5
	4-30	53
302248	12-97	4
302250	4-21	30
	4-26	44
	4-30	44
302252	3-103	43

See Service Manual for service procedures.
©2009 HYSTER COMPANY

NUMERICAL INDEX (continued)

PART NO.	PAGE	ITEM
302363	3-13	6
302385	2-75	2
	5-3	6
	5-9	12
	5-15	12
302398	4-26	55
	4-30	55
	6-13	7
302399	4-25	41
	4-30	41
302400	1-9	31
	3-13	9
	6-3	27
	7-9	14
	12-9	10
302461	10-10	26
	11-16	32
302462	9-8	10
	11-5	9
302487	12-15	11
	12-19	11
	12-23	11
303072	3-25	16
	3-59	16
	3-61	16
304406	5-35	3
	5-37	3
304526	10-10	29
	11-16	34
304619	2-77	2
	2-81	2
304620	2-77	2
	2-81	2
305080	3-5	2
	3-7	2
	3-33	27
	3-69	12
305100	4-49	12
	4-51	11
305371	2-75	3
306200	12-49	1
	12-49	1
306209	12-49	1
306774	2-77	1
	2-81	1
308624	2-103	24
	2-107	24
	2-111	24
308980	8-49	12
	8-53	12
	8-57	12
	8-61	12
	12-65	2
309062	10-28	15
	10-30	15
	11-23	15
	11-25	15
	11-27	15
309109	3-87	8
	8-49	9
	8-53	9
	8-57	9
	8-61	9
309124	4-9	13
	4-13	13
	4-17	13
	4-22	46
	4-26	73
	4-30	73
	4-34	51
309651	3-73	40
309656	3-73	36
309831	5-35	18
	5-37	18
310081	4-47	17
310085	4-47	7
310088	4-47	25
313022	5-4	51
	5-41	3
313805	3-83	11
	3-85	11
	9-26	15
	12-55	7
	12-57	7
	12-59	7
313828	1-3	31
	3-9	7
	3-33	9
	3-35	35
	3-39	18
	3-53	4
	3-71	6
	3-73	18
	3-83	6
	3-85	6
	8-49	24
	8-53	24
	8-57	24
	8-61	24
	9-12	26
	9-26	5
	10-7	12
	10-36	9
	11-12	24
	11-16	9
	11-32	8
	12-9	10
	12-9	10
	12-33	7
314539	2-85	8
	2-89	8
314773	4-91	5
314775	4-89	13
	4-90	14
	4-93	16
	4-119	16
	4-121	24
	4-125	24
316132	4-5	17
	4-5	17
	7-3	30
316306	9-12	17
	10-7	18
	11-12	22
316448	12-5	5
316678	12-89	4
316825	3-15	22
	3-36	58
	3-36	79
316826	2-13	4
	2-15	8
	2-17	21
	2-19	2
	2-21	5
	2-25	18
	3-11	23
	10-9	4
	11-31	3
316828	2-7	15
	2-71	40
316833	3-35	13
	3-103	26
316834	4-5	22
	4-31	94
	8-49	13
	8-53	13
	8-57	13
	8-61	13
	12-63	28
	12-93	4
	12-95	5
316835	8-50	62
	8-54	53
	8-57	34
	8-61	42
	12-61	20
	12-67	5
	12-69	17
	12-81	6
316879	12-39	6
317075	6-5	24
317076	6-5	23
317679	5-41	3
317735	10-33	7
	11-29	7
	12-15	18
	12-19	13
	12-23	13
318375	3-15	28
320154	4-10	50
	4-31	98
	4-33	18
	4-34	60
	4-37	15
	4-57	12
	4-59	20
320155	3-87	9
	4-5	11
	4-18	51
	4-21	5
	4-25	6
	4-29	6
	6-3	10
	12-91	4
	12-97	5
320156	1-3	29
	2-71	17
	3-83	10
	3-85	10
	3-91	4
	3-95	4
	3-99	4
	3-103	10
	4-5	28
	4-6	56
	4-17	9
	4-21	25
	4-25	25
	4-29	25
	4-31	95
	4-33	11
	6-3	21
	8-4	55
	8-8	55
	8-12	54
	8-16	54
	8-20	55
	12-55	9

©2009 HYSTER COMPANY

NUMERICAL INDEX (continued)

PART NO.	PAGE	ITEM
	12-57	9
	12-59	9
	12-77	13
	12-79	29
	12-95	3
320157	2-31	3
	2-35	31
	2-37	14
	2-39	31
	2-41	31
	2-71	27
	3-9	5
	3-13	18
	3-33	11
	3-53	2
	3-71	4
	3-73	3
	3-73	42
	4-5	33
	4-9	9
	4-13	9
	4-21	16
	4-25	16
	4-29	16
	4-33	6
	4-37	29
	4-49	7
	4-51	5
	4-57	6
	5-27	35
	5-31	38
	5-45	8
	5-47	7
	5-55	11
	7-13	3
	8-3	6
	8-7	6
	8-11	7
	8-15	7
	8-19	6
	8-23	21
	8-50	41
	8-50	59
	8-53	39
	8-54	50
	8-58	41
	8-58	43
	8-61	33
	8-61	39
	9-12	14
	10-7	10
	11-12	18
	11-16	41
	12-69	7
	12-69	16
	12-69	21
	12-73	24
	12-79	8
	12-95	9
320158	1-3	32
	1-9	29
	1-13	10
	3-35	36
	3-39	19
	3-73	17
	3-83	7
	3-85	7
	3-91	9
	3-95	9
	3-99	9
	3-104	49
	4-5	30
	4-9	5
	4-13	5
	4-17	15
	4-22	53
	4-22	77
	4-25	40
	4-30	40
	4-34	55
	7-9	15
	8-23	17
	8-49	21
	8-50	60
	8-53	21
	8-54	51
	8-57	21
	8-58	44
	8-61	21
	8-61	40
	11-32	28
	12-59	12
	12-93	6
320159	1-4	40
	1-13	13
	2-13	6
	2-15	7
	2-17	20
	2-19	4
	2-19	4
	2-21	4
	2-23	5
	2-25	20
	2-25	26
	2-27	13
	2-33	11
	3-11	17
	3-13	45
	3-51	37
	3-91	25
	3-96	40
	3-99	40
	4-53	20
	5-4	55
	7-3	20
	8-3	24
	8-7	24
	8-24	47
	10-9	7
	12-59	14
320160	1-9	33
	3-91	11
	3-95	11
	3-99	11
	3-103	6
	11-32	30
	12-7	6
320161	1-9	14
	6-5	3
	10-9	16
	10-36	35
	11-16	24
	11-32	38
320165	11-16	40
320264	5-35	26
	5-37	26
321734	2-86	38
	2-90	37
321792	8-41	4
321797	8-33	12
	8-39	12
	8-41	3
322637	12-45	5
322638	12-45	6
322784	4-5	37
322824	9-21	10
	10-14	13
	10-17	11
	10-22	14
	10-25	12
	11-21	11
	11-21	
322902	9-21	12
	10-14	11
	10-17	10
	10-22	12
	10-25	11
	11-21	12
	11-21	
323090	9-12	11
	10-7	8
	11-12	16
323541	3-25	35
	3-47	5
	3-59	35
	3-61	35
323594	12-51	8
323598	12-51	10
323599	12-51	9
323864	3-7	12
324052	2-81	3
324692	2-57	15
324707	2-67	16
324864	6-5	5
325616	11-16	38
325708	3-91	3
	3-95	3
	3-99	3
	3-99	3
	3-104	53
325789	4-86	1
	4-131	4
	4-132	7
325897	4-21	21
	4-25	21
	4-29	21
	4-33	20
	5-28	45
326477	12-43	13
326488	5-41	1
326504	2-51	18
	2-53	2
	2-55	3
	2-61	9
	2-63	17
	2-67	30
326516	3-25	12
	3-59	12
	3-61	12
326612	2-49	3
326748	2-57	5
326749	2-57	6
326850	2-59	10
326889	4-53	5
326898	2-59	25
326926	3-25	11
	3-59	11
	3-61	11

See Service Manual for service procedures.
©2009 HYSTER COMPANY

NUMERICAL INDEX (continued)

PART NO.	PAGE	ITEM
328390	5-41	12
	5-53	16
329057	12-47	2
329064	12-43	3
329067	1-9	7
	3-15	5
	3-17	25
	3-19	25
	3-35	38
	3-39	14
	3-73	2
	4-65	4
	4-67	4
	8-3	2
	8-7	2
	8-11	2
	8-15	2
	8-19	2
	12-57	18
	12-61	4
	12-63	6
	12-65	5
	12-67	7
332277	3-25	13
	3-59	13
	3-61	13
332755	1-9	38
	7-3	12
	12-61	25
334156	9-18	10
	9-21	15
	11-21	9
334402	5-7	4
	5-7	16
	5-19	3
	5-21	3
	5-23	2
334417	5-7	9
	5-7	21
	5-19	8
334429	5-7	27
	5-13	9
	5-13	9
334439	5-7	3
	5-7	17
334442	5-7	11
	5-7	23
334447	5-35	7
	5-37	7
334449	5-7	8
	5-7	19
334450	5-3	21
	5-10	45
	5-16	45
334452	5-3	22
	5-10	43
	5-15	43
334453	5-35	5
	5-37	5
334454	5-7	31
334475	5-7	12
	5-7	24
	5-19	11
	5-21	11
	5-23	13
334480	5-7	7
	5-7	20
334500	5-27	6
	5-31	28
334524	5-27	3
334525	5-27	4
334531	5-27	9
	5-31	26
334532	5-27	12
334542	5-27	27
	5-31	12
334543	5-27	13
	5-31	13
334560	5-3	24
	5-9	17
	5-15	17
334571	5-3	11
	5-9	3
	5-15	3
334580	5-35	36
334582	5-27	22
	5-31	7
334587	5-35	2
	5-37	2
334595	5-7	6
	5-7	18
334717	6-5	
335012	9-18	12
	9-21	14
	11-21	11
335047	8-3	20
	8-7	20
	8-11	46
	8-15	46
	8-19	20
335988	1-21	9
335991	1-21	10
336393	9-11	1
336550	2-27	8
	2-31	20
	2-33	32
	2-35	18
	2-37	21
	2-39	18
	2-41	18
337174	11-11	1
337179	9-12	18
	10-7	21
	11-12	27
339529	6-5	27
339530	8-11	21
	8-15	21
	8-19	43
	8-23	26
340405	3-36	73
	3-39	48
340796	2-5	3
	2-7	3
	2-9	3
341462	8-65	40
	8-69	40
342734	5-35	24
	5-37	24
343029	4-47	5
343031	4-47	10
343032	4-47	12
343829	12-43	3
344233	4-47	18
344234	4-47	24
345423	6-3	2
345453	2-27	5
	2-31	19
	2-33	30
	2-35	17
	2-37	20
	2-39	17
	2-41	17
345454	2-27	7
	2-31	17
	2-33	29
	2-35	15
	2-37	18
	2-39	15
	2-41	15
345897	12-51	15
346330	4-71	30
	4-73	31
	4-86	3
	4-127	9
	4-129	9
346645	5-27	15
	5-31	31
346648	5-27	8
	5-31	30
346650	5-27	16
	5-31	29
346656	2-35	25
	2-37	8
	2-39	25
	2-41	25
	5-28	44
	12-70	40
346795	5-7	5
	5-7	15
346796	5-19	9
346842	5-35	6
	5-37	6
346843	5-35	6
	5-37	6
346844	5-35	6
	5-37	6
346845	5-35	6
	5-37	6
346846	5-35	6
	5-37	6
346847	5-35	6
	5-37	6
347746	5-35	21
	5-37	21
347767	5-7	28
347768	5-7	29
347770	5-7	32
347773	5-7	33
	5-13	3
349366	3-36	61
349378	2-115	14
350484	5-27	20
	5-31	14
350485	8-65	7
	8-69	7
350818	2-71	25
	4-51	7
352075	5-7	
352485	3-91	6
	3-95	6
	3-99	6
	3-103	8
352499	3-91	28
352885	3-91	29
	3-95	29
	3-99	29
	3-104	54
352950	3-91	13

©2009 HYSTER COMPANY

NUMERICAL INDEX (continued)

PART NO.	PAGE	ITEM
352969	3-107	18
353000	3-73	4
	8-3	7
	8-7	7
	8-11	6
	8-15	6
	8-19	7
353141	3-91	3
	3-95	3
353142	3-91	21
	3-95	21
	3-99	21
	3-103	12
353143	3-91	22
	3-95	22
	3-99	22
	3-103	13
353154	3-107	4
353159	3-91	13
	3-95	13
	3-99	13
	3-103	21
353164	3-91	20
	3-95	20
	3-99	20
353165	3-107	15
353168	3-107	5
353172	3-91	15
	3-95	15
	3-99	15
	3-104	48
353175	3-107	11
353195	3-91	12
	3-95	12
	3-99	12
	3-103	23
353198	2-72	53
	3-35	46
	3-39	24
353199	3-51	15
353230	3-91	16
	3-95	16
	3-99	16
	3-104	46
353310	2-35	19
	2-37	36
	2-39	19
	2-41	19
353311	3-17	1
	3-19	1
	3-39	21
353397	3-107	1
353422	3-107	6
353432	3-107	7
353441	3-107	6
353448	3-107	8
353453	3-91	14
	3-95	14
	3-99	14
	3-103	3
356505	10-9	11
	11-15	7
357749	9-12	19
	10-7	14
	11-12	28
358674	2-103	10
	2-107	10
	2-112	49
359207	3-107	10
359221	5-27	25
	5-31	9
359223	5-27	2
359340	12-49	8
359341	12-49	9
360318	5-7	34
360387	2-71	7
	2-75	14
	2-101	23
	3-107	3
361338	2-115	15
361876	5-27	24
	5-31	11
361877	5-27	23
	5-31	8
361893	5-7	14
361895	5-7	13
362036	3-103	41
362376	12-52	2
364911	1-21	1
365854	2-117	7
366115	11-29	5
	12-19	20
366116	9-23	5
	10-33	5
	12-15	16
	12-23	20
366473	3-15	10
	3-35	23
	3-36	68
	3-39	3
367224	4-9	35
	4-13	34
	4-17	29
367419	1-31	1
367420	1-31	1
367421	1-31	1
367422	1-31	1
367423	1-31	1
367424	1-31	1
367945	5-27	18
	5-31	33
369242	4-57	4
369804	2-27	28
	2-37	34
	2-39	22
	2-39	23
369815	3-7	18
	3-19	40
	3-35	43
	3-35	43
	3-36	53
	3-39	28
	3-39	39
369922	5-27	14
370169	2-78	29
	2-90	35
370250	1-23	3
370251	1-23	3
370252	1-23	3
370253	1-23	3
370254	1-23	3
370255	1-23	3
370256	1-23	3
370257	1-23	3
370258	1-23	3
370259	1-23	3
370646	4-5	7
370647	4-5	8
	4-21	3
	4-25	4
	4-26	46
	4-29	4
	4-30	46
	4-37	13
370730	4-86	3
	4-89	5
	4-90	5
	4-93	6
	4-103	7
	4-107	42
	4-111	42
	4-115	7
	4-119	1
	4-121	4
	4-125	4
370863	4-5	6
370864	4-5	15
370868	4-5	16
	4-5	16
372002	3-15	18
372003	3-39	42
373833	5-28	
	5-32	
374713	3-25	3
	3-59	3
	3-61	3
374922	3-5	6
	3-7	6
	3-33	31
	3-69	16
374923	3-5	7
	3-7	7
	3-33	32
	3-69	17
375555	2-77	25
375572	2-77	23
	2-81	23
375584	2-108	47
375601	2-77	22
	2-81	22
375634	6-9	1
	6-11	1
375635	6-9	7
	6-11	8
375984	7-3	17
375986	5-27	17
	5-31	34
376949	4-57	15
377209	3-19	34
	3-36	69
377841	12-43	10
	12-49	5
377844	12-43	8
377845	12-43	11
377846	12-43	7
377976	2-133	3
378424	8-65	6
	8-69	6
379405	3-7	17
379407	2-71	15
	2-86	40
	2-90	39
379698	1-15	19
380478	5-3	1
	5-9	1
	5-35	28
380479	5-35	28
380481	5-35	34

See Service Manual for service procedures.
©2009 HYSTER COMPANY

NUMERICAL INDEX (continued)

PART NO.	PAGE	ITEM
380483	5-35	32
380485	5-35	33
380486	5-35	30
380488	5-35	31
380489	5-35	29
381002	12-45	3
381003	12-47	2
381004	12-45	3
381250	2-85	3
	2-89	3
381270	2-85	3
381271	2-85	3
381298	6-5	36
381919	4-83	8
	4-85	8
	4-90	20
	4-91	13
	4-119	41
	4-121	32
	4-125	32
	4-131	13
	4-132	11
	12-86	9
381938	3-7	20
	3-19	36
	3-39	7
384101	8-45	10
384210	1-30	1
384211	1-30	1
384213	1-30	1
384214	1-30	1
384215	1-30	1
384216	1-30	1
385474	8-65	8
	8-69	8
385531	2-115	12
385599	2-123	11
385855	8-65	17
	8-65	32
	8-66	49
	8-69	17
	8-69	32
	8-70	49
386459	2-125	8
	2-133	6
387455	7-3	26
387478	3-25	33
	3-59	33
	3-61	33
387480	3-25	34
	3-59	34
	3-61	34
387481	3-25	37
	3-59	17
	3-61	17
387867	7-9	11
	7-9	11
	7-10	2
	7-10	4
387892	4-5	34
388305	2-103	25
	2-107	25
	2-111	25
388316	2-103	39
	2-107	39
	2-111	39
388321	2-77	13
	2-81	13
388323	2-85	16
	2-89	15
388361	2-95	1
388364	2-77	24
	2-82	24
389688	1-23	24
615130	12-13	5
636851	12-13	7
636941	10-28	14
	10-30	14
	11-23	14
	11-25	14
	11-27	14
637565	10-28	16
	10-30	16
	11-23	16
	11-25	16
	11-27	16
637635	9-18	6
	9-21	5
638246	9-16	12
806555	12-51	12
	12-51	16
806556	12-43	4
806557	12-45	4
815597	4-10	51
	4-31	99
842863	2-115	16
878091	12-69	12
878092	12-69	12
878133	12-69	3
	12-73	21
878138	12-61	3
	12-61	15
878141	12-77	20
878143	12-69	27
	12-69	28
878146	12-69	9
878148	12-69	18
878149	12-69	9
878152	4-65	1
878163	12-77	22
878176	12-69	8
878177	12-69	8
878219	4-71	35
	4-73	36
	12-85	12
878226	12-69	8
878227	12-69	8
878233	12-70	32
878258	2-25	13
878490	12-69	27
878491	12-69	26
878574	8-3	16
	8-7	16
	8-11	18
	8-15	18
	8-19	16
878778	4-22	52
878782	8-3	19
	8-7	19
878903	12-69	11
878904	12-69	11
878906	12-69	27
878907	12-69	5
878908	12-69	22
878909	12-70	41
893209	1-27	1
893210	1-27	3
893308	3-35	27
893320	3-35	18
895468	6-3	37
895972	12-70	
	12-73	20
	12-75	
	12-77	
895973	12-70	
	12-75	
	12-77	
895974	12-70	
895976	12-77	
895977	12-77	
895978	12-77	
930591	4-95	25
931586	3-51	12
980542	12-45	6
981260	3-77	7
982155	2-115	11
983255	4-45	17
983322	3-77	28
986475	2-139	6
992025	2-139	7
996297	5-4	
	5-7	
996336	4-41	
996414	1-24	
996423	3-5	
	3-33	
1113570	3-103	38
1151378	5-55	4
1300117	1-3	33
1300134	4-67	9
	12-61	8
	12-65	10
1300152	3-33	20
	3-51	20
1300295	2-85	18
1300757	3-36	81
1301150	12-75	9
1301156	12-61	6
	12-63	19
	12-65	8
	12-67	13
1301160	12-61	7
	12-63	20
	12-65	9
	12-67	12
1301233	12-75	3
1301286	12-89	1
1301601	3-73	33
1301675	12-75	1
1301720	4-101	23
	4-103	36
	4-107	30
	4-111	30
	4-115	36
	4-119	33
	4-121	22
	4-125	22
1301727	12-55	13
	12-57	13
	12-59	10
1301783	4-83	19
	4-85	19
	4-89	10
	4-90	10
	4-93	43
	4-107	20
	4-111	20
	4-119	40

©2009 HYSTER COMPANY

NUMERICAL INDEX (continued)

PART NO.	PAGE	ITEM
	4-121	11
	4-125	11
1301870	9-11	1
1302024	12-55	4
	12-57	4
1302258	4-65	8
	4-67	1
	12-63	12
1302972	5-28	46
1302973	5-28	43
	5-31	36
1305436	2-35	20
	2-37	31
	2-41	20
1306033	2-137	3
1306143	2-133	13
1306182	2-125	7
1306270	4-83	18
	4-85	18
1306349	3-81	5
1306355	2-135	12
1306357	2-125	24
1306358	4-45	16
1306359	2-123	13
	2-125	26
	2-125	37
	2-137	8
	2-139	18
1306361	2-137	5
1306362	2-125	9
	2-125	29
1306374	2-133	4
1307641	8-45	6
1307875	2-133	23
1307880	2-133	12
1307881	2-117	20
	2-125	12
	2-139	3
1307883	2-129	21
	2-137	30
1307887	2-123	9
1307891	2-125	36
	4-45	15
1307894	2-137	9
1307895	2-131	3
1307898	2-125	30
1307900	2-125	33
1307901	2-125	25
1307908	2-125	28
1307909	2-125	10
1307910	3-77	5
1307967	2-90	42
1308006	3-79	5
1308030	2-125	35
1308259	4-71	19
	4-73	19
	4-89	12
	4-90	13
	4-93	15
	4-119	17
	4-121	23
	4-125	23
	4-127	8
	4-129	8
1309419	8-65	6
	8-69	6
1309775	12-55	2
	12-57	2
1310142	4-83	27
	4-85	12
1310370	9-18	9
	9-21	7
1310599	6-5	17
1310611	8-24	44
1310630	12-63	21
	12-67	14
	12-75	11
1312331	5-27	41
1312813	2-103	27
	2-107	27
	2-111	27
1314381	2-101	1
	4-21	39
1314392	4-21	24
	4-25	24
	4-29	24
1315425	6-5	18
1315499	2-139	12
1315766	2-125	23
1316809	5-3	28
	5-9	23
	5-15	23
1317468	2-97	11
	2-101	10
1318306	4-45	14
1318940	2-131	4
	2-133	15
1318965	2-125	34
1318968	2-125	31
1319004	3-11	19
1319175	4-17	20
1319190	2-101	11
	4-22	57
	4-27	84
	4-31	84
1319668	9-16	9
	9-21	7
	10-12	12
	10-14	14
	10-15	4
	10-17	13
	10-20	13
	10-22	15
	10-23	5
	10-25	14
	11-20	8
1320669	4-5	3
	4-21	19
	4-25	19
	4-29	19
	4-67	10
	12-63	21
	12-65	10
	12-75	8
1320673	12-45	3
1320893	4-37	4
	7-3	29
1321149	6-9	4
1321174	6-5	31
	6-9	
	8-3	45
	8-7	45
	8-11	43
	8-15	43
	8-19	45
1322627	5-3	25
	5-10	46
	5-16	46
1323052	1-9	17
1323575	4-105	22
	4-107	28
	4-111	28
	4-116	49
	4-131	12
1323576	4-95	14
	4-97	14
	4-103	42
	4-105	23
	4-107	29
	4-111	29
	4-115	42
	4-131	11
1323577	4-119	39
	4-121	34
1323578	4-105	16
	4-107	22
	4-111	22
	4-115	45
1323579	4-79	12
	4-81	14
	4-83	16
	4-95	7
	4-99	6
	4-101	6
	4-105	6
	4-107	6
	4-111	6
	4-115	46
	4-119	24
	4-121	30
1323580	4-105	25
1323581	4-69	29
	4-71	29
	4-73	30
	4-93	9
	4-99	14
	4-101	14
	4-103	21
	4-105	14
	4-107	19
	4-111	19
	4-115	21
	4-116	50
1323583	4-79	11
	4-81	13
	4-83	17
	4-85	17
	4-105	27
1323586	4-95	13
	4-97	13
	4-103	41
	4-105	24
	4-107	31
	4-111	31
	4-115	41
1323864	3-33	40
1324006	2-103	19
	2-107	19
	2-111	19
1324029	7-15	2
1324035	7-15	9
1324040	7-15	6
1324041	7-15	7
1324042	7-15	8
1324048	7-15	4
1324278	2-59	1
	4-9	26
	4-13	25

©2009 HYSTER COMPANY

NUMERICAL INDEX (continued)

PART NO.	PAGE	ITEM
1324309	4-83	22
	4-85	22
1324310	4-83	23
	4-85	23
	4-89	21
	4-90	24
	4-93	26
1324311	4-89	7
	4-90	7
	4-119	15
	4-121	16
	4-125	16
1324312	4-89	8
	4-90	8
	4-119	14
	4-121	17
	4-125	17
1324557	7-3	28
1324577	12-67	6
1325119	8-45	13
1325271	1-23	18
1326394	4-39	1
1326395	4-39	2
1326396	4-39	3
1326397	4-39	4
1326398	4-39	5
1326399	4-39	6
1326536	4-39	7
1326537	4-39	9
1326538	4-39	11
1326660	1-30	1
1326661	1-30	1
1326663	1-30	1
1326664	1-30	1
1326665	1-30	1
1326666	1-30	1
1326931	4-49	2
1326939	4-9	19
	4-13	19
	4-17	18
	4-22	51
	4-26	81
	4-31	81
	4-34	56
1327161	7-3	2
1327164	4-95	9
	4-99	20
	4-101	20
	4-105	26
	4-107	39
	4-111	39
1327246	5-41	18
	5-53	11
1327414	8-69	4
1327415	8-69	1
1327554	3-11	6
1327957	4-97	20
1327958	4-105	15
	4-107	21
	4-111	21
	4-115	47
1328680	8-3	18
	8-11	34
	8-15	34
	8-19	17
1328692	5-3	34
	5-9	7
	5-15	7
1328822	8-41	6
1328828	8-31	16
	8-37	16
1328930	8-49	7
	8-53	7
	8-57	7
	8-61	7
1329147	4-69	15
	4-69	17
	4-71	17
	4-71	22
	4-73	17
	4-90	11
	4-93	8
	4-93	12
	4-99	21
	4-101	21
	4-105	29
	4-116	53
	4-119	11
	4-121	7
	4-125	7
	4-127	7
	12-79	5
	12-85	7
	12-99	1
1329148	4-131	9
	4-132	4
	12-99	2
1329150	12-97	3
1329151	12-99	4
1329152	12-99	3
1329250	6-3	4
1329271	2-27	19
	2-31	10
	2-33	17
	2-35	8
	2-37	24
	2-39	8
	2-41	8
1329272	2-27	20
1329286	2-5	14
1329567	2-101	3
1330283	4-93	7
	4-99	15
	4-101	15
	4-103	32
	4-105	17
	4-107	23
	4-111	23
	4-115	32
	4-131	15
	4-132	12
1330284	4-131	7
	4-132	5
1330292	4-93	5
	4-99	18
	4-101	18
	4-103	30
	4-105	20
	4-107	26
	4-111	26
	4-115	30
	4-131	14
	4-132	13
1330293	4-14	58
	4-21	2
	4-25	3
	4-26	47
	4-29	3
	4-30	47
	4-37	12
1330295	4-131	8
	4-132	6
1330298	4-69	13
	4-71	20
	4-89	15
	4-90	17
	4-93	10
	4-99	8
	4-101	8
	4-103	8
	4-105	8
	4-107	8
	4-111	8
	4-115	8
	4-119	12
	4-121	5
	4-125	5
	12-79	3
1330299	4-69	16
	4-71	16
	4-73	16
	4-79	10
	4-81	12
	4-83	15
	4-99	5
	4-101	5
	4-105	5
	4-107	5
	4-111	5
	4-127	5
	12-85	6
1330355	4-95	23
	4-97	17
	4-99	12
	4-101	12
	4-103	19
	4-105	12
	4-107	17
	4-111	17
	4-115	19
1330356	4-95	21
	4-97	10
	4-99	13
	4-101	13
	4-103	20
	4-105	13
	4-107	18
	4-111	18
	4-115	20
1330357	4-99	11
	4-101	11
	4-103	18
	4-105	11
	4-107	16
	4-111	16
	4-115	18
1330409	4-86	2
	4-103	37
	4-115	37
	4-127	10
	4-129	10
	4-131	2
	4-132	2
	12-85	9
1330410	3-79	10
	3-107	13
	12-63	24
	12-65	13

©2009 HYSTER COMPANY

NUMERICAL INDEX (continued)

PART NO.	PAGE	ITEM
1330411	12-82	1
	12-83	1
	12-97	2
1330412	4-75	7
	4-77	1
	4-85	15
	12-86	6
1330413	4-75	1
	4-79	5
	4-81	5
	4-83	5
	4-85	5
	12-99	9
1330414	4-86	2
	4-103	38
	4-115	38
	4-127	11
	4-129	11
	4-131	3
	4-132	3
	12-85	10
1330415	3-107	13
	12-63	24
	12-65	13
1330416	12-82	2
	12-83	2
1330417	4-75	8
	4-77	2
	4-85	16
	12-86	7
1330418	4-75	2
	4-79	6
	4-81	6
	4-83	6
	4-85	6
	12-99	10
1330419	4-69	11
	4-71	11
	4-73	11
	4-81	10
	4-83	13
	4-85	13
	4-99	16
	4-105	18
	4-107	24
	4-127	3
	4-129	3
	12-86	1
1330420	4-69	4
	4-71	4
	4-73	4
	4-119	35
	4-121	9
	4-125	9
1330421	4-69	9
	4-71	9
	4-73	9
	4-79	14
	4-81	17
	4-83	20
	4-85	20
	4-91	1
	4-101	16
	4-111	24
	4-127	1
	4-129	1
	12-85	4
	12-86	4
	12-99	11
1330422	4-69	1
	4-71	1
	4-73	1
	4-103	5
	4-115	5
	12-85	1
1330423	4-69	6
	4-71	6
	4-73	6
	4-89	1
	4-90	1
	4-93	1
	4-99	1
	4-101	1
	4-103	1
	4-105	1
	4-107	1
	4-111	1
	4-115	1
	4-119	6
	4-121	1
	4-125	1
	12-99	5
1330424	4-69	12
	4-71	12
	4-73	12
	4-81	11
	4-83	14
	4-85	14
	4-99	17
	4-105	19
	4-107	25
	4-127	4
	4-129	4
	12-86	2
1330426	4-69	5
	4-71	5
	4-73	5
	4-119	36
	4-121	14
	4-125	14
1330427	4-69	10
	4-71	10
	4-73	10
	4-83	21
	4-85	21
	4-91	2
	4-101	17
	4-111	25
	4-127	2
	4-129	2
	12-85	5
	12-86	5
	12-99	12
1330428	4-69	2
	4-71	2
	4-71	3
	4-73	2
	4-103	6
	4-115	6
	12-85	2
1330429	4-69	7
	4-71	7
	4-73	7
	4-89	2
	4-90	2
	4-93	2
	4-99	2
	4-101	2
	4-103	2
	4-105	2
	4-107	2
	4-111	2
	4-115	2
	4-119	5
	4-121	28
	4-125	28
	12-99	6
1330433	4-75	3
1330435	3-107	13
	4-77	3
	4-86	2
	4-131	1
	4-132	1
	12-63	24
	12-65	13
1330437	4-79	7
	4-81	7
	4-83	7
	4-85	7
	4-103	39
	4-115	39
	12-85	11
	12-86	8
	12-99	8
1330438	4-69	3
	4-73	3
	4-79	2
	4-81	2
	4-83	2
	4-85	2
	4-89	3
	4-90	3
	4-91	3
	4-93	3
	4-99	3
	4-101	3
	4-103	3
	4-105	3
	4-107	3
	4-111	3
	4-115	3
	4-119	3
	4-121	2
	4-125	2
	4-131	18
	4-132	16
	12-85	3
	12-86	3
	12-99	7
1330439	4-69	8
	4-71	8
	4-73	8
	4-75	6
	4-77	4
	4-79	3
	4-81	3
	4-83	3
	4-85	3
	4-89	14
	4-90	16
	4-93	4
	4-99	4
	4-101	4
	4-103	4
	4-105	4
	4-107	4
	4-111	4
	4-115	4

See Service Manual for service procedures.
©2009 HYSTER COMPANY

NUMERICAL INDEX (continued)

PART NO.	PAGE	ITEM
	4-119	4
	4-121	27
	4-125	27
	4-131	19
	4-132	17
1330450	2-77	5
	2-81	5
1330452	2-103	37
	2-107	37
	2-111	37
1330453	2-103	30
	2-107	30
	2-111	30
1330456	2-97	7
	2-101	29
1330459	2-78	27
	2-82	27
1330467	2-93	2
	2-95	2
1330725	2-97	13
	2-101	6
1330772	2-85	24
	2-89	23
1330917	1-23	13
1330919	1-23	7
1330920	1-23	20
1331152	2-27	23
	2-33	24
1331233	4-69	22
	4-71	34
	4-73	35
	4-103	35
	4-107	38
	4-111	38
	4-115	35
	4-119	32
	4-122	42
	4-125	42
	4-131	16
	4-132	14
1331245	12-75	12
1331325	2-77	8
	2-81	8
1331329	2-93	4
	2-95	4
1331330	2-93	12
	2-95	12
	4-41	
1331331	2-93	8
	2-95	8
1331335	2-77	7
	2-81	7
1331336	2-77	7
	2-81	7
1331341	2-103	2
	2-107	2
	2-111	2
1331343	2-85	12
	2-89	12
1331344	2-85	14
	2-89	14
1331349	2-85	20
	2-93	16
	2-95	16
1332670	1-3	3
1332745	1-31	1
1333018	1-31	1
1333020	1-31	1
1333021	1-31	1
1333022	1-31	1
1333023	1-31	1
1333024	1-31	1
1333329	11-11	10
1333382	9-12	8
	10-7	4
	11-11	12
1333385	5-41	34
	5-53	30
	8-45	15
1333392	9-12	16
	10-7	13
	11-12	21
1333396	9-4	6
	9-7	5
	10-3	6
	10-5	5
	11-3	6
	11-5	6
	11-9	5
1333397	9-4	6
	9-8	5
1333399	11-29	2
	12-19	18
1333484	2-107	16
1333807	3-51	11
1333808	3-39	43
1333835	8-11	22
	8-15	22
	8-19	18
1333840	3-36	50
	3-39	40
1334400	4-41	1
1334401	4-41	2
1334402	4-41	3
1334403	4-41	4
1334404	4-41	5
1334405	4-41	6
1334406	4-41	7
1334407	4-41	8
1334408	4-41	9
1334409	4-41	10
1334410	4-41	11
1334411	4-41	12
1334412	4-41	13
1334413	4-41	14
1334638	7-5	9
1334639	7-5	8
1334642	7-5	6
1334645	7-5	21
1334646	7-5	21
1334647	7-5	2
1334648	7-5	1
1334717	5-3	4
	5-9	18
	5-15	18
1334718	6-5	7
1334723	6-5	1
1334771	5-3	18
	5-10	48
	5-16	48
1334772	5-3	5
	5-9	14
	5-15	14
1334786	5-3	33
1334791	5-41	25
1334796	5-35	13
	5-37	13
1334798	12-47	2
1334813	12-45	3
1334815	12-45	3
1334818	12-45	3
1334820	12-70	39
1334845	3-36	56
1334847	3-36	72
1334999	4-69	14
	4-71	21
	4-89	16
	4-90	18
	4-93	11
	4-99	9
	4-101	9
	4-103	9
	4-105	9
	4-107	9
	4-111	9
	4-115	9
	4-119	10
	4-121	6
	4-125	6
	12-79	4
1335129	1-23	9
1335212	2-78	28
1335219	2-85	19
1335222	2-103	12
	2-107	12
	2-111	12
1335224	2-97	9
1335228	2-77	25
	2-82	25
1335499	2-103	4
	2-107	4
	2-111	4
1335502	5-41	20
1335503	5-41	26
1335751	1-13	1
1335752	1-13	1
1335753	1-13	1
1335754	1-13	1
1335755	1-13	1
1335756	1-13	1
1335761	1-13	3
1335763	1-13	6
1335764	2-23	1
	2-25	22
1335765	2-19	30
	2-23	2
	2-25	23
1335825	2-85	15
1335828	2-93	7
	2-95	7
1335898	2-13	12
	2-15	23
	2-17	14
	2-19	11
	2-21	7
	2-25	11
1335921	5-3	17
	5-10	49
	5-16	49
1335937	2-75	5
1335967	6-3	25
1335976	4-59	
1335977	4-59	
1335979	4-59	
1335980	4-59	
1335986	5-41	13
	5-53	28
1335987	6-3	30

©2009 HYSTER COMPANY

NUMERICAL INDEX (continued)

PART NO.	PAGE	ITEM
1336135	3-15	3
	3-17	12
	3-40	52
1336137	3-15	27
1336171	4-99	19
	4-101	19
	4-103	31
	4-105	21
	4-107	27
	4-111	27
	4-115	31
1336173	4-69	18
	4-71	18
	4-73	18
	4-99	7
	4-101	7
	4-105	7
	4-107	7
	4-111	7
	4-119	38
	4-121	35
	4-127	6
	12-85	8
1336605	1-23	14
1336870	4-69	25
	4-71	25
	4-73	26
1336871	4-69	26
	4-71	26
	4-73	27
1336874	4-69	27
	4-71	27
	4-73	28
1337002	2-27	1
1337012	2-5	13
1337014	2-5	12
1337043	6-3	18
1337051	5-3	38
	5-9	29
	5-15	29
1337052	5-3	42
	5-9	38
1337091	7-3	16
1337093	2-75	16
1337108	7-3	11
1337114	4-59	18
1337118	2-15	24
	2-17	15
	2-19	10
	2-25	10
1337148	1-3	4
1337159	8-3	10
	8-7	10
	8-11	27
	8-15	27
	8-19	10
1337179	1-9	1
1337196	4-57	11
	6-3	17
1337197	4-5	41
	4-63	15
1337350	4-93	21
1337384	4-122	43
	4-125	43
1337386	4-121	30
	4-125	30
1337389	4-121	34
	4-125	34
1337390	4-121	35
	4-125	35
1337393	4-69	28
	4-71	28
	4-73	29
1337665	2-93	9
1337666	2-93	10
1337743	12-43	1
1337746	12-51	1
1337817	5-27	7
	5-31	27
1338087	1-30	1
1338088	1-30	1
1338089	1-30	1
1338098	1-31	1
1338255	5-41	27
	5-53	9
	7-5	
1338256	5-41	19
	5-53	8
	7-5	
1338258	2-13	10
	2-21	6
	2-25	8
1338259	5-3	26
	5-9	19
	5-15	19
1338260	7-3	5
1338262	7-3	5
1338263	2-17	10
	2-19	14
1338264	2-15	20
	2-17	13
	2-19	13
1338268	2-15	21
	2-17	12
	2-19	12
1338276	2-13	13
	2-17	2
	2-25	3
1338282	2-13	1
	2-25	1
1338286	4-57	9
1338291	6-13	8
1338292	8-49	17
	8-53	17
	8-57	17
	8-61	17
1338296	5-39	5
1338300	2-13	14
1338308	2-13	16
	2-15	18
	2-17	9
	2-19	22
	2-53	15
	2-55	11
1338328	2-27	1
1338557	5-55	7
1338558	5-55	1
1338559	5-55	8
1338569	1-3	15
1338570	8-23	41
1338573	3-35	4
1338616	9-23	1
1338618	9-23	1
1338642	1-29	1
1338645	1-29	1
1338740	8-47	3
1338741	8-47	9
1338742	8-3	44
	8-7	44
	8-11	31
	8-15	31
	8-19	44
	8-47	
1338743	8-47	1
1338744	8-47	2
1338916	7-5	12
1338917	7-5	12
1339127	12-63	16
1339265	3-5	8
	3-7	8
	3-9	2
	3-33	34
	3-51	14
	3-53	6
	3-69	2
	3-71	2
1339300	8-49	18
	8-53	18
	8-57	18
	8-61	18
1339332	5-3	39
	5-9	30
	5-15	30
1339334	5-3	41
	5-9	31
	5-15	31
1339444	4-26	48
	4-30	48
	4-33	14
1339459	4-26	52
	4-30	52
1339461	4-26	51
	4-30	51
1339626	3-88	3
1339632	3-83	17
	3-85	17
1339635	2-27	26
1339636	8-49	31
	8-57	31
1339637	4-57	10
1339647	8-3	5
	8-7	5
	8-11	5
	8-15	5
	8-19	5
1339651	2-27	24
	2-31	6
	2-39	11
1339667	1-23	8
1339668	1-23	8
1339669	1-23	8
1339670	1-23	8
1339672	1-23	2
1339674	1-23	5
1339700	8-3	4
	8-7	4
	8-11	4
	8-15	4
	8-19	4
1339702	8-49	8
	8-53	8
	8-57	8
	8-61	8
1339706	3-11	9
1339713	8-50	52
	8-58	52
1339715	8-49	27
	8-53	27

See Service Manual for service procedures.
©2009 HYSTER COMPANY

NUMERICAL INDEX (continued)

PART NO.	PAGE	ITEM
	8-57	27
	8-61	27
1339717	3-91	19
1339720	3-73	21
1339723	8-49	4
	8-53	4
	8-57	4
	8-61	4
1339724	8-49	5
	8-53	5
	8-57	5
	8-61	5
1339725	8-49	14
	8-53	14
	8-57	14
	8-61	14
1339727	8-49	15
	8-53	15
	8-57	15
	8-61	15
1339729	8-49	16
	8-53	16
	8-57	16
	8-61	16
1339731	8-49	32
	8-57	32
1339737	8-49	26
	8-53	26
	8-57	26
	8-61	26
1339745	8-50	51
	8-58	51
1339746	8-50	50
	8-58	50
1339748	8-50	49
1339749	8-49	11
	8-53	11
	8-61	11
1339770	8-50	49
1339773	1-9	21
1339776	1-9	24
1339777	1-9	20
1339793	1-3	28
	8-49	19
	8-53	19
	8-57	19
	8-61	19
1339799	8-49	31
	8-53	30
	8-57	31
	8-61	30
1339947	12-93	7
	12-95	11
1340958	4-75	10
1341000	9-3	1
	9-3	1
	10-3	1
	10-3	1
1341001	9-3	1
	9-3	1
	10-3	1
	10-3	1
1341004	11-3	1
	11-3	1
1341005	9-3	1
	10-3	1
1341007	11-3	1
	11-3	1
1341008	9-3	1
	9-3	1
	10-3	1
	10-3	1
	11-3	1
	11-3	1
1341010	11-3	1
1341013	9-3	1
	9-3	1
	11-3	1
	11-3	1
	11-3	1
1341017	11-3	1
1341019	9-3	1
	9-3	1
1341024	9-3	1
	9-3	1
1341205	9-7	1
	9-7	1
1341206	9-7	1
	9-7	1
1341210	9-7	1
1341213	9-7	1
	9-7	1
1341218	9-7	1
	9-7	1
1341223	9-7	1
	9-7	1
1341228	9-7	1
	9-7	1
1341390	9-16	
1341391	9-16	
1341395	9-16	
1341398	9-16	
1341403	9-16	
1341408	9-16	
1341413	9-16	
1341427	9-16	
1341428	9-16	
1341432	9-16	
1341435	9-16	
1341440	9-16	
1341445	9-16	
1341450	9-16	
1341464	9-18	
1341465	9-18	
1341482	9-21	
1341487	9-21	
1341501	9-18	
1341502	9-18	
1341519	9-21	
1341524	9-21	
1341542	11-20	
1341545	11-20	
1341546	11-20	
1341550	11-20	
1341575	11-20	
1341578	11-20	
1341579	11-20	
1341583	11-20	
1341608	11-20	
1341611	11-20	
1341612	11-20	
1341613	11-20	
1341616	11-20	
1341620	11-20	
1341641	11-20	
1341644	11-20	
1341645	11-20	
1341646	11-20	
1341649	11-20	
1341653	11-20	
1341714	11-5	1
	11-5	1
1341717	11-5	1
	11-5	1
1341718	11-5	1
	11-5	1
1341719	11-5	1
1341722	11-5	1
	11-5	1
1341726	11-5	1
1342116	9-11	1
	11-15	1
1342118	11-15	1
1342120	11-11	1
1342121	11-15	1
1342123	11-11	1
1342124	11-11	1
1342126	11-11	1
1342129	11-11	1
1342132	11-11	1
1342217	10-11	
1342218	10-11	
1342222	10-11	
1342225	10-11	
1342247	10-23	
1342275	10-19	
1342276	10-19	
1342283	10-19	
1342370	10-9	2
1342377	10-9	2
1342379	9-11	1
1342383	9-11	1
1342384	11-15	1
1342390	10-9	2
1342391	11-15	1
1342392	9-11	1
1342393	9-11	1
1342407	11-15	2
	11-15	2
1342410	11-15	2
	11-15	2
1342411	11-15	2
	11-15	2
1342412	11-15	2
1342415	11-15	2
	11-15	2
1342419	11-15	2
1342469	10-5	1
	10-5	1
1342470	10-5	1
	10-5	1
1342474	10-5	1
1342477	10-5	1
	10-5	1
1343219	5-35	10
1343443	8-49	6
	8-53	6
	8-57	6
	8-61	6
1343448	3-73	1
1343449	3-73	5
	8-3	1
	8-7	1
	8-11	1
	8-15	1
	8-19	1
1343452	8-3	9
	8-7	9
	8-11	8

©2009 HYSTER COMPANY

NUMERICAL INDEX (continued)

PART NO.	PAGE	ITEM
	8-15	8
	8-19	9
1343458	1-3	1
1343461	8-49	37
	8-53	35
	8-57	37
	8-61	35
1343473	1-3	2
1343478	5-39	7
1343479	5-39	4
1343480	5-39	6
1343481	8-49	38
	8-53	36
	8-58	38
	8-61	36
1343508	7-3	33
1343526	3-91	
1343530	3-91	
1343531	8-49	39
	8-53	37
	8-58	39
	8-61	37
1343533	5-3	27
	5-9	6
	5-15	6
1343537	6-3	9
1343540	7-3	3
1343541	7-3	1
1343553	7-3	15
1343557	5-4	46
	5-10	47
	5-16	47
1343560	8-3	14
	8-7	14
	8-11	19
	8-15	19
	8-19	14
1343572	6-3	11
1343573	6-3	31
1343574	6-3	14
1343577	6-13	1
1343578	6-13	2
1343579	6-13	3
1343593	6-13	5
1343594	6-13	9
1343595	4-6	48
1343596	4-6	58
1343597	4-5	44
1343598	6-13	4
1343607	6-3	13
1343613	4-59	
1343614	4-59	
1343618	2-27	1
1343623	2-27	1
1343630	7-3	4
1343635	3-5	1
	3-7	1
	3-33	26
	3-69	11
1343636	4-6	49
1343638	3-5	13
	3-7	13
	3-33	38
1343647	1-9	6
	12-77	21
1343844	10-33	
1343845	10-33	
1343846	9-23	
1343847	9-23	
1343891	12-59	1
1343892	12-93	8
	12-95	12
1343893	10-23	
1343989	11-16	21
1343990	1-29	2
	12-41	2
1344274	4-47	11
1345027	4-91	11
1345029	4-90	15
1345183	9-8	8
	11-6	12
1345190	9-26	9
	10-36	31
	11-32	14
1345194	11-32	35
1345199	10-36	10
	11-32	9
1345204	10-36	11
	11-32	10
1345216	9-3	2
	9-7	2
	10-3	2
	10-5	2
	10-33	1
	11-3	2
	11-5	2
	11-9	2
	11-29	1
1345219	9-23	2
	10-33	2
	10-33	2
	12-15	13
	12-23	18
1345239	10-33	1
1345240	10-33	1
1345263	9-23	4
	10-33	4
	12-15	15
	12-23	19
1345264	9-23	1
1345267	1-29	1
1345314	10-9	1
1345348	9-26	17
1345354	8-45	5
	8-47	
1345359	11-15	3
	11-15	3
1345362	11-15	3
	11-15	3
1345363	11-15	3
	11-15	3
1345364	11-15	3
1345367	11-15	3
	11-15	3
1345371	11-15	3
1345401	11-16	12
1345403	9-12	21
	10-7	20
	11-12	23
1345412	9-26	4
1345413	9-26	4
1345423	10-36	16
1345492	9-26	1
	9-26	1
1345493	9-26	1
	9-26	1
1345500	9-26	1
	9-26	1
1345516	9-26	1
	9-26	1
1345566	10-35	3
	10-35	3
1345571	10-35	3
1345825	2-27	9
	2-31	14
	2-33	27
	2-35	12
	2-37	16
	2-39	12
	2-41	12
1345939	1-23	17
1345998	1-23	10
1346872	3-15	19
	3-36	70
1347004	4-6	47
	6-13	
1347018	1-3	17
1347020	5-41	35
1347021	3-33	8
1347026	2-27	3
	2-31	15
	2-33	26
	2-35	13
	2-37	15
	2-39	13
	2-41	13
1347027	8-3	38
	8-7	38
	8-11	13
	8-15	13
	8-19	38
	8-58	64
	8-62	52
1347028	8-3	39
	8-7	39
	8-11	15
	8-15	15
	8-19	39
	8-58	61
	8-62	54
1347029	8-3	40
	8-7	40
	8-11	12
	8-15	12
	8-19	40
	8-58	63
	8-62	51
1347030	8-3	41
	8-7	41
	8-11	14
	8-15	14
	8-19	41
	8-58	62
	8-62	53
1347043	2-15	27
	2-17	3
	2-19	27
	2-21	10
	2-23	9
	2-25	4
1347045	1-3	19
	1-13	14
	2-15	28
	2-17	4
	2-19	28
	2-21	11
	2-23	8
	2-25	5

See Service Manual for service procedures.
©2009 HYSTER COMPANY

NUMERICAL INDEX (continued)

PART NO.	PAGE	ITEM
	3-73	20
1347048	7-9	1
	7-15	
1347067	4-9	32
	4-13	31
	4-17	27
	4-21	38
	4-25	31
	4-29	31
	4-33	27
1347072	2-27	4
	2-33	33
1347076	2-27	17
1347088	1-3	13
	1-3	13
1347091	7-9	6
1347096	1-3	1
1347110	1-3	12
1347112	8-50	40
	8-53	38
	8-58	40
	8-61	38
1347114	4-37	16
	4-37	16
	4-67	11
	12-61	24
	12-63	30
	12-65	19
1347116	7-9	13
1347126	2-13	9
1347127	2-17	5
1347135	6-3	36
1347142	12-7	1
1347143	12-7	1
1347144	12-7	5
1347145	12-7	2
1347146	12-7	2
1347153	3-73	32
1347157	2-75	13
1347158	5-39	8
1347159	3-91	7
	3-95	7
	3-99	7
	3-103	9
1347166	3-15	6
1347189	12-47	2
	12-47	2
1347190	12-43	3
1347191	12-43	3
1347196	12-7	1
1347197	12-7	1
1347198	12-7	2
1347201	12-7	2
1347210	4-99	10
	4-101	10
	4-103	17
	4-105	10
	4-107	15
	4-111	15
	4-115	17
1347212	8-3	29
	8-7	29
	8-11	36
	8-15	36
	8-19	29
1347224	4-69	21
	4-71	33
	4-73	34
	4-119	31
	4-122	41
	4-125	41
	4-131	17
	4-132	15
1347300	5-27	10
1347312	2-33	31
1347970	7-5	11
1347971	7-5	11
1348246	11-32	24
1348247	11-32	24
1350036	3-33	19
	3-51	19
1350042	3-33	16
	3-51	16
1350215	1-3	20
	3-71	10
	8-50	55
	8-53	45
	8-58	55
	8-61	45
1350231	1-9	19
	1-13	12
	3-73	19
1350241	1-3	18
1350273	8-3	21
	8-7	21
1350282	1-3	24
	4-5	13
	4-57	3
1350285	1-3	16
1350286	3-73	6
1350290	3-73	10
1350291	3-73	9
1350292	3-73	28
1350298	3-73	14
1350299	3-73	15
1350400	3-15	20
	3-29	21
	3-31	15
	3-36	67
	3-39	44
1350706	8-65	4
1350707	8-65	1
1350733	12-93	7
	12-95	11
1350734	12-93	7
	12-95	11
1350735	12-93	7
	12-95	11
1350736	12-93	7
	12-95	11
1350904	4-131	5
	4-132	8
1351000	3-73	11
1351008	1-3	11
1351014	1-13	1
1351016	1-13	1
1351017	2-5	11
	2-7	10
	2-9	10
1351060	2-5	7
	2-7	7
	2-9	7
	2-11	7
1351061	2-5	6
	2-7	6
	2-9	6
	2-11	6
1351068	4-79	1
	4-81	1
	4-83	1
	4-85	1
	4-131	20
	4-132	18
1351069	4-79	4
	4-81	4
	4-83	4
	4-85	4
	4-131	21
	4-132	19
1351070	4-79	8
	4-81	8
	4-83	9
	4-85	9
1351071	4-83	11
	4-85	11
1351076	4-79	9
	4-81	9
	4-83	10
	4-85	10
1351077	8-3	42
	8-7	42
	8-11	16
	8-15	16
	8-19	42
	8-23	29
1351096	2-5	5
	2-7	5
	2-9	5
1351098	2-5	4
	2-7	4
	2-9	4
	2-11	4
1351099	4-79	13
	4-81	18
	4-83	24
1351100	4-83	12
1351133	4-9	33
	4-13	32
	4-22	66
	4-25	34
	4-29	34
	4-33	33
1351134	5-45	1
1351135	5-45	2
1351139	4-107	49
	4-111	49
	4-116	56
1351140	8-4	52
	8-8	52
1351145	3-11	21
1351146	3-11	22
	3-19	35
	3-36	85
	3-39	31
1351169	3-39	46
1351176	2-13	5
	2-15	5
	2-17	18
	2-19	3
	2-21	2
	2-25	19
1351177	2-13	7
	2-15	6
	2-17	19
	2-19	6
	2-21	3
	2-25	21
1351178	2-23	6

©2009 HYSTER COMPANY

NUMERICAL INDEX (continued)

PART NO.	PAGE	ITEM
	2-25	12
1351184	12-13	3
1351681	4-9	7
	4-13	7
	4-17	5
	4-22	69
	4-25	37
	4-29	37
	4-33	37
1351682	4-10	41
	4-13	40
	4-17	35
	4-22	68
	4-25	36
	4-29	36
	4-33	36
1351683	4-6	45
1351693	1-13	6
1352066	4-9	29
	4-13	28
	4-17	24
	4-22	65
	4-25	32
	4-29	32
	4-33	29
	4-86	
1352088	4-6	57
	4-77	
1352090	3-107	12
1352123	3-15	12
	3-17	26
	3-19	26
	3-35	31
	3-39	10
1352124	1-3	21
1352125	1-3	22
1352126	1-3	23
1352140	2-27	22
	2-31	23
	2-33	35
	2-35	2
	2-37	2
	2-39	2
	2-41	2
1352142	4-105	30
1352157	8-4	50
	8-12	59
1352463	8-29	
	8-35	
1352575	3-95	1
	3-99	1
	3-107	
1352599	4-75	9
1352602	4-75	4
1352603	4-75	5
1352606	4-75	11
	12-97	9
1352608	1-9	1
1352612	4-21	11
	4-25	11
	4-29	11
1352616	8-4	54
	8-8	54
	8-12	56
	8-16	56
	8-20	54
1353408	9-23	7
	12-15	18
1353464	11-32	25
1353530	9-26	18
	10-36	17
	11-31	4
1354046	2-85	29
	2-89	28
1354047	2-85	31
	2-90	30
1354049	4-59	3
1354090	1-9	22
1354106	4-67	6
	12-63	31
1354114	3-36	54
1354117	3-36	54
	3-36	54
1354140	1-15	4
1354163	1-23	11
1354165	1-23	4
1354171	1-23	19
1354200	12-61	19
	12-63	24
	12-65	13
1354203	3-15	17
	3-36	62
1354204	4-93	35
	4-108	51
	4-112	51
1354237	4-105	28
	4-105	30
	4-107	43
	4-111	43
	4-116	48
1354300	6-13	11
1354323	4-5	14
1354336	3-15	25
1354379	4-9	6
	4-13	6
	4-17	4
	4-21	42
	4-26	68
	4-30	68
	4-33	44
1354380	1-4	36
1354718	9-16	1
1354724	9-16	2
	9-16	2
1354733	2-129	35
	2-129	39
1354775	4-59	1
1354776	4-59	2
1354777	4-59	22
1354778	4-59	8
1354780	4-59	5
1354782	4-59	10
1354783	4-59	9
1354784	4-59	12
1354785	4-59	13
1354786	4-59	14
1354787	4-59	15
1354788	4-59	16
1354792	4-59	23
1354793	4-59	24
1354796	4-59	26
	4-59	26
	4-59	26
	4-59	26
1354804	4-59	4
1354805	4-59	11
1354806	4-59	17
1354807	4-59	25
1354814	2-103	1
	2-107	1
	2-111	1
1354901	11-16	21
1354902	10-9	14
	11-16	36
1354903	11-16	22
1354904	9-26	16
	11-31	6
1354906	11-32	18
1354907	11-32	18
1354915	9-12	24
	10-7	5
	11-11	13
1354916	9-12	24
	10-7	5
	11-11	13
1354917	9-12	24
	10-7	5
	11-12	13
1354918	10-36	19
1354919	9-26	13
1354921	9-26	13
1354922	9-26	16
	11-31	6
1354923	1-29	2
1354956	10-9	9
1354961	11-32	26
1354962	11-16	37
1354967	10-9	13
1355127	9-16	3
1355128	9-16	1
1355129	9-16	1
1355130	9-16	2
	9-16	2
1355132	9-16	1
1355145	9-16	1
1355146	9-16	2
	9-16	2
1355148	9-16	1
1355157	9-16	1
1355158	9-16	2
	9-16	2
1355160	9-16	1
1355177	9-16	1
1355178	9-16	2
	9-16	2
1355180	9-16	1
1355189	9-16	4
1355198	9-16	1
1355199	9-16	2
	9-16	2
1355200	9-16	1
1355217	9-16	2
	9-16	2
1355219	9-16	1
1355221	9-16	4
1355222	9-16	1
1355276	9-16	
1355277	9-16	
1355278	9-18	1
	9-21	
1355281	9-18	2
	9-18	2
	9-21	2
	9-21	2
1355284	9-18	3
	10-12	10
	10-15	3
	10-20	11

See Service Manual for service procedures.
©2009 HYSTER COMPANY

NUMERICAL INDEX (continued)

PART NO.	PAGE	ITEM
	10-23	3
1355285	9-18	4
	9-18	4
	9-18	4
	9-18	4
1355286	9-18	
1355287	9-18	1
	9-21	
1355288	9-18	1
	9-21	
1355289	9-18	2
	9-18	2
	9-21	2
	9-21	2
1355291	9-18	1
	9-21	
1355305	7-15	
1355314	3-95	34
	3-99	34
	3-104	59
1355335	6-7	15
1355348	5-3	17
	5-10	49
	5-16	49
1355366	9-21	
1355367	9-21	2
	9-21	2
1355369	9-21	
1355390	9-21	
1355391	9-21	2
	9-21	2
1355393	9-21	
1355409	9-21	8
1355410	9-21	13
	9-21	13
	9-21	13
	9-21	13
1355411	9-21	
1355413	9-21	
1355414	9-21	2
	9-21	2
1355416	9-21	
1355433	9-21	
1355434	9-21	2
	9-21	2
1355436	9-21	
1355497	11-21	
1355523	12-9	1
1355547	12-9	1
1355587	11-20	2
	11-20	2
1355589	11-20	1
1355598	11-20	1
1355599	11-20	2
	11-20	2
1355601	11-20	1
1355602	11-20	1
1355603	11-20	2
	11-20	2
1355605	11-20	1
1355610	11-20	4
	11-20	4
1355619	11-20	1
1355620	11-20	2
	11-20	2
1355622	11-20	1
1355711	11-20	4
	11-20	4
	11-20	4
	11-20	4
	11-20	4
1355714	11-21	
1355728	11-20	1
1355729	11-20	2
	11-20	2
1355731	11-20	1
1355740	11-20	1
1355741	11-20	2
	11-20	2
1355743	11-20	1
1355744	11-20	1
1355745	11-20	2
	11-20	2
1355747	11-20	1
1355748	11-20	1
1355749	11-20	2
	11-20	2
1355751	11-20	4
	11-20	4
	11-20	4
1355752	11-20	1
1355757	11-20	1
1355758	11-20	2
	11-20	2
1355760	11-20	1
1355765	11-20	4
	11-20	4
1355774	11-20	1
1355775	11-20	2
	11-20	2
1355777	11-20	1
1355874	10-11	7
	10-13	7
	10-19	8
	10-21	8
1355875	10-11	1
	10-13	1
	10-19	2
	10-21	2
1355876	10-11	3
	10-13	3
	10-19	4
	10-21	4
1355886	10-11	7
	10-13	7
	10-19	8
	10-21	8
1355887	10-11	1
	10-13	1
	10-19	2
	10-21	2
1355888	10-11	3
	10-13	3
	10-19	4
	10-21	4
1355910	10-11	7
	10-13	7
1355911	10-11	1
	10-13	1
1355912	10-11	3
	10-13	3
1355928	10-11	7
	10-13	7
	10-19	8
	10-21	8
1355929	10-11	1
	10-13	1
	10-19	2
	10-21	2
1355930	10-11	3
	10-13	3
	10-19	4
	10-21	4
1356058	10-19	1
	10-19	1
	10-19	1
	10-23	4
1356065	11-25	2
	11-27	2
1356074	11-25	2
	11-27	2
1356089	11-27	2
1356100	1-9	25
1356103	4-53	18
	8-3	22
	8-7	22
1356105	4-9	31
	4-13	30
	4-17	26
	4-21	29
	4-25	33
	4-29	33
1356108	4-9	37
	4-17	31
	4-22	73
	4-26	63
1356117	12-61	15
1356126	4-67	7
1356131	4-9	25
	4-17	23
1356137	1-23	6
1356292	10-28	3
	10-30	3
	11-23	3
	11-25	3
	11-27	3
1356295	10-28	2
	10-30	2
1356298	10-28	2
	10-30	2
1356318	8-45	6
1356328	12-55	15
	12-57	15
	12-59	15
	12-61	29
	12-63	25
	12-65	14
1356336	12-61	22
1356342	12-55	5
	12-57	5
	12-59	5
1356347	12-59	1
1356351	12-61	27
1356352	12-61	28
1356354	12-61	26
1356393	8-3	3
	8-7	3
	8-11	3
	8-15	3
	8-19	3
1356400	12-5	1
1356401	12-5	2
1356410	12-70	
1356411	12-70	
1356412	12-73	
1356414	12-75	

©2009 HYSTER COMPANY

NUMERICAL INDEX (continued)

PART NO.	PAGE	ITEM
1356437	3-83	4
	3-85	4
1356454	3-36	48
	3-40	49
1356459	3-73	12
1356478	3-91	
	3-93	9
1356479	3-91	
	3-93	9
1356509	12-73	17
1356510	12-73	17
1356511	12-73	9
1356513	3-15	36
	3-35	34
1356514	3-15	4
1356520	12-89	2
	12-89	2
1356522	3-87	3
1356525	1-9	28
1356540	12-55	14
	12-57	14
	12-59	11
1356541	12-55	5
	12-57	5
1356560	10-28	2
	10-30	2
	11-25	2
	11-27	2
1356569	10-28	2
	10-30	2
	11-25	2
	11-27	2
1356572	11-25	2
	11-27	2
1356587	11-25	2
1356658	10-28	2
	10-30	2
1356661	10-28	3
	10-30	3
	11-23	3
	11-25	3
	11-27	3
1356662	10-28	
	10-30	
	11-23	
	11-25	
	11-27	
1356667	10-28	2
	10-30	2
1356682	11-25	2
	11-27	2
1356688	10-28	2
	10-30	2
1356691	11-25	2
	11-27	2
1356694	11-27	2
1356747	10-11	4
	10-13	4
	10-15	7
	10-17	5
	10-19	5
	10-21	5
	10-23	8
	10-25	5
1356748	10-15	11
	10-17	4
	10-23	12
	10-25	4
	11-21	15
1356749	9-16	14
	9-18	14
	9-21	11
	10-12	11
	10-14	12
	10-15	8
	10-17	12
	10-20	12
	10-22	13
	10-23	9
	10-25	13
	11-21	14
1356750	9-16	13
1356751	9-18	13
	9-21	16
	11-21	12
1356752	9-16	14
1356754	10-15	
1356755	10-15	
1356759	10-15	
1356762	10-15	
1356778	10-15	1
	10-17	3
	10-23	1
	10-25	3
1356779	10-15	1
	10-17	3
	10-23	1
	10-25	3
1356783	10-15	1
	10-17	3
1356786	10-15	1
	10-17	3
	10-23	1
	10-25	3
1356838	2-103	18
	2-107	18
	2-111	18
1356857	12-9	3
1356863	12-9	5
1356867	12-9	4
1356882	12-9	
1356902	12-9	4
1356912	12-9	3
1356918	12-9	
1357036	5-27	40
1357196	7-15	10
1357197	7-15	1
1357199	7-15	3
1357201	7-15	5
1357300	12-45	1
1357302	12-49	1
1357353	8-65	44
	8-69	44
1357354	8-65	10
	8-69	10
1357355	8-65	26
	8-69	26
1357361	8-65	25
	8-65	43
	8-66	57
	8-69	25
	8-69	43
	8-70	57
1357364	8-65	39
	8-69	39
1357367	4-59	27
	4-59	27
	4-59	27
	4-59	27
	4-59	27
1357369	8-65	7
	8-69	7
1357707	3-65	12
	3-66	
1357716	2-27	1
1357717	2-27	1
1357721	2-27	1
1357749	3-65	11
	3-66	11
1358150	2-77	26
1358177	12-49	1
	12-49	1
1358178	12-51	1
	12-51	1
1358179	12-43	1
	12-43	1
1358183	12-45	1
	12-45	1
1358188	12-49	1
1358189	12-51	1
1358190	12-43	1
1358194	12-45	1
1358224	7-5	10
	7-5	10
1358225	7-5	10
1358239	3-25	17
1358240	3-25	25
1358241	3-25	21
	3-59	21
	3-61	21
1358242	3-25	22
	3-59	22
	3-61	22
1358243	3-25	23
	3-59	23
	3-61	23
1358245	3-25	18
	3-59	18
	3-61	18
1358352	11-31	1
	11-31	1
1358354	11-31	1
	11-31	1
1358355	11-31	1
1358358	11-31	1
1358515	3-36	47
	3-36	76
	3-39	41
1358809	12-9	9
1358814	12-10	16
1358815	12-10	17
1358816	12-10	16
1358817	12-10	17
1358821	12-10	13
1358858	4-59	21
1358911	4-22	83
	4-25	1
	4-29	1
	4-47	
1358932	10-15	2
	10-17	6
	10-23	2
	10-25	6
1358933	10-15	2
	10-17	6
	10-23	2
	10-25	6
1358937	10-15	2

See Service Manual for service procedures.
©2009 HYSTER COMPANY

NUMERICAL INDEX (continued)

PART NO.	PAGE	ITEM
	10-17	6
1358940	10-15	2
	10-17	6
	10-23	2
	10-25	6
1358963	10-12	
	10-20	
1358969	10-28	
	10-30	
	11-23	
	11-25	
	11-27	
1358970	10-28	9
	10-30	9
	11-23	9
	11-25	9
	11-27	9
1358972	10-28	14
	10-30	14
	11-23	14
	11-25	14
	11-27	14
1358973	11-20	1
1359100	2-98	35
1359102	2-98	31
1359103	2-98	30
1359234	9-11	1
1359437	3-73	33
1359450	3-83	3
	3-85	3
1359460	3-15	24
1359496	12-82	3
1359497	12-83	3
1359509	12-69	13
1359510	12-69	13
1359523	12-79	11
1359534	1-9	20
1359535	1-9	21
1359559	12-82	
1359560	12-83	
1359562	12-77	16
1359564	12-79	2
1359565	12-79	1
1359580	2-27	21
	2-31	21
	2-33	34
	2-39	20
1359581	2-27	5
	2-31	16
	2-33	28
	2-35	14
	2-37	17
	2-39	14
	2-41	14
1359587	1-3	6
1359600	1-9	16
	12-65	17
1359608	3-5	17
	3-7	16
	3-33	5
	3-69	9
1359620	8-50	47
	8-53	43
	8-58	47
	8-61	43
1359624	4-17	6
1359631	1-9	37
1359632	1-9	32
1360086	4-9	22
	4-13	21
	4-17	21
1360125	12-9	6
	12-13	
1360126	12-9	6
	12-13	
1360127	11-21	15
1360142	10-15	
	10-24	
1360146	2-35	33
	2-37	37
	2-41	33
	4-9	21
	4-21	8
	4-25	9
	4-29	9
1360178	2-112	47
1360215	2-97	26
	2-101	15
1360229	12-9	7
1360326	10-36	23
	10-36	23
1360327	10-36	23
	10-36	23
1360331	10-36	23
1360334	10-36	23
	10-36	23
1360356	10-36	24
	10-36	24
1360357	10-36	24
	10-36	24
1360361	10-36	24
1360364	10-36	24
	10-36	24
1360386	9-26	12
	10-36	14
	11-32	17
1360507	9-26	19
	10-36	20
	11-31	5
1360508	10-36	13
1360534	11-16	27
1360538	11-32	23
1360548	9-26	7
1360549	9-26	6
	11-32	11
1360633	10-33	
1360637	10-33	
1360718	1-9	11
1360759	2-103	23
	2-107	23
	2-111	23
1360792	7-5	15
1360793	7-5	14
1360794	7-5	13
1360795	7-5	12
1360796	7-5	12
	7-5	24
1360797	7-5	12
1360798	7-5	16
1360841	3-36	51
	3-39	47
1360878	2-45	1
1360879	2-45	3
1360880	2-45	26
1360881	2-45	8
1360882	2-45	10
1360883	2-45	21
1360884	2-45	23
1360885	2-45	9
1360886	2-45	11
1360887	2-45	13
1360888	2-45	14
1360889	2-45	15
1360890	2-45	16
1360891	2-45	17
1360892	2-45	18
1360893	2-45	19
1360894	2-61	8
	2-63	10
	2-65	12
1360895	2-45	2
1360896	2-43	11
1360897	2-43	1
1360898	2-43	3
1360899	2-43	10
1360932	12-51	11
1361087	1-7	16
	12-81	3
1361093	2-17	7
1361102	8-57	18
	8-61	18
1361121	4-6	46
1361126	12-93	1
1361142	8-50	48
	8-53	44
	8-58	48
	8-61	44
1361143	12-86	
1361164	3-25	14
	3-47	2
	3-59	14
1361276	10-23	
1361302	10-28	4
	10-30	4
	11-23	4
	11-25	4
	11-27	4
1361305	4-5	2
	4-18	41
	4-37	24
1361501	7-5	19
1361502	7-5	20
1361503	7-5	3
1361504	7-5	4
1361505	7-5	13
1361506	7-5	12
1361507	7-5	12
	7-5	24
1361552	12-93	5
	12-95	10
1361559	7-9	12
1361561	12-89	3
1361584	8-4	52
	8-8	52
1361595	4-67	8
	12-63	9
1361675	2-43	8
1361676	2-43	5
1361677	2-43	12
1361678	2-51	1
1361679	2-51	12
1361680	2-51	5
1361681	2-51	7
1361682	2-51	24
1361683	2-51	8
1361684	2-51	9
1361685	2-51	22
1361686	2-51	10

©2009 HYSTER COMPANY

NUMERICAL INDEX (continued)

PART NO.	PAGE	ITEM
1361687	2-51	11
1361688	2-51	2
	2-57	3
1361689	2-51	13
1361690	2-51	16
1361691	2-51	15
1361692	2-51	3
1361694	2-47	1
1361695	2-47	2
1361696	2-47	3
1361697	2-47	7
1361698	2-47	4
1361699	2-47	5
1361700	2-47	8
1361701	2-47	6
1361702	2-47	9
1361703	2-47	11
1361704	2-47	11
1361705	2-47	11
1361706	2-47	11
1361707	2-47	12
1361708	2-47	12
1361709	2-47	12
1361710	2-47	13
1361711	2-47	13
1361712	2-47	13
1361713	2-47	13
1361714	2-47	10
1361715	2-47	10
1361716	2-47	10
1361717	2-49	18
1361718	2-49	24
1361719	2-49	25
1361720	2-49	1
1361721	2-49	2
1361722	2-49	4
1361723	2-49	5
1361724	2-49	6
1361725	2-49	7
1361726	2-49	9
1361727	2-49	10
1361728	2-49	11
1361729	2-49	12
1361730	2-49	13
1361731	2-49	14
1361732	2-49	15
1361733	2-49	16
1361734	2-49	17
1361735	2-49	8
1361736	2-49	19
1361737	2-49	23
1361738	2-49	20
1361739	2-49	21
1361740	2-53	5
1361741	2-53	8
	2-63	3
1361742	2-53	3
	2-55	4
1361744	2-53	10
	2-55	6
1361745	2-53	11
	2-55	7
1361746	2-53	12
	2-55	9
1361747	2-53	13
	2-55	10
1361749	2-61	5
	2-63	1
1361751	2-61	7
	3-20	
1361752	2-61	3
	2-63	4
1361756	2-61	6
	2-63	7
1361761	2-61	2
1361765	3-5	24
	3-7	24
1361766	2-63	6
	2-65	6
	3-5	23
	3-7	23
1361773	2-61	1
1361791	2-53	4
1361794	2-63	9
	2-65	4
	3-5	21
	3-7	25
1361796	2-63	13
	2-65	10
1361797	2-63	14
	3-5	22
	3-7	22
1361798	2-57	2
1361801	2-57	17
1361802	2-57	9
1361804	2-57	11
1361805	2-57	12
1361806	2-57	13
1361807	2-57	14
1361809	2-67	9
1361810	2-67	5
1361811	2-67	2
1361812	2-67	38
1361813	2-67	25
1361814	2-67	7
1361815	2-67	4
1361816	2-67	3
1361817	2-67	1
1361818	2-67	11
1361819	2-67	12
1361821	2-67	15
1361823	2-67	18
1361824	2-67	20
1361825	2-67	17
1361826	2-67	32
1361827	2-67	21
1361828	2-67	22
1361829	2-67	23
1361830	2-67	24
1361832	2-67	26
1361833	2-67	37
1361834	2-67	10
1361835	2-67	27
1361837	2-59	2
1361838	2-59	5
1361839	2-59	3
1361840	2-59	6
1361841	2-59	7
1361842	2-59	8
1361843	2-59	9
1361844	2-59	11
1361845	2-59	12
1361846	2-59	14
1361853	4-43	
1361867	2-59	26
1361868	2-57	19
1361869	2-63	15
	2-65	1
1361870	2-63	16
	2-65	8
1361871	2-65	3
	2-65	5
1361873	2-53	7
	2-63	18
	2-65	13
	2-67	31
1361875	2-57	16
1361878	2-57	18
	2-67	36
1361879	2-57	7
1361880	2-67	8
1361881	2-59	20
	2-67	33
1361882	2-67	29
	2-67	35
1361884	2-67	19
1361885	2-53	9
	2-67	29
	2-67	34
1361888	2-59	18
1361889	2-45	20
	2-59	17
1361890	2-59	16
1361891	2-59	13
1361893	2-59	19
1361894	2-45	6
1361895	2-59	21
1361896	2-45	22
1361897	2-45	7
1361898	2-45	12
	2-51	19
	2-53	14
	2-61	4
1361948	8-45	14
1362000	2-45	24
1362001	2-45	25
	2-51	17
1362002	2-45	4
1362003	2-43	4
	2-45	5
1362005	2-43	2
	2-53	16
1362007	2-43	6
1362008	2-43	7
1362009	2-43	9
1362010	2-51	14
1362011	2-51	20
1362012	2-51	4
1362013	2-51	19
1362015	2-51	6
1362016	2-49	22
1362017	2-53	6
1362036	4-39	10
1362037	4-39	8
1362039	4-39	13
1362040	4-39	15
1362042	4-39	14
1362043	12-61	27
1362044	12-61	27
1362049	1-15	10
1362052	1-15	11
1362053	1-15	12
1362061	1-15	13
1362069	4-10	42
	4-53	
1362070	2-103	17
	2-111	16
1362113	2-59	

See Service Manual for service procedures.
©2009 HYSTER COMPANY

NUMERICAL INDEX (continued)

PART NO.	PAGE	ITEM
1362387	11-32	12
1362390	11-16	11
1362406	12-35	
1362407	12-35	
1362408	12-35	
1362409	12-35	
1362416	12-33	
1362417	12-33	
1362418	12-33	
1362419	12-33	
1362422	12-33	11
1362423	12-33	12
1362426	12-33	
	12-35	
1362433	10-10	33
	11-16	39
1362714	1-3	9
1363010	12-61	17
1363011	12-61	17
	12-63	26
	12-65	15
1363013	12-59	2
1363015	12-59	3
1363016	12-61	22
1363885	3-79	11
1363886	4-119	37
	4-121	8
	4-125	8
1363896	3-39	12
1363916	1-9	8
1363917	1-9	9
1363918	1-9	10
1364271	6-3	28
1365062	10-36	15
1365140	11-11	10
1365286	12-77	5
1365287	12-77	7
1365288	12-77	8
1365289	12-77	9
1365290	12-70	35
	12-73	28
1365292	12-69	25
	12-73	27
1365294	12-81	11
	12-81	18
	12-81	22
1365296	12-69	6
	12-69	6
	12-73	23
1365299	12-77	11
1365500	10-35	1
	10-35	1
	10-35	1
	10-35	1
1365502	10-35	1
	10-35	1
1365504	10-35	2
	10-35	2
1365506	10-35	2
	10-35	2
1365514	10-35	2
1365517	10-35	2
	10-35	2
1365827	1-9	
1365860	4-5	23
1365876	4-57	1
1365877	4-57	2
1365887	2-19	33
	2-23	6
1365895	3-5	25
1366435	9-26	20
	9-26	20
1366600	12-77	17
1366601	12-77	10
1366603	12-77	4
1366607	12-75	10
1366618	12-70	43
1366620	12-69	26
	12-69	27
1366622	12-77	20
1366623	12-77	18
1366624	12-69	10
	12-70	33
	12-77	19
	12-77	19
1366625	12-73	1
1366626	12-73	1
1366627	12-70	36
1366632	12-69	20
1366633	12-75	13
1366729	10-28	
1366733	10-28	
	11-25	
1366736	10-28	
	11-25	
1366737	11-25	
1366742	11-25	
1367111	12-69	26
	12-69	27
1367137	1-15	14
1367190	2-45	
	2-49	
	2-51	
	2-57	
	2-59	
	2-67	
1367191	2-67	14
1367430	5-3	3
	5-10	44
	5-15	44
1367431	8-3	15
	8-7	15
1367440	12-49	1
1367441	12-51	1
1367442	12-43	1
1367443	12-45	1
1367444	12-49	1
1367445	12-51	1
1367446	12-43	1
1367447	12-45	1
1367517	3-20	1
1367518	3-23	1
1367519	3-20	2
	3-23	2
1367520	3-20	3
	3-23	3
1367521	3-23	4
1367522	3-20	4
	3-23	5
1367523	3-20	5
	3-23	6
1367524	3-20	6
	3-23	7
1367525	3-20	7
	3-23	8
1367526	3-20	8
	3-23	9
1367527	3-20	9
	3-23	10
1367574	4-59	9
1367633	4-9	23
	4-13	22
1367639	4-65	5
	4-67	2
	12-63	10
	12-70	38
1367640	4-21	20
	4-25	20
	4-29	20
1367645	12-57	19
	12-61	5
	12-63	8
	12-65	7
	12-67	8
1368056	1-23	8
1368061	4-9	11
1368100	12-81	9
	12-81	13
	12-81	15
	12-81	17
	12-81	21
1368105	12-79	20
	12-79	42
1368110	12-79	13
1368136	12-79	12
1368137	12-77	6
1368140	12-77	12
1368145	12-81	8
1368146	12-81	12
1368147	12-81	14
1368148	12-81	16
1368149	12-81	20
1368313	9-26	1
1368314	9-26	20
	9-26	20
1368400	10-35	3
	10-35	3
	10-35	4
	10-35	4
1368411	11-31	1
	11-31	1
1368414	11-31	1
	11-31	1
1368442	10-35	4
1368445	11-32	31
	11-32	31
1368656	9-8	6
	11-5	10
1368790	2-57	8
1368848	4-53	9
1368849	4-53	2
1368850	4-53	11
1368851	4-53	12
1368852	4-53	13
1368853	4-53	14
1368854	4-53	15
1368855	4-53	16
1368856	4-53	17
1368857	4-53	7
1368858	4-53	3
1368859	4-53	8
1368860	4-53	4
1368861	4-53	6
1368862	4-53	1
1368863	4-53	10
1368917	3-5	14
1368924	12-61	9

©2009 HYSTER COMPANY

NUMERICAL INDEX (continued)

PART NO.	PAGE	ITEM
	12-63	22
	12-65	11
1368949	2-27	25
	2-31	13
1368952	12-79	27
1368953	12-77	14
1368955	12-79	36
1368956	12-81	10
1368957	12-69	14
1368967	12-79	35
1368968	12-79	34
1368980	3-5	14
1368983	4-9	38
	4-13	37
	4-17	32
1369038	3-25	6
	3-27	5
1369065	3-65	13
	3-66	17
1369066	3-65	19
	3-66	4
1369328	11-15	1
1369344	9-23	6
	10-33	6
	11-29	6
	12-15	17
	12-19	14
	12-23	14
1369345	9-23	6
	10-33	6
	11-29	6
	12-15	17
	12-19	14
	12-23	14
1369356	9-11	6
	11-11	6
	11-16	18
1369357	9-11	6
	10-9	20
	11-11	6
	11-16	18
1369425	12-70	30
1369426	12-70	31
1369427	12-70	30
1369428	12-70	31
1369450	3-59	6
	3-61	6
1369456	3-15	17
	3-36	62
1369457	3-15	17
1369471	12-69	29
	12-73	26
1369472	12-69	29
1369543	10-28	
1369544	10-28	
1369549	11-25	
1369572	3-15	14
	3-35	32
	3-65	
1369602	9-26	1
	9-26	1
1369606	9-26	1
	9-26	1
1369611	9-26	1
	9-26	1
1369617	9-26	1
	9-26	1
1369625	11-31	1
	11-31	1
1369627	11-31	1
	11-31	1
1369633	10-35	4
	10-35	4
1369643	11-32	31
1369709	12-5	6
1369914	2-57	21
1369999	2-55	5
1370479	12-33	3
1370480	12-35	2
1370481	12-35	1
1370482	12-35	2
1370483	12-35	1
1370484	12-35	2
1370486	12-35	1
1370487	12-35	1
	12-35	2
1370488	12-33	2
1370489	12-33	1
1370490	12-33	2
1370491	12-33	2
1370492	12-33	2
1370493	12-33	1
1370494	12-33	2
1370495	12-33	2
1370683	2-53	17
1370690	2-55	8
1370736	2-51	21
1370749	10-28	
1370942	12-81	19
	12-81	23
1370949	2-135	14
1371100	1-7	15
1371102	1-7	12
1371103	1-7	13
1371117	3-73	32
1371166	3-73	44
	4-17	23
1371203	4-59	6
1371289	12-9	9
1371429	5-45	2
1371582	2-97	17
1371584	2-75	9
1371595	2-75	1
1371599	3-36	55
1371601	10-28	
1371602	11-25	
1371605	11-25	
1371608	11-25	
1371631	11-27	2
1371652	2-51	23
	2-75	9
1373801	1-3	2
1373819	8-50	57
	8-54	48
	8-58	57
	8-61	31
1373949	12-77	2
1374050	12-77	3
1374057	3-25	32
	3-59	32
	3-61	32
1374066	12-69	26
	12-69	28
1374068	12-73	2
1374069	12-73	6
1374070	12-73	5
	12-73	12
1374071	12-73	4
1374072	12-73	3
1374073	12-73	7
1374074	12-73	8
	12-73	13
	12-73	19
1374075	12-73	18
1374076	12-73	10
1374077	12-73	11
1374107	2-77	15
	2-81	15
1374108	2-78	29
	2-81	19
	2-85	36
	2-107	22
	2-111	14
1374313	2-107	5
	2-111	5
1374601	3-11	14
1374750	1-15	16
1374916	3-5	18
	3-51	10
1374917	3-5	26
1375029	3-65	10
	3-66	10
1375030	3-65	17
1375037	3-65	5
	3-66	5
1375047	3-65	3
1375048	7-5	12
1375049	7-5	12
1375125	2-7	11
	2-71	37
1375128	2-7	13
	2-71	8
1375129	2-7	12
	2-71	10
1375132	2-27	25
	2-31	13
	2-33	22
	2-35	11
1375134	2-27	26
1375144	2-71	3
	2-75	16
1375145	2-71	4
	2-75	5
1375148	5-3	43
	5-9	35
	5-15	35
1375157	4-22	61
	4-27	90
	4-31	90
1375158	4-22	62
	4-27	89
	4-31	89
1375168	12-61	2
	12-67	3
1375169	12-61	3
	12-67	9
1375171	12-61	1
1375172	12-61	1
1375173	4-65	3
1375174	3-33	1
1375183	5-4	47
	5-9	36
	5-15	36
1375196	2-98	29
1375214	1-13	7
1375239	3-11	15
1375597	12-93	
1375602	2-101	13

See Service Manual for service procedures.
©2009 HYSTER COMPANY

NUMERICAL INDEX (continued)

PART NO.	PAGE	ITEM
1375693	3-33	13
1375696	3-33	2
1375703	4-5	1
	4-22	48
	4-26	82
	4-31	82
	4-75	
1375711	3-35	33
1375713	3-35	24
1375722	3-33	7
1375744	3-33	12
1375786	3-83	12
	3-85	12
1375795	4-93	17
	4-119	25
	4-127	12
	4-129	12
1375796	4-93	17
	4-119	25
	4-119	43
	4-127	12
	4-129	12
1375797	4-93	18
	4-119	23
1375822	12-97	1
1375826	3-83	5
1375834	3-83	1
	3-85	1
1375835	3-83	2
	3-85	2
1375844	4-18	37
	4-21	18
	4-25	18
	4-29	18
1375847	4-21	1
	4-25	2
	4-29	2
1375848	3-73	43
	3-83	8
	3-85	8
	4-22	80
1375867	4-31	102
1375878	4-22	55
	4-27	85
	4-31	85
1375905	3-25	19
1375950	4-91	4
1375952	2-103	6
	2-107	6
	2-111	6
1375953	2-77	26
	2-82	26
1375954	2-85	17
	2-89	16
1376000	3-11	18
1376006	3-11	8
1376007	12-43	2
	12-45	2
	12-51	19
1376114	10-35	4
	10-35	4
1376120	10-35	4
	10-35	4
1376131	11-31	1
	11-31	1
1376133	11-32	31
	11-32	31
1376161	11-31	1
1376164	11-31	1
	11-31	1
1376167	11-31	1
1376338	12-41	1
1376340	12-9	
1376341	12-9	1
1376343	12-9	3
1376344	12-9	4
1376423	8-45	2
1376424	8-45	1
1376429	3-65	8
1376439	4-65	7
	4-67	1
	12-63	15
1376440	4-65	7
	4-67	1
	12-63	14
1376446	4-67	1
1376557	7-13	1
1376568	3-35	41
1376571	3-35	44
	3-39	29
1376576	3-33	24
1376579	12-61	1
	12-67	2
1376581	4-5	12
1376617	4-95	26
	4-107	47
	4-111	47
	4-116	57
1376618	4-108	50
	4-112	50
	4-116	55
1376619	4-107	48
	4-111	48
	4-116	54
1376620	2-53	1
1376621	3-15	30
	3-25	
1376624	4-21	33
1376655	4-22	76
1376661	4-26	49
	4-30	49
1376666	12-79	40
1376667	4-21	33
1376722	2-27	24
	2-31	6
	2-35	6
	2-37	25
1376726	3-33	14
1376727	3-83	28
	3-85	24
1376732	4-5	4
	4-22	49
	4-69	
1376743	6-3	33
1376744	6-3	32
1376745	6-3	16
1376746	3-73	16
1376747	4-9	30
	4-17	25
	4-21	28
	4-79	
1376748	4-5	9
1376749	4-65	6
	12-63	11
1376750	4-21	33
1376766	2-13	11
	2-21	8
1376767	2-72	49
	4-22	56
	4-27	86
	4-31	86
1376782	3-83	16
	3-85	16
1376789	2-85	35
	2-90	41
1376876	2-103	22
1377047	4-47	4
1377048	4-47	6
1377049	4-47	21
1377050	4-47	13
1377051	4-47	20
1377052	4-47	19
1377053	4-47	23
1377067	4-47	2
1377080	3-9	11
	3-51	27
	3-53	13
	3-71	17
1377083	3-9	14
	3-51	33
	3-53	18
	3-71	21
1377110	2-85	6
	2-89	6
1377255	8-29	7
	8-35	11
	8-41	
1377256	8-41	7
1377257	8-41	9
1377258	8-41	
1377259	8-41	10
1377260	8-41	11
1377261	8-41	8
1377264	8-29	2
	8-31	2
1377266	8-29	2
	8-31	2
1377274	12-70	
1377751	4-51	1
1377803	5-49	15
1377804	5-49	14
1377811	2-11	3
1377825	5-53	2
1377828	5-53	10
1377854	12-77	1
1377860	4-101	25
	4-103	33
	4-107	36
	4-111	36
	4-115	33
	4-121	31
	4-125	31
1377868	4-103	34
	4-107	37
	4-111	37
	4-115	34
	4-121	20
	4-125	20
1377908	2-115	19
1377925	12-33	3
1377928	12-33	6
1377935	12-33	1
1377936	12-33	2
1377937	12-33	1
1377938	12-33	2
1377945	12-33	16
1377948	12-39	7
1377949	12-39	7

©2009 HYSTER COMPANY

NUMERICAL INDEX (continued)

PART NO.	PAGE	ITEM
1377952	12-39	
1377953	12-39	9
1377954	12-39	10
1377959	12-33	
1377960	12-33	
1377992	1-3	15
	1-3	15
1377998	4-17	1
1378055	12-9	2
1378057	12-9	2
1378065	12-9	5
1378072	12-9	2
1378082	12-9	5
1378307	1-15	15
1378317	2-85	1
	2-89	1
1378318	2-93	13
	2-95	13
1378319	2-93	14
	2-95	14
1378418	4-97	1
1378537	3-35	45
	3-39	23
1378550	3-35	14
	3-103	25
1378558	2-75	1
1378600	6-3	29
1378652	4-95	6
1378661	4-14	48
1378671	4-119	22
	4-121	19
	4-125	19
1378690	10-9	23
	11-16	31
1378691	9-8	7
	11-5	11
1378692	10-10	24
	11-16	30
1378693	10-10	24
	11-16	30
1378694	9-8	9
	11-6	13
1378698	9-8	8
	11-6	12
1378699	9-8	8
	9-8	9
	10-10	24
	11-6	12
	11-6	13
	11-16	30
1379425	2-45	
	2-49	
1379455	3-11	4
1379459	11-29	
1379460	11-29	
1379463	11-29	
1379481	4-21	41
	4-26	67
	4-30	67
	4-33	43
1379506	8-50	45
	8-58	45
1379507	8-50	46
	8-58	46
1379682	10-9	24
	11-16	30
1379683	10-10	24
	11-16	30
1379684	9-8	9
	11-6	13
1379685	9-8	8
	11-6	12
1379687	9-12	16
	10-7	13
1379758	7-6	
1379799	12-61	22
1380036	10-9	3
1380092	6-11	3
1380115	5-53	30
	8-45	15
1380245	2-119	7
1380261	2-133	5
1380268	3-59	19
	3-61	19
1380744	4-107	40
	4-111	40
	4-131	10
1380745	4-103	23
	4-107	41
	4-111	41
	4-115	23
1380757	4-65	7
	4-67	1
	12-63	13
1380879	9-21	8
	10-14	10
	10-17	9
	10-22	11
	10-25	10
1380976	10-14	10
	10-17	9
	10-22	11
	10-25	10
1381082	8-47	5
1381354	11-9	1
	11-9	1
1381357	11-9	1
	11-9	1
1381358	11-9	1
	11-9	1
1381359	11-9	1
1381362	11-9	1
	11-9	1
1381366	11-9	1
1381560	11-29	1
1381561	11-29	1
1381564	11-29	1
1381765	12-10	21
	12-37	6
1381766	12-10	22
	12-37	7
1381771	10-36	25
	11-31	2
1381772	10-36	25
	11-31	2
1381778	12-39	
1381779	12-39	
1381794	12-35	
1381795	12-35	
1381796	12-35	
1381797	12-35	
1381798	12-39	
1381799	12-39	
1381923	7-9	5
1382056	12-70	42
1382059	3-25	27
1382111	1-15	1
1382112	1-15	2
1382113	1-15	1
1382114	1-15	2
1382130	12-55	1
	12-57	1
1382306	1-4	41
	1-7	17
1382316	8-3	46
	8-8	46
	8-11	44
	8-15	44
	8-20	46
1382320	5-45	1
1382546	2-125	18
1382556	6-3	3
1382562	3-81	4
1382680	2-43	
	2-45	
	2-47	
	2-49	
	2-51	
	2-53	
	2-57	
	2-59	
	2-61	
	2-67	
1382810	2-75	1
	2-77	11
	2-81	11
1382819	2-33	16
1382954	2-133	18
1382990	2-33	15
1383004	8-23	36
1383012	2-13	9
	2-25	7
1383037	12-13	6
1383062	8-47	4
1383331	4-9	1
	4-13	1
	4-21	40
	4-26	66
	4-30	66
	4-33	42
1383401	4-21	32
	4-26	42
	4-99	
1383421	4-21	32
	4-105	
1383450	5-9	1
	5-15	1
	5-37	28
1383455	5-37	32
1383457	5-37	33
1383458	5-37	30
1383460	5-37	31
1383461	5-37	29
1383466	5-37	36
1383574	3-13	14
1383621	2-133	8
1383777	6-5	25
1383783	3-69	6
	3-71	7
1383784	3-69	8
1383997	2-97	1
1384006	2-67	28
1384008	2-59	15
1384355	5-49	4
1384357	2-7	5
	2-11	5
	5-49	21
1384365	2-11	12

See Service Manual for service procedures.
©2009 HYSTER COMPANY

NUMERICAL INDEX (continued)

PART NO.	PAGE	ITEM
	5-49	21
1384366	2-11	13
	5-49	24
1384368	5-49	22
	5-53	31
1384369	5-49	2
1384372	8-23	14
1384373	5-49	7
1384377	8-23	5
1384378	8-24	53
1384382	8-23	9
1384384	8-23	8
1384389	8-23	10
1384390	8-24	49
1384393	8-23	11
1384396	8-24	51
1384400	2-139	17
1384939	8-12	47
	8-16	47
	8-20	60
	8-43	
1384949	8-23	9
1385015	8-23	6
1385016	8-23	32
1385017	8-23	35
1385019	5-53	6
1385023	5-53	8
	7-5	
1385027	3-107	1
1385028	3-95	28
	3-99	28
	3-104	60
1385029	3-95	35
	3-99	35
1385032	5-53	1
1385033	5-53	3
1385034	5-53	4
1385036	8-23	19
1385037	5-49	13
1385048	8-11	30
	8-15	30
1385522	12-59	1
1385862	4-9	20
	4-89	
1385863	4-21	43
	4-26	70
	4-30	70
1385873	4-26	50
	4-30	50
	5-32	44
1386216	1-3	5
1386217	1-3	7
1386220	1-4	43
1386221	1-4	42
1386785	2-135	3
1386795	2-75	15
	2-135	4
1386799	2-75	1
1386800	2-75	1
1386806	5-35	1
	5-37	1
1386813	5-39	4
1386815	2-75	15
	2-135	4
1386833	3-35	5
1386834	3-35	6
1386940	5-27	36
	5-32	45
1386958	5-13	6
1387148	3-35	3
1387149	3-36	80
1387230	5-31	25
1387235	5-7	9
	5-21	8
	5-23	10
1387239	3-36	59
	3-59	
1388304	12-97	8
	12-99	
1388305	12-97	
1388386	2-137	19
1388387	2-115	9
	2-117	5
1388559	5-27	1
1388573	5-32	42
	5-33	6
1388579	3-11	20
1388924	5-31	22
1389359	2-71	1
	2-75	1
	2-77	11
	2-81	11
1389475	4-5	26
1389476	4-69	23
	4-71	23
	4-73	24
1389477	4-69	24
	4-71	24
	4-73	25
1389479	4-69	19
1389480	4-69	20
1389485	4-5	18
1389497	3-36	55
1389498	3-36	59
	3-59	
1389499	3-83	19
1389608	5-4	48
	5-9	10
	5-15	10
1390182	1-9	5
	11-32	15
1390350	12-35	1
1390351	12-35	2
1390352	12-35	1
1390353	12-35	2
1390354	12-35	2
1390355	12-35	1
1390356	12-35	1
1390357	12-35	2
1390358	12-39	1
1390359	12-39	2
1390360	12-39	1
1390361	12-39	2
1390365	12-10	18
	12-37	8
1390366	12-10	19
	12-37	9
1390367	12-10	18
1390368	12-10	19
1390410	10-35	7
1390411	10-35	6
1390420	10-35	3
	10-35	3
1390421	10-35	3
	10-35	3
1390422	10-35	3
	10-35	3
1390426	10-35	4
	10-35	4
1390607	1-9	26
1390609	5-27	39
1390610	5-31	40
1390611	1-9	23
1391295	12-43	9
1391321	4-22	54
	4-27	83
1391375	5-27	38
	5-31	40
1391377	5-3	2
	5-9	5
	5-27	
1392180	8-12	48
	8-16	48
	8-19	15
1392183	5-55	14
1392184	5-55	3
1392191	8-24	45
1392192	8-23	2
1392193	8-23	34
1392194	8-11	45
	8-15	45
	8-19	19
1392240	8-23	12
1392248	8-12	58
	8-16	58
	8-19	27
1392718	1-3	2
	1-7	7
1393132	9-23	2
1393142	11-29	2
1393160	5-27	42
	5-32	40
	5-33	4
1393164	5-27	40
	5-32	40
1393167	12-69	4
	12-73	22
1393168	12-69	1
	12-73	20
1393169	12-69	2
1393427	2-78	
	2-93	
	2-95	
	2-104	
	2-108	
	2-112	
1393580	2-103	
1394008	3-9	1
	3-33	33
	3-53	5
	3-53	20
	3-69	18
	3-71	1
1394010	8-27	1
1394021	3-95	1
	3-99	1
	3-103	2
	3-107	
1394100	12-61	18
	12-63	23
	12-65	12
1394710	5-31	17
1394711	5-31	19
1394714	5-31	18
1394879	5-19	2
	5-21	2
	5-23	4
1394881	5-19	10

©2009 HYSTER COMPANY

NUMERICAL INDEX (continued)

PART NO.	PAGE	ITEM
	5-21	10
	5-23	12
1394882	5-19	5
	5-21	5
	5-23	5
1394884	5-13	7
1394885	5-19	4
	5-21	4
1394886	5-13	8
1394887	5-13	5
1394888	5-13	4
1394893	5-19	6
	5-21	6
	5-23	6
1394894	5-13	2
1394895	5-13	13
1394902	5-13	10
	5-19	
1394903	5-13	11
	5-19	
1394904	5-39	3
1394908	5-19	1
	5-21	1
1394909	5-19	1
	5-21	1
1394912	5-19	7
	5-21	7
	5-23	7
1394915	2-71	2
	2-75	17
1394923	5-3	37
	5-9	27
	5-15	27
1394930	5-3	
1394931	5-7	2
1394932	5-7	1
1394942	5-9	
	5-13	
1395174	11-29	2
1395175	9-23	2
	10-33	2
1395176	11-29	2
1395285	10-10	25
	11-16	29
1395291	10-36	26
	11-32	33
1395292	10-36	27
	11-32	32
1396211	2-27	25
	2-31	13
	2-41	11
1396212	2-27	24
	2-31	6
	2-41	6
1396221	2-27	26
1396223	2-33	16
1396250	7-10	6
1396251	7-10	9
1396252	7-10	10
1396253	7-10	8
1396255	3-69	10
1396256	3-73	35
	3-79	
1396257	3-73	22
1396259	4-17	19
	4-119	
1396263	2-33	22
1396264	2-33	15
1396270	2-25	16
1396272	2-25	9
1396273	2-25	6
1396274	2-25	15
1396335	4-18	38
1396341	4-17	2
1396342	3-73	30
	3-77	32
1396344	5-55	25
1396345	8-23	42
1396346	5-55	9
1396347	4-37	9
	4-131	
1396348	4-37	9
	4-132	
1396406	10-36	28
	11-32	36
1396407	10-36	29
	11-32	34
1396431	12-9	2
	12-9	2
1396434	12-9	2
	12-9	3
1396460	12-9	4
1396462	12-9	4
1396472	12-9	4
1396518	2-15	25
	2-17	8
	2-19	8
	2-21	18
1396573	3-35	2
	3-103	27
1396637	5-31	1
1397267	12-9	3
1397277	12-9	3
1397325	3-35	11
1397326	2-33	23
1397335	8-23	5
1398099	3-13	22
1398479	9-26	20
	9-26	20
1398493	9-26	20
1398512	9-26	20
	9-26	20
1398541	9-26	20
	9-26	20
1398595	11-32	31
	11-32	31
1398604	11-32	31
1398645	9-26	20
	9-26	20
1398951	11-32	31
	11-32	31
1399006	12-9	3
1399008	12-9	3
1399023	12-9	3
	12-9	3
1399041	12-9	
1399044	12-9	
1399048	12-9	
1400158	5-33	3
1400159	5-32	40
	5-33	
1401746	12-15	9
	12-19	9
	12-23	9
1402189	2-21	19
1402414	3-13	36
1402735	2-43	
	2-45	
	2-47	
	2-49	
	2-49	
	2-51	
	2-53	
	2-57	
	2-59	
	2-67	
	2-67	
1402817	4-103	44
	4-115	44
1402890	4-95	11
1402907	4-95	28
1402942	4-103	22
	4-115	22
1450104	4-9	11
	4-13	11
1450126	3-65	14
	3-65	16
	3-66	14
1450203	1-15	
1450204	1-15	
1450256	3-95	33
	3-99	33
	3-104	58
1450293	4-65	1
	4-67	3
	12-63	9
1450356	4-65	2
	4-67	5
	12-63	18
1450696	2-97	12
	2-101	5
1450744	12-69	26
	12-69	27
1450928	2-59	22
	4-13	43
	4-43	
1451092	8-65	5
	8-69	5
1451568	3-15	2
	3-17	23
	3-19	23
	3-35	37
1451604	2-137	2
1451696	6-7	16
1451697	6-7	4
1451698	6-7	6
1451700	6-7	8
1451703	6-7	10
1451707	6-7	19
1451710	6-7	3
1451712	6-7	18
1451743	4-45	19
1451788	8-45	10
1451891	2-33	2
1451892	2-33	3
1452112	3-9	11
	3-51	28
	3-53	13
	3-71	17
1452143	4-49	1
1452270	8-49	28
	8-54	47
	8-57	28
	8-62	47
1452595	5-32	40
1452596	5-32	40
1452798	3-59	4
	3-61	4

See Service Manual for service procedures.
©2009 HYSTER COMPANY

NUMERICAL INDEX (continued)

PART NO.	PAGE	ITEM
1452828	4-37	23
1453153	4-59	19
1453348	2-115	
	2-125	
	2-137	
1453538	6-3	8
	6-7	
	8-4	57
	8-12	49
	8-16	49
	8-20	58
1453562	2-59	4
	4-39	
1453580	2-77	
	2-85	
	2-93	
	2-97	
1453620	8-3	25
	8-7	25
	8-11	11
	8-15	11
	8-19	25
1453687	6-3	1
1453779	3-25	4
1453882	1-15	5
1453883	1-15	6
1453884	1-15	7
1453885	1-15	7
1453886	1-15	8
1453887	1-15	9
1454096	1-3	14
1454511	1-15	1
1454512	1-15	2
1454513	1-15	1
1454514	1-15	2
1454655	1-4	47
1454663	4-119	21
	4-121	18
	4-125	18
1454827	4-119	26
	4-121	40
	4-125	40
1454828	4-119	30
	4-121	39
	4-125	39
1454829	4-33	46
	4-119	28
	4-121	38
	4-125	38
1454860	4-119	27
	4-121	36
	4-125	36
1454862	4-33	46
	4-119	29
	4-121	37
	4-125	37
1455262	3-59	25
1455305	3-66	18
1455306	3-65	15
	3-66	16
1455307	3-66	15
1455309	3-66	1
1455310	3-65	1
	3-66	21
1455381	2-115	
1455404	8-4	49
	8-8	49
	8-29	
1455464	1-4	48
1455550	7-9	7
	7-10	7
1455601	2-77	9
1455602	2-93	5
	2-95	5
1455674	2-57	4
1455675	2-57	1
1455677	2-57	10
1455770	6-7	5
1455771	6-7	7
1455780	6-7	17
1455987	12-85	
1455988	12-61	17
1456071	2-97	24
1456275	8-27	5
1456464	4-18	54
1456472	8-4	49
	8-8	49
	8-35	
1456473	8-4	49
	8-8	49
	8-35	
1456518	3-81	6
1456522	3-77	19
1456524	3-77	20
1456546	1-4	49
1457120	4-21	37
	4-27	87
	4-31	87
1457312	2-27	6
	2-31	18
	2-35	16
	2-37	19
	2-39	16
	2-41	16
1457408	2-115	
1457409	2-115	3
1457410	2-115	4
1457413	2-115	5
1457414	2-115	6
1457415	2-115	7
1457416	2-115	8
1457446	2-115	10
1457447	2-115	13
1457448	2-121	
1457449	2-121	2
1457450	2-121	2
1457451	2-121	2
1457452	2-121	2
1457453	2-121	3
1457454	2-121	3
1457478	2-121	3
1457479	2-121	3
1457480	2-121	4
1457481	2-121	4
1457482	2-121	5
1457484	2-121	9
1457485	2-121	10
1457486	2-121	11
1457487	2-121	13
1457488	2-121	13
1457489	2-121	16
1457490	2-121	17
1457491	2-121	17
1457493	2-117	
1457494	2-117	1
1457495	2-117	2
1457496	2-117	3
1457497	2-117	4
1457498	2-117	8
1457499	2-117	9
1457500	2-117	10
1457501	2-117	11
1457502	2-117	12
1457503	2-117	13
1457504	2-117	14
1457505	2-117	15
1457506	2-117	16
1457508	2-123	
1457509	2-123	1
1457510	2-123	3
1457511	2-123	4
1457512	2-123	5
1457513	2-123	7
1457514	2-123	8
1457515	2-123	10
1457517	2-123	12
1457518	2-123	14
1457520	2-123	16
1457521	2-123	17
1457646	2-125	1
1457647	2-125	2
1457648	2-125	3
1457649	2-125	4
1457650	2-125	5
1457651	2-125	6
1457652	2-125	27
1457653	2-125	11
1457654	2-125	13
1457655	2-125	14
1457656	2-125	15
1457657	2-125	16
	2-129	49
1457658	2-125	17
1457659	2-125	19
1457660	2-125	20
1457661	2-125	21
1457662	2-125	22
1457667	2-129	1
1457669	2-129	2
1457670	2-129	3
1457671	2-129	4
1457672	2-129	5
1457673	2-129	6
1457674	2-129	7
1457675	2-129	8
1457676	2-129	9
1457677	2-129	10
	2-129	46
1457678	2-129	11
1457679	2-129	12
1457680	2-129	13
1457681	2-129	14
1457683	2-129	16
1457684	2-129	17
1457686	2-129	19
1457687	2-129	20
1457688	2-129	22
1457689	2-129	23
1457690	2-129	24
1457692	2-129	25
1457693	2-129	26
1457694	2-129	27
1457695	2-129	28
1457696	2-129	29
1457698	2-129	31
1457700	2-129	34
1457701	2-133	21
1457702	2-129	36

©2009 HYSTER COMPANY

NUMERICAL INDEX (continued)

PART NO.	PAGE	ITEM
1457703	2-129	37
1457704	2-129	38
1457706	2-129	40
1457707	2-129	41
1457708	2-129	42
1457709	2-129	43
1457710	2-129	44
1457711	2-129	45
1457712	2-139	21
1457713	2-129	47
1457714	2-129	48
1457715	2-133	19
1457749	2-133	22
1457750	2-133	24
1457751	2-133	25
1457752	2-133	26
1457753	2-133	27
1457754	2-133	28
1457755	2-133	29
1457756	2-137	1
1457758	2-137	29
1457759	2-137	4
1457760	2-137	4
1457761	2-137	4
1457762	2-137	4
1457763	2-137	4
1457765	2-137	12
1457766	2-137	15
1457767	2-137	21
1457768	2-137	22
1457769	2-137	23
1457770	2-137	24
1457771	2-137	20
1457772	2-137	25
	3-77	21
1457773	2-137	10
1457774	2-137	11
1457775	2-137	16
1457776	2-137	17
1457777	2-137	18
1457803	2-135	13
1457805	2-135	11
1457806	2-135	6
1457807	2-135	7
1457808	2-135	5
1457810	2-135	15
1457811	2-119	1
1457812	2-133	1
1457813	2-133	7
1457814	2-133	9
1457815	2-133	10
1457816	2-133	11
1457817	2-133	14
1457819	2-119	3
1457820	2-119	6
1457821	2-119	4
1457822	2-119	9
1457823	2-119	8
1457824	2-119	14
1457825	2-119	10
1457827	2-119	13
1457828	2-133	17
1457844	2-121	18
1457845	2-121	20
1457846	2-121	19
1457847	2-139	13
1457857	2-139	19
1457858	2-139	9
1457859	2-139	15
1457860	2-139	16
1457861	2-139	1
1457862	2-139	2
1457863	2-139	4
1457864	2-139	5
1457866	2-139	14
1457872	2-139	20
1457874	4-45	1
1457875	4-45	11
1457876	4-45	12
1457877	4-45	13
1457878	4-45	20
1457879	4-45	18
1457880	4-45	2
1457881	4-45	3
1457882	4-45	4
1457883	4-45	5
1457884	4-45	6
1457885	4-45	7
1457886	4-45	8
1457887	4-45	9
1457888	4-45	10
1457889	2-125	32
1457890	2-131	2
1457891	2-131	1
1457892	2-131	5
1457893	2-131	6
1457894	2-131	7
1457895	3-77	17
	3-81	
1457896	2-139	10
1457897	3-77	11
1457898	3-77	18
1457899	3-77	24
1457901	3-77	27
1457902	3-77	31
1457905	2-117	19
1457906	2-137	6
1457907	2-137	7
1457908	2-9	13
	2-11	16
	2-135	10
1457909	2-9	12
	2-11	14
	2-135	8
1457910	2-9	13
	2-11	17
	2-135	10
1457911	2-115	17
1457920	3-77	8
1457955	2-131	
	2-139	
1457956	2-133	
	3-81	
1457964	3-15	14
	3-35	32
	3-66	
1458009	4-9	12
	4-13	12
	4-17	12
	4-26	72
1458049	2-9	11
	2-11	15
	2-135	9
1458089	2-103	11
	2-107	11
	2-111	11
1458091	2-108	49
	2-111	10
1458162	2-97	20
	2-101	19
1458163	2-98	28
1458164	2-97	24
1458166	2-98	27
	2-101	14
1458427	3-87	8
	3-88	6
1458673	2-135	6
1458752	8-3	33
	8-7	33
	8-12	61
	8-16	61
	8-19	33
1458791	2-33	8
1458792	2-33	6
1458793	2-33	7
1458794	2-33	9
1458795	2-33	10
1458802	8-29	3
	8-31	3
1458803	8-29	4
	8-35	14
1458804	8-29	5
	8-31	4
	8-35	4
	8-37	5
1458805	8-29	6
1458806	8-35	2
	8-37	2
1458810	8-35	7
	8-37	4
1458811	8-35	10
	8-37	10
1458813	8-29	6
1458814	8-35	2
	8-37	2
1458818	8-35	10
	8-37	10
1459037	4-25	38
	4-29	38
1459167	4-107	46
	4-111	46
	4-116	52
1459168	4-107	45
	4-111	45
	4-116	51
1459173	1-15	3
1459216	3-95	32
	3-99	32
	3-104	57
1459270	4-107	44
	4-111	44
	4-116	58
1459383	4-26	59
	4-30	59
1459493	2-77	
	2-85	
	2-93	
	2-97	
	2-103	
1459717	3-65	
	3-66	
1460210	2-121	
1460211	2-121	
1460212	2-121	
1460231	1-21	
1460281	3-15	27
1460367	1-3	8
1460387	4-41	8

See Service Manual for service procedures.
©2009 HYSTER COMPANY

NUMERICAL INDEX (continued)

PART NO.	PAGE	ITEM
1460477	2-19	17
	2-21	16
1460495	1-15	16
1460684	3-15	30
	3-27	
1460739	2-137	28
1460764	4-25	38
	4-29	38
1460788	3-103	24
1460936	12-70	34
	12-73	25
1460948	5-9	26
	5-15	26
1460950	3-103	7
1460959	5-9	5
	5-15	5
	5-31	
1460975	5-9	
	5-13	
1460993	3-103	39
1461038	3-103	35
1461042	3-103	42
1461044	3-83	5
	3-85	5
1461062	3-95	13
	3-99	13
	3-103	21
1461066	3-103	1
1461077	5-31	21
1461081	1-21	3
1461082	2-93	9
	2-95	9
1461083	2-93	10
	2-95	10
1461090	3-103	32
1461092	3-103	31
1461193	4-37	5
1461194	4-37	18
1461258	8-11	38
	8-16	57
	8-20	48
1461261	4-37	7
1461427	3-88	3
	3-93	1
1461718	2-139	22
1461720	2-117	17
1461721	2-117	18
1461752	3-103	19
1461801	3-95	19
	3-99	19
1461802	1-9	12
1461951	8-12	60
	8-16	60
	8-20	52
1462217	8-23	1
1462411	12-35	3
1462442	3-9	15
	3-51	31
	3-53	16
	3-71	15
1462523	5-51	1
1462551	9-12	28
	10-7	23
	11-12	30
1462593	5-51	2
1462594	5-51	2
1462598	5-51	3
1462615	12-49	1
1462616	12-51	1
1462617	12-45	1
1463249	3-27	2
1463326	8-23	13
1463575	4-37	22
	4-127	
1463912	4-33	16
1463941	5-55	15
1463942	8-57	8
	8-61	8
1464144	5-33	5
1464540	3-79	3
1464541	3-79	2
1464543	3-79	1
1464544	3-79	6
1464545	3-79	7
1464546	3-79	8
1464641	5-51	2
1465130	8-31	9
1465133	8-31	13
	8-33	13
	8-39	13
1465135	8-31	9
1465139	8-31	15
	8-37	15
1465140	8-31	
	8-33	
	8-37	
	8-39	
1465141	8-31	
	8-37	
1465142	8-31	
	8-37	
1465252	1-27	2
1465253	1-27	6
1465259	8-58	65
	8-62	55
1465277	1-27	1
1465331	1-27	7
1465336	3-73	32
1465390	2-71	
	2-77	
	2-89	
	2-95	
	2-97	
	2-107	
1465468	4-81	15
	4-83	25
	4-85	25
1465504	10-9	12
	11-16	35
1465702	4-81	16
	4-83	26
	4-85	24
1465875	12-39	3
1466006	1-17	
	1-19	
1466007	1-17	
	1-19	
1466043	4-9	30
	4-17	25
	4-27	91
	4-31	91
	4-81	
1466709	1-3	8
1467430	6-7	
1467513	1-17	3
1467514	1-17	4
1467515	1-17	5
1467516	1-17	6
1467517	1-17	7
1467518	1-17	8
1467519	1-17	9
1467520	1-17	10
1467521	1-17	11
1467522	1-17	12
1467523	1-19	1
1467524	1-19	2
1467525	1-19	3
1467526	1-19	4
1467527	1-19	5
1467528	1-19	6
1467529	1-19	7
1467530	1-17	13
1467531	1-17	14
1467532	1-17	15
1467533	1-17	1
1467535	1-17	1
1467536	1-17	2
1467580	2-108	48
	2-112	48
1467581	2-81	6
1467582	2-81	6
1467583	2-81	9
1468538	8-3	17
	8-7	17
1468570	3-36	59
	3-61	
1469300	5-7	10
	5-7	22
1469301	5-7	10
	5-19	9
	5-21	9
	5-23	11
1469342	2-15	2
	2-19	23
1469346	2-63	2
	3-17	17
	3-39	13
	3-55	
1469347	3-17	9
	3-19	9
1469348	3-7	14
1469350	3-39	1
	3-63	
1469351	3-51	13
1469363	2-15	16
	2-19	26
1469364	2-15	3
	2-19	16
1469365	2-19	29
1469375	2-15	9
	2-19	20
1469378	2-15	30
1469379	2-15	13
1469382	2-43	
	2-45	
	2-47	
	2-49	
	2-51	
	2-53	
	2-57	
	2-59	
	2-63	
	2-67	
1469385	2-45	27
1469390	2-15	17
	2-19	7
1469405	2-15	11
	2-19	18

©2009 HYSTER COMPANY

NUMERICAL INDEX (continued)

PART NO.	PAGE	ITEM
1469406	2-15	29
1469529	4-14	49
1469597	2-71	13
	4-29	1
	4-51	15
1469599	4-29	1
1469602	2-72	44
1469603	2-72	45
	2-95	11
	4-31	83
1469643	5-49	6
	5-51	
1470175	1-21	11
1470176	1-21	12
1470177	1-21	13
1470287	5-49	1
1470687	4-31	100
1471521	3-61	25
1471591	12-43	1
1471613	3-51	5
1471694	3-17	18
	3-19	18
	3-39	37
1471701	3-7	21
1471829	12-43	1
1471832	12-51	1
1471835	12-45	1
1471837	12-49	1
1471862	3-85	19
1471921	12-49	1
1471922	12-43	1
	12-45	1
	12-51	1
1472454	3-39	45
1472696	2-82	
1473594	5-23	8
1473595	5-23	9
1473806	3-51	7
1474020	3-39	16
1474043	3-17	2
	3-19	2
1474231	5-35	12
	5-37	12
1474341	3-39	11
1474763	4-91	6
	4-93	30
	4-101	29
	4-103	25
	4-112	53
	4-115	25
1474764	4-91	9
	4-93	29
	4-101	30
	4-103	24
	4-112	55
	4-115	24
1475156	2-63	5
	2-65	7
	3-51	8
1475159	3-39	5
1475162	3-39	25
1475206	5-51	4
1475409	3-17	15
	3-19	15
	3-39	38
1475410	12-81	
1475413	12-81	1
1475414	12-81	1
1475415	12-81	1
1475416	12-81	5
1475417	12-81	7
1475441	12-81	2
1476398	4-112	56
1476419	3-19	37
1476421	12-63	2
1476595	4-10	44
	4-91	
1476598	4-91	8
	4-93	27
	4-101	32
	4-103	27
	4-115	27
1476599	4-91	7
	4-93	28
	4-101	31
	4-103	26
	4-112	54
	4-115	26
1476727	4-30	42
	4-111	
1476728	4-30	42
1476759	4-9	30
	4-13	29
	4-17	25
	4-83	
1478908	3-39	5
1479091	3-17	5
	3-19	5
1479109	4-73	23
	4-129	7
1479128	2-98	32
1479246	3-51	2
1479503	3-55	1
	3-57	1
1479504	3-55	2
	3-57	2
1479505	3-55	3
	3-57	3
1479507	3-55	4
	3-57	4
1479508	3-55	5
	3-57	5
1479509	3-55	6
	3-57	6
1479510	3-55	7
	3-57	7
1479511	3-55	8
	3-57	8
1479512	3-55	10
1479513	3-55	9
	3-57	10
1479514	3-55	11
	3-57	11
1479515	3-55	12
	3-57	12
1479516	3-55	13
	3-57	13
1479517	3-55	14
	3-57	14
1479518	3-55	15
	3-57	15
1479519	3-55	25
	3-57	16
1479520	3-55	24
	3-57	17
1479521	3-55	26
	3-57	18
1479522	3-55	16
1479523	3-55	17
1479524	3-55	18
1479525	3-55	19
1479526	3-55	23
	3-57	19
1479527	3-55	22
	3-57	20
1479528	3-55	21
	3-57	21
1479529	3-55	20
	3-57	22
1479530	3-55	
	3-57	
1479531	3-55	
	3-57	
1479532	3-17	18
	3-19	18
1479533	3-17	18
	3-19	18
1479539	3-19	38
	3-39	8
1479687	4-10	52
1479862	3-39	9
1482459	4-13	23
1482460	4-13	47
1482648	4-93	37
1482651	4-93	40
1482654	4-93	39
1482657	4-93	38
1482660	4-93	22
1482662	4-14	56
1482663	4-93	32
1482664	4-93	34
1482665	4-93	33
1482667	4-93	31
1482668	4-14	51
	4-95	27
	4-97	11
1482699	4-14	57
1483109	5-31	23
1483113	5-35	10
	5-37	10
1483117	1-9	21
1483207	4-9	12
	4-13	12
	4-30	72
1483250	1-3	5
1483338	1-9	20
1483511	5-51	8
1483512	5-51	10
1483514	5-51	6
1483515	5-51	7
1483661	12-35	8
	12-37	13
1483663	12-35	7
	12-37	11
1483664	12-35	9
	12-37	12
1483818	5-51	3
1483846	12-39	6
1483881	1-3	1
1483882	1-3	2
1483884	1-3	3
1483891	3-17	14
	3-19	14
1483916	4-14	52
1483917	1-9	11
1484092	8-20	52
1484154	4-93	41
1484336	3-71	9

©2009 HYSTER COMPANY

NUMERICAL INDEX (continued)

PART NO.	PAGE	ITEM
1484337	3-9	6
	3-53	8
1484338	3-51	1
1484339	3-71	13
1484444	2-71	
	2-81	
	2-89	
	2-95	
	2-97	
	2-107	
1484657	2-33	5
1485320	3-9	10
	3-51	26
	3-53	12
	3-71	14
1485321	3-9	10
	3-51	26
	3-53	12
	3-71	14
1485328	1-3	1
	1-7	11
1485343	1-3	7
1485805	2-35	26
	2-37	6
	2-39	26
	2-41	26
1485864	1-9	1
1485866	1-9	1
1485873	4-17	19
	4-121	
1485882	5-13	7
1486178	12-15	
	12-28	
1486179	12-23	
	12-30	
1486180	12-19	
	12-29	
1486182	12-15	
	12-28	
1486183	12-23	
	12-30	
1486184	12-19	
	12-29	
1486185	12-15	
	12-28	
1486186	12-23	
	12-30	
1486187	12-19	
	12-29	
1486188	12-15	
	12-28	
1486189	12-23	
	12-30	
1486190	12-19	
	12-29	
1486191	12-15	
	12-28	
1486192	12-23	
	12-30	
1486193	12-19	
	12-29	
1486194	12-15	
	12-28	
1486195	12-23	
	12-30	
1486196	12-19	
	12-29	
1486349	5-9	
	5-13	
1486367	5-13	10
	5-21	
1486368	5-13	11
	5-21	
1486374	4-13	20
	4-93	
1486530	2-95	11
	4-27	83
	4-31	83
1486546	5-23	1
1486547	5-23	1
1486566	3-93	4
1486707	3-51	23
1486766	4-5	4
	4-26	58
	4-30	58
	4-71	
1486836	8-45	2
1487172	2-19	24
1487189	2-19	25
1487190	3-19	27
1487191	4-13	24
	4-31	103
1487192	3-19	28
1487199	3-19	17
	3-57	
1487201	5-23	12
1487202	5-23	12
1487441	4-97	16
1487623	2-125	1
1487624	2-125	7
1487625	2-125	4
1487626	2-125	3
1487968	3-19	29
1487969	3-19	30
1488554	1-9	11
1488775	2-129	30
1488776	4-93	25
1488874	2-15	19
	2-17	10
	2-19	14
1488918	12-15	1
1488965	12-23	1
1488966	12-19	1
1488967	12-15	1
1488968	12-23	1
1488969	12-19	1
1488974	12-15	2
	12-19	2
	12-23	2
1488975	12-15	2
	12-19	2
	12-23	2
1488976	12-15	2
	12-19	2
	12-23	2
1488998	12-15	1
1488999	12-23	1
1489000	12-19	1
1489002	12-15	1
1489003	12-23	1
1489004	12-19	1
1489010	12-15	2
	12-19	2
	12-23	2
1489011	12-15	2
	12-19	2
	12-23	2
1489012	12-15	2
	12-19	2
	12-23	2
1489016	12-27	1
1489017	12-27	1
1489034	12-28	2
1489035	12-27	3
1489037	12-27	2
1489039	12-27	5
1489050	12-30	2
1489065	4-31	92
1489711	3-35	34
1490274	4-49	8
1490391	5-31	32
1490407	2-72	45
	2-95	11
	4-31	83
1490464	3-7	19
1490465	3-19	3
1490806	2-53	1
1491830	6-13	8
1492342	1-3	14
1492644	8-47	
1493165	2-117	
	2-137	
	3-77	
1493166	2-125	
	2-137	
1493246	2-63	8
	3-29	
1493247	3-29	1
	3-31	1
	3-63	1
1493248	3-29	2
	3-31	2
	3-63	2
1493249	3-29	3
	3-31	3
	3-63	3
1493250	3-29	4
	3-31	4
	3-63	4
1493251	3-29	5
	3-31	5
	3-63	5
1493252	3-29	6
	3-31	6
	3-63	6
1493253	3-29	7
	3-31	7
	3-63	7
1493254	3-29	8
	3-31	8
	3-63	8
1493255	3-29	9
	3-31	9
	3-63	9
1493256	3-29	10
	3-63	10
1493257	3-29	11
	3-63	11
1493258	3-29	12
	3-63	12
1493259	3-29	13
	3-63	13
1493260	3-29	14
1493261	3-29	15
	3-31	10
	3-63	15
1493262	3-29	16
	3-31	11

©2009 HYSTER COMPANY

NUMERICAL INDEX (continued)

PART NO.	PAGE	ITEM
	3-63	16
1493263	3-29	17
	3-31	12
	3-63	17
1493264	3-29	18
	3-31	13
	3-63	18
1493265	3-29	19
	3-31	14
	3-63	19
1493266	3-29	20
	3-31	16
1493267	3-29	22
	3-31	17
1493299	3-31	
1493407	4-101	
1493417	2-137	13
1493436	4-73	22
1493442	4-95	17
1493446	4-73	20
1493447	4-73	21
1493620	2-63	2
	3-17	17
	3-39	13
1493624	3-57	23
1494017	9-26	8
	10-36	30
	11-32	13
1494023	3-9	12
	3-51	29
	3-53	14
	3-71	16
1494024	3-9	13
	3-51	30
	3-53	15
	3-71	18
1494029	3-9	16
	3-51	32
	3-53	17
	3-71	19
1494030	3-9	17
	3-51	34
	3-53	19
	3-71	20
1494076	1-17	2
1494102	3-63	14
1494358	4-5	4
	4-73	
1494684	2-125	11
1494796	4-37	22
	4-129	
1494863	4-129	5
1494864	4-129	6
1495121	3-57	24
1495124	3-31	18
1495125	3-31	19
1495185	4-5	5
1495412	2-59	15
1495413	2-59	24
1495422	2-63	12
	3-20	
	3-23	
1495427	2-57	20
1495428	2-67	13
	2-67	13
1495429	2-63	11
	2-65	11
1495473	2-47	12
1495474	2-47	12
1495475	2-47	12
1495500	2-65	2
1495767	5-13	10
	5-23	
1495768	5-13	11
	5-23	
1495881	8-45	16
1495986	3-36	62
1496024	3-11	20
1496172	3-57	9
1496740	4-17	19
	4-121	
1496922	10-14	
	10-17	
	10-22	
	10-26	
1497828	2-115	
	2-117	
	2-119	
	2-121	
	2-125	
	2-137	
1497829	2-115	
	2-117	
	2-119	
	2-121	
1498044	4-97	2
1498047	4-97	7
1498114	2-137	6
1498198	3-85	17
1498325	12-27	4
1498326	12-16	22
	12-20	22
	12-24	22
1498507	2-97	1
	2-98	
1498636	5-9	38
	5-15	38
1499111	9-21	
1499511	3-9	8
1500537	8-57	27
	8-61	27
1500782	1-30	5
1500784	1-31	5
1500880	2-71	21
	2-89	24
1500884	2-82	28
1500885	2-107	9
	2-111	9
1500899	4-103	44
	4-115	44
1501259	1-23	21
1501332	3-77	15
1501333	3-77	14
	3-77	16
1501413	6-9	
1502194	8-58	66
	8-62	56
1502543	2-13	15
	2-15	26
	2-19	9
	3-45	6
1502776	1-7	2
1502777	1-7	1
1502778	1-7	3
1502779	1-7	4
1502780	1-7	5
1502781	1-7	6
1502793	1-7	10
1502808	3-71	9
1503096	12-27	6
1503336	5-49	6
	5-51	
1503337	5-49	1
1503474	12-29	2
1503476	12-28	2
	12-29	2
	12-30	2
1503478	12-28	1
1503479	12-28	1
1503481	12-29	1
	12-30	1
1503482	12-29	1
	12-30	1
1503879	1-24	
1503882	1-24	
1504010	9-23	6
	10-33	6
	11-29	6
	12-15	17
	12-19	14
	12-23	14
1504011	9-23	6
1504012	10-33	6
	11-29	6
	12-15	17
	12-19	14
	12-23	14
1504038	5-41	19
	5-53	8
	7-5	
1504039	5-41	27
	5-53	9
	7-5	
1504040	5-53	8
	7-5	
1504424	2-77	1
	2-81	1
1504946	4-10	55
	4-18	56
	4-31	101
1506840	4-18	37
1506841	2-71	
	2-81	
	2-89	
	2-95	
	2-97	
	2-111	
1507400	2-95	11
	4-31	83
1507610	2-125	12
1507692	2-71	22
	2-90	28
1507772	5-51	2
1508072	7-5	11
1508073	7-5	11
1508234	2-7	14
	2-71	11
	4-49	10
1510116	3-13	25
1510314	4-63	1
1510315	4-63	1
1510317	4-63	1
1510318	4-63	1
1510786	3-9	3
	3-53	1
	3-71	3
1511318	12-43	1
1511319	12-43	1

See Service Manual for service procedures.
©2009 HYSTER COMPANY

NUMERICAL INDEX (continued)

PART NO.	PAGE	ITEM
1511320	12-43	1
1511910	12-43	1
1511911	12-43	1
1511915	12-43	1
1512403	2-21	15
1513906	1-3	15
	1-3	15
1514215	4-9	37
	4-13	36
	4-17	31
	4-30	63
	4-33	39
1514429	3-93	5
1514866	9-11	5
	9-23	9
	10-9	21
	10-33	9
	11-11	7
	11-16	26
	11-29	9
	12-16	20
	12-19	16
	12-23	16
1514911	4-17	19
	4-125	
1515588	7-3	5
1515680	5-23	8
1516142	5-41	4
	5-41	4
1517405	3-13	11
1517437	3-13	2
1517438	3-13	10
1517441	12-37	2
1517448	12-37	1
1517449	12-37	1
1517452	12-37	1
1517453	12-37	1
1517850	2-49	
	2-67	
1517960	12-63	4
	12-65	3
1517961	12-63	27
	12-65	16
	12-67	1
1517962	12-63	26
	12-65	15
1518089	12-59	5
1518219	12-37	
1518233	12-37	
1518234	12-37	
1518236	12-37	
1518237	12-37	
1518238	12-37	
1518239	12-37	
1518240	12-37	
1518241	12-37	
1518249	12-37	1
1518250	12-37	1
1518251	12-37	1
1518252	12-37	1
1518253	12-37	1
1518254	12-37	1
1518983	2-101	26
1518987	12-63	1
	12-65	1
1518991	12-37	
1518992	12-37	
1519025	4-103	15
	4-115	15
1519099	4-103	40
	4-115	40
1519131	5-47	4
	5-47	5
1519132	5-47	4
	5-47	5
1519133	5-47	13
1519134	5-47	14
1519632	2-135	16
	4-18	58
1520644	4-21	31
	4-26	43
	4-30	43
1520828	2-71	14
	4-51	2
1522243	5-17	3
	5-25	
1522294	5-17	4
	5-25	
1523456	4-37	16
1523551	5-23	9
1523732	1-30	3
	1-31	3
1523733	1-30	4
1523735	1-30	2
1523737	1-31	4
1523739	1-31	2
1523953	5-23	3
1524201	2-71	
	2-81	
	2-89	
	2-95	
	2-97	
	2-111	
1525441	3-13	13
1525442	3-13	35
1525459	3-13	31
1525478	3-13	41
1525916	3-51	24
1526078	2-98	38
1526079	2-97	23
1526082	12-55	3
	12-57	3
1526166	5-9	16
	5-15	16
	5-35	38
	5-37	39
1526168	2-35	32
	2-37	9
	2-39	32
	2-41	32
1526612	2-129	15
1526995	2-39	6
1527018	2-71	12
	4-51	8
1527353	2-101	12
1527470	1-13	4
1527835	2-41	7
1527836	2-35	7
	2-37	32
1527837	2-39	7
1527876	3-93	3
1527880	3-45	7
1528132	4-97	8
1528353	4-17	25
1528482	3-45	3
1528492	2-35	21
	2-37	10
	2-39	21
	2-41	21
1528495	2-35	3
	2-37	3
	2-39	3
	2-41	3
1528527	2-71	
	2-81	
	2-89	
	2-95	
	2-101	
	2-111	
1528866	5-47	10
1528899	3-13	33
1528903	3-13	39
1528948	1-4	50
1530541	2-41	36
1530542	2-41	38
1530543	2-41	35
1530544	2-35	38
	2-37	28
	2-39	35
	2-41	37
1530546	2-39	33
1530583	4-63	15
1530591	2-39	36
1530592	2-35	34
1530594	2-39	34
1530956	2-117	17
1531326	12-63	7
	12-65	6
1531486	4-95	24
	4-97	15
1532571	4-97	21
1533939	12-95	1
1534649	3-13	17
1534660	1-24	
1534671	3-13	37
1534672	3-13	38
1534674	3-13	19
1534675	3-13	30
1534677	3-13	23
1534679	3-13	27
1534697	12-63	8
	12-65	7
1535196	2-35	38
	4-9	31
	4-17	26
	4-33	31
1536998	2-9	13
1536999	2-9	13
1537441	5-25	6
1537444	5-25	7
1537445	5-25	8
1537446	5-25	9
1537449	5-25	13
1537450	5-25	14
1537451	5-25	18
1537455	5-25	2
1537459	5-25	20
1537474	3-85	19
1538089	5-17	2
1538871	2-71	
	2-81	
	2-89	
	2-95	
	2-101	
	2-111	
1539261	12-67	11
1541607	4-97	9
1541608	4-97	12

©2009 HYSTER COMPANY

NUMERICAL INDEX (continued)

PART NO.	PAGE	ITEM
1542466	2-35	34
	2-37	26
1542467	2-35	35
	2-37	27
1542468	2-35	37
	2-37	29
1542479	3-53	11
1543094	5-25	13
1543096	5-25	13
1543097	5-25	13
1543098	5-25	13
1543102	5-25	
1543104	5-25	
1543105	5-25	
1543106	5-25	
1543568	2-71	16
1544114	2-21	9
1544577	4-33	2
1544792	3-45	14
1544934	4-33	4
1545116	4-33	3
1545408	4-34	58
1545418	3-45	4
1545445	2-129	32
1545857	2-72	51
1545871	5-23	12
1546688	2-21	12
1547239	3-93	1
1547479	4-95	1
1547482	4-95	8
1547483	4-95	15
	4-97	22
1547484	4-95	19
	4-95	20
1547838	12-63	26
	12-65	15
1547839	12-63	26
	12-65	15
1548351	3-93	2
1548752	4-18	60
1549375	4-33	30
1549399	4-33	46
1549461	3-45	5
1553084	4-67	1
	12-63	11
1553745	2-13	8
1553758	8-3	5
1553766	2-55	1
1553793	2-65	9
	3-31	
1553856	2-65	15
1553878	2-57	21
1555006	8-7	19
1555637	12-77	
1555993	2-115	
	2-117	
	2-119	
	2-121	
	2-125	
	2-137	
1555994	2-115	
	2-117	
	2-119	
	2-121	
1556407	3-85	17
1556850	4-9	30
	4-17	25
1556851	4-85	
1558161	3-47	21
	3-49	11
1558163	3-43	10
	3-47	3
1558164	3-43	11
	3-47	19
1558165	3-47	11
1558168	3-47	18
	3-49	7
1558170	3-47	8
1558171	3-47	10
1558175	3-43	8
	3-47	17
1558176	3-47	20
	3-49	8
1558177	3-47	22
1558187	3-43	6
	3-45	13
	3-49	1
1558188	3-49	2
1558189	3-49	3
1558190	3-43	1
	3-49	4
1558191	3-43	7
	3-49	5
1558192	3-49	6
1558193	3-49	9
1558194	3-49	12
1558196	2-90	37
	3-43	15
1558198	3-43	3
	3-43	4
	3-43	8
	3-43	13
	3-43	16
1558202	3-43	2
1558432	3-47	15
1558435	3-47	6
1558532	3-43	9
	3-47	1
1558533	3-47	4
1558534	3-47	9
1558535	3-43	12
	3-47	12
1558536	3-43	17
	3-47	13
1558537	3-47	16
1558538	3-49	10
1558539	3-43	14
1558540	3-43	4
1558541	3-43	8
	3-47	17
1558542	3-43	3
1558543	3-43	13
1559958	2-101	28
1559959	2-89	26
1561008	6-11	4
1561145	4-95	3
1561147	4-95	4
1561148	4-95	5
1561870	3-43	
1562045	2-71	31
1562046	2-71	32
1562047	2-71	33
1562285	2-43	
	2-45	
	2-47	
	2-51	
	2-55	
	2-57	
	2-59	
	2-65	
1564058	5-47	11
1566561	2-89	24
1566564	11-32	39
1566645	2-71	24
1566700	6-11	
1567310	4-97	18
1567311	4-97	19
1567312	4-95	22
1567316	4-97	6
1567317	4-97	3
1567319	4-97	5
1567320	4-97	4
1567333	4-95	10
1567685	4-34	50
1567694	4-97	23
1567695	4-95	16
	4-97	24
1567696	4-95	18
1568271	6-5	32
1568397	2-119	15
1568834	3-13	
1568839	3-13	3
1568844	3-13	1
1568853	3-13	5
1570604	3-43	
1572857	3-47	7
1578672	8-33	18
	8-39	18
1578673	8-39	4
1578690	2-17	1
1578693	8-33	9
	8-39	9
1579918	2-101	17
1579919	2-101	13
1580813	2-135	3
1581678	8-33	
	8-39	
1581679	8-39	2
1581682	8-33	16
	8-39	16
1581683	8-33	15
	8-39	15
1581684	8-33	10
	8-39	10
1581686	8-33	3
	8-39	3
1581692	8-33	2
1581694	8-33	4
1581698	8-33	2
1581701	8-39	2
1581887	3-13	7
1581888	3-13	8
1582385	3-43	5
	3-43	20
1582386	3-43	2
	3-43	5
	3-43	21
1582514	3-43	5
1582515	3-43	19
1583928	2-71	
	2-81	
	2-89	
	2-95	
	2-101	
	2-111	
1587016	4-95	2
1591664	7-5	7
1591665	7-5	7

See Service Manual for service procedures.
©2009 HYSTER COMPANY

NUMERICAL INDEX (continued)

PART NO.	PAGE	ITEM
1593651	8-58	49
1593880	8-58	49
1593985	8-57	11
1594144	3-19	17
1595781	4-95	12
1596370	8-43	
1603857	3-49	13
1608764	2-137	14
1619123	2-65	9
1624904	8-7	17
1643405	10-36	18
	11-32	22
1650223	3-43	9
	3-47	1
1650426	2-95	1
	4-31	83
1654577	4-14	59
	4-17	37
	4-37	26
1662409	12-61	27
	12-63	27
	12-65	16
1702706	11-16	37
2004005	3-5	16
	10-36	21
2007856	1-9	18
2013075	9-16	10
	11-21	9
2013088	10-28	15
	10-30	15
	11-23	15
	11-25	15
	11-27	15
2013089	10-28	16
	10-30	16
	11-23	16
	11-25	16
	11-27	16
2013099	10-28	8
	10-30	8
	11-23	8
	11-25	8
	11-27	8
2021512	2-35	27
	2-37	4
	2-39	27
	2-41	27
2022655	2-45	22
2026608	4-9	22
	4-13	21
	4-17	21
2026798	4-39	12
2027655	2-31	11
	2-35	9
	2-37	23
	2-39	9
	2-41	9
2029170	2-35	4
	2-37	5
	2-39	4
	2-41	4
2029227	2-35	28
	2-37	7
	2-39	28
	2-41	28
2029344	5-17	1
2032490	6-9	3
2033502	8-4	47
	8-8	47
	8-20	47
	8-49	30
	8-53	29
	8-57	30
	8-61	29
	8-65	
2033503	8-4	47
	8-8	47
	8-20	47
	8-49	30
	8-57	30
	8-69	
2033547	3-95	31
	3-99	31
	3-104	56
2033602	7-3	6
2033612	4-33	22
2033682	2-71	36
2034109	2-33	4
2034461	2-33	1
2034520	3-36	49
	3-40	50
2035531	4-25	38
	4-29	38
2035596	12-52	1
2035599	12-52	1
2035600	12-47	1
	12-47	1
	12-47	1
2035603	12-47	1
	12-47	1
2035711	4-26	42
	4-107	
2036169	4-9	20
	4-90	
2036234	4-25	38
	4-29	38
2036646	4-25	38
	4-29	38
2037189	8-4	49
	8-8	49
	8-31	
2037190	8-4	49
	8-8	49
	8-31	
2037192	8-4	49
	8-8	49
	8-37	
2037193	8-4	49
	8-8	49
	8-37	
2037311	1-21	2
2037936	2-31	1
2038501	4-37	19
2039172	2-31	1
2039173	2-31	9
2039174	2-31	9
2039175	2-31	9
2039306	4-10	47
	4-31	96
2040357	8-4	47
	8-8	47
	8-20	47
	8-49	30
	8-57	30
	8-69	
2040523	2-15	1
	2-19	21
2040959	7-5	2
2041822	2-31	1
2041823	2-31	2
2042619	8-4	47
	8-8	47
	8-20	47
	8-49	30
	8-53	29
	8-57	30
	8-61	29
	8-65	
2042799	3-19	4
2043322	5-23	3
2043440	5-25	17
2043528	12-15	3
	12-19	3
	12-23	3
	12-27	
2043529	12-15	3
	12-19	3
	12-23	3
	12-27	
2043530	12-15	6
	12-19	6
	12-23	6
2043531	12-15	4
	12-19	4
	12-23	4
2043532	12-15	4
	12-19	4
	12-23	4
2043533	12-15	5
	12-19	5
	12-23	5
2043534	12-15	5
	12-19	5
	12-23	5
2043859	4-89	20
	4-90	23
	4-93	23
2043988	2-101	24
2044370	8-47	11
2044371	6-9	8
	6-11	9
2044948	4-34	57
2045027	2-53	5
2045028	2-53	6
	2-55	2
2045308	2-65	14
2045320	2-59	23
2045461	5-9	
	5-13	
2045701	10-13	
2045705	10-13	
2045743	10-21	
2045750	10-21	
2045773	10-13	
2045776	10-13	
2045779	10-21	
2045795	10-17	
2045836	10-25	
2045837	10-25	
2045844	10-25	
2045865	10-17	
2045866	10-17	
2045869	10-17	
2046163	9-21	13
	9-21	13
	9-21	13
	9-21	13
	9-21	13

©2009 HYSTER COMPANY

NUMERICAL INDEX (continued)

PART NO.	PAGE	ITEM
	9-21	13
	9-21	13
	9-21	13
2046174	9-21	
2046179	9-21	
2046185	9-21	
2046186	9-21	
2046187	9-21	
2046193	9-21	
2046198	9-21	
2046243	12-15	4
	12-19	4
	12-23	4
2046244	12-15	5
	12-19	5
	12-23	5
2046245	12-15	4
	12-19	4
	12-23	4
2046246	12-15	5
	12-19	5
	12-23	5
2046279	9-21	
2046715	10-21	1
	10-25	7
2048107	9-3	
	9-7	
2048109	9-3	
	9-7	
2048113	9-3	
	9-7	
2048116	9-3	
	9-7	
2048121	9-3	
	9-7	
2048128	9-3	
	9-7	
2048133	9-3	
	9-7	
2048147	9-3	
	9-7	
2048148	9-3	
	9-7	
2048155	9-3	
	9-7	
2048160	9-3	
	9-7	
2048165	9-3	
	9-7	
2048170	9-3	
	9-7	
2048194	11-3	
	11-5	
	11-9	
2048197	11-3	
	11-5	
	11-9	
2048198	11-3	
	11-5	
	11-9	
2048202	11-3	
	11-5	
	11-9	
2048282	11-3	
	11-5	
	11-9	
2048286	11-3	
	11-5	
	11-9	
2048288	11-3	
	11-5	
	11-9	
2048290	11-3	
	11-5	
	11-9	
2048295	11-3	
	11-5	
	11-9	
2048303	11-3	
	11-5	
	11-9	
2048379	10-3	
	10-5	
2048381	10-3	
	10-5	
2048391	10-3	
	10-5	
2048399	10-3	
	10-5	
2048457	10-3	
	10-5	
2048460	10-3	
	10-5	
2048477	10-3	
	10-5	
2049385	2-95	4
2053666	2-71	29
	2-101	18
2053667	2-97	1
	2-101	28
2053668	12-15	6
	12-19	6
	12-23	6
2053670	4-30	42
	4-103	
2053671	4-30	42
	4-115	
2053730	1-13	5
2053770	11-27	
2053771	11-27	
2053772	11-27	
2053773	11-27	
2053775	11-27	
2053795	10-30	
	11-27	
2053796	10-30	
	11-27	
2053797	11-27	
2053799	11-27	
2054530	2-39	1
2054531	2-35	1
	2-37	1
	2-41	1
2055337	2-39	1
2055338	2-35	1
	2-37	1
	2-41	1
2058112	10-30	
2058115	10-30	
2058205	10-30	1
2058206	10-30	1
2058210	10-30	1
	11-27	1
2058213	10-30	1
	11-25	1
	11-27	1
2058214	11-27	1
2058219	11-27	1
2058247	10-30	1
2058248	10-30	1
2058253	10-30	1
2058259	11-27	1
2060639	12-63	3
2060653	5-15	
	5-17	
2061861	10-30	
2061862	10-30	
2061868	10-30	
2061875	11-27	
2062262	4-33	15
2062421	3-45	17
2062450	4-37	19
2062462	3-53	9
2062877	2-72	54
2062954	2-21	13
2063066	4-33	26
2063645	11-27	1
2063690	11-27	1
2063691	11-27	1
2063693	11-27	1
2064046	11-27	1
2064464	10-11	2
	10-13	2
	10-19	3
	10-21	3
2065705	3-93	1
2066205	2-71	30
2067529	3-45	1
2067796	4-33	1
2068094	4-95	
	4-97	
2069689	8-8	49
	8-33	
2069690	8-8	49
	8-33	
2069692	8-8	49
	8-39	
2069693	8-8	49
	8-39	
2071094	6-11	2
2071096	6-5	31
	6-11	
	8-7	45
	8-19	45
2074390	2-71	13
	4-29	1
	4-51	15
2075656	1-23	1
2076356	8-58	69
2076368	8-58	67
2076419	8-58	68
2076497	8-58	70
2076740	2-13	1
	2-25	1
2091257	11-20	3
2091259	11-20	3
2302410	11-23	
2302899	8-47	8
2303489	11-23	
2303532	11-23	
2303634	12-13	2
2303824	11-23	2
2303871	10-28	1
	11-23	1
	11-25	1
2303899	11-23	2
2303951	11-23	
2304216	11-23	2

©2009 HYSTER COMPANY

NUMERICAL INDEX (continued)

PART NO.	PAGE	ITEM
2304345	12-13	1
2304575	10-28	1
2305742	11-23	1
	11-25	1
2306283	12-13	8
2306755	12-13	3
2306774	11-23	2
2307201	10-28	1
2307457	10-28	1
2307647	12-13	
2307773	11-23	
2308980	10-28	1
2309026	11-23	1
	11-25	1
2309044	11-23	2
2309136	10-28	1
2309353	11-23	1
	11-25	1
2309410	11-23	2
2309480	11-23	
2309719	12-13	2
2309766	9-12	17
	10-7	18
	11-12	22
2309770	11-23	1
	11-25	1
2309799	1-23	16
2310270	11-23	
2310340	11-25	1
2310768	12-13	8
2311141	11-23	2
2311434	10-28	1
	11-23	1
2311471	12-13	1
2311624	12-13	
2311691	11-23	1
	11-25	1
2314322	4-10	42
	4-13	41
	4-55	
2314973	2-45	17
3022445	4-30	44

©2009 HYSTER COMPANY

NUMERICAL INDEX (continued)

NOTES

©2009 HYSTER COMPANY


HYSTER