RUTHZIL TRATOR COMERCIAL DE PEÇAS LTDA 11 97083-6812 ROLANDO

PARTS MANUAL

H2.0FT H3.5FT

FORTENS®

H2.0FT-H3.5FT

(L177)

Customer Edition

HYSTER

1599951
06/2005

PRINTED IN ENGLAND BY XEROX BUSINESS SERVICES

©1999 HYSTER COMPANY

PARTS MANUAL

H2.0FT-H3.5FT
(L177)

CUSTOMER EDITION

HYSTER

1599951
06/2005

©2005 Hyster Company

SECTIONS

1	FRAME
2	ENGINES
3	FUEL SYSTEM
4	ELECTRICAL SYSTEM
5	TRANSMISSION
6	DRIVE AXLE
7	STEERING SYSTEM
8	BRAKE SYSTEM
9	HYDRAULIC SYSTEM
10	MAST-TWO STAGE LIMITED FREE-LIFT
11	MAST-TWO STAGE FULL FREE-LIFT
12	MAST-THREE STAGE FULL FREE-LIFT
13	OPTIONS
14	NUMERICAL INDEX

This Parts Manual is divided into 14 major sections which are listed above. Quick reference to these sections can be made by placing the right thumb on the tab of the desired section, bending the book back and thumbing the pages to the corresponding tab.

TABLE OF CONTENTS

DESCRIPTION	PAGE
A	
ACCUMULATOR AND ATTACHING PARTS	13-13
AIR CLEANER ASSEMBLY	3-2
AIR INTAKE AND FILTER SYSTEM	
GM 2.4L	
LPG	3-6
MAZDA 2.0L AND 2.2L	
LPG	3-4
YANMAR 2.6L AND 3.3L	
DIESEL	3-8
ALTERNATOR AND MOUNTING	
GM 2.4L	
LPG	2-50
YANMAR 2.6L AND 3.3L	
DIESEL	4-9
ASSEMBLED ENGINE	
GM 2.4L, LPG	
SHEET 1 OF 4	2-42
SHEET 2 OF 4	2-44
SHEET 3 OF 4	2-46
SHEET 4 OF 4	2-48
AUXILIARY ONE AND TWO	
MANUAL CONTROL VALVE	
THREE AND FOUR FUNCTION	9-22
AUXILIARY ONE SECTION	
ELECTRONIC CONTROL	
THREE AND FOUR FUNCTION	9-30
AUXILIARY TUBE EXTENSIONS	
TWO AND THREE STAGE FULL FREE-LIFT	13-30
TWO STAGE LIMITED FREE-LIFT	13-28
AUXILIARY TWO SECTION	
ELECTRONIC CONTROL	
FOUR FUNCTION	9-32
B	
BACK-UP ALARM	13-4
BATTERY CABLES	
GM 2.4L	
LPG	4-10
BRAKE ASSEMBLY	
DRY BRAKE	8-10
BRAKE COOLING SYSTEM	
SINGLE AND DUAL PEDAL	
WET BRAKE	8-14
BRAKE LINKAGE	
DUAL PEDAL	
DRY BRAKE	8-4
WET BRAKE	8-8
SINGLE PEDAL	
DRY BRAKE	8-2
WET BRAKE	8-6

©2005 HYSTER COMPANY

TABLE OF CONTENTS (Continued)

DESCRIPTION	PAGE
C	
CAB	
FRAME AND ATTACHING PARTS	1-28
INTERIOR PANELS	1-26
LH DOOR	1-20
RH DOOR AND HEATER ASSEMBLY	1-22
WINDOWS AND WINDOW WIPER SYSTEM	1-24
CAB AND ATTACHING PARTS	1-18
CAMSHAFT AND DRIVE GEAR	
YANMAR 2.6L AND 3.3L	
DIESEL	2-84
CAMSHAFT AND VALVES	
MAZDA 2.0L AND 2.2L	
LPG	2-30
CAMSHAFT, CYLINDER HEAD AND MANIFOLDS	
GM 2.4L	
LPG	2-58
CARRIAGE	
THREE STAGE FULL FREE-LIFT	12-28
TWO STAGE FULL FREE-LIFT	11-16
TWO STAGE LIMITED FREE-LIFT	10-14
CONTROL VALVE	
TRANSMISSION	5-34
CONTROL VALVE ASSEMBLY	
ELECTRONIC CONTROL	
THREE AND FOUR FUNCTION	9-26
MANUAL CONTROL	
THREE AND FOUR FUNCTION	9-18
COOLING MANIFOLD AND ATTACHING PARTS	
GM 2.4L	
LPG	2-51
COOLING SYSTEM	
GM 2.4L, LPG, SQUARE WAVE RADIATOR	2-52
MAZDA 2.0L AND 2.2L, LPG, SERPENTINE RADIATOR	
BASIC POWERSHIFT TRANSMISSION	2-8
MAZDA 2.0L AND 2.2L, LPG, SQUARE WAVE RADIATOR	
BASIC POWERSHIFT TRANSMISSION, WITH INTERNAL AIR OIL COOLER	2-10
ELECTRONIC CONTROL TRANSMISSION, WITH EXTERNAL AIR OIL COOLER	2-14
ELECTRONIC CONTROL TRANSMISSION, WITH INTERNAL AIR OIL COOLER	2-12
YANMAR 2.6L AND 3.3L, DIESEL, SQUARE WAVE RADIATOR	
WITH EXTERNAL AIR OIL COOLER	2-68
WITH INTERNAL AIR OIL COOLER	2-66
COUNTERWEIGHTS	1-14
COWL ELECTRICAL	4-18
COWL MOUNT	1-12
CRANKSHAFT AND PISTONS	
MAZDA 2.0L AND 2.2L	
LPG	2-32
YANMAR 2.6L AND 3.3L	
DIESEL	2-86
CRANKSHAFT, PISTONS AND OIL PAN	
GM 2.4L	

©2005 HYSTER COMPANY

TABLE OF CONTENTS (Continued)

DESCRIPTION	PAGE
C (continued)	
LPG	2-62
CYLINDER BLOCK	
MAZDA 2.0L AND 2.2L	
LPG	2-34
YANMAR 2.6L AND 3.3L	
DIESEL	2-88
CYLINDER HEAD	
MAZDA 2.0L AND 2.2L	
LPG	2-28
YANMAR 2.6L AND 3.3L	
DIESEL	2-80
D	
DISTRIBUTOR	
MAZDA 2.0L AND 2.2L	
LPG	4-8
DRIVE AXLE AND ATTACHING PARTS	
WET BRAKE	6-2
DRIVE AXLE ASSEMBLY	
DRY BRAKE	6-4
DRIVE TIRE AND WHEEL	
PNEUMATIC RADIAL	6-10
SNAP-ON SOLID TIRE	6-12
SOLID PNEUMATIC	
SINGLE	6-7
WIDE TREAD	6-8
DUAL DRIVE WHEELS AND TIRES	6-14
E	
ELECTRICAL SYSTEM	
RH CHASSIS	4-2
ELECTRO HYDRAULIC POPPET VALVE	
ELECTRONIC CONTROL	
LIFT AND LOWER	9-38
EMISSIONS LINES	
MAZDA 2.0L AND 2.2L	
LPG	2-40
ENGINE ELECTRICAL COMPONENTS	
MAZDA 2.0L AND 2.2L	
LPG	4-4
ENGINE ELECTRICAL SYSTEM	
MAZDA 2.0L AND 2.2L	
LPG	4-6
YANMAR 2.6L AND 3.3L, DIESEL	
WITH OVERHEAD GUARD	4-12
ENGINE MOUNTING	2-4
EXHAUST MANIFOLD	
MAZDA 2.0L AND 2.2L	
LPG	2-18

©2005 HYSTER COMPANY

TABLE OF CONTENTS (Continued)

DESCRIPTION	PAGE
E (continued)	
EXHAUST SYSTEM	
GM 2.4L	
LPG	2-54
MAZDA 2.0L AND 2.2L	
LPG	2-16
YANMAR 2.6L AND 3.3L	
DIESEL	2-70
F	
FAN ASSEMBLY	2-6
FENDER EXTENSIONS	1-10
FIRE EXTINGUISHER	13-12
FLOORPLATES AND COVERS	1-6
FLYWHEEL AND HOUSING	
GM 2.4L	
LPG	2-56
MAZDA 2.0L AND 2.2L	
LPG	2-22
YANMAR 2.6L AND 3.3L	
DIESEL	2-78
FORKS	1-48
OPTIONAL	1-49
FORWARD CLUTCH	
SINGLE SPEED TRANSMISSION	5-18
FORWARD CLUTCH, HIGH	
DUAL SPEED TRANSMISSION	5-28
FREE-LIFT	
THREE STAGE FULL FREE-LIFT	12-16
TWO STAGE FULL FREE-LIFT	11-10
FREE-LIFT CYLINDER	
THREE STAGE FULL FREE-LIFT	12-20
TWO STAGE FULL FREE-LIFT	11-12
FUEL FILTER AND WATER SEPARATOR	
YANMAR 2.6L AND 3.3L	
DIESEL	3-26
FUEL INJECTION SYSTEM	
YANMAR 2.6L AND 3.3L	
DIESEL	3-24
FUEL SYSTEM	
GM 2.4L	
LPG	3-14
MAZDA 2.0L AND 2.2L	
LPG	3-10
YANMAR 2.6L AND 3.3L	
DIESEL	3-22

©2005 HYSTER COMPANY

TABLE OF CONTENTS (Continued)

DESCRIPTION	PAGE
G	
GEAR HOUSING	
YANMAR 2.6L AND 3.3L	
DIESEL	2-74
GEAR PUMP	9-4
H	
HAND LEVERS	
FOUR FUNCTION	
WITH DETENTED LEVERS	9-14
WITHOUT DETENTED LEVERS	9-16
THREE FUNCTION	
WITH DETENTED LEVERS	9-10
WITHOUT DETENTED LEVERS	9-12
HEADER HOSES	
THREE STAGE FULL FREE-LIFT	12-24
TWO STAGE FULL FREE-LIFT	11-14
TWO STAGE LIMITED FREE-LIFT	10-12
HEATER HOSE ARRANGEMENT	
LPG AND DIESEL	13-10
HOOD ASSEMBLY	1-2
HYDRAULIC FILTER	9-6
HYDRAULIC HOSES	
LIFT, TILT, AND AUXILIARY	9-8
HYDRAULIC SUPPLY AND RETURN	9-2
I	
INNER MAST	
THREE STAGE FULL FREE-LIFT	12-6
TWO STAGE FULL FREE-LIFT	11-4
TWO STAGE LIMITED FREE-LIFT	10-4
INPUT CLUTCH, LOW	
DUAL SPEED TRANSMISSION	5-32
INSTRUMENT CLUSTER	4-19
INTAKE AND EXHAUST MANIFOLD	
YANMAR 2.6L AND 3.3L	
DIESEL	2-72
INTAKE MANIFOLD	
MAZDA 2.0L AND 2.2L	
LPG	2-20
INTEGRAL SIDE-SHIFT ASSEMBLY	
THREE STAGE FULL FREE-LIFT	13-22
TWO STAGE FULL FREE-LIFT	13-20
TWO STAGE LIMITED FREE-LIFT	13-16
INTEGRAL SIDE-SHIFT CYLINDER	13-28
INTEGRAL SIDE-SHIFT HYDRAULIC HOSES	
TWO AND THREE STAGE FULL FREE-LIFT	13-24
TWO STAGE LIMITED FREE-LIFT	13-18
INTERMEDIATE MAST	
THREE STAGE FULL FREE-LIFT	12-4

©2005 HYSTER COMPANY

TABLE OF CONTENTS (Continued)

DESCRIPTION	PAGE
J	
JOYSTICK AND ELECTRONIC CONTROL LEVERS	4-20
L	
LABELS	
CONTROL LEVER	1-42
ELECTRONIC LEVER	1-44
EXTERIOR	1-38
INTERIOR	1-40
JOYSTICK	1-46
LIFTING EYE	13-2
LIGHTS	
BRAKE, TAIL, BACKUP, SIDE, TURN SIGNALS, WORK, STROBE	
WITH CAB	4-26
WITH OVERHEAD GUARD	4-24
LOAD BACK REST EXTENSION	1-50
LPG BRACKET ASSEMBLY	
EZXCHANGE BRACKET	3-18
SWING OUT BRACKET	3-20
LPG REGULATOR	
GM 2.4L	3-16
LUBRICATION SYSTEM	
YANMAR 2.6L AND 3.3L	
DIESEL	2-92
M	
MAIN LIFT	
THREE STAGE FULL FREE-LIFT	12-8
TWO STAGE FULL FREE-LIFT	11-6
TWO STAGE LIMITED FREE-LIFT	10-6
MAIN LIFT CYLINDER	
LEFT HAND	
TWO STAGE FULL FREE-LIFT	11-9
RIGHT HAND	
TWO STAGE FULL FREE-LIFT	11-8
MAIN LIFT CYLINDERS	
THREE STAGE FULL FREE-LIFT	12-12
TWO STAGE LIMITED FREE-LIFT	10-8
MAST ELECTRICAL	4-30
MIRRORS	
WITH CAB	13-8
WITH OVERHEAD GUARD	13-8
MONOTROL PEDAL ASSEMBLY	3-38
O	
OIL PAN	
YANMAR 2.6L AND 3.3L	
DIESEL	2-76
OIL PUMP AND FILTER	
MAZDA 2.0L AND 2.2L	
LPG	2-26

©2005 HYSTER COMPANY

TABLE OF CONTENTS (Continued)

DESCRIPTION	PAGE
O (continued)	
OUTER MAST	
THREE STAGE FULL FREE-LIFT	12-2
TWO STAGE FULL FREE-LIFT	11-2
TWO STAGE LIMITED FREE-LIFT	10-2
OUTLET SECTION	
ELECTRONIC CONTROL	
THREE AND FOUR FUNCTION	9-36
MANUAL CONTROL VALVE	
THREE AND FOUR FUNCTION	9-24
OVERHEAD GUARD	1-16
P	
PARK BRAKE ASSEMBLY	8-12
POWER DISTRIBUTION MODULE	4-18
R	
REMOTE OIL FILTER	
GM 2.4L	
LPG	2-57
REVERSE CLUTCH	
DUAL SPEED TRANSMISSION	5-30
SINGLE SPEED TRANSMISSION	5-20
S	
SEAT	
FULL SUSPENSION	
WITH AND WITHOUT ELECTRONIC CONTROLS	1-30
NON-SUSPENSION	
WITHOUT ELECTRONIC CONTROLS	1-34
SEMI-SUSPENSION	
WITH AND WITHOUT ELECTRONIC CONTROLS	1-32
SWIVEL	
WITH AND WITHOUT ELECTRONIC CONTROLS	1-36
STEER AXLE	7-10
STEER CYLINDER	7-12
STEER TIRES AND WHEELS	
H2.0-2.5FT	7-14
H2.0-3.5FT	7-16
STEERING COLUMN AND ATTACHING PARTS	7-2
STEERING COLUMN ASSEMBLY	7-4
STEERING CONTROL UNIT	7-6
STEERING LINES	7-8
T	
THROTTLE BODY AND ATTACHING PARTS	
GM 2.4L	
LPG	3-32
THROTTLE CABLE ASSEMBLY	
MAZDA 2.0L AND 2.2L	

TABLE OF CONTENTS (Continued)

DESCRIPTION — PAGE

T (continued)

LPG ... 3-28
YANMAR 2.6L AND 3.3L
DIESEL ... 3-30
THROTTLE PEDAL AND ATTACHING PARTS
MAZDA 2.0L AND 2.2L/GM 2.4L
LPG ... 3-36
THROTTLE POSITION SENSOR AND ATTACHING PARTS
YANMAR 2.6L AND 3.3L
DIESEL ... 3-34
TILT CYLINDER AND MAST INSTALLATION ... 9-40
TILT CYLINDERS
H2.0-2.5FT ... 9-42
H3.0-3.5FT ... 9-44
TILT SECTION
ELECTRONIC CONTROL
THREE AND FOUR FUNCTION ... 9-34
TIMING GEAR COVER AND OIL PAN
MAZDA 2.0L AND 2.2L
LPG ... 2-24
TORQUE CONVERTER ... 5-4
TRANSMISSION
DUAL SPEED
SHEET 1 OF 2 ... 5-22
SHEET 2 OF 2 ... 5-26
SINGLE SPEED
SHEET 1 OF 2 ... 5-12
SHEET 2 OF 2 ... 5-16
TRANSMISSION COOLING
MAZDA 2.0L AND 2.2L, LPG
SERPENTINE AND SQUARE WAVE WITHOUT AIR COOLER ... 5-6
MAZDA 2.0L AND 2.2L/GM 2.4L, LPG
SQUARE WAVE WITH AIR OIL COOLER ... 5-8
YANMAR 2.6L AND 3.3L
DIESEL ... 5-10
TRANSMISSION ELECTRICAL SYSTEM ... 4-28
TRANSMISSION MOUNTING ... 5-2

V

VALVE ASSEMBLY, LIFT AND LOWER
ELECTRONIC CONTROL VALVE
THREE AND FOUR FUNCTION ... 9-28
VALVE ASSEMBLY, LIFT AND TILT
MANUAL CONTROL VALVE
THREE AND FOUR FUNCTION ... 9-20

W

WATER PUMP
MAZDA 2.0L AND 2.2L
LPG ... 2-36

©2005 HYSTER COMPANY

TABLE OF CONTENTS (Continued)

DESCRIPTION	PAGE
W (continued)	
YANMAR 2.6L AND 3.3L DIESEL	2-90
WIRE HARESS RH CHASSIS GM 2.4L, LPG	4-36
WIRE HARNESS COWL	4-50
ELECTRONIC CONTROL VALVE FOUR FUNCTION	4-56
THREE FUNCTION	4-54
ENGINE GM 2.4L, LPG	4-46
MAZDA 2.0L AND 2.2L, LPG	4-44
YANMAR 2.6L AND 3.3L, DIESEL	4-48
LIGHTS	4-58
RH CHASSIS MAZDA 2.0L AND 2.2L, LPG	4-32
YANMAR 2.6L AND 3.3L, DIESEL	4-40
TRANSMISSION DUAL SPEED	4-60
SINGLE SPEED	4-62

©2005 HYSTER COMPANY

ABBREVIATIONS QUICK REFERENCE SHEET

Listed below are abbreviations used in parts manuals to denote the following expressions:

TERM	DEFINITION
Amp	Amperes
AR	As Required
BDI	Battery Discharge Indicators
BWI	Brush Wear Indicator
CE	Communicator End
CRE	Corrosive Environment
D/B	Date Break
dbA	Decibel "A" Scale
DE	Drive End
ECH	Empty Container Handler
ECH-3	Empty Container Handler - 3 High Stacking
ECH-4	Empty Container Handler - 4 High Stacking
ECH-5	Empty Container Handler - 5 High Stacking
ECH-6	Empty Container Handler - 6 High Stacking
ECH-7	Empty Container Handler - 7 High Stacking
ECM	Electronic Control Module
ECN	Engineering Change Notice
EEPROM	Electrically Erasable Programmable Read Only Memory
EPA	US Environmental Protection Agency
EPROM	Electrically Programmable Read Only Memory

TERM	DEFINITION
FRE	Freezer Environment
in.	Inches
LPG	Liquefied Petroleum Gas
MAP	Manifold Absolute Pressure
mm	millimeters
MSTS	Microprocessor Spark Timing System
NPT	National Pipe Threads
O/S	Oversize
PTO	Power Take Off
RPM	Revolutions per Minute
S/N	Serial Number
TMM	Truck Management Module
UL Type D	Diesel-Powered Safety Rating
UL Type DS	Diesel-Powered Safety Rating
UL Type E	Battery-Powered Safety Rating
UL Type EE	Battery-Powered Safety Rating
UL Type ES	Battery-Powered Safety Rating
UL Type G	Gasoline-Powered Safety Rating
UL Type GS	Gasoline-Powered Safety Rating
UL Type LP	Gas-Powered Safety Rating
UL Type LPS	LP Gas-Powered Safety Rating
U/S	Undersize
UL	Underwriters Laboratory
V	Volts

©2005 HYSTER COMPANY

HOW TO USE THE ILLUSTRATED PARTS MANUAL

This parts manual describes and illustrates assemblies, subassemblies, and detail parts needed for service replacement.

The different constructions are indicated by keys and footnotes. The callouts correspond to descriptions found on the next page.

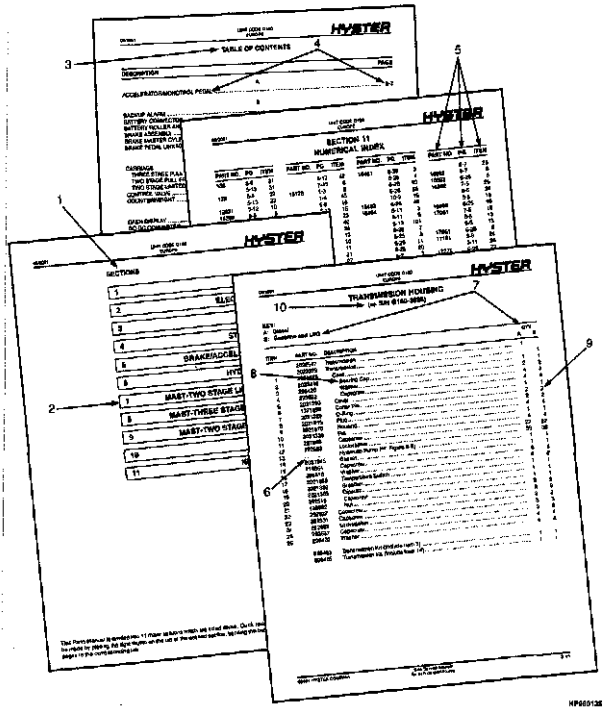

HOW TO FIND THE DESIRED PART NUMBER

WHEN THE PART NUMBER AND THE NEXT HIGHER ASSEMBLY IS NOT KNOWN:

1. Determine the function and application of the part required. Turn to the Sections Page. Choose the general area of reference most likely to include the part.

2. Turn to the section you chose. Use the Section Table of Contents to determine the assembly which would normally contain the part required. Then locate the part on the assembly breakdown page.

WHEN THE PART NUMBER IS NOT KNOWN AND THE NEXT HIGHER ASSEMBLY IS KNOWN:

3. Determine the assembly the required part is used on. Turn to the Table of Contents on Page i.

4. Locate the assembly the required part is used on and turn to the page indicated for that assembly. Then locate the part on the assembly breakdown page.

WHEN THE PART NUMBER IS KNOWN:

5. Use the Numerical Index on Page 14-1 to find the part number. Turn to the page listed and locate the part as indicated by the item number.

GENERAL:

The assembly breakdowns include part numbers, descriptions, quantities required, keys and footnotes to help in selecting correct parts.

6. Five periods in the PART NO. column (. . . . .) indicate that the part is either *Not Serviced Separately* or there is a reference to another figure. A figure reference is denoted by a pointing hand followed by a figure number in the DESCRIPTION column (☞Figure 10)

7. Keys are used to show two or more similar assemblies, RH and LH assembly parts, etc. Select the appropriate key, "A", "B", "C", "D", or "E" and the corresponding quantity column to find the required parts. Two periods in the QTY column (..) indicate that the part is not used for that assembly.

8. Indented descriptions under the DESCRIPTION column are used to indicate assemblies and subparts of assemblies. In the example on the previous page, *BEARING CAP* (item 2) is a subpart of the major assembly *CASE*.

9. Quantities shown are for one assembly. The quantities of the subpart *BEARING CAP* are indicated as two and two. This means two per *CASE* assembly.

10. Serial number breaks identify the most current parts information and are shown as follows:
    ⇒ S/N D001H-2628
    Indicates last serial number affected.
    S/N D001H-2629 ⇒
    Indicates the first serial number affected.
    S/N D001H-1553 ⇔ S/N D001H-3291
    Indicates a range of serial numbers affected.

    ECN numbers for pending serial numbers are shown to allow for the inclusion of the most current parts information and are identified as follows:
    ⇒ S/N Pending Per ECN 63243
    Indicates a pending serial number for last unit affected.
    S/N Pending Per ECN 63243 ⇒
    indicates a pending serial number for first unit affected.

    Date breaks are used to indicate when a change occurred but a subsequent serial number break was not recorded. This is an arbitrary date usually based on the ECN release and are identified as follows:
    ⇒ D/B 3/00
    indicates that a change occurred sometime within that month for the item affected.
    D/B 3/00 ⇒
    Indicates that a change occurred sometime within that month for the item affected.
    D/B 3/00 ⇔ D/B 4/00
    Indicates a range of production dates of the item affected.

    Contact your local dealer for Hyster lift trucks for serial number information for items with a ECN or a date break.

ORDERING PARTS:

When ordering replacement parts, give the unit serial number, part number, name of part and quantity required.

For any further information on parts, service, or ordering, consult your local dealer for Hyster lift trucks.

©2005 HYSTER COMPANY

IDENTIFICATION OF TRUCK SERIAL NUMBERS

X OOO X OOOO X
(1) (2) (3) (4) (5)

(1) and (2) The first letter and three numbers indicate the truck unit code.

(3) The second letter indicates the plant of manufacture.

(4) The four or five digit number indicates the production sequence number of the truck.

(5) The final letter indicates the year of manufacture starting with "A" in 1957, 1980, and 2003. The letters "I", "O", and "Q" will not be used.

For pending serial numbers contact your local dealer for Hyster lift trucks.

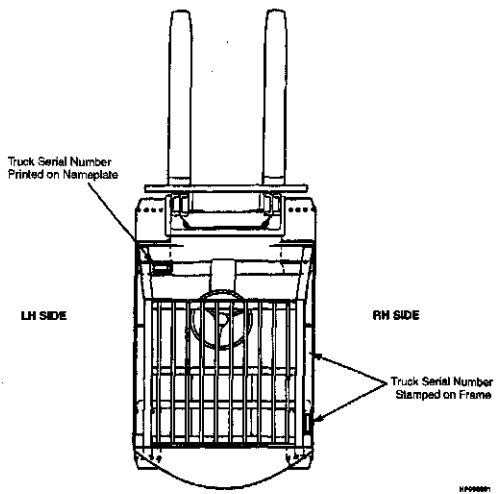

Parts referred to in this book as right or left hand parts are in accordance with the illustration above.

IDENTIFICATION OF MAST SERIAL NUMBERS

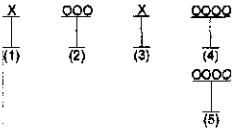

(1) and (2) The first letter and number indicates the mast unit code.

(3) The second letter indicates the plant of manufacture.

(4) The four or five digit number indicates the production sequence number of the mast.

(5) Carriage travel in millimeters stamped just below the serial number.

Mast Group identification consists of mast unit code (1) and (2) plus carriage travel (5).

For pending production sequence numbers contact your local dealer for Hyster lift trucks.

LIFT EQUIPMENT IDENTIFICATION

1. Fork part number, capacity rating, plant code letter, and date of manufacture are stamped approximately six inches below the top of most forks.

2. The carriage group number is stamped on the right hand side of the top crossmember (pin type) or on the back of the right hand end of the bottom crossmember (hook type). A date code has two letters in line with or below the carriage group number.

3. The mast identification number has a unit code, a letter indicating the plant of manufacture, and a serial number. Underneath the production sequence number is a four digit number that indicates the carriage travel in millimeters.

4. Tilt and lift cylinder group numbers are stamped on the cylinder shell.

   Always refer to the group, serial, or part number when ordering service parts.

   Modification of masts and carriages by SPED (Special Products Engineering Department) are identified by a model prefix code beginning with the letter "S". contact your dealer for Hyster lift trucks for information on these assemblies.

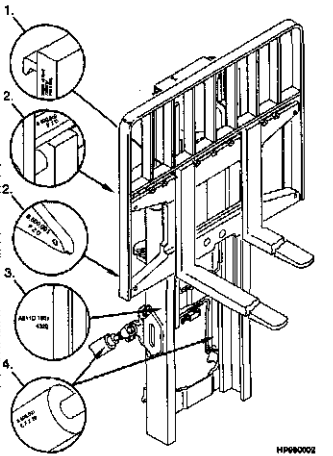

©2005 HYSTER COMPANY

IDENTIFICATION OF ATTACHMENT AND SIDE-SHIFT CARRIAGE SERIAL NUMBERS

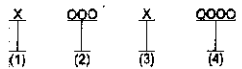

(1) and (2) The first letter and three numbers indicate the attachment unit code.

(3) The second letter indicates the plant of manufacture.

(4) The four or five digit number indicates the production sequence number.

For pending production sequence numbers contact your local dealer for Hyster lift trucks.

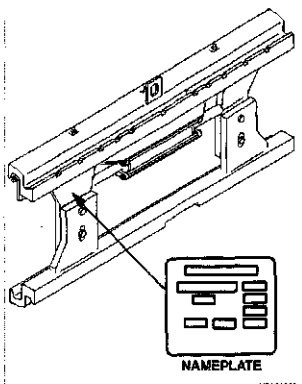

Side-shift carriages and attachments have nameplates. Use the serial number found on the nameplate to identify the attachment.

Always refer to the group, serial, or part number when ordering service parts.

Modifications of attachments and side-shift carriages by SPED (Special Products Engineering Department) are identified by a model prefix code beginning with the letter "S". Contact your dealer for Hyster lift trucks for information on these assemblies.

©2005 HYSTER COMPANY

PUBLICATIONS

Every new lift truck is provided with an OPERATING MANUAL. This manual has information that the operator must know for inspection and operation of the lift truck.

SERVICE MAINTENANCE MANUALS, which provide service and overhaul procedures, and PARTS MANUALS with complete replacement part identification, are available at a nominal fee from your Hyster dealer to assist users in effectively maintaining Hyster lift trucks in a safe, useful condition. See the list below for information on ordering specific publications for this model lift truck.

PUBLICATION	HYSTER PART NUMBER
Operating Manual	1599944
Service Manual (Complete)	1599956
Parts Manual	1599951

©2005 HYSTER COMPANY

1 FRAME

SECTION 1
FRAME

DESCRIPTION	PAGE
CAB	
FRAME AND ATTACHING PARTS	1-26
INTERIOR PANELS	1-26
LH DOOR	1-20
RH DOOR AND HEATER ASSEMBLY	1-22
WINDOWS AND WINDOW WIPER SYSTEM	1-24
CAB AND ATTACHING PARTS	1-18
COUNTERWEIGHTS	1-14
COWL MOUNT	1-12
FENDER EXTENSIONS	1-10
FLOORPLATES AND COVERS	1-6
FORKS	1-48
OPTIONAL	1-49
HOOD ASSEMBLY	1-2
LABELS	
CONTROL LEVER	1-42
ELECTRONIC LEVER	1-44
EXTERIOR	1-38
INTERIOR	1-40
JOYSTICK	1-46
LOAD BACK REST EXTENSION	1-50
OVERHEAD GUARD	1-16
SEAT	
FULL SUSPENSION	
WITH AND WITHOUT ELECTRONIC CONTROLS	1-30
NON-SUSPENSION	
WITHOUT ELECTRONIC CONTROLS	1-34
SEMI-SUSPENSION	
WITH AND WITHOUT ELECTRONIC CONTROLS	1-32
SWIVEL	
WITH AND WITHOUT ELECTRONIC CONTROLS	1-36

©2005 HYSTER COMPANY

HOOD ASSEMBLY (Figure 1-1)

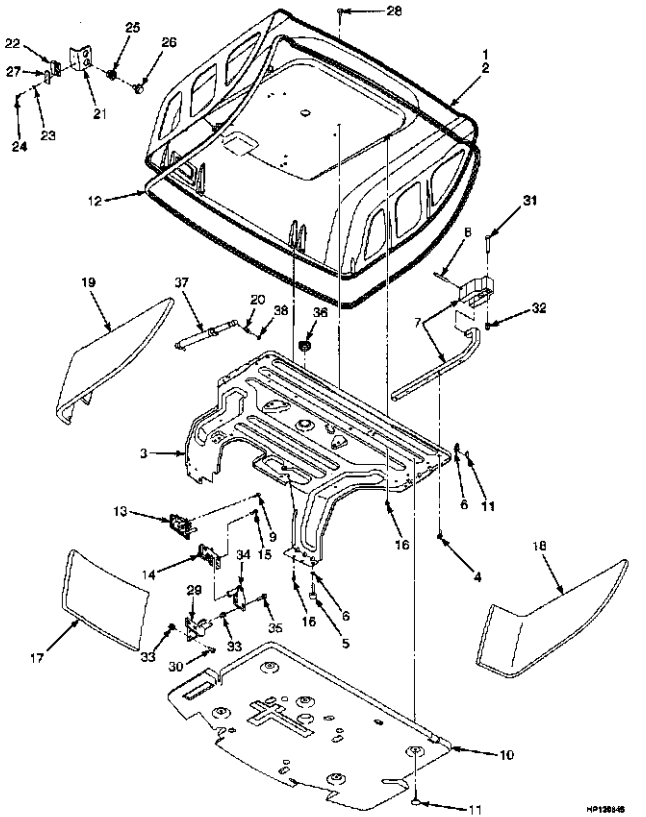

©2005 HYSTER COMPANY

HOOD ASSEMBLY

ITEM	PART NO.	DESCRIPTION	QTY
1	b 1589667	Hood Assembly (Low Noise)	1
1	c 1543994	Hood Assembly (Standard)	1
1	1594927	Hood Assembly (Vented)	1
1	ac 1603215	Hood Assembly (Non-Vented)	1
1	ab 1605122	Hood Assembly (Low Noise)	1
1	a 1603216	Hood Assembly (Vented)	1
2	b 1590149	Hood (Low Noise)	1
2	c 1543995	Hood (Standard)	1
2	1594926	Hood (Vented)	1
2	ac 1603212	Hood (Non-Vented)	1
2	ab 1605121	Hood (Low Noise)	1
2	a 1603214	Hood (Vented)	1
3	1544846	Reinforcement Assembly	1
4	1510113	Capscrew	8
5	1528906	Stop Screw	2
6	329069	Nut	4
7	1548618	Hinge Assembly	2
8	302380	Pin	2
9	1527876	Capscrew	2
10	1545387	Hood Liner	1
11	1304971	Fastener	4
12	1580652	Seal	1
13	1582287	Handle	1
14	1582286	Latch Rotor	1
15	1527878	Capscrew	4
16	1534417	Capscrew	6
17	b 1552010	Liner (Front Panel) (Low Noise)	1
18	b 1552011	Liner (LH Panel) (Low Noise)	1
19	b 1552012	Liner (RH Panel) (Low Noise)	1
20	c 1563369	Ball Stud	4
20	b 1563369	Ball Stud	3
20	b 1606659	Ball Stud	1
21	1527228	Bracket (Hood Switch)	1
22	1565545	Magnet (Reed Switch)	1
23	320152	Washer	4
24	302010	Screw	4
25	1531557	Insert	2
26	1583611	Capscrew	2
27	1585765	Plate	1
28	1347046	Fastener	8
29	1583672	Bumper Rest	1
30	1583611	Capscrew	2
31	296032	Capscrew	4
32	1530244	Insert	4
33	1530243	Insert	4
34	1584617	Striker Bolt	1
35	1527881	Capscrew	2
36	1561015	Grommet	1
37	c 1563497	Gas Spring	2
37	b 1560647	Gas Spring (LH)	1
37	b 1563836	Gas Spring (RH)	1

©2005 HYSTER COMPANY

HOOD ASSEMBLY

ITEM	PART NO.	DESCRIPTION	QTY
38	329069	Nut	2
	a 1585592	Plug (Not Illustrated)	1

FOOTNOTES:

a Use With Swivel Seat
b With Cab
c With Overhead Guard

©2005 HYSTER COMPANY

NOTES

FLOORPLATES AND COVERS (Figure 1-2)

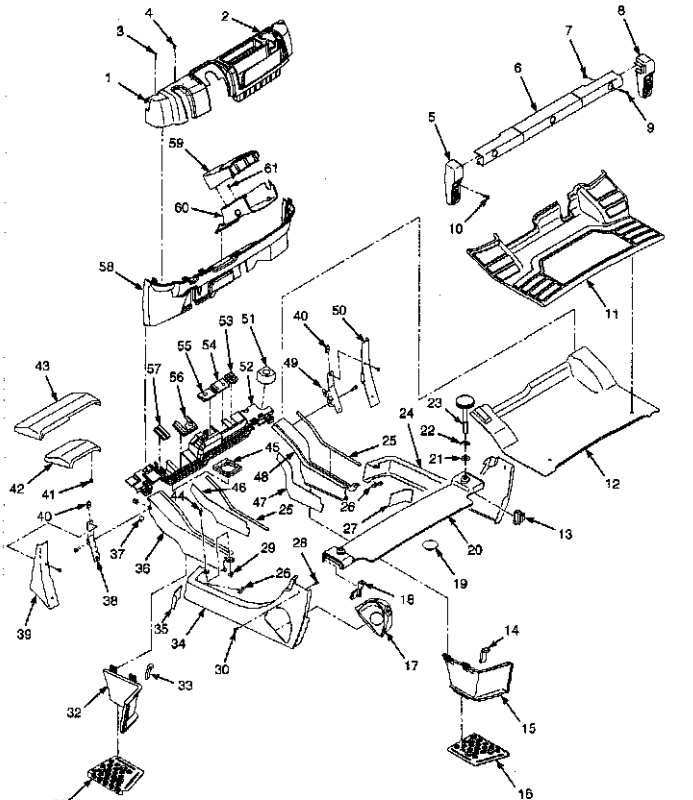

©2005 HYSTER COMPANY

FLOORPLATES AND COVERS

KEY:
A: With Cab
B: With Overhead Guard

ITEM	PART NO.	DESCRIPTION	QTY A	QTY B
1	1517420	Dash Assembly (Manual Valve)	1	1
1	1517421	Dash Assembly (Electronic Valve)	1	1
2	2070975	Cup Holder	1	1
3	2071261	Capscrew	5	5
4	2065667	Clip	6	6
5	2056822	Bracket (Tail Light) (LH)	1	1
6	2069203	Cover (Rear)	..	1
7	1531001	Insert	..	6
7	1531001	Insert	5	..
8	2056823	Bracket (Tail Light) (RH)	1	1
9	1540643	Capscrew	3	3
10	1586495	Capscrew	4	4
11	2071262	Floor Mat	1	1
12	1573774	Floor Plate	1	1
13	2070274	Seal Panel (RH)	1	1
14	1586624	Seal (RH)	1	1
15	1574277	Step Panel (RH)	1	1
16	1544416	Plate (RH)	1	1
17	1517658	Splash Shield (Diesel)	1	1
18	2070273	Seal Panel (LH)	1	1
19	2021395	Cap (LPG)	1	1
20	1547468	Radiator Cover Assembly	..	1
20	1547467	Seal (LH)	..	1
20	1547468	Seal (RH)	..	1
21	320157	Washer	..	2
22	353206	Snap Ring	..	2
23	1520970	Screw	..	2
24	1527948	Rear Panel (RH)	1	1
25	1564528	Seal	2	2
26	1582072	Trim Seal	2	2
27	1597058	Damping Sheet (RH Rear Panel)	1	1
28	1609707	Sound Liner	1	..
29	1609709	Sound Liner	1	..
30	1609708	Sound Liner	1	..
31	1609706	Sound Liner	1	..
32	1531558	Insert	6	6
33	1480237	Clip Nut (Diesel)	23	23
33	1480237	Clip Nut (LPG)	21	21
34	1530019	Screw	6	6
35	1544413	Plate (LH)	1	1
36	1574275	Step Panel (LH)	1	1
37	1586625	Seal (LH)	1	1
38	1527939	Panel (Rear) (LH, Diesel)	1	1
38	1527940	Panel (Rear) (LH, LPG)	1	1
39	1597052	Damping Sheet (LH Rear Panel)	1	1
40	1540860	Front Panel (LH)	1	1

©2005 HYSTER COMPANY

FLOORPLATES AND COVERS

ITEM	PART NO.	DESCRIPTION	QTY A	QTY B
41	1581079	Plug	4	4
42	1590145	Bracket (LH) (Fender Cover)	1	1
43	1563881	Cover (LH) (Fender)	1	1
44	1350215	Nut (Foldover)	4	4
45	1544153	Lock Nut (Standard Tread, Wide Tread)	4	4
45	1544153	Lock Nut (Dual Tread)	6	6
46	2069008	Mud Guard (Standard Tread)	2	2
46	2069545	Mud Guard (RH, Wide Tread)	1	1
46	2069954	Mud Guard (RH, Dual Tread)	1	1
47	2069544	Mud Guard (LH, Wide Tread)	1	1
47	2069550	Mud Guard (LH, Dual Tread)	1	1
48	1583611	Capscrew (Diesel)	23	23
48	1583611	Capscrew (LPG)	21	21
49	1579837	Seal (Wet Brake)	1	1
49	1580093	Seal (Dry Brake)	1	1
50	1597051	Damping Sheet (LH, Front Panel)	1	1
51	1597070	Damping Sheet (RH, Front Panel)	1	1
52	1540670	Front Panel (RH)	1	1
53	1590147	Bracket (RH) (Fender Cover)	1	1
54	1563863	Cover (RH) (Fender)	1	1
55	1530135	Grommet (RH)	1	1
56	1563840	Seal Plate Assembly	1	1
56	1529427	Seal	1	1
57	2069464	Seal	1	..
58	2065799	Seal (Manual Valve)	1	..
58	2065826	Seal (Electronic Valve)	1	..
59	2065798	Seal (Manual Valve)	1	..
59	2065827	Seal (Electronic Valve)	1	..
60	2065797	Seal	1	..
61	2065796	Seal	1	..
62	2071595	Kick Panel (Single Brake Pedal)	1	1
63	2065568	Cover (Steering Column) (Upper)	1	1
63	2071596	Kick Panel (Dual Brake Pedal)	1	1
64	2065866	Cover (Steering Column) (Lower)	1	1
65	2027656	Screw	2	2

©2005 HYSTER COMPANY

NOTES

FENDER EXTENSIONS (Figure 1-3)

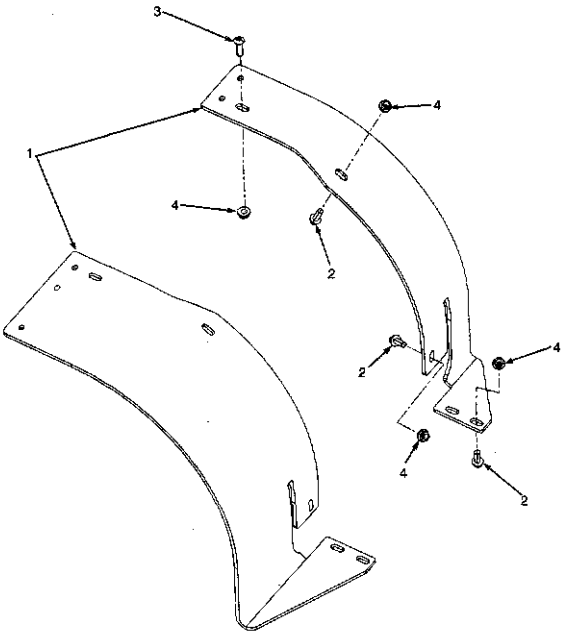

HP120535

©2005 HYSTER COMPANY

FENDER EXTENSIONS

ITEM	PART NO.	DESCRIPTION	QTY
1	1562359	Fender (Wide Width) (LH)	1
1	1562361	Fender (Dual) (LH)	1
1	1562360	Fender (Wide Width) (RH)	1
1	1562362	Fender (Dual) (RH)	1
2	1586630	Capscrew	8
3	2076289	Capscrew	2
4	1586432	Nut	10

©2005 HYSTER COMPANY

COWL MOUNT (Figure 1-4)

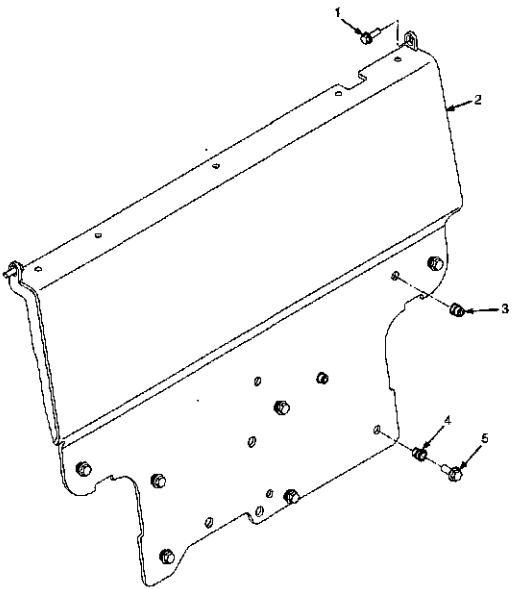

HP126730

ITEM	PART NO.	DESCRIPTION	QTY
1	1583611	Capscrew	2
2	1588815	Cowl	1
3	1530243	Insert	2
4	1530244	Insert	7
5	1605990	Capscrew	7

©2005 HYSTER COMPANY

NOTES

COUNTERWEIGHTS (Figure 1-5)

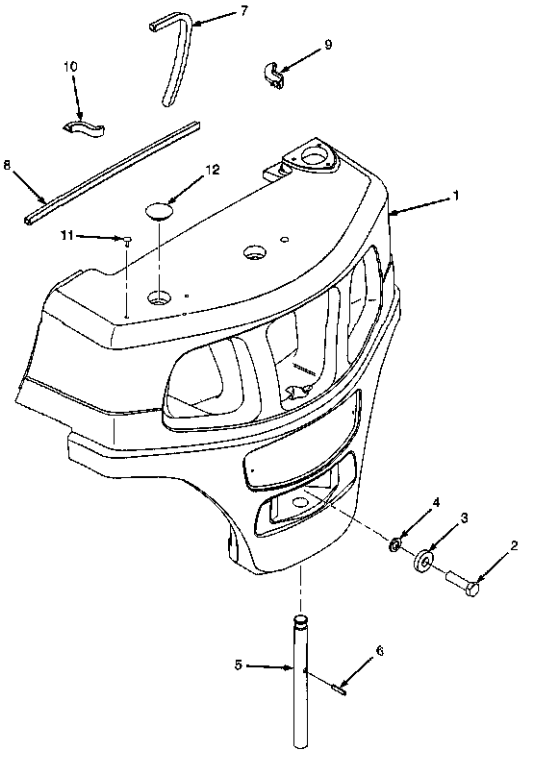

©2005 HYSTER COMPANY

COUNTERWEIGHTS

ITEM		PART NO.	DESCRIPTION	QTY
1		1533597	Counterweight (H2.0FT)	1
1		1533598	Counterweight (H2.5FT)	1
1		1533599	Counterweight (H3.0FT)	1
1		1533601	Counterweight (H3.5FT)	1
2	a	292608	Capscrew (101,6 mm)	1
2	b	292613	Capscrew (152,4 mm)	1
3		1375214	Washer	1
4		292689	Lockwasher	1
5		1533596	Pin	1
6		302491	Pin	1
7		1590279	Seal (Counterweight)	1
8		1590280	Seal (Counterweight) (Top)	1
9		1590152	Seal (RH)	1
10		1590153	Seal (LH)	1
11		1347045	Fastener	4
12		2021395	Cap	2

FOOTNOTES:
a H2.0FT
b H2.5-3.5FT

©2005 HYSTER COMPANY

OVERHEAD GUARD (Figure 1-6)

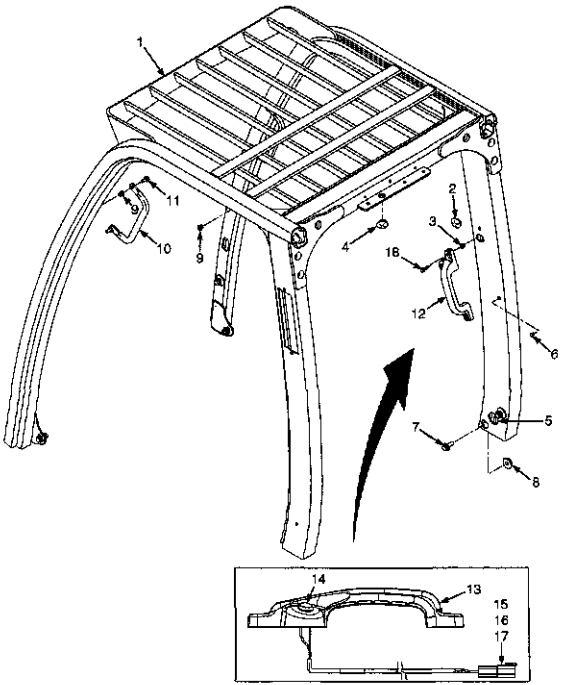

©2005 HYSTER COMPANY

OVERHEAD GUARD

ITEM	PART NO.	DESCRIPTION	QTY
1	1556574	Overhead Guard (High)	1
1	1556713	Overhead Guard (Low)	1
2	1558219	Grommet	3
3	1531558	Insert	2
4	1560671	Grommet	1
5	1561654	Grommet	1
6	1494886	Plug	2
7	1528889	Capscrew	8
8	1528888	Nut	2
9	1531557	Insert	4
10	1536813	Handle (Grab)	1
11	1583611	Capscrew	2
12	2070223	Handle Assembly (RH, Rear)	1
13	2069454	Handle	1
14	1566726	Switch (Horn)	1
15	1493465	Connector	1
16	1330414	Secondary Lock	1
17	1330437	Terminal (Pin)	2
18	1586495	Capscrew	2

©2005 HYSTER COMPANY

CAB AND ATTACHING PARTS (Figure 1-7)

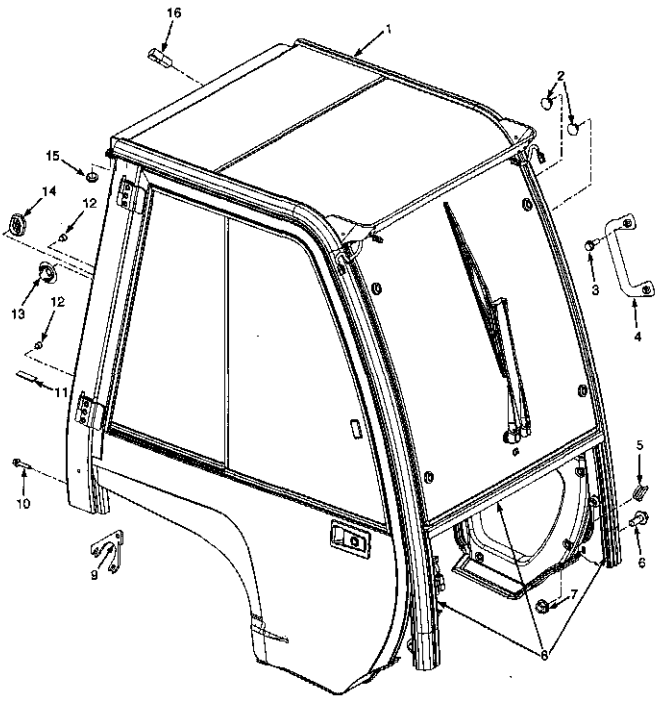

©2005 HYSTER COMPANY

CAB AND ATTACHING PARTS

ITEM	PART NO.	DESCRIPTION	QTY
1	1519232	Cab Assembly (☞ Figure 1-8, ☞ Figure 1-9, ☞ Figure 1-10, ☞ Figure 1-11, ☞ Figure 1-12)	1
2	1574301	Plug	8
3	1583611	Capscrew	8
4	1536813	Handle (Grab)	1
5	1589787	Seal	2
6	1528889	Capscrew	8
7	1528888	Nut	2
8	1611140	Seal (Three Piece)	1
9	1610890	Shim	AR
10	1586495	Capscrew	6
11	1609521	Seal	1
12	1494888	Plug	2
13	1599415	Plug	1
14	1558219	Grommet	1
15	1560871	Grommet	1
16	1351661	Connector	1

©2005 HYSTER COMPANY

CAB (Figure 1-8)
LH DOOR

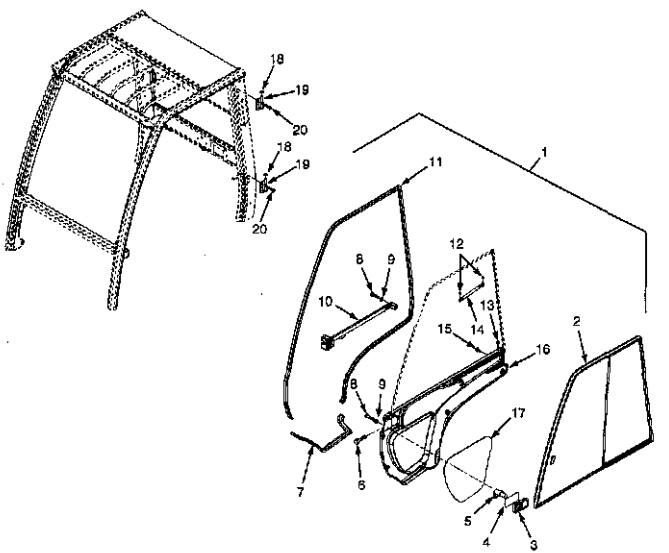

HP123861

©2005 HYSTER COMPANY

CAB
LH DOOR

ITEM	PART NO.	DESCRIPTION	QTY
	1519232	Cab Assembly	1
1	1598417	Door Assembly (LH)	1
2	1598396	Sliding Window (LH)	1
3	1598393	Grip	1
4	1598394	Shim	1
5	1598392	Lever	1
6	298229	Capscrew	2
7	1393539	Seal	AR
8	302047	Screw	5
9	320156	Washer	5
10	1393479	Handle and Latch (LH)	1
11	1515337	Seal	AR
12	316835	Nut	2
13	1598390	Plug	2
14	1598397	Gas Spring	1
15	1598389	Fastener	5
16	1598391	Cover (Door, LH)	1
17	1598395	Screen (Door, Lower, LH)	1
18	1468312	Washer	2
19	1503958	Hinge (LH)	2
20	1493308	Bolt	12
a	1598390	Plug	5

FOOTNOTES:
a Not Illustrated

CAB (Figure 1-9)
RH DOOR AND HEATER ASSEMBLY

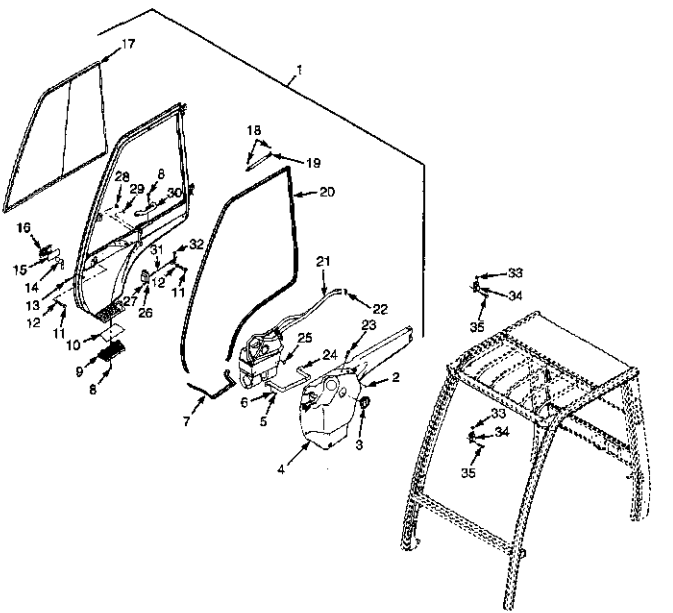

©2005 HYSTER COMPANY

CAB
RH DOOR AND HEATER ASSEMBLY

ITEM	PART NO.	DESCRIPTION	QTY
	1519232	Cab Assembly	1
1	1598416	Door Assembly (RH)	1
2	1598389	Fastener	6
3	1598398	Nozzle	3
4	1598407	Cover (Door, RH)	1
5	239503	Nut	2
6	320158	Washer	2
7	1393539	Seal	AR
8	1598399	Screw	6
9	1598401	Bracket	1
10	1598400	Filter	1
11	302047	Screw	6
12	320156	Washer	6
13	298229	Capscrew	2
14	1598411	Lever	1
15	1598394	Shim	1
16	1598393	Grip	1
17	1598413	Sliding Window (RH)	1
18	316835	Nut	2
19	1598414	Gas Spring	1
20	1515337	Seal	AR
21	1598404	Heater Assembly	1
21	1598675	Heater	1
21	1598674	Hose	4
21	1598673	Switch	1
21	1598672	Valve	1
21	1598671	Wire Harness	1
21	1598670	Connector	2
22	1393499	Clamp	1
23	1598403	Screw	4
24	1598669	Bracket	1
25	1598390	Plug	5
26	1598412	Lock (RH)	1
27	1598408	Nut	2
28	1579116	Grommet	2
29	1598402	Grommet	1
30	1598406	Handle	1
31	1598409	Release Bar	1
32	1598410	Lever	1
33	1468312	Washer	2
34	1503959	Hinge (RH)	2
35	1493308	Bolt	12

©2005 HYSTER COMPANY

CAB (Figure 1-10)
WINDOWS AND WINDOW WIPER SYSTEM

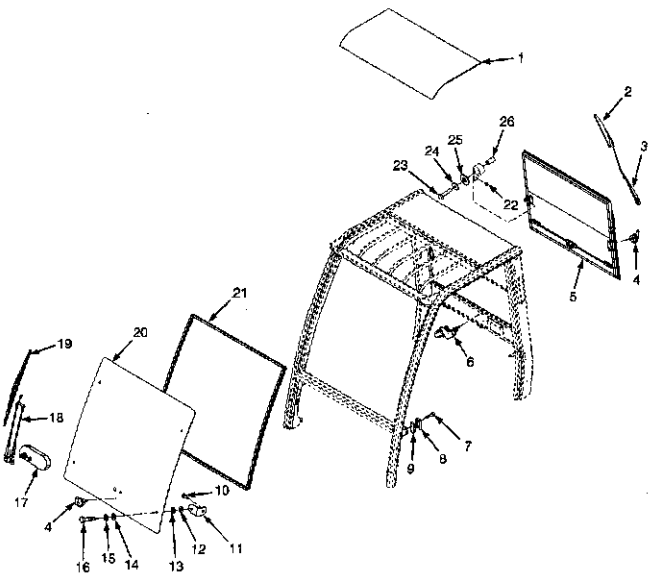

HP130862

©2005 HYSTER COMPANY

CAB
WINDOWS AND WINDOW WIPER SYSTEM

ITEM	PART NO.	DESCRIPTION	QTY
	1519232	Cab Assembly	1
1	1598293	Window (Roof)	1
2	1598297	Wiper Blade (Rear)	1
3	1598296	Wiper Arm (Rear)	1
4	1493336	Connector	2
5	1598290	Sliding Window (Rear)	1
6	1598285	Wiper Motor (Rear)	1
7	1598300	Bolt	2
8	1393541	Guard	2
9	1393488	Block	2
10	1493308	Bolt	4
11	1598210	Bracket	4
12	1598211	Washer	4
13	1468317	Washer	4
14	1468316	Washer	4
15	1468315	Washer	4
16	1468314	Screw	4
17	1598294	Wiper Motor (Front)	1
18	1598298	Wiper Arm (Front)	1
19	1598299	Wiper Blade (Front)	1
20	1598209	Screen (Front)	1
21	1581657	Seal	AR
22	302019	Screw	2
23	1598291	Screw	2
24	1558052	Washer	2
25	1598302	Spacer	2
26	1598301	Bushing	4

CAB (Figure 1-11)
INTERIOR PANELS

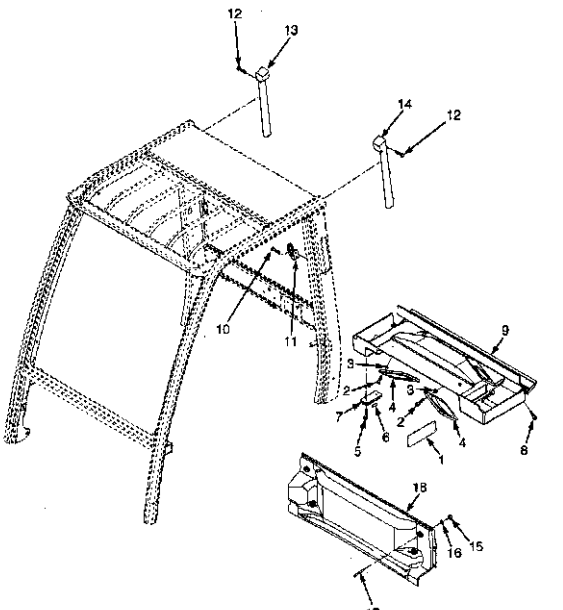

©2005 HYSTER COMPANY

CAB
INTERIOR PANELS

ITEM	PART NO.	DESCRIPTION	QTY
	1519232	Cab Assembly	1
1	1571628	Cover (Radio)	1
2	1468320	Screw	8
3	1598420	Nut	8
4	1598421	Cover (Speakers)	2
5	1468319	Screw	2
6	1393527	Bulb	1
7	1393528	Dome Light	1
8	1493308	Bolt	4
9	1598422	Console (Radio)	1
10	1598423	Screw	2
11	1393458	Hanger	1
12	1468319	Screw	6
13	1598424	Support (RH)	1
14	1598425	Support (LH)	1
15	1598426	Nut	4
16	320158	Washer	4
17	1598427	Screw	4
18	1598428	Cover (Radiator)	1

©2005 HYSTER COMPANY

CAB (Figure 1-12)
FRAME AND ATTACHING PARTS

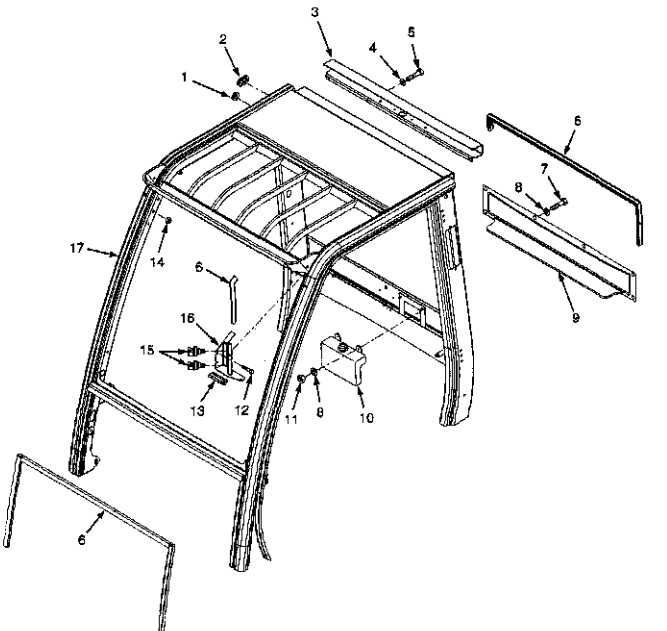

BP120158

©2005 HYSTER COMPANY

CAB
FRAME AND ATTACHING PARTS

ITEM		PART NO.	DESCRIPTION	QTY
		1519232	Cab Assembly	1
1		1579116	Grommet	3
2		1598332	Grommet	2
3		1598321	Cover (Cable)	1
4		320168	Washer	4
5		136681	Capscrew	4
6		1515337	Seal	AR
7		1571775	Screw	5
8		320156	Washer	7
9		1598668	Cover (Rear)	1
10		1598329	Water Tank	1
11		136687	Nut	2
12		1598323	Screw	2
13		1393539	Seal	AR
14		1466308	Nut	6
15		1598327	Connector	2
16		1598325	Bracket	1
17	a	. . . . .	Frame 2	1

FOOTNOTES:
a Not Serviced Separately

SEAT (Figure 1-13)
FULL SUSPENSION
WITH AND WITHOUT ELECTRONIC CONTROLS

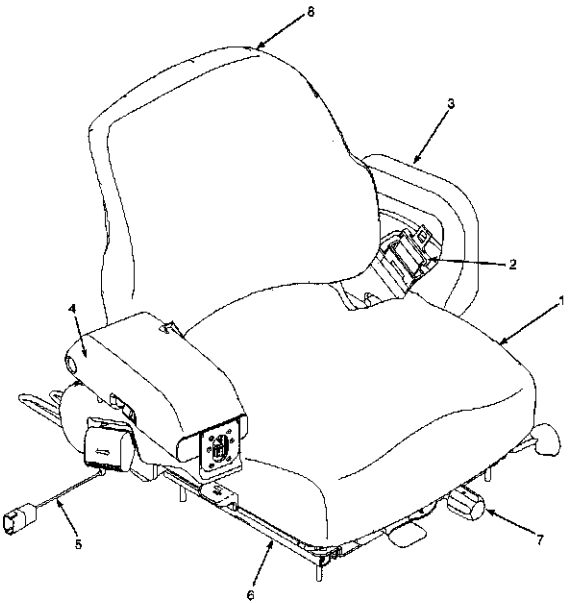

HP120887

©2005 HYSTER COMPANY

SEAT
FULL SUSPENSION
WITH AND WITHOUT ELECTRONIC CONTROLS

KEY:
A: Full Suspension (Vinyl)
B: Full Suspension (Cloth)
C: Full Suspension (Vinyl with Electronic Control Arm)
D: Full Suspension (Cloth with Electronic Control Arm)

ITEM	PART NO.	DESCRIPTION	QTY A	B	C	D
	1593413	Full Suspension Seat (Vinyl)	1	..	..	..
	1593414	Full Suspension Seat (Cloth)	..	1	..	..
	1593417	Full Suspension Seat (Vinyl)	..	..	1	..
	1593418	Full Suspension Seat (Cloth)	..	..	..	1
1	1563207	Seat Cushion	1	..	1	..
1	1566453	Seat Cushion	..	1	..	1
2	1598504	Seat Belt Kit	1	1	1	1
3	1563230	Arm Cushion (LH)	1	1	1	1
4	1563231	Arm Cushion (RH)	1	1	..	..
5	2075429	Wire Harness	1	1	..	..
5	2075428	Wire Harness	..	..	1	1
6	1470161	Slide Kit	1	1	1	1
7	1470163	Weight Adjuster Kit	1	1	1	1
8	1470152	Back Cushion	1	..	1	..
8	1470153	Back Cushion	..	1	..	1
a	1563208	Sensor	1	1	1	1
a	1483828	Shock Kit	1	1	1	1
a	1563210	Foam Cap (Electronic Control Arm)	..	..	1	1
a	1563211	Knobs (Electronic Control Arm)	..	..	1	1

FOOTNOTES:
a Not Illustrated

SEAT (Figure 1-14)
SEMI-SUSPENSION
WITH AND WITHOUT ELECTRONIC CONTROLS

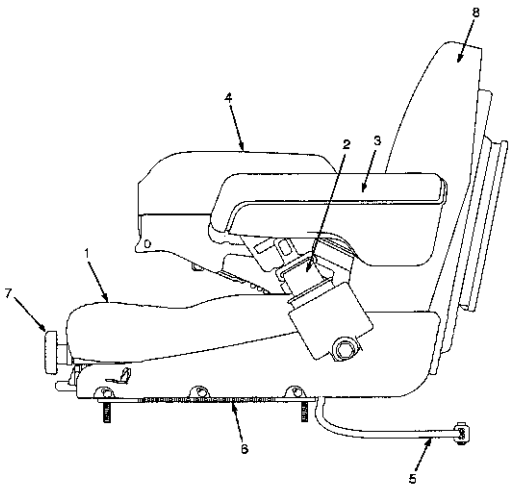

HP120663

©2005 HYSTER COMPANY

SEAT
SEMI-SUSPENSION
WITH AND WITHOUT ELECTRONIC CONTROLS

KEY:
A: Semi-Suspension (Vinyl)
B: Semi-Suspension (Cloth)
C: Semi-Suspension (Vinyl with Electronic Control Arm)
D: Semi-Suspension (Cloth with Electronic Control Arm)

ITEM	PART NO.	DESCRIPTION	QTY A	B	C	D
	1593411	Seat Assembly (Vinyl)	1	..	..	..
	1593412	Seat Assembly (Cloth)	..	1	..	..
	1593415	Seat Assembly (Vinyl)	..	..	1	..
	1593416	Seat Assembly (Cloth)	..	..	..	1
1	1382112	Seat Cushion (Vinyl)	1	..	1	..
1	1382114	Seat Cushion (Cloth)	..	1	..	1
2	1598504	Seat Belt Kit	1	1	1	1
3	1453882	Armrest (LH)	1	1	1	1
4	1453883	Armrest (RH)	1	1	..	..
5	2075428	Wire Harness	..	..	1	1
6	1459173	Slide Kit	1	1	1	1
7	1563227	Weight Adjust Knob	1	1	1	1
8	1382111	Back Cushion (Vinyl)	1	..	1	..
8	1382113	Back Cushion (Cloth)	..	1	..	1
a	1563215	Sensor (Operator Presence)	1	1	1	1
a	1362049	Shock Absorber Kit	1	1	1	1
a	1563210	Foam Cap (Electronic Control Arm)	..	..	1	1
a	1563211	Knobs (Electronic Control Arm)	..	..	1	1

FOOTNOTES:
a Not Illustrated

©2005 HYSTER COMPANY

SEAT (Figure 1-15)
NON-SUSPENSION
WITHOUT ELECTRONIC CONTROLS

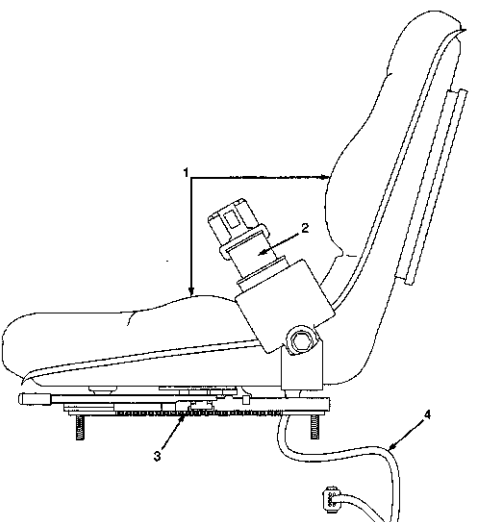

HP130699

©2005 HYSTER COMPANY

SEAT
NON-SUSPENSION
WITHOUT ELECTRONIC CONTROLS

ITEM	PART NO.	DESCRIPTION	QTY
	1593409	Non-Suspension Seat (Vinyl)	1
1	1583351	Cushions (Vinyl)	1
2	1598504	Seat Belt Kit	1
3	1459173	Slide Kit	1
4	2075429	Wire Harness	1
	a 1583215	Sensor (Operator Presence)	1

FOOTNOTES:
a Not Illustrated

©2005 HYSTER COMPANY

SEAT (Figure 1-16)
SWIVEL
WITH AND WITHOUT ELECTRONIC CONTROLS

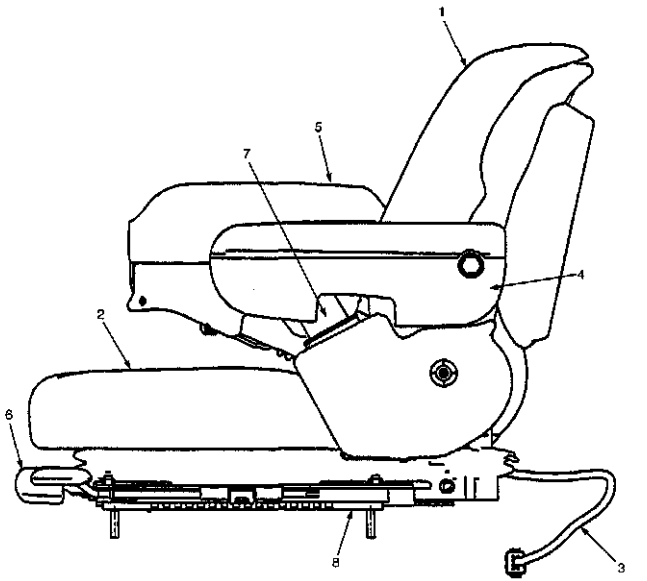

HP920691

©2005 HYSTER COMPANY

SEAT
SWIVEL
WITH AND WITHOUT ELECTRONIC CONTROLS

KEY:
A: Full Suspension (Vinyl)
B: Full Suspension (Cloth)
C: Full Suspension (Vinyl with Electronic Control Arm)
D: Full Suspension (Cloth with Electronic Control Arm)

ITEM		PART NO.	DESCRIPTION	QTY A	B	C	D
		1593421	Seat Assembly (Vinyl)	1	..	..	..
		1593422	Seat Assembly (Cloth)	..	1	..	..
		1593423	Seat Assembly (Vinyl)	..	..	1	..
		1593424	Seat Assembly (Cloth)	..	..	..	1
1		1470162	Back Cushion	1	..	1	..
1		1470153	Back Cushion	..	1	..	1
2		1563207	Seat Cushion	1	..	1	..
2		1586453	Seat Cushion	..	1	..	1
3		2075428	Wire Harness	..	..	1	1
3		2075429	Wire Harness	1	1	..	..
4		1563230	Arm Cushion (LH)	1	1	1	1
5		1563231	Arm Cushion (RH)	1	1	..	..
6		1470163	Weight Adjuster Kit	1	1	1	1
7		1598504	Seat Belt Kit	1	1	1	1
8		1470161	Slide Kit	1	1	1	1
9	a	1483828	Shock Kit	1	1	1	1
10	a	1563210	Foam Cap (Electronic Control Arm)	..	..	1	1
11	a	1563211	Knobs (Electronic Control Arm)	..	..	1	1
12	a	1563208	Sensor	1	1	1	1

FOOTNOTES:
a Not Illustrated

©2005 HYSTER COMPANY

LABELS (Figure 1-17)
EXTERIOR

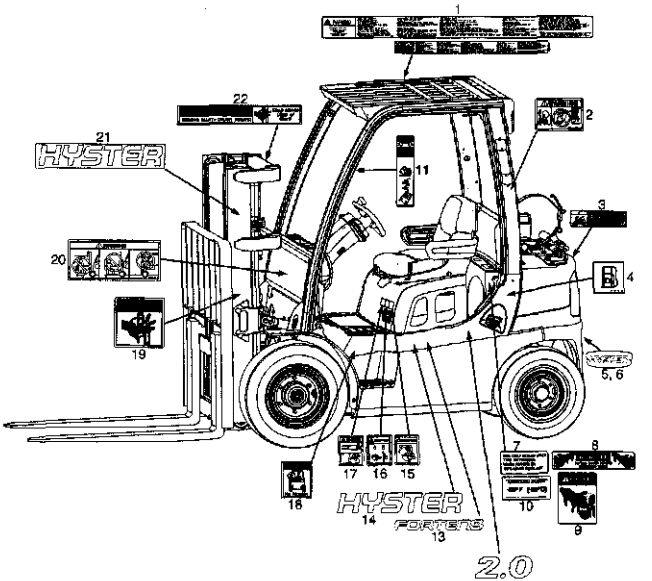

HP1139881

©2005 HYSTER COMPANY

LABELS
EXTERIOR

ITEM		PART NO.	DESCRIPTION	QTY
1		2073198	Label (Operator Warning)	1
2	a	2034480	Label (Ether Warning)	1
3		1354172	Label (Flammable LPG)	1
4		2074256	Label (Diesel Fuel Only)	1
5		1583809	Plate (Hyster Logo)	1
6		1566851	Fastener	2
7		1375676	Label (Boron Free Anti-Freeze Only)	1
8		1345926	Label (Fan Warning)	1
9		1300094	Label (Fan Warning)	2
10		1354165	Label (Anti-Freeze)	2
11		1359588	Label (Operator Restraint)	2
12		1598305	Label (Model 2.0)	2
12		1598322	Label (Model 2.5)	2
12		1598324	Label (Model 3.0)	2
12		1598326	Label (Model 3.5)	2
13		1601748	Label (Fortens)	2
14		1586440	Label (Hyster)	2
15		2074740	Label (Joystick Caution)	1
16		2075417	Label (Locking Gas Spring)	1
17	c	2075614	Label (Hood Opening Warning)	1
17	b	2076171	Label (Swivel Seat Caution)	1
18		1339828	Label (No Riders)	2
19		1339832	Label (Pinch Point)	2
20		2075655	Label (Mast Warning)	2
21		1562363	Label (Hyster)	2
22		1343276	Label (Mast Warning)	1

FOOTNOTES:

a Diesel Only
b For Use With Swivel Seats Only
c LPG Only

LABELS (Figure 1-18)
INTERIOR

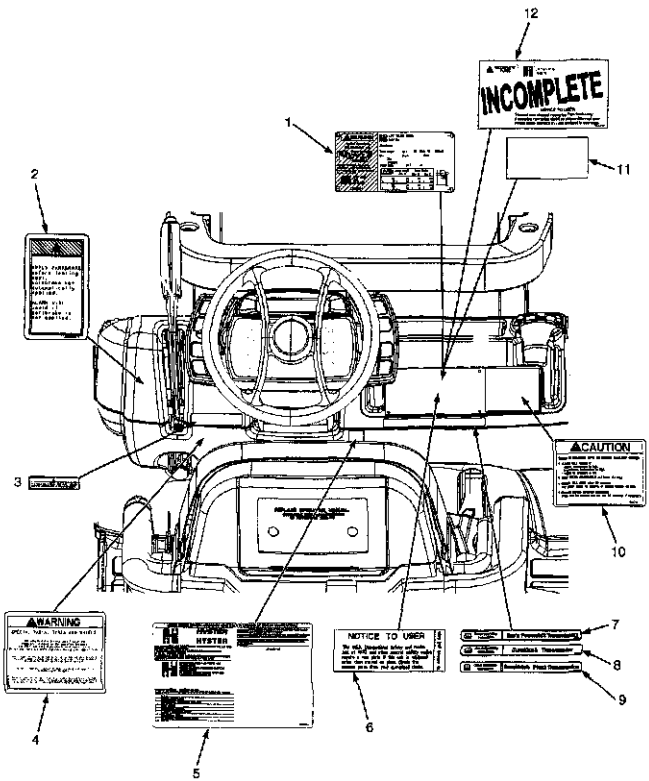

©2005 HYSTER COMPANY

LABELS
INTERIOR

ITEM		PART NO.	DESCRIPTION	QTY
1	b	. . . . .	Nameplate	1
1		170658	Rivet	4
2		2074210	Label (Park Brake Warning)	1
3		1365830	Label (Caution Soot Trap)	1
4		1374549	Label (Radial Tire Warning)	1
5		1534660	Label (Patents and Trademarks)	1
6		1336138	Nameplate Tag	1
7	a	1589377	Label (Basic Powershift Transmission)	1
8	c	1589397	Label (DuraMatch Transmission)	1
9		1589437	Label (DuraMatch Plus2 Transmission)	1
10		1385102	Label (Drive Train Protection)	1
11		389688	Cover	1
12		1674147	Label (Incomplete Truck Nameplate)	1

FOOTNOTES:

a Basic Transmission
b Contact Your Local Hyster Dealer
c Electric Transmission

©2005 HYSTER COMPANY

LABELS (Figure 1-19)
CONTROL LEVER

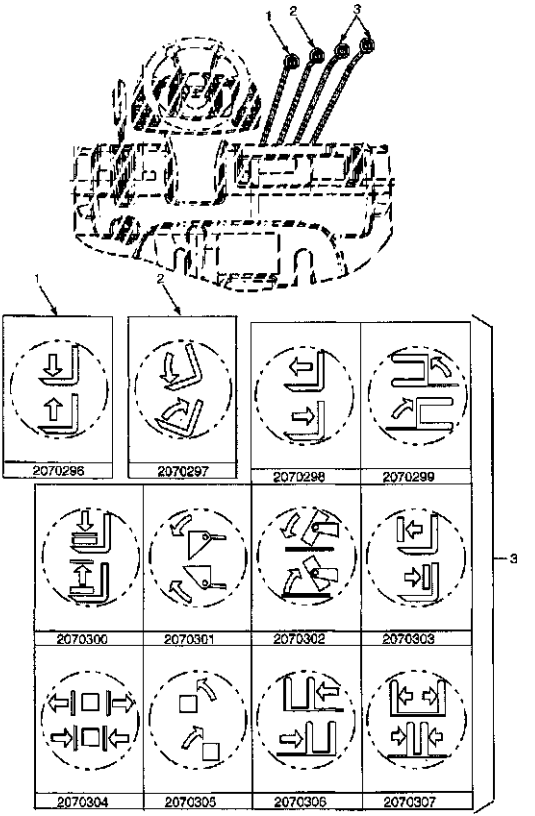

©2005 HYSTER COMPANY

LABELS
CONTROL LEVER

ITEM		PART NO.	DESCRIPTION	QTY
1	b	2070296	Lens (Lift)	1
2	b	2070297	Lens (Tilt)	1
3	a	2070298	Lens (Reach)	1
3	a	2070299	Lens (Swing)	1
3	a	2070300	Lens (Load Stabilizer)	1
3	a	2070301	Lens (Scoop)	1
3	a	2070302	Lens (Upender)	1
3	a	2070303	Lens (Push/Pull)	1
3	a	2070304	Lens (Clamp)	1
3	a	2070305	Lens (Rotate)	1
3	a	2070306	Lens (Side-Shift)	1
3	a	2070307	Lens (Fork Spread)	1

FOOTNOTES:
a Optional Function
b Standard Function

©2005 HYSTER COMPANY

LABELS (Figure 1-20)
ELECTRONIC LEVER

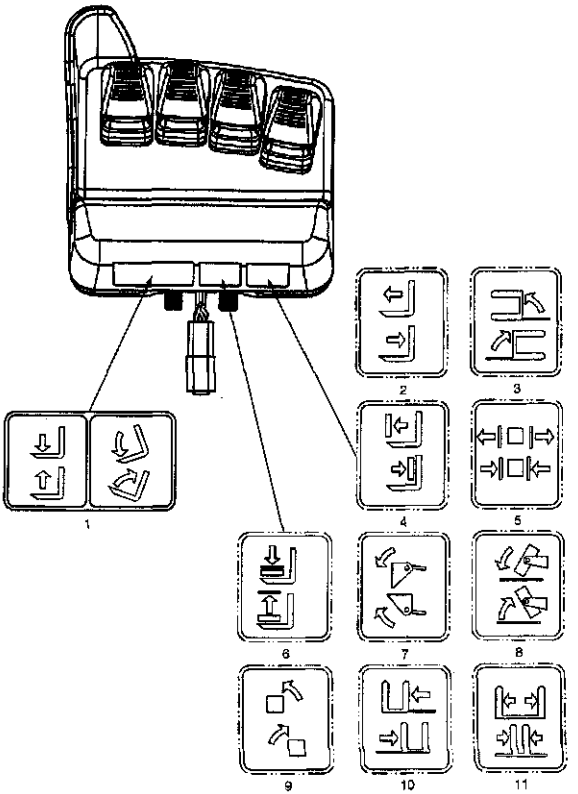

©2005 HYSTER COMPANY

LABELS
ELECTRONIC LEVER

ITEM	PART NO.	DESCRIPTION	QTY
1	1581055	Label (Hoist and Tilt)	1
2	2073115	Label (Reach)	1
3	2073114	Label (Swing)	1
4	2073116	Label (Load Stabilizer)	1
5	2073117	Label (Scoop)	1
6	2073119	Label (Upender)	1
7	2073118	Label (Push/Pull)	1
8	2073120	Label (Clamp)	1
9	2073121	Label (Rotate)	1
10	2073122	Label (Side-Shift)	1
11	2073123	Label (Fork Spread)	1

©2005 HYSTER COMPANY

LABELS (Figure 1-21)
JOYSTICK

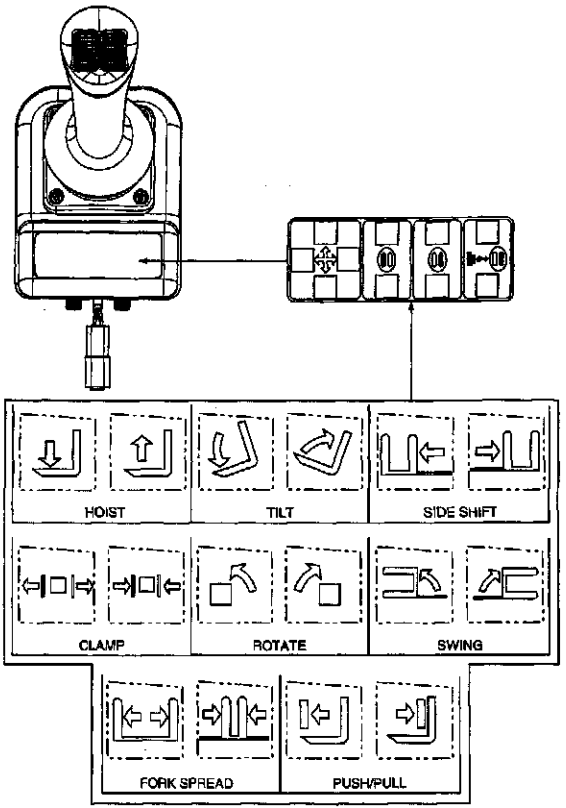

©2005 HYSTER COMPANY

LABELS
JOYSTICK

ITEM	PART NO.	DESCRIPTION	QTY
	2070481	Label Set (Hoist and Tilt)	1
	2070482	Label Set (Hoist and Tilt, Side-Shift)	1
	2074989	Label Set (Hoist and Tilt, Fork Spread)	1
	2070483	Label Set (Hoist and Tilt, Side-Shift, Fork Spread)	1
	2070484	Label Set (Hoist and Tilt, Side-Shift, Push/Pull)	1
	2070486	Label Set (Hoist and Tilt, Clamp)	1
	2070487	Label Set (Hoist and Tilt, Side-Shift, Clamp)	1
	2070488	Label Set (Hoist and Tilt, Side-Shift, Rotate)	1
	2070489	Label Set (Hoist and Tilt, Side-Shift, Rotate, Clamp)	1
	2070491	Label Set (Hoist and Tilt, Rotate, Clamp)	1
	2070495	Label Set (Hoist and Tilt, Swing, Clamp)	1
	2070496	Label Set (Hoist and Tilt, Swing, Rotate, Clamp)	1

©2005 HYSTER COMPANY

FORKS (Figure 1-22)

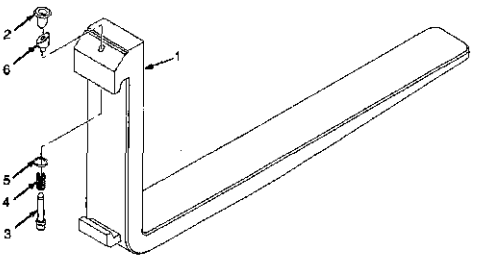

BP280003

KEY:
A: Standard Class II (100 mm x 40 mm)
B: Standard Class III (125 mm x 50 mm)

ITEM		PART NO.	DESCRIPTION	QTY A	QTY B
1		1333043	Fork (1000 mm)	2	..
1		1333044	Fork (1100 mm)	2	..
1		1333045	Fork (1200 mm)	2	..
1		1338140	Fork (1000 mm)	..	2
1		1338142	Fork (1100 mm)	..	2
1		1338144	Fork (1200 mm)	..	2
2		1523732	Knob	1	1
3		1523733	Pin	1	..
3		1523737	Pin	..	1
4		1500782	Spring	1	..
4		1500784	Spring	..	1
5	a	1477166	Washer	1	1
6	a	1477167	Wedge	1	..
6		1477237	Wedge	..	1
		1523734	Retainer Pin (Not Illustrated)	1	1
		1523735	Latch Kit (Class II) (Includes Items 2-6)	2	..
		1523739	Latch Kit (Class III) (Includes Items 2-6)	..	2

FOOTNOTES:
a Refer to Latch Kit Installation Instructions

©2005 HYSTER COMPANY

FORKS (Figure 1-23)
OPTIONAL

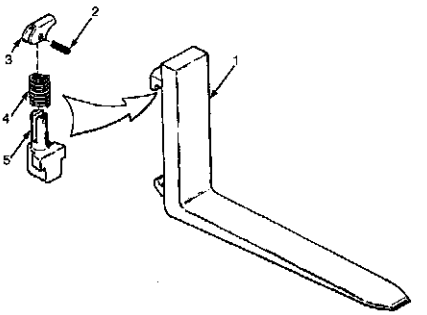

HP120793

KEY:
A: 100 mm x 40 mm (4 in. x 1.5 in.) Standard Taper (H2.0-2.5FT)
B: *125mm x 50mm (5 in. x 2 in.) Standard Taper (H3.0-3.5FT)*

ITEM	PART NO.	DESCRIPTION	QTY A	QTY B
1	1378787	Fork (1016 mm)	2	..
1	1378796	Fork (1194 mm)	2	..
1	1378791	Fork (1524 mm)	2	..
1	1378793	Fork (991 mm)	2	..
1	1378794	Fork (1092 mm)	2	..
1	1378726	Fork (991 mm)	..	2
1	1378727	Fork (1092 mm)	..	2
1	1378728	Fork (1194 mm)	..	2
2	302450	Pin	1	1
3	1378763	Latch	1	1
4	1378762	Spring	1	1
5	1378760	Pin	1	..
5	1378761	Pin	..	1
	1378765	Latch Kit (Class II) (Includes Items 2-5)	1	..
	1378766	Latch Kit (Class III) (Includes Items 2-5)	..	1

©2005 HYSTER COMPANY

LOAD BACK REST EXTENSION (Figure 1-24)

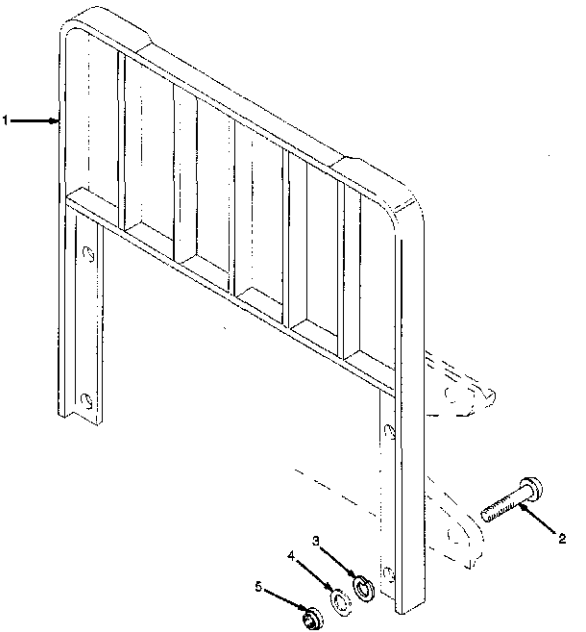

©2005 HYSTER COMPANY

LOAD BACK REST EXTENSION

KEY:
A: For Use With Standard Carriage Only
B: For Use With Integral Side-Shift Carriage Only

ITEM		PART NO.	DESCRIPTION	QTY A	QTY B
1		1385778	Load Backrest Extension (1219 mm) (Class III)	1	1
1		1338645	Load Backrest Extension (1067 mm) (Class III)	1	1
1		1338642	Load Backrest Extension (1067 mm) (Class II)	1	..
1		1376338	Load Backrest Extension (1219 mm) (Class II)	1	..
1		1338642	Load Backrest Extension (1067 mm) (Class II)	..	1
1		1376338	Load Backrest Extension (1219 mm) (Class II)	..	1
2		2034347	Capscrew	..	4
2	a	1343990	Capscrew	4	4
2	b	1354923	Capscrew	4	4
3		298423	Washer	4	4
4		221771	Washer	4	4
5		300937	Locknut	4	4

FOOTNOTES:
a For Use On 42" Class III, 42" Class II Standard Carriage, And 48" Class II Standard Carriage Only
b For Use On 48" Class III Only

NOTES

2 ENGINES

SECTION 2
ENGINES

DESCRIPTION	PAGE
ALTERNATOR AND MOUNTING	
GM 2.4L	
LPG	2-50
ASSEMBLED ENGINE	
GM 2.4L, LPG	
SHEET 1 OF 4	2-42
SHEET 2 OF 4	2-44
SHEET 3 OF 4	2-46
SHEET 4 OF 4	2-48
CAMSHAFT AND DRIVE GEAR	
YANMAR 2.6L AND 3.3L	
DIESEL	2-64
CAMSHAFT AND VALVES	
MAZDA 2.0L AND 2.2L	
LPG	2-30
CAMSHAFT, CYLINDER HEAD AND MANIFOLDS	
GM 2.4L	
LPG	2-58
COOLING MANIFOLD AND ATTACHING PARTS	
GM 2.4L	
LPG	2-61
COOLING SYSTEM	
GM 2.4L, LPG, SQUARE WAVE RADIATOR	2-52
MAZDA 2.0L AND 2.2L, LPG, SERPENTINE RADIATOR	
BASIC POWERSHIFT TRANSMISSION	2-8
MAZDA 2.0L AND 2.2L, LPG, SQUARE WAVE RADIATOR	
BASIC POWERSHIFT TRANSMISSION, WITH INTERNAL AIR OIL COOLER	2-10
ELECTRONIC CONTROL TRANSMISSION, WITH EXTERNAL AIR OIL COOLER	2-14
ELECTRONIC CONTROL TRANSMISSION, WITH INTERNAL AIR OIL COOLER	2-12
YANMAR 2.6L AND 3.3L, DIESEL, SQUARE WAVE RADIATOR	
WITH EXTERNAL AIR OIL COOLER	2-68
WITH INTERNAL AIR OIL COOLER	2-66
CRANKSHAFT AND PISTONS	
MAZDA 2.0L AND 2.2L	
LPG	2-32
YANMAR 2.6L AND 3.3L	
DIESEL	2-86
CRANKSHAFT, PISTONS AND OIL PAN	
GM 2.4L	
LPG	2-62
CYLINDER BLOCK	
MAZDA 2.0L AND 2.2L	
LPG	2-34
YANMAR 2.6L AND 3.3L	
DIESEL	2-88
CYLINDER HEAD	
MAZDA 2.0L AND 2.2L	
LPG	2-28
YANMAR 2.6L AND 3.3L	
DIESEL	2-80

©2005 HYSTER COMPANY

See Service Manual for service procedures.

SECTION 2
ENGINES (Continued)

DESCRIPTION	PAGE
EMISSIONS LINES	
MAZDA 2.0L AND 2.2L	
LPG	2-40
ENGINE MOUNTING	2-4
EXHAUST MANIFOLD	
MAZDA 2.0L AND 2.2L	
LPG	2-18
EXHAUST SYSTEM	
GM 2.4L	
LPG	2-54
MAZDA 2.0L AND 2.2L	
LPG	2-16
YANMAR 2.6L AND 3.3L	
DIESEL	2-70
FAN ASSEMBLY	2-6
FLYWHEEL AND HOUSING	
GM 2.4L	
LPG	2-56
MAZDA 2.0L AND 2.2L	
LPG	2-22
YANMAR 2.6L AND 3.3L	
DIESEL	2-78
GEAR HOUSING	
YANMAR 2.6L AND 3.3L	
DIESEL	2-74
INTAKE AND EXHAUST MANIFOLD	
YANMAR 2.6L AND 3.3L	
DIESEL	2-72
INTAKE MANIFOLD	
MAZDA 2.0L AND 2.2L	
LPG	2-20
LUBRICATION SYSTEM	
YANMAR 2.6L AND 3.3L	
DIESEL	2-92
OIL PAN	
YANMAR 2.6L AND 3.3L	
DIESEL	2-76
OIL PUMP AND FILTER	
MAZDA 2.0L AND 2.2L	
LPG	2-26
REMOTE OIL FILTER	
GM 2.4L	
LPG	2-57
TIMING GEAR COVER AND OIL PAN	
MAZDA 2.0L AND 2.2L	
LPG	2-24
WATER PUMP	
MAZDA 2.0L AND 2.2L	
LPG	2-38
YANMAR 2.6L AND 3.3L	

©2005 HYSTER COMPANY

SECTION 2
ENGINES (Continued)

DESCRIPTION	PAGE
DIESEL	2-90

ENGINE MOUNTING (Figure 2-1)

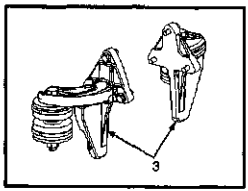

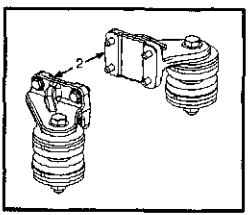

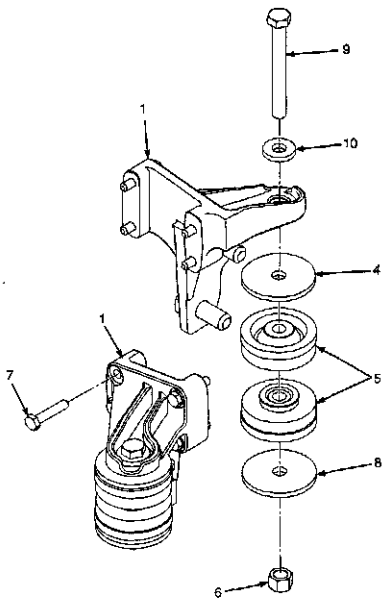

HP001236

©2005 HYSTER COMPANY

ENGINE MOUNTING

KEY:
A: Mazda Engine
B: GM Engine
C: Yanmar Diesel Engine

ITEM	PART NO.	DESCRIPTION	QTY A	QTY B	QTY C
1	1557478	Engine Mount (RH)	1	..	..
1	1557479	Engine Mount (LH)	1	..	..
2	1557767	Engine Mount	..	..	2
3	1558184	Engine Mount (LH)	..	1	..
3	1558186	Engine Mount (RH)	..	1	..
4	1557737	Washer	4	4	4
5	2069951	Isolator	4	4	4
6	1565453	Nut (Flange)	2	2	4
7	293698	Capscrew	8	6	8
8	1504075	Washer	2	2	4
9	1565150	Bolt (Flange)	2	..	..
9	1565195	Capscrew	..	2	..
9	293630	Capscrew	..	..	4
10	298420	Washer	..	..	8

FAN ASSEMBLY (Figure 2-2)

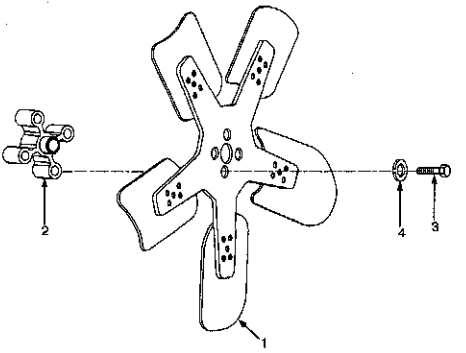

KEY:
A: Mazda Engines
B: GM Engines
C: Yanmar Diesel Engines

ITEM	PART NO.	DESCRIPTION	QTY A	QTY B	QTY C
1	1375642	Fan	1	1	1
2	1528140	Spacer	1	..	..
2	1539154	Spacer	..	1	..
2	1377781	Spacer	..	..	1
3	293619	Capscrew	4	..	4
3	1566505	Capscrew	..	4	..
4	296418	Washer	4	4	4

©2005 HYSTER COMPANY

NOTES

COOLING SYSTEM (Figure 2-3)
MAZDA 2.0L AND 2.2L, LPG, SERPENTINE RADIATOR
BASIC POWERSHIFT TRANSMISSION

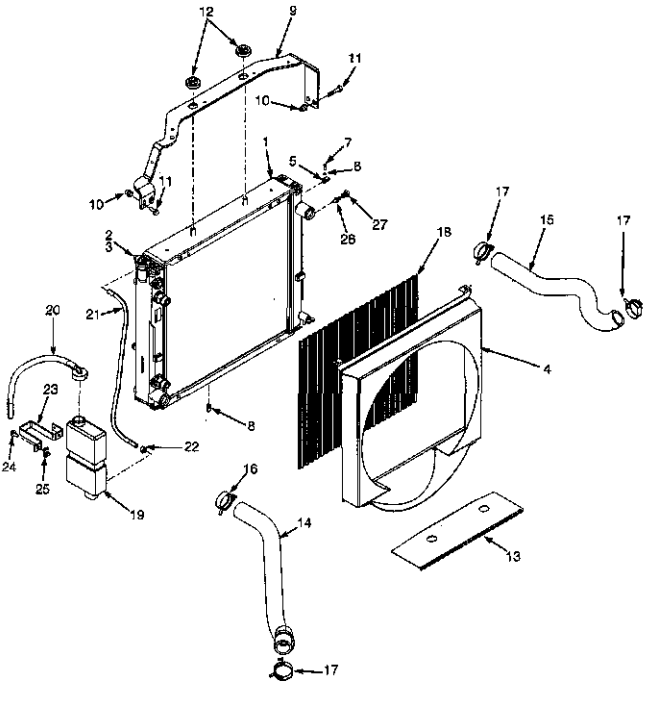

HP000039

©2005 HYSTER COMPANY

COOLING SYSTEM
MAZDA 2.0L AND 2.2L, LPG, SERPENTINE RADIATOR
BASIC POWERSHIFT TRANSMISSION

ITEM	PART NO.	DESCRIPTION	QTY
1	2054879	Radiator	1
2	1528495	Drain Plug	1
3	1352140	Cap	1
4	1593356	Shroud	1
5	1535257	Clip	2
6	320154	Washer	2
7	302023	Screw	2
8	1329271	Clip	2
9	1588508	Bracket (Radiator)	1
10	1530243	Insert	4
11	1583611	Capscrew	4
12	1529787	Isolator	4
13	1565691	Shield (Exhaust)	1
14	2069699	Hose (Upper)	1
15	2069698	Hose (Lower)	1
16	1502000	Clamp	1
17	1527982	Clamp	3
18	1548497	Screen	1
19	1347026	Reservoir	1
20	345455	Outlet Assembly	1
20	336650	Bushing	1
20	345453	Outlet (Reservoir)	1
20	345454	Cap	1
20	339735	Hose	1
21	1567874	Hose	1
22	369815	Clamp	2
23	1531167	Bracket	1
24	1527879	Capscrew	2
25	1480237	Clip Nut	2
26	1531404	Sensor (Low Coolant Level)	1
27	a 14385	Plug	1

FOOTNOTES:

a Without Low Coolant Level Sensor

©2005 HYSTER COMPANY

See Service Manual for service procedures.

COOLING SYSTEM (Figure 2-4)

MAZDA 2.0L AND 2.2L, LPG, SQUARE WAVE RADIATOR
BASIC POWERSHIFT TRANSMISSION, WITH INTERNAL AIR OIL COOLER

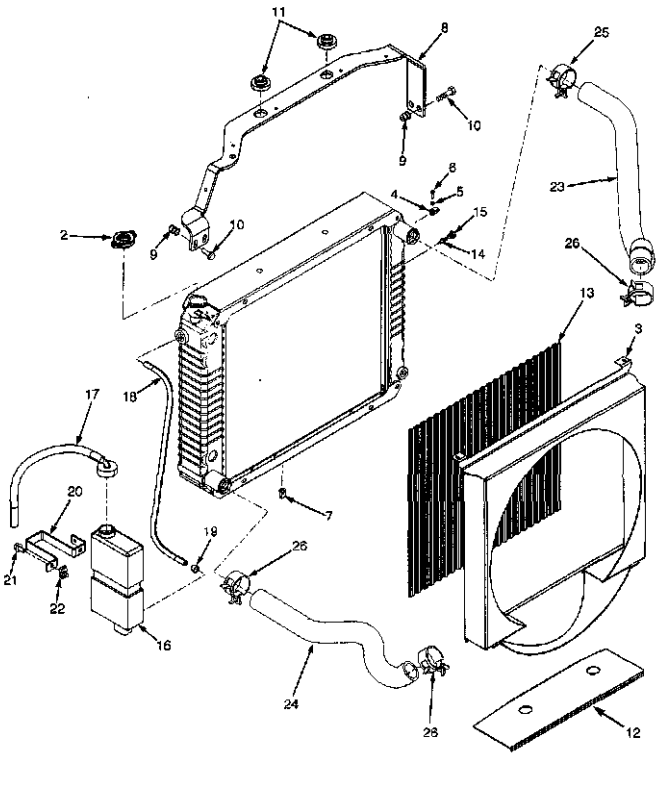

©2005 HYSTER COMPANY

COOLING SYSTEM
MAZDA 2.0L AND 2.2L, LPG, SQUARE WAVE RADIATOR
BASIC POWERSHIFT TRANSMISSION, WITH INTERNAL AIR OIL COOLER

ITEM	PART NO.	DESCRIPTION	QTY
1	2056870	Radiator	1
1	1569079	Draincock (With Thread Wrap)	1
2	1352140	Cap	1
3	1565391	Shroud	1
4	1535257	Clip	2
5	320154	Washer	2
6	302023	Screw	2
7	1329271	Clip	2
8	1568507	Bracket (Radiator)	1
9	1530243	Insert	4
10	1583611	Capscrew	4
11	1529787	Isolator	4
12	1565691	Shield (Exhaust)	1
13	1548497	Screen	1
14	1531404	Sensor (Low Coolant Level)	1
15	a 14385	Plug	1
16	1347026	Reservoir	1
17	345455	Outlet Assembly	1
17	345453	Outlet (Reservoir)	1
17	345454	Cap	1
17	336550	Bushing	1
17	339735	Hose	1
18	1567874	Hose	1
19	369815	Clamp	2
20	1531167	Bracket	1
21	1527879	Capscrew	2
22	1480237	Clip Nut	2
23	2069699	Hose (Upper)	1
24	2069698	Hose (Lower)	1
25	1502000	Clamp	1
26	1527982	Clamp	3

FOOTNOTES:

a Without Low Coolant Level Sensor

©2005 HYSTER COMPANY

COOLING SYSTEM (Figure 2-5)

MAZDA 2.0L AND 2.2L, LPG, SQUARE WAVE RADIATOR
ELECTRONIC CONTROL TRANSMISSION, WITH INTERNAL AIR OIL COOLER

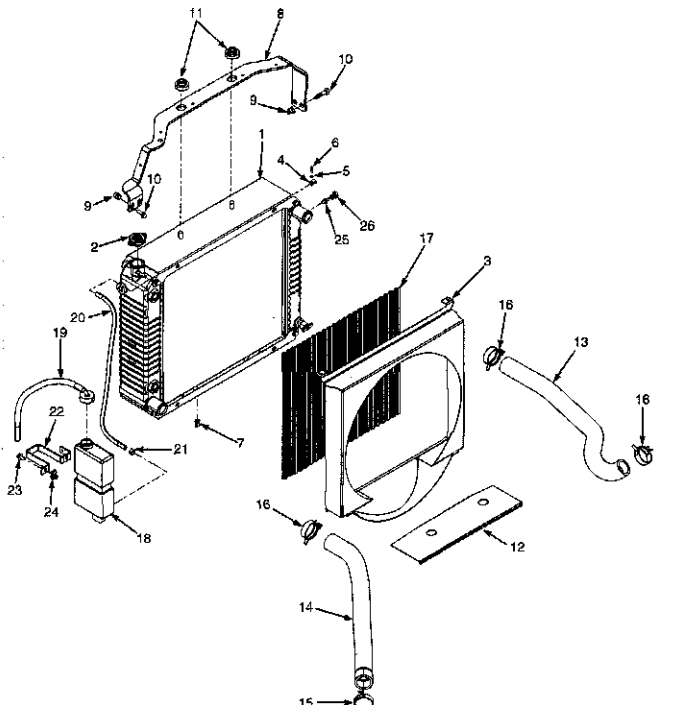

HP060048

©2005 HYSTER COMPANY

COOLING SYSTEM
MAZDA 2.0L AND 2.2L, LPG, SQUARE WAVE RADIATOR
ELECTRONIC CONTROL TRANSMISSION, WITH INTERNAL AIR OIL COOLER

ITEM	PART NO.	DESCRIPTION	QTY
1	2071615	Radiator Assembly	1
1	1569079	Draincock (With Thread Wrap)	1
1	1597795	Capscrew	8
2	1352140	Cap	1
3	1584057	Shroud	1
4	1535257	Clip	2
5	320154	Washer	2
6	302023	Screw	2
7	1551663	Clip	2
8	1585317	Bracket (Radiator)	1
9	1530243	Insert	4
10	1583611	Capscrew	4
11	1529787	Isolator	4
12	1565692	Shield (Exhaust)	1
13	2069701	Hose (Upper)	1
14	2069702	Hose (Lower)	1
15	1502000	Clamp	1
16	1527982	Clamp	3
17	1582078	Screen	1
18	1347026	Reservoir	1
19	345455	Outlet Assembly	1
19	336550	Bushing	1
19	345453	Outlet (Reservoir)	1
19	345454	Cap	1
19	339735	Hose	1
20	1567674	Hose	1
21	369815	Clamp	2
22	1531167	Bracket	1
23	1527879	Capscrew	2
24	1480237	Clip Nut	2
25	1531404	Sensor (Low Coolant Level)	1
26	a 14385	Plug	1

FOOTNOTES:

a Without Low Coolant Level Sensor

©2005 HYSTER COMPANY

COOLING SYSTEM (Figure 2-6)

MAZDA 2.0L AND 2.2L, LPG, SQUARE WAVE RADIATOR ELECTRONIC CONTROL TRANSMISSION, WITH EXTERNAL AIR OIL COOLER

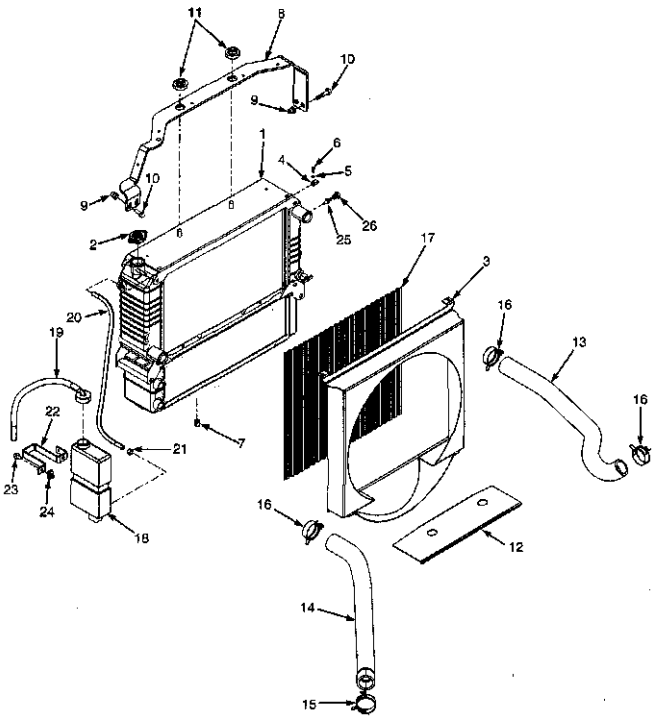

HP0600047

©2005 HYSTER COMPANY

COOLING SYSTEM
MAZDA 2.0L AND 2.2L, LPG, SQUARE WAVE RADIATOR ELECTRONIC CONTROL TRANSMISSION, WITH EXTERNAL AIR OIL COOLER

ITEM	PART NO.	DESCRIPTION	QTY
1	2074789	Radiator Assembly	1
1	1590917	Radiator	1
1	1590918	Oil Cooler	1
1	1597765	Washer	4
1	1597766	Screw	4
2	1352140	Cap	1
3	1582074	Shroud	1
4	1535257	Clip	2
5	320154	Washer	2
6	302023	Screw	2
7	1551663	Clip	2
8	1585317	Bracket (Radiator)	1
9	1530243	Insert	4
10	1583611	Capscrew	4
11	1529787	Isolator	4
12	1565692	Shield (Exhaust)	1
13	2069701	Hose (Upper)	1
14	2069702	Hose (Lower)	1
15	1502000	Clamp	1
16	1527982	Clamp	3
17	1582078	Screen	1
18	1347026	Reservoir	1
19	345455	Outlet Assembly	1
19	338550	Bushing	1
19	345453	Outlet (Reservoir)	1
19	345454	Cap	1
19	339735	Hose	1
20	1567674	Hose	1
21	369815	Clamp	2
22	1531167	Bracket	1
23	1527879	Capscrew	2
24	1480237	Clip Nut	2
25	1531404	Sensor (Low Coolant Level)	1
26	a 14385	Plug	1

FOOTNOTES:

a Without Low Coolant Sensor

©2005 HYSTER COMPANY

EXHAUST SYSTEM (Figure 2-7)
MAZDA 2.0L AND 2.2L
LPG

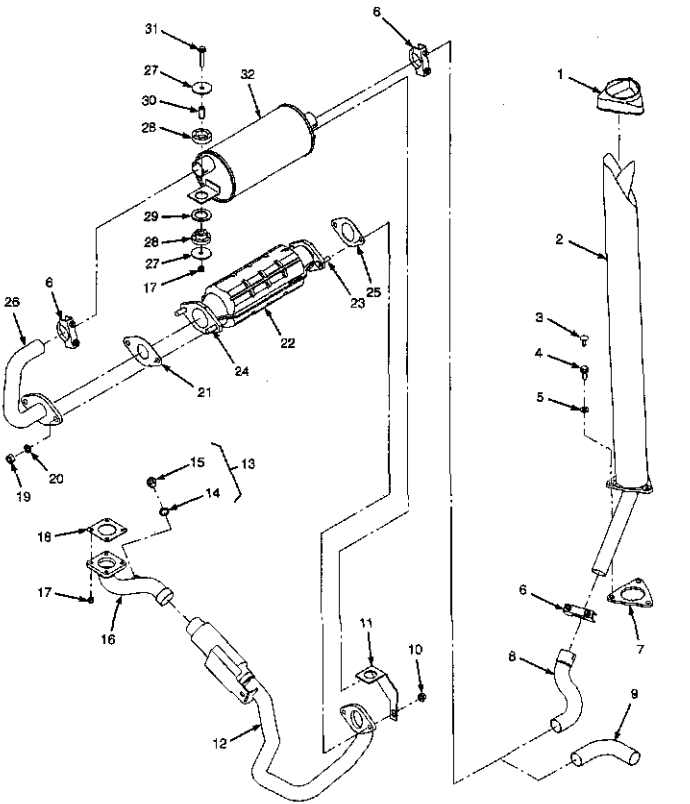

©2005 HYSTER COMPANY

EXHAUST SYSTEM
MAZDA 2.0L AND 2.2L
LPG

KEY:
A: With Catalytic Converter
B: Without Catalytic Converter

ITEM	PART NO.	DESCRIPTION	QTY A	QTY B
1	2021394	Cover	1	1
2	1534789	Exhaust Pipe	1	1
3	1347046	Fastener	1	1
4	1586013	Capscrew	1	1
5	320159	Washer	1	1
6	68968	Clamp	2	2
7	1533839	Cover	1	1
8	1533863	Exhaust Pipe	1	1
9	1589312	Exhaust Pipe	1	1
10	1460477	Nut (Flange)	2	..
11	1532523	Bracket	1	..
12	1542870	Exhaust Pipe	1	..
13	1396518	Plug Assembly	1	1
14	1509103	Ring (Copper)	1	1
15	1509104	Plug	1	1
16	1586515	Exhaust Pipe	..	1
17	1582222	Lock Nut	4	4
18	1528937	Gasket	1	1
19	1469405	Nut	2	..
20	292683	Lockwasher	2	..
21	1469379	Gasket	1	..
22	1469342	Catalytic Converter	1	..
23	1495502	Bolt	2	..
24	1495501	Bolt	2	..
25	1547712	Gasket	1	..
26	1534174	Exhaust Pipe	1	..
27	1528938	Washer	4	4
28	1528930	Isolator	2	2
29	1532585	Washer	1	1
30	1528934	Spacer	2	2
31	1510115	Capscrew	2	2
32	2060957	Muffler	1	1

©2005 HYSTER COMPANY

EXHAUST MANIFOLD (Figure 2-8)
MAZDA 2.0L AND 2.2L
LPG

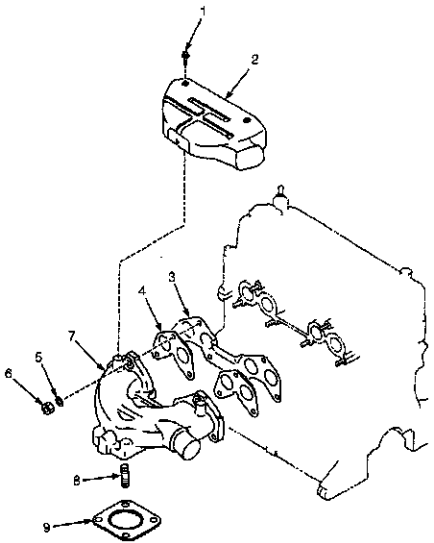

©2005 HYSTER COMPANY

EXHAUST MANIFOLD
MAZDA 2.0L AND 2.2L
LPG

ITEM	PART NO.	DESCRIPTION	QTY
1	1361898	Bolt	3
2	1370691	Cover	1
3	1361747	Gasket Set	1
4	1370689	Gasket	2
5	1370690	Washer	6
6	1361746	Nut	6
7	1370688	Manifold (Exhaust)	1
8	1361745	*Stud*	4
9	1338308	Gasket	1

©2005 HYSTER COMPANY

INTAKE MANIFOLD (Figure 2-9)
MAZDA 2.0L AND 2.2L
LPG

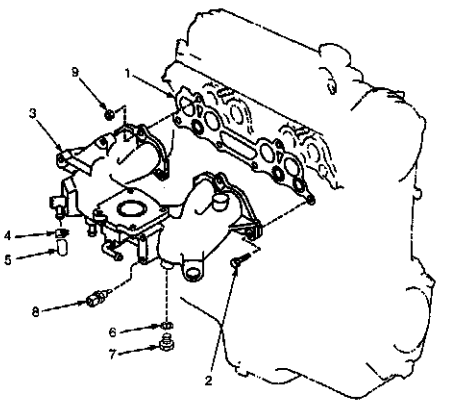

HP0001249

©2005 HYSTER COMPANY

INTAKE MANIFOLD
MAZDA 2.0L AND 2.2L
LPG

ITEM	PART NO.	DESCRIPTION	QTY
1	1553776	Gasket	1
2	1361885	Bolt	2
3	1573015	Intake Manifold	1
4	1361873	Clamp	1
5	1361741	Cap	1
6	1368743	Washer	1
7	1368902	Bolt	1
8	1539962	Sensor (Air Temperature)	1
9	326504	Nut	4

©2005 HYSTER COMPANY

FLYWHEEL AND HOUSING (Figure 2-10)
MAZDA 2.0L AND 2.2L
LPG

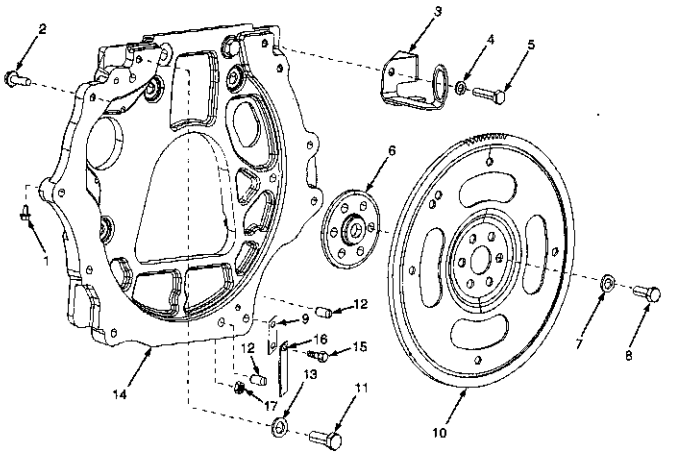

HP991264

©2005 HYSTER COMPANY

FLYWHEEL AND HOUSING
MAZDA 2.0L AND 2.2L
LPG

ITEM	PART NO.	DESCRIPTION	QTY
1	1534417	Capscrew	3
2	1527884	Capscrew	2
3	1551606	Bracket	1
4	292682	Lockwasher	10
5	292517	Capscrew	10
6	1506572	Adapter	1
7	296422	Washer	6
8	1528415	Capscrew	6
9	1565632	Bracket	1
10	1605467	Flywheel	1
11	2072918	Capscrew	6
12	303150	Pin	2
13	296424	Washer	6
14	1553266	Flywheel Housing	1
15	1586013	Capscrew	1
16	240072	Static Strap	1
17	1460477	Nut (Flange)	1

TIMING GEAR COVER AND OIL PAN (Figure 2-11)
MAZDA 2.0L AND 2.2L
LPG

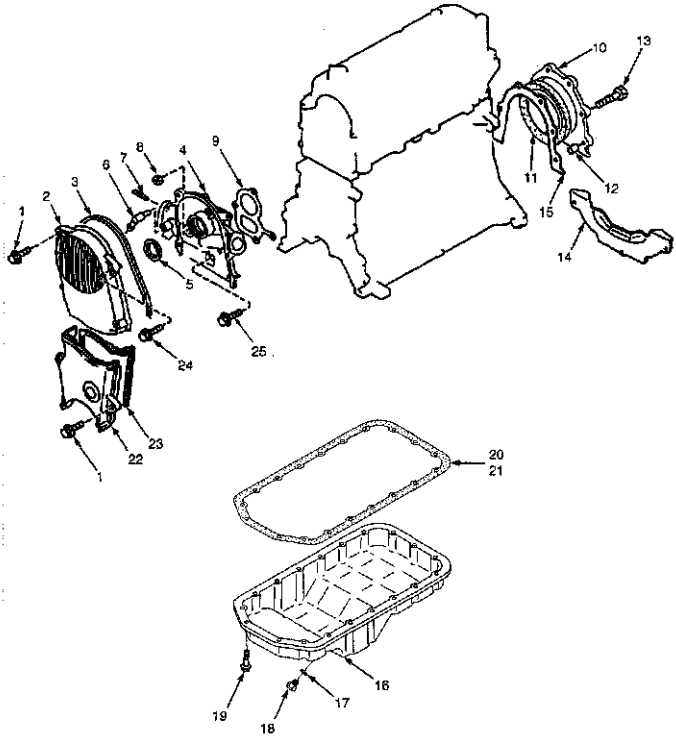

©2005 HYSTER COMPANY

TIMING GEAR COVER AND OIL PAN
MAZDA 2.0L AND 2.2L
LPG

ITEM	PART NO.	DESCRIPTION	QTY
	1587843	Engine Block (Long) (2.0L, LPG)	1
	1587845	Engine Block (Long) (2.2L, LPG)	1
1	1362001	Bolt	5
2	1553716	Cover (Upper Timing Belt) (2.0L)	1
2	2029084	Cover (Upper Timing Belt) (2.2L)	1
3	1553717	Gasket (2.0L)	1
3	2028854	Gasket (2.2L)	1
4	2051129	Housing Assembly (2.2L)	1
4	1553715	Housing Assembly (2.0L)	1
5	1361688	Oil Seal	1
6	1361692	Hose	1
7	1362012	Stud	2
8	326504	Nut	1
9	1361679	Gasket	1
10	1361689	Cover Assembly	1
11	1361691	Oil Seal (Rear)	1
12	1362010	Pin	2
13	1362011	Bolt	6
14	1371652	Cover	1
15	1361690	Gasket	1
16	1361680	Oil Pan Assembly (2.0L)	1
16	2029082	Oil Pan Assembly (2.2L)	1
17	1362015	Gasket	1
18	1361681	Drain Plug	1
19	1370736	Capscrew	19
20	1361682	Gasket (Oil Pan)	1
21	1370737	Sealant	1
22	2051128	Cover	1
23	2028853	Gasket	1
24	2029086	Bolt	1
25	1369993	Bolt	2
	2045036	Gasket Kit (Includes Items 3, 5, 9-11, 20, 23)	1

©2005 HYSTER COMPANY

OIL PUMP AND FILTER (Figure 2-12)
MAZDA 2.0L AND 2.2L
LPG

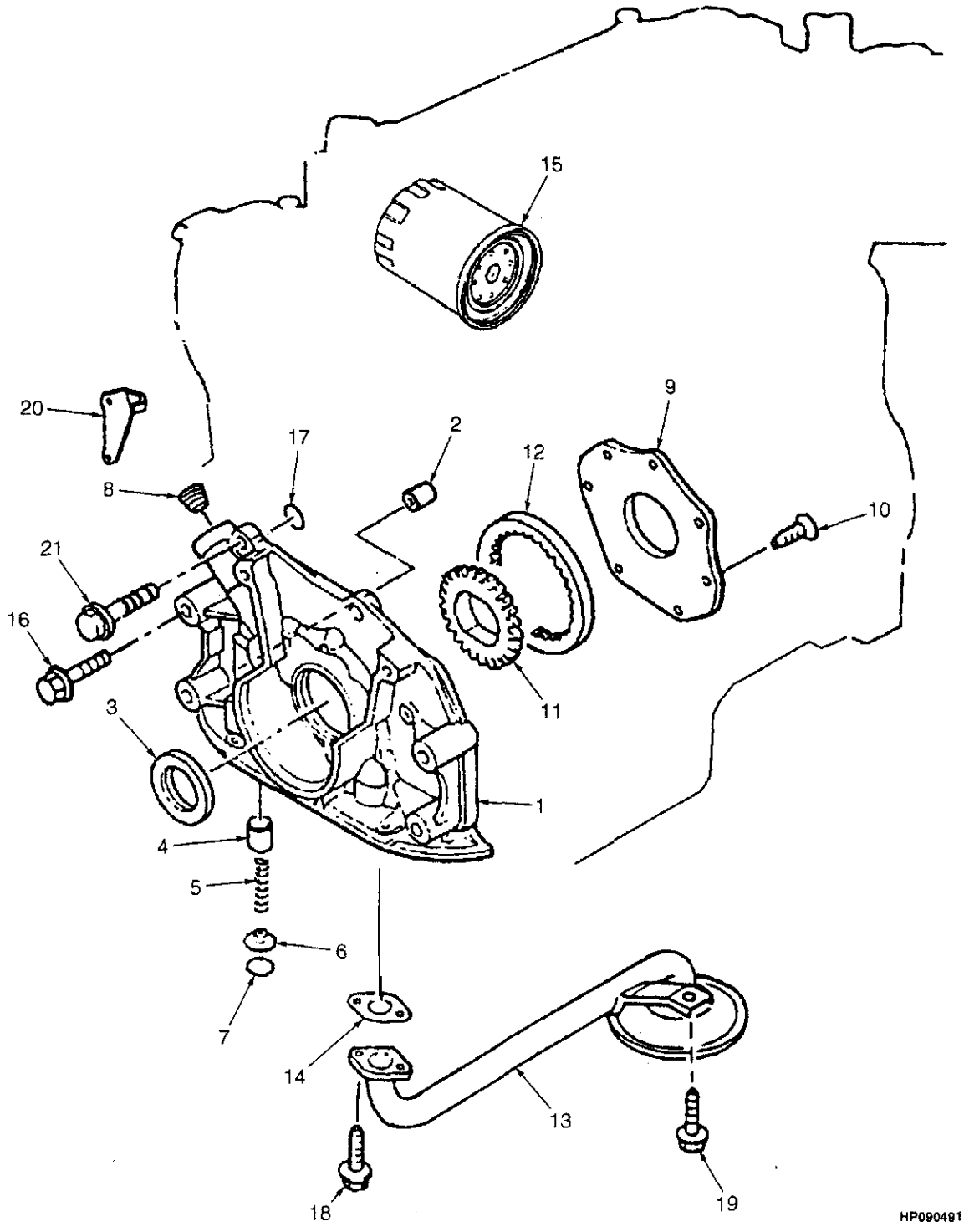

©2005 HYSTER COMPANY

OIL PUMP AND FILTER
MAZDA 2.0L AND 2.2L
LPG

ITEM	PART NO.	DESCRIPTION	QTY
	1587843	Engine Block (Long) (2.0L, LPG)	1
	1587845	Engine Block (Long) (2.2L, LPG)	1
1	1455676	Oil Pump	1
2	1361798	Pin	2
3	1361688	Oil Seal	1
4	1455674	Plunger	1
5	326748	Spring	1
6	326749	Seat	1
7	1361879	Snap Ring	1
8	1495426	Plug	1
9	2029100	Cover	1
10	1455677	Screw	7
11	2029101	Gear	1
12	2029102	Gear	1
13	1361806	Strainer	1
14	1361807	Gasket	1
15	333642	Filter	1
16	1553878	Bolt	2
17	1361801	O-Ring	1
18	1361878	Screw	2
19	1361868	Screw	1
20	1495427	Pin (Top Indicator)	1
21	2029103	Bolt	6

©2005 HYSTER COMPANY

CYLINDER HEAD (Figure 2-13)
MAZDA 2.0L AND 2.2L
LPG

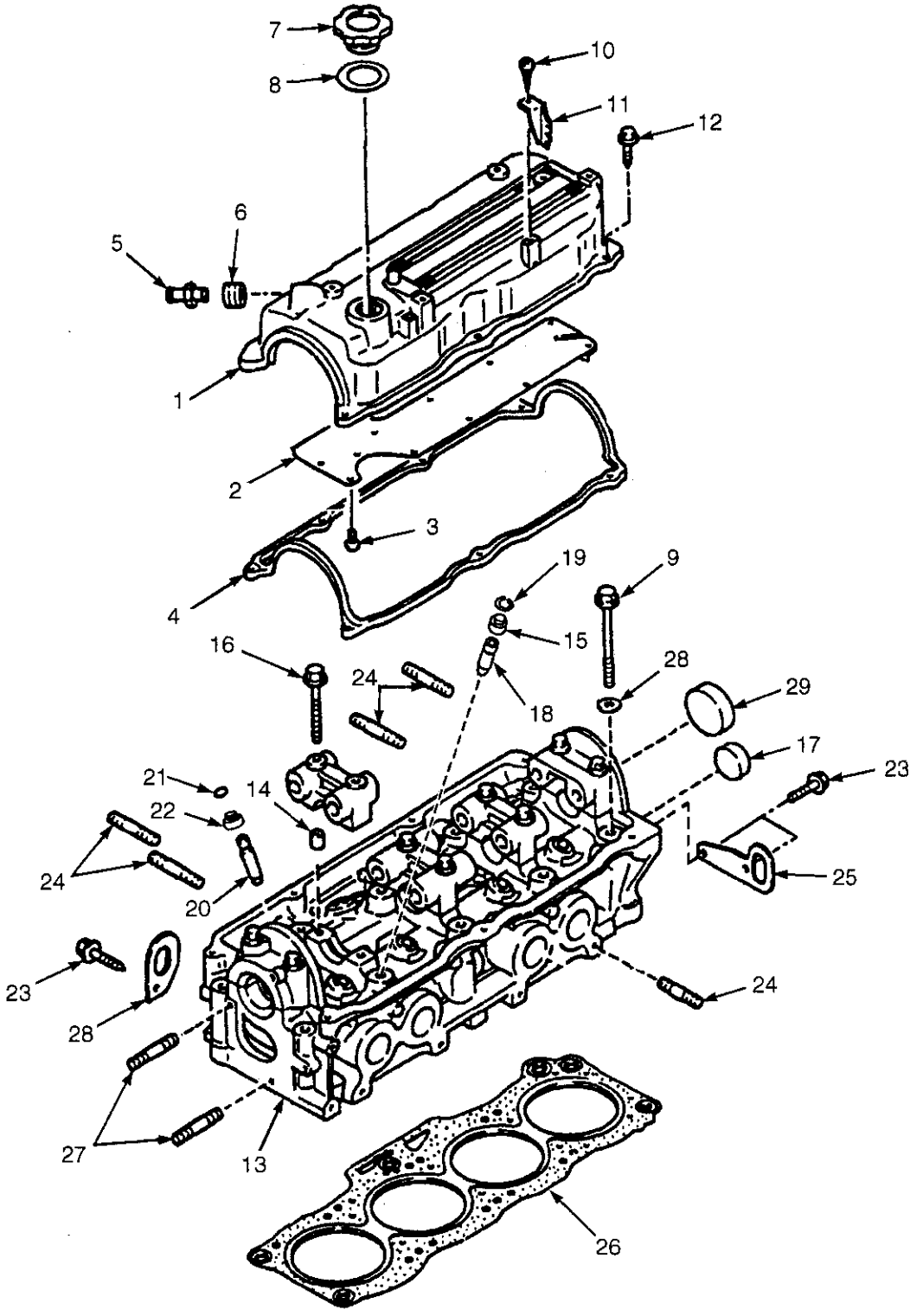

HP000902

©2005 HYSTER COMPANY

CYLINDER HEAD
MAZDA 2.0L AND 2.2L
LPG

ITEM	PART NO.	DESCRIPTION	QTY
	1587843	Engine Block (Long) (2.0L, LPG)	1
	1587845	Engine Block (Long) (2.2L, LPG)	1
1	1360883	Cover Assembly (LPG)	1
2	1360884	Plate	1
3	2022655	Screw	10
4	1360886	Gasket	1
5	1360893	Valve (PCV, LPG)	1
6	1360892	Seal	1
7	1360887	Cap (Oil)	1
8	1360888	Gasket	1
9	1360880	Bolt	10
10	1362000	Screw	2
11	1360885	Cord Protector	2
12	1362001	Bolt	7
13	1360878	Cylinder Head	1
14	1362002	Pin	10
15	1361719	Seal (Exhaust Valve)	4
16	1361894	Bolt	10
17	1362003	Plug	1
18	1360895	Valve Guide Assembly	4
19	1360879	Clip	1
20	1360895	Valve Guide Assembly	4
21	1360879	Clip	4
22	1361718	Seal (Inlet Valve)	4
23	1361898	Bolt	2
24	1361897	Stud	20
25	2314973	Hanger	1
26	2045321	Gasket (Cylinder Head)	1
27	1361899	Stud	2
28	1360881	Washer	10
29	1360882	Cap	1

©2005 HYSTER COMPANY

CAMSHAFT AND VALVES (Figure 2-14)
MAZDA 2.0L AND 2.2L
LPG

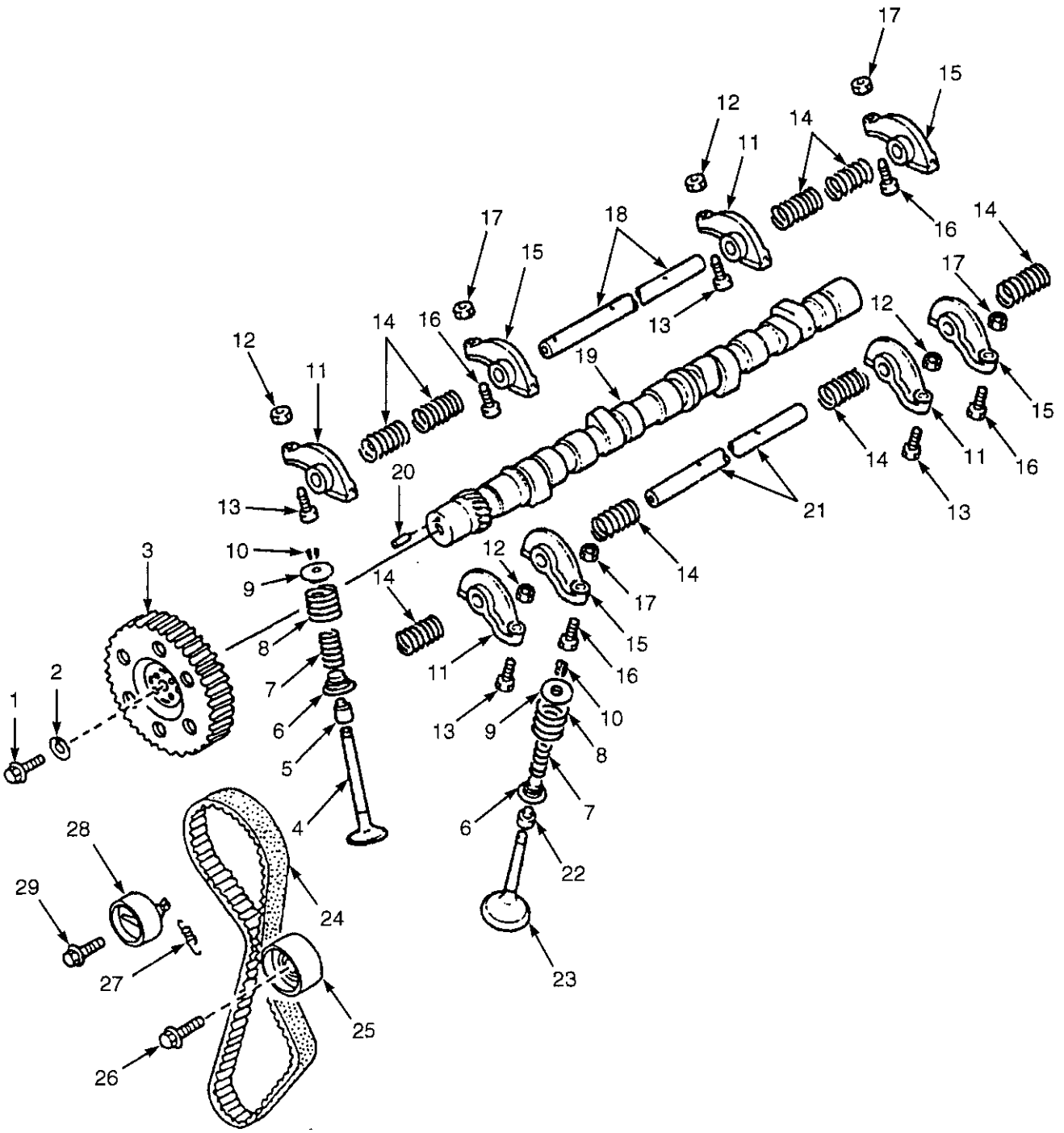

HP091086

©2005 HYSTER COMPANY

CAMSHAFT AND VALVES
MAZDA 2.0L AND 2.2L
LPG

ITEM	PART NO.	DESCRIPTION	QTY
	1587843	Engine Block (Long) (2.0L, LPG)	1
	1587845	Engine Block (Long) (2.2L, LPG)	1
1	1361736	Bolt	1
2	1361737	Washer	1
3	2029095	Pulley (Camshaft)	1
4	1361720	Valve (Intake)	4
5	1361718	Seal	4
6	1361724	Seat	8
7	1361723	Spring	8
8	1361722	Spring	8
9	1361721	Valve Seat	8
10	326612	Keeper	16
11	1361726	Rocker Arm	4
12	1361728	Nut	4
13	1361727	Screw	4
14	1361731	Spring	8
15	1361729	Rocker Arm	4
16	1361727	Screw	4
17	1361728	Nut	4
18	1361730	Shaft	1
19	1361734	Camshaft	1
20	1361717	Pin	1
21	1361732	Shaft	1
22	1361719	Seal	4
23	1361725	Valve (Exhaust)	4
24	1553762	Timing Belt (2.0L)	1
24	2028852	Timing Belt (2.2L)	1
25	2029098	Idler	1
26	1361884	Bolt	1
27	1553763	Spring (2.0L)	1
27	2029096	Spring (2.2L)	1
28	2029097	Belt Tensioner	1
29	1362016	Bolt	1

©2005 HYSTER COMPANY

CRANKSHAFT AND PISTONS (Figure 2-15)
MAZDA 2.0L AND 2.2L
LPG

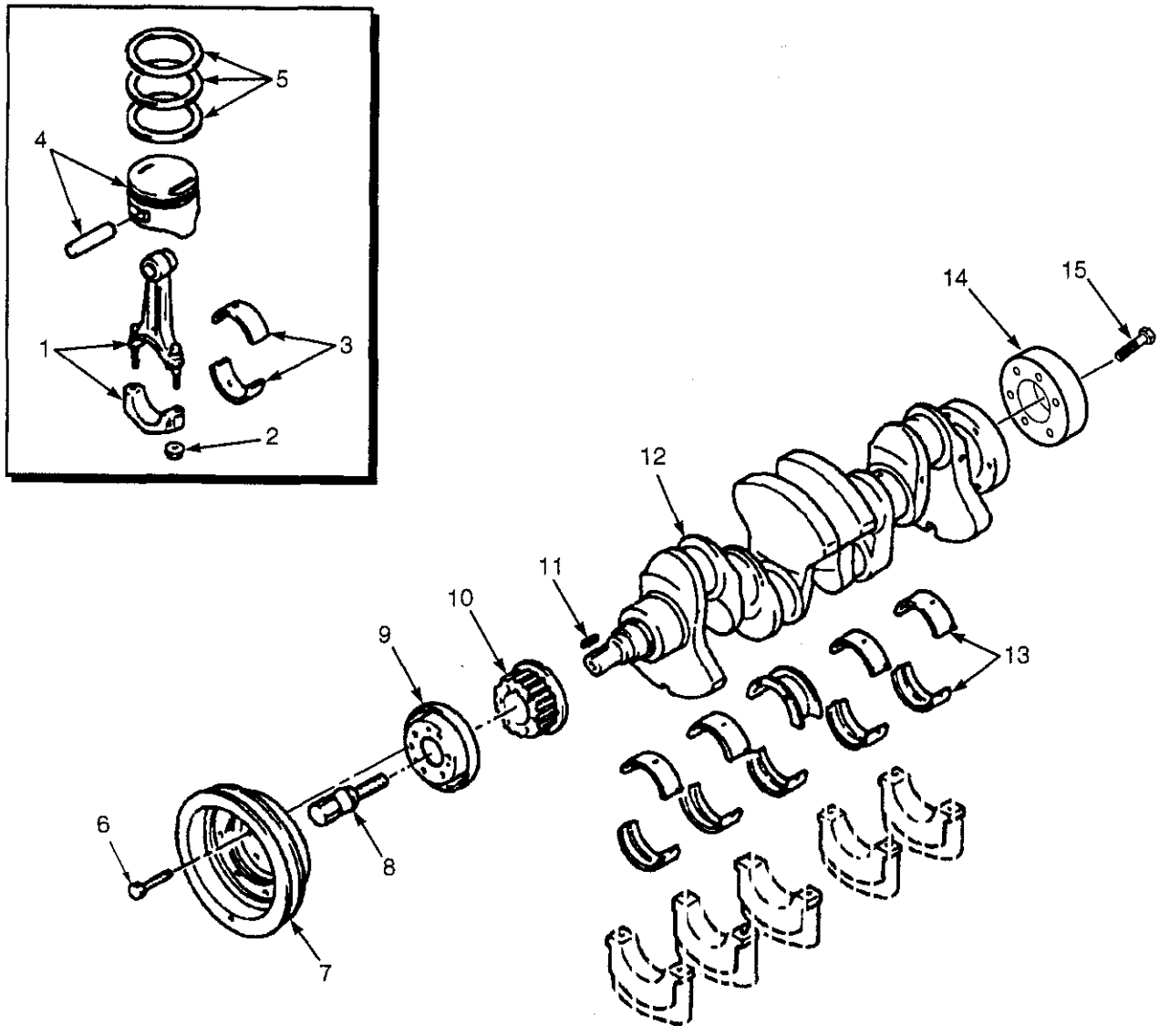

HP090487

©2005 HYSTER COMPANY

CRANKSHAFT AND PISTONS
MAZDA 2.0L AND 2.2L
LPG

KEY:
A: Mazda 2.0L LPG Engine
B: Mazda 2.2L LPG Engine

ITEM	PART NO.	DESCRIPTION	QTY A	QTY B
	1587843	Engine Block (Long) (2.0L, LPG)	1	..
	1587845	Engine Block (Long) (2.2L, LPG)	..	1
1	1361694	Piston Rod Assembly	4	..
1	1370746	Piston Rod Assembly	..	4
2	1361695	Nut	2	2
3	1361703	Bearing Set (Standard)	1	1
3	1361704	Bearing Set (0.25 mm)	1	1
3	1361705	Bearing Set (0.50 mm)	1	1
3	1361706	Bearing Set (0.75 mm)	1	1
4	1572593	Piston (Standard)	4	..
4	1572597	Piston (0.25 mm)	4	..
4	1572595	Piston (0.50 mm)	4	..
4	1572594	Piston (Standard)	..	4
4	1572596	Piston (0.25 mm)	..	4
4	1572598	Piston (0.50 mm)	..	4
5	1495473	Piston Ring Set (Standard)	1	1
5	1495475	Piston Ring Set (0.25 mm)	1	1
5	1495474	Piston Ring Set (0.50 mm)	1	1
6	1361700	Bolt	6	6
7	1495472	Pulley	1	1
8	1361701	Bolt	1	1
9	2045033	Plate	1	1
10	2045030	Pulley	1	1
11	1361697	Key	1	1
12	1361696	Crankshaft	1	..
12	2045029	Crankshaft	..	1
13	1361710	Bearing Set (Standard)	1	1
13	1361713	Bearing Set (0.25 mm)	1	1
13	1361711	Bearing Set (0.50 mm)	1	1
13	1361712	Bearing Set (0.75 mm)	1	1
14	2021442	Back Plate	1	1
15	2021438	Bolt	1	1

©2005 HYSTER COMPANY

CYLINDER BLOCK (Figure 2-16)
MAZDA 2.0L AND 2.2L
LPG

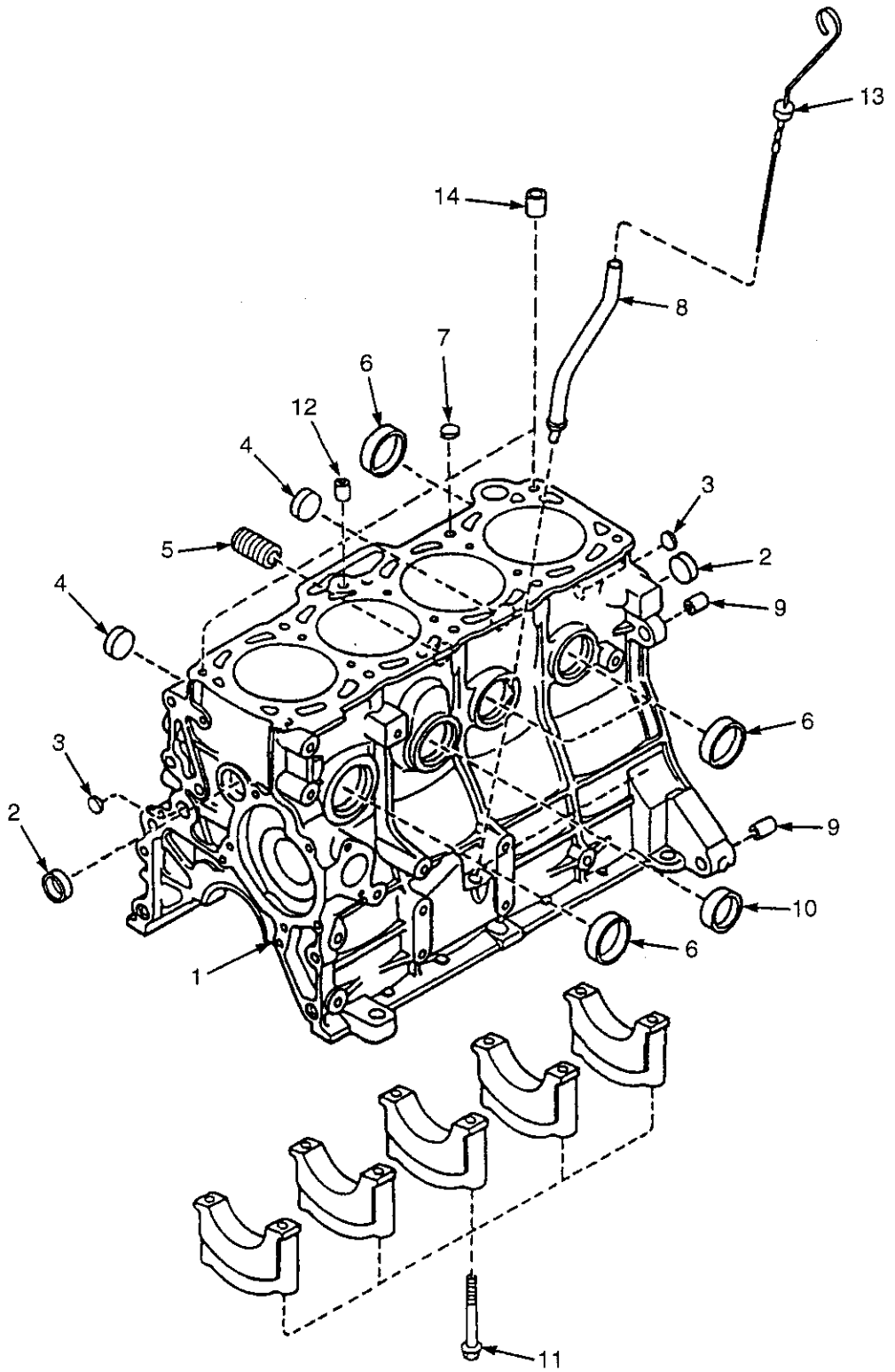

HP091247

©2005 HYSTER COMPANY

CYLINDER BLOCK
MAZDA 2.0L AND 2.2L
LPG

ITEM	PART NO.	DESCRIPTION	QTY
	1587843	Engine Block (Long) (2.0L, LPG)	1
	1587845	Engine Block (Long) (2.2L, LPG)	1
	1572387	Engine Block (Short) (2.0L, LPG)	1
	1572388	Engine Block (Short) (2.2L, LPG)	1
1	1553710	Cylinder Block (2.0L)	1
1	1370744	Cylinder Block (2.2L)	1
2	1362009	Plug	2
3	1361675	Plug	2
4	1362005	Plug	2
5	1360898	Joint	1
6	1362003	Plug	4
7	2028927	Plug	1
8	1360899	Pipe	1
9	1362008	Pin	2
10	1362007	Plug	2
11	1361676	Bolt	10
12	2029081	Plug	1
13	1361677	Dipstick	1
14	1360896	Pin	2

©2005 HYSTER COMPANY

WATER PUMP (Figure 2-17)
MAZDA 2.0L AND 2.2L
LPG

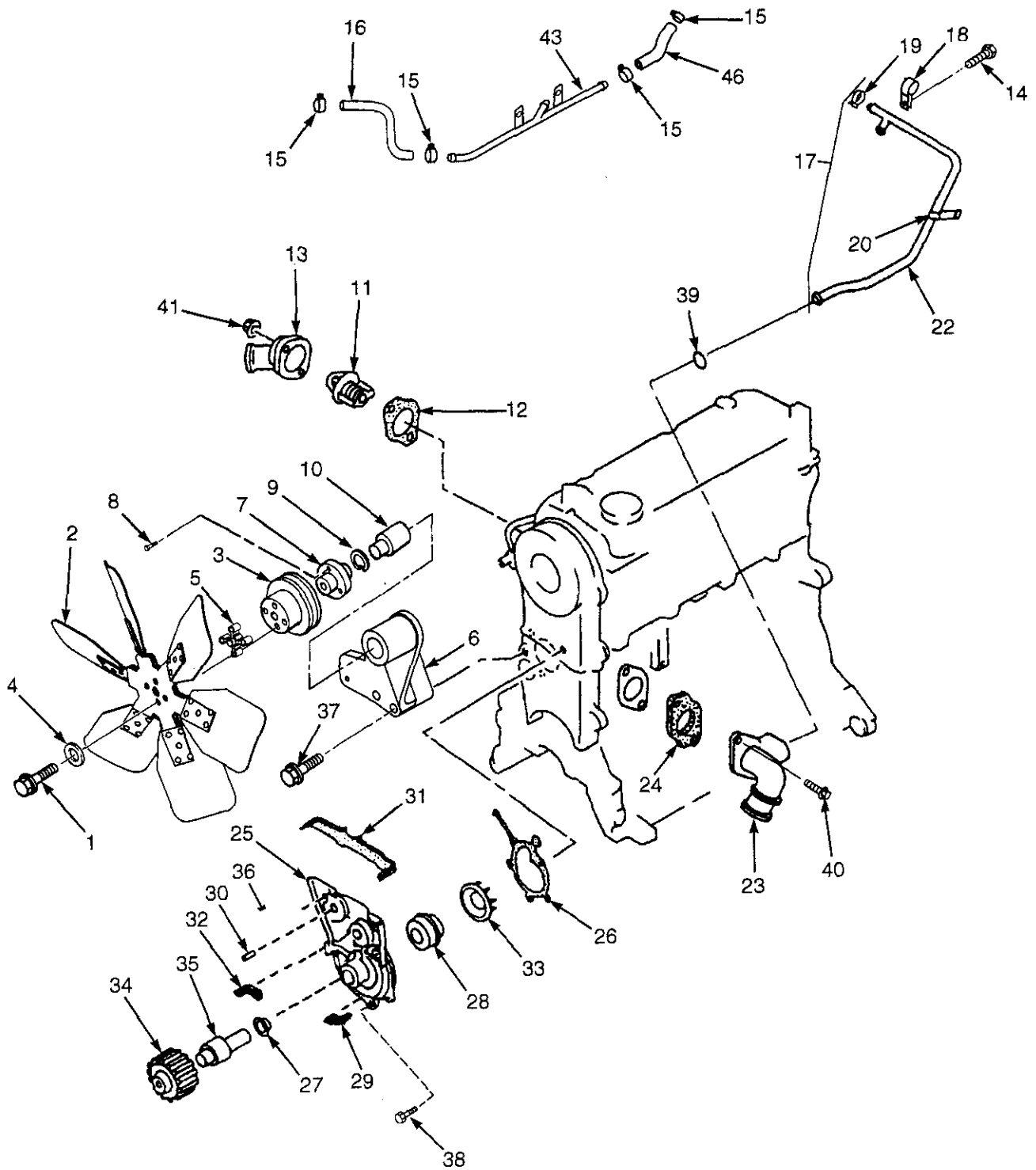

HP091262

©2005 HYSTER COMPANY

WATER PUMP
MAZDA 2.0L AND 2.2L
LPG

ITEM		PART NO.	DESCRIPTION	QTY
		1587843	Engine Block (Long) (2.0L, LPG)	1
		1587845	Engine Block (Long) (2.2L, LPG)	1
1		293619	Capscrew	4
2		1375642	Fan	1
3		1573179	Pulley (Fan)	1
4		296418	Washer	4
5		1528140	Spacer	1
6		1573176	Bracket Assembly	1
7		2029116	Shaft	1
8		2045026	Screw	3
9		2045025	Clip	1
10		1361813	Hub	1
11		1495428	Thermostat	1
12		1367191	Gasket	1
13		1361821	Cover	1
14		1361898	Bolt	1
15		1361873	Clamp	4
16		1361825	Hose (LPG)	1
17		2045024	Pipe (2.2L)	1
17		1553943	Pipe (2.0L)	1
18		1361826	Clip	1
19		1361886	Clamp	1
20		1361873	Clamp	1
21	a	1361836	Cap	1
22		2029108	Hose	1
23		2029112	Pipe (Intake)	1
24		2029120	Gasket (Intake)	1
25		2028644	Pump Assembly	1
26		2028645	Gasket	1
27		. . . . .	Baffle	1
28		. . . . .	Seal	1
29		. . . . .	Seal	1
30		. . . . .	Stud	1
31		. . . . .	Seal (Upper)	1
32		. . . . .	Seal (Lower)	1
33		. . . . .	Impeller	1
34		. . . . .	Pulley	1
35		. . . . .	Shaft	1
36		326608	Bolt	2
37		2045026	Screw	3
38		1369914	Bolt	5
39		1361827	O-Ring	1
40		1361875	Capscrew	2
41		326504	Nut	2
42		2029108	Hose	1

©2005 HYSTER COMPANY

WATER PUMP
MAZDA 2.0L AND 2.2L
LPG

ITEM	PART NO.	DESCRIPTION	QTY
43	1361823	Pipe (Water Bypass)	1
	2045036	Gasket Kit (Includes Items 24, 26)	1

FOOTNOTES:
a Not Illustrated

©2005 HYSTER COMPANY

NOTES

EMISSIONS LINES (Figure 2-18)
MAZDA 2.0L AND 2.2L
LPG

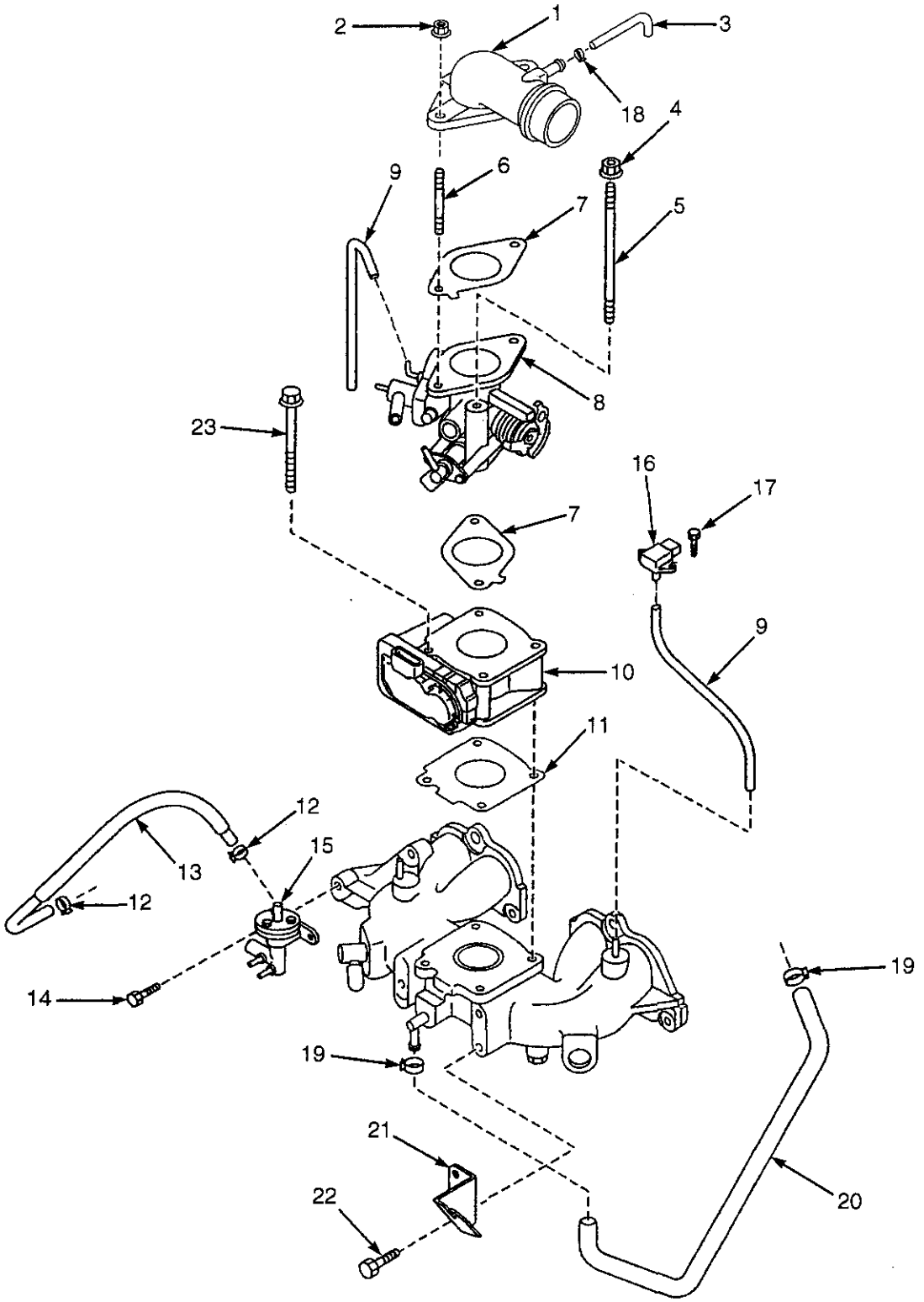

HP000900

©2005 HYSTER COMPANY

EMISSIONS LINES
MAZDA 2.0L AND 2.2L
LPG

ITEM	PART NO.	DESCRIPTION	QTY
1	1573118	Air Funnel	1
2	2066629	Nut	2
3	1573562	Hose (Ventilation)	1
4	326504	Nut	2
5	1582323	Stud	2
6	1553774	Stud	2
7	1573117	Gasket	2
8	1573119	Carburetor	1
9	1495413	Hose	1
10	1553838	Governor	1
11	1361756	Gasket	1
12	1553799	Clamp	2
13	1573120	Hose (Fuel)	1
14	1361878	Screw	2
15	1581048	Fuel Filter Assembly	1
15	1583593	Cover Set	1
15	1581051	Screw Set	1
15	1581050	Screw	3
15	1581052	Fuel Filter Set (With O-Ring)	1
15	1581049	Spring	1
16	1548352	Sensor	1
17	1582324	Screw	2
18	1361871	Clamp	1
19	1366933	Clamp	2
20	1573564	Hose (PCV)	1
21	1573021	Bracket (Throttle)	1
22	1361898	Bolt	2
23	1582321	Bolt	2

©2005 HYSTER COMPANY

ASSEMBLED ENGINE (Figure 2-19)
GM 2.4L, LPG
SHEET 1 OF 4

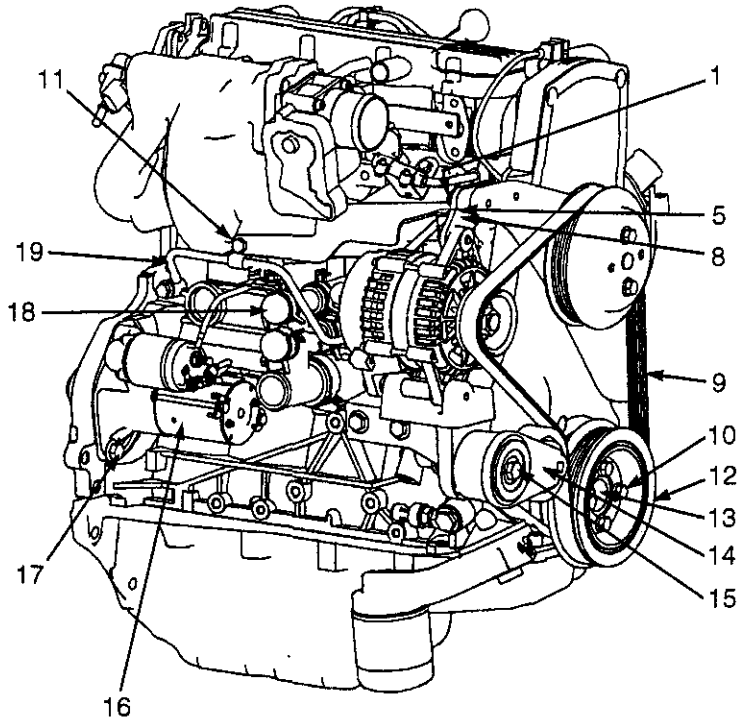

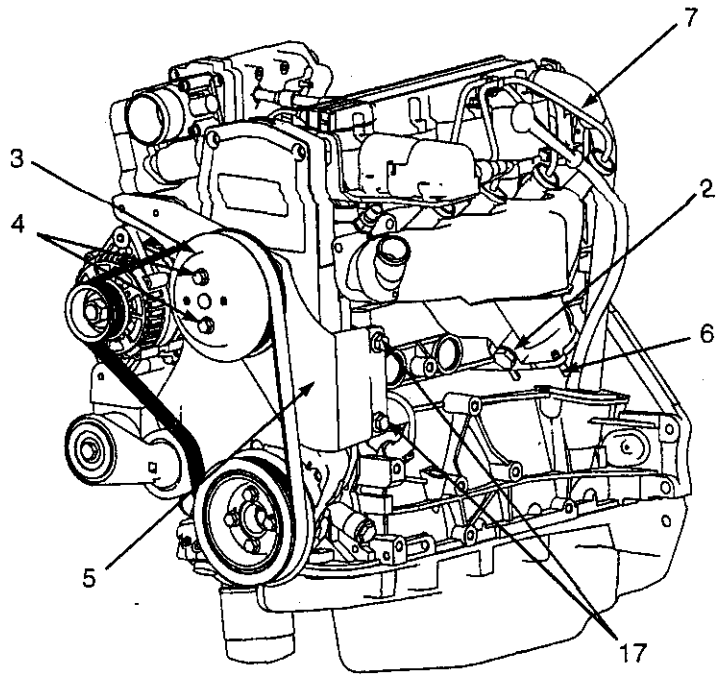

HP091257

©2005 HYSTER COMPANY

ASSEMBLED ENGINE
GM 2.4L, LPG
SHEET 1 OF 4

ITEM	PART NO.	DESCRIPTION	QTY
	1501695	Engine Assembly (GM 2.4L)	1
1	1500113	Capscrew	3
2	1396518	Plug Assembly	1
2	1509103	Ring (Copper)	1
2	1509104	Plug	1
3	2067888	Pulley (Fan)	1
4	1527879	Capscrew	2
5	1534013	Fan Mount Assembly	1
5	1542675	Bracket	1
5	1542676	Bearing	1
5	1542677	Hub	1
6	1534417	Capscrew	3
7	2067623	Wire Harness (Spark Plug)	1
8	1547984	Bracket	1
9	2067889	Belt (Micro-V)	1
10	1527881	Capscrew	4
11	1529366	Capscrew	1
12	1580792	Pulley (Crankshaft)	1
13	1531254	Spacer (Pulley)	1
14	2067631	Tensioner	1
15	292521	Capscrew	1
16	1548620	Starter	1
16	1551845	Solenoid	1
17	1586013	Capscrew	3
18	1532513	Cap	2
19	1501997	Clamp	2

©2005 HYSTER COMPANY

ASSEMBLED ENGINE (Figure 2-20)
GM 2.4L, LPG
SHEET 2 OF 4

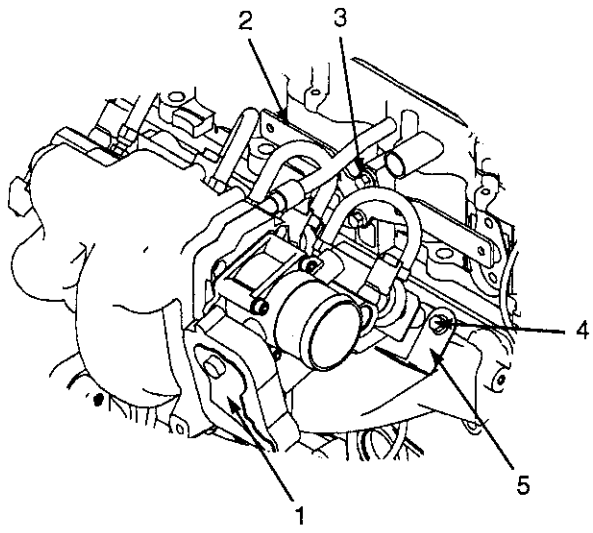

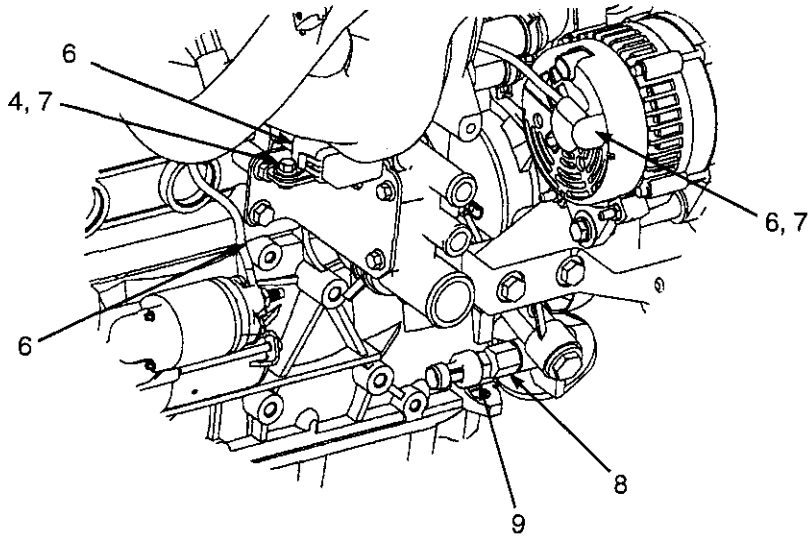

HP091258

©2005 HYSTER COMPANY

ASSEMBLED ENGINE
GM 2.4L, LPG
SHEET 2 OF 4

ITEM	PART NO.	DESCRIPTION	QTY
	1501695	Engine Assembly (GM 2.4L)	1
1	2067622	Fuel System (LPG)	1
2	2056355	Bracket	1
3	1527876	Capscrew	2
4	1534417	Capscrew	3
5	1569776	Bracket	1
6	2057865	Fused Wire Harness (Alternator, Starter)	1
6	1454829	Fuse (60 Amp)	1
6	1454862	Cover (With Seal)	1
6	148614	Terminal	1
6	148615	Terminal	1
6	1520543	Terminal	2
6	1543553	Fuse Holder	1
6	1566146	Boot	1
6	1454827	Seal	2
7	1514429	Nut (Flange)	5
8	1585083	Adapter	1
8	1585084	O-Ring	1
8	1585085	Retainer Ring	1
9	1566654	Sensor (Oil Pressure)	1

©2005 HYSTER COMPANY

ASSEMBLED ENGINE (Figure 2-21)
GM 2.4L, LPG
SHEET 3 OF 4

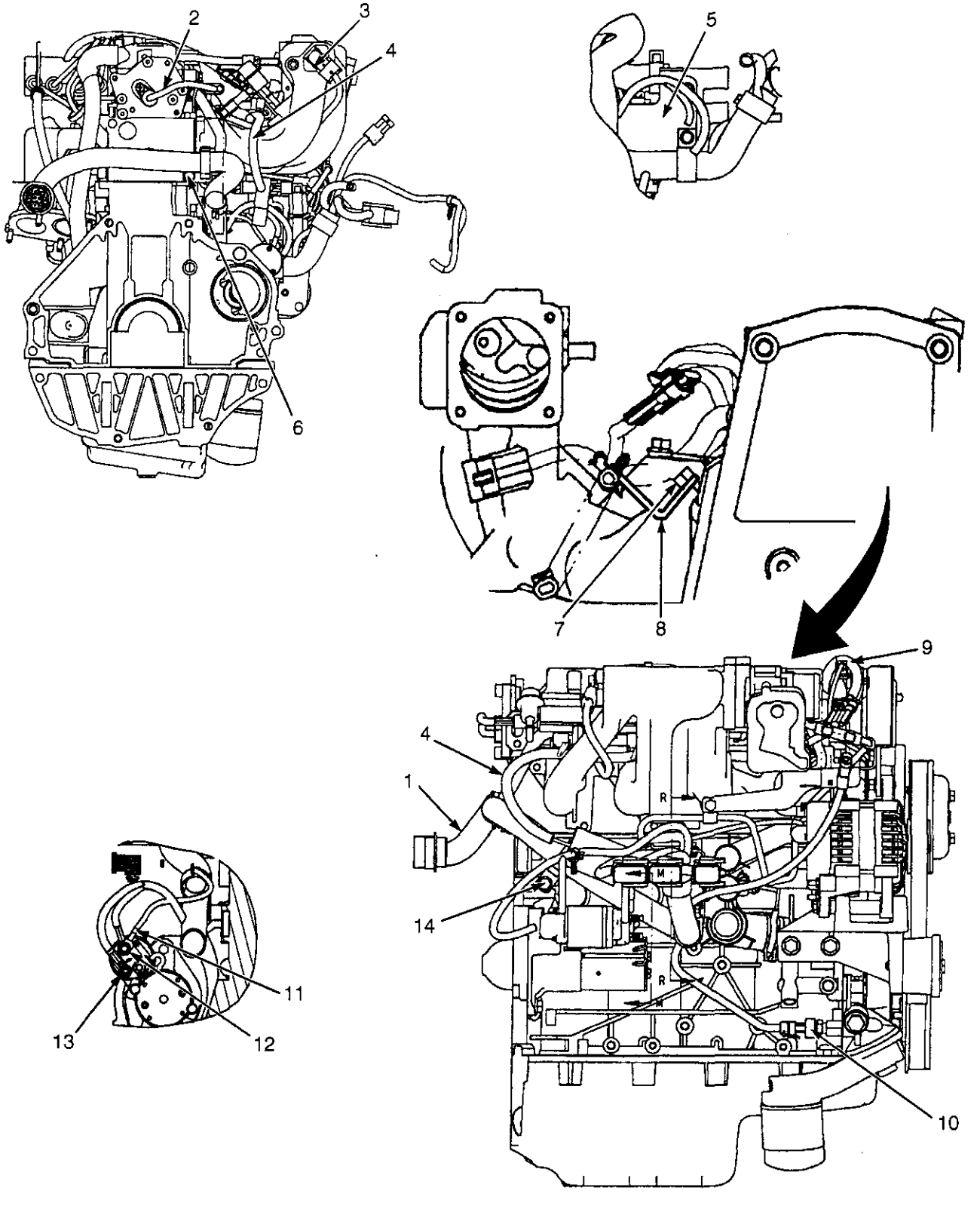

©2005 HYSTER COMPANY

ASSEMBLED ENGINE
GM 2.4L, LPG
SHEET 3 OF 4

ITEM	PART NO.	DESCRIPTION	QTY
	1501695	Engine Assembly (GM 2.4L)	1
1	2053099	Wire Harness (Engine) (☞ Figure 4-20)	1
2	1564587	Sensor (Camshaft Position)	1
3	1584472	MAP Sensor	1
4	1554838	Wire Harness (Injector)	1
5	2055232	Bracket	1
6	1527879	Capscrew	2
7	1534417	Capscrew	3
8	1569776	Bracket	1
9	2068357	Wire Harness (Ignition Coil)	1
10	1524031	Sensor (Oil Pressure)	1
11	2057865	Fused Wire Harness (Alternator, Starter)	1
11	148614	Terminal	1
11	148615	Terminal	1
11	1566146	Boot	1
11	1543553	Fuse Holder	1
11	1454829	Fuse (60 Amp)	1
11	1454862	Cover (With Seal)	1
11	1454827	Seal	2
11	1520543	Terminal	1
12	329069	Nut	1
13	1514429	Nut (Flange)	5
14	1527879	Capscrew	2

©2005 HYSTER COMPANY

ASSEMBLED ENGINE (Figure 2-22)
GM 2.4L, LPG
SHEET 4 OF 4

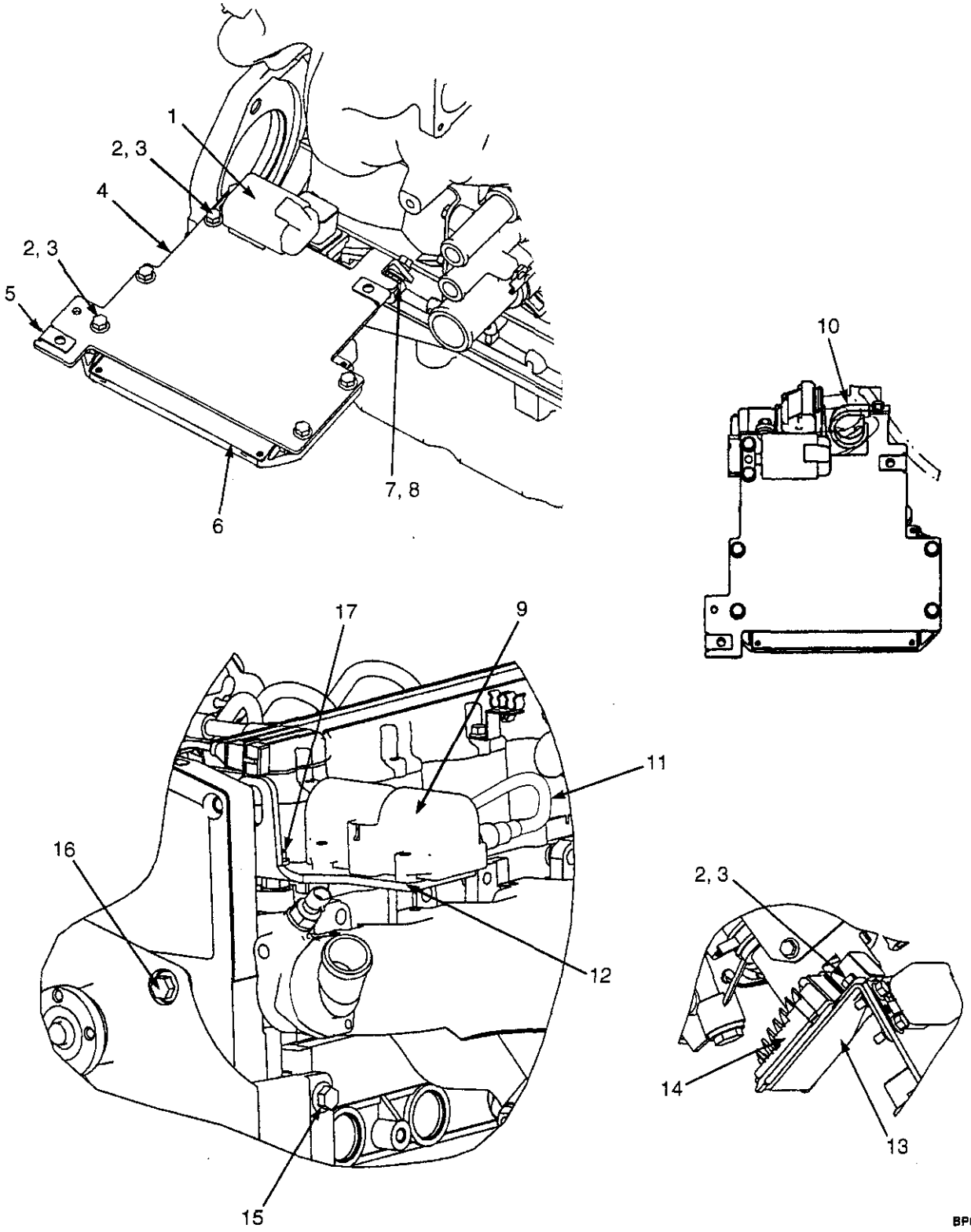

©2005 HYSTER COMPANY

ASSEMBLED ENGINE
GM 2.4L, LPG
SHEET 4 OF 4

ITEM	PART NO.	DESCRIPTION	QTY
	1501695	Engine Assembly (GM 2.4L)	1
1	1330301	Relay (Fuel Pump)	1
2	1527877	Capscrew	7
3	1514429	Nut (Flange)	6
4	1582162	Bracket	1
5	1480237	Clip Nut	2
6	2077554	Engine Control Unit	1
7	1527877	Capscrew	1
8	1514429	Nut (Flange)	1
9	1584523	Ignition Coil	1
10	. . . . .	Clamp (Supplied With Engine)	1
11	2067623	Wire Harness (Spark Plug)	1
12	1536719	Bracket (Coil)	1
13	1582163	Bracket	1
14	2059248	Module (Injector Drive)	1
15	1586013	Capscrew	2
16	1527885	Capscrew	1
17	1460477	Nut (Flange)	2

©2005 HYSTER COMPANY

ALTERNATOR AND MOUNTING (Figure 2-23)
GM 2.4L
LPG

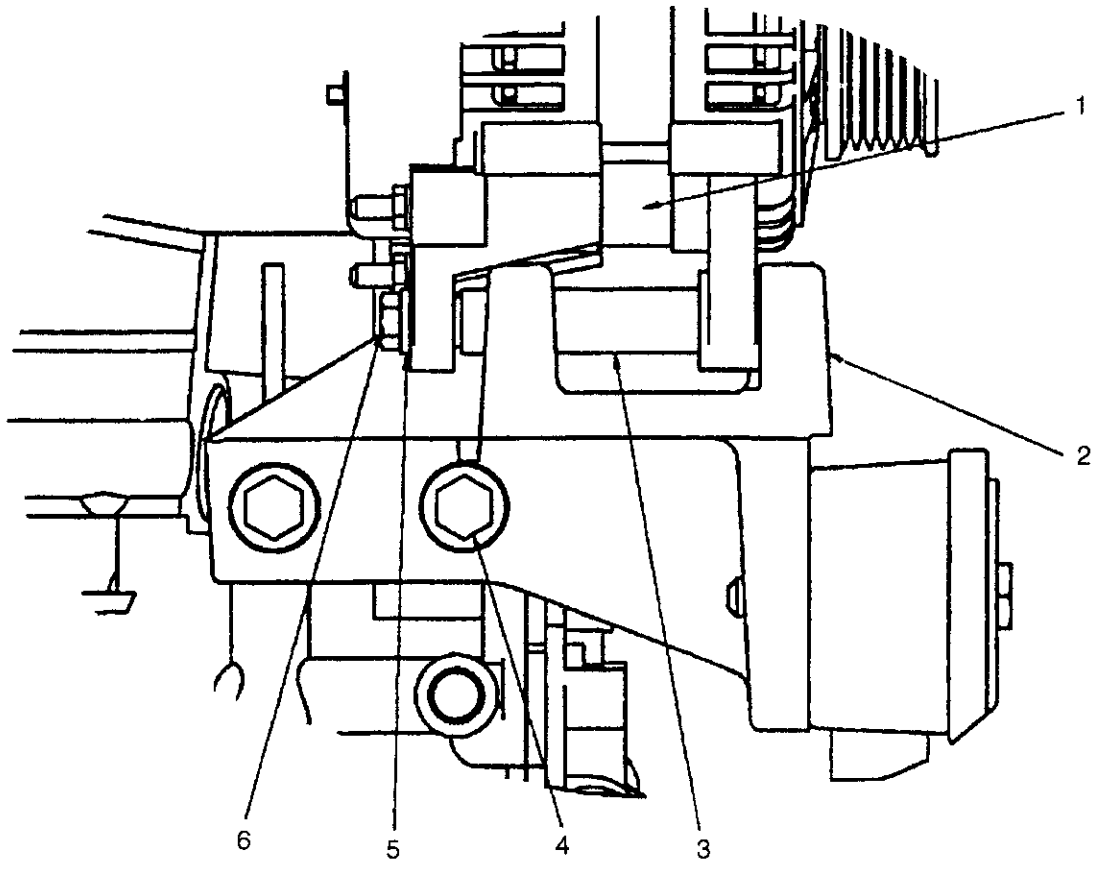

BP090151

ITEM	PART NO.	DESCRIPTION	QTY
1	1534017	Alternator	1
2	1554816	Bracket	1
3	1554814	Spacer	1
4	1527892	Capscrew	4
5	320157	Washer	1
6	1307994	Capscrew	1

©2005 HYSTER COMPANY

COOLING MANIFOLD AND ATTACHING PARTS (Figure 2-24)

GM 2.4L

LPG

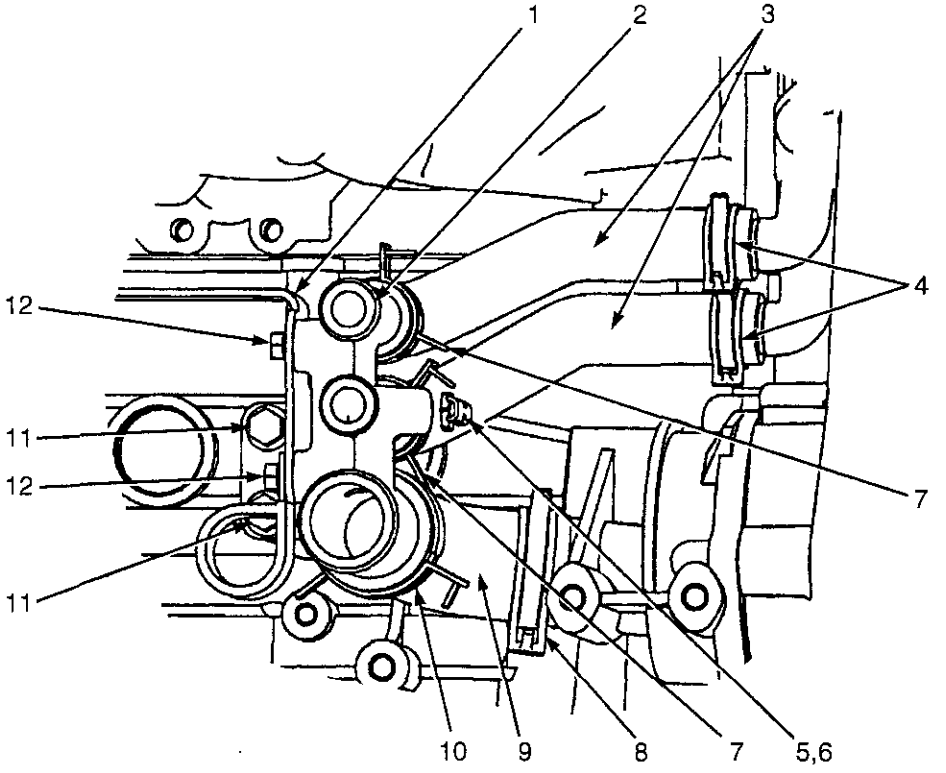

BP090152

ITEM	PART NO.	DESCRIPTION	QTY
1	2055232	Bracket	1
2	1554921	Manifold	1
3	2056732	Hose (Coolant)	2
4	1502009	Clamp	2
5	15329	Valve	1
6	246108	Sealant	AR
7	1501997	Clamp	2
8	1527982	Clamp	1
9	2055298	Hose (Radiator)	1
10	1502001	Clamp	1
11	1527879	Capscrew	2
12	1534417	Capscrew	2

©2005 HYSTER COMPANY

COOLING SYSTEM (Figure 2-25)
GM 2.4L, LPG, SQUARE WAVE RADIATOR

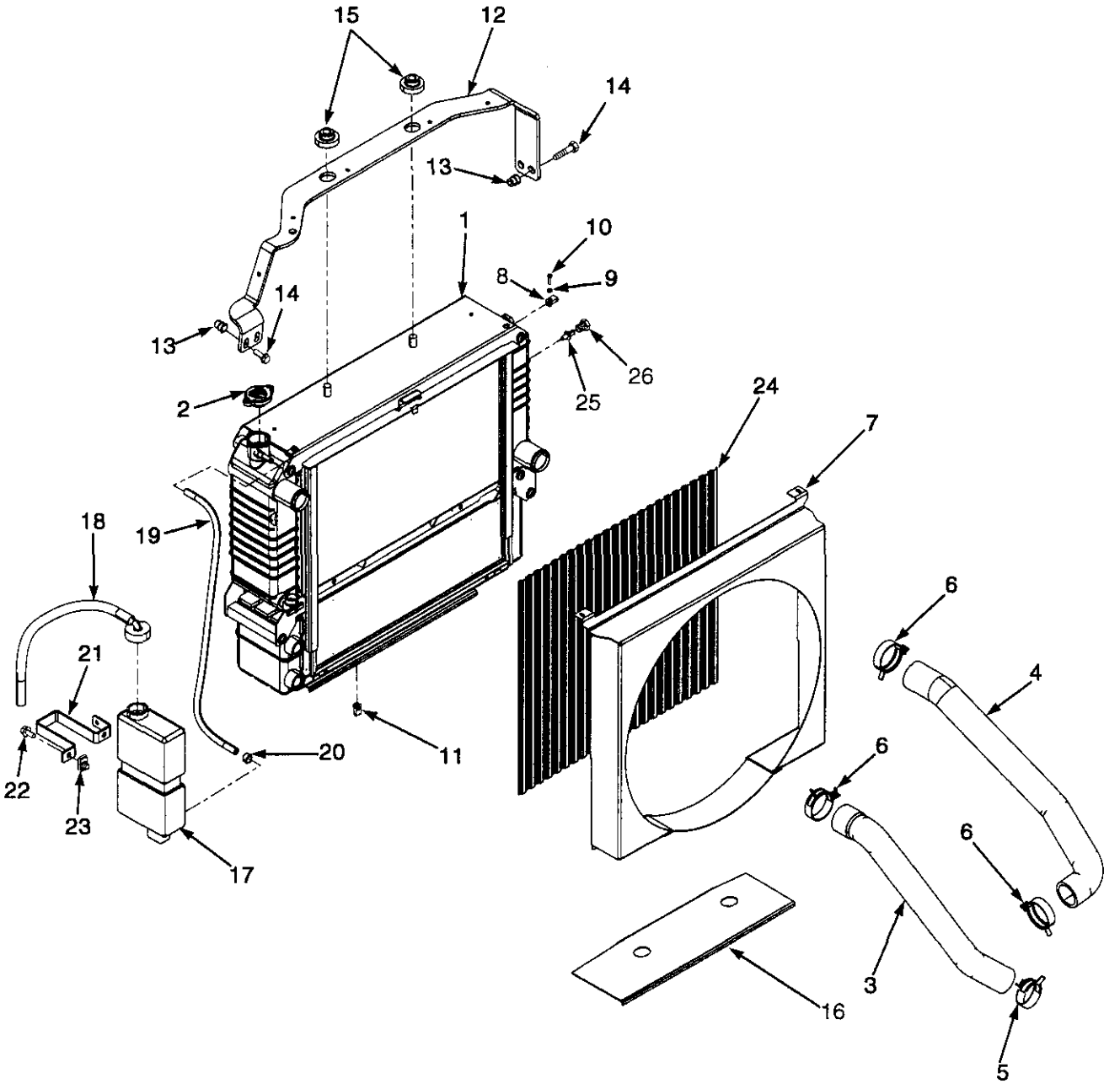

HP060042

©2005 HYSTER COMPANY

COOLING SYSTEM
GM 2.4L, LPG, SQUARE WAVE RADIATOR

ITEM		PART NO.	DESCRIPTION	QTY
1		2074790	Radiator Assembly	1
1		1590972	Radiator	1
1		1590918	Oil Cooler	1
1		1597765	Washer	4
1		1597766	Screw	4
2		1352140	Cap	1
3		2069685	Hose (Upper)	1
4		2069686	Hose (Lower)	1
5		1527982	Clamp	1
6		1502001	Clamp	3
7		1582076	Shroud	1
8		1535257	Clip	2
9		320154	Washer	2
10		302023	Screw	2
11		1551663	Clip	2
12		1585317	Bracket (Radiator)	1
13		1530243	Insert	4
14		1583611	Capscrew	4
15		1529787	Isolator	4
16		1565692	Shield (Exhaust)	1
17		1347026	Reservoir	1
18		345455	Outlet Assembly	1
18		336550	Bushing	1
18		345453	Outlet (Reservoir)	1
18		345454	Cap	1
18		339735	Hose	1
19		1567674	Hose	1
20		369815	Clamp	2
21		1531167	Bracket	1
22		1527879	Capscrew	2
23		1480237	Clip Nut	2
24		1582078	Screen	1
25		1531404	Sensor (Low Coolant Level)	1
26	a	14385	Plug	1

FOOTNOTES:

a Without Low Coolant Level Sensor

©2005 HYSTER COMPANY

EXHAUST SYSTEM (Figure 2-26)
GM 2.4L
LPG

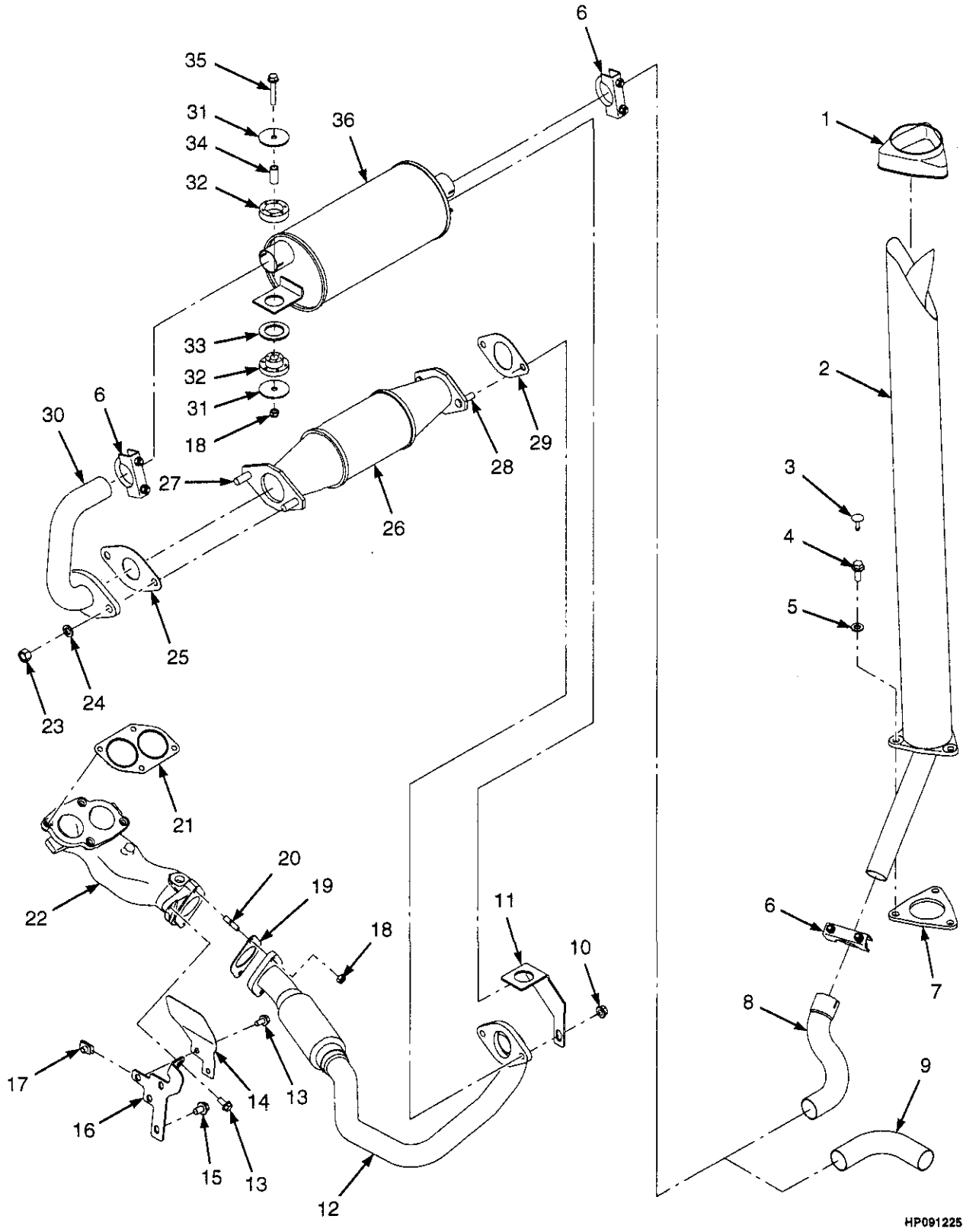

©2005 HYSTER COMPANY

EXHAUST SYSTEM
GM 2.4L
LPG

KEY:
A: With Catalytic Converter
B: Without Catalytic Converter

ITEM	PART NO.	DESCRIPTION	QTY A	QTY B
1	2021394	Cover	1	1
2	1534789	Exhaust Pipe	1	1
3	1347045	Fastener	1	1
4	1586013	Capscrew	1	1
5	320159	Washer	1	1
6	68968	Clamp	3	3
7	1533639	Cover	1	1
8	1533863	Exhaust Pipe (Overhead)	1	1
9	1589312	Exhaust Pipe (Counterweight)	1	1
10	1460477	Nut (Flange)	2	..
11	1532523	Bracket	1	..
12	1546731	Exhaust Pipe	1	..
12	1566515	Exhaust Pipe (Not Illustrated)	..	1
13	1527879	Capscrew	1	1
14	1587069	Shield	1	1
15	1528778	Capscrew	1	1
16	1587068	Bracket	1	1
17	1480237	Clip Nut	1	1
18	1582222	Lock Nut	4	4
19	1566528	Gasket	1	1
20	1567831	Stud (Exhaust)	2	2
21	1582139	Gasket	1	1
22	1583713	Adapter	1	1
23	1469405	Nut	2	..
24	292683	Lockwasher	2	..
25	1469379	Gasket	1	..
26	2059689	Catalytic Converter	1	..
27	1495501	Bolt	2	..
28	1495502	Bolt	2	..
29	1547712	Gasket	1	..
30	1534174	Exhaust Pipe	1	..
31	1528938	Washer	4	4
32	1528930	Isolator	2	2
33	1532585	Washer	1	1
34	1528934	Spacer	2	2
35	1510115	Capscrew	2	2
36	2060957	Muffler	1	1

©2005 HYSTER COMPANY

FLYWHEEL AND HOUSING (Figure 2-27)
GM 2.4L
LPG

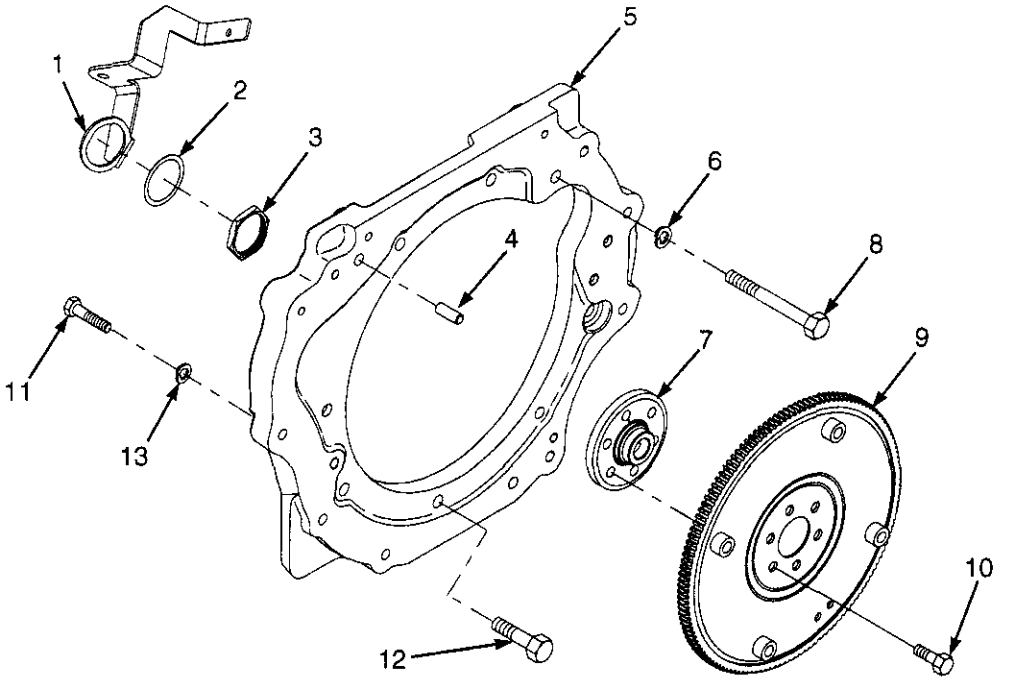

ITEM	PART NO.	DESCRIPTION	QTY
1	1551608	Bracket	1
2	1539086	Lockwasher	1
3	1539085	Nut	1
4	303150	Pin	2
5	1553267	Flywheel Housing	1
6	292683	Lockwasher	11
7	1588963	Adapter	1
8	292539	Capscrew	1
9	1605988	Flywheel	1
10	309740	Capscrew	6
11	292517	Capscrew	10
12	246001	Capscrew	10
13	292682	Lockwasher	10

©2005 HYSTER COMPANY

REMOTE OIL FILTER (Figure 2-28)
GM 2.4L
LPG

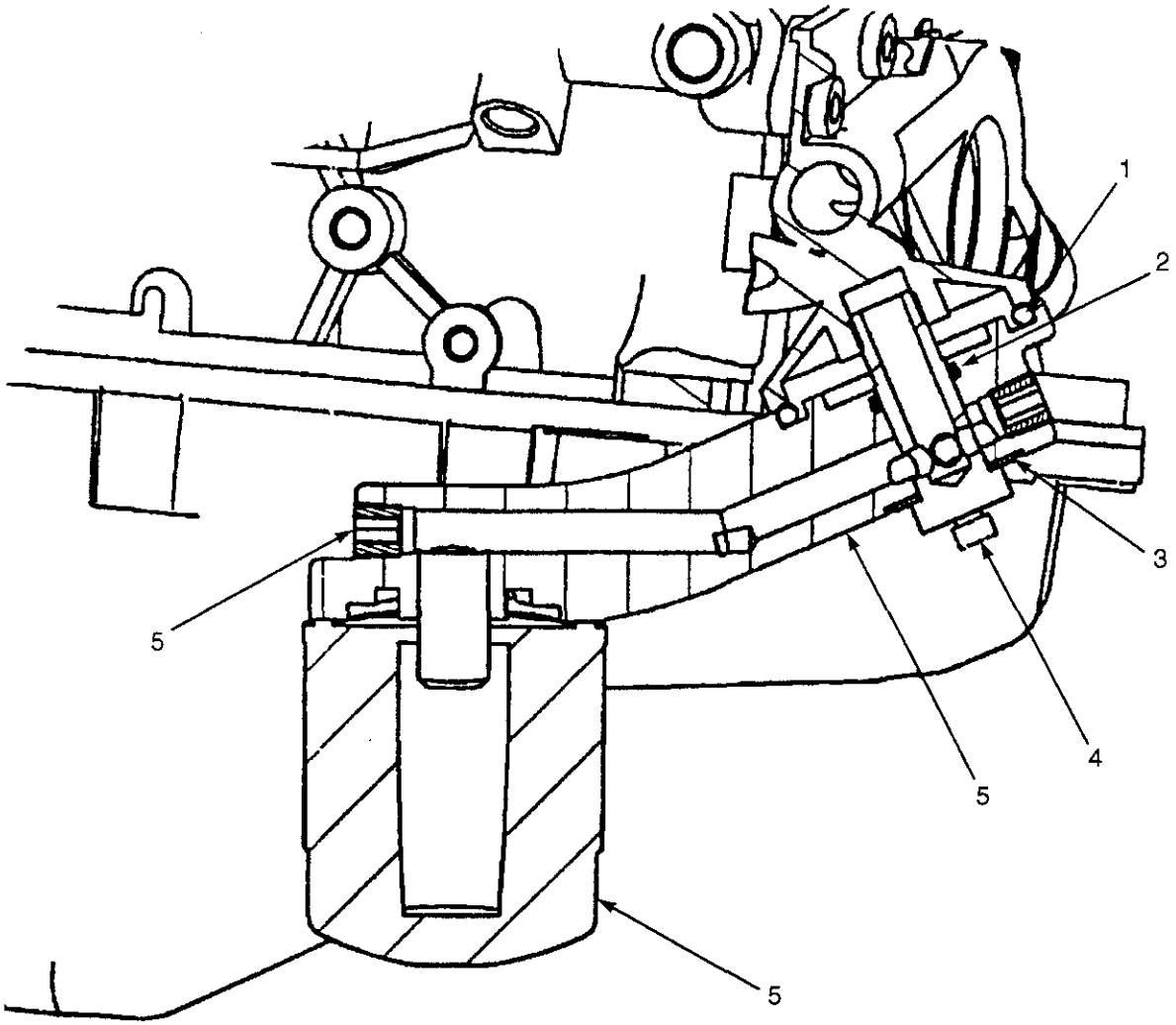

BP090154

ITEM	PART NO.	DESCRIPTION	QTY
	1501695	Engine Assembly (GM 2.4L)	1
1	61191	O-Ring	1
2	60836	O-Ring	1
3	118257	Sealing Washer	1
4	1568774	Banjo Bolt	1
5	1542674	Oil Filter Adapter Assembly	1
5	. . . . .	Adapter	1
5	15483	Fitting	2
5	125347	Fitting	2
6	1584120	Oil Filter	1

©2005 HYSTER COMPANY

CAMSHAFT, CYLINDER HEAD AND MANIFOLDS (Figure 2-29)
GM 2.4L
LPG

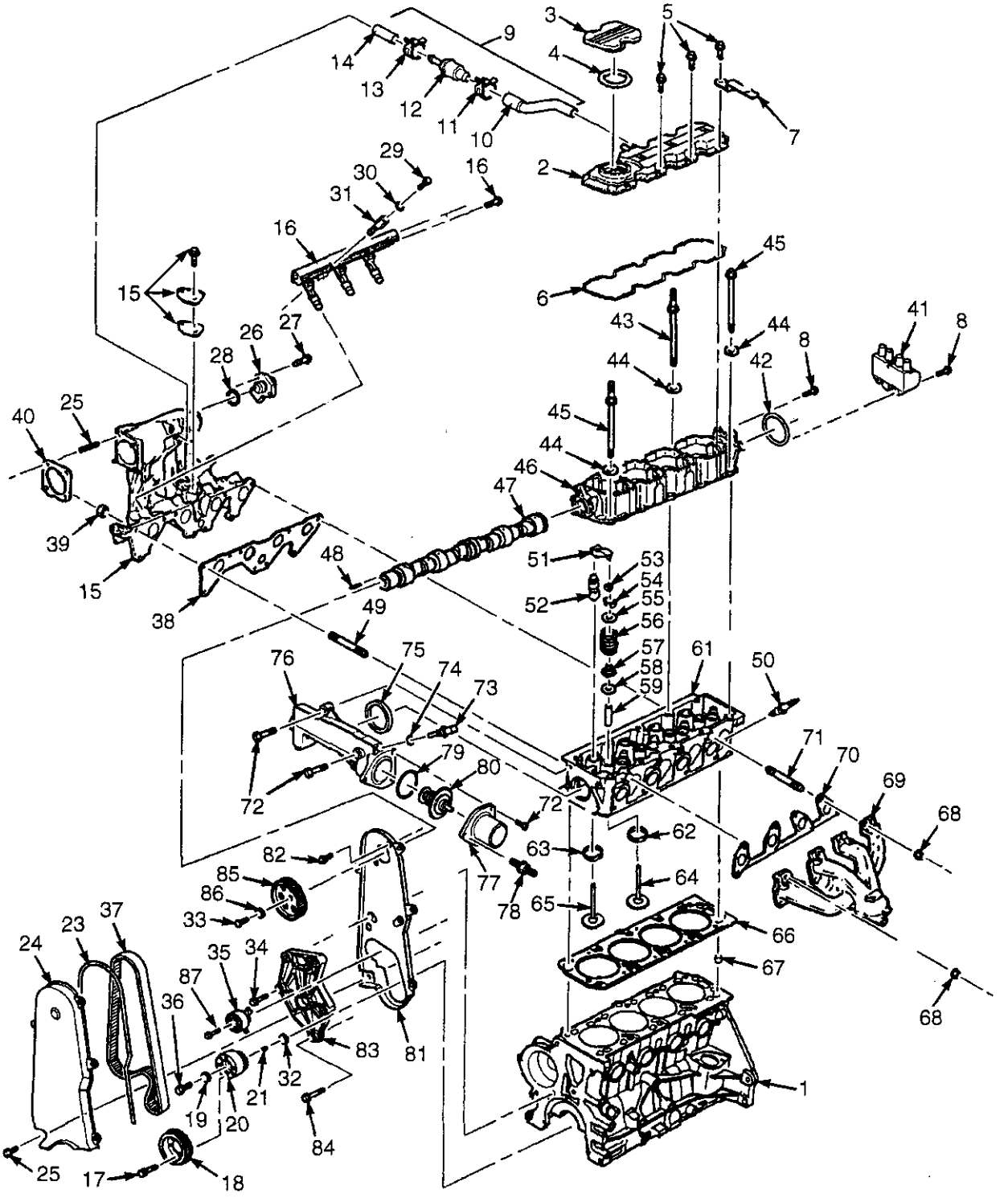

BP090196

©2005 HYSTER COMPANY

CAMSHAFT, CYLINDER HEAD AND MANIFOLDS
GM 2.4L
LPG

ITEM	PART NO.	DESCRIPTION	QTY
1	1501695	Engine Assembly (GM 2.4L)	1
2	1584492	Cover	1
3	1584493	Filler Cap	1
4	1584495	Seal	1
5	1593665	Bolt	8
6	1584497	Gasket	1
7	1584532	Bracket	1
8	1584490	Screw	8
9	1584266	Hose Assembly (PCV)	1
10	1584445	Hose	1
11	1584451	Clamp	1
12	1584442	Valve (PCV)	1
13	1584444	Clamp (LH)	1
14	1584267	Hose	1
15	1584465	Intake Manifold	1
15	. . . . .	Screw	2
15	. . . . .	Cover	1
15	. . . . .	Gasket	1
16	1581795	Fuel Rail (LPG)	1
16	. . . . .	Bolt	1
17	1584520	Screw	4
18	1580793	Balancer (Crankshaft)	1
19	1584506	Washer	1
20	1584502	Sprocket	1
21	1584504	Key	1
22	. . . . .	Stud	4
23	. . . . .	Seal	1
24	1584458	Cover (Timing Belt)	1
25	1584452	Screw	5
26	1584472	MAP Sensor	1
27	. . . . .	Bolt	2
28	. . . . .	Seal	1
29	. . . . .	Bolt	4
30	. . . . .	Washer	4
31	1548394	Extension (Fuel Rail)	4
32	1584505	Spacer	2
33	1584498	Screw	1
34	1584522	Screw	1
35	1584509	Tensioner	1
36	1584503	Screw	1
37	1584507	Timing Belt	1
38	1584464	Gasket	1
39	. . . . .	Nut	4
40	. . . . .	Gasket	1
41	1584523	Ignition Coil	1
42	1584488	Seal	1
43	1584206	Bolt	8
44	1584208	Washer	10
45	1584207	Stud	7
46	1584479	Housing	1

©2005 HYSTER COMPANY

CAMSHAFT, CYLINDER HEAD AND MANIFOLDS
GM 2.4L
LPG

ITEM	PART NO.	DESCRIPTION	QTY
47	1584480	Camshaft	1
48	1584481	Pin	1
49	1584203	Stud	9
50	1584123	Spark Plug	4
51	1584519	Rocker Arm	8
52	1584508	Lifter	8
53	1584511	Seat	8
54	1584202	Key	16
55	1584201	Retainer	8
56	1584200	Spring	8
57	1584199	Valve Seal	8
58	1584197	Seat (Intake Valve Spring)	8
59	1584193	Valve Guide	8
60	1593654	Valve Guide (0.25 O/S)	8
61	1584188	Cylinder Head	1
62	1584190	Seat (Exhaust Valve)	4
63	1584189	Seat (Inlet Valve)	4
64	1584196	Valve (Exhaust)	4
65	1584195	Valve (Inlet)	4
66	1584141	Gasket	1
67	1584182	Pin	4
68	1584474	Nut	8
69	1584478	Exhaust Manifold	1
70	1584475	Gasket	1
71	1584204	Stud	8
72	1584462	Screw	4
73	1584140	Sensor (Engine Coolant)	1
74	. . . . .	Seal	1
75	1584463	Seal	1
76	1584459	Housing	1
77	1584179	Water Inlet	1
78	1584460	Stud	1
79	1584122	Seal	1
80	1584121	Thermostat	1
81	1584453	Cover	1
82	302047	Screw	4
83	1584521	Adapter	1
84	1584243	Bolt	2
85	1584491	Sprocket	1
86	1593662	Washer	2
87	1584510	Screw	1

See Service Manual for service procedures.
©2005 HYSTER COMPANY

NOTES

CRANKSHAFT, PISTONS AND OIL PAN (Figure 2-30)

GM 2.4L

LPG

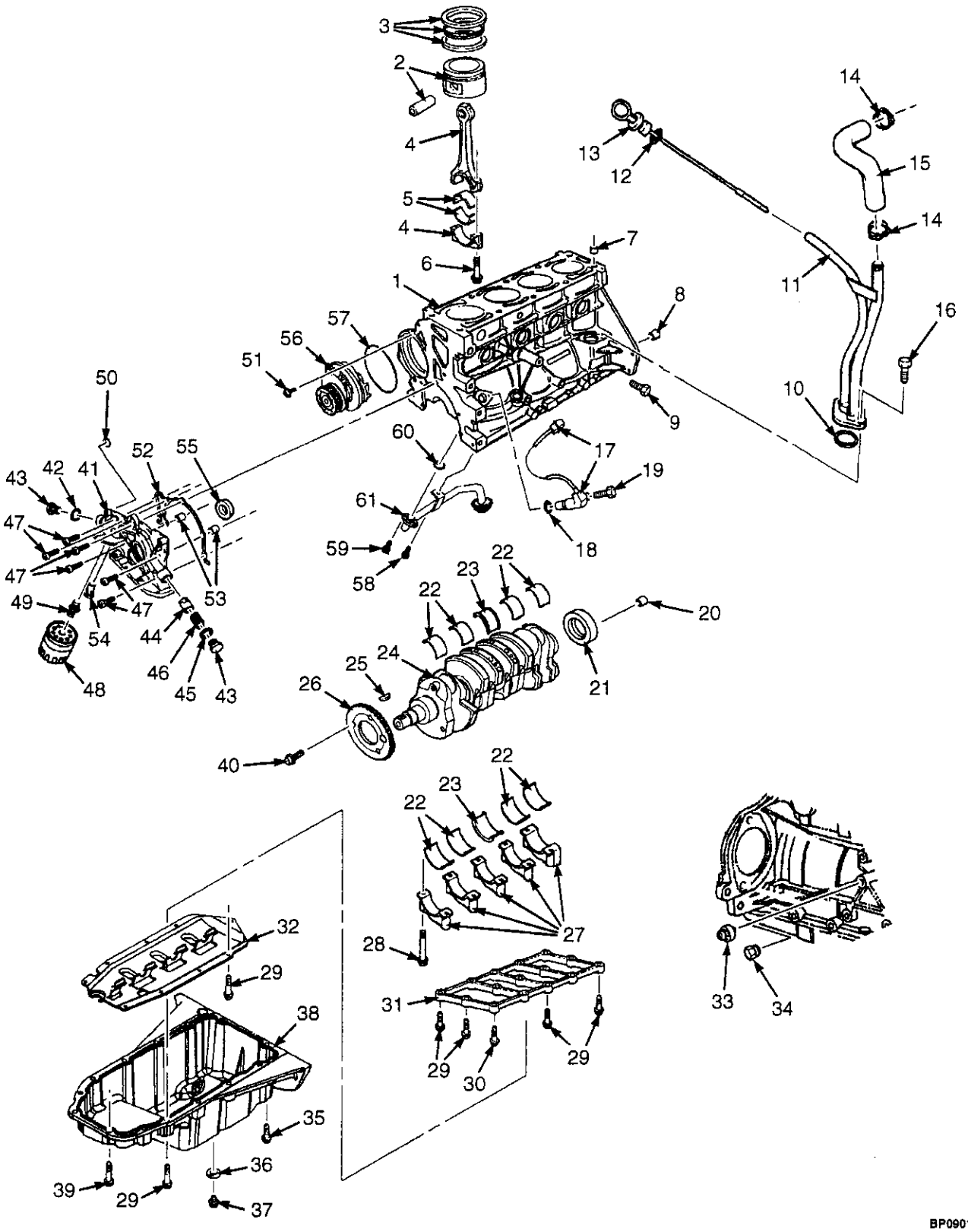

BP090164

©2005 HYSTER COMPANY

CRANKSHAFT, PISTONS AND OIL PAN
GM 2.4L
LPG

ITEM	PART NO.	DESCRIPTION	QTY
1	1501695	Engine Assembly (GM 2.4L)	1
2	1593657	Piston/Ring Set (Standard)	4
2	1593659	Piston/Ring Set (0.25 O/S)	4
3	1593658	Piston Ring Kit	1
4	1584232	Connecting Rod Assembly	4
4	1584239	Bolt	2
5	1584248	Bearing Kit (Standard)	4
5	1584662	Bearing Kit (0.25 O/S)	4
6	1584239	Bolt	8
7	1584182	Pin	4
8	1584183	Pin	2
9	. . . . .	Plug	1
10	1584447	Gasket	1
11	1584446	Pipe Assembly	1
12	. . . . .	Seal	1
13	1584265	Indicator	1
14	1584451	Clamp	2
15	1584450	Hose	1
16	1584449	Screw	2
17	1584514	Sensor (Crankshaft Position)	1
18	. . . . .	Seal	1
19	1584227	Bolt	4
20	. . . . .	Bearing	1
21	1584533	Seal	1
22	1584618	Bearing Kit (Standard)	4
22	1584619	Bearing Kit (0.25 O/S)	4
23	1593655	Bearing Kit (Standard)	1
23	1593656	Bearing Kit (0.25 O/S)	1
24	1584209	Crankshaft	1
25	1584504	Key	1
26	1584222	Capacitor	1
27	. . . . .	Cap	4
28	1584178	Screw	10
29	1584243	Bolt	24
30	1593653	Bolt	1
31	1584185	Plate	1
32	1584241	Baffle	1
33	1593661	Sensor (Knock)	1
34	1358026	Plug	1
35	1584242	Bolt	2
36	1597697	Seal	1
37	1597698	Drain Plug	1
38	1584240	Oil Pan	1
39	1584244	Bolt	4
40	1584227	Bolt	4
41	1584247	Oil Pump Assembly	1
42	1584262	Seal	1
43	1584257	Bolt	2
44	1584254	Valve	1
45	1584261	Gasket	1

©2005 HYSTER COMPANY

CRANKSHAFT, PISTONS AND OIL PAN
GM 2.4L
LPG

ITEM	PART NO.	DESCRIPTION	QTY
46	1584255	Spring	1
47	1584253	Bolt	5
48	1584120	Oil Filter	1
49	1584252	Fitting	1
50	1584187	Washer	1
51	1584455	Screw	3
52	1584246	Gasket	2
53	1584184	Pin	1
54	1584256	Valve	1
55	1584260	Seal	1
56	1584456	Water Pump	1
57	1591538	Seal	1
58	. . . . .	Bolt	1
59	1584457	Seal	1
59	1593660	Bolt	2
60	1584263	Seal	3
61	1584264	Pipe (Oil Pump Suction)	1

©2005 HYSTER COMPANY

NOTES

COOLING SYSTEM (Figure 2-31)
YANMAR 2.6L AND 3.3L, DIESEL, SQUARE WAVE RADIATOR WITH INTERNAL AIR OIL COOLER

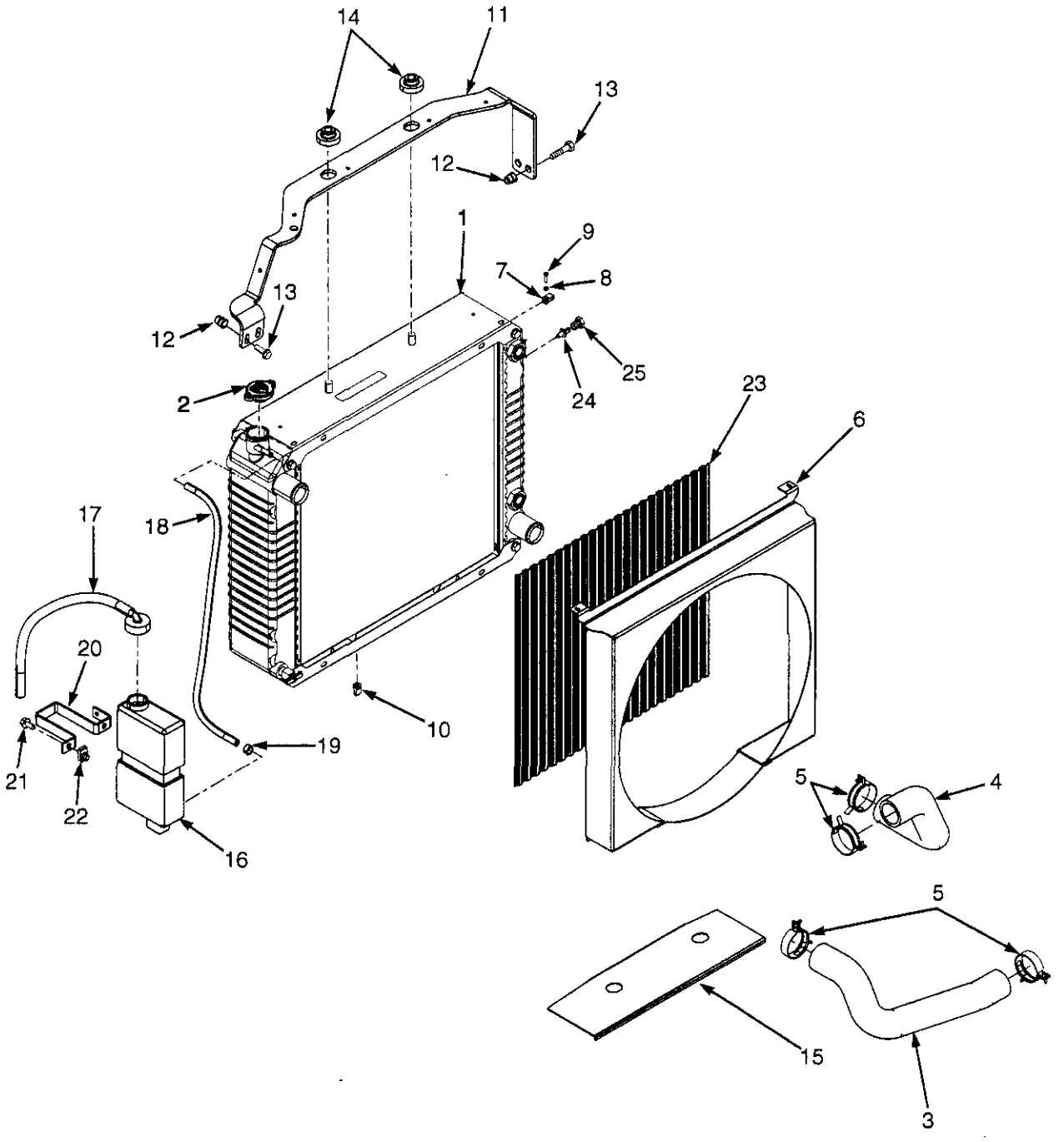

©2005 HYSTER COMPANY

COOLING SYSTEM
YANMAR 2.6L AND 3.3L, DIESEL, SQUARE WAVE RADIATOR WITH INTERNAL AIR OIL COOLER

ITEM		PART NO.	DESCRIPTION	QTY
1		2069552	Radiator	1
1		1569079	Draincock (With Thread Wrap)	1
2		1352140	Cap	1
3		2070071	Hose (Upper)	1
4		2070072	Hose (Lower)	1
5		1502001	Clamp	4
6		1566802	Shroud	1
7		1535257	Clip	2
8		320154	Washer	2
9		302023	Screw	2
10		1329271	Clip	2
11		1585317	Bracket (Radiator)	1
12		1530243	Insert	4
13		1583611	Capscrew	4
14		1529787	Isolator	4
15		1565692	Shield (Exhaust)	1
16		1347026	Reservoir	1
17		345455	Outlet Assembly	1
17		336550	Bushing	1
17		345453	Outlet (Reservoir)	1
17		345454	Cap	1
17		339735	Hose	1
18		1567674	Hose	1
19		369815	Clamp	2
20		1531167	Bracket	1
21		1527879	Capscrew	2
22		1480237	Clip Nut	2
23		1582078	Screen	1
24		1531404	Sensor (Low Coolant Level)	1
25	a	14385	Plug	1

FOOTNOTES:

a Without Low Coolant Level Sensor

©2005 HYSTER COMPANY

COOLING SYSTEM (Figure 2-32)
YANMAR 2.6L AND 3.3L, DIESEL, SQUARE WAVE RADIATOR WITH EXTERNAL AIR OIL COOLER

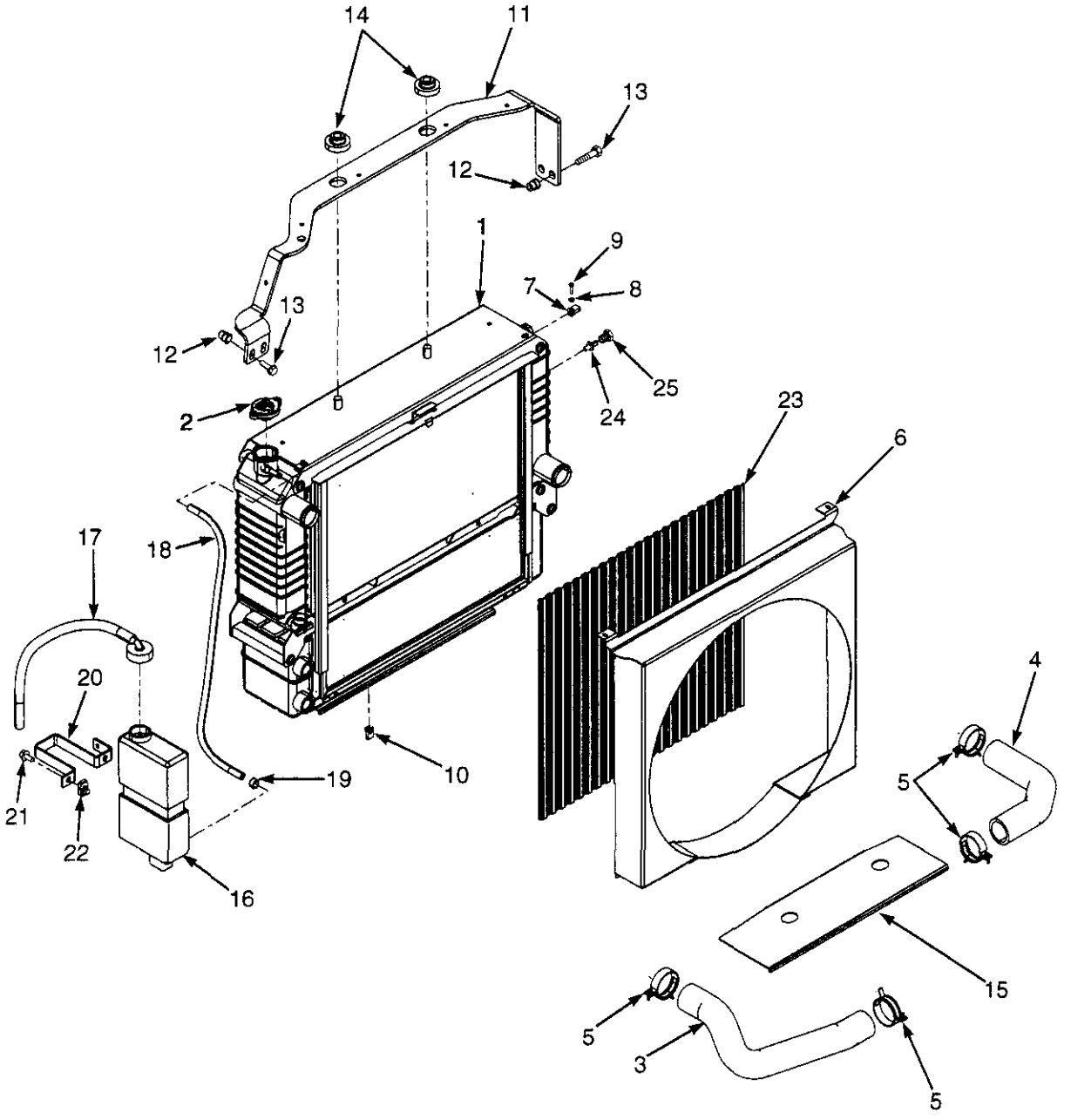

HP060041

©2005 HYSTER COMPANY

COOLING SYSTEM
YANMAR 2.6L AND 3.3L, DIESEL, SQUARE WAVE RADIATOR WITH EXTERNAL AIR OIL COOLER

ITEM	PART NO.	DESCRIPTION	QTY
1	2074790	Radiator Assembly	1
1	1590972	Radiator	1
1	1590918	Oil Cooler	1
1	1597765	Washer	4
1	1597766	Screw	4
2	1352140	Cap	1
3	2070071	Hose (Upper)	1
4	2069688	Hose (Lower)	1
5	1502001	Clamp	4
6	1582076	Shroud	1
7	1535257	Clip	2
8	320154	Washer	2
9	302023	Screw	2
10	1551663	Clip	2
11	1585317	Bracket (Radiator)	1
12	1530243	Insert	4
13	1583611	Capscrew	4
14	1529787	Isolator	4
15	1565692	Shield (Exhaust)	1
16	1347026	Reservoir	1
17	345455	Outlet Assembly	1
17	336550	Bushing	1
17	345453	Outlet (Reservoir)	1
17	345454	Cap	1
17	339735	Hose	1
18	1567674	Hose	1
19	369815	Clamp	2
20	1531167	Bracket	1
21	1527879	Capscrew	2
22	1480237	Clip Nut	2
23	1582078	Screen	1
24	1531404	Sensor (Low Coolant Level)	1
25	**a** 14385	Plug	1

FOOTNOTES:

a Without Low Coolant Level Sensor

©2005 HYSTER COMPANY

EXHAUST SYSTEM (Figure 2-33)
YANMAR 2.6L AND 3.3L
DIESEL

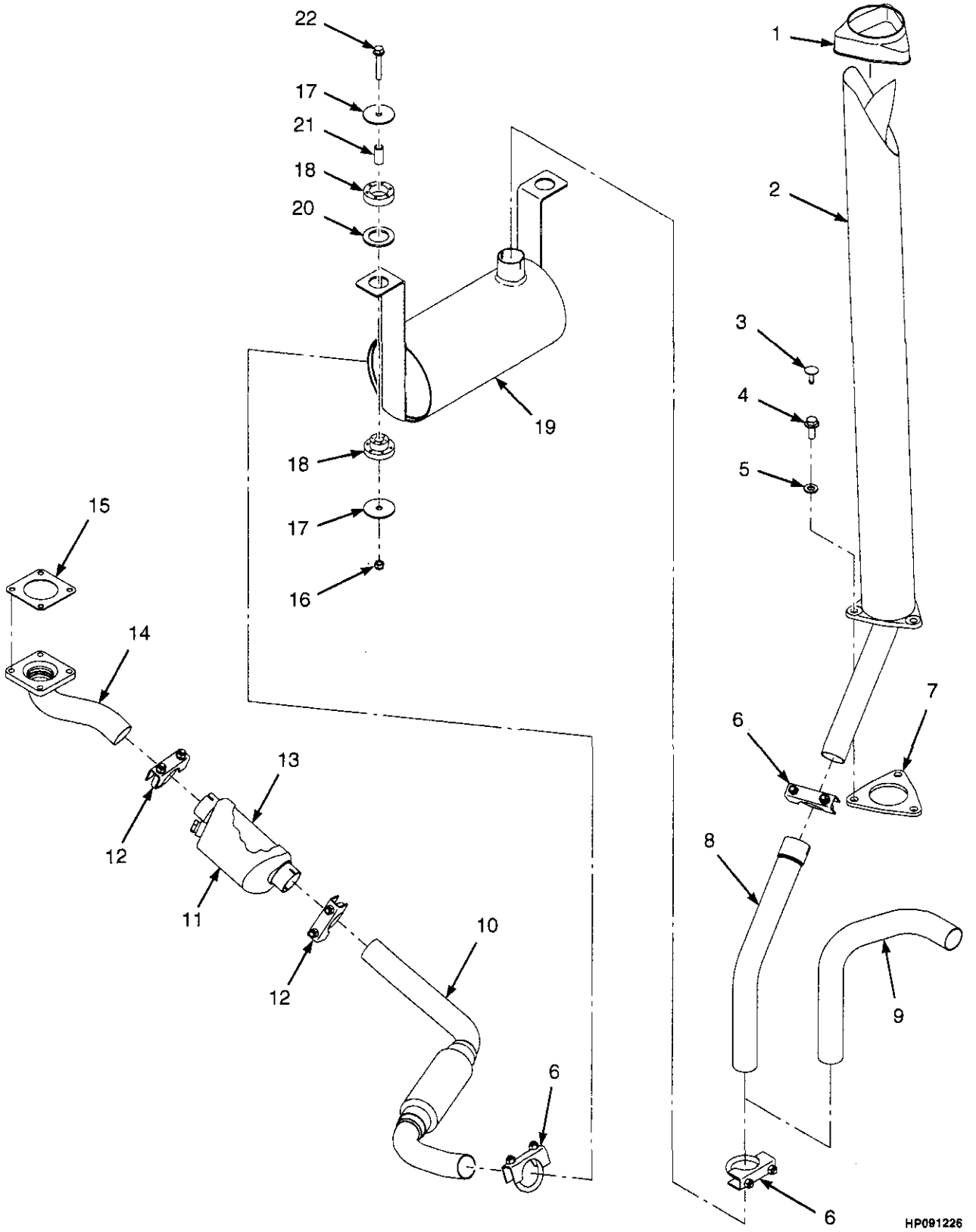

©2005 HYSTER COMPANY

EXHAUST SYSTEM
YANMAR 2.6L AND 3.3L DIESEL

KEY:
A: With Catalytic Converter
B: Without Catalytic Converter

ITEM	PART NO.	DESCRIPTION	QTY A	QTY B
1	2021394	Cover	1	1
2	1534789	Exhaust Pipe	1	1
3	1347045	Fastener	3	3
4	1586013	Capscrew	3	3
5	320159	Washer	3	3
6	68968	Clamp	3	3
7	1533639	Cover	1	1
8	1567020	Exhaust Pipe (Overhead)	1	1
9	1586967	Exhaust Pipe (Counterweight)	1	1
10	1589629	Exhaust Pipe	1	..
10	1589630	Exhaust Pipe (Not Illustrated)	..	1
11	878258	Purifier (Exhaust)	1	..
12	1391757	Clamp	2	..
13	1391758	Sock (Fiberglass)	1	..
14	1589635	Exhaust Pipe	1	..
15	1532363	Gasket	1	1
16	1582222	Lock Nut	4	4
17	1528938	Washer	4	4
18	1528930	Isolator	2	2
19	2075554	Muffler (Exhaust)	1	1
20	1532585	Washer	2	2
21	1528934	Spacer	2	2
22	1510115	Capscrew	2	2

©2005 HYSTER COMPANY

INTAKE AND EXHAUST MANIFOLD (Figure 2-34)
YANMAR 2.6L AND 3.3L
DIESEL

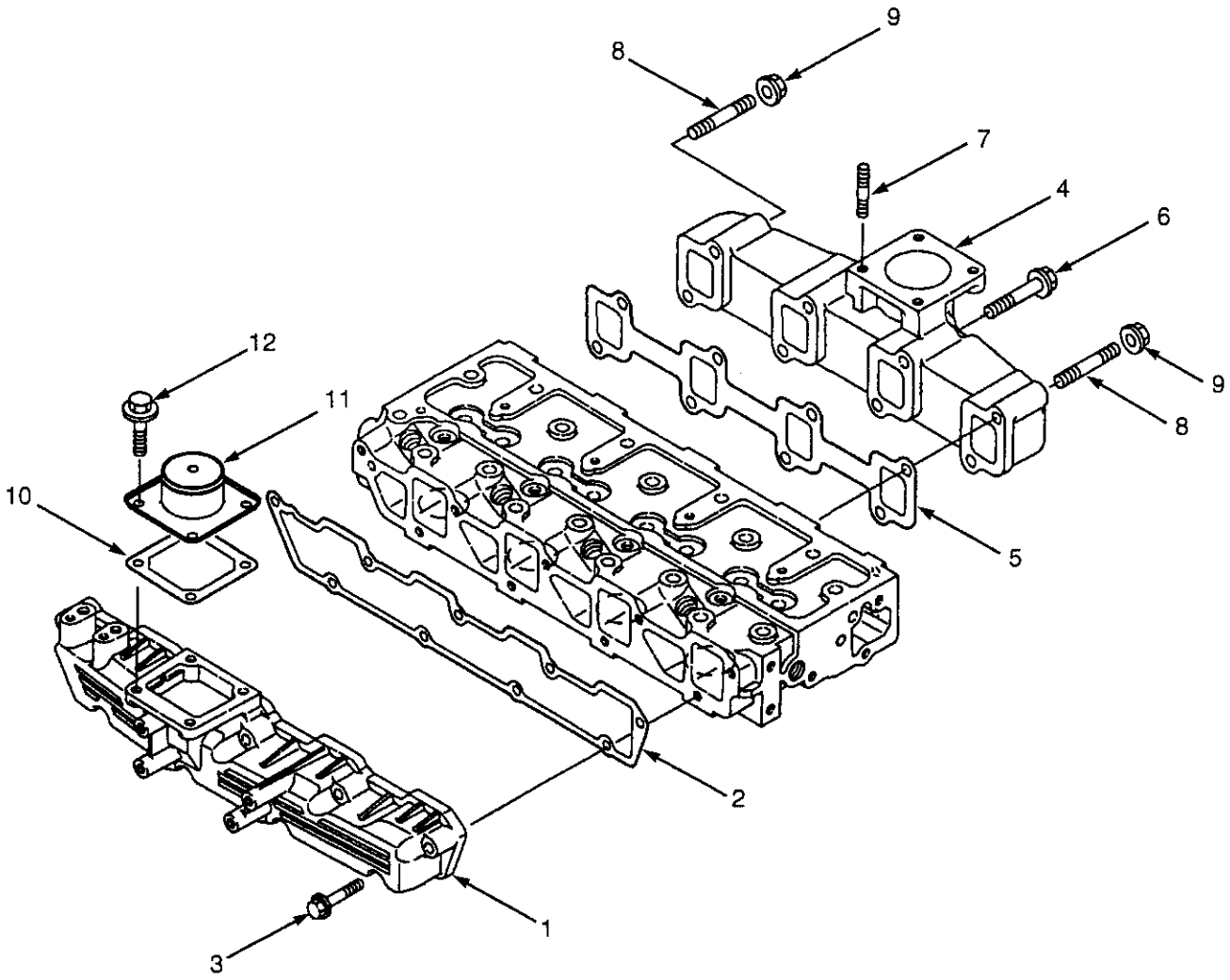

BP090185

©2005 HYSTER COMPANY

INTAKE AND EXHAUST MANIFOLD
YANMAR 2.6L AND 3.3L
DIESEL

ITEM	PART NO.	DESCRIPTION	QTY
	1501687	Engine Assembly (2.6L)	1
	1501690	Engine Assembly (3.3L)	1
1	1599556	Intake Manifold	1
2	1599543	Gasket	1
3	1599475	Bolt	9
4	1599559	Exhaust Manifold	1
5	1599560	Gasket	1
6	1599561	Bolt	9
7	1599562	Stud	4
8	1599563	Stud	2
9	2068378	Nut	2
10	1599565	Gasket	1
11	1599567	Joint	1
12	1599568	Bolt	4
	1599898	Gasket Set (Includes Items 2, 5, 10)	1
	1600085	Gasket Set (Includes Items 2, 5, 10)	1

©2005 HYSTER COMPANY

GEAR HOUSING (Figure 2-35)
YANMAR 2.6L AND 3.3L
DIESEL

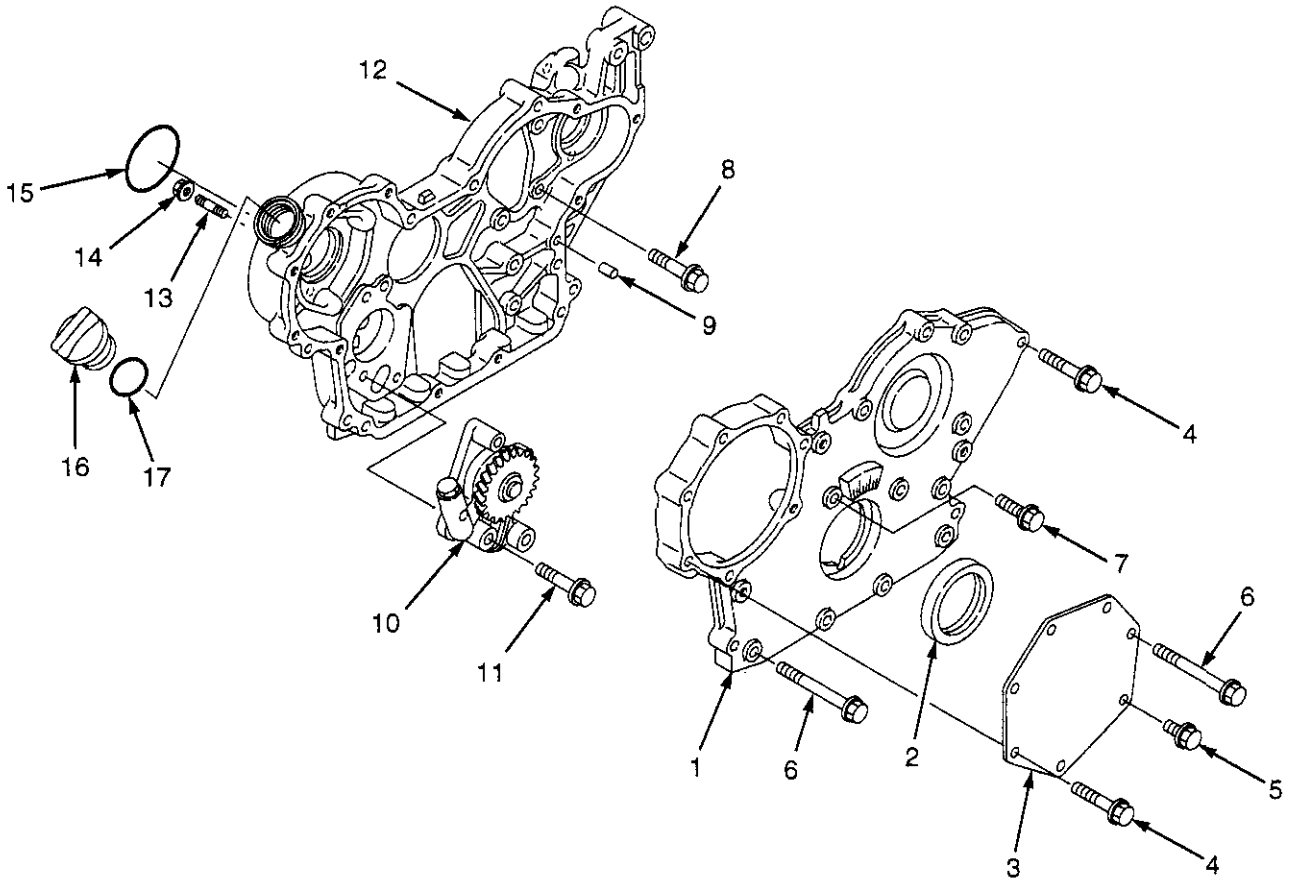

BP090182

©2005 HYSTER COMPANY

GEAR HOUSING
YANMAR 2.6L AND 3.3L
DIESEL

ITEM	PART NO.	DESCRIPTION	QTY
	1501687	Engine Assembly (2.6L)	1
	1501690	Engine Assembly (3.3L)	1
1	1599459	Gear Cover Assembly	1
2	1599460	Oil Seal	1
3	1599461	Cover	1
4	1599473	Bolt	10
5	1599470	Bolt	1
6	1599476	Bolt	7
7	1599472	Bolt	1
8	1599471	Bolt	3
9	1599458	Pin	4
10	1599466	Pump	1
11	1599475	Bolt	1
12	1599465	Gear Case	1
13	1599467	Stud	3
14	2068378	Nut	3
15	1599462	O-Ring	1
16	1599463	Cap (Oil Fill)	1
17	1599464	O-Ring	1
	1599478	Liquid Gasket	AR
	1600085	Gasket Set (Includes Items 15, 17)	1
	1599898	Gasket Set (Includes Items 15, 17)	1

©2005 HYSTER COMPANY

OIL PAN (Figure 2-36)
YANMAR 2.6L AND 3.3L DIESEL

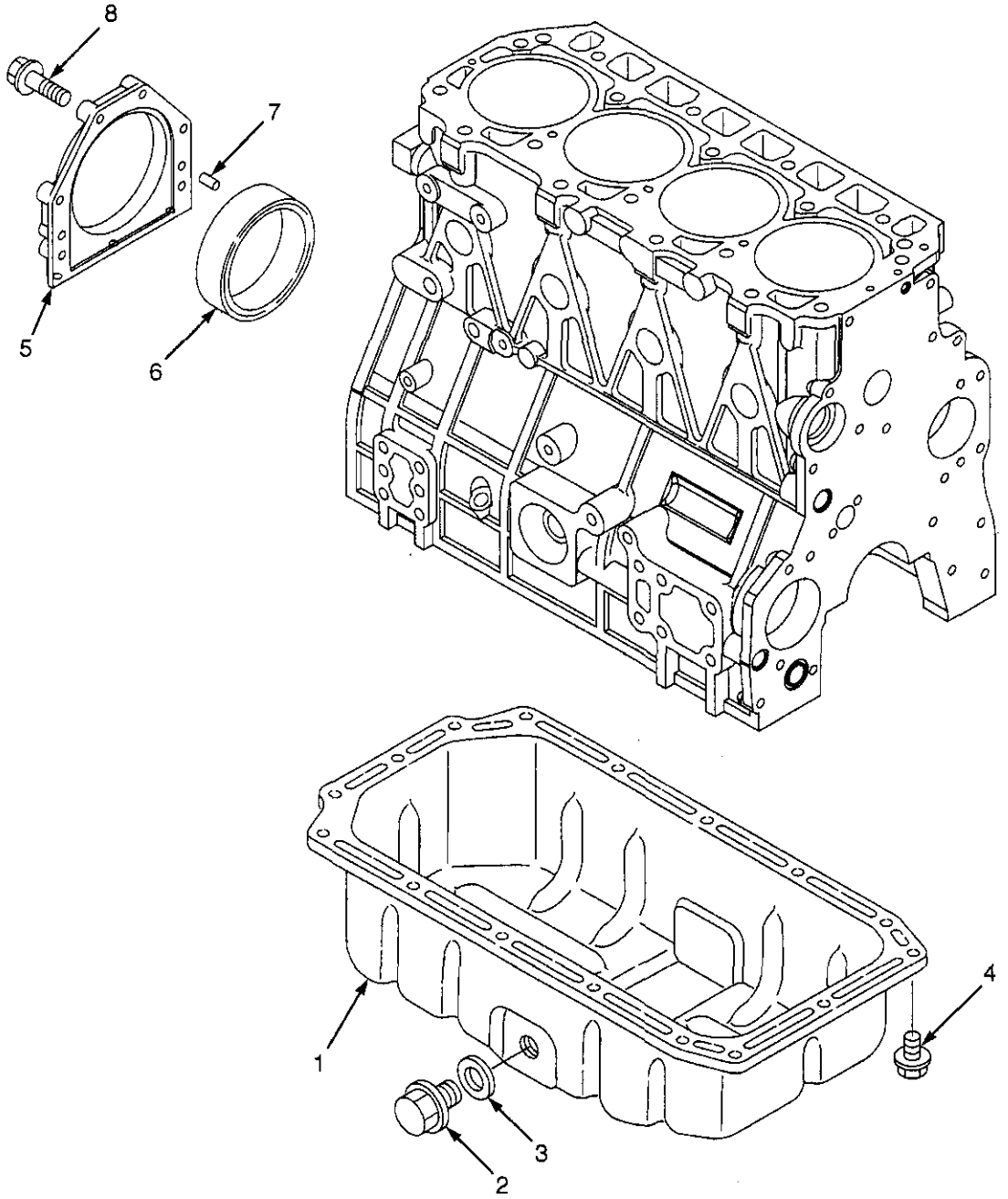

BP090183

©2005 HYSTER COMPANY

OIL PAN
YANMAR 2.6L AND 3.3L
DIESEL

ITEM	PART NO.	DESCRIPTION	QTY
	1501687	Engine Assembly (2.6L)	1
	1501690	Engine Assembly (3.3L)	1
1	1599479	Oil Pan	1
2	1599480	Drain Plug	1
3	1599481	Seal	1
4	1599448	Bolt	16
5	1599483	Case	1
6	1599484	Seal	1
7	1599458	Pin	2
8	1599485	Bolt	6
	1599478	Liquid Gasket (Not Illustrated)	AR
	1600085	Gasket Set (Includes Items 3, 9)	1
	1599898	Gasket Set (Includes Items 3, 9)	1

©2005 HYSTER COMPANY

FLYWHEEL AND HOUSING (Figure 2-37)
YANMAR 2.6L AND 3.3L
DIESEL

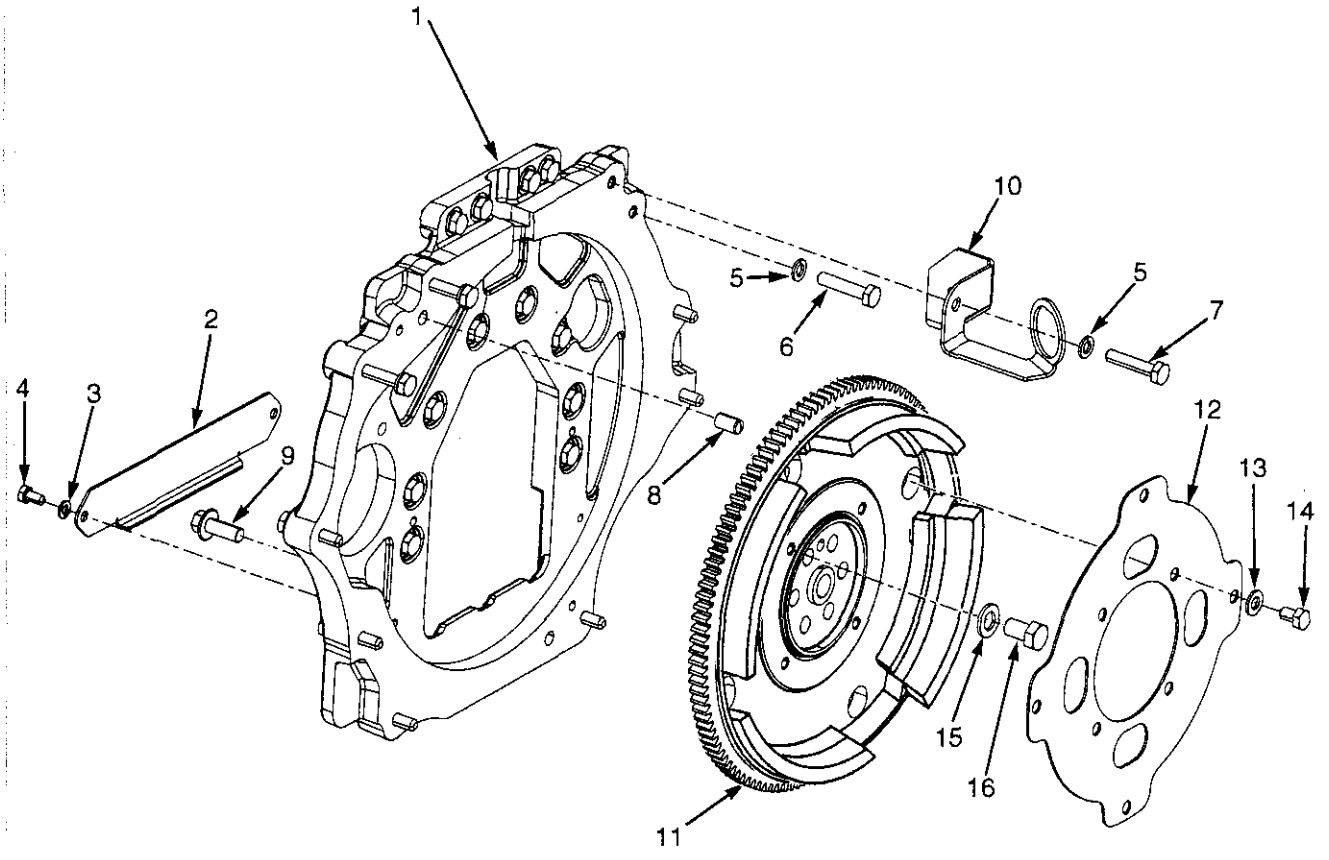

HP091235

©2005 HYSTER COMPANY

FLYWHEEL AND HOUSING
YANMAR 2.6L AND 3.3L
DIESEL

ITEM	PART NO.	DESCRIPTION	QTY
1	1553265	Housing	1
2	1522363	Cover	1
3	292681	Lockwasher	2
4	287851	Capscrew	2
5	292682	Lockwasher	22
6	136985	Capscrew	12
7	292517	Capscrew	10
8	303150	Pin	2
9	1528889	Capscrew	2
10	1551608	Bracket	1
11	1598007	Flywheel	1
12	1531806	Flex Plate	1
13	296420	Washer	4
14	293626	Capscrew	4
15	296424	Washer	6
16	1550747	Capscrew	6
	1584621	Sealant	AR

©2005 HYSTER COMPANY

CYLINDER HEAD (Figure 2-38)
YANMAR 2.6L AND 3.3L
DIESEL

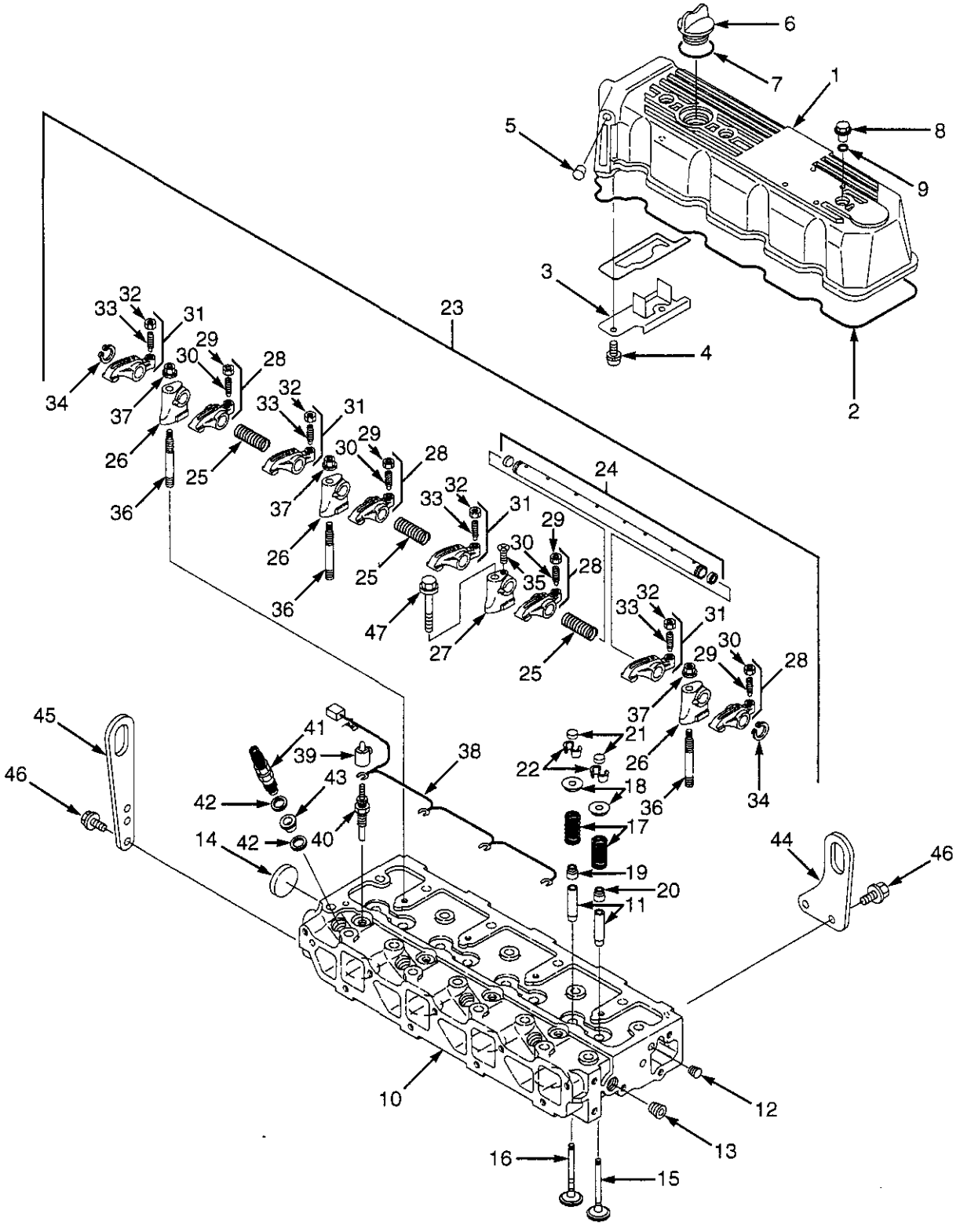

©2005 HYSTER COMPANY

CYLINDER HEAD
YANMAR 2.6L AND 3.3L
DIESEL

ITEM	PART NO.	DESCRIPTION	QTY
	1501687	Engine Assembly (2.6L)	1
	1501690	Engine Assembly (3.3L)	1
1	1599545	Cover	1
2	1599546	Gasket	1
3	1599547	Plate	1
4	1599548	Screw	2
5	1599549	Plug	1
6	1599463	Cap (Oil Fill)	1
7	1599464	O-Ring	1
8	1599544	Valve Cover Nut	3
9	1599550	O-Ring	3
10	1599488	Cylinder Head Assembly (2.6L)	1
10	1600273	Cylinder Head Assembly (3.3L)	1
10	1599524	Cylinder Head (2.6L)	1
10	1600274	Cylinder Head (3.3L)	1
11	1599525	Valve Guide	8
12	1599526	Plug	1
13	1599441	Plug	1
14	1599528	Plug	1
15	1599489	Intake Valve	4
16	1599516	Exhaust Valve	4
17	1599517	Spring	8
18	1599518	Retainer	8
19	1599519	Seal (Exhaust Valve)	4
20	1599520	Seal (Intake Valve)	4
21	1599521	Cap	8
22	1599529	Cotter	8
23	1599530	Rocker Arm Support Assembly	1
24	1599531	Rocker Arm Shaft	1
25	1599532	Spring	3
26	1599533	Support	3
27	1599534	Support	1
28	1599535	Intake Rocker Arm Kit	4
29	1599536	Screw	1
30	1599537	Nut	1
31	1599538	Exhaust Rocker Arm Kit	4
32	1599536	Screw	1
33	1599537	Nut	1
34	1599539	Clip	2
35	1599540	Screw	1
36	1599541	Stud	3
37	1599542	Nut	3
38	1599553	Connector (Glow Plug)	1
39	1599557	Cover	4
40	1599552	Glow Plug	4
41	1599819	Nozzle	1
42	1599523	Gasket	8
43	1599522	Protector	4
44	1599487	Lifting Eye	1
45	1599486	Lifting Eye	1

©2005 HYSTER COMPANY

CYLINDER HEAD
YANMAR 2.6L AND 3.3L DIESEL

ITEM	PART NO.	DESCRIPTION	QTY
46	1599470	Bolt	4
47	1599555	Bolt	1
	1600085	Gasket Set (3.3L) (Includes Items 2, 7, 9, 19-20, 42-43)	1
	1599898	Gasket Set (2.6L) (Includes Items 2, 7, 9, 19-20, 42-43)	1

©2005 HYSTER COMPANY

NOTES

CAMSHAFT AND DRIVE GEAR (Figure 2-39)
YANMAR 2.6L AND 3.3L
DIESEL

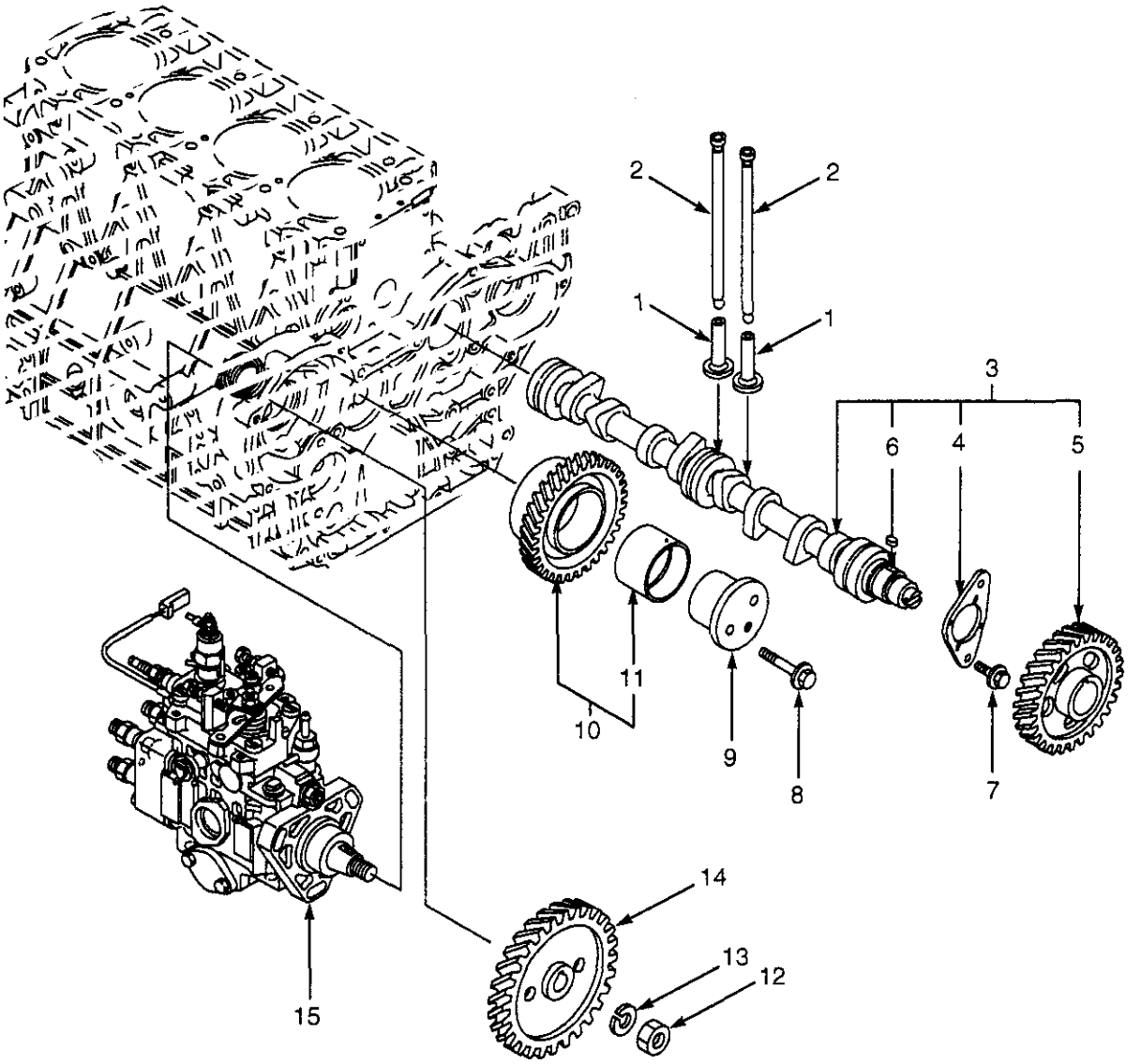

BP090186

©2005 HYSTER COMPANY

CAMSHAFT AND DRIVE GEAR
YANMAR 2.6L AND 3.3L
DIESEL

ITEM	PART NO.	DESCRIPTION	QTY
	1501687	Engine Assembly (2.6L)	1
	1501690	Engine Assembly (3.3L)	1
1	1599569	Tappet	8
2	1599570	Push Rod	8
3	1599571	Camshaft Assembly	1
4	1599572	Retainer	1
5	1599573	Gear	1
6	1599574	Key	1
7	1599470	Bolt	2
8	1599579	Bolt	2
9	1599576	Idler Shaft	1
10	1599577	Idler Gear	1
11	1599578	Bushing	1
12	1599582	Lock Nut	1
13	1599581	Spring Washer	1
14	1599580	Gear	1
15	1599901	Fuel Injection Pump (2.6L) (☞ Figure 3-11)	1
15	1600084	Fuel Injection Pump (3.3L) (☞ Figure 3-11)	1

©2005 HYSTER COMPANY

CRANKSHAFT AND PISTONS (Figure 2-40)
YANMAR 2.6L AND 3.3L
DIESEL

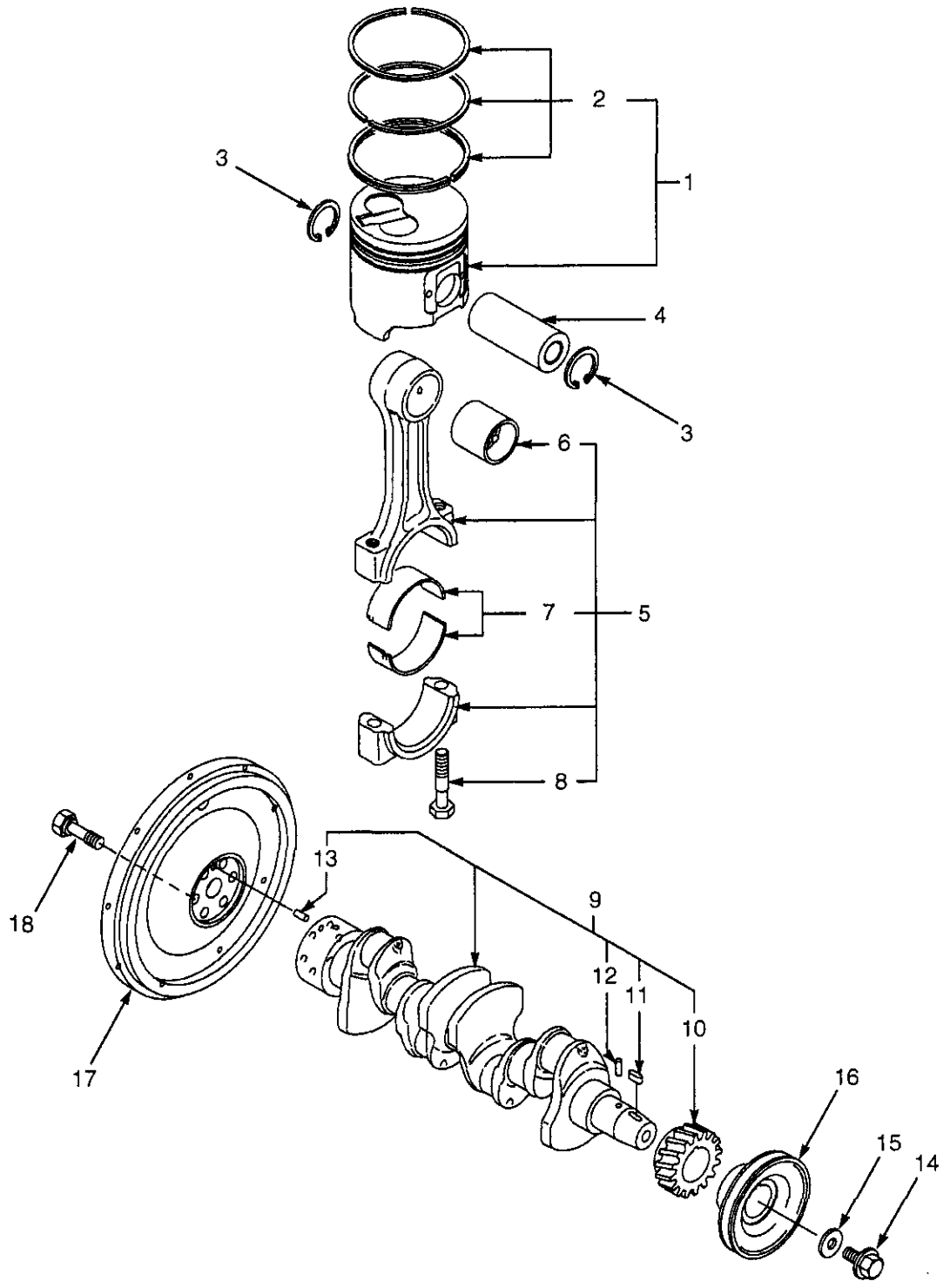

BP090187

©2005 HYSTER COMPANY

CRANKSHAFT AND PISTONS
YANMAR 2.6L AND 3.3L
DIESEL

ITEM	PART NO.	DESCRIPTION	QTY
	1501687	Engine Assembly (2.6L)	1
	1501690	Engine Assembly (3.3L)	1
1	1599592	Piston Assembly (With Standard Rings) (2.6L)	4
1	1600276	Piston Assembly (With Standard Rings) (3.3L)	4
1	1599600	Piston Assembly (With O/S 0.25 Rings) (2.6L)	4
1	1600278	Piston Assembly (With O/S 0.25 Rings) (3.3L)	4
2	1599593	Ring Set (Standard) (2.6L)	1
2	1600277	Ring Set (Standard) (3.3L)	1
2	1599601	Ring Set (O/S 0.25) (2.6L)	1
2	1600279	Ring Set (O/S 0.25) (3.3L)	1
3	1599595	Snap Ring	8
4	1599594	Pin	4
5	1599596	Connecting Rod Assembly	4
6	1599597	Bushing	1
7	1599599	Bearing (Standard)	1
7	1599602	Bearing (U/S 0.25)	4
8	1599598	Bolt	2
9	1599583	Crankshaft Assembly (2.6L)	1
9	1600275	Crankshaft Assembly (3.3L)	1
10	1599584	Gear	1
11	1599574	Key	1
12	1599585	Pin	1
13	1599586	Pin	1
14	1599590	Bolt	1
15	1599589	Washer	1
16	1599588	Pulley	1
17	1599603	Flywheel	1
18	1599591	Bolt	6

©2005 HYSTER COMPANY

CYLINDER BLOCK (Figure 2-41)
YANMAR 2.6L AND 3.3L
DIESEL

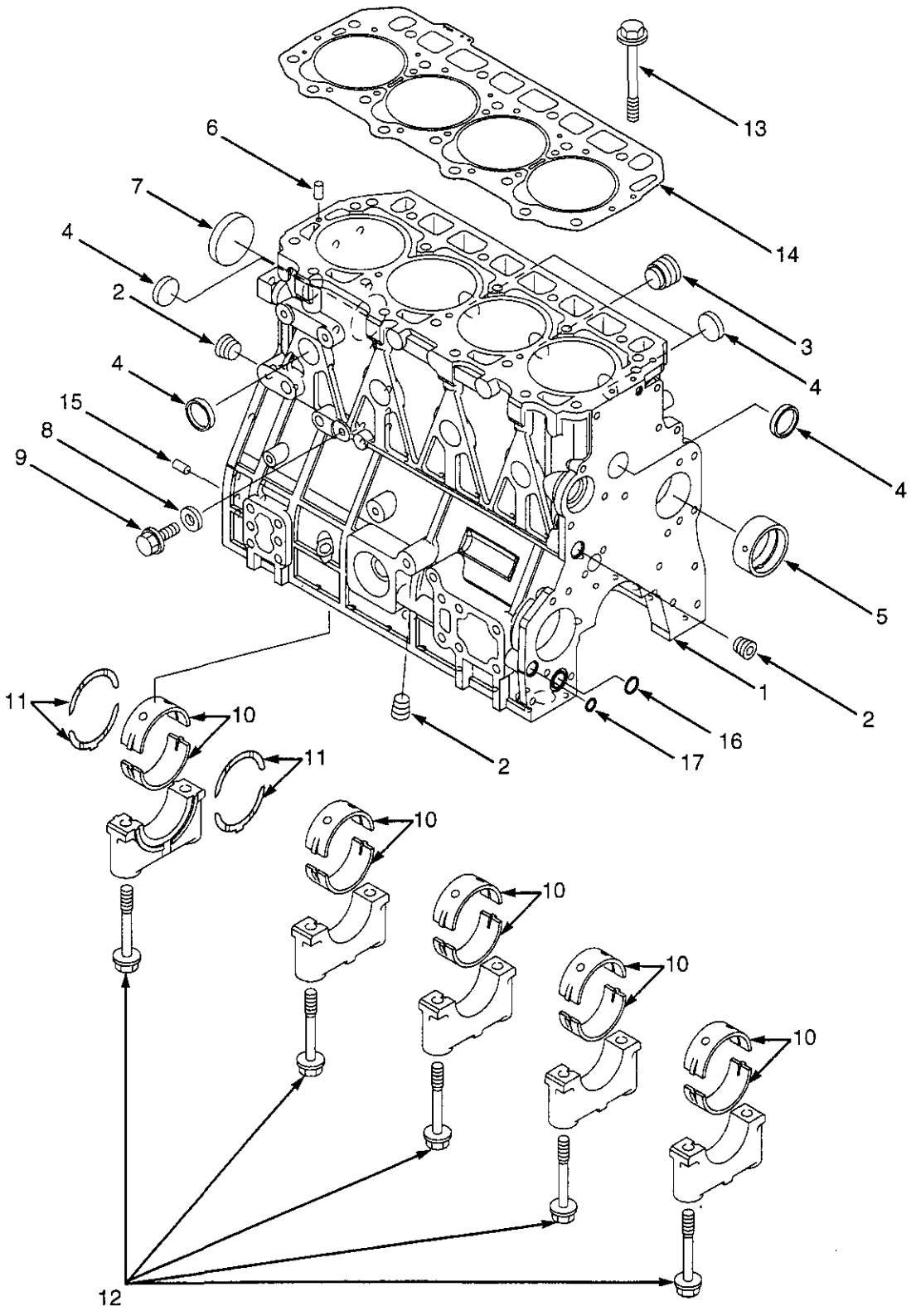

BP090181

©2005 HYSTER COMPANY

CYLINDER BLOCK
YANMAR 2.6L AND 3.3L DIESEL

ITEM	PART NO.	DESCRIPTION	QTY
	1501687	Engine Assembly (2.6L)	1
	1501690	Engine Assembly (3.3L)	1
1	1599904	Engine Block	1
2	1599441	Plug	3
3	1599442	Plug	1
4	1599451	Plug	8
5	1599444	Bushing	1
6	1599446	Spring Pin	2
7	1599449	Plug	1
8	1599445	Washer	1
9	1599448	Bolt	1
10	1599452	Main Bearing Set (Standard)	5
10	1599456	Main Bearing Set (U/S 0.25)	5
11	1599453	Thrust Bearing Set (Standard)	2
11	1599457	Thrust Bearing Set (U/S 0.25)	2
12	1599443	Bolt	10
13	1599454	Bolt	18
14	1599455	Gasket (2.6L)	1
14	1599905	Gasket (3.3L)	1
15	1599458	Pin	2
16	1599468	O-Ring	1
17	1599469	O-Ring	1
	1600085	Gasket Set (Includes Items 8, 14, 16-17)	1
	1599898	Gasket Set (Includes Items 8, 14, 16-17)	1

©2005 HYSTER COMPANY

WATER PUMP (Figure 2-42)
YANMAR 2.6L AND 3.3L
DIESEL

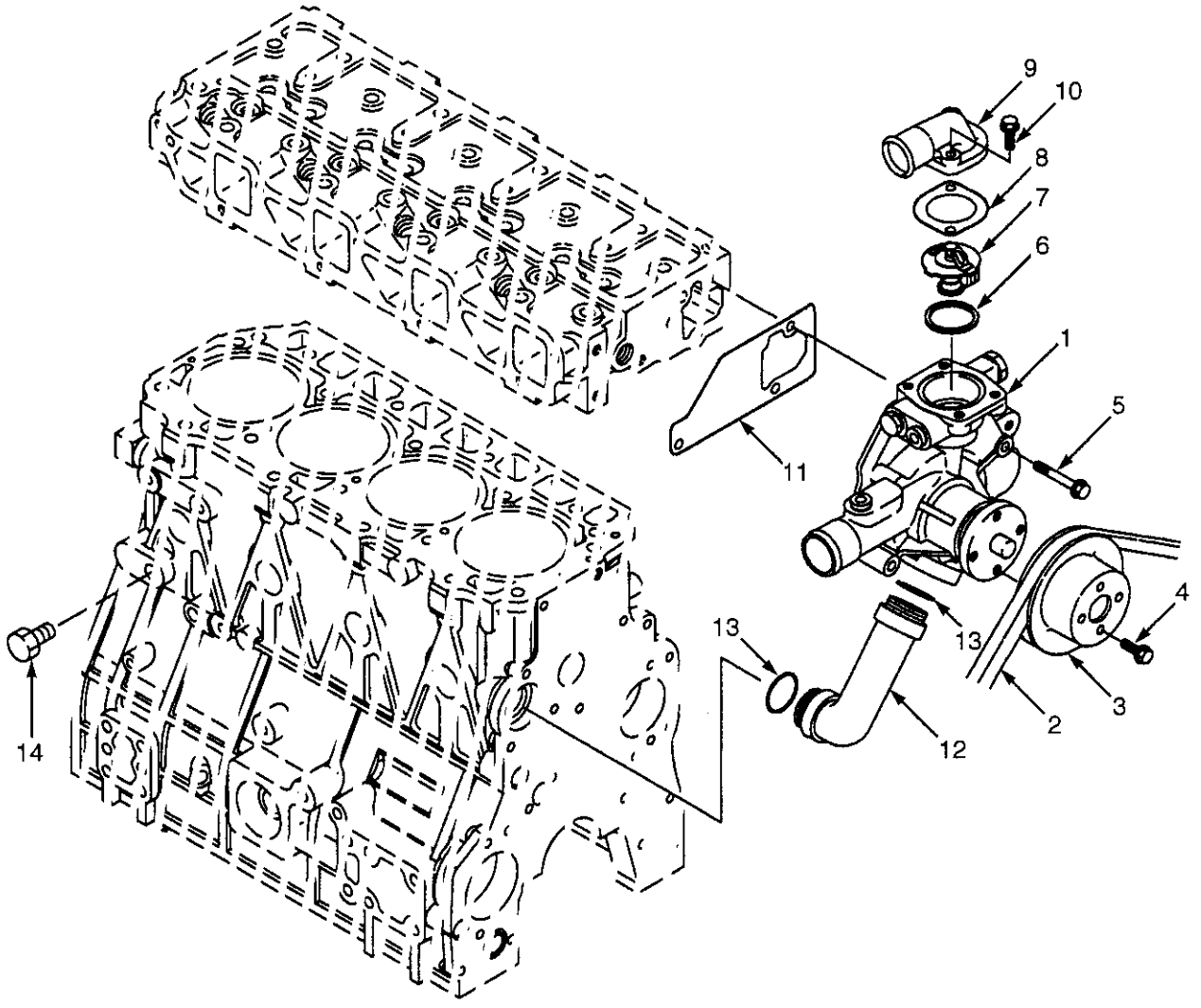

BP090193

©2005 HYSTER COMPANY

WATER PUMP
YANMAR 2.6L AND 3.3L
DIESEL

ITEM	PART NO.	DESCRIPTION	QTY
	1501687	Engine Assembly (2.6L)	1
	1501690	Engine Assembly (3.3L)	1
1	1599804	Water Pump	1
2	1599794	V-Belt	1
3	1599795	Pulley	1
4	1599448	Bolt	4
5	1599579	Bolt	3
6	1597709	Gasket	1
7	1599800	Thermostat	1
8	1597710	Gasket	1
9	1599798	Cover	1
10	1599801	Bolt	1
11	1599803	Gasket	1
12	1599797	Pipe	1
13	1599807	O-Ring	2
14	1599802	Drain Plug	2
	1599898	Gasket Set (Includes Items 11-13)	1
	1600085	Gasket Set (Includes Items 11-13)	1

©2005 HYSTER COMPANY

LUBRICATION SYSTEM (Figure 2-43)
YANMAR 2.6L AND 3.3L
DIESEL

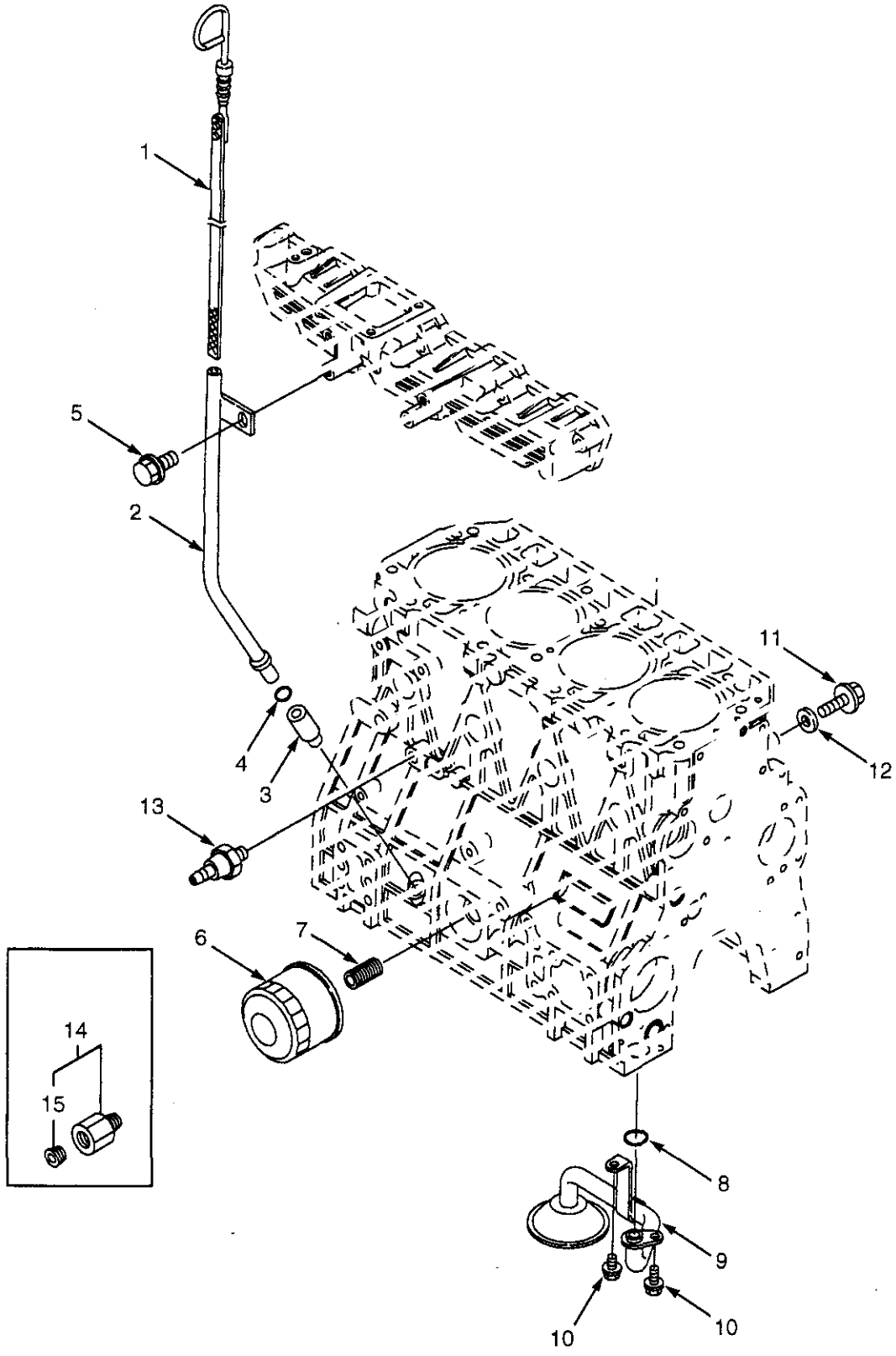

©2005 HYSTER COMPANY

LUBRICATION SYSTEM
YANMAR 2.6L AND 3.3L
DIESEL

ITEM	PART NO.	DESCRIPTION	QTY
	1501687	Engine Assembly (2.6L)	1
	1501690	Engine Assembly (3.3L)	1
1	1599604	Dipstick	1
2	1599606	Tube (Dipstick)	1
3	1599605	Guide	1
4	1599607	O-Ring	1
5	1599470	Bolt	1
6	2077983	Oil Filter	1
7	1599610	Stud	1
8	1599468	O-Ring	1
9	1599611	Pipe	1
10	1599612	Bolt	2
11	1599448	Bolt	1
12	1599445	Washer	1
13	1599613	Switch (Oil Pressure)	1
14	1599616	Plug Assembly	1
15	1599793	Plug	1
	1599898	Gasket Set (Includes Items 4, 8, 12)	1
	1600085	Gasket Set (Includes Items 4, 8, 12)	1

©2005 HYSTER COMPANY

NOTES

3 FUEL SYSTEM

SECTION 3
FUEL SYSTEM

DESCRIPTION	PAGE
AIR CLEANER ASSEMBLY	3-2
AIR INTAKE AND FILTER SYSTEM	
GM 2.4L	
LPG	3-6
MAZDA 2.0L AND 2.2L	
LPG	3-4
YANMAR 2.6L AND 3.3L	
DIESEL	3-8
FUEL FILTER AND WATER SEPARATOR	
YANMAR 2.6L AND 3.3L	
DIESEL	3-26
FUEL INJECTION SYSTEM	
YANMAR 2.6L AND 3.3L	
DIESEL	3-24
FUEL SYSTEM	
GM 2.4L	
LPG	3-14
MAZDA 2.0L AND 2.2L	
LPG	3-10
YANMAR 2.6L AND 3.3L	
DIESEL	3-22
LPG BRACKET ASSEMBLY	
EZXCHANGE BRACKET	3-18
SWING OUT BRACKET	3-20
LPG REGULATOR	
GM 2.4L	3-16
MONOTROL PEDAL ASSEMBLY	3-38
THROTTLE BODY AND ATTACHING PARTS	
GM 2.4L	
LPG	3-32
THROTTLE CABLE ASSEMBLY	
MAZDA 2.0L AND 2.2L	
LPG	3-28
YANMAR 2.6L AND 3.3L	
DIESEL	3-30
THROTTLE PEDAL AND ATTACHING PARTS	
MAZDA 2.0L AND 2.2L/GM 2.4L	
LPG	3-36
THROTTLE POSITION SENSOR AND ATTACHING PARTS	
YANMAR 2.6L AND 3.3L	
DIESEL	3-34

©2005 HYSTER COMPANY

AIR CLEANER ASSEMBLY (Figure 3-1)

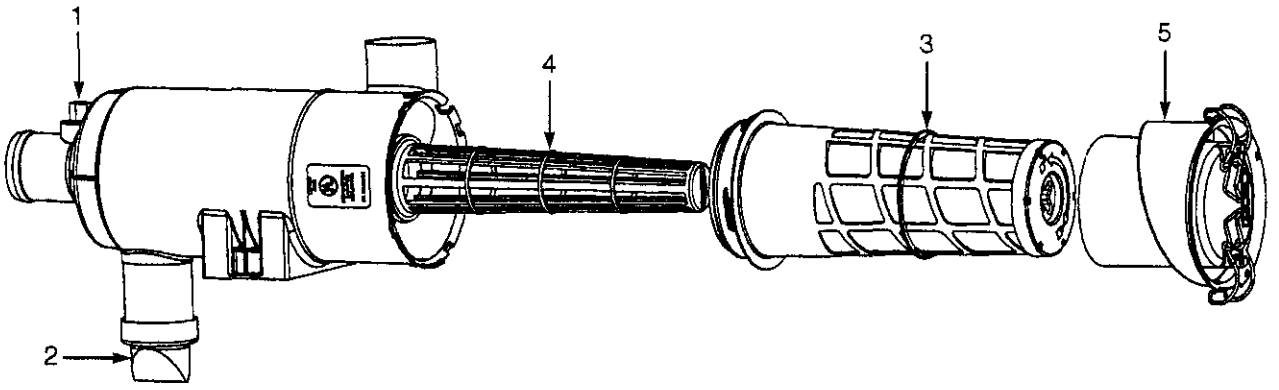

HP091227

KEY:
A: Yanmar Diesel and GM LPG Engines
B: Mazda LPG Engines

ITEM	PART NO.	DESCRIPTION	QTY A	QTY B
	2055193	Air Cleaner Assembly	..	1
	1501855	Air Cleaner Assembly	1	..
1	141331	Cap	1	1
2	374923	Valve	1	1
3	1559418	Filter	..	1
3	1574111	Filter	1	..
4	1559419	Liner (with O-Ring)	..	1
4	1574260	Liner (with O-ring)	1	..
5	1559420	Cover	..	1
5	1574131	Cover	1	..

©2005 HYSTER COMPANY

NOTES

AIR INTAKE AND FILTER SYSTEM (Figure 3-2)
MAZDA 2.0L AND 2.2L
LPG

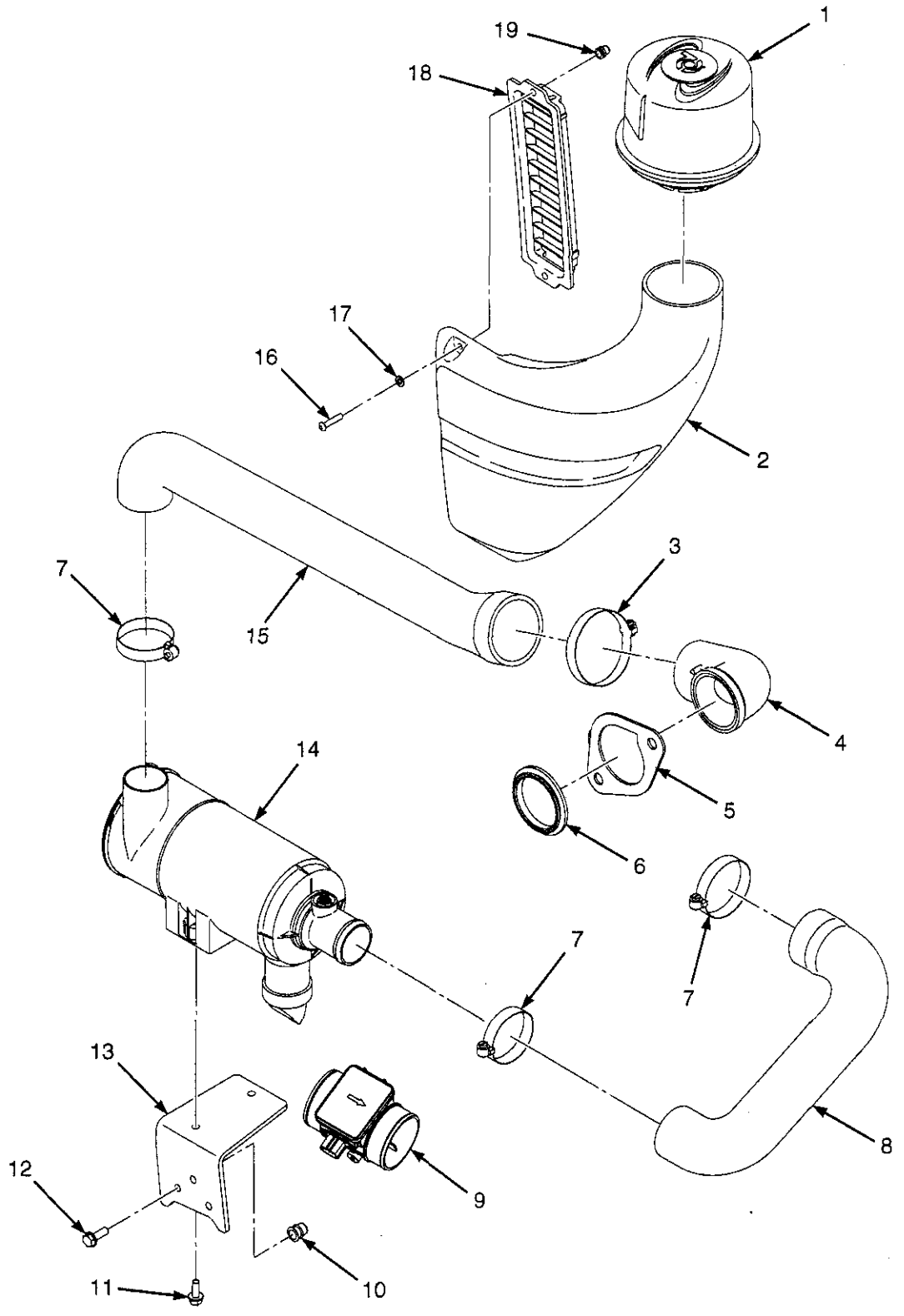

©2005 HYSTER COMPANY

AIR INTAKE AND FILTER SYSTEM
MAZDA 2.0L AND 2.2L
LPG

ITEM	PART NO.	DESCRIPTION	QTY
1	1501888	Pre-Cleaner	1
2	1565201	Air Duct	1
3	115696	Clamp	1
4	1581438	Elbow	1
5	1581439	Retainer (Elbow)	1
6	1502079	Grommet	1
7	112989	Clamp	3
8	1501835	Hose	1
9	1501629	Sensor (Mass Air Flow)	1
10	1530243	Insert	3
11	1527880	Capscrew	2
12	1583611	Capscrew	3
13	1501848	Bracket	1
14	2055193	Air Cleaner Assembly (☞ Figure 3-1)	1
15	1502034	Hose	1
16	2071261	Capscrew	2
17	1506738	Washer	2
18	2067476	Grill	1
19	1531558	Insert	2

©2005 HYSTER COMPANY

AIR INTAKE AND FILTER SYSTEM (Figure 3-3)
GM 2.4L
LPG

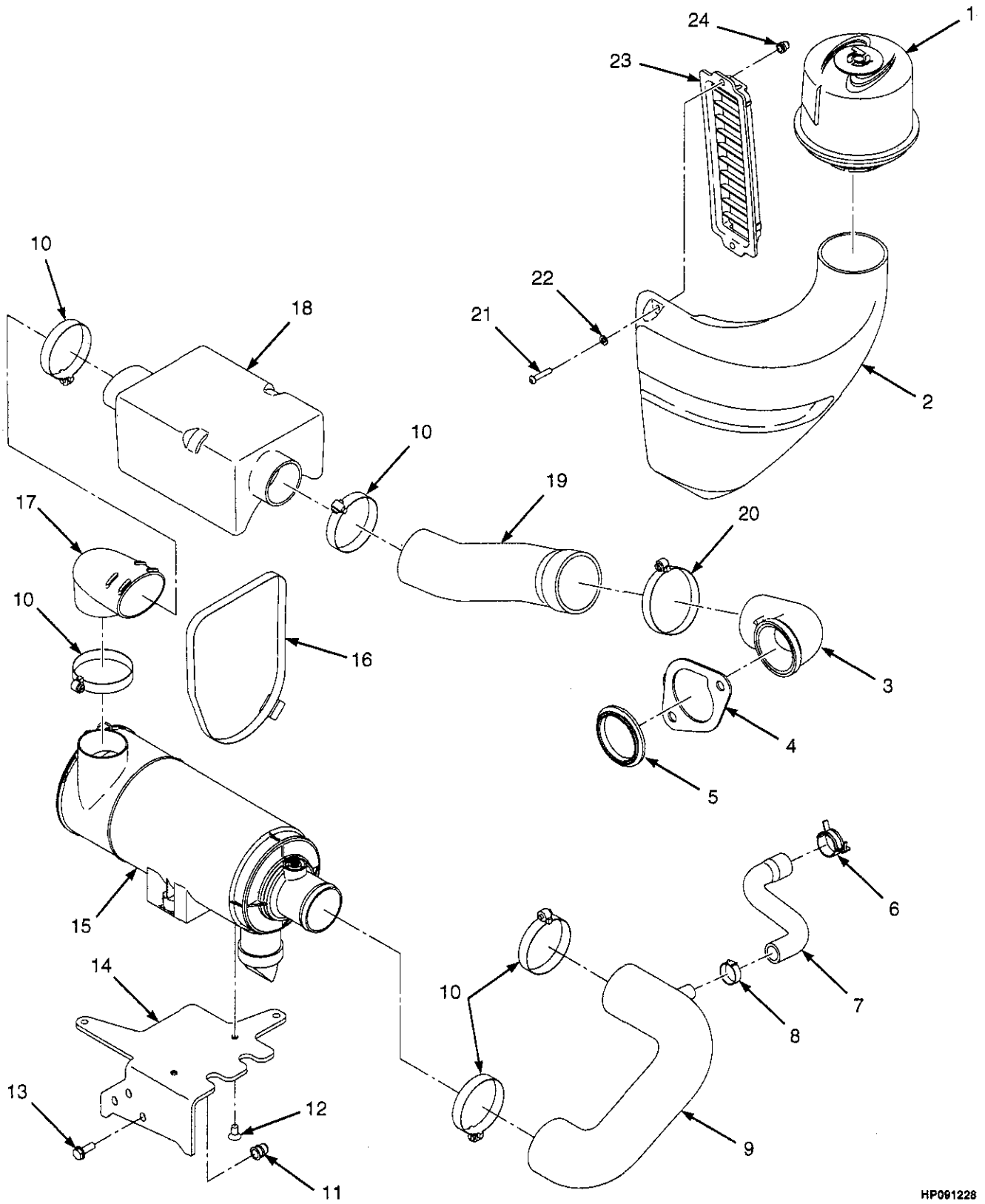

©2005 HYSTER COMPANY

AIR INTAKE AND FILTER SYSTEM
GM 2.4L
LPG

ITEM	PART NO.	DESCRIPTION	QTY
1	1501888	Pre-Cleaner	1
2	1565201	Air Duct	1
3	1581438	Elbow	1
4	1581439	Retainer	1
5	1502079	Grommet	1
6	1501997	Clamp	1
7	1501887	Hose	1
8	353199	Clamp	1
9	1501837	Hose	1
10	112989	Clamp	5
11	1530243	Insert	3
12	296481	Screw	2
13	1583611	Capscrew	3
14	1582159	Bracket	1
15	1501855	Air Cleaner Assembly (☞ Figure 3-1)	1
16	1580068	Strap	1
17	1565199	Elbow	1
18	1565200	Silencer	1
19	1565212	Hose	1
20	115696	Clamp	1
21	2071261	Capscrew	2
22	1506738	Washer	2
23	2067476	Grill	1
24	1531558	Insert	2

©2005 HYSTER COMPANY

AIR INTAKE AND FILTER SYSTEM (Figure 3-4)
YANMAR 2.6L AND 3.3L
DIESEL

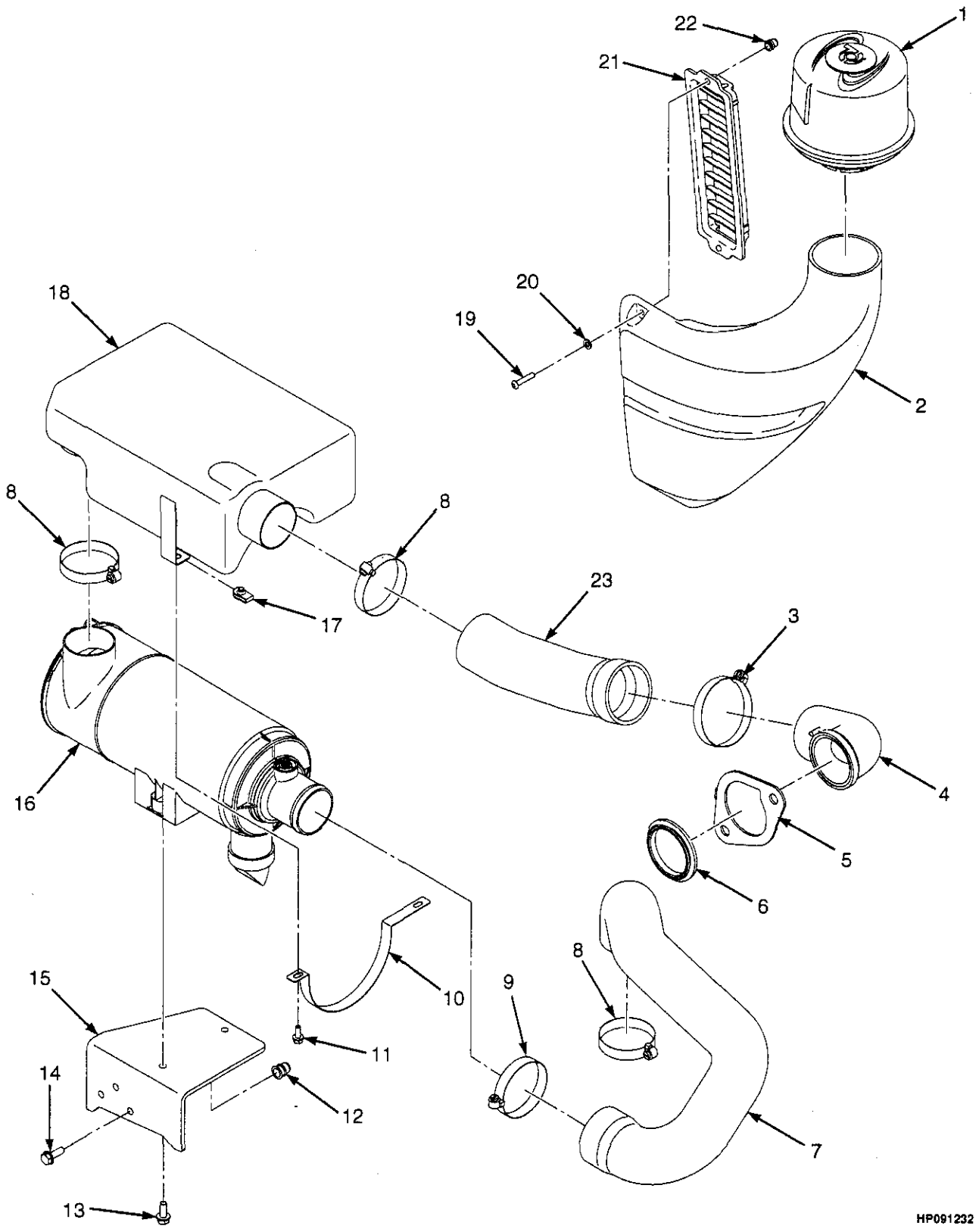

©2005 HYSTER COMPANY

AIR INTAKE AND FILTER SYSTEM
YANMAR 2.6L AND 3.3L DIESEL

ITEM	PART NO.	DESCRIPTION	QTY
1	1501888	Pre-Cleaner	1
2	1565201	Air Duct	1
3	115696	Clamp	1
4	1581438	Elbow	1
5	1581439	Retainer (Elbow)	1
6	1502079	Grommet	1
7	2075783	Hose	1
8	112989	Clamp	3
9	1394008	Clamp	1
10	1589542	Strap	1
11	1527876	Capscrew	2
12	1530243	Insert	3
13	1527880	Capscrew	2
14	1583611	Capscrew	3
15	1501849	Bracket	1
16	1501855	Air Cleaner Assembly (☞ Figure 3-1)	1
17	1566420	Clip Nut	2
18	2078092	Silencer	1
19	2071261	Capscrew	2
20	1506738	Washer	2
21	2067476	Grill	1
22	1531558	Insert	2
23	1565212	Hose	1

©2005 HYSTER COMPANY

FUEL SYSTEM (Figure 3-5)
MAZDA 2.0L AND 2.2L
LPG

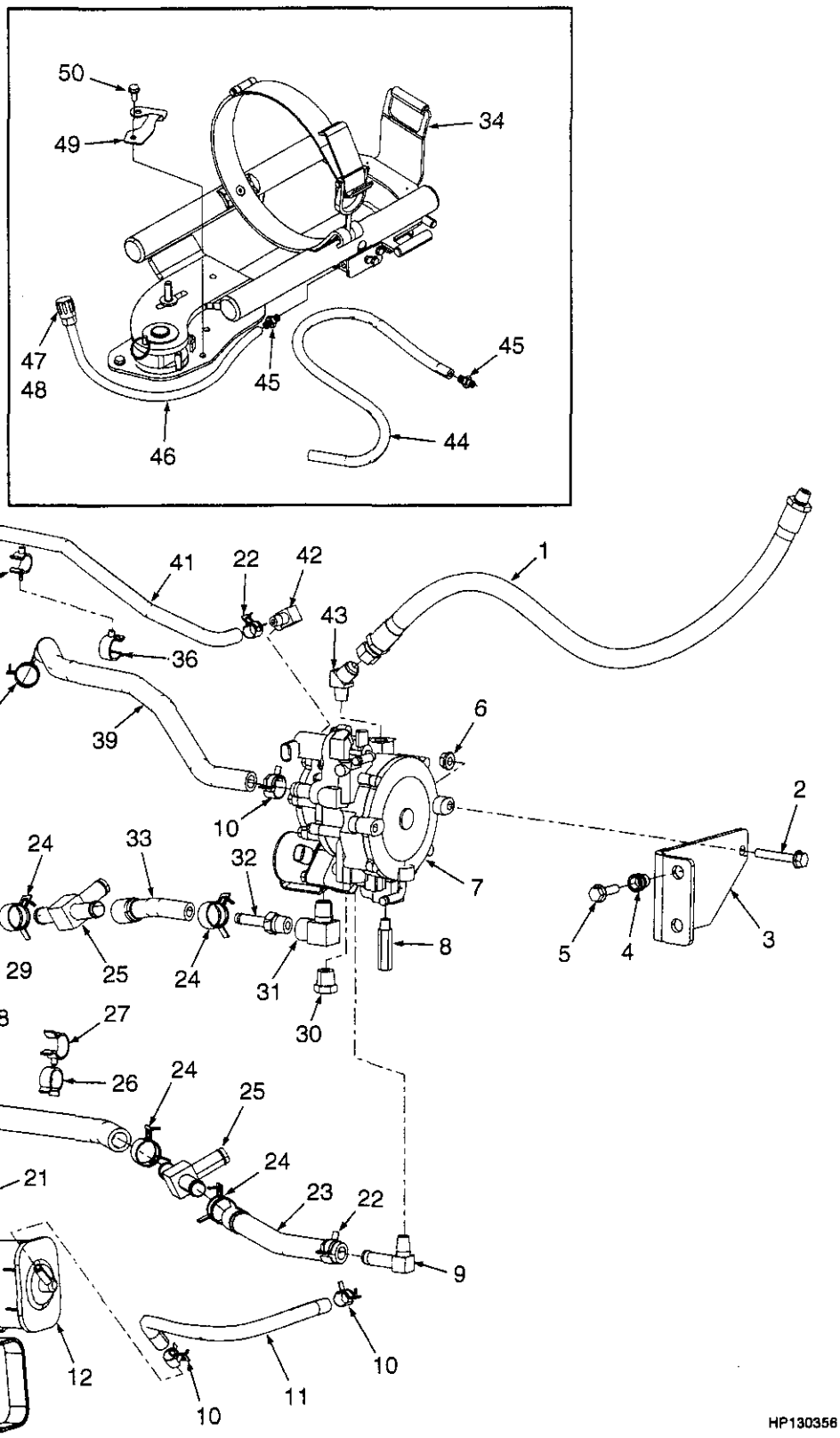

HP130356

©2005 HYSTER COMPANY

FUEL SYSTEM
MAZDA 2.0L AND 2.2L
LPG

KEY:
A: With Cab
B: With Overhead Guard

ITEM	PART NO.	DESCRIPTION	QTY A	QTY B
1	2072300	Hose	1	1
2	1510115	Capscrew	2	2
3	1502069	Bracket (Regulator)	1	1
4	1530243	Insert	2	2
5	1527881	Capscrew	2	2
6	1502543	Nut (Flange)	2	2
7	1594144	Regulator Lockout	1	1
8	1502058	Fitting	1	1
9	16788	Fitting	1	1
10	1502003	Clamp	4	4
11	260878	Hose	1	1
12	1471694	Resonator	1	1
13	1475409	Clamp	1	1
14	1480237	Clip Nut	1	1
15	369815	Clamp	2	2
16	1502085	Hose	1	1
17	16199	Fitting	1	1
18	16168	Fitting	1	1
19	1502027	Nipple	1	1
20	1527880	Capscrew	1	1
21	1339452	Clamp	1	1
22	1502007	Clamp	3	3
23	2071303	Hose	1	1
24	1501994	Clamp	2	..
25	366000	Nipple	1	1
26	1502066	Clamp	1	1
27	1502054	Clamp	1	1
28	1502082	Hose	..	1
28	2071302	Hose	1	..
29	1501995	Clamp	1	1
30	16143	Fitting	1	1
31	63108	Fitting	1	1
32	1502005	Clamp	4	2
33	141776	Fitting	1	1
34	2080338	Hose	1	1
35	1608989	Nipple	1	1
36	1502055	Clamp	1	1
37	1502053	Clamp	2	2
38	1502083	Hose	..	1
38	2070784	Hose	1	..
39	1502081	Hose	1	1
40	1543691	Clamp (Swivel)	1	1
41	1502084	Hose	1	1
42	15971	Fitting	1	1
43	16863	Fitting	1	1

©2005 HYSTER COMPANY

FUEL SYSTEM
MAZDA 2.0L AND 2.2L
LPG

ITEM		PART NO.	DESCRIPTION	QTY A	QTY B
44		2072298	Hose	1	1
45		16134	Fitting	2	2
46		2058426	Hose	1	1
47		97999	Disconnect	1	1
48		2071517	Sleeve	1	1
49	a	1564061	Bracket	1	1
50		1586013	Capscrew	4	4
51		1519360	LPG Bracket Assembly (EZXchange)	1	1
51		1582409	LPG Bracket Assembly (Swing Out)	1	1

FOOTNOTES:

a For Use With Swing Out Bracket Only

©2005 HYSTER COMPANY

NOTES

FUEL SYSTEM (Figure 3-6)
GM 2.4L
LPG

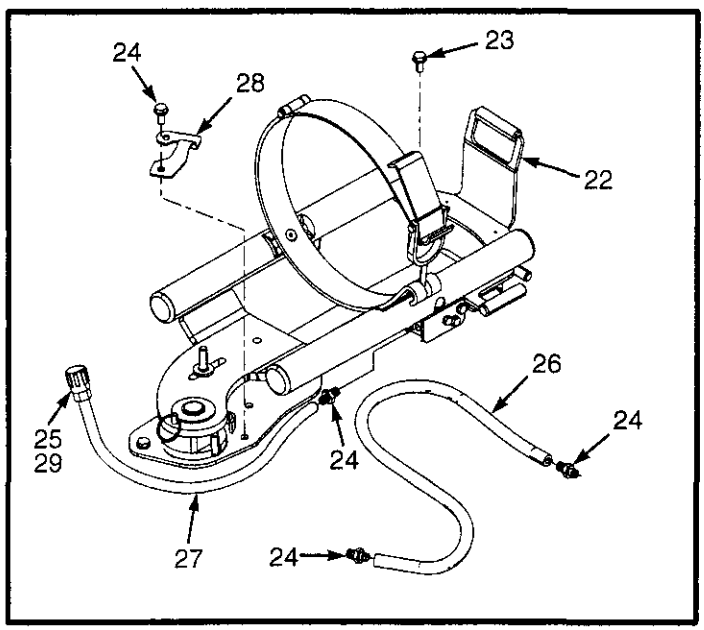

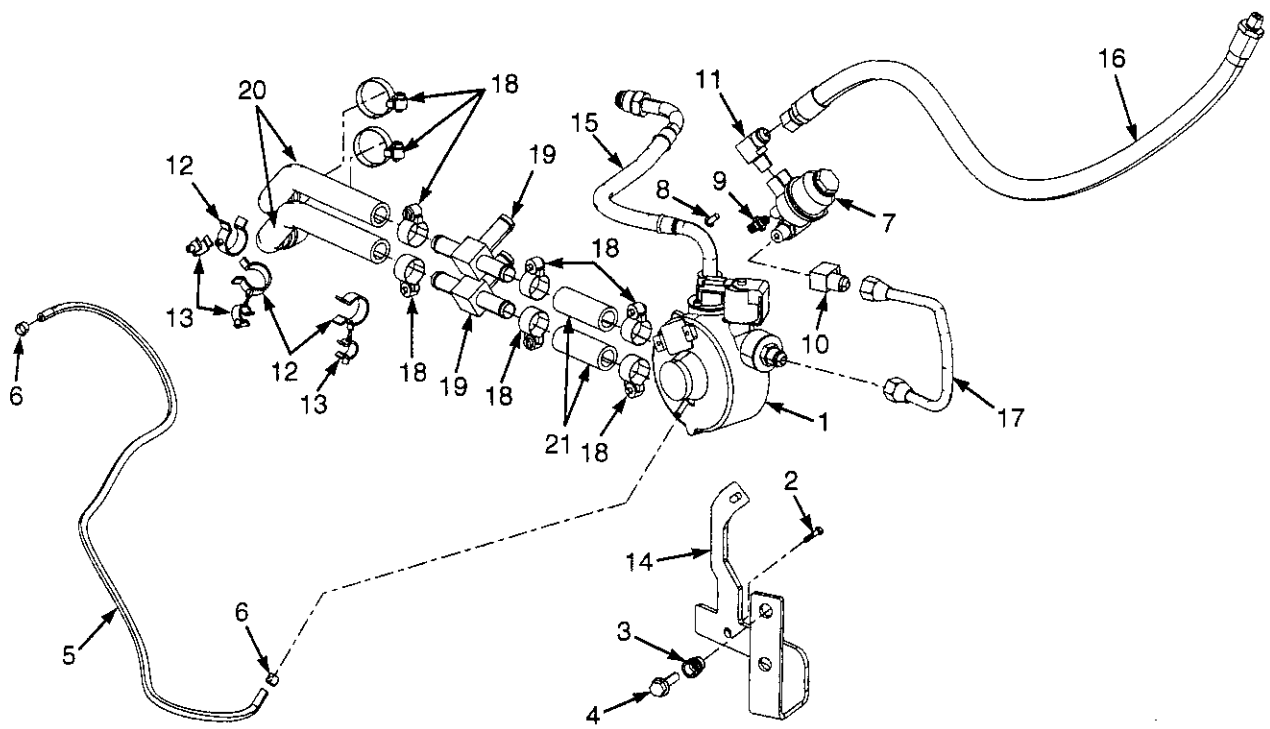

BP080378

©2005 HYSTER COMPANY

FUEL SYSTEM
GM 2.4L
LPG

ITEM		PART NO.	DESCRIPTION	QTY
1		2056762	Regulator (LPG) (☞ Figure 3-7)	1
2		1529366	Capscrew	1
3		1530243	Insert	2
4		1527881	Capscrew	2
5		1347166	Hose	1
6		366473	Clamp	2
7		2070100	Fuel Filter (LPG)	1
7		1581302	Fuel Filter Kit	1
8		296152	Capscrew	2
9		16151	Fitting	1
10		14372	Fitting	1
11		14358	Fitting	1
12		1542436	Clamp	3
13		1542439	Clamp	3
14		1578965	Bracket	1
15		2064431	Hose	1
16		2072300	Hose	1
17		2072299	Tube	1
18	**a**	130845	Clamp	8
18	**b**	130845	Clamp	4
19	**a**	366000	Nipple	2
20	**a**	2072894	Hose	2
20	**b**	2072895	Hose	2
21	**a**	2070782	Hose	2
22		1519360	LPG Bracket Assembly (EZXchange)	1
22		1582409	LPG Bracket Assembly (Swing Out)	1
23		1586013	Capscrew	4
24		16134	Fitting	2
25		97999	Disconnect	1
26		2072298	Hose	1
27		2058426	Hose	1
28	**c**	1564061	Bracket	1
29		2071517	Sleeve	1

FOOTNOTES:

a For Vehicles With Cab
b For Vehicles With Overhead Guard
c For Vehicles With Swing Out Bracket

©2005 HYSTER COMPANY

LPG REGULATOR (Figure 3-7)
GM 2.4L

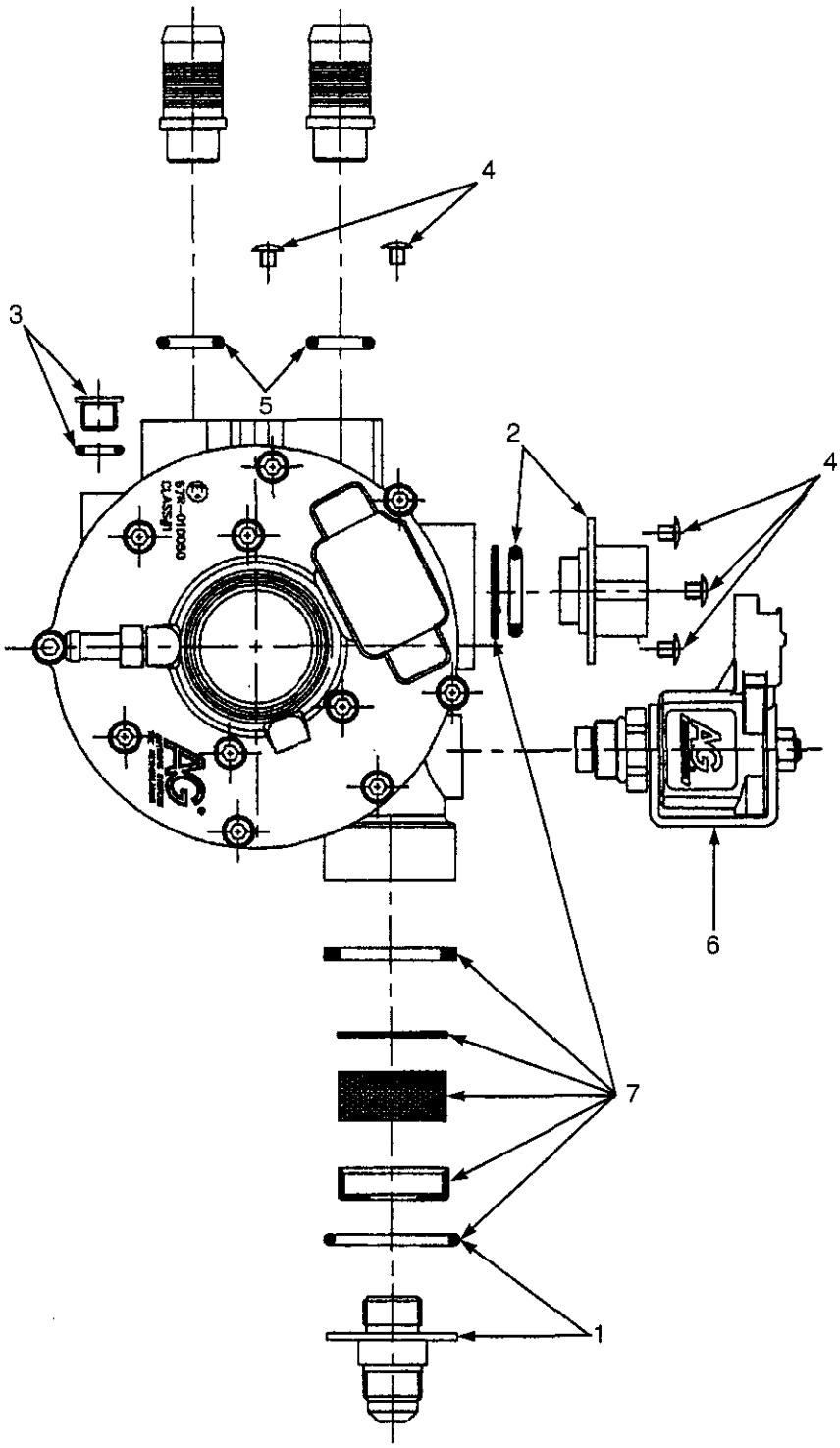

HP130352

©2005 HYSTER COMPANY

LPG REGULATOR
GM 2.4L

ITEM	PART NO.	DESCRIPTION	QTY
	2056762	Regulator (LPG)	1
1	1581762	Fitting (Inlet Fitting With O-Ring)	1
2	1581763	Fitting (Outlet Fitting With O-Ring)	1
3	1581764	Drain Plug (With O-Ring)	1
4	1585751	Screw Kit (Includes 5 Connector Screws)	1
5	1585748	O-Ring Kit (Includes 2 Coolant Fitting O-Rings)	1
6	1585747	Lock-Off Kit	1
7	1581761	Filter Replacement Kit	1
7	. . . . .	O-Ring	1
7	. . . . .	Plastic Cap	1
7	. . . . .	Foam Filter	1
7	. . . . .	Paper Filter	1
7	. . . . .	Rubber Washer	1
7	. . . . .	Screen	1

©2005 HYSTER COMPANY

LPG BRACKET ASSEMBLY (Figure 3-8)
EZXCHANGE BRACKET

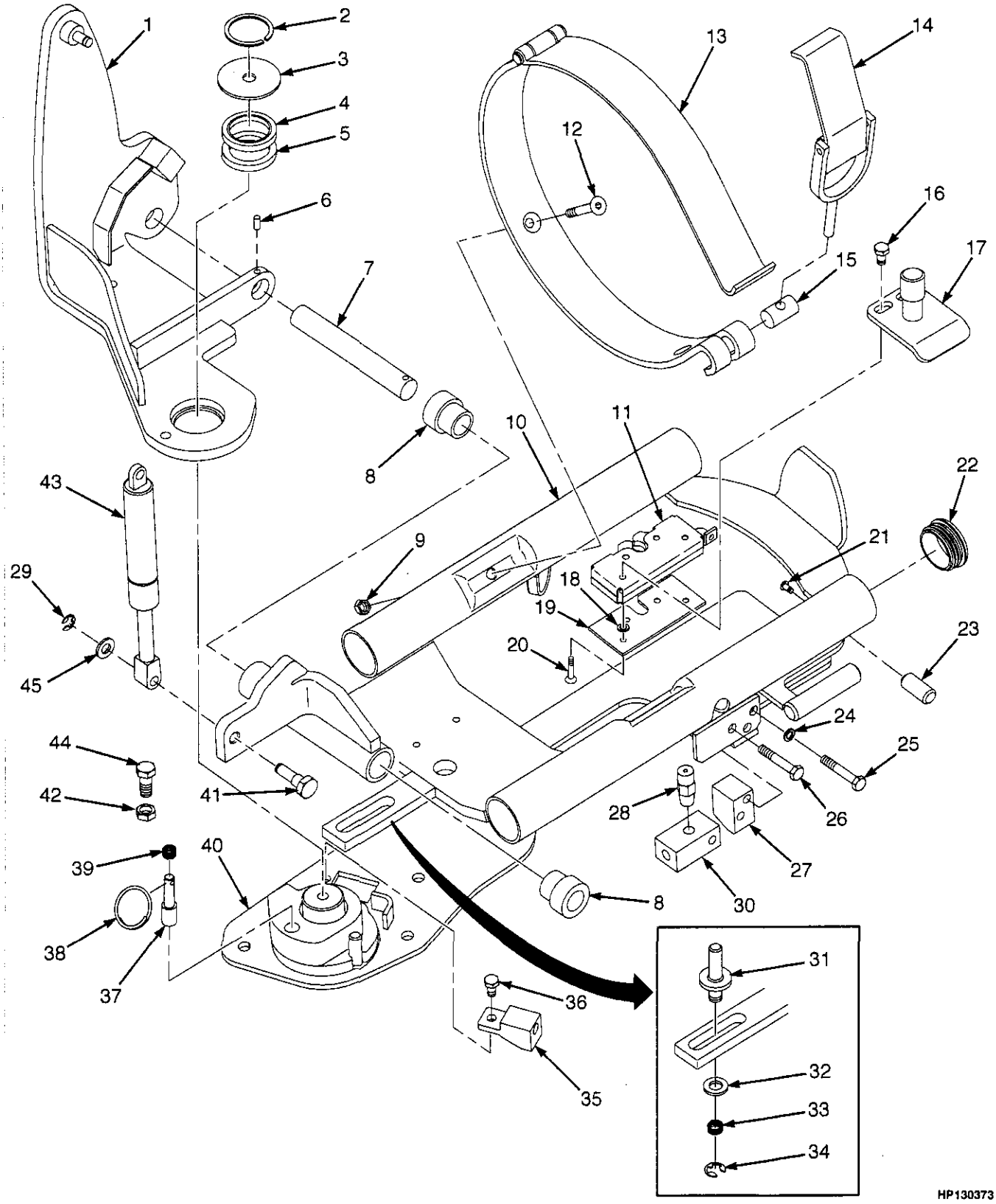

©2005 HYSTER COMPANY

LPG BRACKET ASSEMBLY
EZXCHANGE BRACKET

ITEM	PART NO.	DESCRIPTION	QTY
	1519360	LPG Bracket Assembly	1
1	1517437	Pivot (Intermediate)	1
2	34507	Snap Ring	1
3	1568839	Washer (Pivot)	1
4	184451	Ball Bearing	2
5	1568853	Washer (Thrust)	1
6	302363	Pin	1
7	1581887	Shaft	1
8	1581888	Bushing	2
9	1581739	Nut	4
10	1517438	Support	1
11	1517405	Latch	1
12	1581733	Capscrew	2
13	1525441	Strap	1
14	1586458	Latch	1
14	1383573	Fork	1
14	147288	Lever	1
14	196298	Pin	1
14	1581744	Capscrew	1
14	1581773	Nut	1
15	147294	Nut (Adjustment)	1
16	1581885	Capscrew	2
17	1534649	Pin Weldment	1
18	1581556	Washer	4
19	1534674	Plate	1
20	1581899	Capscrew	4
21	1581740	Capscew	1
22	1398099	Plug	4
23	1534677	Pin	1
24	1581898	Washer	1
25	1585835	Capscrew	2
26	1581583	Capscrew	1
27	1534679	Block (Anti-Rattle)	1
28	101809	Relief Valve	1
29	1525442	Retaining Ring	2
30	1534675	Fitting (Bulkhead)	1
31	1525459	Pin (Alignment)	1
32	1581559	Washer	1
33	1528899	Compression Spring	1
34	182118	Retaining Ring	1
35	1525451	Fitting (Bulkhead)	1
36	1581579	Capscrew	1
37	1534671	Pin	1
38	1534672	Ring	1
39	1528903	Compression Spring	1
40	1568844	Base	1
41	1525478	Pin	1
42	1581848	Nut	1
43	1402414	Gas Spring	1
44	1586022	Capscrew	1
45	1581557	Washer	2

©2005 HYSTER COMPANY

LPG BRACKET ASSEMBLY (Figure 3-9)
SWING OUT BRACKET

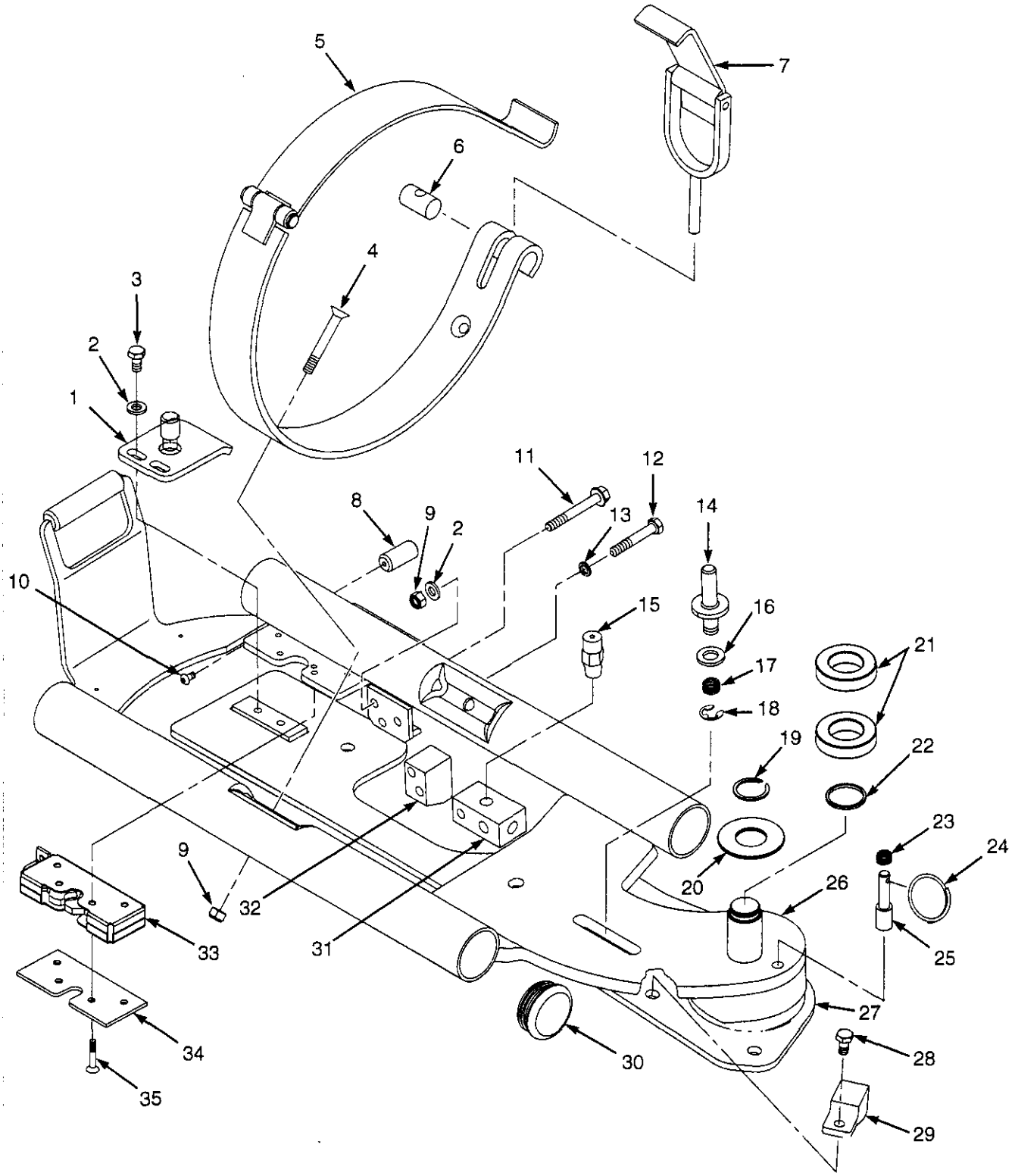

©2005 HYSTER COMPANY

LPG BRACKET ASSEMBLY
SWING OUT BRACKET

ITEM	PART NO.	DESCRIPTION	QTY
	1582409	LPG Bracket Assembly	1
1	1534649	Pin Weldment	1
2	1581556	Washer	2
3	1581885	Capscrew	2
4	1581733	Capscrew	2
5	1525441	Strap	1
6	147294	Nut (Adjusting)	1
7	1586458	Latch	1
7	1383573	Fork	1
7	147288	Lever	1
7	196298	Pin	1
7	1581744	Capscrew	1
7	1581773	Nut	1
8	1534677	Pin	1
9	1581739	Nut	4
10	1581740	Capscew	1
11	1585835	Capscrew	2
12	1581583	Capscrew	1
13	1581898	Washer	1
14	1525459	Pin (Alignment)	1
15	101809	Relief Valve	1
16	1581559	Washer	1
17	1528899	Compression Spring	1
18	182118	Retaining Ring	1
19	34507	Snap Ring	1
20	1568839	Washer (Pivot)	1
21	184451	Ball Bearing	2
22	1568853	Washer	1
23	1528903	Compression Spring	1
24	1534672	Ring	1
25	1534671	Pin	1
26	1582410	Support (Tank)	1
27	1568844	Base	1
28	1581579	Capscrew	1
29	1525451	Fitting (Bulkhead)	1
30	1398099	Plug	4
31	1534675	Fitting (Bulkhead)	1
32	1534679	Block (Anti-Rattle)	1
33	1517405	Latch	1
34	1534674	Plate	1
35	1581899	Capscrew	4

©2005 HYSTER COMPANY

FUEL SYSTEM (Figure 3-10)
YANMAR 2.6L AND 3.3L
DIESEL

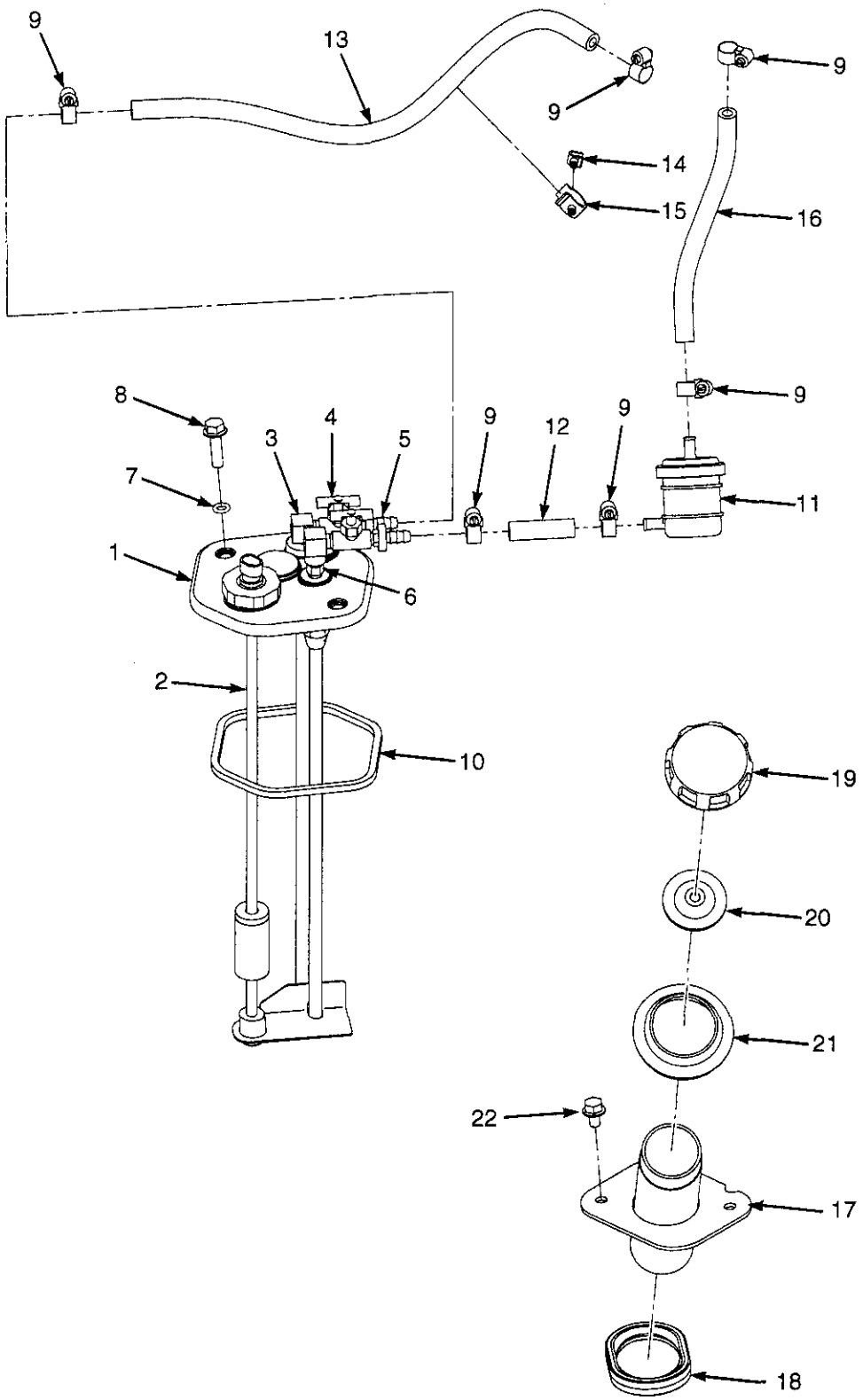

HP130381

©2005 HYSTER COMPANY

FUEL SYSTEM
YANMAR 2.6L AND 3.3L
DIESEL

ITEM	PART NO.	DESCRIPTION	QTY
1	1532532	Fuel Pump Assembly	1
2	1501811	Fuel Sender	1
3	17650	Fitting	1
4	87446	Valve (Shut-Off)	2
5	309651	Fitting	2
6	16151	Fitting	1
7	353000	O-Ring	2
8	1527881	Capscrew	2
9	168718	Clamp	6
10	1528893	Quadrant Ring	1
11	1586457	Fuel Filter	1
12	2062587	Hose	1
13	260878	Hose	1
14	1542440	Clamp (Swivel)	1
15	1543691	Clamp (Swivel)	1
16	2075360	Hose	1
17	1564392	Pipe (Fill)	1
18	1528314	Seal	1
19	2069453	Fuel Cap	1
20	2021683	Gasket	1
21	1528608	Grommet	1
22	1529366	Capscrew	2

©2005 HYSTER COMPANY

FUEL INJECTION SYSTEM (Figure 3-11)
YANMAR 2.6L AND 3.3L
DIESEL

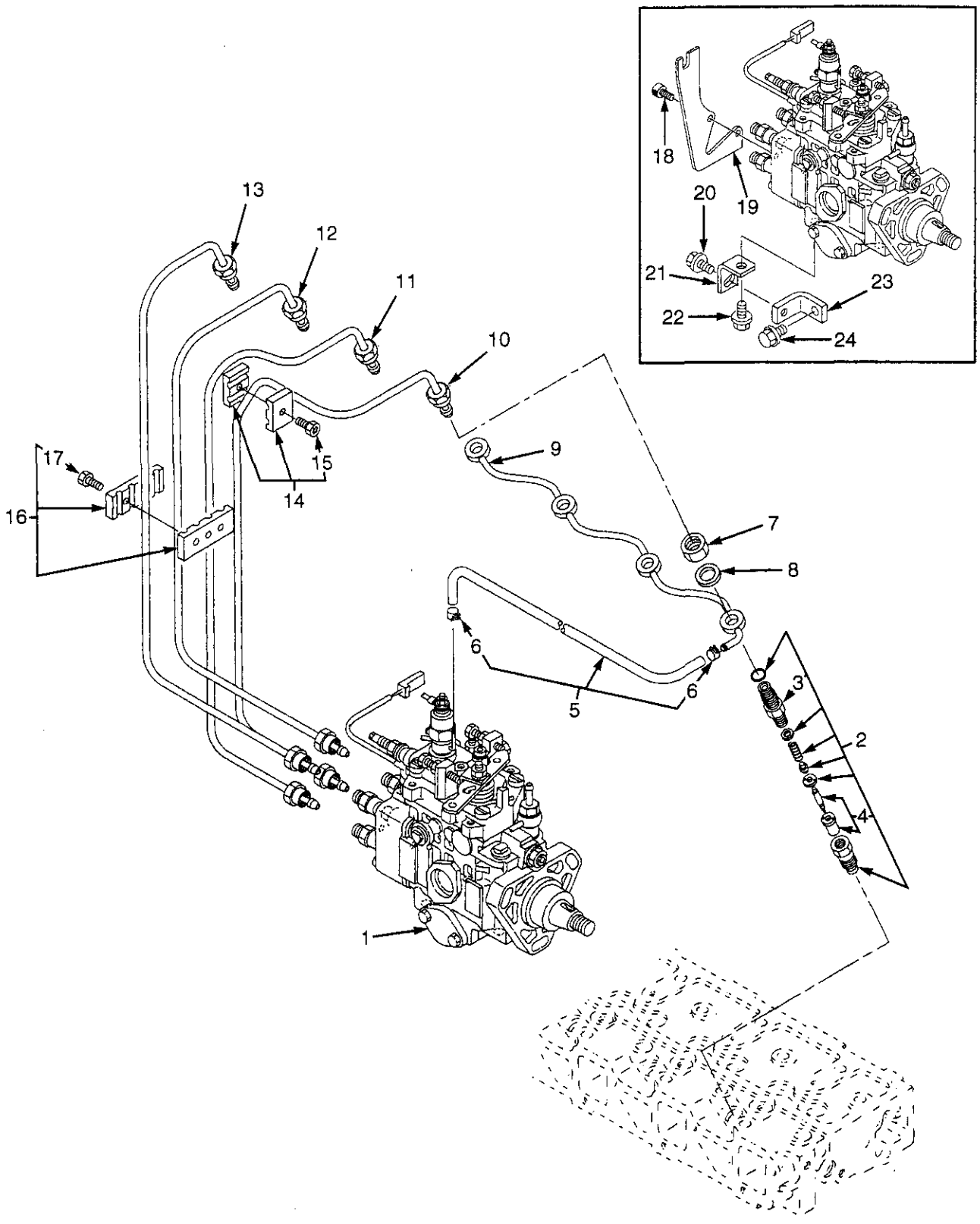

BP090190

©2005 HYSTER COMPANY

FUEL INJECTION SYSTEM
YANMAR 2.6L AND 3.3L
DIESEL

ITEM	PART NO.	DESCRIPTION	QTY
	1501687	Engine Assembly (2.6L)	1
	1501690	Engine Assembly (3.3L)	1
1	1599901	Fuel Injection Pump (2.6L)	1
1	1600084	Fuel Injection Pump (3.3L)	1
1	1608616	Solenoid (Fuel Shut-Off) (3.3L)	1
1	1608617	O-Ring	1
1	1597644	Solenoid Valve (Cold Start)	1
1	1600093	O-Ring	1
2	1599818	Fuel Injector Assembly	4
3	1599820	Retainer	1
4	1599819	Nozzle	1
5	1599828	Pipe	1
6	1599829	Clamp	2
7	1599832	Nut	4
8	1599831	Gasket	4
9	1599830	Pipe (Fuel Return)	1
10	1599827	Pipe (#4)	1
11	1599826	Pipe (#3)	1
12	1599825	Pipe (#2)	1
13	1599824	Pipe (#1)	1
14	1599821	Retainer	2
15	1599822	Bolt	1
16	1599823	Retainer	1
17	1599822	Bolt	2
18	1599908	Bolt	2
19	1599907	Bracket	1
20	1599912	Bolt	1
21	1599909	Retainer	1
22	1599911	Bolt	1
23	1599910	Bracket	1
24	1599913	Bolt	1
	1599898	Gasket Set (Includes Item 8)	1
	1600085	Gasket Set (Includes Item 8)	1

©2005 HYSTER COMPANY

FUEL FILTER AND WATER SEPARATOR (Figure 3-12)
YANMAR 2.6L AND 3.3L
DIESEL

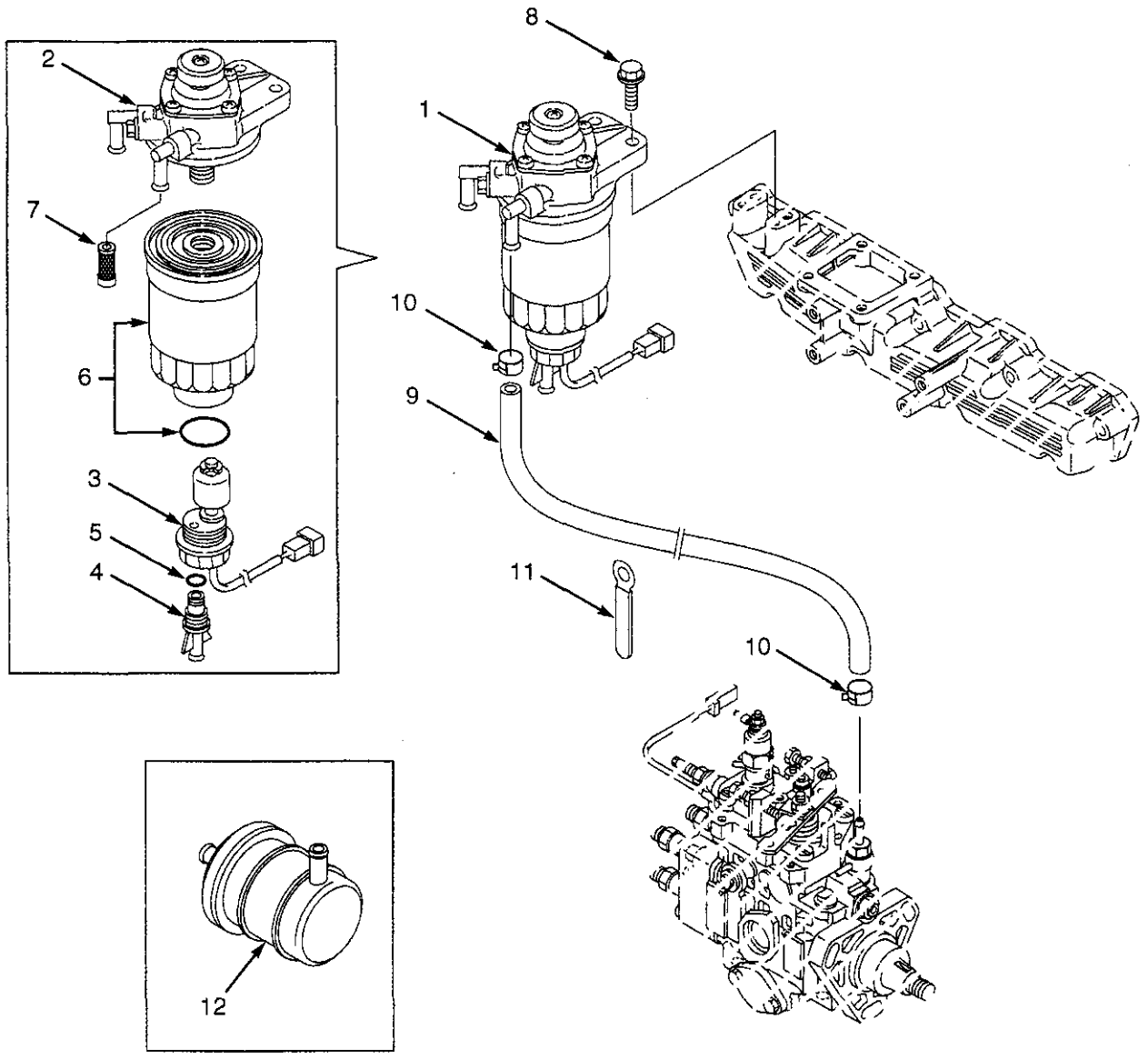

BP090191

©2005 HYSTER COMPANY

FUEL FILTER AND WATER SEPARATOR
YANMAR 2.6L AND 3.3L
DIESEL

ITEM	PART NO.	DESCRIPTION	QTY
	1501687	Engine Assembly (2.6L)	1
	1501690	Engine Assembly (3.3L)	1
1	1599833	Water Separator	1
2	1599834	Body	1
3	1599835	Sensor	1
4	1599836	Plug	1
5	1599837	O-Ring	1
6	1599838	Element Kit	1
7	1599839	Filter	1
8	1599801	Bolt	2
9	1599841	Pipe	1
10	1599842	Clamp	2
11	1599843	Clamp	2
12	1586457	Fuel Filter	1

©2005 HYSTER COMPANY

THROTTLE CABLE ASSEMBLY (Figure 3-13)
MAZDA 2.0L AND 2.2L
LPG

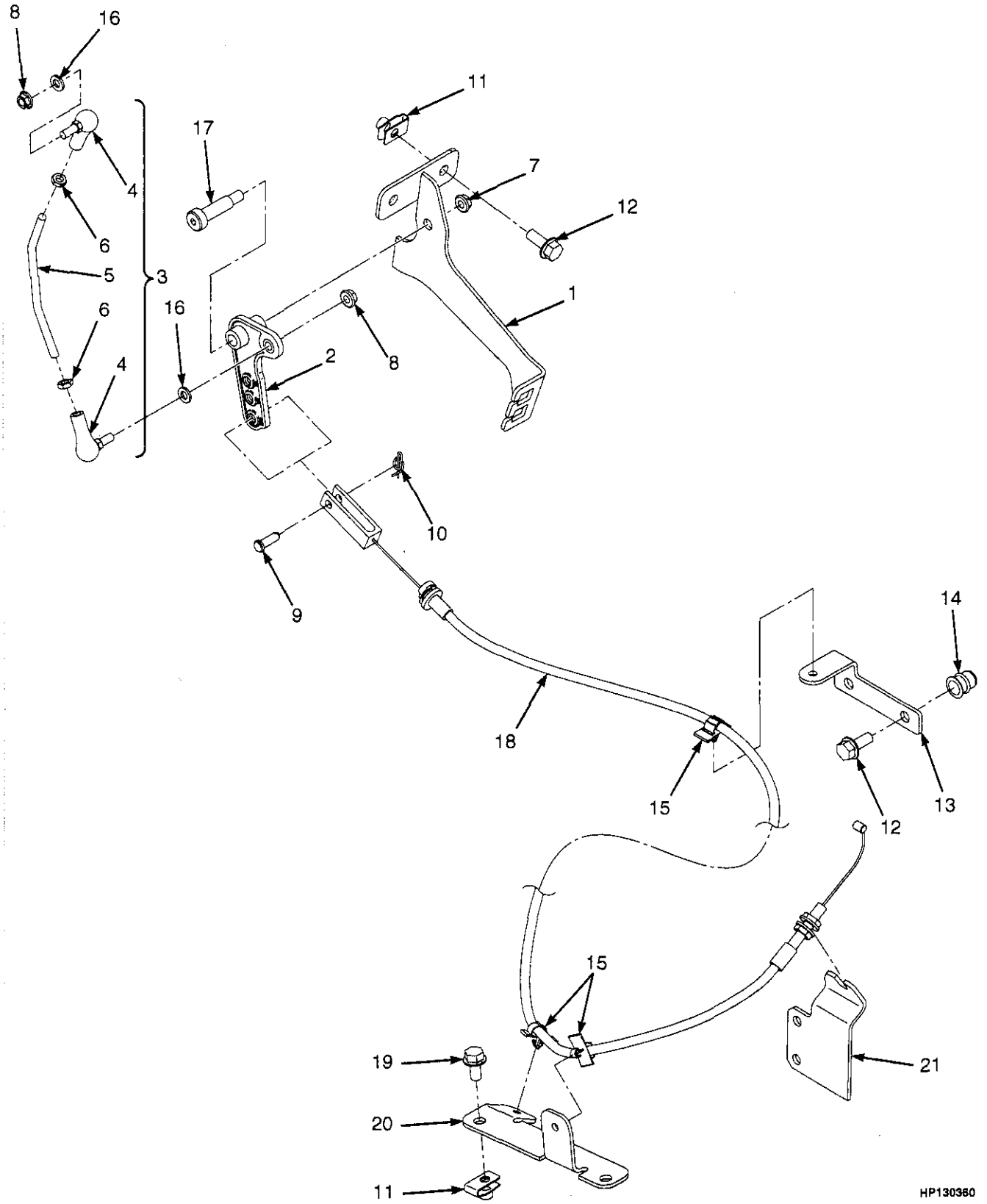

©2005 HYSTER COMPANY

THROTTLE CABLE ASSEMBLY
MAZDA 2.0L AND 2.2L
LPG

ITEM	PART NO.	DESCRIPTION	QTY
1	1609374	Bracket (Throttle Cable)	1
2	1538162	Bellcrank	1
3	1538782	Push Rod Assembly	1
4	2027949	Joint Ball	2
5	1538490	Pushrod	1
6	2308541	Jam Nut	2
7	302400	Locknut	1
8	1514429	Nut (Flange)	2
9	126	Rod End Pin	1
10	1517361	Cotter Pin	1
11	1480237	Clip Nut	4
12	1527880	Capscrew	4
13	1542082	Bracket	1
14	1530243	Insert	2
15	1562088	Clip	3
16	320156	Washer	2
17	1399802	Bolt	1
18	2067395	Cable	1
19	1527879	Capscrew	2
20	1542555	Bracket	1
21	1535136	Bracket (Throttle Cable)	1

©2005 HYSTER COMPANY

THROTTLE CABLE ASSEMBLY (Figure 3-14)
YANMAR 2.6L AND 3.3L
DIESEL

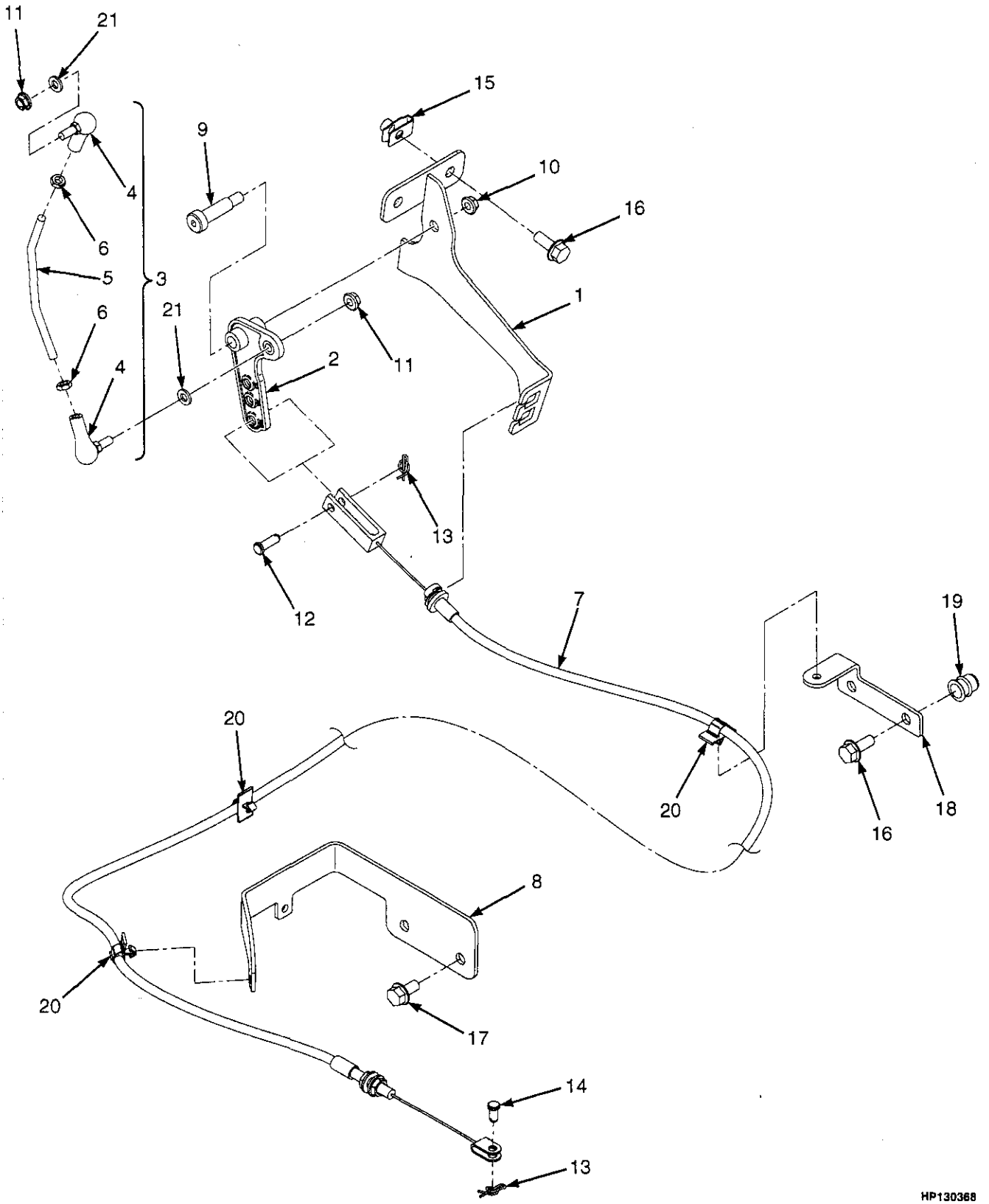

©2005 HYSTER COMPANY

THROTTLE CABLE ASSEMBLY
YANMAR 2.6L AND 3.3L
DIESEL

ITEM	PART NO.	DESCRIPTION	QTY
1	1539298	Bracket (Throttle Cable)	1
2	1538162	Bellcrank	1
3	1538782	Push Rod Assembly	1
4	2027949	Joint Ball	2
5	1538490	Pushrod	1
6	2308541	Jam Nut	2
7	2067396	Throttle Cable	1
8	1542500	Bracket	1
9	1399802	Bolt	1
10	302400	Locknut	1
11	1514429	Nut (Flange)	2
12	126	Rod End Pin	1
13	1517361	Cotter Pin	2
14	128263	Pin	1
15	1480237	Clip Nut	2
16	1527880	Capscrew	4
17	1527879	Capscrew	2
18	1542082	Bracket	1
19	1530243	Insert	2
20	1562088	Clip	3
21	320156	Washer	2

©2005 HYSTER COMPANY

THROTTLE BODY AND ATTACHING PARTS (Figure 3-15)

GM 2.4L

LPG

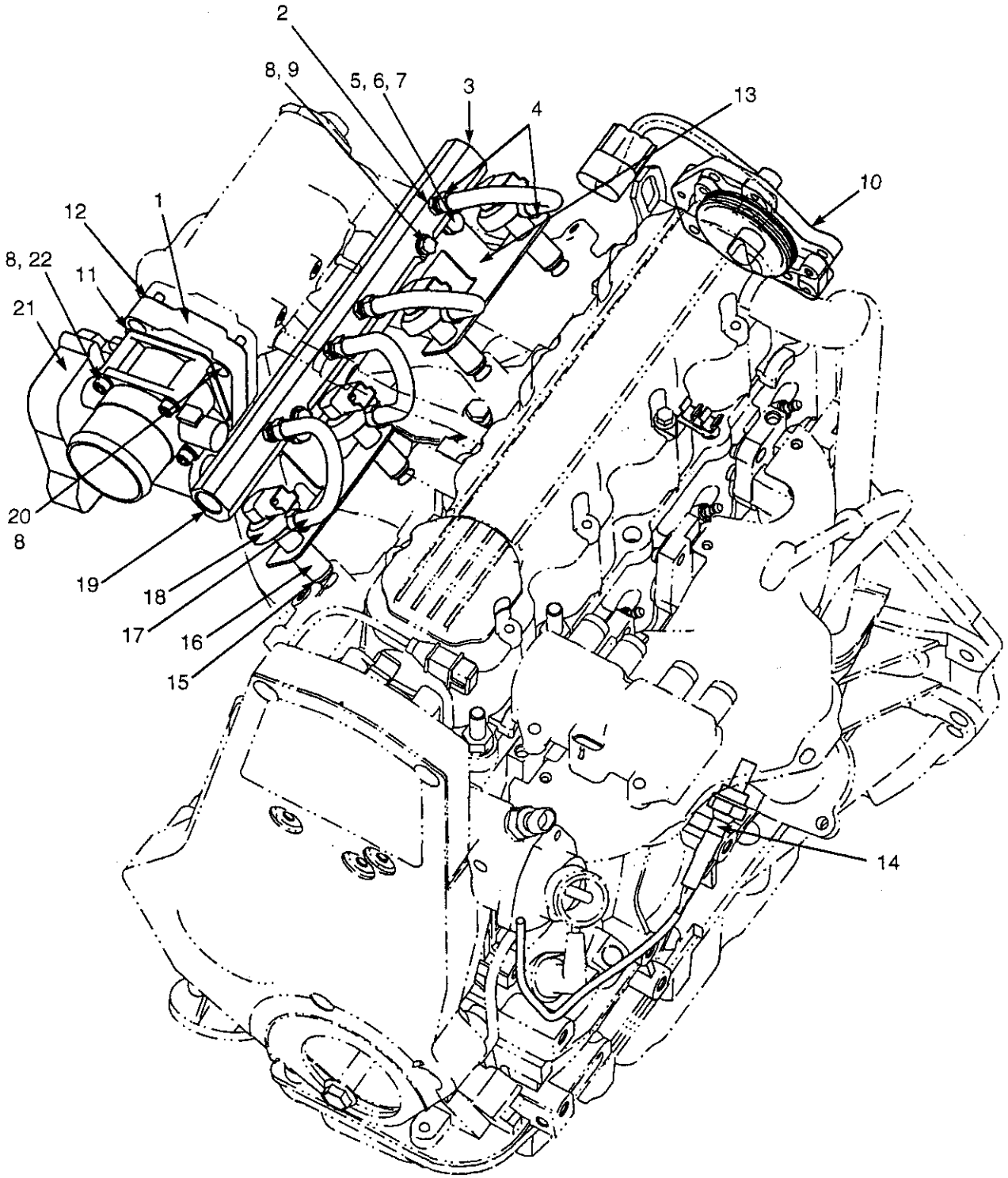

HP130378

©2005 HYSTER COMPANY

THROTTLE BODY AND ATTACHING PARTS
GM 2.4L
LPG

ITEM	PART NO.	DESCRIPTION	QTY
1	1557553	Plate (Throttle Adapter)	1
2	. . . . .	Fitting	4
3	. . . . .	Plug	1
4	1557566	Clamp	8
5	1557558	Lockwasher	2
6	1557559	Capscrew	2
7	1557561	Spacer	2
8	1557550	Lockwasher	10
9	1557554	Capscrew	2
10	1581796	Cam Sensor Kit	1
10	1564589	Screw	1
10	1564588	O-Ring	1
10	1564587	Sensor (Camshaft Position)	1
10	1557550	Lockwasher	1
11	1557551	Gasket (Throttle Body)	1
12	1557552	Gasket (Throttle Plate)	1
13	1557564	Bracket	1
14	1557546	Sensor (Oxygen)	1
15	1557565	O-Ring	4
16	1557563	Adapter (Injector)	4
17	1557562	Hose (LPG Vapor)	4
18	1557560	Injector (LPG)	4
19	1581795	Fuel Rail (LPG)	1
20	1557549	Capscrew	4
21	1557547	Throttle Body	1
22	1557548	Capscrew	4

©2005 HYSTER COMPANY

THROTTLE POSITION SENSOR AND ATTACHING PARTS (Figure 3-16)
YANMAR 2.6L AND 3.3L
DIESEL

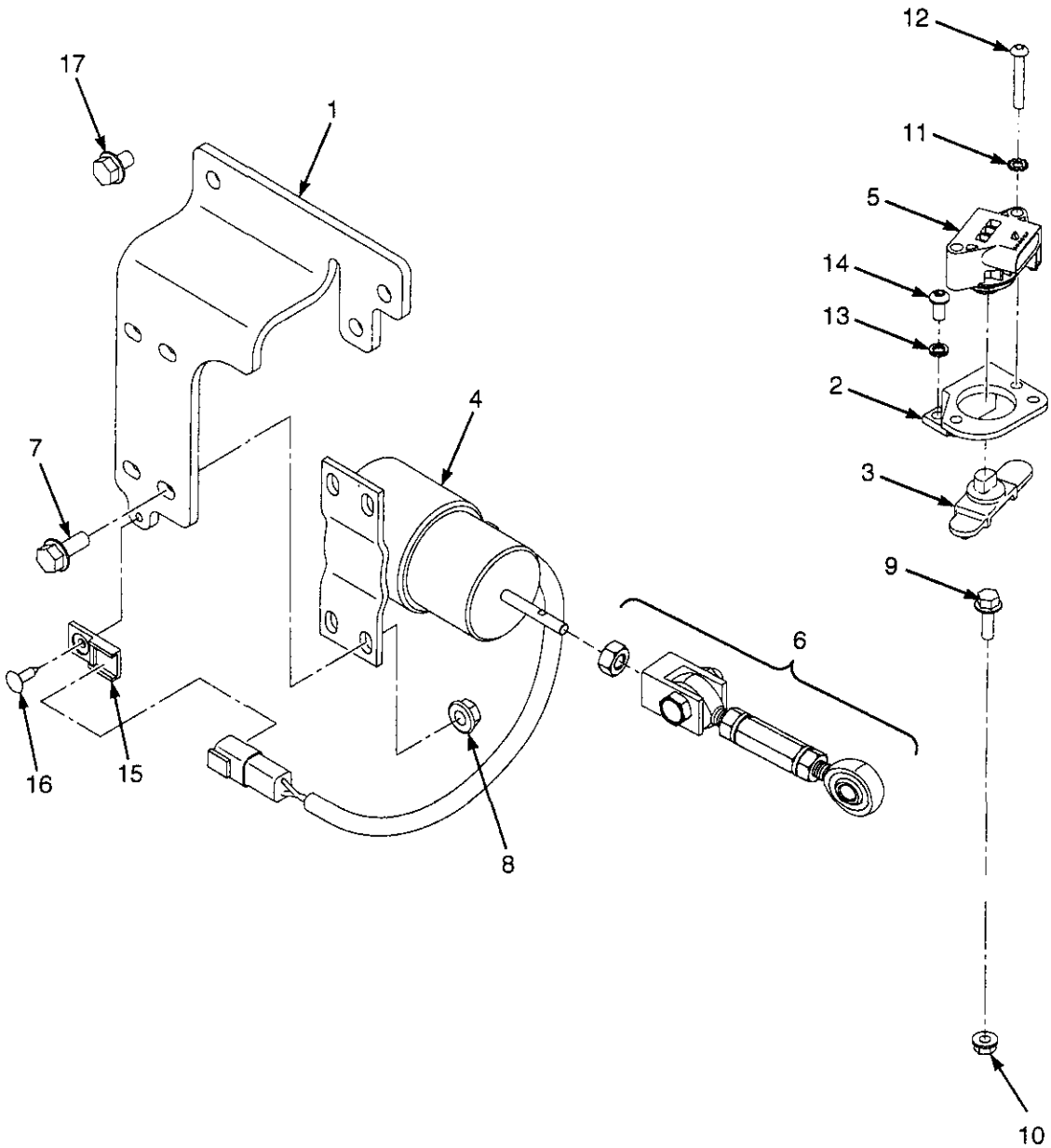

©2005 HYSTER COMPANY

THROTTLE POSITION SENSOR AND ATTACHING PARTS
YANMAR 2.6L AND 3.3L
DIESEL

ITEM	PART NO.	DESCRIPTION	QTY
1	1547550	Bracket (Actuator)	1
2	1586012	Bracket	1
3	2078335	Rotor	1
4	1542772	Actuator (Pull)	1
5	2063842	Throttle Position Sensor	1
6	1542773	Electronic Throttle Linkage Assembly	1
7	1527880	Capscrew	7
8	1502543	Nut (Flange)	4
9	1527877	Capscrew	1
10	313805	Nut	1
11	296378	Washer	2
12	1553897	Capscrew	2
13	293779	Lockwasher	2
14	296158	Capscrew	2
15	1500912	Clip	1
16	1344124	Fastener	1
17	1529366	Capscrew	2

©2005 HYSTER COMPANY

THROTTLE PEDAL AND ATTACHING PARTS (Figure 3-17)
MAZDA 2.0L AND 2.2L/GM 2.4L
LPG

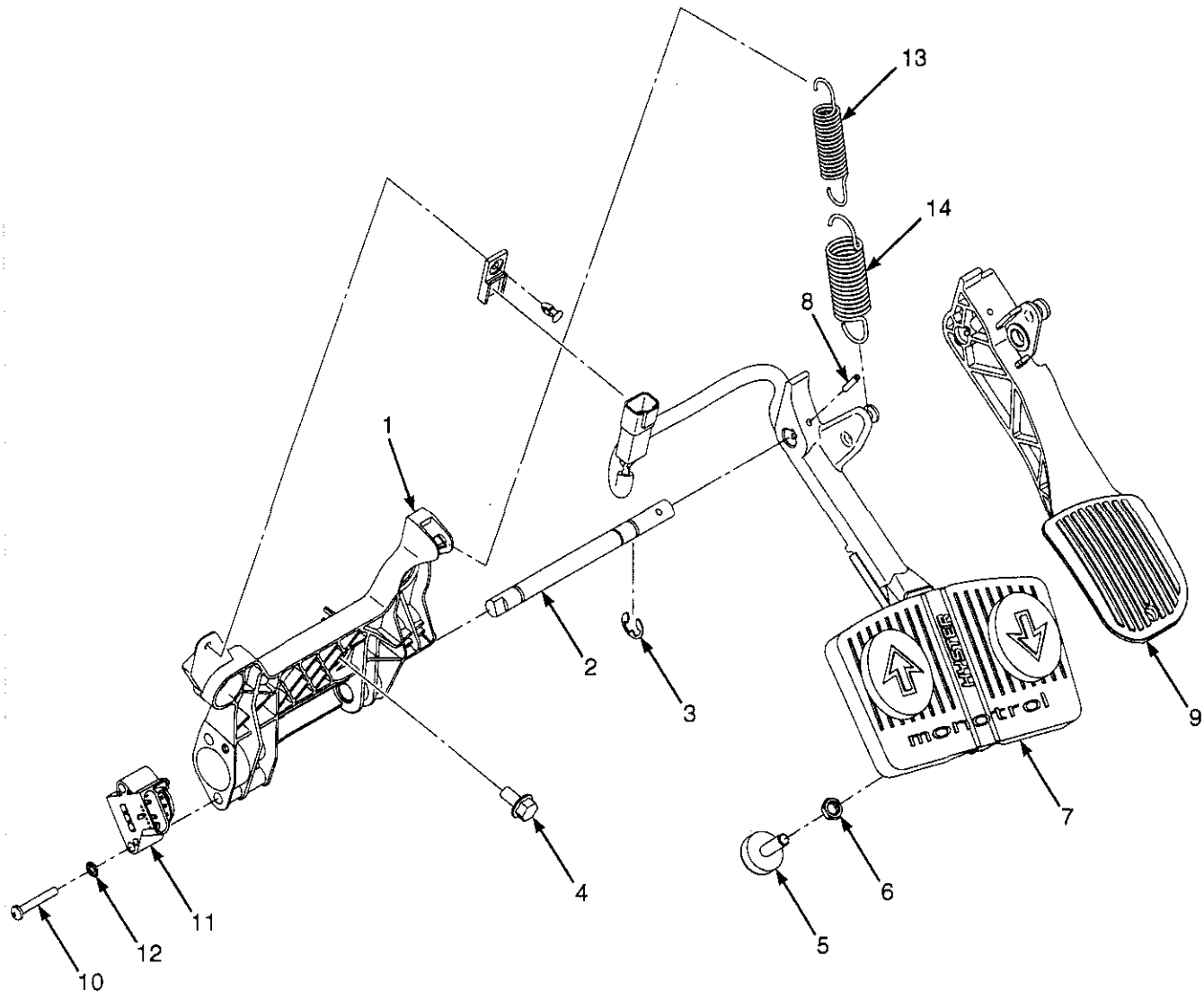

HP130364

©2005 HYSTER COMPANY

THROTTLE PEDAL AND ATTACHING PARTS
MAZDA 2.0L AND 2.2L/GM 2.4L
LPG

ITEM		PART NO.	DESCRIPTION	QTY
1		1538488	Base (Throttle)	1
2		1556962	Shaft	1
3		1530971	Retaining Ring	1
4		1527879	Capscrew	3
5		1530311	Screw (Stop)	1
6		329069	Nut	1
7		1557269	Monotrol Pedal Assembly (☞ Figure 3-18)	1
8	b	302437	Cotter Pin	1
8	c	302443	Pin	1
9		2071181	Pedal (Standard)	1
10		1564752	Screw	2
11		2063842	Throttle Position Sensor	1
12		296378	Washer	2
13		1582301	Spring (Inner)	1
13	a	1582303	Spring (Inner)	1
14		1582300	Spring (Outer)	1
14	a	1582302	Spring (Outer)	1

FOOTNOTES:
a For Use With Mazda Engines Only
b For Use With Monotrol Pedal Only
c For Use With Standard Pedal Only

©2005 HYSTER COMPANY

MONOTROL PEDAL ASSEMBLY (Figure 3-18)

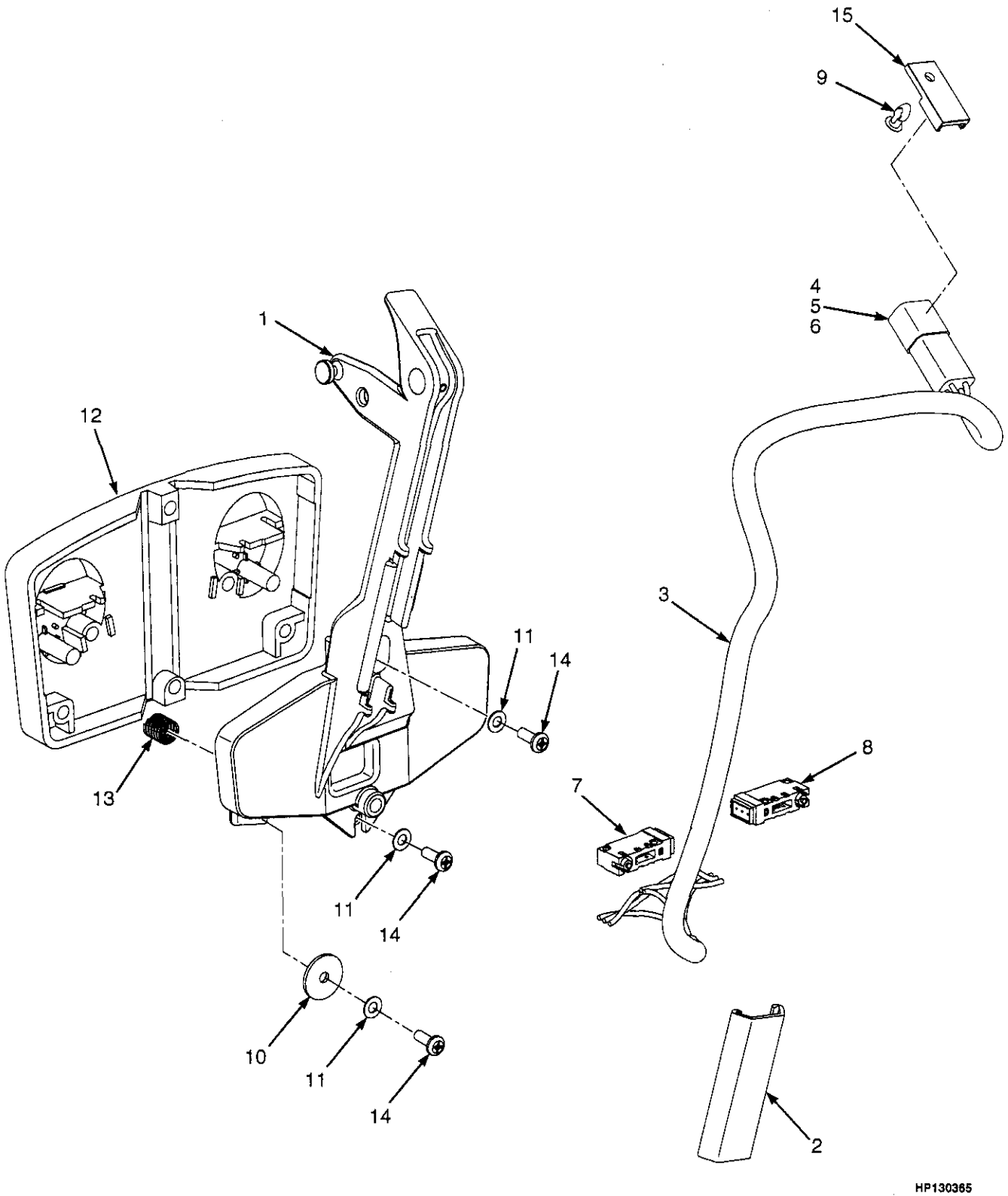

©2005 HYSTER COMPANY

MONOTROL PEDAL ASSEMBLY

ITEM	PART NO.	DESCRIPTION	QTY
	1557269	Monotrol Pedal Assembly	1
1	1556829	Bracket (Pedal)	1
2	1539418	Clip	1
3	2072782	Wire Harness	1
4	1330416	Secondary Lock	1
5	1489655	Connector	1
6	1531312	Terminal	4
7	. . . . .	Switch	1
8	. . . . .	Switch	1
9	1564526	Clip	1
10	362036	Washer	2
11	15931	Lockwasher	4
12	1340470	Pad	1
13	325699	Spring	2
14	16708	Screw	4
15	1500912	Clip	1

©2005 HYSTER COMPANY

NOTES

4 ELECTRICAL SYSTEM

SECTION 4
ELECTRICAL SYSTEM

DESCRIPTION	PAGE
ALTERNATOR AND MOUNTING	
YANMAR 2.6L AND 3.3L	
DIESEL	4-9
BATTERY CABLES	
GM 2.4L	
LPG	4-10
COWL ELECTRICAL	4-16
DISTRIBUTOR	
MAZDA 2.0L AND 2.2L	
LPG	4-8
ELECTRICAL SYSTEM	
RH CHASSIS	4-2
ENGINE ELECTRICAL COMPONENTS	
MAZDA 2.0L AND 2.2L	
LPG	4-4
ENGINE ELECTRICAL SYSTEM	
MAZDA 2.0L AND 2.2L	
LPG	4-6
YANMAR 2.6L AND 3.3L, DIESEL	
WITH OVERHEAD GUARD	4-12
INSTRUMENT CLUSTER	4-19
JOYSTICK AND ELECTRONIC CONTROL LEVERS	4-20
LIGHTS	
BRAKE, TAIL, BACKUP, SIDE, TURN SIGNALS, WORK, STROBE	
WITH CAB	4-26
WITH OVERHEAD GUARD	4-24
MAST ELECTRICAL	4-30
POWER DISTRIBUTION MODULE	4-18
TRANSMISSION ELECTRICAL SYSTEM	4-28
WIRE HARESS	
RH CHASSIS	
GM 2.4L, LPG	4-36
WIRE HARNESS	
COWL	4-50
ELECTRONIC CONTROL VALVE	
FOUR FUNCTION	4-56
THREE FUNCTION	4-54
ENGINE	
GM 2.4L, LPG	4-46
MAZDA 2.0L AND 2.2L, LPG	4-44
YANMAR 2.6L AND 3.3L, DIESEL	4-48
LIGHTS	4-58
RH CHASSIS	
MAZDA 2.0L AND 2.2L, LPG	4-32
YANMAR 2.6L AND 3.3L, DIESEL	4-40
TRANSMISSION	
DUAL SPEED	4-60
SINGLE SPEED	4-62

©2005 HYSTER COMPANY

ELECTRICAL SYSTEM (Figure 4-1)
RH CHASSIS

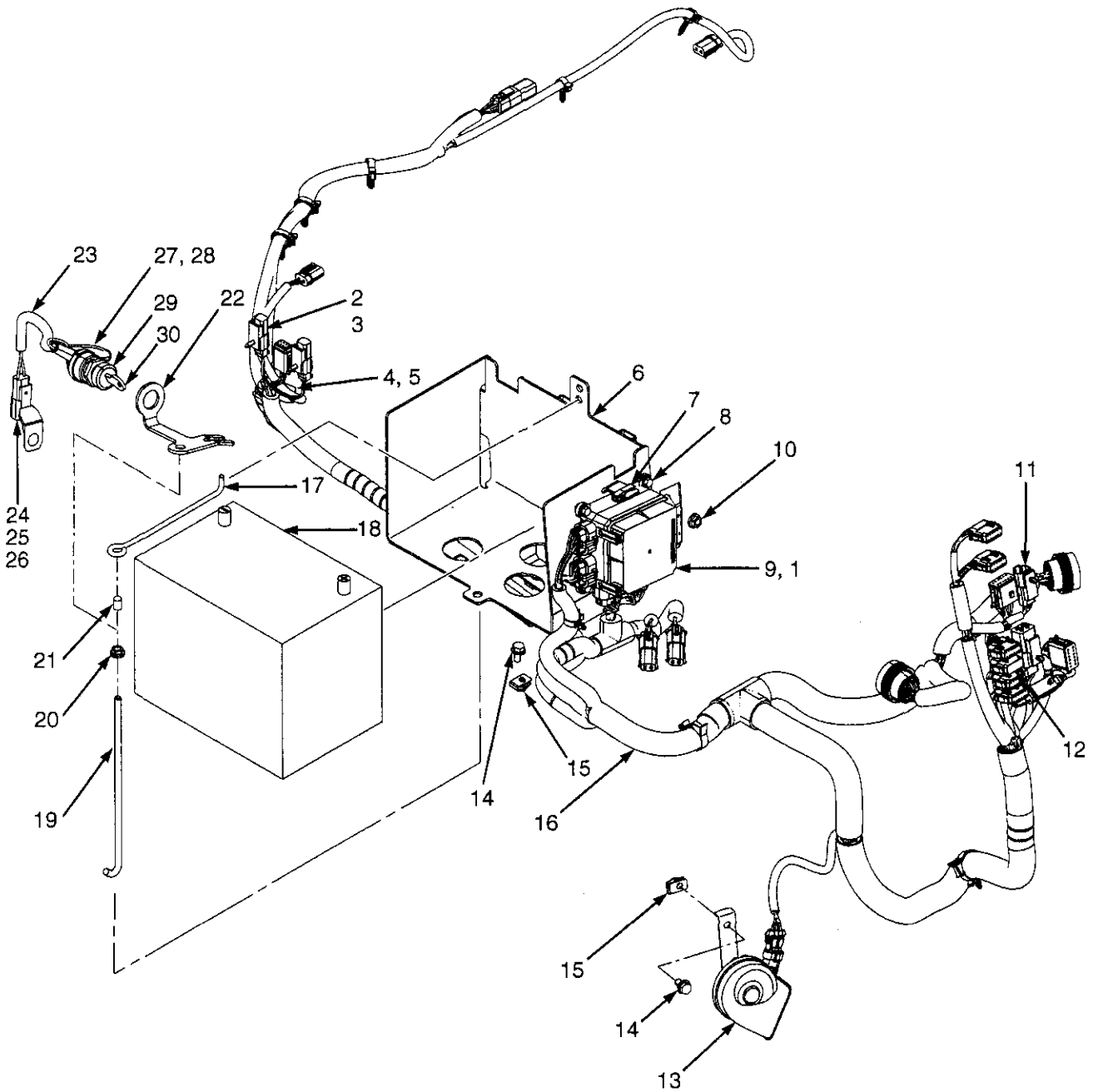

HP061625

©2005 HYSTER COMPANY

ELECTRICAL SYSTEM
RH CHASSIS

ITEM		PART NO.	DESCRIPTION	QTY
1		2063093	Power Distribution Module (☞ Figure 4-9)	1
2		1582464	Fastener	6
3		1582442	Clip	1
4		1588027	Bracket	1
5		1529366	Capscrew	1
6		1584944	Battery Tray	1
7		1402883	Fuse Puller	1
8		1534417	Capscrew	4
9		1559928	Seal	1
10		1502543	Nut (Flange)	1
11		1500912	Clip	6
12	a	1563909	Connector	1
13		1527264	Horn	1
14		1527879	Capscrew	4
15		1480237	Clip Nut	4
16		2075561	Wire Harness (RH Chassis) (Mazda 2.0L and 2.2L) (☞ Figure 4-16)	1
16		2075560	Wire Harness (RH Chassis) (GM 2.4L) (☞ Figure 4-17)	1
16		2075562	Wire Harness (RH Chassis) (Yanmar 2.6L and 3.3L Diesel) (☞ Figure 4-18)	1
17		1585529	Link (Battery Hold Down)	1
18		1383331	Battery (Wet)	1
19		2065745	Link (Battery Hold Down)	1
20		1502543	Nut (Flange)	1
21		1540805	Cap	1
22		1582337	Bracket	1
23		2074320	Wire Harness (Remote Keyswitch)	1
24		1493465	Connector	1
25		1330414	Secondary Lock	2
26		1330437	Terminal (Pin)	2
27		1497433	Terminal Ring	2
28		190383	Boot	2
29		254007	Ignition Switch	1
30		262798	Ignition Key	1

FOOTNOTES:

a For Use With GM And Mazda Engines Only

©2005 HYSTER COMPANY

ENGINE ELECTRICAL COMPONENTS (Figure 4-2)
MAZDA 2.0L AND 2.2L
LPG

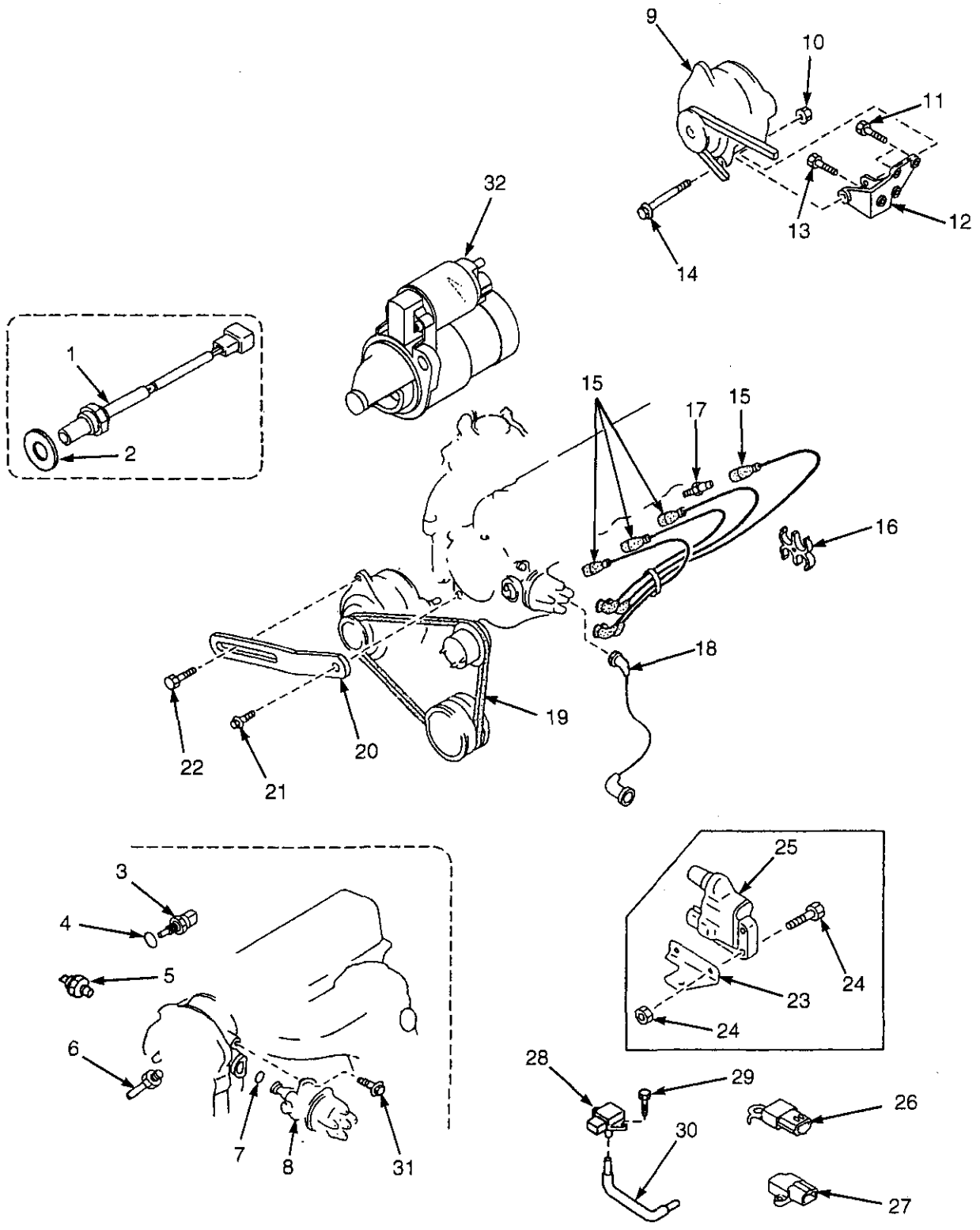

HP091263

©2005 HYSTER COMPANY

ENGINE ELECTRICAL COMPONENTS
MAZDA 2.0L AND 2.2L
LPG

ITEM	PART NO.	DESCRIPTION	QTY
1	1556342	Sensor (Oxygen)	1
2	1368886	Washer	1
3	1539962	Sensor (Air Temperature)	1
4	1368743	Washer	1
5	2026608	Oil Pressure Switch	1
6	1361867	Temperature Sender	1
7	1553985	O-Ring	1
8	1554030	Distributor (☞ Figure 4-4)	1
9	1450928	Alternator	1
10	1361890	Nut	1
11	1361891	Bolt	3
12	1361846	Bracket	1
13	1361888	Bolt	1
14	1368844	Bolt	1
15	1362113	Ignition Cable Set	1
15	1361840	Cable (Spark Plug)	1
15	1361841	Cable (Spark Plug)	1
15	1361842	Cable (Spark Plug)	1
15	1361843	Cable (Spark Plug)	1
16	1361838	Support	1
17	1361837	Spark Plug	4
18	1553984	Coil Wire	1
19	1495412	V-Belt	1
20	1361845	Strap	1
21	1361881	Bolt	1
22	326898	Bolt	1
23	1553996	Bracket	1
24	1553997	Screw Set	1
25	1527571	Ignition Coil	1
26	1545443	Condenser	1
27	1545444	Igniter	1
28	1548352	Sensor b	1
29	1582324	Screw	2
30	1495413	Hose	1
31	1361895	Bolt	1
32	1534424	Starter	1

©2005 HYSTER COMPANY

ENGINE ELECTRICAL SYSTEM (Figure 4-3)
MAZDA 2.0L AND 2.2L
LPG

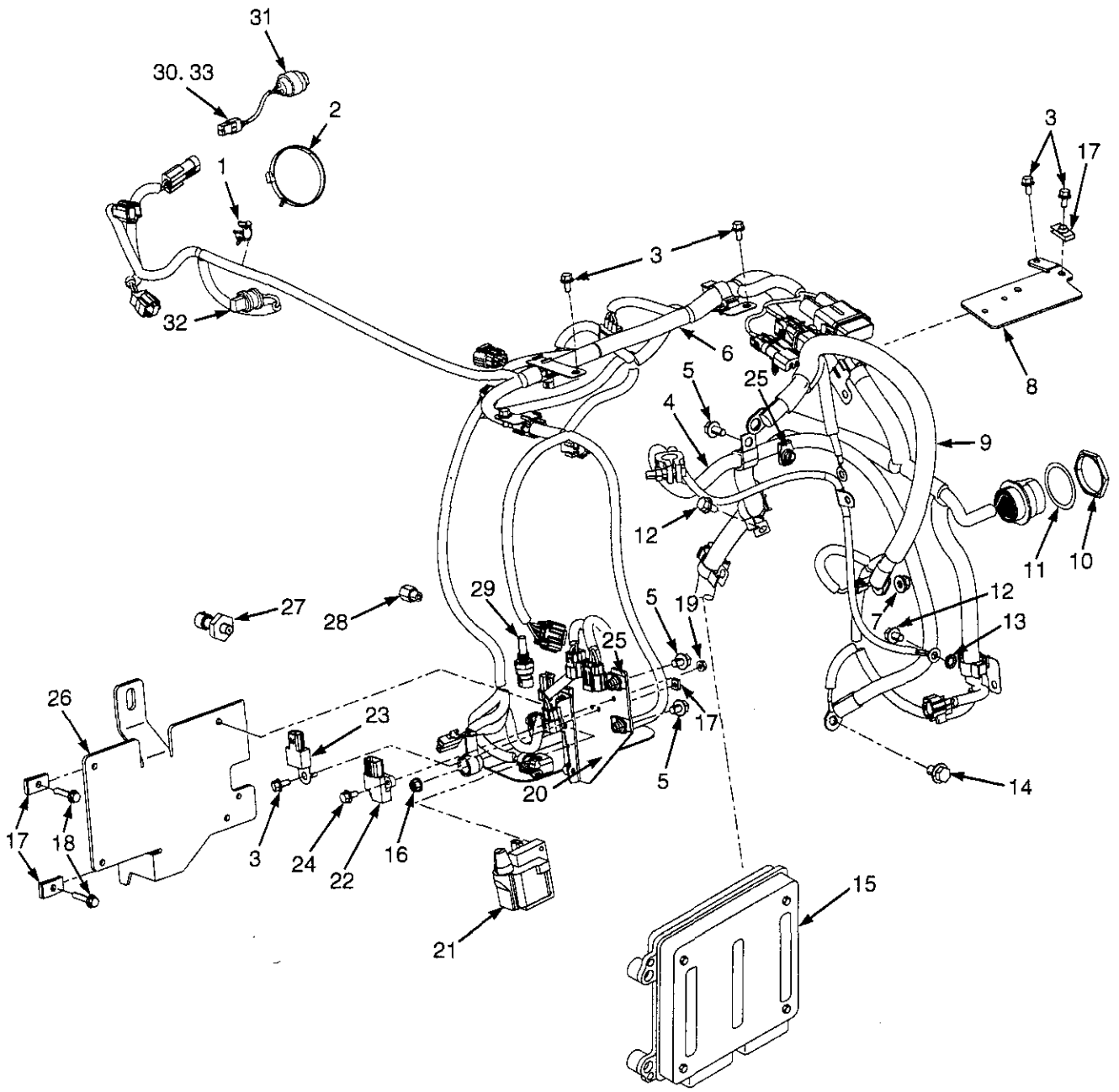

HP081637

©2005 HYSTER COMPANY

ENGINE ELECTRICAL SYSTEM
MAZDA 2.0L AND 2.2L
LPG

ITEM	PART NO.	DESCRIPTION	QTY
1	1542439	Clamp	1
2	1502061	Clamp	1
3	1534417	Capscrew	9
4	2069225	Battery Cable (Negative)	1
4	148789	Terminal	1
4	1564044	Fitting	1
4	128408	Clamp	1
4	806426	Fitting	1
5	1527879	Capscrew	4
6	2065855	Wire Harness (LPG Engine)	1
7	1502543	Nut (Flange)	1
8	1560121	Bracket	1
9	2061383	Battery Cable (Positive)	1
9	148792	Terminal	1
9	16079	Terminal	1
9	806426	Fitting	1
9	1536304	Boot	1
9	1560091	Boot	1
10	1539085	Nut	1
11	1539086	Lockwasher	1
12	1529366	Capscrew	2
13	296380	Lockwasher	1
14	1556623	Bolt	1
15	2065857	Engine Control Unit (2.0L)	1
15	2070685	Engine Control Unit (2.2L)	1
16	1514429	Nut (Flange)	1
17	325182	Nut	9
18	1586495	Capscrew	4
19	1549398	Nut	2
20	1556838	Plate	1
21	1527571	Ignition Coil	1
22	1545444	Igniter	1
23	1545443	Condenser	1
24	296150	Capscrew	2
25	1480237	Clip Nut	4
26	1581526	Formed Bracket	1
27	1537692	Sensor (Oil Pressure)	1
28	367224	Adapter	1
29	1515654	Sensor (Coolant Temperature)	1
30	141259	Fitting	1
31	1529257	Sensor (Air Flow Restriction)	1
32	1501970	Switch (Low Pressure)	1
33	14349	Fitting	1

©2005 HYSTER COMPANY

DISTRIBUTOR (Figure 4-4)
MAZDA 2.0L AND 2.2L
LPG

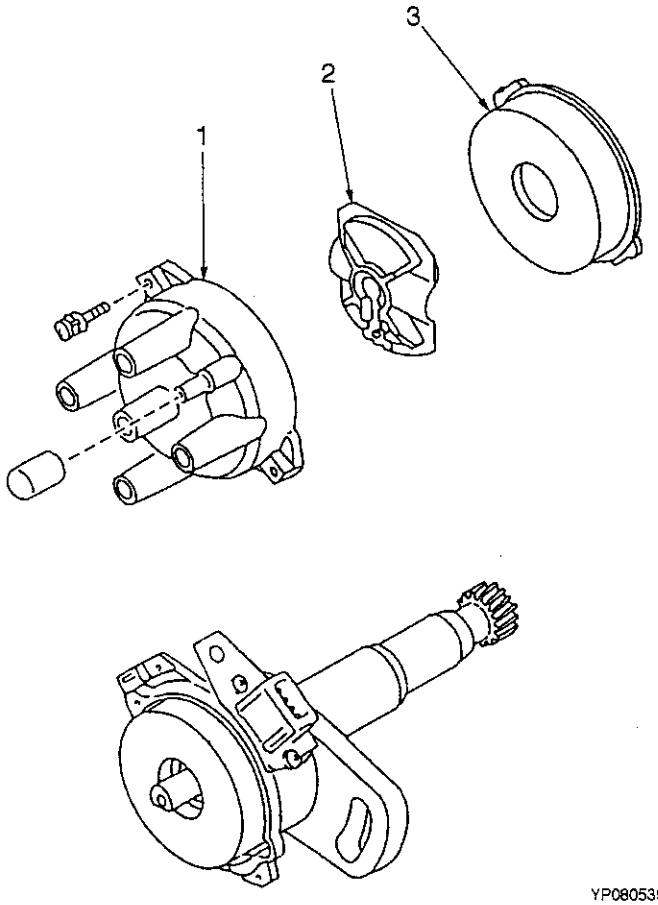

ITEM	PART NO.	DESCRIPTION	QTY
	1554030	Distributor	1
1	1554033	Cap	1
2	1554034	Rotor	1
3	1554032	Cover	1

©2005 HYSTER COMPANY

ALTERNATOR AND MOUNTING (Figure 4-5)
YANMAR 2.6L AND 3.3L
DIESEL

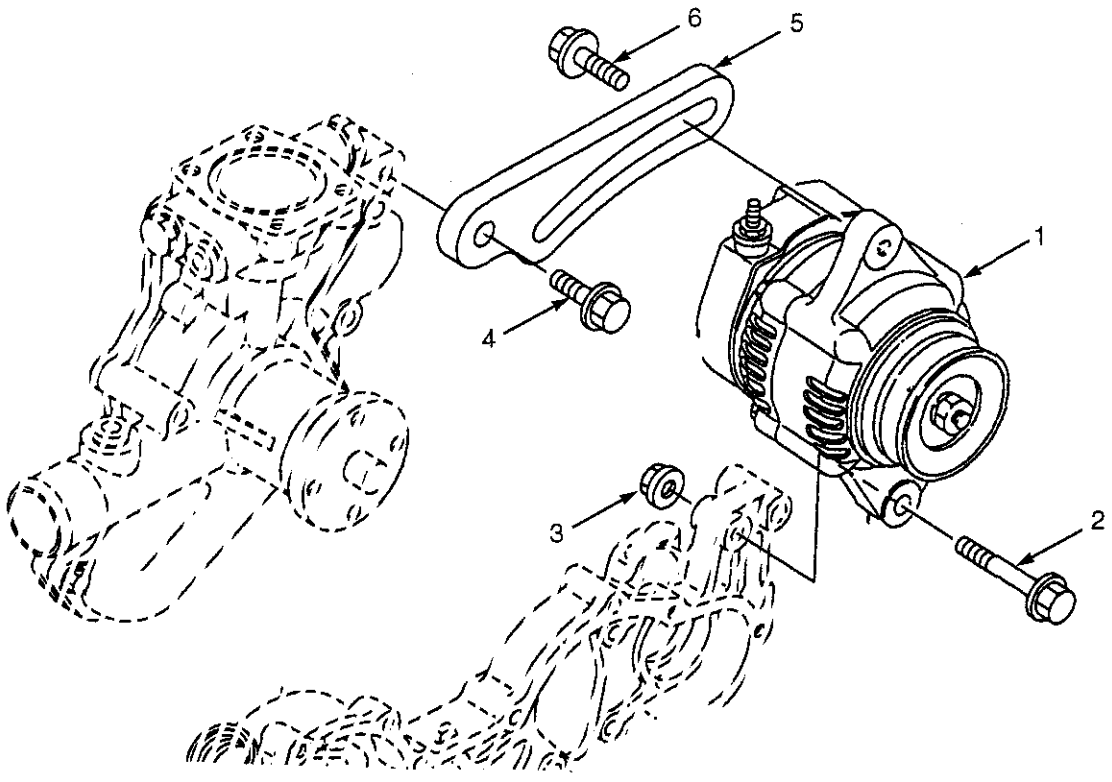

BP080337

ITEM	PART NO.	DESCRIPTION	QTY
1	1599869	Alternator	1
2	1599893	Bolt	1
3	1599894	Nut	1
4	1599897	Bolt	1
5	1599895	Belt Adjuster	1
6	1599896	Bolt	1

©2005 HYSTER COMPANY

BATTERY CABLES (Figure 4-6)
GM 2.4L
LPG

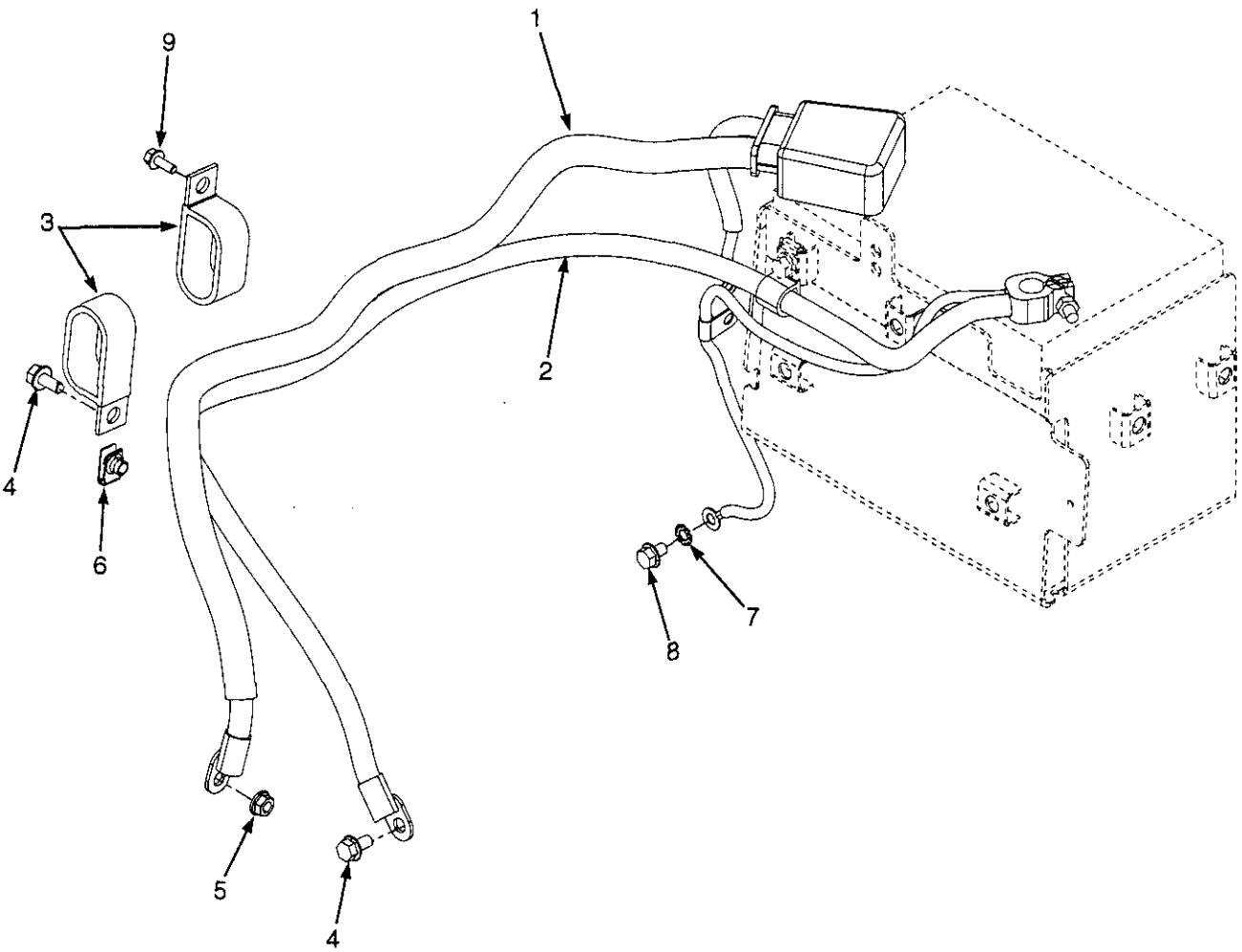

HP081655

©2005 HYSTER COMPANY

BATTERY CABLES
GM 2.4L
LPG

ITEM	PART NO.	DESCRIPTION	QTY
1	2061381	Battery Cable (Positive)	1
1	1536304	Boot	1
1	1560091	Boot	1
1	16079	Terminal	1
1	148792	Terminal	1
1	806426	Fitting	1
2	2069224	Battery Cable (Negative)	1
2	148789	Terminal	1
2	1564044	Fitting	1
2	16079	Terminal	1
2	128408	Clamp	1
2	806426	Fitting	1
3	212786	Clamp	2
4	1527879	Capscrew	1
5	1502543	Nut (Flange)	1
6	1480237	Clip Nut	1
7	296380	Lockwasher	1
8	1529366	Capscrew	1
9	1527876	Capscrew	1

©2005 HYSTER COMPANY

ENGINE ELECTRICAL SYSTEM (Figure 4-7)
YANMAR 2.6L AND 3.3L, DIESEL
WITH OVERHEAD GUARD

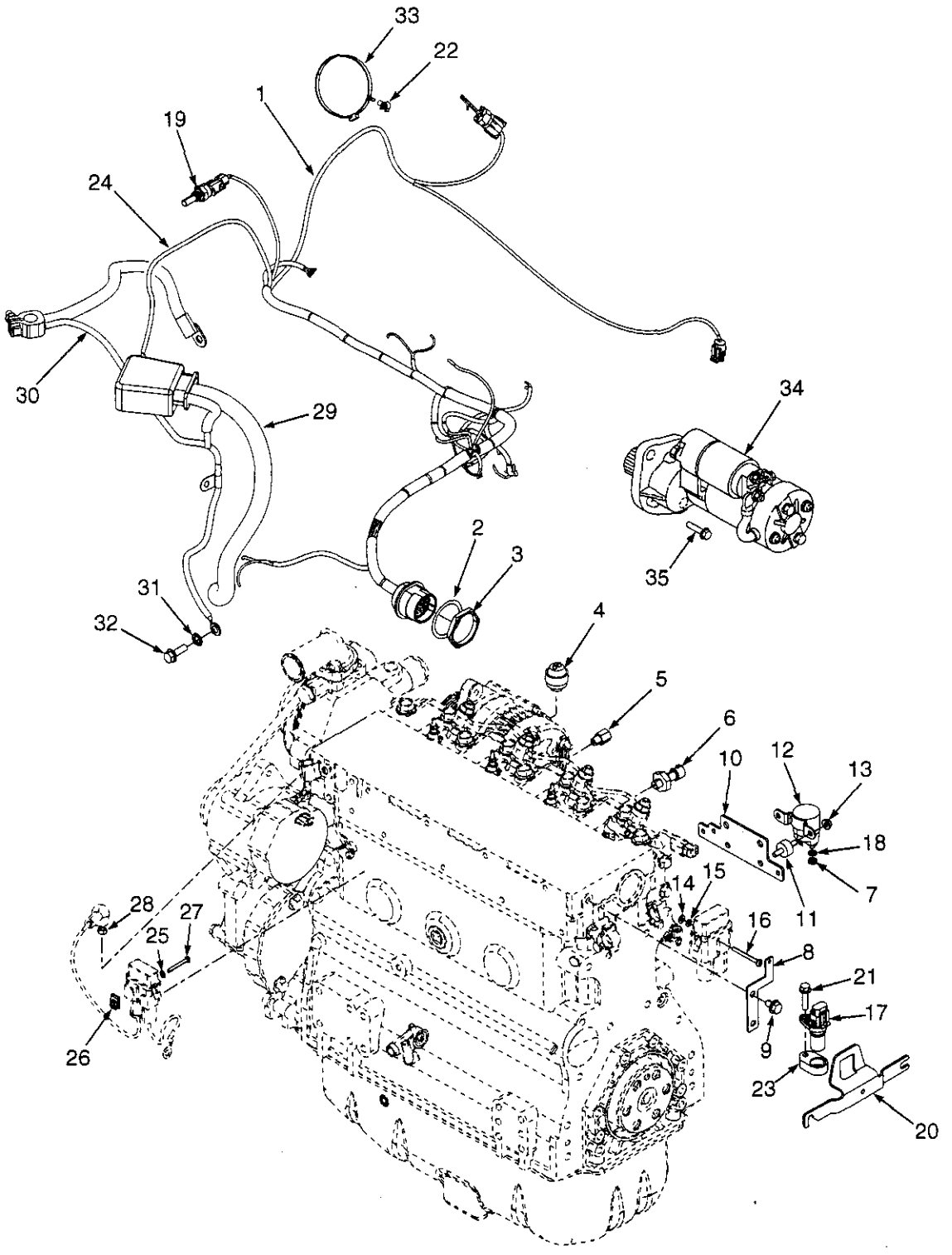

HP081653

©2005 HYSTER COMPANY

ENGINE ELECTRICAL SYSTEM
YANMAR 2.6L AND 3.3L, DIESEL WITH OVERHEAD GUARD

ITEM	PART NO.	DESCRIPTION	QTY
1	2060844	Wire Harness (Engine) (☞ Figure 4-21)	1
2	1539086	Lockwasher	1
3	1539085	Nut	1
4	1529257	Sensor (Air Flow Restriction)	1
5	367224	Adapter	1
6	1566654	Sensor (Oil Pressure)	1
7	1560678	Nut	2
8	1582150	Bracket	1
9	1529366	Capscrew	4
10	1582151	Bracket	1
11	1527562	Isolation Mount	2
12	1454967	Relay (Glow Plug)	1
13	1514429	Nut (Flange)	2
14	320152	Washer	1
15	292676	Lockwasher	1
16	302015	Screw	1
17	1541231	Sensor (Speed)	1
18	296379	Washer	2
19	1515654	Sensor (Coolant Temperature)	1
20	1594055	Bracket	1
21	1527878	Capscrew	1
22	1542440	Clamp (Swivel)	1
23	1591454	Bracket	1
24	2065098	Wire Harness (Alternator)	1
24	1454860	Connector	1
24	1454829	Fuse (60 Amp)	1
24	1454862	Cover (With Seal)	1
24	1566146	Boot	1
24	1454827	Seal	2
24	1454828	Terminal	2
24	148615	Terminal	1
25	320154	Washer	1
26	1537551	Clip Nut	1
27	302027	Screw	1
28	136687	Nut	1
29	2066344	Battery Cable (Positive)	1
29	148792	Terminal	1
29	16079	Terminal	1
29	806426	Fitting	1
29	1560091	Boot	1
29	1536304	Boot	1
30	2069226	Battery Cable (Negative)	1
30	148789	Terminal	1
30	16079	Terminal	1
30	1564044	Fitting	1
30	128408	Clamp	1
30	806426	Fitting	1
31	296380	Lockwasher	1
32	1529366	Capscrew	2
33	1502061	Clamp	1

©2005 HYSTER COMPANY

ENGINE ELECTRICAL SYSTEM
YANMAR 2.6L AND 3.3L, DIESEL
WITH OVERHEAD GUARD

ITEM	PART NO.	DESCRIPTION	QTY
34	1599845	Starter	1
35	1528889	Capscrew	1

©2005 HYSTER COMPANY

NOTES

COWL ELECTRICAL (Figure 4-8)

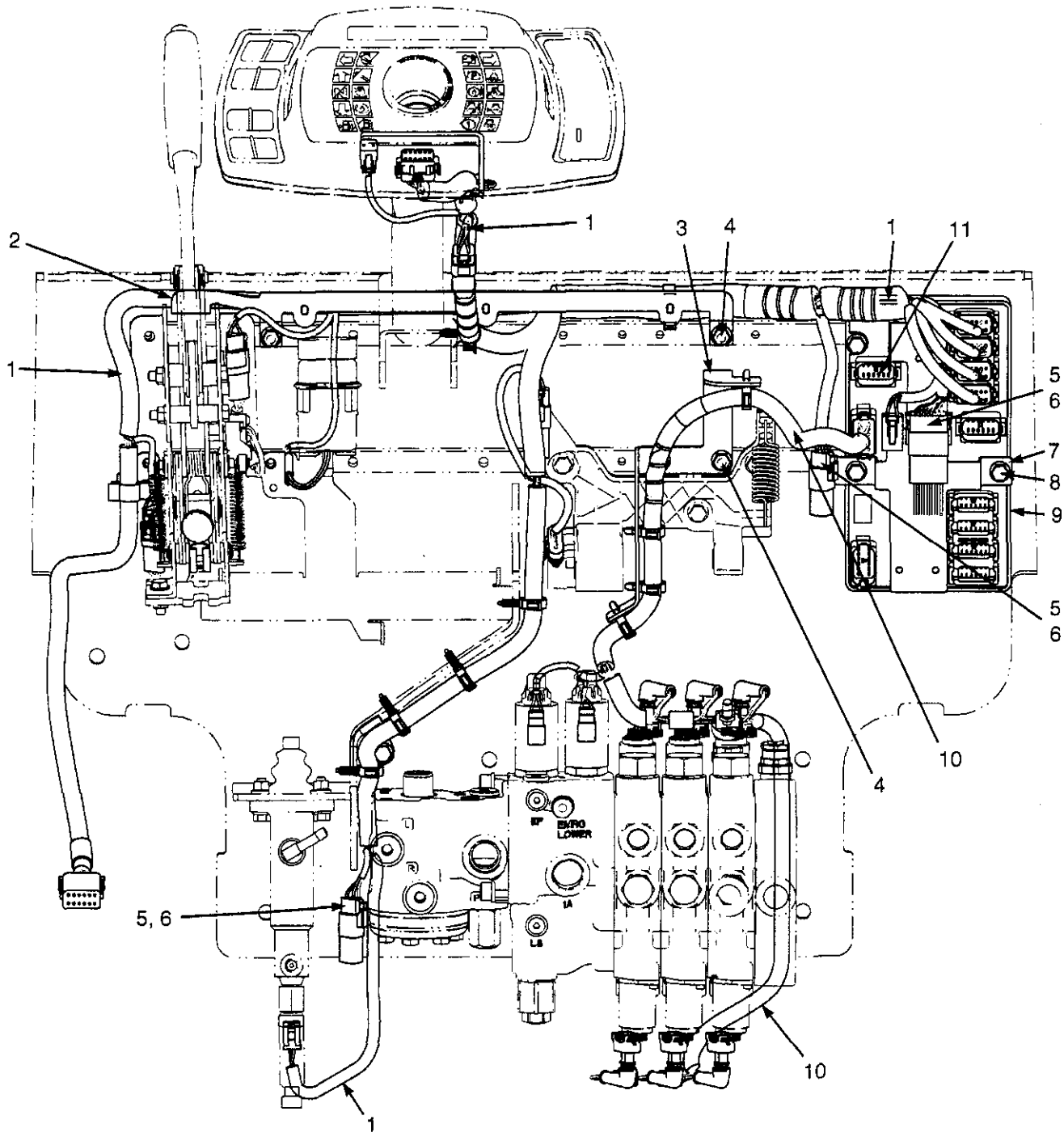

©2005 HYSTER COMPANY

COWL ELECTRICAL

ITEM	PART NO.	DESCRIPTION	QTY
1	2070269	Wire Harness (Cowl) (☞ Figure 4-22)	1
2	1600190	Bracket	1
3	1531975	Bracket	1
4	1529366	Capscrew	4
5	1500912	Clip	3
6	1582464	Fastener	3
7	1582465	Bracket	1
8	1510115	Capscrew	3
9	e 2068339	Vehicle System Manager	1
9	cd 2068340	Vehicle System Manager	1
9	bc 2068344	Vehicle System Manager	1
10	2058909	Wire Harness (Electronic Control Valve) (Four Function) (☞ Figure 4-24)	1
10	2060198	Wire Harness (Electronic Control Valve) (Three Function) (☞ Figure 4-23)	1
11	1563841	Connector	1
	a 1554902	Screw	2

FOOTNOTES:

a Not Illustrated
b With Cab
c With Electronic Hydraulics
d With Overhead Guard
e Without Electronic Hydraulics

©2005 HYSTER COMPANY

POWER DISTRIBUTION MODULE (Figure 4-9)

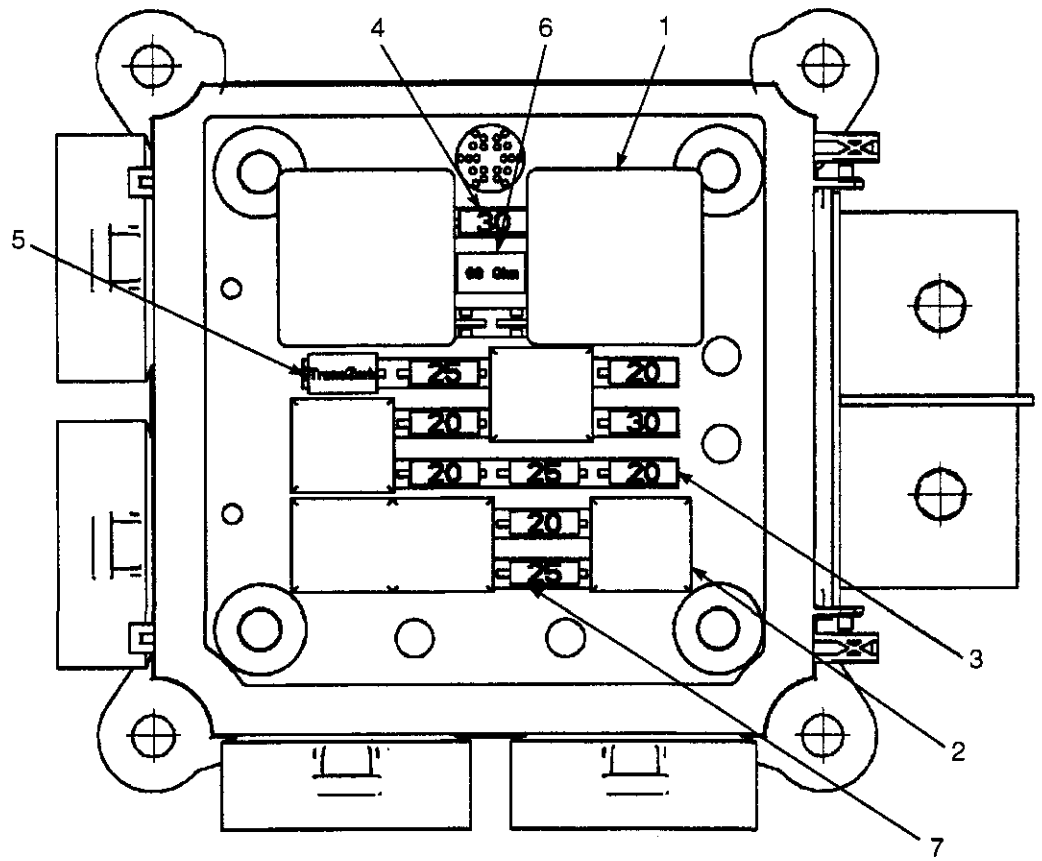

BP080278

ITEM	PART NO.	DESCRIPTION	QTY
	2063093	Power Distribution Module	1
1	2044712	Relay (30 Amp)	2
2	1528315	Relay (20 Amp)	5
3	1528132	Fuse (20 Amp)	5
4	1528133	Fuse (30 Amp)	2
5	1528630	Semiconductor	1
6	1528631	Resistor (68 Ohm, 5 Watt)	1
7	1544255	Fuse (25 Amp)	3

©2005 HYSTER COMPANY

INSTRUMENT CLUSTER (Figure 4-10)

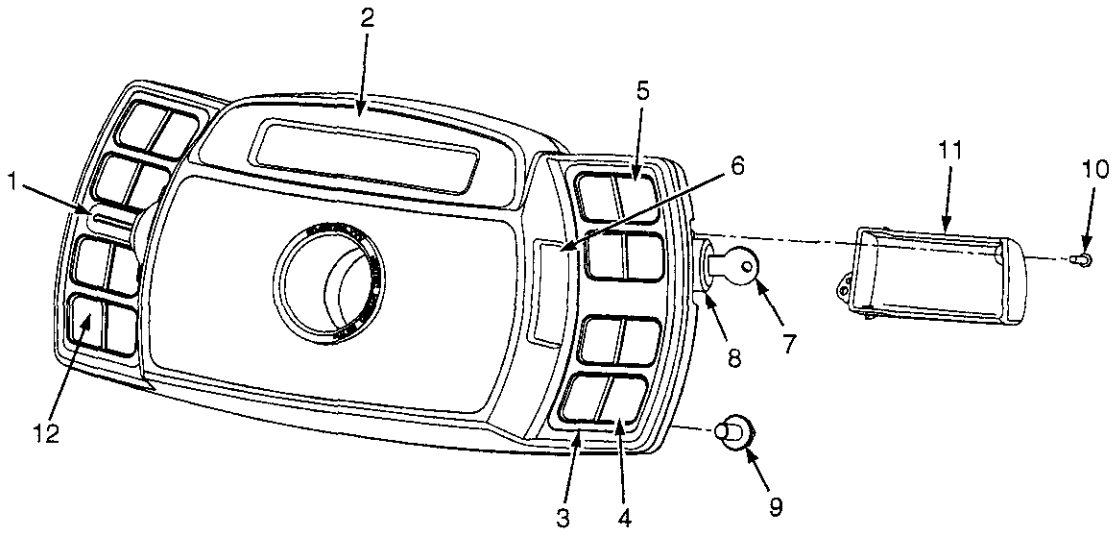

KEY:
A: Standard Ignition Switch - With Cab
B: Standard Ignition Switch - With Overhead Guard

ITEM		PART NO.	DESCRIPTION	QTY A	QTY B
1		2060837	Lever (Detent) (Forward/Reverse Shift Lever)	1	1
1		2060838	Lever (Momentary) (Turn Signal Lever)	1	1
2		2076695	Instrument Cluster	..	1
2		2076696	Instrument Cluster	1	..
3		2066485	Bezel	1	1
4		2066484	Decal (RH Display, All Options)	1	1
5	a	2066482	Overlay (RH Display)	1	1
6		2060032	Cover (Display Lever)	1	1
7		1337197	Key Set	1	1
7		186304	Key	2	2
8		2057948	Ignition Switch	1	1
9		1527879	Capscrew	4	4
10		1554902	Screw	5	5
11		2060033	Cover (Keyswitch)	1	1
12		2069431	Decal (LH Instrument Cluster)	..	1
12		2066483	Decal (LH Instrument Cluster)	1	..

FOOTNOTES:
a Remove Panels From Overlay As Required For Truck Configuration.

©2005 HYSTER COMPANY

JOYSTICK AND ELECTRONIC CONTROL LEVERS (Figure 4-11)

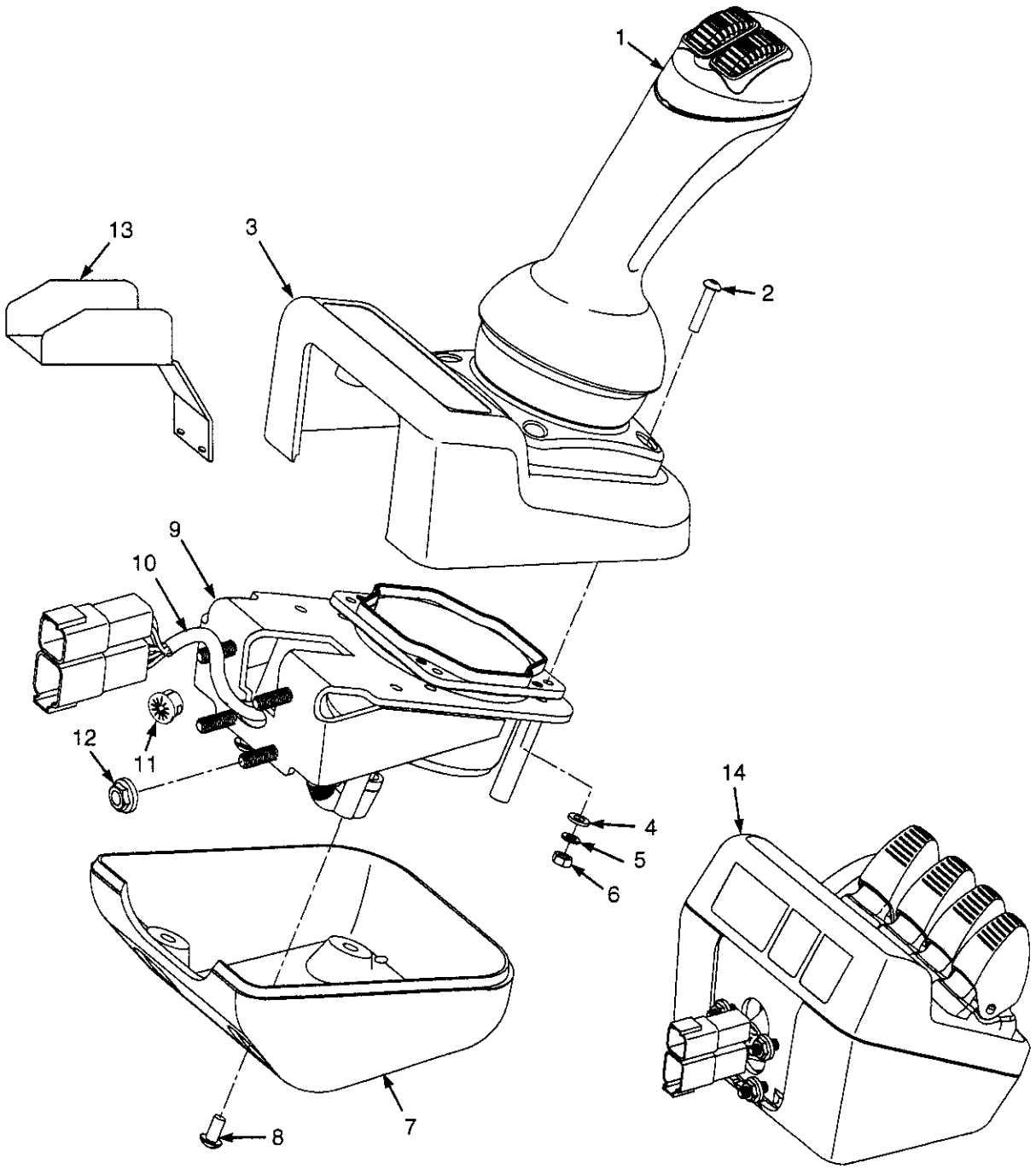

HP081644

©2005 HYSTER COMPANY

JOYSTICK AND ELECTRONIC CONTROL LEVERS

KEY:
A: Three Function, Without Clamping
B: Three Function, With Clamping
C: Four Function, Without Clamping
D: Four Function, With Clamping

ITEM		PART NO.	DESCRIPTION	QTY A	B	C	D
		1585906	Joystick Control (Without Interlock)	1	1	..	..
		1585907	Joystick Control (Without Interlock)	..	..	1	1
		1585908	Joystick Control (With Interlock)	1	1	..	..
		1585909	Joystick Control (With Interlock)	..	..	1	1
1		2075224	Joystick (Without Interlock)	1	1	..	..
1		2075225	Joystick (Without Interlock)	..	..	1	1
1		2075226	Joystick (With Interlock)	1	1	..	..
1		2075227	Joystick (With Interlock)	..	..	1	1
2		1598283	Screw	4	4	4	4
3		1550647	Housing (Upper)	1	1	1	1
4		320154	Washer	4	4	4	4
5		292678	Lockwasher	4	4	4	4
6		292667	Nut	4	4	4	4
7		1550646	Housing (Lower)	1	1	1	1
8		2062718	Capscrew	6	6	6	6
9		1552107	Bracket	1	1	1	1
10		2062070	Wire Harness (Joystick)	1	1	1	1
10		1463140	Terminal (Pin)	6	6	6	6
10		1530960	Connector	1	1	1	1
10		1530961	Secondary Lock	1	1	1	1
10		1550495	Connector	1	1	1	1
10		1550496	Terminal (Socket)	6	6	6	6
10		1532904	Connector	1	1	1	1
10		1463193	Secondary Lock	1	1	1	1
11		1569995	Bushing	1	1	1	1
12		1514429	Nut (Flange)	4	4	4	4
13		1579847	Bracket	1	1	1	1
14		2064790	Mini-Levers	1	..	..	..
14		1598222	Mini-Lever Plug Kit	1	..	..	..
14		1598221	Mini-Lever Interlock Switch Kit	1	..	..	..
14		1598223	Momentary Switch Plug Kit	2	..	..	..
14		1555731	Lever Kit	3	..	..	..
14		2075911	Mini-Levers	..	1	..	..
14		1598222	Mini-Lever Plug Kit	..	1	..	..
14		1598221	Mini-Lever Interlock Switch Kit	..	1	..	..
14		1598223	Momentary Switch Plug Kit	..	2	..	..
14		1555731	Lever Kit	..	2	..	..
14		1591185	Mini-Lever Interlock Kit	..	1	..	..
14	**b**	2075913	Mini-Levers	1	..	..	..
14	**b**	1598222	Mini-Lever Plug Kit	1	..	..	..
14	**b**	1598221	Mini-Lever Interlock Switch Kit	1	..	..	..
14	**b**	1598223	Momentary Switch Plug Kit	2	..	..	..
14	**b**	1555731	Lever Kit	2	..	..	..
14	**b**	1591185	Mini-Lever Interlock Kit	1	..	..	..
14	**b**	2075916	Mini-Levers	..	1	..	..

©2005 HYSTER COMPANY

JOYSTICK AND ELECTRONIC CONTROL LEVERS

ITEM		PART NO.	DESCRIPTION	QTY A	B	C	D
14	b	1555731	Lever Kit	..	1	..	..
14	b	1591185	Mini-Lever Interlock Kit	..	2	..	..
14		2064807	Mini-Levers	..	..	1	..
14		1598222	Mini-Lever Plug Kit	..	..	1	..
14		1598221	Mini-Lever Interlock Switch Kit	..	..	1	..
14		1598223	Momentary Switch Plug Kit	..	..	2	..
14		1555731	Lever Kit	..	..	4	..
14		2075912	Mini-Levers	..	..	..	1
14		1598222	Mini-Lever Plug Kit	..	..	..	1
14		1598221	Mini-Lever Interlock Switch Kit	..	..	..	1
14		1598223	Momentary Switch Plug Kit	..	..	..	2
14		1555731	Lever Kit	..	..	..	3
14		1591185	Mini-Lever Interlock Kit	..	..	..	1
14	b	2075914	Mini-Levers	..	..	1	..
14	b	1598222	Mini-Lever Plug Kit	..	..	1	..
14	b	1598221	Mini-Lever Interlock Switch Kit	..	..	1	..
14	b	1598223	Momentary Switch Plug Kit	..	..	2	..
14	b	1555731	Lever Kit	..	..	3	..
14	b	1591185	Mini-Lever Interlock Kit	..	..	1	..
14	b	2075917	Mini-Levers	..	..	..	1
14	b	1598222	Mini-Lever Plug Kit	..	..	..	1
14	b	1598221	Mini-Lever Interlock Switch Kit	..	..	..	1
14	b	1598223	Momentary Switch Plug Kit	..	..	..	2
14	b	1555731	Lever Kit	..	..	..	2
14	b	1591185	Mini-Lever Interlock Kit	..	..	..	2
	a	1598222	Mini-Lever Plug Kit	1	1	1	1
	a	1598221	Mini-Lever Interlock Switch Kit	1	1	1	1
	a	1598223	Momentary Switch Plug Kit	2	2	2	2

FOOTNOTES:

a Not Illustrated

b With Return To Set Tilt

©2005 HYSTER COMPANY

NOTES

LIGHTS (Figure 4-12)
BRAKE, TAIL, BACKUP, SIDE, TURN SIGNALS, WORK, STROBE WITH OVERHEAD GUARD

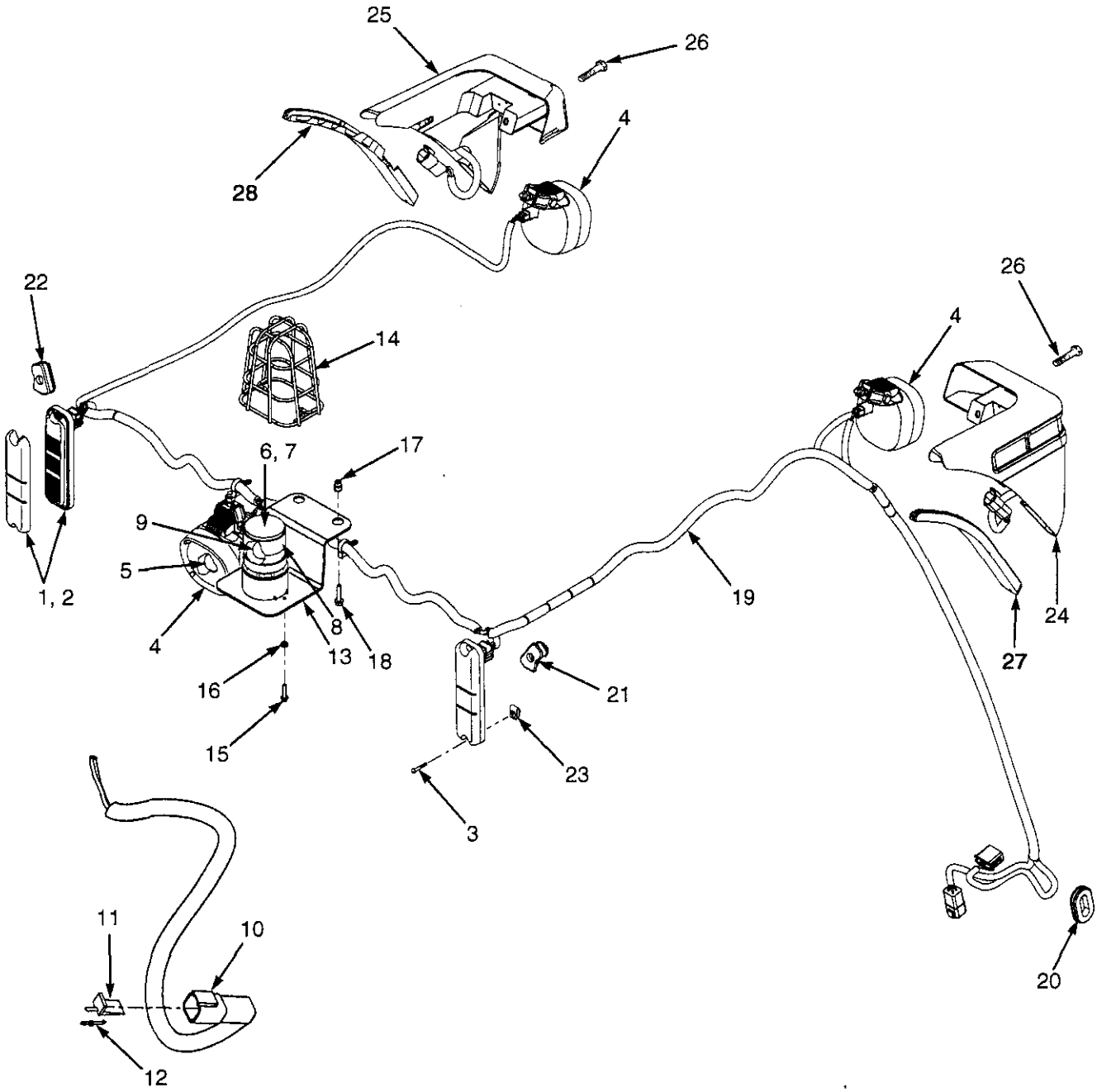

BP080385

©2005 HYSTER COMPANY

LIGHTS
BRAKE, TAIL, BACKUP, SIDE, TURN SIGNALS, WORK, STROBE WITH OVERHEAD GUARD

ITEM	PART NO.	DESCRIPTION	QTY
1	2056824	Light (Stop,Turn,Tail, And Back-Up)	2
1	. . . . .	Bracket (☞ Figure 1-2)	2
2	2056826	Reflector (Tail)	2
3	1565125	Screw	4
4	2064836	Work Light (Rear)	1
4	2070553	Work Light (RH Front)	1
4	2070554	Work Light (LH Front)	1
5	1495122	Bulb	1
6	1581670	Strobe Light Assembly	1
7	1382130	Strobe Light	1
8	1526082	Lens (Amber)	1
9	1309775	Bulb	1
10	1561559	Connector	1
11	1561755	Secondary Lock	1
12	1463138	Pin	2
13	1565076	Bracket	1
14	1302024	Guard	1
15	1586759	Capscrew	2
16	1586428	Nut	2
17	1531001	Insert	2
18	1586495	Capscrew	2
19	2074737	Wire Harness (☞ Figure 4-25)	1
20	1539584	Grommet (Vehicle System Manager)	1
21	1560447	Grommet (RH Tail Light)	1
22	1560448	Grommet (LH Tail Light)	1
23	1537551	Clip Nut	4
24	2070561	Turn Signal (RH Front)	1
24	2070563	Cap	2
24	1493466	Connector	1
24	1330415	Lock	1
24	1330437	Terminal (Pin)	3
25	2070562	Turn Signal (LH Front)	1
25	2070563	Cap	2
25	1493466	Connector	1
25	1330415	Lock	1
25	1330437	Terminal (Pin)	3
26	1608654	Capscrew	4
27	1608589	Trim (RH Marker)	1
28	1608590	Trim (LH Marker)	1

©2005 HYSTER COMPANY

LIGHTS (Figure 4-13)
BRAKE, TAIL, BACKUP, SIDE, TURN SIGNALS, WORK, STROBE
WITH CAB

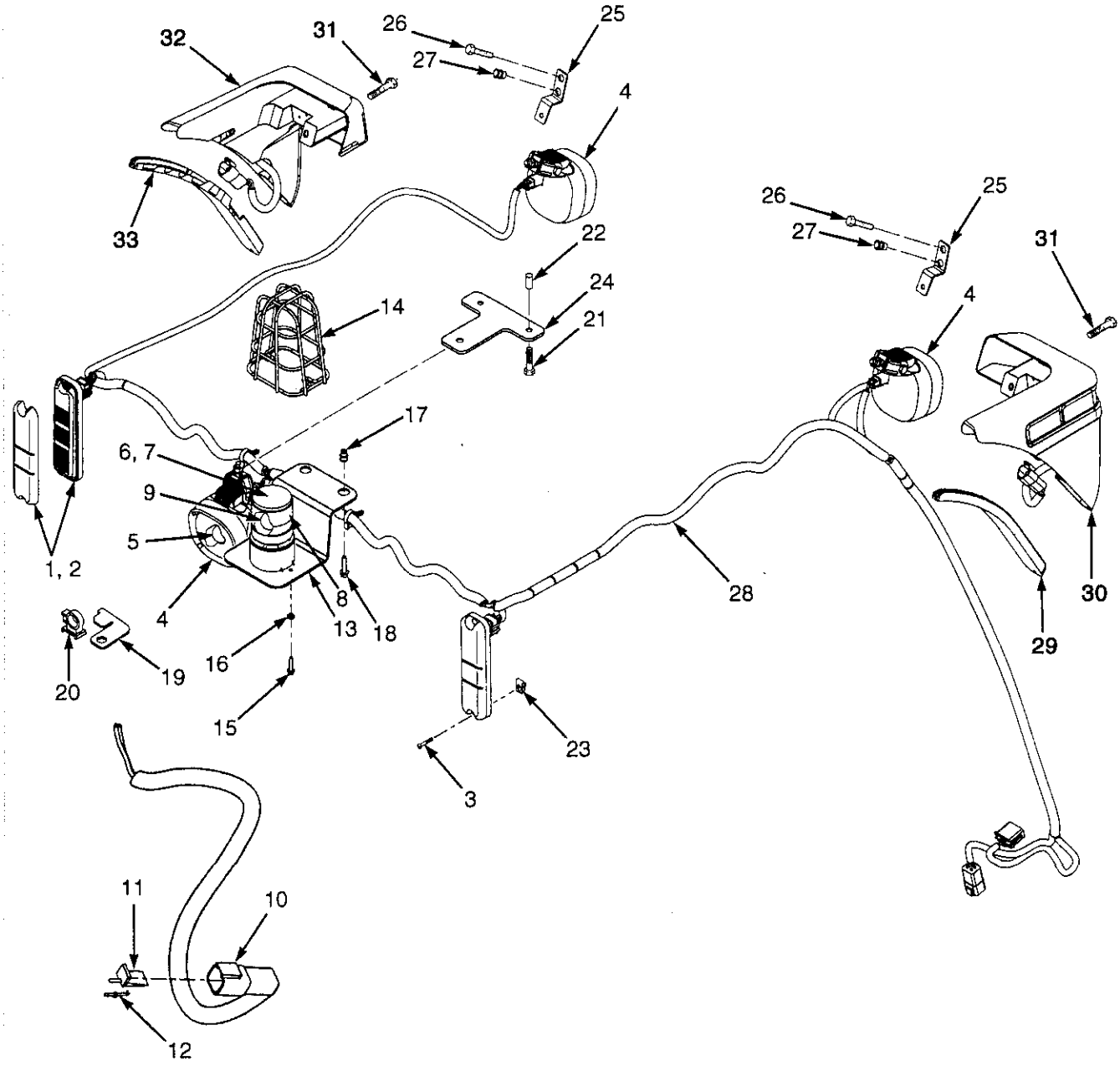

©2005 HYSTER COMPANY

LIGHTS
BRAKE, TAIL, BACKUP, SIDE, TURN SIGNALS, WORK, STROBE
WITH CAB

ITEM	PART NO.	DESCRIPTION	QTY
1	2056824	Light (Stop,Turn,Tail, And Back-Up)	2
1	. . . . .	Bracket (☞ Figure 1-2)	2
2	2056826	Reflector (Tail)	2
3	1565125	Screw	4
4	2064836	Work Light (Rear)	1
4	2064837	Work Light (RH Front)	1
4	2064838	Work Light (LH Front)	1
5	1495122	Bulb	1
6	1581670	Strobe Light Assembly	1
7	1382130	Strobe Light	1
8	1526082	Lens (Amber)	1
9	1309775	Bulb	1
10	1561559	Connector	1
11	1561755	Secondary Lock	1
12	1463138	Pin	2
13	1565076	Bracket	1
14	1302024	Guard	1
15	1586759	Capscrew	2
16	1586428	Nut	2
17	1531558	Insert	2
18	1586495	Capscrew	2
19	1532759	Bracket	1
20	1532775	Clip	1
21	1586495	Capscrew	2
22	1531558	Insert	2
23	1537551	Clip Nut	4
24	1558771	Bracket	1
25	1588583	Bracket	2
26	1583611	Capscrew	4
27	1531557	Insert	4
28	1598333	Wire Harness	1
29	1608591	Trim (RH Marker)	1
30	2070561	Turn Signal (RH Front)	1
31	1608654	Capscrew	4
32	2070562	Turn Signal (LH Front)	1
33	1608592	Trim (LH Marker)	1

©2005 HYSTER COMPANY

TRANSMISSION ELECTRICAL SYSTEM (Figure 4-14)

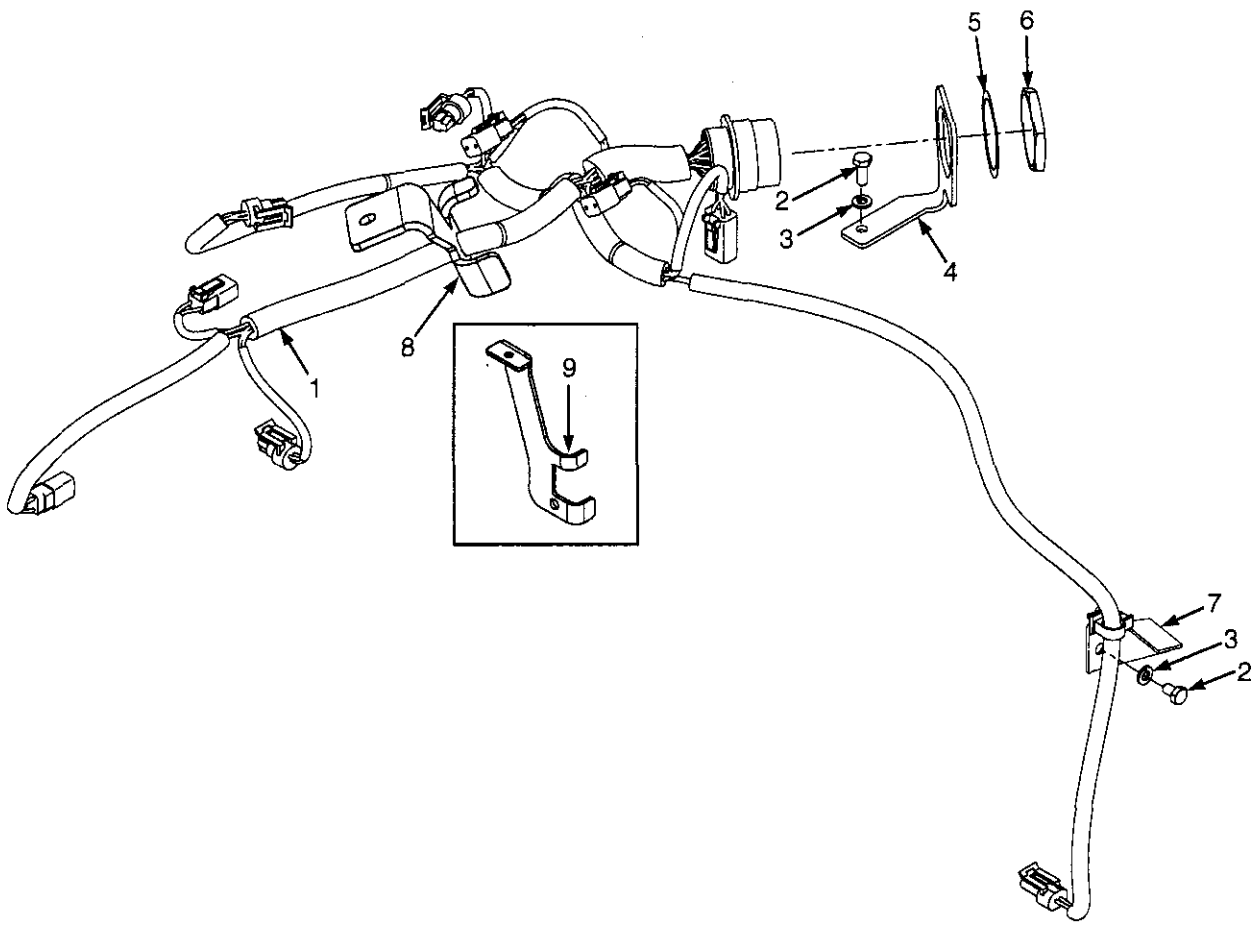

HP081626

©2005 HYSTER COMPANY

TRANSMISSION ELECTRICAL SYSTEM

KEY:
A: Single Speed
B: Dual Speed

ITEM	PART NO.	DESCRIPTION	QTY A	QTY B
1	2070731	Wire Harness (Transmission) (Single Speed) (☞ Figure 4-27)	1	..
1	2075644	Wire Harness (Transmission) (Dual Speed) (☞ Figure 4-26)	..	1
2	287851	Capscrew	2	2
3	292681	Lockwasher	2	2
4	. . . . .	Bracket	1	1
5	1539086	Lockwasher	1	1
6	1539085	Nut	1	1
7	1531519	Bracket	1	1
8	1581176	Bracket	..	1
9	1584127	Bracket	1	..

©2005 HYSTER COMPANY

MAST ELECTRICAL (Figure 4-15)

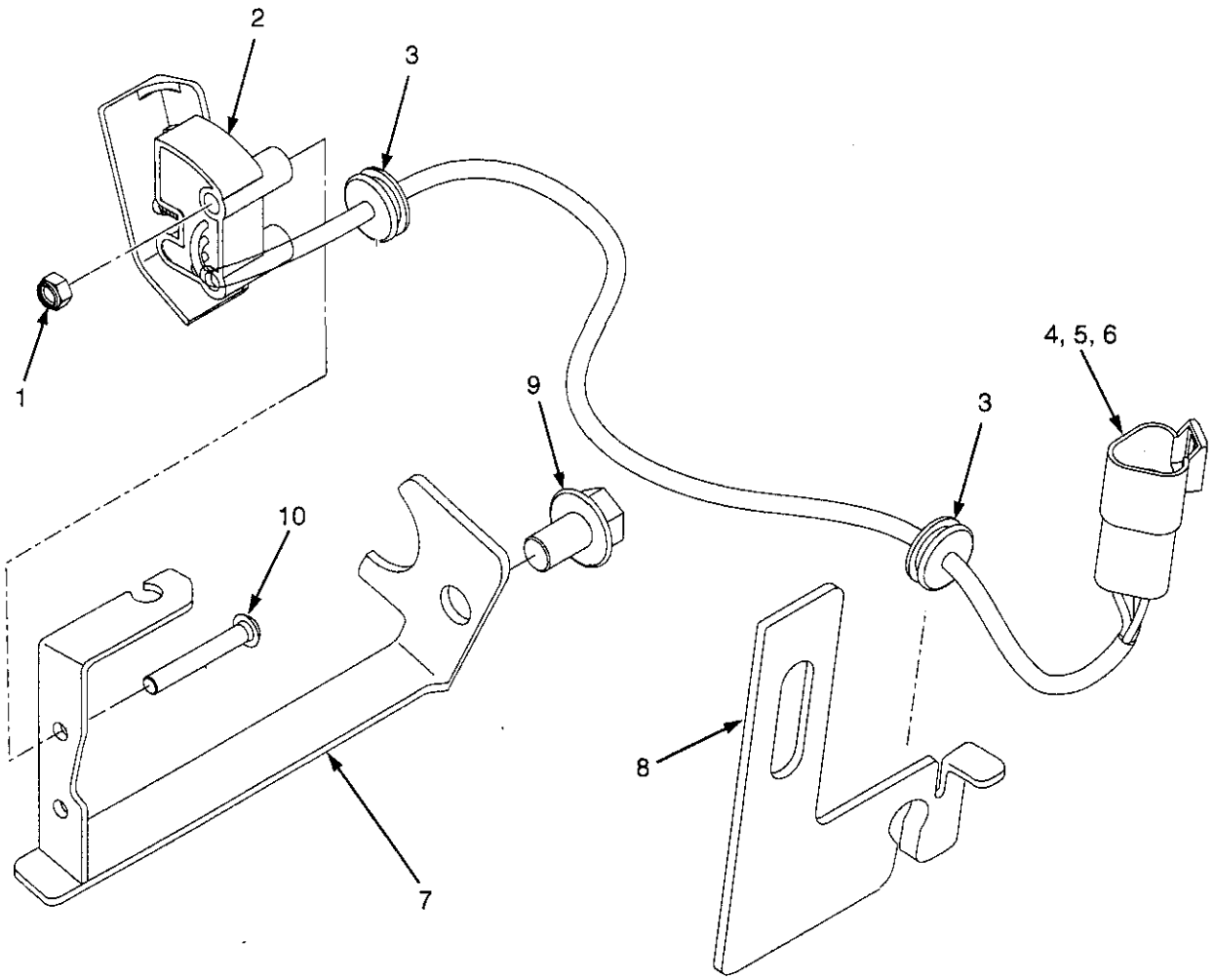

HP081616

ITEM	PART NO.	DESCRIPTION	QTY
1	302398	Nut	2
2	1589621	Sensor (Mast)	1
3	98644	Grommet	2
4	1493466	Connector	1
5	1330415	Lock	1
6	1330437	Terminal (Pin)	3
7	1592071	Bracket	1
8	1592076	Bracket	1
9	1527883	Capscrew	1
10	1553897	Capscrew	2

©2005 HYSTER COMPANY

NOTES

WIRE HARNESS (Figure 4-16)
RH CHASSIS
MAZDA 2.0L AND 2.2L, LPG

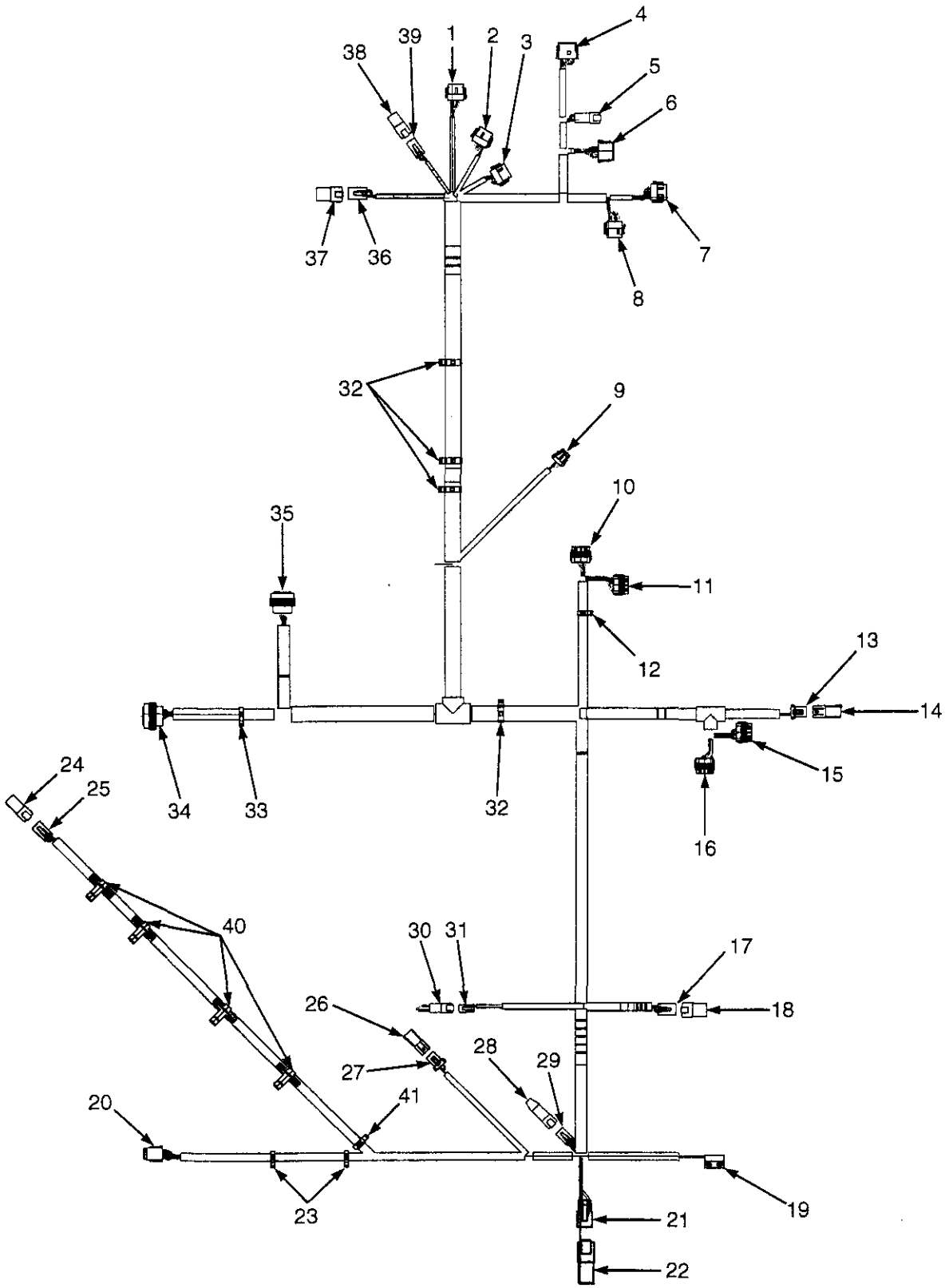

©2005 HYSTER COMPANY

WIRE HARNESS
RH CHASSIS
MAZDA 2.0L AND 2.2L, LPG

ITEM	PART NO.	DESCRIPTION	QTY
	2075561	Wire Harness (RH Chassis)	1
1	1525570	Connector (Vehicle System Manager)	1
1	1530037	Secondary Lock	1
1	1463139	Terminal	9
1	1484377	Plug	4
2	1525568	Connector (Vehicle System Manager)	1
2	1530037	Secondary Lock	1
2	1463139	Terminal	7
2	1484377	Plug	5
3	1525567	Connector (Vehicle System Manager)	1
3	1530037	Secondary Lock	1
3	1463139	Terminal	9
3	1484377	Plug	3
4	1525563	Connector (Vehicle System Manager)	1
4	1500913	Secondary Lock	1
4	1330438	Socket (Terminal)	8
4	1363886	Socket	4
5	1489655	Connector (To Cowl Harness)	1
5	1330416	Secondary Lock	1
5	1330437	Terminal (Pin)	4
6	1493428	Connector (12-Way) (To Cowl Harness)	1
6	1500913	Secondary Lock	1
6	1330438	Socket (Terminal)	9
6	1484377	Plug	3
7	1525567	Connector (Vehicle System Manager)	1
7	1529046	Secondary Lock	1
7	1463139	Terminal	6
7	1484377	Plug	6
8	1525569	Connector (Vehicle System Manager)	1
8	1529046	Secondary Lock	1
8	1463139	Terminal	9
8	1484377	Plug	3
9	1476064	Connector (Horn)	1
9	1476109	Secondary Lock	1
9	1330355	Terminal	3
9	1330356	Seal	2
9	1476108	Seal	1
10	1521184	Connector (Power Distribution Module)	1
10	1521188	Secondary Lock	1
10	1330281	Terminal	5
10	1521989	Terminal	1
10	1327164	Plug	2
10	1402888	Seal	1
10	1323579	Seal	5
11	1521183	Connector (Power Distribution Module)	1
11	1521188	Secondary Lock	1
11	1330281	Terminal	4
11	1521989	Terminal	3
11	1323579	Seal	7
11	1327164	Plug	1

©2005 HYSTER COMPANY

WIRE HARNESS
RH CHASSIS
MAZDA 2.0L AND 2.2L, LPG

ITEM	PART NO.	DESCRIPTION	QTY
12	1534828	Clip	1
13	1329152	Connector (Hydraulic Filter)	1
13	1329151	Secondary Lock	1
13	1330281	Terminal	2
13	1402888	Seal	2
14	1329150	Connector (End Cap)	1
14	1329151	Secondary Lock	1
14	1327164	Plug	2
15	1521185	Connector (Power Distribution Module)	1
15	1521188	Secondary Lock	1
15	1330281	Terminal	5
15	1521989	Terminal	2
15	1323579	Seal	7
15	1327164	Plug	1
16	1521186	Connector (Power Distribution Module)	1
16	1521188	Secondary Lock	1
16	1521989	Terminal	7
16	1323579	Seal	7
16	1327164	Plug	1
17	1514602	Connector (Accessory 2)	1
17	1514603	Secondary Lock	1
17	1554359	Terminal	3
17	1330439	Plug	1
18	1514597	Connector (End Cap)	1
18	1330439	Plug	4
19	1572588	Switch (Hood Switch)	1
20	1541991	Connector (To Seat Harness)	1
20	1541992	Secondary Lock	1
20	1463139	Terminal	8
21	1490242	Connector (Alternate Horn Button)	1
21	1490243	Secondary Lock	1
21	1330438	Socket (Terminal)	2
22	1351681	Connector (End Cap)	1
23	1402815	Clip	2
24	1351683	Connector (End Cap)	1
25	1493430	Connector (To Back-Up Alarm)	1
25	1529052	Secondary Lock	1
25	1330438	Socket (Terminal)	6
26	1329150	Connector (End Cap)	1
26	1329151	Secondary Lock	1
26	1327164	Plug	2
27	1329152	Connector (Coolant Level)	1
27	1329151	Secondary Lock	1
27	1330281	Terminal	2
27	1402888	Seal	2
28	1525577	Connector (End Cap)	1
29	1489656	Connector (Bus Terminal)	1
29	1489657	Secondary Lock	1
29	1330438	Socket (Terminal)	4
30	1493465	Connector (Key Switch)	1

©2005 HYSTER COMPANY

WIRE HARNESS
RH CHASSIS
MAZDA 2.0L AND 2.2L, LPG

ITEM	PART NO.	DESCRIPTION	QTY
30	1330414	Secondary Lock	1
30	1330437	Terminal (Pin)	2
31	1490242	Connector (Key Switch)	1
31	1490243	Secondary Lock	1
31	1330438	Socket (Terminal)	2
32	1534282	Clip	4
33	1500899	Clip	1
34	1502627	Connector (To Transmission Harness)	1
34	1330438	Socket (Terminal)	17
34	1484377	Plug	6
35	1531501	Connector (To Engine Harness)	1
35	1330438	Socket (Terminal)	8
35	1554359	Terminal	3
35	1484377	Plug	17
35	1330439	Plug	1
36	1514602	Connector (To Lights/Cab Harness)	1
36	1514603	Secondary Lock	1
36	1554359	Terminal	4
37	. . . . .	End Cap	..
37	1514597	Connector	1
37	1330439	Plug	4
38	. . . . .	End Cap	..
38	1480187	Connector	1
38	1330439	Plug	2
39	1545202	Connector (Accessory 1)	1
39	1546697	Secondary Lock	1
39	1554359	Terminal	2
40	1587778	Clip	4
41	1509890	Clip	1

©2005 HYSTER COMPANY

WIRE HARESS (Figure 4-17)
RH CHASSIS
GM 2.4L, LPG

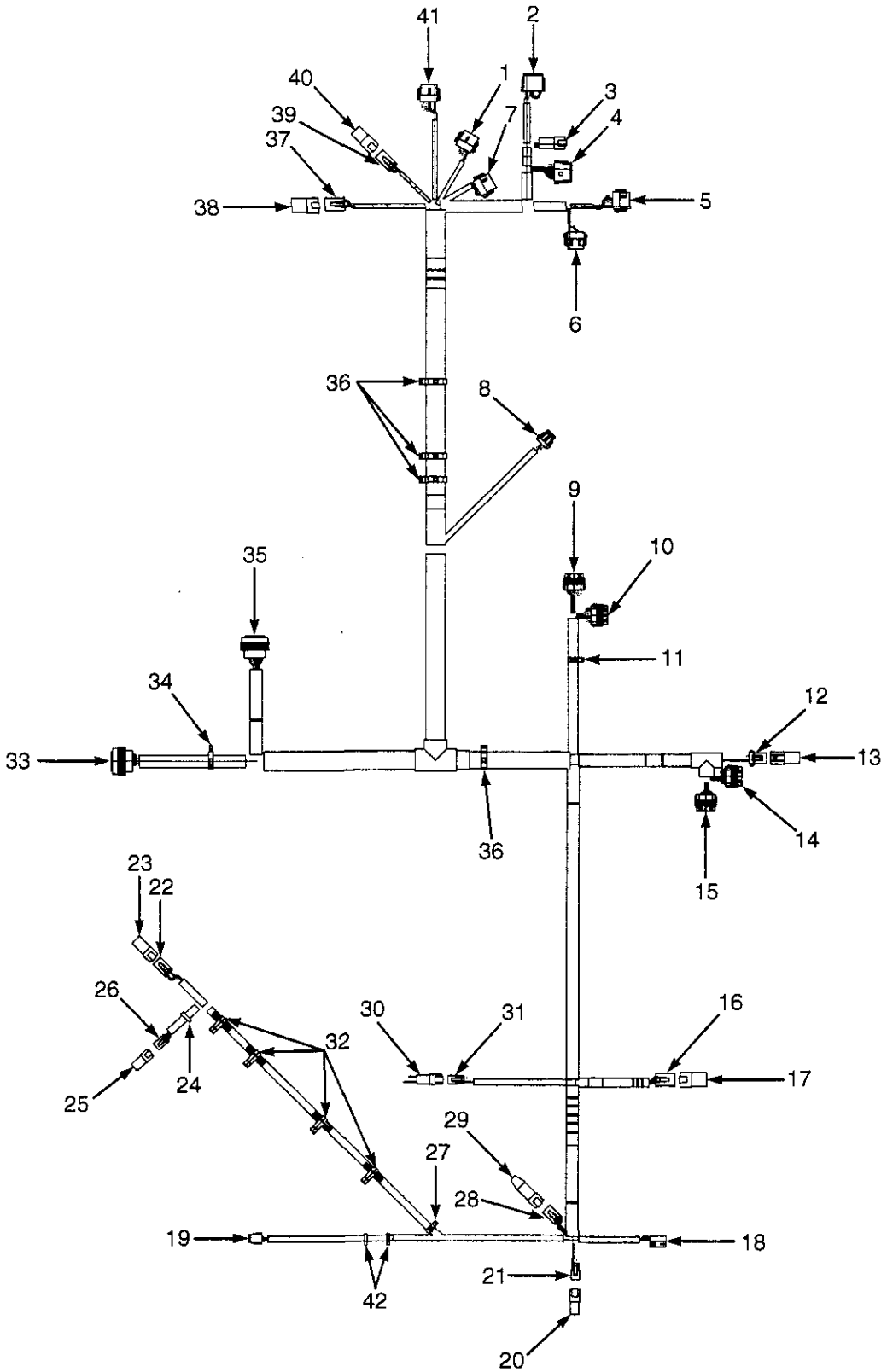

HP081622

©2005 HYSTER COMPANY

WIRE HARESS
RH CHASSIS
GM 2.4L, LPG

ITEM	PART NO.	DESCRIPTION	QTY
	2075560	Wire Harness (RH Chassis)	1
1	1525568	Connector (Vehicle System Manager)	1
1	1530037	Secondary Lock	1
1	1463139	Terminal	7
1	1484377	Plug	5
2	1525563	Connector (Vehicle System Manager)	1
2	1500913	Secondary Lock	1
2	1330438	Socket (Terminal)	8
2	1363886	Socket	4
3	1489655	Connector (To Cowl Harness)	1
3	1330416	Secondary Lock	1
3	1330437	Terminal (Pin)	4
4	1493428	Connector (12-Way) (To Cowl Harness)	1
4	1500913	Secondary Lock	1
4	1330438	Socket (Terminal)	9
4	1484377	Plug	3
5	1525567	Connector (Vehicle System Manager)	1
5	1529046	Secondary Lock	1
5	1463139	Terminal	6
5	1484377	Plug	6
6	1525569	Connector (Vehicle System Manager)	1
6	1529046	Secondary Lock	1
6	1463139	Terminal	3
6	1484377	Plug	9
7	1525567	Connector (Vehicle System Manager)	1
7	1530037	Secondary Lock	1
7	1463139	Terminal	9
7	1484377	Plug	3
8	1476064	Connector (Horn)	1
8	1476109	Secondary Lock	1
8	1330355	Terminal	3
8	1330356	Seal	2
8	1476108	Seal	1
9	1521184	Connector (Power Distribution Module)	1
9	1521188	Secondary Lock	1
9	1330281	Terminal	6
9	1521989	Terminal	1
9	1323579	Seal	5
9	1402888	Seal	2
9	1327164	Plug	1
10	1521183	Connector (Power Distribution Module)	1
10	1521188	Secondary Lock	1
10	1330281	Terminal	4
10	1521989	Terminal	3
10	1323579	Seal	7
10	1327164	Plug	1
11	1534828	Clip	1
12	1329152	Connector (Hydraulic Filter)	1
12	1329151	Secondary Lock	1
12	1330281	Terminal	2

©2005 HYSTER COMPANY

WIRE HARESS
RH CHASSIS
GM 2.4L, LPG

ITEM	PART NO.	DESCRIPTION	QTY
12	1402888	Seal	2
13	1329150	Connector (End Cap)	1
13	1329151	Secondary Lock	1
13	1327164	Plug	2
14	1521185	Connector (Power Distribution Module)	1
14	1521188	Secondary Lock	1
14	1330281	Terminal	5
14	1521989	Terminal	3
14	1323579	Seal	8
15	1521186	Connector (Power Distribution Module)	1
15	1521188	Secondary Lock	1
15	1521989	Terminal	7
15	1323579	Seal	7
15	1327164	Plug	1
16	1514602	Connector (Accessory 2)	1
16	1514603	Secondary Lock	1
16	1554359	Terminal	3
16	1330439	Plug	1
17	1514597	Connector (End Cap)	1
17	1330439	Plug	4
18	1572588	Switch (Hood Switch)	1
19	1541991	Connector (To Seat Harness)	1
19	1541992	Secondary Lock	1
19	1463139	Terminal	8
20	1351681	Connector (End Cap)	1
21	1490242	Connector (Alternate Horn Button)	1
21	1490243	Secondary Lock	1
21	1330438	Socket (Terminal)	2
22	1493430	Connector (To Back-Up Alarm Harness)	1
22	1529052	Secondary Lock	1
22	1330438	Socket (Terminal)	6
23	1351683	Connector (End Cap)	1
24	1509888	Clip	1
25	1329150	Connector (End Cap)	1
25	1329151	Secondary Lock	1
25	1327164	Plug	2
26	1329152	Connector (Coolant Level)	1
26	1329151	Secondary Lock	1
26	1330281	Terminal	2
26	1402888	Seal	2
27	1509890	Clip	1
28	1489656	Connector (Bus Terminal 2)	1
28	1489657	Secondary Lock	1
28	1330438	Socket (Terminal)	4
29	1525577	Connector (End Cap)	1
30	1493465	Connector (Key Switch)	1
30	1330414	Secondary Lock	1
30	1330437	Terminal (Pin)	2
31	1490242	Connector (Key Switch)	1
31	1490243	Secondary Lock	1

©2005 HYSTER COMPANY

WIRE HARESS
RH CHASSIS
GM 2.4L, LPG

ITEM	PART NO.	DESCRIPTION	QTY
31	1330438	Socket (Terminal)	2
32	1587778	Clip	4
33	1502627	Connector (To Transmission Harness)	1
33	1330438	Socket (Terminal)	17
33	1484377	Plug	6
34	1500899	Clip	1
35	1531501	Connector (To Engine Harness)	1
35	1330438	Socket (Terminal)	9
35	1463139	Terminal	6
35	1554359	Terminal	4
35	1484377	Plug	10
36	1534282	Clip	4
37	1514602	Connector (To Lights/Cab Harness)	1
37	1514603	Secondary Lock	1
37	1554359	Terminal	4
38	1514597	Connector (End Cap)	1
38	1330439	Plug	4
39	1545202	Connector (Accessory 1)	1
39	1546697	Secondary Lock	1
39	1554359	Terminal	2
40	1480187	Connector (End Cap)	1
40	1330439	Plug	2
41	1525570	Connector (Vehicle System Manager)	1
41	1530037	Secondary Lock	1
41	1463139	Terminal	8
41	1484377	Plug	4
42	1402815	Clip	2

©2005 HYSTER COMPANY

WIRE HARNESS (Figure 4-18)
RH CHASSIS
YANMAR 2.6L AND 3.3L, DIESEL

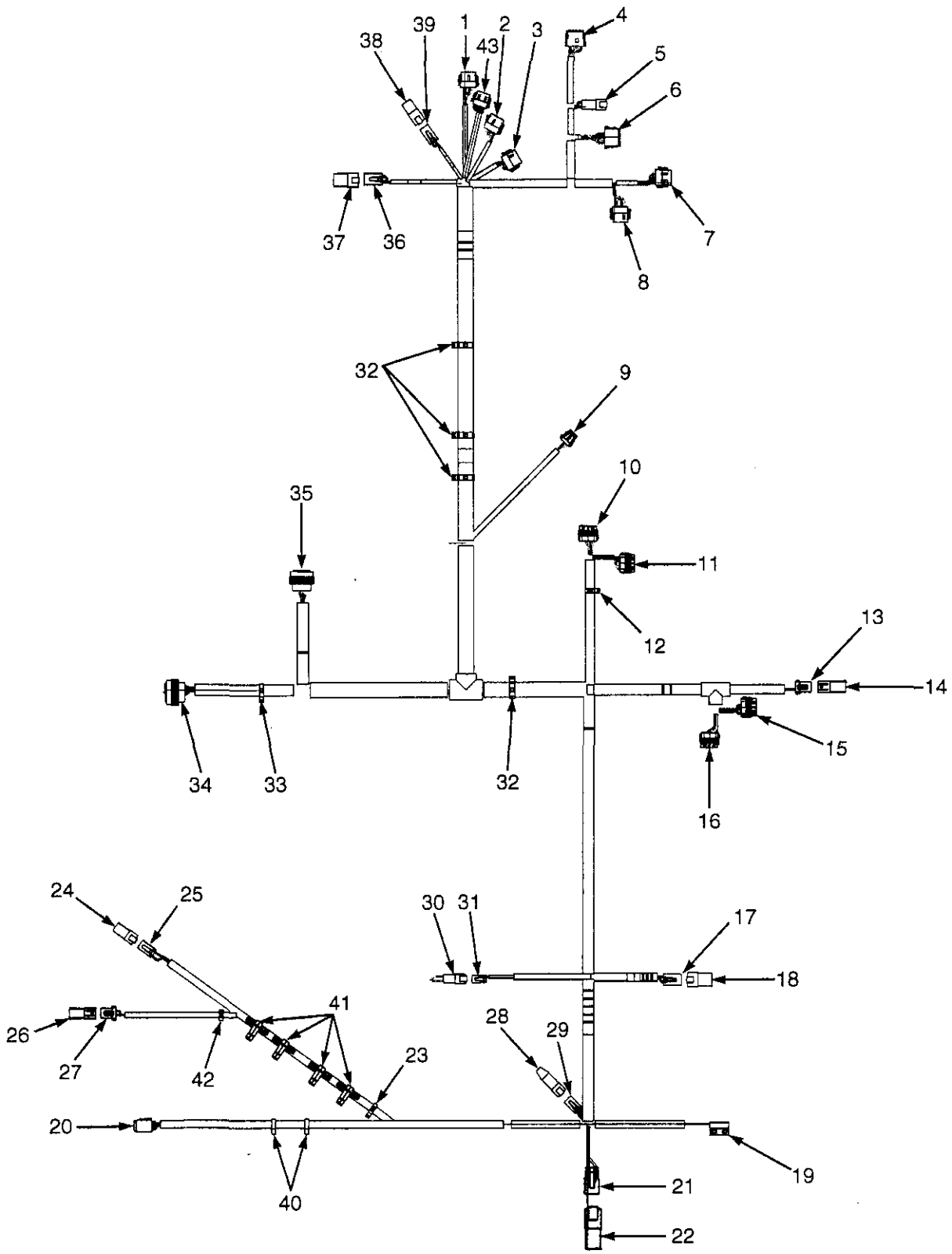

HP081619

©2005 HYSTER COMPANY

WIRE HARNESS
RH CHASSIS
YANMAR 2.6L AND 3.3L, DIESEL

ITEM	PART NO.	DESCRIPTION	QTY
	2075562	Wire Harness (RH Chassis)	1
1	1525570	Connector (Vehicle System Manager)	1
1	1463139	Terminal	7
1	1484377	Plug	5
1	1530037	Secondary Lock	1
2	1525568	Connector (Vehicle System Manager)	1
2	1463139	Terminal	9
2	1484377	Plug	3
2	1530037	Secondary Lock	1
3	1525567	Connector (Vehicle System Manager)	1
3	1530037	Secondary Lock	1
3	1463139	Terminal	9
3	1484377	Plug	3
4	1525563	Connector (Vehicle System Manager)	1
4	1500913	Secondary Lock	1
4	1330438	Socket (Terminal)	8
4	1363886	Socket	4
5	1489655	Connector (To Cowl Harness)	1
5	1330416	Secondary Lock	1
5	1330437	Terminal (Pin)	4
6	1493428	Connector (12-Way) (To Cowl Harness)	1
6	1330438	Socket (Terminal)	9
6	1484377	Plug	3
6	1500913	Secondary Lock	1
7	1525567	Connector (Vehicle System Manager)	1
7	1529046	Secondary Lock	1
7	1463139	Terminal	6
7	1484377	Plug	6
8	1525569	Connector (Vehicle System Manager)	1
8	1529046	Secondary Lock	1
8	1463139	Terminal	9
8	1484377	Plug	3
9	1476064	Connector (Horn)	1
9	1476109	Secondary Lock	1
9	1330356	Seal	2
9	1330355	Terminal	3
9	1476108	Seal	1
10	1521184	Connector (Power Distribution Module)	1
10	1521188	Secondary Lock	1
10	1323579	Seal	5
10	1327164	Plug	2
10	1330281	Terminal	5
10	1521989	Terminal	1
10	1402888	Seal	1
11	1521183	Connector (Power Distribution Module)	1
11	1521188	Secondary Lock	1
11	1323579	Seal	7
11	1327164	Plug	1
11	1330281	Terminal	4
11	1521989	Terminal	3

©2005 HYSTER COMPANY

WIRE HARNESS
RH CHASSIS
YANMAR 2.6L AND 3.3L, DIESEL

ITEM	PART NO.	DESCRIPTION	QTY
12	1534828	Clip	1
13	1329152	Connector (Hydraulic Filter)	1
13	1329151	Secondary Lock	1
13	1330281	Terminal	2
13	1402888	Seal	2
14	1329150	Connector (End Cap)	1
14	1327164	Plug	2
14	1329151	Secondary Lock	1
15	1521185	Connector (Power Distribution Module)	1
15	1521188	Secondary Lock	1
15	1323579	Seal	8
15	1521989	Terminal	2
15	1330281	Terminal	6
15	1521989	Terminal	2
16	1521186	Connector (Power Distribution Module)	1
16	1521188	Secondary Lock	1
16	1323579	Seal	7
16	1327164	Plug	1
16	1521989	Terminal	7
17	1514602	Connector (Accessory 2)	1
17	1514603	Secondary Lock	1
17	1330439	Plug	1
17	1554359	Terminal	3
18	1514597	Connector (End Cap)	1
18	1330439	Plug	4
19	1572588	Switch (Hood Switch)	1
20	1541991	Connector (To Seat Harness)	1
20	1541992	Secondary Lock	1
20	1463139	Terminal	8
21	1490242	Connector (Alternate Horn Button)	1
21	1561519	Connector	1
21	1330438	Socket (Terminal)	2
22	1351681	Connector (End Cap)	1
23	1509890	Clip	1
24	1351683	Connector (End Cap)	1
25	1493430	Connector (To Back-Up Alarm)	1
25	1529052	Secondary Lock	1
25	1330438	Socket (Terminal)	6
26	1329150	Connector (End Cap)	1
26	1329151	Secondary Lock	1
26	1327164	Plug	2
27	1329152	Connector (Coolant Level)	1
27	1329151	Secondary Lock	1
27	1330281	Terminal	2
27	1402888	Seal	2
28	1525577	Connector (End Cap)	1
29	1489656	Connector (Bus Terminal)	1
29	1489657	Secondary Lock	1
29	1330438	Socket (Terminal)	4
30	1493465	Connector (Key Switch)	1

©2005 HYSTER COMPANY

WIRE HARNESS
RH CHASSIS
YANMAR 2.6L AND 3.3L, DIESEL

ITEM	PART NO.	DESCRIPTION	QTY
30	1330414	Secondary Lock	1
30	1330437	Terminal (Pin)	2
31	1490242	Connector (Key Switch)	1
31	1490243	Secondary Lock	1
31	1330438	Socket (Terminal)	2
32	1534282	Clip	4
33	1500899	Clip	1
34	1502627	Connector (To Transmission Harness)	1
34	1330438	Socket (Terminal)	16
34	1484377	Plug	7
35	1531501	Connector (To Engine Harness)	1
35	1330438	Socket (Terminal)	13
35	1330439	Plug	1
35	1484377	Plug	6
35	1554359	Terminal	3
35	1463139	Terminal	6
36	1514602	Connector (To Lights/Cab Harness)	1
36	1514603	Secondary Lock	1
36	1554359	Terminal	4
37	. . . . .	(End Cap)	..
37	1514597	Connector	1
37	1330439	Plug	4
38	. . . . .	(End Cap)	..
38	1480187	Connector	1
38	1330439	Plug	2
39	1545202	Connector (Accessory 1)	1
39	1554359	Terminal	2
39	1546697	Secondary Lock	1
40	1402815	Clip	2
41	1587778	Clip	4
42	1509888	Clip	2
43	1525569	Connector (Vehicle System Manager)	1
43	1530037	Secondary Lock	1
43	1463139	Terminal	11
43	1484377	Plug	1

©2005 HYSTER COMPANY

WIRE HARNESS (Figure 4-19)
ENGINE
MAZDA 2.0L AND 2.2L, LPG

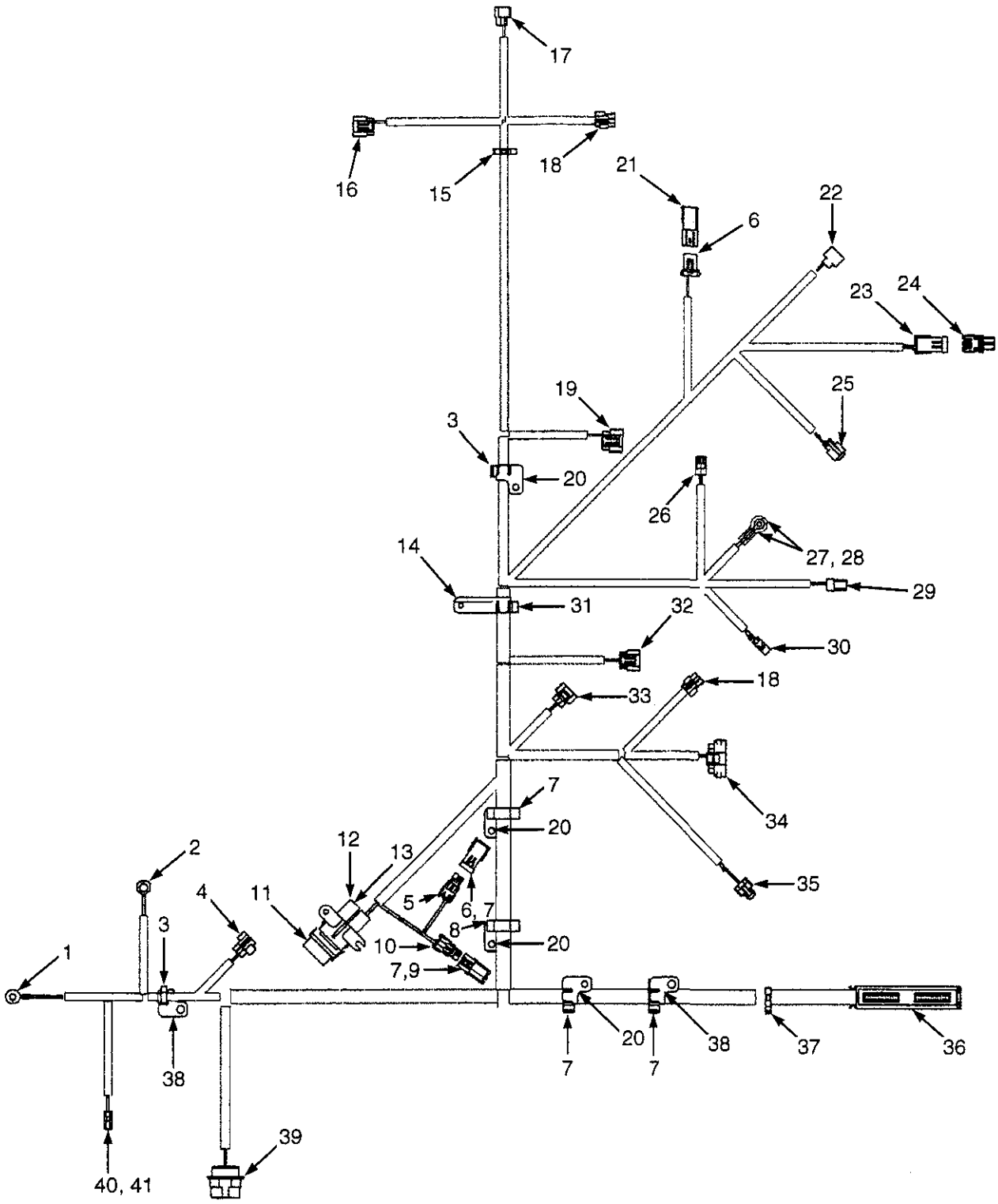

HP081563

©2005 HYSTER COMPANY

WIRE HARNESS
ENGINE
MAZDA 2.0L AND 2.2L, LPG

ITEM	PART NO.	DESCRIPTION	QTY
	2065855	Wire Harness (LPG Engine)	1
1	1493458	E-Ring	1
2	1402890	Terminal	1
3	1532775	Clip	2
4	1561518	Connector (Oxygen Sensor)	1
5	1465468	Connector	2
6	1547482	Connector	2
7	1567333	Clip	2
8	1532777	Clip	4
9	1547482	Connector	1
10	1378652	Connector Body	1
11	1454862	Cover (With Seal) (Alternator)	1
12	1378418	Fuse (50 Amp)	1
13	1543553	Fuse Holder	1
14	1558226	Bracket	1
15	1402816	Clip	1
16	1531237	Body (Igniter)	1
17	1531239	Connector (Coil)	1
18	1482651	Connector (Condenser)	2
19	1531240	Body (Distributor)	1
20	1532761	Bracket	4
21	1329150	Connector (LPG Low Pressure Switch)	1
22	1474764	Connector (Idle LPG Solenoid)	1
23	1465469	Receptacle (Air Filter Restriction)	1
24	1465468	Connector (Air Filter Restriction Sensor)	1
25	1474763	Connector (Main LPG Solenoid)	1
26	1327957	Connector (Oil Pressure Sensor)	1
27	1520864	Boot (Alternator)	1
28	129888	Terminal	1
29	1323586	Connector (Coolant Temperature)	1
30	1308259	Connector Body (Alternator)	1
31	1532776	Clip	1
32	1560441	Connector (MAP Sensor)	1
33	1531991	Connector (Throttle Position Sensor)	1
34	1531231	Connector (Governor)	1
35	1482654	Connector (Injector)	1
36	1547479	Housing	1
37	1500899	Clip	1
38	1558228	Bracket	2
39	1531502	Connector (Chassis Harness)	1
40	1581313	Connector (Starter)	1
41	1581315	Terminal	1

©2005 HYSTER COMPANY

WIRE HARNESS (Figure 4-20)
ENGINE
GM 2.4L, LPG

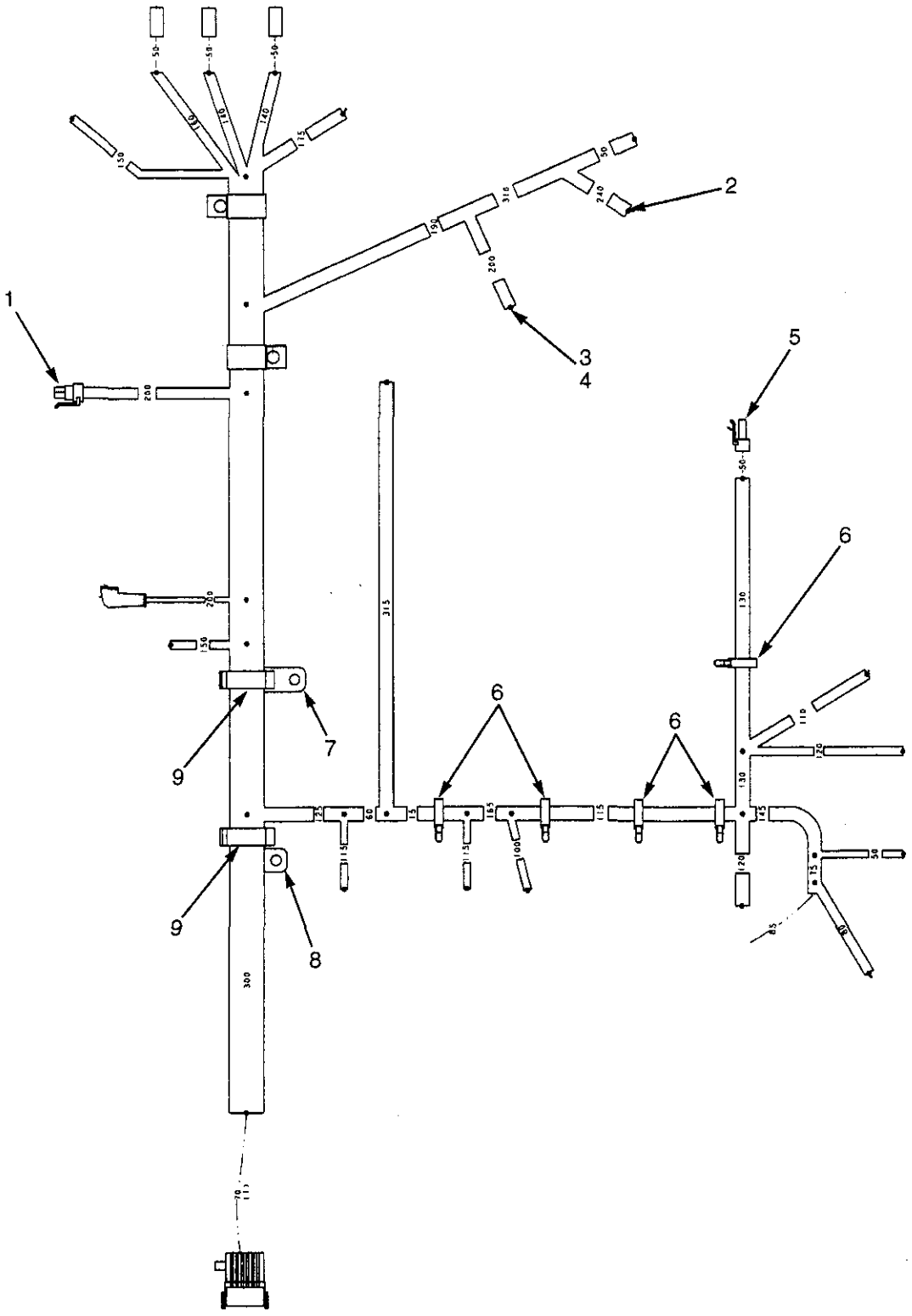

©2005 HYSTER COMPANY

WIRE HARNESS
ENGINE
GM 2.4L, LPG

ITEM	PART NO.	DESCRIPTION	QTY
	2053099	Wire Harness (Engine)	1
1	1327957	Connector	1
2	1327164	Plug	1
3	1465469	Receptacle	1
4	1323578	Pin	1
5	1323586	Connector	1
6	1500900	Clip	5
7	1532759	Bracket	1
8	1532758	Bracket	1
9	1532779	Clip	3

©2005 HYSTER COMPANY

WIRE HARNESS (Figure 4-21)
ENGINE
YANMAR 2.6L AND 3.3L, DIESEL

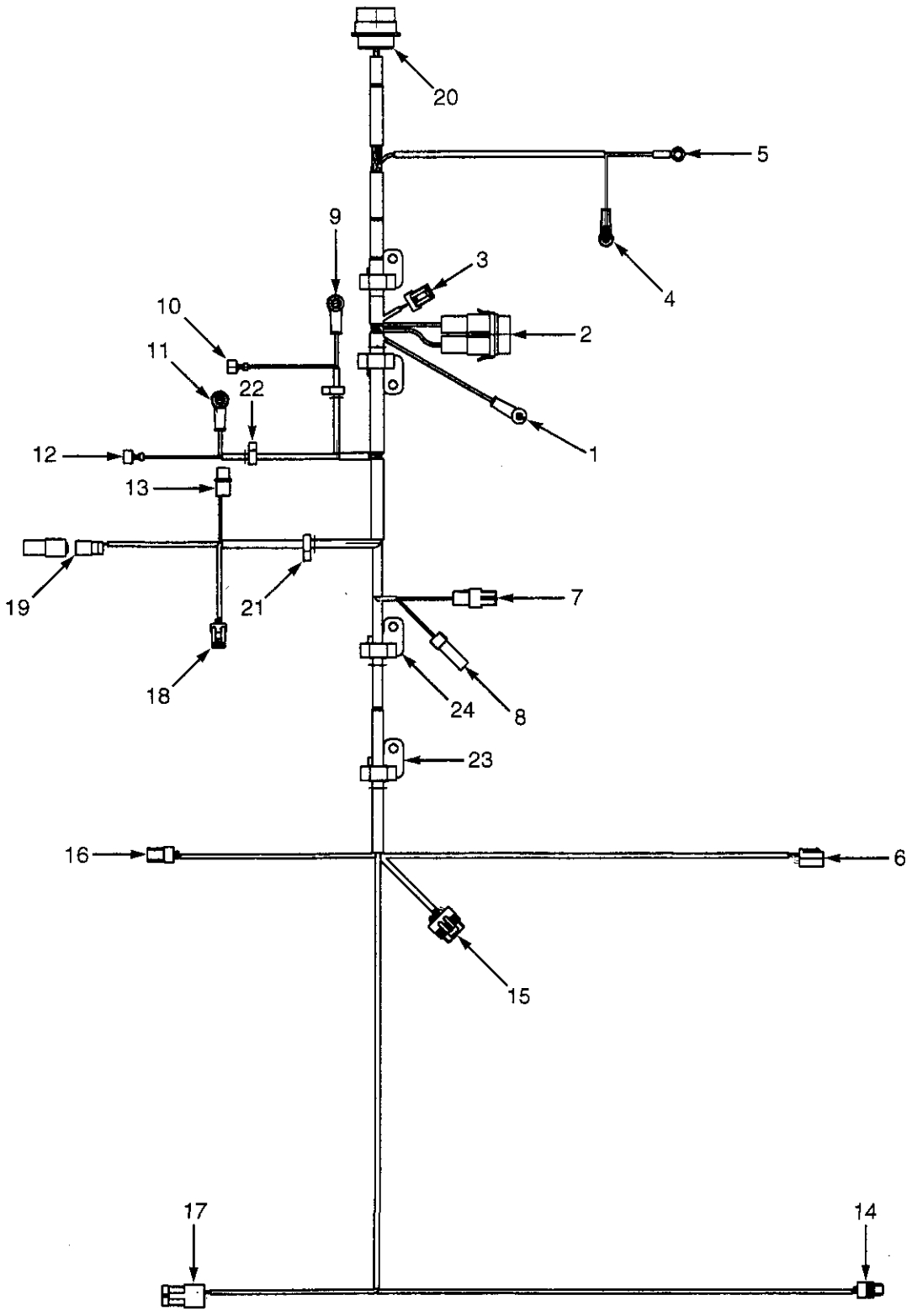

HP081650

©2005 HYSTER COMPANY

WIRE HARNESS
ENGINE
YANMAR 2.6L AND 3.3L, DIESEL

ITEM	PART NO.	DESCRIPTION	QTY
	2060844	Wire Harness (Engine)	1
1	1559049	Terminal (Glow Plug)	1
1	190382	Boot	1
2	1454860	Connector (Fuse)	1
2	1382695	Connector	2
2	1382694	Fuse Connector	2
2	1454829	Fuse (60 Amp)	1
2	1454862	Cover (With Seal)	1
3	1546673	Connector (Engine RPM Sensor)	1
3	1323576	Terminal	3
4	1559049	Terminal (Starter Solenoid)	1
4	190382	Boot	1
5	148611	Terminal (Starter Stud)	1
6	1547368	Connector (Alternator)	1
6	1565098	Fitting	2
7	1582484	Connector (Fuel Shut-Off Solenoid)	1
8	1582486	Connector (Cold Start Aid)	1
9	1521328	Terminal (Relay Power To Glow Plugs)	1
9	190383	Boot	1
10	325789	Fitting (Relay Ground)	1
11	1521328	Terminal (Fused Power Positive)	1
11	190383	Boot	1
12	325789	Fitting (Relay Signal)	1
13	1547369	Connector (Fuel Filter/Water Separator)	1
14	1476077	Connector (Fuel Level Sensor)	1
14	1323576	Terminal	2
15	1525584	Connector (Throttle Position Sensor)	1
15	1532571	Terminal	6
16	1323586	Connector (Water Temperature Sensor)	1
16	1323576	Terminal	2
17	1465469	Receptacle (Air Filter Sensor)	1
17	1323578	Pin	2
17	1402888	Seal	2
17	1498416	Terminal	2
18	1327957	Connector (Low Engine Oil Pressure Switch)	1
18	1532571	Terminal	3
19	1330419	Connector (Pull Actuator)	1
19	1330436	Terminal	2
19	1330424	Secondary Lock	1
19	1351681	Connector	1
20	1531502	Connector (Engine To Chassis)	1
20	1484709	Terminal (Pin)	3
20	1330437	Terminal (Pin)	19
20	1330439	Plug	7
21	1500901	Clip	1
22	1509888	Clip	2
23	1532776	Clip	4
24	1532761	Bracket	4

©2005 HYSTER COMPANY

WIRE HARNESS (Figure 4-22)
COWL

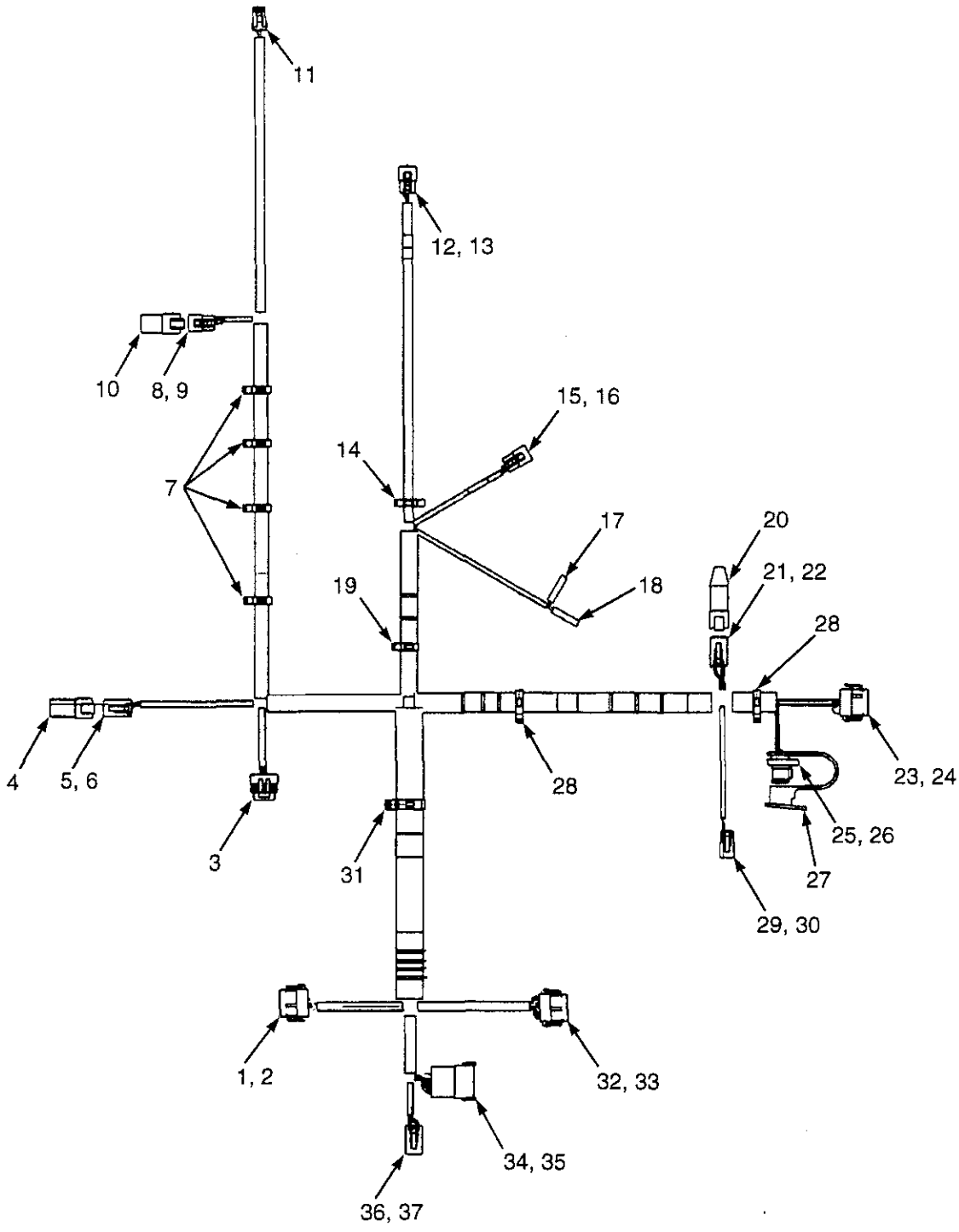

©2005 HYSTER COMPANY

WIRE HARNESS
COWL

ITEM	PART NO.	DESCRIPTION	QTY
	2070269	Wire Harness	1
1	1525568	Connector (Vehicle System Manager)	1
1	1463139	Terminal	10
1	1484377	Plug	2
2	1529046	Secondary Lock	1
3	1525584	Connector (Accelerator Pedal)	1
3	1532571	Terminal	6
4	1525573	Connector	1
5	1489656	Connector (To Monotrol Harness)	1
5	1330438	Socket (Terminal)	4
6	1489657	Secondary Lock	1
7	1509890	Clip	4
8	1484397	Connector (To Mast Harness)	1
8	1330438	Socket (Terminal)	3
9	1463194	Secondary Lock	1
10	1351682	End Cap	1
11	1327957	Connector (Brake Pressure)	1
11	1532571	Terminal	3
12	1484397	Connector (Brake Pedal)	1
12	1330438	Socket (Terminal)	3
13	1463194	Secondary Lock	1
14	1402816	Clip	1
15	1484397	Connector (Park Brake)	1
15	1330438	Socket (Terminal)	3
16	1463194	Secondary Lock	1
17	1324310	Terminal	1
17	1566227	Terminal (Optional)	1
17	1324309	Sleeve	1
17	1566076	Seal (Optional)	1
18	1324310	Terminal	1
18	1566227	Terminal (Optional)	1
18	1324309	Sleeve	1
18	1566076	Seal (Optional)	1
19	1534828	Clip	1
20	1525577	Connector	1
21	1489656	Connector (Bus Terminal 1)	1
21	1330438	Socket (Terminal)	4
22	1489657	Secondary Lock	1
23	1525567	Connector (Display)	1
23	1463139	Terminal	5
23	1484377	Plug	7
24	1529046	Secondary Lock	1
25	1566116	Connector (Diagnostic)	1
25	1330438	Socket (Terminal)	3
26	1532664	Secondary Lock	1
27	1566117	Dust Cap	1
28	1500899	Clip	2
29	1490242	Connector (Horn Button)	1
29	1330438	Socket (Terminal)	2
30	1490243	Secondary Lock	1
31	1534282	Clip	1

©2005 HYSTER COMPANY

WIRE HARNESS
COWL

ITEM	PART NO.	DESCRIPTION	QTY
32	1525570	Connector (Vehicle System Manager)	1
32	1463139	Terminal	7
32	1484377	Plug	5
33	1529046	Secondary Lock	1
34	1500925	Connector (RH Chassis)	1
34	1330437	Terminal (Pin)	9
34	1330439	Plug	3
35	1352603	Secondary Lock	1
36	1489656	Connector (RH Chassis)	1
36	1330438	Socket (Terminal)	4
37	1489657	Secondary Lock	1

©2005 HYSTER COMPANY

NOTES

WIRE HARNESS (Figure 4-23)
ELECTRONIC CONTROL VALVE
THREE FUNCTION

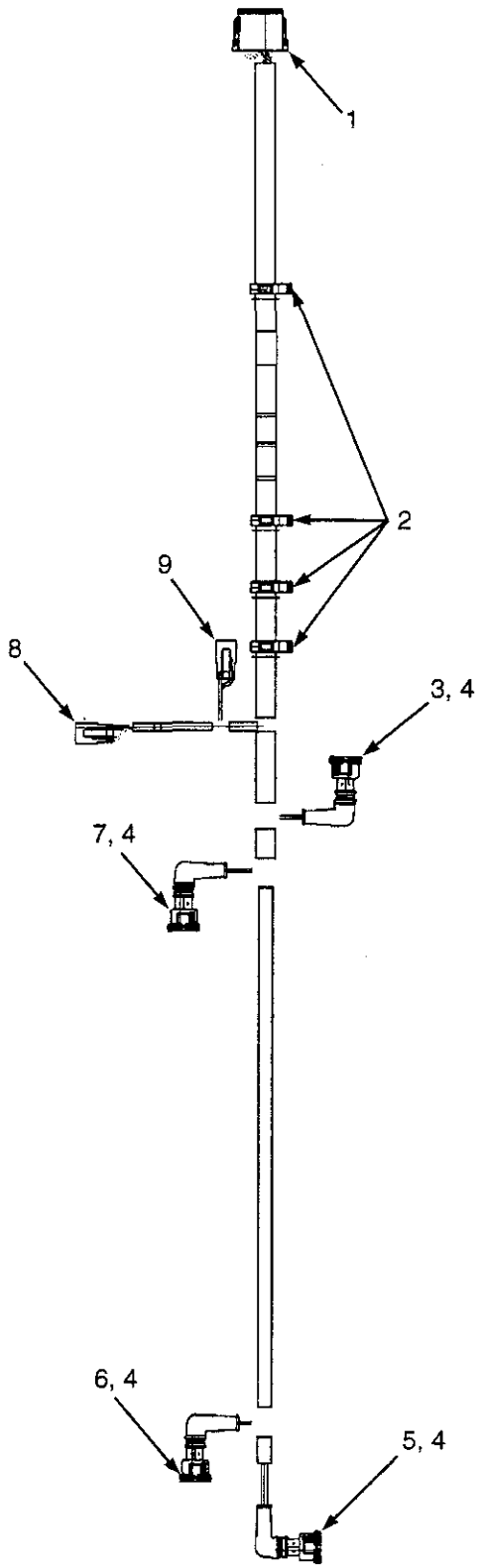

HP081569

©2005 HYSTER COMPANY

WIRE HARNESS
ELECTRONIC CONTROL VALVE
THREE FUNCTION

ITEM	PART NO.	DESCRIPTION	QTY
	2060198	Wire Harness (Electronic Control Valve)	1
1	1525564	Connector (Vehicle System Manager)	1
1	1330438	Socket (Terminal)	9
1	1330439	Plug	3
1	1525564	Connector	1
1	1500913	Secondary Lock	1
2	1402815	Clip	4
3	1531162	Connector (2A Tilt)	1
3	1562649	Seal	2
3	1402814	Terminal	2
4	190383	Boot	4
5	1531162	Connector (2B Tilt)	1
5	1562649	Seal	2
5	1402814	Terminal	2
6	1493435	Socket (3B Auxiliary 1)	1
6	1562649	Seal	2
6	1402814	Terminal	2
7	1493435	Socket (3A Auxiliary 1)	1
7	1562649	Seal	2
7	1402814	Terminal	2
8	1490242	Connector (Lift)	1
8	1330438	Socket (Terminal)	2
8	1490243	Secondary Lock	1
9	1490242	Connector (Lower)	1
9	1330438	Socket (Terminal)	2
9	1490243	Secondary Lock	1

©2005 HYSTER COMPANY

WIRE HARNESS (Figure 4-24)
ELECTRONIC CONTROL VALVE
FOUR FUNCTION

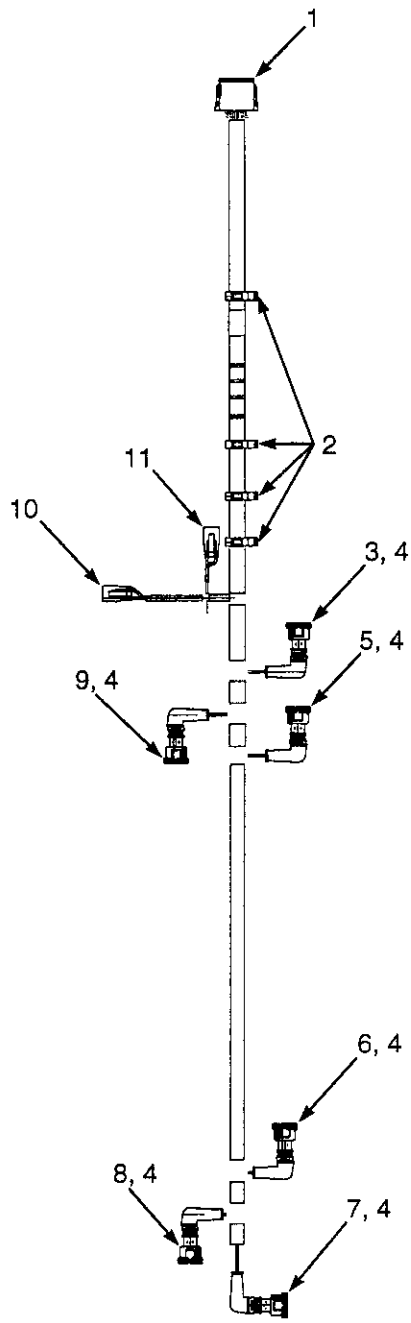

HP081568

©2005 HYSTER COMPANY

WIRE HARNESS
ELECTRONIC CONTROL VALVE
FOUR FUNCTION

ITEM	PART NO.	DESCRIPTION	QTY
	2058909	Wire Harness (Electronic Control Valve)	1
1	1525564	Connector (Vehicle System Manager)	1
1	1330438	Socket (Terminal)	12
1	1500913	Secondary Lock	1
2	1402815	Clip	4
3	1531162	Connector (2A Tilt)	1
3	1562649	Seal	2
3	1402814	Terminal	2
4	190383	Boot	6
5	1493447	Socket Housing (4A Auxiliary 2)	1
5	1562649	Seal	2
5	1402814	Terminal	2
6	1493447	Socket Housing (4B Auxiliary 2)	1
6	1562649	Seal	2
6	1402814	Terminal	2
7	1531162	Connector (2B Tilt)	1
7	1562649	Seal	2
7	1402814	Terminal	2
8	1493435	Socket (3B Auxiliary 1)	1
8	1562649	Seal	2
8	1402814	Terminal	2
9	1493435	Socket (3A Auxiliary 1)	1
9	1562649	Seal	2
9	1402814	Terminal	2
10	1490242	Connector (Lift)	1
10	1330438	Socket (Terminal)	2
10	1490243	Secondary Lock	1
11	1490242	Connector (Lower)	1
11	1330438	Socket (Terminal)	2
11	1490243	Secondary Lock	1

©2005 HYSTER COMPANY

WIRE HARNESS (Figure 4-25)
LIGHTS

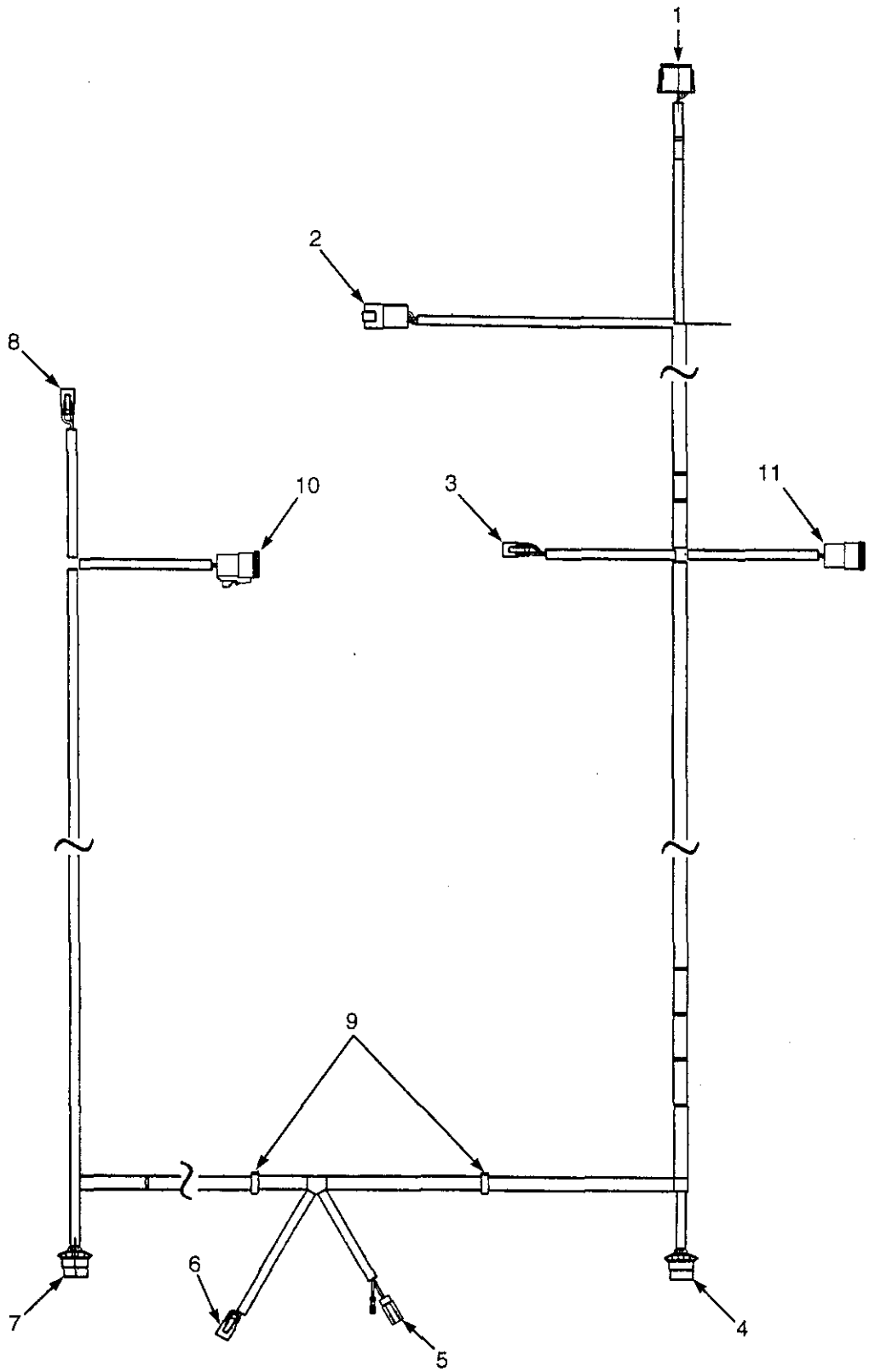

©2005 HYSTER COMPANY

WIRE HARNESS
LIGHTS

ITEM	PART NO.	DESCRIPTION	QTY
	2074737	Wire Harness (Lights)	1
1	1525566	Connector (Vehicle System Manager)	1
1	1330439	Plug	7
1	1330438	Socket (Terminal)	5
1	1500913	Secondary Lock	1
2	1514597	Connector (Chassis Harness)	1
2	1484709	Terminal (Pin)	4
2	1514598	Secondary Lock	1
3	1490242	Connector (RH Front Work Lights)	1
3	1363886	Socket	2
3	1490243	Secondary Lock	1
4	1531486	Connector (RH Rear Signal Lights)	1
4	1330355	Terminal	5
4	1330356	Seal	1
4	1482668	Plug	1
4	930591	Lock	1
4	1476108	Seal	4
5	1484557	Housing (Socket) (Strobe Lights)	1
5	1484558	Retainer (Socket)	1
5	1463139	Terminal	2
6	1490242	Connector (Rear Work Lights)	1
6	1363886	Socket	2
6	1490243	Secondary Lock	1
7	1531486	Connector (LH Rear Signal Lights)	1
7	1330355	Terminal	5
7	1330356	Seal	1
7	1482668	Plug	1
7	930591	Lock	1
7	1476108	Seal	4
8	1490242	Connector (LH Front Work Lights)	1
8	1363886	Socket	2
8	1490243	Secondary Lock	1
9	1509890	Clip	2
10	1484397	Connector (LH Front Signal)	1
10	1330438	Socket (Terminal)	3
11	1484397	Connector (RH Front Signal)	1
11	1330438	Socket (Terminal)	3

©2005 HYSTER COMPANY

WIRE HARNESS (Figure 4-26)
TRANSMISSION
DUAL SPEED

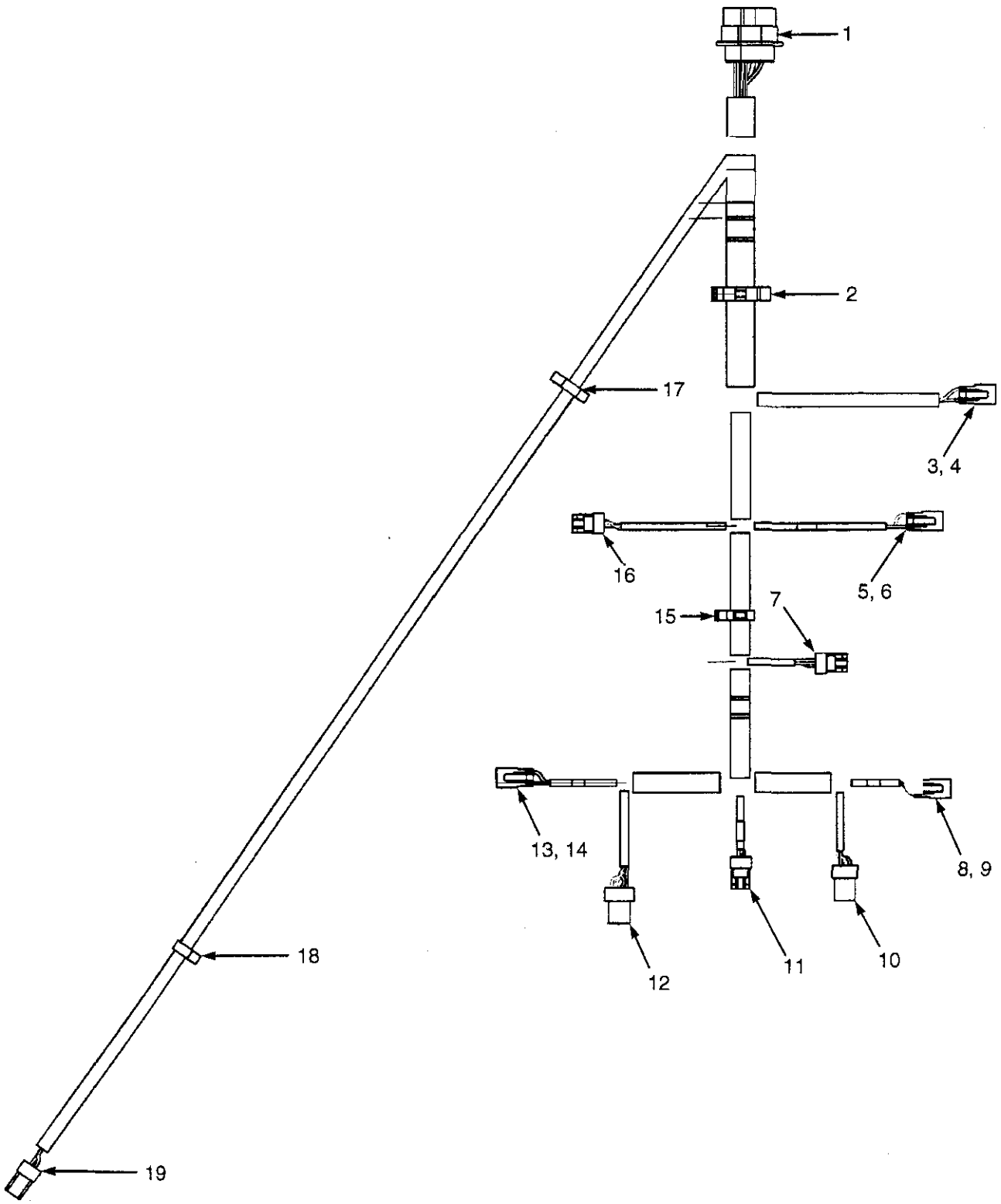

©2005 HYSTER COMPANY

WIRE HARNESS
TRANSMISSION
DUAL SPEED

ITEM	PART NO.	DESCRIPTION	QTY
	2075644	Wire Harness (Transmission)	1
1	1500919	Connector (To Chassis)	1
1	1330437	Terminal (Pin)	17
1	1484377	Plug	6
2	1402813	Clip	1
3	1490242	Connector (Clutch Forward 2)	1
3	1330438	Socket (Terminal)	2
4	1490243	Secondary Lock	1
5	1490242	Connector (Clutch Forward 1)	1
5	1330438	Socket (Terminal)	2
6	1490243	Secondary Lock	1
7	1327957	Connector (Forward 1 Pressure)	1
7	1532571	Terminal	3
8	1490242	Connector (Clutch Reverse 1)	1
8	1330438	Socket (Terminal)	2
9	1490243	Secondary Lock	1
10	1546673	Connector (Turbine Shaft RPM)	1
10	1323576	Terminal	3
11	1327957	Connector (Reverse 1 Pressure)	1
11	1532571	Terminal	3
12	1558156	Connector (Tail Shaft RPM)	1
12	1323576	Terminal	4
13	1490242	Connector (Transmission Check Valve)	1
13	1330438	Socket (Terminal)	2
14	1490243	Secondary Lock	1
15	1534828	Clip	1
16	1327957	Connector (Forward 2 Pressure)	1
16	1532571	Terminal	3
17	1402816	Clip	1
18	1509888	Clip	1
19	1402868	Connector (Transmission Temperature)	1
19	1323576	Terminal	2

©2005 HYSTER COMPANY

WIRE HARNESS (Figure 4-27)
TRANSMISSION
SINGLE SPEED

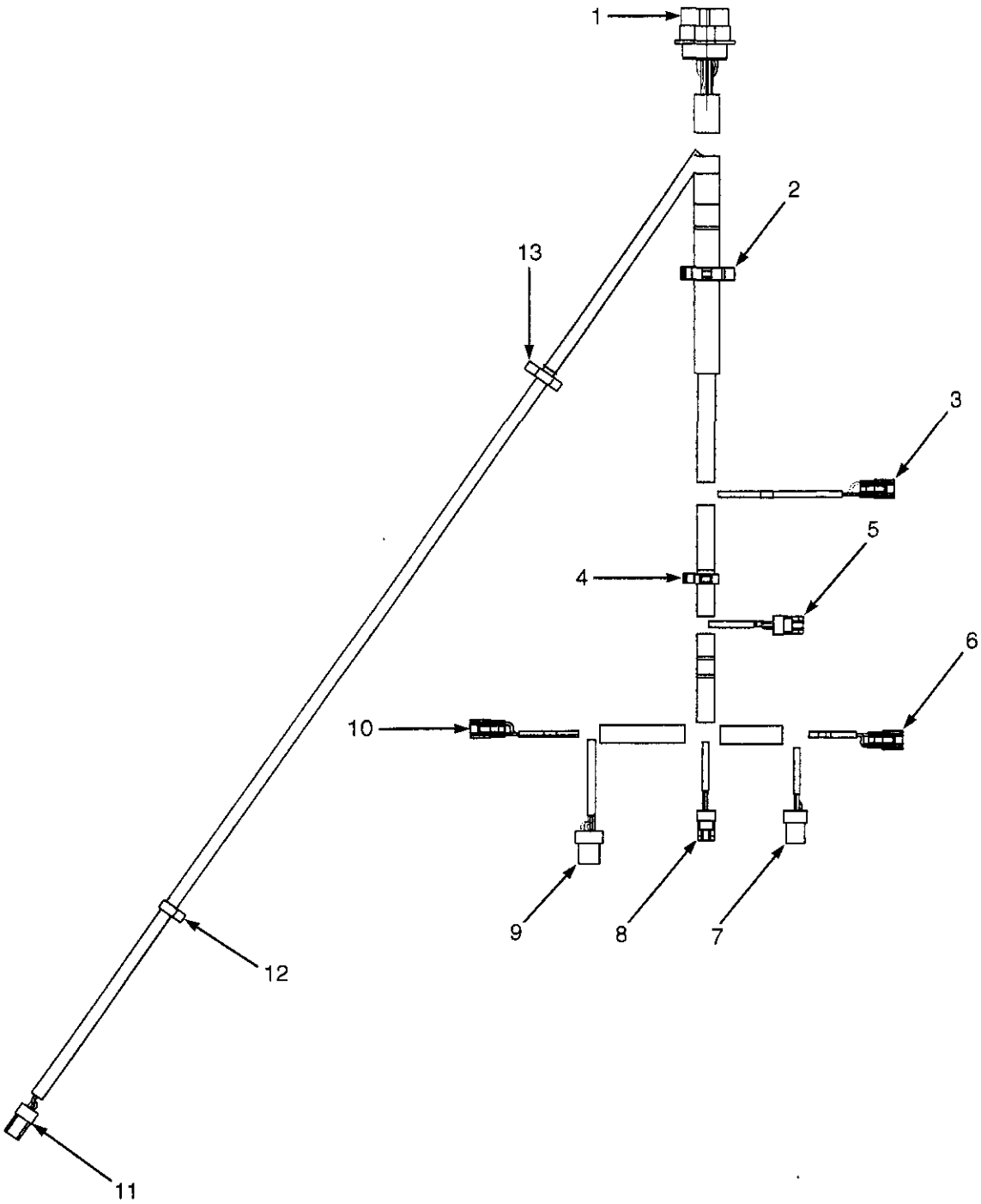

HP081642

©2005 HYSTER COMPANY

WIRE HARNESS
TRANSMISSION
SINGLE SPEED

ITEM	PART NO.	DESCRIPTION	QTY
	2070731	Wire Harness (Transmission)	1
1	1500919	Connector (To Chassis)	1
1	1330437	Terminal (Pin)	14
1	1330439	Plug	9
2	1402813	Clip	1
3	1490242	Connector (Clutch Forward 1)	1
3	1330438	Socket (Terminal)	2
3	1490243	Secondary Lock	1
4	1402815	Clip	1
5	1327957	Connector (Forward 1 Pressure)	1
5	1532571	Terminal	3
6	1490242	Connector (Clutch Reverse 1)	1
6	1330438	Socket (Terminal)	2
6	1490243	Secondary Lock	1
7	1546673	Connector (Turbine Shaft RPM)	1
7	1323576	Terminal	3
8	1327957	Connector (Reverse 1 Pressure)	1
8	1532571	Terminal	3
9	1558156	Connector (Tail Shaft RPM)	1
9	1323576	Terminal	4
10	1490242	Connector (Transmission Charge Valve)	1
10	1490243	Secondary Lock	1
10	1330438	Socket (Terminal)	2
11	1402868	Connector (Transmission Temperature)	1
11	1323576	Terminal	2
12	1509888	Clip	1
13	1402816	Clip	1

©2005 HYSTER COMPANY

NOTES

5 TRANSMISSION

SECTION 5
TRANSMISSION

DESCRIPTION	PAGE
CONTROL VALVE	
TRANSMISSION	5-34
FORWARD CLUTCH	
SINGLE SPEED TRANSMISSION	5-18
FORWARD CLUTCH, HIGH	
DUAL SPEED TRANSMISSION	5-28
INPUT CLUTCH, LOW	
DUAL SPEED TRANSMISSION	5-32
REVERSE CLUTCH	
DUAL SPEED TRANSMISSION	5-30
SINGLE SPEED TRANSMISSION	5-20
TORQUE CONVERTER	5-4
TRANSMISSION	
DUAL SPEED	
SHEET 1 0F 2	5-22
SHEET 2 OF 2	5-26
SINGLE SPEED	
SHEET 1 0F 2	5-12
SHEET 2 OF 2	5-16
TRANSMISSION COOLING	
MAZDA 2.0L AND 2.2L, LPG	
SERPENTINE AND SQUARE WAVE WITHOUT AIR COOLER	5-6
MAZDA 2.0L AND 2.2L/GM 2.4L, LPG	
SQUARE WAVE WITH AIR OIL COOLER	5-8
YANMAR 2.6L AND 3.3L	
DIESEL	5-10
TRANSMISSION MOUNTING	5-2

©2005 HYSTER COMPANY

TRANSMISSION MOUNTING (Figure 5-1)

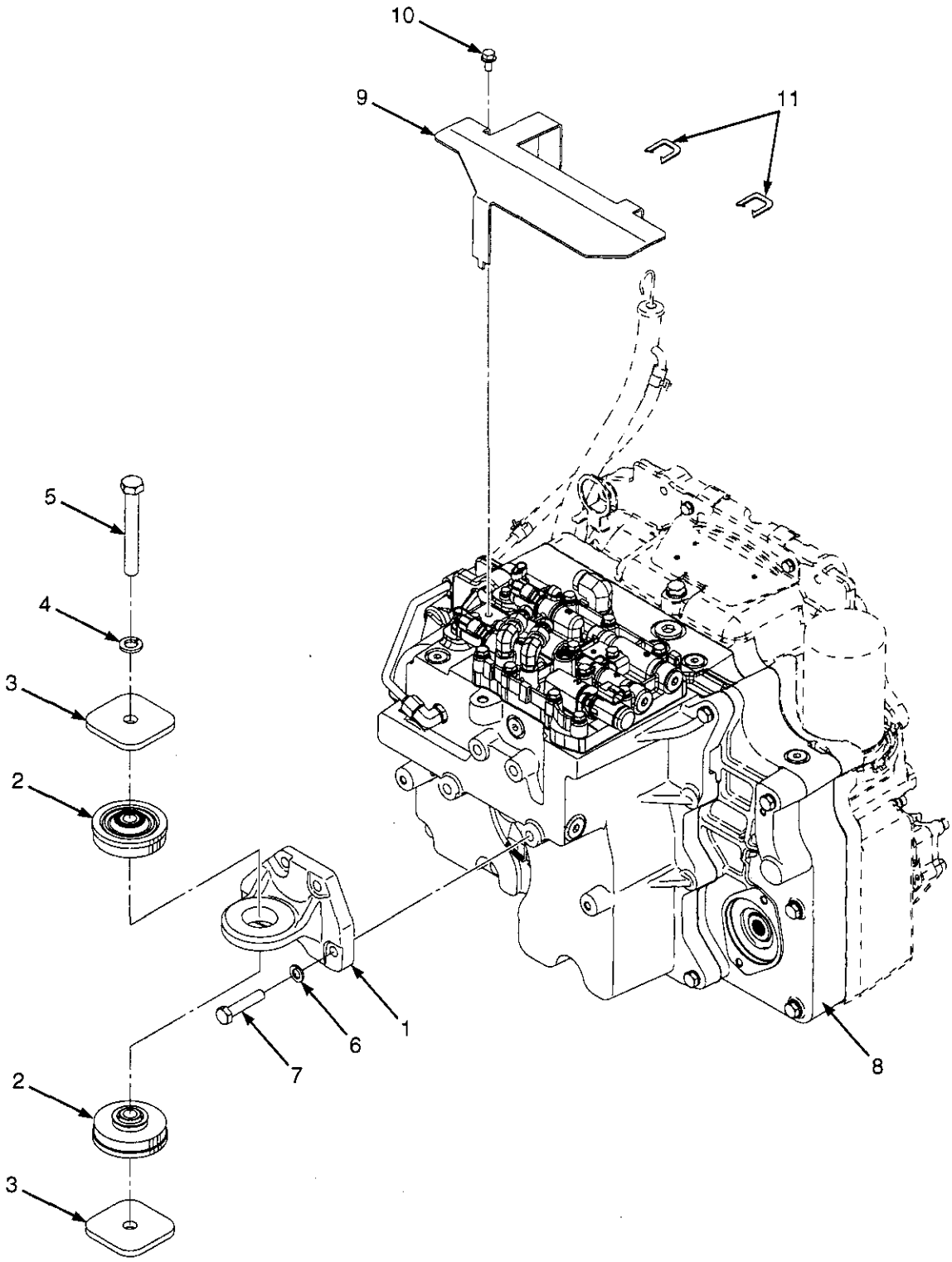

HM240481

©2005 HYSTER COMPANY

TRANSMISSION MOUNTING

ITEM	PART NO.	DESCRIPTION	QTY
1	1501274	Bracket	1
2	2070147	Isolator	2
3	1566329	Washer	2
4	292685	Lockwasher	1
5	293697	Capscrew	1
6	292683	Lockwasher	4
7	292531	Capscrew	4
8	1529896	Transmission Assembly (Dual Speed) (☞ Figure 5-10, ☞ Figure 5-11)	1
8	1550565	Transmission Assembly (☞ Figure 5-6, ☞ Figure 5-7)	1
9	1569768	Shield	1
10	1527879	Capscrew	1
11	1380849	Trim	2

©2005 HYSTER COMPANY

TORQUE CONVERTER (Figure 5-2)

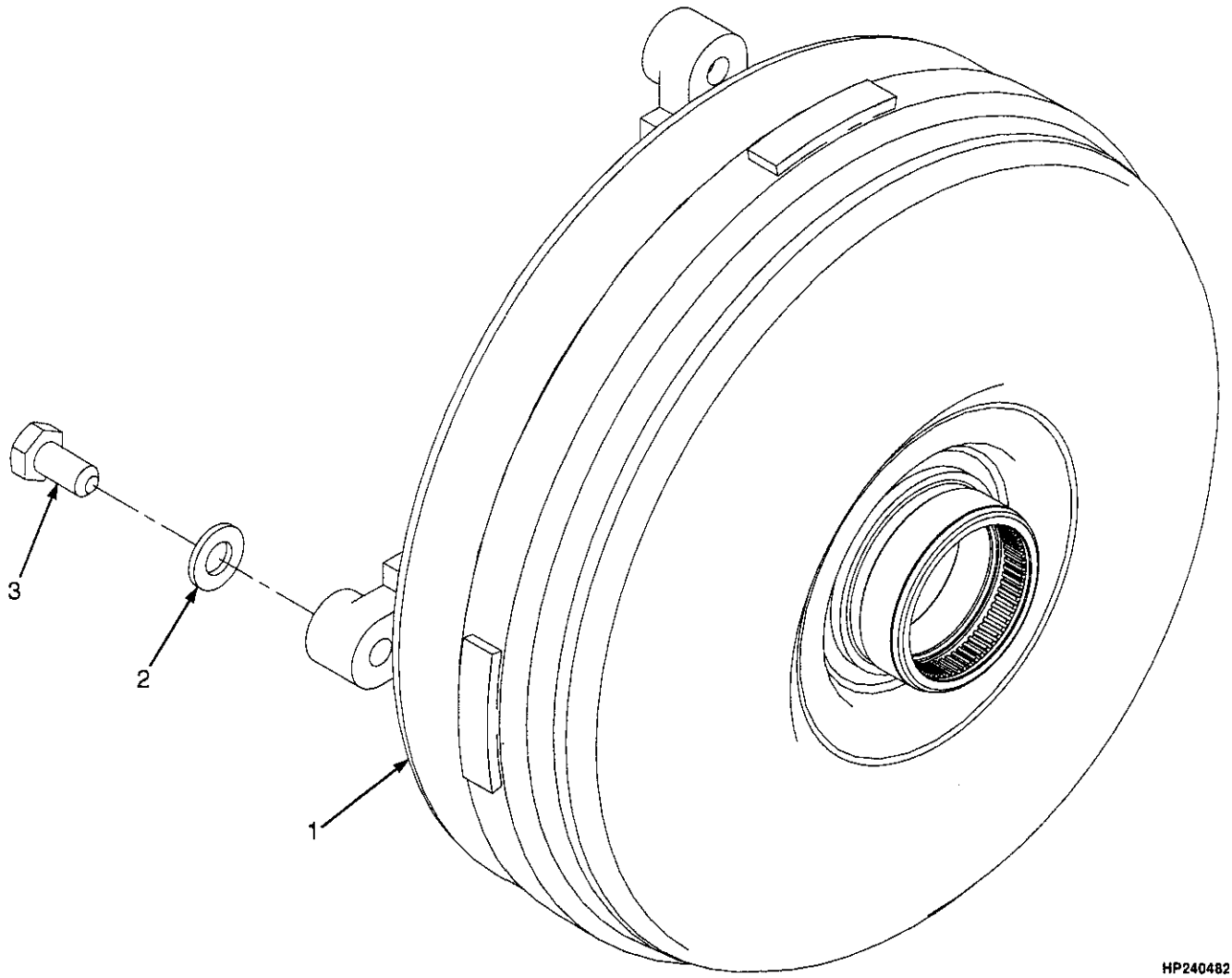

KEY:
A: For Use With Mazda Engines
B: For Use With GM Engines
C: For Use With Yanmar Diesel Engines

ITEM	PART NO.	DESCRIPTION	QTY A	QTY B	QTY C
1	1553122	Torque Converter	1	..	..
1	1553125	Torque Converter	..	1	..
1	1553123	Torque Converter	..	..	1
2	296420	Washer	4	4	4
3	1541921	Capscew	4	..	4
3	309740	Capscrew	..	4	..

©2005 HYSTER COMPANY

NOTES

TRANSMISSION COOLING (Figure 5-3)
MAZDA 2.0L AND 2.2L, LPG
SERPENTINE AND SQUARE WAVE WITHOUT AIR COOLER

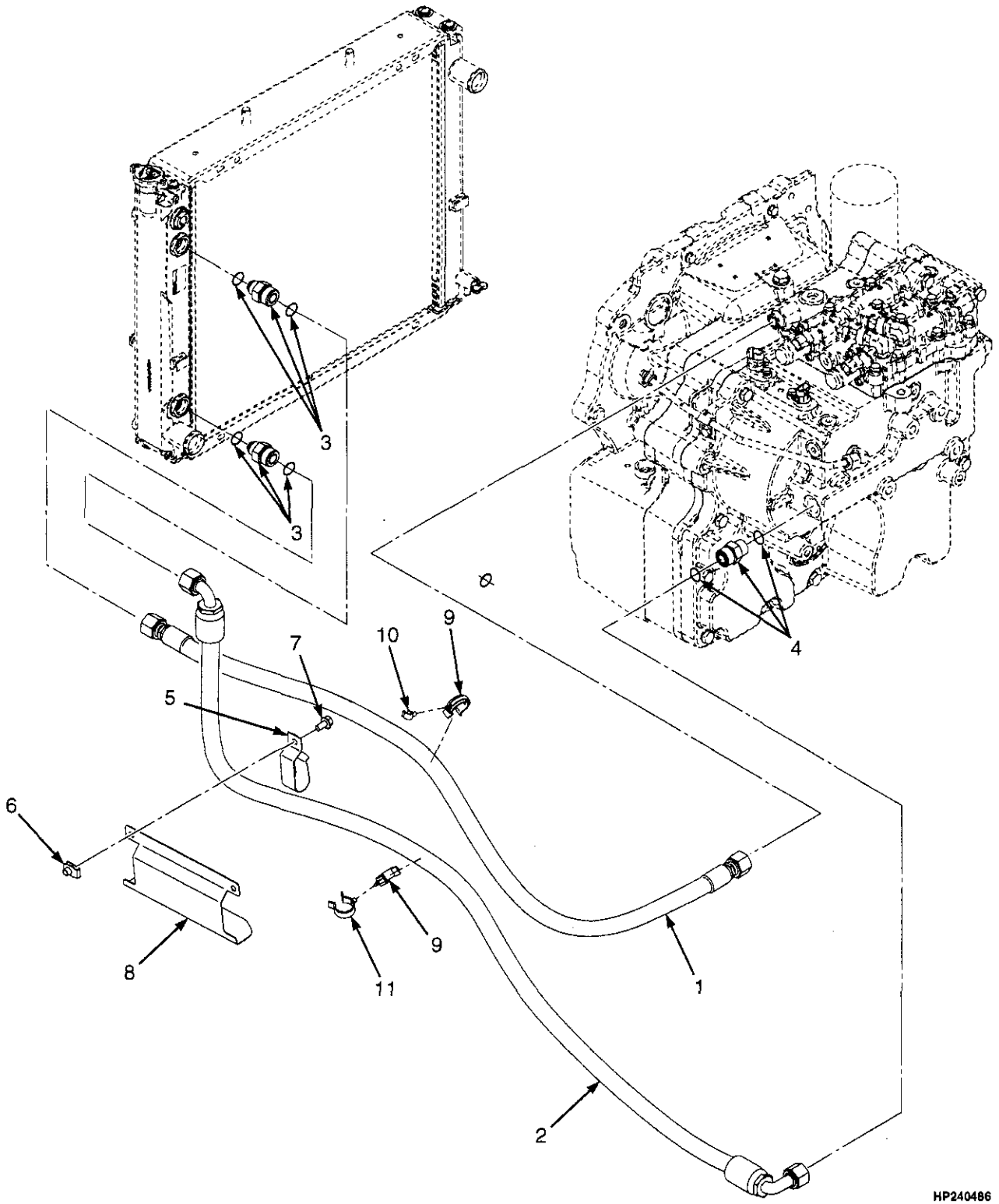

©2005 HYSTER COMPANY

TRANSMISSION COOLING
MAZDA 2.0L AND 2.2L, LPG
SERPENTINE AND SQUARE WAVE WITHOUT AIR COOLER

KEY:
A: With Serpentine Radiator
B: With Square Wave Radiator, Without Air Oil Cooler

ITEM		PART NO.	DESCRIPTION	QTY A	QTY B
1		2075249	Hose	1	1
1		2075844	Hose	..	..
2		2070227	Hose	1	1
2		2075846	Hose	..	..
3	a	1565127	Fitting	..	2
3		16484	O-Ring	..	2
3		252729	O-Ring	..	2
4		1486749	Fitting	1	1
4		16485	O-Ring	1	1
4		252729	O-Ring	1	1
5		1562648	Clip	2	2
6		1480237	Clip Nut	2	2
7		1527879	Capscrew	2	2
8		2075787	Heat Shield	1	1
9		1569465	Clamp	2	2
10		1561871	Clamp (Swivel)	1	1
11		1542436	Clamp	1	1

FOOTNOTES:
a Fittings And O-Rings Supplied With Serpentine Radiator.

©2005 HYSTER COMPANY

TRANSMISSION COOLING (Figure 5-4)
MAZDA 2.0L AND 2.2L/GM 2.4L, LPG
SQUARE WAVE WITH AIR OIL COOLER

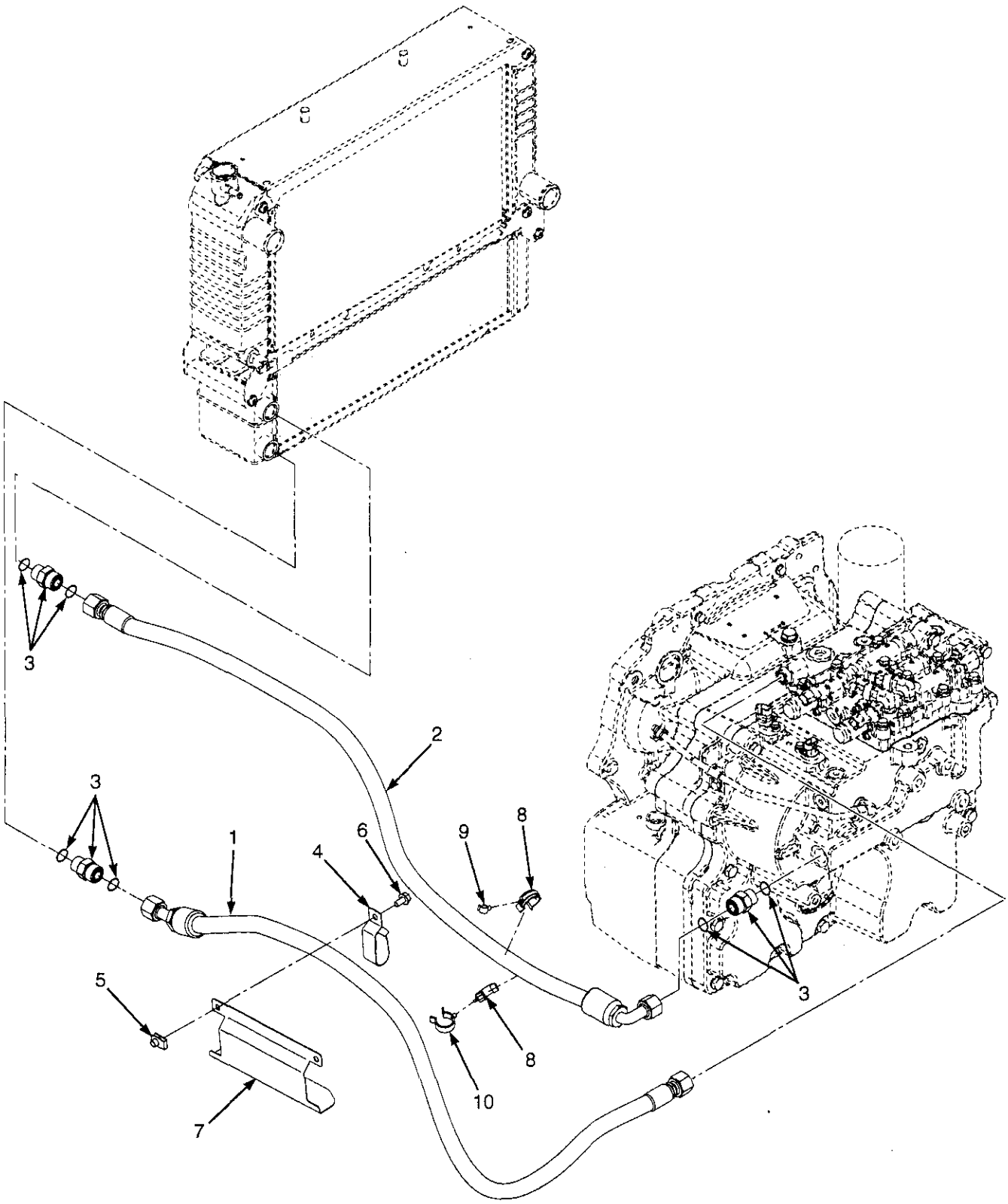

©2005 HYSTER COMPANY

TRANSMISSION COOLING
MAZDA 2.0L AND 2.2L/GM 2.4L, LPG
SQUARE WAVE WITH AIR OIL COOLER

ITEM	PART NO.	DESCRIPTION	QTY
1	2075844	Hose	1
2	2075846	Hose	1
3	1486749	Fitting	3
3	16485	O-Ring	3
3	252729	O-Ring	3
4	1562648	Clip	1
5	1480237	Clip Nut	1
6	1527879	Capscrew	1
7	2075787	Heat Shield	1
8	1569465	Clamp	2
9	1561871	Clamp (Swivel)	1
10	1542436	Clamp	1

©2005 HYSTER COMPANY

TRANSMISSION COOLING (Figure 5-5)
YANMAR 2.6L AND 3.3L
DIESEL

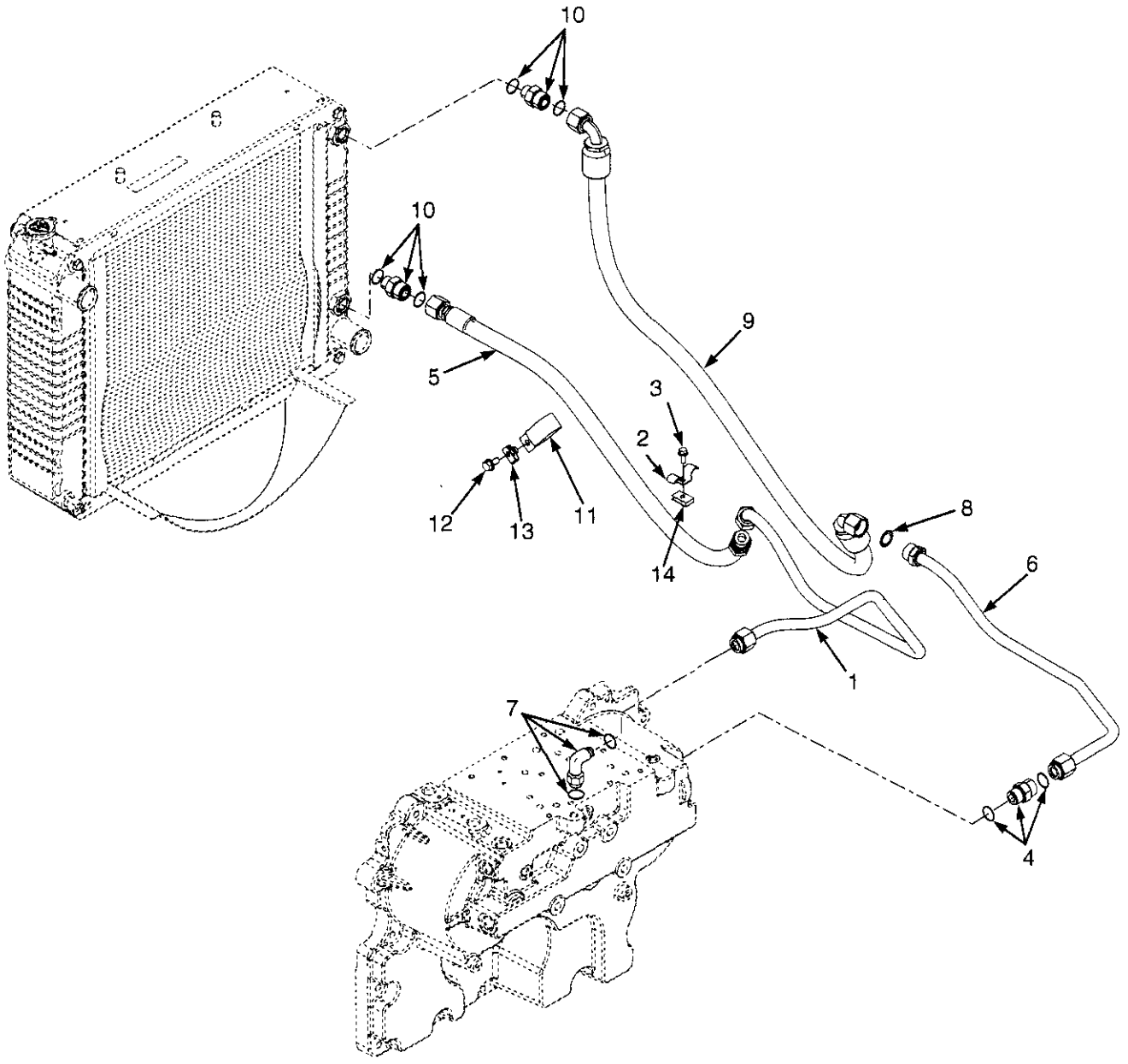

HP240498

©2005 HYSTER COMPANY

TRANSMISSION COOLING
YANMAR 2.6L AND 3.3L
DIESEL

ITEM	PART NO.	DESCRIPTION	QTY
1	2067598	Tube	1
2	1561780	Clip	1
3	1527876	Capscrew	1
4	1486749	Fitting	1
4	16485	O-Ring	1
4	252729	O-Ring	1
5	2070228	Hose	1
6	2067597	Tube	1
7	1487067	Fitting	1
7	252729	O-Ring	1
7	16485	O-Ring	1
8	1582449	Flange Seal	1
9	2075551	Hose	1
10	1565127	Fitting	2
10	16484	O-Ring	2
10	252729	O-Ring	2
11	1562648	Clip	1
12	1527879	Capscrew	1
13	1480237	Clip Nut	1
14	1350215	Nut (Foldover)	1

©2005 HYSTER COMPANY

TRANSMISSION (Figure 5-6)
SINGLE SPEED
SHEET 1 0F 2

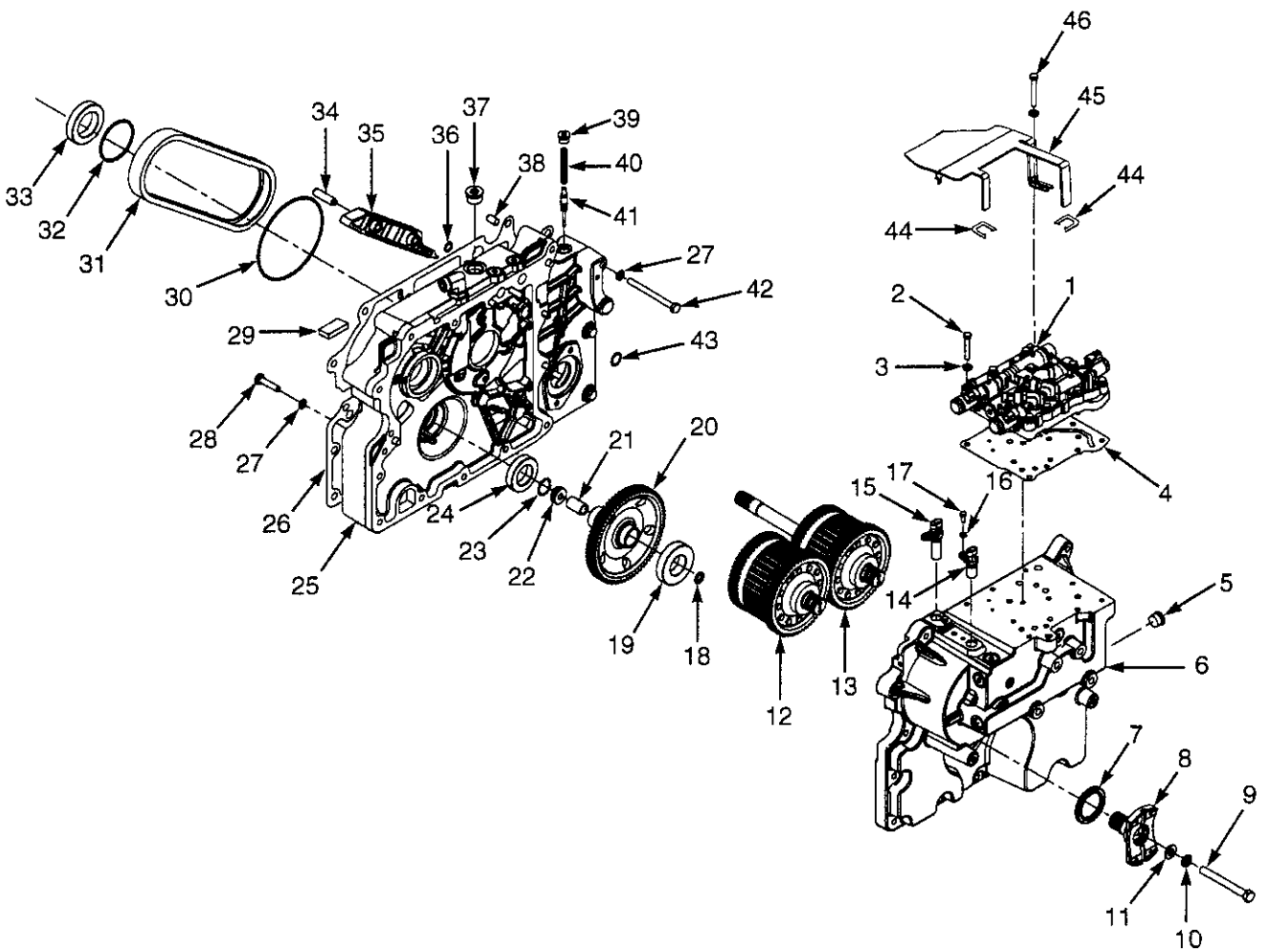

HP240493

©2005 HYSTER COMPANY

TRANSMISSION
SINGLE SPEED
SHEET 1 0F 2

ITEM		PART NO.	DESCRIPTION	QTY
	a	1550565	Transmission Assembly	1
	c	1591261	Transmission Assembly (Dual Speed)	1
1		1570361	Control Valve (☞ Figure 5-15)	1
2		292509	Capscrew	11
3		320157	Washer	12
4		1570360	Gasket	1
5		233693	Fitting	1
5		16485	O-Ring	1
6		1550577	Housing (Transmission)	1
7		1547447	Oil Seal	1
8		1550578	Yoke (24 Tooth)	1
9		18595	Capscrew	1
10		15158	Lockwasher	1
11		15135	Washer	1
12		1595421	Clutch Pack Assembly (Counter/Reverse) (☞ Figure 5-9)	1
13		1595420	Clutch Pack Assembly (Input/Forward) (☞ Figure 5-8)	1
14		1541231	Sensor (Speed)	1
15		1541232	Sensor	1
16		292680	Lockwasher	2
17		292500	Capscrew	2
18		86229	Washer	1
19		43208	Bearing	1
20		1585745	Gear (Output)	1
21		1516851	Spacer	1
22		1516849	Nut	1
23		58916	Snap Ring	1
24		44308	Ball Bearing	1
25		1550575	Housing (Front Cover)	1
26		1550576	Gasket (Cover To Transmission Housing)	1
27		292682	Lockwasher	24
28		292516	Capscrew	4
29		334560	Magnet	1
30		16682	O-Ring	1
31		1494750	Chain (Drive Pump)	1
32		1544218	Sealing Ring	1
33		44310	Ball Bearing	1
34		303100	Pin	4
35		1553270	Snubber	2
36		1553475	O-Ring	1
37		222444	Fitting	1
37		16486	O-Ring	1
38		303150	Pin	4
39		235691	Fitting	7
39		16484	O-Ring	1
40		1525693	Compression Spring (Regulator)	1
41		1525692	Spool (Regulator)	1
42		1359458	Capscrew	16
43		1553403	O-Ring	4
44		1380849	Trim	2
45		1569768	Shield	1

©2005 HYSTER COMPANY

TRANSMISSION
SINGLE SPEED
SHEET 1 0F 2

ITEM	PART NO.	DESCRIPTION	QTY
46	1527879	Capscrew	1
b	1566457	Baffle	1

FOOTNOTES:
a Dry Brakes
b Not Illustrated
c Wet Brakes

©2005 HYSTER COMPANY

NOTES

TRANSMISSION (Figure 5-7)
SINGLE SPEED
SHEET 2 OF 2

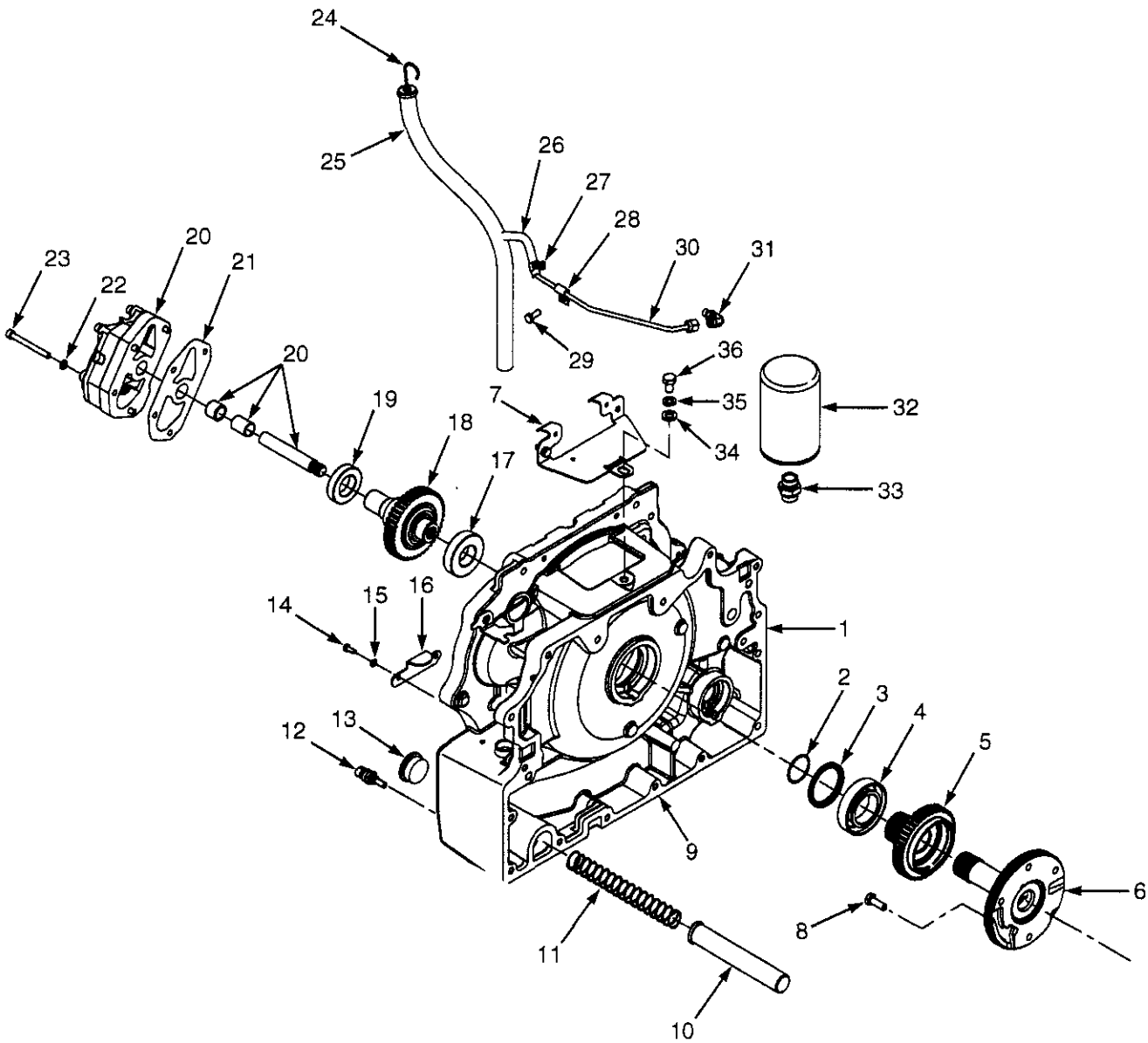

HP240494

©2005 HYSTER COMPANY

TRANSMISSION
SINGLE SPEED
SHEET 2 OF 2

ITEM		PART NO.	DESCRIPTION	QTY
	a	1550565	Transmission Assembly	1
	b	1591261	Transmission Assembly (Dual Speed)	1
1		1550566	Housing (Torque Convertor)	1
2		145481	O-Ring	1
3		1544217	Oil Seal	1
4		1544216	Bearing	1
5		1541556	Sprocket	1
6		1550585	Stator Assembly	1
6		1516826	Bushing	1
7		1566169	Cover	1
8		136985	Capscrew	4
9		1550573	Gasket	1
10		1550571	Screen (Suction)	1
11		1550572	Spring (Suction Screen)	1
12		1515654	Sensor (Coolant Temperature)	1
13		188210	Fitting	1
13		16983	O-Ring	1
14		292500	Capscrew	2
15		292680	Lockwasher	2
16		1550567	Cover (Torque Convertor Housing)	1
17		43207	Ball Bearing	1
18		1550574	Sprocket (Driven)	1
19		44307	Bearing	1
20	a	1529894	Charge Pump (20.5 CC/REV)	1
20	b	1552853	Charge Pump (27.0 CC/REV)	1
21		1525696	Gasket (Charge Pump)	1
22		292681	Lockwasher	7
23		296022	Capscrew	4
24		1516818	Dipstick	1
25		1566166	Tube (Dipstick)	1
26		169690	Hose	1
27		1569616	Clamp	2
28		164488	Clamp	1
29		136681	Capscrew	3
30		1566168	Tube	1
31		1487063	Fitting	1
31		16483	O-Ring	1
32		2075558	Filter	1
33		1558515	Fitting	1
34		320161	Washer	1
35		292683	Lockwasher	1
36		292526	Capscrew	1

FOOTNOTES:
a Dry Brakes
b Wet Brakes

©2005 HYSTER COMPANY

FORWARD CLUTCH (Figure 5-8)
SINGLE SPEED TRANSMISSION

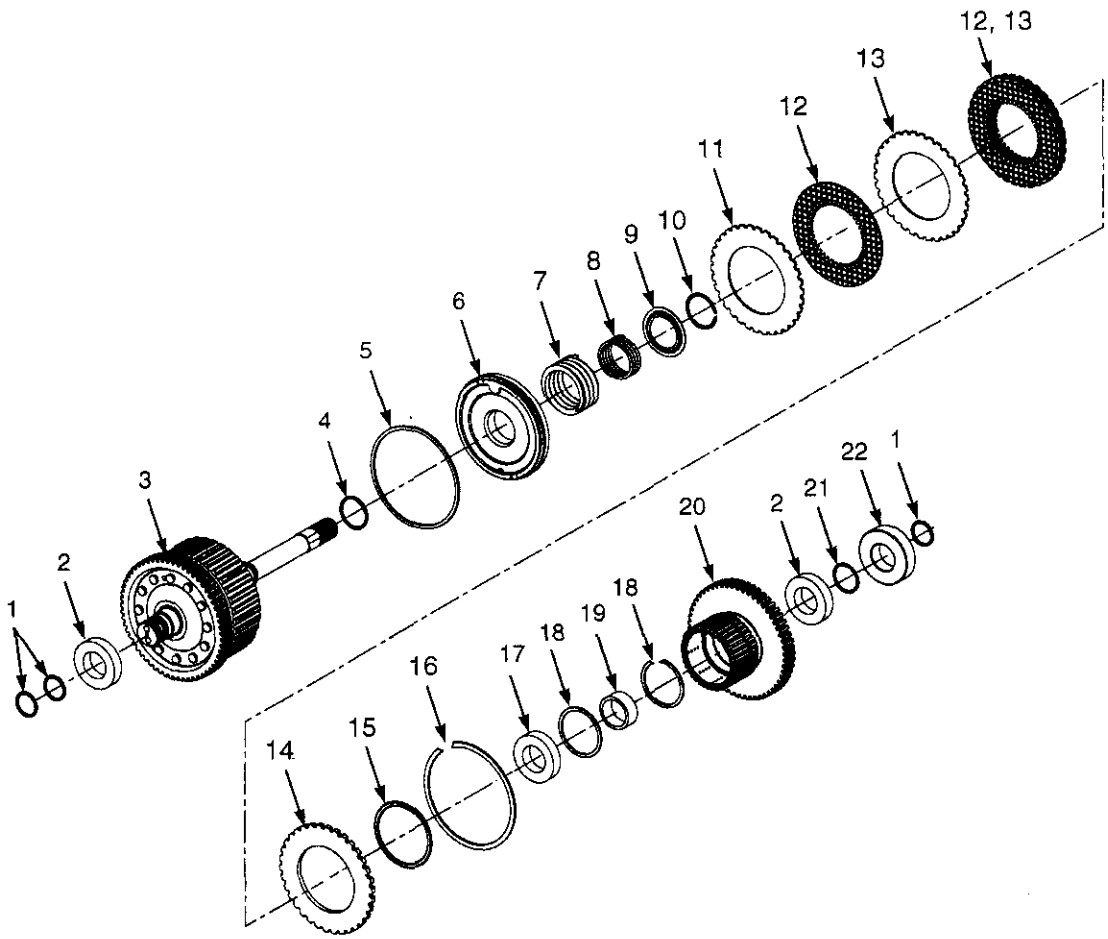

BP240049

©2005 HYSTER COMPANY

FORWARD CLUTCH
SINGLE SPEED TRANSMISSION

ITEM	PART NO.	DESCRIPTION	QTY
	1595420	Clutch Pack Assembly (Input/Forward)	1
1	. . . . .	Ring Seal	3
2	1581116	Bearing	2
3	1581104	Gear and Shaft Assembly	1
4	. . . . .	Ring Seal	1
5	. . . . .	Ring Seal	1
6	1552525	Piston	1
7	1581108	Spring	1
8	1581098	Spring	1
9	1581099	Spring Guide	1
10	1581100	Snap Ring	1
11	. . . . .	Conical Plate	1
12	. . . . .	Friction Plate	5
13	. . . . .	Separator Plate	4
14	1543094	Pressure Plate (5.8 mm)	1
14	1537449	Pressure Plate (6.0 mm)	1
14	1543096	Pressure Plate (5.6 mm)	1
14	1543097	Pressure Plate (5.4 mm)	1
14	1543098	Pressure Plate (5.2 mm)	1
15	. . . . .	O-Ring	1
16	1537450	Snap Ring	1
17	124603	Bearing	1
18	1581107	Snap Ring	2
19	1581117	Spacer	1
20	1595427	Clutch Gear	1
21	1581106	Snap Ring	1
22	43207	Ball Bearing	1
	1595426	Clutch Plates and Seals Kit (Includes Items 1, 4-5, 11-13, 15)	1
	1543102	Clutch Pack Plates Kit (Includes Items 11-13)	1
	1595425	Clutch Pack Seals Kit (Includes Items 1, 4-5, 15)	1

©2005 HYSTER COMPANY

REVERSE CLUTCH (Figure 5-9)
SINGLE SPEED TRANSMISSION

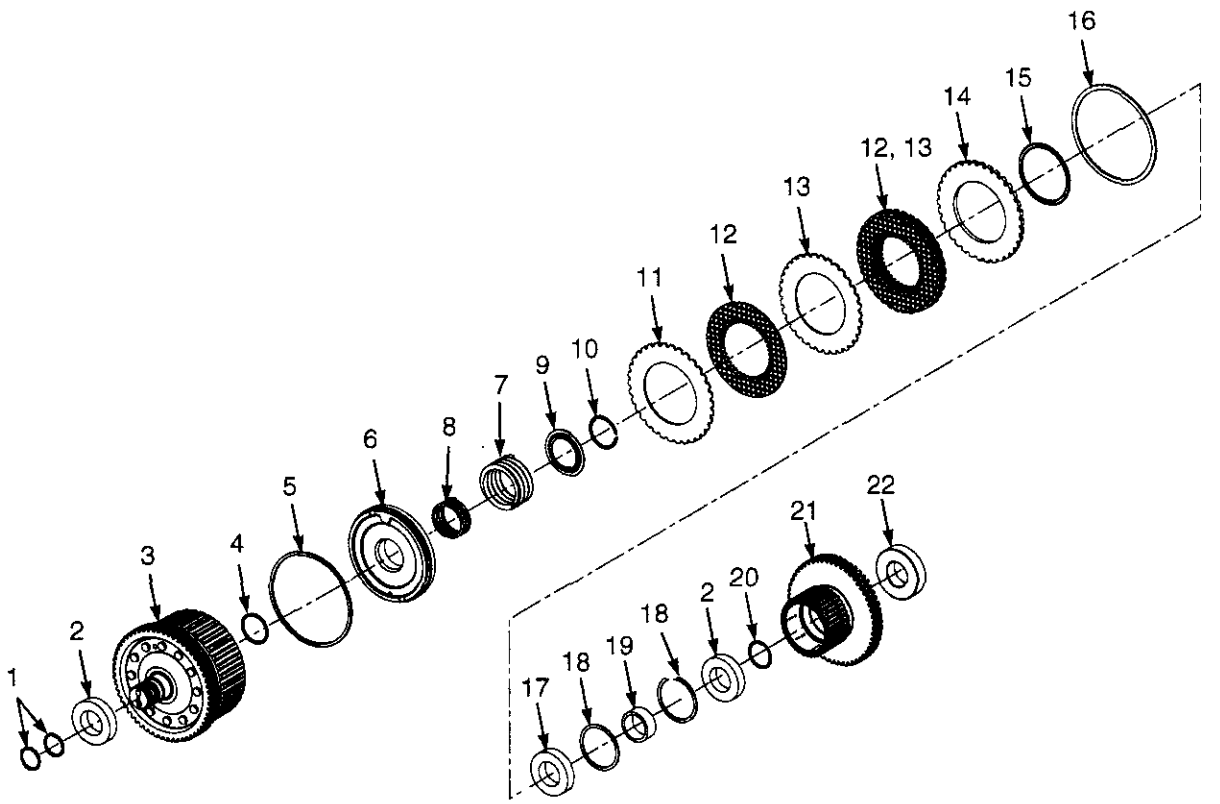

BP240051

©2005 HYSTER COMPANY

REVERSE CLUTCH
SINGLE SPEED TRANSMISSION

ITEM	PART NO.	DESCRIPTION	QTY
	1595421	Clutch Pack Assembly (Counter/Reverse)	1
1	. . . . .	Seal	2
2	1581116	Bearing	2
3	1581114	Gear and Shaft Assembly	1
4	. . . . .	Seal	1
5	. . . . .	Seal	1
6	1552525	Piston	1
7	1581108	Spring	1
8	1581098	Spring	1
9	1581099	Spring Guide	1
10	1581100	Snap Ring	1
11	. . . . .	Conical Plate	1
12	. . . . .	Friction Plate	5
13	. . . . .	Separator Plate	4
14	1543094	Pressure Plate (5.8 mm)	1
14	1537449	Pressure Plate (6.0 mm)	1
14	1543096	Pressure Plate (5.6 mm)	1
14	1543097	Pressure Plate (5.4 mm)	1
14	1543098	Pressure Plate (5.2 mm)	1
15	. . . . .	O-Ring	1
16	1537450	Snap Ring	1
17	124603	Bearing	1
18	1581107	Snap Ring	1
19	1581117	Spacer	1
20	1581106	Snap Ring	1
21	1595427	Clutch Gear	1
22	43207	Ball Bearing	1
	1595426	Clutch Plates and Seals Kit (Includes Items 1, 4-5, 11-13, 15)	1
	1543102	Clutch Pack Plates Kit (Includes Items 11-13)	1
	1595425	Clutch Pack Seals Kit (Includes Items 1, 4-5, 15)	1

©2005 HYSTER COMPANY

TRANSMISSION (Figure 5-10)
DUAL SPEED
SHEET 1 0F 2

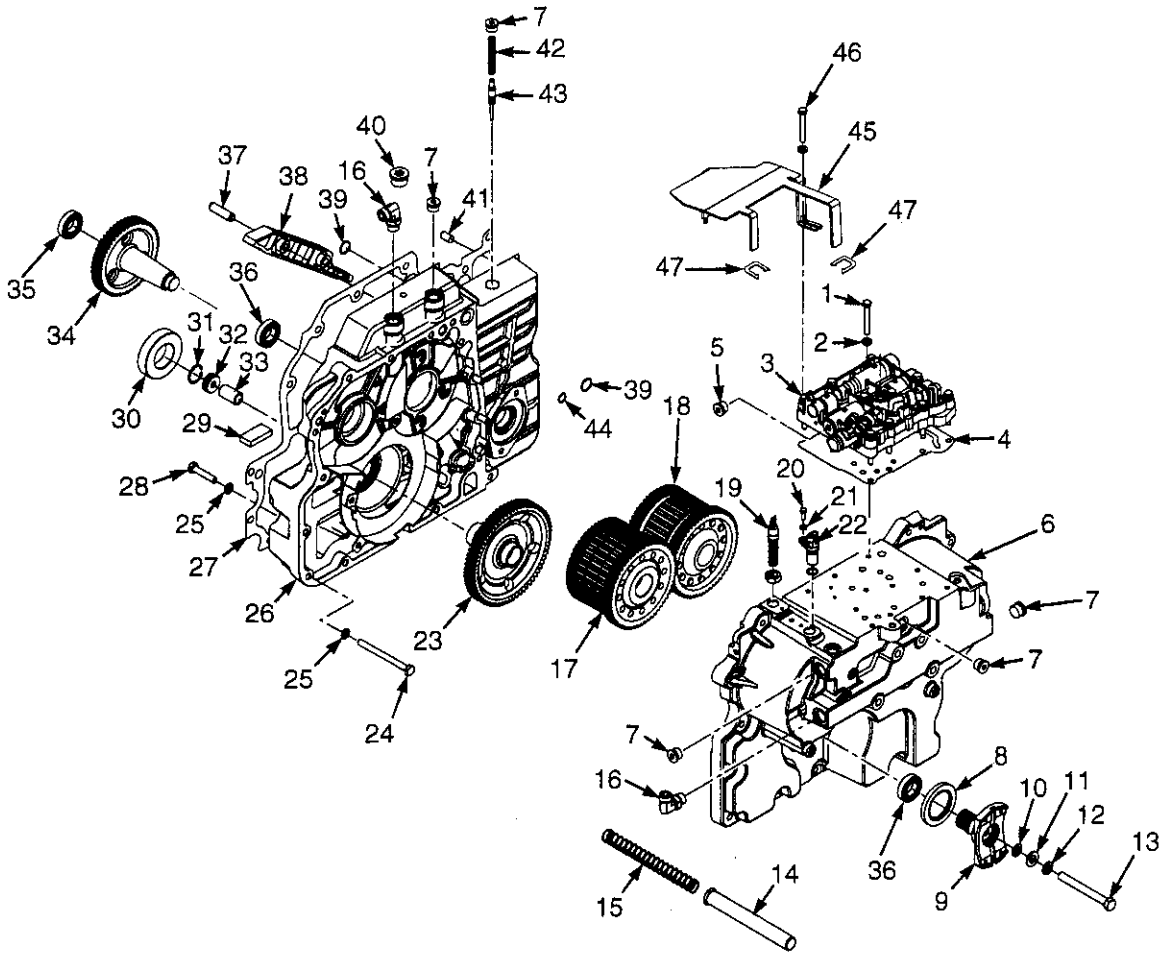

HP240491

©2005 HYSTER COMPANY

TRANSMISSION
DUAL SPEED
SHEET 1 0F 2

ITEM	PART NO.	DESCRIPTION	QTY
a	1529896	Transmission Assembly (Dual Speed)	1
b	1593993	Transmission Assembly (Single Speed)	1
1	292509	Capscrew	11
2	320157	Washer	12
3	1570361	Control Valve (☞ Figure 5-15)	1
4	1570360	Gasket (Control Valve)	1
5	233693	Fitting	1
5	16485	O-Ring	1
6	1570362	Housing (Transmission)	1
7	235691	Fitting	7
7	16484	O-Ring	7
8	1547447	Oil Seal	1
9	1550584	Yoke (27 Tooth)	1
10	86229	Washer	1
11	15135	Washer	1
12	15158	Lockwasher	1
13	18595	Capscrew	1
14	1550571	Screen (Suction)	1
15	1550572	Spring (Suction Screen)	1
16	1487067	Fitting	1
16	16485	O-Ring	1
17	1595423	Clutch Pack Assembly (Counter/Reverse) (☞ Figure 5-13)	1
18	1595424	Clutch Pack Assembly (Forward-High) (☞ Figure 5-12)	1
19	1541232	Sensor	1
20	292500	Capscrew	2
21	292680	Lockwasher	2
22	1541231	Sensor (Speed)	1
23	1565135	Gear (Output)	1
24	1359458	Capscrew	16
25	292682	Lockwasher	23
26	1550581	Housing (Front Cover)	1
27	1550582	Gasket (Cover To Transmission Housing)	1
28	292516	Capscrew	3
29	334560	Magnet	1
30	44309	Bearing (Charge Pump)	1
31	213099	Snap Ring	1
32	1525686	Nut	1
33	1516851	Spacer	1
34	1585750	Gear (Idler)	1
35	44306	Ball Bearing	1
36	43209	Ball Bearing	1
37	303100	Pin	4
38	1553270	Snubber	2
39	1553475	O-Ring	1
40	222444	Fitting	1
40	16486	O-Ring	1
41	303150	Pin	4
42	1525693	Compression Spring (Regulator)	1
43	1525692	Spool (Regulator)	1
44	1553403	O-Ring	1

©2005 HYSTER COMPANY

TRANSMISSION
DUAL SPEED
SHEET 1 0F 2

ITEM	PART NO.	DESCRIPTION	QTY
45	1569768	Shield	1
46	1527879	Capscrew	1
47	1380849	Trim	2
	1566457	Baffle (Not Illustrated)	1

FOOTNOTES:
a Dry Brakes
b Wet Brakes

©2005 HYSTER COMPANY

NOTES

TRANSMISSION (Figure 5-11)
DUAL SPEED
SHEET 2 OF 2

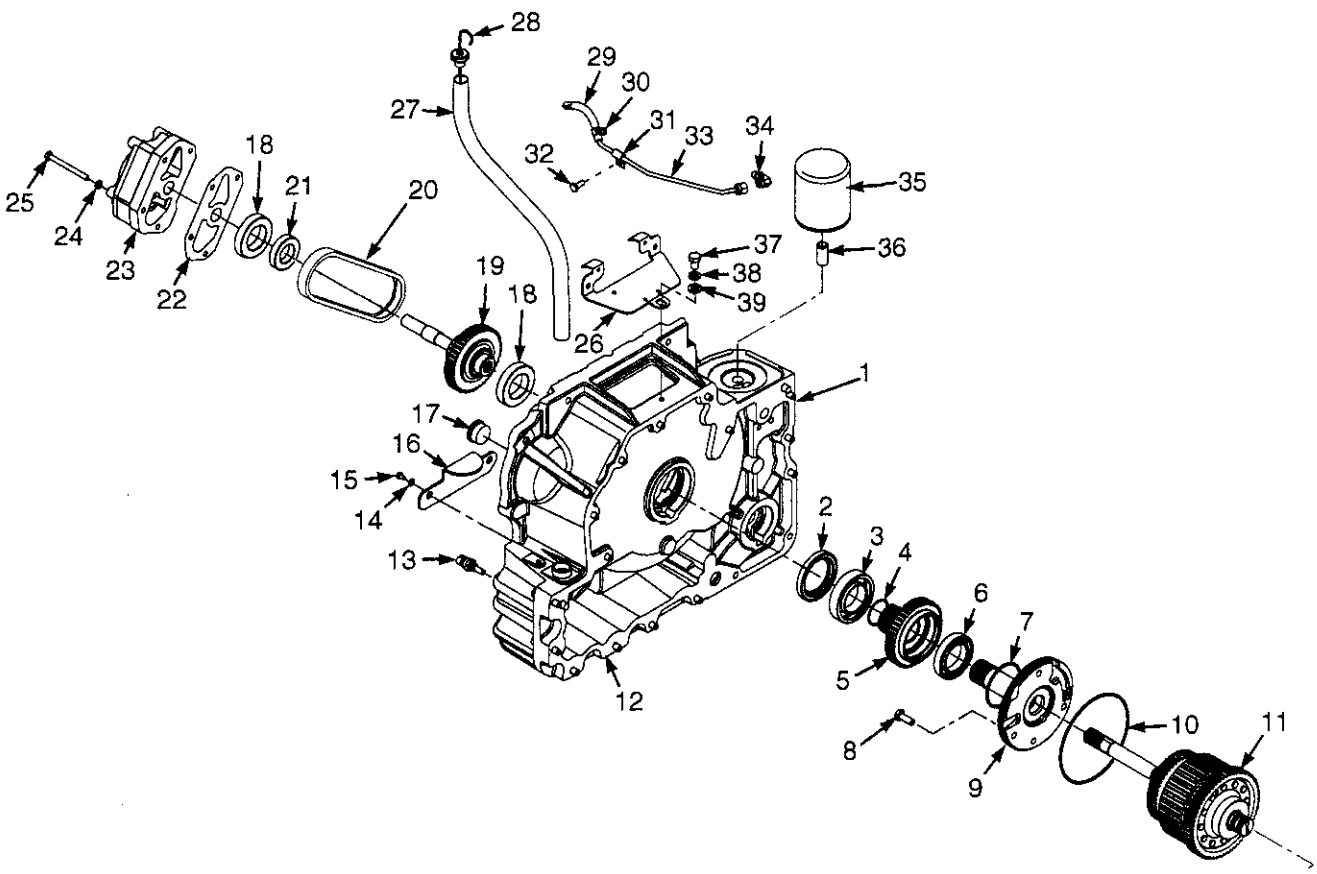

HP240492

©2005 HYSTER COMPANY

TRANSMISSION
DUAL SPEED
SHEET 2 OF 2

ITEM		PART NO.	DESCRIPTION	QTY
	a	1529896	Transmission Assembly (Dual Speed)	1
	b	1593993	Transmission Assembly (Single Speed)	1
1		1550566	Housing (Torque Convertor)	1
2		1544217	Oil Seal	1
3		44310	Ball Bearing	1
4		145481	O-Ring	1
5		1541556	Sprocket	1
6		1544216	Bearing	1
7		1544218	Sealing Ring	1
8		136985	Capscrew	4
9		1525677	Stator Assembly	1
9		1516826	Bushing	1
10		16682	O-Ring	1
11		1595422	Clutch Pack Assembly (Input/Forward-Low) (☞ Figure 5-14)	1
12		1550573	Gasket (Torque Convertor Housing To Cover)	1
13		1515654	Sensor (Coolant Temperature)	1
14		292680	Lockwasher	2
15		292500	Capscrew	2
16		1550567	Cover (Torque Convertor Housing)	1
17		188210	Fitting	1
17		16983	O-Ring	1
18		43209	Ball Bearing	1
19		1550580	Sprocket (Driven)	1
20		1494750	Chain (Drive Pump)	1
21		44307	Bearing	1
22		1525696	Gasket (Charge Pump)	1
23	a	1552853	Charge Pump (27.0 CC/REV)	1
23	b	2073470	Charge Pump (32.4 CC/REV Without Boost)	1
23	b	2076527	Charge Pump (32.4 CC/REV With Boost)	1
24		292681	Lockwasher	7
25		296022	Capscrew	4
26		1566169	Cover	1
27		1566166	Tube (Dipstick)	1
28		1516818	Dipstick	1
29		169690	Hose	1
30		1569616	Clamp	2
31		164488	Clamp	1
32		136681	Capscrew	3
33		1566168	Tube	1
34		1487063	Fitting	1
34		16483	O-Ring	1
35		2075558	Filter	1
36		1558515	Fitting	1
37		292526	Capscrew	1
38		292683	Lockwasher	1
39		320161	Washer	1

FOOTNOTES:
a Dry Brakes
b Wet Brakes

©2005 HYSTER COMPANY

FORWARD CLUTCH, HIGH (Figure 5-12)
DUAL SPEED TRANSMISSION

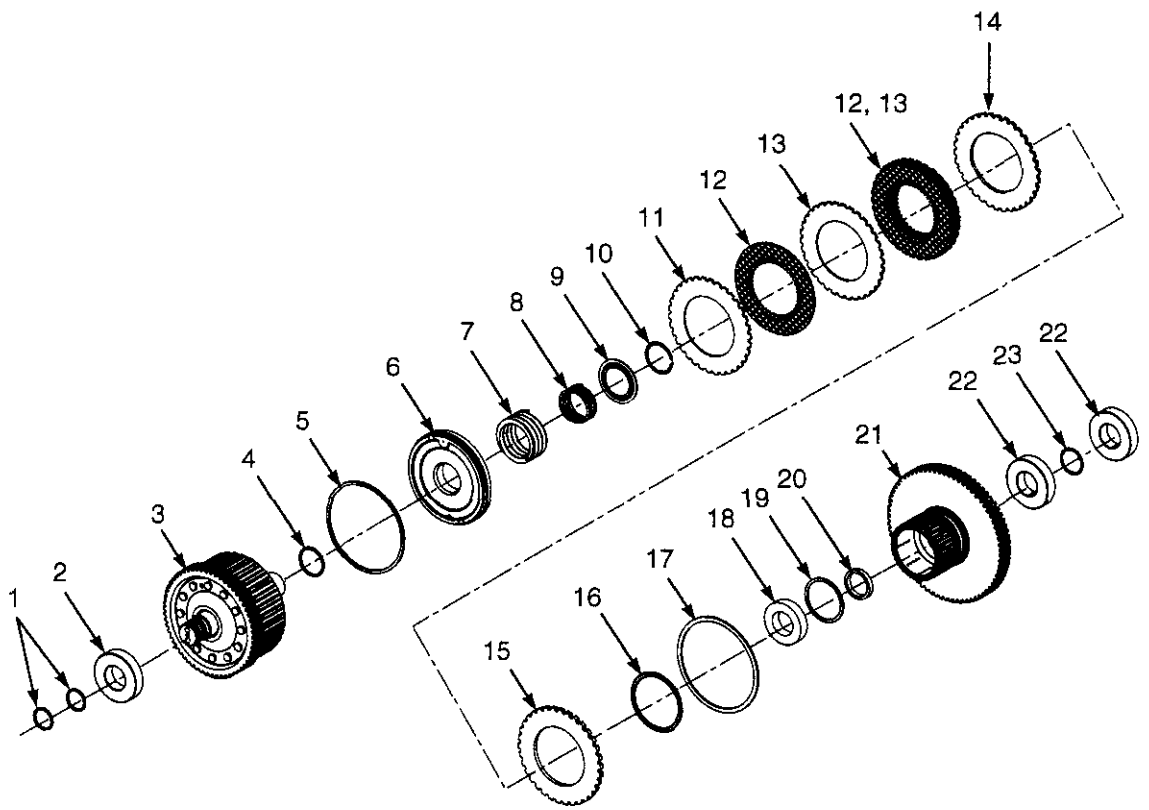

BP240053

©2005 HYSTER COMPANY

FORWARD CLUTCH, HIGH
DUAL SPEED TRANSMISSION

ITEM	PART NO.	DESCRIPTION	QTY
	1595424	Clutch Pack Assembly (Forward-High)	1
1	. . . . .	Seal	2
2	1537455	Bearing (Ball)	1
3	1581097	Gear and Shaft Assembly	1
4	. . . . .	Seal	1
5	. . . . .	Seal	1
6	1552525	Piston	1
7	1581108	Spring	1
8	1581098	Spring	1
9	1581099	Spring Guide	1
10	1581100	Snap Ring	1
11	. . . . .	Conical Plate	1
12	. . . . .	Friction Plate	5
13	. . . . .	Separator Plate	4
14	1543094	Pressure Plate (5.8 mm)	1
14	1537449	Pressure Plate (6.0 mm)	1
14	1543096	Pressure Plate (5.6 mm)	1
14	1543097	Pressure Plate (5.4 mm)	1
14	1543098	Pressure Plate (5.2 mm)	1
15	1581109	Back Plate	1
16	. . . . .	O-Ring	1
17	1537450	Snap Ring	1
18	124603	Bearing	1
19	1581107	Snap Ring	1
20	1581105	Spacer	1
21	1595430	Clutch Gear	1
22	43207	Ball Bearing	1
23	1581106	Snap Ring	1
	1595426	Clutch Plates and Seals Kit (Includes Items 1, 4-5, 11-13, 16)	1
	1543102	Clutch Pack Plates Kit (Includes Items 11-13)	1
	1595425	Clutch Pack Seals Kit (Includes Items 1, 4-5, 16)	1

©2005 HYSTER COMPANY

REVERSE CLUTCH (Figure 5-13)
DUAL SPEED TRANSMISSION

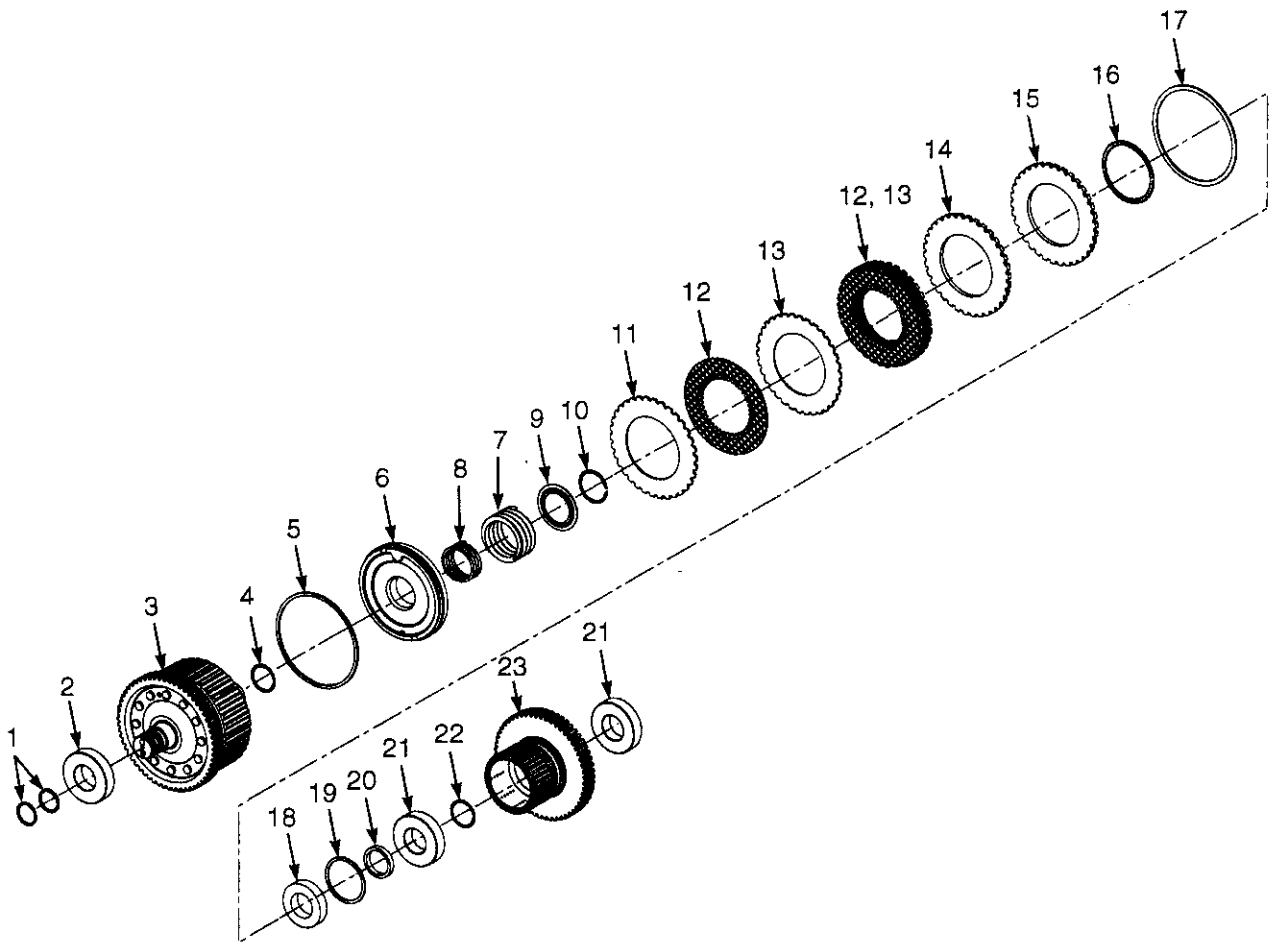

BP240052

©2005 HYSTER COMPANY

REVERSE CLUTCH
DUAL SPEED TRANSMISSION

ITEM	PART NO.	DESCRIPTION	QTY
	1595423	Clutch Pack Assembly (Counter/Reverse)	1
1	. . . . .	Seal	2
2	2029343	Bearing	2
3	1581097	Gear and Shaft Assembly	1
4	. . . . .	Seal	1
5	. . . . .	Seal	1
6	1552525	Piston	1
7	1581108	Spring	1
8	1581098	Spring	1
9	1581099	Spring Guide	1
10	1581100	Snap Ring	1
11	. . . . .	Conical Plate	1
12	. . . . .	Friction Plate	5
13	. . . . .	Separator Plate	4
14	1543094	Pressure Plate (5.8 mm)	1
14	1537449	Pressure Plate (6.0 mm)	1
14	1543096	Pressure Plate (5.6 mm)	1
14	1543097	Pressure Plate (5.4 mm)	1
14	1543098	Pressure Plate (5.2 mm)	1
15	1581109	Back Plate	1
16	. . . . .	O-Ring	1
17	1537450	Snap Ring	1
18	124603	Bearing	1
19	1581107	Snap Ring	1
20	1581105	Spacer	1
21	43207	Ball Bearing	2
22	1581106	Snap Ring	1
23	1595429	Clutch Gear	1
	1595426	Clutch Plates and Seals Kit (Includes Items 1, 4-5, 11-13, 16)	1
	1543102	Clutch Pack Plates Kit (Includes Items 11-13)	1
	1595425	Clutch Pack Seals Kit (Includes Items 1, 4-5, 16)	1

©2005 HYSTER COMPANY

INPUT CLUTCH, LOW (Figure 5-14)
DUAL SPEED TRANSMISSION

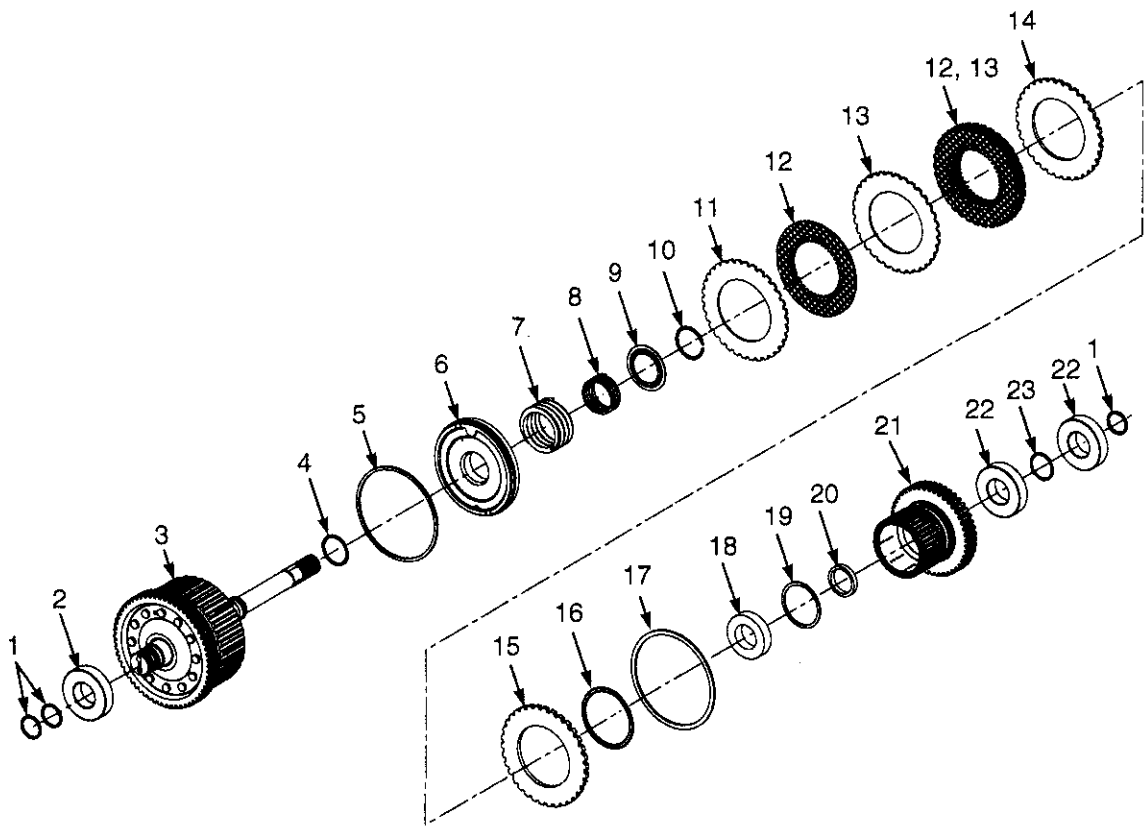

BP240050

©2005 HYSTER COMPANY

INPUT CLUTCH, LOW
DUAL SPEED TRANSMISSION

ITEM	PART NO.	DESCRIPTION	QTY
	1595422	Clutch Pack Assembly (Input/Forward-Low)	1
1	. . . . .	Seal	3
2	2029343	Bearing	1
3	1581112	Gear and Shaft Assembly	1
4	. . . . .	Seal	1
5	. . . . .	Seal	1
6	1552525	Piston	1
7	1581108	Spring	1
8	1581098	Spring	1
9	1581099	Spring Guide	1
10	1581100	Snap Ring	1
11	. . . . .	Conical Plate	1
12	. . . . .	Friction Plate	5
13	. . . . .	Separator Plate	4
14	1543094	Pressure Plate (5.8 mm)	1
14	1537449	Pressure Plate (6.0 mm)	1
14	1543096	Pressure Plate (5.6 mm)	1
14	1543097	Pressure Plate (5.4 mm)	1
14	1543098	Pressure Plate (5.2 mm)	1
15	1581109	Back Plate	1
16	. . . . .	Ring	1
17	1537450	Snap Ring	1
18	124603	Bearing	1
19	1581107	Snap Ring	1
20	1581105	Spacer	1
21	1595428	Clutch Gear	1
22	43207	Ball Bearing	2
23	1581106	Snap Ring	1
	1595426	Clutch Plates and Seals Kit (Includes Items 1, 4-5, 11-13, 16)	1
	1543102	Clutch Pack Plates Kit (Includes Items 11-13)	1
	1595425	Clutch Pack Seals Kit (Includes Items 1, 4-5, 16)	1

©2005 HYSTER COMPANY

CONTROL VALVE (Figure 5-15)
TRANSMISSION

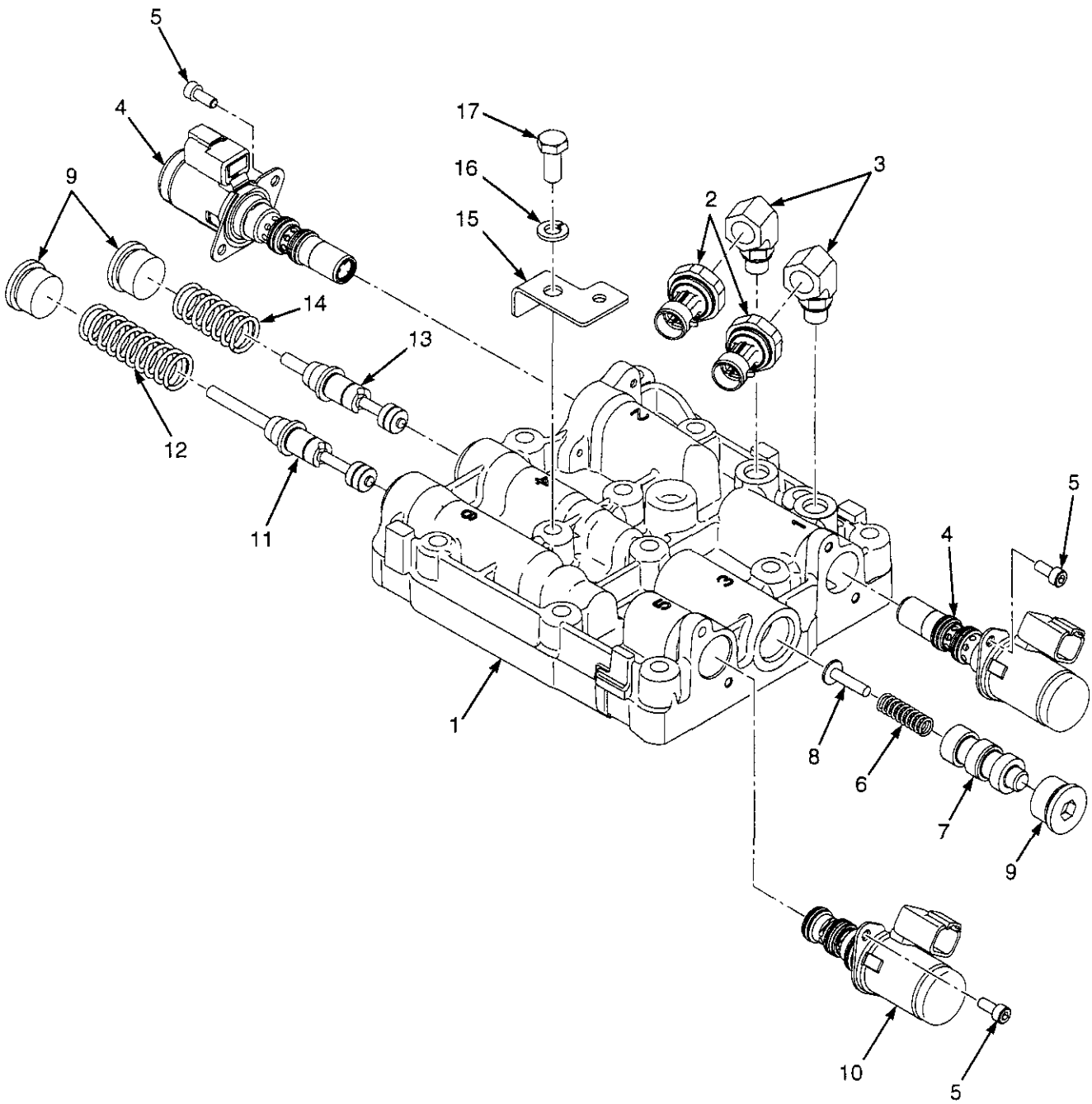

BP240046

©2005 HYSTER COMPANY

CONTROL VALVE
TRANSMISSION

ITEM	PART NO.	DESCRIPTION	QTY
	1570361	Control Valve	1
1	1570363	Body	1
2	2070263	Transducer	2
3	1545546	Fitting	2
3	16481	O-Ring	2
4	1530722	Proportional Valve	2
5	293742	Capscrew	6
6	1590866	Spring (Return)	1
7	1590865	Spool (Cut-Off)	1
8	1590839	Spool Stop	1
9	233693	Fitting	3
9	16485	O-Ring	3
10	1520660	Solenoid Valve	1
11	1544758	Spool (Torque Convertor Regulator)	1
12	1550561	Spring (Torque Convertor Regulator)	1
13	1544759	Spool (Torque Convertor Regulator)	1
14	1514138	Spring (Torque Convertor Regulator)	1
15	1562310	Clip	1
16	292681	Lockwasher	1
17	136681	Capscrew	1

©2005 HYSTER COMPANY

NOTES

6 DRIVE AXLE

SECTION 6
DRIVE AXLE

DESCRIPTION	PAGE
DRIVE AXLE AND ATTACHING PARTS	
WET BRAKE	6-2
DRIVE AXLE ASSEMBLY	
DRY BRAKE	6-4
DRIVE TIRE AND WHEEL	
PNEUMATIC RADIAL	6-10
SNAP-ON SOLID TIRE	6-12
SOLID PNEUMATIC	
SINGLE	6-7
WIDE TREAD	6-8
DUAL DRIVE WHEELS AND TIRES	6-14

©2005 HYSTER COMPANY

DRIVE AXLE AND ATTACHING PARTS (Figure 6-1)
WET BRAKE

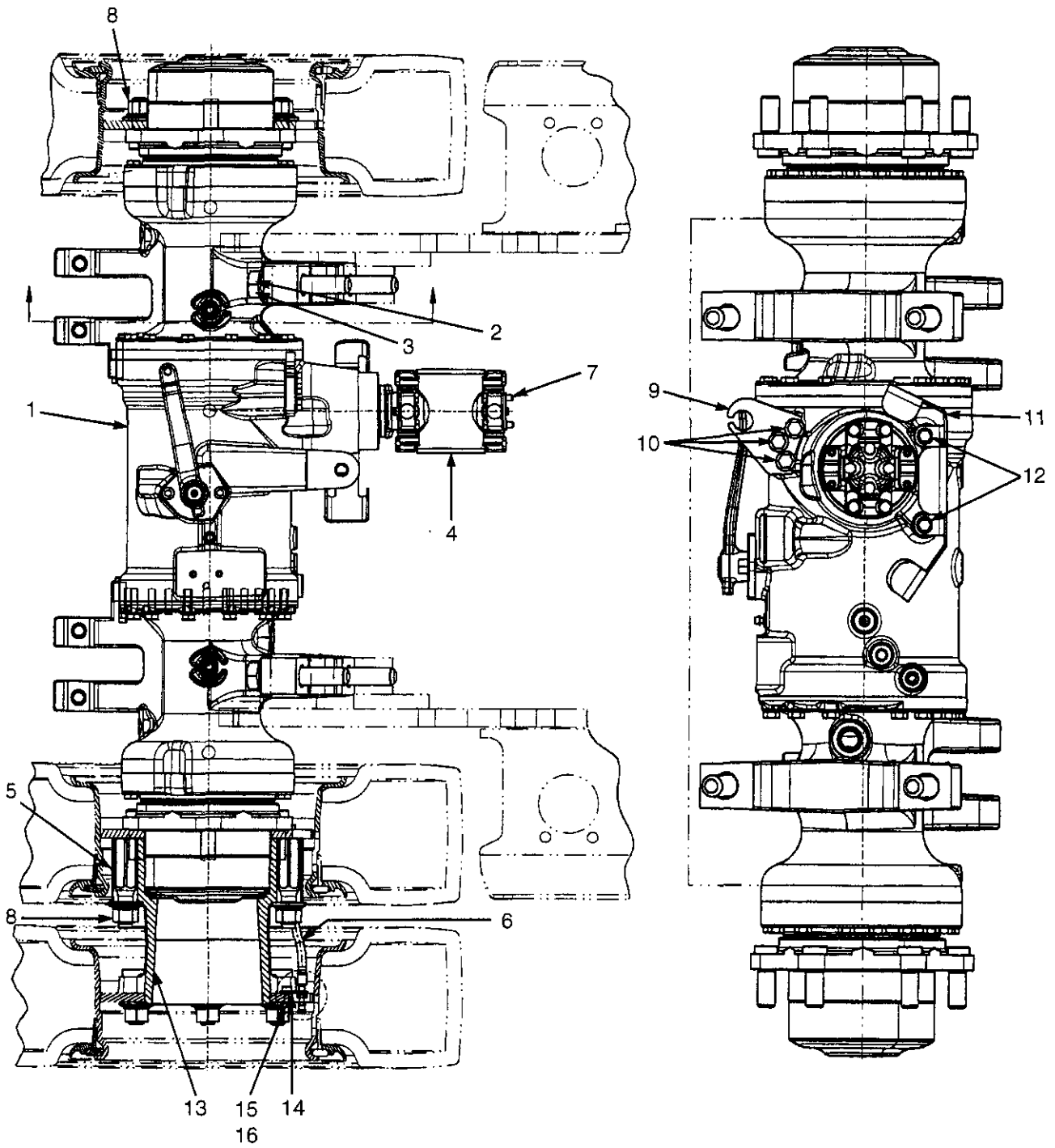

HP070110

©2005 HYSTER COMPANY

DRIVE AXLE AND ATTACHING PARTS
WET BRAKE

KEY:
A: Single Wheel
B: Dual Wheel

ITEM	PART NO.	DESCRIPTION	QTY A	QTY B
1	1539245	Drive Axle (14.52 Overall Ratio)	1	1
1	1539246	Drive Axle (17.82 Overall Ratio)	1	1
1	2070734	Drive Axle (12.79 Overall Ratio)	1	1
2	296434	Washer	4	4
3	226430	Capscrew	4	4
4	1551649	U-Joint	1	1
4	1569273	Yoke	1	1
4	1569274	Spider and Bearing	2	2
5	1545401	Stud	..	12
6	1583169	Valve Stem Extension	..	2
7	293616	Capscrew	8	8
8	1537133	Wheel Nut	6	12
9	1580213	Plate	1	1
10	1527884	Capscrew	3	3
11	1585528	Bracket	1	1
12	1527879	Capscrew	2	2
13	1552290	Hub Assembly	..	2
13	1545402	Hub	..	1
13	1532337	Bolt	..	6
14	1584690	Bracket	..	2
15	136687	Nut	..	2
16	292680	Lockwasher	..	2

©2005 HYSTER COMPANY

DRIVE AXLE ASSEMBLY (Figure 6-2)
DRY BRAKE

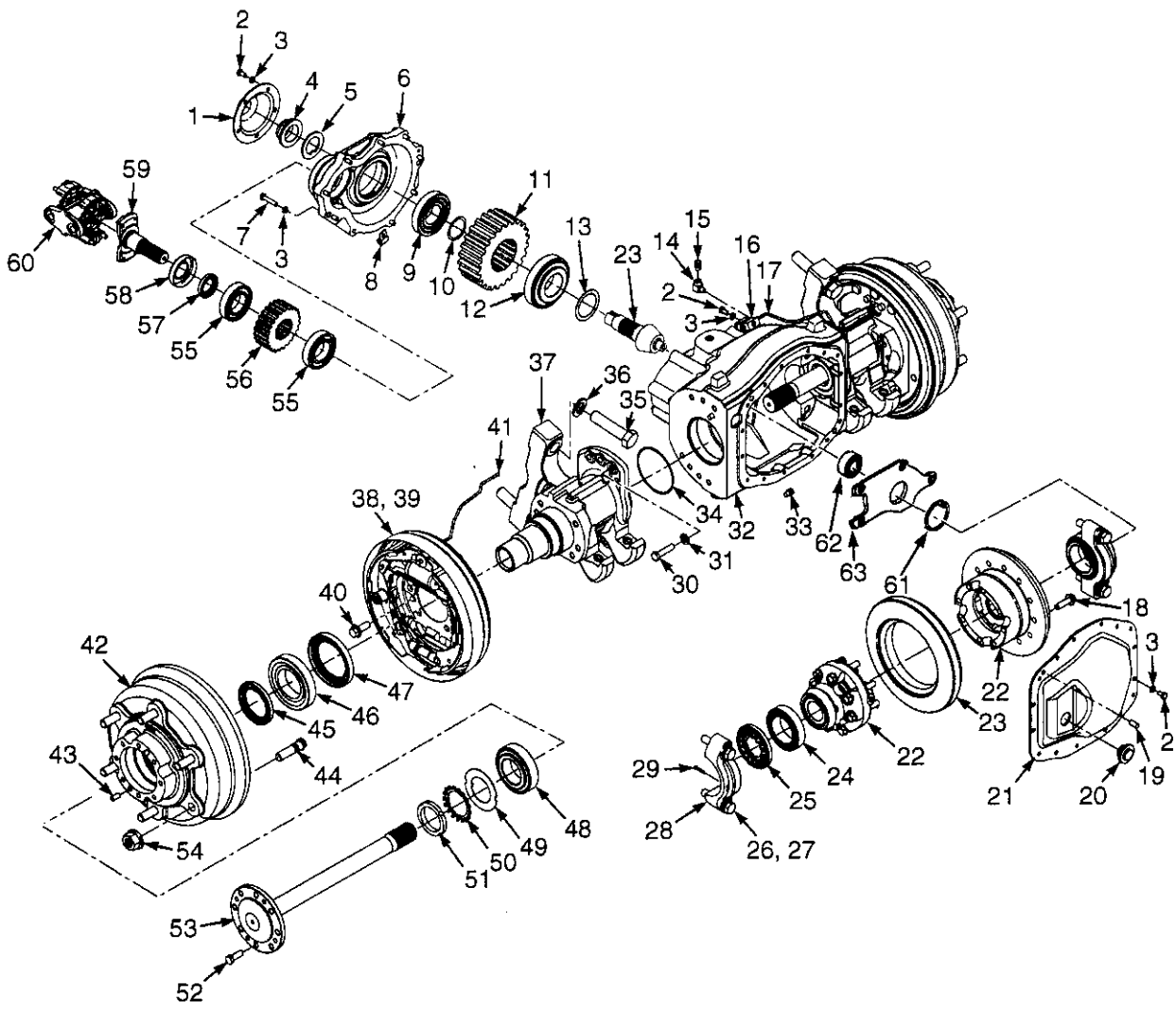

HP070111

©2005 HYSTER COMPANY

DRIVE AXLE ASSEMBLY
DRY BRAKE

ITEM		PART NO.	DESCRIPTION	QTY
		1532729	Drive Axle (2.17 Gear Ratio)	1
		1532730	Drive Axle (2.48 Gear Ratio)	1
1		1516536	Cover (Pinion)	1
2		287851	Capscrew	20
3		292681	Lockwasher	29
4		2026861	Nut	1
5		1530588	Washer	1
6		1516535	Housing (Drop Box)	1
7		292508	Capscrew	9
8		2075120	Clamp	1
9		2022352	Roller Bearing	1
10		1516335	Shim (0.50 mm)	AR
10		1516331	Shim (0.12 mm)	AR
10		1516332	Shim (0.15 mm)	AR
10		1516333	Shim (0.18 mm)	AR
10		1516334	Shim (0.25 mm)	AR
11		1517576	Gear (2.17 Gear Ratio)	1
11		1516526	Gear (2.48 Gear Ratio)	1
12		2028862	Roller Bearing	1
13		1520755	Shim (0.01 in.)	AR
13		1569912	Shim (0.002 in.)	AR
13		1569913	Shim (0.0025 in.)	AR
13		1520752	Shim (0.003 in.)	AR
13		1569914	Shim (0.0035 in.)	AR
13		1520753	Shim (0.004 in.)	AR
13		1569915	Shim (0.0045 in.)	AR
13		1520754	Shim (0.005 in.)	AR
14		16151	Fitting	1
15		21420	Breather	1
16		1591122	Manifold Assembly	1
16		1532350	Formed Bracket	1
16		1588050	Manifold	1
16		1510126	Capscrew (Button Head)	2
16		292680	Lockwasher	2
17		2063265	Brake Line (LH)	1
18		1565327	Bolt	8
19		302385	Pin	5
20		1516075	Plug	1
21		1532735	Cover (Center)	1
22		2067962	Differential	1
23		1606532	Gear Set (Differential)	1
23		. . . . .	Pinion (Differential)	4
23		. . . . .	Side Gear (Differential)	2
23		1565324	Washer Kit	1
24		1375488	Roller Bearing	2
25	a	. . . . .	Bearing Cap	2
26	a	293692	Capscrew	4
27	a	296426	Washer (Hardened)	4
28		1532732	Housing (Center)	1
29		15241	Cotter Pin	2
30		293686	Capscrew	14

©2005 HYSTER COMPANY

DRIVE AXLE ASSEMBLY
DRY BRAKE

ITEM	PART NO.	DESCRIPTION	QTY
31	296426	Washer (Hardened)	14
32	1531148	Retainer	2
33	234038	Dowel Pin	4
34	2027828	O-Ring	2
35	226430	Capscrew	4
36	296422	Washer	4
37	1503681	Hanger (RH)	1
37	1503680	Hanger (LH)	1
38	1579454	Brake Assembly (LH) (☞ Figure 8-5)	1
39	1579455	Brake Assembly (RH) (☞ Figure 8-5)	1
40	1327246	Lock Bolt	16
41	2063264	Brake Line (RH)	1
42	1532335	Hub Assembly	2
42	1532339	Hub	1
43	302385	Pin	2
44	1532337	Bolt	6
45	2028621	Oil Seal	1
46	1375492	Roller Bearing	1
47	2027817	Oil Seal	1
48	1375486	Roller Bearing	1
49	1515219	Washer (Wheel Bearing)	2
50	2027756	Bearing (Washer Lock)	2
51	2028145	Locknut	2
52	293646	Capscrew	20
53	1532708	Axle Shaft	2
54	1537133	Wheel Nut	12
55	1523479	Ball Bearing	2
56	1517578	Drive Gear (2.17 Gear Ratio)	1
56	1516530	Drive Gear (2.48 Gear Ratio)	1
57	1522377	Oil Seal	1
58	1516534	Dust Cover	1
59	1517673	Input Shaft	1
60	1547757	Drive Shaft Assembly	1
60	1566461	Yoke	1
60	1566462	U-Joint	2
61	320264	Snap Ring	1
62	135158	Roller Bearing	1
63	1512561	Support	1

FOOTNOTES:
a Included With Center Housing

©2005 HYSTER COMPANY

DRIVE TIRE AND WHEEL (Figure 6-3)
SOLID PNEUMATIC
SINGLE

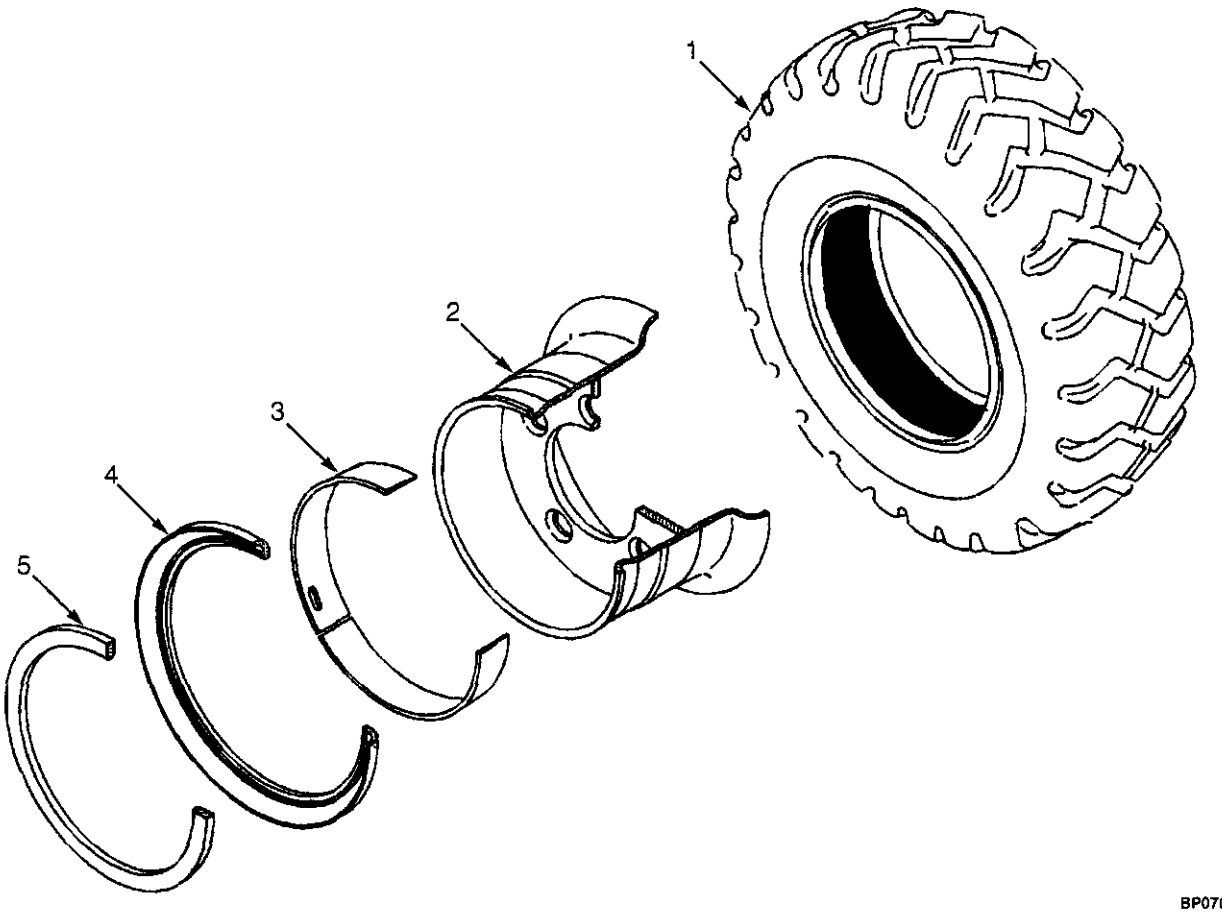

BP070012

KEY:
A: 7.00 X 12 14 Solid Pneumatic (H2.0-2.5FT)
B: 28 X 9 15 Solid Pneumatic (H2.0-3.5FT)

ITEM	PART NO.	DESCRIPTION	QTY A	QTY B
1	1543060	Tire (Trell)	2	..
1	1543070	Tire (Monarch)	2	..
1	1543061	Tire (Trell)	..	2
1	1543071	Tire (Monarch)	..	2
2	2070073	Wheel Assembly	2	..
2	2070074	Wheel Assembly	..	2
3	161890	Side Ring	1	..
3	160653	Side Ring	..	1
4	1584694	Tapered Bead Seat Ring	1	..
4	1584695	Tapered Bead Seat Ring	..	1
5	161889	Locking Ring	1	..
5	980542	Locking Ring	..	1

©2005 HYSTER COMPANY

DRIVE TIRE AND WHEEL (Figure 6-4)
SOLID PNEUMATIC
WIDE TREAD

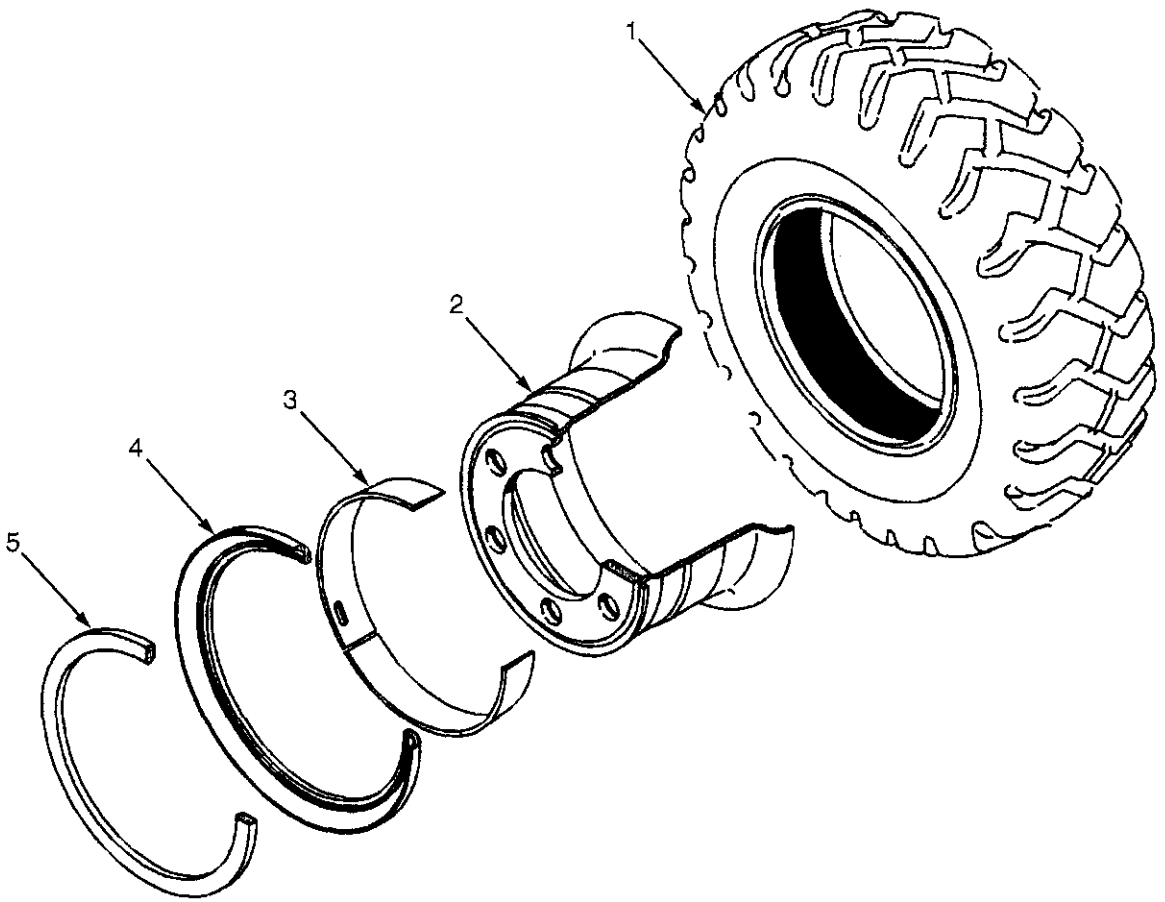

KEY:
A: 7.00 x 12 14 Solid Pneumatic (H2.0-2.5FT)
B: 28 x 9-15 14 Solid Pneumatic (H2.0-3.5FT)

ITEM	PART NO.	DESCRIPTION	QTY A	QTY B
1	1543060	Tire (Trell)	2	..
1	1543070	Tire (Monarch)	2	..
1	1543061	Tire (Trell)	..	2
1	1543071	Tire (Monarch)	..	2
2	2070075	Wheel Assembly	2	..
2	2070076	Wheel Assembly	..	2
3	161890	Side Ring	1	..
3	160653	Side Ring	..	1
4	1584694	Tapered Bead Seat Ring	1	..
4	1584695	Tapered Bead Seat Ring	..	1
5	161889	Locking Ring	1	..
5	980542	Locking Ring	..	1

©2005 HYSTER COMPANY

NOTES

DRIVE TIRE AND WHEEL (Figure 6-5)
PNEUMATIC RADIAL

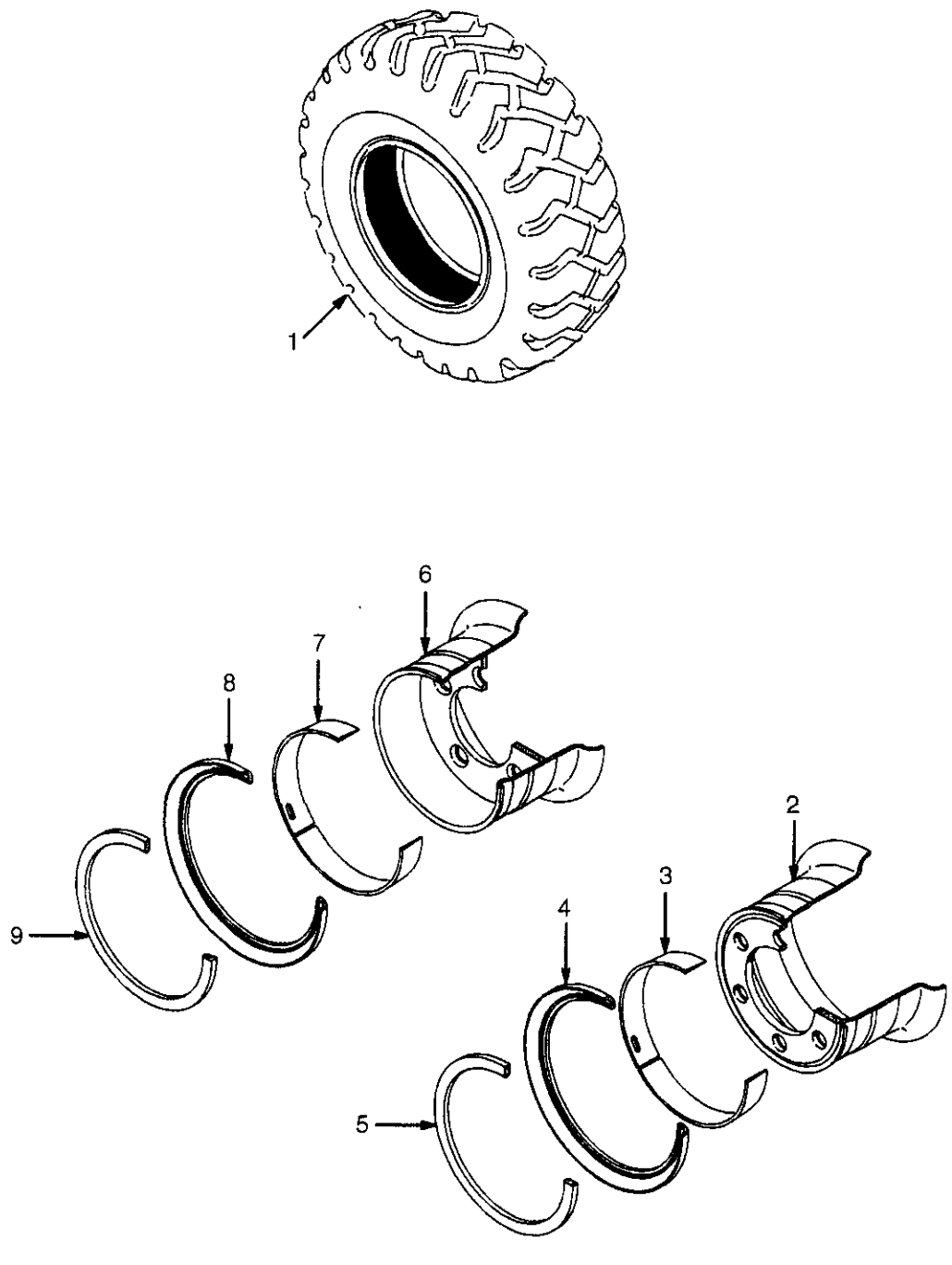

©2005 HYSTER COMPANY

DRIVE TIRE AND WHEEL
PNEUMATIC RADIAL

KEY:
A: 7.00 R12 Pneumatic Radial (H2.0-2.5FT)
B: 225/75 R15 Pneumatic Radial (H2.0-3.5FT)

ITEM	PART NO.	DESCRIPTION	QTY A	QTY B
1	1471829	Tire Assembly (Michelin XZM)	2	..
1	1471591	Tubeless Bead Seal	1	..
1	1358179	Tire	1	..
1	1471922	Bead Seal Valve	1	..
1	1471835	Tire Assembly	..	2
1	1462617	Tubeless Bead Seal	..	1
1	1358183	Tire (Michelin XZM)	..	1
1	1471922	Bead Seal Valve	..	1
2	2070073	Wheel Assembly	2	..
2	2070075	Wheel Assembly (Wide Tread)	2	..
3	161890	Side Ring	1	..
4	1584694	Tapered Bead Seat Ring	1	..
5	161889	Locking Ring	1	..
6	2070074	Wheel Assembly	..	2
6	2070076	Wheel Assembly (Wide Tread)	..	2
7	160653	Side Ring	..	1
8	1584695	Tapered Bead Seat Ring	..	1
9	980542	Locking Ring	..	1

©2005 HYSTER COMPANY

DRIVE TIRE AND WHEEL (Figure 6-6)
SNAP-ON SOLID TIRE

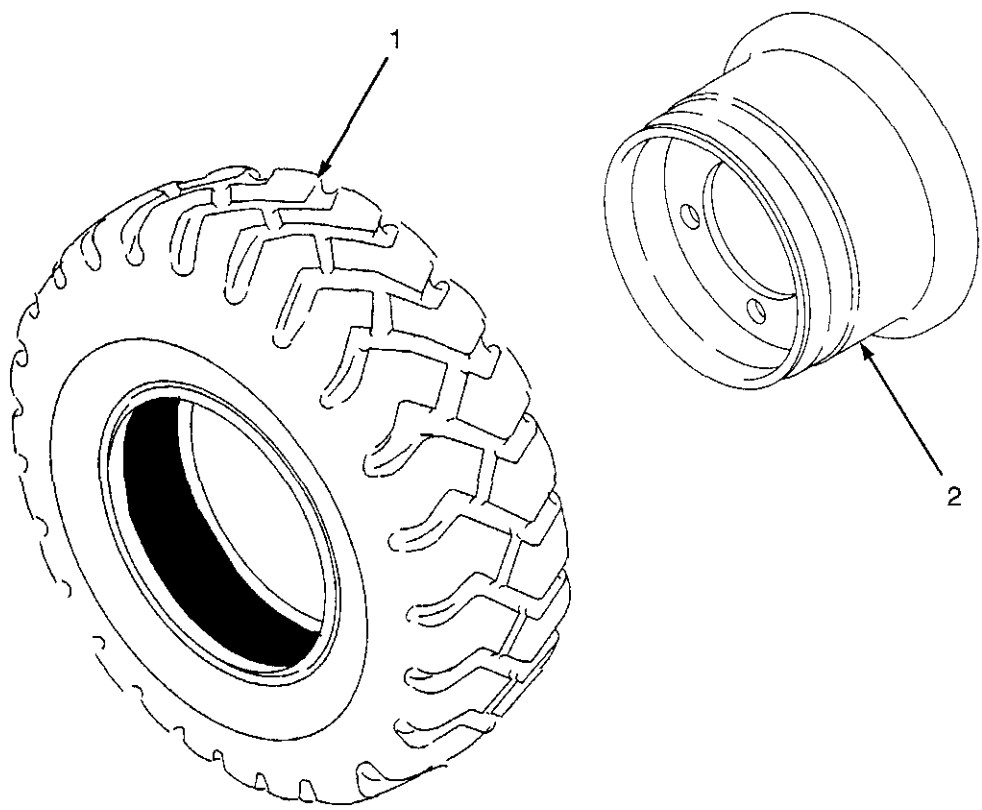

BP000223

©2005 HYSTER COMPANY

DRIVE TIRE AND WHEEL
SNAP-ON SOLID TIRE

KEY:
A: 7.00 x 12 Tire
B: 28 x 9-15 Tire
C: 7.00 x 11 Wide Tread
D: 28 x 9-15 Wide Tread

ITEM	PART NO.	DESCRIPTION	QTY A	QTY B	QTY C	QTY D
1	1543063	Tire	2	..	2	..
1	1543064	Tire	..	2	..	2
2	2070080	Rim	2	..	..	..
2	2070079	Rim	..	2	..	..
2	2070078	Rim	..	..	2	..
2	2070077	Rim	..	..	..	2

©2005 HYSTER COMPANY

DUAL DRIVE WHEELS AND TIRES (Figure 6-7)

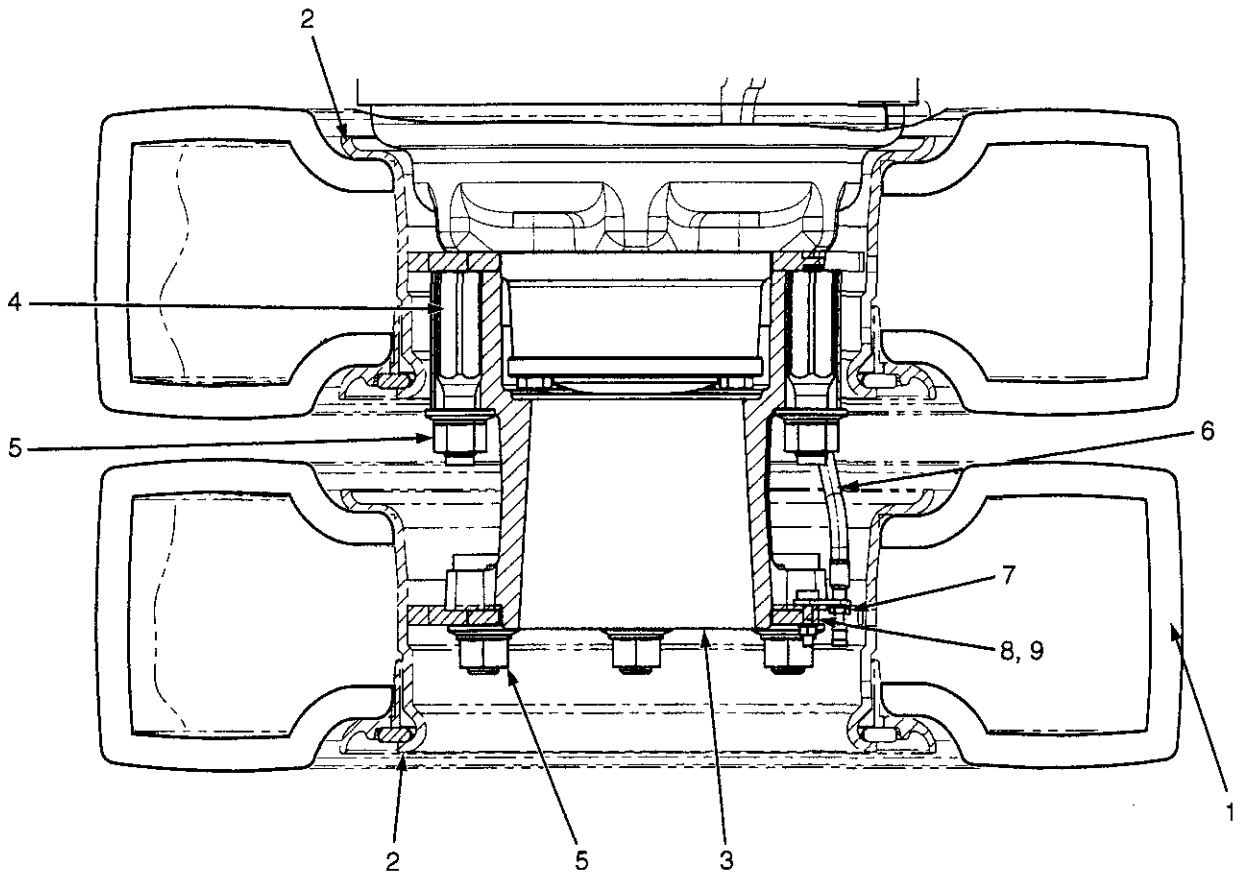

HP070054

©2005 HYSTER COMPANY

DUAL DRIVE WHEELS AND TIRES

ITEM	PART NO.	DESCRIPTION	QTY
1	1543070	Tire (Monarch)	4
1	1543060	Tire (Trell)	4
2	2075454	Wheel	4
3	1552290	Hub Assembly	2
3	1532337	Bolt	6
3	1545402	Hub	1
4	1545401	Stud	12
5	1537133	Wheel Nut	12
6	1583169	Valve Stem Extension	2
7	1584690	Bracket	2
8	136687	Nut	2
9	292680	Lockwasher	2

©2005 HYSTER COMPANY

NOTES

7 STEERING SYSTEM

SECTION 7
STEERING SYSTEM

DESCRIPTION	PAGE
STEER AXLE	7-10
STEER CYLINDER	7-12
STEER TIRES AND WHEELS	
H2.0-2.5FT	7-14
H2.0-3.5FT	7-16
STEERING COLUMN AND ATTACHING PARTS	7-2
STEERING COLUMN ASSEMBLY	7-4
STEERING CONTROL UNIT	7-6
STEERING LINES	7-8

©2005 HYSTER COMPANY

STEERING COLUMN AND ATTACHING PARTS (Figure 7-1)

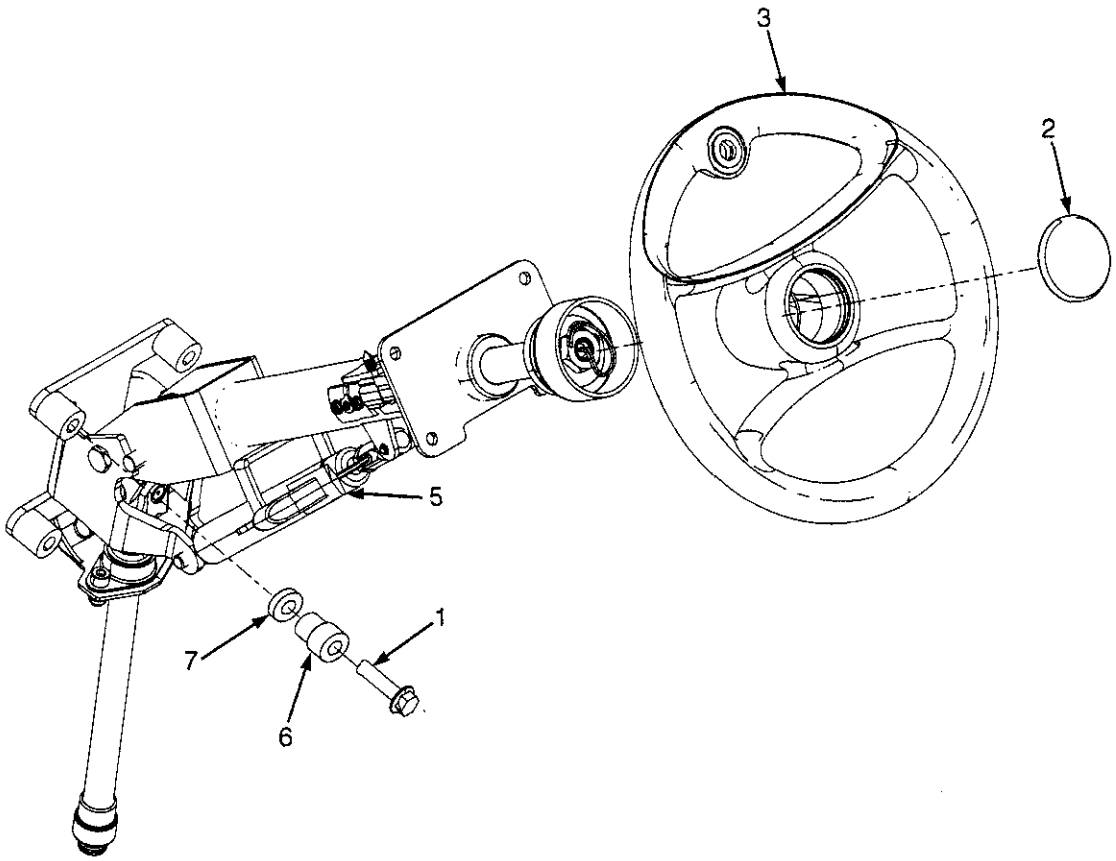

HP220446

ITEM		PART NO.	DESCRIPTION	QTY
1		1512403	Capscrew	4
2		1450503	Horn Button	1
3		1531563	Steering Wheel (With Spinner)	1
3		1551839	Steering Wheel (Without Spinner)	1
4		1544566	Steering Column Assembly	1
5		1606912	Clip	1
6	a	1606750	Spacer	4
7	a	2079369	Isolator	8

FOOTNOTES:

a For Vehicles With Diesel Engines Only

©2005 HYSTER COMPANY

NOTES

STEERING COLUMN ASSEMBLY (Figure 7-2)

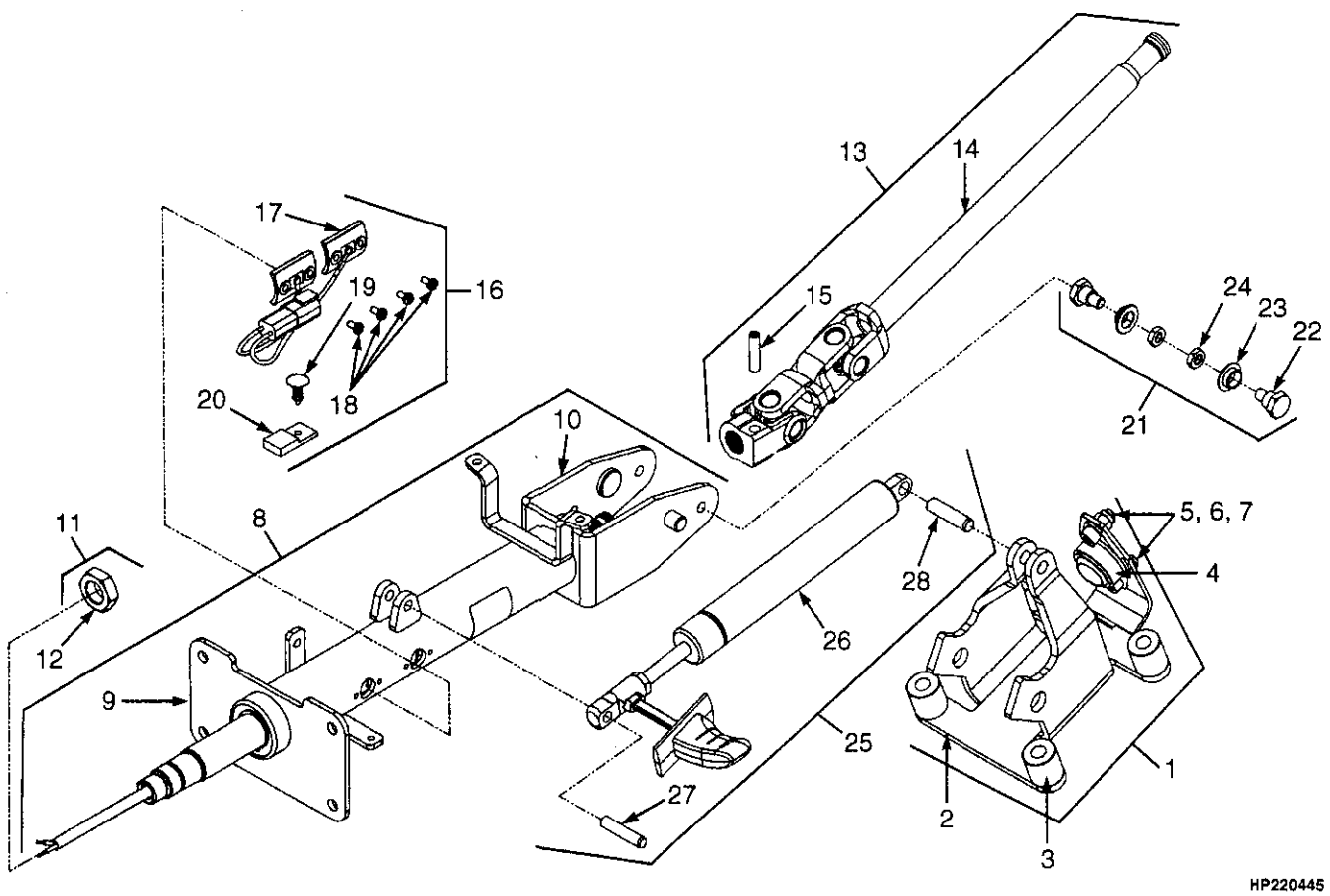

©2005 HYSTER COMPANY

STEERING COLUMN ASSEMBLY

ITEM	PART NO.	DESCRIPTION	QTY
	1544566	Steering Column Assembly (LPG)	1
	1606891	Steering Column Assembly (Diesel)	1
1	1562509	Support Kit	1
2	. . . . .	Support	1
3	. . . . .	Spacer	4
4	. . . . .	Joint	1
5	. . . . .	Nut	2
6	. . . . .	Washer	2
7	. . . . .	Screw	2
8	1562489	Shaft Kit (Upper)	1
9	. . . . .	Shaft Assembly (Upper)	1
10	. . . . .	Housing Assembly	1
11	1562492	Nut Kit	1
12	. . . . .	Nut	2
13	1562493	Shaft Kit (Lower)	1
14	. . . . .	Shaft Assembly (Lower)	1
15	. . . . .	Pin	1
16	1562496	Contact Kit	1
17	. . . . .	Contact Assembly (Horn)	1
18	. . . . .	Screw	4
19	. . . . .	Fastener	1
20	. . . . .	Connector	1
21	1562501	Pivot Kit (Lower)	1
22	. . . . .	Bolt (Pivot)	2
23	. . . . .	Bushing	2
24	. . . . .	Nut	2
25	1562505	Gas Spring Kit	1
26	. . . . .	Gas Spring	1
27	. . . . .	Pin	1
28	. . . . .	Pin	1

©2005 HYSTER COMPANY

STEERING CONTROL UNIT (Figure 7-3)

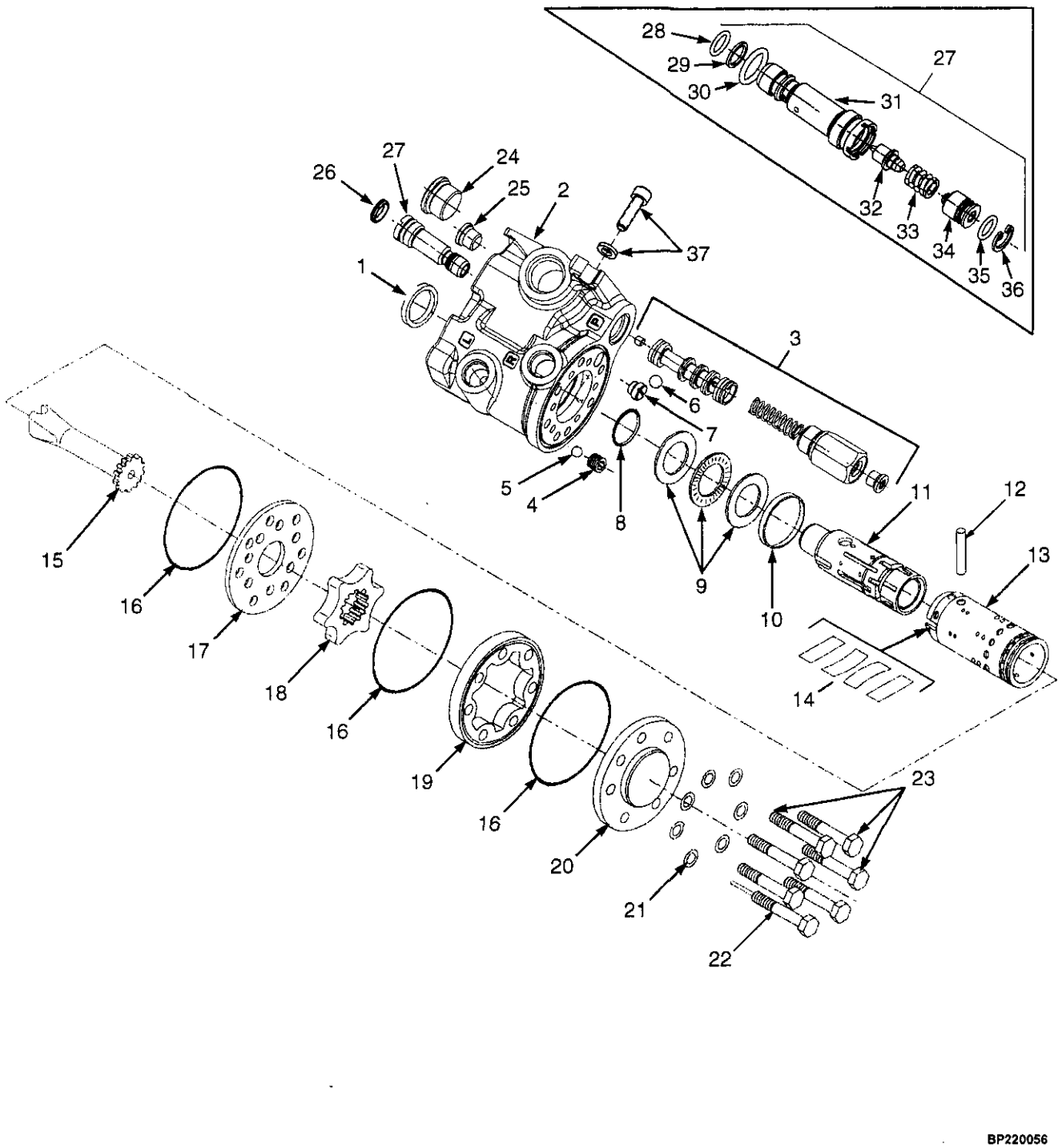

BP220056

©2005 HYSTER COMPANY

STEERING CONTROL UNIT

ITEM	PART NO.	DESCRIPTION	QTY
	2056868	Steering Control Unit (H2.0-3.0FT)	1
	2056869	Steering Control Unit (H3.5FT)	1
1	. . . . .	Dust Seal	1
2	. . . . .	Housing	1
3	. . . . .	Relief Valve	1
4	. . . . .	Bushing	1
5	. . . . .	Check Ball	1
6	. . . . .	Check Ball	1
7	. . . . .	Seat	1
8	. . . . .	O-Ring	1
9	. . . . .	Bearing Set	1
10	. . . . .	Ring	1
11	. . . . .	Spool	1
12	. . . . .	Pin	1
13	. . . . .	Sleeve	1
14	. . . . .	Spring Set	1
15	. . . . .	Shaft	1
16	. . . . .	O-Ring	3
17	. . . . .	Plate	1
18	. . . . .	Gear Set	1
19	. . . . .	Gear Ring	1
20	. . . . .	Cover	1
21	. . . . .	Washer	7
22	. . . . .	Special Screw	2
23	. . . . .	Capscrew	5
24	. . . . .	Priority Valve Plug	1
25	. . . . .	Diagnostic Plug (Supply Pressure)	1
26	. . . . .	Cap	1
27	. . . . .	System Relief Valve	1
28	. . . . .	O-Ring	1
29	. . . . .	Back-Up Ring	1
30	. . . . .	O-Ring	1
31	. . . . .	Cartridge	1
32	. . . . .	Seat	1
33	. . . . .	Spring	1
34	. . . . .	Plug	1
35	. . . . .	Anti-Tamper Ring	1
36	. . . . .	Snap Ring	1
37	1581858	Steering Control Unit Bolt Kit	1
	1579908	Seal Kit (Includes Items 1, 8, 16, 21, 28-30, 34)	1

©2005 HYSTER COMPANY

STEERING LINES (Figure 7-4)

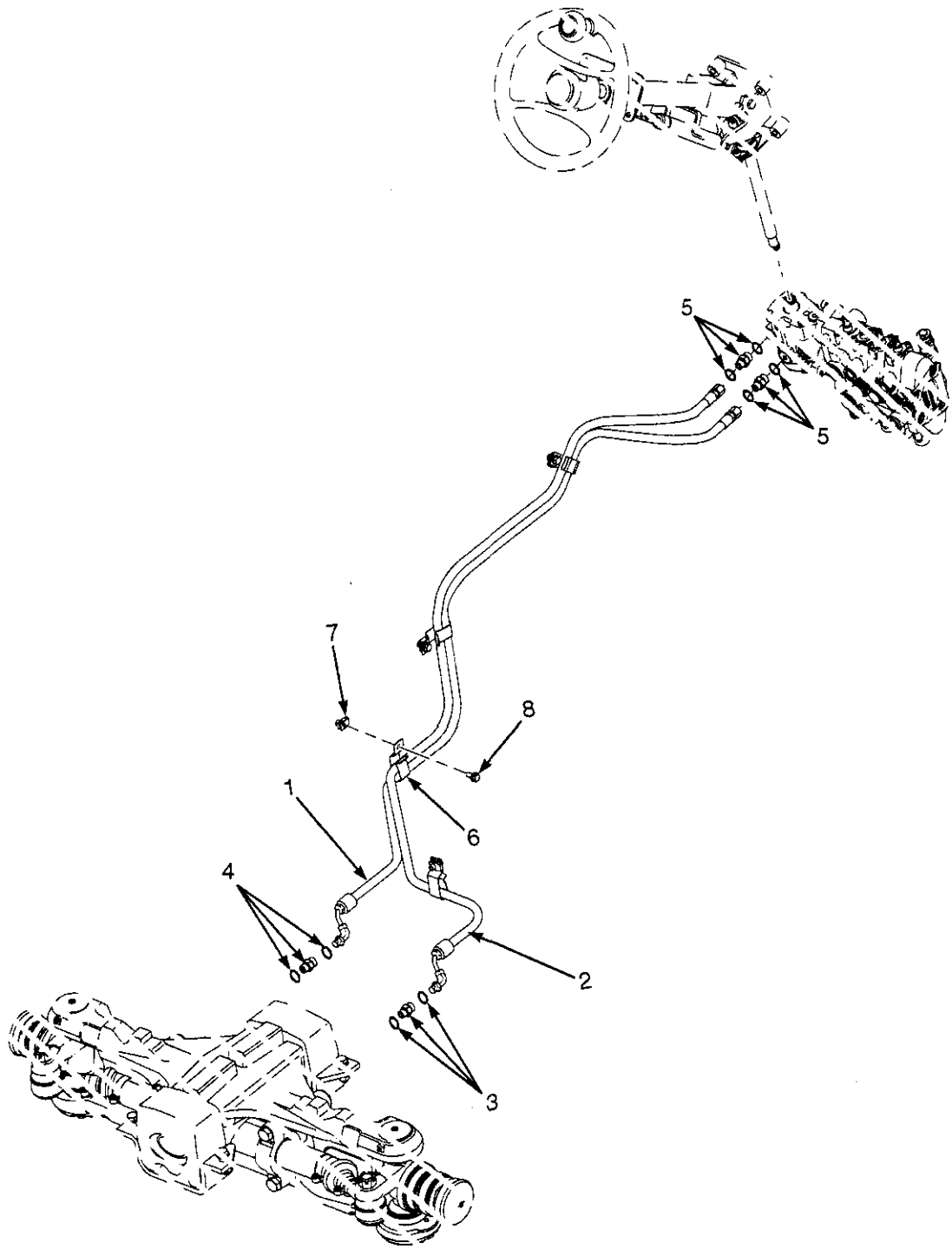

HP220443

©2005 HYSTER COMPANY

STEERING LINES

ITEM	PART NO.	DESCRIPTION	QTY
1	2073016	Hose (H2.0-3.0FT)	1
1	2072903	Hose (H3.5FT)	1
2	2072902	Hose (H2.0-3.0FT)	1
2	2073017	Hose (H3.5FT)	1
3	1516201	Fitting	1
3	265787	O-Ring	1
3	16484	O-Ring	1
4	1486742	Fitting	1
4	265787	O-Ring	1
4	16484	O-Ring	1
5	1487063	Fitting	2
5	265787	O-Ring	2
5	1527813	O-Ring	2
6	1544157	Clamp	6
7	1480237	Clip Nut	6
8	1527879	Capscrew	6

©2005 HYSTER COMPANY

STEER AXLE (Figure 7-5)

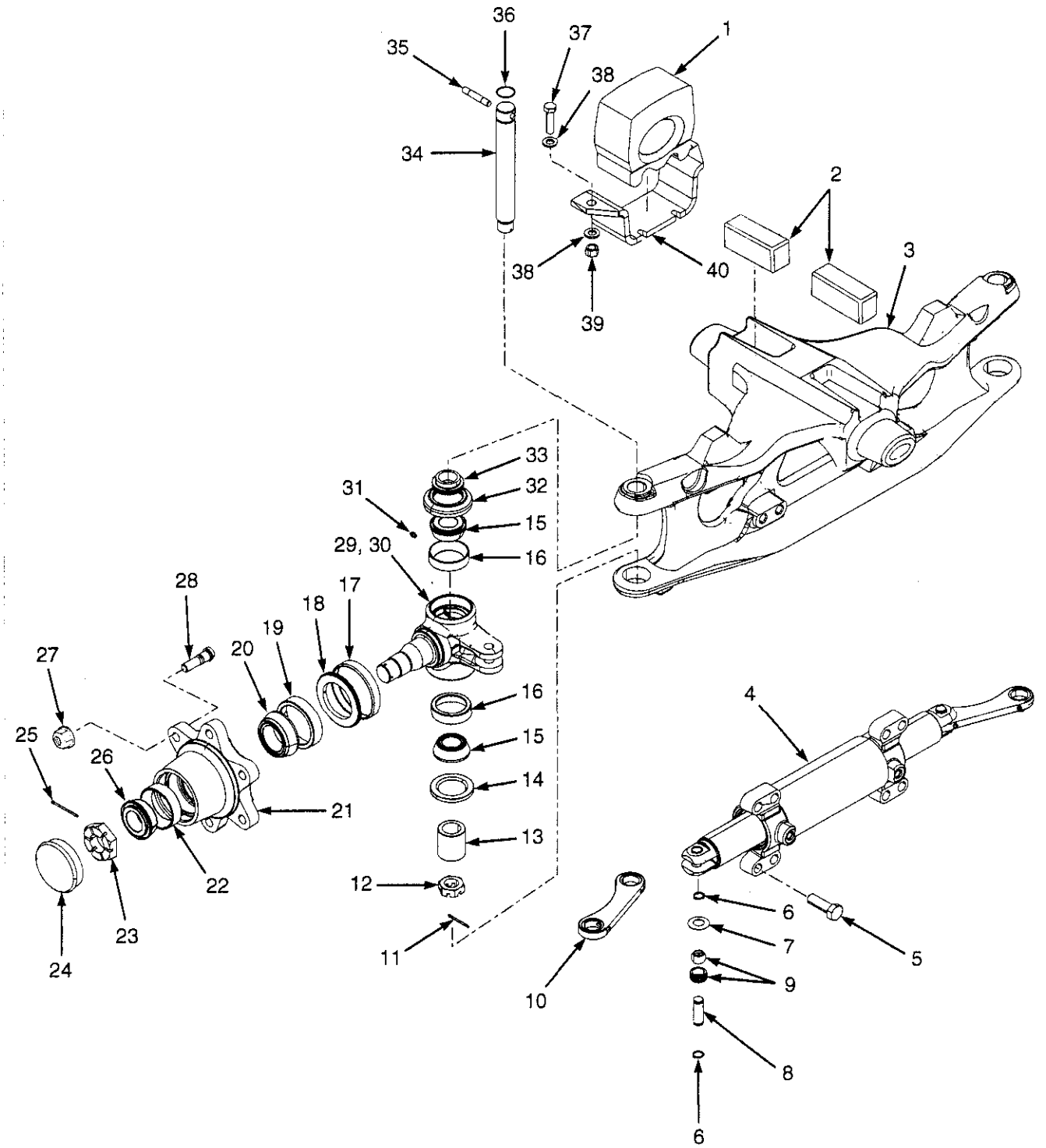

HP220442

©2005 HYSTER COMPANY

STEER AXLE

ITEM	PART NO.	DESCRIPTION	QTY
1	1525354	Mount	2
2	1388838	Mount	2
3	1537400	Steer Axle Frame	1
4	1321174	Steer Cylinder Assembly (☞ Figure 7-6)	1
5	293686	Capscrew	8
6	58903	Snap Ring	8
7	300752	Washer	8
8	1568271	Pin	4
9	300751	Bushing	4
10	381298	Tie Rod	2
11	15225	Cotter Pin	2
12	249289	Nut	2
13	300766	Sleeve	2
14	98525	Oil Seal	2
15	156194	Bearing Cup	4
16	156195	Bearing Cone	4
17	164639	Wear Sleeve	2
18	44542	Oil Seal	2
19	163970	Bearing Cup	2
20	30273	Bearing Cone	2
21	1537667	Hub	2
22	317075	Bearing Cup	2
23	1383777	Nut	2
24	69029	Hub Cap	2
25	15227	Cotter Pin	2
26	317076	Bearing Cone	2
27	1517836	Wheel Nut	12
28	1502276	Bolt	12
29	1310599	Spindle (LH)	1
30	1315425	Spindle (RH)	1
31	13957	Lube Fitting	6
32	264973	Seal	2
33	300767	Spacer	2
34	300765	King Pin	2
35	226986	Pin	2
36	39352	O-Ring	2
37	293648	Capscrew	4
38	320161	Washer	8
39	300937	Locknut	4
40	1543254	Plate	2

©2005 HYSTER COMPANY

STEER CYLINDER (Figure 7-6)

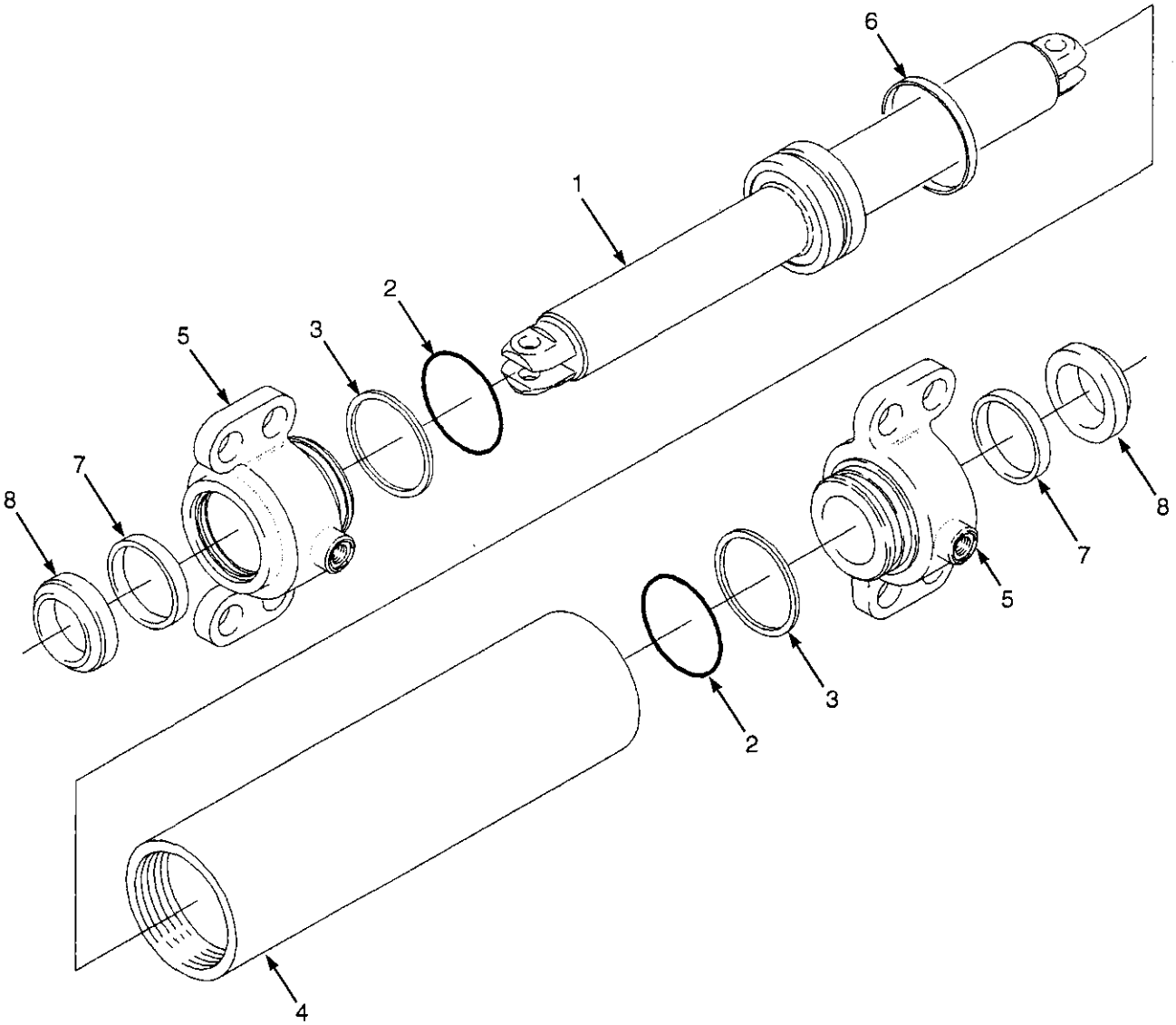

HP220444

©2005 HYSTER COMPANY

STEER CYLINDER

ITEM	PART NO.	DESCRIPTION	QTY
	1321174	Steer Cylinder Assembly	1
1	375634	Piston and Rod Assembly	1
1	375636	Piston	1
1	375641	Rod	1
2	130825	O-Ring	2
3	147973	Back-Up Ring	2
4	375635	Shell	1
5	1321149	End Cap	2
6	2044371	Piston Seal	1
7	210183	Seal	2
8	203071	Rod Wiper	2
	1501413	Seal Kit (Includes Items 2-3, 6-8)	1

©2005 HYSTER COMPANY

STEER TIRES AND WHEELS (Figure 7-7)
H2.0-2.5FT

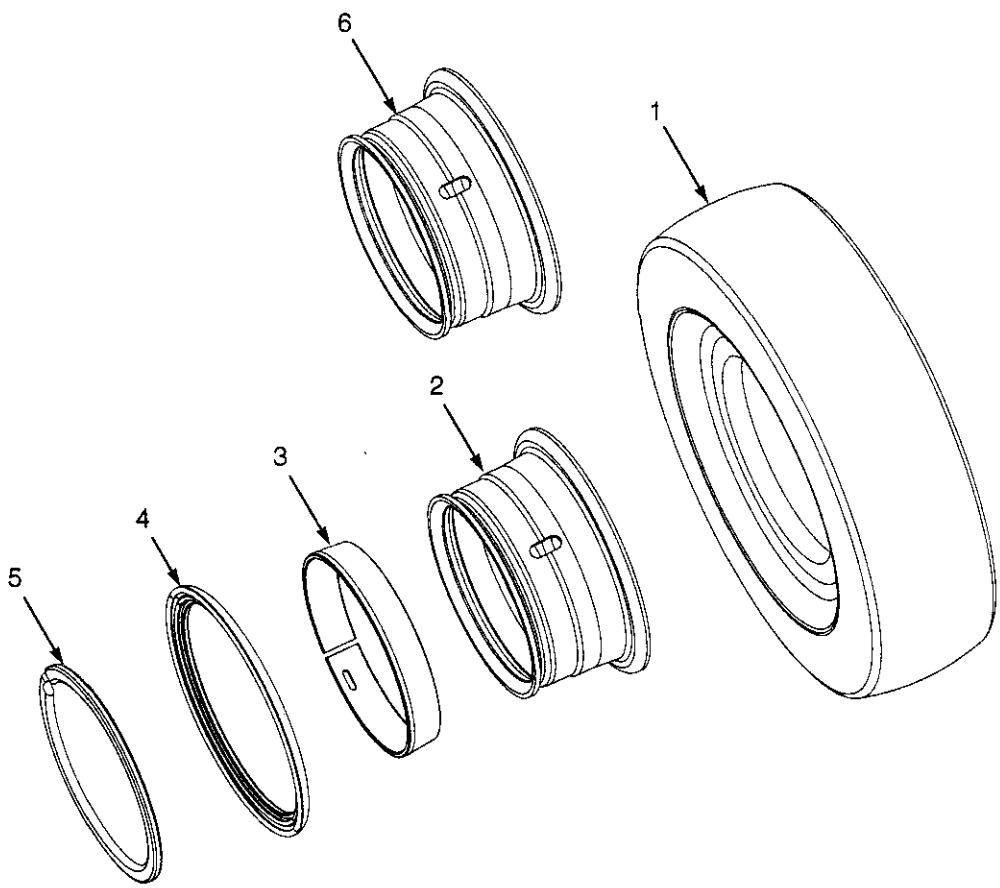

HP070092

©2005 HYSTER COMPANY

STEER TIRES AND WHEELS
H2.0-2.5FT

KEY:
A: 6.00 x 9.00 Solid Pneumatic
B: 6.00 x 9 Radial
C: 6.00 x 9-12 PR
D: 6.00 x 9 Snap-On Tire

ITEM	PART NO.	DESCRIPTION	QTY A	B	C	D
1	1543059	Tire	2	..	2	..
1	1543062	Tire	..	..	..	2
1	1603491	Tire (Non-Marking)	..	..	..	2
1	1358177	Tire (Michelin XZM)	..	2	..	..
1	1471837	Tire Assembly	..	2	..	..
1	1471921	Valve	..	1	..	..
1	1462615	Tubeless Bead Seal	..	1	..	..
2	2070081	Wheel Assembly	2	2	2	..
3	161885	Side Ring	1	1	1	..
4	1584693	Tapered Bead Seat Ring	1	1	1	..
5	161884	Locking Ring	1	1	1	..
6	2070083	Wheel	..	..	..	2

©2005 HYSTER COMPANY

STEER TIRES AND WHEELS (Figure 7-8)
H2.0-3.5FT

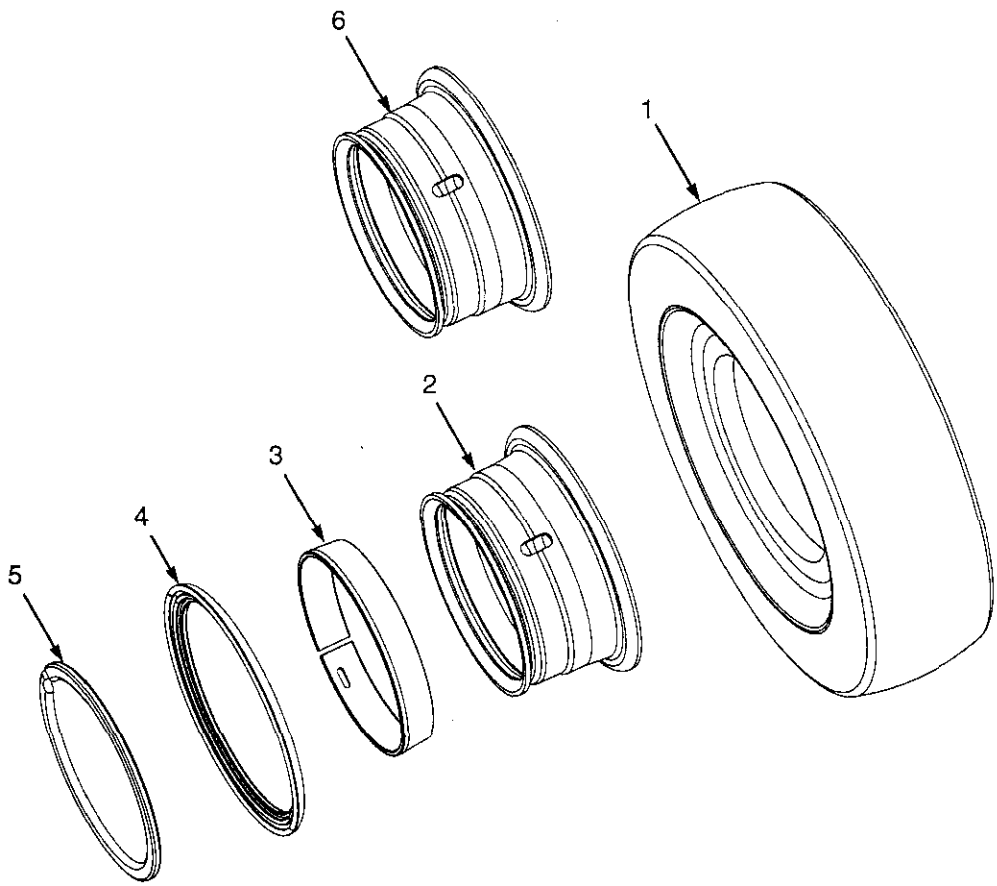

HP070092

©2005 HYSTER COMPANY

STEER TIRES AND WHEELS
H2.0-3.5FT

KEY:
A: 6.50 R10 Radial
B: 6.50 x 10 Snap-On Tire
C: 6.50 x 10-12PR

ITEM	PART NO.	DESCRIPTION	QTY A	QTY B	QTY C
1	1539639	Tire	..	2	..
1	1603493	Tire	..	2	..
1	1544232	Tire	..	..	2
1	1462616	Tubeless Bead Seal	1	..	..
1	1471832	Tire Assembly	2	..	..
1	1358178	Tire (Michelin XZM)	1	..	..
1	1471922	Bead Seal Valve	1	..	..
2	2067044	Wheel	2	..	2
3	1580426	Side Ring	1	..	1
4	1590427	Tapered Bead Seat Ring	1	..	1
5	161894	Locking Ring	1	..	1
6	2067045	Wheel	..	2	..

©2005 HYSTER COMPANY

NOTES

8 BRAKE SYSTEM

SECTION 8
BRAKE SYSTEM

DESCRIPTION	PAGE
BRAKE ASSEMBLY	
DRY BRAKE	8-10
BRAKE COOLING SYSTEM	
SINGLE AND DUAL PEDAL	
WET BRAKE	8-14
BRAKE LINKAGE	
DUAL PEDAL	
DRY BRAKE	8-4
WET BRAKE	8-8
SINGLE PEDAL	
DRY BRAKE	8-2
WET BRAKE	8-6
PARK BRAKE ASSEMBLY	8-12

©2005 HYSTER COMPANY

BRAKE LINKAGE (Figure 8-1)
SINGLE PEDAL
DRY BRAKE

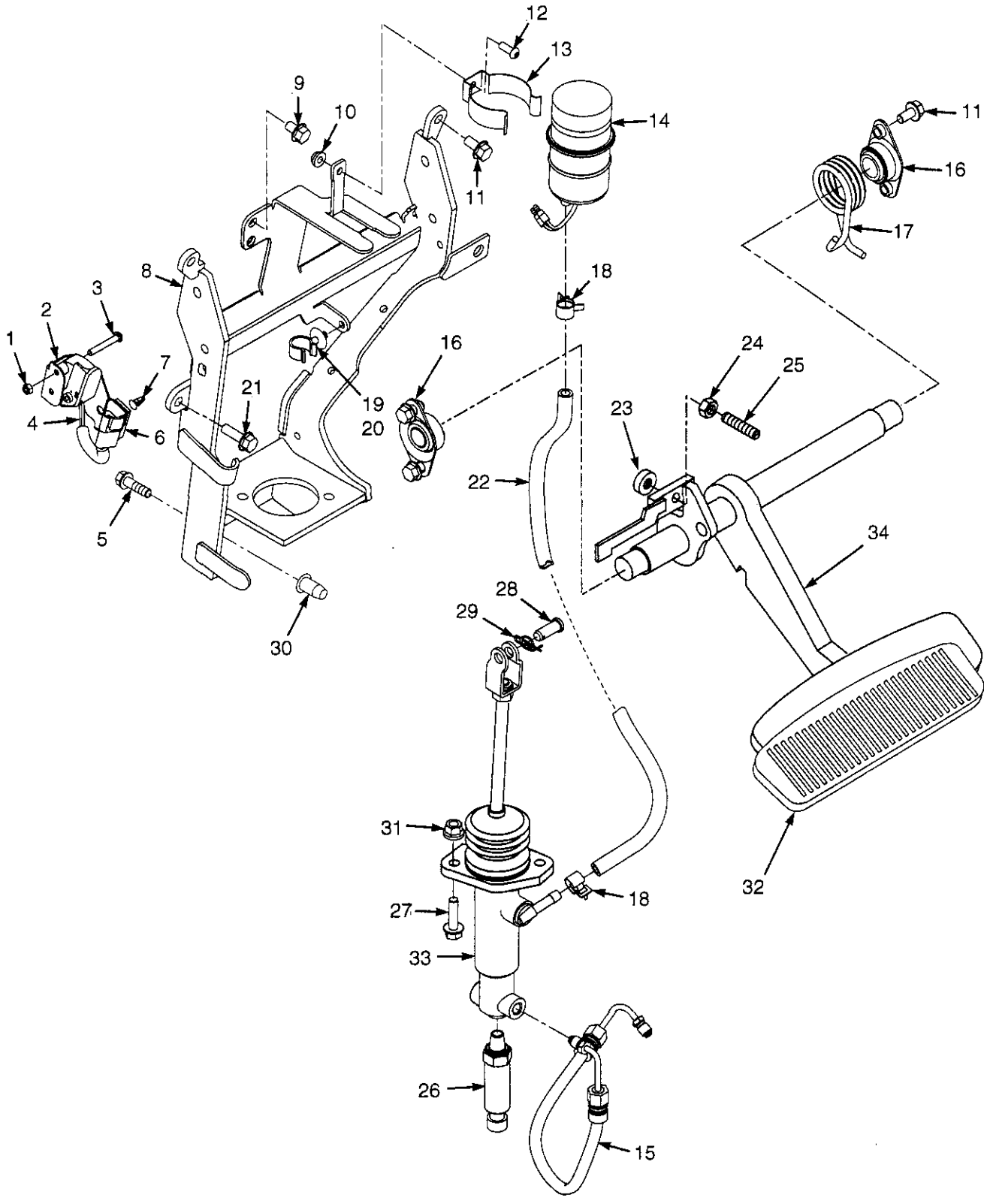

HP040421

©2005 HYSTER COMPANY

BRAKE LINKAGE
SINGLE PEDAL
DRY BRAKE

ITEM	PART NO.	DESCRIPTION	QTY
1	302398	Nut	2
2	1531567	Bracket (Inching Sensor)	1
3	1553897	Capscrew	2
4	1547849	Sensor	1
5	1586627	Capscrew	2
6	1500912	Clip	1
7	1564526	Clip	1
8	1570290	Bracket	1
9	1529366	Capscrew	1
10	1514429	Nut (Flange)	1
11	1527879	Capscrew	6
12	1510126	Capscrew (Button Head)	1
13	2021353	Bracket	1
14	2314223	Reservoir Assembly	1
14	2021341	Cap	1
14	2077604	Tank and Switch	1
14	2021343	Packing	1
15	1527879	Capscrew	4
15	2059937	Hose (Brake)	1
16	1585575	Bushing	2
17	1568075	Spring (RH)	1
18	1543698	Clamp (Swivel)	1
19	1543842	Base (Clamp)	1
20	1502003	Clamp	2
21	1583611	Capscrew	2
22	1531569	Hose (Brake Feed)	1
23	1556475	Bumper	1
24	239503	Nut	1
25	1534871	Bolt	1
26	1530485	Transducer	1
27	1527881	Capscrew	2
28	1375391	Pin (Rod End)	1
29	1351689	Cotter Pin	1
30	1530243	Insert	2
31	1544153	Lock Nut	2
32	1570298	Rubber Pad	1
33	1536724	Master Cylinder	1
33	1566141	Push Rod	1
33	2041520	Yoke	1
33	1566142	Nut	2
33	1566143	Fitting	1
33	1566144	Gasket	1
33	1566131	Repair Kit	1
34	1568243	Bracket (Pedal)	1

©2005 HYSTER COMPANY

BRAKE LINKAGE (Figure 8-2)
DUAL PEDAL
DRY BRAKE

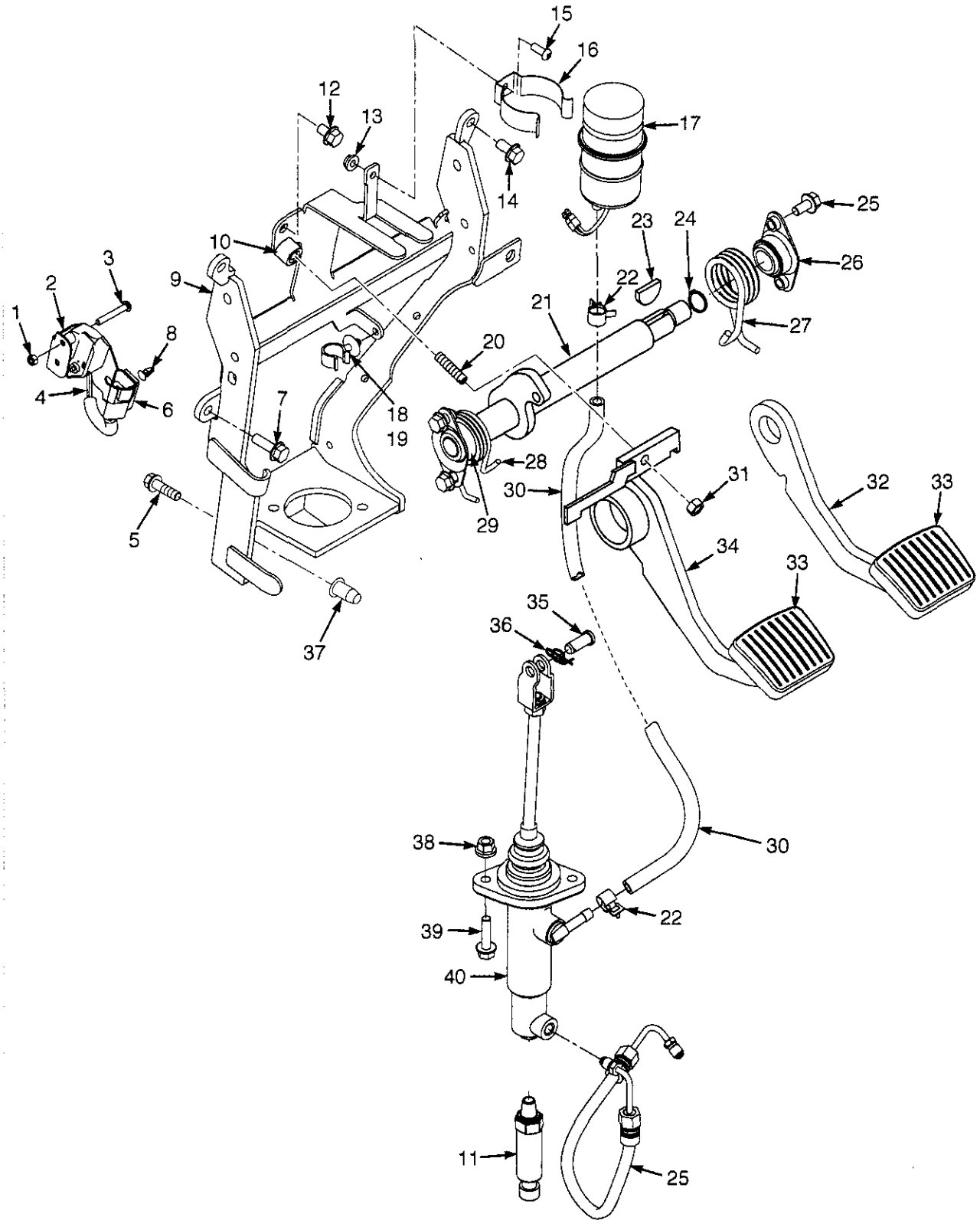

HP040422

©2005 HYSTER COMPANY

BRAKE LINKAGE
DUAL PEDAL
DRY BRAKE

ITEM	PART NO.	DESCRIPTION	QTY
1	302398	Nut	2
2	1531567	Bracket (Inching Sensor)	1
3	1553897	Capscrew	2
4	1547849	Sensor	1
5	1586627	Capscrew	2
6	1500912	Clip (Connector)	1
7	1583611	Capscrew	2
8	1564526	Clip (Key Hole)	1
9	1570290	Bracket	1
10	1556475	Bumper	1
11	1530485	Transducer	1
12	1529366	Capscrew	1
13	1514429	Nut (Flange)	1
14	1527879	Capscrew	6
15	1510126	Capscrew (Button Head)	1
16	2021353	Bracket	1
17	2314223	Reservoir Assembly	1
17	2021341	Cap	1
17	2077604	Tank and Switch	1
17	2021343	Packing	1
18	1543698	Clamp (Swivel)	1
19	1543842	Base (Clamp)	1
20	1534871	Bolt	1
21	1568253	Crank	1
22	1502003	Clamp	2
23	206	Woodruff Key	1
24	12929	Snap Ring	1
25	2059937	Hose (Brake)	1
26	1585575	Bushing	2
27	1568076	Spring (RH)	1
28	1568077	Spring (LH)	1
29	244540	Bushing	2
30	1531569	Hose (Brake Feed)	1
31	239503	Nut	1
32	1568256	Brake Pedal (RH)	1
33	1570300	Pad	2
34	1568245	Brake Pedal (LH)	1
35	1375391	Pin (Rod End)	1
36	1351689	Cotter Pin	1
37	1530243	Insert	2
38	1544153	Lock Nut	2
39	1527881	Capscrew	2
40	1536724	Master Cylinder	1
40	1566141	Push Rod	1
40	2041520	Yoke	1
40	1566142	Nut	2
40	1566144	Gasket	1
40	1566143	Fitting	1
40	1566131	Repair Kit	1

©2005 HYSTER COMPANY

BRAKE LINKAGE (Figure 8-3)
SINGLE PEDAL
WET BRAKE

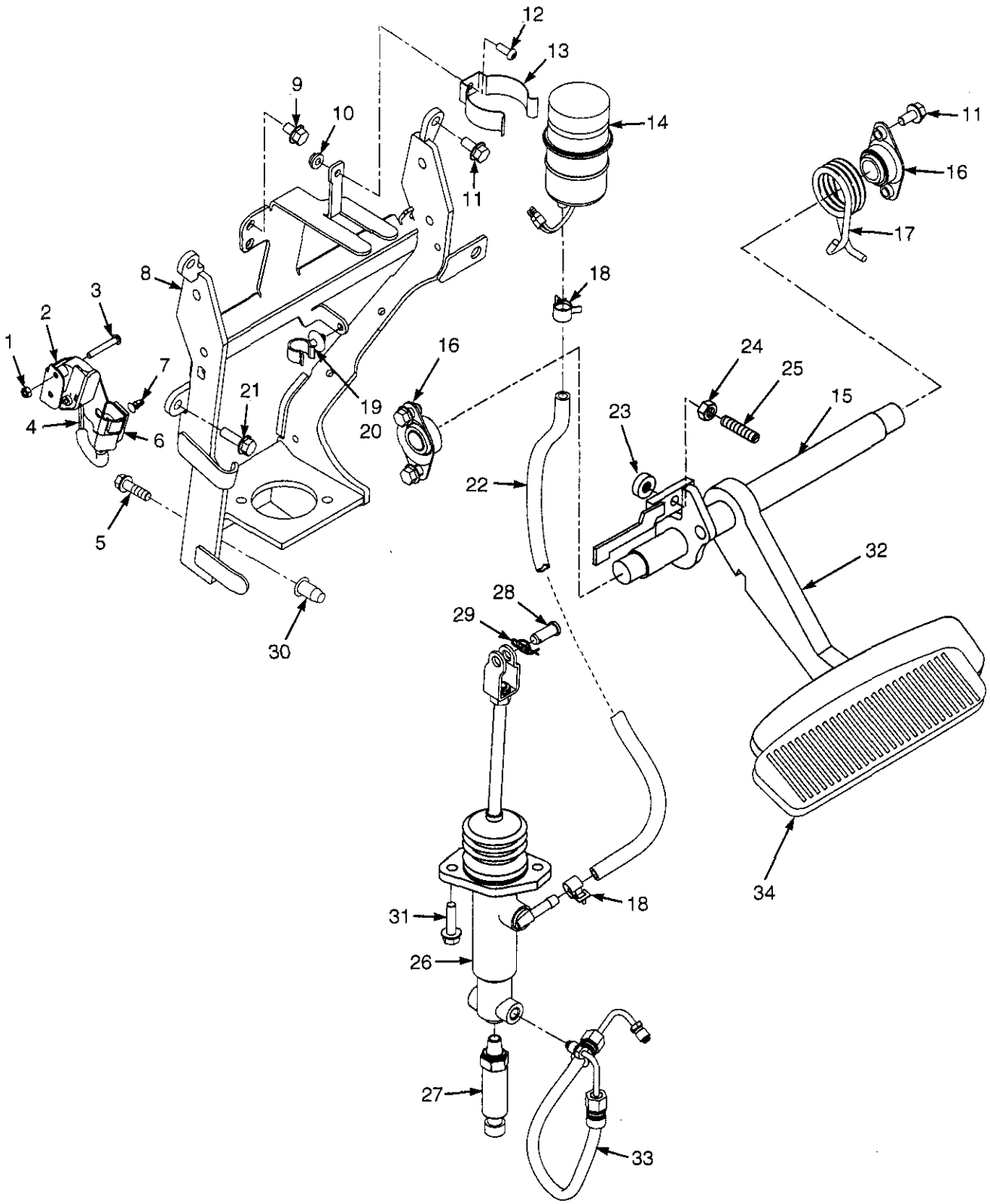

HP040417

©2005 HYSTER COMPANY

BRAKE LINKAGE
SINGLE PEDAL
WET BRAKE

ITEM	PART NO.	DESCRIPTION	QTY
1	302398	Nut	2
2	1531567	Bracket	1
3	1553897	Capscrew	2
4	1547849	Sensor	1
5	1528482	Capscrew	2
6	1500912	Clip	1
7	1564526	Clip	1
8	1574153	Bracket	1
9	1529366	Capscrew	1
10	1514429	Nut (Flange)	1
11	1527879	Capscrew	6
12	1510126	Capscrew (Button Head)	1
13	2021353	Bracket	1
14	1569211	Reservoir Assembly	1
14	1606006	Brake Reservoir Kit	1
15	1579026	Crank	1
16	1531568	Bushing	2
17	1568075	Spring (RH)	1
18	1543698	Clamp (Swivel)	1
19	1543842	Base (Clamp)	1
20	1502003	Clamp	2
21	1583611	Capscrew	2
22	211882	Hose (Brake Feed)	1
23	1556475	Bumper	1
24	239503	Nut	1
25	1534871	Bolt	1
26	1573675	Master Cylinder	1
26	1596179	Repair Kit (Major)	1
27	1530485	Transducer	1
28	1375391	Pin (Rod End)	1
29	1351689	Cotter Pin	1
30	1530243	Insert	2
31	1527880	Capscrew	4
32	1579027	Pedal	1
33	2076656	Hose (Brake)	1
34	1570298	Rubber Pad	1

©2005 HYSTER COMPANY

BRAKE LINKAGE (Figure 8-4)
DUAL PEDAL
WET BRAKE

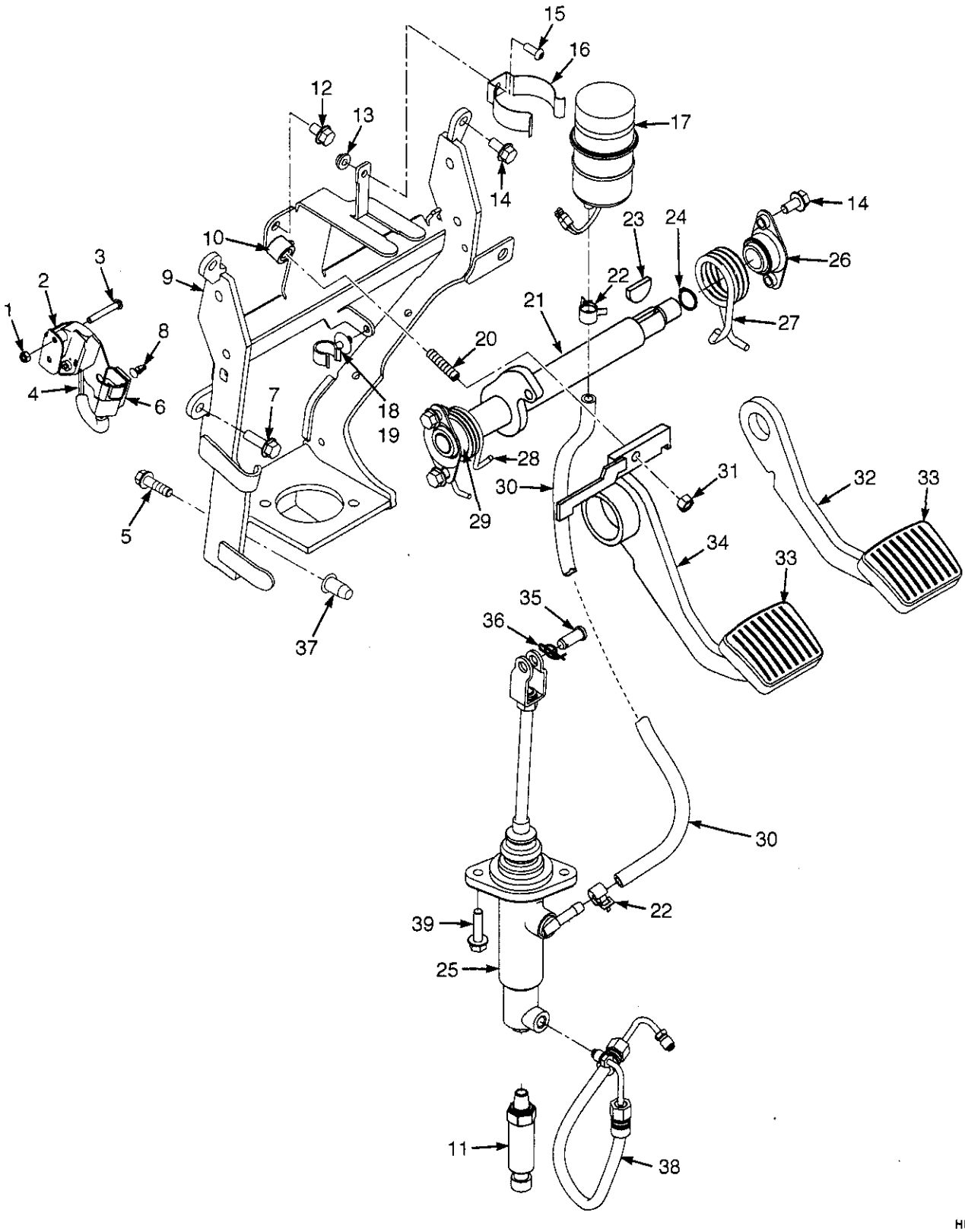

HP040418

©2005 HYSTER COMPANY

BRAKE LINKAGE
DUAL PEDAL
WET BRAKE

ITEM	PART NO.	DESCRIPTION	QTY
1	302398	Nut	2
2	1531567	Bracket	1
3	1553897	Capscrew	2
4	1547849	Sensor	1
5	1528482	Capscrew	2
6	1500912	Clip (Connector)	1
7	1583611	Capscrew	2
8	1564526	Clip (Key Hole)	1
9	1574153	Bracket	1
10	1556475	Bumper	1
11	1530485	Transducer	1
12	1529366	Capscrew	1
13	1514429	Nut (Flange)	1
14	1527879	Capscrew	6
15	1510126	Capscrew (Button Head)	1
16	2021353	Bracket	1
17	1569211	Reservoir Assembly	1
17	1606006	Brake Reservoir Kit	1
18	1543698	Clamp (Swivel)	1
19	1543842	Base (Clamp)	1
20	1534871	Bolt	1
21	1579028	Crank	1
22	1502003	Clamp	2
23	206	Woodruff Key	1
24	12929	Snap Ring	1
25	1573675	Master Cylinder	1
25	1596179	Repair Kit	1
26	1531568	Bushing	2
27	1568076	Spring (RH)	1
28	1568077	Spring (LH)	1
29	244540	Bushing	2
30	211882	Hose (Brake Feed)	1
31	239503	Nut	1
32	1568256	Brake Pedal (RH)	1
33	1570300	Pad	2
34	1568245	Brake Pedal (LH)	1
35	1375391	Pin (Rod End)	1
36	1351689	Cotter Pin	1
37	1530243	Insert	2
38	2076656	Hose (Brake)	1
39	1527880	Capscrew	4

©2005 HYSTER COMPANY

BRAKE ASSEMBLY (Figure 8-5)
DRY BRAKE

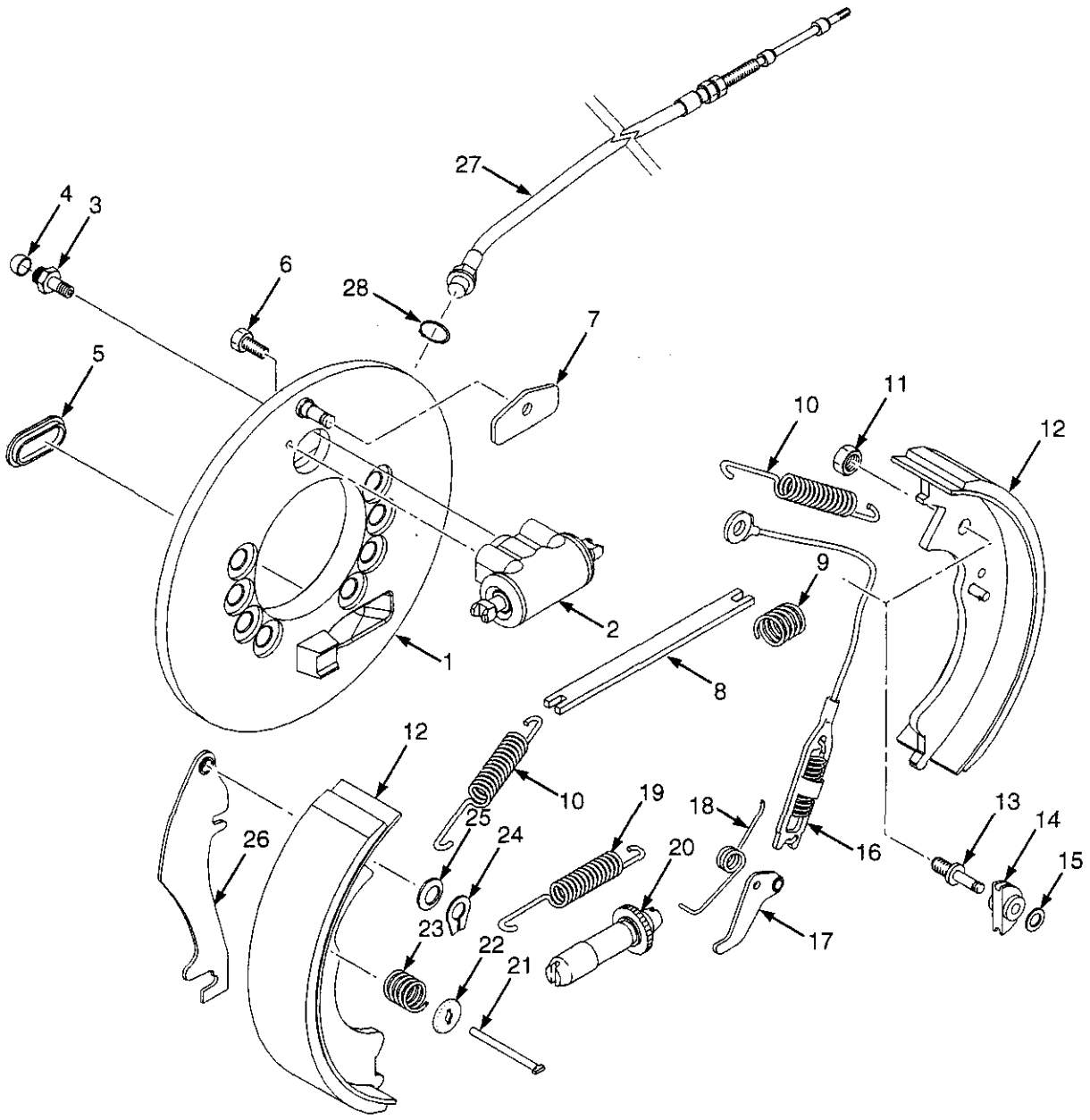

BP040047

©2005 HYSTER COMPANY

BRAKE ASSEMBLY
DRY BRAKE

KEY:
A: RH
B: LH

ITEM	PART NO.	DESCRIPTION	QTY A	QTY B
	1579455	Brake Assembly (With Cable and Dust Shield)	1	..
	1579454	Brake Assembly (With Cable and Dust Shield)	..	1
	1606086	Brake Assembly (Without Cable)	1	..
	1606085	Brake Assembly (Without Cable)	..	1
1	1606088	Backing Plate	1	..
1	1606087	Backing Plate	..	1
2	1565290	Wheel Cylinder Assembly	1	1
2	1334647	Repair Kit	1	1
3	1361503	Bleeder Screw	1	1
4	1361504	Bleeder Cap	1	1
5	1334642	Cover	1	1
6	1565303	Bolt	2	2
7	2037343	Guide	1	1
8	1360796	Strut	1	..
8	1361507	Strut	..	1
9	1360797	Spring	1	1
10	. . . . .	Spring	1	1
11	. . . . .	Nut	1	1
12	1565314	Shoe and Lining Kit	1	..
12	1565313	Shoe and Lining Kit	..	1
13	. . . . .	Pin	1	1
14	1334644	Sheave	1	1
15	1361500	Washer	1	1
16	. . . . .	Cable and Spring Assembly	1	1
17	2037518	Lever	1	..
17	2037517	Lever	..	1
18	. . . . .	Spring	1	1
19	2037340	Spring	1	1
20	1600492	Adjuster	1	..
20	1600491	Adjuster	..	1
21	2037323	Pin	1	1
22	2037341	Cup	1	1
23	. . . . .	Spring	1	1
24	1338916	Retainer	1	1
25	1338917	Washer	1	1
26	. . . . .	Park Brake Lever	1	1
27	1565305	Cable	1	..
27	1600493	Cable	..	1
28	1361502	Snap Ring	1	1
	1565316	Spring Kit (Includes Item 10)	1	1
	1565310	Auto Adjuster Kit (RH) (Includes Items 16-19)	1	..
	1565309	Auto Adjuster Kit (LH) (Includes Items 16-19)	..	1
	1565311	Park Brake Kit (LH) (Includes Items 8-9, 24-26)	..	1
	1565312	Park Brake Kit (RH) (Includes Items 8-9, 24-26)	1	..
	1565315	Shoe Hold Down Kit (Includes Items 21-23)	1	1

©2005 HYSTER COMPANY

PARK BRAKE ASSEMBLY (Figure 8-6)

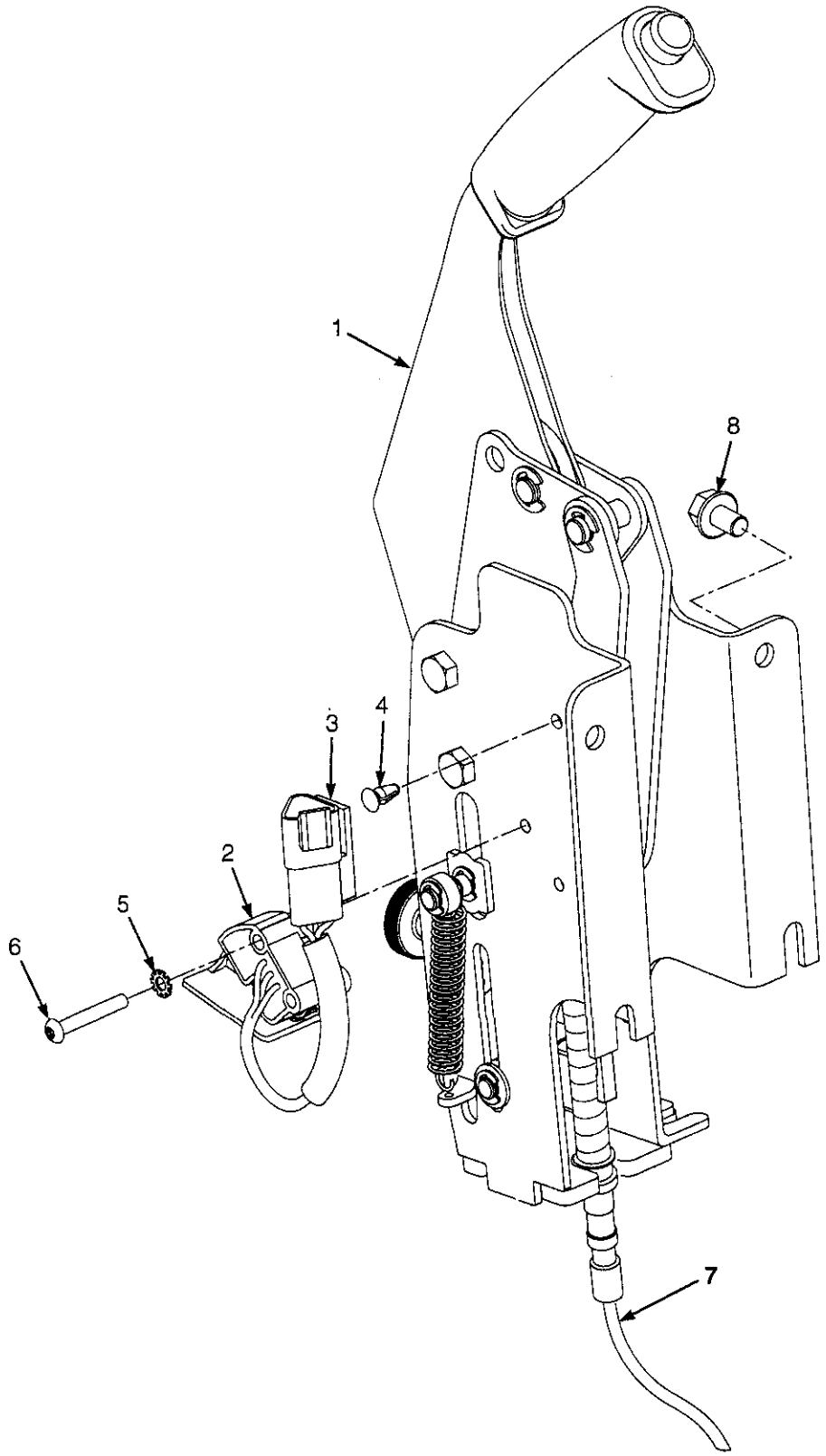

©2005 HYSTER COMPANY

PARK BRAKE ASSEMBLY

KEY:
A: Without Cab - Dry Brakes
B: With Cab - Dry Brakes
C: Without Cab - Wet Brakes
D: With Cab - Wet Brakes

ITEM	PART NO.	DESCRIPTION	QTY A	B	C	D
1	1544466	Park Brake Assembly	1	..	..	..
1	1548181	Park Brake Assembly	..	1	..	..
1	1551493	Park Brake Assembly	..	..	1	..
1	1551494	Park Brake Assembly	..	..	..	1
2	1547849	Sensor	1	1	1	1
3	1500912	Clip	1	1	1	1
4	1564526	Clip	1	1	1	1
5	296378	Washer	2	2	2	2
6	1553897	Capscrew	2	2	2	2
7	2072905	Cable	..	..	2	2
7	1600493	Cable (LH)	1	1	..	..
7	1565305	Cable (RH)	1	1	..	..
8	1529366	Capscrew	4	4	4	4
	133683	Pin (Not Illustrated)	..	..	1	1
	1530010	Cotter Pin (Not Illustrated)	..	..	1	1

©2005 HYSTER COMPANY

BRAKE COOLING SYSTEM (Figure 8-7)
SINGLE AND DUAL PEDAL
WET BRAKE

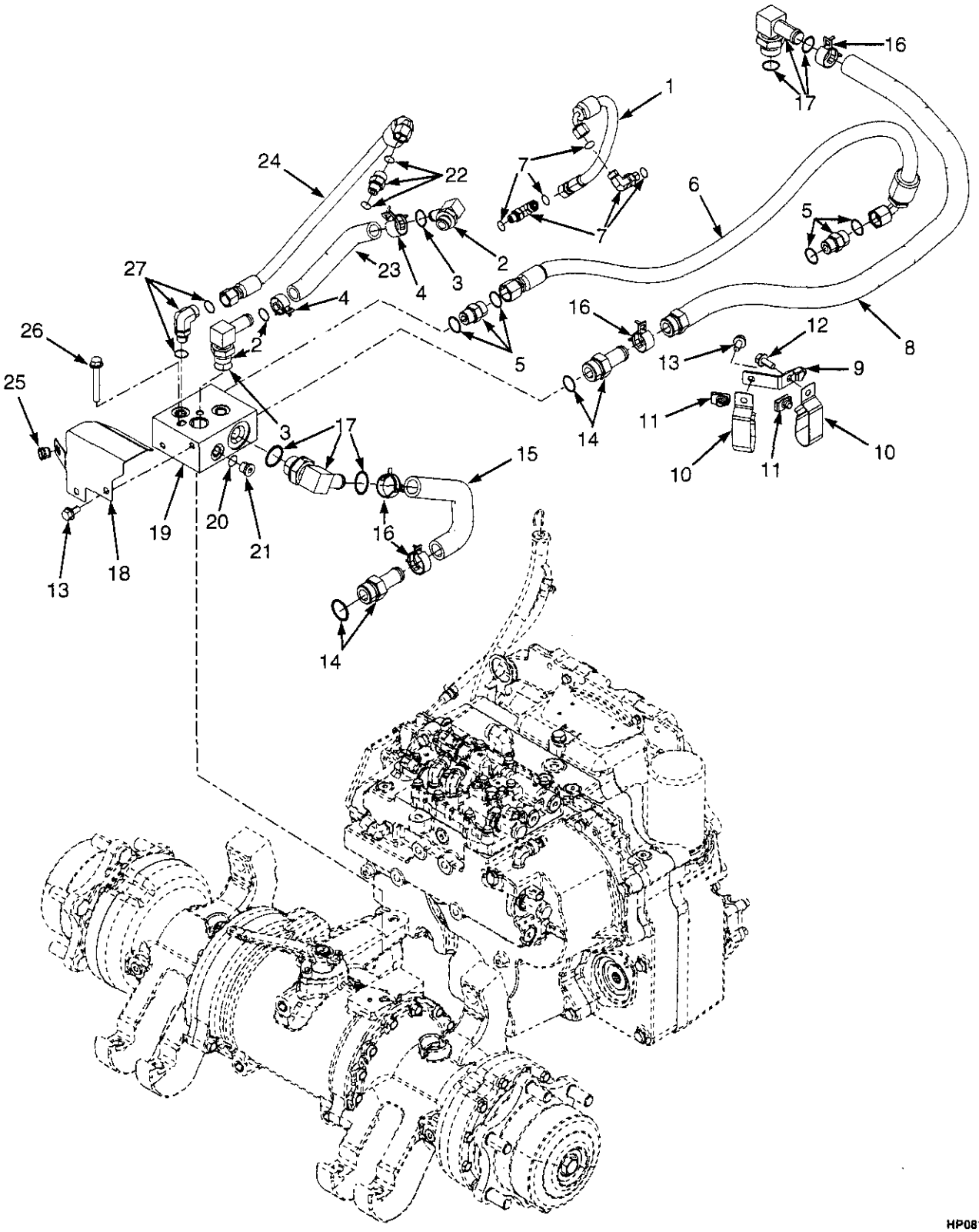

©2005 HYSTER COMPANY

BRAKE COOLING SYSTEM
SINGLE AND DUAL PEDAL
WET BRAKE

ITEM	PART NO.	DESCRIPTION	QTY
1	2076656	Hose	1
2	222512	Fitting	1
2	16485	O-Ring	1
3	265731	O-Ring	1
4	1502008	Clamp	2
5	1473887	Fitting	2
5	16484	O-Ring	2
5	265787	O-Ring	2
6	2076635	Hose	1
7	1487058	Fitting	2
7	16481	O-Ring	2
7	1527813	O-Ring	2
8	2072899	Hose	1
9	1580683	Bracket	1
10	1562648	Clip	2
11	1480237	Clip Nut	3
12	1527880	Capscrew	1
13	1527879	Capscrew	4
14	17758	Fitting	2
14	16486	O-Ring	2
15	2072897	Hose	1
16	1502009	Clamp	2
17	17775	Fitting	2
17	16486	O-Ring	2
18	1588577	Bracket	1
19	2072809	Manifold	1
20	16483	O-Ring	1
21	222443	Fitting	1
22	1486740	Fitting	1
22	1527813	O-Ring	1
22	265787	O-Ring	1
23	2072901	Hose	1
24	2072900	Hose	1
25	1531557	Insert	1
26	1510116	Capscrew	2
27	1487063	Fitting	1
27	1527813	O-Ring	1
27	265787	O-Ring	1

©2005 HYSTER COMPANY

NOTES

9 HYDRAULIC SYSTEM

SECTION 9
HYDRAULIC SYSTEM

DESCRIPTION	PAGE
AUXILIARY ONE AND TWO	
MANUAL CONTROL VALVE	
THREE AND FOUR FUNCTION	9-22
AUXILIARY ONE SECTION	
ELECTRONIC CONTROL	
THREE AND FOUR FUNCTION	9-30
AUXILIARY TWO SECTION	
ELECTRONIC CONTROL	
FOUR FUNCTION	9-32
CONTROL VALVE ASSEMBLY	
ELECTRONIC CONTROL	
THREE AND FOUR FUNCTION	9-26
MANUAL CONTROL	
THREE AND FOUR FUNCTION	9-18
ELECTRO HYDRAULIC POPPET VALVE	
ELECTRONIC CONTROL	
LIFT AND LOWER	9-38
GEAR PUMP	9-4
HAND LEVERS	
FOUR FUNCTION	
WITH DETENTED LEVERS	9-14
WITHOUT DETENTED LEVERS	9-16
THREE FUNCTION	
WITH DETENTED LEVERS	9-10
WITHOUT DETENTED LEVERS	9-12
HYDRAULIC FILTER	9-6
HYDRAULIC HOSES	
LIFT, TILT, AND AUXILIARY	9-8
HYDRAULIC SUPPLY AND RETURN	9-2
OUTLET SECTION	
ELECTRONIC CONTROL	
THREE AND FOUR FUNCTION	9-36
MANUAL CONTROL VALVE	
THREE AND FOUR FUNCTION	9-24
TILT CYLINDER AND MAST INSTALLATION	9-40
TILT CYLINDERS	
H2.0-2.5FT	9-42
H3.0-3.5FT	9-44
TILT SECTION	
ELECTRONIC CONTROL	
THREE AND FOUR FUNCTION	9-34
VALVE ASSEMBLY, LIFT AND LOWER	
ELECTRONIC CONTROL VALVE	
THREE AND FOUR FUNCTION	9-28
VALVE ASSEMBLY, LIFT AND TILT	
MANUAL CONTROL VALVE	
THREE AND FOUR FUNCTION	9-20

©2005 HYSTER COMPANY

See Service Manual for service procedures.

HYDRAULIC SUPPLY AND RETURN (Figure 9-1)

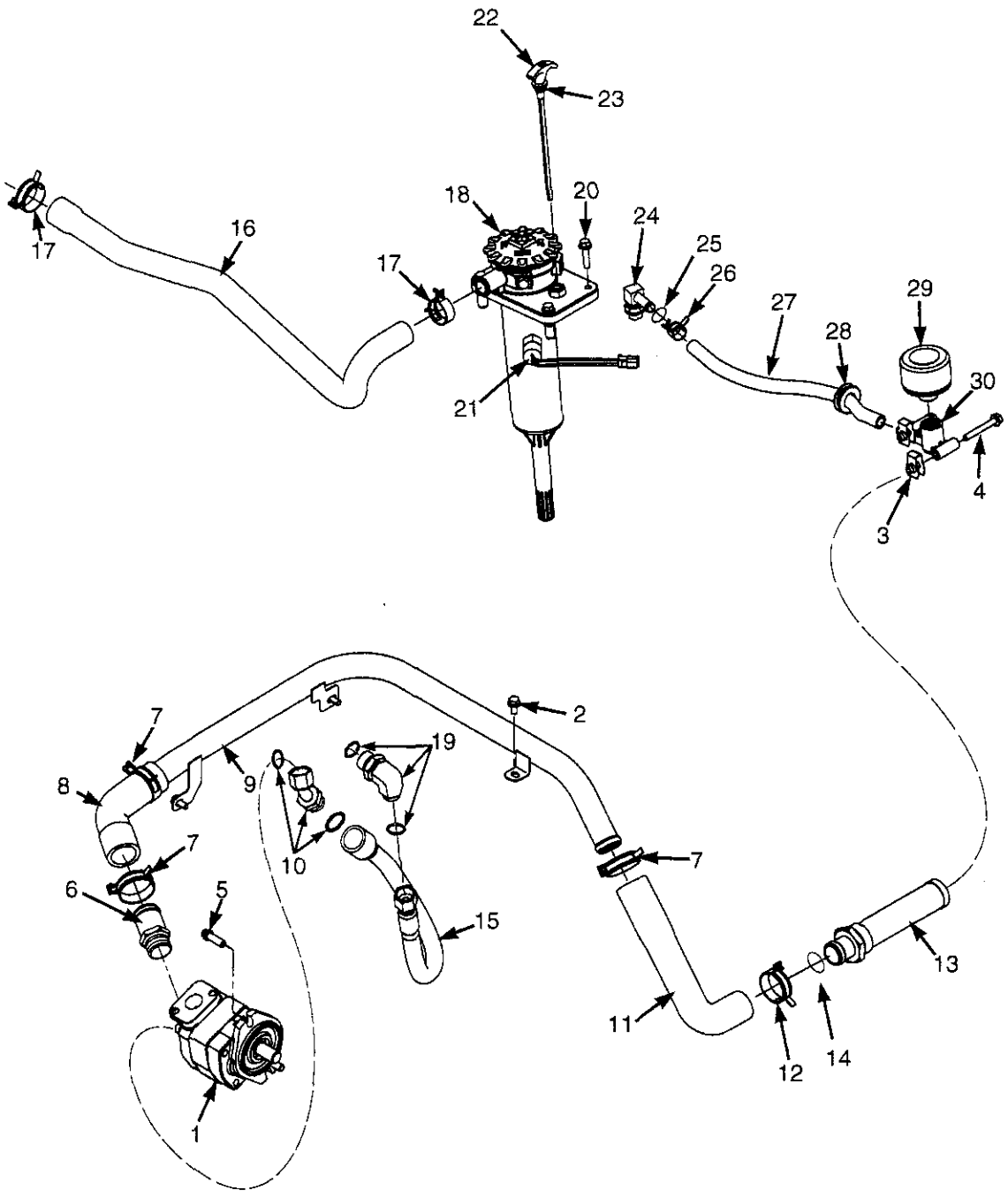

HP150973

©2005 HYSTER COMPANY

HYDRAULIC SUPPLY AND RETURN

ITEM		PART NO.	DESCRIPTION	QTY
1	a	2067802	Gear Pump (☞ Figure 9-2)	1
1	a	2067803	Gear Pump (☞ Figure 9-2)	1
1	b	2067800	Gear Pump (☞ Figure 9-2)	1
1	b	2067801	Gear Pump (☞ Figure 9-2)	1
1	c	2074230	Gear Pump (☞ Figure 9-2)	1
1	c	2074211	Gear Pump (☞ Figure 9-2)	1
2		1527879	Capscrew	3
3		1393879	Clip Nut	2
4		1510116	Capscrew	2
5		1564515	Capscrew	2
6		1568199	Adapter	1
7		1501992	Clamp	3
8		2069005	Hose	1
9		2068947	Tube	1
10		1528596	Fitting	1
10		16485	O-Ring	1
10		252729	O-Ring	1
11		2061778	Hose	1
12		1527982	Clamp	1
13		1526186	Strainer	1
14		16984	O-Ring	1
15		2070114	Hose	1
16		2076408	Hose	1
17		369804	Clamp	2
18		1544975	Filter Assembly (☞ Figure 9-3)	1
19		1487069	Fitting	1
19		252729	O-Ring	1
19		16486	O-Ring	1
20		1586627	Capscrew	4
21		2068337	Pressure Switch	1
22		2060751	Dipstick	1
23		1580682	O-Ring	1
24		222510	Fitting	1
25		16484	O-Ring	1
26		1502007	Clamp	1
27		127918	Hose	1
28		1527395	Grommet	1
29		1582161	Breather	1
30		1582160	Adapter	1

FOOTNOTES:

a For Use With GM Engines
b For Use With Mazda Engines
c For Use With Yanmar Diesel Engines

©2005 HYSTER COMPANY

GEAR PUMP (Figure 9-2)

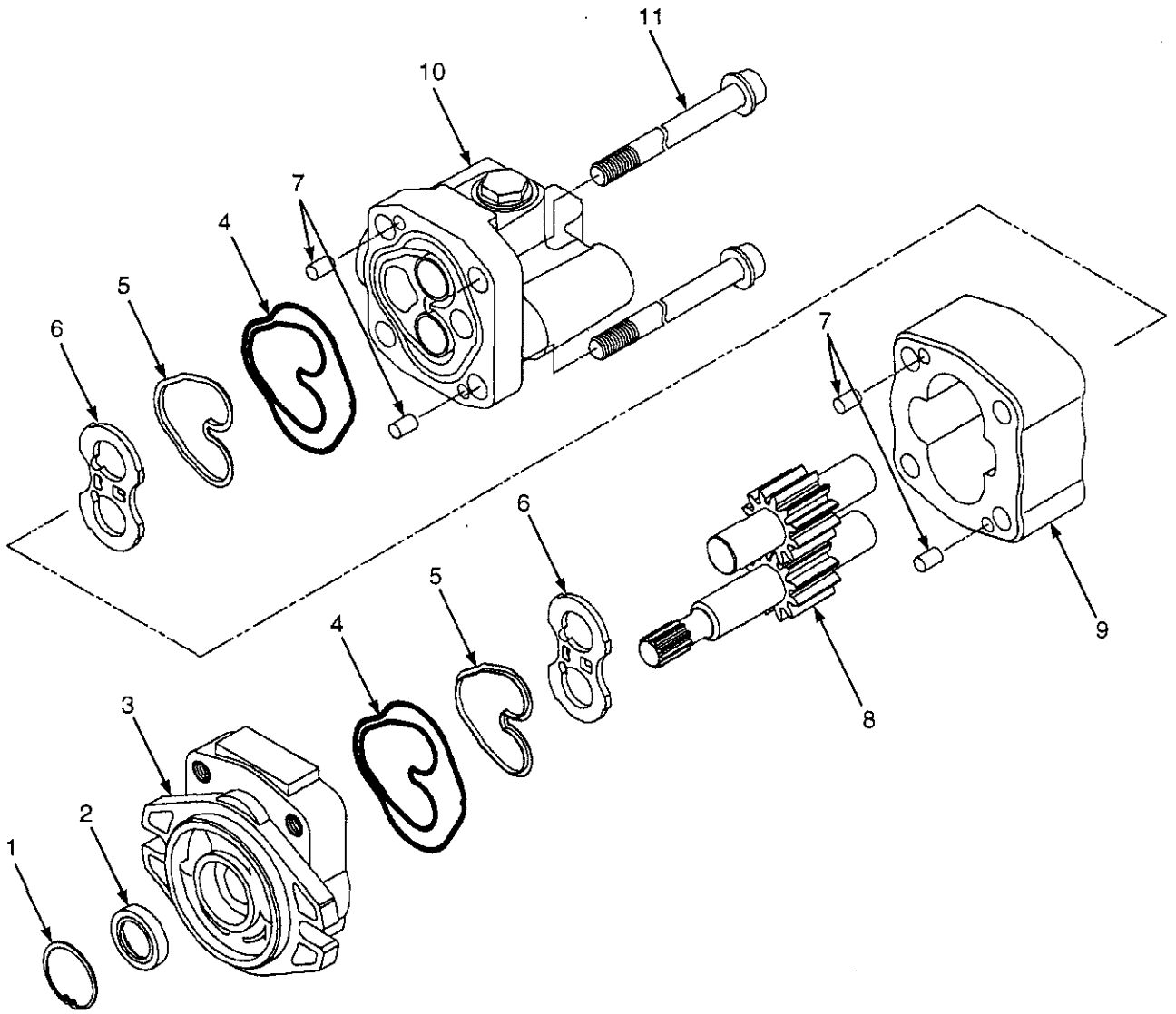

BP150098

©2005 HYSTER COMPANY

GEAR PUMP

KEY:
A: Mazda
B: GM
C: Yanmar

ITEM		PART NO.	DESCRIPTION	QTY A	QTY B	QTY C
	a	2067801	Gear Pump	1	..	..
	b	2067800	Gear Pump	1	..	..
	a	2074211	Gear Pump	..	1	..
	b	2074230	Gear Pump	..	1	..
	a	2067803	Gear Pump	..	..	1
	b	2067802	Gear Pump	..	..	1
1		. . . . .	Snap Ring	1	1	1
2		. . . . .	Oil Seal	1	1	1
3	**a**	1578664	Flange Mounting	1	1	1
3	**b**	1581536	Flange Mounting	1	1	1
4		. . . . .	Back-Up Seal	2	2	2
5		. . . . .	Plate Seal	2	2	2
6		1578673	Side Plate	2	2	2
7		1578672	Dowel Pin	4	4	4
8		1581537	Gear Set	1	..	..
8		1584987	Gear Set	..	1	..
8		1581534	Gear Set	..	..	1
8		. . . . .	Drive Gear	1	1	1
8		. . . . .	Driven Gear	1	1	1
9		. . . . .	Gear Plate	1	1	1
10	**a**	1578665	Cover	1	1	1
10	**b**	1581535	Cover	1	1	1
11		1578671	Screw	4	4	..
11		1578693	Screw	..	..	4
		1465140	Seal Kit (Includes Items 1-2, 4-5)	1	1	1

FOOTNOTES:
a High Pressure
b Low Pressure

©2005 HYSTER COMPANY

HYDRAULIC FILTER (Figure 9-3)

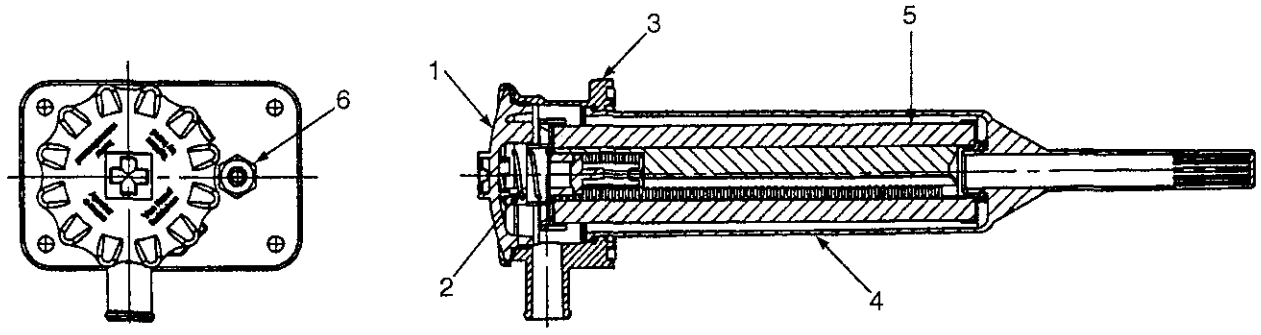

BP150095

ITEM	PART NO.	DESCRIPTION	QTY
	1544975	Filter Assembly	1
1	1570338	Filter Lid	1
1	. . . . .	Gasket	1
2	1570340	Spring	1
3	1570342	Filter Head	1
3	209457	Quad Ring	1
3	14591	Fitting	1
3	16481	O-Ring	1
4	1570346	Filter Canister	1
4	. . . . .	O-Ring	1
5	2070611	Element	1
5	. . . . .	O-Ring	1
6	1568182	Dipstick Assembly	1
6	. . . . .	O-Ring	1
	1570337	Seal Kit (Includes Items 1, 3-6)	1

©2005 HYSTER COMPANY

NOTES

HYDRAULIC HOSES (Figure 9-4)
LIFT, TILT, AND AUXILIARY

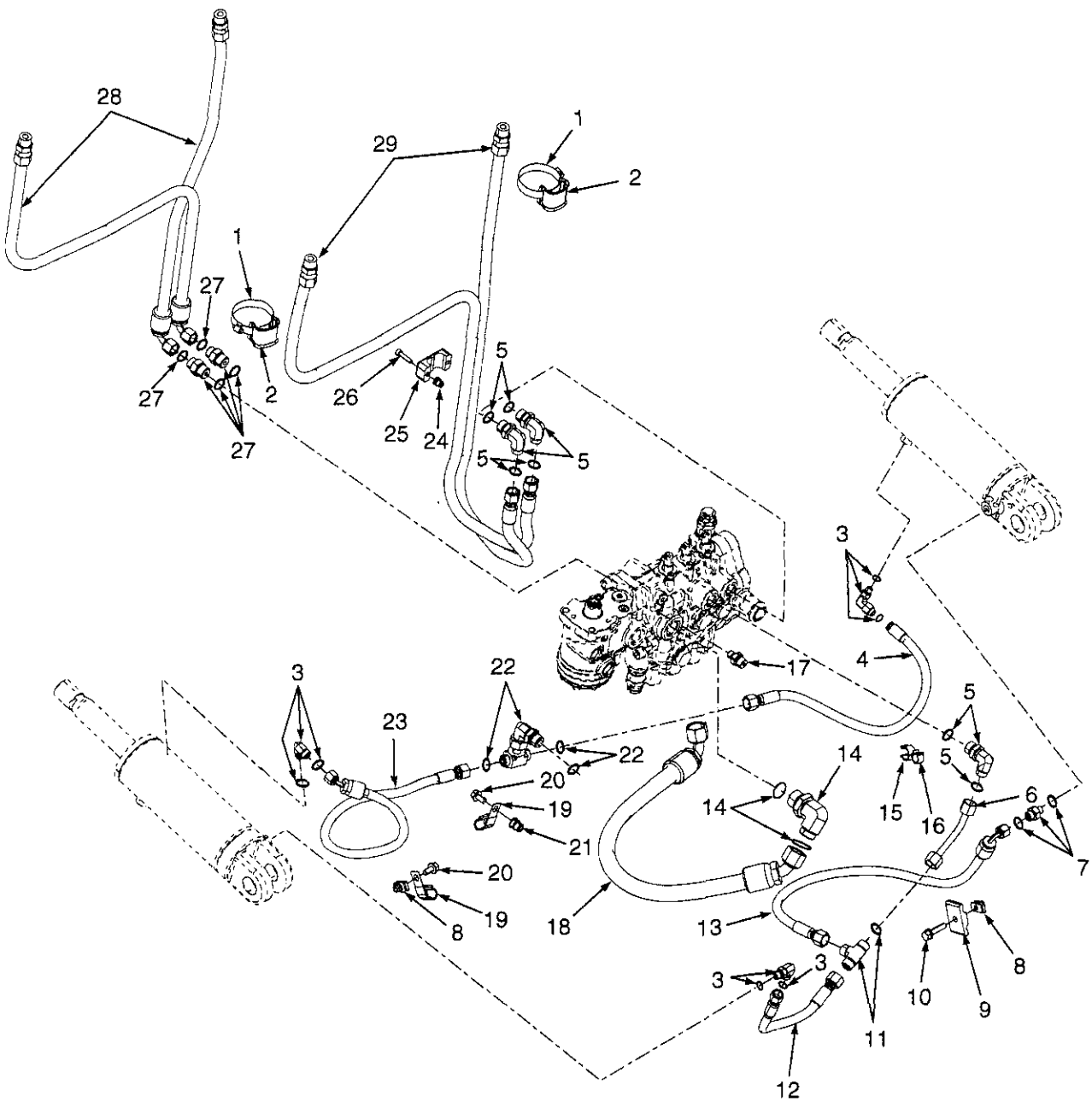

HP150984

©2005 HYSTER COMPANY

HYDRAULIC HOSES
LIFT, TILT, AND AUXILIARY

KEY:
A: Three Function
B: Four Function

ITEM	PART NO.	DESCRIPTION	QTY A	QTY B
1	1481229	Clamp	2	2
2	1477996	Clamp	2	2
3	1487058	Fitting	3	3
3	1527813	O-Ring	3	3
3	16481	O-Ring	3	3
4	2075630	Hose	1	1
5	1487061	Fitting	3	3
5	265787	O-Ring	3	3
5	16484	O-Ring	3	3
6	2074327	Tube	1	1
7	1486737	Fitting	1	1
7	16481	O-Ring	1	1
7	1527813	O-Ring	1	1
8	1480237	Clip Nut	2	2
9	1359620	Clamp	1	1
10	1586627	Capscrew	1	1
11	1522425	Fitting	1	1
11	265787	O-Ring	1	1
12	2074326	Hose	1	1
13	2077092	Hose	1	1
14	1487069	Fitting	1	1
14	252729	O-Ring	1	1
14	16486	O-Ring	1	1
15	1502055	Clamp	1	1
16	1502059	Clamp	1	1
17	2061646	Fitting	1	1
18	2070148	Hose	1	1
19	325804	Clamp	2	2
20	1527879	Capscrew	2	2
21	1530243	Insert	1	1
22	1488464	Fitting	1	1
22	265787	O-Ring	3	3
23	2074325	Hose	1	1
24	1531558	Insert	2	..
25	1360386	Clamp	1	..
26	293796	Capscrew	2	..
27	1486742	Fitting	2	2
27	265787	O-Ring	2	2
27	16484	O-Ring	2	2
28	2065051	Hose	2	..
28	2065052	Hose	..	2
29	2073495	Hose	2	..
29	2073496	Hose	..	2

©2005 HYSTER COMPANY

HAND LEVERS (Figure 9-5)
THREE FUNCTION
WITH DETENTED LEVERS

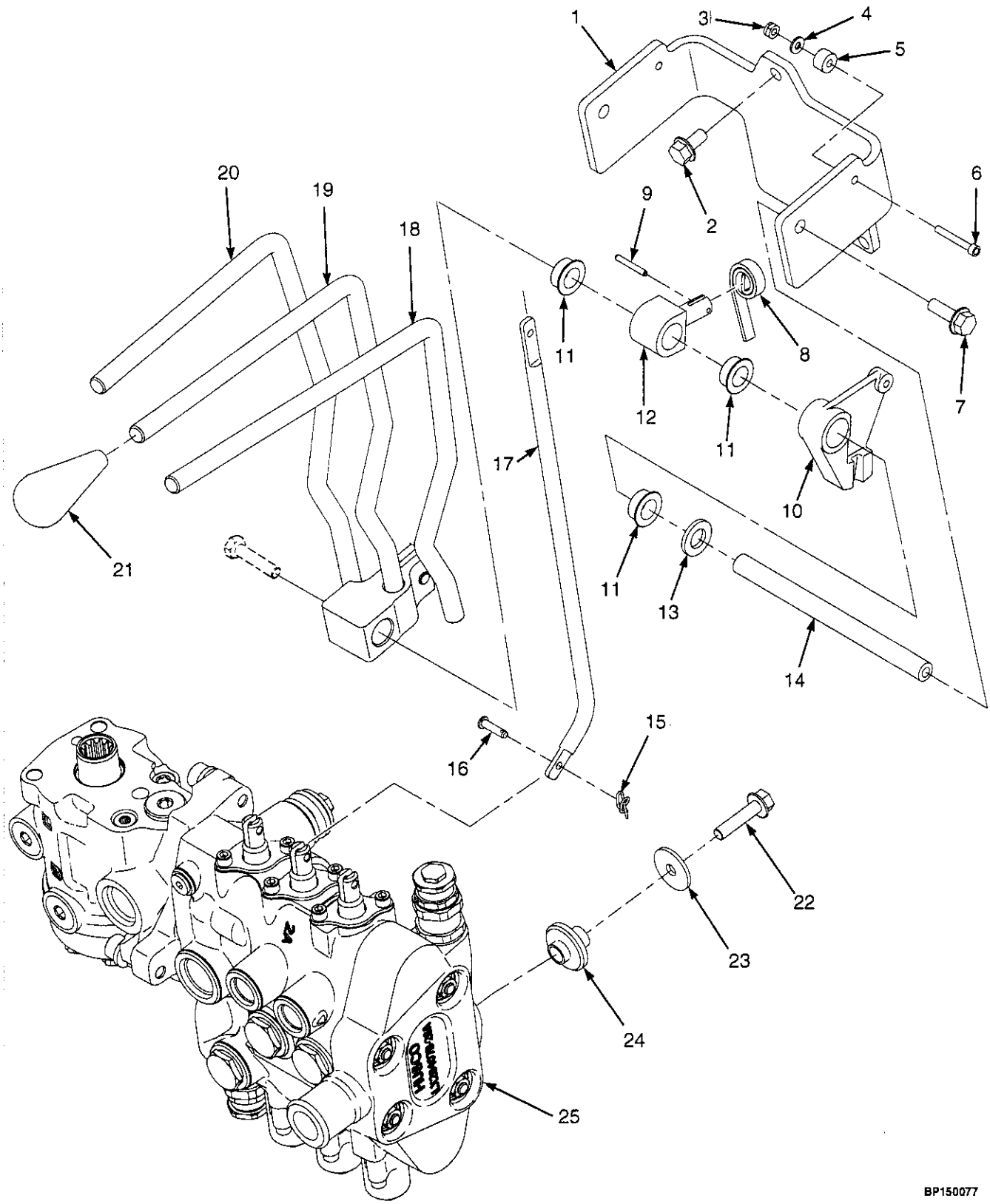

©2005 HYSTER COMPANY

HAND LEVERS
THREE FUNCTION
WITH DETENTED LEVERS

ITEM	PART NO.	DESCRIPTION	QTY
1	1561163	Bracket	1
2	1527879	Capscrew	3
3	230882	Nut	1
4	197067	Washer	2
5	1528339	Spacer	1
6	18094	Capscrew	1
7	1583611	Capscrew	2
8	175861	Spring	1
9	302428	Pin	1
10	1542546	Lever	2
11	1564747	Bushing	10
12	306113	Pin (Selector)	1
13	320161	Washer	2
14	1528328	Pivot Shaft	1
15	1517361	Cotter Pin	6
16	309109	Rod End Pin	6
17	1517394	Link	3
18	1517379	Hand Lever (Auxiliary One And Two)	1
19	1517357	Hand Lever (Tilt)	1
20	1517356	Hand Lever (Lift)	1
21	1517395	Knob	3
22	1586627	Capscrew	3
23	1346752	Washer	3
24	2063991	Isolator	3
25	2064895	Control Valve Assembly (Manual) (H2.0-3.0FT) (☞ Figure 9-9)	1
25	2064899	Control Valve Assembly (Manual) (H3.5FT) (☞ Figure 9-9)	1

©2005 HYSTER COMPANY

HAND LEVERS (Figure 9-6)
THREE FUNCTION
WITHOUT DETENTED LEVERS

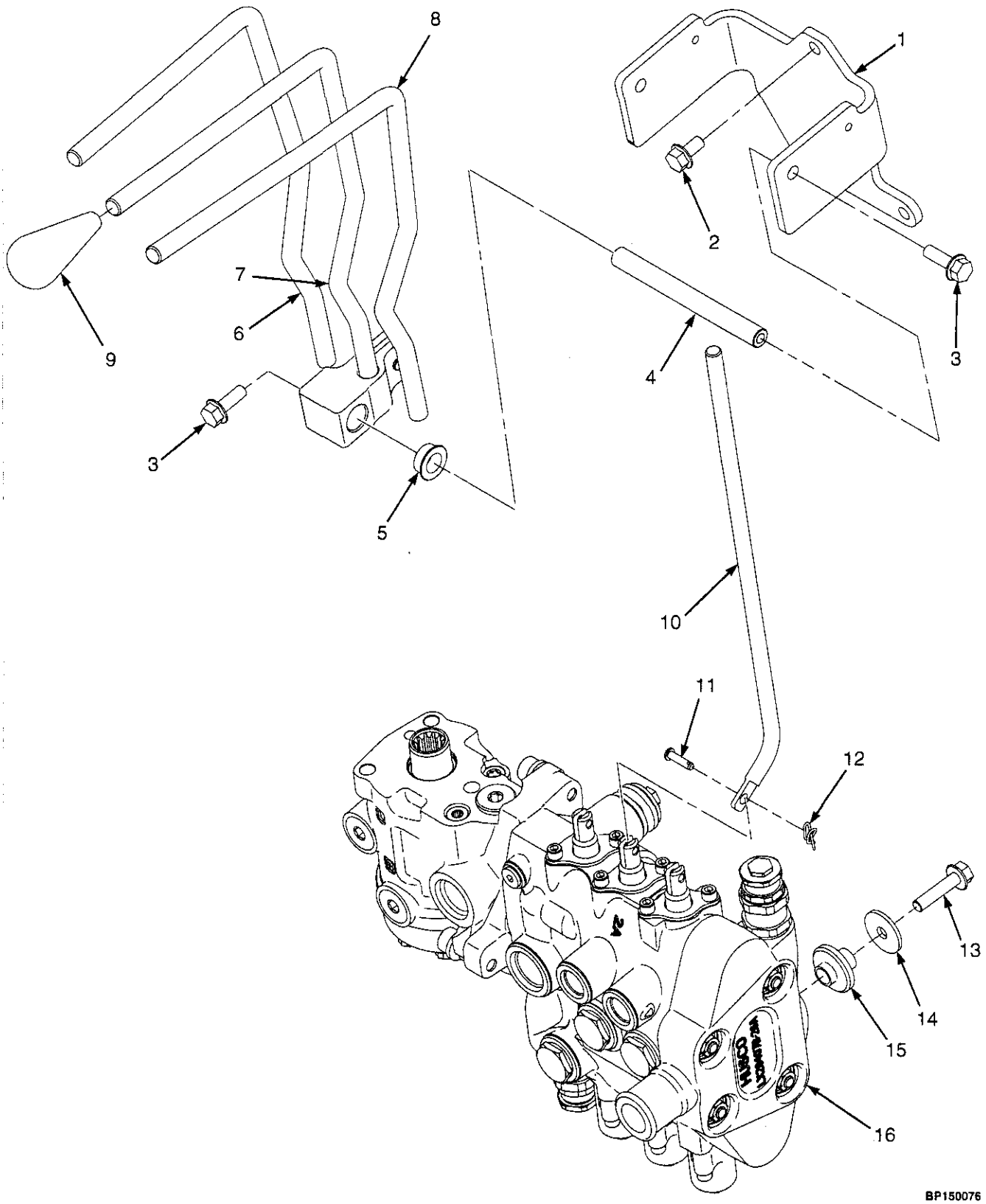

©2005 HYSTER COMPANY

HAND LEVERS
THREE FUNCTION
WITHOUT DETENTED LEVERS

ITEM	PART NO.	DESCRIPTION	QTY
1	1561162	Bracket	1
2	1527879	Capscrew	3
3	1583611	Capscrew	2
4	1528327	Pivot Shaft	1
5	1564747	Bushing	6
6	1517356	Hand Lever (Lift)	1
7	1517357	Hand Lever (Tilt)	1
8	1517358	Hand Lever (Auxiliary One)	1
9	1517395	Knob	3
10	1517394	Link	3
11	309109	Rod End Pin	6
12	1517361	Cotter Pin	6
13	1586627	Capscrew	3
14	1346752	Washer	3
15	2063991	Isolator	3
16	2064895	Control Valve Assembly (Manual) (H2.0-3.0FT) (☞ Figure 9-9)	1
16	2064899	Control Valve Assembly (Manual) (H3.5FT) (☞ Figure 9-9)	1

©2005 HYSTER COMPANY

HAND LEVERS (Figure 9-7)
FOUR FUNCTION
WITH DETENTED LEVERS

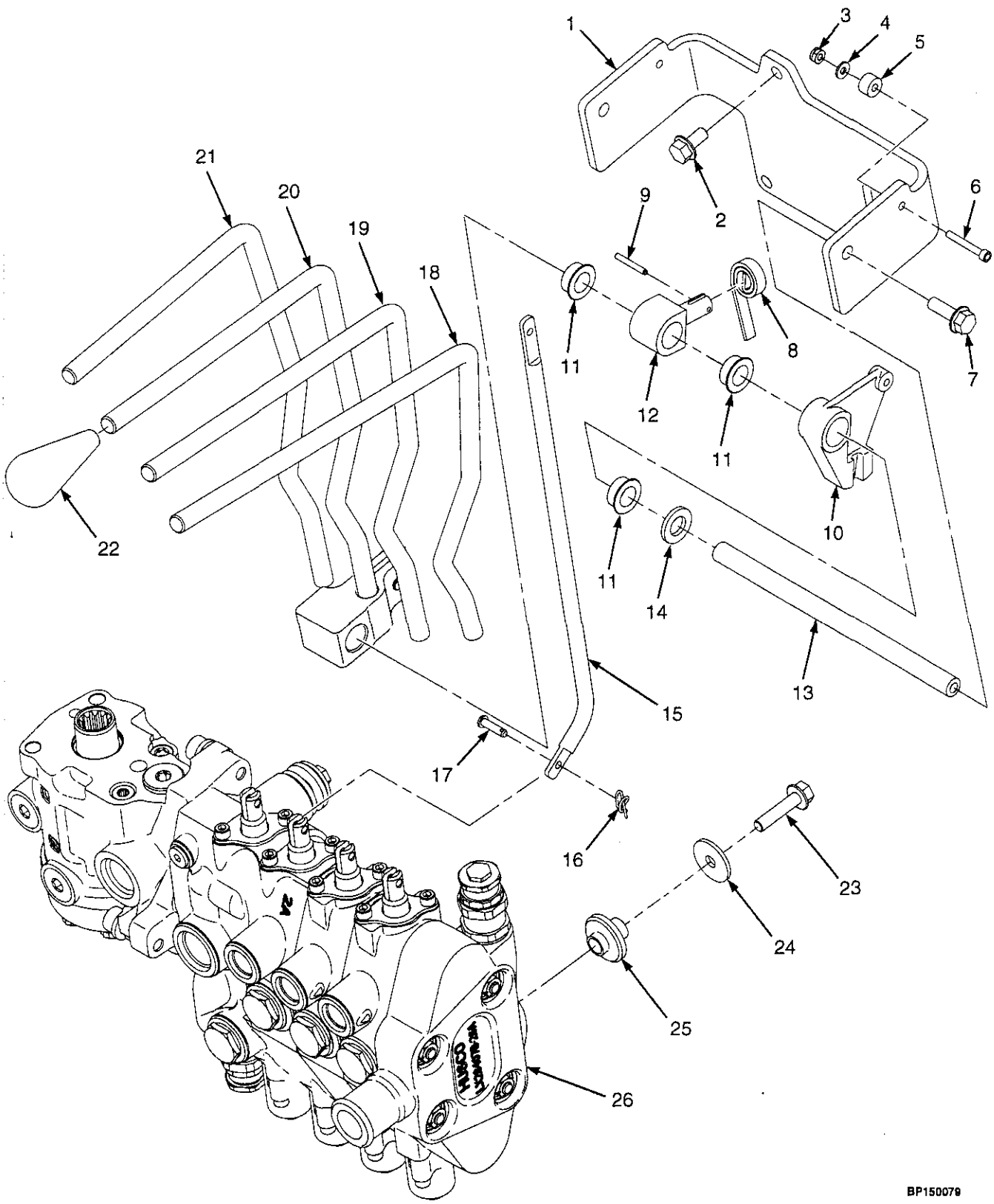

©2005 HYSTER COMPANY

HAND LEVERS
FOUR FUNCTION
WITH DETENTED LEVERS

ITEM	PART NO.	DESCRIPTION	QTY
1	1561164	Bracket	1
2	1527879	Capscrew	3
3	230882	Nut	1
4	197067	Washer	2
5	1528339	Spacer	1
6	18094	Capscrew	1
7	1583611	Capscrew	2
8	175861	Spring	1
9	302428	Pin	1
10	1542546	Lever	2
11	1564747	Bushing	12
12	306113	Pin (Selector)	1
13	1528329	Pivot Shaft	1
14	320161	Washer	2
15	1517394	Link	4
16	1517361	Cotter Pin	8
17	309109	Rod End Pin	8
18	1517378	Hand Lever (Auxiliary Two And Three)	1
19	1517358	Hand Lever (Auxiliary One)	1
20	1517357	Hand Lever (Tilt)	1
21	1517356	Hand Lever (Lift)	1
22	1517395	Knob	4
23	1586627	Capscrew	3
24	1346752	Washer	3
25	2063991	Isolator	3
26	2064897	Control Valve Assembly (Manual) (H2.0-3.0FT) (☞ Figure 9-9)	1
26	2064901	Control Valve Assembly (Manual) (H3.5FT) (☞ Figure 9-9)	1

©2005 HYSTER COMPANY

HAND LEVERS (Figure 9-8)
FOUR FUNCTION
WITHOUT DETENTED LEVERS

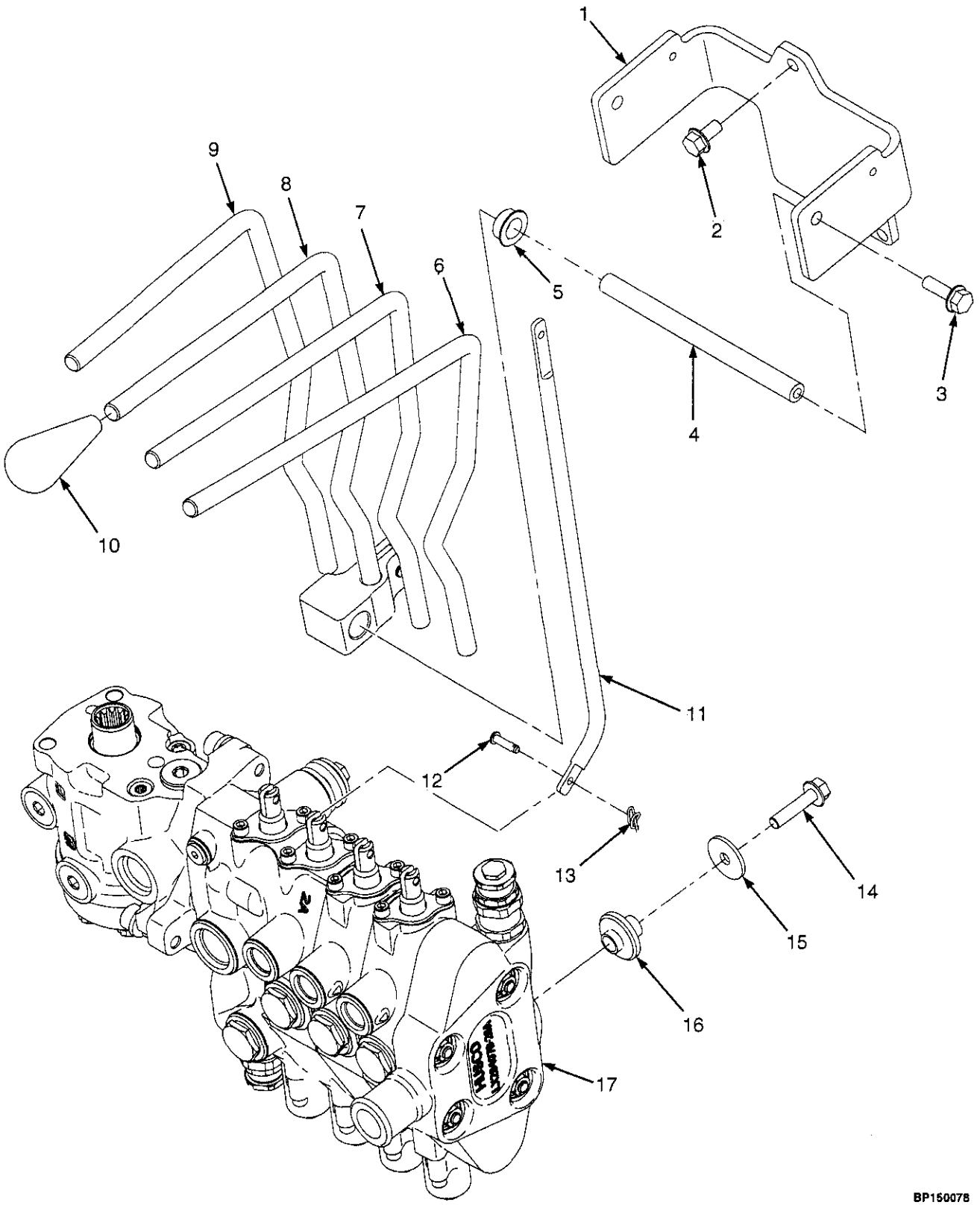

©2005 HYSTER COMPANY

HAND LEVERS
FOUR FUNCTION
WITHOUT DETENTED LEVERS

ITEM	PART NO.	DESCRIPTION	QTY
1	1561163	Bracket	1
2	1527879	Capscrew	3
3	1583611	Capscrew	2
4	1528328	Pivot Shaft	1
5	1564747	Bushing	8
6	1517359	Hand Lever (Auxiliary Two)	1
7	1517358	Hand Lever (Auxiliary One)	1
8	1517357	Hand Lever (Tilt)	1
9	1517356	Hand Lever (Lift)	1
10	1517395	Knob	4
11	1517394	Link	4
12	309109	Rod End Pin	8
13	1517361	Cotter Pin	8
14	1586627	Capscrew	3
15	1346752	Washer	3
16	2063991	Isolator	3
17	2064897	Control Valve Assembly (Manual) (H2.0-3.0FT) (☞ Figure 9-9)	1
17	2064901	Control Valve Assembly (Manual) (H3.5FT) (☞ Figure 9-9)	1

©2005 HYSTER COMPANY

CONTROL VALVE ASSEMBLY (Figure 9-9)
MANUAL CONTROL
THREE AND FOUR FUNCTION

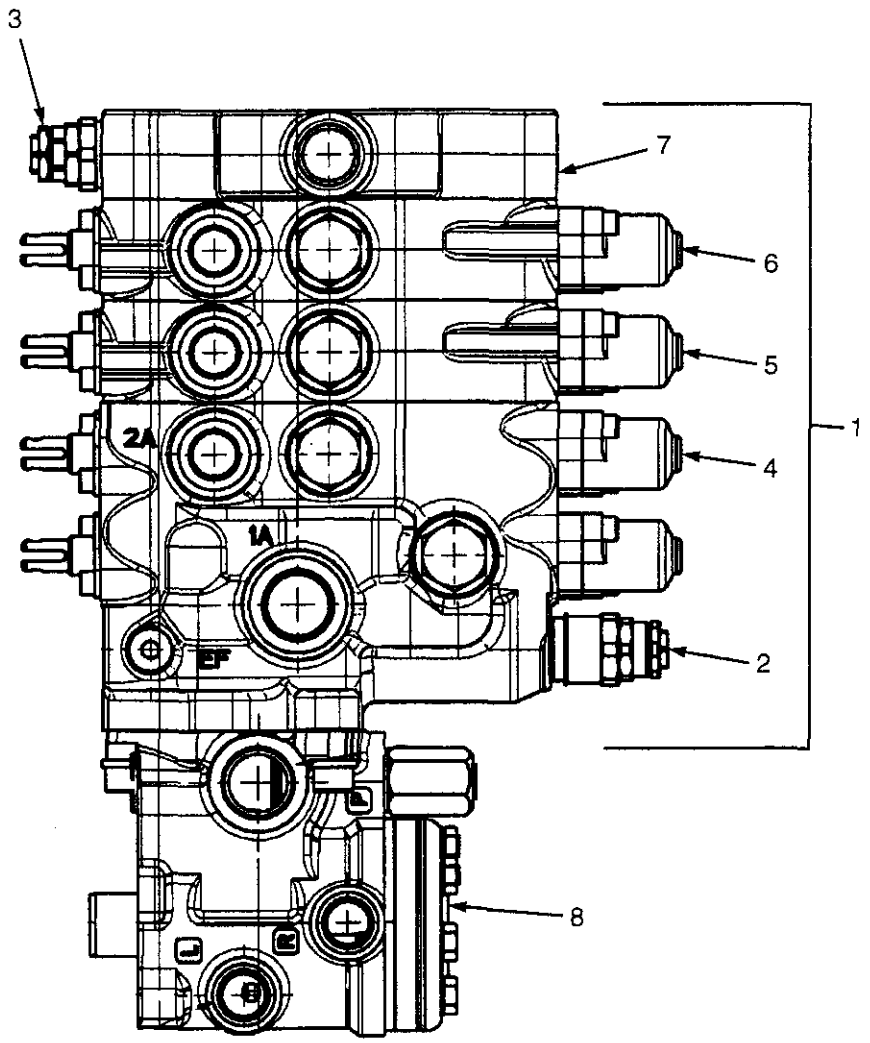

BP140045

©2005 HYSTER COMPANY

CONTROL VALVE ASSEMBLY
MANUAL CONTROL
THREE AND FOUR FUNCTION

KEY:
A: H2.0-3.0FT
B: H3.5FT

ITEM	PART NO.	DESCRIPTION	QTY A	QTY B
	2064895	Control Valve Assembly (Manual) (3 Function)	1	..
	2064897	Control Valve Assembly (Manual) (Four Function)	1	..
	2064899	Control Valve Assembly (Manual) (Three Function)	..	1
	2064901	Control Valve Assembly (Manual) (Four Function)	..	1
1	2064885	Hydraulic Control Valve (Three Function)	1	..
1	2064886	Hydraulic Control Valve (Four Function)	1	..
1	2064887	Hydraulic Control Valve (Three Function)	..	1
1	2064888	Hydraulic Control Valve (Four Function)	..	1
2	1578747	Relief Valve (3100 PSI Main Relief)	1	..
2	1578748	Relief Valve (3400 PSI Main Relief)	..	1
2	1580097	Seal and Spring Kit	1	1
3	1578707	Valve (Secondary Relief)	1	1
3	1580131	Seal and Spring Kit	1	1
4	1578743	Valve Assembly (Lift and Tilt) (☞ Figure 9-10)	1	1
5	1578744	Auxiliary One Section (Three Function) (☞ Figure 9-11)	1	1
6	1578745	Auxiliary Two Section (Four Function) (☞ Figure 9-11)	1	1
7	1578746	Outlet Section (☞ Figure 9-12)	1	1
8	2063117	Steering Control Unit (☞ Figure 7-3)	1	..
8	2056869	Steering Control Unit (☞ Figure 7-3)	..	1
8	1579908	Seal Kit	1	1
	1580146	Seal Kit (Three Function)	1	1
	1580148	Seal Kit (Four Function)	1	1

©2005 HYSTER COMPANY

VALVE ASSEMBLY, LIFT AND TILT (Figure 9-10)
MANUAL CONTROL VALVE
THREE AND FOUR FUNCTION

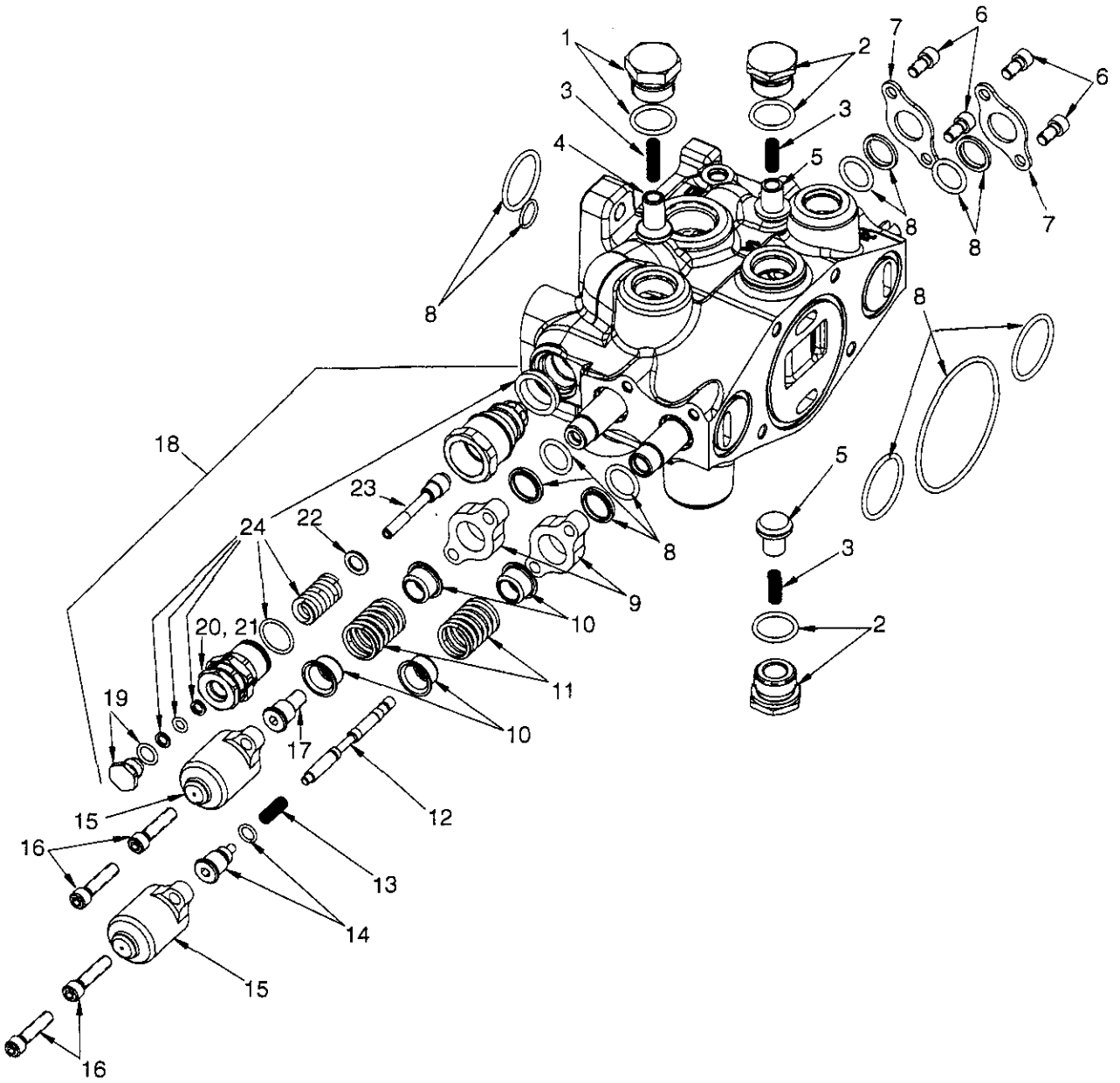

BP140046

©2005 HYSTER COMPANY

VALVE ASSEMBLY, LIFT AND TILT
MANUAL CONTROL VALVE
THREE AND FOUR FUNCTION

ITEM	PART NO.	DESCRIPTION	QTY
	1578743	Valve Assembly (Lift and Tilt)	1
1	1578713	Plug Set	2
2	1578940	Plug	1
3	77442	Spring	3
4	1578943	Poppet	1
5	77443	Poppet	2
6	16706	Screw	4
7	188515	Seal Plate	2
8	1580133	Seal Kit	1
9	. . . . .	Seal Plate	2
10	320289	Spring Seat	2
11	1581860	Spring	2
12	1581861	Piston	1
13	341462	Spring	1
14	386015	Spool End	1
15	1560681	Cap	2
16	1578705	Capscrew	4
17	1581859	Spool End	1
18	1578747	Relief Valve (3100 PSI Main Relief) (H2.0-3.0FT)	1
18	1578748	Relief Valve (3400 PSI Main Relief) (H3.5FT)	1
19	. . . . .	Plug	1
20	. . . . .	Screw	1
21	. . . . .	Nut	1
22	. . . . .	Washer	1
23	. . . . .	Poppet	1
24	1580097	Seal and Spring Kit (H2.0-3.0FT)	1
24	1580131	Seal and Spring Kit (H3.5FT)	1

©2005 HYSTER COMPANY

AUXILIARY ONE AND TWO (Figure 9-11)
MANUAL CONTROL VALVE
THREE AND FOUR FUNCTION

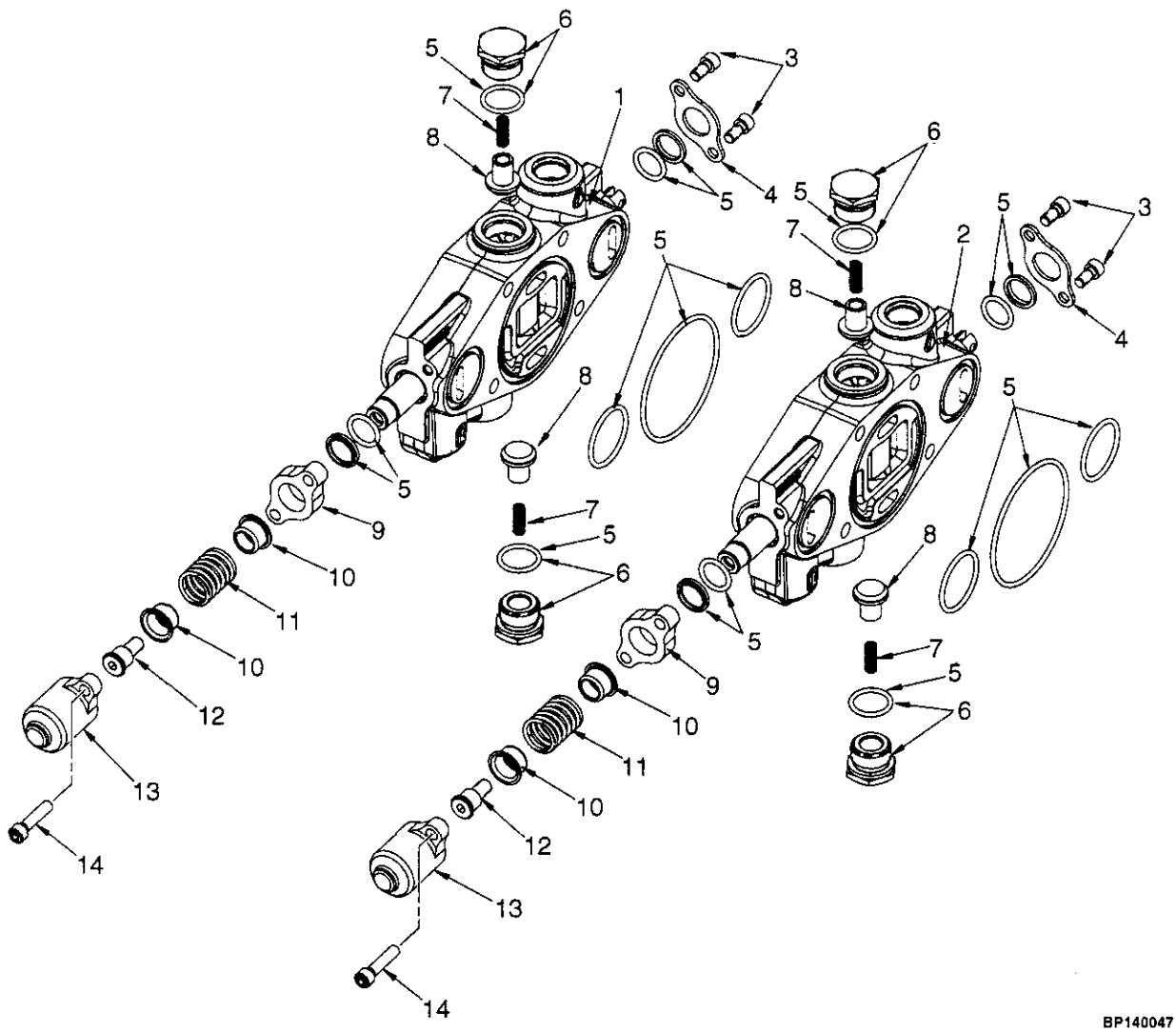

©2005 HYSTER COMPANY

AUXILIARY ONE AND TWO
MANUAL CONTROL VALVE
THREE AND FOUR FUNCTION

KEY:
A: Three Function
B: Four Function

ITEM	PART NO.	DESCRIPTION	QTY A	QTY B
1	1578744	Auxiliary One Section	1	1
2	1578745	Auxiliary Two Section	..	1
3	16706	Screw	2	2
4	188515	Seal Plate	1	1
5	1580147	Seal Kit	1	1
6	1578713	Plug Set	2	2
6	77441	Plug	2	2
7	77442	Spring	2	2
8	77443	Poppet	2	2
9	. . . . .	Seal Plate	1	1
10	320289	Spring Seat	1	1
11	1581860	Spring	1	1
12	1581859	Spool End	1	1
13	1560681	Cap	1	1
14	1578705	Capscrew	2	4

©2005 HYSTER COMPANY

OUTLET SECTION (Figure 9-12)
MANUAL CONTROL VALVE
THREE AND FOUR FUNCTION

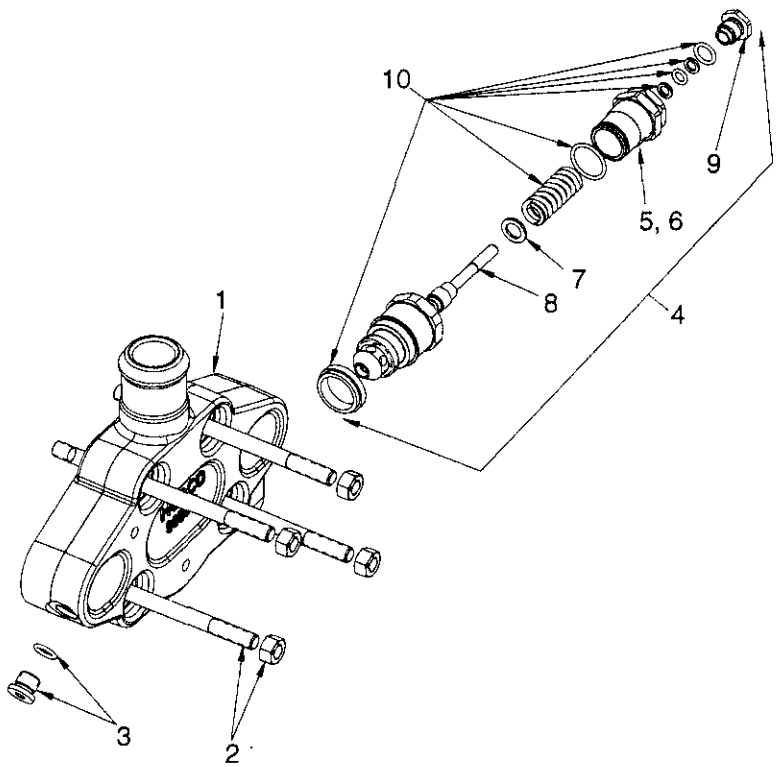

BP140048

ITEM	PART NO.	DESCRIPTION	QTY
1	1578746	Outlet Section	1
2	1580155	Tie Rod Kit (Three Function)	1
2	1580156	Tie Rod Kit (Four Function)	1
2	15055	Nut	4
3	1578712	Plug Assembly	1
3	204128	Plug	1
4	1578707	Valve (Secondary Relief)	1
5	. . . . .	Nut	1
6	. . . . .	Screw	1
7	. . . . .	Washer	1
8	. . . . .	Poppet	1
9	. . . . .	Plug	1
10	1580131	Seal and Spring Kit	1

©2005 HYSTER COMPANY

NOTES

CONTROL VALVE ASSEMBLY (Figure 9-13)
ELECTRONIC CONTROL
THREE AND FOUR FUNCTION

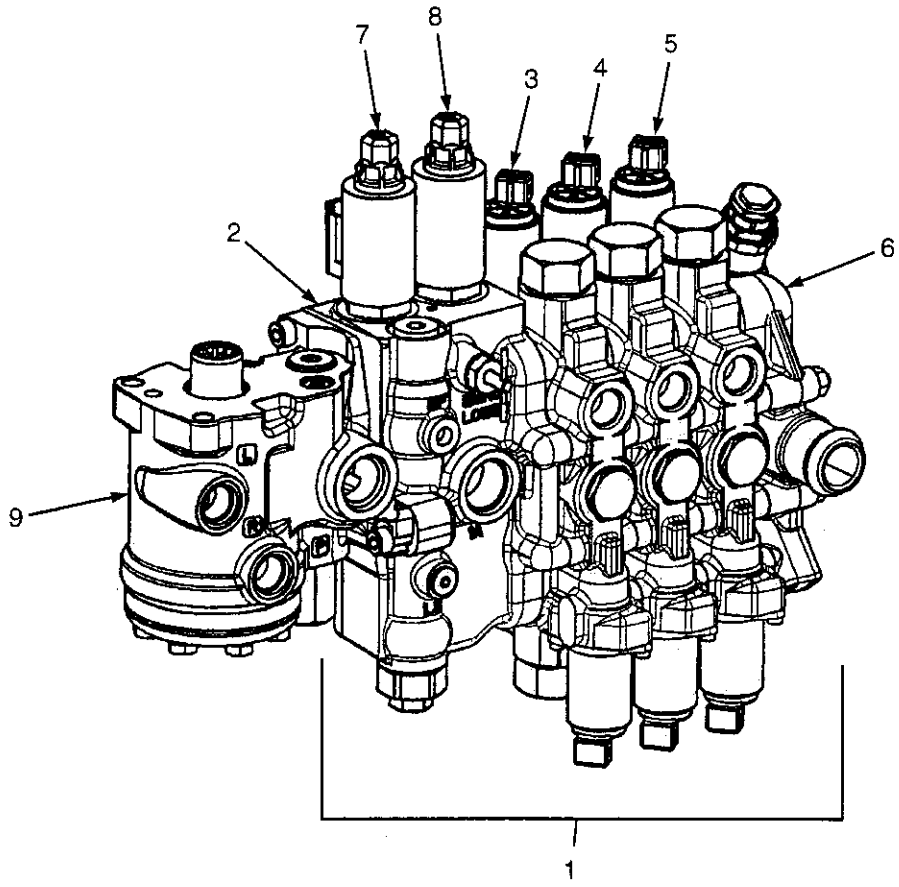

BP140053

©2005 HYSTER COMPANY

CONTROL VALVE ASSEMBLY
ELECTRONIC CONTROL
THREE AND FOUR FUNCTION

KEY:
A: H2.0-3.0FT
B: H3.5FT

ITEM		PART NO.	DESCRIPTION	QTY A	QTY B
	c	2064848	Control Valve Assembly	1	..
	c	2064851	Control Valve Assembly	..	1
	a	2064859	Control Valve Assembly	1	..
	a	2064862	Control Valve Assembly	..	1
1	c	2064845	Control Valve	1	..
1	c	2064849	Control Valve	..	1
1	a	2064857	Control Valve	1	..
1	a	2064860	Control Valve	..	1
2		1578701	Valve Body Assembly (Lift and Lower) (☞ Figure 9-14)	1	..
2		1578700	Valve Body Assembly (Lift and Lower) (☞ Figure 9-14)	..	1
3		1578702	Tilt Section (☞ Figure 9-17)	1	1
4	c	1578703	Auxiliary One Section (☞ Figure 9-15)	1	1
5	a	1578741	Auxiliary Two Section (☞ Figure 9-16)	1	1
6		1578704	Outlet Section (☞ Figure 9-18)	1	1
7		1590113	Poppet Valve Assembly (Lift) (☞ Figure 9-19)	1	1
8		1590114	Poppet Valve Assembly (Lower) (☞ Figure 9-19)	1	1
9		2063117	Steering Control Unit (☞ Figure 7-3)	1	..
9		2063118	Steering Control Unit (☞ Figure 7-3)	..	1
	b	1579908	Seal Kit	1	1
	b	2063991	Isolator	3	3
	b	1586627	Capscrew	3	3
	b	1346752	Washer	3	3

FOOTNOTES:
a Four Function
b Not Illustrated
c Three Function

©2005 HYSTER COMPANY

VALVE ASSEMBLY, LIFT AND LOWER (Figure 9-14)
ELECTRONIC CONTROL VALVE
THREE AND FOUR FUNCTION

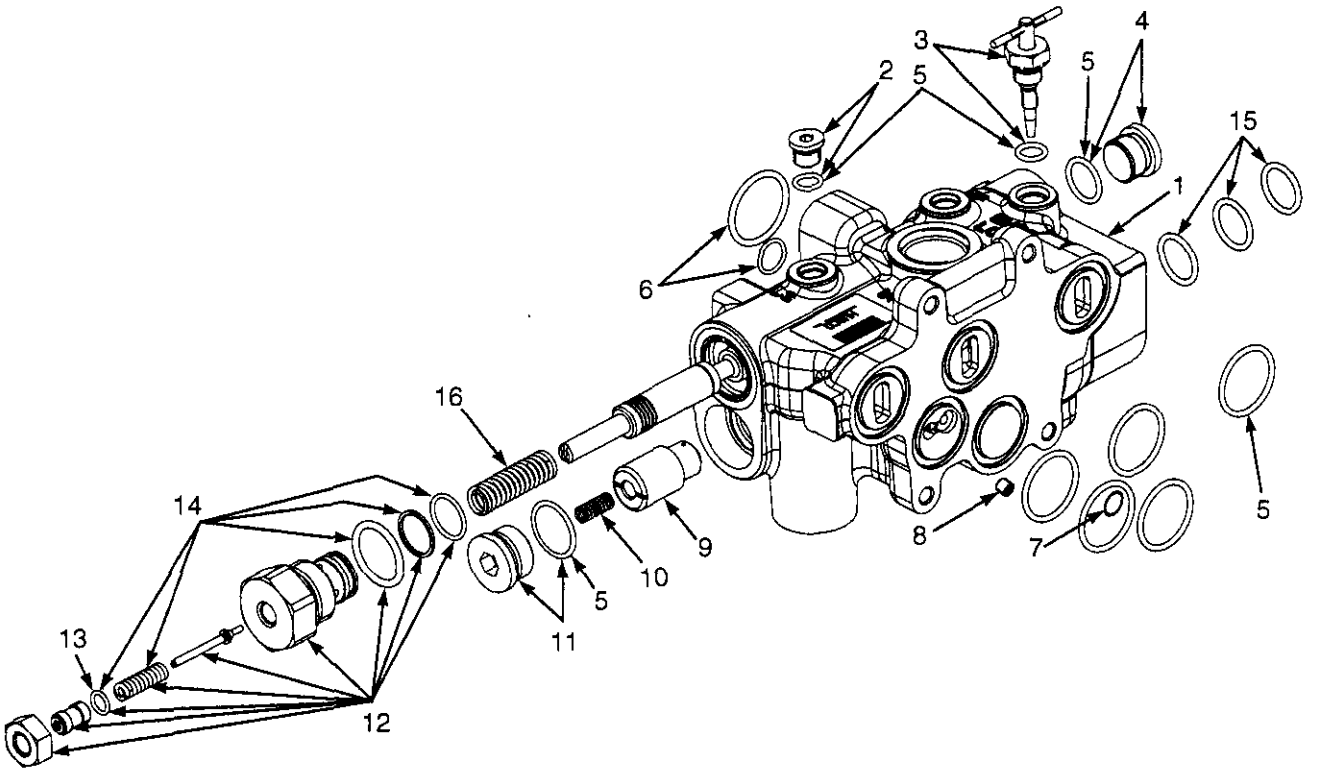

HP140018

©2005 HYSTER COMPANY

VALVE ASSEMBLY, LIFT AND LOWER
ELECTRONIC CONTROL VALVE
THREE AND FOUR FUNCTION

ITEM	PART NO.	DESCRIPTION	QTY
1	1578701	Valve Body Assembly (Lift and Lower) (H2.0-3.0FT)	1
1	1578700	Valve Body Assembly (Lift and Lower) (H3.5FT)	1
2	1578712	Plug Assembly	1
2	204128	Plug	1
3	1581862	Manual Lower Assembly Kit	1
4	1569602	Plug	1
5	1578904	Seal Kit	1
6	1578911	Seal Kit (Steering Control Unit Interface)	1
7	1578875	Shuttle	1
8	1578888	Set Screw	1
9	1586280	Poppet	1
10	1578876	Spring	1
11	1578714	Plug	1
12	1578706	Relief Valve (Main) (H2.0-3.0FT)	1
12	1578753	Relief Valve (Main) (H3.5FT)	1
12	1580749	Adjusting Screw	1
13	16480	O-Ring	1
14	1580132	Seal and Spring Kit	1
15	1586279	Seal Kit	AR
16	1578881	Spring	1

©2005 HYSTER COMPANY

AUXILIARY ONE SECTION (Figure 9-15)
ELECTRONIC CONTROL
THREE AND FOUR FUNCTION

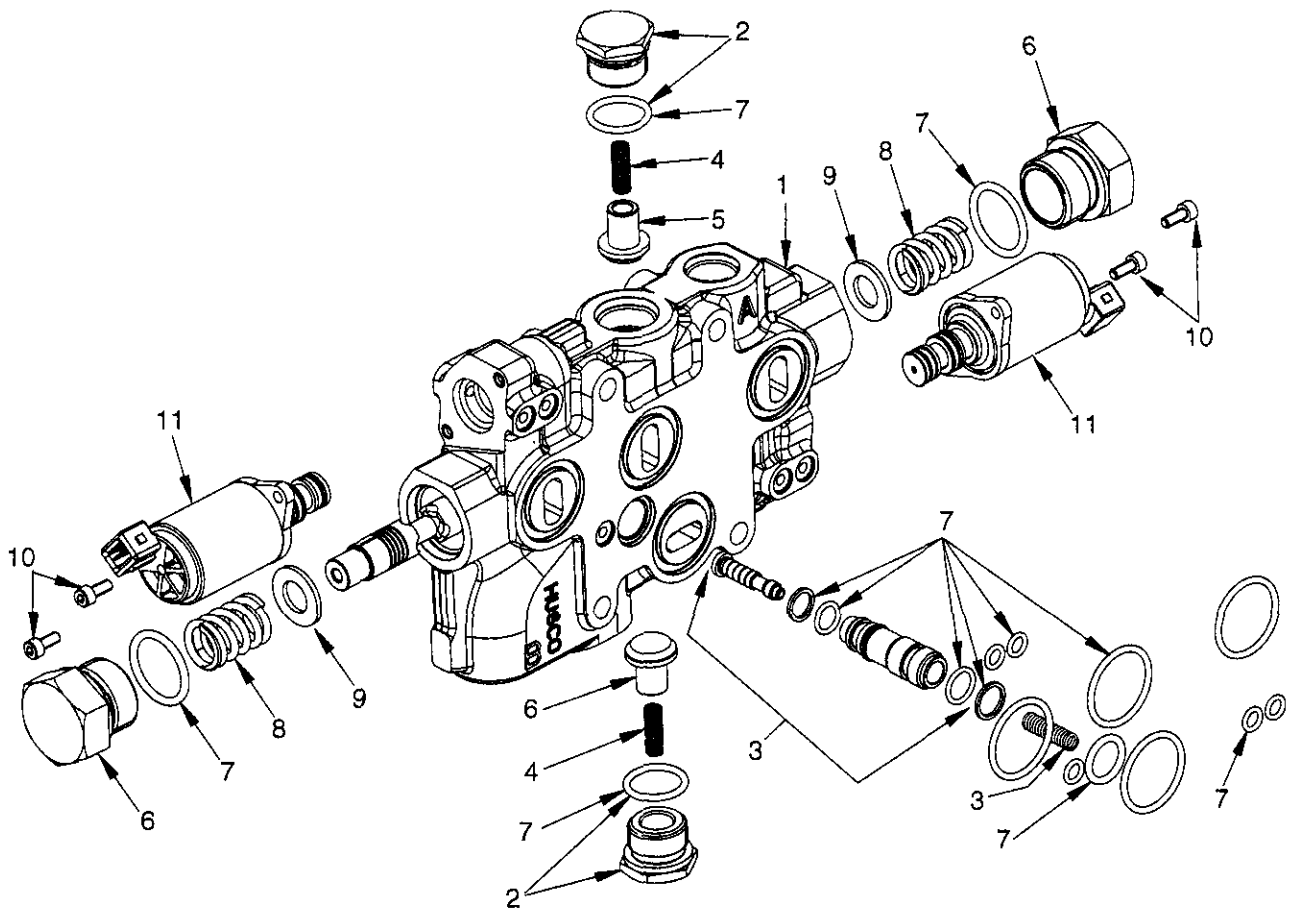

HP140019

©2005 HYSTER COMPANY

AUXILIARY ONE SECTION
ELECTRONIC CONTROL
THREE AND FOUR FUNCTION

ITEM	PART NO.	DESCRIPTION	QTY
1	1578703	Auxiliary One Section	1
2	1578713	Plug Set	2
2	77441	Plug	2
3	1578718	Anti-Stall Valve Kit	1
3	1578886	Spring	1
3	266519	O-Ring	2
4	77442	Spring	2
5	77443	Poppet	2
6	1578889	Plug Set	2
7	1578906	Seal Kit (Auxiliary One Section)	1
8	1578882	Spring	2
9	1578883	Washer	2
10	1578878	Capscrew	4
11	1578711	Solenoid	2
	a 1578912	Seal Kit	1

FOOTNOTES:
a Not Illustrated

©2005 HYSTER COMPANY

AUXILIARY TWO SECTION (Figure 9-16)
ELECTRONIC CONTROL
FOUR FUNCTION

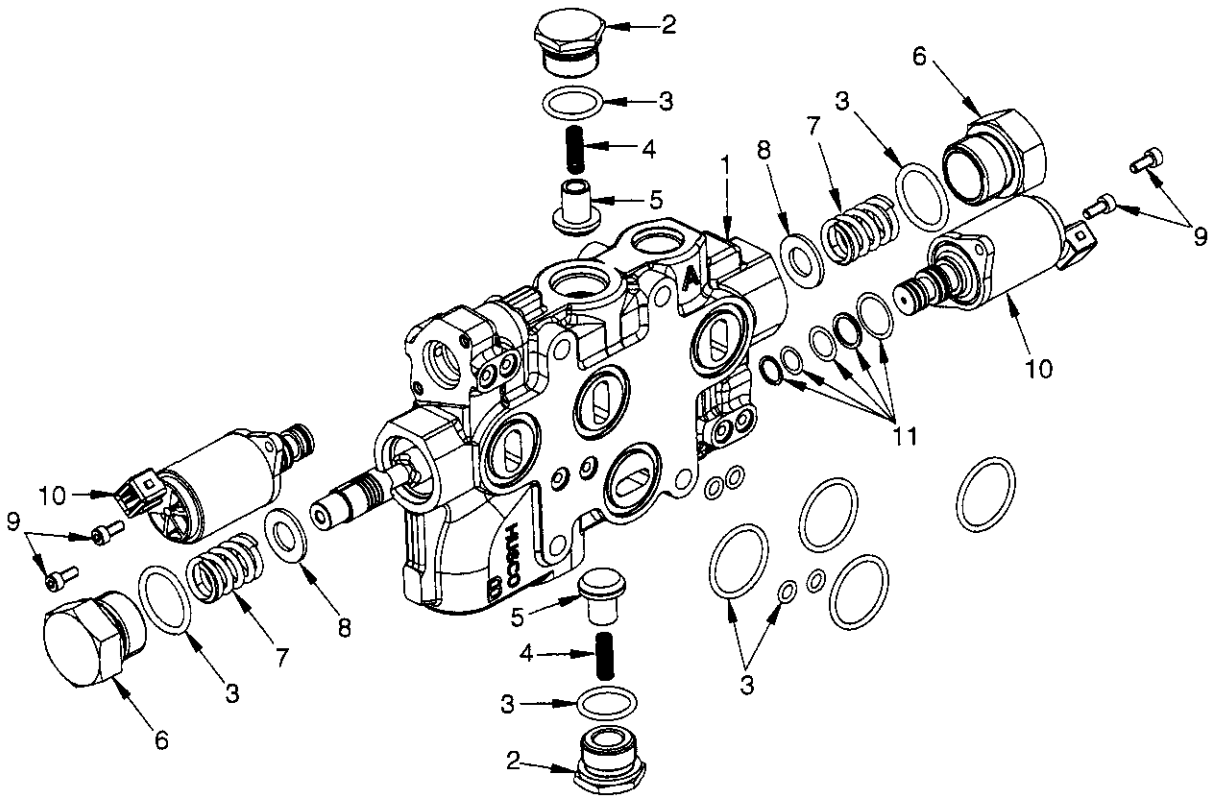

©2005 HYSTER COMPANY

AUXILIARY TWO SECTION
ELECTRONIC CONTROL
FOUR FUNCTION

ITEM	PART NO.	DESCRIPTION	QTY
1	1578741	Auxiliary Two Section	1
2	1578713	Plug Set	2
2	77441	Plug	2
3	1578907	Seal Kit	1
4	77442	Spring	2
5	77443	Poppet	2
6	1578889	Plug Set	2
7	1578882	Spring	2
8	1578883	Washer	2
9	1578878	Capscrew	4
10	1578711	Solenoid	2
11	1578912	Seal Kit	1

©2005 HYSTER COMPANY

TILT SECTION (Figure 9-17)
ELECTRONIC CONTROL
THREE AND FOUR FUNCTION

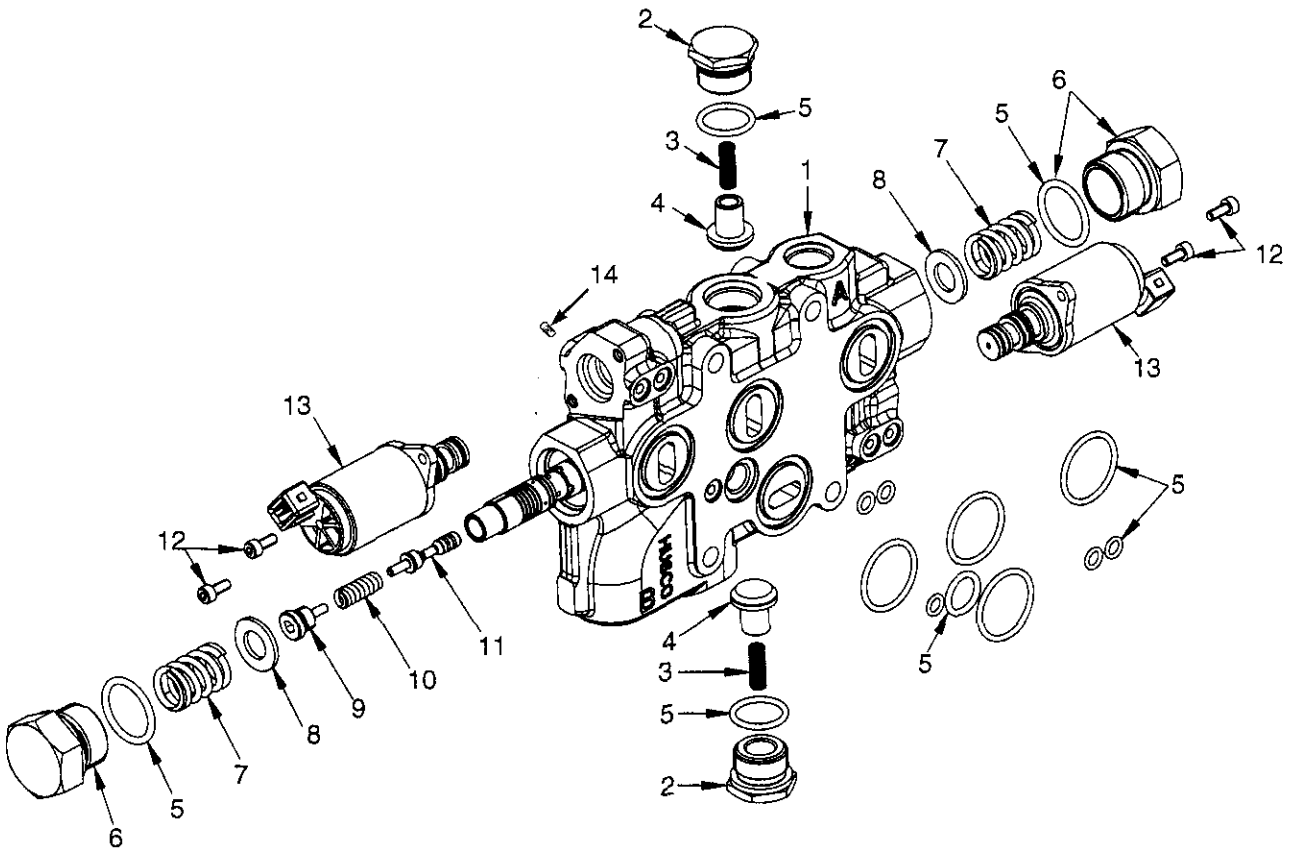

BP140054

©2005 HYSTER COMPANY

TILT SECTION
ELECTRONIC CONTROL
THREE AND FOUR FUNCTION

ITEM	PART NO.	DESCRIPTION	QTY
1	1578702	Tilt Section	1
2	1578713	Plug Set	2
3	77442	Spring	2
4	77443	Poppet	2
5	1578905	Seal Kit	1
6	1578889	Plug Set	2
7	1578882	Spring	2
8	1578883	Washer	2
9	. . . . .	Spool End	1
10	. . . . .	Spring	1
11	. . . . .	Piston	1
12	1578878	Capscrew	4
13	1578711	Solenoid	2
13	1578912	Seal Kit	1
14	1578887	Set Screw	1

©2005 HYSTER COMPANY

OUTLET SECTION (Figure 9-18)
ELECTRONIC CONTROL
THREE AND FOUR FUNCTION

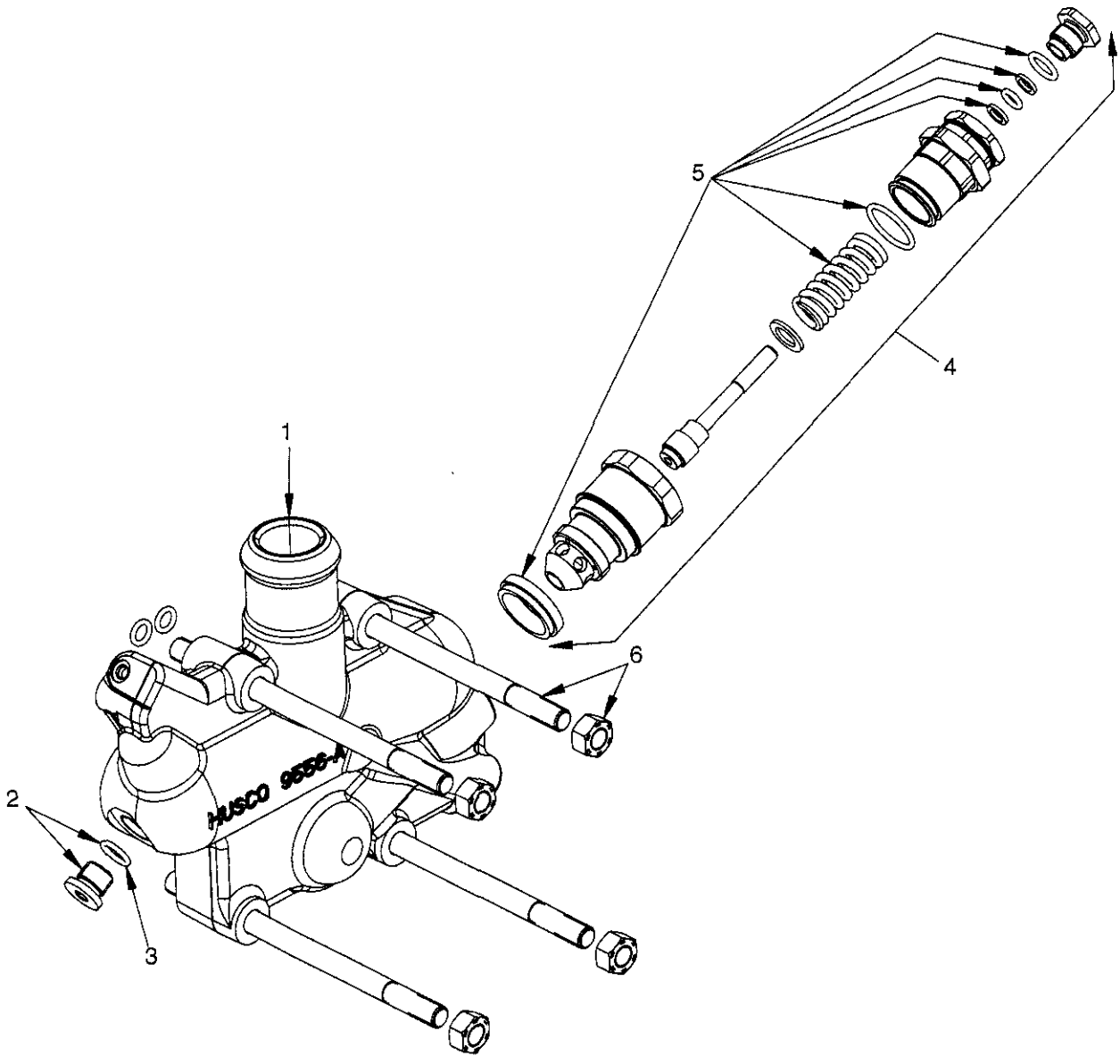

BP140058

©2005 HYSTER COMPANY

OUTLET SECTION
ELECTRONIC CONTROL
THREE AND FOUR FUNCTION

ITEM	PART NO.	DESCRIPTION	QTY
1	1578704	Outlet Section	1
2	1578712	Plug Assembly	1
2	204128	Plug	1
3	1578904	Seal Kit	1
4	1578707	Valve (Secondary Relief)	1
5	1580131	Seal and Spring Kit	1
6	1578715	Tie Rod Kit (Three Function)	1
6	1580151	Tie Rod Kit (Four Function)	1
6	15055	Nut	4

©2005 HYSTER COMPANY

ELECTRO HYDRAULIC POPPET VALVE (Figure 9-19)
ELECTRONIC CONTROL
LIFT AND LOWER

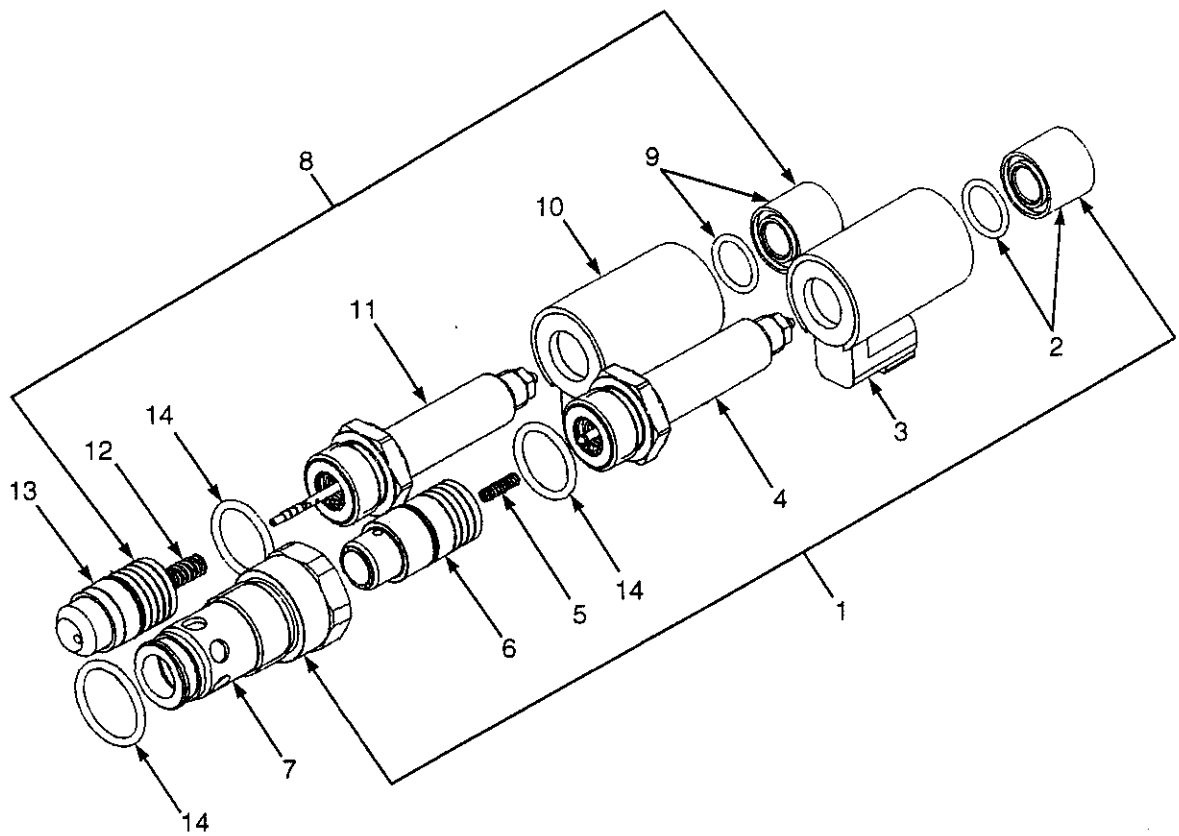

BP140055

©2005 HYSTER COMPANY

ELECTRO HYDRAULIC POPPET VALVE
ELECTRONIC CONTROL
LIFT AND LOWER

ITEM	PART NO.	DESCRIPTION	QTY
1	1590114	Poppet Valve Assembly (Lower)	1
2	1586018	Coil Nut	1
3	1578710	Coil	1
4	1578918	Tube (Solenoid)	1
5	1578934	Spring	1
6	1586021	Poppet	1
7	1586020	Sleeve	1
8	1590113	Poppet Valve Assembly (Lift)	1
9	1586018	Coil Nut	1
10	1578710	Coil	1
11	1586019	Tube (Solenoid)	1
12	1586017	Spring	1
13	1586016	Poppet	1
14	1586279	Seal Kit	1

©2005 HYSTER COMPANY

TILT CYLINDER AND MAST INSTALLATION (Figure 9-20)

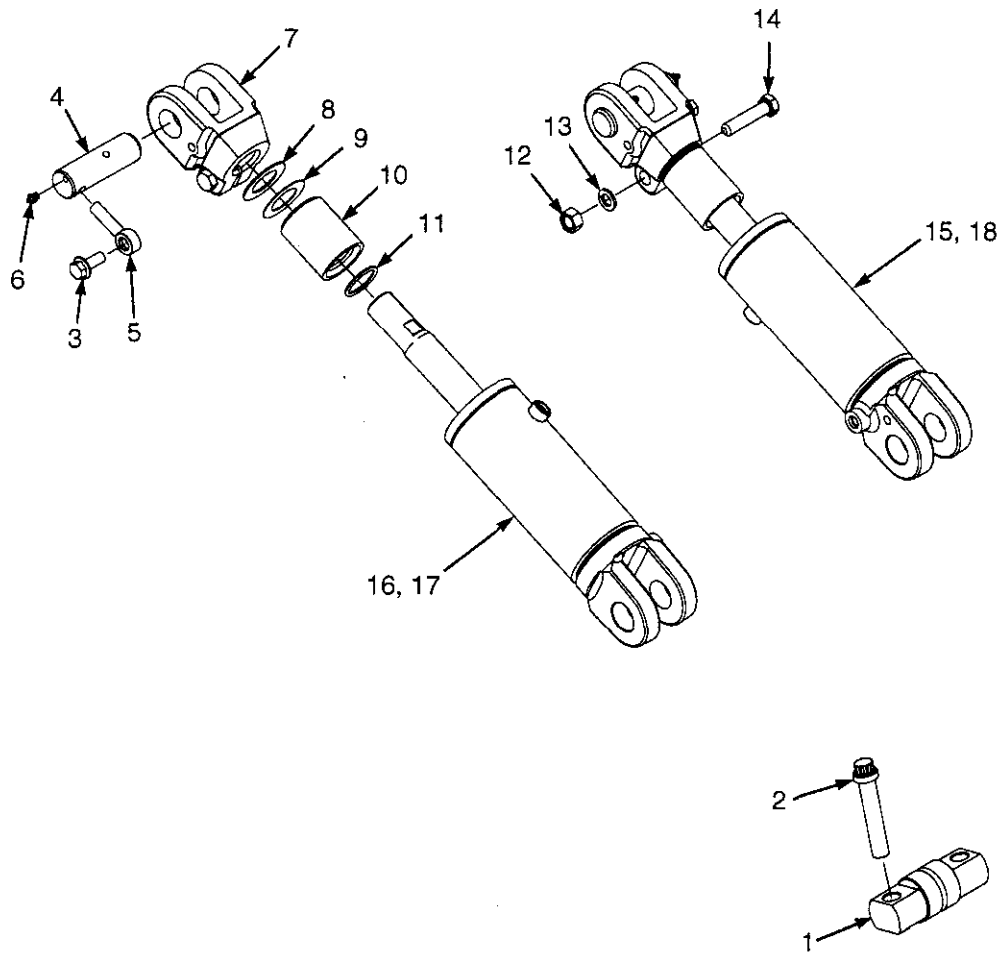

©2005 HYSTER COMPANY

TILT CYLINDER AND MAST INSTALLATION

KEY:
A: H2.0-2.5FT
B: H3.0-3.5FT

ITEM		PART NO.	DESCRIPTION	QTY A	QTY B
1		1514269	Pin	2	2
2		1520290	Bolt	4	4
3		1586013	Capscrew	2	2
4		1533493	Pin	2	2
5		1533494	Anchor Pin	2	2
6		16041	Lube Fitting	2	2
7	**bcd**	1544118	Rod End	2	..
7	**a**	1544120	Rod End	2	..
7	**bcd**	1544119	Rod End	..	2
7	**a**	1544121	Rod End	..	2
8	**cd**	134675	Shim	4	..
8	**cd**	142247	Shim	..	4
9	**cd**	1325119	Shim	4	..
9	**cd**	1325120	Shim	..	4
10	**d**	1544122	Tilt Spacer	2	..
10	**c**	192877	Tilt Spacer	2	..
10	**d**	1544123	Tilt Spacer	..	2
10	**c**	1544124	Tilt Spacer	..	2
11	**cd**	55434	O-Ring	4	..
11	**cd**	60563	O-Ring	..	4
12		1581848	Nut	2	2
13		1581564	Lockwasher	2	2
14		1597381	Capscrew	2	2
15		2069187	Tilt Cylinder (LH) (☞ Figure 9-21)	1	..
16		2069188	Tilt Cylinder (RH) (☞ Figure 9-21)	1	..
17		2069186	Tilt Cylinder (RH) (☞ Figure 9-22)	..	1
18		2069189	Tilt Cylinder (LH) (☞ Figure 9-22)	..	1

FOOTNOTES:
a 10° Forward/6° Back
b 6° Forward/10° Back
c 6° Forward/5° Back
d 6° Forward/6° Back

©2005 HYSTER COMPANY

TILT CYLINDERS (Figure 9-21)
H2.0-2.5FT

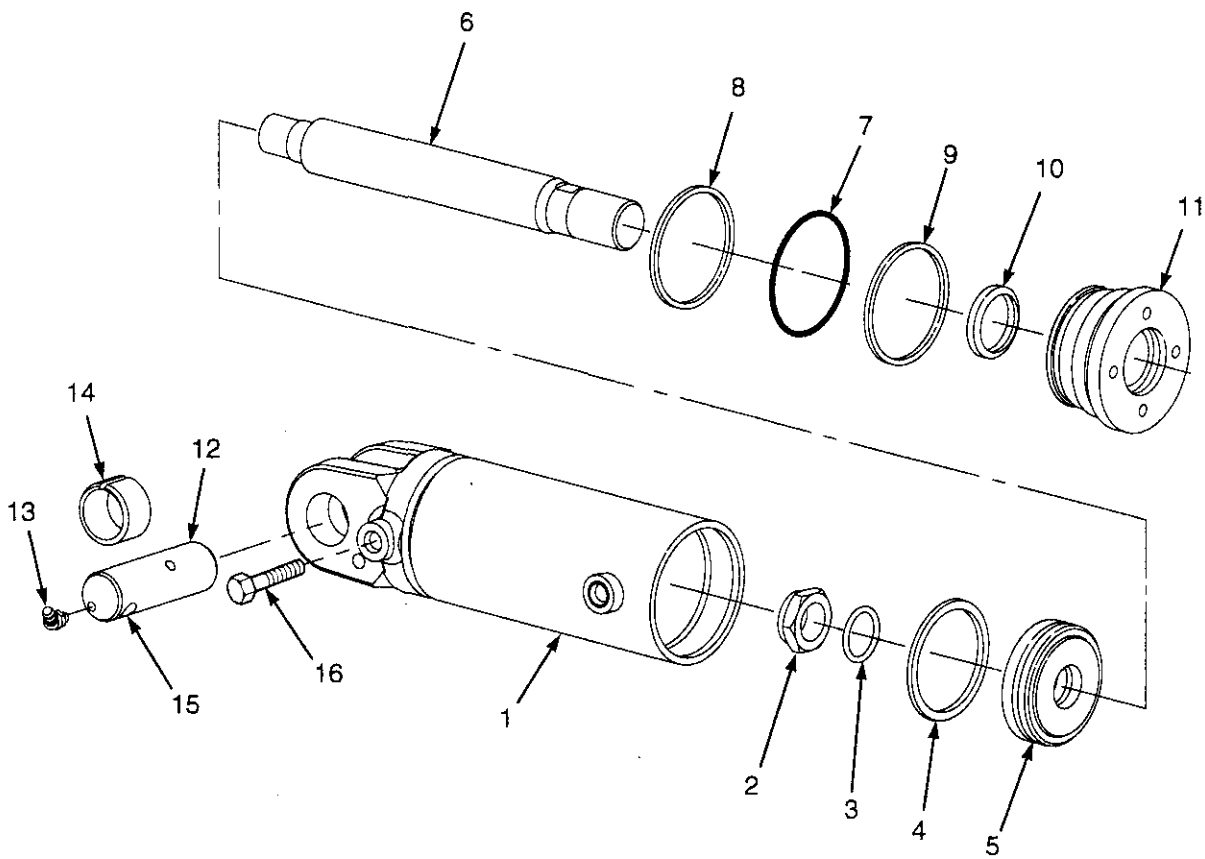

HP150974

©2005 HYSTER COMPANY

TILT CYLINDERS
H2.0-2.5FT

ITEM	PART NO.	DESCRIPTION	QTY
	2069187	Tilt Cylinder (LH)	1
	2069188	Tilt Cylinder (RH)	1
1	2076537	Shell	1
1	2076541	Shell	1
2	2302899	Nut	1
3	39374	O-Ring	1
4	2044370	Seal (Piston)	1
5	1338741	Piston	1
6	2076539	Rod	1
7	46388	O-Ring	1
8	154375	Back-Up Ring	1
9	1381082	Rod Seal	1
10	1383062	Wiper Ring	1
11	1338744	Gland	1
12	1533493	Pin	2
13	16040	Lube Fitting	2
14	300982	Bushing	2
15	1533494	Anchor Pin	1
16	1586013	Capscrew	1
	1492644	Seal Kit (Includes Items 3-4, 7-10)	1

©2005 HYSTER COMPANY

TILT CYLINDERS (Figure 9-22)
H3.0-3.5FT

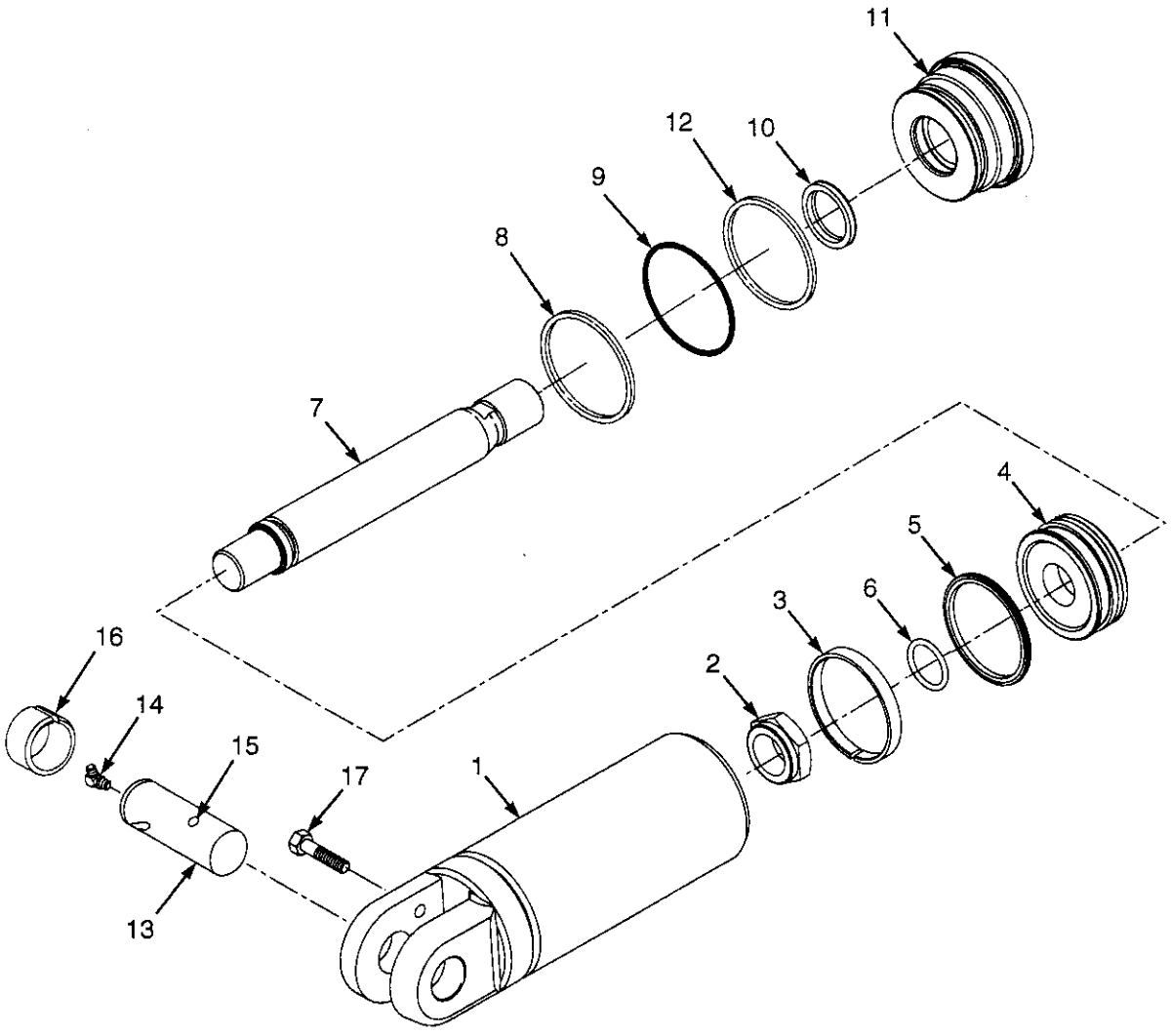

BP150082

©2005 HYSTER COMPANY

TILT CYLINDERS
H3.0-3.5FT

ITEM	PART NO.	DESCRIPTION	QTY
	2069186	Tilt Cylinder (RH)	1
	2069189	Tilt Cylinder (LH)	1
1	2076536	Shell	1
1	2076540	Shell	1
2	2070018	Nut	1
3	199852	Wear Ring	1
4	1381078	Piston	1
5	2044371	Piston Seal	1
6	237812	O-Ring	1
7	2076538	Rod	1
8	268619	O-Ring	1
9	147973	Back-Up Ring	1
10	1383063	Wiper Ring	1
11	1527520	Gland	1
12	1381083	Seal	1
13	1533493	Pin	1
14	16040	Lube Fitting	1
15	1533494	Anchor Pin	1
16	300982	Bushing	1
17	1586013	Capscrew	1
	1527719	Seal Kit (Includes Items 3, 5-6, 8-10, 12)	1

©2005 HYSTER COMPANY

NOTES

10 MAST-TWO STAGE LIMITED FREE-LIFT

SECTION 10
MAST-TWO STAGE LIMITED FREE-LIFT

DESCRIPTION	PAGE
CARRIAGE	
TWO STAGE LIMITED FREE-LIFT	10-14
HEADER HOSES	
TWO STAGE LIMITED FREE-LIFT	10-12
INNER MAST	
TWO STAGE LIMITED FREE-LIFT	10-4
MAIN LIFT	
TWO STAGE LIMITED FREE-LIFT	10-6
MAIN LIFT CYLINDERS	
TWO STAGE LIMITED FREE-LIFT	10-8
OUTER MAST	
TWO STAGE LIMITED FREE-LIFT	10-2

©2005 HYSTER COMPANY

OUTER MAST (Figure 10-1)
TWO STAGE LIMITED FREE-LIFT

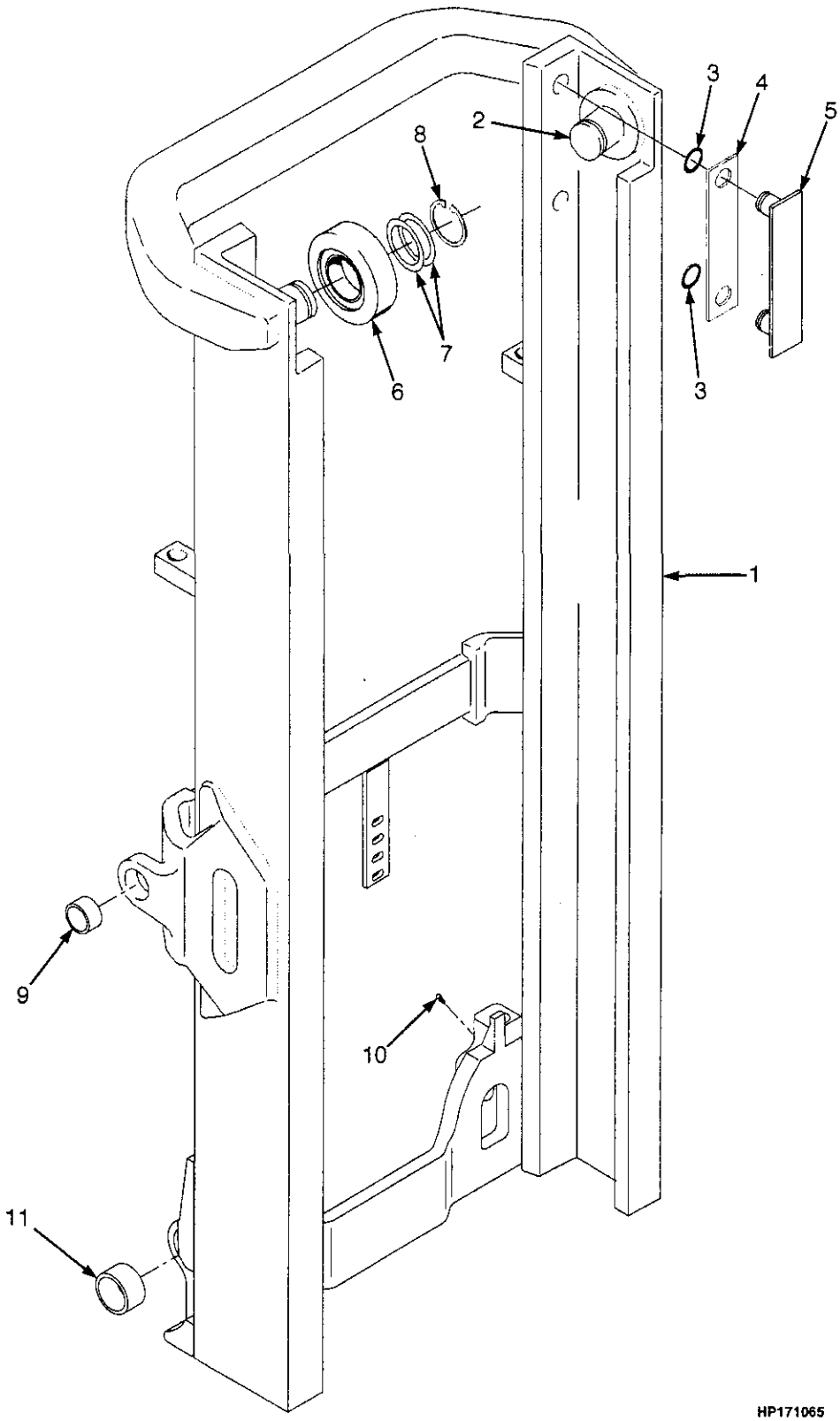

©2005 HYSTER COMPANY

OUTER MAST
TWO STAGE LIMITED FREE-LIFT

H2.0-2.5FT

ITEM	DESCRIPTION 1 2 3 4	LIFT HEIGHT TO BOTTOM OF FORKS			
		3252 mm	3752 mm	4292 mm	4792 mm
	Mast Group Number	D507 3252	D507 3752	D507 4292	D507 4792
1	Outer Mast	1524755	1524760	1524766	1524771

H3.0-3.5FT

ITEM	DESCRIPTION 1 2 3 4	LIFT HEIGHT TO BOTTOM OF FORKS			
		3059 mm	3559 mm	4059 mm	4559 mm
	Mast Group Number	D562 3059	D562 3559	D562 4059	D562 4559
1	Outer Mast	1524755	1524760	1524766	1524771

ITEM	PART NO.	DESCRIPTION	QTY
1	a	Outer Mast	1
2	1345216	Stubshaft	2
3	104506	O-Ring	4
4	131716	Shim (0,508 mm)	AR
5	215211	Bearing Strip	2
6	1333396	Load Roller (0,76 mm)	2
7	129387	Shim (0,508 mm)	AR
8	58901	Snap Ring	2
9	300982	Bushing	2
10	16001	Lube Fitting	2
11	1502811	Bushing	2

FOOTNOTES:
a Refer to Table

©2005 HYSTER COMPANY

INNER MAST (Figure 10-2)
TWO STAGE LIMITED FREE-LIFT

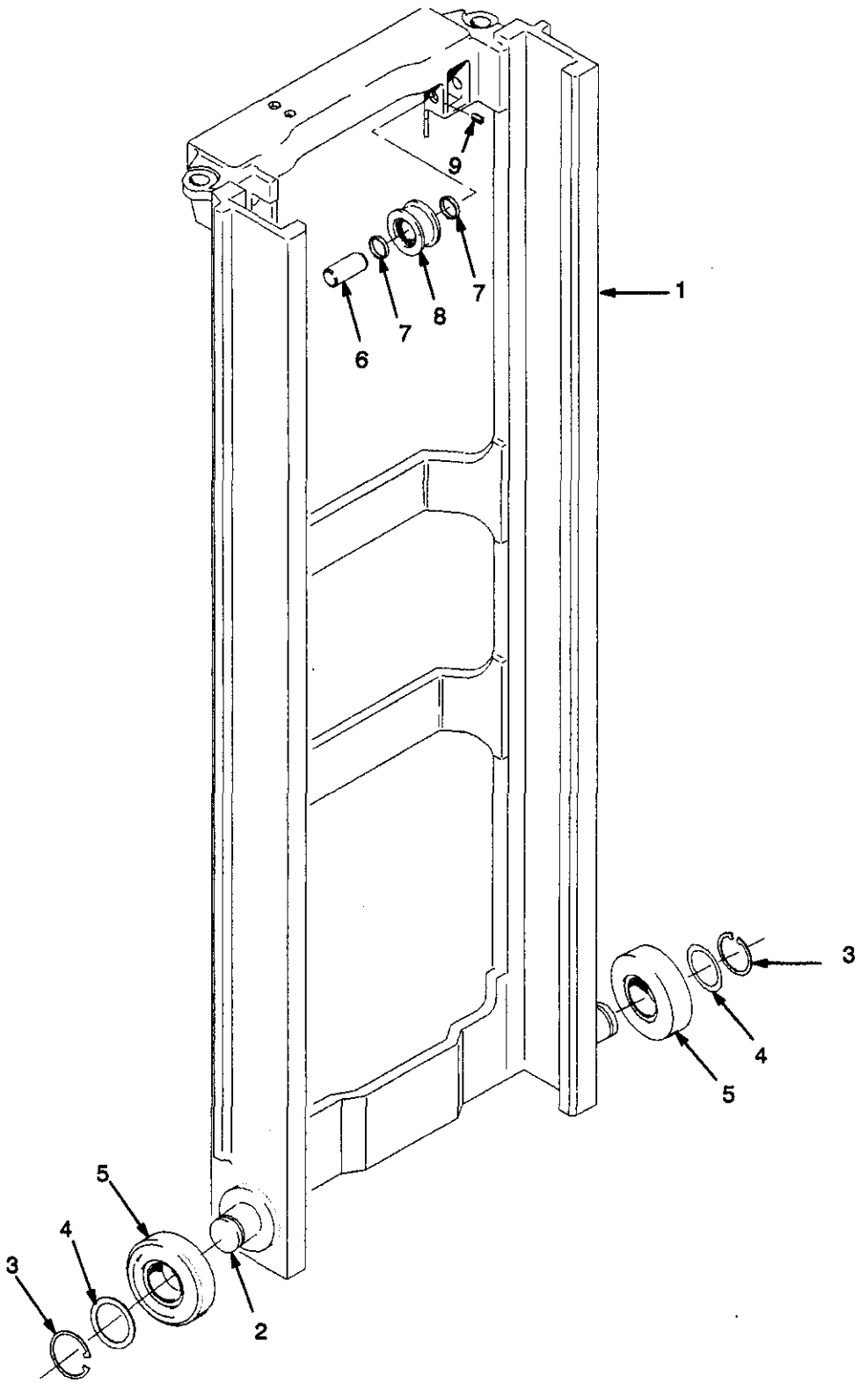

HP290008

©2005 HYSTER COMPANY

INNER MAST
TWO STAGE LIMITED FREE-LIFT

H2.0-2.5FT

ITEM	DESCRIPTION 1 2 3 4	LIFT HEIGHT TO BOTTOM OF FORKS			
		3252 mm	3752 mm	4292 mm	4792 mm
	Mast Group Number	D507 3252	D507 3752	D507 4292	D507 4792
1	Inner Mast	1524798	1524803	1524808	1524813

H3.0-3.5FT

ITEM	DESCRIPTION 1 2 3 4	LIFT HEIGHT TO BOTTOM OF FORKS			
		3059 mm	3559 mm	4059 mm	4559 mm
	Mast Group Number	D562 3059	D562 3559	D562 4059	D562 4559
1	Inner Mast	1524798	1524803	1524808	1524813

ITEM	PART NO.	DESCRIPTION	QTY
1	a	Inner Mast	1
2	1345216	Stubshaft	2
3	58901	Snap Ring	2
4	129387	Shim (0,508 mm)	AR
5	1333396	Load Roller	2
6	1368656	Pin	2
7	1378691	Spacer	4
8	1379684	Chain Sheave Assembly (H2.0-2.5FT)	2
8	1379685	Chain Sheave Assembly (H3.0-3.5FT)	2
8	1378698	Chain Sheave	1
8	1378694	Chain Sheave	1
8	37752	Snap Ring	1
8	1378699	Bearing	1
9	302462	Pin	2

FOOTNOTES:
a Refer to Table

©2005 HYSTER COMPANY

MAIN LIFT (Figure 10-3)
TWO STAGE LIMITED FREE-LIFT

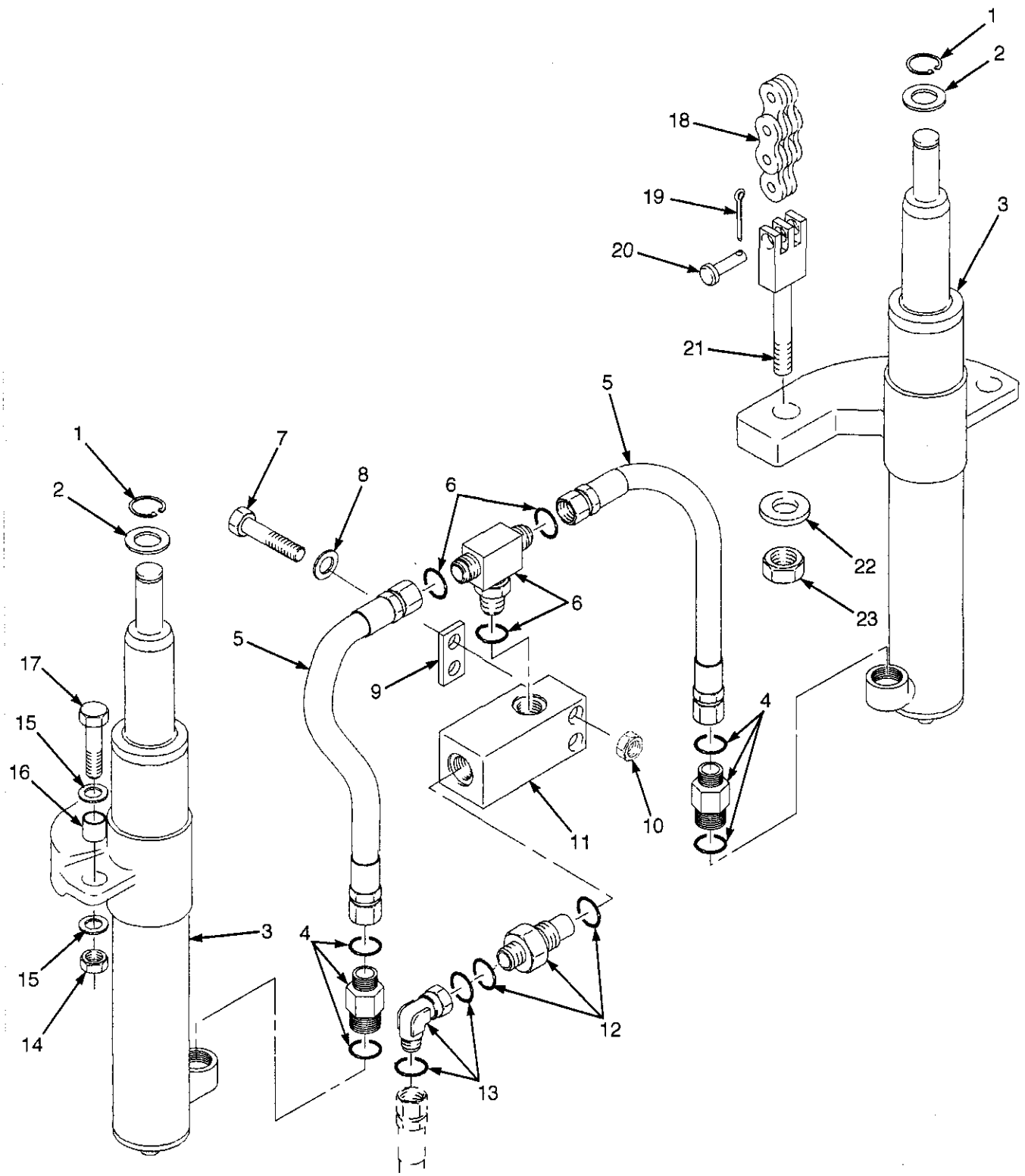

HP290003

©2005 HYSTER COMPANY

MAIN LIFT
TWO STAGE LIMITED FREE-LIFT

ITEM	PART NO.	DESCRIPTION	QTY
1	131358	Snap Ring	2
2	1333382	Washer (1.50 mm)	2
2	1354915	Washer (0,254 mm)	AR
2	1354916	Washer (0,762 mm)	AR
2	1354917	Washer (1,524 mm)	AR
3	. . . . .	Main Lift Cylinders (☞ Figure 10-4)	2
4	2062686	Velocity Fuse (H2.0-2.5FT)	2
4	2062687	Velocity Fuse (H3.0-3.5FT)	2
4	16485	O-Ring	2
4	252729	O-Ring	2
5	1481097	Hose	2
6	1532650	Fitting	1
6	252729	O-Ring	2
6	16485	O-Ring	1
7	1581836	Capscrew	2
8	1581566	Nut	2
9	1354913	Spacer	1
10	1581566	Nut	2
11	1379687	Housing (Lowering Control)	1
12	2062651	Valve (Lowering Control) (H2.0-2.5FT)	1
12	2062652	Valve (Lowering Control) (H3.0-3.5FT)	1
12	16982	O-Ring	1
12	252729	O-Ring	1
13	1486773	Fitting	1
13	252729	O-Ring	2
14	1581849	Nut	2
15	1581852	Washer	4
16	323090	Spacer	2
17	1581829	Capscrew	2
18	223389	Chain (H2.0-2.5FT 3252 mm)	2
18	246994	Chain (H2.0-2.5FT 3752 mm and 4292 mm)	2
18	336393	Chain (H2.0-2.5FT 4792 mm)	2
18	1342383	Chain (H3.0-3.5FT 3059 mm)	2
18	1342393	Chain (H3.0-3.5FT 3559 mm)	2
18	1359234	Chain (H3.0-3.5FT 4059 mm)	2
18	1342392	Chain (H3.0-3.5FT 4559 mm)	2
19	15211	Cotter Pin	2
20	1514866	Pin	2
21	1369357	Chain Anchor (H2.0-2.5FT)	2
21	1369356	Chain Anchor (H3.0-3.5FT)	2
22	297649	Base Ring	2
23	161003	Nut	2

©2005 HYSTER COMPANY

MAIN LIFT CYLINDERS (Figure 10-4)
TWO STAGE LIMITED FREE-LIFT

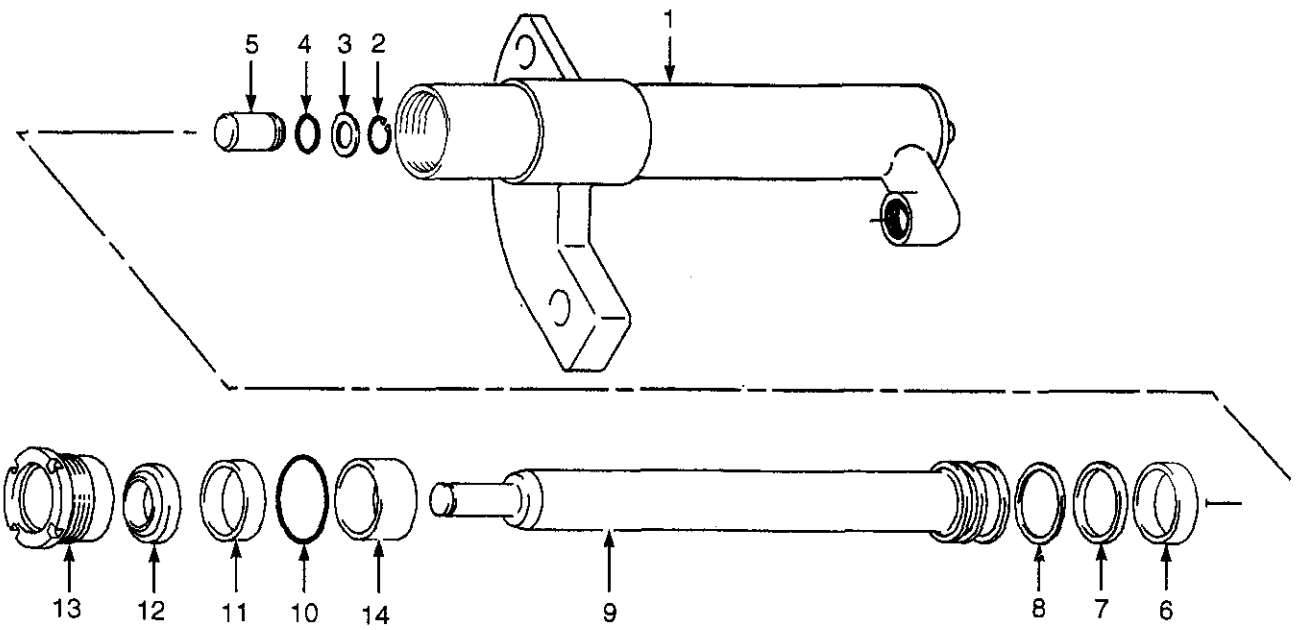

HP170907

©2005 HYSTER COMPANY

MAIN LIFT CYLINDERS
TWO STAGE LIMITED FREE-LIFT

LEFT HAND

ITEM	DESCRIPTION 1 2 3 4	LIFT HEIGHT TO BOTTOM OF FORKS			
		3059 mm	3252 mm	3559 mm	3752 mm
	Mast Group Number	D562 3059	D507 3252	D562 3559	D507 3752
	Cylinder Group Number	8518009	8517709	8518014	8517714
	Main Lift Cylinder	2064352	2064142	2064357	2064147
1	Shell	2064278	2064202	2064283	2064207
9	Rod	1355367	1355158	1355391	1355178

LEFT HAND (CONT.)

ITEM	DESCRIPTION 1 2 3 4	LIFT HEIGHT TO BOTTOM OF FORKS			
		4059 mm	4292 mm	4559 mm	4792 mm
	Mast Group Number	D562 4059	D507 4292	D562 4559	D507 4792
	Cylinder Group Number	8518802	8517719	8518807	8518101
	Main Lift Cylinder	2064379	2064152	2064384	2064106
1	Shell	2064288	2064212	2064293	2064218
9	Rod	1355414	1355199	1355434	1355217

RIGHT HAND

ITEM	DESCRIPTION 1 2 3 4	LIFT HEIGHT TO BOTTOM OF FORKS			
		3059 mm	3252 mm	3559 mm	3752 mm
	Mast Group Number	D562 3059	D507 3252	D562 3559	D507 3752
	Cylinder Group Number	8518059	8517759	8518064	8517764
	Main Lift Cylinder	2064369	2064166	2064374	2064171
1	Shell	2064314	2064239	2064319	2064245
9	Rod	1355367	1355158	1355391	1355178

©2005 HYSTER COMPANY

MAIN LIFT CYLINDERS
TWO STAGE LIMITED FREE-LIFT

RIGHT HAND (CONT.)

ITEM	DESCRIPTION 1 2 3 4	LIFT HEIGHT TO BOTTOM OF FORKS			
		4059 mm	4292 mm	4559 mm	4792 mm
	Mast Group Number	D562 4059	D507 4292	D562 4559	D507 4792
	Cylinder Group Number	8518852	8517769	8518857	8518151
	Main Lift Cylinder	2064399	2064176	2064404	2064120
1	Shell	2064324	2064250	2064343	2064256
9	Rod	1355414	1355199	1355434	1355217

KEY:
A: H2.0-2.5FT
B: H3.0-3.5FT

ITEM		PART NO.	DESCRIPTION	QTY A	QTY B
	a	. . . . .	Main Lift Cylinder	1	1
1	a	. . . . .	Shell	1	1
2		187388	Snap Ring	1	1
3		297531	Washer	1	1
4		39348	O-Ring	1	1
5		257913	Check Valve	1	1
6		1356750	Wear Ring	1	..
6		1356751	Wear Ring	..	1
6		322902	Wear Ring	..	1
7		2013075	Seal	1	..
7		334156	Seal	..	1
8		638246	Back-Up Ring	1	..
8		335012	Back-Up Ring	..	1
8		322824	Back-Up Ring	..	1
9	a	. . . . .	Rod	1	1
10		92861	O-Ring	1	..
10		59229	O-Ring	..	1
11		1356749	Rod Seal	1	..
11		1356752	Rod Seal	1	1
11		1381095	Rod Seal	..	1
12		1319668	Wiper Ring	1	1
12		1310370	Wiper Ring	1	1
13		1355496	Gland (D507-3252 mm, D507-3752 mm, D507-4292 mm)	1	..
13		1355220	Gland (D507-4792 mm)	1	..
13		1355713	Gland (D562-3059 mm, D562-3559 mm)	..	1
13		1355409	Gland (D562-4059 mm, D562-4559 mm)	..	1
		1355276	Seal Kit (D507-3252 mm, D507-3752 mm, D507-4292 mm) (Includes Items 4, 6-8, 10-12)	1	..
		1355277	Seal Kit (D507-4792 mm) (Includes Items 4, 6-8, 10-12)	1	..

©2005 HYSTER COMPANY

MAIN LIFT CYLINDERS
TWO STAGE LIMITED FREE-LIFT

ITEM	PART NO.	DESCRIPTION	QTY A	QTY B
	1499111	Seal Kit (D562-3059 mm, D562-3559 mm) (Includes Items 4, 6-8, 10-12)	..	1
	1355411	Seal Kit (D562-4059 mm, D562-4559 mm) (Includes Items 4, 6-8, 10-12)	..	1

FOOTNOTES:
a Refer to Table

©2005 HYSTER COMPANY

HEADER HOSES (Figure 10-5)
TWO STAGE LIMITED FREE-LIFT

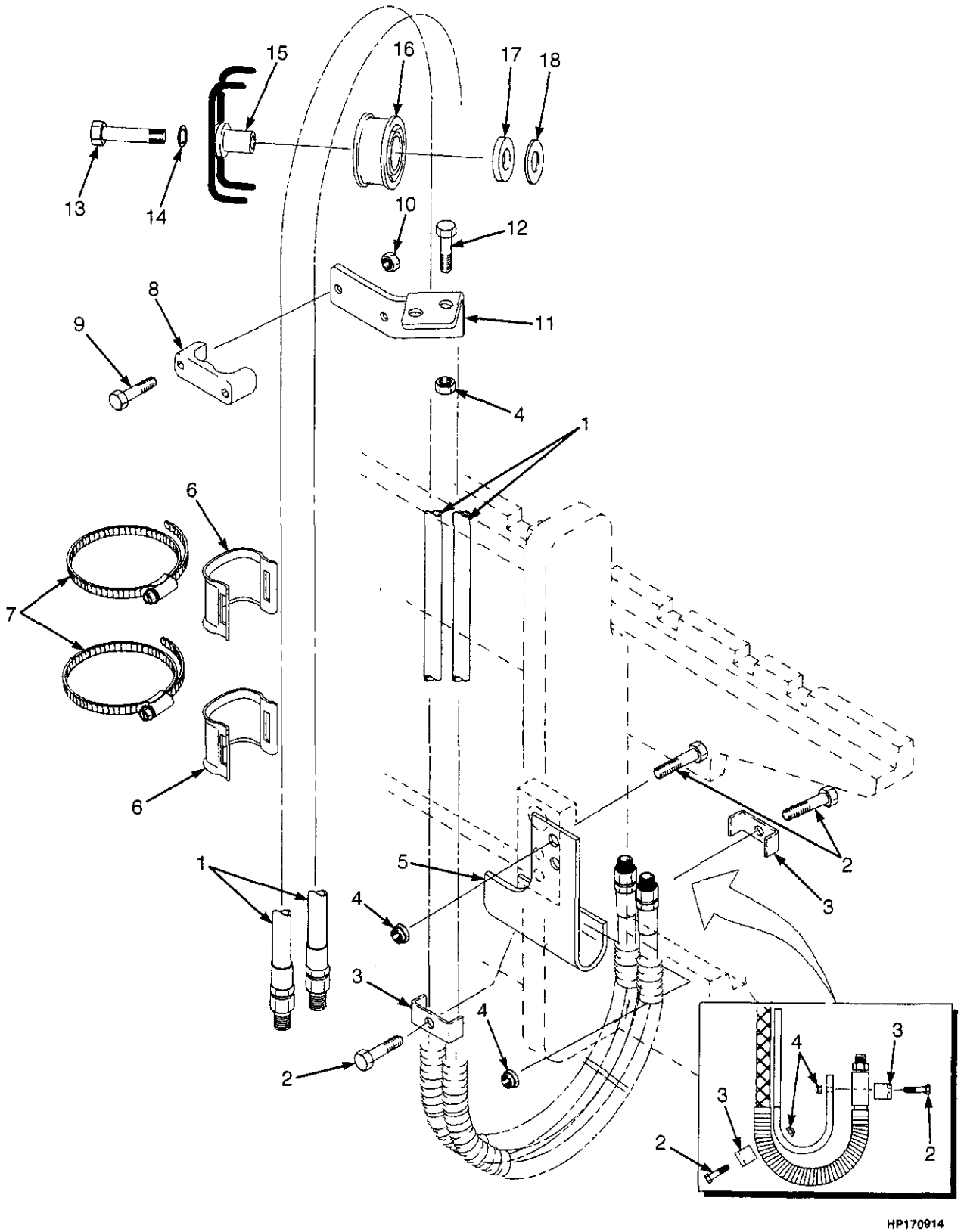

©2005 HYSTER COMPANY

HEADER HOSES
TWO STAGE LIMITED FREE-LIFT

KEY:
A: Three Function
B: Four Function

ITEM	PART NO.	DESCRIPTION	QTY A	QTY B
1	2065138	Hose (3059 mm, 3252 mm)	2	4
1	2065143	Hose (3752 mm, 3559 mm)	2	4
1	2065148	Hose (4292 mm, 4059 mm)	2	4
1	2065153	Hose (4792 mm, 4559 mm)	2	4
2	1581582	Capscrew	4	8
3	1345348	Clamp	2	4
4	1581566	Nut	6	12
5	1345412	Bracket (RH)	1	..
5	1345413	Bracket (LH)	1	1
6	1477996	Clamp	3	6
7	1481229	Clamp	1	2
8	1360386	Clamp	1	2
9	1581834	Capscrew	2	4
10	1581565	Nut	2	4
11	1354919	Bracket (RH)	1	..
11	1354921	Bracket (LH)	1	1
12	1581836	Capscrew	2	4
13	1581830	Capscrew	1	2
14	1581564	Lockwasher	1	2
15	1360548	Stubshaft	1	2
16	1494017	Sheave	1	2
17	1360549	Spacer	1	2
18	1345190	Washer	1	2
a	1529015	Cap	2	4

FOOTNOTES:
a Not Illustrated

©2005 HYSTER COMPANY

CARRIAGE (Figure 10-6)
TWO STAGE LIMITED FREE-LIFT

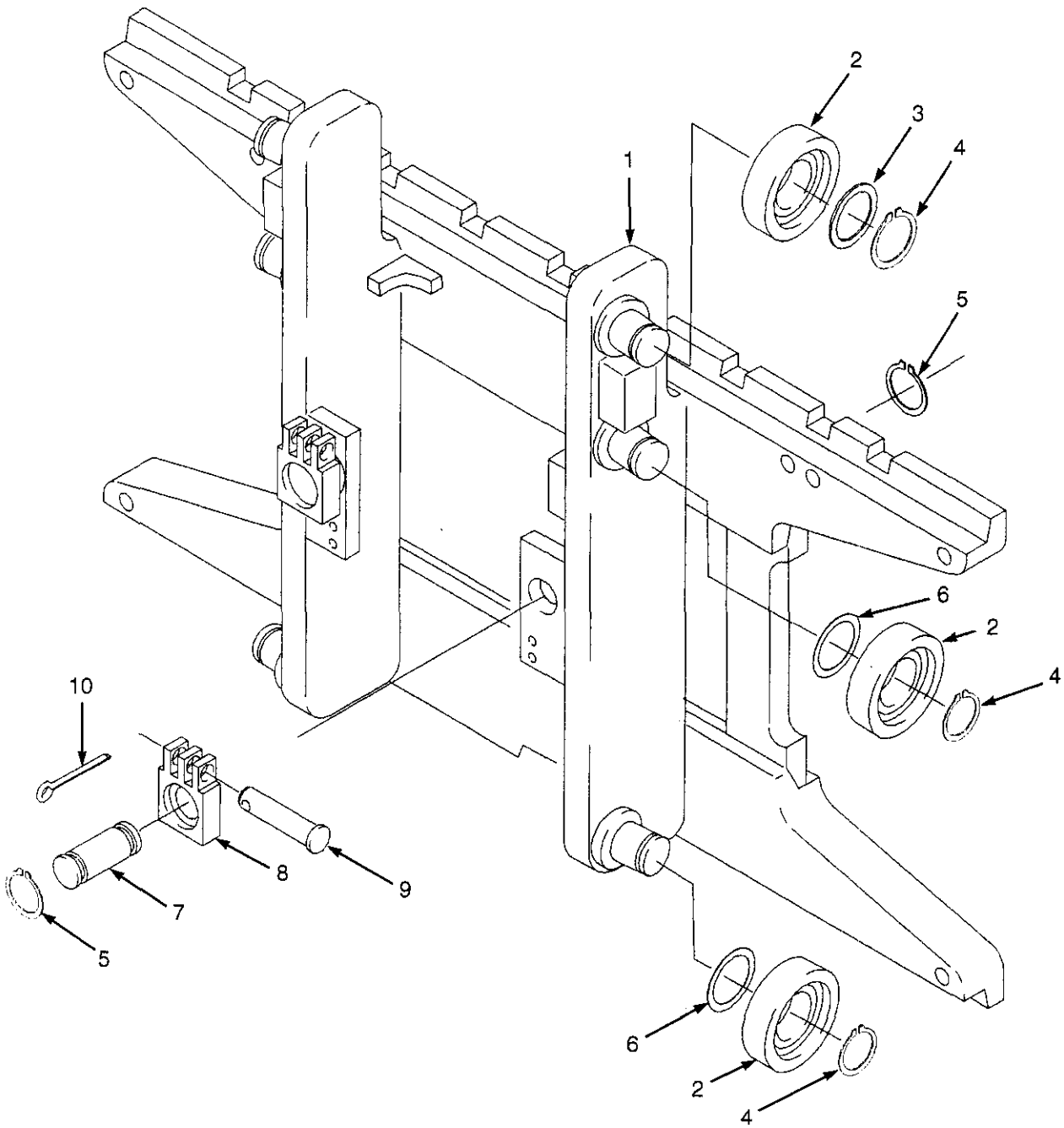

HP290013

©2005 HYSTER COMPANY

CARRIAGE
TWO STAGE LIMITED FREE-LIFT

KEY:
A: H2.0-2.5FT
B: H3.0-3.5FT

ITEM	PART NO.	DESCRIPTION	QTY A	QTY B
	1343846	Carriage Assembly (1067 mm)	1	..
	1477647	Carriage Assembly (1067 mm)	..	1
1	1338616	Frame	1	..
1	1477930	Frame	..	1
1	1345264	Stubshaft	6	6
2	1345219	Load Roller	6	6
3	366116	Spacer	2	2
4	12891	Snap Ring	6	6
5	131358	Snap Ring	4	4
6	1345263	Shim (0,508 mm)	AR	AR
7	1353408	Pin	2	2
8	1369345	Chain Anchor (Dual Hole)	2	..
8	1504010	Chain Anchor (Single Hole) (Optional)	2	..
8	1369344	Chain Anchor (Dual Hole)	..	2
8	1504012	Chain Anchor (Single Hole) (Optional)	..	2
9	1514866	Pin	2	2
10	15211	Cotter Pin	2	2
	a 386422	Snap Ring	6	6

FOOTNOTES:
a Not Illustrated

©2005 HYSTER COMPANY

NOTES

11 MAST-TWO STAGE FULL FREE-LIFT

SECTION 11
MAST-TWO STAGE FULL FREE-LIFT

DESCRIPTION	PAGE
CARRIAGE	
TWO STAGE FULL FREE-LIFT	11-16
FREE-LIFT	
TWO STAGE FULL FREE-LIFT	11-10
FREE-LIFT CYLINDER	
TWO STAGE FULL FREE-LIFT	11-12
HEADER HOSES	
TWO STAGE FULL FREE-LIFT	11-14
INNER MAST	
TWO STAGE FULL FREE-LIFT	11-4
MAIN LIFT	
TWO STAGE FULL FREE-LIFT	11-6
MAIN LIFT CYLINDER	
LEFT HAND	
TWO STAGE FULL FREE-LIFT	11-9
RIGHT HAND	
TWO STAGE FULL FREE-LIFT	11-8
OUTER MAST	
TWO STAGE FULL FREE-LIFT	11-2

©2005 HYSTER COMPANY

OUTER MAST (Figure 11-1)
TWO STAGE FULL FREE-LIFT

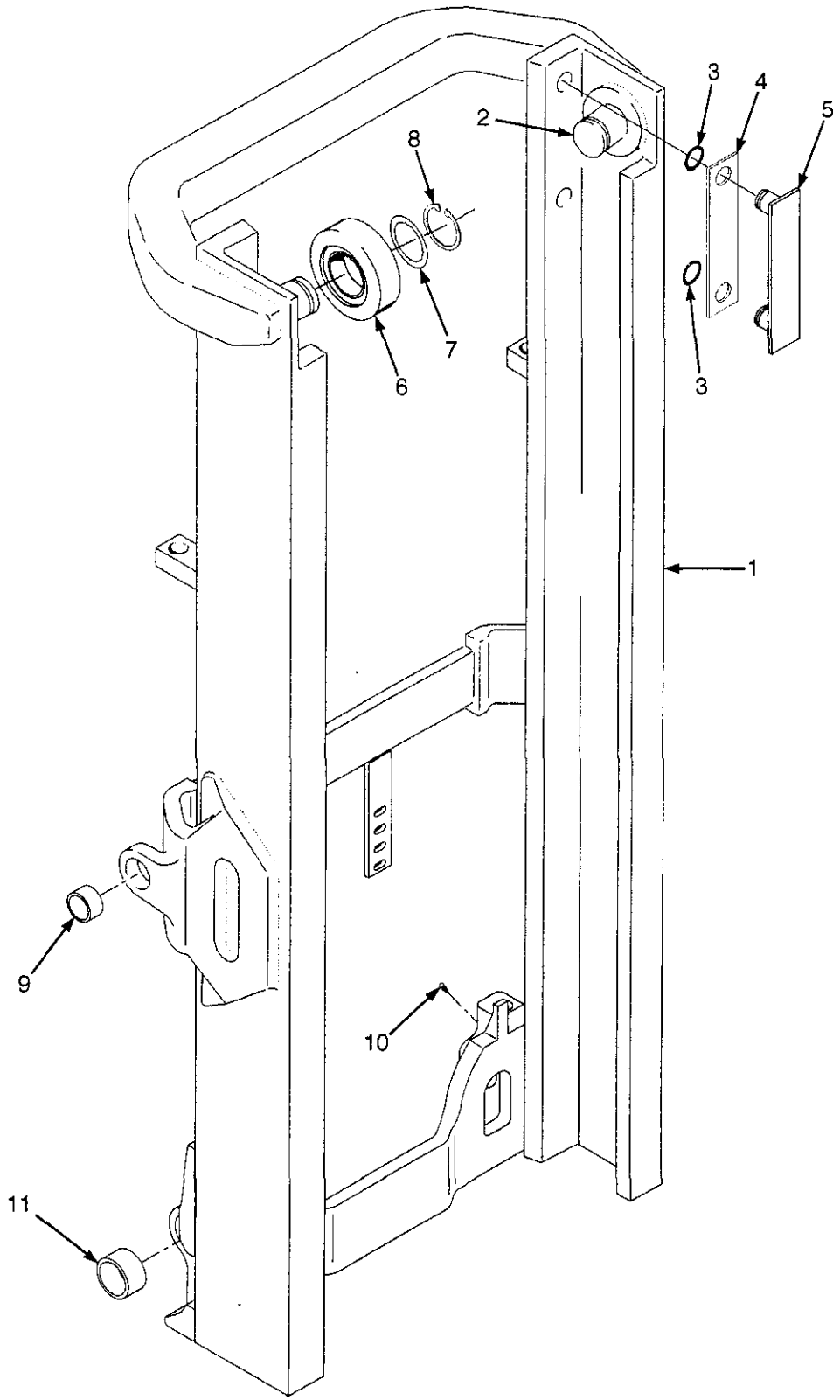

HP290004

©2005 HYSTER COMPANY

OUTER MAST
TWO STAGE FULL FREE-LIFT

KEY:
A: H2.0-2.5FT, D509-3262 mm
B: H3.0-3.5FT, D564-3060 mm

ITEM	PART NO.	DESCRIPTION	QTY A	QTY B
1	1524755	Outer Mast	1	1
2	1345216	Stubshaft	2	2
3	104506	O-Ring	4	4
4	131716	Shim (0,508 mm)	AR	AR
4	131715	Shim (0,178 mm) (Optional)	AR	AR
5	215211	Bearing Strip	2	2
6	1333396	Load Roller	2	2
7	129387	Shim (0,508 mm)	AR	AR
8	58901	Snap Ring	2	2
9	300982	Bushing	2	2
10	16001	Lube Fitting	2	2
11	1502811	Bushing	2	2

©2005 HYSTER COMPANY

INNER MAST (Figure 11-2)
TWO STAGE FULL FREE-LIFT

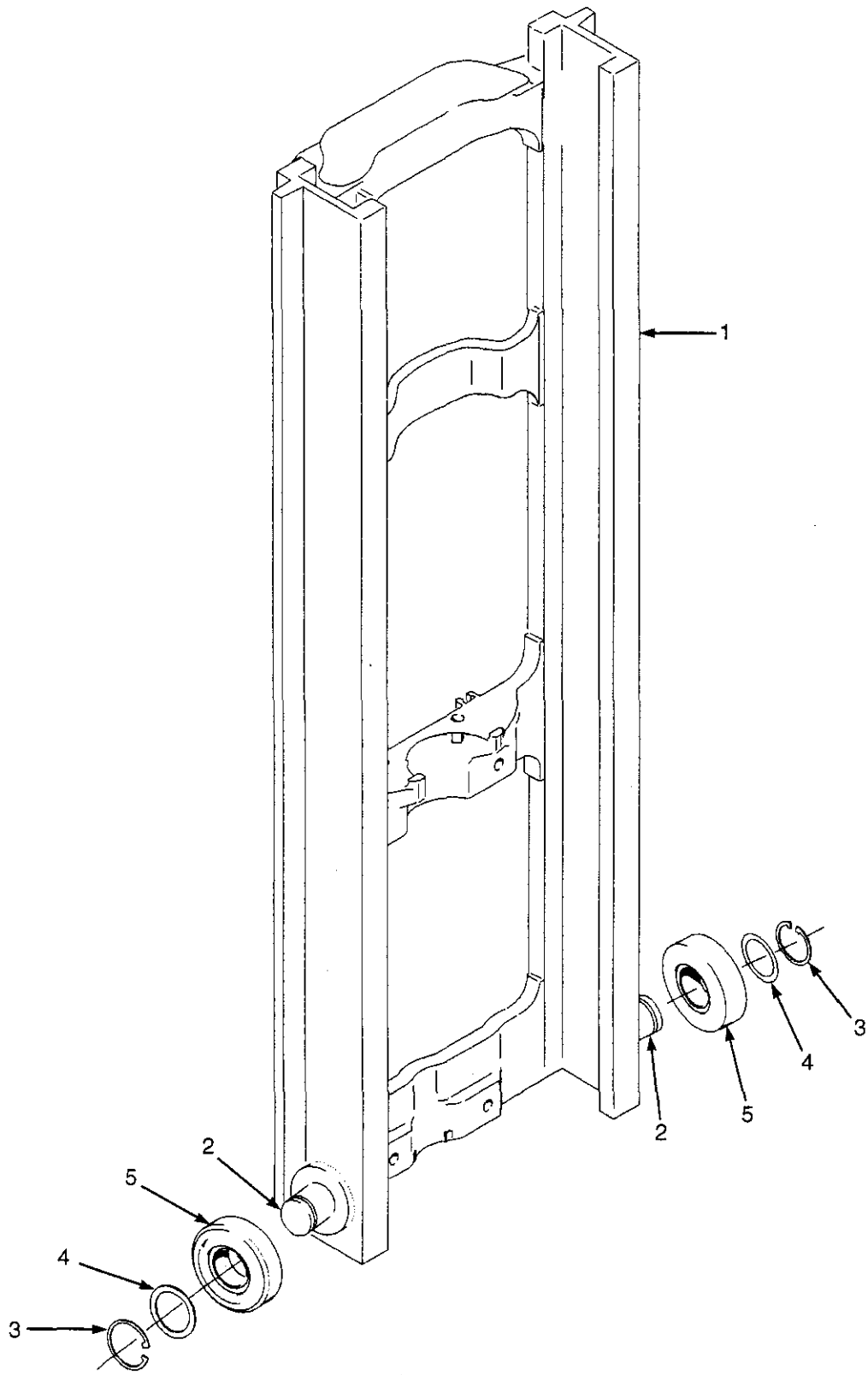

HP290005

©2005 HYSTER COMPANY

INNER MAST
TWO STAGE FULL FREE-LIFT

KEY:
A: H2.0-2.5FT, D509-3262 mm
B: H3.0-3.5FT, D564-3060 mm

ITEM	PART NO.	DESCRIPTION	QTY A	QTY B
1	1342477	Inner Mast	1	1
2	1345264	Stubshaft	2	2
3	58901	Snap Ring	2	2
4	129387	Shim (0,508 mm)	AR	AR
5	1333396	Load Roller	2	2

©2005 HYSTER COMPANY

MAIN LIFT (Figure 11-3)
TWO STAGE FULL FREE-LIFT

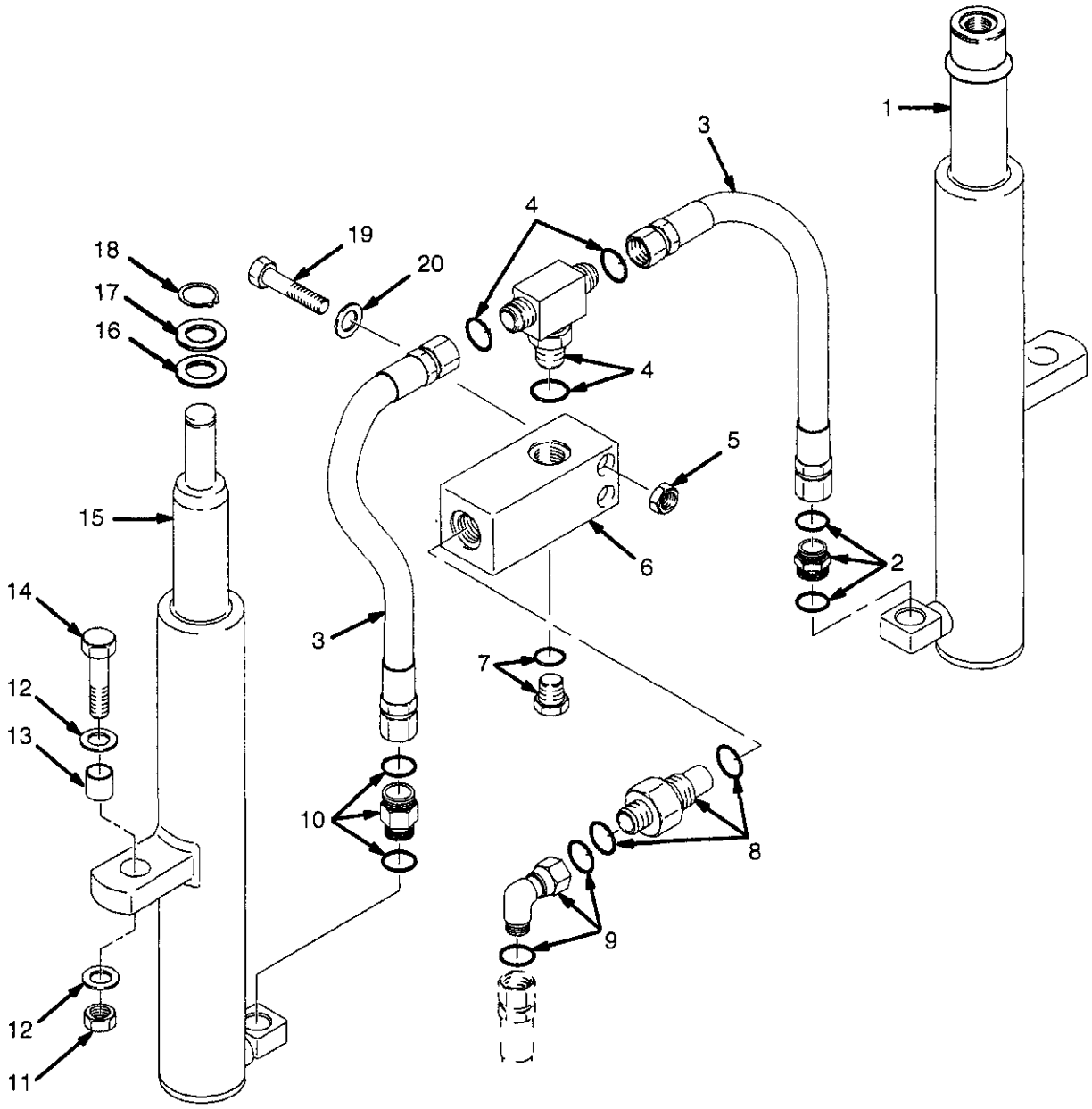

BP290036

©2005 HYSTER COMPANY

MAIN LIFT
TWO STAGE FULL FREE-LIFT

KEY:
A: H2.0-2.5FT, D509-3262 mm
B: H3.0-3.5FT, D564-3060 mm

ITEM	PART NO.	DESCRIPTION	QTY A	QTY B
1	. . . . .	Main Lift Cylinder (LH) (☞ Figure 11-5)	1	1
2	1486749	Fitting	1	1
2	252729	O-Ring	1	1
2	16485	O-Ring	1	1
3	1481097	Hose	2	2
4	1532650	Fitting	1	1
4	252729	O-Ring	2	2
4	16485	O-Ring	1	1
5	1581566	Nut	2	2
6	1379687	Housing (Lowering Control)	1	1
7	14603	Fitting	1	1
7	16486	O-Ring	1	1
8	2062652	Valve (Lowering Control)	..	1
8	2062651	Valve (Lowering Control)	1	..
8	16982	O-Ring	1	1
8	252729	O-Ring	1	1
9	1486773	Fitting	1	1
9	252729	O-Ring	2	2
10	2062687	Velocity Fuse	..	1
10	2062686	Velocity Fuse	1	..
10	16485	O-Ring	1	1
10	252729	O-Ring	1	1
11	1581849	Nut	2	2
12	1581852	Washer	4	4
13	323090	Spacer	2	2
14	1581829	Capscrew	2	2
15	. . . . .	Main Lift Cylinder (RH) (☞ Figure 11-4)	1	1
16	1354915	Washer (0.010 in.)	AR	AR
16	1354916	Washer (0.030 in.)	AR	AR
16	1354917	Washer (0.060 in.)	AR	AR
17	1333382	Washer (1.50 mm) (0.060 in.)	1	1
18	131358	Snap Ring	1	1
19	1581835	Capscrew	2	2
20	1581556	Washer	2	2

©2005 HYSTER COMPANY

MAIN LIFT CYLINDER (Figure 11-4)
RIGHT HAND
TWO STAGE FULL FREE-LIFT

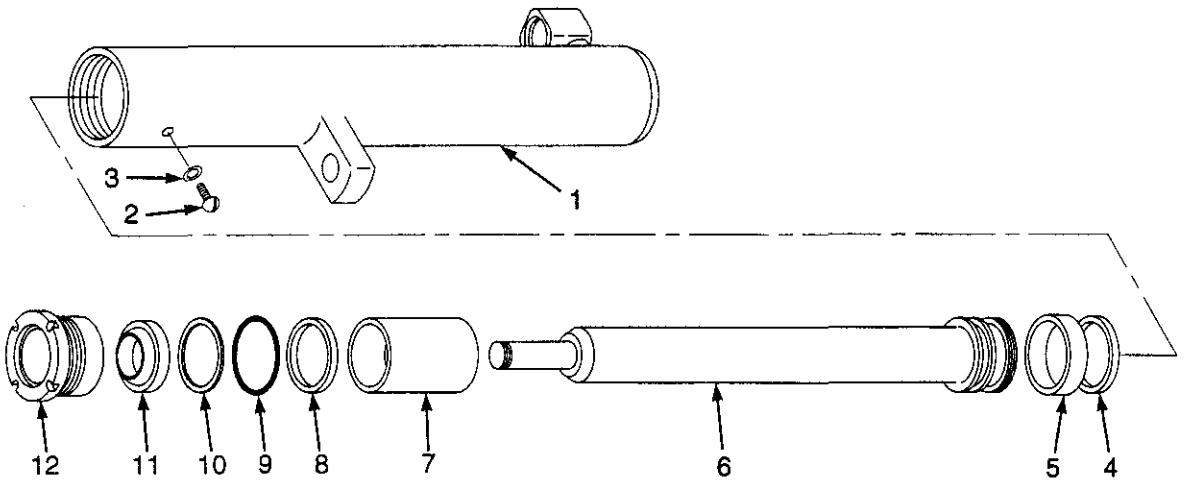

BP170124

ITEM	PART NO.	DESCRIPTION	QTY
	2058651	Main Lift Cylinder (H2.0-2.5FT, D509-3262 mm)	1
	2060422	Main Lift Cylinder (H3.0-3.5FT, D564-3060 mm)	1
1	2058536	Shell	1
2	295649	Screw	1
3	190887	Seal	1
4	1356748	Piston Ring	1
5	1356747	Wear Ring	1
6	1358940	Rod	1
7	2073159	Spacer	1
8	1381095	Rod Seal	1
9	59229	O-Ring	1
10	147972	Back-Up Ring	1
11	1319668	Wiper Ring	1
12	1355713	Gland	1
	1496922	Seal Kit (Includes Items 3-5, 8-10, 12)	1

©2005 HYSTER COMPANY

MAIN LIFT CYLINDER (Figure 11-5)
LEFT HAND
TWO STAGE FULL FREE-LIFT

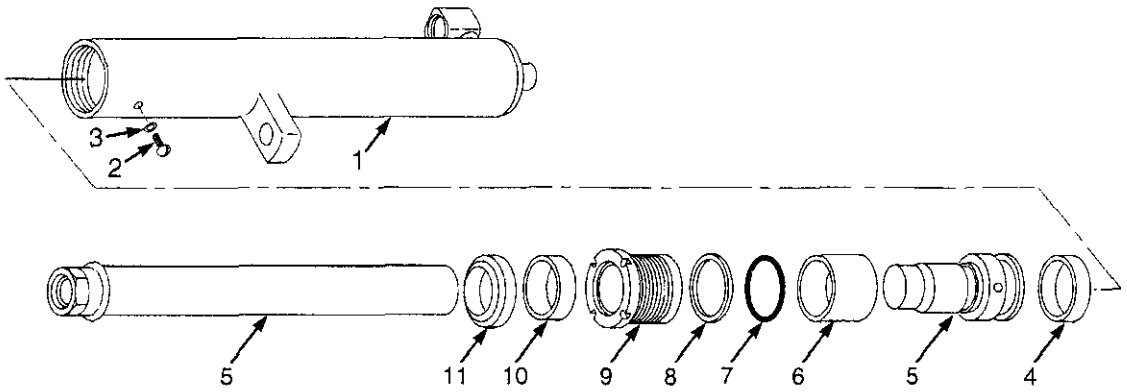

BP170125

ITEM	PART NO.	DESCRIPTION	QTY
	2058619	Main Lift Cylinder (H2.0-2.5FT, D509-3262 mm)	1
	2058823	Main Lift Cylinder (H3.0-3.5FT, D564-3060 mm)	1
1	2058500	Shell	1
2	295649	Screw	1
3	190887	Seal	1
4	1356747	Wear Ring	1
5	1355929	Rod And Piston Assembly	1
5	1355930	Rod	1
5	2064464	Piston	1
6	2073159	Spacer (H60-70FT Models Only)	1
7	59229	O-Ring	1
8	147972	Back-Up Ring	1
9	1355713	Gland	1
10	1381095	Rod Seal	1
11	1319668	Wiper Ring	1
	1496922	Seal Kit (Includes Items 7-8, 10-11)	1

©2005 HYSTER COMPANY

FREE-LIFT (Figure 11-6)
TWO STAGE FULL FREE-LIFT

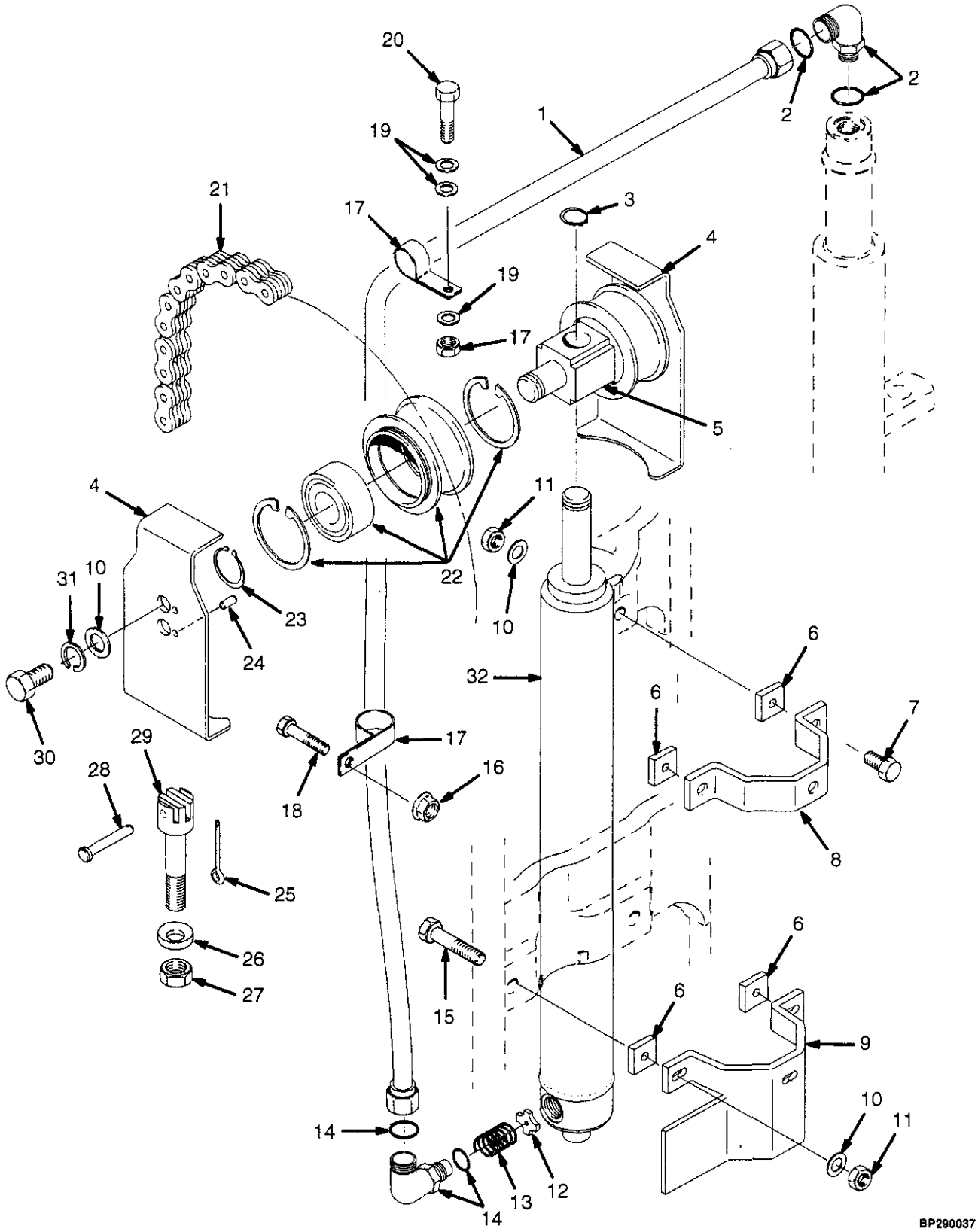

©2005 HYSTER COMPANY

FREE-LIFT
TWO STAGE FULL FREE-LIFT

KEY:
A: H2.0-2.5FT, D509-3262 mm
B: H3.0-3.5FT, D564-3060 mm

ITEM	PART NO.	DESCRIPTION	QTY A	QTY B
1	1481742	Tube	1	1
2	1481090	Fitting	1	1
2	16485	O-Ring	1	1
2	244167	O-Ring	1	1
3	131358	Snap Ring	1	1
4	1395285	Chain Guard	2	2
5	1378690	Crosshead	1	1
6	1354902	Spacer	..	4
7	1581828	Capscrew	..	2
7	1581827	Capscrew	2	..
8	1465504	Clamp	1	1
9	1354967	Bracket	1	1
10	1581559	Washer	6	6
11	1581849	Nut	4	4
12	356505	Washer (Special)	1	1
13	154355	Spring	1	1
14	1481096	Fitting	1	1
14	16485	O-Ring	1	1
14	244167	O-Ring	1	1
15	1581832	Capscrew	2	2
16	1581567	Nut	2	2
17	178119	Clamp	2	2
18	1581587	Capscrew	1	1
19	1581557	Washer	3	3
20	1581841	Capscrew	1	1
21	180177	Chain	2	..
21	1342377	Chain	..	2
22	1379683	Chain Sheave Assembly	..	2
22	1379682	Chain Sheave Assembly	2	..
22	1378693	Sheave	..	1
22	1378692	Sheave	1	..
22	37752	Snap Ring	2	2
22	1378699	Bearing	1	1
23	304526	Snap Ring	3	3
24	302461	Pin	2	2
25	15211	Cotter Pin	2	2
26	297649	Base Ring	2	2
27	161003	Nut	2	2
28	1514866	Pin	2	2
29	1369356	Chain Anchor	..	2
29	1369357	Chain Anchor	2	..
30	1581590	Capscrew	2	2
31	1581564	Lockwasher	2	2
32	. . . . .	Free-Lift Cylinder (☞ Figure 11-7)	1	1

©2005 HYSTER COMPANY

FREE-LIFT CYLINDER (Figure 11-7)
TWO STAGE FULL FREE-LIFT

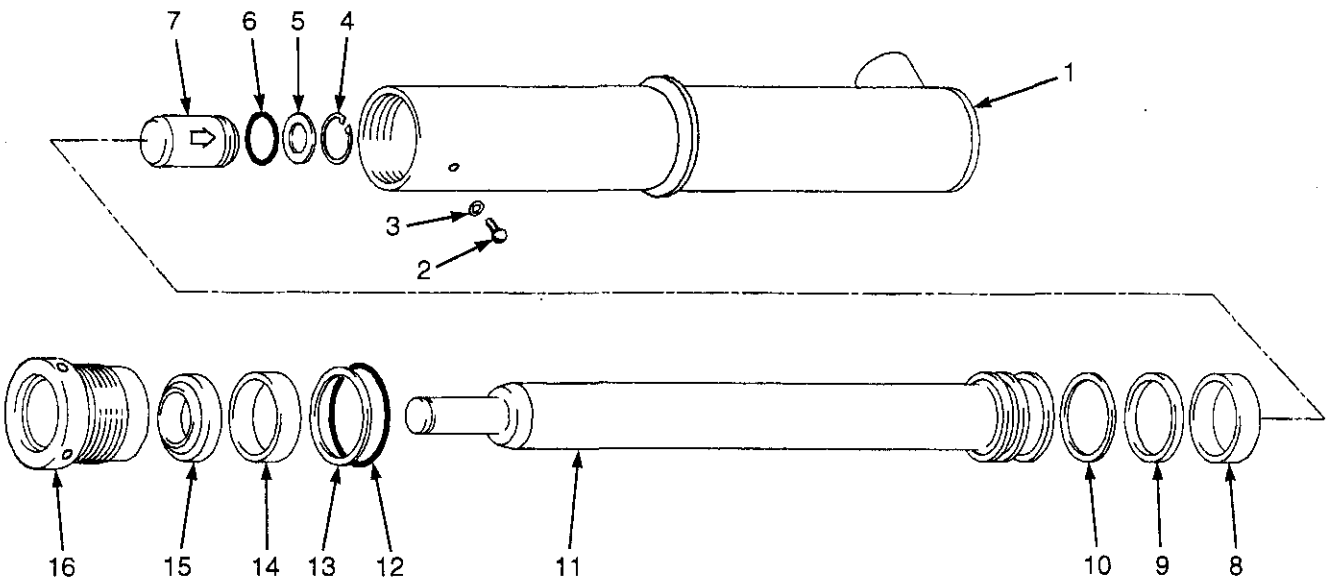

BP170110

©2005 HYSTER COMPANY

FREE-LIFT CYLINDER
TWO STAGE FULL FREE-LIFT

KEY:
A: H2.0-2.5FT, D509-3262 mm
B: H3.0-3.5FT, D564-3060 mm

ITEM	PART NO.	DESCRIPTION	QTY A	QTY B
	2058326	Free-Lift Cylinder	..	1
	2053796	Free-Lift Cylinder	1	..
1	2058252	Shell	..	1
1	2058213	Shell	1	..
2	1361302	Screw	1	1
3	190887	Seal	1	1
4	187388	Snap Ring	1	1
5	297531	Washer	1	1
6	190580	O-Ring	..	1
6	39348	O-Ring	1	..
7	257913	Check Valve	1	1
8	636941	Wear Ring	..	1
8	1358972	Wear Ring	1	..
9	309062	Seal	..	1
9	2013088	Seal	1	..
10	637565	Back-Up Ring	..	1
10	2013089	Back-Up Ring	1	..
11	1356691	Rod	..	1
11	1356688	Rod	1	..
12	15880	O-Ring	..	1
12	90263	O-Ring	1	..
13	164840	Back-Up Ring	..	1
13	147973	Back-Up Ring	1	..
14	1358970	Seal	1	1
15	2013099	Wiper Ring	1	1
16	1356661	Gland	..	1
16	1356292	Gland	1	..
	1356662	Seal Kit (Includes Items 3, 6, 8-10, 12-15)	..	1
	1358969	Seal Kit (Includes Items 3, 6, 8-10, 12-15)	1	..

©2005 HYSTER COMPANY

HEADER HOSES (Figure 11-8)
TWO STAGE FULL FREE-LIFT

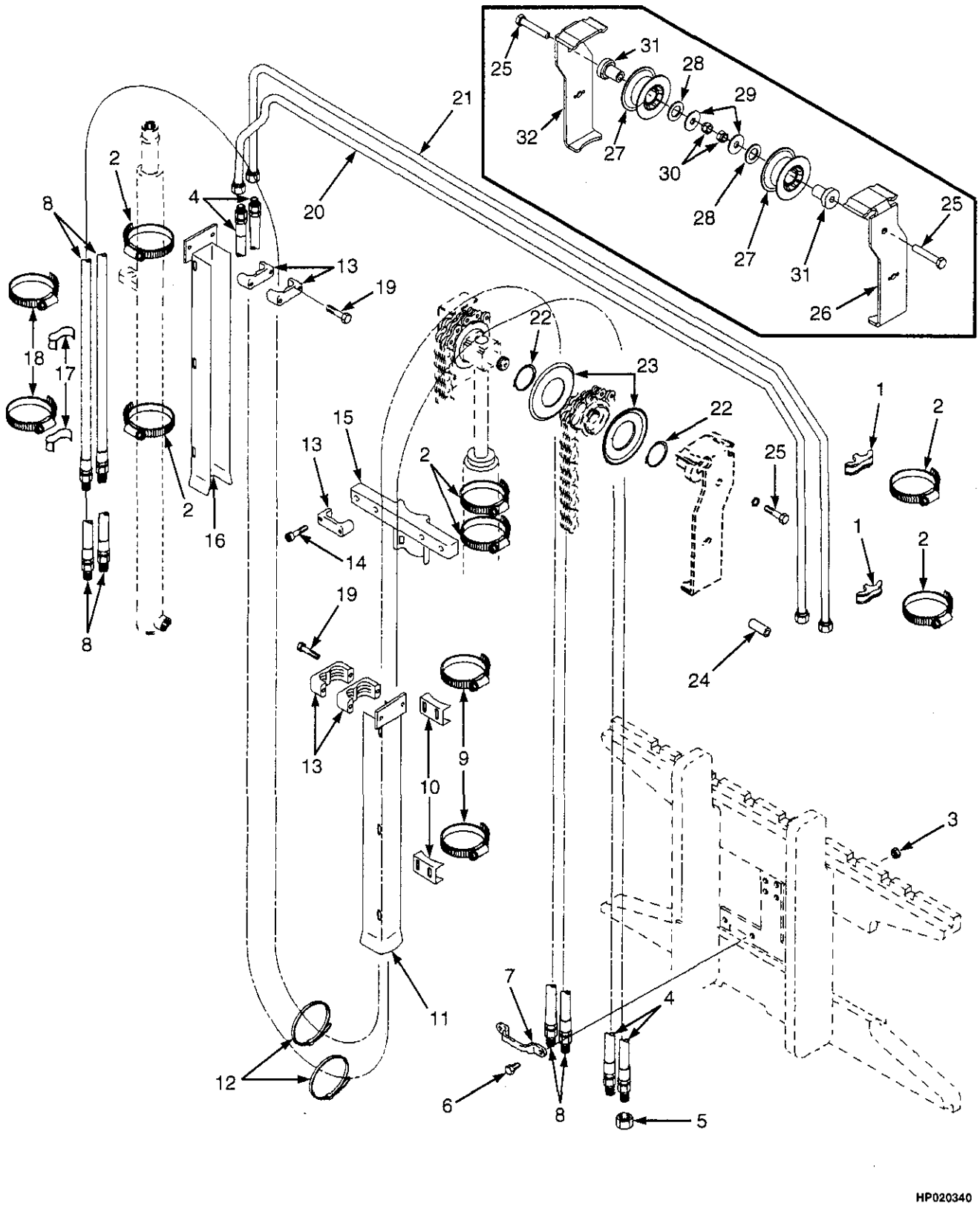

©2005 HYSTER COMPANY

HEADER HOSES
TWO STAGE FULL FREE-LIFT

KEY:
A: Three Function
B: Four Function

ITEM	PART NO.	DESCRIPTION	QTY A	QTY B
1	1353530	Clamp	2	2
2	1360507	Clamp	8	8
3	1581566	Nut	2	4
4	2065211	Hose (To Side-Shift)	2	2
5	1529015	Cap	2	4
6	1581581	Capscrew	2	4
7	1369333	Clamp	1	2
8	2065241	Hose (To Mast)	..	2
9	1360508	Clamp	2	2
10	1345423	Clamp	2	2
11	1481232	Channel (RH)	1	1
12	137852	Strap Clamp	1	2
13	1360386	Clamp	3	6
14	1581741	Capscrew	2	4
15	1354918	Bracket	1	1
16	1365517	Channel (LH)	1	1
17	1477996	Clamp	..	2
18	1481229	Clamp	..	2
19	1581842	Capscrew	4	8
20	2065001	Tube	1	1
21	2065030	Tube	1	1
22	1345204	Snap Ring	2	4
23	1345199	Hose Guide	2	4
24	302461	Pin	2	4
25	1581830	Capscrew	1	2
26	1395292	Bracket	..	1
27	1494017	Sheave	1	2
28	1581560	Washer	1	2
29	1345190	Washer	1	2
30	1581849	Nut	1	2
31	1396406	Stubshaft	1	2
32	1395291	Bracket	1	1

©2005 HYSTER COMPANY

CARRIAGE (Figure 11-9)
TWO STAGE FULL FREE-LIFT

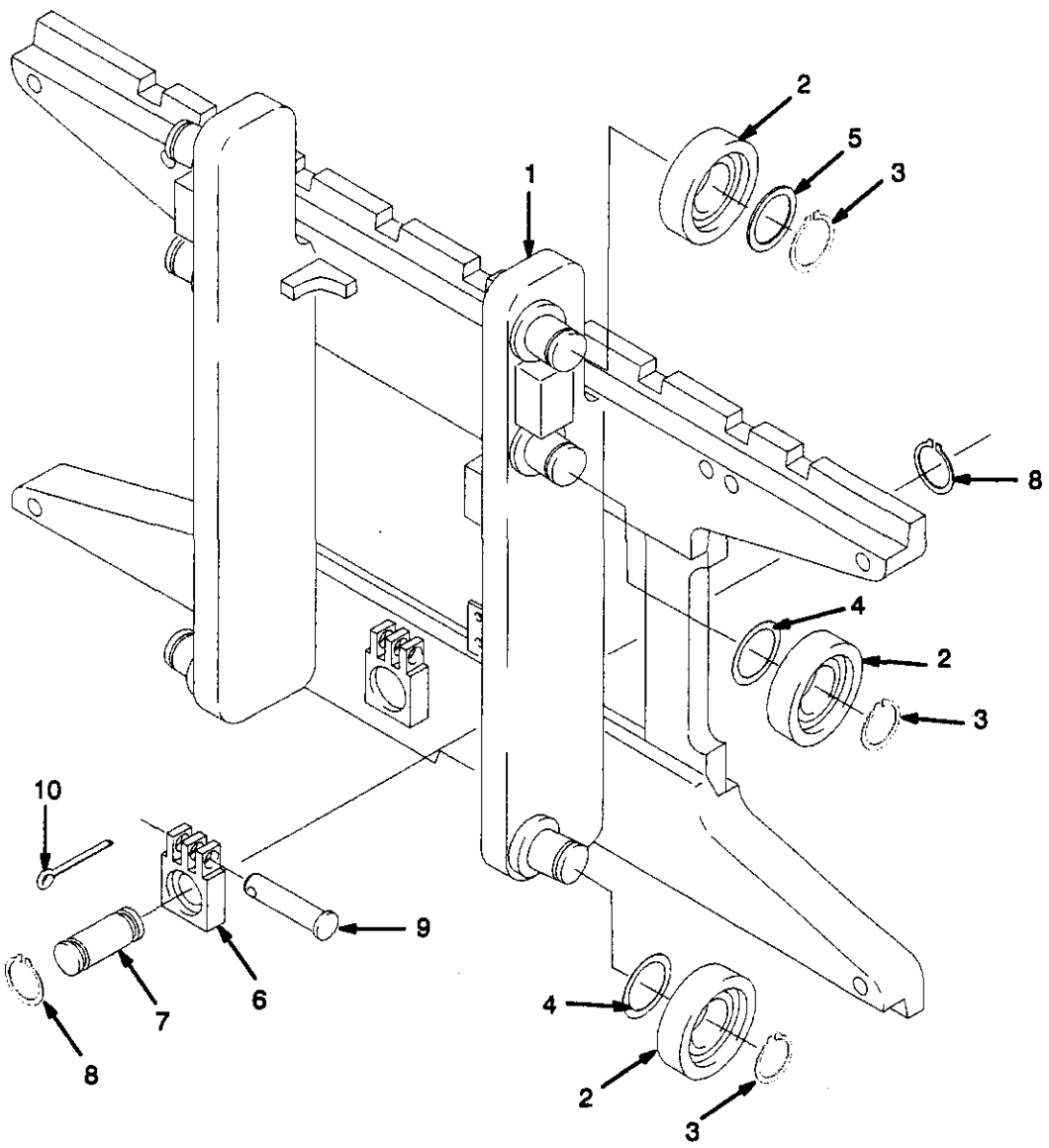

HP290012

©2005 HYSTER COMPANY

CARRIAGE
TWO STAGE FULL FREE-LIFT

KEY:
A: H2.0-2.5FT D509
B: H3.0-3.5FT D564

ITEM	PART NO.	DESCRIPTION	QTY A	QTY B
	1343844	Carriage Assembly	1	..
	1477683	Carriage Assembly	..	1
1	1345239	Frame	1	..
1	1477932	Frame	..	1
1	1345264	Stubshaft	6	6
2	1345219	Load Roller	6	6
3	12891	Snap Ring	6	6
4	1345263	Shim (0,508 mm)	AR	AR
5	366116	Spacer	2	2
6	1369345	Chain Anchor (Dual Hole)	2	..
6	1504010	Chain Anchor (Single Hole) (Optional)	2	..
6	1369344	Chain Anchor (Dual Hole)	..	2
6	1504012	Chain Anchor (Single Hole) (Optional)	..	2
7	317735	Pin	2	2
8	131358	Snap Ring	4	4
9	1514866	Pin	2	2
10	15211	Cotter Pin	2	2
	a 386422	Snap Ring	6	6

FOOTNOTES:
a Not Illustrated

©2005 HYSTER COMPANY

NOTES

12 MAST-THREE STAGE FULL FREE-LIFT

SECTION 12
MAST-THREE STAGE FULL FREE-LIFT

DESCRIPTION	PAGE
CARRIAGE	
THREE STAGE FULL FREE-LIFT	12-28
FREE-LIFT	
THREE STAGE FULL FREE-LIFT	12-16
FREE-LIFT CYLINDER	
THREE STAGE FULL FREE-LIFT	12-20
HEADER HOSES	
THREE STAGE FULL FREE-LIFT	12-24
INNER MAST	
THREE STAGE FULL FREE-LIFT	12-6
INTERMEDIATE MAST	
THREE STAGE FULL FREE-LIFT	12-4
MAIN LIFT	
THREE STAGE FULL FREE-LIFT	12-8
MAIN LIFT CYLINDERS	
THREE STAGE FULL FREE-LIFT	12-12
OUTER MAST	
THREE STAGE FULL FREE-LIFT	12-2

©2005 HYSTER COMPANY

OUTER MAST (Figure 12-1)
THREE STAGE FULL FREE-LIFT

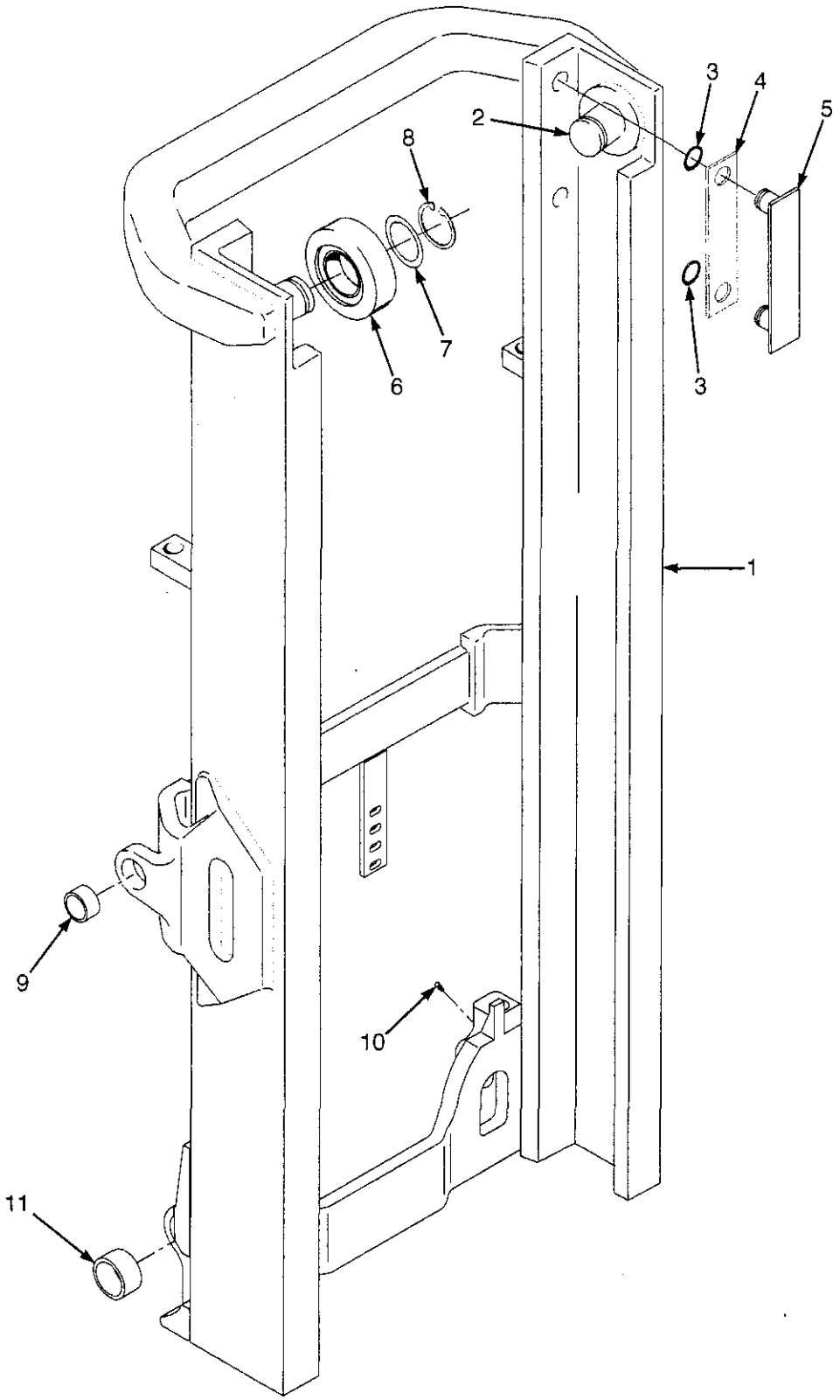

HP290019

©2005 HYSTER COMPANY

OUTER MAST
THREE STAGE FULL FREE-LIFT

H2.0-2.5FT

ITEM	DESCRIPTION 1 2 3 4	LIFT HEIGHT TO BOTTOM OF FORKS			
		4310 mm	4910 mm	5510 mm	5960 mm
	Mast Group Number	D508 4310	D508 4910	D508 5510	D508 5960
1	Outer Mast	1524751	1524755	1524760	1524763

H3.0-3.5FT

ITEM	DESCRIPTION 1 2 3 4	LIFT HEIGHT TO BOTTOM OF FORKS				
		3968 mm	4568 mm	4868 mm	5168 mm	5768 mm
	Mast Group Number	D563 3968	D563 4568	D563 4868	D563 5168	D563 5768
1	Outer Mast	1524751	1524755	1524758	1524760	1524764

ITEM	PART NO.	DESCRIPTION	QTY
1	a	Outer Mast	1
2	1345216	Stubshaft	2
3	104506	O-Ring	4
4	131716	Shim (0,508 mm)	AR
4	131715	Shim (0,178 mm) (Optional)	AR
5	215211	Bearing Strip	2
6	1333396	Load Roller	2
7	129387	Shim (0,508 mm)	AR
8	58901	Snap Ring	2
9	300982	Bushing	2
10	16001	Lube Fitting	2
11	1502811	Bushing	2

FOOTNOTES:
a Refer to Table

©2005 HYSTER COMPANY

INTERMEDIATE MAST (Figure 12-2)
THREE STAGE FULL FREE-LIFT

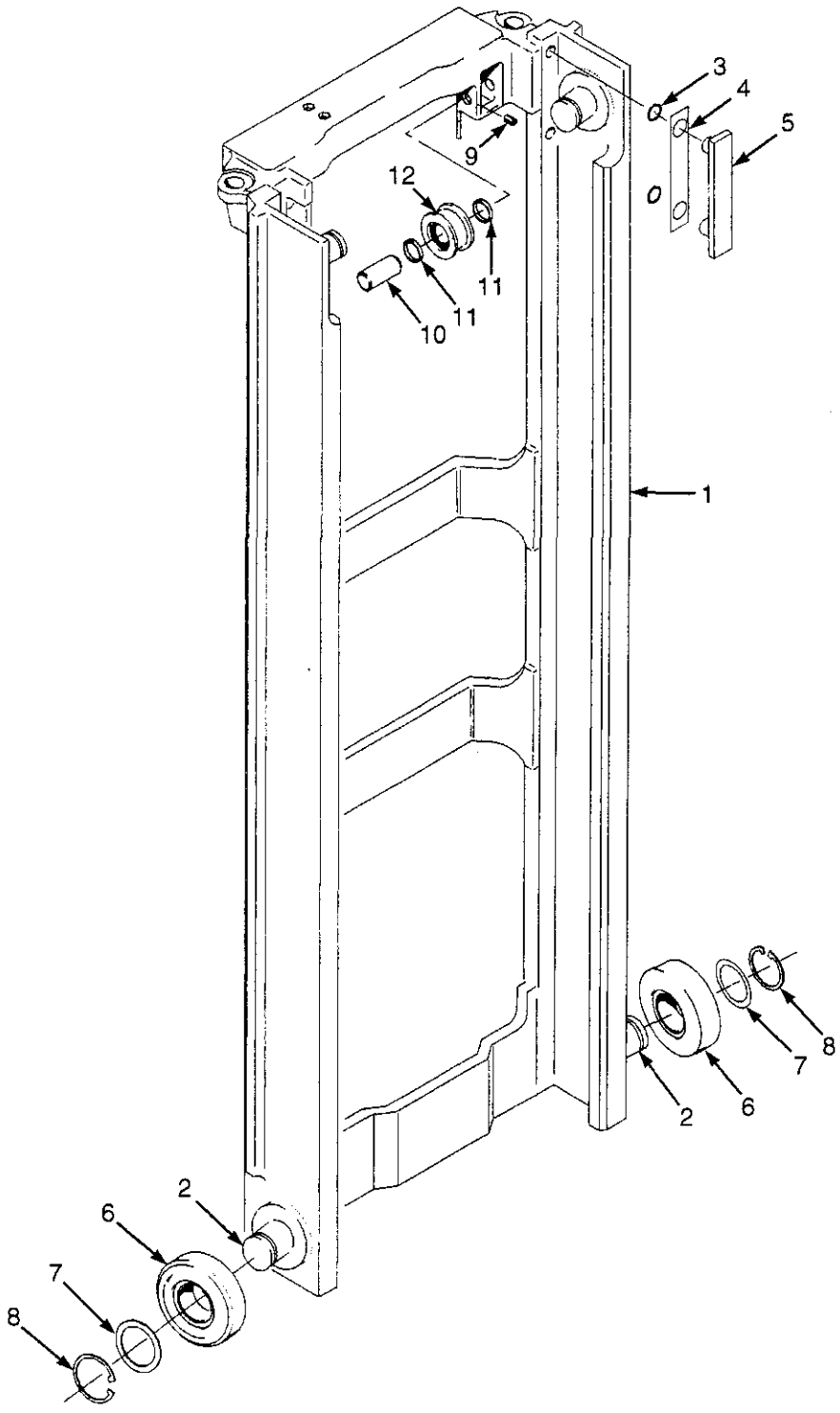

HP290018

©2005 HYSTER COMPANY

INTERMEDIATE MAST
THREE STAGE FULL FREE-LIFT

H2.0-2.5FT

ITEM	DESCRIPTION 1 2 3 4	LIFT HEIGHT TO BOTTOM OF FORKS			
		4310 mm	4910 mm	5510 mm	5960 mm
	Mast Group Number	D508 4310	D508 4910	D508 5510	D508 5960
1	Intermediate Mast	1524831	1524835	1524839	1524842

H3.0-3.5FT

ITEM	DESCRIPTION 1 2 3 4	LIFT HEIGHT TO BOTTOM OF FORKS				
		3968 mm	4568 mm	4868 mm	5168 mm	5768 mm
	Mast Group Number	D563 3968	D563 4568	D563 4868	D563 5168	D563 5768
1	Intermediate Mast	1524831	1524835	1524837	1524839	1524843

KEY:
A: H2.0-2.5FT
B: H3.0-3.5FT

ITEM		PART NO.	DESCRIPTION	QTY A	QTY B
1	a	. . . . .	Intermediate Mast	1	1
2		1345216	Stubshaft	2	2
3		104506	O-Ring	4	4
4		131716	Shim (0,508 mm)	AR	AR
4		131715	Shim (0,178 mm) (Optional)	AR	AR
5		215211	Bearing Strip	2	2
6		1333396	Load Roller	4	4
7		129387	Shim (0,508 mm)	AR	AR
8		58901	Snap Ring	4	4
9		302462	Pin	2	2
10		1368656	Pin	2	2
11		1378691	Spacer	4	4
12		1379685	Chain Sheave Assembly	2	..
12		1379684	Chain Sheave Assembly	..	2
12		1378698	Chain Sheave	1	..
12		1378694	Chain Sheave	..	1
12		37752	Snap Ring	1	1
12		1378699	Bearing	1	1

FOOTNOTES:
a Refer to Table

©2005 HYSTER COMPANY

INNER MAST (Figure 12-3)
THREE STAGE FULL FREE-LIFT

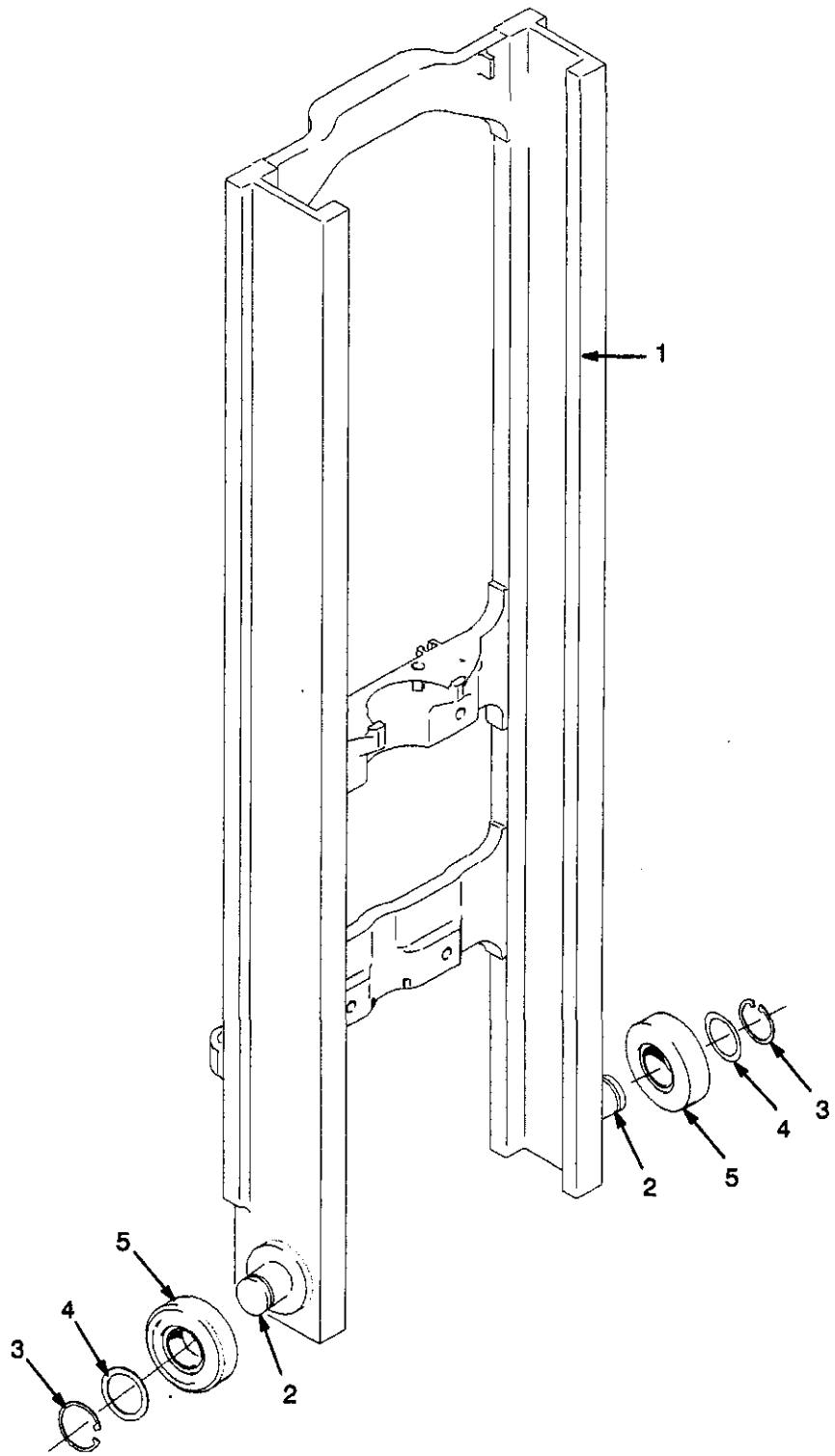

HP290017

©2005 HYSTER COMPANY

INNER MAST
THREE STAGE FULL FREE-LIFT

H2.0-2.5FT

ITEM	DESCRIPTION 1 2 3 4	LIFT HEIGHT TO BOTTOM OF FORKS			
		4310 mm	4910 mm	5510 mm	5960 mm
	Mast Group Number	D508 4310	D508 4910	D508 5510	D508 5960
1	Inner Mast	1381354	1381358	1381362	1381365

H3.0-3.5FT

ITEM	DESCRIPTION 1 2 3 4	LIFT HEIGHT TO BOTTOM OF FORKS				
		3968 mm	4568 mm	4868 mm	5168 mm	5768 mm
	Mast Group Number	D563 3968	D563 4568	D563 4868	D563 5168	D563 5768
1	Inner Mast	1381354	1381358	1381360	1381362	1381366

ITEM		PART NO.	DESCRIPTION	QTY
1	a	. . . . .	Inner Mast	1
2		1345216	Stubshaft	2
3		58901	Snap Ring	2
4		129387	Shim (0,508 mm)	AR
5		1333396	Load Roller	2

FOOTNOTES:
a Refer to Table

MAIN LIFT (Figure 12-4)
THREE STAGE FULL FREE-LIFT

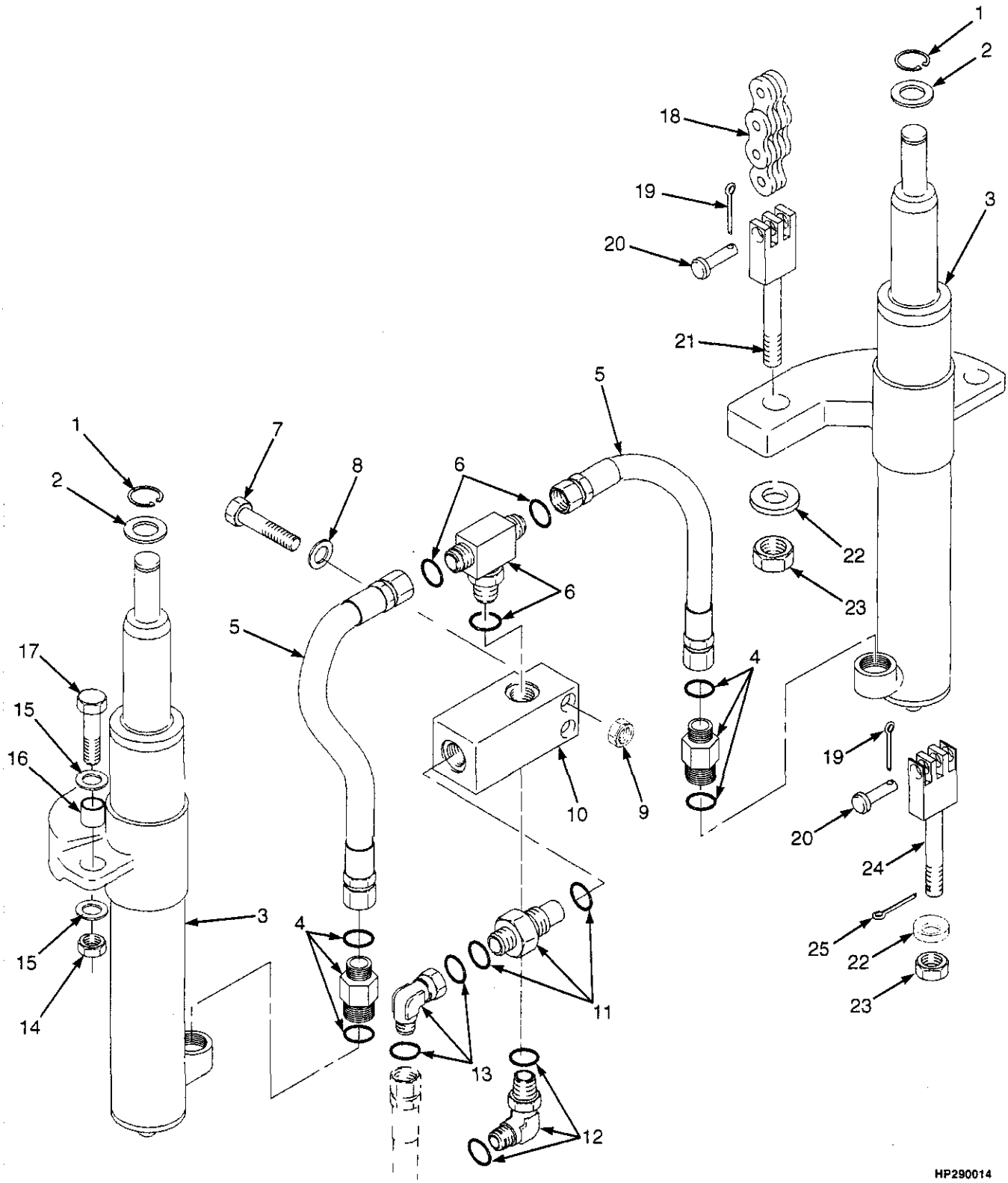

©2005 HYSTER COMPANY

MAIN LIFT
THREE STAGE FULL FREE-LIFT

H2.0-2.5FT

ITEM	DESCRIPTION 1 2 3 4	LIFT HEIGHT TO BOTTOM OF FORKS			
		4310 mm	4910 mm	5510 mm	5960 mm
	Mast Group Number	D508 4310	D508 4910	D508 5510	D508 5960
18	Chain	182343	337174	135588	335041

H3.0-3.5FT

ITEM	DESCRIPTION 1 2 3 4	LIFT HEIGHT TO BOTTOM OF FORKS				
		3968 mm	4568 mm	4868 mm	5168 mm	5768 mm
	Mast Group Number	D563 3968	D563 4568	D563 4868	D563 5168	D563 5768
18	Chain	1342120	1342124	1342127	1342129	1342132

KEY:
A: H2.0-2.5FT
B: H3.0-3.5FT

ITEM	PART NO.	DESCRIPTION	QTY A	QTY B
1	131358	Snap Ring	2	2
2	1333382	Washer (1.50 mm)	2	2
2	1354915	Washer	AR	AR
2	1354916	Washer	AR	AR
2	1354917	Washer	AR	AR
3	. . . . .	Main Lift Cylinders (☞ Figure 12-5)	2	2
4	2062686	Velocity Fuse	2	..
4	2062687	Velocity Fuse	..	2
4	16485	O-Ring	1	1
4	252729	O-Ring	1	1
5	1481097	Hose	2	2
6	1532650	Fitting	1	1
6	252729	O-Ring	2	2
6	16485	O-Ring	1	1
7	1581835	Capscrew	2	2
8	1581556	Washer	2	2
9	1581566	Nut	2	2
10	1333392	Housing	1	1
11	2062651	Valve (Lowering Control)	1	..
11	2062652	Valve (Lowering Control)	..	1
11	280154	O-Ring	1	1
11	252729	O-Ring	1	1
12	1480747	Fitting	1	1
12	16486	O-Ring	1	1
12	244167	O-Ring	1	1
13	1486773	Fitting	1	1
13	252729	O-Ring	1	1

©2005 HYSTER COMPANY

MAIN LIFT
THREE STAGE FULL FREE-LIFT

ITEM		PART NO.	DESCRIPTION	QTY A	QTY B
14		1581849	Nut	2	2
15		1581852	Washer	4	4
16		323090	Spacer	2	2
17		1581829	Capscrew	2	2
18	a	. . . . .	Chain	1	1
19		15211	Cotter Pin	4	4
20		1514866	Pin	4	4
21		1369357	Chain Anchor	2	..
21		1369356	Chain Anchor	..	2
22		297649	Base Ring	4	4
23		161003	Nut	4	4
24		1365140	Chain Anchor	2	..
24		1333329	Chain Anchor	..	2
25		15223	Cotter Pin	2	2

FOOTNOTES:
a Refer to Table

©2005 HYSTER COMPANY

NOTES

MAIN LIFT CYLINDERS (Figure 12-5)
THREE STAGE FULL FREE-LIFT

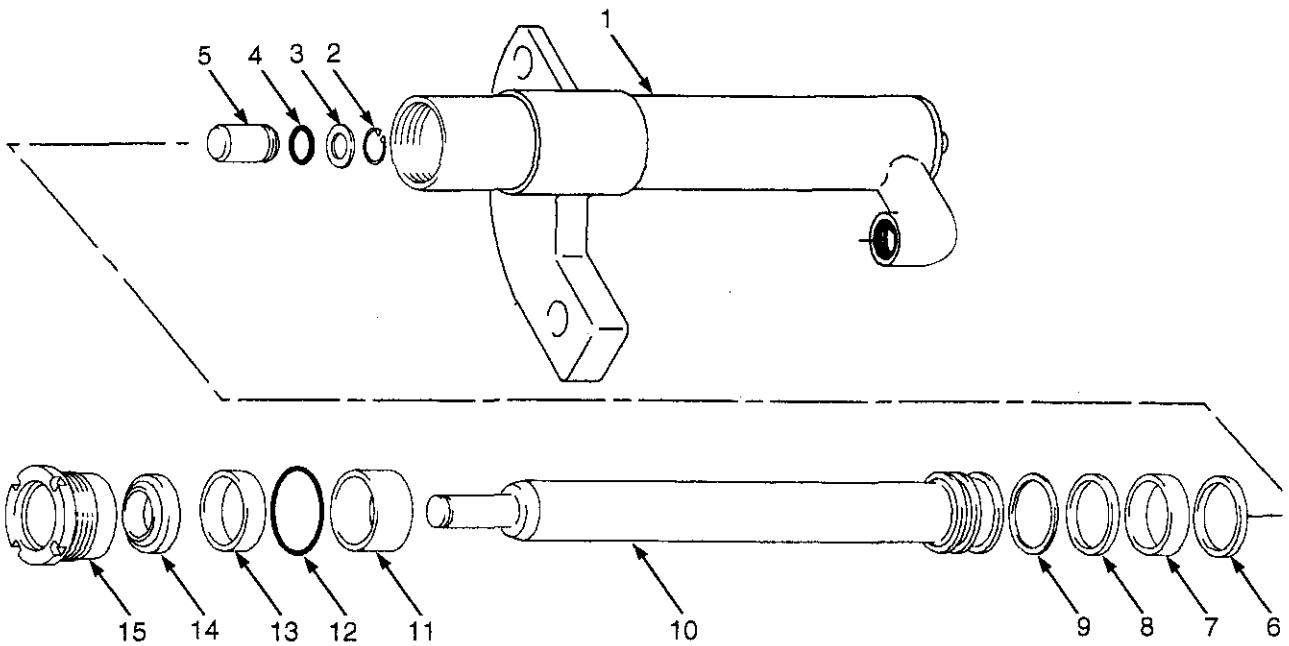

BP170102

©2005 HYSTER COMPANY

MAIN LIFT CYLINDERS
THREE STAGE FULL FREE-LIFT

LEFT HAND

ITEM	DESCRIPTION 1 2 3 4	LIFT HEIGHT TO BOTTOM OF FORKS				
		3968 mm	4310 mm	4568 mm	4868 mm	4910 mm
	Mast Group Number	D563 3968	D508 4310	D563 4568	D563 4868	D508 4910
	Cylinder Group Number	8518305	8518205	8518309	8518311	8518209
	Main Lift Cylinder	2064706	2064640	2064710	2064712	2064644
1	Shell	2064583	2064607	2064563	2064565	2064611
10	Rod	1355729	1355587	1355745	1355710	1355603

LEFT HAND (CONT.)

ITEM	DESCRIPTION 1 2 3 4	LIFT HEIGHT TO BOTTOM OF FORKS			
		5168 mm	5510 mm	5768 mm	5960 mm
	Mast Group Number	D563 5168	D508 5510	D563 5768	D508 5960
	Cylinder Group Number	8518313	8518213	8518317	8518216
	Main Lift Cylinder	2064714	2064648	2064718	2064651
1	Shell	2064567	2064615	2064571	2064618
10	Rod	1355758	1355620	1355775	1355633

RIGHT HAND

ITEM	DESCRIPTION 1 2 3 4	LIFT HEIGHT TO BOTTOM OF FORKS				
		3968 mm	4310 mm	4568 mm	4868 mm	4910 mm
	Mast Group Number	D563 3968	D508 4310	D563 4568	D563 4868	D508 4910
	Cylinder Group Number	8518355	8518255	8518359	8518361	8518259
	Main Lift Cylinder	2064731	2064673	2064735	2064737	2064677
1	Shell	2064559	2073082	2064587	2064589	2073084
10	Rod	1355729	1355587	1355745	1355710	1355603

©2005 HYSTER COMPANY

MAIN LIFT CYLINDERS
THREE STAGE FULL FREE-LIFT

RIGHT HAND (CONT.)

ITEM	DESCRIPTION 1 2 3 4	LIFT HEIGHT TO BOTTOM OF FORKS			
		5168 mm	5510 mm	5768 mm	5960 mm
	Mast Group Number	D563 5168	D508 5510	D563 5768	D508 5960
	Cylinder Group Number	8518363	8518263	8518367	8518266
	Main Lift Cylinder	2064739	2064681	2064743	2064684
1	Shell	2064591	2073086	2064595	2079984
10	Rod	1355758	1355620	1355775	1355633

KEY:
A: H2.0-2.5FT
B: H3.0-3.5FT

ITEM		PART NO.	DESCRIPTION	QTY A	QTY B
	a	. . . . .	Main Lift Cylinder	1	1
1	a	. . . . .	Shell	1	1
2		187388	Snap Ring	1	1
3		297531	Washer	1	1
4		39348	O-Ring	1	1
5		257913	Check Valve	1	1
6		1360127	Piston Ring	1	..
6		1356748	Piston Ring	..	1
7		1356750	Wear Ring	1	..
7		1356751	Wear Ring	..	1
8		2013075	Seal	1	..
8		334156	Seal	..	1
9		638246	Back-Up Ring	1	..
9		335012	Back-Up Ring	..	1
10	a	. . . . .	Rod	1	1
11		1355610	Spacer	1	..
11		2073087	Spacer	..	1
12		92861	O-Ring	1	..
12		59229	O-Ring	..	1
13		1381095	Rod Seal	1	1
14		1319668	Wiper Ring	1	1
15		1355496	Gland	1	..
15		1355713	Gland	..	1
		1355497	Seal Kit (Includes Items 4, 6-9, 12-14)	1	..
		1355714	Seal Kit (Includes Items 4, 6-9, 12-14)	..	1

FOOTNOTES:
a Refer to Table

©2005 HYSTER COMPANY

NOTES

FREE-LIFT (Figure 12-6)
THREE STAGE FULL FREE-LIFT

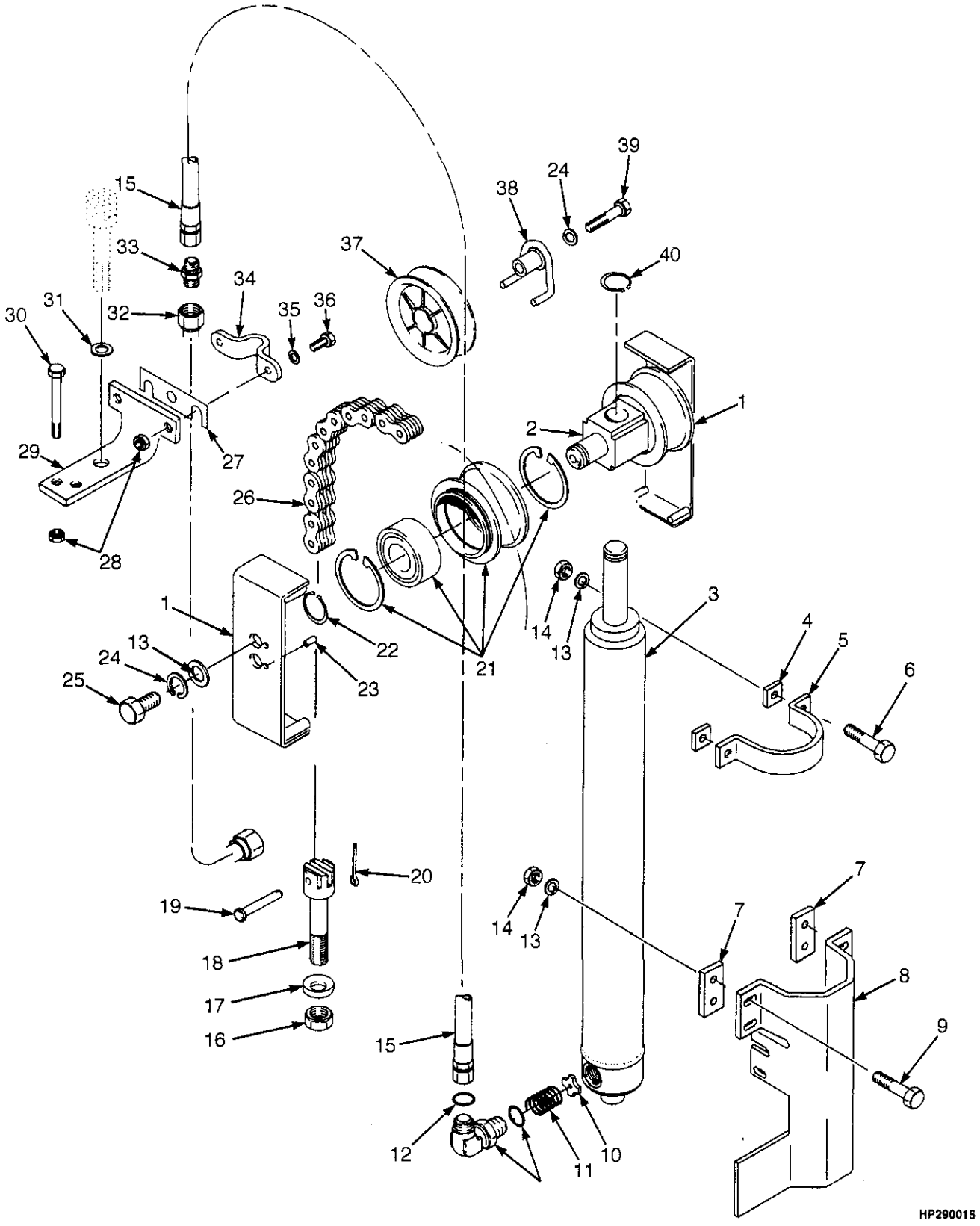

©2005 HYSTER COMPANY

FREE-LIFT
THREE STAGE FULL FREE-LIFT

H2.0-2.5FT

ITEM	DESCRIPTION 1 2 3 4	LIFT HEIGHT TO BOTTOM OF FORKS			
		4310 mm	4910 mm	5510 mm	5960 mm
	Mast Group Number	D508 4310	D508 4910	D508 5510	D508 5960
15	Hose	1481705	1481709	1481713	1481716
26	Chain	197345	161029	180057	180137
32	Tube	2075925	2075929	2075933	2075936

H3.0-3.5FT

ITEM	DESCRIPTION 1 2 3 4	LIFT HEIGHT TO BOTTOM OF FORKS				
		3968 mm	4568 mm	4868 mm	5168 mm	5768 mm
	Mast Group Number	D563 3968	D563 4568	D563 4868	D563 5168	D563 5768
15	Hose	1481705	1481709	1481711	1481713	1481717
26	Chain	1342391	1342116	1342380	1342121	1342384
32	Tube	2075925	2075929	2075931	2075933	2075937

KEY:
A: H2.0-2.5FT
B: H3.0-3.5FT

ITEM	PART NO.	DESCRIPTION	QTY A	QTY B
1	1395285	Chain Guard	2	2
2	1378690	Crosshead	1	1
3	. . . . .	Free-Lift Cylinder (☞ Figure 12-7)	1	1
4	1354902	Spacer	..	2
5	1465504	Clamp	1	1
6	1581827	Capscrew	2	..
6	1581828	Capscrew	..	2
7	1354903	Spacer	..	2
8	1354962	Bracket	1	1
9	1581832	Capscrew	4	4
10	356505	Washer (Special)	1	1
11	154355	Spring	1	1
12	1481095	Fitting	1	1
12	16485	O-Ring	1	1
12	16982	O-Ring	1	1
13	1581559	Washer	8	8
14	1581849	Nut	6	6
15	a	Hose	1	1
16	161003	Nut	2	2
17	297649	Base Ring	2	2
18	1369357	Chain Anchor	2	..
18	1369356	Chain Anchor	..	2

©2005 HYSTER COMPANY

FREE-LIFT
THREE STAGE FULL FREE-LIFT

ITEM		PART NO.	DESCRIPTION	QTY A	QTY B
19		1514866	Pin	2	2
20		15211	Cotter Pin	2	2
21		1379682	Chain Sheave Assembly	2	..
21		1379683	Chain Sheave Assembly	..	2
21		1378692	Sheave	1	..
21		1378693	Sheave	..	1
21		37752	Snap Ring	1	1
21		1378699	Bearing	1	1
22		304526	Snap Ring	2	2
23		302461	Pin	2	2
24		1581564	Lockwasher	3	3
25		1581590	Capscrew	2	2
26	a	. . . . .	Chain	2	2
27		325616	Spacer	AR	AR
28		1581566	Nut	4	4
29		1550298	Bracket	1	1
30		1581836	Capscrew	2	2
31		1581850	Washer	1	1
32	a	. . . . .	Tube	1	1
33		1522442	Fitting	1	1
33		244167	O-Ring	1	1
33		280154	O-Ring	1	1
34		1345401	Clamp	1	1
35		1581556	Washer	2	2
36		1581581	Capscrew	2	2
37		1343989	Hose Sheave	1	1
37		1354901	Bushing	1	1
38		1360534	Stubshaft	1	1
39		1581829	Capscrew	1	1
40		131358	Snap Ring	1	1

FOOTNOTES:
a Refer to Table

©2005 HYSTER COMPANY

NOTES

FREE-LIFT CYLINDER (Figure 12-7)
THREE STAGE FULL FREE-LIFT

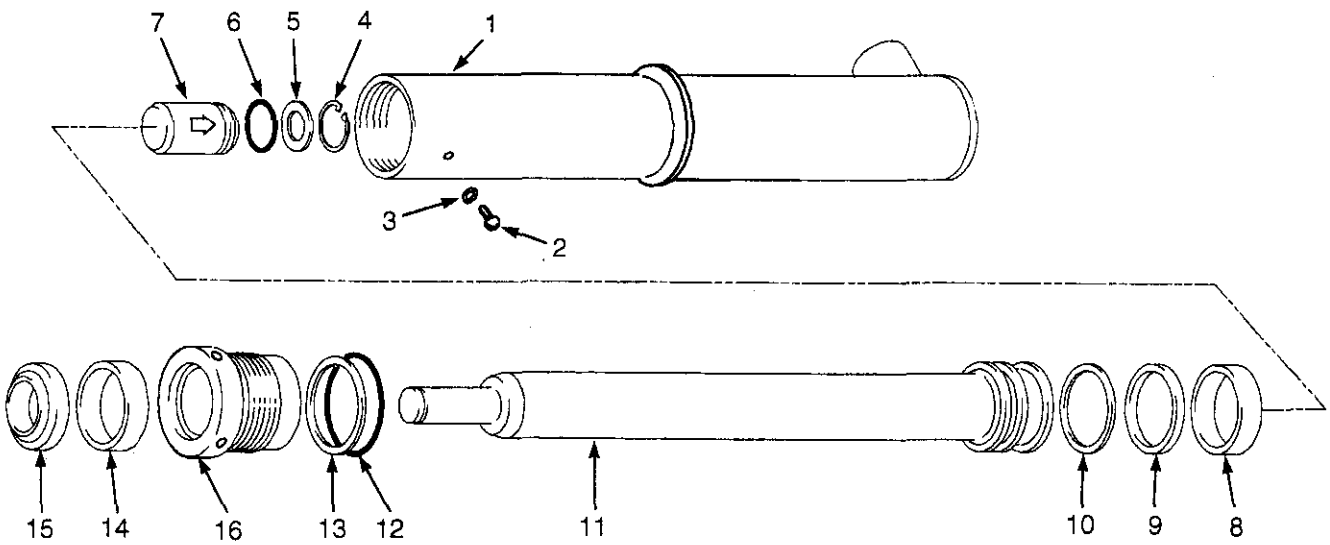

BP170103

©2005 HYSTER COMPANY

FREE-LIFT CYLINDER
THREE STAGE FULL FREE-LIFT

H2.0-2.5FT

ITEM	DESCRIPTION 1 2 3 4	LIFT HEIGHT TO BOTTOM OF FORKS			
		4310 mm	4910 mm	5510 mm	5960 mm
	Mast Group Number	D508 4310	D508 4910	D508 5510	D508 5960
	Cylinder Group Number	8514556	8514560	8514565	8514568
	Free-Lift Cylinder	2053795	2053797	2053799	2058126
1	Shell	2058210	2058214	2058219	2058222
11	Rod	1356560	1356572	1371631	1356596

H3.0-3.5FT

ITEM	DESCRIPTION 1 2 3 4	LIFT HEIGHT TO BOTTOM OF FORKS				
		3968 mm	4568 mm	4868 mm	5168 mm	5768 mm
	Mast Group Number	D563 3968	D563 4568	D563 4868	D563 5168	D563 5768
	Cylinder Group Number	8518707	8518711	8518714	8518716	8518721
	Free-Lift Cylinder	2058324	2058328	2058331	2058333	2058338
1	Shell	2058251	2063691	2064046	2064754	2064753
11	Rod	1356682	1356694	1356068	1356074	1356089

KEY:
A: H2.0-2.5FT
B: H3.0-3.5FT

ITEM		PART NO.	DESCRIPTION	QTY A	QTY B
	a	. . . . .	Free-Lift Cylinder	1	1
1	a	. . . . .	Shell	1	1
2		1361302	Screw	1	1
3		190887	Seal	1	1
4		187388	Snap Ring	1	1
5		297531	Washer	1	1
6		39348	O-Ring	1	..
6		190580	O-Ring	..	1
7		257913	Check Valve	1	1
8		1358972	Wear Ring	1	..
8		636941	Wear Ring	..	1
9		2013088	Seal	1	..
9		309062	Seal	..	1
10		2013089	Back-Up Ring	1	..
10		637565	Back-Up Ring	..	1
11	a	. . . . .	Rod	1	1
12		90263	O-Ring	1	..
12		15880	O-Ring	..	1

©2005 HYSTER COMPANY

FREE-LIFT CYLINDER
THREE STAGE FULL FREE-LIFT

ITEM	PART NO.	DESCRIPTION	QTY A	QTY B
13	147973	Back-Up Ring	1	..
13	164840	Back-Up Ring	..	1
14	1358970	Seal	1	1
15	2013099	Wiper Ring	1	1
16	1356292	Gland	1	..
16	1356661	Gland	..	1
	1358969	Seal Kit (Includes Items 3, 6, 8-10, 12-15)	1	..
	1356662	Seal Kit (Includes Items 3, 6, 8-10, 12-15)	..	1

FOOTNOTES:
a Refer to Table

©2005 HYSTER COMPANY

NOTES

HEADER HOSES (Figure 12-8)
THREE STAGE FULL FREE-LIFT

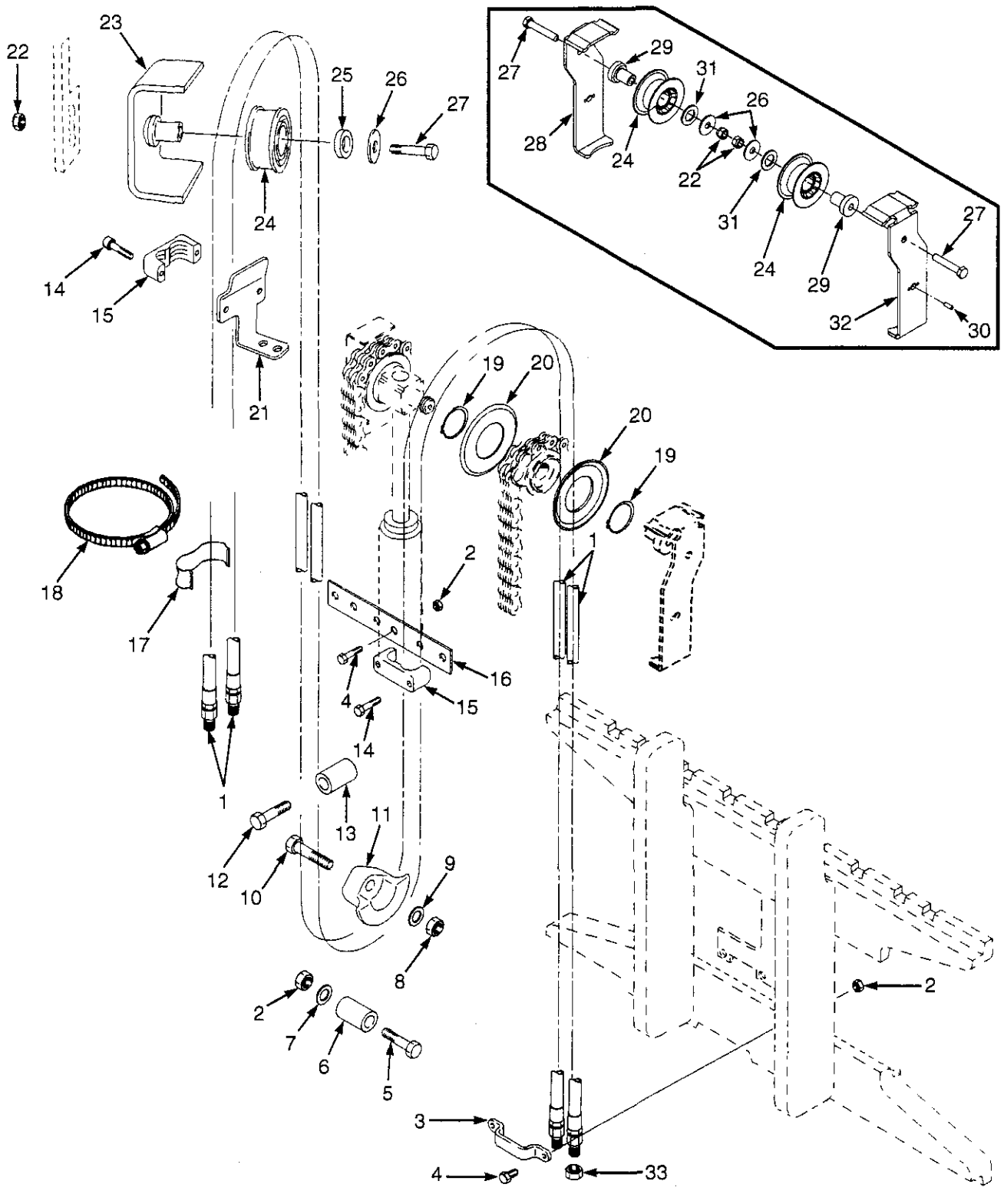

©2005 HYSTER COMPANY

HEADER HOSES
THREE STAGE FULL FREE-LIFT

H2.0-2.5FT

ITEM	DESCRIPTION 1 2 3 4	LIFT HEIGHT TO BOTTOM OF FORKS			
		4310 mm	4910 mm	5510 mm	5960 mm
	Mast Group Number	D508 4310	D508 4910	D508 5510	D508 5960
1	Hose	2065121	2065125	2065164	2065167

H3.0-3.5FT

ITEM	DESCRIPTION 1 2 3 4	LIFT HEIGHT TO BOTTOM OF FORKS				
		3968 mm	4568 mm	4868 mm	5168 mm	5768 mm
	Mast Group Number	D563 3968	D563 4568	D563 4868	D563 5168	D563 5768
1	Hose	2065121	2065125	2065162	2065164	2065168

KEY:
A: Three Function
B: Four Function

ITEM	PART NO.	DESCRIPTION	QTY A	QTY B
1	a	Hose	2	4
2	1581566	Nut	5	10
3	1369333	Clamp	1	2
4	1581581	Capscrew	4	6
5	1581835	Capscrew	1	2
6	1354961	Hose Restraint	1	2
7	1581851	Washer	1	2
8	1581567	Nut	1	2
9	1581558	Washer	1	2
10	1581588	Capscrew	1	2
11	1348246	Hose Guide (RH)	1	1
11	1348247	Hose Guide (LH)	..	1
12	1581831	Capscrew	1	2
13	1360538	Tube	1	2
14	1581842	Capscrew	4	8
15	1360386	Clamp	2	4
16	1353464	Plate	1	1
17	1477996	Clamp	1	2
18	1481229	Clamp	1	2
19	1345204	Snap Ring	2	4
20	1345199	Hose Guide	2	4
21	1354906	Bracket (RH)	1	1
21	1354907	Bracket (LH)	..	1
22	1390182	Nut	2	4
23	1362387	Stubshaft	1	2
24	1494017	Sheave	2	4
25	1360549	Spacer	1	2

©2005 HYSTER COMPANY

HEADER HOSES
THREE STAGE FULL FREE-LIFT

ITEM	PART NO.	DESCRIPTION	QTY A	QTY B
26	1345190	Washer	2	4
27	1581830	Capscrew	2	4
28	1395291	Bracket (RH Hose Guard)	1	1
29	1396406	Stubshaft	1	2
30	302461	Pin	1	2
31	1581560	Washer	1	2
32	1395292	Bracket (LH Hose Guard)	..	1
33	1529015	Cap	2	4
	1566564	Cap (Not Illustrated)	1	2

FOOTNOTES:
a Refer to Table

©2005 HYSTER COMPANY

NOTES

CARRIAGE (Figure 12-9)
THREE STAGE FULL FREE-LIFT

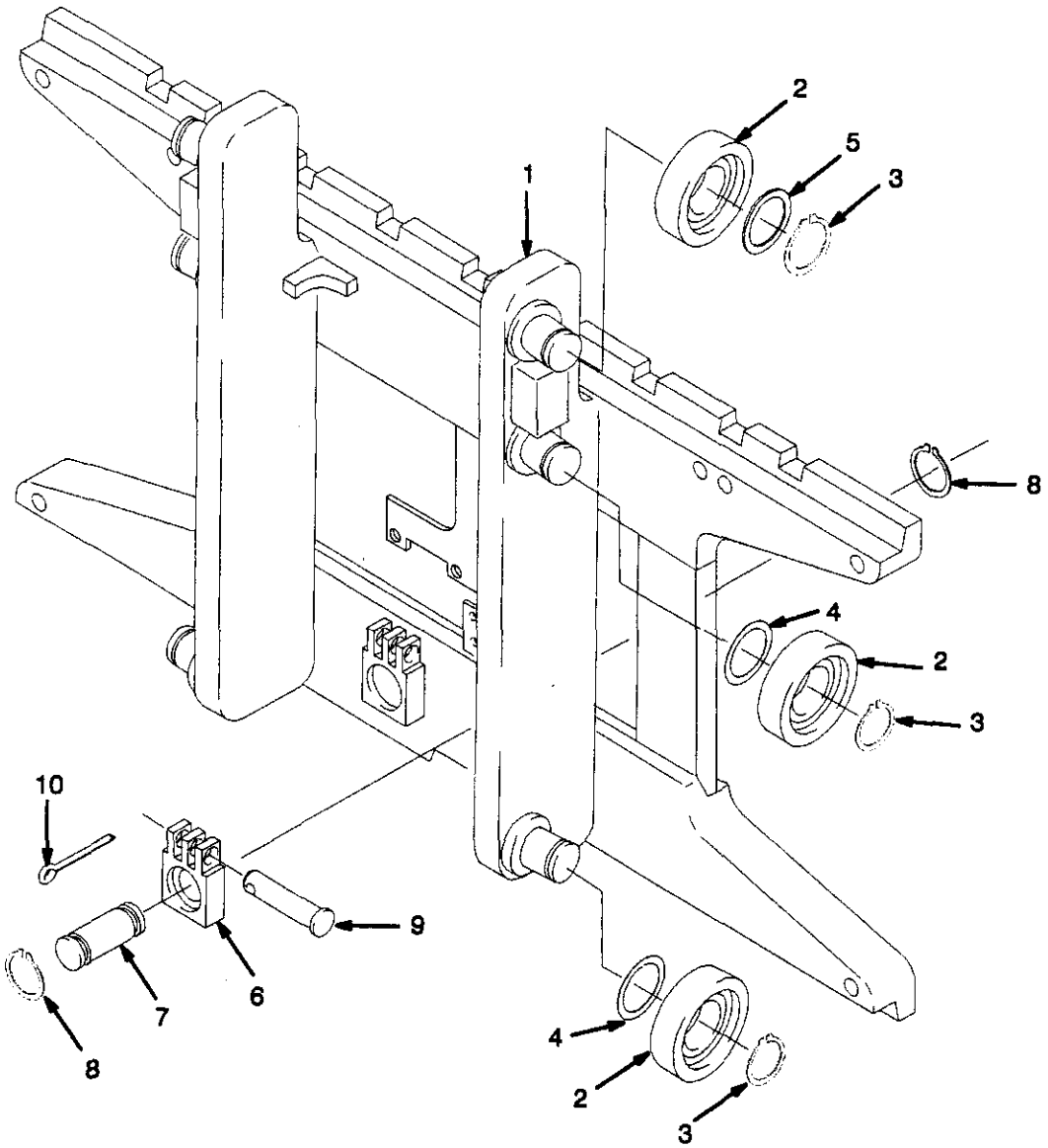

HP290016

©2005 HYSTER COMPANY

CARRIAGE
THREE STAGE FULL FREE-LIFT

KEY:
A: H2.0-2.5FT
B: H3.0-3.5FT

ITEM	PART NO.	DESCRIPTION	QTY A	QTY B
	1379459	Carriage Assembly	1	..
	1477680	Carriage Assembly	..	1
1	1381560	Frame	1	..
1	1477931	Frame	..	1
1	1345216	Stubshaft	6	6
2	1333399	Load Roller	6	6
3	58901	Snap Ring	6	6
4	129387	Shim (0,508 mm)	AR	AR
5	366115	Spacer	2	2
6	1369345	Chain Anchor (Dual Hole)	2	..
6	1504010	Chain Anchor (Single Hole) (Optional)	2	..
6	1369344	Chain Anchor (Dual Hole)	..	2
6	1504012	Chain Anchor (Single Hole) (Optional)	..	2
7	317735	Pin	2	2
8	131358	Snap Ring	4	4
9	1514866	Pin (Chain Anchor)	2	2
10	15211	Cotter Pin	2	2
	a 1374797	Snap Ring	6	6

FOOTNOTES:
a Not Illustrated

©2005 HYSTER COMPANY

NOTES

13 OPTIONS

SECTION 13
OPTIONS

DESCRIPTION	PAGE
ACCUMULATOR AND ATTACHING PARTS	13-13
AUXILIARY TUBE EXTENSIONS	
TWO AND THREE STAGE FULL FREE-LIFT	13-30
TWO STAGE LIMITED FREE-LIFT	13-28
BACK-UP ALARM	13-4
FIRE EXTINGUISHER	13-12
HEATER HOSE ARRANGEMENT	
LPG AND DIESEL	13-10
INTEGRAL SIDE-SHIFT ASSEMBLY	
THREE STAGE FULL FREE-LIFT	13-22
TWO STAGE FULL FREE-LIFT	13-20
TWO STAGE LIMITED FREE-LIFT	13-16
INTEGRAL SIDE-SHIFT CYLINDER	13-26
INTEGRAL SIDE-SHIFT HYDRAULIC HOSES	
TWO AND THREE STAGE FULL FREE-LIFT	13-24
TWO STAGE LIMITED FREE-LIFT	13-18
LIFTING EYE	13-2
MIRRORS	
WITH CAB	13-6
WITH OVERHEAD GUARD	13-8

©2005 HYSTER COMPANY

LIFTING EYE (Figure 13-1)

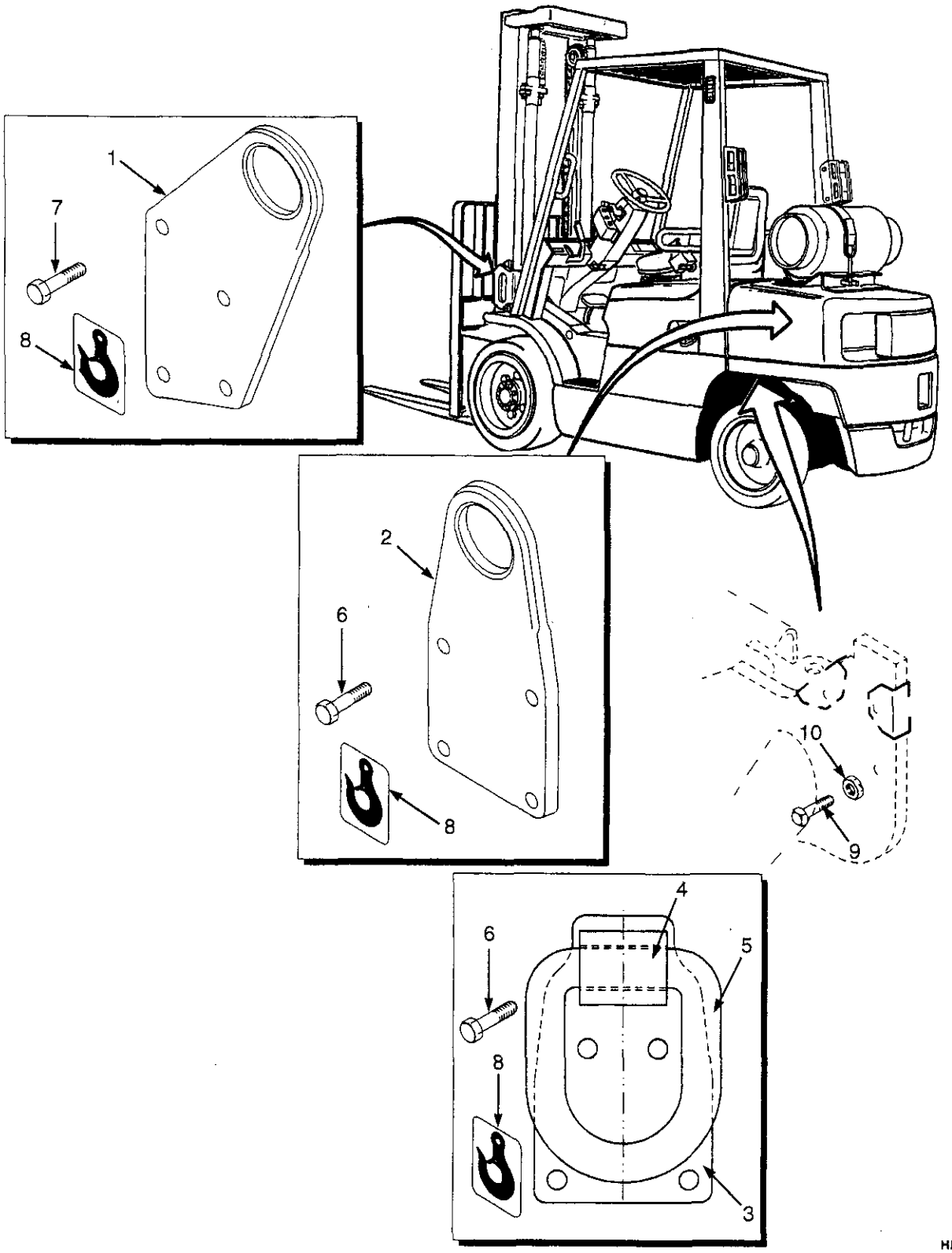

©2005 HYSTER COMPANY

LIFTING EYE

ITEM		PART NO.	DESCRIPTION	QTY
		1602394	Lifting Eye Kit (LPG)	1
		1602395	Lifting Eye Kit (Diesel)	1
1		1356400	Lifting Eye (Front)	2
2	a	1356401	Lifting Eye (Rear)	2
3	b	1566849	Lifting Eye (Rear)	2
4		1329850	Clip	1
5		1329851	Ring	1
6		1566853	Capscrew	8
7		1586790	Capscrew	8
8		316448	Label (Lifting Eye)	4
9		302323	Screw	2
10		296130	Nut	2

FOOTNOTES:
a Diesel Only
b LPG Only

©2005 HYSTER COMPANY

BACK-UP ALARM (Figure 13-2)

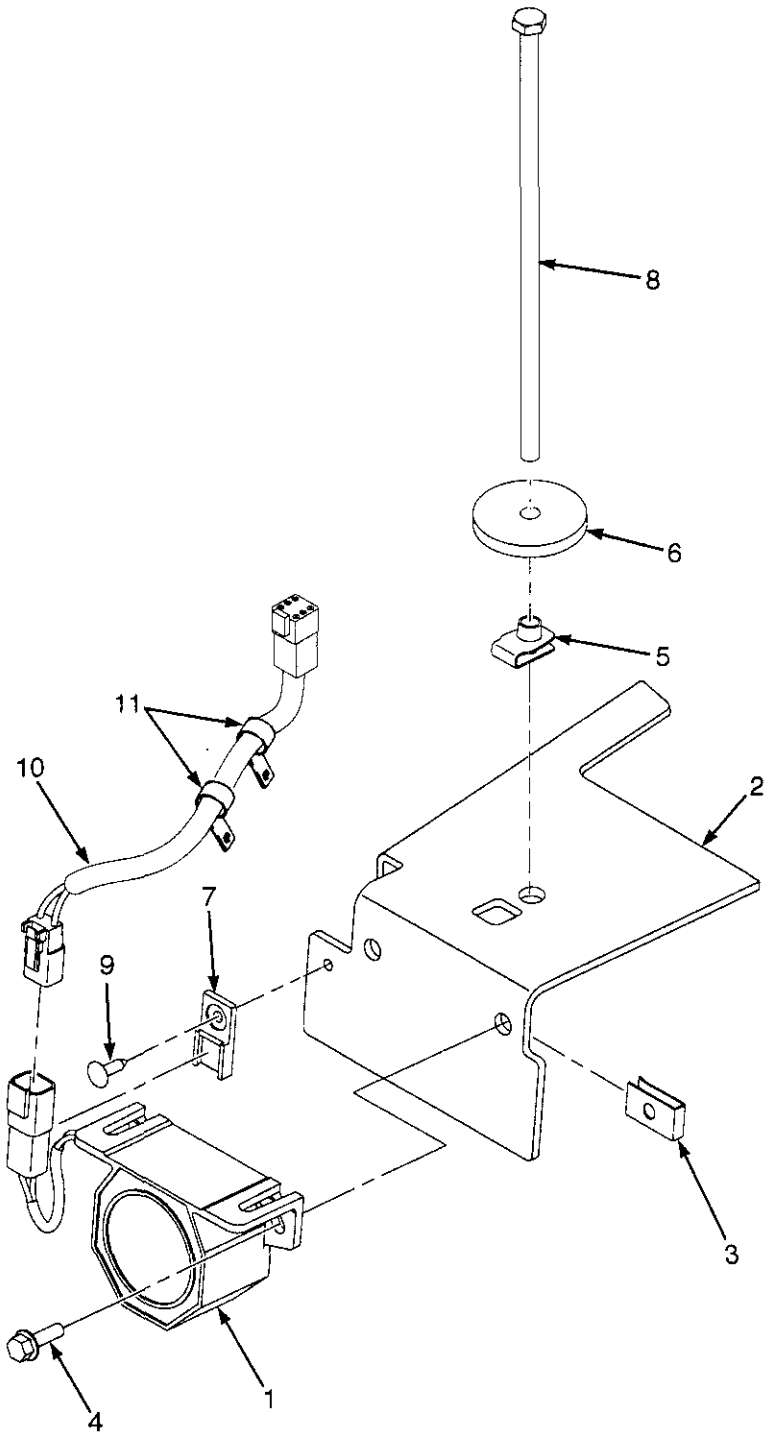

HP000897

©2005 HYSTER COMPANY

BACK-UP ALARM

ITEM	PART NO.	DESCRIPTION	QTY
1	2064929	Back-Up Alarm (82-102 dbA)	1
2	1589195	Bracket	1
3	1350215	Nut (Foldover)	2
4	1527877	Capscrew	2
5	1480237	Clip Nut	1
6	1547756	Washer	1
7	1500912	Clip	1
8	1543982	Capscrew	1
9	1582464	Fastener	1
10	2075699	Wire Harness (To RH Chassis)	1
10	1330437	Terminal (Pin)	2
10	1330438	Socket (Terminal)	2
10	1330439	Plug	4
10	1402923	Connector	1
10	1490242	Connector	1
10	1490243	Secondary Lock	1
10	1330417	Secondary Lock	1
11	1509888	Clip	2

©2005 HYSTER COMPANY

MIRRORS (Figure 13-3)
WITH CAB

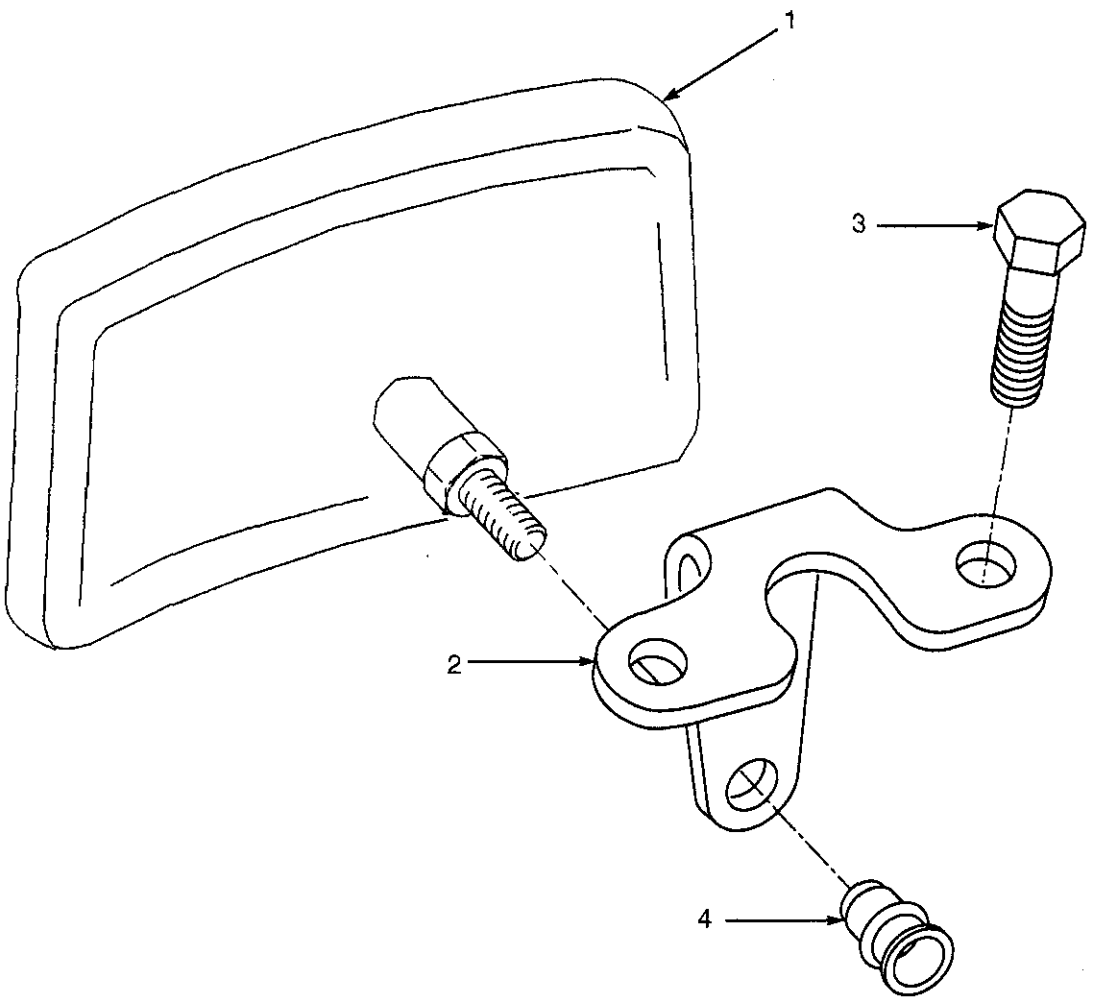

HP000896

©2005 HYSTER COMPANY

MIRRORS
WITH CAB

ITEM	PART NO.	DESCRIPTION	QTY
1	1301286	Mirror	2
2	1579412	Bracket	2
3	1583611	Capscrew	4
4	1531557	Insert	4

©2005 HYSTER COMPANY

MIRRORS (Figure 13-4)
WITH OVERHEAD GUARD

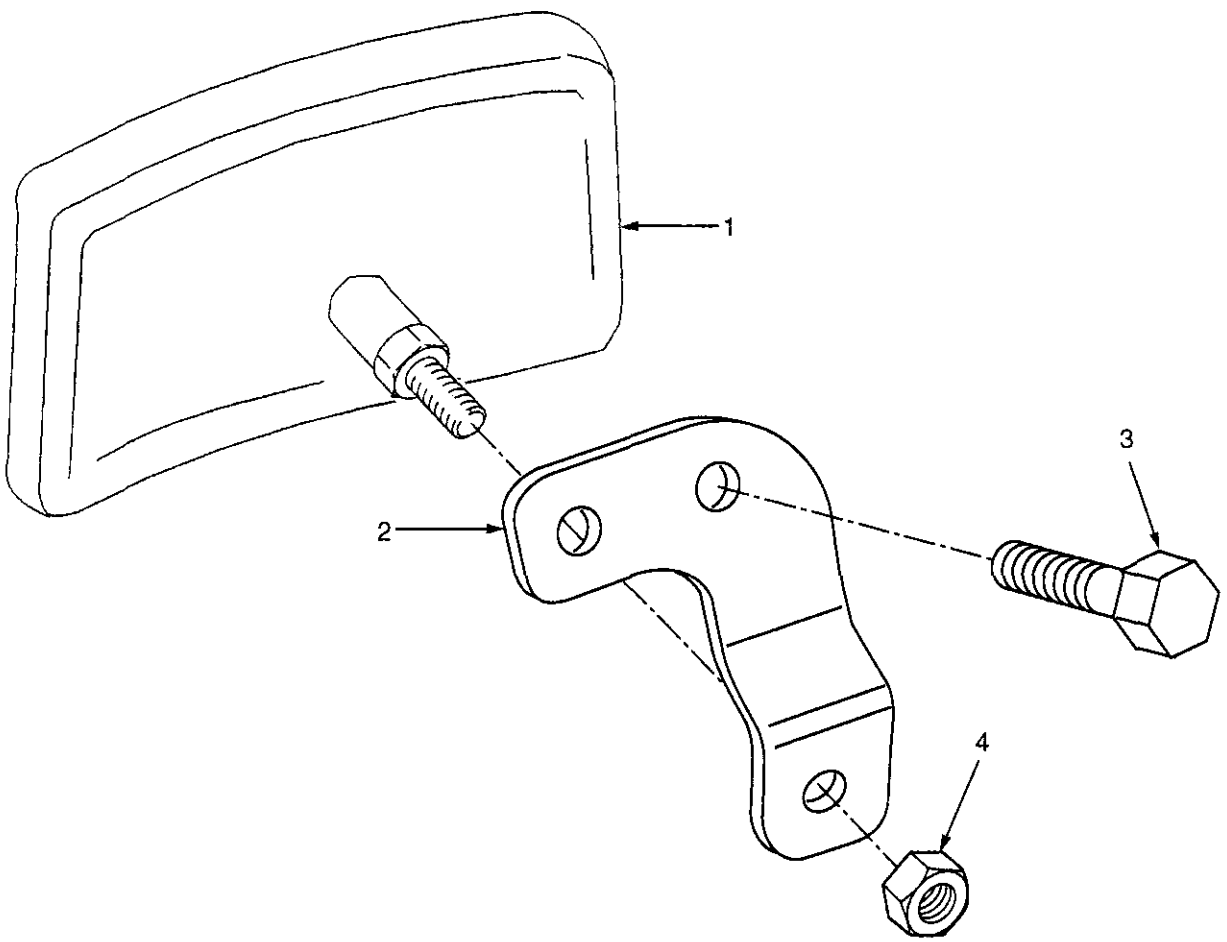

©2005 HYSTER COMPANY

MIRRORS
WITH OVERHEAD GUARD

ITEM	PART NO.	DESCRIPTION	QTY
1	1301286	Mirror	2
2	1569277	Bracket (RH)	1
2	1569278	Bracket (LH)	1
3	1583611	Capscrew	4
4	1586430	Nut	4

©2005 HYSTER COMPANY

HEATER HOSE ARRANGEMENT (Figure 13-5)
LPG AND DIESEL

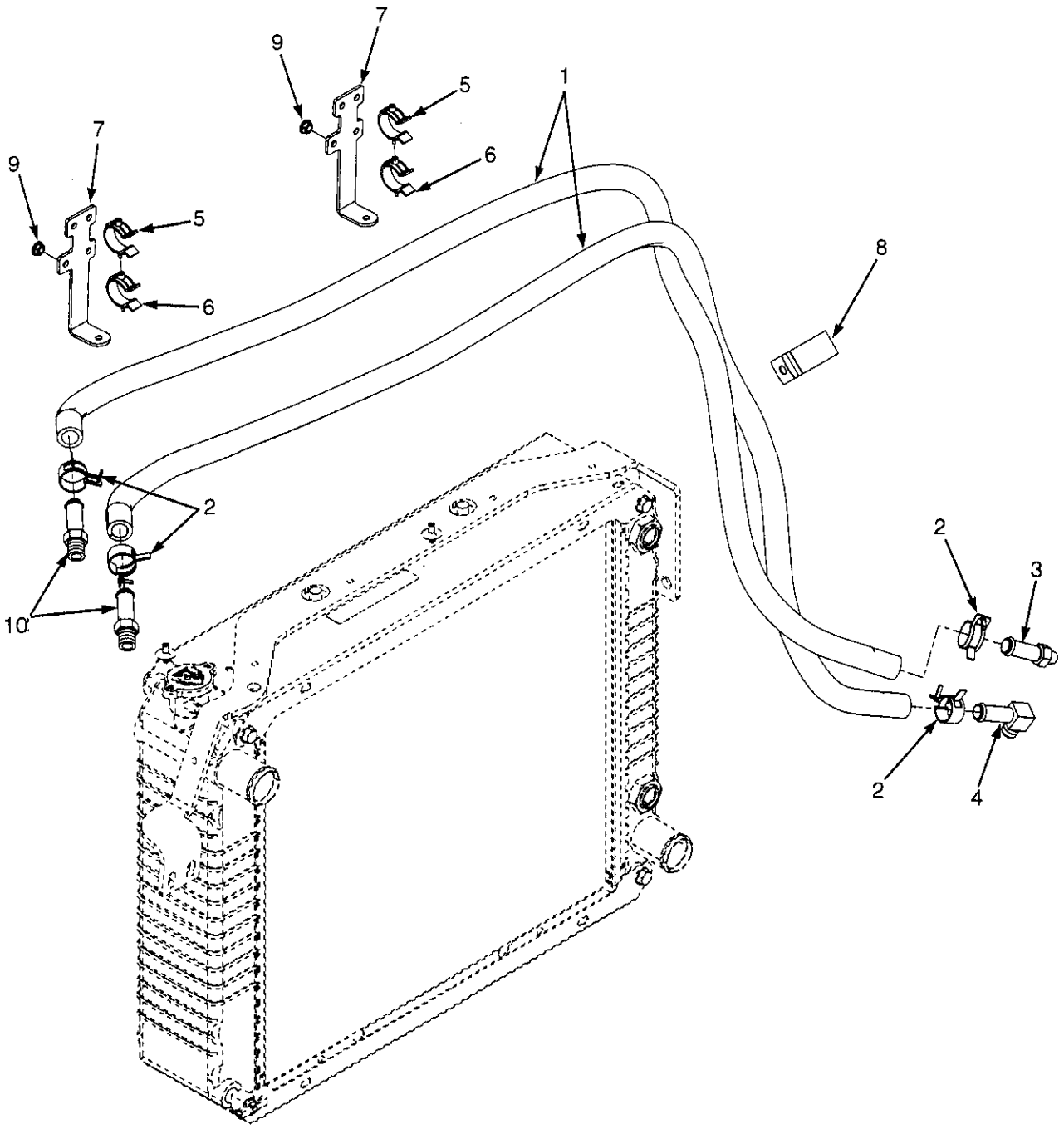

HP000905

©2005 HYSTER COMPANY

HEATER HOSE ARRANGEMENT
LPG AND DIESEL

KEY:
A: Mazda LPG Engines
B: GM LPG Engines
C: Yanmar Diesel Engines

ITEM	PART NO.	DESCRIPTION	QTY A	QTY B	QTY C
1	2071300	Hose	1	..	..
1	2070769	Hose	1	..	2
1	2070783	Hose	..	2	..
2	1501994	Clamp	4	4	4
3	138710	Fitting	..	..	1
3	. . . . .	Fitting (☞ Figure 1-9)	1	1	..
4	125305	Fitting	..	..	1
4	. . . . .	Fitting (☞ Figure 1-9)	1	1	..
5	1569465	Clamp	4	4	4
6	1543842	Base (Clamp)	2	2	2
7	1588833	Bracket	2	2	2
8	1562648	Clip	1	1	1
9	1514429	Nut (Flange)	4	4	4
10	. . . . .	Fitting (To Cab) (☞ Figure 1-9)	2	2	2

©2005 HYSTER COMPANY

FIRE EXTINGUISHER (Figure 13-6)

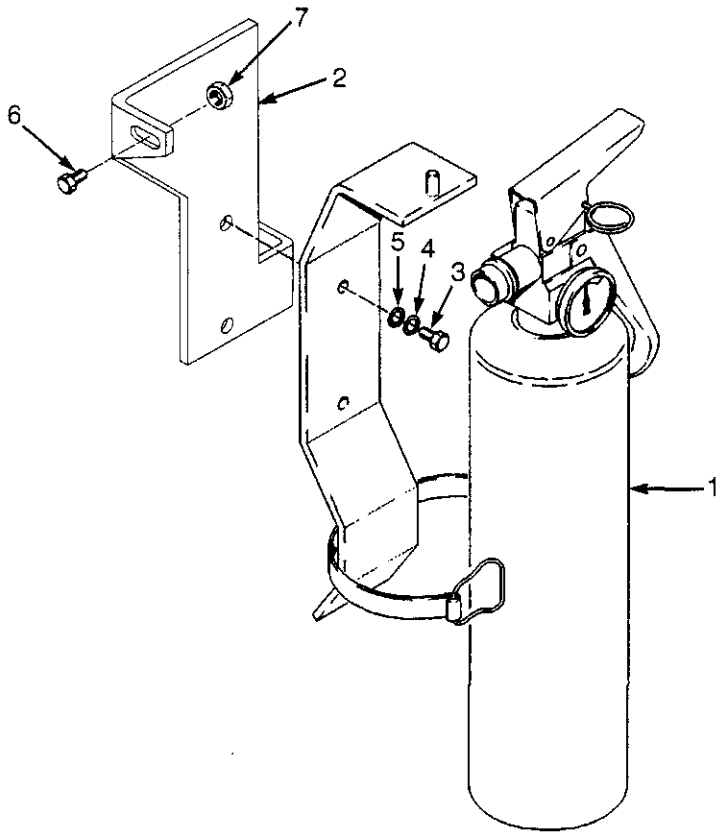

BP000252

ITEM	PART NO.	DESCRIPTION	QTY
1	146540	Fire Extinguisher Assembly	1
1	. . . . .	Fire Extinguisher	1
1	1561749	Bracket	1
2	1582141	Bracket	1
3	296507	Screw	2
4	292679	Lockwasher	2
5	320155	Washer	2
6	1583611	Capscrew	1
7	1502543	Nut (Flange)	1

©2005 HYSTER COMPANY

ACCUMULATOR AND ATTACHING PARTS (Figure 13-7)

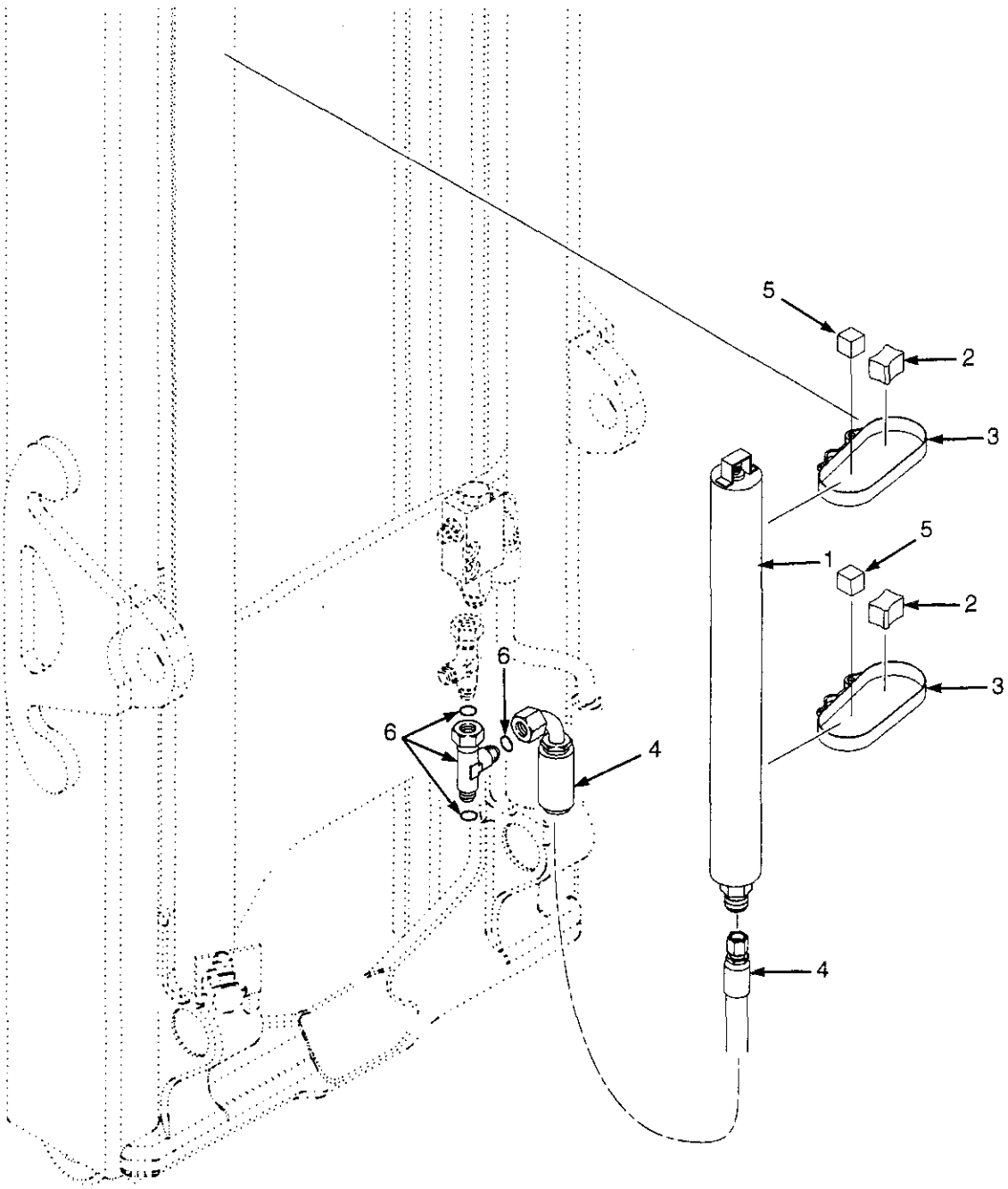

ACCUMULATOR AND ATTACHING PARTS

ITEM	PART NO.	DESCRIPTION	QTY
1	1465897	Accumulator	1
2	1466337	Spacer	2
3	1466472	Clamp	2
4	2073766	Hose	1
5	1582570	Spacer	4
6	1487096	Fitting	1
6	252729	O-Ring	3

©2005 HYSTER COMPANY

NOTES

INTEGRAL SIDE-SHIFT ASSEMBLY (Figure 13-8)
TWO STAGE LIMITED FREE-LIFT

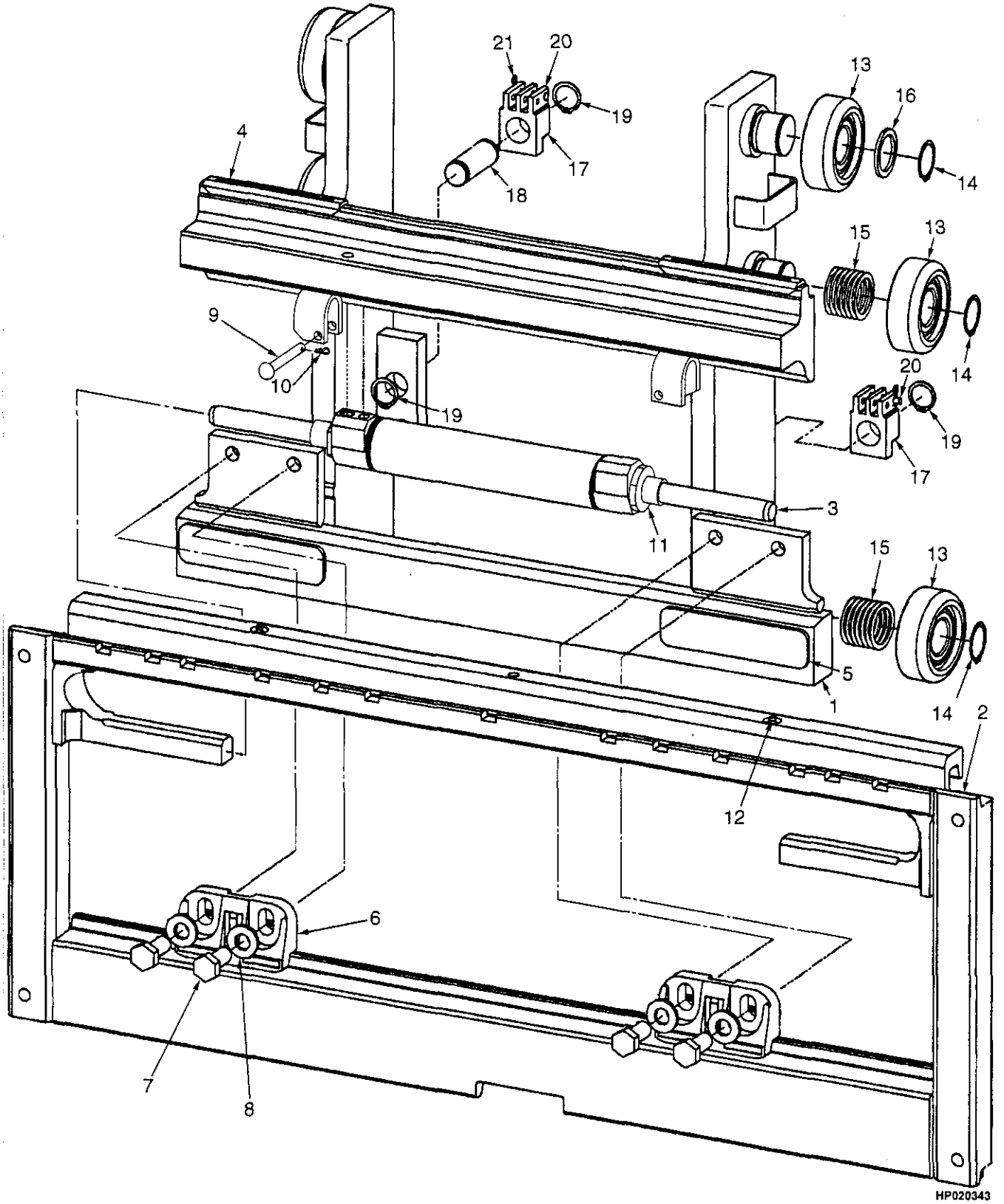

©2005 HYSTER COMPANY

INTEGRAL SIDE-SHIFT ASSEMBLY
TWO STAGE LIMITED FREE-LIFT

KEY:
A: H2.0-2.5FT D507
B: H3.0-3.5FT D562

ITEM	PART NO.	DESCRIPTION	QTY A	QTY B
	1486182	Side-Shift Carriage Assembly (1067 mm)	1	..
	1486185	Side-Shift Carriage Assembly (1219 mm)	1	..
	1487981	Side-Shift Carriage Assembly (1067 mm)	..	1
	1487982	Side-Shift Carriage Assembly (1219 mm)	..	1
1	1489002	Frame (Inner)	1	..
1	1477849	Frame (Inner)	..	1
2	1489011	Frame (1067 mm) (Outer)	1	..
2	1489012	Frame (1219 mm) (Outer)	1	..
2	1488975	Frame (1067 mm) (Outer)	..	1
2	1488976	Frame (1219 mm) (Outer)	..	1
3	2043528	Cylinder Assembly (☞ Figure 13-13)	1	..
3	2043529	Cylinder Assembly (☞ Figure 13-13)	..	1
4	2043531	Bearing (Upper)	2	..
4	2043532	Bearing (Upper)	..	2
5	2043533	Bearing (Lower)	2	..
5	2043534	Bearing (Lower)	..	2
6	2043530	Hook (Lower)	2	2
7	226458	Capscrew	4	4
8	296426	Washer (Hardened)	4	4
9	1401746	Pin	2	2
10	18832	Cotter Pin	2	2
11	1498326	Shim	3	3
12	16041	Lube Fitting	2	2
13	1345219	Load Roller	6	6
14	12891	Snap Ring	6	6
15	1345263	Shim (0,508 mm)	28	28
16	366116	Spacer	2	2
17	1369344	Chain Anchor (Dual Hole)	..	2
17	1504012	Chain Anchor (Single Hole) (Optional)	..	2
17	1369345	Chain Anchor (Dual Hole)	2	..
17	1504010	Chain Anchor (Single Hole) (Optional)	2	..
18	1353408	Pin	2	2
18	317735	Pin (48 in.)	2	..
19	131358	Snap Ring	4	4
20	1514866	Pin	2	2
21	15211	Cotter Pin	2	2
a	386422	Snap Ring	6	6

FOOTNOTES:
a Not Illustrated

©2005 HYSTER COMPANY

INTEGRAL SIDE-SHIFT HYDRAULIC HOSES (Figure 13-9)
TWO STAGE LIMITED FREE-LIFT

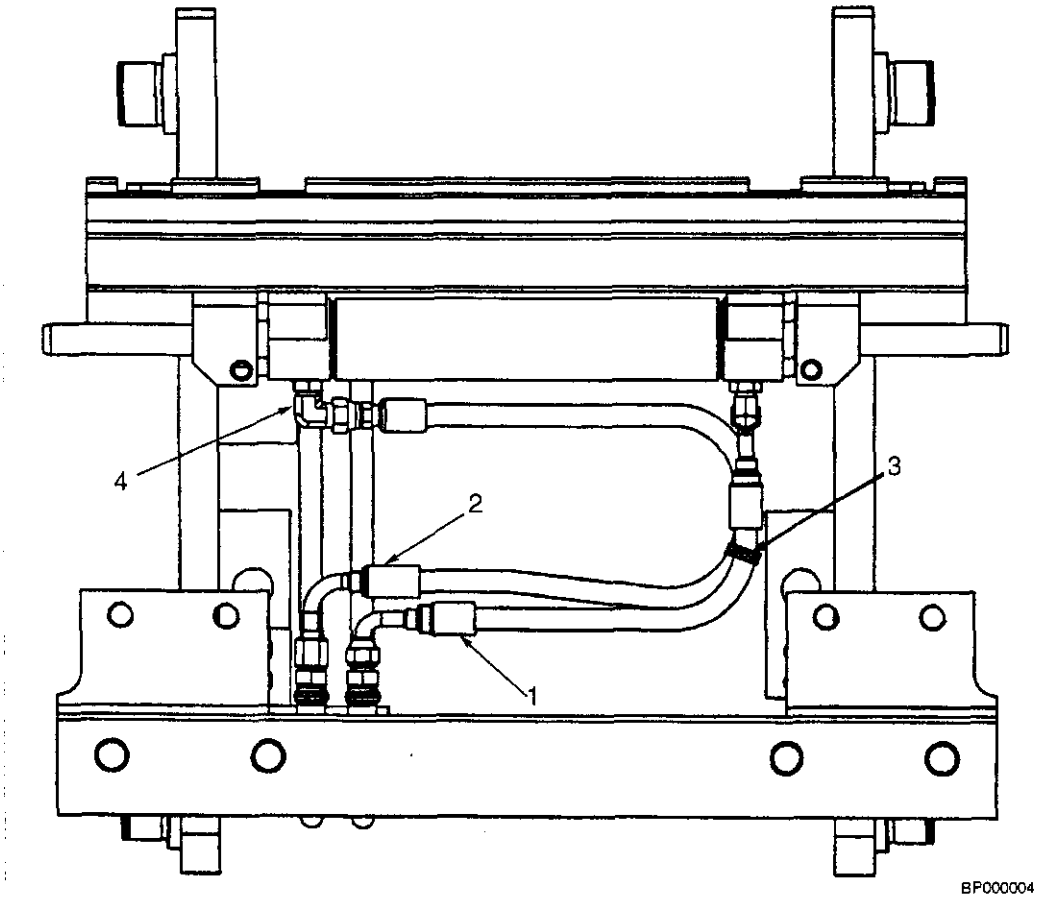

KEY:
A: H2.0-2.5FT
B: H3.0-3.5FT

ITEM	PART NO.	DESCRIPTION	QTY A	QTY B
1	2067822	Hose	1	..
1	2065672	Hose	..	1
2	2065670	Hose	1	..
2	2065671	Hose	..	1
3	114312	Strap Clamp	1	1
4	1487063	Fitting	2	2
4	1527813	O-Ring	1	1
4	265787	O-Ring	1	1

©2005 HYSTER COMPANY

NOTES

INTEGRAL SIDE-SHIFT ASSEMBLY (Figure 13-10)
TWO STAGE FULL FREE-LIFT

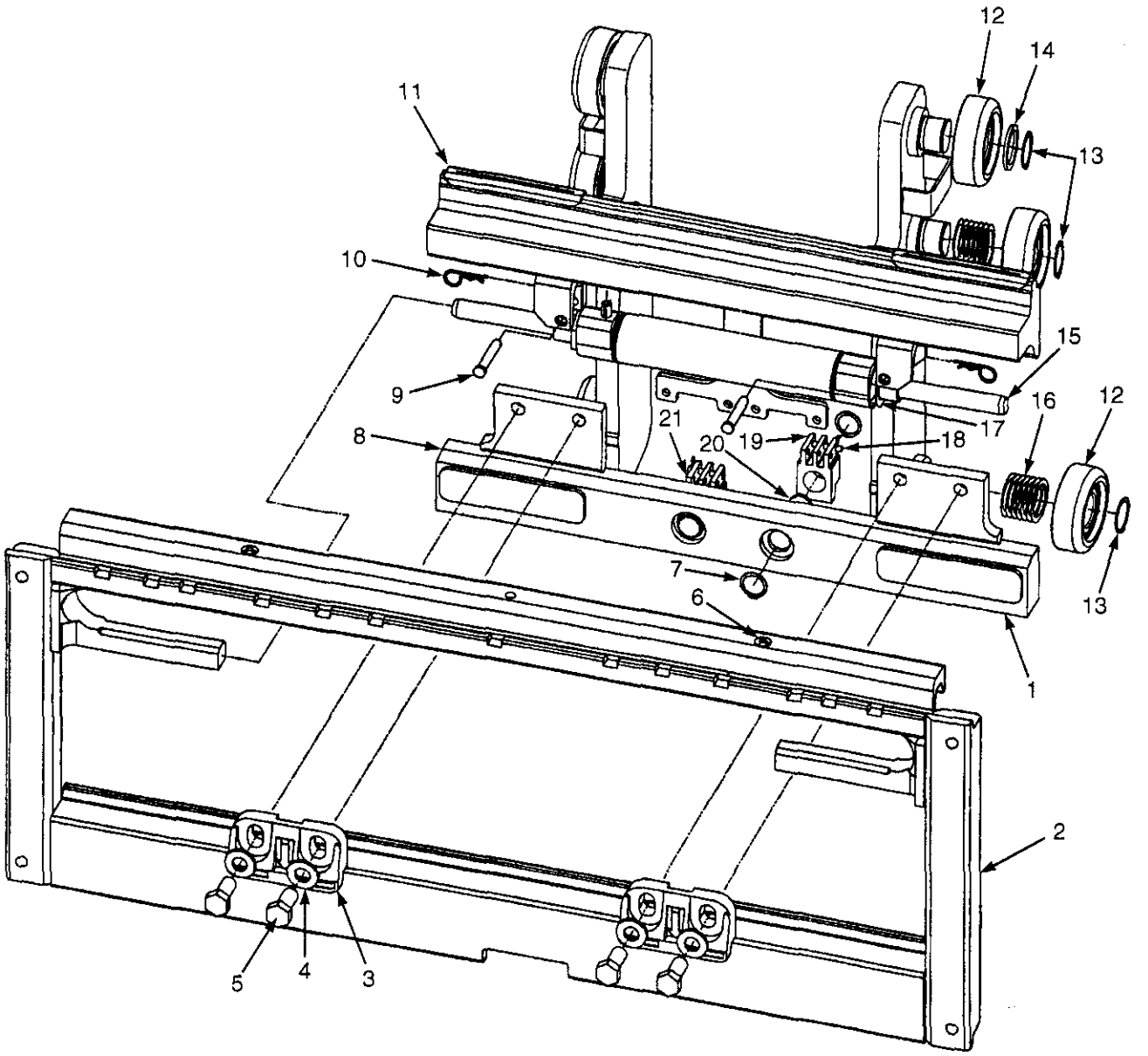

HP020344

©2005 HYSTER COMPANY

INTEGRAL SIDE-SHIFT ASSEMBLY
TWO STAGE FULL FREE-LIFT

KEY:
A: H2.0-2.5FT D509
B: H3.0-3.5FT D564

ITEM	PART NO.	DESCRIPTION	QTY A	QTY B
	1486183	Side-Shift Carriage (1067 mm)	1	..
	1486186	Side-Shift Carriage (1219 mm)	1	..
	1477944	Side-Shift Carriage (1067 mm)	..	1
	1477946	Side-Shift Carriage (1219 mm)	..	1
1	1489003	Frame (1067 mm, 1219 mm) (Inner)	1	..
1	1477938	Frame (1067 mm, 1219 mm) (Inner)	..	1
2	1489011	Frame (1067 mm) (Outer)	1	..
2	1489012	Frame (1219 mm) (Outer)	1	..
2	1488975	Frame (1067 mm) (Outer)	..	1
2	1488976	Frame (1219 mm) (Outer)	..	1
3	2043530	Hook (Lower)	2	2
4	296426	Washer (Hardened)	4	4
5	226458	Capscrew	4	2
6	16041	Lube Fitting	2	2
7	131358	Snap Ring	4	4
8	2043533	Bearing (Lower)	2	..
8	2043534	Bearing (Lower)	..	2
9	1401746	Pin	2	2
10	18832	Cotter Pin	2	2
11	2043531	Bearing (Upper)	2	..
11	2043532	Bearing (Upper)	..	2
12	1345219	Load Roller	6	6
13	12891	Snap Ring	6	6
14	366116	Spacer	2	2
15	2043528	Cylinder Assembly (☞ Figure 13-13)	1	..
15	2043529	Cylinder Assembly (☞ Figure 13-13)	..	1
16	1345263	Shim (0,508 mm)	28	28
17	1498326	Shim	3	3
18	1514866	Pin	2	2
19	1369345	Chain Anchor (Dual Hole)	2	..
19	1504010	Chain Anchor (Single Hole) (Optional)	2	..
19	1369344	Chain Anchor (Dual Hole)	..	2
19	1504012	Chain Anchor (Single Hole) (Optional)	..	2
20	317735	Pin	2	2
21	15211	Cotter Pin	2	2
	a 386422	Snap Ring	6	6

FOOTNOTES:
a Not Illustrated

©2005 HYSTER COMPANY

INTEGRAL SIDE-SHIFT ASSEMBLY (Figure 13-11)
THREE STAGE FULL FREE-LIFT

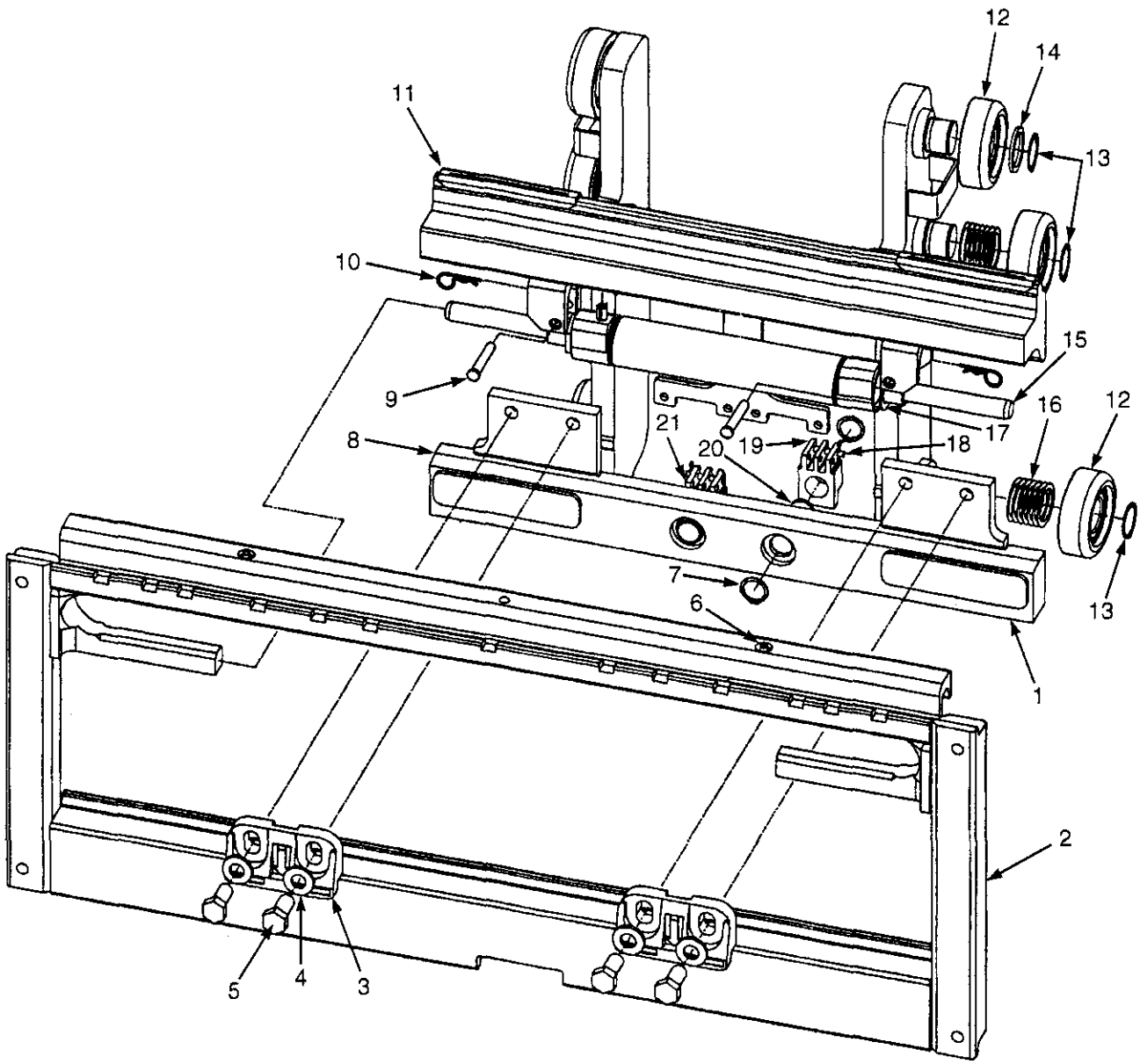

HP020344

©2005 HYSTER COMPANY

INTEGRAL SIDE-SHIFT ASSEMBLY
THREE STAGE FULL FREE-LIFT

KEY:
A: H2.0-2.5FT D508
B: H3.0-3.5FT D563

ITEM		PART NO.	DESCRIPTION	QTY A	QTY B
		1486184	Side-Shift Carriage (1067 mm)	1	..
		1486187	Side-Shift Carriage (1219 mm)	1	..
		1477945	Side-Shift Carriage (1067 mm)	..	1
		1477947	Side-Shift Carriage (1219 mm)	..	1
1		1489004	Frame (1067 mm, 1219 mm) (Inner)	1	..
1		1477939	Frame (1067 mm, 1219 mm) (Inner)	..	1
2		1489011	Frame (1067 mm) (Outer)	1	..
2		1489012	Frame (1219 mm) (Outer)	1	..
2		1488975	Frame (1067 mm) (Outer)	..	1
2		1488976	Frame (1219 mm) (Outer)	..	1
3		2043530	Hook (Lower)	2	2
4		296426	Washer (Hardened)	4	4
5		226458	Capscrew	4	2
6		16041	Lube Fitting	2	2
7		131358	Snap Ring	4	4
8		2043533	Bearing (Lower)	2	..
8		2043534	Bearing (Lower)	..	2
9		1401746	Pin	2	2
10		18832	Cotter Pin	2	2
11		2043531	Bearing (Upper)	2	..
11		2043532	Bearing (Upper)	..	2
12		1333399	Load Roller	6	6
13		58901	Snap Ring	6	6
14		366115	Spacer	2	2
15		2043528	Cylinder Assembly (☞ Figure 13-13)	1	..
15		2043529	Cylinder Assembly (☞ Figure 13-13)	..	1
16		129387	Shim (0,508 mm)	28	28
17		1498326	Shim	3	3
18		1514866	Pin	2	2
19		1369345	Chain Anchor (Dual Hole)	2	..
19		1504010	Chain Anchor (Single Hole) (Optional)	2	..
19		1369344	Chain Anchor (Dual Hole)	..	2
19		1504012	Chain Anchor (Single Hole) (Optional)	..	2
20		317735	Pin	2	2
21		15211	Cotter Pin	2	2
22	a	1374797	Snap Ring	6	6

FOOTNOTES:
a Not Illustrated

©2005 HYSTER COMPANY

INTEGRAL SIDE-SHIFT HYDRAULIC HOSES (Figure 13-12)
TWO AND THREE STAGE FULL FREE-LIFT

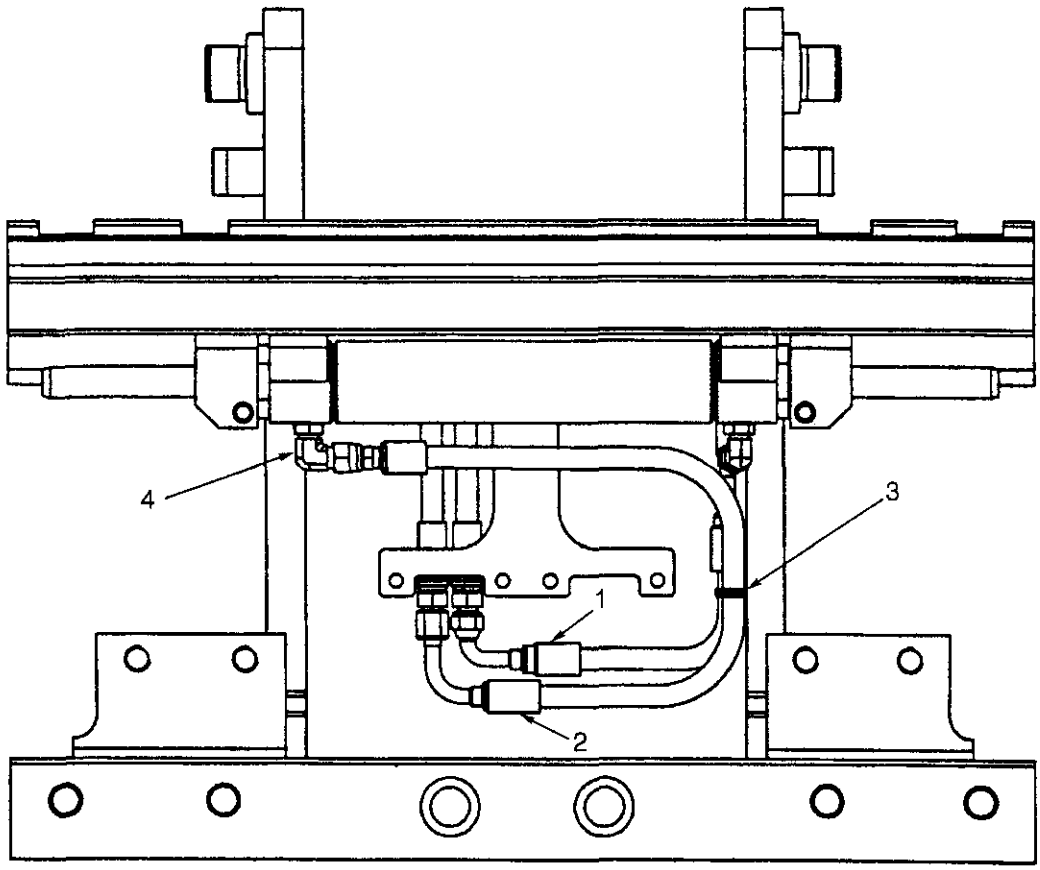

KEY:
A: H2.0-2.5FT
B: H3.0-3.5FT

ITEM	PART NO.	DESCRIPTION	QTY A	QTY B
1	2065675	Hose	1	..
1	2065674	Hose	..	1
2	2065671	Hose	1	..
2	2065670	Hose	..	1
3	114312	Strap Clamp	1	1
4	1487063	Fitting	2	2
4	1527813	O-Ring	1	1
4	265787	O-Ring	1	1

©2005 HYSTER COMPANY

NOTES

INTEGRAL SIDE-SHIFT CYLINDER (Figure 13-13)

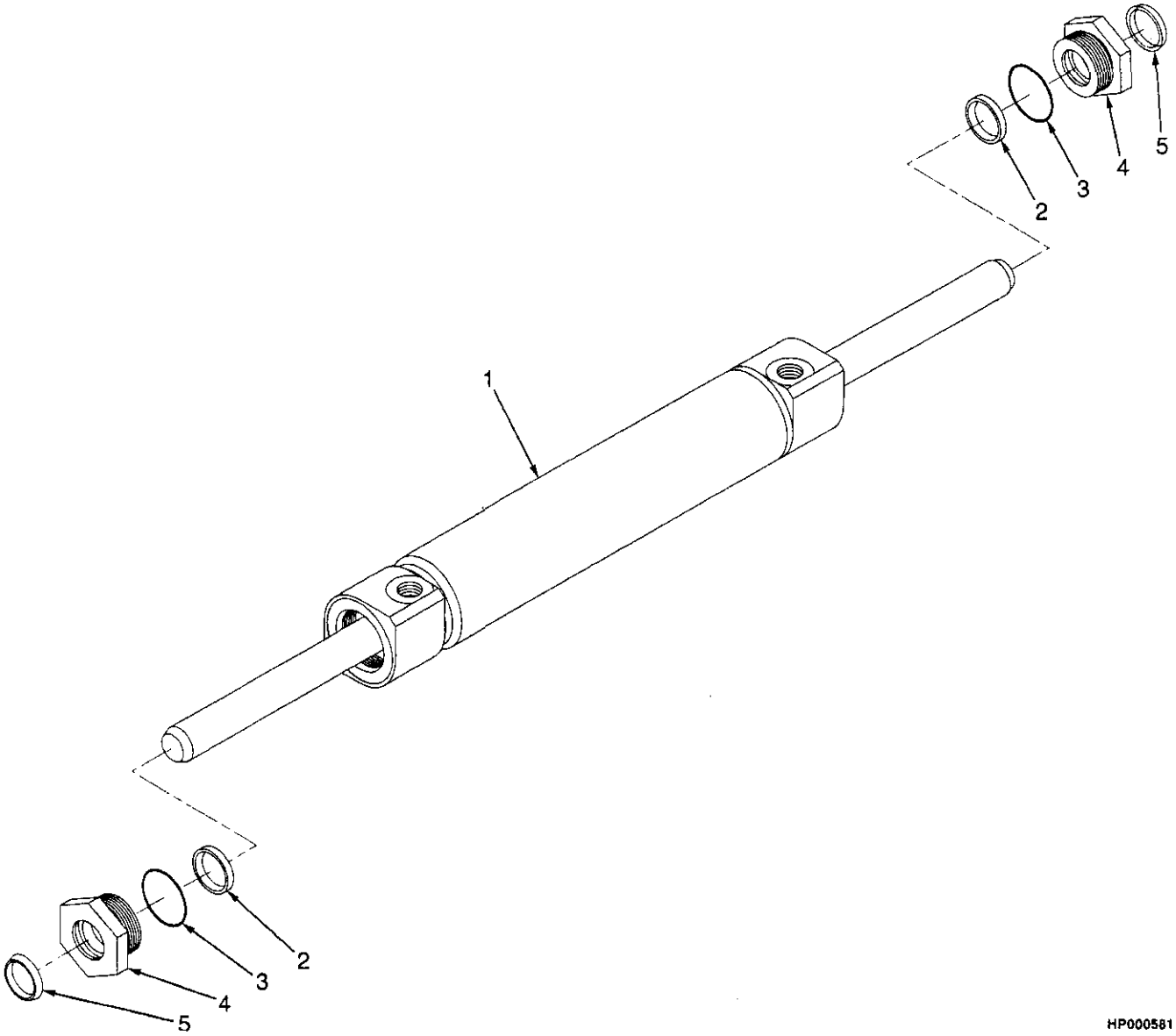

©2005 HYSTER COMPANY

INTEGRAL SIDE-SHIFT CYLINDER

ITEM		PART NO.	DESCRIPTION	QTY
		2043528	Cylinder Assembly (H2.0-2.5FT)	1
		2043529	Cylinder Assembly (H3.0-3.5FT)	1
1		1489018	Cylinder Shell	1
2		1489037	Rod Seal	2
3		1489035	O-Ring	2
4		1498325	Retainer	2
5		1489039	Rod Wiper	2
6	a	302487	Pin	1
		1503096	Seal Kit (Includes Items 2-3, 5)	1

FOOTNOTES:

a Not Illustrated

©2005 HYSTER COMPANY

AUXILIARY TUBE EXTENSIONS (Figure 13-14)
TWO STAGE LIMITED FREE-LIFT

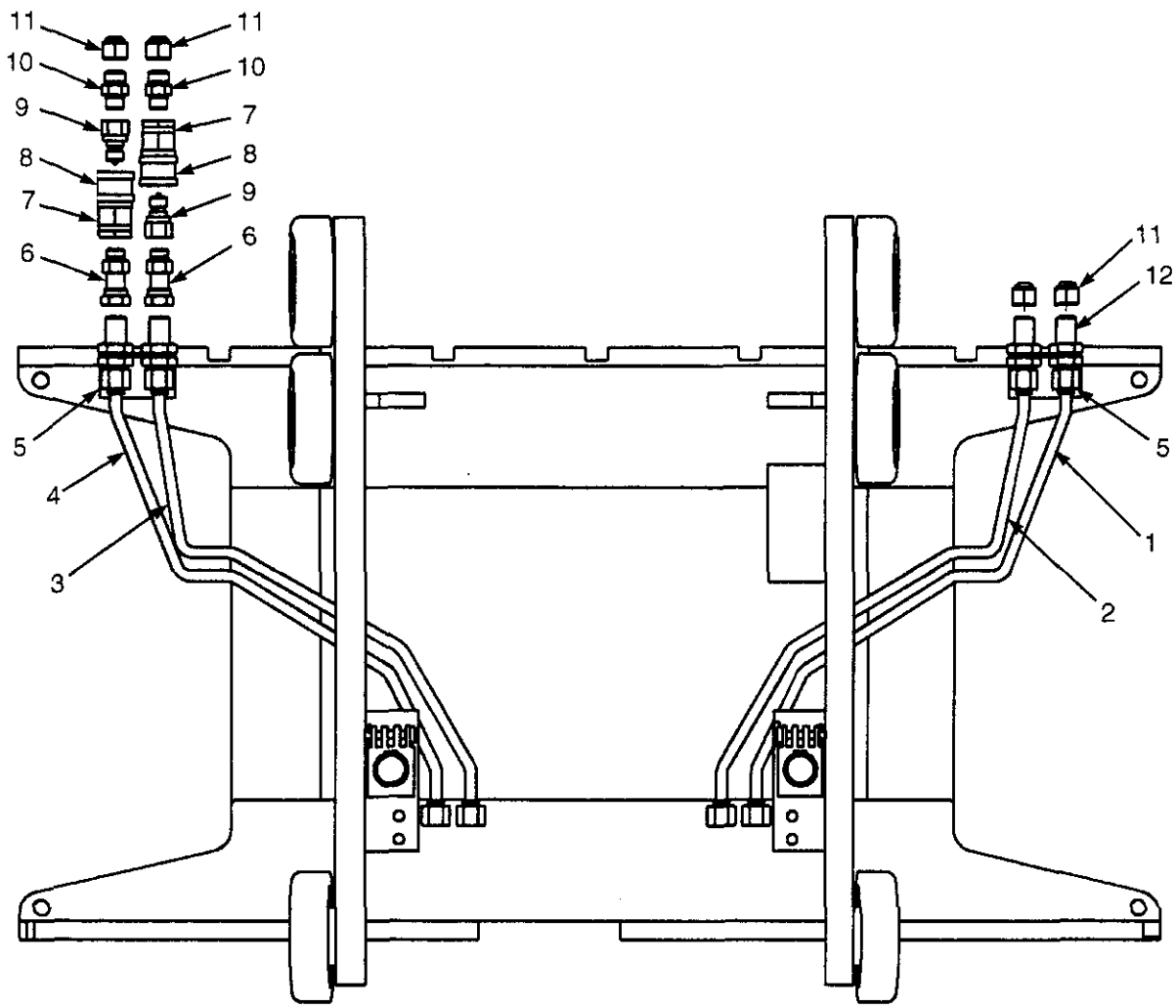

HP020346

©2005 HYSTER COMPANY

AUXILIARY TUBE EXTENSIONS
TWO STAGE LIMITED FREE-LIFT

KEY:
A: D507, Standard Carriage
B: D507, Integral Side-Shift Carriage
C: D562, Standard Carriage
D: D562, Integral Side-Shift Carriage

ITEM		PART NO.	DESCRIPTION	QTY A	B	C	D
1		2079327	Tube	1	..	..	..
1		2079331	Tube	..	..	1	..
2		2079328	Tube	1	..	..	..
2		2079332	Tube	..	..	1	..
3		2079329	Tube	1	1	..	..
3		2079333	Tube	..	..	1	1
4		2079330	Tube	1	1	..	..
4		2079334	Tube	..	..	1	1
5		1549718	Bracket	..	1	..	..
5		1549724	Bracket	..	..	..	1
5		1550070	Bracket	1	..	1	..
6	a	1549715	Fitting	2	2	2	2
6	a	265787	O-Ring	2	2	2	2
6	a	1527813	O-Ring	2	2	2	2
7	a	1483663	Quick Disconnect Socket	2	2	2	2
8	a	1483661	Dust Cap	2	2	2	2
9	a	1483664	Quick Disconnect Nipple	2	2	2	2
10	a	1486740	Fitting	2	2	2	2
10	a	1527813	O-Ring	2	2	2	2
10	a	265787	O-Ring	2	2	2	2
11		1529015	Cap	2	2	2	2
12		1528573	Fitting	2	2	2	2
12		265787	O-Ring	4	4	4	4

FOOTNOTES:
a Used With Quick Disconnect Only

©2005 HYSTER COMPANY

AUXILIARY TUBE EXTENSIONS (Figure 13-15)
TWO AND THREE STAGE FULL FREE-LIFT

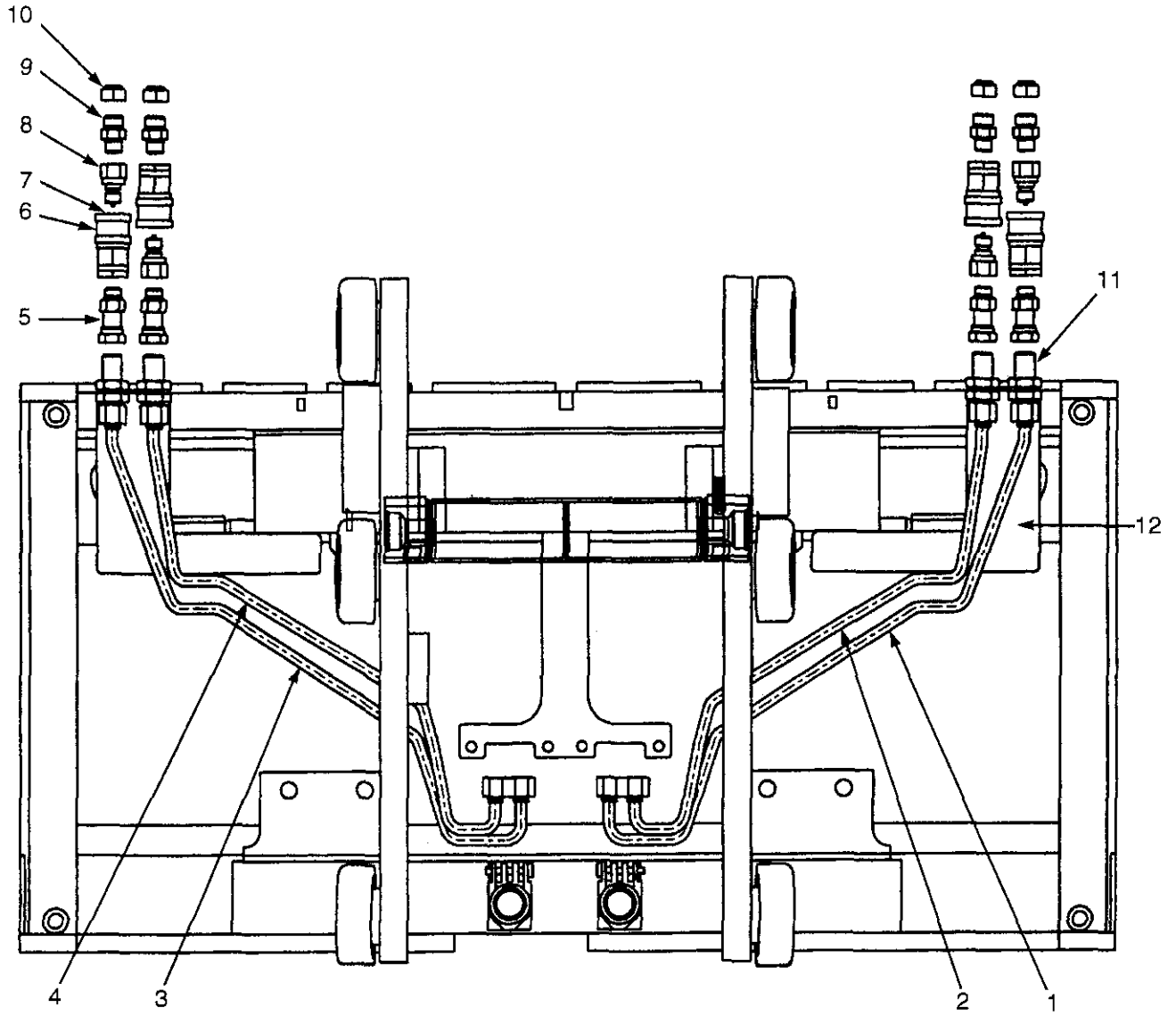

HP020347

©2005 HYSTER COMPANY

AUXILIARY TUBE EXTENSIONS
TWO AND THREE STAGE FULL FREE-LIFT

KEY:
A: D564, Standard Carriage
B: D564, Integral Side-Shift Carriage
C: D509, Standard Carriage
D: D509, Integral Side-Shift Carriage

ITEM		PART NO.	DESCRIPTION	QTY A	B	C	D
1		2074408	Tube	..	..	1	..
1		2074412	Tube	1	..	..	..
2		2074409	Tube	..	..	1	..
2		2074413	Tube	1	..	..	..
3		2074410	Tube	..	..	..	1
3		2074414	Tube	..	1	..	..
4		2074411	Tube	..	..	..	1
4		2074415	Tube	..	1	..	..
5	a	1549715	Fitting	2	2	2	2
5	a	1527813	O-Ring	2	2	2	2
5	a	265787	O-Ring	2	2	2	2
6	a	1483663	Quick Disconnect Socket	2	2	2	2
7	a	1483661	Dust Cap	2	2	2	2
8	a	1483664	Quick Disconnect Nipple	2	2	2	2
9	a	1486740	Fitting	2	2	2	2
9	a	1527813	O-Ring	2	2	2	2
9	a	265787	O-Ring	2	2	2	2
10		1529015	Cap	2	2	2	2
11		1528573	Fitting	2	2	2	2
11		265787	O-Ring	4	4	4	4
12		1550070	Bracket	1	..	1	..
12		1549724	Bracket	..	1	..	..
12		1549718	Bracket	..	..	..	1

FOOTNOTES:
a Used With Quick Disconnect Only

©2005 HYSTER COMPANY

NOTES

14 NUMERICAL INDEX

SECTION 14
NUMERICAL INDEX

PART NO.	PG	ITEM
126	3-29	9
	3-31	12
206	8-5	23
	8-9	23
12891	10-15	4
	11-17	3
	13-17	14
	13-21	13
12929	8-5	24
	8-9	24
13957	7-11	31
14349	4-7	33
14358	3-15	11
14372	3-15	10
14385	2-9	27
	2-11	15
	2-13	26
	2-15	26
	2-53	26
	2-67	25
	2-69	25
14591	9-6	3
14603	11-7	7
15055	9-24	2
	9-37	6
15135	5-13	11
	5-23	11
15158	5-13	10
	5-23	12
15211	10-7	19
	10-15	10
	11-11	25
	11-17	10
	12-10	19
	12-18	20
	12-29	10
	13-17	21
	13-21	21
	13-23	21
15223	12-10	25
15225	7-11	11
15227	7-11	25
15241	6-5	29
15329	2-51	5
15483	2-57	5
15880	11-13	12
	12-21	12
15931	3-39	11
15971	3-11	42
16001	10-3	10
	11-3	10
	12-3	10
16040	9-43	13
	9-45	14
16041	9-41	6
	13-17	12
	13-21	6
	13-23	6
16079	4-7	9
	4-11	1
	4-11	2
	4-13	29
	4-13	30
16134	3-12	45
	3-15	24
16143	3-11	30
16151	3-15	9
	3-23	6
	6-5	14
16168	3-11	18
16199	3-11	17
16480	9-29	13
16481	5-35	3
	8-15	7
	9-6	3
	9-9	3
	9-9	7
16483	5-17	31
	5-27	34
	8-15	20
16484	5-7	3
	5-11	10
	5-13	39
	5-23	7
	7-9	3
	7-9	4
	8-15	5
	9-3	25
	9-9	5
	9-9	27
16485	5-7	4
	5-9	3
	5-11	4
	5-11	7
	5-13	5
	5-23	5
	5-23	16
	5-35	9
	8-15	2
	9-3	10
	10-7	4
	10-7	6
	11-7	2
	11-7	4
	11-7	10
	11-11	2
	11-11	14
	12-9	4
	12-9	6
	12-17	12
16486	5-13	37
	5-23	40
	8-15	14
	8-15	17
	9-3	19
	9-9	14
	11-7	7
	12-9	12
16682	5-13	30
	5-27	10
16706	9-21	6
	9-23	3
16708	3-39	14
16788	3-11	9
16863	3-11	43
16982	10-7	12
	11-7	8
	12-17	12
16983	5-17	13
	5-27	17
16984	9-3	14
17650	3-23	3
17758	8-15	14
17775	8-15	17
18094	9-11	6
	9-15	6
18595	5-13	9
	5-23	13
18832	13-17	10
	13-21	10
	13-23	10
21420	6-5	15
30273	7-11	20
34507	3-19	2
	3-21	19
37752	10-5	8
	11-11	22
	12-5	12
	12-18	21
39348	10-10	4
	11-13	6
	12-14	4
	12-21	6
39352	7-11	36
39374	9-43	3
43207	5-17	17
	5-19	22
	5-21	22
	5-29	22
	5-31	21
	5-33	22
43208	5-13	19
43209	5-23	36
	5-27	18
44306	5-23	35
44307	5-17	19
	5-27	21
44308	5-13	24
44309	5-23	30
44310	5-13	33
	5-27	3
44542	7-11	18
46388	9-43	7
55434	9-41	11
58901	10-3	8
	10-5	3
	11-3	8
	11-5	3
	12-3	8
	12-5	8
	12-7	3
	12-29	3
	13-23	13
58903	7-11	6
58916	5-13	23
59229	10-10	10
	11-8	9
	11-9	7
	12-14	12
60563	9-41	11
60836	2-57	2
61191	2-57	1
63108	3-11	31
68968	2-17	6
	2-55	6
	2-71	6
69029	7-11	24
77441	9-23	6
	9-31	2
	9-33	2
77442	9-21	3
	9-23	7
	9-31	4
	9-33	4
	9-35	3
77443	9-21	5
	9-23	8
	9-31	5

©2005 HYSTER COMPANY

See Service Manual for service procedures.

NUMERICAL INDEX (Continued)

PART NO.	PG	ITEM
	9-33	5
	9-35	4
86229	5-13	18
	5-23	10
87446	3-23	4
90263	11-13	12
	12-21	12
92861	10-10	10
	12-14	12
97999	3-12	47
	3-15	25
98525	7-11	14
98644	4-30	3
101809	3-19	28
	3-21	15
104506	10-3	3
	11-3	3
	12-3	3
	12-5	3
112989	3-5	7
	3-7	10
	3-9	8
114312	13-18	3
	13-24	3
115696	3-5	3
	3-7	20
	3-9	3
118257	2-57	3
124603	5-19	17
	5-21	17
	5-29	18
	5-31	18
	5-33	18
125305	13-11	4
125347	2-57	5
127918	9-3	27
128263	3-31	14
128408	4-7	4
	4-11	2
	4-13	30
129387	10-3	7
	10-5	4
	11-3	7
	11-5	4
	12-3	7
	12-5	7
	12-7	4
	12-29	4
	13-23	16
129888	4-45	28
130825	7-13	2
130845	3-15	18
	3-15	18
131358	10-7	1
	10-15	5
	11-7	18
	11-11	3
	11-17	8
	12-9	1
	12-18	40
	12-29	8
	13-17	19
	13-21	7
	13-23	7
131715	11-3	4
	12-3	4
	12-5	4
131716	10-3	4
	11-3	4
	12-3	4
	12-5	4
133683	8-13	9
134675	9-41	8
135158	6-6	62
135588	12-10	18
136681	1-29	5
	5-17	29
	5-27	32
	5-35	17
136687	1-29	11
	4-13	28
	6-3	15
	6-15	8
136985	2-79	6
	5-17	8
	5-27	8
137852	11-15	12
138710	13-11	3
141259	4-7	30
141331	3-2	1
141776	3-11	33
142247	9-41	8
145481	5-17	2
	5-27	4
146540	13-12	1
147288	3-19	14
	3-21	7
147294	3-19	15
	3-21	6
147972	11-8	10
	11-9	8
147973	7-13	3
	9-45	9
	11-13	13
	12-21	13
148611	4-49	5
148614	2-45	6
	2-47	11
148615	2-45	6
	2-47	11
	4-13	24
148789	4-7	4
	4-11	2
	4-13	30
148792	4-7	9
	4-11	1
	4-13	29
154355	11-11	13
	12-17	11
154375	9-43	8
156194	7-11	15
156195	7-11	16
160653	6-7	3
	6-8	3
	6-11	7
161003	10-7	23
	11-11	27
	12-10	23
	12-17	16
161029	12-18	26
161884	7-15	5
161885	7-15	3
161889	6-7	5
	6-8	5
	6-11	5
161890	6-7	3
	6-8	3
	6-11	3
161894	7-17	5
163970	7-11	19
164488	5-17	28
	5-27	31
164639	7-11	17
164840	11-13	13
	12-22	13
168718	3-23	9
169690	5-17	26
	5-27	29
170658	1-41	1
175861	9-11	8
	9-15	8
178119	11-11	17
180057	12-18	26
180137	12-18	26
180177	11-11	21
182118	3-19	34
	3-21	18
182343	12-10	18
184451	3-19	4
	3-21	21
186304	4-19	7
187388	10-10	2
	11-13	4
	12-14	2
	12-21	4
188210	5-17	13
	5-27	17
188515	9-21	7
	9-23	4
190382	4-49	1
	4-49	4
190383	4-3	28
	4-49	9
	4-49	11
	4-55	4
	4-57	4
190580	11-13	6
	12-21	6
190887	11-8	3
	11-9	3
	11-13	3
	12-21	3
192877	9-41	10
196298	3-19	14
	3-21	7
197067	9-11	4
	9-15	4
197345	12-18	26
199852	9-45	3
203071	7-13	8
204128	9-24	3
	9-29	2
	9-37	2
209457	9-6	3
210183	7-13	7
211882	8-7	22
	8-9	30
212786	4-11	3
213099	5-23	31
215211	10-3	5
	11-3	5
	12-3	5
	12-5	5
221771	1-51	4
222443	8-15	21
222444	5-13	37
	5-23	40
222510	9-3	24

©2005 HYSTER COMPANY

NUMERICAL INDEX (Continued)

PART NO.	PG	ITEM
222512	8-15	2
223389	10-7	18
226430	6-3	3
	6-6	35
226458	13-17	7
	13-21	5
	13-23	5
226986	7-11	35
230882	9-11	3
	9-15	3
233693	5-13	5
	5-23	5
	5-35	9
234038	6-6	33
235691	5-13	39
	5-23	7
237812	9-45	6
239503	1-23	5
	8-3	24
	8-5	31
	8-7	24
	8-9	31
240072	2-23	16
244167	11-11	2
	11-11	14
	12-9	12
	12-18	33
244540	8-5	29
	8-9	29
246001	2-56	12
246108	2-51	6
246994	10-7	18
249289	7-11	12
252729	5-7	3
	5-7	4
	5-9	3
	5-11	4
	5-11	7
	5-11	10
	9-3	10
	9-3	19
	9-9	14
	10-7	4
	10-7	6
	10-7	12
	10-7	13
	11-7	2
	11-7	4
	11-7	8
	11-7	9
	11-7	10
	12-9	4
	12-9	6
	12-9	11
	12-9	13
	13-14	6
254007	4-3	29
257913	10-10	5
	11-13	7
	12-14	5
	12-21	7
260878	3-11	11
	3-23	13
262798	4-3	30
264973	7-11	32
265731	8-15	3
265787	7-9	3
	7-9	4
	7-9	5
	8-15	5
	8-15	22
	8-15	27
	9-9	5
	9-9	11
	9-9	22
	9-9	27
	13-18	4
	13-24	4
	13-29	6
	13-29	10
	13-29	12
	13-31	5
	13-31	9
	13-31	11
266519	9-31	3
268619	9-45	8
280154	12-9	11
	12-18	33
287851	2-79	4
	4-29	2
	6-5	2
292500	5-13	17
	5-17	14
	5-23	20
	5-27	15
292508	6-5	7
292509	5-13	2
	5-23	1
292516	5-13	28
	5-23	28
292517	2-23	5
	2-56	11
	2-79	7
292521	2-43	15
292526	5-17	36
	5-27	37
292531	5-3	7
292539	2-56	8
292608	1-15	2
292613	1-15	2
292667	4-21	6
292676	4-13	15
292678	4-21	5
292679	13-12	4
292680	5-13	16
	5-17	15
	5-23	21
	5-27	14
	6-3	16
	6-5	16
	6-15	9
292681	2-79	3
	4-29	3
	5-17	22
	5-27	24
	5-35	16
	6-5	3
292682	2-23	4
	2-56	13
	2-79	5
	5-13	27
	5-23	25
292683	2-17	20
	2-55	24
	2-56	6
	5-3	6
	5-17	35
	5-27	38
292685	5-3	4
292689	1-15	4
293616	6-3	7
293619	2-6	3
	2-37	1
293626	2-79	14
293630	2-5	9
293646	6-6	52
293648	7-11	37
293686	6-5	30
	7-11	5
293692	6-5	26
293697	5-3	5
293698	2-5	7
293742	5-35	5
293779	3-35	13
293796	9-9	26
295649	11-8	2
	11-9	2
296022	5-17	23
	5-27	25
296032	1-3	31
296130	13-3	10
296150	4-7	24
296152	3-15	8
296158	3-35	14
296229	1-21	6
	1-23	13
296378	3-35	11
	3-37	12
	8-13	5
296379	4-13	18
296380	4-7	13
	4-11	7
	4-13	31
296418	2-6	4
	2-37	4
296420	2-5	10
	2-79	13
	5-4	2
296422	2-23	7
	6-6	36
296423	1-51	3
296424	2-23	13
	2-79	15
296426	6-5	27
	6-5	31
	13-17	8
	13-21	4
	13-23	4
296434	6-3	2
296481	3-7	12
296507	13-12	3
297531	10-10	3
	11-13	5
	12-14	3
	12-21	5
297649	10-7	22
	11-11	26
	12-10	22
	12-17	17
300751	7-11	9
300752	7-11	7
300765	7-11	34
300766	7-11	13
300767	7-11	33
300937	1-51	5
	7-11	39
300982	9-43	14
	9-45	16

©2005 HYSTER COMPANY

NUMERICAL INDEX (Continued)

PART NO.	PG	ITEM
	10-3	9
	11-3	9
	12-3	9
302010	1-3	24
302015	4-13	16
302019	1-25	22
302023	2-9	7
	2-11	6
	2-13	6
	2-15	6
	2-53	10
	2-67	9
	2-69	9
302027	4-13	27
302047	1-21	8
	1-23	11
	2-60	82
302323	13-3	9
302363	3-19	6
302380	1-3	8
302385	6-5	19
	6-6	43
302398	4-30	1
	8-3	1
	8-5	1
	8-7	1
	8-9	1
302400	3-29	7
	3-31	10
302428	9-11	9
	9-15	9
302437	3-37	8
302443	3-37	8
302450	1-49	2
302461	11-11	24
	11-15	24
	12-18	23
	12-26	30
302462	10-5	9
	12-5	9
302487	13-27	6
302491	1-15	6
303100	5-13	34
	5-23	37
303150	2-23	12
	2-56	4
	2-79	8
	5-13	38
	5-23	41
304526	11-11	23
	12-18	22
306113	9-11	12
	9-15	12
309062	11-13	9
	12-21	9
309109	9-11	16
	9-13	11
	9-15	17
	9-17	12
309651	3-23	5
309740	2-56	10
	5-4	3
313805	3-35	10
316448	13-3	8
316835	1-21	12
	1-23	18
317075	7-11	22
317076	7-11	26
317735	11-17	7
	12-29	7
	13-17	18
	13-21	20
	13-23	20
320152	1-3	23
	4-13	14
320154	2-9	6
	2-11	5
	2-13	5
	2-15	5
	2-53	9
	2-67	8
	2-69	8
	4-13	25
	4-21	4
320155	13-12	5
320156	1-21	9
	1-23	12
	1-29	8
	3-29	16
	3-31	21
320157	1-7	21
	2-50	5
	5-13	3
	5-23	2
320158	1-23	6
	1-27	16
	1-29	4
320159	2-17	5
	2-55	5
	2-71	5
320161	5-17	34
	5-27	39
	7-11	38
	9-11	13
	9-15	14
320264	6-6	61
320289	9-21	10
	9-23	10
322824	10-10	8
322902	10-10	6
323090	10-7	16
	11-7	13
	12-10	16
325182	4-7	17
325616	12-18	27
325699	3-39	13
325789	4-49	10
	4-49	12
325804	9-9	19
326504	2-21	9
	2-25	8
	2-37	41
	2-41	4
326608	2-37	36
326612	2-31	10
326748	2-27	5
326749	2-27	6
326898	4-5	22
329069	1-3	6
	1-3	38
	2-47	12
	3-37	6
333642	2-27	15
334156	10-10	7
	12-14	8
334560	5-13	29
	5-23	29
335012	10-10	8
	12-14	9
335041	12-10	18
336393	10-7	18
336550	2-9	20
	2-11	17
	2-13	19
	2-15	19
	2-53	18
	2-67	17
	2-69	17
337174	12-10	18
339735	2-9	20
	2-11	17
	2-13	19
	2-15	19
	2-53	18
	2-67	17
	2-69	17
341462	9-21	13
345453	2-9	20
	2-11	17
	2-13	19
	2-15	19
	2-53	18
	2-67	17
	2-69	17
345454	2-9	20
	2-11	17
	2-13	19
	2-15	19
	2-53	18
	2-67	17
	2-69	17
345455	2-9	20
	2-11	17
	2-13	19
	2-15	19
	2-53	18
	2-67	17
	2-69	17
353000	3-23	7
353199	3-7	8
353206	1-7	22
356505	11-11	12
	12-17	10
362036	3-39	10
366000	3-11	25
	3-15	19
366115	12-29	5
	13-23	14
366116	10-15	3
	11-17	5
	13-17	16
	13-21	14
366473	3-15	6
367224	4-7	28
	4-13	5
369804	9-3	17
369815	2-9	22
	2-11	19
	2-13	21
	2-15	21
	2-53	20
	2-67	19
	2-69	19
	3-11	15
374923	3-2	2
375634	7-13	1
375635	7-13	4
375636	7-13	1

©2005 HYSTER COMPANY

NUMERICAL INDEX (Continued)

PART NO.	PG	ITEM
375641	7-13	1
381298	7-11	10
386015	9-21	14
386422	10-15	11
	11-17	11
	13-17	22
	13-21	22
389688	1-41	11
636941	11-13	8
	12-21	8
637565	11-13	10
	12-21	10
638246	10-10	8
	12-14	9
806426	4-7	4
	4-7	9
	4-11	1
	4-11	2
	4-13	29
	4-13	30
878258	2-71	11
930591	4-59	4
	4-59	7
980542	6-7	5
	6-8	5
	6-11	9
1300094	1-39	9
1301286	13-7	1
	13-9	1
1302024	4-25	14
	4-27	14
1304971	1-3	11
1307994	2-50	6
1308259	4-45	30
1309775	4-25	9
	4-27	9
1310370	10-10	12
1310599	7-11	29
1315425	7-11	30
1319668	10-10	12
	11-8	11
	11-9	11
	12-14	14
1321149	7-13	5
1321174	7-11	4
	7-13	
1323576	4-49	3
	4-49	14
	4-49	16
	4-61	10
	4-61	12
	4-61	19
	4-63	7
	4-63	9
	4-63	11
1323578	4-47	4
	4-49	17
1323579	4-33	10
	4-33	11
	4-34	15
	4-34	16
	4-37	9
	4-37	10
	4-38	14
	4-38	15
	4-41	10
	4-41	11
	4-42	15
	4-42	16
1323586	4-45	29
	4-47	5
	4-49	16
1324309	4-51	17
	4-51	18
1324310	4-51	17
	4-51	18
1325119	9-41	9
1325120	9-41	9
1327164	4-33	10
	4-33	11
	4-34	14
	4-34	15
	4-34	16
	4-34	26
	4-37	9
	4-37	10
	4-38	13
	4-38	15
	4-38	25
	4-41	10
	4-41	11
	4-42	14
	4-42	16
	4-42	26
	4-47	2
1327246	6-6	40
1327957	4-45	26
	4-47	1
	4-49	18
	4-51	11
	4-61	7
	4-61	11
	4-61	16
	4-63	5
	4-63	8
1329150	4-34	14
	4-34	26
	4-38	13
	4-38	25
	4-42	14
	4-42	26
	4-45	21
1329151	4-34	13
	4-34	14
	4-34	26
	4-34	27
	4-37	12
	4-38	13
	4-38	25
	4-38	26
	4-42	13
	4-42	14
	4-42	26
	4-42	27
1329152	4-34	13
	4-34	27
	4-37	12
	4-38	26
	4-42	13
	4-42	27
1329271	2-9	8
	2-11	7
	2-67	10
1329850	13-3	4
1329851	13-3	5
1330281	4-33	10
	4-33	11
	4-34	13
	4-34	15
	4-34	27
	4-37	9
	4-37	10
	4-37	12
	4-38	14
	4-38	26
	4-41	10
	4-41	11
	4-42	13
	4-42	15
	4-42	27
1330301	2-49	1
1330355	4-33	9
	4-37	8
	4-41	9
	4-59	4
	4-59	7
1330356	4-33	9
	4-37	8
	4-41	9
	4-59	4
	4-59	7
1330414	1-17	16
	4-3	25
	4-34	30
	4-38	30
	4-42	30
1330415	4-25	24
	4-25	25
	4-30	5
1330416	3-39	4
	4-33	5
	4-37	3
	4-41	5
1330417	13-5	10
1330419	4-49	19
1330424	4-49	19
1330436	4-49	19
1330437	1-17	17
	4-3	26
	4-25	24
	4-25	25
	4-30	6
	4-33	5
	4-35	30
	4-37	3
	4-38	30
	4-41	5
	4-43	30
	4-49	20
	4-52	34
	4-61	1
	4-63	1
	13-5	10
1330438	4-33	4
	4-33	6
	4-34	21
	4-34	25
	4-34	29
	4-35	31
	4-35	34
	4-35	35
	4-37	2
	4-37	4
	4-38	21
	4-38	22
	4-38	28
	4-38	31
	4-39	33

©2005 HYSTER COMPANY

NUMERICAL INDEX (Continued)

PART NO.	PG	ITEM
	4-39	35
	4-41	4
	4-41	6
	4-42	21
	4-42	25
	4-42	29
	4-43	31
	4-43	34
	4-43	35
	4-51	5
	4-51	8
	4-51	12
	4-51	15
	4-51	21
	4-51	25
	4-51	29
	4-52	36
	4-55	1
	4-55	8
	4-55	9
	4-57	1
	4-57	10
	4-57	11
	4-59	1
	4-59	10
	4-59	11
	4-61	3
	4-61	5
	4-61	8
	4-61	13
	4-63	3
	4-63	6
	4-63	10
	13-5	10
1330439	4-34	17
	4-34	18
	4-35	35
	4-35	37
	4-35	38
	4-38	16
	4-38	17
	4-39	38
	4-39	40
	4-42	17
	4-42	18
	4-43	35
	4-43	37
	4-43	38
	4-49	20
	4-52	34
	4-55	1
	4-59	1

PART NO.	PG	ITEM
	4-63	1
	13-5	10
1333043	1-48	1
1333044	1-48	1
1333045	1-48	1
1333329	12-10	24
1333382	10-7	2
	11-7	17
	12-9	2
1333392	12-9	10
1333396	10-3	6
	10-5	5
	11-3	6
	11-5	5
	12-3	6
	12-5	6
	12-7	5
1333399	12-29	2
	13-23	12
1334642	8-11	5
1334644	8-11	14
1334647	8-11	2
1335138	1-41	6
1337197	4-19	7
1338140	1-48	1
1338142	1-48	1
1338144	1-48	1
1338308	2-19	9
1338616	10-15	1
1338642	1-51	1
	1-51	1
1338645	1-51	1
1338741	9-43	5
1338744	9-43	11
1338916	8-11	24
1338917	8-11	25
1339452	3-11	21
1339828	1-39	18
1339832	1-39	19
1340470	3-39	12
1342116	12-18	26
1342120	12-10	18
1342121	12-18	26
1342124	12-10	18
1342127	12-10	18
1342129	12-10	18
1342132	12-10	18
1342377	11-11	21
1342380	12-18	26
1342383	10-7	18
1342384	12-18	26
1342391	12-18	26

PART NO.	PG	ITEM
1342392	10-7	18
1342393	10-7	18
1342477	11-5	1
1343276	1-39	22
1343844	11-17	
1343846	10-15	
1343989	12-18	37
1343990	1-51	2
1344124	3-35	16
1345190	10-13	18
	11-15	29
	12-25	26
1345199	11-15	23
	12-25	20
1345204	11-15	22
	12-25	19
1345216	10-3	2
	10-5	2
	11-3	2
	12-3	2
	12-5	2
	12-7	2
	12-29	1
1345219	10-15	2
	11-17	2
	13-17	13
	13-21	12
1345239	11-17	1
1345263	10-15	6
	11-17	4
	13-17	15
	13-21	16
1345264	10-15	1
	11-5	2
	11-17	1
1345348	10-13	3
1345401	12-18	34
1345412	10-13	5
1345413	10-13	5
1345423	11-15	10
1345926	1-39	8
1346752	9-11	23
	9-13	14
	9-15	24
	9-17	15
	9-27	13
1347026	2-9	19
	2-11	16
	2-13	18
	2-15	18
	2-53	17
	2-67	16

PART NO.	PG	ITEM
	2-69	16
1347045	1-3	28
	1-15	11
	2-17	3
	2-55	3
	2-71	3
1347166	3-15	5
1348246	12-25	11
1348247	12-25	11
1350215	1-8	44
	5-11	14
	13-5	3
1351681	1-19	16
	4-34	22
	4-38	20
	4-42	22
	4-49	19
1351682	4-51	10
1351683	4-34	24
	4-38	23
	4-42	24
1351689	8-3	29
	8-5	36
	8-7	29
	8-9	36
1352140	2-9	3
	2-11	2
	2-13	2
	2-15	2
	2-53	2
	2-67	2
	2-69	2
1352603	4-52	35
1353408	10-15	7
	13-17	18
1353464	12-25	16
1353530	11-15	1
1354165	1-39	10
1354172	1-39	3
1354901	12-18	37
1354902	11-11	6
	12-17	4
1354903	12-17	7
1354906	12-25	21
1354907	12-25	21
1354913	10-7	9
1354915	10-7	2
	11-7	16
	12-9	2
1354916	10-7	2
	11-7	16
	12-9	2

©2005 HYSTER COMPANY

NUMERICAL INDEX (Continued)

PART NO.	PG	ITEM
1354917	10-7	2
	11-7	16
	12-9	2
1354918	11-15	15
1354919	10-13	11
1354921	10-13	11
1354923	1-51	2
1354961	12-25	6
1354962	12-17	8
1354967	11-11	9
1355158	10-10	9
1355178	10-10	9
1355199	10-10	9
1355217	10-10	9
1355220	10-10	13
1355276	10-10	15
1355277	10-10	15
1355367	10-10	9
1355391	10-10	9
1355409	10-10	13
1355411	10-11	16
1355414	10-10	9
1355434	10-10	9
1355496	10-10	13
	12-14	15
1355497	12-14	16
1355587	12-14	10
1355603	12-14	10
1355610	12-14	11
1355620	12-14	10
1355633	12-14	10
1355710	12-14	10
1355713	10-10	13
	11-8	12
	11-9	9
	12-14	15
1355714	12-14	17
1355729	12-14	10
1355745	12-14	10
1355758	12-14	10
1355775	12-14	10
1355929	11-9	5
1355930	11-9	5
1356068	12-21	11
1356074	12-21	11
1356089	12-21	11
1356292	11-13	16
	12-22	16
1356400	13-3	1
1356401	13-3	2
1356560	12-21	11
1356572	12-21	11
1356596	12-21	11
1356661	11-13	16
	12-22	16
1356662	11-13	17
	12-22	17
1356682	12-21	11
1356688	11-13	11
1356691	11-13	11
1356694	12-21	11
1356747	11-8	5
	11-9	4
1356748	11-8	4
	12-14	6
1356749	10-10	11
1356750	10-10	6
	12-14	7
1356751	10-10	6
	12-14	7
1356752	10-10	11
1358026	2-63	34
1358177	7-15	1
1358178	7-17	1
1358179	6-11	1
1358183	6-11	1
1358940	11-8	6
1358969	11-13	17
	12-22	17
1358970	11-13	14
	12-22	14
1358972	11-13	8
	12-21	8
1359234	10-7	18
1359458	5-13	42
	5-23	24
1359588	1-39	11
1359620	9-9	9
1360127	12-14	6
1360386	9-9	25
	10-13	8
	11-15	13
	12-25	15
1360507	11-15	2
1360508	11-15	9
1360534	12-18	38
1360538	12-25	13
1360548	10-13	15
1360549	10-13	17
	12-25	25
1360796	8-11	8
1360797	8-11	9
1360878	2-29	13
1360879	2-29	19
	2-29	21
1360880	2-29	9
1360881	2-29	28
1360882	2-29	29
1360883	2-29	1
1360884	2-29	2
1360885	2-29	11
1360886	2-29	4
1360887	2-29	7
1360888	2-29	8
1360892	2-29	6
1360893	2-29	5
1360895	2-29	18
	2-29	20
1360896	2-35	14
1360898	2-35	5
1360899	2-35	8
1361302	11-13	2
	12-21	2
1361500	8-11	15
1361502	8-11	28
1361503	8-11	3
1361504	8-11	4
1361507	8-11	8
1361675	2-35	3
1361676	2-35	11
1361677	2-35	13
1361679	2-25	9
1361680	2-25	16
1361681	2-25	18
1361682	2-25	20
1361688	2-25	5
	2-27	3
1361689	2-25	10
1361690	2-25	15
1361691	2-25	11
1361692	2-25	6
1361694	2-33	1
1361695	2-33	2
1361696	2-33	12
1361697	2-33	11
1361700	2-33	6
1361701	2-33	8
1361703	2-33	3
1361704	2-33	3
1361705	2-33	3
1361706	2-33	3
1361710	2-33	13
1361711	2-33	13
1361712	2-33	13
1361713	2-33	13
1361717	2-31	20
1361718	2-29	22
	2-31	5
1361719	2-29	15
	2-31	22
1361720	2-31	4
1361721	2-31	9
1361722	2-31	8
1361723	2-31	7
1361724	2-31	6
1361725	2-31	23
1361726	2-31	11
1361727	2-31	13
	2-31	16
1361728	2-31	12
	2-31	17
1361729	2-31	15
1361730	2-31	18
1361731	2-31	14
1361732	2-31	21
1361734	2-31	19
1361736	2-31	1
1361737	2-31	2
1361741	2-21	5
1361745	2-19	8
1361746	2-19	6
1361747	2-19	3
1361756	2-41	11
1361798	2-27	2
1361801	2-27	17
1361806	2-27	13
1361807	2-27	14
1361813	2-37	10
1361821	2-37	13
1361823	2-37	43
1361825	2-37	16
1361826	2-37	18
1361827	2-37	39
1361836	2-37	21
1361837	4-5	17
1361838	4-5	16
1361840	4-5	15
1361841	4-5	15
1361842	4-5	15
1361843	4-5	15
1361845	4-5	20
1361846	4-5	12
1361867	4-5	6
1361868	2-27	19
1361871	2-41	18
1361873	2-21	4
	2-37	15
	2-37	20

©2005 HYSTER COMPANY

NUMERICAL INDEX (Continued)

PART NO.	PG	ITEM
1361875	2-37	40
1361878	2-27	18
	2-41	14
1361879	2-27	7
1361881	4-5	21
1361884	2-31	26
1361885	2-21	2
1361886	2-37	19
1361888	4-5	13
1361890	4-5	10
1361891	4-5	11
1361894	2-29	16
1361895	4-5	31
1361897	2-29	24
1361898	2-19	1
	2-29	23
	2-37	14
	2-41	22
1361899	2-29	27
1362000	2-29	10
1362001	2-25	1
	2-29	12
1362002	2-29	14
1362003	2-29	17
	2-35	6
1362005	2-35	4
1362007	2-35	10
1362008	2-35	9
1362009	2-35	2
1362010	2-25	12
1362011	2-25	13
1362012	2-25	7
1362015	2-25	17
1362016	2-31	29
1362049	1-33	10
1362113	4-5	15
1362387	12-25	23
1363886	4-33	4
	4-37	2
	4-41	4
	4-59	3
	4-59	6
	4-59	8
1365140	12-10	24
1365517	11-15	16
1365778	1-51	1
1365830	1-41	3
1366902	2-21	7
1366933	2-41	19
1367191	2-37	12
1368656	10-5	6
	12-5	10
1368743	2-21	6
	4-5	4
1368844	4-5	14
1368886	4-5	2
1369333	11-15	7
	12-25	3
1369344	10-15	8
	11-17	6
	12-29	6
	13-17	17
	13-21	19
	13-23	19
1369345	10-15	8
	11-17	6
	12-29	6
	13-17	17
	13-21	19
	13-23	19
1369356	10-7	21
	11-11	29
	12-10	21
	12-17	18
1369357	10-7	21
	11-11	29
	12-10	21
	12-17	18
1369914	2-37	38
1369993	2-25	25
1370688	2-19	7
1370689	2-19	4
1370690	2-19	5
1370691	2-19	2
1370736	2-25	19
1370737	2-25	21
1370744	2-35	1
1370746	2-33	1
1371631	12-21	11
1371652	2-25	14
1374549	1-41	4
1374797	12-29	11
	13-23	22
1375214	1-15	3
1375391	8-3	28
	8-5	35
	8-7	28
	8-9	35
1375486	6-6	48
1375488	6-5	24
1375492	6-6	46
1375642	2-6	1
	2-37	2
1375676	1-39	7
1376338	1-51	1
	1-51	1
1377781	2-6	2
1378418	4-45	12
1378652	4-45	10
1378690	11-11	5
	12-17	2
1378691	10-5	7
	12-5	11
1378692	11-11	22
	12-18	21
1378693	11-11	22
	12-18	21
1378694	10-5	8
	12-5	12
1378698	10-5	8
	12-5	12
1378699	10-5	8
	11-11	22
	12-5	12
	12-18	21
1378726	1-49	1
1378727	1-49	1
1378728	1-49	1
1378760	1-49	5
1378761	1-49	5
1378762	1-49	4
1378763	1-49	3
1378765	1-49	6
1378766	1-49	7
1378787	1-49	1
1378791	1-49	1
1378793	1-49	1
1378794	1-49	1
1378796	1-49	1
1379459	12-29	
1379682	11-11	22
	12-18	21
1379683	11-11	22
	12-18	21
1379684	10-5	8
	12-5	12
1379685	10-5	8
	12-5	12
1379687	10-7	11
	11-7	6
1380849	5-3	11
	5-13	44
	5-24	47
1381078	9-45	4
1381082	9-43	9
1381083	9-45	12
1381095	10-10	11
	11-8	8
	11-9	10
	12-14	13
1381354	12-7	1
1381358	12-7	1
1381360	12-7	1
1381362	12-7	1
1381365	12-7	1
1381366	12-7	1
1381560	12-29	1
1382111	1-33	8
1382112	1-33	1
1382113	1-33	8
1382114	1-33	1
1382130	4-25	7
	4-27	7
1382694	4-49	2
1382695	4-49	2
1383062	9-43	10
1383063	9-45	10
1383331	4-3	18
1383573	3-19	14
	3-21	7
1383777	7-11	23
1385102	1-41	10
1388838	7-11	2
1390182	12-25	22
1391757	2-71	12
1391758	2-71	13
1393458	1-27	11
1393479	1-21	10
1393488	1-25	9
1393499	1-23	22
1393527	1-27	6
1393528	1-27	7
1393539	1-21	7
	1-23	7
	1-29	13
1393541	1-25	8
1393879	9-3	3
1394008	3-9	9
1395285	11-11	4
	12-17	1
1395291	11-15	32
	12-26	28
1395292	11-15	26
	12-26	32
1396406	11-15	31
	12-26	29
1396518	2-17	13
	2-43	2

©2005 HYSTER COMPANY

NUMERICAL INDEX (Continued)

PART NO.	PG	ITEM
1398099	3-19	22
	3-21	30
1399802	3-29	17
	3-31	9
1401746	13-17	9
	13-21	9
	13-23	9
1402414	3-19	43
1402813	4-61	2
	4-63	2
1402814	4-55	3
	4-55	5
	4-55	6
	4-55	7
	4-57	3
	4-57	5
	4-57	6
	4-57	7
	4-57	8
	4-57	9
1402815	4-34	23
	4-39	42
	4-43	40
	4-55	2
	4-57	2
	4-63	4
1402816	4-45	15
	4-51	14
	4-61	17
	4-63	13
1402868	4-61	19
	4-63	11
1402883	4-3	7
1402888	4-33	10
	4-34	13
	4-34	27
	4-37	9
	4-37	12
	4-38	26
	4-41	10
	4-42	13
	4-42	27
	4-49	17
1402890	4-45	2
1402923	13-5	10
1450503	7-2	2
1450928	4-5	9
1453882	1-33	3
1453883	1-33	4
1454827	2-45	6
	2-47	11
	4-13	24
1454828	4-13	24
1454829	2-45	6
	2-47	11
	4-13	24
	4-49	2
1454860	4-13	24
	4-49	2
1454862	2-45	6
	2-47	11
	4-13	24
	4-45	11
	4-49	2
1454967	4-13	12
1455674	2-27	4
1455676	2-27	1
1455677	2-27	10
1459173	1-33	6
	1-35	3
1460477	2-17	10
	2-23	17
	2-49	17
	2-55	10
1462615	7-15	1
1462616	7-17	1
1462617	6-11	1
1463138	4-25	12
	4-27	12
1463139	4-33	1
	4-33	2
	4-33	3
	4-33	7
	4-33	8
	4-34	20
	4-37	1
	4-37	5
	4-37	6
	4-37	7
	4-38	19
	4-39	35
	4-39	41
	4-41	1
	4-41	2
	4-41	3
	4-41	7
	4-41	8
	4-42	20
	4-43	35
	4-43	43
	4-51	1
	4-51	23
	4-52	32
	4-59	5
1463140	4-21	10
1463193	4-21	10
1463194	4-51	9
	4-51	13
	4-51	16
1465140	9-5	14
1465468	4-45	5
	4-45	24
1465469	4-45	23
	4-47	3
	4-49	17
1465504	11-11	8
	12-17	5
1465897	13-14	1
1466337	13-14	2
1466472	13-14	3
1468308	1-29	14
1468312	1-21	18
	1-23	33
1468314	1-25	16
1468315	1-25	15
1468316	1-25	14
1468317	1-25	13
1468319	1-27	5
	1-27	12
1468320	1-27	2
1469342	2-17	22
1469379	2-17	21
	2-55	25
1469405	2-17	19
	2-55	23
1470152	1-31	8
	1-37	1
1470153	1-31	8
	1-37	1
1470161	1-31	6
	1-37	8
1470163	1-31	7
	1-37	6
1471591	6-11	1
1471694	3-11	12
1471829	6-11	1
1471832	7-17	1
1471835	6-11	1
1471837	7-15	1
1471921	7-15	1
1471922	6-11	1
	6-11	1
	7-17	1
1473887	8-15	5
1474763	4-45	25
1474764	4-45	22
1475409	3-11	13
1476064	4-33	9
	4-37	8
	4-41	9
1476077	4-49	14
1476108	4-33	9
	4-37	8
	4-41	9
	4-59	4
	4-59	7
1476109	4-33	9
	4-37	8
	4-41	9
1477166	1-48	5
1477167	1-48	6
1477237	1-48	6
1477647	10-15	
1477680	12-29	
1477683	11-17	
1477849	13-17	1
1477930	10-15	1
1477931	12-29	1
1477932	11-17	1
1477938	13-21	1
1477939	13-23	1
1477944	13-21	
1477945	13-23	
1477946	13-21	
1477947	13-23	
1477996	9-9	2
	10-13	6
	11-15	17
	12-25	17
1480187	4-35	38
	4-39	40
	4-43	38
1480237	1-7	33
	1-7	33
	2-9	25
	2-11	22
	2-13	24
	2-15	24
	2-49	5
	2-53	23
	2-55	17
	2-67	22
	2-69	22
	3-11	14
	3-29	11
	3-31	15
	4-3	15
	4-7	25

©2005 HYSTER COMPANY

NUMERICAL INDEX (Continued)

PART NO.	PG	ITEM
	4-11	6
	5-7	6
	5-9	5
	5-11	13
	7-9	7
	8-15	11
	9-9	8
	13-5	5
1480747	12-9	12
1481090	11-11	2
1481095	12-17	12
1481096	11-11	14
1481097	10-7	5
	11-7	3
	12-9	5
1481229	9-9	1
	10-13	7
	11-15	18
	12-25	18
1481232	11-15	11
1481705	12-17	15
1481709	12-17	15
1481711	12-17	15
1481713	12-17	15
1481716	12-17	15
1481717	12-17	15
1481742	11-11	1
1482651	4-45	18
1482654	4-45	35
1482668	4-59	4
	4-59	7
1483661	13-29	8
	13-31	7
1483663	13-29	7
	13-31	6
1483664	13-29	9
	13-31	8
1483828	1-31	14
	1-37	9
1484377	4-33	1
	4-33	2
	4-33	3
	4-33	6
	4-33	7
	4-33	8
	4-35	34
	4-35	35
	4-37	1
	4-37	4
	4-37	5
	4-37	6
	4-37	7
	4-39	33
	4-39	35
	4-39	41
	4-41	1
	4-41	2
	4-41	3
	4-41	6
	4-41	7
	4-41	8
	4-43	34
	4-43	35
	4-43	43
	4-51	1
	4-51	23
	4-52	32
	4-61	1
1484397	4-51	8
	4-51	12
	4-51	15
	4-59	10
	4-59	11
1484557	4-59	5
1484558	4-59	5
1484709	4-49	20
	4-59	2
1486182	13-17	
1486183	13-21	
1486184	13-23	
1486185	13-17	
1486186	13-21	
1486187	13-23	
1486737	9-9	7
1486740	8-15	22
	13-29	10
	13-31	9
1486742	7-9	4
	9-9	27
1486749	5-7	4
	5-9	3
	5-11	4
	11-7	2
1486773	10-7	13
	11-7	9
	12-9	13
1487058	8-15	7
	9-9	3
1487061	9-9	5
1487063	5-17	31
	5-27	34
	7-9	5
	8-15	27
	13-18	4
	13-24	4
1487067	5-11	7
	5-23	16
1487069	9-3	19
	9-9	14
1487096	13-14	6
1487981	13-17	
1487982	13-17	
1488464	9-9	22
1488975	13-17	2
	13-21	2
	13-23	2
1488976	13-17	2
	13-21	2
	13-23	2
1489002	13-17	1
1489003	13-21	1
1489004	13-23	1
1489011	13-17	2
	13-21	2
	13-23	2
1489012	13-17	2
	13-21	2
	13-23	2
1489018	13-27	1
1489035	13-27	3
1489037	13-27	2
1489039	13-27	5
1489655	3-39	5
	4-33	5
	4-37	3
	4-41	5
1489656	4-34	29
	4-38	28
	4-42	29
	4-51	5
	4-51	21
	4-52	36
1489657	4-34	29
	4-38	28
	4-42	29
	4-51	6
	4-51	22
	4-52	37
1490242	4-34	21
	4-35	31
	4-38	21
	4-38	31
	4-42	21
	4-43	31
	4-51	29
	4-55	8
	4-55	9
	4-57	10
	4-57	11
	4-59	3
	4-59	6
	4-59	8
	4-61	3
	4-61	5
	4-61	8
	4-61	13
	4-63	3
	4-63	6
	4-63	10
	13-5	10
1490243	4-34	21
	4-35	31
	4-38	21
	4-38	31
	4-43	31
	4-51	30
	4-55	8
	4-55	9
	4-57	10
	4-57	11
	4-59	3
	4-59	6
	4-59	8
	4-61	4
	4-61	6
	4-61	9
	4-61	14
	4-63	3
	4-63	6
	4-63	10
	13-5	10
1492644	9-43	17
1493308	1-21	20
	1-23	35
	1-25	10
	1-27	8
1493336	1-25	4
1493428	4-33	6
	4-37	4
	4-41	6
1493430	4-34	25
	4-38	22
	4-42	25
1493435	4-55	6
	4-55	7
	4-57	8
	4-57	9
1493447	4-57	5

See Service Manual for service procedures.
©2005 HYSTER COMPANY

NUMERICAL INDEX (Continued)

PART NO.	PG	ITEM
	4-57	6
1493458	4-45	1
1493465	1-17	15
	4-3	24
	4-34	30
	4-38	30
	4-42	30
1493466	4-25	24
	4-25	25
	4-30	4
1494017	10-13	16
	11-15	27
	12-25	24
1494750	5-13	31
	5-27	20
1494888	1-17	6
	1-19	12
1495122	4-25	5
	4-27	5
1495412	4-5	19
1495413	2-41	9
	4-5	30
1495426	2-27	8
1495427	2-27	20
1495428	2-37	11
1495472	2-33	7
1495473	2-33	5
1495474	2-33	5
1495475	2-33	5
1495501	2-17	24
	2-55	27
1495502	2-17	23
	2-55	28
1496922	11-8	13
	11-9	12
1497433	4-3	27
1498325	13-27	4
1498326	13-17	11
	13-21	17
	13-23	17
1498416	4-49	17
1499111	10-10	16
1500113	2-43	1
1500782	1-48	4
1500784	1-48	4
1500899	4-35	33
	4-39	34
	4-43	33
	4-45	37
	4-51	28
1500900	4-47	6
1500901	4-49	21
1500912	3-35	15
	3-39	15
	4-3	11
	4-17	5
	8-3	6
	8-5	6
	8-7	6
	8-9	6
	8-13	3
	13-5	7
1500913	4-33	4
	4-33	6
	4-37	2
	4-37	4
	4-41	4
	4-41	6
	4-55	1
	4-57	1
	4-59	1
1500919	4-61	1
	4-63	1
1500925	4-52	34
1501274	5-3	1
1501413	7-13	10
1501629	3-5	9
1501687	2-73	
	2-75	
	2-77	
	2-81	
	2-85	
	2-87	
	2-89	
	2-91	
	2-93	
	3-25	
	3-27	
1501690	2-73	
	2-75	
	2-77	
	2-81	
	2-85	
	2-87	
	2-89	
	2-91	
	2-93	
	3-25	
	3-27	
1501695	2-43	
	2-45	
	2-47	
	2-49	
	2-57	
	2-59	1
	2-63	1
1501811	3-23	2
1501835	3-5	8
1501837	3-7	9
1501848	3-5	13
1501849	3-9	15
1501855	3-2	
	3-7	15
	3-9	16
1501887	3-7	7
1501888	3-5	1
	3-7	1
	3-9	1
1501970	4-7	32
1501992	9-3	7
1501994	3-11	24
	13-11	2
1501995	3-11	29
1501997	2-43	19
	2-51	7
	3-7	6
1502000	2-9	16
	2-11	25
	2-13	15
	2-15	15
1502001	2-51	10
	2-53	6
	2-67	5
	2-69	5
1502003	3-11	10
	8-3	20
	8-5	22
	8-7	20
	8-9	22
1502005	3-11	32
1502007	3-11	22
	9-3	26
1502008	8-15	4
1502009	2-51	4
	8-15	16
1502027	3-11	19
1502034	3-5	15
1502053	3-11	37
1502054	3-11	27
1502055	3-11	36
	9-9	15
1502058	3-11	8
1502059	9-9	16
1502061	4-7	2
	4-13	33
1502066	3-11	26
1502069	3-11	3
1502079	3-5	6
	3-7	5
	3-9	6
1502081	3-11	39
1502082	3-11	28
1502083	3-11	38
1502084	3-11	41
1502085	3-11	16
1502276	7-11	28
1502543	3-11	6
	3-35	8
	4-3	10
	4-3	20
	4-7	7
	4-11	5
	13-12	7
1502627	4-35	34
	4-39	33
	4-43	34
1502811	10-3	11
	11-3	11
	12-3	11
1503096	13-27	7
1503680	6-6	37
1503681	6-6	37
1503958	1-21	19
1503959	1-23	34
1504010	10-15	8
	11-17	6
	12-29	6
	13-17	17
	13-21	19
	13-23	19
1504012	10-15	8
	11-17	6
	12-29	6
	13-17	17
	13-21	19
	13-23	19
1504075	2-5	8
1506572	2-23	6
1506738	3-5	17
	3-7	22
	3-9	20
1509103	2-17	14
	2-43	2
1509104	2-17	15
	2-43	2
1509888	4-38	24
	4-43	42
	4-49	22

©2005 HYSTER COMPANY

NUMERICAL INDEX (Continued)

PART NO.	PG	ITEM
	4-61	18
	4-63	12
	13-5	11
1509890	4-35	41
	4-38	27
	4-42	23
	4-51	7
	4-59	9
1510113	1-3	4
1510115	2-17	31
	2-55	35
	2-71	22
	3-11	2
	4-17	8
1510116	8-15	26
	9-3	4
1510126	6-5	16
	8-3	12
	8-5	15
	8-7	12
	8-9	15
1512403	7-2	1
1512561	6-6	63
1514138	5-35	14
1514269	9-41	1
1514429	2-45	7
	2-47	13
	2-49	3
	2-49	8
	3-29	8
	3-31	11
	4-7	16
	4-13	13
	4-21	12
	8-3	10
	8-5	13
	8-7	10
	8-9	13
	13-11	9
1514597	4-34	18
	4-35	37
	4-38	17
	4-39	38
	4-42	18
	4-43	37
	4-59	2
1514598	4-59	2
1514602	4-34	17
	4-35	36
	4-38	16
	4-39	37
	4-42	17
	4-43	36
1514603	4-34	17
	4-35	36
	4-38	16
	4-39	37
	4-42	17
	4-43	36
1514866	10-7	20
	10-15	9
	11-11	28
	11-17	9
	12-10	20
	12-17	19
	12-29	9
	13-17	20
	13-21	18
	13-23	18
1515219	6-6	49
1515337	1-21	11
	1-23	20
	1-29	6
1515654	4-7	29
	4-13	19
	5-17	12
	5-27	13
1516075	6-5	20
1516201	7-9	3
1516331	6-5	10
1516332	6-5	10
1516333	6-5	10
1516334	6-5	10
1516335	6-5	10
1516526	6-5	11
1516530	6-6	56
1516534	6-6	58
1516535	6-5	6
1516536	6-5	1
1516818	5-17	24
	5-27	28
1516826	5-17	6
	5-27	9
1516849	5-13	22
1516851	5-13	21
	5-23	33
1517356	9-11	20
	9-13	6
	9-15	21
	9-17	9
1517357	9-11	19
	9-13	7
	9-15	20
	9-17	8
1517358	9-13	8
	9-15	19
	9-17	7
1517359	9-17	6
1517361	3-29	10
	3-31	13
	9-11	15
	9-13	12
	9-15	16
	9-17	13
1517378	9-15	18
1517379	9-11	18
1517394	9-11	17
	9-13	10
	9-15	15
	9-17	11
1517395	9-11	21
	9-13	9
	9-15	22
	9-17	10
1517405	3-19	11
	3-21	33
1517420	1-7	1
1517421	1-7	1
1517437	3-19	1
1517438	3-19	10
1517576	6-5	11
1517578	6-6	56
1517656	1-7	17
1517673	6-6	59
1517836	7-11	27
1519232	1-19	1
	1-21	
	1-23	
	1-25	
	1-27	
	1-29	
1519360	3-12	51
	3-15	22
	3-19	
1520290	9-41	2
1520543	2-45	6
	2-47	11
1520660	5-35	10
1520752	6-5	13
1520753	6-5	13
1520754	6-5	13
1520755	6-5	13
1520864	4-45	27
1520970	1-7	23
1521183	4-33	11
	4-37	10
	4-41	11
1521184	4-33	10
	4-37	9
	4-41	10
1521185	4-34	15
	4-38	14
	4-42	15
1521186	4-34	16
	4-38	15
	4-42	16
1521188	4-33	10
	4-33	11
	4-34	15
	4-34	16
	4-37	9
	4-37	10
	4-38	14
	4-38	15
	4-41	10
	4-41	11
	4-42	15
	4-42	16
1521328	4-49	9
	4-49	11
1521989	4-33	10
	4-33	11
	4-34	15
	4-34	16
	4-37	9
	4-37	10
	4-38	14
	4-38	15
	4-41	10
	4-41	11
	4-42	15
	4-42	15
	4-42	16
1522363	2-79	2
1522377	6-6	57
1522425	9-9	11
1522442	12-18	33
1523479	6-6	55
1523732	1-48	2
1523733	1-48	3
1523734	1-48	7
1523735	1-48	8
1523737	1-48	3
1523739	1-48	9
1524031	2-47	10
1524751	12-3	1
1524755	10-3	1
	11-3	1

©2005 HYSTER COMPANY

NUMERICAL INDEX (Continued)

PART NO.	PG	ITEM
	12-3	1
1524758	12-3	1
1524760	10-3	1
	12-3	1
1524763	12-3	1
1524764	12-3	1
1524766	10-3	1
1524771	10-3	1
1524798	10-5	1
1524803	10-5	1
1524808	10-5	1
1524813	10-5	1
1524831	12-5	1
1524835	12-5	1
1524837	12-5	1
1524839	12-5	1
1524842	12-5	1
1524843	12-5	1
1525354	7-11	1
1525441	3-19	13
	3-21	5
1525442	3-19	29
1525451	3-19	35
	3-21	29
1525459	3-19	31
	3-21	14
1525478	3-19	41
1525563	4-33	4
	4-37	2
	4-41	4
1525564	4-55	1
	4-55	1
	4-57	1
1525566	4-59	1
1525567	4-33	3
	4-33	7
	4-37	5
	4-37	7
	4-41	3
	4-41	7
	4-51	23
1525568	4-33	2
	4-37	1
	4-41	2
	4-51	1
1525569	4-33	8
	4-37	6
	4-41	8
	4-43	43
1525570	4-33	1
	4-39	41
	4-41	1
	4-51	32
1525573	4-51	4
1525577	4-34	28
	4-38	29
	4-42	28
	4-51	20
1525584	4-49	15
	4-51	3
1525677	5-27	9
1525686	5-23	32
1525692	5-13	41
	5-23	43
1525693	5-13	40
	5-23	42
1525696	5-17	21
	5-27	22
1526082	4-25	8
	4-27	8
1526186	9-3	13
1527228	1-3	21
1527264	4-3	13
1527395	9-3	28
1527520	9-45	11
1527562	4-13	11
1527571	4-5	25
	4-7	21
1527719	9-45	18
1527813	7-9	5
	8-15	7
	8-15	22
	8-15	27
	9-9	3
	9-9	7
	13-18	4
	13-24	4
	13-29	6
	13-29	10
	13-31	5
	13-31	9
1527876	1-3	9
	2-45	3
	3-9	11
	4-11	9
	5-11	3
1527877	2-49	2
	2-49	7
	3-35	9
	13-5	4
1527878	1-3	15
	4-13	21
1527879	2-9	24
	2-11	21
	2-13	23
	2-15	23
	2-43	4
	2-47	6
	2-47	14
	2-51	11
	2-53	22
	2-55	13
	2-67	21
	2-69	21
	3-29	19
	3-31	17
	3-37	4
	4-3	14
	4-7	5
	4-11	4
	4-19	9
	5-3	10
	5-7	7
	5-9	6
	5-11	12
	5-13	46
	5-24	46
	6-3	12
	7-9	8
	8-3	11
	8-3	15
	8-5	14
	8-7	11
	8-9	14
	8-15	13
	9-3	2
	9-9	20
	9-11	2
	9-13	2
	9-15	2
	9-17	2
1527880	3-5	11
	3-9	13
	3-11	20
	3-29	12
	3-31	16
	3-35	7
	8-7	31
	8-9	39
	8-15	12
1527881	1-3	35
	2-43	10
	3-11	5
	3-15	4
	3-23	8
	8-3	27
	8-5	39
1527883	4-30	9
1527884	2-23	2
	6-3	10
1527885	2-49	16
1527892	2-50	4
1527939	1-7	38
1527940	1-7	38
1527946	1-7	24
1527982	2-9	17
	2-11	26
	2-13	16
	2-15	16
	2-51	8
	2-53	5
	9-3	12
1528132	4-18	3
1528133	4-18	4
1528140	2-6	2
	2-37	5
1528314	3-23	18
1528315	4-18	2
1528327	9-13	4
1528328	9-11	14
	9-17	4
1528329	9-15	13
1528339	9-11	5
	9-15	5
1528415	2-23	8
1528482	8-7	5
	8-9	5
1528495	2-9	2
1528573	13-29	12
	13-31	11
1528596	9-3	10
1528608	3-23	21
1528630	4-18	5
1528631	4-18	6
1528778	2-55	15
1528888	1-17	8
	1-19	7
1528889	1-17	7
	1-19	6
	2-79	9
	4-14	35
1528893	3-23	10
1528899	3-19	33
	3-21	17
1528903	3-19	39
	3-21	23
1528906	1-3	5
1528930	2-17	28

©2005 HYSTER COMPANY

NUMERICAL INDEX (Continued)

PART NO.	PG	ITEM
	2-55	32
	2-71	18
1528934	2-17	30
	2-55	34
	2-71	21
1528937	2-17	18
1528938	2-17	27
	2-55	31
	2-71	17
1529015	10-13	19
	11-15	5
	12-26	33
	13-29	11
	13-31	10
1529046	4-33	7
	4-33	8
	4-37	5
	4-37	6
	4-41	7
	4-41	8
	4-51	2
	4-51	24
	4-52	33
1529052	4-34	25
	4-38	22
	4-42	25
1529257	4-7	31
	4-13	4
1529366	2-43	11
	3-15	2
	3-23	22
	3-35	17
	4-3	5
	4-7	12
	4-11	8
	4-13	9
	4-13	32
	4-17	4
	8-3	9
	8-5	12
	8-7	9
	8-9	12
	8-13	8
1529427	1-8	56
1529787	2-9	12
	2-11	11
	2-13	11
	2-15	11
	2-53	15
	2-67	14
	2-69	14
1529894	5-17	20
1529896	5-3	8
	5-23	
	5-27	
1530010	8-13	10
1530019	1-7	34
1530037	4-33	1
	4-33	2
	4-33	3
	4-37	1
	4-37	7
	4-39	41
	4-41	1
	4-41	2
	4-41	3
	4-43	43
1530135	1-8	55
1530243	1-3	33
	1-12	3
	2-9	10
	2-11	9
	2-13	9
	2-15	9
	2-53	13
	2-67	12
	2-69	12
	3-5	10
	3-7	11
	3-9	12
	3-11	4
	3-15	3
	3-29	14
	3-31	19
	8-3	30
	8-5	37
	8-7	30
	8-9	37
	9-9	21
1530244	1-3	32
	1-12	4
1530311	3-37	5
1530485	8-3	26
	8-5	11
	8-7	27
	8-9	11
1530588	6-5	5
1530722	5-35	4
1530960	4-21	10
1530961	4-21	10
1530971	3-37	3
1531001	1-7	7
	1-7	7
	4-25	17
1531148	6-6	32
1531162	4-55	3
	4-55	5
	4-57	3
	4-57	7
1531167	2-9	23
	2-11	20
	2-13	22
	2-15	22
	2-53	21
	2-67	20
	2-69	20
1531231	4-45	34
1531237	4-45	16
1531239	4-45	17
1531240	4-45	19
1531254	2-43	13
1531312	3-39	6
1531404	2-9	26
	2-11	14
	2-13	25
	2-15	25
	2-53	25
	2-67	24
	2-69	24
1531486	4-59	4
	4-59	7
1531501	4-35	35
	4-39	35
	4-43	35
1531502	4-45	39
	4-49	20
1531519	4-29	7
1531557	1-3	25
	1-17	9
	4-27	27
	8-15	25
	13-7	4
1531558	1-7	32
	1-17	3
	3-5	19
	3-7	24
	3-9	22
	4-27	17
	4-27	22
	9-9	24
1531563	7-2	3
1531567	8-3	2
	8-5	2
	8-7	2
	8-9	2
1531568	8-7	16
	8-9	26
1531569	8-3	22
	8-5	30
1531806	2-79	12
1531975	4-17	3
1531991	4-45	33
1532335	6-6	42
1532337	6-3	13
	6-6	44
	6-15	3
1532339	6-6	42
1532350	6-5	16
1532363	2-71	15
1532513	2-43	18
1532523	2-17	11
	2-55	11
1532532	3-23	1
1532571	4-49	15
	4-49	18
	4-51	3
	4-51	11
	4-61	7
	4-61	11
	4-61	16
	4-63	5
	4-63	8
1532585	2-17	29
	2-55	33
	2-71	20
1532650	10-7	6
	11-7	4
	12-9	6
1532664	4-51	26
1532708	6-6	53
1532729	6-5	
1532730	6-5	
1532732	6-5	28
1532735	6-5	21
1532758	4-47	8
1532759	4-27	19
	4-47	7
1532761	4-45	20
	4-49	24
1532775	4-27	20
	4-45	3
1532776	4-45	31
	4-49	23
1532777	4-45	8
1532779	4-47	9
1532904	4-21	10
1533493	9-41	4
	9-43	12

See Service Manual for service procedures.
©2005 HYSTER COMPANY

NUMERICAL INDEX (Continued)

PART NO.	PG	ITEM
	9-45	13
1533494	9-41	5
	9-43	15
	9-45	15
1533596	1-15	5
1533597	1-15	1
1533598	1-15	1
1533599	1-15	1
1533601	1-15	1
1533639	2-17	7
	2-55	7
	2-71	7
1533863	2-17	8
	2-55	8
1534013	2-43	5
1534017	2-50	1
1534174	2-17	26
	2-55	30
1534282	4-35	32
	4-39	36
	4-43	32
	4-51	31
1534417	1-3	16
	2-23	1
	2-43	6
	2-45	4
	2-47	7
	2-51	12
	4-3	8
	4-7	3
1534424	4-5	32
1534649	3-19	17
	3-21	1
1534660	1-41	5
1534671	3-19	37
	3-21	25
1534672	3-19	38
	3-21	24
1534674	3-19	19
	3-21	34
1534675	3-19	30
	3-21	31
1534677	3-19	23
	3-21	8
1534679	3-19	27
	3-21	32
1534789	2-17	2
	2-55	2
	2-71	2
1534828	4-33	12
	4-37	11
	4-41	12
	4-51	19
	4-61	15
1534871	8-3	25
	8-5	20
	8-7	25
	8-9	20
1535136	3-29	21
1535257	2-9	5
	2-11	4
	2-13	4
	2-15	4
	2-53	8
	2-67	7
	2-69	7
1536304	4-7	9
	4-11	1
	4-13	29
1536719	2-49	12
1536724	8-3	33
	8-5	40
1536813	1-17	10
	1-19	4
1537133	6-3	8
	6-6	54
	6-15	5
1537400	7-11	3
1537449	5-19	14
	5-21	14
	5-29	14
	5-31	14
	5-33	14
1537450	5-19	16
	5-21	16
	5-29	17
	5-31	17
	5-33	17
1537455	5-29	2
1537551	4-13	26
	4-25	23
	4-27	23
1537667	7-11	21
1537692	4-7	27
1538162	3-29	2
	3-31	2
1538488	3-37	1
1538490	3-29	5
	3-31	5
1538782	3-29	3
	3-31	3
1539085	2-56	3
	4-7	10
	4-13	3
	4-29	6
1539086	2-56	2
	4-7	11
	4-13	2
	4-29	5
1539154	2-6	2
1539245	6-3	1
1539246	6-3	1
1539298	3-31	1
1539418	3-39	2
1539584	4-25	20
1539639	7-17	1
1539962	2-21	8
	4-5	3
1540643	1-7	9
1540805	4-3	21
1540860	1-7	40
1540870	1-8	52
1541231	4-13	17
	5-13	14
	5-23	22
1541232	5-13	15
	5-23	19
1541556	5-17	5
	5-27	5
1541921	5-4	3
1541991	4-34	20
	4-38	19
	4-42	20
1541992	4-34	20
	4-38	19
	4-42	20
1542082	3-29	13
	3-31	18
1542436	3-15	12
	5-7	11
	5-9	10
1542439	3-15	13
	4-7	1
1542440	3-23	14
	4-13	22
1542500	3-31	8
1542546	9-11	10
	9-15	10
1542555	3-29	20
1542670	2-17	12
1542674	2-57	5
1542675	2-43	5
1542676	2-43	5
1542677	2-43	5
1542772	3-35	4
1542773	3-35	6
1543059	7-15	1
1543060	6-7	1
	6-8	1
	6-15	1
1543061	6-7	1
	6-8	1
1543062	7-15	1
1543063	6-13	1
1543064	6-13	1
1543070	6-7	1
	6-8	1
	6-15	1
1543071	6-7	1
	6-8	1
1543094	5-19	14
	5-21	14
	5-29	14
	5-31	14
	5-33	14
1543096	5-19	14
	5-21	14
	5-29	14
	5-31	14
	5-33	14
1543097	5-19	14
	5-21	14
	5-29	14
	5-31	14
	5-33	14
1543098	5-19	14
	5-21	14
	5-29	14
	5-31	14
	5-33	14
1543102	5-19	24
	5-21	24
	5-29	25
	5-31	25
	5-33	25
1543254	7-11	40
1543553	2-45	6
	2-47	11
	4-45	13
1543691	3-11	40
	3-23	15
1543698	8-3	18
	8-5	18
	8-7	18
	8-9	18
1543842	8-3	19
	8-5	19
	8-7	19

©2005 HYSTER COMPANY

NUMERICAL INDEX (Continued)

PART NO.	PG	ITEM
	8-9	19
	13-11	6
1543982	13-5	8
1543994	1-3	1
1543995	1-3	2
1544118	9-41	7
1544119	9-41	7
1544120	9-41	7
1544121	9-41	7
1544122	9-41	10
1544123	9-41	10
1544124	9-41	10
1544153	1-8	45
	1-8	45
	8-3	31
	8-5	38
1544157	7-9	6
1544216	5-17	4
	5-27	6
1544217	5-17	3
	5-27	2
1544218	5-13	32
	5-27	7
1544232	7-17	1
1544255	4-18	7
1544413	1-7	35
1544415	1-7	16
1544466	8-13	1
1544566	7-2	4
	7-5	
1544758	5-35	11
1544759	5-35	13
1544846	1-3	3
1544975	9-3	18
	9-6	
1545202	4-35	39
	4-39	39
	4-43	39
1545387	1-3	10
1545401	6-3	5
	6-15	4
1545402	6-3	13
	6-15	3
1545443	4-5	26
	4-7	23
1545444	4-5	27
	4-7	22
1545546	5-35	3
1546673	4-49	3
	4-61	10
	4-63	7
1546697	4-35	39
	4-39	39
	4-43	39
1546731	2-55	12
1547368	4-49	6
1547369	4-49	13
1547447	5-13	7
	5-23	8
1547466	1-7	20
1547467	1-7	20
1547468	1-7	20
1547479	4-45	36
1547482	4-45	6
	4-45	9
1547550	3-35	1
1547712	2-17	25
	2-55	29
1547756	13-5	6
1547757	6-6	60
1547849	8-3	4
	8-5	4
	8-7	4
	8-9	4
	8-13	2
1547984	2-43	8
1548181	8-13	1
1548352	2-41	16
	4-5	28
1548394	2-59	31
1548497	2-9	18
	2-11	13
1548618	1-3	7
1548620	2-43	16
1549398	4-7	19
1549715	13-29	6
	13-31	5
1549718	13-29	5
	13-31	12
1549724	13-29	5
	13-31	12
1550070	13-29	5
	13-31	12
1550298	12-18	29
1550495	4-21	10
1550496	4-21	10
1550561	5-35	12
1550565	5-3	8
	5-13	
	5-17	
1550566	5-17	1
	5-27	1
1550567	5-17	16
	5-27	16
1550571	5-17	10
	5-23	14
1550572	5-17	11
	5-23	15
1550573	5-17	9
	5-27	12
1550574	5-17	18
1550575	5-13	25
1550576	5-13	26
1550577	5-13	6
1550578	5-13	8
1550580	5-27	19
1550581	5-23	26
1550582	5-23	27
1550584	5-23	9
1550585	5-17	6
1550646	4-21	7
1550647	4-21	3
1550747	2-79	16
1551493	8-13	1
1551494	8-13	1
1551608	2-23	3
	2-56	1
	2-79	10
1551649	6-3	4
1551663	2-13	7
	2-15	7
	2-53	11
	2-69	10
1551839	7-2	3
1551845	2-43	16
1552010	1-3	17
1552011	1-3	18
1552012	1-3	19
1552107	4-21	9
1552290	6-3	13
	6-15	3
1552525	5-19	6
	5-21	6
	5-29	6
	5-31	6
	5-33	6
1552853	5-17	20
	5-27	23
1553122	5-4	1
1553123	5-4	1
1553125	5-4	1
1553265	2-79	1
1553266	2-23	14
1553267	2-56	5
1553270	5-13	35
	5-23	38
1553403	5-13	43
	5-23	44
1553475	5-13	36
	5-23	39
1553710	2-35	1
1553715	2-25	4
1553716	2-25	2
1553717	2-25	3
1553762	2-31	24
1553763	2-31	27
1553774	2-41	6
1553776	2-21	1
1553799	2-41	12
1553838	2-41	10
1553878	2-27	16
1553897	3-35	12
	4-30	10
	8-3	3
	8-5	3
	8-7	3
	8-9	3
	8-13	6
1553943	2-37	17
1553984	4-5	18
1553985	4-5	7
1553996	4-5	23
1553997	4-5	24
1554030	4-5	8
	4-8	
1554032	4-8	3
1554033	4-8	1
1554034	4-8	2
1554359	4-34	17
	4-35	35
	4-35	36
	4-35	39
	4-38	16
	4-39	35
	4-39	37
	4-39	39
	4-42	17
	4-43	35
	4-43	36
	4-43	39
1554814	2-50	3
1554816	2-50	2
1554838	2-47	4
1554902	4-17	12
	4-19	10
1554921	2-51	2
1555731	4-21	14
	4-21	14

©2005 HYSTER COMPANY

NUMERICAL INDEX (Continued)

PART NO.	PG	ITEM
	4-21	14
	4-21	14
	4-22	14
	4-22	14
	4-22	14
	4-22	14
1556342	4-5	1
1556475	8-3	23
	8-5	10
	8-7	23
	8-9	10
1556574	1-17	1
1556623	4-7	14
1556713	1-17	1
1556829	3-39	1
1556838	4-7	20
1556962	3-37	2
1557269	3-37	7
	3-39	
1557478	2-5	1
1557479	2-5	1
1557546	3-33	14
1557547	3-33	21
1557548	3-33	22
1557549	3-33	20
1557550	3-33	8
	3-33	10
1557551	3-33	11
1557552	3-33	12
1557553	3-33	1
1557554	3-33	9
1557558	3-33	5
1557559	3-33	6
1557560	3-33	18
1557561	3-33	7
1557562	3-33	17
1557563	3-33	16
1557564	3-33	13
1557565	3-33	15
1557566	3-33	4
1557737	2-5	4
1557767	2-5	2
1558052	1-25	24
1558156	4-61	12
	4-63	9
1558184	2-5	3
1558186	2-5	3
1558219	1-17	2
	1-19	14
1558226	4-45	14
1558228	4-45	38
1558515	5-17	33
	5-27	36
1558771	4-27	24
1559049	4-49	1
	4-49	4
1559418	3-2	3
1559419	3-2	4
1559420	3-2	5
1559928	4-3	9
1560091	4-7	9
	4-11	1
	4-13	29
1560121	4-7	8
1560441	4-45	32
1560447	4-25	21
1560448	4-25	22
1560647	1-3	37
1560671	1-17	4
	1-19	15
1560678	4-13	7
1560681	9-21	15
	9-23	13
1561015	1-3	36
1561162	9-13	1
1561163	9-11	1
	9-17	1
1561164	9-15	1
1561518	4-45	4
1561519	4-42	21
1561559	4-25	10
	4-27	10
1561749	13-12	1
1561755	4-25	11
	4-27	11
1561780	5-11	2
1561871	5-7	10
	5-9	9
1562088	3-29	15
	3-31	20
1562310	5-35	15
1562353	1-39	21
1562359	1-11	1
1562360	1-11	1
1562361	1-11	1
1562362	1-11	1
1562489	7-5	8
1562492	7-5	11
1562493	7-5	13
1562496	7-5	16
1562501	7-5	21
1562505	7-5	25
1562509	7-5	1
1562648	5-7	5
	5-9	4
	5-11	11
	8-15	10
	13-11	8
1562649	4-55	3
	4-55	5
	4-55	6
	4-55	7
	4-57	3
	4-57	5
	4-57	6
	4-57	7
	4-57	8
	4-57	9
1563207	1-31	1
	1-37	2
1563208	1-31	13
	1-37	12
1563210	1-31	15
	1-33	11
	1-37	10
1563211	1-31	16
	1-33	12
	1-37	11
1563215	1-33	9
	1-35	5
1563227	1-33	7
1563230	1-31	3
	1-37	4
1563231	1-31	4
	1-37	5
1563351	1-35	1
1563369	1-3	20
	1-3	20
1563497	1-3	37
1563836	1-3	37
1563840	1-8	56
1563841	4-17	11
1563881	1-8	43
1563883	1-8	54
1563909	4-3	12
1564044	4-7	4
	4-11	2
	4-13	30
1564061	3-12	49
	3-15	28
1564392	3-23	17
1564515	9-3	5
1564526	3-39	9
	8-3	7
	8-5	8
	8-7	7
	8-9	8
	8-13	4
1564529	1-7	25
1564587	2-47	2
	3-33	10
1564588	3-33	10
1564589	3-33	10
1564747	9-11	11
	9-13	5
	9-15	11
	9-17	5
1564752	3-37	10
1565076	4-25	13
	4-27	13
1565098	4-49	6
1565125	4-25	3
	4-27	3
1565127	5-7	3
	5-11	10
1565135	5-23	23
1565150	2-5	9
1565195	2-5	9
1565199	3-7	17
1565200	3-7	18
1565201	3-5	2
	3-7	2
	3-9	2
1565212	3-7	19
	3-9	23
1565290	8-11	2
1565303	8-11	6
1565305	8-11	27
	8-13	7
1565309	8-11	31
1565310	8-11	31
1565311	8-11	32
1565312	8-11	33
1565313	8-11	12
1565314	8-11	12
1565315	8-11	34
1565316	8-11	30
1565324	6-5	23
1565327	6-5	18
1565391	2-11	3
1565453	2-5	6
1565545	1-3	22
1565691	2-9	13
	2-11	12
1565692	2-13	12
	2-15	12
	2-53	16
	2-67	15

©2005 HYSTER COMPANY

NUMERICAL INDEX (Continued)

PART NO.	PG	ITEM
	2-69	15
1565832	2-23	9
1566076	4-51	17
	4-51	18
1566116	4-51	25
1566117	4-51	27
1566131	8-3	33
	8-5	40
1566141	8-3	33
	8-5	40
1566142	8-3	33
	8-5	40
1566143	8-3	33
	8-5	40
1566144	8-3	33
	8-5	40
1566146	2-45	6
	2-47	11
	4-13	24
1566166	5-17	25
	5-27	27
1566168	5-17	30
	5-27	33
1566169	5-17	7
	5-27	26
1566227	4-51	17
	4-51	18
1566329	5-3	3
1566420	3-9	17
1566453	1-31	1
	1-37	2
1566457	5-14	48
	5-24	52
1566461	6-6	60
1566462	6-6	60
1566505	2-6	3
1566515	2-17	16
	2-55	12
1566528	2-55	19
1566564	12-26	43
1566654	2-45	9
	4-13	6
1566726	1-17	14
1566802	2-67	6
1566849	13-3	3
1566853	13-3	6
1566951	1-39	6
1567020	2-71	8
1567333	4-45	7
1567674	2-9	21
	2-11	18
	2-13	20
	2-15	20
	2-53	19
	2-67	18
	2-69	18
1567831	2-55	20
1568075	8-3	17
	8-7	17
1568076	8-5	27
	8-9	27
1568077	8-5	28
	8-9	28
1568182	9-6	6
1568199	9-3	6
1568243	8-3	34
1568245	8-5	34
	8-9	34
1568253	8-5	21
1568256	8-5	32
	8-9	32
1568271	7-11	8
1568774	2-57	4
1568839	3-19	3
	3-21	20
1568844	3-19	40
	3-21	27
1568853	3-19	5
	3-21	22
1569079	2-11	1
	2-13	1
	2-67	1
1569211	8-7	14
	8-9	17
1569273	6-3	4
1569274	6-3	4
1569277	13-9	2
1569278	13-9	2
1569465	5-7	9
	5-9	8
	13-11	5
1569602	9-29	4
1569616	5-17	27
	5-27	30
1569768	5-3	9
	5-13	45
	5-23	45
1569776	2-45	5
	2-47	8
1569912	6-5	13
1569913	6-5	13
1569914	6-5	13
1569915	6-5	13
1569995	4-21	11
1570290	8-3	8
	8-5	9
1570298	8-3	32
	8-7	34
1570300	8-5	33
	8-9	33
1570337	9-6	7
1570338	9-6	1
1570340	9-6	2
1570342	9-6	3
1570346	9-6	4
1570360	5-13	4
	5-23	4
1570361	5-13	1
	5-23	3
	5-35	
1570362	5-23	6
1570363	5-35	1
1571628	1-27	1
1571775	1-29	7
1572387	2-35	
1572388	2-35	
1572588	4-34	19
	4-38	18
	4-42	19
1572593	2-33	4
1572594	2-33	4
1572595	2-33	4
1572596	2-33	4
1572597	2-33	4
1572598	2-33	4
1573015	2-21	3
1573021	2-41	21
1573117	2-41	7
1573118	2-41	1
1573119	2-41	8
1573120	2-41	13
1573176	2-37	6
1573179	2-37	3
1573562	2-41	3
1573564	2-41	20
1573675	8-7	26
	8-9	25
1573774	1-7	12
1574111	3-2	3
1574131	3-2	5
1574147	1-41	12
1574153	8-7	8
	8-9	9
1574260	3-2	4
1574275	1-7	36
1574277	1-7	15
1574301	1-19	2
1578664	9-5	3
1578665	9-5	10
1578671	9-5	11
1578672	9-5	7
1578673	9-5	6
1578693	9-5	11
1578700	9-27	2
	9-29	1
1578701	9-27	2
	9-29	1
1578702	9-27	3
	9-35	1
1578703	9-27	4
	9-31	1
1578704	9-27	6
	9-37	1
1578705	9-21	16
	9-23	14
1578706	9-29	12
1578707	9-19	3
	9-24	4
	9-37	4
1578710	9-39	3
	9-39	10
1578711	9-31	11
	9-33	10
	9-35	13
1578712	9-24	3
	9-29	2
	9-37	2
1578713	9-21	1
	9-23	6
	9-31	2
	9-33	2
	9-35	2
1578714	9-29	11
1578715	9-37	6
1578718	9-31	3
1578741	9-27	5
	9-33	1
1578743	9-19	4
	9-21	
1578744	9-19	5
	9-23	1
1578745	9-19	6
	9-23	2
1578746	9-19	7
	9-24	1
1578747	9-19	2
	9-21	18
1578748	9-19	2

©2005 HYSTER COMPANY

NUMERICAL INDEX (Continued)

PART NO.	PG	ITEM
	9-21	18
1578753	9-29	12
1578875	9-29	7
1578876	9-29	10
1578878	9-31	10
	9-33	9
	9-35	12
1578881	9-29	16
1578882	9-31	8
	9-33	7
	9-35	7
1578883	9-31	9
	9-33	8
	9-35	8
1578886	9-31	3
1578887	9-35	14
1578888	9-29	8
1578889	9-31	6
	9-33	6
	9-35	6
1578904	9-29	5
	9-37	3
1578905	9-35	5
1578906	9-31	7
1578907	9-33	3
1578911	9-29	6
1578912	9-31	11
	9-33	11
	9-35	13
1578918	9-39	4
1578934	9-39	5
1578940	9-21	2
1578943	9-21	4
1578965	3-15	14
1579026	8-7	15
1579027	8-7	32
1579028	8-9	21
1579116	1-23	28
	1-29	1
1579412	13-7	2
1579454	6-6	38
	8-11	
1579455	6-6	39
	8-11	
1579837	1-8	49
1579847	4-21	13
1579908	7-7	38
	9-19	8
	9-27	10
1580068	3-7	16
1580093	1-8	49
1580097	9-19	2
	9-21	24
1580131	9-19	3
	9-21	24
	9-24	10
	9-37	5
1580132	9-29	14
1580133	9-21	8
1580146	9-19	9
1580147	9-23	5
1580148	9-19	10
1580151	9-37	6
1580155	9-24	2
1580156	9-24	2
1580213	6-3	9
1580426	7-17	3
1580652	1-3	12
1580682	9-3	23
1580683	8-15	9
1580749	9-29	12
1580792	2-43	12
1580793	2-59	18
1581048	2-41	15
1581049	2-41	15
1581050	2-41	15
1581051	2-41	15
1581052	2-41	15
1581055	1-45	1
1581079	1-7	41
1581097	5-29	3
	5-31	3
1581098	5-19	8
	5-21	8
	5-29	8
	5-31	8
	5-33	8
1581099	5-19	9
	5-21	9
	5-29	9
	5-31	9
	5-33	9
1581100	5-19	10
	5-21	10
	5-29	10
	5-31	10
	5-33	10
1581104	5-19	3
1581105	5-29	20
	5-31	20
	5-33	20
1581106	5-19	21
	5-21	20
	5-29	23
	5-31	22
	5-33	23
1581107	5-19	18
	5-21	18
	5-29	19
	5-31	19
	5-33	19
1581108	5-19	7
	5-21	7
	5-29	7
	5-31	7
	5-33	7
1581109	5-29	15
	5-31	15
	5-33	15
1581112	5-33	3
1581114	5-21	3
1581116	5-19	2
	5-21	2
1581117	5-19	19
	5-21	19
1581176	4-29	8
1581302	3-15	7
1581313	4-45	40
1581315	4-45	41
1581438	3-5	4
	3-7	3
	3-9	4
1581439	3-5	5
	3-7	4
	3-9	5
1581526	4-7	26
1581534	9-5	8
1581535	9-5	10
1581536	9-5	3
1581537	9-5	8
1581556	3-19	18
	3-21	2
	11-7	20
	12-9	8
	12-18	35
1581557	3-19	45
	11-11	19
1581558	12-25	9
1581559	3-19	32
	3-21	16
	11-11	10
	12-17	13
1581560	11-15	28
	12-26	31
1581564	9-41	13
	10-13	14
	11-11	31
	12-18	24
1581565	10-13	10
1581566	10-7	8
	10-7	10
	10-13	4
	11-7	5
	11-15	3
	12-9	9
	12-18	28
	12-25	2
1581567	11-11	16
	12-25	8
1581579	3-19	36
	3-21	28
1581581	11-15	6
	12-18	36
	12-25	4
1581582	10-13	2
1581583	3-19	26
	3-21	12
1581587	11-11	18
1581588	12-25	10
1581590	11-11	30
	12-18	25
1581654	1-17	5
1581657	1-25	21
1581670	4-25	6
	4-27	6
1581733	3-19	12
	3-21	4
1581739	3-19	9
	3-21	9
1581740	3-19	21
	3-21	10
1581741	11-15	14
1581744	3-19	14
	3-21	7
1581761	3-17	7
1581762	3-17	1
1581763	3-17	2
1581764	3-17	3
1581773	3-19	14
	3-21	7
1581795	2-59	16
	3-33	19
1581796	3-33	10
1581827	11-11	7
	12-17	6
1581828	11-11	7
	12-17	6
1581829	10-7	17

©2005 HYSTER COMPANY

NUMERICAL INDEX (Continued)

PART NO.	PG	ITEM
	11-7	14
	12-10	17
	12-18	39
1581830	10-13	13
	11-15	25
	12-26	27
1581831	12-25	12
1581832	11-11	15
	12-17	9
1581834	10-13	9
1581835	11-7	19
	12-9	7
	12-25	5
1581836	10-7	7
	10-13	12
	12-18	30
1581841	11-11	20
1581842	11-15	19
	12-25	14
1581848	3-19	42
	9-41	12
1581849	10-7	14
	11-7	11
	11-11	11
	11-15	30
	12-9	14
	12-17	14
1581850	12-18	31
1581851	12-25	7
1581852	10-7	15
	11-7	12
	12-10	15
1581858	7-7	37
1581859	9-21	17
	9-23	12
1581860	9-21	11
	9-23	11
1581861	9-21	12
1581862	9-29	3
1581885	3-19	16
	3-21	3
1581887	3-19	7
1581888	3-19	8
1581898	3-19	24
	3-21	13
1581899	3-19	20
	3-21	35
1582072	1-7	26
1582074	2-15	3
1582076	2-53	7
	2-69	6
1582078	2-13	17
	2-15	17
	2-53	24
	2-67	23
	2-69	23
1582139	2-55	21
1582141	13-12	2
1582150	4-13	8
1582151	4-13	10
1582159	3-7	14
1582160	9-3	30
1582161	9-3	29
1582162	2-49	4
1582163	2-49	13
1582222	2-17	17
	2-55	18
	2-71	16
1582286	1-3	14
1582287	1-3	13
1582300	3-37	14
1582301	3-37	13
1582302	3-37	14
1582303	3-37	13
1582321	2-41	23
1582323	2-41	5
1582324	2-41	17
	4-5	29
1582337	4-3	22
1582409	3-12	51
	3-15	22
	3-21	
1582410	3-21	26
1582442	4-3	3
1582449	5-11	8
1582464	4-3	2
	4-17	6
	13-5	9
1582465	4-17	7
1582484	4-49	7
1582486	4-49	8
1582570	13-14	5
1583169	6-3	6
	6-15	6
1583593	2-41	15
1583609	1-39	5
1583611	1-3	26
	1-3	30
	1-8	48
	1-8	48
	1-12	1
	1-17	11
	1-19	3
	2-9	11
	2-11	10
	2-13	10
	2-15	10
	2-53	14
	2-67	13
	2-69	13
	3-5	12
	3-7	13
	3-9	14
	4-27	26
	8-3	21
	8-5	7
	8-7	21
	8-9	7
	9-11	7
	9-13	3
	9-15	7
	9-17	3
	13-7	3
	13-9	3
	13-12	6
1583672	1-3	29
1583713	2-55	22
1584120	2-57	6
	2-64	48
1584121	2-60	80
1584122	2-60	79
1584123	2-60	50
1584127	4-29	9
1584140	2-60	73
1584141	2-60	66
1584178	2-63	28
1584179	2-60	77
1584182	2-60	67
	2-63	7
1584183	2-63	8
1584184	2-64	53
1584185	2-63	31
1584187	2-64	50
1584188	2-60	61
1584189	2-60	63
1584190	2-60	62
1584193	2-60	59
1584195	2-60	65
1584196	2-60	64
1584197	2-60	58
1584199	2-60	57
1584200	2-60	56
1584201	2-60	55
1584202	2-60	54
1584203	2-60	49
1584204	2-60	71
1584206	2-59	43
1584207	2-59	45
1584208	2-59	44
1584209	2-63	24
1584222	2-63	26
1584227	2-63	19
	2-63	40
1584232	2-63	4
1584239	2-63	4
	2-63	6
1584240	2-63	38
1584241	2-63	32
1584242	2-63	35
1584243	2-60	84
	2-63	29
1584244	2-63	39
1584246	2-64	52
1584247	2-63	41
1584248	2-63	5
1584252	2-64	49
1584253	2-64	47
1584254	2-63	44
1584255	2-63	46
1584256	2-64	54
1584257	2-63	43
1584260	2-64	55
1584261	2-63	45
1584262	2-63	42
1584263	2-64	60
1584264	2-64	61
1584265	2-63	13
1584266	2-59	9
1584267	2-59	14
1584442	2-59	12
1584444	2-59	13
1584445	2-59	10
1584446	2-63	11
1584447	2-63	10
1584449	2-63	16
1584450	2-63	15
1584451	2-59	11
	2-63	14
1584452	2-59	25
1584453	2-60	81
1584455	2-64	51
1584456	2-64	56
1584457	2-64	59
1584458	2-59	24
1584459	2-60	76
1584460	2-60	78
1584462	2-60	72
1584463	2-60	75

See Service Manual for service procedures.
©2005 HYSTER COMPANY

NUMERICAL INDEX (Continued)

PART NO.	PG	ITEM
1584464	2-59	38
1584465	2-59	15
1584472	2-47	3
	2-59	26
1584474	2-60	68
1584475	2-60	70
1584478	2-60	69
1584479	2-59	46
1584480	2-59	47
1584481	2-60	48
1584488	2-59	42
1584490	2-59	8
1584491	2-60	85
1584492	2-59	2
1584493	2-59	3
1584495	2-59	4
1584497	2-59	6
1584498	2-59	33
1584502	2-59	20
1584503	2-59	36
1584504	2-59	21
	2-63	25
1584505	2-59	32
1584506	2-59	19
1584507	2-59	37
1584508	2-60	52
1584509	2-59	35
1584510	2-60	87
1584511	2-60	53
1584514	2-63	17
1584519	2-60	51
1584520	2-59	17
1584521	2-60	83
1584522	2-59	34
1584523	2-49	9
	2-59	41
1584532	2-59	7
1584533	2-63	21
1584617	1-3	34
1584618	2-63	22
1584619	2-63	22
1584621	2-79	17
1584662	2-63	5
1584690	6-3	14
	6-15	7
1584693	7-15	4
1584694	6-7	4
	6-8	4
	6-11	4
1584695	6-7	4
	6-8	4
	6-11	8
1584944	4-3	6
1584987	9-5	8
1585083	2-45	8
1585084	2-45	8
1585085	2-45	8
1585317	2-13	8
	2-15	8
	2-53	12
	2-67	11
	2-69	11
1585528	6-3	11
1585529	4-3	17
1585575	8-3	16
	8-5	26
1585592	1-4	39
1585745	5-13	20
1585747	3-17	6
1585748	3-17	5
1585750	5-23	34
1585751	3-17	4
1585765	1-3	27
1585835	3-19	25
	3-21	11
1585906	4-21	
1585907	4-21	
1585908	4-21	
1585909	4-21	
1586012	3-35	2
1586013	2-17	4
	2-23	15
	2-43	17
	2-49	15
	2-55	4
	2-71	4
	3-12	50
	3-15	23
	9-41	3
	9-43	16
	9-45	17
1586016	9-39	13
1586017	9-39	12
1586018	9-39	2
	9-39	9
1586019	9-39	11
1586020	9-39	7
1586021	9-39	6
1586022	3-19	44
1586279	9-29	15
	9-39	14
1586280	9-29	9
1586428	4-25	16
	4-27	16
1586430	13-9	4
1586432	1-11	4
1586440	1-39	14
1586457	3-23	11
	3-27	12
1586458	3-19	14
	3-21	7
1586495	1-7	10
	1-17	18
	1-19	10
	4-7	18
	4-25	18
	4-27	18
	4-27	21
1586627	8-3	5
	8-5	5
	9-3	20
	9-9	10
	9-11	22
	9-13	13
	9-15	23
	9-17	14
	9-27	12
1586630	1-11	2
1586759	4-25	15
	4-27	15
1586790	13-3	7
1586815	1-12	2
1586967	2-71	9
1587068	2-55	16
1587069	2-55	14
1587778	4-35	40
	4-39	32
	4-43	41
1587843	2-25	
	2-27	
	2-29	
	2-31	
	2-33	
	2-35	
	2-37	
1587845	2-25	
	2-27	
	2-29	
	2-31	
	2-33	
	2-35	
	2-37	
1588027	4-3	4
1588050	6-5	16
1588507	2-11	8
1588508	2-9	9
1588577	8-15	18
1588583	4-27	25
1588833	13-11	7
1588963	2-56	7
1589195	13-5	2
1589312	2-17	9
	2-55	9
1589377	1-41	7
1589397	1-41	8
1589437	1-41	9
1589542	3-9	10
1589621	4-30	2
1589629	2-71	10
1589630	2-71	10
1589635	2-71	14
1589667	1-3	1
1589787	1-19	5
1590113	9-27	7
	9-39	8
1590114	9-27	8
	9-39	1
1590145	1-8	42
1590147	1-8	53
1590149	1-3	2
1590152	1-15	9
1590153	1-15	10
1590279	1-15	7
1590280	1-15	8
1590427	7-17	4
1590839	5-35	8
1590865	5-35	7
1590866	5-35	6
1590917	2-15	1
1590918	2-15	1
	2-53	1
	2-69	1
1590972	2-53	1
	2-69	1
1591122	6-5	16
1591185	4-21	14
	4-21	14
	4-22	14
	4-22	14
	4-22	14
	4-22	14
1591261	5-13	
	5-17	
1591454	4-13	23
1591538	2-64	57
1592071	4-30	7
1592076	4-30	8
1593356	2-9	4

©2005 HYSTER COMPANY

NUMERICAL INDEX (Continued)

PART NO.	PG	ITEM
1593409	1-35	
1593411	1-33	
1593412	1-33	
1593413	1-31	
1593414	1-31	
1593415	1-33	
1593416	1-33	
1593417	1-31	
1593418	1-31	
1593421	1-37	
1593422	1-37	
1593423	1-37	
1593424	1-37	
1593653	2-63	30
1593654	2-60	60
1593655	2-63	23
1593656	2-63	23
1593657	2-63	2
1593658	2-63	3
1593659	2-63	2
1593660	2-64	59
1593661	2-63	33
1593662	2-60	86
1593665	2-59	5
1593993	5-23	
	5-27	
1594055	4-13	20
1594057	2-13	3
1594144	3-11	7
1594926	1-3	2
1594927	1-3	1
1595420	5-13	13
	5-19	
1595421	5-13	12
	5-21	
1595422	5-27	11
	5-33	
1595423	5-23	17
	5-31	
1595424	5-23	18
	5-29	
1595425	5-19	25
	5-21	25
	5-29	26
	5-31	26
	5-33	26
1595426	5-19	23
	5-21	23
	5-29	24
	5-31	24
	5-33	24
1595427	5-19	20
	5-21	21
1595428	5-33	21
1595429	5-31	23
1595430	5-29	21
1596179	8-7	26
	8-9	25
1596624	1-7	14
1596625	1-7	37
1597051	1-8	50
1597052	1-7	39
1597058	1-7	27
1597070	1-8	51
1597381	9-41	14
1597644	3-25	1
1597697	2-63	36
1597698	2-63	37
1597709	2-91	6
1597710	2-91	8
1597765	2-15	1
	2-53	1
	2-69	1
1597766	2-15	1
	2-53	1
	2-69	1
1597795	2-13	1
1598007	2-79	11
1598209	1-25	20
1598210	1-25	11
1598211	1-25	12
1598221	4-21	14
	4-21	14
	4-21	14
	4-22	14
	4-22	14
	4-22	14
	4-22	14
	4-22	15
1598222	4-21	14
	4-21	14
	4-21	14
	4-22	14
	4-22	14
	4-22	14
	4-22	14
	4-22	15
1598223	4-21	14
	4-21	14
	4-21	14
	4-22	14
	4-22	14
	4-22	14
	4-22	14
	4-22	14
1598283	4-21	2
1598290	1-25	5
1598291	1-25	23
1598293	1-25	1
1598294	1-25	17
1598295	1-25	6
1598296	1-25	3
1598297	1-25	2
1598298	1-25	18
1598299	1-25	19
1598300	1-25	7
1598301	1-25	26
1598302	1-25	25
1598305	1-39	12
1598321	1-29	3
1598322	1-39	12
1598323	1-29	12
1598324	1-39	12
1598325	1-29	16
1598326	1-39	12
1598327	1-29	15
1598329	1-29	10
1598332	1-29	2
1598333	4-27	28
1598389	1-21	15
	1-23	2
1598390	1-21	13
	1-21	21
	1-23	25
1598391	1-21	16
1598392	1-21	5
1598393	1-21	3
	1-23	16
1598394	1-21	4
	1-23	15
1598395	1-21	17
1598396	1-21	2
1598397	1-21	14
1598398	1-23	3
1598399	1-23	8
1598400	1-23	10
1598401	1-23	9
1598402	1-23	29
1598403	1-23	23
1598404	1-23	21
1598406	1-23	30
1598407	1-23	4
1598408	1-23	27
1598409	1-23	31
1598410	1-23	32
1598411	1-23	14
1598412	1-23	26
1598413	1-23	17
1598414	1-23	19
1598416	1-23	1
1598417	1-21	1
1598420	1-27	3
1598421	1-27	4
1598422	1-27	9
1598423	1-27	10
1598424	1-27	13
1598425	1-27	14
1598426	1-27	15
1598427	1-27	17
1598428	1-27	18
1598504	1-31	2
	1-33	2
	1-35	2
	1-37	7
1598668	1-29	9
1598669	1-23	24
1598670	1-23	21
1598671	1-23	21
1598672	1-23	21
1598673	1-23	21
1598674	1-23	21
1598675	1-23	21
1599415	1-19	13
1599441	2-81	13
	2-89	2
1599442	2-89	3
1599443	2-89	12
1599444	2-89	5
1599445	2-89	8
	2-93	12
1599446	2-89	6
1599448	2-77	4
	2-89	9
	2-91	4
	2-93	11
1599449	2-89	7
1599451	2-89	4
1599452	2-89	10
1599453	2-89	11
1599454	2-89	13
1599455	2-89	14
1599456	2-89	10
1599457	2-89	11
1599458	2-75	9
	2-77	7
	2-89	15
1599459	2-75	1
1599460	2-75	2

©2005 HYSTER COMPANY

NUMERICAL INDEX (Continued)

PART NO.	PG	ITEM
1599461	2-75	3
1599462	2-75	15
1599463	2-75	16
	2-81	6
1599464	2-75	17
	2-81	7
1599465	2-75	12
1599466	2-75	10
1599467	2-75	13
1599468	2-89	16
	2-93	8
1599469	2-89	17
1599470	2-75	5
	2-81	46
	2-85	7
	2-93	5
1599471	2-75	8
1599472	2-75	7
1599473	2-75	4
1599475	2-73	3
	2-75	11
1599476	2-75	6
1599478	2-75	18
	2-77	9
1599479	2-77	1
1599480	2-77	2
1599481	2-77	3
1599483	2-77	5
1599484	2-77	6
1599485	2-77	8
1599486	2-81	45
1599487	2-81	44
1599488	2-81	10
1599489	2-81	15
1599516	2-81	16
1599517	2-81	17
1599518	2-81	18
1599519	2-81	19
1599520	2-81	20
1599521	2-81	21
1599522	2-81	43
1599523	2-81	42
1599524	2-81	10
1599525	2-81	11
1599526	2-81	12
1599528	2-81	14
1599529	2-81	22
1599530	2-81	23
1599531	2-81	24
1599532	2-81	25
1599533	2-81	26
1599534	2-81	27
1599535	2-81	28
1599536	2-81	29
	2-81	32
1599537	2-81	30
	2-81	33
1599538	2-81	31
1599539	2-81	34
1599540	2-81	35
1599541	2-81	36
1599542	2-81	37
1599543	2-73	2
1599544	2-81	8
1599545	2-81	1
1599546	2-81	2
1599547	2-81	3
1599548	2-81	4
1599549	2-81	5
1599550	2-81	9
1599552	2-81	40
1599553	2-81	38
1599555	2-82	47
1599556	2-73	1
1599557	2-81	39
1599559	2-73	4
1599560	2-73	5
1599561	2-73	6
1599562	2-73	7
1599563	2-73	8
1599565	2-73	10
1599567	2-73	11
1599568	2-73	12
1599569	2-85	1
1599570	2-85	2
1599571	2-85	3
1599572	2-85	4
1599573	2-85	5
1599574	2-85	6
	2-87	11
1599576	2-85	9
1599577	2-85	10
1599578	2-85	11
1599579	2-85	8
	2-91	5
1599580	2-85	14
1599581	2-85	13
1599582	2-85	12
1599583	2-87	9
1599584	2-87	10
1599585	2-87	12
1599586	2-87	13
1599588	2-87	16
1599589	2-87	15
1599590	2-87	14
1599591	2-87	18
1599592	2-87	1
1599593	2-87	2
1599594	2-87	4
1599595	2-87	3
1599596	2-87	5
1599597	2-87	6
1599598	2-87	8
1599599	2-87	7
1599600	2-87	1
1599601	2-87	2
1599602	2-87	7
1599603	2-87	17
1599604	2-93	1
1599605	2-93	3
1599606	2-93	2
1599607	2-93	4
1599610	2-93	7
1599611	2-93	9
1599612	2-93	10
1599613	2-93	13
1599616	2-93	14
1599793	2-93	15
1599794	2-91	2
1599795	2-91	3
1599797	2-91	12
1599798	2-91	9
1599800	2-91	7
1599801	2-91	10
	3-27	8
1599802	2-91	14
1599803	2-91	11
1599804	2-91	1
1599807	2-91	13
1599818	3-25	2
1599819	2-81	41
	3-25	4
1599820	3-25	3
1599821	3-25	14
1599822	3-25	15
	3-25	17
1599823	3-25	16
1599824	3-25	13
1599825	3-25	12
1599826	3-25	11
1599827	3-25	10
1599828	3-25	5
1599829	3-25	6
1599830	3-25	9
1599831	3-25	8
1599832	3-25	7
1599833	3-27	1
1599834	3-27	2
1599835	3-27	3
1599836	3-27	4
1599837	3-27	5
1599838	3-27	6
1599839	3-27	7
1599841	3-27	9
1599842	3-27	10
1599843	3-27	11
1599845	4-13	34
1599869	4-9	1
1599893	4-9	2
1599894	4-9	3
1599895	4-9	5
1599896	4-9	6
1599897	4-9	4
1599898	2-73	13
	2-75	20
	2-77	11
	2-82	48
	2-89	19
	2-91	15
	2-93	16
	3-25	25
1599901	2-85	15
	3-25	1
1599904	2-89	1
1599905	2-89	14
1599907	3-25	19
1599908	3-25	18
1599909	3-25	21
1599910	3-25	23
1599911	3-25	22
1599912	3-25	20
1599913	3-25	24
1600084	2-85	15
	3-25	1
1600085	2-73	14
	2-75	19
	2-77	10
	2-82	48
	2-89	18
	2-91	16
	2-93	17
	3-25	26
1600093	3-25	1
1600190	4-17	2
1600273	2-81	10
1600274	2-81	10
1600275	2-87	9
1600276	2-87	1

©2005 HYSTER COMPANY

NUMERICAL INDEX (Continued)

PART NO.	PG	ITEM
1600277	2-87	2
1600278	2-87	1
1600279	2-87	2
1600491	8-11	20
1600492	8-11	20
1600493	8-11	27
	8-13	7
1601748	1-39	13
1602394	13-3	
1602395	13-3	
1603212	1-3	2
1603214	1-3	2
1603215	1-3	1
1603216	1-3	1
1603491	7-15	1
1603493	7-17	1
1605121	1-3	2
1605122	1-3	1
1605467	2-23	10
1605988	2-56	9
1605990	1-12	5
1606006	8-7	14
	8-9	17
1606085	8-11	
1606086	8-11	
1606087	8-11	1
1606088	8-11	1
1606532	6-5	23
1606659	1-3	20
1606750	7-2	6
1606891	7-5	
1606912	7-2	5
1608589	4-25	27
1608590	4-25	28
1608591	4-27	29
1608592	4-27	33
1608616	3-25	1
1608617	3-25	1
1608654	4-25	26
	4-27	31
1608989	3-11	35
1609374	3-29	1
1609621	1-19	11
1609706	1-7	31
1609707	1-7	28
1609708	1-7	30
1609709	1-7	29
1610890	1-19	9
1611140	1-19	8
2013075	10-10	7
	12-14	8
2013088	11-13	9
	12-21	9
2013089	11-13	10
	12-21	10
2013099	11-13	15
	12-22	15
2021341	8-3	14
	8-5	17
2021343	8-3	14
	8-5	17
2021353	8-3	13
	8-5	16
	8-7	13
	8-9	16
2021394	2-17	1
	2-55	1
	2-71	1
2021395	1-7	19
	1-15	12
2021438	2-33	15
2021442	2-33	14
2021683	3-23	20
2022352	6-5	9
2022655	2-29	3
2026608	4-5	5
2026861	6-5	4
2027655	1-8	65
2027756	6-6	50
2027817	6-6	47
2027828	6-6	34
2027949	3-29	4
	3-31	4
2028145	6-6	51
2028621	6-6	45
2028644	2-37	25
2028645	2-37	26
2028852	2-31	24
2028853	2-25	23
2028854	2-25	3
2028862	6-5	12
2028927	2-35	7
2029081	2-35	12
2029082	2-25	16
2029084	2-25	2
2029086	2-25	24
2029095	2-31	3
2029096	2-31	27
2029097	2-31	28
2029098	2-31	25
2029100	2-27	9
2029101	2-27	11
2029102	2-27	12
2029103	2-27	21
2029108	2-37	22
	2-37	42
2029112	2-37	23
2029116	2-37	7
2029120	2-37	24
2029343	5-31	2
	5-33	2
2034347	1-51	2
2034460	1-39	2
2037323	8-11	21
2037340	8-11	19
2037341	8-11	22
2037343	8-11	7
2037517	8-11	17
2037518	8-11	17
2041520	8-3	33
	8-5	40
2043528	13-17	3
	13-21	15
	13-23	15
	13-27	
2043529	13-17	3
	13-21	15
	13-23	15
	13-27	
2043530	13-17	6
	13-21	3
	13-23	3
2043531	13-17	4
	13-21	11
	13-23	11
2043532	13-17	4
	13-21	11
	13-23	11
2043533	13-17	5
	13-21	8
	13-23	8
2043534	13-17	5
	13-21	8
	13-23	8
2044370	9-43	4
2044371	7-13	6
	9-45	5
2044712	4-18	1
2045024	2-37	17
2045025	2-37	9
2045026	2-37	8
	2-37	37
2045029	2-33	12
2045030	2-33	10
2045033	2-33	9
2045036	2-25	28
	2-38	47
2045321	2-29	26
2051128	2-25	22
2051129	2-25	4
2053099	2-47	1
	4-47	
2053795	12-21	
2053796	11-13	
2053797	12-21	
2053799	12-21	
2054879	2-9	1
2055193	3-2	
	3-5	14
2055232	2-47	5
	2-51	1
2055298	2-51	9
2056355	2-45	2
2056732	2-51	3
2056762	3-15	1
	3-17	
2056822	1-7	5
2056823	1-7	8
2056824	4-25	1
	4-27	1
2056826	4-25	2
	4-27	2
2056868	7-7	
2056869	7-7	
	9-19	8
2056870	2-11	1
2057865	2-45	6
	2-47	11
2057948	4-19	8
2058126	12-21	
2058210	12-21	1
2058213	11-13	1
2058214	12-21	1
2058219	12-21	1
2058222	12-21	1
2058251	12-21	1
2058252	11-13	1
2058324	12-21	
2058326	11-13	
2058328	12-21	
2058331	12-21	
2058333	12-21	
2058338	12-21	
2058426	3-12	46
	3-15	27
2058500	11-9	1
2058536	11-8	1
2058619	11-9	

See Service Manual for service procedures.
©2005 HYSTER COMPANY

NUMERICAL INDEX (Continued)

PART NO.	PG	ITEM
2058651	11-8	
2058823	11-9	
2058909	4-17	10
	4-57	
2059248	2-49	14
2059689	2-55	26
2059937	8-3	15
	8-5	25
2060032	4-19	6
2060033	4-19	11
2060198	4-17	10
	4-55	
2060422	11-8	
2060751	9-3	22
2060837	4-19	1
2060838	4-19	1
2060844	4-13	1
	4-49	
2060957	2-17	32
	2-55	36
2061381	4-11	1
2061383	4-7	9
2061646	9-9	17
2061778	9-3	11
2062070	4-21	10
2062587	3-23	12
2062651	10-7	12
	11-7	8
	12-9	11
2062652	10-7	12
	11-7	8
	12-9	11
2062686	10-7	4
	11-7	10
	12-9	4
2062687	10-7	4
	11-7	10
	12-9	4
2062718	4-21	8
2063093	4-3	1
	4-18	
2063117	9-19	8
	9-27	9
2063118	9-27	9
2063264	6-6	41
2063265	6-5	17
2063691	12-21	1
2063842	3-35	5
	3-37	11
2063991	9-11	24
	9-13	15
	9-15	25
	9-17	16
	9-27	11
2064046	12-21	1
2064106	10-10	
2064120	10-10	
2064142	10-10	
2064147	10-10	
2064152	10-10	
2064166	10-10	
2064171	10-10	
2064176	10-10	
2064202	10-10	1
2064207	10-10	1
2064212	10-10	1
2064218	10-10	1
2064239	10-10	1
2064245	10-10	1
2064250	10-10	1
2064256	10-10	1
2064278	10-10	1
2064283	10-10	1
2064288	10-10	1
2064293	10-10	1
2064314	10-10	1
2064319	10-10	1
2064324	10-10	1
2064343	10-10	1
2064352	10-10	
2064357	10-10	
2064369	10-10	
2064374	10-10	
2064379	10-10	
2064384	10-10	
2064399	10-10	
2064404	10-10	
2064431	3-15	15
2064464	11-9	5
2064559	12-14	1
2064563	12-14	1
2064565	12-14	1
2064567	12-14	1
2064571	12-14	1
2064583	12-14	1
2064587	12-14	1
2064589	12-14	1
2064591	12-14	1
2064595	12-14	1
2064607	12-14	1
2064611	12-14	1
2064615	12-14	1
2064618	12-14	1
2064640	12-14	
2064644	12-14	
2064648	12-14	
2064651	12-14	
2064673	12-14	
2064677	12-14	
2064681	12-14	
2064684	12-14	
2064706	12-14	
2064710	12-14	
2064712	12-14	
2064714	12-14	
2064718	12-14	
2064731	12-14	
2064735	12-14	
2064737	12-14	
2064739	12-14	
2064743	12-14	
2064753	12-21	1
2064754	12-21	1
2064790	4-21	14
2064807	4-22	14
2064836	4-25	4
	4-27	4
2064837	4-27	4
2064838	4-27	4
2064845	9-27	1
2064848	9-27	
2064849	9-27	1
2064851	9-27	
2064857	9-27	1
2064859	9-27	
2064860	9-27	1
2064862	9-27	
2064885	9-19	1
2064886	9-19	1
2064887	9-19	1
2064888	9-19	1
2064895	9-11	25
	9-13	16
	9-19	
2064897	9-15	26
	9-17	17
	9-19	
2064899	9-11	25
	9-13	16
	9-19	
2064901	9-15	26
	9-17	17
	9-19	
2064929	13-5	1
2065001	11-15	20
2065030	11-15	21
2065051	9-9	28
2065052	9-9	28
2065098	4-13	24
2065121	12-25	1
2065125	12-25	1
2065138	10-13	1
2065143	10-13	1
2065148	10-13	1
2065153	10-13	1
2065162	12-25	1
2065164	12-25	1
2065167	12-25	1
2065168	12-25	1
2065211	11-15	4
2065241	11-15	8
2065666	1-8	64
2065667	1-7	4
2065668	1-8	63
2065670	13-18	2
	13-24	2
2065671	13-18	2
	13-24	2
2065672	13-18	1
2065674	13-24	1
2065675	13-24	1
2065745	4-3	19
2065796	1-8	61
2065797	1-8	60
2065798	1-8	59
2065799	1-8	58
2065826	1-8	58
2065827	1-8	59
2065855	4-7	6
	4-45	1
2065857	4-7	15
2066344	4-13	29
2066482	4-19	5
2066483	4-19	12
2066484	4-19	4
2066485	4-19	3
2066629	2-41	2
2067044	7-17	2
2067045	7-17	6
2067395	3-29	18
2067396	3-31	7
2067476	3-5	18
	3-7	23
	3-9	21
2067597	5-11	6
2067598	5-11	1
2067622	2-45	1
2067623	2-43	7

©2005 HYSTER COMPANY

NUMERICAL INDEX (Continued)

PART NO.	PG	ITEM
	2-49	11
2067631	2-43	14
2067800	9-3	1
	9-5	
2067801	9-3	1
	9-5	
2067802	9-3	1
	9-5	
2067803	9-3	1
	9-5	
2067822	13-18	1
2067888	2-43	3
2067889	2-43	9
2067962	6-5	22
2068337	9-3	21
2068339	4-17	9
2068340	4-17	9
2068344	4-17	9
2068357	2-47	9
2068378	2-73	9
	2-75	14
2068947	9-3	9
2069005	9-3	8
2069008	1-8	46
2069186	9-41	17
	9-45	
2069187	9-41	15
	9-43	
2069188	9-41	16
	9-43	
2069189	9-41	18
	9-45	
2069203	1-7	6
2069224	4-11	2
2069225	4-7	4
2069226	4-13	30
2069431	4-19	12
2069453	3-23	19
2069454	1-17	13
2069464	1-8	57
2069544	1-8	47
2069545	1-8	46
2069550	1-8	47
2069552	2-67	1
2069685	2-53	3
2069686	2-53	4
2069688	2-69	4
2069698	2-9	15
	2-11	24
2069699	2-9	14
	2-11	23
2069701	2-13	13
	2-15	13
2069702	2-13	14
	2-15	14
2069951	2-5	5
2069954	1-8	46
2070018	9-45	2
2070071	2-67	3
	2-69	3
2070072	2-67	4
2070073	6-7	2
	6-11	2
2070074	6-7	2
	6-11	6
2070075	6-8	2
	6-11	2
2070076	6-8	2
	6-11	6
2070077	6-13	2
2070078	6-13	2
2070079	6-13	2
2070080	6-13	2
2070081	7-15	2
2070083	7-15	6
2070100	3-15	7
2070114	9-3	15
2070147	5-3	2
2070148	9-9	18
2070223	1-17	12
2070227	5-7	2
2070228	5-11	5
2070263	5-35	2
2070269	4-17	1
	4-51	
2070273	1-7	18
2070274	1-7	13
2070296	1-43	1
2070297	1-43	2
2070298	1-43	3
2070299	1-43	3
2070300	1-43	3
2070301	1-43	3
2070302	1-43	3
2070303	1-43	3
2070304	1-43	3
2070305	1-43	3
2070306	1-43	3
2070307	1-43	3
2070481	1-47	
2070482	1-47	
2070483	1-47	
2070484	1-47	
2070486	1-47	
2070487	1-47	
2070488	1-47	
2070489	1-47	
2070491	1-47	
2070495	1-47	
2070496	1-47	
2070553	4-25	4
2070554	4-25	4
2070561	4-25	24
	4-27	30
2070562	4-25	25
	4-27	32
2070563	4-25	24
	4-25	25
2070611	9-6	5
2070685	4-7	15
2070731	4-29	1
	4-63	
2070734	6-3	1
2070769	13-11	1
2070782	3-15	21
2070783	13-11	1
2070784	3-11	38
2070975	1-7	2
2071181	3-37	9
2071261	1-7	3
	3-5	16
	3-7	21
	3-9	19
2071262	1-7	11
2071300	13-11	1
2071302	3-11	28
2071303	3-11	23
2071517	3-12	48
	3-15	29
2071595	1-8	62
2071596	1-8	63
2071615	2-13	1
2072298	3-11	44
	3-15	26
2072299	3-15	17
2072300	3-11	1
	3-15	16
2072782	3-39	3
2072809	8-15	19
2072894	3-15	20
2072895	3-15	20
2072897	8-15	15
2072899	8-15	8
2072900	8-15	24
2072901	8-15	23
2072902	7-9	2
2072903	7-9	1
2072905	8-13	7
2072918	2-23	11
2073016	7-9	1
2073017	7-9	2
2073082	12-14	1
2073084	12-14	1
2073086	12-14	1
2073087	12-14	11
2073114	1-45	3
2073115	1-45	2
2073116	1-45	4
2073117	1-45	5
2073118	1-45	7
2073119	1-45	6
2073120	1-45	8
2073121	1-45	9
2073122	1-45	10
2073123	1-45	11
2073159	11-8	7
	11-9	6
2073198	1-39	1
2073470	5-27	23
2073495	9-9	29
2073496	9-9	29
2073766	13-14	4
2074210	1-41	2
2074211	9-3	1
	9-5	
2074230	9-3	1
	9-5	
2074256	1-39	4
2074320	4-3	23
2074325	9-9	23
2074326	9-9	12
2074327	9-9	6
2074408	13-31	1
2074409	13-31	2
2074410	13-31	3
2074411	13-31	4
2074412	13-31	1
2074413	13-31	2
2074414	13-31	3
2074415	13-31	4
2074737	4-25	19
	4-59	1
2074740	1-39	15
2074789	2-15	1
2074790	2-53	1
	2-69	1
2074989	1-47	
2075120	6-5	8

©2005 HYSTER COMPANY

NUMERICAL INDEX (Continued)

PART NO.	PG	ITEM
2075224	4-21	1
2075225	4-21	1
2075226	4-21	1
2075227	4-21	1
2075249	5-7	1
2075360	3-23	16
2075417	1-39	16
2075428	1-31	5
	1-33	5
	1-37	3
2075429	1-31	5
	1-35	4
	1-37	3
2075454	6-15	2
2075551	5-11	9
2075554	2-71	19
2075558	5-17	32
	5-27	35
2075560	4-3	16
	4-37	
2075561	4-3	16
	4-33	
2075562	4-3	16
	4-41	
2075614	1-39	17
2075630	9-9	4
2075644	4-29	1
	4-61	
2075655	1-39	20
2075699	13-5	10
2075783	3-9	7
2075787	5-7	8
	5-9	7
2075844	5-7	1
	5-9	1
2075846	5-7	2
	5-9	2
2075911	4-21	14
2075912	4-22	14
2075913	4-21	14
2075914	4-22	14
2075916	4-21	14
2075917	4-22	14
2075925	12-18	32
2075929	12-18	32
2075931	12-18	32
2075933	12-18	32
2075936	12-18	32
2075937	12-18	32
2076171	1-39	17
2076289	1-11	3
2076408	9-3	16
2076527	5-27	23
2076536	9-45	1
2076537	9-43	1
2076538	9-45	7
2076539	9-43	6
2076540	9-45	1
2076541	9-43	1
2076635	8-15	6
2076656	8-7	33
	8-9	38
	8-15	1
2076695	4-19	2
2076696	4-19	2
2077092	9-9	13
2077554	2-49	6
2077604	8-3	14
	8-5	17
2077983	2-93	6
2078092	3-9	18
2078335	3-35	3
2079327	13-29	1
2079328	13-29	2
2079329	13-29	3
2079330	13-29	4
2079331	13-29	1
2079332	13-29	2
2079333	13-29	3
2079334	13-29	4
2079369	7-2	7
2079984	12-14	1
2080338	3-11	34
2302899	9-43	2
2308541	3-29	6
	3-31	6
2314223	8-3	14
	8-5	17
2314973	2-29	25

©2005 HYSTER COMPANY

NOTES


HYSTER

