RUTHZIL TRATOR COMERCIAL DE PEÇAS LTDA 11 97083-6812 ROLANDO

PARTS MANUAL

HYSTER

CHALLENGER
H300-360XL, H33-360XL-EC
(D019)

CUSTOMER EDITION

HYSTER

897597
11/2010

©2010 HYSTER COMPANY

SECTIONS

1	FRAME
2	ENGINE ASSEMBLY
3	FUEL SYSTEM
4	ELECTRICAL SYSTEM
5	TRANSMISSION
6	STEERING SYSTEM
7	BRAKE SYSTEM
8	HYDRAULIC SYSTEM
9	MAST-TWO STAGE LIMITED FREE-LIFT
10	MAST-THREE STAGE FULL FREE-LIFT
11	EMPTY CONTAINER HANDLER
12	OPTIONS
13	NUMERICAL INDEX

This Parts Manual is divided into 13 major sections which are listed above. Quick reference to these sections can be made by placing the right thumb on the tab of the desired section, bending the book back and thumbing the pages to the corresponding tab.

TABLE OF CONTENTS

DESCRIPTION **PAGE**

A

AIR COMPRESSOR
→ U563738X 7-24
→ S/N D019D01756 INC. 1758 EXC. 1753 U563739X → 7-26
S/N D019D01757 → INC. 1753 EXC. 1758 → U593028 7-28
U593029 ↔ U607097 7-30
S/N D019D02377 ↔ S/N D019D02997X U607098 → 7-32
366 LPG ENGINE 7-40
SHEET 1 OF 2 (S/N D019D02998X →) 7-36
SHEET 2 OF 2 (S/N D019D02998X →) 7-38
AIR COMPRESSOR AND ATTACHING PARTS
S/N D019D02998X → 7-34
AIR DUCTS
DIESEL TURBO 2-100
AIR FILTER
DIESEL NON TURBO 3-24
DIESEL TURBO WITH LOW EMISSIONS (S/N D019D02377 →) 3-44
DIESEL TURBO WITHOUT LOW EMISSIONS 3-42
LPG 3-26
AIR SYSTEM
EMPTY CONTAINER HANDLER 11-12
AIR TANK
→ S/N D019D01521 7-14
S/N D019D01522 → 7-16
WITH AUTOSHIFT (S/N D019D12439 →) 7-18
ALTERNATOR
LPG (S/N D019D01797 → (DIESEL)) 4-32
SHEET 1 OF 2 (→ S/N D019D01796 (DIESEL)) 4-24
SHEET 2 OF 2 (→ S/N D019D01796 (DIESEL)) 4-28
ALTERNATOR MOUNTING
DIESEL WITH LOW EMISSIONS (S/N D019D02377 →) 4-36
DIESEL WITHOUT LOW EMISSIONS 4-34
LPG 4-38
AUXILIARY DRIVE GEAR
DIESEL (→ S/N D019D01756 INC. 1758 EXC. 1753) 2-48
DIESEL (S/N D019D01757 → INC. 1753 EXC. 1758) 2-52

B

BACK-UP ALARM 12-38
BRAKE CHAMBER 7-54
BRAKE LINES
→ S/N D019D01521 7-2
S/N D019D01522 ↔ S/N D019D002996X 7-6
S/N D019D02997X → 7-10
WITH AUTOSHIFT (S/N D019D12439 →) 7-20
BRAKE SYSTEM 7-50

©2010 HYSTER COMPANY

TABLE OF CONTENTS (continued)

DESCRIPTION **PAGE**

C

CARBURETOR
LPG ... 3-20
CARRIAGE
TWO STAGE LIMITED FREE-LIFT ... 9-18
WITH SIDE-SHIFT AND FORK POSITIONER - THREE STAGE FULL FREE-LIFT ... 10-20
CARRIAGE HYDRAULICS
WITH SIDE-SHIFT AND FORK POSITIONER - THREE STAGE FULL FREE-LIFT ... 10-22
CHARGE PUMP ... 5-32
CLUTCH
FORWARD AND REVERSE ... 5-22
REVERSE AND SECOND ... 5-24
THIRD ... 5-28
COMPRESSOR MOUNTING
LPG ... 7-42
CONTAINER HANDLING ATTACHMENT
EMPTY CONTAINER HANDLER ... 11-2
CONTROL VALVE ... 5-36
FIVE FUNCTION (→ S/N D019D02127) ... 8-56
FIVE FUNCTION (S/N D019D02128 →) ... 8-60
FOUR FUNCTION (→ S/N D019D02127) ... 8-44
FOUR FUNCTION (S/N D019D02128 →) ... 8-48
THREE FUNCTION (→ S/N D019D02127) ... 8-32
THREE FUNCTION (S/N D019D02128 →) ... 8-36
TWO FUNCTION (→ S/N D019D02127) ... 8-18
TWO FUNCTION (S/N D019D02128 →) ... 8-20
CONVERTER
LPG ... 3-23
COOLING
DIESEL TURBO AND NON TURBO ... 2-12
LPG ... 2-16
COUNTERWEIGHT ... 1-62
CRANKSHAFT AND PISTON
DIESEL NON TURBO ... 2-28
DIESEL TURBO - WITH AND WITHOUT LOW EMISSIONS ... 2-30
CYLINDER BLOCK
DIESEL NON TURBO ... 2-22
DIESEL TURBO WITH LOW EMISSIONS (S/N D019D02377 →) ... 2-26
DIESEL TURBO WITHOUT LOW EMISSIONS ... 2-24
LPG ... 2-104
CYLINDER HEAD
DIESEL NON TURBO ... 2-32
DIESEL TURBO WITH LOW EMISSIONS (S/N D019D02377 →) ... 2-36
DIESEL TURBO WITHOUT LOW EMISSIONS ... 2-34
CYLINDER HEAD AND VALVES
LPG ... 2-106

©2010 HYSTER COMPANY

TABLE OF CONTENTS (continued)

DESCRIPTION	PAGE
D	
DIFFERENTIAL	
→ S/N D019D01619 (NON-EC AND EC-3) → S/N D019D01965 (EC-4)	5-56
S/N D019D01620 → (NON EC AND EC-3) S/N D019D01966 → (EC-4)	5-62
DISTRIBUTOR	
LPG	4-22
DRIVE AXLE	
EC-4 (→ S/N D019D01965)	5-40
EMPTY CONTAINER HANDLER-4 (S/N D019D01966 →)	5-58
NON-EC AND EC-3 (→ S/N D019D01619)	5-44
NON-EC AND EC-3 (S/N D019D01620 ↔ S/N D019D01781)	5-48
NON-EC AND EC-3 (S/N D019D01782 →)	5-52
E	
ELECTRICAL	
DIESEL WITH AUTOSHIFT (S/N D019D12439 →)	4-6
ELECTRICAL CONTROL	
EMPTY CONTAINER HANDLER	11-16
ELECTRICAL SYSTEM	
DIESEL WITHOUT AUTOSHIFT	4-2
EMPTY CONTAINER HANDLER	11-18
LPG WITHOUT AUTOSHIFT	4-12
ENDBEAM	
EMPTY CONTAINER HANDLER	11-4
EXHAUST	
DIESEL NON TURBO	2-6
DIESEL TURBO	2-8
LPG	2-10
EXTENSION	
EMPTY CONTAINER HANDLER	11-14
F	
FAN	1-66
FIRE EXTINGUISHER	12-36
FLOODLIGHTS	12-34
FLOOR PLATES AND COVERS	1-42
FLYWHEEL	
DIESEL	2-18
LPG	2-20
FORK	12-15
HOOK TYPE QUICK DISCONNECT - DUAL FUNCTION (S/N D019D02394U →)	12-17
FORK POSITIONER CYLINDER	
THREE STAGE FULL FREE-LIFT	10-24
FORK POSITIONER VALVE	
THREE STAGE FULL FREE-LIFT	10-28
FREE-LIFT	
THREE STAGE FULL FREE-LIFT	10-14
FREE-LIFT CYLINDER	
THREE STAGE FULL FREE-LIFT	10-18

©2010 HYSTER COMPANY

TABLE OF CONTENTS (continued)

DESCRIPTION	PAGE
FUEL FILTER	
DIESEL TURBO WITH LOW EMISSIONS (S/N D019D02377 →)	3-40
FUEL INJECTION	
DIESEL TURBO WITH LOW EMISSIONS (S/N D019D02377 →)	3-32
DIESEL TURBO WITHOUT LOW EMISSIONS	3-28
DIESEL WITHOUT LOW EMISSIONS	3-8
FUEL INTAKE	
DIESEL	3-2
FUEL PRE-FILTER	
DIESEL	3-6
FUEL SYSTEM	
LPG	3-18
FUEL TANK	
LPG	3-16
G	
GENERAL TRUCK	1-2
H	
HEADER HOSE	
FIVE FUNCTION - DUAL FUNCTION SIDE-SHIFT FORK POSITIONER	12-22
THREE AND FOUR FUNCTION - THREE STAGE FULL FREE-LIFT	10-30
TWO STAGE LIMITED FREE-LIFT	9-20
HEATER	
DIESEL	1-34
LPG	1-38
HEATER CONTROL	1-46
HOOD	
WITH LOW EMISSIONS (S/N D019D02377 →)	1-60
WITHOUT LOW EMISSIONS	1-56
HYDRAULIC CYLINDER	
DUAL FUNCTION PIN OR QUICK DISCONNECT (S/N D019D02394U →)	12-12
HYDRAULIC HOSES	
EMPTY CONTAINER HANDLER	11-6
HYDRAULIC PUMP	
WITH LOW EMISSIONS (S/N D019D02377U →) (S/N D019E02328V →)	8-14
WITHOUT LOW EMISSIONS	8-12
HYDRAULIC SYSTEM	
DIESEL AND LPG NON-EC	8-2
EMPTY CONTAINER HANDLER - SHEET 1	8-6
EMPTY CONTAINER HANDLER - SHEET 2	11-10
HYDRAULIC TANK	8-10
I	
IDLER SHAFT	5-30
INNER MAST	
THREE STAGE FULL FREE-LIFT	10-6
TWO STAGE LIMITED FREE-LIFT	9-6

©2010 HYSTER COMPANY

TABLE OF CONTENTS (continued)

DESCRIPTION	PAGE
INSTRUMENT PANEL	
DIESEL	4-8
LPG	4-18
INTAKE MANIFOLD	
LPG	2-110
INTERMEDIATE MAST	
THREE STAGE FULL FREE-LIFT	10-4
L	
LABELS	1-52
LIFT	
TWO STAGE LIMITED FREE-LIFT	9-8
LIFT CYLINDER	
EMPTY CONTAINER HANDLER 3 AND 4 - TWO STAGE LIMITED FREE-LIFT	9-16
TWO STAGE LIMITED FREE-LIFT - NON-EMPTY CONTAINER HANDLER (→ S/N D019D02025)	9-12
TWO STAGE LIMITED FREE-LIFT - NON-EMPTY CONTAINER HANDLER (S/N D019D02026 →)	9-14
LIFT PUMP	3-12
LIGHTS	
EMPTY CONTAINER HANDLER	11-22
LOCK-OFF FILTER	
LPG	3-22
LOW PRESSURE SYSTEM	
DIESEL TURBO WITH LOW EMISSIONS (S/N D019D02377 →)	3-38
DIESEL TURBO WITHOUT LOW EMISSIONS	3-36
DIESEL WITHOUT LOW EMISSIONS	3-10
LPG TANK MOUNTING	3-14
LUBRICANT SYSTEM	
DIESEL TURBO	2-102
M	
MAIN LIFT	
THREE STAGE FULL FREE-LIFT	10-8
MAIN LIFT CYLINDER	
THREE STAGE FULL FREE-LIFT	10-12
MANIFOLD	
DIESEL NON TURBO	2-84
DIESEL TURBO WITH LOW EMISSIONS	2-88
DIESEL TURBO WITHOUT LOW EMISSIONS	2-86
MODULATOR VALVE	5-34
MONOTROL PEDAL	5-38
O	
OIL FILTER	
DIESEL NON TURBO (→ S/N D019D01756 INC. 1758 EXC. 1753)	2-74
DIESEL NON TURBO (S/N D019D01757 → INC. 1753 EXC. 1758)	2-75
DIESEL TURBO WITH LOW EMISSIONS	2-82
DIESEL TURBO WITHOUT LOW EMISSIONS (→ U647451C)	2-78
DIESEL TURBO WITHOUT LOW EMISSIONS (U647452C →)	2-80

©2010 HYSTER COMPANY

TABLE OF CONTENTS (continued)

DESCRIPTION	PAGE
OIL PAN	
DIESEL NON TURBO	2-56
DIESEL TURBO WITH LOW EMISSIONS	2-62
DIESEL TURBO WITHOUT LOW EMISSIONS	2-60
OIL PUMP AND PAN	
LPG	2-112
OPERATOR COMPARTMENT	
WITH CAB - SHEET 1 OF 6 (→ S/N D019E02261)	1-12
WITH CAB - SHEET 2 OF 6 (S/N D019E02262 →)	1-16
WITH CAB - SHEET 3 OF 6 (→ S/N D019E02261)	1-18
WITH CAB - SHEET 4 OF 6 (S/N D019E02262 →)	1-22
WITH CAB - SHEET 5 OF 6 (→ S/N D019E02261)	1-26
WITH CAB - SHEET 6 OF 6 (S/N D019E02262 →)	1-30
WITHOUT CAB (→ S/N D019E02261)	1-4
WITHOUT CAB (S/N D019E02262 →)	1-8
OUTER MAST	
THREE STAGE FULL FREE-LIFT	10-2
TWO STAGE LIMITED FREE-LIFT	9-2
OUTPUT GEAR	5-31
P	
PARK BRAKE ATTACHING PARTS	
→ S/N D019D01521	7-46
S/N D019D01522 →	7-48
PARK BRAKE VALVE	
→ S/N D019D01521	7-58
S/N D019D01522 →	7-60
PIN FORK	
STANDARD TAPER (S/N D019D02394U →)	12-16
POWERTRAIN MOUNT	2-4
PUMP DRIVE GEAR	5-20
R	
RANGE CONTROL	
WITH AUTOSHIFT (S/N D019D02439 ↔ S/N D019D02720) (T050M-6089 →)	5-6
WITH AUTOSHIFT (S/N D019D02721 ↔ 9/1999) (T050M-6089 →)	5-8
WITH AUTOSHIFT (9/1999 →)	5-10
WITHOUT AUTOSHIFT	5-4
ROTATING BEACON	12-28
S	
SELECTOR VALVE	
S/N D019D02394U →	12-14
SEMI-SUSPENSION SEAT	1-50
SHAFT ASSEMBLY	
REVERSE AND SECOND CLUTCH SHAFT	5-26
SIDE-SHIFT CARRIAGE	
DUAL FUNCTION PIN OR QUICK DISCONNECT (S/N D019D02394U →)	12-8
THREE STAGE FULL FREE-LIFT	12-4
TWO STAGE LIMITED FREE-LIFT	12-2

©2010 HYSTER COMPANY

TABLE OF CONTENTS (continued)

DESCRIPTION	PAGE
SIDE-SHIFT CYLINDER	
EMPTY CONTAINER HANDLER	11-20
THREE STAGE FULL FREE-LIFT	10-26
SOLENOID VALVE	
PNEUMATIC (S/N D019D12439 →)	7-22
STARTER	
S/N D019E02654 →	4-16
DIESEL	4-40
STEER PUMP	6-6
STEERING	6-2
STEERING AXLE	6-10
STEERING CYLINDER	6-14
STROBE LIGHT	12-26
SUSPENSION SEAT	1-48
T	
THROTTLE LINKAGE	
DIESEL NON EMISSIONS	3-46
DIESEL WITH LOW EMISSIONS (S/N D019D02377 →)	3-48
LOW EMISSION DIESEL WITH AUTOSHIFT (S/N D019D12439 →)	3-52
LPG	3-54
NON EMISSION DIESEL AND LPG WITH AUTOSHIFT (S/N D019D12439 →)	3-50
THROTTLE PEDAL	
FORWARD AND REVERSE LEVER	3-56
FORWARD AND REVERSE LEVER - WITH AUTOSHIFT (S/N D019D12439 →)	3-62
MONOTROL PEDAL	3-58
MONOTROL PEDAL WITH AUTOSHIFT (S/N D019D12439 →)	3-60
TILT CYLINDER	
THREE STAGE FULL FREE-LIFT	8-73
TWO STAGE LIMITED FREE-LIFT - H300XL-H360XL NON-EC	8-66
TWO STAGE LIMITED FREE-LIFT - EMPTY CONTAINER HANDLER	8-70
TILT CYLINDER ATTACHING PARTS	8-64
TILT LOCK VALVE	8-74
TIMING COVER	
PERKINS - TIER II ENGINE	2-46
TIMING GEAR	
DIESEL NON TURBO	2-38
DIESEL TURBO - WITH AND WITHOUT LOW EMISSIONS	2-42
TIRE AND WHEEL	
H300XL	12-18
H300XL-H360XL	12-20
TRANSMISSION	
→ S/N D019D02438 → T050M-6088	5-12
S/N D019D02439 → T050M-6089 →	5-16
TRANSMISSION ATTACHING PARTS	5-2
TREADLE VALVE	
SHEET 1	7-44
SHEET 2	7-56

©2010 HYSTER COMPANY

TABLE OF CONTENTS (continued)

DESCRIPTION	PAGE
TURBOCHARGER	
DIESEL TURBO	2-96
DIESEL TURBO (S/N D019D02377 →)	2-98
V	
VALVE ATTACHING PARTS	
DUAL FUNCTION SIDE-SHIFT (S/N D019D02394U →)	8-28
FIVE FUNCTION	8-52
FOUR FUNCTION	8-40
THREE FUNCTION	8-24
TWO FUNCTION	8-16
VALVE BLOCK	6-8
VALVE COVER	
DIESEL NON TURBO	2-64
DIESEL TURBO WITH LOW EMISSIONS (S/N D019D02377 →)	2-72
DIESEL TURBO WITHOUT LOW EMISSIONS	2-68
W	
WATER PUMP	
DIESEL (→ S/N D019D01756 INC. 1758 EXC. 1753)	2-90
DIESEL (S/N D019D01757 → INC. 1753 EXC. 1758)	2-92
DIESEL TURBO WITH LOW EMISSIONS (S/N D019D02377 →)	2-94
LPG	2-114
WINDSHIELD WASHER	1-68
WIRE HARNESS	
CONTROL PANEL (S/N D019D02394U →)	4-42
CONTROLLER AUTOSHIFT (S/N D019D12439 →)	4-50
ENGINE COMPARTMENT (S/N D019D12439 ↔ S/N D019D02996X)	4-44
ENGINE COMPARTMENT WITH AUTOSHIFT (S/N D019D02997X →)	4-46
ENGINE COMPARTMENT WITHOUT AUTOSHIFT (S/N D019D02997X →)	4-48
MONOTROL (S/N D019D12439 →)	4-53
OPERATOR COMPARTMENT - WITH OPTIONAL ROTATING BEACON	4-54
SHIFTER AUTOSHIFT (S/N D019D12439 →)	4-52

©2010 HYSTER COMPANY

ABBREVIATIONS QUICK REFERENCE SHEET

Listed below are abbreviations used in parts manuals to denote the following expressions:

TERM	DEFINITION
Amp	Amperes
AR	As Required
BDI	Battery Discharge Indicators
BWI	Brush Wear Indicator
CE	Communicator End
CRE	Corrosive Environment
D/B	Date Break
dbA	Decibel "A" Scale
DE	Drive End
ECH	Empty Container Handler
ECH-3	Empty Container Handler - 3 High Stacking
ECH-4	Empty Container Handler - 4 High Stacking
ECH-5	Empty Container Handler - 5 High Stacking
ECH-6	Empty Container Handler - 6 High Stacking
ECH-7	Empty Container Handler - 7 High Stacking
ECM	Electronic Control Module
ECN	Engineering Change Notice
EEPROM	Electrically Erasable Programmable Read Only Memory
EPA	US Environmental Protection Agency
EPROM	Electrically Programmable Read Only Memory

TERM	DEFINITION
FRE	Freezer Environment
in.	inches
LPG	Liquefied Petroleum Gas
MAP	Manifold Absolute Pressure
mm	millimeters
MSTS	Microprocessor Spark Timing System
NPT	National Pipe Threads
O/S	Oversize
PTO	Power Take Off
RPM	Revolutions per Minute
S/N	Serial Number
TMM	Truck Management Module
UL Type D	Diesel-Powered Safety Rating
UL Type DS	Diesel-Powered Safety Rating
UL Type E	Battery-Powered Safety Rating
UL Type EE	Battery-Powered Safety Rating
UL Type ES	Battery-Powered Safety Rating
UL Type G	Gasoline-Powered Safety Rating
UL Type GS	Gasoline-Powered Safety Rating
UL Type LP	Gas-Powered Safety Rating
UL Type LPS	LP Gas-Powered Safety Rating
U/S	Undersize
UL	Underwriters Laboratory
V	Volts

©2010 HYSTER COMPANY

HOW TO USE THE ILLUSTRATED PARTS MANUAL

This parts manual describes and illustrates assemblies, subassemblies, and detail parts needed for service replacement.

The different constructions are indicated by keys and footnotes. The callouts correspond to descriptions found on the next page.

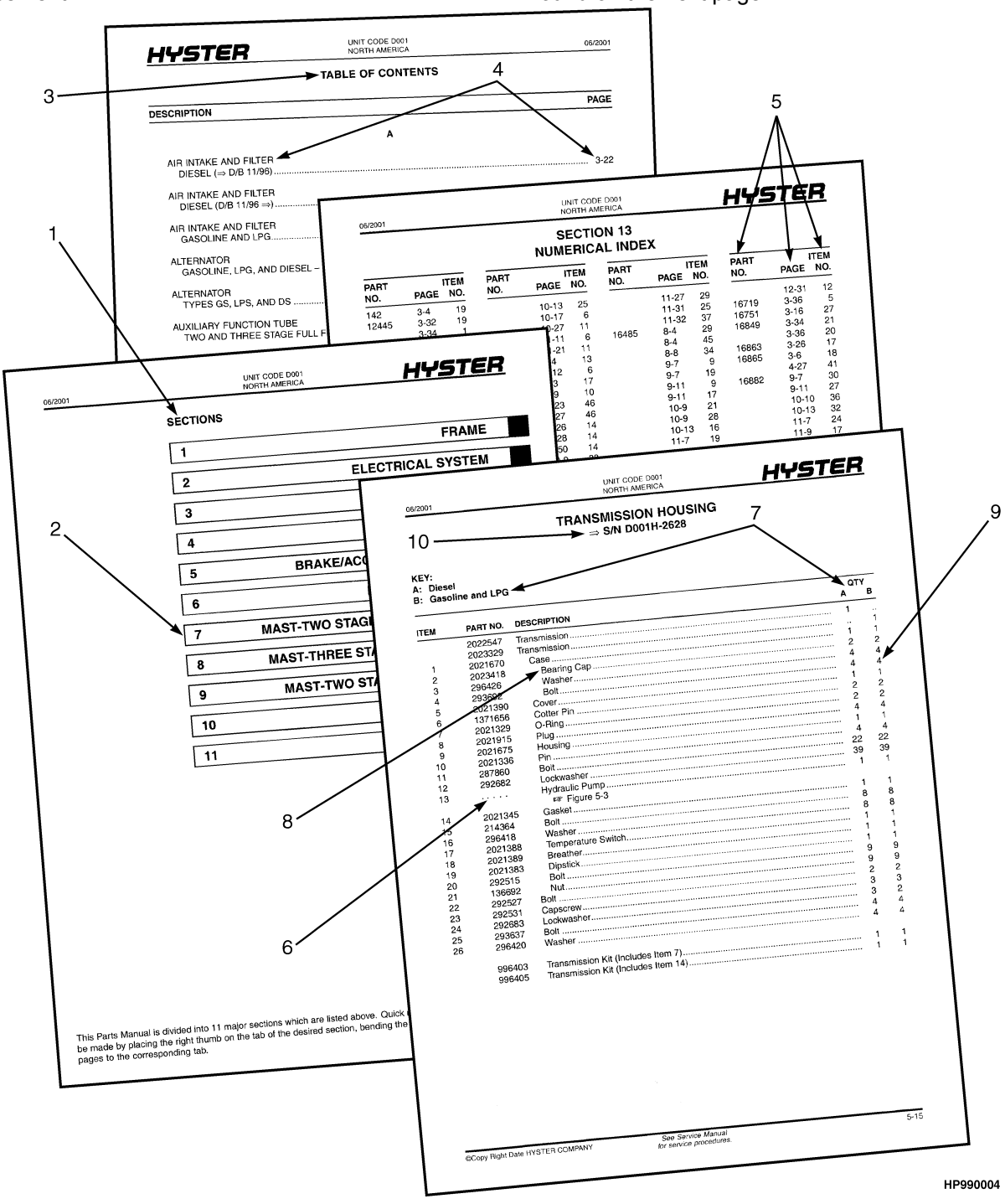

©2010 HYSTER COMPANY

HOW TO FIND THE DESIRED PART NUMBER

WHEN THE PART NUMBER AND THE NEXT HIGHER ASSEMBLY IS NOT KNOWN:

1. Determine the function and application of the part required. Turn to the Sections Page. Choose the general area of reference most likely to include the part.
2. Turn to the section you chose. Use the Section Table of Contents to determine the assembly which would normally contain the part required. Then locate the part on the assembly breakdown page.

WHEN THE PART NUMBER IS NOT KNOWN AND THE NEXT HIGHER ASSEMBLY IS KNOWN:

3. Determine the assembly the required part is used on. Turn to the Table of Contents (Page i).
4. Locate the assembly the required part is used on and turn to the page indicated for that assembly. Then locate the part on the assembly breakdown page.

WHEN THE PART NUMBER IS KNOWN:

5. Use the Numerical Index (Page 13-1) to find the part number. Turn to the page listed and locate the part as indicated by the item number.

GENERAL:

The assembly breakdowns include part numbers, descriptions, quantities required, keys and footnotes to help in selecting correct parts.

6. Parts Supersession Information. Part numbers that have this history will be displayed in the parts list in the order that they were superseded (from oldest to newest). The superseded part numbers will be shown with a line through them.

   Five periods in the PART NO. column (. . . . .) indicate that the part is either *Not Serviced Separately* or there is a reference to another figure. A figure reference is denoted by a pointing hand followed by a figure number in the DESCRIPTION column (☞Figure 10)
7. Keys are used to show two or more similar assemblies, RH and LH assembly parts, etc. Select the appropriate key, "A", "B", "C", "D", or "E" and the corresponding quantity column to find the required parts. Two periods in the QTY column (..) indicate that the part is not used for that assembly.
8. Indented descriptions under the DESCRIPTION column are used to indicate assemblies and subparts of assemblies. In the example on the previous page, *BEARING CAP* (Item 2) is a subpart of the major assembly *CASE*.
9. Quantities shown are for one assembly. The quantities of the subpart *BEARING CAP* are indicated as two and two. This means two per *CASE* assembly.
10. Serial number breaks identify the most current parts information and are shown as follows:
    → S/N D001H2628
    Indicates last serial number affected.
    S/N D001H2629 →
    Indicates the first serial number affected.
    S/N D001H1553 ↔ S/N D001H3291
    Indicates a range of serial numbers affected.

    ECN numbers for pending serial numbers are shown to allow for the inclusion of the most current parts information and are identified as follows:
    → S/N Pending Per ECN 63243
    Indicates a pending serial number for last unit affected.
    S/N Pending Per ECN 63243 →
    Indicates a pending serial number for first unit affected.

    Date breaks are used to indicate when a change occurred but a subsequent serial number break was not recorded. This is an arbitrary date usually based on the ECN release and are identified as follows:
    → D/B 3/00
    Indicates that a change occurred sometime within that month for the item affected.
    D/B 3/00 →
    Indicates that a change occurred sometime within that month for the item affected.
    D/B 3/00 ↔ D/B 4/00
    Indicates a range of production dates of the item affected.

    Contact your local dealer for Hyster lift trucks for serial number information for items with a ECN or a date break.

ORDERING PARTS:

When ordering replacement parts, give the unit serial number, part number, name of part and quantity required.

For any further information on parts, service, or ordering, consult your local dealer for Hyster lift trucks.

©2010 HYSTER COMPANY

IDENTIFICATION OF TRUCK SERIAL NUMBERS

X	OOO	X	OOOO	X
(1)	(2)	(3)	(4)	(5)

(1) and (2) The first letter and three numbers indicate the truck unit code.

(3) The second letter indicates the plant of manufacture.

(4) The four or five digit number indicates the production sequence number of the truck.

(5) The final letter indicates the year of manufacture starting with "A" in 1957, 1980, and 2003. The letters "I", "O", and "Q" will not be used.

For pending serial numbers contact your local dealer for Hyster lift trucks.

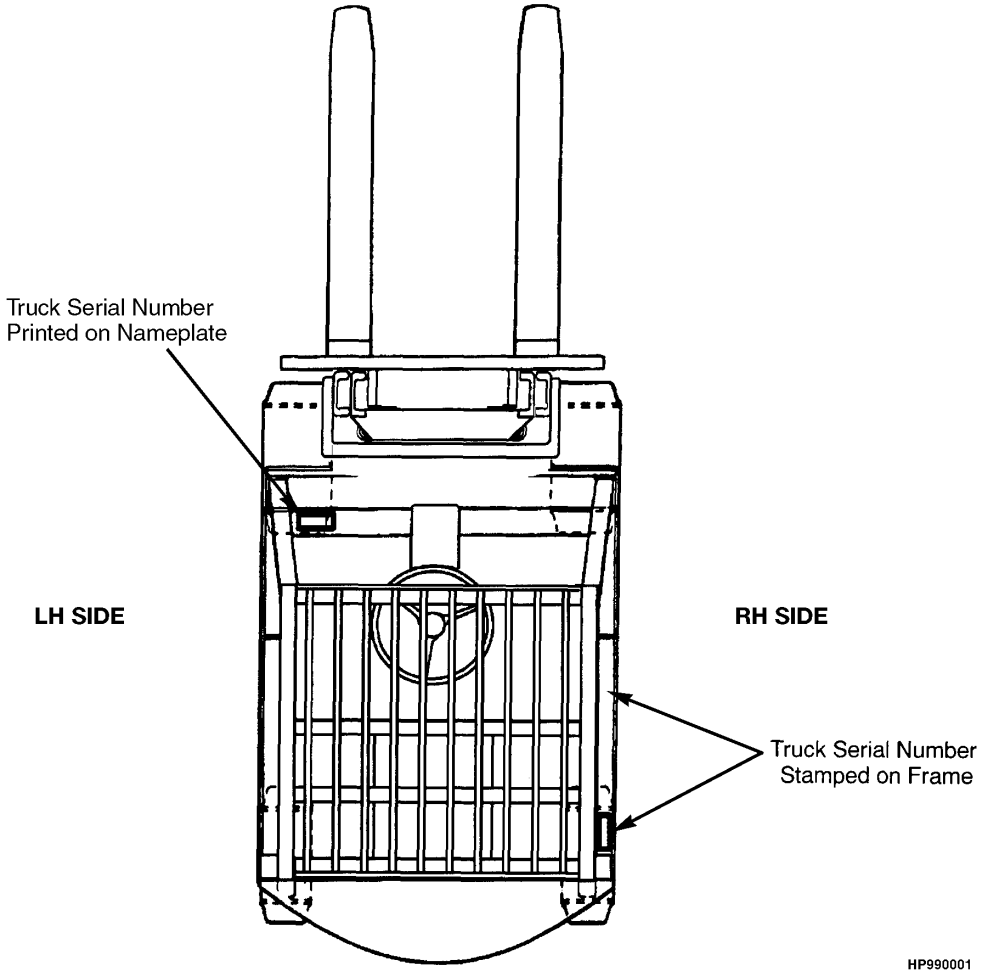

Parts referred to in this book as right or left hand parts are in accordance with the illustration above.

©2010 HYSTER COMPANY

IDENTIFICATION OF MAST SERIAL NUMBERS

X OOO X OOOO

(1) (2) (3) (4)

OOOO

(5)

(1) and (2) The first letter and number indicates the mast unit code.

(3) The second letter indicates the plant of manufacture.

(4) The four or five digit number indicates the production sequence number of the mast.

(5) Carriage travel in millimeters stamped just below the serial number.

Mast Group identification consists of mast unit code (1) and (2) plus carriage travel (5).

For pending production sequence numbers contact your local dealer for Hyster lift trucks.

LIFT EQUIPMENT IDENTIFICATION

1. Fork part number, capacity rating, plant code letter, and date of manufacture are stamped approximately six inches below the top of most forks.
2. The carriage group number is stamped on the right hand side of the top crossmember (pin type) or on the back of the right hand end of the bottom crossmember (hook type). A date code has two letters in line with or below the carriage group number.
3. The mast identification number has a unit code, a letter indicating the plant of manufacture, and a serial number. Underneath the production sequence number is a four digit number that indicates the carriage travel in millimeters.
4. Tilt and lift cylinder group numbers are stamped on the cylinder shell.

   Always refer to the group, serial, or part number when ordering service parts.

   Modification of masts and carriages by SPED (Special Products Engineering Department) are identified by a model prefix code beginning with the letter "S". contact your dealer for Hyster lift trucks for information on these assemblies.

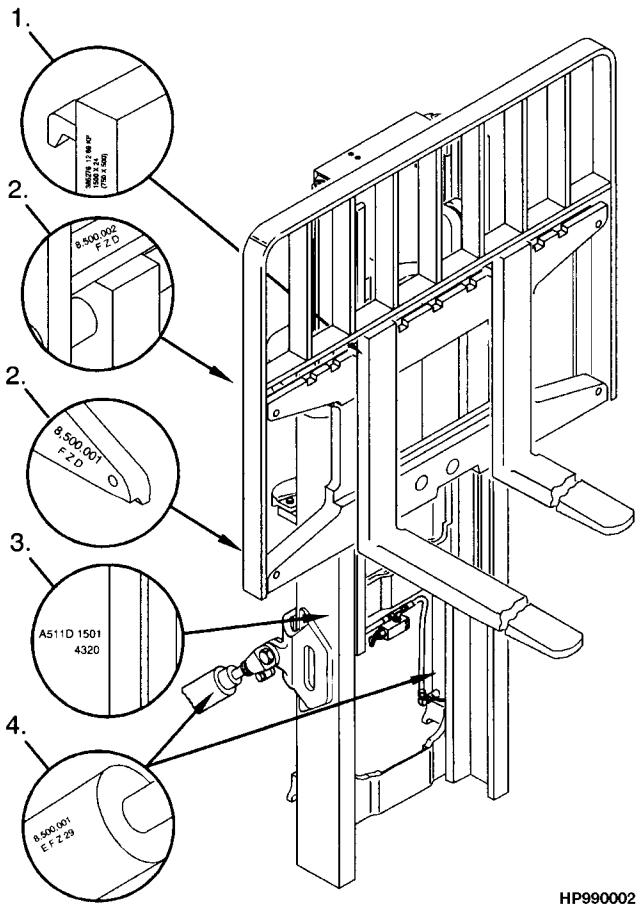

IDENTIFICATION OF ATTACHMENT AND SIDE-SHIFT CARRIAGE SERIAL NUMBERS

X OOO X OOOO

(1) (2) (3) (4)

(1) and (2) The first letter and three numbers indicate the attachment unit code.

(3) The second letter indicates the plant of manufacture.

(4) The four or five digit number indicates the production sequence number.

For pending production sequence numbers contact your local dealer for Hyster lift trucks.

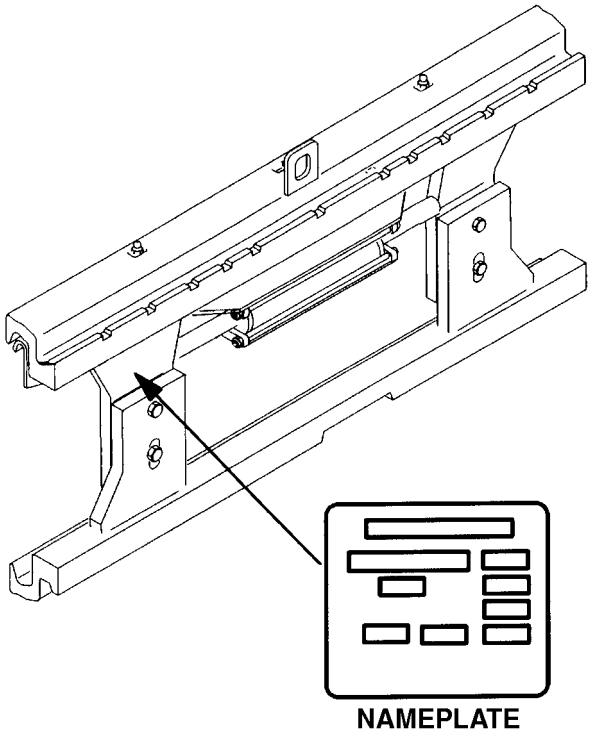

Side-shift carriages and attachments have nameplates. Use the serial number found on the nameplate to identify the attachment.

Always refer to the group, serial, or part number when ordering service parts.

Modifications of attachments and side-shift carriages by SPED (Special Products Engineering Department) are identified by a model prefix code beginning with the letter "S". Contact your dealer for Hyster lift trucks for information on these assemblies.

©2010 HYSTER COMPANY

PUBLICATIONS

Every new lift truck is provided with an OPERATING MANUAL. This manual has information that the operator must know for inspection and operation of the lift truck.

SERVICE MAINTENANCE MANUALS, which provide service and overhaul procedures, and PARTS MANUALS with complete replacement part identification, are available at a nominal fee from your Hyster dealer to assist users in effectively maintaining Hyster lift trucks in a safe, useful condition. See the list below for information on ordering specific publications for this model lift truck.

PUBLICATION	HYSTER PART NUMBER
Operating Manual	897342
Service Manual (Complete)	897373
Parts Manual	897597

©2010 HYSTER COMPANY

NOTES

©2010 HYSTER COMPANY

1 FRAME

SECTION 1
FRAME

DESCRIPTION	PAGE
COUNTERWEIGHT	1-62
FAN	1-66
FLOOR PLATES AND COVERS	1-42
GENERAL TRUCK	1-2
HEATER	
DIESEL	1-34
LPG	1-38
HEATER CONTROL	1-46
HOOD	
WITH LOW EMISSIONS (S/N D019D02377 →)	1-60
WITHOUT LOW EMISSIONS	1-56
LABELS	1-52
OPERATOR COMPARTMENT	
WITH CAB - SHEET 1 OF 6 (→ S/N D019E02261)	1-12
WITH CAB - SHEET 2 OF 6 (S/N D019E02262 →)	1-16
WITH CAB - SHEET 3 OF 6 (→ S/N D019E02261)	1-18
WITH CAB - SHEET 4 OF 6 (S/N D019E02262 →)	1-22
WITH CAB - SHEET 5 OF 6 (→ S/N D019E02261)	1-26
WITH CAB - SHEET 6 OF 6 (S/N D019E02262 →)	1-30
WITHOUT CAB (→ S/N D019E02261)	1-4
WITHOUT CAB (S/N D019E02262 →)	1-8
SEMI-SUSPENSION SEAT	1-50
SUSPENSION SEAT	1-48
WINDSHIELD WASHER	1-68

©2010 HYSTER COMPANY

GENERAL TRUCK (FIGURE 1-1)

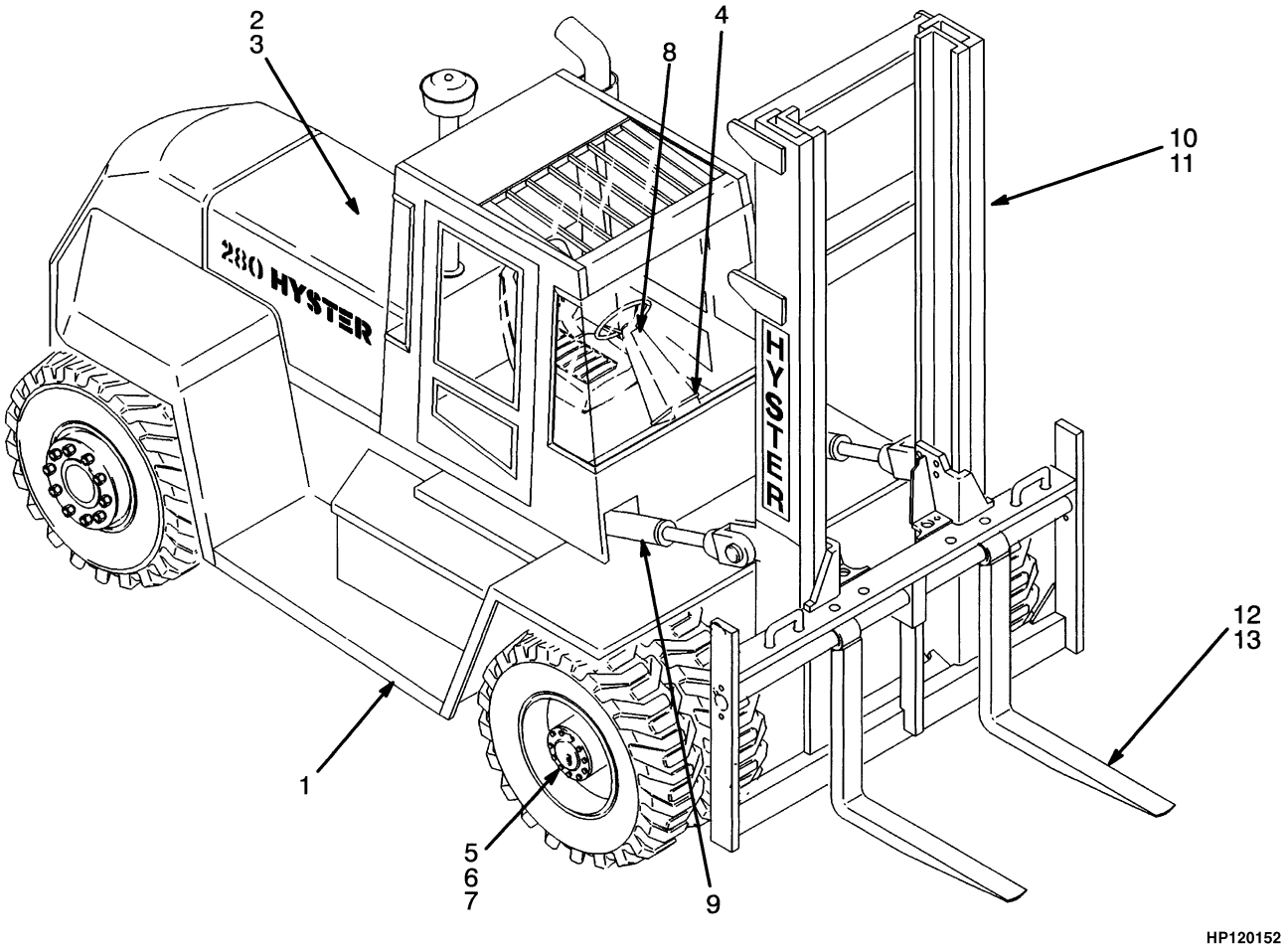

ITEM	PART NO.	DESCRIPTION	QTY

©2010 HYSTER COMPANY

ITEM	PART NO.	DESCRIPTION	QTY
1	. . . . .	Frame (☞Figure 1-2).....	1
2	. . . . .	Engine Assembly (☞Figure 2-1).....	1
3	. . . . .	Fuel System (☞Figure 3-1).....	1
4	. . . . .	Electrical System (☞Figure 4-1).....	1
5	. . . . .	Transmission	1
6	. . . . .	Steering System (☞Figure 6-1).....	1
7	. . . . .	Brake System (☞Figure 7-1).....	1
8	. . . . .	Hydraulic System (☞Figure 8-1).....	1
9	. . . . .	Mast-Two Stage Limited Free-Lift (☞Figure 9-1).....	1
10	. . . . .	Mast-Three Stage Full Free-Lift (☞Figure 10-1).....	1
11	. . . . .	Empty Container Handler (☞Figure 11-1).....	1
12	. . . . .	Options (☞Figure 12-1).....	1

©2010 HYSTER COMPANY

OPERATOR COMPARTMENT (FIGURE 1-2)

WITHOUT CAB (→ S/N D019E02261)

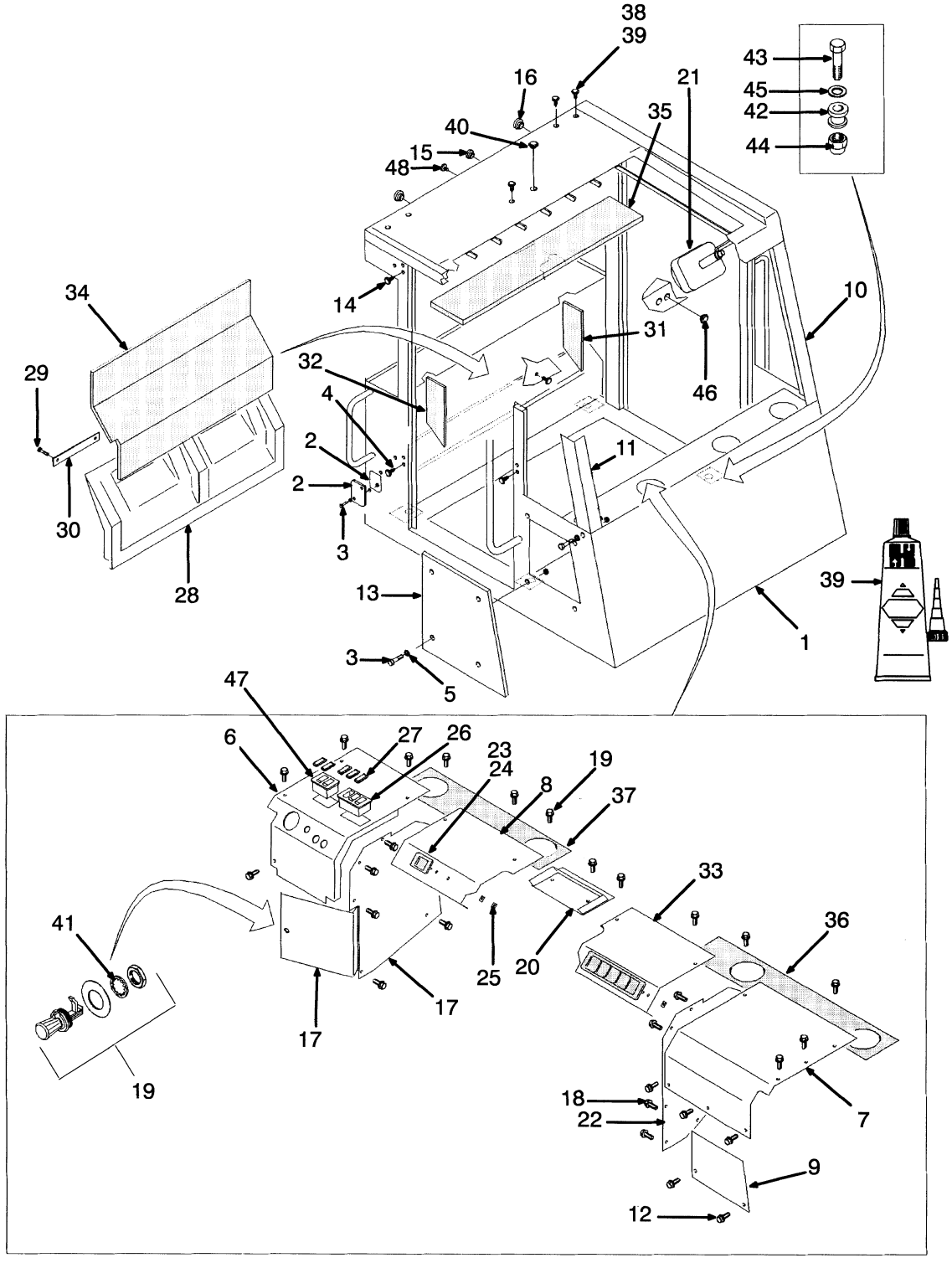

HP120153

©2010 HYSTER COMPANY

OPERATOR COMPARTMENT

WITHOUT CAB (→ S/N D019E02261)

ITEM	PART NO.	DESCRIPTION	QTY
1	1346423	Operator Compartment	1
1	**a** 894828	Operator Compartment (LPG Only)	1
1	**b** 1462734	Operator Compartment (LPG Only)	1
2	1301066	Plate	2
3	1330574	Screw	12
4	136687	Nut	12
5	292680	Washer	1
6	**c** 1325598	Cover (LH)	1
6	**d** 1359659	Cover (LH)	1
7	1325597	Cover (RH)	1
8	1325599	Plate (Non-EC)	1
8	1325616	Cover (ECH 3 and 4)	1
9	1325600	Plate	1
10	1301196	Bracket (LH)	1
11	1346452	Bracket (RH)	1
12	1301177	Screw	2
14	1301288	Fastener	16
15	1311217	Plug	4
16	1307737	Fastener	2
17	1311388	Door	1
18	1301177	Screw	31
19	1311288	Latch	1
20	1301189	Cover	1
21	1301286	Mirror	2
22	1301255	Panel (RH Access)	1
23	1301208	Label	1
24	1301209	Label	1
25	1301414	Nut	4
26	376947	Frame	1
27	376949	Cover	5
27	376949	Cover (LPG Only)	1
28	1342664	Sound Liner	2
28	1342664	Sound Liner (LPG Only)	1
29	329067	Screw	2
29	329067	Screw (LPG Only)	1
30	1301297	Plate	1
31	1301263	Sound Liner	1
32	1301264	Sound Liner	1
33	1301089	Cover Plate	1
34	1325623	Liner	1
35	1325624	Liner	1
36	1301292	Gasket (RH)	1
37	1301293	Gasket (LH)	1
38	1307737	Fastener	4
39	280472	Sealant	AR
40	1311217	Plug	2
41	1311287	Washer	1
42	1325519	Motor Mount (Cab)	4
43	292538	Capscrew	4
44	300937	Nut	4

©2010 HYSTER COMPANY

OPERATOR COMPARTMENT

WITHOUT CAB (→ S/N D019E02261)

ITEM	PART NO.	DESCRIPTION	QTY
45	300939	Washer	4
46	1311346	Fastener	1
47	376948	Bezel	1
48	1304971	Fastener	1

FOOTNOTES:

a With Empty Container Handler
b Without Empty Container Handler
c → S/N D019D01521
d S/N D019D01522 →

©2010 HYSTER COMPANY

NOTES

©2010 HYSTER COMPANY

OPERATOR COMPARTMENT (FIGURE 1-3)

WITHOUT CAB (S/N D019E02262 →)

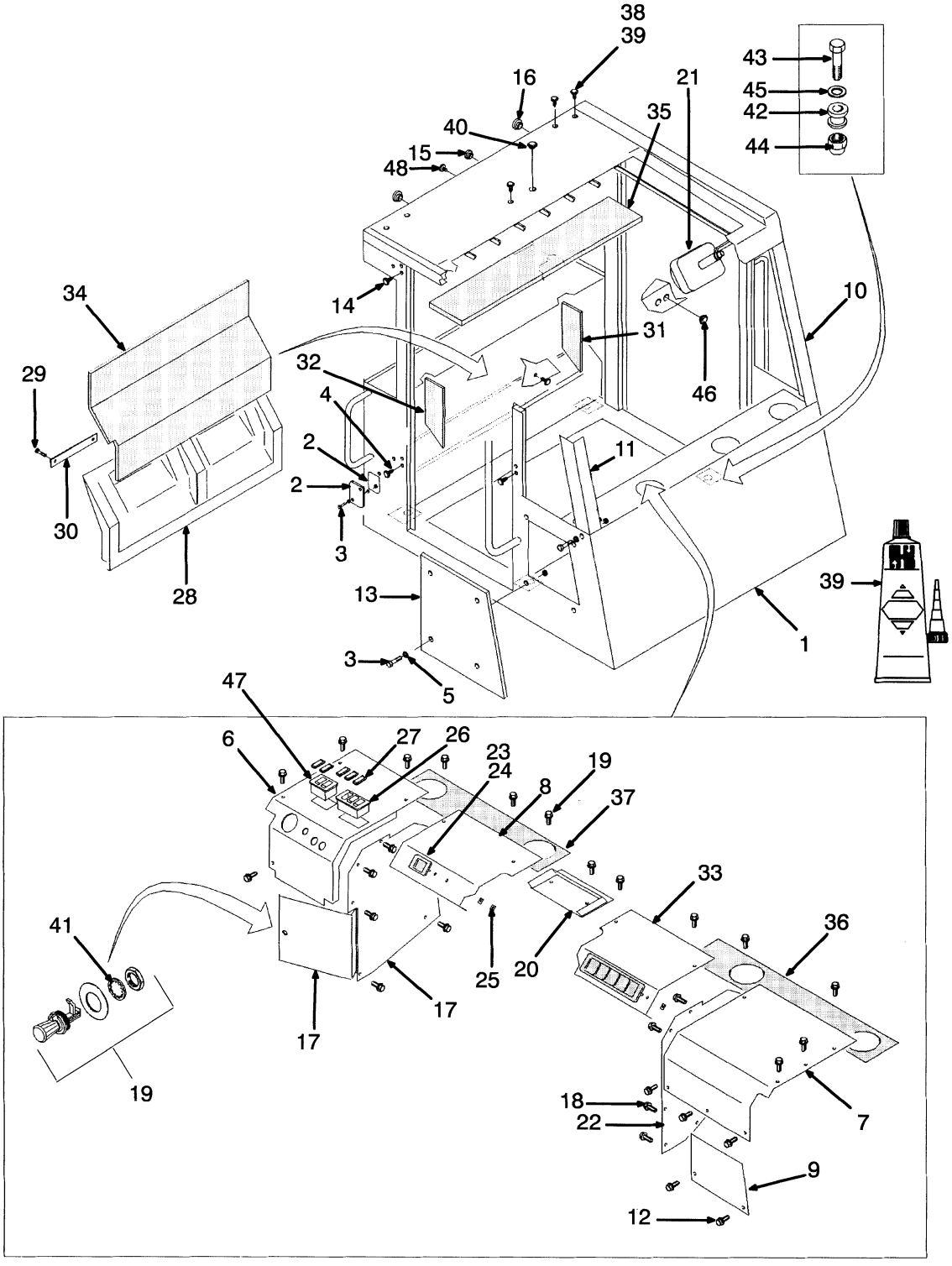

HP120153

©2010 HYSTER COMPANY

OPERATOR COMPARTMENT

WITHOUT CAB (S/N D019E02262 →)

ITEM	PART NO.	DESCRIPTION	QTY
1	**a** 1375944	Operator Compartment	1
1	**b** 1462733	Operator Compartment	1
1	**a** 894828	Operator Compartment (LPG Only)	1
1	**b** 1462734	Operator Compartment (LPG Only)	1
2	. . . . .	Plate	2
3	. . . . .	Capscrew	12
4	. . . . .	Nut	12
5	. . . . .	Lockwasher	1
6	1359659	Cover (LH)	1
7	1325597	Cover (RH)	1
8	1325599	Plate (Non-EC)	1
8	1325616	Cover (ECH 3 and 4)	1
9	. . . . .	Plate	1
10	. . . . .	Angle (LH)	1
11	. . . . .	Angle (RH)	1
12	. . . . .	Screw	2
13	1301195	Plate	1
14	. . . . .	Plug	16
15	. . . . .	Plug	4
16	. . . . .	Fastener	2
17	1311388	Door	1
18	1301177	Screw	31
19	1311288	Latch	1
20	1301189	Cover	1
21	1301286	Mirror	2
22	1301255	Panel (RH Access)	1
23	1301208	Label	1
24	1301209	Label	1
25	1301414	Nut	4
26	376947	Frame	1
27	376949	Cover	5
27	376949	Cover (LPG Only)	1
28	1342664	Sound Liner	2
28	1342664	Sound Liner (LPG Only)	1
29	329067	Screw	2
29	329067	Screw (LPG Only)	1
30	1301297	Plate	1
31	1301263	Sound Liner	1
32	1301264	Sound Liner	1
33	1301089	Cover Plate	1
34	1325623	Liner	1
35	1325624	Liner	1
36	1301292	Gasket	1
37	1301293	Gasket	1
38	1307737	Fastener	2
39	280472	Sealant	AR
40	1311217	Plug	2
41	1311287	Washer	1
42	1325519	Motor Mount (Cab)	4
43	292538	Capscrew	4

©2010 HYSTER COMPANY

OPERATOR COMPARTMENT

WITHOUT CAB (S/N D019E02262 →)

ITEM	PART NO.	DESCRIPTION	QTY
44	300937	Nut	4
45	300939	Washer	4
46	. . . . .	Plug	1
47	376948	Bezel	2
48	1304971	Fastener	2

FOOTNOTES:

a With Empty Container Handler

b Without Empty Container Handler

©2010 HYSTER COMPANY

NOTES

©2010 HYSTER COMPANY

OPERATOR COMPARTMENT (FIGURE 1-4)

WITH CAB — SHEET 1 OF 6 (→ S/N D019E02261)

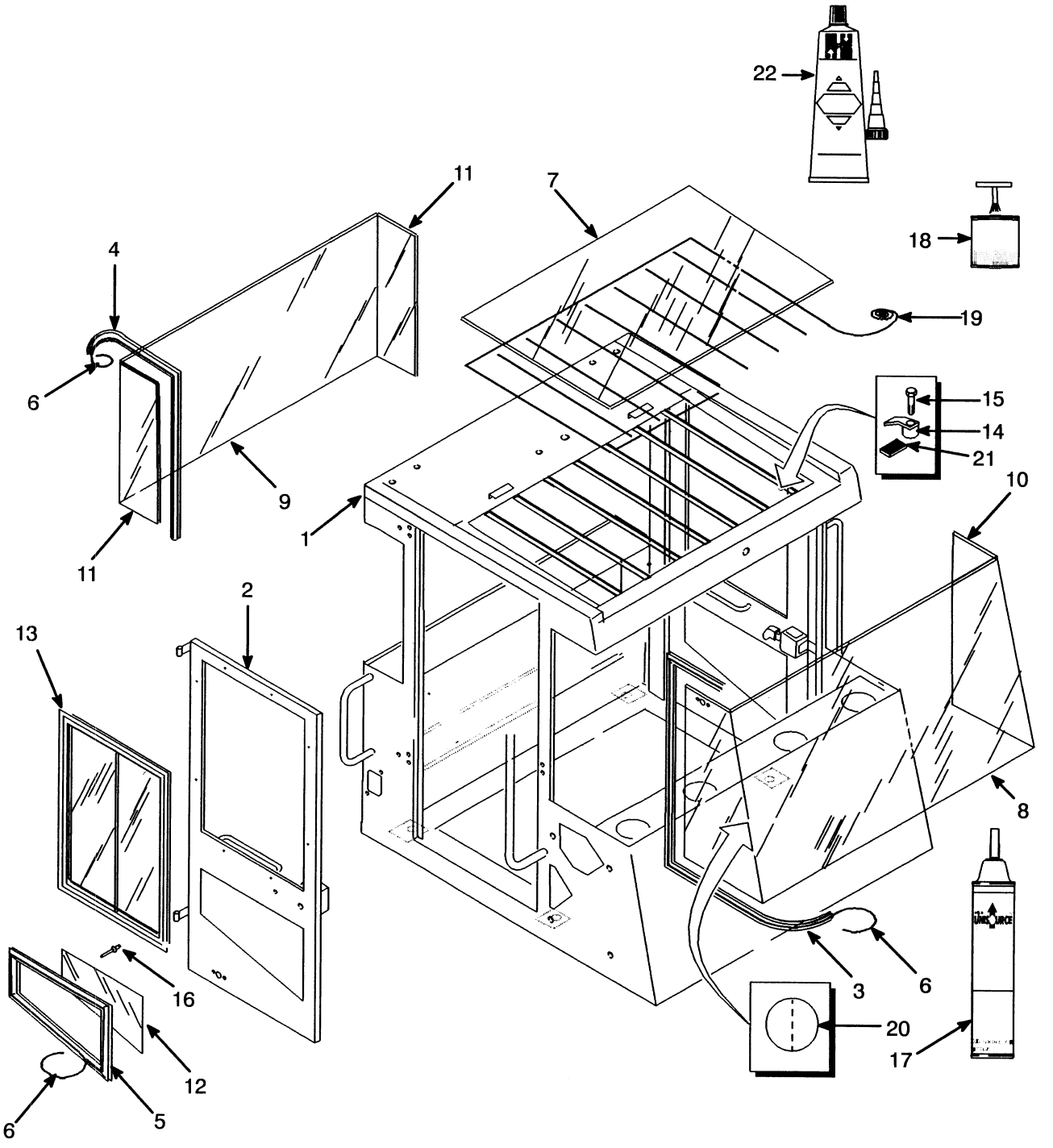

©2010 HYSTER COMPANY

OPERATOR COMPARTMENT

WITH CAB – SHEET 1 OF 6 (→ S/N D019E02261)

ITEM	PART NO.	DESCRIPTION	QTY
1	**a** 1346423	Operator Compartment (Without Noise Reduction)	1
1	**a** 1346460	Operator Compartment (With Noise Reduction)	1
2	1300995	Door (LH)	1
2	1300996	Door (RH)	1
3	1346426	Seal	1
4	376064	Seal	1
5	376867	Seal (LH)	1
5	376868	Seal (RH)	1
6	376922	Strip Seal	AR
7	1346422	Window	1
8	1301371	Glass	1
9	1301372	Glass	1
10	1301373	Glass	2
11	1301374	Glass	1
12	1301375	Glass	1
13	**b** 1311302	Sliding Window (RH)	1
13	**b** 1324761	Glass (Stationary)	1
13	**b** 1324762	Glass (Sliding)	1
13	**b** 1324767	Seal	1
13	**b** 1324088	Adhesive	1
13	**b** 1311303	Sliding Window (LH)	1
13	**b** 1324761	Glass (Stationary)	1
13	**b** 1324762	Glass (Sliding)	1
13	**b** 1324765	Strip	1
13	**b** 1324084	Latch	1
13	**b** 1324767	Seal	1
13	**b** 1324088	Adhesive	1
13	**c** 1375984	Sliding Window (RH)	1
13	**c** 1377703	Glass (Sliding)	1
13	**c** 1377704	Glass (Stationary)	1
13	**c** 1377702	Latch	1
13	**c** 1377271	Screw	4
13	**c** 1375985	Sliding Window (LH)	1
13	**c** 1377703	Glass (Sliding)	1
13	**c** 1377704	Glass (Stationary)	1
13	**c** 1377702	Latch	1
13	**c** 1377271	Screw	4
13	**b** 1324765	Strip	1
13	**b** 1324084	Latch	1
14	1301184	Plate	1
15	302244	Capscrew	1
16	265817	Rivet	16
17	3047334	Adhesive	AR
18	365337	Primer	AR
19	318352	Sealant	AR
20	376840	Spacer	2
21	1342660	Strip Seal	4
22	288394	Sealant	AR

©2010 HYSTER COMPANY

FOOTNOTES:

a With Empty Container Handler
b → S/N D019D01755
c S/N D019D01756 →

©2010 HYSTER COMPANY

NOTES

©2010 HYSTER COMPANY

OPERATOR COMPARTMENT (FIGURE 1-5)

WITH CAB — SHEET 2 OF 6 (S/N D019E02262 →)

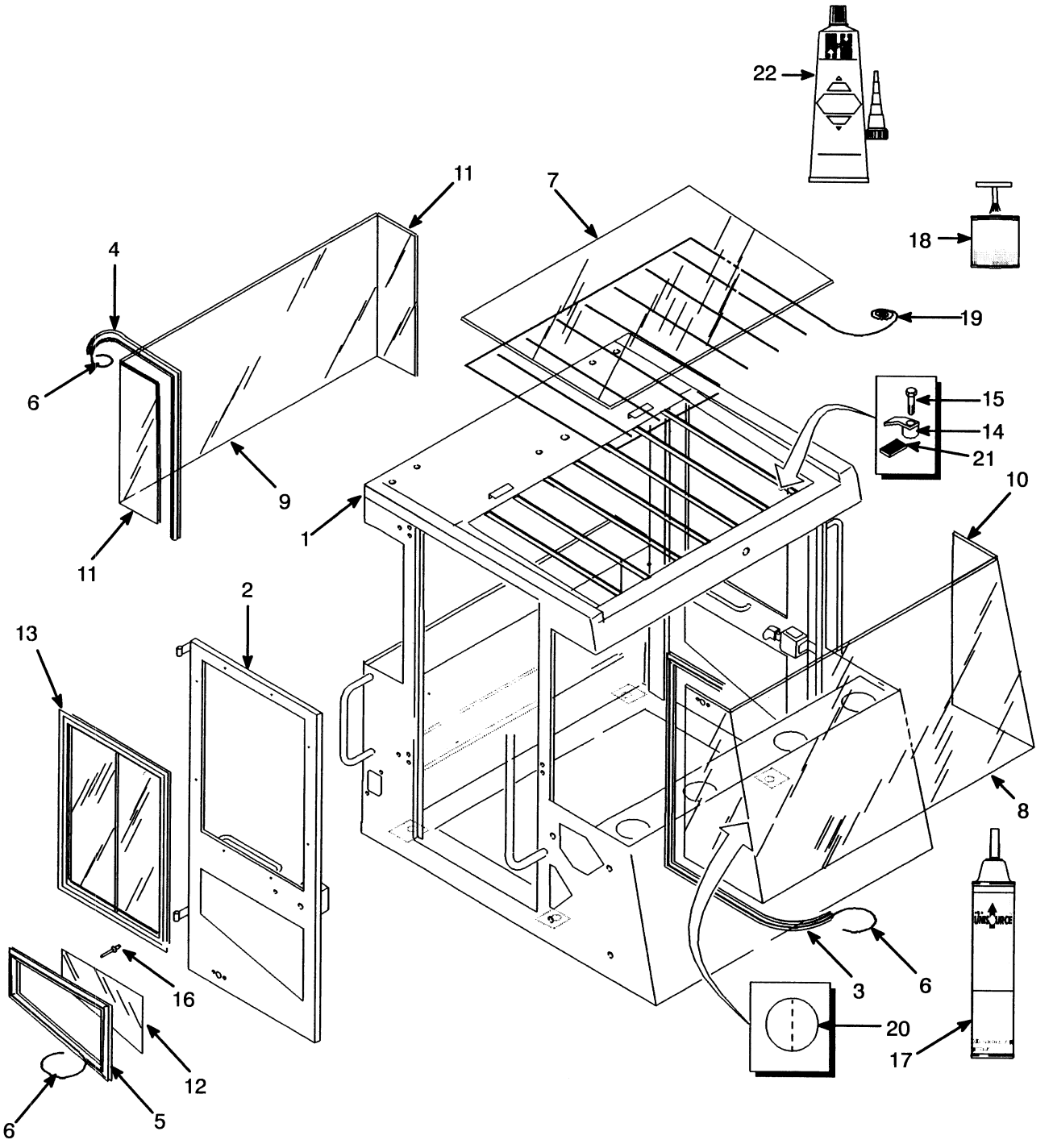

©2010 HYSTER COMPANY

OPERATOR COMPARTMENT

WITH CAB – SHEET 2 OF 6 (S/N D019E02262 →)

ITEM	PART NO.	DESCRIPTION	QTY
1	**a** 1378447	Operator Compartment (Without Noise Reduction)	1
1	**b**	Cab Assembly (Without Noise Reduction)	1
1	**a** 894823	Operator Compartment (LPG Only)	1
1	**b** 1462542	Operator Compartment (LPG Only)	1
1	**a** 1375947	Operator Compartment (With Noise Reduction)	1
1	**b** 1463263	Cab (With Noise Reduction)	1
2	1377726	Door (LH)	1
2	1377727	Door (RH)	1
3	1346426	Seal	1
4	376064	Seal	1
5	376867	Seal (LH)	1
5	376868	Seal (RH)	1
6	376922	Strip Seal	AR
7	1346422	Window	1
8	1346424	Front Window	1
8	1463773	Window	1
9	1301372	Glass	1
10	1346425	Front Window	2
11	1301374	Glass	2
12	1301375	Glass	2
13	1375984	Sliding Window (RH)	1
13	1377703	Glass (Sliding)	1
13	1377704	Glass (Stationary)	1
13	1377702	Latch	1
13	1377271	Screw	4
13	1375985	Sliding Window (LH)	1
13	1377703	Glass (Sliding)	1
13	1377704	Glass (Stationary)	1
13	1377702	Latch	1
13	1377271	Screw	4
14	1301184	Plate	1
15	302244	Capscrew	1
16	265817	Rivet	16
17	3047334	Adhesive	AR
18	365337	Primer	AR
19	318352	Sealant	AR
20	376840	Spacer	AR
21	1342660	Strip Seal	2
22	288394	Sealant	AR

FOOTNOTES:

a With Empty Container Handler

b Without Empty Container Handler

©2010 HYSTER COMPANY

OPERATOR COMPARTMENT (FIGURE 1-6)

WITH CAB — SHEET 3 OF 6 (→ S/N D019E02261)

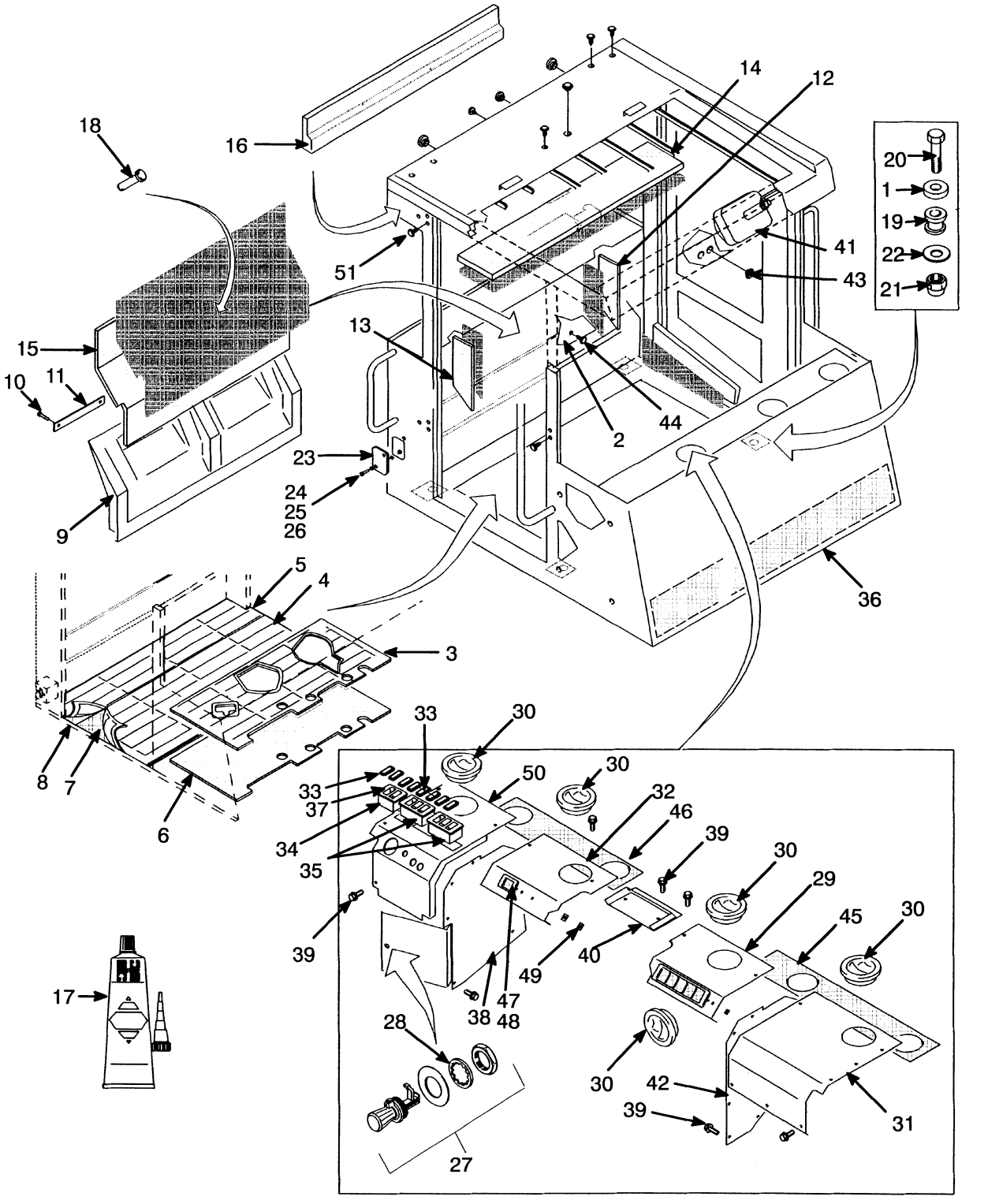

HP120155

©2010 HYSTER COMPANY

OPERATOR COMPARTMENT

WITH CAB – SHEET 3 OF 6 (→ S/N D019E02261)

ITEM	PART NO.	DESCRIPTION	QTY
1	300939	Washer	4
2	**b** 1301260	Sound Liner (RH)	1
2	**b** 1301261	Sound Liner (LH)	1
2	**a** 1311432	Sound Liner (RH)	1
2	**a** 1311433	Sound Liner (LH)	1
3	1325619	Floormat (Front)	1
4	1325620	Floormat	1
5	1325731	Floormat	1
5	**e** 1460962	Floormat	1
6	1325621	Barrier (Front)	1
6	**e** 1456552	Barrier	1
7	1325622	Barrier (Rear)	1
8	1325730	Barrier	1
9	1342664	Sound Liner	2
10	329067	Screw	2
11	1301297	Plate	1
12	**b** 1336985	Liner (RH)	1
12	**a** 1336986	Liner (RH)	1
13	**b** 1301263	Sound Liner (LH)	1
13	**a** 1311430	Sound Liner (LH)	1
14	**b** 1325624	Liner	1
14	**a** 1325726	Liner	1
15	**b** 1325623	Liner	1
15	**a** 1325729	Liner	1
16	1301746	Liner	1
17	288394	Sealant	AR
18	**a** 280644	Button	6
19	1325519	Motor Mount (Cab)	4
20	292538	Capscrew	4
21	300937	Nut	4
22	300939	Washer	4
23	1301066	Plate	2
24	353144	Capscrew	12
25	136687	Nut	12
26	292680	Washer	12
27	1311288	Latch	1
28	1311287	Washer	2
29	1301088	Cover Plate	1
30	376276	Nozzle	5
31	1325550	Cover (RH)	1
32	1301109	Cover Plate	1
32	1325617	Plate (EC3 and EC4)	1
32	1325583	Plate (Non-EC)	1
33	376949	Cover	5
34	376948	Bezel	1
35	376947	Frame	2
36	1301746	Liner	1
37	228376	Button	6
38	1311388	Door	1
39	1301177	Screw	31

©2010 HYSTER COMPANY

OPERATOR COMPARTMENT

WITH CAB – SHEET 3 OF 6 (→ S/N D019E02261)

ITEM	PART NO.	DESCRIPTION	QTY
40	1301189	Cover	1
41	1301286	Mirror	2
42	1301255	Panel (RH Access)	1
43	1311217	Plug	2
44	1307737	Fastener	4
45	1301292	Gasket (RH)	1
46	1301293	Gasket (LH)	1
47	1301208	Label	1
48	1301209	Label	1
49	1301414	Nut	4
50	**c** 1325329	Cover	1
50	**d** 1359658	Cover (LH)	1
51	302244	Capscrew	4

FOOTNOTES:

a With Noise Reduction
b Without Noise Reduction
c → S/N D019D01521
d S/N D019D01522 →
e S/N D019D12439 → (With Autoshift)

©2010 HYSTER COMPANY

NOTES

©2010 HYSTER COMPANY

OPERATOR COMPARTMENT (FIGURE 1-7)

WITH CAB — SHEET 4 OF 6 (S/N D019E02262 →)

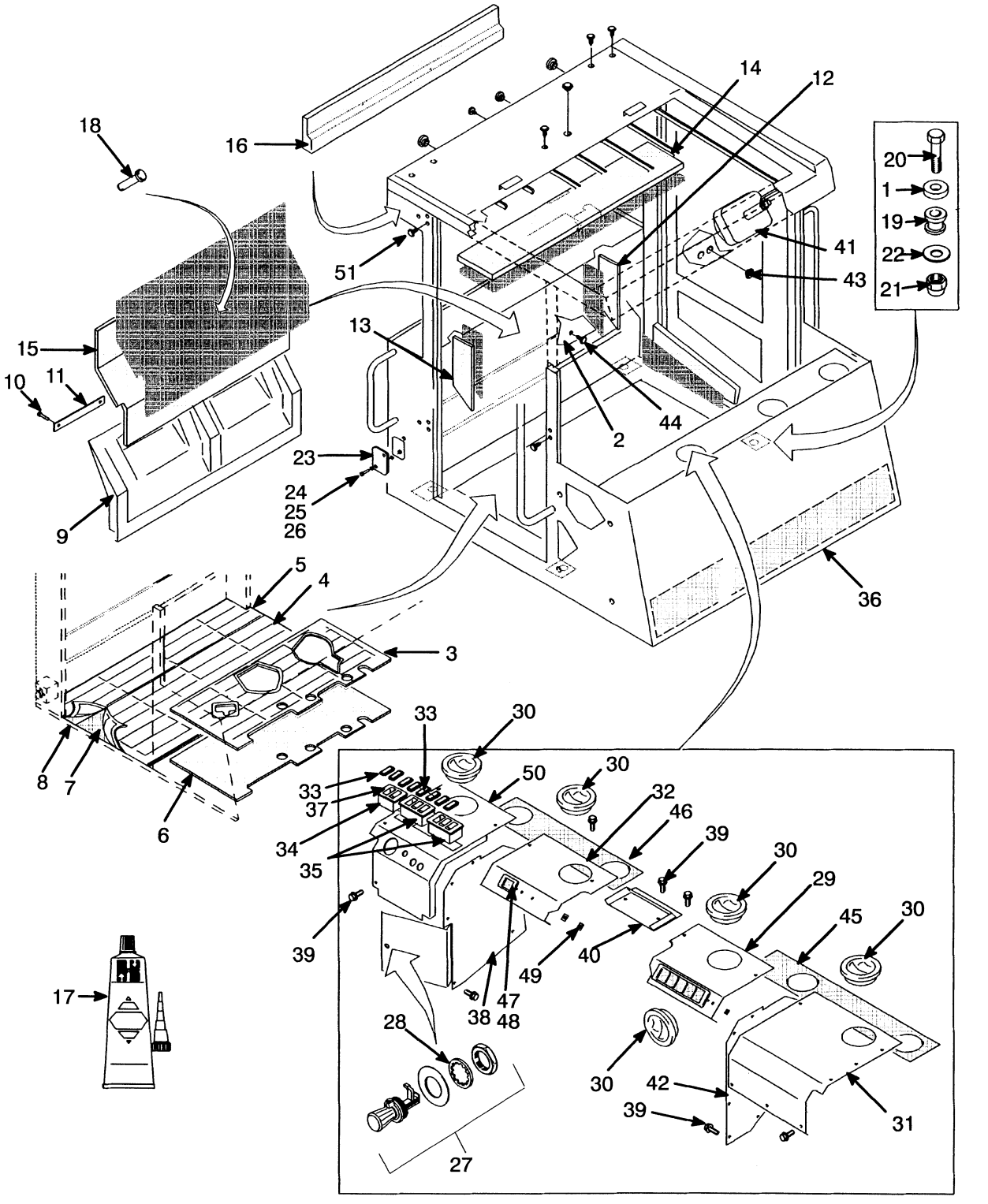

HP120155

©2010 HYSTER COMPANY

OPERATOR COMPARTMENT

WITH CAB – SHEET 4 OF 6 (S/N D019E02262 →)

ITEM	PART NO.	DESCRIPTION	QTY
1	1463548	Spacer	4
2	**b** 1377730	Liner (RH)	1
2	**a** 1377728	Liner (RH)	1
2	**b** 1377731	Liner (LH)	1
2	**a** 1377729	Liner (LH)	1
3	1325619	Floormat (Front)	1
4	1325620	Floormat	1
5	1325731	Floormat	1
5	**c** 1460962	Floormat	1
6	1325621	Barrier (Front)	1
6	**c** 1456552	Barrier	1
7	1325622	Barrier (Rear)	1
8	1325730	Barrier	1
9	1342664	Sound Liner	2
10	329067	Screw	2
11	1301297	Plate	1
12	**b** 1336985	Liner (RH)	1
12	**a** 1336986	Liner (RH)	1
13	**b** 1301263	Sound Liner (RH)	1
13	**a** 1311430	Sound Liner (LH)	1
14	**b** 1325624	Liner (LH)	1
14	**a** 1325726	Liner	1
15	**b** 1325623	Liner	1
15	**a** 1325729	Liner	1
16	1301746	Liner	1
17	288394	Sealant	AR
18	**a** 280644	Button	6
19	1325519	Motor Mount (Cab)	4
20	292538	Capscrew	4
21	300937	Nut	4
22	300939	Washer	4
23	. . . . .	Plate	2
24	. . . . .	Capscrew	12
25	. . . . .	Nut	12
26	292680	Washer	4
27	1311288	Latch	1
28	1311287	Washer	2
29	1301088	Cover Plate	1
30	376276	Nozzle	5
31	1325550	Cover (RH)	1
32	1325617	Plate (EC3 and EC4)	1
32	1325583	Plate (Non-EC)	1
32	**c** 894417	Plate (Non-EC)	1
32	**c** 894419	Plate (EC3 and EC4)	1
33	376949	Cover	5
34	376948	Bezel	1
35	376947	Frame	2
36	1301746	Liner	1
37	228376	Button	6
38	1311388	Door	1

©2010 HYSTER COMPANY

OPERATOR COMPARTMENT

WITH CAB – SHEET 4 OF 6 (S/N D019E02262 →)

ITEM	PART NO.	DESCRIPTION	QTY
39	1301177	Screw	31
40	1301189	Cover	1
41	1301286	Mirror	2
42	1301255	Panel (RH Access)	1
43	1311217	Plug	2
44	1307737	Fastener	4
45	1301292	Gasket (RH)	1
46	1301293	Gasket (LH)	1
47	1301208	Label	1
48	1301209	Label	1
49	1301414	Nut	4
50	1359658	Cover (LH)	1
51	302244	Capscrew	4

FOOTNOTES:

a With Noise Reduction
b Without Noise Reduction
c S/N D019D12439 → (With Autoshift)

©2010 HYSTER COMPANY

NOTES

©2010 HYSTER COMPANY

OPERATOR COMPARTMENT (FIGURE 1-8)

WITH CAB — SHEET 5 OF 6 (→ S/N D019E02261)

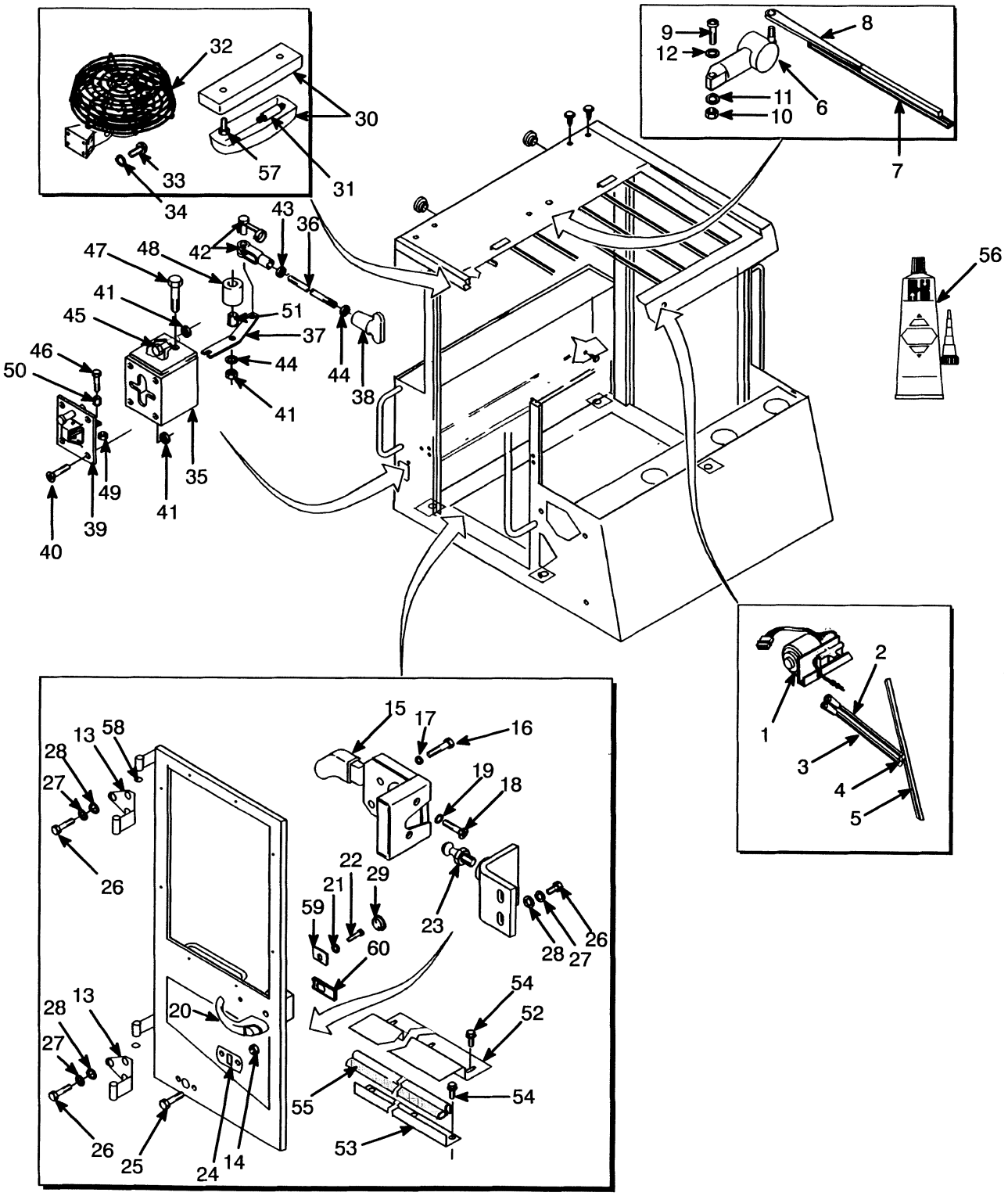

HP120676

©2010 HYSTER COMPANY

OPERATOR COMPARTMENT

WITH CAB – SHEET 5 OF 6 (→ S/N D019E02261)

ITEM	PART NO.	DESCRIPTION	QTY
1	334228	Wiper Motor	2
2	334234	Wiper Arm	2
3	334233	Wiper Arm	2
4	334229	Bracket	2
5	334230	Wiper Blade	1
6	1321911	Wiper Motor	1
7	376953	Wiper Blade	1
8	376954	Arm	1
9	302248	Capscrew	1
10	292668	Nut	1
11	292679	Washer	1
12	320155	Washer	1
13	1300978	Hinge (LH)	2
13	1300979	Hinge (RH)	2
14	302399	Nut	4
15	1309824	Door Handle (RH)	1
15	1312450	Door Handle (LH)	1
16	302248	Capscrew	4
17	292679	Washer	4
18	296464	Screw	4
19	296396	Washer	4
20	1319177	Handle	2
20	1360777	Key	1
21	292680	Washer	2
22	302256	Capscrew	2
23	365344	Bolt	2
24	3047418	Retainer	2
25	353144	Capscrew	4
26	1301705	Capscrew	16
27	1301707	Washer	16
28	1301706	Lockwasher	16
29	309666	Plug	2
30	1301254	Dome Light	1
31	1301256	Bulb	2
32	1311213	Fan (☞Figure 1-20)	1
33	16750	Screw	4
34	15152	Lockwasher	4
35	376972	Bracket Wldmt	2
36	376971	Link	2
37	376968	Link	2
38	1479124	Knob	2
39	3047417	Retainer	2
40	296472	Screw	8
41	302399	Nut	16
42	3047330	Rod End	2
43	292668	Nut	4
44	320156	Washer	2
45	292501	Capscrew	6
46	302248	Capscrew	2
47	292505	Capscrew	2

©2010 HYSTER COMPANY

OPERATOR COMPARTMENT

WITH CAB – SHEET 5 OF 6 (→ S/N D019E02261)

ITEM	PART NO.	DESCRIPTION	QTY
48	376970	Spacer	2
49	302398	Locknut	2
50	1301026	Spacer	2
51	1301027	Spacer	2
52	1325567	Bracket	2
53	1325576	Bracket	2
54	309637	Screw	12
55	1343205	Seal	2
56	288394	Sealant	AR
57	302236	Capscrew	2
58	1301700	Ring (Brass)	4
59	816377	Seal	2
60	816378	Seal	2

©2010 HYSTER COMPANY

NOTES

©2010 HYSTER COMPANY

OPERATOR COMPARTMENT (FIGURE 1-9)

WITH CAB — SHEET 6 OF 6 (S/N D019E02262 →)

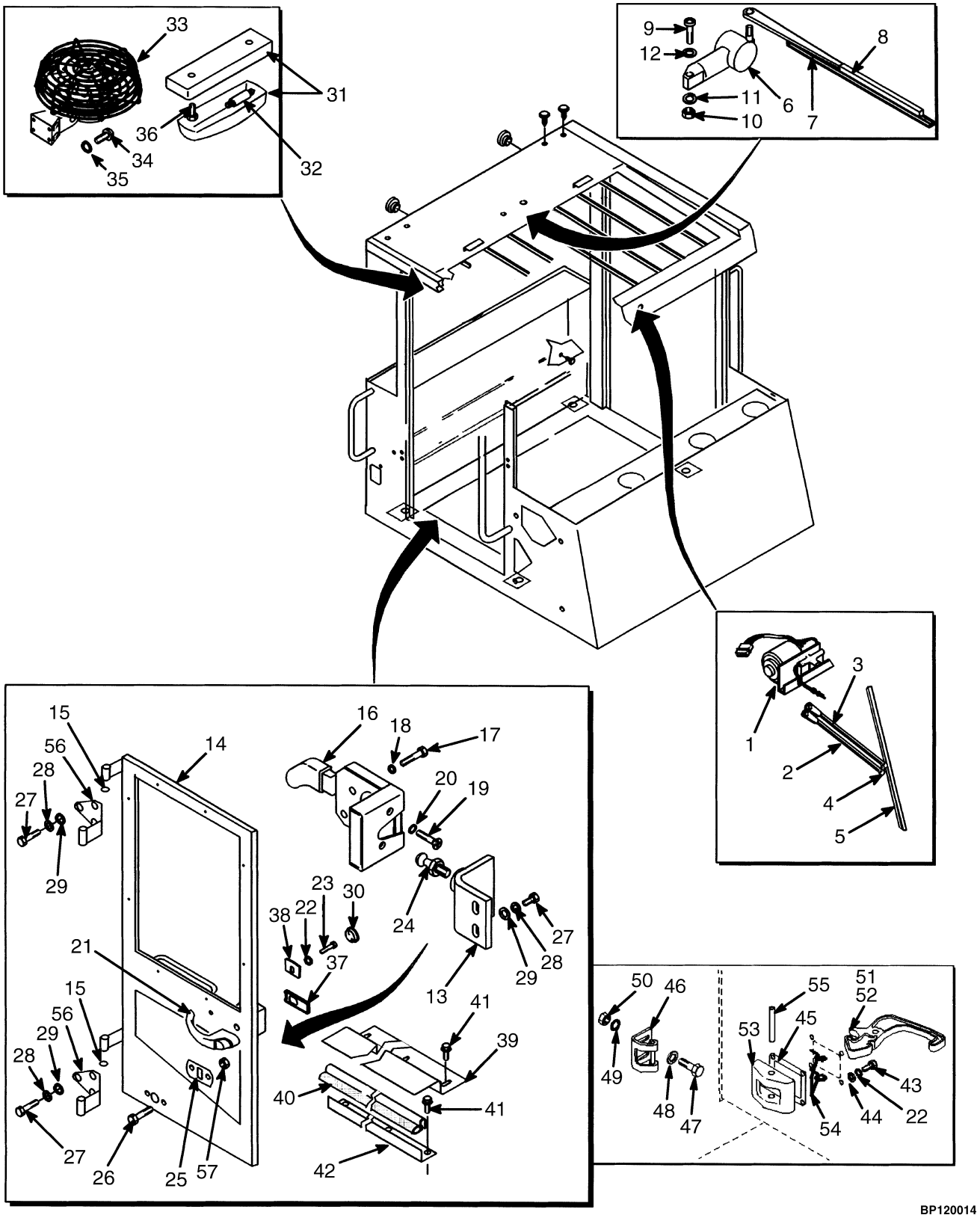

BP120014

©2010 HYSTER COMPANY

OPERATOR COMPARTMENT

WITH CAB – SHEET 6 OF 6 (S/N D019E02262 →)

ITEM	PART NO.	DESCRIPTION	QTY
1	334228	Wiper Motor	1
2	1491260	Wiper Arm	1
2	334233	Wiper Arm	1
3	334234	Wiper Arm	1
4	334229	Bracket	1
5	334230	Wiper Blade	1
6	1321911	Wiper Motor	2
7	376953	Wiper Blade	2
8	376954	Arm	2
9	302248	Capscrew	2
10	292668	Nut	2
11	292679	Washer	2
12	320155	Washer	2
13	1300980	Striker Plate	2
14	1377726	Door (LH)	1
14	1377727	Door (RH)	1
15	1301700	Ring (Brass)	4
16	1309824	Door Handle (RH)	1
16	1312450	Door Handle (RH)	1
17	302248	Capscrew	4
18	292679	Washer	4
19	296464	Screw	4
20	296396	Washer	4
21	1319177	Handle	2
21	1360777	Key	1
22	292680	Washer	10
23	302256	Capscrew	2
24	365344	Bolt	2
25	3047418	Retainer	2
26	353144	Capscrew	4
27	1301705	Capscrew	4
28	1301707	Washer	4
29	1301706	Lockwasher	4
30	309666	Plug	2
31	1301254	Dome Light	1
32	1301256	Bulb	2
33	1301745	Fan	1
34	16750	Screw	4
35	15152	Lockwasher	4
36	1301284	Screw	2
37	816377	Seal	2
38	816378	Seal	2
39	376918	Bracket	2
40	1325576	Bracket	2
41	309637	Screw	12
42	300088	Seal (Door)	AR
43	292500	Capscrew	8
44	320156	Washer	8
45	1369496	Seal	2
46	1393748	Striker	2

©2010 HYSTER COMPANY

OPERATOR COMPARTMENT

WITH CAB – SHEET 6 OF 6 (S/N D019E02262 →)

ITEM	PART NO.	DESCRIPTION	QTY
47	292513	Capscrew	4
48	320159	Washer	4
49	~~388049~~		
	292682	Lockwasher	4
50	136692	Nut	4
51	1374428	Latch	2
52	1356943	Latch	1
53	1356948	Bracket	1
54	1358734	Spring	1
55	226774	Pin	1
56	1300978	Hinge (LH)	2
56	1300979	Hinge (RH)	2
57	302399	Nut	4

©2010 HYSTER COMPANY

NOTES

©2010 HYSTER COMPANY

HEATER (FIGURE 1-10)
DIESEL

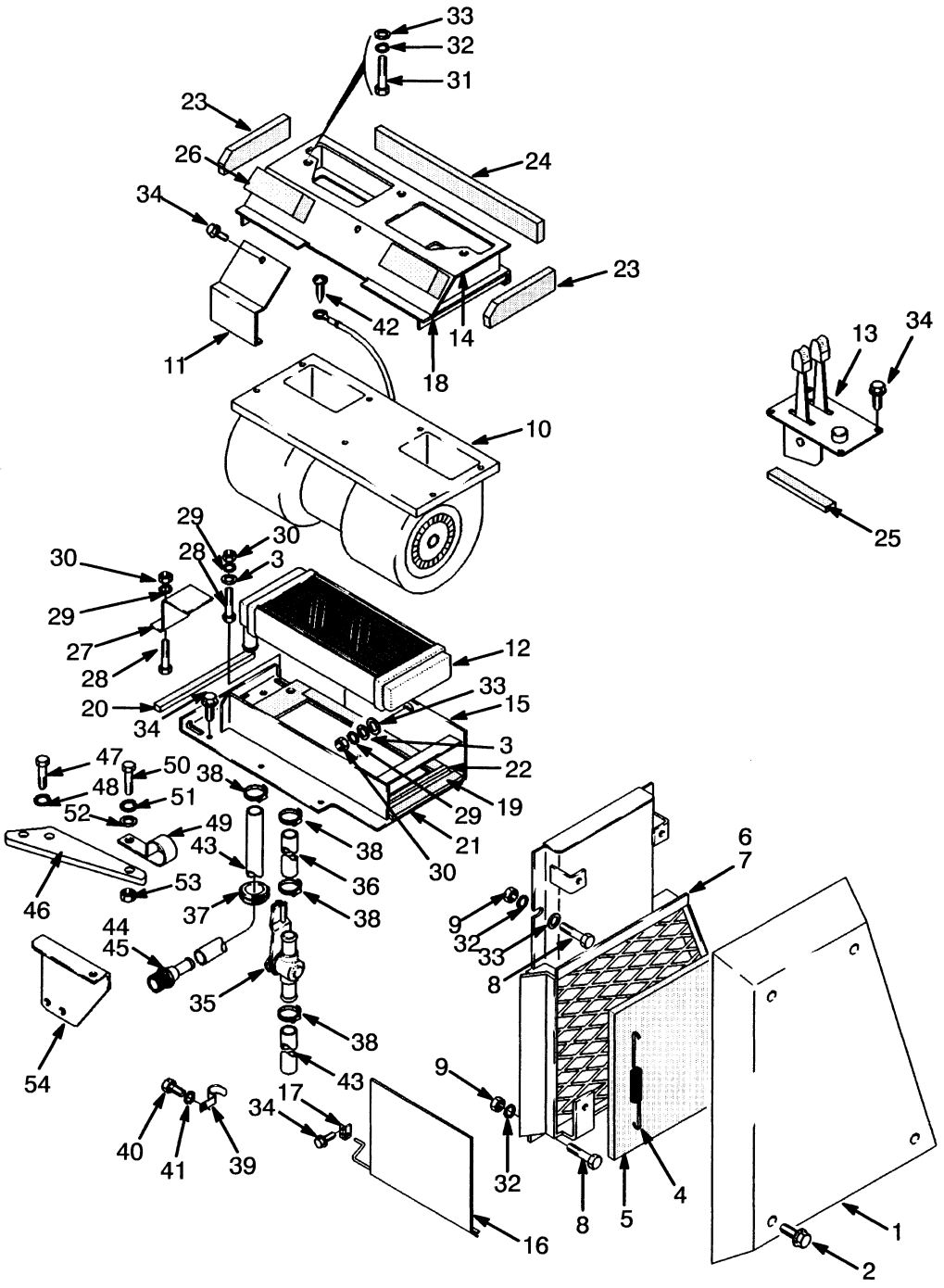

©2010 HYSTER COMPANY

HEATER
DIESEL

ITEM	PART NO.	DESCRIPTION	QTY
1	1301326	Cover	1
2	1301708	Capscrew	4
3	320156	Washer	3
4	1301323	Spring	2
5	1301127	Filter	1
6	280472	Sealant	AR
7	1301310	Plate	1
8	136681	Capscrew	4
9	239503	Nut	4
10	1311272	Blower	1
10	1368150	Blower	1
10	1453030	Resistor	1
11	1301389	Retainer	1
12	376137	Core	1
13	1301020	Heater Control (☞Figure 1-13)	1
14	1301393	Flange	1
15	1325585	Support	1
16	1325548	Damper	1
17	1301121	Bracket	2
18	1311273	Gasket	1
19	1301395	Foam	1
20	1301396	Foam	1
21	1301397	Foam	1
22	1301398	Foam	2
23	1301404	Foam	4
24	1301405	Foam	1
25	1301589	Foam	1
26	1301399	Foam (Sound Barrier)	2
27	1301400	Clamp	1
28	292501	Capscrew	2
29	292680	Washer	3
30	136687	Nut	3
31	287851	Capscrew	3
32	292681	Lockwasher	7
33	320157	Washer	6
34	1301177	Screw	11
35	1301001	Drain Valve	1
36	1301598	Hose	1
37	279752	Grommet	4
38	130845	Clamp	6
39	18901	Clamp	1
40	302244	Capscrew	1
41	292679	Washer	1
42	1301284	Screw	1
43	125303	Hose	2
44	16156	Fitting	1
45	246108	Sealant	AR
46	1301642	Bracket	1
47	292513	Capscrew	2
48	~~388049~~	Lockwasher	2

©2010 HYSTER COMPANY

HEATER
DIESEL

ITEM	PART NO.	DESCRIPTION	QTY
	292682		
49	198678	Clamp	2
50	136749	Screw	2
51	292681	Lockwasher	2
52	320157	Washer	4
53	239503	Nut	2
54	1309524	Bracket	1

©2010 HYSTER COMPANY

NOTES

©2010 HYSTER COMPANY

HEATER (FIGURE 1-11)

LPG

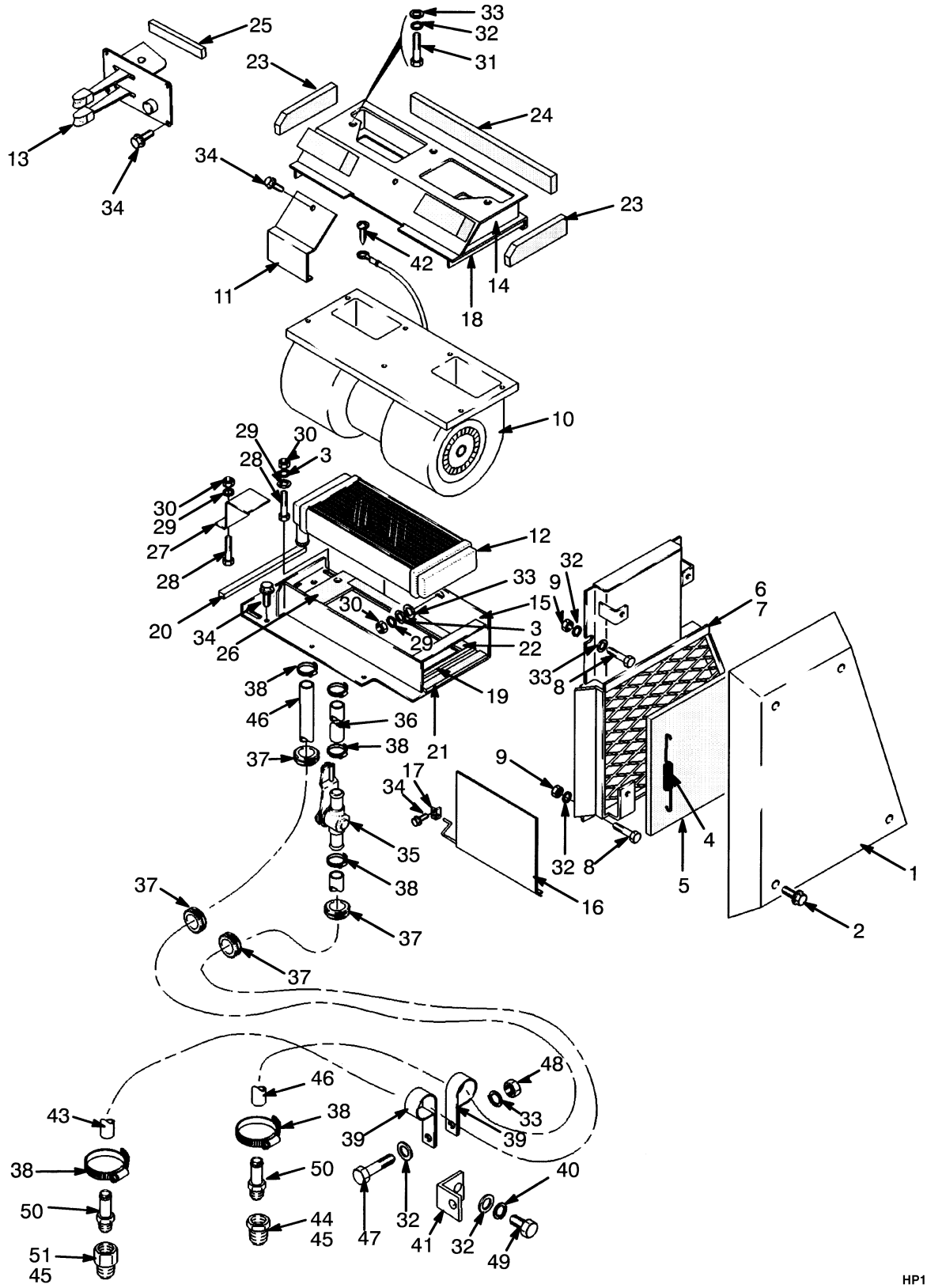

©2010 HYSTER COMPANY

HEATER
LPG

ITEM	PART NO.	DESCRIPTION	QTY
1	1301326	Cover	1
2	1301708	Capscrew	4
3	320156	Washer	3
4	1301323	Spring	2
5	1301127	Filter	1
6	280472	Sealant	AR
7	1301310	Plate	1
8	136681	Capscrew	4
9	239503	Nut	4
10	1311272	Blower	1
10	1368150	Blower	1
10	1453030	Resistor	1
11	1301389	Retainer	1
12	376137	Core	1
13	1301020	Heater Control (☞Figure 1-13)	1
14	1301393	Flange	1
15	1325585	Support	1
16	1325548	Damper	1
17	1301121	Bracket	2
18	1311273	Gasket	1
19	1301395	Foam	1
20	1301396	Foam	1
21	1301397	Foam	1
22	1301398	Foam	2
23	1301404	Foam	4
24	1301405	Foam	1
25	1301589	Foam	1
26	1301399	Foam (Sound Barrier)	2
27	1301400	Clamp	1
28	292501	Capscrew	2
29	292680	Washer	3
30	136687	Nut	3
31	287851	Capscrew	3
32	292681	Lockwasher	7
33	320157	Washer	6
34	1301177	Screw	11
35	1301001	Drain Valve	1
36	1301598	Hose	1
37	279752	Grommet	4
38	130845	Clamp	6
39	198678	Clamp	1
40	~~388049~~		
	292682	Lockwasher	1
41	1301642	Bracket	1
42	1301284	Screw	1
43	169593	Hose	2
43	123798	Hose	1
44	12845	Fitting	AR
45	246108	Sealant	1
46	134131	Hose	2

©2010 HYSTER COMPANY

HEATER
LPG

ITEM	PART NO.	DESCRIPTION	QTY
46	125303	Hose	2
47	136749	Screw	2
48	239503	Nut	2
49	292513	Capscrew	2
50	127852	Fitting	4
51	16344	Fitting	2

©2010 HYSTER COMPANY

NOTES

©2010 HYSTER COMPANY

FLOOR PLATES AND COVERS (FIGURE 1-12)

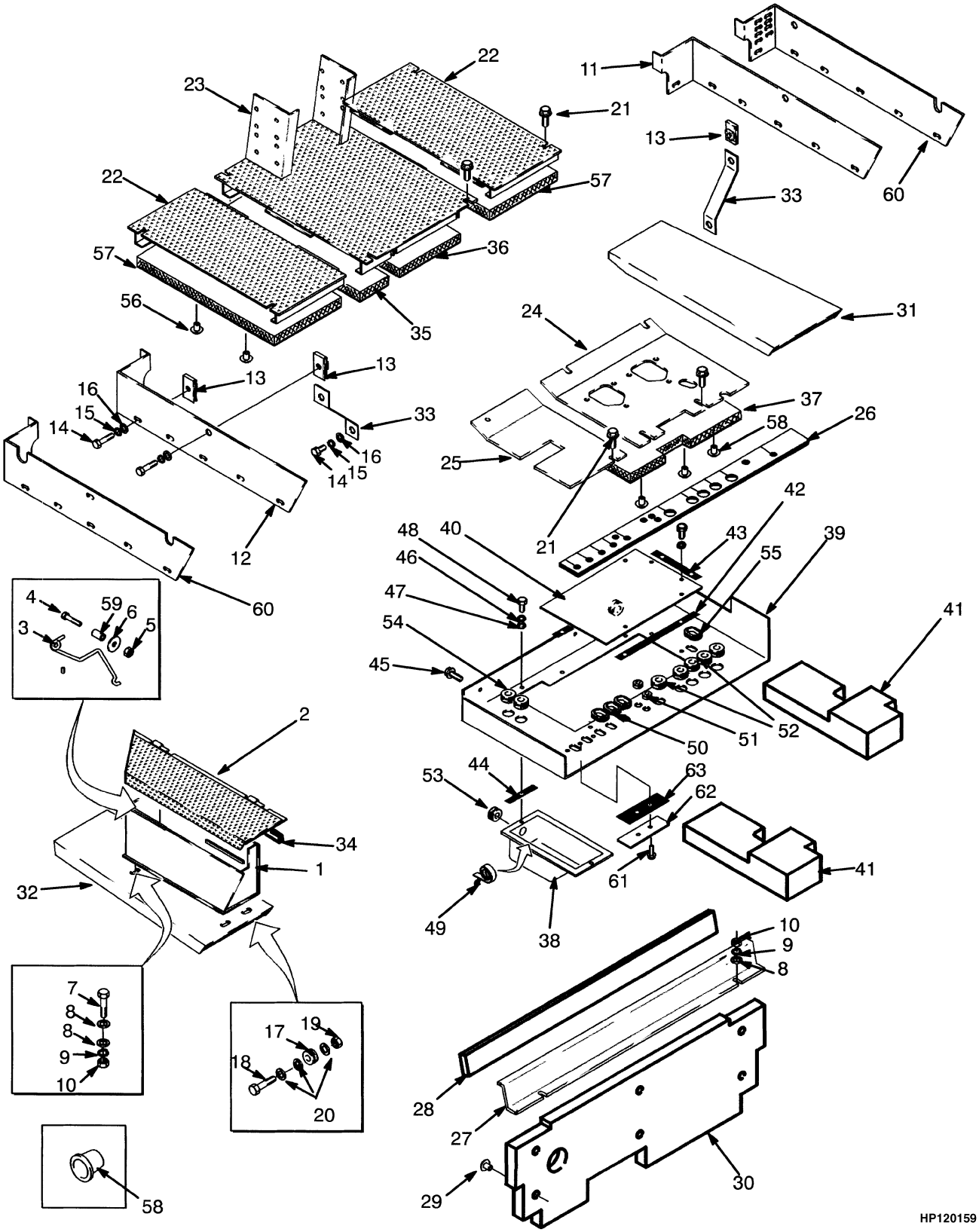

©2010 HYSTER COMPANY

FLOOR PLATES AND COVERS

ITEM	PART NO.	DESCRIPTION	QTY
1	1336327	Battery Tray	1
2	**f** 1357424	Cover	1
2	1357425	Cover (Optional)	1
2	**h** 1458554	Cover	1
3	1319189	Spring (Latch)	1
4	287816	Capscrew	2
5	313805	Nut	1
6	1335832	Washer	1
7	287854	Capscrew	4
8	320160	Washer	10
9	~~388049~~		
	292682	Lockwasher	6
10	136692	Nut	6
11	**f** 1325555	Plate (LH)	1
11	**h** 1458947	Plate (LH)	1
12	**f** 376801	Cover Plate (RH)	1
12	**h** 1458940	Cover (RH)	1
13	376397	Retainer	12
14	18497	Capscrew	12
15	292681	Lockwasher	12
16	320158	Washer	12
17	216735	Grommet	14
18	246001	Capscrew	14
19	300937	Nut	14
20	320162	Washer	42
21	329067	Screw	14
22	**c** 1325557	Floorplate	2
22	**b** 1336668	Floorplate	2
23	**c** 1465376	Floorplate	1
23	1465375	Floorplate (Optional)	1
23	**b** 1465403	Floorplate	1
23	1465406	Floorplate	1
24	**c** 1325551	Floorplate	1
24	**b** 1336669	Floorplate	1
25	1301179	Floorplate	1
26	1336982	Seal	1
27	376999	Cover Plate	1
28	1451330	Foam	1
29	**e** 228376	Button	6
30	**e** 1359715	Foam	1
30	**g** 1453259	Foam	1
31	**f** 1357401	Running Board (LH)	1
31	**h** 1458552	Running Board (LH)	1
31	**a** 894863	Running Board (LH)	1
32	**f** 1357398	Running Board (RH)	1
32	**h** 1458551	Running Board (RH)	1
33	**d** 1319176	Brace	2
34	375295	Trim	2
35	**b** 1336671	Foam	1
36	**b** 1336672	Foam	1
37	**b** 1336670	Foam	1

©2010 HYSTER COMPANY

FLOOR PLATES AND COVERS

ITEM	PART NO.	DESCRIPTION	QTY
38	**b** 1332915	Bracket	1
39	**b** 1334521	Plate Wldmt	1
40	**b** 1332917	Plate	1
41	**b** 1334523	Foam	2
42	**b** 1325398	Foam	2
43	**b** 1325399	Foam	1
44	**b** 1333750	Foam	2
45	**b** 329067	Screw	3
46	**b** 320157	Washer	2
47	**b** 292681	Lockwasher	8
48	**b** 136749	Screw	8
49	**b** 186504	Tape	AR
50	**b** 228342	Grommet	2
51	**b** 236890	Grommet	2
52	**b** 392238	Grommet	5
53	**b** 1465553	Grommet	2
54	**b** 279752	Grommet	2
55	**b** 187791	Grommet	1
56	**b** 280644	Button	14
57	**b** 1325737	Foam	2
58	**b** 1151313	Plug	2
59	**b** 1335831	Bushing	1
60	**a** 894621	Plate (LH)	1
60	**a** 894622	Plate (RH)	1
61	**b** 309637	Screw	2
62	**b** 1333752	Plate	1
63	**b** 1333753	Foam	1

FOOTNOTES:

a LPG Only
b With Noise Reduction
c Without Noise Reduction
d → 9/1999
e → S/N D019E02244
f → S/N D019E02426
g S/N D019E02245 →
h S/N D019E02427 →

©2010 HYSTER COMPANY

NOTES

©2010 HYSTER COMPANY

HEATER CONTROL (FIGURE 1-13)

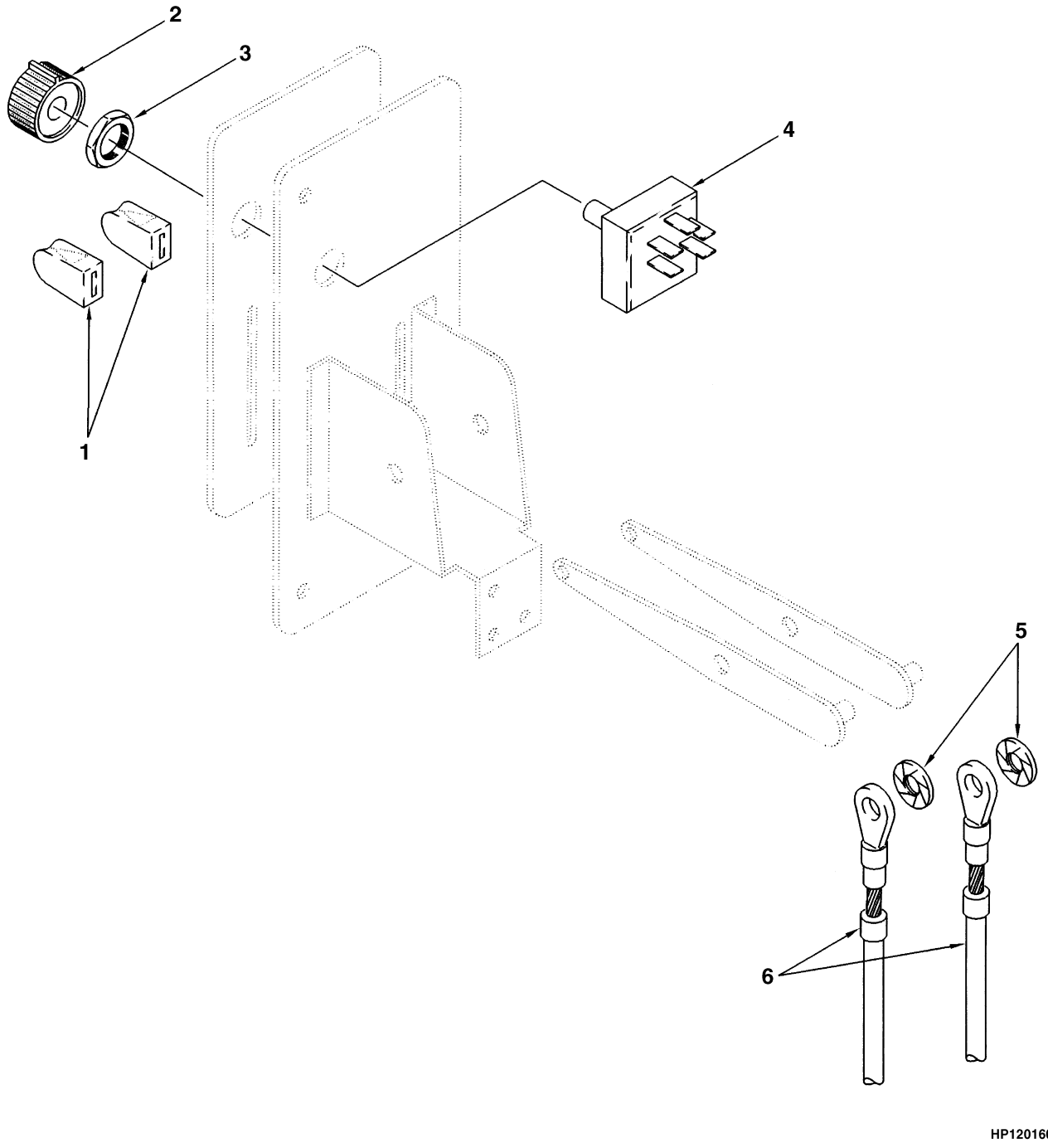

©2010 HYSTER COMPANY

HEATER CONTROL

ITEM	PART NO.	DESCRIPTION	QTY
	1301020	Heater Control	1
1	1313733	Knob	2
2	1313734	Knob	1
3	1313744	Nut	1
4	1313735	Switch	1
5	1313736	Nut	2
6	1313737	Cable Assy	2

©2010 HYSTER COMPANY

SUSPENSION SEAT (FIGURE 1-14)

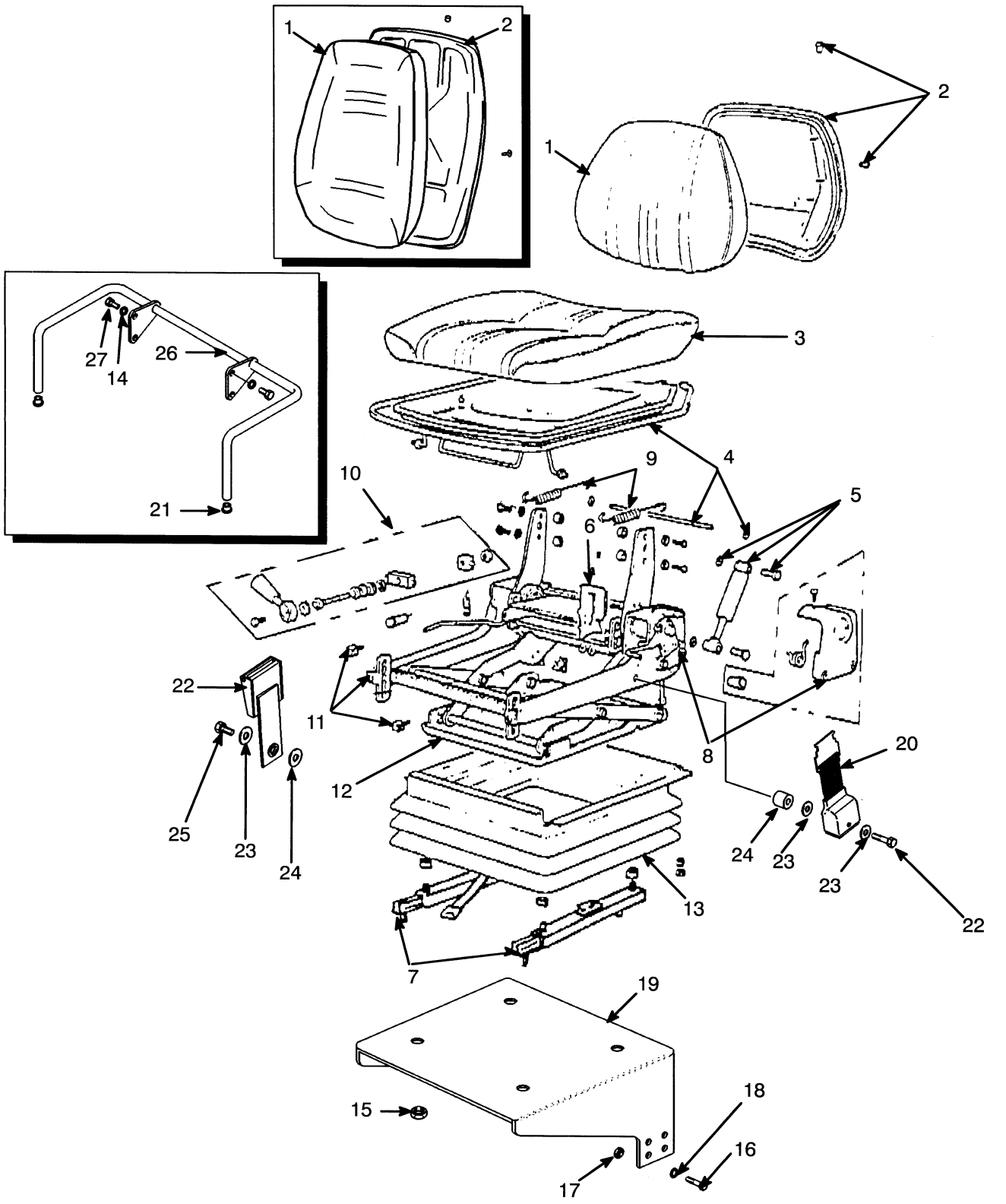

©2010 HYSTER COMPANY

SUSPENSION SEAT

KEY:
A: Vinyl
B: Fabric

ITEM	PART NO.	DESCRIPTION	QTY A	QTY B
	1325356	Seat-Full Suspension	1	..
	a 1453799	Seat-Full Suspension	1	..
	356821	Seat-Full Suspension	..	1
	a 1453798	Seat-Full Suspension	..	1
1	1335576	Cushion-Back Assy	1	..
1	**a** 1454003	Seat Cushion	1	..
1	359767	Cushion-Back Assy	..	1
1	**a** 1454002	Seat Cushion	..	1
2	1334458	Pan (Back Cushion)	1	1
2	**a** 1454004	Pan (Back Cushion)	1	1
3	1335578	Seat Cushion	1	..
3	1334470	Seat Cushion	..	1
4	1334461	Pan (Seat Cushion)	1	1
5	1335579	Kit-Damper	1	..
5	1334463	Kit-Damper	..	1
6	1334465	Kit-Indicator Ride	1	1
7	1334468	Kit-Seat Rail	1	1
8	1334464	Kit-Recliner	1	1
9	1334466	Kit-Height Adjuster	1	1
10	1334462	Handle	1	1
11	1334467	Kit-Bumper	1	1
12	1335575	Kit-Suspension	1	1
13	1325346	Kit-Cover	1	1
14	379675	Washer	4	4
15	313828	Nut	4	4
16	287854	Capscrew	8	8
17	136692	Nut	8	8
18	~~388049~~			
	292682	Lockwasher	8	8
19	1465381	Seat Pan	1	1
20	1374750	Seat Belt	1	1
21	1311409	Plug	2	2
22	1323115	Capscrew	1	1
23	1323117	Washer	4	4
24	385516	Spacer	1	1
25	1323116	Capscrew	1	1
26	1311371	Hip Restraint	1	1
27	385514	Capscrew	4	4

FOOTNOTES:

a With High Back

©2010 HYSTER COMPANY

SEMI-SUSPENSION SEAT (FIGURE 1-15)

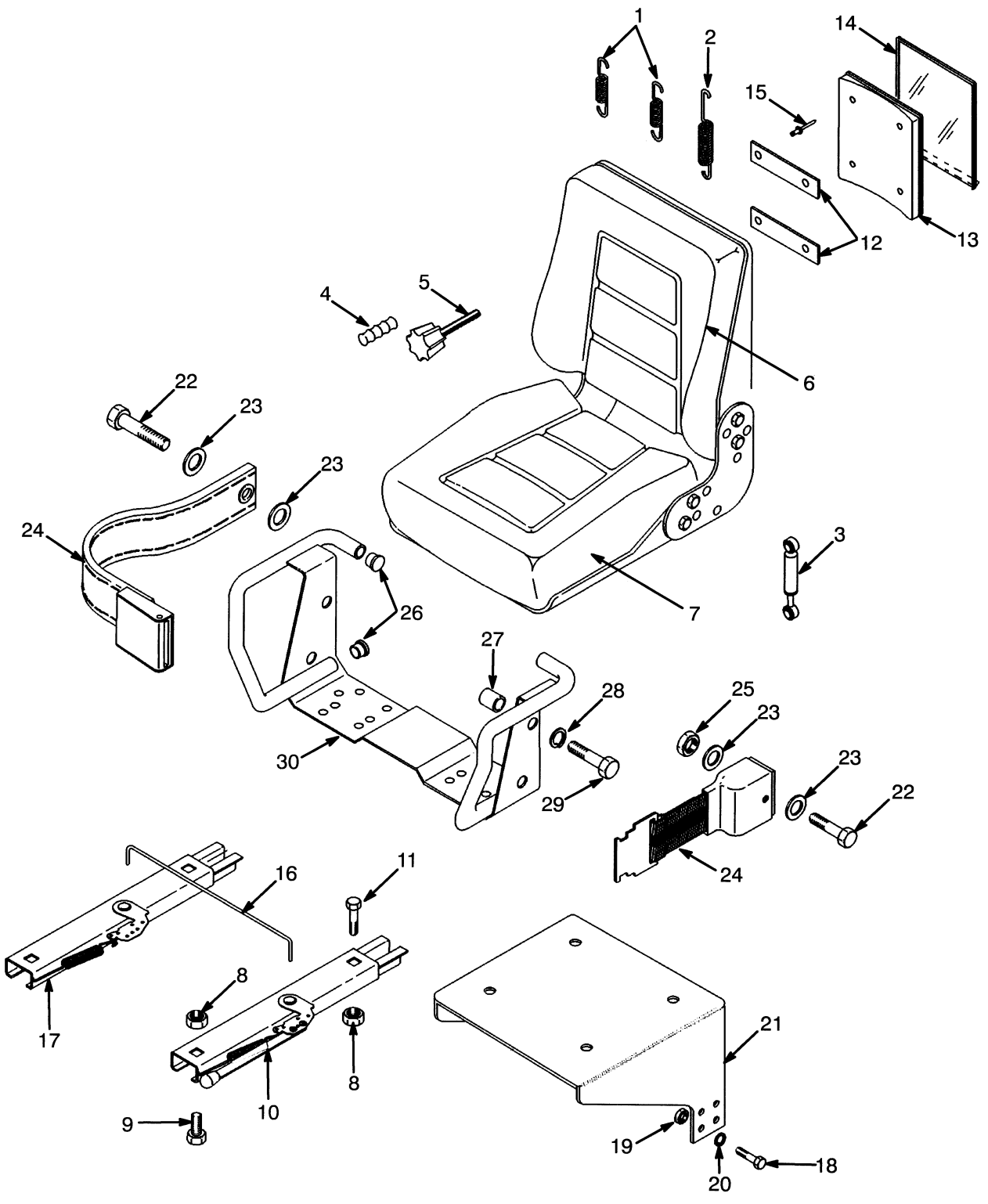

©2010 HYSTER COMPANY

SEMI-SUSPENSION SEAT

ITEM	PART NO.	DESCRIPTION	QTY
	1345826	Seat-Semi Suspension	1
1	326364	Spring	2
2	326363	Support	1
3	326978	Shock Absorber	1
4	326362	Knob	1
5	326365	Spindle (Adjuster)	1
6	326361	Back Cushion (Vinyl)	1
7	326360	Bottom Cushion	1
8	145639	Locknut	8
9	18727	Screw	4
10	335553	Seat Rail (LH)	1
11	18497	Capscrew	4
12	1326337	Spacer	4
13	335989	Information Case	1
14	335991	Cover (Information Case)	1
15	222030	Rivet	4
16	1300107	Rod	1
17	383116	Seat Rail (RH)	1
18	287854	Capscrew	8
19	136692	Nut	8
20	~~388049~~		
	292682	Lockwasher	8
21	1465381	Seat Pan	1
22	379199	Capscrew	2
23	379697	Washer	4
24	1374750	Seat Belt	1
25	379698	Nut	2
26	364854	Plug	4
27	364848	Spacer	2
28	379675	Washer	2
29	379674	Capscrew	2
30	364847	Hip Restraint	1

©2010 HYSTER COMPANY

LABELS (FIGURE 1-16)

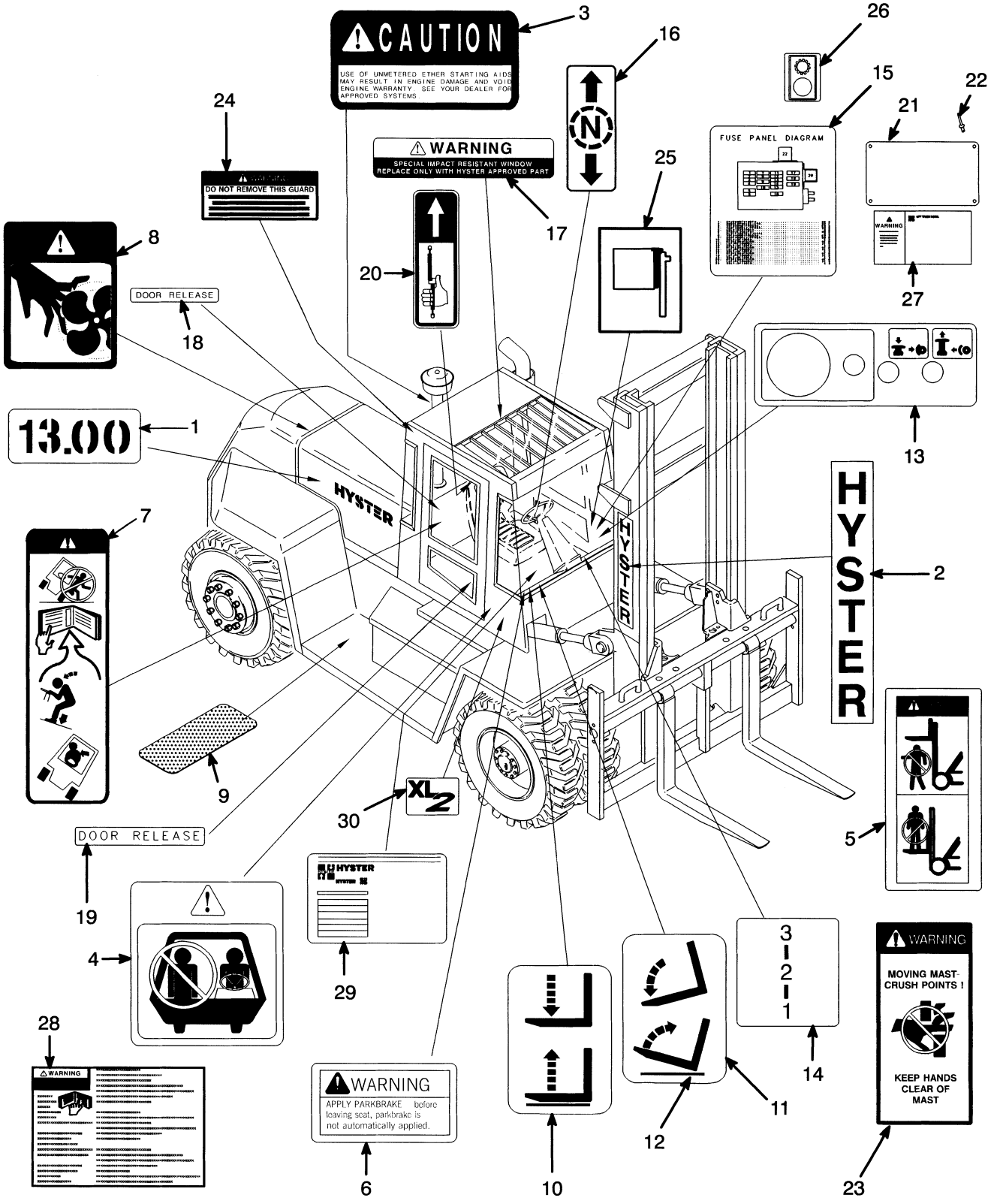

HP120163

©2010 HYSTER COMPANY

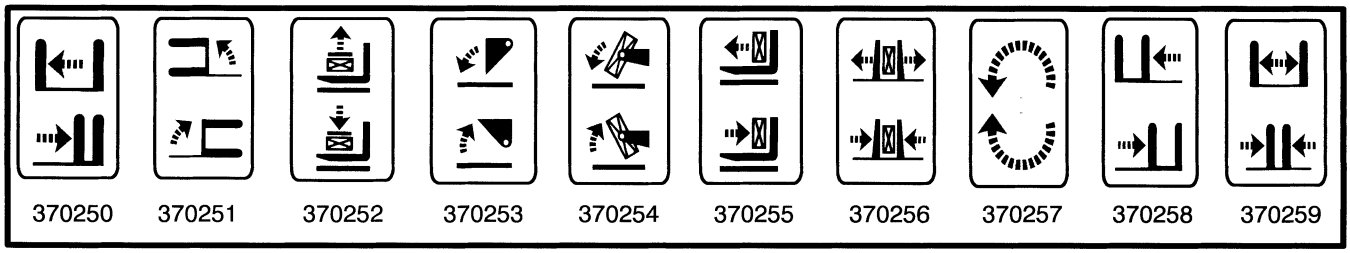

HP120171

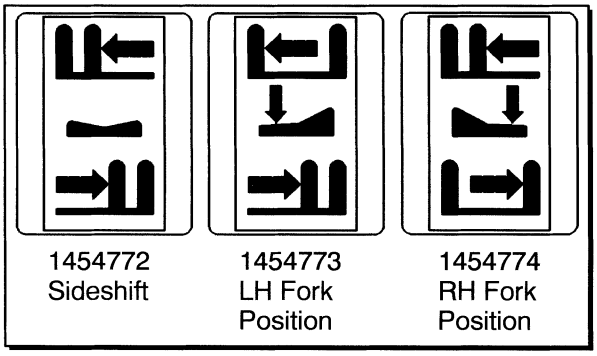

HP120172

LABELS

ITEM	PART NO.	DESCRIPTION	QTY
1	1303476	Label (H300XL)	2
1	1303477	Label (H330XL)	2
1	1303478	Label (H360XL)	2
1	1326815	Label (H330XL-EC)	2
1	1326816	Label (H360XL-EC)	2
2	1347855	Label (Hyster)	2
3	2034459	Label (Ether Warning)	2
4	1330920	Label (No Riders)	2
5	1335126	Label (Mast Warning)	2
6	**d** 1303494	Label (Park Brake)	1
6	**c** 1335146	Label (Park Brake Warning)	1
7	**d** 1335143	Label (Tip Over Warning)	2
7	**c** 1330917	Label (Operator Restraint)	2
8	1345939	Label (Fan Warning)	2
9	239423	Anti-Slip Tread	2
10	1301411	Label (Hoist)	1
11	1301410	Label (Tilt)	1
12	370250	Label (Auxiliary Function - Reach)	1
12	370251	Label (Auxiliary Function - Swing)	1
12	370252	Label (Auxiliary Function - Stabilizer)	1
12	370253	Label (Auxiliary Function - Dump/Scoop)	1
12	370254	Label (Auxiliary Function - Upender)	1
12	370255	Label (Auxiliary Function - Push/Pull)	1
12	370256	Label (Auxiliary Function, Clamp)	1
12	370257	Label (Auxiliary Function, Rotate)	1
12	370258	Label (Auxiliary Function, Side-Shift)	1
12	370259	Label (Auxiliary Function - Fork Spreader)	1
12	1454772	Label (Auxiliary Function - Side-Shift)	1
12	1454773	Label (Auxiliary Function - Fork Positioner) (LH)	1
12	1454774	Label (Auxiliary Function - Fork Positioner) (RH)	1

©2010 HYSTER COMPANY

LABELS

ITEM	PART NO.	DESCRIPTION	QTY
13	**e** 1316540	Label (Air Brake)	1
13	**h** 1347860	Label (Air Brake)	1
14	1301413	Label (Gear Selection)	1
15	**g** 1325613	Label (Fuse Panel)	1
15	**k** 1458323	Label (Fuse Panel)	1
16	1301412	Label (Forward and Reverse)	1
17	1308050	Label (Impact Resistant Window)	1
18	**bi** 377618	Label (Door Release)	2
19	**bf** 1301744	Label (Door Release)	2
19	**bj** 1451416	Label (Door Release)	2
20	1311423	Label (Gas Spring)	1
21	389688	Nameplate	1
22	166818	Rivet	4
23	1346893	Label (Mast Warning)	1
24	**a**	Label-Overhead Guard Impact Rating	1
25	1330576	Label (Container Attachment Load Center)	1
26	**i** 894423	Label (Transmission Warning Light)	1
27	1381125	Label (Nameplate)	1
28	1336605	Label (Operator Warning)	1
29	1534660	Label (Patents and Trademarks)	1
30	1359706	Label (XL2)	2

FOOTNOTES:

a Contact Your Local Yale Dealer
b With Cab
c With Operator Restraint
d Without Operator Restraint
e → S/N D019D01521
f → S/N D019E02261
g → S/N D019E02653
h S/N D019D01522 →
i S/N D019D02377 →
j S/N D019E02262 →
k S/N D019E02654 →

©2010 HYSTER COMPANY

NOTES

©2010 HYSTER COMPANY

HOOD (FIGURE 1-17)
WITHOUT LOW EMISSIONS

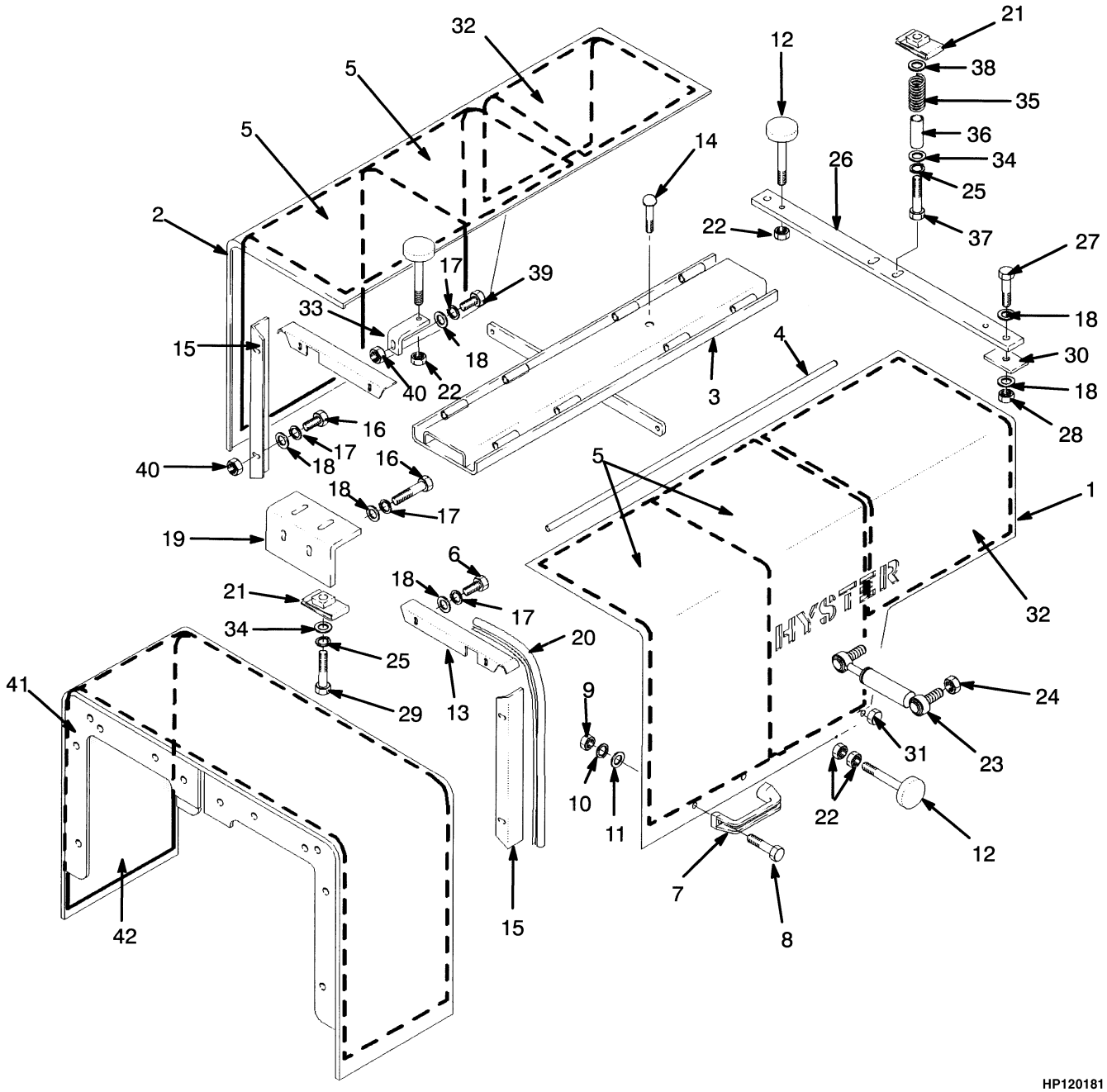

©2010 HYSTER COMPANY

HOOD
WITHOUT LOW EMISSIONS

ITEM	PART NO.	DESCRIPTION	QTY
1	**a** 1325336	Hood (LH)	1
1	**b** 1382762	Hood (LH)	1
2	**a** 1325338	Hood (RH)	1
2	**b** 1382758	Hood (RH)	1
3	1357225	Channel (Non Turbo and LPG)	1
3	1377573	Channel (Turbo)	1
4	376410	Rod	2
5	376441	Sound Liner	4
6	367251	Screw	8
7	362030	Handle	2
8	292501	Capscrew	4
9	136687	Nut	4
10	292680	Washer	4
11	320156	Washer	4
12	367251	Screw	6
13	376447	Bracket (LH)	1
13	376448	Bracket (RH)	1
14	1311346	Fastener	1
15	1303281	Bracket (LH)	1
15	1303282	Bracket (RH)	1
16	136985	Capscrew	20
17	~~388049~~		
	292682	Lockwasher	24
18	296421	Washer	40
19	376400	Bracket	1
20	300088	Seal (Door)	1
21	376397	Retainer	4
22	15055	Nut	8
23	376300	Gas Spring	2
24	239503	Nut	4
25	292681	Lockwasher	4
26	387353	Crossmember	1
27	293639	Capscrew	2
28	316826	Nut	2
29	18498	Capscrew	2
30	376402	Washer	2
31	309666	Plug	2
32	376442	Hood Liner	2
33	376567	Bracket	2
34	320157	Washer	4
35	1301702	Spring	2
36	1301703	Spacer	2
36	894480	Spacer (LPG)	2
37	18516	Capscrew	2
37	18508	Capscrew (LPG)	2
38	296422	Washer	4
39	287860	Capscrew	4
40	136692	Nut	12
41	387348	Plate	1
42	387356	Hood Liner	2

©2010 HYSTER COMPANY

HOOD
WITHOUT LOW EMISSIONS

ITEM	PART NO.	DESCRIPTION	QTY

FOOTNOTES:

a → S/N D019D01722

b S/N D019D01723 →

©2010 HYSTER COMPANY

NOTES

©2010 HYSTER COMPANY

HOOD (FIGURE 1-18)
WITH LOW EMISSIONS (S/N D019D02377 →)

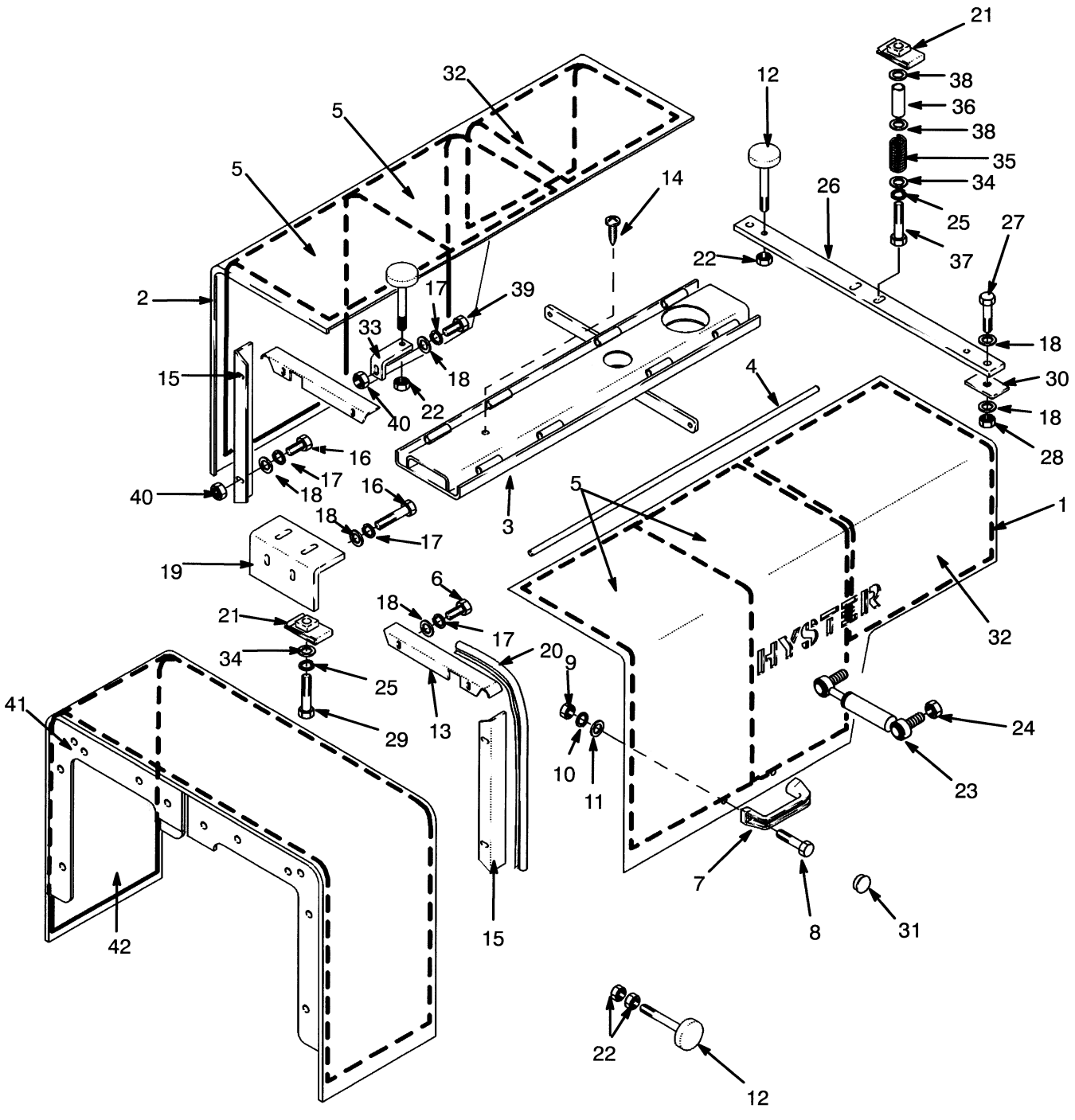

©2010 HYSTER COMPANY

HOOD

WITH LOW EMISSIONS (S/N D019D02377 →)

ITEM	PART NO.	DESCRIPTION	QTY
1	**a** 1382762	Hood (LH)	1
2	**a** 1382758	Hood (RH)	1
3	1455867	Channel	1
4	376410	Rod	2
5	376441	Sound Liner	4
6	367251	Screw	8
7	362030	Handle	2
8	292501	Capscrew	4
9	136687	Nut	4
10	292680	Washer	4
11	320156	Washer	4
12	367251	Screw	6
13	376447	Bracket (LH)	1
13	376448	Bracket (RH)	1
14	1311346	Fastener	1
15	1303281	Bracket (LH)	1
15	1303282	Bracket (RH)	1
16	136985	Capscrew	20
17	~~388049~~		
	292682	Lockwasher	24
18	296421	Washer	40
19	376400	Bracket	1
20	300088	Seal (Door)	1
21	376397	Retainer	4
22	15055	Nut	8
23	376300	Gas Spring	2
24	239503	Nut	4
25	292681	Lockwasher	4
26	387353	Crossmember	1
27	293639	Capscrew	2
28	316826	Nut	2
29	18498	Capscrew	2
30	376402	Washer	2
31	309666	Plug	2
32	376442	Hood Liner	2
33	376567	Bracket	2
34	320157	Washer	4
35	1301702	Spring	2
36	1301703	Spacer	2
37	18516	Capscrew	2
38	296422	Washer	4
39	287860	Capscrew	4
40	136692	Nut	12
41	387348	Plate	1
42	387356	Hood Liner	2

FOOTNOTES:

a S/N D019D01723 →

©2010 HYSTER COMPANY

COUNTERWEIGHT (FIGURE 1-19)

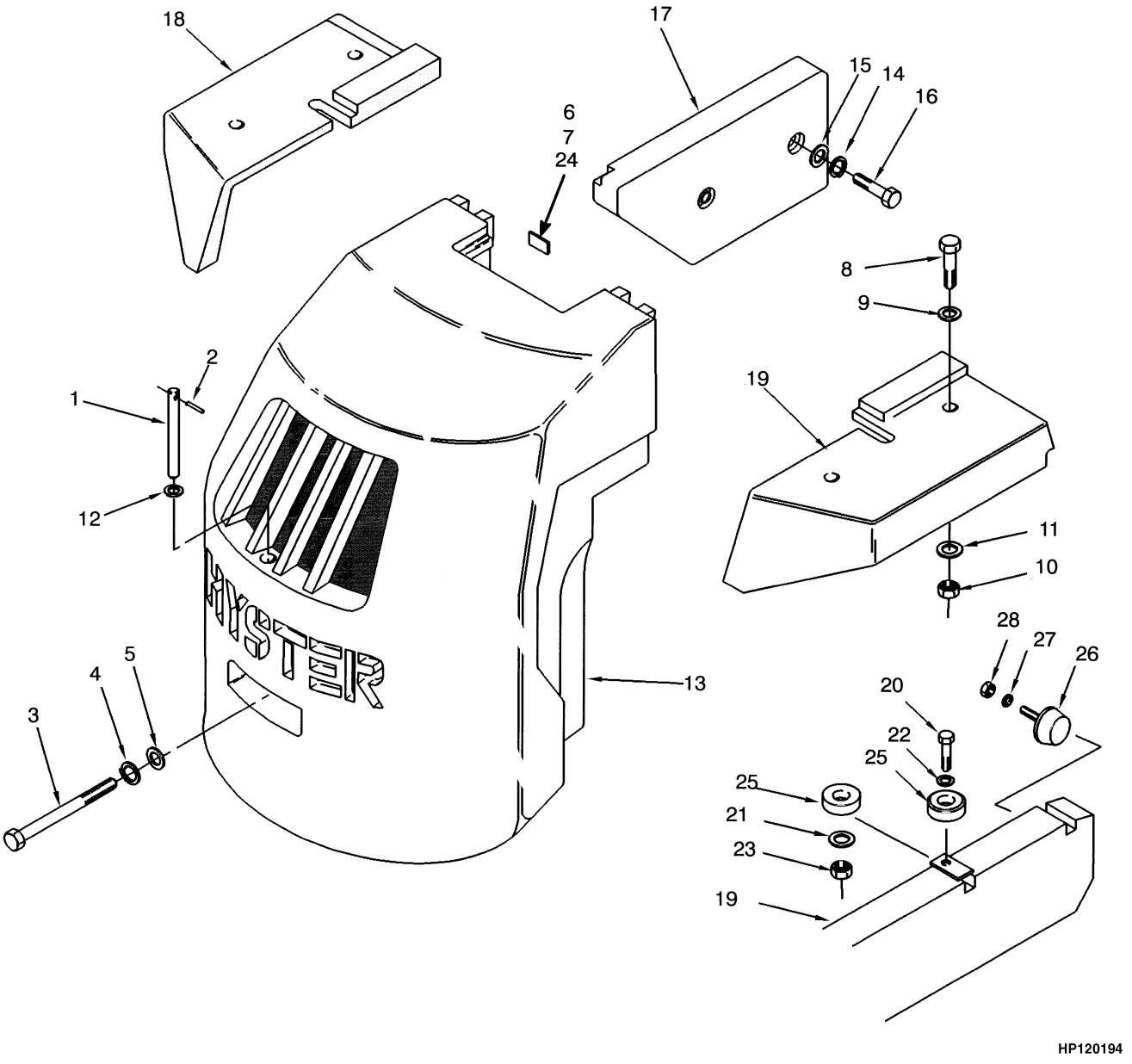

©2010 HYSTER COMPANY

COUNTERWEIGHT

KEY:
A: H300XL
B: H330XL
C: H360XL
D: H360XL-EC

ITEM	PART NO.	DESCRIPTION	QTY A	QTY B	QTY C	QTY D
1	376318	Tow Pin	1	1	1	1
2	1458191	Pin	1	1	1	1
3	**a** 376319	Capscrew	1	1	..	..
3	**c** 1453470	Capscrew	1	1	..	..
3	**a** 1303274	Capscrew	..	..	1	1
3	**c** 1453469	Capscrew	..	..	1	1
4	**a** 149531	Washer	1	1	1	1
4	**c** 221786	Washer	2	2	2	2
5	**a** 15168	Lockwasher	1	1	1	1
5	**c** 15170	Lockwasher	1	1	1	1
6	352909	Plate	AR	AR	AR	AR
7	280472	Sealant	AR	AR	AR	AR
8	292598	Capscrew	8	8	8	8
9	296431	Washer	4	4	4	4
10	316829	Nut	4	4	4	4
11	1301086	Washer	4	4	4	4
12	15189	Washer	1	1	1	1
13	376245	Counterweight	1	1	..	..
13	387358	Counterweight	..	..	1	1
14	15166	Lockwasher	..	..	4	4
15	38556	Washer	..	..	4	4
16	18678	Capscrew	..	..	4	4
17	1359712	Counterweight	..	2	2	2
18	1303271	Fender (RH)	1	1	1	1
18	1303272	Fender (LH)	1	1	1	1
19	**b** 1331561	Fender (RH)	..	..	..	1
19	**d** 816136	Slab (RH)	..	..	..	1
19	**b** 1331562	Fender (LH)	..	..	..	1
19	**d** 816137	Slab (LH)	..	..	..	1
20	**b** 292566	Capscrew	..	..	..	4
20	**d** 293696	Capscrew	..	..	..	4
21	**b** 292685	Lockwasher	..	..	..	4
21	**d** 816138	Washer	..	..	..	4
22	1331575	Washer	..	..	..	4
23	**b** 292600	Nut	..	..	..	4
23	**d** 316828	Nut	..	..	..	4
24	816043	Plate	AR	AR	AR	AR
25	**d** 1373270	Isolator	..	..	..	4
26	**d** 816231	Stop	..	..	..	4
27	**d** 216877	Nut	..	..	..	4
28	**d** 296130	Nut	..	..	..	4

©2010 HYSTER COMPANY

FOOTNOTES:

a → S/N D019D02422
b → S/N D019E01931
c S/N D019D02423 →
d S/N D019E01932 →

©2010 HYSTER COMPANY

NOTES

©2010 HYSTER COMPANY

FAN (FIGURE 1-20)

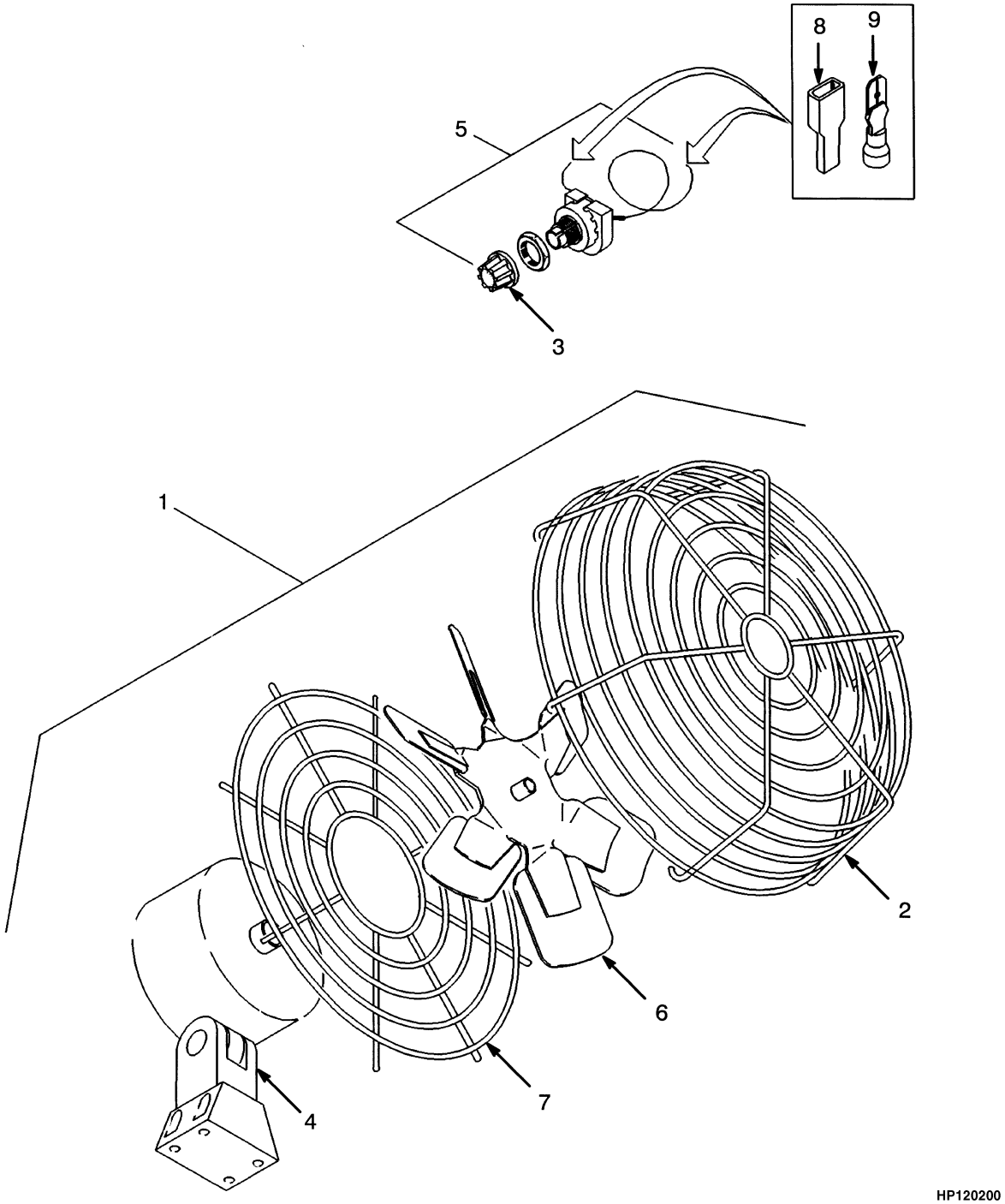

©2010 HYSTER COMPANY

FAN

ITEM	PART NO.	DESCRIPTION	QTY
1	1311213	Fan	1
2	. . . . .	Guard (Front)	1
3	. . . . .	Knob	1
4	. . . . .	Motor	1
5	. . . . .	Switch	1
6	. . . . .	Fan	1
7	. . . . .	Guard (Rear)	1
8	181045	Connector Body	1
9	134810	Terminal	1

©2010 HYSTER COMPANY

WINDSHIELD WASHER (FIGURE 1-21)

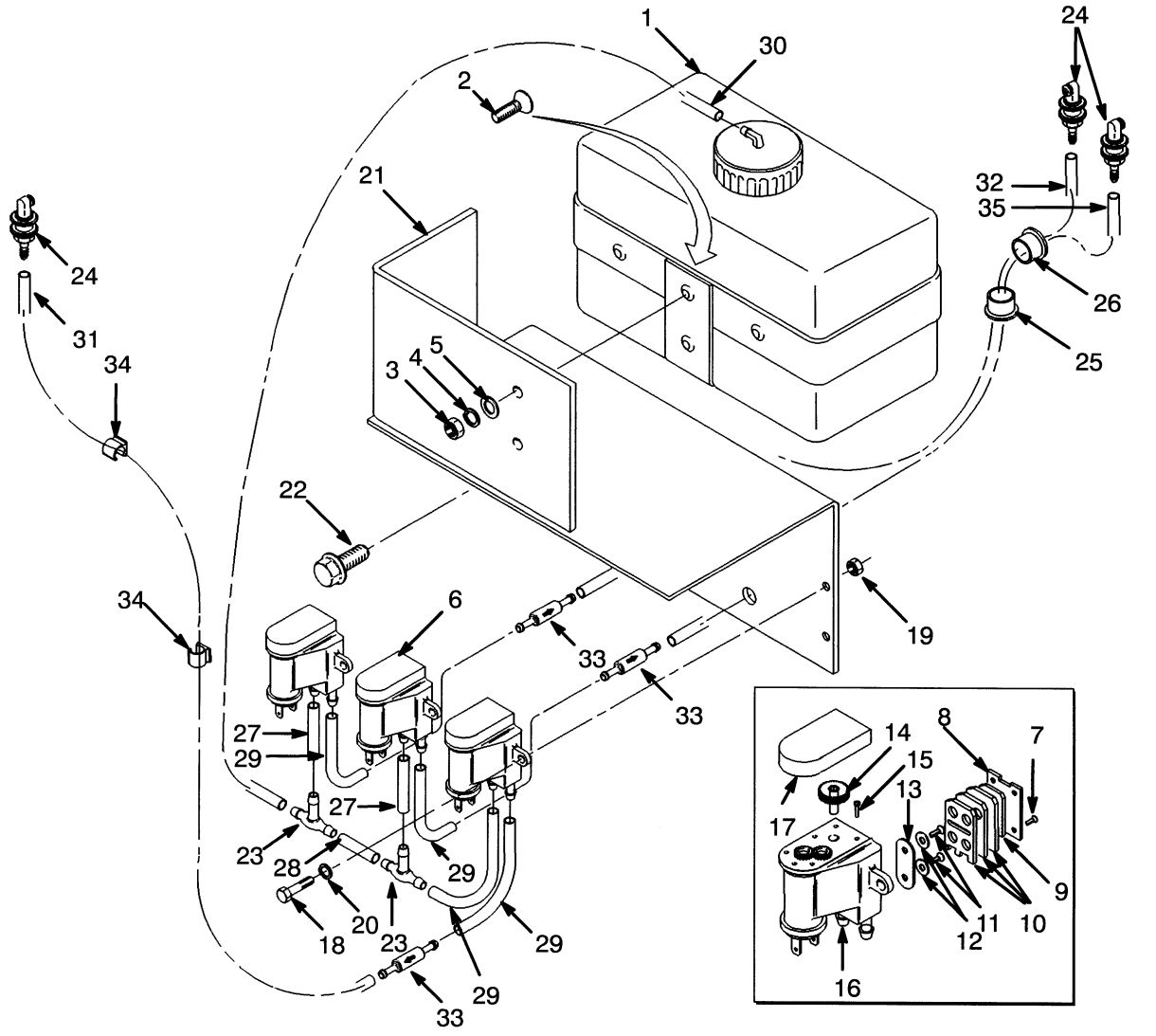

HP120201

©2010 HYSTER COMPANY

WINDSHIELD WASHER

ITEM	PART NO.	DESCRIPTION	QTY
1	1311267	Reservoir	1
2	296472	Screw	2
3	136687	Nut	2
4	292680	Washer	2
5	197068	Washer	2
6	1301684	Pump	3
7	. . . . .	Screw	4
8	. . . . .	Plate	1
9	. . . . .	Shim	1
10	. . . . .	Plate	3
11	. . . . .	Screw	2
12	. . . . .	Pad	2
13	. . . . .	Membrane	1
14	. . . . .	Gear	1
15	. . . . .	Screw	2
16	. . . . .	Motor	1
17	. . . . .	Cap	1
18	302036	Screw	6
19	292668	Nut	6
20	292679	Washer	6
21	1325604	Bracket	1
22	329067	Screw	2
23	1311260	Fitting	2
24	1301686	Nozzle	3
25	286901	Bushing	1
26	1301424	Bushing	1
27	1311295	Hose	2
28	1311296	Hose	1
29	1311297	Hose	4
30	1326772	Hose	1
31	**a** 86520	Hose	1
31	**b** 1467588	Hose	1
32	1311300	Hose	1
33	1301685	Check Valve	3
34	1301727	Clamp	2
35	**b** 1467586	Hose	1

FOOTNOTES:

a → 7/1999

b 7/1999 →

©2010 HYSTER COMPANY

NOTES

©2010 HYSTER COMPANY

2 ENGINE ASSEMBLY

SECTION 2
ENGINE ASSEMBLY

DESCRIPTION	PAGE
AIR DUCTS	
DIESEL TURBO	2-100
AUXILIARY DRIVE GEAR	
DIESEL (→ S/N D019D01756 INC. 1758 EXC. 1753)	2-48
DIESEL (S/N D019D01757 → INC. 1753 EXC. 1758)	2-52
COOLING	
DIESEL TURBO AND NON TURBO	2-12
LPG	2-16
CRANKSHAFT AND PISTON	
DIESEL NON TURBO	2-28
DIESEL TURBO - WITH AND WITHOUT LOW EMISSIONS	2-30
CYLINDER BLOCK	
DIESEL NON TURBO	2-22
DIESEL TURBO WITH LOW EMISSIONS (S/N D019D02377 →)	2-26
DIESEL TURBO WITHOUT LOW EMISSIONS	2-24
LPG	2-104
CYLINDER HEAD	
DIESEL NON TURBO	2-32
DIESEL TURBO WITH LOW EMISSIONS (S/N D019D02377 →)	2-36
DIESEL TURBO WITHOUT LOW EMISSIONS	2-34
CYLINDER HEAD AND VALVES	
LPG	2-106
EXHAUST	
DIESEL NON TURBO	2-6
DIESEL TURBO	2-8
LPG	2-10
FLYWHEEL	
DIESEL	2-18
LPG	2-20
INTAKE MANIFOLD	
LPG	2-110
LUBRICANT SYSTEM	
DIESEL TURBO	2-102
MANIFOLD	
DIESEL NON TURBO	2-84
DIESEL TURBO WITH LOW EMISSIONS	2-88
DIESEL TURBO WITHOUT LOW EMISSIONS	2-86
OIL FILTER	
DIESEL NON TURBO (→ S/N D019D01756 INC. 1758 EXC. 1753)	2-74
DIESEL NON TURBO (S/N D019D01757 → INC. 1753 EXC. 1758)	2-75
DIESEL TURBO WITH LOW EMISSIONS	2-82
DIESEL TURBO WITHOUT LOW EMISSIONS (→ U647451C)	2-78
DIESEL TURBO WITHOUT LOW EMISSIONS (U647452C →)	2-80
OIL PAN	
DIESEL NON TURBO	2-56
DIESEL TURBO WITH LOW EMISSIONS	2-62
DIESEL TURBO WITHOUT LOW EMISSIONS	2-60
OIL PUMP AND PAN	
LPG	2-112

©2010 HYSTER COMPANY

SECTION 2
ENGINE ASSEMBLY

DESCRIPTION	PAGE
POWERTRAIN MOUNT	2-4
TIMING COVER	
PERKINS - TIER II ENGINE	2-46
TIMING GEAR	
DIESEL NON TURBO	2-38
DIESEL TURBO - WITH AND WITHOUT LOW EMISSIONS	2-42
TURBOCHARGER	
DIESEL TURBO	2-96
DIESEL TURBO (S/N D019D02377 →)	2-98
VALVE COVER	
DIESEL NON TURBO	2-64
DIESEL TURBO WITH LOW EMISSIONS (S/N D019D02377 →)	2-72
DIESEL TURBO WITHOUT LOW EMISSIONS	2-68
WATER PUMP	
DIESEL (→ S/N D019D01756 INC. 1758 EXC. 1753)	2-90
DIESEL (S/N D019D01757 → INC. 1753 EXC. 1758)	2-92
DIESEL TURBO WITH LOW EMISSIONS (S/N D019D02377 →)	2-94
LPG	2-114

©2010 HYSTER COMPANY

NOTES

©2010 HYSTER COMPANY

POWERTRAIN MOUNT (FIGURE 2-1)

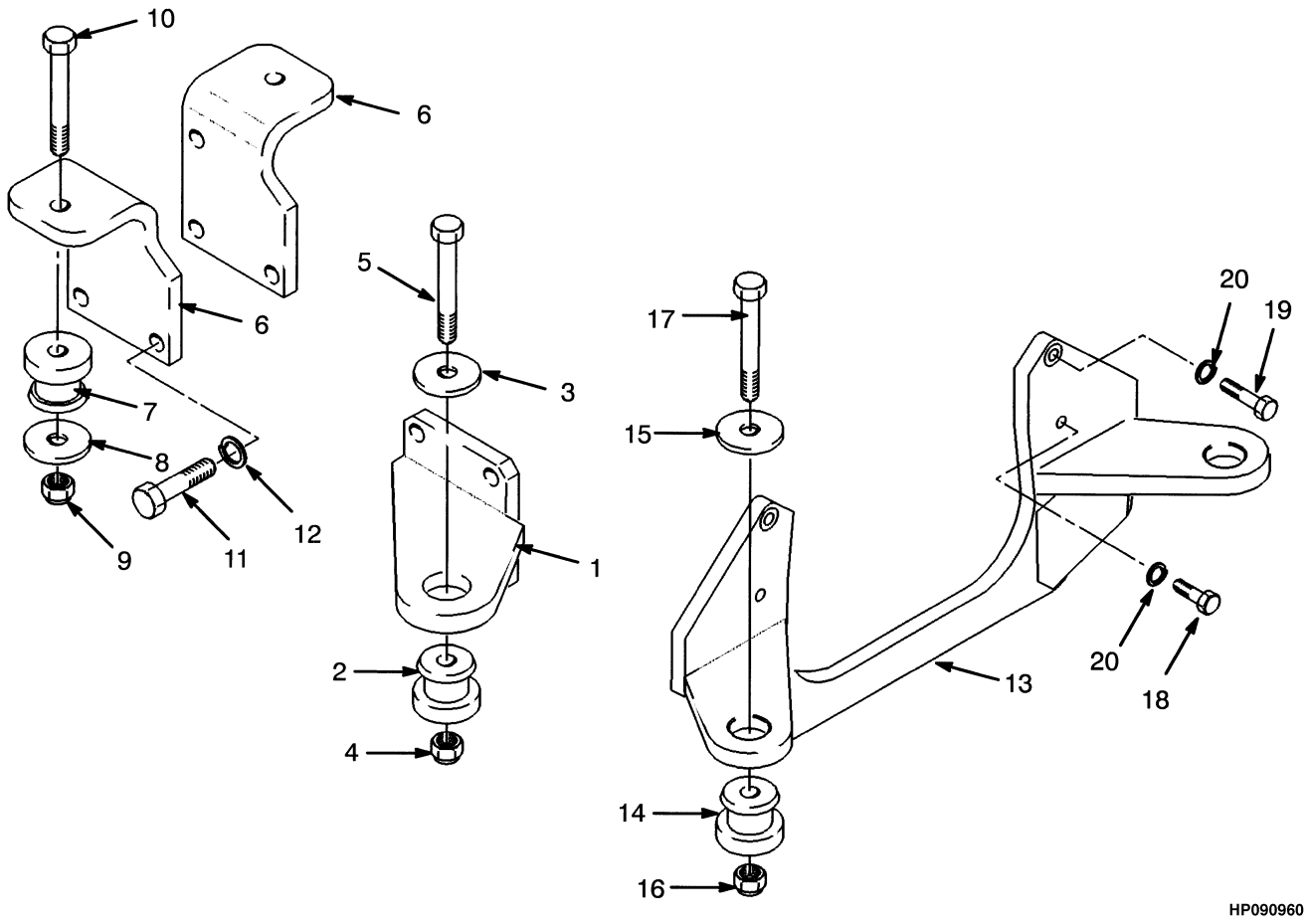

©2010 HYSTER COMPANY

POWERTRAIN MOUNT

KEY:
A: Diesel Engine
B: LPG Engine

ITEM	PART NO.	DESCRIPTION	QTY A	QTY B
1	**a** 1301605	Mount	2	..
1	**b** 1394108	Mount	2	..
2	**a** 173307	Motor Mount (Engine)	2	..
2	**b** 1393708	Isolator	2	..
3	1452404	Washer	2	..
4	221357	Locknut	2	..
5	**a** 18608	Capscrew	2	..
5	**b** 18612	Capscrew	1	..
5	1480310	Capscrew	1	..
6	1327682	Bracket	2	..
7	**a** 376981	Mount (Transmission)	2	..
7	**b** 1393707	Isolator	2	..
8	**a** 159368	Washer	2	..
8	**b** 1452404	Washer	2	..
9	**a** 221358	Locknut	2	..
9	**b** 221357	Locknut	2	..
10	**a** 18628	Capscrew	2	..
10	**b** 18612	Capscrew	2	..
11	292581	Capscrew	6	..
12	292687	Lockwasher	6	..
13	1452406	Mount	..	1
14	**a** 173307	Motor Mount (Engine)	..	2
14	**b** 1393708	Isolator	..	2
15	1452404	Washer	..	2
16	221357	Locknut	..	2
17	**a** 18611	Capscrew	..	2
17	**b** 18612	Capscrew	..	2
18	131136	Capscrew	..	3
19	163180	Capscrew	..	1
20	15157	Lockwasher	..	4

FOOTNOTES:

a → S/N D019D02310 INC. 2312-2314, 2318

b S/N D019D02311 → EXC. 2312-2314, 2318

©2010 HYSTER COMPANY

EXHAUST (FIGURE 2-2)
DIESEL NON TURBO

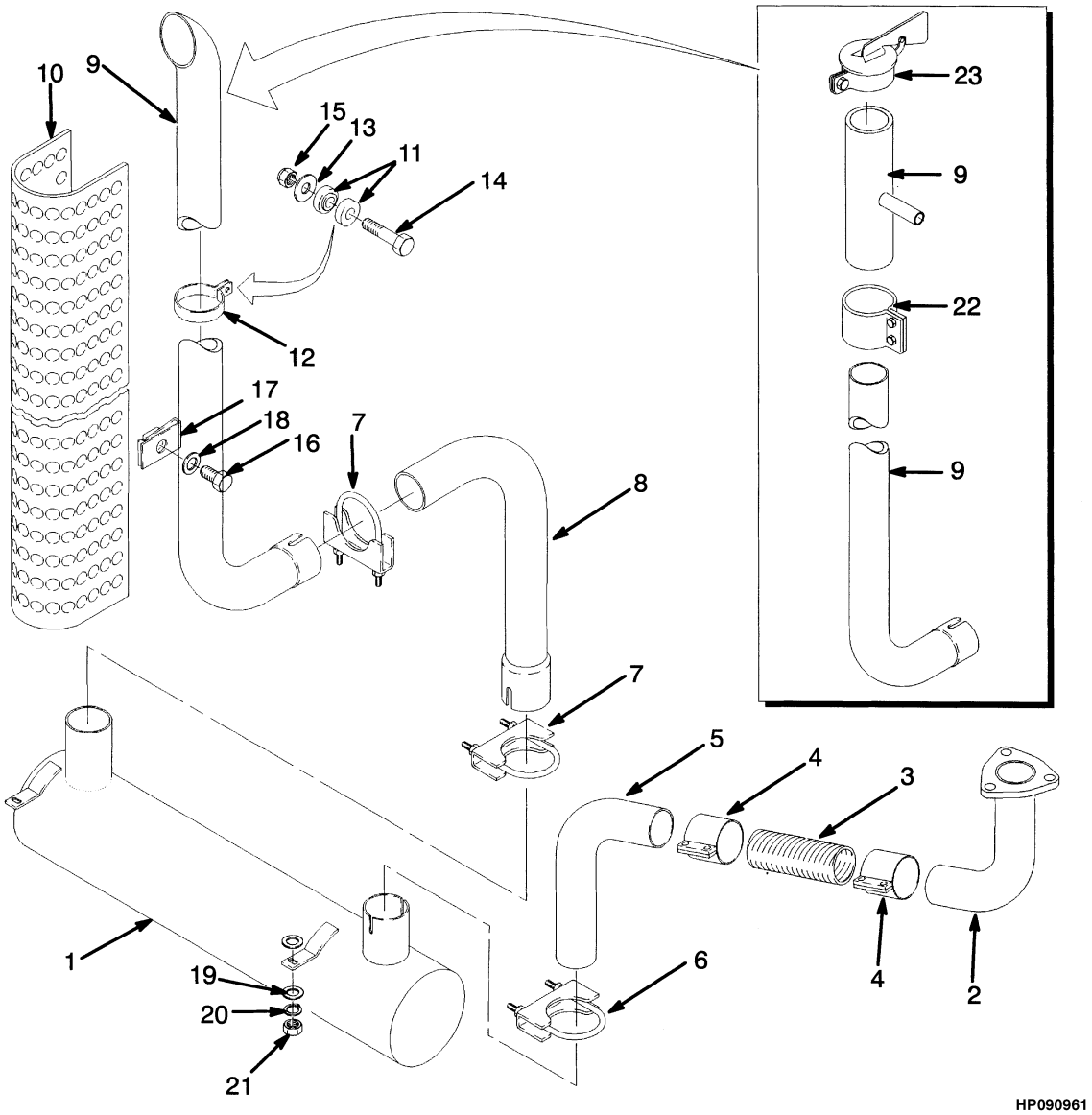

©2010 HYSTER COMPANY

EXHAUST
DIESEL NON TURBO

ITEM	PART NO.	DESCRIPTION	QTY
1	1327706	Muffler	1
2	376271	Exhaust Pipe	1
3	1301586	Flex Tube (Flex)	1
4	270825	Clamp	2
5	376270	Exhaust Pipe	1
6	30372	Clamp	1
7	30374	Clamp	2
8	1327702	Exhaust Pipe	1
9	**b** 1325553	Exhaust Pipe	1
9	**a** 1358337	Exhaust Pipe	1
10	1377561	Exhaust Shield	1
11	223216	Bushing	4
12	376255	Clamp	2
13	15176	Washer	2
14	16815	Capscrew	2
15	145641	Locknut (Prevailing Torque)	2
16	16374	Capscrew	3
17	376397	Retainer	3
18	18515	Washer	3
19	320159	Washer	2
20	~~388049~~		
	292682	Lockwasher	2
21	136692	Nut	2
22	**a** 270825	Clamp	1
23	**a** 1361200	Rain Cap	1

FOOTNOTES:

a Aspirated

b Non Aspirated

©2010 HYSTER COMPANY

EXHAUST (FIGURE 2-3)
DIESEL TURBO

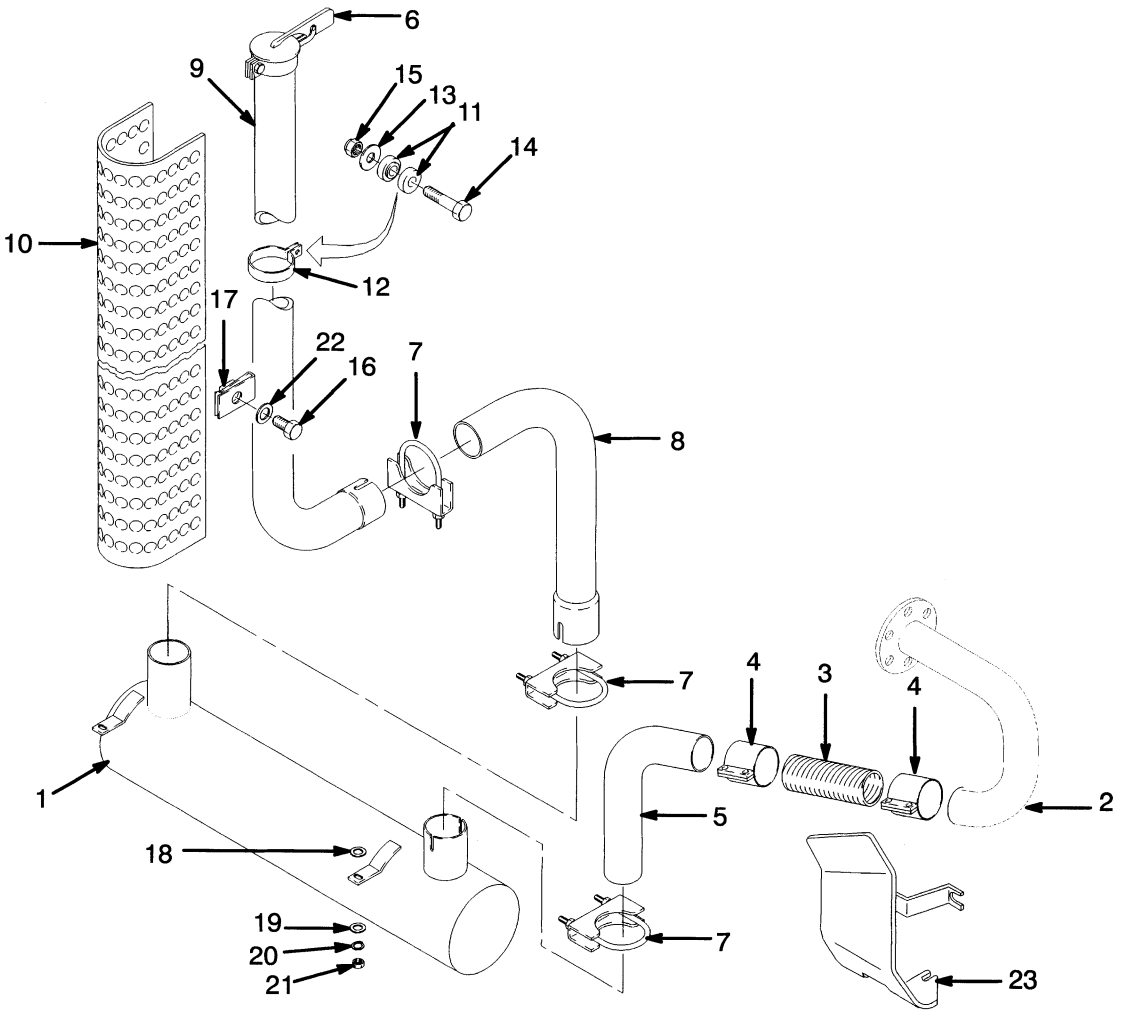

©2010 HYSTER COMPANY

EXHAUST
DIESEL TURBO

ITEM	PART NO.	DESCRIPTION	QTY
1	1377556	Muffler	1
2	1377558	Exhaust Pipe	1
2	**a** 1451856	Exhaust Pipe (With Emissions)	1
3	1377562	Flex Tube	1
4	270826	Clamp	2
5	1377559	Exhaust Pipe	1
6	1361200	Rain Cap (Aspirated)	1
7	30375	Clamp	3
8	1377589	Exhaust Pipe	1
9	1377590	Exhaust Pipe (Non Aspirated)	1
9	1377601	Exhaust Pipe (Aspirated)	1
10	1377561	Exhaust Shield	1
11	223216	Bushing	4
12	1377560	Clamp	2
13	15176	Washer	2
14	16815	Capscrew	2
15	145641	Locknut (Prevailing Torque)	2
16	16374	Capscrew	3
17	376397	Retainer	3
18	15178	Washer	3
19	320159	Washer	2
20	~~388049~~		
	292682	Lockwasher	2
21	136692	Nut	2
22	18515	Washer	3
23	1457151	Heat Shield	1

FOOTNOTES:

a S/N D019D237705 →

©2010 HYSTER COMPANY

EXHAUST (FIGURE 2-4)
LPG

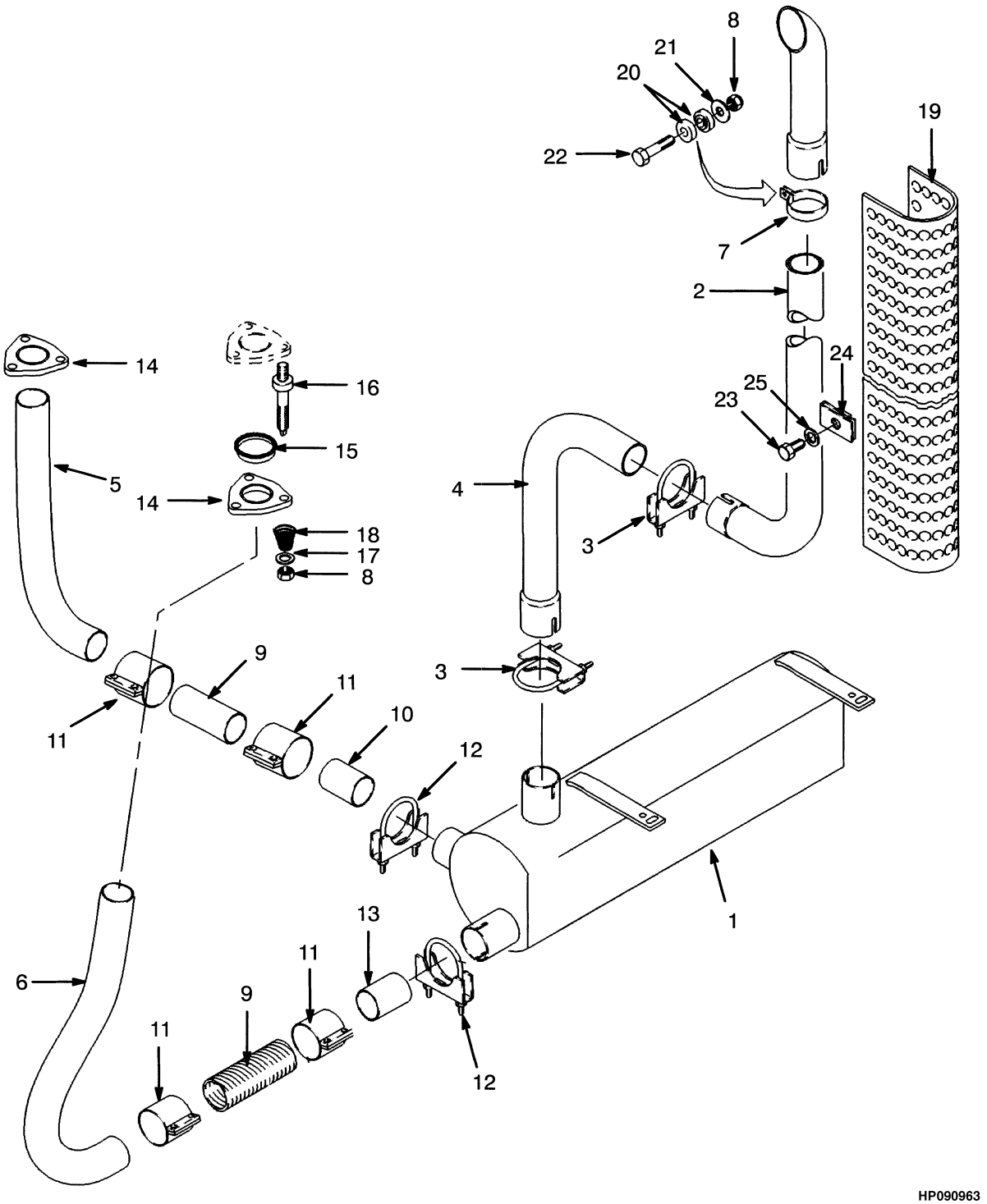

©2010 HYSTER COMPANY

EXHAUST
LPG

ITEM	PART NO.	DESCRIPTION	QTY
1	894452	Muffler	1
2	894467	Exhaust Pipe	1
3	30374	Clamp	3
4	894468	Exhaust Pipe	1
5	894471	Exhaust Pipe (LH)	1
6	894472	Exhaust Pipe (RH)	1
7	376255	Clamp	2
8	145641	Locknut (Prevailing Torque)	8
9	894459	Flex Tube	2
10	894470	Exhaust Pipe (LH)	1
11	270825	Clamp	4
12	30372	Clamp	2
13	894469	Exhaust Pipe	1
14	894454	Flange	2
15	894526	Seal	2
16	894527	Stud	6
17	320160	Washer	6
18	1380803	Spring	6
19	1377561	Exhaust Shield	1
20	223216	Bushing	4
21	15170	Lockwasher	2
22	16815	Capscrew	2
23	16374	Capscrew	3
24	376397	Retainer	3
25	18515	Washer	3

©2010 HYSTER COMPANY

COOLING (FIGURE 2-5)
DIESEL TURBO AND NON TURBO

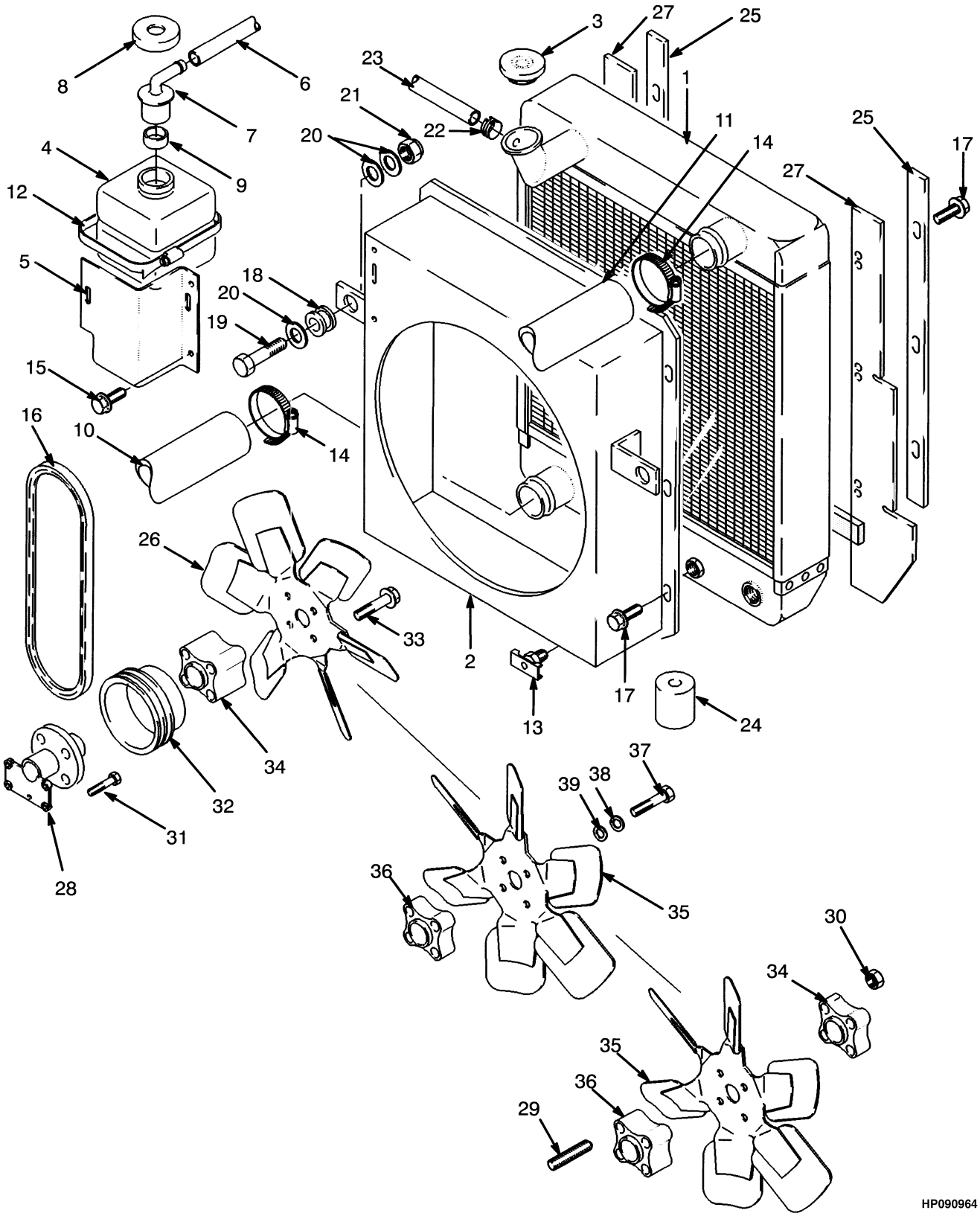

©2010 HYSTER COMPANY

COOLING
DIESEL TURBO AND NON TURBO

KEY:
A: Without Low Emissions
B: With Low Emissions

ITEM	PART NO.	DESCRIPTION	QTY A	QTY B
1	**c** 376478	Radiator	1	1
1	**d** 1377551	Radiator	1	1
2	**c** 376479	Shroud	1	..
2	**d** 1377552	Shroud	..	1
3	178899	Radiator Cap (Radiator)	1	1
4	344432	Reservoir	1	1
5	1301442	Bracket	1	1
6	339735	Hose	1	1
7	345453	Outlet (Reservoir)	1	1
8	345454	Cap	1	1
9	336550	Bushing	1	1
10	376876	Radiator Hose	1	1
11	376772	Radiator Hose	1	1
12	340204	Strap	1	1
13	12815	Drain Valve (Drain)	1	1
14	119236	Clamp	4	4
15	124119	Screw	2	2
16	268225	V-Belt Set (Matched Set of 2)	1	1
16	**d** 1455265	V-Belt	1	..
17	157233	Screw	12	12
18	216735	Grommet	2	2
19	287837	Capscrew	2	2
20	320162	Washer	6	6
21	300937	Nut	2	2
22	353310	Clamp	2	2
23	376480	Hose	1	1
24	376649	Isolator	1	1
25	1301441	Plate	2	2
26	**c** 376018	Fan (Puller) (19 in.)	1	..
26	**c** 1303263	Fan (19 in.) (Optional)	1	..
26	**de** 1377554	Fan (Puller) (20 in.)	1	1
26	**h** 833694	Fan (Puller) (20 in.)	1	1
27	1301314	Seal	2	2
27	261780	Seal	AR	AR
28	**a** 1318935	Housing	1	..
28	**adg** 1451609	Fan Housing	..	1
29	**dg** 1454155	Stud	..	4
30	**dg** 1454156	Locknut	..	4
31	**a** 1307913	Screw	4	..
31	**ag** 1306365	Screw	..	4
32	**af** 1318937	Pulley	1	..
32	**d** 1451611	Fan Pulley	..	1
33	1306368	Screw	4	4
34	**d** 1377907	Spacer	1	..
34	**df** 1394111	Spacer	..	1

©2010 HYSTER COMPANY

COOLING
DIESEL TURBO AND NON TURBO

KEY:
A: Without Low Emissions
B: With Low Emissions

ITEM	PART NO.	DESCRIPTION	QTY A	QTY B
35	**d** 1377592	Fan (Pusher) (20 in.)	1	1
35	**c** 1303376	Fan (Pusher) (19 in.)	1	..
36	**bc** 1311360	Adapter (20 in.)	1	1
36	**df** 1394110	Extension (20 in.)	..	1
36	**h** 1454154	Extension (20 in.)	..	1
37	**bc** 293623	Capscrew	4	4
38	**bc** 292681	Lockwasher	4	4
39	**bc** 320157	Washer	4	4

FOOTNOTES:

a Included with Engine
b Included with Pusher Fan
c Non Turbo Engine
d Turbo Engine
e → 3/1998
f S/N D019D02377 ↔ 3/1998
g S/N D019D02377 →
h 3/1998 →

©2010 HYSTER COMPANY

NOTES

©2010 HYSTER COMPANY

COOLING (FIGURE 2-6)
LPG

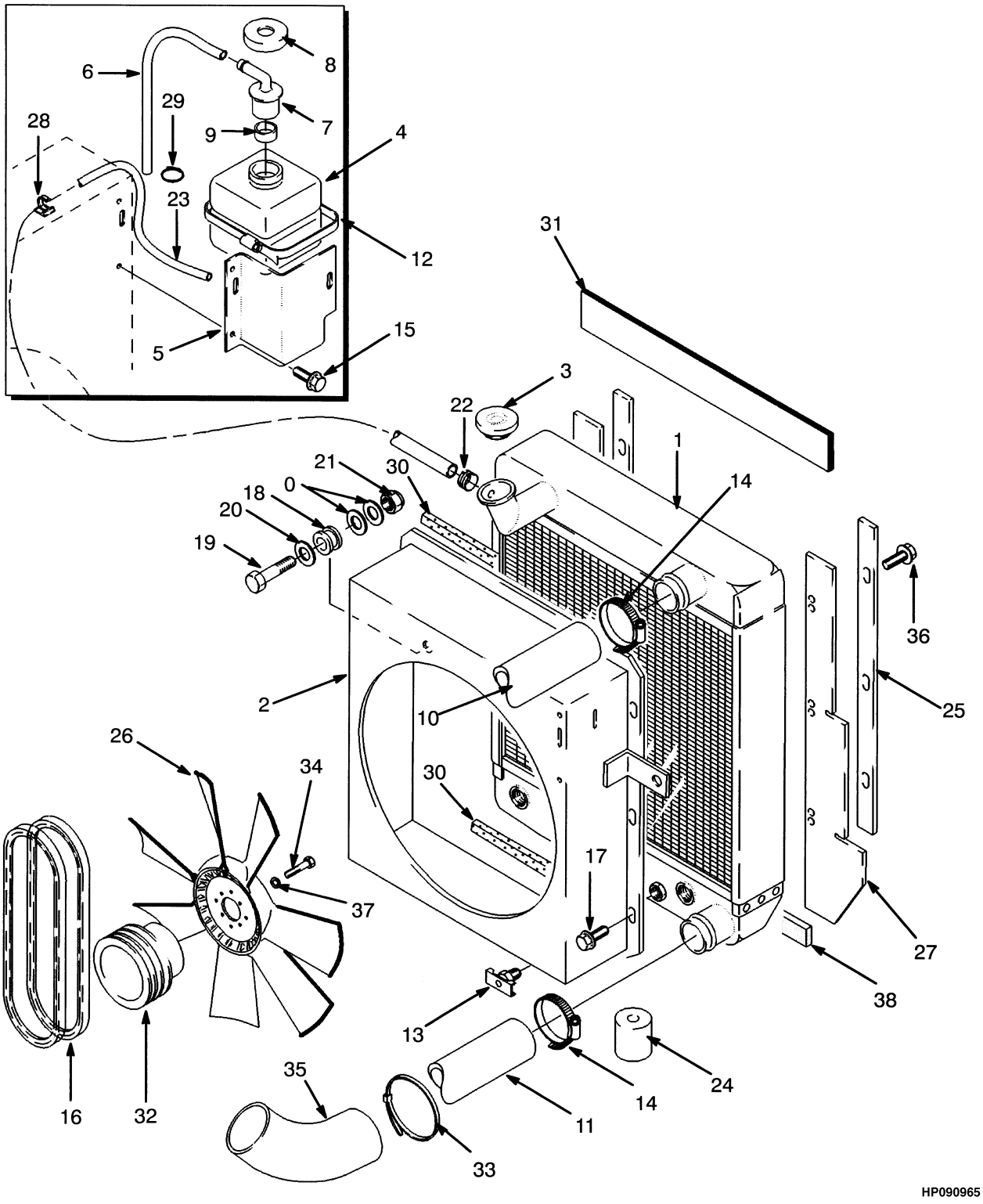

©2010 HYSTER COMPANY

COOLING
LPG

ITEM	PART NO.	DESCRIPTION	QTY
1	894633	Radiator	1
2	894634	Shroud	1
3	178899	Radiator Cap (Radiator)	1
4	344432	Reservoir	1
5	894639	Bracket	1
6	339735	Hose	1
7	345453	Outlet (Reservoir)	1
8	345454	Cap	1
9	336550	Bushing	1
10	894638	Radiator Hose	1
11	191492	Radiator Hose	1
12	340204	Strap	1
13	12815	Drain Valve (Drain)	1
14	119236	Clamp	4
15	124119	Screw	2
16	1520833	V-Belt	2
17	139589	Screw	12
18	216735	Grommet	2
19	287837	Capscrew	2
20	320162	Washer	6
21	300937	Nut	2
22	353310	Clamp	2
23	1302957	Hose	1
24	376649	Isolator	1
25	894640	Plate	2
26	894643	Fan	1
27	894629	Seal	2
28	1301727	Clamp	2
29	137852	Strap Clamp	1
30	261162	Foam Tape (Sponge Rubber)	AR
31	894630	Liner (Top Rear)	1
32	894642	Pulley	1
33	129563	Strap Clamp	3
34	287831	Capscrew	4
35	894641	Sleeve	1
36	157233	Screw	6
37	320157	Washer	4
38	1303390	Tape	1

©2010 HYSTER COMPANY

FLYWHEEL (FIGURE 2-7)
DIESEL

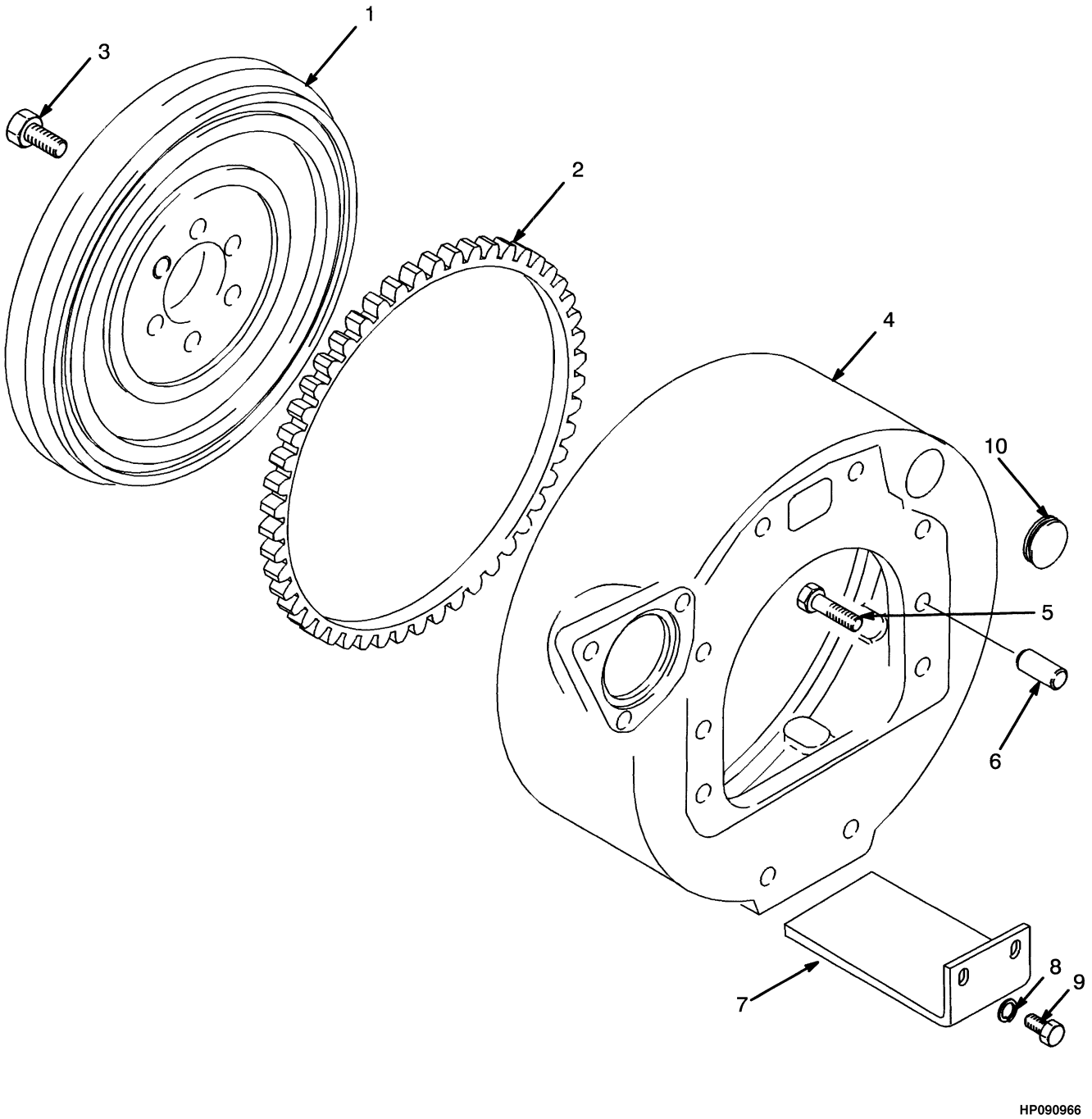

©2010 HYSTER COMPANY

FLYWHEEL
DIESEL

ITEM	PART NO.	DESCRIPTION	QTY
1	1327699	Flywheel	1
2	146049	Ring Gear	1
3	93260	Bolt	6
4	376116	Housing	1
4	894931	Flywheel Housing (Flywheel)	1
5	293629	Capscrew	6
5	251099	Loctite	AR
6	186420	Dowel	2
7	376117	Dust Cover (Dust)	1
8	15134	Washer	2
9	16870	Capscrew	2
10	1301609	Plug	2
10	894956	Plug	1

©2010 HYSTER COMPANY

FLYWHEEL (FIGURE 2-8)
LPG

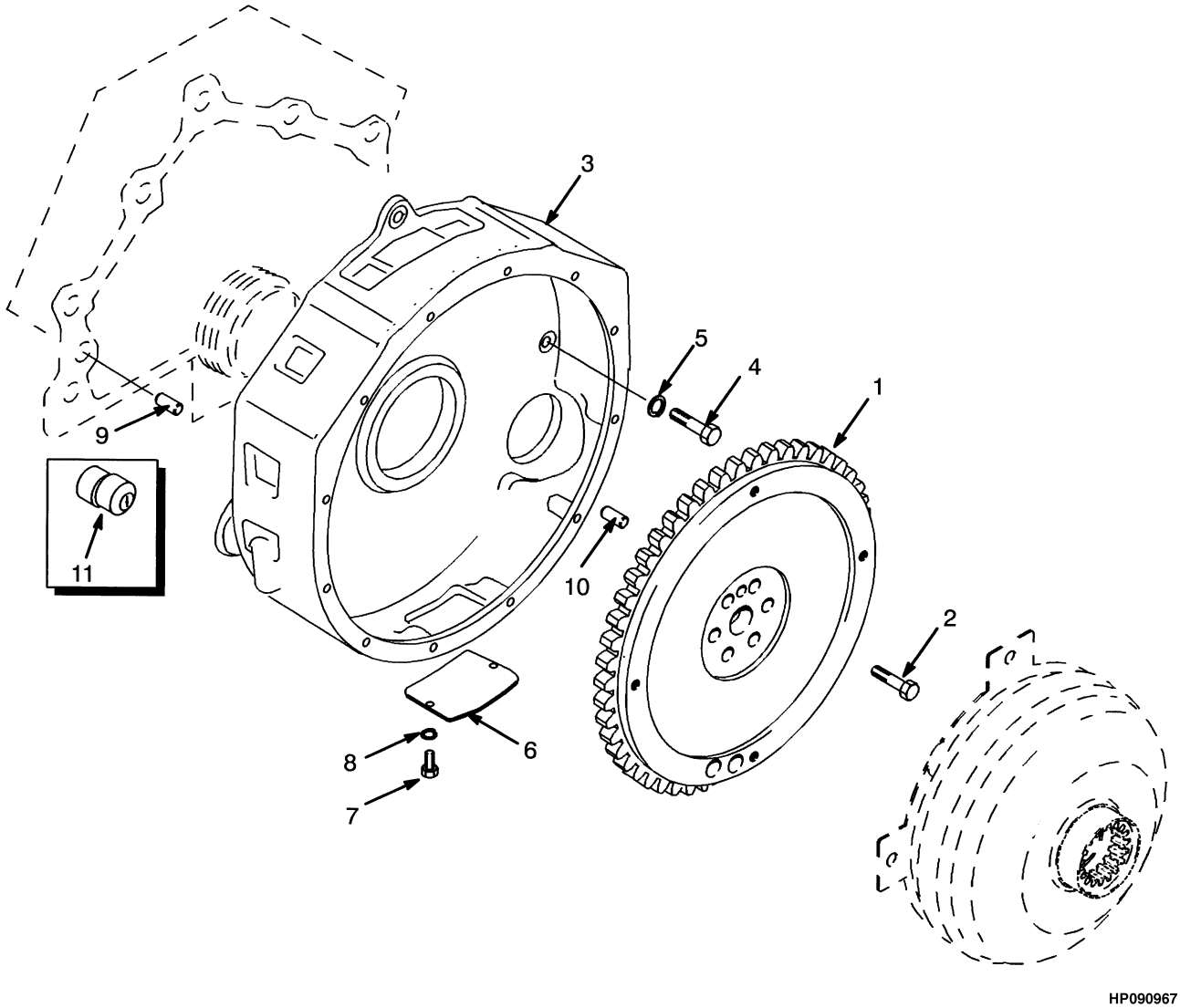

©2010 HYSTER COMPANY

FLYWHEEL
LPG

ITEM	PART NO.	DESCRIPTION	QTY
1	894544	Flywheel	1
1	894880	Flywheel	1
1	143061	Ring Gear	1
1	894879	Ring Gear	1
2	221533	Capscrew	6
3	894517	Housing	1
4	16805	Capscrew	7
5	15156	Lockwasher	7
6	158753	Plate	1
7	16374	Capscrew	2
8	15155	Lockwasher	2
9	1301609	Plug	1
10	375571	Pin	2
11	270329	Dowel	2

©2010 HYSTER COMPANY

CYLINDER BLOCK (FIGURE 2-9)
DIESEL NON TURBO

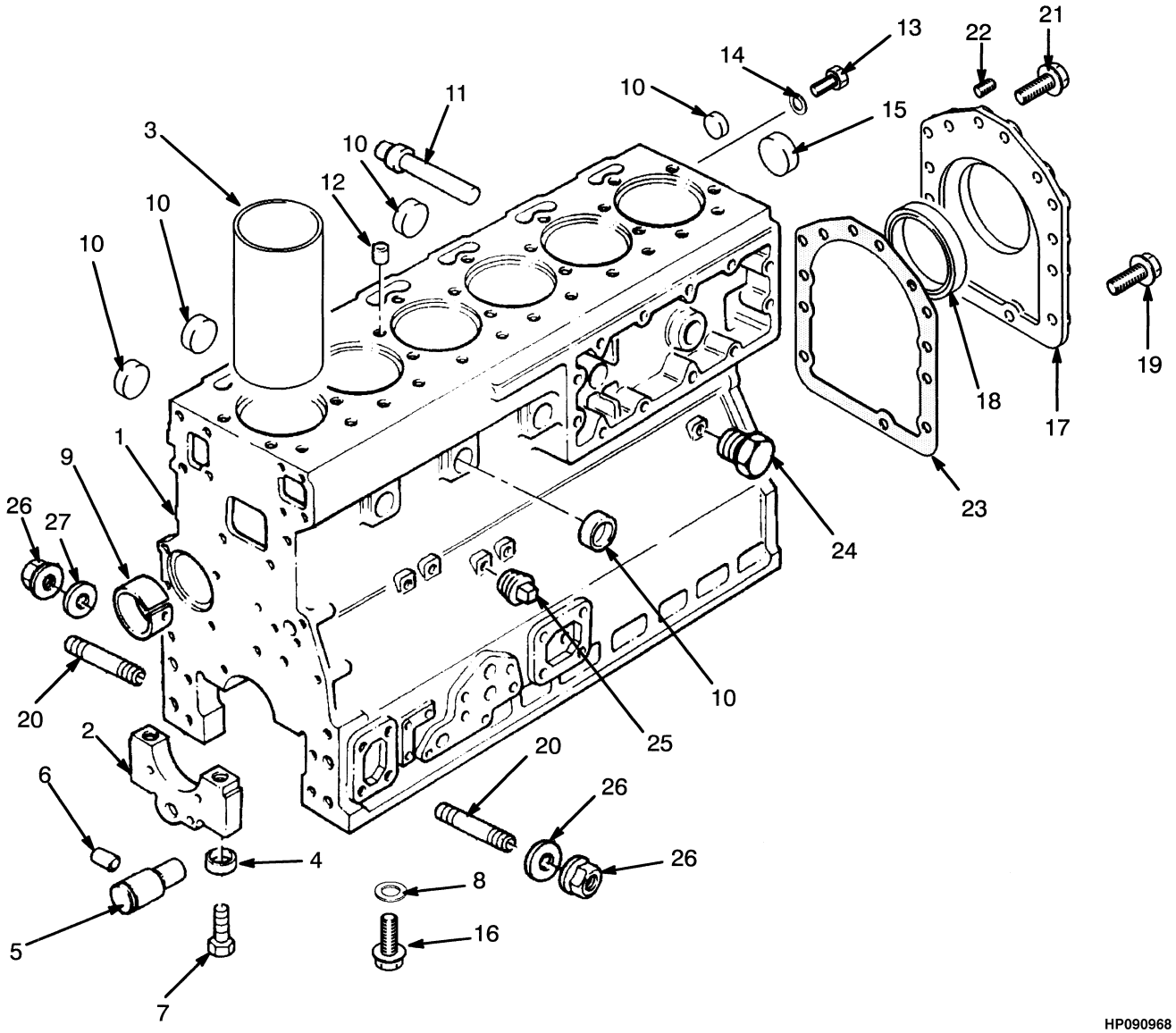

©2010 HYSTER COMPANY

CYLINDER BLOCK
DIESEL NON TURBO

ITEM	PART NO.	DESCRIPTION	QTY
	a 376001	Engine Assy-Diesel	1
	b 1376008	Engine Assy-Diesel (Without Sound Reduction)	1
	b 1376009	Engine Assy-Diesel (With Sound Reduction)	1
1	1382565	Cylinder Block	1
2	. . . . .	Bearing Cup	5
3	1305696	Cylinder Liner	6
4	99576	Thimble	14
5	1380755	Shaft	1
6	1380253	Pin	1
7	16794	Capscrew	14
8	152605	Spacer	6
9	257603	Bushing	1
10	980727	Plug	17
11	365854	Plug	1
12	992393	Plug	1
13	161385	Plug	1
14	984632	Washer	1
15	1305697	Plug	1
16	16794	Capscrew	6
17	1369077	Housing	1
18	350397	Seal	1
19	1382061	Screw	2
20	1319060	Stud	8
21	386459	Screw	12
22	158139	Dowel	2
23	350397	Seal	1
24	245800	Plug	1
25	15483	Fitting	2
26	1380266	Nut	8
27	1380264	Washer	8
	1379738	Kit-Gasket (Bottom)	1

FOOTNOTES:

a → S/N D019D01756 INC. 1758 EXC. 1753

b S/N D019D01757 → INC. 1753 EXC. 1758

©2010 HYSTER COMPANY

CYLINDER BLOCK (FIGURE 2-10)
DIESEL TURBO WITHOUT LOW EMISSIONS

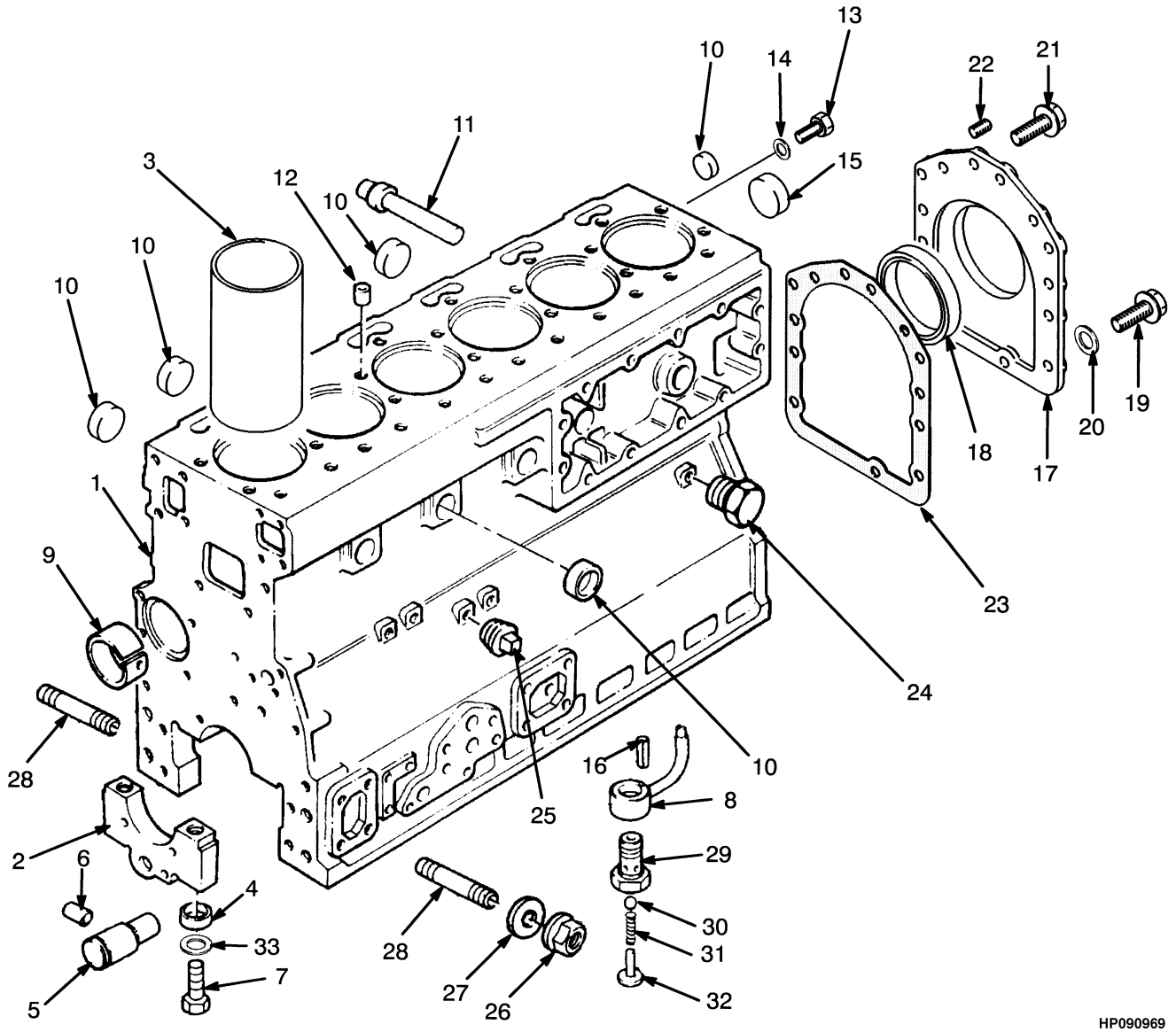

©2010 HYSTER COMPANY

CYLINDER BLOCK
DIESEL TURBO WITHOUT LOW EMISSIONS

ITEM	PART NO.	DESCRIPTION	QTY
	1377550	Engine Assy-Diesel	1
1	1382060	Kit-Cylinder Block	1
2	. . . . .	Bearing Cup	5
3	1305696	Cylinder Liner	6
4	99576	Thimble	14
5	1380755	Shaft	1
6	1380253	Pin	1
7	16794	Capscrew	14
8	361271	Jet	6
9	257603	Bushing	1
10	980727	Plug	17
11	365854	Plug	1
12	992393	Plug	1
13	161385	Plug	1
14	984632	Washer	1
15	1305697	Plug	1
16	1311058	Dowel	6
17	1369077	Housing	1
18	350397	Seal	1
19	1369081	Screw	2
20	328043	Washer	2
21	386459	Screw	12
22	158139	Dowel	2
23	1379734	Gasket	1
24	369485	Plug	1
25	15483	Fitting	2
26	1380266	Nut	8
27	1380264	Washer	8
28	1319060	Stud	8
29	1311054	Valve	6
30	1311055	Ball	1
31	1311056	Spring	1
32	1311057	Retainer	1
33	301836	Washer	14
	1379738	Kit-Gasket (Bottom)	1

©2010 HYSTER COMPANY

CYLINDER BLOCK (FIGURE 2-11)

DIESEL TURBO WITH LOW EMISSIONS (S/N D019D02377 →)

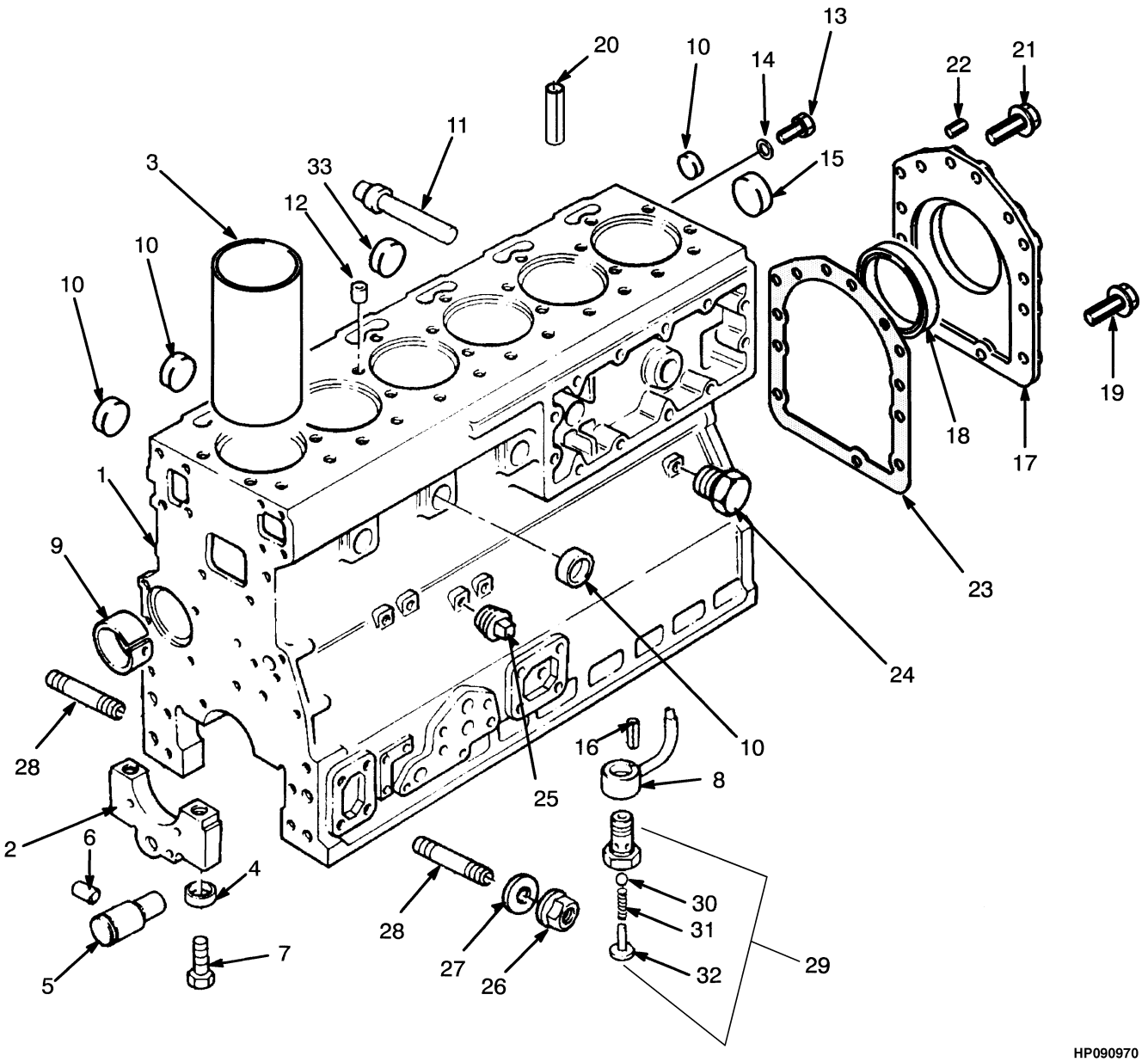

©2010 HYSTER COMPANY

CYLINDER BLOCK

DIESEL TURBO WITH LOW EMISSIONS (S/N D019D02377 →)

ITEM	PART NO.	DESCRIPTION	QTY
	1395975	Engine Assy-Diesel	1
1	. . . . .	Cylinder Block	1
2	. . . . .	Bearing Cup	5
3	1451624	Liner	6
4	99576	Thimble	14
5	1380755	Shaft	1
6	1380253	Pin	1
7	16794	Capscrew	14
8	361271	Jet	6
9	1451625	Bushing	1
10	385531	Plug	12
11	365854	Plug	1
12	992393	Plug	1
13	161385	Plug	1
14	984632	Washer	1
15	1388387	Plug	1
16	1311058	Dowel	6
17	1369077	Housing	1
18	350397	Seal	1
19	1382061	Screw	2
20	1451627	Dowel	2
21	386459	Screw	12
22	158139	Dowel	2
23	1379734	Gasket	1
24	245800	Plug	1
25	15483	Fitting	2
26	1380266	Nut	8
27	1380264	Washer	8
28	1319060	Stud	8
29	1311054	Valve	6
30	1311055	Ball	1
31	1311056	Spring	1
32	1311057	Retainer	1
33	161383	Plug	1
	1453064	Kit-Gasket (Low Emissions)	1
	1452861	Kit-Cylinder Block	1

©2010 HYSTER COMPANY

CRANKSHAFT AND PISTON (FIGURE 2-12)
DIESEL NON TURBO

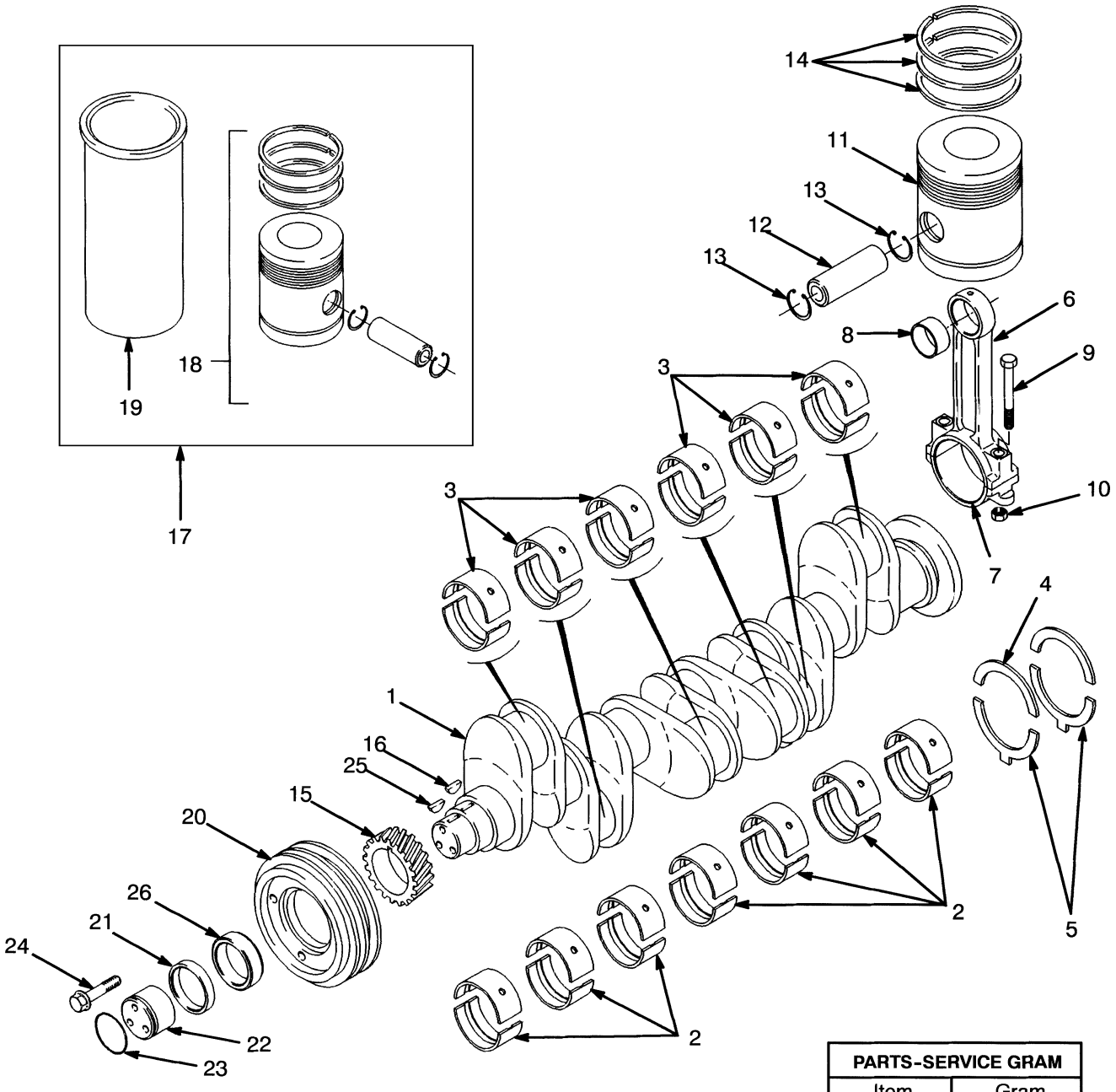

PARTS-SERVICE GRAM	
Item	Gram
11	A-A-18 (E)

HP090971

©2010 HYSTER COMPANY

CRANKSHAFT AND PISTON
DIESEL NON TURBO

ITEM	PART NO.	DESCRIPTION	QTY
	a 376001	Engine Assy-Diesel	1
	b 1376008	Engine Assy-Diesel (Without Sound Reduction)	1
	b 1376009	Engine Assy-Diesel (With Sound Reduction)	1
1	**a** 303741	Crankshaft	1
1	**b** 1318906	Crankshaft	1
2	1318910	Bearing Set (Standard)	1
2	1318907	Kit-Crankshaft Bearing (0.010 in.)	1
2	1318908	Kit-Crankshaft Bearing (0.020 in.)	1
2	1318909	Kit-Crankshaft Bearing (0.030 in.)	1
3	159865	Piston Rod Bearing (Standard)	1
3	159866	Piston Rod Bearing (0.010 in.)	1
3	159867	Piston Rod Bearing (0.020 in.)	1
3	159868	Piston Rod Bearing (0.030 in.)	1
4	842799	Washer	2
4	161296	Washer (0.007 in.)	2
5	842800	Washer	2
5	161297	Thrust Washer (0.007 in.)	2
6	161440	Kit-Piston Rod	6
6	1458329	Thimble	2
7	. . . . .	Cap	1
8	99668	Bearing	1
9	1306350	Bolt	2
10	99663	Nut	2
11	. . . . .	Piston Kit	6
12	. . . . .	Pin	1
13	992003	Snap Ring	2
14	1309832	Kit-Piston Ring	6
15	1305706	Gear	1
16	99610	Key	1
17	**a** 1319062	Kit-Piston	6
18	**a** 1319063	Kit-Piston	1
19	1305696	Cylinder Liner	1
20	**b** 1318960	Pulley	1
20	**b** 1380267	Pulley (Non-Turbo)	1
21	302711	Cam	1
22	301791	Thrust Block	1
23	302712	O-Ring	1
24	302713	Screw	3
25	59184	Woodruff Key	1
26	1318961	Spacer	1

FOOTNOTES:

a → S/N D019D01756 INC. 1758 EXC. 1753

b S/N D019D01757 → INC. 1753 EXC. 1758

©2010 HYSTER COMPANY

CRANKSHAFT AND PISTON (FIGURE 2-13)
DIESEL TURBO — WITH AND WITHOUT LOW EMISSIONS

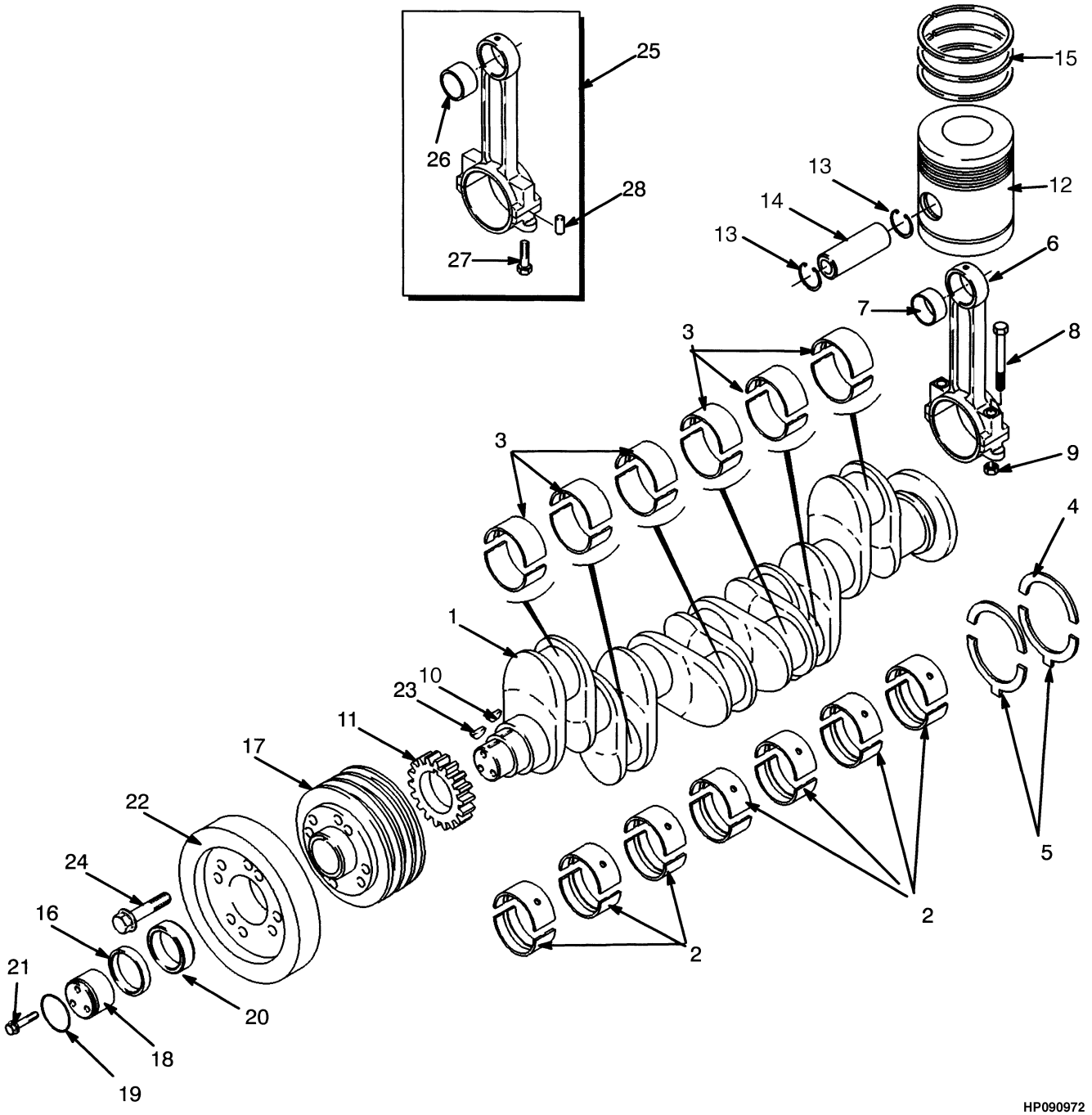

©2010 HYSTER COMPANY

CRANKSHAFT AND PISTON

DIESEL TURBO – WITH AND WITHOUT LOW EMISSIONS

ITEM	PART NO.	DESCRIPTION	QTY
	1377550	Engine Assy-Diesel	1
	a 1395975	Engine Assy-Diesel	1
1	1382063	Crankshaft	1
2	1318910	Bearing Set (Standard)	1
2	1318907	Kit-Crankshaft Bearing (0.010 in.)	1
2	1318908	Kit-Crankshaft Bearing (0.020 in.)	1
2	1318909	Kit-Crankshaft Bearing (0.030 in.)	1
3	1382069	Piston Rod Bearing (Standard)	1
3	1382064	Piston Rod Bearing (0.010 in.)	1
3	1382065	Piston Rod Bearing (0.020 in.)	1
3	1382066	Piston Rod Bearing (0.030 in.)	1
4	842799	Washer (Standard)	2
4	161296	Washer (0.007 in.)	2
5	842800	Washer (Standard)	2
5	161297	Thrust Washer (0.007 in.)	2
6	. . . . .	Connecting Rod	6
6	1458329	Thimble	2
7	303748	Bushing	1
8	1306350	Bolt	2
9	99663	Nut	2
10	99610	Key (Woodruff)	1
11	1305706	Gear	1
12	1508301	Kit-Piston	6
13	139820	Snap Ring	2
14	. . . . .	Pin	6
15	1391231	Kit-Piston Ring	6
16	302711	Cam	1
17	1382464	Pulley (Turbo)	1
18	301791	Thrust Block	1
19	302712	O-Ring	1
20	1318961	Spacer	1
21	302713	Screw	3
22	1382462	Damper	1
23	59184	Woodruff Key	1
24	1382463	Screw	8
25	**a** 1451601	Kit-Piston Rod	6
26	**a** 1451602	Bushing	1
27	**a** 1451603	Bolt	2
28	**a** 1451604	Dowel	2

FOOTNOTES:

a S/N D019D02377 → (With Low Emissions)

©2010 HYSTER COMPANY

CYLINDER HEAD (FIGURE 2-14)
DIESEL NON TURBO

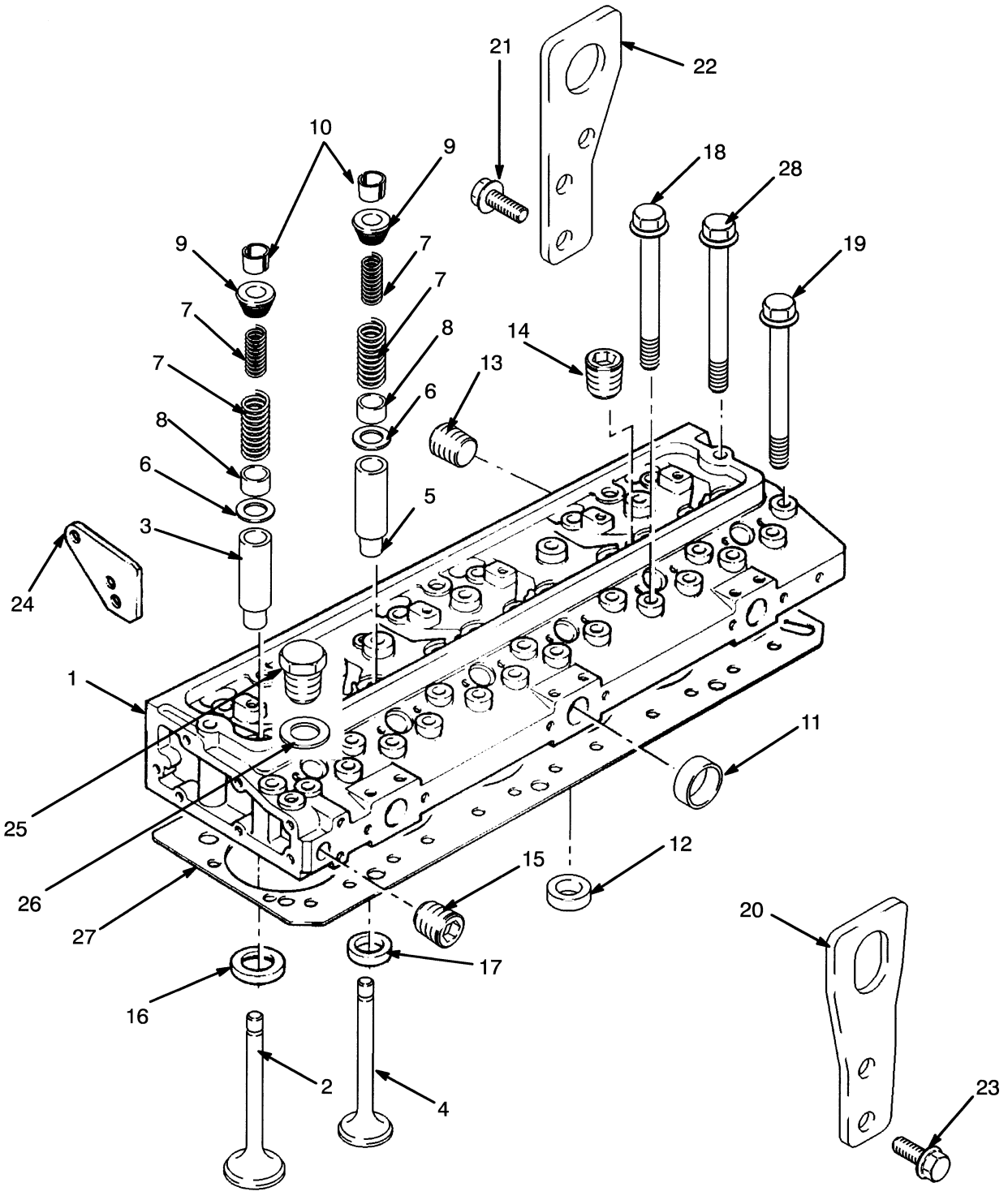

HP090973

©2010 HYSTER COMPANY

CYLINDER HEAD
DIESEL NON TURBO

ITEM	PART NO.	DESCRIPTION	QTY
	a 376001	Engine Assy-Diesel	1
	b 1376008	Engine Assy-Diesel (Without Sound Reduction)	1
	b 1376009	Engine Assy-Diesel (With Sound Reduction)	1
1	1318900	Cylinder Head	1
1	**c** 1460102	Cylinder Head	1
1	**c** 1454176	Dowel	2
2	1305711	Inlet Valve (Standard)	6
3	1305714	Guide	6
4	371536	Exhaust Valve	6
5	1382073	Guide	6
6	99569	Washer	12
7	1305716	Spring (Inner)	12
7	1305715	Spring (Outer)	12
8	187004	Seal	12
9	1305717	Cap	12
10	99571	Keeper	12
11	980727	Plug	3
12	385533	Plug	6
13	1318904	Plug	1
14	150879	Fitting	6
15	15962	Fitting	3
16	**b** 1305709	Insert	6
17	**b** 1382475	Insert	6
18	1370945	Bolt	12
19	1370944	Bolt	18
20	1306346	Plate	1
21	1307910	Capscrew	2
22	1306347	Plate	1
23	1306371	Screw	2
24	1315750	Plate	2
25	992025	Plug	1
26	986475	Washer	1
27	**c** 1451638	Cylinder Head Gasket	1
27	1318903	Gasket	1
28	361336	Screw	2
	1369431	Kit-Gasket (Top)	1

FOOTNOTES:

a → S/N D019D01756 INC. 1758 EXC. 1753
b S/N D019D01757 → INC. 1753 EXC. 1758
c U647521C →

©2010 HYSTER COMPANY

CYLINDER HEAD (FIGURE 2-15)
DIESEL TURBO WITHOUT LOW EMISSIONS

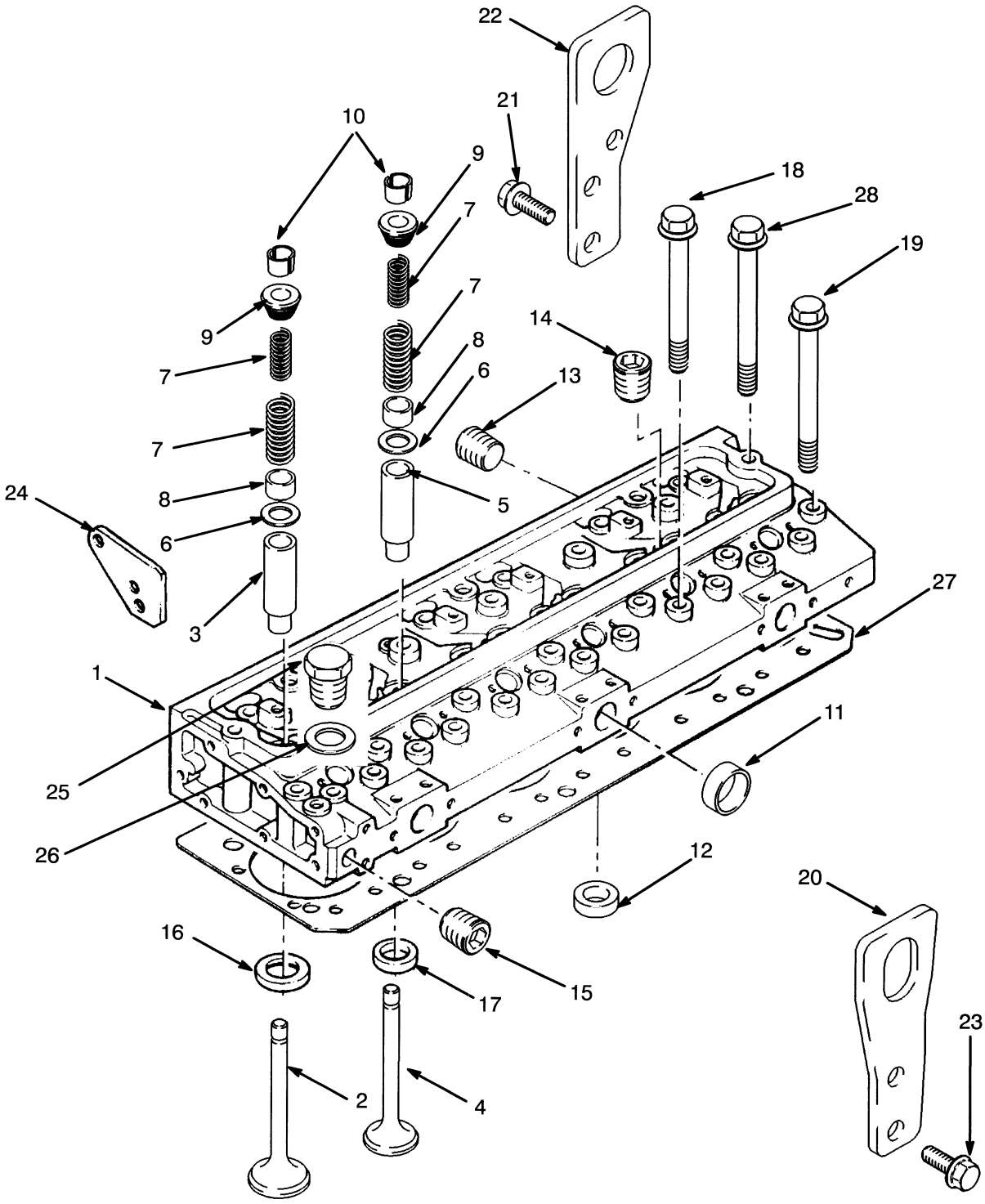

HP090974

©2010 HYSTER COMPANY

CYLINDER HEAD
DIESEL TURBO WITHOUT LOW EMISSIONS

ITEM	PART NO.	DESCRIPTION	QTY
	1377550	Engine Assy-Diesel	1
1	1382071	Cylinder Head	1
1	**a** 1460100	Cylinder Head	1
1	**a** 1454176	Dowel	2
2	1382072	Inlet Valve (Standard)	6
3	1382073	Guide	6
4	371536	Exhaust Valve	6
5	1305714	Guide	6
6	99569	Washer	12
7	1305716	Spring (Inner)	12
7	1305715	Spring (Outer)	12
8	187004	Seal	12
9	1305717	Cap	12
10	99571	Keeper	12
11	980727	Plug	3
12	385533	Plug	6
13	1318904	Plug	1
14	150879	Fitting	6
15	15303	Plug	1
16	1382074	Insert	6
17	1382475	Insert	6
18	1370945	Bolt	12
19	1370944	Bolt	18
20	1306346	Plate	1
21	1307910	Capscrew	2
22	1371730	Plate	1
23	1306371	Screw	2
24	1315750	Plate	1
25	992025	Plug	1
26	986475	Washer	1
27	**a** 1318903	Gasket	1
27	1451638	Cylinder Head Gasket	1
28	361336	Screw	2
	1369431	Kit-Gasket (Top)	1

FOOTNOTES:

a U647452C →

©2010 HYSTER COMPANY

CYLINDER HEAD (FIGURE 2-16)

DIESEL TURBO WITH LOW EMISSIONS (S/N D019D02377 →)

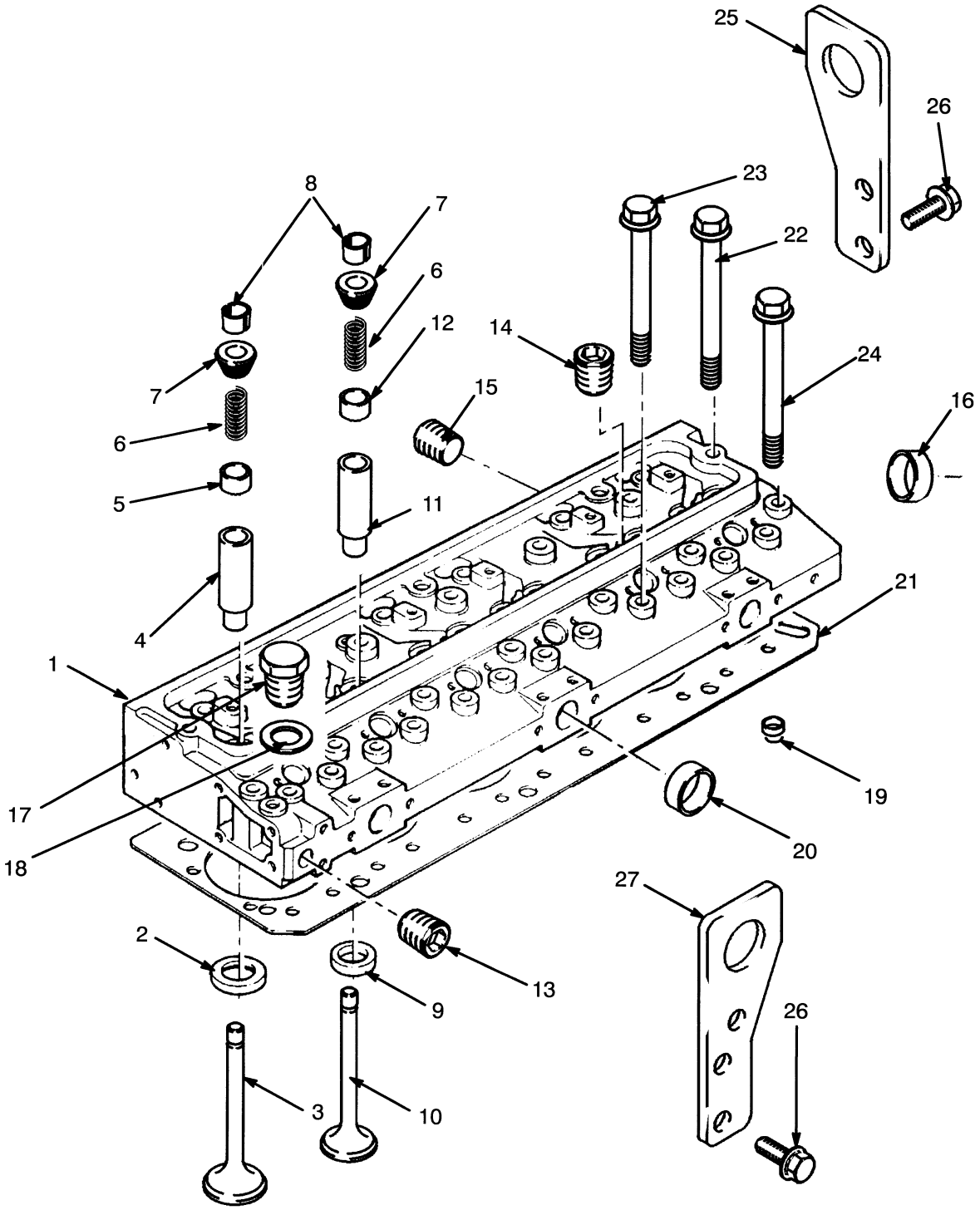

©2010 HYSTER COMPANY

CYLINDER HEAD

DIESEL TURBO WITH LOW EMISSIONS (S/N D019D02377 →)

ITEM	PART NO.	DESCRIPTION	QTY
	1395975	Engine Assy-Diesel (Turbo with Emissions)	1
1	1452862	Cylinder Head	1
2	1451635	Insert	6
3	1451641	Exhaust Valve	6
4	1456704	Guide	6
5	1451630	Seal	6
6	1451631	Spring	12
7	1451633	Cap	12
8	1451636	Keeper	24
9	1451634	Insert	6
10	1451639	Inlet Valve	6
11	1451629	Guide	6
12	1451632	Seal	6
13	15962	Fitting	1
14	150879	Fitting	6
15	1451637	Plug	1
16	385531	Plug	1
17	992025	Plug	1
18	986475	Washer	1
19	1454176	Dowel	2
20	980727	Plug	4
21	1451638	Cylinder Head Gasket	1
22	361336	Screw	2
23	1370945	Bolt	12
24	1370944	Bolt	18
25	1451772	Plate	1
26	1307910	Capscrew	4
27	1451771	Plate	1
	1565146	Kit-Gasket (Top)	1

©2010 HYSTER COMPANY

TIMING GEAR (FIGURE 2-17)
DIESEL NON TURBO

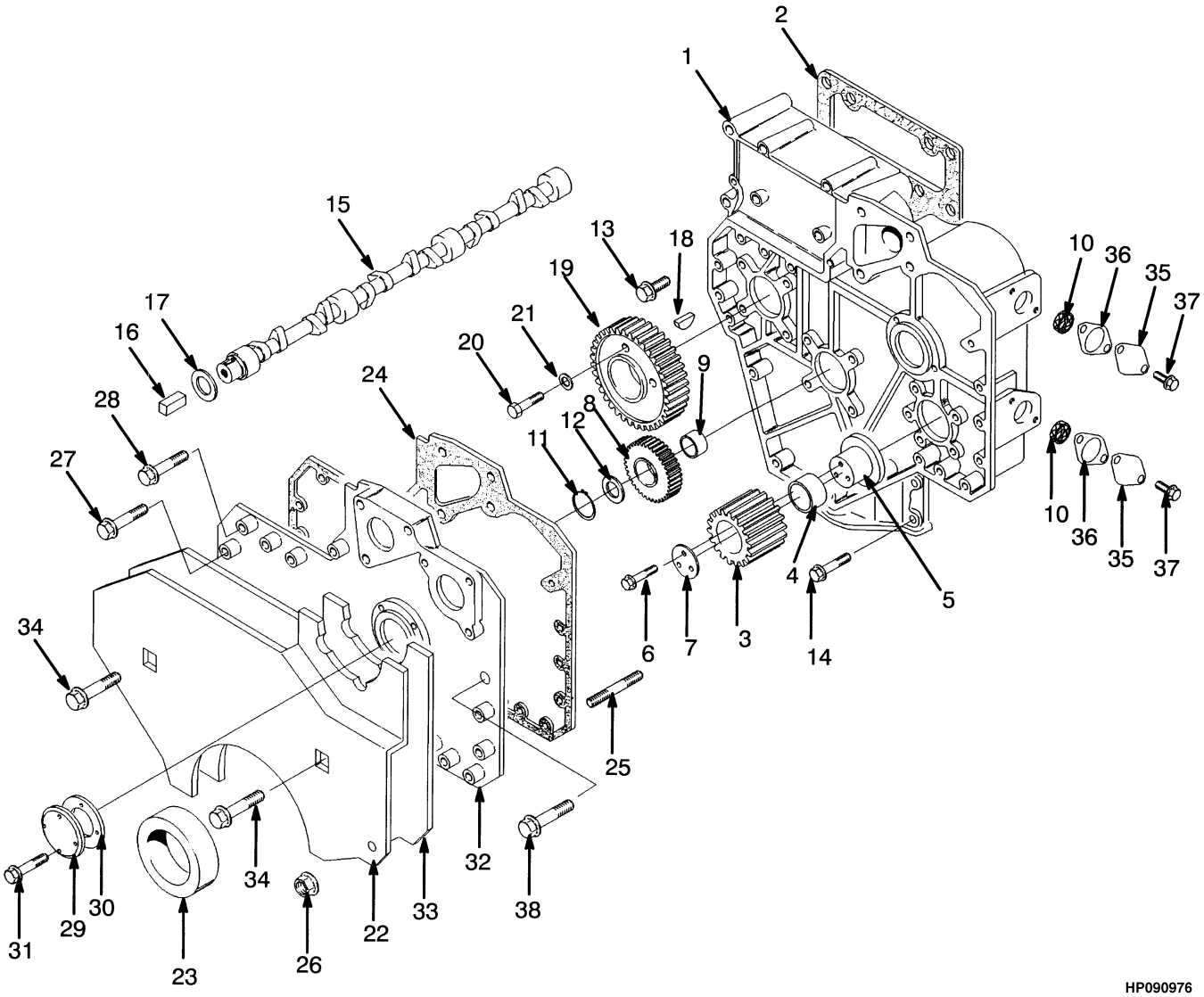

©2010 HYSTER COMPANY

TIMING GEAR
DIESEL NON TURBO

ITEM	PART NO.	DESCRIPTION	QTY
	a 376001	Engine Assy-Diesel	1
	b 1376008	Engine Assy-Diesel (Without Sound Reduction)	1
	b 1376009	Engine Assy-Diesel (With Sound Reduction)	1
1	**a** 1369046	Case	1
1	**b** 1377906	Case	1
2	1345787	Gasket	1
3	1306030	Gear	1
4	983484	Bushing	1
5	229875	Hub	1
6	1306356	Screw	3
7	1382479	Plate	1
8	1318916	Gear	1
9	1306041	Bushing	1
10	**b** 1306185	Strainer	2
11	328047	Snap Ring	1
12	385847	Washer	1
13	386459	Screw	8
14	1306358	Screw	4
15	1382480	Camshaft	1
16	**a** 224226	Pin	1
16	**b** 298096	Dowel	1
17	303758	Washer	1
18	99610	Key	1
19	1382481	Gear	1
20	**a** 1306355	Screw	1
20	**b** 1328565	Screw	1
21	1306364	Washer	1
22	**a** 1306036	Shield	1
22	**b** 1371703	Shield	1
23	350399	Seal	1
24	**b** 1382482	Gasket	1
25	1306033	Stud	2
26	1306359	Nut	2
27	**a** 386459	Screw	8
27	**b** 1306362	Screw	6
28	1306357	Screw	6
29	**a** 1318918	Cover	1
29	**b** 1306034	Cover	1
30	1345790	Gasket	1
31	1306360	Screw	4
32	**a** 1306031	Engine Cover	1
32	**b** 1479982	Timing Case	1
32	**b** 1466858	O-Ring	1
32	**b** 1479983	Cover	1
33	1306037	Damper	1
34	1306361	Screw	2
35	**b** 1306186	Plate	2
36	**b** 1380251	Gasket	2
37	**b** 1307881	Screw	4
38	1306354	Screw	1

©2010 HYSTER COMPANY

TIMING GEAR
DIESEL NON TURBO

ITEM	PART NO.	DESCRIPTION	QTY
	1379738	Kit-Gasket (Bottom)	1

FOOTNOTES:

a → S/N D019D01756 INC. 1758 EXC. 1753

b S/N D019D01757 → INC. 1753 EXC. 1758

©2010 HYSTER COMPANY

NOTES

©2010 HYSTER COMPANY

TIMING GEAR (FIGURE 2-18)
DIESEL TURBO — WITH AND WITHOUT LOW EMISSIONS

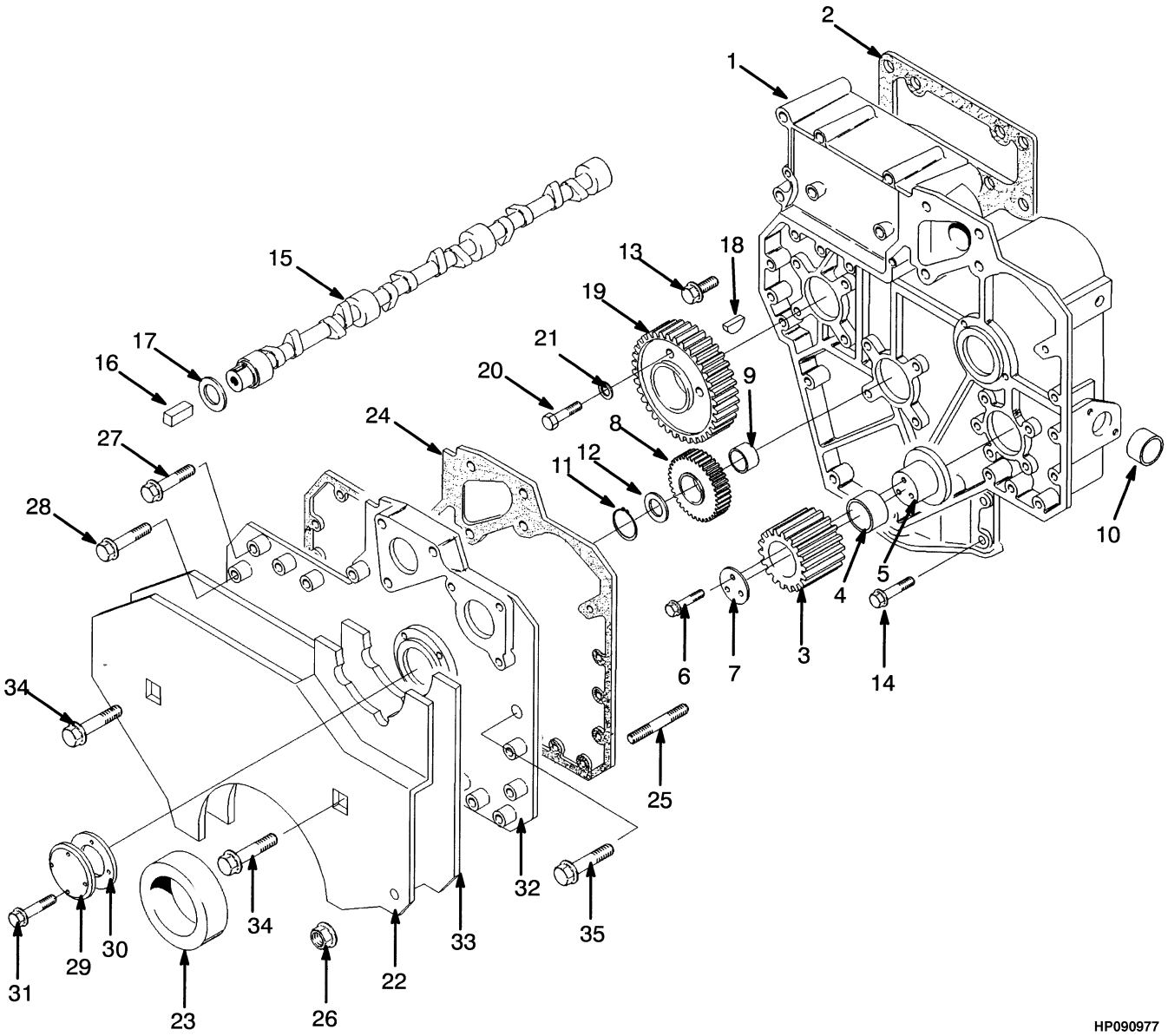

©2010 HYSTER COMPANY

TIMING GEAR

DIESEL TURBO – WITH AND WITHOUT LOW EMISSIONS

ITEM	PART NO.	DESCRIPTION	QTY
	a 1377550	Engine Assy-Diesel (Turbo)	1
	b 1395975	Engine Assy-Diesel (Turbo with Low Emissions)	1
1	**a** 1382478	Timing Case	1
1	**b** 1451647	Case	1
2	1345787	Gasket	1
3	1306030	Gear	1
4	983484	Bushing	1
5	229875	Hub	1
6	1306356	Screw	3
7	**a** 982226	Plate	1
7	**b** 1382479	Plate	1
8	1318916	Gear	1
9	1306041	Bushing	1
10	**a** 1306182	Plug	2
11	328047	Snap Ring	1
12	385847	Washer	1
13	386459	Screw	8
14	1306358	Screw	5
15	**a** 1382480	Camshaft	1
15	**b** 1451648	Camshaft	1
16	298096	Dowel	1
17	303758	Washer	1
18	99610	Key	1
19	1382481	Gear	1
20	1328565	Screw	1
21	1306364	Washer	1
22	**a** 1306037	Damper	1
22	**b** 1451651	Damper	1
23	350399	Seal	1
24	1382482	Gasket	1
25	1306033	Stud	2
26	1306359	Nut	2
27	1306357	Screw	6
28	**a** 1306362	Screw	6
29	**a** 1306034	Cover	1
30	**a** 1345790	Gasket	1
31	**a** 1306360	Screw	4
32	**a** 1479982	Timing Case	1
32	**a** 1466858	O-Ring	1
32	**a** 1479983	Cover	1
32	**a** 1306031	Engine Cover	1
32	**b**	Cover Assembly (Tier II Engine) (☞Figure 2-19)	1
33	**a** 1371703	Shield	1
33	**b** 1451650	Shield	1
34	1306361	Screw	2
35	1523972	Screw	2
	1379738	Kit-Gasket (Bottom)	1
	1453064	Kit-Gasket (Low Emissions)	1

©2010 HYSTER COMPANY

FOOTNOTES:

a Without Low Emissions

b S/N D019D02377 → (With Low Emissions)

©2010 HYSTER COMPANY

NOTES

©2010 HYSTER COMPANY

TIMING COVER (FIGURE 2-19)
PERKINS — TIER II ENGINE

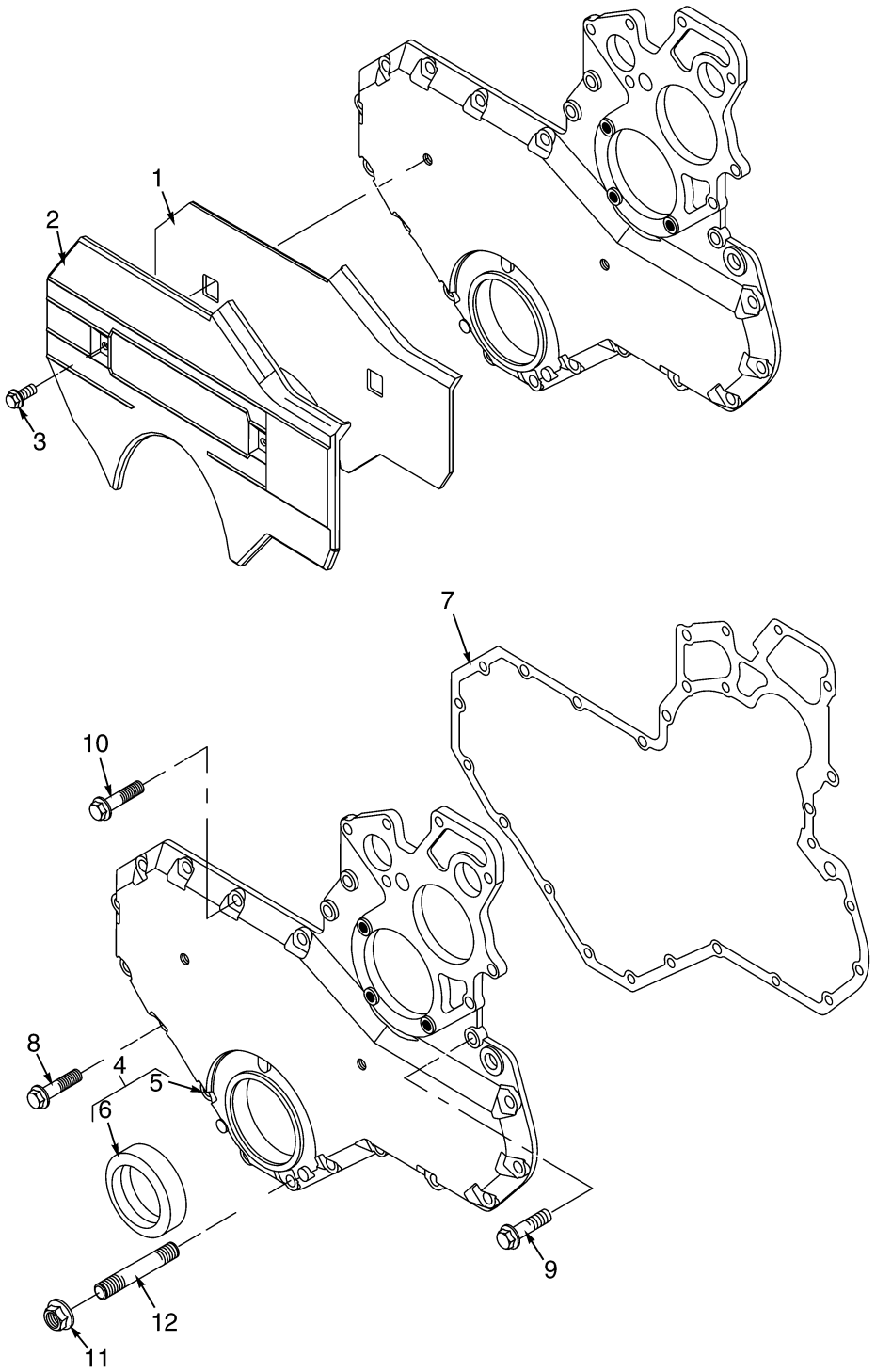

BP090043

©2010 HYSTER COMPANY

TIMING COVER
PERKINS – TIER II ENGINE

ITEM	PART NO.	DESCRIPTION	QTY
	b 1377550	Engine Assy-Diesel (Turbo)	1
	ac 1395975	Engine Assy-Diesel (Turbo with Low Emissions)	1
1	1451651	Damper	1
2	1451650	Shield	1
3	1306361	Screw	2
4	1451649	Cover	1
5	. . . . .	Cover	1
6	350399	Seal	1
7	1537353	Gasket	1
8	1306362	Screw	7
9	1306358	Screw	1
10	1306357	Screw	6
11	1306359	Nut	2
12	1306033	Stud	2
	1453311	Kit-Gasket (Bottom)	1

FOOTNOTES:

a With Low Emissions
b Without Low Emissions
c S/N D019D02377 →

©2010 HYSTER COMPANY

AUXILIARY DRIVE GEAR (FIGURE 2-20)

DIESEL (→ S/N D019D01756 INC. 1758 EXC. 1753)

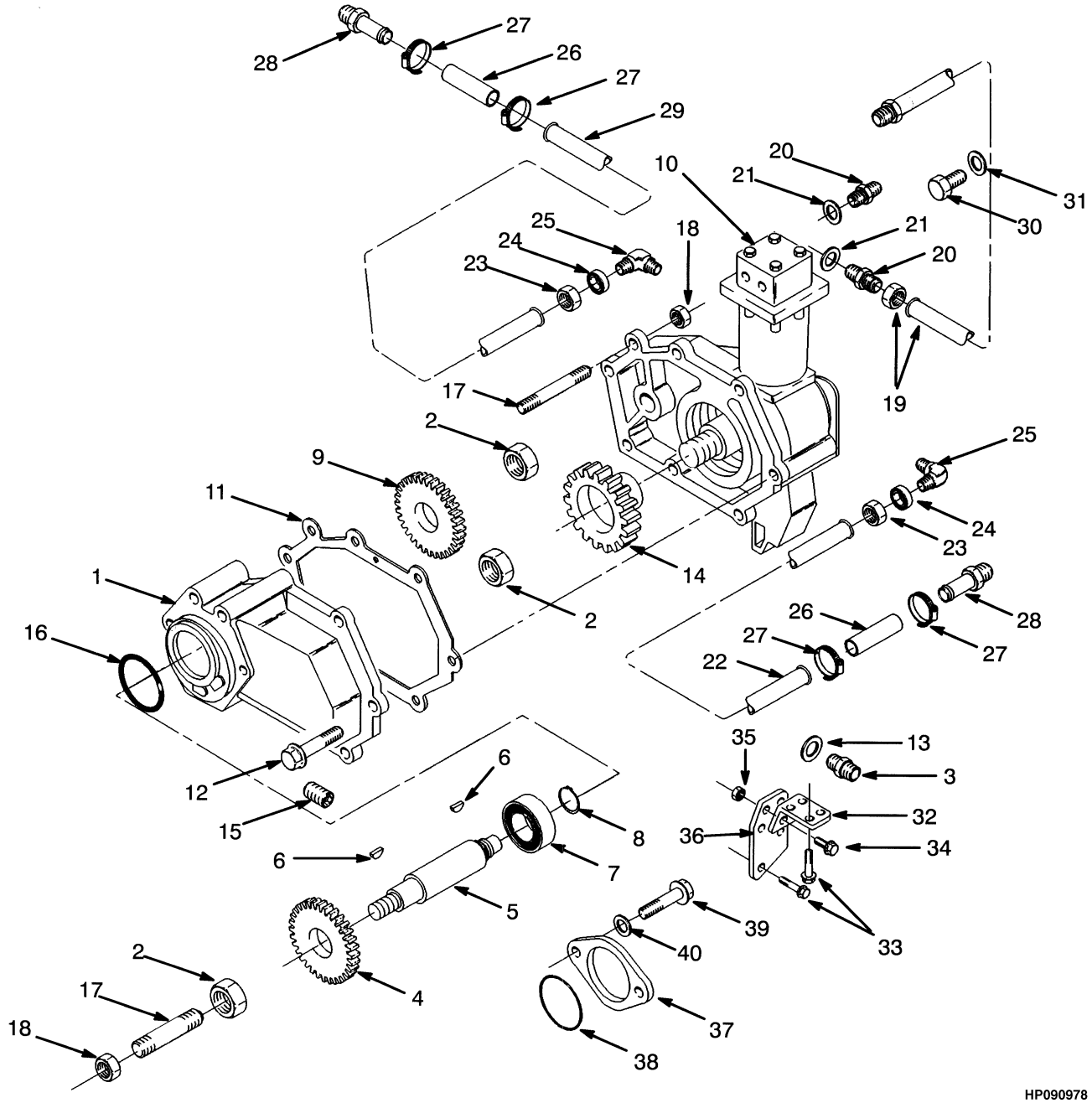

©2010 HYSTER COMPANY

AUXILIARY DRIVE GEAR

DIESEL (→ S/N D019D01756 INC. 1758 EXC. 1753)

ITEM	PART NO.	DESCRIPTION	QTY
	376001	Engine Assy-Diesel	1
1	**b** 1318969	Housing	1
1	**h** 1382486	Housing	1
2	1318970	Nut	3
3	1319040	Adapter	2
4	1318971	Gear	1
5	1318972	Shaft	1
6	9033	Woodruff Key	2
7	1318973	Bearing	1
8	361289	Snap Ring	1
9	1318974	Gear	1
10	**b** 1318324	Compressor (☞Figure 7-9)	1
10	**ah** 1382485	Compressor (☞Figure 7-10)	1
10	**cf** 1379772	Compressor (☞Figure 7-11)	1
10	**d** 1385674	Compressor (☞Figure 7-12)	1
10	**ge** 1391791	Compressor (Without Low Emissions) (☞Figure 7-13)	1
11	**b** 1345801	Gasket	1
11	**h** 1382487	Gasket	1
12	1306358	Screw	3
13	992522	Washer	2
14	1319027	Gear	1
15	150879	Fitting	1
16	**b** 1311603	O-Ring	1
16	**h** 1382488	O-Ring	1
17	1307901	Stud	6
18	1306359	Nut	6
19	1319029	Pipe	1
19	16193	Fitting	2
19	51455	Fitting	2
20	1319028	Adapter	2
21	101985	Washer	2
22	1319030	Pipe	1
23	224384	Nut	2
24	158160	Sleeve	2
25	1319031	Elbow	2
26	1319032	Hose	2
27	130845	Clamp	4
28	1319033	Fitting	2
29	1319034	Pipe	1
30	1306371	Screw	1
31	1319035	Spacer	1
32	1319036	Bracket	1
33	1307910	Capscrew	6
34	1307913	Screw	2
35	1307891	Nut	2
36	1319037	Bracket	1
37	1319038	Plate	1
38	1307902	Seal	1
39	1311074	Screw	2

©2010 HYSTER COMPANY

AUXILIARY DRIVE GEAR

DIESEL (→ S/N D019D01756 INC. 1758 EXC. 1753)

ITEM	PART NO.	DESCRIPTION	QTY
40	1318306	Washer	2

FOOTNOTES:

a → S/N D019D01756 INC. 1758 EXC. 1753
b → U563738X
c → U593028
d U593029 ↔ U607097
e U607098 →
f S/N D019D01757 → INC. 1753 EXC. 1758
g S/N D019D02377 →
h U563739X →

©2010 HYSTER COMPANY

NOTES

©2010 HYSTER COMPANY

AUXILIARY DRIVE GEAR (FIGURE 2-21)

DIESEL (S/N D019D01757 → INC. 1753 EXC. 1758)

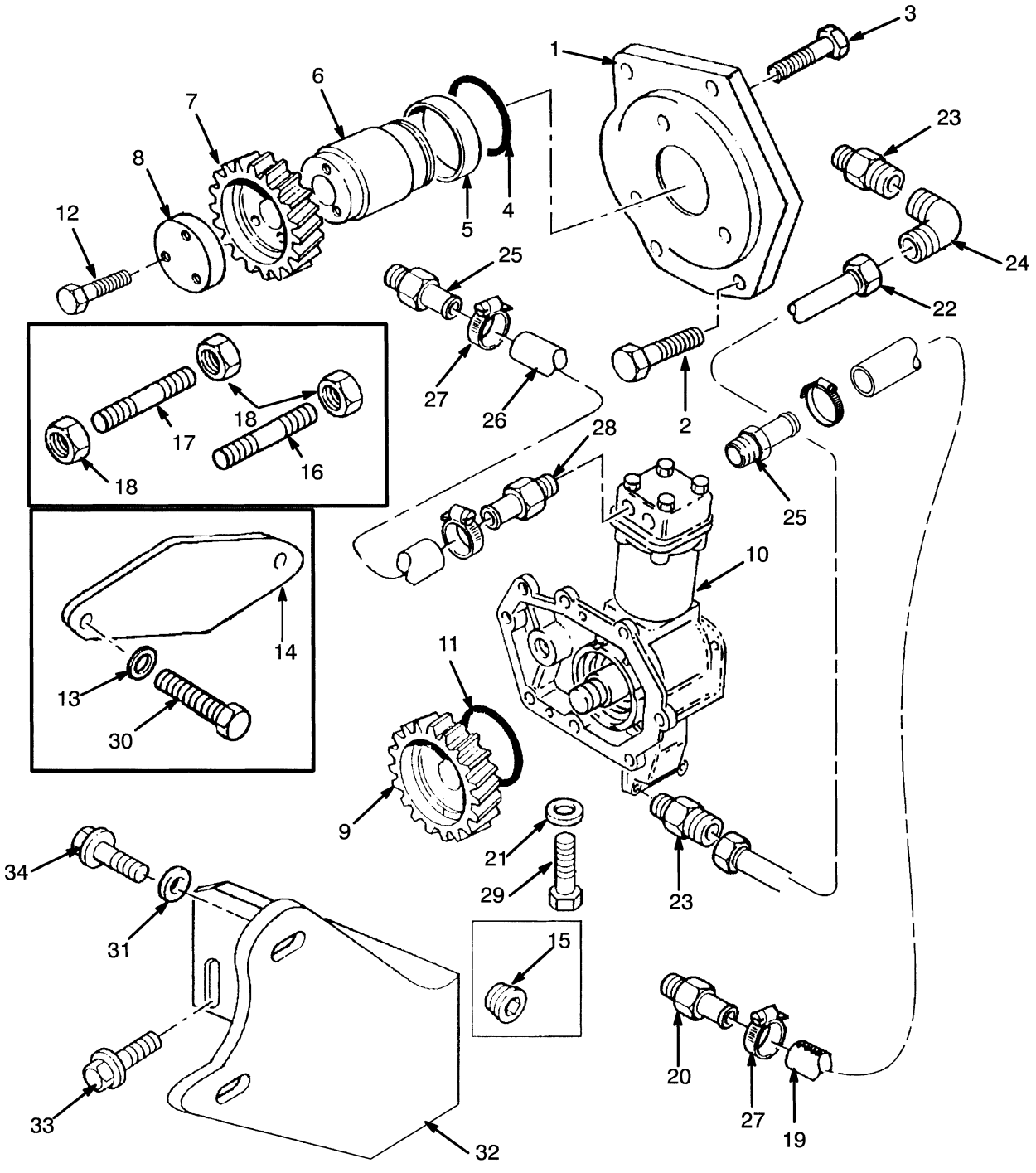

©2010 HYSTER COMPANY

AUXILIARY DRIVE GEAR

DIESEL (S/N D019D01757 → INC. 1753 EXC. 1758)

ITEM	PART NO.	DESCRIPTION	QTY
	1376008	Engine Assy-Diesel (Without Sound Reduction)	1
	1376009	Engine Assy-Diesel (With Sound Reduction)	1
	b 1377550	Engine Assy-Diesel (Turbo)	1
	am 1395975	Engine Assy-Diesel (Turbo)	1
1	1379774	Bracket	1
2	1380206	Screw	4
3	1380205	Screw	3
4	1380201	O-Ring	1
5	1380202	Bearing	1
6	1380200	Hub	1
7	1380203	Gear	1
8	**b** 1380204	Plate	1
8	**am** 1451747	Plate	1
9	1379773	Gear	1
10	**co** 1382485	Compressor (☞Figure 7-10)	1
10	**d** 1318324	Compressor (☞Figure 7-9)	1
10	**fq** 1379772	Compressor (☞Figure 7-11)	1
10	**i** 1385674	Compressor (☞Figure 7-12)	1
10	**hj** 1391791	Compressor (Without Low Emissions) (☞Figure 7-13)	1
10	**nk** 1495255	Compressor (With Low Emissions)	1
11	1380214	O-Ring	1
12	1307881	Screw	3
13	**b** 1318306	Washer	2
14	1319038	Plate	1
15	150879	Fitting	1
16	1458694	Stud	2
17	1380210	Stud	2
18	1370949	Nut	3
19	1554082	Hose	1
20	**b** 1319040	Adapter	1
21	101985	Washer	2
22	**e** 1380207	Tube Assy	1
22	**p** 1385675	Tube Assy	1
22	16193	Fitting	2
22	51455	Fitting	2
23	981608	Fitting	1
24	**b** 983761	Fitting	1
25	1319033	Fitting	1
26	**g** 1380208	Hose	1
26	**l** 1385678	Hose	1
27	130845	Clamp	4
28	**b** 302638	Fitting	1
29	1306219	Screw	1
30	1311074	Screw	2
31	**b** 1380213	Spacer	2
32	**b** 1380212	Bracket	1
33	**b** 1307910	Capscrew	2
34	**b** 1306362	Screw	2

©2010 HYSTER COMPANY

FOOTNOTES:

a With Emissions
b Without Emissions
c → S/N D019D01756 INC. 1758 EXC. 1753
d → U563738X
e → U588828Y
f → U593028
g → YA70337U588585Y
h S/N D019D02377 ↔ S/N D019D02997X
i U593029 ↔ U607097
j U607098 →
k U740015G →
l YA70337U588586Y →
m S/N D019D02377 →
n S/N D019D02997X →
o U563739X →
p U588829Y →
q S/N D019D01757 → INC. 1753 EXC. 1758

©2010 HYSTER COMPANY

NOTES

©2010 HYSTER COMPANY

OIL PAN (FIGURE 2-22)
DIESEL NON TURBO

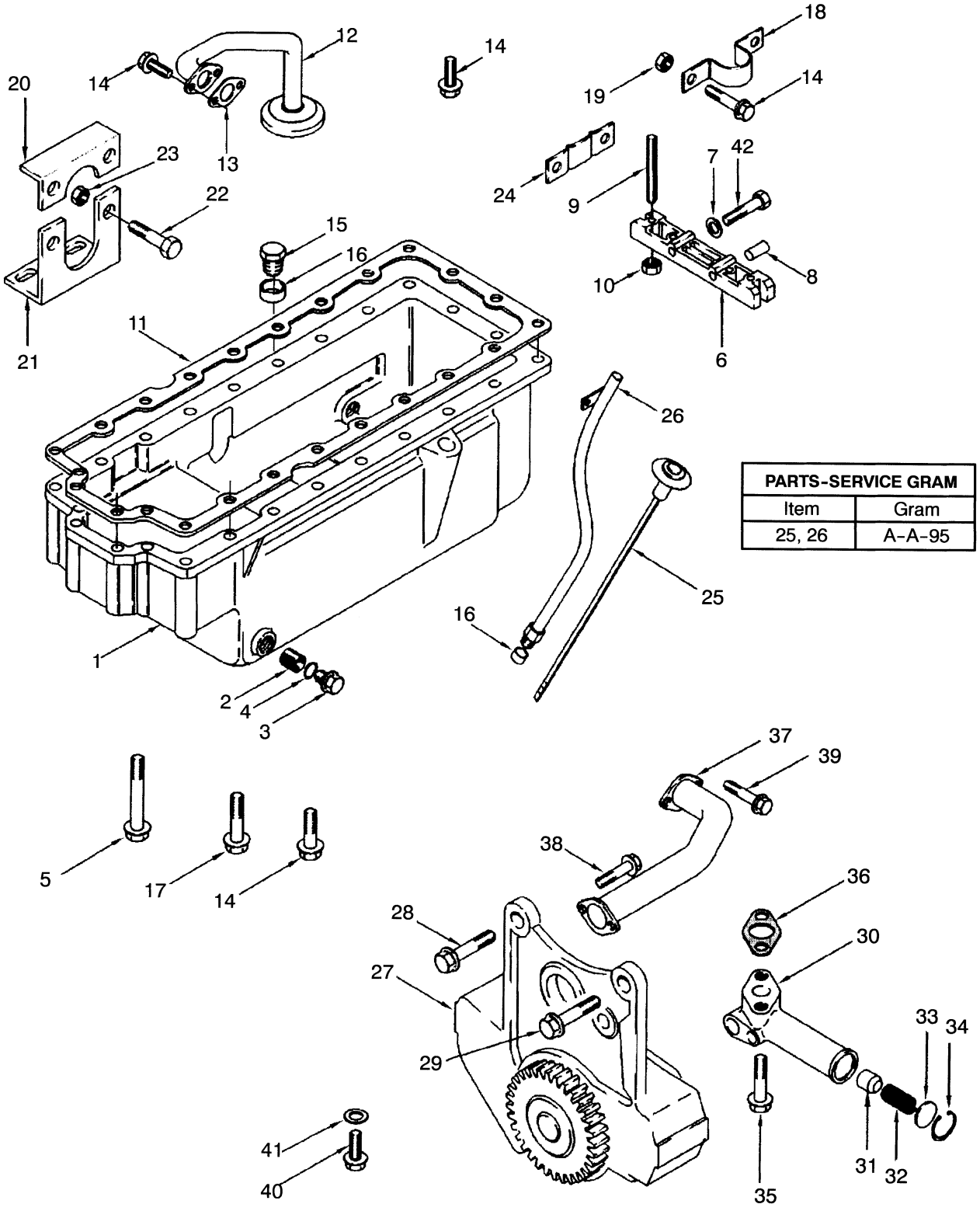

PARTS-SERVICE GRAM	
Item	Gram
25, 26	A-A-95

©2010 HYSTER COMPANY

OIL PAN
DIESEL NON TURBO

ITEM	PART NO.	DESCRIPTION	QTY
	a 376001	Engine Assy-Diesel	1
	c 1376008	Engine Assy-Diesel (Without Sound Reduction)	1
	c 1376009	Engine Assy-Diesel (With Sound Reduction)	1
1	1377720	Oil Pan	1
2	266465	Insert	2
3	377976	Plug	2
4	1306374	O-Ring	2
5	1318940	Screw	5
6	1555423	Bridge	1
7	144613	Washer	2
8	99601	Joint	2
9	1307876	Stud	2
10	1306359	Nut	2
11	1345786	Gasket	1
12	1318943	Pipe	1
13	1351996	Gasket	1
14	386459	Screw	25
15	1377908	Plug	1
16	1306143	Olive	2
17	1318945	Screw	1
18	1318946	Clip	1
19	1306359	Nut	2
20	1318947	Bracket	1
21	1318948	Bracket	1
22	1306358	Screw	2
23	1306359	Nut	2
24	1318949	Plate	1
25	**b** 1318950	Dipstick	1
25	**d** 1385703	Dipstick	1
26	**b** 1311081	Tube	1
26	**d** 1385704	Tube	1
27	1318919	Engine Oil Pump	1
28	1306358	Screw	2
29	1307881	Screw	1
30	1318920	Valve	1
31	301749	Plunger	1
32	301750	Spring	1
33	301751	Cap	1
34	1306328	Snap Ring	1
35	**a** 1318921	Screw	2
35	**c** 1318968	Screw	2
36	**a** 301752	Gasket	1
37	**a** 1318922	Pipe	1
37	**c** 1380259	Pipe	1
38	**a** 1307898	Screw	2
39	**a** 1306358	Screw	2
40	**a** 16372	Capscrew	6
41	**a** 152605	Spacer	6
42	1307875	Screw	2

©2010 HYSTER COMPANY

OIL PAN
DIESEL NON TURBO

ITEM	PART NO.	DESCRIPTION	QTY
	1379738	Kit-Gasket (Bottom)	1

FOOTNOTES:

a → S/N D019D01756 INC. 1758 EXC. 1753
b → U588823Y
c S/N D019D01757 → INC. 1753 EXC. 1758
d U588824Y →

©2010 HYSTER COMPANY

NOTES

©2010 HYSTER COMPANY

OIL PAN (FIGURE 2-23)

DIESEL TURBO WITHOUT LOW EMISSIONS

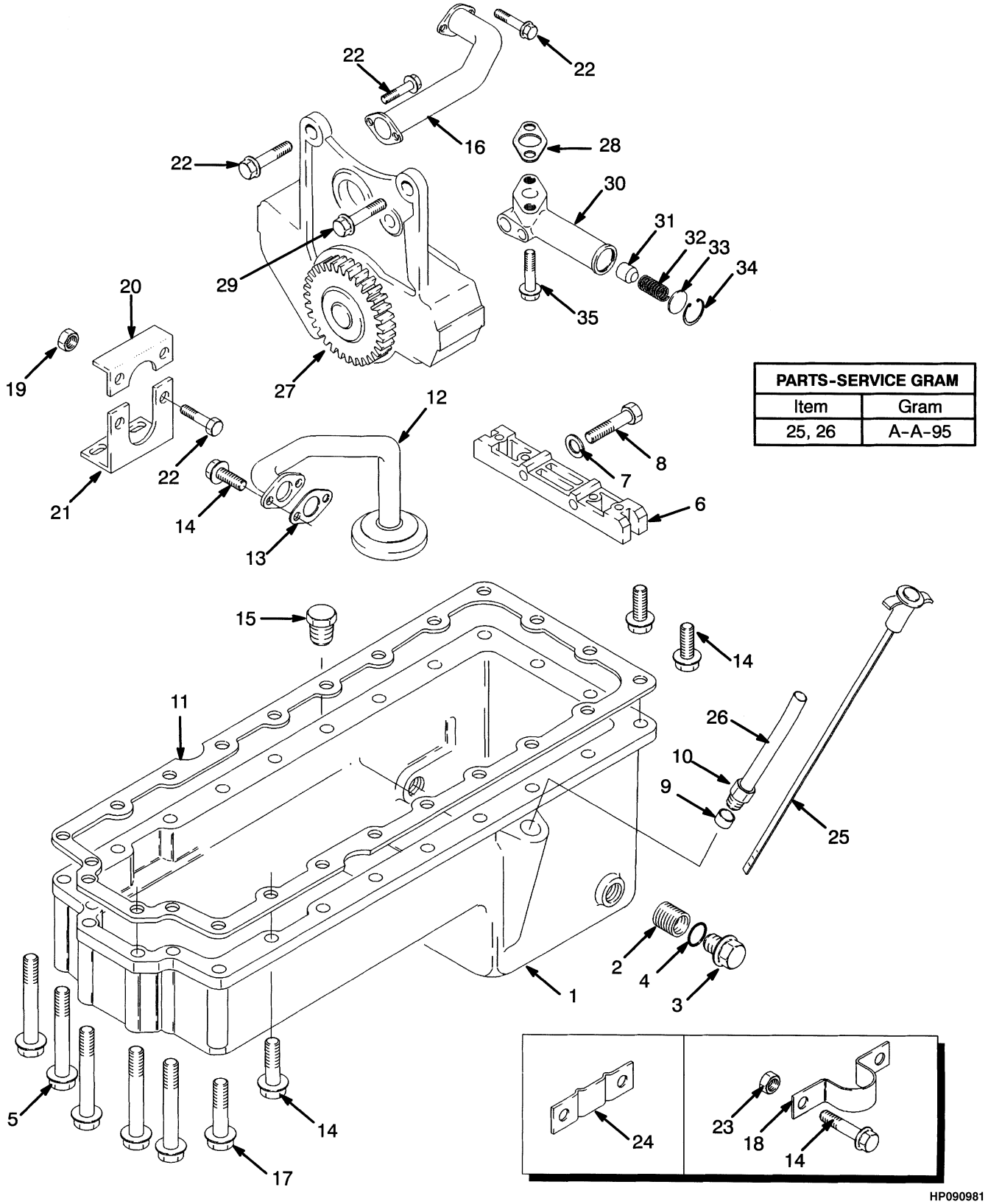

PARTS-SERVICE GRAM	
Item	Gram
25, 26	A–A–95

©2010 HYSTER COMPANY

OIL PAN
DIESEL TURBO WITHOUT LOW EMISSIONS

ITEM	PART NO.	DESCRIPTION	QTY
	1377550	Engine Assy-Diesel	1
1	1377720	Oil Pan	1
2	266465	Insert	2
3	377976	Plug	2
4	1306374	O-Ring	2
5	1318940	Screw	5
6	1555423	Bridge	1
7	328043	Washer	2
8	1307875	Screw	2
9	1306143	Olive	1
10	1318951	Nut	1
11	1345786	Gasket	1
12	1318943	Pipe	1
13	1351996	Gasket	1
14	386459	Screw	25
15	1377908	Plug	1
16	1380259	Pipe	1
17	1380261	Screw	1
18	1318946	Clip	1
19	1306359	Nut	2
20	1318947	Bracket	1
21	1318948	Bracket	1
22	1306358	Screw	6
23	1306359	Nut	2
24	1318949	Plate	1
25	**ab** 1318950	Dipstick	1
25	**c** 1385703	Dipstick	1
26	**ab** 1311081	Tube	1
26	**c** 1385704	Tube	1
27	1382484	Engine Oil Pump	1
28	301752	Gasket	1
29	1307881	Screw	1
30	1318920	Valve	1
31	301749	Plunger	1
32	301750	Spring	1
33	301751	Cap	1
34	1306328	Snap Ring	1
35	1318968	Screw	2
	1379738	Kit-Gasket (Bottom)	1

FOOTNOTES:

a Must Replace Both Tube and Dipstick with New Tube and Dipstick

b U588824Y →

c U588825Y →

©2010 HYSTER COMPANY

OIL PAN (FIGURE 2-24)
DIESEL TURBO WITH LOW EMISSIONS

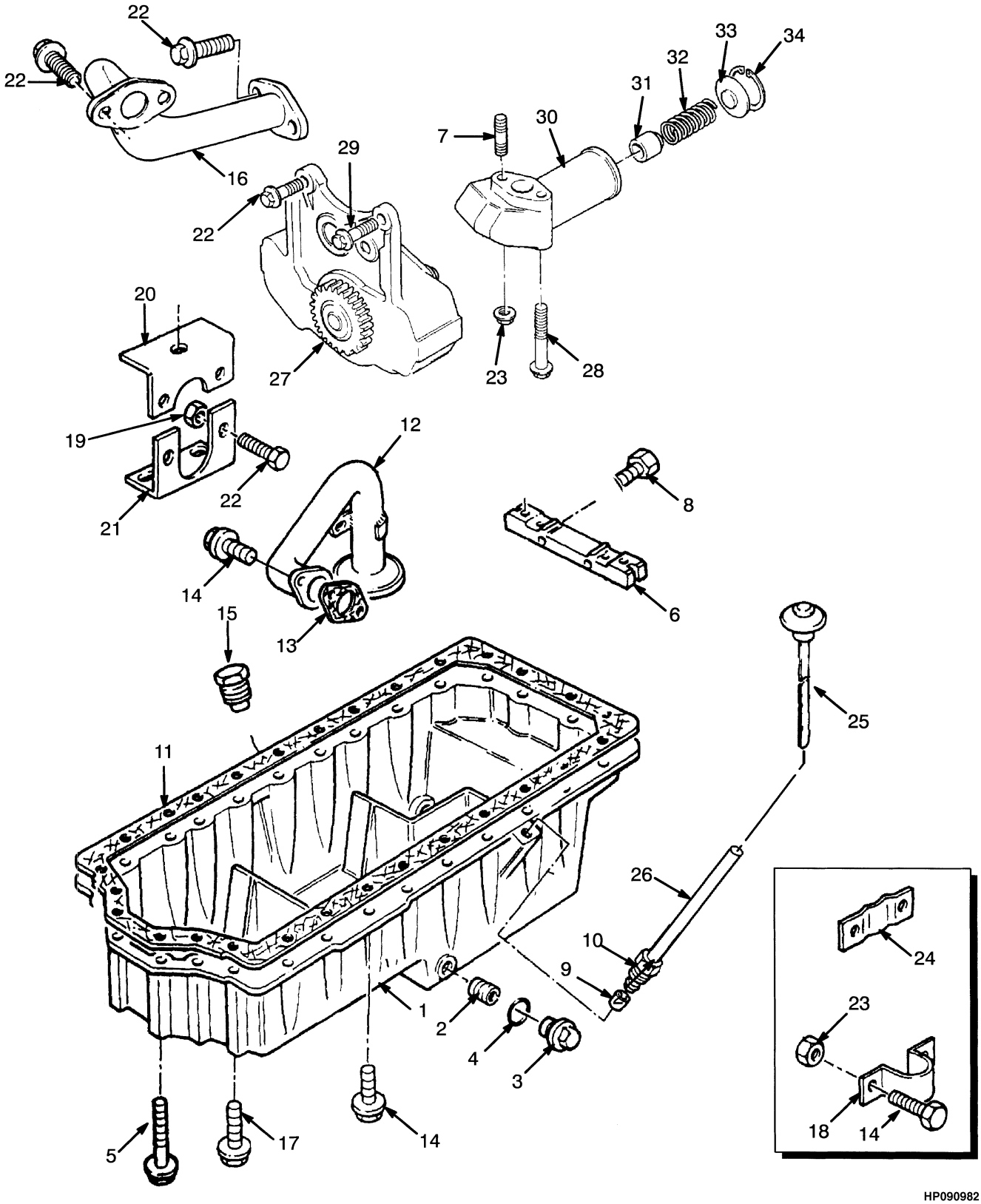

©2010 HYSTER COMPANY

OIL PAN
DIESEL TURBO WITH LOW EMISSIONS

ITEM	PART NO.	DESCRIPTION	QTY
	1395975	Engine Assy-Diesel (Turbo with Emissions)	1
1	1377720	Oil Pan	1
2	266465	Insert	2
3	377976	Plug	2
4	1306374	O-Ring	2
5	1318940	Screw	5
6	1555423	Bridge	1
7	1307901	Stud	1
8	1307875	Screw	2
9	1306143	Olive	1
10	1318951	Nut	1
11	1345786	Gasket	1
12	1318943	Pipe	1
13	1351996	Gasket	1
14	386459	Screw	25
15	1377908	Plug	1
16	1380259	Pipe	1
17	1380261	Screw	1
18	1318946	Clip	1
19	1306359	Nut	2
20	1318947	Bracket	1
21	1318948	Bracket	1
22	1306358	Screw	8
23	1306359	Nut	3
24	1318949	Plate	1
25	1385703	Dipstick	1
26	1385704	Tube	1
27	1382484	Engine Oil Pump	1
28	1318968	Screw	2
29	1307881	Screw	1
30	1318920	Valve	1
31	301749	Plunger	1
32	301750	Spring	1
33	301751	Cap	1
34	1306328	Snap Ring	1
	1453064	Kit-Gasket (Low Emissions)	1

©2010 HYSTER COMPANY

VALVE COVER (FIGURE 2-25)
DIESEL NON TURBO

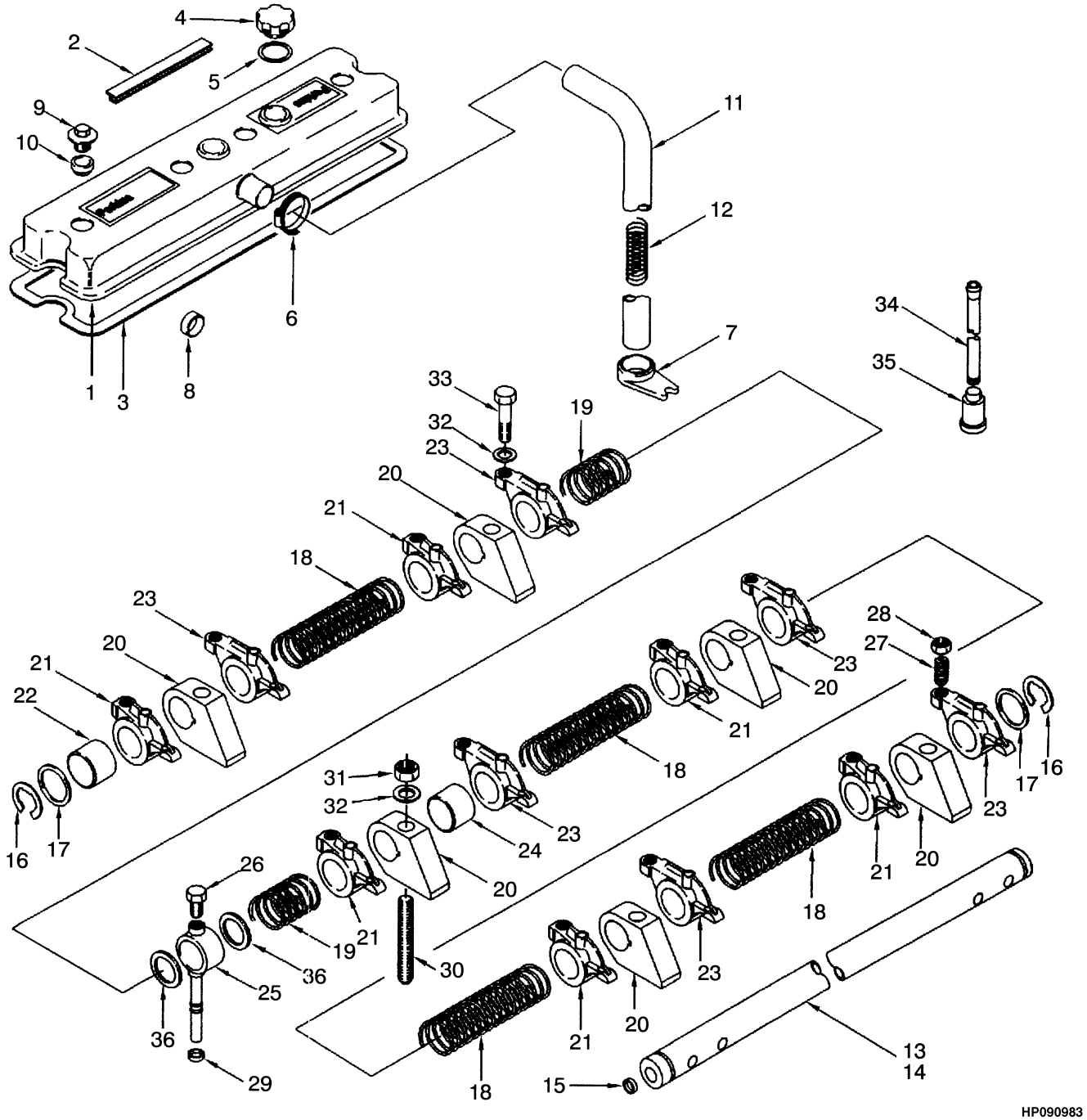

©2010 HYSTER COMPANY

VALVE COVER
DIESEL NON TURBO

ITEM	PART NO.	DESCRIPTION	QTY
	ab 376001	Engine Assy-Diesel	1
	cd 1376008	Engine Assy-Diesel (Without Sound Reduction)	1
	cd 1376009	Engine Assy-Diesel (With Sound Reduction)	1
1	**ab** 1318952	Cover	1
1	**cd** 1384985	Engine Cover	1
2	**ab** 1318953	Seal	1
2	**cd** 1380248	Seal	1
3	**ab** 1318954	Gasket	1
3	**cd** 1380249	Gasket	1
4	**ab** 1306180	Cap	1
5	**ab** 1306181	Seal	1
6	**ab** 130845	Clamp	1
6	**cd** 1380250	Clip	1
7	301785	Bracket	1
8	**ab** 1306182	Plug	1
8	**cd** 980727	Plug	1
9	**ab** 1307888	Nut	4
9	**cd** 1380763	Nut	4
10	1380245	Seal	4
11	276022	Pipe	1
12	358506	Spring	1
13	**ab** 1318912	Rocker Shaft	1
13	**cd** 1380258	Rocker Shaft	1
14	1318913	Rocker Shaft	1
15	990429	Plug	2
16	99725	Snap Ring	2
17	377945	Washer	2
18	99722	Spring (Long)	4
19	99723	Spring (Short)	2
20	**ab** 1305722	Bracket	6
20	**cd** 1370947	Bracket	6
21	1458331	Rocker Arm (RH)	6
22	161454	Bushing	1
23	1458332	Rocker Arm (RH)	6
24	161454	Bushing	1
25	**ab** 360815	Connector	1
25	**cd** 1374980	Fitting	1
26	**ab** 360816	Screw	1
26	**cd** 1370948	Screw	1
27	1466859	Screw	12
28	15026	Nut	12
29	158187	Olive	1
30	1306351	Stud	4
31	1318914	Nut	4
32	**ab** 1306352	Washer	6
33	1306353	Screw	2
34	99728	Rod	12
35	224248	Tappet	12
36	367394	Shim (0.020 in.)	2

©2010 HYSTER COMPANY

VALVE COVER
DIESEL NON TURBO

ITEM	PART NO.	DESCRIPTION	QTY
	1369431	Kit-Gasket (Top)	1

FOOTNOTES:

a → S/N D019D01756 INC. 1758 EXC. 1753
b → U595032A
c S/N D019D01757 →
d U595033A →

©2010 HYSTER COMPANY

NOTES

©2010 HYSTER COMPANY

VALVE COVER (FIGURE 2-26)
DIESEL TURBO WITHOUT LOW EMISSIONS

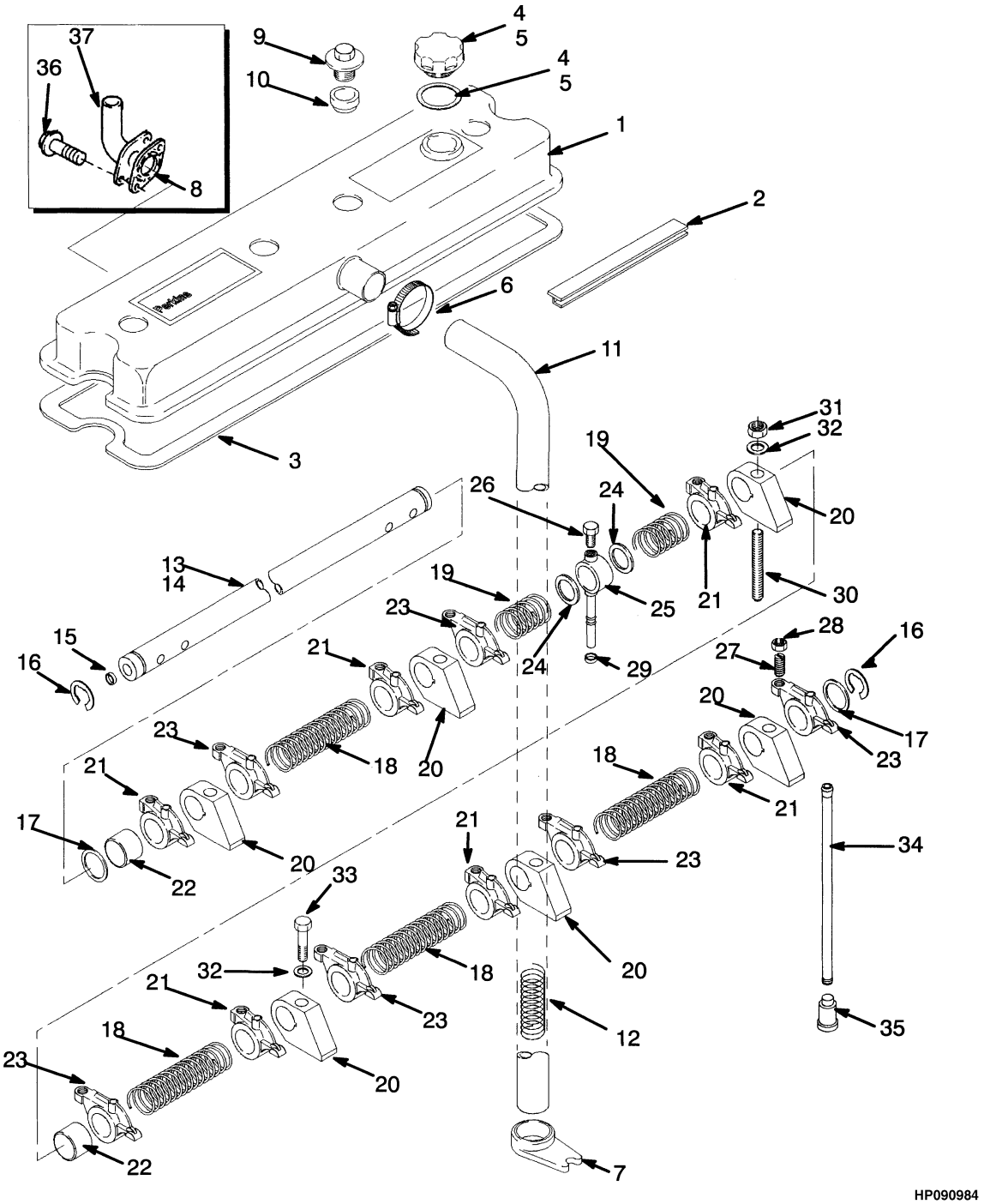

©2010 HYSTER COMPANY

VALVE COVER
DIESEL TURBO WITHOUT LOW EMISSIONS

ITEM	PART NO.	DESCRIPTION	QTY
	1377550	Engine Assy-Diesel	1
1	**a** 1318952	Cover	1
1	1384985	Engine Cover	1
2	**a** 1318953	Seal	1
2	**b** 1380248	Seal	1
3	**a** 1318954	Gasket	1
3	**b** 1380249	Gasket	1
4	**a** 1306180	Cap	1
4	**a** 1306181	Seal	1
5	**b** 1391246	Cap	1
5	**b** 1516930	O-Ring	1
6	130845	Clamp	1
7	301785	Bracket	1
8	1345751	Gasket	1
9	1380244	Nut	4
10	301775	Bushing	4
10	1380245	Seal	4
10	1371711	Shim	4
11	276022	Pipe	1
12	358506	Spring	1
13	1380258	Rocker Shaft	1
14	1318912	Rocker Shaft	1
15	990429	Plug	2
16	99725	Snap Ring	2
17	377945	Washer	2
18	99722	Spring (Long)	4
19	99723	Spring (Short)	2
20	1370947	Bracket	6
21	1305723	Rocker Arm (RH)	6
22	161454	Bushing	1
23	1305724	Rocker Arm (LH)	6
24	**a** 367394	Shim (0.020 in.)	2
25	1374980	Fitting	1
26	1370948	Screw	1
27	1466859	Screw	12
28	15026	Nut	12
29	158187	Olive	1
30	1306351	Stud	4
31	1370949	Nut	4
32	1306352	Washer	6
33	1306353	Screw	2
34	99728	Rod	12
35	224248	Tappet	12
36	1307881	Screw	2
37	1382459	Tube Assy	1
	1369431	Kit-Gasket (Top)	1

©2010 HYSTER COMPANY

FOOTNOTES:

a → U595032A

b U595033A →

©2010 HYSTER COMPANY

NOTES

©2010 HYSTER COMPANY

VALVE COVER (FIGURE 2-27)

DIESEL TURBO WITH LOW EMISSIONS (S/N D019D02377 →)

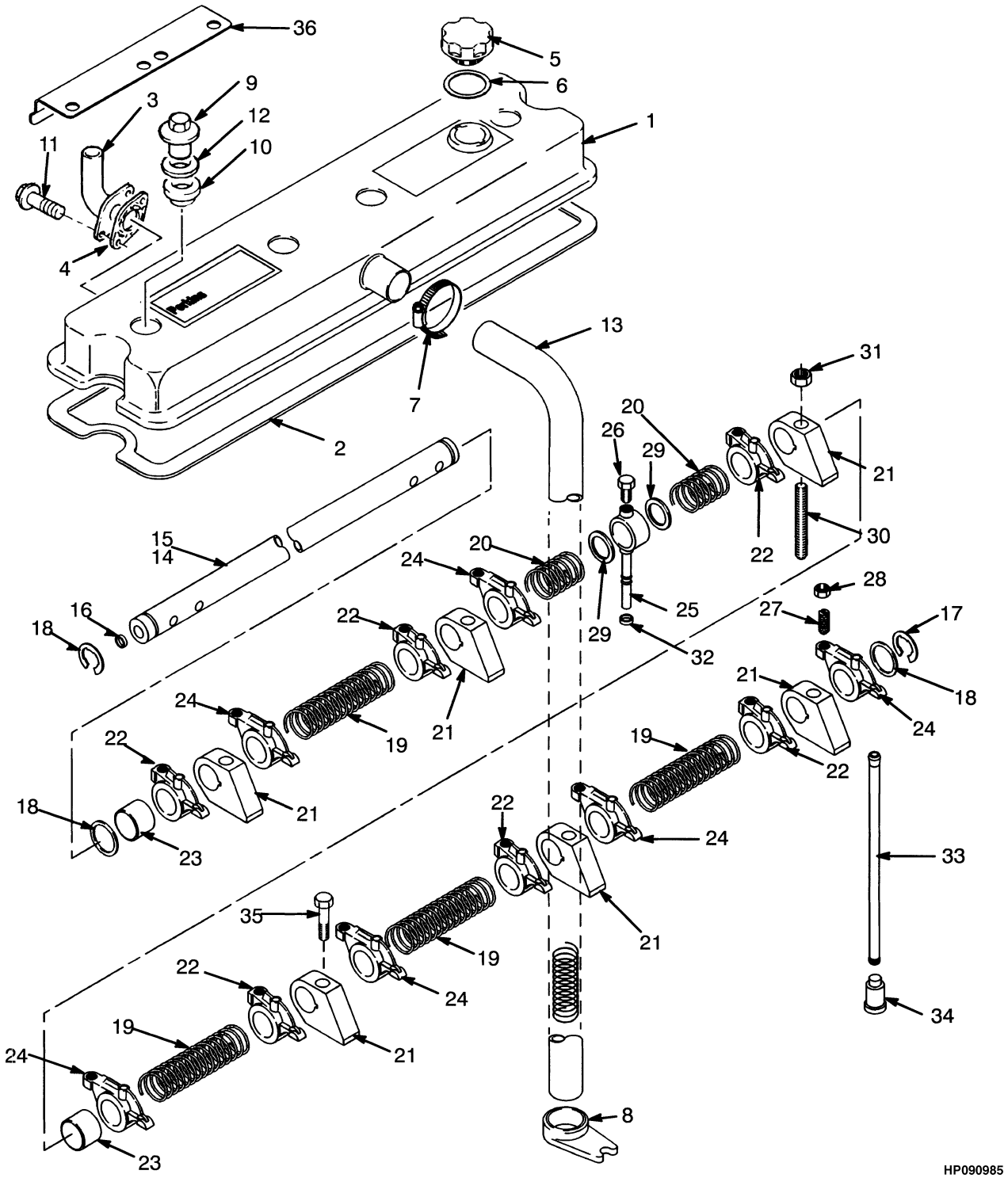

©2010 HYSTER COMPANY

VALVE COVER

DIESEL TURBO WITH LOW EMISSIONS (S/N D019D02377 →)

ITEM	PART NO.	DESCRIPTION	QTY
	1395975	Engine Assy-Diesel	1
1	**a** 1451677	Cover	1
1	**b** 1555920	Cover	1
1	1516558	Adapter	1
2	1451715	Gasket	1
3	1451719	Tube Assy	1
4	1345751	Gasket	1
5	1391246	Cap	1
6	1516930	O-Ring	1
7	1380250	Clip	1
8	301785	Bracket	1
9	1380763	Nut	4
10	1380245	Seal	1
11	1307881	Screw	2
12	15125	Washer	4
13	276022	Pipe	1
14	1452863	Rocker Shaft	1
15	1452864	Rocker Shaft	1
16	990429	Plug	2
17	99725	Snap Ring	2
18	1451642	Washer	2
19	99722	Spring (Long)	4
20	99723	Spring (Short)	2
21	1370947	Bracket	6
22	1451643	Rocker Arm (RH)	6
23	1451644	Bushing	6
24	1451645	Rocker Arm (LH)	6
25	1374980	Fitting	1
26	1370948	Screw	1
27	1466859	Screw	12
28	15026	Nut	12
29	367394	Shim (0.020 in.)	2
30	1306351	Stud	4
31	1370949	Nut	4
32	158187	Olive	1
33	99728	Rod	12
34	224248	Tappet	12
35	1306353	Screw	2
36	1471326	Heat Shield	1
	1565146	Kit-Gasket (Top)	1

FOOTNOTES:

a → U708388D

b U708389D →

©2010 HYSTER COMPANY

OIL FILTER (FIGURE 2-28)

DIESEL NON TURBO (→ S/N D019D01756 INC. 1758 EXC. 1753)

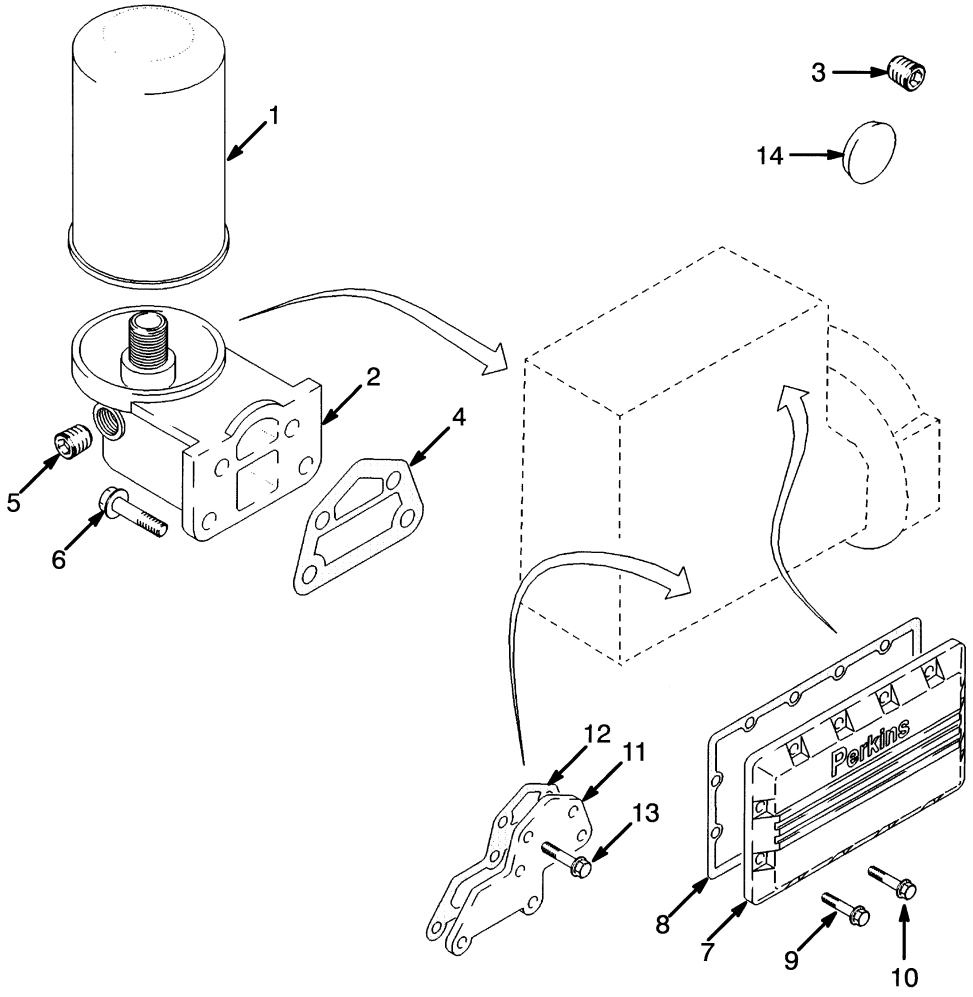

HP090986

ITEM	PART NO.	DESCRIPTION	QTY
	376001	Engine Assy-Diesel	1
1	1327905	Oil Filter	1
2	1391245	Filter Head	1
3	150879	Fitting	1
4	1345800	Gasket	1
5	15483	Fitting	1
6	1306368	Screw	4
7	1318956	Cover	1
8	1383623	Gasket	1
9	1307894	Screw	2
10	386459	Screw	10
11	1318958	Adapter	1
12	1345802	Gasket	1
13	1306365	Screw	2
14	170748	Plug	1
	1379738	Kit-Gasket (Bottom)	1

©2010 HYSTER COMPANY

OIL FILTER (FIGURE 2-29)

DIESEL NON TURBO (S/N D019D01757 → INC. 1753 EXC. 1758)

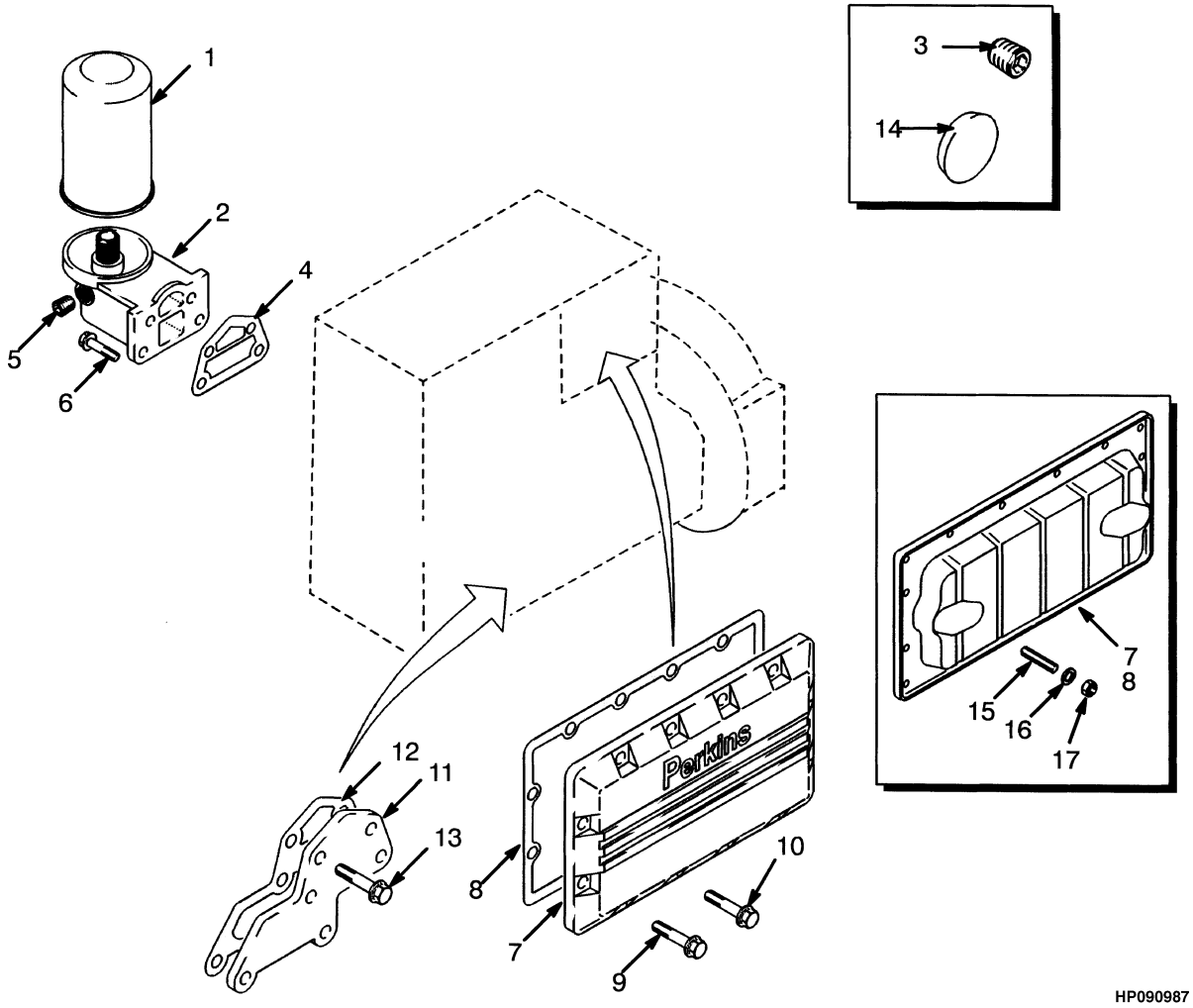

ITEM	PART NO.	DESCRIPTION	QTY
	1376008	Engine Assy-Diesel (Without Sound Reduction)	1
	1376009	Engine Assy-Diesel (With Sound Reduction)	1
1	1327905	Oil Filter	1
2	1391245	Filter Head	1
3	150879	Fitting	1
4	1345800	Gasket	1
5	15483	Fitting	1
6	1306368	Screw	4
7	1318956	Cover	1
7	1453378	Cover	1
8	1383623	Gasket	1
8	1460209	Sealant	AR
9	1307894	Screw	2
10	386459	Screw	10
11	1318958	Adapter	1
12	1345802	Gasket	1
13	1306365	Screw	2
14	170748	Plug	1
15	1306033	Stud	3
16	982256	Spacer	3
17	1306359	Nut	3
	1379738	Kit-Gasket (Bottom)	1

©2010 HYSTER COMPANY

NOTES

©2010 HYSTER COMPANY

OIL FILTER (FIGURE 2-30)

DIESEL TURBO WITHOUT LOW EMISSIONS (→ U647451C)

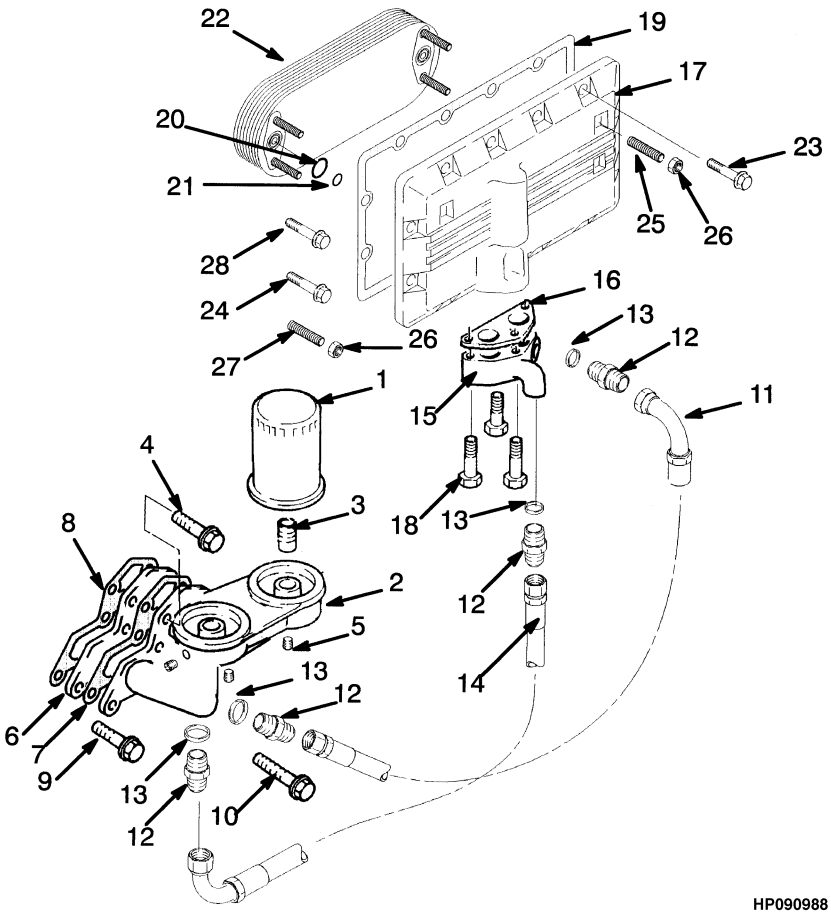

©2010 HYSTER COMPANY

OIL FILTER

DIESEL TURBO WITHOUT LOW EMISSIONS (→ U647451C)

ITEM	PART NO.	DESCRIPTION	QTY
	1377550	Engine Assy-Diesel (Turbo)	1
1	195852	Oil Filter	2
2	1382953	Filter Head	1
3	1382954	Fitting	1
4	1318963	Screw	4
5	15313	Plug	3
6	1382955	Adapter	1
7	1345800	Gasket	1
8	1357098	Gasket	1
9	1306368	Screw	1
10	1307914	Screw	1
11	1382956	Tube Assy	1
12	1382957	Fitting	4
13	1382958	Washer	4
14	1382959	Tube Assy	1
15	1382960	Adapter	1
16	1382961	Gasket	1
17	1383622	Housing	1
18	1318968	Screw	3
19	1383623	Gasket	1
20	1383621	O-Ring	2
21	1311094	O-Ring	1
22	1383620	Oil Cooler	1
23	1306362	Screw	8
24	1315497	Screw	1
25	1383624	Stud	1
26	1306359	Nut	6
27	1384400	Stud	1
28	1307909	Screw	2
	1379738	Kit-Gasket (Bottom)	1

©2010 HYSTER COMPANY

OIL FILTER (FIGURE 2-31)

DIESEL TURBO WITHOUT LOW EMISSIONS (U647452C →)

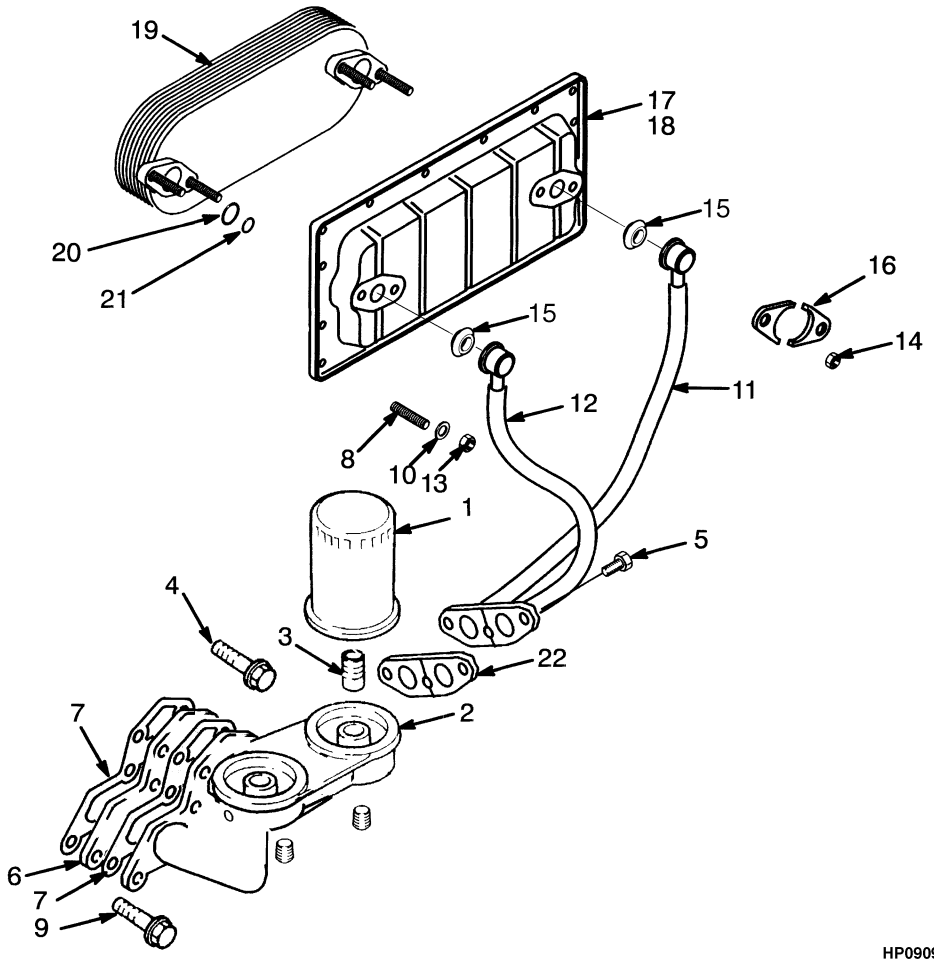

©2010 HYSTER COMPANY

OIL FILTER

DIESEL TURBO WITHOUT LOW EMISSIONS (U647452C →)

ITEM	PART NO.	DESCRIPTION	QTY
	1377550	Engine Assy-Diesel	1
1	195852	Oil Filter	2
2	1382953	Filter Head	1
3	1382954	Fitting	1
4	1318963	Screw	4
5	1306358	Screw	2
6	1382955	Adapter	1
7	1345800	Gasket	2
8	1306033	Stud	3
9	1306368	Screw	1
10	982256	Spacer	3
11	1554083	Tube Assy (Oil)	1
12	1526729	Tube Assy (Oil)	1
13	1306358	Screw	3
14	1307891	Nut	4
15	1537286	Seal	4
16	1451729	Flange	4
17	1451728	Housing	1
17	1495937	Gasket	1
18	1460209	Sealant	1
19	1460103	Oil Cooler	1
20	1451727	Seal	4
21	1537286	Seal	4
22	1382961	Gasket	1

©2010 HYSTER COMPANY

OIL FILTER (FIGURE 2-32)
DIESEL TURBO WITH LOW EMISSIONS

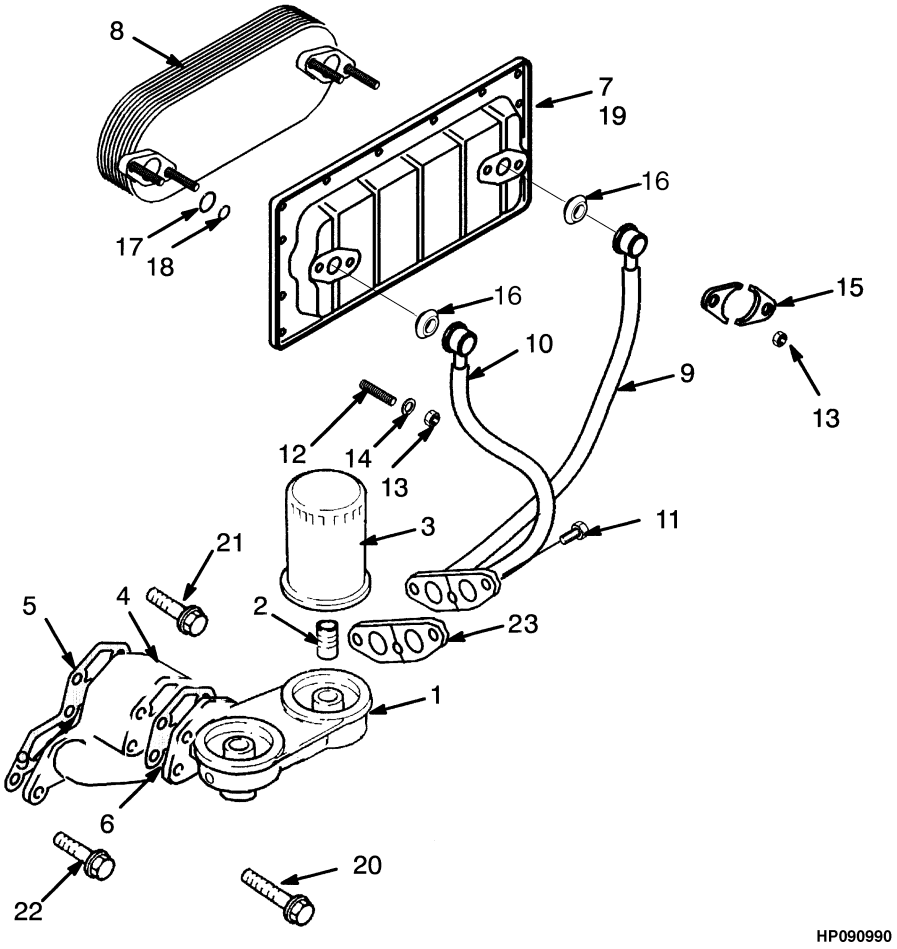

©2010 HYSTER COMPANY

OIL FILTER

DIESEL TURBO WITH LOW EMISSIONS

ITEM	PART NO.	DESCRIPTION	QTY
	1395975	Engine Assy-Diesel (Turbo)	1
1	1382953	Filter Head	1
2	1382954	Fitting	1
3	195852	Oil Filter	2
4	1451722	Adapter	1
5	1451723	Gasket	1
6	1345800	Gasket	1
7	1451728	Housing	1
7	1495937	Gasket	1
8	1451726	Oil Cooler	1
9	1554083	Tube Assy (Oil)	1
10	1526729	Tube Assy (Oil)	1
11	1306358	Screw	3
12	1306033	Stud	3
13	1306359	Nut	7
14	982256	Spacer	3
15	1451729	Flange	4
16	1537286	Seal	4
17	1451727	Seal	4
18	1311094	O-Ring	2
19	1460209	Sealant	1
20	1307913	Screw	1
21	1307881	Screw	13
22	1306368	Screw	1
23	1382961	Gasket	1
	1530618	Kit-Gasket (Low Emissions)	1

©2010 HYSTER COMPANY

MANIFOLD (FIGURE 2-33)
DIESEL NON TURBO

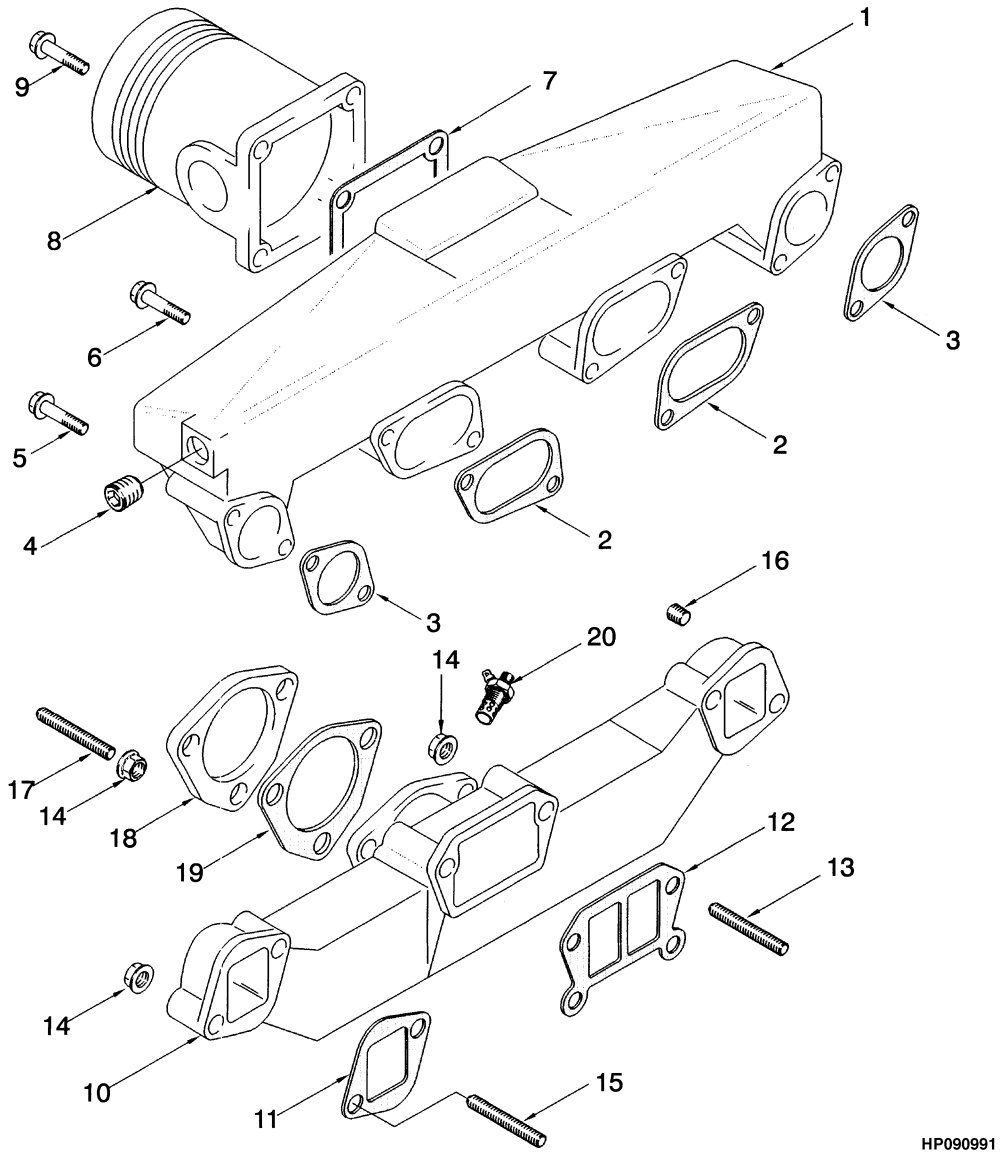

©2010 HYSTER COMPANY

MANIFOLD
DIESEL NON TURBO

ITEM	PART NO.	DESCRIPTION	QTY
	a 376001	Engine Assy-Diesel	1
	b 1376008	Engine Assy-Diesel (Without Sound Reduction)	1
	b 1376009	Engine Assy-Diesel (With Sound Reduction)	1
1	1319041	Intake Manifold	1
2	301806	Gasket	2
3	301805	Gasket	2
4	982155	Plug	1
5	1319042	Screw	6
6	1319043	Screw	2
7	1345793	Gasket	1
8	1319045	Connector	1
9	1307910	Capscrew	4
10	1319046	Exhaust Manifold	1
11	367338	Gasket	2
12	303835	Gasket (Center)	1
13	1319047	Stud	4
14	**a** 1306370	Nut	12
14	**b** 1306370	Nut	9
15	1307911	Stud	2
16	1318904	Plug	2
17	1459728	Stud	4
18	1306224	Flange	1
19	1355319	Gasket	1
20	245885	Glow Plug (Intake)	1
	1369431	Kit-Gasket (Top)	1

FOOTNOTES:

a → S/N D019D01756 INC. 1758 EXC. 1753

b S/N D019D01757 → INC. 1753 EXC. 1758

©2010 HYSTER COMPANY

MANIFOLD (FIGURE 2-34)
DIESEL TURBO WITHOUT LOW EMISSIONS

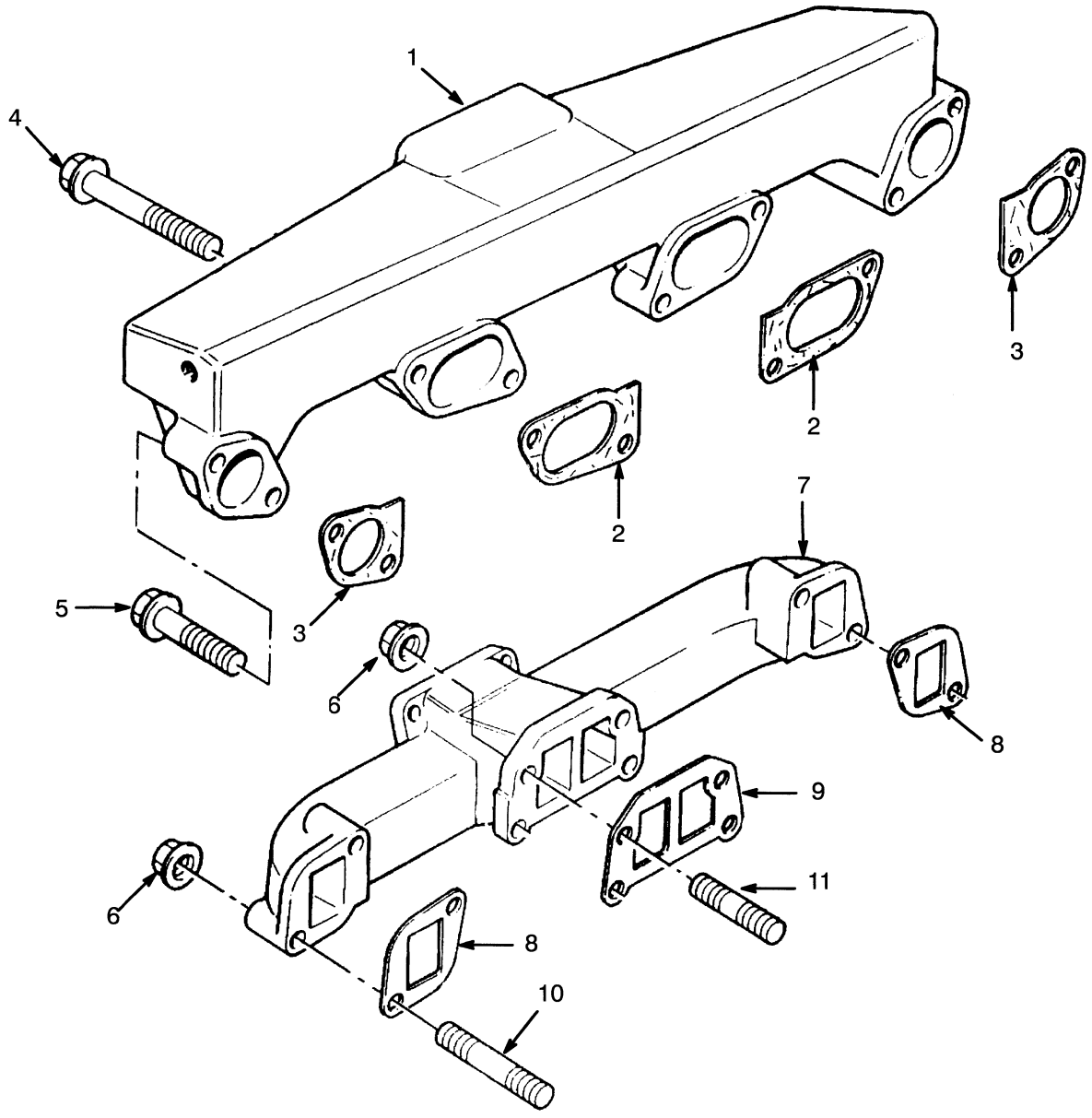

HP090992

©2010 HYSTER COMPANY

MANIFOLD

DIESEL TURBO WITHOUT LOW EMISSIONS

ITEM	PART NO.	DESCRIPTION	QTY
	1377550	Engine Assy-Diesel (Turbo)	1
1	1319041	Intake Manifold	1
2	301806	Gasket	2
3	301805	Gasket	2
4	1319043	Screw	2
5	1319042	Screw	6
6	1306370	Nut	2
7	1382467	Exhaust Manifold	1
8	367338	Gasket	2
9	1369073	Gasket (Center)	1
10	1460564	Stud	4
11	1382468	Stud	4
	1369431	Kit-Gasket (Top)	1

©2010 HYSTER COMPANY

MANIFOLD (FIGURE 2-35)
DIESEL TURBO WITH LOW EMISSIONS

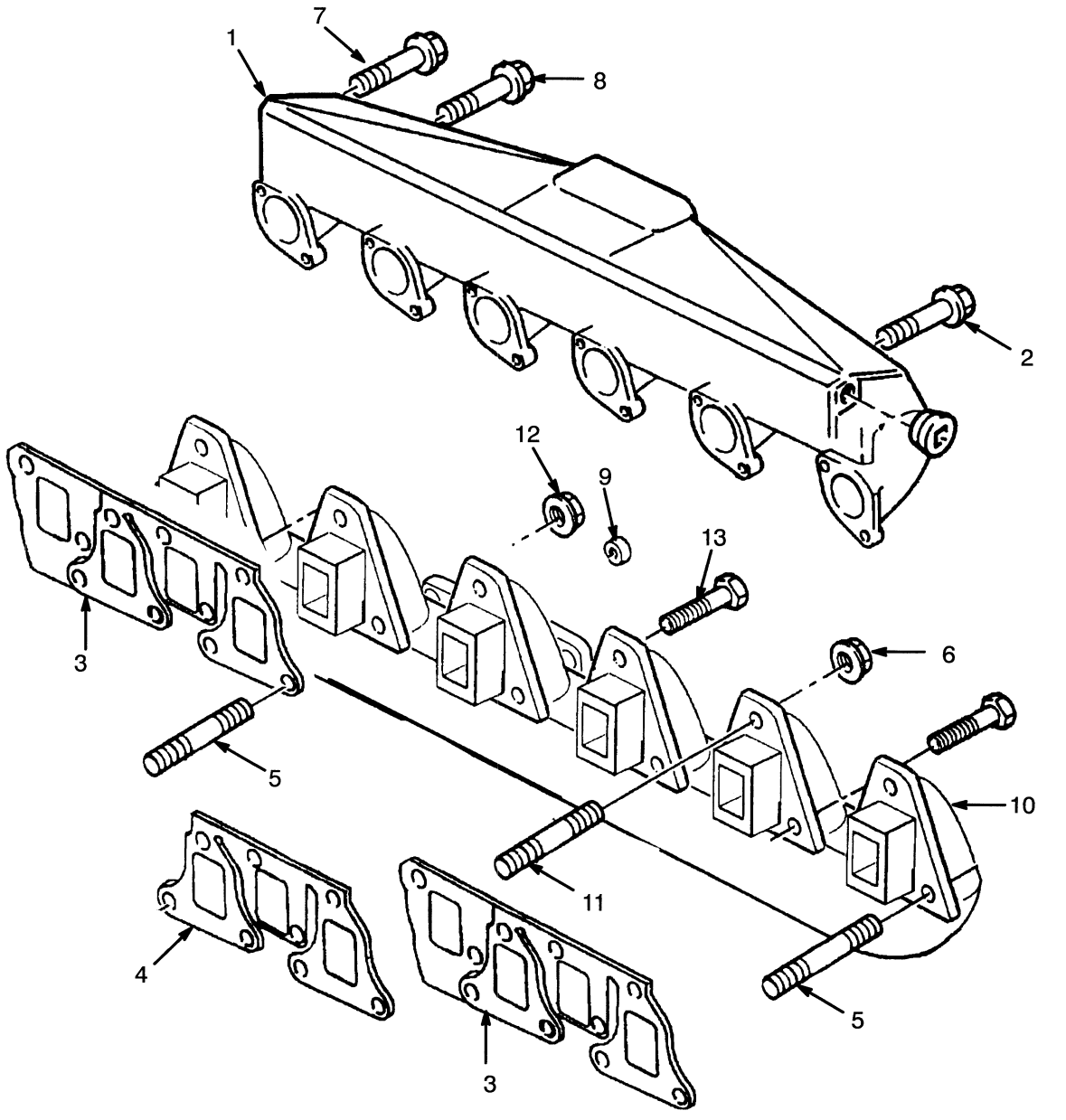

©2010 HYSTER COMPANY

MANIFOLD

DIESEL TURBO WITH LOW EMISSIONS

ITEM	PART NO.	DESCRIPTION	QTY
	1395975	Engine Assy-Diesel (Turbo)	1
1	1451749	Manifold (Intake)	1
2	1452800	Screw	6
3	1451750	Gasket	2
4	1451751	Gasket	1
5	1451754	Stud	12
6	1451753	Nut	20
7	1307908	Screw	5
8	1451758	Screw	1
9	1453185	Sleeve	2
10	1451752	Exhaust Manifold (Exhaust)	1
11	1459731	Stud	5
12	1454267	Nut	5
13	1453390	Screw	1
	1565146	Kit-Gasket (Top)	1

©2010 HYSTER COMPANY

WATER PUMP (FIGURE 2-36)

DIESEL (→ S/N D019D01756 INC. 1758 EXC. 1753)

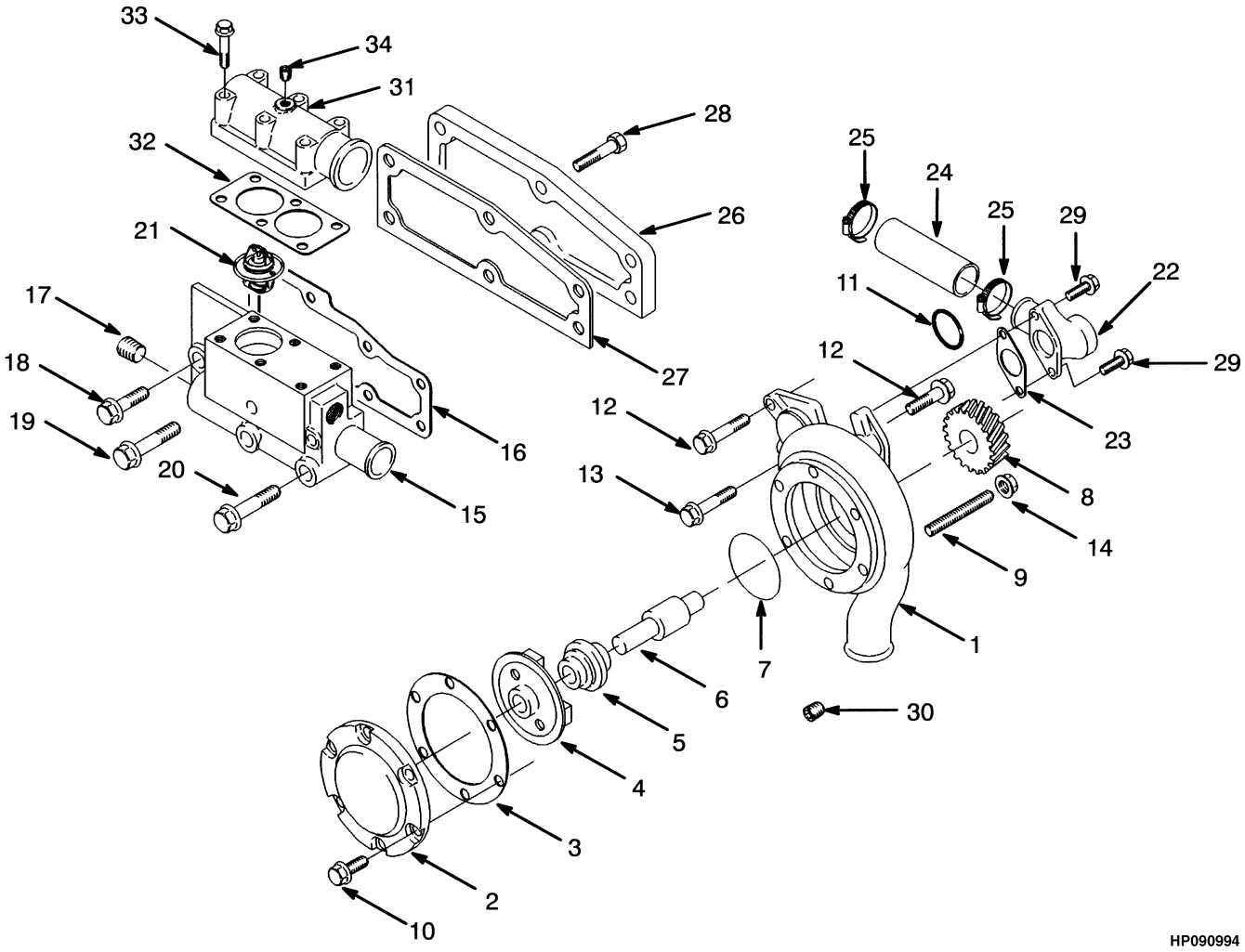

©2010 HYSTER COMPANY

WATER PUMP

DIESEL (→ S/N D019D01756 INC. 1758 EXC. 1753)

ITEM	PART NO.	DESCRIPTION	QTY
	376001	Engine Assy-Diesel	1
1	**a** 1338837	Water Pump	1
1	. . . . .	Body	1
2	1306201	Cover	1
3	1345785	Gasket	1
4	. . . . .	Impeller	1
5	1307904	Seal	1
6	. . . . .	Shaft	1
7	1307902	Seal	1
8	1318967	Gear	1
9	1338838	Screw	3
10	1307900	Screw	6
11	1466858	O-Ring	1
12	1306373	Screw	2
13	1307895	Screw	1
14	1306359	Nut	3
15	1318962	Housing	1
16	1345798	Gasket	1
17	15962	Fitting	2
18	1307898	Screw	1
19	1318921	Screw	2
20	1318963	Screw	2
21	301793	Thermostat	2
22	1306205	Connector	1
23	1345791	Gasket	1
24	1309831	Kit-Hose	1
25	119236	Clamp	2
26	1306199	Plate	1
27	1369074	Gasket	1
28	1307881	Screw	3
29	1307913	Screw	2
30	1318964	Plug	1
31	1306208	Connector	1
32	1345792	Gasket	1
33	1318968	Screw	4
33	1307898	Screw	2
34	349378	Plug	1
	1379738	Kit-Gasket (Bottom)	1
	1319089	Kit-Repair Water Pump	1
	1369431	Kit-Gasket (Top)	1

FOOTNOTES:

a Remanufactured Water Pump 3026190

©2010 HYSTER COMPANY

WATER PUMP (FIGURE 2-37)

DIESEL (S/N D019D01757 → INC. 1753 EXC. 1758)

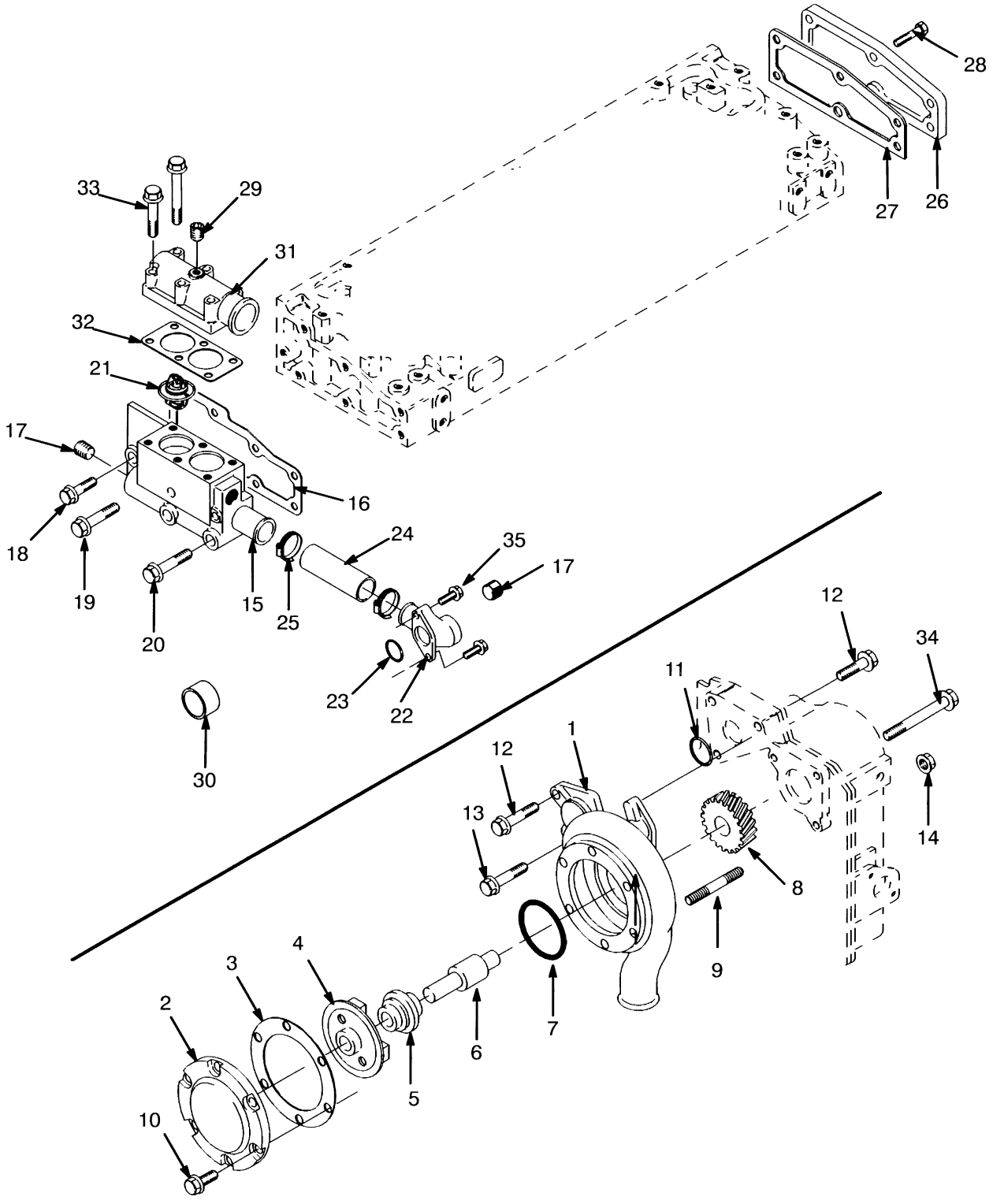

©2010 HYSTER COMPANY

WATER PUMP

DIESEL (S/N D019D01757 → INC. 1753 EXC. 1758)

ITEM	PART NO.	DESCRIPTION	QTY
	1376008	Engine Assy-Diesel (Without Sound Reduction)	1
	1376009	Engine Assy-Diesel (With Sound Reduction)	1
	1377550	Engine Assy-Diesel (Turbo)	1
1	**a** 1457099	Water Pump	1
1	. . . . .	Body	1
2	. . . . .	Cover	1
3	1345785	Gasket	1
4	. . . . .	Impeller	1
5	1388376	Seal	1
6	. . . . .	Shaft	1
7	1307902	Seal	1
8	1318967	Gear	1
9	1307901	Stud	3
10	1369041	Screw	6
11	1466858	O-Ring	1
12	1306373	Screw	2
13	1307895	Screw	1
14	1306359	Nut	3
15	1318962	Housing	1
16	1345798	Gasket	1
17	15962	Fitting	3
18	1307898	Screw	3
19	1318921	Screw	2
20	1318963	Screw	2
21	301793	Thermostat (180° F)	2
22	1454317	Fitting	1
23	1454318	O-Ring	1
24	1309831	Kit-Hose	1
25	119236	Clamp	2
26	1306199	Plate	1
27	1369074	Gasket	1
28	1307881	Screw	3
29	349378	Plug	1
30	1318964	Plug	1
31	1306208	Connector	1
32	1345792	Gasket	1
33	1318968	Screw	6
34	1338838	Screw	3
35	1307913	Screw	2
	1380263	Kit-Repair Water Pump	1
	1369431	Kit-Gasket (Top)	1

FOOTNOTES:

a Remanufactured Water Pump 3026190R

©2010 HYSTER COMPANY

WATER PUMP (FIGURE 2-38)

DIESEL TURBO WITH LOW EMISSIONS (S/N D019D02377 →)

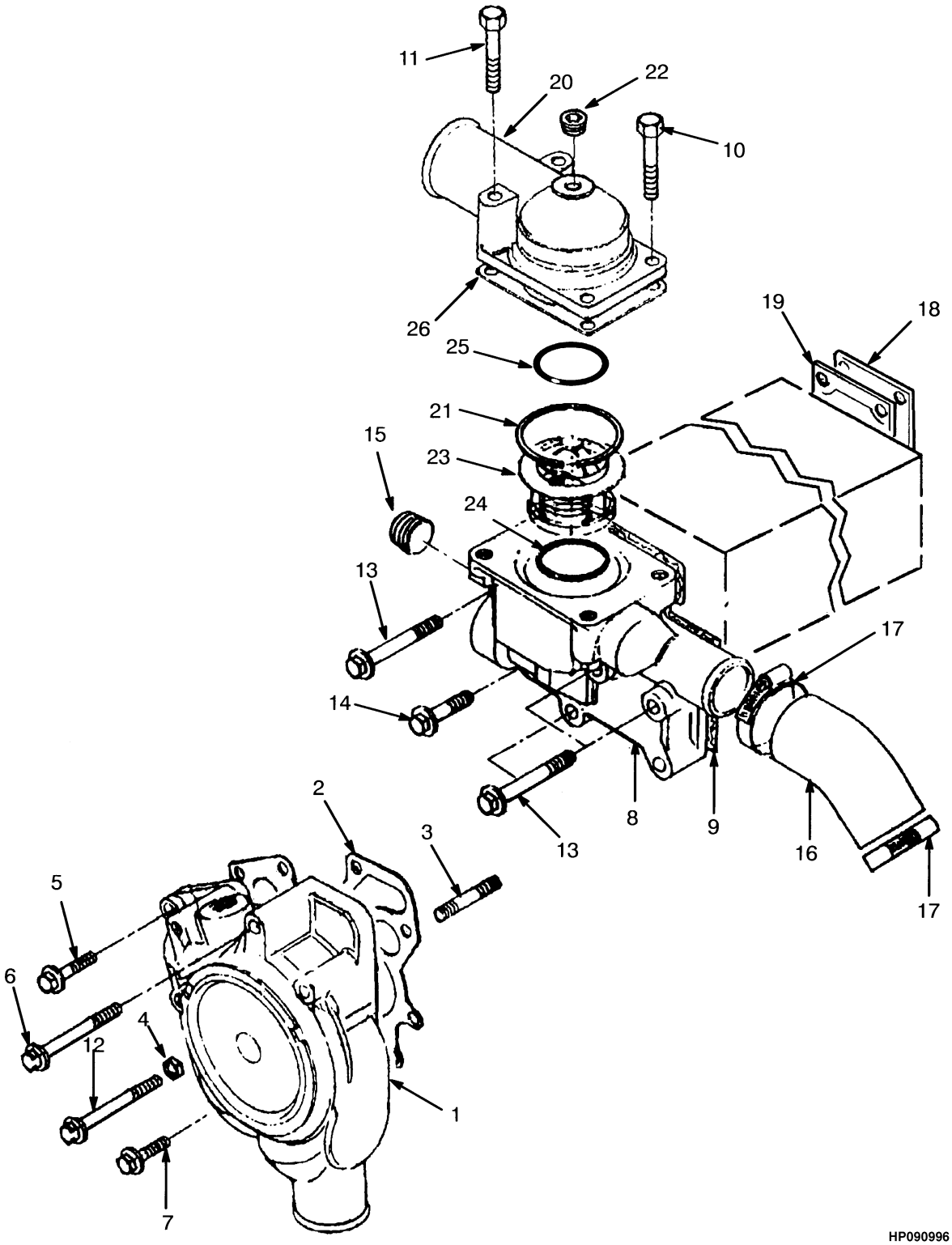

©2010 HYSTER COMPANY

WATER PUMP

DIESEL TURBO WITH LOW EMISSIONS (S/N D019D02377 →)

ITEM	PART NO.	DESCRIPTION	QTY
	1395975	Engine Assy-Diesel (Turbo)	1
1	**a** 1460454	Water Pump	1
1	**c** 1465895	Water Pump	1
1	**f** 1545442	Water Pump	1
2	1451733	Gasket	1
3	1451731	Stud	2
4	1306359	Nut	2
5	1315497	Screw	1
6	1307908	Screw	4
7	1307894	Screw	3
8	1466329	Thermostat Housing	1
9	1451735	Gasket	1
10	**b** 386459	Screw	2
10	**d** 1318968	Screw	2
11	**b** 1307881	Screw	6
11	**d** 1306358	Screw	2
12	1318965	Screw	1
13	1307898	Screw	5
14	**b** 1318921	Screw	3
14	**d** 1318921	Screw	1
15	15962	Fitting	1
16	1451736	Kit-Hose	1
17	127045	Clamp (Hose)	2
18	1456742	Plate	1
19	1451739	Gasket	1
20	**b** 1451741	Fitting	1
20	**d** 1465803	Thermostat Housing	1
20	**e** 1537294	Fitting	1
21	1465810	O-Ring	1
22	**b** 1465811	Plug	1
22	**d** 349378	Plug	1
23	**b** 1456745	Thermostat	1
23	**d** 1456745	Thermostat	1
23	**e** 1466053	Thermostat	1
24	**b** 1451737	O-Ring	1
24	**d** 1451737	O-Ring	1
25	**b** 1465812	Ring	1
25	**d** 1451738	Ring	1
26	1451742	Gasket	1
	1460560	Kit-Repair Water Pump	1
	1565146	Kit-Gasket (Top)	1
	1537291	Kit-Repair Water Pump	1

FOOTNOTES:

a → 6/1999
b → U654221C
c 6/1999 ↔ 5/2003
d U654222C ↔ U654243C
e U6545244C →
f 5/2003 →

©2010 HYSTER COMPANY

TURBOCHARGER (FIGURE 2-39)
DIESEL TURBO

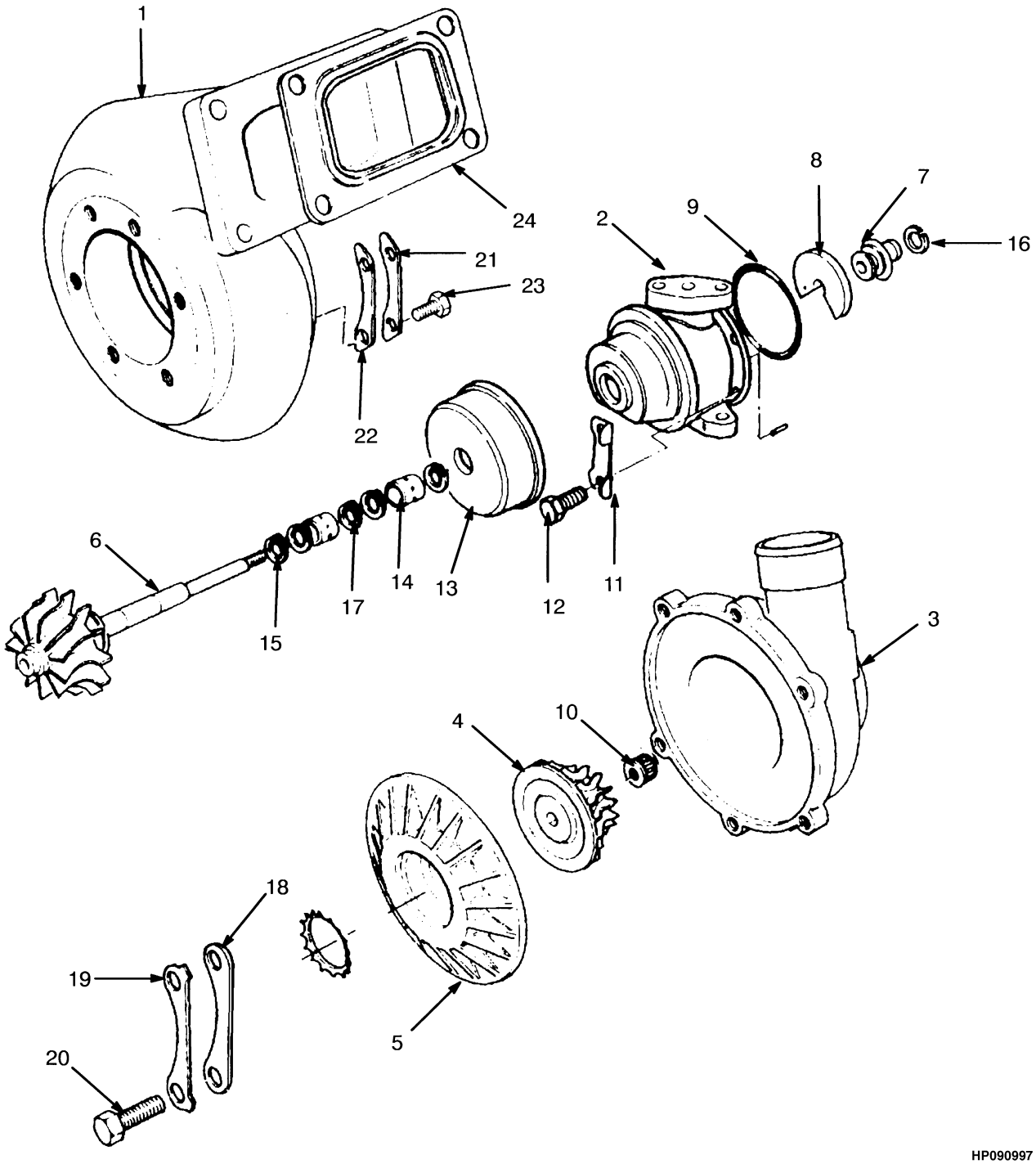

©2010 HYSTER COMPANY

TURBOCHARGER
DIESEL TURBO

ITEM	PART NO.	DESCRIPTION	QTY
	1377550	Engine Assy-Diesel (Turbo)	1
1	1382528	Turbocharger	1
2	1382530	Housing	1
3	1382531	Housing	1
4	1382532	Wheel	1
5	349479	Plate	1
6	303820	Shaft	1
7	303828	Collar	1
8	303829	Thrust Bearing	1
9	303826	Sealing Ring	1
10	303819	Nut	6
11	303825	Washer	2
12	303824	Setscrew	4
13	. . . . .	Shroud	1
14	303830	Bearing	1
15	349478	Piston Ring	1
16	303827	Piston Ring	1
17	303831	Snap Ring	4
18	303808	Clamp	3
19	303810	Washer	3
20	303809	Setscrew	6
21	303814	Washer	3
22	303812	Clamp	3
23	303809	Setscrew	6
24	1357789	Gasket	1
	349480	Kit-Compressor	1

©2010 HYSTER COMPANY

TURBOCHARGER (FIGURE 2-40)

DIESEL TURBO (S/N D019D02377 →)

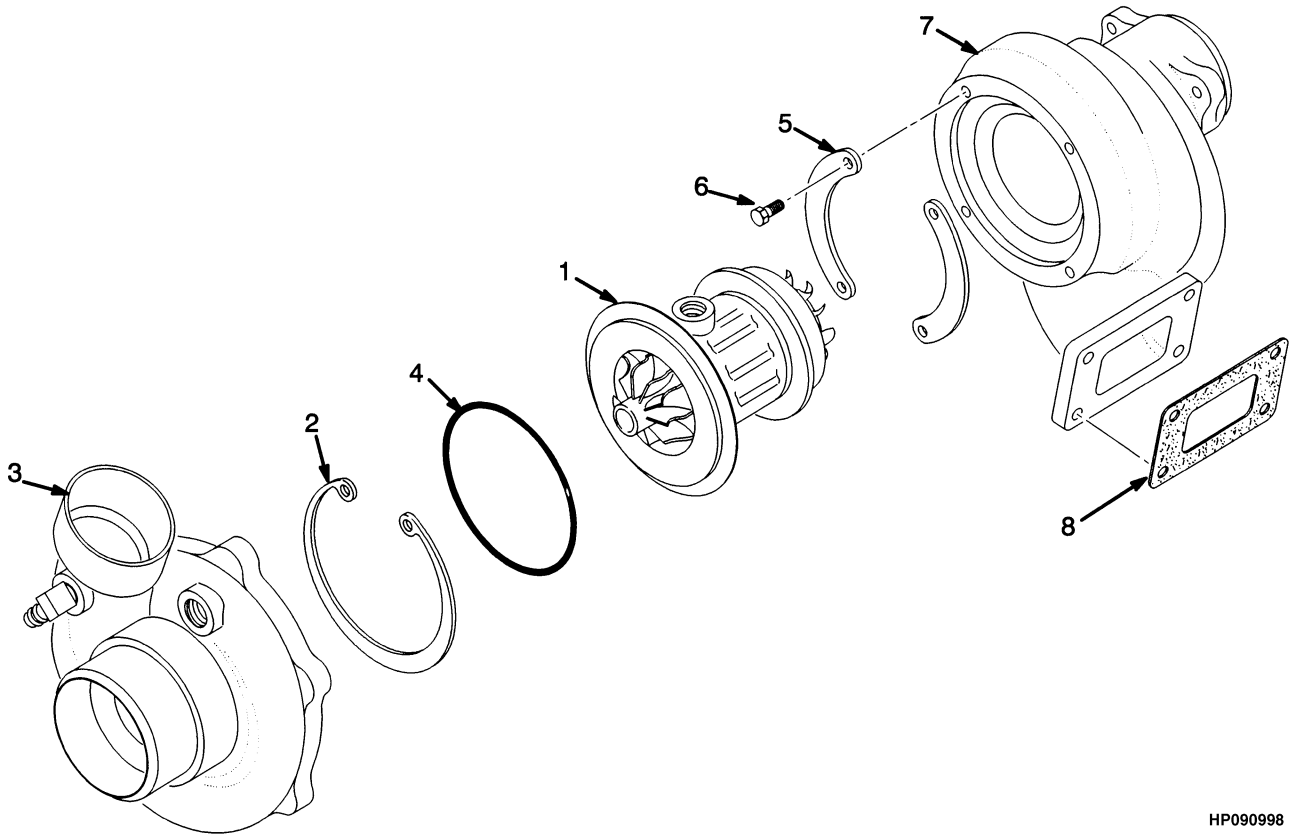

©2010 HYSTER COMPANY

ITEM	PART NO.	DESCRIPTION	QTY
	1395975	Engine Assy-Diesel (Turbo)	1
	1451759	Turbocharger	1
1	1467401	Housing	1
2	1467402	Retaining Ring	1
3	1467403	Housing	1
3	1467404	Wheel	1
4	1467405	O-Ring	1
6	361298	Bolt	4
7	1467407	Housing	1
7	1467408	Wheel	1
7	1467409	Bolt	1
8	1451760	Gasket	1

©2010 HYSTER COMPANY

AIR DUCTS (FIGURE 2-41)
DIESEL TURBO

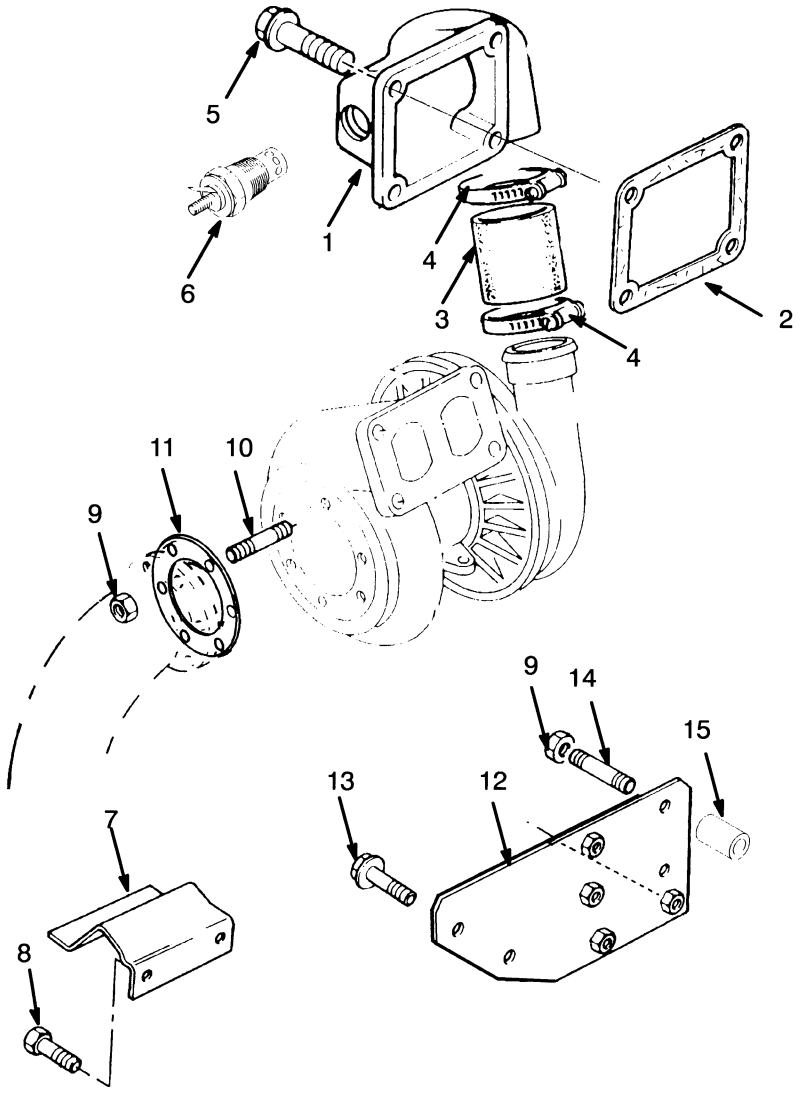

©2010 HYSTER COMPANY

AIR DUCTS
DIESEL TURBO

KEY:
A: Without Emissions
B: With Emissions

ITEM	PART NO.	DESCRIPTION	QTY A	QTY B
1	1382534	Elbow	1	..
1	**a** 1451761	Elbow	..	1
2	1345793	Gasket	1	..
2	**a** 1451762	Gasket	..	1
3	1454296	Hose	1	..
3	**a** 1451763	Hose	..	1
4	119236	Clamp	2	2
5	1343174	Screw	4	..
5	**a** 1307897	Screw	..	4
6	245885	Glow Plug (Intake)	1	1
7	306751	Shield	12	..
8	1307881	Screw	2	..
9	1382472	Nut	6	..
9	1460066	Nut	..	6
10	1382471	Stud	6	6
11	1382470	Gasket	1	1
12	1382526	Heat Shield	1	..
12	**a** 1451764	Heat Shield	..	1
13	1315497	Screw	2	..
13	**a** 1307886	Screw	..	3
14	1382527	Stud	2	..
15	303865	Spacer	1	..
	1565146	Kit-Gasket (Top) (Top)	1	1
	1369431	Kit-Gasket (Top)	1	1

FOOTNOTES:

a S/N D019D02377 →

©2010 HYSTER COMPANY

LUBRICANT SYSTEM (FIGURE 2-42)
DIESEL TURBO

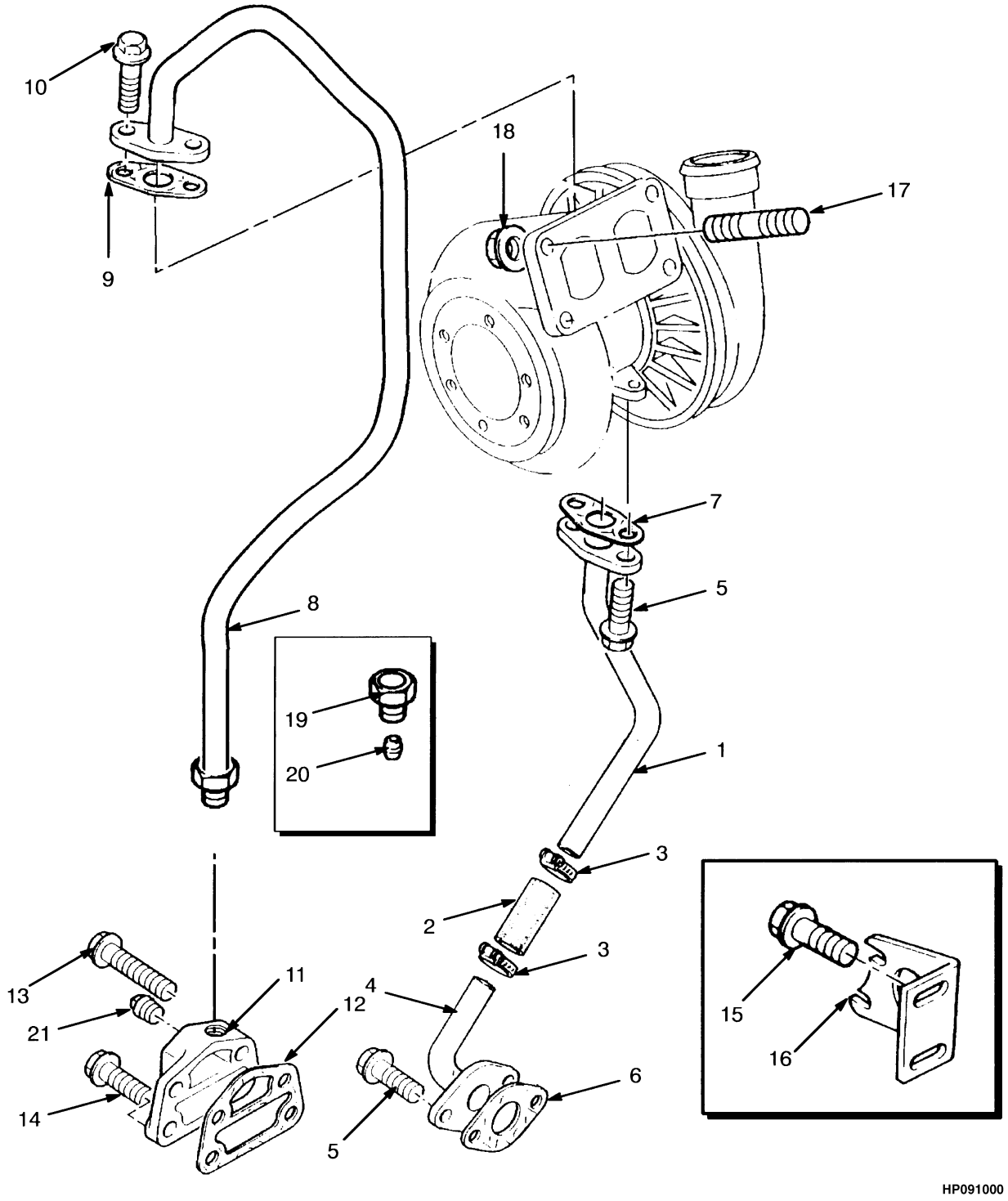

©2010 HYSTER COMPANY

LUBRICANT SYSTEM
DIESEL TURBO

KEY:
A: Without Emissions
B: With Emissions

ITEM	PART NO.	DESCRIPTION	QTY A	QTY B
1	1382536	Tube Assy (Oil)	1	..
1	**a** 1451755	Tube Assy (Oil)	..	1
2	1537307	Hose	1	..
2	**a** 1451756	Hose	..	1
3	1380250	Clip	2	..
3	130845	Clamp	..	2
4	1382459	Tube Assy	1	..
4	**a** 1451719	Tube Assy	..	1
5	1307881	Screw	4	..
6	1345751	Gasket	1	1
7	1357097	Gasket	1	1
8	1382539	Tube Assy (Oil)	1	..
8	**a** 1459453	Pipe (Oil)	..	1
9	1344924	Gasket	1	1
10	386459	Screw	2	4
11	1311085	Adapter	1	..
11	1459455	Adapter	..	1
12	1345800	Gasket	1	..
13	1382963	Screw	1	..
13	1369081	Screw	..	1
14	1307910	Capscrew	3	..
15	1307881	Screw	2	..
16	1382538	Bracket	1	..
17	1307877	Stud	6	..
17	**a** 1307890	Stud	..	4
18	1306370	Nut	6	..
18	**a** 1451753	Nut	..	4
19	224384	Nut	..	1
20	158160	Sleeve	..	1
21	1459454	Screw	..	1
	1565146	Kit-Gasket (Top)	1	1
	1379738	Kit-Gasket (Bottom)	1	1
	1369431	Kit-Gasket (Top)	1	1

FOOTNOTES:

a S/N D019D02377 →

©2010 HYSTER COMPANY

CYLINDER BLOCK (FIGURE 2-43)
LPG

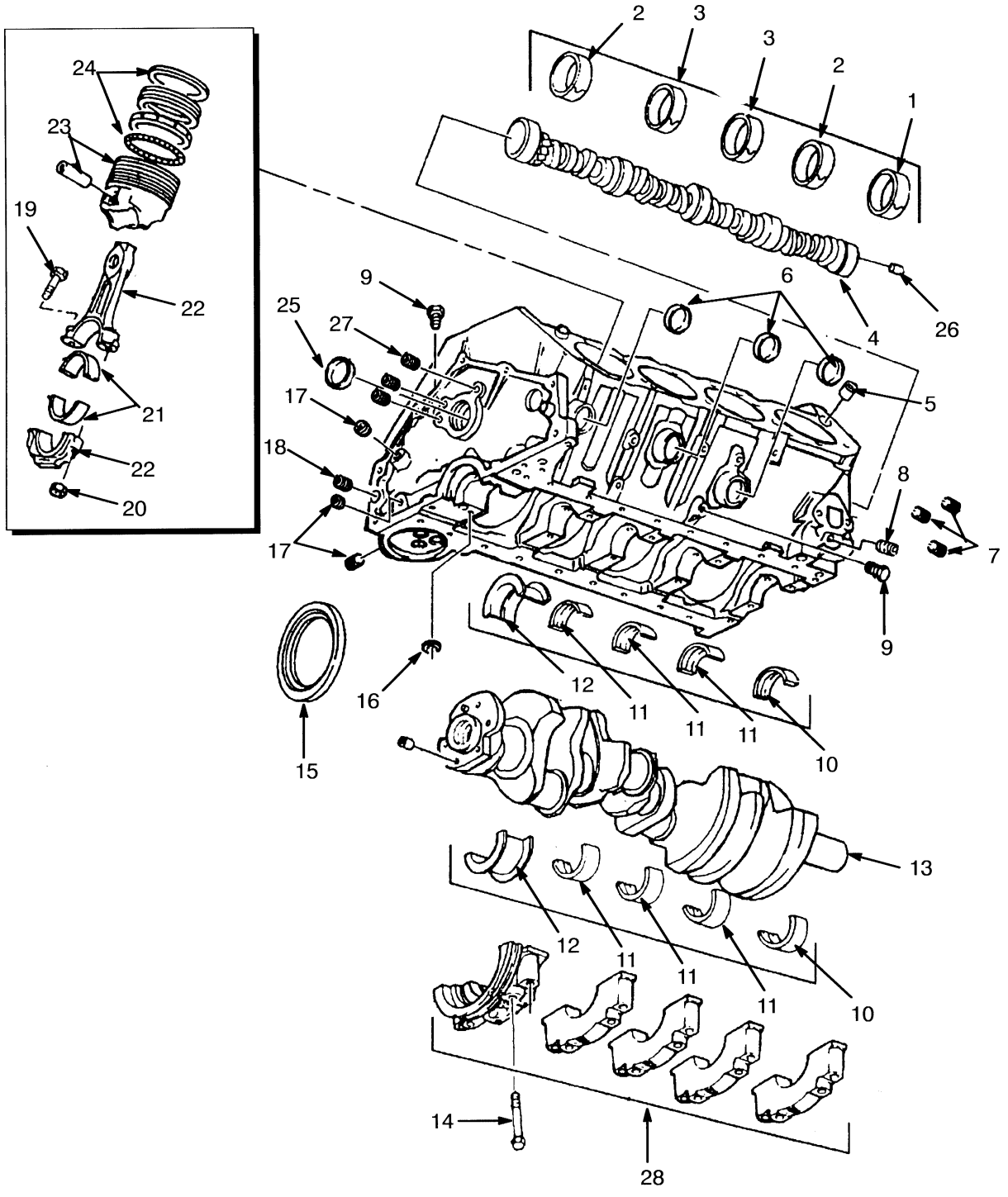

HP091001

©2010 HYSTER COMPANY

CYLINDER BLOCK
LPG

ITEM	PART NO.	DESCRIPTION	QTY
	a	Engine Assembly	1
1	1451220	Bearing	1
2	1451221	Bearing	2
3	1451222	Bearing	2
4	1451034	Camshaft	1
5	1451223	Pin	4
6	159971	Plug	6
7	1451224	Plug	3
8	1331341	Plug	3
9	274232	Plug	2
10	1451225	Bearing Set	1
11	1451226	Bearing Set	3
12	1451227	Bearing Set	1
13	1451228	Crankshaft	1
14	1451229	Bolt	10
15	1451230	Seal	1
16	1451231	Seal	1
17	1331341	Plug	3
18	1335499	Pin	2
19	1451234	Bolt	16
20	1375954	Nut	16
21	1451232	Bearing Set	8
22	1451233	Rod	8
23	1451235	Piston (Standard)	8
23	1451236	Piston	8
24	1451237	Kit-Piston Ring (Standard)	8
24	1451238	Kit-Piston Ring	8
25	1451240	Plug	1
26	1450941	Pin	1
27	1335216	Plug	3
28	. . . . .	Bearing Cup	5

FOOTNOTES:

a Assembly Number Not Available

©2010 HYSTER COMPANY

CYLINDER HEAD AND VALVES (FIGURE 2-44)

LPG

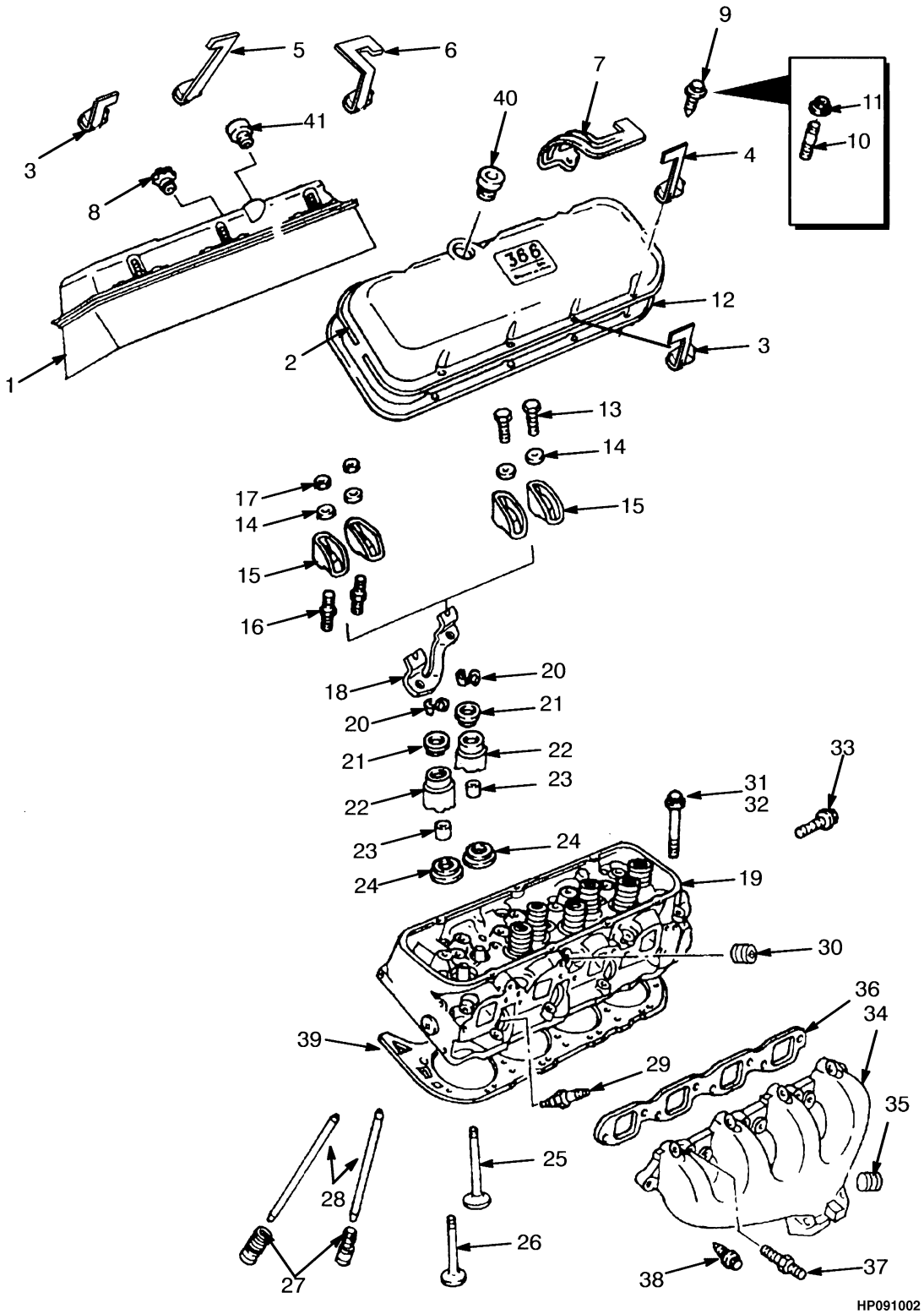

©2010 HYSTER COMPANY

CYLINDER HEAD AND VALVES
LPG

ITEM	PART NO.	DESCRIPTION	QTY
	a	Engine Assembly	1
1	1451241	Cover (RH)	1
2	1451243	Cover (LH)	1
3	1451244	Support	5
4	1451245	Support (LH)	1
5	1451246	Support (RH)	1
6	1451247	Support (RH)	1
7	1451248	Support (LH)	1
8	244901	Breather	1
9	1451250	Bolt	14
10	370155	Stud	AR
11	1451249	Nut	AR
12	1451242	Gasket	2
13	1451251	Bolt	16
14	1451253	Ball	16
15	1451252	Kit-Rocker Arm	16
16	1451279	Stud	16
17	1451249	Nut	16
18	1451255	Guide	8
19	1451261	Cylinder Head	2
20	1451256	Key	32
21	1451257	Cap	8
22	1451258	Spring	8
23	1451287	Seal	8
24	1451259	Rotator	8
25	1451270	Inlet Valve (0.003 in. O/S)	4
25	1451271	Inlet Valve (0.015 in. O/S)	4
25	1451272	Inlet Valve (0.030 in. O/S)	4
26	1451273	Exhaust Valve (Standard)	8
26	1451274	Exhaust Valve (0.0035 in. O/S)	8
26	1451275	Exhaust Valve (0.0155 in. O/S)	8
26	1451276	Exhaust Valve (0.0305 in. O/S)	8
27	1335243	Valve Lifter	16
28	1451277	Rod (Exhaust)	8
28	1451278	Rod (Intake)	8
29	1451269	Spark Plug	8
30	14349	Fitting (Pipe Plug)	2
30	1451264	Sealant	AR
31	1451262	Bolt	24
32	1335479	Bolt	8
33	1451263	Bolt	2
34	1451265	Manifold (LH)	1
34	1451266	Manifold (RH)	1
35	894572	Plug (Exhaust)	1
36	1451284	Gasket	2
37	1451267	Stud	15
38	1451268	Bolt	8
39	1451288	Cylinder Head Gasket	2
40	94724	Grommet	1
41	1451280	Cap	1

©2010 HYSTER COMPANY

CYLINDER HEAD AND VALVES
LPG

ITEM	PART NO.	DESCRIPTION	QTY
	1450953	Kit-Gasket	1

FOOTNOTES:

a Engine Assembly Not Available

©2010 HYSTER COMPANY

NOTES

©2010 HYSTER COMPANY

INTAKE MANIFOLD (FIGURE 2-45)

LPG

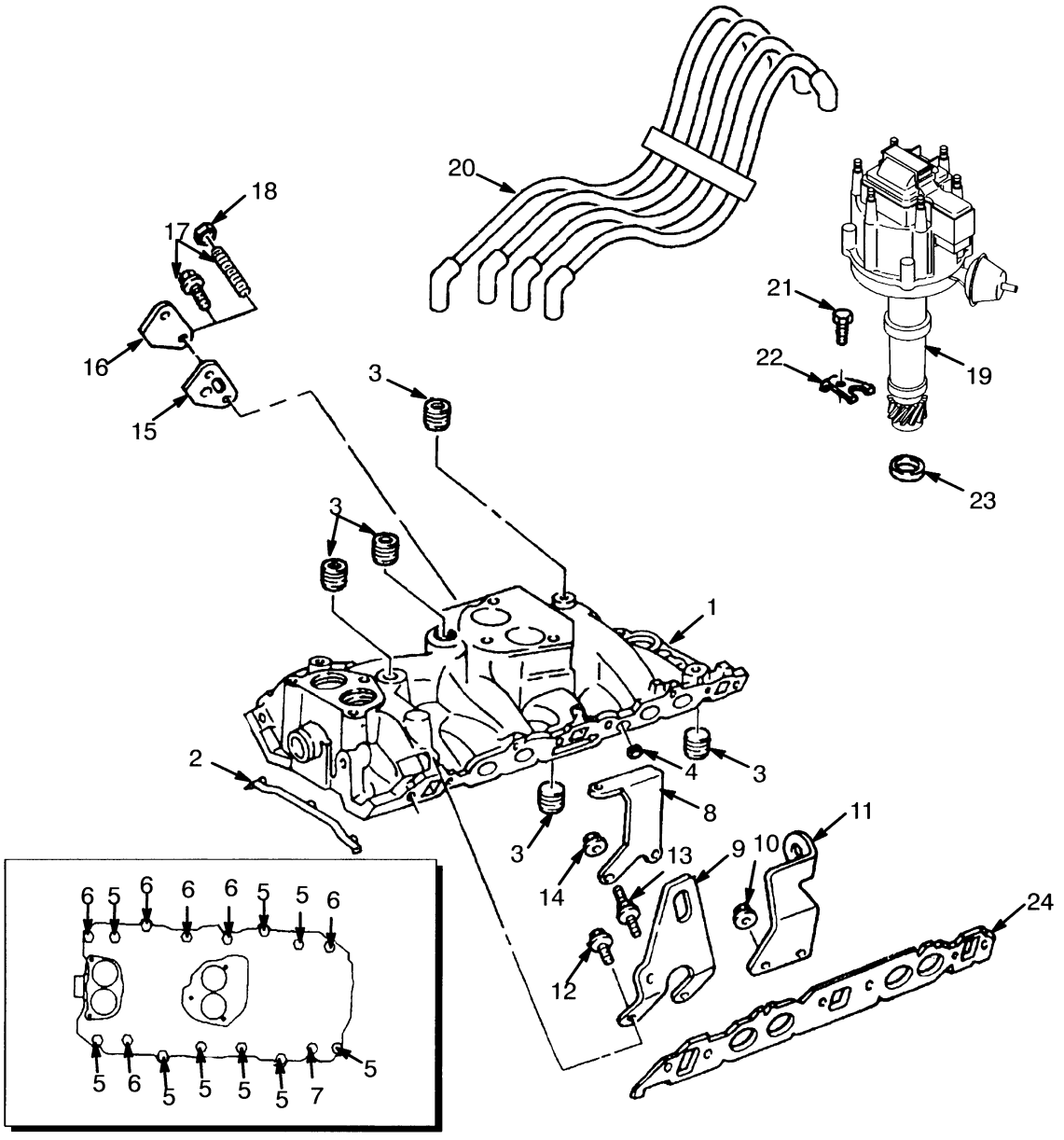

©2010 HYSTER COMPANY

INTAKE MANIFOLD
LPG

ITEM	PART NO.	DESCRIPTION	QTY
	a	Engine Assembly	1
1	1450948	Manifold (Intake)	1
2	. . . . .	Gasket	1
3	1450949	Plug	5
4	1450950	Plug	4
5	1450947	Stud	9
6	388308	Bolt	6
7	1450952	Bolt	1
8	1450994	Bracket	1
9	. . . . .	Bracket	1
10	1450990	Nut	1
11	1450996	Bracket	1
12	388308	Bolt	6
13	1450947	Stud	8
14	. . . . .	Nut	2
15	894522	Gasket	1
16	1374112	Cover	1
17	388364	Stud	2
17	221455	Capscrew (Optional)	AR
18	1360178	Nut	2
19	894570	Distributor	1
20	. . . . .	Spark Plug Wire Assembly (RH)	1
20	. . . . .	Spark Plug Wire Assembly (LH)	1
21	1451213	Bolt	1
22	1335497	Clamp	1
23	1334423	Gasket	1
24	. . . . .	Gasket	1
	1450953	Kit-Gasket	1
	1471336	Kit-Ignition Cable	1

FOOTNOTES:

a Engine Assembly Not Available

©2010 HYSTER COMPANY

OIL PUMP AND PAN (FIGURE 2-46)
LPG

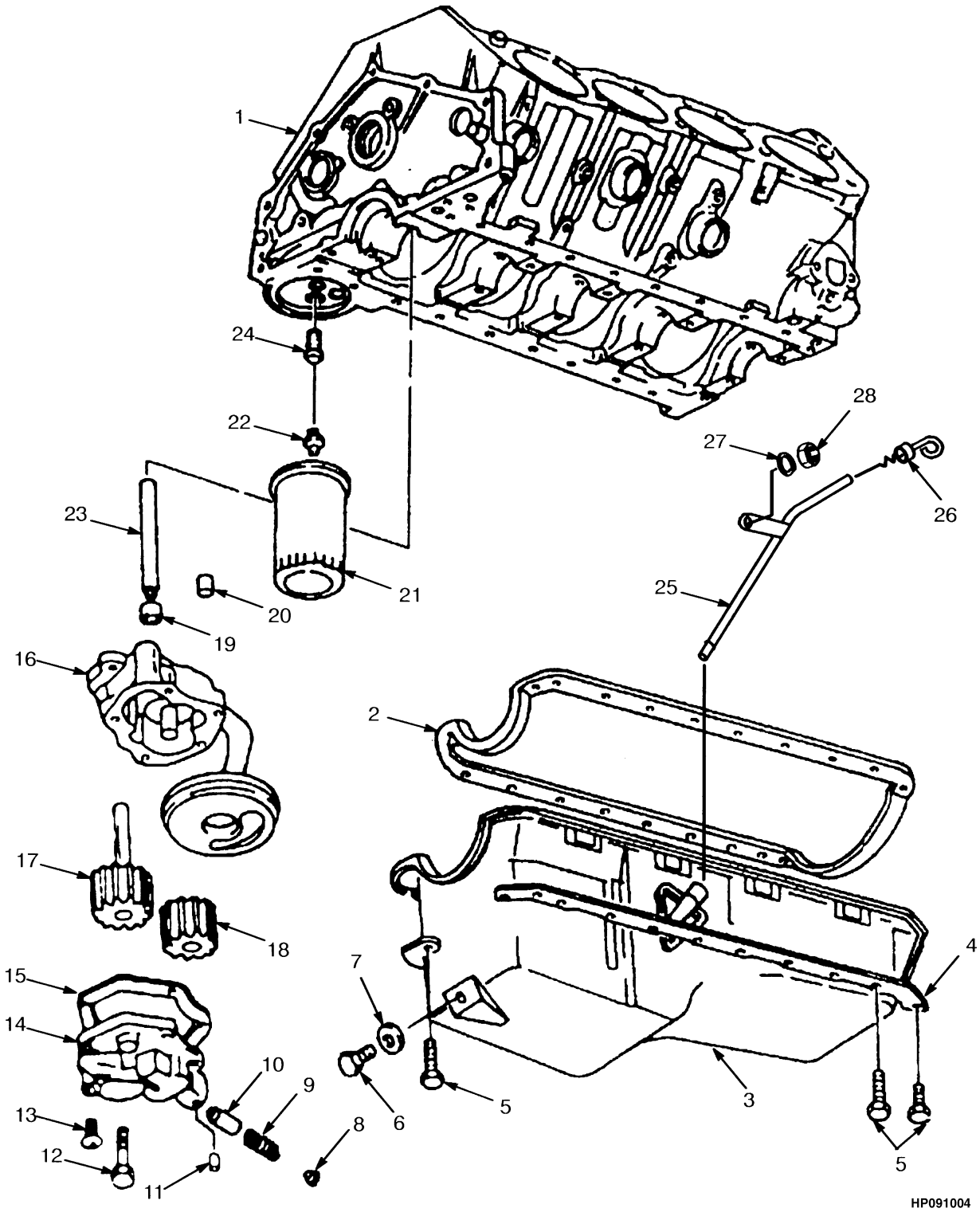

©2010 HYSTER COMPANY

OIL PUMP AND PAN
LPG

ITEM	PART NO.	DESCRIPTION	QTY
1	**a**	Engine Assembly	1
2	1450932	Gasket	1
3	1450933	Oil Pan	1
4	. . . . .	Reinforcement	1
5	1335217	Bolt	20
6	381255	Bolt	AR
7	388305	Gasket	1
8	1450934	Retainer	1
9	1451292	Spring	1
10	1450936	Valve	1
11	1330453	Pin	1
12	1450944	Bolt	1
13	1333541	Kit-Screw	5
14	1450945	Cover	1
15	1450939	Gasket	1
16	1450940	Oil Pump	1
17	. . . . .	Gear	1
18	. . . . .	Gear	1
19	263795	Retainer	1
20	1450941	Pin	1
21	1450942	Oil Filter	1
22	159942	Fitting	1
23	1450943	Shaft	1
24	1375952	Valve	2
25	894514	Tube	1
26	894513	Indicator (Oil Level)	1
27	221767	Washer	1
28	15056	Nut	1

FOOTNOTES:

a Engine Assembly Not Available

©2010 HYSTER COMPANY

WATER PUMP (FIGURE 2-47)
LPG

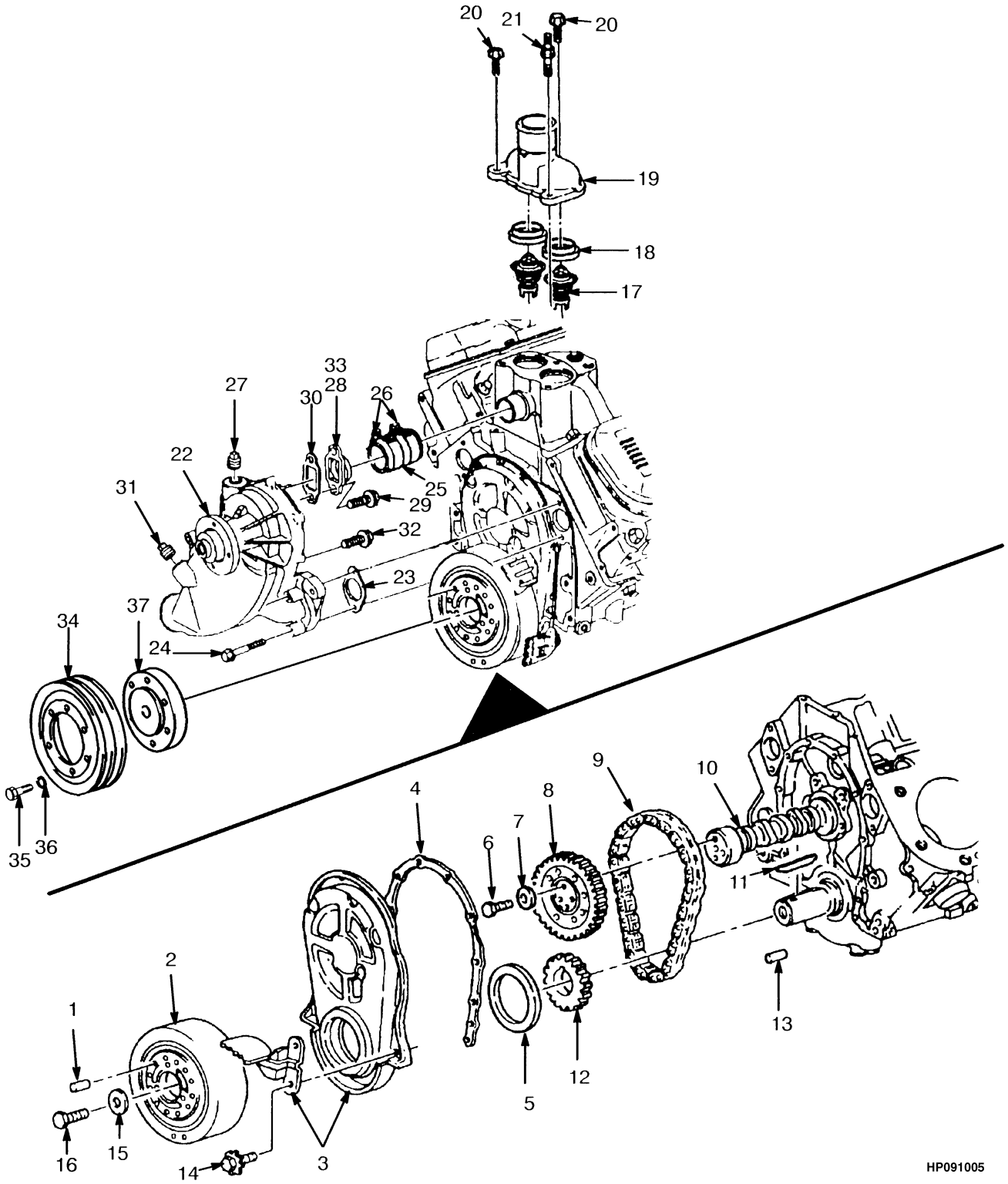

©2010 HYSTER COMPANY

WATER PUMP
LPG

ITEM	PART NO.	DESCRIPTION	QTY
	a	Engine Assembly	1
1	1338222	Pin	AR
2	1451028	Balancer	1
3	1451029	Cover	1
4	1451030	Gasket	1
5	1451031	Seal	1
6	221453	Capscrew	3
7	221465	Capscrew	3
8	1451032	Sprocket	1
9	1451033	Chain	1
10	1451034	Camshaft	1
11	1451035	Key	1
12	1451039	Sprocket	1
13	1450941	Pin	2
14	1451041	Bolt	6
15	1451290	Washer	1
16	1451043	Bolt	1
17	894568	Thermostat (180°)	2
18	1374110	Seal	2
19	1451045	Water Outlet	1
20	1451046	Bolt	2
21	1451047	Stud	1
22	1451048	Kit-Repair Water Pump	1
23	1451050	Gasket	2
24	1451049	Bolt	4
25	1451051	Hose	1
26	1451052	Clamp	1
27	1451053	Plug	1
28	1451054	Adapter	1
29	1451213	Bolt	2
30	1451055	Gasket	1
31	1451056	Plug	1
32	370169	Kit-Screw	6
33	1451291	Sealant	AR
34	894511	Pulley	1
35	221465	Capscrew	6
36	15155	Lockwasher	6
37	894573	Spacer	1

FOOTNOTES:

a Engine Assembly Not Available

©2010 HYSTER COMPANY

NOTES

©2010 HYSTER COMPANY

3 FUEL SYSTEM

SECTION 3
FUEL SYSTEM

DESCRIPTION	PAGE
AIR FILTER	
DIESEL NON TURBO	3-24
DIESEL TURBO WITH LOW EMISSIONS (S/N D019D02377 →)	3-44
DIESEL TURBO WITHOUT LOW EMISSIONS	3-42
LPG	3-26
CARBURETOR	
LPG	3-20
CONVERTER	
LPG	3-23
FUEL FILTER	
DIESEL TURBO WITH LOW EMISSIONS (S/N D019D02377 →)	3-40
FUEL INJECTION	
DIESEL TURBO WITH LOW EMISSIONS (S/N D019D02377 →)	3-32
DIESEL TURBO WITHOUT LOW EMISSIONS	3-28
DIESEL WITHOUT LOW EMISSIONS	3-8
FUEL INTAKE	
DIESEL	3-2
FUEL PRE-FILTER	
DIESEL	3-6
FUEL SYSTEM	
LPG	3-18
FUEL TANK	
LPG	3-16
LIFT PUMP	3-12
LOCK-OFF FILTER	
LPG	3-22
LOW PRESSURE SYSTEM	
DIESEL TURBO WITH LOW EMISSIONS (S/N D019D02377 →)	3-38
DIESEL TURBO WITHOUT LOW EMISSIONS	3-36
DIESEL WITHOUT LOW EMISSIONS	3-10
LPG TANK MOUNTING	3-14
THROTTLE LINKAGE	
DIESEL NON EMISSIONS	3-46
DIESEL WITH LOW EMISSIONS (S/N D019D02377 →)	3-48
LOW EMISSION DIESEL WITH AUTOSHIFT (S/N D019D12439 →)	3-52
LPG	3-54
NON EMISSION DIESEL AND LPG WITH AUTOSHIFT (S/N D019D12439 →)	3-50
THROTTLE PEDAL	
FORWARD AND REVERSE LEVER	3-56
FORWARD AND REVERSE LEVER - WITH AUTOSHIFT (S/N D019D12439 →)	3-62
MONOTROL PEDAL	3-58
MONOTROL PEDAL WITH AUTOSHIFT (S/N D019D12439 →)	3-60

©2010 HYSTER COMPANY

FUEL INTAKE (FIGURE 3-1)
DIESEL

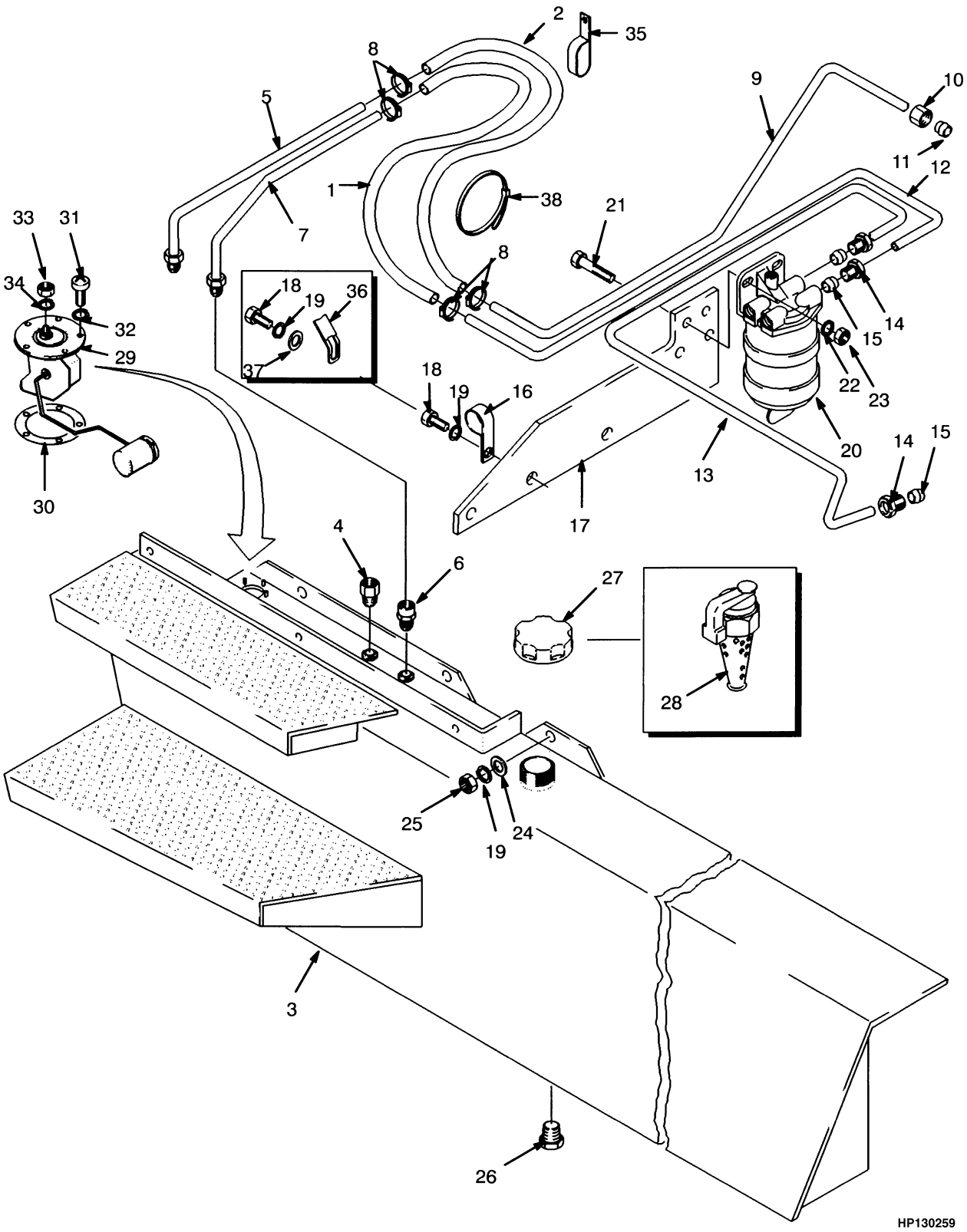

©2010 HYSTER COMPANY

FUEL INTAKE
DIESEL

ITEM	PART NO.	DESCRIPTION	QTY
1	387326	Hose	1
2	387327	Hose	1
3	1357430	Fuel Tank Wldmt	1
3	1357431	Fuel Tank Wldmt (Optional)	1
4	16142	Fitting	1
5	376316	Tube Assy	1
6	14326	Fitting	1
7	387313	Tube Assy	1
8	168718	Clamp	4
9	**a** 387312	Tube Assy	1
9	**b** 1359711	Tube	1
10	16118	Fitting	1
11	16114	Fitting	1
12	**a** 1359710	Tube	1
12	**b** 1377586	Tube	1
13	**a** 1359711	Tube	1
13	**b** 1377587	Tube	1
13	**c** 1452382	Tube (With Low Emissions)	1
14	16100	Fitting	3
15	16177	Fitting	3
16	387316	Clamp	1
17	**a** 1377585	Bracket	1
17	**b** 387317	Bracket	1
18	292527	Capscrew	2
19	292683	Lockwasher	5
20	271047	Water Separator	1
21	287860	Capscrew	2
22	~~388049~~		
	292682	Lockwasher	2
23	136692	Nut	2
24	320162	Washer	3
25	216877	Nut	3
26	14388	Fitting	1
26	35503	Fitting (Optional)	1
27	298832	Fuel Cap	1
27	311245	Gasket	1
28	63899	Fuel Cap	1
29	371257	Fuel Sender	1
30	111561	Gasket	1
31	16708	Screw	5
32	15931	Lockwasher	5
33	15002	Nut	1
34	15916	Lockwasher	1
35	**a** 119074	Clamp	1
35	**b** 397676	Strap Clamp	1
36	1350911	Strap	1
37	15135	Washer	1
38	397676	Strap Clamp	1

©2010 HYSTER COMPANY

FOOTNOTES:

a → S/N D019D01834
b S/N D019D01835 →
c S/N D019D02377 →

©2010 HYSTER COMPANY

NOTES

©2010 HYSTER COMPANY

FUEL PRE-FILTER (FIGURE 3-2)
DIESEL

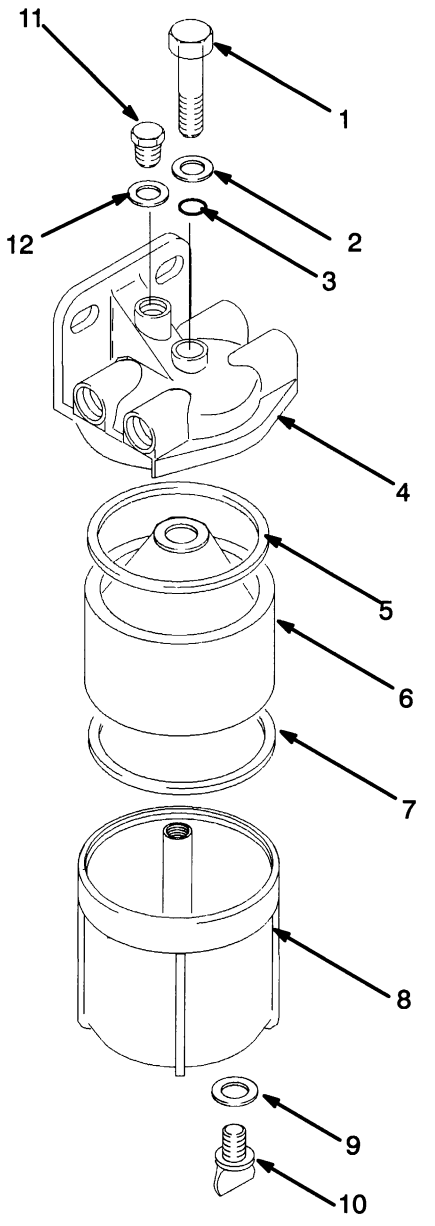

©2010 HYSTER COMPANY

FUEL PRE-FILTER
DIESEL

ITEM	PART NO.	DESCRIPTION	QTY
	271047	Water Separator	1
1	256219	Bolt	1
2	272274	Washer	2
3	168914	Seal	2
4	272273	Filter Head	1
5	292781	Seal	1
6	177407	Fuel Filter	1
7	292782	Seal	1
8	271443	Base	1
9	271449	Washer	1
10	271448	Drain Plug	1
11	170688	Plug	2
12	256220	Washer	1

©2010 HYSTER COMPANY

FUEL INJECTION (FIGURE 3-3)
DIESEL WITHOUT LOW EMISSIONS

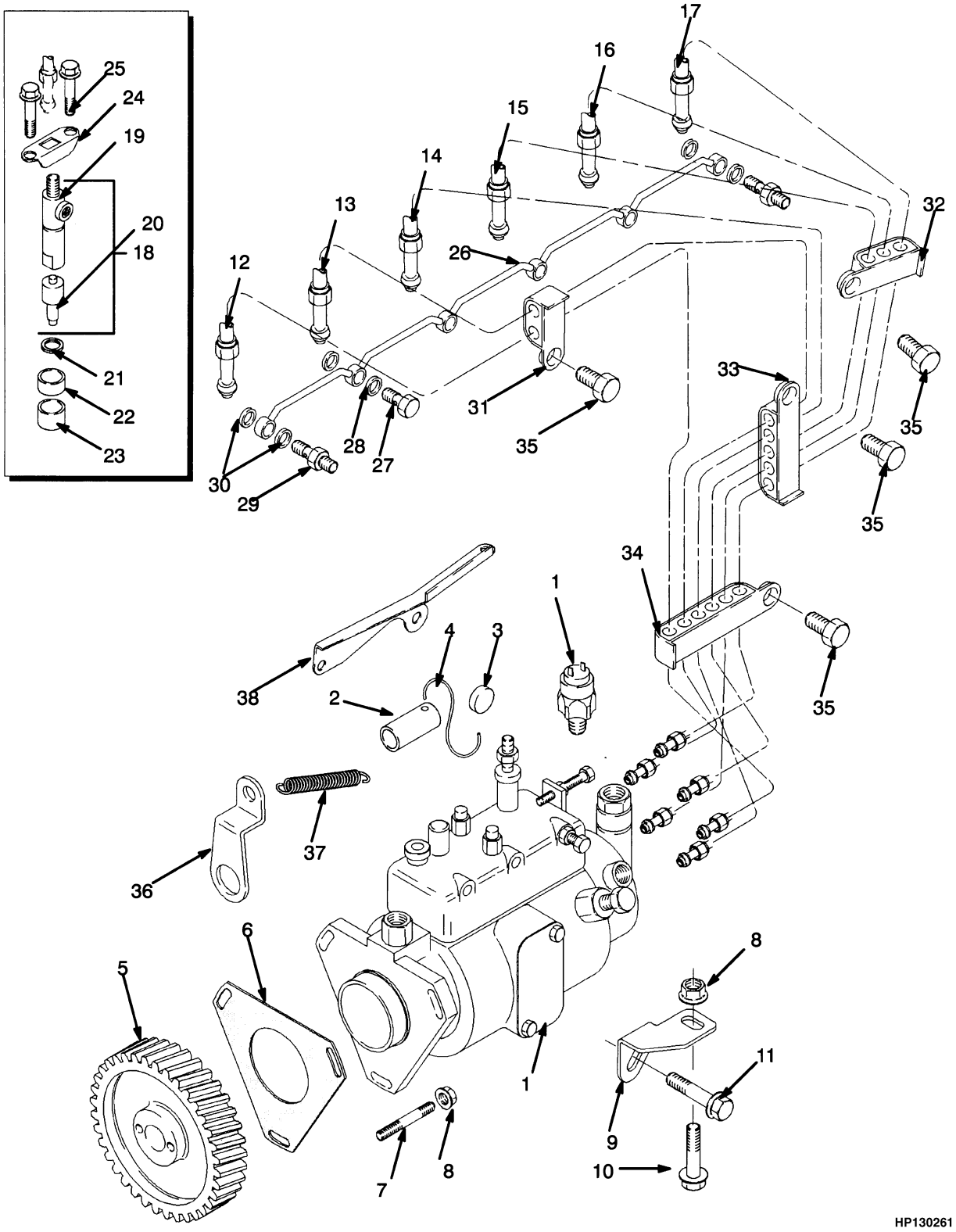

©2010 HYSTER COMPANY

FUEL INJECTION
DIESEL WITHOUT LOW EMISSIONS

ITEM	PART NO.	DESCRIPTION	QTY
	a 376001	Engine Assy-Diesel	1
	b 1376008	Engine Assy-Diesel (Without Sound Reduction)	1
	b 1376009	Engine Assy-Diesel (With Sound Reduction)	1
1	1502585	Kit-Repair Injection Pump	1
1	1306329	Solenoid	1
2	**a** 134958	Sleeve	1
2	**b** 1311708	Spacer	1
3	151315	Seal	1
4	151316	Wire	1
5	1306049	Gear	1
6	1371720	Gasket	1
7	1456726	Stud	3
8	1306359	Nut	4
9	1306125	Bracket	1
10	1306371	Screw	1
11	386459	Screw	1
12	1318924	Tube Assy (No. 1)	1
13	1318925	Tube Assy (No. 2)	1
14	1318926	Tube Assy (No. 3)	1
15	1318927	Tube Assy (No. 4)	1
16	1318928	Tube Assy (No. 5)	1
17	1318929	Tube Assy (No. 6)	1
18	1318930	Atomizer	6
19	1306133	Holder	1
20	1306134	Nozzle	1
21	99756	Washer	6
22	359144	Spacer	6
23	359145	Seal	6
24	1306135	Clamp	6
25	1306373	Screw	12
26	1318931	Pipe	1
27	983340	Bolt	5
28	985567	Washer	10
29	983375	Bolt	2
30	985567	Washer	4
31	1388385	Clip	1
32	1457771	Clip	1
33	1318933	Clip	1
34	1318934	Clip	1
35	1306372	Screw	4
36	1306334	Bracket	1
37	1315751	Spring	1
38	**a** 1315752	Bracket	1
	1379738	Kit-Gasket (Bottom)	1
	1369431	Kit-Gasket (Top)	1

FOOTNOTES:

a → S/N D019D01756 INC. 1758 EXC. 1753

b S/N D019D01757 → INC. 1753 EXC. 1758

©2010 HYSTER COMPANY

LOW PRESSURE SYSTEM (FIGURE 3-4)
DIESEL WITHOUT LOW EMISSIONS

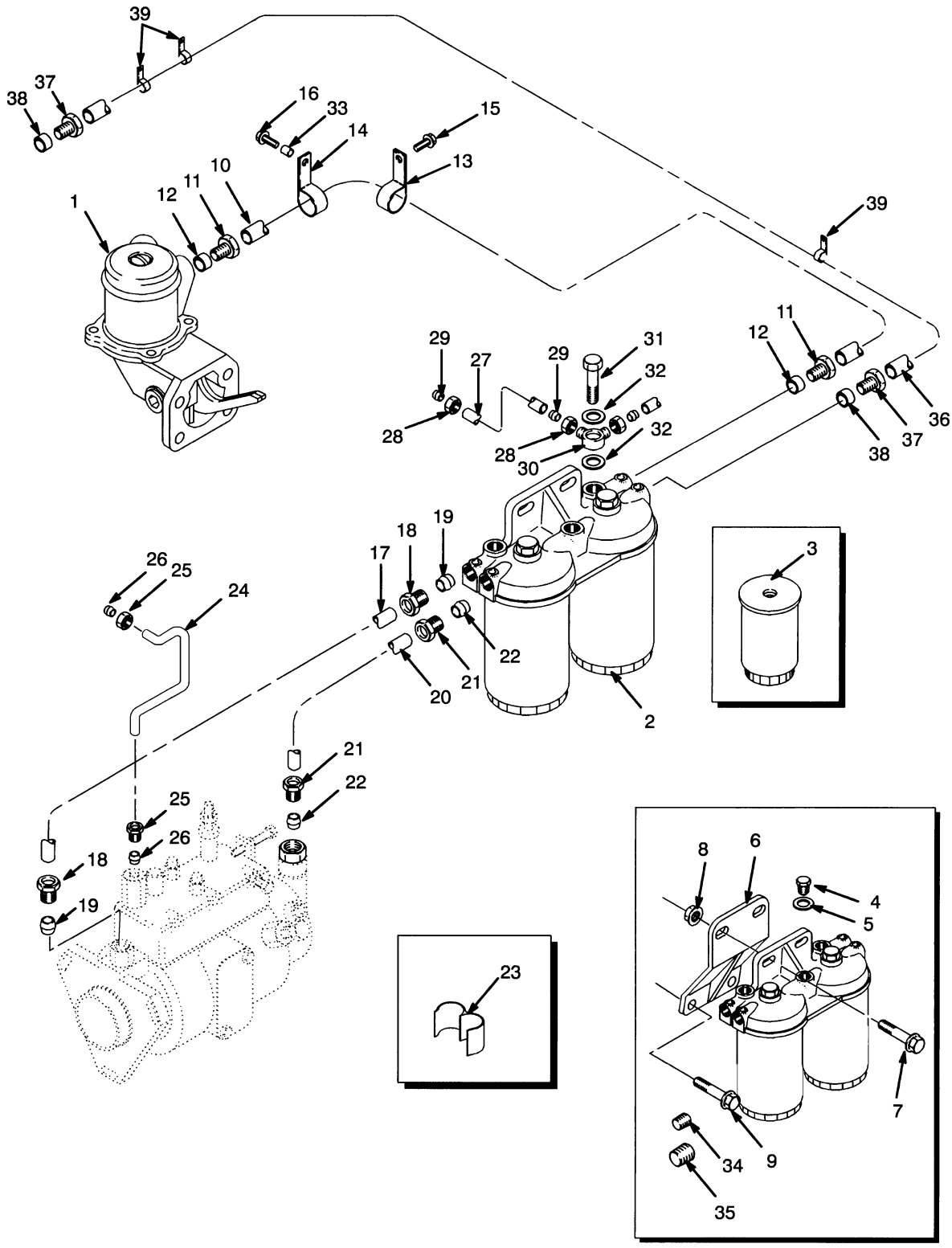

HP130266

©2010 HYSTER COMPANY

LOW PRESSURE SYSTEM
DIESEL WITHOUT LOW EMISSIONS

ITEM	PART NO.	DESCRIPTION	QTY
	b 376001	Engine Assy-Diesel	1
	d 1376008	Engine Assy-Diesel (Without Sound Reduction)	1
	d 1376009	Engine Assy-Diesel (With Sound Reduction)	1
1	**a** 1388388	Lift Pump (☞Figure 3-5)	1
1	**c** 1456339	Lift Pump (☞Figure 3-5)	1
2	1319050	Fuel Filter	1
3	1306331	Fuel Filter	2
4	302720	Plug	2
5	302721	Washer	2
6	1319051	Bracket	1
7	1307914	Screw	2
8	1307891	Nut	2
9	1306371	Screw	2
10	1319053	Pipe	1
11	16100	Fitting	2
12	167023	Sleeve	2
13	386461	Clip	1
14	1319054	Clip	1
15	386459	Screw	1
16	1306362	Screw	1
17	1332831	Pipe	1
18	16100	Fitting	2
19	16177	Fitting	2
20	1319056	Pipe	1
21	16100	Fitting	2
22	167023	Sleeve	2
23	1456528	Clip	2
24	1334617	Pipe	1
25	1311070	Nut	2
26	152608	Olive	2
27	1319057	Pipe	1
28	152608	Olive	2
29	152609	Nut	2
30	982234	Fitting	1
31	983346	Bolt	1
32	101985	Washer	2
33	1319058	Spacer	1
34	150879	Fitting	1
35	15962	Fitting	1
36	1319059	Pipe	1
37	1308007	Nut	2
38	1306337	Olive	2
39	1306339	Clip	3

FOOTNOTES:

a → 11/1994
b → S/N D019D01756 INC. 1758 EXC. 1753
c 11/1994 →
d S/N D019D01757 → INC. 1753 EXC. 1758

©2010 HYSTER COMPANY

LIFT PUMP (FIGURE 3-5)

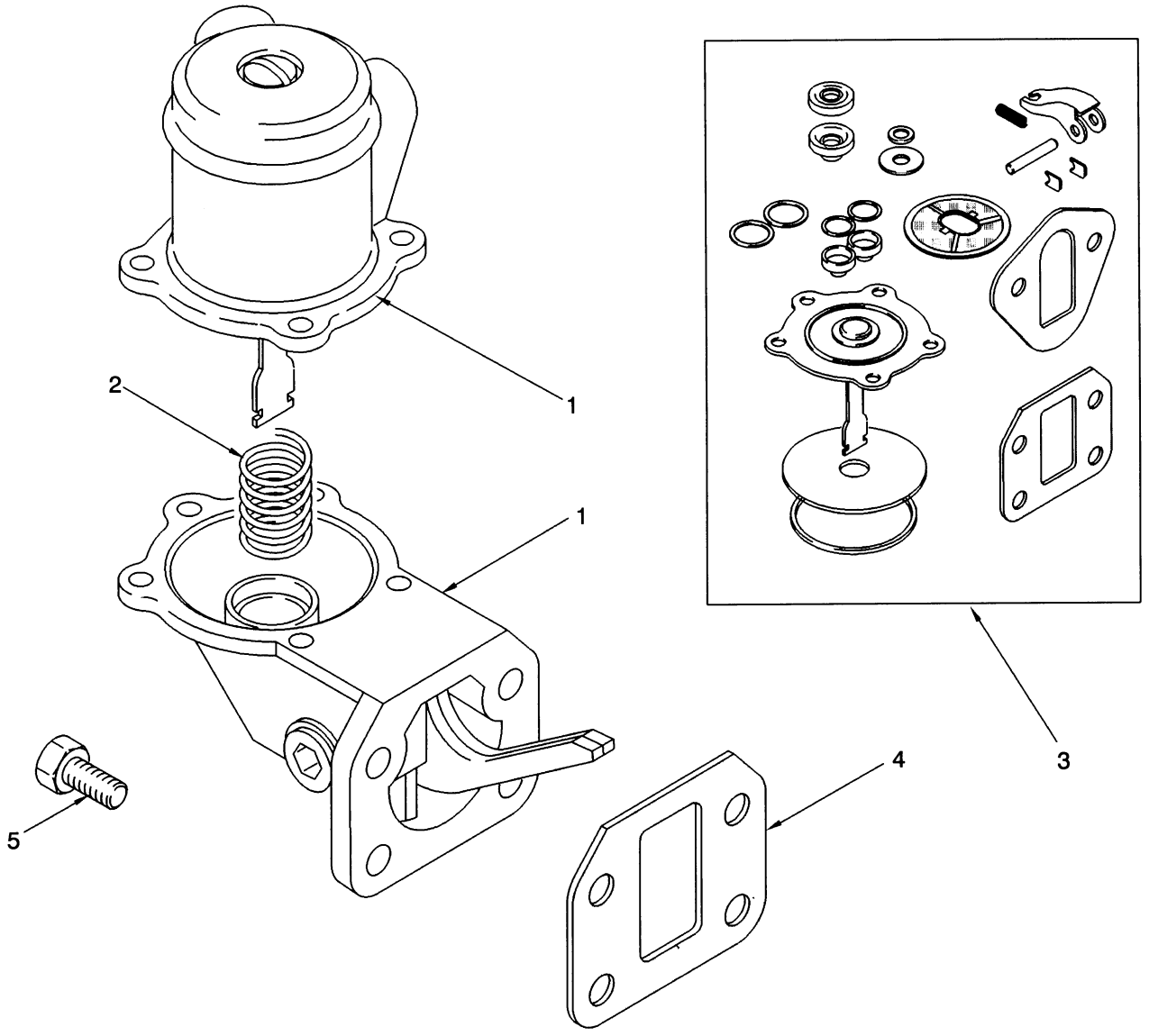

©2010 HYSTER COMPANY

LIFT PUMP

KEY:
A: Without Low Emissions
B: With Low Emissions

ITEM	PART NO.	DESCRIPTION	QTY A	QTY B
1	**a** 1388388	Lift Pump	1	..
1	**b** 1456339	Lift Pump	1	..
1	**c** 1451765	Lift Pump	..	1
2	332256	Spring	1	..
2	. . . . .	Spring	1	1
3	1388389	Kit-Repair Lift Pump	1	..
3	1451766	Kit-Repair Lift Pump	1	1
4	1388390	Gasket	1	1
5	1306362	Screw	4	4

FOOTNOTES:

a → 11/1994
b 11/1994 →
c S/N D019D02377 →

©2010 HYSTER COMPANY

LPG TANK MOUNTING (FIGURE 3-6)

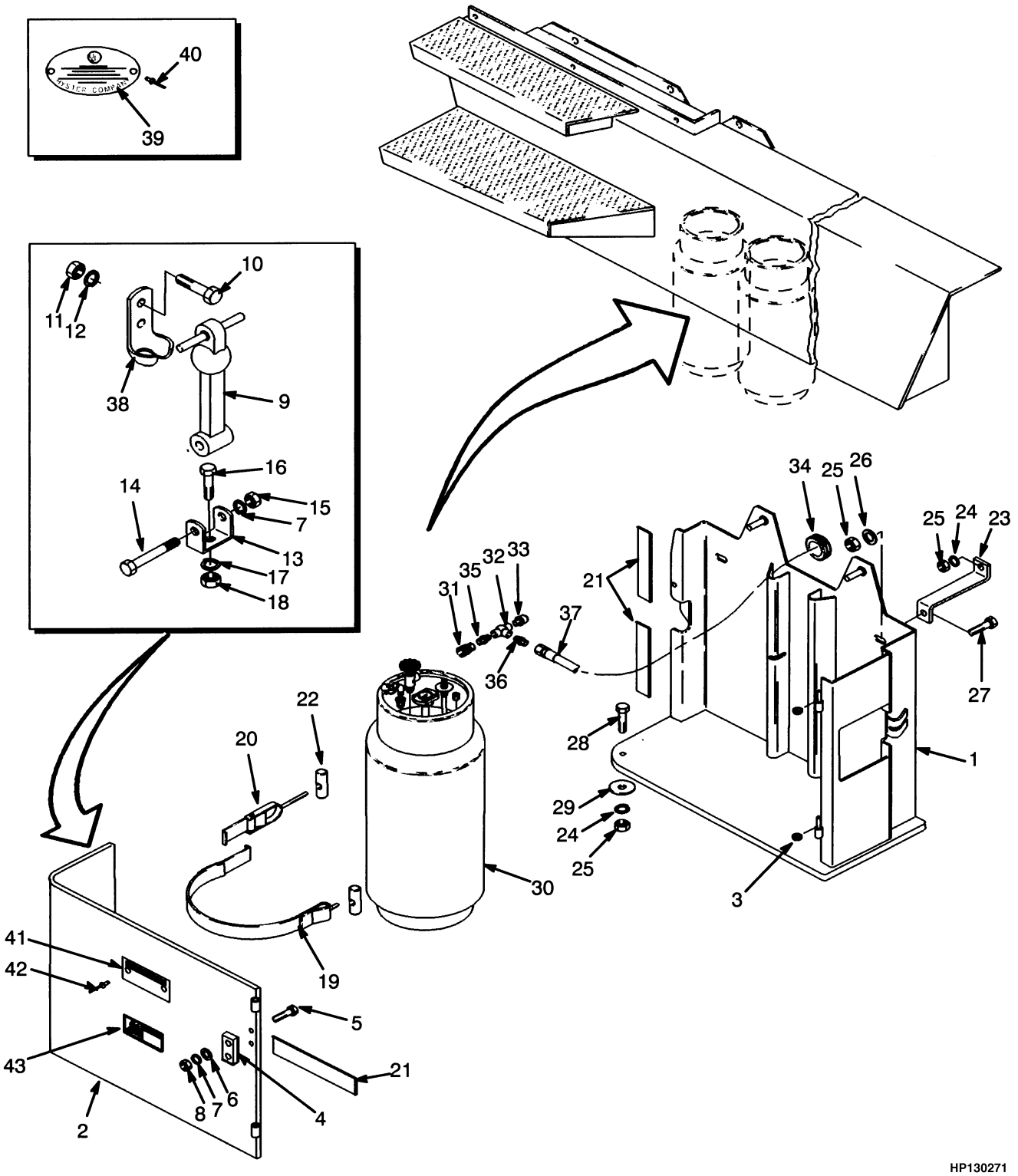

©2010 HYSTER COMPANY

LPG TANK MOUNTING

ITEM	PART NO.	DESCRIPTION	QTY
1	894580	Bracket (LPG)	1
2	894584	Plate Wldmt	1
3	1301700	Ring (Brass)	2
4	1336038	Plate	1
5	18465	Capscrew	2
6	15127	Washer	2
7	15154	Lockwasher	2
8	15054	Nut	2
9	177989	Latch (Hood)	1
10	220494	Screw	2
11	15052	Nut	2
12	15152	Lockwasher	2
13	177991	Bracket (Anchor)	1
14	18470	Capscrew	1
15	221341	Locknut	1
16	16836	Capscrew	1
17	15155	Lockwasher	1
18	15055	Nut	1
19	306008	Strap	2
20	196297	Latch	2
21	341788	Bumper	6
22	147294	Nut	4
23	1456937	Bracket	2
24	292683	Lockwasher	9
25	216877	Nut	8
26	320162	Washer	6
27	292527	Capscrew	2
28	292531	Capscrew	4
29	300939	Washer	4
30	125789	Lpg Tank (LPG) (☞Figure 3-7)	2
31	97999	Fitting	1
32	63111	Fitting	1
33	101809	Relief Valve	1
34	279752	Grommet	1
35	16271	Fitting	1
36	16863	Fitting	1
37	101804	Hose Assy	1
38	1315918	Bracket (Hood)	1
39	179414	Nameplate (LPG)	1
40	166818	Rivet	2
41	1520824	Nameplate (LP Tank Identifier)	1
42	170658	Rivet	2
43	1320264	Label (Flammable LP Gas)	1

©2010 HYSTER COMPANY

FUEL TANK (FIGURE 3-7)
LPG

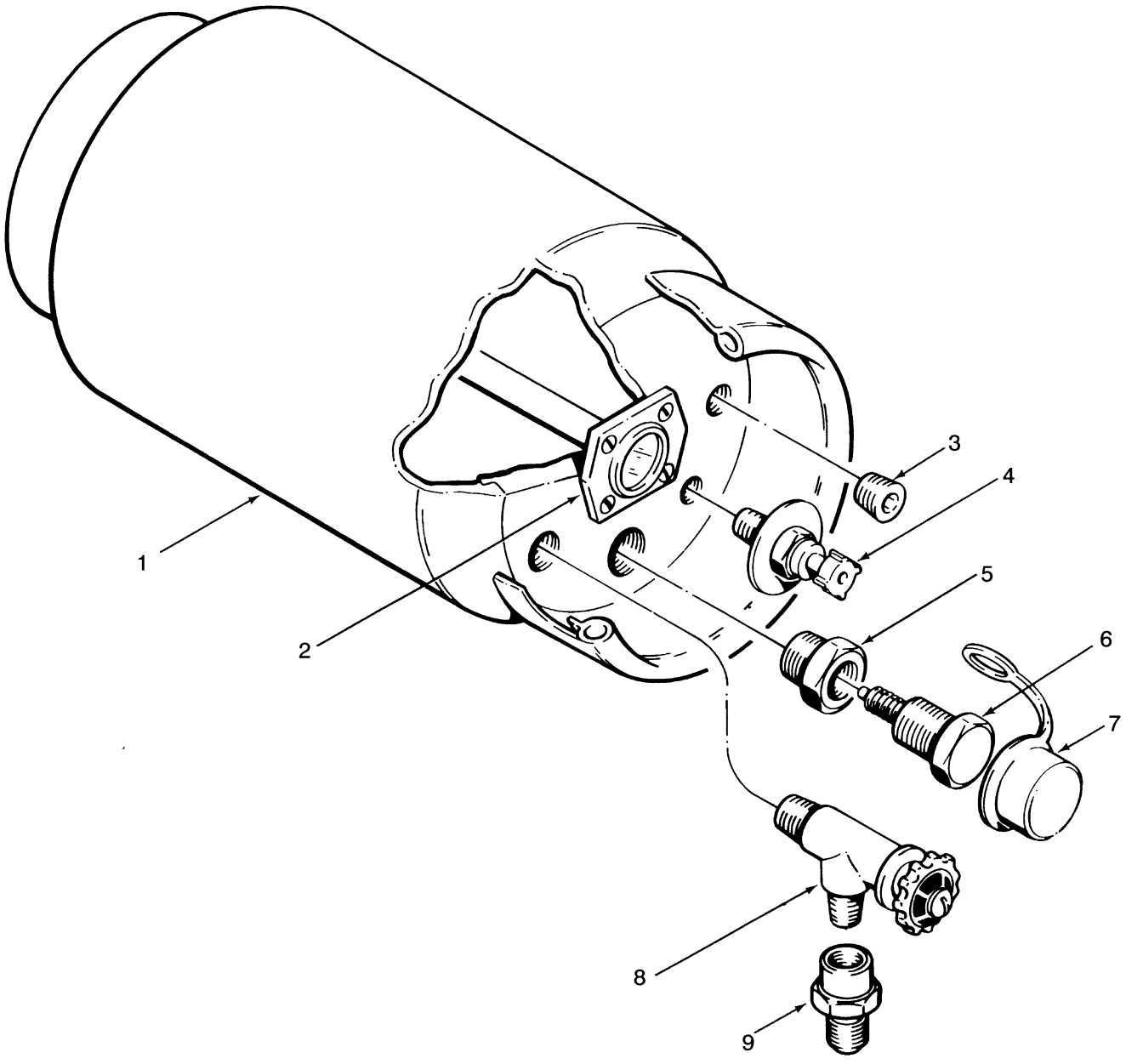

©2010 HYSTER COMPANY

FUEL TANK
LPG

ITEM	PART NO.	DESCRIPTION	QTY
1	125789	Lpg Tank (LPG)	1
2	**c** 344230	Gauge	1
2	**a** 197041	Gauge	1
3	246869	Plug (Magnetic)	1
4	197038	Gauge	1
4	**b** 344232	Gauge	1
5	344228	Adapter	1
6	200170	Relief Valve	1
7	200172	Cap	1
8	233908	Valve	1
9	124010	Coupling	1

FOOTNOTES:

a Bolt on Type
b Optional with Removable Dip Tube
c Screw in Type

©2010 HYSTER COMPANY

FUEL SYSTEM (FIGURE 3-8)
LPG

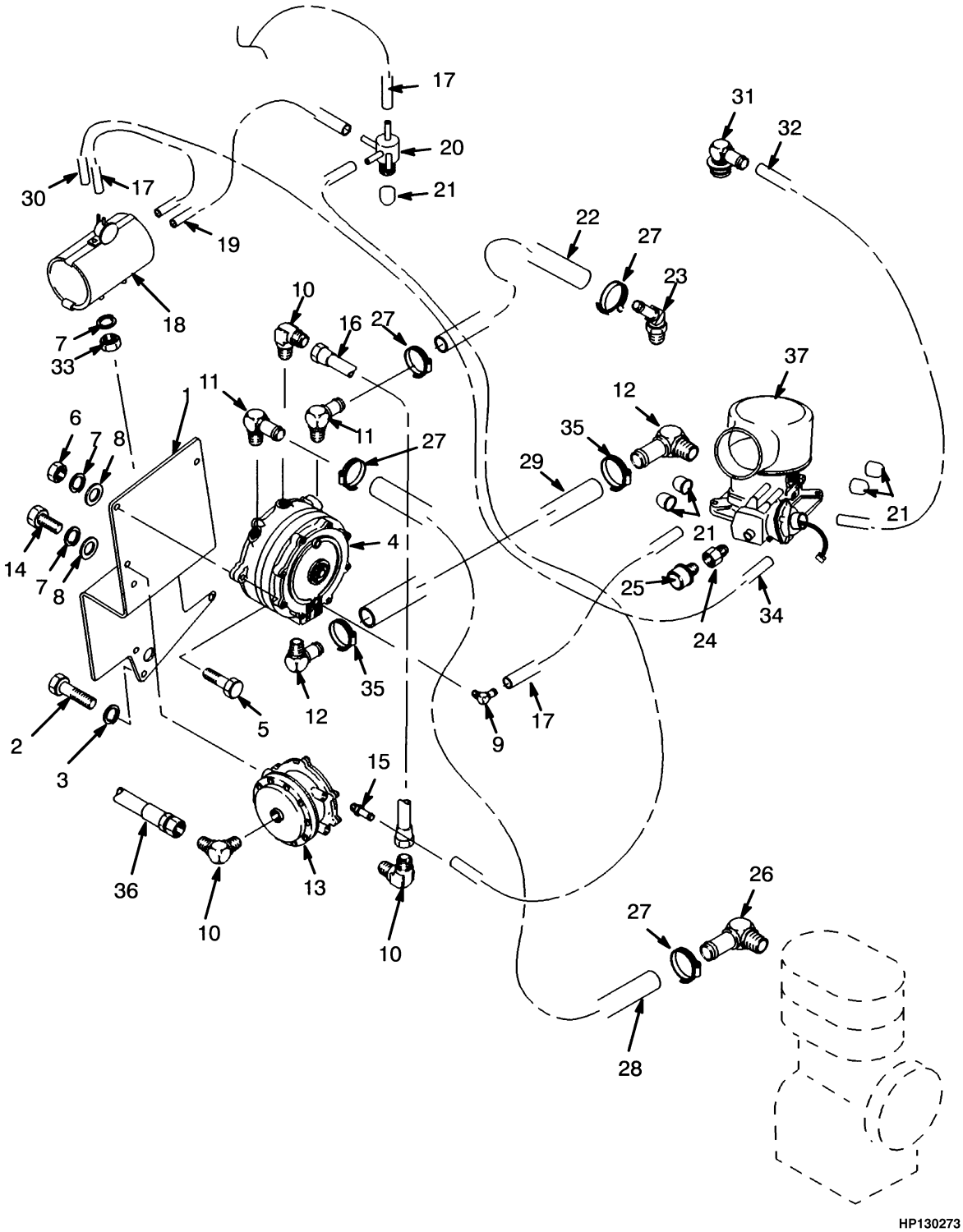

©2010 HYSTER COMPANY

FUEL SYSTEM
LPG

ITEM	PART NO.	DESCRIPTION	QTY
1	894746	Bracket (LPG)	1
2	18557	Capscrew	3
3	15157	Lockwasher	3
4	258320	Lpg Converter (LPG) (☞Figure 3-11)	1
5	18470	Capscrew	2
6	15054	Nut	6
7	15154	Lockwasher	6
8	15127	Washer	4
9	17343	Fitting	1
10	14358	Fitting	3
11	125305	Fitting	2
12	110177	Fitting	2
13	258321	Kit-Filter and Lock-Off Valve (☞Figure 3-10)	1
14	18460	Capscrew	2
15	16746	Fitting	1
16	894747	Tube Assy	1
17	377210	Hose	3
18	894749	Surge Tank	1
19	372003	Hose	1
20	894520	Fitting	1
21	894742	Cap	5
22	350965	Hose	1
23	127852	Fitting	1
24	12860	Fitting	1
25	121452	Breather	1
26	16155	Fitting	1
27	130845	Clamp	4
28	151857	Hose	1
29	192406	Hose	1
30	377211	Hose	1
31	894521	Pcv Valve	1
32	85785	Hose	1
33	15000	Nut	2
34	372008	Hose	1
35	127045	Clamp (Hose)	2
36	1319373	Hose Assy	1
37	894531	Carburetor (☞Figure 3-9)	1

©2010 HYSTER COMPANY

CARBURETOR (FIGURE 3-9)
LPG

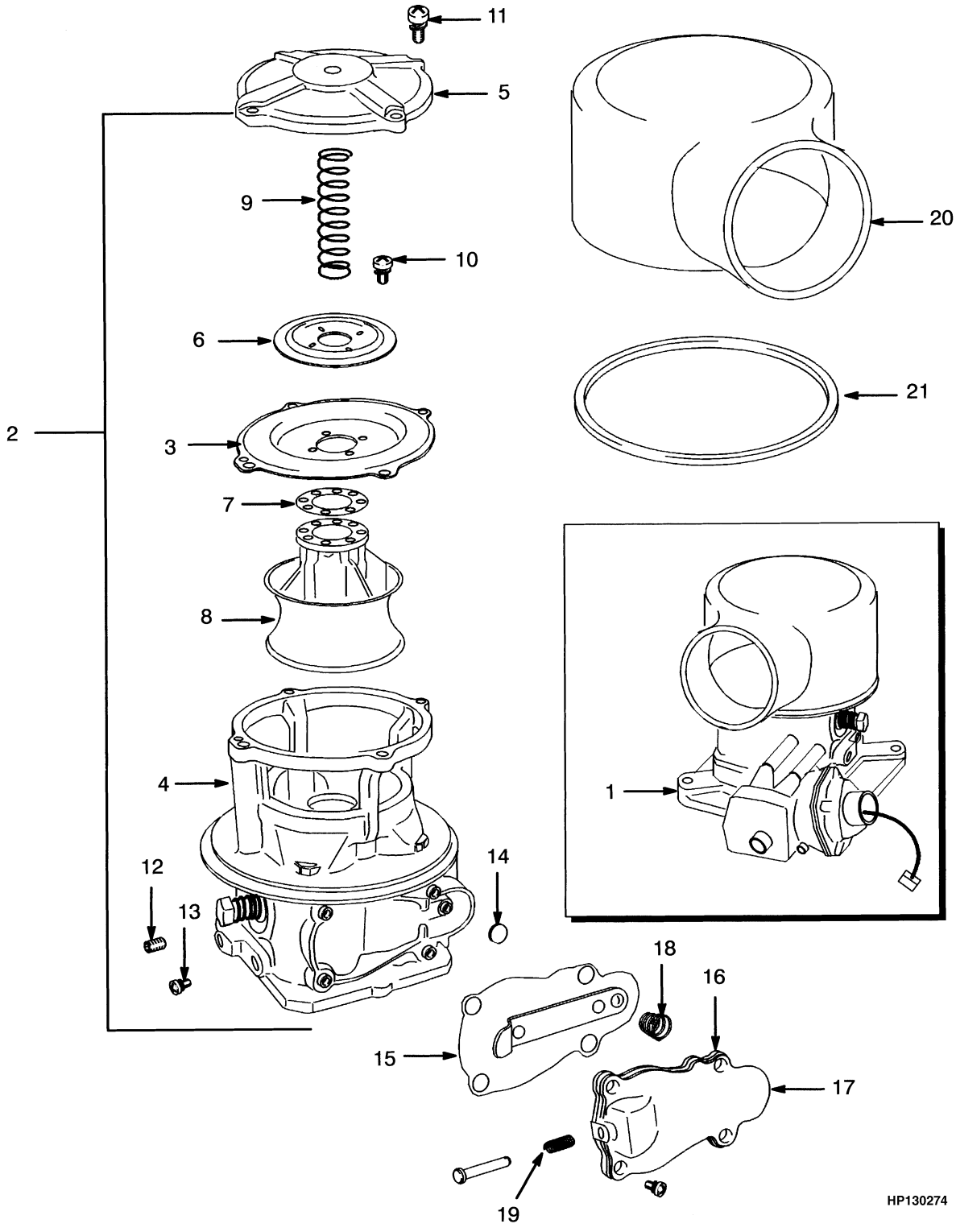

©2010 HYSTER COMPANY

CARBURETOR
LPG

ITEM	PART NO.	DESCRIPTION	QTY
	894531	Carburetor	1
1	. . . . .	Throttle Body	1
1	1450620	Gasket	1
1	1450621	Stud	1
1	1450622	Washer	1
2	1450623	Lpg Converter	1
3	1450628	Diaphragm	1
4	. . . . .	Body	1
4	323541	Fitting	3
4	1450629	Fitting	1
4	1450632	Screw (Fill)	1
4	1450633	Screw	1
4	214117	Spring (Idle Screw)	1
4	1450637	Seal	1
4	1450641	Washer	1
5	1450626	Cover	1
6	. . . . .	Back-Up Plate	1
7	1450630	Gasket	1
8	1450639	Valve (Air/Gasoline)	1
8	1450640	Valve (Gasoline Meter)	1
9	1450635	Spring	1
10	220283	Screw	4
11	132473	Screw	4
12	1357749	Plug	2
13	326926	Screw	1
14	1450638	Seat Assy	1
15	1532276	Diaphragm	1
16	. . . . .	Gasket	1
17	1450627	Cover	1
18	1450634	Spring	1
19	1450636	Spring	1
20	894532	Air Horn	1
21	261963	Gasket	1

©2010 HYSTER COMPANY

LOCK-OFF FILTER (FIGURE 3-10)

LPG

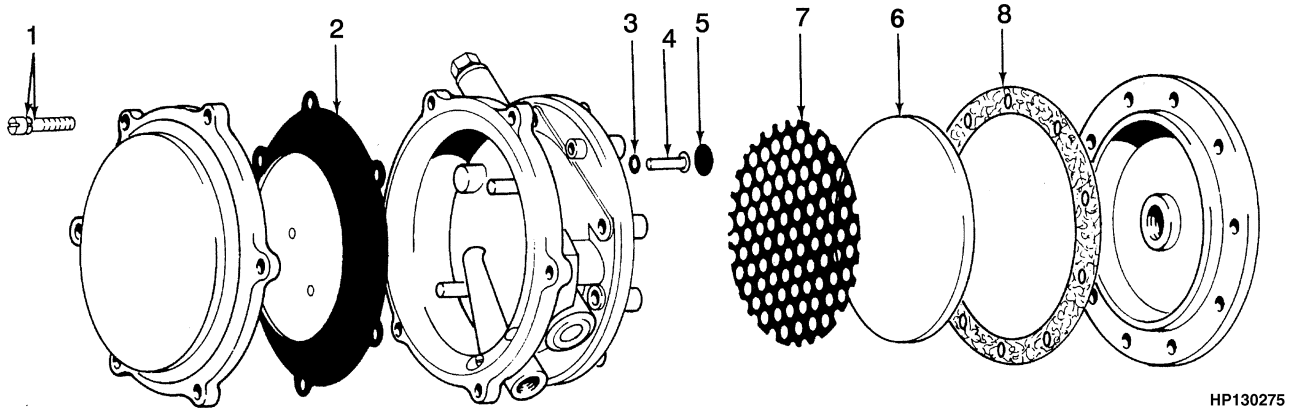

ITEM	PART NO.	DESCRIPTION	QTY
	258321	Kit-Filter and Lock-Off Valve	1
	263958	Kit-Repair Lpg Converter	1
1	. . . . .	Screw	6
1	. . . . .	Washer	6
2	. . . . .	Diaphragm	1
3	. . . . .	O-Ring	1
4	. . . . .	Screw	1
5	. . . . .	Valve Seat	1
6	. . . . .	Filter	1
7	. . . . .	Screen	1
8	. . . . .	Gasket	1

©2010 HYSTER COMPANY

CONVERTER (FIGURE 3-11)
LPG

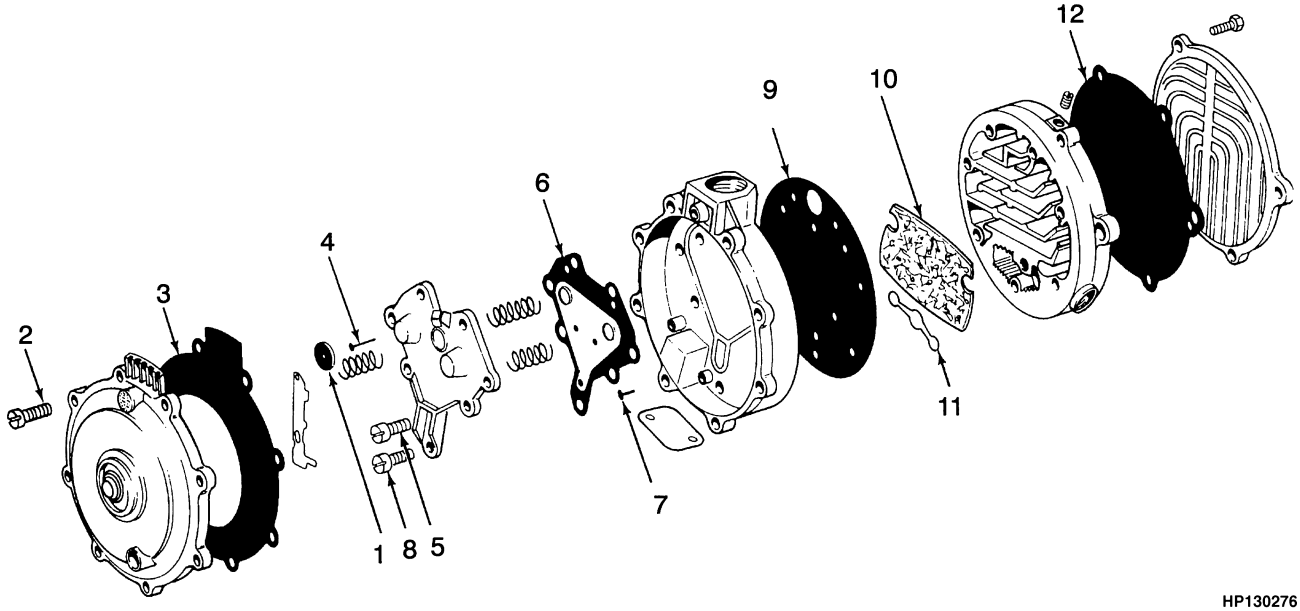

HP130276

ITEM	PART NO.	DESCRIPTION	QTY
	258320	Lpg Converter (LPG)	1
	263950	Kit-Repair Lpg Converter	1
1	. . . . .	Washer	1
2	. . . . .	Screw	6
2	. . . . .	Washer	6
3	. . . . .	Diaphragm	1
4	. . . . .	Pin	1
5	. . . . .	Screw	1
6	. . . . .	Diaphragm	1
7	. . . . .	Pin	1
8	. . . . .	Screw	1
8	. . . . .	Washer	1
9	. . . . .	Gasket	1
10	. . . . .	Sponge	1
11	. . . . .	Seat	1
12	. . . . .	Gasket	1

©2010 HYSTER COMPANY

AIR FILTER (FIGURE 3-12)
DIESEL NON TURBO

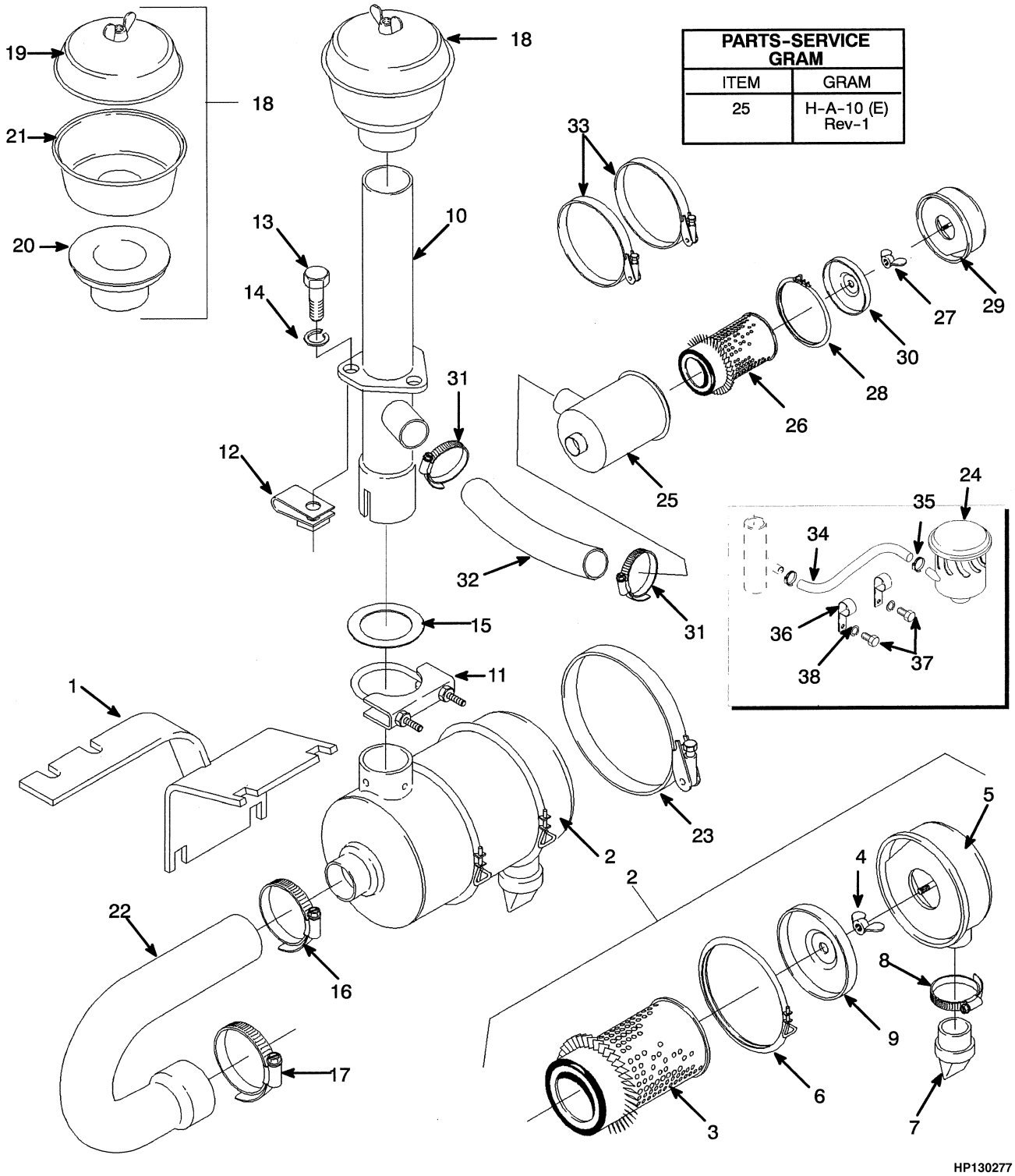

©2010 HYSTER COMPANY

AIR FILTER
DIESEL NON TURBO

ITEM	PART NO.	DESCRIPTION	QTY
1	1347852	Bracket Wldmt	1
2	1352666	Air Filter	1
3	97310	Filter Element	1
4	125847	Gasket	1
5	262283	Cup	1
6	97313	Clamp	1
7	141276	Boot	1
8	314538	Clamp	1
9	170682	Baffle	1
10	1347856	Exhaust Pipe	1
11	30375	Clamp	1
12	376397	Retainer	3
13	18497	Capscrew	3
14	292681	Lockwasher	3
15	1301535	Shim	AR
16	115696	Hose Clamp	1
17	78286	Clamp	1
18	**b** 1301167	Pre-Cleaner	1
19	328753	Cover	1
20	1313904	Sleeve	1
21	328754	Body	1
22	**b** 1357229	Hose	1
22	**a** 1357228	Hose	1
23	1301582	Hose Clamp	2
24	**a** 1358325	Pre-Cleaner	1
25	1352669	Air Filter	1
26	1352670	Filter Element	1
27	1360191	Nut	1
28	1360192	Clamp	1
29	1360193	Cap (Steel)	1
30	1360194	Cap (Rubber)	1
31	119236	Clamp	2
32	1357230	Hose	1
33	227220	Clamp	2
34	**a** 1361201	Hose	1
35	**a** 127045	Clamp (Hose)	2
36	**a** 339530	Clamp	2
37	**a** 1301708	Capscrew	2
38	320157	Washer	2

FOOTNOTES:

a Aspirated

b Non-Aspirated

©2010 HYSTER COMPANY

AIR FILTER (FIGURE 3-13)
LPG

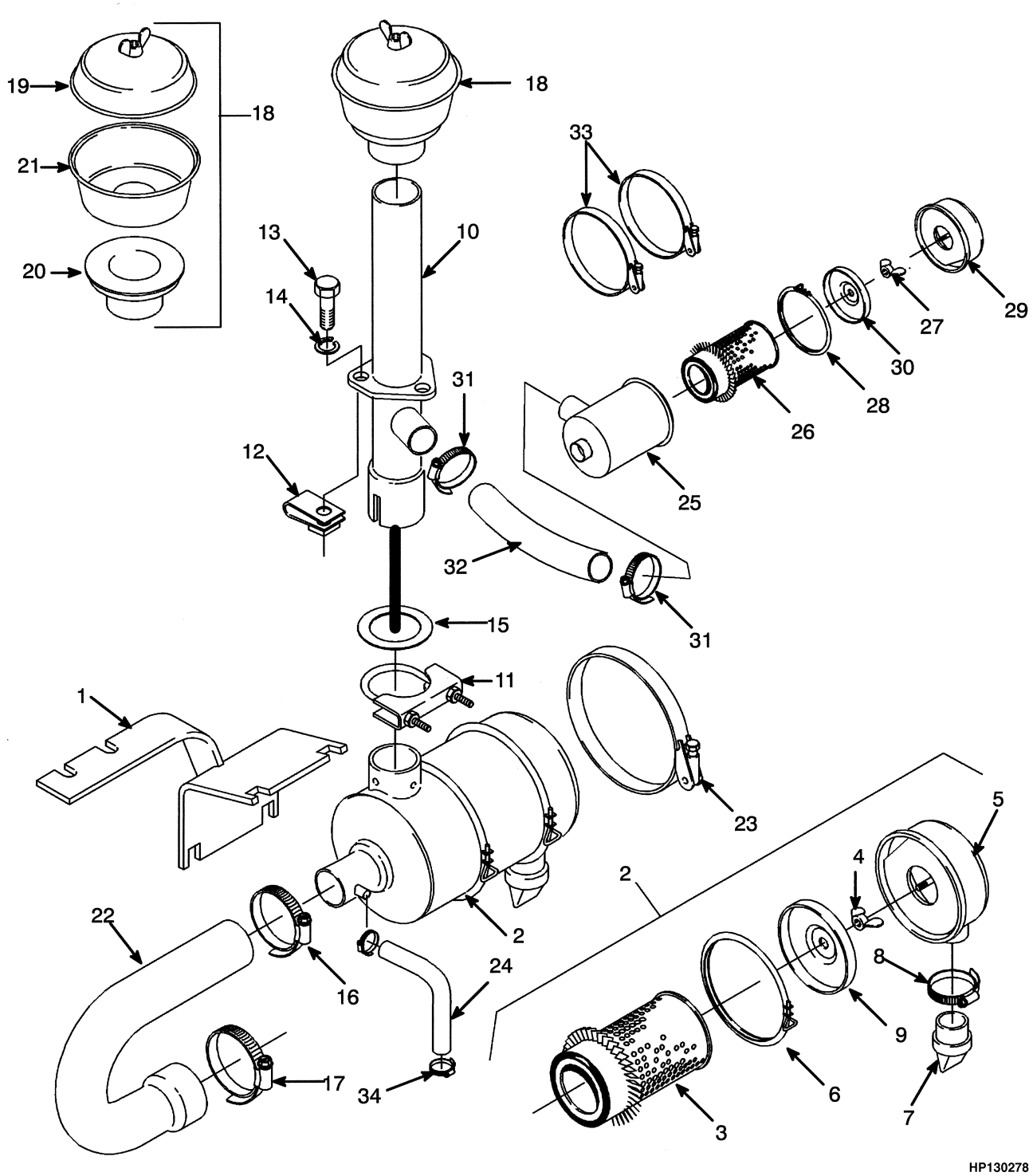

©2010 HYSTER COMPANY

AIR FILTER
LPG

ITEM	PART NO.	DESCRIPTION	QTY
1	1347852	Bracket Wldmt	1
2	1311219	Air Filter	1
3	97310	Filter Element	1
4	125847	Gasket	1
5	262283	Cup	1
6	97313	Clamp	1
7	141276	Boot	1
8	314538	Clamp	1
9	170682	Baffle	1
10	1347856	Exhaust Pipe	1
11	30375	Clamp	1
12	376397	Retainer	3
13	18497	Capscrew	3
14	292681	Lockwasher	3
15	1301535	Shim	AR
16	115696	Hose Clamp	1
17	78286	Clamp	1
18	1301167	Pre-Cleaner (Non-Aspirated)	1
19	328753	Cover	1
20	1313904	Sleeve	1
21	328754	Body	1
22	894682	Hose	1
23	1301582	Hose Clamp	2
24	241976	Hose (Fire Arrester)	1
25	1352669	Air Filter	1
26	1352670	Filter Element	1
27	1360191	Nut	1
28	1360192	Clamp	1
29	1360193	Cap (Steel)	1
30	1360194	Cap (Rubber)	1
31	119236	Clamp	2
32	1357230	Hose	1
33	227220	Clamp	2
34	127045	Clamp (Hose)	2

©2010 HYSTER COMPANY

FUEL INJECTION (FIGURE 3-14)
DIESEL TURBO WITHOUT LOW EMISSIONS

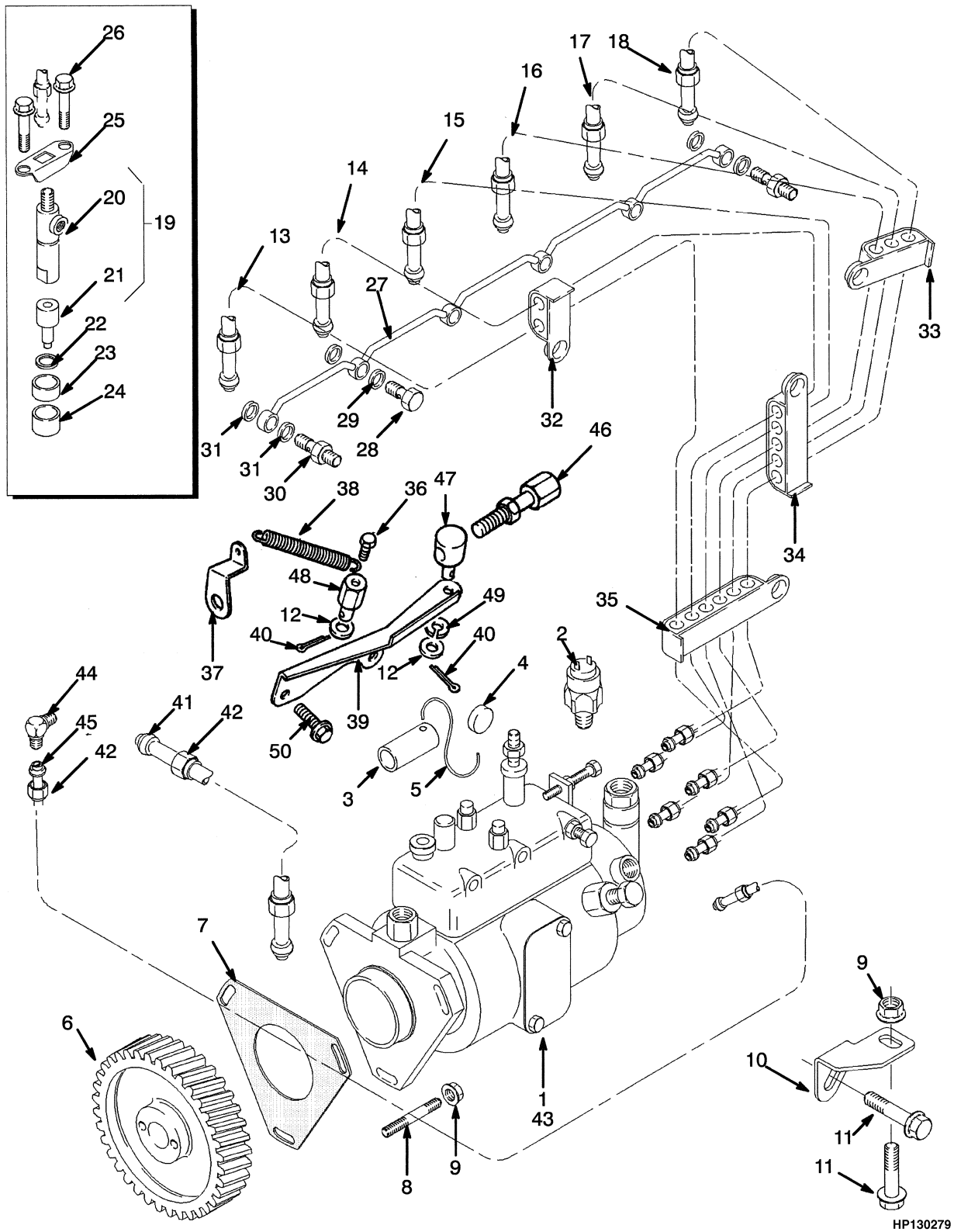

©2010 HYSTER COMPANY

FUEL INJECTION
DIESEL TURBO WITHOUT LOW EMISSIONS

ITEM	PART NO.	DESCRIPTION	QTY
	1377550	Engine Assy-Diesel (Turbo)	1
1	1382551	Injection Pump	1
2	1306329	Solenoid	1
3	1371708	Sleeve	1
4	151315	Seal	1
5	151316	Wire	1
6	1306049	Gear	1
7	1371720	Gasket	1
8	1456726	Stud	3
9	1306325	Gasket	4
10	1306125	Bracket	1
11	1306371	Screw	2
12	15132	Washer	2
13	1382497	Tube Assy (No. 1)	1
14	1382498	Tube Assy (No. 2)	1
15	1382499	Tube Assy (No. 3)	1
16	1382450	Tube Assy (No. 4)	1
17	1382451	Tube Assy (No. 5)	1
18	1382452	Tube Assy (No. 6)	1
19	1323024	Atomizer	6
20	1382453	Holder	1
21	1311067	Nozzle	1
22	99756	Washer	6
23	359144	Spacer	6
24	359145	Seal	6
25	1306135	Clamp	6
26	1306373	Screw	12
27	1318931	Pipe	1
28	983340	Bolt	5
29	985567	Washer	8
30	983375	Bolt	2
31	985567	Washer	4
32	1382454	Clip	1
33	1382455	Clip	1
34	1382456	Clip	1
35	1382457	Clip	1
36	1311518	Screw	1
37	1306334	Bracket	1
38	1315751	Spring	1
39	1382545	Bracket	1
40	15200	Cotter Pin	2
41	1382553	Pipe	1
42	1311070	Nut	1
43	1382951	Kit-Repair Injection Pump	1
44	983761	Fitting	1
45	152608	Olive	1
46	99784	Adjuster	1
47	99782	Pin	1
48	1311517	Pin	1
49	99783	Washer	1

©2010 HYSTER COMPANY

FUEL INJECTION
DIESEL TURBO WITHOUT LOW EMISSIONS

ITEM	PART NO.	DESCRIPTION	QTY
50	1382546	Screw	2
	1379738	Kit-Gasket (Bottom)	1
	1369431	Kit-Gasket (Top)	1

©2010 HYSTER COMPANY

NOTES

©2010 HYSTER COMPANY

FUEL INJECTION (FIGURE 3-15)

DIESEL TURBO WITH LOW EMISSIONS (S/N D019D02377 →)

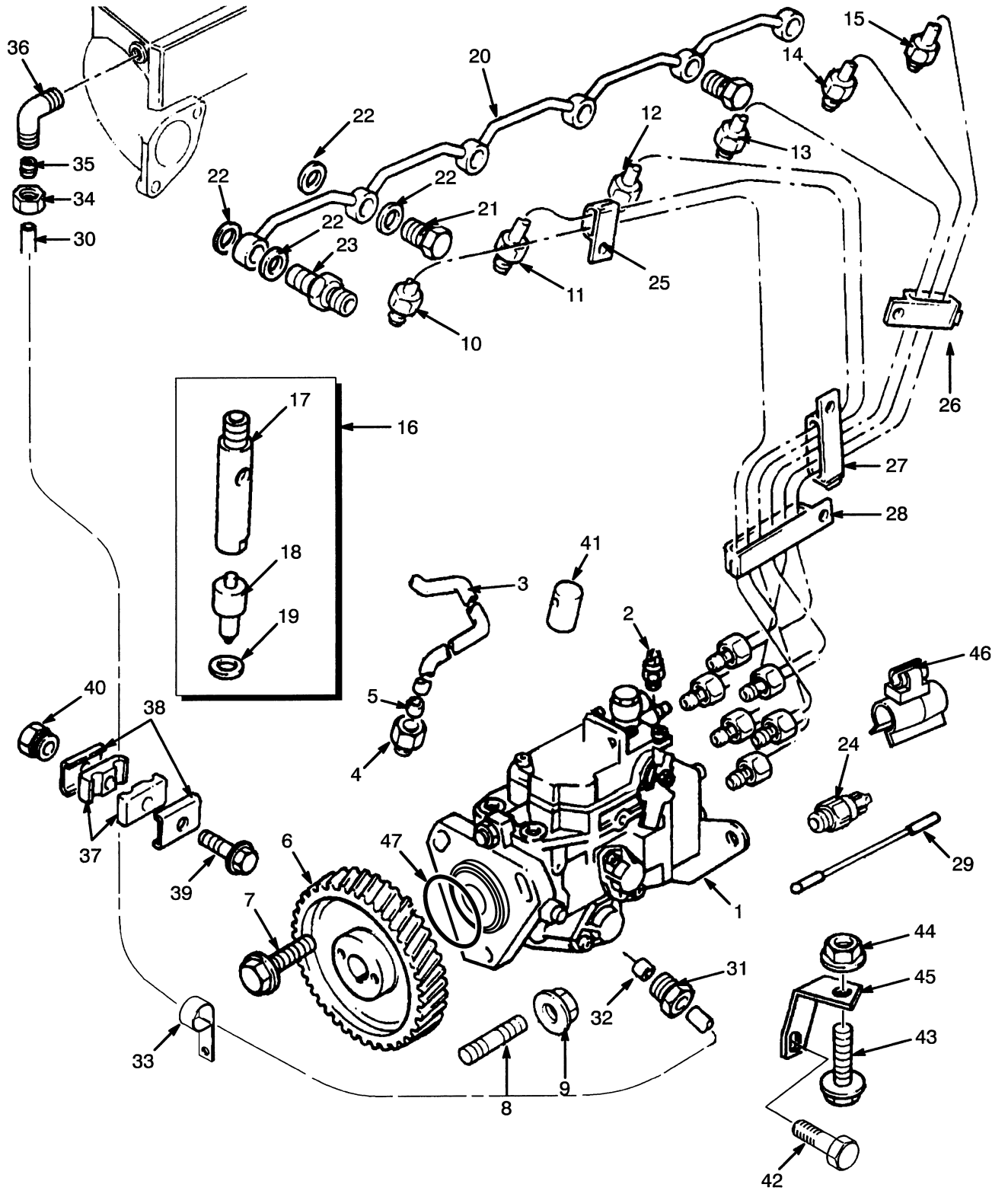

HP130280

©2010 HYSTER COMPANY

FUEL INJECTION

DIESEL TURBO WITH LOW EMISSIONS (S/N D019D02377 →)

ITEM	PART NO.	DESCRIPTION	QTY
	1395975	Engine Assy-Diesel (Turbo)	1
1	1460025	Injection Pump (Turbo)	1
1	1453122	Lever	1
1	1640061	Spring	1
2	1306329	Solenoid	1
3	1451655	Tube Assy (Fuel)	1
4	1311070	Nut	1
5	152608	Olive	1
6	1456727	Gear	1
7	1307881	Screw	4
8	1456726	Stud	3
9	1306359	Nut	4
10	1451657	Tube Assy (No. 1)	1
11	1451659	Tube Assy (No. 2)	1
12	1451660	Tube Assy (No. 3)	1
13	1451661	Tube Assy (No. 4)	1
14	1451662	Tube Assy (No. 5)	1
15	1451663	Tube Assy (No. 6)	1
16	1451665	Atomizer (Turbo)	6
17	1451666	Holder	1
18	1451667	Nozzle (Turbo)	1
19	1451669	Washer (Copper)	6
20	1451670	Pipe	1
21	1451672	Bolt	5
22	1451673	Washer	10
23	1451674	Fitting	2
24	1451656	Sender (Cold Start Installed on Manifold-Inlet)	1
25	1382454	Clip	3
26	1382455	Clip	1
27	1382456	Clip	1
28	1382457	Clip	1
29	1453154	Wire	1
30	1451676	Pipe (Air Turbo)	1
31	1311070	Nut	1
32	152608	Olive	1
33	1306338	Clip	1
34	16193	Fitting	1
35	51455	Fitting	1
36	983761	Fitting	1
37	99779	Damper	1
38	99780	Plate	2
39	1307922	Screw	1
40	1307923	Nut	1
41	1460024	Cap	1
42	1306371	Screw	1
43	386459	Screw	1
44	1306359	Nut	1
45	1453315	Bracket	1
46	1458327	Clip	1
47	1460572	O-Ring	1

©2010 HYSTER COMPANY

FUEL INJECTION

DIESEL TURBO WITH LOW EMISSIONS (S/N D019D02377 →)

ITEM	PART NO.	DESCRIPTION	QTY
	1565146	Kit-Gasket (Top)	1

©2010 HYSTER COMPANY

NOTES

©2010 HYSTER COMPANY

LOW PRESSURE SYSTEM (FIGURE 3-16)
DIESEL TURBO WITHOUT LOW EMISSIONS

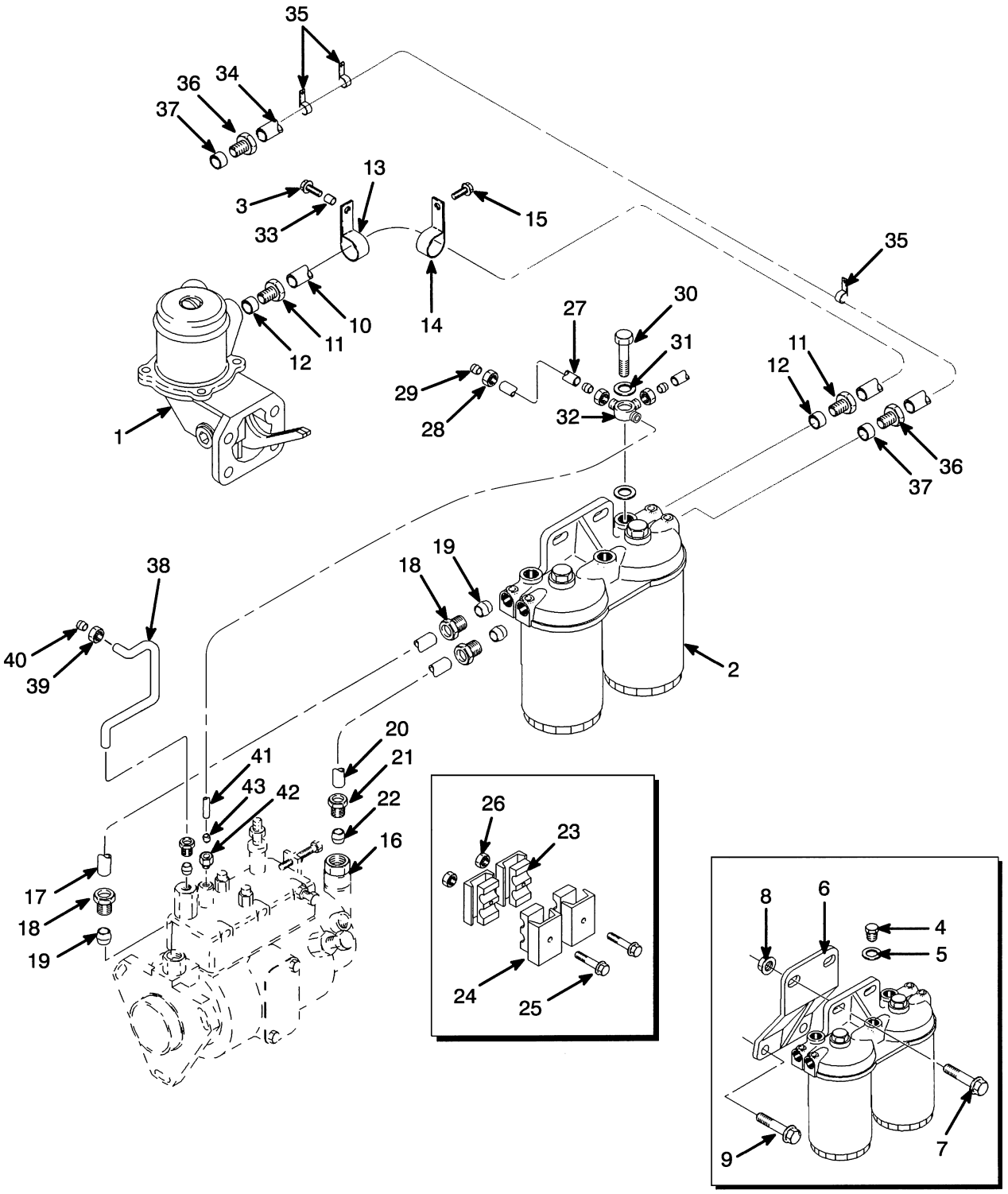

HP130281

©2010 HYSTER COMPANY

LOW PRESSURE SYSTEM
DIESEL TURBO WITHOUT LOW EMISSIONS

ITEM	PART NO.	DESCRIPTION	QTY
	1377550	Engine Assy-Diesel (Turbo)	1
1	**a** 1388388	Lift Pump (☞Figure 3-5)	1
1	**b** 1456339	Lift Pump (☞Figure 3-5)	1
2	1306331	Fuel Filter	2
2	1319050	Fuel Filter	1
3	1306362	Screw	1
4	302720	Plug	2
5	302721	Washer	2
6	1319051	Bracket	1
7	1307914	Screw	2
8	1307891	Nut	2
9	1306371	Screw	2
10	1319053	Pipe	1
11	16100	Fitting	2
12	167023	Sleeve	2
13	386461	Clip	1
14	1319054	Clip	1
15	386459	Screw	1
16	1382542	Fitting	1
17	1382540	Tube Assy	1
18	16100	Fitting	2
19	167023	Sleeve	2
20	1382541	Tube Assy	1
21	16100	Fitting	2
22	167023	Sleeve	2
23	301821	Clip	4
24	99780	Plate	4
25	1307922	Screw	2
26	1307923	Nut	2
27	1319057	Pipe	1
28	152609	Nut	2
29	152608	Olive	2
30	983346	Bolt	1
31	101985	Washer	1
32	982234	Fitting	1
33	1319058	Spacer	1
34	1319059	Pipe	1
35	1306339	Clip	3
36	1308007	Nut	2
37	1306337	Olive	2
38	1334617	Pipe (Return)	1
39	1311070	Nut	2
40	152608	Olive	2
41	1526672	Pipe (Fuel)	1
42	1311070	Nut	1
43	1306337	Olive	1

FOOTNOTES:

a → 11/1994

b 11/1994 →

©2010 HYSTER COMPANY

LOW PRESSURE SYSTEM (FIGURE 3-17)

DIESEL TURBO WITH LOW EMISSIONS (S/N D019D02377 →)

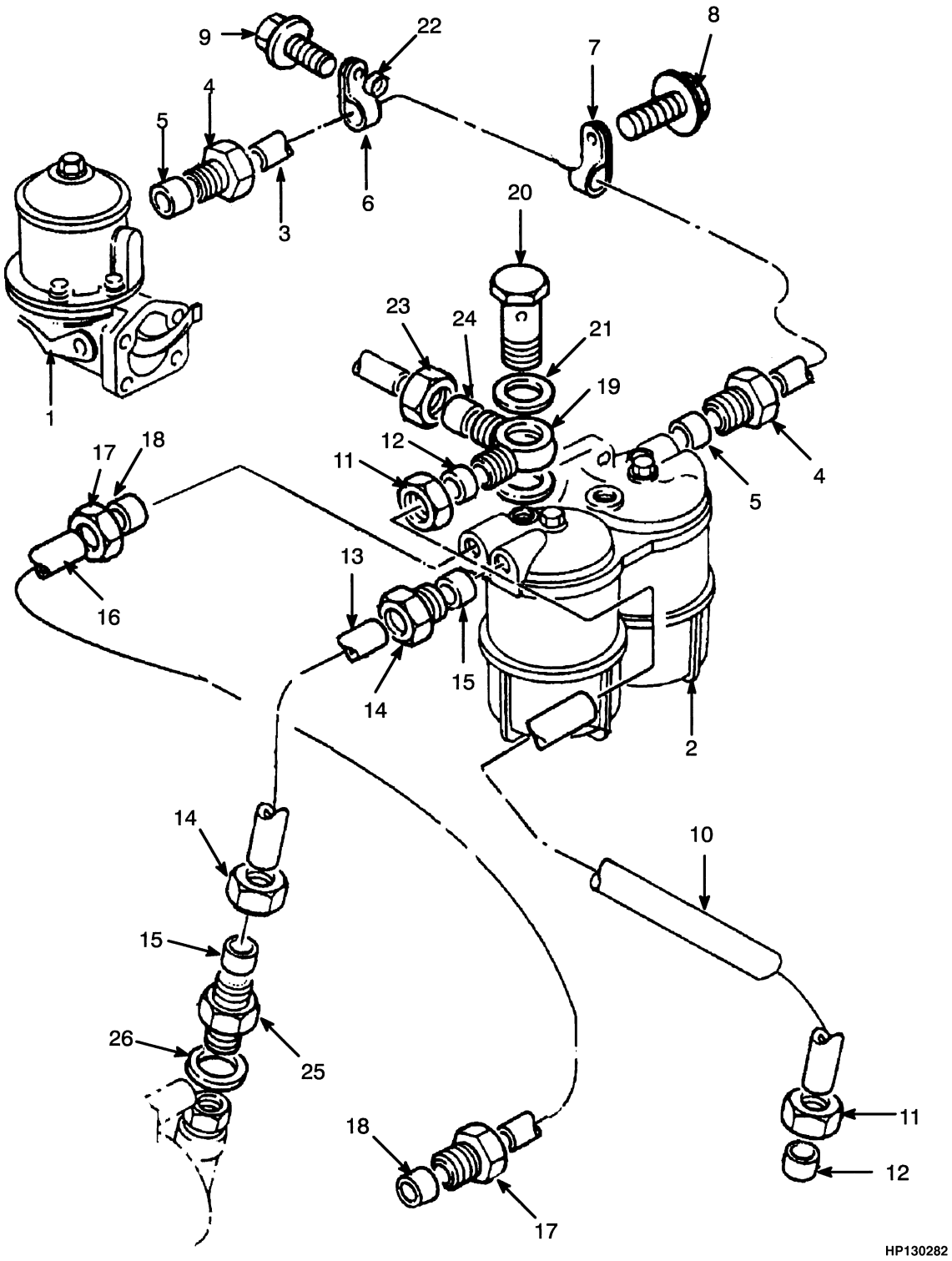

©2010 HYSTER COMPANY

LOW PRESSURE SYSTEM

DIESEL TURBO WITH LOW EMISSIONS (S/N D019D02377 →)

ITEM	PART NO.	DESCRIPTION	QTY
	1395975	Engine Assy-Diesel	1
1	1451765	Lift Pump (☞Figure 3-5)	1
2	1319050	Fuel Filter (☞Figure 3-18)	1
3	1319053	Pipe	1
4	16100	Fitting	2
5	167023	Sleeve	2
6	386461	Clip	1
7	1319054	Clip	1
8	386459	Screw	1
9	1306362	Screw	1
10	1451769	Pipe	1
11	152609	Nut	2
12	152608	Olive	2
13	1451767	Tube Assy	1
14	16100	Fitting	2
15	167023	Sleeve	2
16	1451768	Tube Assy	1
17	16100	Fitting	2
18	167023	Sleeve	2
19	1451770	Fitting	1
20	983346	Bolt	1
21	101985	Washer	2
22	1319058	Spacer	1
23	16118	Fitting	1
24	16114	Fitting	1
25	1382542	Fitting	1
26	1382543	Washer	1

©2010 HYSTER COMPANY

FUEL FILTER (FIGURE 3-18)

DIESEL TURBO WITH LOW EMISSIONS (S/N D019D02377 →)

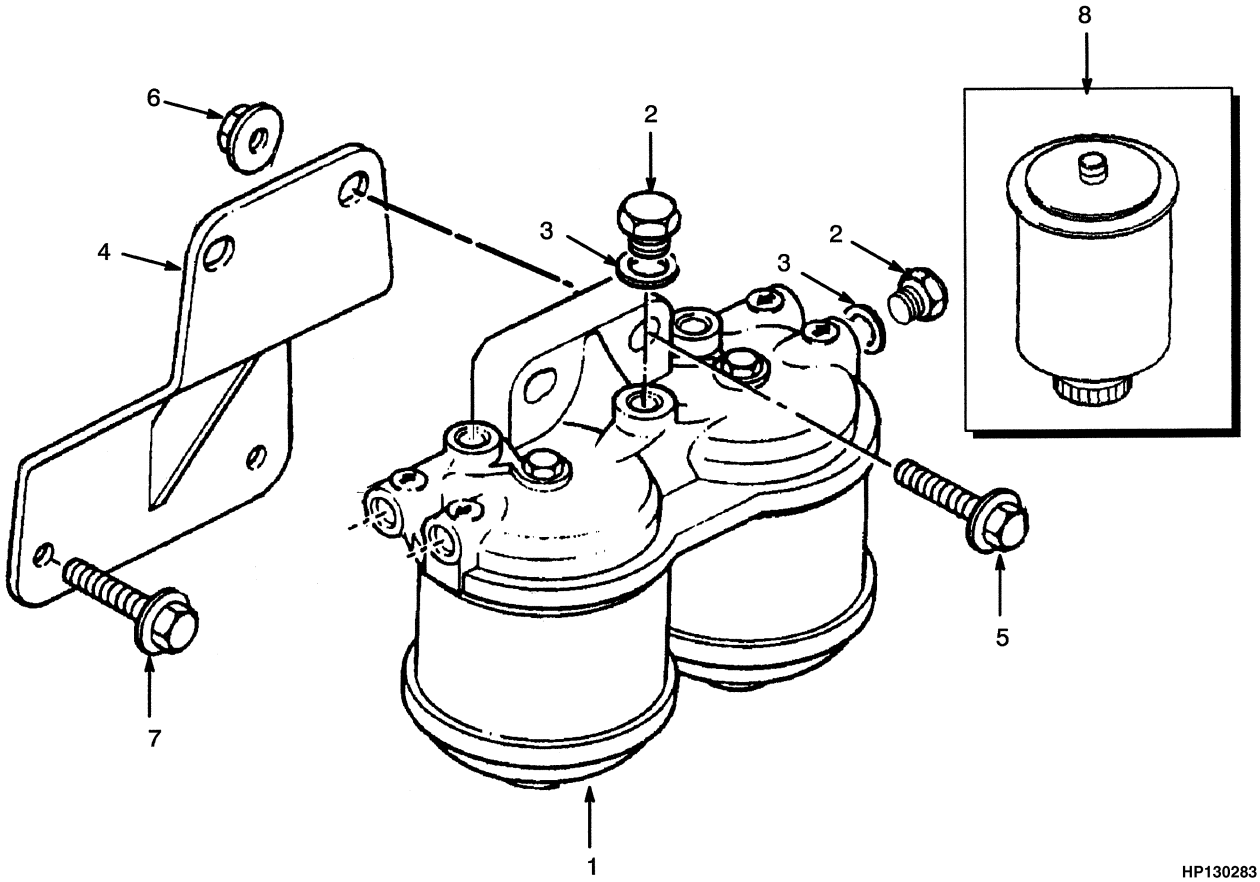

ITEM	PART NO.	DESCRIPTION	QTY
1	1319050	Fuel Filter	1
2	302720	Plug	2
3	302721	Washer	2
4	1319051	Bracket	1
5	1307914	Screw	2
6	1307891	Nut	2
7	1306371	Screw	2
8	1306331	Fuel Filter	2

©2010 HYSTER COMPANY

NOTES

©2010 HYSTER COMPANY

AIR FILTER (FIGURE 3-19)
DIESEL TURBO WITHOUT LOW EMISSIONS

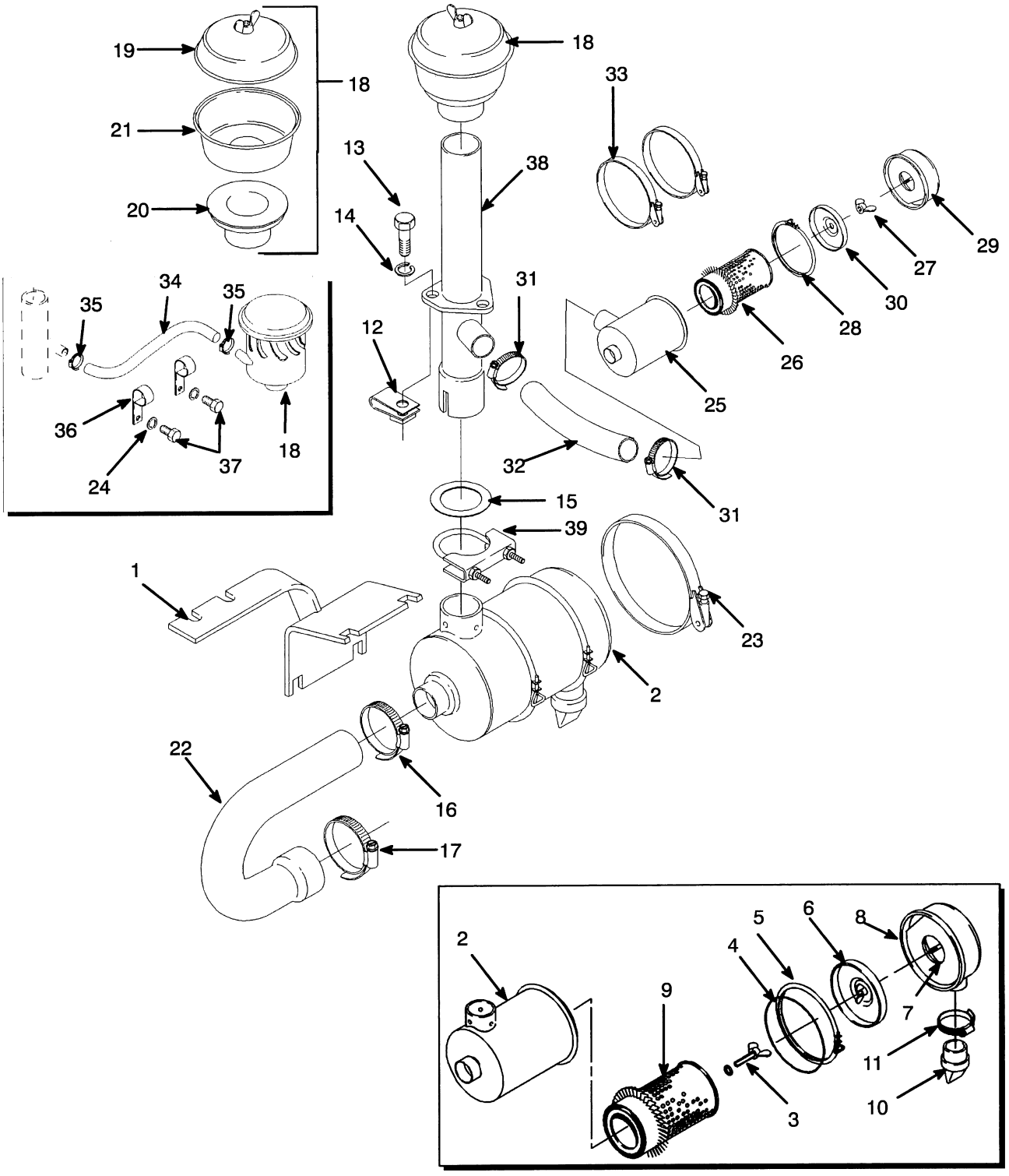

©2010 HYSTER COMPANY

AIR FILTER
DIESEL TURBO WITHOUT LOW EMISSIONS

ITEM	PART NO.	DESCRIPTION	QTY
1	1377564	Bracket	1
2	179967	Air Filter	1
3	214338	Capscrew	1
4	156961	O-Ring	1
5	156958	Clamp	1
6	156960	Baffle	1
7	169307	Spring	1
8	169303	Cap	1
9	156954	Filter Element	1
10	141276	Boot	1
11	314538	Clamp	1
12	376397	Retainer	3
13	18497	Capscrew	3
14	292681	Lockwasher	3
15	1301535	Shim	AR
16	115696	Hose Clamp	1
17	78286	Clamp	1
18	1377588	Pre-Cleaner (Aspirated)	1
18	1377577	Pre-Cleaner (Non-Aspirated)	1
19	147983	Cover	1
20	1377091	Sleeve	1
21	147985	Body	1
22	1377597	Hose	1
23	162562	Hose Clamp	2
24	320157	Washer	2
25	1352669	Air Filter	1
26	1352670	Filter Element	1
27	1360191	Nut	1
28	1360192	Clamp	1
29	1360193	Cap (Steel)	1
30	1360194	Cap (Rubber)	1
31	119236	Clamp	2
32	1357230	Hose	1
33	227220	Clamp	2
34	1361201	Hose (Aspirated)	1
35	127045	Clamp (Hose) (Aspirated)	2
36	339530	Clamp (Aspirated)	2
37	1301708	Capscrew (Aspirated)	2
38	1377580	Exhaust Pipe	1
39	131878	Clamp	1

©2010 HYSTER COMPANY

AIR FILTER (FIGURE 3-20)

DIESEL TURBO WITH LOW EMISSIONS (S/N D019D02377 →)

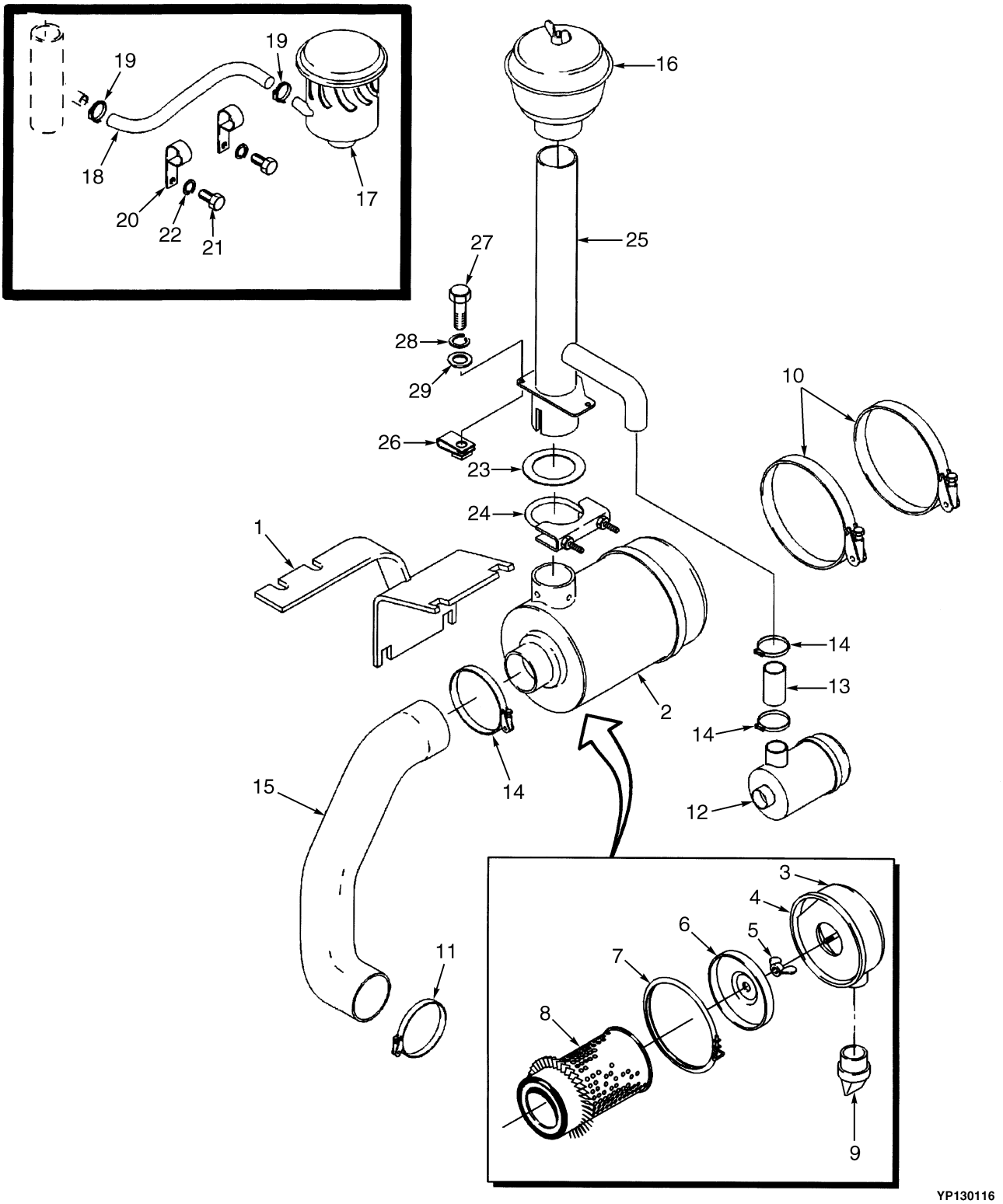

©2010 HYSTER COMPANY

AIR FILTER

DIESEL TURBO WITH LOW EMISSIONS (S/N D019D02377 →)

ITEM	PART NO.	DESCRIPTION	QTY
1	1455864	Bracket	1
2	1455855	Air Filter	1
2	170620	Cap	1
2	169307	Spring	1
3	141331	Cap	1
4	170621	O-Ring	1
5	214338	Capscrew	1
6	170619	Baffle	1
7	150839	Clamp	1
8	2035952	Filter Element	1
9	141276	Boot	1
10	162562	Hose Clamp	2
11	2054459	Hose Clamp	1
12	1352669	Air Filter	1
12	1352670	Filter Element	1
12	1360191	Nut	1
12	1360192	Clamp	1
12	1360193	Cap (Steel)	1
12	1360194	Cap (Rubber)	1
12	119236	Clamp	2
13	1455862	Hose	1
14	227220	Clamp	3
15	1455879	Hose	1
16	1455856	Pre-Cleaner (Non Aspirated)	1
16	147983	Cover	1
16	147985	Body	1
16	1458890	Sleeve	1
16	1458891	Clamp	1
17	1455857	Pre-Cleaner (Aspirated)	1
18	1361201	Hose (Aspirated)	1
19	127045	Clamp (Hose) (Aspirated)	2
20	339530	Clamp (Aspirated)	2
21	1301708	Capscrew (Aspirated)	2
22	320157	Washer	2
23	1301535	Shim	2
24	1455926	Clamp	1
25	1455861	Exhaust Pipe	1
26	376397	Retainer	3
27	18497	Capscrew	3
28	292681	Lockwasher	3
29	320157	Washer	3

©2010 HYSTER COMPANY

THROTTLE LINKAGE (FIGURE 3-21)
DIESEL NON EMISSIONS

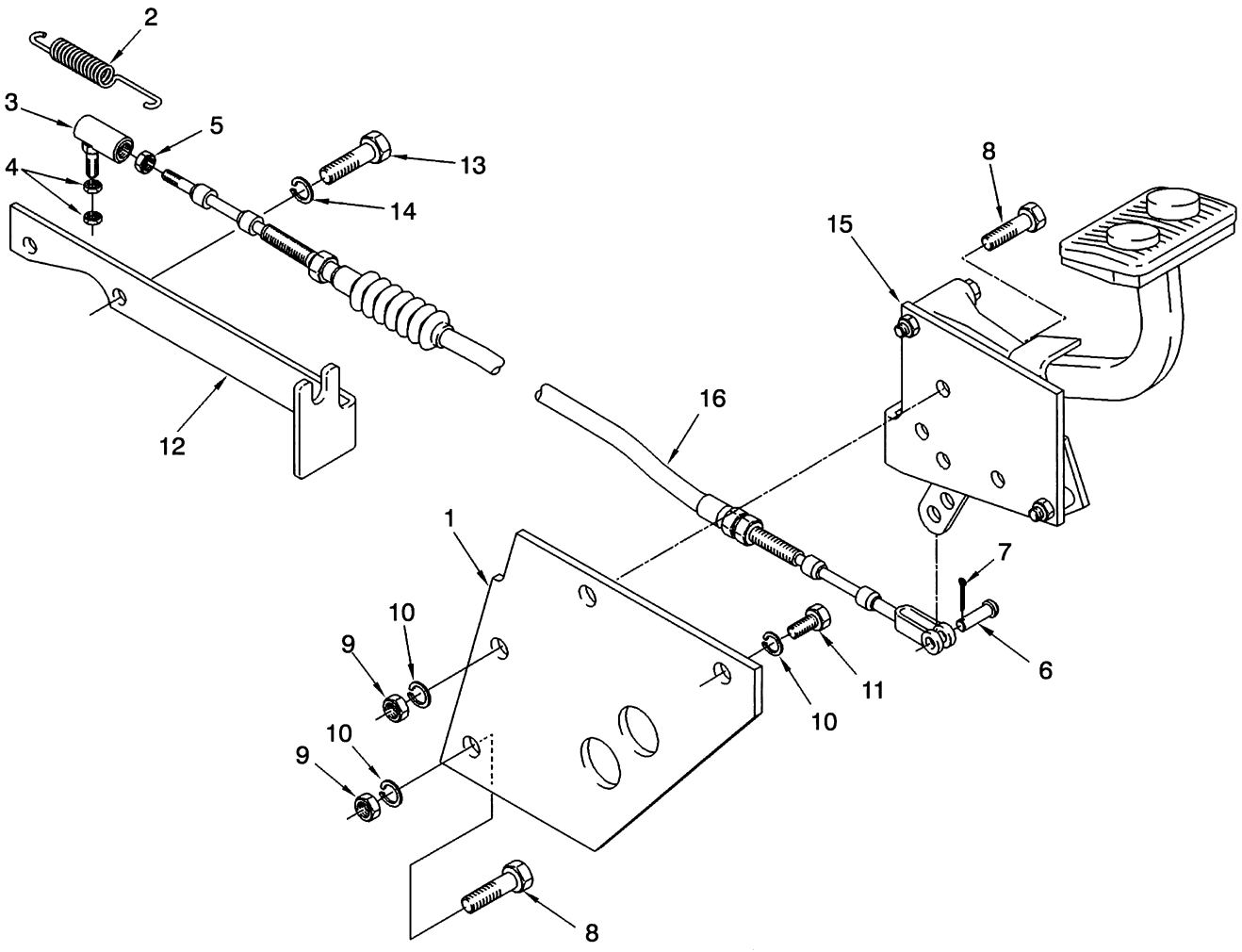

©2010 HYSTER COMPANY

THROTTLE LINKAGE
DIESEL NON EMISSIONS

ITEM	PART NO.	DESCRIPTION	QTY
1	1301634	Plate	1
2	1337225	Spring	1
3	161252	Ball Joint	1
4	15024	Nut	2
5	15002	Nut	1
6	162836	Pin	1
7	15212	Cotter Pin	1
8	136985	Capscrew	2
9	136692	Nut	2
10	~~388049~~		
	292682	Lockwasher	4
11	292514	Capscrew	2
12	1310616	Bracket (Non-Turbo)	1
12	1377639	Bracket (Turbo)	1
13	292500	Capscrew	2
14	292680	Washer	2
15	. . . . .	Throttle Pedal (☞Figure 3-26, ☞Figure 3-27, ☞Figure 3-28, ☞Figure 3-29)	1
16	1337772	Throttle Cable (93 in.)	1

©2010 HYSTER COMPANY

THROTTLE LINKAGE (FIGURE 3-22)
DIESEL WITH LOW EMISSIONS (S/N D019D02377 →)

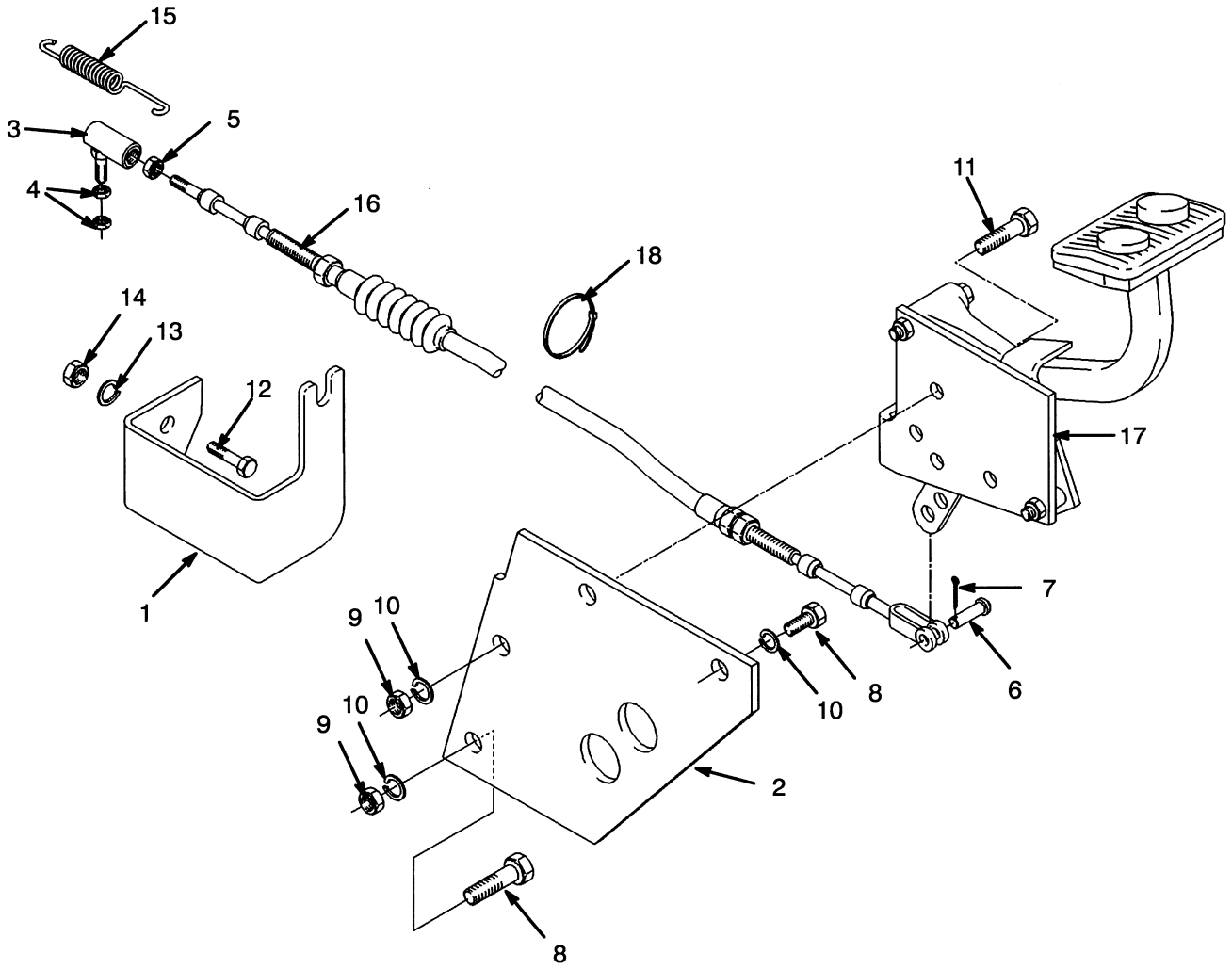

©2010 HYSTER COMPANY

THROTTLE LINKAGE

DIESEL WITH LOW EMISSIONS (S/N D019D02377 →)

ITEM	PART NO.	DESCRIPTION	QTY
1	1456340	Bracket	1
2	833549	Plate – Throttle Mount	1
3	161252	Ball Joint	1
4	15024	Nut	2
5	15002	Nut	1
6	162836	Pin	1
7	15212	Cotter Pin	1
8	136985	Capscrew	2
9	136692	Nut	2
10	~~388049~~		
	292682	Lockwasher	4
11	292514	Capscrew	2
12	287816	Capscrew	2
13	292680	Washer	2
14	136687	Nut	2
15	1337225	Spring	1
16	1337772	Throttle Cable (93 in.)	1
17	. . . . .	Throttle Cable (☞Figure 3-26, ☞Figure 3-27, ☞Figure 3-28, ☞Figure 3-29)	1
18	397676	Strap Clamp	1

©2010 HYSTER COMPANY

THROTTLE LINKAGE (FIGURE 3-23)

NON EMISSION DIESEL AND LPG WITH AUTOSHIFT (S/N D019D12439 →)

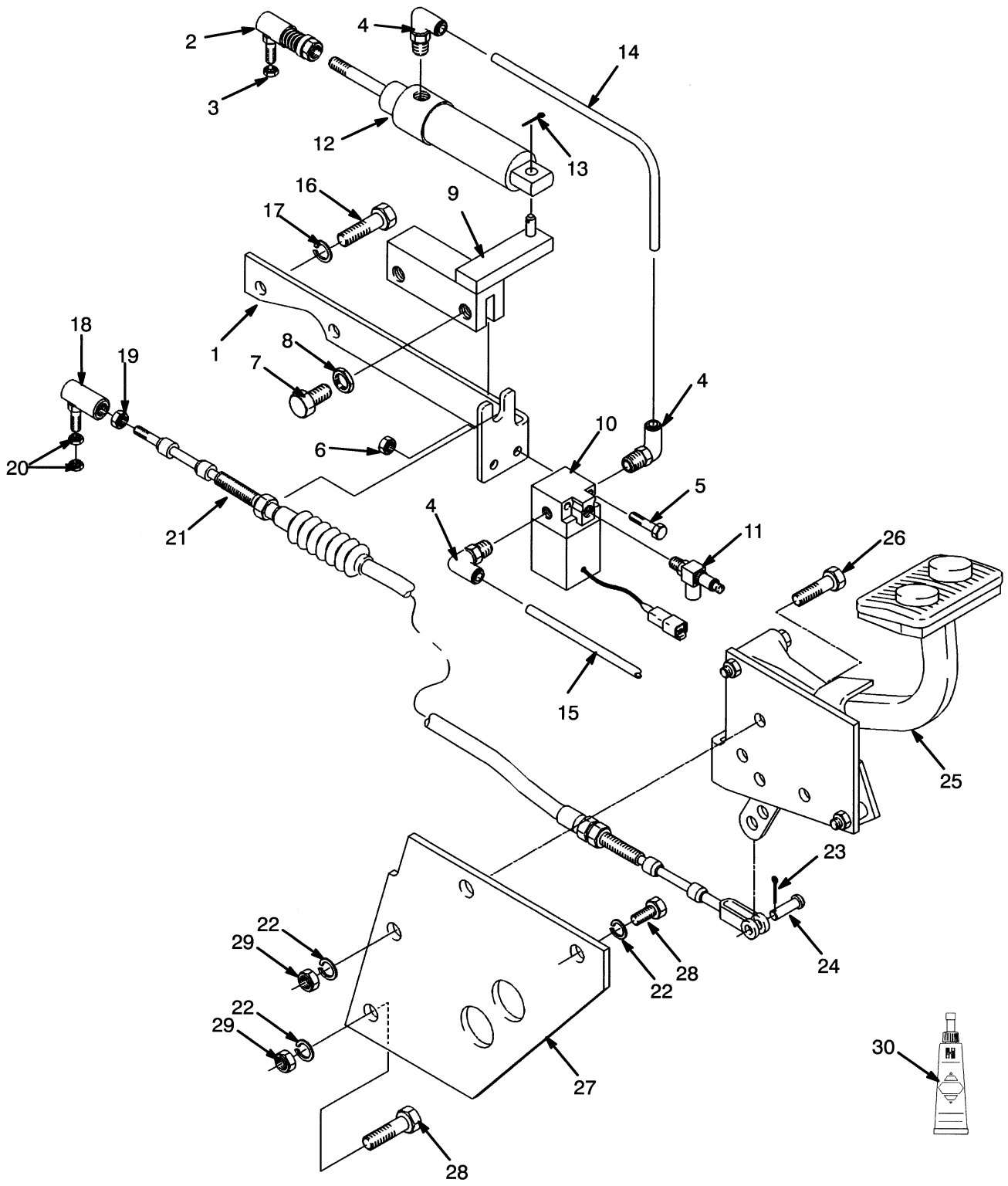

©2010 HYSTER COMPANY

THROTTLE LINKAGE

NON EMISSION DIESEL AND LPG WITH AUTOSHIFT (S/N D019D12439 →)

ITEM	PART NO.	DESCRIPTION	QTY
1	894924	Bracket	1
1	894925	Bracket (Turbo)	1
2	139024	Ball Joint	1
3	15024	Nut	2
4	1301433	Quick Disconnect Fitting	3
5	815596	Capscrew	2
6	815597	Nut	2
7	136681	Capscrew	2
8	~~388049~~		
	292682	Lockwasher	2
9	894441	Bracket	1
10	894444	Solenoid Valve	1
11	894445	Flow Valve	1
12	894446	Air Cylinder	1
13	15200	Cotter Pin	1
14	255124	Tube	1
15	125574	Tube	1
16	292500	Capscrew	2
17	292680	Washer	2
18	161252	Ball Joint	1
19	15002	Nut	1
20	15024	Nut	2
21	1337772	Throttle Cable	1
21	894668	Throttle Cable	1
22	~~388049~~		
	292682	Lockwasher	4
23	15212	Cotter Pin	1
24	162836	Pin	1
25	. . . . .	Throttle Pedal (☞Figure 3-26, ☞Figure 3-27, ☞Figure 3-28, ☞Figure 3-29)	1
26	292514	Capscrew	2
27	1301634	Plate	1
28	136985	Capscrew	2
29	136692	Nut	2
30	246108	Sealant	AR

©2010 HYSTER COMPANY

THROTTLE LINKAGE (FIGURE 3-24)

LOW EMISSION DIESEL WITH AUTOSHIFT (S/N D019D12439 →)

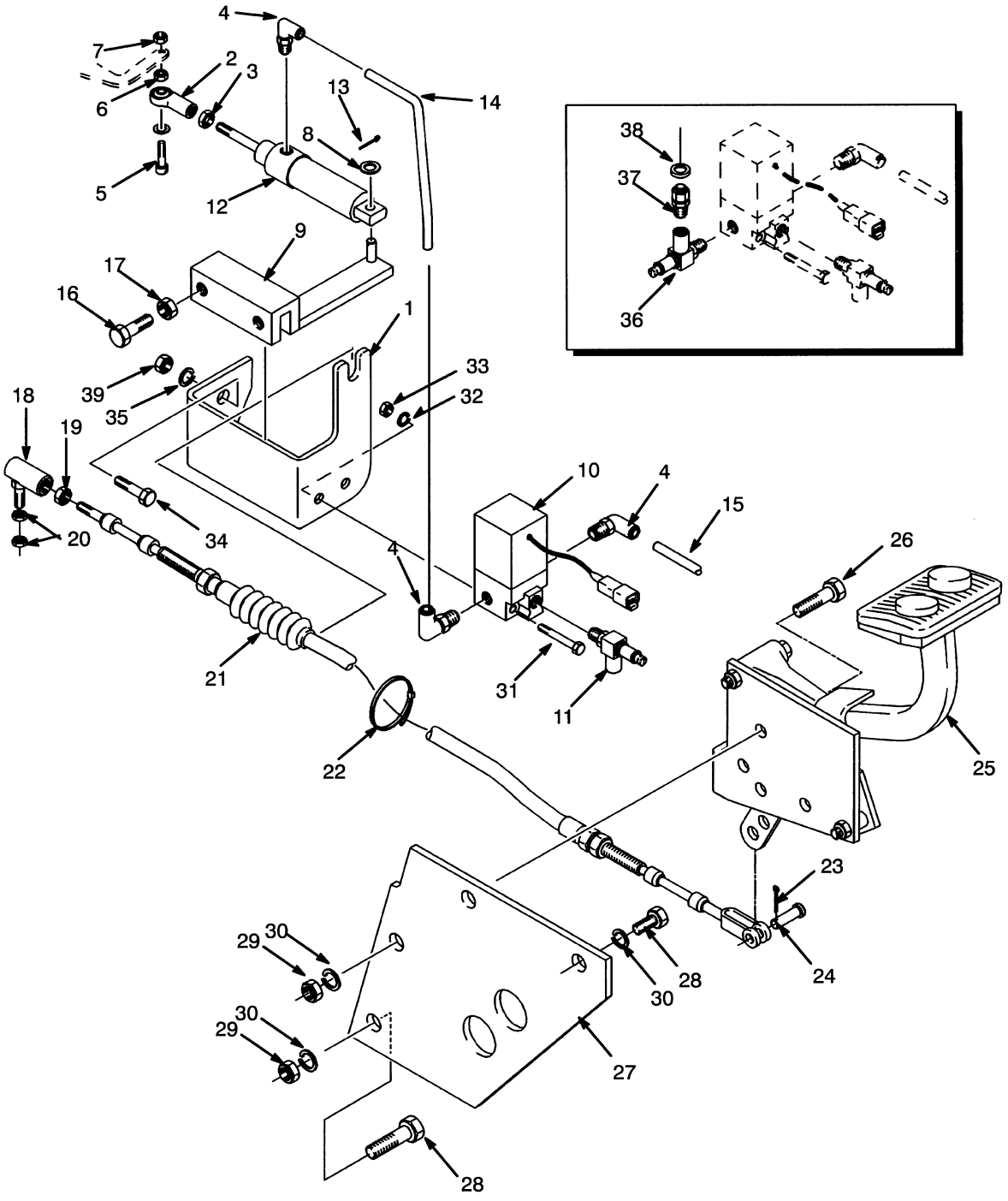

©2010 HYSTER COMPANY

THROTTLE LINKAGE

LOW EMISSION DIESEL WITH AUTOSHIFT (S/N D019D12439 →)

ITEM	PART NO.	DESCRIPTION	QTY
1	1456340	Bracket	1
2	1456286	Rod End	1
3	15024	Nut	2
4	**a** 1301433	Quick Disconnect Fitting	3
4	**b** 1301433	Quick Disconnect Fitting	2
5	894438	Capscrew	1
6	222085	Washer	1
7	264141	Nut	1
8	18500	Washer	1
9	1456287	Bracket Wldmt	1
10	894444	Solenoid Valve	1
11	894445	Flow Valve	1
12	894446	Air Cylinder	1
13	15200	Cotter Pin	1
14	255124	Tube	1
15	125574	Tube	1
16	136749	Screw	2
17	239503	Nut	2
18	161252	Ball Joint	1
19	15002	Nut	1
20	15024	Nut	2
21	1337772	Throttle Cable (93 in.)	1
22	397676	Strap Clamp	1
23	15212	Cotter Pin	1
24	162836	Pin	1
25	. . . . .	Throttle Pedal (☞Figure 3-26, ☞Figure 3-27, ☞Figure 3-28, ☞Figure 3-29)	1
26	292514	Capscrew	2
27	1301634	Plate	1
28	136985	Capscrew	2
29	136692	Nut	2
30	~~388049~~		
	292682	Lockwasher	4
31	815596	Capscrew	2
32	292678	Lockwasher	2
33	815597	Nut	2
34	287816	Capscrew	2
35	292680	Washer	2
36	**b** 894445	Flow Valve	1
37	**b** 1359661	Fitting	1
38	**b** 1301431	Fitting	1
39	136687	Nut	2

FOOTNOTES:

a → S/N D019D02691

b S/N D019D02692 →

©2010 HYSTER COMPANY

THROTTLE LINKAGE (FIGURE 3-25)

LPG

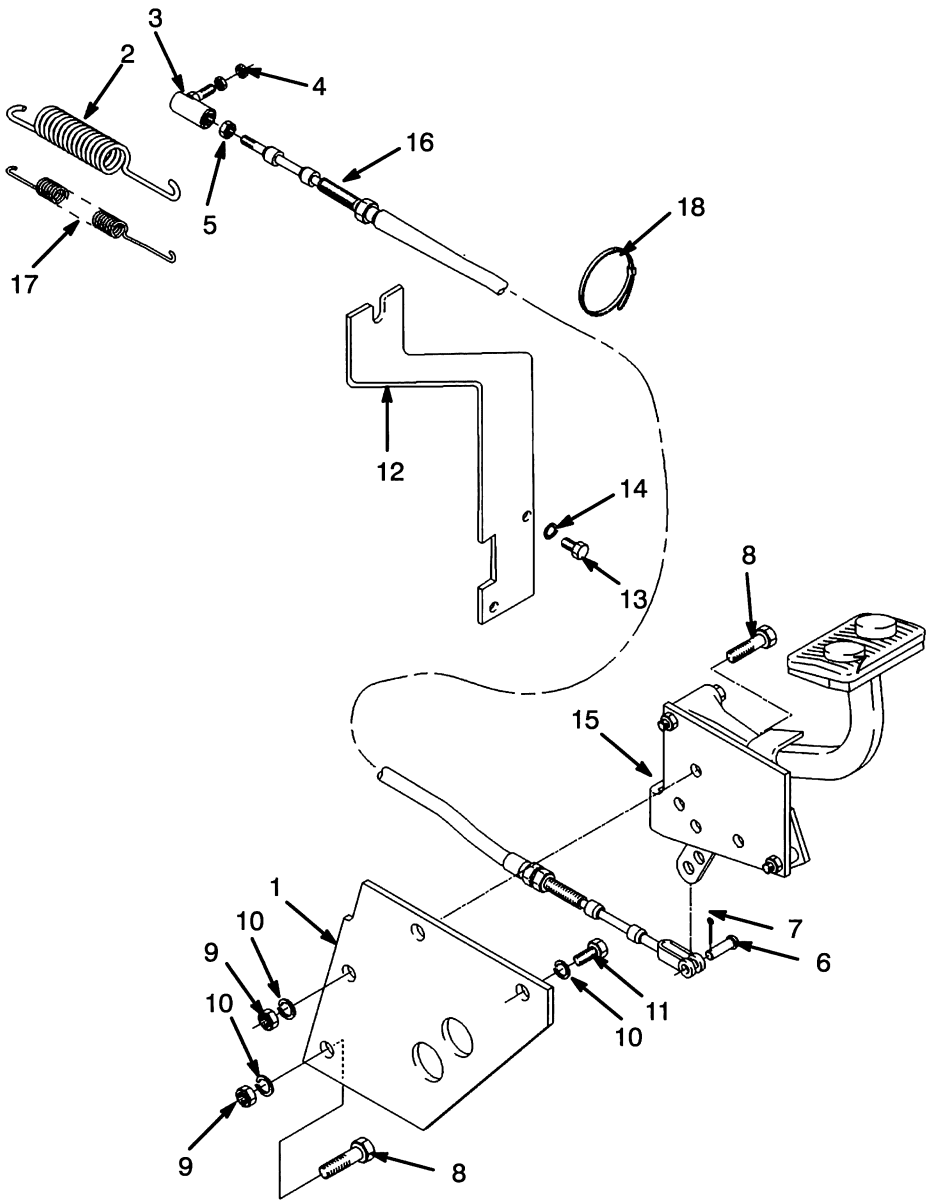

©2010 HYSTER COMPANY

THROTTLE LINKAGE
LPG

ITEM	PART NO.	DESCRIPTION	QTY
1	1301634	Plate	1
2	894659	Spring	1
3	161252	Ball Joint	1
4	15024	Nut	2
5	15002	Nut	1
6	162836	Pin	1
7	15212	Cotter Pin	1
8	136985	Capscrew	2
9	136692	Nut	2
10	~~388049~~		
	292682	Lockwasher	4
11	292514	Capscrew	2
12	894660	Bracket	1
13	292500	Capscrew	2
14	292680	Washer	2
15	. . . . .	Throttle Pedal (☞Figure 3-26, ☞Figure 3-27, ☞Figure 3-28, ☞Figure 3-29)	1
16	894668	Throttle Cable	1
17	894658	Spring	1
18	397676	Strap Clamp	1

©2010 HYSTER COMPANY

THROTTLE PEDAL (FIGURE 3-26)
FORWARD AND REVERSE LEVER

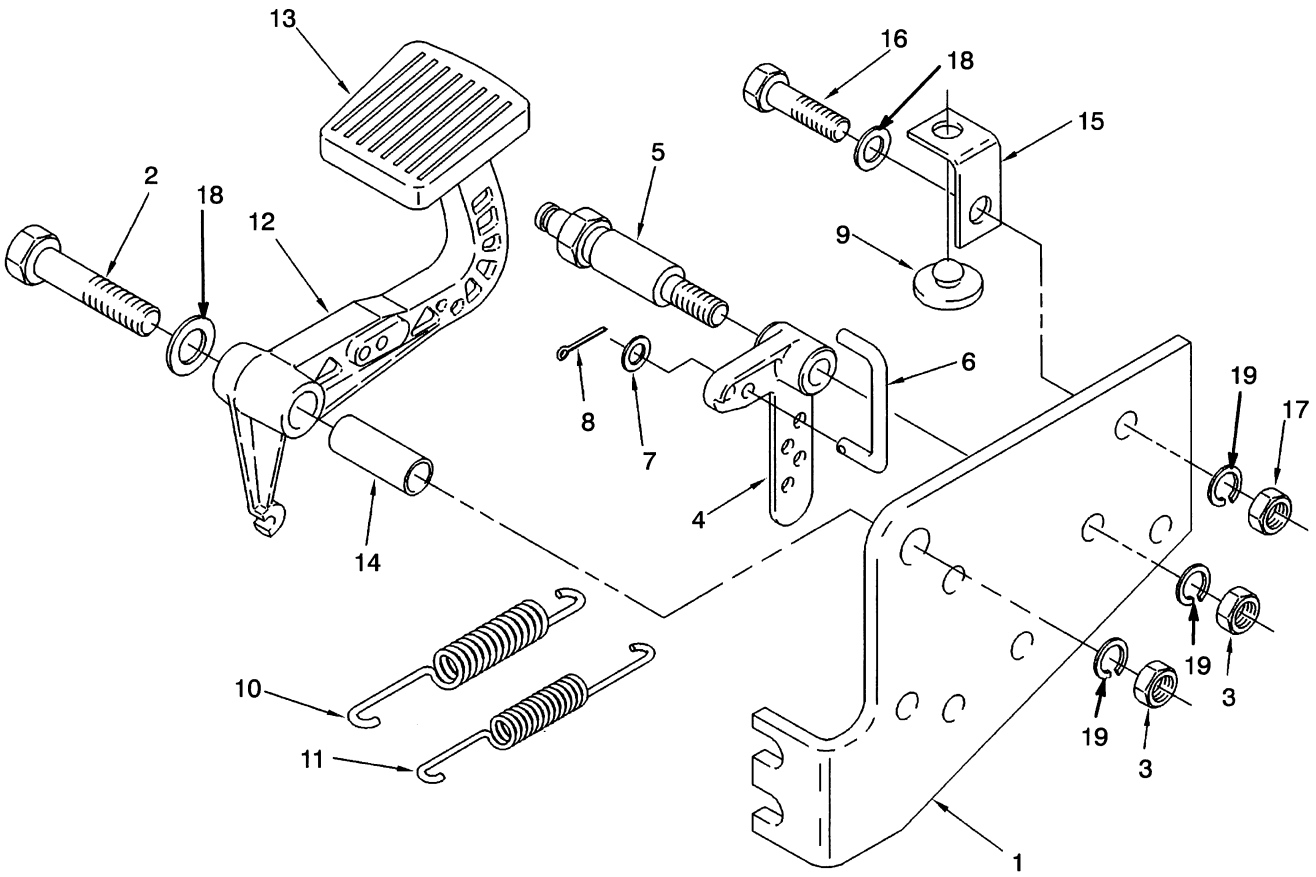

©2010 HYSTER COMPANY

THROTTLE PEDAL
FORWARD AND REVERSE LEVER

ITEM	PART NO.	DESCRIPTION	QTY
1	352482	Bracket (Diesel)	1
1	894671	Bracket (LPG)	1
2	292521	Capscrew	1
3	136692	Nut	2
4	353164	Crank	1
5	352485	Shaft	1
6	353129	Rod	1
7	320156	Washer	1
8	15200	Cotter Pin	1
9	353195	Bumper	1
10	353142	Spring	1
11	353143	Spring	1
12	352499	Pedal (Accelerator)	1
13	352885	Rubber Pad	1
14	325708	Tube Assy (Pivot)	1
15	353159	Bracket	1
16	287854	Capscrew	1
17	296128	Nut	1
18	320160	Washer	2
19	~~388049~~		
	292682	Lockwasher	3

©2010 HYSTER COMPANY

THROTTLE PEDAL (FIGURE 3-27)
MONOTROL PEDAL

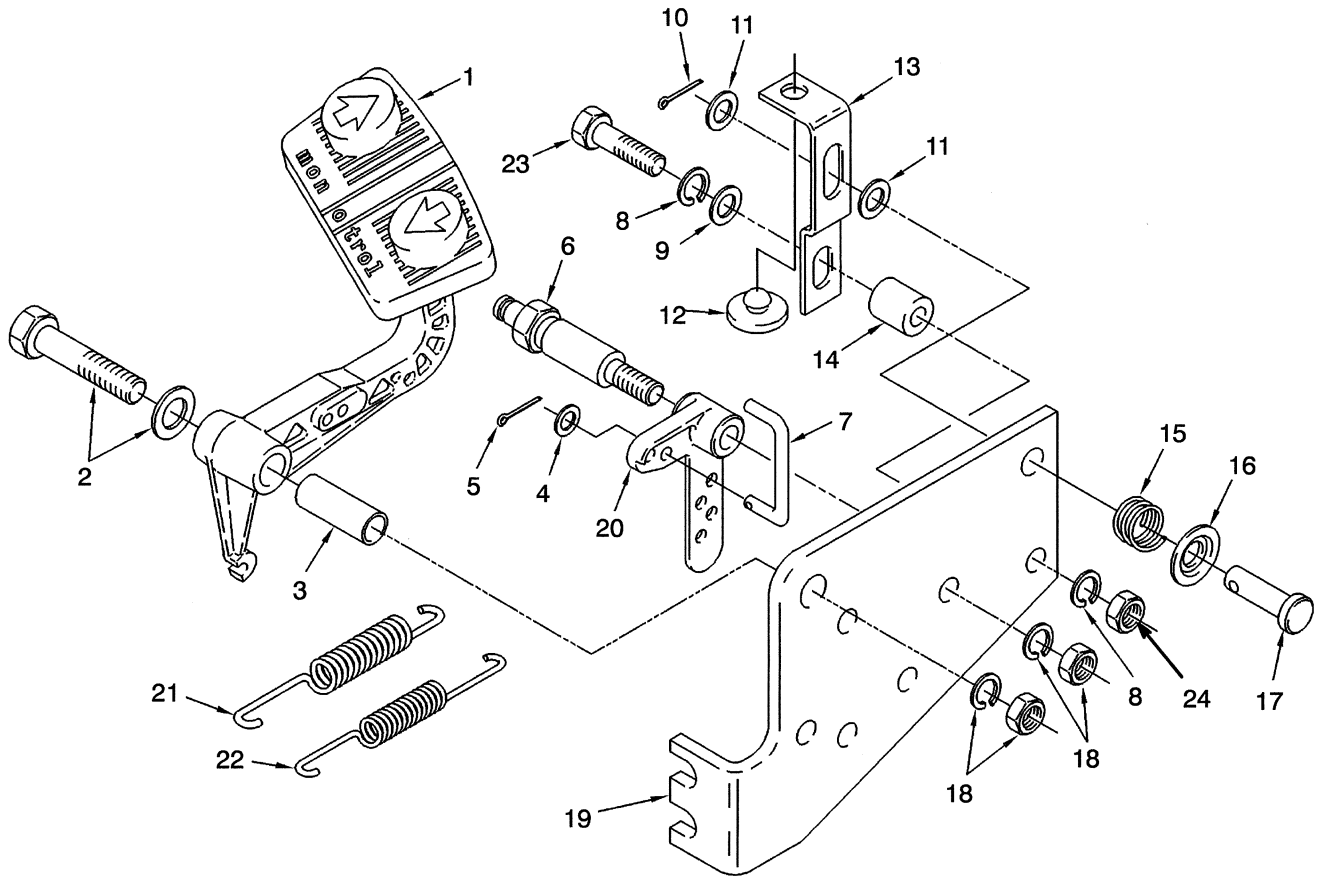

HP130292

©2010 HYSTER COMPANY

THROTTLE PEDAL
MONOTROL PEDAL

ITEM	PART NO.	DESCRIPTION	QTY
1	353398	Monotrol Pedal	1
2	292523	Capscrew	1
2	320160	Washer	1
3	353141	Tube Assy (Pivot)	1
4	320156	Washer	1
5	15200	Cotter Pin	1
6	352485	Shaft	1
7	353129	Rod	1
8	292681	Lockwasher	2
9	320158	Washer	1
10	15212	Cotter Pin	1
11	320160	Washer	2
12	353195	Bumper	1
13	352950	Bracket	1
14	353453	Mount	1
15	353172	Spring	1
16	353230	Cap	1
17	142	Pin	1
18	~~388049~~		
	292682	Lockwasher	2
18	136692	Nut	2
19	352482	Bracket (Diesel)	1
19	894671	Bracket (LPG)	1
20	353164	Crank	1
21	353142	Spring	1
22	353143	Spring	1
23	287851	Capscrew	1
24	239503	Nut	1

©2010 HYSTER COMPANY

THROTTLE PEDAL (FIGURE 3-28)

MONOTROL PEDAL WITH AUTOSHIFT (S/N D019D12439 →)

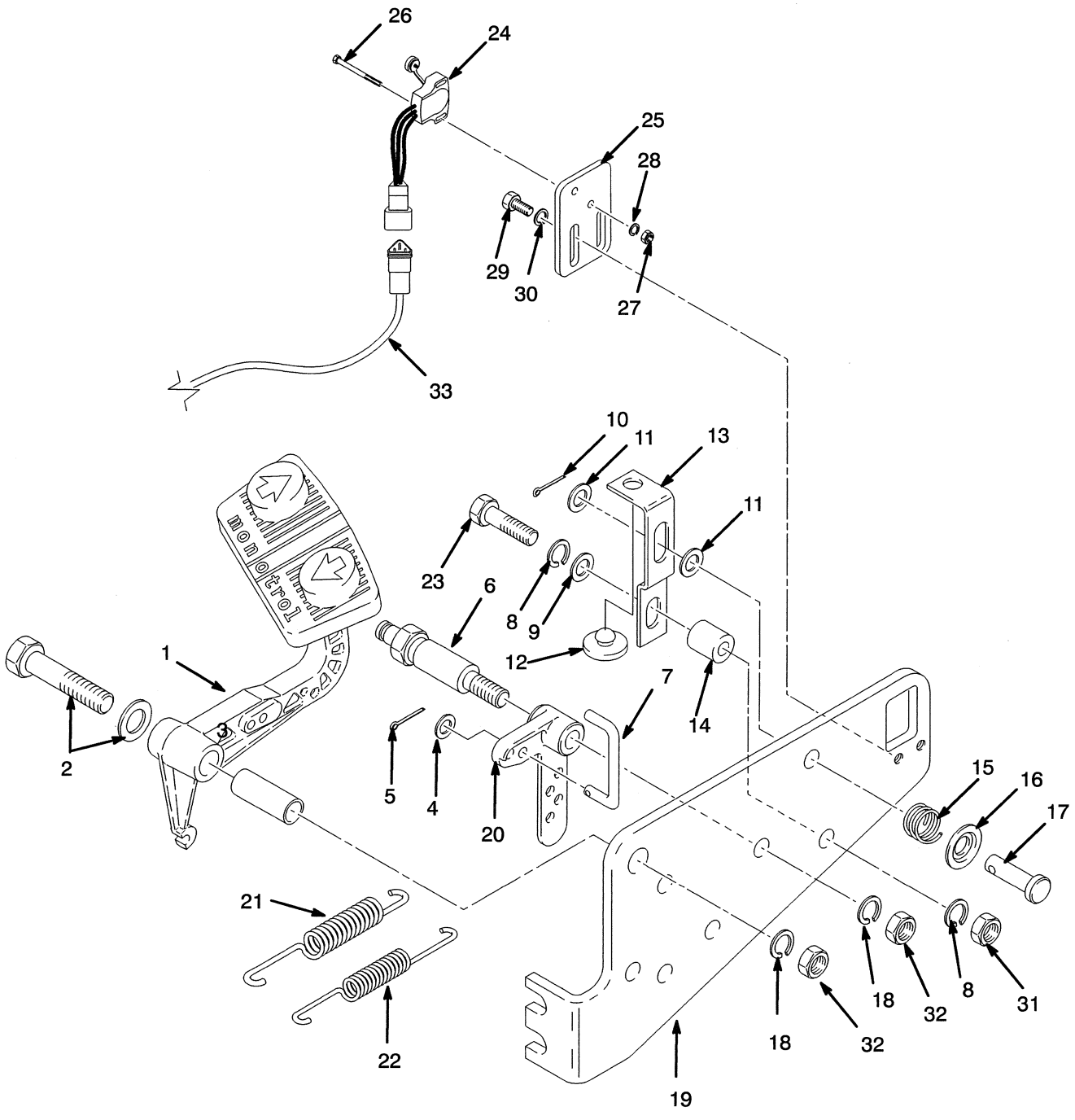

©2010 HYSTER COMPANY

THROTTLE PEDAL

MONOTROL PEDAL WITH AUTOSHIFT (S/N D019D12439 →)

ITEM	PART NO.	DESCRIPTION	QTY
1	353398	Monotrol Pedal (☞Figure 3-27)	1
2	292523	Capscrew	1
2	320160	Washer	1
3	353141	Tube Assy (Pivot)	1
4	320156	Washer	1
5	15200	Cotter Pin	1
6	352485	Shaft	1
7	353129	Rod	1
8	292681	Lockwasher	2
9	320158	Washer	1
10	15212	Cotter Pin	1
11	320160	Washer	2
12	353195	Bumper	1
13	352950	Bracket	1
14	353453	Mount	1
15	353172	Spring	1
16	353230	Cap	1
17	142	Pin	1
18	~~388049~~		
	292682	Lockwasher	1
19	894425	Bracket (Diesel)	1
19	894426	Bracket (LPG)	1
20	353164	Crank	1
21	353142	Spring	1
22	353143	Spring	1
23	287851	Capscrew	1
24	894427	Sensor	1
25	894424	Mounting Plate	1
26	220456	Screw	2
27	15049	Nut	2
28	15151	Lockwasher	2
29	302271	Capscrew	2
30	320157	Washer	2
31	239503	Nut	1
32	136692	Nut	2
33	2039068	Wire Harness	1

©2010 HYSTER COMPANY

THROTTLE PEDAL (FIGURE 3-29)

FORWARD AND REVERSE LEVER — WITH AUTOSHIFT (S/N D019D12439 →)

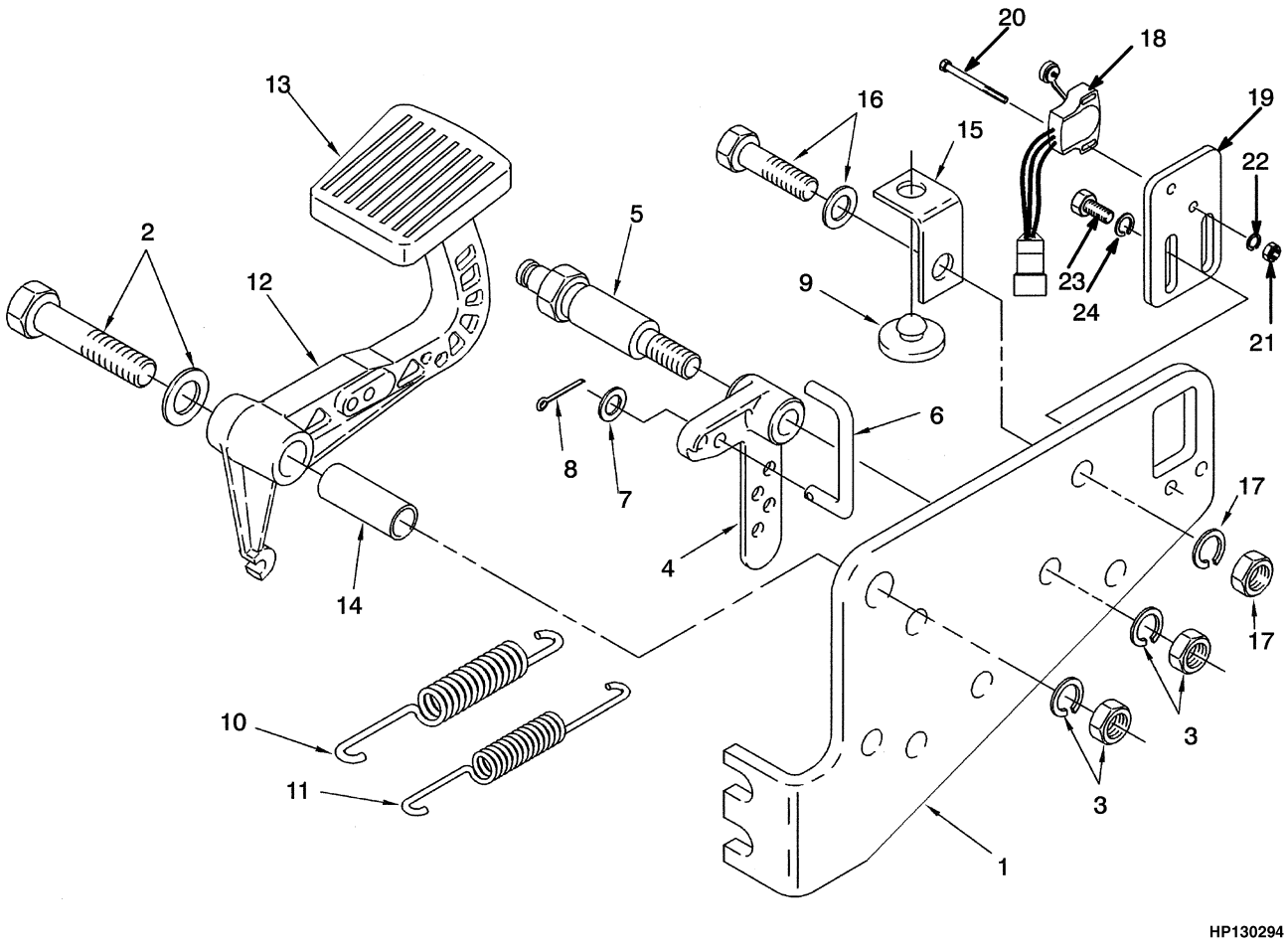

©2010 HYSTER COMPANY

THROTTLE PEDAL

FORWARD AND REVERSE LEVER – WITH AUTOSHIFT (S/N D019D12439 →)

KEY:
A: Diesel
B: LPG

ITEM	PART NO.	DESCRIPTION	QTY A	QTY B
1	894425	Bracket	1	..
1	894426	Bracket	..	1
2	320160	Washer	1	1
2	292521	Capscrew	1	1
3	136692	Nut	2	2
3	~~388049~~			
	292682	Lockwasher	2	2
4	353164	Crank	1	1
5	352485	Shaft	1	1
6	353129	Rod	1	1
7	320156	Washer	1	1
8	15200	Cotter Pin	1	1
9	353195	Bumper	1	1
10	353142	Spring	1	1
11	353143	Spring	1	1
12	352499	Pedal (Accelerator)	1	1
13	352885	Rubber Pad	1	1
14	325708	Tube Assy (Pivot)	1	1
15	353159	Bracket	1	1
16	287854	Capscrew	1	1
16	320160	Washer	1	1
17	296128	Nut	1	1
17	~~388049~~			
	292682	Lockwasher	1	1
18	894427	Sensor	1	..
19	894424	Mounting Plate	1	..
20	220456	Screw	2	..
21	15049	Nut	2	..
22	15151	Lockwasher	2	..
23	302271	Capscrew	2	..
24	320157	Washer	2	..

©2010 HYSTER COMPANY

NOTES

©2010 HYSTER COMPANY

4 ELECTRICAL SYSTEM

SECTION 4
ELECTRICAL SYSTEM

DESCRIPTION	PAGE
ALTERNATOR	
LPG (S/N D019D01797 → (DIESEL))	4-32
SHEET 1 OF 2 (→ S/N D019D01796 (DIESEL))	4-24
SHEET 2 OF 2 (→ S/N D019D01796 (DIESEL))	4-28
ALTERNATOR MOUNTING	
DIESEL WITH LOW EMISSIONS (S/N D019D02377 →)	4-36
DIESEL WITHOUT LOW EMISSIONS	4-34
LPG	4-38
DISTRIBUTOR	
LPG	4-22
ELECTRICAL	
DIESEL WITH AUTOSHIFT (S/N D019D12439 →)	4-6
ELECTRICAL SYSTEM	
DIESEL WITHOUT AUTOSHIFT	4-2
LPG WITHOUT AUTOSHIFT	4-12
INSTRUMENT PANEL	
DIESEL	4-8
LPG	4-18
STARTER	
S/N D019E02654 →	4-16
DIESEL	4-40
WIRE HARNESS	
CONTROL PANEL (S/N D019D02394U →)	4-42
CONTROLLER AUTOSHIFT (S/N D019D12439 →)	4-50
ENGINE COMPARTMENT (S/N D019D12439 ↔ S/N D019D02996X)	4-44
ENGINE COMPARTMENT WITH AUTOSHIFT (S/N D019D02997X →)	4-46
ENGINE COMPARTMENT WITHOUT AUTOSHIFT (S/N D019D02997X →)	4-48
MONOTROL (S/N D019D12439 →)	4-53
OPERATOR COMPARTMENT - WITH OPTIONAL ROTATING BEACON	4-54
SHIFTER AUTOSHIFT (S/N D019D12439 →)	4-52

©2010 HYSTER COMPANY

ELECTRICAL SYSTEM (FIGURE 4-1)
DIESEL WITHOUT AUTOSHIFT

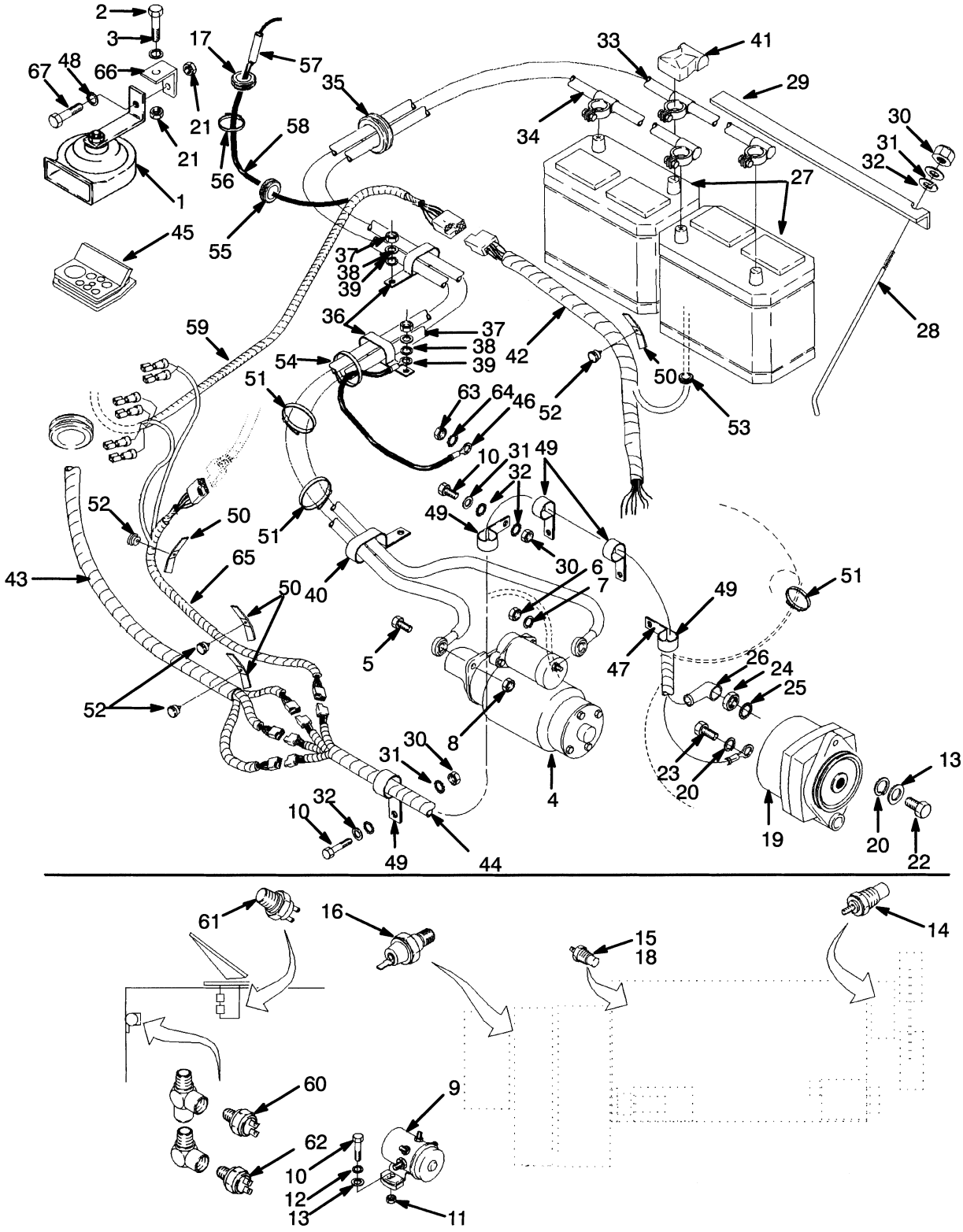

©2010 HYSTER COMPANY

ELECTRICAL SYSTEM
DIESEL WITHOUT AUTOSHIFT

ITEM	PART NO.	DESCRIPTION	QTY
1	1383778	Horn	1
2	136681	Capscrew	1
3	292681	Lockwasher	1
4	**k** 894878	Starter (☞Figure 4-5)	1
4	1313394	Starter (Diesel) (☞Figure 4-14)	1
5	16805	Capscrew	3
5	15156	Lockwasher	3
6	292668	Nut	1
7	292679	Washer	1
8	136692	Nut	1
9	116102	Switch	1
10	287816	Capscrew	2
11	136687	Nut	2
12	292680	Washer	2
13	320157	Washer	4
14	1319175	Temperature Sender	1
15	190252	Pressure Switch	1
16	114662	Switch (Transmission)	1
17	102990	Grommet	1
18	246108	Sealant	AR
19	**ce** 385656	Alternator (☞Figure 4-8)	1
19	**be** 339599	Alternator (☞Figure 4-9)	1
19	**h** 1358911	Alternator (☞Figure 4-10)	1
20	292681	Lockwasher	2
21	239503	Nut	2
22	136749	Screw	1
23	136681	Capscrew	1
24	136687	Nut	1
25	296359	Washer	1
26	157065	Boot	1
27	305522	Start Battery Wet (Wet)	2
27	305681	Start Battery Dry (Dry) (Optional)	2
28	309124	Battery Hold Down	3
29	1301406	Battery Hold Down	1
30	136687	Nut	3
31	292680	Washer	3
32	320156	Washer	3
33	1303438	Battery Cable (Negative)	1
34	1303437	Battery Cable (Positive)	1
35	1347854	Grommet	1
36	1350914	Strap	3
37	136692	Nut	4
38	320159	Washer	5
39	~~388049~~		
	292682	Lockwasher	4
40	1350911	Strap	1
41	257241	Boot	2
42	**a** 1325610	Wire Harness (Module)	1
43	1451306	Wire Harness (Operator Compartment)	1
44	**f** 1451304	Wire Harness (Engine Compartment)	1

©2010 HYSTER COMPANY

ELECTRICAL SYSTEM
DIESEL WITHOUT AUTOSHIFT

ITEM	PART NO.	DESCRIPTION	QTY
44	**gi** 1452412	Wire Harness (Engine Compartment)	1
44	**j** 2042757	Wire Harness (Engine Compartment)	1
45	1301640	Seal	1
46	150179	Wire	1
47	101625	Clamp	1
48	320157	Washer	2
49	1345023	Strap	8
50	1301593	Clamp	9
51	137852	Strap Clamp	8
52	340044	Gripnail	9
53	**d** 1301424	Bushing	1
54	397676	Strap Clamp	12
55	**d** 1300757	Grommet	2
56	**d** 137852	Strap Clamp	2
57	**d** 181046	Connector Body	4
58	**d** 1311268	Wire Harness	1
59	**a** 1334515	Wire Harness	1
60	**a** 1301647	Pressure Switch (NC)	1
61	**a** 1301648	Pressure Switch	1
62	**a** 1301299	Pressure Switch (Low Pressure) (NO)	1
63	239503	Nut	2
64	**a** 296380	Washer	2
65	1301747	Wire Harness (Forward/Reverse)	1
66	1325379	Bracket	1
67	136681	Capscrew	1

FOOTNOTES:

a Monotrol Pedal
b Remanufactured Alternator 3012611R
c Remanufactured Alternator 3029189R
d With Cab
e → S/N D019D01796
f → S/N D019D02376
g → S/N D019D02996X
h S/N D019D01797 →
i S/N D019D02377 →
j S/N D019D02997X →
k S/N D019E02654 →

©2010 HYSTER COMPANY

NOTES

©2010 HYSTER COMPANY

ELECTRICAL (FIGURE 4-2)
DIESEL WITH AUTOSHIFT (S/N D019D12439 →)

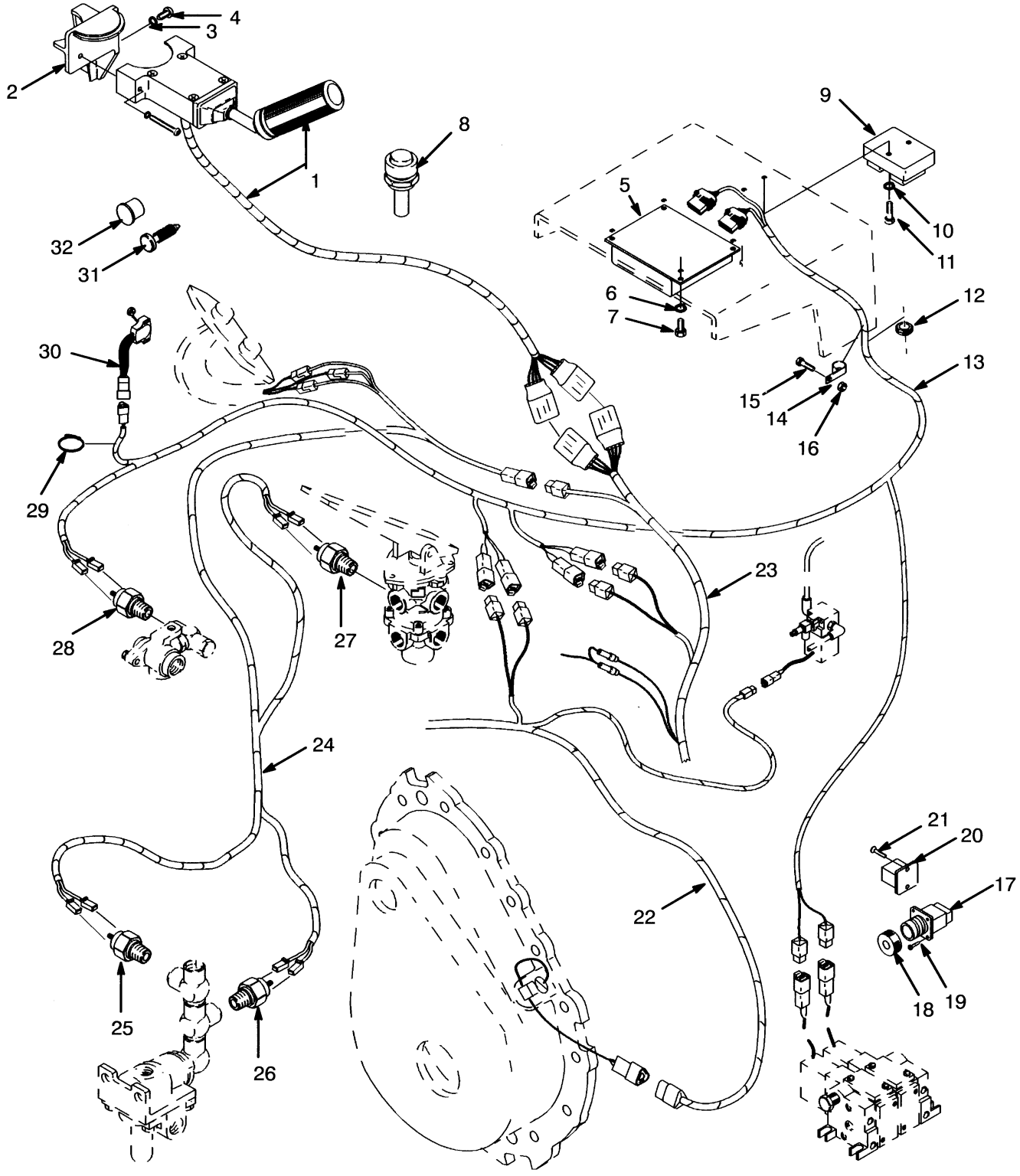

©2010 HYSTER COMPANY

ELECTRICAL

DIESEL WITH AUTOSHIFT (S/N D019D12439 →)

ITEM	PART NO.	DESCRIPTION	QTY
1	**b** 894411	Gear Selector (4 Position)	1
1	**a** 894410	Gear Selector (4 Position)	1
2	1455928	Bracket	1
3	292681	Lockwasher	2
4	1324996	Capscrew	2
5	**c** 2038103	Controller	1
5	**e** 2038103	Controller	1
6	309637	Screw	2
7	292680	Washer	2
8	1325331	Lamp	1
9	894932	Controller (By-Pass)	1
10	15154	Lockwasher	2
11	227113	Screw	2
12	94351	Grommet	1
13	894929	Wire Harness (Controller) (☞Figure 4-19)	1
14	1301721	Clamp	1
15	287854	Capscrew	1
16	136692	Nut	1
17	1455929	Receptacle	1
18	894974	Cap	1
19	227163	Screw	4
20	1301233	Relay	1
21	**a** 1301284	Screw	2
22	**d** 894975	Wire Harness (Engine Compartment) (☞Figure 4-16)	1
22	**f** 2042741	Wire Harness (Engine Compartment) (☞Figure 4-17)	1
23	894934	Wire Harness (Engine Compartment) (☞Figure 4-20)	1
24	**b** 894927	Wire Harness (Monotrol) (☞Figure 4-21)	1
25	**b** 1301299	Pressure Switch (Low Pressure)	1
26	**b** 1301647	Pressure Switch	1
27	**b** 1301648	Pressure Switch	1
28	1301299	Pressure Switch (Low Pressure)	1
29	397676	Strap Clamp	1
30	894427	Sensor (☞Figure 3-28, ☞Figure 3-29)	1
31	**b** 1307737	Fastener	2
32	**b** 1331037	Plug	1

FOOTNOTES:

a Forward/Reverse
b Monotrol
c → 9/2001
d S/N D019D12439 ↔ S/N D019D02997X
e 9/2001 →
f S/N D019D02997X →

©2010 HYSTER COMPANY

INSTRUMENT PANEL (FIGURE 4-3)
DIESEL

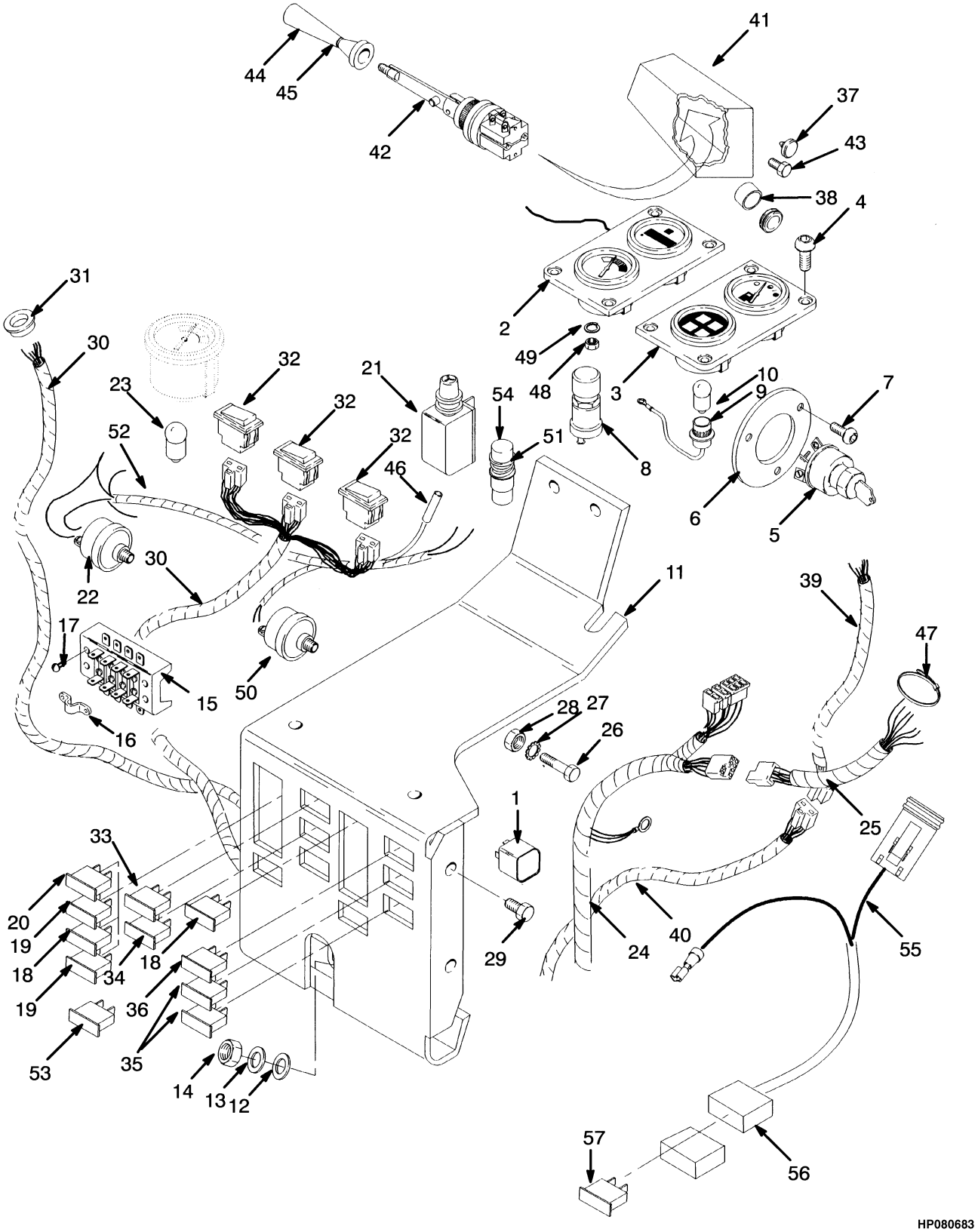

©2010 HYSTER COMPANY

INSTRUMENT PANEL
DIESEL

ITEM	PART NO.	DESCRIPTION	QTY
1	1301233	Relay	1
2	1324313	Instrument Cluster (LH)	1
2	1312473	Bezel	1
2	2040602	Hourmeter	1
2	1329414	Temperature Gauge	1
2	1320001	Bulb	1
2	1317394	Terminal	1
2	1312339	Gasket	1
2	1312340	Bracket	1
3	1301645	Instrument Cluster (RH)	1
3	1312473	Bezel	1
3	1312344	Fuel Gauge	1
3	1320001	Bulb	1
3	1317394	Terminal	1
3	1312339	Gasket	1
3	1312340	Bracket	1
4	1330574	Screw	8
5	379902	Ignition Switch	1
5	1337197	Key Set	1
6	1301739	Plate	1
7	379650	Screw	3
8	370776	Switch (Momentary)	1
9	1342662	Socket	2
10	169786	Bulb	2
11	**e** 1301235	Fuse Panel	1
11	**f** 1458373	Fuse Panel	1
12	320157	Washer	2
13	320156	Washer	2
14	136687	Nut	2
15	1301296	Terminal Block	1
16	1301704	Jumper	1
17	1301284	Screw	2
18	370647	Fuse (10 Amp)	2
19	370646	Fuse (5 Amp) (5 Amp)	2
20	370648	Fuse (20 Amp)	1
21	1301295	Alarm	1
22	1331530	Pressure Switch	1
23	169786	Bulb	1
24	2037934	Wire Harness	1
25	1301341	Wire Harness (Steering Column)	1
26	176640	Bolt	3
27	296380	Washer	5
28	239503	Nut	3
29	1301284	Screw	4
30	**d** 1325611	Wire Harness	1
31	**d** 1301424	Bushing	3
32	**d** 1301616	Switch	3
32	**d** 1301160	Switch	1
32	**d** 1301157	Lens (Green) (Work Light)	1
33	**d** 370646	Fuse (5 Amp)	1

©2010 HYSTER COMPANY

INSTRUMENT PANEL
DIESEL

ITEM	PART NO.	DESCRIPTION	QTY
34	**d** 370648	Fuse (20 Amp)	1
35	1301282	Breaker (5 Amp)	2
35	1301282	Breaker (5 Amp)	1
36	1301283	Breaker	1
37	**b** 1307737	Fastener	2
38	**b** 1307736	Plug	1
39	**a** 1301563	Wire Harness (Forward/Reverse)	1
40	**a** 1301747	Wire Harness	1
41	**a** 1301690	Housing	1
42	**a** 1324744	Switch	1
42	**a** 1335051	Contact	1
43	**a** 302069	Screw	2
44	**a** 289143	Handle	1
45	**a** 289166	Boot	1
46	1311403	Wire	1
47	137852	Strap Clamp	2
48	15049	Nut	1
49	16743	Lockwasher	1
50	1331530	Pressure Switch	1
51	1325331	Lamp	1
52	1456337	Wire Harness (Brake Indicator)	1
53	381846	Fuse Holder	1
54	1377187	Lens	1
55	**c** 1385513	Wire Harness	1
56	**c** 381846	Fuse Holder	1
57	**c** 370647	Fuse (10 Amp)	1

FOOTNOTES:

a Forward/Reverse Lever
b Monotrol Pedal
c Optional
d With Cab
e → S/N D019D02653
f S/N D019D02654 →

©2010 HYSTER COMPANY

NOTES

©2010 HYSTER COMPANY

ELECTRICAL SYSTEM (FIGURE 4-4)
LPG WITHOUT AUTOSHIFT

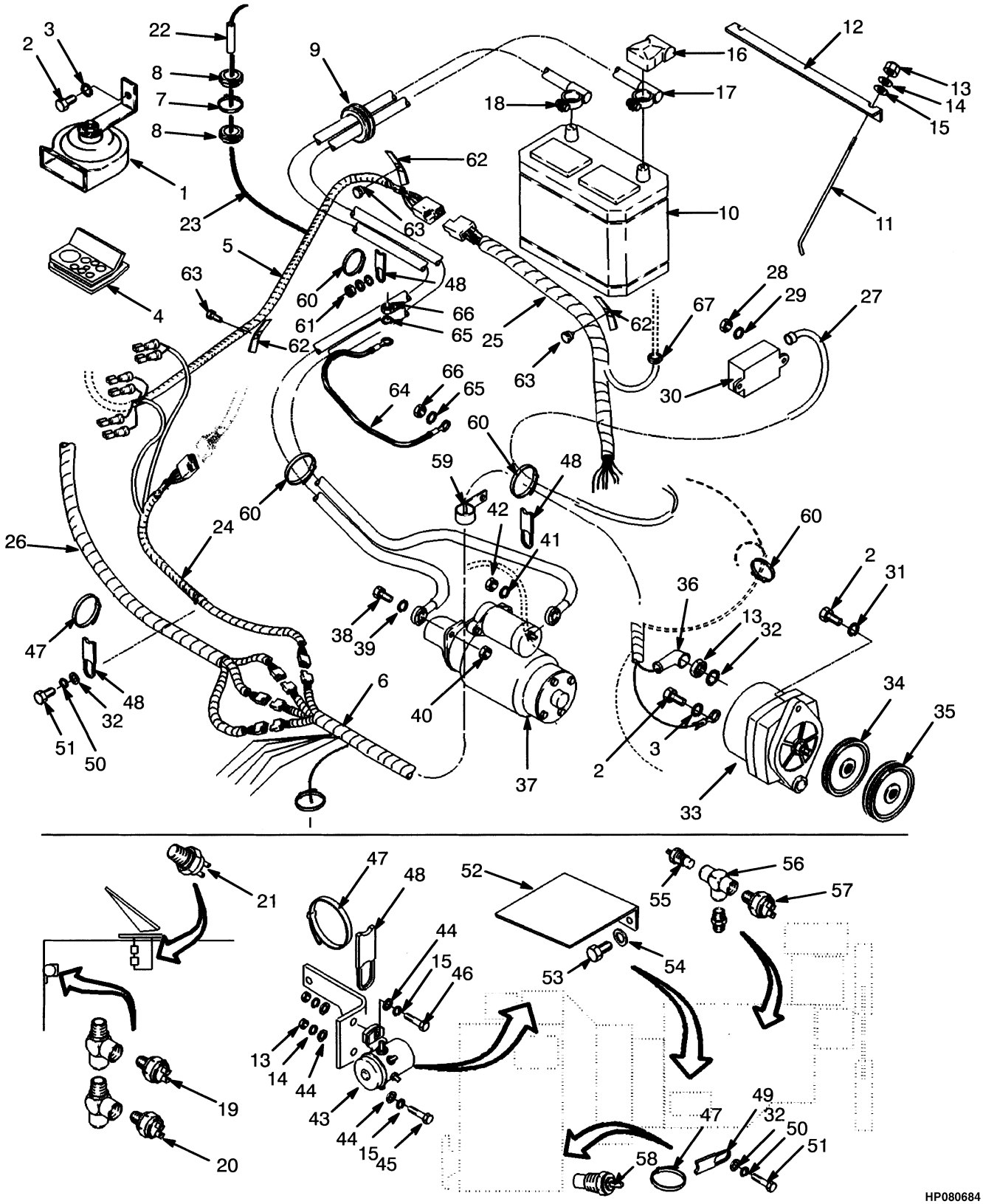

©2010 HYSTER COMPANY

ELECTRICAL SYSTEM
LPG WITHOUT AUTOSHIFT

ITEM	PART NO.	DESCRIPTION	QTY
1	1383778	Horn	1
2	136681	Capscrew	3
3	292681	Lockwasher	2
4	1301640	Seal	1
5	**a** 1334515	Wire Harness (Monotrol)	1
6	**c** 1451305	Wire Harness (Engine Compartment)	1
6	**d** 894886	Wire Harness (Engine Compartment)	1
7	**b** 137852	Strap Clamp	1
8	**b** 1300757	Grommet	2
9	1347854	Grommet	1
10	305522	Start Battery Wet (Wet)	1
11	309124	Battery Hold Down	1
12	894872	Battery Hold Down	1
13	136687	Nut	4
14	292680	Washer	3
15	320156	Washer	3
16	257241	Boot	2
17	894875	Battery Cable (Positive)	1
18	**c** 894703	Battery Cable (Negative)	1
18	**d** 894885	Battery Cable (Negative)	1
19	**a** 1301647	Pressure Switch	1
20	**a** 1301299	Pressure Switch (Low Pressure)	1
21	**a** 1301648	Pressure Switch	1
22	**b** 181046	Connector Body	1
23	**b** 1311268	Wire Harness	1
24	1301747	Wire Harness (Forward/Reverse Switch)	1
25	1325610	Wire Harness (Module)	1
26	1451306	Wire Harness (Operator Compartment)	1
27	894706	Wire Harness (Governor)	1
28	15000	Nut	2
29	15154	Lockwasher	2
30	306725	Governor Controller	1
31	320158	Washer	2
32	~~388049~~		
	292682	Lockwasher	4
33	1358911	Alternator (☞Figure 4-10)	1
34	126358	Fan	1
35	1310277	Pulley	1
36	157065	Boot	1
37	**c** 894566	Starter	1
37	**d** 894878	Starter (☞Figure 4-5)	1
38	**c** 18557	Capscrew	2
38	**d** 18558	Capscrew	2
39	**c** 15157	Lockwasher	2
39	**d** 292679	Washer	1
40	**c** 15039	Nut	2
40	**d** 292668	Nut	1
41	**c** 15156	Lockwasher	1
41	**d** 292681	Lockwasher	1
42	**c** 15086	Nut	1

©2010 HYSTER COMPANY

ELECTRICAL SYSTEM
LPG WITHOUT AUTOSHIFT

ITEM	PART NO.	DESCRIPTION	QTY
42	**d** 239503	Nut	1
43	116102	Switch (Solenoid)	1
44	320157	Washer	4
45	292501	Capscrew	1
46	287816	Capscrew	1
47	1345023	Strap	4
48	397676	Strap Clamp	4
49	137852	Strap Clamp	1
50	320159	Washer	3
51	292513	Capscrew	2
52	894876	Shield	1
53	**c** 16836	Capscrew	2
53	**d** 16874	Capscrew	2
54	177946	Lockwasher	2
55	1319190	Temperature Sender	1
56	12843	Fitting	1
57	190252	Pressure Switch (NC)	1
58	1319175	Temperature Sender	1
59	114312	Strap Clamp	1
60	1350914	Strap	3
61	136692	Nut	3
62	1301593	Clamp	3
63	340044	Gripnail	3
64	150179	Wire	1
65	296380	Washer	2
66	239503	Nut	2
67	**b** 1301424	Bushing	1

FOOTNOTES:

a Monotrol Pedal
b With Cab
c → S/N D019D02653
d S/N D019D02654 →

©2010 HYSTER COMPANY

NOTES

©2010 HYSTER COMPANY

STARTER (FIGURE 4-5)
(S/N D019E02654 →)

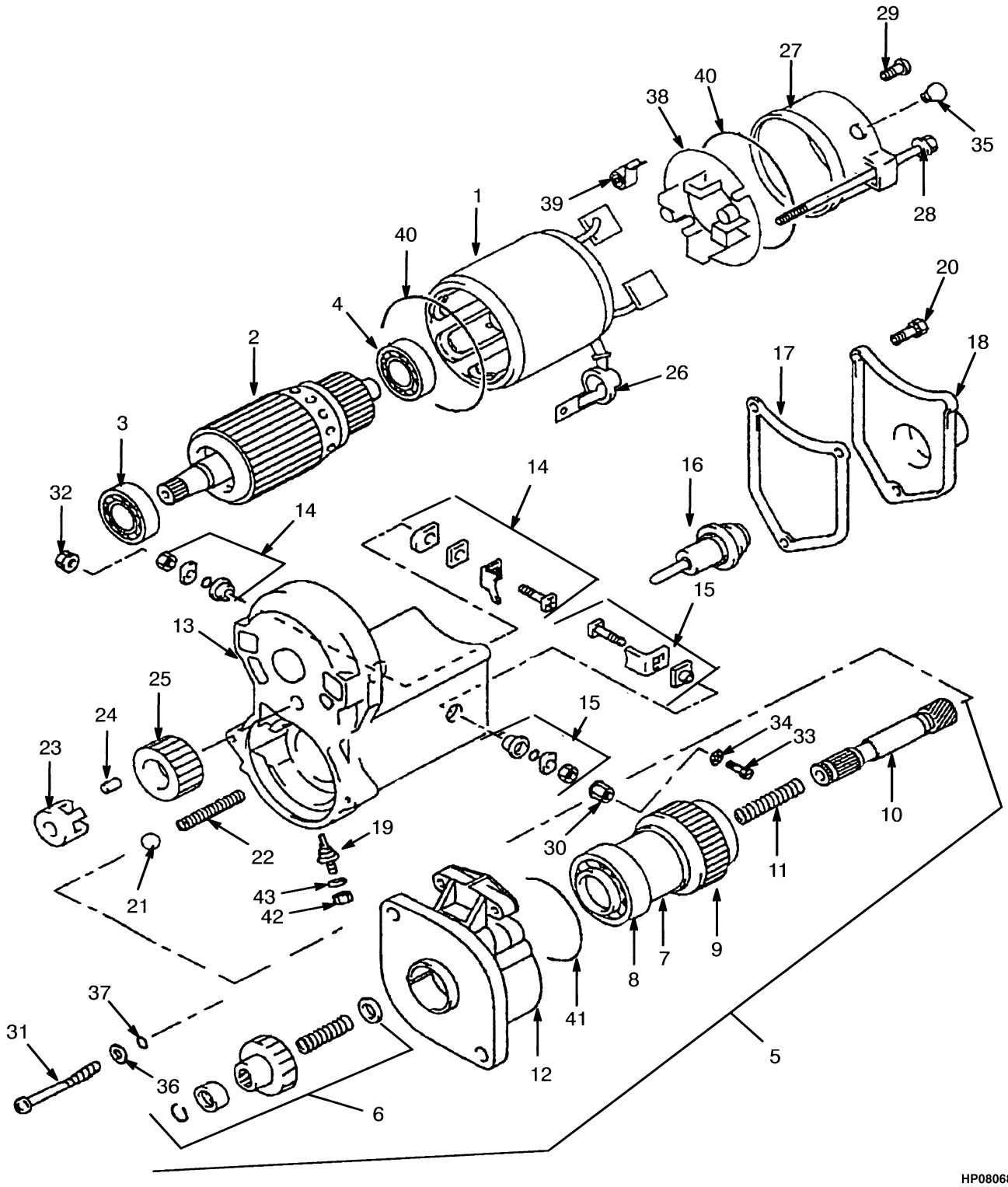

©2010 HYSTER COMPANY

STARTER
(S/N D019E02654 →)

ITEM	PART NO.	DESCRIPTION	QTY
	894878	Starter	1
1	1390149	Yoke	1
1	. . . . .	Brush	4
2	1465634	Armature	1
3	1453889	Ball Bearing	1
3	1390169	Ball Bearing (Optional)	1
4	1390168	Ball Bearing	1
5	1465635	Clutch Assy	1
6	. . . . .	Piston Kit	1
7	. . . . .	Clutch Kit	1
8	. . . . .	Bearing	1
9	. . . . .	Ball Bearing	1
10	. . . . .	Shaft	1
11	. . . . .	Spring	1
12	. . . . .	Housing Assembly	1
13	1465639	Switch	1
14	1453550	Kit-Starter	1
15	1453551	Kit-Terminal (C)	1
16	1391238	Plunger	1
17	1391239	Gasket (A)	1
18	1391240	Cover (Solenoid)	1
19	1465640	Capscrew	1
20	1465641	Bolt	1
21	1453890	Ball Bearing	1
22	2037996	Spring	1
23	1390157	Retainer	1
24	324634	Roller	5
25	1390156	Pinion	1
26	1390173	Cover	1
27	1465642	Frame	1
28	1390161	Bolt	2
29	1390162	Screw	2
30	1390165	Nut	1
31	1390160	Screw	2
32	1390172	Nut	1
33	1390166	Bolt	1
34	1391244	Washer	1
35	1390171	Cover	1
36	1390163	Washer	2
37	1390164	O-Ring	2
38	1390155	Brush Holder	1
39	1390159	Spring	4
40	1390170	O-Ring	2
41	1459303	Seal	1
42	1465643	Nut	1
43	1465644	Washer	1

©2010 HYSTER COMPANY

INSTRUMENT PANEL (FIGURE 4-6)
LPG

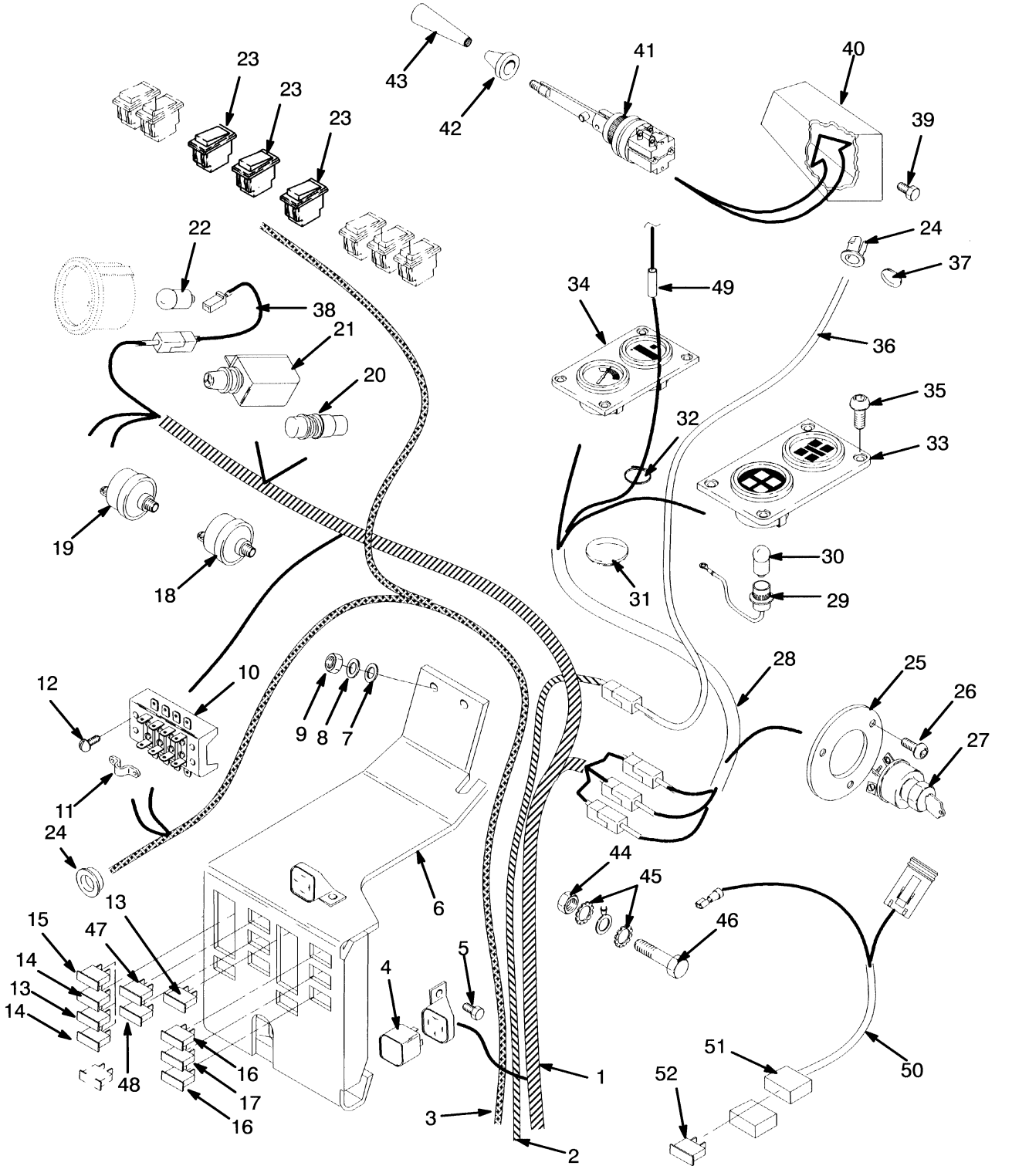

©2010 HYSTER COMPANY

INSTRUMENT PANEL
LPG

ITEM	PART NO.	DESCRIPTION	QTY
1	1360661	Wire Harness (Operator Compartment)	1
2	**a** 1301747	Wire Harness	1
3	**c** 1325611	Wire Harness	1
4	1301233	Relay	1
5	1301284	Screw	1
6	**d** 1301235	Fuse Panel	1
6	**e** 1458373	Fuse Panel	1
7	320157	Washer	2
8	320156	Washer	2
9	136687	Nut	2
10	1301296	Terminal Block	1
11	1301704	Jumper	1
12	1301284	Screw	2
13	370647	Fuse (10 Amp)	2
14	370646	Fuse (5 Amp) (5 Amp)	2
15	370648	Fuse (20 Amp)	1
16	**c** 1301283	Breaker (10 Amp)	2
17	**c** 1301282	Breaker (5 Amp)	1
18	1301647	Pressure Switch (Pressure)	1
19	1331530	Pressure Switch (Pressure)	1
20	1325331	Lamp	1
21	1301295	Alarm	1
22	169786	Bulb (12 Volt)	1
23	**c** 1301616	Switch	3
23	**c** 1301160	Switch	1
23	**c** 1301157	Lens (Green) (Work Light)	1
24	**c** 1301424	Bushing	1
25	1301739	Plate	1
26	379650	Screw	3
27	379902	Ignition Switch	1
28	**a** 1301341	Wire Harness (Steering Column)	1
29	1342662	Socket	1
30	169786	Bulb (12 Volt)	1
31	350498	Plug	1
32	137852	Strap Clamp	1
33	370473	Instrument Cluster (RH)	1
33	1312474	Bezel	1
33	1312345	Light Panel	1
34	1324313	Instrument Cluster (LH)	1
34	1312473	Bezel	1
34	1329414	Temperature Gauge	1
34	1479807	Hourmeter	1
35	1330574	Screw	8
36	**a** 1301563	Wire Harness (Forward/Reverse)	1
37	1307736	Plug (Monotrol Pedal)	1
38	1456337	Wire Harness (Brake Indicator)	1
39	**a** 302069	Screw	2
40	**a** 1301690	Housing	1
41	**a** 1324744	Switch	1
42	**a** 289166	Boot	1

©2010 HYSTER COMPANY

INSTRUMENT PANEL
LPG

ITEM	PART NO.	DESCRIPTION	QTY
43	**a** 289143	Handle	1
44	239503	Nut	1
45	296380	Washer	2
46	176640	Bolt	1
47	**c** 370646	Fuse (5 Amp) (10 Amp)	1
48	**c** 370648	Fuse (20 Amp)	1
49	181046	Connector Body	1
50	**b** 1385513	Wire Harness (Rotating Beacon)	1
51	**b** 381846	Fuse Holder	1
52	**b** 370647	Fuse (10 Amp)	1

FOOTNOTES:

a Forward/Reverse Lever
b Optional
c With Cab
d → S/N D019D02653
e S/N D019D02654 →

©2010 HYSTER COMPANY

NOTES

©2010 HYSTER COMPANY

DISTRIBUTOR (FIGURE 4-7)

LPG

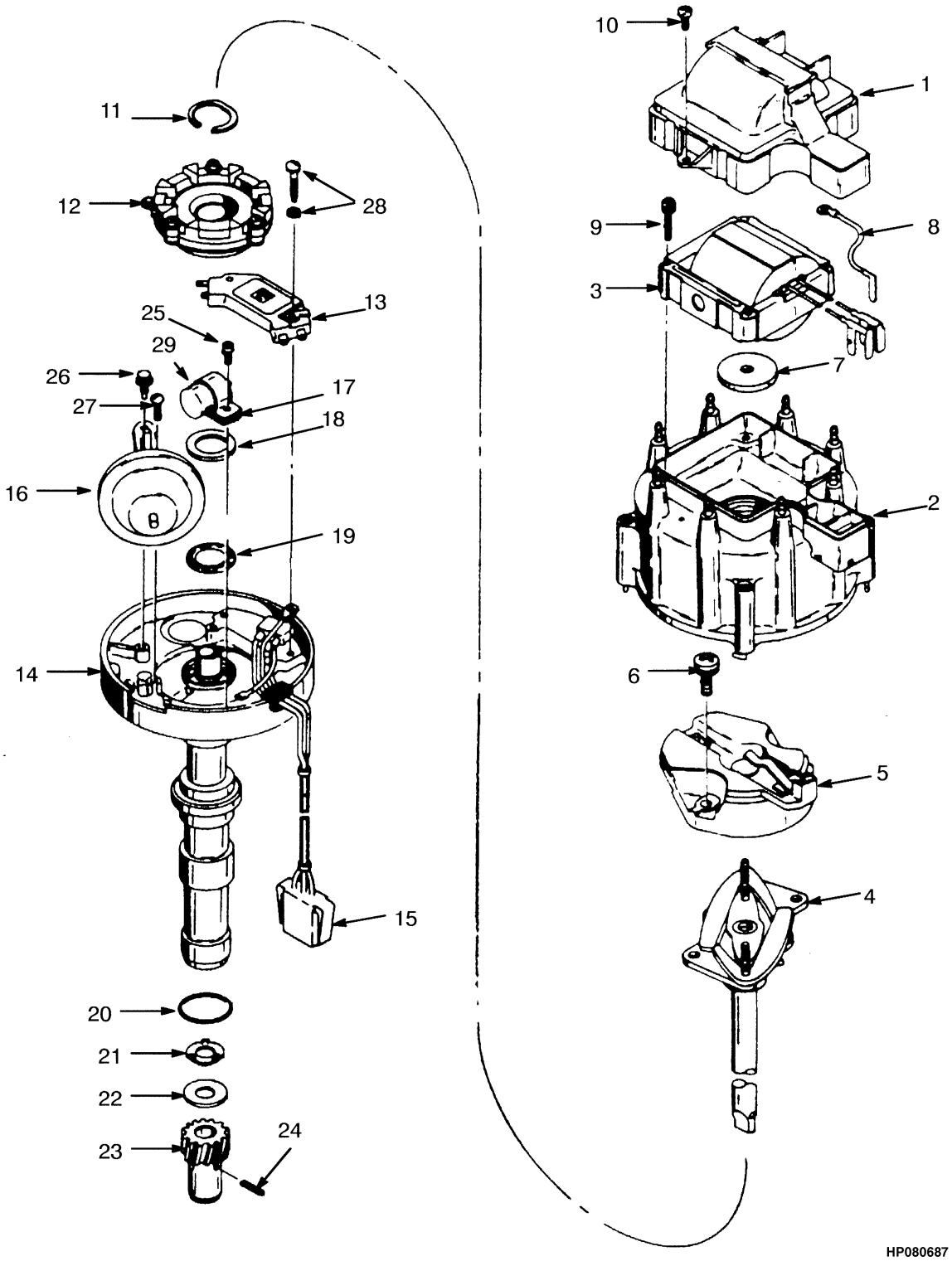

©2010 HYSTER COMPANY

DISTRIBUTOR
LPG

ITEM	PART NO.	DESCRIPTION	QTY
	366098	Distributor	1
1	. . . . .	Cover	1
2	274369	Distributor Cap	1
2	274370	Brush	1
3	274366	Ignition Coil	1
4	366097	Shaft	1
5	281846	Rotor	1
6	271494	Kit-Screw	2
7	274368	Seal	1
8	288032	Static Strap	1
9	274367	Screw	4
10	271666	Screw	1
11	271668	Retaining Ring	1
12	274374	Pole Shoe	1
13	271496	Module	1
14	. . . . .	Housing	1
15	274373	Wire Harness	1
16	894571	Kit-Vacuum Advance	1
17	271495	Bracket	1
18	271670	Washer (Felt)	1
19	166216	Seal	1
20	1334411	Seal	1
21	274403	Washer	1
22	274402	Washer	1
23	274401	Gear	1
24	19870	Pin	1
25	271666	Screw	1
26	220302	Screw	1
27	1329030	Screw	1
28	271497	Screw	2
29	271499	Capacitor	1

©2010 HYSTER COMPANY

ALTERNATOR (FIGURE 4-8)

SHEET 1 OF 2 (→ S/N D019D01796 (DIESEL))

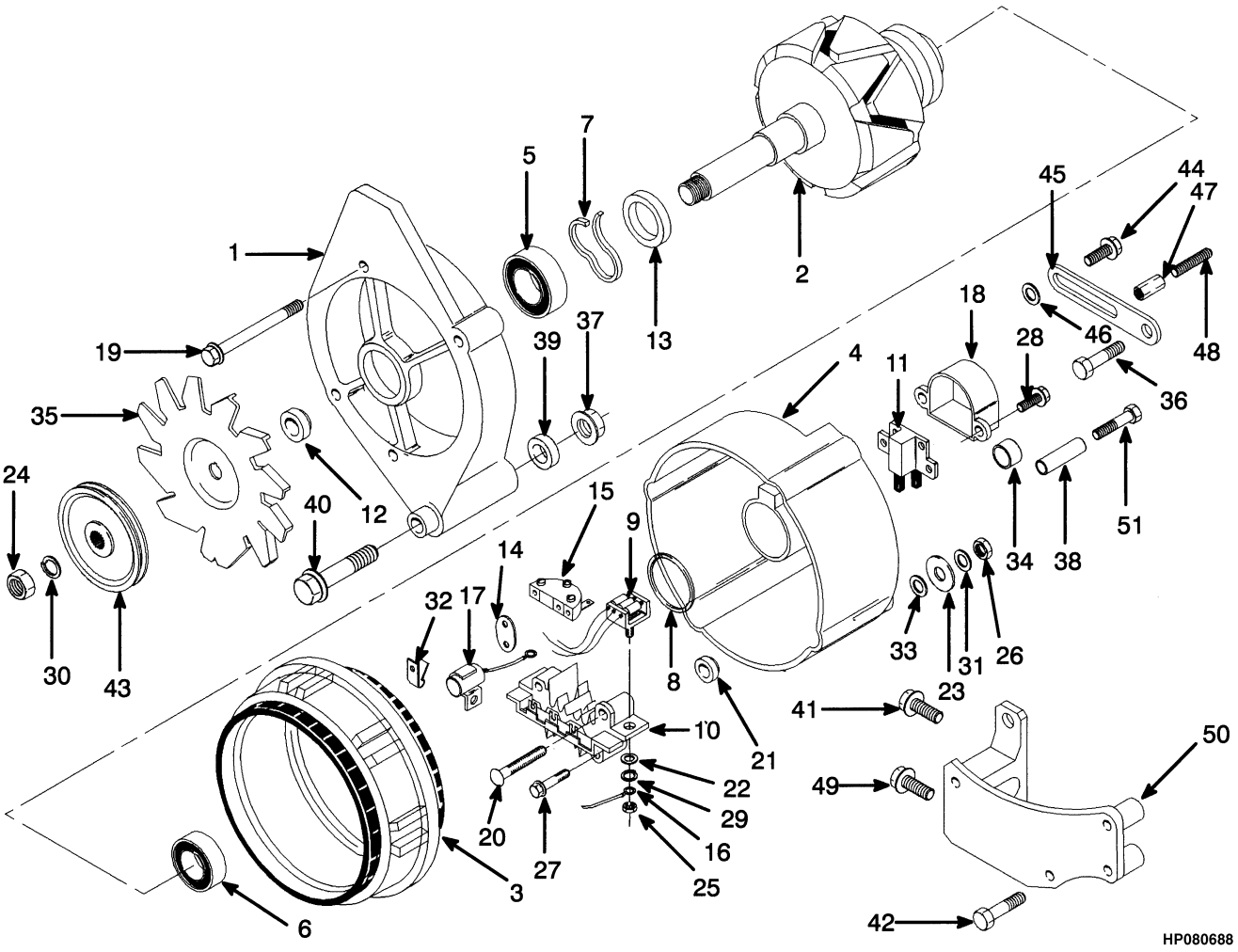

©2010 HYSTER COMPANY

ALTERNATOR

SHEET 1 OF 2 (→ S/N D019D01796 (DIESEL))

ITEM	PART NO.	DESCRIPTION	QTY
	a 385656	Alternator	1
1	. . . . .	Housing (Front)	1
2	386069	Rotor	1
3	386070	Stator	1
4	. . . . .	Housing	1
5	248128	Bearing	1
6	386071	Bearing	1
7	248129	Retainer	1
8	226577	Retainer (Rear)	1
9	382639	Diode	1
10	386073	Diode	1
11	386074	Brush	1
12	386400	Spacer	1
13	386401	Spacer	1
14	386402	Terminal	1
15	386403	Terminal	1
16	386404	Cable	1
17	386405	Capacitor	1
18	386406	Regulator	1
19	387493	Bolt	4
20	387494	Bolt	1
21	386407	Insulator	1
22	197067	Washer	1
23	387489	Washer	1
24	248147	Nut	1
25	15052	Nut	1
26	387492	Nut	1
27	387487	Screw	2
28	387488	Screw	10
29	15152	Lockwasher	1
30	246943	Lockwasher	1
31	387490	Washer	1
32	387491	Clamp	2
33	382642	Washer	2
34	133481	Heat Shrink	1
35	126358	Fan	1
36	1307910	Capscrew	1
37	1307907	Nut	1
38	1306216	Sleeve	1
38	1345014	Sleeve	1
39	1457876	Spacer	1
40	1307906	Screw	1
40	292523	Capscrew	1
41	1306365	Screw	2
42	1318968	Screw	4
43	1310277	Pulley	1
44	1306358	Screw	1
45	1306214	Lever	1
46	296418	Washer	1
47	1454316	Nut (Adjusting)	1

©2010 HYSTER COMPANY

ALTERNATOR

SHEET 1 OF 2 (→ S/N D019D01796 (DIESEL))

ITEM	PART NO.	DESCRIPTION	QTY
48	1307911	Stud	1
49	1307898	Screw	2
50	1306212	Bracket	1
50	1345008	Bracket	1
51	1307908	Screw	1
	376001	Engine Assy-Diesel	1

FOOTNOTES:

a Remanufactured Alternator 3029189R

©2010 HYSTER COMPANY

NOTES

©2010 HYSTER COMPANY

ALTERNATOR (FIGURE 4-9)
SHEET 2 OF 2 (→ S/N D019D01796 (DIESEL))

PARTS-SERVICE GRAM	
Item	Gram
Alternator	F-D-1 (E)

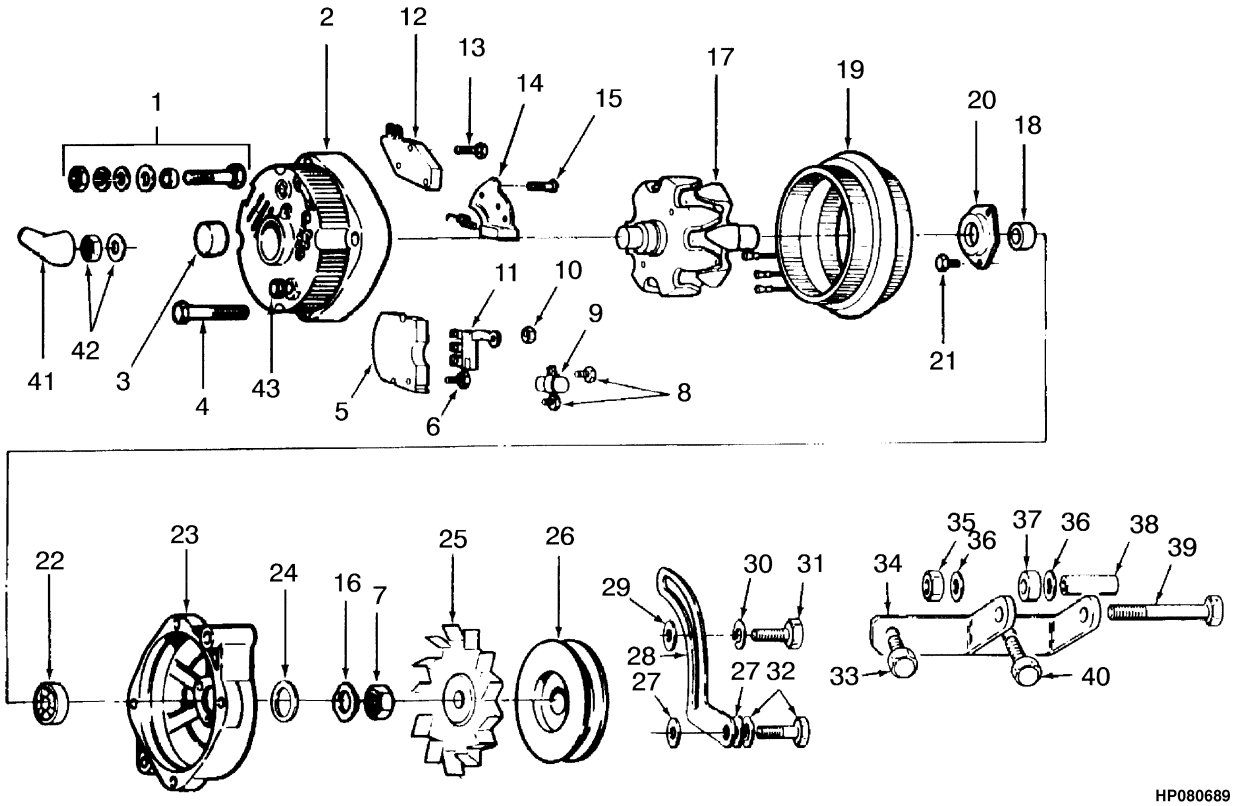

©2010 HYSTER COMPANY

ALTERNATOR

SHEET 2 OF 2 (→ S/N D019D01796 (DIESEL))

ITEM	PART NO.	DESCRIPTION	QTY
	a 339599	Alternator	1
1	310081	Kit-Terminal	1
2	343038	Frame (CE)	1
3	128838	Bearing	1
4	128852	Bolt	4
5	343031	Rectifier	1
6	343032	Screw	1
7	55580	Nut	1
8	198410	Screw	2
9	198401	Capacitor	1
9	. . . . .	Bracket	1
10	15039	Nut	3
11	343040	Diode	1
12	290303	Regulator	1
13	343042	Screw	1
14	343041	Brush Holder	1
14	334970	Brush Spring	2
15	268356	Screw	2
16	128835	Lockwasher	1
17	343046	Rotor	1
18	343029	Collar	1
19	343039	Stator	1
20	202003	Plate	1
21	344234	Screw	3
22	290509	Bearing	1
23	343033	End Head (DE)	1
24	322177	Collar	1
25	126358	Fan	1
26	208483	Pulley	1
27	18515	Washer	2
28	1326931	Strap	1
29	18515	Washer	1
30	15155	Lockwasher	1
31	136749	Screw	1
32	18498	Capscrew	1
32	15155	Lockwasher	1
33	196898	Screw	1
34	1490274	Bracket Wldmt	1
35	139743	Locknut	1
36	261379	Washer	2
37	189338	Spacer	1
38	305100	Sleeve	1
39	18546	Capscrew	1
40	197853	Screw	1
41	157065	Boot	1
42	136687	Nut	1
42	15915	Lockwasher	1
43	136681	Capscrew	1
43	15155	Lockwasher	1

©2010 HYSTER COMPANY

FOOTNOTES:

a Remanufactured Alternator 3012611R

©2010 HYSTER COMPANY

NOTES

©2010 HYSTER COMPANY

ALTERNATOR (FIGURE 4-10)

LPG (S/N D019D01797 → (DIESEL))

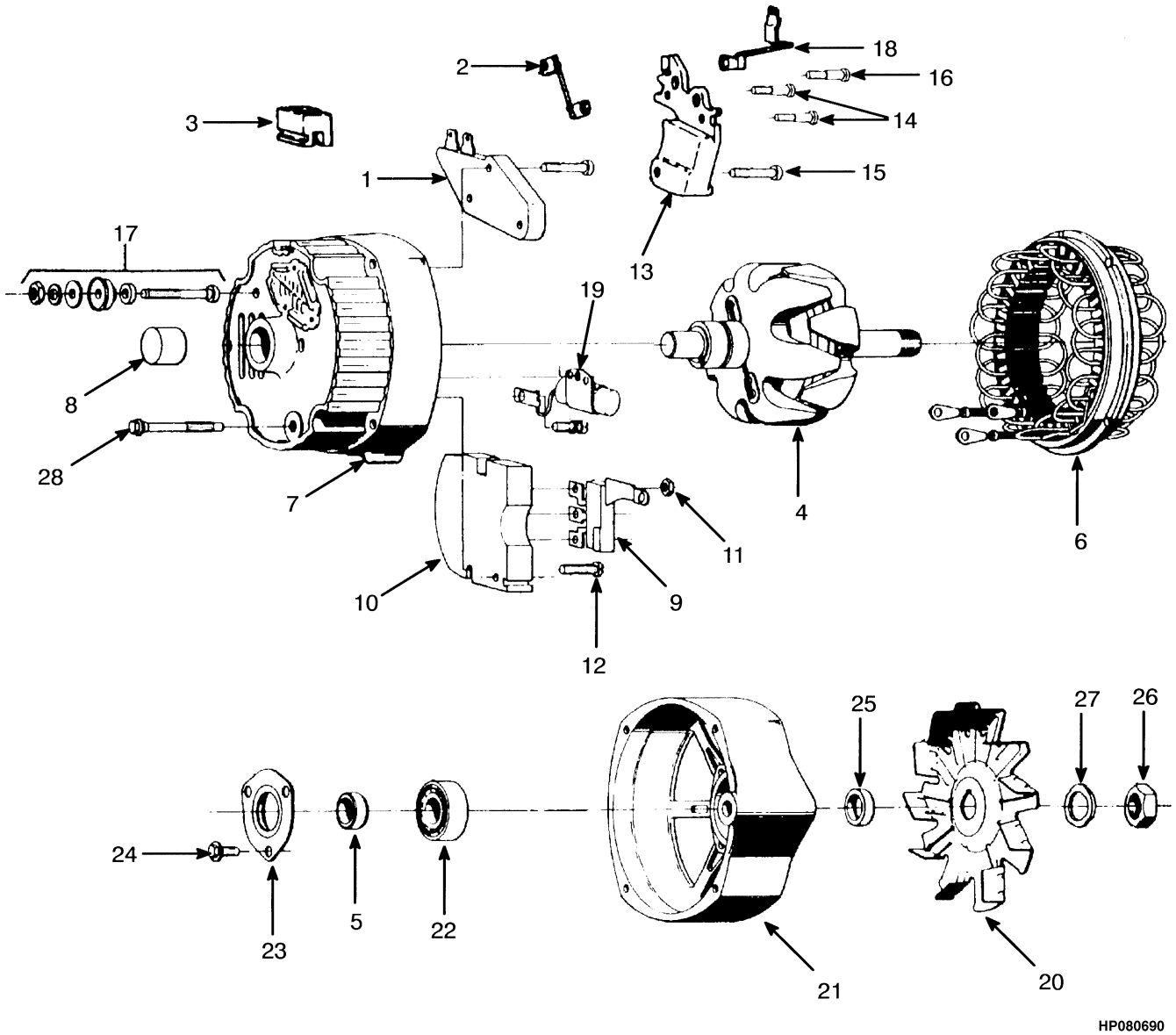

©2010 HYSTER COMPANY

ALTERNATOR

LPG (S/N D019D01797 → (DIESEL))

ITEM	PART NO.	DESCRIPTION	QTY
	1358911	Alternator	1
1	290303	Regulator	1
2	1377067	Resistor	1
3	274648	Boot	1
4	1377047	Rotor	1
5	343029	Collar (CE)	1
6	1377048	Stator	1
7	310085	Frame (CE)	1
8	290508	Bearing (CE)	1
9	223095	Diode	1
10	343031	Rectifier	1
11	1344274	Nut	3
12	343032	Screw	1
13	290300	Brush Holder	1
13	1377050	Brush Spring	2
14	268356	Screw (Brush)	2
15	290369	Screw (Brush Holder)	1
16	290370	Screw (Brush Holder)	1
17	310081	Kit-Terminal	1
18	344233	Terminal	1
19	1377052	Capacitor	1
20	1377051	Fan	1
21	1377049	End Head	1
22	290509	Bearing	1
23	1377053	Plate	1
24	344234	Screw (Retaining Plate)	3
25	310088	Collar (DE)	1
26	55580	Nut	1
27	128835	Lockwasher	1
28	128852	Bolt	4

©2010 HYSTER COMPANY

ALTERNATOR MOUNTING (FIGURE 4-11)
DIESEL WITHOUT LOW EMISSIONS

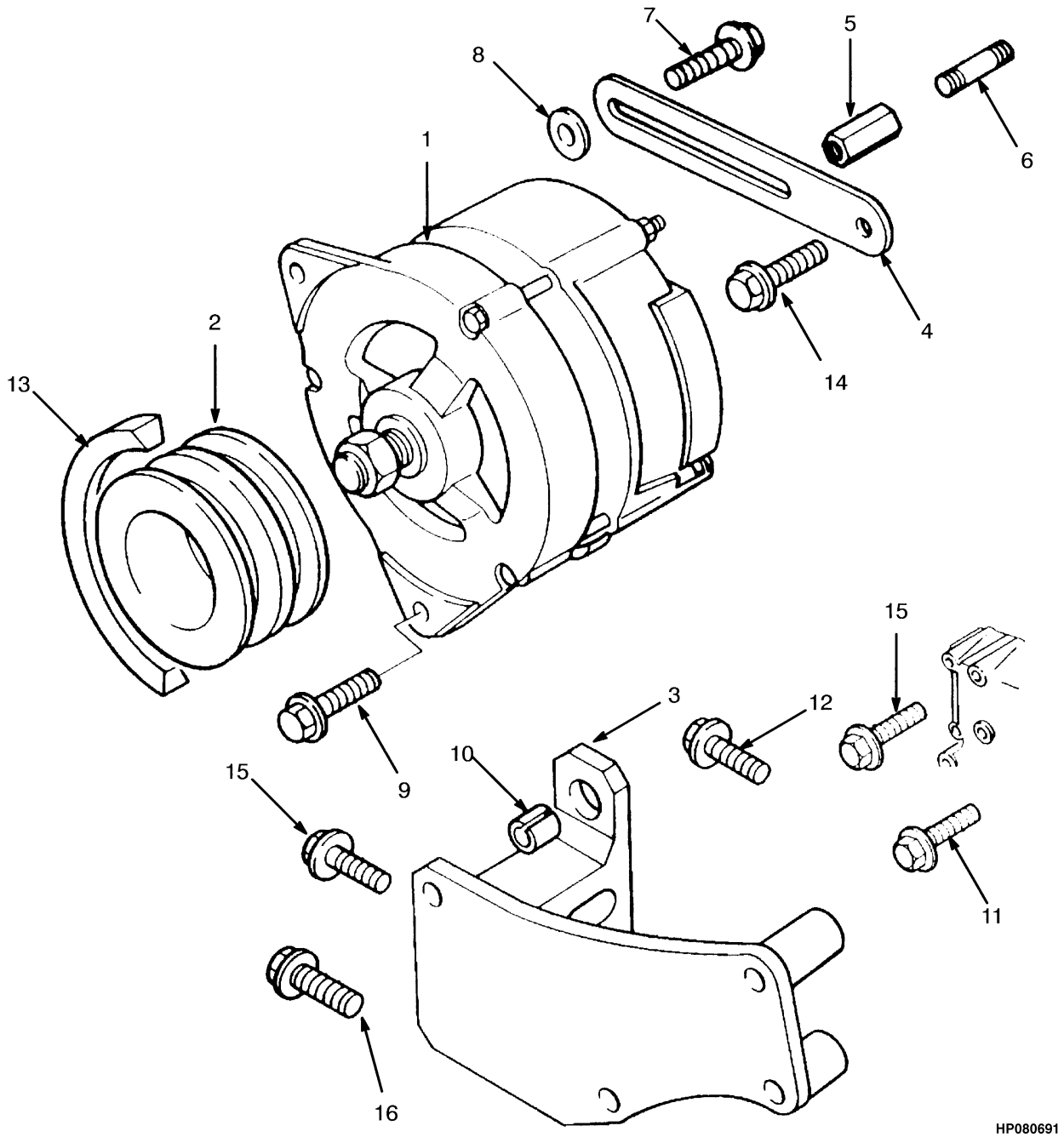

©2010 HYSTER COMPANY

ALTERNATOR MOUNTING
DIESEL WITHOUT LOW EMISSIONS

ITEM	PART NO.	DESCRIPTION	QTY
1	**bc** 385656	Alternator (☞Figure 4-8)	1
1	**ac** 339599	Alternator (☞Figure 4-9)	1
1	**d** 1358911	Alternator (☞Figure 4-10)	1
2	1310277	Pulley	1
3	1456744	Bracket	1
4	1306214	Lever	1
5	1454316	Nut (Adjusting)	1
6	1307911	Stud	1
7	1306353	Screw	1
8	296418	Washer	1
9	1308030	Screw	1
10	1345014	Sleeve	1
11	1306358	Screw	1
12	1307908	Screw	1
13	. . . . .	Belt	1
14	1307910	Capscrew	1
15	1307914	Screw	2
16	1318968	Screw	1

FOOTNOTES:

a Remanufactured Alternator 3012611R
b Remanufactured Alternator 3029189R
c → S/N D019D01796
d S/N D019D01797 →

©2010 HYSTER COMPANY

ALTERNATOR MOUNTING (FIGURE 4-12)

DIESEL WITH LOW EMISSIONS (S/N D019D02377 →)

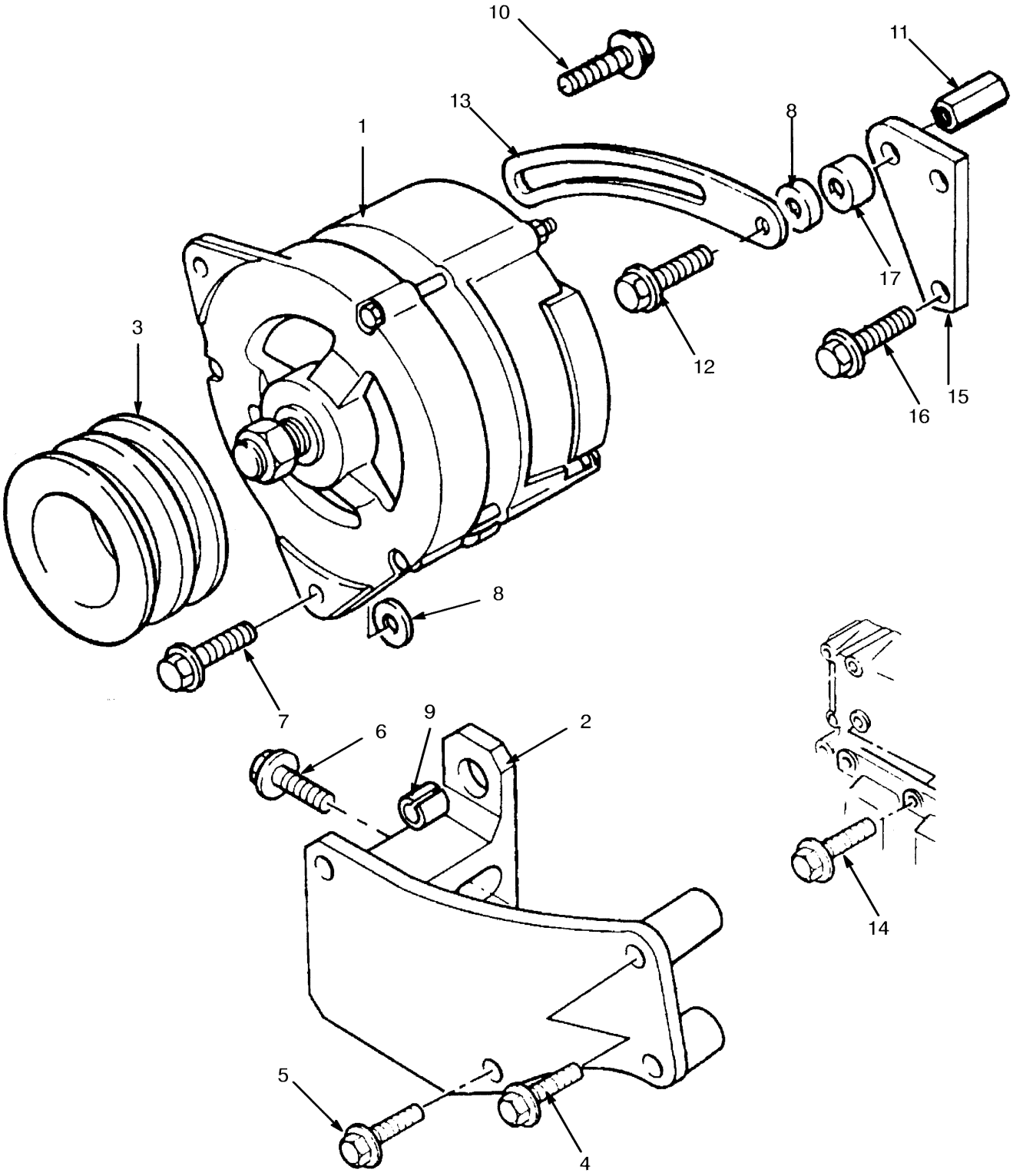

©2010 HYSTER COMPANY

ALTERNATOR MOUNTING

DIESEL WITH LOW EMISSIONS (S/N D019D02377 →)

ITEM	PART NO.	DESCRIPTION	QTY
1	1358911	Alternator (☞Figure 4-10)	1
2	1310277	Pulley	1
3	1456744	Bracket	1
4	1307908	Screw	1
5	1315497	Screw	2
6	1307914	Screw	2
7	292523	Capscrew	1
8	1318306	Washer	2
9	1345014	Sleeve	1
10	386459	Screw	1
11	1451745	Nut	1
12	1382963	Screw	1
13	1451743	Lever	1
14	1306362	Screw	1
15	1451746	Bracket	1
16	1306357	Screw	1
17	1451744	Spacer	1

©2010 HYSTER COMPANY

ALTERNATOR MOUNTING (FIGURE 4-13)

LPG

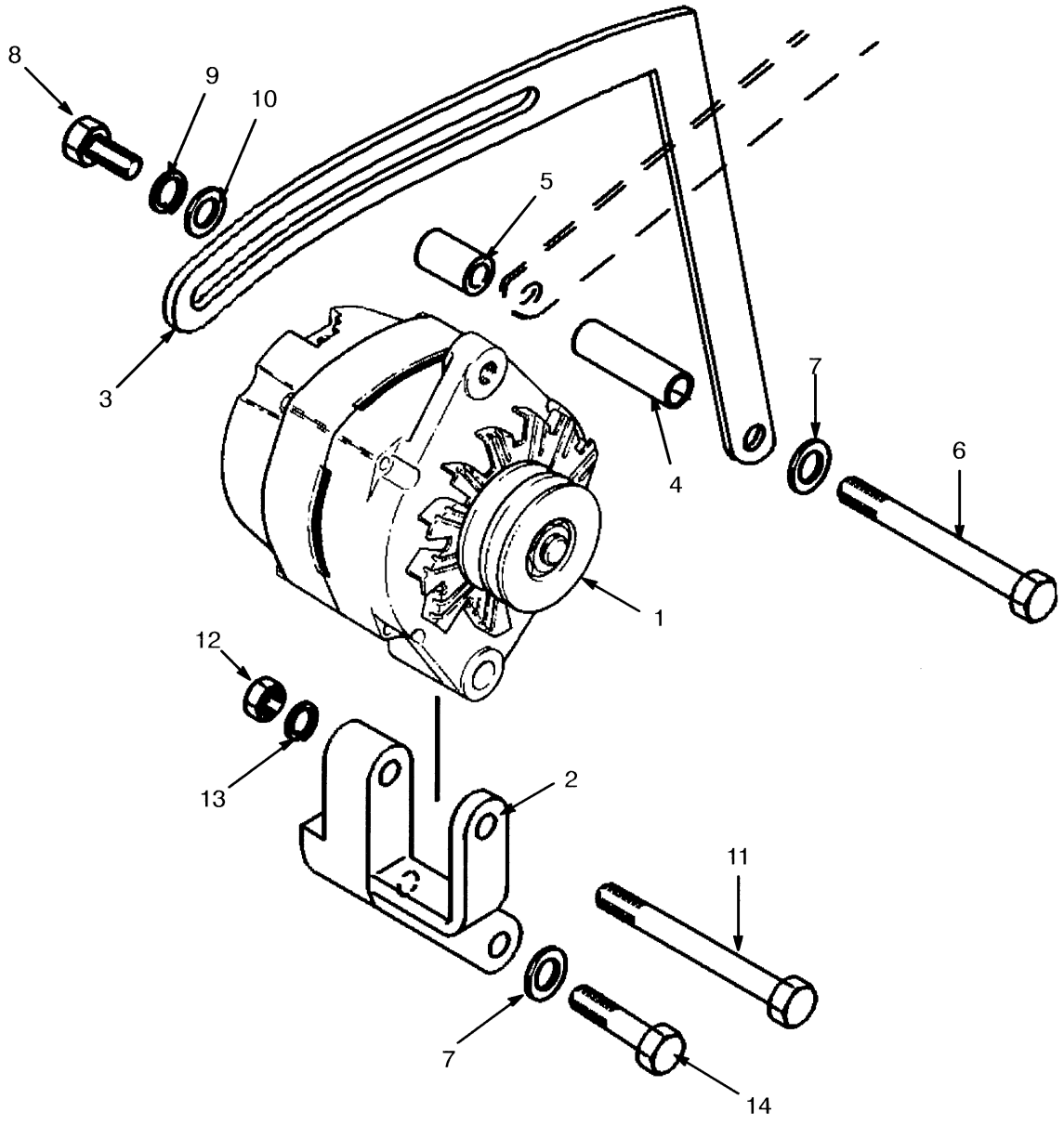

©2010 HYSTER COMPANY

ALTERNATOR MOUNTING
LPG

ITEM	PART NO.	DESCRIPTION	QTY
1	1358911	Alternator (☞Figure 4-10)	1
2	894549	Bracket	1
3	**a** 894558	Plate	1
3	**b** 894883	Plate	1
4	894560	Spacer	1
5	894561	Spacer	1
6	18574	Capscrew	1
7	15157	Lockwasher	2
8	136749	Screw	1
9	292681	Lockwasher	1
10	320158	Washer	1
11	292525	Capscrew	1
12	136692	Nut	1
13	~~388049~~		
	292682	Lockwasher	1
14	18565	Capscrew	1

FOOTNOTES:

a → S/N D019D02478

b S/N D019D02479 →

©2010 HYSTER COMPANY

STARTER (FIGURE 4-14)
DIESEL

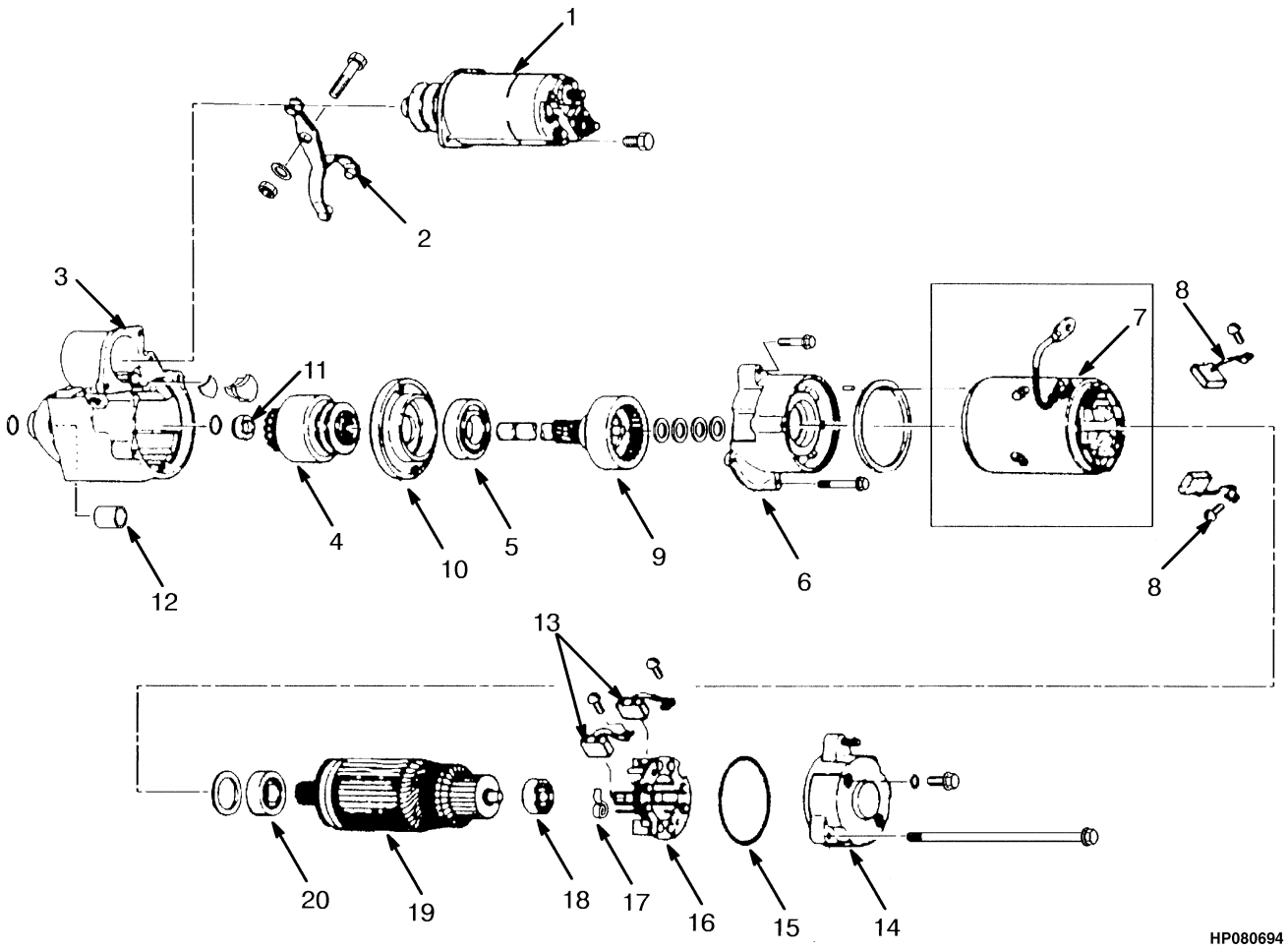

©2010 HYSTER COMPANY

STARTER
DIESEL

ITEM	PART NO.	DESCRIPTION	QTY
	1313394	Starter	1
1	1343187	Solenoid	1
2	1343197	Lever	1
3	1343169	Drive Axle Housing	1
4	1343769	Clutch Assy	1
5	1343196	Support (Center)	1
6	1343702	Bracket	1
7	1343705	Coil and Frame	1
8	1343191	Brush	1
9	1343701	Drive Shaft	1
10	1343703	Plate	1
11	1343198	Collar	1
12	1343192	Bushing	1
13	1343190	Brush	1
14	1343700	End Head	1
15	1343706	O-Ring	1
16	1343189	Brush Holder	1
17	1343193	Brush Spring	1
18	1343195	Bearing	1
19	1343199	Armature	1
20	1343194	Bearing	1

©2010 HYSTER COMPANY

WIRE HARNESS (FIGURE 4-15)

CONTROL PANEL (S/N D019D02394U →)

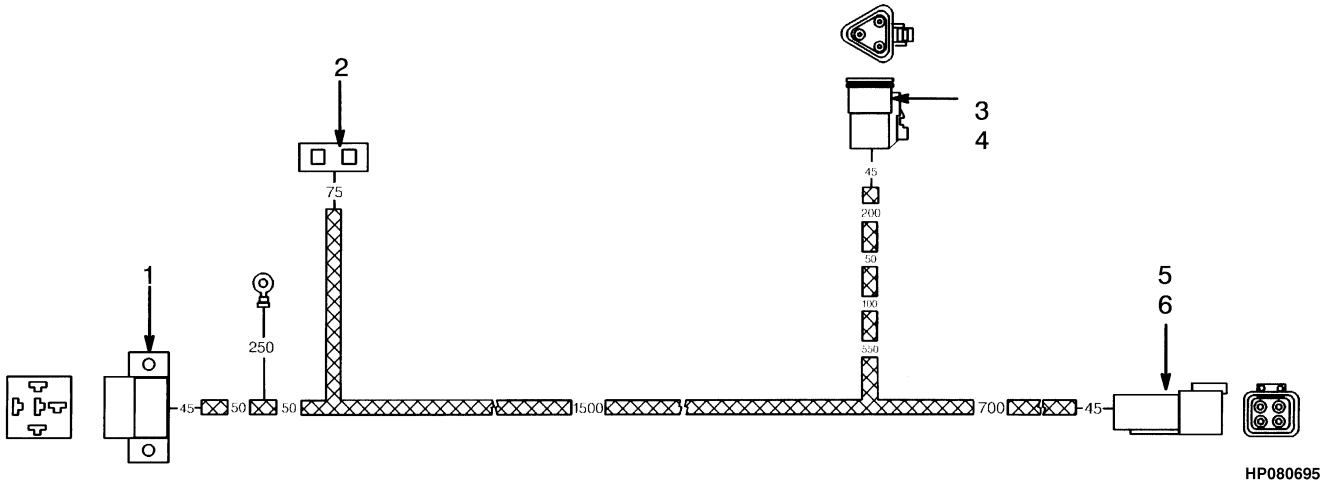

HP080695

ITEM	PART NO.	DESCRIPTION	QTY
	1454954	Wire Harness (Control Panel)	1
1	1301229	Connector (Relay)	1
2	381846	Fuse Holder	1
3	1330420	Connector (Handle Switch)	1
4	1330426	Connector	1
5	1330411	Connector (Mast Harness)	1
6	1330416	Connector	1

©2010 HYSTER COMPANY

NOTES

©2010 HYSTER COMPANY

WIRE HARNESS (FIGURE 4-16)
ENGINE COMPARTMENT (S/N D019D12439 ↔ S/N D019D02996X)

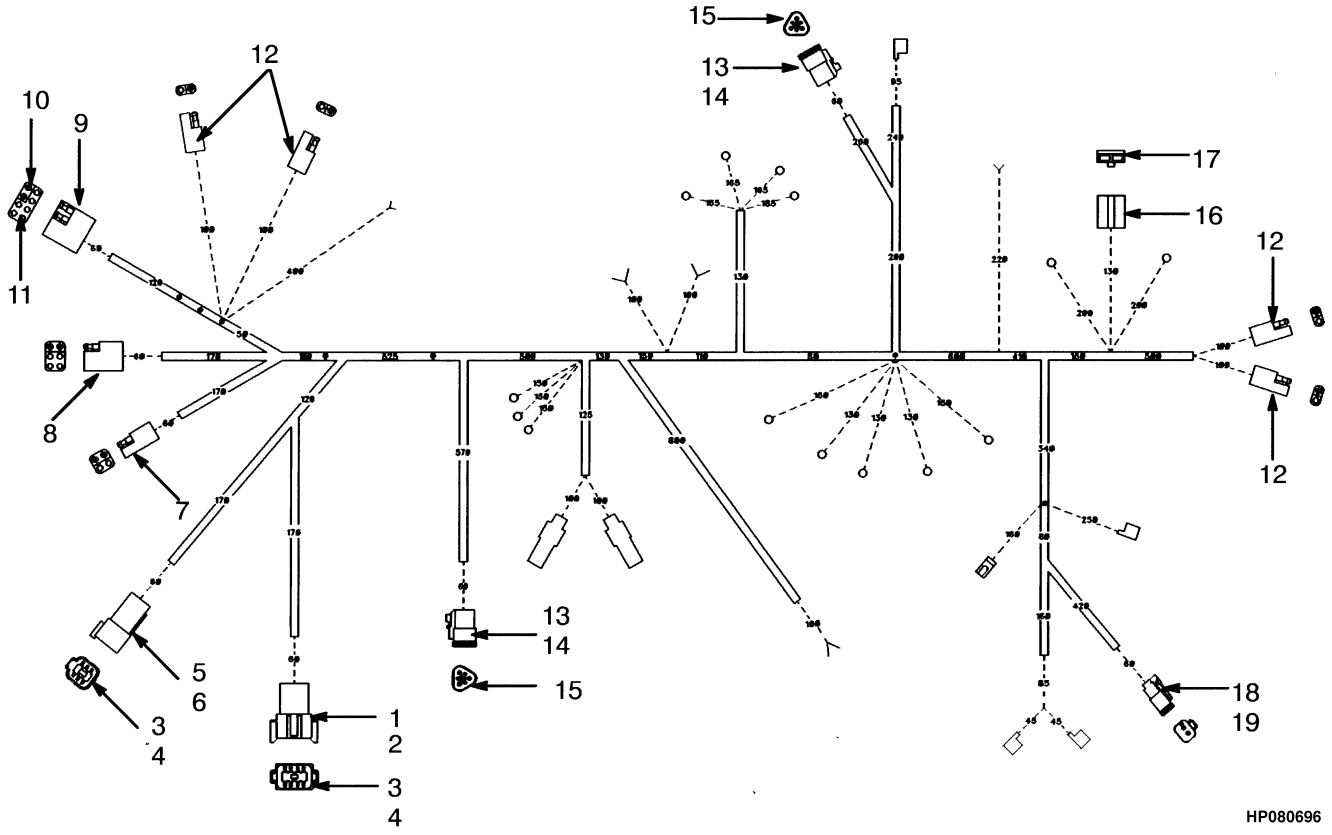

©2010 HYSTER COMPANY

WIRE HARNESS

ENGINE COMPARTMENT (S/N D019D12439 ↔ S/N D019D02996X)

ITEM	PART NO.	DESCRIPTION	QTY
	894975	Wire Harness (Engine Compartment)	1
1	1330413	Connector (Controller Harness)	1
2	1330418	Connector	1
3	1330439	Plug	2
4	1330437	Terminal (Pin)	12
5	1330412	Connector (Controller Harness)	1
6	1330417	Connector	1
7	164433	Connector (Male)	1
8	164436	Connector (Female)	1
9	190270	Connector (Female)	1
10	198011	Terminal (Male)	2
11	198013	Terminal (Female)	4
12	164431	Connector	4
13	1330420	Connector	2
14	1330426	Connector	2
15	1330438	Terminal (Socket)	2
16	245996	Connector Body	1
17	134812	Terminal	2
18	1330419	Connector	1
19	1330424	Connector (Secondary Lock)	1

©2010 HYSTER COMPANY

WIRE HARNESS (FIGURE 4-17)
ENGINE COMPARTMENT WITH AUTOSHIFT (S/N D019D02997X →)

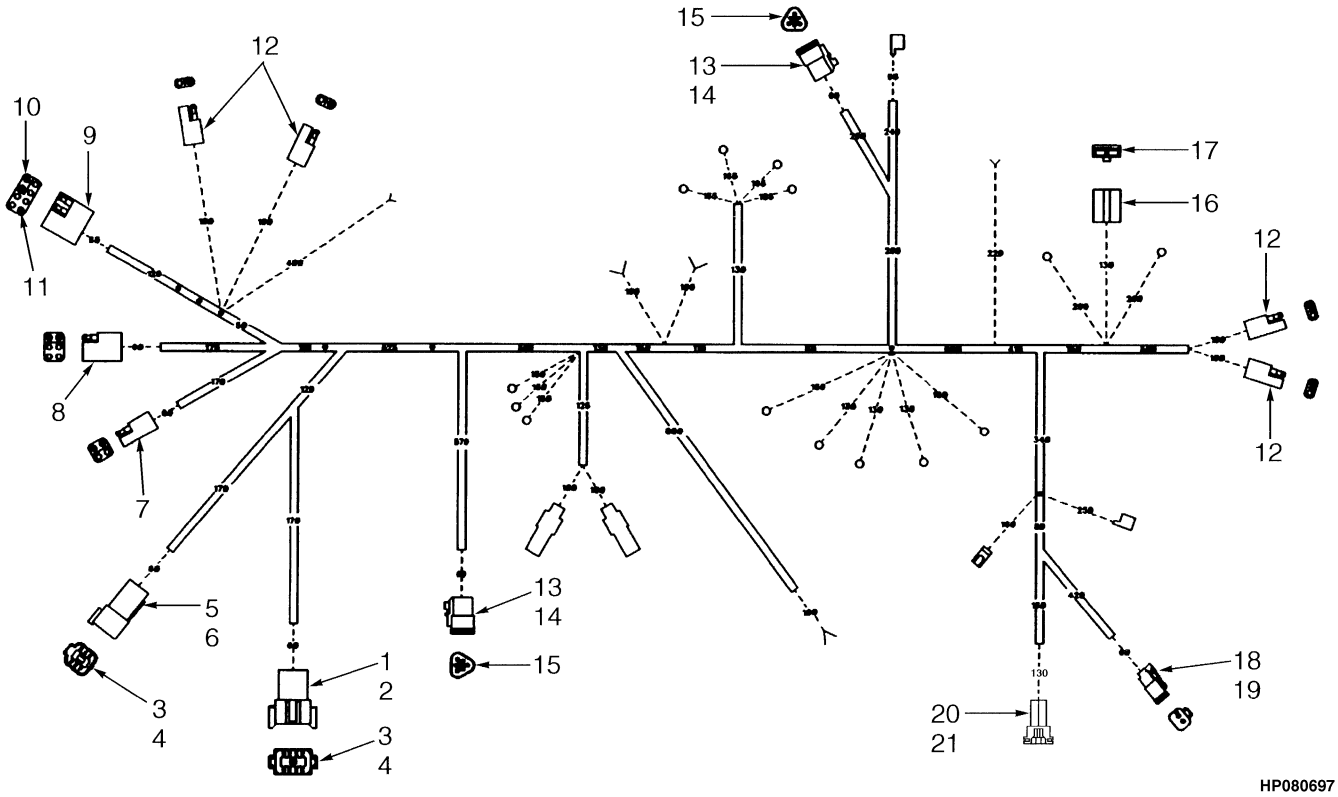

©2010 HYSTER COMPANY

WIRE HARNESS

ENGINE COMPARTMENT WITH AUTOSHIFT (S/N D019D02997X →)

ITEM	PART NO.	DESCRIPTION	QTY
	2042741	Wire Harness	1
1	1330413	Connector	1
2	1330418	Connector	1
3	1330439	Plug	2
4	1330437	Terminal (Pin)	12
5	1330412	Connector	1
6	1330417	Connector	1
7	164433	Connector (Male)	1
8	164436	Connector (Female)	1
9	190270	Connector (Female)	1
10	198011	Terminal (Male)	2
11	198013	Terminal (Female)	4
12	164431	Connector	4
13	1330420	Connector	2
14	1330426	Connector	2
15	1330438	Terminal (Socket)	2
16	245996	Connector Body	1
17	134812	Terminal	2
18	1330419	Connector	1
19	1330424	Connector (Secondary Lock)	1
20	1479108	Connector	1
21	1479109	Seal	2

©2010 HYSTER COMPANY

WIRE HARNESS (FIGURE 4-18)

ENGINE COMPARTMENT WITHOUT AUTOSHIFT (S/N D019D02997X →)

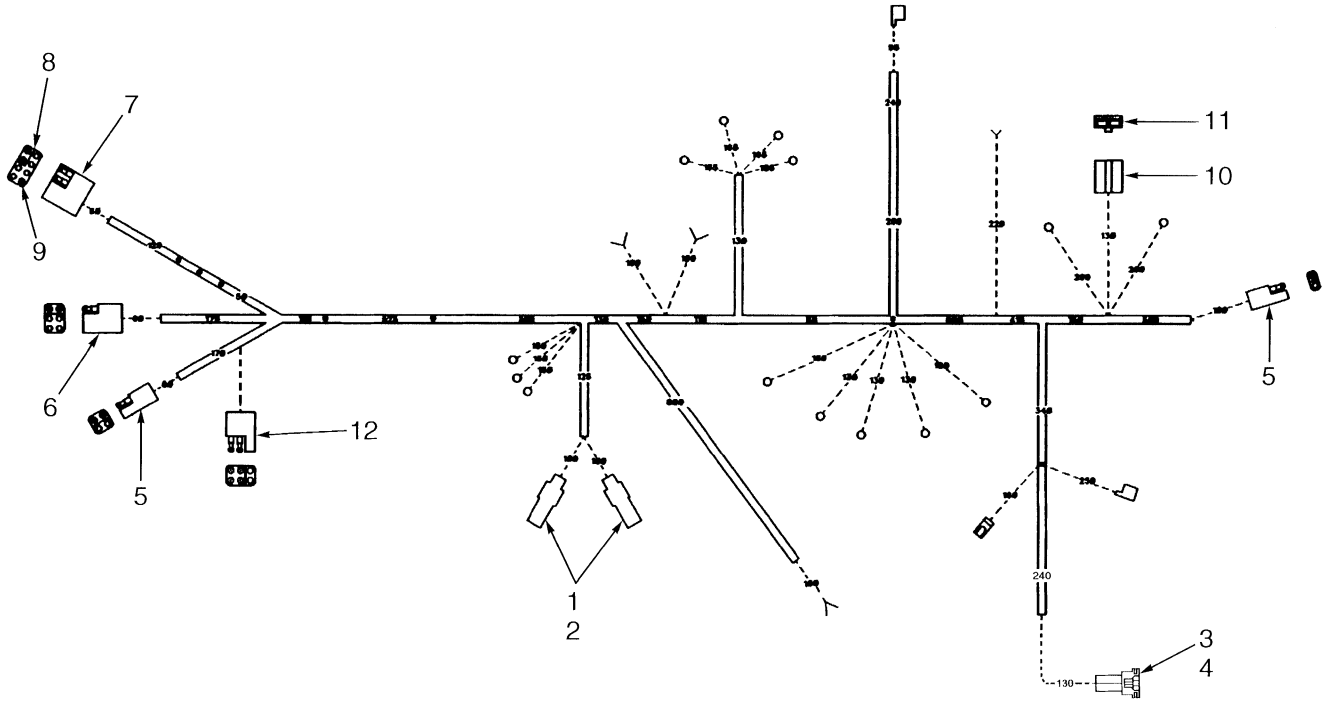

HP080698

ITEM	PART NO.	DESCRIPTION	QTY
	2042757	Wire Harness (Engine Compartment)	1
1	1330298	Connector	2
2	1329147	Seal	2
3	1479108	Connector	1
4	1479109	Seal	2
5	164433	Connector (Male)	1
6	164436	Connector (Female)	1
7	190270	Connector (Female)	1
8	198011	Terminal (Male)	2
9	198013	Terminal (Female)	4
10	245996	Connector Body	1
11	134812	Terminal	2
12	169320	Connector	1

©2010 HYSTER COMPANY

NOTES

©2010 HYSTER COMPANY

WIRE HARNESS (FIGURE 4-19)
CONTROLLER AUTOSHIFT (S/N D019D12439 →)

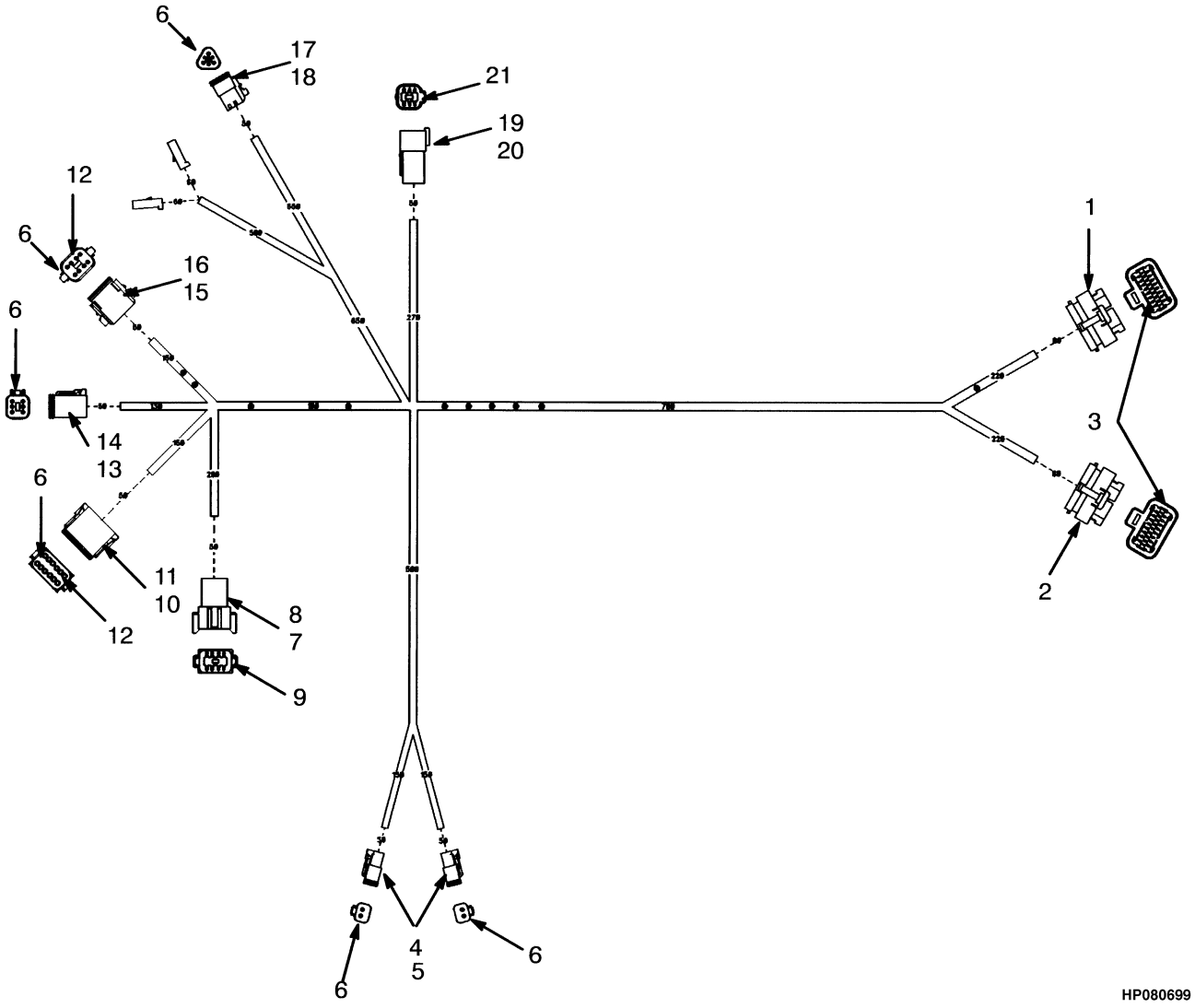

©2010 HYSTER COMPANY

WIRE HARNESS

CONTROLLER AUTOSHIFT (S/N D019D12439 →)

ITEM	PART NO.	DESCRIPTION	QTY
	894929	Wire Harness (Controller)	1
1	2035275	Connector (Controller)	1
2	1456118	Connector (Controller)	1
3	~~1561019~~		
	2035276	Connector	1
4	1330419	Connector (Solenoid)	2
5	1330424	Connector (Secondary Lock)	2
6	1330438	Terminal (Socket)	28
7	1330413	Connector (Shifter Harness)	1
8	1330418	Connector	1
9	1330437	Terminal (Pin)	13
10	1351068	Connector (Shifter Harness)	1
11	1351069	Connector	1
12	1330439	Plug	6
13	1330422	Connector (Sensor Harness)	1
14	1330429	Connector	1
15	1330423	Connector (Engine Compartment)	1
16	1330429	Connector	1
17	1330420	Connector (Throttle Sensor)	1
18	1330426	Connector	1
19	1330412	Connector (Monotrol Harness)	1
20	1330417	Connector	1
21	1330437	Terminal (Pin)	13

©2010 HYSTER COMPANY

WIRE HARNESS (FIGURE 4-20)

SHIFTER AUTOSHIFT (S/N D019D12439 →)

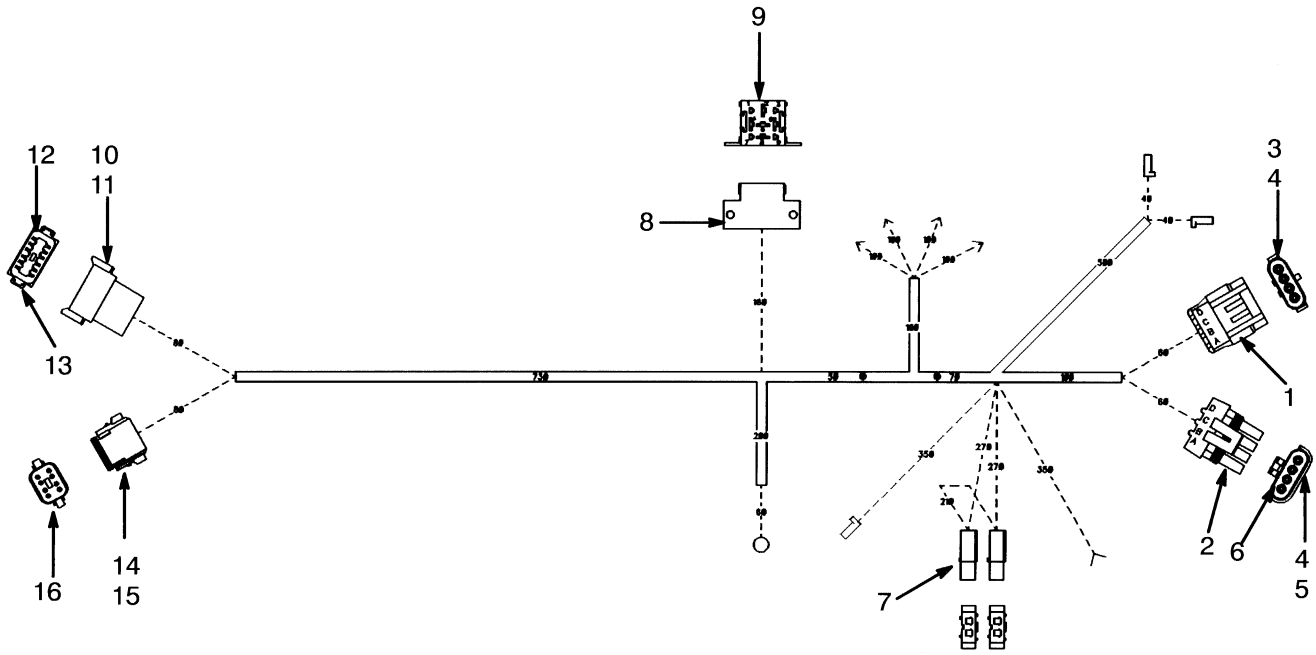

HP080700

ITEM	PART NO.	DESCRIPTION	QTY
	894934	Wire Harness (Engine Compartment)	1
1	1383803	Connector (Shifter)	1
2	1383804	Connector (Shifter)	1
3	1334999	Terminal	4
4	1323579	Seal	7
5	1336173	Terminal	3
6	1327164	Seal	1
7	381846	Fuse Holder	2
8	1301229	Connector	1
9	1331233	Terminal	4
10	1352602	Connector (Controller Harness)	1
11	1352603	Connector	1
12	1330439	Plug	3
13	1330437	Terminal (Pin)	9
14	1330423	Connector (Controller Harness)	1
15	1330429	Connector	1
16	1330438	Terminal (Socket)	8

©2010 HYSTER COMPANY

WIRE HARNESS (FIGURE 4-21)

MONOTROL (S/N D019D12439 →)

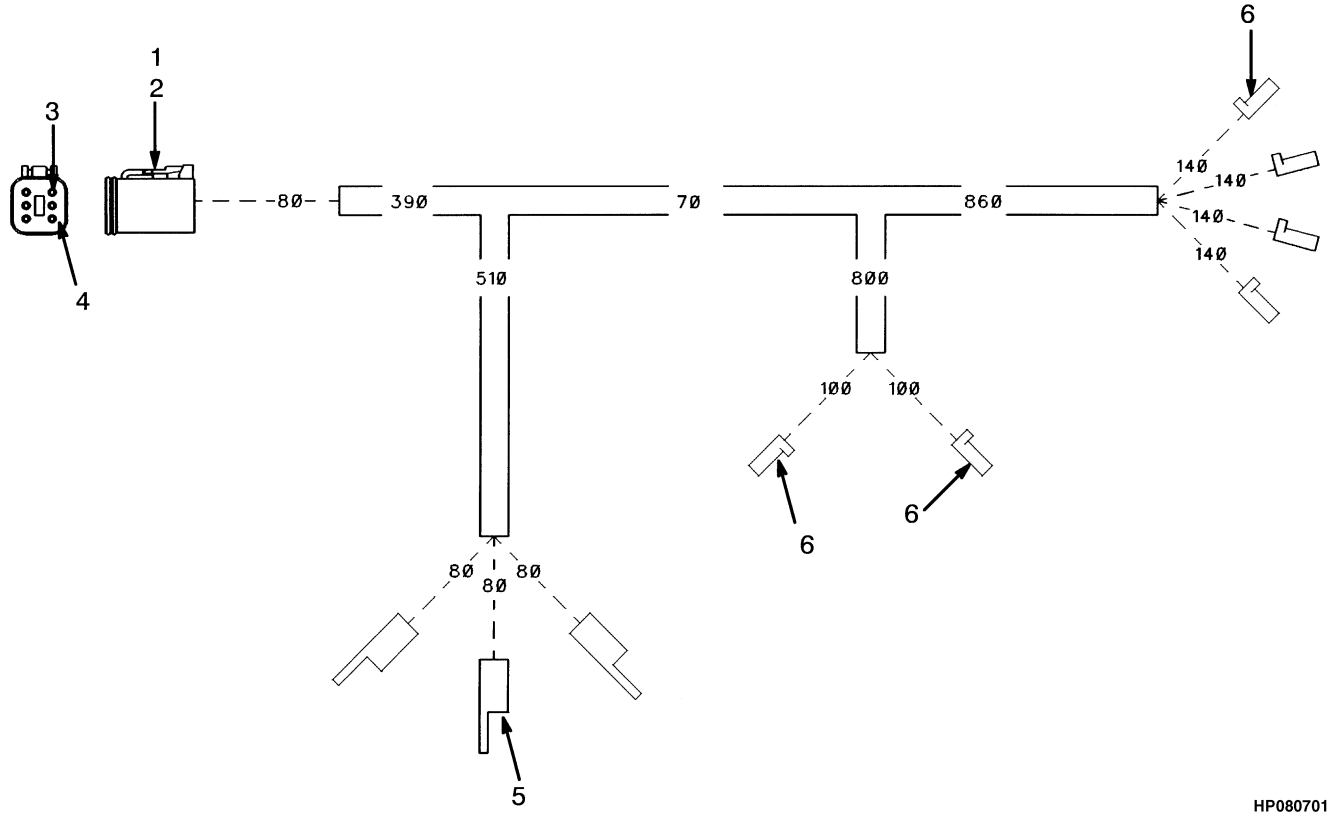

ITEM	PART NO.	DESCRIPTION	QTY
	894927	Wire Harness (Monotrol)	1
1	1330422	Connector	1
2	1330428	Connector	1
3	1330439	Plug	1
4	1330438	Terminal (Socket)	5
5	181045	Connector Body	3
6	181046	Connector Body	6

WIRE HARNESS (FIGURE 4-22)
OPERATOR COMPARTMENT — WITH OPTIONAL ROTATING BEACON

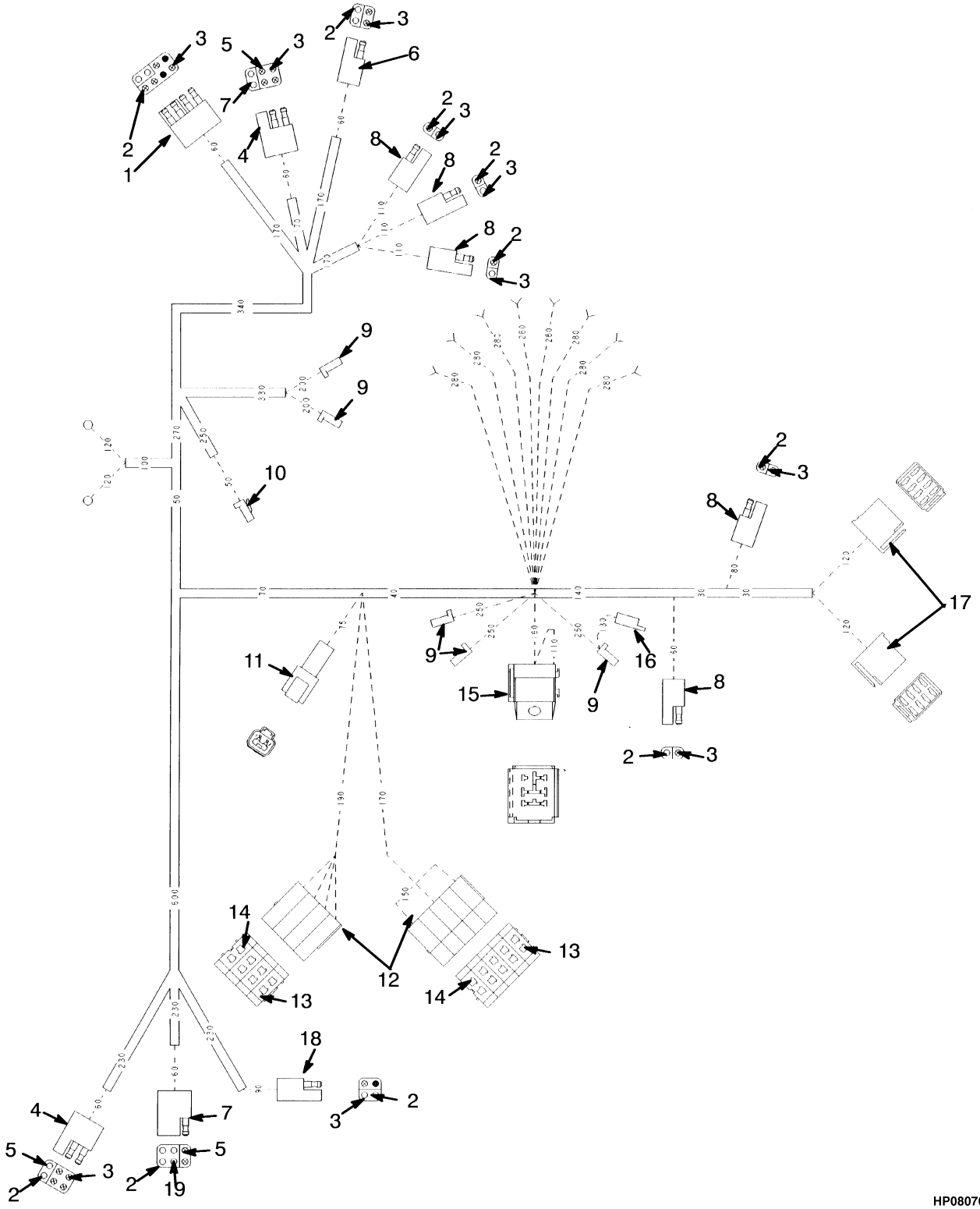

©2010 HYSTER COMPANY

WIRE HARNESS

OPERATOR COMPARTMENT – WITH OPTIONAL ROTATING BEACON

ITEM	PART NO.	DESCRIPTION	QTY
	2037934	Wire Harness	1
1	190269	Connector	1
2	198013	Terminal	16
3	198011	Terminal	18
4	164435	Connector	2
5	198014	Terminal	3
6	164433	Connector	2
7	164436	Connector	1
8	164431	Connector	5
9	181046	Connector Body	5
10	277446	Connector Body	1
11	1330409	Connector	1
12	381846	Fuse Holder	9
13	381847	Terminal	11
14	1300231	Terminal	7
15	1347224	Socket	1
16	181045	Connector Body	1
17	1301154	Housing	2
18	192529	Connector	1
19	198012	Terminal	4

©2010 HYSTER COMPANY

NOTES

©2010 HYSTER COMPANY

5 TRANSMISSION

SECTION 5
TRANSMISSION

DESCRIPTION	PAGE
CHARGE PUMP	5-32
CLUTCH	
FORWARD AND REVERSE	5-22
REVERSE AND SECOND	5-24
THIRD	5-28
CONTROL VALVE	5-36
DIFFERENTIAL	
→ S/N D019D01619 (NON-EC AND EC-3) → S/N D019D01965 (EC-4)	5-56
S/N D019D01620 → (NON EC AND EC-3) S/N D019D01966 → (EC-4)	5-62
DRIVE AXLE	
EC-4 (→ S/N D019D01965)	5-40
EMPTY CONTAINER HANDLER-4 (S/N D019D01966 →)	5-58
NON-EC AND EC-3 (→ S/N D019D01619)	5-44
NON-EC AND EC-3 (S/N D019D01620 ↔ S/N D019D01781)	5-48
NON-EC AND EC-3 (S/N D019D01782 →)	5-52
IDLER SHAFT	5-30
MODULATOR VALVE	5-34
MONOTROL PEDAL	5-38
OUTPUT GEAR	5-31
PUMP DRIVE GEAR	5-20
RANGE CONTROL	
WITH AUTOSHIFT (S/N D019D02439 ↔ S/N D019D02720) (T050M-6089 →)	5-6
WITH AUTOSHIFT (S/N D019D02721 ↔ 9/1999) (T050M-6089 →)	5-8
WITH AUTOSHIFT (9/1999 →)	5-10
WITHOUT AUTOSHIFT	5-4
SHAFT ASSEMBLY	
REVERSE AND SECOND CLUTCH SHAFT	5-26
TRANSMISSION	
→ S/N D019D02438 → T050M-6088	5-12
S/N D019D02439 → T050M-6089 →	5-16
TRANSMISSION ATTACHING PARTS	5-2

©2010 HYSTER COMPANY

TRANSMISSION ATTACHING PARTS (FIGURE 5-1)

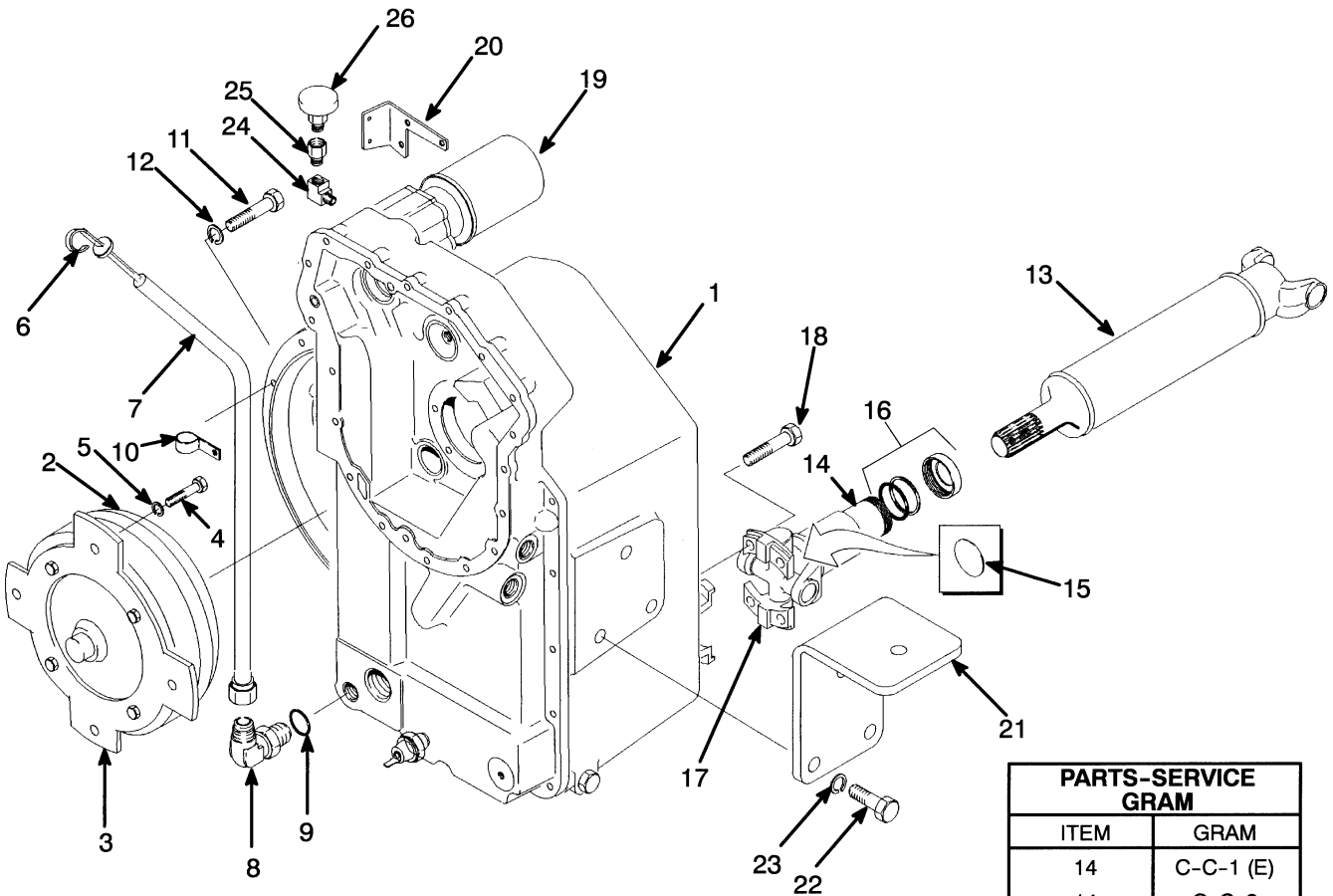

PARTS-SERVICE GRAM	
ITEM	GRAM
14	C-C-1 (E)
14	C-C-2

HP240130

©2010 HYSTER COMPANY

TRANSMISSION ATTACHING PARTS

ITEM	PART NO.	DESCRIPTION	QTY
1	**bc** 1327662	Transmission Assy (☞Figure 5-6)	1
1	**ef** 894954	Transmission Assy (☞Figure 5-7)	1
2	1327681	Torque Converter	1
2	894497	Torque Converter (LPG)	1
2	1474278	O-Ring (LPG)	1
2	1474279	Lockring (LPG)	1
2	1474280	Adapter (LPG)	1
3	1327656	Drive Plate (Drive)	1
4	15942	Bolt	8
5	221767	Washer	8
6	1455631	Dipstick	1
7	1327691	Dipstick Tube	1
8	184761	Fitting	1
9	16486	O-Ring	1
10	88194	Clamp	1
11	16828	Capscrew	11
12	15156	Lockwasher	12
13	**a** 387240	Shaft	1
13	**d** 1360967	Shaft	1
14	**a** 1312823	Yoke (Slip)	1
14	**d**	Yoke	1
15	**a** 1312824	Plug	1
16	**a** 1312825	Cap	1
16	**d** 1367556	Dust Cap	1
17	1312827	Kit-Bearing (Cross And Bearing)	2
18	221507	Capscrew	8
19	1315621	Filter	1
20	1327705	Bracket	1
21	1327682	Bracket	2
22	292581	Capscrew	6
23	292687	Lockwasher	6
24	1327821	Fitting	1
25	12855	Fitting	1
26	1343562	Breather	1

FOOTNOTES:

a → S/N D019D01619
b → S/N D019D02438
c → T050M-6088
d S/N D019D01620 →
e S/N D019D02439 →
f T050M-6089 →

©2010 HYSTER COMPANY

RANGE CONTROL (FIGURE 5-2)
WITHOUT AUTOSHIFT

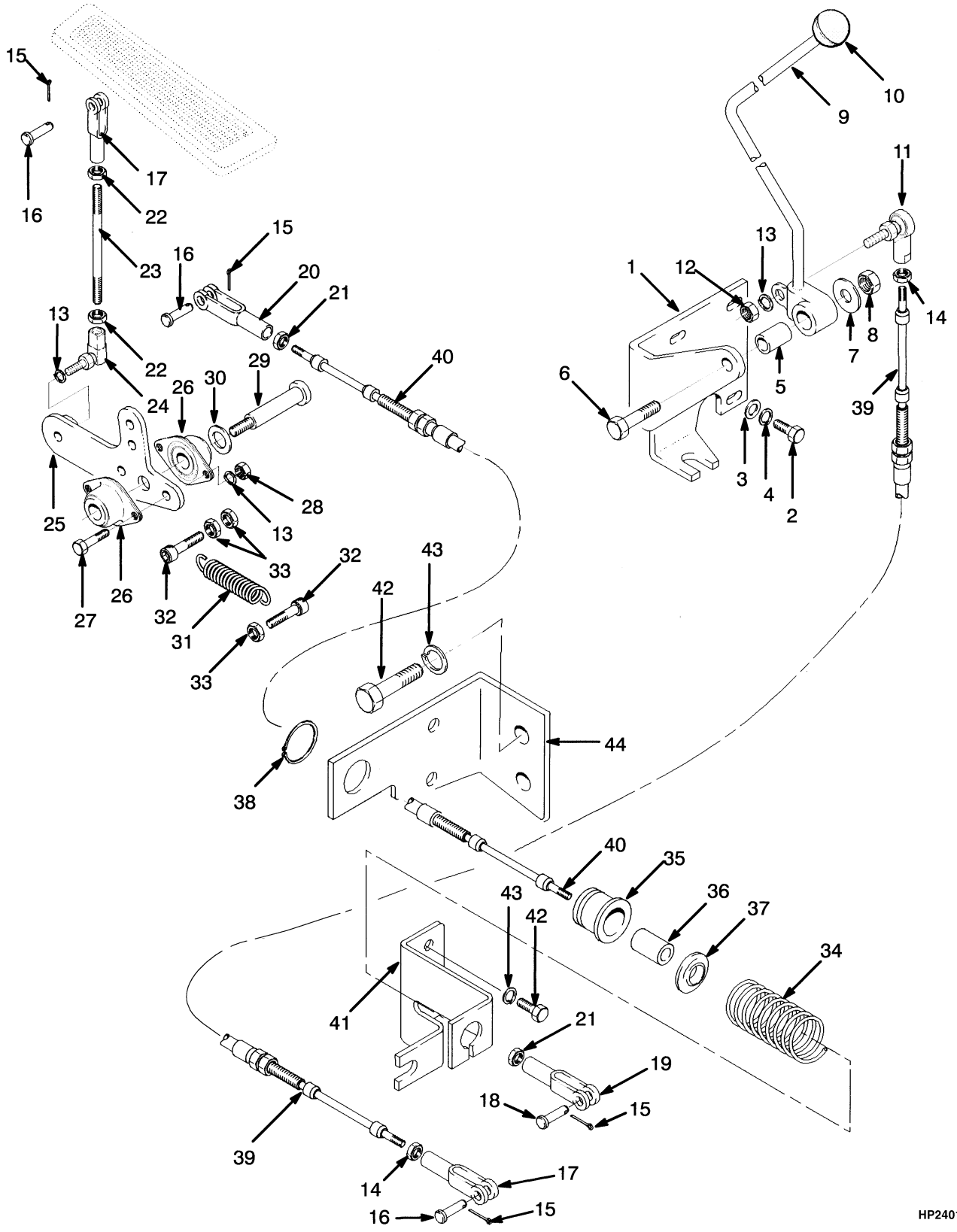

©2010 HYSTER COMPANY

RANGE CONTROL
WITHOUT AUTOSHIFT

ITEM	PART NO.	DESCRIPTION	QTY
1	1301175	Bracket	1
2	136681	Capscrew	3
3	320158	Washer	3
4	292681	Lockwasher	3
5	1301164	Spacer	1
6	293635	Capscrew	1
7	15177	Washer	1
8	316829	Nut	1
9	1301211	Lever	1
10	308993	Knob	1
11	357263	Ball Joint	1
12	15004	Nut	1
13	15154	Lockwasher	4
14	15024	Nut	2
15	15201	Cotter Pin	4
16	126	Pin	3
17	125	Rod End	2
18	309109	Pin	1
19	161617	Rod End	1
20	314809	Rod End	1
21	15002	Nut	2
22	15004	Nut	2
23	1301038	Link	1
24	139012	Ball Joint	1
25	1301203	Crank	1
26	313860	Flange	2
27	221420	Capscrew	2
28	221703	Nut	2
29	340213	Capscrew	1
30	320161	Washer	1
31	1301041	Spring	1
32	296011	Capscrew	2
33	329069	Nut	3
34	1327703	Spring	1
35	1327746	Bushing	1
36	1327747	Spring Guide	1
37	1327748	Sleeve	1
38	213100	Snap Ring	1
39	1303455	Cable Assy	1
40	1346972	Cable Assy	1
41	1327709	Plate	1
42	136985	Capscrew	4
43	~~388049~~		
	292682	Lockwasher	4
44	1327708	Plate	1

©2010 HYSTER COMPANY

RANGE CONTROL (FIGURE 5-3)

WITH AUTOSHIFT (S/N D019D02439 ↔ S/N D019D02720) (T050M-6089 →)

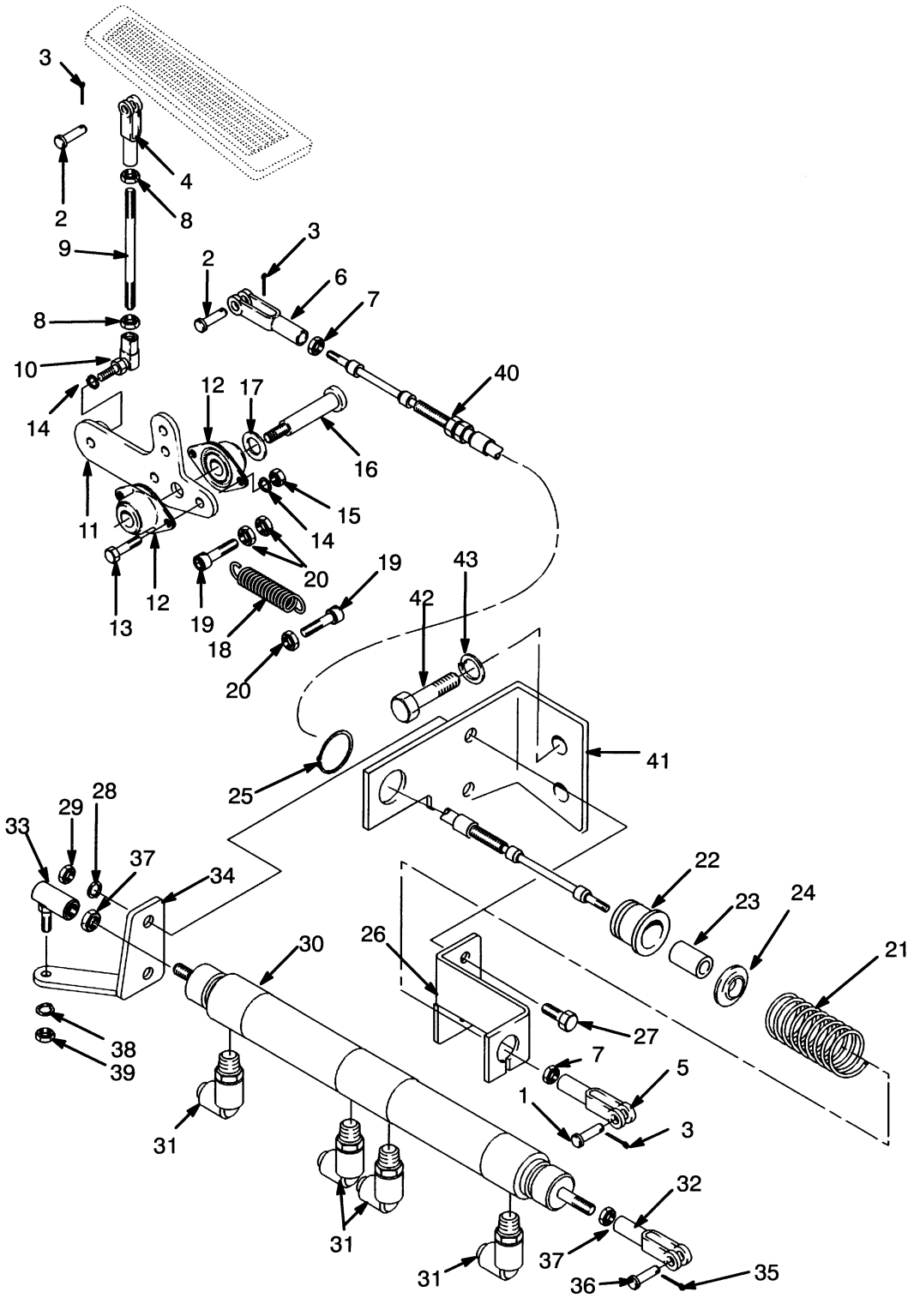

HP240132

©2010 HYSTER COMPANY

RANGE CONTROL

WITH AUTOSHIFT (S/N D019D02439 ↔ S/N D019D02720) (T050M-6089 →)

ITEM	PART NO.	DESCRIPTION	QTY
1	309109	Pin	1
2	126	Pin	2
3	15201	Cotter Pin	3
4	125	Rod End	1
5	161617	Rod End	1
6	314809	Rod End	1
7	15002	Nut	2
8	15004	Nut	2
9	1301038	Link	1
10	139012	Ball Joint	1
11	1301203	Crank	1
12	313860	Flange	2
13	221420	Capscrew	2
14	15154	Lockwasher	3
15	221703	Nut	2
16	340213	Capscrew	1
17	320161	Washer	1
18	1301041	Spring	1
19	296011	Capscrew	2
20	329069	Nut	3
21	1327703	Spring	1
22	1327746	Bushing	1
23	1327747	Spring Guide	1
24	1327748	Sleeve	1
25	213100	Snap Ring	1
26	894416	Bracket	1
27	292515	Capscrew	2
28	~~388049~~		
	292682	Lockwasher	2
29	136692	Nut	2
30	894950	Air Cylinder	1
31	1301433	Quick Disconnect Fitting	4
32	894949	Clevis	1
33	139012	Ball Joint	1
34	894951	Bracket	1
35	3039895	Pin	1
36	1198539	Retaining Ring	1
37	15024	Nut	2
38	15154	Lockwasher	1
39	221704	Nut	1
40	1346972	Cable Assy	1
41	1327708	Plate	1
42	136985	Capscrew	4
43	~~388049~~		
	292682	Lockwasher	4

©2010 HYSTER COMPANY

RANGE CONTROL (FIGURE 5-4)

WITH AUTOSHIFT (S/N D019D02721 ↔ 9/1999) (T050M-6089 →)

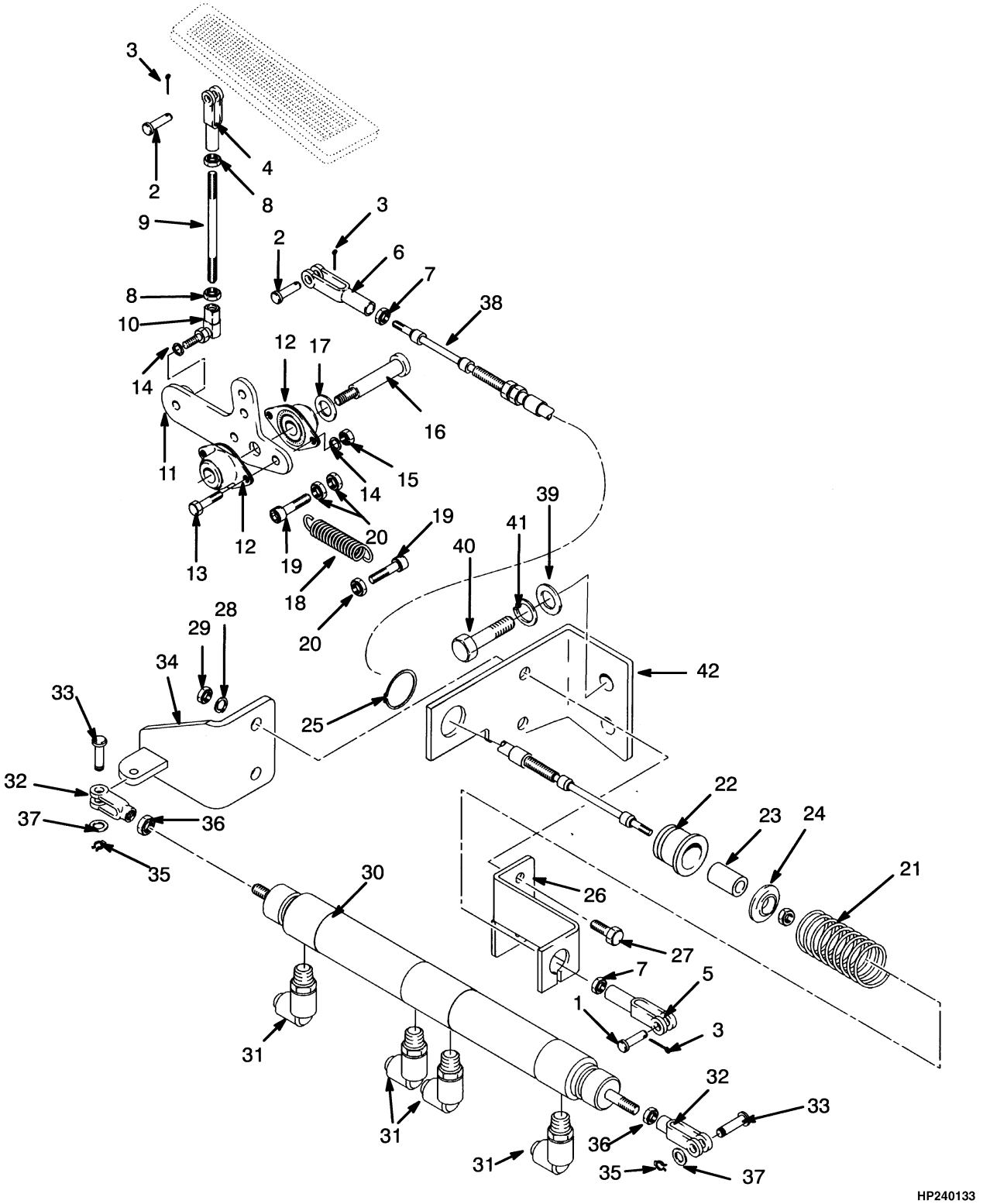

©2010 HYSTER COMPANY

RANGE CONTROL

WITH AUTOSHIFT (S/N D019D02721 ↔ 9/1999) (T050M-6089 →)

ITEM	PART NO.	DESCRIPTION	QTY
1	309109	Pin	1
2	126	Pin	2
3	15201	Cotter Pin	3
4	125	Rod End	1
5	161617	Rod End	1
6	314809	Rod End	1
7	15002	Nut	2
8	15004	Nut	2
9	1301038	Link	1
10	139012	Ball Joint	1
11	1301203	Crank	1
12	313860	Flange	2
13	221420	Capscrew	2
14	15154	Lockwasher	3
15	221703	Nut	2
16	340213	Capscrew	1
17	320161	Washer	1
18	1301041	Spring	1
19	296011	Capscrew	2
20	329069	Nut	3
21	1327703	Spring	1
22	1327746	Bushing	1
23	1327747	Spring Guide	1
24	1327748	Sleeve	1
25	213100	Snap Ring	1
26	894416	Bracket	1
27	292515	Capscrew	2
28	~~388049~~		
	292682	Lockwasher	2
29	136692	Nut	2
30	894950	Air Cylinder	1
31	1301433	Quick Disconnect Fitting	4
32	894949	Clevis	2
33	2037089	Pin	2
34	2037088	Bracket	1
35	2037090	Bracket	2
36	15024	Nut	2
37	15127	Washer	2
38	1346972	Cable Assy	1
39	320158	Washer	4
40	136985	Capscrew	4
41	~~388049~~		
	292682	Lockwasher	4
42	1327708	Plate	1

©2010 HYSTER COMPANY

RANGE CONTROL (FIGURE 5-5)
WITH AUTOSHIFT (9/1999 →)

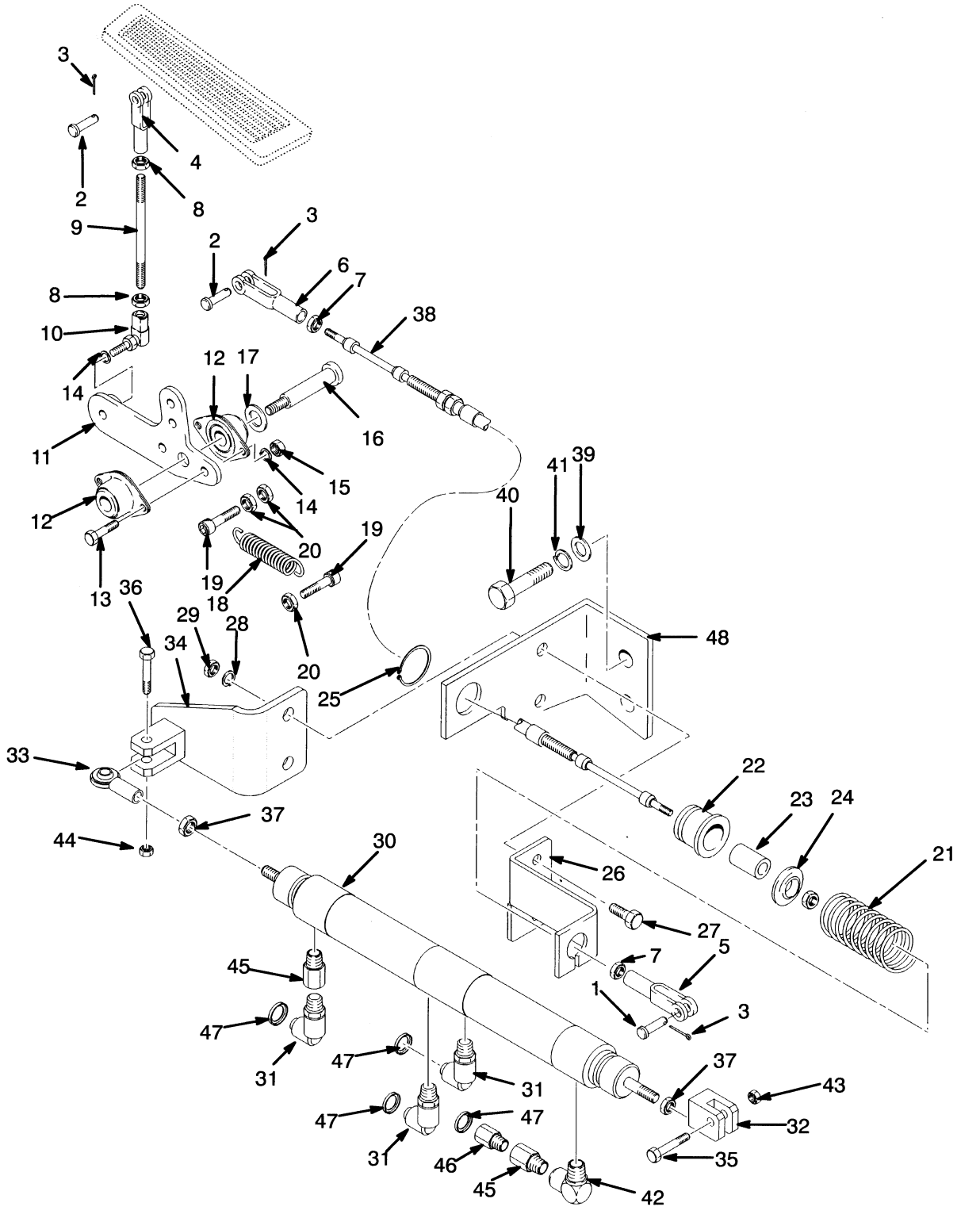

©2010 HYSTER COMPANY

RANGE CONTROL
WITH AUTOSHIFT (9/1999 →)

ITEM	PART NO.	DESCRIPTION	QTY
1	309109	Pin	1
2	126	Pin	2
3	15201	Cotter Pin	3
4	125	Rod End	1
5	161617	Rod End	1
6	314809	Rod End	1
7	15002	Nut	2
8	15004	Nut	2
9	1301038	Link	1
10	139012	Ball Joint	1
11	1301203	Crank	1
12	313860	Flange	2
13	221420	Capscrew	2
14	15154	Lockwasher	3
15	221703	Nut	2
16	340213	Capscrew	1
17	320161	Washer	1
18	1301041	Spring	1
19	296011	Capscrew	2
20	329069	Nut	3
21	1327703	Spring	1
22	1327746	Bushing	1
23	1327747	Spring Guide	1
24	1327748	Sleeve	1
25	213100	Snap Ring	1
26	894416	Bracket	1
27	287860	Capscrew	2
28	~~388049~~		
	292682	Lockwasher	2
29	292655	Nut	2
30	1470910	Air Cylinder	1
31	1301433	Quick Disconnect Fitting	3
32	1470911	Clevis	1
33	1470912	Rod End	1
34	1470913	Bracket	1
35	1470916	Pin	1
36	1470912	Rod End	1
37	15025	Nut	2
38	1346972	Cable Assy	1
39	320158	Washer	4
40	136681	Capscrew	4
41	292681	Lockwasher	4
42	16151	Fitting	1
43	15106	Locknut	1
44	15107	Locknut	1
45	1471320	Fitting	2
46	1359661	Fitting	1
47	1301434	Button	4
48	1327708	Plate	1

©2010 HYSTER COMPANY

TRANSMISSION (FIGURE 5-6)

(→ S/N D019D02438) (→ T050M-6088)

PARTS-SERVICE GRAM	
ITEM	GRAM
3	C-B-110

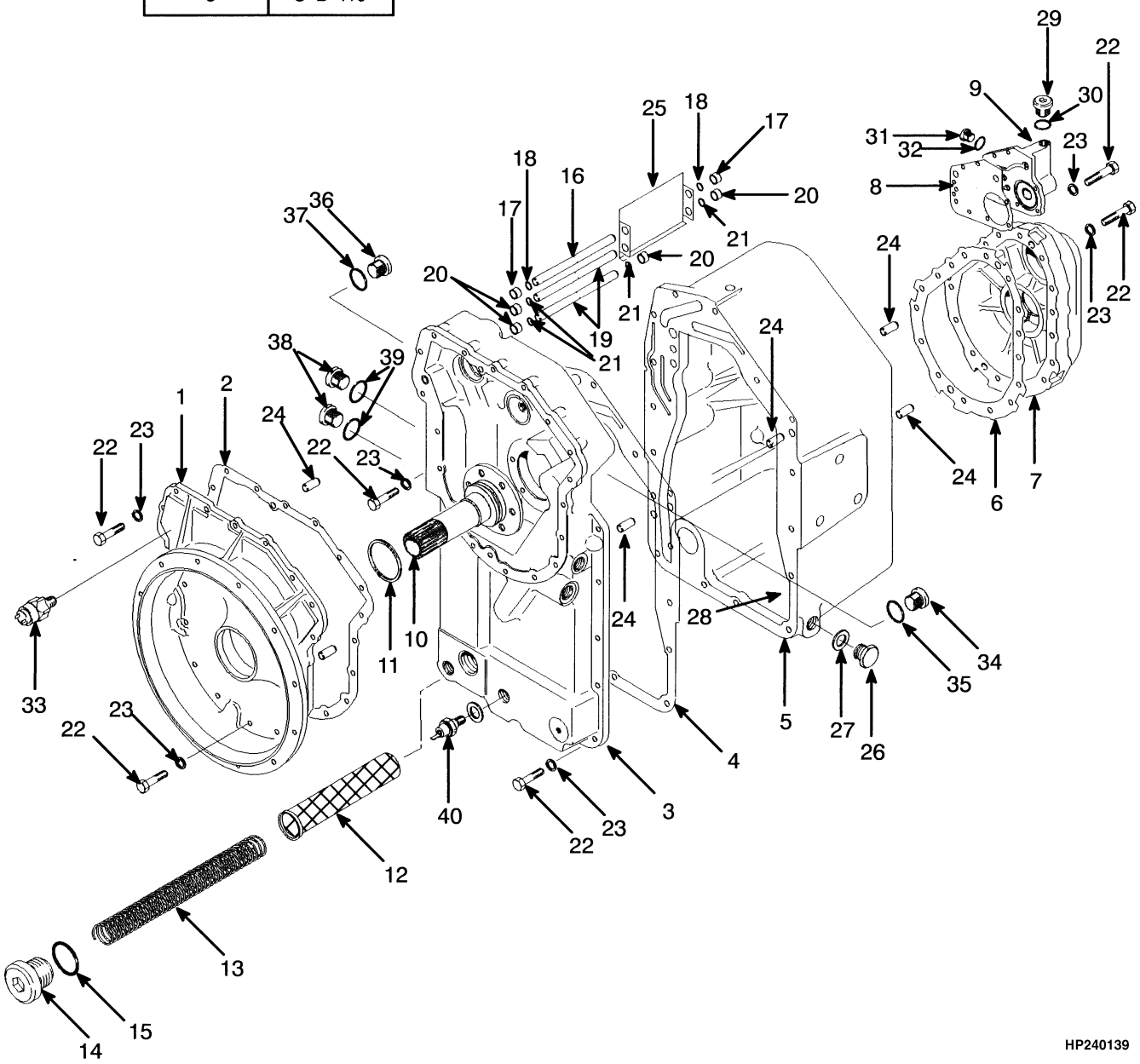

©2010 HYSTER COMPANY

TRANSMISSION

(→ S/N D019D02438) (→ T050M-6088)

ITEM	PART NO.	DESCRIPTION	QTY
	1327662	Transmission Assy	1
1	1327619	Converter Housing (Torque Converter)	1
2	1539493	Gasket	1
3	**a** 1327621	Cover	1
3	**bc** 1365940	Cover	1
3	**d** 1450618	Cover	1
4	**a** 1327658	Gasket	1
4	**c** 1365942	Gasket	1
5	**a** 1327615	Transmission Housing	1
5	**c** 1365938	Transmission Housing (Transmission)	1
6	1327659	Gasket	1
7	1327595	Cover	1
8	1327660	Gasket	1
9	1327620	Manifold	1
10	1327692	Support	1
11	1327710	Sealing Ring	1
12	1327694	Screen	1
13	1327695	Spring	1
14	188210	Fitting	1
15	16983	O-Ring	1
16	1327575	Tube	1
17	1327683	Spacer	2
18	192293	O-Ring	2
19	1327624	Tube	2
20	1327671	Spacer	4
21	87300	O-Ring	4
22	287860	Capscrew	65
23	~~388049~~		
	292682	Lockwasher	65
24	186420	Dowel	6
25	1327803	Baffle	1
26	14595	Plug Assembly	1
27	16484	O-Ring	1
28	334560	Magnet	1
29	235691	Fitting	1
30	16484	O-Ring	1
31	14591	Plug	3
32	16481	O-Ring	1
33	1323146	Pressure Switch (Transmission Oil)	1
34	222444	Fitting	1
35	16486	O-Ring	1
36	233683	Fitting	1
37	16487	O-Ring	1
38	233693	Fitting	2
39	16485	O-Ring	1
40	114662	Switch	1
	b 1365941	Kit-Seal	1
	d 1450828	Kit-Seal	1

©2010 HYSTER COMPANY

FOOTNOTES:

a → T050M-2389
b → T050M-5063
c T050M-2390 →
d T050M-5064 →

©2010 HYSTER COMPANY

NOTES

©2010 HYSTER COMPANY

TRANSMISSION (FIGURE 5-7)

(S/N D019D02439 →) (T050M-6089 →)

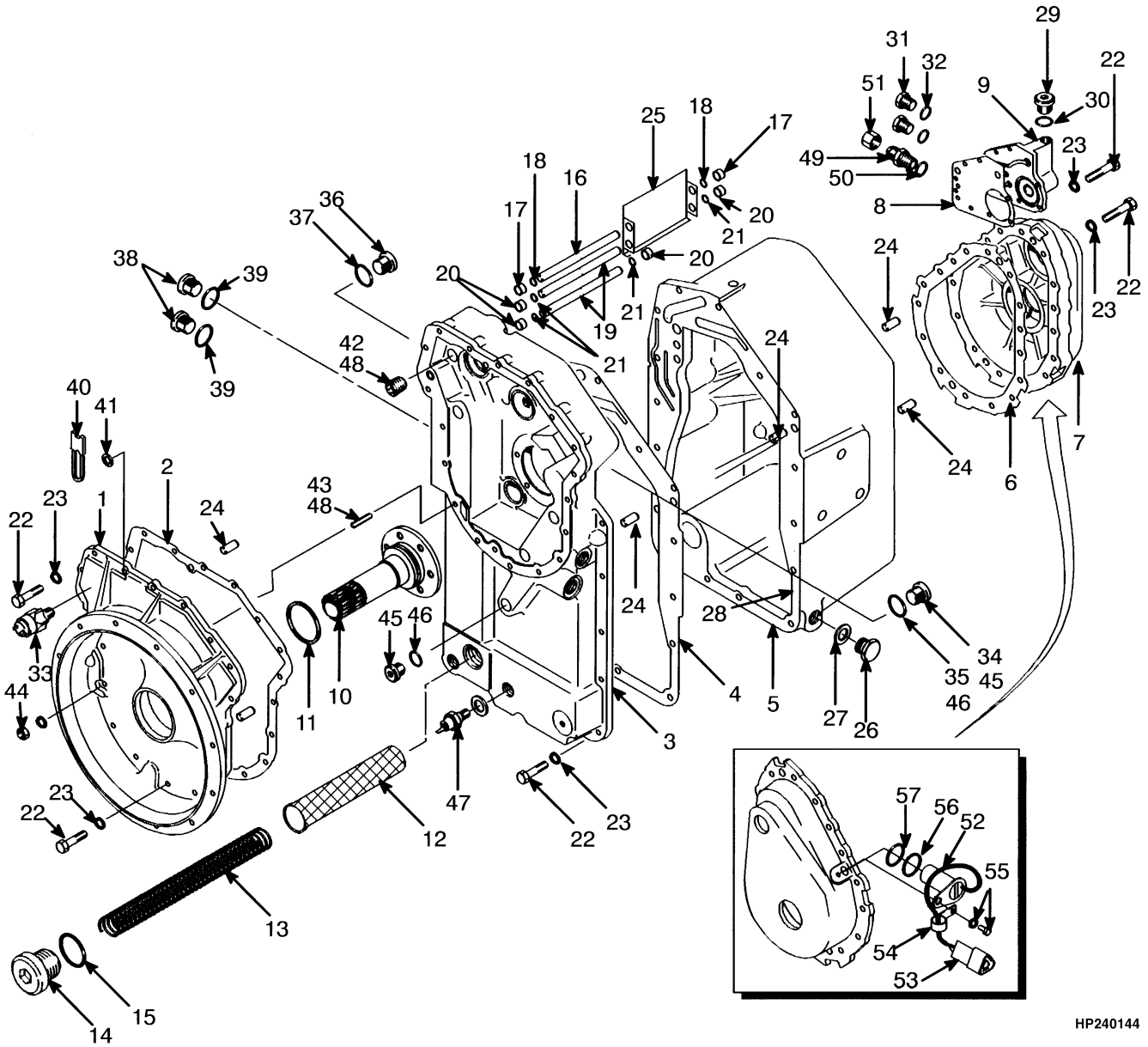

©2010 HYSTER COMPANY

TRANSMISSION

(S/N D019D02439 →) (T050M-6089 →)

ITEM	PART NO.	DESCRIPTION	QTY
	b 894954	Transmission Assy	1
	894956	Plug	1
	c 1456346	Transmission Assy	1
1	1327619	Converter Housing (Torque Converter)	1
2	1539493	Gasket	1
3	**b** 1450618	Cover	1
3	**c** 1456345	Cover	1
4	1365942	Gasket	1
5	1365938	Transmission Housing (Transmission)	1
6	1327659	Gasket	1
7	894953	Cover	1
7	894956	Plug	1
8	1327660	Gasket	1
9	1327620	Manifold	1
10	1327692	Support	1
11	1327710	Sealing Ring	1
12	1327694	Screen	1
13	1327695	Spring	1
14	188210	Fitting	1
15	16983	O-Ring	1
16	1327575	Tube	1
17	1327683	Spacer	2
18	192293	O-Ring	2
19	1327624	Tube	2
20	1327671	Spacer	4
21	87300	O-Ring	4
22	287860	Capscrew	64
23	~~388049~~		
	292682	Lockwasher	67
24	186420	Dowel	6
25	1327803	Baffle	1
26	14595	Plug Assembly	1
27	16484	O-Ring	1
28	334560	Magnet	1
29	235691	Fitting	1
30	16484	O-Ring	1
31	14591	Plug	2
32	16481	O-Ring	1
33	1323146	Pressure Switch (Transmission Oil)	1
34	222444	Fitting	1
35	16486	O-Ring	1
36	233683	Fitting	1
37	16487	O-Ring	1
38	233693	Fitting	2
39	16485	O-Ring	1
40	1345023	Strap	2
41	320159	Washer	2
42	246869	Plug (Magnetic)	4
43	1365943	Stud	1
44	136692	Nut	1

©2010 HYSTER COMPANY

TRANSMISSION

(S/N D019D02439 →) (T050M-6089 →)

ITEM	PART NO.	DESCRIPTION	QTY
45	222444	Fitting	2
46	16486	O-Ring	2
47	1322627	Switch (Oil Temperature Warning)	1
48	264159	Adhesive	AR
49	16538	Connector	1
50	16481	O-Ring	1
51	16923	Nut	1
52	**a** 894958	Sensor	1
53	**a** 1330410	Connector	1
53	**a** 1330415	Connector	1
54	**a** 177599	Clamp	1
55	**a** 292680	Washer	1
55	**a** 292500	Capscrew	1
56	**a** 223625	Back-Up Ring	1
57	**a** 39349	O-Ring	1
	1450828	Kit-Seal	1

FOOTNOTES:

a With Autoshift
b → T050M-6788
c T050M-6789 →

©2010 HYSTER COMPANY

NOTES

©2010 HYSTER COMPANY

PUMP DRIVE GEAR (FIGURE 5-8)

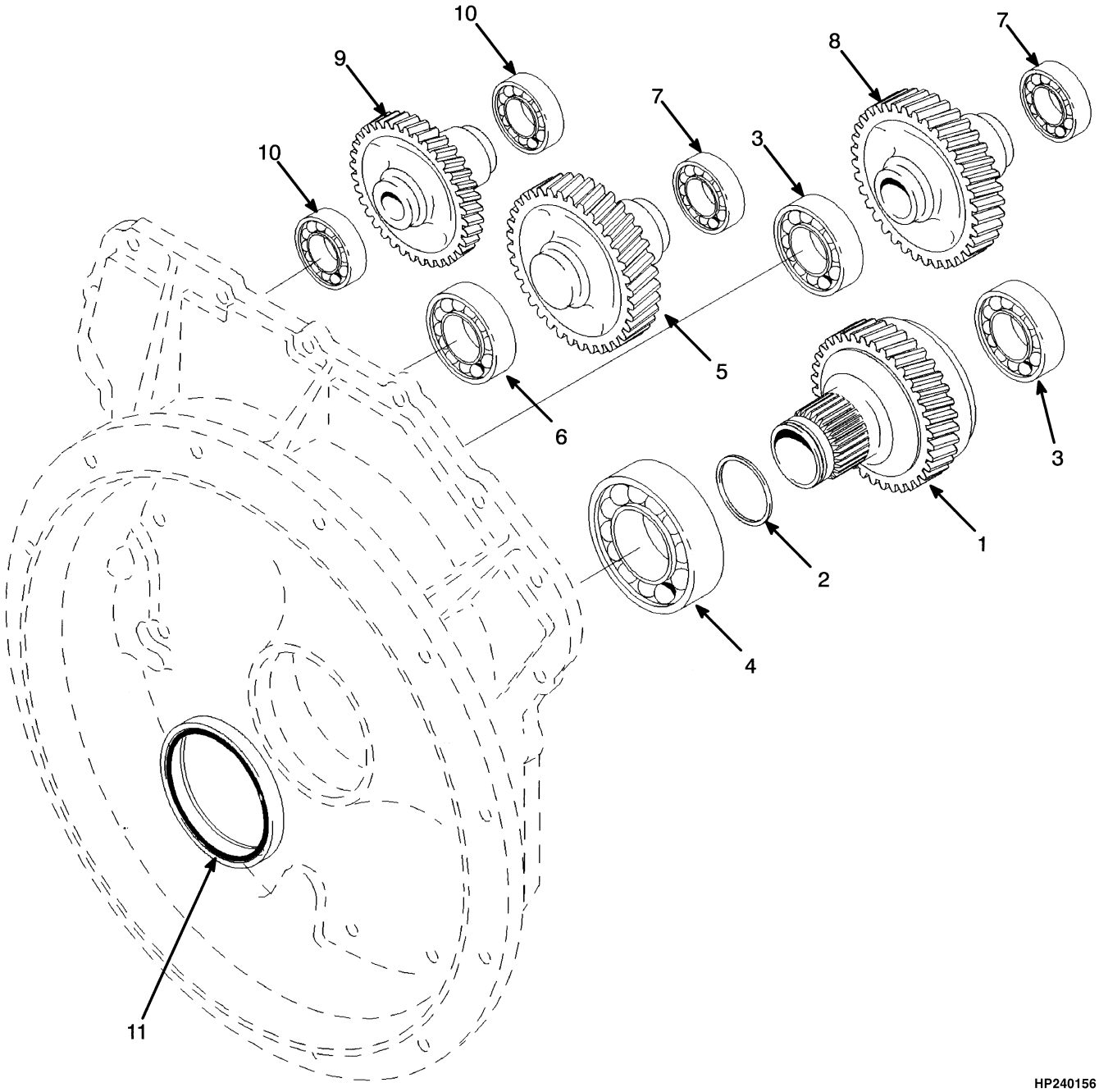

©2010 HYSTER COMPANY

PUMP DRIVE GEAR

ITEM	PART NO.	DESCRIPTION	QTY
1	**a** 1327611	Gear	1
2	1327663	O-Ring	1
3	43211	Ball Bearing	2
4	43215	Ball Bearing	1
5	**a** 1327598	Idler Gear	1
6	43209	Ball Bearing	1
7	44309	Ball Bearing	2
8	**a** 1327596	Gear	1
9	**a** 1327606	Gear	1
10	44307	Ball Bearing	2
11	1327696	Seal	1
	1365941	Kit-Seal	1

FOOTNOTES:

a PTO

©2010 HYSTER COMPANY

CLUTCH (FIGURE 5-9)
FORWARD AND REVERSE

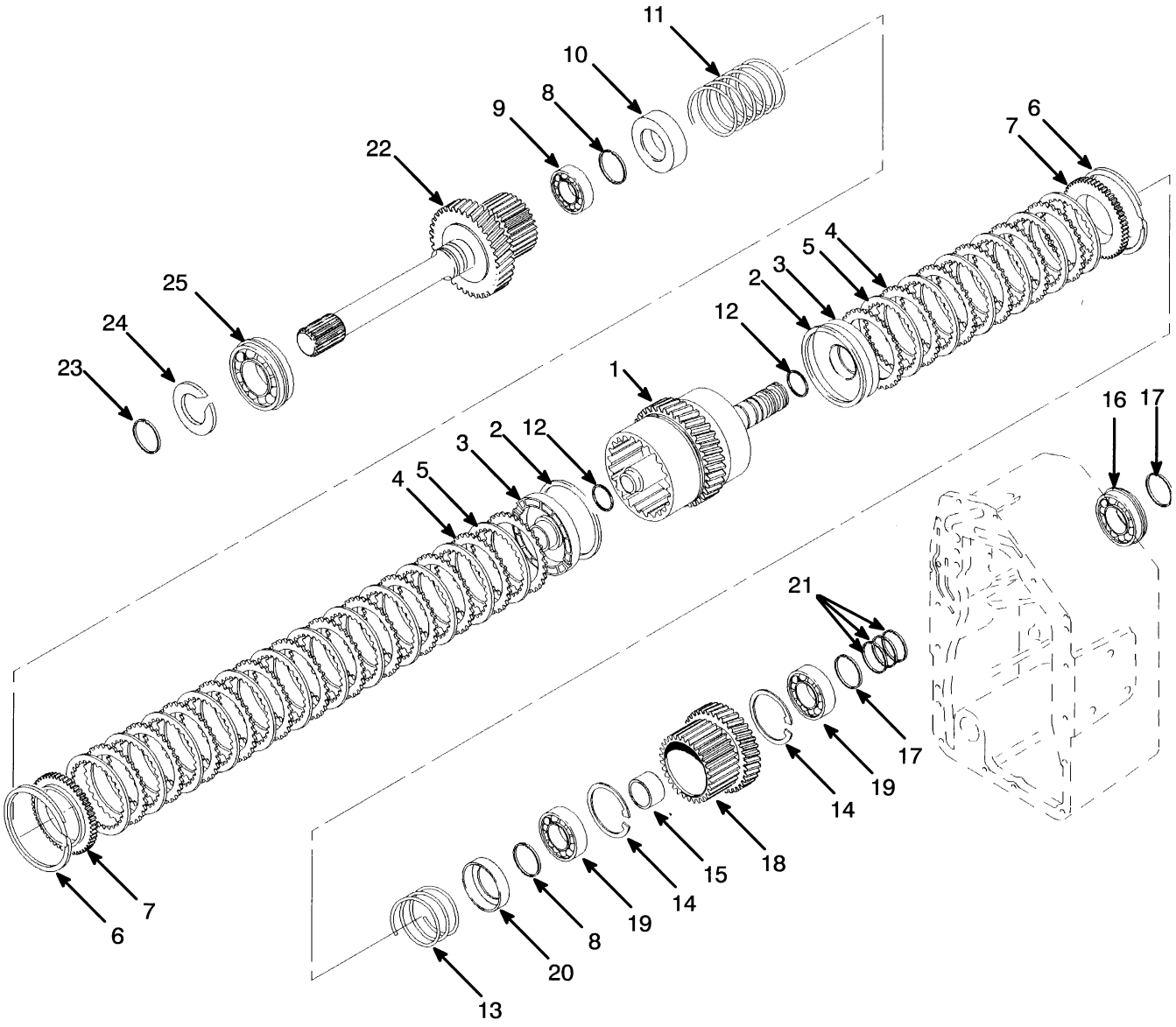

HP240157

©2010 HYSTER COMPANY

CLUTCH
FORWARD AND REVERSE

ITEM	PART NO.	DESCRIPTION	QTY
	a 1327664	Clutch Pack	1
	b 1490510	Clutch Pack	1
1	1327667	Clutch Assy	1
2	334402	Seal	2
3	1327582	Piston	2
4	**a** 334417	Separator Plate (Separator)	18
4	**b** 1387235	Separator Plate (Separator)	18
5	**a** 1469300	Plate (Friction)	18
5	**b** 1469301	Friction Disk (Friction)	18
6	334475	Snap Ring	2
7	334442	Pressure Plate (Pressure)	2
8	334480	Snap Ring	2
9	44308	Ball Bearing	1
10	1327601	Guide	1
11	1327603	Spring	1
12	346795	O-Ring	2
13	346671	Spring	1
14	58911	Snap Ring	2
15	1327651	Spacer	1
16	124682	Ball Bearing	1
17	346675	Snap Ring	2
18	1327591	Gear (Low)	1
19	124642	Ball Bearing	2
20	1327602	Guide	1
21	346677	Ring	3
22	1327583	Shaft	1
23	1327653	Sealing Ring	1
24	41459	Snap Ring	1
25	124744	Ball Bearing	1
	1365941	Kit-Seal	1

FOOTNOTES:

a → 8/2000

b 8/2000 →

©2010 HYSTER COMPANY

CLUTCH (FIGURE 5-10)
REVERSE AND SECOND

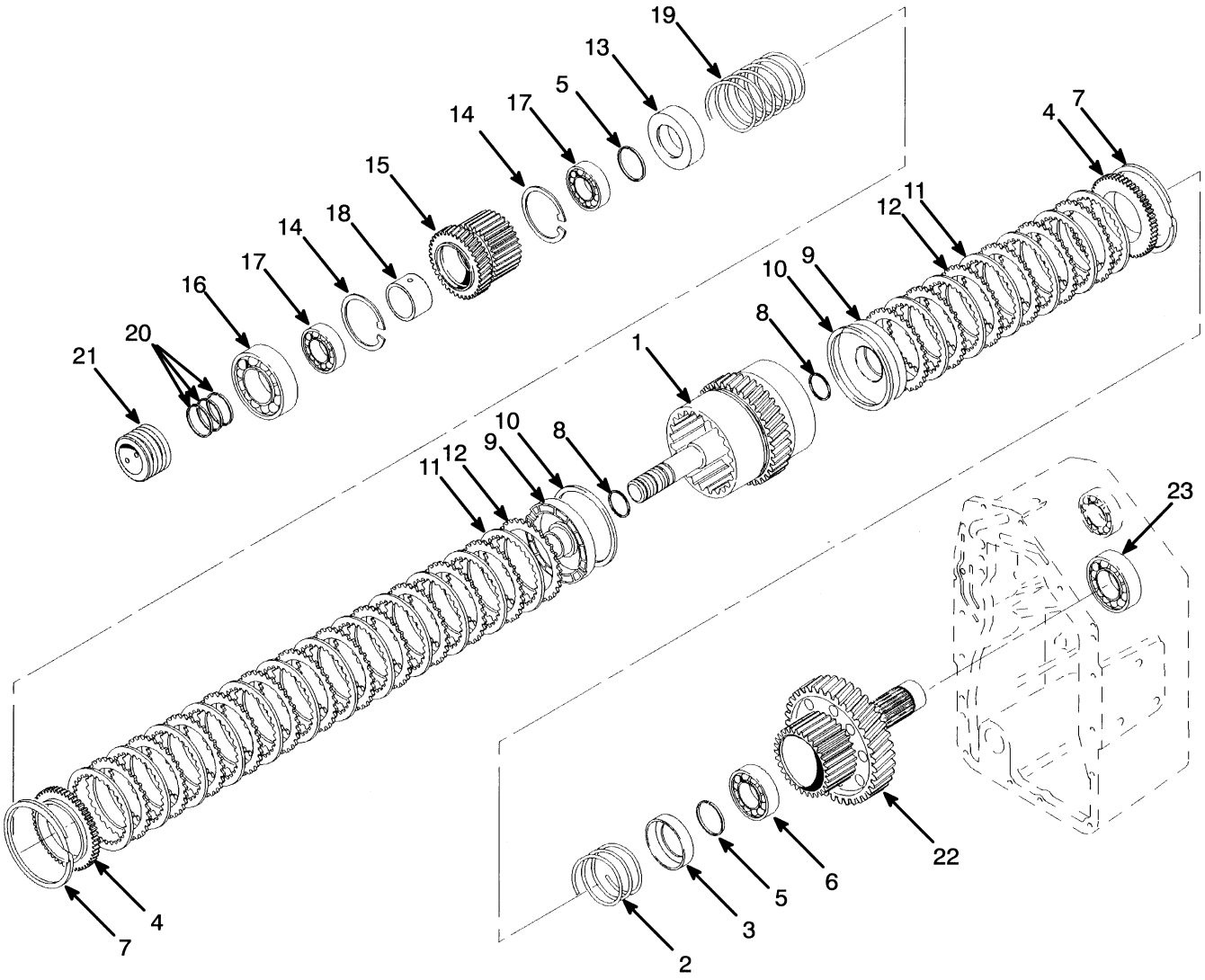

HP240174

©2010 HYSTER COMPANY

CLUTCH
REVERSE AND SECOND

ITEM	PART NO.	DESCRIPTION	QTY
	a 1327665	Clutch Pack	1
	c 1490511	Clutch Pack	1
1	1327668	Shaft (☞Figure 5-11)	1
2	346671	Spring	1
3	1327602	Guide	1
4	334442	Pressure Plate (Pressure)	2
5	334480	Snap Ring	2
6	43307	Bearing	1
7	334475	Snap Ring	2
8	346795	O-Ring	2
9	1327582	Piston	2
10	334402	Seal	2
11	**a** 1469300	Plate (Friction)	18
11	**c** 1469301	Friction Disk (Friction)	18
12	**a** 334417	Separator Plate (Separator)	18
12	**c** 1387235	Separator Plate (Separator)	18
13	1327601	Guide	1
14	12894	Snap Ring	2
15	1327608	Gear (Reverse)	1
16	43308	Ball Bearing	1
17	124606	Ball Bearing	2
18	1327650	Spacer	1
19	1327603	Spring	1
20	346677	Ring	3
21	**b** 1327605	Bushing	1
22	1327588	Shaft	1
23	41310	Ball Bearing	1
	1365941	Kit-Seal	1

FOOTNOTES:

a → 8/2000
b → T050M-6788
c 8/2000 →

©2010 HYSTER COMPANY

SHAFT ASSEMBLY (FIGURE 5-11)
REVERSE AND SECOND CLUTCH SHAFT

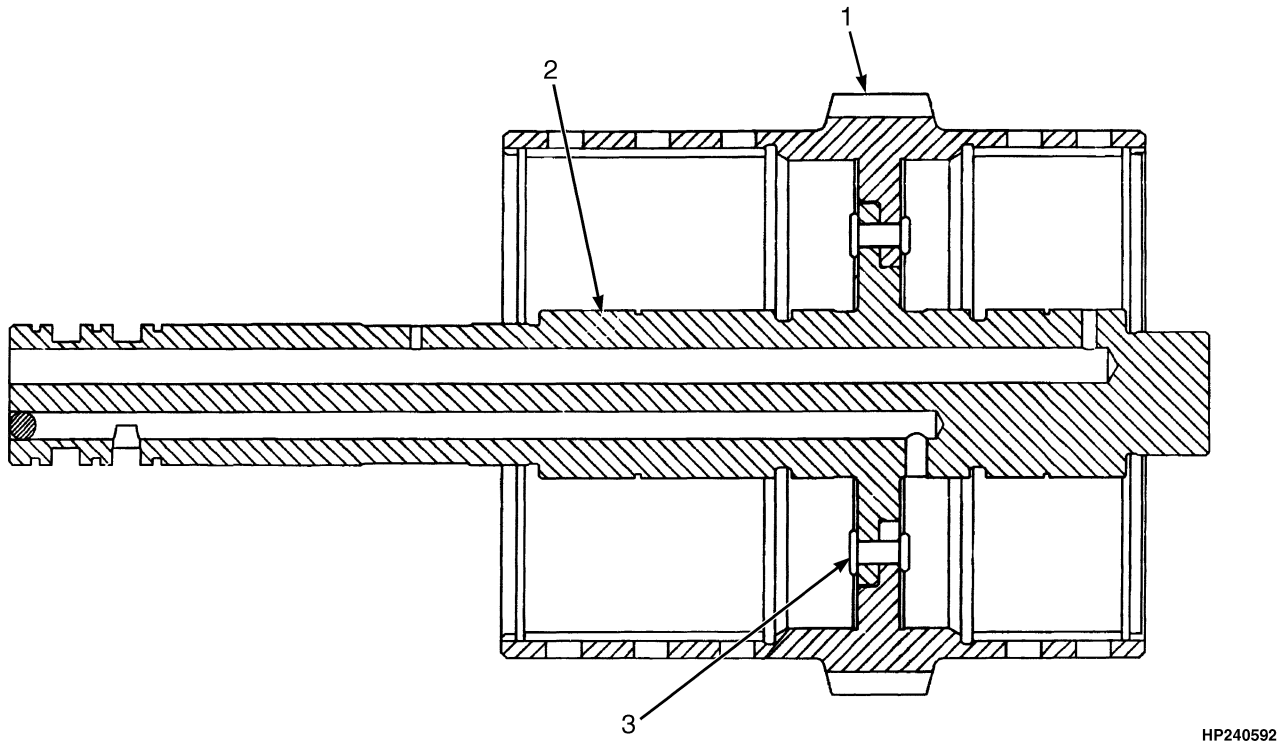

HP240592

ITEM	PART NO.	DESCRIPTION	QTY
	1327668	Shaft	1
1	1327580	Gear-Rev/2ND Clutch	1
2	1327586	Shaft	1
3	334436	Rivet	16
	a 55280	Ball	2

FOOTNOTES:

a Not Illustrated

©2010 HYSTER COMPANY

NOTES

©2010 HYSTER COMPANY

CLUTCH (FIGURE 5-12)
THIRD

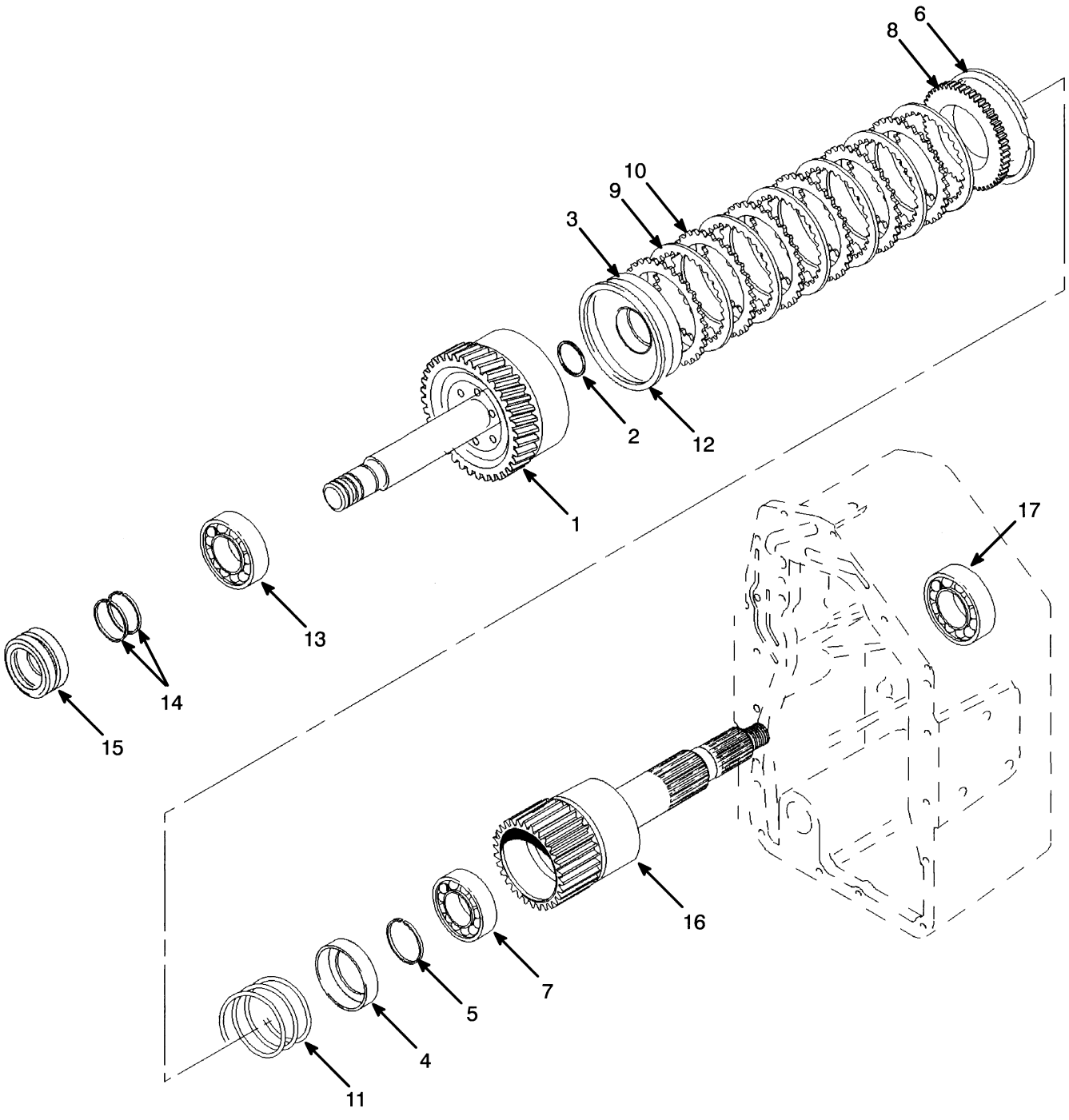

©2010 HYSTER COMPANY

CLUTCH
THIRD

ITEM	PART NO.	DESCRIPTION	QTY
	a 1327666	Clutch Pack	1
	c 1490512	Clutch Pack	1
1	1327670	Shaft	1
2	346795	O-Ring	1
3	1327582	Piston	1
4	1327602	Guide	1
5	334480	Snap Ring	1
6	334475	Snap Ring	1
7	43208	Ball Bearing	1
8	334442	Pressure Plate (Pressure)	1
9	**a** 1469300	Plate (Friction)	6
9	**c** 1469301	Friction Disk (Friction)	6
10	**a** 334417	Separator Plate (Separator)	6
10	**c** 1387235	Separator Plate (Separator)	6
11	346671	Spring	1
12	334402	Seal	1
13	43308	Ball Bearing	1
14	346677	Ring	2
15	**b** 346716	Bushing	1
16	1327587	Shaft	1
17	43212	Ball Bearing	1
	1365941	Kit-Seal	1

FOOTNOTES:

a → 8/2000
b → T050M-6788
c 8/2000 →

©2010 HYSTER COMPANY

IDLER SHAFT (FIGURE 5-13)

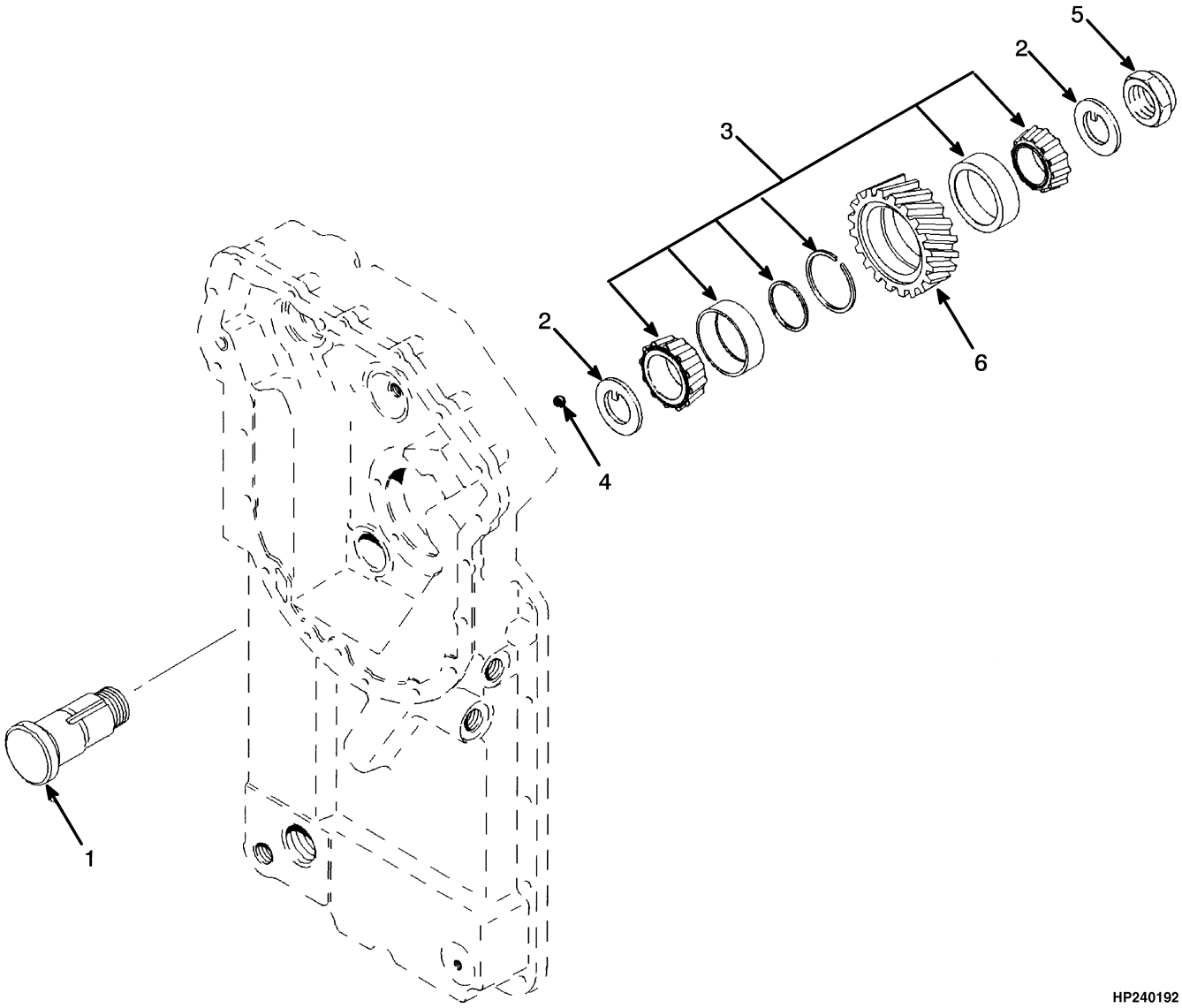

HP240192

ITEM	PART NO.	DESCRIPTION	QTY
1	1327745	Shaft	1
2	1327652	Washer	2
3	1327711	Bearing Set	1
4	55280	Ball	1
5	1327732	Nut	1
6	1327590	Gear	1

©2010 HYSTER COMPANY

OUTPUT GEAR (FIGURE 5-14)

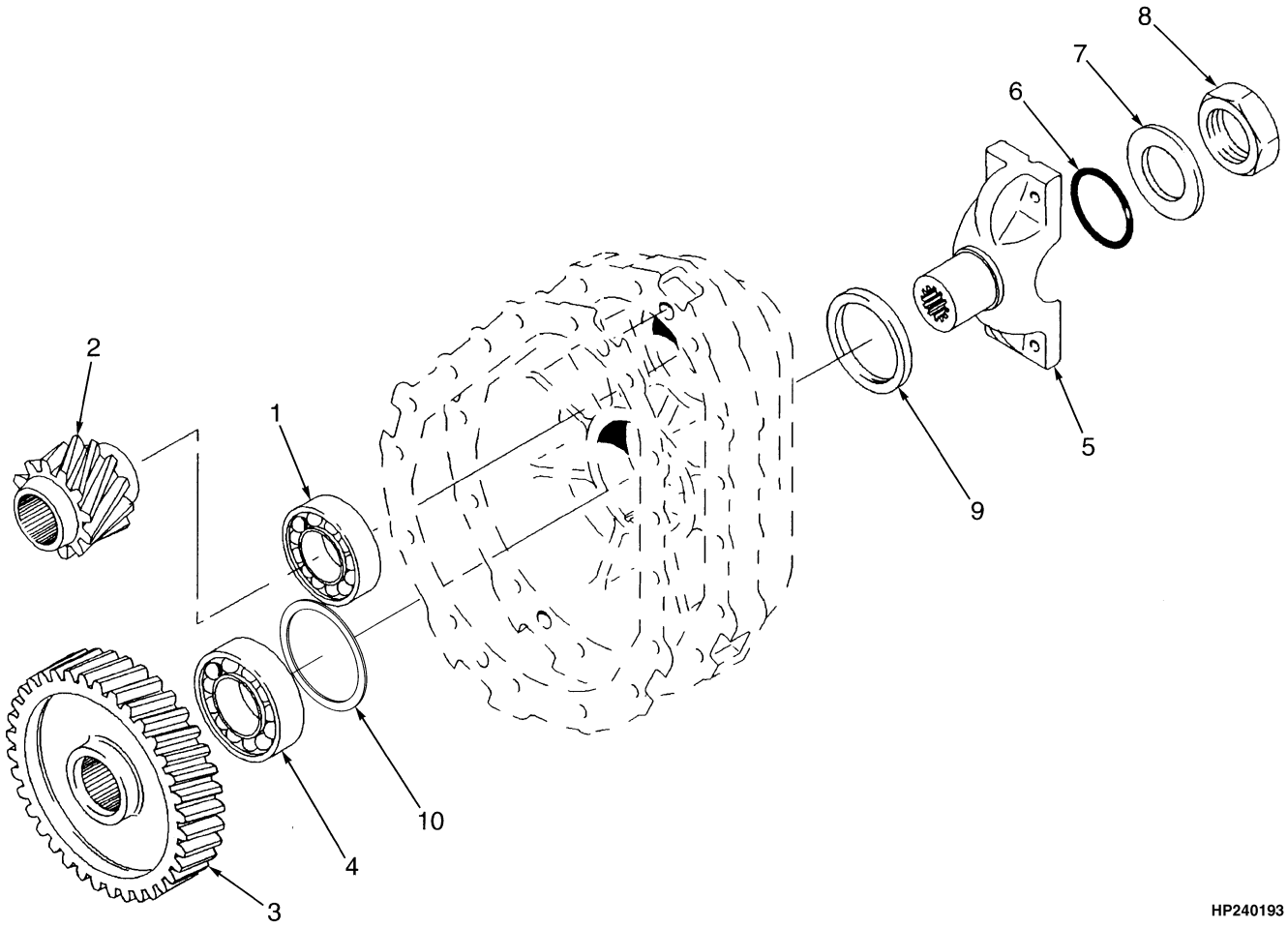

ITEM	PART NO.	DESCRIPTION	QTY
1	43308	Ball Bearing	1
2	1327593	Gear (Second)	1
3	1327592	Gear	1
4	43310	Bearing	1
5	1327616	Yoke (Output)	1
6	60835	O-Ring	1
7	15128	Washer	1
8	1327697	Nut	1
9	44479	Seal	1
10	**a** 1490546	Shim (0.010 in.)	AR
10	**a** 1490548	Shim (0.030 in.)	AR
	1365941	Kit-Seal	1

FOOTNOTES:

a 8/2000 →

CHARGE PUMP (FIGURE 5-15)

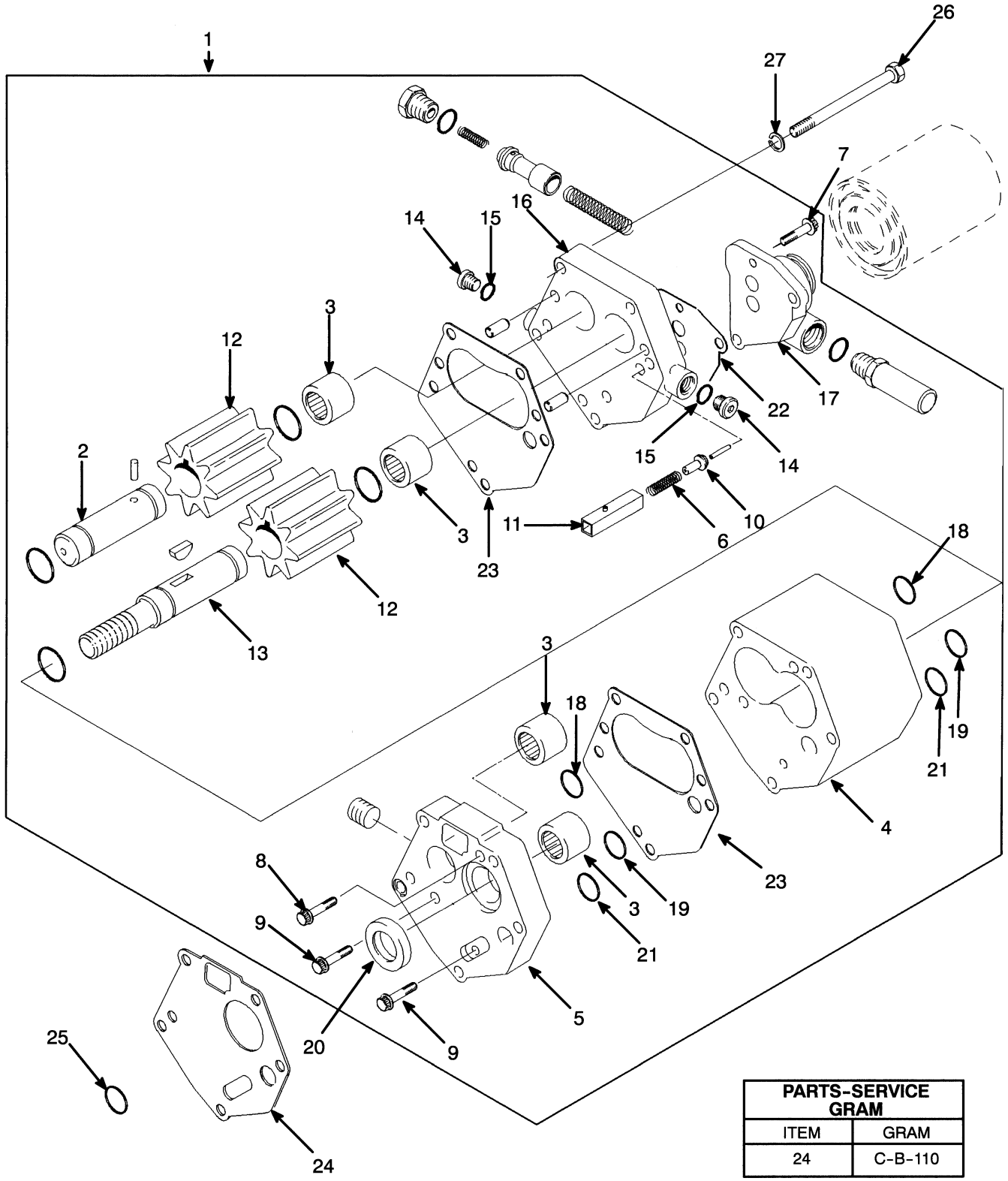

PARTS-SERVICE GRAM	
ITEM	GRAM
24	C-B-110

HP240212

©2010 HYSTER COMPANY

CHARGE PUMP

ITEM	PART NO.	DESCRIPTION	QTY
1	**a** 1327612	Charge Pump	1
2	. . . . .	Idler Shaft	1
3	. . . . .	Bearing	4
4	. . . . .	Housing	1
5	. . . . .	Housing	1
6	. . . . .	Spring	1
7	. . . . .	Screw	1
8	. . . . .	Screw	1
9	. . . . .	Screw	2
10	. . . . .	Plunger	1
11	. . . . .	Housing	1
12	. . . . .	Gear	2
13	. . . . .	Drive Shaft	1
14	134436	Fitting	2
15	16482	O-Ring	1
16	. . . . .	Housing	1
17	1354770	Filter	1
18	. . . . .	O-Ring	2
19	. . . . .	O-Ring	2
20	. . . . .	Seal	1
21	. . . . .	O-Ring	2
22	. . . . .	Gasket	1
23	**b** 1363008	Gasket (0.0015 in.) (Purple)	2
23	**b** 1363009	Gasket (0.001 in.) (Orange)	2
24	**c** 1327661	Gasket	1
24	**d** 1450488	Gasket	1
25	**e** 87281	O-Ring	1
26	18580	Capscrew	5
27	15157	Lockwasher	5
	1357035	Kit-Gasket	1
	1357865	Kit-Seal	1
	1450828	Kit-Seal	1

FOOTNOTES:

a For Charge Pump Replacement use P/N 2076615
b Replace Shims with Same Color Shims
c → S/N T050M-5064
d S/N T050M-5064 →
e T050M-5064 →

©2010 HYSTER COMPANY

MODULATOR VALVE (FIGURE 5-16)

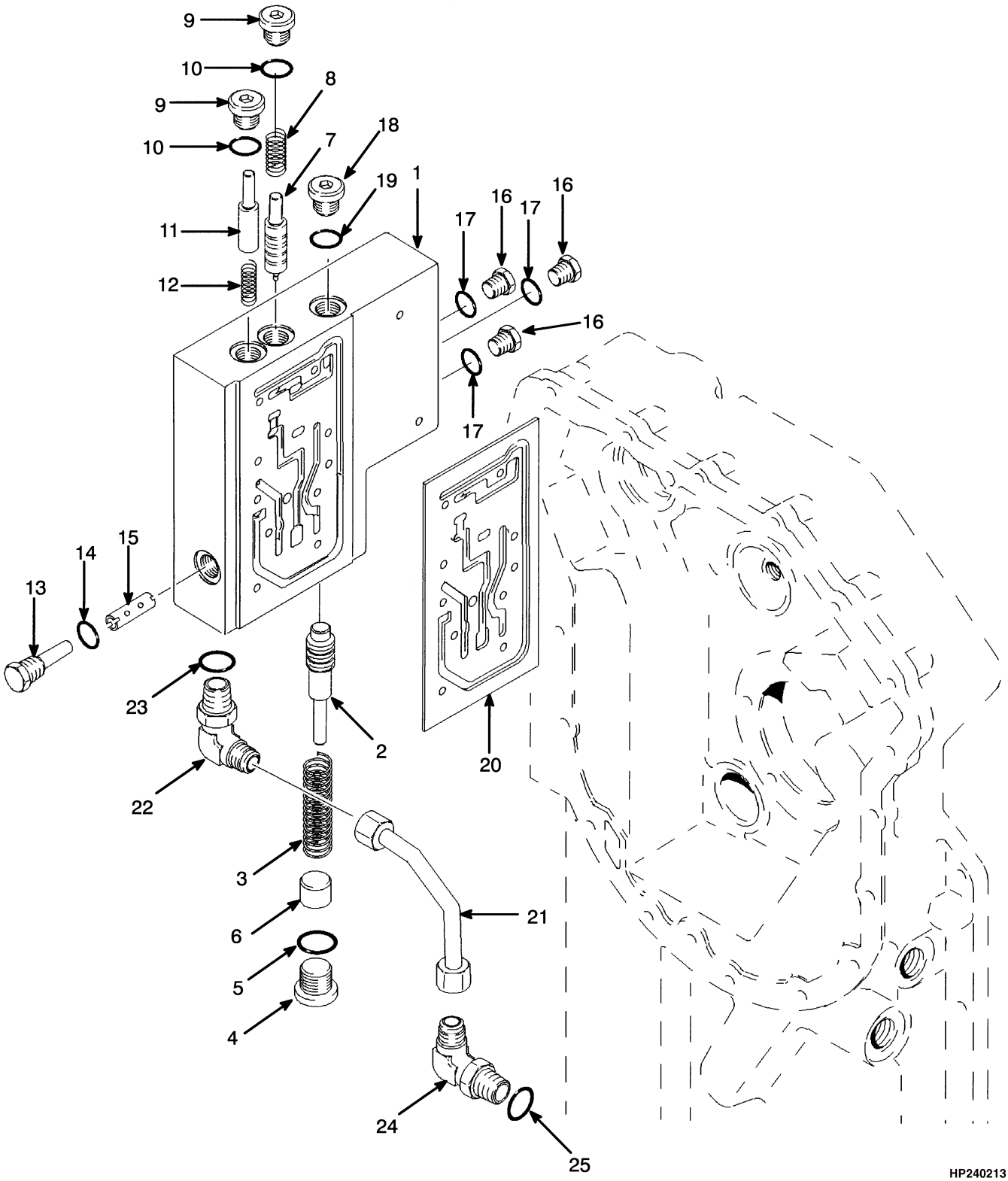

©2010 HYSTER COMPANY

MODULATOR VALVE

ITEM	PART NO.	DESCRIPTION	QTY
1	**a** 1327649	Modulator	1
1	**b** 1452258	Valve	1
2	346788	Spool (Accumulator)	1
3	346636	Spring	1
4	200659	Fitting	1
5	16982	O-Ring	1
6	346848	Spacer	1
7	**a** 346634	Spool (Trimmer)	1
7	**b** 1452262	Spool (Trimmer)	1
8	346805	Spring	1
9	235691	Fitting	1
10	16484	O-Ring	2
11	**a** 334542	Spool (Dump)	1
11	**b** 1455641	Spool (Dump)	1
12	334543	Spring	1
13	1327643	Plug	1
14	16484	O-Ring	1
15	1327644	Spool (Check)	1
16	14591	Plug	3
17	16481	O-Ring	1
18	233693	Fitting	1
19	16485	O-Ring	1
20	1327646	Gasket	1
21	1327655	Tube Assy	1
22	16558	Fitting	1
23	16483	O-Ring	1
24	222400	Fitting	1
25	16485	O-Ring	1
	1357866	Kit-Seal	1

FOOTNOTES:

a → T050M-6248

b T050M-6249 →

©2010 HYSTER COMPANY

CONTROL VALVE (FIGURE 5-17)

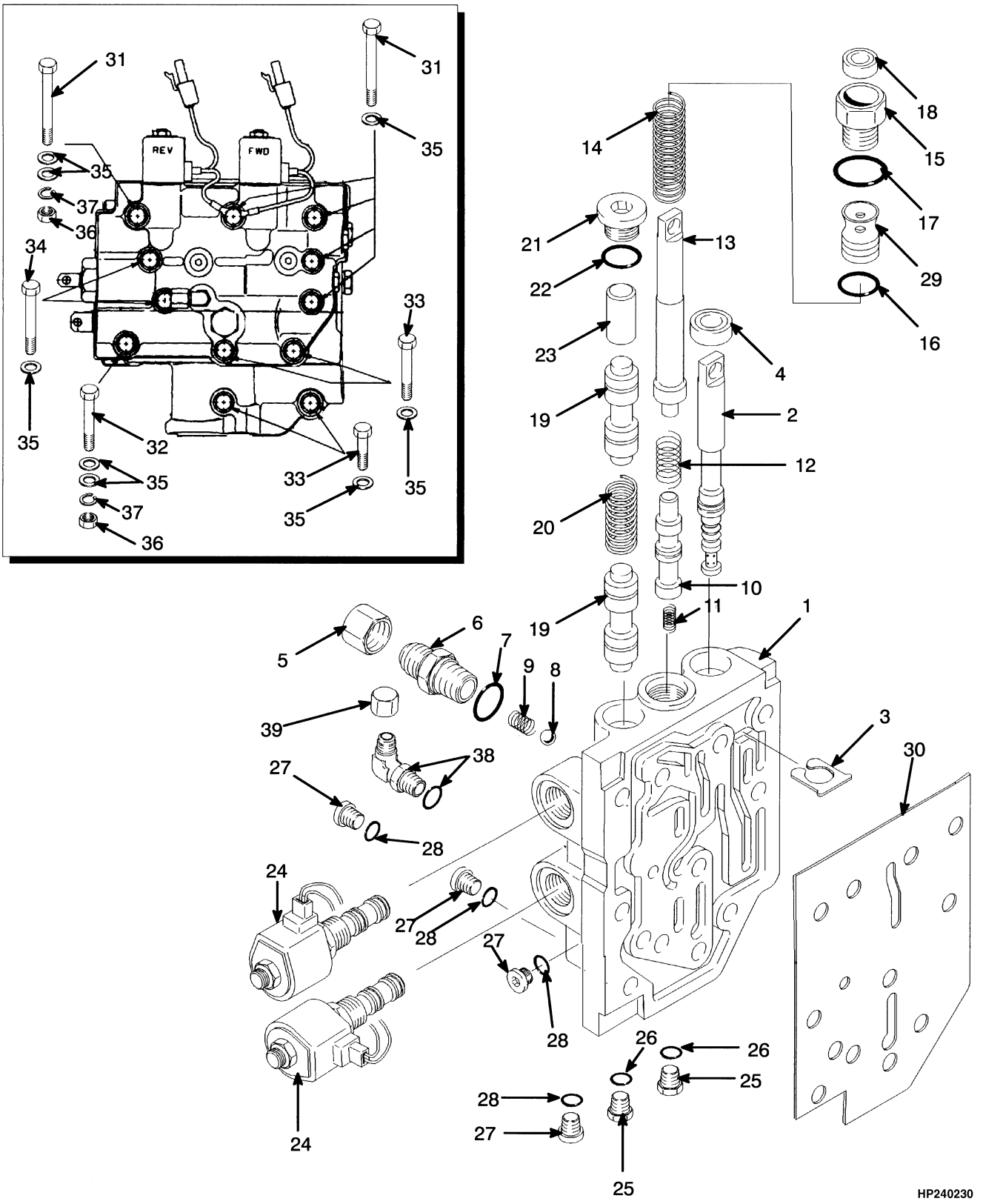

©2010 HYSTER COMPANY

CONTROL VALVE

ITEM	PART NO.	DESCRIPTION	QTY
1	1327625	Hydraulic Control Valve	1
2	1327628	Spool (Range)	1
3	1327630	Retainer	1
4	334500	Seal	1
5	16925	Fitting	1
6	16541	Fitting	1
7	16484	O-Ring	1
8	21278	Ball	1
9	1327811	Spring	1
10	1327633	Spool (Inching)	1
11	334543	Spring	1
12	1327634	Spring (Inching)	1
13	1327635	Plunger (Inching)	1
14	1327636	Spring (Plunger)	1
15	1327742	Plug	1
16	95721	O-Ring	1
17	16486	O-Ring	1
18	1327638	Seal	1
19	1327639	Spool (Forward and Reverse)	2
20	1327640	Spring	1
21	233693	Fitting	1
22	16485	O-Ring	1
23	1327641	Spacer	1
24	1390609	Solenoid Valve	2
24	1452597	Coil	1
24	1452596	Cartridge	1
24	1393160	Kit-Seal	1
25	222442	Fitting	4
26	16481	O-Ring	1
27	14591	Plug	2
28	16481	O-Ring	1
29	1327743	Insert (Inching)	1
30	1327645	Gasket	1
31	1327647	Capscrew	5
32	1307994	Capscrew	3
33	136703	Capscrew	2
34	136704	Capscrew	2
35	320157	Washer	14
36	239503	Nut	2
37	292681	Lockwasher	2
38	16556	Fitting	1
38	16481	O-Ring	1
39	16923	Nut	1
	1357866	Kit-Seal	1

©2010 HYSTER COMPANY

MONOTROL PEDAL (FIGURE 5-18)

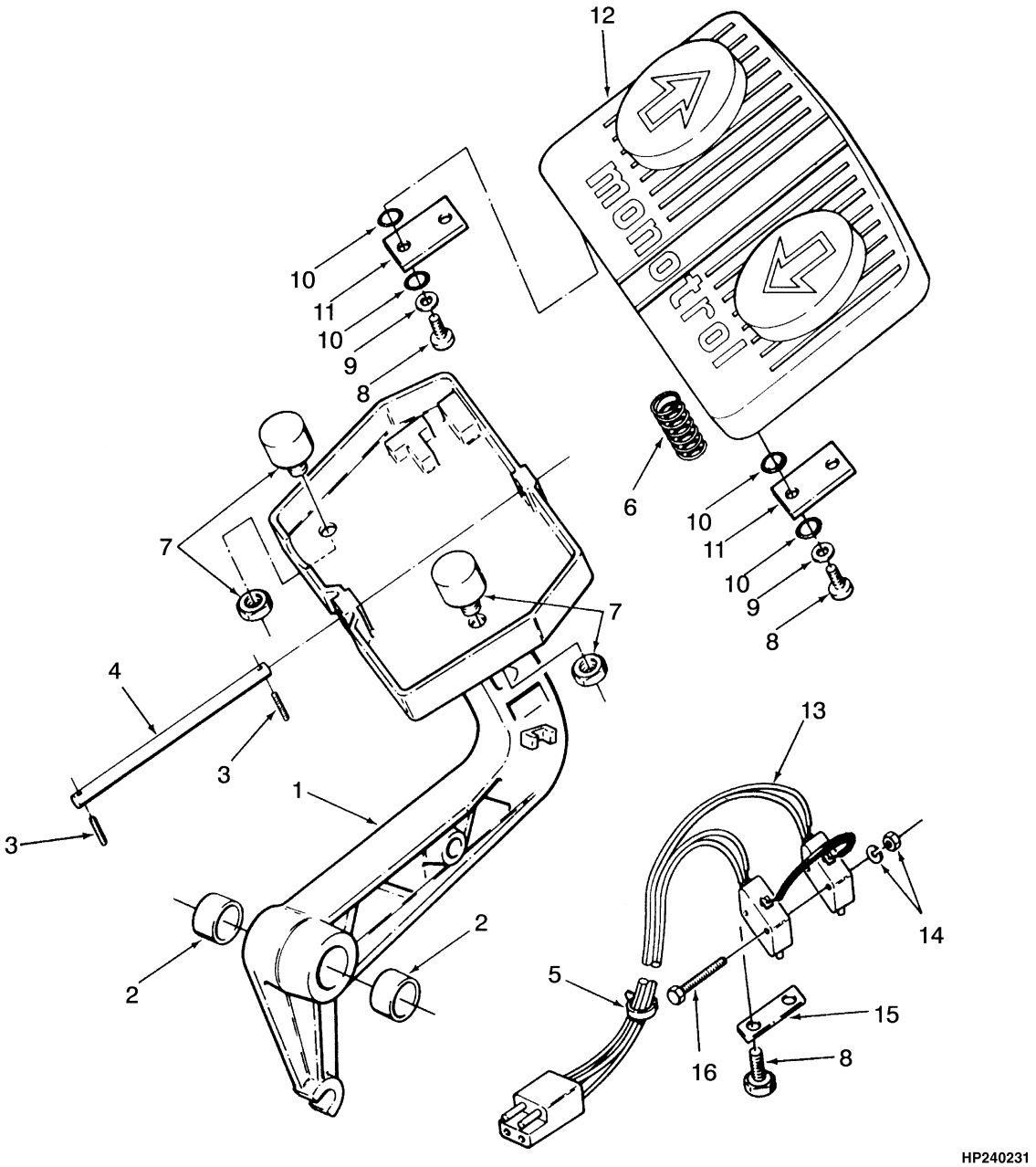

©2010 HYSTER COMPANY

MONOTROL PEDAL

ITEM	PART NO.	DESCRIPTION	QTY
	353398	Monotrol Pedal	1
1	353397	Pedal	1
2	135685	Bushing	2
3	220932	Setscrew	2
3	360387	Loctite	AR
4	353154	Pin	1
5	114312	Strap Clamp	3
6	353168	Spring	1
7	353422	Magnet	2
7	353432	Nut	2
8	352969	Screw	6
9	353448	Washer	4
10	57568	O-Ring	8
11	359207	Plate	2
12	353175	Pad Assembly	1
13	353220	Switch	1
14	53162	Lockwasher	2
14	16865	Nut	2
15	353165	Retainer	1
16	220434	Screw	2

©2010 HYSTER COMPANY

DRIVE AXLE (FIGURE 5-19)

EC-4 (→ S/N D019D01965)

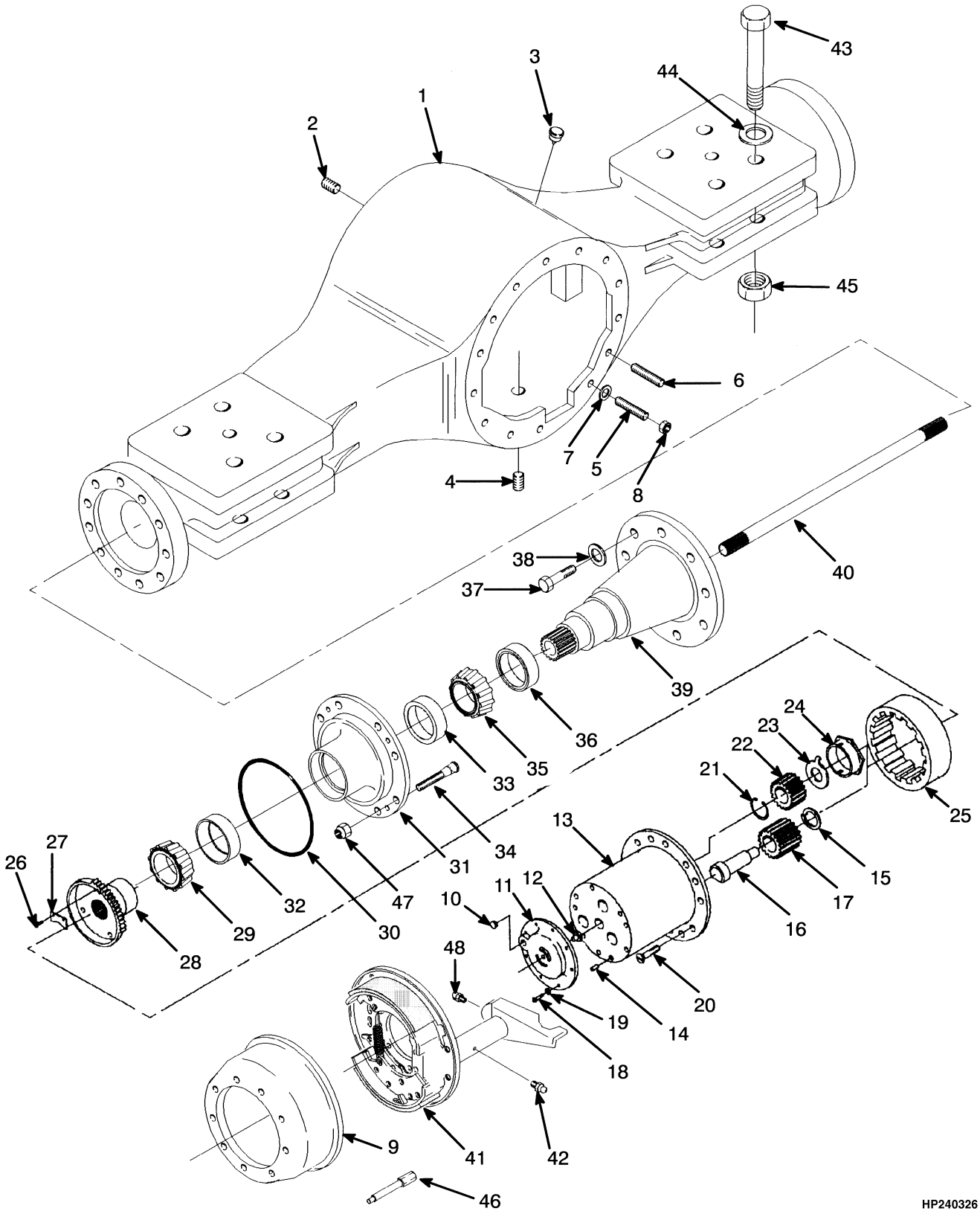

©2010 HYSTER COMPANY

DRIVE AXLE

EC-4 (→ S/N D019D01965)

ITEM	PART NO.	DESCRIPTION	QTY
	1309568	Drive Axle (Planetary)	1
	1474641	Differential Carrier (☞Figure 5-23)	1
1	1329691	Housing	1
2	15316	Fitting	1
3	200445	Breather	1
4	321293	Plug	1
5	304242	Stud (Short)	8
6	1316039	Stud (Long)	4
7	221771	Washer	12
8	221355	Locknut	12
9	1316306	Brake Drum	2
10	321293	Plug	2
11	1316307	Cover	2
12	1303551	Button (Thrust)	1
13	1374596	Spider	1
13	1377887	Spider	2
14	1316040	Pin	3
15	1316044	Washer	3
16	1316309	Shaft	3
17	1316310	Pinion	3
18	16815	Capscrew	12
19	221767	Washer	12
20	1313869	Screw	10
21	1316041	Snap Ring	2
22	1329694	Gear	2
23	1316045	Thrust Washer	2
24	1316042	Nut	2
25	1316312	Gear	2
26	199567	Capscrew	4
27	1316043	Locknut	2
28	1316313	Hub	2
29	170379	Bearing Cone	2
30	1312805	O-Ring	2
31	1316047	Wheel Hub (Wheel)	2
32	170380	Bearing Cup	1
33	132462	Bearing Cup	1
34	1511548	Wheel Stud	20
35	1316314	Bearing Cone	2
36	1312807	Seal	2
37	1316049	Capscrew	26
38	268980	Washer	26
39	1316316	Spindle	2
40	1329700	Shaft (RH)	1
40	1329701	Shaft (LH)	1
41	. . . . .	Brake (☞Figure 7-22)	2
42	16001	Grease Fitting	2
43	1323889	Capscrew	8
44	221780	Washer	16
45	221720	Nut	8
46	1303417	Valve Stem	2

©2010 HYSTER COMPANY

DRIVE AXLE

EC-4 (→ S/N D019D01965)

ITEM	PART NO.	DESCRIPTION	QTY
47	376026	Wheel Nut	20
48	16015	Grease Fitting	2

©2010 HYSTER COMPANY

NOTES

©2010 HYSTER COMPANY

DRIVE AXLE (FIGURE 5-20)

NON-EC AND EC-3 (→ S/N D019D01619)

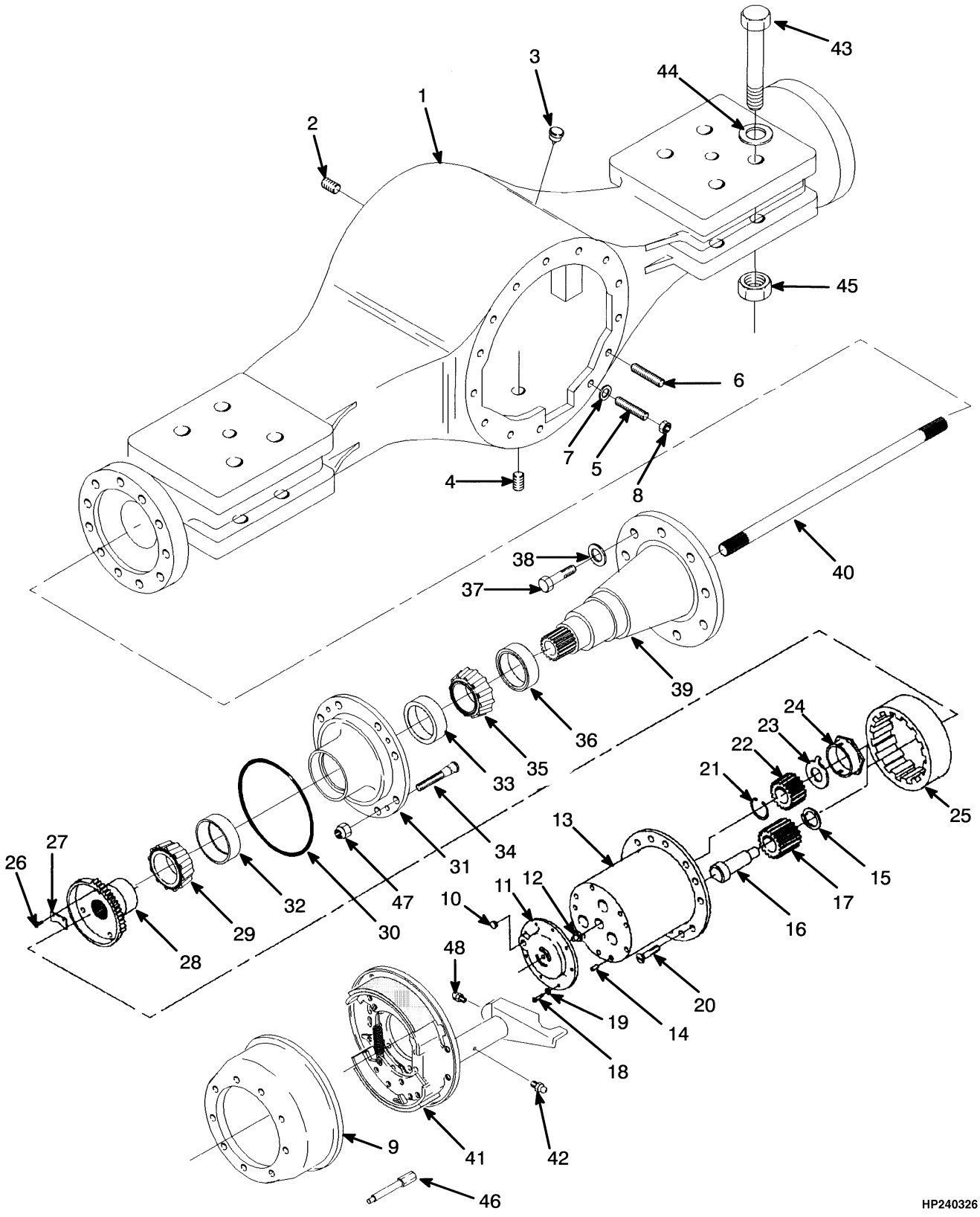

©2010 HYSTER COMPANY

DRIVE AXLE

NON-EC AND EC-3 (→ S/N D019D01619)

ITEM	PART NO.	DESCRIPTION	QTY
	387080	Drive Axle (Planetary)	1
	1474641	Differential Carrier (☞Figure 5-23)	1
1	1315649	Housing	1
2	15316	Fitting	1
3	200445	Breather	1
4	321293	Plug	1
5	304242	Stud (Short)	8
6	1316039	Stud (Long)	4
7	221771	Washer	12
8	221355	Locknut	12
9	1316306	Brake Drum	2
10	321293	Plug	2
11	1316307	Cover	2
12	1303551	Button (Thrust)	1
13	1374596	Spider	1
13	1377887	Spider	2
14	1316040	Pin	3
15	1316044	Washer	3
16	1316309	Shaft	3
17	1316310	Pinion	3
18	16815	Capscrew	12
19	221767	Washer	12
20	1313869	Screw	10
21	1316041	Snap Ring	2
22	1329694	Gear	2
23	1316045	Thrust Washer	2
24	1316042	Nut	2
25	1316312	Gear	2
26	199567	Capscrew	4
27	1316043	Locknut	2
28	1316313	Hub	2
29	170379	Bearing Cone	2
30	1312805	O-Ring	2
31	1316047	Wheel Hub (Wheel)	2
32	170380	Bearing Cup	1
33	132462	Bearing Cup	1
34	1511548	Wheel Stud	20
35	1316314	Bearing Cone	2
36	1312807	Seal	2
37	1316049	Capscrew	26
38	268980	Washer	26
39	1316316	Spindle	2
40	1316317	Shaft (RH)	1
40	1316318	Shaft (LH)	1
41	. . . . .	Brake (☞Figure 7-22)	2
42	16001	Grease Fitting	2
43	1323889	Capscrew	8
44	221780	Washer	16
45	221720	Nut	8
46	1303417	Valve Stem	2

©2010 HYSTER COMPANY

DRIVE AXLE

NON-EC AND EC-3 (→ S/N D019D01619)

ITEM	PART NO.	DESCRIPTION	QTY
47	376026	Wheel Nut	20
48	16015	Grease Fitting	2

©2010 HYSTER COMPANY

NOTES

©2010 HYSTER COMPANY

DRIVE AXLE (FIGURE 5-21)

NON-EC AND EC-3 (S/N D019D01620 ↔ S/N D019D01781)

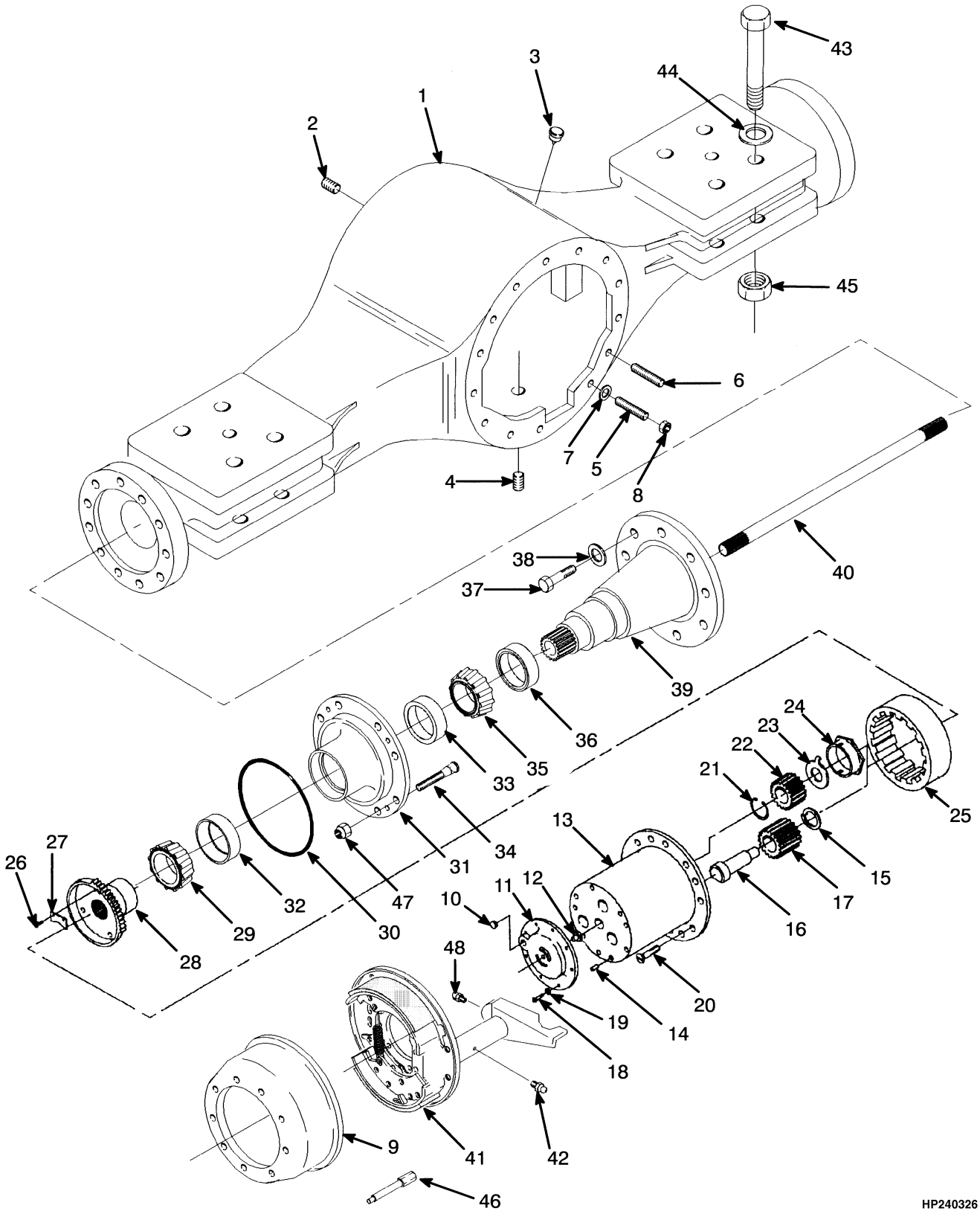

©2010 HYSTER COMPANY

DRIVE AXLE

NON-EC AND EC-3 (S/N D019D01620 ↔ S/N D019D01781)

ITEM	PART NO.	DESCRIPTION	QTY
	1360969	Drive Axle (Planetary)	1
	1455814	Differential Carrier (Non-Emissions) (☞Figure 5-25)	1
	a 1452990	Differential Carrier (☞Figure 5-25)	1
1	1374586	Housing	1
2	15316	Fitting	1
3	200445	Breather	1
4	321293	Plug	1
5	1347588	Capscrew	8
7	86007	Washer	12
8	358099	Nut	12
9	1316306	Brake Drum	2
10	321293	Plug	2
11	1316307	Cover	2
12	1303551	Button (Thrust)	2
13	1374596	Spider	1
13	1329693	Spider	2
14	1316040	Pin	3
15	1316044	Washer	3
16	1316309	Shaft	3
17	1316310	Pinion	3
18	16815	Capscrew	12
19	221767	Washer	12
20	1313869	Screw	10
21	1316041	Snap Ring	2
22	1329694	Gear	2
23	1316045	Thrust Washer	2
24	1316042	Nut	2
25	1316312	Gear	2
26	199567	Capscrew	4
27	1316043	Locknut	2
28	1316313	Hub	2
29	170379	Bearing Cone	2
30	1312805	O-Ring	2
31	1316047	Wheel Hub (Wheel)	2
32	170380	Bearing Cup	1
33	132462	Bearing Cup	1
34	1511548	Wheel Stud	20
35	1316314	Bearing Cone	2
36	1312807	Seal	2
37	1316049	Capscrew	26
38	268980	Washer	26
39	1316316	Spindle	2
40	1316317	Shaft	1
40	1316318	Shaft	1
41	. . . . .	Brake	2
42	16001	Grease Fitting	2
43	1323889	Capscrew	8
44	221780	Washer	16
45	221720	Nut	8
46	1303417	Valve Stem	2

©2010 HYSTER COMPANY

DRIVE AXLE

NON-EC AND EC-3 (S/N D019D01620 ↔ S/N D019D01781)

ITEM	PART NO.	DESCRIPTION	QTY
47	376026	Wheel Nut	20
48	16015	Grease Fitting	2

FOOTNOTES:

a S/N D019D02377 → (Turbo DSL with Emissions)

©2010 HYSTER COMPANY

NOTES

©2010 HYSTER COMPANY

DRIVE AXLE (FIGURE 5-22)

NON-EC AND EC-3 (S/N D019D01782 →)

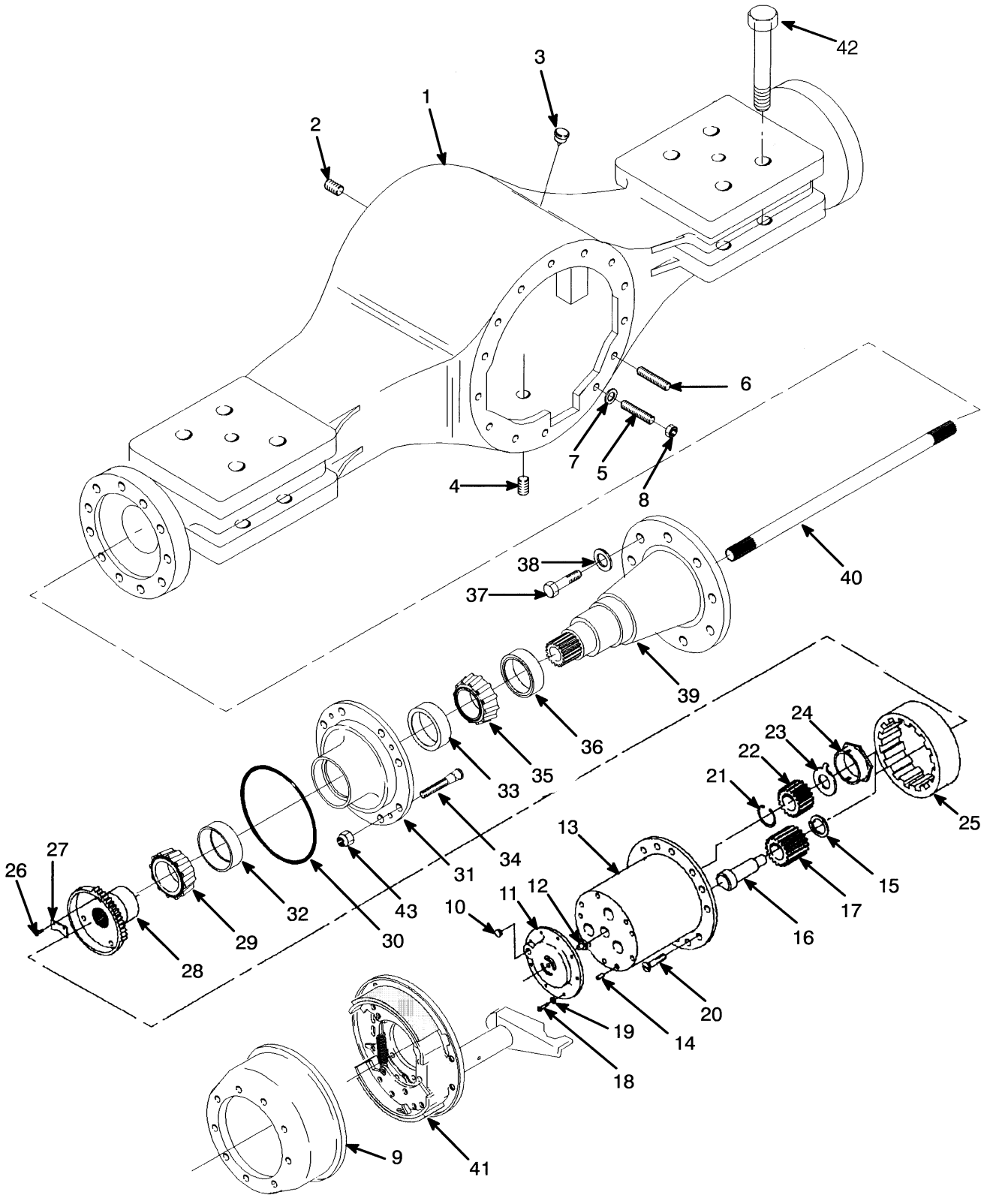

HP240416

©2010 HYSTER COMPANY

DRIVE AXLE

NON-EC AND EC-3 (S/N D019D01782 →)

ITEM	PART NO.	DESCRIPTION	QTY
	1376020	Drive Axle	1
	a 1452781	Drive Axle	1
	1455814	Differential Carrier (☞Figure 5-25)	1
	a 1452990	Differential Carrier (☞Figure 5-25)	1
1	1380786	Housing	1
2	15316	Fitting	1
3	200445	Breather	1
4	321293	Plug	1
5	214195	Bolt (Short)	8
6	1380784	Stud (Long)	4
7	86007	Washer	12
8	358099	Nut	12
9	1316306	Brake Drum	2
10	321293	Plug	2
11	1316307	Cover	2
12	1303551	Button (Thrust)	1
13	1374596	Spider	1
13	1377887	Spider	2
14	1316040	Pin	3
15	1316044	Washer	3
16	1316309	Shaft	3
17	1316310	Pinion	3
18	16815	Capscrew	12
19	221767	Washer	12
20	1313869	Screw	10
21	1316041	Snap Ring	2
22	1329694	Gear	2
23	1316045	Thrust Washer	2
24	1316042	Nut	2
25	1316312	Gear	2
26	199567	Capscrew	4
27	1316043	Locknut	2
28	1316313	Hub	2
29	170379	Bearing Cone	2
30	1312805	O-Ring	2
31	1316047	Wheel Hub (Wheel)	2
32	170380	Bearing Cup	1
33	132462	Bearing Cup	1
34	1511548	Wheel Stud	20
35	1316314	Bearing Cone	2
36	1312807	Seal	2
37	1316049	Capscrew	26
38	268980	Washer	26
39	1316316	Spindle	2
40	1374599	Axle Shaft (LH)	1
40	1374598	Axle Shaft (RH)	1
41	. . . . .	Brake	2
42	1323889	Capscrew	8
43	376026	Wheel Nut	20

©2010 HYSTER COMPANY

FOOTNOTES:

a S/N D019D02377 → (Turbo DSL with Low Emissions)

©2010 HYSTER COMPANY

NOTES

©2010 HYSTER COMPANY

DIFFERENTIAL (FIGURE 5-23)

(→ S/N D019D01619 (NON-EC AND EC-3)) (→ S/N D019D01965 (EC-4))

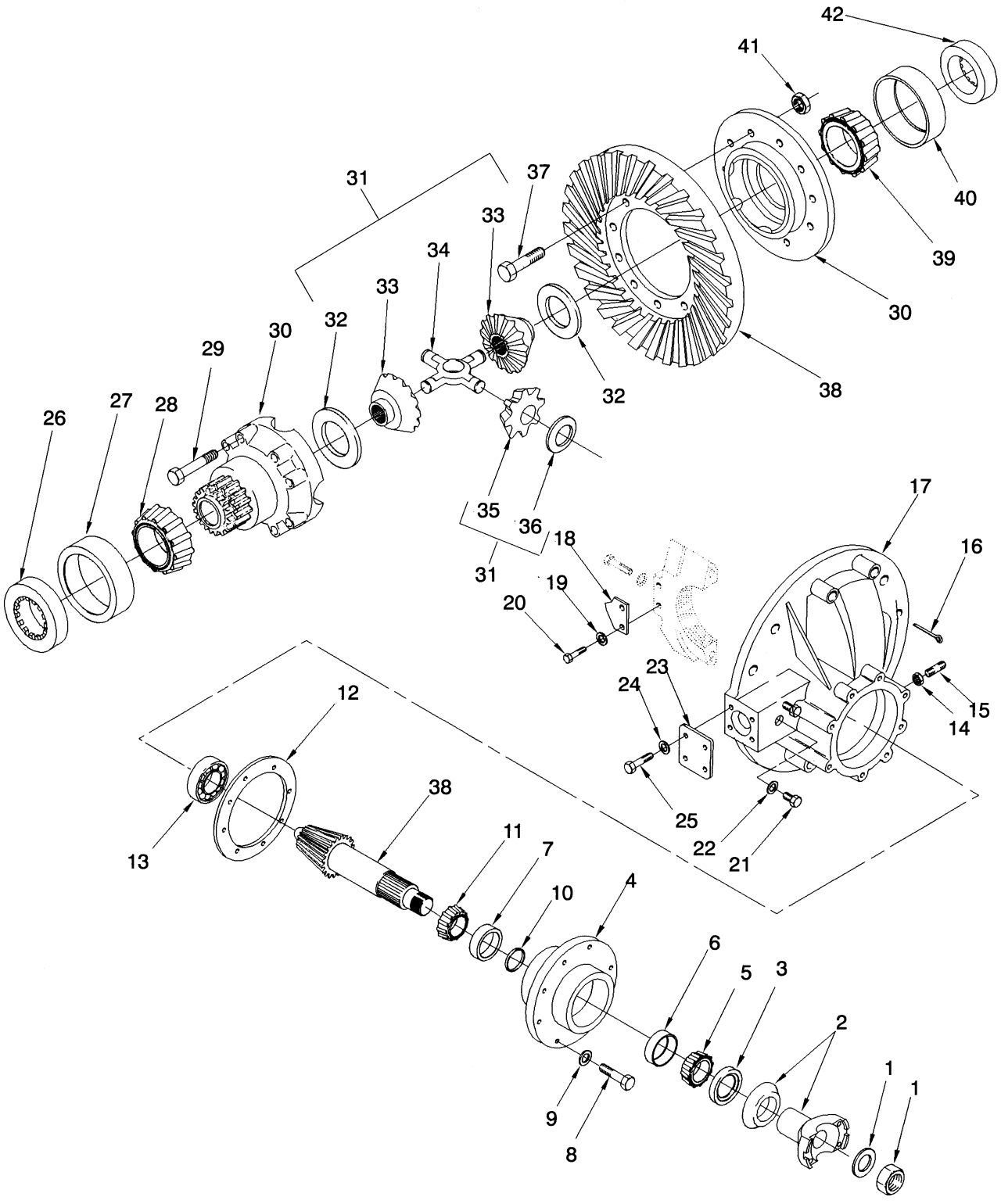

HP240412

©2010 HYSTER COMPANY

DIFFERENTIAL

(→ S/N D019D01619 (NON-EC AND EC-3)) (→ S/N D019D01965 (EC-4))

ITEM	PART NO.	DESCRIPTION	QTY
	. . . . .	Carrier	1
	1474641	Differential Carrier	1
1	1357208	Nut	1
1	287719	Washer	1
2	1312633	Yoke	1
2	1328921	Yoke	1
2	1312634	Deflector	1
3	366057	Oil Seal	1
4	1312635	Cage	1
5	1313876	Bearing Cone	1
6	230419	Bearing Cup	1
7	200972	Bearing Cup (Tapered)	1
8	293647	Capscrew	8
9	88587	Washer	8
10	378289	Kit-Spacer	1
11	143004	Bearing Cone	1
12	1313883	Kit-Shim	1
13	1313884	Bearing	1
14	1312616	Locknut	1
15	1312617	Screw	1
16	1312618	Drain Plug	1
17	1312636	Differential Carrier	1
18	1312619	Lock	1
19	1313879	Washer	2
20	293613	Capscrew	2
21	1312620	Capscrew	1
22	1313885	Washer	1
23	1312637	Cover	1
24	1328919	Washer	4
25	1328920	Capscrew	4
26	1312638	Ring	1
27	1313887	Cup	1
28	1313888	Bearing Cone	1
29	1373928	Kit-Capscrew	12
30	1459763	Case (Two Pieces)	1
31	1328917	Kit-Differential	1
32	1313889	Washer	2
33	1312640	Gear	2
34	1312641	Spider	1
35	1312642	Pinion	4
36	1313890	Washer	4
37	1302735	Capscrew	12
38	1312643	Gear and Pinion (Pinion)	1
39	230376	Bearing Cone	1
40	286199	Bearing Cup	1
41	1312624	Nut	12
42	1312645	Ring	1
	1459767	Kit-Hardware	1

©2010 HYSTER COMPANY

DRIVE AXLE (FIGURE 5-24)

EMPTY CONTAINER HANDLER-4 (S/N D019D01966 →)

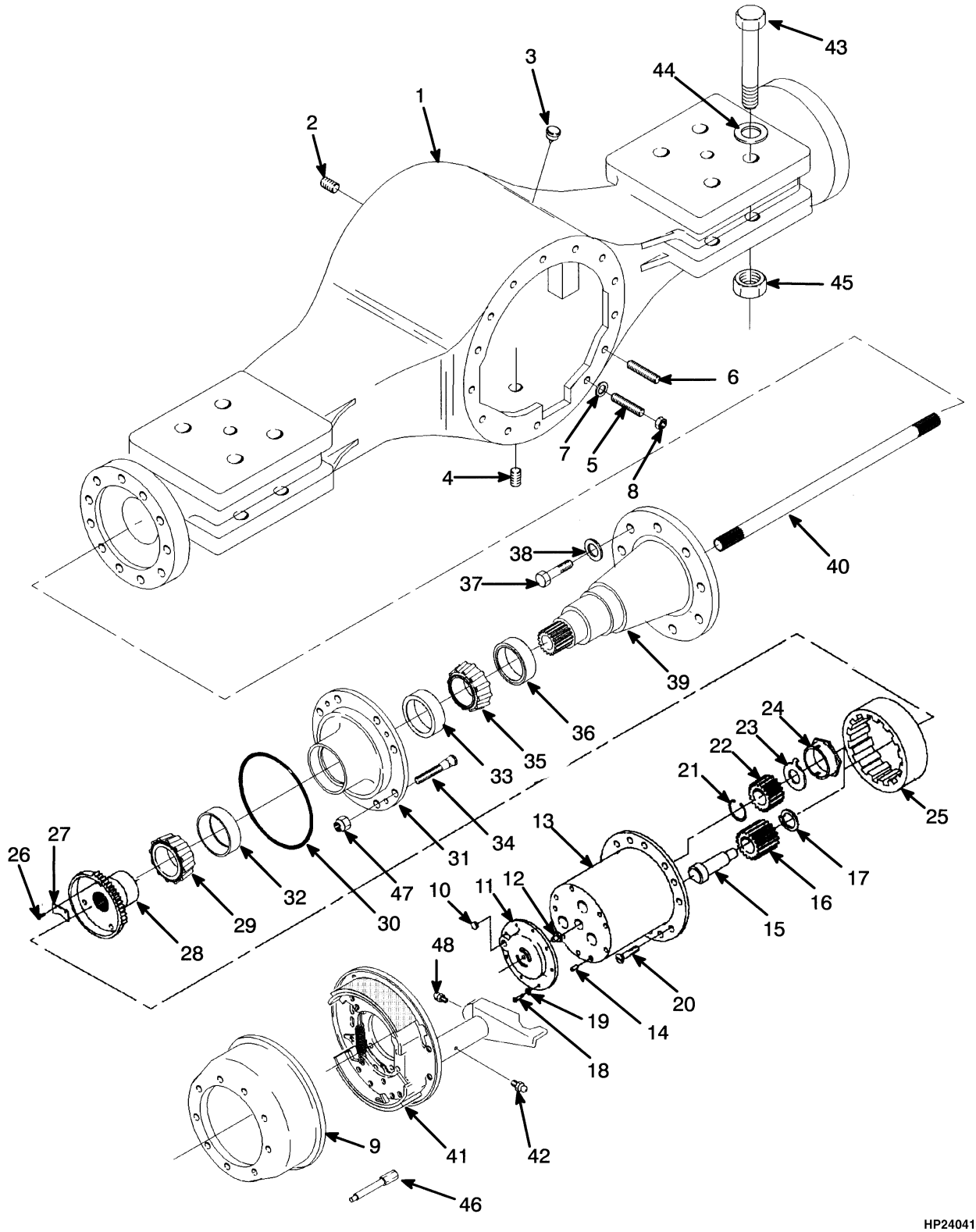

©2010 HYSTER COMPANY

DRIVE AXLE

EMPTY CONTAINER HANDLER-4 (S/N D019D01966 →)

ITEM	PART NO.	DESCRIPTION	QTY
	a 1366710	Drive Axle	1
	b 1452779	Drive Axle	1
	a 1455814	Differential Carrier	1
	b 1452990	Differential Carrier	1
1	1385718	Housing	1
2	15316	Fitting	1
3	200445	Breather	1
4	321293	Plug	1
5	214195	Bolt (Short)	8
6	1380784	Stud (Long)	8
7	86007	Washer	12
8	358099	Nut	12
9	1316306	Brake Drum	2
10	321293	Plug	2
11	1316307	Cover	2
12	1303551	Button (Thrust)	1
13	1374596	Spider	1
13	1377887	Spider	2
14	1316040	Pin	3
15	1316309	Shaft	3
16	1316310	Pinion	3
17	1316044	Washer	3
18	16815	Capscrew	12
19	221767	Washer	12
20	1385715	Screw	10
21	1316041	Snap Ring	2
22	1329694	Gear	2
23	1316045	Thrust Washer	2
24	1316042	Nut	2
25	1316312	Gear	2
26	199567	Capscrew	4
27	1316043	Locknut	2
28	1316313	Hub	2
29	170379	Bearing Cone	2
30	1312805	O-Ring	2
31	1316047	Wheel Hub (Wheel)	2
32	170380	Bearing Cup	1
33	132462	Bearing Cup	1
34	1511548	Wheel Stud	20
35	1316314	Bearing Cone	2
36	1312807	Seal	2
37	1316049	Capscrew	26
38	268980	Washer	26
39	1316316	Spindle	2
40	1385716	Shaft (LH)	1
40	1385717	Shaft (RH)	1
41	. . . . .	Brake (☞Figure 7-22)	2
42	16001	Grease Fitting	2
43	376350	Capscrew	8
43	1323889	Capscrew	8

©2010 HYSTER COMPANY

DRIVE AXLE

EMPTY CONTAINER HANDLER-4 (S/N D019D01966 →)

ITEM	PART NO.	DESCRIPTION	QTY
44	221780	Washer	16
45	221720	Nut	8
46	1303417	Valve Stem	2
47	376026	Wheel Nut	20
48	16015	Grease Fitting	2

FOOTNOTES:

a Non Emissions

b S/N D019D02377 → (Turbo DSL with Emissions)

©2010 HYSTER COMPANY

NOTES

©2010 HYSTER COMPANY

DIFFERENTIAL (FIGURE 5-25)

(S/N D019D01620 → (NON EC AND EC-3)) (S/N D019D01966 → (EC-4))

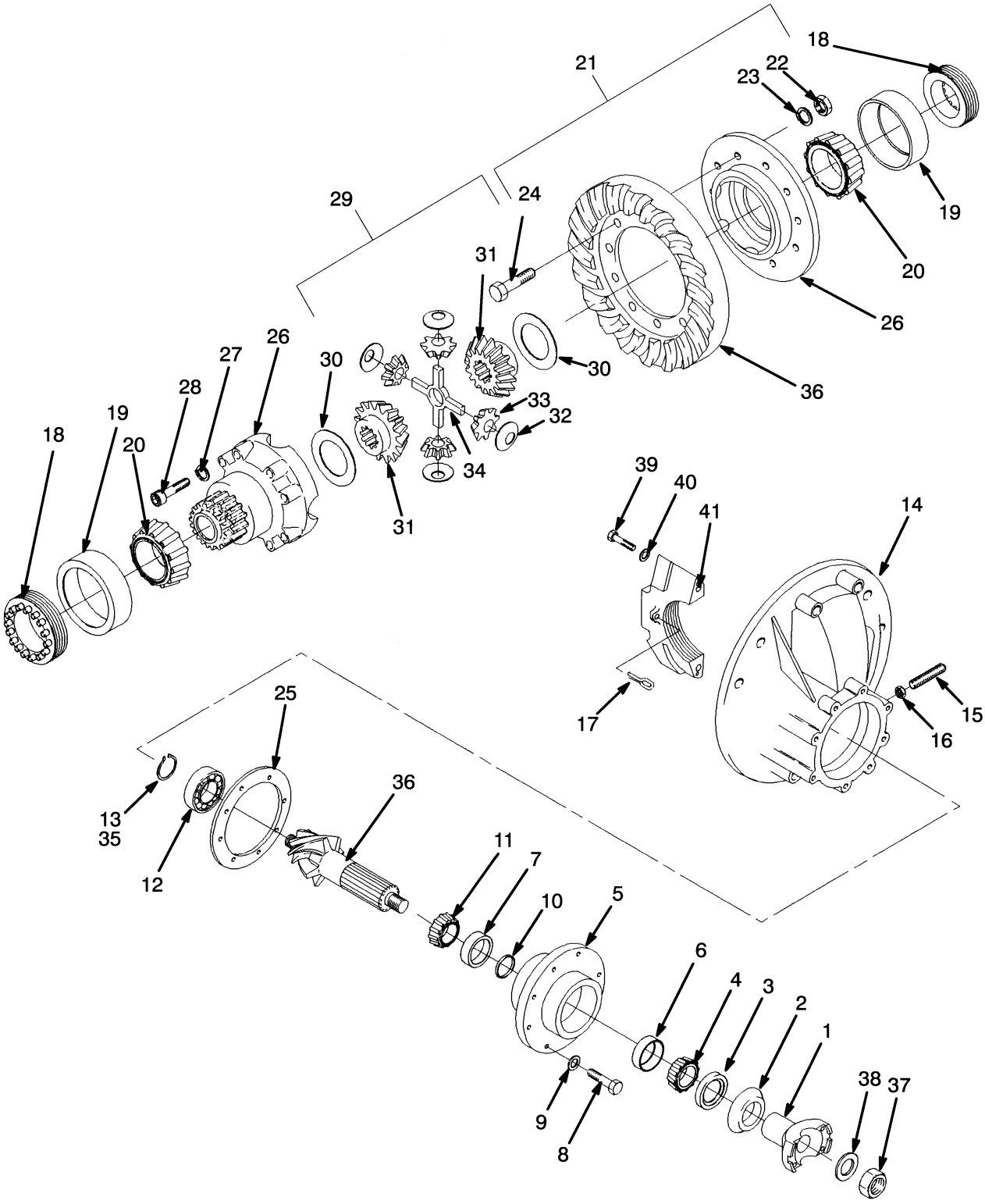

HP240414

©2010 HYSTER COMPANY

DIFFERENTIAL

(S/N D019D01620 → (NON EC AND EC-3)) (S/N D019D01966 → (EC-4))

ITEM	PART NO.	DESCRIPTION	QTY
	a 1455814	Differential Carrier	1
	b 1452990	Differential Carrier	1
1	1374088	Yoke Assembly	1
2	1374089	Deflector	1
3	1642099	Oil Seal	1
4	1347774	Bearing Cone	1
5	1380779	Cage	1
6	200972	Bearing Cup (Tapered)	1
7	30062	Bearing Cup	1
8	1347819	Capscrew	8
9	1450861	Washer	8
10	1347800	Kit-Spacer	1
11	1347812	Bearing Cone	1
12	1374094	Bearing	1
13	1374095	Snap Ring	1
14	1380798	Carrier	1
15	1374097	Screw	1
16	1312616	Locknut	1
17	86008	Cotter Pin	1
18	1347839	Ring	2
19	1475420	Bearing Cup	2
20	1475421	Bearing Cone	2
21	1347822	Bolt	1
22	1374550	Nut	12
23	125428	Washer	12
24	1374551	Bolt	12
25	1347813	Kit-Shim	1
26	1380273	Differential Housing	1
26	1374554	Differential Housing (Two Pieces)	1
27	88587	Washer	16
28	1347831	Capscrew	16
29	1380274	Kit-Differential	1
30	~~1379752~~		
	1380797	Thrust Washer	4
31	1380776	Gear	2
32	200982	Washer	4
33	1347835	Pinion	4
34	1374558	Spider	1
35	280472	Sealant	1
36	**a** 1374559	Gear and Pinion	1
36	**b** 1452991	Bevel Gear	1
37	1357734	Locknut	1
38	1312083	Washer	1
39	293716	Capscrew	4
40	1347770	Washer	4
41	1380777	Ball	4

FOOTNOTES:

a Non Emissions

b S/N D019D02377 → (Turbo DSL with Emissions)

©2010 HYSTER COMPANY

NOTES

©2010 HYSTER COMPANY

6 STEERING SYSTEM

SECTION 6
STEERING SYSTEM

DESCRIPTION	PAGE
STEER PUMP	6-6
STEERING	6-2
STEERING AXLE	6-10
STEERING CYLINDER	6-14
VALVE BLOCK	6-8

©2010 HYSTER COMPANY

STEERING (FIGURE 6-1)

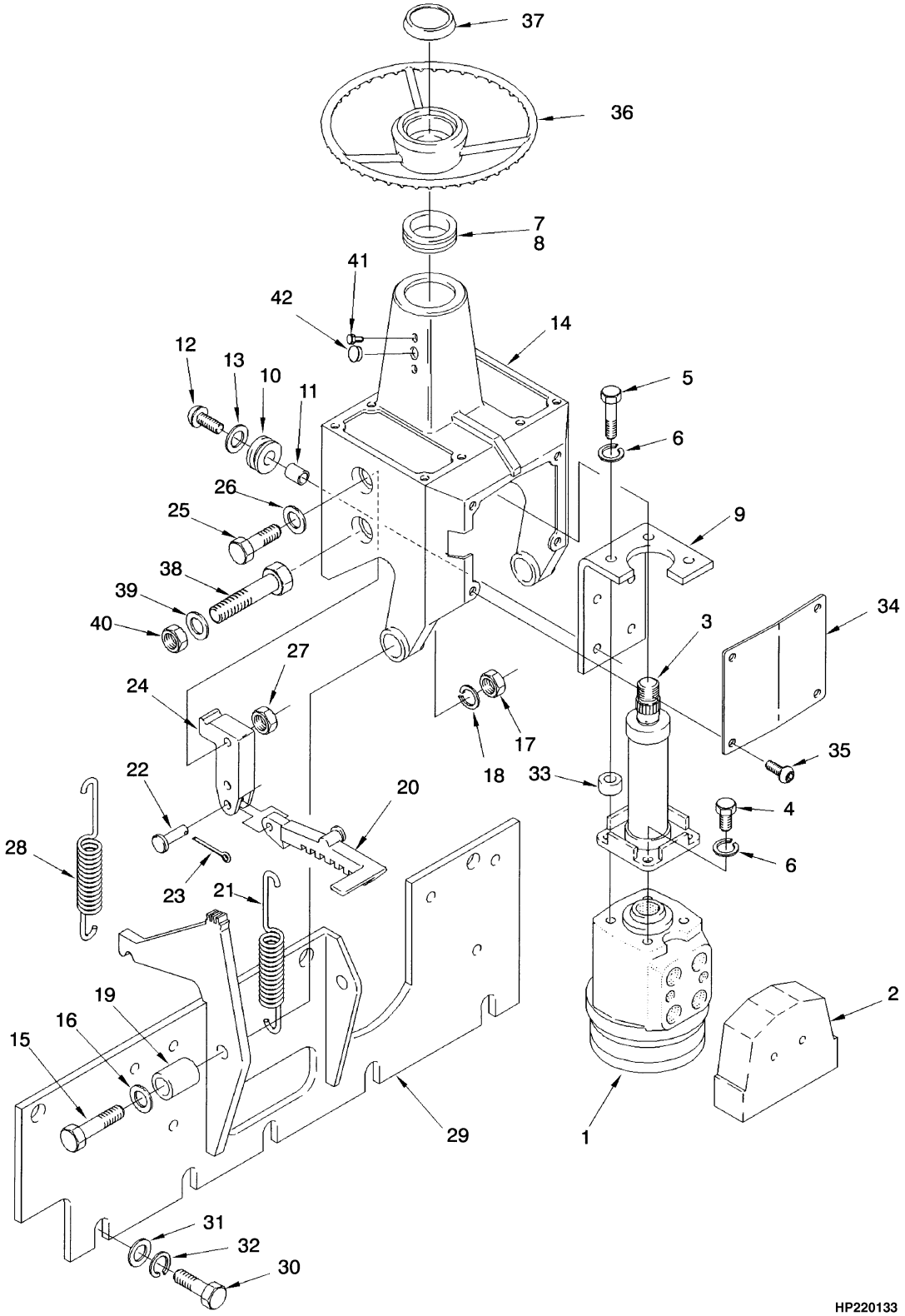

©2010 HYSTER COMPANY

STEERING

ITEM	PART NO.	DESCRIPTION	QTY
1	1369084	Steering Pump (With Load Sensing) (☞Figure 6-2)	1
1	1301348	Steering Pump (Without Load Sensing) (☞Figure 6-2)	1
2	1311366	Valve Block	1
3	1301422	Steering Column	1
3	362816	Kit-Terminal	1
3	345423	Nut	1
4	16597	Capscrew	1
5	16815	Capscrew	3
6	~~388049~~		
	292682	Lockwasher	4
7	2005059	Grommet	1
8	362255	Grommet (Optional)	1
9	376504	Bracket	1
10	216735	Grommet	4
11	376505	Spacer	4
12	369242	Capscrew	4
13	1300117	Washer	4
14	376510	Cover	1
14	894406	Cover (With Autoshift)	1
15	292529	Capscrew	2
16	379697	Washer	2
17	216877	Nut	2
18	293782	Lockwasher	2
19	376506	Spacer	2
20	324896	Latch	1
21	1301437	Spring	1
22	133683	Pin	1
23	15212	Cotter Pin	1
24	1301426	Bracket	1
25	379674	Capscrew	2
26	375629	Washer	2
27	313828	Nut	2
28	1301425	Spring	1
29	1325564	Plate	1
30	136681	Capscrew	8
31	320158	Washer	8
32	292681	Lockwasher	8
33	1300165	Spacer	3
34	1301676	Plate	1
35	353144	Capscrew	4
36	**b** 352955	Steering Wheel	1
36	**c** 1327895	Steering Wheel	1
37	371666	Horn Button	1
38	**a** 1326808	Capscrew	2
39	**a** 296360	Washer	2
40	**a** 329069	Nut	2
41	1307737	Fastener	1
42	1307736	Plug	1

©2010 HYSTER COMPANY

FOOTNOTES:

a Empty Container Handler
b → S/N D019E02478
c S/N D019E02479 →

©2010 HYSTER COMPANY

NOTES

©2010 HYSTER COMPANY

STEER PUMP (FIGURE 6-2)

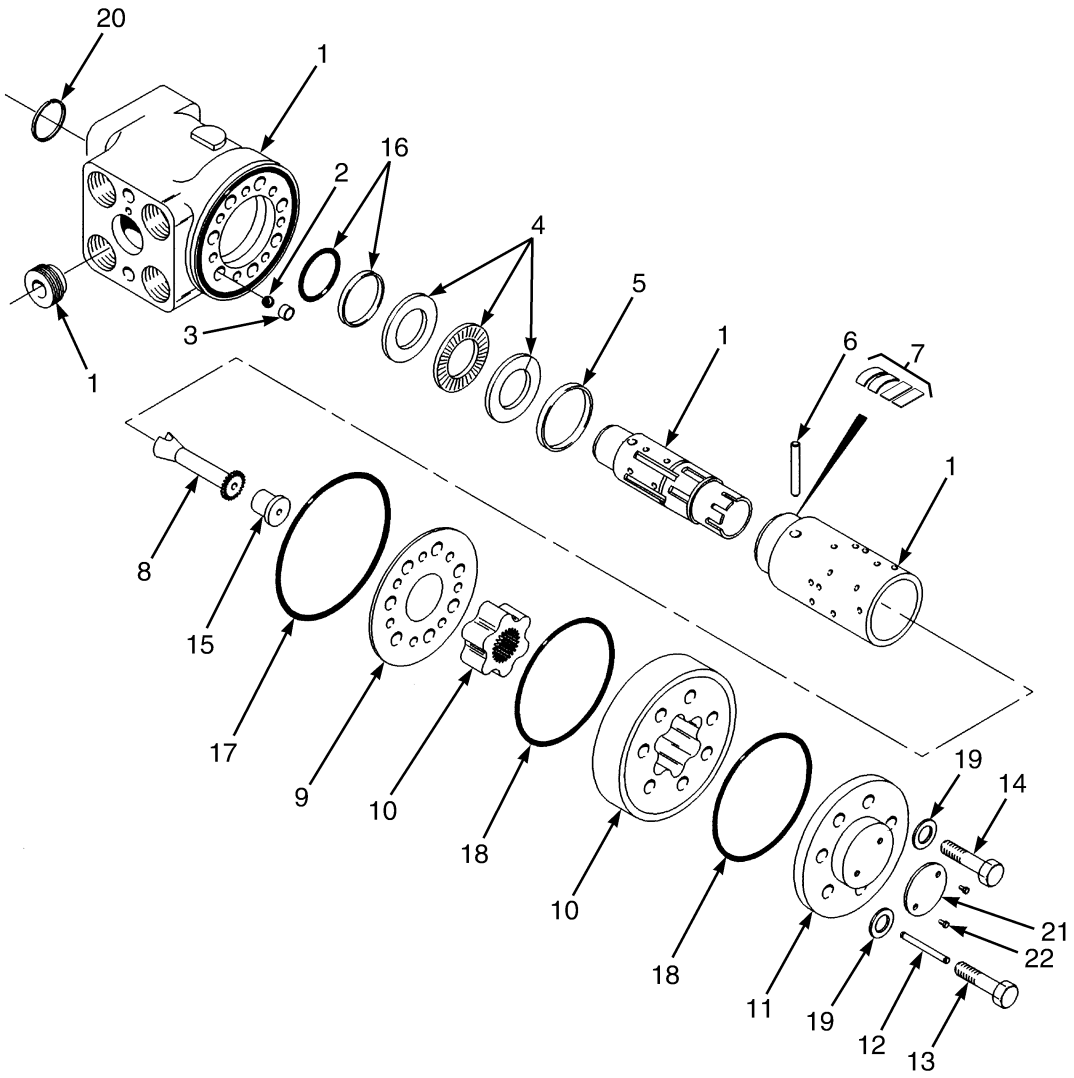

HP220134

©2010 HYSTER COMPANY

STEER PUMP

ITEM	PART NO.	DESCRIPTION	QTY
	1369084	Steering Pump (With Load Sensing)	1
	1301348	Steering Pump (Without Load Sensing)	1
1	. . . . .	Housing	1
2	345408	Ball	1
3	345409	Bushing	1
4	345410	Bearing Set	1
5	345411	Ring	1
6	345412	Pin	1
7	345413	Spring	1
7	1375018	Kit-Spring (With Load Sensing)	1
8	1355326	Shaft	1
9	1357026	Plate	1
10	1315778	Kit-Gear	1
10	1375019	Gear Set (With Load Sensing)	1
11	345424	End Cover	1
12	345418	Pin	1
13	1315779	Screw	1
14	1315780	Screw	6
15	1315781	Spacer	1
16	1384429	Seal	1
16	. . . . .	O-Ring	1
16	. . . . .	Ring	1
16	2032230	Seal	1
17	. . . . .	O-Ring	1
18	. . . . .	O-Ring	2
19	. . . . .	Washer	7
20	. . . . .	Ring	1
21	. . . . .	Nameplate	1
22	. . . . .	Screw	2
	2032229	Kit-Seal	1

©2010 HYSTER COMPANY

VALVE BLOCK (FIGURE 6-3)

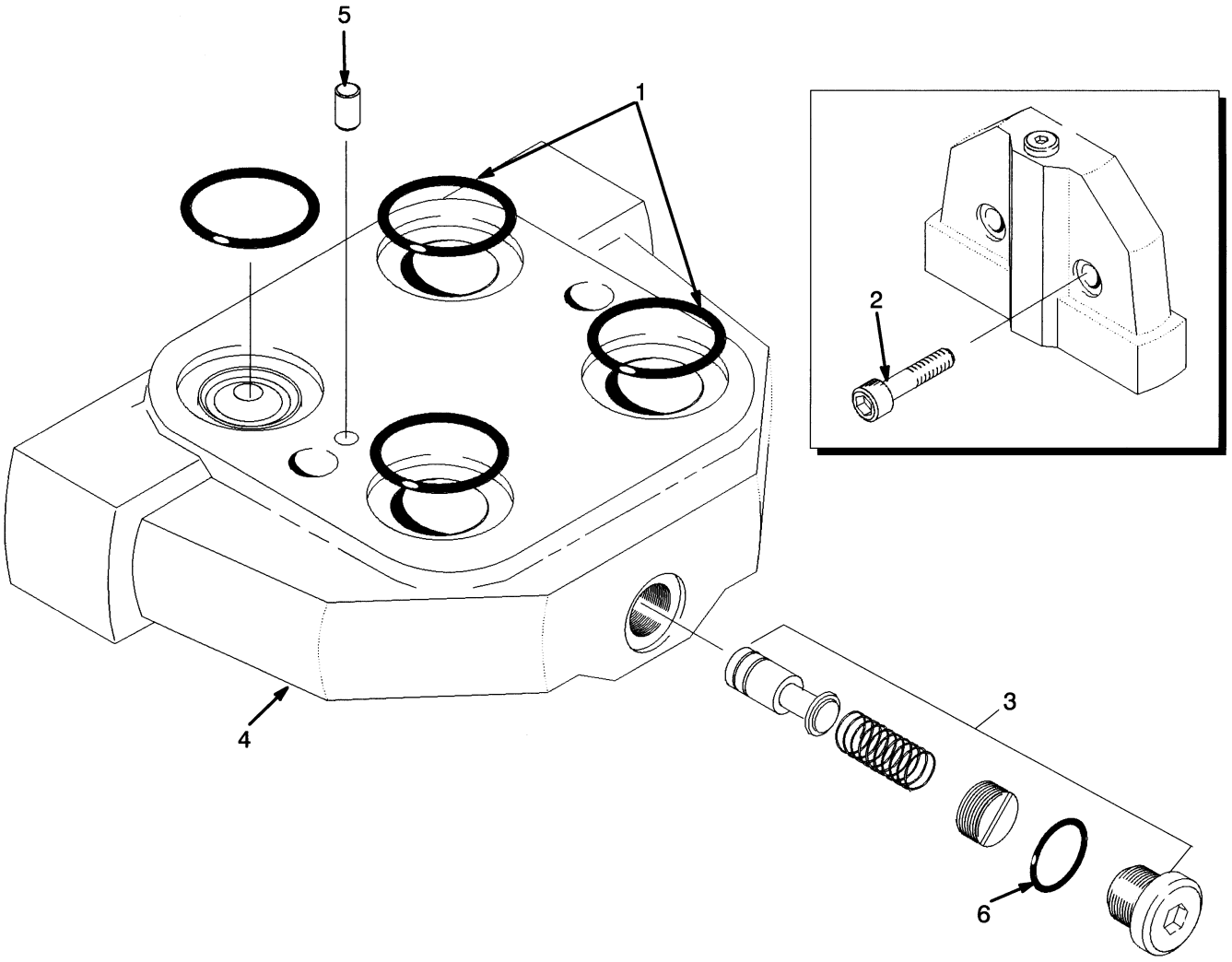

HP220138

ITEM	PART NO.	DESCRIPTION	QTY
	1311366	Valve Block	1
1	1462890	O-Ring	4
2	1462891	Screw	2
3	366063	Relief Valve	1
4	. . . . .	Housing	1
5	366064	Pin	1
6	366065	Seal	1
	366066	Kit-Repair Valve	1

©2010 HYSTER COMPANY

NOTES

©2010 HYSTER COMPANY

STEERING AXLE (FIGURE 6-4)

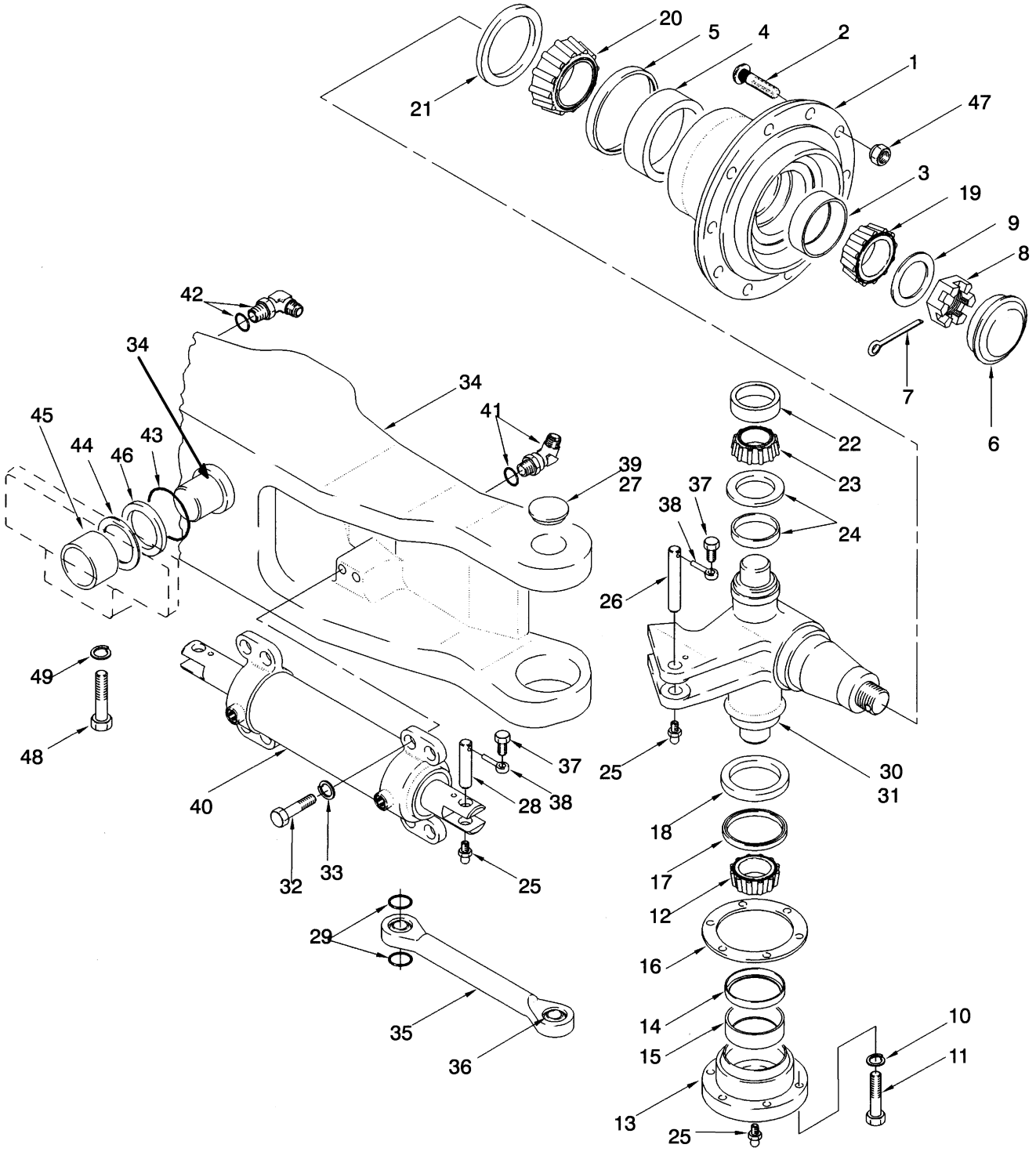

©2010 HYSTER COMPANY

STEERING AXLE

ITEM	PART NO.	DESCRIPTION	QTY
1	387229	Hub	2
2	1311407	Wheel Stud	10
3	186412	Bearing Cup	1
4	30100	Bearing Cup	1
5	387225	Wear Sleeve	2
6	158609	Cap	2
7	15255	Cotter Pin	2
8	1313375	Nut	2
9	1313374	Washer	2
10	15158	Washer	6
11	18588	Capscrew	6
12	247093	Bearing Cone	2
13	247827	Bearing Cap	2
14	164639	Wear Sleeve	1
15	30189	Bearing Cup	1
16	247097	Shim (0.005 in.)	AR
16	247098	Shim (0.007 in.)	AR
16	247099	Shim (0.020 in.)	AR
17	44542	Seal	2
18	247041	Seal	2
19	186415	Bearing Cone	2
20	30107	Bearing Cone	2
21	44547	Seal	2
22	200972	Bearing Cup (Tapered)	2
23	143004	Bearing Cone	2
24	129498	Seal	2
24	129499	Wear Sleeve	2
25	13963	Grease Fitting	6
26	1385648	Pin	2
27	69029	Cap	2
28	1385647	Pin	2
29	270854	Seal	8
30	387118	Spindle (LH)	1
31	387119	Spindle (RH)	1
32	293708	Capscrew	8
33	292687	Lockwasher	8
34	1339904	Frame	1
34	1337774	Shaft	2
35	387078	Tie Rod	2
36	192814	Bushing	2
37	183611	Capscrew	4
38	195566	Anchor	4
39	288394	Sealant	AR
40	376091	Steering Cylinder (☞Figure 6-5)	1
41	16568	Fitting	1
41	16484	O-Ring	1
42	16559	Fitting	1
42	16484	O-Ring	1
43	131193	Sealing Ring	1
44	131190	Shim (0.110 in.)	AR
44	131191	Shim (0.040 in.)	AR

©2010 HYSTER COMPANY

STEERING AXLE

ITEM	PART NO.	DESCRIPTION	QTY
45	1335873	Bushing	2
46	1335870	Flange	2
47	376026	Wheel Nut	20
48	16279	Capscrew	2
49	15162	Lockwasher	2

©2010 HYSTER COMPANY

NOTES

©2010 HYSTER COMPANY

STEERING CYLINDER (FIGURE 6-5)

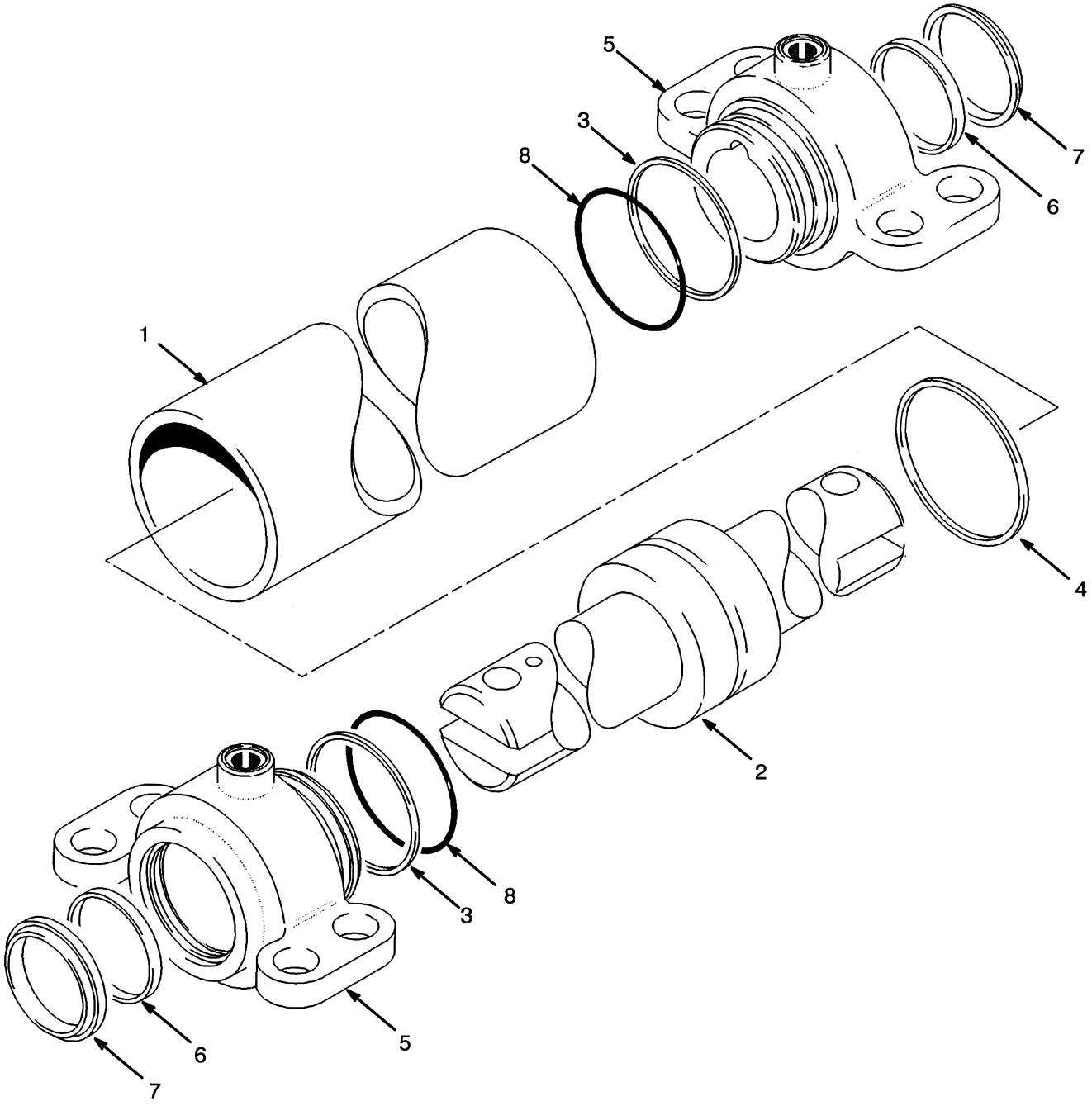

BP220037

©2010 HYSTER COMPANY

STEERING CYLINDER

ITEM	PART NO.	DESCRIPTION	QTY
	376091	Steering Cylinder	1
1	376087	Tube Wldmt-Cylinder	1
1	1538812	Shim (Not Illustrated)	2
2	376090	Cylinder Rod	1
2	376088	Piston	1
2	376089	Rod	1
3	270330	Back-Up Ring	2
4	1380886	Piston Seal	1
5	376086	End Cap	2
6	1538493	Seal (Double Lip)	2
7	225334	Rod Wiper	2
8	46629	O-Ring	2
	1538811	Kit-Seal (Shell)	1
	1311358	Kit-Seal (Steering Cylinder)	1

©2010 HYSTER COMPANY

NOTES

©2010 HYSTER COMPANY

7 BRAKE SYSTEM

SECTION 7
BRAKE SYSTEM

DESCRIPTION	PAGE
AIR COMPRESSOR	
→ U563738X	7-24
→ S/N D019D01756 INC. 1758 EXC. 1753 U563739X →	7-26
S/N D019D01757 → INC. 1753 EXC. 1758 → U593028	7-28
U593029 ↔ U607097	7-30
S/N D019D02377 ↔ S/N D019D02997X U607098 →	7-32
366 LPG ENGINE	7-40
SHEET 1 OF 2 (S/N D019D02998X →)	7-36
SHEET 2 OF 2 (S/N D019D02998X →)	7-38
AIR COMPRESSOR AND ATTACHING PARTS	
S/N D019D02998X →	7-34
AIR TANK	
→ S/N D019D01521	7-14
S/N D019D01522 →	7-16
WITH AUTOSHIFT (S/N D019D12439 →)	7-18
BRAKE CHAMBER	7-54
BRAKE LINES	
→ S/N D019D01521	7-2
S/N D019D01522 ↔ S/N D019D002996X	7-6
S/N D019D02997X →	7-10
WITH AUTOSHIFT (S/N D019D12439 →)	7-20
BRAKE SYSTEM	7-50
COMPRESSOR MOUNTING	
LPG	7-42
PARK BRAKE ATTACHING PARTS	
→ S/N D019D01521	7-46
S/N D019D01522 →	7-48
PARK BRAKE VALVE	
→ S/N D019D01521	7-58
S/N D019D01522 →	7-60
SOLENOID VALVE	
PNEUMATIC (S/N D019D12439 →)	7-22
TREADLE VALVE	
SHEET 1	7-44
SHEET 2	7-56

©2010 HYSTER COMPANY

BRAKE LINES (FIGURE 7-1)

(→ S/N D019D01521)

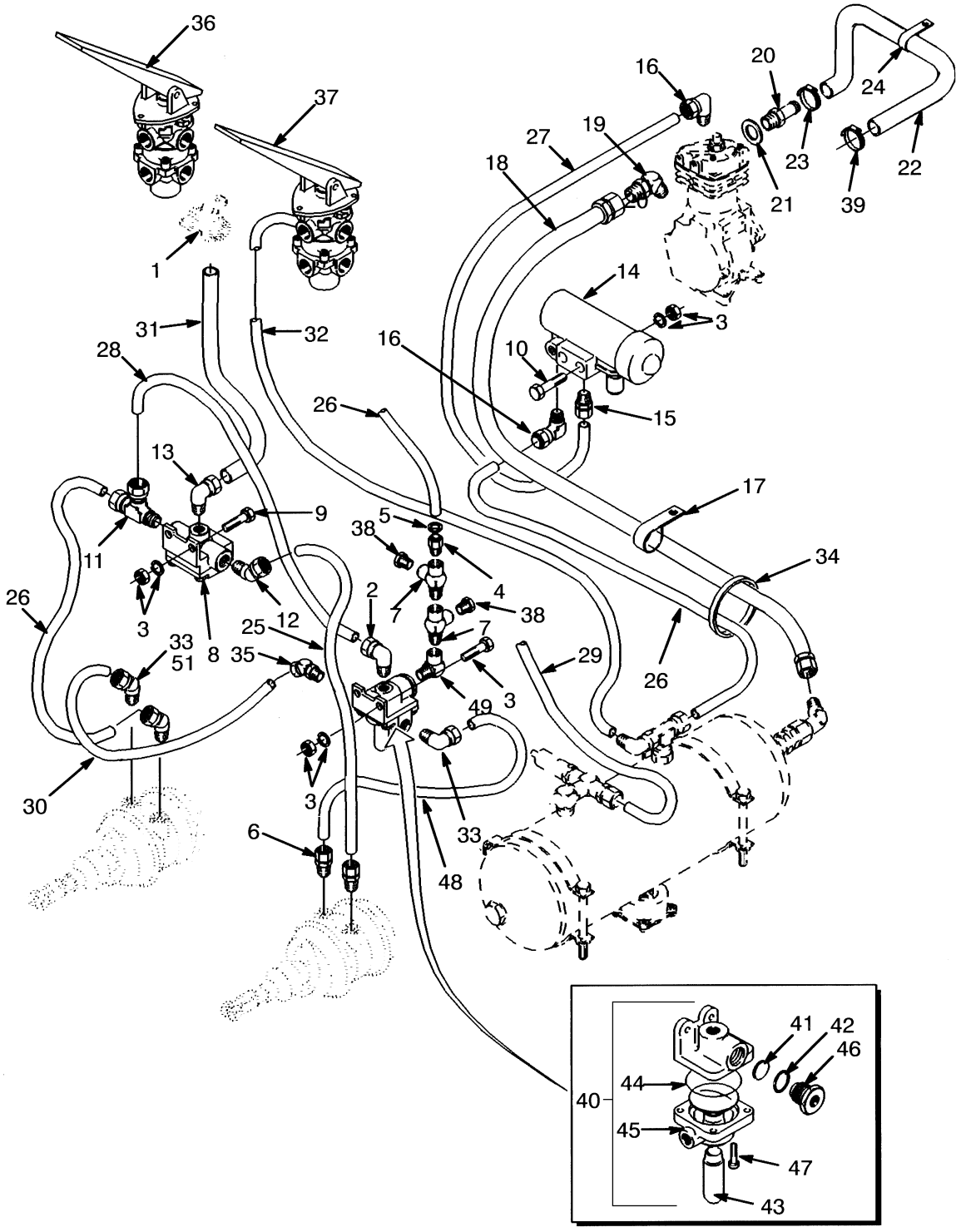

HP040183

©2010 HYSTER COMPANY

BRAKE LINES
(→ S/N D019D01521)

ITEM	PART NO.	DESCRIPTION	QTY
1	1326100	Check Valve (☞Figure 7-19)	1
2	1331034	Fitting	1
3	176640	Bolt	6
3	239503	Nut	8
3	292681	Lockwasher	8
4	1301430	Quick Disconnect Fitting	1
5	1301435	Cap	1
6	**b** 1326757	Fitting	2
7	17216	Fitting	2
8	251974	Valve	1
8	1302305	Kit-Repair Valve	1
9	136749	Screw	2
10	292512	Capscrew	2
11	1301545	Fitting	1
12	1311375	Fitting	1
13	1301544	Fitting	1
14	355750	Governor	1
15	1301537	Fitting	1
16	1301542	Fitting	2
17	128408	Clamp	1
18	1346958	Hose	1
19	14550	Fitting	1
20	1352671	Fitting	1
21	992522	Washer	1
22	1352668	Hose	1
23	127045	Clamp (Hose)	1
24	1345023	Strap	5
24	320157	Washer	1
24	129563	Strap Clamp	1
25	**a** 255156	Tube	1
25	**b** 1323884	Tube	1
26	1303463	Tube	2
27	322793	Tube	1
28	355597	Tube	1
29	266535	Hose	1
30	**b** 1303464	Tube	1
30	**b** 1326750	Tube	1
30	**b** 358458	Tube	1
31	**c** 1332947	Tube	1
31	**d** 322794	Tube	1
31	**b** 1303463	Tube	1
32	**c** 1332947	Tube	1
32	**d** 322794	Tube	1
32	**b** 1323885	Tube	1
33	1309503	Fitting	2
34	137852	Strap Clamp	2
35	**b** 1326757	Fitting	4
36	352013	Valve (RH) (Brake Pedal) (☞Figure 7-19, ☞Figure 7-24)	1
37	1327751	Valve (LH) (Inching Pedal) (☞Figure 7-19, ☞Figure 7-24)	1
38	16187	Fitting	2

©2010 HYSTER COMPANY

BRAKE LINES
(→ S/N D019D01521)

ITEM	PART NO.	DESCRIPTION	QTY
39	119236	Clamp	4
40	1331033	Check Valve	1
41	1322339	Diaphragm	1
42	1322322	O-Ring	1
43	1322342	Silencer	1
44	1322337	Sealing Ring	1
45	1322338	Diaphragm	1
46	1322340	Cap	1
47	16848	Screw	4
48	**a** 217979	Hose	1
49	17314	Fitting	1
51	**b** 1326756	Fitting	4

FOOTNOTES:

a H300-330XL
b H360XL-EC
c With Sound Reduction
d Without Sound Reduction

©2010 HYSTER COMPANY

NOTES

©2010 HYSTER COMPANY

BRAKE LINES (FIGURE 7-2)

(S/N D019D01522 ↔ S/N D019D002996X)

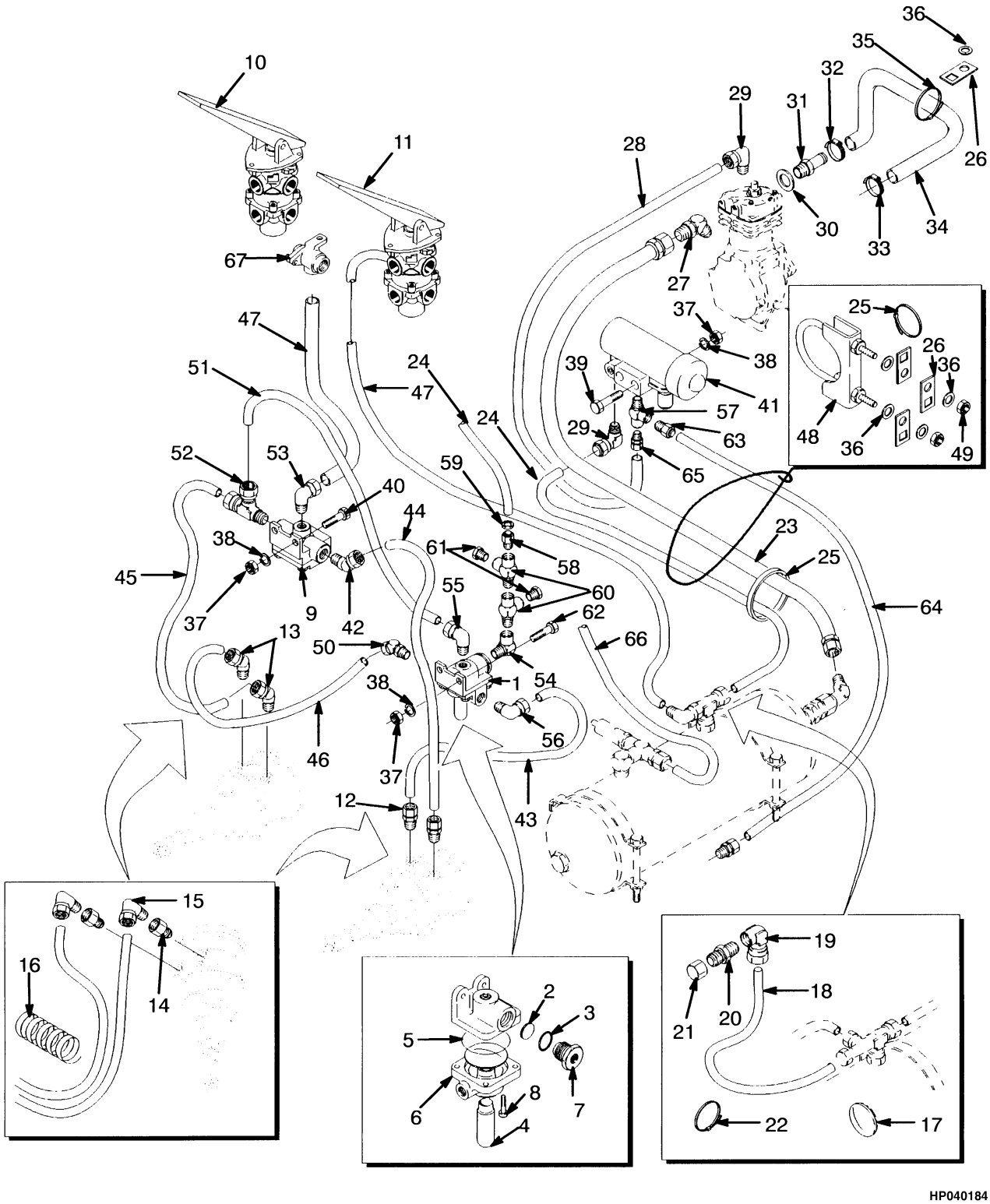

©2010 HYSTER COMPANY

BRAKE LINES

(S/N D019D01522 ↔ S/N D019D002996X)

KEY:
A: Diesel
B: LPG

ITEM	PART NO.	DESCRIPTION	QTY A	QTY B
1	1331033	Check Valve	1	1
2	1322339	Diaphragm	1	1
3	1322322	O-Ring	1	1
4	1322342	Silencer	1	1
5	1322337	Sealing Ring	1	1
6	1322338	Diaphragm	1	1
7	1322340	Cap	..	11
8	16848	Screw	4	4
9	251974	Valve	1	1
9	1302305	Kit-Repair Valve	1	1
10	352013	Valve (Brake) (☞Figure 7-24)	1	1
11	1327751	Valve (Inching) (☞Figure 7-24)	1	1
12	**b** 1301539	Fitting	2	2
13	**b** 1326757	Fitting	2	2
14	**c** 12831	Fitting	4	..
15	**c** 1326756	Fitting	4	..
16	**c** 1326763	Hose Guard	2	..
17	**c** 1358738	Plug	2	..
18	**a** 1303463	Tube	1	..
19	**a** 1326756	Fitting	1	..
20	**a** 14676	Fitting	1	..
21	**a** 16693	Nut	1	..
22	**a** 137852	Strap Clamp	2	..
23	1346958	Hose	1	..
23	894793	Hose	..	1
24	1303463	Tube	1	..
24	217964	Tube	..	1
25	137852	Strap Clamp	2	2
26	129563	Strap Clamp	3	3
27	14550	Fitting	1	..
27	17306	Fitting	..	1
28	322793	Tube	1	..
29	1301542	Fitting	2	..
29	1301537	Fitting	..	1
30	992522	Washer	1	1
31	1352671	Fitting	1	1
32	127045	Clamp (Hose)	1	1
33	119236	Clamp	1	1
34	1352668	Hose	1	1
35	1345023	Strap	4	4
36	320157	Washer	4	4
37	239503	Nut	13	11
38	292681	Lockwasher	13	11
39	292512	Capscrew	2	..
40	136749	Screw	4	4

©2010 HYSTER COMPANY

BRAKE LINES

(S/N D019D01522 ↔ S/N D019D002996X)

KEY:
A: Diesel
B: LPG

ITEM	PART NO.	DESCRIPTION	QTY A	QTY B
41	355750	Governor	1	..
42	1311375	Fitting	1	1
43	**b** 217979	Hose	1	1
43	**c** 1323885	Tube	1	..
44	**b** 255156	Tube	1	1
44	**c** 1323884	Tube	1	..
45	**b** 266535	Hose	1	1
45	**c** 358458	Tube	1	..
46	**b** 1303464	Tube	1	1
46	**c** 1326750	Tube	1	..
47	**d** 1332947	Tube	2	..
47	**e** 322794	Tube	2	2
48	30368	Clamp	1	1
49	15055	Nut	4	4
50	1326757	Fitting	1	1
51	355597	Tube	1	1
52	1301545	Fitting	1	1
53	1301544	Fitting	1	1
54	17314	Fitting	1	1
55	1331034	Fitting	1	1
56	1309503	Fitting	1	1
57	16186	Fitting	1	1
58	1301430	Quick Disconnect Fitting	1	1
59	1301435	Cap	1	1
60	17216	Fitting	2	2
61	16187	Fitting	2	2
62	176640	Bolt	7	7
63	1359661	Fitting	1	1
64	255115	Tube	1	..
64	145858	Tube	..	1
65	1301537	Fitting	1	..
66	266535	Hose	1	1
67	1322344	Shuttle Valve (☞Figure 7-19)	1	1

FOOTNOTES:

a Empty Container Handle
b H300XL-H330XL and H330XL-EC
c H360XL-EC
d Non-EC with Sound Reduction
e Non-EC without Sound Reduction

©2010 HYSTER COMPANY

NOTES

©2010 HYSTER COMPANY

BRAKE LINES (FIGURE 7-3)

(S/N D019D02997X →)

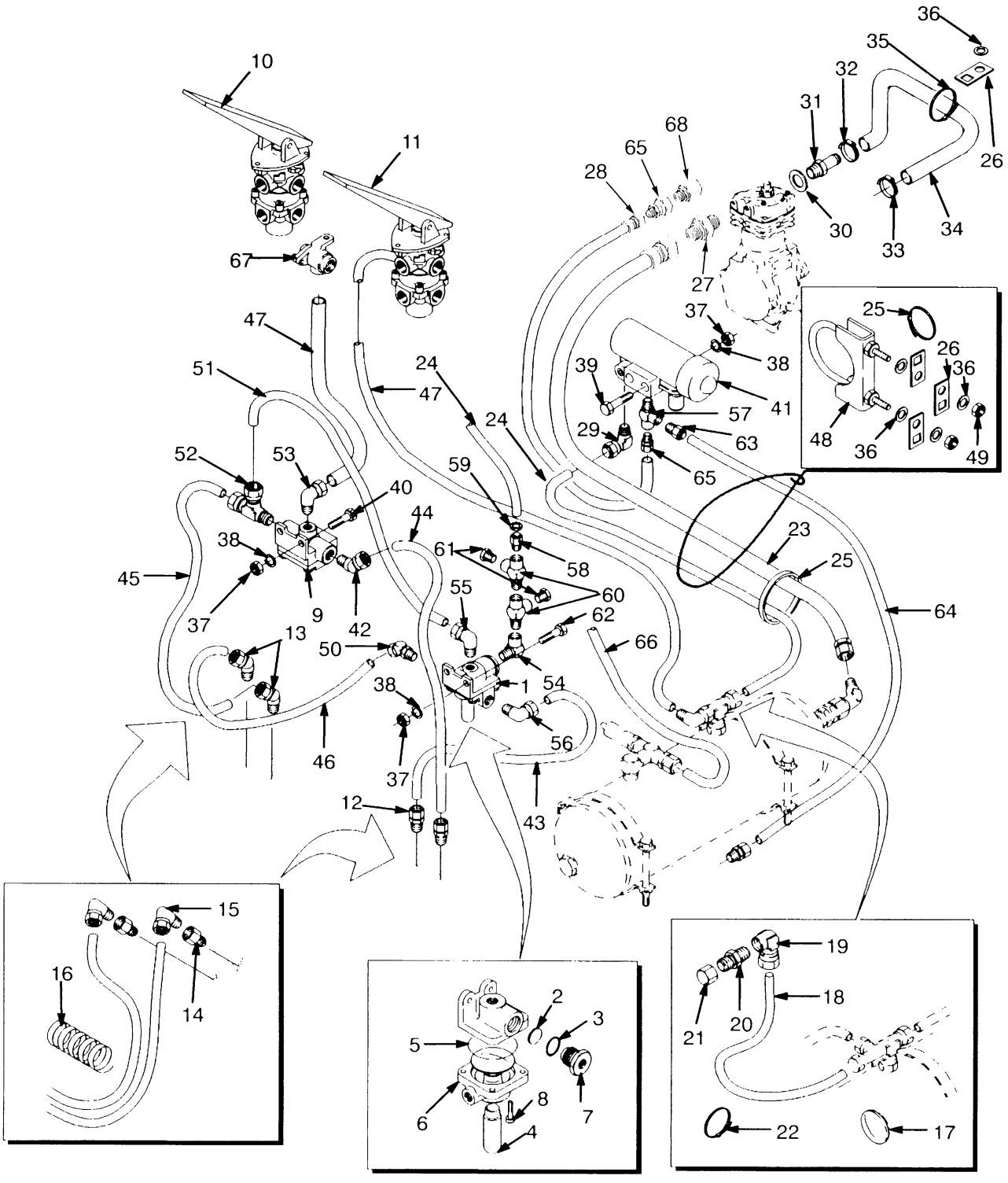

©2010 HYSTER COMPANY

BRAKE LINES
(S/N D019D02997X →)

KEY:
A: Diesel
B: LPG

ITEM	PART NO.	DESCRIPTION	QTY A	QTY B
1	1331033	Check Valve	1	1
2	1322339	Diaphragm	1	1
3	1322322	O-Ring	1	1
4	1322342	Silencer	1	1
5	1322337	Sealing Ring	1	1
6	1322338	Diaphragm	1	1
7	1322340	Cap	1	1
8	16848	Screw	4	4
9	251974	Valve	1	1
9	1302305	Kit-Repair Valve	1	1
10	352013	Valve (Brake) (☞Figure 7-24)	1	1
11	1327751	Valve (Inching) (☞Figure 7-24)	1	1
12	**b** 1301539	Fitting	2	2
13	**b** 1326757	Fitting	2	2
14	**c** 12831	Fitting	4	..
15	**c** 1326756	Fitting	4	..
16	**c** 1326763	Hose Guard	2	..
17	**c** 1358738	Plug	2	..
18	**a** 1303463	Tube	1	..
19	**a** 1326756	Fitting	1	..
20	**a** 14676	Fitting	1	..
21	**a** 16693	Nut	1	..
22	**a** 137852	Strap Clamp	2	..
23	1476495	Hose Assy	1	..
23	1476494	Hose Assy	..	1
24	1303463	Tube	1	..
24	217964	Tube	..	1
25	137852	Strap Clamp	2	2
26	129563	Strap Clamp	3	3
27	66885	Fitting	1	..
27	1474001	Fitting (Adapter)	..	1
28	1474004	Tube	1	..
29	1301537	Fitting	1	..
29	1301542	Fitting	..	1
30	992522	Washer	1	1
31	1352671	Fitting	1	1
32	127045	Clamp (Hose)	1	1
33	119236	Clamp	1	1
34	1352668	Hose	1	1
35	1345023	Strap	4	4
36	320157	Washer	4	4
37	239503	Nut	13	11
38	292681	Lockwasher	13	11
39	292512	Capscrew	2	..
40	136749	Screw	4	4

©2010 HYSTER COMPANY

BRAKE LINES
(S/N D019D02997X →)

KEY:
A: Diesel
B: LPG

ITEM	PART NO.	DESCRIPTION	QTY A	QTY B
41	355750	Governor	1	..
42	1311375	Fitting	1	1
43	**b** 217979	Hose	1	1
43	**c** 1323885	Tube	1	..
44	**b** 255156	Tube	1	1
44	**c** 1323884	Tube	1	..
45	**b** 266535	Hose	1	1
45	**c** 358458	Tube	1	..
46	**b** 1303464	Tube	1	1
46	**c** 1326750	Tube	1	..
47	**d** 1332947	Tube	2	..
47	**e** 322794	Tube	2	2
48	30368	Clamp	1	1
49	15055	Nut	4	4
50	1326757	Fitting	1	1
51	355597	Tube	1	1
52	1301545	Fitting	1	1
53	1301544	Fitting	1	1
54	17314	Fitting	1	1
55	1331034	Fitting	1	1
56	1309503	Fitting	1	1
57	16186	Fitting	1	1
58	1301430	Quick Disconnect Fitting	1	1
59	1301435	Cap	1	1
60	17216	Fitting	2	2
61	16187	Fitting	2	2
62	176640	Bolt	7	7
63	1359661	Fitting	1	1
64	145858	Tube	1	..
64	255115	Tube	..	1
65	1301537	Fitting	2	..
66	266535	Hose	1	1
67	1322344	Shuttle Valve (☞Figure 7-19)	1	1
68	1475493	Fitting (Adapter)	1	..

FOOTNOTES:

a Empty Container Handler
b H300XL-H330XL and H330XL-EC
c H360XL-EC
d Non-EC with Sound Reduction
e Non-EC without Sound Reduction

©2010 HYSTER COMPANY

NOTES

©2010 HYSTER COMPANY

AIR TANK (FIGURE 7-4)

(→ S/N D019D01521)

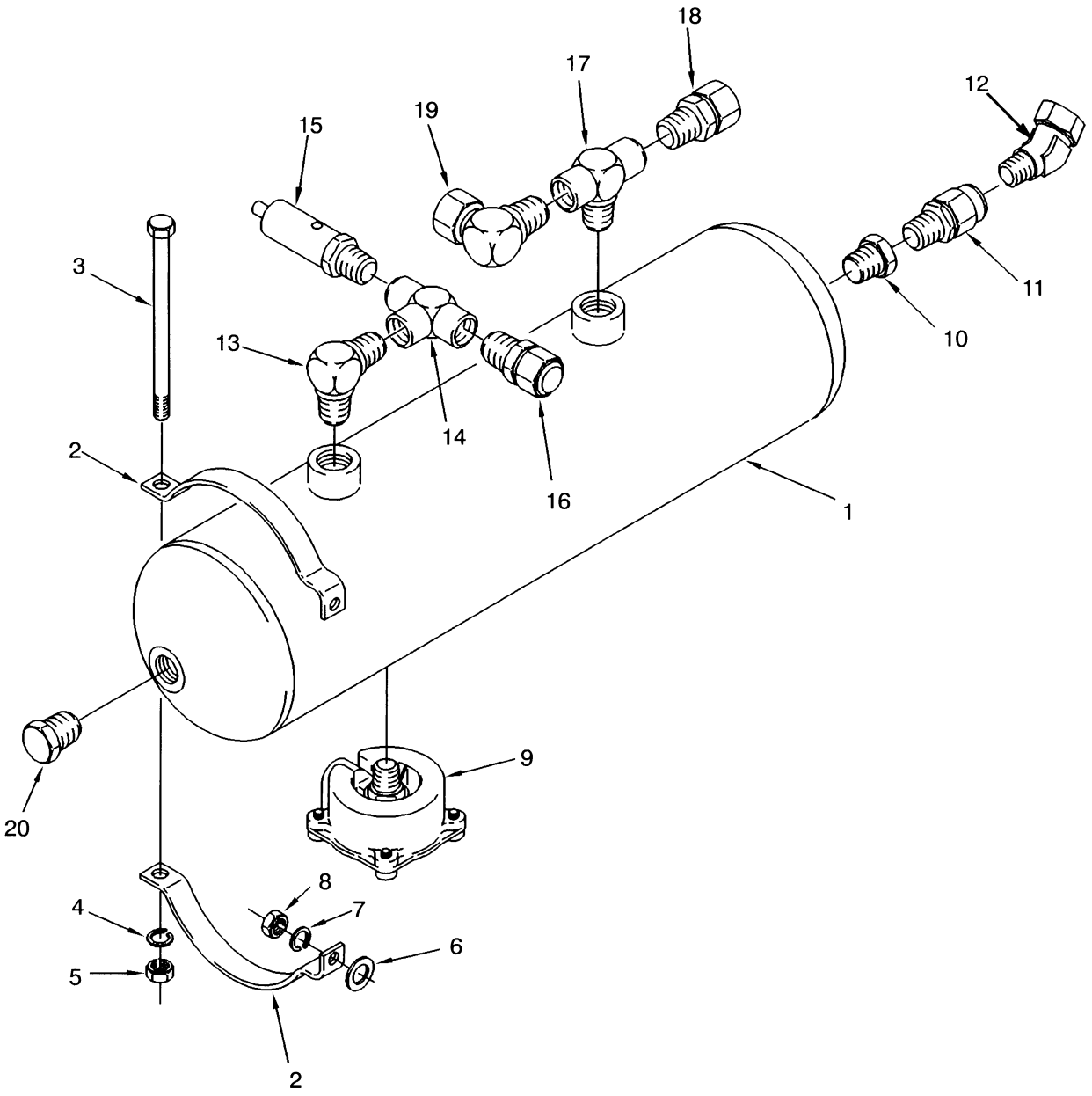

©2010 HYSTER COMPANY

AIR TANK
(→ S/N D019D01521)

ITEM	PART NO.	DESCRIPTION	QTY
1	295197	Reservoir	1
2	319049	Bracket	4
3	17258	Capscrew	2
4	15156	Lockwasher	2
5	15056	Nut	2
6	320161	Washer	4
7	~~388049~~		
	292682	Lockwasher	4
8	136692	Nut	4
9	173357	Drain Valve	1
9	249564	Kit-Service Air Tank	1
10	100792	Fitting	1
11	281190	Check Valve	1
12	1303469	Fitting	1
13	17144	Fitting	1
14	63111	Fitting	1
15	319050	Valve (Safety)	1
16	1301538	Fitting	1
17	17665	Fitting	1
18	1301539	Fitting	1
19	1301544	Fitting	1
20	14388	Fitting	1

©2010 HYSTER COMPANY

AIR TANK (FIGURE 7-5)
(S/N D019D01522 →)

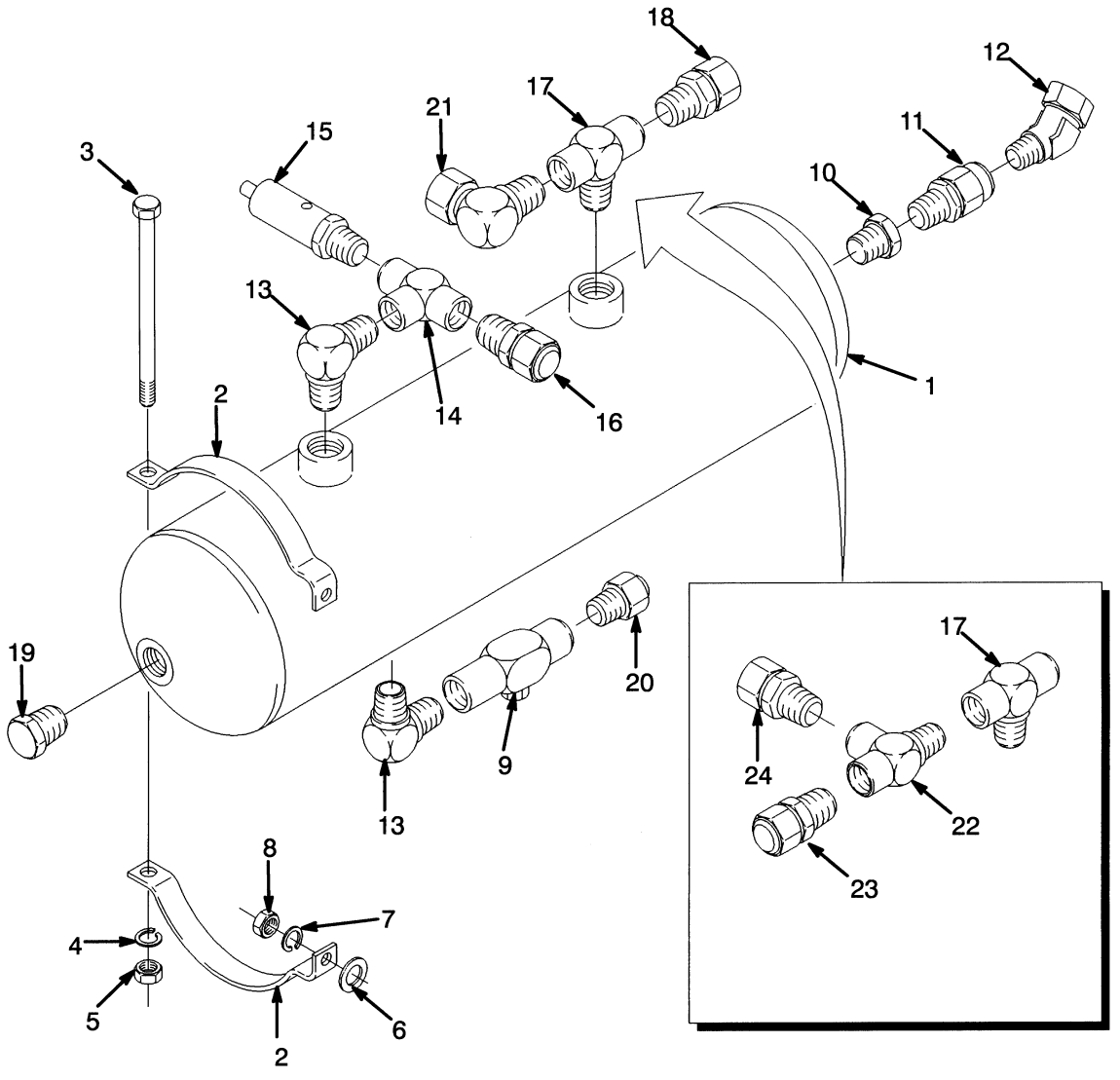

©2010 HYSTER COMPANY

AIR TANK
(S/N D019D01522 →)

ITEM	PART NO.	DESCRIPTION	QTY
1	295197	Reservoir	1
2	319049	Bracket	4
3	17258	Capscrew	2
4	15156	Lockwasher	2
5	15056	Nut	2
6	320161	Washer	4
7	~~388049~~		
	292682	Lockwasher	4
8	136692	Nut	4
9	128398	Drain Valve	1
10	100792	Fitting	1
11	281190	Check Valve	1
12	**cd** 17344	Fitting	1
12	**be** 16294	Fitting	1
13	17144	Fitting	2
14	63111	Fitting	1
15	319050	Valve (Safety)	1
16	1301538	Fitting	1
17	17665	Fitting	1
18	1301539	Fitting	1
19	246869	Plug (Magnetic)	1
20	1359661	Fitting	1
21	1301544	Fitting	1
22	**a** 154452	Fitting	1
23	**a** 1301539	Fitting	1
24	**a** 1301541	Fitting	1

FOOTNOTES:

a Empty Container Handler Only
b NON-TURBO
c TURBO
d → S/N D019D02996X
e S/N D019D03016X →

©2010 HYSTER COMPANY

AIR TANK (FIGURE 7-6)
WITH AUTOSHIFT (S/N D019D12439 →)

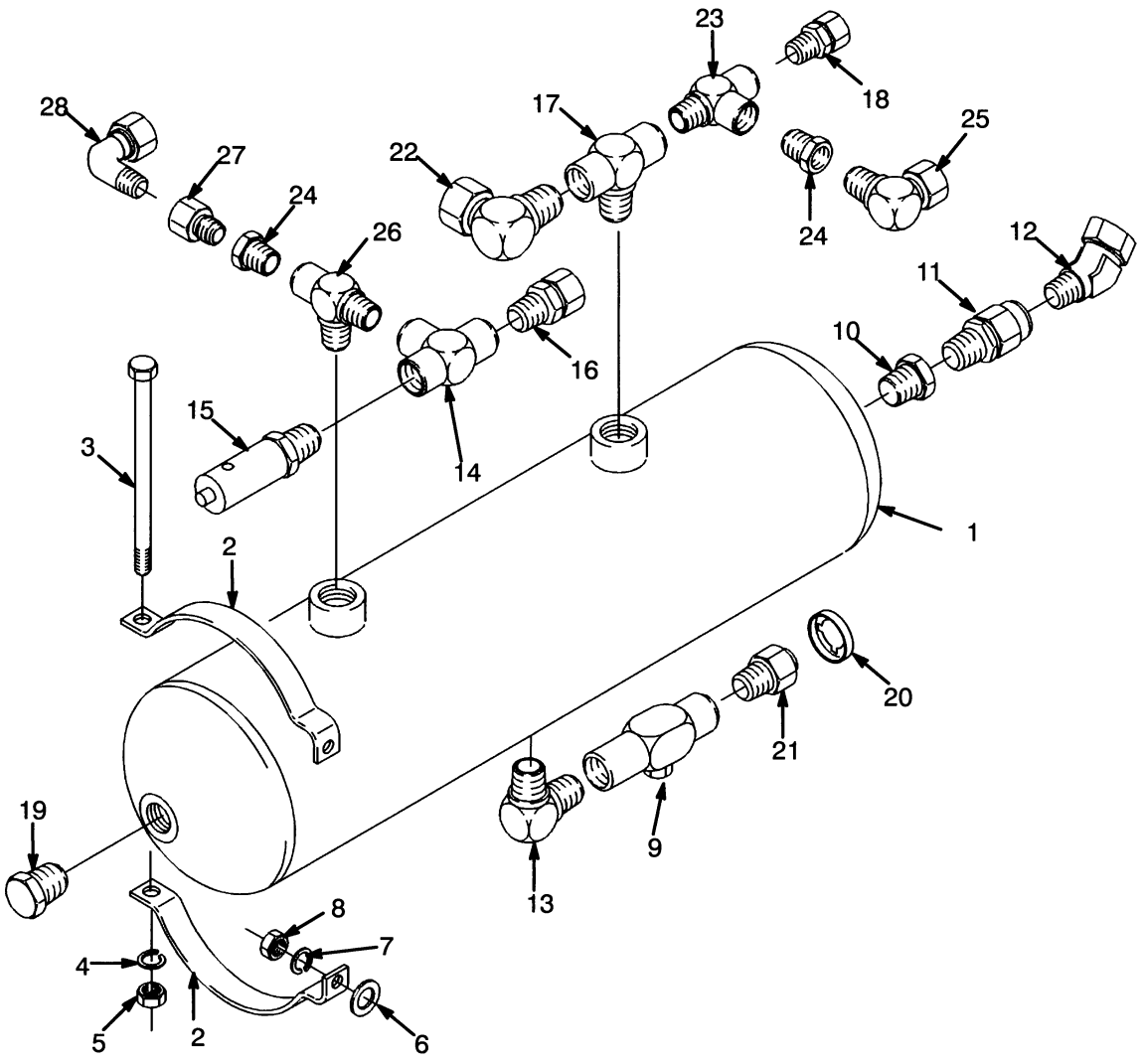

©2010 HYSTER COMPANY

AIR TANK

WITH AUTOSHIFT (S/N D019D12439 →)

ITEM	PART NO.	DESCRIPTION	QTY
1	295197	Reservoir	1
2	319049	Bracket	4
3	17258	Capscrew	2
4	15156	Lockwasher	2
5	15056	Nut	2
6	320161	Washer	4
7	~~388049~~		
	292682	Lockwasher	4
8	136692	Nut	4
9	128398	Drain Valve	1
10	100792	Fitting	1
11	281190	Check Valve	1
12	**bc** 17344	Fitting	1
12	**ad** 17344	Fitting	1
12	**be** 16294	Fitting	1
12	**af** 16294	Fitting	1
13	17144	Fitting	2
14	63111	Fitting	1
15	319050	Valve (Safety)	1
16	1301538	Fitting	1
17	17665	Fitting	1
18	1301539	Fitting	1
19	246869	Plug (Magnetic)	1
20	1301434	Button	1
21	1359661	Fitting	1
22	1301544	Fitting	1
23	154452	Fitting	1
24	63108	Fitting	2
25	1301428	Quick Disconnect Fitting	1
26	17672	Fitting	1
27	12855	Fitting	1
28	1331034	Fitting	1

FOOTNOTES:

a NON-TURBO
b TURBO
c → S/N D019D02996X
d → S/N D019D03015X
e S/N D019D02997X →
f S/N D019D03016X →

©2010 HYSTER COMPANY

BRAKE LINES (FIGURE 7-7)
WITH AUTOSHIFT (S/N D019D12439 →)

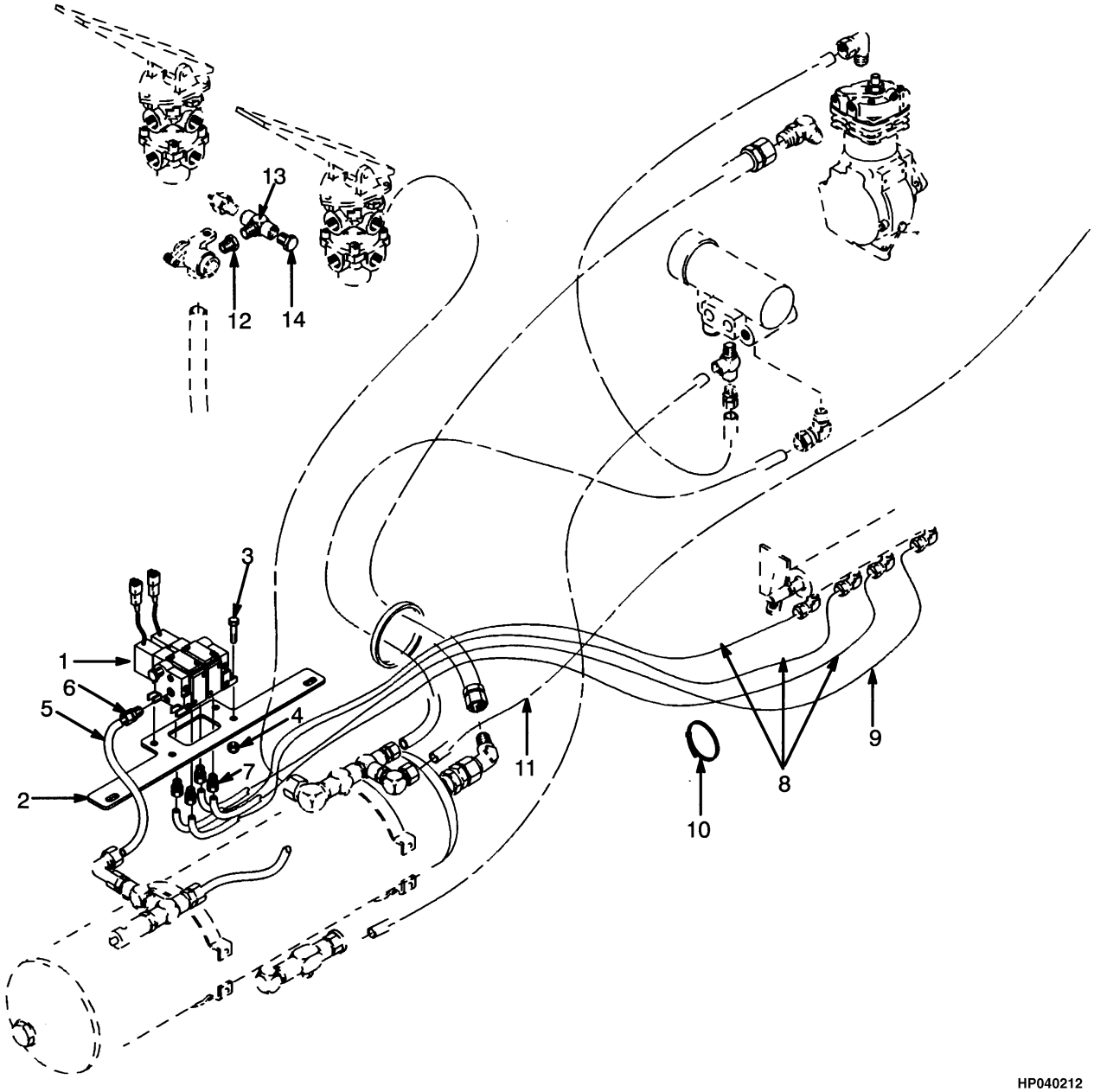

©2010 HYSTER COMPANY

BRAKE LINES

WITH AUTOSHIFT (S/N D019D12439 →)

ITEM	PART NO.	DESCRIPTION	QTY
1	894946	Solenoid Valve Assembly (☞Figure 7-8)	1
2	894945	Plate	1
3	287816	Capscrew	4
4	302399	Nut	4
5	1456028	Tube	1
6	1301538	Fitting	1
7	1359661	Fitting	4
8	1456027	Tube	3
9	128216	Tube	1
10	137852	Strap Clamp	3
11	1456109	Tube	1
12	12843	Fitting	1
13	16199	Fitting	1
14	14349	Fitting (Pipe Plug)	1

©2010 HYSTER COMPANY

SOLENOID VALVE (FIGURE 7-8)

PNEUMATIC (S/N D019D12439 →)

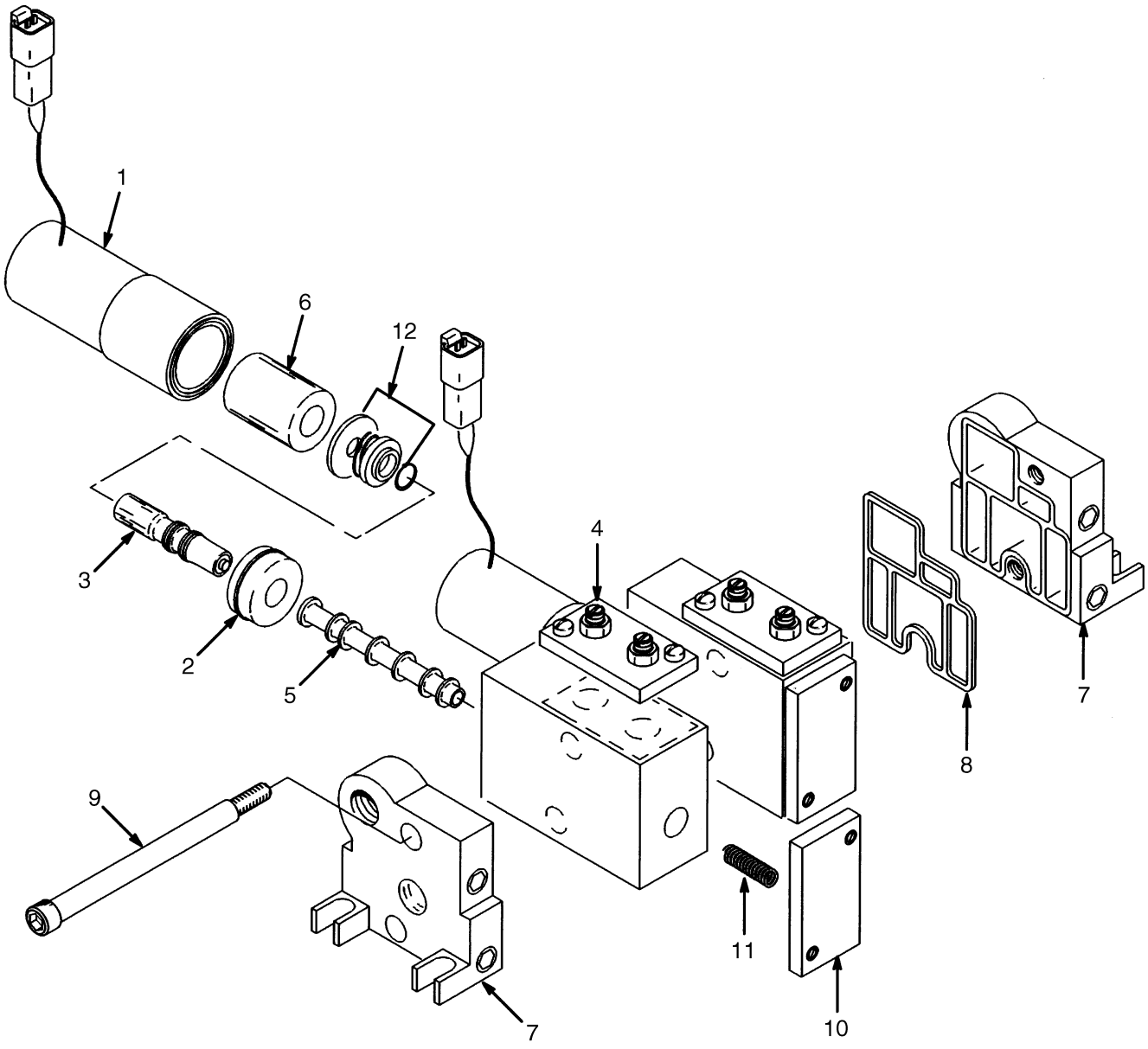

HP040219

©2010 HYSTER COMPANY

SOLENOID VALVE

PNEUMATIC (S/N D019D12439 →)

ITEM	PART NO.	DESCRIPTION	QTY
	894946	Solenoid Valve Assembly	1
1	1456819	Valve	2
2	1456824	Piston	1
3	1456825	Cartridge	1
4	1456820	Cover	2
5	1456821	Kit-Repair Solenoid Valve	2
5	1456829	Spool	1
6	1456822	Coil	2
7	1456823	Housing	1
7	1456826	Screw	2
8	1456827	Seal	1
9	1457279	Tie Rod	4
10	1457284	Retainer	2
11	1457296	Spring	1
12	1457275	Muffler	1

©2010 HYSTER COMPANY

AIR COMPRESSOR (FIGURE 7-9)

(→ U563738X)

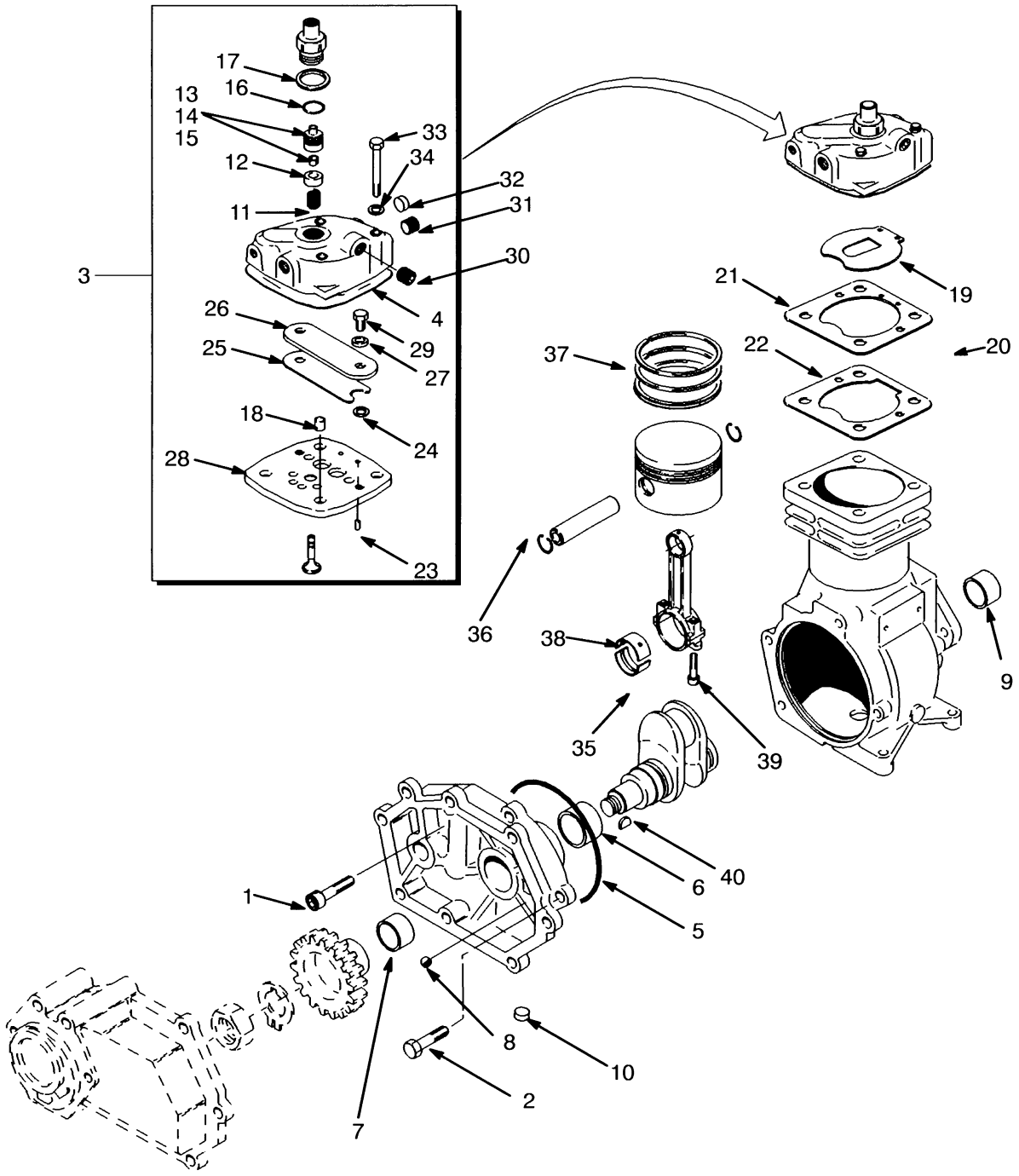

©2010 HYSTER COMPANY

AIR COMPRESSOR
(→ U563738X)

ITEM	PART NO.	DESCRIPTION	QTY
	1318324	Compressor	1
1	1329417	Screw	3
2	1329418	Screw	1
3	1329419	Cylinder Head	1
4	1329420	Gasket	1
5	. . . . .	O-Ring	1
6	. . . . .	Bushing	1
7	. . . . .	Bushing	1
8	. . . . .	Ball	1
9	. . . . .	Bushing	1
10	. . . . .	Plug	2
11	. . . . .	Seat	1
12	. . . . .	Bushing	1
13	. . . . .	Spring	1
14	. . . . .	Guide	1
15	. . . . .	Collar	2
16	. . . . .	O-Ring	1
17	. . . . .	Washer	1
18	. . . . .	Pin	2
19	. . . . .	Disk	1
20	. . . . .	Gasket Kit	1
21	1350666	Gasket	1
22	1350667	Gasket	1
23	. . . . .	Pin	2
24	. . . . .	Disk	1
25	. . . . .	Valve Disk	1
26	. . . . .	Plate	1
27	. . . . .	Sleeve	2
28	. . . . .	Plate	1
29	. . . . .	Capscrew	2
30	. . . . .	Plug	1
31	. . . . .	Plug	2
32	. . . . .	Plug	1
33	1329425	Screw	4
34	. . . . .	Washer	4
35	1329426	Piston Rod	1
36	1382494	Piston	1
37	1329428	Kit-Piston Ring	1
38	. . . . .	Bearing Set	1
39	. . . . .	Bolt	2
40	. . . . .	Key (Woodruff)	1
	1382033	Kit-Repair Compressor	1
	1350665	Kit-Gasket	1

©2010 HYSTER COMPANY

AIR COMPRESSOR (FIGURE 7-10)

(→ S/N D019D01756 INC. 1758 EXC. 1753) (U563739X →)

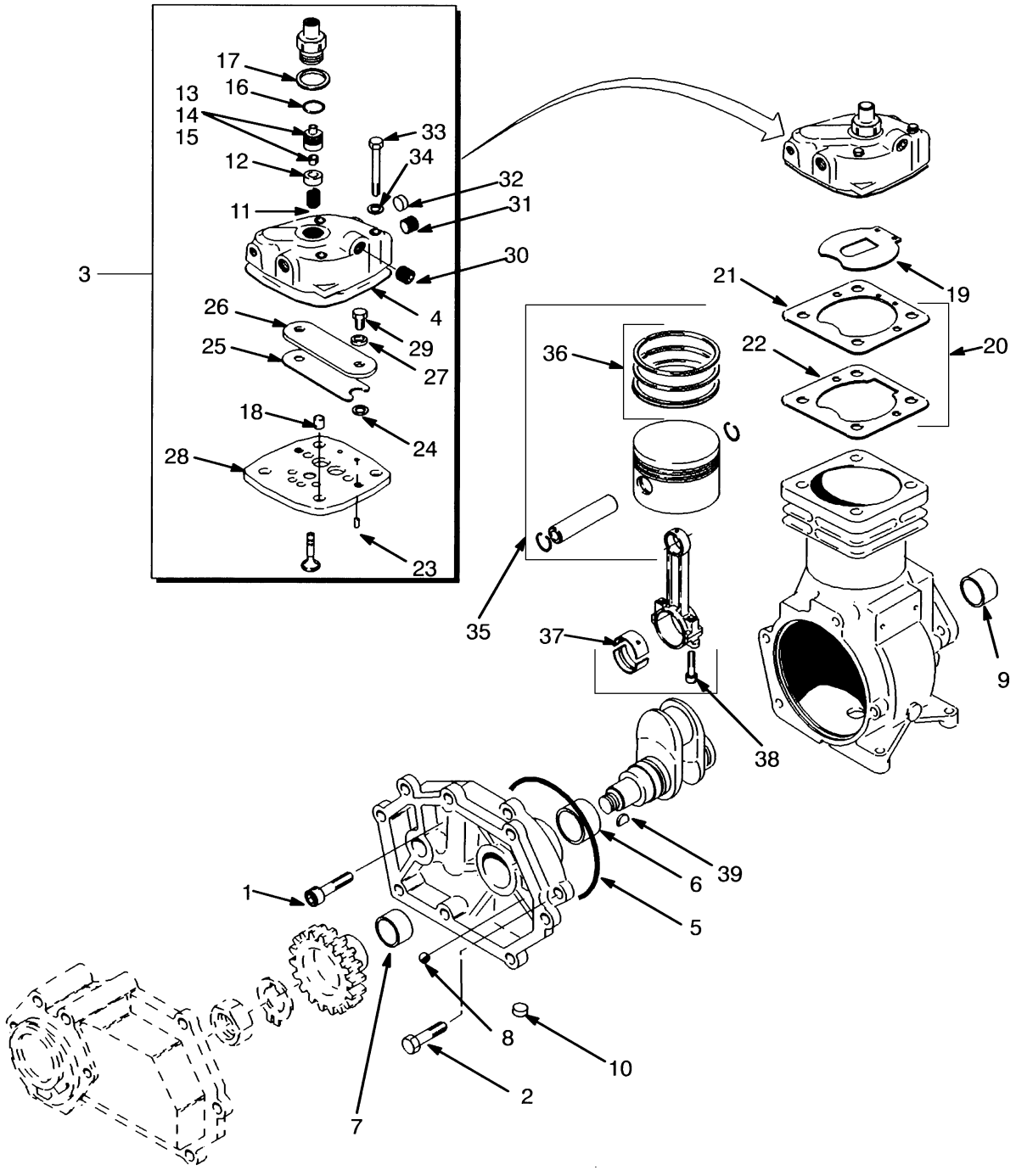

©2010 HYSTER COMPANY

AIR COMPRESSOR

(→ S/N D019D01756 INC. 1758 EXC. 1753) (U563739X →)

ITEM	PART NO.	DESCRIPTION	QTY
	1382485	Compressor	1
1	1329417	Screw	3
2	1329418	Screw	1
3	1329419	Cylinder Head	1
4	1329420	Gasket	1
5	. . . . .	O-Ring	1
6	. . . . .	Bushing	1
7	. . . . .	Bushing	1
8	. . . . .	Ball	1
9	. . . . .	Bushing	1
10	1382491	Plug	2
11	. . . . .	Seat	1
12	. . . . .	Bushing	1
13	. . . . .	Spring	1
14	. . . . .	Guide	1
15	. . . . .	Collar	2
16	. . . . .	O-Ring	1
17	. . . . .	Washer	1
18	. . . . .	Pin	2
19	. . . . .	Disk	1
20	. . . . .	Gasket Kit	1
21	1350666	Gasket	1
22	1350667	Gasket	1
23	. . . . .	Pin	2
24	. . . . .	Disk	1
25	. . . . .	Valve Disk	1
26	. . . . .	Plate	1
27	. . . . .	Sleeve	2
28	1382492	Plate	1
29	. . . . .	Capscrew	2
30	. . . . .	Plug	1
31	. . . . .	Plug	2
32	. . . . .	Plug	1
33	. . . . .	Screw	4
34	. . . . .	Washer	4
35	1382494	Piston	1
36	1329428	Kit-Piston Ring	1
37	1382493	Tube Wldmt-Cylinder	1
38	. . . . .	Bolt	2
39	. . . . .	Key (Woodruff)	1
	1350665	Kit-Gasket	1

©2010 HYSTER COMPANY

AIR COMPRESSOR (FIGURE 7-11)

(S/N D019D01757 → INC. 1753 EXC. 1758) (→ U593028)

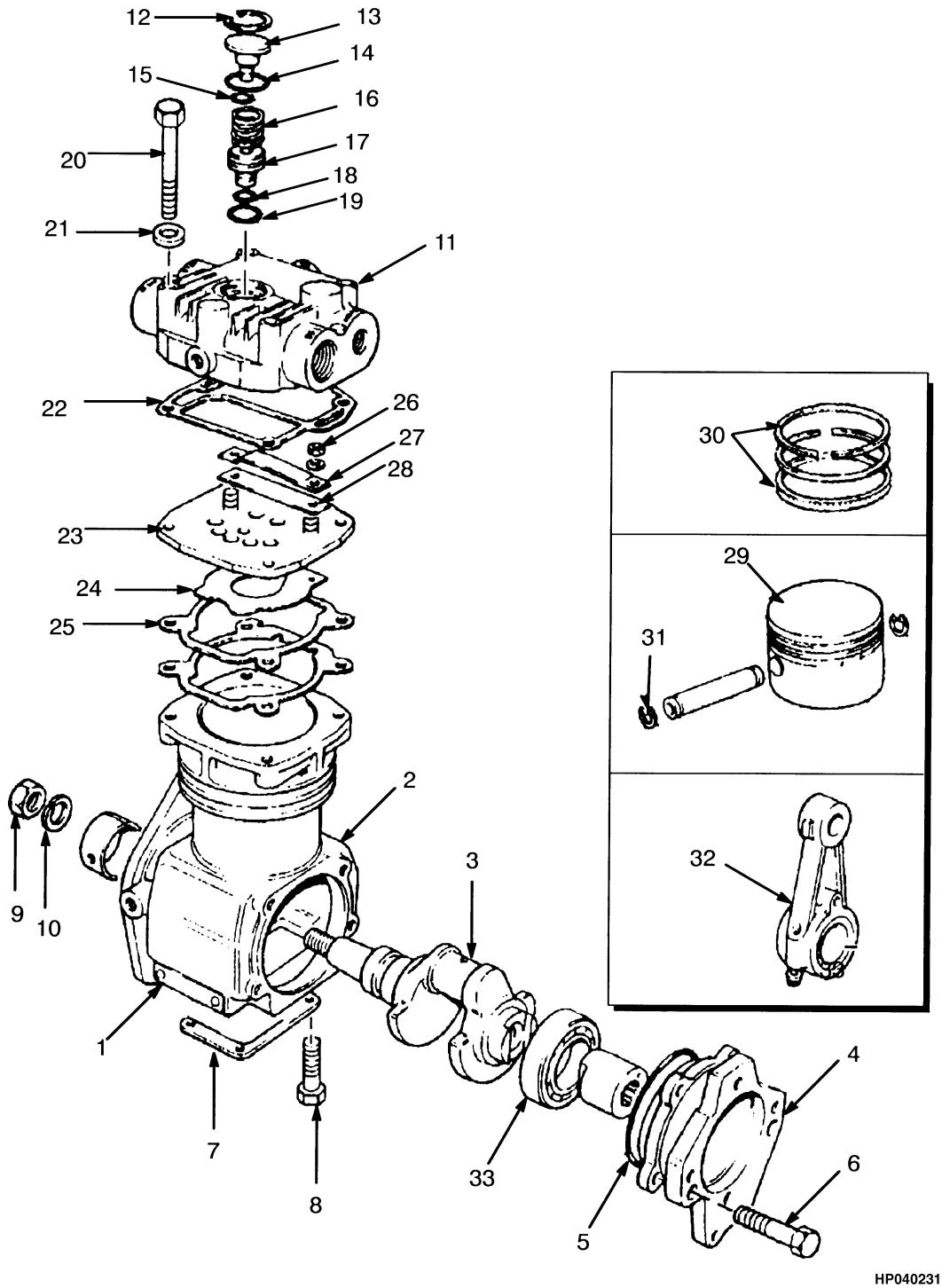

©2010 HYSTER COMPANY

AIR COMPRESSOR

(S/N D019D01757 → INC. 1753 EXC. 1758) (→ U593028)

ITEM	PART NO.	DESCRIPTION	QTY
1	1379772	Compressor	1
2	1380215	Housing	1
3	. . . . .	Crankshaft	1
4	1380216	Cover	1
5	1380217	O-Ring	1
6	1380218	Screw	4
7	1380219	Cover	1
8	1380220	Screw	4
9	1380221	Nut	1
10	1380222	Washer	1
11	1380223	Kit-Cylinder Head	1
12	1380224	Snap Ring	1
13	1380225	Cap	1
14	1380226	O-Ring	1
15	1380227	O-Ring	1
16	1380228	Spring	1
17	1380229	Plunger	1
18	1380230	O-Ring	1
19	1380231	O-Ring	1
20	1380232	Bolt	4
21	1380233	Washer	4
22	1380234	Gasket	1
23	1380235	Plate	1
24	1380236	Gasket	1
25	1380237	Gasket	1
26	. . . . .	Nut	1
27	. . . . .	Valve	1
28	. . . . .	Valve	1
29	1380238	Kit-Piston	1
29	. . . . .	Piston	1
29	. . . . .	Pin	1
30	1385683	Kit-Piston Ring	1
31	. . . . .	Snap Ring	2
32	1380239	Piston Rod	1
32	. . . . .	Connecting Rod	1
32	. . . . .	Bearing	1
33	. . . . .	Ball Bearing	1

©2010 HYSTER COMPANY

AIR COMPRESSOR (FIGURE 7-12)

(U593029 ↔ U607097)

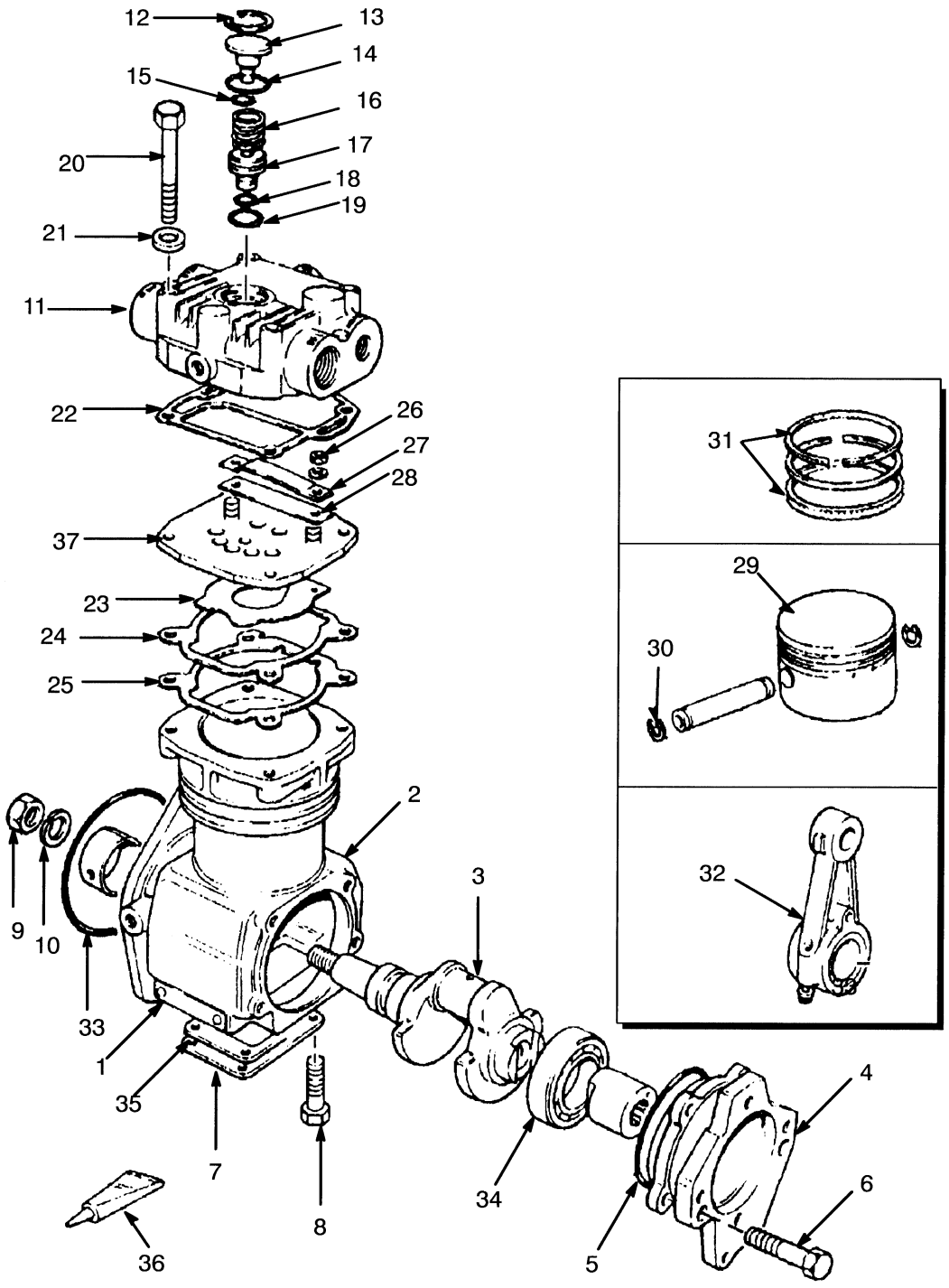

©2010 HYSTER COMPANY

AIR COMPRESSOR
(U593029 ↔ U607097)

ITEM	PART NO.	DESCRIPTION	QTY
1	1385674	Compressor	1
2	. . . . .	Housing	1
3	. . . . .	Crankshaft	1
4	. . . . .	Cover	1
5	. . . . .	O-Ring	1
6	. . . . .	Screw	4
7	. . . . .	Cover	1
8	. . . . .	Screw	4
9	. . . . .	Nut	1
10	. . . . .	Washer	1
11	. . . . .	Cylinder Head	1
12	. . . . .	Snap Ring	1
13	. . . . .	Cap	1
14	. . . . .	O-Ring	1
15	. . . . .	O-Ring	1
16	. . . . .	Spring	1
17	. . . . .	Plunger	1
18	. . . . .	O-Ring	1
19	. . . . .	O-Ring	1
20	. . . . .	Bolt	4
21	. . . . .	Washer	4
22	. . . . .	Gasket	1
23	. . . . .	Valve Inlet	1
24	. . . . .	Gasket (Head)	1
25	. . . . .	Gasket (Head)	1
26	. . . . .	Nut	1
27	. . . . .	Valve	1
28	. . . . .	Valve	1
29	1385682	Kit-Piston	1
29	. . . . .	Piston	2
29	. . . . .	Pin	1
30	. . . . .	Snap Ring	1
31	1385683	Kit-Piston Ring	1
32	1385684	Kit-Piston Rod	1
32	. . . . .	Connecting Rod	1
32	. . . . .	Bearing	1
33	. . . . .	O-Ring	1
34	385895	Ball Bearing	1
35	. . . . .	Gasket	1
36	. . . . .	Grease	1
37	. . . . .	Plate	1
	1385679	Kit-Gasket	1
	1385681	Kit-Valve	1

©2010 HYSTER COMPANY

AIR COMPRESSOR (FIGURE 7-13)

(S/N D019D02377 ↔ S/N D019D02997X) (U607098 →)

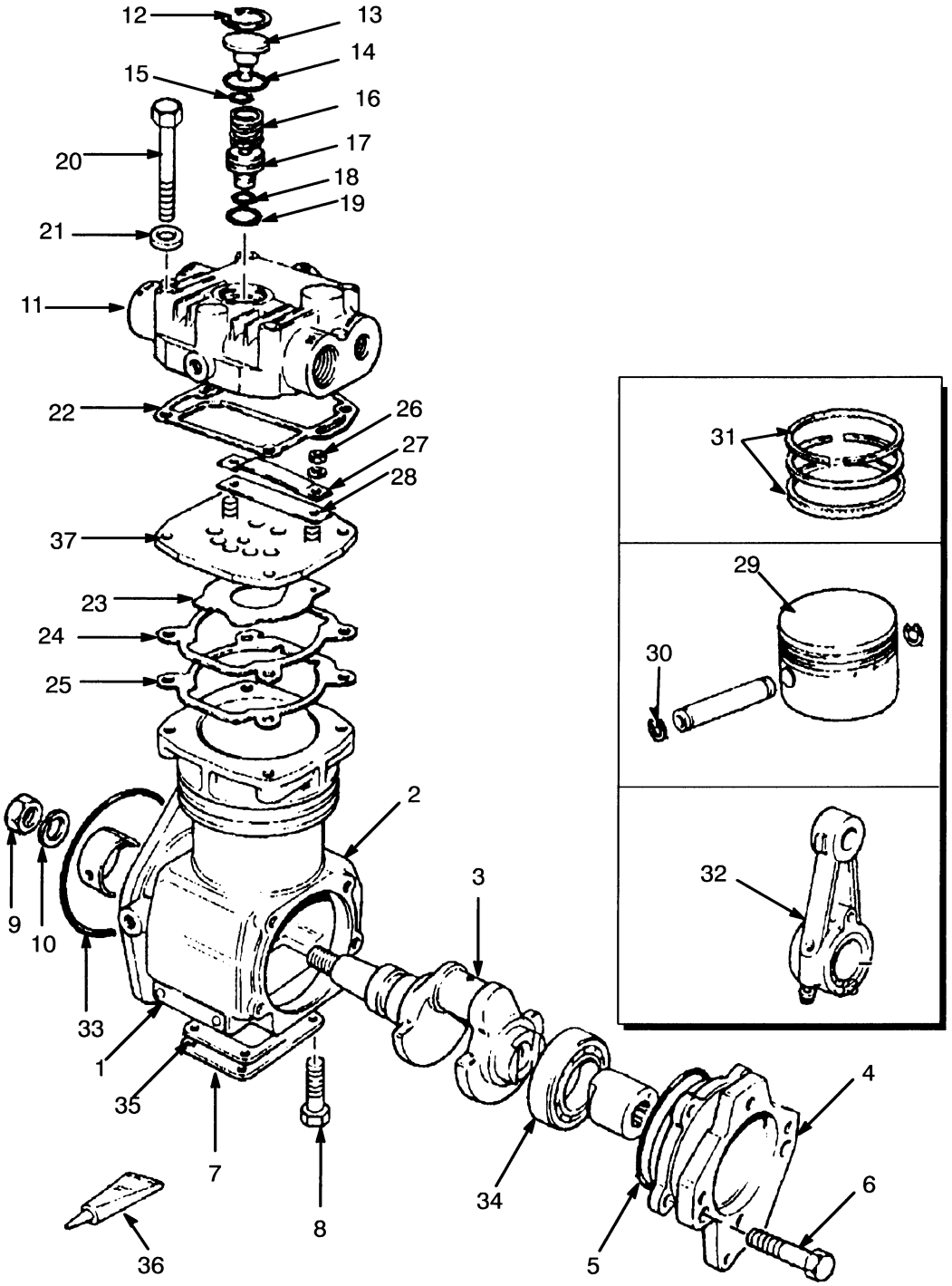

©2010 HYSTER COMPANY

AIR COMPRESSOR

(S/N D019D02377 ↔ S/N D019D02997X) (U607098 →)

ITEM	PART NO.	DESCRIPTION	QTY
1	1391791	Compressor (Without Low Emissions)	1
2	. . . . .	Housing	1
3	. . . . .	Crankshaft	1
4	. . . . .	Cover	1
5	. . . . .	O-Ring	1
6	. . . . .	Screw	4
7	. . . . .	Cover	1
8	. . . . .	Screw	4
9	. . . . .	Nut	1
10	. . . . .	Washer	1
11	. . . . .	Cylinder Head	1
12	. . . . .	Snap Ring	1
13	. . . . .	Cap	1
14	. . . . .	O-Ring	1
15	. . . . .	O-Ring	1
16	. . . . .	Spring	1
17	. . . . .	Plunger	1
18	. . . . .	O-Ring	1
19	. . . . .	O-Ring	1
20	. . . . .	Bolt	4
21	. . . . .	Washer	4
22	. . . . .	Gasket	1
23	. . . . .	Valve Inlet	1
24	. . . . .	Gasket (Head)	1
25	. . . . .	Gasket (Head)	1
26	. . . . .	Nut	1
27	. . . . .	Valve	1
28	. . . . .	Valve	1
29	1385682	Kit-Piston	1
29	. . . . .	Piston	2
29	. . . . .	Pin	1
30	. . . . .	Snap Ring	1
31	1385683	Kit-Piston Ring	1
32	1385684	Kit-Piston Rod	1
32	. . . . .	Connecting Rod	1
32	. . . . .	Bearing	1
33	. . . . .	O-Ring	1
34	385895	Ball Bearing	1
35	. . . . .	Gasket	1
36	. . . . .	Grease	1
37	. . . . .	Plate	1
	1385679	Kit-Gasket	1
	1385681	Kit-Valve	1
	1677634	Kit	1

©2010 HYSTER COMPANY

AIR COMPRESSOR AND ATTACHING PARTS (FIGURE 7-14)

(S/N D019D02998X →)

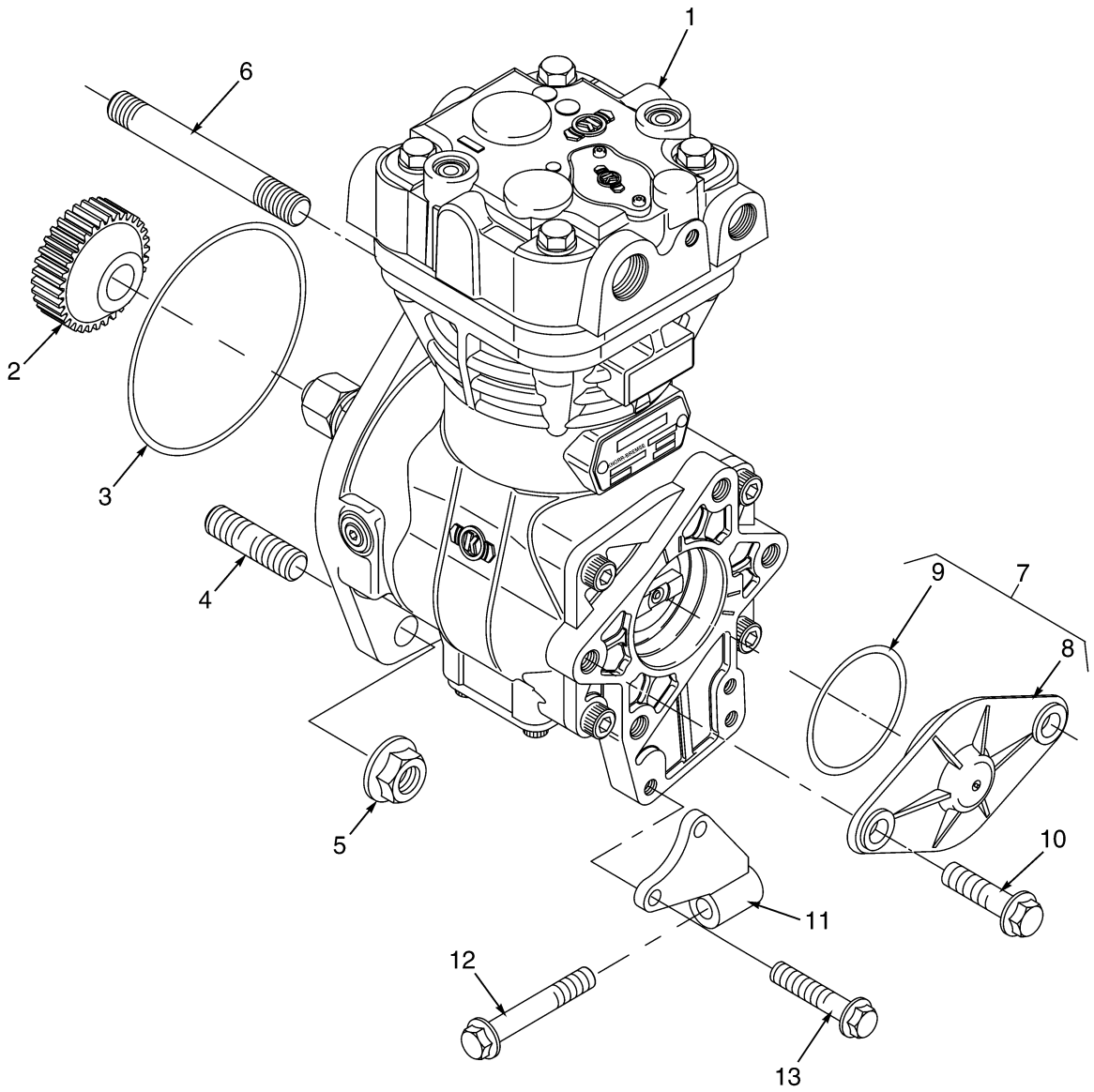

BP090045

©2010 HYSTER COMPANY

AIR COMPRESSOR AND ATTACHING PARTS

(S/N D019D02998X →)

ITEM	PART NO.	DESCRIPTION	QTY
1	1495255	Compressor (With Low Emissions)	1
2	1319027	Gear	1
3	1380214	O-Ring	1
4	1380210	Stud	1
5	1370949	Nut	1
6	1380211	Stud	1
7	1497394	Plate	1
8	. . . . .	Plate	1
9	1497395	O-Ring	1
10	1311074	Screw	2
11	1537298	Bracket	1
12	1306365	Screw	1
13	386459	Screw	2

©2010 HYSTER COMPANY

AIR COMPRESSOR (FIGURE 7-15)

SHEET 1 OF 2 (S/N D019D02998X →)

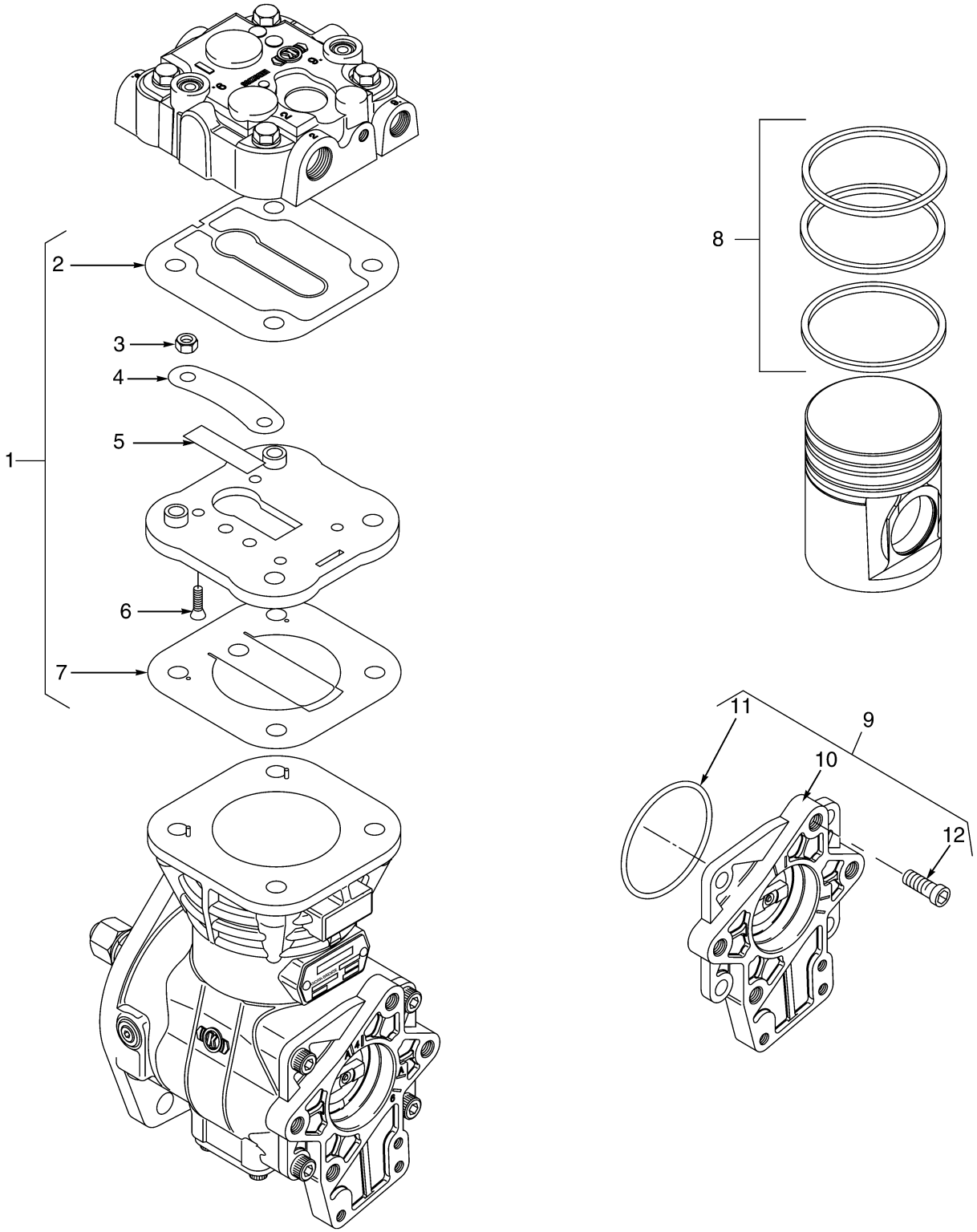

©2010 HYSTER COMPANY

AIR COMPRESSOR

SHEET 1 OF 2 (S/N D019D02998X →)

ITEM	PART NO.	DESCRIPTION	QTY
	1495255	Compressor (With Low Emissions)	1
1	1497404	Kit-Valve	1
2	. . . . .	Head Gasket	1
3	. . . . .	Nut	2
4	. . . . .	Bridge	1
5	. . . . .	Connector	1
6	. . . . .	Screw	1
7	. . . . .	Connection	2
8	1497405	Kit-Piston Ring	1
9	1497406	Kit-Cover	1
10	. . . . .	End Cover	1
11	. . . . .	O-Ring	1
12	. . . . .	Screw	4

©2010 HYSTER COMPANY

AIR COMPRESSOR (FIGURE 7-16)

SHEET 2 OF 2 (S/N D019D02998X →)

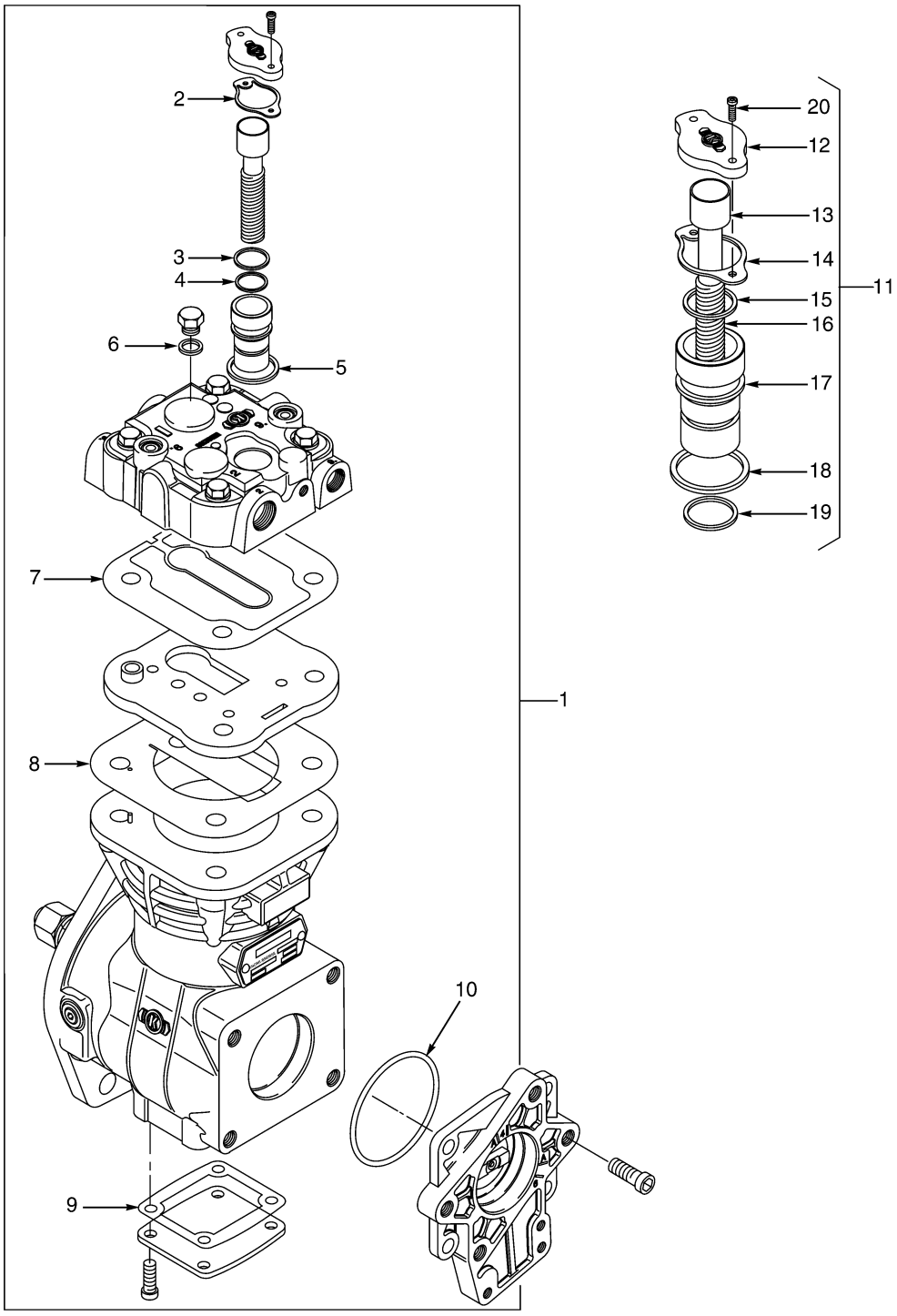

BP090047

©2010 HYSTER COMPANY

AIR COMPRESSOR

SHEET 2 OF 2 (S/N D019D02998X →)

ITEM	PART NO.	DESCRIPTION	QTY
	1495255	Compressor (With Low Emissions)	1
1	1497402	Kit-Seal	1
2	. . . . .	Gasket	1
3	. . . . .	O-Ring	1
4	. . . . .	O-Ring	1
5	. . . . .	O-Ring	1
6	. . . . .	Washer	1
7	. . . . .	Head Gasket	1
8	. . . . .	Gasket (Inlet)	1
9	. . . . .	Gasket (Pan)	1
10	. . . . .	O-Ring	1
11	1497403	Kit-Piston	1
12	. . . . .	Cap	1
13	. . . . .	Piston	1
14	. . . . .	Gasket	1
15	. . . . .	O-Ring	1
16	. . . . .	Spring	1
17	. . . . .	Piston	1
18	. . . . .	O-Ring	1
19	. . . . .	O-Ring	1
20	. . . . .	Screw	2

©2010 HYSTER COMPANY

AIR COMPRESSOR (FIGURE 7-17)
366 LPG ENGINE

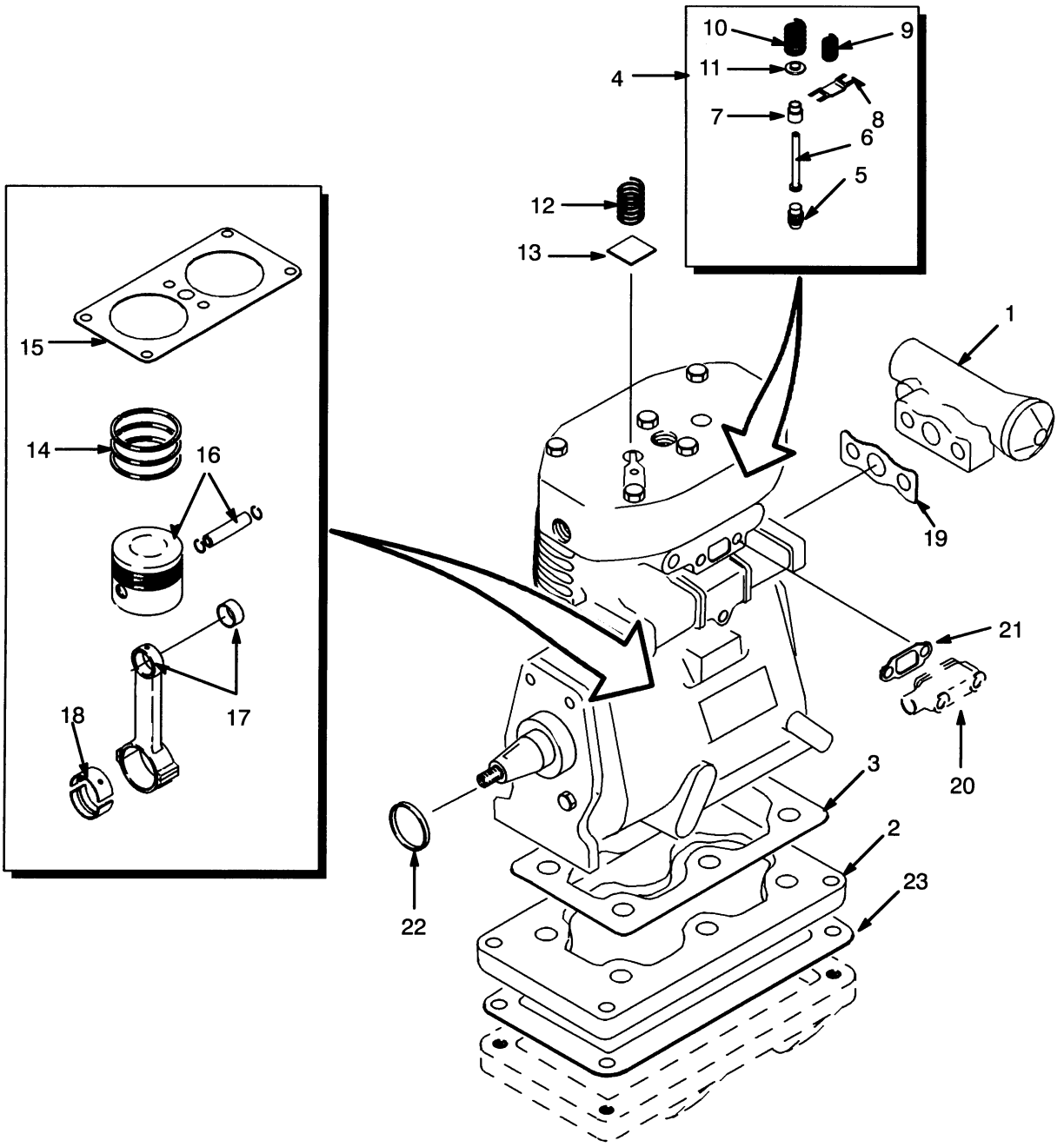

©2010 HYSTER COMPANY

AIR COMPRESSOR
366 LPG ENGINE

ITEM	PART NO.	DESCRIPTION	QTY
	a 894515	Compressor	1
	24236	Nut	1
	17253	Woodruff Key	1
	362812	Ball Bearing	1
	362807	Thrust Washer	1
	1455254	Crankshaft Bearing	1
1	385251	Governor	1
2	1452110	Adapter	1
3	1452925	Gasket	1
4	1452077	Kit-Unloader	1
5	1452082	Piston	2
6	1452086	Plunger	2
7	1452085	Guide	2
8	1452087	Spring	1
9	. . . . .	Saddle	1
10	1452084	Spring	1
11	1452083	Spring Seat	1
12	235832	Spring	1
13	235831	Valve	1
13	235830	Guide	1
14	1452088	Kit-Piston Ring (Standard)	1
14	1452079	Kit-Piston Ring (0.001 in. O/S)	1
14	1452097	Kit-Piston Ring (0.002 in. O/S)	1
14	1452098	Kit-Piston Ring (0.003 in. O/S)	1
15	1452081	Cylinder Head Gasket	1
16	1452099	Kit-Piston (Standard)	1
16	1452100	Kit-Piston (0.001 in. O/S)	1
16	1452101	Kit-Piston (0.002 in. O/S)	1
16	1452102	Kit-Piston (0.003 in. O/S)	1
17	1452103	Kit-Piston Rod	1
18	1452104	Bearing Set (Standard)	1
18	1452105	Bearing Set (0.010 in. O/S)	1
18	1452106	Bearing Set (0.020 in. O/S)	1
18	1452107	Bearing Set (0.030 in. O/S)	1
19	235796	Gasket	1
20	200445	Breather	1
21	1452080	Gasket	1
22	151557	Oil Seal	1
23	235811	Gasket	1
	1452076	Kit-Repair Compressor	1
	1452096	Kit-Gasket	1

FOOTNOTES:

a Remanufactured Compressor 1452074

©2010 HYSTER COMPANY

COMPRESSOR MOUNTING (FIGURE 7-18)

LPG

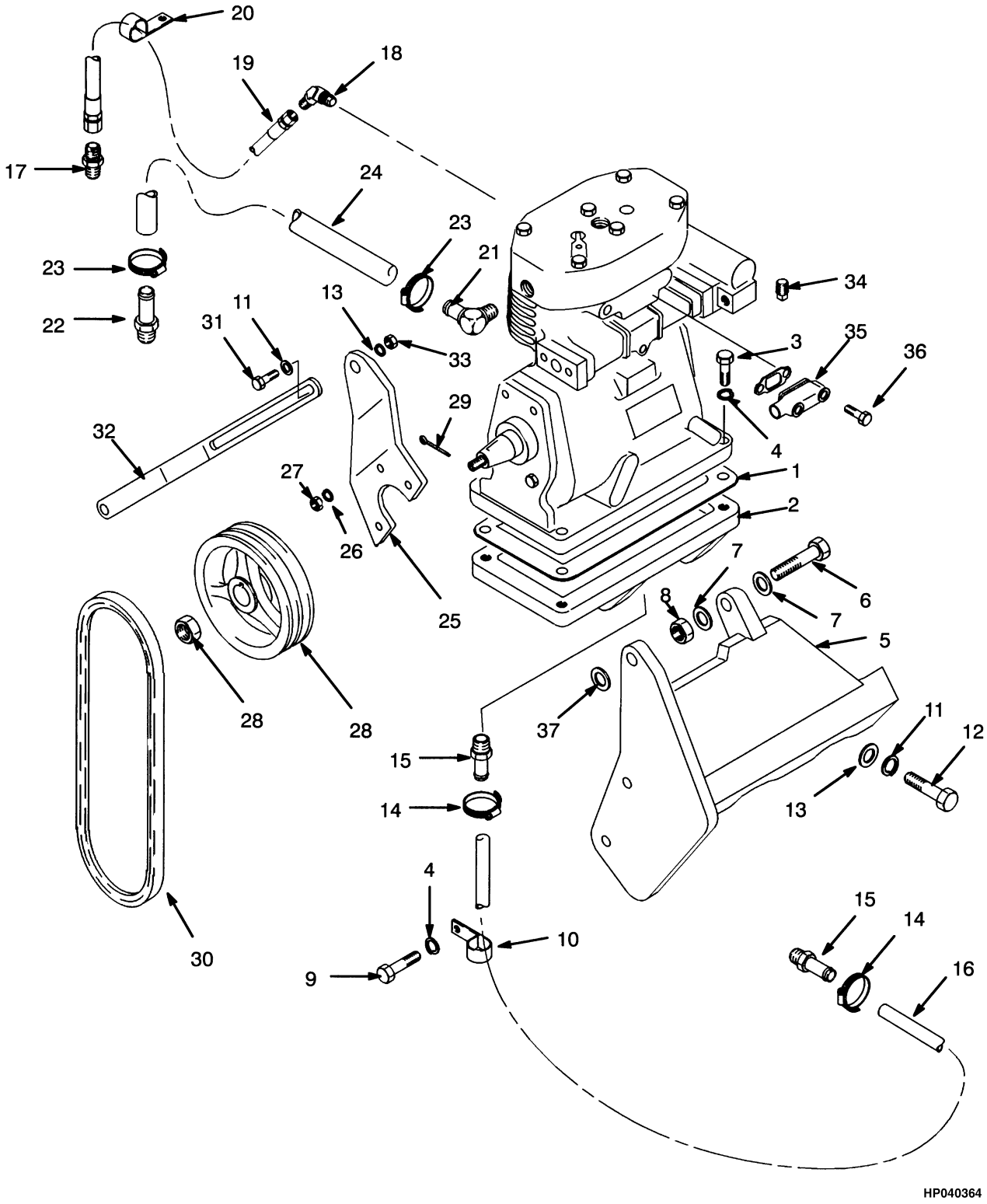

©2010 HYSTER COMPANY

COMPRESSOR MOUNTING
LPG

ITEM	PART NO.	DESCRIPTION	QTY
	894515	Compressor	1
1	. . . . .	Cover	1
2	894516	Bracket	1
3	18557	Capscrew	4
4	15157	Lockwasher	6
5	894550	Bracket	1
6	292564	Capscrew	2
7	320166	Washer	4
8	316828	Nut	2
9	131137	Capscrew	2
10	153070	Clamp	1
11	15176	Washer	3
12	16816	Capscrew	2
13	15156	Lockwasher	3
14	166857	Clamp	2
15	16764	Fitting	2
16	110279	Hose	1
17	14668	Fitting	1
18	14538	Fitting	1
19	894557	Hose	1
20	128408	Clamp	1
21	16155	Fitting	1
22	138710	Fitting	1
23	130845	Clamp	2
24	3001530	Hose	1
25	894519	Bracket	1
26	18515	Washer	3
27	222666	Nut	3
28	155510	Pulley	1
28	. . . . .	Nut	1
29	15224	Cotter Pin	1
30	155442	V-Belt	1
31	16828	Capscrew	1
32	**a** 894559	Adjuster	1
32	**b** 894881	Strap	1
33	15056	Nut	1
34	200445	Breather	1
35	894574	Adapter	1
36	16835	Capscrew	2
37	894575	Shim	1

FOOTNOTES:

a → S/N D019D02478

b S/N D019D02479 →

©2010 HYSTER COMPANY

TREADLE VALVE (FIGURE 7-19)
SHEET 1

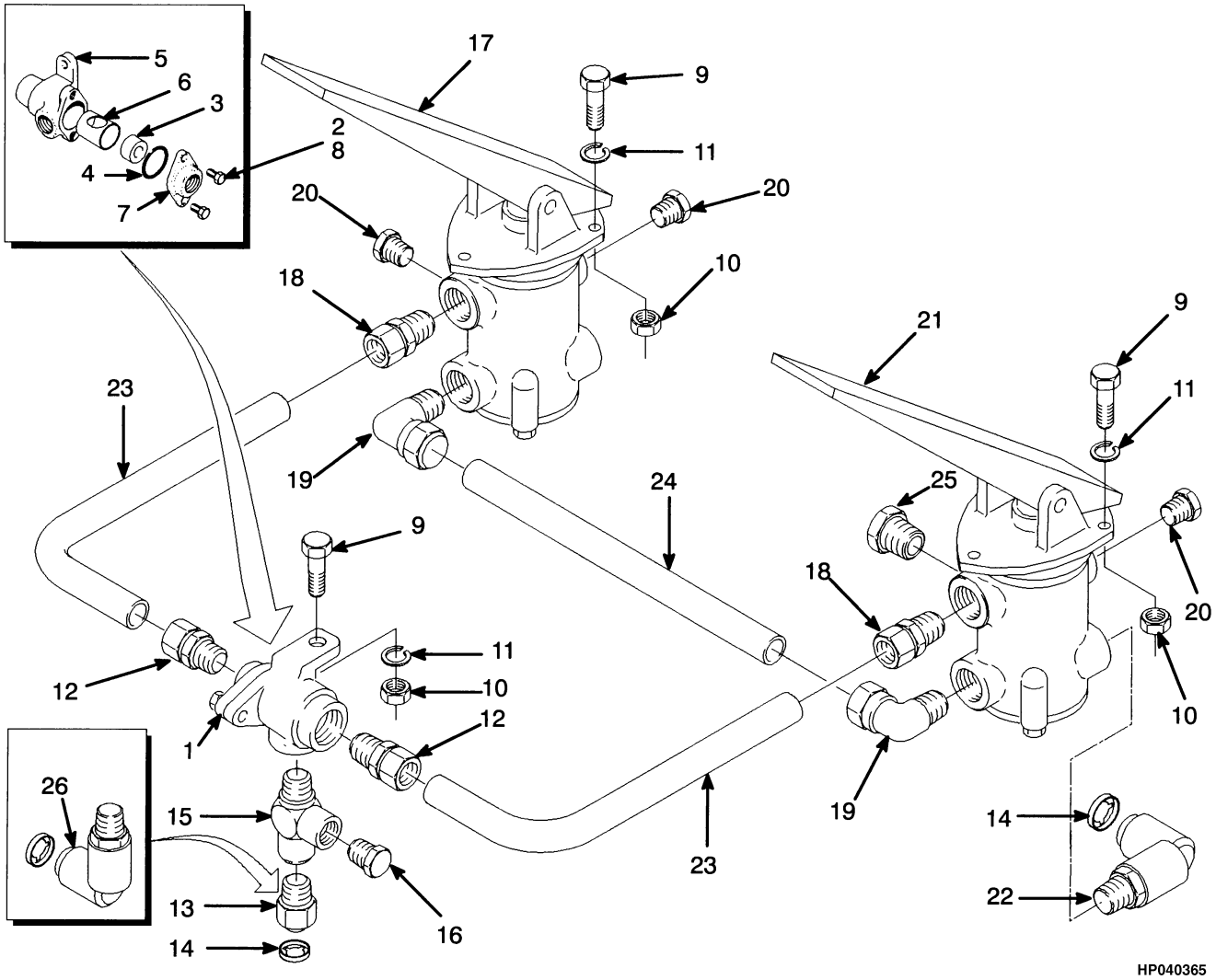

©2010 HYSTER COMPANY

TREADLE VALVE
SHEET 1

ITEM	PART NO.	DESCRIPTION	QTY
1	1326100	Check Valve	1
2	1322343	Washer	1
3	1322344	Shuttle Valve	1
4	1322322	O-Ring	1
5	1322346	Body	1
6	1322347	Guide	1
7	1322348	Cap	1
8	1322349	Screw	2
9	176640	Bolt	7
10	239503	Nut	7
11	292681	Lockwasher	7
12	1301539	Fitting	2
13	1331048	Quick Disconnect Fitting	1
13	1325380	Quick Disconnect Fitting (With Noise Reduction)	1
14	1331049	Cap	2
15	154452	Fitting	1
16	14386	Fitting	1
17	352013	Valve (Brake) (☞Figure 7-24)	1
18	1301540	Fitting	2
19	1301543	Fitting	2
20	14387	Fitting (Forward/Reverse Lever)	4
21	1327751	Valve (Inching) (☞Figure 7-24)	1
22	1331047	Quick Disconnect Fitting	1
23	322792	Tube	2
24	1301689	Tube	1
25	12844	Fitting (Monotrol Pedal)	1
26	1301544	Fitting (Forward/Reverse Lever)	1

©2010 HYSTER COMPANY

PARK BRAKE ATTACHING PARTS (FIGURE 7-20)

(→ S/N D019D01521)

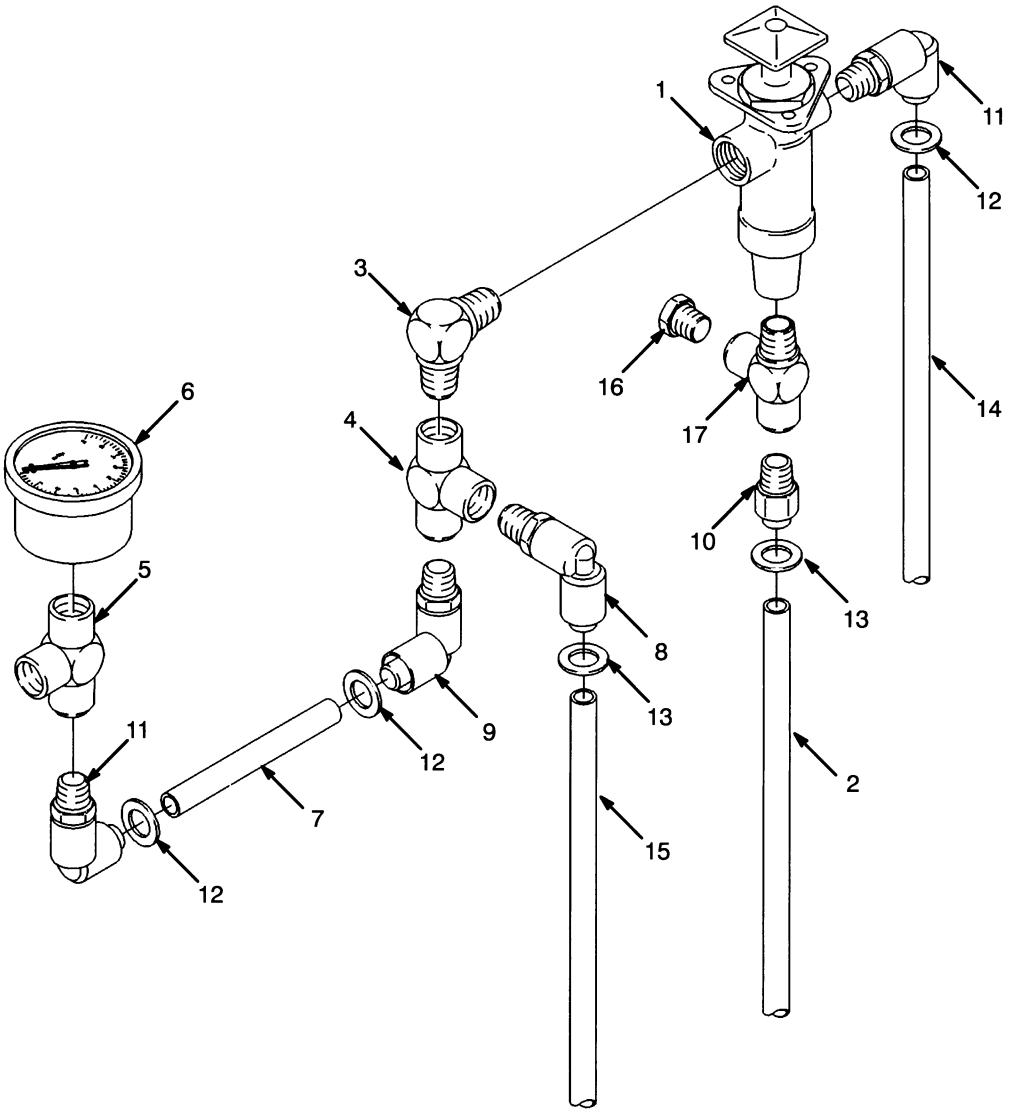

©2010 HYSTER COMPANY

PARK BRAKE ATTACHING PARTS

(→ S/N D019D01521)

ITEM	PART NO.	DESCRIPTION	QTY
1	160268	Parking Brake Valve (☞Figure 7-25)	1
2	358458	Tube	1
3	16841	Fitting	1
4	63111	Fitting	1
5	12838	Fitting	1
6	1311376	Gauge	1
7	1301550	Tube	1
8	1301429	Quick Disconnect Fitting	1
9	1301428	Quick Disconnect Fitting	1
10	1301430	Quick Disconnect Fitting	1
11	1301433	Quick Disconnect Fitting	2
12	1301434	Button	3
13	1301435	Cap	2
14	217977	Hose	1
15	217977	Hose	1
16	16187	Fitting	1
17	17216	Fitting	1

©2010 HYSTER COMPANY

PARK BRAKE ATTACHING PARTS (FIGURE 7-21)

(S/N D019D01522 →)

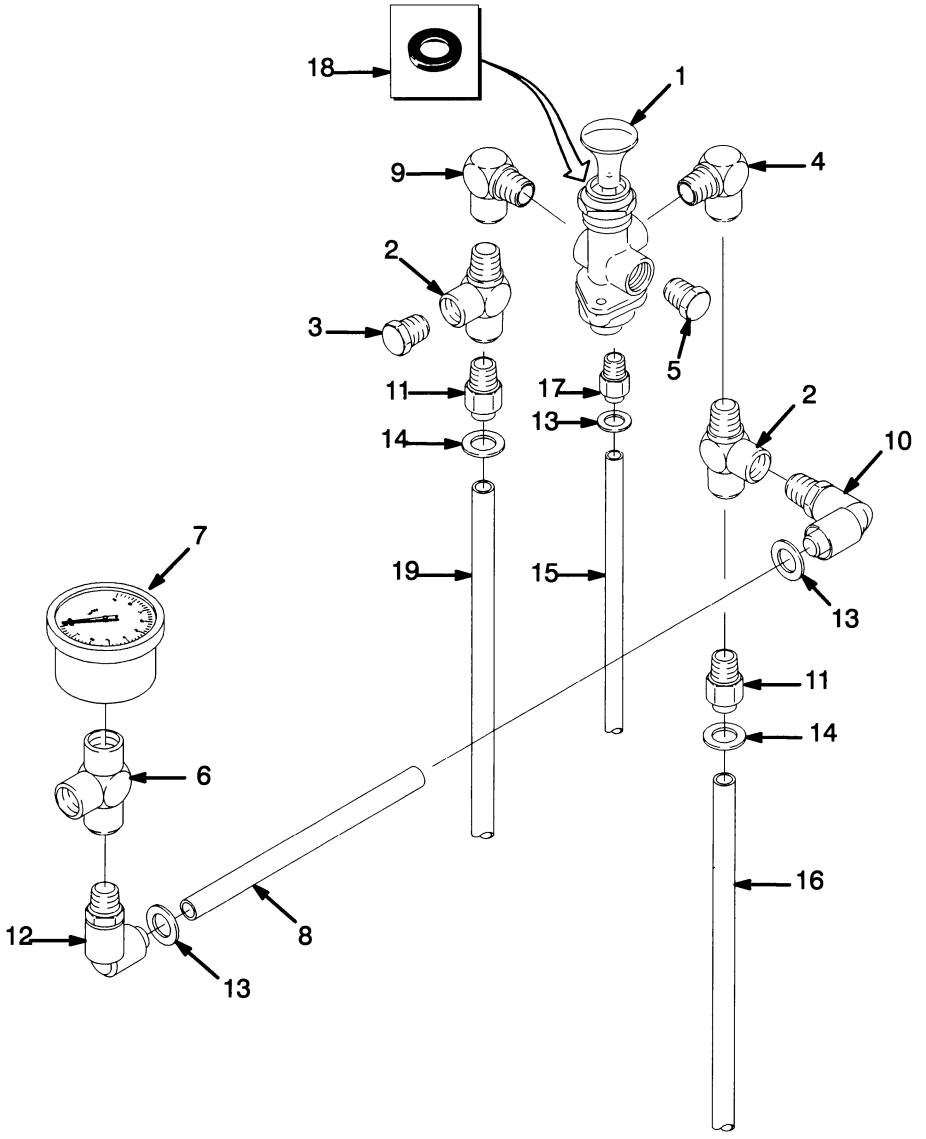

HP040367

©2010 HYSTER COMPANY

PARK BRAKE ATTACHING PARTS

(S/N D019D01522 →)

ITEM	PART NO.	DESCRIPTION	QTY
1	1357437	Valve (Park Brake) (☞Figure 7-26)	1
2	17216	Fitting	2
3	16187	Fitting	1
4	17736	Fitting	1
5	14385	Fitting	1
6	12838	Fitting	1
7	1311376	Gauge	1
8	139727	Tube	1
9	17314	Fitting	1
10	1301428	Quick Disconnect Fitting	1
11	1301430	Quick Disconnect Fitting	2
12	1301433	Quick Disconnect Fitting	1
13	1301434	Button	3
14	1301435	Cap	2
15	139728	Tube	1
16	217977	Hose	1
17	1359661	Fitting	1
18	1357237	Wiper	1
19	358458	Tube	1

©2010 HYSTER COMPANY

BRAKE SYSTEM (FIGURE 7-22)

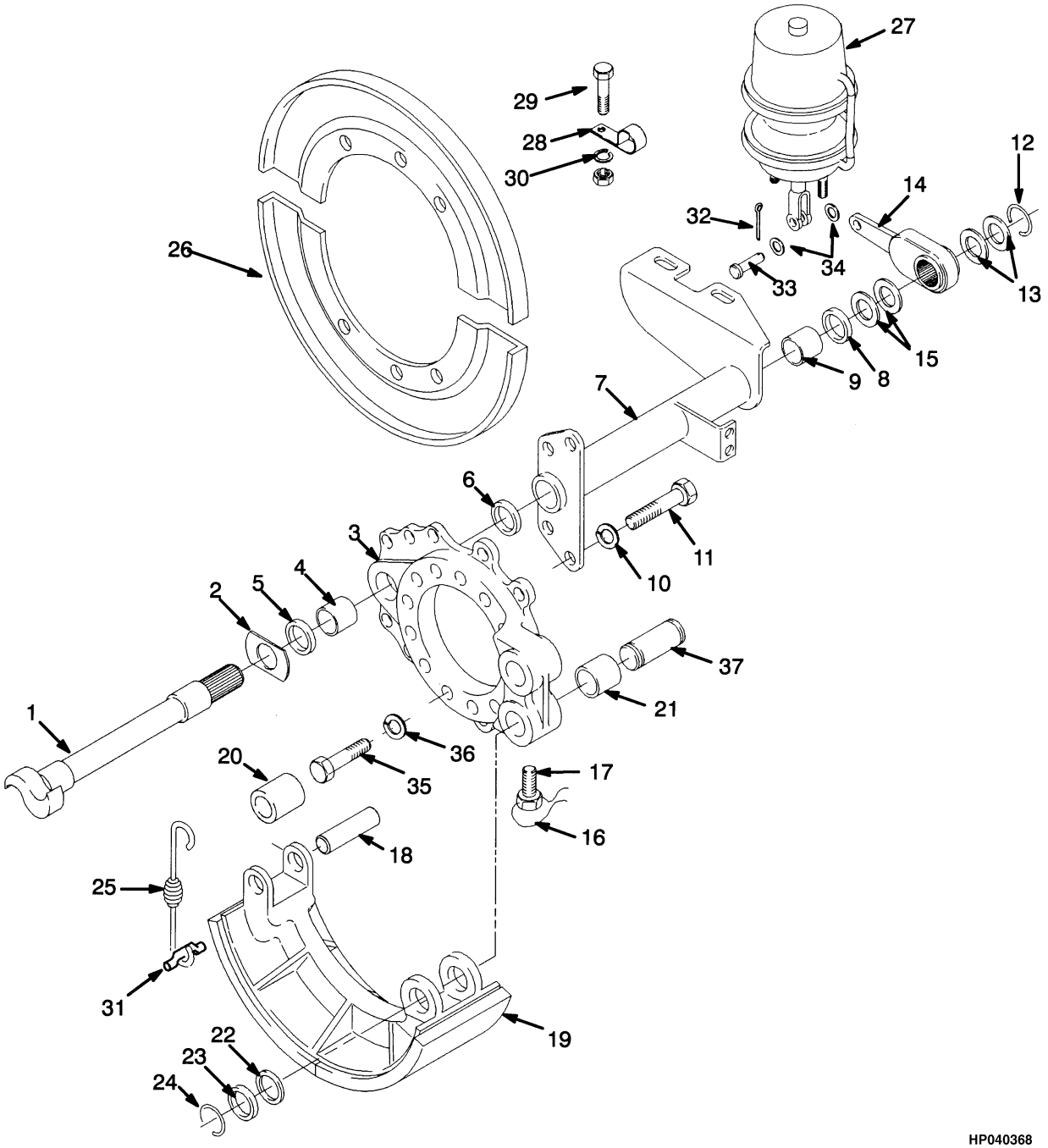

©2010 HYSTER COMPANY

BRAKE SYSTEM

KEY:
A: Non-EC and EC-3
B: EC-4

ITEM	PART NO.	DESCRIPTION	QTY A	QTY B
1	1312608	Brake Camshaft (LH)	1	..
1	1329703	Brake Camshaft (LH)	..	1
1	1312609	Brake Camshaft (RH)	1	..
1	1329704	Brake Camshaft (RH)	..	1
2	1455057	Washer	2	2
3	1329705	Spider	2	2
4	97647	Bushing	1	1
5	301986	Seal	1	1
6	1374086	O-Ring	2	2
7	1333923	Bracket (RH)	1	..
7	1329707	Bracket (RH)	..	1
7	1333924	Bracket (LH)	1	..
7	1329708	Bracket (LH)	..	1
8	301986	Seal	1	1
9	97647	Bushing	1	1
10	88587	Washer	8	8
11	200454	Capscrew	8	8
12	122400	Snap Ring	2	2
13	1374588	Washer	2	2
14	1455058	Adjuster (10 Large Teeth)	2	2
14	**a** 1489317	Adjuster (Optional, 30 Small Teeth)	2	2
15	322428	Washer	4	4
16	296734	Cable	4	4
17	200465	Capscrew	4	4
18	1315648	Pin	4	4
19	1374591	Brake Shoe	4	4
19	1377888	Brake Shoe	1	1
19	1354439	Kit-Brake Lining	1	1
19	200591	Rivet	AR	AR
20	1329710	Roller	2	2
21	321703	Bushing	2	2
22	97656	Felt	8	8
23	97657	Retainer	8	10
24	99037	Snap Ring	8	8
25	1316322	Spring (Return)	2	2
26	1346960	Kit-Dust Shield	1	1
27	1374594	Brake Chamber	2	..
27	1329714	Brake Chamber (☞Figure 7-23)	..	2
28	1312614	Clamp	2	2
29	16597	Capscrew	4	4
30	15160	Washer	4	4
31	1316384	Adapter	4	4
32	15223	Cotter Pin	4	4
33	321719	Pin	4	4
34	15160	Washer	4	4
35	166425	Capscrew	12	12

©2010 HYSTER COMPANY

BRAKE SYSTEM

KEY:
A: Non-EC and EC-3
B: EC-4

ITEM	PART NO.	DESCRIPTION	QTY A	QTY B
36	125428	Washer	12	12
37	321298	Pin	2	2
	1382967	Brake Camshaft	1	1

FOOTNOTES:

a Optional

©2010 HYSTER COMPANY

NOTES

©2010 HYSTER COMPANY

BRAKE CHAMBER (FIGURE 7-23)

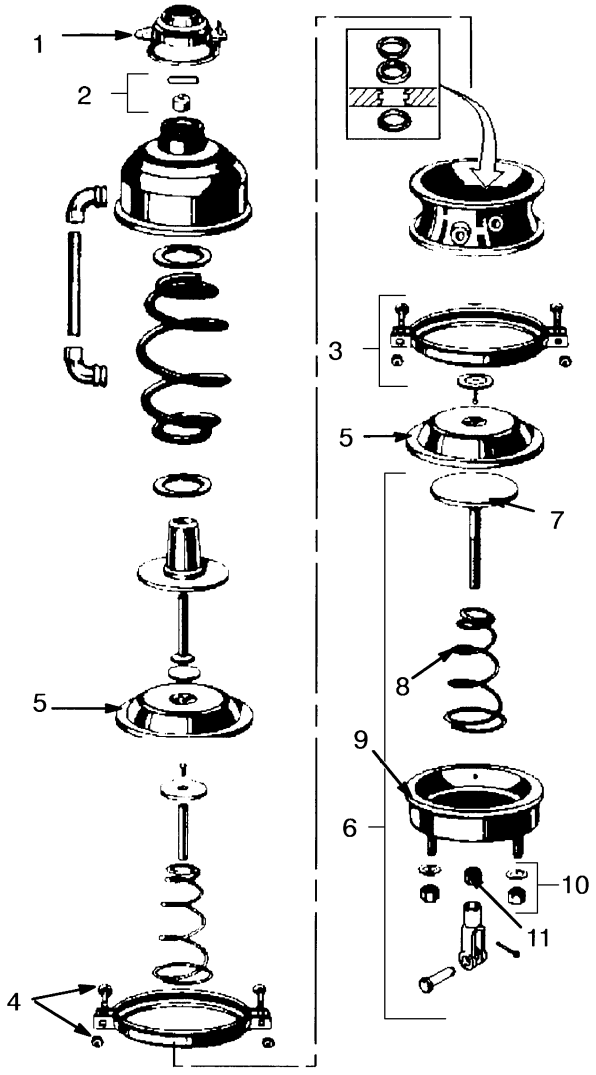

HP040369

©2010 HYSTER COMPANY

BRAKE CHAMBER

ITEM	PART NO.	DESCRIPTION	QTY
	1329714	Brake Chamber	2
1	1309059	End Cap	1
2	1332780	Kit-Breather	1
3	199728	Ring	1
4	1309065	Bolt and Nut Kit	1
5	1309067	Diaphragm	1
6	1309068	Chamber (Non-Pressure)	1
7	199725	Piston and Rod	1
8	263922	Return Spring	1
9	1309071	Brake Chamber (Non-Pressure)	1
10	1309427	Kit-Nut and Washer	1
11	15030	Nut	1

©2010 HYSTER COMPANY

TREADLE VALVE (FIGURE 7-24)
SHEET 2

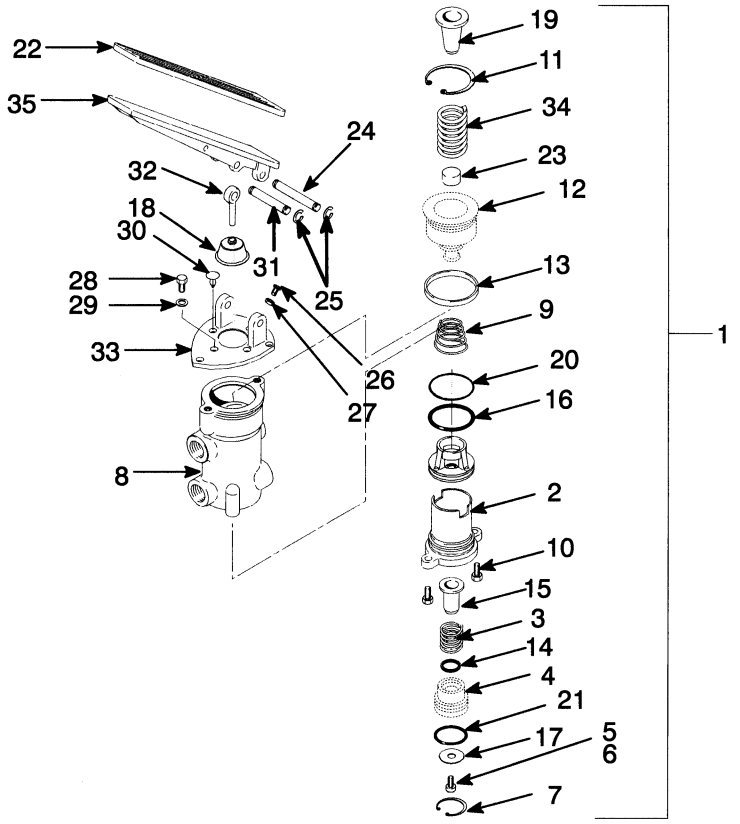

HP040370

©2010 HYSTER COMPANY

TREADLE VALVE
SHEET 2

KEY:
A: Brake Pedal (RH)
B: Inching Pedal (LH)

ITEM	PART NO.	DESCRIPTION	QTY A	QTY B
	352013	Valve	1	..
	1327751	Valve	..	1
1	357426	Valve	1	1
2	128795	Cartridge	1	1
2	. . . . .	Body	..	1
3	. . . . .	Spring	1	1
4	. . . . .	Guide	1	1
5	220283	Screw	1	1
6	222080	Washer	1	1
7	135189	Snap Ring	1	1
8	. . . . .	Body	1	1
9	1312814	Spring	1	1
10	18460	Capscrew	2	2
11	1332078	Snap Ring	1	..
11	1342839	Snap Ring	..	1
12	1331018	Piston	1	1
13	. . . . .	U-Cup	1	1
14	. . . . .	U-Cup	1	1
15	. . . . .	Seat	1	1
16	. . . . .	O-Ring	1	1
17	. . . . .	Disc	1	1
18	. . . . .	Boot	1	1
19	1331014	Cup	1	1
20	. . . . .	O-Ring	1	1
21	. . . . .	O-Ring	1	1
22	166129	Cover	..	1
23	. . . . .	Stop	1	1
24	128779	Pin	1	1
25	12898	Snap Ring	2	2
26	16836	Capscrew	1	1
27	15001	Nut	1	1
28	18479	Capscrew	1	1
29	15918	Lockwasher	1	1
30	. . . . .	Plug	1	1
31	128777	Pin	1	1
32	1331015	Rod	1	1
33	1331017	Mounting Plate	1	1
34	1309403	Spring	1	..
34	1332084	Spring	..	1
35	1334267	Pad	..	1
	357427	Kit-Repair Valve	1	1

©2010 HYSTER COMPANY

PARK BRAKE VALVE (FIGURE 7-25)

(→ S/N D019D01521)

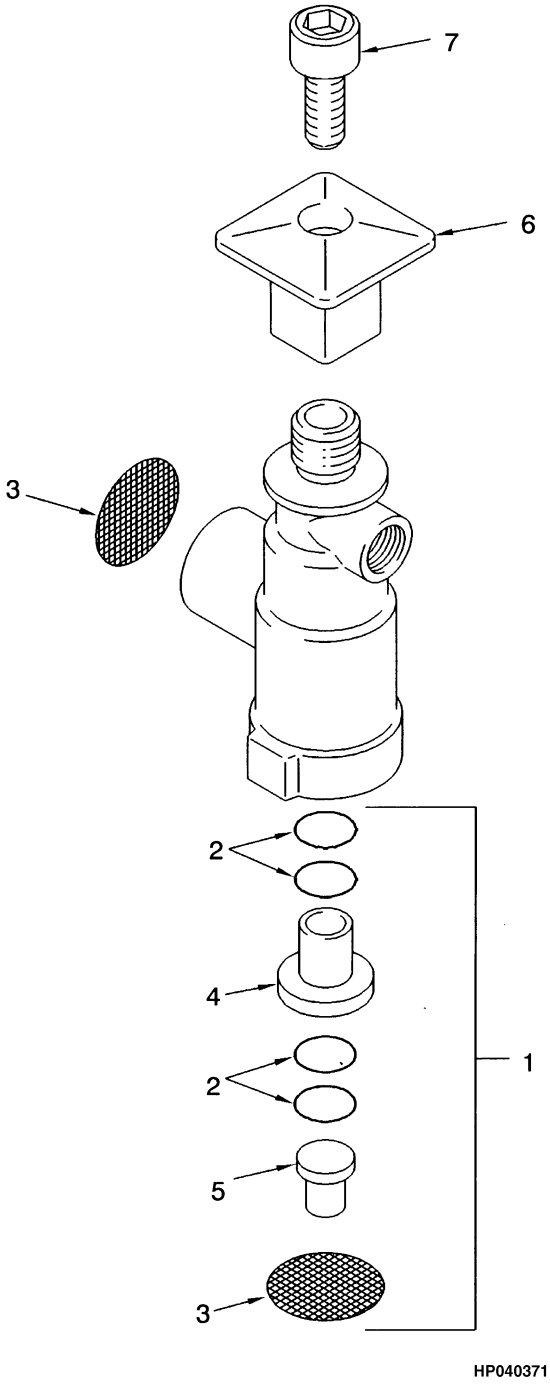

©2010 HYSTER COMPANY

PARK BRAKE VALVE

(→ S/N D019D01521)

ITEM	PART NO.	DESCRIPTION	QTY
	160268	Parking Brake Valve	1
1	165719	Kit-Repair Valve	1
2	. . . . .	O-Ring	4
3	. . . . .	Screen	2
4	. . . . .	Tube	1
5	. . . . .	Poppet	1
6	165702	Button	1
7	165703	Screw	1

©2010 HYSTER COMPANY

PARK BRAKE VALVE (FIGURE 7-26)

(S/N D019D01522 →)

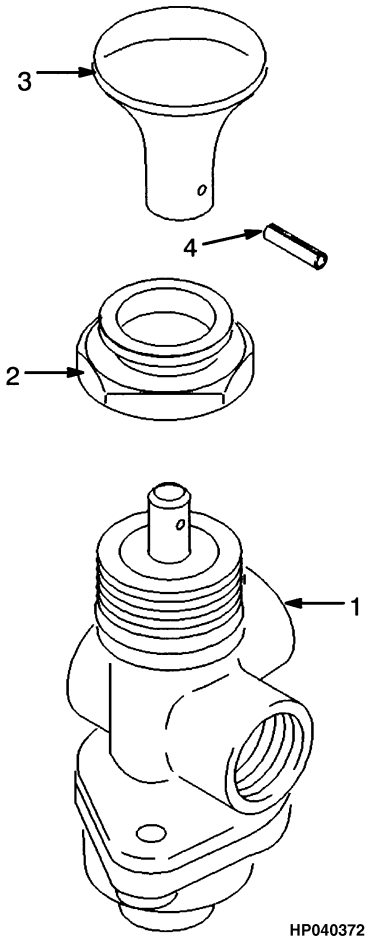

ITEM	PART NO.	DESCRIPTION	QTY
	1357437	Valve (Park Brake)	1
1	1365266	Hydraulic Control Valve	1
1	1377882	Kit-Valve	1
2	1365264	Boot	1
3	1365265	Button	1
4	1365275	Pin	1

©2010 HYSTER COMPANY

8 HYDRAULIC SYSTEM

SECTION 8
HYDRAULIC SYSTEM

DESCRIPTION	PAGE
CONTROL VALVE	
FIVE FUNCTION (→ S/N D019D02127)	8-56
FIVE FUNCTION (S/N D019D02128 →)	8-60
FOUR FUNCTION (→ S/N D019D02127)	8-44
FOUR FUNCTION (S/N D019D02128 →)	8-48
THREE FUNCTION (→ S/N D019D02127)	8-32
THREE FUNCTION (S/N D019D02128 →)	8-36
TWO FUNCTION (→ S/N D019D02127)	8-18
TWO FUNCTION (S/N D019D02128 →)	8-20
HYDRAULIC PUMP	
WITH LOW EMISSIONS (S/N D019D02377U →) (S/N D019E02328V →)	8-14
WITHOUT LOW EMISSIONS	8-12
HYDRAULIC SYSTEM	
DIESEL AND LPG NON-EC	8-2
EMPTY CONTAINER HANDLER - SHEET 1	8-6
HYDRAULIC TANK	8-10
TILT CYLINDER	
THREE STAGE FULL FREE-LIFT	8-73
TWO STAGE LIMITED FREE-LIFT - H300XL-H360XL NON-EC	8-66
TWO STAGE LIMITED FREE-LIFT - EMPTY CONTAINER HANDLER	8-70
TILT CYLINDER ATTACHING PARTS	8-64
TILT LOCK VALVE	8-74
VALVE ATTACHING PARTS	
DUAL FUNCTION SIDE-SHIFT (S/N D019D02394U →)	8-28
FIVE FUNCTION	8-52
FOUR FUNCTION	8-40
THREE FUNCTION	8-24
TWO FUNCTION	8-16

©2010 HYSTER COMPANY

HYDRAULIC SYSTEM (FIGURE 8-1)
DIESEL AND LPG NON-EC

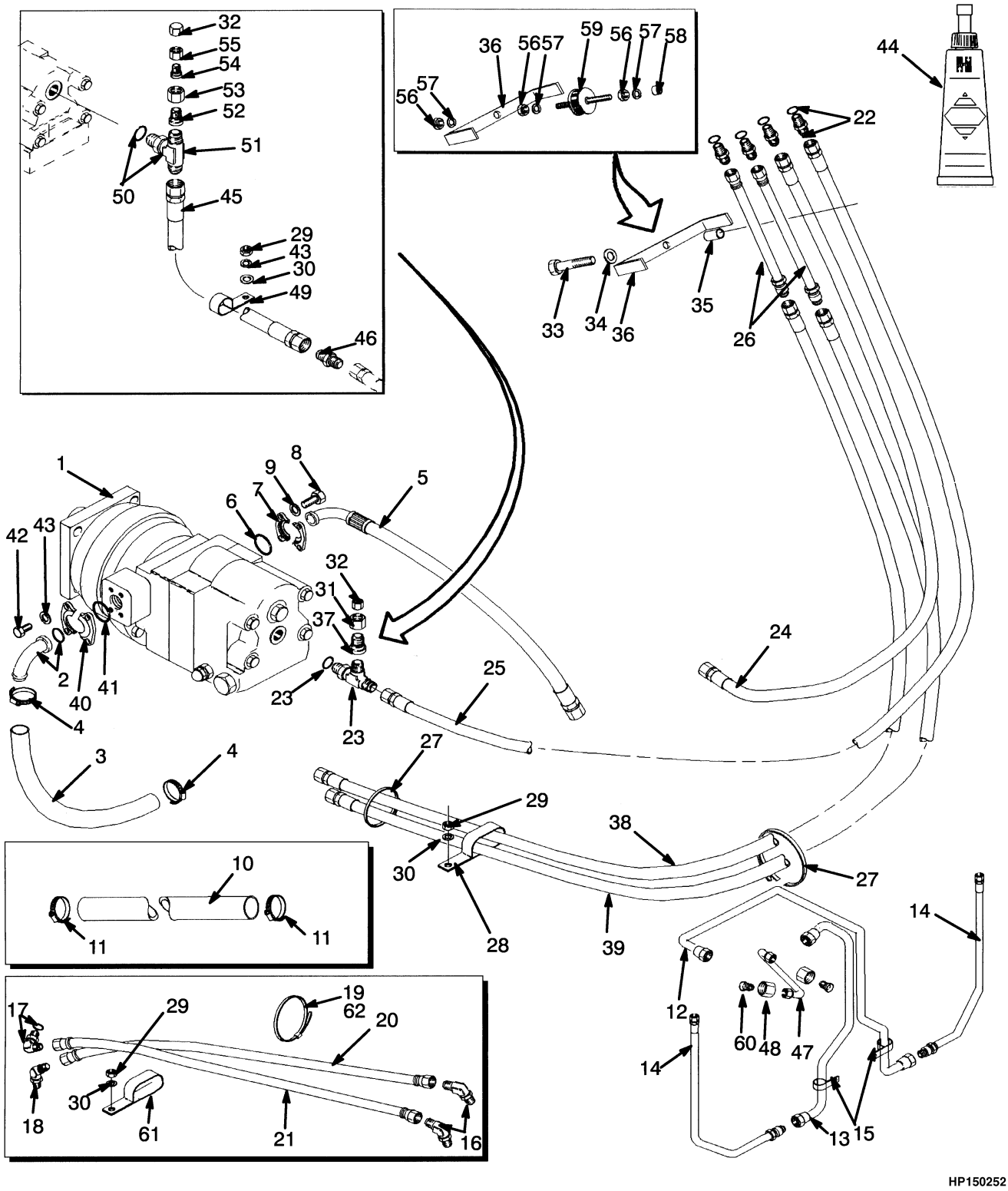

HP150252

©2010 HYSTER COMPANY

HYDRAULIC SYSTEM
DIESEL AND LPG NON-EC

KEY:
A: Diesel
B: LPG

ITEM	PART NO.	DESCRIPTION	QTY A	QTY B
1	**c** 376206	Pump	1	..
1	**c** 894502	Hydraulic Pump	..	1
1	**ag** 1395977	Pump	1	1
2	222590	Fitting	1	..
2	894504	Fitting	..	1
3	816373	Hose	1	1
4	112989	Hose Clamp	2	2
5	1303431	Hose Assy	1	1
6	199917	O-Ring	1	1
7	222531	Clamp (Split Half)	2	2
8	18588	Capscrew	8	8
9	15158	Washer	8	8
10	1301668	Hose	1	1
11	127045	Clamp (Hose)	2	2
12	**e** 1367826	Tube Assy	1	..
12	**f** 1385601	Tube Assy	1	1
13	**e** 1367825	Tube Assy	1	..
13	**f** 1385602	Tube Assy	1	1
14	1301325	Hose Assy	2	2
15	183779	Clamp	2	2
16	16570	Fitting	2	2
16	16485	O-Ring	1	1
17	111331	Fitting	1	1
17	16485	O-Ring	1	1
18	112471	Fitting	1	1
18	16485	O-Ring	1	1
19	129563	Strap Clamp	1	1
20	1327818	Hose Assy	1	1
21	1327819	Hose Assy	1	1
22	16541	Fitting	4	4
22	16584	Locknut	1	1
23	**d** 14586	T-Fitting	1	1
23	16485	O-Ring	1	1
24	**d** 1303432	Hose Assy	1	1
24	**d** 1326812	Hose Assy (Optional)	1	1
24	**b** 198693	Hose Assy	1	..
25	1313356	Hose Assy	1	1
26	1332942	Hose Assy	2	2
26	1332943	Hose Assy (Optional)	2	2
27	323864	Strap Clamp	2	2
28	177303	Clamp	3	3
29	136692	Nut	4	4
30	~~388049~~ 292682	Lockwasher	4	4
31	**d** 222365	Fitting	4	4

©2010 HYSTER COMPANY

HYDRAULIC SYSTEM
DIESEL AND LPG NON-EC

KEY:
A: Diesel
B: LPG

ITEM	PART NO.	DESCRIPTION	QTY A	QTY B
32	**d** 16923	Nut	1	1
32	**b** 167261	Sleeve	1	1
33	**d** 136704	Capscrew	1	..
34	**d** 292681	Lockwasher	1	1
35	**d** 1301585	Spacer	1	1
36	1332941	Clamp	1	1
37	**d** 14491	Sleeve	1	1
38	1303440	Hose Assy	1	1
38	1326813	Hose Assy (Optional)	1	1
39	1303441	Hose Assy	1	1
39	1326814	Hose Assy (Optional)	1	1
40	17764	Clamp (Split Half)	2	2
41	198518	O-Ring	1	1
42	18558	Capscrew	4	4
43	15157	Lockwasher	4	4
44	280472	Sealant	AR	AR
45	**b** 1301534	Hose Assy	1	..
45	**b** 1301671	Hose Assy (Optional)	1	..
46	**b** 17635	Fitting	2	..
47	1325366	Tube Assy	1	1
48	17780	Fitting	2	2
49	**b** 258590	Clamp	1	..
50	**b** 167260	Fitting	1	..
51	**b** 139922	Connector	1	..
52	**b** 17054	Fitting	1	..
53	**b** 17783	Fitting	1	..
54	**b** 14494	Sleeve	1	..
55	**b** 17779	Fitting	1	..
56	**b** 239503	Nut	3	..
57	**b** 292681	Lockwasher	3	..
58	**b** 1334491	Spacer	1	..
59	**b** 1332940	Mount	1	..
59	**b** 1332907	Mount (Optional)	1	..
60	167261	Sleeve	2	2
61	1350914	Strap	1	1
62	397676	Strap Clamp	2	2

FOOTNOTES:

a With Emissions
b With Noise Reduction
c Without Emissions
d Without Noise Reduction
e → S/N D019D02127 (Diesel)
f S/N D019D02128 → (Diesel)
g S/N D019D02377 →

©2010 HYSTER COMPANY

NOTES

©2010 HYSTER COMPANY

HYDRAULIC SYSTEM (FIGURE 8-2)
EMPTY CONTAINER HANDLER — SHEET 1

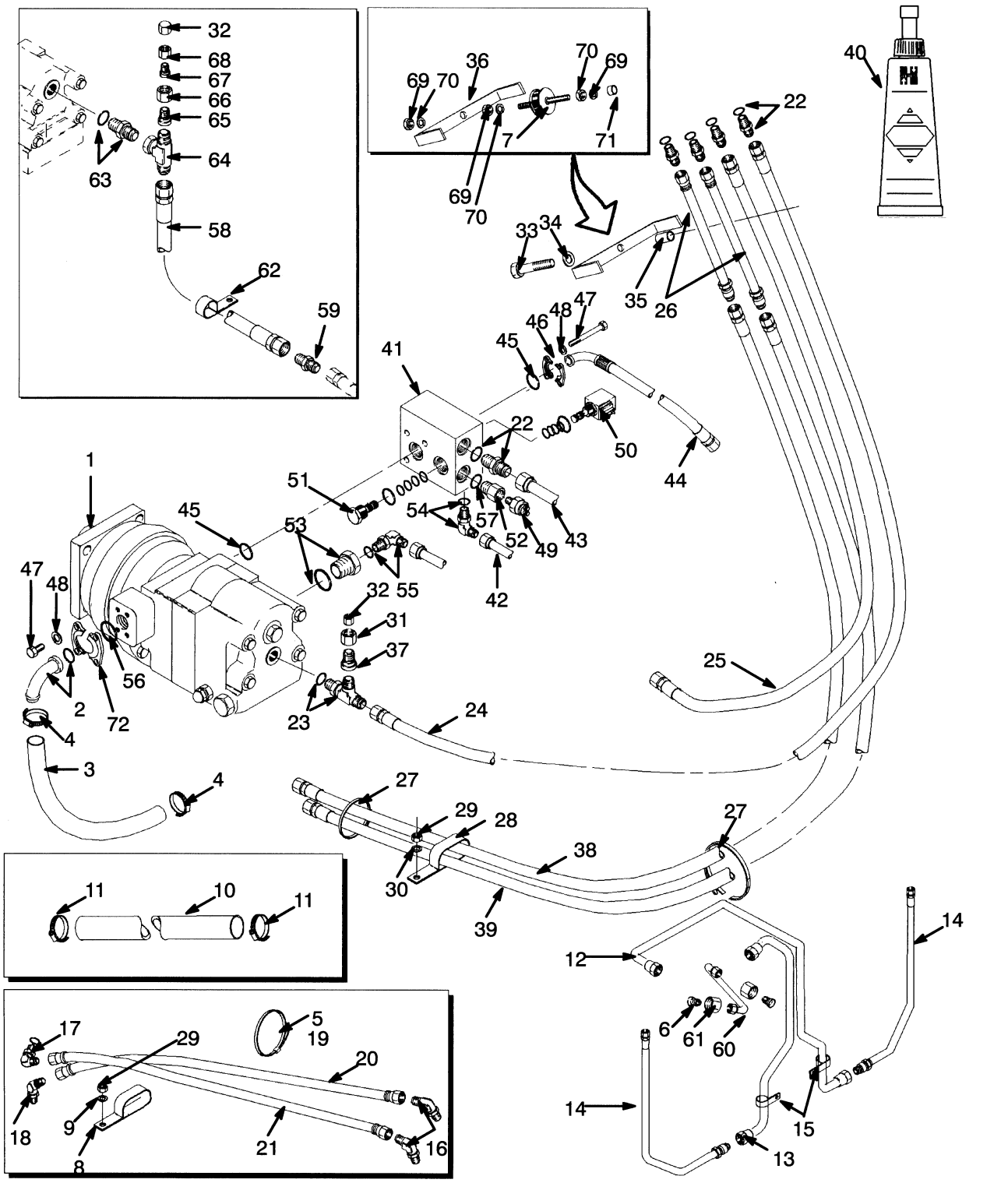

HP150253

©2010 HYSTER COMPANY

HYDRAULIC SYSTEM
EMPTY CONTAINER HANDLER – SHEET 1

ITEM	PART NO.	DESCRIPTION	QTY
1	1326762	Pump (Without Emissions)	1
1	**d** 1395979	Pump (With Emissions)	1
2	222590	Fitting	1
2	18909	O-Ring	1
3	1301327	Hose	1
4	112989	Hose Clamp	2
5	397676	Strap Clamp	2
6	17780	Fitting	2
7	**b** 1332940	Mount	1
7	**b** 1332907	Mount (Optional)	1
8	1350914	Strap	1
9	320159	Washer	2
10	1301668	Hose	1
11	127045	Clamp (Hose)	2
12	1326775	Tube Assy (EC-4)	1
12	1367826	Tube Assy (EC-3)	1
13	1367825	Tube Assy (EC-3)	1
13	1326774	Tube Assy (EC-4)	1
14	1301325	Hose Assy	2
15	183779	Clamp	2
16	16570	Fitting	2
16	16485	O-Ring	1
17	111331	Fitting	1
17	16485	O-Ring	1
18	112471	Fitting	1
18	16485	O-Ring	1
19	129563	Strap Clamp	1
20	1327818	Hose Assy	1
21	1327819	Hose Assy	1
22	16541	Fitting	4
22	16484	O-Ring	1
23	**b** 14586	T-Fitting	1
23	16485	O-Ring	1
24	**c** 1303432	Hose Assy	1
24	**c** 1326812	Hose Assy (Optional)	1
24	**b** 198693	Hose Assy	1
25	1313356	Hose Assy	1
26	1332942	Hose Assy (Optional)	2
26	**b** 1332943	Hose Assy	2
27	323864	Strap Clamp	2
28	177303	Clamp	3
29	136692	Nut	4
30	~~388049~~		
	292682	Lockwasher	4
31	**c** 222365	Fitting	1
32	16923	Nut	1
33	**c** 136704	Capscrew	1
34	**c** 292681	Lockwasher	1
35	**c** 1301585	Spacer	1
36	1332941	Clamp	1

©2010 HYSTER COMPANY

HYDRAULIC SYSTEM
EMPTY CONTAINER HANDLER – SHEET 1

ITEM	PART NO.	DESCRIPTION	QTY
37	**c** 14491	Sleeve	1
38	1303440	Hose Assy	1
38	1326813	Hose Assy (Optional)	1
39	1303441	Hose Assy	1
39	1326814	Hose Assy (Optional)	1
40	280472	Sealant	AR
41	1323862	Valve Block	1
42	1323863	Tube	1
42	**ad** 1395982	Tube Assy	1
43	1323864	Tube	1
43	**ad** 1395983	Tube Assy	1
44	1303431	Hose Assy	1
45	199917	O-Ring	2
46	17764	Clamp (Split Half)	2
47	18574	Capscrew	4
48	15157	Lockwasher	4
49	1323865	Pressure Switch	1
50	1323866	Solenoid Valve	1
50	323488	Kit-Seal	1
51	1323867	Check Valve	1
51	323488	Kit-Seal	1
52	1323869	Fitting	1
53	1323870	Fitting	1
54	16568	Fitting	1
54	16485	O-Ring	1
55	17224	Fitting	1
55	16484	O-Ring	1
56	199971	Seal	1
57	16484	O-Ring	1
58	**b** 1301534	Hose Assy	1
58	**b** 1301671	Hose Assy (Optional)	1
59	167261	Sleeve	2
59	**b** 17635	Fitting	2
60	1325366	Tube Assy	1
61	**b** 167260	Fitting	1
62	**b** 258590	Clamp	1
63	**b** 139922	Connector	1
63	16485	O-Ring	1
64	**b** 17054	Fitting	1
65	**b** 17783	Fitting	1
66	**b** 14494	Sleeve	1
67	**b** 17779	Fitting	1
68	**b** 167261	Sleeve	1
69	**b** 239503	Nut	3
70	**b** 292681	Lockwasher	3
71	**b** 1334491	Spacer	1
72	222531	Clamp (Split Half)	1

©2010 HYSTER COMPANY

FOOTNOTES:

a With Low Emissions
b With Noise Reduction
c Without Noise Reduction
d S/N D019D02377 →

©2010 HYSTER COMPANY

HYDRAULIC TANK (FIGURE 8-3)

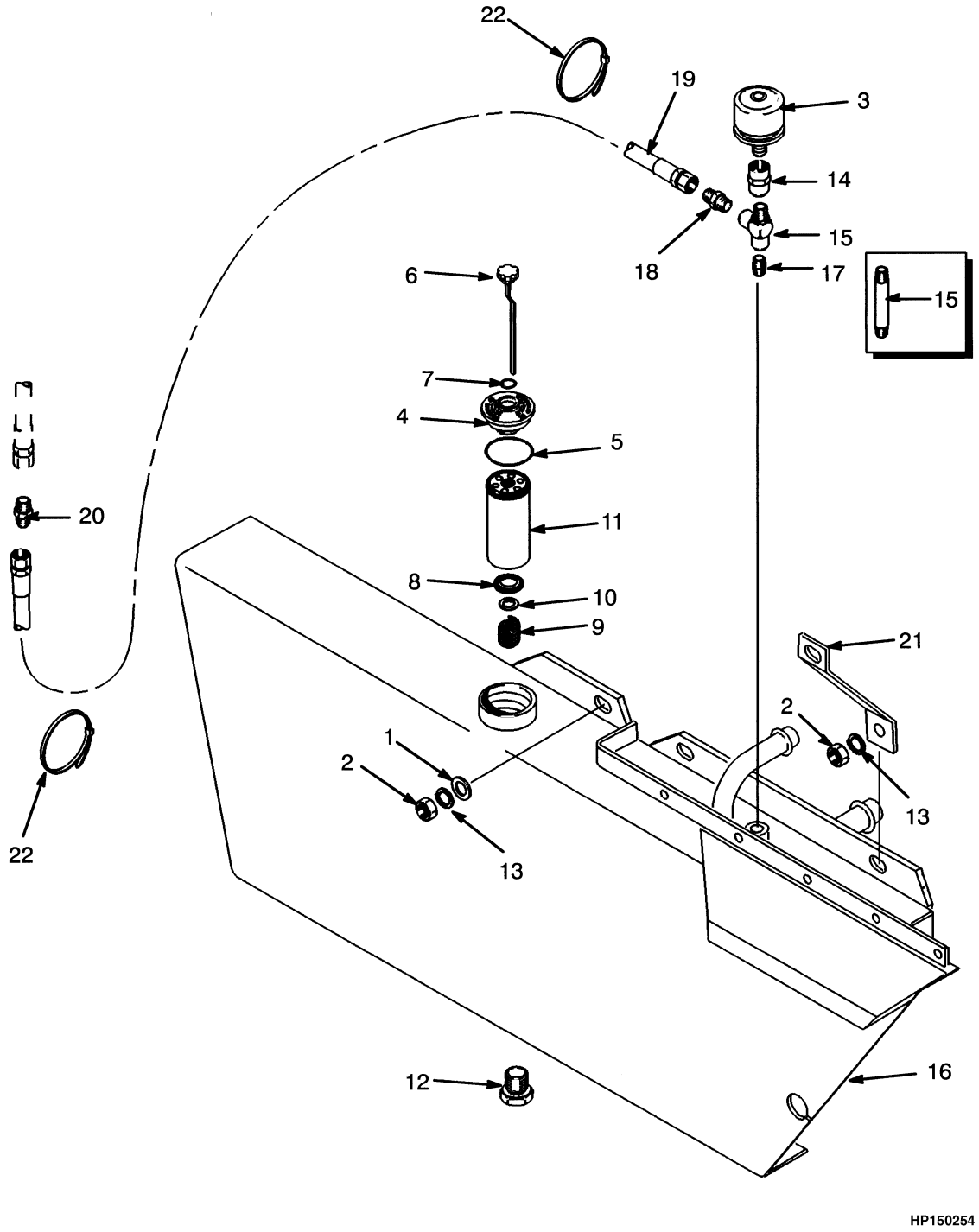

©2010 HYSTER COMPANY

HYDRAULIC TANK

ITEM	PART NO.	DESCRIPTION	QTY
1	320162	Washer	3
2	216877	Nut	3
3	353302	Breather	1
4	190787	Filter Head	1
5	39742	O-Ring	1
6	348368	Dipstick	1
6	348362	Dipstick	1
6	218612	Cap	1
6	244272	Screw	1
7	16487	O-Ring	1
8	181941	Seal	1
9	190784	Spring	1
10	190785	Washer	1
11	376066	Hydraulic Filter	1
12	14388	Fitting	1
13	292683	Lockwasher	3
14	12829	Fitting	1
15	**a** 15382	Fitting	1
15	**b** 15383	Fitting	1
16	1357427	Hyd Tank Wldmt	1
16	1357428	Hyd Tank Wldmt (Optional)	1
17	**b** 156696	Fitting	1
18	**b** 17345	Fitting	1
19	**b** 283453	Hose Assy	1
20	**b** 14692	Fitting	1
21	**b** 1319176	Brace	1
22	**b** 323864	Strap Clamp	2

FOOTNOTES:

a → S/N D019D02025

b S/N D019D02026 →

©2010 HYSTER COMPANY

HYDRAULIC PUMP (FIGURE 8-4)
WITHOUT LOW EMISSIONS

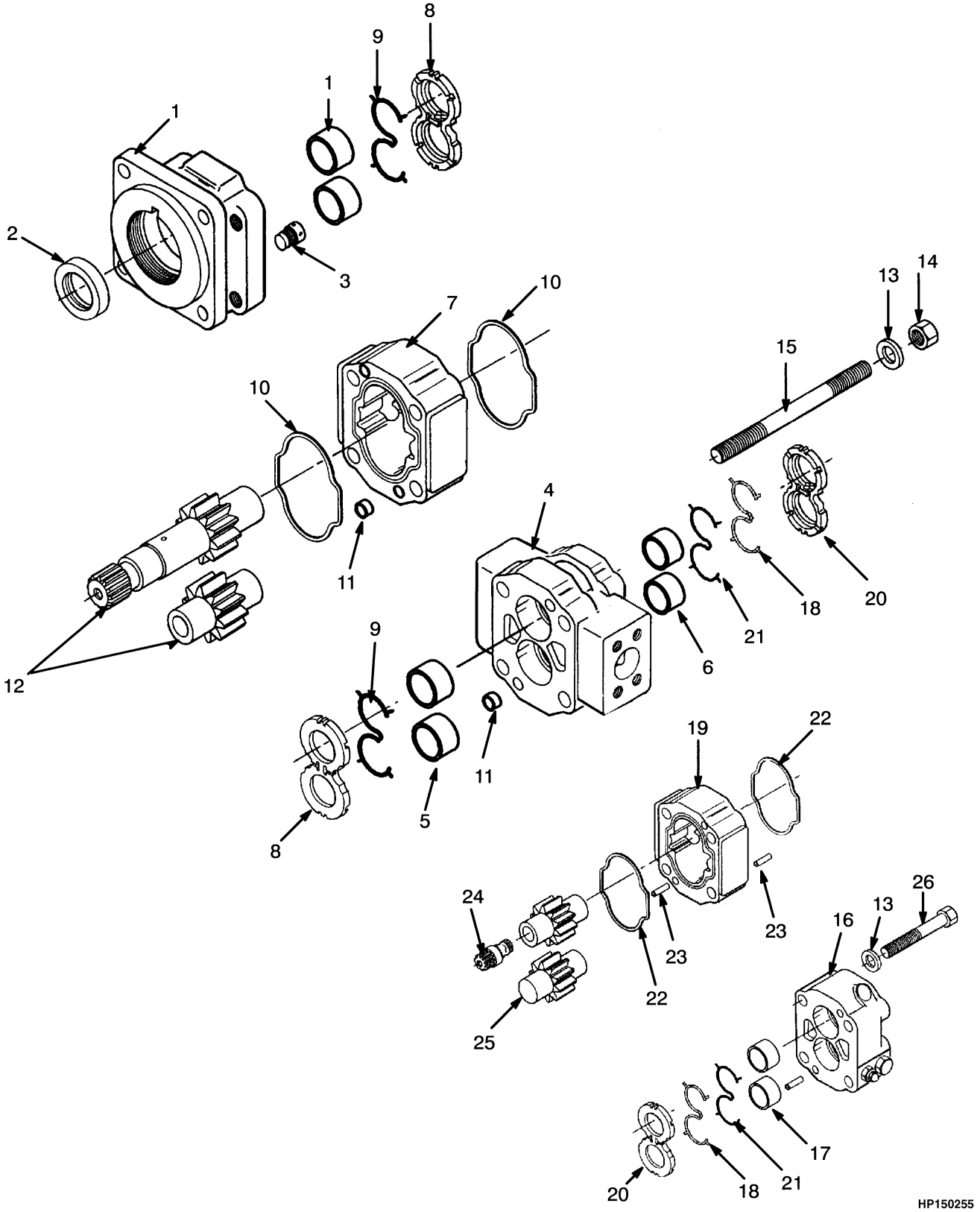

©2010 HYSTER COMPANY

HYDRAULIC PUMP
WITHOUT LOW EMISSIONS

KEY:
A: Empty Container Handler
B: Non-EC

ITEM	PART NO.	DESCRIPTION	QTY A	QTY B
	1326762	Pump	1	..
	376206	Pump (Diesel)	..	1
	894502	Hydraulic Pump (LPG)	..	1
1	1311780	Cover	1	1
2	1331521	Seal	1	1
3	176159	Plug	1	1
4	1311781	Cover	1	1
5	1360875	Bushing	2	2
6	1360876	Bushing	2	2
7	1311787	Housing (Gear)	1	1
8	1311782	Thrust Plate	2	2
9	1311791	Seal	2	2
10	1311792	Seal	2	2
11	1311783	Dowel	8	8
12	1311784	Gear Set (Diesel)	1	1
12	1450254	Gear Set (LPG)	..	1
13	176167	Washer	8	8
14	15060	Nut	4	4
15	1311795	Stud	4	4
16	1331523	Housing (End Port)	1	..
16	1311785	Cap (Priority Port)	..	1
17	. . . . .	Bushing	2	2
18	1311793	Seal	1	1
19	1311788	Housing (Gear)	1	1
20	1466398	Kit-Pump Thrust Plate	2	2
21	372112	Seal	2	2
22	176173	Seal	2	2
23	1151722	Dowel	4	4
24	1311786	Shaft	1	1
25	1314295	Gear Set	1	1
26	1311794	Capscrew	4	4
	1312821	Kit-Seal	1	1

©2010 HYSTER COMPANY

HYDRAULIC PUMP (FIGURE 8-5)

WITH LOW EMISSIONS (S/N D019D02377U →) (S/N D019E02328V →)

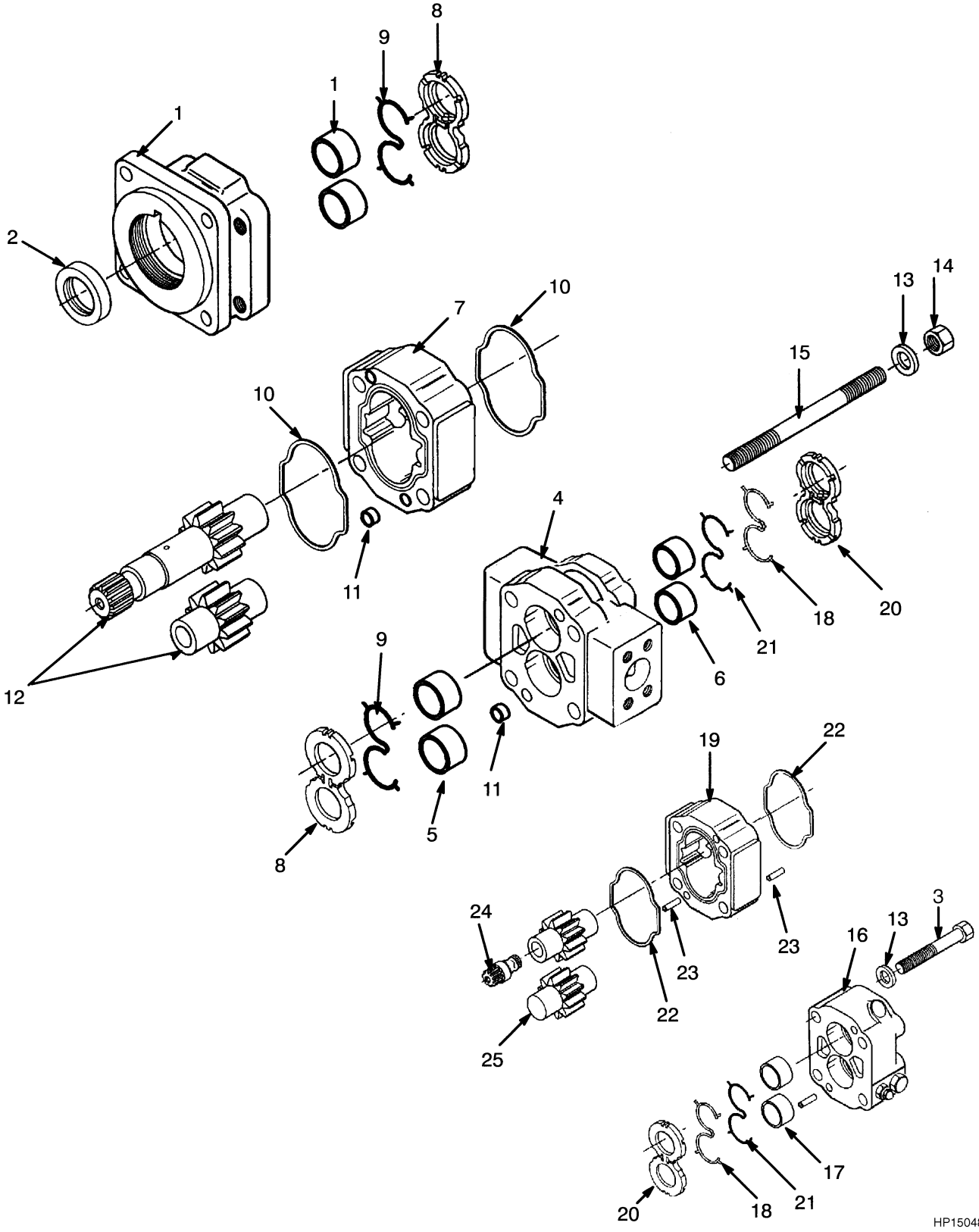

©2010 HYSTER COMPANY

HYDRAULIC PUMP

WITH LOW EMISSIONS (S/N D019D02377U →) (S/N D019E02328V →)

KEY:
A: Empty Container Handler
B: Non-EC

ITEM	PART NO.	DESCRIPTION	QTY A	QTY B
	1395979	Pump	1	..
	a 1395978	Pump (With Load Sensing)	1	..
	1395977	Pump	..	1
1	1311780	Cover (Shift End)	1	1
1	. . . . .	Bushing	1	1
2	1331521	Seal	1	1
3	1311794	Capscrew	4	4
4	1311781	Cover (Port End)	1	1
5	1360875	Bushing	2	2
6	1360876	Bushing	2	2
7	1453778	Housing (Gear)	1	1
8	1453777	Thrust Plate	2	2
9	1311791	Seal	2	2
10	1311792	Seal	2	2
11	1311783	Dowel	8	8
12	. . . . .	Gear Set (Diesel)	1	1
13	176167	Washer	8	8
14	15060	Nut	4	4
15	1311795	Stud	4	4
16	1311785	Cap (Priority Port)	..	1
16	372109	Housing (End Port)	1	..
16	1327501	Cap (with Bushings)	2	..
17	1360875	Bushing	2	..
18	1453775	Seal	1	1
19	372110	Housing (Gear)	1	1
20	1466398	Kit-Pump Thrust Plate	2	2
21	1453776	Seal	2	2
22	176173	Seal	2	2
23	1151722	Dowel	4	4
24	1311786	Shaft	1	1
25	. . . . .	Gear Set	1	1
	1312821	Kit-Seal	1	1

FOOTNOTES:

a S/N D019E01579R →

©2010 HYSTER COMPANY

VALVE ATTACHING PARTS (FIGURE 8-6)
TWO FUNCTION

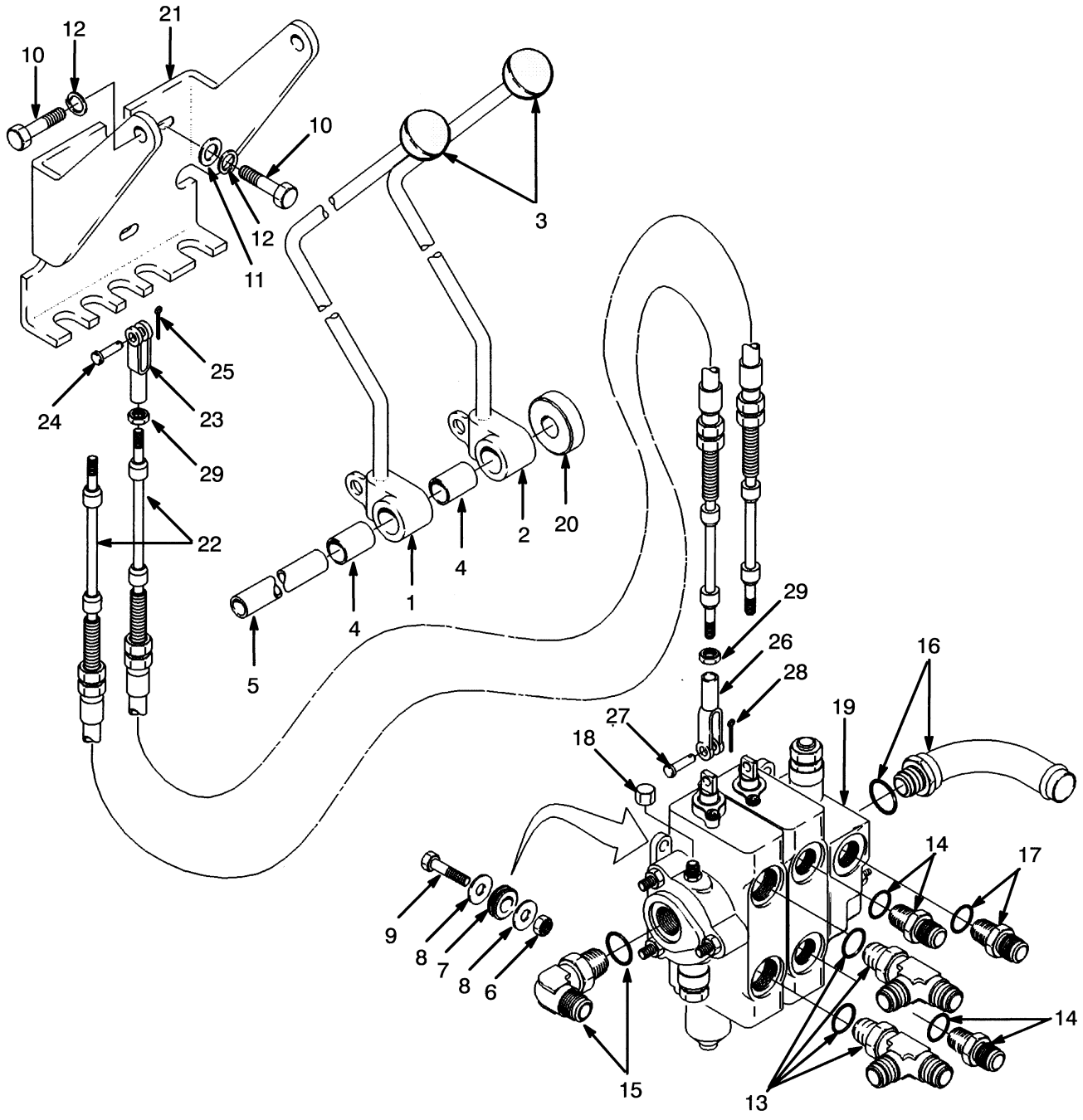

©2010 HYSTER COMPANY

VALVE ATTACHING PARTS
TWO FUNCTION

ITEM	PART NO.	DESCRIPTION	QTY
1	1300988	Lever	1
2	1300989	Lever	1
3	308993	Knob	2
4	1328699	Bushing	2
5	1301726	Shaft	1
6	**a** 221354	Locknut	4
6	**b** 221354	Locknut	3
7	**a** 339969	Grommet	4
7	**b** 339969	Grommet	3
8	**a** 15178	Washer	8
8	**b** 15178	Washer	6
9	**a** 16813	Capscrew	4
9	**b** 16813	Capscrew	3
10	1328930	Capscrew	5
11	320158	Washer	3
12	292681	Lockwasher	5
13	16971	T-Fitting	2
13	16486	O-Ring	1
14	16909	Fitting	2
14	16485	O-Ring	1
15	16571	Fitting	1
15	16487	O-Ring	1
16	362011	Fitting	1
16	16487	O-Ring	1
17	16541	Fitting	1
17	16484	O-Ring	1
18	16923	Nut	1
19	**a** 1301528	Hydraulic Control Valve (☞Figure 8-7)	1
19	**b** 1385611	Hydraulic Control Valve (☞Figure 8-8)	1
20	1309475	Collar	1
21	1301129	Bracket	1
22	1316806	Cable Assy	2
23	1316807	Rod End	1
24	126	Pin	2
25	15200	Cotter Pin	2
26	138	Rod End	2
27	139	Pin	2
28	15212	Cotter Pin	2
29	15025	Nut	4

FOOTNOTES:

a → S/N D019D02127

b S/N D019D02128 →

©2010 HYSTER COMPANY

CONTROL VALVE (FIGURE 8-7)
TWO FUNCTION (→ S/N D019D02127)

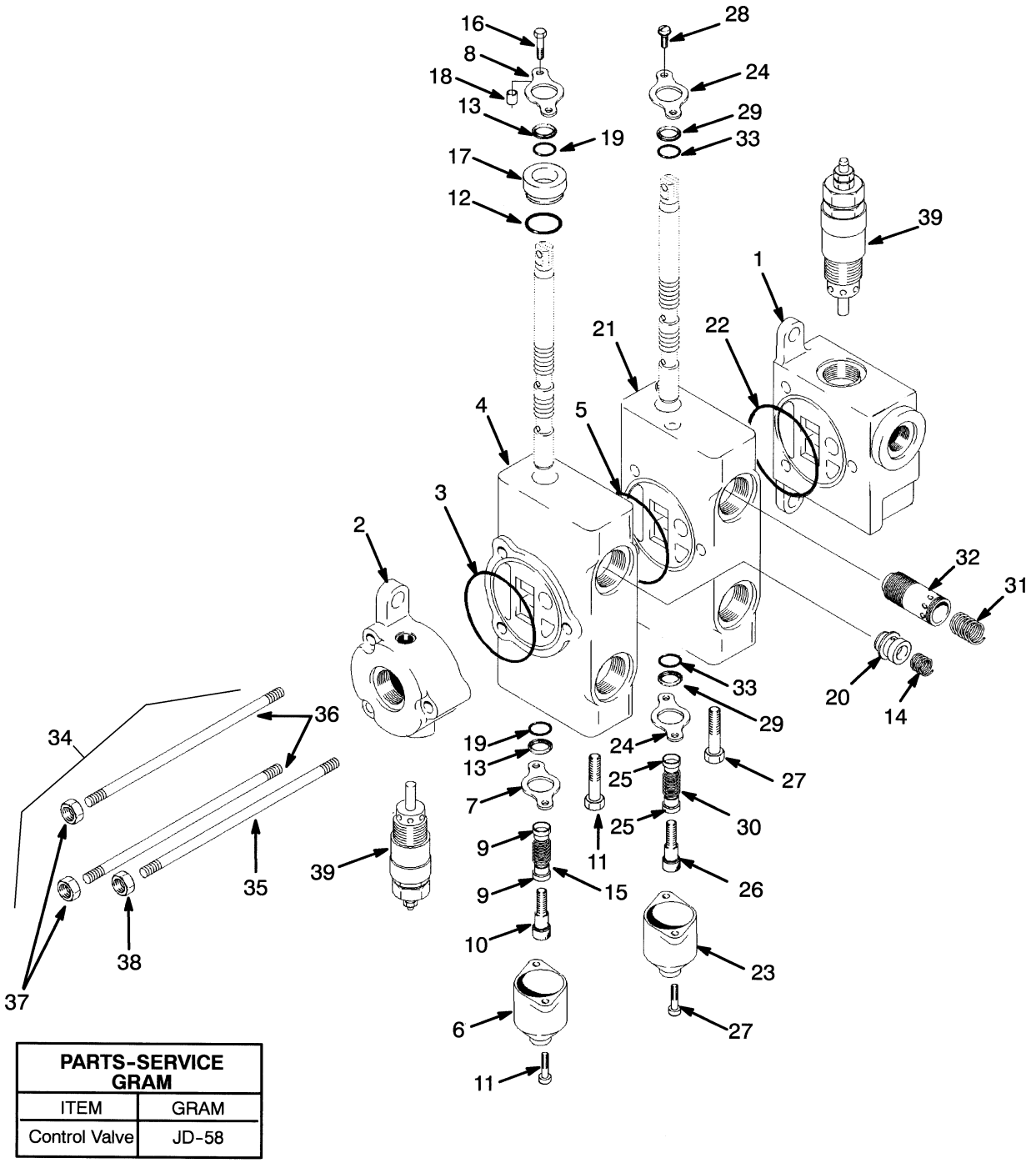

PARTS-SERVICE GRAM	
ITEM	GRAM
Control Valve	JD-58

HP150514

©2010 HYSTER COMPANY

CONTROL VALVE

TWO FUNCTION (→ S/N D019D02127)

ITEM	PART NO.	DESCRIPTION	QTY
	1301528	Hydraulic Control Valve	1
1	1320980	Valve Section	1
2	1320981	Valve Section	1
3	1320982	O-Ring	1
4	1320976	Valve Section	1
5	1320982	O-Ring	1
6	274426	Cap	1
7	77451	Plate	1
8	1320992	Plate	1
9	274427	Spring Seat	2
10	274548	Capscrew	1
11	16328	Capscrew	2
12	1455596	O-Ring	1
13	1393703	Wiper	2
14	1320994	Spring	1
15	1320991	Spring	1
16	1320995	Capscrew	2
17	1320996	Spacer	1
18	1320997	Spacer	2
19	1393704	Seal	2
20	1320998	Poppet	1
21	1320978	Valve Section (Tilt)	1
22	1320982	O-Ring	1
23	274426	Cap	1
24	77451	Plate	2
25	274427	Spring Seat	2
26	274548	Capscrew	1
27	16328	Capscrew	2
28	16706	Screw	2
29	1393703	Wiper	2
30	300723	Spring	1
31	1320988	Spring	1
32	1320989	Poppet	1
33	1393704	Seal	2
34	1320999	Kit-Tie Rod	1
35	1321376	Tie Rod	1
36	1321375	Tie Rod	2
37	1320986	Nut	4
38	1320983	Nut	2
39	1320979	Relief Valve	2
39	1321381	Kit-Seal	1

©2010 HYSTER COMPANY

CONTROL VALVE (FIGURE 8-8)

TWO FUNCTION (S/N D019D02128 →)

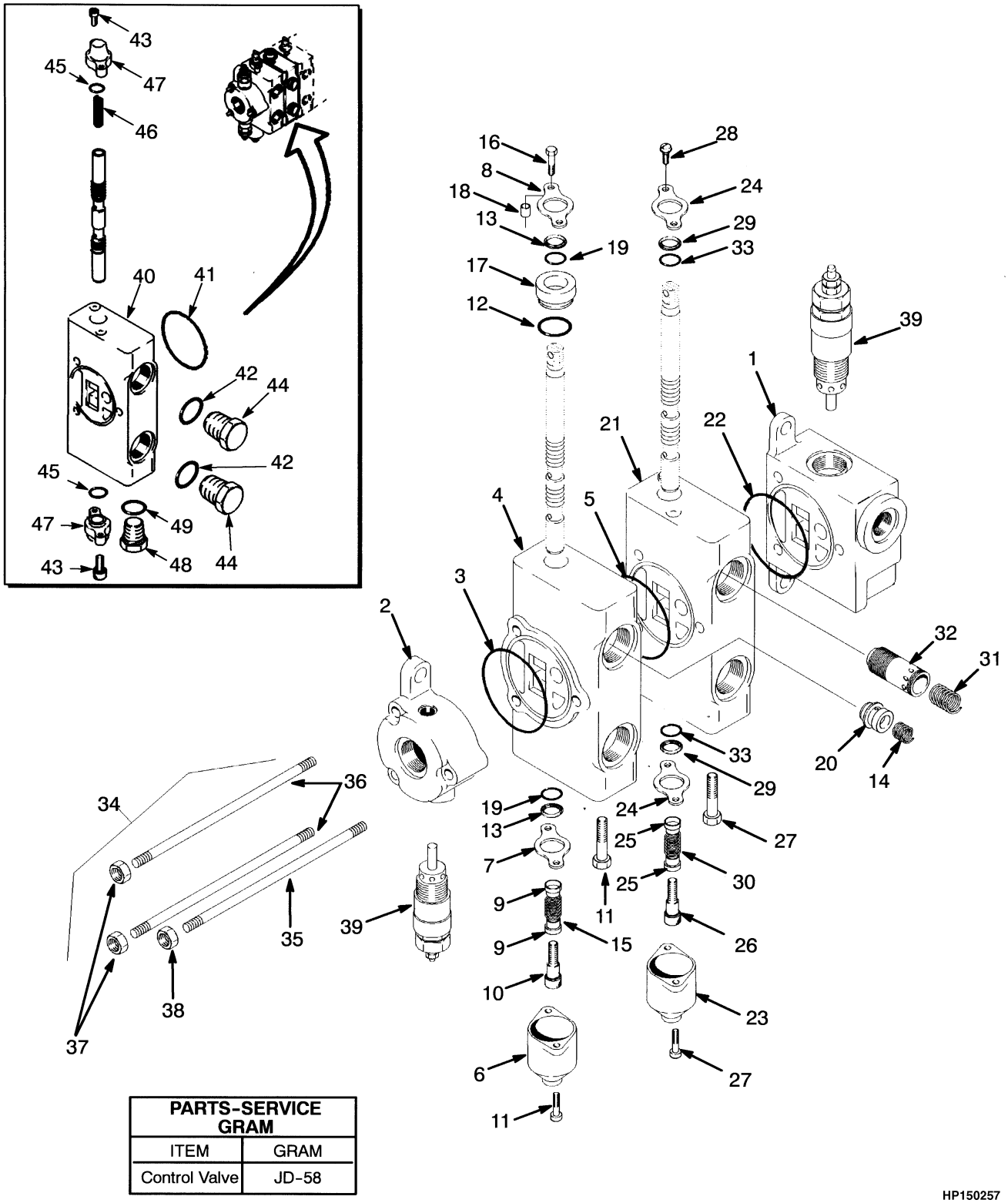

PARTS-SERVICE GRAM	
ITEM	GRAM
Control Valve	JD-58

HP150257

©2010 HYSTER COMPANY

CONTROL VALVE

TWO FUNCTION (S/N D019D02128 →)

ITEM	PART NO.	DESCRIPTION	QTY
	1385611	Hydraulic Control Valve	1
1	1320980	Valve Section	1
2	1320981	Valve Section	1
3	1320982	O-Ring	1
4	1320976	Valve Section	1
5	1320982	O-Ring	1
6	274426	Cap	1
7	77451	Plate	1
8	1320992	Plate	1
9	274427	Spring Seat	2
10	274548	Capscrew	1
11	16328	Capscrew	2
12	1455596	O-Ring	1
13	1393703	Wiper	2
14	1320994	Spring	1
15	1320991	Spring	1
16	1320995	Capscrew	2
17	1320996	Spacer	1
18	1320997	Spacer	2
19	1393704	Seal	2
20	1320998	Poppet	1
21	1391638	Valve Section	1
22	1320982	O-Ring	1
23	274426	Cap	1
24	77451	Plate	2
25	274427	Spring Seat	2
26	274548	Capscrew	1
27	16328	Capscrew	2
28	16706	Screw	2
29	1393703	Wiper	2
30	300723	Spring	1
31	1320994	Spring	1
32	1320998	Poppet	1
33	1393704	Seal	2
34	1321377	Kit-Tie Rod	1
35	1321383	Tie Rod	1
36	1321382	Tie Rod	2
37	1320986	Nut	4
38	1320983	Nut	2
39	1320979	Relief Valve	2
39	1321381	Kit-Seal	1
40	1385616	Valve Section	1
41	1320982	O-Ring	1
42	16485	O-Ring	2
43	1455595	Capscrew	4
44	188486	Plug	2
45	1455596	O-Ring	2
46	1391645	Spring	1
47	1455594	Cap	2
48	1391644	Plug	1

©2010 HYSTER COMPANY

CONTROL VALVE

TWO FUNCTION (S/N D019D02128 →)

ITEM	PART NO.	DESCRIPTION	QTY
49	1391643	O-Ring	1

©2010 HYSTER COMPANY

NOTES

©2010 HYSTER COMPANY

VALVE ATTACHING PARTS (FIGURE 8-9)

THREE FUNCTION

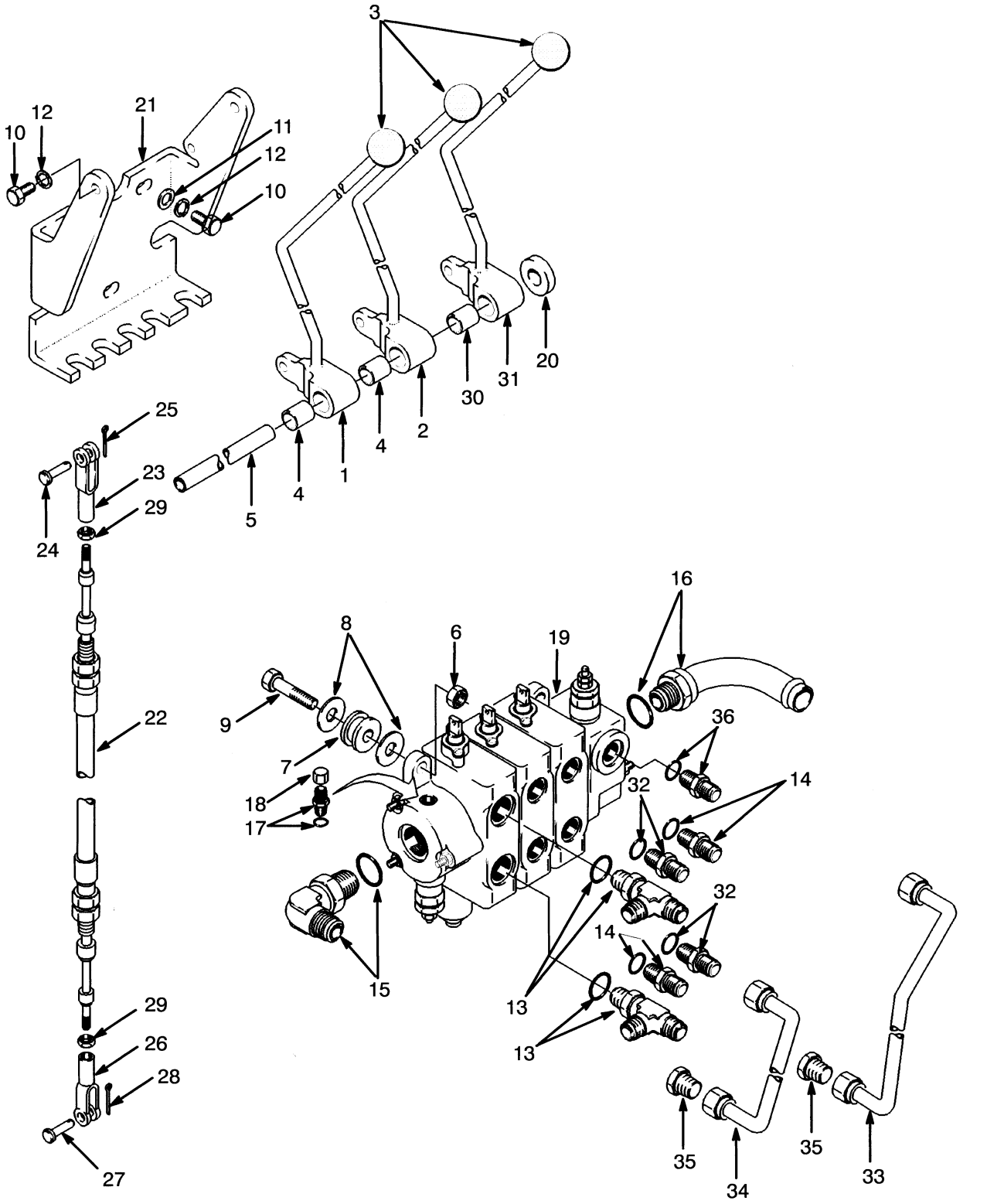

HP150258

©2010 HYSTER COMPANY

VALVE ATTACHING PARTS
THREE FUNCTION

ITEM	PART NO.	DESCRIPTION	QTY
1	1300988	Lever	1
2	1300989	Lever	1
3	308993	Knob	3
4	1328699	Bushing	2
5	1301726	Shaft	1
6	**a** 221354	Locknut	4
6	**b** 221354	Locknut	3
7	**a** 339969	Grommet	4
7	**b** 339969	Grommet	3
8	**a** 15178	Washer	8
8	**b** 15178	Washer	6
9	**a** 16813	Capscrew	4
9	**b** 16813	Capscrew	3
10	1328930	Capscrew	5
11	320158	Washer	3
12	292681	Lockwasher	5
13	16971	T-Fitting	2
13	16486	O-Ring	1
14	16909	Fitting	2
14	16485	O-Ring	1
15	16571	Fitting	1
15	16487	O-Ring	1
16	362011	Fitting	1
16	16487	O-Ring	1
17	16538	Connector	1
17	16481	O-Ring	1
18	16923	Nut	1
19	**a** 1301529	Hydraulic Control Valve (☞Figure 8-11)	1
19	**b** 1385612	Hydraulic Control Valve (☞Figure 8-12)	1
20	1309475	Collar	1
21	1301129	Bracket	1
22	1316806	Cable Assy	3
23	1316807	Rod End	3
24	126	Pin	3
25	15200	Cotter Pin	3
26	138	Rod End	3
27	139	Pin	3
28	15212	Cotter Pin	3
29	15025	Nut	6
30	1328699	Bushing	1
31	1300990	Lever	1
32	16909	Fitting	2
32	16486	O-Ring	1
33	1301416	Tube Assy	1
34	1301417	Tube Assy	1
35	17321	Fitting	2
36	16541	Fitting	1
36	16484	O-Ring	1

©2010 HYSTER COMPANY

FOOTNOTES:

a → S/N D019D02127

b S/N D019D02128 →

©2010 HYSTER COMPANY

NOTES

©2010 HYSTER COMPANY

VALVE ATTACHING PARTS (FIGURE 8-10)

DUAL FUNCTION SIDE-SHIFT (S/N D019D02394U →)

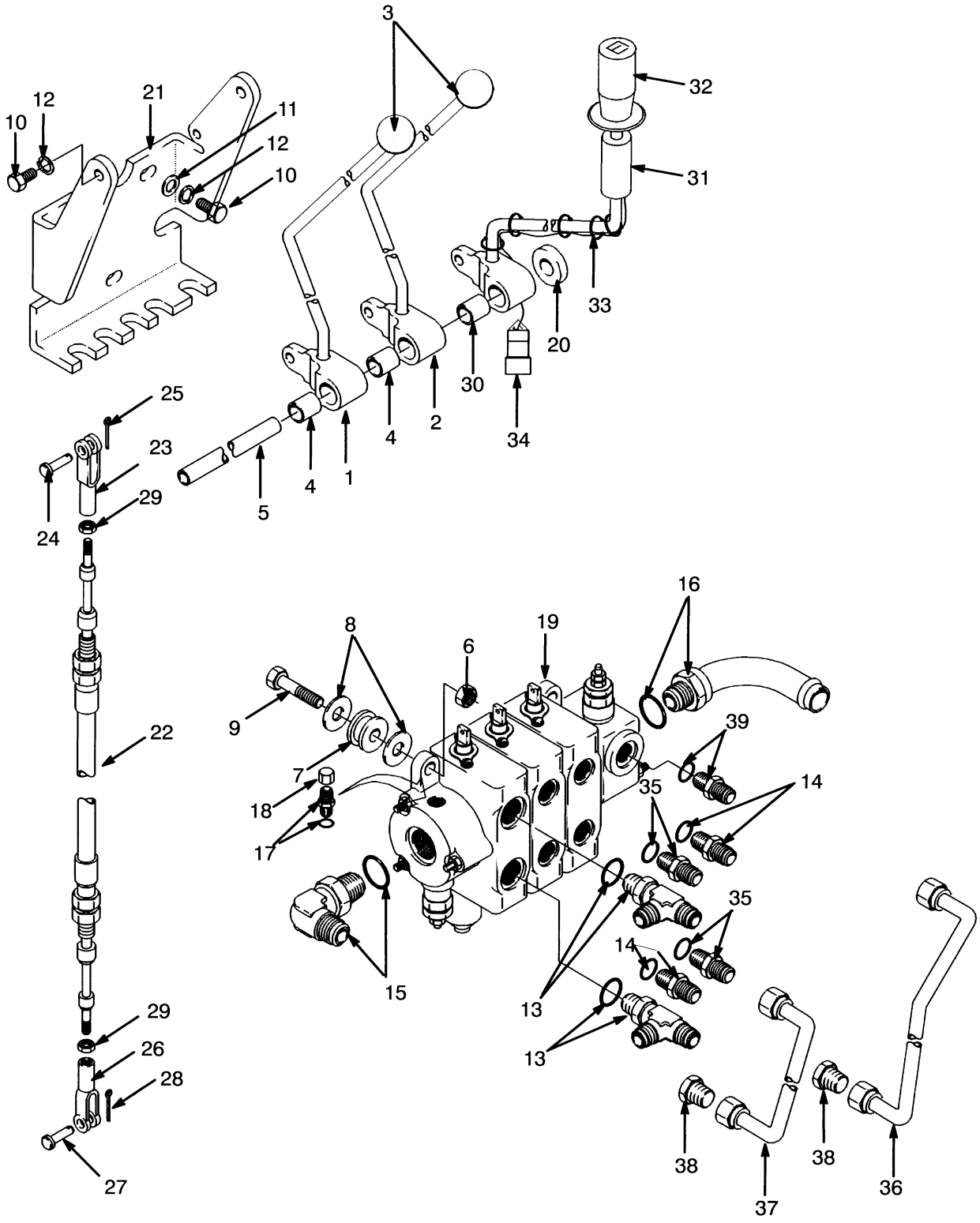

HP150259

©2010 HYSTER COMPANY

VALVE ATTACHING PARTS

DUAL FUNCTION SIDE-SHIFT (S/N D019D02394U →)

ITEM	PART NO.	DESCRIPTION	QTY
1	1300988	Lever	1
2	1300989	Lever	1
3	308993	Knob	2
4	1328699	Bushing	2
5	1301726	Shaft	1
6	221354	Locknut	3
7	339969	Grommet	3
8	15178	Washer	6
9	16813	Capscrew	3
10	1328930	Capscrew	5
11	320158	Washer	3
12	292681	Lockwasher	5
13	16971	T-Fitting	2
13	16486	O-Ring	1
14	16909	Fitting	2
14	16485	O-Ring	1
15	16571	Fitting	1
15	16487	O-Ring	1
16	362011	Fitting	1
16	16487	O-Ring	1
17	16538	Connector	1
17	16481	O-Ring	1
18	16923	Nut	1
19	**a** 1301529	Hydraulic Control Valve (☞Figure 8-11)	1
19	**b** 1385612	Hydraulic Control Valve (☞Figure 8-12)	1
20	1309475	Collar	1
21	1301129	Bracket	1
22	1316806	Cable Assy	3
23	1316807	Rod End	3
24	126	Pin	3
25	15200	Cotter Pin	3
26	138	Rod End	3
27	139	Pin	3
28	15212	Cotter Pin	3
29	15025	Nut	6
30	1328699	Bushing	1
31	1454506	Lever (Electrical)	1
31	1454507	Lever	1
32	1326699	Handle	1
33	114312	Strap Clamp	5
34	1330410	Connector	1
34	1330433	Terminal	3
35	16909	Fitting	2
35	16486	O-Ring	1
36	1301416	Tube Assy	1
37	1301417	Tube Assy	1
38	17321	Fitting	2
39	16541	Fitting	1
39	16484	O-Ring	1

©2010 HYSTER COMPANY

FOOTNOTES:

a → S/N D019D02127

b S/N D019D02128 →

©2010 HYSTER COMPANY

NOTES

©2010 HYSTER COMPANY

CONTROL VALVE (FIGURE 8-11)
THREE FUNCTION (→ S/N D019D02127)

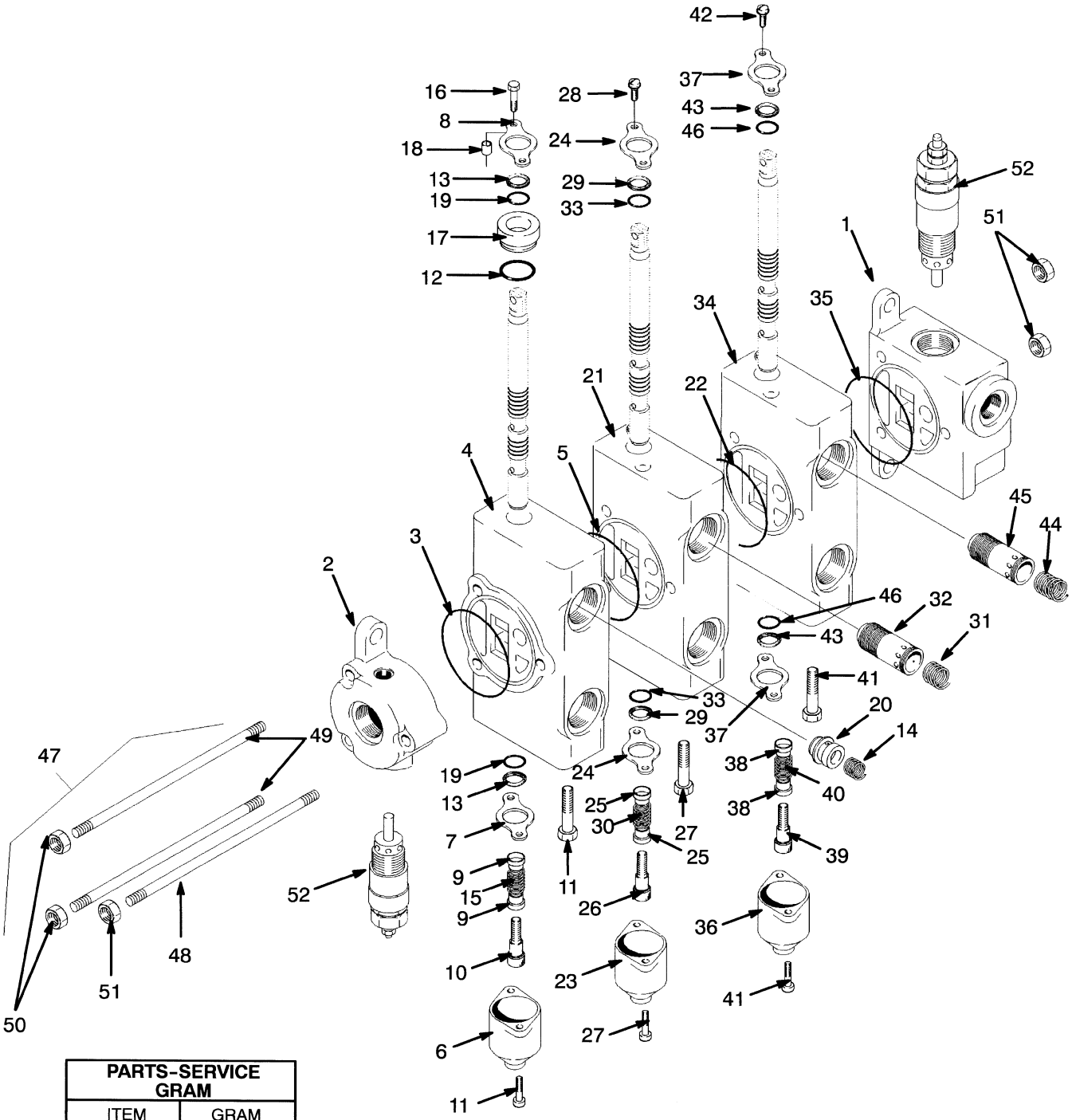

PARTS-SERVICE GRAM	
ITEM	GRAM
Control Valve	JD-58

©2010 HYSTER COMPANY

CONTROL VALVE

THREE FUNCTION (→ S/N D019D02127)

ITEM	PART NO.	DESCRIPTION	QTY
	1301529	Hydraulic Control Valve	1
1	1320980	Valve Section	1
2	1320981	Valve Section	1
3	1320982	O-Ring	1
4	1320976	Valve Section	1
5	1320982	O-Ring	1
6	274426	Cap	1
7	77451	Plate	1
8	1320992	Plate	1
9	274427	Spring Seat	2
10	274548	Capscrew	1
11	16328	Capscrew	2
12	1455596	O-Ring	1
13	1393703	Wiper	2
14	1320994	Spring	1
15	1320991	Spring	1
16	1320995	Capscrew	2
17	1320996	Spacer	1
18	1320997	Spacer	2
19	1393704	Seal	2
20	1320998	Poppet	1
21	1320978	Valve Section (Tilt)	1
22	1320982	O-Ring	1
23	274426	Cap	1
24	77451	Plate	2
25	274427	Spring Seat	2
26	274548	Capscrew	1
27	16328	Capscrew	2
28	16706	Screw	2
29	1393703	Wiper	2
30	300723	Spring	1
31	1320988	Spring	1
32	1320989	Poppet	1
33	1393704	Seal	2
34	1320977	Valve Section (Auxiliary)	1
35	1320982	O-Ring	1
36	274426	Cap	1
37	77451	Plate	2
38	274427	Spring Seat	2
39	274548	Capscrew	1
40	1320991	Spring	1
41	16328	Capscrew	2
42	16706	Screw	2
43	1393703	Wiper	2
44	1320988	Spring	1
45	1320989	Poppet	1
46	1393704	Seal	2
47	1321377	Kit-Tie Rod	1
48	1321383	Tie Rod	1
49	1321382	Tie Rod	2

©2010 HYSTER COMPANY

CONTROL VALVE

THREE FUNCTION (→ S/N D019D02127)

ITEM	PART NO.	DESCRIPTION	QTY
50	1320986	Nut	4
51	1320983	Nut	2
52	1320979	Relief Valve	2
52	1321381	Kit-Seal	1

©2010 HYSTER COMPANY

NOTES

©2010 HYSTER COMPANY

CONTROL VALVE (FIGURE 8-12)
THREE FUNCTION (S/N D019D02128 →)

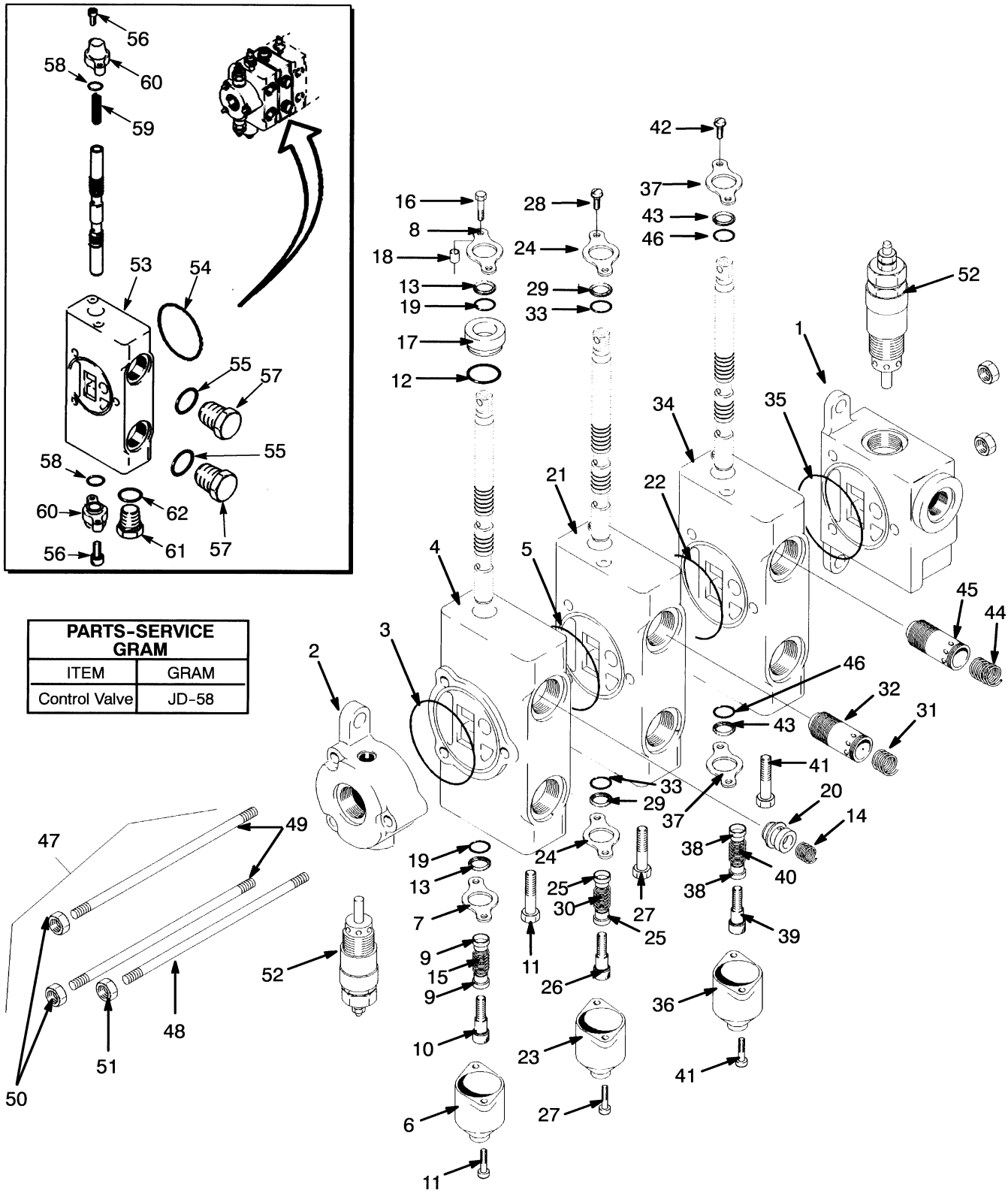

PARTS-SERVICE GRAM	
ITEM	GRAM
Control Valve	JD-58

HP150260

©2010 HYSTER COMPANY

CONTROL VALVE

THREE FUNCTION (S/N D019D02128 →)

ITEM	PART NO.	DESCRIPTION	QTY
	1385612	Hydraulic Control Valve	1
1	1320980	Valve Section	1
2	1320981	Valve Section	1
3	1320982	O-Ring	1
4	1320976	Valve Section	1
5	1320982	O-Ring	1
6	274426	Cap	1
7	77451	Plate	1
8	1320992	Plate	1
9	274427	Spring Seat	2
10	274548	Capscrew	1
11	16328	Capscrew	2
12	1455596	O-Ring	1
13	1393703	Wiper	2
14	1320994	Spring	1
15	1320991	Spring	1
16	1320995	Capscrew	2
17	1320996	Spacer	1
18	1320997	Spacer	2
19	1393704	Seal	2
20	1320998	Poppet	1
21	1391638	Valve Section	1
22	1320982	O-Ring	1
23	274426	Cap	1
24	77451	Plate	2
25	274427	Spring Seat	2
26	274548	Capscrew	1
27	16328	Capscrew	2
28	16706	Screw	2
29	1393703	Wiper	2
30	300723	Spring	1
31	1320994	Spring	1
32	1320998	Poppet	1
33	1393704	Seal	2
34	1391639	Valve Section	1
35	1320982	O-Ring	1
36	274426	Cap	1
37	77451	Plate	2
38	274427	Spring Seat	2
39	274548	Capscrew	1
40	1320991	Spring	1
41	16328	Capscrew	2
42	16706	Screw	2
43	1393703	Wiper	2
44	1320994	Spring	1
45	1320998	Poppet	1
46	1393704	Seal	2
47	1321378	Kit-Tie Rod	1
48	1321380	Tie Rod	1
49	1321379	Tie Rod	2

©2010 HYSTER COMPANY

CONTROL VALVE

THREE FUNCTION (S/N D019D02128 →)

ITEM	PART NO.	DESCRIPTION	QTY
50	1320986	Nut	4
51	1320983	Nut	2
52	1320979	Relief Valve	2
52	1321381	Kit-Seal	1
53	1385616	Valve Section	1
54	1320982	O-Ring	1
55	16485	O-Ring	2
56	1455595	Capscrew	4
57	188486	Plug	2
58	1455596	O-Ring	2
59	1391645	Spring	1
60	1455594	Cap	2
61	1391644	Plug	1
62	1391643	O-Ring	1

©2010 HYSTER COMPANY

NOTES

©2010 HYSTER COMPANY

VALVE ATTACHING PARTS (FIGURE 8-13)

FOUR FUNCTION

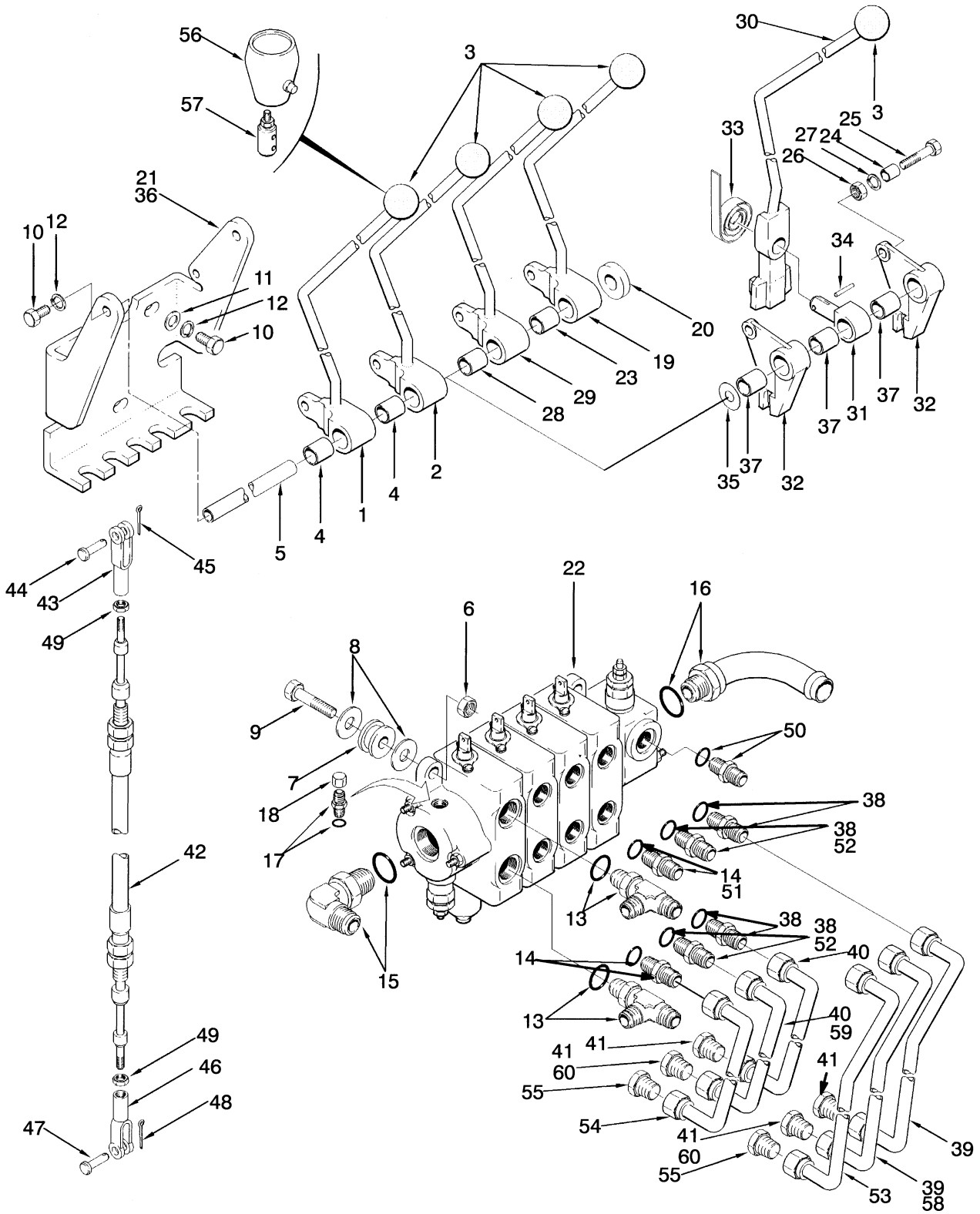

HP150261

©2010 HYSTER COMPANY

VALVE ATTACHING PARTS
FOUR FUNCTION

ITEM	PART NO.	DESCRIPTION	QTY
1	1300988	Lever	1
1	**a** 1326761	Lever	1
2	1300989	Lever	1
3	308993	Knob	4
4	1328699	Bushing	2
5	1301726	Shaft	1
6	**e** 221354	Locknut	4
6	**f** 221354	Locknut	3
7	**e** 339969	Grommet	4
7	**f** 339969	Grommet	3
8	**e** 15178	Washer	8
8	**f** 15178	Washer	6
9	**e** 16813	Capscrew	4
9	**f** 16813	Capscrew	3
10	1328930	Capscrew	5
11	320158	Washer	3
12	292681	Lockwasher	5
13	16971	T-Fitting	2
13	16486	O-Ring	1
14	16909	Fitting	2
14	16485	O-Ring	1
15	16571	Fitting	1
15	16487	O-Ring	1
16	362011	Fitting	1
16	16487	O-Ring	1
17	16538	Connector	1
17	16481	O-Ring	1
18	16923	Nut	1
19	**d** 1300991	Lever	1
20	**d** 1309475	Collar	1
21	**d** 1301129	Bracket	1
22	**e** 1301530	Hydraulic Control Valve (☞Figure 8-14)	1
22	**e** 1330604	Hydraulic Control Valve (☞Figure 8-14)	1
22	**f** 1385613	Hydraulic Control Valve (☞Figure 8-15)	1
22	**f** 1385615	Valve (☞Figure 8-15)	1
23	**d** 1328699	Bushing	1
24	**c** 1300999	Spacer	1
25	**c** 293604	Capscrew	1
26	**c** 136687	Nut	1
27	**c** 292680	Washer	1
28	1328699	Bushing	1
29	1300990	Lever	1
30	**c** 1300993	Lever	1
31	**c** 306113	Pin (Selector)	1
32	**c** 1301122	Lever	2
33	**c** 175861	Spring	1
34	**c** 302428	Roll Pin	1
35	**c** 1309479	Shim (0.020 in.)	AR
35	**c** 1328696	Shim (0.010 in.)	AR
36	**c** 1301133	Bracket	1

©2010 HYSTER COMPANY

VALVE ATTACHING PARTS
FOUR FUNCTION

ITEM	PART NO.	DESCRIPTION	QTY
37	**c** 1328697	Bushing	3
38	**b** 16909	Fitting	4
38	**b** 16485	O-Ring	1
39	**b** 1301416	Tube Assy	2
40	**b** 1301417	Tube Assy	2
41	**b** 17321	Fitting	4
42	1316806	Cable Assy	4
43	1316807	Rod End	4
44	126	Pin	4
45	15200	Cotter Pin	4
46	138	Rod End	4
47	139	Pin	4
48	15212	Cotter Pin	4
49	15025	Nut	8
50	16541	Fitting	1
50	16484	O-Ring	1
51	**a** 16541	Fitting	2
51	16484	O-Ring	1
52	**a** 201783	Fitting	2
52	**a** 16484	O-Ring	1
53	**a** 1301416	Tube Assy	1
54	**a** 1301417	Tube Assy	1
55	**a** 17321	Fitting	2
56	**a** 1300050	Knob	2
56	1308955	Switch	1
57	**a** 389045	Adapter	1
58	**a** 1326809	Tube Assy	1
59	**a** 1326810	Tube Assy	1
60	**a** 16935	Fitting	2
60	**a** 17321	Fitting	2

FOOTNOTES:

a Empty Container Handler
b Non-EC
c With Clamp Attachment
d Without Clamp Attachment
e → S/N D019D02127
f S/N D019D02128 →

©2010 HYSTER COMPANY

NOTES

©2010 HYSTER COMPANY

CONTROL VALVE (FIGURE 8-14)
FOUR FUNCTION (→ S/N D019D02127)

PARTS-SERVICE GRAM	
ITEM	GRAM
Control Valve	JD-58

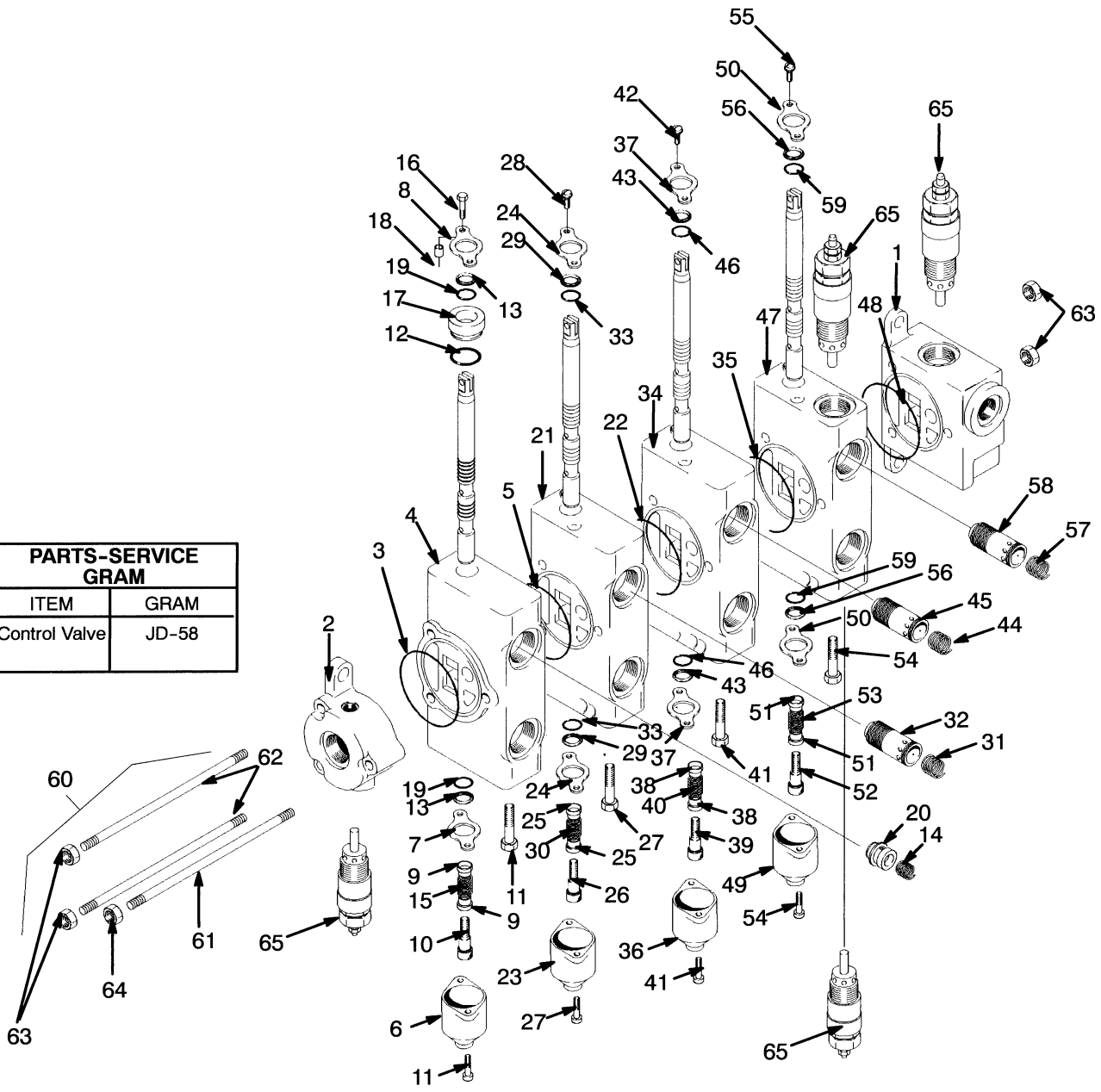

HP150515

©2010 HYSTER COMPANY

CONTROL VALVE

FOUR FUNCTION (→ S/N D019D02127)

ITEM	PART NO.	DESCRIPTION	QTY
	b 1301530	Hydraulic Control Valve	1
	a 1330604	Hydraulic Control Valve	1
1	1320980	Valve Section	1
2	1320981	Valve Section	1
3	1320982	O-Ring	1
4	1320976	Valve Section	1
5	1320982	O-Ring	1
6	274426	Cap	1
7	77451	Plate	1
8	1320992	Plate	1
9	274427	Spring Seat	2
10	274548	Capscrew	1
11	16328	Capscrew	2
12	1455596	O-Ring	1
13	1393703	Wiper	2
14	1320994	Spring	1
15	1320991	Spring	1
16	1320995	Capscrew	2
17	1320996	Spacer	1
18	1320997	Spacer	2
19	1393704	Seal	2
20	1320998	Poppet	1
21	**b** 1320978	Valve Section (Tilt)	1
21	**a** 1334945	Valve Section (Tilt)	1
22	1320982	O-Ring	1
23	274426	Cap	1
24	77451	Plate	2
25	274427	Spring Seat	2
26	274548	Capscrew	1
27	16328	Capscrew	2
28	16706	Screw	2
29	1393703	Wiper	2
30	300723	Spring	1
31	**b** 1320988	Spring	1
32	**b** 1320989	Poppet	1
32	**a** 1320998	Poppet	1
33	1320990	O-Ring	2
34	**b** 1320977	Valve Section (Auxiliary)	2
34	**a** 1320977	Valve Section (Auxiliary)	1
35	1320982	O-Ring	1
36	274426	Cap	1
37	77451	Plate	2
38	274427	Spring Seat	2
39	274548	Capscrew	1
40	1320991	Spring	1
41	16328	Capscrew	2
42	16706	Screw	2
43	1393703	Wiper	2
44	1320988	Spring	1
45	1320989	Poppet	1

©2010 HYSTER COMPANY

CONTROL VALVE
FOUR FUNCTION (→ S/N D019D02127)

ITEM	PART NO.	DESCRIPTION	QTY
46	1393704	Seal	2
47	**a** 1334946	Valve Section (Auxiliary)	1
48	**a** 1320982	O-Ring	1
49	**a** 274426	Cap	1
50	**a** 77451	Plate	2
51	**a** 274427	Spring Seat	2
52	**a** 274548	Capscrew	1
53	**a** 274428	Spring	1
54	**a** 16328	Capscrew	2
55	**a** 16706	Screw	2
56	**a** 1393703	Wiper	2
57	**a** 1320988	Spring	1
58	**a** 1335247	Poppet	1
59	**a** 1393704	Seal	2
60	1385619	Kit-Tie Rod	1
61	1321380	Tie Rod	1
62	1321379	Tie Rod	2
63	1320986	Nut	4
64	1320983	Nut	2
65	1320979	Relief Valve	4
65	1321381	Kit-Seal	1

FOOTNOTES:

a Empty Container Handler

b Non-EC

©2010 HYSTER COMPANY

NOTES

©2010 HYSTER COMPANY

CONTROL VALVE (FIGURE 8-15)
FOUR FUNCTION (S/N D019D02128 →)

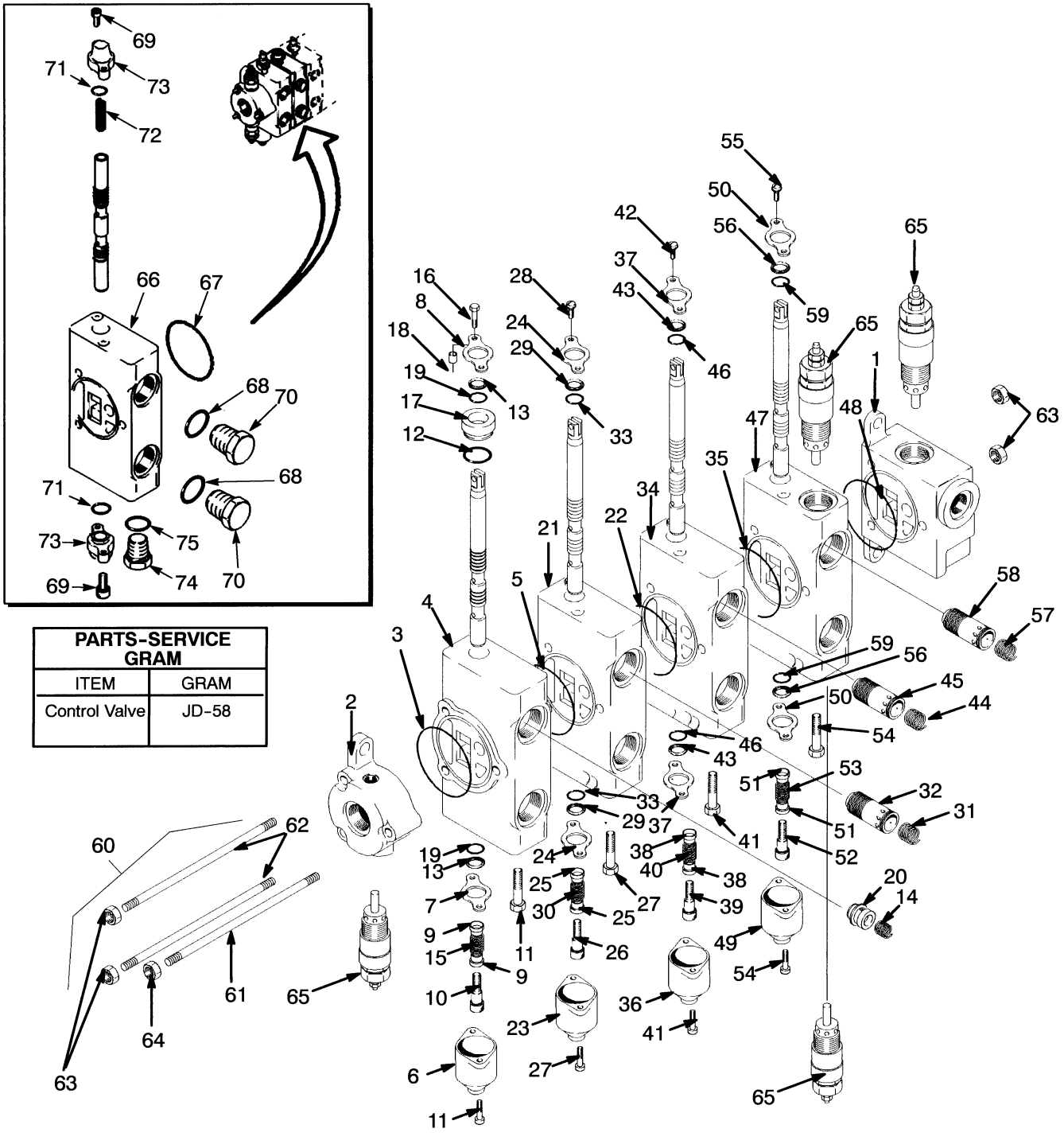

PARTS-SERVICE GRAM	
ITEM	GRAM
Control Valve	JD-58

HP150268

©2010 HYSTER COMPANY

CONTROL VALVE

FOUR FUNCTION (S/N D019D02128 →)

ITEM	PART NO.	DESCRIPTION	QTY
	b 1385613	Hydraulic Control Valve	1
	a 1385615	Valve	1
1	1320980	Valve Section	1
2	1320981	Valve Section	1
3	1320982	O-Ring	1
4	1320976	Valve Section	1
5	1320982	O-Ring	1
6	274426	Cap	1
7	77451	Plate	1
8	1320992	Plate	1
9	274427	Spring Seat	2
10	274548	Capscrew	1
11	16328	Capscrew	2
12	1455596	O-Ring	1
13	1393703	Wiper	2
14	1320994	Spring	1
15	1320991	Spring	1
16	1320995	Capscrew	2
17	1320996	Spacer	1
18	1320997	Spacer	2
19	1393704	Seal	2
20	1320998	Poppet	1
21	**b** 1391638	Valve Section	1
21	**a** 1334945	Valve Section (Tilt)	1
22	1320982	O-Ring	1
23	274426	Cap	1
24	77451	Plate	2
25	274427	Spring Seat	2
26	274548	Capscrew	1
27	16328	Capscrew	2
28	16706	Screw	2
29	1393703	Wiper	2
30	300723	Spring	1
31	**a** 1320994	Spring	1
32	**a** 1320998	Poppet	1
33	1320990	O-Ring	2
34	**b** 1391639	Valve Section	2
34	**a** 1391639	Valve Section	1
35	1320982	O-Ring	1
36	274426	Cap	1
37	77451	Plate	2
38	274427	Spring Seat	2
39	274548	Capscrew	1
40	1320991	Spring	1
41	16328	Capscrew	2
42	16706	Screw	2
43	1393703	Wiper	2
44	1320994	Spring	1
45	1320998	Poppet	1
46	1393704	Seal	2

©2010 HYSTER COMPANY

CONTROL VALVE

FOUR FUNCTION (S/N D019D02128 →)

ITEM	PART NO.	DESCRIPTION	QTY
47	**a** 1334946	Valve Section (Auxiliary)	1
48	**a** 1320982	O-Ring	1
49	**a** 274426	Cap	1
50	**a** 77451	Plate	2
51	**a** 274427	Spring Seat	2
52	**a** 274548	Capscrew	1
53	**a** 300723	Spring	1
54	**a** 16328	Capscrew	2
55	**a** 16706	Screw	2
56	**a** 1393703	Wiper	2
57	**a** 1320988	Spring	1
58	**a** 1335247	Poppet	1
59	**a** 1393704	Seal	2
60	1320975	Kit-Tie Rod	1
61	1320985	Tie Rod	1
62	1320984	Tie Rod	2
63	1320986	Nut	4
64	1320983	Nut	2
65	1320979	Relief Valve	4
65	1321381	Kit-Seal	1
66	1385616	Valve Section	1
67	1320982	O-Ring	1
68	16485	O-Ring	2
69	1455595	Capscrew	4
70	188486	Plug	2
71	1455596	O-Ring	2
72	1391645	Spring	1
73	1455594	Cap	2
74	1391644	Plug	1
75	1391643	O-Ring	1

FOOTNOTES:

a Empty Container Handler

b Non-EC

©2010 HYSTER COMPANY

NOTES

©2010 HYSTER COMPANY

VALVE ATTACHING PARTS (FIGURE 8-16)

FIVE FUNCTION

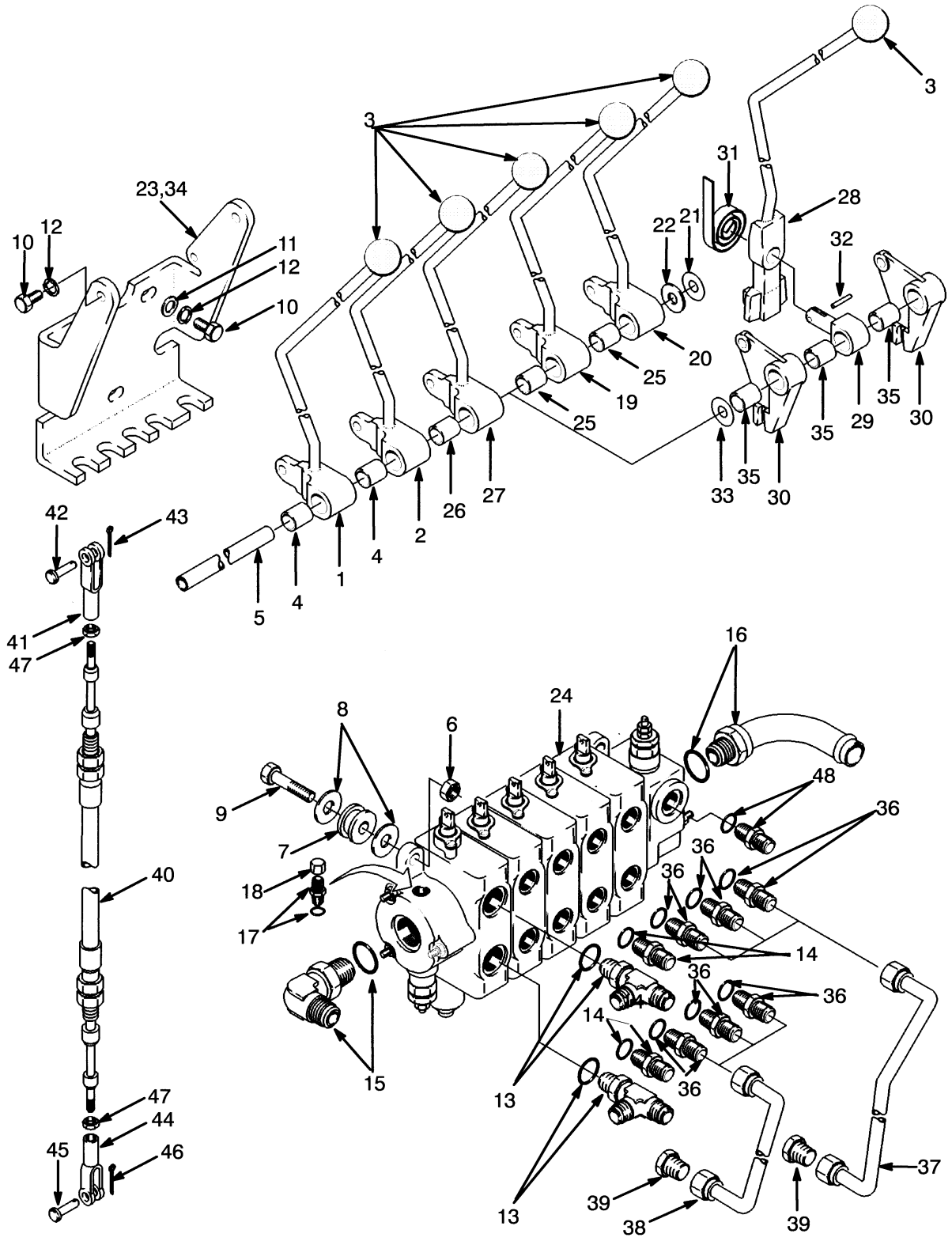

HP150278

©2010 HYSTER COMPANY

VALVE ATTACHING PARTS
FIVE FUNCTION

ITEM	PART NO.	DESCRIPTION	QTY
1	1300988	Lever	1
2	1300989	Lever	1
3	308993	Knob	5
4	1328699	Bushing	2
5	1301726	Shaft	1
6	**c** 221354	Locknut	4
6	**d** 221354	Locknut	3
7	**c** 339969	Grommet	4
7	**d** 339969	Grommet	3
8	**c** 15178	Washer	8
8	**d** 15178	Washer	6
9	**c** 16813	Capscrew	4
9	**d** 16813	Capscrew	3
10	1328930	Capscrew	5
11	320158	Washer	3
12	292681	Lockwasher	5
13	16971	T-Fitting	2
13	16486	O-Ring	1
14	16909	Fitting	2
14	16485	O-Ring	1
15	16571	Fitting	1
15	16487	O-Ring	1
16	362011	Fitting	1
16	16487	O-Ring	1
17	16538	Connector	1
17	16481	O-Ring	1
18	16923	Nut	1
19	**b** 1300991	Lever	1
20	**b** 1300992	Lever	1
21	**b** 1309479	Shim (0.020 in.)	AR
21	**b** 1328696	Shim (0.010 in.)	AR
22	**b** 320162	Washer	AR
23	**b** 1301129	Bracket	1
24	**c** 1301531	Hydraulic Control Valve (☞Figure 8-17)	1
24	**d** 1385614	Hydraulic Control Valve (☞Figure 8-18)	1
25	**b** 1328699	Bushing	2
26	1328699	Bushing	1
27	1300990	Lever	1
28	**a** 1300993	Lever	1
29	**a** 306113	Pin (Selector)	1
30	**a** 1301122	Lever	2
31	**a** 175861	Spring	1
32	**a** 302428	Roll Pin	1
33	**a** 1309479	Shim (0.020 in.)	AR
33	**b** 1328696	Shim (0.010 in.)	AR
34	**a** 1301133	Bracket	1
35	**a** 1328697	Bushing	3
36	16909	Fitting	6
36	16486	O-Ring	1
37	1301416	Tube Assy	3

©2010 HYSTER COMPANY

VALVE ATTACHING PARTS
FIVE FUNCTION

ITEM	PART NO.	DESCRIPTION	QTY
38	1301417	Tube Assy	3
39	17321	Fitting	6
40	1316806	Cable Assy	5
41	1316807	Rod End	5
42	126	Pin	5
43	15200	Cotter Pin	5
44	139	Pin	5
45	15212	Cotter Pin	5
46	138	Rod End	5
47	15025	Nut	10
48	16541	Fitting	1
48	16484	O-Ring	1

FOOTNOTES:

a With Clamp Attachment
b Without Clamp Attachment
c → S/N D019D02127
d S/N D019D02128 →

©2010 HYSTER COMPANY

NOTES

©2010 HYSTER COMPANY

CONTROL VALVE (FIGURE 8-17)
FIVE FUNCTION (→ S/N D019D02127)

PARTS-SERVICE GRAM	
ITEM	GRAM
Control Valve	JD-58

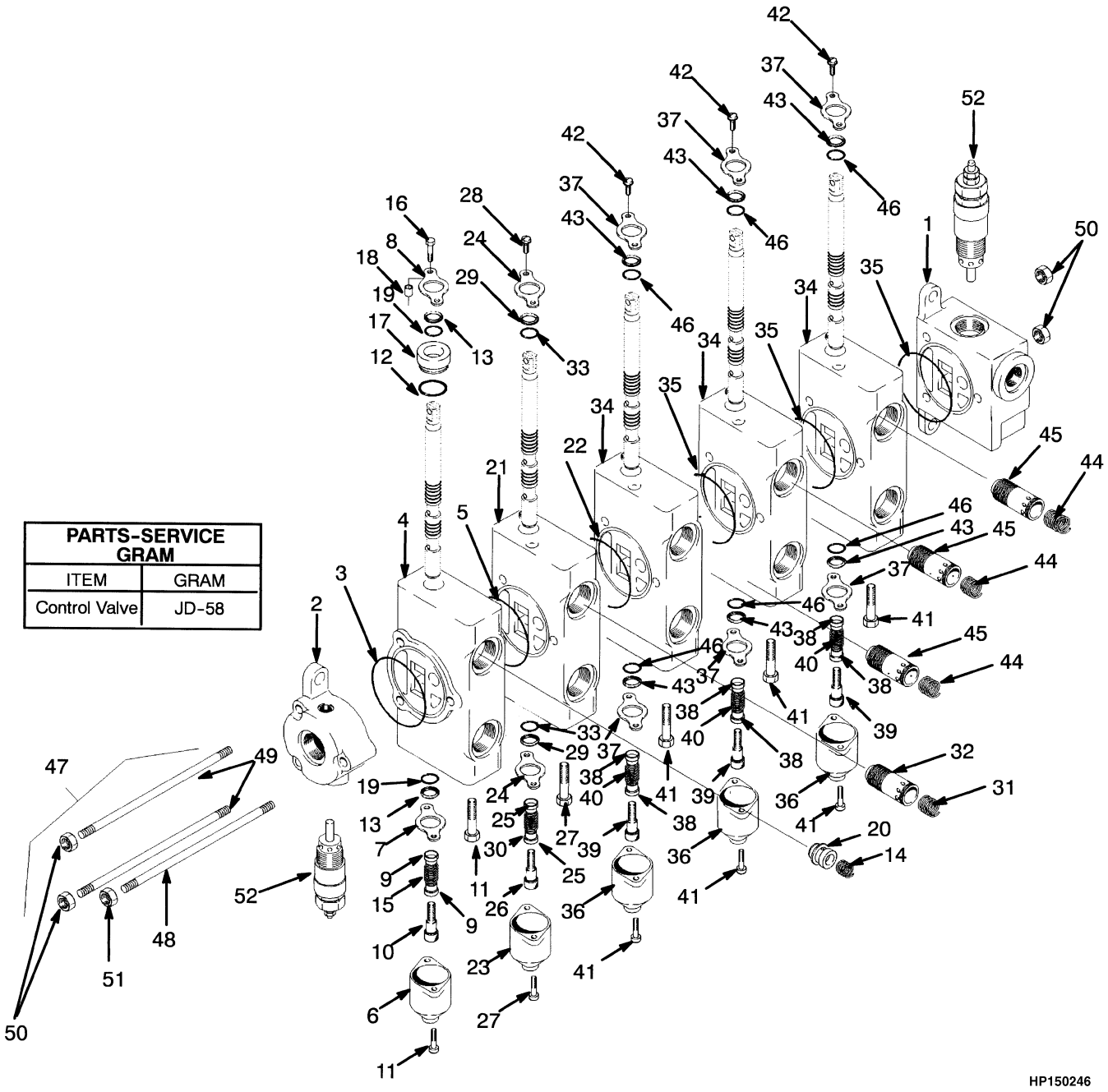

©2010 HYSTER COMPANY

CONTROL VALVE

FIVE FUNCTION (→ S/N D019D02127)

ITEM	PART NO.	DESCRIPTION	QTY
	1301531	Hydraulic Control Valve	1
1	1320980	Valve Section	1
2	1320981	Valve Section	1
3	1320982	O-Ring	1
4	1320976	Valve Section	1
5	1320982	O-Ring	1
6	274426	Cap	1
7	77451	Plate	1
8	1320992	Plate	1
9	274427	Spring Seat	2
10	274548	Capscrew	1
11	16328	Capscrew	2
12	1455596	O-Ring	1
13	1393703	Wiper	2
14	1320994	Spring	1
15	1320991	Spring	1
16	1320995	Capscrew	2
17	1320996	Spacer	1
18	1320997	Spacer	2
19	1393704	Seal	2
20	1320998	Poppet	1
21	1320978	Valve Section (Tilt)	1
22	1320982	O-Ring	1
23	274426	Cap	1
24	77451	Plate	2
25	274427	Spring Seat	2
26	274548	Capscrew	1
27	16328	Capscrew	2
28	16706	Screw	2
29	1393703	Wiper	2
30	300723	Spring	1
31	1320988	Spring	1
32	1320989	Poppet	1
33	1393704	Seal	2
34	1320977	Valve Section (Auxiliary)	3
35	1320982	O-Ring	1
36	274426	Cap	1
37	77451	Plate	2
38	274427	Spring Seat	2
39	274548	Capscrew	1
40	1320991	Spring	1
41	16328	Capscrew	2
42	16706	Screw	2
43	1393703	Wiper	2
44	1320988	Spring	1
45	1320989	Poppet	1
46	1393704	Seal	2
47	1320975	Kit-Tie Rod	1
48	1320985	Tie Rod	1
49	1320984	Tie Rod	2

©2010 HYSTER COMPANY

CONTROL VALVE

FIVE FUNCTION (→ S/N D019D02127)

ITEM	PART NO.	DESCRIPTION	QTY
50	1320983	Nut	4
51	1320986	Nut	2
52	1320979	Relief Valve	2
52	1321381	Kit-Seal	1

©2010 HYSTER COMPANY

NOTES

©2010 HYSTER COMPANY

CONTROL VALVE (FIGURE 8-18)

FIVE FUNCTION (S/N D019D02128 →)

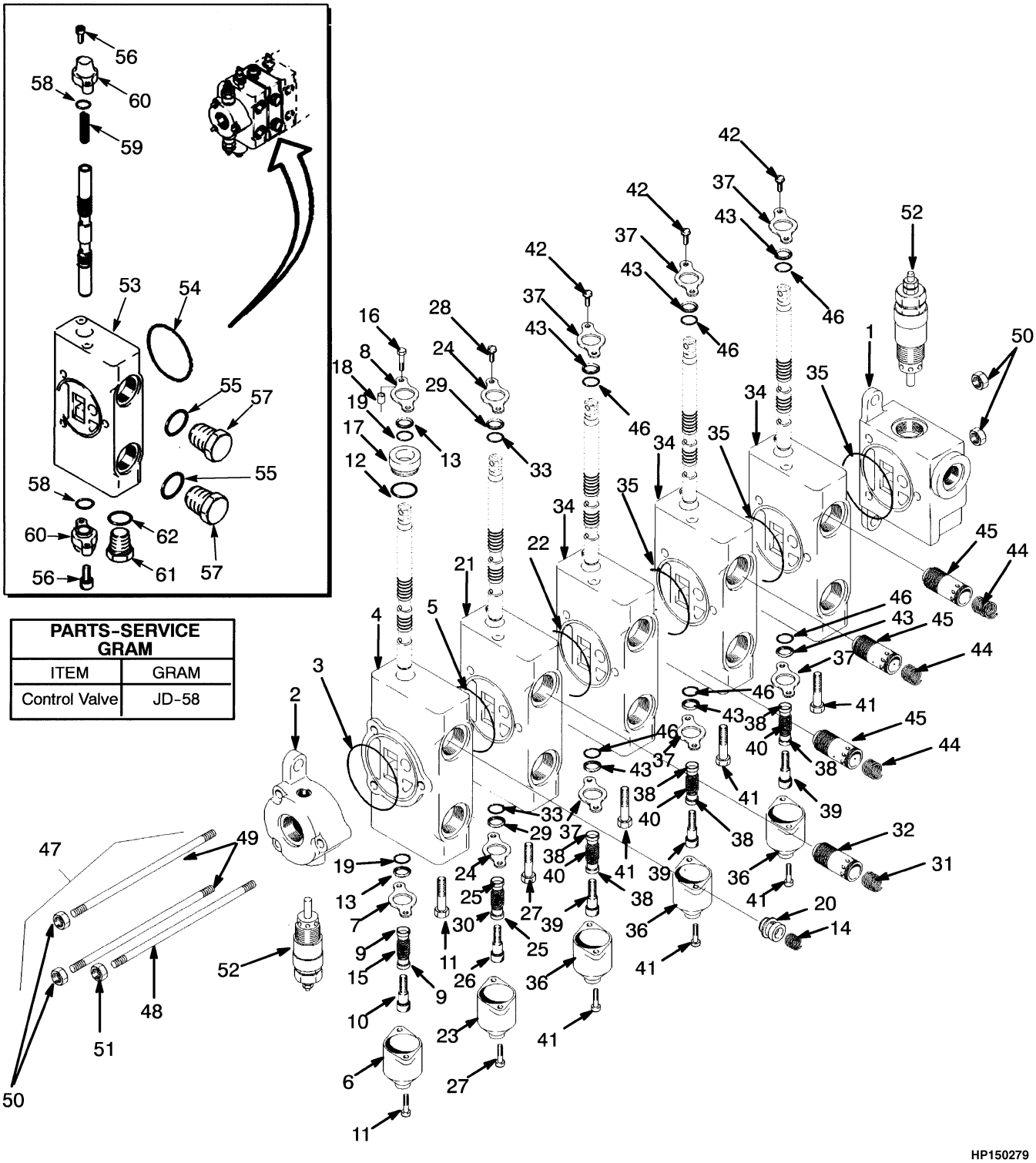

PARTS-SERVICE GRAM	
ITEM	GRAM
Control Valve	JD-58

©2010 HYSTER COMPANY

CONTROL VALVE

FIVE FUNCTION (S/N D019D02128 →)

ITEM	PART NO.	DESCRIPTION	QTY
	1385614	Hydraulic Control Valve	1
1	1320980	Valve Section	1
2	1320981	Valve Section	1
3	1320982	O-Ring	1
4	1320976	Valve Section	1
5	1320982	O-Ring	1
6	274426	Cap	1
7	77451	Plate	1
8	1320992	Plate	1
9	274427	Spring Seat	2
10	274548	Capscrew	1
11	16328	Capscrew	2
12	1455596	O-Ring	1
13	1393703	Wiper	2
14	1320994	Spring	1
15	1320991	Spring	1
16	1320995	Capscrew	2
17	1320996	Spacer	1
18	1320997	Spacer	2
19	1393704	Seal	2
20	1320998	Poppet	1
21	1391638	Valve Section	1
22	1320982	O-Ring	1
23	274426	Cap	1
24	77451	Plate	2
25	274427	Spring Seat	2
26	274548	Capscrew	1
27	16328	Capscrew	2
28	16706	Screw	2
29	1393703	Wiper	2
30	300723	Spring	1
31	1320994	Spring	1
32	1320998	Poppet	1
33	1393704	Seal	2
34	1391639	Valve Section	3
35	1320982	O-Ring	1
36	274426	Cap	1
37	77451	Plate	2
38	274427	Spring Seat	2
39	274548	Capscrew	1
40	1320991	Spring	1
41	16328	Capscrew	2
42	16706	Screw	2
43	1393703	Wiper	2
44	1320994	Spring	1
45	1320998	Poppet	1
46	1393704	Seal	2
47	1385619	Kit-Tie Rod	1
48	1377237	Tie Rod	1
49	1377238	Tie Rod	2

©2010 HYSTER COMPANY

CONTROL VALVE

FIVE FUNCTION (S/N D019D02128 →)

ITEM	PART NO.	DESCRIPTION	QTY
50	1320983	Nut	4
51	1320986	Nut	2
52	1320979	Relief Valve	2
52	1321381	Kit-Seal	1
53	1385616	Valve Section	1
54	1320982	O-Ring	1
55	16485	O-Ring	2
56	1455595	Capscrew	4
57	188486	Plug	2
58	1455596	O-Ring	2
59	1391645	Spring	1
60	1455594	Cap	2
61	1391644	Plug	1
62	1391643	O-Ring	1

©2010 HYSTER COMPANY

NOTES

©2010 HYSTER COMPANY

TILT CYLINDER ATTACHING PARTS (FIGURE 8-19)

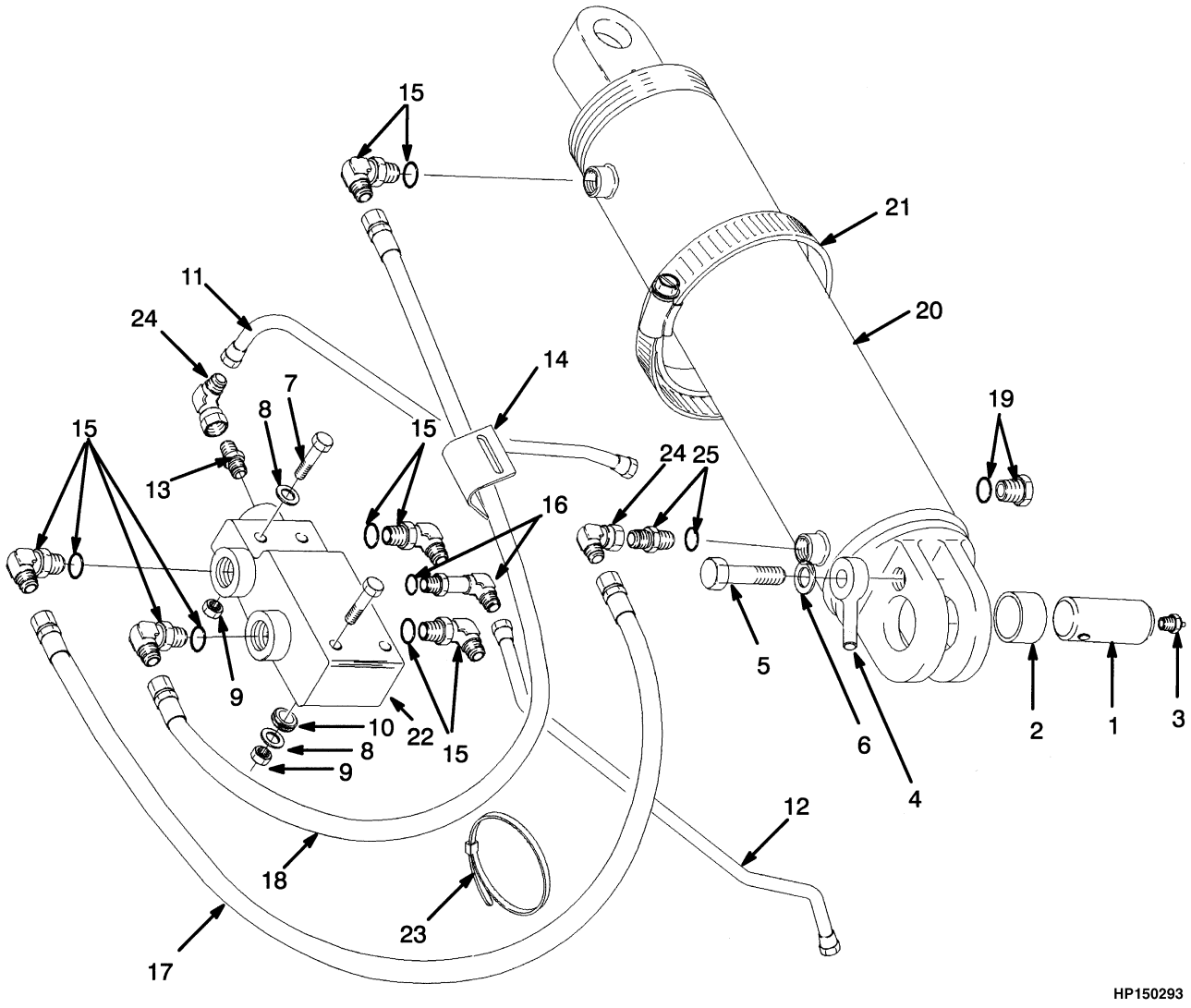

©2010 HYSTER COMPANY

TILT CYLINDER ATTACHING PARTS

ITEM	PART NO.	DESCRIPTION	QTY
1	1347862	Pin	2
2	376051	Bushing	2
3	16006	Grease Fitting	2
4	1347861	Anchor	2
5	292560	Capscrew	2
6	292685	Lockwasher	2
7	136704	Capscrew	2
8	320158	Washer	2
9	313828	Nut	2
10	1301346	Grommet	3
11	1311351	Tube Assy (Without Noise Reduction)	1
11	**a** 1332944	Tube Assy (With Noise Reduction)	1
11	**b** 1385603	Tube Assy (With Noise Reduction)	1
12	**a** 1311350	Tube Assy	1
12	**b** 1385604	Tube Assy	1
13	305110	Fitting (Without Noise Reduction)	1
14	87911	Clamp	2
15	16559	Fitting	8
15	16484	O-Ring	1
16	169592	Fitting	1
16	16484	O-Ring	1
17	313979	Hose Assy	2
18	357869	Hose Assy	2
19	14595	Plug Assembly	2
19	16484	O-Ring	1
20	. . . . .	Tilt Cylinder (☞Figure 8-20, ☞Figure 8-22)	2
21	144157	Hose Clamp	2
22	317801	Hydraulic Control Valve (Tilt) (☞Figure 8-23)	1
23	129563	Strap Clamp	1
24	16989	Fitting (With Noise Reduction)	2
25	16541	Fitting	2
25	16484	O-Ring	1

FOOTNOTES:

a → S/N D019D02127

b S/N D019D02128 →

©2010 HYSTER COMPANY

TILT CYLINDER (FIGURE 8-20)

TWO STAGE LIMITED FREE-LIFT — H300XL-H360XL NON-EC

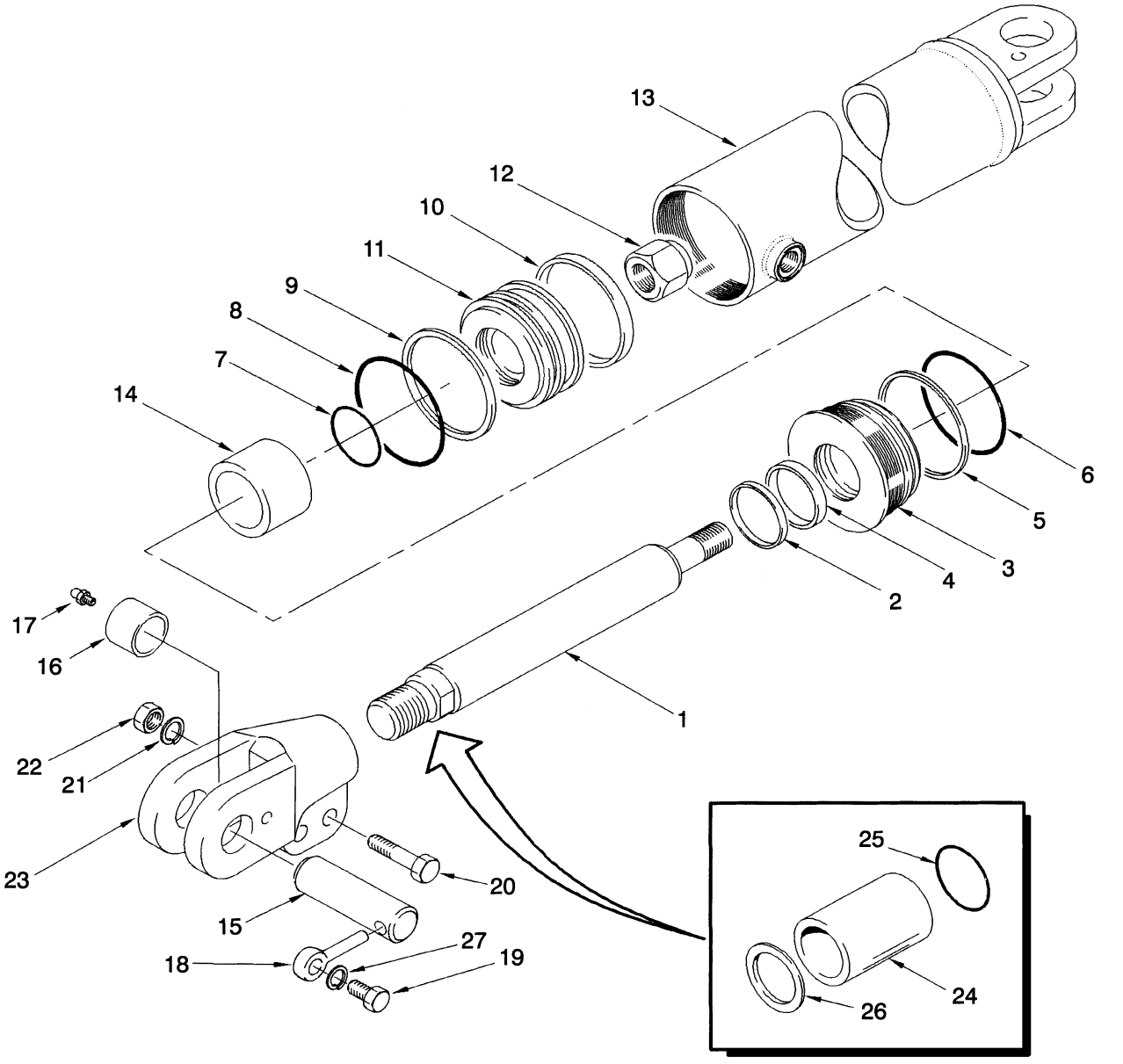

HP150294

©2010 HYSTER COMPANY

TILT CYLINDER

TWO STAGE LIMITED FREE-LIFT – H300XL-H360XL NON-EC

KEY:
A: H300XL-H360XL (15° Forward/12° Back)
B: H300XL-H360XL (20.5° Forward/7° Back)
C: H300XL-H360XL (5° Forward/12° Back)

ITEM	PART NO.	DESCRIPTION	QTY A	QTY B	QTY C
	a 1347869	Tilt Cylinder	1	1	..
	b 2013403	Tilt Cylinder	1	1	..
	c 2013803	Tilt Cylinder	1	1	..
	d 2037398	Tilt Cylinder	1	1	..
	a 1347870	Tilt Cylinder	..	..	1
	b 2013404	Tilt Cylinder	..	..	1
	c 2013804	Tilt Cylinder	..	..	1
	d 2015363	Tilt Cylinder	..	..	1
	d 2032001	Tilt Cylinder	..	..	1
1	**a** 387243	Piston Rod	1	1	1
1	**b** 2013407	Cylinder Rod	1	1	1
1	**c** 2013809	Cylinder Rod	1	1	1
1	**d** 2015375	Rod	1	1	1
1	**d** 2015376	Rod	..	..	1
2	816578	Rod Wiper	1	1	1
3	387244	End Plug	1	1	1
3	2013361	End Plug	1	1	1
4	816580	Rod Seal	1	1	1
5	146803	Back-Up Ring	1	1	1
6	55289	O-Ring	1	1	1
7	198518	O-Ring	1	1	1
8	15890	O-Ring	1	1	1
9	1380890	Piston Seal	1	1	1
10	387247	Wear Ring	1	1	1
11	387248	Piston	1	1	1
12	221377	Locknut	1	1	1
13	**a** 1347872	Tube Wldmt-Cylinder	1	1	1
13	**bcd** 2013366	Tube Wldmt-Cylinder	1	1	1
14	**cd** 1303443	Spacer	..	..	1
14	**d** 2015381	Spacer	..	..	1
15	1347862	Pin	2	2	2
16	376051	Bushing	2	2	2
17	16015	Grease Fitting	2	2	2
18	1347861	Anchor	2	2	2
19	292560	Capscrew	2	2	2
20	292538	Capscrew	4	4	4
21	292683	Lockwasher	4	4	4
22	216877	Nut	4	4	4
23	**c** 1347863	Rod End	2	..	..
23	**d** 1382936	Rod End	2	..	2
23	**c** 1347864	Rod End	..	2	..
23	**d** 1382937	Rod End	..	2	..
23	**c** 1347874	Rod End	..	..	2
24	**a** 1326755	Spacer	2	2	2

©2010 HYSTER COMPANY

TILT CYLINDER

TWO STAGE LIMITED FREE-LIFT – H300XL-H360XL NON-EC

KEY:
A: H300XL-H360XL (15° Forward/12° Back)
B: H300XL-H360XL (20.5° Forward/7° Back)
C: H300XL-H360XL (5° Forward/12° Back)

ITEM	PART NO.	DESCRIPTION	QTY A	QTY B	QTY C
24	**b** 2013415	Spacer	2	2	2
24	**a** 1325382	Spacer	2	2	2
24	**b** 2013414	Spacer	2	2	2
25	15870	O-Ring	2	2	2
26	1326764	Shim	AR	AR	AR
27	292683	Lockwasher	2	2	2
	387325	Kit-Seal	1	1	1

FOOTNOTES:

a → S/N D019D01614
b S/N D019D01615 ↔ S/N D019D01657
c S/N D019D01658 ↔ S/N D019D01854
d S/N D019D01855 →

©2010 HYSTER COMPANY

NOTES

©2010 HYSTER COMPANY

TILT CYLINDER (FIGURE 8-21)

TWO STAGE LIMITED FREE-LIFT — EMPTY CONTAINER HANDLER

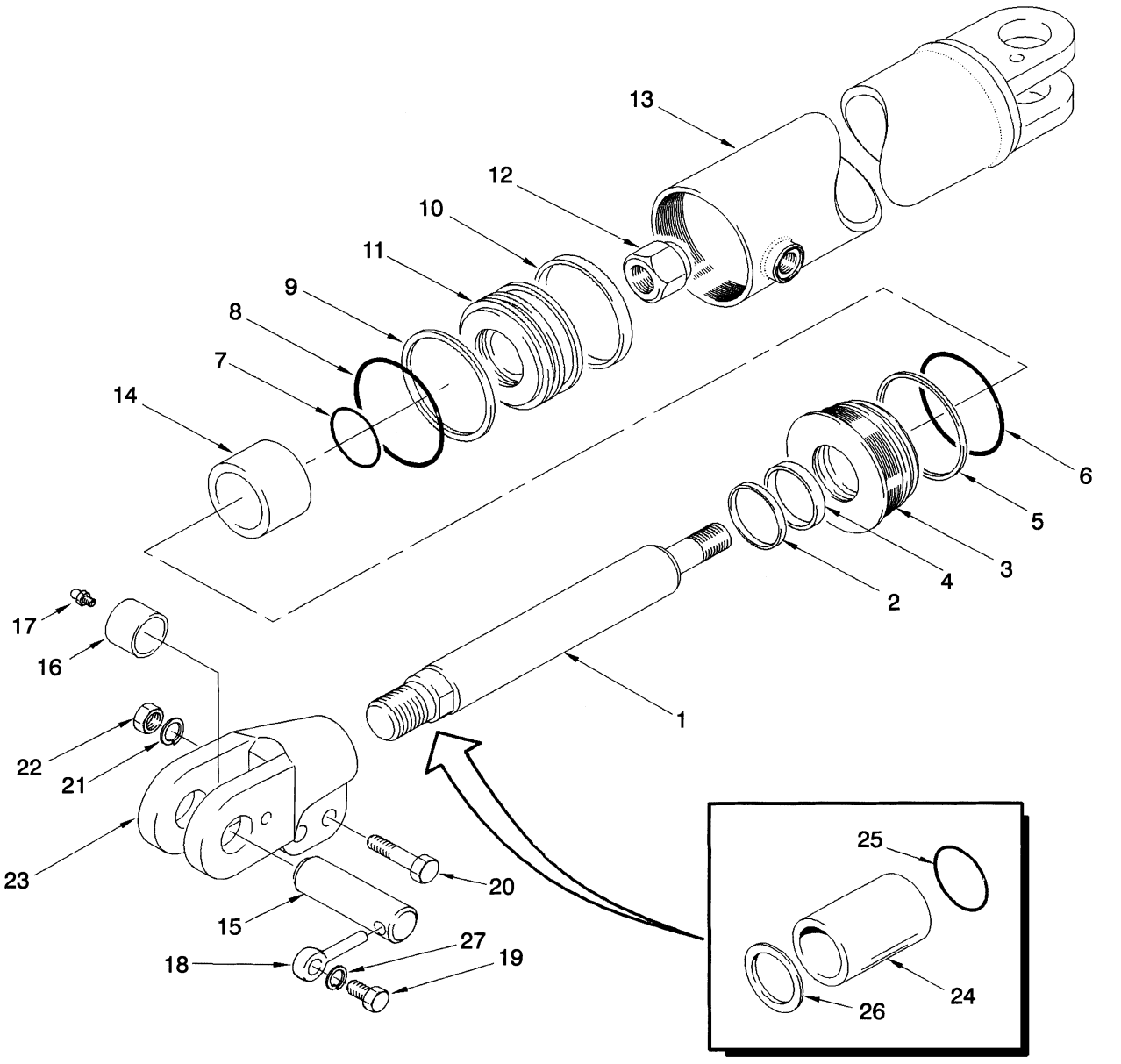

©2010 HYSTER COMPANY

TILT CYLINDER

TWO STAGE LIMITED FREE-LIFT – EMPTY CONTAINER HANDLER

KEY:
A: H330XL-EC (5° Forward/5° Back)
B: H330XL-EC (3° Forward/5° Back)
C: H360XL-EC (5° Forward/5° Back)
D: H360XL-EC (3° Forward/5° Back)

ITEM	PART NO.	DESCRIPTION	QTY A	B	C	D
	a 1347870	Tilt Cylinder	1	..	..	..
	b 2013404	Tilt Cylinder	1	..	..	..
	c 2013804	Tilt Cylinder	1	..	..	..
	d 2015363	Tilt Cylinder	1	..	..	..
	2035802	Tilt Cylinder	..	1	..	..
	a 1347871	Tilt Cylinder	..	..	1	..
	b 2013405	Tilt Cylinder	..	..	1	..
	c 2013805	Tilt Cylinder	..	..	1	..
	d 2015364	Tilt Cylinder	..	..	1	..
	1458005	Tilt Cylinder	..	..	..	1
1	**a** 387243	Piston Rod	1	..	1	..
1	**b** 2013407	Cylinder Rod	1	..	1	..
1	**c** 2013809	Cylinder Rod	1	..	1	..
1	**d** 2015376	Rod	1	..	..	..
1	2015376	Rod	..	1	..	..
1	**d** 2015377	Rod	..	..	1	..
1	2015377	Rod	..	..	..	1
2	816578	Rod Wiper	1	1	1	1
3	**a** 387244	End Plug	1	..	1	..
3	**bcd** 2013361	End Plug	1	..	1	..
3	2013361	End Plug	..	1	..	1
4	816580	Rod Seal	1	1	1	1
5	146803	Back-Up Ring	1	1	1	1
6	55289	O-Ring	1	1	1	1
7	198518	O-Ring	1	1	1	1
8	15890	O-Ring	1	1	1	1
9	1380890	Piston Seal	1	1	1	1
10	387247	Wear Ring	1	1	1	1
11	387248	Piston	1	1	1	1
12	221377	Locknut	1	1	1	1
13	**a** 1347872	Tube Wldmt-Cylinder	1	..	1	..
13	**bcd** 2013366	Tube Wldmt-Cylinder	1	..	1	..
13	2013366	Tube Wldmt-Cylinder	..	1	..	1
14	**c** 1303443	Spacer	1	..	..	..
14	**d** 2015381	Spacer	1	..	1	..
14	1458007	Spacer	..	1	..	1
14	**c** 1331581	Spacer	..	..	1	..
15	1347862	Pin	2	2	2	2
16	376051	Bushing	2	2	2	2
17	16015	Grease Fitting	2	2	2	2
18	1347861	Anchor	2	2	2	2
19	292560	Capscrew	2	2	2	2
20	292538	Capscrew	4	4	4	4

©2010 HYSTER COMPANY

TILT CYLINDER

TWO STAGE LIMITED FREE-LIFT – EMPTY CONTAINER HANDLER

KEY:
A: H330XL-EC (5° Forward/5° Back)
B: H330XL-EC (3° Forward/5° Back)
C: H360XL-EC (5° Forward/5° Back)
D: H360XL-EC (3° Forward/5° Back)

ITEM	PART NO.	DESCRIPTION	QTY A	B	C	D
21	292683	Lockwasher	4	4	4	4
22	216877	Nut	4	4	4	4
23	**d** 1382936	Rod End	2	..	2	..
23	1382936	Rod End	..	2	..	2
23	**c** 1347874	Rod End	2	..	2	..
24	**a** 1326755	Spacer	2	2	..	..
24	**b** 2013415	Spacer	2	2	..	..
24	**a** 1325382	Spacer	..	..	2	2
24	**b** 2013414	Spacer	..	..	2	2
25	15870	O-Ring	2	2	..	..
26	1326764	Shim	AR	AR	..	..
27	292683	Lockwasher	2	2	2	2
	387325	Kit-Seal	1	1	1	1

FOOTNOTES:

a → S/N D019D01614
b S/N D019D01615 ↔ S/N D019D01657
c S/N D019D01658 ↔ S/N D019D01846
d S/N D019D01847 →

©2010 HYSTER COMPANY

TILT CYLINDER (FIGURE 8-22)
THREE STAGE FULL FREE-LIFT

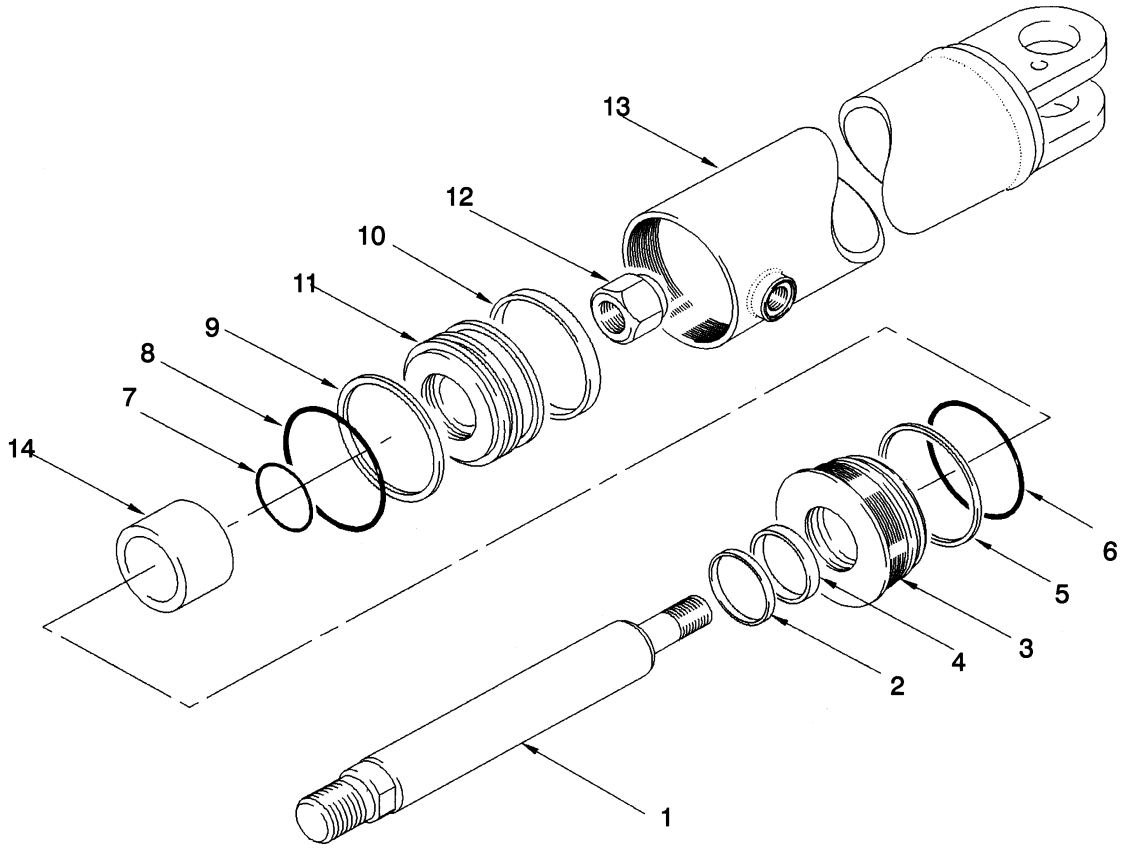

HP150309

ITEM	PART NO.	DESCRIPTION	QTY
	1454508	Tilt Cylinder (Non-EC) (5° Forward/6° Back)	1
1	1455623	Cylinder Rod	1
2	816578	Rod Wiper	1
3	2013361	End Plug	1
4	816580	Rod Seal	1
5	1476882	Back-Up Ring	1
6	55289	O-Ring	1
7	198518	O-Ring	1
8	15890	O-Ring	1
9	1380890	Piston Seal	1
10	387247	Wear Ring	1
11	387248	Piston	1
12	221377	Locknut	1
13	2013366	Tube Wldmt-Cylinder	1
14	1392601	Spacer	1
	1476917	Kit-Seal	1

©2010 HYSTER COMPANY

TILT LOCK VALVE (FIGURE 8-23)

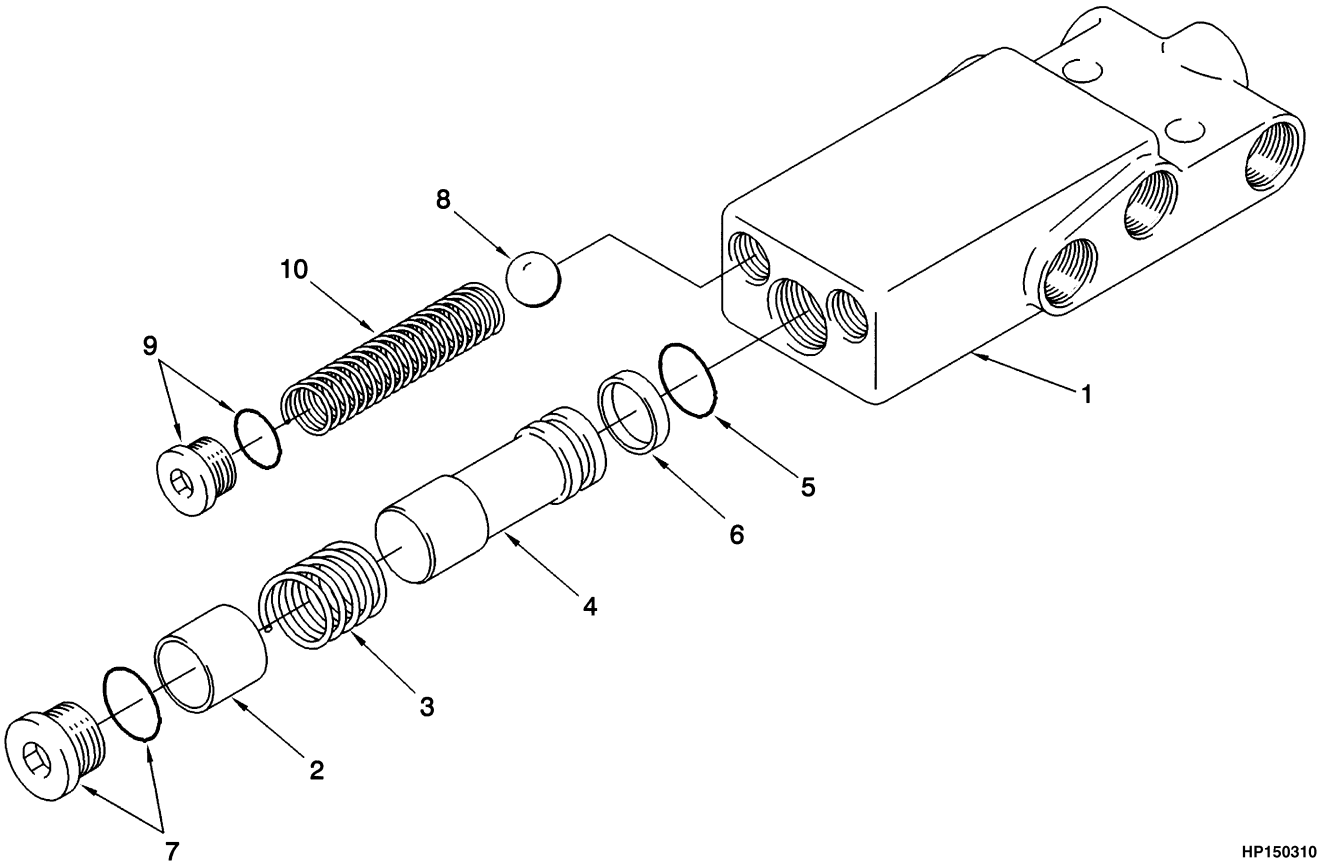

HP150310

ITEM	PART NO.	DESCRIPTION	QTY
	317801	Hydraulic Control Valve (Tilt)	1
1	317802	Body	1
2	305104	Pin	1
3	276963	Spring	1
4	294863	Spool	1
5	87300	O-Ring	1
6	98594	Back-Up Ring	1
7	235691	Fitting	1
7	16484	O-Ring	1
8	5586	Ball Bearing	2
9	134436	Fitting	2
9	16482	O-Ring	1
10	112468	Spring	2

©2010 HYSTER COMPANY

9 MAST-TWO STAGE LIMITED FREE-LIFT

SECTION 9
MAST-TWO STAGE LIMITED FREE-LIFT

DESCRIPTION	PAGE
CARRIAGE	
TWO STAGE LIMITED FREE-LIFT	9-18
HEADER HOSE	
TWO STAGE LIMITED FREE-LIFT	9-20
INNER MAST	
TWO STAGE LIMITED FREE-LIFT	9-6
LIFT	
TWO STAGE LIMITED FREE-LIFT	9-8
LIFT CYLINDER	
EMPTY CONTAINER HANDLER 3 AND 4 - TWO STAGE LIMITED FREE-LIFT	9-16
TWO STAGE LIMITED FREE-LIFT - NON-EMPTY CONTAINER HANDLER (→ S/N D019D02025)	9-12
TWO STAGE LIMITED FREE-LIFT - NON-EMPTY CONTAINER HANDLER (S/N D019D02026 →)	9-14
OUTER MAST	
TWO STAGE LIMITED FREE-LIFT	9-2

©2010 HYSTER COMPANY

OUTER MAST (FIGURE 9-1)
TWO STAGE LIMITED FREE-LIFT

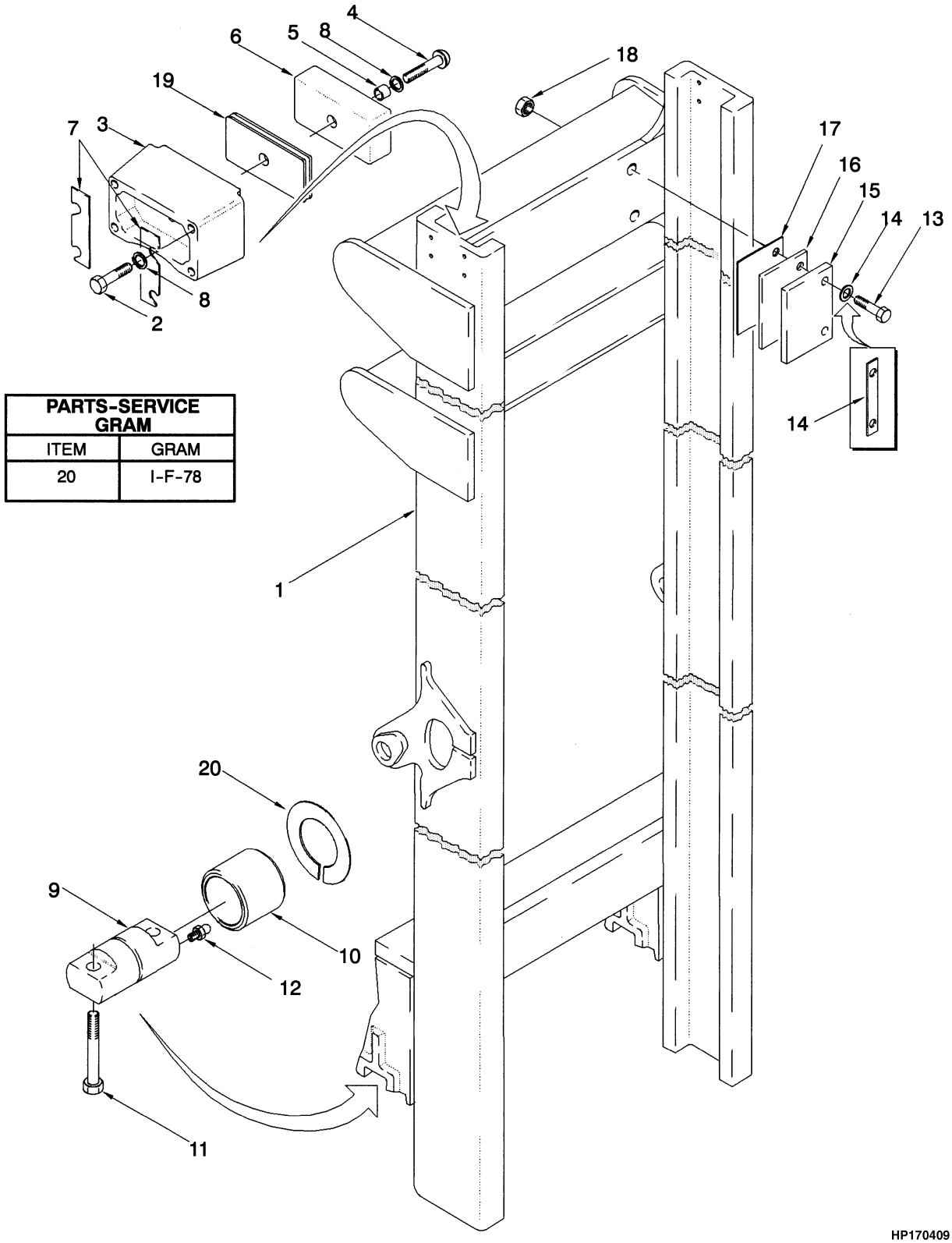

PARTS-SERVICE GRAM	
ITEM	GRAM
20	I-F-78

©2010 HYSTER COMPANY

OUTER MASS

TWO STAGE LIMITED FREE-LIFT

EMPTY CONTAINER HANDLER

ITEM	DESCRIPTION 1 2 3 4	LIFT HEIGHT TO BOTTOM OF FORKS	
		6920 mm (272.4 in.)	9910 mm (390.2 in.)
	Mast Group Number	-	-
	Mast Assy	**aef**1358721 **ajk**1460189	**beg**1323847 **bjl**1460190
1	Outer Mast	**aef**1358713 **ajk**1460198	**beg**1323837 **bjl**1460136

NON-EMPTY CONTAINER HANDLER

ITEM	DESCRIPTION 1 2 3 4	LIFT HEIGHT TO BOTTOM OF FORKS				
		3658 mm (144.0 in.)	4547 mm (179.0 in.)	5309 mm (209.0 in.)	6109 mm (240.5 in.)	6612 mm (260.3 in.)
	Mast Group Number	-	-	-	-	-
	Mast Assy	**h**1385953 **d**1303361	**h**1385954 **d**1303362	**h**1385955 **d**1303363	**h**1385956 **d**1303364	**h**1385957 **d**1303365
1	Outer Mast	1303345	1303346	1303347	1303348	1334583

ITEM	PART NO.	DESCRIPTION	QTY
	c	Mast Assy	1
1	**c**	Outer Mast	1
2	221506	Capscrew	8
3	1301018	Bracket	2
4	376203	Capscrew	2
5	1301016	Spacer	2
6	1335179	Bearing	2
7	1310592	Shim (0.030 in.)	AR
8	15156	Lockwasher	10
9	**d** 376053	Pin	2
9	**i** 1385549	Pin	2
10	376038	Bushing	2
11	1326777	Capscrew	4
12	16015	Grease Fitting	2
13	292529	Capscrew	4
14	1347851	Plate	2
15	1346892	Wear Plate	2
16	1346973	Shim	AR
17	1346974	Shim	AR
18	300937	Nut	4
19	1301014	Shim (0.050 in.)	AR
20	1359101	Shim (0.12 in.)	AR

©2010 HYSTER COMPANY

FOOTNOTES:

a ECH-3
b ECH-4
c Refer to Table
d → S/N D019D02168
e → S/N D019D02680V
f → S/N D019E02463X
g → S/N D019E02470W
h S/N D019D02026S →
i S/N D019D02169 →
j S/N D019D02681V →
k S/N D019E02464X →
l S/N D019E02471W →

©2010 HYSTER COMPANY

NOTES

©2010 HYSTER COMPANY

INNER MAST (FIGURE 9-2)
TWO STAGE LIMITED FREE-LIFT

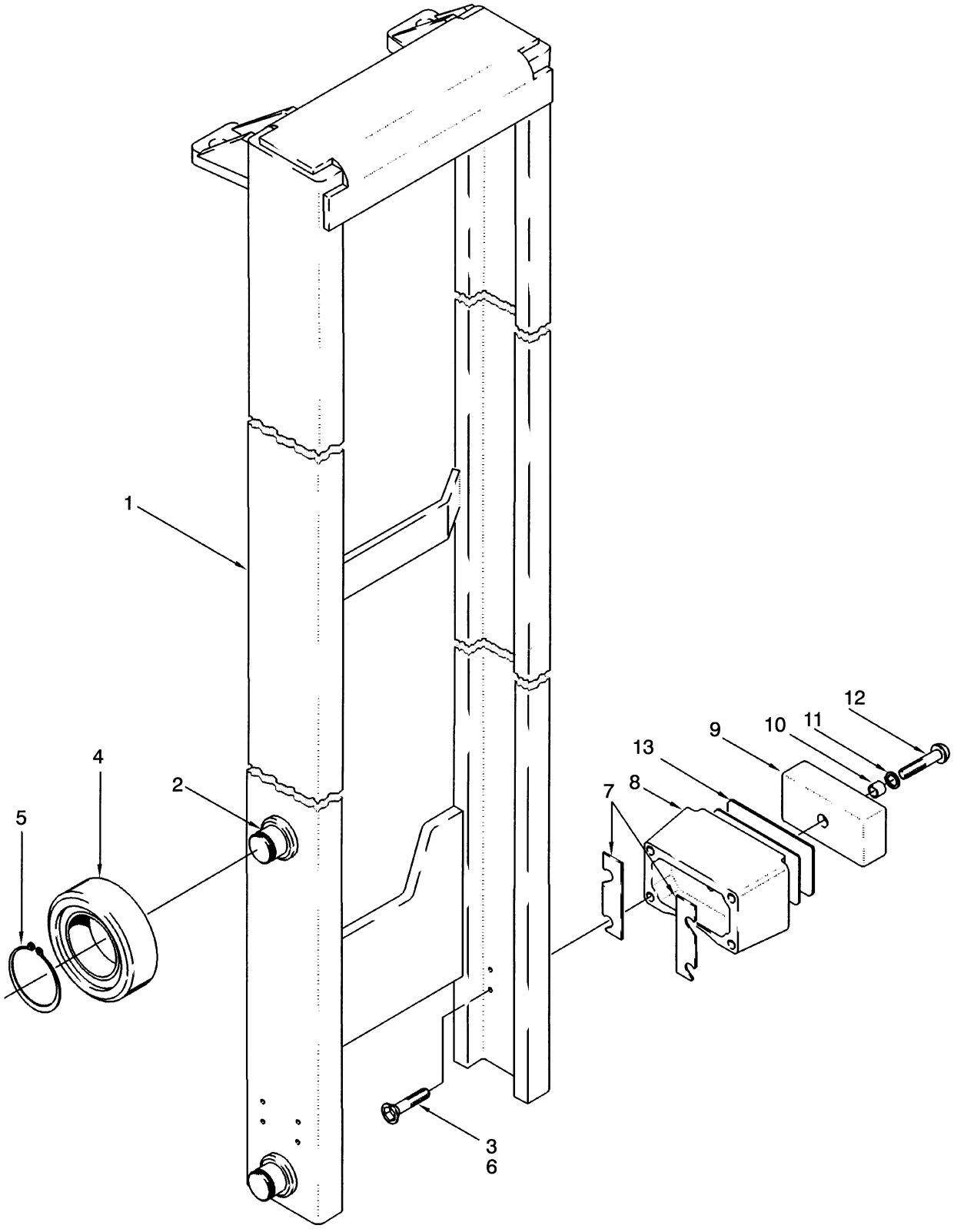

©2010 HYSTER COMPANY

INNER MASS

TWO STAGE LIMITED FREE-LIFT

EMPTY CONTAINER HANDLER

ITEM	DESCRIPTION 1 2 3 4	LIFT HEIGHT TO BOTTOM OF FORKS	
		6920 mm (272.4 in.)	9910 mm (390.2 in.)
	Mast Group Number	-	-
	Mast Assy	**adf**1358721 **ajl**1460189	**beg**1323847 **bik**1460190
1	Inner Mast	**adf**1358746 **aij**1460197	**bdg**1323848 **bik**1460137

NON-EMPTY CONTAINER HANDLER

ITEM	DESCRIPTION 1 2 3 4	LIFT HEIGHT TO BOTTOM OF FORKS				
		3658 mm (144.0 in.)	4547 mm (179.0 in.)	5309 mm (209.0 in.)	6109 mm (240.5 in.)	6612 mm (260.3 in.)
	Mast Group Number	-	-	-	-	-
	Mast Assy	**h**1385953 **d**1303361	**h**1385954 **d**1303362	**h**1385955 **d**1303363	**h**1385956 **d**1303364	**h**1385957 **d**1303365
1	Inner Mast	1303311	1303312	1303313	1303314	1303315

ITEM	PART NO.	DESCRIPTION	QTY
	c	Mast Assy	1
1	**c**	Inner Mast	1
2	1313357	Stubshaft	4
3	220159	Capscrew	8
4	1313358	Load Roller	4
5	58918	Snap Ring	4
6	321197	Loctite	AR
7	1310592	Shim (0.030 in.)	AR
8	1301018	Bracket	2
9	1335179	Bearing	2
10	1301016	Spacer	2
11	15156	Lockwasher	2
12	376203	Capscrew	2
13	1301014	Shim (0.050 in.)	AR

FOOTNOTES:

a ECH-3
b ECH-4
c Refer to Table
d → S/N D019D02680V
e → S/N D019D02681V
f → S/N D019E02463X
g → S/N D019E02470W
h S/N D019D02026S →
i S/N D019D02681V →
j S/N D019E02464X →
k S/N D019E02471W →
l S/N D019E02681V →

©2010 HYSTER COMPANY

LIFT (FIGURE 9-3)
TWO STAGE LIMITED FREE-LIFT

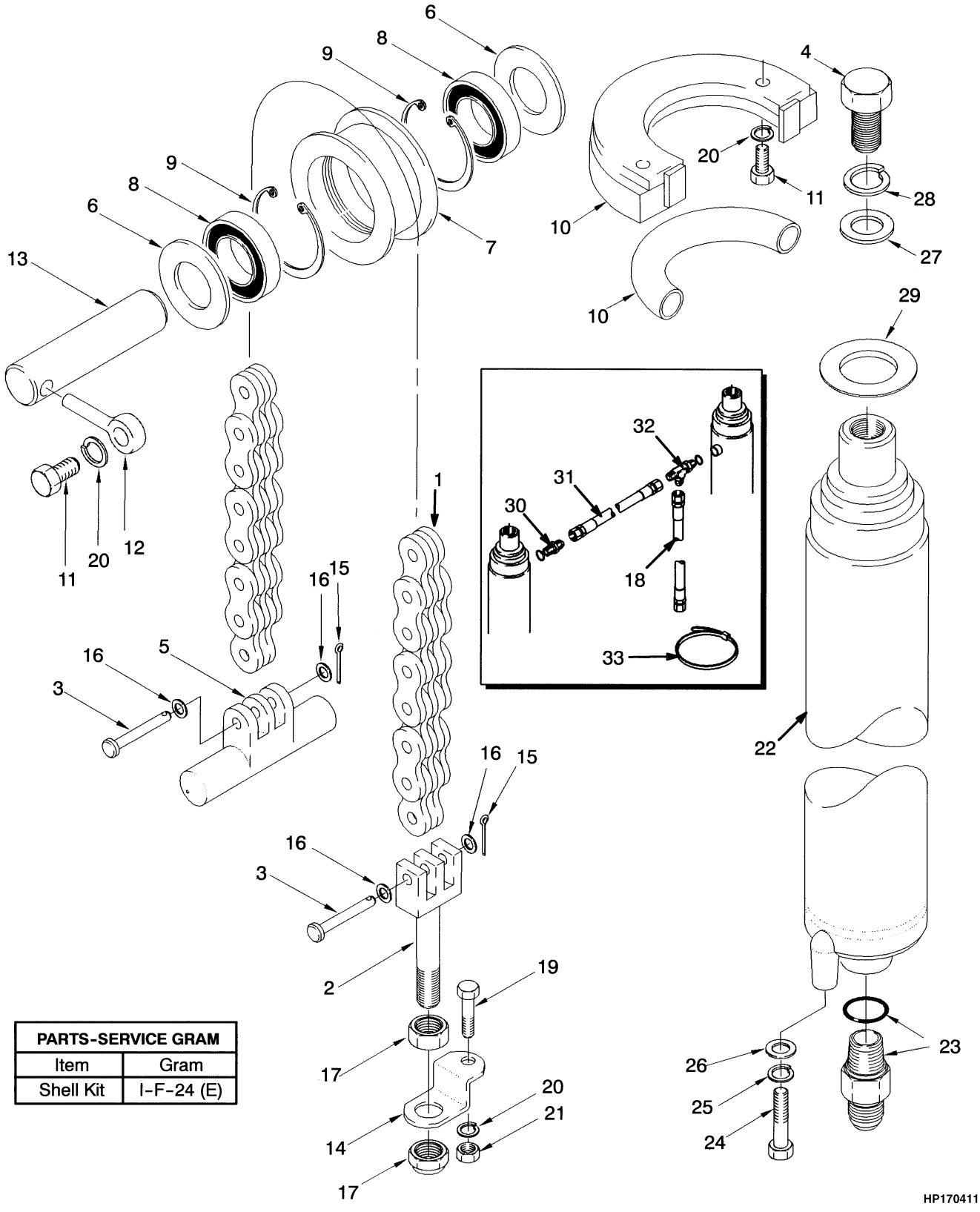

PARTS-SERVICE GRAM	
Item	Gram
Shell Kit	I-F-24 (E)

©2010 HYSTER COMPANY

LIFT
TWO STAGE LIMITED FREE-LIFT

EMPTY CONTAINER HANDLER

ITEM	DESCRIPTION 1 2 3 4	LIFT HEIGHT TO BOTTOM OF FORKS	
		6920 mm (272.4 in.)	9910 mm (390.2 in.)
	Mast Group Number	-	-
	Mast Assy	**bfg**1358721 **bkm**1460189	**cfh**1323847 **ckn**1460190
1	Chain	**bfg**1358714 **abkm**1460135	**cfh**1323839 **ckn**1460134

NON-EMPTY CONTAINER HANDLER

ITEM	DESCRIPTION 1 2 3 4	LIFT HEIGHT TO BOTTOM OF FORKS				
		3658 mm (144.0 in.)	4547 mm (179.0 in.)	5309 mm (209.0 in.)	6109 mm (240.5 in.)	6612 mm (260.3 in.)
	Mast Group Number	-	-	-	-	-
	Mast Assy	**l**1385953 **f**1303361	**l**1385954 **f**1303362	**j**1385955 **f**1303363	**j**1385956 **f**1303364	**j**1385957 **f**1303365
1	Chain	1303366	1303367	1303368	1303369	1303370
18	Hose Assy	88300	123045	252388	159369	116046

ITEM	PART NO.	DESCRIPTION	QTY
	e	Mast Assy	1
1	**e**	Chain	2
2	267827	Chain Anchor	2
3	1303383	Pin	4
4	292580	Capscrew	2
5	267829	Chain Anchor	2
6	267837	Washer	4
7	1328695	Chain Sheave	2
8	267830	Ball Bearing	4
9	46692	Snap Ring	2
10	**c** 1334497	Bracket Wldmt	2
10	**b** 1334500	Hose	2
11	292528	Capscrew	6
11	**d** 292529	Capscrew	4
12	82270	Eyebolt	2
13	1303372	Pin	2
14	132829	Lockplate	2
15	15244	Cotter Pin	4
16	15146	Washer	4
17	221725	Nut	4
18	**e**	Hose Assy	1
19	292531	Capscrew	2
20	292683	Lockwasher	8

©2010 HYSTER COMPANY

LIFT
TWO STAGE LIMITED FREE-LIFT

ITEM	PART NO.	DESCRIPTION	QTY
20	**d** 292683	Lockwasher	4
21	216877	Nut	2
22	. . . . .	Lift Cylinder (☞Figure 9-4, ☞Figure 9-5, ☞Figure 9-6)	2
23	**d** 346971	Lowering Control Valve	1
23	**c** 376681	Lowering Control Valve	1
24	136985	Capscrew	2
25	~~388049~~		
	292682	Lockwasher	2
26	1303391	Washer	2
27	15181	Washer	2
28	292687	Lockwasher	2
29	192830	Shim (0.060 in.)	AR
30	**di** 131460	Fitting	2
30	16483	O-Ring	1
31	**di** 73470	Hose Assy	1
32	**di** 17062	Fitting	1
33	**di** 273775	Strap Clamp	2

FOOTNOTES:

a Change-1460135
b ECH-3
c ECH-4
d Non-EC
e Refer to Table
f → S/N D019D02680V
g → S/N D019E02463X
h → S/N D019E02470W
i S/N D019D02026 →
j S/N D019D02026S →
k S/N D019D02681V →
l S/N D019E02026S →
m S/N D019E02464X →
n S/N D019E02471W →

©2010 HYSTER COMPANY

NOTES

©2010 HYSTER COMPANY

LIFT CYLINDER (FIGURE 9-4)

TWO STAGE LIMITED FREE-LIFT — NON-EMPTY CONTAINER HANDLER (→ S/N D019D02025)

PARTS-SERVICE GRAM	
Item	Gram
Seal Kit	J-F-11
Cylinder	J-F-12

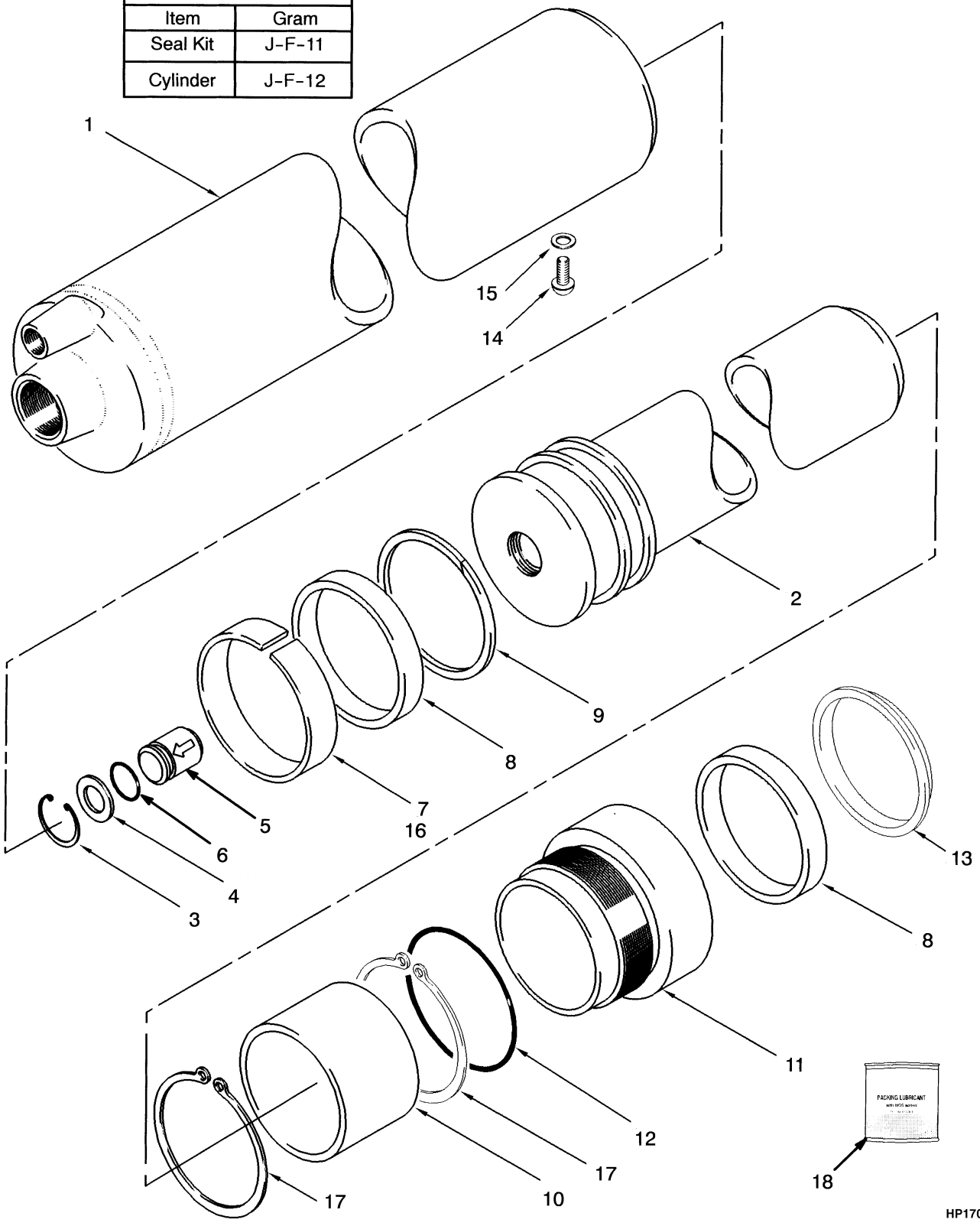

©2010 HYSTER COMPANY

LIFT CYLINDER

TWO STAGE LIMITED FREE-LIFT – NON-EMPTY CONTAINER HANDLER (→ S/N D019D02025)

A018

ITEM	DESCRIPTION 1 2 3 4	LIFT HEIGHT TO BOTTOM OF FORKS				
		3658 mm (144.0 in.)	4547 mm (179.0 in.)	5309 mm (209.0 in.)	6109 mm (240.5 in.)	6612 mm (260.3 in.)
	Mast Group Number	-	-	-	-	-
	Cylinder Group Number	**1334555**	**1334556**	**1334557**	**1334558**	**1334559**
	Cylinder Assy	1334555	1334556	1334557	1334558	1334559
1	Tube Wldmt-Cylinder	387262	387263	387264	387265	387266
2	Cylinder Rod	387281	387282	387283	387284	387285

ITEM	PART NO.	DESCRIPTION	QTY
	a	Cylinder Assy	2
1	**a**	Tube Wldmt-Cylinder	1
2	**a**	Cylinder Rod	1
2	67551	Snap Ring	1
2	387280	Piston	1
3	187388	Snap Ring	1
4	637635	Washer	1
5	257913	Check Valve	1
6	39348	O-Ring	1
7	636954	Wear Ring	2
8	637166	Rod Seal	2
9	638224	Back-Up Ring	2
10	387286	Spacer	1
11	1323845	Gland	1
12	362102	O-Ring	1
13	815620	Rod Wiper	1
14	18701	Capscrew	1
15	190887	Sealing Ring	1
16	318067	Wear Ring	1
17	1323892	Snap Ring	2
18	186061	Lubricant	AR
	1334571	Kit-Seal (Non-EC)	1

FOOTNOTES:

a Refer to Table

©2010 HYSTER COMPANY

LIFT CYLINDER (FIGURE 9-5)

TWO STAGE LIMITED FREE-LIFT — NON-EMPTY CONTAINER HANDLER (S/N D019D02026 →)

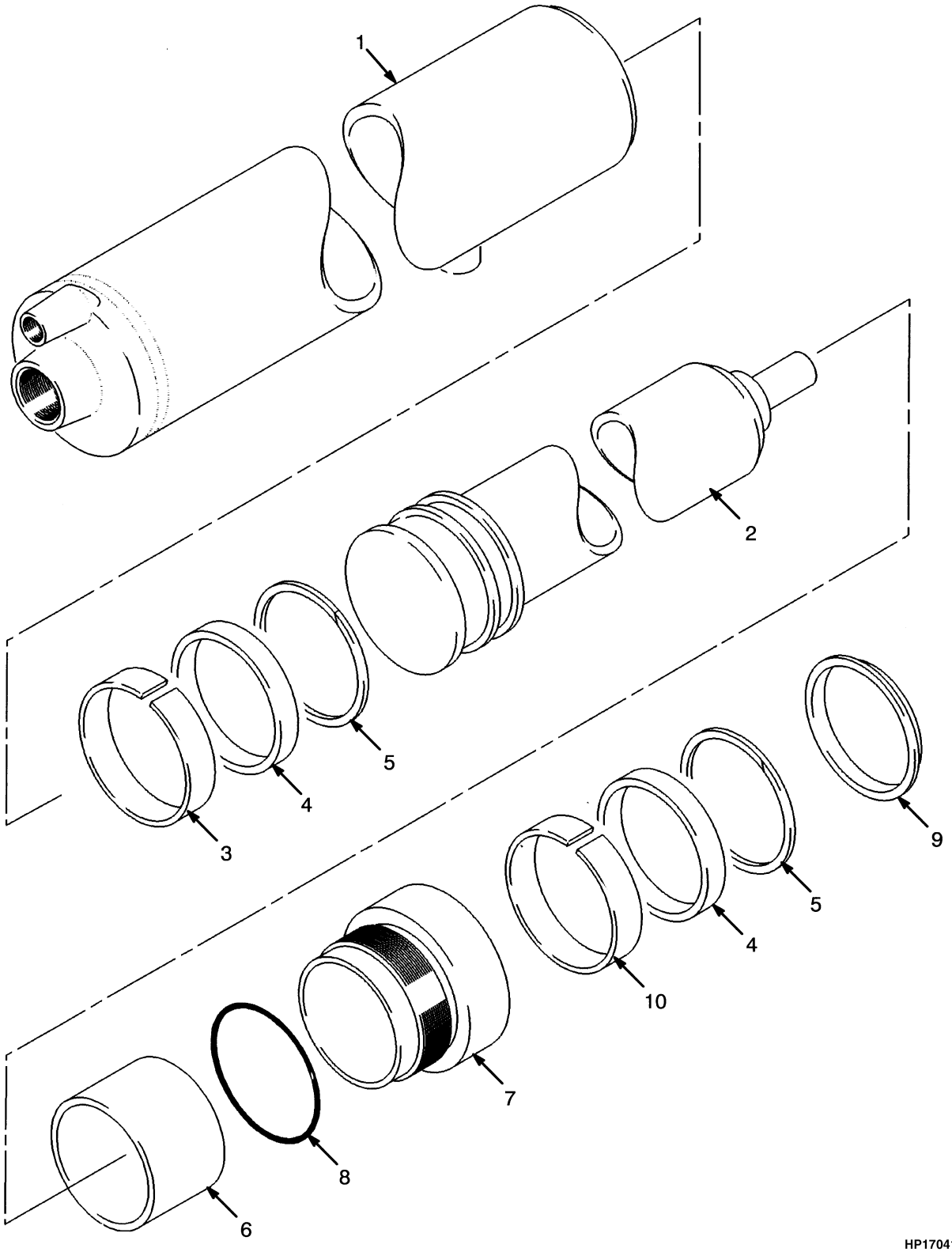

©2010 HYSTER COMPANY

LIFT CYLINDER

TWO STAGE LIMITED FREE-LIFT – NON-EMPTY CONTAINER HANDLER (S/N D019D02026 →)

A018

ITEM	DESCRIPTION 1 2 3 4	LIFT HEIGHT TO BOTTOM OF FORKS				
		3658 mm (144.0 in.)	4547 mm (179.0 in.)	5309 mm (209.0 in.)	6109 mm (240.5 in.)	6612 mm (260.3 in.)
	Mast Group Number	-	-	-	-	-
	Cylinder Group Number	**8504123**	**8504124**	**8504125**	**8504126**	**8504127**
	Cylinder Assy	1385928	1385929	1385930	1385931	1385932
1	Tube Wldmt-Cylinder	1385934	1385935	1385936	1385937	1385938
2	Cylinder Rod	1385884	1385885	1385886	1385887	1385888

ITEM	PART NO.	DESCRIPTION	QTY
	a	Cylinder Assy	2
1	**a**	Tube Wldmt-Cylinder	1
2	**a**	Cylinder Rod	1
3	636954	Wear Ring	1
4	637166	Rod Seal	2
5	638224	Back-Up Ring	2
6	387286	Spacer	1
7	1328946	Retainer	1
8	362102	O-Ring	1
9	815620	Rod Wiper	1
10	318067	Wear Ring	1
	1385958	Kit-Seal	1

FOOTNOTES:

a Refer to Table

©2010 HYSTER COMPANY

LIFT CYLINDER (FIGURE 9-6)

EMPTY CONTAINER HANDLER 3 AND 4 — TWO STAGE LIMITED FREE-LIFT

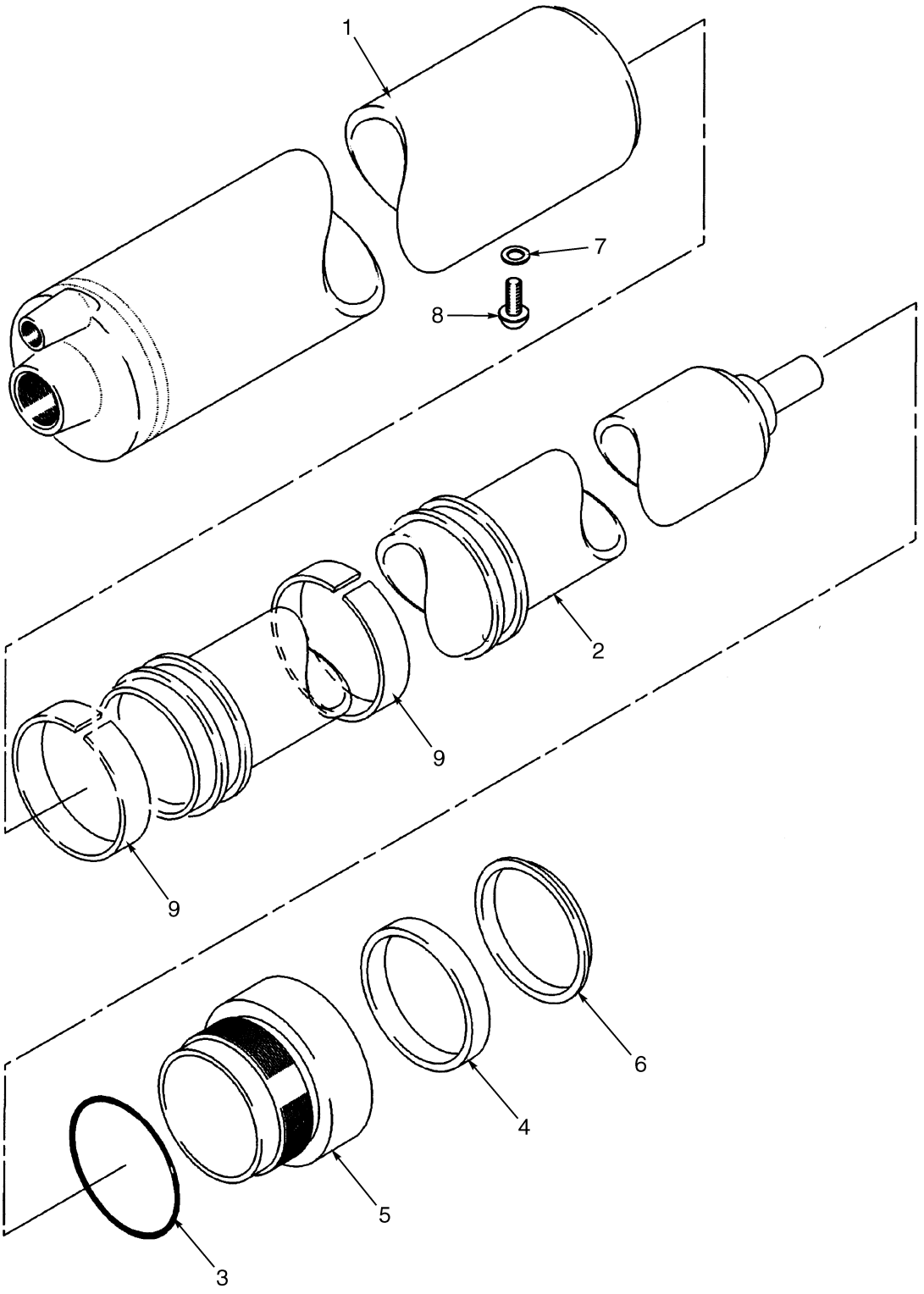

HP170414

©2010 HYSTER COMPANY

LIFT CYLINDER

EMPTY CONTAINER HANDLER 3 AND 4 – TWO STAGE LIMITED FREE-LIFT

A017

ITEM	DESCRIPTION 1 2 3 4	LIFT HEIGHT TO BOTTOM OF FORKS	
		6920 mm (272.4 in.)	9910 mm (390.2 in.)
	Mast Group Number	-	-
	Cylinder Group Number	1358715	1460133
	Cylinder Assy	**ade**1358715 **ahi**1460133	**bdf**1345705 **bhj**1460132
1	Tube Wldmt-Cylinder	**aeg**1358717 **ahi**1460180	**bdf**1313379 **bhj**1460179
2	Cylinder Rod	**ade**1358718 **ahi**1460184	**bdf**1345702 **bhj**1460183

ITEM	PART NO.	DESCRIPTION	QTY
	c	Cylinder Assy	2
1	**c**	Tube Wldmt-Cylinder	1
2	**c**	Cylinder Rod	1
3	362102	O-Ring	1
4	1323844	Rod Seal	1
5	1323845	Gland	1
6	1313386	Rod Wiper	1
7	190887	Sealing Ring	1
8	18701	Capscrew	1
9	636954	Wear Ring	2
	1335188	Kit-Seal	1

FOOTNOTES:

a ECH-3
b ECH-4
c Refer to Table
d → S/N D019D02680V
e → S/N D019E02463X
f → S/N D019E02470W
g S/N D019D02680V →
h S/N D019D02681V →
i S/N D019E02464X →
j S/N D019E02471W →

©2010 HYSTER COMPANY

CARRIAGE (FIGURE 9-7)
TWO STAGE LIMITED FREE-LIFT

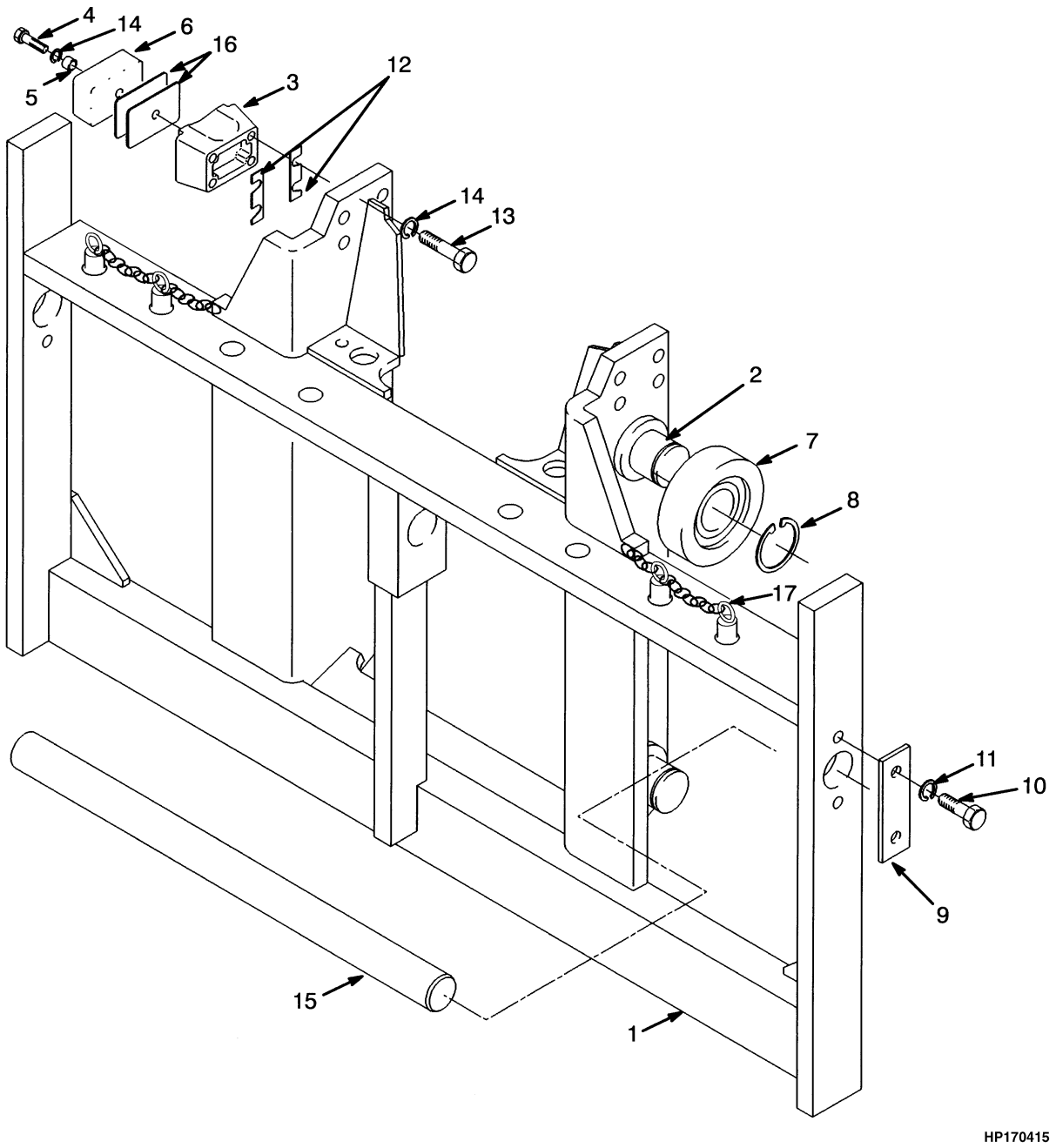

©2010 HYSTER COMPANY

CARRIAGE
TWO STAGE LIMITED FREE-LIFT

ITEM	PART NO.	DESCRIPTION	QTY
	1303279	Carriage	1
1	1303251	Frame	1
2	1313357	Stubshaft	4
3	1301018	Bracket	4
4	376203	Capscrew	4
5	1301016	Spacer	4
6	1335179	Bearing	4
7	1313358	Load Roller	4
8	58918	Snap Ring	4
9	376776	Plate	2
10	293647	Capscrew	4
11	292683	Lockwasher	4
12	1310592	Shim (0.030 in.)	AR
13	221510	Capscrew (2.0 in.)	16
14	15156	Lockwasher	20
15	1303261	Pin	2
16	1301014	Shim (0.050 in.)	AR
17	1334581	Pin (Fork Locking)	2

©2010 HYSTER COMPANY

HEADER HOSE (FIGURE 9-8)
TWO STAGE LIMITED FREE-LIFT

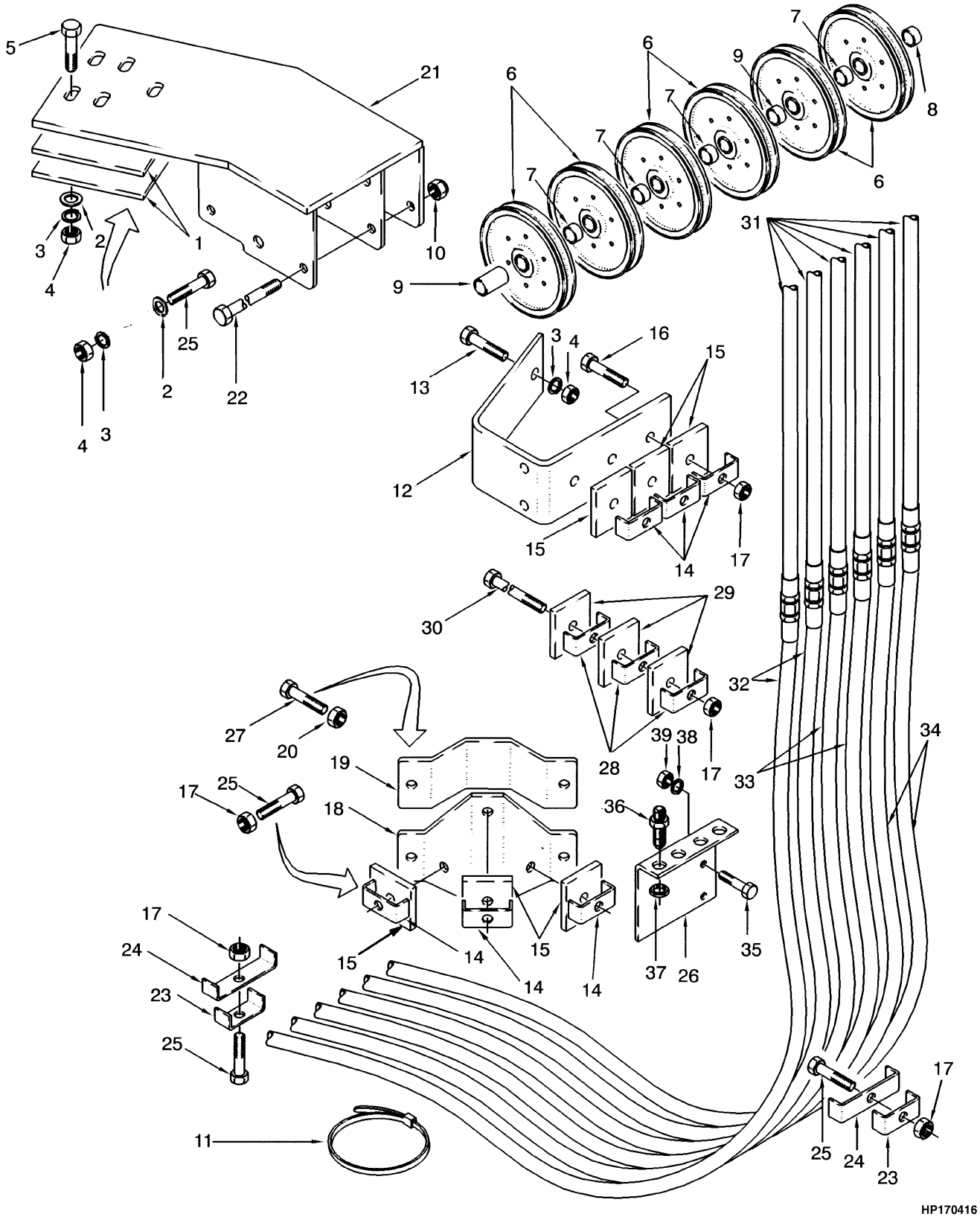

©2010 HYSTER COMPANY

HEADER HOSE
TWO STAGE LIMITED FREE-LIFT

A018

ITEM	DESCRIPTION 1 2 3 4	LIFT HEIGHT TO BOTTOM OF FORKS				
		3658 mm (144.0 in.)	4547 mm (179.0 in.)	5309 mm (209.0 in.)	6109 mm (240.5 in.)	6612 mm (260.3 in.)
	Mast Group Number	-	-	-	-	-
31	Hose Assy	815559	1311337	1311339	1311340	1311341
32	Hose Assy	1311342	1311344	1311344	1311344	1311344
33	Hose Assy	1307375	1311345	1311345	1311345	1311345
34	Hose Assy	1311343	1307367	1307367	1307367	1307367

KEY:
A: Three Function
B: Four Function
C: Five Function

ITEM	PART NO.	DESCRIPTION	QTY A	QTY B	QTY C
1	1301571	Plate	2	2	2
2	320162	Washer	4	4	4
3	292683	Lockwasher	6	6	6
4	216877	Nut	6	6	6
5	292533	Capscrew	3	3	3
6	189451	Hose Sheave	2	4	6
7	280610	Spacer	1	2	4
8	1301650	Spacer	1	1	1
9	1311264	Spacer	1	1	2
9	1301659	Spacer	..	1	..
10	221357	Locknut	3	3	3
11	273775	Strap Clamp	2	2	2
12	1310612	Bracket	1	1	1
13	292528	Capscrew	2	2	2
14	254950	Clamp	2	4	6
15	138929	Plate	2	4	6
16	292531	Capscrew	1	3	3
17	300937	Nut	4	9	11
18	1310608	Bracket	..	1	1
19	1310609	Bracket	..	1	1
20	316826	Nut	2	2	2
21	1352663	Bracket Wldmt	1	..	..
21	1352661	Bracket Wldmt	..	1	1
22	18613	Capscrew	1	..	..
22	1311265	Capscrew	..	3	3
23	254950	Clamp	2	..	..
24	1310637	Clamp	..	2	2
25	292529	Capscrew	2	6	7
26	1311208	Bracket	1	..	..
26	1311363	Bracket	..	1	..

©2010 HYSTER COMPANY

HEADER HOSE
TWO STAGE LIMITED FREE-LIFT

KEY:
A: Three Function
B: Four Function
C: Five Function

ITEM	PART NO.	DESCRIPTION	QTY A	QTY B	QTY C
26	1311362	Bracket	..	..	1
27	292522	Capscrew	2	2	2
28	254950	Clamp (5309mm, 6109mm, 6612mm)	1	2	3
29	138929	Plate (5309mm, 6109mm, 6612mm)	1	2	3
30	**d** 292533	Capscrew (5309mm, 6109mm, 6612mm)	1	1	1
30	**b** 292538	Capscrew (5309mm, 6109mm, 6612mm)	1	1	1
30	**a** 287814	Capscrew (5309mm, 6109mm, 6612mm)	1	1	1
31	**c**	Hose Assy	2	4	6
32	**c**	Hose Assy	2	2	2
33	**c**	Hose Assy	..	2	2
34	**c**	Hose Assy	..	..	2
35	136985	Capscrew	2	2	2
36	16448	Fitting	2	4	6
37	14761	Fitting -Lock Nut	2	4	6
38	292589	Capscrew	2	2	2
39	136692	Nut	2	2	2

FOOTNOTES:

a Five Function
b Four Function
c Refer to Table
d Three Function

©2010 HYSTER COMPANY

10 MAST-THREE STAGE FULL FREE-LIFT

SECTION 10
MAST-THREE STAGE FULL FREE-LIFT

DESCRIPTION	PAGE
CARRIAGE	
WITH SIDE-SHIFT AND FORK POSITIONER - THREE STAGE FULL FREE-LIFT	10-20
CARRIAGE HYDRAULICS	
WITH SIDE-SHIFT AND FORK POSITIONER - THREE STAGE FULL FREE-LIFT	10-22
FORK POSITIONER CYLINDER	
THREE STAGE FULL FREE-LIFT	10-24
FORK POSITIONER VALVE	
THREE STAGE FULL FREE-LIFT	10-28
FREE-LIFT	
THREE STAGE FULL FREE-LIFT	10-14
FREE-LIFT CYLINDER	
THREE STAGE FULL FREE-LIFT	10-18
HEADER HOSE	
THREE AND FOUR FUNCTION - THREE STAGE FULL FREE-LIFT	10-30
INNER MAST	
THREE STAGE FULL FREE-LIFT	10-6
INTERMEDIATE MAST	
THREE STAGE FULL FREE-LIFT	10-4
MAIN LIFT	
THREE STAGE FULL FREE-LIFT	10-8
MAIN LIFT CYLINDER	
THREE STAGE FULL FREE-LIFT	10-12
OUTER MAST	
THREE STAGE FULL FREE-LIFT	10-2
SIDE-SHIFT CYLINDER	
THREE STAGE FULL FREE-LIFT	10-26

©2010 HYSTER COMPANY

OUTER MASS (FIGURE 10-1)

THREE STAGE FULL FREE-LIFT

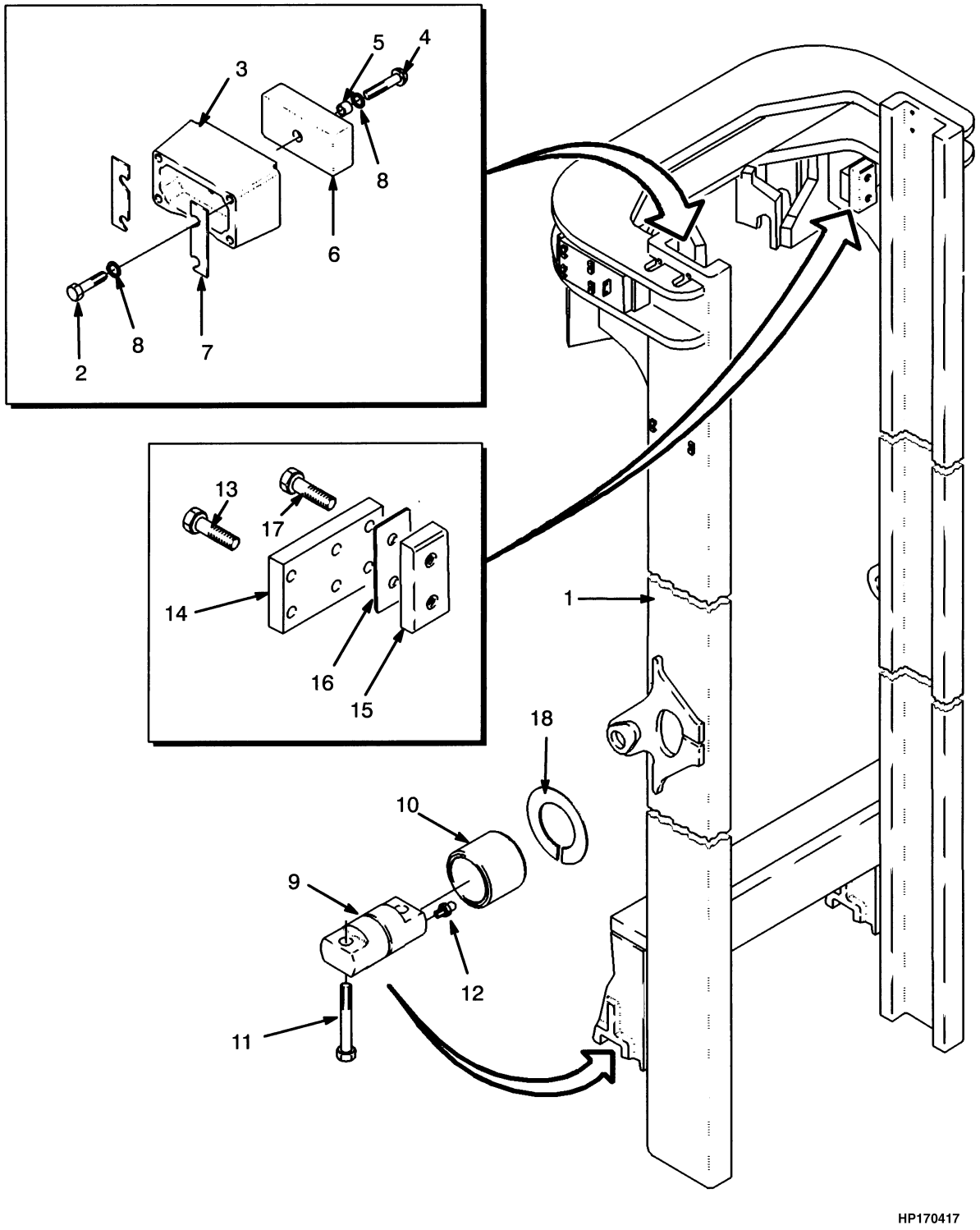

©2010 HYSTER COMPANY

OUTER MAST
THREE STAGE FULL FREE-LIFT

A781

ITEM	DESCRIPTION 1 2 3 4	LIFT HEIGHT TO BOTTOM OF FORKS		
		3658 mm (144.0 in.)	4908 mm (193.2 in.)	6096 mm (240.0 in.)
	Mast Group Number	A781 3658	A781 4908	A781 6096
	Mast Assy	1453234	1453233	1453232
1	Outer Mast	1452177	1452176	1452115

ITEM	PART NO.	DESCRIPTION	QTY
	a	Mast Assy	1
1	**a**	Outer Mast	1
2	221508	Capscrew	8
3	1301018	Bracket	2
4	376203	Capscrew	2
5	1301016	Spacer	2
6	1335179	Bearing	2
7	1310592	Shim (0.030 in.)	AR
8	15156	Lockwasher	10
9	1385549	Pin	2
10	376038	Bushing	2
11	1326777	Capscrew	4
12	16015	Grease Fitting	2
13	221560	Screw	4
14	1453413	Mounting Plate	2
15	342017	Wear Plate	2
16	342032	Shim	AR
17	16807	Capscrew	8
18	1359101	Shim	AR

FOOTNOTES:

a Refer to Table

©2010 HYSTER COMPANY

INTERMEDIATE MAST (FIGURE 10-2)
THREE STAGE FULL FREE-LIFT

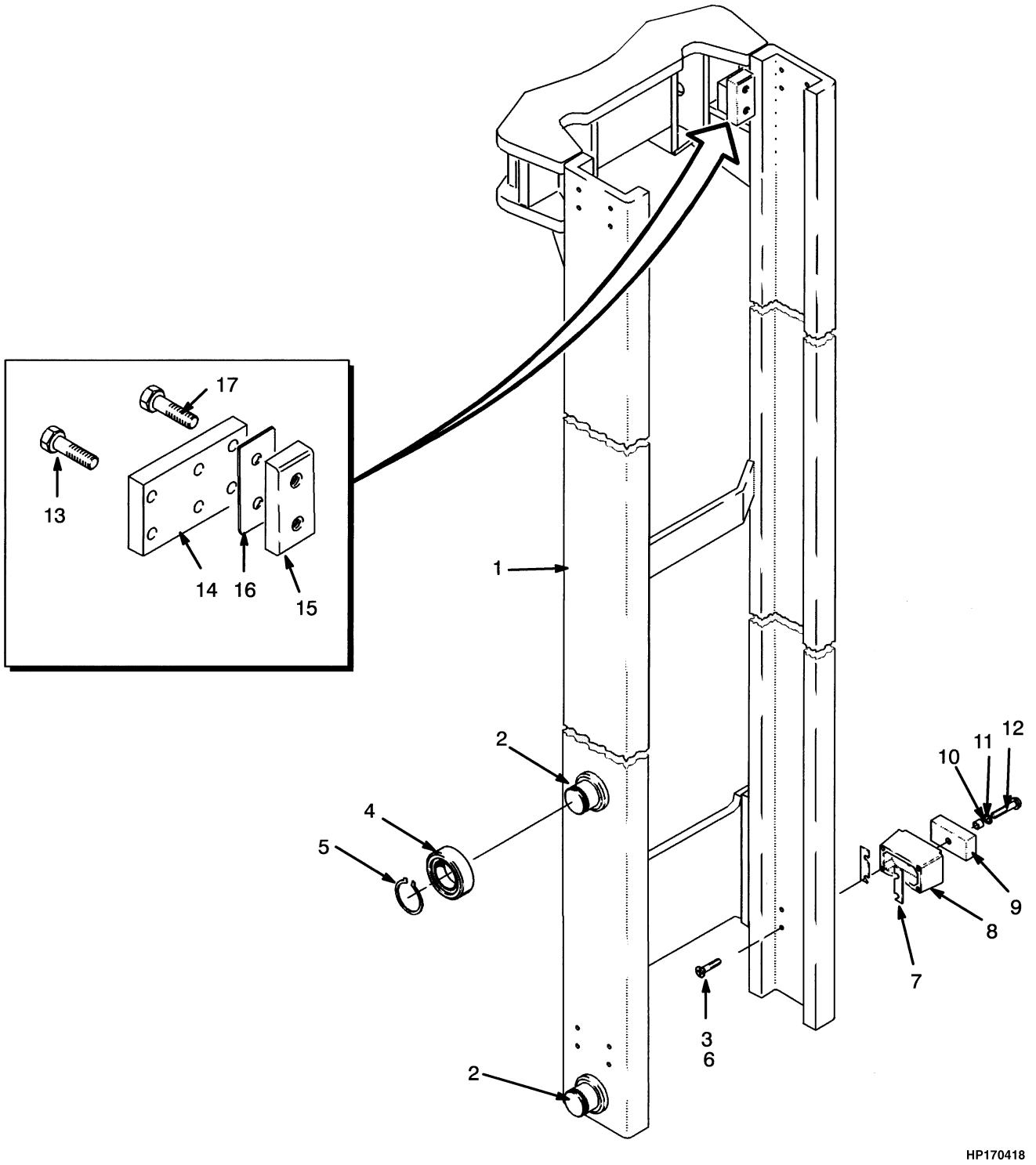

©2010 HYSTER COMPANY

INTERMEDIATE MAST
THREE STAGE FULL FREE-LIFT

A781

ITEM	DESCRIPTION 1 2 3 4	LIFT HEIGHT TO BOTTOM OF FORKS		
		3658 mm (144.0 in.)	4908 mm (193.2 in.)	6096 mm (240.0 in.)
	Mast Group Number	A781 3658	A781 4908	A781 6096
	Mast Assy	1453234	1453233	1453232
1	Intermediate Mast	1452181	1452180	1452173

ITEM	PART NO.	DESCRIPTION	QTY
	a	Mast Assy	1
1	**a**	Intermediate Mast	1
2	1313357	Stubshaft	4
3	220159	Capscrew	8
4	1313358	Load Roller	4
5	58918	Snap Ring	4
6	321197	Loctite	AR
7	1310592	Shim (0.030 in.)	AR
8	1301018	Bracket	2
9	1335179	Bearing	2
10	1301016	Spacer	2
11	15156	Lockwasher	2
12	376203	Capscrew	2
13	221560	Screw	4
14	1453413	Mounting Plate	2
15	342017	Wear Plate	2
16	342032	Shim	AR
17	16807	Capscrew	8

FOOTNOTES:

a Refer to Table

©2010 HYSTER COMPANY

INNER MAST (FIGURE 10-3)
THREE STAGE FULL FREE-LIFT

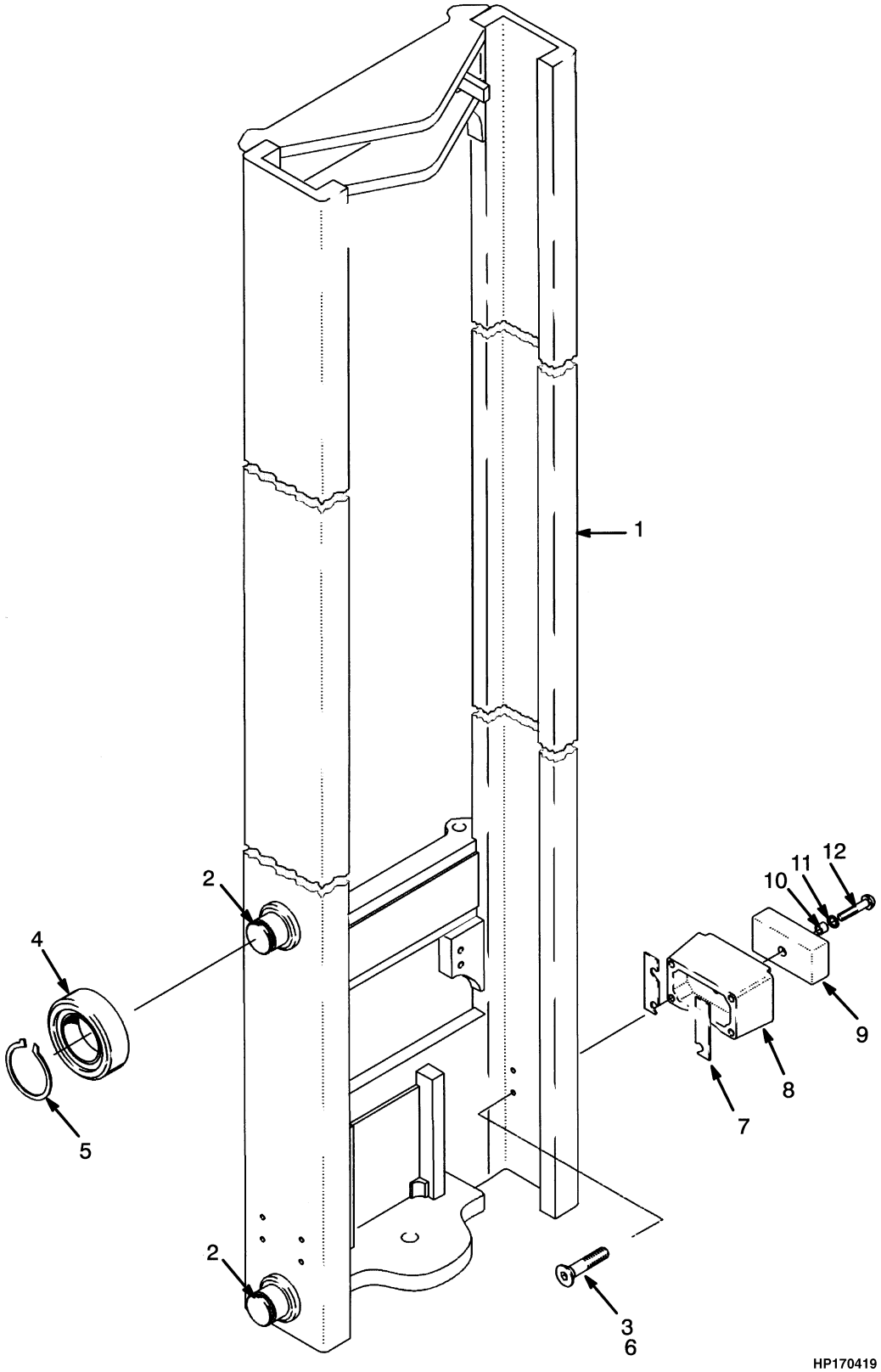

©2010 HYSTER COMPANY

INNER MAST
THREE STAGE FULL FREE-LIFT

A781

ITEM	DESCRIPTION 1 2 3 4	LIFT HEIGHT TO BOTTOM OF FORKS		
		3658 mm (144.0 in.)	4908 mm (193.2 in.)	6096 mm (240.0 in.)
	Mast Group Number	A781 3658	A781 4908	A781 6096
	Mast Assy	1453234	1453233	1453232
1	Inner Mast	1452179	1452178	1452175

ITEM	PART NO.	DESCRIPTION	QTY
	a	Mast Assy	1
1	**a**	Inner Mast	1
2	1313357	Stubshaft	4
3	220159	Capscrew	8
4	1313358	Load Roller	4
5	58918	Snap Ring	4
6	321197	Loctite	AR
7	1310592	Shim (0.030 in.)	AR
8	1301018	Bracket	2
9	1335179	Bearing	2
10	1301016	Spacer	2
11	15156	Lockwasher	2
12	376203	Capscrew	2

FOOTNOTES:

a Refer to Table

©2010 HYSTER COMPANY

MAIN LIFT (FIGURE 10-4)
THREE STAGE FULL FREE-LIFT

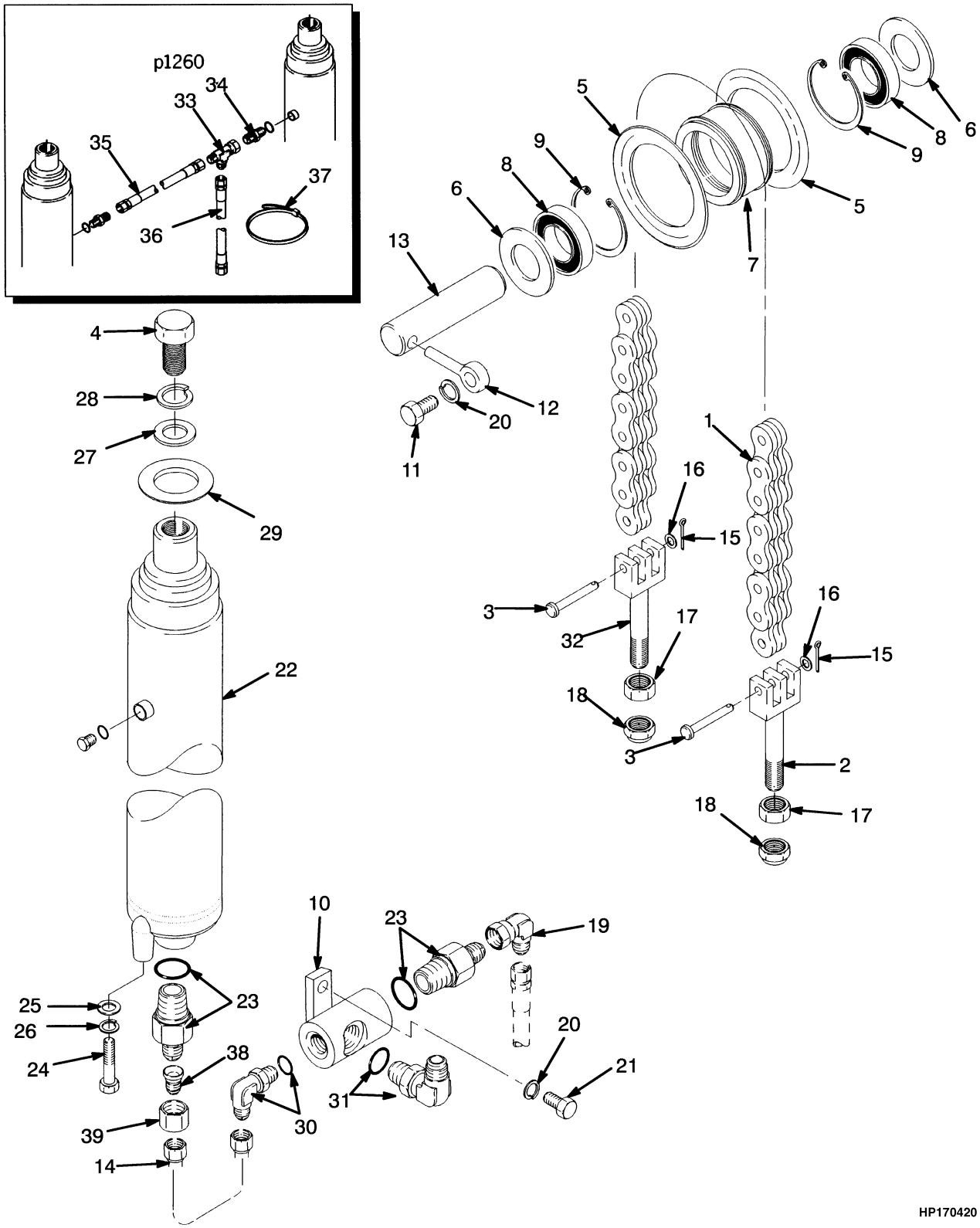

©2010 HYSTER COMPANY

MAIN LIFT
THREE STAGE FULL FREE-LIFT

A781

ITEM	DESCRIPTION 1 2 3 4	LIFT HEIGHT TO BOTTOM OF FORKS		
		3658 mm (144.0 in.)	4908 mm (193.2 in.)	6096 mm (240.0 in.)
	Mast Group Number	A781 3658	A781 4908	A781 6096
	Mast Assy	1453234	1453233	1453232
1	Chain	1453356	1453359	1453357
36	Hose Assy	276639	252382	88300

ITEM	PART NO.	DESCRIPTION	QTY
	ad 1453234	Mast Assy	1
	bd 1453233	Mast Assy	1
	cd 1453232	Mast Assy	1
	d	Mast Assy	1
1	**ad** 1453356	Chain	2
1	**bd** 1453355	Chain	2
1	**cd** 1453353	Chain	2
1	**d**	Chain	2
2	267829	Chain Anchor	2
3	1303383	Pin	4
4	292580	Capscrew	2
5	1453415	Plate	4
6	267837	Washer	4
7	1453414	Sheave	2
8	267830	Ball Bearing	4
9	46692	Snap Ring	4
10	1453490	Housing (LH)	1
10	1453491	Housing (RH)	1
11	292528	Capscrew	2
12	82270	Eyebolt	2
13	1303372	Pin	2
14	1453500	Tube	2
15	15244	Cotter Pin	2
16	15146	Washer	2
17	221725	Nut	2
18	17411	Locknut	2
19	16992	Fitting	2
20	292683	Lockwasher	4
21	300937	Nut	2
22	. . . . .	Lift Cylinder (☞Figure 10-5)	2
23	346971	Lowering Control Valve	2
23	16983	O-Ring	1
24	136985	Capscrew	2
25	~~388049~~		
	292682	Lockwasher	2
26	1303391	Washer	2
27	15181	Washer	2

©2010 HYSTER COMPANY

MAIN LIFT
THREE STAGE FULL FREE-LIFT

ITEM	PART NO.	DESCRIPTION	QTY
28	292687	Lockwasher	2
29	192830	Shim (0.060 in.)	AR
30	111331	Fitting	2
30	16485	O-Ring	1
31	201776	Fitting	2
31	16487	O-Ring	1
32	267827	Chain Anchor	2
33	17062	Fitting	1
34	131460	Fitting	2
34	16486	O-Ring	1
35	73470	Hose Assy	1
36	**ad** 276639	Hose Assy	1
36	**bd** 252382	Hose Assy	1
36	**cd** 88300	Hose Assy	1
36	**d**	Hose Assy	1
37	273775	Strap Clamp	1
38	17783	Fitting	2
39	14494	Sleeve	2

FOOTNOTES:

a A781-3658
b A781-4908
c A781-6096
d Refer to Table

©2010 HYSTER COMPANY

NOTES

©2010 HYSTER COMPANY

MAIN LIFT CYLINDER (FIGURE 10-5)
THREE STAGE FULL FREE-LIFT

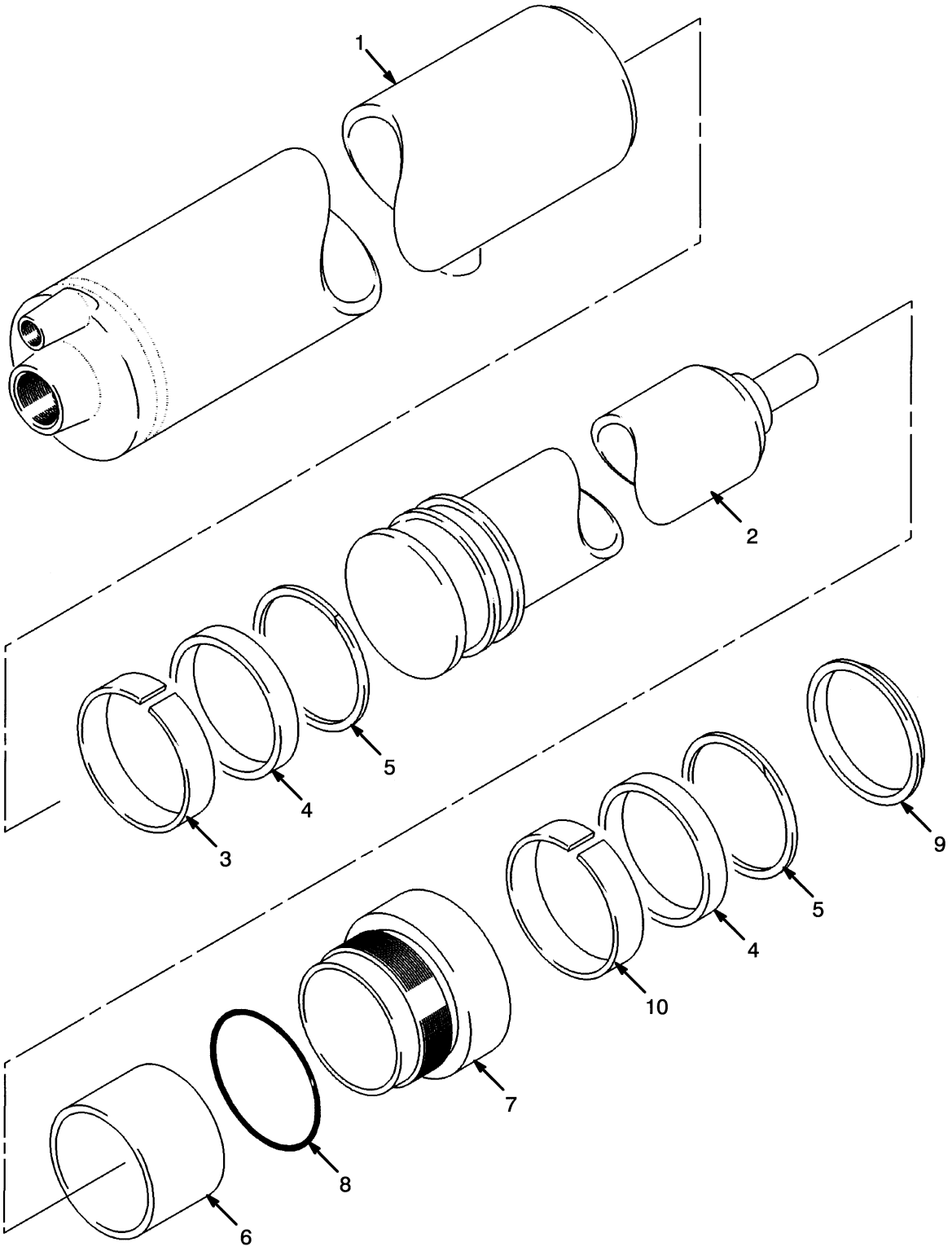

©2010 HYSTER COMPANY

MAIN LIFT CYLINDER
THREE STAGE FULL FREE-LIFT

A781

ITEM	DESCRIPTION 1 2 3 4	LIFT HEIGHT TO BOTTOM OF FORKS		
		3658 mm (144.0 in.)	**4908 mm (193.2 in.)**	**6096 mm (240.0 in.)**
	Mast Group Number	**A781 3658**	**A781 4908**	**A781 6096**
	Cylinder Group Number	**1594232**	**1594231**	**1594230**
	Cylinder Assy	1594232	1594231	1594230
1	Tube Wldmt-Cylinder	1453282	1453281	1453280
2	Cylinder Rod	1594225	1594224	1594223

ITEM	PART NO.	DESCRIPTION	QTY
	a	Cylinder Assy	2
1	**a**	Tube Wldmt-Cylinder	1
2	**a**	Cylinder Rod	1
3	636954	Wear Ring	1
4	637166	Rod Seal	2
5	638224	Back-Up Ring	2
6	387266	Tube Wldmt-Cylinder	1
7	1328946	Retainer	1
8	362102	O-Ring	1
9	815620	Rod Wiper	1
10	318067	Wear Ring	1
	1385958	Kit-Seal	1

FOOTNOTES:

a Refer to Table

©2010 HYSTER COMPANY

FREE-LIFT (FIGURE 10-6)
THREE STAGE FULL FREE-LIFT

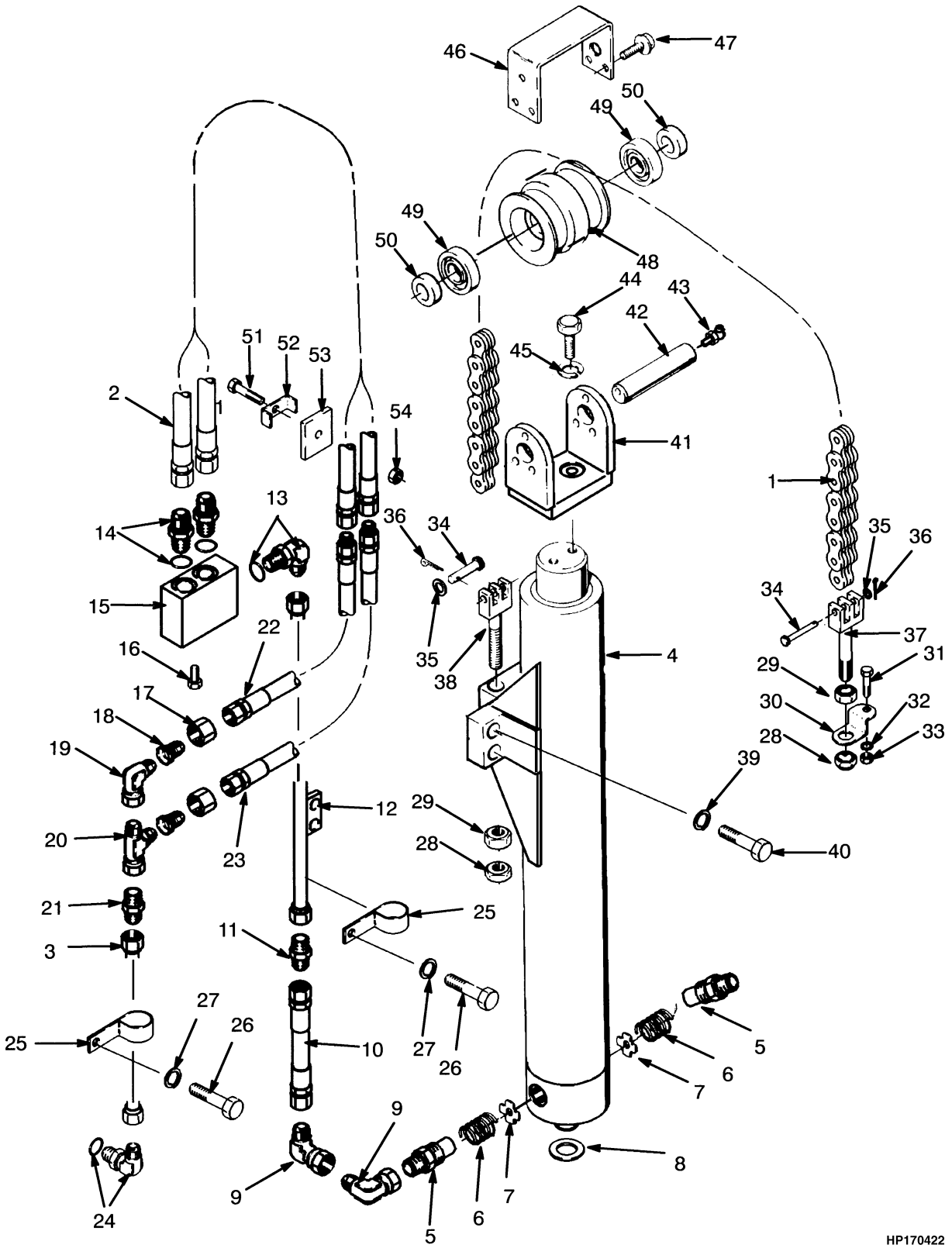

©2010 HYSTER COMPANY

FREE-LIFT
THREE STAGE FULL FREE-LIFT

A781

ITEM	DESCRIPTION 1 2 3 4	LIFT HEIGHT TO BOTTOM OF FORKS		
		3658 mm (144.0 in.)	4908 mm (193.2 in.)	6096 mm (240.0 in.)
	Mast Group Number	A781 3658	A781 4908	A781 6096
1	Chain	1453360	1453359	1453357
2	Hose Assy	1453399	1453398	1453397
3	Tube	1453403 1453407	1453402 1453406	1453401 1453405

ITEM	PART NO.	DESCRIPTION	QTY
1	**a**	Chain	2
2	**a**	Hose Assy	2
3	**a**	Tube	1
4	. . . . .	Free-Lift Cylinder (☞Figure 10-7)	1
5	89894	Fitting	2
6	89892	Spring	2
7	373287	Washer	2
8	1453395	Washer	1
9	16992	Fitting	4
10	1453499	Hose Assy	2
11	17635	Fitting	2
12	1453498	Tube (RH)	1
12	1453497	Tube (LH)	1
13	16561	Elbow	2
13	16486	O-Ring	1
14	16542	Connector	2
14	16485	O-Ring	1
15	**b** 1453495	Junction Block (LH)	1
15	**c** 1455423	Junction Block (LH)	1
15	**b** 1453496	Junction Block (RH)	1
15	**c** 1455424	Junction Block (RH)	1
16	136749	Screw	4
17	14494	Sleeve	4
18	167260	Fitting	4
19	83857	Fitting	2
20	17064	Fitting	2
21	14694	Fitting	2
22	1453418	Hose Assy	2
23	1453419	Hose Assy	2
24	201776	Fitting	2
24	16487	O-Ring	1
25	173247	Clamp	6
26	292528	Capscrew	8
27	~~388049~~		
	292682	Lockwasher	2
28	221725	Nut	4

©2010 HYSTER COMPANY

FREE-LIFT
THREE STAGE FULL FREE-LIFT

ITEM	PART NO.	DESCRIPTION	QTY
29	17411	Locknut	4
30	132829	Lockplate	2
31	292531	Capscrew	2
32	292683	Lockwasher	2
33	216877	Nut	2
34	1303383	Pin	4
35	15146	Washer	4
36	15244	Cotter Pin	4
37	267827	Chain Anchor	2
38	1453408	Chain Anchor	2
39	320169	Washer	4
40	292589	Capscrew	4
41	1453412	Bracket	1
42	1453410	Shaft	1
43	16018	Grease Fitting	1
44	292562	Capscrew	1
45	292685	Lockwasher	1
46	1453417	Chain Guard	1
47	292582	Capscrew	2
48	1453411	Sheave	1
49	45315	Bearing	2
50	1453416	Washer	2
51	292535	Capscrew	1
52	254950	Clamp	1
53	138929	Plate	1
54	300937	Nut	1

FOOTNOTES:

a Refer to Table
b → 1/1999
c 1/1999 →

©2010 HYSTER COMPANY

NOTES

©2010 HYSTER COMPANY

FREE-LIFT CYLINDER (FIGURE 10-7)
THREE STAGE FULL FREE-LIFT

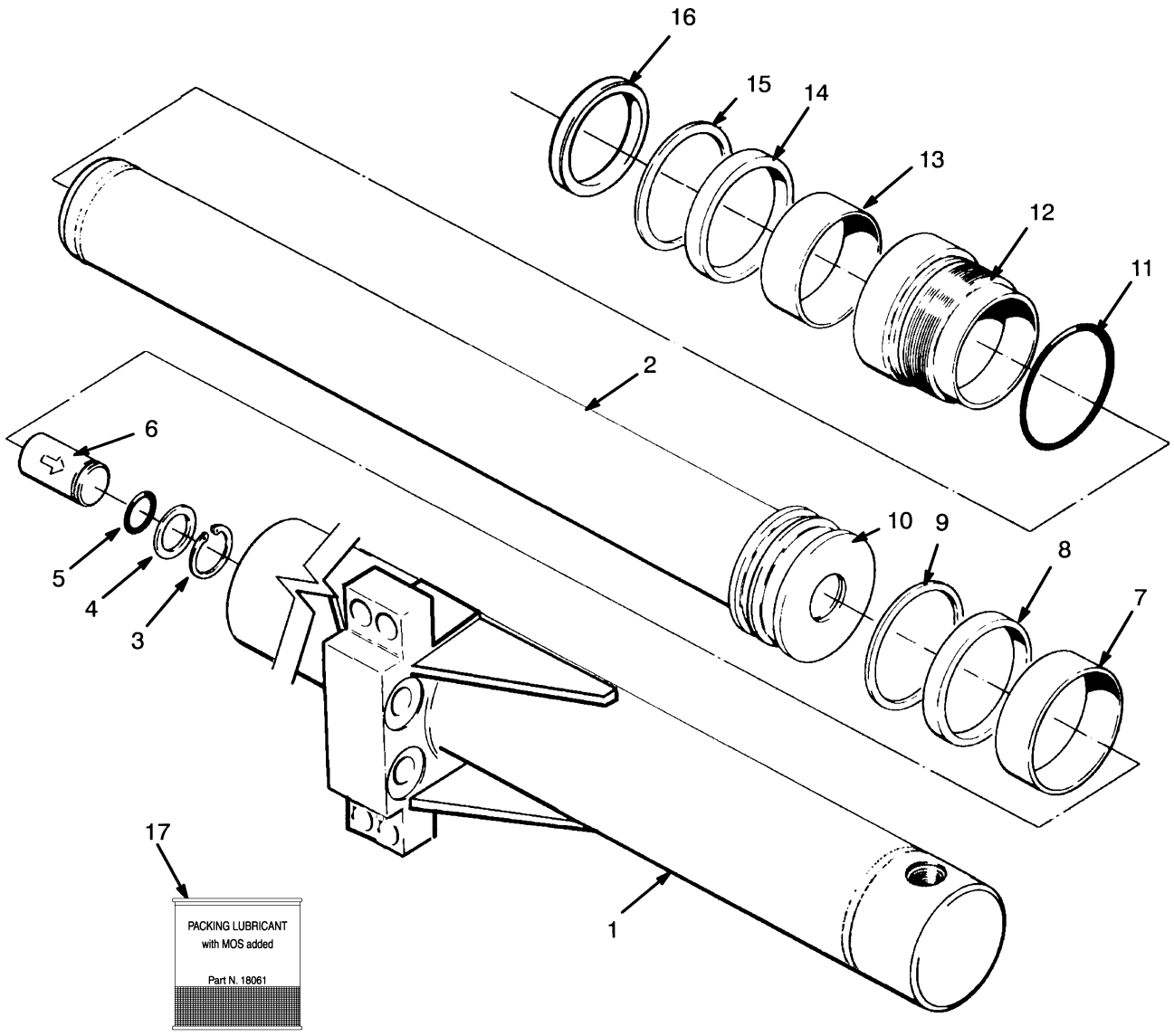

©2010 HYSTER COMPANY

FREE-LIFT CYLINDER
THREE STAGE FULL FREE-LIFT

A781

ITEM	DESCRIPTION 1 2 3 4	LIFT HEIGHT TO BOTTOM OF FORKS		
		3658 mm (144.0 in.)	**4908 mm (193.2 in.)**	**6096 mm (240.0 in.)**
	Mast Group Number	**A781 3658**	**A781 4908**	**A781 6096**
	Cylinder Group Number	**1452290**	**1452289**	**1452288**
	Cylinder Assy	1452290	1452289	1452288
1	Tube Wldmt-Cylinder	1452389	1452388	1452387
2	Cylinder Rod	1452523	1452522	1452521

ITEM	PART NO.	DESCRIPTION	QTY
	a	Cylinder Assy	1
1	**a**	Tube Wldmt-Cylinder	1
2	**a**	Cylinder Rod	1
3	187388	Snap Ring	1
4	637635	Washer	1
5	39348	O-Ring	1
6	257913	Check Valve	1
7	231989	Wear Ring	1
8	246888	Rod Seal	1
9	257030	Piston Seal	1
10	1452582	Spacer	1
11	1452452	O-Ring	1
12	1452444	Retainer	1
13	636956	Wear Ring	1
14	1453275	Rod Seal	2
15	1453276	Back-Up Ring	1
16	1453274	Rod Wiper	1
	1360141	Kit-Seal	1

FOOTNOTES:

a Refer to Table

©2010 HYSTER COMPANY

CARRIAGE (FIGURE 10-8)

WITH SIDE-SHIFT AND FORK POSITIONER — THREE STAGE FULL FREE-LIFT

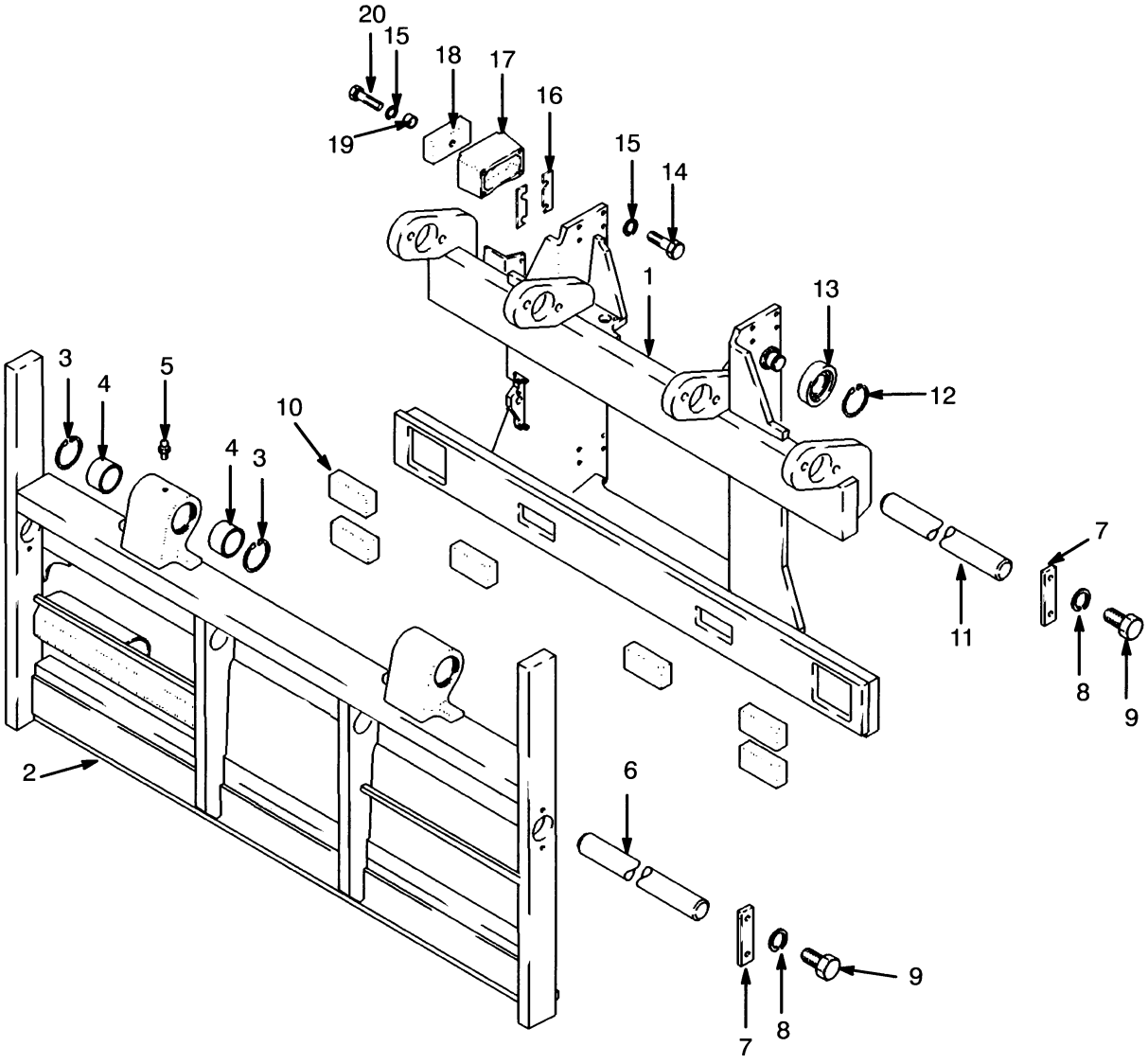

©2010 HYSTER COMPANY

CARRIAGE

WITH SIDE-SHIFT AND FORK POSITIONER – THREE STAGE FULL FREE-LIFT

ITEM	PART NO.	DESCRIPTION	QTY
	1453692	Carriage	1
1	1453446	Carriage Wldmt	1
2	1450252	Apron	1
3	183609	Snap Ring	4
4	376773	Bushing	4
5	16001	Grease Fitting	2
6	1303261	Pin	2
7	376776	Plate	6
8	292683	Lockwasher	12
9	293647	Capscrew	12
10	351458	Bearing	6
11	1303371	Bar	2
12	58918	Snap Ring	4
13	1313358	Load Roller	4
14	221510	Capscrew (2.0 in.)	16
15	15156	Lockwasher	20
16	1310592	Shim (0.030 in.)	AR
17	1301018	Bracket	4
18	1335179	Bearing	4
19	1301016	Spacer	4
20	376203	Capscrew	4

©2010 HYSTER COMPANY

CARRIAGE HYDRAULICS (FIGURE 10-9)

WITH SIDE-SHIFT AND FORK POSITIONER — THREE STAGE FULL FREE-LIFT

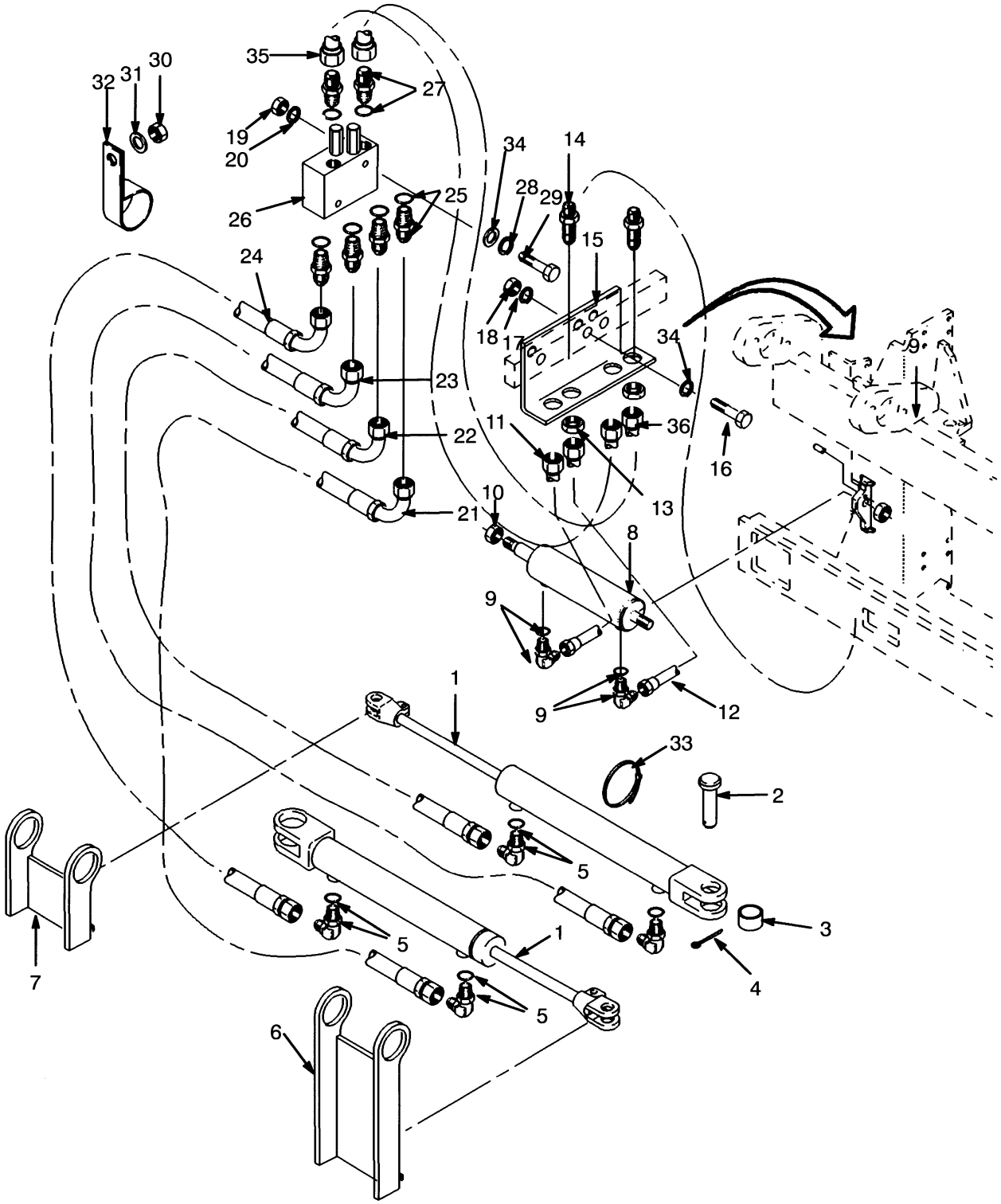

©2010 HYSTER COMPANY

CARRIAGE HYDRAULICS

WITH SIDE-SHIFT AND FORK POSITIONER – THREE STAGE FULL FREE-LIFT

ITEM	PART NO.	DESCRIPTION	QTY
1	2033308	Cylinder Assy (☞Figure 10-10)	2
2	308117	Pin	4
3	300982	Bushing	4
4	15236	Cotter Pin	4
5	1151326	Fitting	4
5	16481	O-Ring	1
6	1450274	Bracket	1
7	1450275	Bracket	1
8	387090	Sideshift Cylinder (☞Figure 10-11)	1
9	96521	Fitting	2
9	16483	O-Ring	1
10	53157	Locknut	2
11	1454370	Tube Assy	1
12	1454369	Tube Assy	1
13	14761	Fitting -Lock Nut	4
14	16448	Fitting	4
15	1454338	Bracket	1
16	136985	Capscrew	2
17	~~388049~~		
	292682	Lockwasher	2
18	136692	Nut	2
19	239503	Nut	2
20	292681	Lockwasher	2
21	1450351	Hose Assy	1
22	1450352	Hose Assy	1
23	1450353	Hose Assy	1
24	1450350	Hose Assy	1
25	16539	Fitting	4
26	1392626	Valve (☞Figure 10-12)	1
27	131460	Fitting	2
28	320157	Washer	2
29	136703	Capscrew	2
30	15056	Nut	2
31	15156	Lockwasher	2
32	153667	Clamp	2
33	129563	Strap Clamp	8
34	292681	Lockwasher	2
35	1454367	Tube Assy	1
36	1454368	Tube Assy	1

©2010 HYSTER COMPANY

FORK POSITIONER CYLINDER (FIGURE 10-10)

THREE STAGE FULL FREE-LIFT

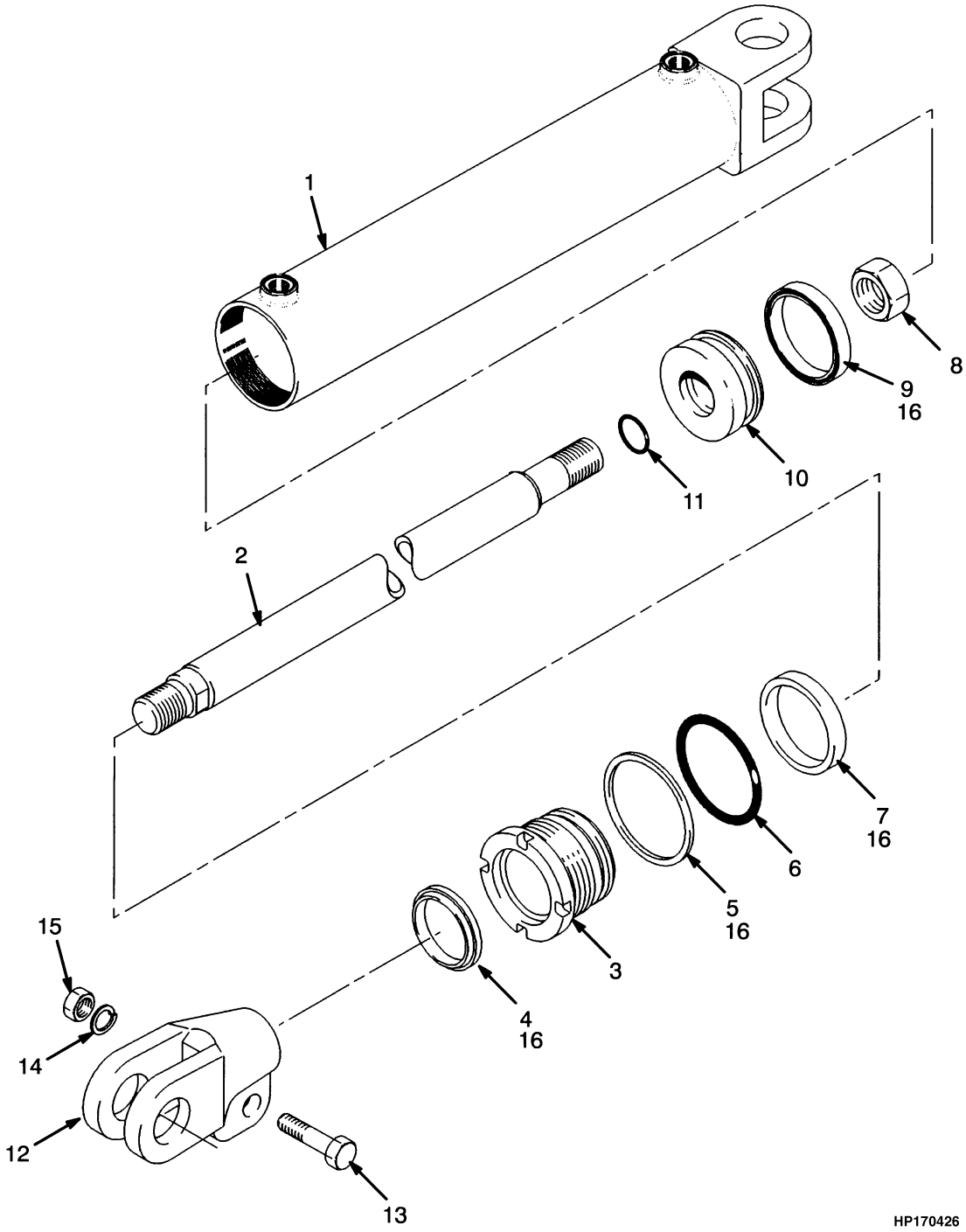

©2010 HYSTER COMPANY

FORK POSITIONER CYLINDER
THREE STAGE FULL FREE-LIFT

ITEM	PART NO.	DESCRIPTION	QTY
	2033308	Cylinder Assy	2
1	2033099	Tube Wldmt-Cylinder	1
2	2033326	Cylinder Rod	1
3	1365689	Gland	1
4	1310369	Rod Wiper	1
5	132834	Back-Up Ring	1
6	55407	O-Ring	1
7	1310372	Rod Seal	1
8	2306366	Locknut	1
9	330692	Rod Seal	1
10	2033105	Piston	1
11	15865	O-Ring	1
12	1307641	Rod End	2
13	18589	Capscrew	2
14	15158	Washer	2
15	15058	Nut	2
16	186061	Lubricant	2
	2033141	Kit-Seal	1

©2010 HYSTER COMPANY

SIDE-SHIFT CYLINDER (FIGURE 10-11)
THREE STAGE FULL FREE-LIFT

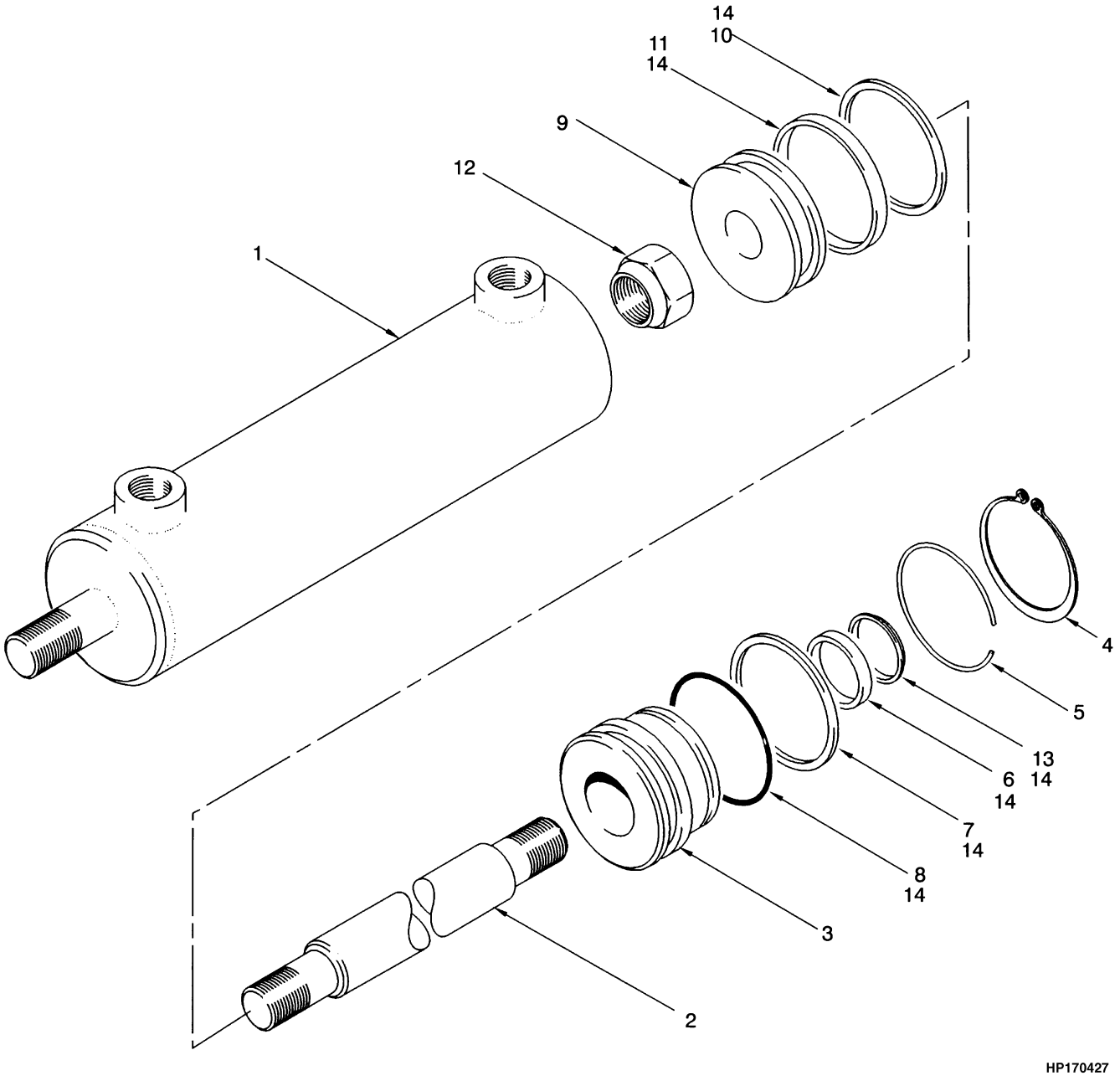

©2010 HYSTER COMPANY

SIDE-SHIFT CYLINDER
THREE STAGE FULL FREE-LIFT

ITEM	PART NO.	DESCRIPTION	QTY
	387090	Sideshift Cylinder	1
1	387085	Tube Wldmt-Cylinder	1
2	387087	Cylinder Rod	1
3	376815	Retainer	1
4	307275	Snap Ring	1
5	376839	Retaining Ring	1
6	330692	Rod Seal	1
7	154358	Back-Up Ring	1
8	15880	O-Ring	1
9	376814	Piston	1
10	638292	Back-Up Ring	1
11	637161	Rod Seal	1
12	53157	Locknut	1
13	203367	Wiper	1
14	186061	Lubricant	1
	376883	Kit-Seal	1

©2010 HYSTER COMPANY

FORK POSITIONER VALVE (FIGURE 10-12)
THREE STAGE FULL FREE-LIFT

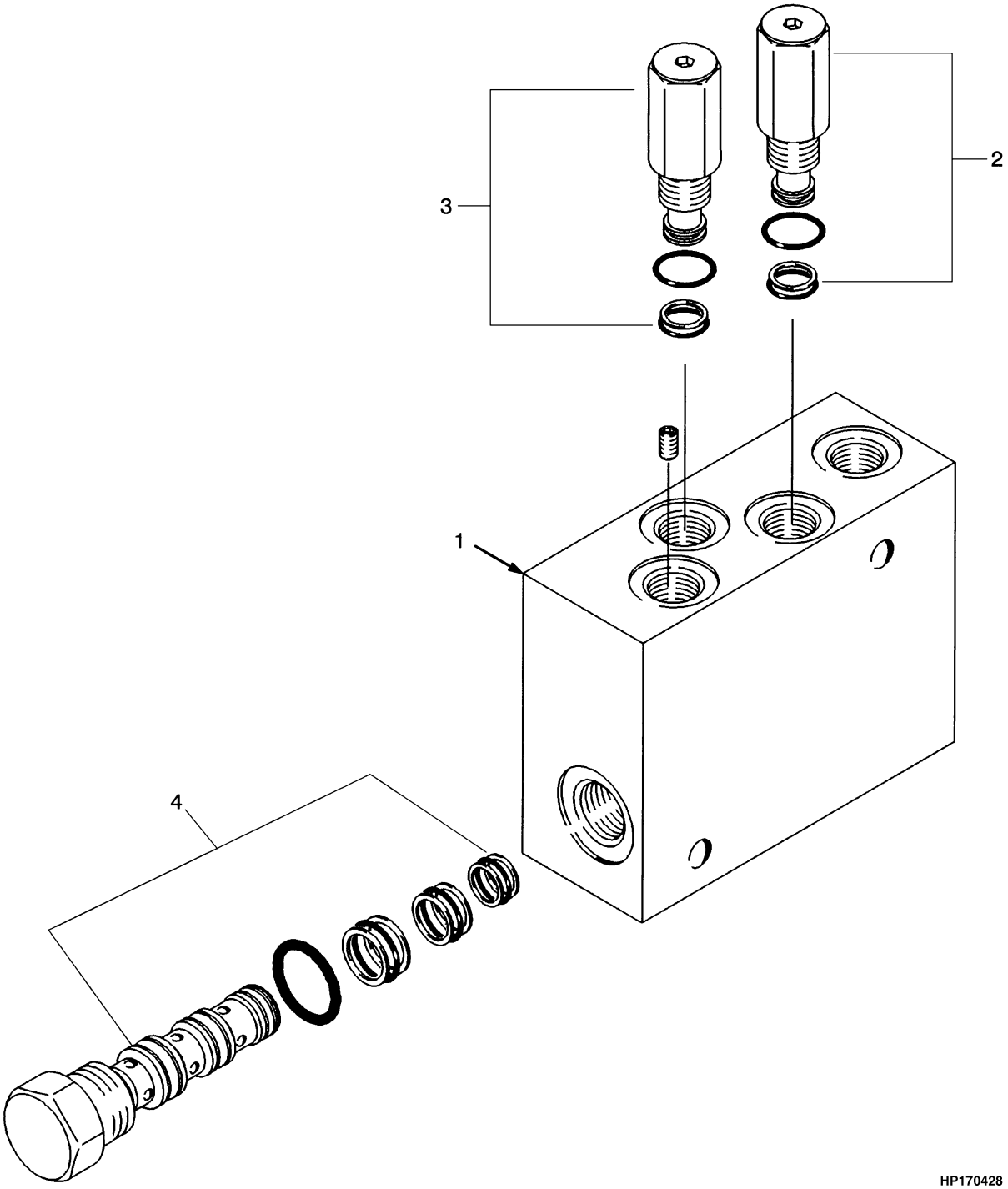

©2010 HYSTER COMPANY

FORK POSITIONER VALVE
THREE STAGE FULL FREE-LIFT

ITEM	PART NO.	DESCRIPTION	QTY
1	1392626	Valve	1
2	1450259	Relief Valve	1
2	361678	Kit-Seal Valve	1
3	1450261	Relief Valve	1
3	1329308	Kit-Seal	1
4	1450260	Flow Valve	1
4	340739	Kit-Seal	1

©2010 HYSTER COMPANY

HEADER HOSE (FIGURE 10-13)

THREE AND FOUR FUNCTION — THREE STAGE FULL FREE-LIFT

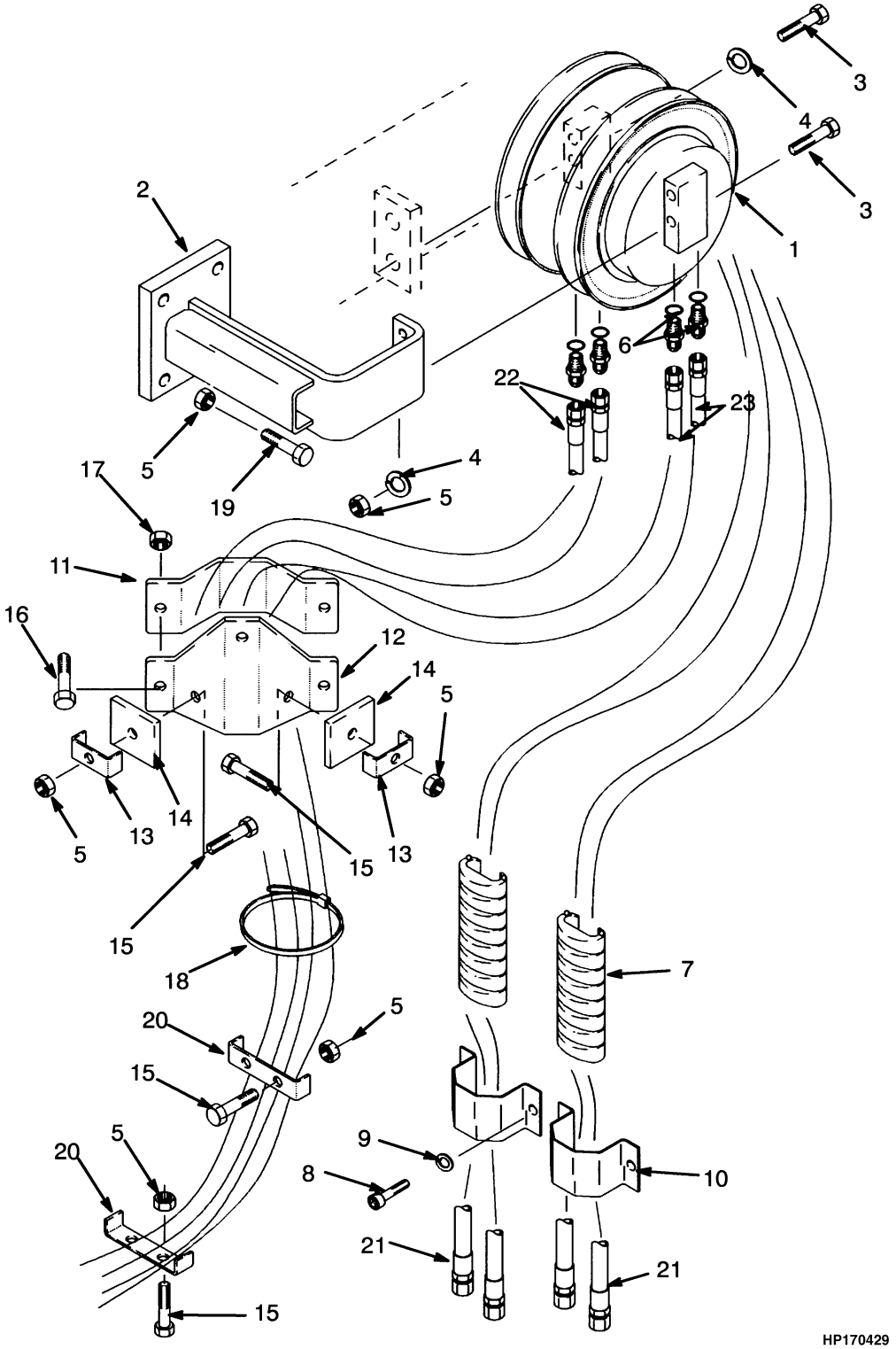

©2010 HYSTER COMPANY

HEADER HOSE

THREE AND FOUR FUNCTION – THREE STAGE FULL FREE-LIFT

KEY:
A: Three Function
B: Four Function
C: Five Function

ITEM	PART NO.	DESCRIPTION	QTY A	QTY B	QTY C
1	1390556	Hose Reel (RH)	1	1	1
1	1390557	Hose Reel (LH)	..	..	1
1	1460171	Sheave	2	2	2
2	1454403	Bracket	..	..	1
3	292535	Capscrew	2	2	2
4	292683	Lockwasher	2	2	2
5	216877	Nut	4	4	9
6	16541	Fitting	2	2	2
6	16484	O-Ring	1	1	1
7	358286	Strain Relief	1	1	1
8	296023	Capscrew	2	2	2
9	~~388049~~				
	292682	Lockwasher	2	2	2
10	358287	Bracket	1	1	1
11	1454656	Bracket	2	2	2
12	1310608	Bracket	2	2	2
13	254950	Clamp	2	2	2
14	138929	Plate	2	2	2
15	292533	Capscrew	4	4	2
16	287860	Capscrew	4	4	..
17	316826	Nut	4	4	..
18	273775	Strap Clamp	2	2	..
19	246001	Capscrew	..	..	4
20	254950	Clamp	2	..	..
20	1310637	Clamp	..	..	2
21	**ad** 386646	Hose Assy	2	2	2
21	**bd** 386646	Hose Assy	2	2	2
21	**cd** 386647	Hose Assy	2	2	2
22	**ad** 1454694	Hose Assy	2	2	..
22	**bd** 1454693	Hose Assy	2	2	..
22	**cd** 1311485	Hose Assy	2	2	..
23	**ad** 1454695	Hose Assy	..	..	2
23	**bd** 1311337	Hose Assy	..	..	2
23	**cd** 1338031	Hose Assy	..	..	2

FOOTNOTES:

a A781-3658
b A781-4908
c A781-6096
d Refer to Table

©2010 HYSTER COMPANY

NOTES

©2010 HYSTER COMPANY

11 EMPTY CONTAINER HANDLER

SECTION 11
EMPTY CONTAINER HANDLER

DESCRIPTION **PAGE**

AIR SYSTEM
EMPTY CONTAINER HANDLER 11-12
CONTAINER HANDLING ATTACHMENT
EMPTY CONTAINER HANDLER 11-2
ELECTRICAL CONTROL
EMPTY CONTAINER HANDLER 11-16
ELECTRICAL SYSTEM
EMPTY CONTAINER HANDLER 11-18
ENDBEAM
EMPTY CONTAINER HANDLER 11-4
EXTENSION
EMPTY CONTAINER HANDLER 11-14
HYDRAULIC HOSES
EMPTY CONTAINER HANDLER 11-6
HYDRAULIC SYSTEM
EMPTY CONTAINER HANDLER - SHEET 2 11-10
LIGHTS
EMPTY CONTAINER HANDLER 11-22
SIDE-SHIFT CYLINDER
EMPTY CONTAINER HANDLER 11-20

©2010 HYSTER COMPANY

CONTAINER HANDLING ATTACHMENT (FIGURE 11-1)

EMPTY CONTAINER HANDLER

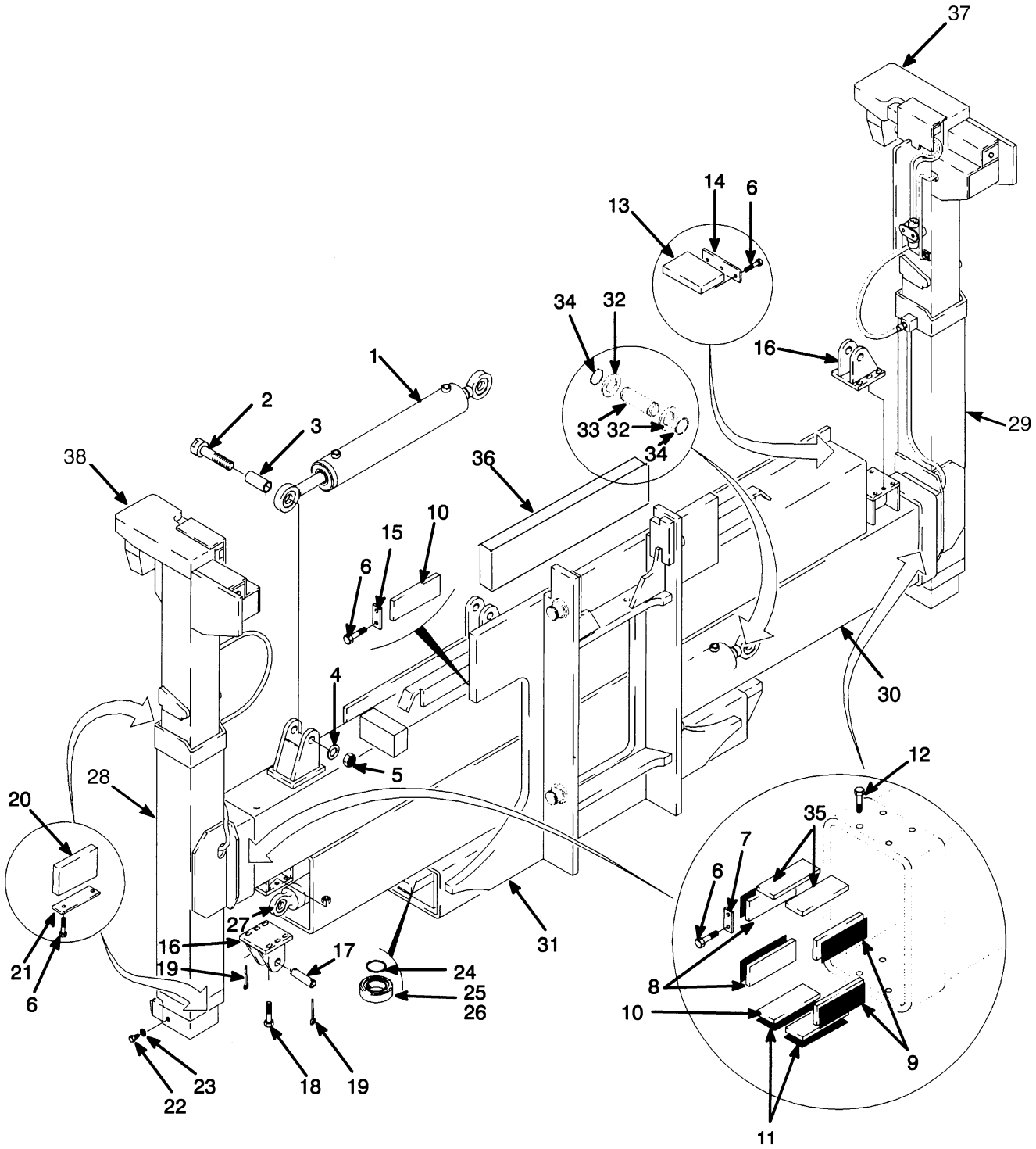

©2010 HYSTER COMPANY

CONTAINER HANDLING ATTACHMENT
EMPTY CONTAINER HANDLER

ITEM	PART NO.	DESCRIPTION	QTY
	b 1457306	Empty Container Attachment	1
	a 1323825	Container Attachment	1
1	1332321	Sideshift Cylinder (☞Figure 11-9)	1
2	1332284	Pin	2
3	1332285	Spacer	2
4	320181	Washer	2
5	302408	Locknut	2
6	132860	Capscrew	66
7	1332278	Bracket	14
8	1332310	Wear Pad	8
9	1329639	Shim (0.080 in.)	AR
9	1329641	Shim (0.20 in.)	AR
10	1332300	Wear Pad	6
11	1329639	Shim (0.080 in.)	AR
11	1329641	Shim (0.20 in.)	AR
12	292516	Capscrew	8
13	1332315	Pad	2
14	1332316	Bracket	2
15	1332278	Bracket	2
16	1332280	Bracket	2
17	1332281	Pin	2
18	293650	Capscrew	12
19	15246	Cotter Pin	2
20	1329499	Pad (Nylon)	4
21	1329498	Bracket	4
22	6996433	Bolt	4
23	1332309	Sealing Ring	4
24	2051587	Snap Ring	8
25	1332288	Roller	8
26	1332289	Bushing	8
26	1376447	Snap Ring	16
27	1332320	Extension Cylinder (☞Figure 11-6)	2
28	1332303	Beam (LH)	1
29	1332304	Beam (RH)	1
30	1332305	Frame	1
31	1332306	Carriage	1
31	1335199	Stubshaft (Lower)	4
31	1485891	Stubshaft (Upper)	4
32	296426	Washer	4
33	1332313	Pin	2
34	1332314	Snap Ring	4
35	1334634	Pad	4
36	1347859	Label	1
37	1329450	End Boom (RH)	1
38	1329451	End Boom (LH)	1

FOOTNOTES:

a → S/N D019D02681

b S/N D019D02681 →

©2010 HYSTER COMPANY

ENDBEAM (FIGURE 11-2)
EMPTY CONTAINER HANDLER

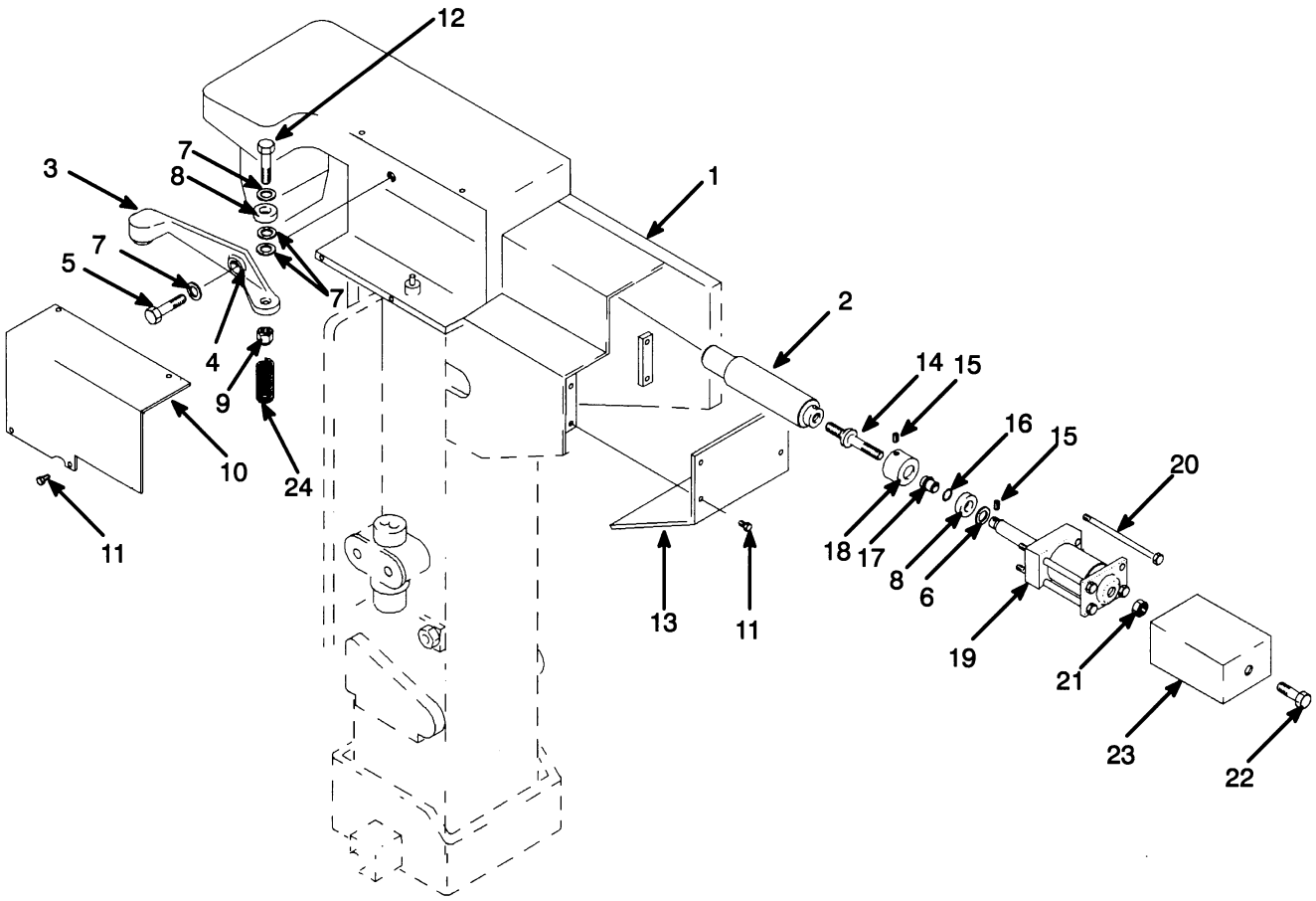

©2010 HYSTER COMPANY

ENDBEAM
EMPTY CONTAINER HANDLER

ITEM	PART NO.	DESCRIPTION	QTY
1	1329450	End Boom (RH)	1
1	1329451	End Boom (LH)	1
2	1329452	Pin	2
3	1329453	Arm (LH)	1
3	1329454	Arm (RH)	1
4	1329455	Bushing	2
5	293689	Capscrew	2
6	1329457	Washer	2
7	1329458	Washer	4
8	1334612	Magnet	4
9	302404	Locknut	2
10	1329494	Cover (LH)	1
10	1329495	Cover (RH)	1
11	1329478	Screw (Allen)	16
12	292561	Capscrew	2
13	1329479	Cover	2
14	1329466	Bolt	2
15	302100	Setscrew	4
16	1329469	O-Ring	2
17	1329468	Bushing	2
18	1329465	Nut	2
19	1329470	Cylinder Assy	2
19	1332317	Kit-Seal	1
20	1390174	Capscrew	8
21	292658	Nut	2
22	292561	Capscrew	2
23	1329474	Indicator	2
24	1374080	Spring	2

©2010 HYSTER COMPANY

HYDRAULIC HOSES (FIGURE 11-3)
EMPTY CONTAINER HANDLER

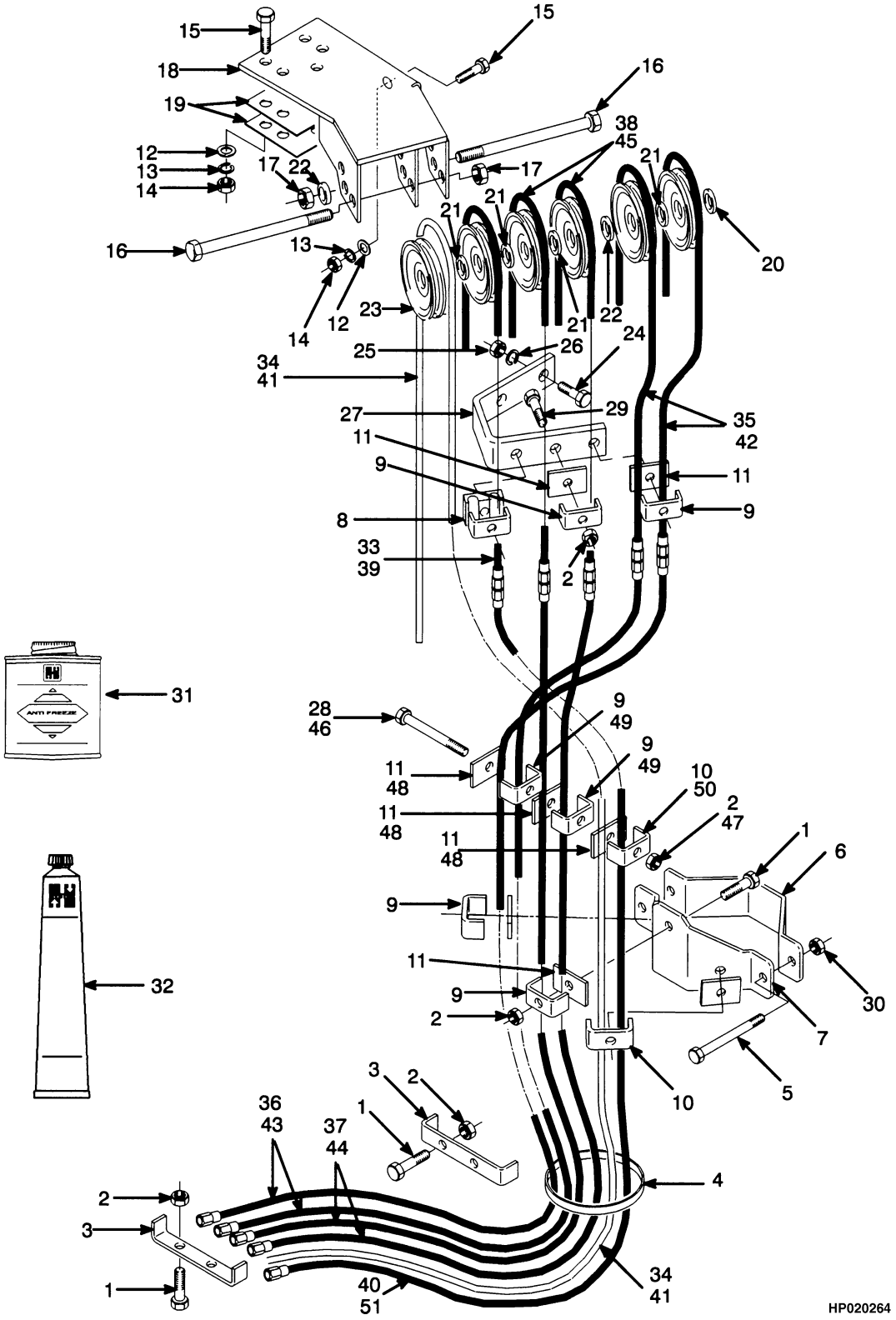

©2010 HYSTER COMPANY

HYDRAULIC HOSES
EMPTY CONTAINER HANDLER

KEY:
A: H330XL-EC3
B: H360XL-EC4

ITEM	PART NO.	DESCRIPTION	QTY A	QTY B
1	292531	Capscrew	7	7
2	300937	Nut	11	11
3	1310637	Clamp	2	2
4	273775	Strap Clamp	2	2
5	292522	Capscrew	2	2
6	1310609	Bracket	1	1
7	1310608	Bracket	1	1
8	1310027	Clamp	1	1
9	254950	Clamp	6	6
10	100623	Clamp	2	2
11	138929	Plate	8	8
12	320160	Washer	4	4
13	~~388049~~ 292682	Lockwasher	5	5
14	136692	Nut	5	5
15	292517	Capscrew	1	1
16	1311265	Capscrew	3	3
17	221357	Locknut	3	3
18	1352661	Bracket Wldmt	1	1
19	1301571	Plate	2	2
20	1301650	Spacer	1	1
21	280610	Spacer	4	4
22	1311264	Spacer	2	1
23	189451	Hose Sheave	6	6
24	292528	Capscrew	2	2
25	216877	Nut	2	2
26	292683	Lockwasher	2	2
27	1310612	Bracket	1	1
28	287814	Capscrew	1	1
29	292533	Capscrew	3	3
30	316826	Nut	2	2
31	322784	Lubricant (Corrosion Preventive)	AR	AR
32	280472	Sealant	AR	AR
33	1330616	Hose Assy	..	1
34	**b** 1358722	Wire Harness	1	..
34	**c** 1457645	Wire Harness	1	..
34	**d** 1460246	Wire Harness	1	..
35	**a** 1358750	Hose Assy	2	..
35	**d** 1460252	Hose Assy	2	..
36	1330614	Hose Assy	2	..
37	1330607	Hose Assy	2	..
38	1358751	Hose Assy	2	..
38	**d** 1460254	Hose Assy	2	..
39	**a** 1358752	Hose Assy	1	..
39	**d** 1460256	Hose Assy	1	..

©2010 HYSTER COMPANY

HYDRAULIC HOSES
EMPTY CONTAINER HANDLER

KEY:
A: H330XL-EC3
B: H360XL-EC4

ITEM	PART NO.	DESCRIPTION	QTY A	QTY B
40	1330618	Hose Assy	1	..
41	**b** 1333763	Wire Harness	..	1
41	**c** 1457644	Wire Harness	..	1
41	**d** 1460247	Wire Harness	..	1
42	**a** 1330611	Hose Assy	..	2
42	**d** 1460253	Hose Assy	..	2
43	1330612	Hose Assy	..	2
44	1330609	Hose Assy	..	2
45	**a** 1330610	Hose Assy	..	2
45	**d** 1460255	Hose Assy	..	2
46	287814	Capscrew	..	2
47	300937	Nut	..	2
48	138929	Plate	..	6
49	254950	Clamp	..	4
50	100623	Clamp	..	2
51	**a** 1330615	Hose Assy	..	1
51	**d** 1460257	Hose Assy	..	1

FOOTNOTES:

a → S/N D019D02680V
b → S/N D019D02962
c S/N D019D02963 ↔ S/N D019D002680V
d S/N D019D02681V →

©2010 HYSTER COMPANY

NOTES

©2010 HYSTER COMPANY

HYDRAULIC SYSTEM (FIGURE 11-4)
EMPTY CONTAINER HANDLER — SHEET 2

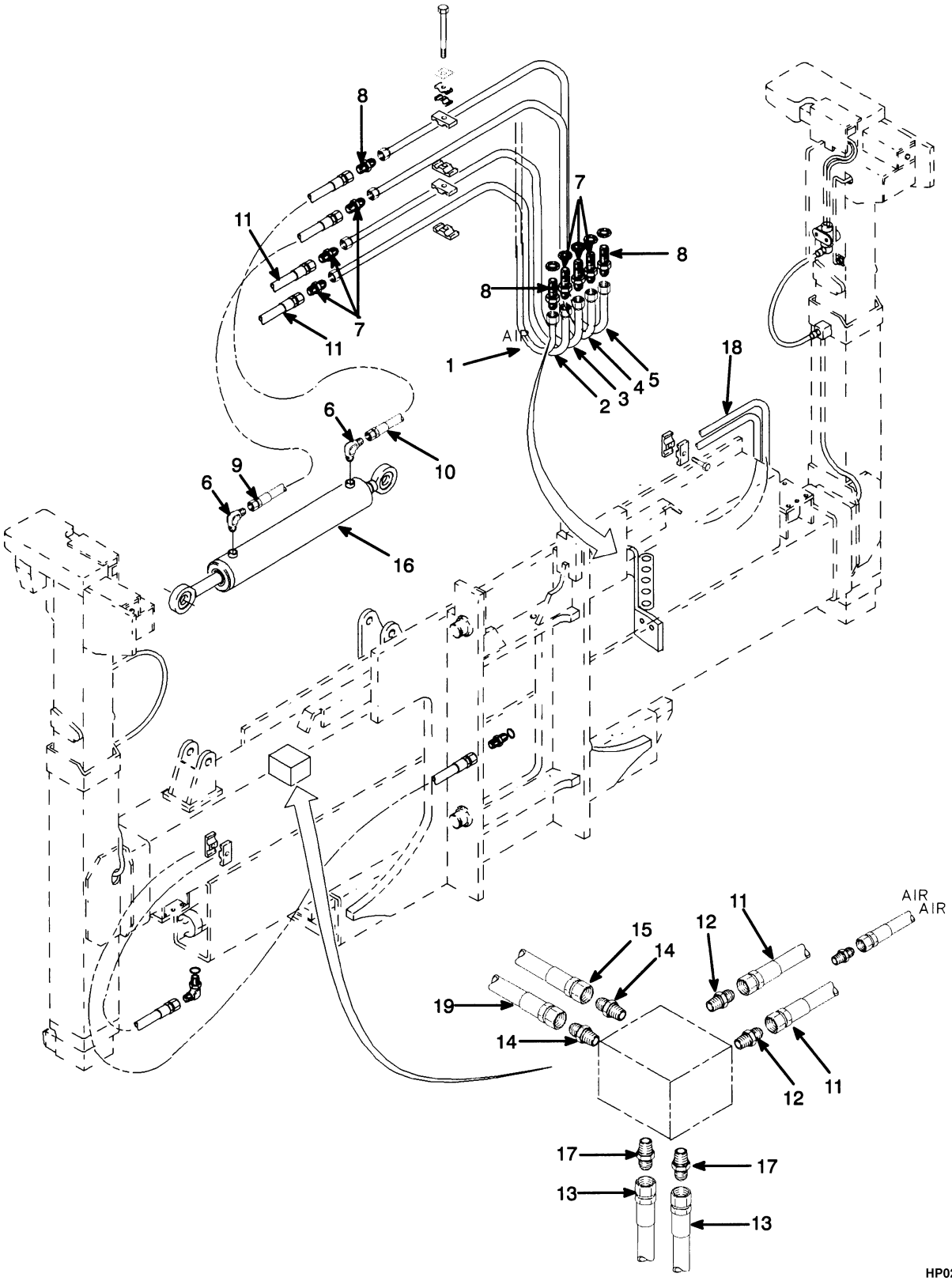

©2010 HYSTER COMPANY

HYDRAULIC SYSTEM
EMPTY CONTAINER HANDLER – SHEET 2

ITEM	PART NO.	DESCRIPTION	QTY
1	1332293	Hose Assy	7
2	1332294	Hose Assy	1
3	1332295	Hose Assy	1
4	1332296	Hose Assy	1
5	1332297	Hose Assy	1
6	1332283	Elbow	4
7	15448	Fitting	6
7	16484	O-Ring	1
8	16449	Fitting	3
8	16485	O-Ring	1
9	1332302	Hose Assy	1
10	1332299	Hose Assy	1
11	181822	Hose Assy	2
12	1332292	Adapter	2
13	1332318	Hose Assy	2
14	1332275	Fitting	2
15	1332324	Hose-Bulk	1
16	1332321	Sideshift Cylinder (☞Figure 11-9)	1
17	1332277	Fitting	2
18	1332319	Hose Assy	2
19	1332325	Hose Assy	2

©2010 HYSTER COMPANY

AIR SYSTEM (FIGURE 11-5)
EMPTY CONTAINER HANDLER

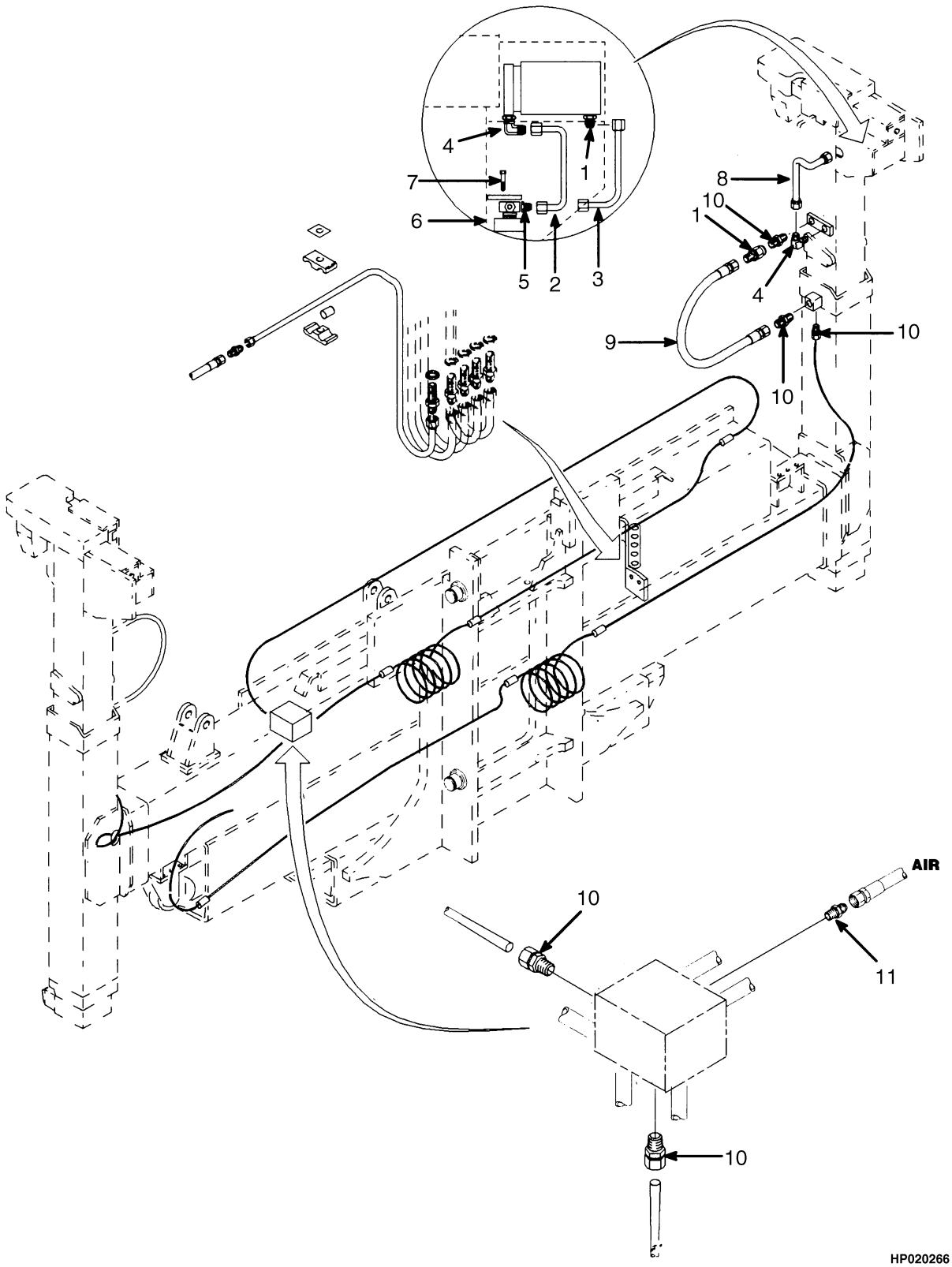

©2010 HYSTER COMPANY

AIR SYSTEM
EMPTY CONTAINER HANDLER

ITEM	PART NO.	DESCRIPTION	QTY
1	1329475	Fitting	6
2	1329480	Pipe	2
3	1329476	Tube (LH)	1
3	1329477	Pipe (RH)	1
4	1329481	Elbow	4
5	1329482	Fitting	6
6	1329483	Solenoid Valve (12 Volt)	2
6	1329483	Solenoid Valve (12 Volt)	1
7	293726	Capscrew	4
8	1329486	Tube (LH)	1
8	1329487	Pipe (RH)	1
9	1332276	Hose Assy	2
10	1332277	Fitting	4
11	16448	Fitting	2

©2010 HYSTER COMPANY

EXTENSION (FIGURE 11-6)
EMPTY CONTAINER HANDLER

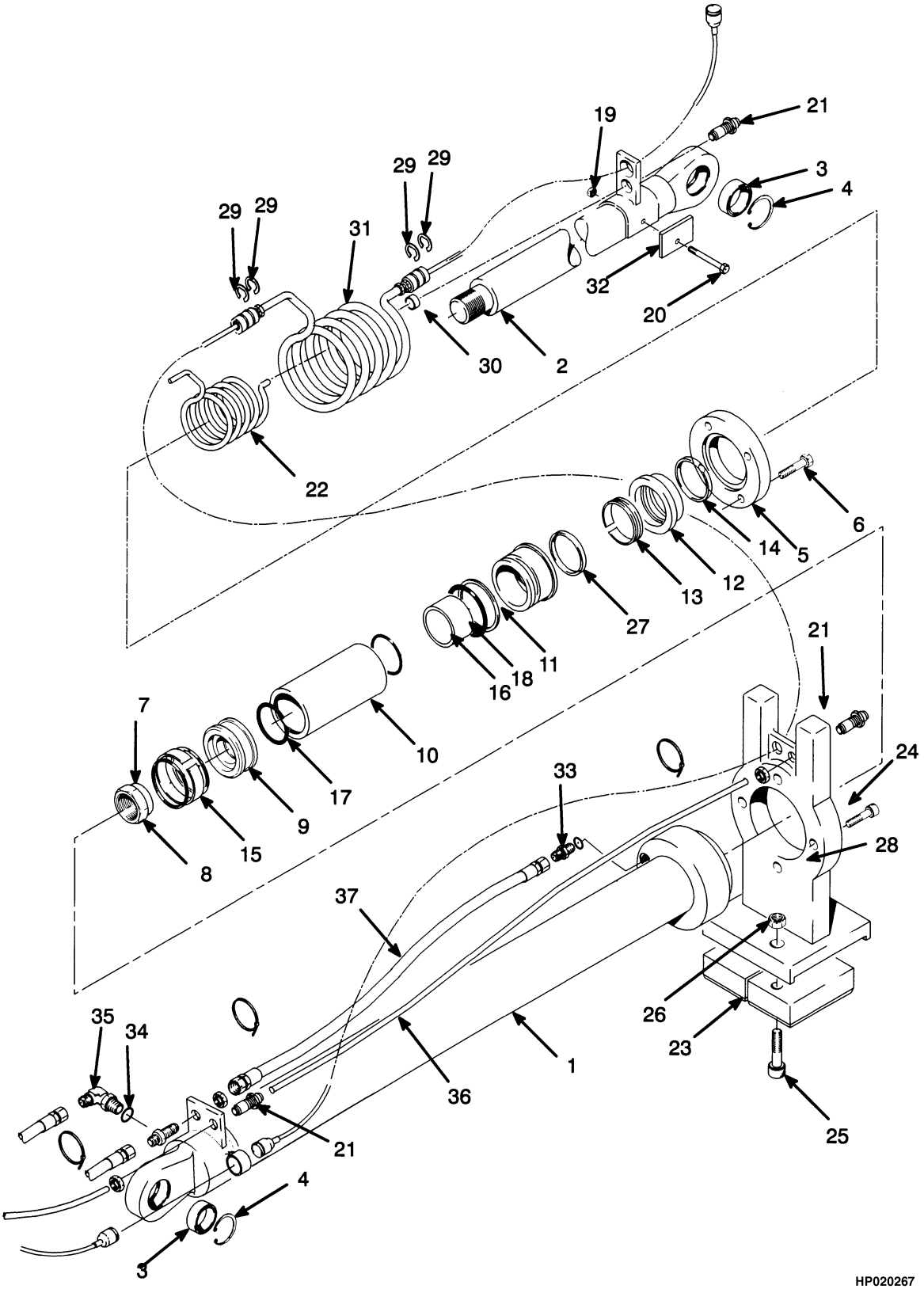

©2010 HYSTER COMPANY

EXTENSION
EMPTY CONTAINER HANDLER

ITEM	PART NO.	DESCRIPTION	QTY
	1332320	Extension Cylinder	1
1	1332339	Tube Wldmt-Cylinder	1
2	1332340	Rod	1
3	356035	Bushing	2
4	1332342	Snap Ring	2
5	1332343	Ring	1
6	293650	Capscrew	4
7	1332344	Nut	1
8	302454	Roll Pin	1
9	1332346	Piston	1
10	1332347	Spacer	1
11	1332348	Gland	1
12	1332349	Washer	1
13	. . . . .	Wiper Ring	1
14	. . . . .	U-Cup Seal	1
15	. . . . .	Seal Ring	1
16	. . . . .	O-Ring	1
17	1343878	O-Ring	1
18	. . . . .	Back-Up Ring	1
19	302400	Nut	2
20	1332337	Screw	2
21	1332322	Fitting	6
22	1332335	Hose	2
23	1332333	Wear Pad	4
24	1332326	Screw	8
25	1332332	Screw	8
26	302402	Locknut	8
27	1332329	Guide (Ring)	2
28	1332330	Support	2
29	1346131	Snap Ring	8
30	1346132	Bushing	2
31	1334631	Cable Assy	2
32	1346129	Bracket	2
33	1332277	Fitting	1
34	16448	Fitting	1
35	1332283	Elbow	1
36	1391204	Hose (72 in.)	1
36	1391200	Hose (102 in.)	1
36	1391201	Hose (124 in.)	1
36	1391202	Hose (144 in.)	1
36	1391203	Hose (246 in.)	1
37	1332325	Hose Assy	1
	1329440	Kit-Seal	1

©2010 HYSTER COMPANY

ELECTRICAL CONTROL (FIGURE 11-7)
EMPTY CONTAINER HANDLER

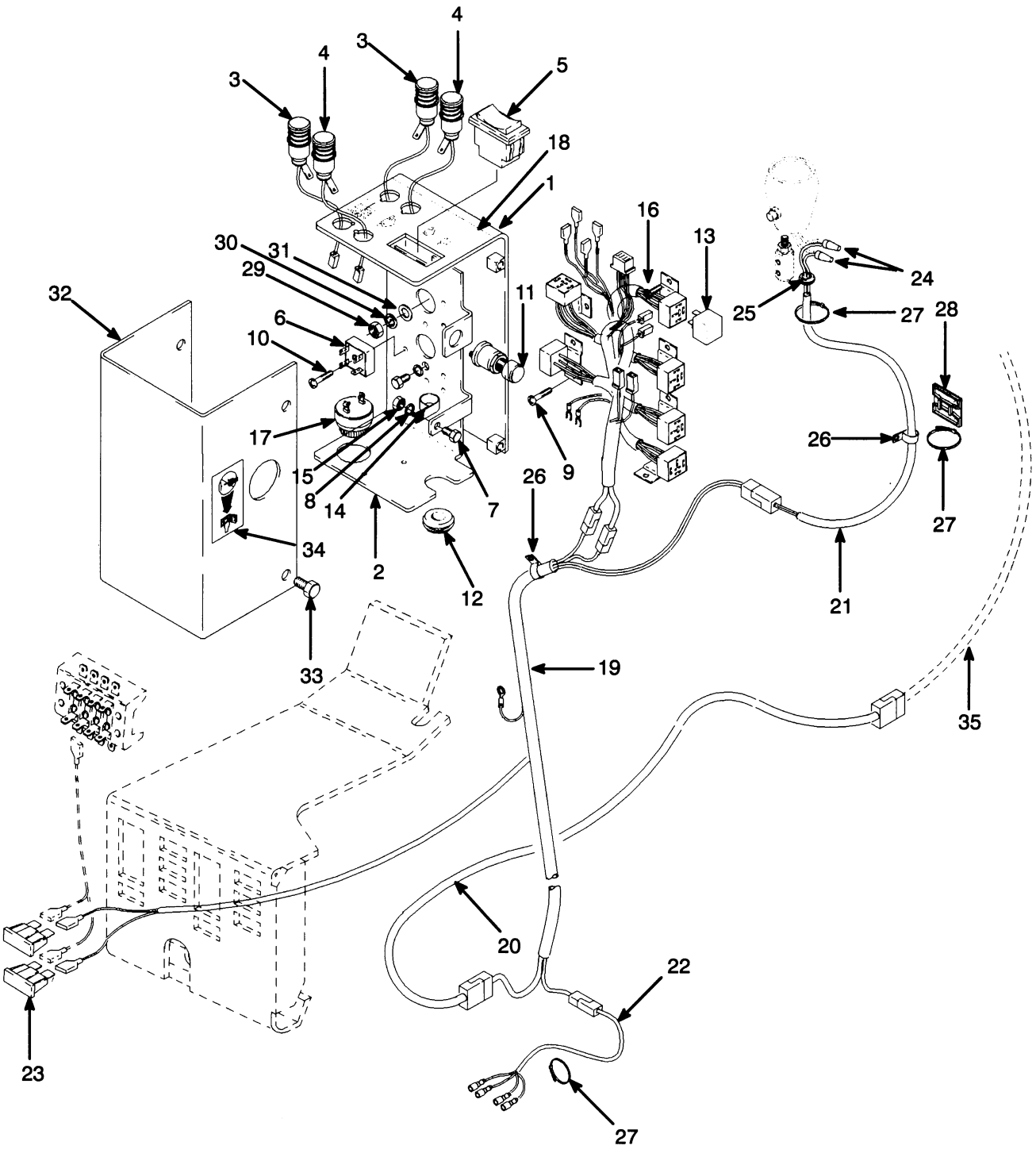

©2010 HYSTER COMPANY

ELECTRICAL CONTROL
EMPTY CONTAINER HANDLER

ITEM	PART NO.	DESCRIPTION	QTY
1	**a** 1323856	Bracket	1
2	**a** 1323854	Plate	1
3	**a** 1326793	Lamp	2
3	**a** 199925	Bulb (12 Volt)	1
3	**a** 325789	Terminal	2
4	**a** 1326795	Lamp	2
4	**a** 199925	Bulb (12 Volt)	1
4	**a** 134810	Terminal	2
4	**a** 181045	Connector Body	1
5	**a** 1316527	Switch	1
6	**a** 1301224	Diode Block	1
7	**a** 287817	Capscrew	3
8	**a** 292680	Washer	3
9	**a** 227096	Screw	12
10	**a** 227099	Screw	1
11	**a** 370776	Switch (Momentary)	1
12	**a** 1152816	Grommet	1
13	**a** 1326783	Relay (12 Volt)	6
14	**a** 132131	Clamp	1
15	**a** 136687	Nut	1
16	**a** 1326791	Wire Harness	1
17	**a** 1330619	Alarm	1
18	**a** 1326804	Label	1
19	**b** 1326784	Wire Harness (Cab)	1
19	**c** 1457833	Wire Harness (Cab)	1
20	**ab** 1326785	Wire Harness	1
20	**ac** 1457336	Wire Harness	1
21	1330581	Wire Harness	1
22	1330582	Wire Harness (Pump)	1
23	370646	Fuse (5 Amp)	2
24	1300053	Connector	2
25	1300040	Grommet	1
26	136516	Clamp	2
27	114312	Strap Clamp	8
28	1331528	Clamp	1
29	239503	Nut	2
30	292681	Lockwasher	2
31	296418	Washer	2
32	1323852	Cover	1
33	353144	Capscrew	4
34	1326805	Label (Override Switch)	1
35	**a** 1326786	Wire Harness (Mast)	1
35	**ab** 1326789	Wire Harness (Mast)	1
35	**ac** 1457444	Wire Harness (Mast)	1

FOOTNOTES:

a Attachment Control
b → S/N D019D02962
c S/N D019D02963 →

©2010 HYSTER COMPANY

ELECTRICAL SYSTEM (FIGURE 11-8)
EMPTY CONTAINER HANDLER

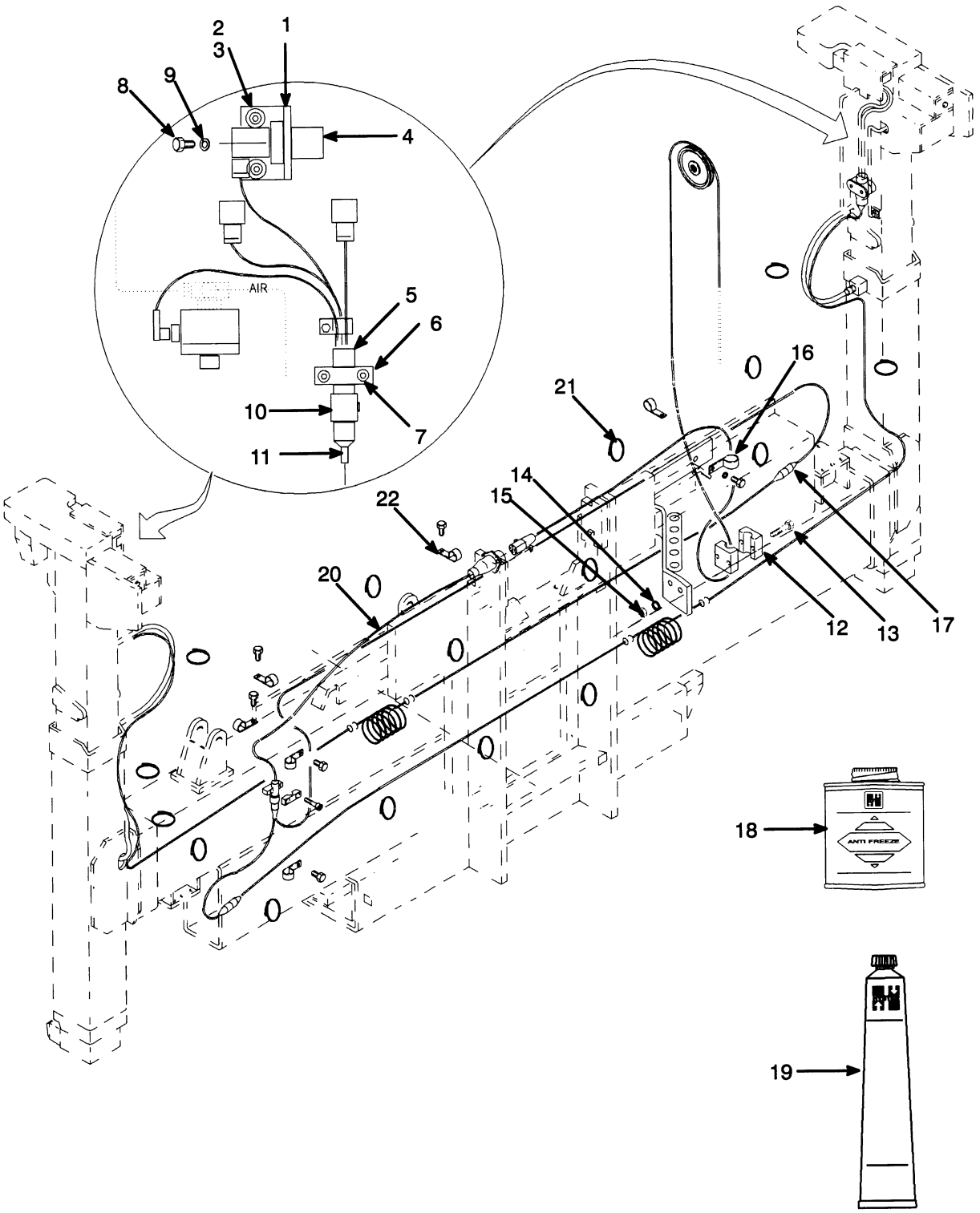

©2010 HYSTER COMPANY

ELECTRICAL SYSTEM
EMPTY CONTAINER HANDLER

ITEM	PART NO.	DESCRIPTION	QTY
1	1329461	Bracket	2
2	292514	Capscrew	4
3	320159	Washer	4
4	1329464	Switch	6
5	1334614	Cable Assy	2
6	1329490	Clamp	3
7	296003	Screw	6
8	292502	Capscrew	12
9	1329493	Washer	12
10	1334633	Bracket	3
11	1335277	Socket	1
12	1330603	Clamp	1
13	136704	Capscrew	2
14	292681	Lockwasher	2
15	239503	Nut	2
16	173247	Clamp	2
17	. . . . .	U-Bolt	1
18	280472	Sealant	AR
19	322784	Lubricant (Corrosion Preventive)	AR
20	1334613	Cable Assy	1
21	114312	Strap Clamp	AR
22	136516	Clamp	AR

©2010 HYSTER COMPANY

SIDE-SHIFT CYLINDER (FIGURE 11-9)
EMPTY CONTAINER HANDLER

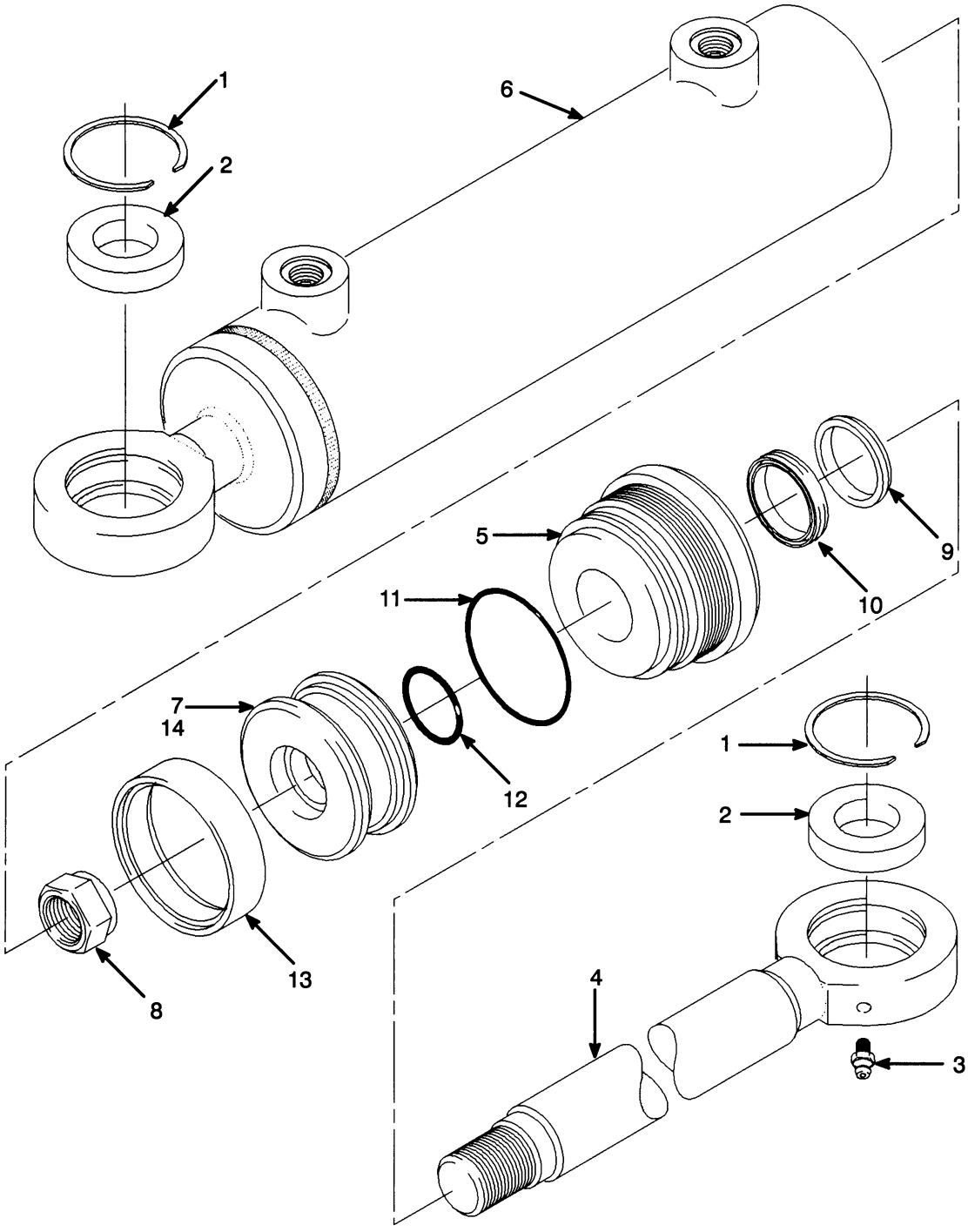

HP020270

©2010 HYSTER COMPANY

SIDE-SHIFT CYLINDER
EMPTY CONTAINER HANDLER

ITEM	PART NO.	DESCRIPTION	QTY
	1332321	Sideshift Cylinder	1
1	1329441	Snap Ring	2
2	1329442	Bushing	2
3	1329443	Fitting	4
4	1329444	Rod	1
5	1329445	End Cap	1
6	1329446	Tube Wldmt-Cylinder	1
7	1329447	Piston	1
8	1329448	Nut	1
9	. . . . .	Seal	1
10	. . . . .	Wiper	1
11	. . . . .	O-Ring	1
12	. . . . .	O-Ring	1
13	. . . . .	Back-Up Ring	1
14	. . . . .	Seal	1
	1329449	Kit-Seal	1

©2010 HYSTER COMPANY

LIGHTS (FIGURE 11-10)
EMPTY CONTAINER HANDLER

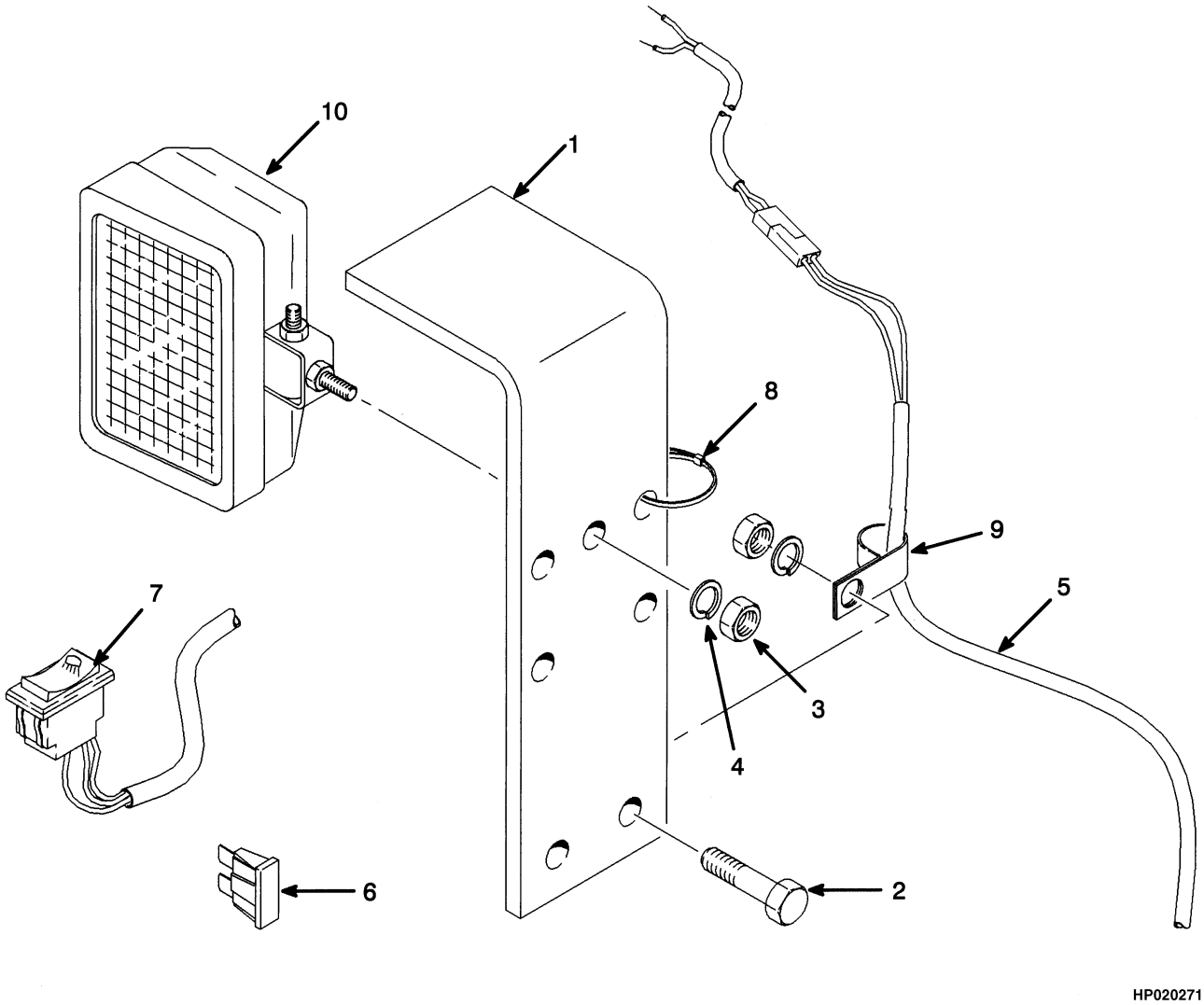

©2010 HYSTER COMPANY

LIGHTS
EMPTY CONTAINER HANDLER

ITEM	PART NO.	DESCRIPTION	QTY
1	1331593	Bracket	2
2	292529	Capscrew	4
3	216877	Nut	4
4	292683	Lockwasher	4
5	1332927	Wire Harness	1
5	1457668	Wire Harness	1
6	1310630	Fuse (15 Amp)	1
7	1331559	Switch	1
7	1331560	Switch	1
7	1323993	Socket	1
7	1326355	Bulb	1
7	1301157	Lens (Green) (Work Light)	1
8	137852	Strap Clamp	6
9	391484	Clamp (Insulated)	2
10	353478	Work Light	2
10	389793	Lamp	2
10	357934	Head/Work Light (Optional)	2

©2010 HYSTER COMPANY

NOTES

©2010 HYSTER COMPANY

12 OPTIONS

SECTION 12
OPTIONS

DESCRIPTION	PAGE
BACK-UP ALARM	12-38
FIRE EXTINGUISHER	12-36
FLOODLIGHTS	12-34
FORK	12-15
HOOK TYPE QUICK DISCONNECT - DUAL FUNCTION (S/N D019D02394U →)	12-17
HEADER HOSE	
FIVE FUNCTION - DUAL FUNCTION SIDE-SHIFT FORK POSITIONER	12-22
HYDRAULIC CYLINDER	
DUAL FUNCTION PIN OR QUICK DISCONNECT (S/N D019D02394U →)	12-12
LIGHTS	12-30
PIN FORK	
STANDARD TAPER (S/N D019D02394U →)	12-16
ROTATING BEACON	12-28
SELECTOR VALVE	
S/N D019D02394U →	12-14
SIDE-SHIFT CARRIAGE	
DUAL FUNCTION PIN OR QUICK DISCONNECT (S/N D019D02394U →)	12-8
THREE STAGE FULL FREE-LIFT	12-4
TWO STAGE LIMITED FREE-LIFT	12-2
SIDE-SHIFT CYLINDER	12-6
STROBE LIGHT	12-26
TIRE AND WHEEL	
H300XL	12-18
H300XL-H360XL	12-20

©2010 HYSTER COMPANY

SIDE-SHIFT CARRIAGE (FIGURE 12-1)
TWO STAGE LIMITED FREE-LIFT

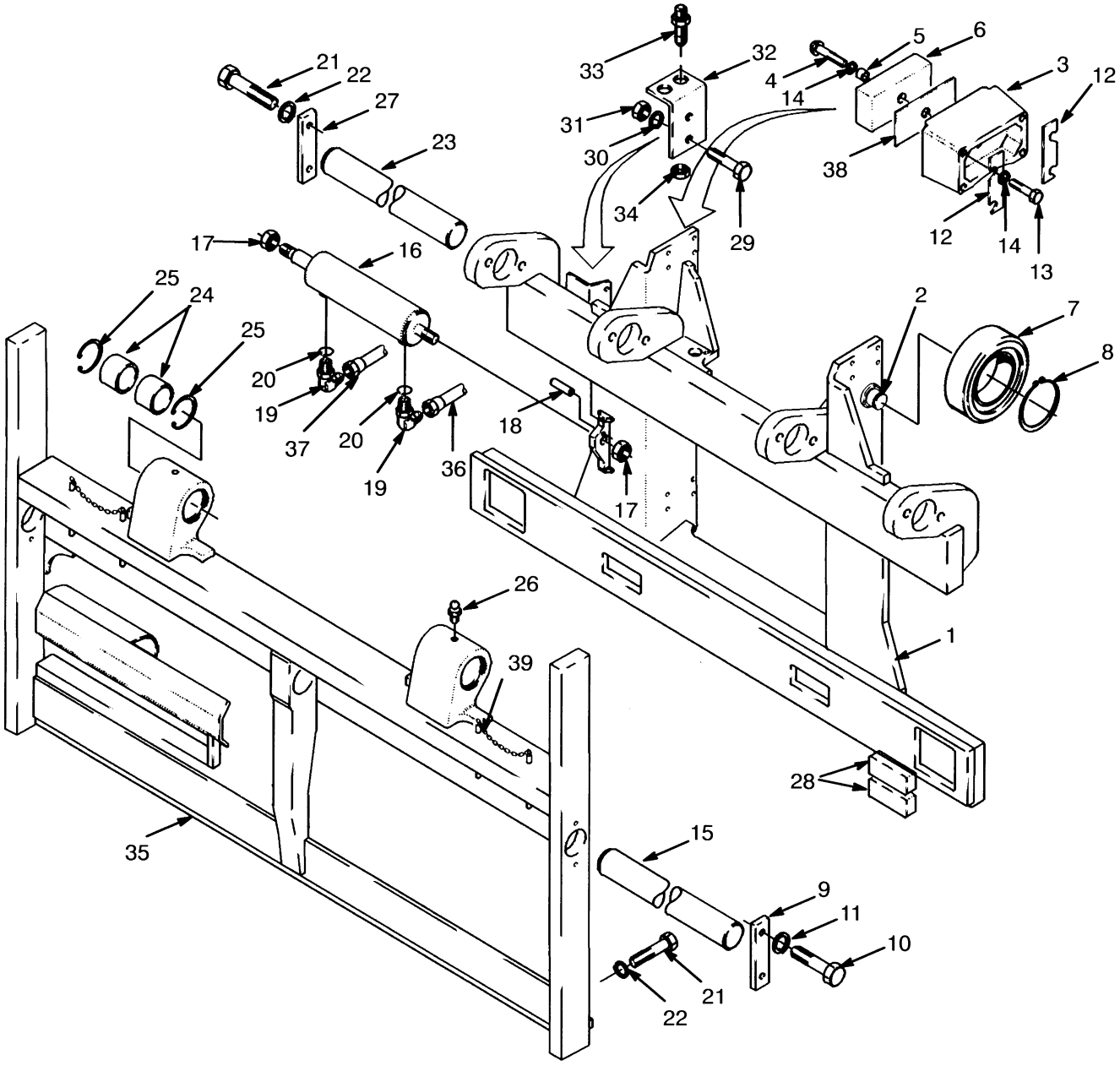

HP000231

©2010 HYSTER COMPANY

ITEM	PART NO.	DESCRIPTION	QTY
	1303386	Side-Shift Carriage	1
1	1303380	Frame	1
2	1313357	Stubshaft	4
3	1301018	Bracket	4
4	376203	Capscrew	4
5	1301016	Spacer	4
6	1335179	Bearing	4
7	1313358	Load Roller	4
8	58918	Snap Ring	4
9	376776	Plate	2
10	293647	Capscrew	4
11	292683	Lockwasher	4
12	1310592	Shim (0.030 in.)	AR
13	221510	Capscrew (2.0 in.)	16
14	15156	Lockwasher	20
15	1303261	Pin	2
16	387090	Sideshift Cylinder (☞Figure 12-3)	1
17	53157	Locknut	2
18	68551	Roll Pin	1
19	96521	Fitting	2
20	16483	O-Ring	1
21	293647	Capscrew	8
22	292683	Lockwasher	8
23	1303371	Bar	2
24	376773	Bushing	4
25	183609	Snap Ring	4
26	16001	Grease Fitting	2
27	376776	Plate	4
28	351458	Bearing	6
29	136985	Capscrew	2
30	~~388049~~		
	292682	Lockwasher	2
31	136692	Nut	2
32	1311208	Bracket	1
33	16448	Fitting	2
34	14761	Fitting -Lock Nut	2
35	1303384	Apron	1
36	1313350	Tube Assy	1
37	1313351	Tube Assy	1
38	1301014	Shim (0.050 in.)	AR
39	1334581	Pin (Fork Locking)	2
	1303400	Kit-Bearing	1

©2010 HYSTER COMPANY

SIDE-SHIFT CARRIAGE (FIGURE 12-2)
THREE STAGE FULL FREE-LIFT

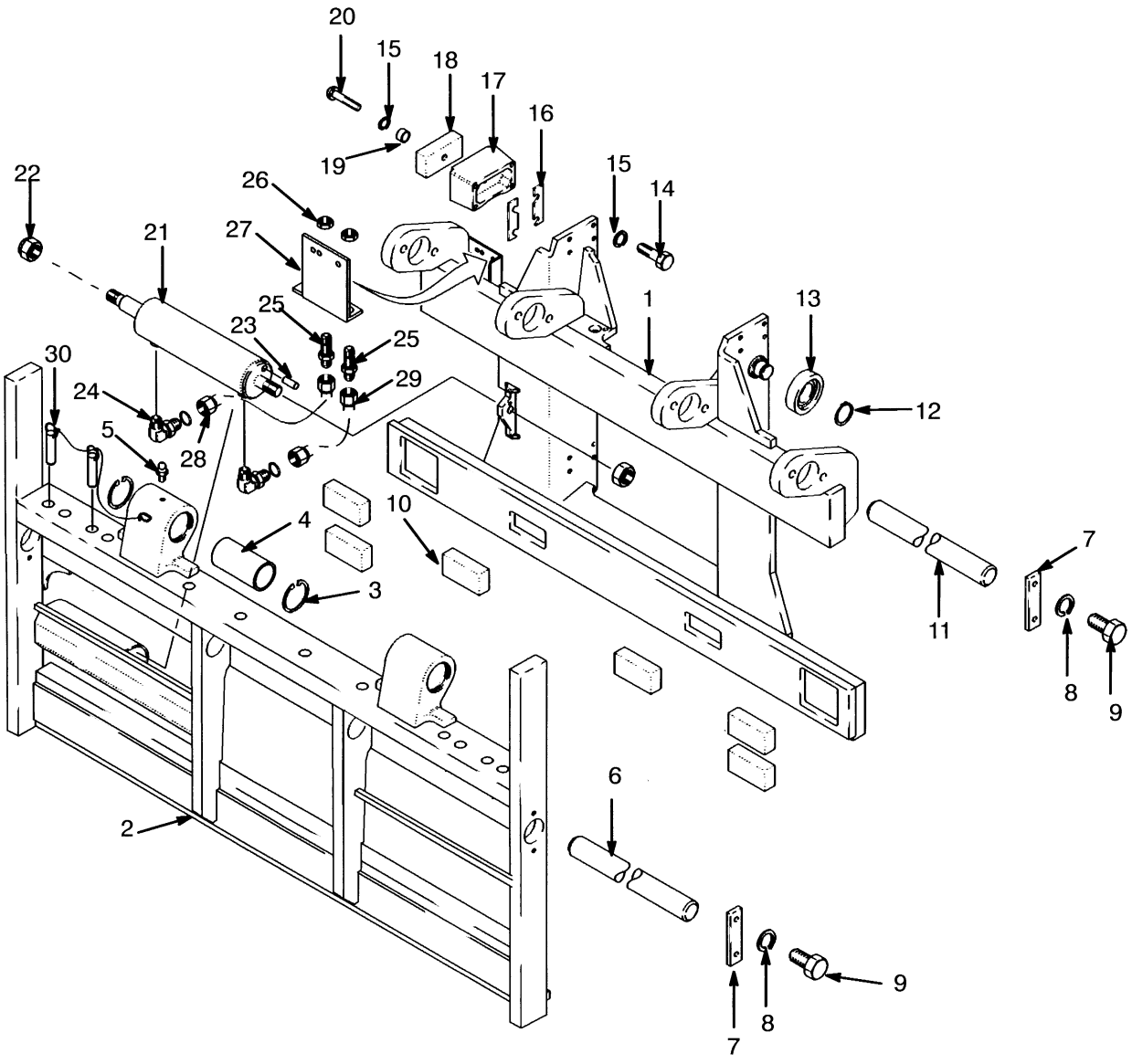

©2010 HYSTER COMPANY

SIDE-SHIFT CARRIAGE
THREE STAGE FULL FREE-LIFT

ITEM	PART NO.	DESCRIPTION	QTY
	1454562	Carriage	1
1	1453446	Carriage Wldmt	1
2	1303384	Apron	1
3	183609	Snap Ring	4
4	376773	Bushing	4
5	16001	Grease Fitting	2
6	1303261	Pin	2
7	376776	Plate	6
8	292683	Lockwasher	12
9	293647	Capscrew	12
10	351458	Bearing	6
11	1303371	Bar	2
12	58918	Snap Ring	4
13	1313358	Load Roller	4
14	221510	Capscrew (2.0 in.)	16
15	15156	Lockwasher	20
16	1310592	Shim (0.030 in.)	AR
17	1301018	Bracket	4
18	1335179	Bearing	4
19	1301016	Spacer	4
20	376203	Capscrew	4
21	387090	Sideshift Cylinder (☞Figure 12-3)	1
22	53157	Locknut	2
23	68551	Roll Pin	1
24	96521	Fitting	2
24	16483	O-Ring	1
25	16448	Fitting	2
26	14761	Fitting -Lock Nut	2
27	1454338	Bracket	1
28	1454369	Tube Assy	1
29	1454370	Tube Assy	1
30	1334581	Pin (Fork Locking)	4

©2010 HYSTER COMPANY

SIDE-SHIFT CYLINDER (FIGURE 12-3)

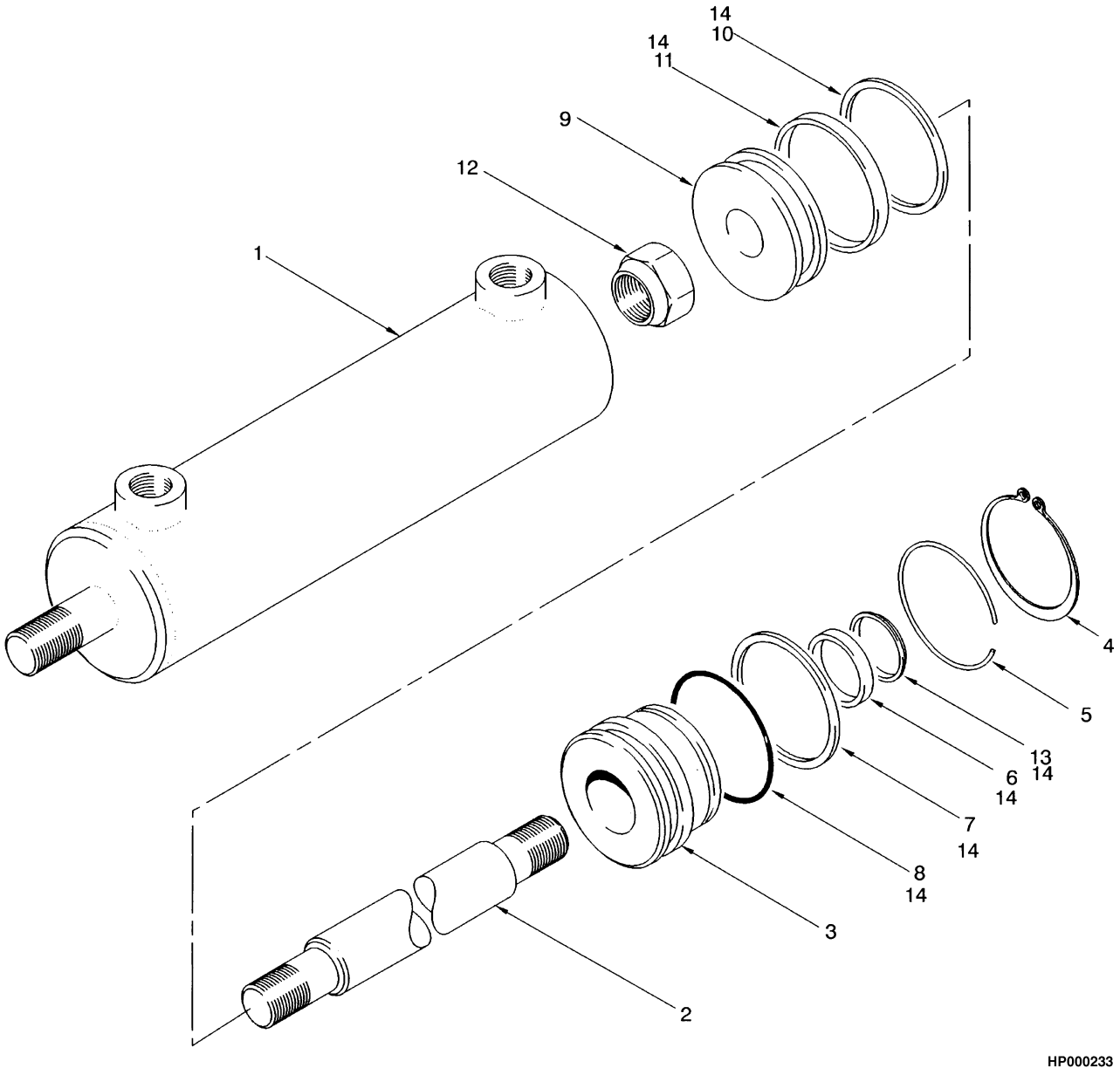

©2010 HYSTER COMPANY

SIDE-SHIFT CYLINDER

ITEM	PART NO.	DESCRIPTION	QTY
	387090	Sideshift Cylinder	1
1	387085	Tube Wldmt-Cylinder	1
2	387087	Cylinder Rod	1
3	376815	Retainer	1
4	307275	Snap Ring	1
5	376839	Retaining Ring	1
6	330692	Rod Seal	1
7	154358	Back-Up Ring	1
8	15880	O-Ring	1
9	376814	Piston	1
10	638292	Back-Up Ring	1
11	637161	Rod Seal	1
12	53157	Locknut	1
13	203367	Wiper	1
14	186061	Lubricant	1
	376883	Kit-Seal	1

©2010 HYSTER COMPANY

SIDE-SHIFT CARRIAGE (FIGURE 12-4)

DUAL FUNCTION PIN OR QUICK DISCONNECT (S/N D019D02394U →)

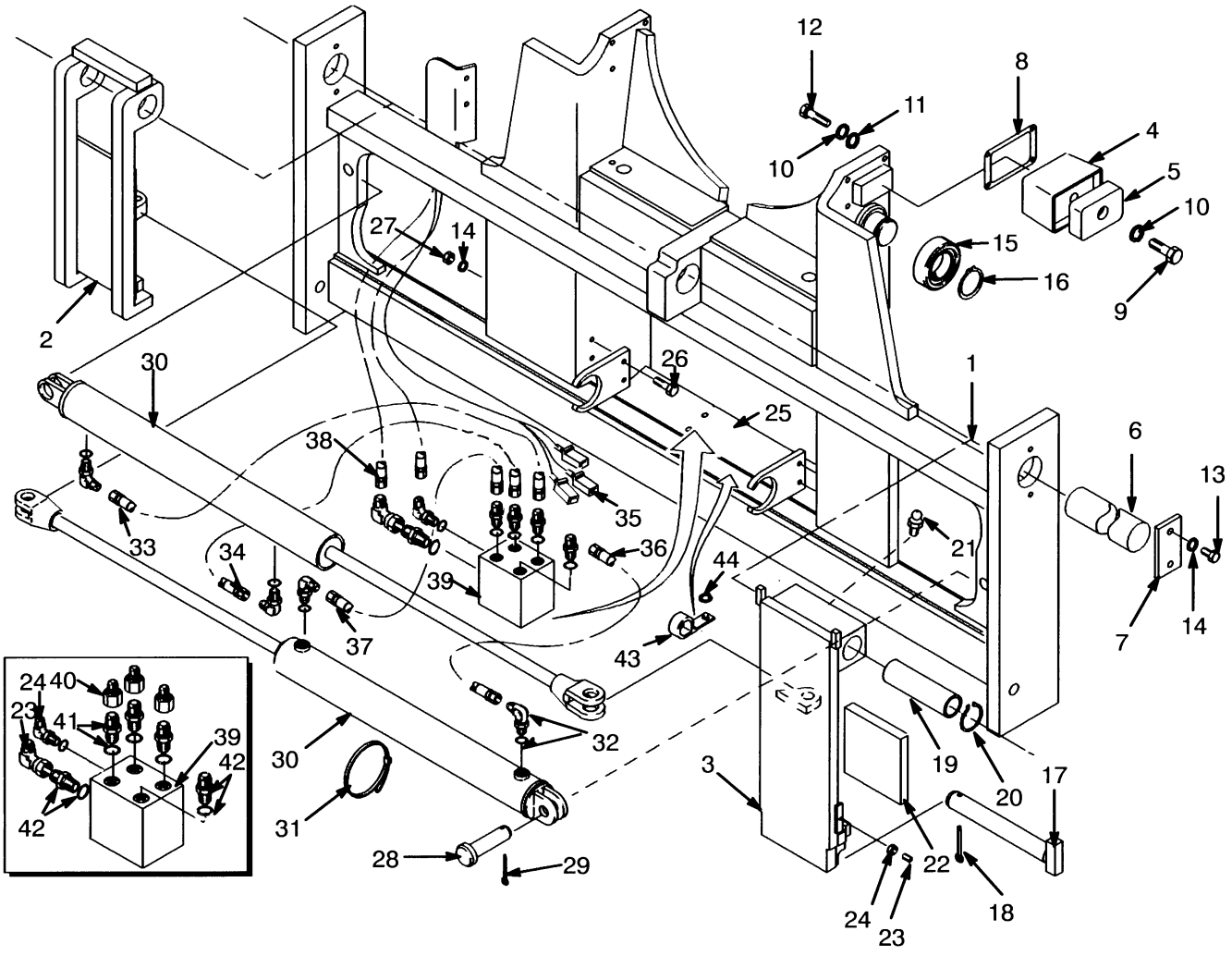

©2010 HYSTER COMPANY

SIDE-SHIFT CARRIAGE

DUAL FUNCTION PIN OR QUICK DISCONNECT (S/N D019D02394U →)

ITEM	PART NO.	DESCRIPTION	QTY
	b 2036848	Carrier	1
	a 2036846	Side-Shift Carriage	1
	1451108	Side-Shift Carriage	1
1	1451110	Carriage Wldmt	1
2	**a** 1451777	Carrier (RH)	1
2	**b** 1452060	Carrier (RH)	1
3	**a** 1451778	Carrier (LH)	1
3	**b** 1452059	Carrier (LH)	1
4	1301018	Bracket	4
5	1335179	Bearing	4
6	1451127	Pin	1
7	1453728	Plate (Keeper)	2
8	1310592	Shim (0.030 in.)	AR
9	376203	Capscrew	4
10	15156	Lockwasher	20
11	1301016	Spacer	4
12	221510	Capscrew (2.0 in.)	16
13	293647	Capscrew	4
14	292683	Lockwasher	8
15	1313358	Load Roller	4
16	58918	Snap Ring	4
17	**b** 1451183	Pin	2
18	**b** 177194	Cotter Pin	2
19	**b** 1452066	Bushing	2
20	**b** 1454339	Snap Ring	4
21	16001	Grease Fitting	2
22	1451833	Block	2
23	17224	Fitting	1
23	16485	O-Ring	1
24	16989	Fitting	1
25	1451155	Bracket	2
26	292529	Capscrew	4
27	216877	Nut	4
28	1373216	Pin	4
29	15237	Cotter Pin	4
30	1451130	Cylinder Assy (☞Figure 12-5)	2
31	323864	Strap Clamp	4
32	16559	Fitting	4
32	16484	O-Ring	4
33	1454102	Hose Assy	1
34	1454104	Hose Assy	1
35	1454091	Wire Harness	1
35	1330419	Connector	3
35	1330424	Connector (Secondary Lock)	3
35	1330434	Terminal	10
35	1330421	Connector	1
35	1330427	Connector	1
36	1454103	Hose Assy	1
37	95733	Hose Assy	1
38	270333	Hose Assy	2

©2010 HYSTER COMPANY

SIDE-SHIFT CARRIAGE

DUAL FUNCTION PIN OR QUICK DISCONNECT (S/N D019D02394U →)

ITEM	PART NO.	DESCRIPTION	QTY
39	1452526	Valve (☞Figure 12-6)	1
40	222517	Fitting	3
41	16551	Fitting	2
41	16485	O-Ring	1
42	16909	Fitting	2
42	16485	O-Ring	1
43	198678	Clamp	1
43	129684	Clamp	1
43	251994	Clamp	2
44	292681	Lockwasher	2

FOOTNOTES:

a Pin Type

b Quick Disconnect

©2010 HYSTER COMPANY

NOTES

©2010 HYSTER COMPANY

HYDRAULIC CYLINDER (FIGURE 12-5)
DUAL FUNCTION PIN OR QUICK DISCONNECT (S/N D019D02394U →)

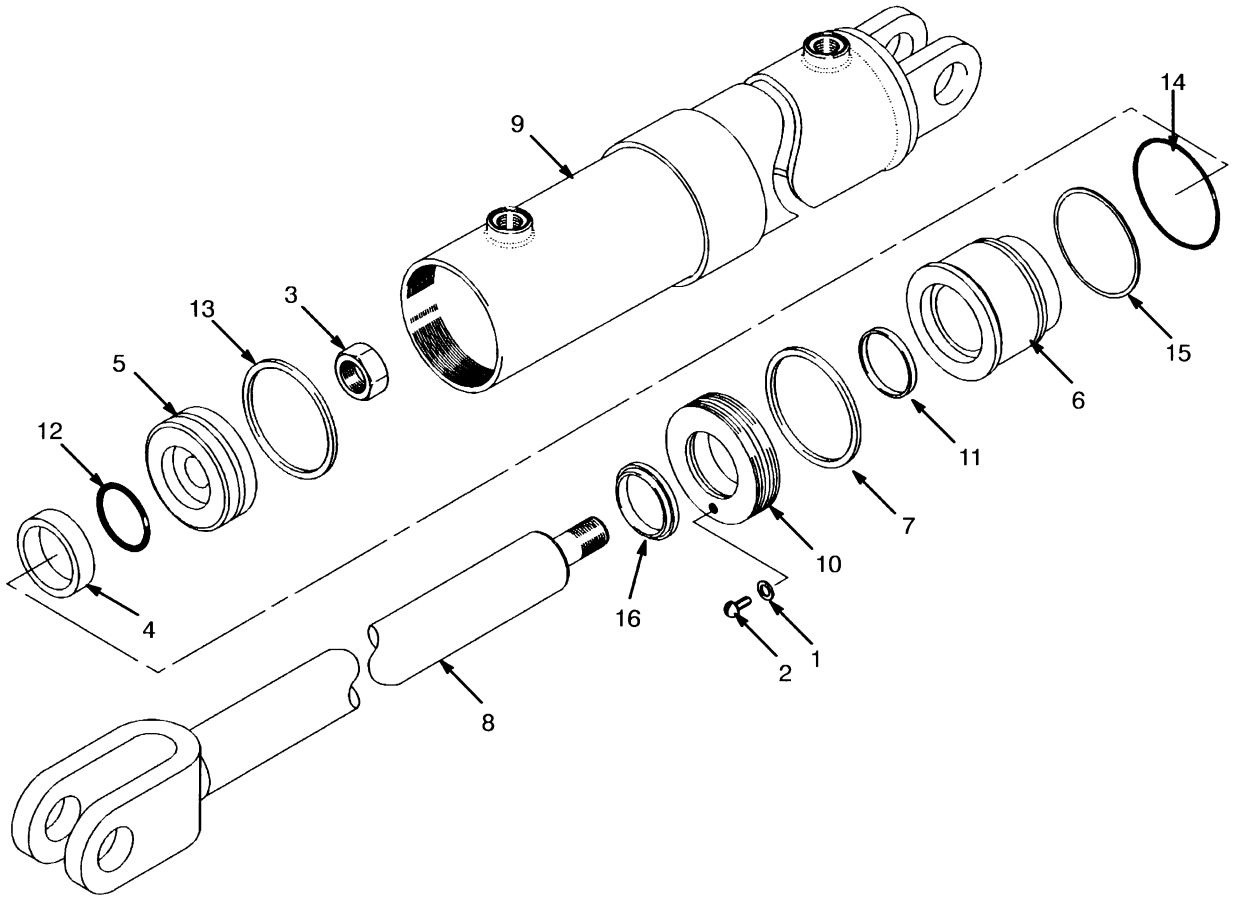

HP000235

©2010 HYSTER COMPANY

HYDRAULIC CYLINDER

DUAL FUNCTION PIN OR QUICK DISCONNECT (S/N D019D02394U →)

ITEM	PART NO.	DESCRIPTION	QTY
	1451130	Cylinder Assy	1
1	1347405	Lockwasher	1
2	18704	Capscrew	1
3	1455367	Nut	1
4	1455473	Spacer	1
5	1455369	Piston	1
6	1455363	Bearing	1
7	1455370	Rod Wiper	1
8	1455471	Rod Assy	1
9	1455472	Tube Assy	1
10	1455364	Retainer	1
11	1455371	Ring	1
12	1455373	O-Ring	1
13	1455372	Seal	1
14	15880	O-Ring	1
15	154358	Back-Up Ring	1
16	361000	Plug	1
	1455362	Kit-Seal	1

©2010 HYSTER COMPANY

SELECTOR VALVE (FIGURE 12-6)

(S/N D019D02394U →)

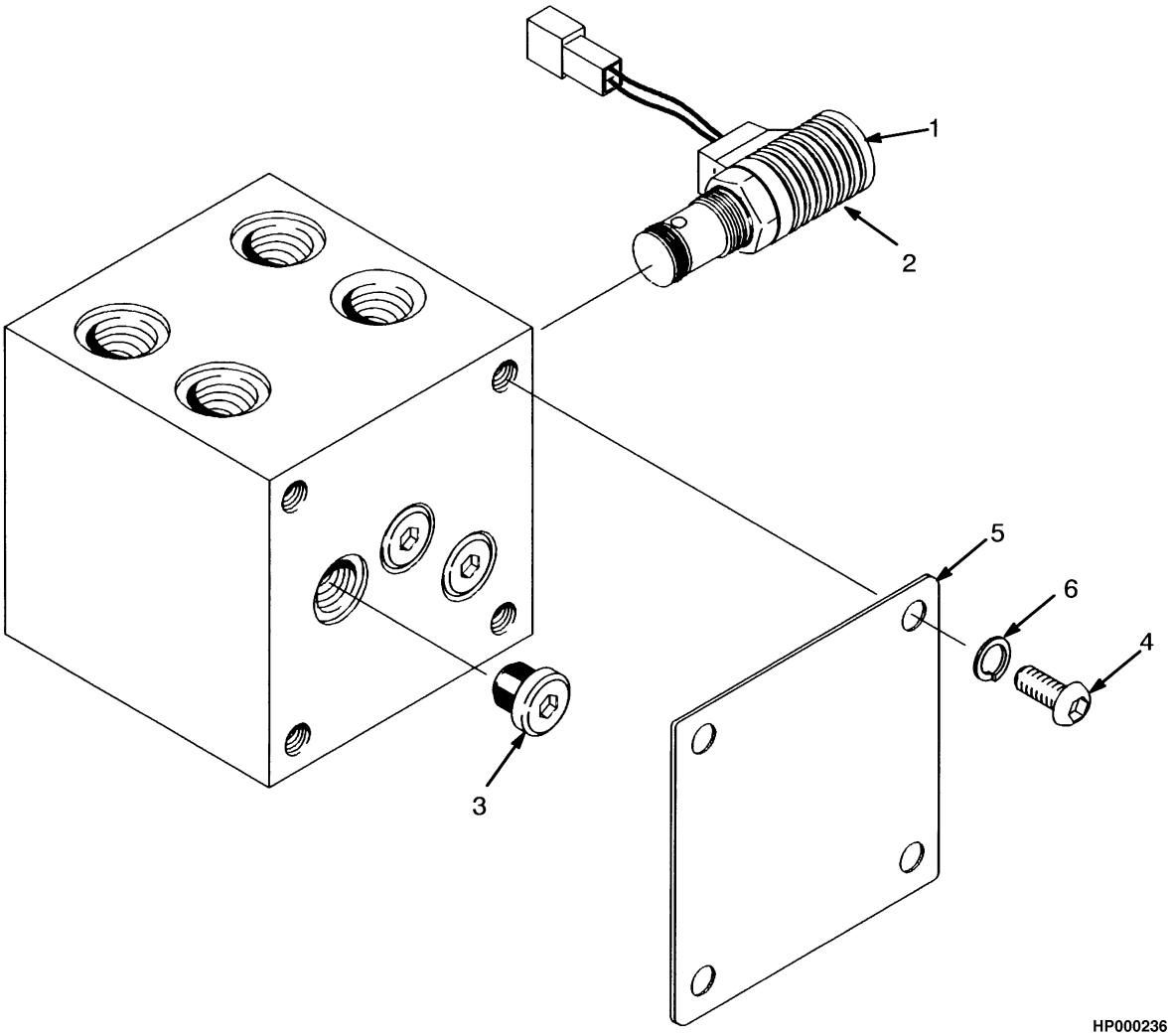

ITEM	PART NO.	DESCRIPTION	QTY
	1452526	Valve	1
1	1452131	Kit-Seal	1
1	1455353	Cartridge	3
2	1455354	Coil	1
3	1452132	Plug	3
4	1452138	Bolt	4
5	1452134	Cover Plate	1
6	1452135	Washer	1

©2010 HYSTER COMPANY

FORK (FIGURE 12-7)

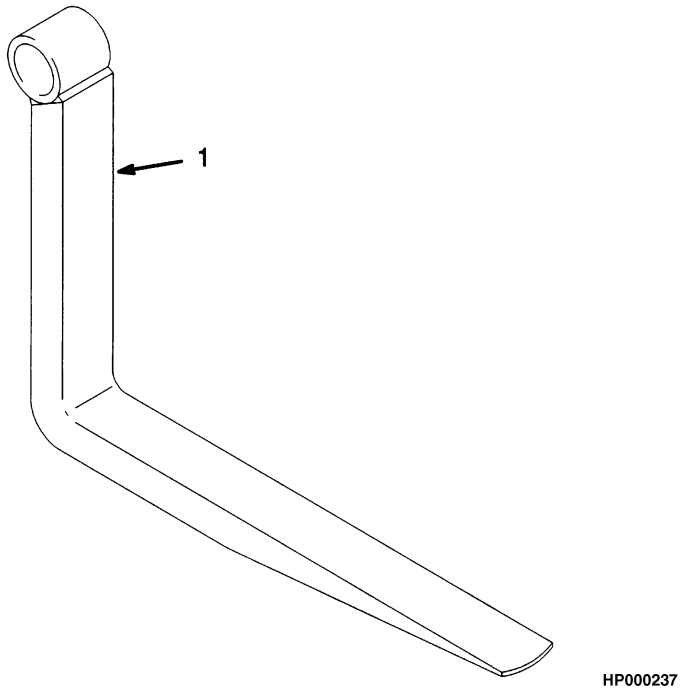

KEY:
A: Standard Taper (3.50 x 8.00 in.)
B: Full Bottom Taper (3.50 x 8.00 in.)

ITEM	PART NO.	DESCRIPTION	QTY A	QTY B
1	1333412	Fork (54 in.)	2	..
1	1333413	Fork (60 in.)	2	..
1	1333414	Fork (72 in.)	2	..
1	1333415	Fork (84 in.)	2	..
1	1333416	Fork (96 in.)	2	..
1	1333417	Fork (54 in.)	..	2
1	1333418	Fork (60 in.)	..	2
1	1333419	Fork (72 in.)	..	2
1	1333420	Fork (84 in.)	..	2
1	1333421	Fork (96 in.)	..	2

©2010 HYSTER COMPANY

PIN FORK (FIGURE 12-8)

STANDARD TAPER (S/N D019D02394U →)

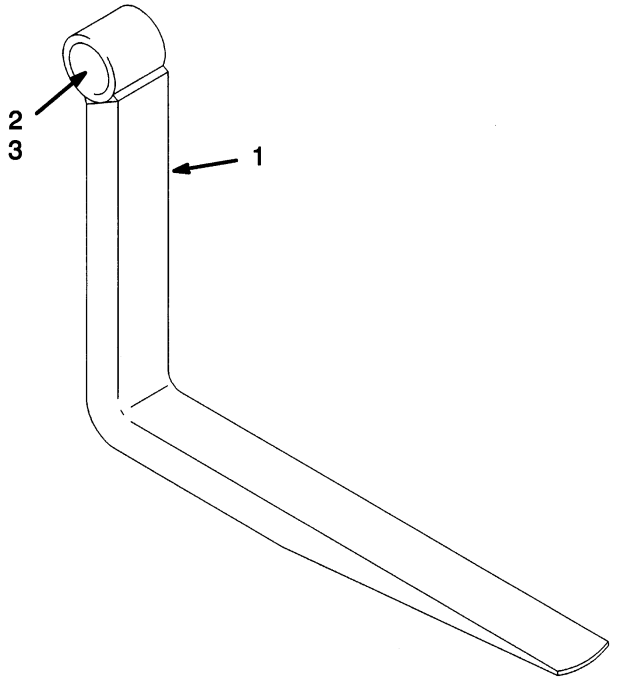

ITEM	PART NO.	DESCRIPTION	QTY
1	1454435	Fork (54 in.)	2
1	1454436	Fork (60 in.)	2
1	1454437	Fork (72 in.)	2
1	1454438	Fork (84 in.)	2
1	1454439	Fork (96 in.)	2
2	1452066	Bushing	2
3	1454339	Snap Ring	2

©2010 HYSTER COMPANY

FORK (FIGURE 12-9)

HOOK TYPE QUICK DISCONNECT — DUAL FUNCTION (S/N D019D02394U →)

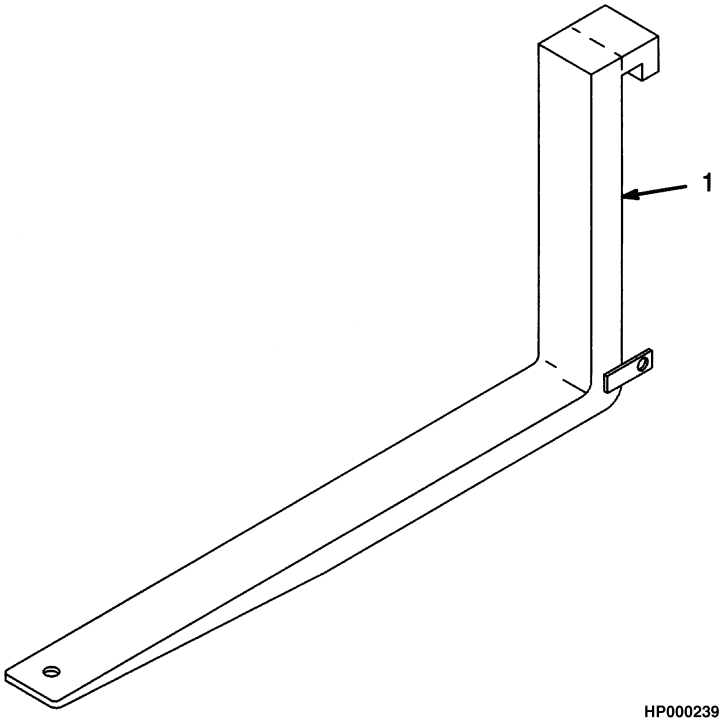

ITEM	PART NO.	DESCRIPTION	QTY
1	1454440	Fork (54 in.)	2
1	1454441	Fork (60 in.)	2
1	1454442	Fork (72 in.)	2
1	1454443	Fork (84 in.)	2
1	1454444	Fork (96 in.)	2

TIRE AND WHEEL (FIGURE 12-10)
H300XL

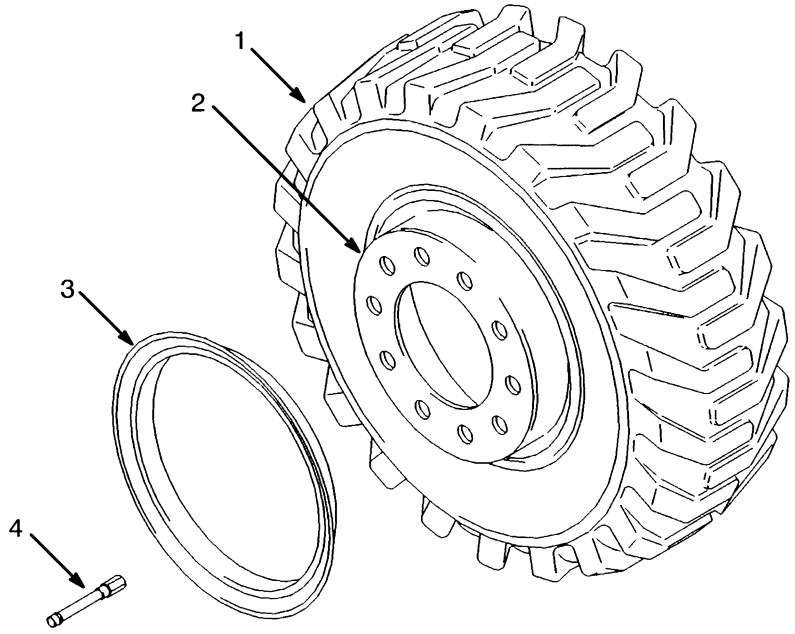

©2010 HYSTER COMPANY

TIRE AND WHEEL
H300XL

KEY:
A: 11.00 x 20 (14 Ply)
B: 12.00 x 20 (16 Ply)
C: 12.00 x 20

ITEM	PART NO.	DESCRIPTION	QTY A	QTY B	QTY C
1	**a** 128734	Tire and Tube	1	..	..
1	**b** 1311377	Tire and Tube (With Flap)	1	..	..
1	**a** 89622	Tire	1	..	..
1	**b** 1311378	Tire and Flap (With Flap)	1	..	..
1	23026	Pneumatic Tire	1	..	..
1	816083	Tire (Solid)	..	1	..
1	**a** 1471841	Pneumatic Tire (Radial)	..	..	1
1	1366719	Pneumatic Tire (Radial)	..	..	1
1	1366717	Tube (Radial)	..	..	1
1	1366715	Tire Flap (Radial)	..	..	1
2	387075	Wheel Assy	1	..	..
2	1374468	Wheel (8.00 x 20) (Optional)	1	..	1
2	1366722	Wheel Assy (8.00 x 20) (Optional)	..	..	1
3	171675	Lockring	1	..	..
4	49189	Extension (Valve Stem)	1	..	..

FOOTNOTES:

a Off Road

b On/Off Road

©2010 HYSTER COMPANY

TIRE AND WHEEL (FIGURE 12-11)

H300XL-H360XL

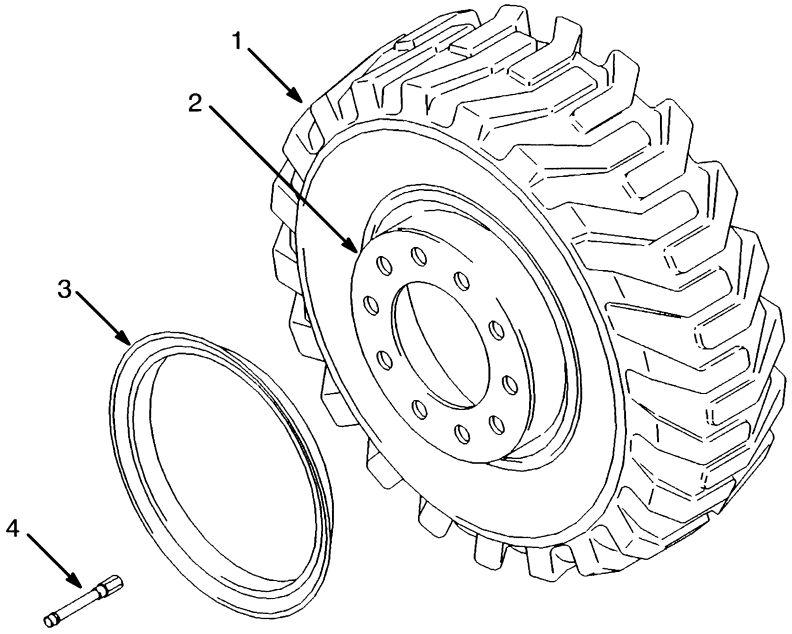

©2010 HYSTER COMPANY

TIRE AND WHEEL
H300XL-H360XL

KEY:
A: 11.00 x 20 (14 Ply)
B: 12.00 x 20 (16 Ply)
C: 12.00 x 20 (18 Ply)
D: 12.00 x 20

ITEM	PART NO.	DESCRIPTION	QTY A	B	C	D
1	1393121	Pneumatic Tire (Lug)	1	..	..	..
1	**b** 1393122	Pneumatic Tire (With Flap)	1	..	..	..
1	23026	Pneumatic Tire	1	..	..	..
1	**ab** 130567	Tire and Tube	..	1	..	..
1	**ac** 1311379	Tire and Tube (With Flap)	..	1	..	..
1	**ab** 88278	Tire	..	1	..	..
1	**ac** 1311380	Tire and Flap (With Flap)	..	1	..	..
1	300294	Pneumatic Tire	..	1	1	..
1	**ab** 300208	Tire and Tube	..	..	1	..
1	**ac** 1311384	Tire and Tube (With Flap)	..	..	1	..
1	**ab** 300209	Tire	..	..	1	..
1	**ac** 1311385	Tire and Flap (With Flap)	..	..	1	..
1	1313390	Sold Tire (12.00 x 20 Solid)	..	..	..	1
1	**b** 1471841	Pneumatic Tire (Radial)	..	..	..	1
1	1366719	Pneumatic Tire (Radial)	..	..	..	1
1	1366717	Tube (Radial)	..	..	..	1
1	1366715	Tire Flap (Radial)	..	..	..	1
2	387075	Wheel Assy	1	1	1	..
2	**d** 1374468	Wheel (8.00 x 20)	1	..	..	1
2	**d** 1366711	Rim (8.00 x 20) (H360XL Only)	1	..	1	..
2	**d** 1366722	Wheel Assy (8.00 x 20)	..	..	..	1
2	**d** 1374468	Wheel (8.00 x 20) (Solid)	..	..	1	..
3	171675	Lockring	..	1	1	..
4	49189	Extension (Valve Stem)	..	1	1	..

FOOTNOTES:

a Empty Container Handler
b Off Road
c On/Off Road
d Optional

©2010 HYSTER COMPANY

HEADER HOSE (FIGURE 12-12)

FIVE FUNCTION — DUAL FUNCTION SIDE-SHIFT FORK POSITIONER

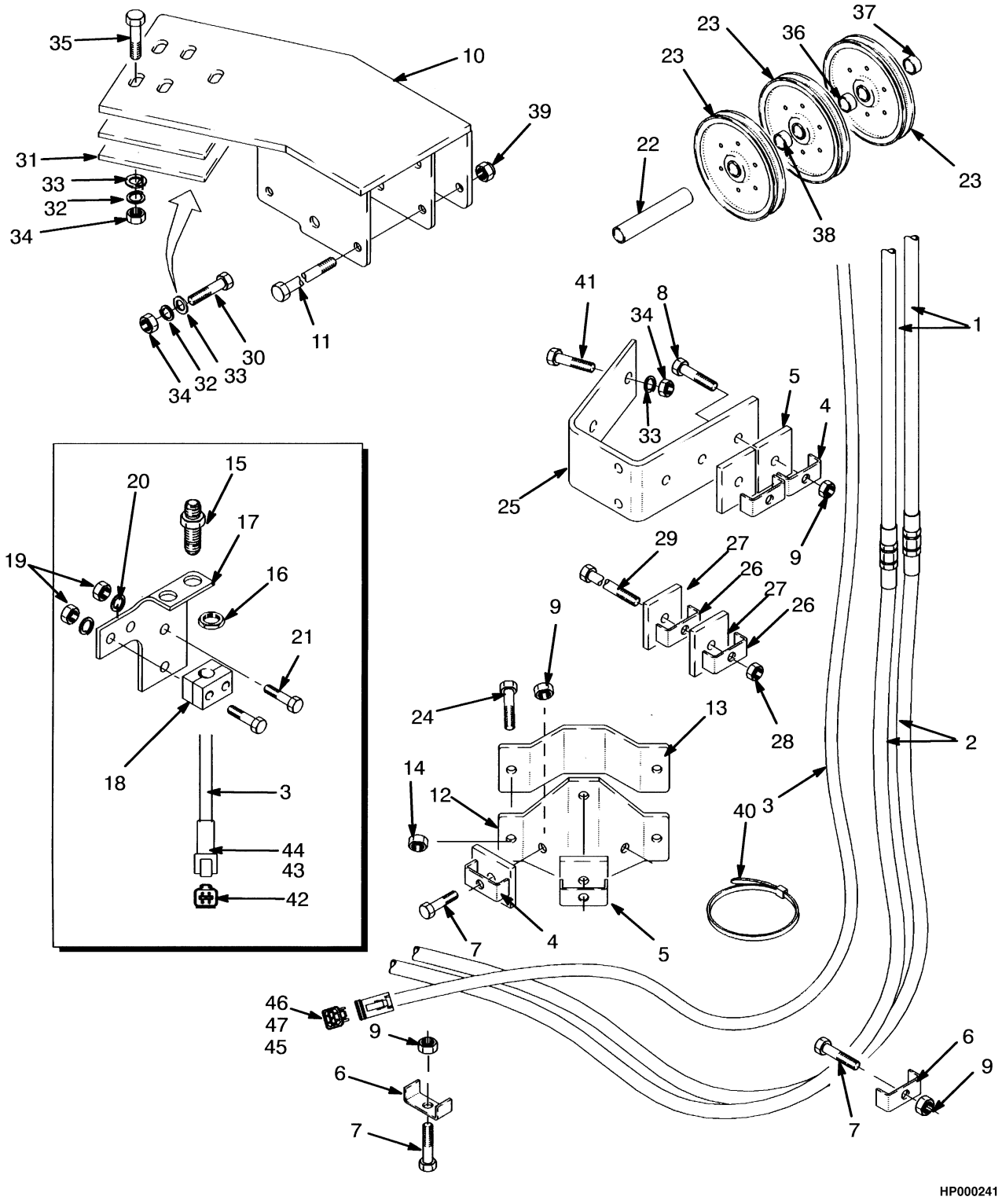

©2010 HYSTER COMPANY

HEADER HOSE

FIVE FUNCTION – DUAL FUNCTION SIDE-SHIFT FORK POSITIONER

ITEM	PART NO.	DESCRIPTION	QTY
1	**ag** 815559	Hose Assy	2
1	**bg** 1311337	Hose Assy	2
1	**cg** 1311339	Hose Assy	2
1	**dg** 1311340	Hose Assy	2
1	**eg** 1311341	Hose Assy	2
2	**ag** 1311342	Hose Assy	2
2	**bcdeg** 1311344	Hose Assy	2
3	**ag** 1454282	Wire Harness (Mast)	1
3	**bg** 1454288	Wire Harness (Mast)	1
3	**cg** 1454289	Wire Harness (Mast)	1
3	**dg** 1454290	Wire Harness (Mast)	1
3	**eg** 1454291	Wire Harness (Mast)	1
4	254950	Clamp	5
5	138929	Plate	5
6	1310637	Clamp	2
7	292529	Capscrew	5
8	292531	Capscrew	2
9	300937	Nut	7
10	1352661	Bracket Wldmt	1
11	1311265	Capscrew	3
12	1310608	Bracket	1
13	1310609	Bracket	1
14	316826	Nut	2
15	16448	Fitting	4
16	14761	Fitting -Lock Nut	4
17	1454301	Bracket	1
18	1330603	Clamp	1
19	239503	Nut	2
20	292681	Lockwasher	2
21	136704	Capscrew	2
22	1454302	Spacer	1
23	189451	Hose Sheave	3
24	292522	Capscrew	2
25	1310612	Bracket	1
26	**f** 254950	Clamp	2
27	**f** 138929	Plate	2
28	**f** 300937	Nut	1
29	**f** 292538	Capscrew	1
30	292529	Capscrew	1
31	1301571	Plate	2
32	320162	Washer	3
33	292683	Lockwasher	6
34	216877	Nut	6
35	292533	Capscrew	3
36	280610	Spacer	1
37	1301650	Spacer	1
38	1311264	Spacer	1
39	221357	Locknut	3
40	273775	Strap Clamp	2

©2010 HYSTER COMPANY

HEADER HOSE

FIVE FUNCTION – DUAL FUNCTION SIDE-SHIFT FORK POSITIONER

ITEM	PART NO.	DESCRIPTION	QTY
41	292528	Capscrew	2
42	1330433	Terminal	4
43	1330411	Connector	1
44	1330416	Connector	1
45	1330421	Connector	1
46	1330436	Terminal	4
47	1330427	Connector	1

FOOTNOTES:

a 144
b 179
c 209
d 240
e 260
f 5310 mm, 6110 mm, and 6610 mm
g Refer to Table

©2010 HYSTER COMPANY

NOTES

©2010 HYSTER COMPANY

STROBE LIGHT (FIGURE 12-13)

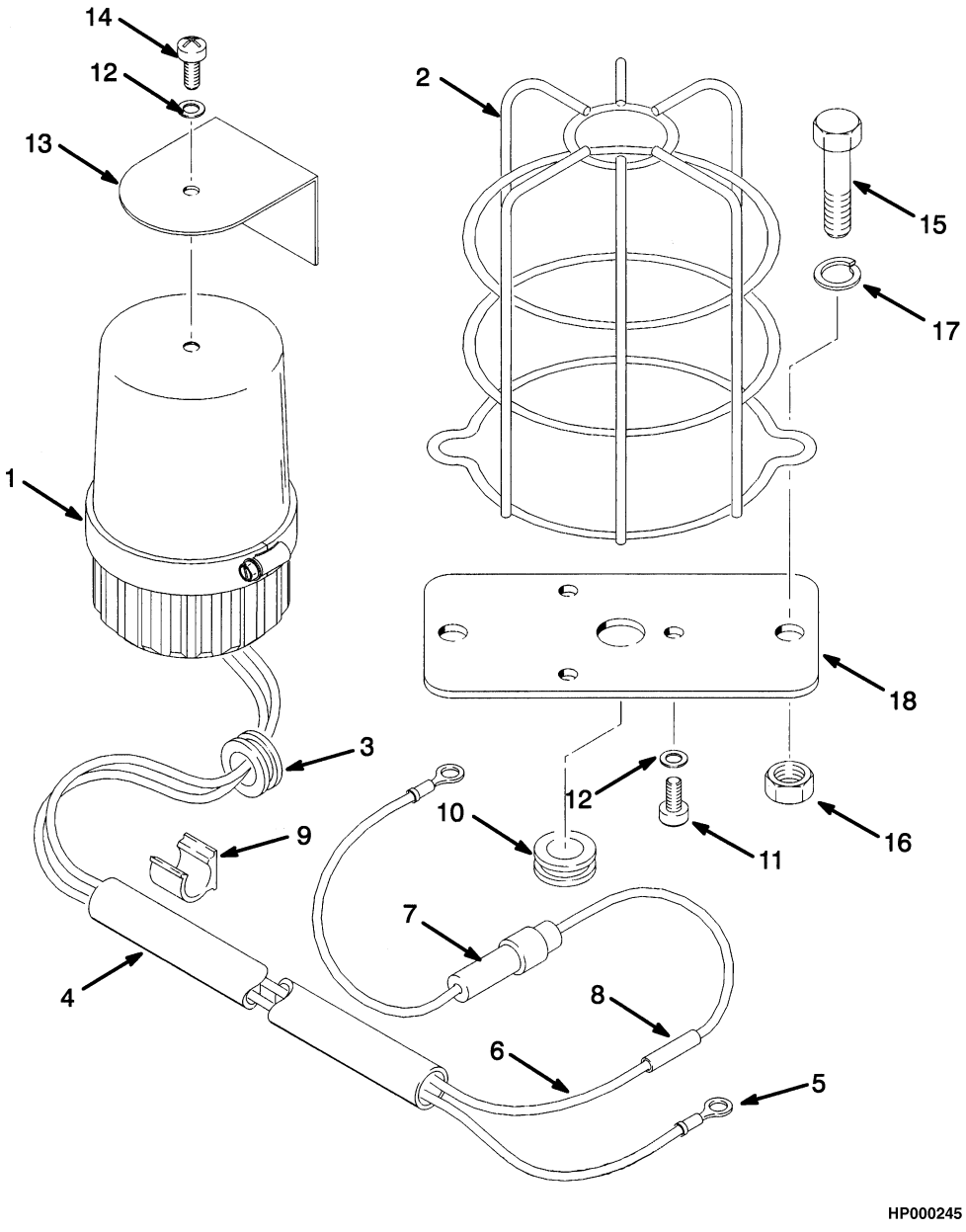

©2010 HYSTER COMPANY

STROBE LIGHT

ITEM	PART NO.	DESCRIPTION	QTY
1	1316485	Strobe Light	1
1	1326366	Lens	1
1	1322390	Tube Assy	1
1	1367544	Printed Circuit Board	1
1	1322393	Fuse	1
2	1312465	Guard	1
3	328389	Grommet	1
4	275494	Conduit	1
5	1306578	Cable Assy	1
6	1306579	Cable Assy	1
7	335850	Wire	1
8	1152830	Connector	1
9	241878	Clamp	3
10	133484	Grommet	1
11	227098	Screw	3
12	15930	Lockwasher	4
13	1316480	Shield	1
14	16719	Screw	1
15	16828	Capscrew	2
16	222667	Nut	2
17	15156	Lockwasher	2
18	1316479	Mounting Plate	1

©2010 HYSTER COMPANY

ROTATING BEACON (FIGURE 12-14)

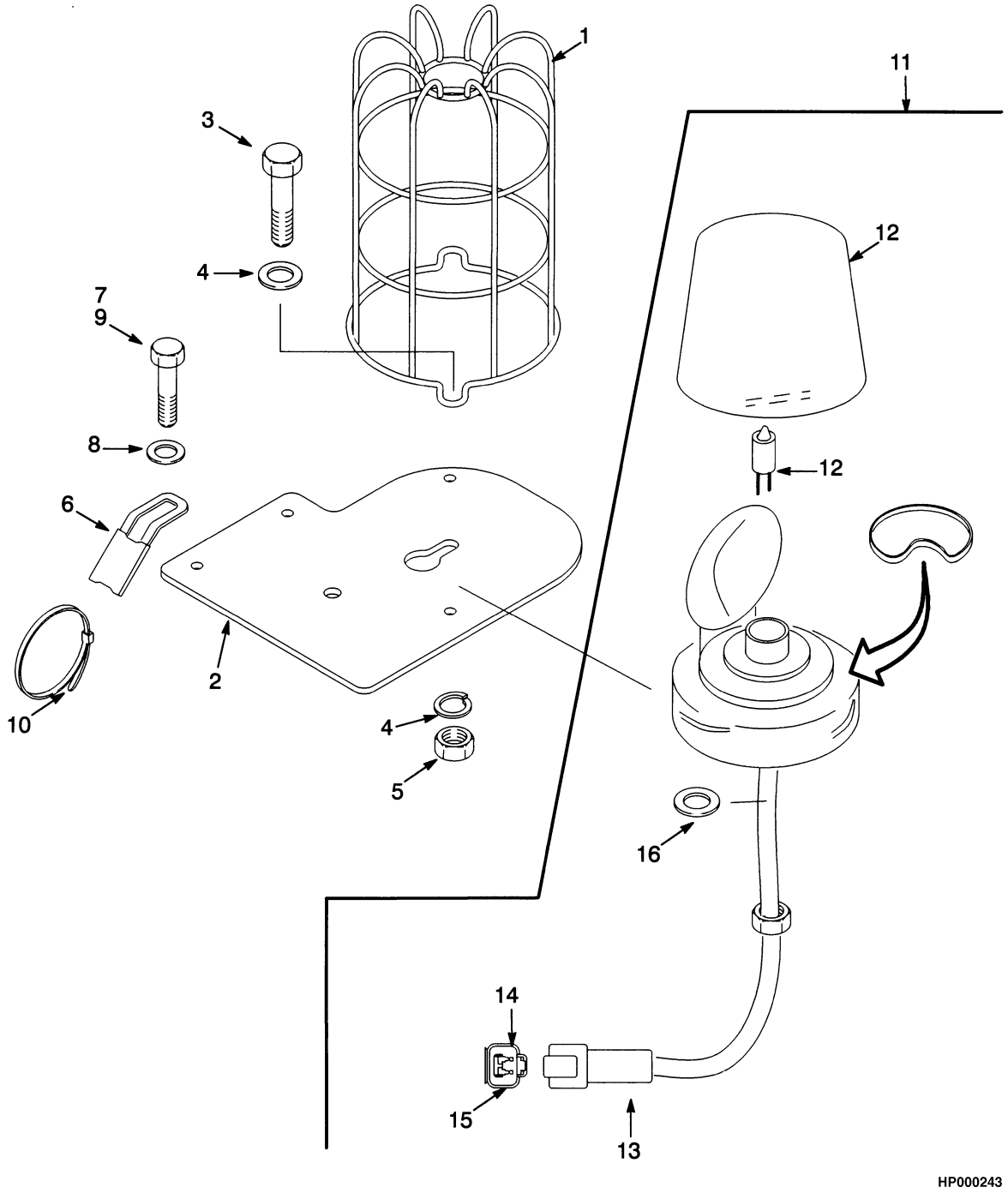

©2010 HYSTER COMPANY

ROTATING BEACON

ITEM	PART NO.	DESCRIPTION	QTY
1	250095	Guard	1
2	1465628	Plate	AR
3	302049	Screw	2
4	320156	Washer	4
5	302399	Nut	2
6	1301727	Clamp	1
7	176640	Bolt	2
8	292681	Lockwasher	2
9	280472	Sealant	AR
10	137852	Strap Clamp	1
11	1465621	Rotating Beacon (12 Volt)	1
12	1385522	Rotating Beacon	1
12	1453564	Bulb (24 Volt)	1
13	1330409	Connector	1
14	1330414	Connector (Secondary Lock)	1
15	1330437	Terminal (Pin)	2
16	320162	Washer	1

©2010 HYSTER COMPANY

LIGHTS (FIGURE 12-15)

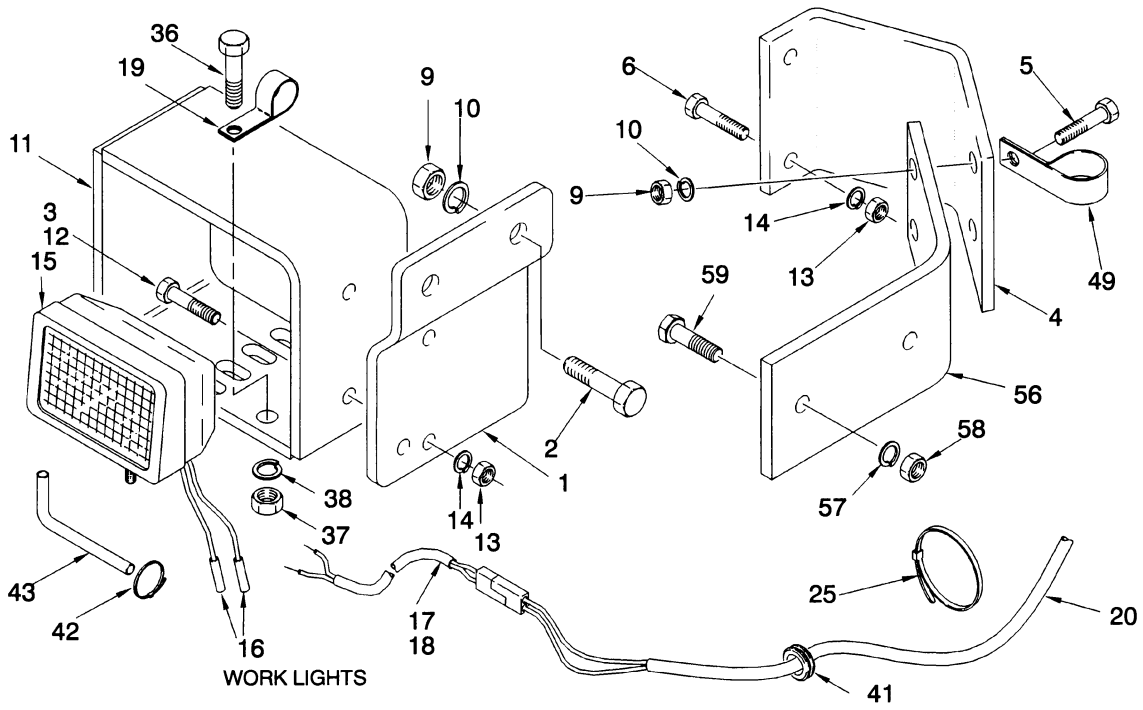

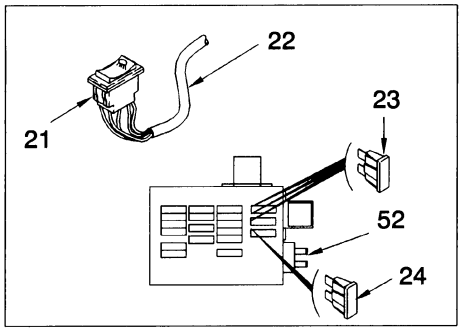

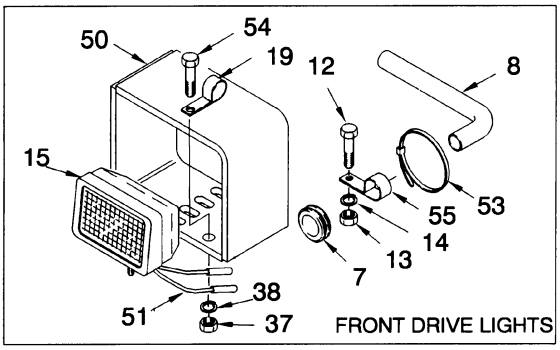

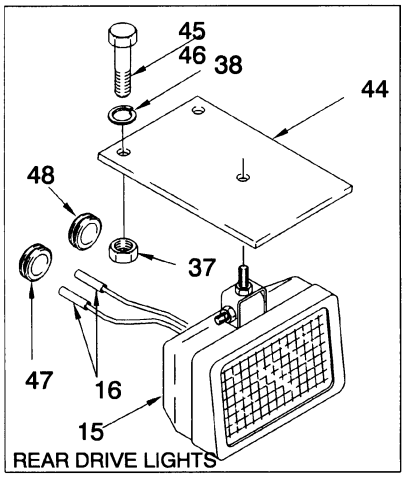

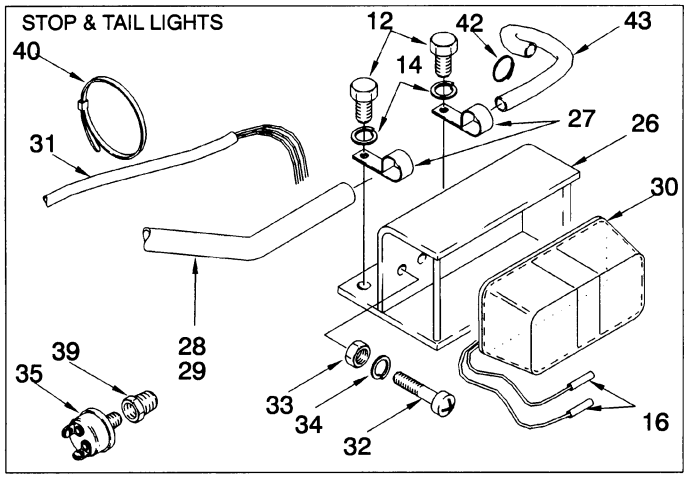

HP000244

©2010 HYSTER COMPANY

LIGHTS

ITEM	PART NO.	DESCRIPTION	QTY
1	1311425	Bracket	1
2	132860	Capscrew	2
3	287854	Capscrew (Without Header Hose)	2
4	**d** 1311209	Bracket	1
5	**d** 246001	Capscrew	2
6	**d** 136985	Capscrew	2
7	216735	Grommet	4
8	**a** 1330569	Tube	2
8	**b** 1332908	Tube	2
9	216877	Nut	4
10	292683	Lockwasher	4
11	389136	Bracket Wldmt	2
12	287854	Capscrew	6
13	136692	Nut	4
14	~~388049~~		
	292682	Lockwasher	8
15	353478	Work Light	4
15	1350992	Lens	1
15	**a** 357934	Head/Work Light	4
15	**a** 389793	Lamp	1
15	1461402	Light (Optional)	4
16	201950	Connector	12
17	1330566	Wire Harness (RH)	1
18	1330567	Wire Harness (LH)	1
19	164488	Clamp	2
20	323864	Strap Clamp	6
21	1301616	Switch	1
21	1301160	Switch	1
21	1323993	Socket	1
21	1326355	Bulb	1
21	1301157	Lens (Green) (Work Light)	1
22	1301748	Wire Harness (Light Switch)	1
23	1310630	Fuse (15 Amp)	2
24	370647	Fuse (10 Amp)	1
25	1311252	Wire Harness (Main Light)	1
26	1301717	Bracket Wldmt	2
27	154278	Clamp	4
28	1309569	Tube Assy (RH)	1
29	1309570	Tube Assy (LH)	1
30	353479	Lamp	2
30	389792	Lens	1
30	177521	Bulb (12 Volt)	1
31	1311254	Wire Harness (Rear)	1
32	1300742	Screw	4
33	15052	Nut	4
34	15152	Lockwasher	4
35	1301299	Pressure Switch (Low Pressure)	1
36	136681	Capscrew	2
37	239503	Nut	3
38	292681	Lockwasher	6
39	12843	Fitting	1

©2010 HYSTER COMPANY

LIGHTS

ITEM	PART NO.	DESCRIPTION	QTY
40	137852	Strap Clamp	3
41	236890	Grommet	2
42	137852	Strap Clamp	6
43	275494	Conduit	AR
44	353379	Plate	2
45	176640	Bolt (With HYBRID Cab)	4
45	132861	Capscrew	4
46	358674	Sealant	AR
46	**a** 288394	Sealant	AR
47	216735	Grommet	2
48	102990	Grommet	2
49	**d** 154208	Clamp	1
50	816442	Bracket Wldmt	2
51	1332905	Wire Harness	2
52	1301224	Diode Block	1
53	137852	Strap Clamp	2
54	136985	Capscrew	4
55	178119	Clamp	4
56	**cd** 1462579	Bracket	1
57	**cd** 292683	Lockwasher	2
58	**cd** 216877	Nut	2
59	**cd** 292528	Capscrew	2

FOOTNOTES:

a H330XL-H360XL, H330LX-EC3
b H360XL-EC4
c Three Stage Full Free-Lift
d With Header Hose

©2010 HYSTER COMPANY

NOTES

©2010 HYSTER COMPANY

FLOODLIGHTS (FIGURE 12-16)

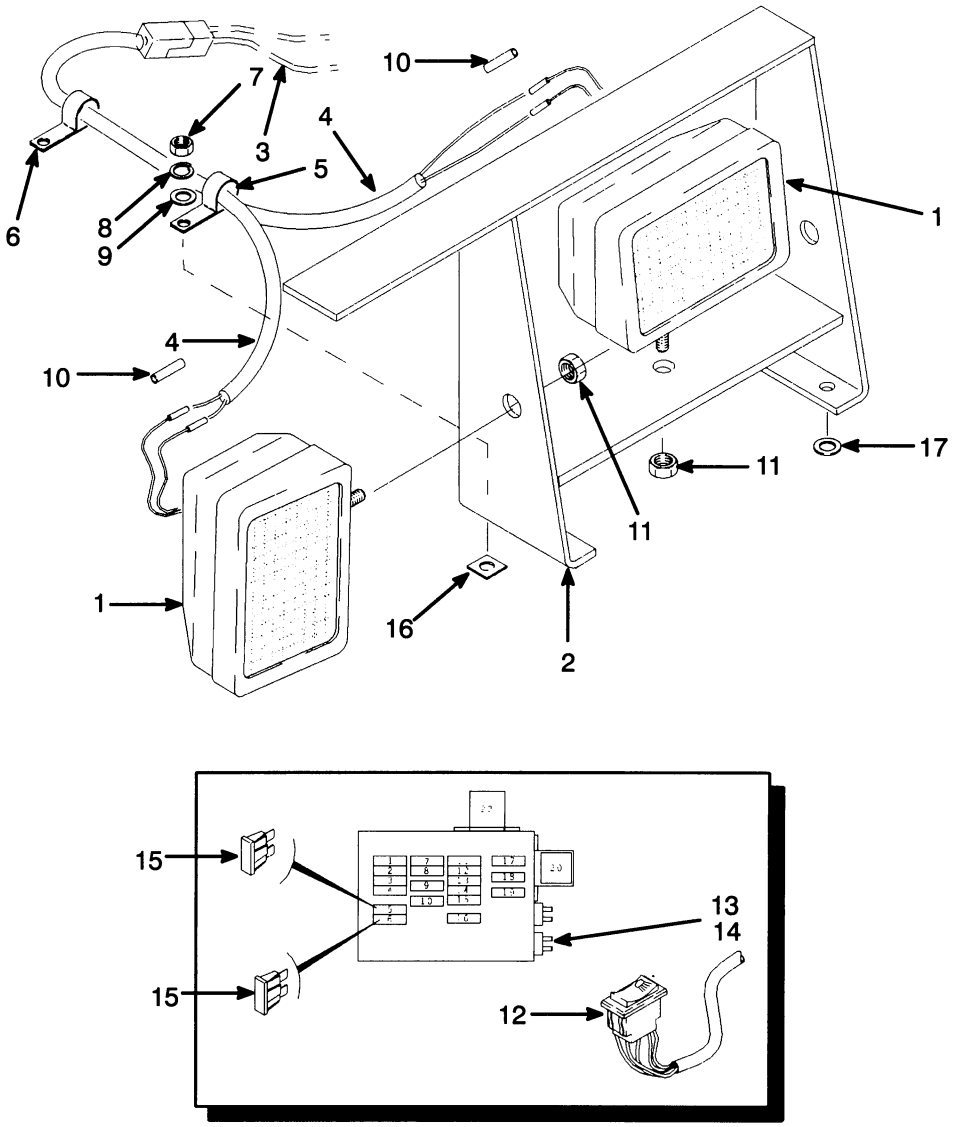

HP000245

©2010 HYSTER COMPANY

FLOODLIGHTS

ITEM	PART NO.	DESCRIPTION	QTY
1	353478	Work Light	4
1	389793	Lamp	1
1	357934	Head/Work Light (Optional)	4
1	1350992	Lens	1
2	1331591	Bracket Wldmt (RH)	1
2	1331592	Bracket Wldmt (LH)	1
3	1331527	Wire Harness	1
4	1331532	Wire Harness	2
5	132131	Clamp	2
6	156848	Clamp	2
7	136692	Nut	6
8	320159	Washer	6
9	292681	Lockwasher	6
10	164431	Connector	4
11	239503	Nut	4
12	1331559	Switch	1
12	1331560	Switch	1
12	1323993	Socket	1
12	1326355	Bulb	1
12	1301157	Lens (Green) (Work Light)	1
13	1301224	Diode Block	1
14	1301284	Screw	1
15	1310630	Fuse (15 Amp)	2
16	1326055	Plate	4
17	320162	Washer	2

©2010 HYSTER COMPANY

FIRE EXTINGUISHER (FIGURE 12-17)

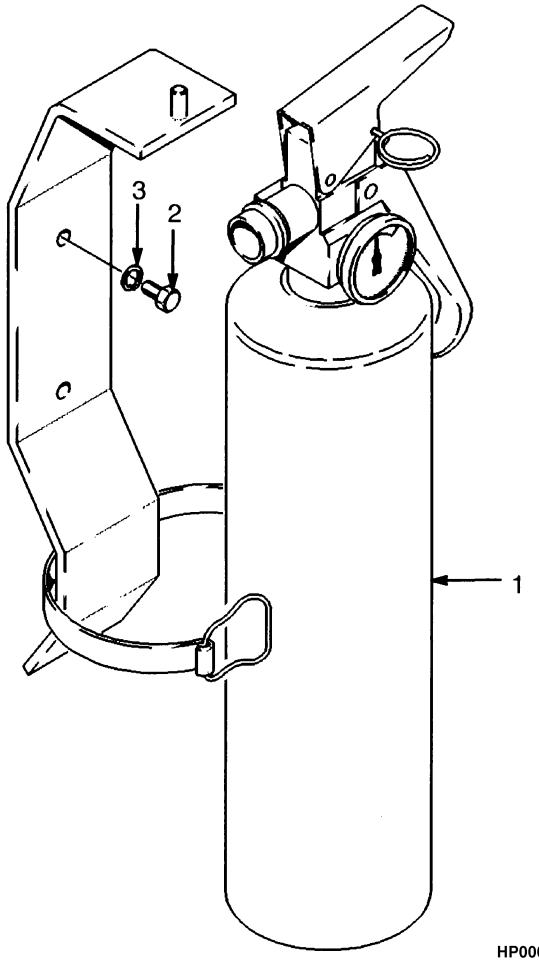

ITEM	PART NO.	DESCRIPTION	QTY
1	146540	Fire Extinguisher	1
2	227180	Screw	3
3	15923	Lockwasher	3

©2010 HYSTER COMPANY

NOTES

©2010 HYSTER COMPANY

BACK-UP ALARM (FIGURE 12-18)

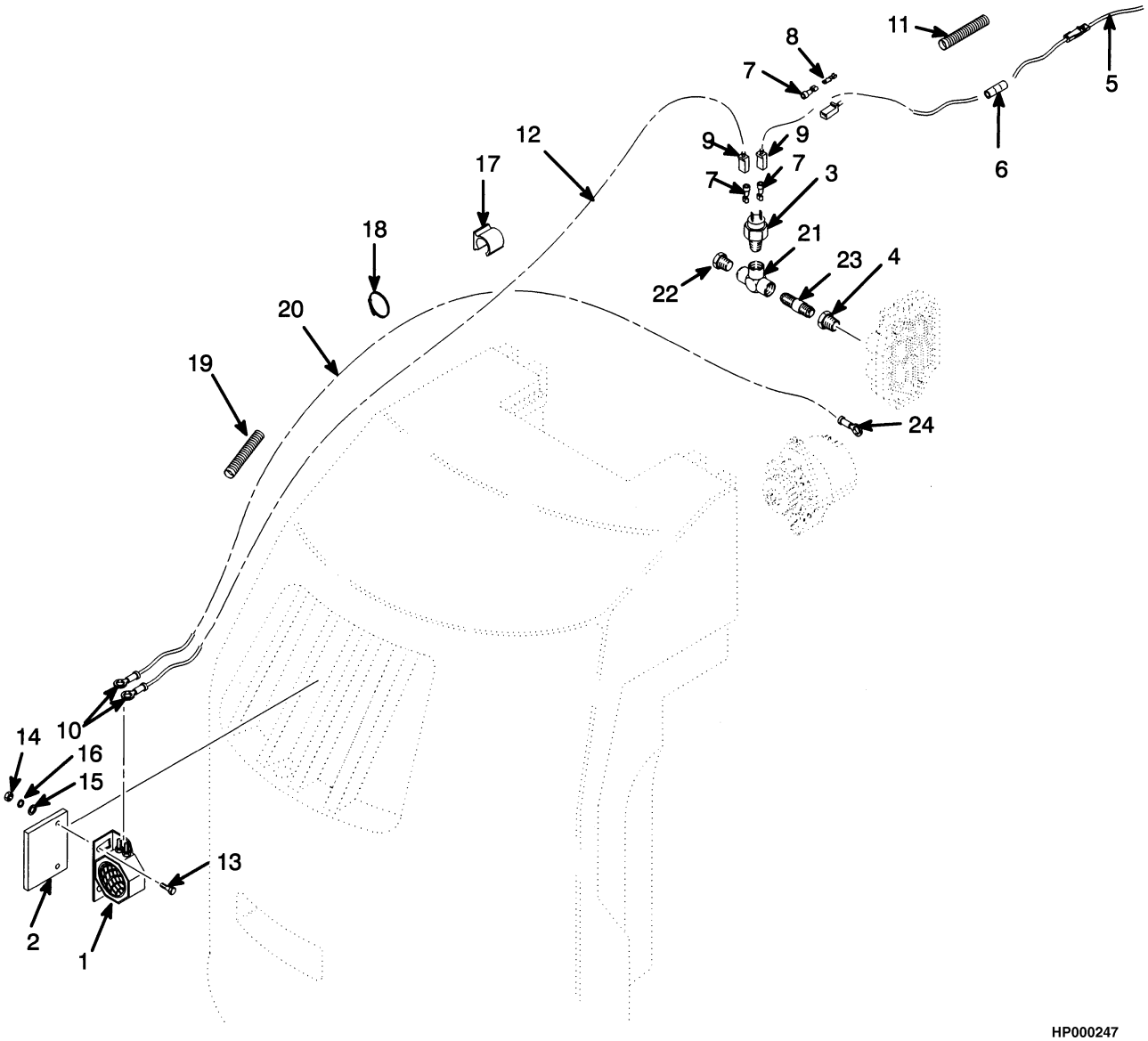

©2010 HYSTER COMPANY

BACK-UP ALARM

ITEM	PART NO.	DESCRIPTION	QTY
1	1350733	Back-Up Alarm (87 dbA)	1
1	1350734	Back-Up Alarm (97 dbA)	1
1	1350735	Back-Up Alarm (102 dbA)	1
1	1350736	Back-Up Alarm (107 dbA)	1
1	1339947	Back-Up Alarm (82-102 dbA)	1
2	1339939	Bracket	1
3	1352534	Pressure Switch	1
4	231956	Connector	1
5	1352544	Wire	1
5	354515	Fuse (2 Amp)	1
6	826004	Connector	1
7	134812	Terminal	5
8	129892	Terminal	3
9	1301720	Connector Body	5
10	129887	E-Ring	2
11	1355818	Conduit	1
12	1355819	Wire	1
13	18461	Capscrew	2
14	15004	Nut	2
15	15127	Washer	2
16	15154	Lockwasher	2
17	279740	Clamp	4
18	137852	Strap Clamp	16
19	1355820	Conduit	1
20	1355821	Wire	1
21	12838	Fitting	1
22	14349	Fitting (Pipe Plug)	1
23	16150	Fitting	1
24	129886	E-Ring	1

©2010 HYSTER COMPANY

NOTES

©2010 HYSTER COMPANY

13 NUMERICAL INDEX

SECTION 13
NUMERICAL INDEX

PART NO.	PAGE	ITEM
125	5-5	17
	5-7	4
	5-9	4
	5-11	4
126	5-5	16
	5-7	2
	5-9	2
	5-11	2
	8-17	24
	8-25	24
	8-29	24
	8-42	44
	8-54	42
138	8-17	26
	8-25	26
	8-29	26
	8-42	46
	8-54	46
139	8-17	27
	8-25	27
	8-29	27
	8-42	47
	8-54	44
142	3-59	17
	3-61	17
5586	8-74	8
9033	2-49	6
12815	2-13	13
	2-17	13
12829	8-11	14
12831	7-7	14
	7-11	14
12838	7-47	5
	7-49	6
	12-39	21
12843	4-14	56
	7-21	12
	12-31	39
12844	7-45	25
12845	1-39	44
12855	5-3	25
	7-19	27
12860	3-19	24
12894	5-25	14
12898	7-57	25
13963	6-11	25
14326	3-3	6
14349	2-107	30
	7-21	14
	12-39	22
14358	3-19	10
14385	7-49	5
14386	7-45	16
14387	7-45	20
14388	3-3	26
	7-15	20
	8-11	12
14491	8-4	37
	8-8	37
14494	8-4	54
	8-8	66
	10-10	39
	10-15	17
14538	7-43	18
14550	7-3	19
	7-7	27
14586	8-3	23
	8-7	23
14591	5-13	31
	5-17	31
	5-35	16
	5-37	27
14595	5-13	26
	5-17	26
	8-65	19
14668	7-43	17
14676	7-7	20
	7-11	20
14692	8-11	20
14694	10-15	21
14761	9-22	37
	10-23	13
	12-3	34
	12-5	26
	12-23	16
15000	3-19	33
	4-13	28
15001	7-57	27
15002	3-3	33
	3-47	5
	3-49	5
	3-51	19
	3-53	19
	3-55	5
	5-5	21
	5-7	7
	5-9	7
	5-11	7
15004	5-5	12
	5-5	22
	5-7	8
	5-9	8
	5-11	8
	12-39	14
15024	3-47	4
	3-49	4
	3-51	3
	3-51	20
	3-53	3
	3-53	20
	3-55	4
	5-5	14
	5-7	37
	5-9	36
15025	5-11	37
	8-17	29
	8-25	29
	8-29	29
	8-42	49
	8-54	47
15026	2-65	28
	2-69	28
	2-73	28
15030	7-55	11
15039	4-13	40
	4-29	10
15049	3-61	27
	3-63	21
	4-10	48
15052	3-15	11
	4-25	25
	12-31	33
15054	3-15	8
	3-19	6
15055	1-57	22
	1-61	22
	3-15	18
	7-8	49
	7-12	49
15056	2-113	28
	7-15	5
	7-17	5
	7-19	5
	7-43	33
	10-23	30
15058	10-25	15
15060	8-13	14
	8-15	14
15086	4-13	42
15106	5-11	43
15107	5-11	44
15125	2-73	12
15127	3-15	6
	3-19	8
	5-9	37
	12-39	15
15128	5-31	7
15132	3-29	12
15134	2-19	8
15135	3-3	37
15146	9-9	16
	10-9	16
	10-16	35
15151	3-61	28
	3-63	22
15152	1-27	34
	1-31	35
	3-15	12
	4-25	29
	12-31	34
15154	3-15	7
	3-19	7
	4-7	10
	4-13	29
	5-5	13
	5-7	14
	5-7	38
	5-9	14
	5-11	14
	12-39	16
15155	2-21	8
	2-115	36
	3-15	17
	4-29	30
	4-29	32
	4-29	43
15156	2-21	5
	4-3	5
	4-13	41
	5-3	12
	7-15	4
	7-17	4
	7-19	4
	7-43	13
	9-3	8
	9-7	11

©2010 HYSTER COMPANY

See Service Manual for service procedures.

NUMERICAL INDEX (continued)

PART NO.	PAGE	ITEM
	9-19	14
	10-3	8
	10-5	11
	10-7	11
	10-21	15
	10-23	31
	12-3	14
	12-5	15
	12-9	10
	12-27	17
15157	2-5	20
	3-19	3
	4-13	39
	4-39	7
	5-33	27
	7-43	4
	8-4	43
	8-8	48
15158	6-11	10
	8-3	9
	10-25	14
15160	7-51	30
	7-51	34
15162	6-12	49
15166	1-63	14
15168	1-63	5
15170	1-63	5
	2-11	21
15176	2-7	13
	2-9	13
	7-43	11
15177	5-5	7
15178	2-9	18
	8-17	8
	8-17	8
	8-25	8
	8-25	8
	8-29	8
	8-41	8
	8-41	8
	8-53	8
	8-53	8
15181	9-10	27
	10-9	27
15189	1-63	12
15200	3-29	40
	3-51	13
	3-53	13
	3-57	8
	3-59	5
	3-61	5
	3-63	8
	8-17	25
	8-25	25
	8-29	25
	8-42	45
	8-54	43
15201	5-5	15
	5-7	3
	5-9	3
	5-11	3
15212	3-47	7
	3-49	7
	3-51	23
	3-53	23
	3-55	7
	3-59	10
	3-61	10
	6-3	23
	8-17	28
	8-25	28
	8-29	28
	8-42	48
	8-54	45
15223	7-51	32
15224	7-43	29
15236	10-23	4
15237	12-9	29
15244	9-9	15
	10-9	15
	10-16	36
15246	11-3	19
15255	6-11	7
15303	2-35	15
15313	2-79	5
15316	5-41	2
	5-45	2
	5-49	2
	5-53	2
	5-59	2
15382	8-11	15
15383	8-11	15
15448	11-11	7
15483	2-23	25
	2-25	25
	2-27	25
	2-74	5
	2-76	5
15865	10-25	11
15870	8-68	25
	8-72	25
15880	10-27	8
	12-7	8
	12-13	14
15890	8-67	8
	8-71	8
	8-73	8
15915	4-29	42
15916	3-3	34
15918	7-57	29
15923	12-36	3
15930	12-27	12
15931	3-3	32
15942	5-3	4
15962	2-33	15
	2-37	13
	2-91	17
	2-93	17
	2-95	15
	3-11	35
16001	5-41	42
	5-45	42
	5-49	42
	5-59	42
	10-21	5
	12-3	26
	12-5	5
	12-9	21
16006	8-65	3
16015	5-42	48
	5-46	48
	5-50	48
	5-60	48
	8-67	17
	8-71	17
	9-3	12
	10-3	12
16018	10-16	43
16100	3-3	14
	3-11	11
	3-11	18
	3-11	21
	3-37	11
	3-37	18
	3-37	21
	3-39	4
	3-39	14
	3-39	17
16114	3-3	11
	3-39	24
16118	3-3	10
	3-39	23
16142	3-3	4
16150	12-39	23
16151	5-11	42
16155	3-19	26
	7-43	21
16156	1-35	44
16177	3-3	15
	3-11	19
16186	7-8	57
	7-12	57
16187	7-3	38
	7-8	61
	7-12	61
	7-47	16
	7-49	3
16193	2-49	19
	2-53	22
	3-33	34
16199	7-21	13
16271	3-15	35
16279	6-12	48
16294	7-17	12
	7-19	12
	7-19	12
16328	8-19	11
	8-19	27
	8-21	11
	8-21	27
	8-33	11
	8-33	27
	8-33	41
	8-37	11
	8-37	27
	8-37	41
	8-45	11
	8-45	27
	8-45	41
	8-46	54
	8-49	11
	8-49	27
	8-49	41
	8-50	54
	8-57	11
	8-57	27
	8-57	41
	8-61	11
	8-61	27
	8-61	41
16344	1-40	51
16372	2-57	40
16374	2-7	16
	2-9	16
	2-11	23
	2-21	7
16448	9-22	36
	10-23	14

©2010 HYSTER COMPANY

NUMERICAL INDEX (continued)

PART NO.	PAGE	ITEM
	11-13	11
	11-15	34
	12-3	33
	12-5	25
	12-23	15
16449	11-11	8
16481	5-13	32
	5-17	32
	5-18	50
	5-35	17
	5-37	26
	5-37	28
	5-37	38
	8-25	17
	8-29	17
	8-41	17
	8-53	17
	10-23	5
16482	5-33	15
	8-74	9
16483	5-35	23
	9-10	30
	10-23	9
	12-3	20
	12-5	24
16484	5-13	27
	5-13	30
	5-17	27
	5-17	30
	5-35	10
	5-35	14
	5-37	7
	6-11	41
	6-11	42
	8-7	22
	8-8	55
	8-8	57
	8-17	17
	8-25	36
	8-29	39
	8-42	50
	8-42	51
	8-42	52
	8-54	48
	8-65	15
	8-65	16
	8-65	19
	8-65	25
	8-74	7
	10-31	6
	11-11	7
	12-9	32
16485	5-13	39
	5-17	39
	5-35	19
	5-35	25
	5-37	22
	8-3	16
	8-3	17
	8-3	18
	8-3	23
	8-7	16
	8-7	17
	8-7	18
	8-7	23
	8-8	54
	8-8	63
	8-17	14
	8-21	42
	8-25	14
	8-29	14
	8-38	55
	8-41	14
	8-42	38
	8-50	68
	8-53	14
	8-62	55
	10-10	30
	10-15	14
	11-11	8
	12-9	23
	12-10	41
	12-10	42
16486	5-3	9
	5-13	35
	5-17	35
	5-18	46
	5-37	17
	8-17	13
	8-25	13
	8-25	32
	8-29	13
	8-29	35
	8-41	13
	8-53	13
	8-53	36
	10-10	34
	10-15	13
16487	5-13	37
	5-17	37
	8-11	7
	8-17	15
	8-17	16
	8-25	15
	8-25	16
	8-29	15
	8-29	16
	8-41	15
	8-41	16
	8-53	15
	8-53	16
	10-10	31
	10-15	24
16538	5-18	49
	8-25	17
	8-29	17
	8-41	17
	8-53	17
16539	10-23	25
16541	5-37	6
	8-3	22
	8-7	22
	8-17	17
	8-25	36
	8-29	39
	8-42	50
	8-42	51
	8-54	48
	8-65	25
	10-31	6
16542	10-15	14
16551	12-10	41
16556	5-37	38
16558	5-35	22
16559	6-11	42
	8-65	15
	12-9	32
16561	10-15	13
16568	6-11	41
	8-8	54
16570	8-3	16
	8-7	16
16571	8-17	15
	8-25	15
	8-29	15
	8-41	15
	8-53	15
16584	8-3	22
16597	6-3	4
	7-51	29
16693	7-7	21
	7-11	21
16706	8-19	28
	8-21	28
	8-33	28
	8-33	42
	8-37	28
	8-37	42
	8-45	28
	8-45	42
	8-46	55
	8-49	28
	8-49	42
	8-50	55
	8-57	28
	8-57	42
	8-61	28
	8-61	42
16708	3-3	31
16719	12-27	14
16743	4-10	49
16746	3-19	15
16750	1-27	33
	1-31	34
16764	7-43	15
16794	2-23	7
	2-23	16
	2-25	7
	2-27	7
16805	2-21	4
	4-3	5
16807	10-3	17
	10-5	17
16813	8-17	9
	8-17	9
	8-25	9
	8-25	9
	8-29	9
	8-41	9
	8-41	9
	8-53	9
	8-53	9
16815	2-7	14
	2-9	14
	2-11	22
	5-41	18
	5-45	18
	5-49	18
	5-53	18
	5-59	18
	6-3	5
16816	7-43	12
16828	5-3	11
	7-43	31
	12-27	15
16835	7-43	36
16836	3-15	16
	4-14	53

©2010 HYSTER COMPANY

NUMERICAL INDEX (continued)

PART NO.	PAGE	ITEM
	7-57	26
16841	7-47	3
16848	7-4	47
	7-7	8
	7-11	8
16863	3-15	36
16865	5-39	14
16870	2-19	9
16874	4-14	53
16909	8-17	14
	8-25	14
	8-25	32
	8-29	14
	8-29	35
	8-41	14
	8-42	38
	8-53	14
	8-53	36
	12-10	42
16923	5-18	51
	5-37	39
	8-4	32
	8-7	32
	8-17	18
	8-25	18
	8-29	18
	8-41	18
	8-53	18
16925	5-37	5
16935	8-42	60
16971	8-17	13
	8-25	13
	8-29	13
	8-41	13
	8-53	13
16982	5-35	5
16983	5-13	15
	5-17	15
	10-9	23
16989	8-65	24
	12-9	24
16992	10-9	19
	10-15	9
17054	8-4	52
	8-8	64
17062	9-10	32
	10-10	33
17064	10-15	20
17144	7-15	13
	7-17	13
	7-19	13
17216	7-3	7
	7-8	60
	7-12	60
	7-47	17
	7-49	2
17224	8-8	55
	12-9	23
17253	7-41	
17258	7-15	3
	7-17	3
	7-19	3
17306	7-7	27
17314	7-4	49
	7-8	54
	7-12	54
	7-49	9
17321	8-25	35
	8-29	38
	8-42	41
	8-42	55
	8-42	60
	8-54	39
17343	3-19	9
17344	7-17	12
	7-19	12
	7-19	12
17345	8-11	18
17411	10-9	18
	10-16	29
17635	8-4	46
	8-8	59
	10-15	11
17665	7-15	17
	7-17	17
	7-19	17
17672	7-19	26
17736	7-49	4
17764	8-4	40
	8-8	46
17779	8-4	55
	8-8	67
17780	8-4	48
	8-7	6
17783	8-4	53
	8-8	65
	10-10	38
18460	3-19	14
	7-57	10
18461	12-39	13
18465	3-15	5
18470	3-15	14
	3-19	5
18479	7-57	28
18497	1-43	14
	1-51	11
	3-25	13
	3-27	13
	3-43	13
	3-45	27
18498	1-57	29
	1-61	29
	4-29	32
18500	3-53	8
18508	1-57	37
18515	2-7	18
	2-9	22
	2-11	25
	4-29	27
	4-29	29
	7-43	26
18516	1-57	37
	1-61	37
18546	4-29	39
18557	3-19	2
	4-13	38
	7-43	3
18558	4-13	38
	8-4	42
18565	4-39	14
18574	4-39	6
	8-8	47
18580	5-33	26
18588	6-11	11
	8-3	8
18589	10-25	13
18608	2-5	5
18611	2-5	17
18612	2-5	5
	2-5	10
	2-5	17
18613	9-21	22
18628	2-5	10
18678	1-63	16
18701	9-13	14
	9-17	8
18704	12-13	2
18727	1-51	9
18901	1-35	39
18909	8-7	2
19870	4-23	24
21278	5-37	8
23026	12-19	1
	12-21	1
24236	7-41	
30062	5-63	7
30100	6-11	4
30107	6-11	20
30189	6-11	15
30368	7-8	48
	7-12	48
30372	2-7	6
	2-11	12
30374	2-7	7
	2-11	3
30375	2-9	7
	3-25	11
	3-27	11
35503	3-3	26
38556	1-63	15
39348	9-13	6
	10-19	5
39349	5-18	57
39742	8-11	5
41310	5-25	23
41459	5-23	24
43208	5-29	7
43209	5-21	6
43211	5-21	3
43212	5-29	17
43215	5-21	4
43307	5-25	6
43308	5-25	16
	5-29	13
	5-31	1
43310	5-31	4
44307	5-21	10
44308	5-23	9
44309	5-21	7
44479	5-31	9
44542	6-11	17
44547	6-11	21
45315	10-16	49
46629	6-15	8
46692	9-9	9
	10-9	9
49189	12-19	4
	12-21	4
51455	2-49	19
	2-53	22
	3-33	35
53157	10-23	10
	10-27	12
	12-3	17
	12-5	22
	12-7	12
53162	5-39	14
55280	5-26	

See Service Manual for service procedures.
©2010 HYSTER COMPANY

NUMERICAL INDEX (continued)

PART NO.	PAGE	ITEM
	5-30	4
55289	8-67	6
	8-71	6
	8-73	6
55407	10-25	6
55580	4-29	7
	4-33	26
57568	5-39	10
58911	5-23	14
58918	9-7	5
	9-19	8
	10-5	5
	10-7	5
	10-21	12
	12-3	8
	12-5	12
	12-9	16
59184	2-29	25
	2-31	23
60835	5-31	6
63108	7-19	24
63111	3-15	32
	7-15	14
	7-17	14
	7-19	14
	7-47	4
63899	3-3	28
66885	7-11	27
67551	9-13	2
68551	12-3	18
	12-5	23
69029	6-11	27
73470	9-10	31
	10-10	35
77451	8-19	7
	8-19	24
	8-21	7
	8-21	24
	8-33	7
	8-33	24
	8-33	37
	8-37	7
	8-37	24
	8-37	37
	8-45	7
	8-45	24
	8-45	37
	8-46	50
	8-49	7
	8-49	24
	8-49	37
	8-50	50
	8-57	7
	8-57	24
	8-57	37
	8-61	7
	8-61	24
	8-61	37
78286	3-25	17
	3-27	17
	3-43	17
82270	9-9	12
	10-9	12
83857	10-15	19
85785	3-19	32
86007	5-49	7
	5-53	7
	5-59	7
86008	5-63	17
86520	1-69	31
87281	5-33	25
87300	5-13	21
	5-17	21
	8-74	5
87911	8-65	14
88194	5-3	10
88278	12-21	1
88300	9-9	18
	10-10	36
	10-10	36
88587	5-57	9
	5-63	27
	7-51	10
89622	12-19	1
89892	10-15	6
89894	10-15	5
93260	2-19	3
94351	4-7	12
94724	2-107	40
95721	5-37	16
95733	12-9	37
96521	10-23	9
	12-3	19
	12-5	24
97310	3-25	3
	3-27	3
97313	3-25	6
	3-27	6
97647	7-51	4
	7-51	9
97656	7-51	22
97657	7-51	23
97999	3-15	31
98594	8-74	6
99037	7-51	24
99569	2-33	6
	2-35	6
99571	2-33	10
	2-35	10
99576	2-23	4
	2-25	4
	2-27	4
99601	2-57	8
99610	2-29	16
	2-31	10
	2-39	18
	2-43	18
99663	2-29	10
	2-31	9
99668	2-29	8
99722	2-65	18
	2-69	18
	2-73	19
99723	2-65	19
	2-69	19
	2-73	20
99725	2-65	16
	2-69	16
	2-73	17
99728	2-65	34
	2-69	34
	2-73	33
99756	3-9	21
	3-29	22
99779	3-33	37
99780	3-33	38
	3-37	24
99782	3-29	47
99783	3-29	49
99784	3-29	46
100623	11-7	10
	11-8	50
100792	7-15	10
	7-17	10
	7-19	10
101625	4-4	47
101804	3-15	37
101809	3-15	33
101985	2-49	21
	2-53	21
	3-11	32
	3-37	31
	3-39	21
102990	4-3	17
	12-32	48
110177	3-19	12
110279	7-43	16
111331	8-3	17
	8-7	17
	10-10	30
111561	3-3	30
112468	8-74	10
112471	8-3	18
	8-7	18
112989	8-3	4
	8-7	4
114312	4-14	59
	5-39	5
	8-29	33
	11-17	27
	11-19	21
114662	4-3	16
	5-13	40
115696	3-25	16
	3-27	16
	3-43	16
116046	9-9	18
116102	4-3	9
	4-14	43
119074	3-3	35
119236	2-13	14
	2-17	14
	2-91	25
	2-93	25
	2-101	4
	3-25	31
	3-27	31
	3-43	31
	3-45	12
	7-4	39
	7-7	33
	7-11	33
121452	3-19	25
122400	7-51	12
123045	9-9	18
123798	1-39	43
124010	3-17	9
124119	2-13	15
	2-17	15
124606	5-25	17
124642	5-23	19
124682	5-23	16
124744	5-23	25
125303	1-35	43
	1-40	46
125305	3-19	11
125428	5-63	23
	7-52	36

©2010 HYSTER COMPANY

NUMERICAL INDEX (continued)

PART NO.	PAGE	ITEM
125574	3-51	15
	3-53	15
125789	3-15	30
	3-17	1
125847	3-25	4
	3-27	4
126358	4-13	34
	4-25	35
	4-29	25
127045	2-95	17
	3-19	35
	3-25	35
	3-27	34
	3-43	35
	3-45	19
	7-3	23
	7-7	32
	7-11	32
	8-3	11
	8-7	11
127852	1-40	50
	3-19	23
128216	7-21	9
128398	7-17	9
	7-19	9
128408	7-3	17
	7-43	20
128734	12-19	1
128777	7-57	31
128779	7-57	24
128795	7-57	2
128835	4-29	16
	4-33	27
128838	4-29	3
128852	4-29	4
	4-33	28
129498	6-11	24
129499	6-11	24
129563	2-17	33
	7-3	24
	7-7	26
	7-11	26
	8-3	19
	8-7	19
	8-65	23
	10-23	33
129684	12-10	43
129886	12-39	24
129887	12-39	10
129892	12-39	8
130567	12-21	1
130845	1-35	38
	1-39	38
	2-49	27
	2-53	27
	2-65	6
	2-69	6
	2-103	3
	3-19	27
	7-43	23
131136	2-5	18
131137	7-43	9
131190	6-11	44
131191	6-11	44
131193	6-11	43
131460	9-10	30
	10-10	34
	10-23	27
131878	3-43	39
132131	11-17	14
	12-35	5
132462	5-41	33
	5-45	33
	5-49	33
	5-53	33
	5-59	33
132473	3-21	11
132829	9-9	14
	10-16	30
132834	10-25	5
132860	11-3	6
	12-31	2
132861	12-32	45
133481	4-25	34
133484	12-27	10
133683	6-3	22
134131	1-39	46
134436	5-33	14
	8-74	9
134810	1-67	9
	11-17	4
134812	4-45	17
	4-47	17
	4-48	11
	12-39	7
134958	3-9	2
135189	7-57	7
135685	5-39	2
136516	11-17	26
	11-19	22
136681	1-35	8
	1-39	8
	3-51	7
	4-3	2
	4-3	23
	4-4	67
	4-13	2
	4-29	43
	5-5	2
	5-11	40
	6-3	30
	12-31	36
136687	1-5	4
	1-19	25
	1-35	30
	1-39	30
	1-57	9
	1-61	9
	1-69	3
	3-49	14
	3-53	39
	4-3	11
	4-3	24
	4-3	30
	4-9	14
	4-13	13
	4-19	9
	4-29	42
	8-41	26
	11-17	15
136692	1-32	50
	1-43	10
	1-49	17
	1-51	19
	1-57	40
	1-61	40
	2-7	21
	2-9	21
	3-3	23
	3-47	9
	3-49	9
	3-51	29
	3-53	29
	3-55	9
	3-57	3
	3-59	18
	3-61	32
	3-63	3
	4-3	8
	4-3	37
	4-7	16
	4-14	61
	4-39	12
	5-7	29
	5-9	29
	5-17	44
	7-15	8
	7-17	8
	7-19	8
	8-3	29
	8-7	29
	9-22	39
	10-23	18
	11-7	14
	12-3	31
	12-31	13
	12-35	7
136703	5-37	33
	10-23	29
136704	5-37	34
	8-4	33
	8-7	33
	8-65	7
	11-19	13
	12-23	21
136749	1-36	50
	1-40	47
	1-44	48
	3-53	16
	4-3	22
	4-29	31
	4-39	8
	7-3	9
	7-7	40
	7-11	40
	10-15	16
136985	1-57	16
	1-61	16
	3-47	8
	3-49	8
	3-51	28
	3-53	28
	3-55	8
	5-5	42
	5-7	42
	5-9	40
	9-10	24
	9-22	35
	10-9	24
	10-23	16
	12-3	29
	12-31	6
	12-32	54
137852	2-17	29
	4-4	51
	4-4	56
	4-10	47
	4-13	7

See Service Manual for service procedures.
©2010 HYSTER COMPANY

NUMERICAL INDEX (continued)

PART NO.	PAGE	ITEM
	4-14	49
	4-19	32
	7-3	34
	7-7	22
	7-7	25
	7-11	22
	7-11	25
	7-21	10
	11-23	8
	12-29	10
	12-32	40
	12-32	42
	12-32	53
	12-39	18
138710	7-43	22
138929	9-21	15
	9-22	29
	10-16	53
	10-31	14
	11-7	11
	11-8	48
	12-23	5
	12-23	27
139012	5-5	24
	5-7	10
	5-7	33
	5-9	10
	5-11	10
139024	3-51	2
139589	2-17	17
139727	7-49	8
139728	7-49	15
139743	4-29	35
139820	2-31	13
139922	8-4	51
	8-8	63
141276	3-25	7
	3-27	7
	3-43	10
	3-45	9
141331	3-45	3
143004	5-57	11
	6-11	23
143061	2-21	1
144157	8-65	21
144613	2-57	7
145639	1-51	8
145641	2-7	15
	2-9	15
	2-11	8
145858	7-8	64
	7-12	64
146049	2-19	2
146540	12-36	1
146803	8-67	5
	8-71	5
147294	3-15	22
147983	3-43	19
	3-45	16
147985	3-43	21
	3-45	16
149531	1-63	4
150179	4-4	46
	4-14	64
150839	3-45	7
150879	2-33	14
	2-35	14
	2-37	14
	2-49	15
	2-53	15
	2-74	3
	2-76	3
	3-11	34
151315	3-9	3
	3-29	4
151316	3-9	4
	3-29	5
151557	7-41	22
151857	3-19	28
152605	2-23	8
	2-57	41
152608	3-11	26
	3-11	28
	3-29	45
	3-33	5
	3-33	32
	3-37	29
	3-37	40
	3-39	12
152609	3-11	29
	3-37	28
	3-39	11
153070	7-43	10
153667	10-23	32
154208	12-32	49
154278	12-31	27
154358	10-27	7
	12-7	7
	12-13	15
154452	7-17	22
	7-19	23
	7-45	15
155442	7-43	30
155510	7-43	28
156696	8-11	17
156848	12-35	6
156954	3-43	9
156958	3-43	5
156960	3-43	6
156961	3-43	4
157065	4-3	26
	4-13	36
	4-29	41
157233	2-13	17
	2-17	36
158139	2-23	22
	2-25	22
	2-27	22
158160	2-49	24
	2-103	20
158187	2-65	29
	2-69	29
	2-73	32
158609	6-11	6
158753	2-21	6
159368	2-5	8
159369	9-9	18
159865	2-29	3
159866	2-29	3
159867	2-29	3
159868	2-29	3
159942	2-113	22
159971	2-105	6
160268	7-47	1
	7-59	
161252	3-47	3
	3-49	3
	3-51	18
	3-53	18
	3-55	3
161296	2-29	4
	2-31	4
161297	2-29	5
	2-31	5
161383	2-27	33
161385	2-23	13
	2-25	13
	2-27	13
161440	2-29	6
161454	2-65	22
	2-65	24
	2-69	22
161617	5-5	19
	5-7	5
	5-9	5
	5-11	5
162562	3-43	23
	3-45	10
162836	3-47	6
	3-49	6
	3-51	24
	3-53	24
	3-55	6
163180	2-5	19
164431	4-45	12
	4-47	12
	4-55	8
	12-35	10
164433	4-45	7
	4-47	7
	4-48	5
	4-55	6
164435	4-55	4
164436	4-45	8
	4-47	8
	4-48	6
	4-55	7
164488	12-31	19
164639	6-11	14
165702	7-59	6
165703	7-59	7
165719	7-59	1
166129	7-57	22
166216	4-23	19
166425	7-51	35
166818	1-54	22
	3-15	40
166857	7-43	14
167023	3-11	12
	3-11	22
	3-37	12
	3-37	19
	3-37	22
	3-39	5
	3-39	15
	3-39	18
167260	8-4	50
	8-8	61
	10-15	18
167261	8-4	32
	8-4	60
	8-8	59
	8-8	68
168718	3-3	8
168914	3-7	3
169303	3-43	8
169307	3-43	7
	3-45	2

©2010 HYSTER COMPANY

NUMERICAL INDEX (continued)

PART NO.	PAGE	ITEM
169320	4-48	12
169592	8-65	16
169593	1-39	43
169786	4-9	10
	4-9	23
	4-19	22
	4-19	30
170379	5-41	29
	5-45	29
	5-49	29
	5-53	29
	5-59	29
170380	5-41	32
	5-45	32
	5-49	32
	5-53	32
	5-59	32
170619	3-45	6
170620	3-45	2
170621	3-45	4
170658	3-15	42
170682	3-25	9
	3-27	9
170688	3-7	11
170748	2-74	14
	2-76	14
171675	12-19	3
	12-21	3
173247	10-15	25
	11-19	16
173307	2-5	2
	2-5	14
173357	7-15	9
175861	8-41	33
	8-53	31
176159	8-13	3
176167	8-13	13
	8-15	13
176173	8-13	22
	8-15	22
176640	4-9	26
	4-20	46
	7-3	3
	7-8	62
	7-12	62
	7-45	9
	12-29	7
	12-32	45
177194	12-9	18
177303	8-3	28
	8-7	28
177407	3-7	6
177521	12-31	30
177599	5-18	54
177946	4-14	54
177989	3-15	9
177991	3-15	13
178119	12-32	55
178899	2-13	3
	2-17	3
179414	3-15	39
179967	3-43	2
181045	1-67	8
	4-53	5
	4-55	16
	11-17	4
181046	4-4	57
	4-13	22
	4-20	49
	4-53	6
	4-55	9
181822	11-11	11
181941	8-11	8
183609	10-21	3
	12-3	25
	12-5	3
183611	6-11	37
183779	8-3	15
	8-7	15
184761	5-3	8
186061	9-13	18
	10-25	16
	10-27	14
	12-7	14
186412	6-11	3
186415	6-11	19
186420	2-19	6
	5-13	24
	5-17	24
186504	1-44	49
187004	2-33	8
	2-35	8
187388	9-13	3
	10-19	3
187791	1-44	55
188210	5-13	14
	5-17	14
188486	8-21	44
	8-38	57
	8-50	70
	8-62	57
189338	4-29	37
189451	9-21	6
	11-7	23
	12-23	23
190252	4-3	15
	4-14	57
190269	4-55	1
190270	4-45	9
	4-47	9
	4-48	7
190784	8-11	9
190785	8-11	10
190787	8-11	4
190887	9-13	15
	9-17	7
191492	2-17	11
192293	5-13	18
	5-17	18
192406	3-19	29
192529	4-55	18
192814	6-11	36
192830	9-10	29
	10-10	29
195566	6-11	38
195852	2-79	1
	2-81	1
	2-83	3
196297	3-15	20
196898	4-29	33
197038	3-17	4
197041	3-17	2
197067	4-25	22
197068	1-69	5
197853	4-29	40
198011	4-45	10
	4-47	10
	4-48	8
	4-55	3
198012	4-55	19
198013	4-45	11
	4-47	11
	4-48	9
	4-55	2
198014	4-55	5
198401	4-29	9
198410	4-29	8
198518	8-4	41
	8-67	7
	8-71	7
	8-73	7
198678	1-36	49
	1-39	39
	12-10	43
198693	8-3	24
	8-7	24
199567	5-41	26
	5-45	26
	5-49	26
	5-53	26
	5-59	26
199725	7-55	7
199728	7-55	3
199917	8-3	6
	8-8	45
199925	11-17	3
	11-17	4
199971	8-8	56
200170	3-17	6
200172	3-17	7
200445	5-41	3
	5-45	3
	5-49	3
	5-53	3
	5-59	3
	7-41	20
	7-43	34
200454	7-51	11
200465	7-51	17
200591	7-51	19
200659	5-35	4
200972	5-57	7
	5-63	6
	6-11	22
200982	5-63	32
201776	10-10	31
	10-15	24
201783	8-42	52
201950	12-31	16
202003	4-29	20
203367	10-27	13
	12-7	13
208483	4-29	26
213100	5-5	38
	5-7	25
	5-9	25
	5-11	25
214117	3-21	4
214195	5-53	5
	5-59	5
214338	3-43	3
	3-45	5
216735	1-43	17
	2-13	18
	2-17	18
	6-3	10
	12-31	7
	12-32	47

See Service Manual for service procedures.
©2010 HYSTER COMPANY

NUMERICAL INDEX (continued)

PART NO.	PAGE	ITEM
216877	1-63	27
	3-3	25
	3-15	25
	6-3	17
	8-11	2
	8-67	22
	8-72	22
	9-10	21
	9-21	4
	10-16	33
	10-31	5
	11-7	25
	11-23	3
	12-9	27
	12-23	34
	12-31	9
	12-32	58
217964	7-7	24
	7-11	24
217977	7-47	14
	7-47	15
	7-49	16
217979	7-4	48
	7-8	43
	7-12	43
218612	8-11	6
220159	9-7	3
	10-5	3
	10-7	3
220283	3-21	10
	7-57	5
220302	4-23	26
220434	5-39	16
220456	3-61	26
	3-63	20
220494	3-15	10
220932	5-39	3
221341	3-15	15
221354	8-17	6
	8-17	6
	8-25	6
	8-25	6
	8-29	6
	8-41	6
	8-41	6
	8-53	6
	8-53	6
221355	5-41	8
	5-45	8
221357	2-5	4
	2-5	9
	2-5	16
	9-21	10
	11-7	17
	12-23	39
221358	2-5	9
221377	8-67	12
	8-71	12
	8-73	12
221420	5-5	27
	5-7	13
	5-9	13
	5-11	13
221453	2-115	6
221455	2-111	17
221465	2-115	7
	2-115	35
221506	9-3	2
221507	5-3	18
221508	10-3	2
221510	9-19	13
	10-21	14
	12-3	13
	12-5	14
	12-9	12
221533	2-21	2
221560	10-3	13
	10-5	13
221703	5-5	28
	5-7	15
	5-9	15
	5-11	15
221704	5-7	39
221720	5-41	45
	5-45	45
	5-49	45
	5-60	45
221725	9-9	17
	10-9	17
	10-15	28
221767	2-113	27
	5-3	5
	5-41	19
	5-45	19
	5-49	19
	5-53	19
	5-59	19
221771	5-41	7
	5-45	7
221780	5-41	44
	5-45	44
	5-49	44
	5-60	44
221786	1-63	4
222030	1-51	15
222080	7-57	6
222085	3-53	6
222365	8-3	31
	8-7	31
222400	5-35	24
222442	5-37	25
222444	5-13	34
	5-17	34
	5-18	45
222517	12-10	40
222531	8-3	7
	8-8	72
222590	8-3	2
	8-7	2
222666	7-43	27
222667	12-27	16
223095	4-33	9
223216	2-7	11
	2-9	11
	2-11	20
223625	5-18	56
224226	2-39	16
224248	2-65	35
	2-69	35
	2-73	34
224384	2-49	23
	2-103	19
225334	6-15	7
226577	4-25	8
226774	1-32	55
227096	11-17	9
227098	12-27	11
227099	11-17	10
227113	4-7	11
227163	4-7	19
227180	12-36	2
227220	3-25	33
	3-27	33
	3-43	33
	3-45	14
228342	1-44	50
228376	1-19	37
	1-23	37
	1-43	29
229875	2-39	5
	2-43	5
230376	5-57	39
230419	5-57	6
231956	12-39	4
231989	10-19	7
233683	5-13	36
	5-17	36
233693	5-13	38
	5-17	38
	5-35	18
	5-37	21
233908	3-17	8
235691	5-13	29
	5-17	29
	5-35	9
	8-74	7
235796	7-41	19
235811	7-41	23
235830	7-41	13
235831	7-41	13
235832	7-41	12
236890	1-44	51
	12-32	41
239423	1-53	9
239503	1-35	9
	1-36	53
	1-39	9
	1-40	48
	1-57	24
	1-61	24
	3-53	17
	3-59	24
	3-61	31
	4-3	21
	4-4	63
	4-9	28
	4-14	42
	4-14	66
	4-20	44
	5-37	36
	7-3	3
	7-7	37
	7-11	37
	7-45	10
	8-4	56
	8-8	69
	10-23	19
	11-17	29
	11-19	15
	12-23	19
	12-31	37
	12-35	11
241878	12-27	9
241976	3-27	24
244272	8-11	6
244901	2-107	8
245800	2-23	24
	2-27	24

©2010 HYSTER COMPANY

NUMERICAL INDEX (continued)

PART NO.	PAGE	ITEM
245885	2-85	20
	2-101	6
245996	4-45	16
	4-47	16
	4-48	10
246001	1-43	18
	10-31	19
	12-31	5
246108	1-35	45
	1-39	45
	3-51	30
	4-3	18
246869	3-17	3
	5-17	42
	7-17	19
	7-19	19
246888	10-19	8
246943	4-25	30
247041	6-11	18
247093	6-11	12
247097	6-11	16
247098	6-11	16
247099	6-11	16
247827	6-11	13
248128	4-25	5
248129	4-25	7
248147	4-25	24
249564	7-15	9
250095	12-29	1
251099	2-19	5
251974	7-3	8
	7-7	9
	7-11	9
251994	12-10	43
252382	10-10	36
	10-10	36
252388	9-9	18
254950	9-21	14
	9-21	23
	9-22	28
	10-16	52
	10-31	13
	10-31	20
	11-7	9
	11-8	49
	12-23	4
	12-23	26
255115	7-8	64
	7-12	64
255124	3-51	14
	3-53	14
255156	7-3	25
	7-8	44
	7-12	44
256219	3-7	1
256220	3-7	12
257030	10-19	9
257241	4-3	41
	4-13	16
257603	2-23	9
	2-25	9
257913	9-13	5
	10-19	6
258320	3-19	4
	3-23	
258321	3-19	13
	3-22	
258590	8-4	49
	8-8	62
261162	2-17	30
261379	4-29	36
261780	2-13	27
261963	3-21	21
262283	3-25	5
	3-27	5
263795	2-113	19
263922	7-55	8
263950	3-23	
263958	3-22	
264141	3-53	7
264159	5-18	48
265817	1-13	16
	1-17	16
266465	2-57	2
	2-61	2
	2-63	2
266535	7-3	29
	7-8	45
	7-8	66
	7-12	45
	7-12	66
267827	9-9	2
	10-10	32
	10-16	37
267829	9-9	5
	10-9	2
267830	9-9	8
	10-9	8
267837	9-9	6
	10-9	6
268225	2-13	16
268356	4-29	15
	4-33	14
268980	5-41	38
	5-45	38
	5-49	38
	5-53	38
	5-59	38
270329	2-21	11
270330	6-15	3
270333	12-9	38
270825	2-7	4
	2-7	22
	2-11	11
270826	2-9	4
270854	6-11	29
271047	3-3	20
	3-7	
271443	3-7	8
271448	3-7	10
271449	3-7	9
271494	4-23	6
271495	4-23	17
271496	4-23	13
271497	4-23	28
271499	4-23	29
271666	4-23	10
	4-23	25
271668	4-23	11
271670	4-23	18
272273	3-7	4
272274	3-7	2
273775	9-10	33
	9-21	11
	10-10	37
	10-31	18
	11-7	4
	12-23	40
274232	2-105	9
274366	4-23	3
274367	4-23	9
274368	4-23	7
274369	4-23	2
274370	4-23	2
274373	4-23	15
274374	4-23	12
274401	4-23	23
274402	4-23	22
274403	4-23	21
274426	8-19	6
	8-19	23
	8-21	6
	8-21	23
	8-33	6
	8-33	23
	8-33	36
	8-37	6
	8-37	23
	8-37	36
	8-45	6
	8-45	23
	8-45	36
	8-46	49
	8-49	6
	8-49	23
	8-49	36
	8-50	49
	8-57	6
	8-57	23
	8-57	36
	8-61	6
	8-61	23
	8-61	36
274427	8-19	9
	8-19	25
	8-21	9
	8-21	25
	8-33	9
	8-33	25
	8-33	38
	8-37	9
	8-37	25
	8-37	38
	8-45	9
	8-45	25
	8-45	38
	8-46	51
	8-49	9
	8-49	25
	8-49	38
	8-50	51
	8-57	9
	8-57	25
	8-57	38
	8-61	9
	8-61	25
	8-61	38
274428	8-46	53
274548	8-19	10
	8-19	26
	8-21	10
	8-21	26
	8-33	10
	8-33	26
	8-33	39
	8-37	10
	8-37	26
	8-37	39

©2010 HYSTER COMPANY

NUMERICAL INDEX (continued)

PART NO.	PAGE	ITEM
	8-45	10
	8-45	26
	8-45	39
	8-46	52
	8-49	10
	8-49	26
	8-49	39
	8-50	52
	8-57	10
	8-57	26
	8-57	39
	8-61	10
	8-61	26
	8-61	39
274648	4-33	3
275494	12-27	4
	12-32	43
276022	2-65	11
	2-69	11
	2-73	13
276639	10-10	36
	10-10	36
276963	8-74	3
277446	4-55	10
279740	12-39	17
279752	1-35	37
	1-39	37
	1-44	54
	3-15	34
280472	1-5	39
	1-9	39
	1-35	6
	1-39	6
	1-63	7
	5-63	35
	8-4	44
	8-8	40
	11-7	32
	11-19	18
	12-29	9
280610	9-21	7
	11-7	21
	12-23	36
280644	1-19	18
	1-23	18
	1-44	56
281190	7-15	11
	7-17	11
	7-19	11
281846	4-23	5
283453	8-11	19
286199	5-57	40
286901	1-69	25
287719	5-57	1
287814	9-22	30
	11-7	28
	11-8	46
287816	1-43	4
	3-49	12
	3-53	34
	4-3	10
	4-14	46
	7-21	3
287817	11-17	7
287831	2-17	34
287837	2-13	19
	2-17	19
287851	1-35	31
	1-39	31
	3-59	23
	3-61	23
287854	1-43	7
	1-49	16
	1-51	18
	3-57	16
	3-63	16
	4-7	15
	12-31	3
	12-31	12
287860	1-57	39
	1-61	39
	3-3	21
	5-11	27
	5-13	22
	5-17	22
	10-31	16
288032	4-23	8
288394	1-13	22
	1-17	22
	1-19	17
	1-23	17
	1-28	56
	6-11	39
	12-32	46
289143	4-10	44
	4-20	43
289166	4-10	45
	4-19	42
290300	4-33	13
290303	4-29	12
	4-33	1
290369	4-33	15
290370	4-33	16
290508	4-33	8
290509	4-29	22
	4-33	22
292500	1-31	43
	3-47	13
	3-51	16
	3-55	13
	5-18	55
292501	1-27	45
	1-35	28
	1-39	28
	1-57	8
	1-61	8
	4-14	45
292502	11-19	8
292505	1-27	47
292512	7-3	10
	7-7	39
	7-11	39
292513	1-32	47
	1-35	47
	1-40	49
	4-14	51
292514	3-47	11
	3-49	11
	3-51	26
	3-53	26
	3-55	11
	11-19	2
292515	5-7	27
	5-9	27
292516	11-3	12
292517	11-7	15
292521	3-57	2
	3-63	2
292522	9-22	27
	11-7	5
	12-23	24
292523	3-59	2
	3-61	2
	4-25	40
	4-37	7
292525	4-39	11
292527	3-3	18
	3-15	27
292528	9-9	11
	9-21	13
	10-9	11
	10-15	26
	11-7	24
	12-24	41
	12-32	59
292529	6-3	15
	9-3	13
	9-9	11
	9-21	25
	11-23	2
	12-9	26
	12-23	7
	12-23	30
292531	3-15	28
	9-9	19
	9-21	16
	10-16	31
	11-7	1
	12-23	8
292533	9-21	5
	9-22	30
	10-31	15
	11-7	29
	12-23	35
292535	10-16	51
	10-31	3
292538	1-5	43
	1-9	43
	1-19	20
	1-23	20
	8-67	20
	8-71	20
	9-22	30
	12-23	29
292560	8-65	5
	8-67	19
	8-71	19
292561	11-5	12
	11-5	22
292562	10-16	44
292564	7-43	6
292566	1-63	20
292580	9-9	4
	10-9	4
292581	2-5	11
	5-3	22
292582	10-16	47
292589	9-22	38
	10-16	40
292598	1-63	8
292600	1-63	23
292655	5-11	29
292658	11-5	21
292668	1-27	10
	1-27	43
	1-31	10
	1-69	19
	4-3	6

©2010 HYSTER COMPANY

NUMERICAL INDEX (continued)

PART NO.	PAGE	ITEM
	4-13	40
292678	3-53	32
292679	1-27	11
	1-27	17
	1-31	11
	1-31	18
	1-35	41
	1-69	20
	4-3	7
	4-13	39
292680	1-5	5
	1-19	26
	1-23	26
	1-27	21
	1-31	22
	1-35	29
	1-39	29
	1-57	10
	1-61	10
	1-69	4
	3-47	14
	3-49	13
	3-51	17
	3-53	35
	3-55	14
	4-3	12
	4-3	31
	4-7	7
	4-13	14
	5-18	55
	8-41	27
	11-17	8
292681	1-35	32
	1-36	51
	1-39	32
	1-43	15
	1-44	47
	1-57	25
	1-61	25
	2-14	38
	3-25	14
	3-27	14
	3-43	14
	3-45	28
	3-59	8
	3-61	8
	4-3	3
	4-3	20
	4-7	3
	4-13	3
	4-13	41
	4-39	9
	5-5	4
	5-11	41
	5-37	37
	6-3	32
	7-3	3
	7-7	38
	7-11	38
	7-45	11
	8-4	34
	8-4	57
	8-7	34
	8-8	70
	8-17	12
	8-25	12
	8-29	12
	8-41	12
	8-53	12
	10-23	20
	10-23	34
	11-17	30
	11-19	14
	12-10	44
	12-23	20
	12-29	8
	12-31	38
	12-35	9
292682	1-32	49
	1-35	48
	1-39	40
	1-43	9
	1-49	18
	1-51	20
	1-57	17
	1-61	17
	2-7	20
	2-9	20
	3-3	22
	3-47	10
	3-49	10
	3-51	8
	3-51	22
	3-53	30
	3-55	10
	3-57	19
	3-59	18
	3-61	18
	3-63	3
	3-63	17
	4-3	39
	4-13	32
	4-39	13
	5-5	43
	5-7	28
	5-7	43
	5-9	28
	5-9	41
	5-11	28
	5-13	23
	5-17	23
	6-3	6
	7-15	7
	7-17	7
	7-19	7
	8-3	30
	8-7	30
	9-10	25
	10-9	25
	10-15	27
	10-23	17
	10-31	9
	11-7	13
	12-3	30
	12-31	14
292683	3-3	19
	3-15	24
	8-11	13
	8-67	21
	8-68	27
	8-72	21
	8-72	27
	9-9	20
	9-10	20
	9-19	11
	9-21	3
	10-9	20
	10-16	32
	10-21	8
	10-31	4
	11-7	26
	11-23	4
	12-3	11
	12-3	22
	12-5	8
	12-9	14
	12-23	33
	12-31	10
	12-32	57
292685	1-63	21
	8-65	6
	10-16	45
292687	2-5	12
	5-3	23
	6-11	33
	9-10	28
	10-10	28
292781	3-7	5
292782	3-7	7
293604	8-41	25
293613	5-57	20
293623	2-14	37
293629	2-19	5
293635	5-5	6
293639	1-57	27
	1-61	27
293647	5-57	8
	9-19	10
	10-21	9
	12-3	10
	12-3	21
	12-5	9
	12-9	13
293650	11-3	18
	11-15	6
293689	11-5	5
293696	1-63	20
293708	6-11	32
293716	5-63	39
293726	11-13	7
293782	6-3	18
294863	8-74	4
295197	7-15	1
	7-17	1
	7-19	1
296003	11-19	7
296011	5-5	32
	5-7	19
	5-9	19
	5-11	19
296023	10-31	8
296128	3-57	17
	3-63	17
296130	1-63	28
296359	4-3	25
296360	6-3	39
296380	4-4	64
	4-9	27
	4-14	65
	4-20	45
296396	1-27	19
	1-31	20
296418	4-25	46
	4-35	8
	11-17	31
296421	1-57	18
	1-61	18
296422	1-57	38

©2010 HYSTER COMPANY

NUMERICAL INDEX (continued)

PART NO.	PAGE	ITEM
	1-61	38
296426	11-3	32
296431	1-63	9
296464	1-27	18
	1-31	19
296472	1-27	40
	1-69	2
296734	7-51	16
298096	2-39	16
	2-43	16
298832	3-3	27
300088	1-31	42
	1-57	20
	1-61	20
300208	12-21	1
300209	12-21	1
300294	12-21	1
300723	8-19	30
	8-21	30
	8-33	30
	8-37	30
	8-45	30
	8-49	30
	8-50	53
	8-57	30
	8-61	30
300937	1-5	44
	1-10	44
	1-19	21
	1-23	21
	1-43	19
	2-13	21
	2-17	21
	9-3	18
	9-21	17
	10-9	21
	10-16	54
	11-7	2
	11-8	47
	12-23	9
	12-23	28
300939	1-6	45
	1-10	45
	1-19	1
	1-19	22
	1-23	22
	3-15	29
300982	10-23	3
301749	2-57	31
	2-61	31
	2-63	31
301750	2-57	32
	2-61	32
	2-63	32
301751	2-57	33
	2-61	33
	2-63	33
301752	2-57	36
	2-61	28
301775	2-69	10
301785	2-65	7
	2-69	7
	2-73	8
301791	2-29	22
	2-31	18
301793	2-91	21
	2-93	21
301805	2-85	3
	2-87	3
301806	2-85	2
	2-87	2
301821	3-37	23
301836	2-25	33
301986	7-51	5
	7-51	8
302036	1-69	18
302049	12-29	3
302069	4-10	43
	4-19	39
302100	11-5	15
302236	1-28	57
302244	1-13	15
	1-17	15
	1-20	51
	1-24	51
	1-35	40
302248	1-27	9
	1-27	16
	1-27	46
	1-31	9
	1-31	17
302256	1-27	22
	1-31	23
302271	3-61	29
	3-63	23
302398	1-28	49
302399	1-27	14
	1-27	41
	1-32	57
	7-21	4
	12-29	5
302400	11-15	19
302402	11-15	26
302404	11-5	9
302408	11-3	5
302428	8-41	34
	8-53	32
302454	11-15	8
302638	2-53	28
302711	2-29	21
	2-31	16
302712	2-29	23
	2-31	19
302713	2-29	24
	2-31	21
302720	3-11	4
	3-37	4
	3-40	2
302721	3-11	5
	3-37	5
	3-40	3
303741	2-29	1
303748	2-31	7
303758	2-39	17
	2-43	17
303808	2-97	18
303809	2-97	20
	2-97	23
303810	2-97	19
303812	2-97	22
303814	2-97	21
303819	2-97	10
303820	2-97	6
303824	2-97	12
303825	2-97	11
303826	2-97	9
303827	2-97	16
303828	2-97	7
303829	2-97	8
303830	2-97	14
303831	2-97	17
303835	2-85	12
303865	2-101	15
304242	5-41	5
	5-45	5
305100	4-29	38
305104	8-74	2
305110	8-65	13
305522	4-3	27
	4-13	10
305681	4-3	27
306008	3-15	19
306113	8-41	31
	8-53	29
306725	4-13	30
306751	2-101	7
307275	10-27	4
	12-7	4
308117	10-23	2
308993	5-5	10
	8-17	3
	8-25	3
	8-29	3
	8-41	3
	8-53	3
309109	5-5	18
	5-7	1
	5-9	1
	5-11	1
309124	4-3	28
	4-13	11
309637	1-28	54
	1-31	41
	1-44	61
	4-7	6
309666	1-27	29
	1-31	30
	1-57	31
	1-61	31
310081	4-29	1
	4-33	17
310085	4-33	7
310088	4-33	25
311245	3-3	27
313805	1-43	5
313828	1-49	15
	6-3	27
	8-65	9
313860	5-5	26
	5-7	12
	5-9	12
	5-11	12
313979	8-65	17
314538	3-25	8
	3-27	8
	3-43	11
314809	5-5	20
	5-7	6
	5-9	6
	5-11	6
316826	1-57	28
	1-61	28
	9-21	20
	10-31	17
	11-7	30
	12-23	14
316828	1-63	23
	7-43	8

©2010 HYSTER COMPANY

NUMERICAL INDEX (continued)

PART NO.	PAGE	ITEM
316829	1-63	10
	5-5	8
317801	8-65	22
	8-74	
317802	8-74	1
318067	9-13	16
	9-15	10
	10-13	10
318352	1-13	19
	1-17	19
319049	7-15	2
	7-17	2
	7-19	2
319050	7-15	15
	7-17	15
	7-19	15
320155	1-27	12
	1-31	12
320156	1-27	44
	1-31	44
	1-35	3
	1-39	3
	1-57	11
	1-61	11
	3-57	7
	3-59	4
	3-61	4
	3-63	7
	4-3	32
	4-9	13
	4-13	15
	4-19	8
	12-29	4
320157	1-35	33
	1-36	52
	1-39	33
	1-44	46
	1-57	34
	1-61	34
	2-14	39
	2-17	37
	3-25	38
	3-43	24
	3-45	22
	3-45	29
	3-61	30
	3-63	24
	4-3	13
	4-4	48
	4-9	12
	4-14	44
	4-19	7
	5-37	35
	7-3	24
	7-7	36
	7-11	36
	10-23	28
320158	1-43	16
	3-59	9
	3-61	9
	4-13	31
	4-39	10
	5-5	3
	5-9	39
	5-11	39
	6-3	31
	8-17	11
	8-25	11
	8-29	11
	8-41	11
	8-53	11
	8-65	8
320159	1-32	48
	2-7	19
	2-9	19
	4-3	38
	4-14	50
	5-17	41
	8-7	9
	11-19	3
	12-35	8
320160	1-43	8
	2-11	17
	3-57	18
	3-59	2
	3-59	11
	3-61	2
	3-61	11
	3-63	2
	3-63	16
	11-7	12
320161	5-5	30
	5-7	17
	5-9	17
	5-11	17
	7-15	6
	7-17	6
	7-19	6
320162	1-43	20
	2-13	20
	2-17	20
	3-3	24
	3-15	26
	8-11	1
	8-53	22
	9-21	2
	12-23	32
	12-29	16
	12-35	17
320166	7-43	7
320169	10-16	39
320181	11-3	4
321197	9-7	6
	10-5	6
	10-7	6
321293	5-41	4
	5-41	10
	5-45	4
	5-45	10
	5-49	4
	5-49	10
	5-53	4
	5-53	10
	5-59	4
	5-59	10
321298	7-52	37
321703	7-51	21
321719	7-51	33
322177	4-29	24
322428	7-51	15
322784	11-7	31
	11-19	19
322792	7-45	23
322793	7-3	27
	7-7	28
322794	7-3	31
	7-3	32
	7-8	47
	7-12	47
323488	8-8	50
	8-8	51
323541	3-21	4
323864	8-3	27
	8-7	27
	8-11	22
	12-9	31
	12-31	20
324634	4-17	24
324896	6-3	20
325708	3-57	14
	3-63	14
325789	11-17	3
326360	1-51	7
326361	1-51	6
326362	1-51	4
326363	1-51	2
326364	1-51	1
326365	1-51	5
326926	3-21	13
326978	1-51	3
328043	2-25	20
	2-61	7
328047	2-39	11
	2-43	11
328389	12-27	3
328753	3-25	19
	3-27	19
328754	3-25	21
	3-27	21
329067	1-5	29
	1-5	29
	1-9	29
	1-9	29
	1-19	10
	1-23	10
	1-43	21
	1-44	45
	1-69	22
329069	5-5	33
	5-7	20
	5-9	20
	5-11	20
	6-3	40
330692	10-25	9
	10-27	6
	12-7	6
332256	3-13	2
334228	1-27	1
	1-31	1
334229	1-27	4
	1-31	4
334230	1-27	5
	1-31	5
334233	1-27	3
	1-31	2
334234	1-27	2
	1-31	3
334402	5-23	2
	5-25	10
	5-29	12
334417	5-23	4
	5-25	12
	5-29	10
334436	5-26	3
334442	5-23	7
	5-25	4
	5-29	8
334475	5-23	6

See Service Manual for service procedures.
©2010 HYSTER COMPANY

NUMERICAL INDEX (continued)

PART NO.	PAGE	ITEM
	5-25	7
	5-29	6
334480	5-23	8
	5-25	5
	5-29	5
334500	5-37	4
334542	5-35	11
334543	5-35	12
	5-37	11
334560	5-13	28
	5-17	28
334970	4-29	14
335553	1-51	10
335850	12-27	7
335989	1-51	13
335991	1-51	14
336550	2-13	9
	2-17	9
339530	3-25	36
	3-43	36
	3-45	20
339599	4-3	19
	4-29	
	4-35	1
339735	2-13	6
	2-17	6
339969	8-17	7
	8-17	7
	8-25	7
	8-25	7
	8-29	7
	8-41	7
	8-41	7
	8-53	7
	8-53	7
340044	4-4	52
	4-14	63
340204	2-13	12
	2-17	12
340213	5-5	29
	5-7	16
	5-9	16
	5-11	16
340739	10-29	4
341788	3-15	21
342017	10-3	15
	10-5	15
342032	10-3	16
	10-5	16
343029	4-29	18
	4-33	5
343031	4-29	5
	4-33	10
343032	4-29	6
	4-33	12
343033	4-29	23
343038	4-29	2
343039	4-29	19
343040	4-29	11
343041	4-29	14
343042	4-29	13
343046	4-29	17
344228	3-17	5
344230	3-17	2
344232	3-17	4
344233	4-33	18
344234	4-29	21
	4-33	24
344432	2-13	4
	2-17	4
345408	6-7	2
345409	6-7	3
345410	6-7	4
345411	6-7	5
345412	6-7	6
345413	6-7	7
345418	6-7	12
345423	6-3	3
345424	6-7	11
345453	2-13	7
	2-17	7
345454	2-13	8
	2-17	8
346634	5-35	7
346636	5-35	3
346671	5-23	13
	5-25	2
	5-29	11
346675	5-23	17
346677	5-23	21
	5-25	20
	5-29	14
346716	5-29	15
346788	5-35	2
346795	5-23	12
	5-25	8
	5-29	2
346805	5-35	8
346848	5-35	6
346971	9-10	23
	10-9	23
348362	8-11	6
348368	8-11	6
349378	2-91	34
	2-93	29
	2-95	22
349478	2-97	15
349479	2-97	5
349480	2-97	
350397	2-23	18
	2-23	23
	2-25	18
	2-27	18
350399	2-39	23
	2-43	23
	2-47	6
350498	4-19	31
350965	3-19	22
351458	10-21	10
	12-3	28
	12-5	10
352013	7-3	36
	7-7	10
	7-11	10
	7-45	17
	7-57	
352482	3-57	1
	3-59	19
352485	3-57	5
	3-59	6
	3-61	6
	3-63	5
352499	3-57	12
	3-63	12
352885	3-57	13
	3-63	13
352909	1-63	6
352950	3-59	13
	3-61	13
352955	6-3	36
352969	5-39	8
353129	3-57	6
	3-59	7
	3-61	7
	3-63	6
353141	3-59	3
	3-61	3
353142	3-57	10
	3-59	21
	3-61	21
	3-63	10
353143	3-57	11
	3-59	22
	3-61	22
	3-63	11
353144	1-19	24
	1-27	25
	1-31	26
	6-3	35
	11-17	33
353154	5-39	4
353159	3-57	15
	3-63	15
353164	3-57	4
	3-59	20
	3-61	20
	3-63	4
353165	5-39	15
353168	5-39	6
353172	3-59	15
	3-61	15
353175	5-39	12
353195	3-57	9
	3-59	12
	3-61	12
	3-63	9
353220	5-39	13
353230	3-59	16
	3-61	16
353302	8-11	3
353310	2-13	22
	2-17	22
353379	12-32	44
353397	5-39	1
353398	3-59	1
	3-61	1
	5-39	
353422	5-39	7
353432	5-39	7
353448	5-39	9
353453	3-59	14
	3-61	14
353478	11-23	10
	12-31	15
	12-35	1
353479	12-31	30
354515	12-39	5
355597	7-3	28
	7-8	51
	7-12	51
355750	7-3	14
	7-8	41
	7-12	41
356035	11-15	3
356821	1-49	
357263	5-5	11
357426	7-57	1
357427	7-57	

©2010 HYSTER COMPANY

NUMERICAL INDEX (continued)

PART NO.	PAGE	ITEM
357869	8-65	18
357934	11-23	10
	12-31	15
	12-35	1
358099	5-49	8
	5-53	8
	5-59	8
358286	10-31	7
358287	10-31	10
358458	7-3	30
	7-8	45
	7-12	45
	7-47	2
	7-49	19
358506	2-65	12
	2-69	12
358674	12-32	46
359144	3-9	22
	3-29	23
359145	3-9	23
	3-29	24
359207	5-39	11
359767	1-49	1
360387	5-39	3
360815	2-65	25
360816	2-65	26
361000	12-13	16
361271	2-25	8
	2-27	8
361289	2-49	8
361298	2-99	6
361336	2-33	28
	2-35	28
	2-37	22
361678	10-29	2
362011	8-17	16
	8-25	16
	8-29	16
	8-41	16
	8-53	16
362030	1-57	7
	1-61	7
362102	9-13	12
	9-15	8
	9-17	3
	10-13	8
362255	6-3	8
362807	7-41	
362812	7-41	
362816	6-3	3
364847	1-51	30
364848	1-51	27
364854	1-51	26
365337	1-13	18
	1-17	18
365344	1-27	23
	1-31	24
365854	2-23	11
	2-25	11
	2-27	11
366057	5-57	3
366063	6-8	3
366064	6-8	5
366065	6-8	6
366066	6-8	
366097	4-23	4
366098	4-23	
367251	1-57	6
	1-57	12
	1-61	6
	1-61	12
367338	2-85	11
	2-87	8
367394	2-65	36
	2-69	24
	2-73	29
369242	6-3	12
369485	2-25	24
370155	2-107	10
370169	2-115	32
370250	1-53	12
370251	1-53	12
370252	1-53	12
370253	1-53	12
370254	1-53	12
370255	1-53	12
370256	1-53	12
370257	1-53	12
370258	1-53	12
370259	1-53	12
370473	4-19	33
370646	4-9	19
	4-9	33
	4-19	14
	4-20	47
	11-17	23
370647	4-9	18
	4-10	57
	4-19	13
	4-20	52
	12-31	24
370648	4-9	20
	4-10	34
	4-19	15
	4-20	48
370776	4-9	8
	11-17	11
371257	3-3	29
371536	2-33	4
	2-35	4
371666	6-3	37
372003	3-19	19
372008	3-19	34
372109	8-15	16
372110	8-15	19
372112	8-13	21
373287	10-15	7
375295	1-43	34
375571	2-21	10
375629	6-3	26
376001	2-23	
	2-29	
	2-33	
	2-39	
	2-49	
	2-57	
	2-65	
	2-74	
	2-85	
	2-91	
	3-9	
	3-11	
	4-26	
376018	2-13	26
376026	5-42	47
	5-46	47
	5-50	47
	5-53	43
	5-60	47
	6-12	47
376038	9-3	10
	10-3	10
376051	8-65	2
	8-67	16
	8-71	16
376053	9-3	9
376064	1-13	4
	1-17	4
376066	8-11	11
376086	6-15	5
376087	6-15	1
376088	6-15	2
376089	6-15	2
376090	6-15	2
376091	6-11	40
	6-15	
376116	2-19	4
376117	2-19	7
376137	1-35	12
	1-39	12
376203	9-3	4
	9-7	12
	9-19	4
	10-3	4
	10-5	12
	10-7	12
	10-21	20
	12-3	4
	12-5	20
	12-9	9
376206	8-3	1
	8-13	
376245	1-63	13
376255	2-7	12
	2-11	7
376270	2-7	5
376271	2-7	2
376276	1-19	30
	1-23	30
376300	1-57	23
	1-61	23
376316	3-3	5
376318	1-63	1
376319	1-63	3
376350	5-59	43
376397	1-43	13
	1-57	21
	1-61	21
	2-7	17
	2-9	17
	2-11	24
	3-25	12
	3-27	12
	3-43	12
	3-45	26
376400	1-57	19
	1-61	19
376402	1-57	30
	1-61	30
376410	1-57	4
	1-61	4
376441	1-57	5
	1-61	5
376442	1-57	32
	1-61	32
376447	1-57	13
	1-61	13
376448	1-57	13

©2010 HYSTER COMPANY

NUMERICAL INDEX (continued)

PART NO.	PAGE	ITEM
	1-61	13
376478	2-13	1
376479	2-13	2
376480	2-13	23
376504	6-3	9
376505	6-3	11
376506	6-3	19
376510	6-3	14
376567	1-57	33
	1-61	33
376649	2-13	24
	2-17	24
376681	9-10	23
376772	2-13	11
376773	10-21	4
	12-3	24
	12-5	4
376776	9-19	9
	10-21	7
	12-3	9
	12-3	27
	12-5	7
376801	1-43	12
376814	10-27	9
	12-7	9
376815	10-27	3
	12-7	3
376839	10-27	5
	12-7	5
376840	1-13	20
	1-17	20
376867	1-13	5
	1-17	5
376868	1-13	5
	1-17	5
376876	2-13	10
376883	10-27	
	12-7	
376918	1-31	39
376922	1-13	6
	1-17	6
376947	1-5	26
	1-9	26
	1-19	35
	1-23	35
376948	1-6	47
	1-10	47
	1-19	34
	1-23	34
376949	1-5	27
	1-5	27
	1-9	27
	1-9	27
	1-19	33
	1-23	33
376953	1-27	7
	1-31	7
376954	1-27	8
	1-31	8
376968	1-27	37
376970	1-28	48
376971	1-27	36
376972	1-27	35
376981	2-5	7
376999	1-43	27
377210	3-19	17
377211	3-19	30
377618	1-54	18
377945	2-65	17
	2-69	17
377976	2-57	3
	2-61	3
	2-63	3
378289	5-57	10
379199	1-51	22
379650	4-9	7
	4-19	26
379674	1-51	29
	6-3	25
379675	1-49	14
	1-51	28
379697	1-51	23
	6-3	16
379698	1-51	25
379902	4-9	5
	4-19	27
381255	2-113	6
381846	4-10	53
	4-10	56
	4-20	51
	4-42	2
	4-52	7
	4-55	12
381847	4-55	13
382639	4-25	9
382642	4-25	33
383116	1-51	17
385251	7-41	1
385514	1-49	27
385516	1-49	24
385531	2-27	10
	2-37	16
385533	2-33	12
	2-35	12
385656	4-3	19
	4-25	
	4-35	1
385847	2-39	12
	2-43	12
385895	7-31	34
	7-33	34
386069	4-25	2
386070	4-25	3
386071	4-25	6
386073	4-25	10
386074	4-25	11
386400	4-25	12
386401	4-25	13
386402	4-25	14
386403	4-25	15
386404	4-25	16
386405	4-25	17
386406	4-25	18
386407	4-25	21
386459	2-23	21
	2-25	21
	2-27	21
	2-39	13
	2-39	27
	2-43	13
	2-57	14
	2-61	14
	2-63	14
	2-74	10
	2-76	10
	2-95	10
	2-103	10
	3-9	11
	3-11	15
	3-33	43
	3-37	15
	3-39	8
	4-37	10
	7-35	13
386461	3-11	13
	3-37	13
	3-39	6
386646	10-31	21
	10-31	21
386647	10-31	21
387075	12-19	2
	12-21	2
387078	6-11	35
387080	5-45	
387085	10-27	1
	12-7	1
387087	10-27	2
	12-7	2
387090	10-23	8
	10-27	
	12-3	16
	12-5	21
	12-7	
387118	6-11	30
387119	6-11	31
387225	6-11	5
387229	6-11	1
387240	5-3	13
387243	8-67	1
	8-71	1
387244	8-67	3
	8-71	3
387247	8-67	10
	8-71	10
	8-73	10
387248	8-67	11
	8-71	11
	8-73	11
387262	9-13	1
387263	9-13	1
387264	9-13	1
387265	9-13	1
387266	9-13	1
	10-13	6
387280	9-13	2
387281	9-13	2
387282	9-13	2
387283	9-13	2
387284	9-13	2
387285	9-13	2
387286	9-13	10
	9-15	6
387312	3-3	9
387313	3-3	7
387316	3-3	16
387317	3-3	17
387325	8-68	
	8-72	
387326	3-3	1
387327	3-3	2
387348	1-57	41
	1-61	41
387353	1-57	26
	1-61	26
387356	1-57	42
	1-61	42
387358	1-63	13
387487	4-25	27

©2010 HYSTER COMPANY

NUMERICAL INDEX (continued)

PART NO.	PAGE	ITEM
387488	4-25	28
387489	4-25	23
387490	4-25	31
387491	4-25	32
387492	4-25	26
387493	4-25	19
387494	4-25	20
388305	2-113	7
388308	2-111	6
	2-111	12
388364	2-111	17
389045	8-42	57
389136	12-31	11
389688	1-54	21
389792	12-31	30
389793	11-23	10
	12-31	15
	12-35	1
391484	11-23	9
392238	1-44	52
397676	3-3	35
	3-3	38
	3-49	18
	3-53	22
	3-55	18
	4-4	54
	4-7	29
	4-14	48
	8-4	62
	8-7	5
636954	9-13	7
	9-15	3
	9-17	9
	10-13	3
636956	10-19	13
637161	10-27	11
	12-7	11
637166	9-13	8
	9-15	4
	10-13	4
637635	9-13	4
	10-19	4
638224	9-13	9
	9-15	5
	10-13	5
638292	10-27	10
	12-7	10
815559	9-22	31
	12-23	1
815596	3-51	5
	3-53	31
815597	3-51	6
	3-53	33
815620	9-13	13
	9-15	9
	10-13	9
816043	1-63	24
816083	12-19	1
816136	1-63	19
816137	1-63	19
816138	1-63	21
816231	1-63	26
816373	8-3	3
816377	1-28	59
	1-31	37
816378	1-28	60
	1-31	38
816442	12-32	50
816578	8-67	2
	8-71	2
	8-73	2
816580	8-67	4
	8-71	4
	8-73	4
826004	12-39	6
833549	3-49	2
833694	2-13	26
842799	2-29	4
	2-31	4
842800	2-29	5
	2-31	5
894406	6-3	14
894410	4-7	1
894411	4-7	1
894416	5-7	26
	5-9	26
	5-11	26
894417	1-23	32
894419	1-23	32
894423	1-54	26
894424	3-61	25
	3-63	19
894425	3-61	19
	3-63	1
894426	3-61	19
	3-63	1
894427	3-61	24
	3-63	18
	4-7	30
894438	3-53	5
894441	3-51	9
894444	3-51	10
	3-53	10
894445	3-51	11
	3-53	11
	3-53	36
894446	3-51	12
	3-53	12
894452	2-11	1
894454	2-11	14
894459	2-11	9
894467	2-11	2
894468	2-11	4
894469	2-11	13
894470	2-11	10
894471	2-11	5
894472	2-11	6
894480	1-57	36
894497	5-3	2
894502	8-3	1
	8-13	
894504	8-3	2
894511	2-115	34
894513	2-113	26
894514	2-113	25
894515	7-41	
	7-43	
894516	7-43	2
894517	2-21	3
894519	7-43	25
894520	3-19	20
894521	3-19	31
894522	2-111	15
894526	2-11	15
894527	2-11	16
894531	3-19	37
	3-21	
894532	3-21	20
894544	2-21	1
894549	4-39	2
894550	7-43	5
894557	7-43	19
894558	4-39	3
894559	7-43	32
894560	4-39	4
894561	4-39	5
894566	4-13	37
894568	2-115	17
894570	2-111	19
894571	4-23	16
894572	2-107	35
894573	2-115	37
894574	7-43	35
894575	7-43	37
894580	3-15	1
894584	3-15	2
894621	1-44	60
894622	1-44	60
894629	2-17	27
894630	2-17	31
894633	2-17	1
894634	2-17	2
894638	2-17	10
894639	2-17	5
894640	2-17	25
894641	2-17	35
894642	2-17	32
894643	2-17	26
894658	3-55	17
894659	3-55	2
894660	3-55	12
894668	3-51	21
	3-55	16
894671	3-57	1
	3-59	19
894682	3-27	22
894703	4-13	18
894706	4-13	27
894742	3-19	21
894746	3-19	1
894747	3-19	16
894749	3-19	18
894793	7-7	23
894823	1-17	1
894828	1-5	1
	1-9	1
894863	1-43	31
894872	4-13	12
894875	4-13	17
894876	4-14	52
894878	4-3	4
	4-13	37
	4-17	
894879	2-21	1
894880	2-21	1
894881	7-43	32
894883	4-39	3
894885	4-13	18
894886	4-13	6
894924	3-51	1
894925	3-51	1
894927	4-7	24
	4-53	
894929	4-7	13
	4-51	
894931	2-19	4
894932	4-7	9
894934	4-7	23

See Service Manual for service procedures.
©2010 HYSTER COMPANY

NUMERICAL INDEX (continued)

PART NO.	PAGE	ITEM
	4-52	
894945	7-21	2
894946	7-21	1
	7-23	
894949	5-7	32
	5-9	32
894950	5-7	30
	5-9	30
894951	5-7	34
894953	5-17	7
894954	5-3	1
	5-17	
894956	2-19	10
	5-17	
	5-17	7
894958	5-18	52
894974	4-7	18
894975	4-7	22
	4-45	
980727	2-23	10
	2-25	10
	2-33	11
	2-35	11
	2-37	20
	2-65	8
981608	2-53	23
982155	2-85	4
982226	2-43	7
982234	3-11	30
	3-37	32
982256	2-76	16
	2-81	10
	2-83	14
983340	3-9	27
	3-29	28
983346	3-11	31
	3-37	30
	3-39	20
983375	3-9	29
	3-29	30
983484	2-39	4
	2-43	4
983761	2-53	24
	3-29	44
	3-33	36
984632	2-23	14
	2-25	14
	2-27	14
985567	3-9	28
	3-9	30
	3-29	29
	3-29	31
986475	2-33	26
	2-35	26
	2-37	18
990429	2-65	15
	2-69	15
	2-73	16
992003	2-29	13
992025	2-33	25
	2-35	25
	2-37	17
992393	2-23	12
	2-25	12
	2-27	12
992522	2-49	13
	7-3	21
	7-7	30
	7-11	30
1151313	1-44	58
1151326	10-23	5
1151722	8-13	23
	8-15	23
1152816	11-17	12
1152830	12-27	8
1198539	5-7	36
1300040	11-17	25
1300050	8-42	56
1300053	11-17	24
1300107	1-51	16
1300117	6-3	13
1300165	6-3	33
1300231	4-55	14
1300742	12-31	32
1300757	4-4	55
	4-13	8
1300978	1-27	13
	1-32	56
1300979	1-27	13
	1-32	56
1300980	1-31	13
1300988	8-17	1
	8-25	1
	8-29	1
	8-41	1
	8-53	1
1300989	8-17	2
	8-25	2
	8-29	2
	8-41	2
	8-53	2
1300990	8-25	31
	8-41	29
	8-53	27
1300991	8-41	19
	8-53	19
1300992	8-53	20
1300993	8-41	30
	8-53	28
1300995	1-13	2
1300996	1-13	2
1300999	8-41	24
1301001	1-35	35
	1-39	35
1301014	9-3	19
	9-7	13
	9-19	16
	12-3	38
1301016	9-3	5
	9-7	10
	9-19	5
	10-3	5
	10-5	10
	10-7	10
	10-21	19
	12-3	5
	12-5	19
	12-9	11
1301018	9-3	3
	9-7	8
	9-19	3
	10-3	3
	10-5	8
	10-7	8
	10-21	17
	12-3	3
	12-5	17
	12-9	4
1301020	1-35	13
	1-39	13
	1-47	
1301026	1-28	50
1301027	1-28	51
1301038	5-5	23
	5-7	9
	5-9	9
	5-11	9
1301041	5-5	31
	5-7	18
	5-9	18
	5-11	18
1301066	1-5	2
	1-19	23
1301086	1-63	11
1301088	1-19	29
	1-23	29
1301089	1-5	33
	1-9	33
1301109	1-19	32
1301121	1-35	17
	1-39	17
1301122	8-41	32
	8-53	30
1301127	1-35	5
	1-39	5
1301129	8-17	21
	8-25	21
	8-29	21
	8-41	21
	8-53	23
1301133	8-41	36
	8-53	34
1301154	4-55	17
1301157	4-9	32
	4-19	23
	11-23	7
	12-31	21
	12-35	12
1301160	4-9	32
	4-19	23
	12-31	21
1301164	5-5	5
1301167	3-25	18
	3-27	18
1301175	5-5	1
1301177	1-5	12
	1-5	18
	1-9	18
	1-19	39
	1-24	39
	1-35	34
	1-39	34
1301179	1-43	25
1301184	1-13	14
	1-17	14
1301189	1-5	20
	1-9	20
	1-20	40
	1-24	40
1301195	1-9	13
1301196	1-5	10
1301203	5-5	25
	5-7	11
	5-9	11
	5-11	11
1301208	1-5	23
	1-9	23
	1-20	47

©2010 HYSTER COMPANY

NUMERICAL INDEX (continued)

PART NO.	PAGE	ITEM
	1-24	47
1301209	1-5	24
	1-9	24
	1-20	48
	1-24	48
1301211	5-5	9
1301224	11-17	6
	12-32	52
	12-35	13
1301229	4-42	1
	4-52	8
1301233	4-7	20
	4-9	1
	4-19	4
1301235	4-9	11
	4-19	6
1301254	1-27	30
	1-31	31
1301255	1-5	22
	1-9	22
	1-20	42
	1-24	42
1301256	1-27	31
	1-31	32
1301260	1-19	2
1301261	1-19	2
1301263	1-5	31
	1-9	31
	1-19	13
	1-23	13
1301264	1-5	32
	1-9	32
1301282	4-10	35
	4-10	35
	4-19	17
1301283	4-10	36
	4-19	16
1301284	1-31	36
	1-35	42
	1-39	42
	4-7	21
	4-9	17
	4-9	29
	4-19	5
	4-19	12
	12-35	14
1301286	1-5	21
	1-9	21
	1-20	41
	1-24	41
1301288	1-5	14
1301292	1-5	36
	1-9	36
	1-20	45
	1-24	45
1301293	1-5	37
	1-9	37
	1-20	46
	1-24	46
1301295	4-9	21
	4-19	21
1301296	4-9	15
	4-19	10
1301297	1-5	30
	1-9	30
	1-19	11
	1-23	11
1301299	4-4	62
	4-7	25
	4-7	28
	4-13	20
	12-31	35
1301310	1-35	7
	1-39	7
1301314	2-13	27
1301323	1-35	4
	1-39	4
1301325	8-3	14
	8-7	14
1301326	1-35	1
	1-39	1
1301327	8-7	3
1301341	4-9	25
	4-19	28
1301346	8-65	10
1301348	6-3	1
	6-7	
1301371	1-13	8
1301372	1-13	9
	1-17	9
1301373	1-13	10
1301374	1-13	11
	1-17	11
1301375	1-13	12
	1-17	12
1301389	1-35	11
	1-39	11
1301393	1-35	14
	1-39	14
1301395	1-35	19
	1-39	19
1301396	1-35	20
	1-39	20
1301397	1-35	21
	1-39	21
1301398	1-35	22
	1-39	22
1301399	1-35	26
	1-39	26
1301400	1-35	27
	1-39	27
1301404	1-35	23
	1-39	23
1301405	1-35	24
	1-39	24
1301406	4-3	29
1301410	1-53	11
1301411	1-53	10
1301412	1-54	16
1301413	1-54	14
1301414	1-5	25
	1-9	25
	1-20	49
	1-24	49
1301416	8-25	33
	8-29	36
	8-42	39
	8-42	53
	8-53	37
1301417	8-25	34
	8-29	37
	8-42	40
	8-42	54
	8-54	38
1301422	6-3	3
1301424	1-69	26
	4-4	53
	4-9	31
	4-14	67
	4-19	24
1301425	6-3	28
1301426	6-3	24
1301428	7-19	25
	7-47	9
	7-49	10
1301429	7-47	8
1301430	7-3	4
	7-8	58
	7-12	58
	7-47	10
	7-49	11
1301431	3-53	38
1301433	3-51	4
	3-53	4
	3-53	4
	5-7	31
	5-9	31
	5-11	31
	7-47	11
	7-49	12
1301434	5-11	47
	7-19	20
	7-47	12
	7-49	13
1301435	7-3	5
	7-8	59
	7-12	59
	7-47	13
	7-49	14
1301437	6-3	21
1301441	2-13	25
1301442	2-13	5
1301528	8-17	19
	8-19	
1301529	8-25	19
	8-29	19
	8-33	
1301530	8-41	22
	8-45	
1301531	8-53	24
	8-57	
1301534	8-4	45
	8-8	58
1301535	3-25	15
	3-27	15
	3-43	15
	3-45	23
1301537	7-3	15
	7-7	29
	7-8	65
	7-11	29
	7-12	65
1301538	7-15	16
	7-17	16
	7-19	16
	7-21	6
1301539	7-7	12
	7-11	12
	7-15	18
	7-17	18
	7-17	23
	7-19	18
	7-45	12
1301540	7-45	18
1301541	7-17	24
1301542	7-3	16
	7-7	29
	7-11	29

See Service Manual for service procedures.
©2010 HYSTER COMPANY

NUMERICAL INDEX (continued)

PART NO.	PAGE	ITEM
1301543	7-45	19
1301544	7-3	13
	7-8	53
	7-12	53
	7-15	19
	7-17	21
	7-19	22
	7-45	26
1301545	7-3	11
	7-8	52
	7-12	52
1301550	7-47	7
1301563	4-10	39
	4-19	36
1301571	9-21	1
	11-7	19
	12-23	31
1301582	3-25	23
	3-27	23
1301585	8-4	35
	8-7	35
1301586	2-7	3
1301589	1-35	25
	1-39	25
1301593	4-4	50
	4-14	62
1301598	1-35	36
	1-39	36
1301605	2-5	1
1301609	2-19	10
	2-21	9
1301616	4-9	32
	4-19	23
	12-31	21
1301634	3-47	1
	3-51	27
	3-53	27
	3-55	1
1301640	4-4	45
	4-13	4
1301642	1-35	46
	1-39	41
1301645	4-9	3
1301647	4-4	60
	4-7	26
	4-13	19
	4-19	18
1301648	4-4	61
	4-7	27
	4-13	21
1301650	9-21	8
	11-7	20
	12-23	37
1301659	9-21	9
1301668	8-3	10
	8-7	10
1301671	8-4	45
	8-8	58
1301676	6-3	34
1301684	1-69	6
1301685	1-69	33
1301686	1-69	24
1301689	7-45	24
1301690	4-10	41
	4-19	40
1301700	1-28	58
	1-31	15
	3-15	3
1301702	1-57	35
	1-61	35
1301703	1-57	36
	1-61	36
1301704	4-9	16
	4-19	11
1301705	1-27	26
	1-31	27
1301706	1-27	28
	1-31	29
1301707	1-27	27
	1-31	28
1301708	1-35	2
	1-39	2
	3-25	37
	3-43	37
	3-45	21
1301717	12-31	26
1301720	12-39	9
1301721	4-7	14
1301726	8-17	5
	8-25	5
	8-29	5
	8-41	5
	8-53	5
1301727	1-69	34
	2-17	28
	12-29	6
1301739	4-9	6
	4-19	25
1301744	1-54	19
1301745	1-31	33
1301746	1-19	16
	1-19	36
	1-23	16
	1-23	36
1301747	4-4	65
	4-10	40
	4-13	24
	4-19	2
1301748	12-31	22
1302305	7-3	8
	7-7	9
	7-11	9
1302735	5-57	37
1302957	2-17	23
1303251	9-19	1
1303261	9-19	15
	10-21	6
	12-3	15
	12-5	6
1303263	2-13	26
1303271	1-63	18
1303272	1-63	18
1303274	1-63	3
1303279	9-19	
1303281	1-57	15
	1-61	15
1303282	1-57	15
	1-61	15
1303311	9-7	1
1303312	9-7	1
1303313	9-7	1
1303314	9-7	1
1303315	9-7	1
1303345	9-3	1
1303346	9-3	1
1303347	9-3	1
1303348	9-3	1
1303361	9-3	
	9-7	
	9-9	
1303362	9-3	
	9-7	
	9-9	
1303363	9-3	
	9-7	
	9-9	
1303364	9-3	
	9-7	
	9-9	
1303365	9-3	
	9-7	
	9-9	
1303366	9-9	1
1303367	9-9	1
1303368	9-9	1
1303369	9-9	1
1303370	9-9	1
1303371	10-21	11
	12-3	23
	12-5	11
1303372	9-9	13
	10-9	13
1303376	2-14	35
1303380	12-3	1
1303383	9-9	3
	10-9	3
	10-16	34
1303384	12-3	35
	12-5	2
1303386	12-3	
1303390	2-17	38
1303391	9-10	26
	10-9	26
1303400	12-3	
1303417	5-41	46
	5-45	46
	5-49	46
	5-60	46
1303431	8-3	5
	8-8	44
1303432	8-3	24
	8-7	24
1303437	4-3	34
1303438	4-3	33
1303440	8-4	38
	8-8	38
1303441	8-4	39
	8-8	39
1303443	8-67	14
	8-71	14
1303455	5-5	39
1303463	7-3	26
	7-3	31
	7-7	18
	7-7	24
	7-11	18
	7-11	24
1303464	7-3	30
	7-8	46
	7-12	46
1303469	7-15	12
1303476	1-53	1
1303477	1-53	1
1303478	1-53	1
1303494	1-53	6
1303551	5-41	12
	5-45	12
	5-49	12

©2010 HYSTER COMPANY

NUMERICAL INDEX (continued)

PART NO.	PAGE	ITEM
	5-53	12
	5-59	12
1304971	1-6	48
	1-10	48
1305696	2-23	3
	2-25	3
	2-29	19
1305697	2-23	15
	2-25	15
1305706	2-29	15
	2-31	11
1305709	2-33	16
1305711	2-33	2
1305714	2-33	3
	2-35	5
1305715	2-33	7
	2-35	7
1305716	2-33	7
	2-35	7
1305717	2-33	9
	2-35	9
1305722	2-65	20
1305723	2-69	21
1305724	2-69	23
1306030	2-39	3
	2-43	3
1306031	2-39	32
	2-43	32
1306033	2-39	25
	2-43	25
	2-47	12
	2-76	15
	2-81	8
	2-83	12
1306034	2-39	29
	2-43	29
1306036	2-39	22
1306037	2-39	33
	2-43	22
1306041	2-39	9
	2-43	9
1306049	3-9	5
	3-29	6
1306125	3-9	9
	3-29	10
1306133	3-9	19
1306134	3-9	20
1306135	3-9	24
	3-29	25
1306143	2-57	16
	2-61	9
	2-63	9
1306180	2-65	4
	2-69	4
1306181	2-65	5
	2-69	4
1306182	2-43	10
	2-65	8
1306185	2-39	10
1306186	2-39	35
1306199	2-91	26
	2-93	26
1306201	2-91	2
1306205	2-91	22
1306208	2-91	31
	2-93	31
1306212	4-26	50
1306214	4-25	45
	4-35	4
1306216	4-25	38
1306219	2-53	29
1306224	2-85	18
1306325	3-29	9
1306328	2-57	34
	2-61	34
	2-63	34
1306329	3-9	1
	3-29	2
	3-33	2
1306331	3-11	3
	3-37	2
	3-40	8
1306334	3-9	36
	3-29	37
1306337	3-11	38
	3-37	37
	3-37	43
1306338	3-33	33
1306339	3-11	39
	3-37	35
1306346	2-33	20
	2-35	20
1306347	2-33	22
1306350	2-29	9
	2-31	8
1306351	2-65	30
	2-69	30
	2-73	30
1306352	2-65	32
	2-69	32
1306353	2-65	33
	2-69	33
	2-73	35
	4-35	7
1306354	2-39	38
1306355	2-39	20
1306356	2-39	6
	2-43	6
1306357	2-39	28
	2-43	27
	2-47	10
	4-37	16
1306358	2-39	14
	2-43	14
	2-47	9
	2-49	12
	2-57	22
	2-57	28
	2-57	39
	2-61	22
	2-63	22
	2-81	5
	2-81	13
	2-83	11
	2-95	11
	4-25	44
	4-35	11
1306359	2-39	26
	2-43	26
	2-47	11
	2-49	18
	2-57	10
	2-57	19
	2-57	23
	2-61	19
	2-61	23
	2-63	19
	2-63	23
	2-76	17
	2-79	26
	2-83	13
	2-91	14
	2-93	14
	2-95	4
	3-9	8
	3-33	9
	3-33	44
1306360	2-39	31
	2-43	31
1306361	2-39	34
	2-43	34
	2-47	3
1306362	2-39	27
	2-43	28
	2-47	8
	2-53	34
	2-79	23
	3-11	16
	3-13	5
	3-37	3
	3-39	9
	4-37	14
1306364	2-39	21
	2-43	21
1306365	2-13	31
	2-74	13
	2-76	13
	4-25	41
	7-35	12
1306368	2-13	33
	2-74	6
	2-76	6
	2-79	9
	2-81	9
	2-83	22
1306370	2-85	14
	2-85	14
	2-87	6
	2-103	18
1306371	2-33	23
	2-35	23
	2-49	30
	3-9	10
	3-11	9
	3-29	11
	3-33	42
	3-37	9
	3-40	7
1306372	3-9	35
1306373	2-91	12
	2-93	12
	3-9	25
	3-29	26
1306374	2-57	4
	2-61	4
	2-63	4
1306578	12-27	5
1306579	12-27	6
1307367	9-22	34
	9-22	34
	9-22	34
	9-22	34
1307375	9-22	33
1307641	10-25	12
1307736	4-10	38
	4-19	37
	6-3	42
1307737	1-5	16

©2010 HYSTER COMPANY

NUMERICAL INDEX (continued)

PART NO.	PAGE	ITEM
	1-5	38
	1-9	38
	1-20	44
	1-24	44
	4-7	31
	4-10	37
	6-3	41
1307875	2-57	42
	2-61	8
	2-63	8
1307876	2-57	9
1307877	2-103	17
1307881	2-39	37
	2-53	12
	2-57	29
	2-61	29
	2-63	29
	2-69	36
	2-73	11
	2-83	21
	2-91	28
	2-93	28
	2-95	11
	2-101	8
	2-103	5
	2-103	15
	3-33	7
1307886	2-101	13
1307888	2-65	9
1307890	2-103	17
1307891	2-49	35
	2-81	14
	3-11	8
	3-37	8
	3-40	6
1307894	2-74	9
	2-76	9
	2-95	7
1307895	2-91	13
	2-93	13
1307897	2-101	5
1307898	2-57	38
	2-91	18
	2-91	33
	2-93	18
	2-95	13
	4-26	49
1307900	2-91	10
1307901	2-49	17
	2-63	7
	2-93	9
1307902	2-49	38
	2-91	7
	2-93	7
1307904	2-91	5
1307906	4-25	40
1307907	4-25	37
1307908	2-89	7
	2-95	6
	4-26	51
	4-35	12
	4-37	4
1307909	2-79	28
1307910	2-33	21
	2-35	21
	2-37	26
	2-49	33
	2-53	33
	2-85	9
	2-103	14
	4-25	36
	4-35	14
1307911	2-85	15
	4-26	48
	4-35	6
1307913	2-13	31
	2-49	34
	2-83	20
	2-91	29
	2-93	35
1307914	2-79	10
	3-11	7
	3-37	7
	3-40	5
	4-35	15
	4-37	6
1307922	3-33	39
	3-37	25
1307923	3-33	40
	3-37	26
1307994	5-37	32
1308007	3-11	37
	3-37	36
1308030	4-35	9
1308050	1-54	17
1308955	8-42	56
1309059	7-55	1
1309065	7-55	4
1309067	7-55	5
1309068	7-55	6
1309071	7-55	9
1309403	7-57	34
1309427	7-55	10
1309475	8-17	20
	8-25	20
	8-29	20
	8-41	20
1309479	8-41	35
	8-53	21
	8-53	33
1309503	7-3	33
	7-8	56
	7-12	56
1309524	1-36	54
1309568	5-41	
1309569	12-31	28
1309570	12-31	29
1309824	1-27	15
	1-31	16
1309831	2-91	24
	2-93	24
1309832	2-29	14
1310027	11-7	8
1310277	4-13	35
	4-25	43
	4-35	2
	4-37	2
1310369	10-25	4
1310372	10-25	7
1310592	9-3	7
	9-7	7
	9-19	12
	10-3	7
	10-5	7
	10-7	7
	10-21	16
	12-3	12
	12-5	16
	12-9	8
1310608	9-21	18
	10-31	12
	11-7	7
	12-23	12
1310609	9-21	19
	11-7	6
	12-23	13
1310612	9-21	12
	11-7	27
	12-23	25
1310616	3-47	12
1310630	11-23	6
	12-31	23
	12-35	15
1310637	9-21	24
	10-31	20
	11-7	3
	12-23	6
1311054	2-25	29
	2-27	29
1311055	2-25	30
	2-27	30
1311056	2-25	31
	2-27	31
1311057	2-25	32
	2-27	32
1311058	2-25	16
	2-27	16
1311067	3-29	21
1311070	3-11	25
	3-29	42
	3-33	4
	3-33	31
	3-37	39
	3-37	42
1311074	2-49	39
	2-53	30
	7-35	10
1311081	2-57	26
	2-61	26
1311085	2-103	11
1311094	2-79	21
	2-83	18
1311208	9-21	26
	12-3	32
1311209	12-31	4
1311213	1-27	32
	1-67	1
1311217	1-5	15
	1-5	40
	1-9	40
	1-20	43
	1-24	43
1311219	3-27	2
1311252	12-31	25
1311254	12-31	31
1311260	1-69	23
1311264	9-21	9
	11-7	22
	12-23	38
1311265	9-21	22
	11-7	16
	12-23	11
1311267	1-69	1
1311268	4-4	58
	4-13	23
1311272	1-35	10
	1-39	10
1311273	1-35	18

©2010 HYSTER COMPANY

NUMERICAL INDEX (continued)

PART NO.	PAGE	ITEM
	1-39	18
1311287	1-5	41
	1-9	41
	1-19	28
	1-23	28
1311288	1-5	19
	1-9	19
	1-19	27
	1-23	27
1311295	1-69	27
1311296	1-69	28
1311297	1-69	29
1311300	1-69	32
1311302	1-13	13
1311303	1-13	13
1311337	9-22	31
	10-31	23
	12-23	1
1311339	9-22	31
	12-23	1
1311340	9-22	31
	12-23	1
1311341	9-22	31
	12-23	1
1311342	9-22	32
	12-23	2
1311343	9-22	34
1311344	9-22	32
	9-22	32
	9-22	32
	9-22	32
	12-23	2
1311345	9-22	33
	9-22	33
	9-22	33
	9-22	33
1311346	1-6	46
	1-57	14
	1-61	14
1311350	8-65	12
1311351	8-65	11
1311358	6-15	
1311360	2-14	36
1311362	9-22	26
1311363	9-21	26
1311366	6-3	2
	6-8	
1311371	1-49	26
1311375	7-3	12
	7-8	42
	7-12	42
1311376	7-47	6
	7-49	7
1311377	12-19	1
1311378	12-19	1
1311379	12-21	1
1311380	12-21	1
1311384	12-21	1
1311385	12-21	1
1311388	1-5	17
	1-9	17
	1-19	38
	1-23	38
1311403	4-10	46
1311407	6-11	2
1311409	1-49	21
1311423	1-54	20
1311425	12-31	1
1311430	1-19	13
	1-23	13
1311432	1-19	2
1311433	1-19	2
1311485	10-31	22
1311517	3-29	48
1311518	3-29	36
1311603	2-49	16
1311708	3-9	2
1311780	8-13	1
	8-15	1
1311781	8-13	4
	8-15	4
1311782	8-13	8
1311783	8-13	11
	8-15	11
1311784	8-13	12
1311785	8-13	16
	8-15	16
1311786	8-13	24
	8-15	24
1311787	8-13	7
1311788	8-13	19
1311791	8-13	9
	8-15	9
1311792	8-13	10
	8-15	10
1311793	8-13	18
1311794	8-13	26
	8-15	3
1311795	8-13	15
	8-15	15
1312083	5-63	38
1312339	4-9	2
	4-9	3
1312340	4-9	2
	4-9	3
1312344	4-9	3
1312345	4-19	33
1312450	1-27	15
	1-31	16
1312465	12-27	2
1312473	4-9	2
	4-9	3
	4-19	34
1312474	4-19	33
1312608	7-51	1
1312609	7-51	1
1312614	7-51	28
1312616	5-57	14
	5-63	16
1312617	5-57	15
1312618	5-57	16
1312619	5-57	18
1312620	5-57	21
1312624	5-57	41
1312633	5-57	2
1312634	5-57	2
1312635	5-57	4
1312636	5-57	17
1312637	5-57	23
1312638	5-57	26
1312640	5-57	33
1312641	5-57	34
1312642	5-57	35
1312643	5-57	38
1312645	5-57	42
1312805	5-41	30
	5-45	30
	5-49	30
	5-53	30
	5-59	30
1312807	5-41	36
	5-45	36
	5-49	36
	5-53	36
	5-59	36
1312814	7-57	9
1312821	8-13	
	8-15	
1312823	5-3	14
1312824	5-3	15
1312825	5-3	16
1312827	5-3	17
1313350	12-3	36
1313351	12-3	37
1313356	8-3	25
	8-7	25
1313357	9-7	2
	9-19	2
	10-5	2
	10-7	2
	12-3	2
1313358	9-7	4
	9-19	7
	10-5	4
	10-7	4
	10-21	13
	12-3	7
	12-5	13
	12-9	15
1313374	6-11	9
1313375	6-11	8
1313379	9-17	1
1313386	9-17	6
1313390	12-21	1
1313394	4-3	4
	4-41	
1313733	1-47	1
1313734	1-47	2
1313735	1-47	4
1313736	1-47	5
1313737	1-47	6
1313744	1-47	3
1313869	5-41	20
	5-45	20
	5-49	20
	5-53	20
1313876	5-57	5
1313879	5-57	19
1313883	5-57	12
1313884	5-57	13
1313885	5-57	22
1313887	5-57	27
1313888	5-57	28
1313889	5-57	32
1313890	5-57	36
1313904	3-25	20
	3-27	20
1314295	8-13	25
1315497	2-79	24
	2-95	5
	2-101	13
	4-37	5
1315621	5-3	19
1315648	7-51	18
1315649	5-45	1
1315750	2-33	24
	2-35	24
1315751	3-9	37

See Service Manual for service procedures.
©2010 HYSTER COMPANY

NUMERICAL INDEX (continued)

PART NO.	PAGE	ITEM
	3-29	38
1315752	3-9	38
1315778	6-7	10
1315779	6-7	13
1315780	6-7	14
1315781	6-7	15
1315918	3-15	38
1316039	5-41	6
	5-45	6
1316040	5-41	14
	5-45	14
	5-49	14
	5-53	14
	5-59	14
1316041	5-41	21
	5-45	21
	5-49	21
	5-53	21
	5-59	21
1316042	5-41	24
	5-45	24
	5-49	24
	5-53	24
	5-59	24
1316043	5-41	27
	5-45	27
	5-49	27
	5-53	27
	5-59	27
1316044	5-41	15
	5-45	15
	5-49	15
	5-53	15
	5-59	17
1316045	5-41	23
	5-45	23
	5-49	23
	5-53	23
	5-59	23
1316047	5-41	31
	5-45	31
	5-49	31
	5-53	31
	5-59	31
1316049	5-41	37
	5-45	37
	5-49	37
	5-53	37
	5-59	37
1316306	5-41	9
	5-45	9
	5-49	9
	5-53	9
	5-59	9
1316307	5-41	11
	5-45	11
	5-49	11
	5-53	11
	5-59	11
1316309	5-41	16
	5-45	16
	5-49	16
	5-53	16
	5-59	15
1316310	5-41	17
	5-45	17
	5-49	17
	5-53	17
	5-59	16
1316312	5-41	25
	5-45	25
	5-49	25
	5-53	25
	5-59	25
1316313	5-41	28
	5-45	28
	5-49	28
	5-53	28
	5-59	28
1316314	5-41	35
	5-45	35
	5-49	35
	5-53	35
	5-59	35
1316316	5-41	39
	5-45	39
	5-49	39
	5-53	39
	5-59	39
1316317	5-45	40
	5-49	40
1316318	5-45	40
	5-49	40
1316322	7-51	25
1316384	7-51	31
1316479	12-27	18
1316480	12-27	13
1316485	12-27	1
1316527	11-17	5
1316540	1-54	13
1316806	8-17	22
	8-25	22
	8-29	22
	8-42	42
	8-54	40
1316807	8-17	23
	8-25	23
	8-29	23
	8-42	43
	8-54	41
1317394	4-9	2
	4-9	3
1318306	2-50	40
	2-53	13
	4-37	8
1318324	2-49	10
	2-53	10
	7-25	
1318900	2-33	1
1318903	2-33	27
	2-35	27
1318904	2-33	13
	2-35	13
	2-85	16
1318906	2-29	1
1318907	2-29	2
	2-31	2
1318908	2-29	2
	2-31	2
1318909	2-29	2
	2-31	2
1318910	2-29	2
	2-31	2
1318912	2-65	13
	2-69	14
1318913	2-65	14
1318914	2-65	31
1318916	2-39	8
	2-43	8
1318918	2-39	29
1318919	2-57	27
1318920	2-57	30
	2-61	30
	2-63	30
1318921	2-57	35
	2-91	19
	2-93	19
	2-95	14
	2-95	14
1318922	2-57	37
1318924	3-9	12
1318925	3-9	13
1318926	3-9	14
1318927	3-9	15
1318928	3-9	16
1318929	3-9	17
1318930	3-9	18
1318931	3-9	26
	3-29	27
1318933	3-9	33
1318934	3-9	34
1318935	2-13	28
1318937	2-13	32
1318940	2-57	5
	2-61	5
	2-63	5
1318943	2-57	12
	2-61	12
	2-63	12
1318945	2-57	17
1318946	2-57	18
	2-61	18
	2-63	18
1318947	2-57	20
	2-61	20
	2-63	20
1318948	2-57	21
	2-61	21
	2-63	21
1318949	2-57	24
	2-61	24
	2-63	24
1318950	2-57	25
	2-61	25
1318951	2-61	10
	2-63	10
1318952	2-65	1
	2-69	1
1318953	2-65	2
	2-69	2
1318954	2-65	3
	2-69	3
1318956	2-74	7
	2-76	7
1318958	2-74	11
	2-76	11
1318960	2-29	20
1318961	2-29	26
	2-31	20
1318962	2-91	15
	2-93	15
1318963	2-79	4
	2-81	4
	2-91	20
	2-93	20
1318964	2-91	30
	2-93	30
1318965	2-95	12

©2010 HYSTER COMPANY

NUMERICAL INDEX (continued)

PART NO.	PAGE	ITEM
1318967	2-91	8
	2-93	8
1318968	2-57	35
	2-61	35
	2-63	28
	2-79	18
	2-91	33
	2-93	33
	2-95	10
	4-25	42
	4-35	16
1318969	2-49	1
1318970	2-49	2
1318971	2-49	4
1318972	2-49	5
1318973	2-49	7
1318974	2-49	9
1319027	2-49	14
	7-35	2
1319028	2-49	20
1319029	2-49	19
1319030	2-49	22
1319031	2-49	25
1319032	2-49	26
1319033	2-49	28
	2-53	25
1319034	2-49	29
1319035	2-49	31
1319036	2-49	32
1319037	2-49	36
1319038	2-49	37
	2-53	14
1319040	2-49	3
	2-53	20
1319041	2-85	1
	2-87	1
1319042	2-85	5
	2-87	5
1319043	2-85	6
	2-87	4
1319045	2-85	8
1319046	2-85	10
1319047	2-85	13
1319050	3-11	2
	3-37	2
	3-39	2
	3-40	1
1319051	3-11	6
	3-37	6
	3-40	4
1319053	3-11	10
	3-37	10
	3-39	3
1319054	3-11	14
	3-37	14
	3-39	7
1319056	3-11	20
1319057	3-11	27
	3-37	27
1319058	3-11	33
	3-37	33
	3-39	22
1319059	3-11	36
	3-37	34
1319060	2-23	20
	2-25	28
	2-27	28
1319062	2-29	17
1319063	2-29	18
1319089	2-91	
1319175	4-3	14
	4-14	58
1319176	1-43	33
	8-11	21
1319177	1-27	20
	1-31	21
1319189	1-43	3
1319190	4-14	55
1319373	3-19	36
1320001	4-9	2
	4-9	3
1320264	3-15	43
1320975	8-50	60
	8-57	47
1320976	8-19	4
	8-21	4
	8-33	4
	8-37	4
	8-45	4
	8-49	4
	8-57	4
	8-61	4
1320977	8-33	34
	8-45	34
	8-45	34
	8-57	34
1320978	8-19	21
	8-33	21
	8-45	21
	8-57	21
1320979	8-19	39
	8-21	39
	8-34	52
	8-38	52
	8-46	65
	8-50	65
	8-58	52
	8-62	52
1320980	8-19	1
	8-21	1
	8-33	1
	8-37	1
	8-45	1
	8-49	1
	8-57	1
	8-61	1
1320981	8-19	2
	8-21	2
	8-33	2
	8-37	2
	8-45	2
	8-49	2
	8-57	2
	8-61	2
1320982	8-19	3
	8-19	5
	8-19	22
	8-21	3
	8-21	5
	8-21	22
	8-21	41
	8-33	3
	8-33	5
	8-33	22
	8-33	35
	8-37	3
	8-37	5
	8-37	22
	8-37	35
	8-38	54
	8-45	3
	8-45	5
	8-45	22
	8-45	35
	8-46	48
	8-49	3
	8-49	5
	8-49	22
	8-49	35
	8-50	48
	8-50	67
	8-57	3
	8-57	5
	8-57	22
	8-57	35
	8-61	3
	8-61	5
	8-61	22
	8-61	35
	8-62	54
1320983	8-19	38
	8-21	38
	8-34	51
	8-38	51
	8-46	64
	8-50	64
	8-58	50
	8-62	50
1320984	8-50	62
	8-57	49
1320985	8-50	61
	8-57	48
1320986	8-19	37
	8-21	37
	8-34	50
	8-38	50
	8-46	63
	8-50	63
	8-58	51
	8-62	51
1320988	8-19	31
	8-33	31
	8-33	44
	8-45	31
	8-45	44
	8-46	57
	8-50	57
	8-57	31
	8-57	44
1320989	8-19	32
	8-33	32
	8-33	45
	8-45	32
	8-45	45
	8-57	32
	8-57	45
1320990	8-45	33
	8-49	33
1320991	8-19	15
	8-21	15
	8-33	15
	8-33	40
	8-37	15
	8-37	40
	8-45	15
	8-45	40
	8-49	15
	8-49	40

See Service Manual for service procedures.
©2010 HYSTER COMPANY

NUMERICAL INDEX (continued)

PART NO.	PAGE	ITEM
	8-57	15
	8-57	40
	8-61	15
	8-61	40
1320992	8-19	8
	8-21	8
	8-33	8
	8-37	8
	8-45	8
	8-49	8
	8-57	8
	8-61	8
1320994	8-19	14
	8-21	14
	8-21	31
	8-33	14
	8-37	14
	8-37	31
	8-37	44
	8-45	14
	8-49	14
	8-49	31
	8-49	44
	8-57	14
	8-61	14
	8-61	31
	8-61	44
1320995	8-19	16
	8-21	16
	8-33	16
	8-37	16
	8-45	16
	8-49	16
	8-57	16
	8-61	16
1320996	8-19	17
	8-21	17
	8-33	17
	8-37	17
	8-45	17
	8-49	17
	8-57	17
	8-61	17
1320997	8-19	18
	8-21	18
	8-33	18
	8-37	18
	8-45	18
	8-49	18
	8-57	18
	8-61	18
1320998	8-19	20
	8-21	20
	8-21	32
	8-33	20
	8-37	20
	8-37	32
	8-37	45
	8-45	20
	8-45	32
	8-49	20
	8-49	32
	8-49	45
	8-57	20
	8-61	20
	8-61	32
	8-61	45
1320999	8-19	34
1321375	8-19	36
1321376	8-19	35
1321377	8-21	34
	8-33	47
1321378	8-37	47
1321379	8-37	49
	8-46	62
1321380	8-37	48
	8-46	61
1321381	8-19	39
	8-21	39
	8-34	52
	8-38	52
	8-46	65
	8-50	65
	8-58	52
	8-62	52
1321382	8-21	36
	8-33	49
1321383	8-21	35
	8-33	48
1321911	1-27	6
	1-31	6
1322322	7-4	42
	7-7	3
	7-11	3
	7-45	4
1322337	7-4	44
	7-7	5
	7-11	5
1322338	7-4	45
	7-7	6
	7-11	6
1322339	7-4	41
	7-7	2
	7-11	2
1322340	7-4	46
	7-7	7
	7-11	7
1322342	7-4	43
	7-7	4
	7-11	4
1322343	7-45	2
1322344	7-8	67
	7-12	67
	7-45	3
1322346	7-45	5
1322347	7-45	6
1322348	7-45	7
1322349	7-45	8
1322390	12-27	1
1322393	12-27	1
1322627	5-18	47
1323024	3-29	19
1323115	1-49	22
1323116	1-49	25
1323117	1-49	23
1323146	5-13	33
	5-17	33
1323579	4-52	4
1323825	11-3	
1323837	9-3	1
1323839	9-9	1
1323844	9-17	4
1323845	9-13	11
	9-17	5
1323847	9-3	
	9-7	
	9-9	
1323848	9-7	1
1323852	11-17	32
1323854	11-17	2
1323856	11-17	1
1323862	8-8	41
1323863	8-8	42
1323864	8-8	43
1323865	8-8	49
1323866	8-8	50
1323867	8-8	51
1323869	8-8	52
1323870	8-8	53
1323884	7-3	25
	7-8	44
	7-12	44
1323885	7-3	32
	7-8	43
	7-12	43
1323889	5-41	43
	5-45	43
	5-49	43
	5-53	42
	5-59	43
1323892	9-13	17
1323993	11-23	7
	12-31	21
	12-35	12
1324084	1-13	13
	1-13	13
1324088	1-13	13
	1-13	13
1324313	4-9	2
	4-19	34
1324744	4-10	42
	4-19	41
1324761	1-13	13
	1-13	13
1324762	1-13	13
	1-13	13
1324765	1-13	13
	1-13	13
1324767	1-13	13
	1-13	13
1324996	4-7	4
1325329	1-20	50
1325331	4-7	8
	4-10	51
	4-19	20
1325336	1-57	1
1325338	1-57	2
1325346	1-49	13
1325356	1-49	
1325366	8-4	47
	8-8	60
1325379	4-4	66
1325380	7-45	13
1325382	8-68	24
	8-72	24
1325398	1-44	42
1325399	1-44	43
1325519	1-5	42
	1-9	42
	1-19	19
	1-23	19
1325548	1-35	16
	1-39	16
1325550	1-19	31
	1-23	31
1325551	1-43	24
1325553	2-7	9
1325555	1-43	11

©2010 HYSTER COMPANY

NUMERICAL INDEX (continued)

PART NO.	PAGE	ITEM
1325557	1-43	22
1325564	6-3	29
1325567	1-28	52
1325576	1-28	53
	1-31	40
1325583	1-19	32
	1-23	32
1325585	1-35	15
	1-39	15
1325597	1-5	7
	1-9	7
1325598	1-5	6
1325599	1-5	8
	1-9	8
1325600	1-5	9
1325604	1-69	21
1325610	4-3	42
	4-13	25
1325611	4-9	30
	4-19	3
1325613	1-54	15
1325616	1-5	8
	1-9	8
1325617	1-19	32
	1-23	32
1325619	1-19	3
	1-23	3
1325620	1-19	4
	1-23	4
1325621	1-19	6
	1-23	6
1325622	1-19	7
	1-23	7
1325623	1-5	34
	1-9	34
	1-19	15
	1-23	15
1325624	1-5	35
	1-9	35
	1-19	14
	1-23	14
1325726	1-19	14
	1-23	14
1325729	1-19	15
	1-23	15
1325730	1-19	8
	1-23	8
1325731	1-19	5
	1-23	5
1325737	1-44	57
1326055	12-35	16
1326100	7-3	1
	7-45	1
1326337	1-51	12
1326355	11-23	7
	12-31	21
	12-35	12
1326366	12-27	1
1326699	8-29	32
1326750	7-3	30
	7-8	46
	7-12	46
1326755	8-67	24
	8-72	24
1326756	7-4	51
	7-7	15
	7-7	19
	7-11	15
	7-11	19
1326757	7-3	6
	7-3	35
	7-7	13
	7-8	50
	7-11	13
	7-12	50
1326761	8-41	1
1326762	8-7	1
	8-13	
1326763	7-7	16
	7-11	16
1326764	8-68	26
	8-72	26
1326772	1-69	30
1326774	8-7	13
1326775	8-7	12
1326777	9-3	11
	10-3	11
1326783	11-17	13
1326784	11-17	19
1326785	11-17	20
1326786	11-17	35
1326789	11-17	35
1326791	11-17	16
1326793	11-17	3
1326795	11-17	4
1326804	11-17	18
1326805	11-17	34
1326808	6-3	38
1326809	8-42	58
1326810	8-42	59
1326812	8-3	24
	8-7	24
1326813	8-4	38
	8-8	38
1326814	8-4	39
	8-8	39
1326815	1-53	1
1326816	1-53	1
1326931	4-29	28
1327164	4-52	6
1327501	8-15	16
1327575	5-13	16
	5-17	16
1327580	5-26	1
1327582	5-23	3
	5-25	9
	5-29	3
1327583	5-23	22
1327586	5-26	2
1327587	5-29	16
1327588	5-25	22
1327590	5-30	6
1327591	5-23	18
1327592	5-31	3
1327593	5-31	2
1327595	5-13	7
1327596	5-21	8
1327598	5-21	5
1327601	5-23	10
	5-25	13
1327602	5-23	20
	5-25	3
	5-29	4
1327603	5-23	11
	5-25	19
1327605	5-25	21
1327606	5-21	9
1327608	5-25	15
1327611	5-21	1
1327612	5-33	1
1327615	5-13	5
1327616	5-31	5
1327619	5-13	1
	5-17	1
1327620	5-13	9
	5-17	9
1327621	5-13	3
1327624	5-13	19
	5-17	19
1327625	5-37	1
1327628	5-37	2
1327630	5-37	3
1327633	5-37	10
1327634	5-37	12
1327635	5-37	13
1327636	5-37	14
1327638	5-37	18
1327639	5-37	19
1327640	5-37	20
1327641	5-37	23
1327643	5-35	13
1327644	5-35	15
1327645	5-37	30
1327646	5-35	20
1327647	5-37	31
1327649	5-35	1
1327650	5-25	18
1327651	5-23	15
1327652	5-30	2
1327653	5-23	23
1327655	5-35	21
1327656	5-3	3
1327658	5-13	4
1327659	5-13	6
	5-17	6
1327660	5-13	8
	5-17	8
1327661	5-33	24
1327662	5-3	1
	5-13	
1327663	5-21	2
1327664	5-23	
1327665	5-25	
1327666	5-29	
1327667	5-23	1
1327668	5-25	1
	5-26	
1327670	5-29	1
1327671	5-13	20
	5-17	20
1327681	5-3	2
1327682	2-5	6
	5-3	21
1327683	5-13	17
	5-17	17
1327691	5-3	7
1327692	5-13	10
	5-17	10
1327694	5-13	12
	5-17	12
1327695	5-13	13
	5-17	13
1327696	5-21	11
1327697	5-31	8
1327699	2-19	1
1327702	2-7	8
1327703	5-5	34
	5-7	21

See Service Manual for service procedures.
©2010 HYSTER COMPANY

NUMERICAL INDEX (continued)

PART NO.	PAGE	ITEM
	5-9	21
	5-11	21
1327705	5-3	20
1327706	2-7	1
1327708	5-5	44
	5-7	41
	5-9	42
	5-11	48
1327709	5-5	41
1327710	5-13	11
	5-17	11
1327711	5-30	3
1327732	5-30	5
1327742	5-37	15
1327743	5-37	29
1327745	5-30	1
1327746	5-5	35
	5-7	22
	5-9	22
	5-11	22
1327747	5-5	36
	5-7	23
	5-9	23
	5-11	23
1327748	5-5	37
	5-7	24
	5-9	24
	5-11	24
1327751	7-3	37
	7-7	11
	7-11	11
	7-45	21
	7-57	
1327803	5-13	25
	5-17	25
1327811	5-37	9
1327818	8-3	20
	8-7	20
1327819	8-3	21
	8-7	21
1327821	5-3	24
1327895	6-3	36
1327905	2-74	1
	2-76	1
1328565	2-39	20
	2-43	20
1328695	9-9	7
1328696	8-41	35
	8-53	21
	8-53	33
1328697	8-42	37
	8-53	35
1328699	8-17	4
	8-25	4
	8-25	30
	8-29	4
	8-29	30
	8-41	4
	8-41	23
	8-41	28
	8-53	4
	8-53	25
	8-53	26
1328917	5-57	31
1328919	5-57	24
1328920	5-57	25
1328921	5-57	2
1328930	8-17	10
	8-25	10
	8-29	10
	8-41	10
	8-53	10
1328946	9-15	7
	10-13	7
1329030	4-23	27
1329147	4-48	2
1329308	10-29	3
1329414	4-9	2
	4-19	34
1329417	7-25	1
	7-27	1
1329418	7-25	2
	7-27	2
1329419	7-25	3
	7-27	3
1329420	7-25	4
	7-27	4
1329425	7-25	33
1329426	7-25	35
1329428	7-25	37
	7-27	36
1329440	11-15	
1329441	11-21	1
1329442	11-21	2
1329443	11-21	3
1329444	11-21	4
1329445	11-21	5
1329446	11-21	6
1329447	11-21	7
1329448	11-21	8
1329449	11-21	
1329450	11-3	37
	11-5	1
1329451	11-3	38
	11-5	1
1329452	11-5	2
1329453	11-5	3
1329454	11-5	3
1329455	11-5	4
1329457	11-5	6
1329458	11-5	7
1329461	11-19	1
1329464	11-19	4
1329465	11-5	18
1329466	11-5	14
1329468	11-5	17
1329469	11-5	16
1329470	11-5	19
1329474	11-5	23
1329475	11-13	1
1329476	11-13	3
1329477	11-13	3
1329478	11-5	11
1329479	11-5	13
1329480	11-13	2
1329481	11-13	4
1329482	11-13	5
1329483	11-13	6
	11-13	6
1329486	11-13	8
1329487	11-13	8
1329490	11-19	6
1329493	11-19	9
1329494	11-5	10
1329495	11-5	10
1329498	11-3	21
1329499	11-3	20
1329639	11-3	9
	11-3	11
1329641	11-3	9
	11-3	11
1329691	5-41	1
1329693	5-49	13
1329694	5-41	22
	5-45	22
	5-49	22
	5-53	22
	5-59	22
1329700	5-41	40
1329701	5-41	40
1329703	7-51	1
1329704	7-51	1
1329705	7-51	3
1329707	7-51	7
1329708	7-51	7
1329710	7-51	20
1329714	7-51	27
	7-55	
1330298	4-48	1
1330409	4-55	11
	12-29	13
1330410	5-18	53
	8-29	34
1330411	4-42	5
	12-24	43
1330412	4-45	5
	4-47	5
	4-51	19
1330413	4-45	1
	4-47	1
	4-51	7
1330414	12-29	14
1330415	5-18	53
1330416	4-42	6
	12-24	44
1330417	4-45	6
	4-47	6
	4-51	20
1330418	4-45	2
	4-47	2
	4-51	8
1330419	4-45	18
	4-47	18
	4-51	4
	12-9	35
1330420	4-42	3
	4-45	13
	4-47	13
	4-51	17
1330421	12-9	35
	12-24	45
1330422	4-51	13
	4-53	1
1330423	4-51	15
	4-52	14
1330424	4-45	19
	4-47	19
	4-51	5
	12-9	35
1330426	4-42	4
	4-45	14
	4-47	14
	4-51	18
1330427	12-9	35
	12-24	47
1330428	4-53	2
1330429	4-51	14
	4-51	16

©2010 HYSTER COMPANY

NUMERICAL INDEX (continued)

PART NO.	PAGE	ITEM
	4-52	15
1330433	8-29	34
	12-24	42
1330434	12-9	35
1330436	12-24	46
1330437	4-45	4
	4-47	4
	4-51	9
	4-51	21
	4-52	13
	12-29	15
1330438	4-45	15
	4-47	15
	4-51	6
	4-52	16
	4-53	4
1330439	4-45	3
	4-47	3
	4-51	12
	4-52	12
	4-53	3
1330453	2-113	11
1330566	12-31	17
1330567	12-31	18
1330569	12-31	8
1330574	1-5	3
	4-9	4
	4-19	35
1330576	1-54	25
1330581	11-17	21
1330582	11-17	22
1330603	11-19	12
	12-23	18
1330604	8-41	22
	8-45	
1330607	11-7	37
1330609	11-8	44
1330610	11-8	45
1330611	11-8	42
1330612	11-8	43
1330614	11-7	36
1330615	11-8	51
1330616	11-7	33
1330618	11-8	40
1330619	11-17	17
1330917	1-53	7
1330920	1-53	4
1331014	7-57	19
1331015	7-57	32
1331017	7-57	33
1331018	7-57	12
1331033	7-4	40
	7-7	1
	7-11	1
1331034	7-3	2
	7-8	55
	7-12	55
	7-19	28
1331037	4-7	32
1331047	7-45	22
1331048	7-45	13
1331049	7-45	14
1331233	4-52	9
1331341	2-105	8
	2-105	17
1331521	8-13	2
	8-15	2
1331523	8-13	16
1331527	12-35	3
1331528	11-17	28
1331530	4-9	22
	4-10	50
	4-19	19
1331532	12-35	4
1331559	11-23	7
	12-35	12
1331560	11-23	7
	12-35	12
1331561	1-63	19
1331562	1-63	19
1331575	1-63	22
1331581	8-71	14
1331591	12-35	2
1331592	12-35	2
1331593	11-23	1
1332078	7-57	11
1332084	7-57	34
1332275	11-11	14
1332276	11-13	9
1332277	11-11	17
	11-13	10
	11-15	33
1332278	11-3	7
	11-3	15
1332280	11-3	16
1332281	11-3	17
1332283	11-11	6
	11-15	35
1332284	11-3	2
1332285	11-3	3
1332288	11-3	25
1332289	11-3	26
1332292	11-11	12
1332293	11-11	1
1332294	11-11	2
1332295	11-11	3
1332296	11-11	4
1332297	11-11	5
1332299	11-11	10
1332300	11-3	10
1332302	11-11	9
1332303	11-3	28
1332304	11-3	29
1332305	11-3	30
1332306	11-3	31
1332309	11-3	23
1332310	11-3	8
1332313	11-3	33
1332314	11-3	34
1332315	11-3	13
1332316	11-3	14
1332317	11-5	19
1332318	11-11	13
1332319	11-11	18
1332320	11-3	27
	11-15	
1332321	11-3	1
	11-11	16
	11-21	
1332322	11-15	21
1332324	11-11	15
1332325	11-11	19
	11-15	37
1332326	11-15	24
1332329	11-15	27
1332330	11-15	28
1332332	11-15	25
1332333	11-15	23
1332335	11-15	22
1332337	11-15	20
1332339	11-15	1
1332340	11-15	2
1332342	11-15	4
1332343	11-15	5
1332344	11-15	7
1332346	11-15	9
1332347	11-15	10
1332348	11-15	11
1332349	11-15	12
1332780	7-55	2
1332831	3-11	17
1332905	12-32	51
1332907	8-4	59
	8-7	7
1332908	12-31	8
1332915	1-44	38
1332917	1-44	40
1332927	11-23	5
1332940	8-4	59
	8-7	7
1332941	8-4	36
	8-7	36
1332942	8-3	26
	8-7	26
1332943	8-3	26
	8-7	26
1332944	8-65	11
1332947	7-3	31
	7-3	32
	7-8	47
	7-12	47
1333412	12-15	1
1333413	12-15	1
1333414	12-15	1
1333415	12-15	1
1333416	12-15	1
1333417	12-15	1
1333418	12-15	1
1333419	12-15	1
1333420	12-15	1
1333421	12-15	1
1333541	2-113	13
1333750	1-44	44
1333752	1-44	62
1333753	1-44	63
1333763	11-8	41
1333923	7-51	7
1333924	7-51	7
1334267	7-57	35
1334411	4-23	20
1334423	2-111	23
1334458	1-49	2
1334461	1-49	4
1334462	1-49	10
1334463	1-49	5
1334464	1-49	8
1334465	1-49	6
1334466	1-49	9
1334467	1-49	11
1334468	1-49	7
1334470	1-49	3
1334491	8-4	58
	8-8	71
1334497	9-9	10
1334500	9-9	10
1334515	4-4	59
	4-13	5
1334521	1-44	39

See Service Manual for service procedures.
©2010 HYSTER COMPANY

NUMERICAL INDEX (continued)

PART NO.	PAGE	ITEM
1334523	1-44	41
1334555	9-13	
1334556	9-13	
1334557	9-13	
1334558	9-13	
1334559	9-13	
1334571	9-13	
1334581	9-19	17
	12-3	39
	12-5	30
1334583	9-3	1
1334612	11-5	8
1334613	11-19	20
1334614	11-19	5
1334617	3-11	24
	3-37	38
1334631	11-15	31
1334633	11-19	10
1334634	11-3	35
1334945	8-45	21
	8-49	21
1334946	8-46	47
	8-50	47
1334999	4-52	3
1335051	4-10	42
1335126	1-53	5
1335143	1-53	7
1335146	1-53	6
1335179	9-3	6
	9-7	9
	9-19	6
	10-3	6
	10-5	9
	10-7	9
	10-21	18
	12-3	6
	12-5	18
	12-9	5
1335188	9-17	
1335199	11-3	31
1335216	2-105	27
1335217	2-113	5
1335243	2-107	27
1335247	8-46	58
	8-50	58
1335277	11-19	11
1335479	2-107	32
1335497	2-111	22
1335499	2-105	18
1335575	1-49	12
1335576	1-49	1
1335578	1-49	3
1335579	1-49	5
1335831	1-44	59
1335832	1-43	6
1335870	6-12	46
1335873	6-12	45
1336038	3-15	4
1336173	4-52	5
1336327	1-43	1
1336605	1-54	28
1336668	1-43	22
1336669	1-43	24
1336670	1-43	37
1336671	1-43	35
1336672	1-43	36
1336982	1-43	26
1336985	1-19	12
	1-23	12
1336986	1-19	12
	1-23	12
1337197	4-9	5
1337225	3-47	2
	3-49	15
1337772	3-47	16
	3-49	16
	3-51	21
	3-53	21
1337774	6-11	34
1338031	10-31	23
1338222	2-115	1
1338837	2-91	1
1338838	2-91	9
	2-93	34
1339904	6-11	34
1339939	12-39	2
1339947	12-39	1
1342660	1-13	21
	1-17	21
1342662	4-9	9
	4-19	29
1342664	1-5	28
	1-5	28
	1-9	28
	1-9	28
	1-19	9
	1-23	9
1342839	7-57	11
1343169	4-41	3
1343174	2-101	5
1343187	4-41	1
1343189	4-41	16
1343190	4-41	13
1343191	4-41	8
1343192	4-41	12
1343193	4-41	17
1343194	4-41	20
1343195	4-41	18
1343196	4-41	5
1343197	4-41	2
1343198	4-41	11
1343199	4-41	19
1343205	1-28	55
1343562	5-3	26
1343700	4-41	14
1343701	4-41	9
1343702	4-41	6
1343703	4-41	10
1343705	4-41	7
1343706	4-41	15
1343769	4-41	4
1343878	11-15	17
1344274	4-33	11
1344924	2-103	9
1345008	4-26	50
1345014	4-25	38
	4-35	10
	4-37	9
1345023	4-4	49
	4-14	47
	5-17	40
	7-3	24
	7-7	35
	7-11	35
1345702	9-17	2
1345705	9-17	
1345751	2-69	8
	2-73	4
	2-103	6
1345785	2-91	3
	2-93	3
1345786	2-57	11
	2-61	11
	2-63	11
1345787	2-39	2
	2-43	2
1345790	2-39	30
	2-43	30
1345791	2-91	23
1345792	2-91	32
	2-93	32
1345793	2-85	7
	2-101	2
1345798	2-91	16
	2-93	16
1345800	2-74	4
	2-76	4
	2-79	7
	2-81	7
	2-83	6
	2-103	12
1345801	2-49	11
1345802	2-74	12
	2-76	12
1345826	1-51	
1345939	1-53	8
1346129	11-15	32
1346131	11-15	29
1346132	11-15	30
1346422	1-13	7
	1-17	7
1346423	1-5	1
	1-13	1
1346424	1-17	8
1346425	1-17	10
1346426	1-13	3
	1-17	3
1346452	1-5	11
1346460	1-13	1
1346892	9-3	15
1346893	1-54	23
1346958	7-3	18
	7-7	23
1346960	7-51	26
1346972	5-5	40
	5-7	40
	5-9	38
	5-11	38
1346973	9-3	16
1346974	9-3	17
1347224	4-55	15
1347405	12-13	1
1347588	5-49	5
1347770	5-63	40
1347774	5-63	4
1347800	5-63	10
1347812	5-63	11
1347813	5-63	25
1347819	5-63	8
1347822	5-63	21
1347831	5-63	28
1347835	5-63	33
1347839	5-63	18
1347851	9-3	14
1347852	3-25	1
	3-27	1
1347854	4-3	35
	4-13	9

©2010 HYSTER COMPANY

NUMERICAL INDEX (continued)

PART NO.	PAGE	ITEM
1347855	1-53	2
1347856	3-25	10
	3-27	10
1347859	11-3	36
1347860	1-54	13
1347861	8-65	4
	8-67	18
	8-71	18
1347862	8-65	1
	8-67	15
	8-71	15
1347863	8-67	23
1347864	8-67	23
1347869	8-67	
1347870	8-67	
	8-71	
1347871	8-71	
1347872	8-67	13
	8-71	13
1347874	8-67	23
	8-72	23
1350665	7-25	
	7-27	
1350666	7-25	21
	7-27	21
1350667	7-25	22
	7-27	22
1350733	12-39	1
1350734	12-39	1
1350735	12-39	1
1350736	12-39	1
1350911	3-3	36
	4-3	40
1350914	4-3	36
	4-14	60
	8-4	61
	8-7	8
1350992	12-31	15
	12-35	1
1351068	4-51	10
1351069	4-51	11
1351996	2-57	13
	2-61	13
	2-63	13
1352534	12-39	3
1352544	12-39	5
1352602	4-52	10
1352603	4-52	11
1352661	9-21	21
	11-7	18
	12-23	10
1352663	9-21	21
1352666	3-25	2
1352668	7-3	22
	7-7	34
	7-11	34
1352669	3-25	25
	3-27	25
	3-43	25
	3-45	12
1352670	3-25	26
	3-27	26
	3-43	26
	3-45	12
1352671	7-3	20
	7-7	31
	7-11	31
1354439	7-51	19
1354770	5-33	17
1355319	2-85	19
1355326	6-7	8
1355818	12-39	11
1355819	12-39	12
1355820	12-39	19
1355821	12-39	20
1356943	1-32	52
1356948	1-32	53
1357026	6-7	9
1357035	5-33	
1357097	2-103	7
1357098	2-79	8
1357208	5-57	1
1357225	1-57	3
1357228	3-25	22
1357229	3-25	22
1357230	3-25	32
	3-27	32
	3-43	32
1357237	7-49	18
1357398	1-43	32
1357401	1-43	31
1357424	1-43	2
1357425	1-43	2
1357427	8-11	16
1357428	8-11	16
1357430	3-3	3
1357431	3-3	3
1357437	7-49	1
	7-60	
1357734	5-63	37
1357749	3-21	12
1357789	2-97	24
1357865	5-33	
1357866	5-35	
	5-37	
1358325	3-25	24
1358337	2-7	9
1358713	9-3	1
1358714	9-9	1
1358715	9-17	
1358717	9-17	1
1358718	9-17	2
1358721	9-3	
	9-7	
	9-9	
1358722	11-7	34
1358734	1-32	54
1358738	7-7	17
	7-11	17
1358746	9-7	1
1358750	11-7	35
1358751	11-7	38
1358752	11-7	39
1358911	4-3	19
	4-13	33
	4-33	
	4-35	1
	4-37	1
	4-39	1
1359101	9-3	20
	10-3	18
1359658	1-20	50
	1-24	50
1359659	1-5	6
	1-9	6
1359661	3-53	37
	5-11	46
	7-8	63
	7-12	63
	7-17	20
	7-19	21
	7-21	7
	7-49	17
1359706	1-54	30
1359710	3-3	12
1359711	3-3	9
	3-3	13
1359712	1-63	17
1359715	1-43	30
1360141	10-19	
1360178	2-111	18
1360191	3-25	27
	3-27	27
	3-43	27
	3-45	12
1360192	3-25	28
	3-27	28
	3-43	28
	3-45	12
1360193	3-25	29
	3-27	29
	3-43	29
	3-45	12
1360194	3-25	30
	3-27	30
	3-43	30
	3-45	12
1360661	4-19	1
1360777	1-27	20
	1-31	21
1360875	8-13	5
	8-15	5
	8-15	17
1360876	8-13	6
	8-15	6
1360967	5-3	13
1360969	5-49	
1361200	2-7	23
	2-9	6
1361201	3-25	34
	3-43	34
	3-45	18
1363008	5-33	23
1363009	5-33	23
1365264	7-60	2
1365265	7-60	3
1365266	7-60	1
1365275	7-60	4
1365689	10-25	3
1365938	5-13	5
	5-17	5
1365940	5-13	3
1365941	5-13	
	5-21	
	5-23	
	5-25	
	5-29	
	5-31	
1365942	5-13	4
	5-17	4
1365943	5-17	43
1366710	5-59	
1366711	12-21	2
1366715	12-19	1
	12-21	1
1366717	12-19	1
	12-21	1
1366719	12-19	1

See Service Manual for service procedures.
©2010 HYSTER COMPANY

NUMERICAL INDEX (continued)

PART NO.	PAGE	ITEM
	12-21	1
1366722	12-19	2
	12-21	2
1367544	12-27	1
1367556	5-3	16
1367825	8-3	13
	8-7	13
1367826	8-3	12
	8-7	12
1368150	1-35	10
	1-39	10
1369041	2-93	10
1369046	2-39	1
1369073	2-87	9
1369074	2-91	27
	2-93	27
1369077	2-23	17
	2-25	17
	2-27	17
1369081	2-25	19
	2-103	13
1369084	6-3	1
	6-7	
1369431	2-33	
	2-35	
	2-66	
	2-69	
	2-85	
	2-87	
	2-91	
	2-93	
	2-101	
	2-103	
	3-9	
	3-30	
1369496	1-31	45
1370944	2-33	19
	2-35	19
	2-37	24
1370945	2-33	18
	2-35	18
	2-37	23
1370947	2-65	20
	2-69	20
	2-73	21
1370948	2-65	26
	2-69	26
	2-73	26
1370949	2-53	18
	2-69	31
	2-73	31
	7-35	5
1371703	2-39	22
	2-43	33
1371708	3-29	3
1371711	2-69	10
1371720	3-9	6
	3-29	7
1371730	2-35	22
1373216	12-9	28
1373270	1-63	25
1373928	5-57	29
1374080	11-5	24
1374086	7-51	6
1374088	5-63	1
1374089	5-63	2
1374094	5-63	12
1374095	5-63	13
1374097	5-63	15
1374110	2-115	18
1374112	2-111	16
1374428	1-32	51
1374468	12-19	2
	12-21	2
	12-21	2
1374550	5-63	22
1374551	5-63	24
1374554	5-63	26
1374558	5-63	34
1374559	5-63	36
1374586	5-49	1
1374588	7-51	13
1374591	7-51	19
1374594	7-51	27
1374596	5-41	13
	5-45	13
	5-49	13
	5-53	13
	5-59	13
1374598	5-53	40
1374599	5-53	40
1374750	1-49	20
	1-51	24
1374980	2-65	25
	2-69	25
	2-73	25
1375018	6-7	7
1375019	6-7	10
1375944	1-9	1
1375947	1-17	1
1375952	2-113	24
1375954	2-105	20
1375984	1-13	13
	1-17	13
1375985	1-13	13
	1-17	13
1376008	2-23	
	2-29	
	2-33	
	2-39	
	2-53	
	2-57	
	2-65	
	2-76	
	2-85	
	2-93	
	3-9	
	3-11	
1376009	2-23	
	2-29	
	2-33	
	2-39	
	2-53	
	2-57	
	2-65	
	2-76	
	2-85	
	2-93	
	3-9	
	3-11	
1376020	5-53	
1376447	11-3	26
1377047	4-33	4
1377048	4-33	6
1377049	4-33	21
1377050	4-33	13
1377051	4-33	20
1377052	4-33	19
1377053	4-33	23
1377067	4-33	2
1377091	3-43	20
1377187	4-10	54
1377237	8-61	48
1377238	8-61	49
1377271	1-13	13
	1-13	13
	1-17	13
	1-17	13
1377550	2-25	
	2-31	
	2-35	
	2-43	
	2-47	
	2-53	
	2-61	
	2-69	
	2-79	
	2-81	
	2-87	
	2-93	
	2-97	
	3-29	
	3-37	
1377551	2-13	1
1377552	2-13	2
1377554	2-13	26
1377556	2-9	1
1377558	2-9	2
1377559	2-9	5
1377560	2-9	12
1377561	2-7	10
	2-9	10
	2-11	19
1377562	2-9	3
1377564	3-43	1
1377573	1-57	3
1377577	3-43	18
1377580	3-43	38
1377585	3-3	17
1377586	3-3	12
1377587	3-3	13
1377588	3-43	18
1377589	2-9	8
1377590	2-9	9
1377592	2-14	35
1377597	3-43	22
1377601	2-9	9
1377639	3-47	12
1377702	1-13	13
	1-13	13
	1-17	13
	1-17	13
1377703	1-13	13
	1-13	13
	1-17	13
1377704	1-13	13
	1-13	13
	1-17	13
	1-17	13
1377720	2-57	1
	2-61	1
	2-63	1
1377726	1-17	2
	1-31	14
1377727	1-17	2
	1-31	14
1377728	1-23	2

©2010 HYSTER COMPANY

NUMERICAL INDEX (continued)

PART NO.	PAGE	ITEM
1377729	1-23	2
1377730	1-23	2
1377731	1-23	2
1377882	7-60	1
1377887	5-41	13
	5-45	13
	5-53	13
	5-59	13
1377888	7-51	19
1377906	2-39	1
1377907	2-13	34
1377908	2-57	15
	2-61	15
	2-63	15
1378447	1-17	1
1379734	2-25	23
	2-27	23
1379738	2-23	
	2-25	
	2-40	
	2-43	
	2-58	
	2-61	
	2-74	
	2-76	
	2-79	
	2-91	
	2-103	
	3-9	
	3-30	
1379772	2-49	10
	2-53	10
	7-29	1
1379773	2-53	9
1379774	2-53	1
1380200	2-53	6
1380201	2-53	4
1380202	2-53	5
1380203	2-53	7
1380204	2-53	8
1380205	2-53	3
1380206	2-53	2
1380207	2-53	22
1380208	2-53	26
1380210	2-53	17
	7-35	4
1380211	7-35	6
1380212	2-53	32
1380213	2-53	31
1380214	2-53	11
	7-35	3
1380215	7-29	2
1380216	7-29	4
1380217	7-29	5
1380218	7-29	6
1380219	7-29	7
1380220	7-29	8
1380221	7-29	9
1380222	7-29	10
1380223	7-29	11
1380224	7-29	12
1380225	7-29	13
1380226	7-29	14
1380227	7-29	15
1380228	7-29	16
1380229	7-29	17
1380230	7-29	18
1380231	7-29	19
1380232	7-29	20
1380233	7-29	21
1380234	7-29	22
1380235	7-29	23
1380236	7-29	24
1380237	7-29	25
1380238	7-29	29
1380239	7-29	32
1380244	2-69	9
1380245	2-65	10
	2-69	10
	2-73	10
1380248	2-65	2
	2-69	2
1380249	2-65	3
	2-69	3
1380250	2-65	6
	2-73	7
	2-103	3
1380251	2-39	36
1380253	2-23	6
	2-25	6
	2-27	6
1380258	2-65	13
	2-69	13
1380259	2-57	37
	2-61	16
	2-63	16
1380261	2-61	17
	2-63	17
1380263	2-93	
1380264	2-23	27
	2-25	27
	2-27	27
1380266	2-23	26
	2-25	26
	2-27	26
1380267	2-29	20
1380273	5-63	26
1380274	5-63	29
1380755	2-23	5
	2-25	5
	2-27	5
1380763	2-65	9
	2-73	9
1380776	5-63	31
1380777	5-63	41
1380779	5-63	5
1380784	5-53	6
	5-59	6
1380786	5-53	1
1380797	5-63	30
1380798	5-63	14
1380803	2-11	18
1380886	6-15	4
1380890	8-67	9
	8-71	9
	8-73	9
1381125	1-54	27
1382033	7-25	
1382060	2-25	1
1382061	2-23	19
	2-27	19
1382063	2-31	1
1382064	2-31	3
1382065	2-31	3
1382066	2-31	3
1382069	2-31	3
1382071	2-35	1
1382072	2-35	2
1382073	2-33	5
	2-35	3
1382074	2-35	16
1382450	3-29	16
1382451	3-29	17
1382452	3-29	18
1382453	3-29	20
1382454	3-29	32
	3-33	25
1382455	3-29	33
	3-33	26
1382456	3-29	34
	3-33	27
1382457	3-29	35
	3-33	28
1382459	2-69	37
	2-103	4
1382462	2-31	22
1382463	2-31	24
1382464	2-31	17
1382467	2-87	7
1382468	2-87	11
1382470	2-101	11
1382471	2-101	10
1382472	2-101	9
1382475	2-33	17
	2-35	17
1382478	2-43	1
1382479	2-39	7
	2-43	7
1382480	2-39	15
	2-43	15
1382481	2-39	19
	2-43	19
1382482	2-39	24
	2-43	24
1382484	2-61	27
	2-63	27
1382485	2-49	10
	2-53	10
	7-27	
1382486	2-49	1
1382487	2-49	11
1382488	2-49	16
1382491	7-27	10
1382492	7-27	28
1382493	7-27	37
1382494	7-25	36
	7-27	35
1382497	3-29	13
1382498	3-29	14
1382499	3-29	15
1382526	2-101	12
1382527	2-101	14
1382528	2-97	1
1382530	2-97	2
1382531	2-97	3
1382532	2-97	4
1382534	2-101	1
1382536	2-103	1
1382538	2-103	16
1382539	2-103	8
1382540	3-37	17
1382541	3-37	20
1382542	3-37	16
	3-39	25
1382543	3-39	26
1382545	3-29	39
1382546	3-30	50
1382551	3-29	1

©2010 HYSTER COMPANY

NUMERICAL INDEX (continued)

PART NO.	PAGE	ITEM
1382553	3-29	41
1382565	2-23	1
1382758	1-57	2
	1-61	2
1382762	1-57	1
	1-61	1
1382936	8-67	23
	8-72	23
	8-72	23
1382937	8-67	23
1382951	3-29	43
1382953	2-79	2
	2-81	2
	2-83	1
1382954	2-79	3
	2-81	3
	2-83	2
1382955	2-79	6
	2-81	6
1382956	2-79	11
1382957	2-79	12
1382958	2-79	13
1382959	2-79	14
1382960	2-79	15
1382961	2-79	16
	2-81	22
	2-83	23
1382963	2-103	13
	4-37	12
1382967	7-52	
1383620	2-79	22
1383621	2-79	20
1383622	2-79	17
1383623	2-74	8
	2-76	8
	2-79	19
1383624	2-79	25
1383778	4-3	1
	4-13	1
1383803	4-52	1
1383804	4-52	2
1384400	2-79	27
1384429	6-7	16
1384985	2-65	1
	2-69	1
1385513	4-10	55
	4-20	50
1385522	12-29	12
1385549	9-3	9
	10-3	9
1385601	8-3	12
1385602	8-3	13
1385603	8-65	11
1385604	8-65	12
1385611	8-17	19
	8-21	
1385612	8-25	19
	8-29	19
	8-37	
1385613	8-41	22
	8-49	
1385614	8-53	24
	8-61	
1385615	8-41	22
	8-49	
1385616	8-21	40
	8-38	53
	8-50	66
	8-62	53
1385619	8-46	60
	8-61	47
1385647	6-11	28
1385648	6-11	26
1385674	2-49	10
	2-53	10
	7-31	1
1385675	2-53	22
1385678	2-53	26
1385679	7-31	
	7-33	
1385681	7-31	
	7-33	
1385682	7-31	29
	7-33	29
1385683	7-29	30
	7-31	31
	7-33	31
1385684	7-31	32
	7-33	32
1385703	2-57	25
	2-61	25
	2-63	25
1385704	2-57	26
	2-61	26
	2-63	26
1385715	5-59	20
1385716	5-59	40
1385717	5-59	40
1385718	5-59	1
1385884	9-15	2
1385885	9-15	2
1385886	9-15	2
1385887	9-15	2
1385888	9-15	2
1385928	9-15	
1385929	9-15	
1385930	9-15	
1385931	9-15	
1385932	9-15	
1385934	9-15	1
1385935	9-15	1
1385936	9-15	1
1385937	9-15	1
1385938	9-15	1
1385953	9-3	
	9-7	
	9-9	
1385954	9-3	
	9-7	
	9-9	
1385955	9-3	
	9-7	
	9-9	
1385956	9-3	
	9-7	
	9-9	
1385957	9-3	
	9-7	
	9-9	
1385958	9-15	
	10-13	
1387235	5-23	4
	5-25	12
	5-29	10
1388376	2-93	5
1388385	3-9	31
1388387	2-27	15
1388388	3-11	1
	3-13	1
	3-37	1
1388389	3-13	3
1388390	3-13	4
1390149	4-17	1
1390155	4-17	38
1390156	4-17	25
1390157	4-17	23
1390159	4-17	39
1390160	4-17	31
1390161	4-17	28
1390162	4-17	29
1390163	4-17	36
1390164	4-17	37
1390165	4-17	30
1390166	4-17	33
1390168	4-17	4
1390169	4-17	3
1390170	4-17	40
1390171	4-17	35
1390172	4-17	32
1390173	4-17	26
1390174	11-5	20
1390556	10-31	1
1390557	10-31	1
1390609	5-37	24
1391200	11-15	36
1391201	11-15	36
1391202	11-15	36
1391203	11-15	36
1391204	11-15	36
1391231	2-31	15
1391238	4-17	16
1391239	4-17	17
1391240	4-17	18
1391244	4-17	34
1391245	2-74	2
	2-76	2
1391246	2-69	5
	2-73	5
1391638	8-21	21
	8-37	21
	8-49	21
	8-61	21
1391639	8-37	34
	8-49	34
	8-49	34
	8-61	34
1391643	8-22	49
	8-38	62
	8-50	75
	8-62	62
1391644	8-21	48
	8-38	61
	8-50	74
	8-62	61
1391645	8-21	46
	8-38	59
	8-50	72
	8-62	59
1391791	2-49	10
	2-53	10
	7-33	1
1392601	8-73	14
1392626	10-23	26
	10-29	1
1393121	12-21	1
1393122	12-21	1
1393160	5-37	24
1393703	8-19	13

©2010 HYSTER COMPANY

NUMERICAL INDEX (continued)

PART NO.	PAGE	ITEM
	8-19	29
	8-21	13
	8-21	29
	8-33	13
	8-33	29
	8-33	43
	8-37	13
	8-37	29
	8-37	43
	8-45	13
	8-45	29
	8-45	43
	8-46	56
	8-49	13
	8-49	29
	8-49	43
	8-50	56
	8-57	13
	8-57	29
	8-57	43
	8-61	13
	8-61	29
	8-61	43
1393704	8-19	19
	8-19	33
	8-21	19
	8-21	33
	8-33	19
	8-33	33
	8-33	46
	8-37	19
	8-37	33
	8-37	46
	8-45	19
	8-46	46
	8-46	59
	8-49	19
	8-49	46
	8-50	59
	8-57	19
	8-57	33
	8-57	46
	8-61	19
	8-61	33
	8-61	46
1393707	2-5	7
1393708	2-5	2
	2-5	14
1393748	1-31	46
1394108	2-5	1
1394110	2-14	36
1394111	2-13	34
1395975	2-27	
	2-31	
	2-37	
	2-43	
	2-47	
	2-53	
	2-63	
	2-73	
	2-83	
	2-89	
	2-95	
	2-99	
	3-33	
	3-39	
1395977	8-3	1
	8-15	
1395978	8-15	
1395979	8-7	1
	8-15	
1395982	8-8	42
1395983	8-8	43
1450252	10-21	2
1450254	8-13	12
1450259	10-29	2
1450260	10-29	4
1450261	10-29	3
1450274	10-23	6
1450275	10-23	7
1450350	10-23	24
1450351	10-23	21
1450352	10-23	22
1450353	10-23	23
1450488	5-33	24
1450618	5-13	3
	5-17	3
1450620	3-21	1
1450621	3-21	1
1450622	3-21	1
1450623	3-21	2
1450626	3-21	5
1450627	3-21	17
1450628	3-21	3
1450629	3-21	4
1450630	3-21	7
1450632	3-21	4
1450633	3-21	4
1450634	3-21	18
1450635	3-21	9
1450636	3-21	19
1450637	3-21	4
1450638	3-21	14
1450639	3-21	8
1450640	3-21	8
1450641	3-21	4
1450828	5-13	
	5-18	
	5-33	
1450861	5-63	9
1450932	2-113	2
1450933	2-113	3
1450934	2-113	8
1450936	2-113	10
1450939	2-113	15
1450940	2-113	16
1450941	2-105	26
	2-113	20
	2-115	13
1450942	2-113	21
1450943	2-113	23
1450944	2-113	12
1450945	2-113	14
1450947	2-111	5
	2-111	13
1450948	2-111	1
1450949	2-111	3
1450950	2-111	4
1450952	2-111	7
1450953	2-108	
	2-111	
1450990	2-111	10
1450994	2-111	8
1450996	2-111	11
1451028	2-115	2
1451029	2-115	3
1451030	2-115	4
1451031	2-115	5
1451032	2-115	8
1451033	2-115	9
1451034	2-105	4
	2-115	10
1451035	2-115	11
1451039	2-115	12
1451041	2-115	14
1451043	2-115	16
1451045	2-115	19
1451046	2-115	20
1451047	2-115	21
1451048	2-115	22
1451049	2-115	24
1451050	2-115	23
1451051	2-115	25
1451052	2-115	26
1451053	2-115	27
1451054	2-115	28
1451055	2-115	30
1451056	2-115	31
1451108	12-9	
1451110	12-9	1
1451127	12-9	6
1451130	12-9	30
	12-13	
1451155	12-9	25
1451183	12-9	17
1451213	2-111	21
	2-115	29
1451220	2-105	1
1451221	2-105	2
1451222	2-105	3
1451223	2-105	5
1451224	2-105	7
1451225	2-105	10
1451226	2-105	11
1451227	2-105	12
1451228	2-105	13
1451229	2-105	14
1451230	2-105	15
1451231	2-105	16
1451232	2-105	21
1451233	2-105	22
1451234	2-105	19
1451235	2-105	23
1451236	2-105	23
1451237	2-105	24
1451238	2-105	24
1451240	2-105	25
1451241	2-107	1
1451242	2-107	12
1451243	2-107	2
1451244	2-107	3
1451245	2-107	4
1451246	2-107	5
1451247	2-107	6
1451248	2-107	7
1451249	2-107	11
	2-107	17
1451250	2-107	9
1451251	2-107	13
1451252	2-107	15
1451253	2-107	14
1451255	2-107	18
1451256	2-107	20
1451257	2-107	21
1451258	2-107	22
1451259	2-107	24
1451261	2-107	19
1451262	2-107	31

See Service Manual for service procedures.
©2010 HYSTER COMPANY

NUMERICAL INDEX (continued)

PART NO.	PAGE	ITEM
1451263	2-107	33
1451264	2-107	30
1451265	2-107	34
1451266	2-107	34
1451267	2-107	37
1451268	2-107	38
1451269	2-107	29
1451270	2-107	25
1451271	2-107	25
1451272	2-107	25
1451273	2-107	26
1451274	2-107	26
1451275	2-107	26
1451276	2-107	26
1451277	2-107	28
1451278	2-107	28
1451279	2-107	16
1451280	2-107	41
1451284	2-107	36
1451287	2-107	23
1451288	2-107	39
1451290	2-115	15
1451291	2-115	33
1451292	2-113	9
1451304	4-3	44
1451305	4-13	6
1451306	4-3	43
	4-13	26
1451330	1-43	28
1451416	1-54	19
1451601	2-31	25
1451602	2-31	26
1451603	2-31	27
1451604	2-31	28
1451609	2-13	28
1451611	2-13	32
1451624	2-27	3
1451625	2-27	9
1451627	2-27	20
1451629	2-37	11
1451630	2-37	5
1451631	2-37	6
1451632	2-37	12
1451633	2-37	7
1451634	2-37	9
1451635	2-37	2
1451636	2-37	8
1451637	2-37	15
1451638	2-33	27
	2-35	27
	2-37	21
1451639	2-37	10
1451641	2-37	3
1451642	2-73	18
1451643	2-73	22
1451644	2-73	23
1451645	2-73	24
1451647	2-43	1
1451648	2-43	15
1451649	2-47	4
1451650	2-43	33
	2-47	2
1451651	2-43	22
	2-47	1
1451655	3-33	3
1451656	3-33	24
1451657	3-33	10
1451659	3-33	11
1451660	3-33	12
1451661	3-33	13
1451662	3-33	14
1451663	3-33	15
1451665	3-33	16
1451666	3-33	17
1451667	3-33	18
1451669	3-33	19
1451670	3-33	20
1451672	3-33	21
1451673	3-33	22
1451674	3-33	23
1451676	3-33	30
1451677	2-73	1
1451715	2-73	2
1451719	2-73	3
	2-103	4
1451722	2-83	4
1451723	2-83	5
1451726	2-83	8
1451727	2-81	20
	2-83	17
1451728	2-81	17
	2-83	7
1451729	2-81	16
	2-83	15
1451731	2-95	3
1451733	2-95	2
1451735	2-95	9
1451736	2-95	16
1451737	2-95	24
	2-95	24
1451738	2-95	25
1451739	2-95	19
1451741	2-95	20
1451742	2-95	26
1451743	4-37	13
1451744	4-37	17
1451745	4-37	11
1451746	4-37	15
1451747	2-53	8
1451749	2-89	1
1451750	2-89	3
1451751	2-89	4
1451752	2-89	10
1451753	2-89	6
	2-103	18
1451754	2-89	5
1451755	2-103	1
1451756	2-103	2
1451758	2-89	8
1451759	2-99	
1451760	2-99	8
1451761	2-101	1
1451762	2-101	2
1451763	2-101	3
1451764	2-101	12
1451765	3-13	1
	3-39	1
1451766	3-13	3
1451767	3-39	13
1451768	3-39	16
1451769	3-39	10
1451770	3-39	19
1451771	2-37	27
1451772	2-37	25
1451777	12-9	2
1451778	12-9	3
1451833	12-9	22
1451856	2-9	2
1452059	12-9	3
1452060	12-9	2
1452066	12-9	19
	12-16	2
1452076	7-41	
1452077	7-41	4
1452079	7-41	14
1452080	7-41	21
1452081	7-41	15
1452082	7-41	5
1452083	7-41	11
1452084	7-41	10
1452085	7-41	7
1452086	7-41	6
1452087	7-41	8
1452088	7-41	14
1452096	7-41	
1452097	7-41	14
1452098	7-41	14
1452099	7-41	16
1452100	7-41	16
1452101	7-41	16
1452102	7-41	16
1452103	7-41	17
1452104	7-41	18
1452105	7-41	18
1452106	7-41	18
1452107	7-41	18
1452110	7-41	2
1452115	10-3	1
1452131	12-14	1
1452132	12-14	3
1452134	12-14	5
1452135	12-14	6
1452138	12-14	4
1452173	10-5	1
1452175	10-7	1
1452176	10-3	1
1452177	10-3	1
1452178	10-7	1
1452179	10-7	1
1452180	10-5	1
1452181	10-5	1
1452258	5-35	1
1452262	5-35	7
1452288	10-19	
1452289	10-19	
1452290	10-19	
1452382	3-3	13
1452387	10-19	1
1452388	10-19	1
1452389	10-19	1
1452404	2-5	3
	2-5	8
	2-5	15
1452406	2-5	13
1452412	4-4	44
1452444	10-19	12
1452452	10-19	11
1452521	10-19	2
1452522	10-19	2
1452523	10-19	2
1452526	12-10	39
	12-14	
1452582	10-19	10
1452596	5-37	24
1452597	5-37	24
1452779	5-59	
1452781	5-53	
1452800	2-89	2

©2010 HYSTER COMPANY

NUMERICAL INDEX (continued)

PART NO.	PAGE	ITEM
1452861	2-27	
1452862	2-37	1
1452863	2-73	14
1452864	2-73	15
1452925	7-41	3
1452990	5-49	
	5-53	
	5-59	
	5-63	
1452991	5-63	36
1453030	1-35	10
	1-39	10
1453064	2-27	
	2-43	
	2-63	
1453122	3-33	1
1453154	3-33	29
1453185	2-89	9
1453232	10-3	
	10-5	
	10-7	
	10-9	
	10-9	
1453233	10-3	
	10-5	
	10-7	
	10-9	
	10-9	
1453234	10-3	
	10-5	
	10-7	
	10-9	
	10-9	
1453259	1-43	30
1453274	10-19	16
1453275	10-19	14
1453276	10-19	15
1453280	10-13	1
1453281	10-13	1
1453282	10-13	1
1453311	2-47	
1453315	3-33	45
1453353	10-9	1
1453355	10-9	1
1453356	10-9	1
	10-9	1
1453357	10-9	1
	10-15	1
1453359	10-9	1
	10-15	1
1453360	10-15	1
1453378	2-76	7
1453390	2-89	13
1453395	10-15	8
1453397	10-15	2
1453398	10-15	2
1453399	10-15	2
1453401	10-15	3
1453402	10-15	3
1453403	10-15	3
1453405	10-15	3
1453406	10-15	3
1453407	10-15	3
1453408	10-16	38
1453410	10-16	42
1453411	10-16	48
1453412	10-16	41
1453413	10-3	14
	10-5	14
1453414	10-9	7
1453415	10-9	5
1453416	10-16	50
1453417	10-16	46
1453418	10-15	22
1453419	10-15	23
1453446	10-21	1
	12-5	1
1453469	1-63	3
1453470	1-63	3
1453490	10-9	10
1453491	10-9	10
1453495	10-15	15
1453496	10-15	15
1453497	10-15	12
1453498	10-15	12
1453499	10-15	10
1453500	10-9	14
1453550	4-17	14
1453551	4-17	15
1453564	12-29	12
1453692	10-21	
1453728	12-9	7
1453775	8-15	18
1453776	8-15	21
1453777	8-15	8
1453778	8-15	7
1453798	1-49	
1453799	1-49	
1453889	4-17	3
1453890	4-17	21
1454002	1-49	1
1454003	1-49	1
1454004	1-49	2
1454091	12-9	35
1454102	12-9	33
1454103	12-9	36
1454104	12-9	34
1454154	2-14	36
1454155	2-13	29
1454156	2-13	30
1454176	2-33	1
	2-35	1
	2-37	19
1454267	2-89	12
1454282	12-23	3
1454288	12-23	3
1454289	12-23	3
1454290	12-23	3
1454291	12-23	3
1454296	2-101	3
1454301	12-23	17
1454302	12-23	22
1454316	4-25	47
	4-35	5
1454317	2-93	22
1454318	2-93	23
1454338	10-23	15
	12-5	27
1454339	12-9	20
	12-16	3
1454367	10-23	35
1454368	10-23	36
1454369	10-23	12
	12-5	28
1454370	10-23	11
	12-5	29
1454403	10-31	2
1454435	12-16	1
1454436	12-16	1
1454437	12-16	1
1454438	12-16	1
1454439	12-16	1
1454440	12-17	1
1454441	12-17	1
1454442	12-17	1
1454443	12-17	1
1454444	12-17	1
1454506	8-29	31
1454507	8-29	31
1454508	8-73	
1454562	12-5	
1454656	10-31	11
1454693	10-31	22
1454694	10-31	22
1454695	10-31	23
1454772	1-53	12
1454773	1-53	12
1454774	1-53	12
1454954	4-42	
1455057	7-51	2
1455058	7-51	14
1455254	7-41	
1455265	2-13	16
1455353	12-14	1
1455354	12-14	2
1455362	12-13	
1455363	12-13	6
1455364	12-13	10
1455367	12-13	3
1455369	12-13	5
1455370	12-13	7
1455371	12-13	11
1455372	12-13	13
1455373	12-13	12
1455423	10-15	15
1455424	10-15	15
1455471	12-13	8
1455472	12-13	9
1455473	12-13	4
1455594	8-21	47
	8-38	60
	8-50	73
	8-62	60
1455595	8-21	43
	8-38	56
	8-50	69
	8-62	56
1455596	8-19	12
	8-21	12
	8-21	45
	8-33	12
	8-37	12
	8-38	58
	8-45	12
	8-49	12
	8-50	71
	8-57	12
	8-61	12
	8-62	58
1455623	8-73	1
1455631	5-3	6
1455641	5-35	11
1455814	5-49	
	5-53	
	5-59	
	5-63	
1455855	3-45	2
1455856	3-45	16

See Service Manual for service procedures.
©2010 HYSTER COMPANY

NUMERICAL INDEX (continued)

PART NO.	PAGE	ITEM
1455857	3-45	17
1455861	3-45	25
1455862	3-45	13
1455864	3-45	1
1455867	1-61	3
1455879	3-45	15
1455926	3-45	24
1455928	4-7	2
1455929	4-7	17
1456027	7-21	8
1456028	7-21	5
1456109	7-21	11
1456118	4-51	2
1456286	3-53	2
1456287	3-53	9
1456337	4-10	52
	4-19	38
1456339	3-11	1
	3-13	1
	3-37	1
1456340	3-49	1
	3-53	1
1456345	5-17	3
1456346	5-17	
1456528	3-11	23
1456552	1-19	6
	1-23	6
1456704	2-37	4
1456726	3-9	7
	3-29	8
	3-33	8
1456727	3-33	6
1456742	2-95	18
1456744	4-35	3
	4-37	3
1456745	2-95	23
	2-95	23
1456819	7-23	1
1456820	7-23	4
1456821	7-23	5
1456822	7-23	6
1456823	7-23	7
1456824	7-23	2
1456825	7-23	3
1456826	7-23	7
1456827	7-23	8
1456829	7-23	5
1456937	3-15	23
1457099	2-93	1
1457151	2-9	23
1457275	7-23	12
1457279	7-23	9
1457284	7-23	10
1457296	7-23	11
1457306	11-3	
1457336	11-17	20
1457444	11-17	35
1457644	11-8	41
1457645	11-7	34
1457668	11-23	5
1457771	3-9	32
1457833	11-17	19
1457876	4-25	39
1458005	8-71	
1458007	8-71	14
1458191	1-63	2
1458323	1-54	15
1458327	3-33	46
1458329	2-29	6
	2-31	6
1458331	2-65	21
1458332	2-65	23
1458373	4-9	11
	4-19	6
1458551	1-43	32
1458552	1-43	31
1458554	1-43	2
1458694	2-53	16
1458890	3-45	16
1458891	3-45	16
1458940	1-43	12
1458947	1-43	11
1459303	4-17	41
1459453	2-103	8
1459454	2-103	21
1459455	2-103	11
1459728	2-85	17
1459731	2-89	11
1459763	5-57	30
1459767	5-57	
1460024	3-33	41
1460025	3-33	1
1460066	2-101	9
1460100	2-35	1
1460102	2-33	1
1460103	2-81	19
1460132	9-17	
1460133	9-17	
1460134	9-9	1
1460135	9-9	1
1460136	9-3	1
1460137	9-7	1
1460171	10-31	1
1460179	9-17	1
1460180	9-17	1
1460183	9-17	2
1460184	9-17	2
1460189	9-3	
	9-7	
	9-9	
1460190	9-3	
	9-7	
	9-9	
1460197	9-7	1
1460198	9-3	1
1460209	2-76	8
	2-81	18
	2-83	19
1460246	11-7	34
1460247	11-8	41
1460252	11-7	35
1460253	11-8	42
1460254	11-7	38
1460255	11-8	45
1460256	11-7	39
1460257	11-8	51
1460454	2-95	1
1460560	2-95	
1460564	2-87	10
1460572	3-33	47
1460962	1-19	5
	1-23	5
1461402	12-31	15
1462542	1-17	1
1462579	12-32	56
1462733	1-9	1
1462734	1-5	1
	1-9	1
1462890	6-8	1
1462891	6-8	2
1463263	1-17	1
1463548	1-23	1
1463773	1-17	8
1465375	1-43	23
1465376	1-43	23
1465381	1-49	19
	1-51	21
1465403	1-43	23
1465406	1-43	23
1465553	1-44	53
1465621	12-29	11
1465628	12-29	2
1465634	4-17	2
1465635	4-17	5
1465639	4-17	13
1465640	4-17	19
1465641	4-17	20
1465642	4-17	27
1465643	4-17	42
1465644	4-17	43
1465803	2-95	20
1465810	2-95	21
1465811	2-95	22
1465812	2-95	25
1465895	2-95	1
1466053	2-95	23
1466329	2-95	8
1466398	8-13	20
	8-15	20
1466858	2-39	32
	2-43	32
	2-91	11
	2-93	11
1466859	2-65	27
	2-69	27
	2-73	27
1467401	2-99	1
1467402	2-99	2
1467403	2-99	3
1467404	2-99	3
1467405	2-99	4
1467407	2-99	7
1467408	2-99	7
1467409	2-99	7
1467586	1-69	35
1467588	1-69	31
1469300	5-23	5
	5-25	11
	5-29	9
1469301	5-23	5
	5-25	11
	5-29	9
1470910	5-11	30
1470911	5-11	32
1470912	5-11	33
	5-11	36
1470913	5-11	34
1470916	5-11	35
1471320	5-11	45
1471326	2-73	36
1471336	2-111	
1471841	12-19	1
	12-21	1
1474001	7-11	27
1474004	7-11	28
1474278	5-3	2
1474279	5-3	2
1474280	5-3	2

©2010 HYSTER COMPANY

NUMERICAL INDEX (continued)

PART NO.	PAGE	ITEM
1474641	5-41	
	5-45	
	5-57	
1475420	5-63	19
1475421	5-63	20
1475493	7-12	68
1476494	7-11	23
1476495	7-11	23
1476882	8-73	5
1476917	8-73	
1479108	4-47	20
	4-48	3
1479109	4-47	21
	4-48	4
1479124	1-27	38
1479807	4-19	34
1479982	2-39	32
	2-43	32
1479983	2-39	32
	2-43	32
1480310	2-5	5
1485891	11-3	31
1489317	7-51	14
1490274	4-29	34
1490510	5-23	
1490511	5-25	
1490512	5-29	
1490546	5-31	10
1490548	5-31	10
1491260	1-31	2
1495255	2-53	10
	7-35	1
	7-37	
	7-39	
1495937	2-81	17
	2-83	7
1497394	7-35	7
1497395	7-35	9
1497402	7-39	1
1497403	7-39	11
1497404	7-37	1
1497405	7-37	8
1497406	7-37	9
1502585	3-9	1
1508301	2-31	12
1511548	5-41	34
	5-45	34
	5-49	34
	5-53	34
	5-59	34
1516558	2-73	1
1516930	2-69	5
	2-73	6
1520824	3-15	41
1520833	2-17	16
1523972	2-43	35
1526672	3-37	41
1526729	2-81	12
	2-83	10
1530618	2-83	
1532276	3-21	15
1534660	1-54	29
1537286	2-81	15
	2-81	21
	2-83	16
1537291	2-95	
1537294	2-95	20
1537298	7-35	11
1537307	2-103	2
1537353	2-47	7
1538493	6-15	6
1538811	6-15	
1538812	6-15	1
1539493	5-13	2
	5-17	2
1545442	2-95	1
1554082	2-53	19
1554083	2-81	11
	2-83	9
1555423	2-57	6
	2-61	6
	2-63	6
1555920	2-73	1
1565146	2-37	
	2-73	
	2-89	
	2-95	
	2-101	
	2-103	
	3-34	
1594223	10-13	2
1594224	10-13	2
1594225	10-13	2
1594230	10-13	
1594231	10-13	
1594232	10-13	
1640061	3-33	1
1642099	5-63	3
1677634	7-33	
2005059	6-3	7
2013361	8-67	3
	8-71	3
	8-71	3
	8-73	3
2013366	8-67	13
	8-71	13
	8-71	13
	8-73	13
2013403	8-67	
2013404	8-67	
	8-71	
2013405	8-71	
2013407	8-67	1
	8-71	1
2013414	8-68	24
	8-72	24
2013415	8-68	24
	8-72	24
2013803	8-67	
2013804	8-67	
	8-71	
2013805	8-71	
2013809	8-67	1
	8-71	1
2015363	8-67	
	8-71	
2015364	8-71	
2015375	8-67	1
2015376	8-67	1
	8-71	1
	8-71	1
2015377	8-71	1
	8-71	1
2015381	8-67	14
	8-71	14
2032001	8-67	
2032229	6-7	
2032230	6-7	16
2033099	10-25	1
2033105	10-25	10
2033141	10-25	
2033308	10-23	1
	10-25	
2033326	10-25	2
2034459	1-53	3
2035275	4-51	1
2035276	4-51	3
2035802	8-71	
2035952	3-45	8
2036846	12-9	
2036848	12-9	
2037088	5-9	34
2037089	5-9	33
2037090	5-9	35
2037398	8-67	
2037934	4-9	24
	4-55	
2037996	4-17	22
2038103	4-7	5
	4-7	5
2039068	3-61	33
2040602	4-9	2
2042741	4-7	22
	4-47	
2042757	4-4	44
	4-48	
2051587	11-3	24
2054459	3-45	11
2306366	10-25	8
3001530	7-43	24
3039895	5-7	35
3047330	1-27	42
3047334	1-13	17
	1-17	17
3047417	1-27	39
3047418	1-27	24
	1-31	25
6996433	11-3	22

See Service Manual for service procedures.
©2010 HYSTER COMPANY


HYSTER