RUTHZIL TRATOR COMERCIAL DE PEÇAS LTDA 11 97083-6812 ROLANDO

PARTS MANUAL

HYSTER
CHALLENGER

H360-450H
(A214)

CUSTOMER EDITION

HYSTER

897998
06/2006

©2006 Hyster Company

SECTIONS

1 FRAME
2 ENGINE ASSEMBLY
3 FUEL SYSTEM
4 ELECTRICAL SYSTEM
5 TRANSMISSION
6 DRIVE AXLE
7 STEERING SYSTEM
8 BRAKE SYSTEM
9 HYDRAULIC SYSTEM
10 MAST-TWO STAGE VISTA
11 MAST WITH EMPTY CONTAINER HANDLER
12 OPTIONS
13 NUMERICAL INDEX

This Parts Manual is divided into 13 major sections which are listed above. Quick reference to these sections can be made by placing the right thumb on the tab of the desired section, bending the book back and thumbing the pages to the corresponding tab.

TABLE OF CONTENTS

DESCRIPTION	PAGE
A	
AIR COMPRESSOR PLUMBING	
TIER II ENGINE	
S/N A214E01951A⇒	2-38
AIR FILTER	
EMPTY CONTAINER HANDLER	
TIER II ENGINE	
S/N A214E-01849Z⇒	2-82
FORK LIFT TRUCK	
TIER II ENGINE	
S/N A214E-01843Z⇒	2-80
TIER I ENGINE	2-78
AIR FILTER ASSEMBLY	2-84
AIR INTAKE CONNECTION	
TIER II ENGINE	
S/N A214E01951A⇒	2-52
AIR INTAKE HOSE	
TIER II ENGINE	
S/N A214E01951A⇒	2-54
AIR TRANSFER CONNECTION	
TIER II ENGINE	
S/N A214E01951A⇒	2-55
ALTERNATOR MOUNTING	
TIER II ENGINE	
S/N A214E01951A⇒	2-39
AUXILIARY ATTACHMENTS	
EMPTY CONTAINER HANDLER	11-130
B	
BRAKE ASSEMBLY	
DISC	
S/N A214E-01995B⇒ (H450H)(FLT), S/N A214E-02001B⇒ (ECH), S/N A214E02034A⇒ (H360-400H FLT)	6-20
BRAKE CHECK VALVE	
EMPTY CONTAINER HANDLER	
⇒S/N A214E-1572	8-30
FORK LIFT TRUCK	
⇒S/N A214E-1572	8-32
BRAKE COOLING SYSTEM	
ACCUMULATOR	9-76
EMPTY CONTAINER HANDLER	
⇒S/N A214E-1751	9-68
S/N A214E-1752⇒	9-70
FORK LIFT TRUCK	
⇒S/N A214E-1751	9-72
S/N A214E-1752⇒	9-74
BRAKE LINES	
EMPTY CONTAINER HANDLER	
⇒S/N A214E-1572	8-2
S/N A214E-1573⇒	8-4
FORK LIFT TRUCK	
⇒S/N A214E-1572	8-8

©2006 HYSTER COMPANY

See Service Manual for service procedures.

TABLE OF CONTENTS (Continued)

DESCRIPTION **PAGE**

B (continued)

S/N A214E01766Y⇒ ... 8-14
S/N A214E1573⇔S/N A214E1765Y ... 8-10
BRAKE PEDAL LINKAGE
EMPTY CONTAINER HANDLER ... 8-18
FORK LIFT TRUCK
⇒S/N A214E01765Y ... 8-22
S/N A214E01766Y⇒ ... 8-26
BRAKE SYSTEM
POWER BRAKE VALVE ... 8-34
BREATHER PLUMBING
TIER II ENGINE
S/N A214E01951A⇒ ... 2-28

C

CAMSHAFT
TIER II ENGINE
S/N A214E01951A⇒ ... 2-16
CARRIAGE
HYDRAULIC SYSTEM
TWO STAGE VISTA ... 10-34
TWO STAGE VISTA ... 10-30
WITH MECHANICAL PILE SLOPE
SERIES 582 AND 588 ... 11-78
WITH QUICK DISCONNECT
TWO STAGE VISTA ... 10-32
CONTAINER ATTACHMENT INSTALLATION
582 AND 588 SERIES ... 11-76
CONTROL PANEL
⇒S/N A214E-1806 ... 4-28
S/N A214E-1807⇒ ... 4-30
COOLING
EMPTY CONTAINER HANDLER
TIER II ENGINE
S/N A214E-01849Z⇒ ... 2-94
FORK LIFT TRUCK
TIER II ENGINE
S/N A214E-01843Z⇒ ... 2-90
TIER I ENGINE ... 2-86
COUNTERWEIGHTS ... 1-48
COVERS
EMPTY CONTAINER HANDLER ... 1-28
FORK LIFT TRUCK ... 1-30
CRANKCASE BREATHER
TIER II ENGINE
S/N A214E01951A⇒ ... 2-35
CRANKSHAFT AND MAIN BEARINGS
TIER II ENGINE
S/N A214E01951A⇒ ... 2-12
CYLINDER BLOCK

©2006 HYSTER COMPANY

TABLE OF CONTENTS (Continued)

DESCRIPTION **PAGE**

C (continued)

TIER II ENGINE
S/N A214E01951A⇒ ... 2-6
CYLINDER HEAD
TIER II ENGINE
S/N A214E01951A⇒ ... 2-8

D

DIFFERENTIAL ASSEMBLY
⇒S/N A214E-01994B (H450H)(FLT), ⇒S/N A214E-02000B (ECH), ⇒S/N A214E02033A (H360-400H FLT) ... 6-10
S/N A214E-01995B⇒ (H450H)(FLT), S/N A214E-02001B⇒ (ECH), S/N A214E02034A⇒ (H360-400H FLT) ... 6-14
DOORS ... 1-26
DOUBLE HORIZONTAL TWIST LOCK HEAD ASSEMBLY
CONTAINER HANDLING ATTACHMENT (572)
S/N A214E-1807⇒ ... 11-38
DRIVE AXLE
⇒S/N A214E-01994B (H450H)(FLT), ⇒S/N A214E-02000B (ECH), ⇒S/N A214E02033A (H360-400H FLT) ... 6-2
S/N A214E-01995B⇒ (H450H)(FLT), S/N A214E-02001B⇒ (ECH), S/N A214E02034A⇒ (H360-400H FLT) ... 6-6

E

ELECTRICAL
CHASSIS
TIER I ENGINE ... 4-4
CHASSIS (TIER II ENGINE)
SHEET 1 OF 4 ... 4-8
SHEET 2 OF 4 ... 4-10
SHEET 3 OF 4 ... 4-14
SHEET 4 OF 4 ... 4-18
ELECTRICAL BOX MOUNT
582 AND 588 SERIES ... 11-80
ELECTRICAL SYSTEM
SERIES 582 ... 11-110
SERIES 588 ... 11-112
SPREADER 572 AND 573
S/N A214E-1807⇒ ... 11-70
SPREADER 575
S/N A214E-1807⇒ ... 11-72
SPREADER 578
S/N A214E-1807⇒ ... 11-74
ELECTRONIC FOOT PEDAL MOUNT
TIER II ENGINE ... 3-10
EMPTY HANDLER
EMPTY CONTAINER HANDLER
S/N A214E-1807⇒ ... 11-28
END BEAM ASSEMBLY
SERIES 582 ... 11-96

©2006 HYSTER COMPANY

TABLE OF CONTENTS (Continued)

DESCRIPTION **PAGE**

E (continued)

SERIES 588 11-100
ENGINE ASSEMBLY 2-5
ENGINE CONTROL SYSTEM
TIER II ENGINE
S/N A214E01951A⇒ 2-22
ENGINE MOUNT 2-98
ENGINE OIL COOLER
TIER II ENGINE
S/N A214E01951A⇒ 2-57
EXHAUST
EMPTY CONTAINER HANDLER
TIER I ENGINE 2-100
TIER II ENGINE 2-102
FORK LIFT TRUCK 2-104
EXHAUST MANIFOLD
TIER II ENGINE
S/N A214E01951A⇒ 2-65
EXTENSION BEAM ARRANGEMENT
SERIES 582 AND 588 11-94
EXTENSION CYLINDER
EMPTY CONTAINER HANDLER
⇒S/N A214E-1806 11-62
S/N A214E-1807⇒ 11-64
EXTENSION CYLINDER ASSEMBLY
SERIES 582 AND 588 11-88

F

FAN DRIVE
TIER II ENGINE
S/N A214E01951A⇒ 2-40
FAN PILOT SPACER
TIER II ENGINE
S/N A214E01951A⇒ 2-64
FENDERS
EMPTY CONTAINER HANDLER 1-52
FLOOR PLATES AND COVERS
EMPTY CONTAINER HANDLER 1-4
FORK LIFT TRUCK
SHEET 1 OF 2 1-8
SHEET 2 OF 2 1-12
FLYWHEEL
TIER II ENGINE
S/N A214E01951A⇒ 2-36
FLYWHEEL HOUSING
TIER II ENGINE
S/N A214E01951A⇒ 2-26
FORK
HOOK TYPE 12-10
PIN TYPE 12-8

©2006 HYSTER COMPANY

TABLE OF CONTENTS (Continued)

DESCRIPTION **PAGE**

F (continued)

FORK POSITIONER
SIDE-SHIFT CYLINDER - HOOK TYPE
TWO STAGE VISTA 10-36
FRONT GEAR COVER
TIER II ENGINE
S/N A214E01951A⇒ 2-50
FRONT GEAR TRAIN COVER
TIER II ENGINE
S/N A214E01951A⇒ 2-25
FUEL FILTER
TIER II ENGINE
S/N A214E01951A⇒ 2-41
FUEL FILTER PLUMBING
TIER II ENGINE
S/N A214E01951A⇒ 2-43
FUEL INJECTION PUMP
TIER II ENGINE
S/N A214E01951A⇒ 2-44
FUEL PUMP MOUNT
TIER II ENGINE
S/N A214E01951A⇒ 2-46
FUEL SYSTEM
TIER I ENGINE 3-2
TIER II ENGINE 3-6

G

GEAR HOUSING
TIER II ENGINE
S/N A214E01951A⇒ 2-51
GENERAL TRUCK 1-2

H

HEADER HOSE
EMPTY CONTAINER HANDLER
S/N A214E-01963A⇒ 11-122
⇒S/N A214E-1578 11-116
S/N A214E-1579⇔S/N A214E-01962A 11-118
S/N A214E02078B⇒ 11-126
TWO STAGE VISTA 10-24
HEATER 1-40
HEATER CONTROL 1-44
HOOD
EMPTY CONTAINER HANDLER 1-34
FORK LIFT TRUCK 1-36
HYDRAULIC CONTROL
⇒S/N A214E-1842Z 9-34
S/N A214E-1843Z⇒ 9-38
HYDRAULIC CONTROL VALVE
ATTACHING PARTS 9-42

©2006 HYSTER COMPANY

TABLE OF CONTENTS (Continued)

DESCRIPTION **PAGE**

H (continued)

MAIN 9-44
HYDRAULIC DIRECTIONAL CONTROL VALVE
EMPTY CONTAINER HANDLER 9-48
HYDRAULIC LINES
AUXILIARY
FORK LIFT TRUCK 9-31
CONTROL VALVE
⇒S/N A214E-1806 9-24
SHEET 1 OF 2
S/N A214E-1807⇒ 9-26
SHEET 2 OF 2 9-28
LIFT
FORK LIFT TRUCK 9-32
HYDRAULIC PILOT CONTROL SUPPLY VALVE
EMPTY CONTAINER HANDLER 9-56
HYDRAULIC PILOT CONTROL VALVE
EMPTY CONTAINER HANDLER 9-54
HYDRAULIC PUMP
⇒S/N A214E-1534 9-60
S/N A214E-1535⇒ 9-62
HYDRAULIC RELIEF VALVE
TILT
⇒D/B 04/2003 9-58
HYDRAULIC SOLENOID VALVE
LIFT AND LOWERING INTERRUPT
EMPTY CONTAINER HANDLER
S/N A214E-01752X⇒ 9-52
HYDRAULIC SOLENOID VALVE ATTACHING PARTS
LIFT AND LOWERING INTERRUPT
EMPTY CONTAINER HANDLER
S/N A214E-01752X⇒ 9-50
HYDRAULIC SUPPLY AND RETURN
EMPTY CONTAINER HANDLER
⇒S/N A214E-1534 9-4
S/N A214E-1535⇒ 9-6
FORK LIFT TRUCK
D/B 01/2003⇒ 9-14
⇒D/B 12/2002 9-10
HYDRAULIC SYSTEM
EMPTY CONTAINER HANDLER
SHEET 1 OF 2
⇒S/N A214E-1806 11-24
SHEET 2 OF 2
⇒S/N A214E-1806 11-26
SERIES 582 11-104
SERIES 588 11-106
SPREADER 572
S/N A214E-1807⇒ 11-36
SPREADER 573
S/N A214E-1807⇒ 11-40

©2006 HYSTER COMPANY

TABLE OF CONTENTS (Continued)

DESCRIPTION	PAGE
H (continued)	
SPREADER 575	
S/N A214E-1807⇒	11-54
SPREADER 578	
S/N A214E-1807⇒	11-44
TILT CYLINDER	
EMPTY CONTAINER HANDLER	9-78
FORK LIFT TRUCK	9-80
HYDRAULIC TANK	
⇒S/N A214E-1534	9-64
S/N A214E-1535⇒	9-66
I	
INJECTOR	
TIER II ENGINE	
S/N A214E01951A⇒	2-18
INNER MAST	
EMPTY CONTAINER HANDLER	11-6
TWO STAGE VISTA	10-6
INSTRUMENT PANEL	
SHEET 1 OF 2	4-20
SHEET 2 OF 2	4-24
L	
LABELS	
EXTERIOR	
EMPTY CONTAINER HANDLER	1-66
FORK LIFT TRUCK	1-68
INTERIOR	1-64
LIFT CYLINDER	
EMPTY CONTAINER HANDLER	11-16
H360-400H	
TWO STAGE VISTA	
D/B 09/2004⇒	10-18
⇒D/B 09/2004	10-16
H450H	
TWO STAGE VISTA	
D/B 09/2004⇒	10-22
⇒D/B 09/2004	10-20
LIFT CYLINDER ATTACHING PARTS	
EMPTY CONTAINER HANDLER	11-18
LIFT PUMP	
TIER II ENGINE	
S/N A214E01951A⇒	2-48
LIFT PUMP PLUMBING	
TIER II ENGINE	
S/N A214E01951A⇒	2-49
LIFTING BRACKET	
TIER II ENGINE	
S/N A214E01951A⇒	2-56

©2006 HYSTER COMPANY

TABLE OF CONTENTS (Continued)

DESCRIPTION **PAGE**

L (continued)

LIGHT BAR AND MOUNT 4-26
LIGHT CONTROLS 4-32
LIGHTS
EMPTY CONTAINER HANDLER 4-34
FORK LIFT TRUCK 4-38
ROTATING BEACON 4-42

M

MAIN LIFT
EMPTY CONTAINER HANDLER
⇒S/N A214E-1654 11-8
S/N A214E-1655⇒ 11-12
TWO STAGE VISTA
SHEET 1 OF 2 10-10
SHEET 2 OF 2 10-13
MAST INSTALLATION
EMPTY CONTAINER HANDLER 11-132
TWO STAGE VISTA 10-28

O

OIL COOLER AND ATTACHING PARTS
EMPTY CONTAINER HANDLER
TIER II ENGINE 9-18
FORK LIFT TRUCK
TIER II ENGINE 9-20
OIL FILLER ARRANGEMENT
TIER II ENGINE
S/N A214E01951A⇒ 2-58
OIL FILTER
TIER II ENGINE
S/N A214E01951A⇒ 2-60
OIL LEVEL GAUGE
TIER II ENGINE
S/N A214E01951A⇒ 2-32
OIL PAN
TIER II ENGINE
S/N A214E01951A⇒ 2-29
OIL PUMP
TIER II ENGINE
S/N A214E01951A⇒ 2-34
OPERATOR COMPARTMENT
WITH CAB
SHEET 1 OF 3 1-18
SHEET 2 OF 3 1-20
SHEET 3 OF 3 1-24
WITHOUT CAB 1-16
OUTER MAST
EMPTY CONTAINER HANDLER 11-4
TWO STAGE VISTA 10-2

©2006 HYSTER COMPANY

TABLE OF CONTENTS (Continued)

DESCRIPTION	PAGE
P	
PARK BRAKE	
⇒S/N A214E-01994B (H450H)(FLT), ⇒S/N A214E-02000B (ECH), ⇒S/N A214E02033A (H360-400H FLT)	6-18
PISTON AND CONNECTING ROD	
TIER II ENGINE	
S/N A214E01951A⇒	2-10
PRE-CLEANER ASSEMBLY	2-85
R	
RADIATOR PLUMBING	
TIER II ENGINE	
S/N A214E01951A⇒	2-62
ROCKER LEVERS	
TIER II ENGINE	
S/N A214E01951A⇒	2-14
S	
SEAT	
HIGH BACK	
KAB	
⇒S/N A214E02193C	1-54
SEAT ASSEMBLY	
HIGH BACK	
KAB	
S/N A214E02194C⇒	1-56
SENSORS	
SERIES 582	11-108
SIDE-SHIFT CYLINDER	
EMPTY CONTAINER HANDLER	
⇒S/N A214E-1806	11-66
S/N A214E-1807⇒	11-68
SIDE-SHIFT CYLINDER ASSEMBLY	
SERIES 588	11-114
SINGLE HORIZONTAL TWIST LOCK HEAD ASSEMBLY	
CONTAINER HANDLING ATTACHMENT (573)	
S/N A214E-1807⇒	11-42
SLAVE BEAM	
EMPTY CONTAINER HANDLER	
S/N A214E-1807⇒	11-34
SOLENOID VALVE	
TWO STAGE VISTA	10-38
SPRING LOADED HOOK HEAD ASSEMBLY	
CONTAINER HANDLING ATTACHMENT (575)	
S/N A214E-1807⇒	11-56
STARTER MOTOR	
TIER II ENGINE	
S/N A214E01951A⇒	2-63
STEERING AXLE	7-18
STEERING CONTROL	
BLOCK VALVE	
⇒D/B 10/2003	7-16

©2006 HYSTER COMPANY

TABLE OF CONTENTS (Continued)

DESCRIPTION **PAGE**

S (continued)

STEERING CYLINDER 7-10
OPTIONAL 7-12
STEERING HOUSING AND CONTROL 7-2
STEERING HYDRAULICS
EMPTY CONTAINER HANDLER 7-6
FORK LIFT TRUCK 7-8
STEERING PUMP 7-14
SUSPENSION SEAT
GRAMMER HIGH BACK
SHEET 1 OF 2 1-58
SHEET 2 OF 2 1-62

T

TENSIONER
TIER II ENGINE
S/N A214E01951A⇒ 2-75
THERMOSTAT
TIER II ENGINE
S/N A214E01951A⇒ 2-37
THROTTLE
TIER I ENGINE 3-8
THROTTLE PEDAL
ELECTRONIC
TIER II ENGINE 3-16
TIER I ENGINE
⇒D/B 11/2002 3-12
D/B 12/2002⇒ 3-14
TILT CYLINDER
EMPTY CONTAINER HANDLER 9-82
FORK LIFT TRUCK 9-84
TORQUE CONVERTER OIL COOLER
TIER II ENGINE
S/N A214E01951A⇒ 2-66
TRANSMISSION
CONTROL VALVE
⇒S/N A214E-1615 5-20
S/N A214E-1616⇒ 5-24
CONTROL VALVE ATTACHING PARTS 5-18
FORWARD AND SECOND SPEED CLUTCH
SHEET 2 OF 3 5-32
INPUT SHAFT 5-14
REVERSE AND FIRST CLUTCH
SHEET 1 OF 3 5-28
SHIFT LEVER 5-40
THIRD SPEED CLUTCH
SHEET 3 OF 3 5-36
TORQUE CONVERTER 5-17
TRANSMISSION ATTACHING PARTS
SHEET 1 OF 3 5-2

©2006 HYSTER COMPANY

TABLE OF CONTENTS (Continued)

DESCRIPTION **PAGE**

T (continued)

SHEET 2 OF 3
INCLUDES MOUNTING 5-6
SHEET 3 OF 3
OIL FILTER 5-8
TRANSMISSION HYDRAULIC LINES
⇒S/N A214E-1615 5-10
S/N A214E-1616⇒ 5-12
TURBOCHARGER
TIER II ENGINE
S/N A214E01951A⇒ 2-61
TURBOCHARGER PLUMBING
TIER II ENGINE
S/N A214E01951A⇒ 2-68
TWIST LOCK CYLINDER
EMPTY CONTAINER HANDLER
⇒S/N A214E-1806 11-50
S/N A214E-1807⇒ 11-52

U

UNIVERSAL SHAFT 6-22

V

VALVE ASSEMBLY
END BEAM
CONTAINER HANDLING ATTACHMENT
S/N A214E-1807⇒ 11-60
HEAD
SERIES 582 11-87
LH, EXTENSION, TWISTLOCK
SERIES 582 AND 588 11-83
PILOT CHECK
SERIES 582 AND 588 11-84
RH, EXTENSION, TWISTLOCK
SERIES 582 AND 588 11-82
SIDE-SHIFT
SERIES 582 AND 588 11-85
SPREADER
CONTAINER HANDLING ATTACHMENT
S/N A214E-1807⇒ 11-58
SPREADER 575
CONTAINER HANDLING ATTACHMENT
S/N A214E-1807⇒ 11-59
VALVE COVER
TIER II ENGINE
S/N A214E01951A⇒ 2-70
VALVE TAPPET
TIER II ENGINE
S/N A214E01951A⇒ 2-20
VERTICAL END BEAM

©2006 HYSTER COMPANY

TABLE OF CONTENTS (Continued)

DESCRIPTION **PAGE**

V (continued)

EMPTY CONTAINER HANDLER
⇒S/N A214E-1806 ... 11-22
VERTICAL TWIST LOCK HEAD ASSEMBLY
CONTAINER HANDLING ATTACHMENT (578)
S/N A214E-1807⇒ ... 11-46
VIBRATION DAMPER
TIER II ENGINE
S/N A214E01951A⇒ ... 2-24

W

WATER INLET CONNECTION
TIER II ENGINE
S/N A214E01951A⇒ ... 2-72
WATER OUTLET CONNECTION
TIER II ENGINE
S/N A214E01951A⇒ ... 2-73
WATER PUMP
TIER II ENGINE
S/N A214E01951A⇒ ... 2-74
WEAR PADS
CONTAINER HANDLING ATTACHMENT (570)
S/N A214E-1807⇒ ... 11-32
END BEAM
SERIES 582 AND 588 ... 11-90
EXTENSION BEAM
SERIES 582 AND 588 ... 11-92
WEAR PLATES
EMPTY CONTAINER HANDLER
⇒S/N A214E-1806 ... 11-20
WHEEL AND TIRE
BIAS TIRE ... 12-2
RADIAL TIRE ... 12-4
SOLID TIRE
SMOOTH ... 12-6
SOLID TIRE WITH TREAD ... 12-5
WINDSHIELD WASHER ... 1-46
WIRE HARNESS
ATTACHMENT CONTROL
⇒S/N A214E-1806 ... 4-48
SHEET 1 OF 2
⇒S/N A214E-1650 ... 4-44
SHEET 2 OF 2
⇒S/N A214E-1650 ... 4-46
ATTACHMENT CONTROL SWITCH
S/N A214E-1807⇒ ... 4-50
S/N A214E02078B⇔S/N A214E02194C ... 4-52
S/N A214E02194C⇒ ... 4-54
ATTACHMENT LIGHTS
S/N A214E-1807⇒ ... 4-56

©2006 HYSTER COMPANY

TABLE OF CONTENTS (Continued)

DESCRIPTION **PAGE**

W (continued)

CAB
⇒S/N A214E-1797 4-58
S/N A214E-1798⇒ 4-60
CARRIAGE CONTROL SWITCH 4-62
CHASSIS
EMPTY CONTAINER HANDLER 4-64
FORK LIFT TRUCK 4-66
EMPTY CONTAINER HANDLER
⇒S/N A214E-1806 11-134
ENGINE
⇒S/N A214E-1718 4-68
S/N A214E-1719⇒ 4-70
TIER II
S/N A214E01950A⇒ 4-72
FRONT END EQUIPMENT
EMPTY CONTAINER HANDLER
⇒S/N A214E-1806 4-74
S/N A214E-1807⇒ 4-76
FORK LIFT TRUCK 4-80
S/N A214E02078B⇒ 4-78
FRONT LIGHTS 4-81
HOOK ATTACHMENT
S/N A214E-1807⇒ 11-137
HYDRAULIC
EMPTY CONTAINER HANDLER
S/N A214E-1651⇔S/N A214E-1806 4-82
S/N A214E-1807⇒ 4-84
FORK LIFT TRUCK 4-86
MAST
⇒S/N A214E02077B 11-138
S/N A214E02078B⇒ 11-140
MODULE
⇒S/N A214E-1797 4-88
S/N A214E-1798⇒ 4-89
OPERATOR COMPARTMENT (TIER I)
SHEET 1 OF 2 4-90
SHEET 2 OF 2 4-92
OPERATOR COMPARTMENT (TIER II)
SHEET 1 0F 2
S/N A214E01843Z⇒ (FLT), S/N A214E01849Z⇒ (ECH) 4-94
SHEET 2 OF 2
S/N A214E1843Z⇒ (FLT), S/N A214E1849Z⇒ (ECH) 4-96
OPERATOR COMPARTMENT TO MAST LIGHT JUMPER 4-98
REAR LIGHT 4-99
ROTATING BEACON 4-100
SELECTOR VALVE 4-120
STEERING POD 4-102
SWITCH
WARNING 4-105
SWITCH LIGHTS 4-104

©2006 HYSTER COMPANY

TABLE OF CONTENTS (Continued)

DESCRIPTION **PAGE**

W (continued)

TRANSMISSION 4-106
⇒S/N A214E-1615 4-108
S/N A214E1616⇔S/N A214E02193C 4-110
TRANSMISSION CONTROL
S/N A214E02194C⇒ 4-112
TURN SIGNAL 4-114
TWIST LOCK
S/N A214E-1807⇒ 11-136
WINDSHIELD WASHER 4-115
WORK LIGHTS 4-116
EMPTY CONTAINER HANDLER 4-117
FORK LIFT TRUCK 4-118
WORK LIGHTS EXTENSION
FORK LIFT TRUCK 4-119
WIRING ACCESSORIES
TIER II ENGINE
S/N A214E01951A⇒ 2-76

©2006 HYSTER COMPANY

ABBREVIATIONS QUICK REFERENCE SHEET

Listed below are abbreviations used in parts manuals to denote the following expressions:

TERM	DEFINITION
Amp	Amperes
AR	As Required
BDI	Battery Discharge Indicators
BWI	Brush Wear Indicator
CE	Communicator End
CRE	Corrosive Environment
D/B	Date Break
dbA	Decibel "A" Scale
DE	Drive End
ECH	Empty Container Handler
ECH-3	Empty Container Handler - 3 High Stacking
ECH-4	Empty Container Handler - 4 High Stacking
ECH-5	Empty Container Handler - 5 High Stacking
ECH-6	Empty Container Handler - 6 High Stacking
ECH-7	Empty Container Handler - 7 High Stacking
ECM	Electronic Control Module
ECN	Engineering Change Notice
EEPROM	Electrically Erasable Programmable Read Only Memory
EPA	US Environmental Protection Agency
EPROM	Electrically Programmable Read Only Memory

TERM	DEFINITION
FRE	Freezer Environment
in.	inches
LPG	Liquefied Petroleum Gas
MAP	Manifold Absolute Pressure
mm	millimeters
MSTS	Microprocessor Spark Timing System
NPT	National Pipe Threads
O/S	Oversize
PTO	Power Take Off
RPM	Revolutions per Minute
S/N	Serial Number
TMM	Truck Management Module
UL Type D	Diesel-Powered Safety Rating
UL Type DS	Diesel-Powered Safety Rating
UL Type E	Battery-Powered Safety Rating
UL Type EE	Battery-Powered Safety Rating
UL Type ES	Battery-Powered Safety Rating
UL Type G	Gasoline-Powered Safety Rating
UL Type GS	Gasoline-Powered Safety Rating
UL Type LP	Gas-Powered Safety Rating
UL Type LPS	LP Gas-Powered Safety Rating
U/S	Undersize
UL	Underwriters Laboratory
V	Volts

©2006 HYSTER COMPANY

HOW TO USE THE ILLUSTRATED PARTS MANUAL

This parts manual describes and illustrates assemblies, subassemblies, and detail parts needed for service replacement.

The different constructions are indicated by keys and footnotes. The callouts correspond to descriptions found on the next page.

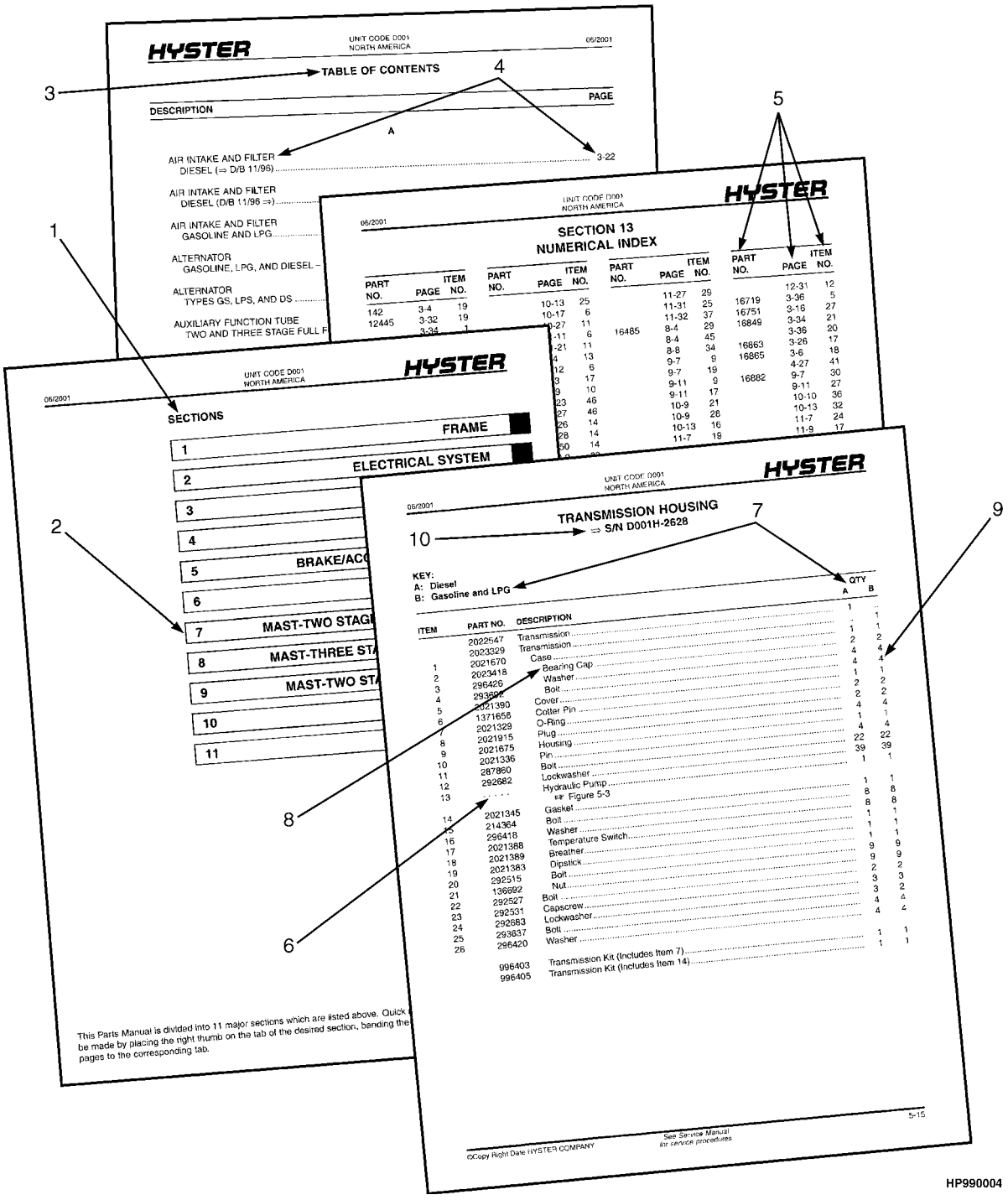

©2006 HYSTER COMPANY

HOW TO FIND THE DESIRED PART NUMBER

WHEN THE PART NUMBER AND THE NEXT HIGHER ASSEMBLY IS NOT KNOWN:

1. Determine the function and application of the part required. Turn to the Sections Page. Choose the general area of reference most likely to include the part.

2. Turn to the section you chose. Use the Section Table of Contents to determine the assembly which would normally contain the part required. Then locate the part on the assembly breakdown page.

WHEN THE PART NUMBER IS NOT KNOWN AND THE NEXT HIGHER ASSEMBLY IS KNOWN:

3. Determine the assembly the required part is used on. Turn to the Table of Contents on Page i.

4. Locate the assembly the required part is used on and turn to the page indicated for that assembly. Then locate the part on the assembly breakdown page.

WHEN THE PART NUMBER IS KNOWN:

5. Use the Numerical Index on Page 13-1 to find the part number. Turn to the page listed and locate the part as indicated by the item number.

GENERAL:

The assembly breakdowns include part numbers, descriptions, quantities required, keys and footnotes to help in selecting correct parts.

6. Five periods in the PART NO. column (. . . . .) indicate that the part is either *Not Serviced Separately* or there is a reference to another figure. A figure reference is denoted by a pointing hand followed by a figure number in the DESCRIPTION column (☞Figure 10)

7. Keys are used to show two or more similar assemblies, RH and LH assembly parts, etc. Select the appropriate key, "A", "B", "C", "D", or "E" and the corresponding quantity column to find the required parts. Two periods in the QTY column (..) indicate that the part is not used for that assembly.

8. Indented descriptions under the DESCRIPTION column are used to indicate assemblies and subparts of assemblies. In the example on the previous page, *BEARING CAP* (Item 2) is a subpart of the major assembly *CASE*.

9. Quantities shown are for one assembly. The quantities of the subpart *BEARING CAP* are indicated as two and two. This means two per *CASE* assembly.

10. Serial number breaks identify the most current parts information and are shown as follows:
    ⇒ S/N D001H-2628
    Indicates last serial number affected.
    S/N D001H-2629 ⇒
    Indicates the first serial number affected.
    S/N D001H-1553 ⇔ S/N D001H-3291
    Indicates a range of serial numbers affected.

    ECN numbers for pending serial numbers are shown to allow for the inclusion of the most current parts information and are identified as follows:
    ⇒ S/N Pending Per ECN 63243
    Indicates a pending serial number for last unit affected.
    S/N Pending Per ECN 63243 ⇒
    Indicates a pending serial number for first unit affected.

    Date breaks are used to indicate when a change occurred but a subsequent serial number break was not recorded. This is an arbitrary date usually based on the ECN release and are identified as follows:
    ⇒ D/B 3/00
    Indicates that a change occurred sometime within that month for the item affected.
    D/B 3/00 ⇒
    Indicates that a change occurred sometime within that month for the item affected.
    D/B 3/00 ⇔ D/B 4/00
    Indicates a range of production dates of the item affected.

    Contact your local dealer for Hyster lift trucks for serial number information for items with a ECN or a date break.

ORDERING PARTS:

When ordering replacement parts, give the unit serial number, part number, name of part and quantity required.

For any further information on parts, service, or ordering, consult your local dealer for Hyster lift trucks.

©2006 HYSTER COMPANY

IDENTIFICATION OF TRUCK SERIAL NUMBERS

X	OOO	X	OOOO	X
(1)	(2)	(3)	(4)	(5)

(1) and (2) The first letter and three numbers indicate the truck unit code.

(3) The second letter indicates the plant of manufacture.

(4) The four or five digit number indicates the production sequence number of the truck.

(5) The final letter indicates the year of manufacture starting with "A" in 1957, 1980, and 2003. The letters "I", "O", and "Q" will not be used.

For pending serial numbers contact your local dealer for Hyster lift trucks.

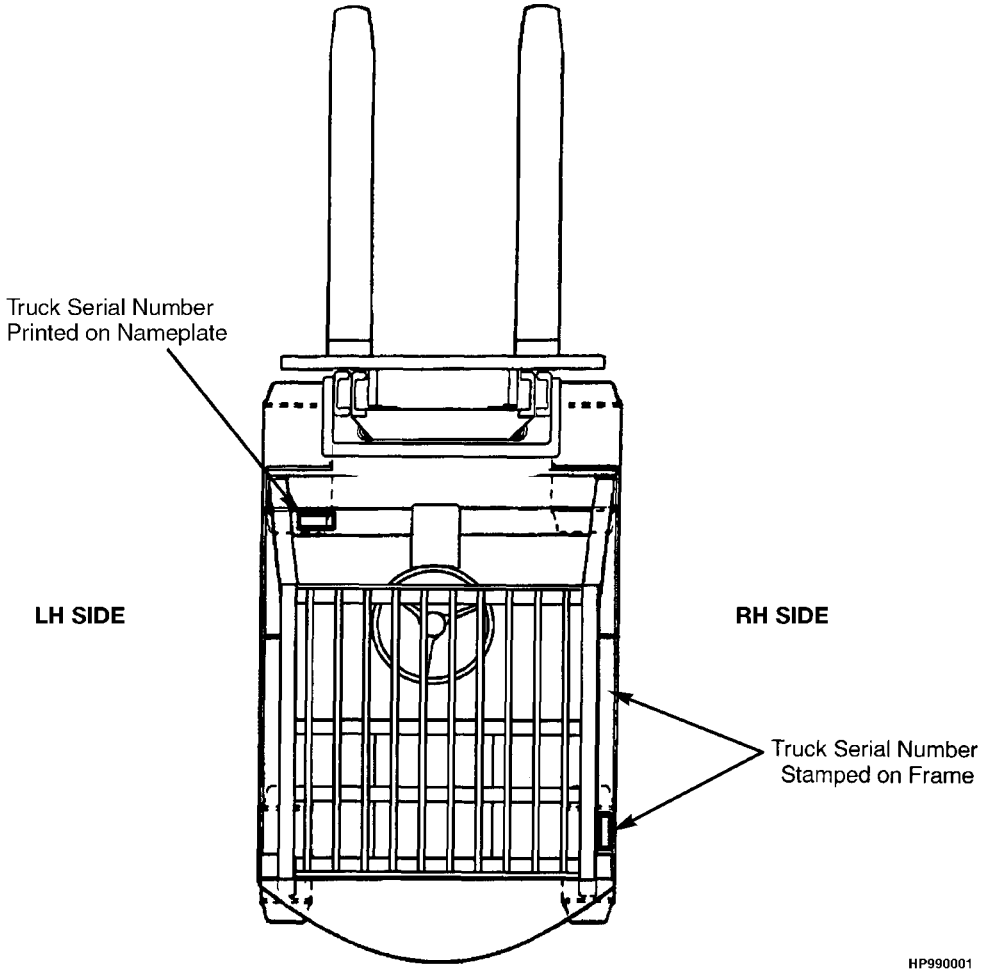

Parts referred to in this book as right or left hand parts are in accordance with the illustration above.

©2006 HYSTER COMPANY

IDENTIFICATION OF MAST SERIAL NUMBERS

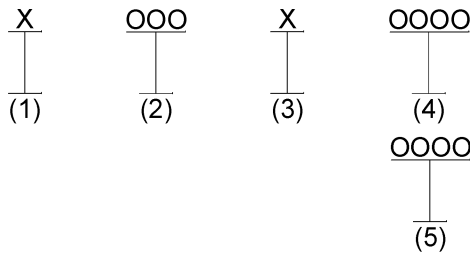

(1) and (2) The first letter and number indicates the mast unit code.

(3) The second letter indicates the plant of manufacture.

(4) The four or five digit number indicates the production sequence number of the mast.

(5) Carriage travel in millimeters stamped just below the serial number.

Mast Group identification consists of mast unit code (1) and (2) plus carriage travel (5).

For pending production sequence numbers contact your local dealer for Hyster lift trucks.

LIFT EQUIPMENT IDENTIFICATION

1. Fork part number, capacity rating, plant code letter, and date of manufacture are stamped approximately six inches below the top of most forks.

2. The carriage group number is stamped on the right hand side of the top crossmember (pin type) or on the back of the right hand end of the bottom crossmember (hook type). A date code has two letters in line with or below the carriage group number.

3. The mast identification number has a unit code, a letter indicating the plant of manufacture, and a serial number. Underneath the production sequence number is a four digit number that indicates the carriage travel in millimeters.

4. Tilt and lift cylinder group numbers are stamped on the cylinder shell.

   Always refer to the group, serial, or part number when ordering service parts.

   Modification of masts and carriages by SPED (Special Products Engineering Department) are identified by a model prefix code beginning with the letter "S". contact your dealer for Hyster lift trucks for information on these assemblies.

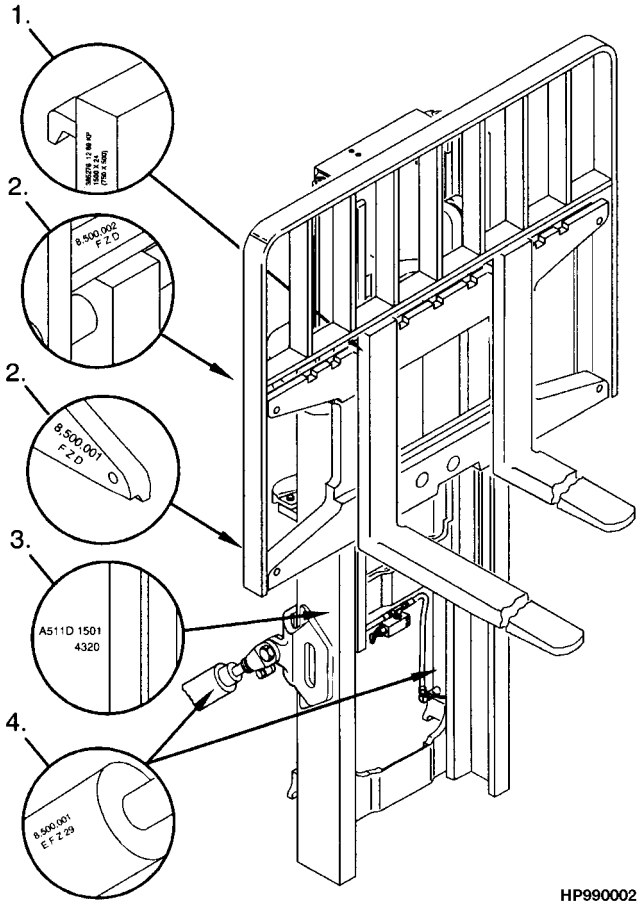

HP990002

IDENTIFICATION OF ATTACHMENT AND SIDE-SHIFT CARRIAGE SERIAL NUMBERS

X OOO X OOOO
(1) (2) (3) (4)

(1) and (2) The first letter and three numbers indicate the attachment unit code.

(3) The second letter indicates the plant of manufacture.

(4) The four or five digit number indicates the production sequence number.

For pending production sequence numbers contact your local dealer for Hyster lift trucks.

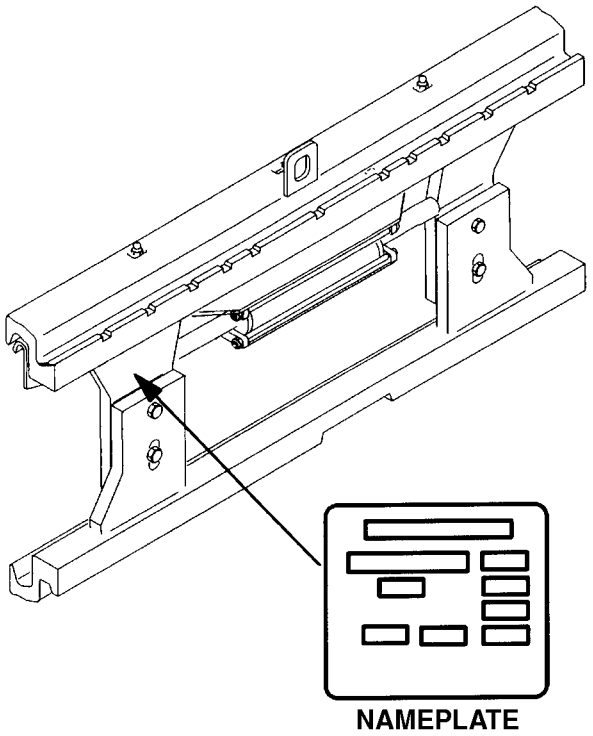

Side-shift carriages and attachments have nameplates. Use the serial number found on the nameplate to identify the attachment.

Always refer to the group, serial, or part number when ordering service parts.

Modifications of attachments and side-shift carriages by SPED (Special Products Engineering Department) are identified by a model prefix code beginning with the letter "S". Contact your dealer for Hyster lift trucks for information on these assemblies.

©2006 HYSTER COMPANY

PUBLICATIONS

Every new lift truck is provided with an OPERATING MANUAL. This manual has information that the operator must know for inspection and operation of the lift truck.

SERVICE MAINTENANCE MANUALS, which provide service and overhaul procedures, and PARTS MANUALS with complete replacement part identification, are available at a nominal fee from your Hyster dealer to assist users in effectively maintaining Hyster lift trucks in a safe, useful condition. See the list below for information on ordering specific publications for this model lift truck.

PUBLICATION	HYSTER PART NUMBER
Operating Manual	1529824
Service Manual (Complete)	1452600
Parts Manual	897998

©2006 HYSTER COMPANY

NOTES

1 FRAME

SECTION 1
FRAME

DESCRIPTION	PAGE
COUNTERWEIGHTS	1-48
COVERS	
EMPTY CONTAINER HANDLER	1-28
FORK LIFT TRUCK	1-30
DOORS	1-26
FENDERS	
EMPTY CONTAINER HANDLER	1-52
FLOOR PLATES AND COVERS	
EMPTY CONTAINER HANDLER	1-4
FORK LIFT TRUCK	
SHEET 1 OF 2	1-8
SHEET 2 OF 2	1-12
GENERAL TRUCK	1-2
HEATER	1-40
HEATER CONTROL	1-44
HOOD	
EMPTY CONTAINER HANDLER	1-34
FORK LIFT TRUCK	1-36
LABELS	
EXTERIOR	
EMPTY CONTAINER HANDLER	1-66
FORK LIFT TRUCK	1-68
INTERIOR	1-64
OPERATOR COMPARTMENT	
WITH CAB	
SHEET 1 OF 3	1-18
SHEET 2 OF 3	1-20
SHEET 3 OF 3	1-24
WITHOUT CAB	1-16
SEAT	
HIGH BACK	
KAB	
⇒S/N A214E02193C	1-54
SEAT ASSEMBLY	
HIGH BACK	
KAB	
S/N A214E02194C⇒	1-56
SUSPENSION SEAT	
GRAMMER HIGH BACK	
SHEET 1 OF 2	1-58
SHEET 2 OF 2	1-62
WINDSHIELD WASHER	1-46

©2006 HYSTER COMPANY

GENERAL TRUCK (Figure 1-1)

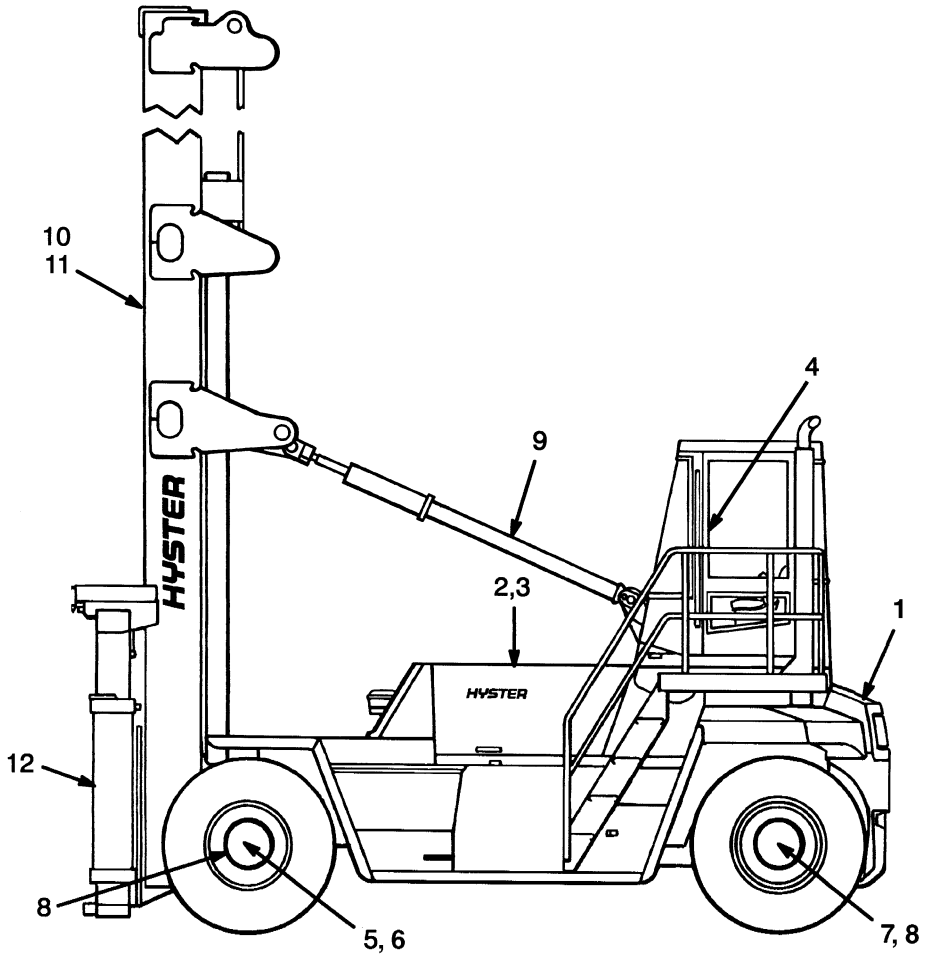

HP990033

ITEM	PART NO.	DESCRIPTION	QTY
1	. . . . .	Counterweights (☞ Figure 1-17)	1
2	. . . . .	Air Filter (☞ Figure 2-52)	1
3	. . . . .	Fuel System (☞ Figure 3-1)	1
4	. . . . .	Electrical System (☞ Figure 4-1)	1
5	. . . . .	Transmission (☞ Figure 5-1)	1
6	. . . . .	Drive Axle (☞ Figure 6-1)	1
7	. . . . .	Steering System (☞ Figure 7-2)	1
8	. . . . .	Brake System (☞ Figure 8-1)	1
9	. . . . .	Hydraulic System (☞ Figure 9-1)	1
10	. . . . .	Mast-Two Stage Limited Free-Lift (☞ Figure 10-1)	1
11	. . . . .	Mast-Empty Container Handler (☞ Figure 11-1)	1
12	. . . . .	Forks (☞ Figure 12-5)	1

©2006 HYSTER COMPANY

NOTES

FLOOR PLATES AND COVERS (Figure 1-2)
EMPTY CONTAINER HANDLER

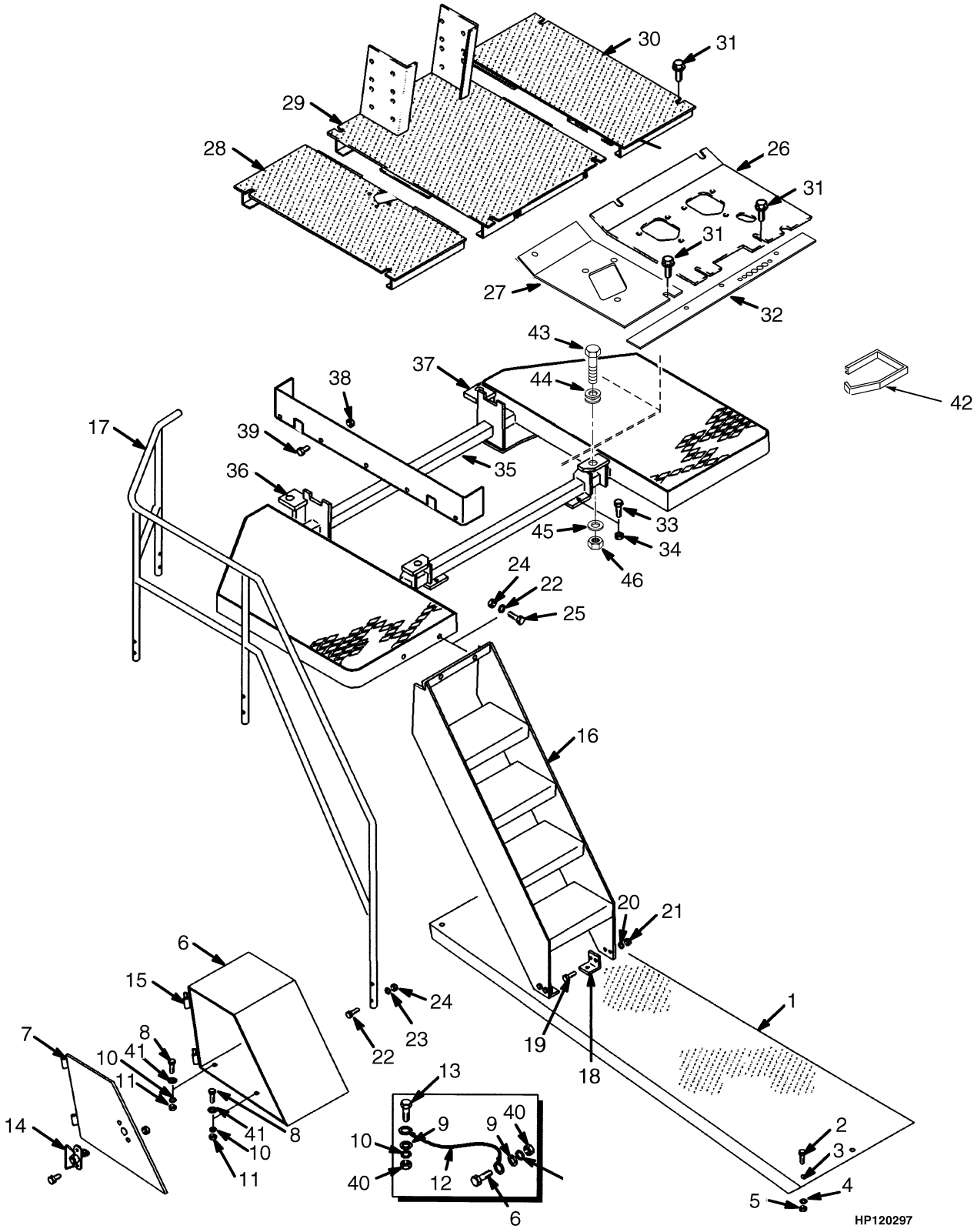

©2006 HYSTER COMPANY

FLOOR PLATES AND COVERS
EMPTY CONTAINER HANDLER

ITEM	PART NO.	DESCRIPTION	QTY
1	1541792	Running Board (RH)	1
1	1541791	Running Board (LH)	1
2	246001	Capscrew	14
3	216735	Grommet	14
4	320162	Washer	42
5	300937	Locknut	14
6	1382005	Battery Box	1
6	1382017	Storage Box	1
7	1382007	Door (LH)	1
7	1382018	Door (RH)	1
8	287854	Capscrew	8
9	320159	Washer	8
10	292682	Lockwasher	8
11	136692	Nut	8
12	1456622	Cable	2
13	296172	Capscrew	4
14	1391416	Latch	2
15	1301700	Ring (Brass)	4
16	1519654	Steps	2
17	1373739	Handrail (LH)	1
17	1373740	Handrail (RH)	1
18	1382612	Bracket (Tier I Engine)	4
19	302335	Capscrew	12
20	320159	Washer	12
21	136692	Nut	12
22	302349	Capscrew	16
23	320162	Washer	16
24	300937	Locknut	22
25	302343	Capscrew	6
26	1382649	Floorplate (LH Front)	1
27	1355113	Floorplate (RH Front), (Tier I Engine)	1
27	1508108	Floorplate (RH Front), (Tier II Engine)	1
28	1336914	Floorplate (RH)	1
29	1465374	Floorplate (Center)	1
30	1325557	Floorplate (LH)	1
31	329067	Screw	15
32	1336912	Seal (Tier I Engine)	1
32	1508250	Seal (Tier II Engine)	1
33	292563	Capscrew	4
34	316828	Nut	4
35	1545279	Platform	1
36	1373747	Plate (LH)	1
37	1373746	Plate (RH)	1
38	316826	Nut	10
39	292514	Bolt	10
40	316826	Nut	4
41	320160	Washer	8
42	1457097	Molding (Rubber)	2
43	292535	Capscrew	4
44	1325519	Mount (Cab)	4

©2006 HYSTER COMPANY

FLOOR PLATES AND COVERS
EMPTY CONTAINER HANDLER

ITEM	PART NO.	DESCRIPTION	QTY
45	300939	Washer	4
46	300937	Locknut	4

©2006 HYSTER COMPANY

NOTES

FLOOR PLATES AND COVERS (Figure 1-3)
FORK LIFT TRUCK
SHEET 1 OF 2

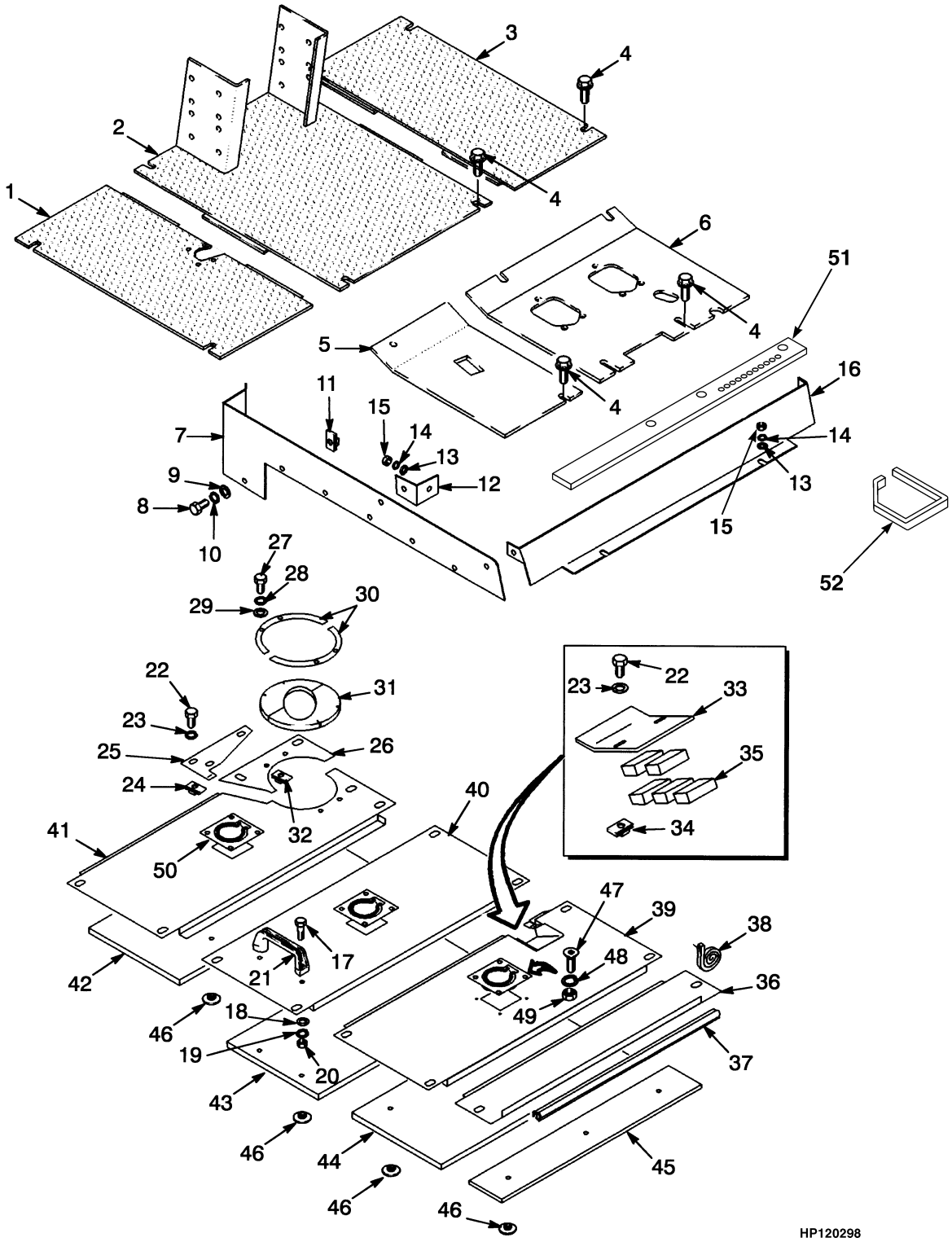

©2006 HYSTER COMPANY

FLOOR PLATES AND COVERS
FORK LIFT TRUCK
SHEET 1 OF 2

ITEM		PART NO.	DESCRIPTION	QTY
1		1336914	Floorplate	1
2		1465374	Floorplate (Center)	1
3		1325557	Floorplate	1
4		329067	Screw	15
5		1355113	Floorplate (RH Front), (Tier I Engine)	1
5		1508108	Floorplate (RH Front), (Tier II Engine)	1
6		1382649	Floorplate	1
7	**a**	1393855	Plate (RH)	1
7	**b**	1393853	Cover (RH)	1
7	**a**	1393854	Cover (LH)	1
7	**b**	1393852	Cover (LH)	1
8	**a**	136749	Capscrew	16
8	**b**	136749	Capscrew	18
9	**a**	320158	Washer	16
9	**b**	320158	Washer	18
10	**a**	292681	Lockwasher	18
10	**b**	292681	Lockwasher	16
11	**a**	1384661	Nut	18
11	**b**	1384661	Nut	16
12		1393856	Bracket	2
13		320160	Washer	4
14		292682	Lockwasher	4
15		136692	Nut	4
16	**a**	1393858	Cover (Front)	1
16	**b**	1393850	Cover (Front)	1
17		292503	Capscrew	2
18		320156	Washer	2
19		292680	Lockwasher	2
20		136687	Nut	2
21		362030	Handle	1
22		136749	Capscrew	20
23		320158	Washer	20
24		1385535	Nut	18
25		1451594	Plate	1
26		1456189	Plate	1
27		296155	Capscrew	4
28		292679	Lockwasher	4
29		320155	Washer	4
30		1451555	Plate	2
31		1451522	Cover (Exhaust)	2
32		1364542	Clip Nut	4
33		1451559	Bracket	1
34		1384661	Nut	2
35		217549	Foam Tape	AR
36		1451783	Cover	1
37		1393871	Seal	1
38		261158	Foam Tape	AR
39		1451717	Cover	1
40		1393872	Cover	1
41		1451782	Cover	1

©2006 HYSTER COMPANY

FLOOR PLATES AND COVERS
FORK LIFT TRUCK
SHEET 1 OF 2

ITEM	PART NO.	DESCRIPTION	QTY
42	1451530	Insulation	1
43	1451529	Insulation	1
44	1451528	Insulation	1
45	1451527	Insulation	1
46	1361087	Button	10
47	296150	Capscrew	12
48	320154	Washer	12
49	815597	Nut	12
50	1451521	Handle	3
51	1336912	Seal (Tier I Engine)	1
51	1508250	Seal (Tier II Engine)	1
52	1457097	Molding (Rubber)	2

FOOTNOTES:
a H400H
b H450H

©2006 HYSTER COMPANY

NOTES

FLOOR PLATES AND COVERS (Figure 1-4)
FORK LIFT TRUCK
SHEET 2 OF 2

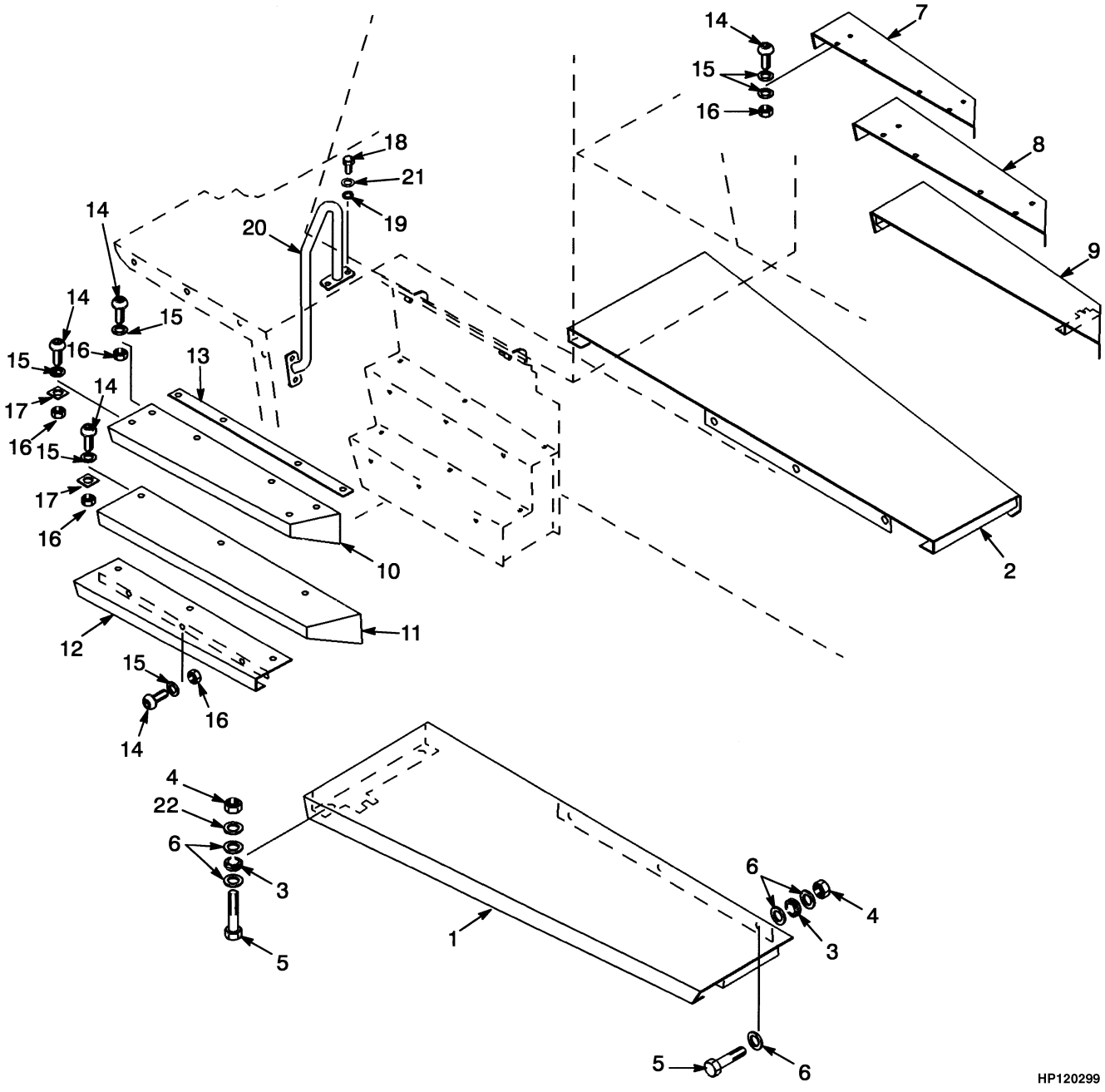

©2006 HYSTER COMPANY

FLOOR PLATES AND COVERS
FORK LIFT TRUCK
SHEET 2 OF 2

ITEM		PART NO.	DESCRIPTION	QTY
1	**ae**	1450769	Running Board (LH)	1
1	**af**	1541789	Running Board (LH)	1
1	**be**	1450783	Running Board (LH)	1
1	**bf**	1541787	Running Board (LH)	1
2	**ae**	1450770	Running Board (RH)	1
2	**af**	1541790	Running Board (RH)	1
2	**be**	1450784	Running Board (RH)	1
2	**bf**	1541788	Running Board (RH)	1
3		216735	Grommet	10
4		300937	Locknut	10
5		246001	Capscrew	10
6	**e**	320162	Washer	30
6	**f**	320162	Washer	34
7	**ac**	1452202	Step	1
7	**ad**	1518324	Step	1
7	**bc**	1452197	Step	1
7	**bd**	1518171	Step	1
8	**ac**	1452203	Step	1
8	**ad**	1518323	Step	1
8	**bc**	1452198	Step	1
8	**bd**	1518100	Step	1
9	**ac**	1454945	Step	1
9	**ad**	1518322	Step	1
9	**bc**	1454949	Step	1
9	**bd**	1518099	Step	1
10	**ae**	1451497	Step (Top)	1
10	**af**	1554855	Step (Top)	1
10	**bf**	1451484	Step (Top)	1
10	**bf**	1556307	Step (Top)	1
11	**ae**	1451494	Step	1
11	**ag**	1554857	Step	1
11	**ah**	1589321	Step	1
11	**be**	1451489	Step	1
11	**bg**	1556306	Step	1
11	**bh**	1589330	Step	1
12	**ae**	1451503	Step	1
12	**ag**	1554858	Step	1
12	**ah**	1589323	Step	1
12	**be**	1451500	Step	1
12	**bg**	1556304	Step	1
12	**bh**	1589328	Step	1
13	**a**	1451478	Plate	1
13	**b**	1451477	Plate	1
14	**d**	296174	Capscrew	27
15	**d**	320160	Washer	30
16	**d**	316826	Nut	27
17		1451012	Spacer	8
18		287860	Capscrew	8
19		316826	Nut	8
20		1452277	Handrail (LH)	1

©2006 HYSTER COMPANY

FLOOR PLATES AND COVERS
FORK LIFT TRUCK
SHEET 2 OF 2

ITEM	PART NO.	DESCRIPTION	QTY
20	1452278	Handrail (RH)	1
21	320159	Washer	16
22	320161	Washer	8

FOOTNOTES:
a H400H
b H450H
c ⇒ S/N A214E01842Z
d S/N A214E01843Z⇔S/N A214E02062E
e ⇒ S/N A214E02062E
f S/N A214E02063E ⇒
g S/N A214E02063E⇔S/N A214E02120C
h S/N A214E02121C ⇒

©2006 HYSTER COMPANY

NOTES

OPERATOR COMPARTMENT (Figure 1-5)
WITHOUT CAB

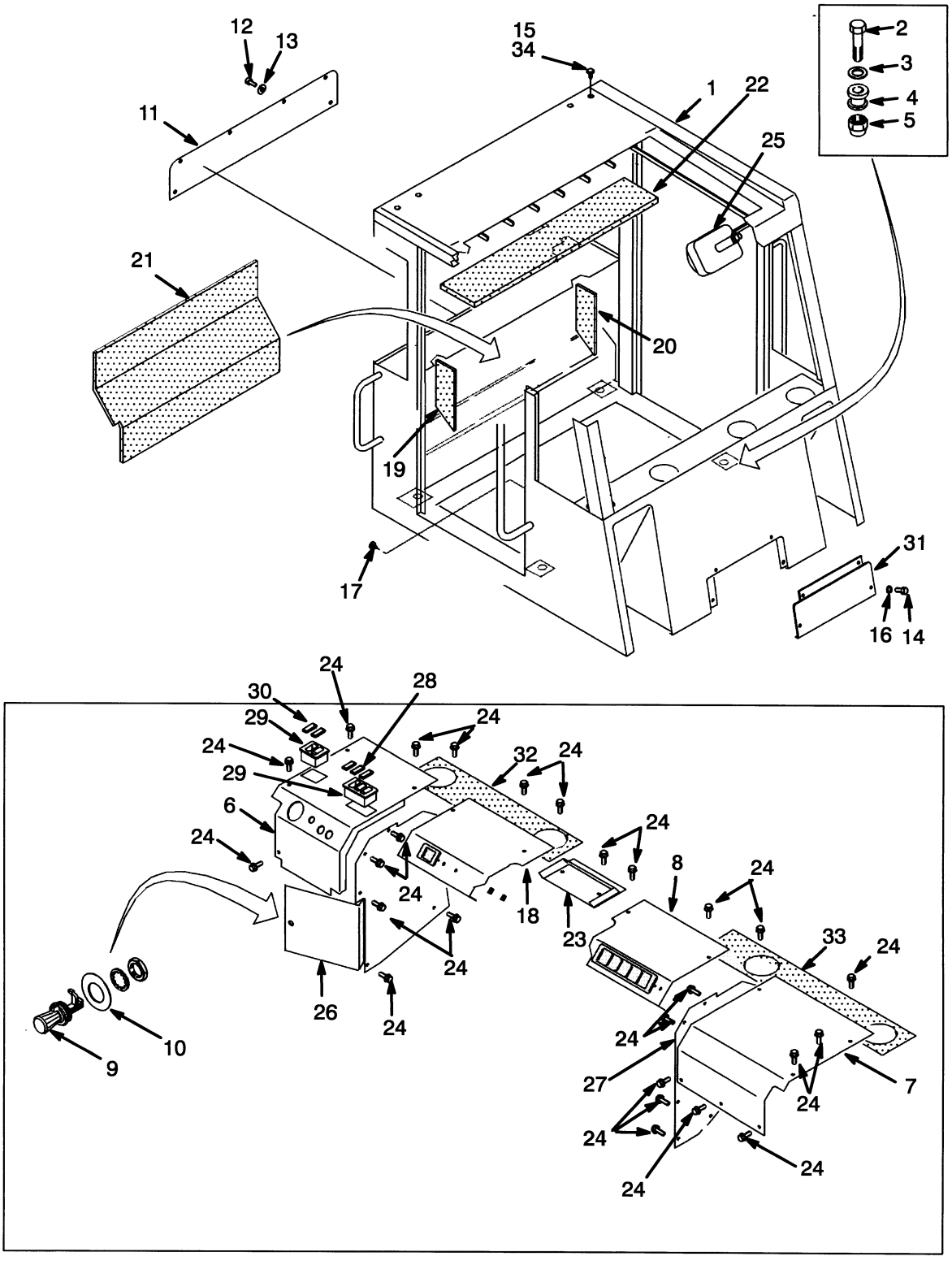

HP120300

©2006 HYSTER COMPANY

OPERATOR COMPARTMENT
WITHOUT CAB

ITEM	PART NO.	DESCRIPTION	QTY
1	1373718	Operator Compartment	1
2	292535	Capscrew	4
3	300939	Washer	4
4	1325519	Mount (Cab)	4
5	300937	Locknut	4
6	1451065	Cover (LH)	1
7	1325597	Cover (RH)	1
8	1393754	Cover	1
9	1311288	Latch	1
10	1311287	Washer	1
11	1453421	Plate	1
12	1384659	Capscrew	6
13	1324577	Washer	6
14	369242	Capscrew	4
15	1307737	Fastener	4
16	375629	Washer	4
17	1304971	Fastener	2
18	1393755	Cover	1
19	1301263	Liner (LH Lower)	1
20	1301264	Liner (RH Lower)	1
21	1325623	Liner (Lower Center)	1
22	1325624	Liner (Top)	1
23	1301189	Cover	1
24	1301177	Screw	31
25	1301286	Mirror	2
26	1311388	Door	1
27	1301255	Panel (RH Access)	1
28	376947	Bezel	1
29	376949	Cover	5
30	376948	Bezel	2
31	1393833	Plate	1
32	1301293	Gasket (LH)	1
33	1301292	Gasket (RH)	1
34	280472	Sealant	AR

©2006 HYSTER COMPANY

OPERATOR COMPARTMENT (Figure 1-6)
WITH CAB
SHEET 1 OF 3

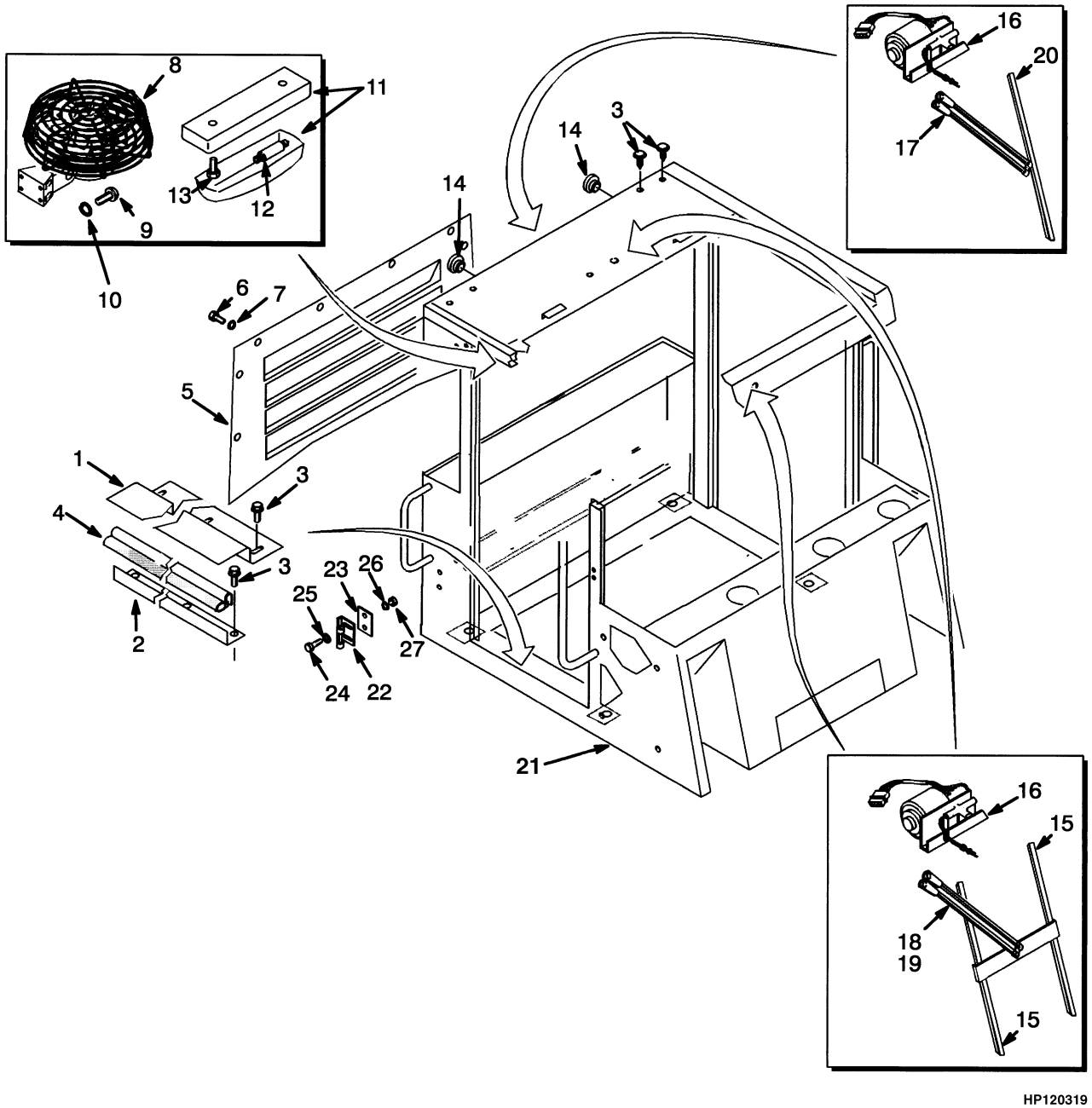

©2006 HYSTER COMPANY

OPERATOR COMPARTMENT
WITH CAB
SHEET 1 OF 3

KEY:
A: Empty Container Handler
B: Fork Lift Truck

ITEM		PART NO.	DESCRIPTION	QTY A	QTY B
1		1325567	Bracket	2	2
2		1325576	Bracket	2	2
3		309637	Screw	12	12
4		1325582	Seal	AR	AR
5		1384506	Cover	1	..
6		1384659	Capscrew	8	..
7		1324577	Washer	8	..
8		1312226	Fan Assembly	1	1
8		1307755	Fan	1	1
8		181045	Connector	1	1
8		134810	Terminal	1	1
8		1301783	Ring	1	1
9		16750	Screw	4	4
10		15152	Lockwasher	4	4
11		1301254	Dome Light	1	1
12		1307051	Bulb	1	1
13		302236	Screw	2	2
14		1311217	Plug	2	2
15		816046	Wiper Blade	4	4
16	**a**	1306902	Wiper Motor	3	3
16	**b**	1504017	Retrofit Kit	1	1
16	**b**	1517976	Wiper Motor Assembly	1	1
16	**b**	1504383	Wiper Motor	1	1
16	**b**	1504384	Linkage	1	1
16	**b**	1504014	Wire Harness (Adapter)	1	1
17		816045	Wiper Arm (Rear)	1	1
18		1458609	Wiper Arm (Front)	1	1
19		816372	Wiper Arm (Top)	1	1
20		1318443	Wiper Blade	1	1
21		1373701	Operator Compartment	1	..
21		1373725	Operator Compartment	..	1
22	**d**	1369520	Striker	..	2
22	**c**	1393748	Striker Plate	..	2
23	**d**	1373690	Spacer	..	2
24		287854	Capscrew	..	4
25		292682	Lockwasher	..	4
26		320159	Washer	..	4
27		136692	Nut	..	4

FOOTNOTES:
a ⇒ S/N A214E-1797
b S/N A214E-1798 ⇒
c D/B 01/1998 ⇒
d ⇒ D/B 03/1998

©2006 HYSTER COMPANY

OPERATOR COMPARTMENT (Figure 1-7)
WITH CAB
SHEET 2 OF 3

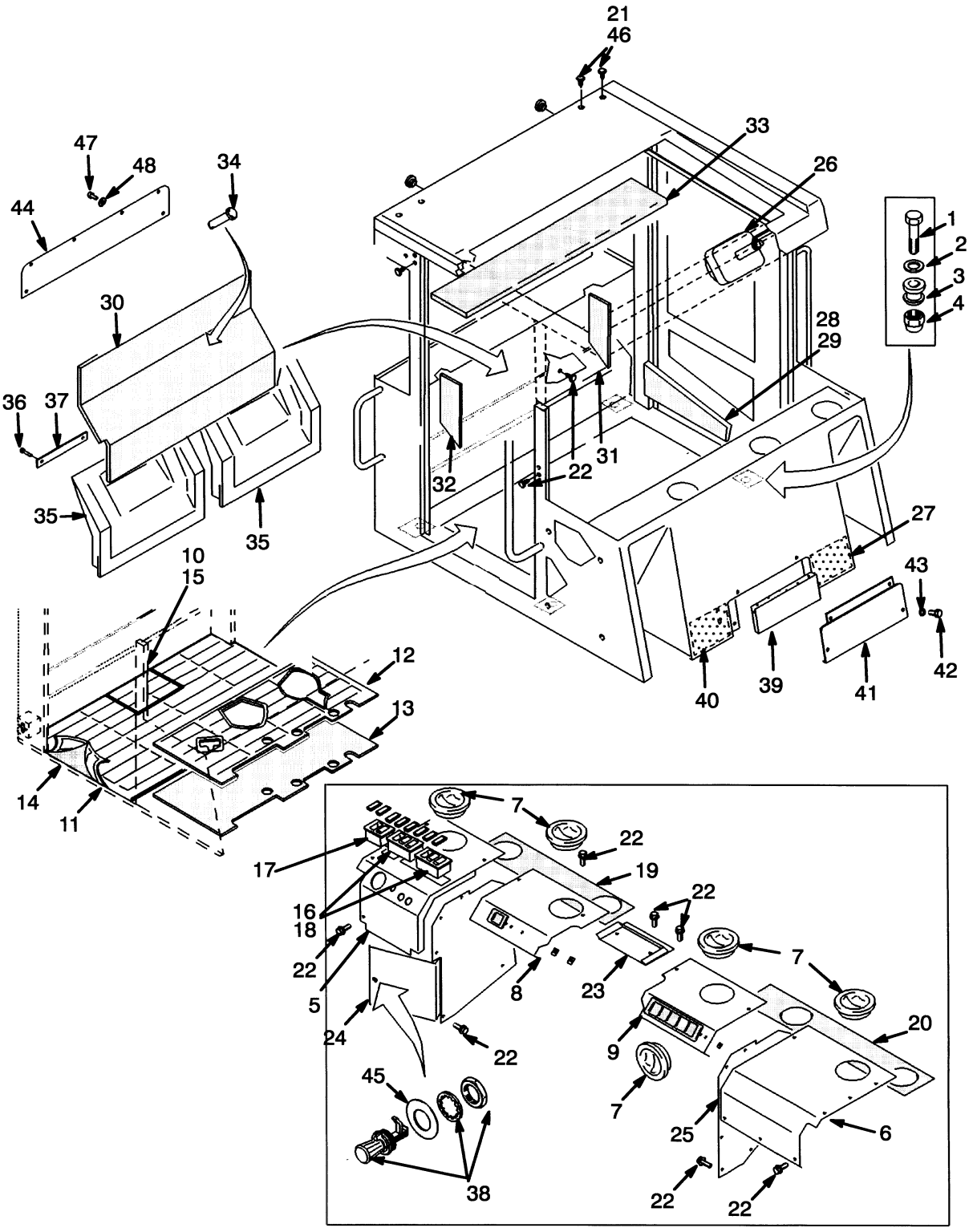

HP120236

©2006 HYSTER COMPANY

OPERATOR COMPARTMENT
WITH CAB
SHEET 2 OF 3

KEY:
A: Empty Container Handler
B: Fork Lift Truck

ITEM		PART NO.	DESCRIPTION	QTY A	QTY B
1		292535	Capscrew	4	4
2		300939	Washer	4	4
3		1325519	Mount (Cab)	4	4
4		300937	Locknut	4	4
5		1373691	Cover (LH)	1	1
6		1325550	Cover (RH)	1	1
7		376276	Nozzle	5	5
8	**a**	1393750	Cover	1	..
8	**b**	1393756	Cover (Tier I)	1	1
8		1507271	Cover (Tier II)	1	1
9		1393753	Cover	1	1
10		1383855	Floormat	1	1
11		1355028	Floormat	1	1
12		1382832	Floormat	1	1
13		1355027	Barrier	1	1
14		1382833	Barrier	1	1
15		1383856	Barrier	1	1
16		376947	Bezel	2	2
17		376948	Bezel	1	1
18		376949	Cover	5	5
19		1301293	Gasket (LH)	1	1
20		1301292	Gasket (RH)	1	1
21		1307737	Fastener	4	4
22		1301177	Screw	31	31
23		1301189	Cover	1	1
24		1311388	Door	1	1
25		1301255	Panel (RH Access)	1	1
26		1301286	Mirror	2	2
27		1393836	Liner	1	1
28		1311432	Liner (RH)	1	..
28		1377728	Liner (RH)	..	1
29		1311433	Liner (LH)	1	..
29		1377729	Liner (LH)	..	1
30		1325729	Liner (Lower Center)	1	1
31		1311430	Liner (LH Lower)	1	1
32		1336986	Liner (RH Lower)	1	1
33		1456470	Liner (Top)	2	2
34		280644	Button	4	4
35		1342664	Liner	2	..
36		329067	Screw	2	..
37		1301297	Plate	1	1
38		1311288	Latch	1	1
39		1393835	Liner	1	1
40		1393834	Liner	1	1
41		1393833	Plate	1	1

©2006 HYSTER COMPANY

OPERATOR COMPARTMENT
WITH CAB
SHEET 2 OF 3

ITEM	PART NO.	DESCRIPTION	QTY A	QTY B
42	369242	Capscrew	4	4
43	375629	Washer	4	4
44	1453421	Plate	..	1
45	1311287	Washer	1	1
46	280472	Sealant	AR	AR
47	1384659	Capscrew	..	6
48	1324577	Washer	..	6

FOOTNOTES:
a ⇒ S/N A214E-1806
b S/N A214E-1807 ⇒

©2006 HYSTER COMPANY

NOTES

OPERATOR COMPARTMENT (Figure 1-8)
WITH CAB
SHEET 3 OF 3

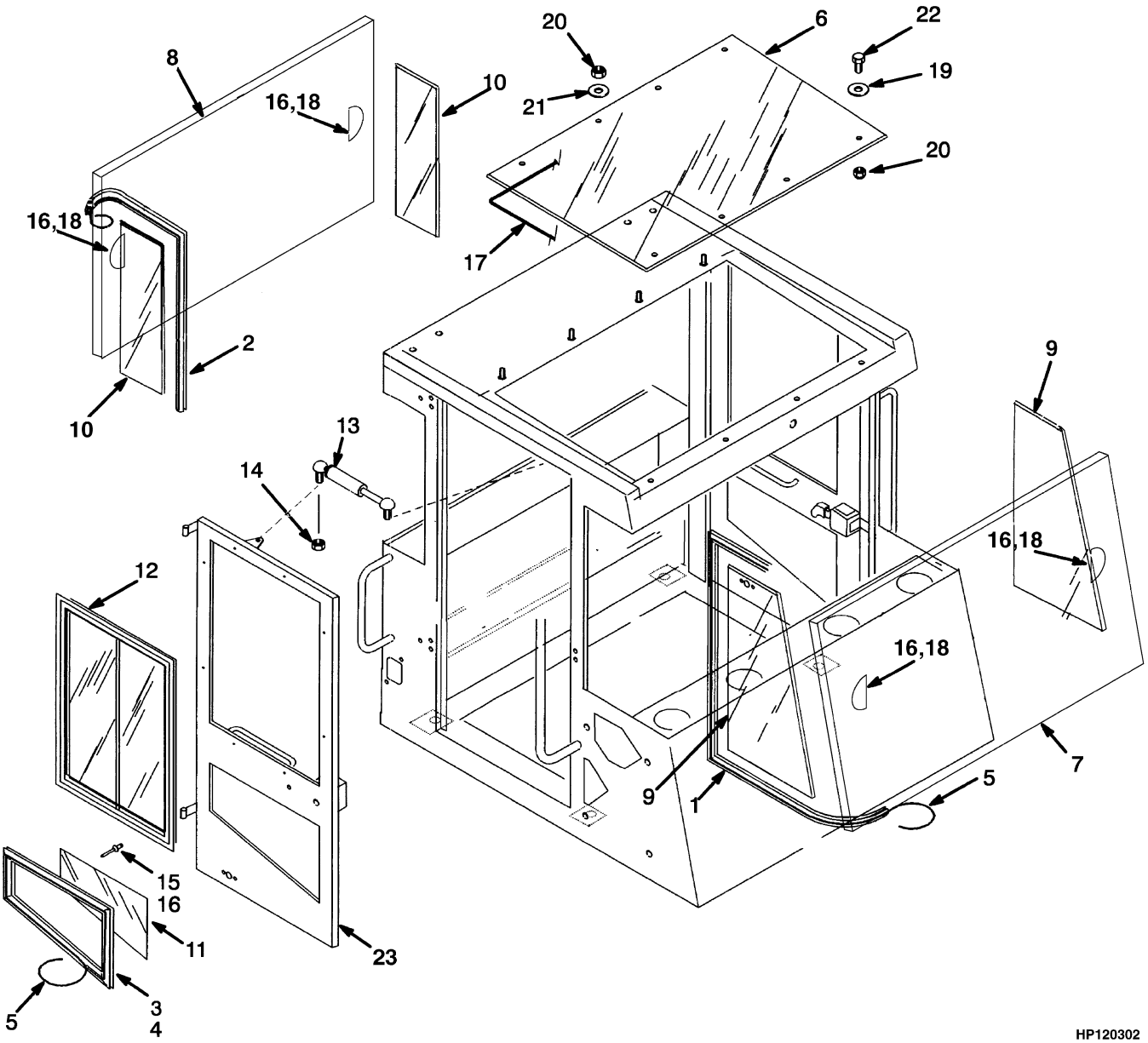

©2006 HYSTER COMPANY

OPERATOR COMPARTMENT
WITH CAB
SHEET 3 OF 3

KEY:
A: Empty Container Handler
B: Fork Lift Truck

ITEM		PART NO.	DESCRIPTION	QTY A	QTY B
1		1346426	Seal	1	1
2		376064	Seal	1	1
3		376867	Seal	1	1
4		376868	Seal	1	1
5		376922	Lock Strip	AR	AR
6		1595164	Window (Top)	1	1
7		1346424	Glass (Front)	1	1
8		1301372	Glass (Rear)	1	1
9		1346425	Glass	2	2
10		1301374	Glass (Rear)	2	2
11		1301375	Glass	2	2
12		1375984	Window (RH)	1	1
12		1377703	Glass	1	1
12		1377704	Glass	1	1
12		1377702	Latch	1	1
12		1377271	Screw	4	4
12		1375985	Window (LH)	1	1
12		1377703	Glass	1	1
12		1377704	Glass	1	1
12		1377702	Latch	1	1
12		1377271	Screw	4	4
13		816380	Gas Spring	2	..
14		316835	Nut	4	..
15		265817	Rivet	16	16
16		3047334	Adhesive	AR	AR
17		318352	Seal	AR	AR
18	**a**	376840	Spacer	2	2
19		1324577	Washer	4	4
20		302401	Locknut	8	8
21		320160	Washer	4	4
22		1384659	Capscrew	4	4
23		1377726	Door (LH) (☞ Figure 1-9)	2	2
23		1377727	Door (RH) (☞ Figure 1-9)	2	2
23		1391422	Door (LH) (☞ Figure 1-9)	1	1
23		1391423	Door (RH) (☞ Figure 1-9)	1	1

FOOTNOTES:
a Half of Item Used in Four Locations

©2006 HYSTER COMPANY

DOORS (Figure 1-9)

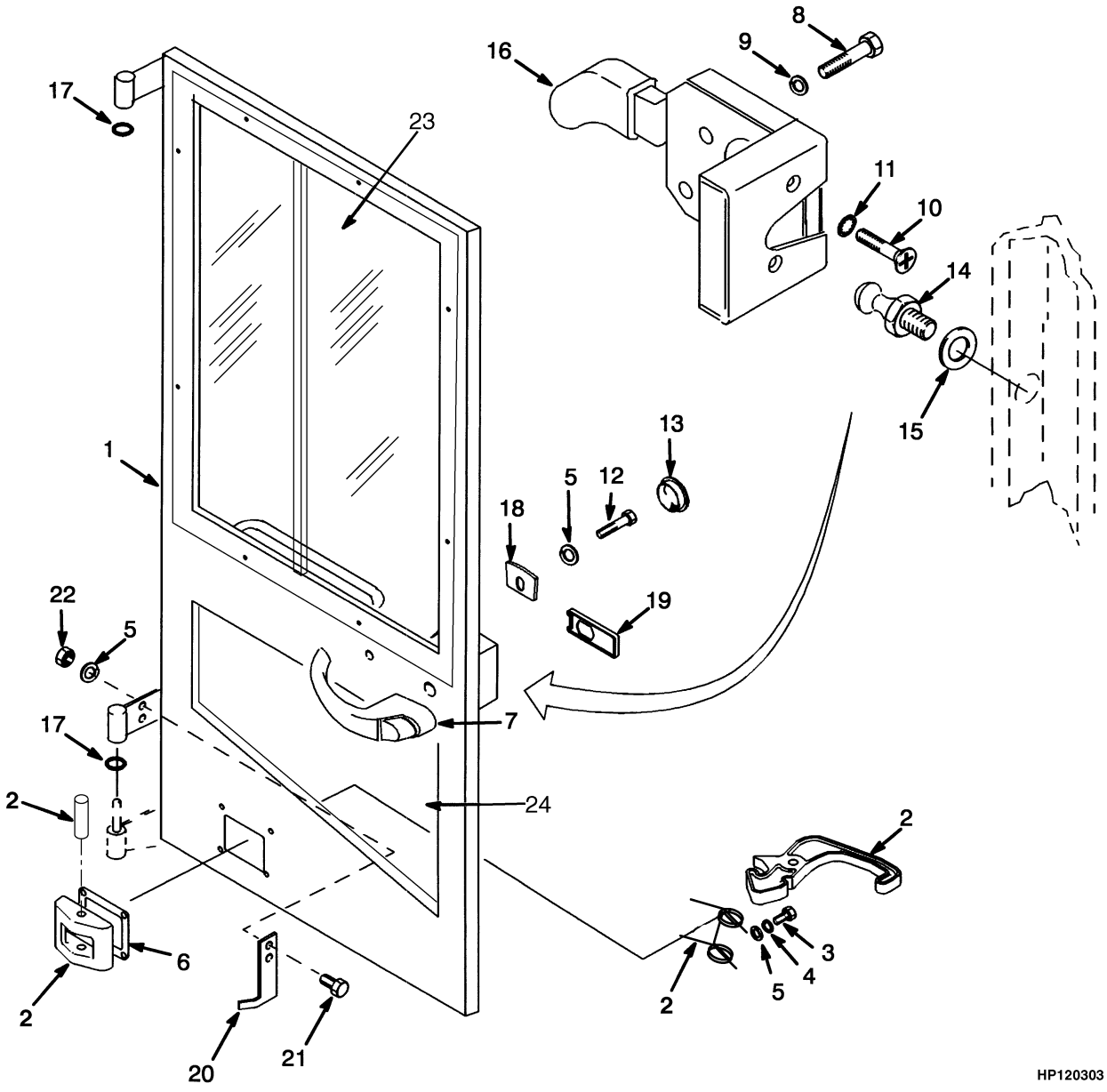

©2006 HYSTER COMPANY

DOORS

KEY:
A: Empty Container Handler
B: Fork Lift Truck

ITEM	PART NO.	DESCRIPTION	QTY A	QTY B
1	1377726	Door (LH)	..	1
1	1377727	Door (RH)	..	1
1	1391422	Door (LH)	1	..
1	1391423	Door (RH)	1	..
2	1374428	Latch Assembly	..	2
2	1356943	Latch	..	1
2	1356948	Bracket	..	1
2	1358734	Spring	..	1
2	226774	Pin	..	1
3	292500	Capscrew	..	8
4	320156	Washer	..	8
5	292680	Lockwasher	6	10
6	1369496	Seal	..	2
7	1319177	Door Handle	2	2
7	1360777	Key	2	2
8	302248	Screw	4	4
9	292679	Lockwasher	4	4
10	296464	Screw	4	4
11	296396	Washer	4	4
12	302256	Screw	2	2
13	309666	Plug	2	2
14	365344	Bolt	2	2
15	296423	Washer	2	2
16	1309824	Door Handle (LH)	1	1
16	1312450	Door Handle (RH)	1	1
17	1301700	Ring (Brass)	4	4
18	816378	Seal	2	..
19	816377	Seal	2	..
20	1391910	Plate (LH)	1	..
20	1393763	Plate (RH)	1	..
21	292501	Capscrew	4	..
22	136692	Nut	4	..
23	1375984	Window (☞ Figure 1-8)	AR	AR
24	1375985	Window (☞ Figure 1-8)	AR	AR
24	1301375	Glass (☞ Figure 1-8)	AR	AR

©2006 HYSTER COMPANY

COVERS (Figure 1-10)
EMPTY CONTAINER HANDLER

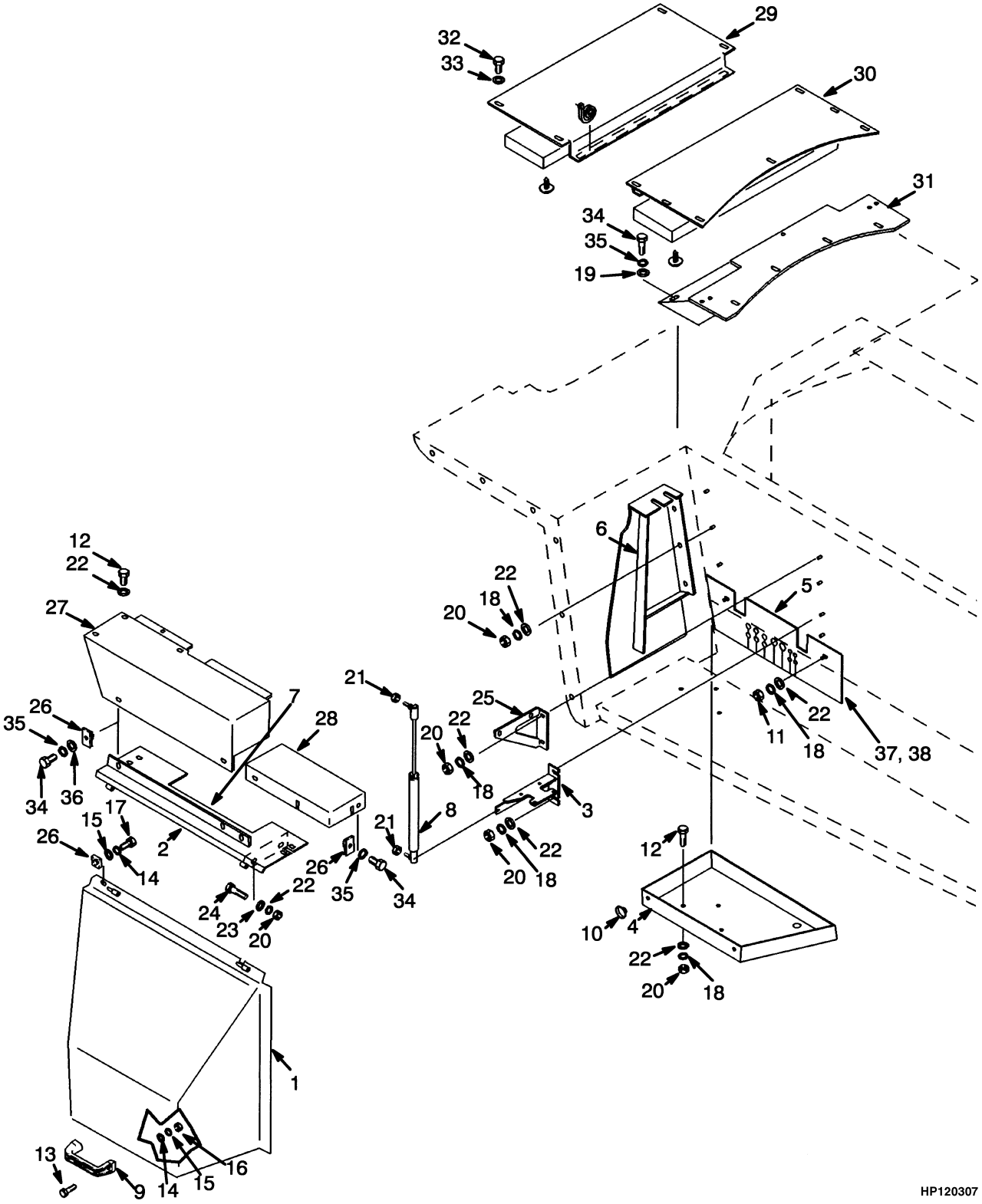

©2006 HYSTER COMPANY

COVERS
EMPTY CONTAINER HANDLER

ITEM		PART NO.	DESCRIPTION	QTY
1		1382634	Cover	1
2		1383879	Cover	1
3		1382846	Bracket	1
4	**a**	1450761	Pan	1
4	**b**	1516916	Pan	1
5	**c**	1384507	Mud Guard	1
5	**d**	1465470	Mud Guard	1
6		1382848	Bracket	1
7		1383876	Stop Plate	1
8		1385584	Gas Spring	1
9		362030	Handle	1
10		1450759	Button	2
11		316836	Nut	2
12		287854	Capscrew	7
13		292501	Capscrew	2
14		320156	Washer	3
15		292680	Lockwasher	3
16		136687	Nut	2
17		292500	Capscrew	1
18		320160	Washer	16
19		292681	Lockwasher	6
20		136692	Nut	16
21		239503	Nut	2
22		292682	Lockwasher	16
23		320159	Washer	4
24		136985	Capscrew	2
25		1384667	Bracket	1
26		1384661	Nut	6
27		1384532	Cover (LH)	1
27		1384648	Cover (RH)	1
28		1393861	Cover	1
29		1384652	Cover	1
30		1384653	Cover	1
31		1384651	Mount	1
32		329067	Screw	18
33		320158	Washer	23
34		136749	Capscrew	6
35		320160	Washer	4
36		292681	Lockwasher	6
37		1302109	Edge Trim	AR
38		238810	Adhesive	AR

FOOTNOTES:
a ⇒ S/N A214E-01842Z
b S/N A214E-01843Z ⇒
c ⇒ S/N A214E-1658
d S/N A214E1659 ⇒ S/N PENDING PER ECN 68224-02

©2006 HYSTER COMPANY

COVERS (Figure 1-11)
FORK LIFT TRUCK

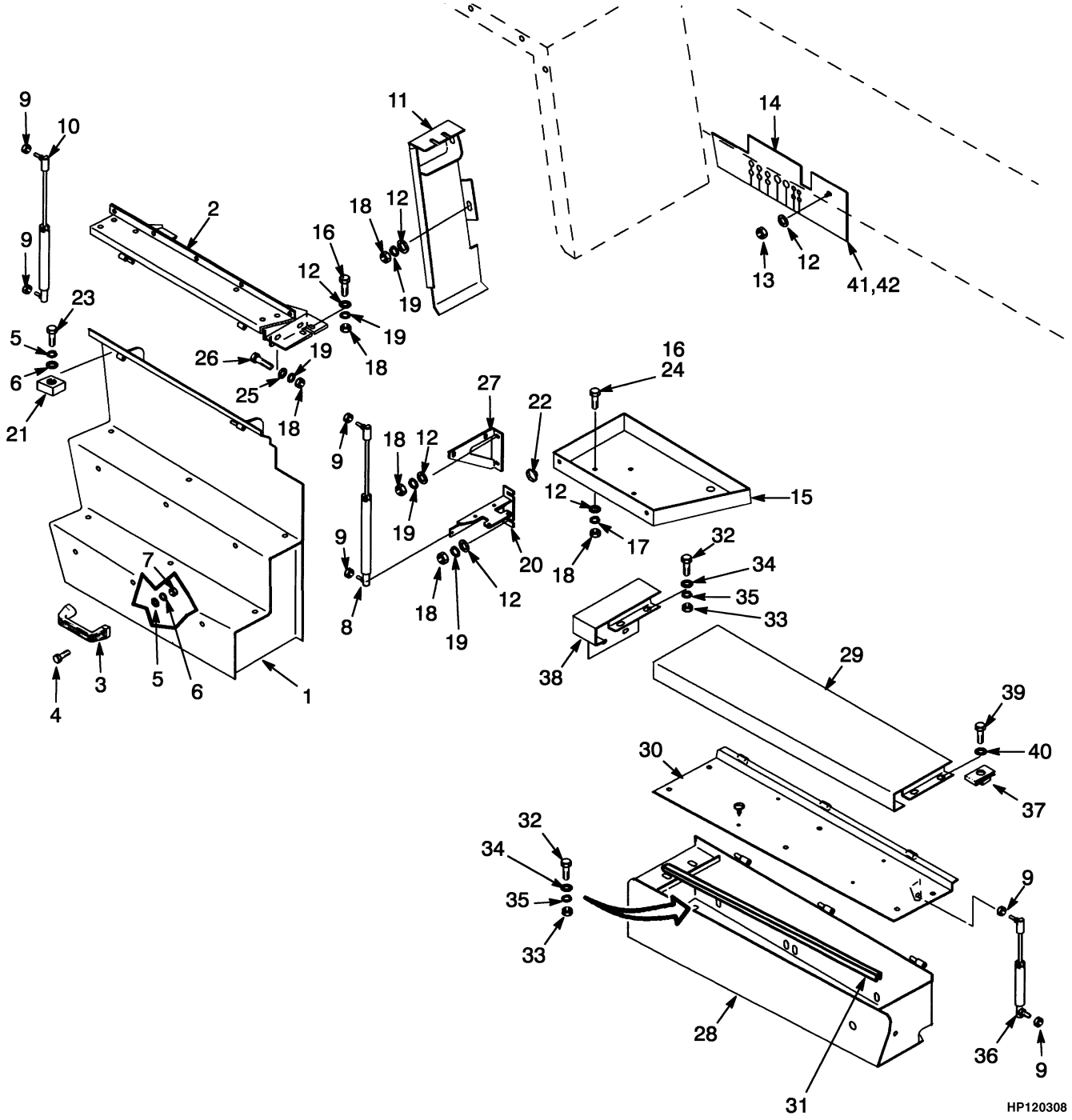

©2006 HYSTER COMPANY

COVERS
FORK LIFT TRUCK

ITEM		PART NO.	DESCRIPTION	QTY
1	**a**	1450972	Cover	1
1	**b**	1450971	Cover	1
2	**a**	1451515	Cover	1
2	**b**	1451514	Cover	1
3		362030	Handle	1
4		292501	Capscrew	2
5		320156	Washer	3
6		292680	Lockwasher	3
7		136687	Nut	2
8		1385584	Gas Spring	1
9		239503	Nut	6
10		1450762	Gas Spring	1
11		1451508	Side Cover	1
12	**i**	320160	Washer	33
12	**f**	320160	Washer	42
13	**i**	316836	Nut	1
14	**i**	1450757	Mud Guard	1
15	**c**	1450761	Pan	1
15	**d**	1516916	Pan	1
16	**i**	287854	Capscrew	7
16	**f**	287854	Capscrew	13
17		320166	Washer	3
18		136692	Nut	15
19		292682	Lockwasher	12
20		1450872	Bracket	1
21		1383876	Stop Plate	1
22		1450759	Button	2
23		292500	Capscrew	1
24		280472	Sealant	AR
25	**i**	320159	Washer	4
25	**f**	320159	Washer	20
26		136985	Capscrew	2
27		1384667	Bracket	1
28	**a**	1451452	Battery Box	1
28	**b**	1451451	Battery Box	1
29	**ae**	1451018	Step (Battery Box)	1
29	**ag**	1554866	Step (Battery Box)	1
29	**ah**	1589318	Step (Battery Box)	1
29	**be**	1451470	Step (Battery Box)	1
29	**bg**	1556302	Step (Battery Box)	1
29	**bh**	1589325	Step (Battery Box)	1
30	**ae**	1451476	Cover (Battery Box)	1
30	**ag**	1554865	Cover (Battery Box)	1
30	**ah**	1589320	Cover (Battery Box)	1
30	**be**	1450897	Cover (Battery Box)	1
30	**bg**	1556299	Cover (Battery Box)	1
30	**bh**	1589327	Cover (Battery Box)	1
31		1451450	Edge Trim	1
32	**i**	292527	Capscrew	8
32		292527	Capscrew	4
33	**i**	300937	Locknut	8

©2006 HYSTER COMPANY

COVERS
FORK LIFT TRUCK

ITEM		PART NO.	DESCRIPTION	QTY
33	**g**	300937	Locknut	4
33	**h**	302402	Locknut	4
34	**i**	320161	Washer	16
34	**f**	320161	Washer	8
35	**i**	292683	Lockwasher	8
35	**f**	292683	Lockwasher	4
36		1455087	Gas Spring	1
37		1385535	Nut	6
38		1451208	Step	1
39		136681	Capscrew	6
40		320158	Washer	12
41		1302109	Edge Trim	AR
42		238810	Adhesive	AR

FOOTNOTES:
a H400H
b H450H
c ⇒ S/N A214E-01842Z
d S/N A214E-01843Z ⇒
e ⇒ S/N A214E02062E
f S/N A214E02063E ⇒
g S/N A214E02063E⇔S/N A214E02120C
h S/N A214E02121C ⇒
i S/N A214E1658⇔S/N A214E02062E

©2006 HYSTER COMPANY

NOTES

HOOD (Figure 1-12)
EMPTY CONTAINER HANDLER

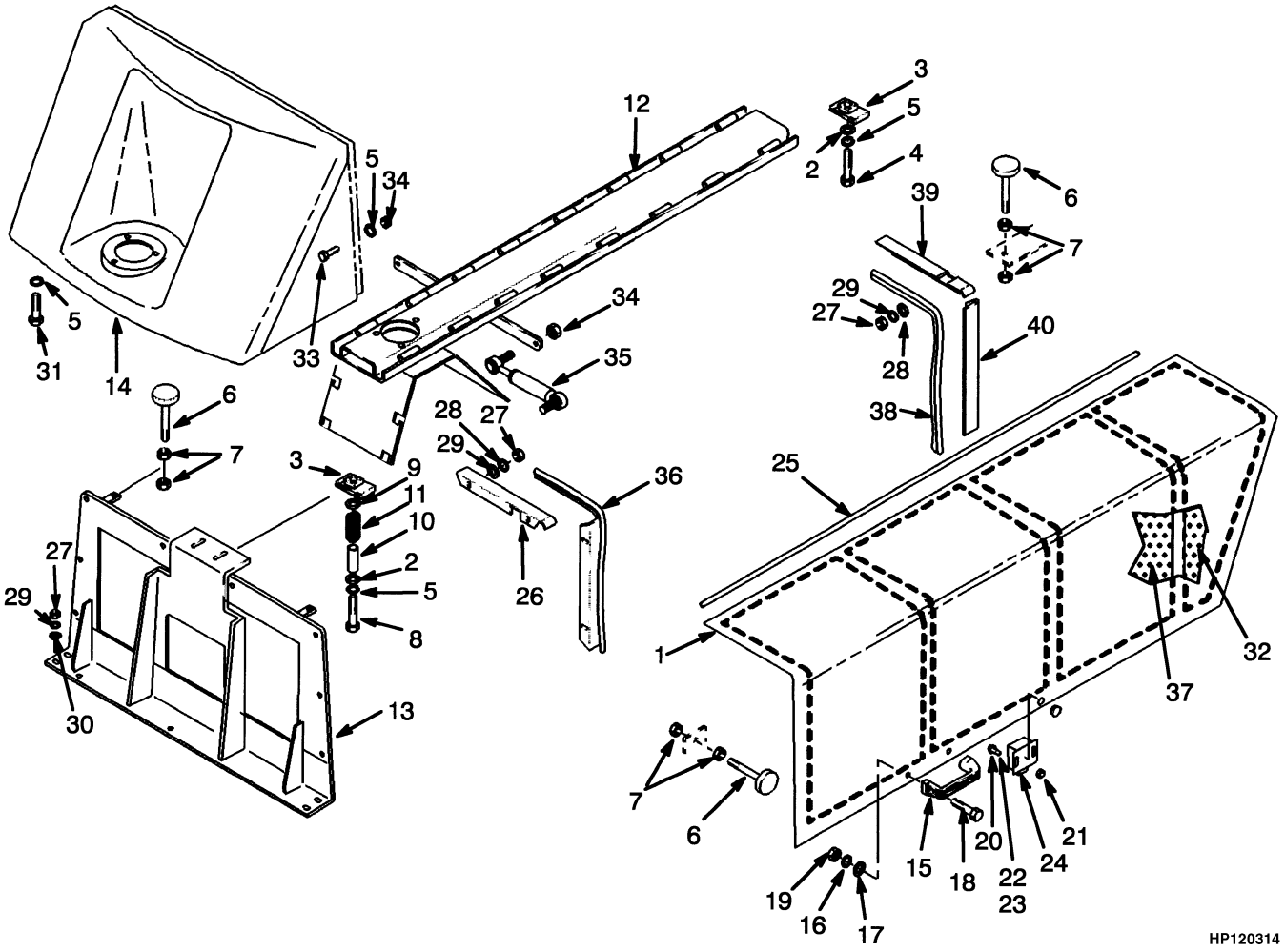

©2006 HYSTER COMPANY

HOOD
EMPTY CONTAINER HANDLER

ITEM	PART NO.	DESCRIPTION	QTY
1	1373540	Hood (LH)	1
1	1373541	Hood (RH)	1
2	292681	Lockwasher	4
3	376397	Nut (Retainer)	4
4	18498	Capscrew	2
5	320157	Washer	20
6	367251	Stop Screw	8
7	15055	Nut	16
8	18516	Capscrew	2
9	296422	Washer	4
10	1301703	Spacer	2
11	1301702	Spring	2
12	1373743	Channel (Tier I Engine)	1
12	1516935	Channel (Tier II Engine)	1
13	1373527	Hood Support	1
14	1384627	Cover	1
15	362030	Handle	2
16	292680	Lockwasher	4
17	320156	Washer	4
18	292501	Capscrew	4
19	136687	Nut	4
20	296152	Capscrew	4
21	292668	Nut	4
22	292679	Lockwasher	4
23	320155	Washer	4
24	1382332	Latch	2
25	1382408	Rod	2
26	1373655	Bracket (LH)	1
26	1373656	Bracket (RH)	1
27	136692	Nut	20
28	296421	Washer	16
29	292682	Lockwasher	20
30	296420	Washer	4
31	176640	Capscrew	4
32	1393842	Liner (LH)	1
32	1393843	Liner (RH)	1
33	136749	Capscrew	6
34	239503	Nut	10
35	1385584	Gas Spring	2
36	1373653	Bracket (LH)	1
36	1373654	Bracket (RH)	1
37	1373547	Hood Liner	6
38	300088	Seal (Door)	AR
39	1373657	Bracket (LH)	1
39	1373658	Bracket (RH)	1
40	1373659	Bracket	2

©2006 HYSTER COMPANY

HOOD (Figure 1-13)
FORK LIFT TRUCK

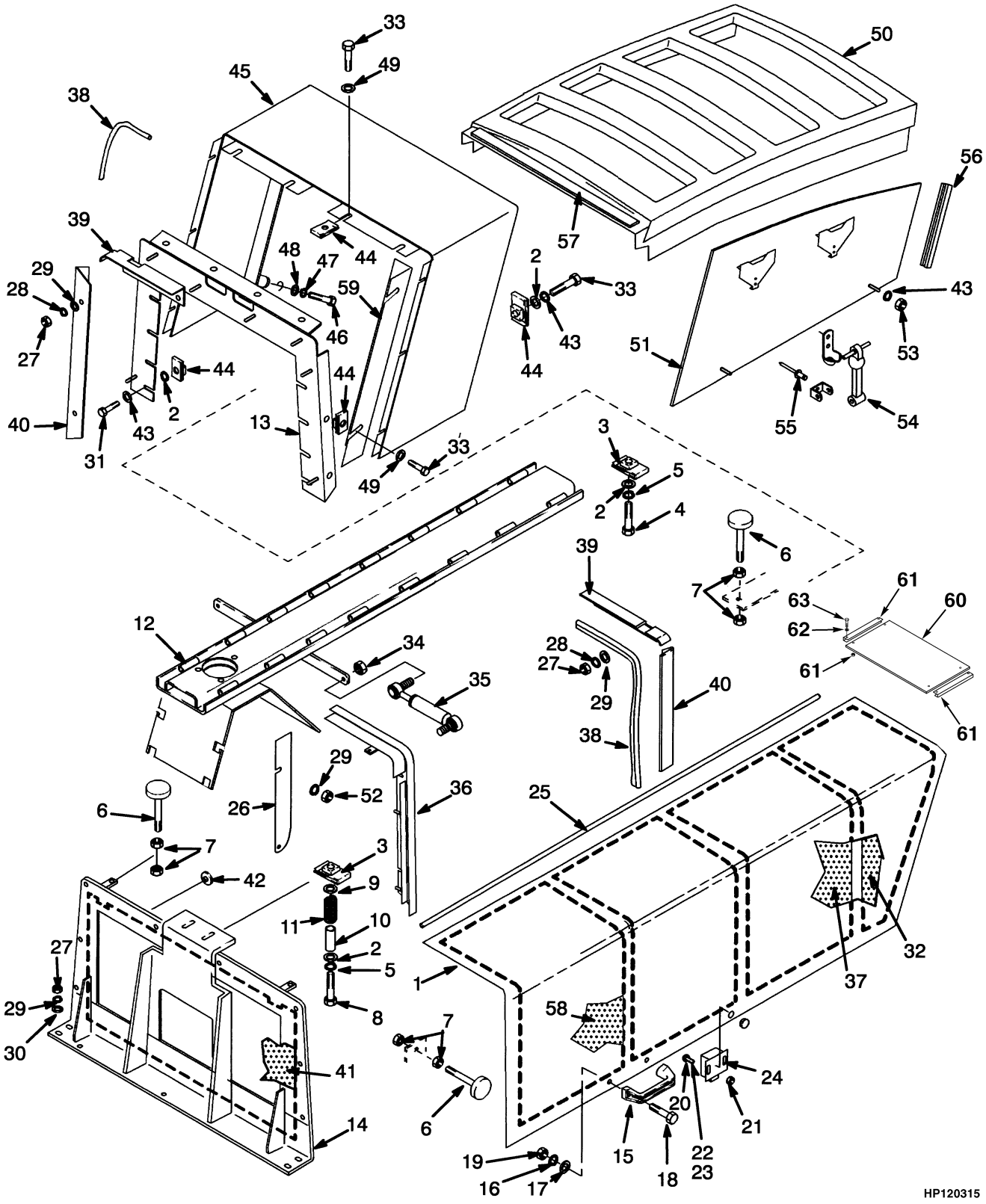

©2006 HYSTER COMPANY

HOOD
FORK LIFT TRUCK

KEY:
A: H360-400H
B: H450H

ITEM		PART NO.	DESCRIPTION	QTY A	QTY B
1		1455040	Hood (LH)	1	1
1		1455042	Hood (RH)	1	1
2		292681	Lockwasher	16	16
3		376397	Nut (Retainer)	4	4
4		18498	Capscrew	2	2
5		320157	Washer	4	4
6		367251	Stop Screw	8	8
7		15055	Nut	16	16
8		18516	Capscrew	2	2
9		296422	Washer	4	4
10		1301703	Spacer	2	2
11		1301702	Spring	2	2
12	**a**	1373744	Channel (Tier I Engine)	1	1
12	**b**	1516936	Channel (Tier II Engine)	1	1
13	**a**	1455466	Support (Tier I Engine)	1	1
13	**b**	1517676	Support (Tier II Engine)	1	1
14		1384683	Support	1	1
15		362030	Handle	2	2
16		292680	Lockwasher	4	4
17		320156	Washer	4	4
18		292501	Capscrew	4	4
19		136687	Nut	4	4
20		296152	Capscrew	4	4
21		292668	Nut	4	4
22		292679	Lockwasher	4	4
23		320155	Washer	4	4
24		1382332	Latch	2	2
25		1382408	Rod	2	2
26		1455049	Plate	1	1
27		136692	Nut	20	20
28		296421	Washer	16	16
29		292682	Lockwasher	22	22
30		296420	Washer	4	4
31		176640	Capscrew	8	8
32		1393842	Liner (LH)	1	1
32		1393843	Liner (RH)	1	1
33		136749	Capscrew	8	14
34		239503	Nut	4	4
35		1385584	Gas Spring	2	2
36		1455060	Plate (LH)	1	1
36		1455177	Plate (RH)	1	1
37		1373547	Hood Liner	4	4
38		300088	Seal (Door)	AR	AR
39		1373657	Bracket (LH)	1	1
39		1373658	Bracket (RH)	1	1
40		1373659	Bracket	2	2

©2006 HYSTER COMPANY

HOOD
FORK LIFT TRUCK

ITEM	PART NO.	DESCRIPTION	QTY A	QTY B
41	1393906	Liner	1	1
42	1361087	Button	4	4
43	296419	Washer	16	16
44	1384661	Nut	16	22
45	1393876	Cover	..	1
46	292540	Capscrew	..	2
47	292683	Lockwasher	..	2
48	320162	Washer	..	2
49	320158	Washer	4	10
50	1393878	Cover	1	1
51	1452829	Cover (LH)	1	1
51	1452830	Cover (RH)	1	1
52	310102	Nut	2	2
53	302400	Locknut	4	4
54	1452820	Latch	4	4
55	222029	Rivet	8	8
56	1345675	Trim	2	2
57	261156	Foam Tape	AR	AR
58	1455044	Hood Liner	2	2
59	1455191	Bracket (LH)	1	..
59	1455192	Bracket (RH)	1	..
60	1516593	Panel	2	2
61	1516594	Bracket	4	4
62	15175	Washer	8	8
63	18496	Capscrew	8	8
64	376397	Nut (Retainer) (Not Illustrated)	8	8
65	15155	Lockwasher (Not Illustrated)	8	8

FOOTNOTES:
a ⇒ S/N A214E-01842Z
b S/N A214E-01843Z ⇒

©2006 HYSTER COMPANY

NOTES

HEATER (Figure 1-14)

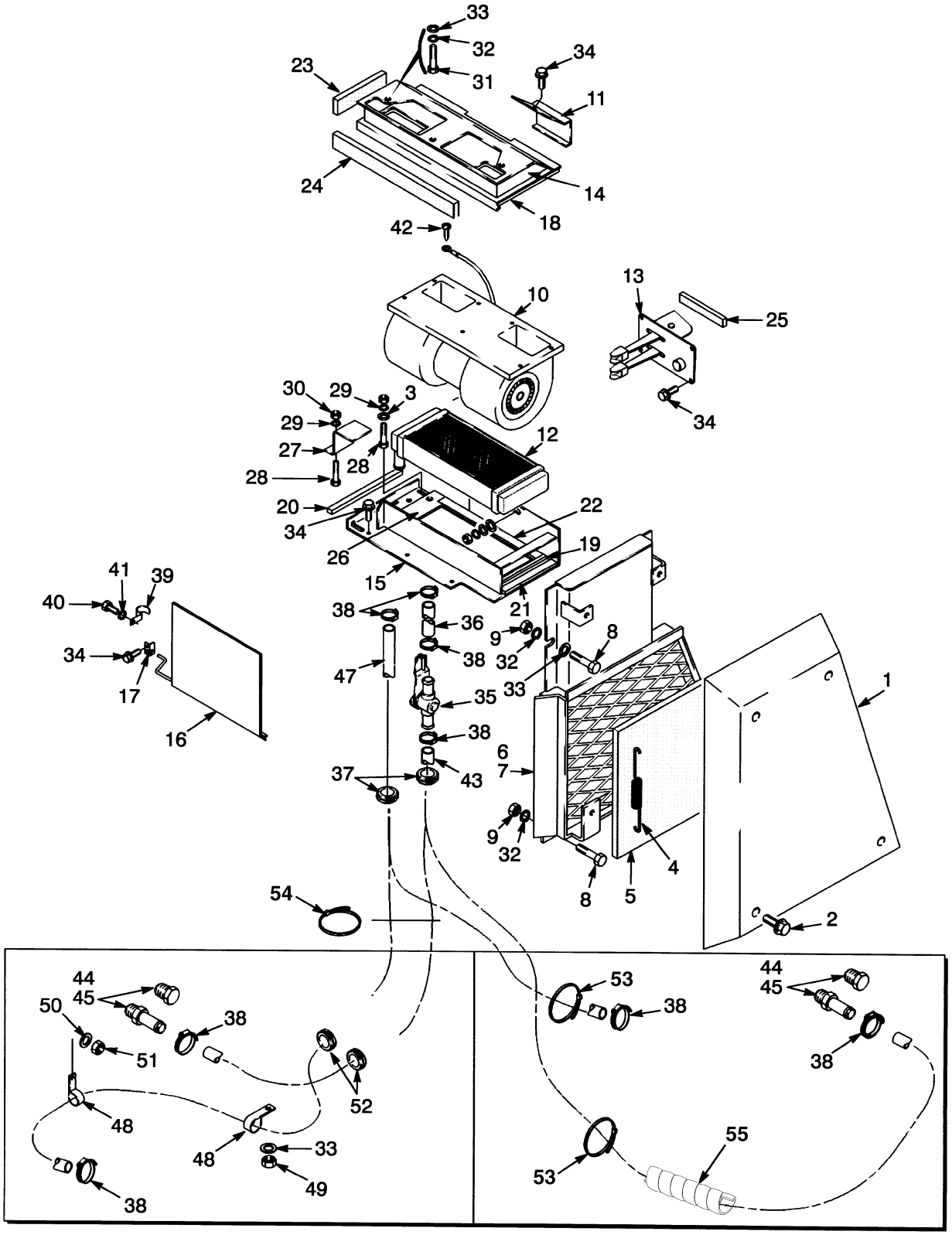

©2006 HYSTER COMPANY

HEATER

KEY:
A: Empty Container Handler
B: Fork Lift Truck

ITEM	PART NO.	DESCRIPTION	QTY A	QTY B
1	1301326	Cover	1	1
2	1301708	Screw	4	4
3	320156	Washer	3	3
4	1301323	Spring	2	2
5	1301127	Filter	1	1
6	280472	Sealant	AR	AR
7	1301310	Intake	1	1
8	136681	Capscrew	4	4
9	239503	Nut	4	4
10	1301587	Blower Assembly	1	1
10	1368151	Blower	1	1
10	1453031	Resistor	1	1
11	1301389	Retainer	1	1
12	376137	Core	1	1
13	1301020	Heater Control (☞ Figure 1-15)	1	1
14	1301393	Flange	1	1
15	1325585	Support	1	1
16	1325548	Damper	1	1
17	1301121	Bracket	2	2
18	1311273	Gasket	1	1
19	1301395	Foam Tape	1	1
20	1301396	Foam Tape	1	1
21	1301397	Foam Tape	1	1
22	1301398	Foam Tape	2	2
23	1301404	Foam Tape	4	4
24	1301405	Foam Tape	1	1
25	1301589	Foam Tape	1	1
26	1301399	Foam (Sound Barrier)	1	1
27	1301400	Clamp	1	1
28	292501	Capscrew	2	2
29	292680	Lockwasher	3	3
30	136687	Nut	3	3
31	287851	Capscrew	3	3
32	292681	Lockwasher	7	7
33	320157	Washer	6	8
34	1301177	Screw	11	11
35	1301001	Valve	1	1
36	1301598	Hose	1	1
37	279752	Grommet	4	4
38	130845	Clamp	6	6
39	18901	Clamp	1	1
40	302244	Screw	1	1
41	292679	Lockwasher	1	1
42	1301284	Screw	1	1
43	1313368	Hose	1	..
43	163520	Hose	..	1

©2006 HYSTER COMPANY

HEATER

ITEM	PART NO.	DESCRIPTION	QTY A	QTY B
44	127852	Fitting (With Cab) (Tier IEngine)	1	1
44	14388	Fitting (Without Cab),	1	1
44	222482	Fitting (With Cab), (Tier II Engine)	1	1
45	246108	Sealant	AR	AR
46	323864	Strap Clamp	AR	AR
47	258493	Hose	..	1
47	1313368	Hose	2	..
48	1310611	Clamp	..	4
49	302400	Locknut	..	2
50	320159	Washer	..	4
51	302401	Locknut	..	2
52	392238	Grommet	..	2
53	1350911	Strap	2	..
54	255578	Clamp	..	1
55	1561538	Coil Sleeve	1	..

©2006 HYSTER COMPANY

NOTES

HEATER CONTROL (Figure 1-15)

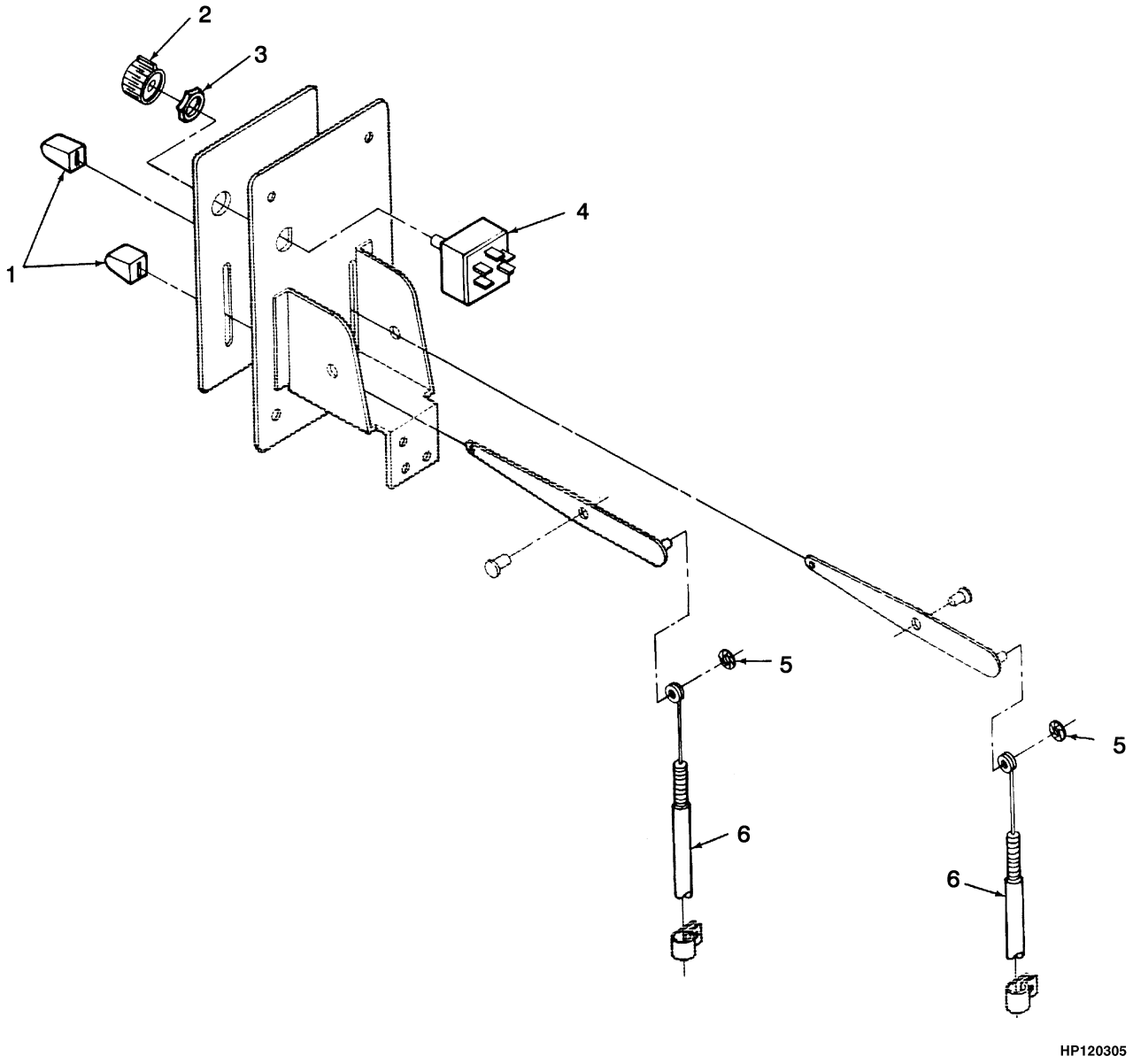

©2006 HYSTER COMPANY

HEATER CONTROL

ITEM	PART NO.	DESCRIPTION	QTY
	1301020	Heater Control	1
1	1313733	Knob	2
2	1313734	Knob	1
3	1313744	Nut	1
4	1313735	Switch	1
5	1313736	Locknut	2
6	1313737	Cable	2

©2006 HYSTER COMPANY

WINDSHIELD WASHER (Figure 1-16)

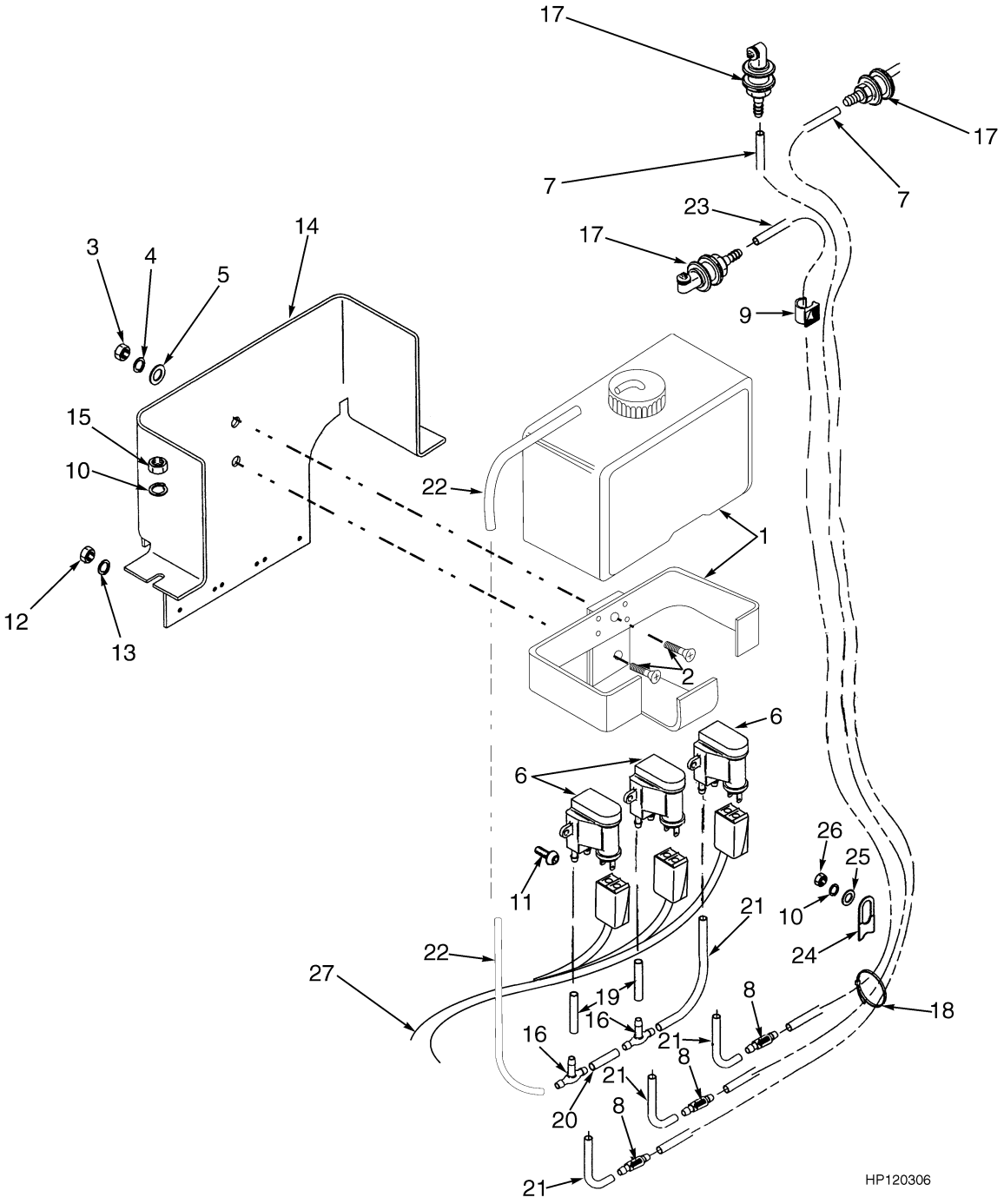

©2006 HYSTER COMPANY

WINDSHIELD WASHER

KEY:
A: Empty Container Handler
B: Fork Lift Truck

ITEM	PART NO.	DESCRIPTION	QTY A	QTY B
1	1311267	Reservoir	1	1
1	. . . . .	Bracket	1	1
2	296472	Screw	2	2
3	136687	Nut	2	2
4	292680	Lockwasher	2	2
5	197068	Washer	2	2
6	1316593	Pump Assembly (24 Volt)	3	3
7	1311300	Hose	..	2
7	1373727	Hose	2	..
8	1301685	Check Valve	3	3
9	1301727	Clamp	1	1
10	320159	Washer	3	5
11	302036	Screw	6	6
12	292668	Nut	6	6
13	292679	Lockwasher	6	6
14	1452663	Bracket	1	1
15	136692	Nut	2	2
16	1311260	Fitting	2	2
17	1301686	Nozzle	3	3
18	114312	Strap Clamp	1	3
19	1311295	Hose	2	2
20	1311296	Hose	1	1
21	1311297	Hose	4	4
22	1326772	Hose	1	1
23	1373728	Hose	1	..
23	86520	Hose	..	1
24	1356947	Strap	1	3
25	320161	Washer	1	2
26	302401	Locknut	1	2
27	1384602	Wire Harness (☞ Figure 4-55)	1	1

©2006 HYSTER COMPANY

COUNTERWEIGHTS (Figure 1-17)

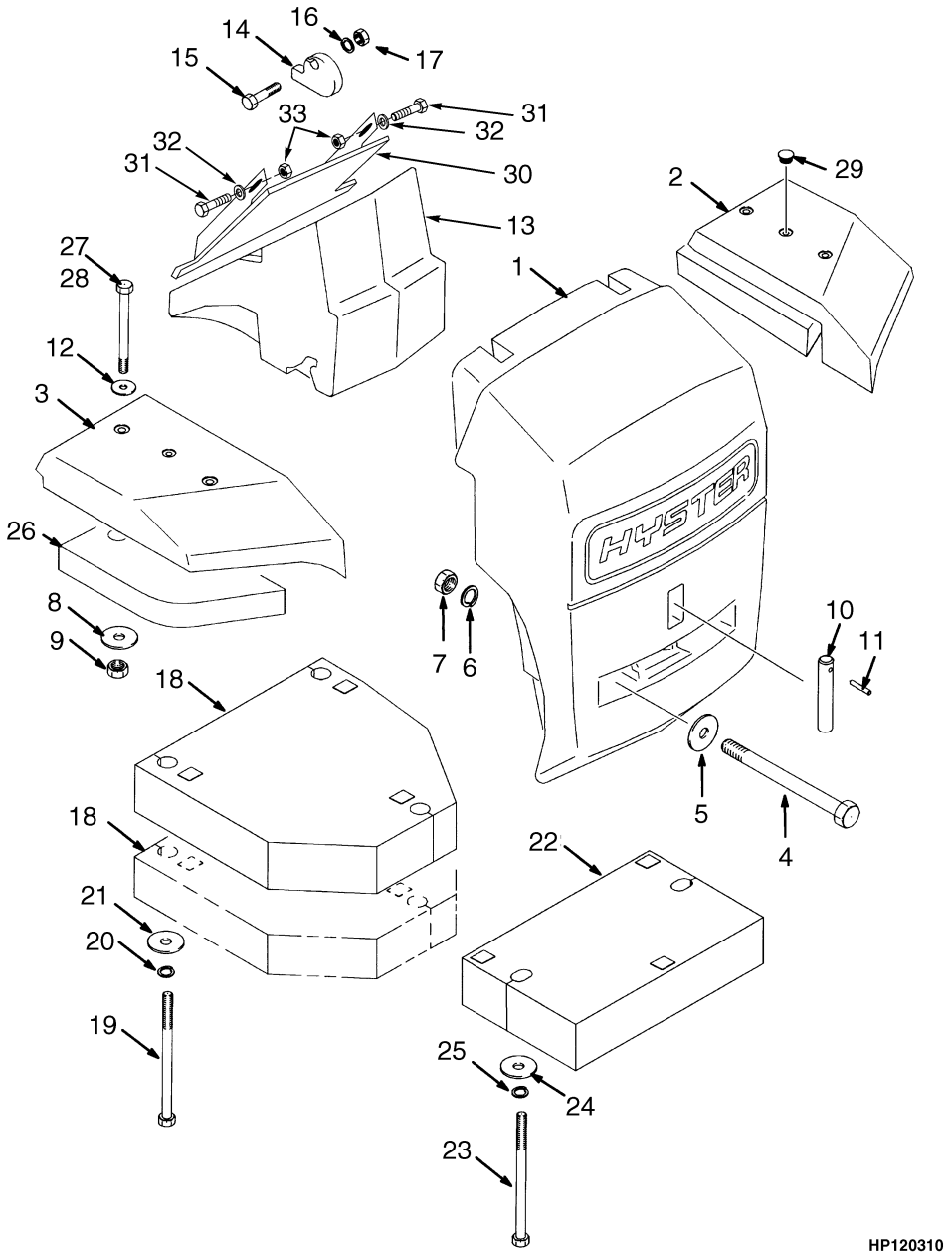

©2006 HYSTER COMPANY

COUNTERWEIGHTS

KEY:
A: H360H
B: H400H
C: H450H
D: H400H-EC
E: H450H-EC

ITEM		PART NO.	DESCRIPTION	QTY A	B	C	D	E
1		1373570	Counterweight (Center)	1	1	1	1	1
2	**b**	1373571	Counterweight (LH) (Rear Fender)	1	1	..	1	1
2	**a**	1453024	Counterweight (LH) (Rear Fender)	..	..	1	1	..
3	**b**	1373572	Counterweight (RH) (Rear Fender)	1	1	..	1	1
3	**a**	1453025	Counterweight (RH) (Rear Fender)	..	..	1	1	..
4		376319	Capscrew	2	2	2	2	2
5		149531	Washer	2	2	2	2	2
6		197070	Washer	2	2	2	2	2
7		221372	Nut	2	2	2	2	2
8		1301086	Washer	4	4	4	4	6
9		316829	Nut	4	4	4	4	4
10		1373760	Tow Pin	1	1	1	1	1
11	**c**	302497	Tow Pin	1	1	1	1	1
11	**d**	1453739	Tow Pin (Coated)	1	1	1	1	1
12		296431	Washer	4	4	4	4	4
13		1373573	Counterweight (Tier I Engine)	..	1	1	1	1
13		1517108	Counterweight (Tier II Engine)	..	1	1	1	1
14		1373750	Cam	..	2	2	2	2
15		292591	Capscrew	..	2	2	2	2
16		296431	Washer	..	4	4	4	4
17		316829	Nut	..	2	2	2	..
18	**b**	1373773	Counterweight	1	2	..	2	..
19	**b**	1382624	Capscrew	1	..	..	..	..
19	**b**	1385545	Capscrew	..	1	..	1	..
20	**b**	292687	Lockwasher	3	3	..	3	..
21	**b**	1301086	Washer	3	3	..	3	..
22		1493615	Counterweight	1	1	1	..	..
23		292597	Capscrew	2	2	2	..	..
24	**b**	1301086	Washer	1	2	..	..	..
25	**b**	292687	Lockwasher	1	2	..	..	..
26	**b**	1373574	Counterweight	..	..	..	2	2
27	**b**	1373761	Capscrew	..	..	..	4	4
28	**a**	1382624	Capscrew	..	..	2	2	..
28		264134	Sealant	AR	AR	AR	AR	AR
28	**b**	309707	Capscrew	4	4	4	..	..
28	**a**	309707	Capscrew	..	..	2	2	..
29		334639	Plug	AR	AR	AR	AR	AR
30		1454087	Deflector	1	1	1	1	1
30		2048776	Edge Trim	2	2	2	2	2
31		292535	Capscrew	2	2	2	2	2

©2006 HYSTER COMPANY

COUNTERWEIGHTS

ITEM	PART NO.	DESCRIPTION	QTY A	B	C	D	E
32	320162	Washer	4	4	4	4	4
33	302402	Locknut	2	2	2	2	2

FOOTNOTES:

a Empty Container Handler
b Fork Lift Truck with Pin or Quick Disconnect Carriage
c ⇒ S/N A214E-1552
d S/N A214E-1553 ⇒

©2006 HYSTER COMPANY

NOTES

FENDERS (Figure 1-18)
EMPTY CONTAINER HANDLER

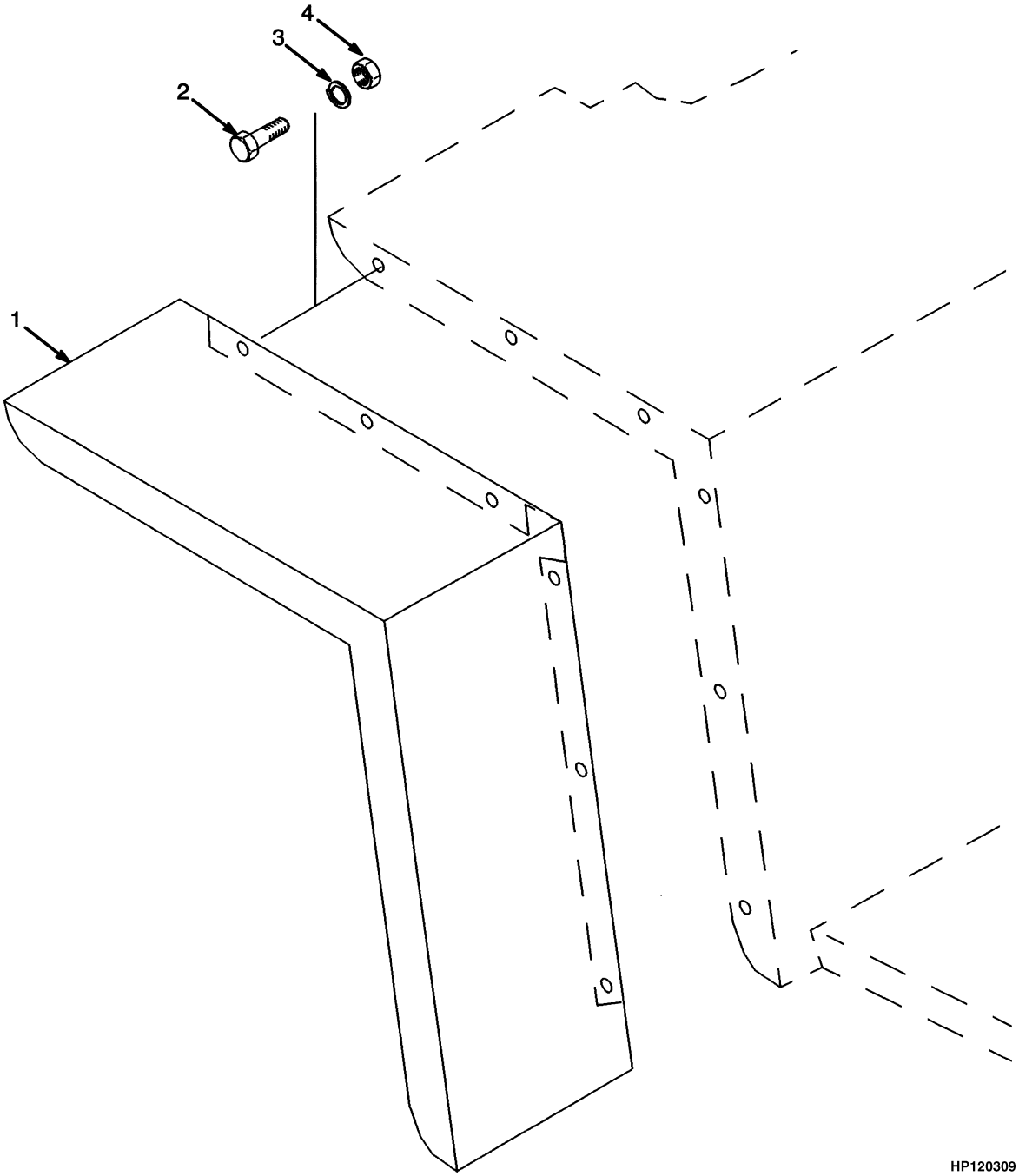

©2006 HYSTER COMPANY

FENDERS
EMPTY CONTAINER HANDLER

ITEM	PART NO.	DESCRIPTION	QTY
1	1381956	Fender (LH)	1
1	1381959	Fender (RH)	1
2	136985	Capscrew	14
3	292682	Lockwasher	14
4	136692	Nut	14

©2006 HYSTER COMPANY

SEAT (Figure 1-19)
HIGH BACK
KAB
(⇒S/N A214E02193C)

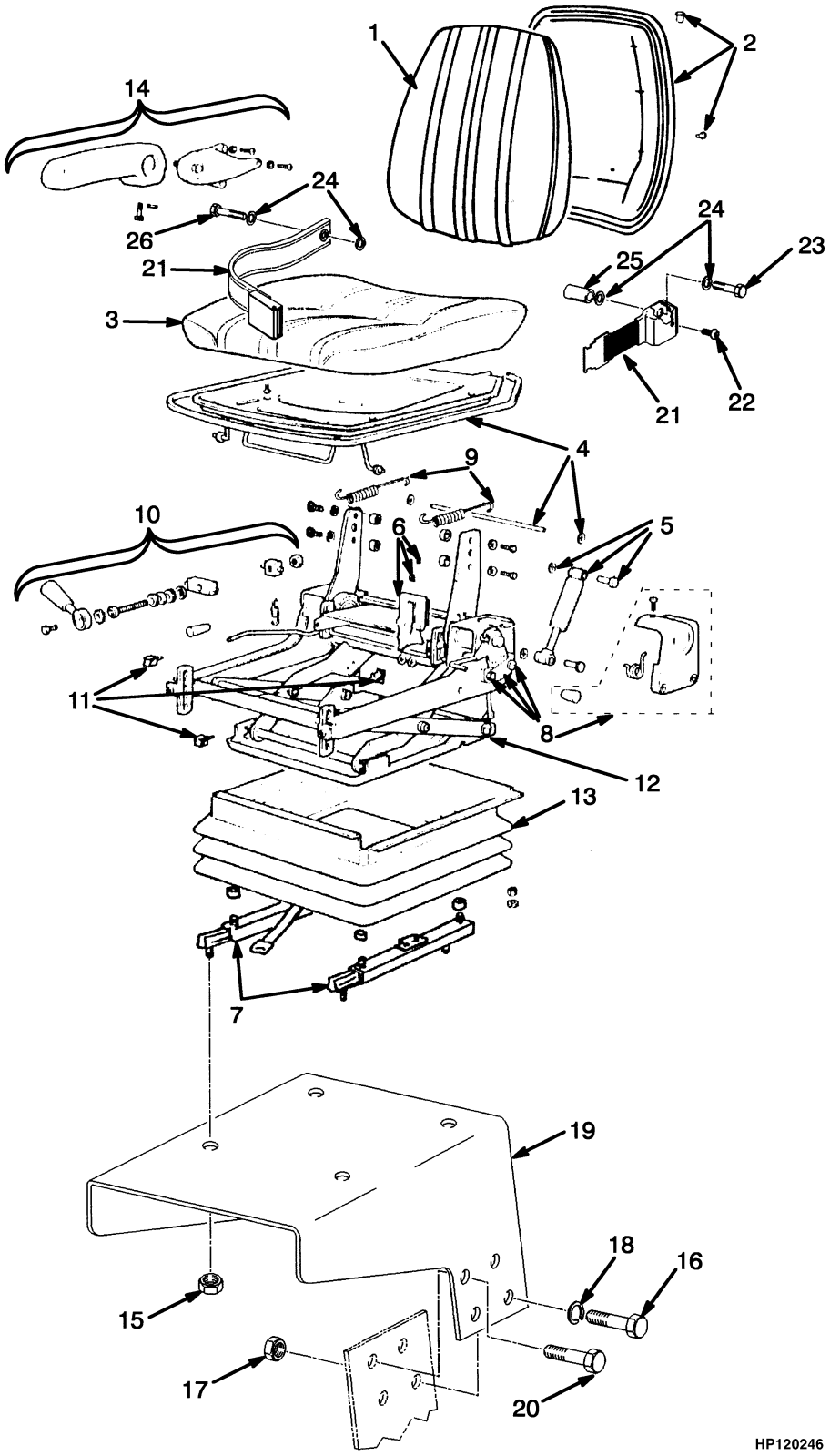

©2006 HYSTER COMPANY

SEAT
HIGH BACK
KAB
(⇒S/N A214E02193C)

KEY:
A: Fabric Cover
B: Vinyl Cover

ITEM	PART NO.	DESCRIPTION	QTY A	QTY B
	1453798	Seat Assembly	1	..
	1453799	Seat Assembly	..	1
1	1454002	Back Cushion	1	..
1	1454003	Back Cushion	..	1
2	1454004	Pan (Back)	1	1
3	1334470	Seat Cushion	1	..
3	1454006	Seat Cushion	..	1
4	1334461	Pan (Seat Assembly)	1	1
5	1335579	Damper Kit	1	1
6	1334465	Ride Indicator Kit	1	1
7	1334468	Adjuster Kit (Latch)	1	1
8	1334464	Recliner Kit (Knob)	1	1
9	1334466	Height Adjuster Kit	1	1
10	1334462	Weight Adjuster Kit	1	..
11	1334467	Stopper Kit	1	1
12	1335575	Suspension Kit	1	1
13	1325346	Suspension Cover Kit	1	1
14	1453800	Armrest Kit	1	1
15	313828	Nut	4	4
16	287854	Capscrew	6	6
17	136692	Nut	8	8
18	292682	Lockwasher	8	8
19	1465382	Seat Pan	1	1
20	136985	Capscrew	2	2
21	1374750	Seat Belt	2	1
22	379650	Screw	2	1
23	1323115	Capscrew	2	1
24	1323117	Washer	4	4
25	385516	Spacer	1	1
26	1323116	Capscrew	1	1

©2006 HYSTER COMPANY

SEAT ASSEMBLY (Figure 1-20)
HIGH BACK
KAB
(S/N A214E02194C⇒)

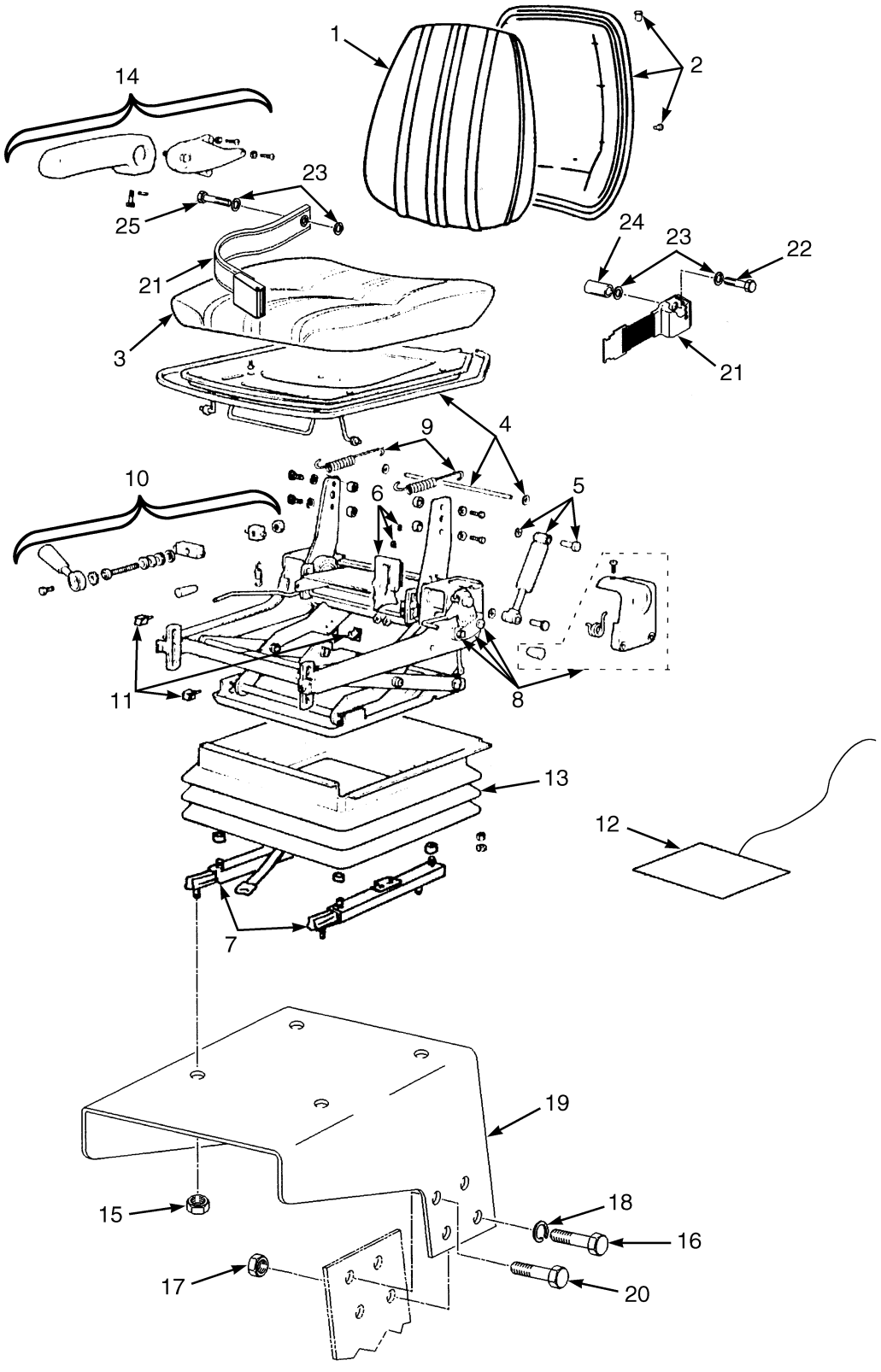

©2006 HYSTER COMPANY

SEAT ASSEMBLY
HIGH BACK
KAB
(S/N A214E02194C⇒)

KEY:
A: Fabric Cover
B: Vinyl Cover

ITEM	PART NO.	DESCRIPTION	QTY A	QTY B
	1611639	Seat Assembly	1	..
	1611640	Seat Assembly	..	1
1	1613832	Back Cushion	1	..
1	1613831	Back Cushion	..	1
2	1454004	Pan (Back)	1	1
3	1613833	Seat Cushion	1	..
3	1335578	Seat Cushion	..	1
4	1334461	Pan (Seat Assembly)	1	1
5	1334463	Damper Kit	1	1
6	1334465	Ride Indicator Kit	1	1
7	1613834	Adjustment Kit (For and Aft)	1	1
8	1334464	Recliner Kit (Knob)	1	1
9	1334466	Height Adjuster Kit	1	1
10	1334462	Weight Adjuster Kit	1	1
11	1334467	Stopper Kit	1	1
12	1613835	Sensor Pad	1	1
13	1325346	Suspension Cover Kit	1	1
14	1453800	Armrest Kit	1	1
15	313828	Nut	4	4
16	287854	Capscrew	6	6
17	136692	Nut	8	8
18	292682	Lockwasher	8	8
19	1465382	Seat Pan	1	1
20	136985	Capscrew	2	2
21	1374750	Seat Belt	1	1
22	1323115	Capscrew	1	1
23	1323117	Washer	4	4
24	385516	Spacer	1	1
25	1323116	Capscrew	1	1

©2006 HYSTER COMPANY

SUSPENSION SEAT (Figure 1-21)
GRAMMER HIGH BACK
SHEET 1 OF 2

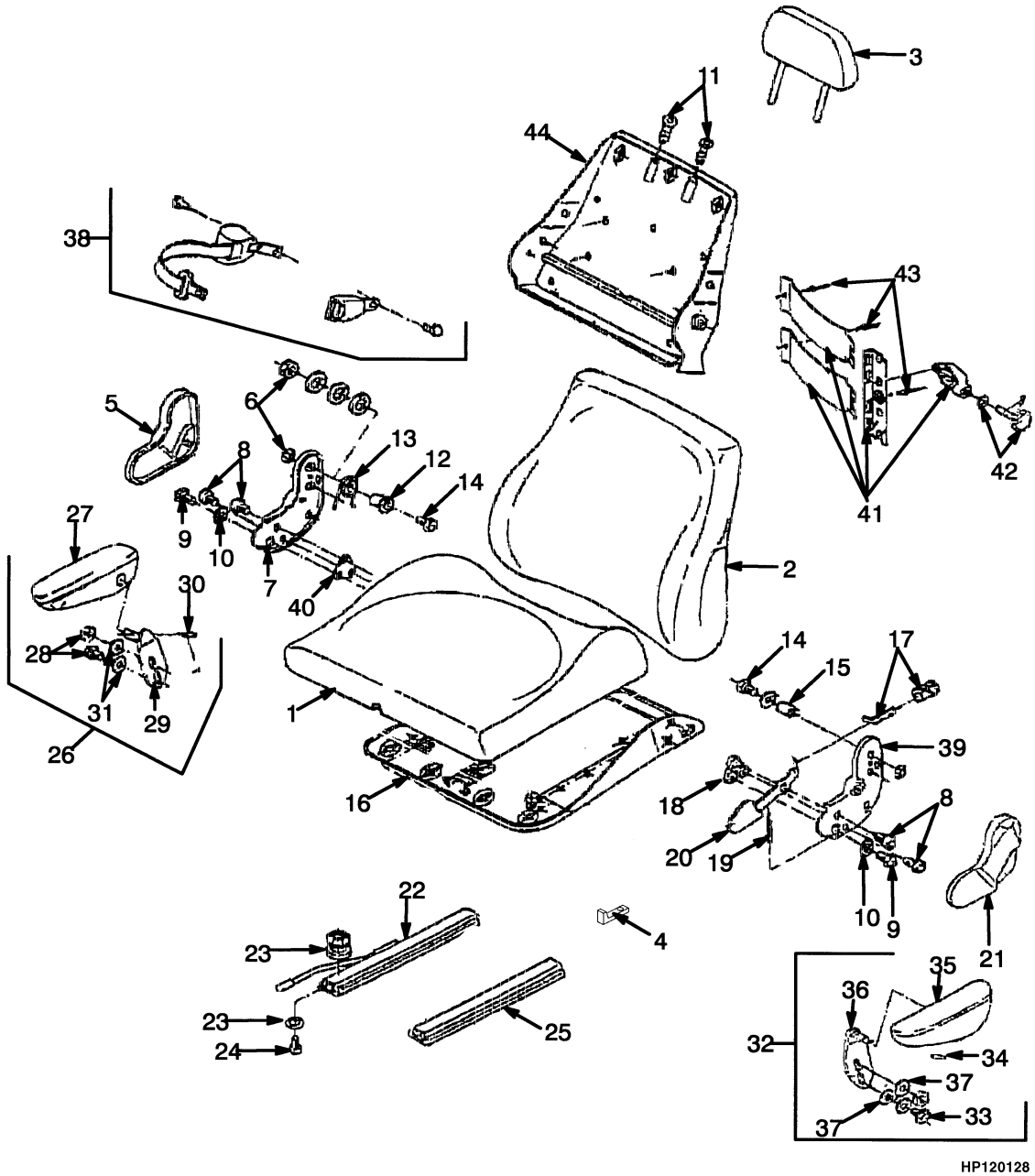

©2006 HYSTER COMPANY

SUSPENSION SEAT
GRAMMER HIGH BACK
SHEET 1 OF 2

KEY:
A: Fabric Cover
B: Vinyl Cover

ITEM	PART NO.	DESCRIPTION	QTY A	QTY B
	1465401	Seat Assembly	1	..
	1465402	Seat Assembly	..	1
1	1473699	Seat Cushion	1	..
1	1474624	Seat Cushion	..	1
2	1315643	Back Cushion	..	1
2	1473700	Back Cushion	1	..
3	1473701	Backrest (Extension)	1	..
3	1474626	Backrest (Extension)	..	1
4	1473630	Stop	1	1
5	1473674	Cover	1	1
6	1474647	Nut	2	2
7	1473676	Plate	1	1
8	1473677	Screw	4	4
9	1473678	Screw	2	2
10	1473679	Washer	2	2
11	1473681	Bushing	2	2
12	1473684	Bushing	1	1
13	1473683	Spring	1	1
14	1473685	Screw	2	2
15	1473694	Tube	1	1
16	1473703	Seat Pan	1	1
17	1473718	Fitting	1	1
18	1473689	Spacer	1	1
19	1473692	Spring	1	1
20	1473691	Lever	1	1
21	1473693	Cover	1	1
22	1473632	Rail	1	1
23	1473631	Washer	4	4
24	1473704	Screw	4	4
25	1473633	Rail	1	1
26	1473617	Armrest (Assembly) (RH)	1	1
27	1473705	Armrest	1	1
28	1473706	Screw	1	1
29	1473707	Support	1	1
30	1473708	Screw	2	2
31	1473631	Washer	2	2
32	1473618	Armrest (Assembly) (LH)	1	1
33	1473706	Screw	1	1
34	1473708	Screw	2	2
35	1473709	Armrest	1	1
36	1473710	Support	1	1
37	1473631	Washer	2	2
38	1473713	Seat Belt	1	1
39	1473688	Plate	1	1
40	1473698	Plate	1	1

©2006 HYSTER COMPANY

SUSPENSION SEAT
GRAMMER HIGH BACK
SHEET 1 OF 2

ITEM	PART NO.	DESCRIPTION	QTY A	QTY B
41	1473714	Support	1	1
42	1473715	Spindle	1	1
43	1473716	Rivet	3	3
44	1473717	Backrest	1	1

©2006 HYSTER COMPANY

NOTES

SUSPENSION SEAT (Figure 1-22)
GRAMMER HIGH BACK
SHEET 2 OF 2

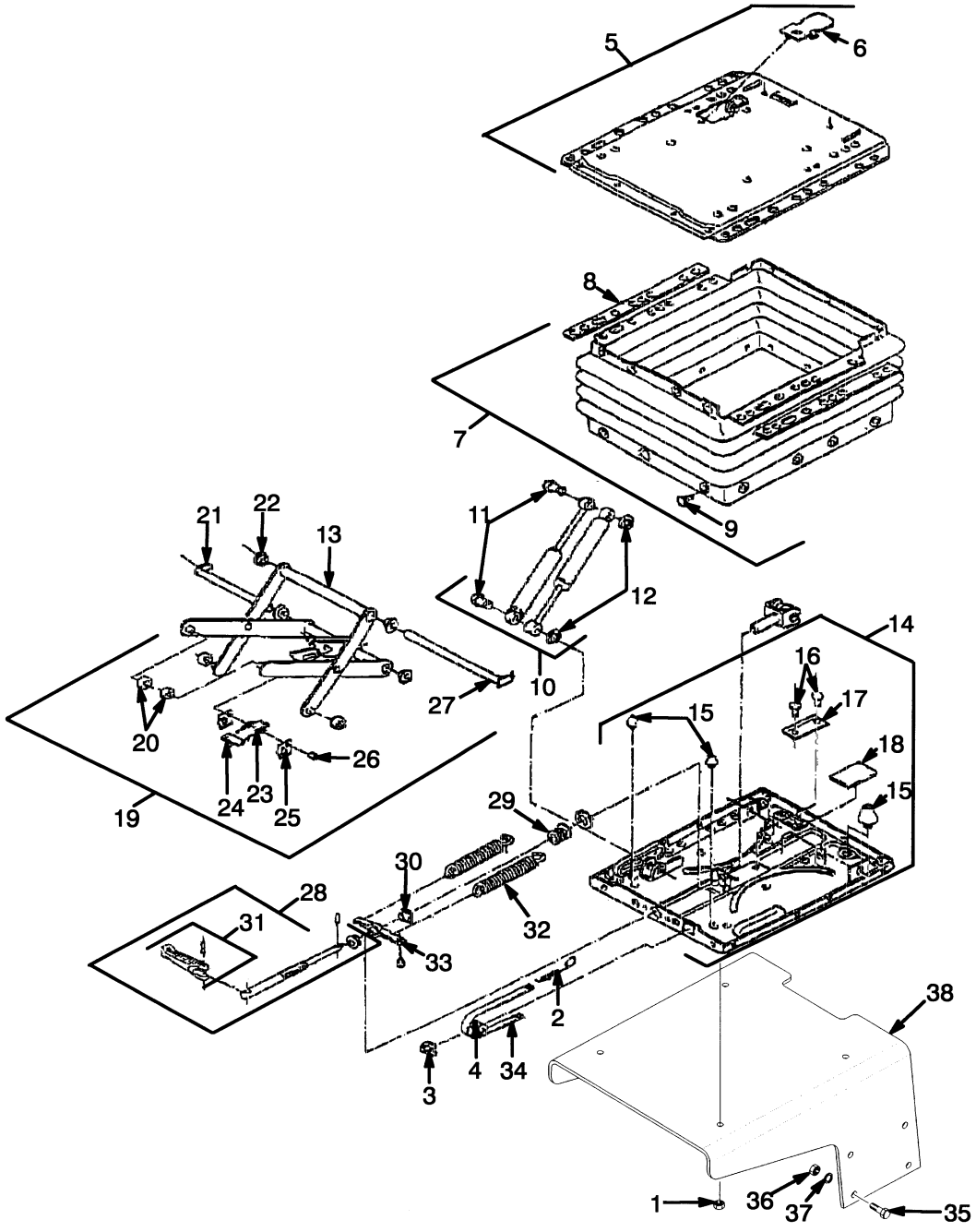

©2006 HYSTER COMPANY

SUSPENSION SEAT
GRAMMER HIGH BACK
SHEET 2 OF 2

ITEM	PART NO.	DESCRIPTION	QTY
	1465401	Seat Assembly (Fabric Cover)	1
	1465402	Seat Assembly (Vinyl Cover)	1
1	313828	Nut	4
2	1315641	Spring	1
3	1473670	Guide	1
4	1473671	Roller	1
5	1473637	Suspension (Upper)	1
6	1473636	Cover	1
7	1473639	Cover	1
8	1473638	Strap	1
9	306957	Plug	21
10	1473643	Shock Absorber	1
11	1473640	Bolt	2
12	1473641	Washer	2
13	1473644	Fork	1
14	1473652	Base (Plate)	1
15	1473647	Bumper (Set)	1
16	1473648	Rivet	2
17	1473649	Rail	1
18	1473650	Plate	1
19	1473661	Arm	1
20	306954	Roller	4
21	1473653	Bolt	1
22	1473654	Bushing	4
23	1473656	Spring	2
24	1473657	Plate	1
25	1473658	Plate	2
26	1473659	Bolt	1
27	1473660	Bolt	1
28	1473666	Spindle	1
29	1473662	Washer	1
30	1473663	Nut	1
31	1473664	Switch	1
32	306952	Spring	2
33	1473668	Bracket	1
34	1474655	Tape	AR
35	287854	Capscrew	8
36	136692	Nut	8
37	292682	Lockwasher	8
38	1508454	Seat Pan	1

©2006 HYSTER COMPANY

LABELS (Figure 1-23)
INTERIOR

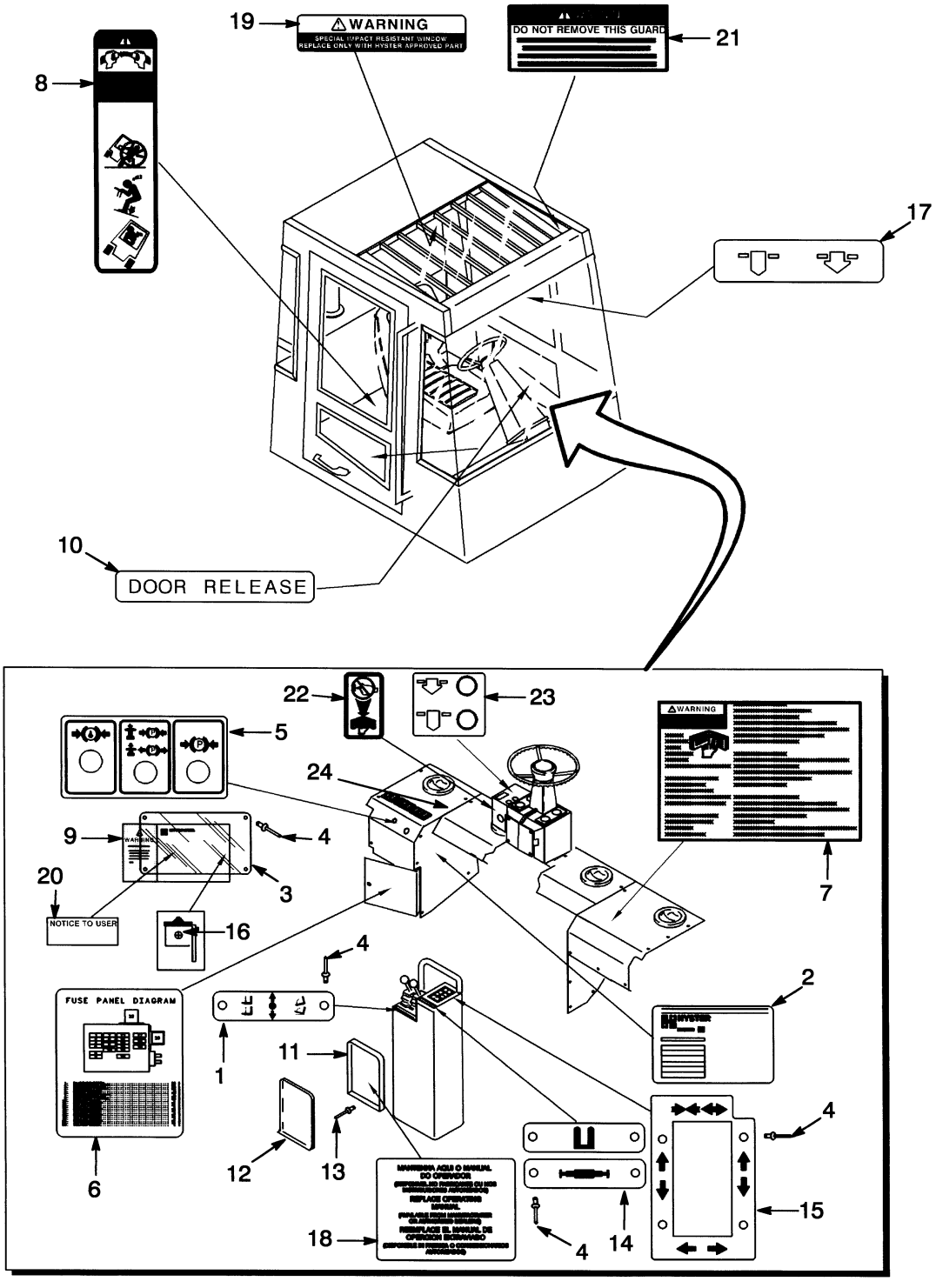

HP120249

©2006 HYSTER COMPANY

LABELS
INTERIOR

ITEM		PART NO.	DESCRIPTION	QTY
1		331536	Label (Control)	1
2		389692	Label (US Patents and Trademarks)	1
3		389688	Cover	1
4		166818	Rivet	12
5		1373710	Label (Brake Temperature) (Tier I Engine)	1
5		1521832	Label (Brake Temperature) (Tier II Engine)	1
6		1383842	Label (Fuse Panel) (Tier I Engine)	1
6		1509833	Label (Fuse Panel) (Tier II Engine)	1
7		1336605	Label (Operator Warning)	1
8		1330917	Label (Operator Restraint)	2
9		1381125	Label (Nameplate)	1
10		1451416	Label (Door Release)	2
11		335989	Tube	1
12		335991	Cover	1
13		222029	Rivet	4
14	**b**	1316542	Label (Control)	1
14	**a**	1393745	Label (Control Label with Container Attachment)	1
15	**b**	1393741	Label (Fork Control Switches)	1
15	**a**	1499043	Label (Container Attachment Switches)	1
16	**a**	1330576	Label (Container Attachment Load Center)	1
17	**a**	1452269	Label (Attachment Controls)	1
18		1328205	Label (Operator Manual)	1
19		2038590	Label (Impact Resistant Window)	1
20		1335137	Nameplate Tag	1
21		1338738	Label (Overhead Guard)	1
22		1326805	Label (Warning)	1
23	**a**	1452271	Label (Attachment Controls)	1
24	**c**	1458768	Label (Park Brake Warning)	1
		1479477	Label (Diagnosis) (Tier II Engine) (Not Illustrated)	1
		2084159	Label (Operator Presence System) (Not Illustrated)	1

FOOTNOTES:
a Container Handling Attachment
b Fork Lift Truck
c S/N A214E-1590 ⇒

©2006 HYSTER COMPANY

LABELS (Figure 1-24)
EXTERIOR
EMPTY CONTAINER HANDLER

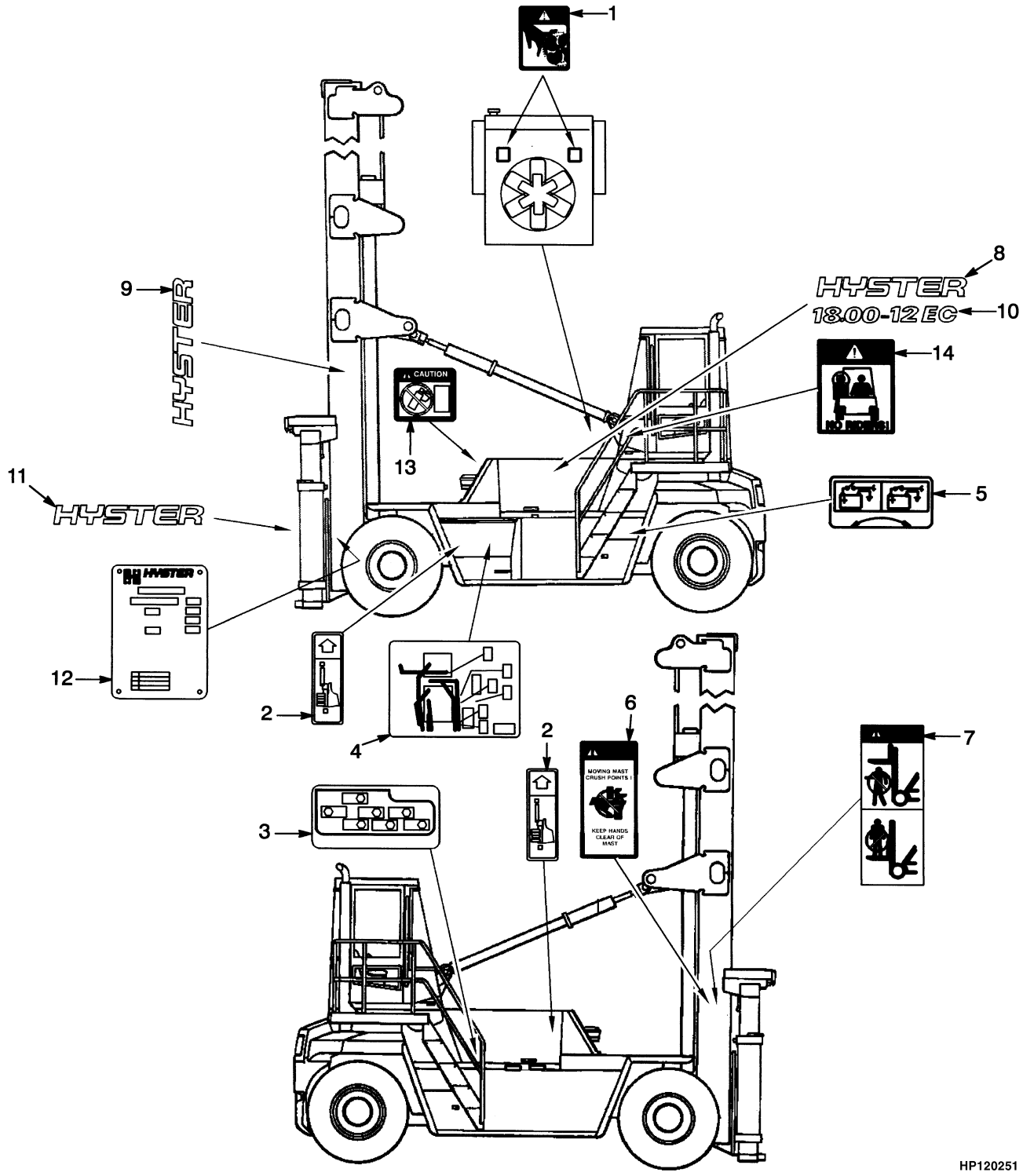

©2006 HYSTER COMPANY

LABELS
EXTERIOR
EMPTY CONTAINER HANDLER

ITEM		PART NO.	DESCRIPTION	QTY
1		1345939	Label (Fan Warning)	2
2		1311423	Label (Gas Spring)	3
3		1450811	Label (Transmission Check Port)	1
4	**a**	1450812	Label (Hydraulic Check Port)	1
4	**b**	1468677	Label (Hydraulic Pressure Checkpoint)	1
4	**c**	1528805	Label (Hydraulic Pressure Checkpoint)	1
5		1352190	Label (Battery Disconnect)	1
6		1346893	Label (Mast Warning)	2
7		1335126	Label (Mast Warning)	2
8		888012	Label (Hyster)	2
9		1450810	Label (Hyster)	2
10		1451335	Label (Model 400-EC)	2
10		1451336	Label (Model 450-EC)	2
11		1385099	Label (Hydraulic Oil Fill)	1
12		1385130	Label (Fuel Fill)	1
13		2034459	Label (Ether Warning)	1
14		1330920	Label (No Riders)	4
15		1393760	Label (Hyster)	1
16		1500965	Nameplate (Attachment)	1

FOOTNOTES:
a S/N A214E-01666W ⇒
b S/N A214E-1666⇔S/N A214E-1806
c S/N A214E-1807 ⇒

©2006 HYSTER COMPANY

LABELS (Figure 1-25)
EXTERIOR
FORK LIFT TRUCK

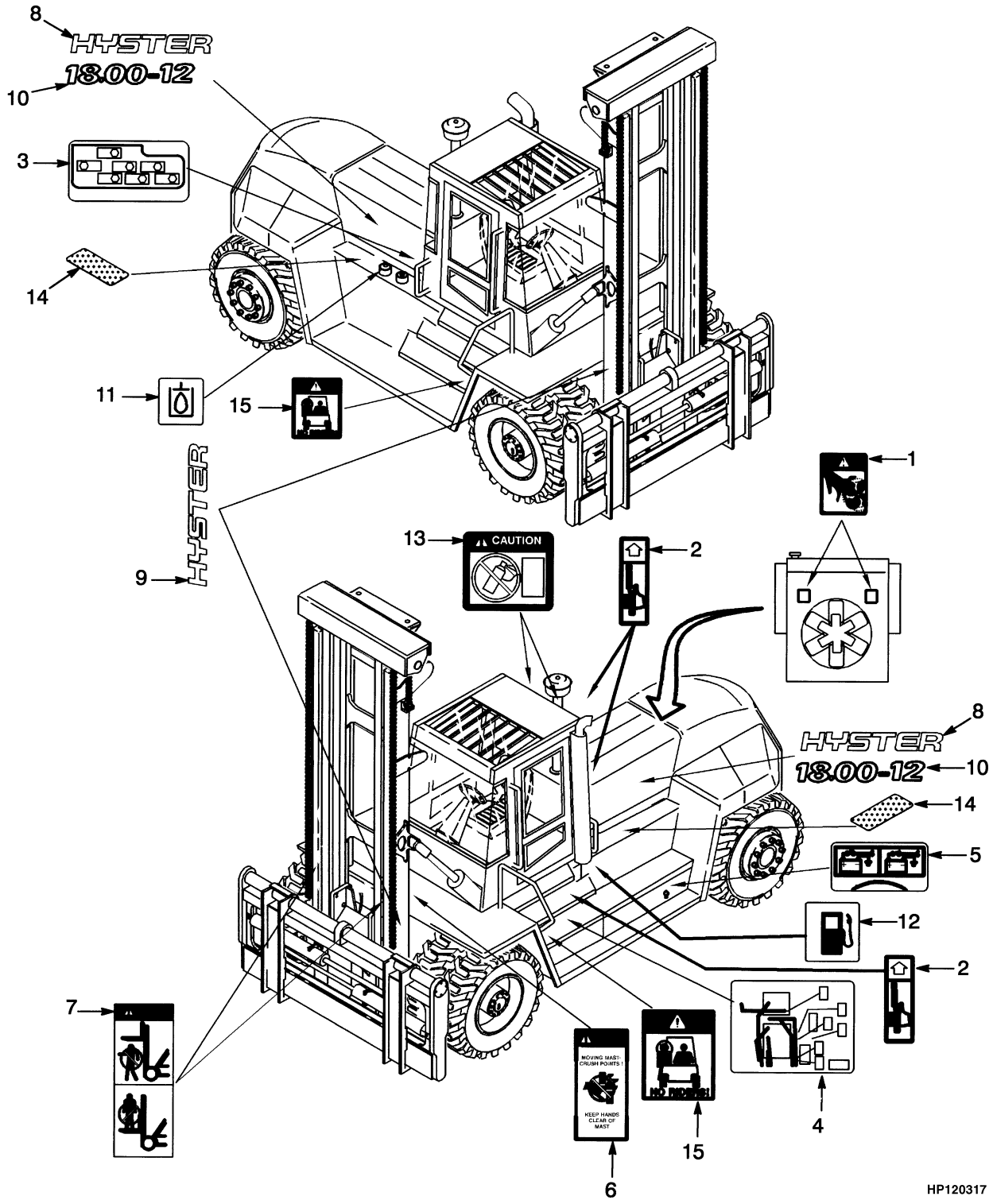

©2006 HYSTER COMPANY

LABELS
EXTERIOR
FORK LIFT TRUCK

ITEM		PART NO.	DESCRIPTION	QTY
1		1345939	Label (Fan Warning)	2
2		1311423	Label (Gas Spring)	3
3		1450811	Label (Transmission Check Port)	1
4	**a**	1450812	Label (Hydraulic Check Port)	1
4	**b**	1468677	Label (Hydraulic Pressure Checkpoint)	1
4	**c**	1528805	Label (Hydraulic Pressure Checkpoint)	1
5		1352190	Label (Battery Disconnect)	1
6		1346893	Label (Mast Warning)	2
7		1335126	Label (Mast Warning)	2
8		888012	Label (Hyster)	2
9		1450810	Label (Hyster)	2
10		1451337	Label (Model 360)	2
10		1451338	Label (Model 400)	2
10		1451339	Label (Model 450)	2
11		1385099	Label (Hydraulic Oil Fill)	1
12		1385130	Label (Fuel Fill)	1
13		2034460	Label (Ether Warning)	2
14		239423	Label (Slip Resistant Tread)	2
15		1339828	Label (No Riders)	2

FOOTNOTES:
a ⇒ S/N A214E-1665
b S/N A214E-1666⇔S/N A214E-1807
c S/N A214E-1808 ⇒

©2006 HYSTER COMPANY

NOTES

2 ENGINE ASSEMBLY

SECTION 2
ENGINE ASSEMBLY

DESCRIPTION **PAGE**

AIR COMPRESSOR PLUMBING
TIER II ENGINE
S/N A214E01951A⇒ ... 2-38
AIR FILTER
EMPTY CONTAINER HANDLER
TIER II ENGINE
S/N A214E-01849Z⇒ ... 2-82
FORK LIFT TRUCK
TIER II ENGINE
S/N A214E-01843Z⇒ ... 2-80
TIER I ENGINE ... 2-78
AIR FILTER ASSEMBLY ... 2-84
AIR INTAKE CONNECTION
TIER II ENGINE
S/N A214E01951A⇒ ... 2-52
AIR INTAKE HOSE
TIER II ENGINE
S/N A214E01951A⇒ ... 2-54
AIR TRANSFER CONNECTION
TIER II ENGINE
S/N A214E01951A⇒ ... 2-55
ALTERNATOR MOUNTING
TIER II ENGINE
S/N A214E01951A⇒ ... 2-39
BREATHER PLUMBING
TIER II ENGINE
S/N A214E01951A⇒ ... 2-28
CAMSHAFT
TIER II ENGINE
S/N A214E01951A⇒ ... 2-16
COOLING
EMPTY CONTAINER HANDLER
TIER II ENGINE
S/N A214E-01849Z⇒ ... 2-94
FORK LIFT TRUCK
TIER II ENGINE
S/N A214E-01843Z⇒ ... 2-90
TIER I ENGINE ... 2-86
CRANKCASE BREATHER
TIER II ENGINE
S/N A214E01951A⇒ ... 2-35
CRANKSHAFT AND MAIN BEARINGS
TIER II ENGINE
S/N A214E01951A⇒ ... 2-12
CYLINDER BLOCK
TIER II ENGINE
S/N A214E01951A⇒ ... 2-6
CYLINDER HEAD
TIER II ENGINE
S/N A214E01951A⇒ ... 2-8

©2006 HYSTER COMPANY

SECTION 2
ENGINE ASSEMBLY (Continued)

DESCRIPTION	PAGE
ENGINE ASSEMBLY	2-5
ENGINE CONTROL SYSTEM	
TIER II ENGINE	
S/N A214E01951A⇒	2-22
ENGINE MOUNT	2-98
ENGINE OIL COOLER	
TIER II ENGINE	
S/N A214E01951A⇒	2-57
EXHAUST	
EMPTY CONTAINER HANDLER	
TIER I ENGINE	2-100
TIER II ENGINE	2-102
FORK LIFT TRUCK	2-104
EXHAUST MANIFOLD	
TIER II ENGINE	
S/N A214E01951A⇒	2-65
FAN DRIVE	
TIER II ENGINE	
S/N A214E01951A⇒	2-40
FAN PILOT SPACER	
TIER II ENGINE	
S/N A214E01951A⇒	2-64
FLYWHEEL	
TIER II ENGINE	
S/N A214E01951A⇒	2-36
FLYWHEEL HOUSING	
TIER II ENGINE	
S/N A214E01951A⇒	2-26
FRONT GEAR COVER	
TIER II ENGINE	
S/N A214E01951A⇒	2-50
FRONT GEAR TRAIN COVER	
TIER II ENGINE	
S/N A214E01951A⇒	2-25
FUEL FILTER	
TIER II ENGINE	
S/N A214E01951A⇒	2-41
FUEL FILTER PLUMBING	
TIER II ENGINE	
S/N A214E01951A⇒	2-43
FUEL INJECTION PUMP	
TIER II ENGINE	
S/N A214E01951A⇒	2-44
FUEL PUMP MOUNT	
TIER II ENGINE	
S/N A214E01951A⇒	2-46
GEAR HOUSING	
TIER II ENGINE	
S/N A214E01951A⇒	2-51
INJECTOR	

©2006 HYSTER COMPANY

SECTION 2
ENGINE ASSEMBLY (Continued)

DESCRIPTION	PAGE
TIER II ENGINE	
S/N A214E01951A⇒	2-18
LIFT PUMP	
TIER II ENGINE	
S/N A214E01951A⇒	2-48
LIFT PUMP PLUMBING	
TIER II ENGINE	
S/N A214E01951A⇒	2-49
LIFTING BRACKET	
TIER II ENGINE	
S/N A214E01951A⇒	2-56
OIL FILLER ARRANGEMENT	
TIER II ENGINE	
S/N A214E01951A⇒	2-58
OIL FILTER	
TIER II ENGINE	
S/N A214E01951A⇒	2-60
OIL LEVEL GAUGE	
TIER II ENGINE	
S/N A214E01951A⇒	2-32
OIL PAN	
TIER II ENGINE	
S/N A214E01951A⇒	2-29
OIL PUMP	
TIER II ENGINE	
S/N A214E01951A⇒	2-34
PISTON AND CONNECTING ROD	
TIER II ENGINE	
S/N A214E01951A⇒	2-10
PRE-CLEANER ASSEMBLY	2-85
RADIATOR PLUMBING	
TIER II ENGINE	
S/N A214E01951A⇒	2-62
ROCKER LEVERS	
TIER II ENGINE	
S/N A214E01951A⇒	2-14
STARTER MOTOR	
TIER II ENGINE	
S/N A214E01951A⇒	2-63
TENSIONER	
TIER II ENGINE	
S/N A214E01951A⇒	2-75
THERMOSTAT	
TIER II ENGINE	
S/N A214E01951A⇒	2-37
TORQUE CONVERTER OIL COOLER	
TIER II ENGINE	
S/N A214E01951A⇒	2-66
TURBOCHARGER	
TIER II ENGINE	

©2006 HYSTER COMPANY

SECTION 2
ENGINE ASSEMBLY (Continued)

DESCRIPTION	PAGE
S/N A214E01951A⇒	2-61
TURBOCHARGER PLUMBING	
TIER II ENGINE	
S/N A214E01951A⇒	2-68
VALVE COVER	
TIER II ENGINE	
S/N A214E01951A⇒	2-70
VALVE TAPPET	
TIER II ENGINE	
S/N A214E01951A⇒	2-20
VIBRATION DAMPER	
TIER II ENGINE	
S/N A214E01951A⇒	2-24
WATER INLET CONNECTION	
TIER II ENGINE	
S/N A214E01951A⇒	2-72
WATER OUTLET CONNECTION	
TIER II ENGINE	
S/N A214E01951A⇒	2-73
WATER PUMP	
TIER II ENGINE	
S/N A214E01951A⇒	2-74
WIRING ACCESSORIES	
TIER II ENGINE	
S/N A214E01951A⇒	2-76

©2006 HYSTER COMPANY

ENGINE ASSEMBLY (Figure 2-1)

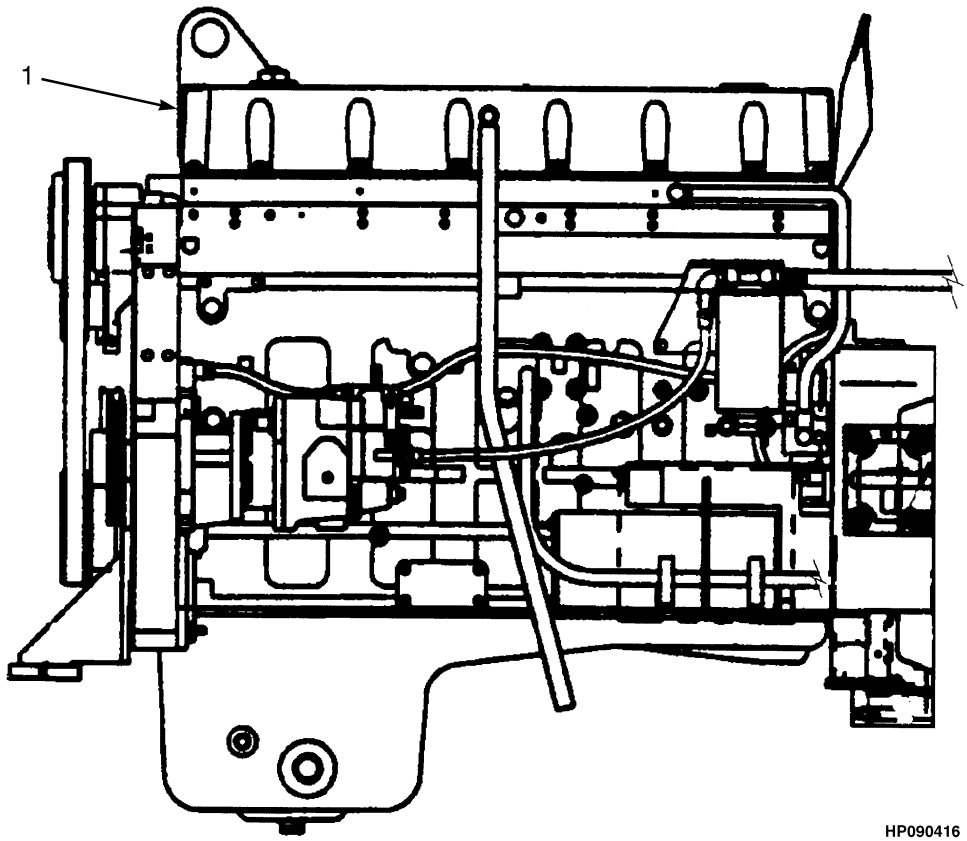

ITEM		PART NO.	DESCRIPTION	QTY
1		1484262	Engine Assembly (Tier I Engine)	1
1	**a**	1499323	Engine Assembly (Tier II Engine)	1
1	**b**	1532627	Engine Assembly (Tier II Engine)	1
1	**c**	1607649	Engine Assembly (Tier II Engine)	1

FOOTNOTES:

a ⇒ S/N A214E-01950A
b S/N A214E01951A⇔S/N A214E02180C
c S/N A214E02181C ⇒

NOTE:

For additional Cummins engine parts and service information during the warrenty period, please contact your local Cummins Dealer.

©2006 HYSTER COMPANY

CYLINDER BLOCK (Figure 2-2)
TIER II ENGINE
(S/N A214E01951A⇒)

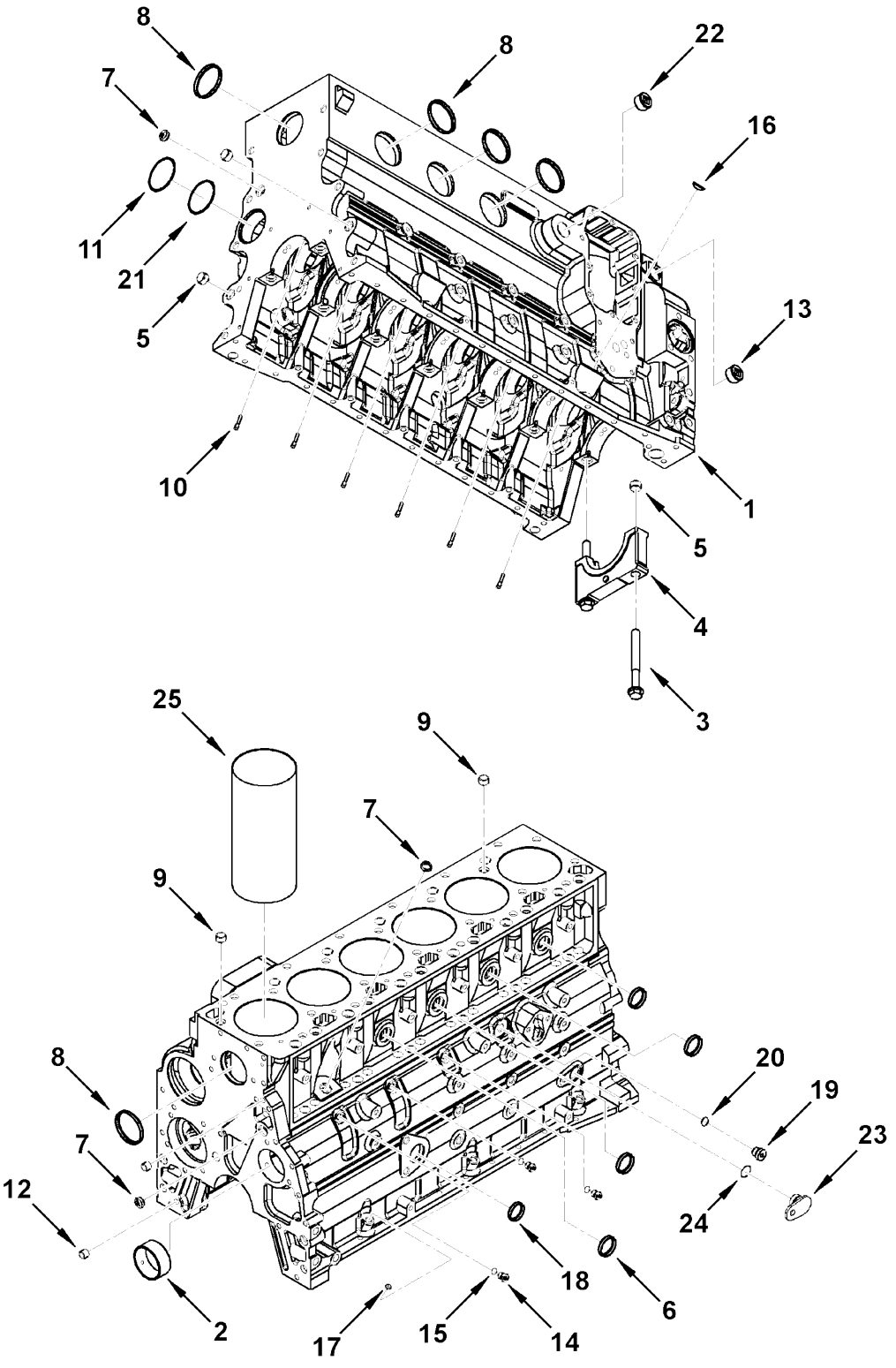

HP091115

©2006 HYSTER COMPANY

CYLINDER BLOCK
TIER II ENGINE
(S/N A214E01951A⇒)

ITEM		PART NO.	DESCRIPTION	QTY
	a	1532627	Engine Assembly	1
	b	1607649	Engine Assembly	1
1		. . . . .	Cylinder Block	1
2		1521682	Bushing	1
3		1521683	Capscrew	14
4		1521684	Cap (Main Bearing)	7
5		1521685	Dowel Ring	2
6		1543325	Plug	4
7		1512304	Expansion Plug	3
8		1514542	Plug	5
9		1521691	Dowel Ring	2
10		1521692	Nozzle (Piston Cooling)	6
11		1521693	Plug	1
12		1513878	Dowel Pin	2
13		1511952	Plug	1
14		1517010	Plug	3
15		1517011	Seal Ring	1
16		1514339	Expansion Plug	2
17		1512130	Plug	3
18		1521694	Expansion Plug	1
19		1521695	Plug Assembly	1
20		1517119	Seal Ring	1
21		1521696	Seal Ring	1
22		1512292	Plug	1
23		1521697	Plug	1
24		1543321	Seal Ring	1
25		1585284	Sleeve	AR
		1521686	Cylinder Block Kit (Includes Items 5, 9-24)	1

FOOTNOTES:
a ⇒ S/N A214E02180C
b S/N A214E02181C ⇒

©2006 HYSTER COMPANY

CYLINDER HEAD (Figure 2-3)
TIER II ENGINE
(S/N A214E01951A⇒)

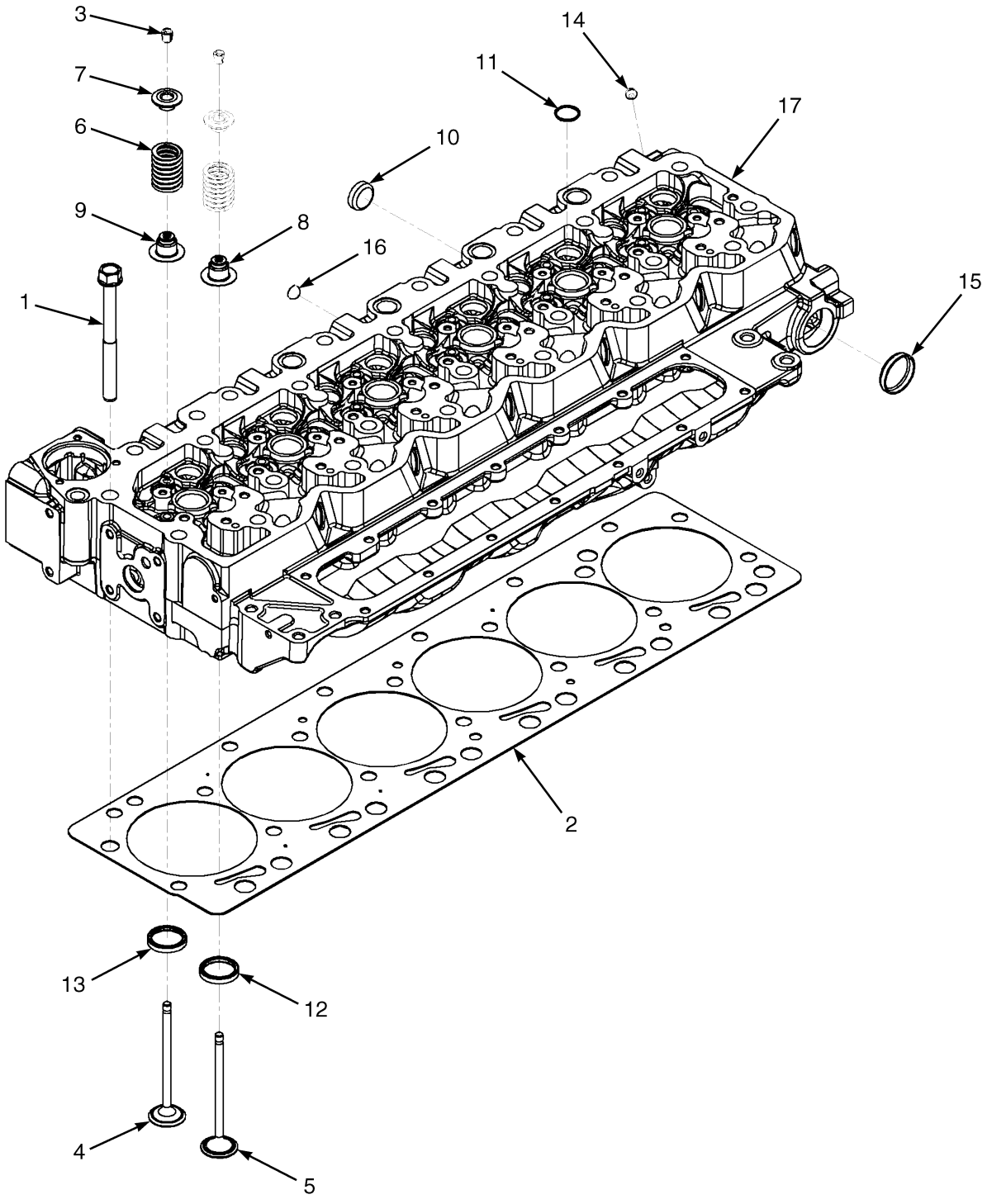

HP091126

©2006 HYSTER COMPANY

CYLINDER HEAD
TIER II ENGINE
(S/N A214E01951A⇒)

ITEM		PART NO.	DESCRIPTION	QTY
	a	1532627	Engine Assembly	1
	b	1607649	Engine Assembly	1
1		1521901	Screw	1
2		1521909	Gasket (Cylinder Head)	1
3		1521914	Collet	2
4		1521912	Valve Kit (Exhaust)	1
5		1521913	Valve Kit (Intake)	1
6		1521916	Valve Spring	1
7		1521915	Retainer	24
8		1584922	Seal (Valve Stem) (Intake)	12
9		1584923	Seal (Valve Stem) (Exhaust)	12
10		1543325	Plug	14
11		1514339	Expansion Plug	11
12		1602488	Insert (.005 in.) (Intake)	12
12		1602489	Insert (.010 in.) (Intake)	12
12		1602490	Insert (.020 in.) (Intake)	12
13		1602491	Insert (.005 in.) (Exhaust)	12
13		1602492	Insert (.010 in.) (Exhaust)	12
13		1602493	Insert (.020 in.) (Exhaust)	12
14		1512586	Plug	7
15		1517190	Expansion Plug	2
16		1521919	Expansion Plug	2
17		1584921	Cylinder Head	1
		1596650	Gasket Set (Upper Engine) (Includes Item 2)	1

FOOTNOTES:
a ⇒ S/N A214E02180C
b S/N A214E02181C ⇒

©2006 HYSTER COMPANY

PISTON AND CONNECTING ROD (Figure 2-4)

TIER II ENGINE

(S/N A214E01951A⇒)

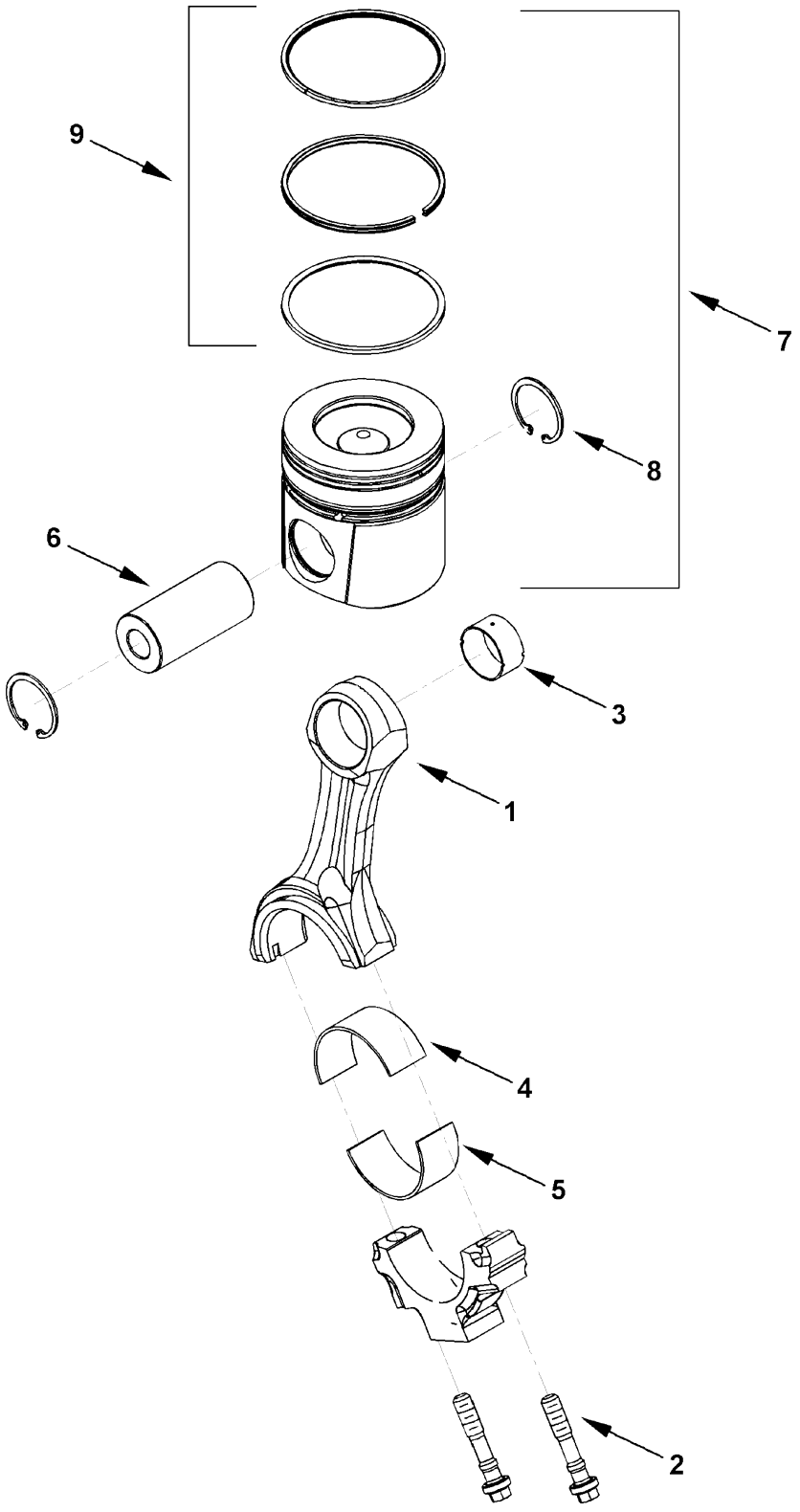

©2006 HYSTER COMPANY

PISTON AND CONNECTING ROD
TIER II ENGINE
(S/N A214E01951A⇒)

ITEM		PART NO.	DESCRIPTION	QTY
	a	1532627	Engine Assembly	1
	b	1607649	Engine Assembly	1
1		1597832	Connecting Rod Assembly	1
2		1553261	Capscrew	2
3		1553262	Bushing	1
4		1543446	Bearing (Standard) (Upper)	6
4		1512150	Bearing (.010 in.) (Upper)	AR
4		1512151	Bearing (.020 in.) (Upper)	AR
4		1512152	Bearing (.030 in.) (Upper)	AR
4		1512153	Bearing (.040 in.) (Upper)	AR
5		1543445	Bearing (Standard) (Lower)	6
5		1584817	Bearing (.010 in.) (Lower)	AR
5		1584818	Bearing (.020 in.) (Lower)	AR
5		1584819	Bearing (.030 in.) (Lower)	AR
5		1584820	Bearing (.040 in.) (Lower)	AR
6		1512149	Pin (Piston)	1
7		1526088	Piston Kit ("A")	6
7		1526090	Piston Kit ("B")	6
7		1526091	Piston Kit ("C")	6
7		1526092	Piston Kit (.020 in.)	6
7		1526094	Piston Kit (.040 in.)	6
8		1512146	Retaining Ring	2
9		1584814	Piston Ring Set (Grade A, B, C)	1
9		1584815	Piston Ring Set (.020 in.)	1
9		1584816	Piston Ring Set (.040 in.)	1

FOOTNOTES:
a ⇒ S/N A214E02180C
b S/N A214E02181C ⇒

©2006 HYSTER COMPANY

CRANKSHAFT AND MAIN BEARINGS (Figure 2-5)

TIER II ENGINE

(S/N A214E01951A⇒)

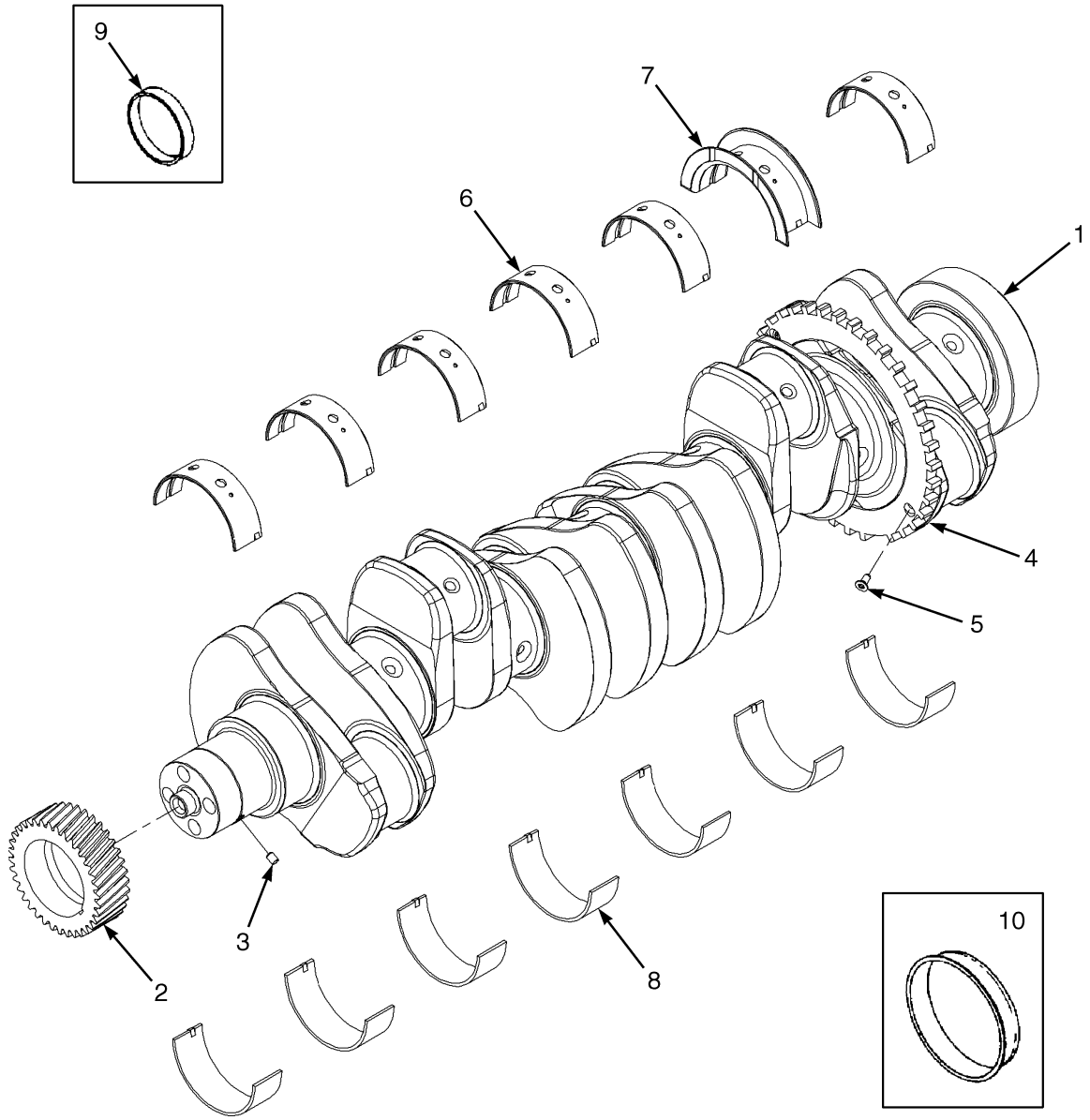

HP091116

©2006 HYSTER COMPANY

CRANKSHAFT AND MAIN BEARINGS
TIER II ENGINE
(S/N A214E01951A⇒)

ITEM		PART NO.	DESCRIPTION	QTY
	a	1532627	Engine Assembly	1
	b	1607649	Engine Assembly	1
1		1521700	Crankshaft Assembly	1
2		. . . . .	Gear	1
3		. . . . .	Dowel Pin	1
4		. . . . .	Ring (Speed Indicator)	1
5		. . . . .	Capscrew	5
6		1543317	Main Bearing (Standard) (Standard)	6
6		1585002	Main Bearing (.010 in.)	6
6		1584992	Main Bearing (.020 in.)	6
6		1584995	Main Bearing (.030 in.)	6
6		1584998	Main Bearing (.040 in.)	6
6		1584994	Main Bearing (.020 in.)	1
6		1584998	Main Bearing (.040 in.)	1
7		1554044	Thrust Bearing (Standard) (Standard)	1
7		1584990	Thrust Bearing (0.010 in.)	1
7		1584993	Thrust Bearing (0.020 in.)	1
7		1584996	Thrust Bearing (0.030 in.)	1
7		1584999	Thrust Bearing (0.040 in.)	1
7		1585001	Thrust Bearing (0.020 in.)	1
7		1585003	Thrust Bearing (0.040 in.)	1
8		1543318	Main Bearing (Standard) (Standard)	7
8		1584991	Main Bearing (.010 in.)	7
8		1584994	Main Bearing (.020 in.)	7
8		1584997	Main Bearing (.030 in.)	7
8		1585000	Main Bearing (.040 in.)	7
9		1554045	Wear Sleeve Kit (Front)	1
10		1514354	Wear Sleeve Kit (Rear)	1
		1554043	Main Bearing Kit (Standard) (Includes Items 6-8)	1
		1521705	Main Bearing Kit (.010 in.) (Includes Items 6-8)	1
		1521706	Main Bearing Kit (.020 in.) (Includes Items 6-8)	1
		1521707	Main Bearing Kit (.030 in.) (Includes Items 6-8)	1
		1521708	Main Bearing Kit (.040 in.) (Includes Items 6-8)	1
		1521709	Thrust Bearing Kit (.020 in.) (Includes Items 6-7)	1
		1521710	Thrust Bearing Kit (.040 in.) (Includes Items 6-7)	1

FOOTNOTES:
a ⇒ S/N A214E02180C
b S/N A214E02181C ⇒

©2006 HYSTER COMPANY

ROCKER LEVERS (Figure 2-6)
TIER II ENGINE
(S/N A214E01951A⇒)

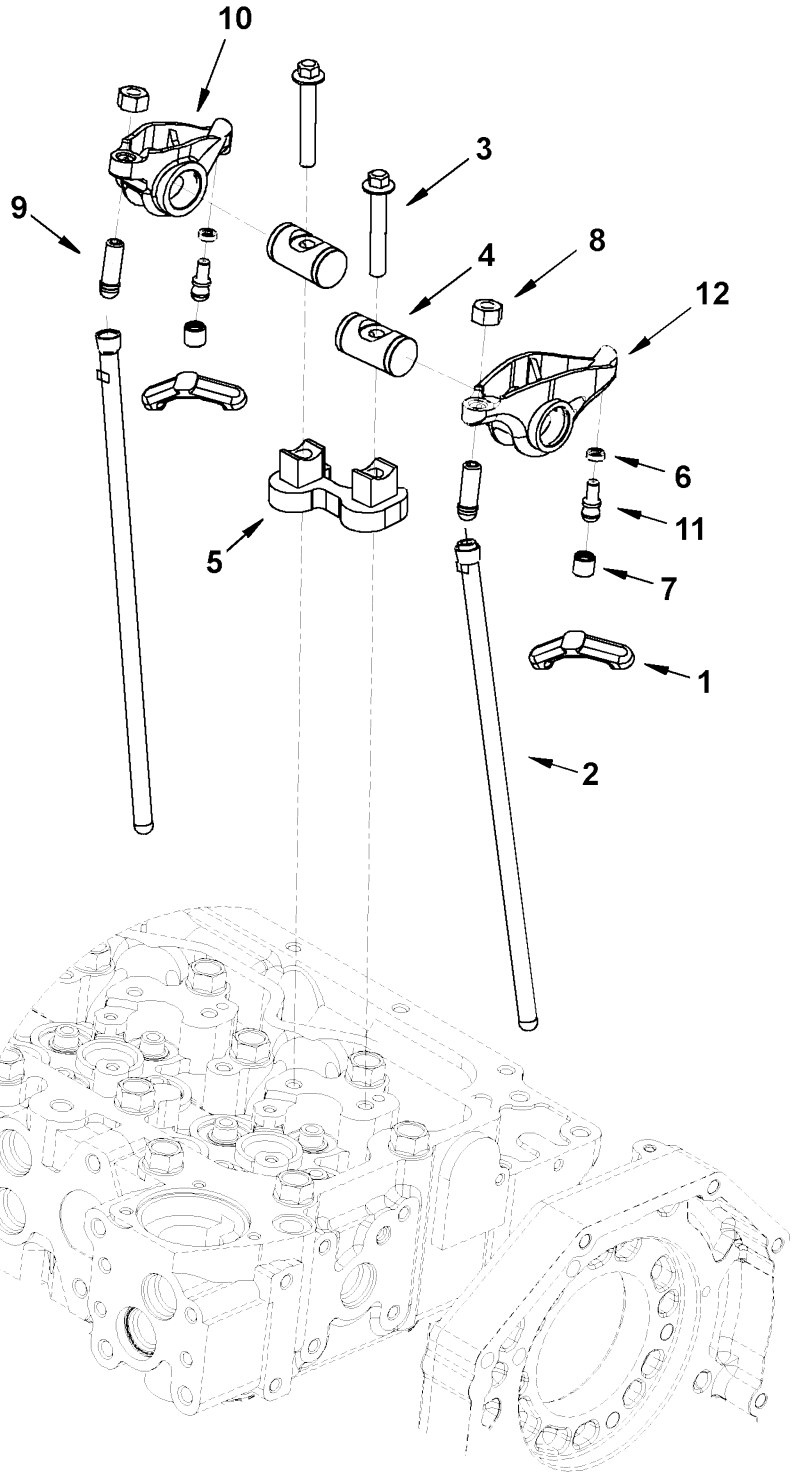

HP091128

©2006 HYSTER COMPANY

ROCKER LEVERS
TIER II ENGINE
(S/N A214E01951A⇒)

ITEM		PART NO.	DESCRIPTION	QTY
	a	1532627	Engine Assembly	1
		1584932	Rocker Lever Assembly	6
	b	1607649	Engine Assembly	1
1		1521944	Valve (Crosshead)	12
2		1521943	Push Rod	12
3		1553952	Capscrew	2
4		1521936	Shaft (Rocker Lever)	2
5		1584933	Support	1
6		1553953	Retainer	1
7		1553954	Socket	1
8		1513806	Nut	1
9		1553956	Screw (Adjusting)	1
10		1521937	Rocker Lever Assembly (Exhaust)	1
11		1553959	Ball	1
12		1521939	Rocker Lever Assembly (Intake)	1

FOOTNOTES:
a ⇒ S/N A214E02180C
b S/N A214E02181C ⇒

©2006 HYSTER COMPANY

CAMSHAFT (Figure 2-7)
TIER II ENGINE
(S/N A214E01951A⇒)

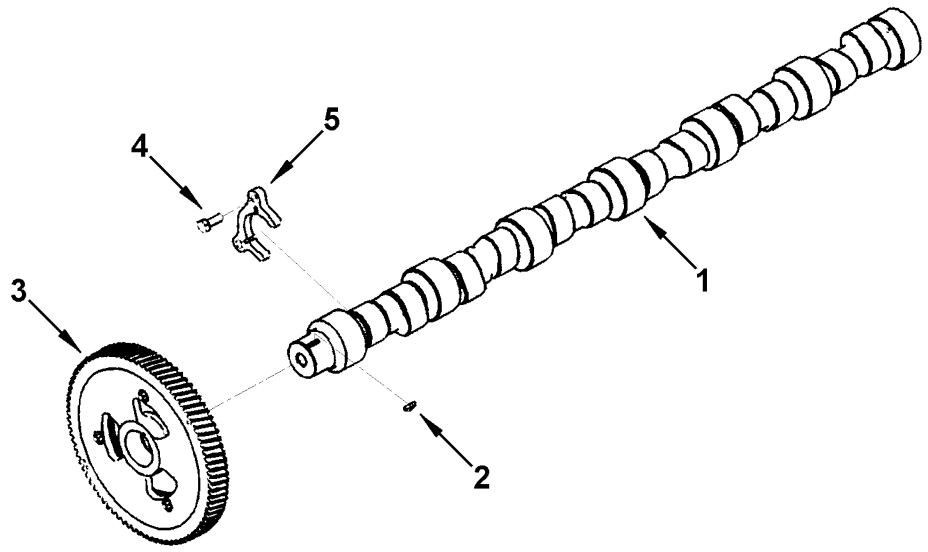

HP091132

ITEM		PART NO.	DESCRIPTION	QTY
	a	1532627	Engine Assembly	1
	b	1607649	Engine Assembly	1
1		1526099	Camshaft	1
2		1512161	Woodruff Key	1
3		1526100	Gear (Camshaft)	1
4		1512163	Capscrew	2
5		1512164	Support	1

FOOTNOTES:
a ⇒ S/N A214E02180C
b S/N A214E02181C ⇒

©2006 HYSTER COMPANY

NOTES

INJECTOR (Figure 2-8)
TIER II ENGINE
(S/N A214E01951A⇒)

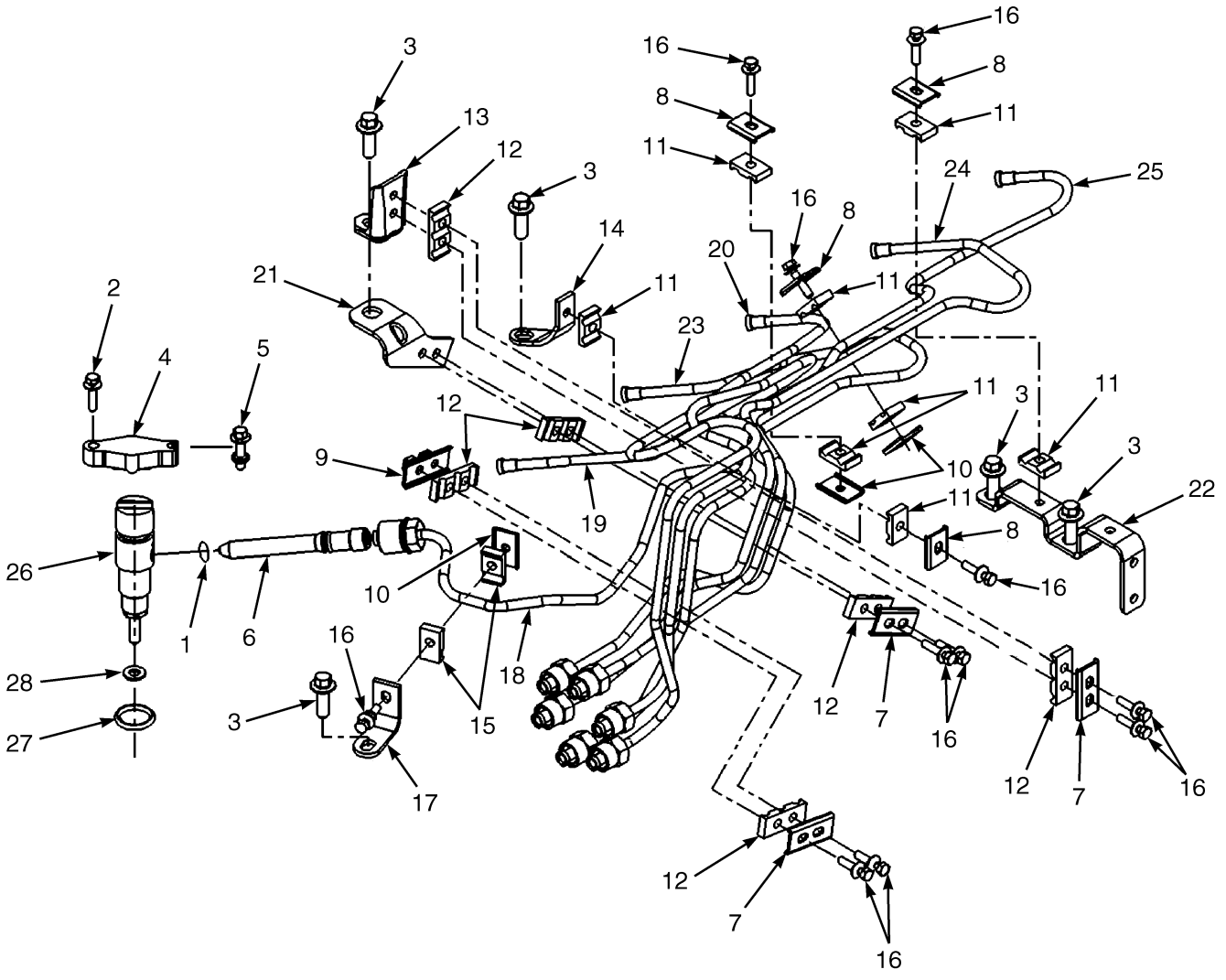

©2006 HYSTER COMPANY

INJECTOR
TIER II ENGINE
(S/N A214E01951A⇒)

ITEM		PART NO.	DESCRIPTION	QTY
	a	1532627	Engine Assembly	1
	b	1607649	Engine Assembly	1
1		1584910	Seal Ring	1
2		1517194	Capscrew	6
3		1512295	Capscrew	5
4		1517195	Clamp	6
5		1517196	Capscrew	6
6		1584909	Connector Assembly	6
6		1517197	Connector	1
7		1514497	Brace	1
8		1514498	Brace	2
9		1514499	Brace	1
10		1514500	Brace	1
11		1514501	Isolator	4
12		1514502	Isolator	2
13		1514496	Brace	1
14		1521921	Brace	1
15		1517198	Isolator	2
16		1514504	Capscrew	7
17		1521922	Brace	1
18		1521923	Tube	1
19		1521924	Tube	1
20		1521925	Tube	1
21		1521928	Brace	1
22		1584911	Brace	1
23		1521930	Tube	1
24		1521931	Tube	1
25		1521932	Tube	1
26		1584912	Injector Assembly	6
27		1517210	Seal Ring	1
28		1584914	Seal	1
		1521926	Tube Assembly (Includes Items 7-20)	1
		1521927	Tube Assembly (Includes Items 7-8, 10-12, 16, 21-25)	1

FOOTNOTES:
a ⇒ S/N A214E02180C
b S/N A214E02181C ⇒

VALVE TAPPET (Figure 2-9)
TIER II ENGINE
(S/N A214E01951A⇒)

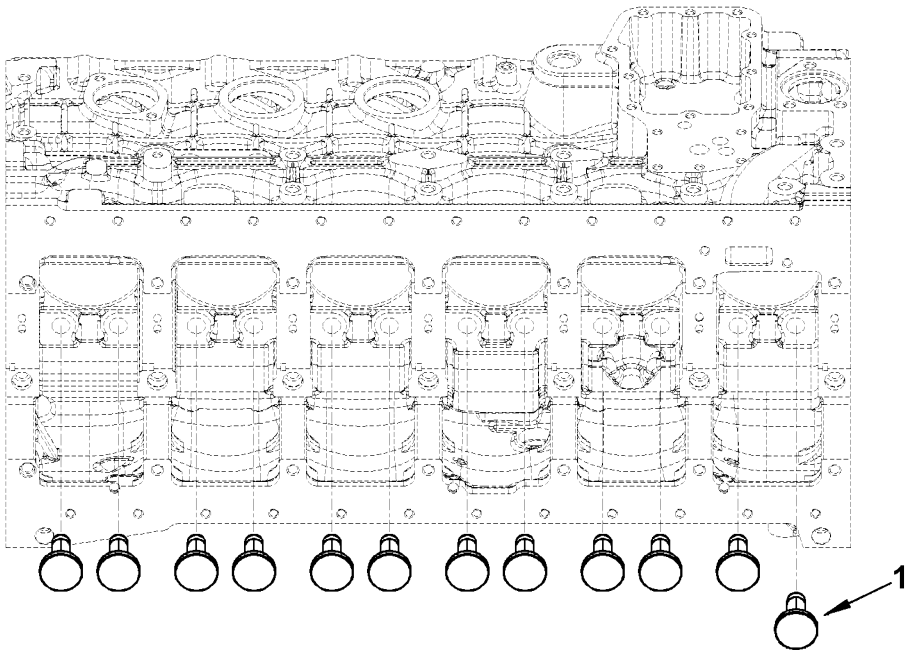

HP091133

ITEM		PART NO.	DESCRIPTION	QTY
	a	1532627	Engine Assembly	1
	b	1607649	Engine Assembly	1
1		1521713	Tappet	12

FOOTNOTES:
a ⇒ S/N A214E02180C
b S/N A214E02181C ⇒

©2006 HYSTER COMPANY

NOTES

ENGINE CONTROL SYSTEM (Figure 2-10)
TIER II ENGINE
(S/N A214E01951A⇒)

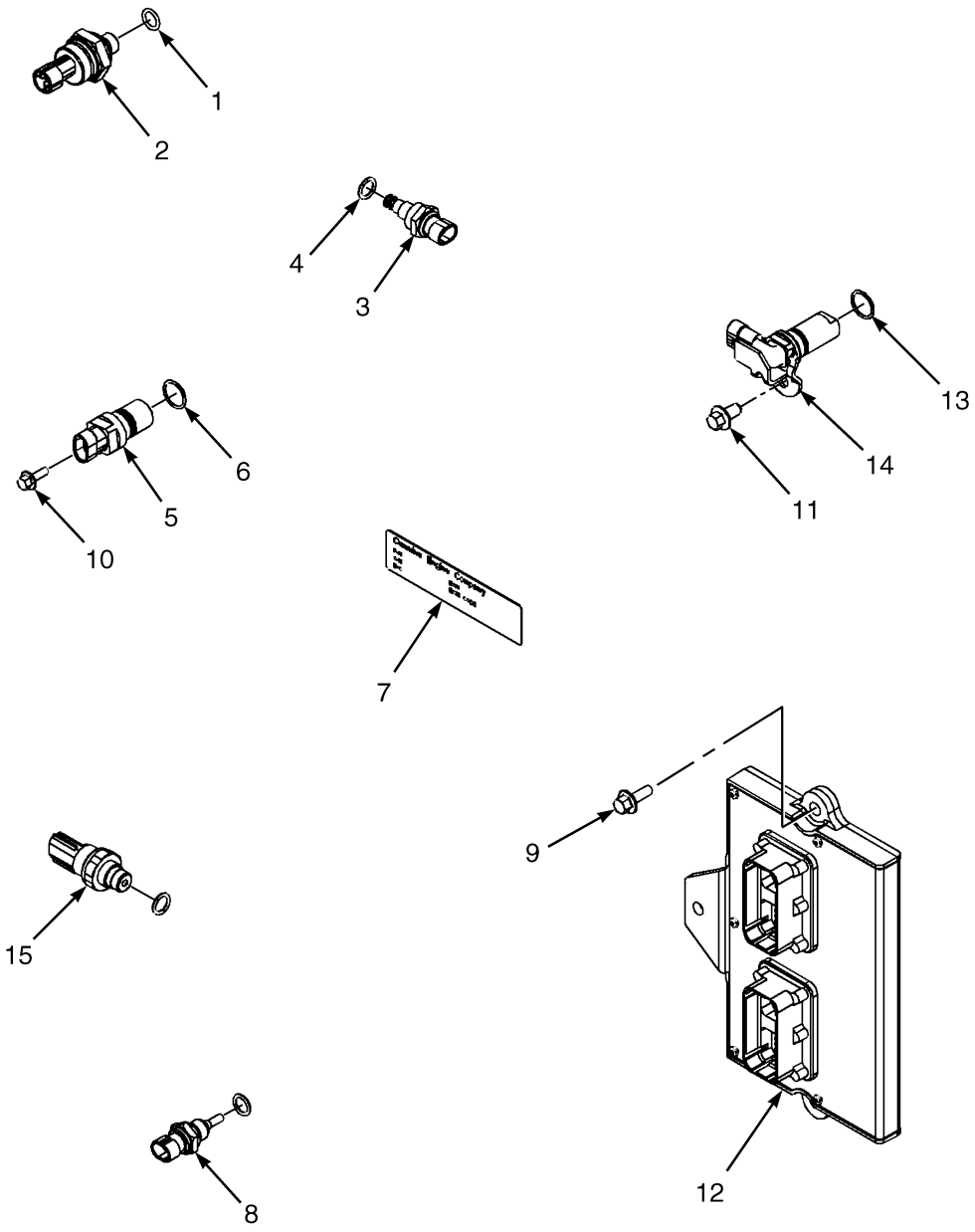

HP091124

©2006 HYSTER COMPANY

ENGINE CONTROL SYSTEM
TIER II ENGINE
(S/N A214E01951A⇒)

ITEM		PART NO.	DESCRIPTION	QTY
	a	1532627	Engine Assembly	1
	b	1607649	Engine Assembly	1
1		1517116	Seal Ring	1
2		1517115	Pressure Sensor (Boost)	1
3		1517118	Temperature Sensor (Air Intake)	1
4		1587596	O-Ring	1
5		1619371	Sensor (Camshaft Position)	1
6		1552288	O-Ring	1
7		. . . . .	Dataplate	1
8		1565040	Temperature Sensor Assembly (Water or Oil)	1
8		1543435	O-Ring	1
9		1512004	Capscrew	3
10		1512051	Capscrew	1
11		1521908	Capscrew	1
12		1554029	Electronic Control Module	1
13		. . . . .	Seal Ring	1
14		1619372	Sensor	1
15		1543439	Pressure Sensor (Air Intake)	1
15		1543435	O-Ring	1

FOOTNOTES:
a ⇒ S/N A214E02180C
b S/N A214E02181C ⇒

©2006 HYSTER COMPANY

VIBRATION DAMPER (Figure 2-11)
TIER II ENGINE
(S/N A214E01951A⇒)

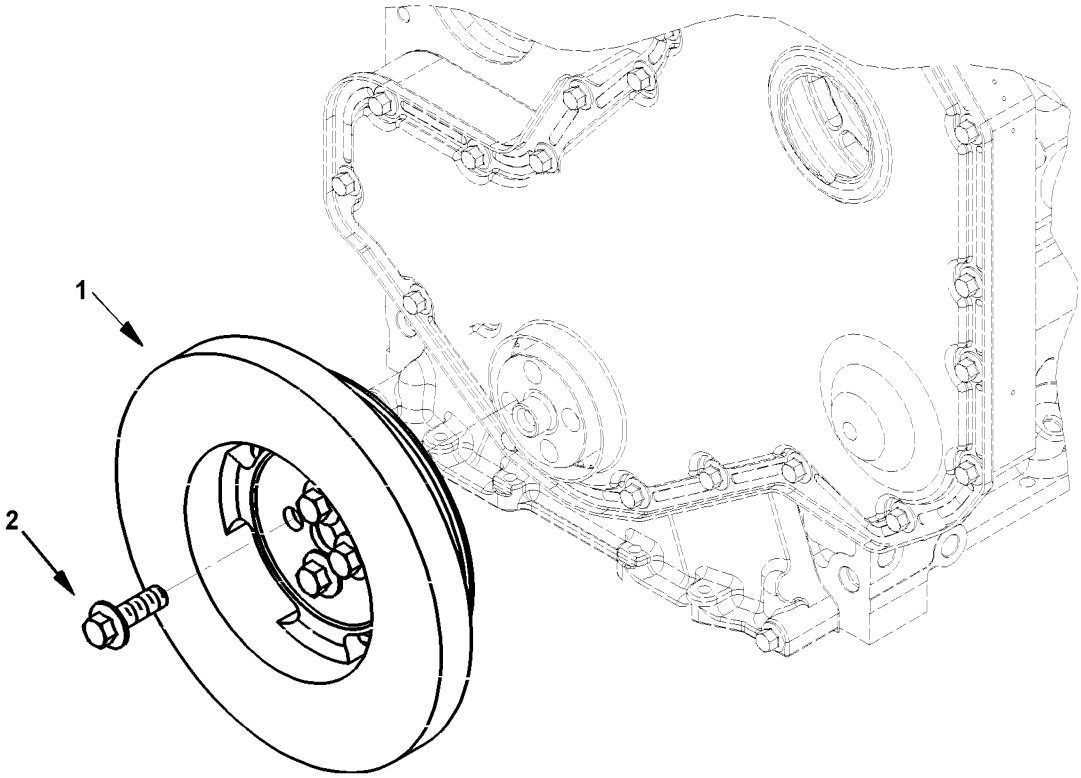

HP091114

ITEM		PART NO.	DESCRIPTION	QTY
	a	1532627	Engine Assembly	1
	b	1607649	Engine Assembly	1
1		1512415	Damper	1
2		1511996	Capscrew	4

FOOTNOTES:
a ⇒ S/N A214E02180C
b S/N A214E02181C ⇒

©2006 HYSTER COMPANY

FRONT GEAR TRAIN COVER (Figure 2-12)
TIER II ENGINE
(S/N A214E01951A⇒)

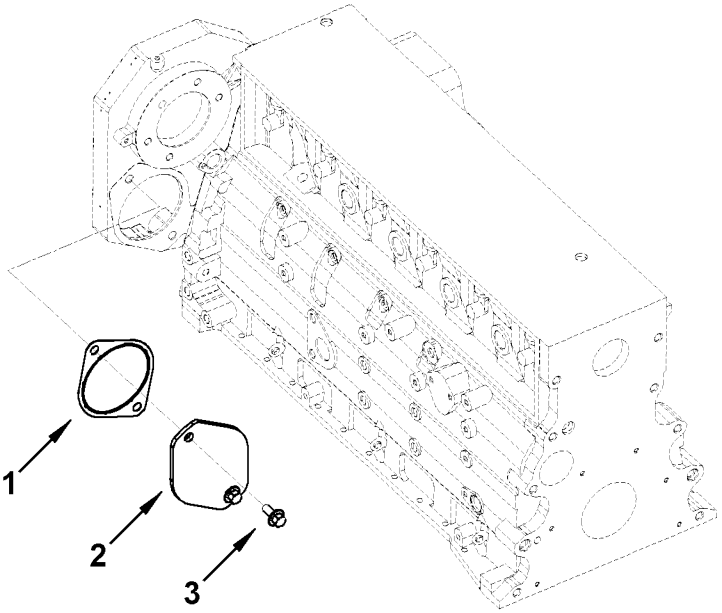

HP091117

ITEM	PART NO.	DESCRIPTION	QTY
a	1532627	Engine Assembly	1
bc	1607649	Engine Assembly	1
1	1511984	Gasket	1
2	1526085	Cover	1
3	1512418	Capscrew	2

FOOTNOTES:
a ⇒ S/N A214E02180C
b S/N A214E02181C ⇒
c S/N A214E02181C ⇒

FLYWHEEL HOUSING (Figure 2-13)
TIER II ENGINE
(S/N A214E01951A⇒)

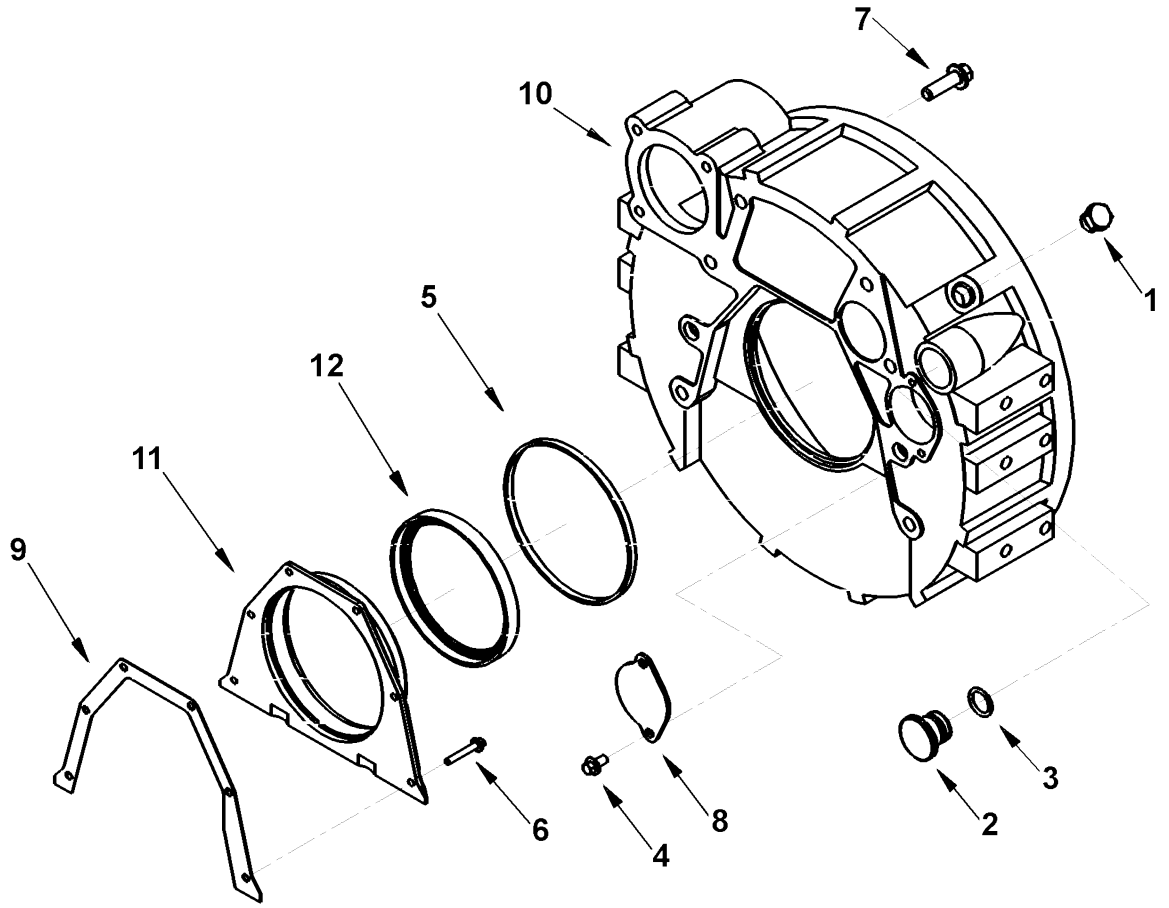

HP091118

©2006 HYSTER COMPANY

FLYWHEEL HOUSING
TIER II ENGINE
(S/N A214E01951A⇒)

ITEM		PART NO.	DESCRIPTION	QTY
	ab	1532627	Engine Assembly	1
	c	1607649	Engine Assembly	1
1		1512046	Plug	1
2		1512047	Plug	1
3		1512048	Seal	1
4		1512433	Capscrew	2
5		1512050	Seal	1
6		1543362	Capscrew	6
7		1512053	Capscrew	8
8		1512056	Plate (Cover)	1
9		1512052	Gasket (Rear Cover)	1
10		1512432	Housing (Flywheel)	1
11		1584540	Cover Assembly (Rear)	1
11		1564992	Seal Kit	1
12		. . . . .	Oil Seal	1

FOOTNOTES:
a S/N A214E02180C ⇒
b ⇒ S/N A214E02180C
c S/N A214E02181C ⇒

©2006 HYSTER COMPANY

BREATHER PLUMBING (Figure 2-14)
TIER II ENGINE
(S/N A214E01951A⇒)

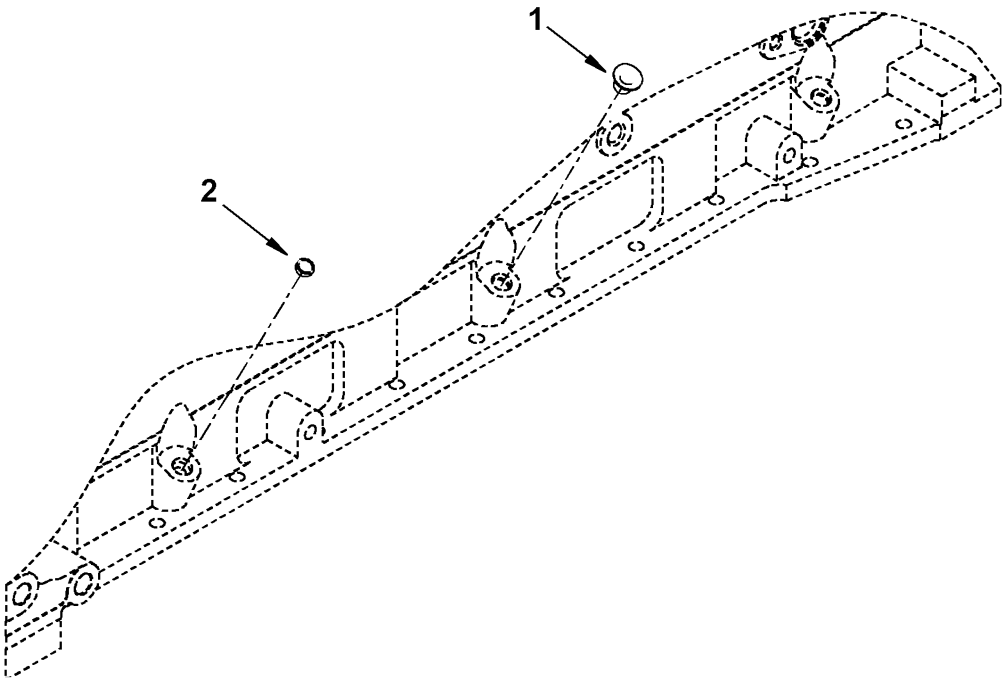

HP091130

ITEM		PART NO.	DESCRIPTION	QTY
	a	1532627	Engine Assembly	1
	b	1607649	Engine Assembly	1
1		1524640	Plug	1
2		1512130	Plug	1

FOOTNOTES:
a ⇒ S/N A214E02180C
b S/N A214E02181C ⇒

©2006 HYSTER COMPANY

OIL PAN (Figure 2-15)
TIER II ENGINE
(S/N A214E01951A⇒)

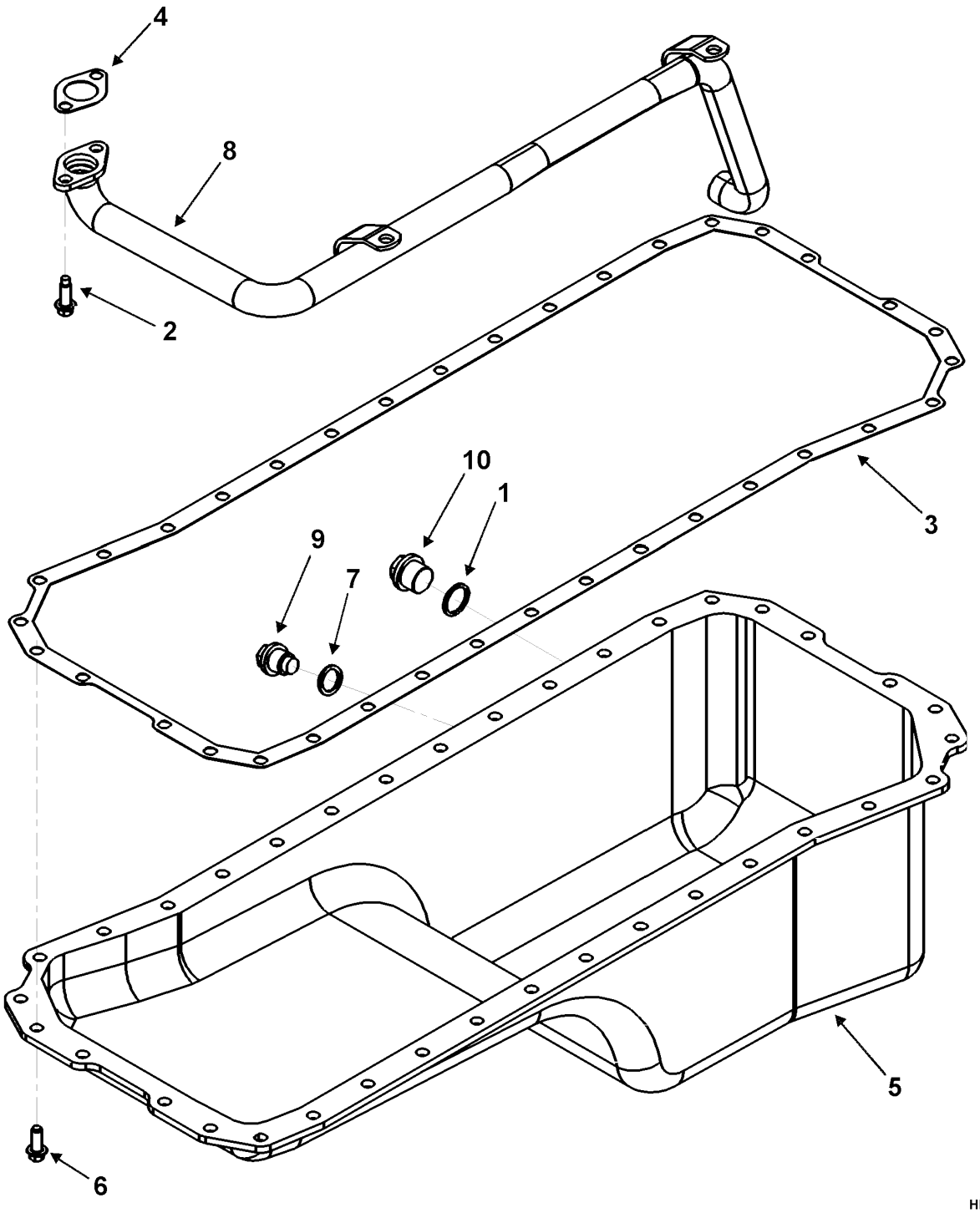

HP091123

ITEM		PART NO.	DESCRIPTION	QTY
	a	1532627	Engine Assembly	1
	b	1607649	Engine Assembly	1
1		1512135	Sealing Washer	1

OIL PAN
TIER II ENGINE
(S/N A214E01951A⇒)

ITEM	PART NO.	DESCRIPTION	QTY
2	1512004	Capscrew	4
3	1543424	Gasket	1
4	1512139	Gasket	1
5	1543430	Oil Pan Assembly	1
6	1513794	Capscrew	36
7	1512137	Sealing Washer	1
8	1512136	Pipe (Oil Suction)	1
9	1512138	Plug	1
10	1512134	Plug	1
	1596650	Gasket Set (Upper Engine) (Includes Item 7)	1

FOOTNOTES:
a ⇒ S/N A214E02180C
b S/N A214E02181C ⇒

©2006 HYSTER COMPANY

NOTES

OIL LEVEL GAUGE (Figure 2-16)
TIER II ENGINE
(S/N A214E01951A⇒)

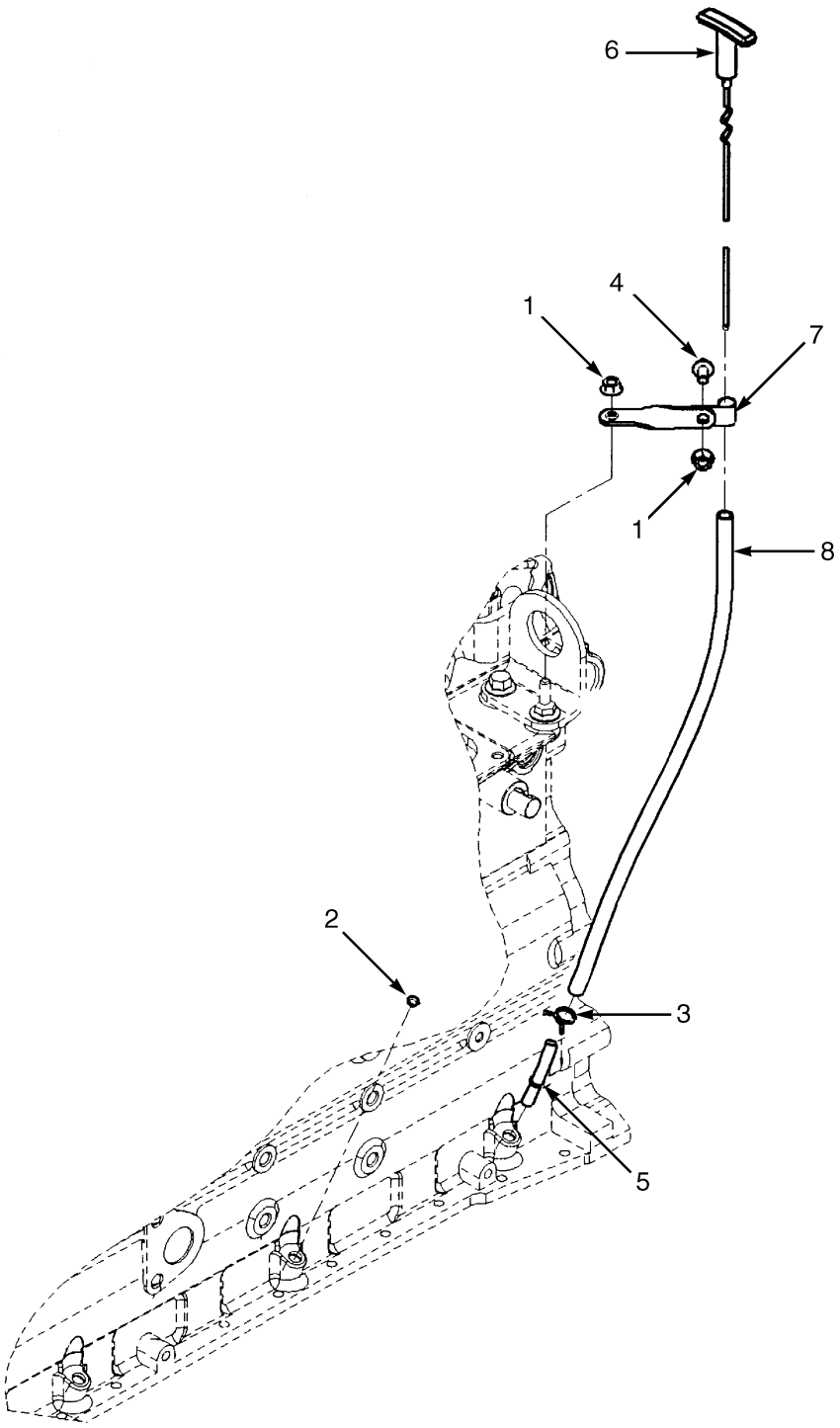

HP091265

©2006 HYSTER COMPANY

OIL LEVEL GAUGE
TIER II ENGINE
(S/N A214E01951A⇒)

ITEM		PART NO.	DESCRIPTION	QTY
	a	1532627	Engine Assembly	1
	b	1607649	Engine Assembly	1
1		1513712	Nut	2
2		1524640	Plug	2
3		1513780	Clamp	2
4		1513749	Capscrew	1
5		1598447	Tube	1
6		1598448	Dipstick	1
7		1597813	Brace	1
8		1597822	Tube	1

FOOTNOTES:
a ⇒ S/N A214E02180C
b S/N A214E02181C ⇒

©2006 HYSTER COMPANY

OIL PUMP (Figure 2-17)
TIER II ENGINE
(S/N A214E01951A⇒)

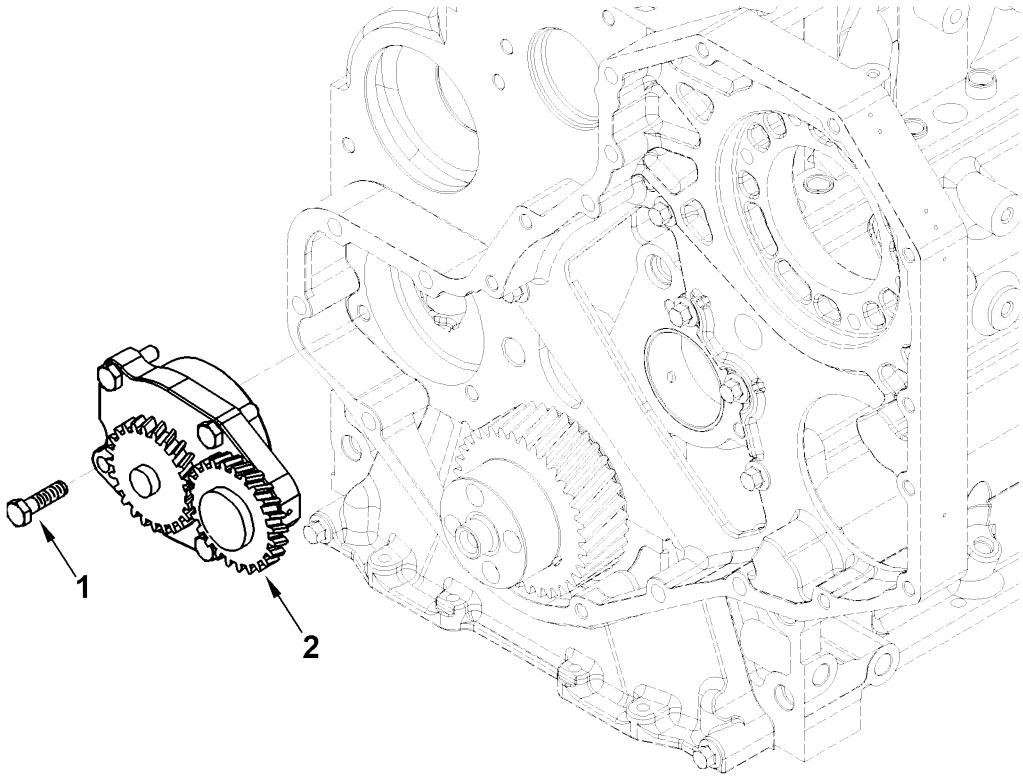

HP091122

ITEM		PART NO.	DESCRIPTION	QTY
	a	1532627	Engine Assembly	1
	b	1607649	Engine Assembly	1
1		1512456	Capscrew	4
2		1521899	Oil Pump	1

FOOTNOTES:
a ⇒ S/N A214E02180C
b S/N A214E02181C ⇒

©2006 HYSTER COMPANY

CRANKCASE BREATHER (Figure 2-18)
TIER II ENGINE
(S/N A214E01951A⇒)

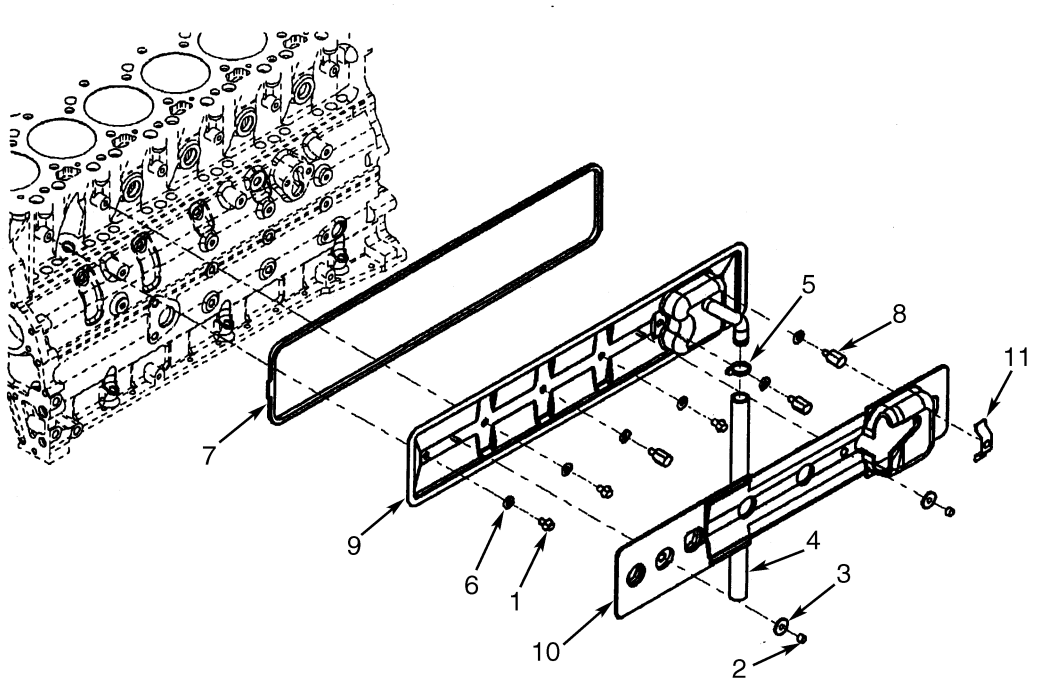

HP090892

ITEM		PART NO.	DESCRIPTION	QTY
	ab	1532627	Engine Assembly	1
	c	1607649	Engine Assembly	1
1		1521810	Capscrew	3
2		1512440	Locknut	2
3		1513797	Washer	2
4		1521811	Hose	1
5		1521812	Clamp	1
6		1511969	Grommet	6
7		1511974	Gasket	1
8		1517122	Spacer	3
9		1521813	Cover (Push Rod)	1
10		. . . . .	Panel (Noise)	1
11		1521814	Brace	1

FOOTNOTES:
a ⇒ S/N A214E02180C
b ⇒ S/N A214E02180C
c S/N A214E02181C ⇒

FLYWHEEL (Figure 2-19)
TIER II ENGINE
(S/N A214E01951A⇒)

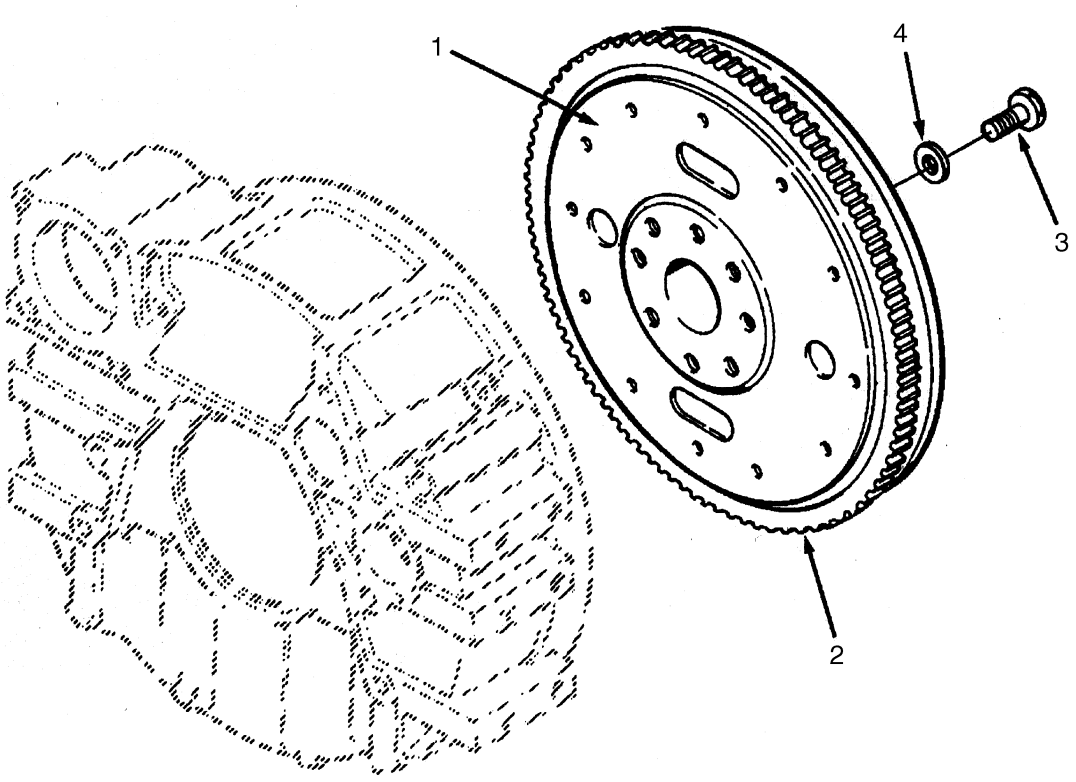

HP090879

ITEM		PART NO.	DESCRIPTION	QTY
	a	1532627	Engine Assembly	1
	b	1607649	Engine Assembly	1
1		1512444	Flywheel	1
2		1512445	Ring Gear	1
3		1512106	Capscrew	8
4		1512107	Washer	8

FOOTNOTES:
a ⇒ S/N A214E02180C
b S/N A214E02181C ⇒

©2006 HYSTER COMPANY

THERMOSTAT (Figure 2-20)
TIER II ENGINE
(S/N A214E01951A⇒)

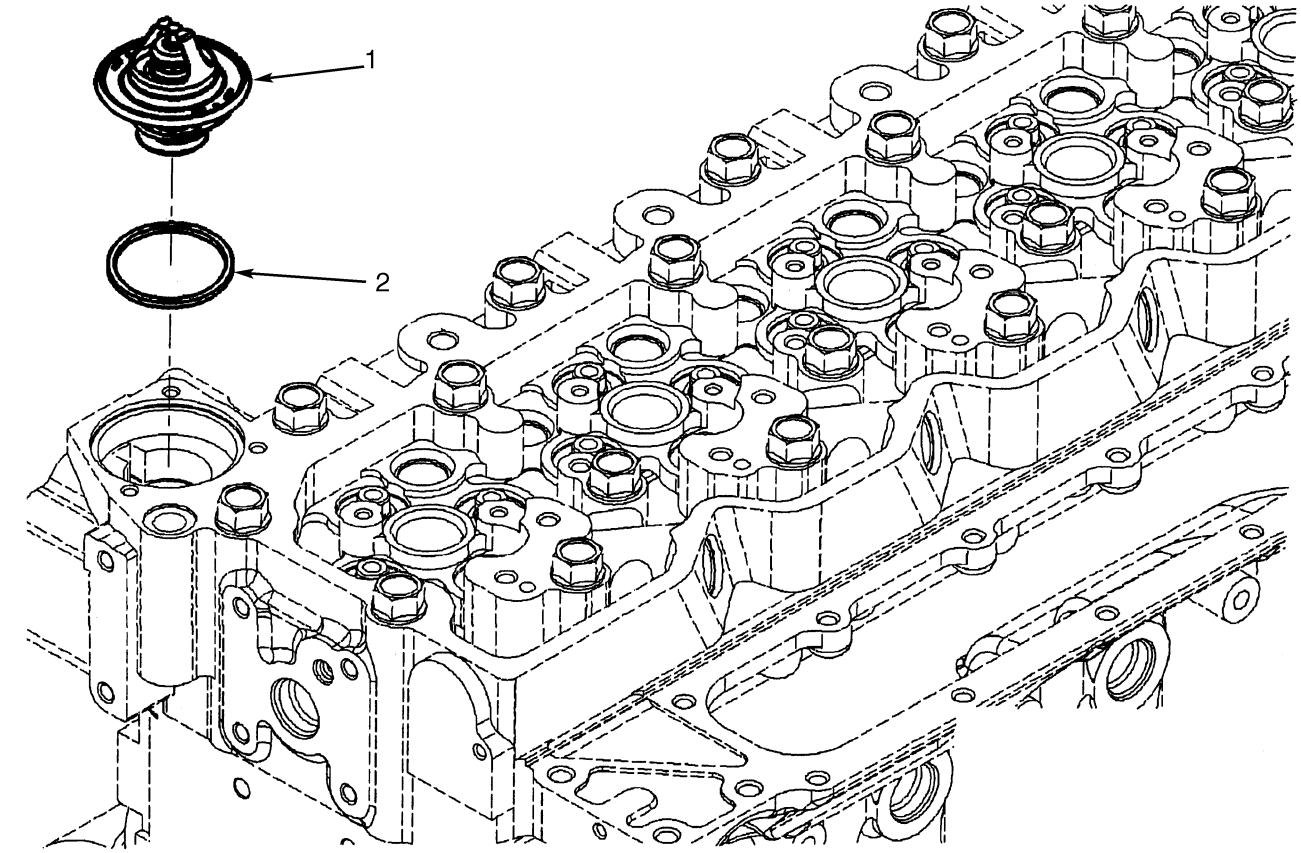

HP090893

ITEM	PART NO.	DESCRIPTION	QTY
a	1532627	Engine Assembly	1
b	1607649	Engine Assembly	1
1	1552715	Thermostat	1
2	1552716	Seal Ring	1

FOOTNOTES:
a ⇒ S/N A214E02180C
b S/N A214E02181C ⇒

AIR COMPRESSOR PLUMBING (Figure 2-21)
TIER II ENGINE
(S/N A214E01951A⇒)

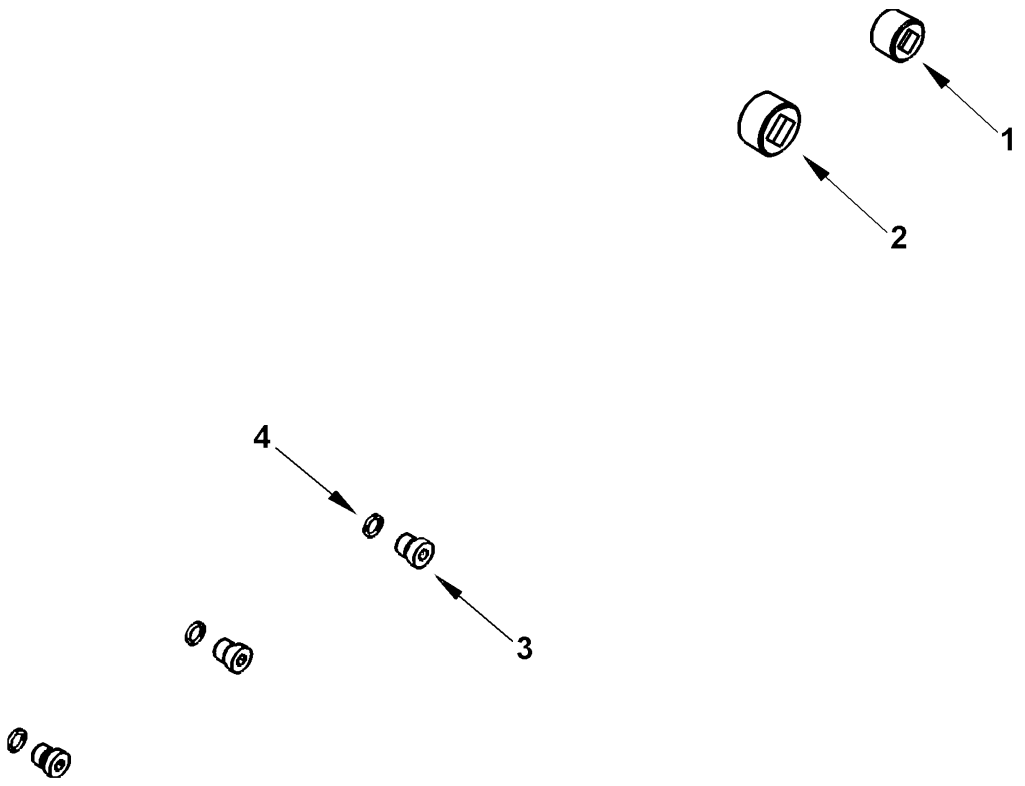

HP091131

ITEM		PART NO.	DESCRIPTION	QTY
	a	1532627	Engine Assembly	1
	b	1607649	Engine Assembly	1
1		1511952	Plug	1
2		1512292	Plug	1
3		1517010	Plug	3
4		1517011	Seal Ring	1

FOOTNOTES:
a ⇒ S/N A214E02180C
b S/N A214E02181C ⇒

©2006 HYSTER COMPANY

ALTERNATOR MOUNTING (Figure 2-22)
TIER II ENGINE
(S/N A214E01951A⇒)

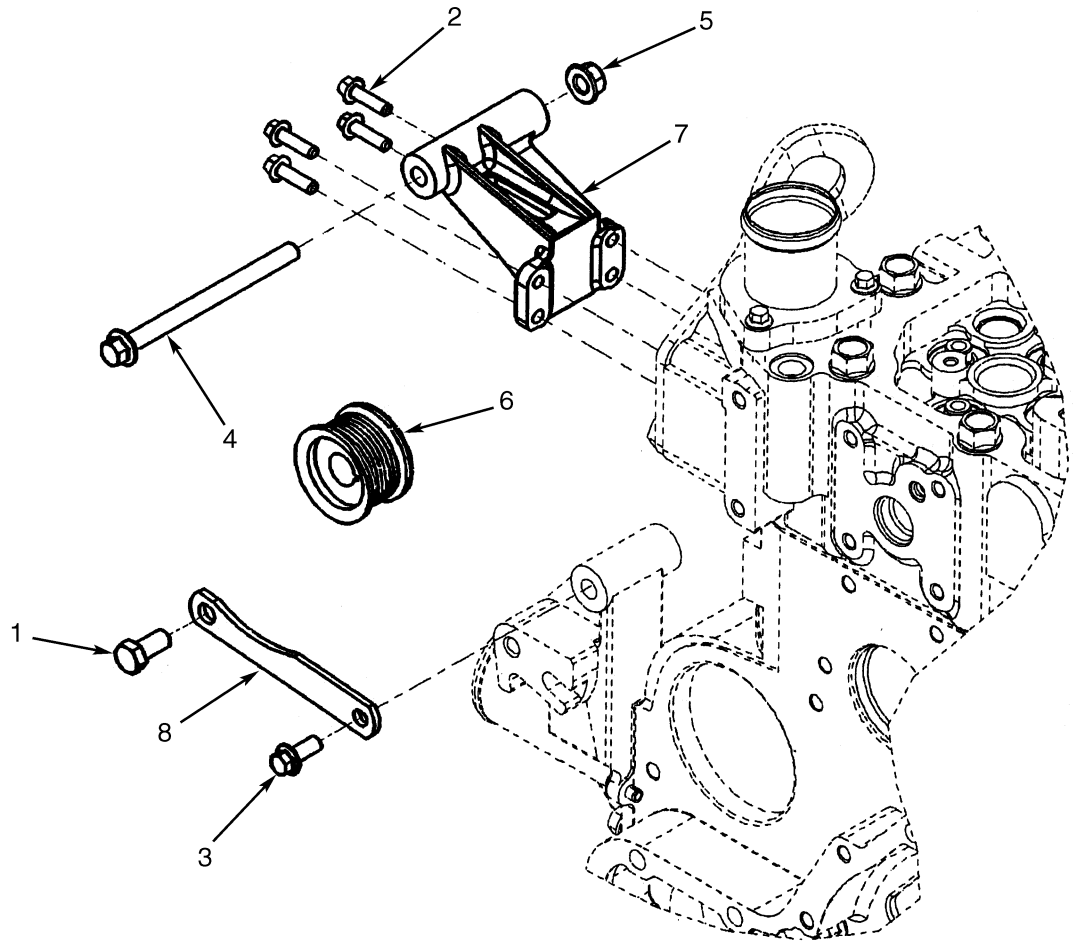

HP090894

ITEM		PART NO.	DESCRIPTION	QTY
	a	1532627	Engine Assembly	1
	b	1607649	Engine Assembly	1
1		1512003	Capscrew	1
2		1512033	Capscrew	4
3		1512503	Capscrew	1
4		1512006	Capscrew	1
5		1511978	Nut	1
6		1521827	Pulley	1
7		1521828	Brace	1
8		1552718	Support	1

FOOTNOTES:
a ⇒ S/N A214E02180C
b S/N A214E02181C ⇒

FAN DRIVE (Figure 2-23)
TIER II ENGINE
(S/N A214E01951A⇒)

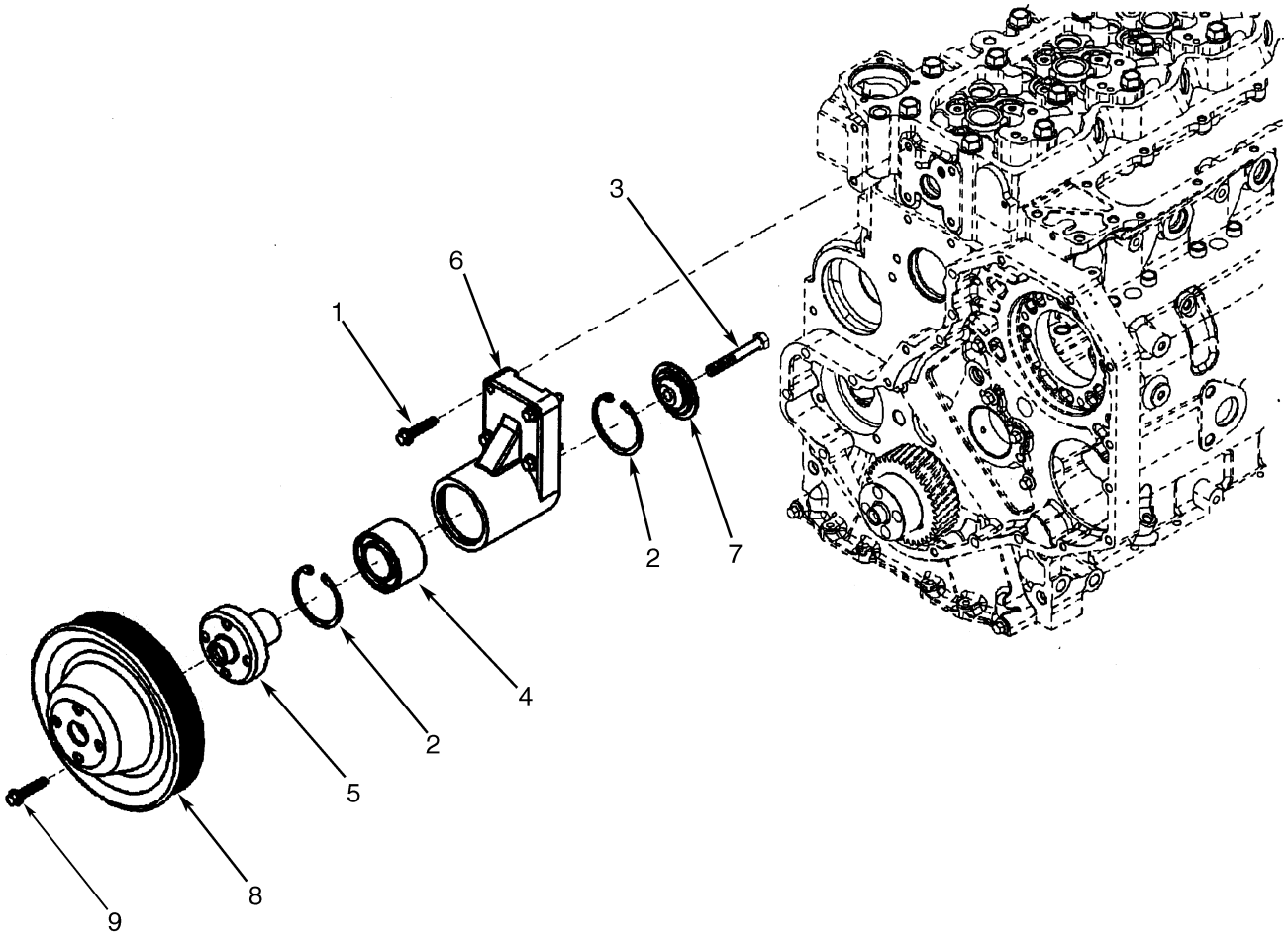

ITEM		PART NO.	DESCRIPTION	QTY
	a	1532627	Engine Assembly	1
	b	1607649	Engine Assembly	1
1		1512029	Capscrew	4
2		1512026	Retaining Ring	2
3		1512027	Capscrew	1
4		1512015	Ball Bearing	1
5		1512024	Hub (Fan)	1
6		1521831	Support	1
7		1512025	Retainer	1
8		1512425	Pulley (Fan)	1
9		1512328	Capscrew	4

FOOTNOTES:
a ⇒ S/N A214E02180C
b S/N A214E02181C ⇒

©2006 HYSTER COMPANY

FUEL FILTER (Figure 2-24)
TIER II ENGINE
(S/N A214E01951A⇒)

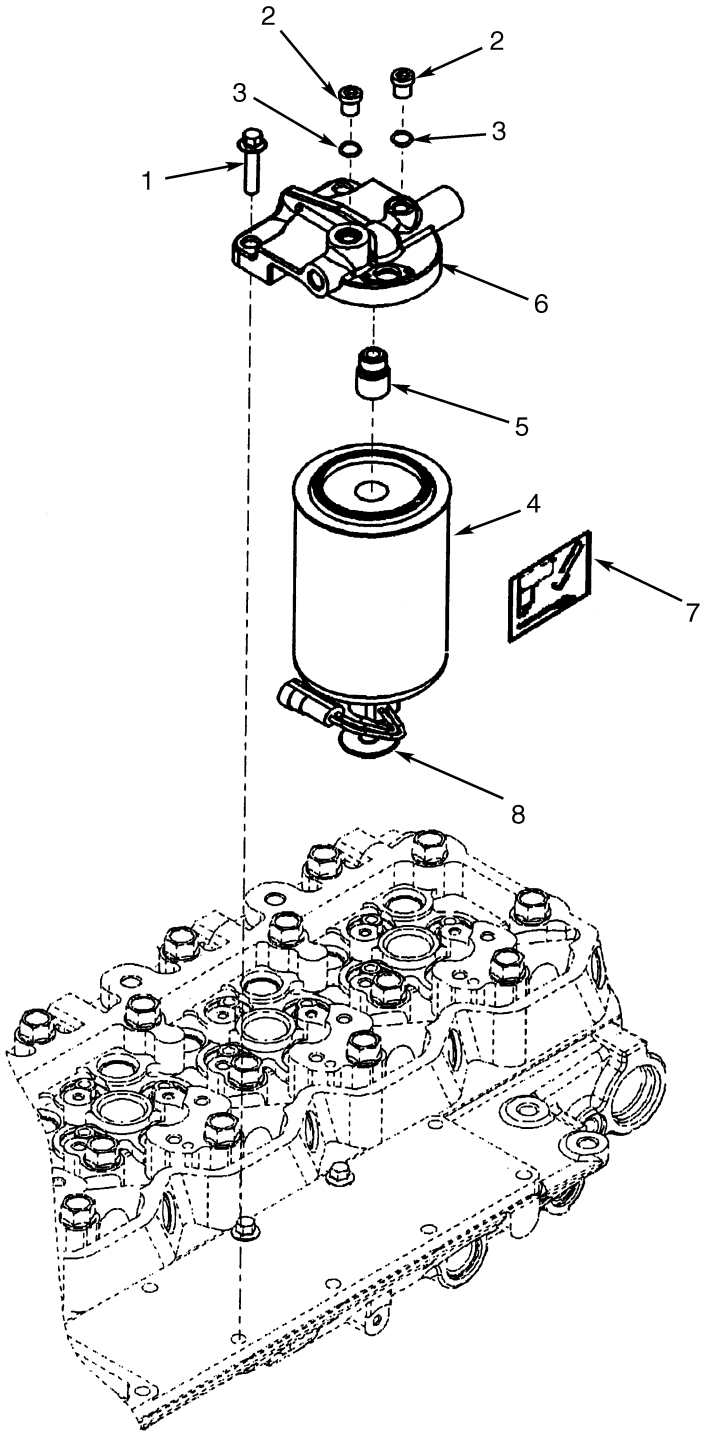

HP090896

ITEM		PART NO.	DESCRIPTION	QTY
	a	1532627	Engine Assembly	1
	b	1607649	Engine Assembly	1
1		1512033	Capscrew	1
2		1517010	Plug	2

©2006 HYSTER COMPANY

FUEL FILTER
TIER II ENGINE
(S/N A214E01951A⇒)

ITEM	PART NO.	DESCRIPTION	QTY
3	1515895	O-Ring	1
4	1596647	Water Separator	1
5	1521837	Adapter	1
6	1521838	Head	1
7	. . . . .	Decal	1
8	1521839	Water Sensor	1

FOOTNOTES:
a ⇒ S/N A214E02180C
b S/N A214E02181C ⇒

©2006 HYSTER COMPANY

FUEL FILTER PLUMBING (Figure 2-25)
TIER II ENGINE
(S/N A214E01951A⇒)

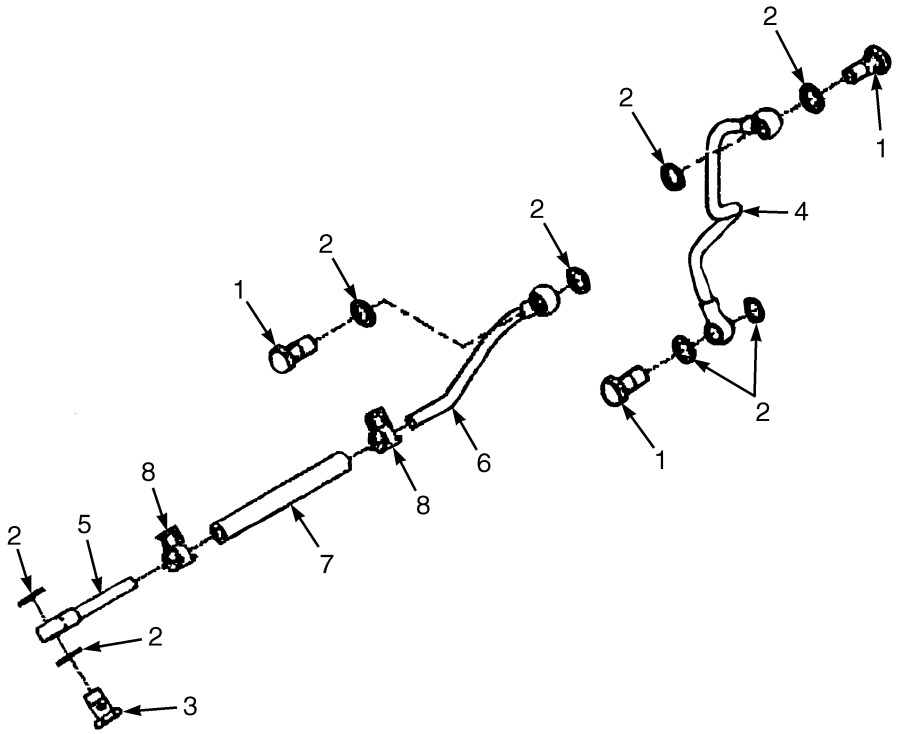

HP091068

ITEM	PART NO.	DESCRIPTION	QTY
	1532627	Engine Assembly	1
1	1514371	Banjo Bolt	3
2	1543359	Sealing Washer	8
3	1521841	Banjo Bolt	1
4	1521843	Tube	1
5	1521844	Tube	1
6	1521845	Tube	1
7	1521847	Hose	1
8	1521846	Clamp	2

©2006 HYSTER COMPANY

FUEL INJECTION PUMP (Figure 2-26)
TIER II ENGINE
(S/N A214E01951A⇒)

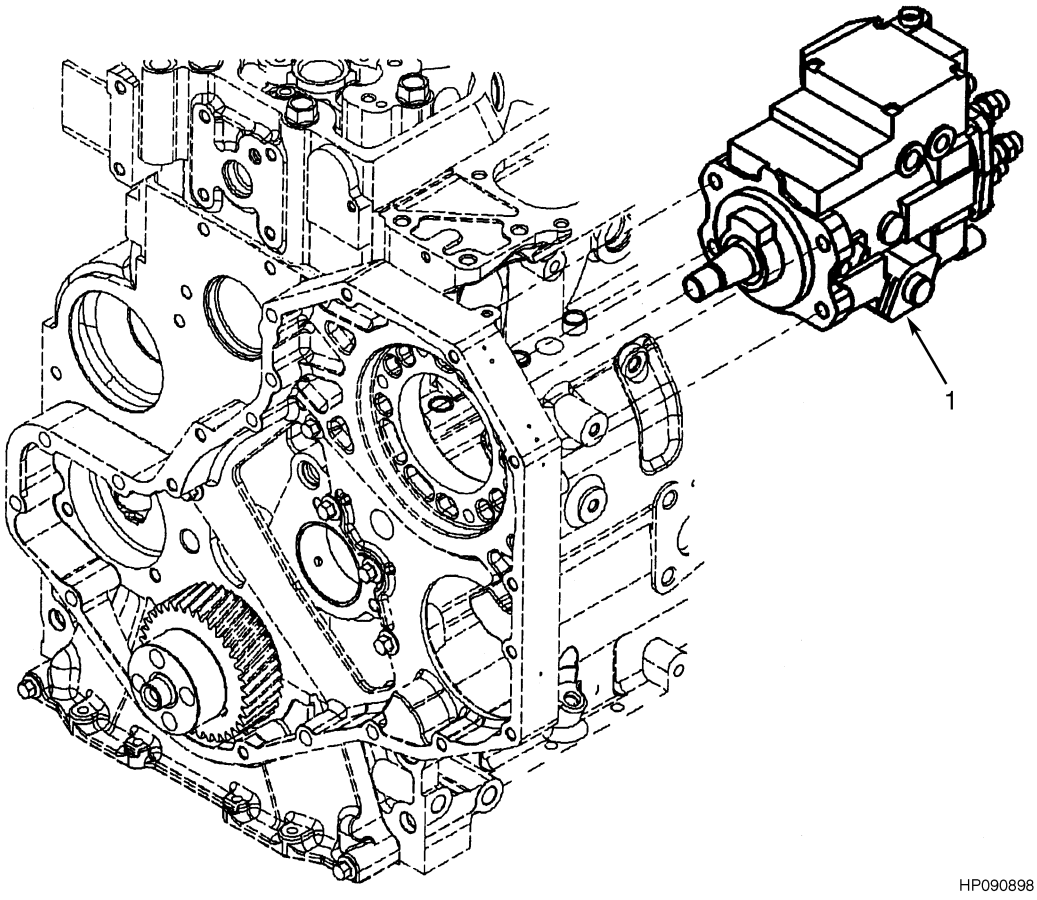

ITEM		PART NO.	DESCRIPTION	QTY
	a	1532627	Engine Assembly	1
	b	1607649	Engine Assembly	1
1		1584544	Fuel Injection Pump	1

FOOTNOTES:
a ⇒ S/N A214E02180C
b S/N A214E02181C ⇒

©2006 HYSTER COMPANY

NOTES

FUEL PUMP MOUNT (Figure 2-27)
TIER II ENGINE
(S/N A214E01951A⇒)

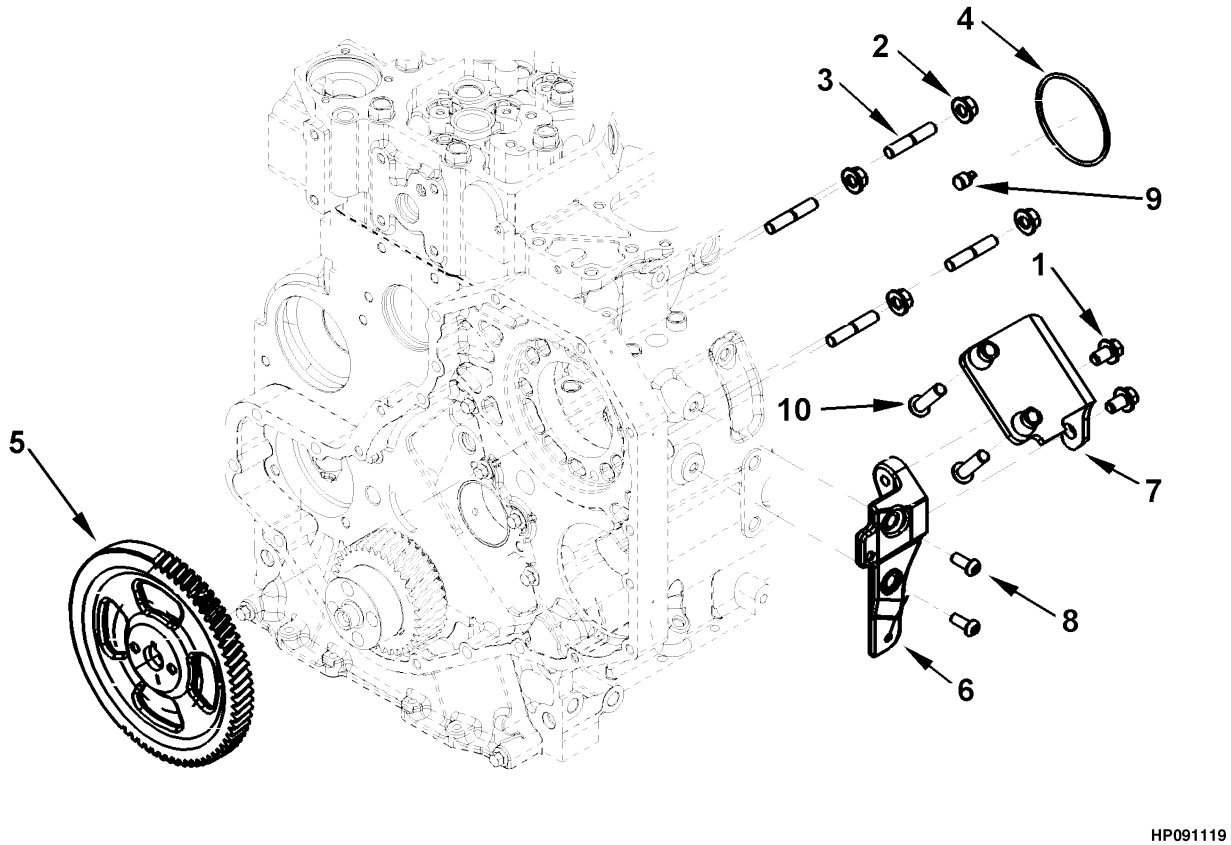

©2006 HYSTER COMPANY

FUEL PUMP MOUNT
TIER II ENGINE
(S/N A214E01951A⇒)

ITEM		PART NO.	DESCRIPTION	QTY
	a	1532627	Engine Assembly	1
	b	1607649	Engine Assembly	1
1		1521852	Capscrew	2
2		1514483	Nut	4
3		1553768	Stud	4
4		1514488	Seal Ring	1
5		1584542	Gear (Fuel Pump)	1
6		1521854	Support	1
7		1521855	Brace	1
8		1512004	Capscrew	2
9		1521857	Dowel	1
10		1521858	Screw	2

FOOTNOTES:
a ⇒ S/N A214E02180C
b S/N A214E02181C ⇒

©2006 HYSTER COMPANY

LIFT PUMP (Figure 2-28)
TIER II ENGINE
(S/N A214E01951A⇒)

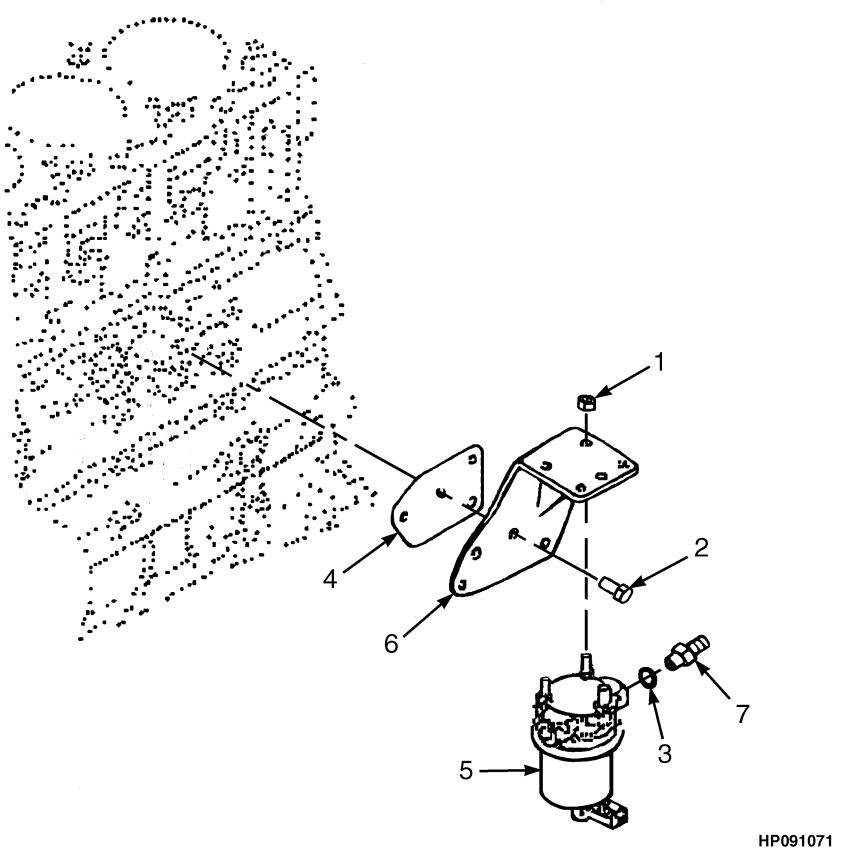

ITEM		PART NO.	DESCRIPTION	QTY
	a	1532627	Engine Assembly	1
	b	1607649	Engine Assembly	1
1		1521860	Nut	3
2		1512004	Capscrew	4
3		1543359	Sealing Washer	1
4		1521861	Gasket	1
5		1521864	Lift Pump	1
6		1521863	Bracket	1
7		1521862	Coupling	1

FOOTNOTES:
a ⇒ S/N A214E02180C
b S/N A214E02181C ⇒

©2006 HYSTER COMPANY

LIFT PUMP PLUMBING (Figure 2-29)
TIER II ENGINE
(S/N A214E01951A⇒)

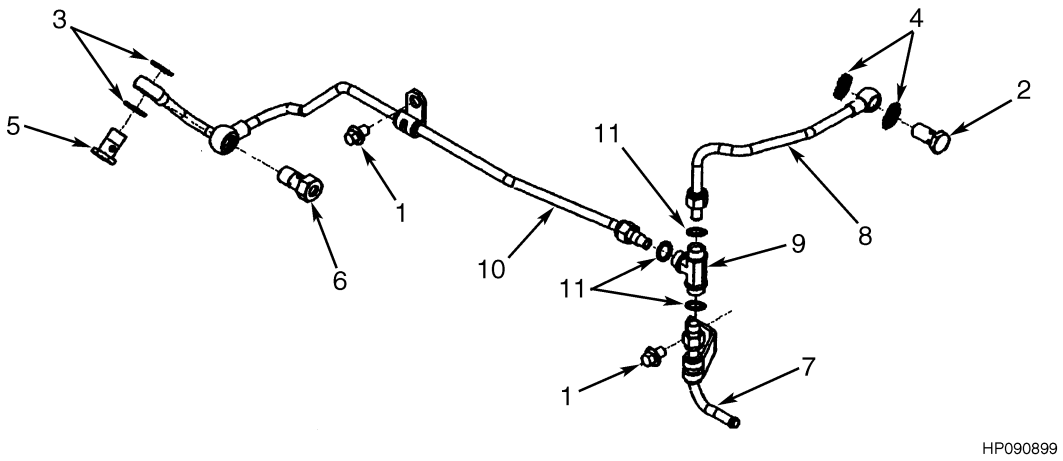

ITEM		PART NO.	DESCRIPTION	QTY
	a	1532627	Engine Assembly	1
	b	1607649	Engine Assembly	1
1		1517266	Capscrew	2
2		1514371	Banjo Bolt	1
3		1584546	Washer	3
4		1543359	Sealing Washer	2
5		1521867	Check Valve	1
6		1521868	Banjo Bolt	1
7		1584547	Tube	1
8		1521870	Tube	1
9		1521871	Connector	1
10		1521872	Tube	1
11		1521873	Seal	3

FOOTNOTES:
a ⇒ S/N A214E02180C
b S/N A214E02181C ⇒

FRONT GEAR COVER (Figure 2-30)
TIER II ENGINE
(S/N A214E01951A⇒)

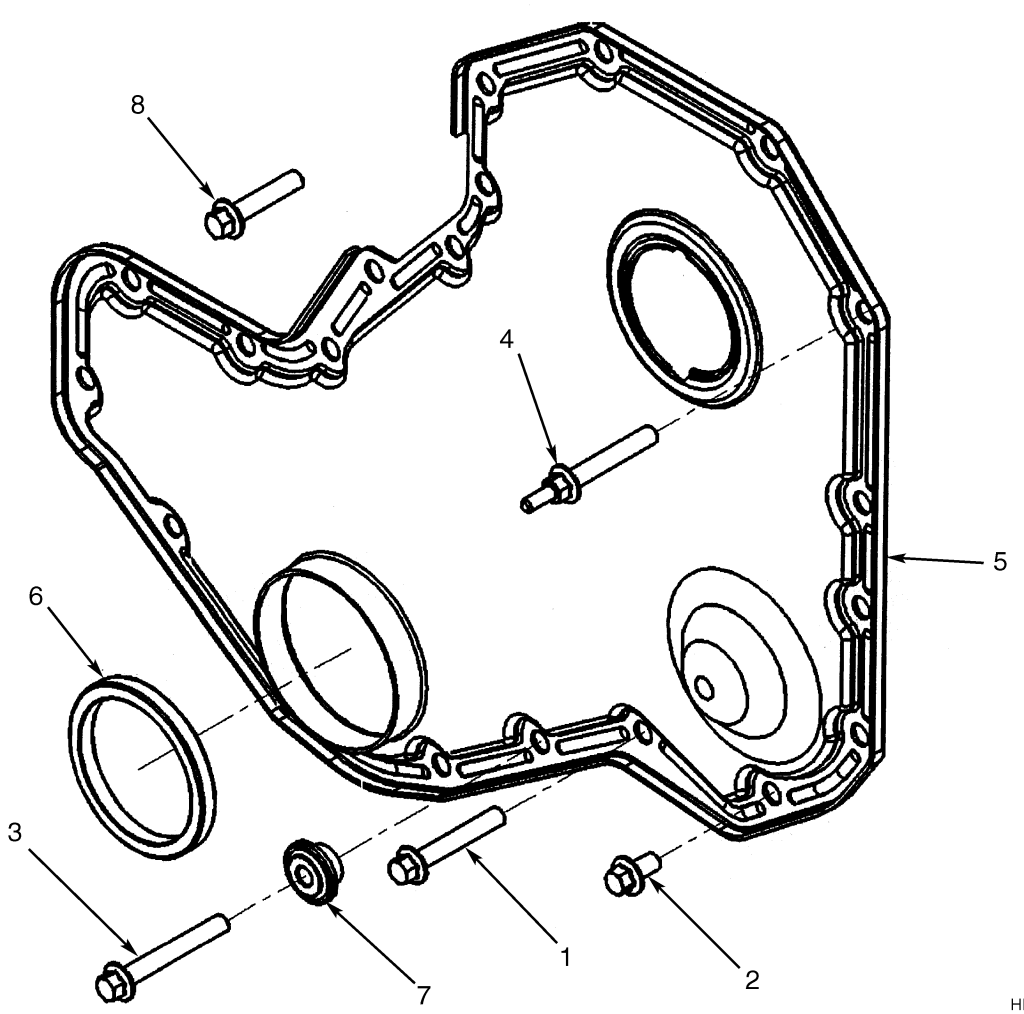

ITEM		PART NO.	DESCRIPTION	QTY
	a	1532627	Engine Assembly	1
	b	1607649	Engine Assembly	1
1		1513725	Capscrew	7
2		1521875	Capscrew	7
3		1513760	Capscrew	1
4		1521876	Capscrew	1
5		1521879	Gear Cover Assembly	1
5		1521878	Gear Cover	1
6		. . . . .	Oil Seal	1
7		1521880	Retainer	1
8		1513789	Capscrew	4

FOOTNOTES:
a ⇒ S/N A214E02180C
b S/N A214E02181C ⇒

©2006 HYSTER COMPANY

GEAR HOUSING (Figure 2-31)
TIER II ENGINE
(S/N A214E01951A⇒)

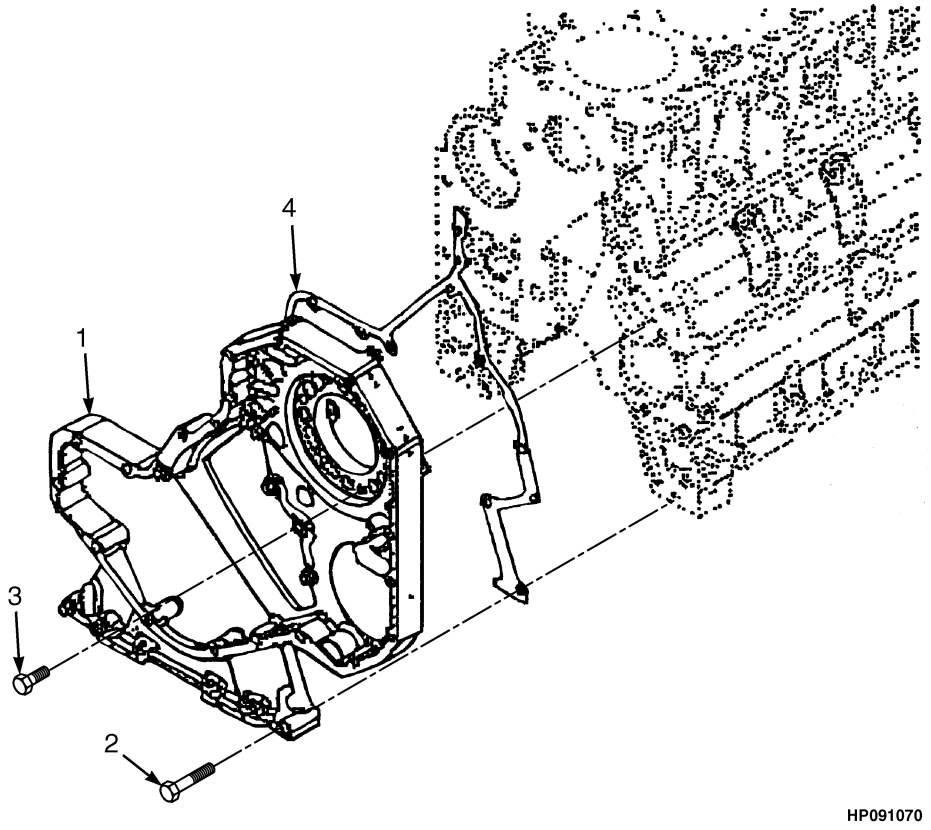

ITEM		PART NO.	DESCRIPTION	QTY
	a	1532627	Engine Assembly	1
	b	1607649	Engine Assembly	1
1		1521711	Housing	1
2		1513725	Capscrew	2
3		1513751	Capscrew	5
4		1521712	Gasket	1

FOOTNOTES:
a ⇒ S/N A214E02180C
b S/N A214E02181C ⇒

AIR INTAKE CONNECTION (Figure 2-32)
TIER II ENGINE
(S/N A214E01951A⇒)

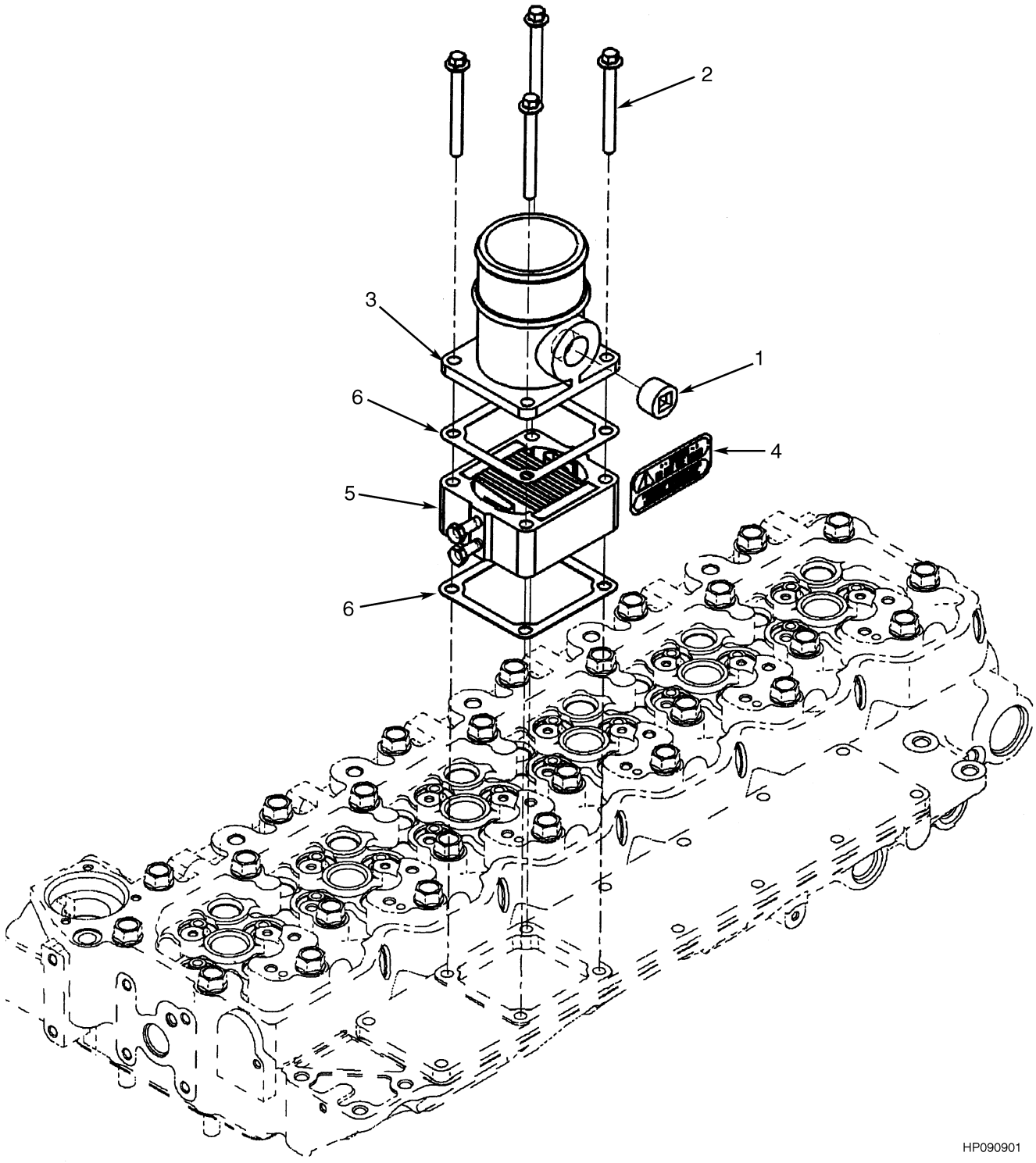

ITEM		PART NO.	DESCRIPTION	QTY
	a	1532627	Engine Assembly	1
	b	1607649	Engine Assembly	1
1		1512292	Plug	1

©2006 HYSTER COMPANY

AIR INTAKE CONNECTION
TIER II ENGINE
(S/N A214E01951A⇒)

ITEM	PART NO.	DESCRIPTION	QTY
2	1521884	Capscrew	4
3	1584549	Connection	1
4	1521886	Tag	1
5	1543315	Heater (Air Intake)	1
6	1596648	Gasket	2

FOOTNOTES:
a ⇒ S/N A214E02180C
b S/N A214E02181C ⇒

©2006 HYSTER COMPANY

AIR INTAKE HOSE (Figure 2-33)
TIER II ENGINE
(S/N A214E01951A⇒)

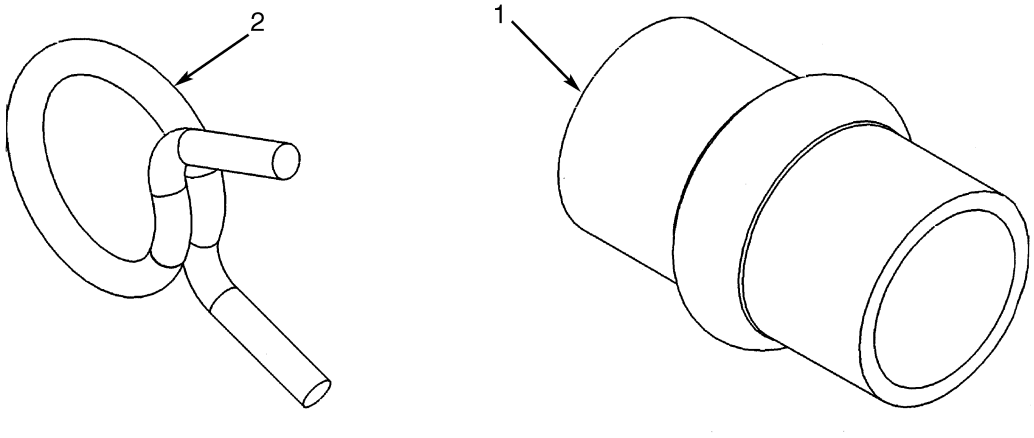

HP090902

ITEM		PART NO.	DESCRIPTION	QTY
	a	1532627	Engine Assembly	1
	b	1607649	Engine Assembly	1
1		1521888	Hose	4
2		1521889	Clamp	8

FOOTNOTES:
a ⇒ S/N A214E02180C
b S/N A214E02181C ⇒

©2006 HYSTER COMPANY

AIR TRANSFER CONNECTION (Figure 2-34)
TIER II ENGINE
(S/N A214E01951A⇒)

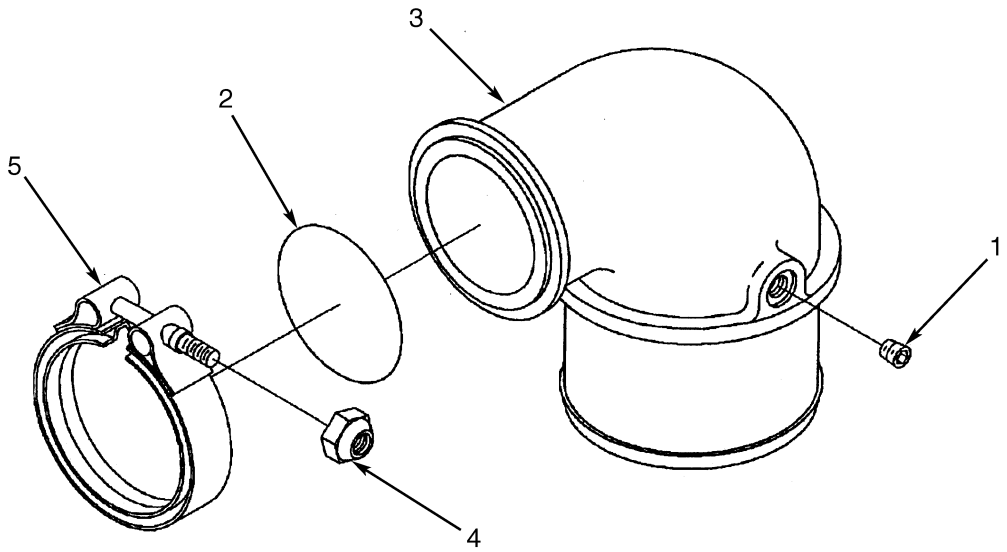

ITEM		PART NO.	DESCRIPTION	QTY
	a	1532627	Engine Assembly	1
	b	1607649	Engine Assembly	1
1		1513191	Plug	1
2		1515787	O-Ring	1
3		1521891	Pipe	1
4		1517094	Locknut	1
5		1517095	Clamp	1
		1596650	Gasket Set (Upper Engine) (Includes Item 2)	1

FOOTNOTES:
a ⇒ S/N A214E02180C
b S/N A214E02181C ⇒

LIFTING BRACKET (Figure 2-35)
TIER II ENGINE
(S/N A214E01951A⇒)

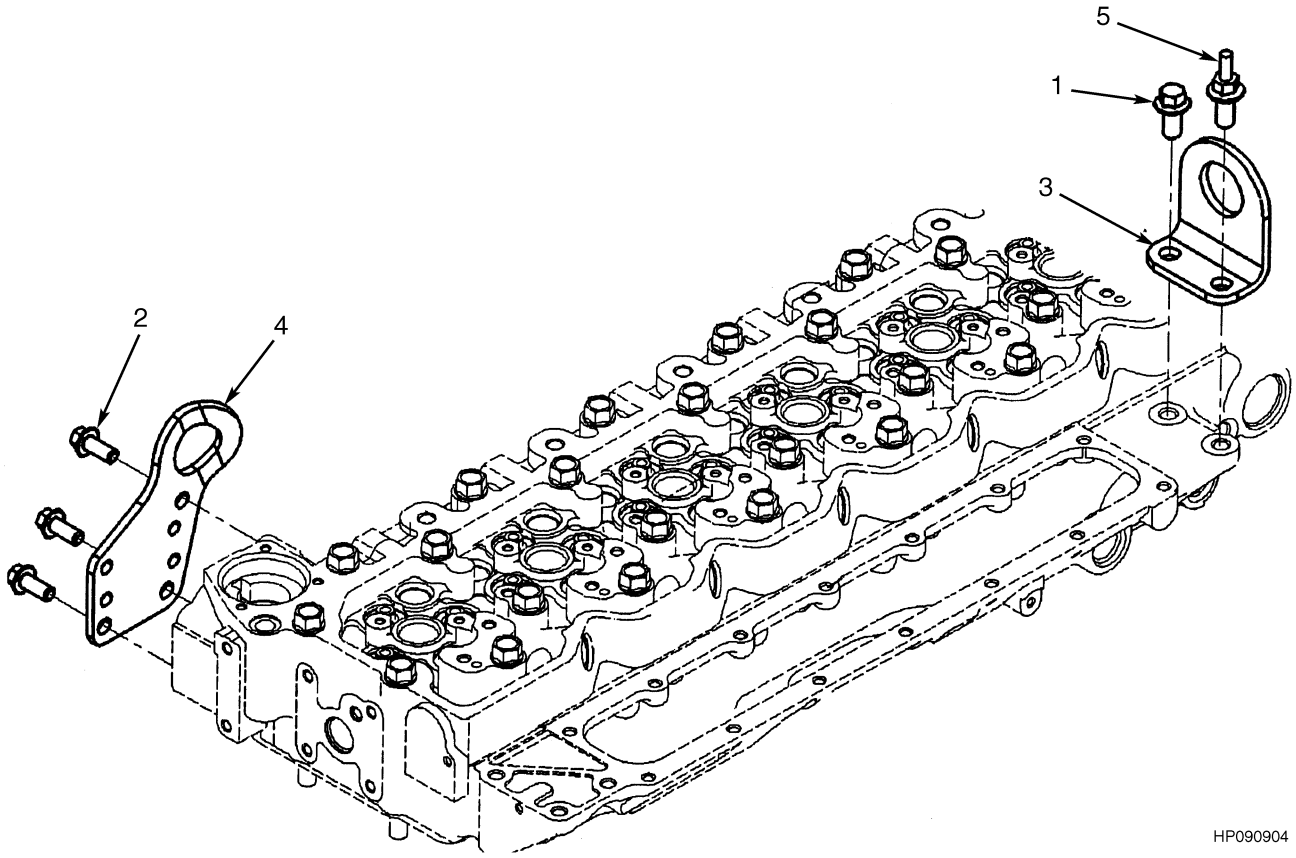

ITEM		PART NO.	DESCRIPTION	QTY
	a	1532627	Engine Assembly	1
	b	1607649	Engine Assembly	1
1		1512418	Capscrew	1
2		1512503	Capscrew	3
3		1521893	Bracket	1
4		1521894	Bracket	1
5		1521895	Capscrew	1

FOOTNOTES:
a ⇒ S/N A214E02180C
b S/N A214E02181C ⇒

©2006 HYSTER COMPANY

ENGINE OIL COOLER (Figure 2-36)
TIER II ENGINE
(S/N A214E01951A⇒)

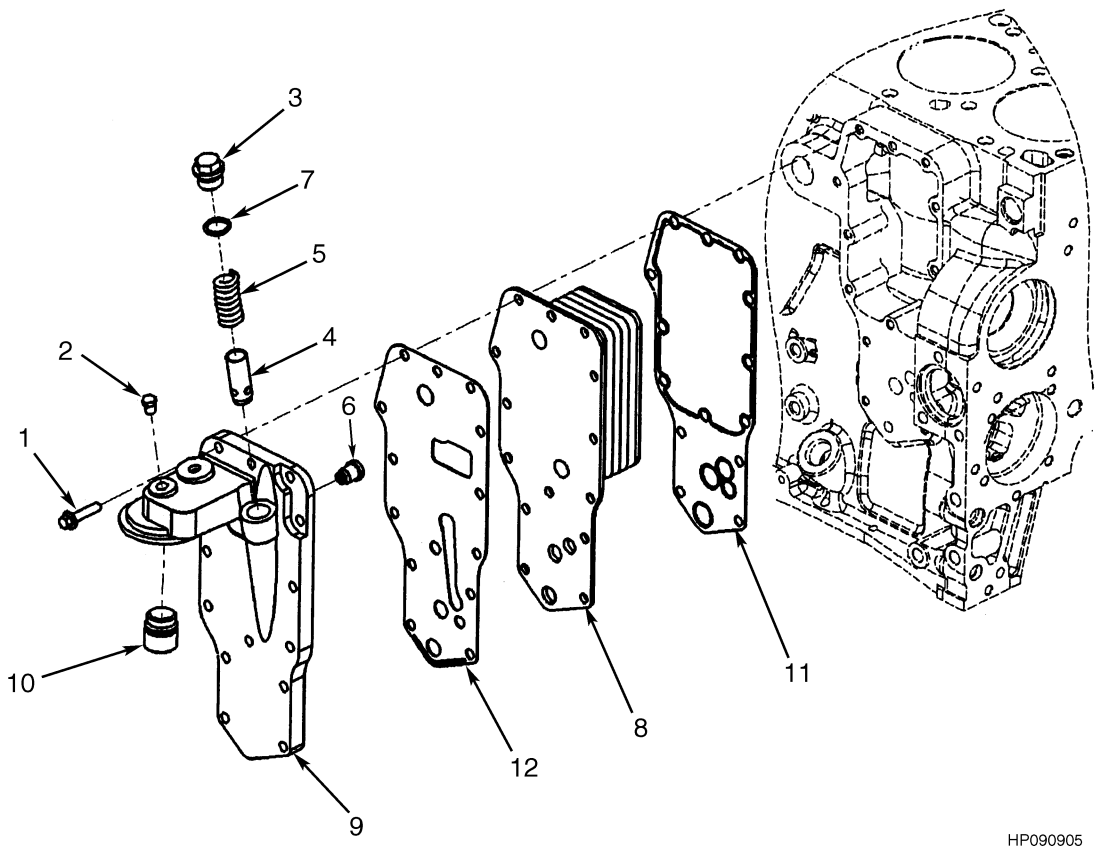

ITEM		PART NO.	DESCRIPTION	QTY
	a	1532627	Engine Assembly	1
	b	1607649	Engine Assembly	1
1		1512033	Capscrew	14
2		1512448	Plug	1
3		1512453	Plug	3
4		1512119	Plunger	1
5		1512112	Spring	1
6		1513772	Valve (Pressure Relief)	1
7		1512118	O-Ring	1
8		1552286	Cooler Core	1
9		1521897	Filter Head	1
10		1553782	Adapter	1
11		1512120	Gasket	1
12		1512452	Gasket	1
		1524551	Filter Element (Not Illustrated)	1

FOOTNOTES:
a ⇒ S/N A214E02180C
b S/N A214E02181C ⇒

OIL FILLER ARRANGEMENT (Figure 2-37)
TIER II ENGINE
(S/N A214E01951A⇒)

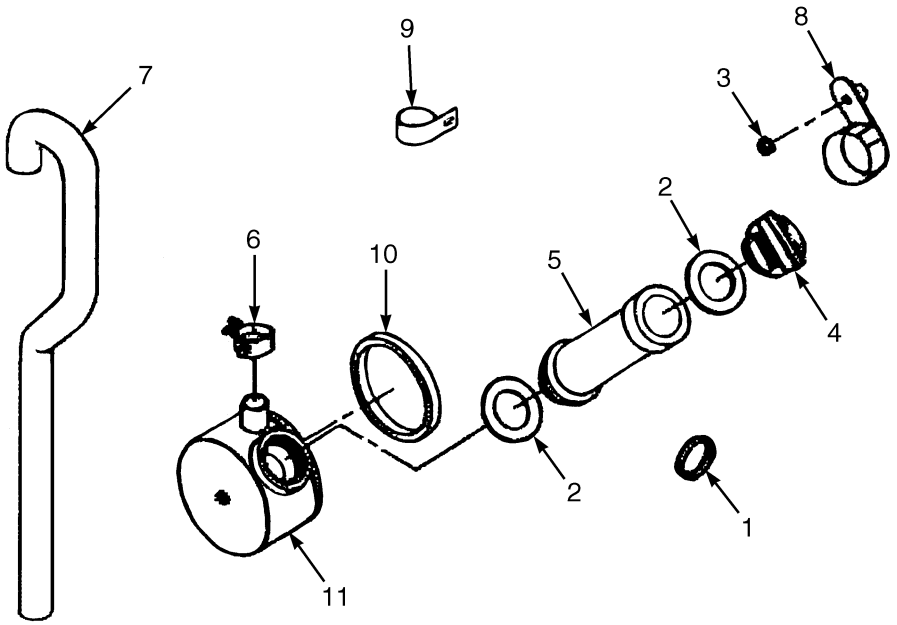

HP091069

©2006 HYSTER COMPANY

OIL FILLER ARRANGEMENT
TIER II ENGINE
(S/N A214E01951A⇒)

ITEM		PART NO.	DESCRIPTION	QTY
	a	1532627	Engine Assembly	1
	b	1607649	Engine Assembly	1
1		1521694	Expansion Plug	1
2		1512312	Seal Ring	2
3		1513793	Nut	2
4		1512463	Cap	1
5		1512464	Tube	1
6		1513701	Clamp	1
7		1527012	Hose	1
8		1521902	Clip	1
9		1527013	Clip	1
10		1512012	Seal Ring	1
11		1527014	Breather (Crankcase)	1

FOOTNOTES:
a ⇒ S/N A214E02180C
b S/N A214E02181C ⇒

©2006 HYSTER COMPANY

OIL FILTER (Figure 2-38)
TIER II ENGINE
(S/N A214E01951A⇒)

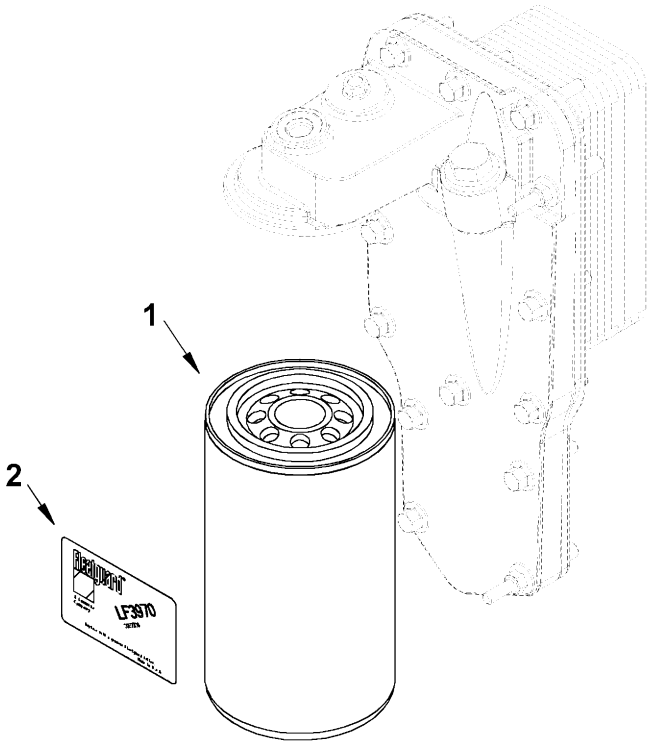

HP091120

ITEM		PART NO.	DESCRIPTION	QTY
	a	1532627	Engine Assembly	1
	b	1607649	Engine Assembly	1
1		1524551	Filter Element	1
2		. . . . .	Decal	1

FOOTNOTES:
a ⇒ S/N A214E02180C
b S/N A214E02181C ⇒

©2006 HYSTER COMPANY

TURBOCHARGER (Figure 2-39)
TIER II ENGINE
(S/N A214E01951A⇒)

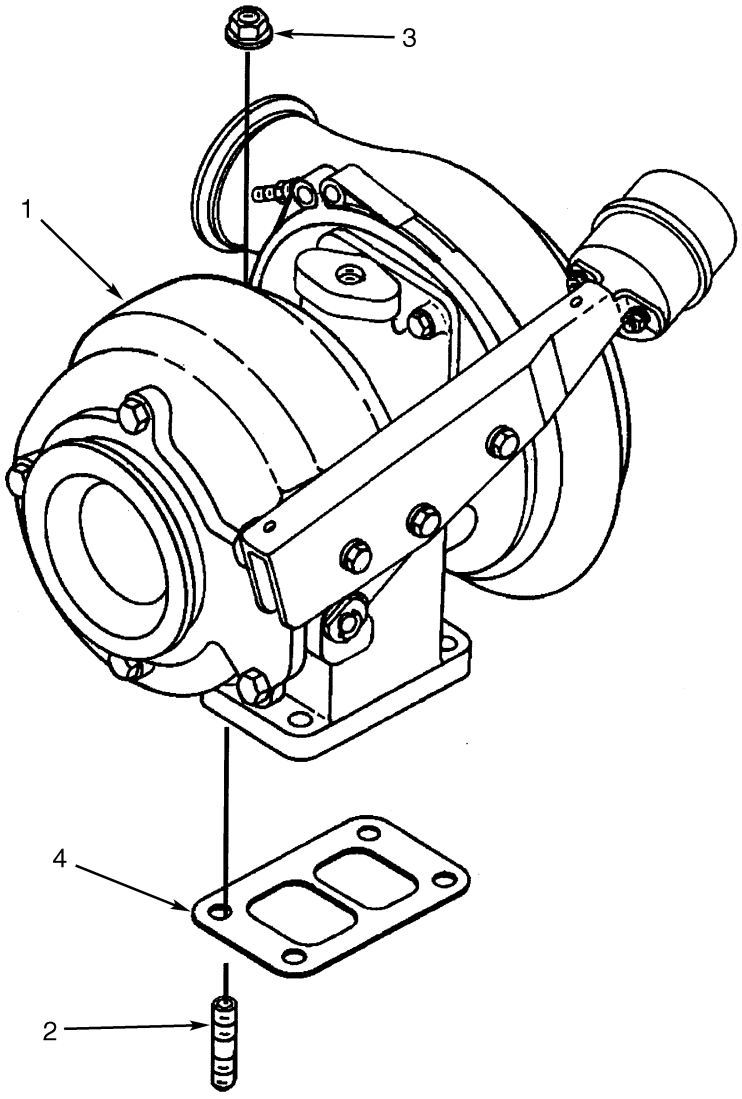

HP090907

ITEM		PART NO.	DESCRIPTION	QTY
	a	1532627	Engine Assembly	1
	b	1607649	Engine Assembly	1
1		. . . . .	Turbocharger	1
1		1597833	Turbocharger Kit	1
2		1513337	Stud	1
3		1513338	Nut	4
4		1517238	Gasket	1
4		1597142	Gasket (Optional)	1
		1596650	Gasket Set (Upper Engine) (Includes Item 4)	1

FOOTNOTES:
a ⇒ S/N A214E02180C
b S/N A214E02181C ⇒

RADIATOR PLUMBING (Figure 2-40)
TIER II ENGINE
(S/N A214E01951A⇒)

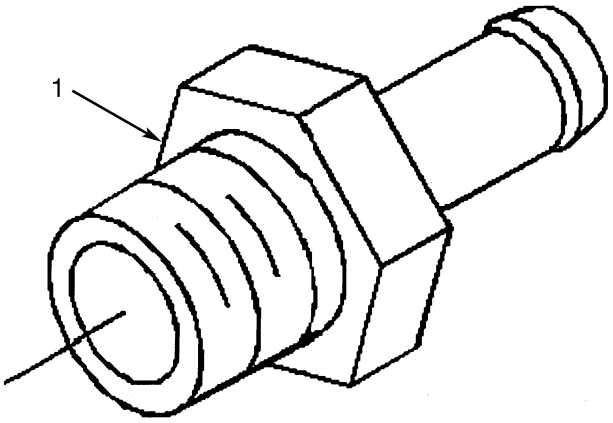

ITEM		PART NO.	DESCRIPTION	QTY
	a	1532627	Engine Assembly	1
	b	1607649	Engine Assembly	1
1		1517250	Fitting	1

FOOTNOTES:
a ⇒ S/N A214E02180C
b S/N A214E02181C ⇒

©2006 HYSTER COMPANY

STARTER MOTOR (Figure 2-41)
TIER II ENGINE
(S/N A214E01951A⇒)

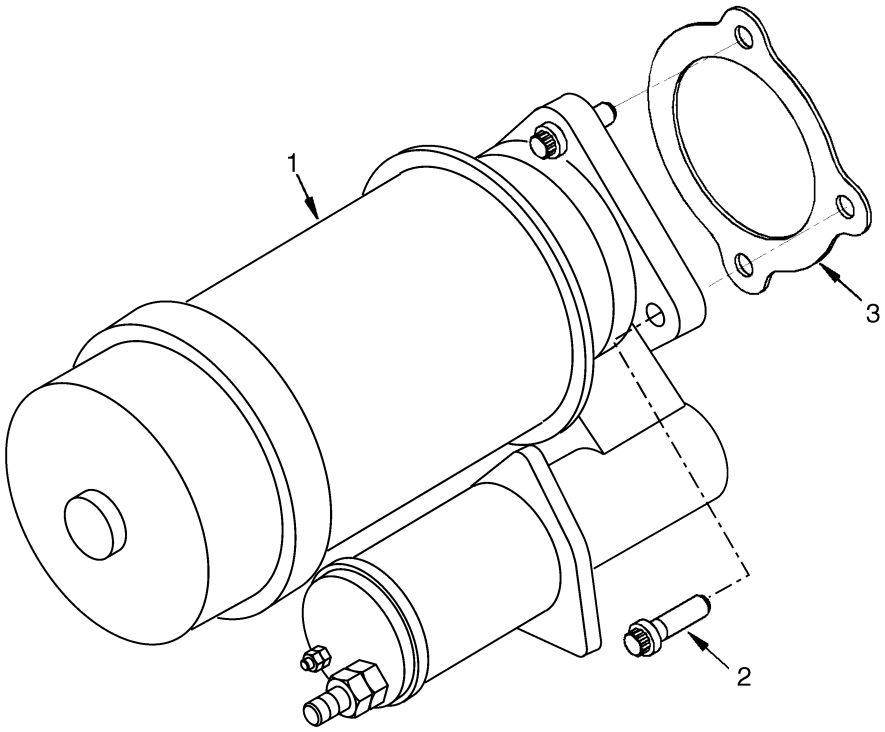

HP091129

ITEM	PART NO.	DESCRIPTION	QTY
a	1532627	Engine Assembly	1
b	1607649	Engine Assembly	1
1	1551462	Starter Motor	1
2	1584936	Capscrew	2
3	1584935	Spacer	1

FOOTNOTES:
a ⇒ S/N A214E02180C
b S/N A214E02181C ⇒

FAN PILOT SPACER (Figure 2-42)
TIER II ENGINE
(S/N A214E01951A⇒)

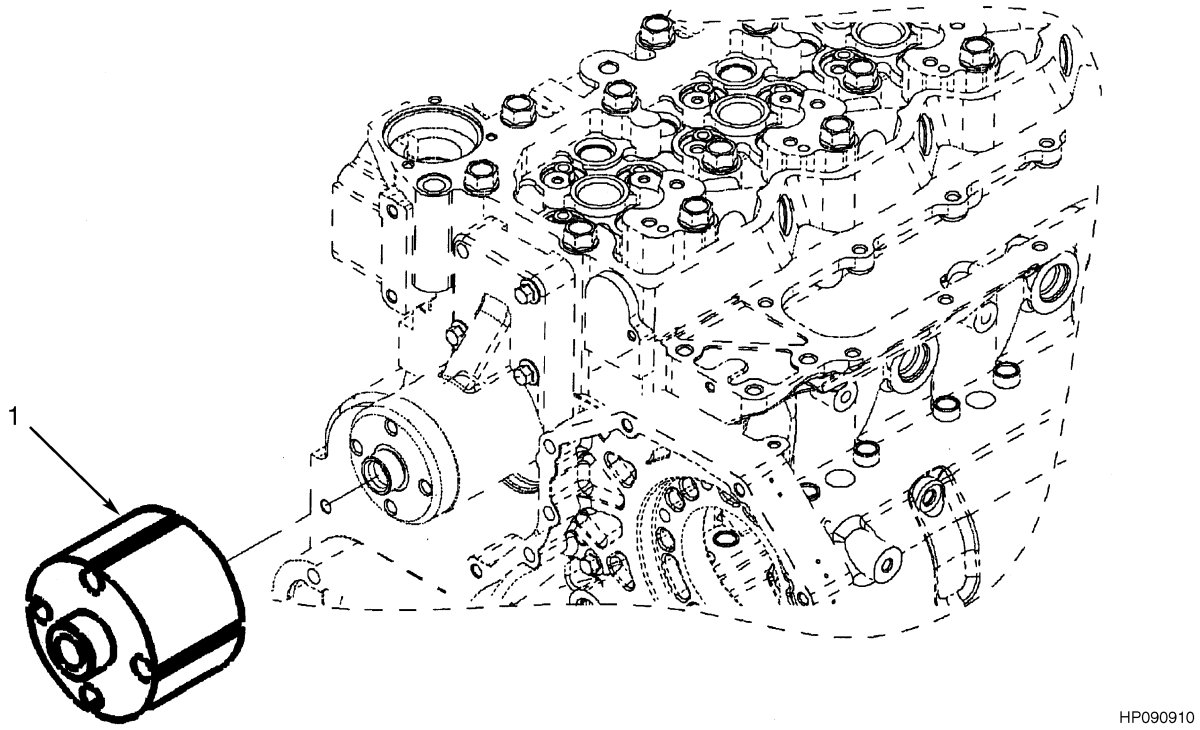

ITEM		PART NO.	DESCRIPTION	QTY
	a	1532627	Engine Assembly	1
	b	1607649	Engine Assembly	1
1		1512287	Spacer (Fan Pilot)	1

FOOTNOTES:
a ⇒ S/N A214E02180C
b S/N A214E02181C ⇒

©2006 HYSTER COMPANY

EXHAUST MANIFOLD (Figure 2-43)
TIER II ENGINE
(S/N A214E01951A⇒)

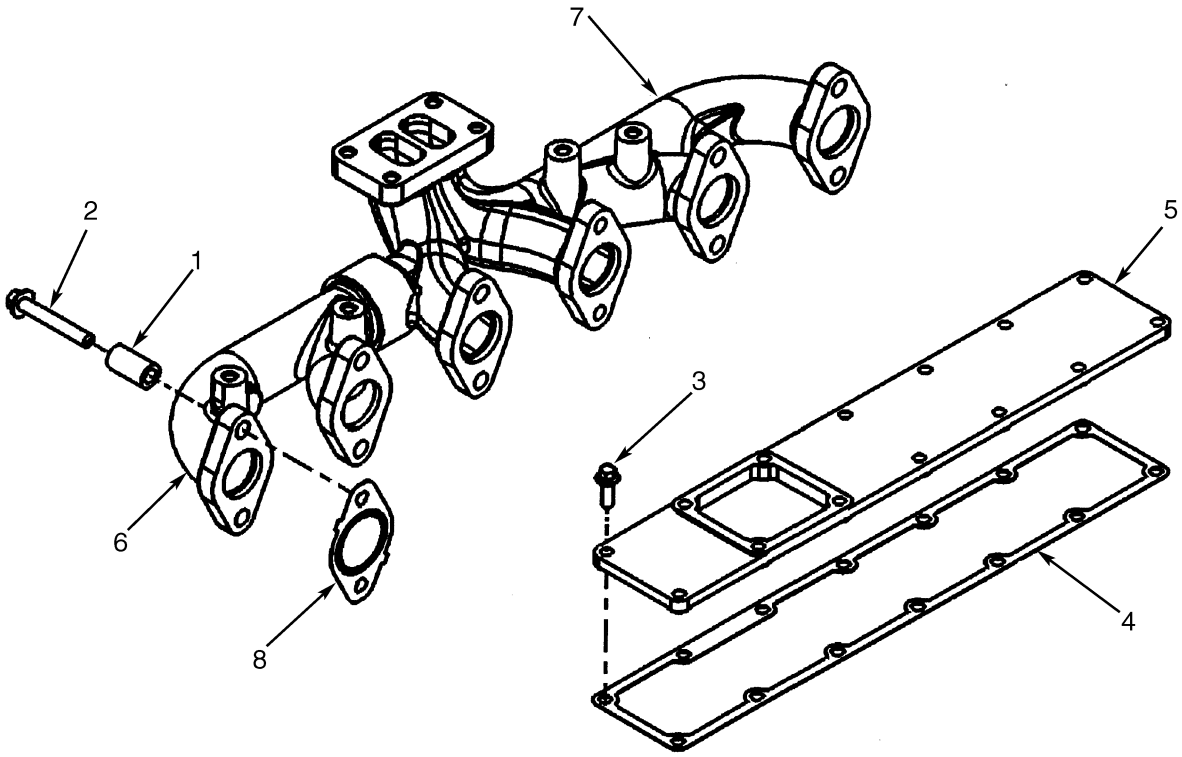

ITEM		PART NO.	DESCRIPTION	QTY
	a	1532627	Engine Assembly	1
	b	1607649	Engine Assembly	1
1		1517256	Spacer	12
2		1517257	Capscrew	12
3		1512295	Capscrew	3
4		1512300	Gasket	1
5		1521949	Cover	1
6		1597821	Exhaust Manifold	1
7		1596649	Exhaust Manifold	1
8		1553965	Gasket	6
		1596650	Gasket Set (Upper Engine) (Includes Item 4)	1

FOOTNOTES:
a ⇒ S/N A214E02180C
b S/N A214E02181C ⇒

TORQUE CONVERTER OIL COOLER (Figure 2-44)

TIER II ENGINE

(S/N A214E01951A⇒)

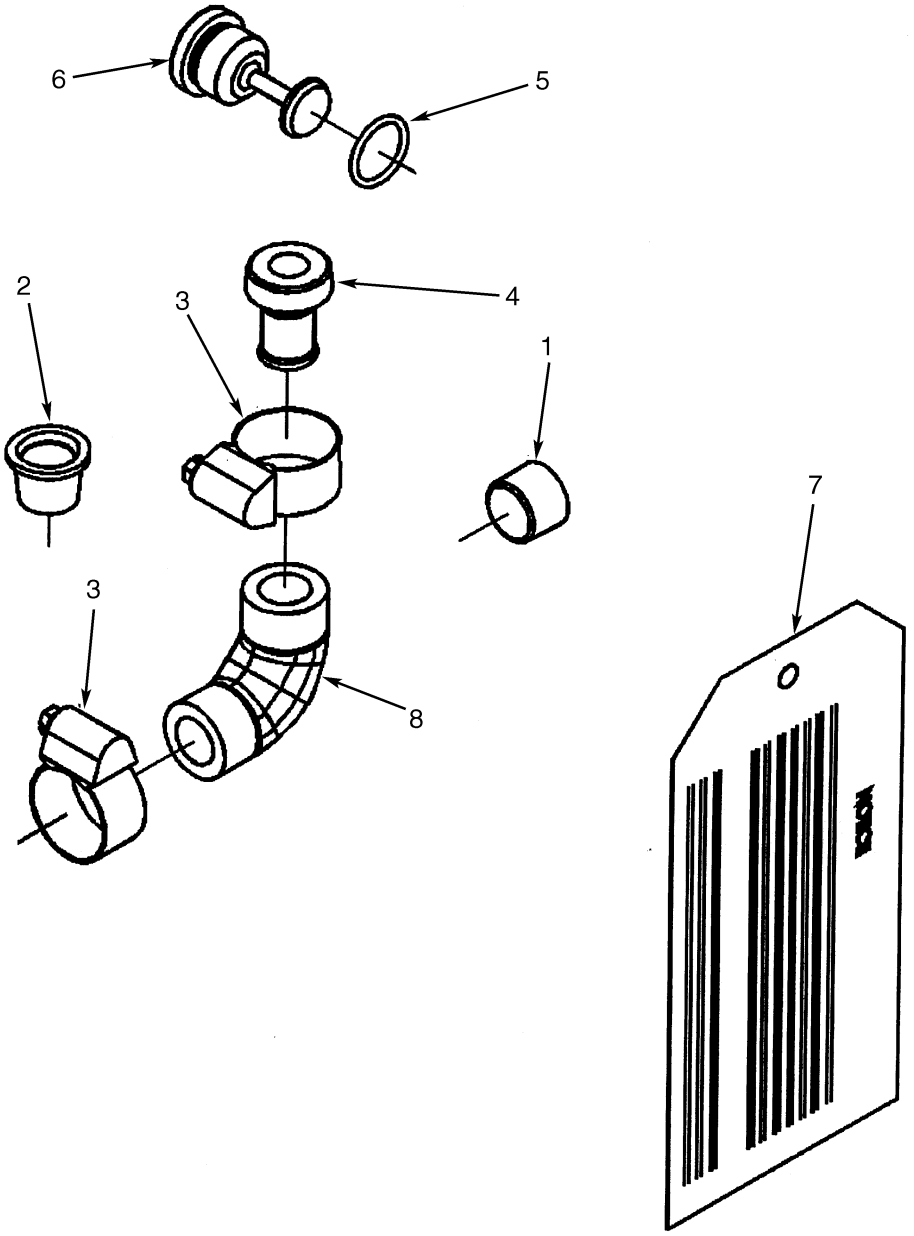

HP090912

ITEM		PART NO.	DESCRIPTION	QTY
	a	1532627	Engine Assembly	1
	b	1607649	Engine Assembly	1
1		1511952	Plug	1
2		1521954	Cover	1
3		1521955	Clamp	1
4		1521956	Coupling	2
5		1517262	O-Ring	1
6		1521957	Plug	1

©2006 HYSTER COMPANY

TORQUE CONVERTER OIL COOLER
TIER II ENGINE
(S/N A214E01951A⇒)

ITEM	PART NO.	DESCRIPTION	QTY
7	. . . . .	Tag	1
8	1521958	Hose	1

FOOTNOTES:
a ⇒ S/N A214E02180C
b S/N A214E02181C ⇒

TURBOCHARGER PLUMBING (Figure 2-45)
TIER II ENGINE
(S/N A214E01951A⇒)

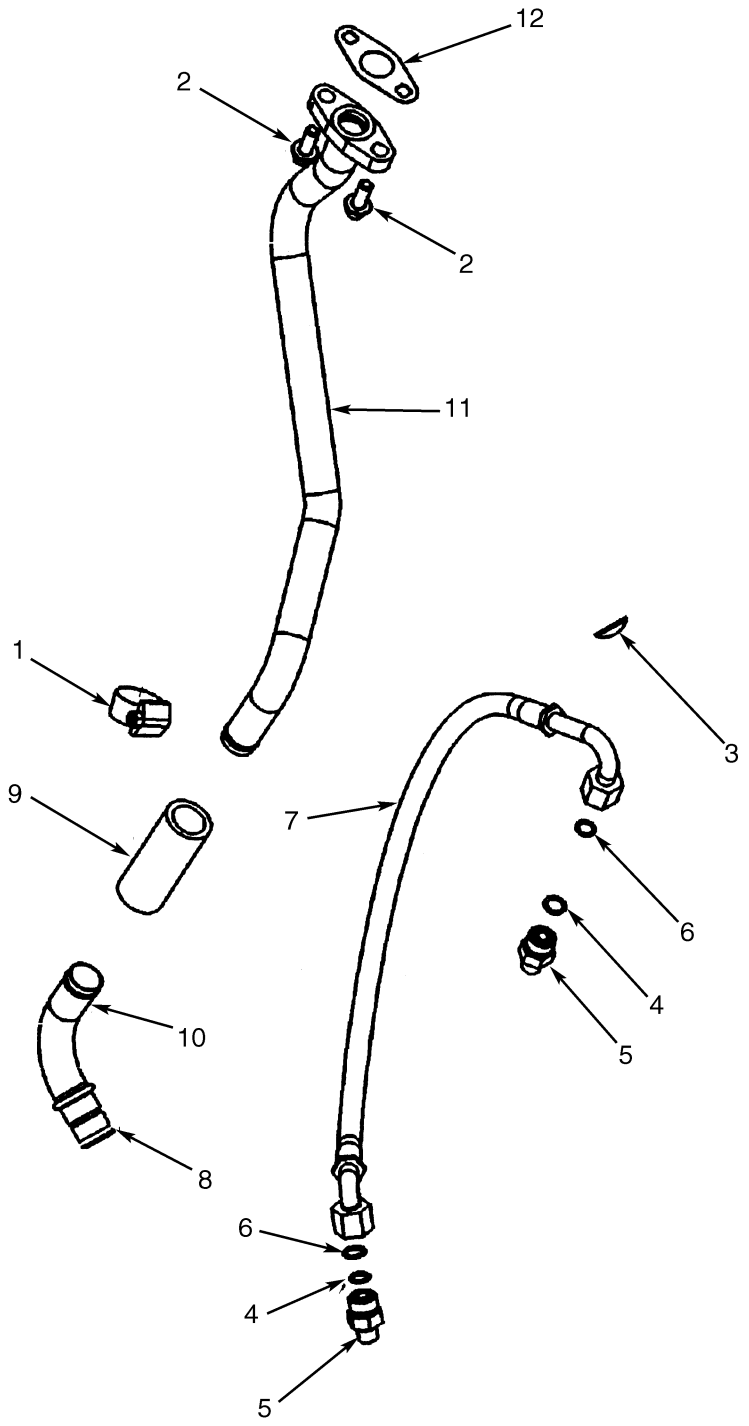

ITEM		PART NO.	DESCRIPTION	QTY
	a	1532627	Engine Assembly	1
	b	1607649	Engine Assembly	1
1		1517268	Clamp	2
2		1513769	Capscrew	2

©2006 HYSTER COMPANY

TURBOCHARGER PLUMBING
TIER II ENGINE
(S/N A214E01951A⇒)

ITEM	PART NO.	DESCRIPTION	QTY
3	1514339	Expansion Plug	1
4	1517069	Seal	2
5	1521960	Connector Assembly	1
6	1513430	Seal	1
7	1521961	Hose	1
8	1517270	Seal	1
9	1517269	Hose	1
10	1521962	Tube	1
11	1521963	Connection	1
12	1514565	Gasket (Oil Drain)	1
	1596650	Gasket Set (Upper Engine) (Includes Items 6, 8, 12)	1

FOOTNOTES:
a ⇒ S/N A214E02180C
b S/N A214E02181C ⇒

©2006 HYSTER COMPANY

VALVE COVER (Figure 2-46)
TIER II ENGINE
(S/N A214E01951A⇒)

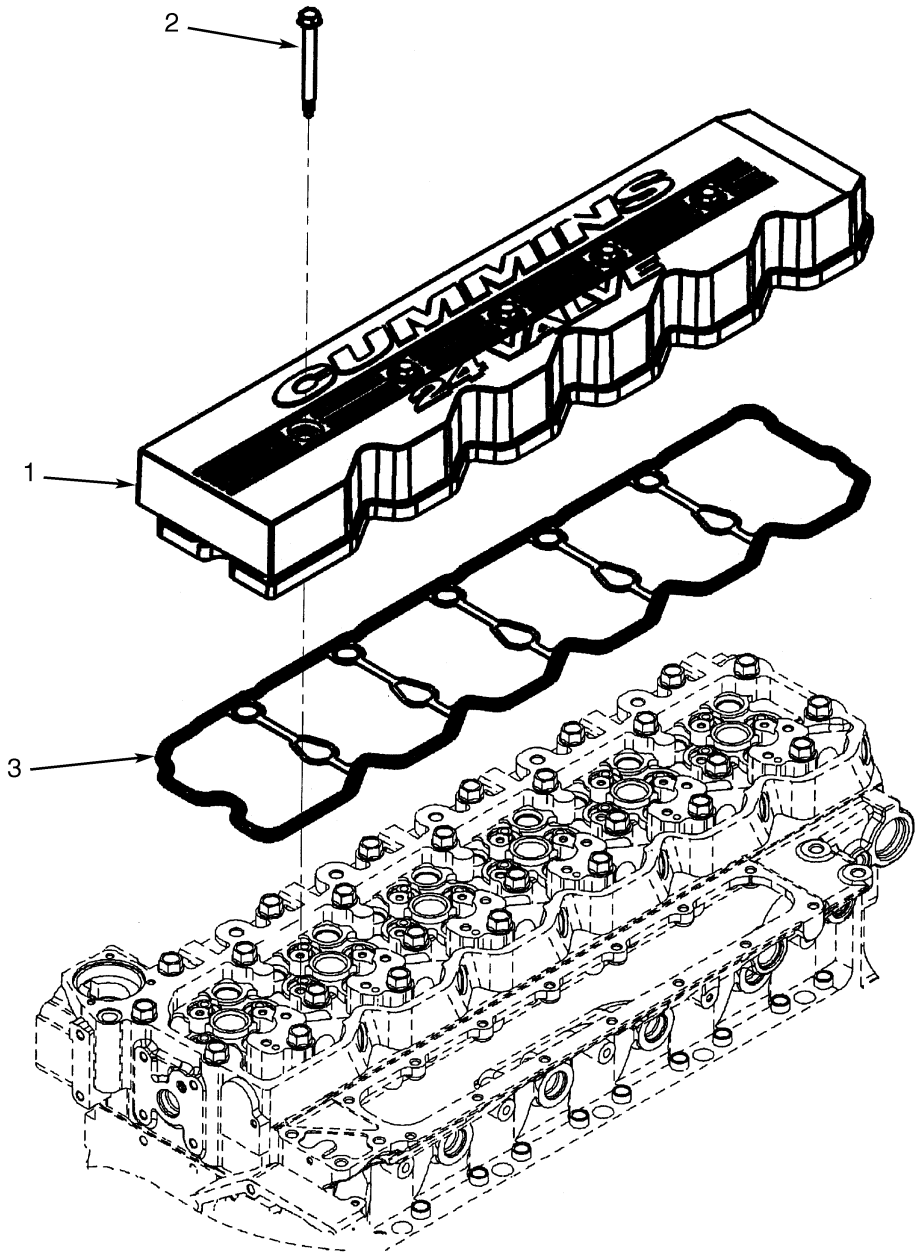

HP090914

ITEM		PART NO.	DESCRIPTION	QTY
	a	1532627	Engine Assembly	1
	b	1607649	Engine Assembly	1
1		1521965	Cover	1
2		1521966	Capscrew	5

©2006 HYSTER COMPANY

VALVE COVER
TIER II ENGINE
(S/N A214E01951A⇒)

ITEM	PART NO.	DESCRIPTION	QTY
3	1521967	Gasket	1
	1596650	Gasket Set (Upper Engine) (Includes Items 2-3)	1

FOOTNOTES:
a ⇒ S/N A214E02180C
b S/N A214E02181C ⇒

©2006 HYSTER COMPANY

WATER INLET CONNECTION (Figure 2-47)
TIER II ENGINE
(S/N A214E01951A⇒)

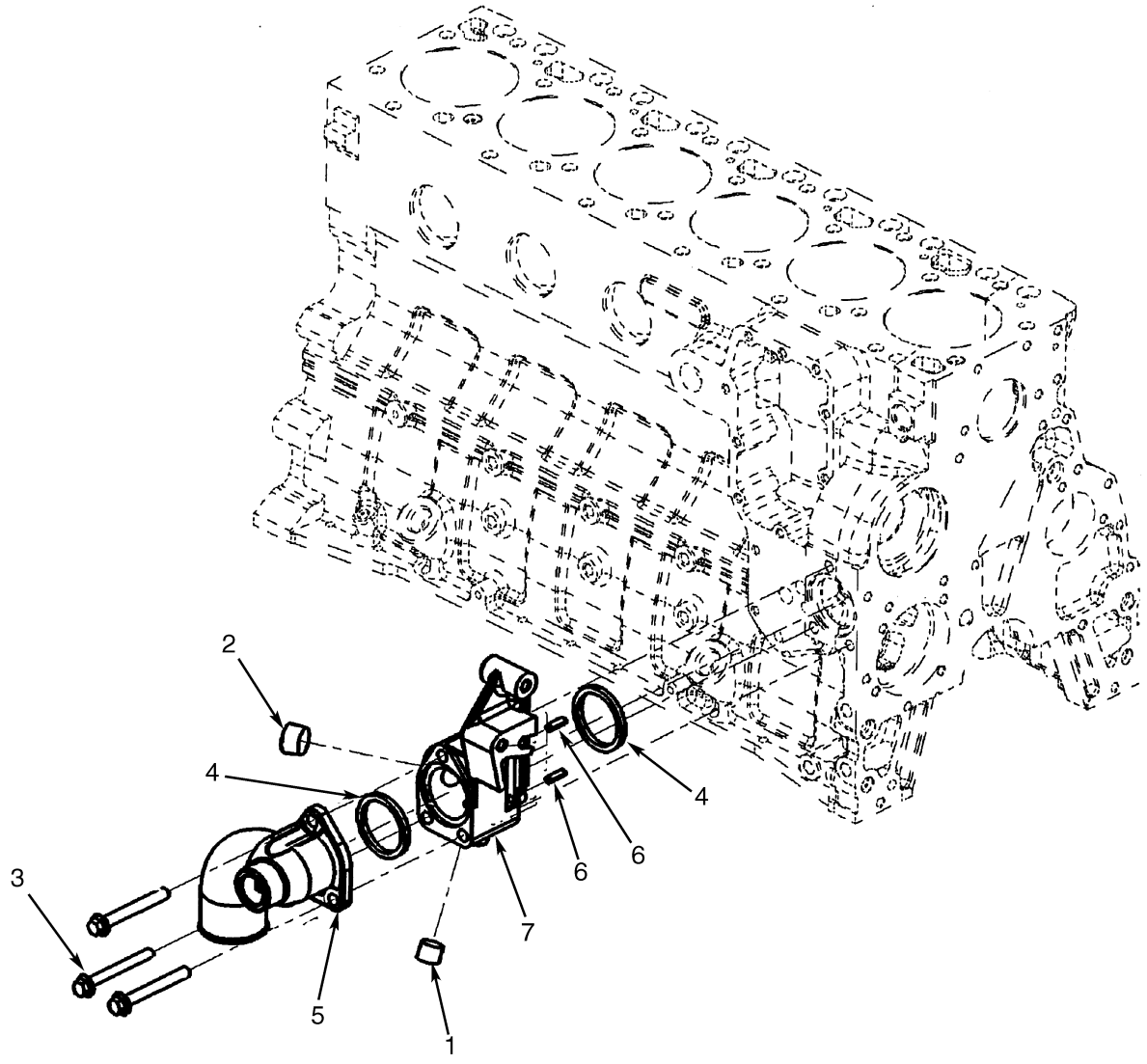

HP090915

ITEM		PART NO.	DESCRIPTION	QTY
	a	1532627	Engine Assembly	1
	b	1607649	Engine Assembly	1
1		1511952	Plug	1
2		1512292	Plug	1
3		1521938	Capscrew	3
4		1512305	O-Ring	2
5		1521969	Connection	1
6		1521971	Roll Pin	2
7		1521970	Connection	1

FOOTNOTES:
a ⇒ S/N A214E02180C
b S/N A214E02181C ⇒

©2006 HYSTER COMPANY

WATER OUTLET CONNECTION (Figure 2-48)
TIER II ENGINE
(S/N A214E01951A⇒)

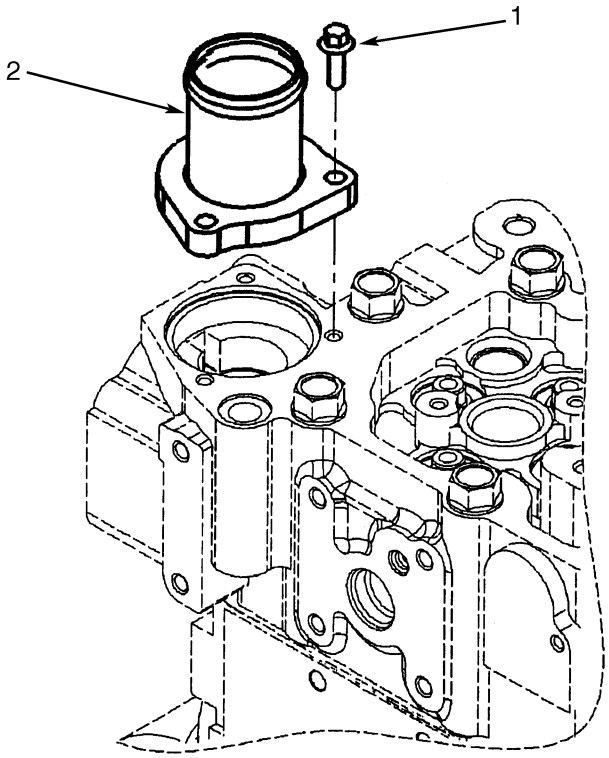

HP090916

ITEM		PART NO.	DESCRIPTION	QTY
	a	1532627	Engine Assembly	1
	b	1607649	Engine Assembly	1
1		1513792	Capscrew	3
2		1521973	Connection	1

FOOTNOTES:
a ⇒ S/N A214E02180C
b S/N A214E02181C ⇒

WATER PUMP (Figure 2-49)
TIER II ENGINE
(S/N A214E01951A⇒)

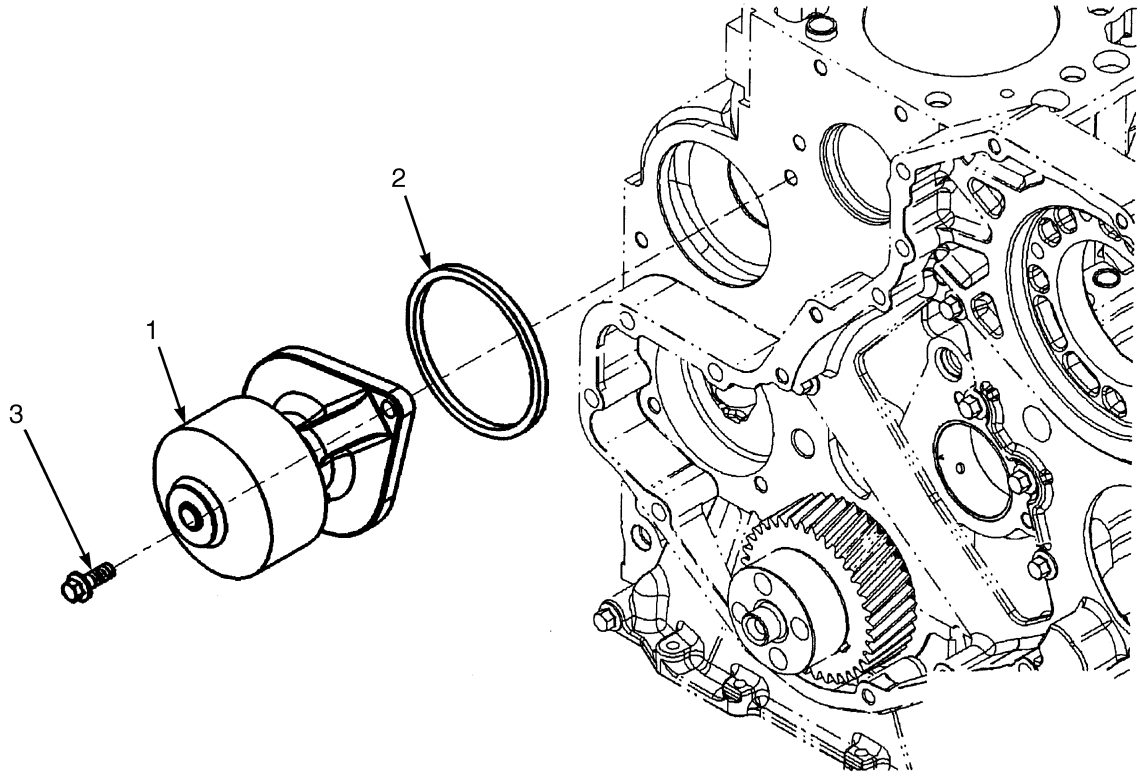

HP090917

ITEM		PART NO.	DESCRIPTION	QTY
	a	1532627	Engine Assembly	1
	b	1607649	Engine Assembly	1
1		1521975	Water Pump Kit	1
2		1512322	Seal Ring	1
3		1512323	Capscrew	2

FOOTNOTES:
a ⇒ S/N A214E02180C
b S/N A214E02181C ⇒

©2006 HYSTER COMPANY

TENSIONER (Figure 2-50)
TIER II ENGINE
(S/N A214E01951A⇒)

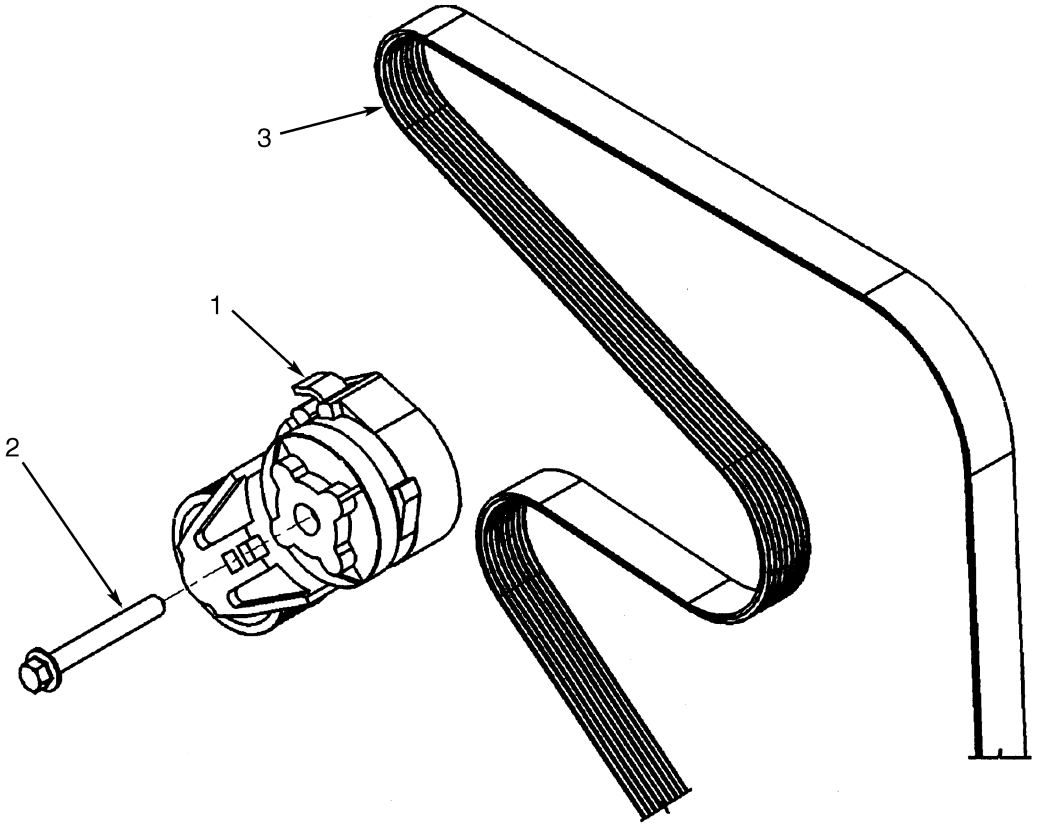

ITEM		PART NO.	DESCRIPTION	QTY
	a	1532627	Engine Assembly	1
	b	1607649	Engine Assembly	1
1		1517295	Tensioner	1
2		1514360	Capscrew	1
3		1584938	V-Belt (For Cooling Fan and Water Pump)	1

FOOTNOTES:
a ⇒ S/N A214E02180C
b S/N A214E02181C ⇒

WIRING ACCESSORIES (Figure 2-51)
TIER II ENGINE
(S/N A214E01951A⇒)

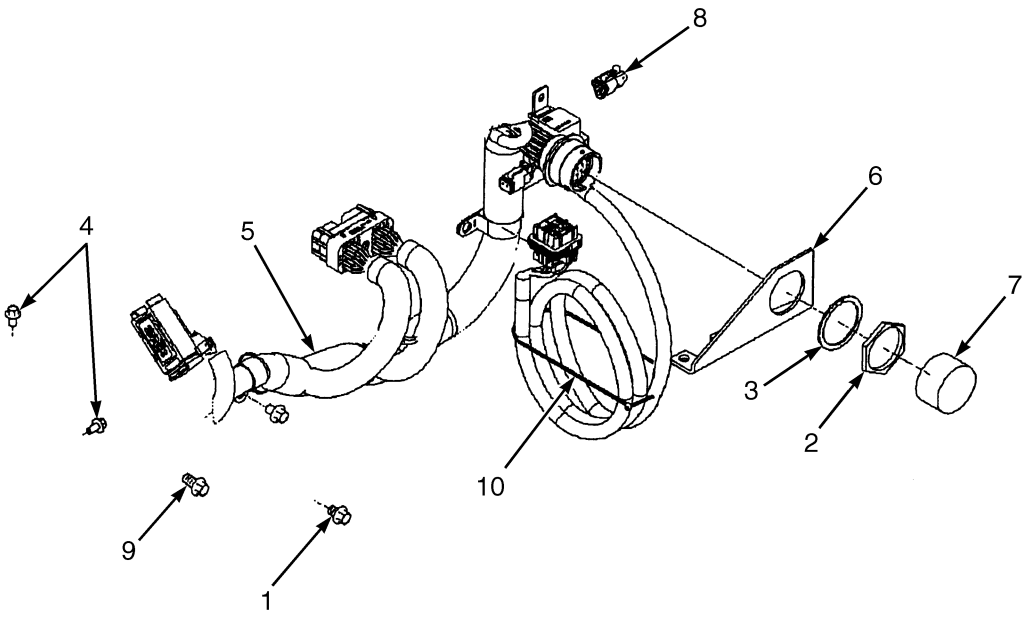

ITEM		PART NO.	DESCRIPTION	QTY
	a	1532627	Engine Assembly	1
	b	1607649	Engine Assembly	1
1		1517266	Capscrew	5
2		1515694	Nut	1
3		1517299	Lockwasher	1
4		1512097	Capscrew	3
5		1553991	Wire Harness	1
6		1521980	Bracket	1
7		1521981	Cover (Protective)	1
8		1521982	Cover (Protective)	1
9		1513789	Capscrew	2
10		1584939	Tie Wrap	1

FOOTNOTES:
a ⇒ S/N A214E02180C
b S/N A214E02181C ⇒

©2006 HYSTER COMPANY

NOTES

AIR FILTER (Figure 2-52)
TIER I ENGINE

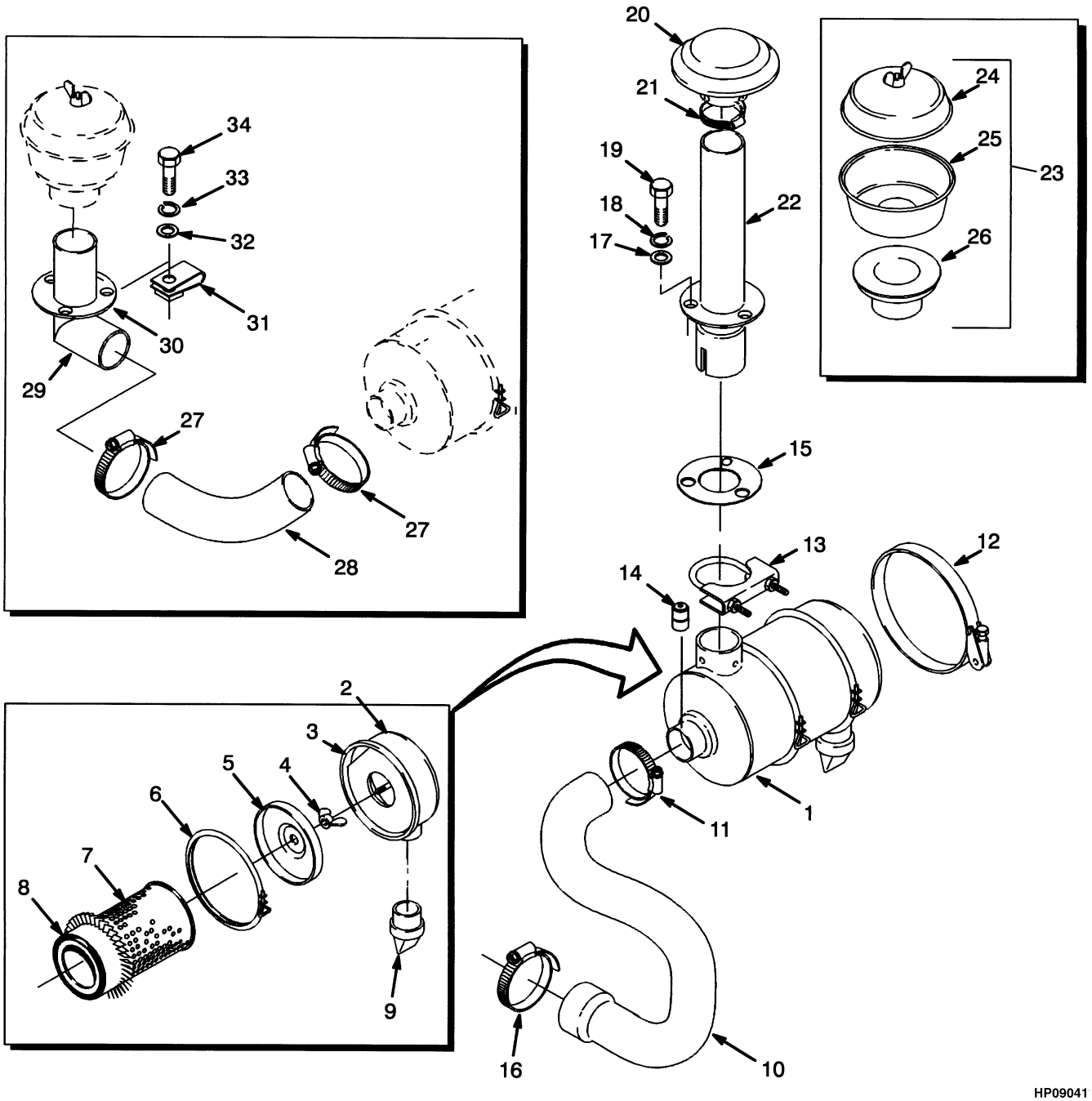

HP09041

©2006 HYSTER COMPANY

AIR FILTER
TIER I ENGINE

KEY:
A: Empty Container Handler
B: Fork Lift Truck

ITEM		PART NO.	DESCRIPTION	QTY A	QTY B
1		1373556	Air Filter (☞ Figure 2-55)	1	1
2		214339	Cap	1	1
3		151554	O-Ring	1	1
4		252793	Nut	1	1
5		168371	Baffle	1	1
6		151551	Clamp	1	1
7		1373551	Element	1	1
8		1373553	Element	1	1
9		141276	Valve	1	1
10		1373285	Hose	..	1
10		1373448	Hose	1	..
11	**a**	1382393	Clamp	1	1
11	**b**	1507395	Clamp	1	1
12		1373446	Clamp	1	1
13		1373437	Clamp	1	1
14		156478	Restriction Indicator	1	1
15		1301535	Shim	..	1
16	**a**	1390722	Clamp	1	1
16	**b**	1512814	Clamp	1	1
17		320159	Washer	..	3
18		292682	Lockwasher	..	3
19		287854	Capscrew	..	3
20		145824	Hood (Without Pre Cleaner)	1	1
21		227220	Clamp	..	1
22		1373292	Stack	..	1
23		196959	Pre-Cleaner (Bowl) (☞ Figure 2-56)	1	1
24		147983	Cover	1	1
25		147985	Body	1	1
26		214336	Sleeve	1	1
27		227221	Clamp	2	..
28		1373566	Hose	1	..
29		1373563	Adapter	1	..
30		1384676	Ring	1	..
31		1385535	Nut	3	..
32		320158	Washer	3	..
33		292681	Lockwasher	3	..
34		136749	Capscrew	3	..

FOOTNOTES:
a ⇒ S/N A214E-1807
b S/N A214E-1808 ⇒

©2006 HYSTER COMPANY

AIR FILTER (Figure 2-53)
FORK LIFT TRUCK
TIER II ENGINE
(S/N A214E-01843Z⇒)

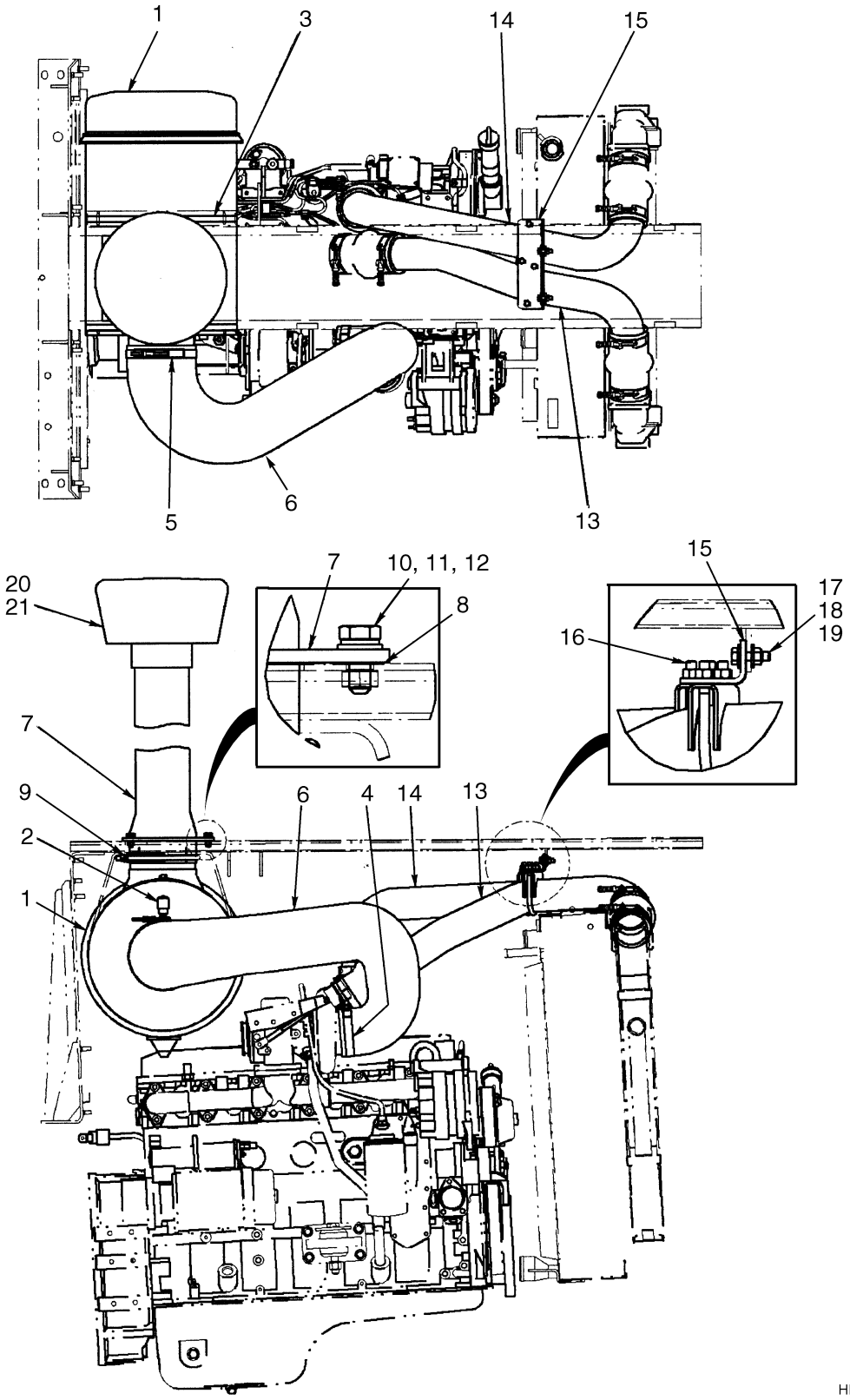

HP090867

©2006 HYSTER COMPANY

AIR FILTER
FORK LIFT TRUCK
TIER II ENGINE
(S/N A214E-01843Z⇒)

ITEM	PART NO.	DESCRIPTION	QTY
1	1373556	Air Filter (☞ Figure 2-55)	1
2	156478	Restriction Indicator	1
3	1373446	Clamp	2
4	1512814	Clamp	1
5	1507395	Clamp	1
6	1373285	Hose	1
7	1373292	Stack	1
8	1301535	Shim	1
9	1373437	Clamp	1
10	287854	Capscrew	3
11	320159	Washer	3
12	292682	Lockwasher	3
13	1507260	Tube	1
14	1507253	Tube	1
15	1511704	Bracket	1
16	321113	Clamp	2
17	320158	Washer	4
18	302400	Locknut	2
19	176640	Capscrew	2
20	145824	Hood	1
21	196959	Pre-Cleaner (Bowl) (☞ Figure 2-56)	1

©2006 HYSTER COMPANY

AIR FILTER (Figure 2-54)
EMPTY CONTAINER HANDLER
TIER II ENGINE
(S/N A214E-01849Z⇒)

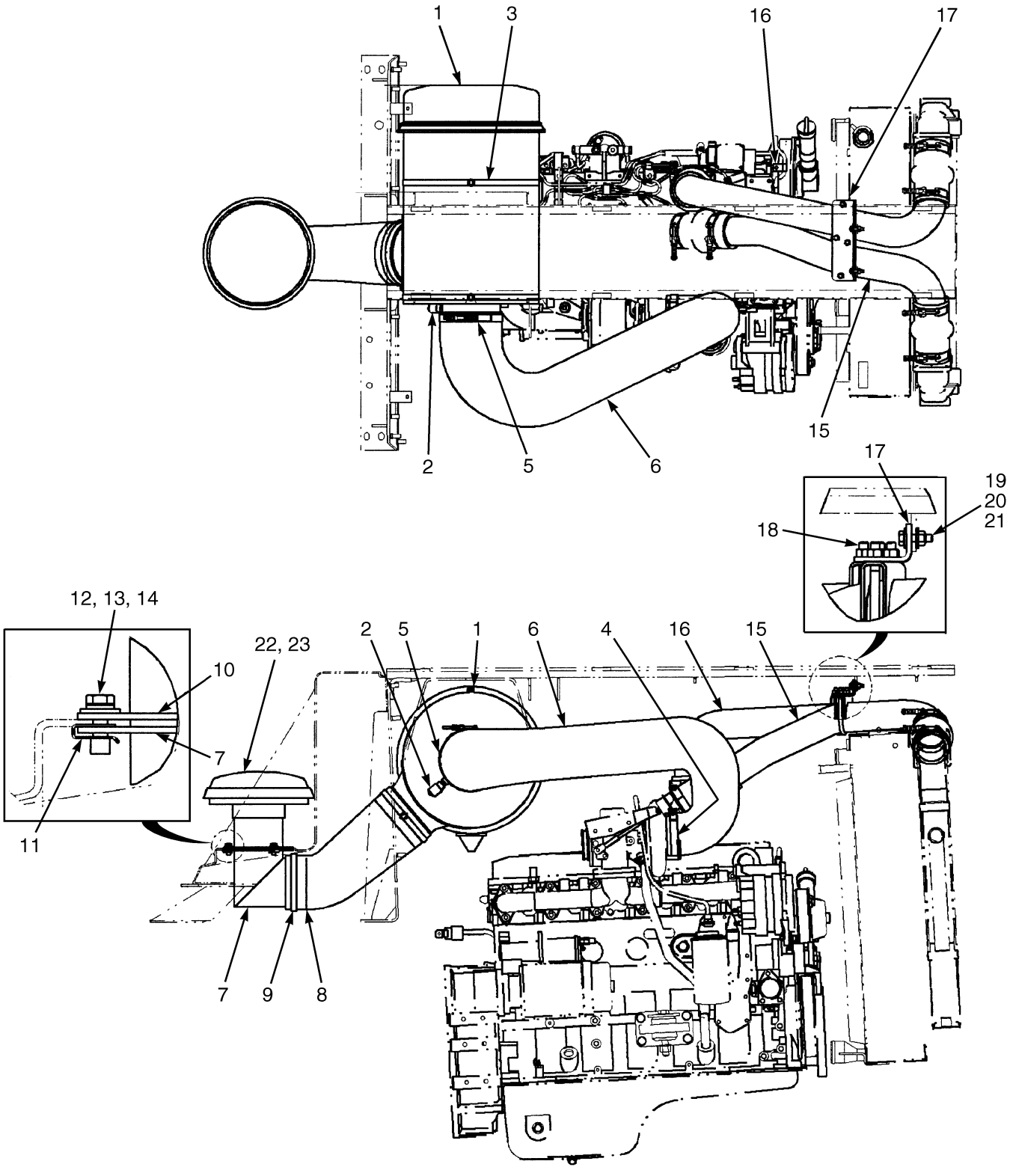

HP090864

©2006 HYSTER COMPANY

AIR FILTER
EMPTY CONTAINER HANDLER
TIER II ENGINE
(S/N A214E-01849Z⇒)

ITEM	PART NO.	DESCRIPTION	QTY
1	1373556	Air Filter (☞ Figure 2-55)	1
2	156478	Restriction Indicator	1
3	1373446	Clamp	2
4	1512814	Clamp	1
5	1507395	Clamp	1
6	1373448	Hose	1
7	1373563	Adapter	1
8	1373566	Hose	1
9	227221	Clamp	2
10	1384676	Ring	1
11	1385535	Nut	3
12	136749	Capscrew	3
13	292681	Lockwasher	3
14	320158	Washer	3
15	1507260	Tube	1
16	1507253	Tube	1
17	1511704	Bracket	1
18	321113	Clamp	2
19	320158	Washer	4
20	302400	Locknut	2
21	176640	Capscrew	2
22	145824	Hood	1
23	196959	Pre-Cleaner (Bowl) (☞ Figure 2-56)	1

©2006 HYSTER COMPANY

AIR FILTER ASSEMBLY (Figure 2-55)

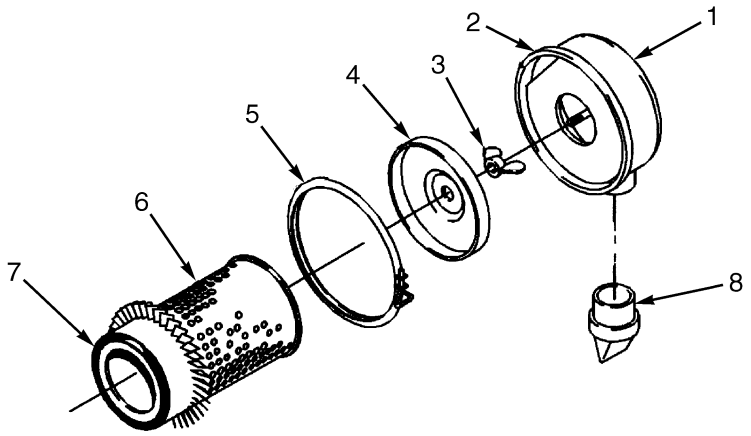

HP090865

ITEM	PART NO.	DESCRIPTION	QTY
	1373556	Air Filter	1
1	214339	Cap	1
2	151554	O-Ring	1
3	252793	Nut	1
4	168371	Baffle	1
5	151551	Clamp	1
6	1373552	Element (Primary)	1
7	1373553	Element (Safety)	1
8	141276	Valve	1

©2006 HYSTER COMPANY

PRE-CLEANER ASSEMBLY (Figure 2-56)

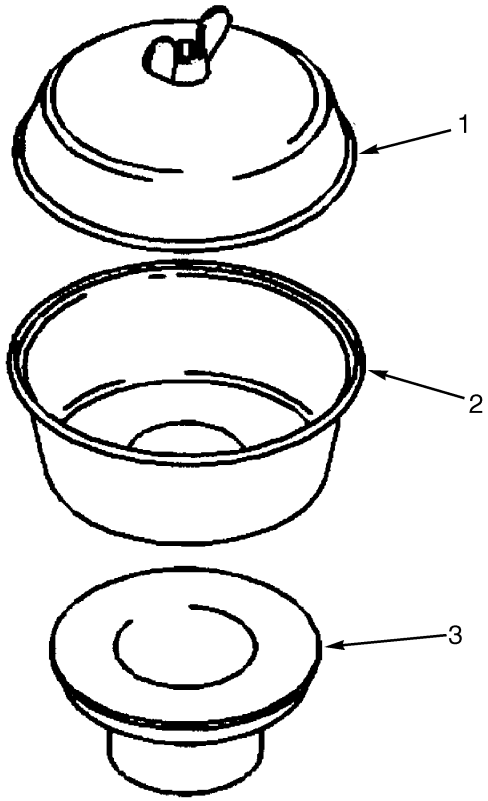

ITEM	PART NO.	DESCRIPTION	QTY
	196959	Pre-Cleaner (Bowl)	1
1	147983	Cover	1
2	147985	Body	1
3	214336	Sleeve	1

COOLING (Figure 2-57)
TIER I ENGINE

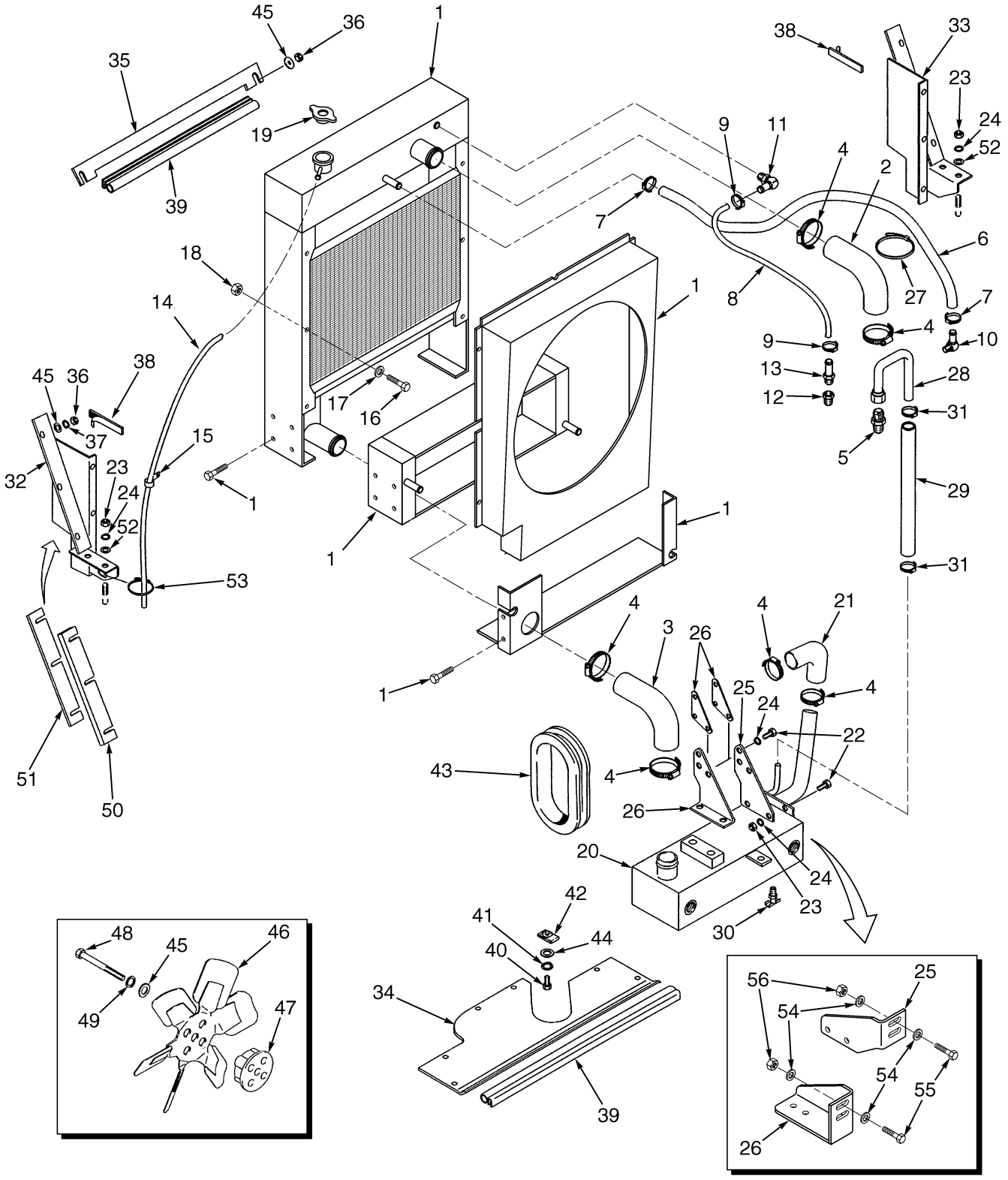

©2006 HYSTER COMPANY

COOLING
TIER I ENGINE

KEY:
A: Empty Container Handler
B: Fork Lift Truck

ITEM		PART NO.	DESCRIPTION	QTY A	QTY B
1		1384681	Radiator	1	1
1		1393166	Oil cooler	1	1
1		1393157	Shroud	1	1
1		1393158	Bolt	16	16
1		1393159	Frame (Bottom)	1	1
2		1373452	Hose	1	1
3		1385561	Hose	1	1
4		112989	Clamp (Hose)	4	4
5		14682	Fitting	1	1
6		127238	Hose	1	1
7		130845	Clamp	4	4
8		323549	Hose	1	1
9		168718	Clamp (Worm Screw)	2	2
10		201800	Fitting	1	1
11		17215	Fitting	1	1
12		69815	Fitting	1	1
13		17217	Fitting	1	1
14		369801	Hose	1	1
15		118807	Clamp	3	2
16		287854	Capscrew	6	6
17		320159	Washer	8	8
18		136692	Nut	8	8
19		119055	Cap	1	1
20		1384682	Oil Cooler	1	1
21		1385560	Hose	1	1
22	**d**	132860	Capscrew	10	10
22	**e**	132860	Capscrew	4	4
23		216877	Nut	2	6
24	**d**	292683	Lockwasher	10	14
24	**e**	292683	Lockwasher	4	4
25	**d**	1385552	Bracket (LH)	1	1
25	**ae**	1480334	Bracket (LH)	1	1
26	**b**	1384695	Bracket (RH)	1	1
26	**c**	1462536	Bracket (RH)	1	1
26	**d**	1462572	Spacer	2	2
26	**e**	1480333	Bracket	1	1
27		273775	Clamp (Strap)	1	1
28		1384536	Tube	1	1
29		287136	Hose	1	1
30		12815	Valve (Drain)	1	1
31		119236	Clamp	2	2
32		1393895	Bracket (LH)	1	1
32		1453780	Bracket (LH)	1	1
33		1393894	Bracket (RH)	1	1
33		1453781	Bracket (RH)	1	1
34		1391900	Plate	1	..

©2006 HYSTER COMPANY

COOLING
TIER I ENGINE

ITEM	PART NO.	DESCRIPTION	QTY A	QTY B
35	1452941	Plate	..	1
35	1453734	Plate	1	..
36	136692	Nut	6	..
37	320159	Washer	6	..
38	1384691	Foam Tape	4	2
39	300088	Seal (Door)	AR	AR
40	136749	Capscrew	6	..
41	320157	Washer	6	..
42	1384661	Nut	6	..
43	1382850	Edge Trim	2	..
44	292681	Lockwasher	6	..
45	292682	Lockwasher	6	..
46	1367342	Fan	1	1
46	1385551	Fan	..	1
47	1373269	Spacer (Pusher Fan)	..	1
47	1393844	Spacer (Puller Fan)	1	1
48	292517	Capscrew (Pusher Fan)	..	4
48	292524	Capscrew (Puller Fan)	4	4
49	296420	Washer	4	4
50	1453566	Spacer	AR	..
51	1453567	Spacer	AR	..
52	296423	Washer	..	4
53	137852	Strap Clamp	..	1
54	320159	Washer	8	8
55	292515	Capscrew	4	4
56	302401	Locknut	4	4

FOOTNOTES:
a Kit 1480453 includes parts for both brackets
b ⇒ S/N A214E-1615
c S/N A214E-1616⇔S/N A214E-1721
d ⇒ S/N A214E-1721
e S/N A214E-1722 ⇒

©2006 HYSTER COMPANY

NOTES

COOLING (Figure 2-58)
FORK LIFT TRUCK
TIER II ENGINE
(S/N A214E-01843Z⇒)

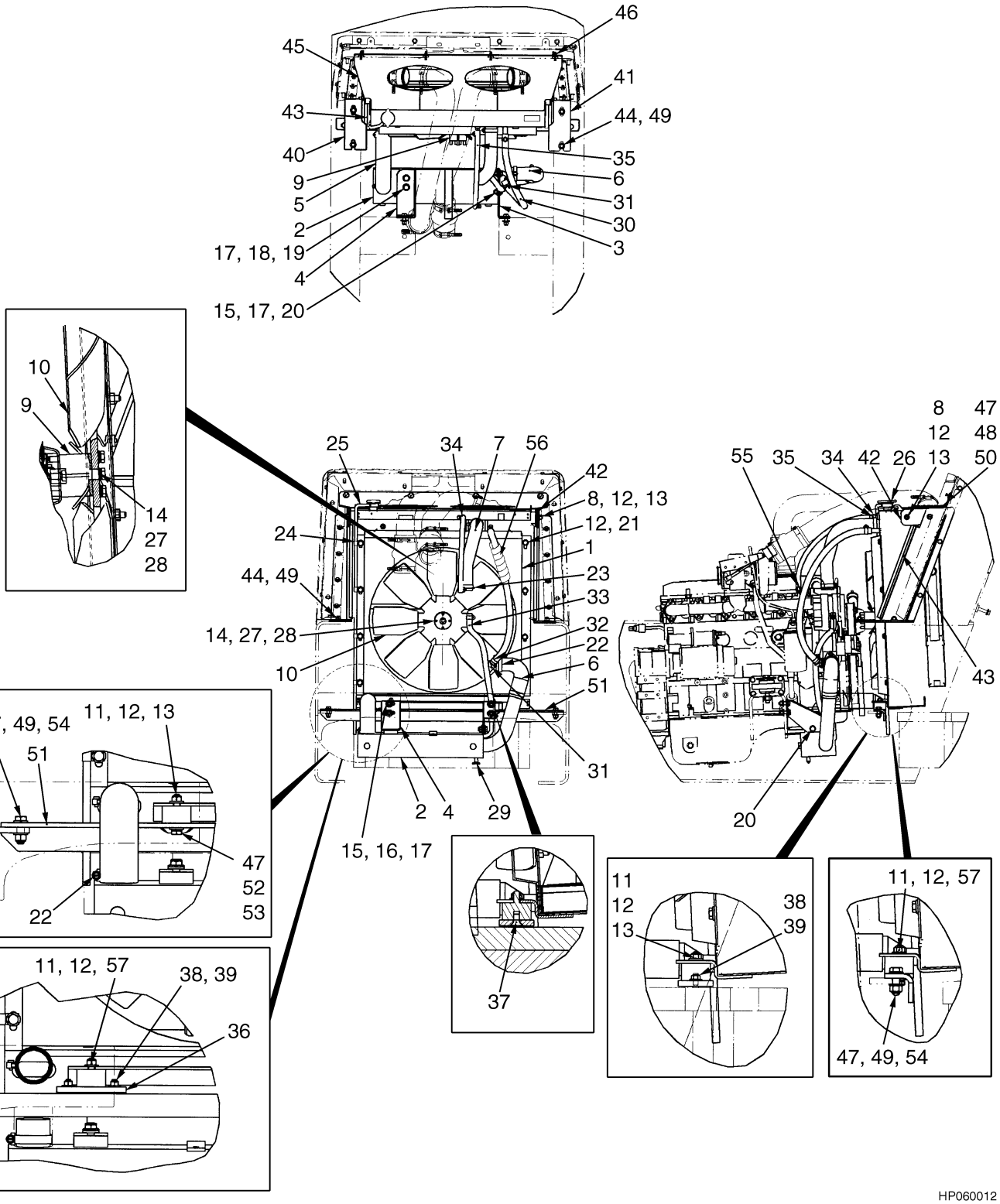

HP060012

©2006 HYSTER COMPANY

COOLING
FORK LIFT TRUCK
TIER II ENGINE
(S/N A214E-01843Z⇒)

ITEM		PART NO.	DESCRIPTION	QTY
1		1504860	Radiator	1
2		1384682	Oil Cooler	1
3		1480334	Bracket	1
4		1480333	Bracket	1
5		1507412	Hose	1
6		1516751	Hose	1
7		1507416	Hose	1
8		1509988	Isolator	1
9		1393844	Spacer	1
10		1510388	Fan (Puller)	1
11		1514238	Isolator	2
12		320160	Washer	12
13		302401	Locknut	4
14		292682	Lockwasher	4
15		302402	Locknut	6
16		292515	Capscrew	4
17		320162	Washer	14
18		292683	Lockwasher	2
19		132860	Capscrew	2
20		292527	Capscrew	2
21		320159	Washer	8
22		112989	Clamp (Hose)	4
23		119236	Clamp	2
24		118807	Clamp	4
25		369801	Hose	1
26		119055	Cap	1
27		296420	Washer	4
28		292524	Capscrew	4
29		12815	Valve (Drain)	1
30		114268	Hose	1
31		16165	Fitting	1
32		130845	Clamp	6
33		154594	Hose	1
34		17352	Fitting	1
35		164289	Hose	1
36	**a**	1514436	Plate	2
37	**a**	296238	Capscrew	2
38	**a**	320158	Washer	4
39	**a**	302400	Locknut	4
40		1516870	Bracket	1
41		1516871	Bracket	1
42		1517485	Plate	2
43		1517563	Trim	2
44		296423	Washer	4
45		1517566	Seal	1
46		1484308	Rivet	4
47		320160	Washer	4
48		302401	Locknut	2
49		302402	Locknut	4

©2006 HYSTER COMPANY

COOLING
FORK LIFT TRUCK
TIER II ENGINE
(S/N A214E-01843Z⇒)

ITEM		PART NO.	DESCRIPTION	QTY
50		136985	Capscrew	2
51	**b**	1510553	Plate	1
52	**b**	292682	Lockwasher	2
53	**b**	292514	Bolt	2
54	**b**	246001	Capscrew	2
55		166857	Clamp	2
56		316596	Sleeve	1
57		1460477	Nut	2

FOOTNOTES:
a H360H
b H400H-H450H

©2006 HYSTER COMPANY

NOTES

COOLING (Figure 2-59)
EMPTY CONTAINER HANDLER
TIER II ENGINE
(S/N A214E-01849Z⇒)

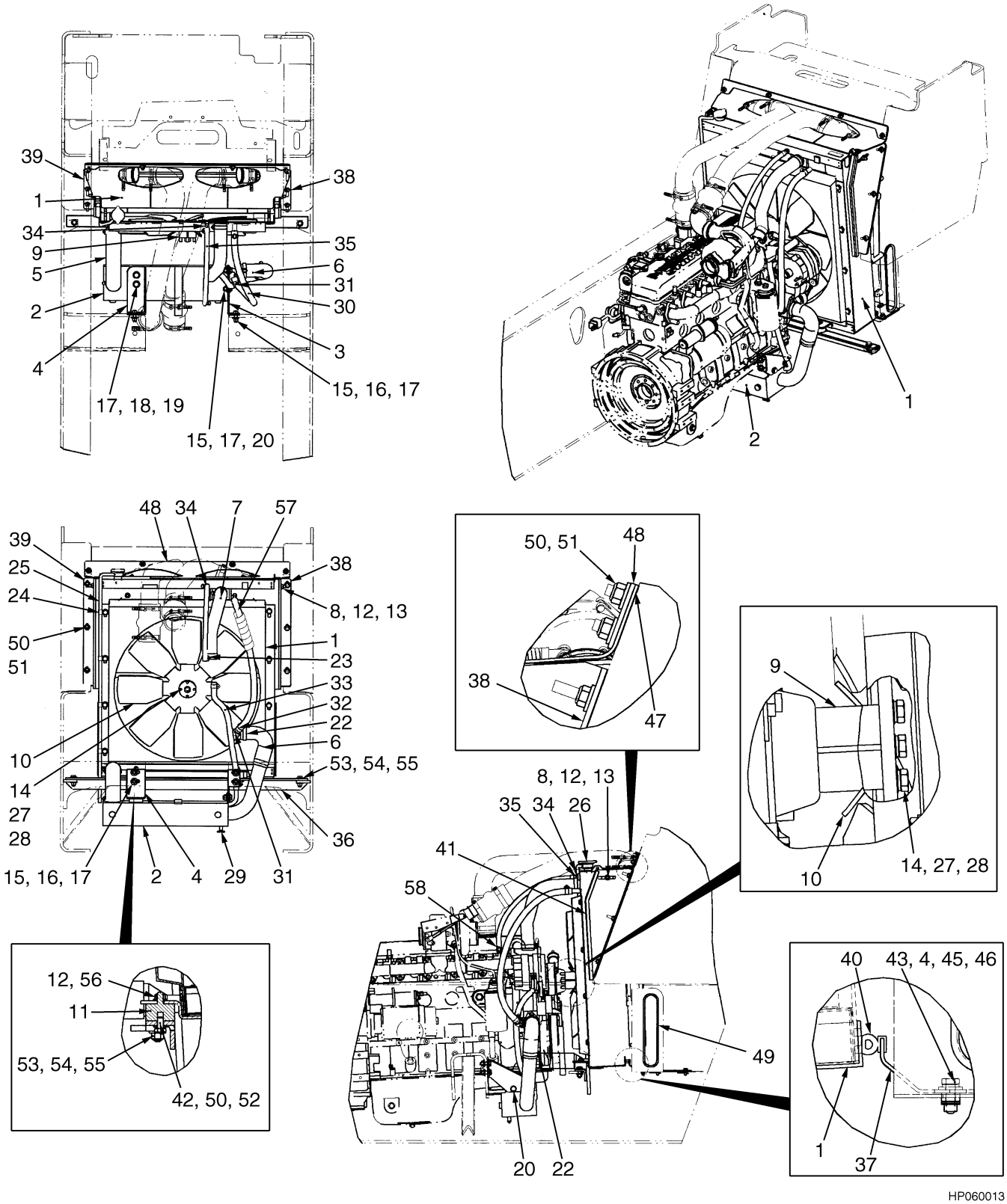

HP060013

©2006 HYSTER COMPANY

COOLING
EMPTY CONTAINER HANDLER
TIER II ENGINE
(S/N A214E-01849Z⇒)

ITEM	PART NO.	DESCRIPTION	QTY
1	1504860	Radiator	1
2	1384682	Oil Cooler (Transmission)	1
3	1480334	Bracket	1
4	1480333	Bracket	1
5	1507412	Hose	1
6	1516751	Hose	1
7	1507416	Hose	1
8	1509988	Isolator	1
9	1393844	Spacer	1
10	1510388	Fan (Puller)	1
11	1514238	Isolator	2
12	320160	Washer	12
13	302401	Locknut	4
14	292682	Lockwasher	4
15	302402	Locknut	6
16	292515	Capscrew	4
17	320162	Washer	14
18	292683	Lockwasher	2
19	132860	Capscrew	2
20	292527	Capscrew	2
21	320159	Washer	8
22	112989	Clamp (Hose)	4
23	119236	Clamp	2
24	118807	Clamp	4
25	369801	Hose	1
26	119055	Cap	1
27	296420	Washer	4
28	292524	Capscrew	4
29	12815	Valve (Drain)	1
30	114268	Hose	1
31	16165	Fitting	1
32	130845	Clamp	6
33	154594	Hose	1
34	17352	Fitting	1
35	164289	Hose	1
36	1510553	Plate	1
37	1512466	Plate	1
38	1508583	Bracket (LH)	1
39	1508584	Bracket (RH)	1
40	1512467	Trim	1
41	1517678	Trim	2
42	292514	Bolt	2
43	1384661	Nut	6
44	320158	Washer	6
45	292681	Lockwasher	6
46	136749	Capscrew	6
47	1517638	Seal	1
48	1517674	Plate	1
49	1517589	Trim	2

©2006 HYSTER COMPANY

COOLING
EMPTY CONTAINER HANDLER
TIER II ENGINE
(S/N A214E-01849Z⇒)

ITEM	PART NO.	DESCRIPTION	QTY
50	320160	Washer	12
51	302401	Locknut	10
52	292682	Lockwasher	2
53	302402	Locknut	2
54	246001	Capscrew	2
55	320162	Washer	4
56	1460477	Nut	2
57	316596	Sleeve	1
58	166857	Clamp	2

©2006 HYSTER COMPANY

NOTES

ENGINE MOUNT (Figure 2-60)

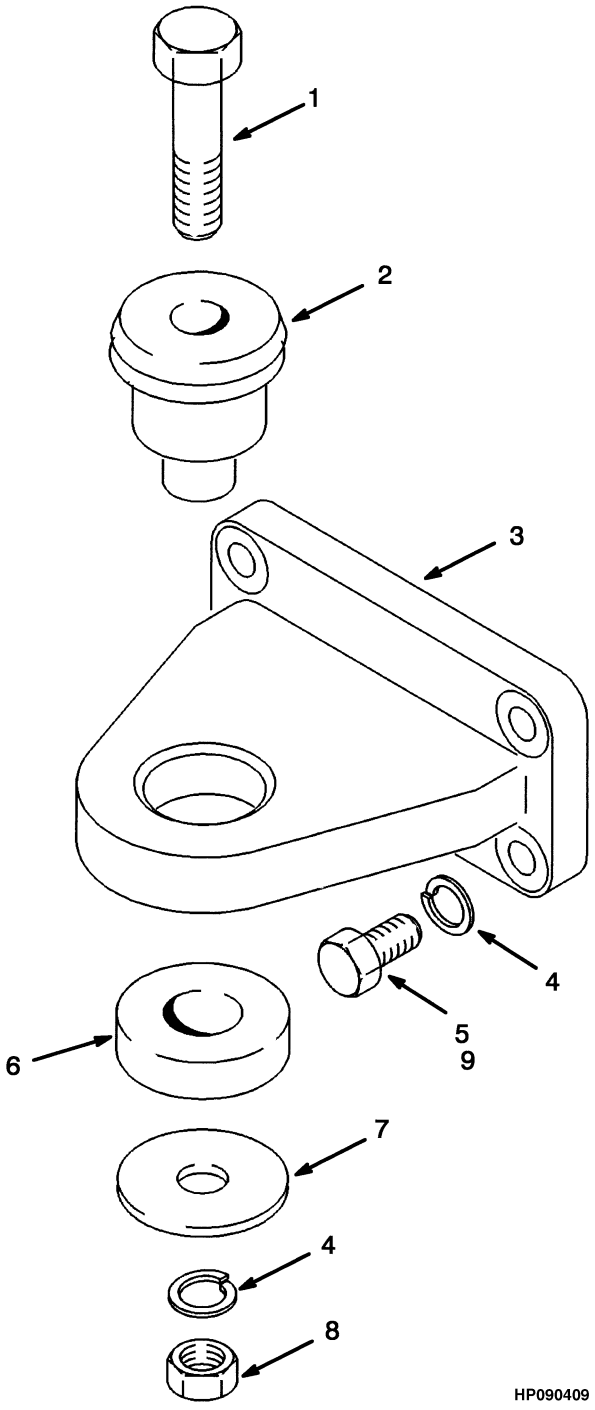

©2006 HYSTER COMPANY

ENGINE MOUNT

ITEM		PART NO.	DESCRIPTION	QTY
1		292572	Capscrew	2
2		1464454	Isolator	2
3		1373274	Mount	2
4		296422	Washer	8
5	**b**	1464456	Capscrew	8
5	**a**	292528	Capscrew	8
6		1302938	Washer	2
7		296426	Washer (Hardened)	2
8		316828	Nut	2
9		383789	Thread Lock	AR

FOOTNOTES:
a ⇒ S/N A214E-1516
b S/N A214E-1517 ⇒

©2006 HYSTER COMPANY

EXHAUST (Figure 2-61)
EMPTY CONTAINER HANDLER
TIER I ENGINE

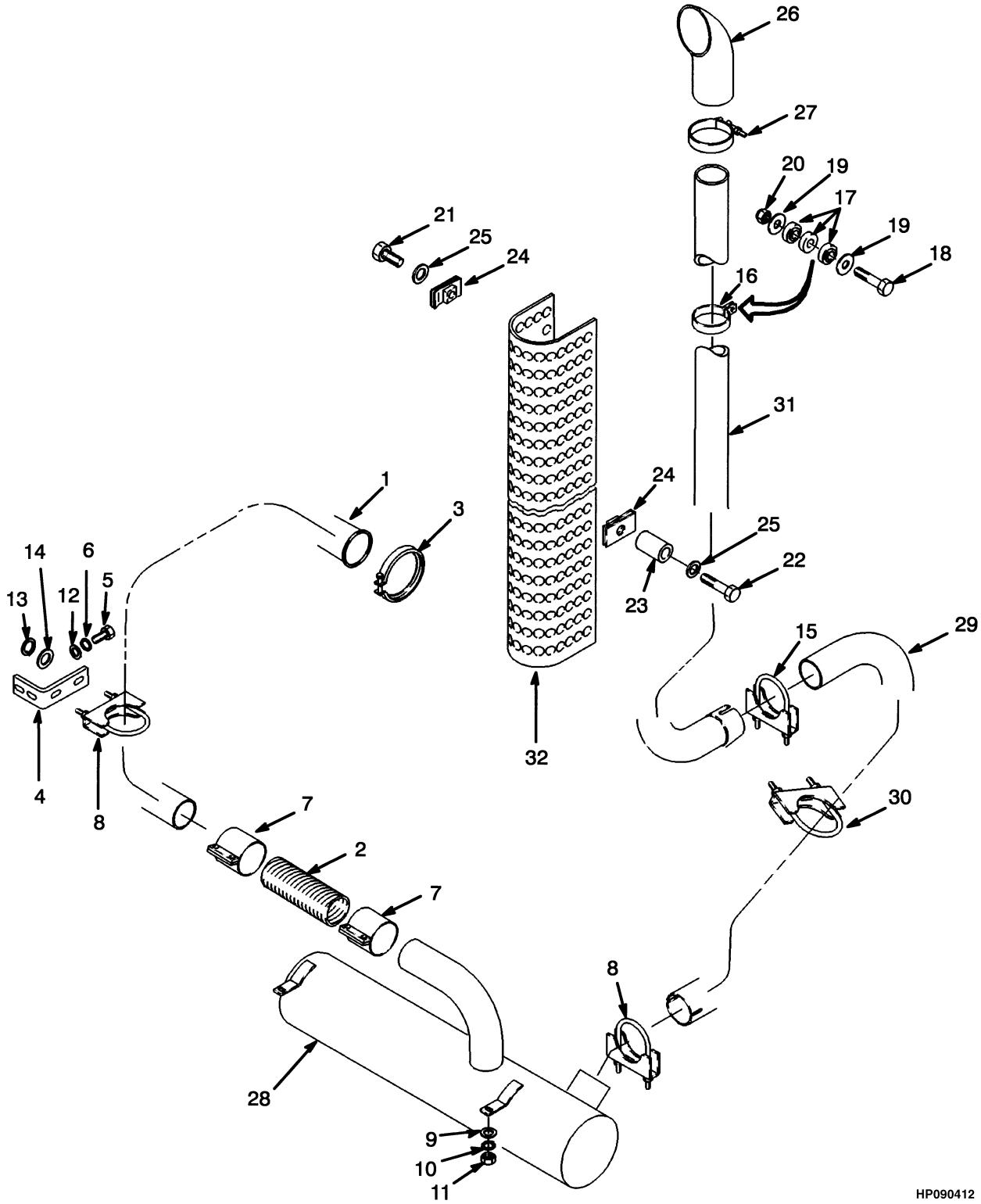

©2006 HYSTER COMPANY

EXHAUST
EMPTY CONTAINER HANDLER
TIER I ENGINE

ITEM		PART NO.	DESCRIPTION	QTY
1		1526357	Exhaust Pipe	1
2		1331909	Flex Tube	1
3		1373430	Clamp	1
4		1373436	Bracket	1
5		292526	Capscrew	2
6		292683	Lockwasher	2
7		1322010	Clamp	2
8		1391427	Clamp	2
9	**a**	320159	Washer	2
9	**b**	320160	Washer	2
10		292682	Lockwasher	2
11		136692	Nut	2
12		320162	Washer	2
13		15134	Washer	2
14		15156	Lockwasher	2
15		132801	Clamp	1
16		1532095	Clamp	2
17		223216	Bushing	6
18		16816	Capscrew	2
19		15176	Washer	4
20		145641	Nut	2
21		16374	Capscrew	2
22		16835	Capscrew	1
23		116091	Tube	1
24		376397	Nut (Retainer)	3
25		18515	Washer	3
26		1384546	Tube	1
27		1384547	Clamp	1
28	**a**	1385547	Muffler	1
28	**b**	1462198	Muffler	1
29		1382389	Exhaust Pipe (Low)	1
29		1458892	Exhaust Pipe (High)	1
30		131878	Clamp	1
31		1373435	Pipe	1
32		1382386	Shield	1

FOOTNOTES:
a ⇒ S/N A214E-1595
b S/N A214E-1596 ⇒

EXHAUST (Figure 2-62)
EMPTY CONTAINER HANDLER
TIER II ENGINE

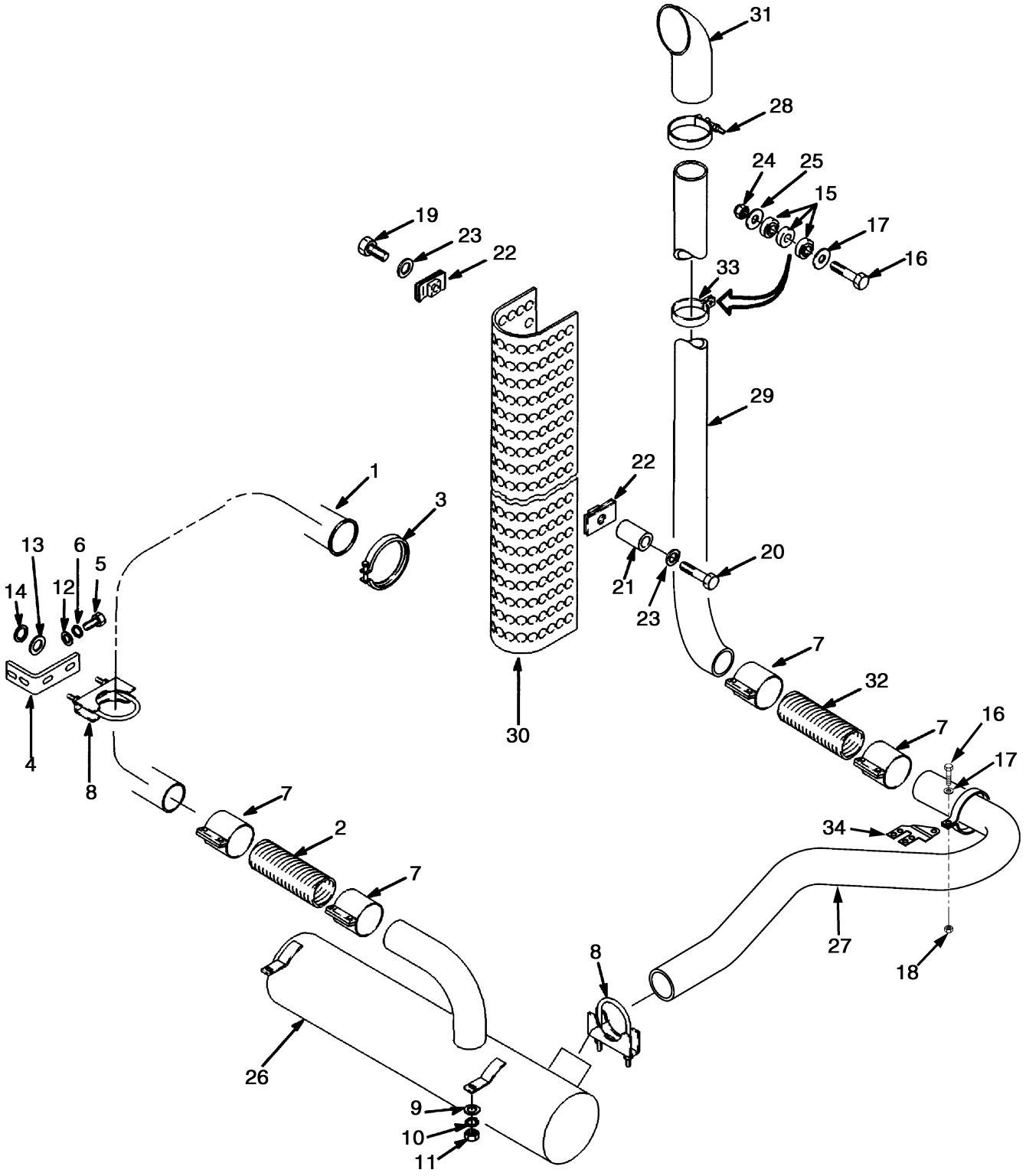

HP091025

©2006 HYSTER COMPANY

EXHAUST
EMPTY CONTAINER HANDLER
TIER II ENGINE

ITEM	PART NO.	DESCRIPTION	QTY
1	1526357	Exhaust Pipe	1
2	1331909	Flex Tube	1
3	1373430	Clamp	1
4	1373436	Bracket	1
5	292526	Capscrew	2
6	292683	Lockwasher	2
7	1322010	Clamp	4
8	1391427	Clamp	2
9	320160	Washer	2
10	292682	Lockwasher	2
11	136692	Nut	2
12	320162	Washer	2
13	15134	Washer	2
14	15156	Lockwasher	2
15	223216	Bushing	4
16	197858	Screw	3
17	15134	Washer	1
18	145641	Nut	1
19	16374	Capscrew	3
20	16835	Capscrew	1
21	116091	Tube	1
22	376397	Nut (Retainer)	3
23	18515	Washer	3
24	15086	Nut	2
25	15134	Washer	2
26	1462198	Muffler	1
27	1527759	Exhaust Pipe	1
28	1528352	Clamp	1
29	1527760	Exhaust Pipe	1
30	1528236	Exhaust Shield	1
31	1527761	Tube	1
32	1532089	Flex Tube	1
33	1527763	Clamp	3
34	1532114	Bracket	1

©2006 HYSTER COMPANY

EXHAUST (Figure 2-63)
FORK LIFT TRUCK

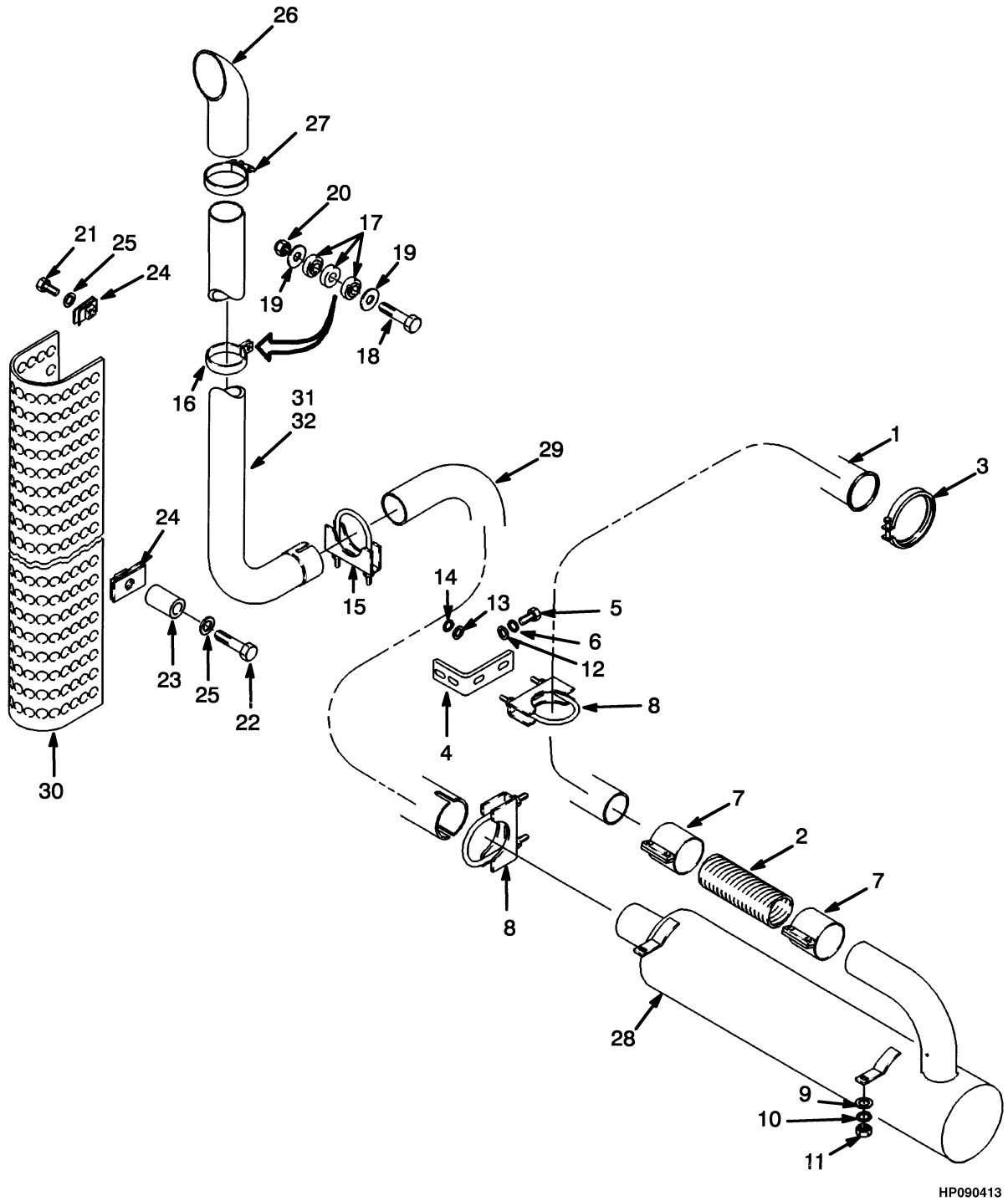

©2006 HYSTER COMPANY

EXHAUST
FORK LIFT TRUCK

ITEM		PART NO.	DESCRIPTION	QTY
1		1526357	Exhaust Pipe	1
2		1331909	Flex Tube	1
3		1373430	Clamp	1
4		1373436	Bracket	1
5		292526	Capscrew	2
6		292683	Lockwasher	2
7		1322010	Clamp	2
8		1391427	Clamp	2
9		320160	Washer	2
10		292682	Lockwasher	2
11		136692	Nut	2
12		320162	Washer	2
13		15134	Washer	2
14		15156	Lockwasher	2
15		132801	Clamp	1
16		1532095	Clamp	2
17		223216	Bushing	6
18		16816	Capscrew	2
19		15176	Washer	4
20		145641	Nut	2
21		16374	Capscrew	1
22		16835	Capscrew	1
23		116091	Tube	1
24		376397	Nut (Retainer)	3
25		18515	Washer	3
26	**b**	1384546	Tube	1
26	**a**	1455801	Tube	1
27		1384547	Clamp	1
28		1385548	Muffler	1
29		1382358	Exhaust Pipe	1
30		1373293	Exhaust Shield	1
31		1382359	Pipe (Non-Aspirated)	1
32		1382390	Pipe (Aspirated)	1

FOOTNOTES:

a ⇒ 3650 mm Lift Height

b Lift Height 4500 mm ⇒

©2006 HYSTER COMPANY

See Service Manual for service procedures.

NOTES

3 FUEL SYSTEM

SECTION 3
FUEL SYSTEM

DESCRIPTION **PAGE**

ELECTRONIC FOOT PEDAL MOUNT
TIER II ENGINE 3-10
FUEL SYSTEM
TIER I ENGINE 3-2
TIER II ENGINE 3-6
THROTTLE
TIER I ENGINE 3-8
THROTTLE PEDAL
ELECTRONIC
TIER II ENGINE 3-16
TIER I ENGINE
⇒D/B 11/2002 3-12
D/B 12/2002⇒ 3-14

FUEL SYSTEM (Figure 3-1)
TIER I ENGINE

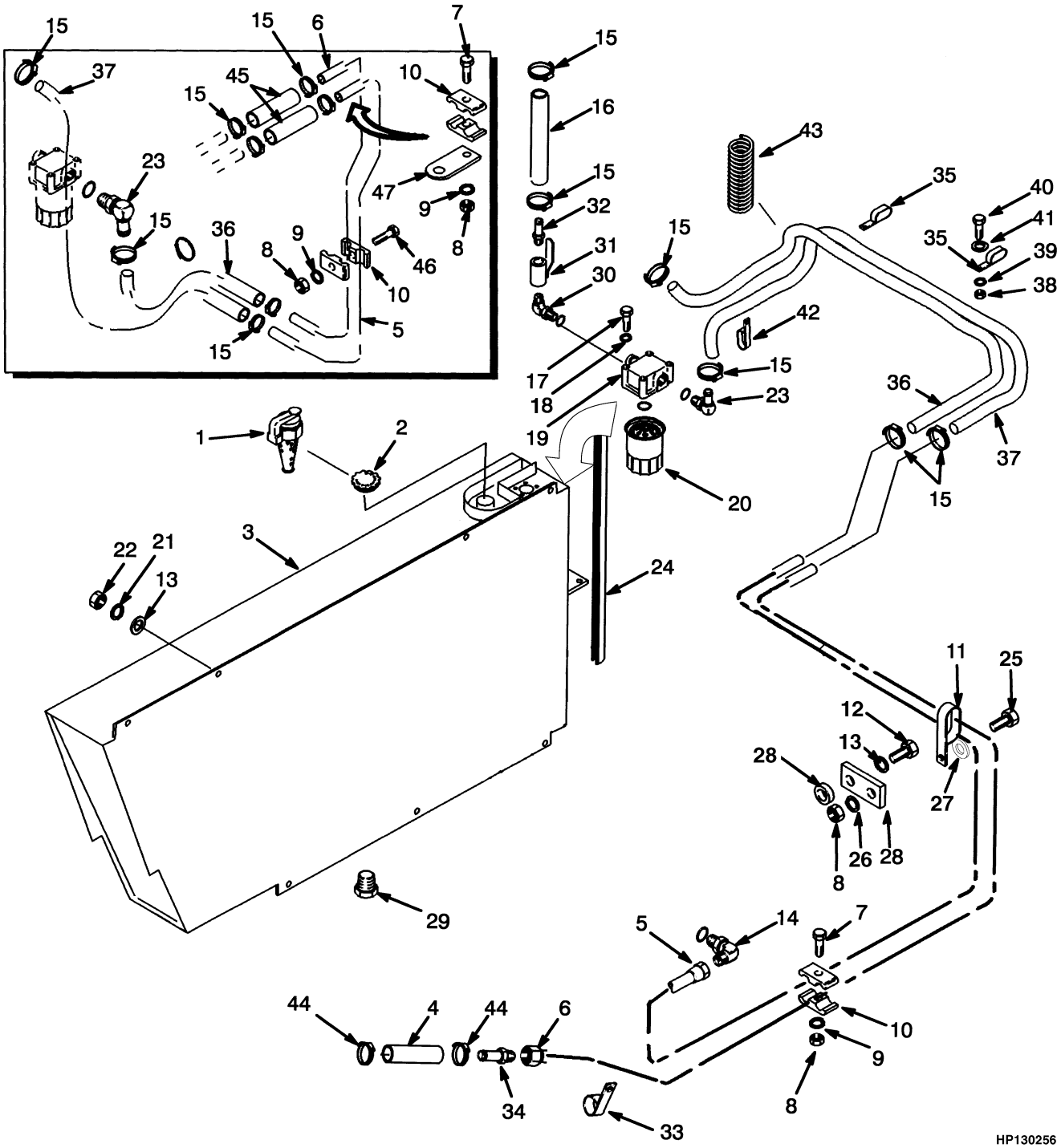

©2006 HYSTER COMPANY

FUEL SYSTEM
TIER I ENGINE

KEY:
A: Empty Container Handler
B: Fork Lift Truck

ITEM		PART NO.	DESCRIPTION	QTY A	QTY B
1		63899	Fuel Cap (Locking)	1	1
1		311245	Gasket	1	1
2		298832	Cap Assembly	1	1
3	**df**	1373412	Fuel Tank	..	1
3	**e**	1489841	Fuel Tank	..	1
3	**a**	1515423	Fuel Tank	..	1
3	**df**	1373413	Fuel Tank	1	..
3	**eg**	816590	Fuel Tank	1	..
3	**a**	1515424	Fuel Tank	1	..
4	**b**	1391409	Hose	1	1
4	**c**	1459842	Hose	1	1
5	**b**	1373585	Tube (Supply)	..	1
5		1391403	Tube (Supply)	1	..
5	**c**	1459840	Tube (Supply)	..	1
6	**b**	1373586	Tube (Return)	..	1
6	**c**	1459841	Tube (Return)	..	1
6	**b**	1391428	Tube (Return)	1	..
6	**c**	1459839	Tube (Return)	1	..
7		292508	Capscrew	1	2
8		239503	Nut	2	4
9		320157	Washer	5	7
10		219302	Clamp	2	4
11		176910	Clamp	1	1
12		246001	Capscrew	4	4
13		292683	Lockwasher	5	5
14		42598	Fitting	1	1
15		166857	Clamp	6	10
16		919724	Hose	1	1
17		18535	Capscrew	4	4
18		15156	Lockwasher	4	4
19		1373415	Filter Head	1	1
20		1373416	Filter Element	1	1
21		320162	Washer	4	4
22		216877	Nut	4	4
23		1373684	Fitting	1	1
24		1382023	Seal	1	1
25		136681	Capscrew	1	1
26		292681	Lockwasher	1	1
27		296419	Washer	3	3
28		1373795	Plate	1	1
28		1373791	Spacer	1	1
29		14388	Fitting	1	1
29		1383897	Fitting (Optional)	1	1
30		1383897	Fitting	1	1
31		1384669	Valve	1	1
32		222473	Fitting	1	1

©2006 HYSTER COMPANY

FUEL SYSTEM
TIER I ENGINE

ITEM		PART NO.	DESCRIPTION	QTY A	QTY B
33		1479453	Clamp	1	1
34		1391408	Fitting	1	1
35		129684	Clamp	2	..
36		111056	Hose	1	..
36		1452699	Hose	..	1
37	**c**	1375232	Hose	..	1
37		141850	Hose	1	..
37	**b**	1452700	Hose	..	1
38		136692	Nut	1	..
39		292682	Lockwasher	1	..
40		136985	Capscrew	1	..
41		320159	Washer	1	..
42		79377	Clamp	2	..
43		316596	Sleeve	1	..
44		168718	Clamp (Worm Screw)	2	2
45		931586	Hose	..	2
46		136704	Capscrew	..	1
47		1452697	Bracket	..	1

FOOTNOTES:
a S/N A214E-01822 ⇒
b ⇒ S/N A214E-1606
c S/N A214E-1607 ⇒
d ⇒ S/N A214E-1745 (FLT)
e S/N A214E-1746⇔S/N A214E-01821
f ⇒ S/N A214E-1748 (ECH)
g S/N A214E-1749⇔S/N A214E-01821

©2006 HYSTER COMPANY

NOTES

FUEL SYSTEM (Figure 3-2)
TIER II ENGINE

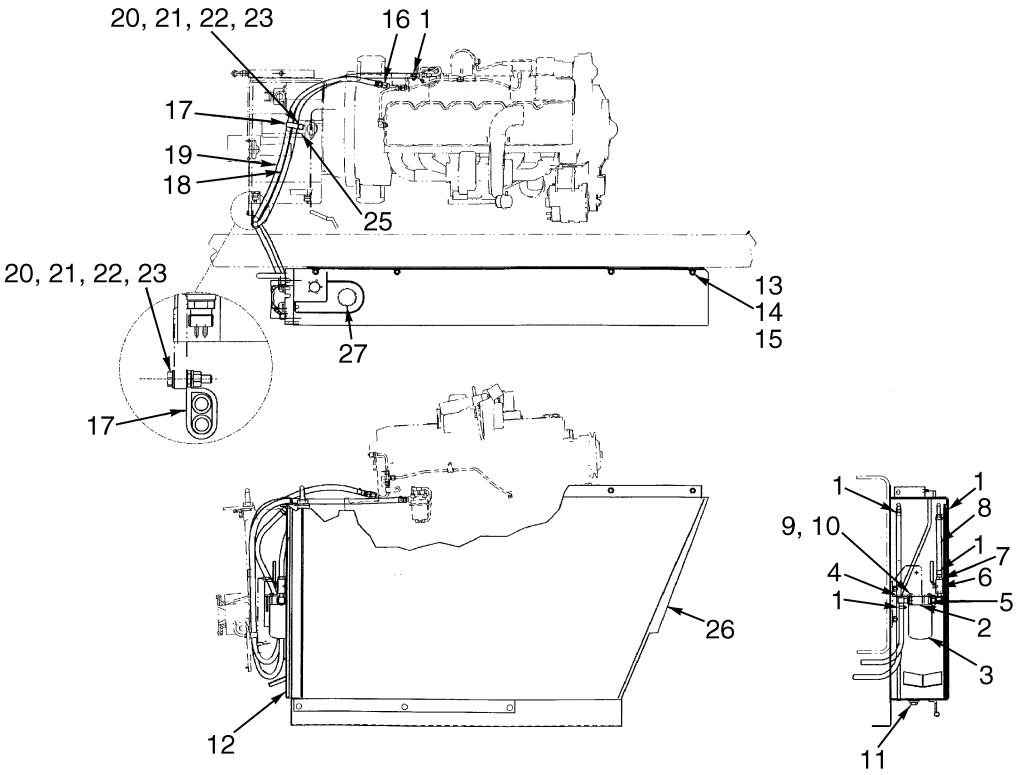

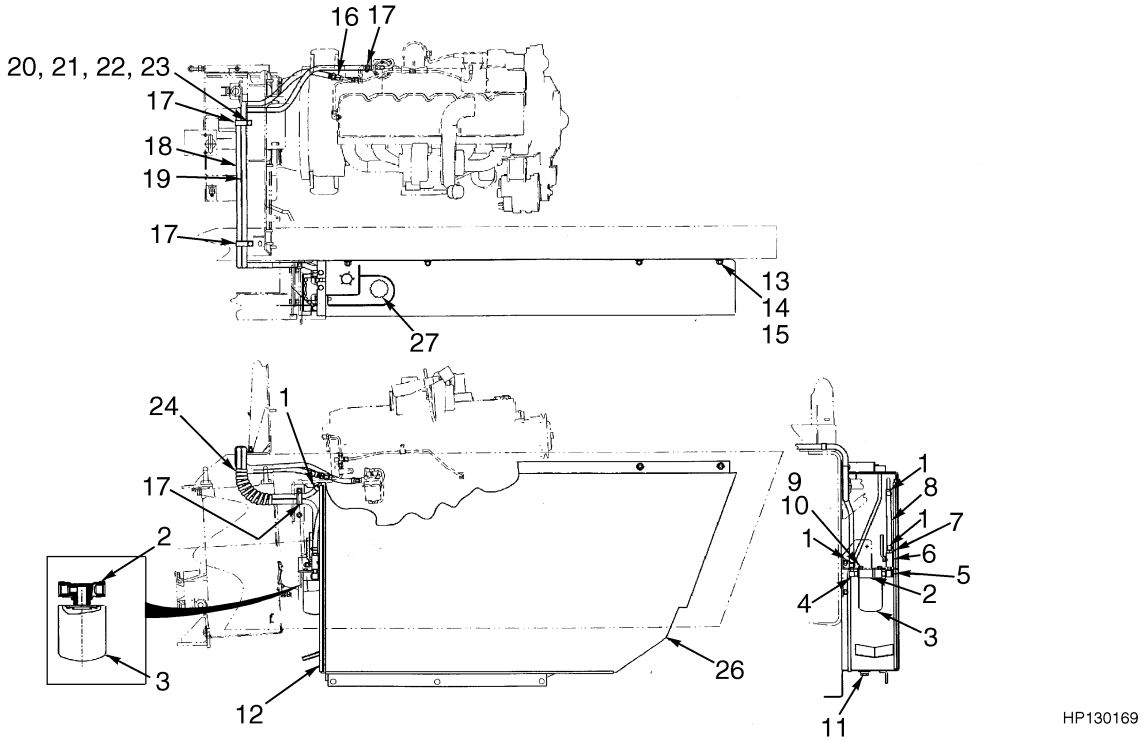

©2006 HYSTER COMPANY

FUEL SYSTEM
TIER II ENGINE

ITEM		PART NO.	DESCRIPTION	QTY
1		166857	Clamp	5
2		1373415	Filter Head	1
3		1373416	Filter Element	1
4		1373684	Fitting	1
5		1383897	Fitting	1
6		1384669	Valve	1
7		222473	Fitting	1
8		919724	Hose	1
9		18535	Capscrew	4
10		15156	Lockwasher	4
11		14388	Fitting	1
12		1382023	Seal	1
13		292683	Lockwasher	4
14		320162	Washer	4
15		216877	Nut	4
16		1517544	Fitting (Reducer)	1
17	**a**	129684	Clamp	3
17	**b**	129684	Clamp	2
18	**a**	1531099	Hose Assembly	1
18	**a**	1399115	Hose	1
19	**b**	1508010	Hose Assembly	1
19	**b**	1399106	Hose	1
20	**a**	136692	Nut	1
20	**b**	136692	Nut	2
21	**a**	292682	Lockwasher	1
21	**b**	292682	Lockwasher	2
22	**a**	136985	Capscrew	1
22	**b**	136985	Capscrew	2
23	**a**	320159	Washer	1
23	**b**	320159	Washer	2
24	**a**	316596	Sleeve	2
25	**b**	1452697	Bracket	1
26	**c**	1336898	Trim (H400H-EC5, H450H-EC6)	1
26		1515424	Fuel Tank (H450H)	1
26		1515423	Fuel Tank (H360H, H400H))	1
26		1526193	Fuel Tank (H400H-EC5, H450H-EC6)	1
27		298832	Cap Assembly	1
27		63899	Fuel Cap	1
27		311245	Gasket	1

FOOTNOTES:
a Empty Container Handler
b Fork Lift Truck
c Not Illustrated

©2006 HYSTER COMPANY

THROTTLE (Figure 3-3)
TIER I ENGINE

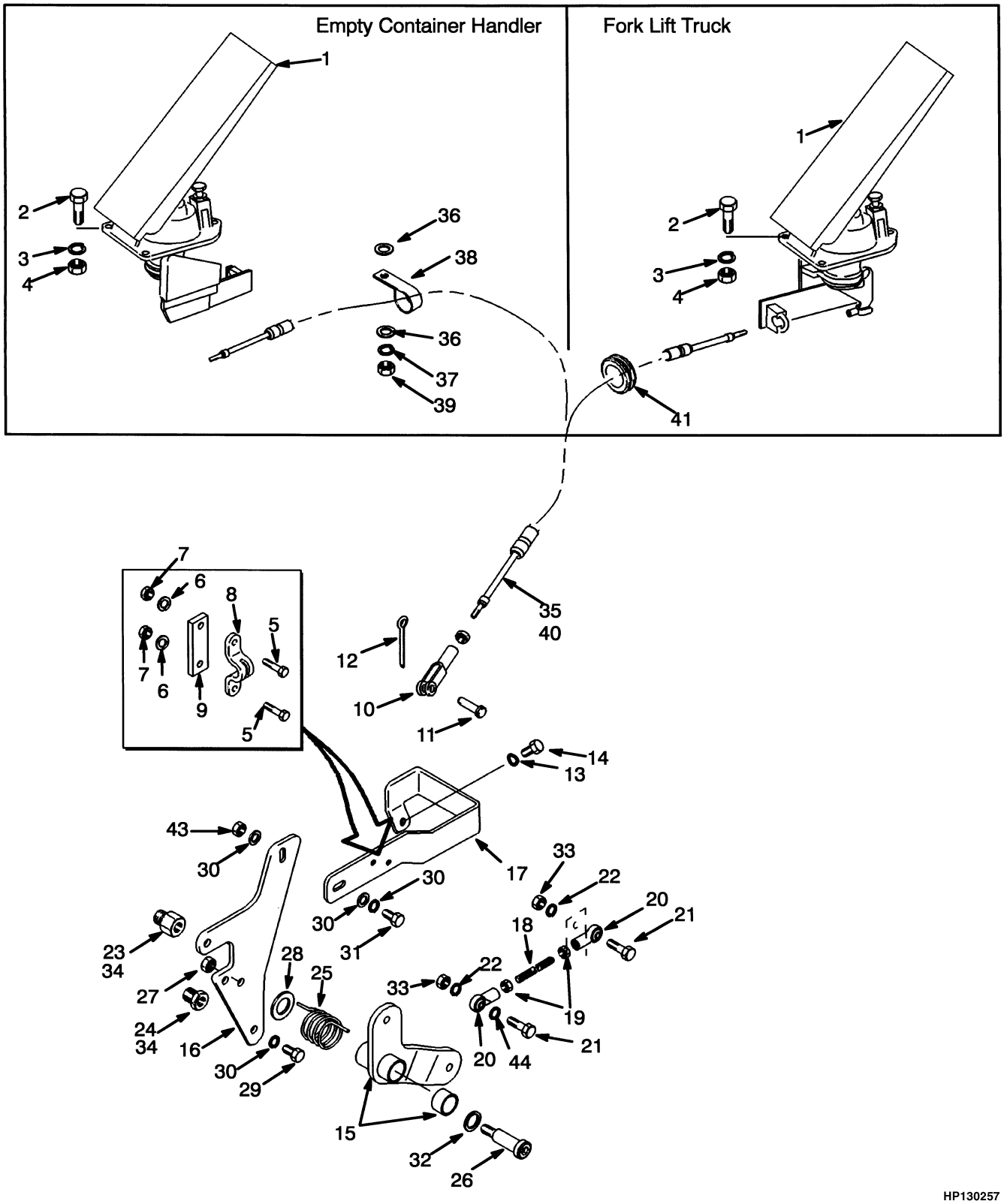

©2006 HYSTER COMPANY

THROTTLE
TIER I ENGINE

ITEM		PART NO.	DESCRIPTION	QTY
1		284847	Pedal Assembly (☞ Figure 3-5)	1
2		18460	Capscrew	3
3		15154	Lockwasher	3
4		15054	Nut	3
5		220499	Screw	2
6		15152	Lockwasher	2
7		15002	Nut	2
8		392016	Clamp	1
9		314170	Shim	1
10		125	Rod End	1
11		126	Rod End Pin	1
12		15200	Cotter Pin	1
13		293782	Washer	1
14		1373381	Capscrew	1
15		1391441	Lever Assembly	1
15		1391440	Lever	1
15		127611	Bushing	1
16		1474197	Plate	1
17		1391435	Bracket	1
18		1391445	Link	1
19		15024	Nut	2
20		1391439	Rod End	2
21		287816	Capscrew	2
22		292680	Lockwasher	2
23		1391437	Insert	1
24		1391438	Insert	1
25		1391444	Spring	1
26		130443	Shoulder Bolt	1
27		145639	Nut	1
28		1391448	Washer	1
29		136681	Capscrew	2
30		292681	Lockwasher	4
31		136749	Capscrew	1
32		221767	Washer	1
33		136687	Nut	2
34		251099	Adhesive	AR
35	**a**	1391446	Throttle Cable	1
36	**a**	320156	Washer	4
37	**a**	293779	Lockwasher	2
38	**a**	164488	Clamp	2
39	**a**	136687	Nut	2
40	**b**	1391447	Throttle Cable	1
41	**b**	1373685	Grommet	1
42		320158	Washer	2
43		239503	Nut	1
44		320156	Washer	2

FOOTNOTES:
a Empty Container Handler
b Fork Lift Truck

©2006 HYSTER COMPANY

ELECTRONIC FOOT PEDAL MOUNT (Figure 3-4)
TIER II ENGINE

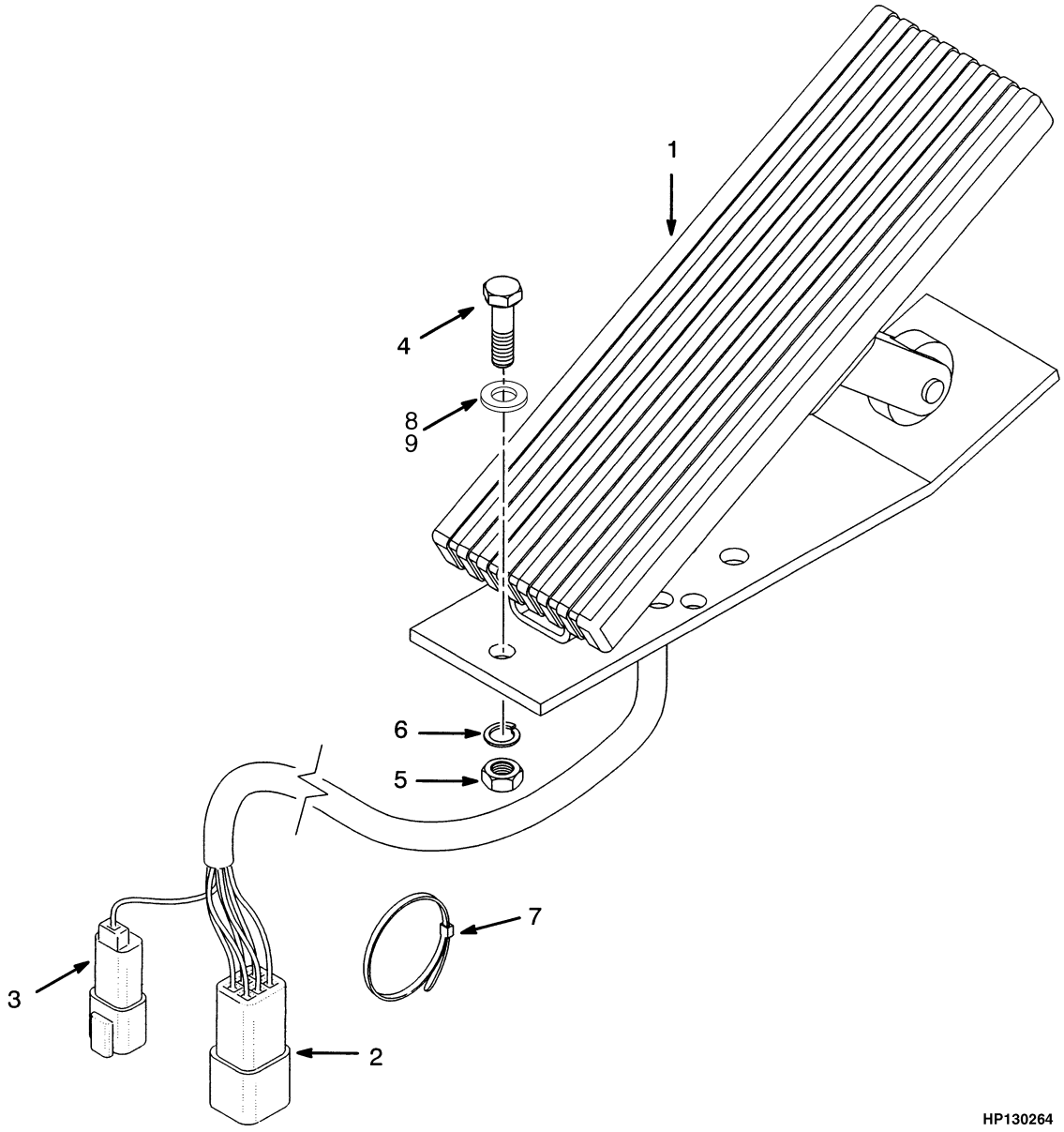

©2006 HYSTER COMPANY

ELECTRONIC FOOT PEDAL MOUNT
TIER II ENGINE

ITEM	PART NO.	DESCRIPTION	QTY
1	1508451	Pedal	1
2	1330422	Connector (Throttle Harness)	1
2	1330428	Secondary Lock	1
3	1330409	Connector (Transmission Control)	1
3	1330414	Secondary Lock	1
4	136749	Capscrew	3
5	239503	Nut	3
6	292681	Lockwasher	3
7	137852	Strap Clamp	3
8	320157	Washer	2
9	320158	Washer	1

©2006 HYSTER COMPANY

THROTTLE PEDAL (Figure 3-5)
TIER I ENGINE
(⇒D/B 11/2002)

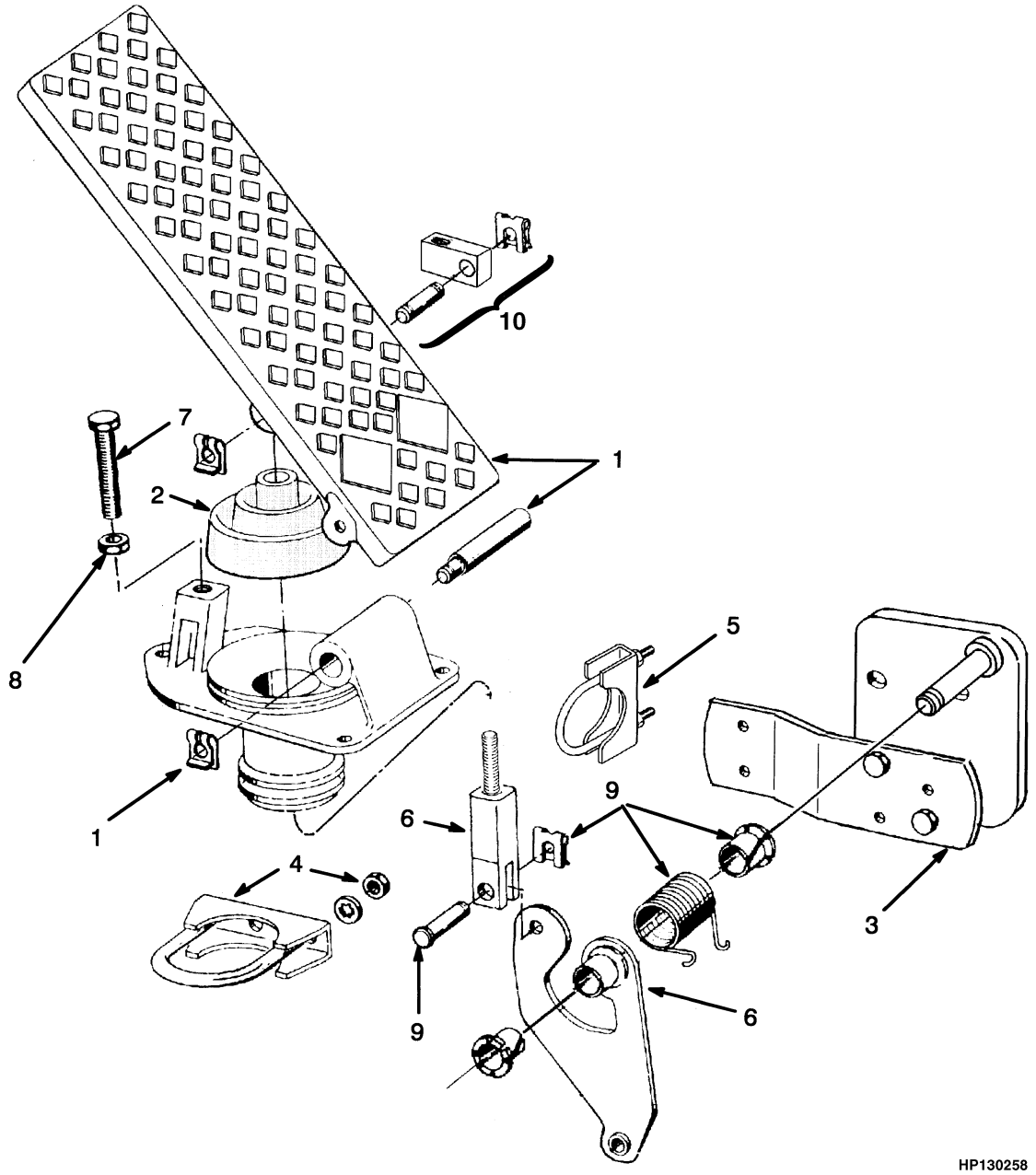

©2006 HYSTER COMPANY

THROTTLE PEDAL
TIER I ENGINE
(⇒D/B 11/2002)

ITEM	PART NO.	DESCRIPTION	QTY
1	284847	Pedal Assembly	1
2	344247	Bellows	1
3	344245	Bracket	1
4	195769	Clamp	1
5	344246	Anchor	1
6	344244	Lever	1
7	1354812	Screw	1
8	1354813	Nut	1
9	344242	Bearing Kit	1
10	345400	Clevis	1

©2006 HYSTER COMPANY

THROTTLE PEDAL (Figure 3-6)
TIER I ENGINE
(D/B 12/2002⇒)

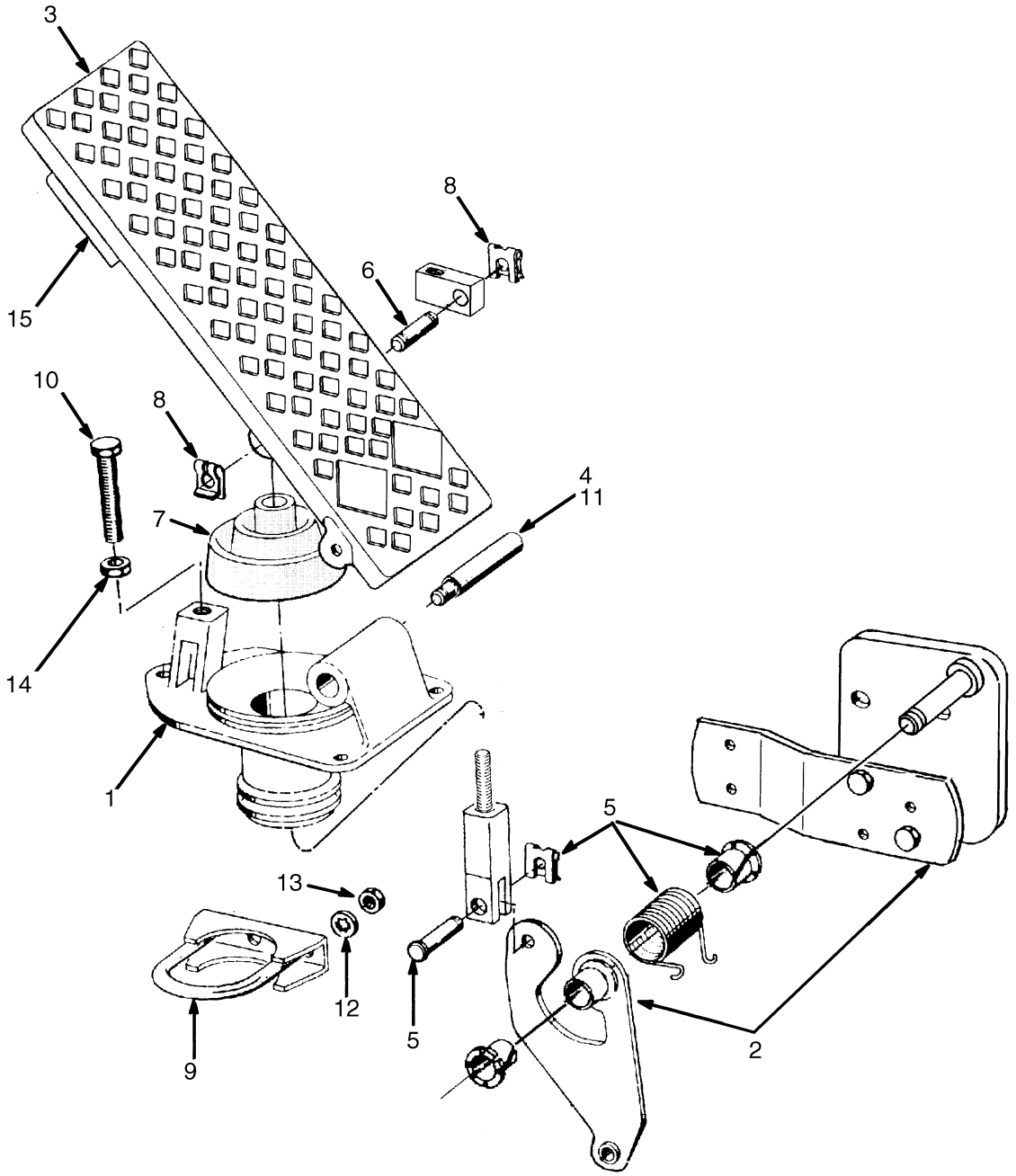

HP130310

©2006 HYSTER COMPANY

THROTTLE PEDAL
TIER I ENGINE
(D/B 12/2002⇒)

ITEM	PART NO.	DESCRIPTION	QTY
	284847	Pedal Assembly	1
1	1533444	Base	1
2	1533445	Bracket Assembly	1
3	1533446	Pedal	1
4	1533447	Pivot Pin	1
5	1533448	Push Rod Assembly	1
6	1533449	Pin	1
7	1533450	Bellows	1
8	1533451	Clip	2
9	1533452	U-Bolt	1
10	1533453	Capscrew	1
11	1533454	Liner (Bearing)	2
12	1533455	Lockwasher	2
13	1533456	Locknut	2
14	1354813	Nut	1
15	1533458	Kit (Cable Clamp)	1

©2006 HYSTER COMPANY

THROTTLE PEDAL (Figure 3-7)
ELECTRONIC
TIER II ENGINE

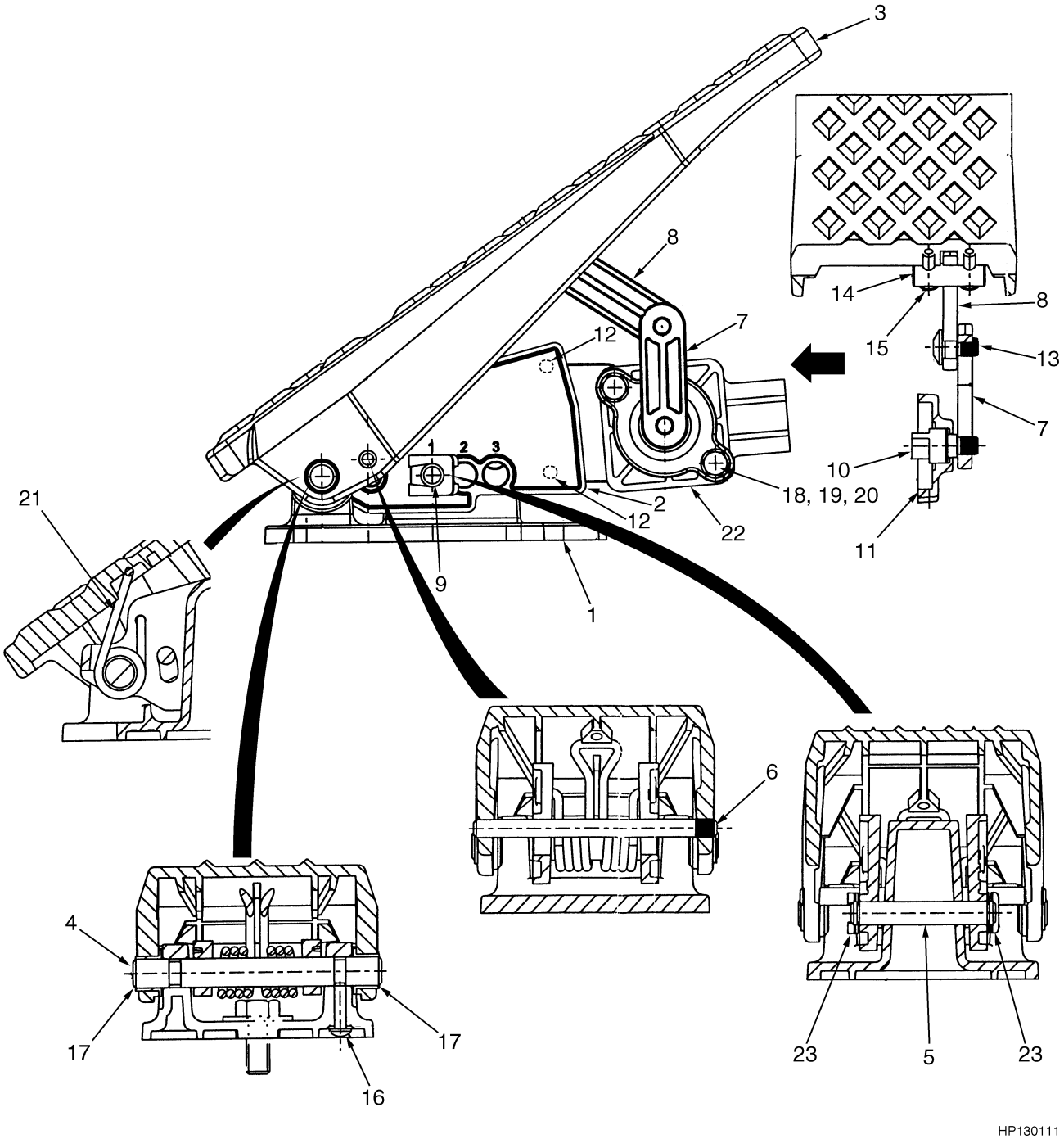

©2006 HYSTER COMPANY

THROTTLE PEDAL
ELECTRONIC
TIER II ENGINE

ITEM	PART NO.	DESCRIPTION	QTY
	1508451	Pedal	1
1	. . . . .	Base	1
2	. . . . .	Frame (Potentiometer)	1
3	. . . . .	Threadle Pedal	1
4	. . . . .	Pin (Pivot)	1
5	. . . . .	Pin (Positioning)	1
6	. . . . .	Pin (Restraining)	1
7	. . . . .	Link (Lower)	1
8	. . . . .	Link (Upper)	1
9	. . . . .	Plate	1
10	. . . . .	Drive Shaft	1
11	. . . . .	Bearing	1
12	. . . . .	Screw (Flange)	2
13	. . . . .	Pin (Hinge)	1
14	. . . . .	Pin (Potentiometer)	1
15	. . . . .	Screw	2
16	. . . . .	Screw	1
17	. . . . .	Bearing	2
18	. . . . .	Nut	2
19	. . . . .	Washer	2
20	. . . . .	Bolt	2
21	. . . . .	Return Spring	1
22	. . . . .	Potentiometer	1
23	. . . . .	Clip (Spring)	2

©2006 HYSTER COMPANY

NOTES

4 ELECTRICAL SYSTEM

SECTION 4
ELECTRICAL SYSTEM

DESCRIPTION	PAGE
CONTROL PANEL	
⇒S/N A214E-1806	4-28
S/N A214E-1807⇒	4-30
ELECTRICAL	
CHASSIS	
TIER I ENGINE	4-4
CHASSIS (TIER II ENGINE)	
SHEET 1 OF 4	4-8
SHEET 2 OF 4	4-10
SHEET 3 OF 4	4-14
SHEET 4 OF 4	4-18
INSTRUMENT PANEL	
SHEET 1 OF 2	4-20
SHEET 2 OF 2	4-24
LIGHT BAR AND MOUNT	4-26
LIGHT CONTROLS	4-32
LIGHTS	
EMPTY CONTAINER HANDLER	4-34
FORK LIFT TRUCK	4-38
ROTATING BEACON	4-42
WIRE HARNESS	
ATTACHMENT CONTROL	
⇒S/N A214E-1806	4-48
SHEET 1 OF 2	
⇒S/N A214E-1650	4-44
SHEET 2 OF 2	
⇒S/N A214E-1650	4-46
ATTACHMENT CONTROL SWITCH	
S/N A214E-1807⇒	4-50
S/N A214E02078B⇔S/N A214E02194C	4-52
S/N A214E02194C⇒	4-54
ATTACHMENT LIGHTS	
S/N A214E-1807⇒	4-56
CAB	
⇒S/N A214E-1797	4-58
S/N A214E-1798⇒	4-60
CARRIAGE CONTROL SWITCH	4-62
CHASSIS	
EMPTY CONTAINER HANDLER	4-64
FORK LIFT TRUCK	4-66
ENGINE	
⇒S/N A214E-1718	4-68
S/N A214E-1719⇒	4-70
TIER II	
S/N A214E01950A⇒	4-72
FRONT END EQUIPMENT	
EMPTY CONTAINER HANDLER	
⇒S/N A214E-1806	4-74
S/N A214E-1807⇒	4-76
FORK LIFT TRUCK	4-80

©2006 HYSTER COMPANY

SECTION 4
ELECTRICAL SYSTEM (Continued)

DESCRIPTION	PAGE
S/N A214E02078B⇒	4-78
FRONT LIGHTS	4-81
HYDRAULIC	
EMPTY CONTAINER HANDLER	
S/N A214E-1651⇔S/N A214E-1806	4-82
S/N A214E-1807⇒	4-84
FORK LIFT TRUCK	4-86
MODULE	
⇒S/N A214E-1797	4-88
S/N A214E-1798⇒	4-89
OPERATOR COMPARTMENT (TIER I)	
SHEET 1 OF 2	4-90
SHEET 2 OF 2	4-92
OPERATOR COMPARTMENT (TIER II)	
SHEET 1 0F 2	
S/N A214E01843Z⇒ (FLT), S/N A214E01849Z⇒ (ECH)	4-94
SHEET 2 OF 2	
S/N A214E1843Z⇒ (FLT), S/N A214E1849Z⇒ (ECH)	4-96
OPERATOR COMPARTMENT TO MAST LIGHT JUMPER	4-98
REAR LIGHT	4-99
ROTATING BEACON	4-100
SELECTOR VALVE	4-120
STEERING POD	4-102
SWITCH	
WARNING	4-105
SWITCH LIGHTS	4-104
TRANSMISSION	4-106
⇒S/N A214E-1615	4-108
S/N A214E1616⇔S/N A214E02193C	4-110
TRANSMISSION CONTROL	
S/N A214E02194C⇒	4-112
TURN SIGNAL	4-114
WINDSHIELD WASHER	4-115
WORK LIGHTS	4-116
EMPTY CONTAINER HANDLER	4-117
FORK LIFT TRUCK	4-118
WORK LIGHTS EXTENSION	
FORK LIFT TRUCK	4-119

©2006 HYSTER COMPANY

NOTES

ELECTRICAL (Figure 4-1)
CHASSIS
TIER I ENGINE

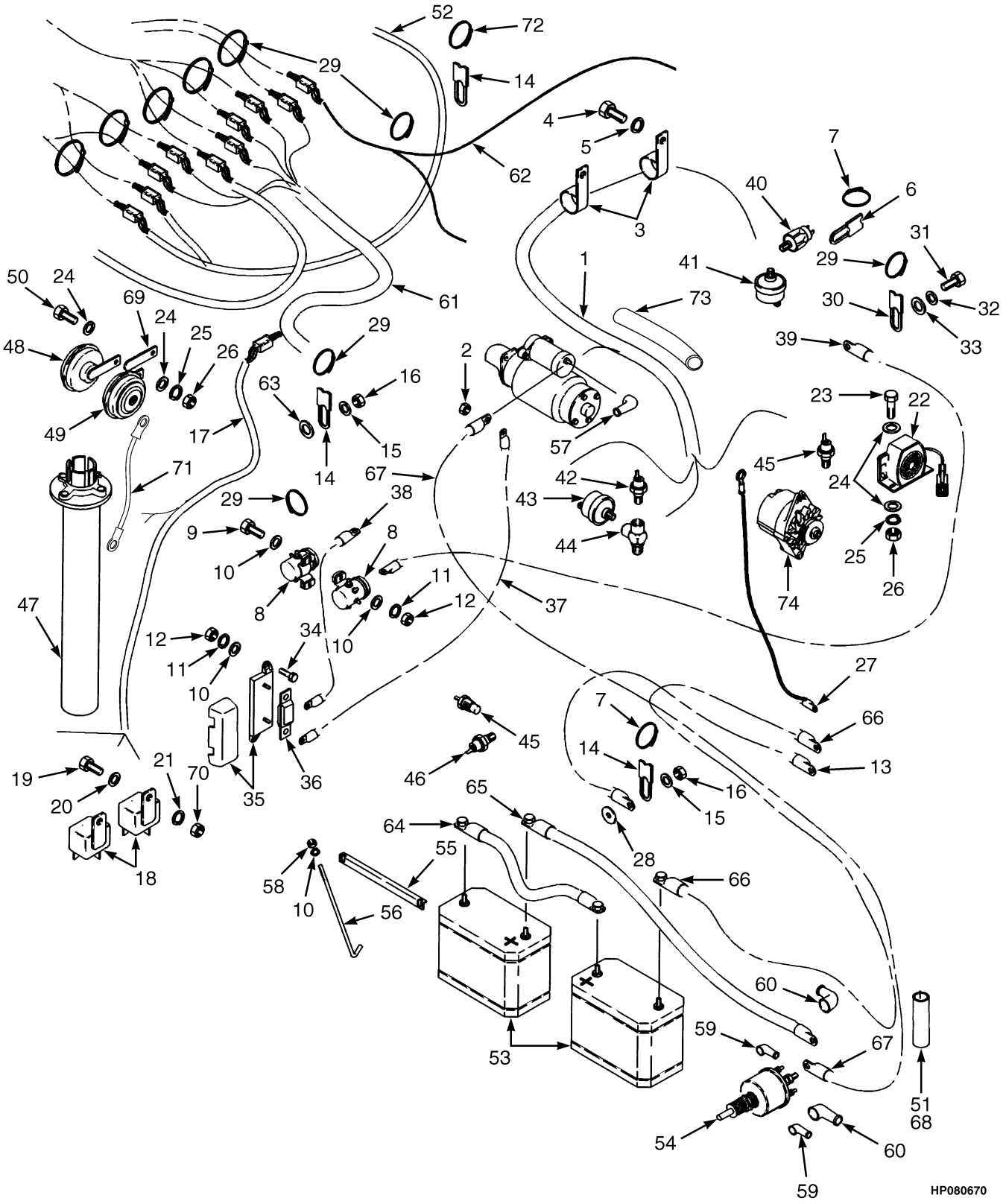

©2006 HYSTER COMPANY

ELECTRICAL
CHASSIS
TIER I ENGINE

ITEM		PART NO.	DESCRIPTION	QTY
1		1382838	Wire Harness (☞ Figure 4-27)	1
1		1473974	Wire Harness (☞ Figure 4-28)	1
2		15011	Nut	1
3		154208	Clamp	2
4		292526	Capscrew	1
5		292683	Lockwasher	1
6		1350911	Strap	1
7		397676	Strap Clamp	2
8		1307121	Switch (24 Volt)	2
9		292501	Capscrew	2
10		320156	Washer	10
11		292680	Lockwasher	4
12		136687	Nut	4
13		816441	Battery Cable	1
14	**a**	1356947	Strap	3
14	**b**	1356947	Strap	9
15	**b**	320159	Washer	10
15	**a**	320159	Washer	5
16	**b**	302401	Locknut	10
16	**a**	302401	Locknut	5
17	**ac**	1464299	Wire Harness (Hydraulic) (☞ Figure 4-35)	1
17	**ad**	1504298	Wire harness (Hydraulic) (☞ Figure 4-36)	1
17	**bc**	1383834	Wire Harness (Hydraulic) (☞ Figure 4-37)	1
17	**bd**	1525240	Wire Harness (Hydraulic)	1
18		1307687	Relay (24 Volt)	3
19		302248	Screw	1
20		320155	Washer	1
21		292679	Lockwasher	1
22		1367282	Alarm Assembly	1
23		136681	Capscrew	2
24		320157	Washer	6
25		292681	Lockwasher	3
26		239503	Nut	3
27		1393785	Wire Harness	1
28		296408	Lockwasher	1
29		137852	Strap Clamp	AR
30		1350914	Strap	2
31		292513	Capscrew	1
32		292682	Lockwasher	1
33		320159	Washer	1
34		302048	Screw	2
35		1385519	Fuse Holder	1
36		1385504	Fuse (200 Amp)	1
37		1391863	Battery Cable	1
38		1391864	Battery Cable	1
39		1391865	Battery Cable	1
40		1323146	Pressure Switch (Transmission Oil)	1
41		231958	Sender (Oil Pressure)	1
42		190252	Pressure Switch	1
43		1393788	Engine Oil Pressure Sender	1

©2006 HYSTER COMPANY

ELECTRICAL
CHASSIS
TIER I ENGINE

ITEM		PART NO.	DESCRIPTION	QTY
44		16186	Fitting	1
45		1319190	Coolant Temperature Sender	2
46		114662	Temperature Warning Switch	1
47		1393778	Fuel Sender	1
48		1451327	Horn (24 Volt) (335Hz)	1
49		1451328	Horn (24 Volt) (400Hz)	1
50		176640	Capscrew	1
51		175899	Electrical Tape	AR
52	**ac**	1384479	Wire Harness (Front End Equipment) (☞ Figure 4-30)	1
52	**ad**	1495795	Wire Harness (Front End Equipment) (☞ Figure 4-31)	1
52	**b**	1393786	Wire Harness (Front End Equipment) (☞ Figure 4-33)	1
53		1373606	Battery	2
54		1324517	Switch (Disconnect)	1
55		286767	Bracket	2
56		309124	Link (Battery Hold Down)	4
57		370009	Boot	1
58		302399	Nut	4
59		190383	Boot	2
60		204223	Boot	2
61	**a**	1383838	Wire Harness (Chassis) (☞ Figure 4-25)	1
61	**b**	1385505	Wire Harness (Chassis) (☞ Figure 4-26)	1
62	**a**	1383832	Wire Harness (Transmission) (☞ Figure 4-50)	1
62	**b**	1383833	Wire Harness (Transmission) (☞ Figure 4-50)	1
63	**a**	320161	Washer	3
63	**b**	320161	Washer	9
64	**a**	1393775	Battery Cable	1
64	**b**	1393790	Battery Cable	1
65	**a**	1393776	Battery Cable	1
65	**b**	1393791	Battery Cable	1
66	**a**	1393777	Battery Cable	1
66	**b**	1393792	Battery Cable	1
67		1382020	Battery Cable	1
68		275496	Conduit	AR
69		1455851	Bracket	1
70		292668	Nut	2
71		1311403	Wire (Horn Ground)	1
72		1345023	Strap	1
73		275498	Conduit	AR
74		1512001	Alternator	1

FOOTNOTES:
a Empty Container Handler
b Fork Lift Truck
c ⇒ S/N A214E1806Y
d S/N A214E1807Y ⇒

©2006 HYSTER COMPANY

NOTES

ELECTRICAL (Figure 4-2)
CHASSIS (TIER II ENGINE)
SHEET 1 OF 4

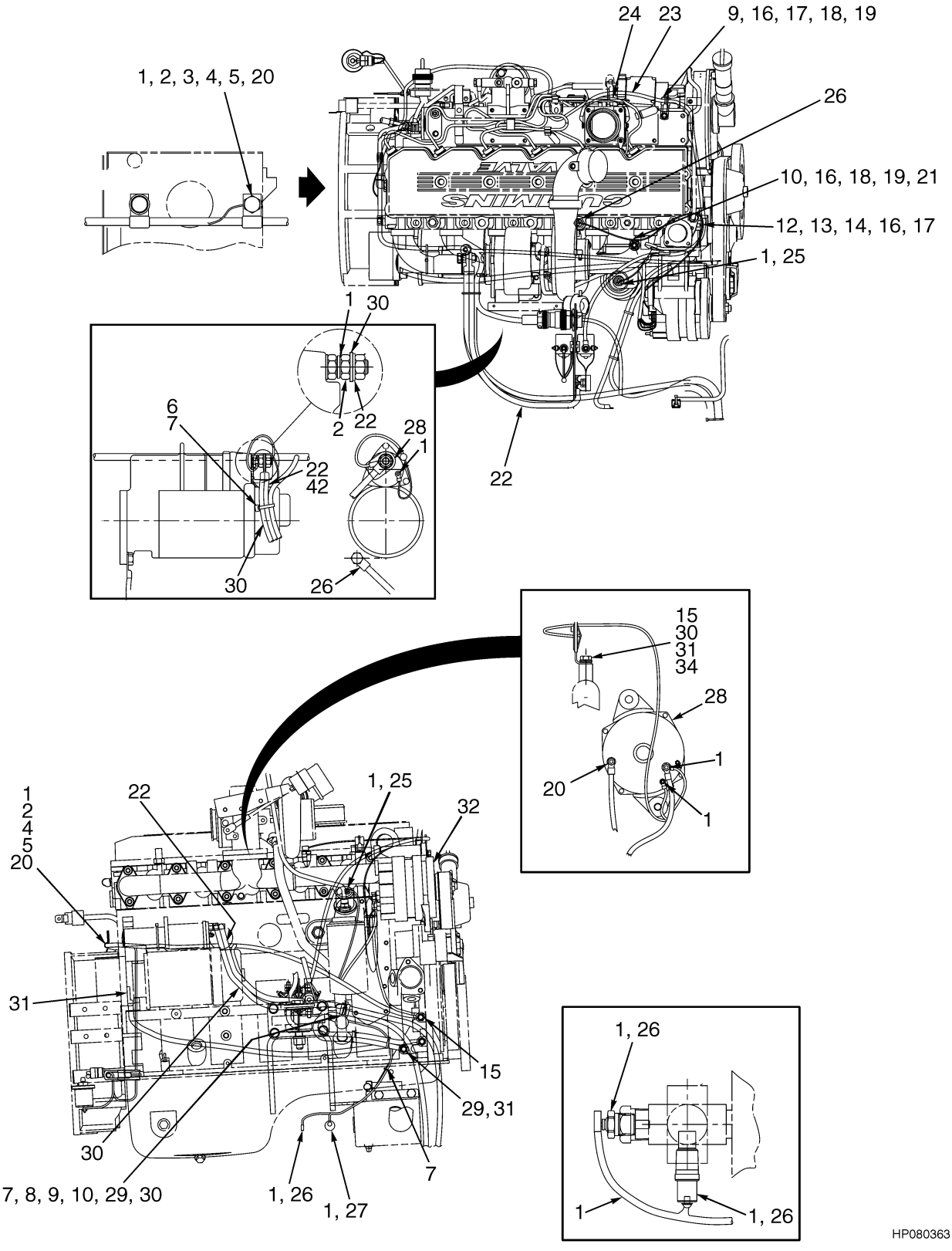

©2006 HYSTER COMPANY

ELECTRICAL
CHASSIS (TIER II ENGINE)
SHEET 1 OF 4

ITEM		PART NO.	DESCRIPTION	QTY
1	**a**	1531383	Wire Harness (Engine) (☞ Figure 4-29)	1
1	**b**	1537659	Wire Harness (Engine) (☞ Figure 4-29)	1
1	**c**	1607648	Wire Harness (Engine) (☞ Figure 4-29)	1
2	**a**	15011	Nut	1
3		298132	Clamp	2
4		292526	Capscrew	2
5		292683	Lockwasher	2
6		397676	Strap Clamp	7
7		816441	Battery Cable	1
8		1356947	Strap	1
9		320159	Washer	4
10		302401	Locknut	1
11		1499053	Wire Harness (Radiator Coolant Level Switch)	1
12		136681	Capscrew	3
13		320157	Washer	5
14		292681	Lockwasher	3
15		1520294	Wire Assembly	1
16		137852	Strap Clamp	AR
17		1350914	Strap	4
18		292513	Capscrew	3
19		292682	Lockwasher	3
20		1373791	Spacer	2
21		1362277	Strap	3
22	**a**	1391863	Battery Cable	1
22	**b**	1538099	Battery Cable	1
23		1507212	Wire Harness (Switch To Grid Heater) (☞ Figure 1-1)	1
24		1508986	Wire Harness (Grid Heater To Grid Heater)	1
25		1393788	Engine Oil Pressure Sender	1
26		1319190	Coolant Temperature Sender	2
27		114662	Temperature Warning Switch	1
28		370009	Boot	1
29		1520495	Battery Cable	1
30	**a**	1520499	Battery Cable	1
30	**b**	1538100	Battery Cable	1
31		1521153	Battery Cable	1
32		1480320	Alternator	1

FOOTNOTES:
a ⇒ S/N A214E-01950A
b S/N A214E01951A⇔S/N A214E02180C
c S/N A214E02181C ⇒

©2006 HYSTER COMPANY

ELECTRICAL (Figure 4-3)
CHASSIS (TIER II ENGINE)
SHEET 2 OF 4

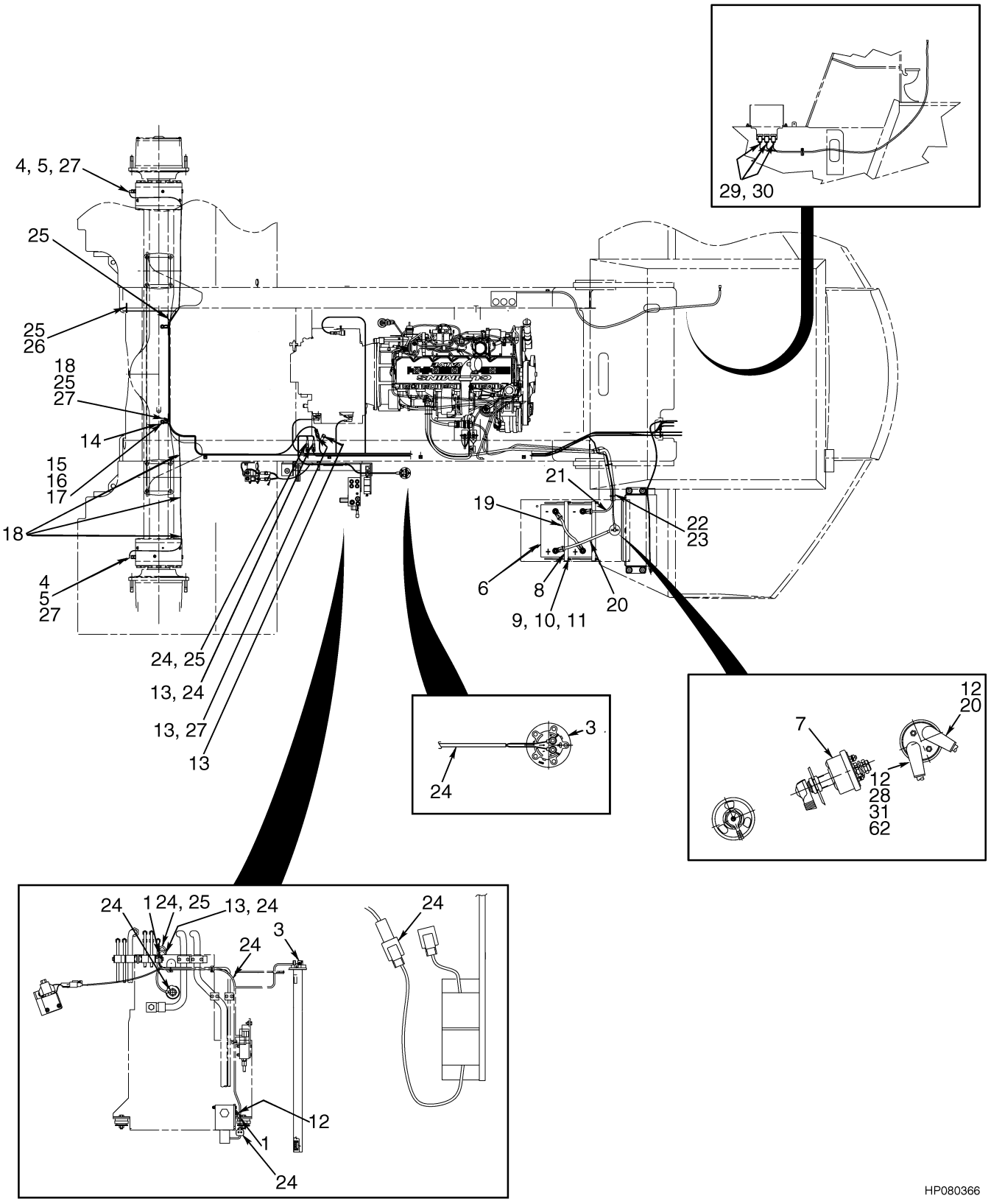

©2006 HYSTER COMPANY

ELECTRICAL
CHASSIS (TIER II ENGINE)
SHEET 2 OF 4

ITEM		PART NO.	DESCRIPTION	QTY
1		397676	Strap Clamp	3
2		1356947	Strap	1
3		1393778	Fuel Sender	1
4		1521310	Adapter	2
5		2043634	Switch (Temperature)	1
6		1373606	Battery	2
7		1324517	Switch (Disconnect)	1
8		286767	Bracket	2
9		309124	Link (Battery Hold Down)	4
10		302399	Nut	4
11		320156	Washer	4
12		204223	Boot	2
13	**a**	1518111	Wire Harness (Chassis)	1
13	**b**	1519026	Wire Harness (Chassis)	1
14	**a**	1356947	Strap	7
14	**b**	1356947	Strap	12
15	**a**	320161	Washer	3
15	**b**	320161	Washer	9
16	**a**	320159	Washer	4
16	**b**	320159	Washer	9
17	**a**	302401	Locknut	4
17	**b**	302401	Locknut	9
18		137852	Strap Clamp	AR
19		1520493	Battery Cable	1
20		1520494	Battery Cable	1
21		1520495	Battery Cable	1
22		275496	Conduit	AR
23		175899	Electrical Tape	AR
24	**a**	1504298	Wire harness (Hydraulic Compartment)	1
24	**b**	1525240	Wire Harness (Hydraulic Compartment)	1
25	**ae**	1495795	Wire Harness (Front End) (☞ Figure 4-31)	1
25	**af**	1573932	Wire Harness (Front End) (☞ Figure 4-32)	1
26	**a**	1345023	Strap	1
27	**a**	1521392	Wire Harness (Brake Temperature Switch)	1
27	**b**	1521391	Wire Harness (Brake Temperature Switch)	1
28		1451327	Horn (335 dBA)	1
28		1451328	Horn (400 dBA)	1
29		1311268	Wire Harness	1
30		1384602	Wire Harness	1
31	**c**	1531383	Wire Harness (Engine) (☞ Figure 4-29)	1
31	**d**	1537659	Wire Harness (Engine) (☞ Figure 4-29)	1
31	**g**	1607648	Wire Harness (Engine) (☞ Figure 4-29)	1
32		1510220	Wire Harness Extension	1

FOOTNOTES:
a Empty Container Handler
b Fork Lift Truck
c ⇒ S/N A214E01950A
d S/N A214E01951A⇔S/N A214E02180C
e ⇒ S/N A214E02077B

©2006 HYSTER COMPANY

ELECTRICAL
CHASSIS (TIER II ENGINE)
SHEET 2 OF 4

f S/N A214E02078B ⇒
g S/N A214E02181C ⇒

©2006 HYSTER COMPANY

NOTES

ELECTRICAL (Figure 4-4)
CHASSIS (TIER II ENGINE)
SHEET 3 OF 4

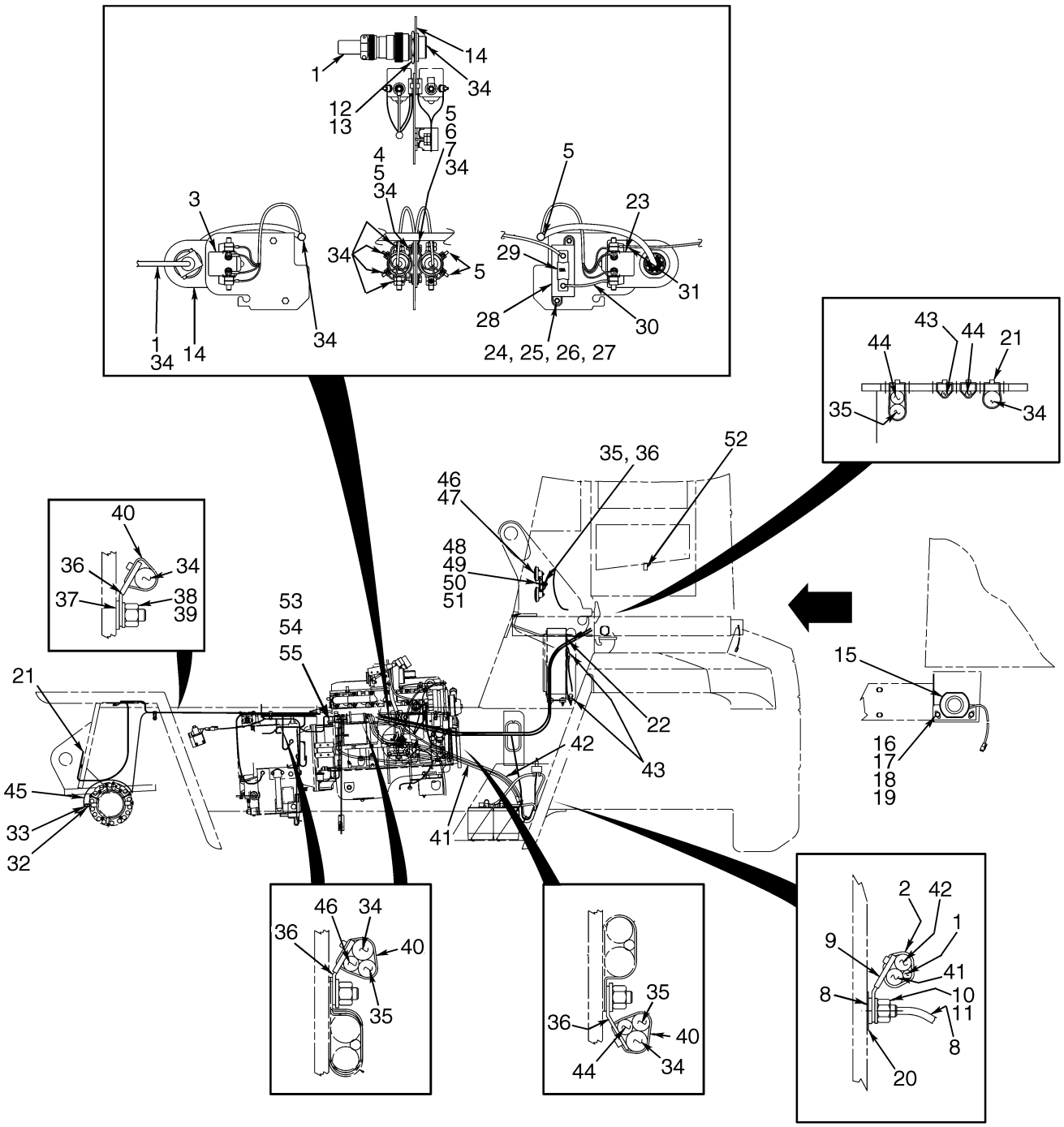

HP080367

©2006 HYSTER COMPANY

ELECTRICAL
CHASSIS (TIER II ENGINE)
SHEET 3 OF 4

ITEM		PART NO.	DESCRIPTION	QTY
1	**c**	1531383	Wire Harness (Engine) (☞ Figure 4-29)	1
1	**d**	1537659	Wire Harness (Engine) (☞ Figure 4-29)	1
1	**g**	1607648	Wire Harness (Engine) (☞ Figure 4-29)	1
2		397676	Strap Clamp	3
3		1307121	Switch (24 Volt)	1
4		287816	Capscrew	2
5		320156	Washer	4
6		292680	Lockwasher	2
7		136687	Nut	2
8		816441	Battery Cable	1
9		1356947	Strap	1
10		320159	Washer	4
11		302401	Locknut	1
12		1484685	Locknut	1
13		1484686	Washer (Spring)	1
14	**h**	1519013	Plate	1
15		1367282	Alarm Assembly	1
16		136681	Capscrew	3
17		320157	Washer	5
18		292681	Lockwasher	3
19		239503	Nut	2
20		296408	Lockwasher	1
21		137852	Strap Clamp	AR
22		132131	Clamp	2
23		1307121	Switch (24 Volt)	1
24		302048	Screw	2
25		320156	Washer	2
26		292680	Lockwasher	2
27		136687	Nut	2
28		1385519	Fuse Holder	1
29		1508300	Fuse (125 Amp)	1
30		1391864	Battery Cable	1
31		1507212	Wire Harness (Switch To Grid Heater)	1
32		1521310	Adapter	2
33		2043634	Switch (Temperature)	1
34	**a**	1518111	Wire Harness (Chassis)	1
34	**b**	1519026	Wire Harness (Chassis)	1
35	**a**	1383832	Wire Harness	1
35	**b**	1383833	Wire Harness	1
36	**a**	1356947	Strap	7
36	**b**	1356947	Strap	12
37	**a**	320161	Washer	3
37	**b**	320161	Washer	9
38	**a**	320159	Washer	4
38	**b**	320159	Washer	9
39	**a**	302401	Locknut	4
39	**b**	302401	Locknut	9
40		137852	Strap Clamp	AR
41		1520495	Battery Cable	1
42		1520499	Battery Cable	1

©2006 HYSTER COMPANY

ELECTRICAL
CHASSIS (TIER II ENGINE)
SHEET 3 OF 4

ITEM		PART NO.	DESCRIPTION	QTY
43	**a**	1519129	Wire Harness (Hydraulic Oil Cooler)	1
43	**b**	1520540	Wire Harness (Hydraulic Oil Cooler)	1
44	**ae**	1495795	Wire Harness (Front End) (☞ Figure 4-31)	1
44	**af**	1573932	Wire Harness (Front End) (☞ Figure 4-32)	1
45	**a**	1521392	Wire Harness (Brake Temperature Switch)	1
45	**b**	1521391	Wire Harness (Brake Temperature Switch)	1
46		1480320	Alternator	1
47		1451328	Horn (400 dBA)	1
47		1451327	Horn (335 dBA)	1
48		292681	Lockwasher	1
49		176640	Capscrew	1
50		239503	Nut	1
51		320157	Washer	2
52		1384602	Wire Harness	1
53		246001	Capscrew	2
54		298132	Clamp	2
55		292683	Lockwasher	2

FOOTNOTES:
a Empty Container Handler
b Fork Lift Truck
c ⇒ S/N A214E01950A
d S/N A214E01951A⇔S/N A214E02181C
e ⇒ S/N A214E02077B
f S/N A214E02078B ⇒
g S/N A214E02181C ⇒
h ⇒ D/B 10/2002

©2006 HYSTER COMPANY

NOTES

ELECTRICAL (Figure 4-5)
CHASSIS (TIER II ENGINE)
SHEET 4 OF 4

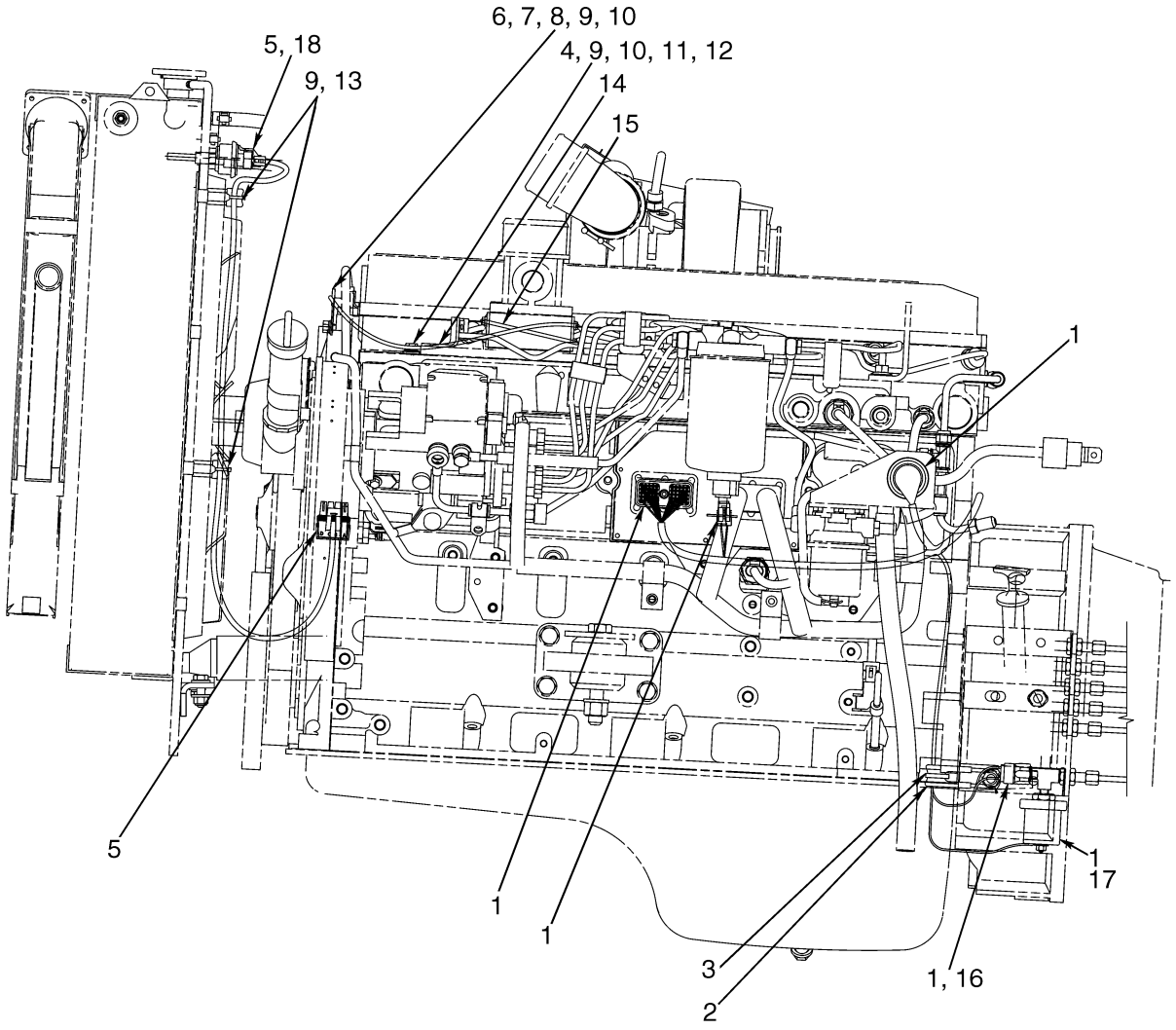

HP080368

©2006 HYSTER COMPANY

ELECTRICAL
CHASSIS (TIER II ENGINE)
SHEET 4 OF 4

ITEM		PART NO.	DESCRIPTION	QTY
1	**a**	1531383	Wire Harness (Engine) (☞ Figure 4-29)	1
1	**b**	1537659	Wire Harness (Engine) (☞ Figure 4-29)	1
1	**c**	1607648	Wire Harness (Engine) (☞ Figure 4-29)	1
2		1350911	Strap	1
3		397676	Strap Clamp	3
4		320159	Washer	4
5		1499053	Wire Harness	1
6		136681	Capscrew	3
7		320157	Washer	5
8		292681	Lockwasher	3
9		137852	Strap Clamp	AR
10		1350914	Strap	4
11		292513	Capscrew	3
12		292682	Lockwasher	3
13		1362277	Strap	3
14		1507212	Wire Harness (Switch To Grid Heater)	1
15		1508986	Wire Harness (Grid Heater To Grid Heater)	1
16		1323146	Pressure Switch (Transmission Oil)	1
17		1483645	Pressure Sensor (Transmission Oil)	1
18		1476852	Switch (Coolant Level)	1

FOOTNOTES:
a ⇒ S/N A214E01950A
b S/N A214E01951A⇔S/N A214E02180C
c S/N A214E02180C ⇒

©2006 HYSTER COMPANY

INSTRUMENT PANEL (Figure 4-6)
SHEET 1 OF 2

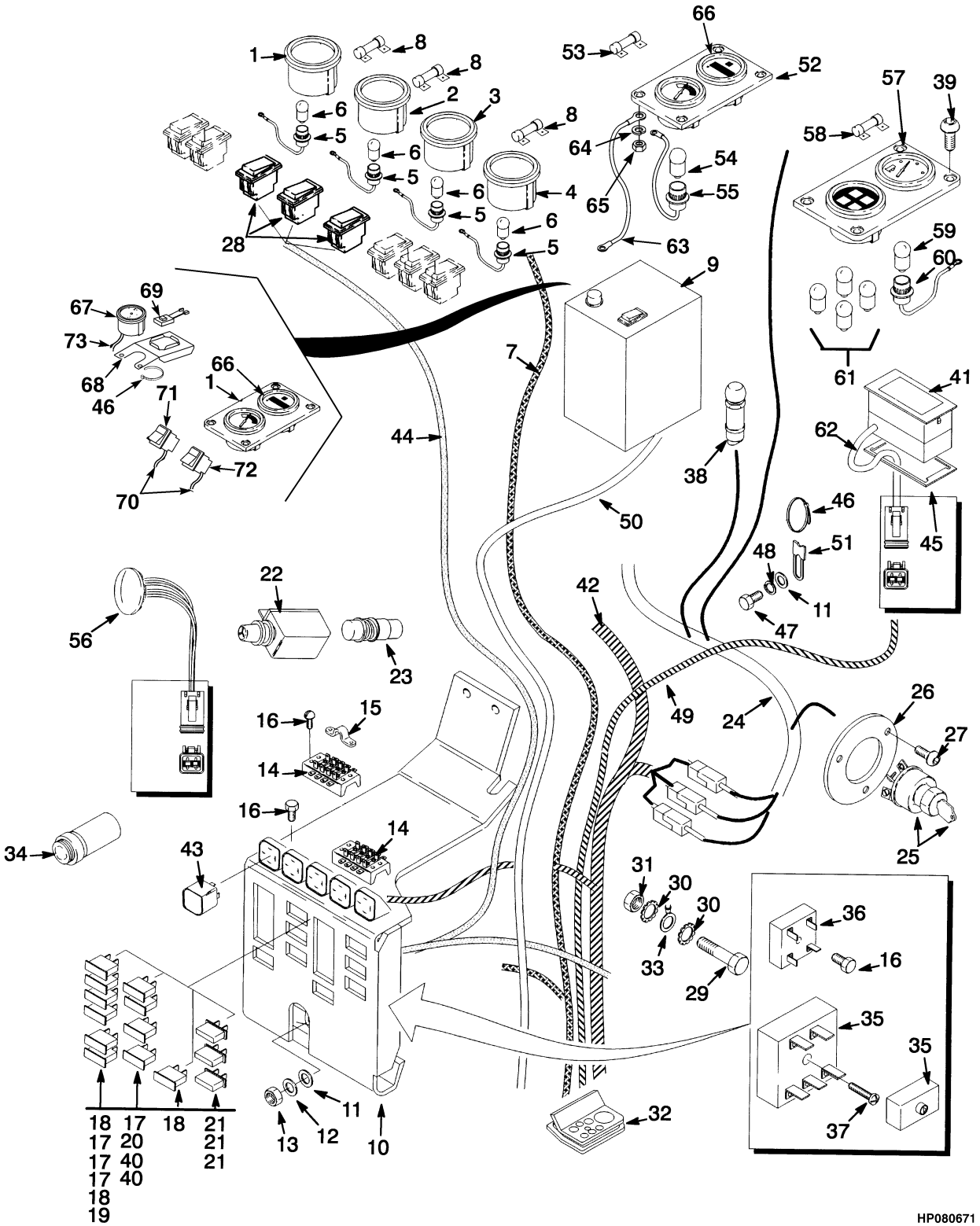

©2006 HYSTER COMPANY

INSTRUMENT PANEL
SHEET 1 OF 2

ITEM		PART NO.	DESCRIPTION	QTY
1		169781	Gauge (Oil Temperature)	1
2		1487908	Gauge (Transmission Oil)	1
3		1310688	Gauge (Voltmeter)	1
4		169759	Gauge (Oil Pressure)	1
5		169785	Socket Assembly	4
6		1310692	Bulb (24 Volt)	4
7		1336796	Wire Harness (Gauge) (Tier I Engine)	1
7		1514947	Wire Harness (Gauge) (Tier II Engine)	1
8		1307110	Resistor	3
9		. . . . .	Control Panel (Attachment) (☞ Figure 4-9, ☞ Figure 4-10)	1
10		1383846	Panel (Fuse)	1
11		320157	Washer	3
12		320156	Washer	2
13		136687	Nut	2
14		1301296	Terminal Block	2
15		1301704	Jumper	2
16		1301284	Screw	7
17		370647	Fuse (10 Amp)	4
17	**a**	381846	Fuse Holder	1
18		370646	Fuse (5 Amp)	3
19		370648	Fuse (20 Amp)	1
20		1310630	Fuse (15 Amp)	1
21	**g**	1301282	Breaker (5 Amp)	3
21		1499598	Breaker (5 Amp)	3
22		1307694	Buzzer (Air Pressure Alarm)	1
23		1315872	Lamp Assembly (Tier I Engine)	1
23		1315872	Lamp Assembly (Tier II Engine)	2
23		134810	Terminal	2
23		1377187	Lens	1
23		1377189	Bulb	1
23		181045	Connector	2
24		1385517	Wire Harness (Steering Pod) (Tier I Engine)	1
24		1518935	Wire Harness (Steering Pod) (Tier II Engine)	1
25		379902	Ignition Switch	1
25		186304	Key	2
26		1301739	Plate	1
27		379650	Screw	3
28		1301613	Switch (Cab Wiper/Washer)	3
29		136749	Capscrew	1
30		296380	Lockwasher	3
31		239503	Nut	2
32		1301640	Seal	1
33		1345720	Wire Harness	1
34		1393781	Alarm	1
35	**c**	1393779	Timer	1
35		1385516	Potentiometer	1
35	**d**	1608893	Timer	1
36		1301224	Diode Block	1
37		227176	Screw	1
38		370776	Switch (Momentary)	1
39		1330574	Capscrew	8

©2006 HYSTER COMPANY

INSTRUMENT PANEL
SHEET 1 OF 2

ITEM		PART NO.	DESCRIPTION	QTY
40		1300057	Fuse (7.5 Amp)	2
41		1553817	Display	1
42		1383845	Wire Harness (Operator Compartment) (Tier I Engine) (☞ Figure 4-40, ☞ Figure 4-41)	1
42	**c**	1518275	Wire Harness (Operator Compartment) (Tier II Engine) (☞ Figure 4-42, ☞ Figure 4-43)	1
42	**d**	1609035	Wire Harness (Operator Compartment) (Tier II Engine) (☞ Figure 4-42, ☞ Figure 4-43)	1
43		1307687	Relay (Horn) (Tier I Engine)	3
43		1307687	Relay (Horn) (Tier II Engine)	5
44	**g**	1383844	Wire Harness (Cab) (☞ Figure 4-22)	1
44	**h**	1499350	Wire Harness (Cab) (☞ Figure 4-23)	1
45		1393784	Retainer	1
46		137852	Strap Clamp	AR
47		287805	Capscrew	1
48		292681	Lockwasher	1
49	**e**	1383830	Wire Harness (Transmission) (☞ Figure 4-51)	1
49	**f**	1457954	Wire Harness (Transmission) (☞ Figure 4-52)	1
49	**d**	1606670	Wire Harness (Transmission) (☞ Figure 4-53)	1
50	**i**	1383863	Wire Harness (Attachment Control) (☞ Figure 4-17)	1
50	**j**	1494384	Wire Harness (Attachment Control) (☞ Figure 4-18)	1
50	**b**	1574088	Wire Harness (Attachment Control Switch) (☞ Figure 4-19)	1
50	**d**	1607978	Wire Harness (Attachment Control) (☞ Figure 4-20)	1
51		1356947	Strap	1
52		1307684	Instrument Cluster Assembly (LH) (Includes Hourmeter and Water Temperature gauge)	1
52		370471	Instrument Cluster	1
53		1307110	Resistor	1
54		1310692	Bulb (24 Volt)	1
55		169785	Socket Assembly	1
56		1383831	Switch (Park Brake)	1
57		1507210	Instrument Cluster (Tier II Engine)	1
57		1507359	Gauge Cluster (Tier II Engine)	1
57		1307683	Instrument Cluster Assembly (RH) (Tier I Engine)	1
57		1301645	Instrument Cluster (Tier I Engine)	1
58		1307110	Resistor (Tier I Engine)	1
59		1310692	Bulb (24 Volt) (Tier I Engine)	1
60		169785	Socket Assembly (Tier I Engine)	1
60		169784	Socket (Tier I Engine)	1
60		206027	Terminal (Tier I Engine)	1
61		1307682	Bulb	4
62		1553819	Wire Harness (Dash Display)	1
63		1311403	Wire (Horn Ground)	1
64		16743	Lockwasher	1
65		15049	Nut	1
66		1480539	Hourmeter	1
67		169775	Fuel Gauge (Tier II Engine)	1
68		1479105	Bracket (Tier II Engine)	1
69		1479227	Switch Assembly (Tier II Engine)	1
70		1495149	Wire Harness (Diagnosis) (Tier II Engine)	1
71		1527404	Switch Assembly (Tier II Engine)	1

©2006 HYSTER COMPANY

INSTRUMENT PANEL
SHEET 1 OF 2

ITEM	PART NO.	DESCRIPTION	QTY
72	1316527	Switch Assembly (Tier II Engine)	1
73	1514948	Wire Harness (Gauge) (Tier II Engine)	1

FOOTNOTES:

a Not Illustrated
b S/N A214E02078B ⇒
c ⇒ S/N A214E02193C
d S/N A214E02194C ⇒
e ⇒ S/N A214E-1615
f S/N A214E-1616 ⇒
g ⇒ S/N A214E1797Y
h S/N A214E1798Y ⇒
i ⇒ S/N A214E1806Y
j S/N A214E1807Y ⇒

©2006 HYSTER COMPANY

INSTRUMENT PANEL (Figure 4-7)
SHEET 2 OF 2

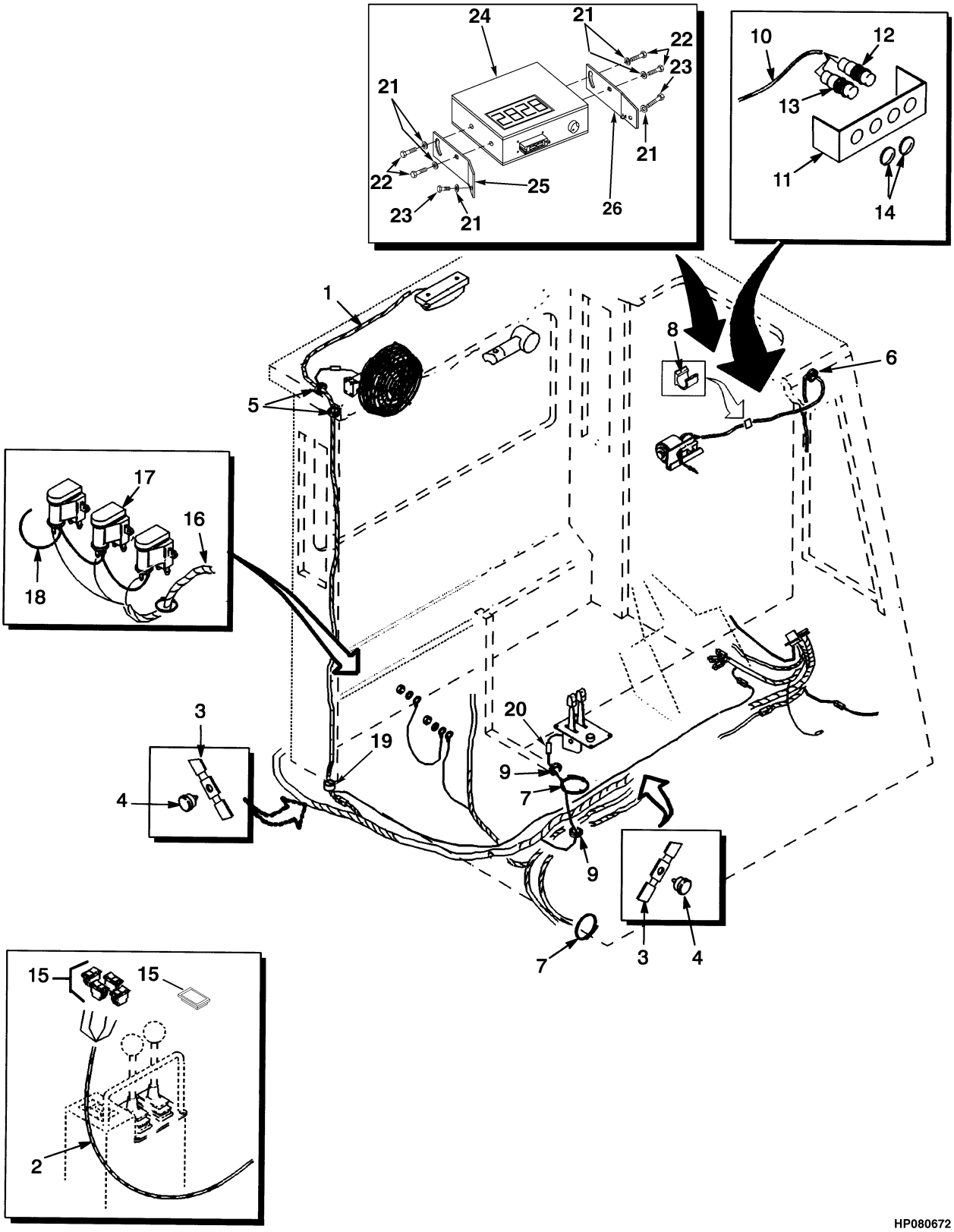

©2006 HYSTER COMPANY

INSTRUMENT PANEL
SHEET 2 OF 2

ITEM		PART NO.	DESCRIPTION	QTY
1	**b**	1385514	Wire Harness (Module) (☞ Figure 4-38)	1
1	**c**	1499351	Wire Harness (Module) (☞ Figure 4-39)	1
2		1383841	Wire Harness (Carriage Control Switch) (☞ Figure 4-24)	1
3		1301593	Clamp	11
4		340044	Gripnail	11
5		102990	Grommet	2
6		164658	Grommet	1
7		137852	Strap Clamp	2
8		279740	Clamp	3
9		1300757	Grommet	2
10	**d**	1385510	Wire Harness (Auxiliary Indicator Lights)	1
10	**e**	1534455	Wire Harness (Attachment Lights) (☞ Figure 4-21)	1
11	**e**	1385508	Bracket	1
12	**a**	1382840	Lamp (Green)	1
12	**a**	1382843	Bulb	1
13	**a**	1382842	Lamp (Amber)	1
13	**a**	1382843	Bulb	1
14	**e**	339528	Plug	2
15		1316527	Switch Assembly	4
15		1306924	Switch	1
15		1310625	Lens	1
16		1384602	Wire Harness (Windshield Washer) (☞ Figure 4-55)	1
17		1316593	Pump Assembly (24 Volt) (☞ Figure 1-16)	3
18		1311268	Wire Harness (Windshield Washer Ground)	1
19		1301424	Bushing	2
20		181046	Connector	2
21		320156	Washer	6
22		292500	Capscrew	4
23		16073	Screw	2
24		1506674	Light Bar (Twistlock) (☞ Figure 4-8)	1
24		1554156	Key Set	1
25		1506665	Bracket	1
26		1506666	Bracket	1

FOOTNOTES:
a ⇒ S/N A214E-01650
b ⇒ S/N A214E1797Y
c S/N A214E1798Y ⇒
d ⇒ S/N A214E-1806
e S/N A214E-1807 ⇒

©2006 HYSTER COMPANY

LIGHT BAR AND MOUNT (Figure 4-8)

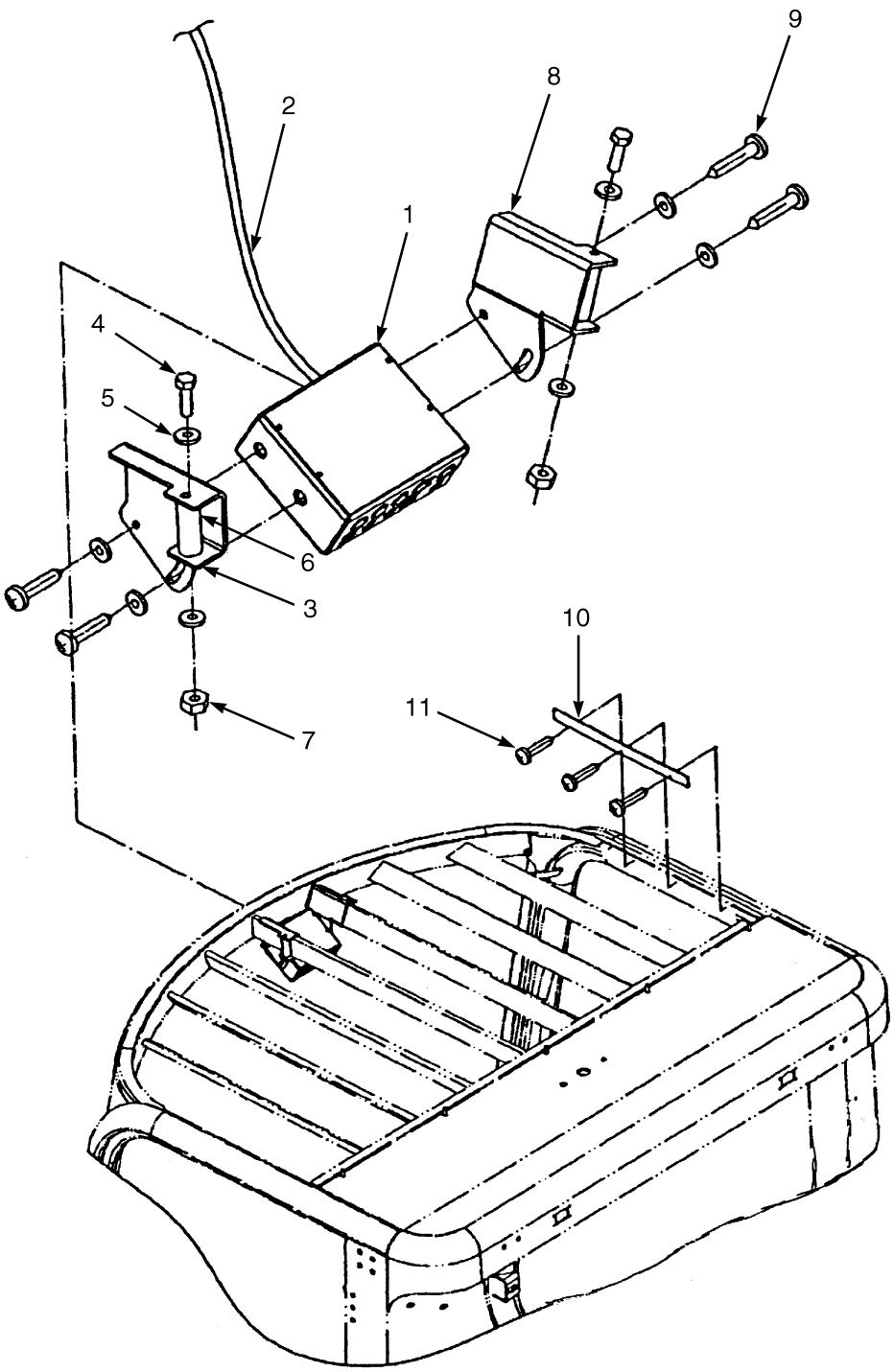

HP081545

©2006 HYSTER COMPANY

LIGHT BAR AND MOUNT

ITEM	PART NO.	DESCRIPTION	QTY
	1506674	Light Bar (Twistlock)	1
1	1571806	Light Bar	1
2	1571805	Wire Harness (Light Bar)	1
3	1506673	Bracket (LH)	1
4	1506669	Screw	2
5	1506738	Washer	8
6	1506671	Sleeve	2
7	1506670	Nut	2
8	1506672	Bracket (RH)	1
9	1506668	Screw	4
10	1506667	Plate	1
11	1468319	Screw	3
12	1554156	Key Set (Not Illustrated)	1

©2006 HYSTER COMPANY

CONTROL PANEL (Figure 4-9)
(⇒S/N A214E-1806)

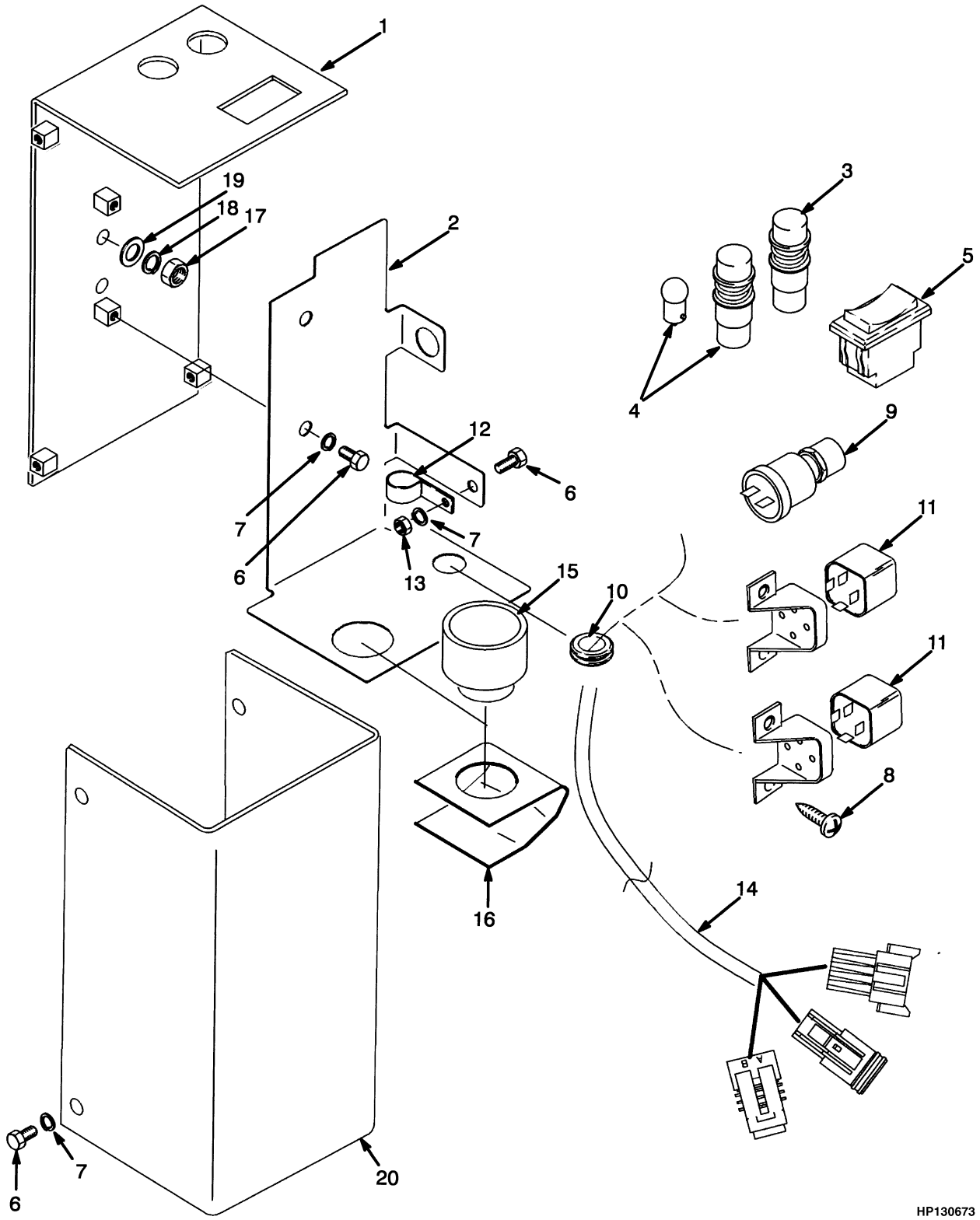

©2006 HYSTER COMPANY

CONTROL PANEL
(⇒S/N A214E-1806)

ITEM		PART NO.	DESCRIPTION	QTY
	a	1381998	Control Assembly	1
	b	1464284	Control Assembly	1
1		1384476	Bracket	1
2		1323854	Plate	1
3		1382842	Lamp (Amber)	1
3		1382843	Bulb	1
4		1382840	Lamp (Green)	1
4		1382843	Bulb	1
5		1316527	Switch Assembly	1
5		1520356	Switch	1
5		1310625	Lens	1
6		287817	Capscrew	3
7		292680	Lockwasher	3
8		227096	Screw	4
9		370776	Switch (Momentary)	1
10		1152816	Grommet	1
11		1307687	Relay	2
12		132131	Clamp	1
13		136687	Nut	1
14	**a**	1382874	Wire Harness (Attachment Controls)	1
14	**b**	1464283	Wire Harness (Attachment Controls)	1
15		1361205	Alarm	1
16		1361207	Deflector	1
17		239503	Nut	2
18		292681	Lockwasher	2
19		296418	Washer	2
20		1323852	Cover	1

FOOTNOTES:
a ⇒ S/N A214E-1650
b S/N A214E-1651 ⇒

CONTROL PANEL (Figure 4-10)
(S/N A214E-1807⇒)

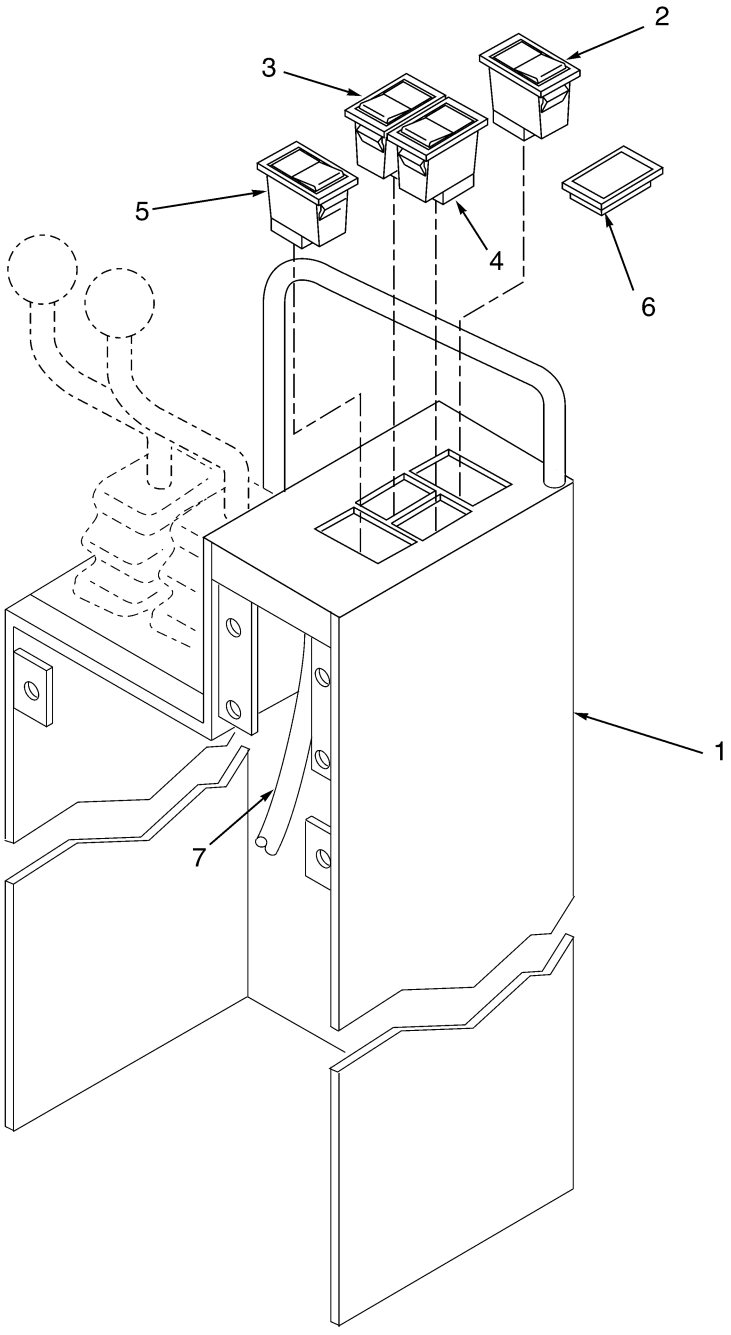

HP081228

©2006 HYSTER COMPANY

CONTROL PANEL
(S/N A214E-1807⇒)

KEY:
A: Attachment With Twist Locks
B: Attachment Without Twist Locks
C: Carriage Control

ITEM		PART NO.	DESCRIPTION	QTY A	QTY B	QTY C
1		1454177	Hydraulic Control Pod (☞ Figure 9-12, ☞ Figure 9-13)	1	1	1
2		1316527	Switch Assembly	1	1	..
3		1316527	Switch Assembly	1	..	1
4		1316527	Switch Assembly	..	..	1
5		1316527	Switch Assembly	1	1	1
6	**a**	376949	Cover	1	2	1
7		1383841	Wire Harness (Carriage Control Switch)	..	..	1
7	**b**	1494384	Wire Harness (Attachment Control Switch) (☞ Figure 4-18)	1	1	..
7	**c**	1574088	Wire Harness (Attachment Control Switch) (☞ Figure 4-19)	1	1	..
7	**d**	1607978	Wire Harness (Attachment Control Switch) (☞ Figure 4-20)	1	1	..

FOOTNOTES:
a Used Where No Switch Installed
b ⇒ S/N A214E02077B
c S/N A214E02078B ⇒
d S/N A214E02194C ⇒

LIGHT CONTROLS (Figure 4-11)

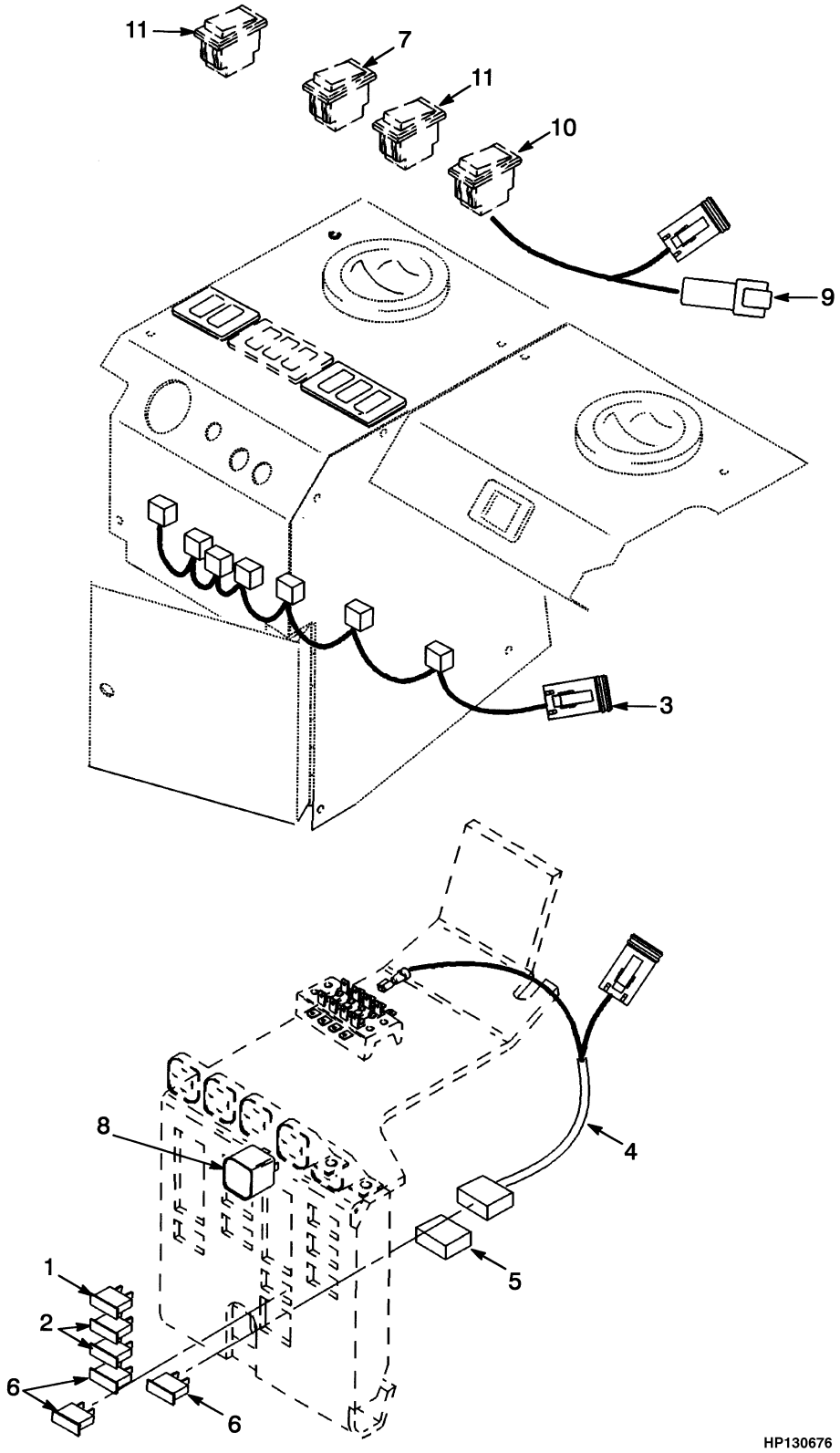

©2006 HYSTER COMPANY

LIGHT CONTROLS

KEY:
A: Fork Lift Truck
B: Empty Container Handler

ITEM	PART NO.	DESCRIPTION	QTY A	QTY B
1	370648	Fuse (20 Amp)	1	1
2	1310630	Fuse (15 Amp)	2	2
3	1336790	Wire Harness (Switch Lights) (☞ Figure 4-48)	1	1
4	1385513	Wire Harness (Rotating Beacon) (☞ Figure 4-46)	1	1
5	381846	Fuse Holder	1	1
6	370647	Fuse (10 Amp)	3	3
7	1301619	Switch Assembly	1	1
7	1310627	Switch	1	1
7	1301157	Lens (Green) (Work Light)	1	1
8	2003859	Flasher Unit	1	1
9	1384495	Wire Harness (Warning) (☞ Figure 4-49)	1	1
10	1452310	Switch Assembly (Hazard Warning)	1	1
10	1331560	Switch	1	1
10	1452308	Lens	1	1
11	1301617	Switch Assembly (Work Lights)	2	2
11	1310627	Switch	1	1
11	1301156	Lens (Green) (Light)	1	1

©2006 HYSTER COMPANY

LIGHTS (Figure 4-12)
EMPTY CONTAINER HANDLER

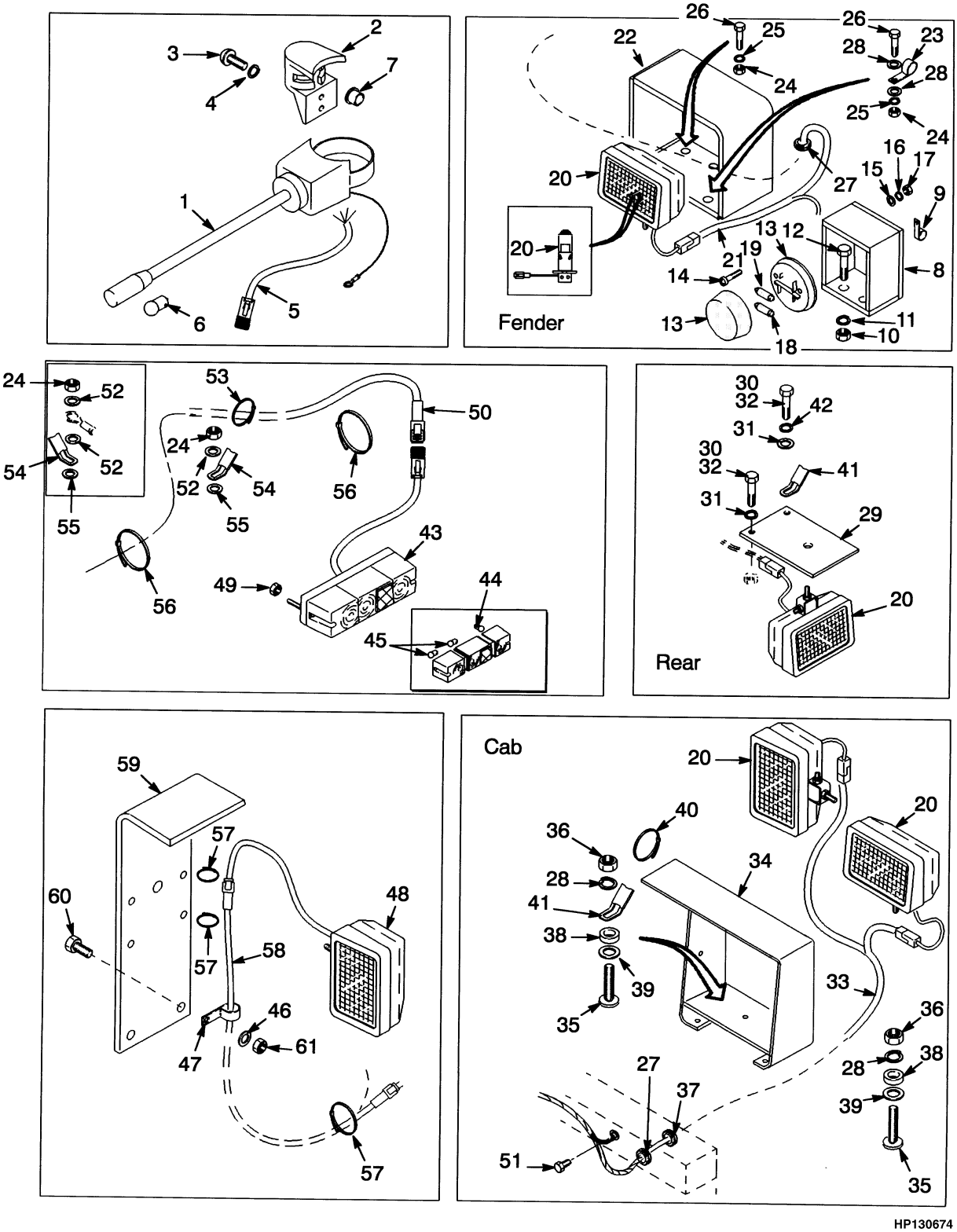

HP130674

©2006 HYSTER COMPANY

LIGHTS
EMPTY CONTAINER HANDLER

ITEM	PART NO.	DESCRIPTION	QTY
1	815914	Switch (Turn Signal)	1
2	1360660	Mount	1
3	369242	Capscrew	2
4	379675	Washer	2
5	1336789	Wire Harness (Turn Signal) (☞ Figure 4-54)	1
6	1310641	Bulb (24 Volt)	1
7	286901	Bushing	1
8	374021	Bracket	2
9	18905	Clamp	2
10	239503	Nut	4
11	292681	Lockwasher	4
12	176640	Capscrew	4
13	373091	Light	2
13	378070	Lens	1
14	302036	Screw	4
15	197067	Washer	4
16	292679	Lockwasher	4
17	292668	Nut	4
18	384014	Bulb	2
19	1310638	Bulb	2
20	1382867	Light Assembly (Sealed Beam) (24 Volt)	2
20	1476614	Light (24 Volt)	1
20	1330409	Connector	1
20	1330414	Secondary Lock	1
20	1363885	Terminal (Pin)	2
21	1384616	Wire Harness (☞ Figure 4-34)	1
22	816442	Support	2
23	164488	Clamp	2
24	136692	Nut	6
25	292682	Lockwasher	4
26	287860	Capscrew	4
27	102990	Grommet	4
28	320159	Washer	8
29	353379	Plate	2
30	132861	Capscrew	4
31	292681	Lockwasher	4
32	358674	Sealant	AR
33	1384606	Wire Harness (Work Lights) (☞ Figure 4-56)	1
34	1331591	Bracket (RH)	1
34	1331592	Bracket (LH)	1
35	1326071	Stud	6
36	302401	Locknut	6
37	216735	Grommet	2
38	1300165	Spacer	6
39	320162	Washer	6
40	137852	Strap Clamp	4
41	1356947	Strap	4
42	320158	Washer	2
43	1479898	Tail Light Assembly	2
43	1491816	Lens Assembly	1
43	1491810	Black String	1

©2006 HYSTER COMPANY

LIGHTS
EMPTY CONTAINER HANDLER

ITEM		PART NO.	DESCRIPTION	QTY
43		1491814	Wire Harness	1
44		1491811	Bulb (24 Volt)	1
45		1491813	Bulb (24 Volt)	2
46	**a**	292683	Lockwasher	4
47	**a**	154208	Clamp	2
48	**a**	1382867	Light Assembly (Sealed Beam)	2
49		316833	Nut	4
50		1384605	Wire Harness (Rear Light) (☞ Figure 4-45)	1
51		136681	Capscrew	1
52		320159	Washer	3
53		137852	Strap Clamp	2
54		1356947	Strap	2
55		320161	Washer	2
56		129563	Strap Clamp	AR
57	**a**	137852	Strap Clamp	AR
58	**a**	1452319	Wire Harness (Work Lights) (☞ Figure 4-57)	1
59	**a**	1331593	Bracket	2
60	**a**	292529	Capscrew	4
61	**a**	216877	Nut	4

FOOTNOTES:
a ⇒ D/B 09/2003

©2006 HYSTER COMPANY

NOTES

LIGHTS (Figure 4-13)
FORK LIFT TRUCK

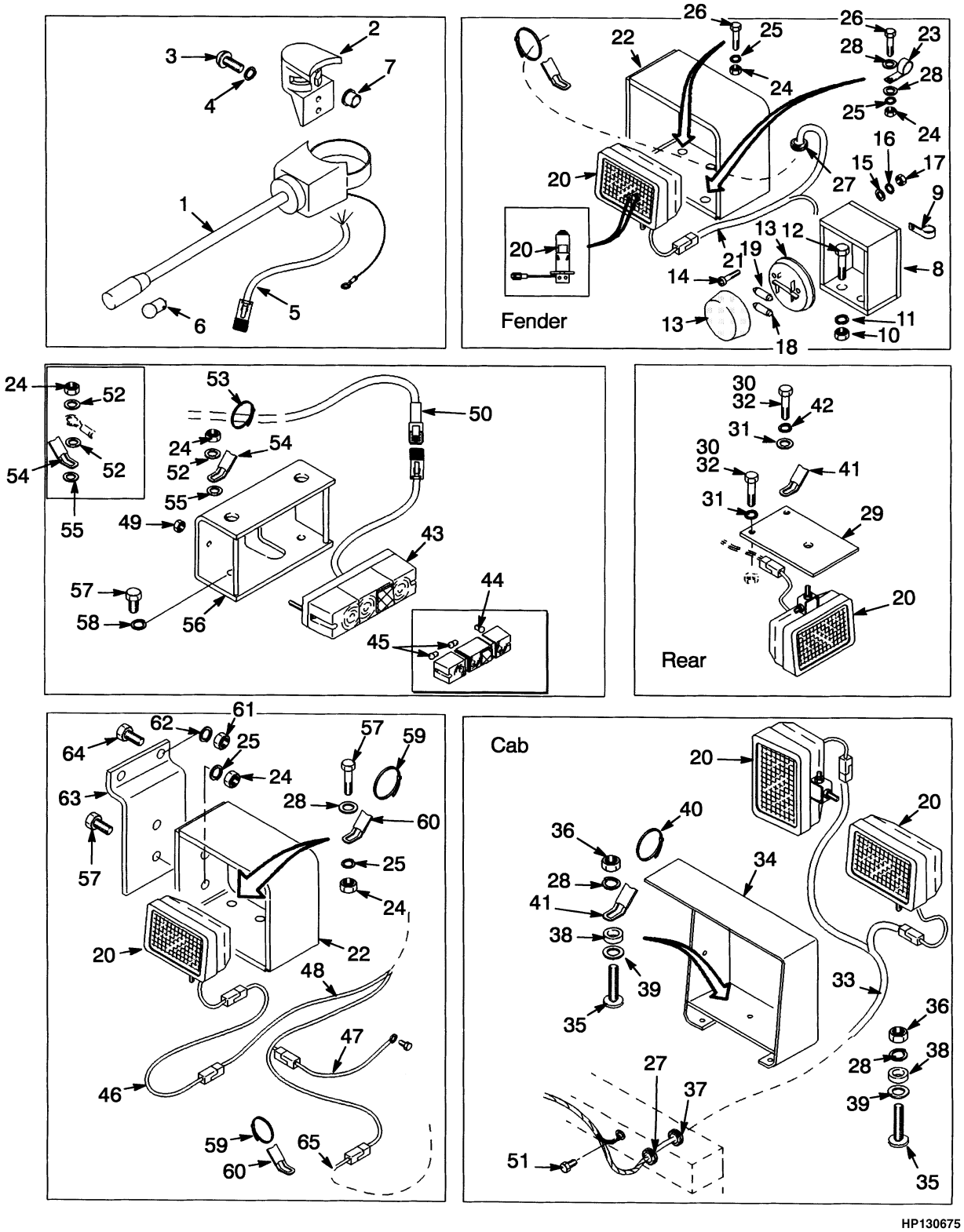

HP130675

©2006 HYSTER COMPANY

LIGHTS
FORK LIFT TRUCK

ITEM	PART NO.	DESCRIPTION	QTY
1	815914	Switch (Turn Signal)	1
2	1360660	Mount	1
3	369242	Capscrew	2
4	379675	Washer	2
5	1336789	Wire Harness (Turn Signal) (☞ Figure 4-54)	1
6	1310641	Bulb (24 Volt)	1
7	286901	Bushing	1
8	374021	Bracket	2
9	18905	Clamp	2
10	239503	Nut	4
11	292681	Lockwasher	4
12	176640	Capscrew	4
13	373091	Light	2
13	378070	Lens	1
14	302036	Screw	4
15	197067	Washer	4
16	292679	Lockwasher	4
17	292668	Nut	4
18	384014	Bulb	2
19	1310638	Bulb	2
20	1382867	Light Assembly (Sealed Beam) (24 Volt)	10
20	1476614	Light (24 Volt)	1
20	1330409	Connector	1
20	1330414	Secondary Lock	1
20	1363885	Terminal (Pin)	2
21	1384616	Wire Harness (☞ Figure 4-34)	1
22	816442	Support	4
23	164488	Clamp	2
24	136692	Nut	12
25	292682	Lockwasher	10
26	287860	Capscrew	4
27	102990	Grommet	4
28	320159	Washer	10
29	353379	Plate	2
30	132861	Capscrew	4
31	292681	Lockwasher	4
32	358674	Sealant	AR
33	1384606	Wire Harness (Work Lights) (☞ Figure 4-56)	1
34	1331591	Bracket (RH)	1
34	1331592	Bracket (LH)	1
35	1326071	Stud	6
36	302401	Locknut	6
37	216735	Grommet	2
38	1300165	Spacer	6
39	320162	Washer	6
40	137852	Strap Clamp	4
41	1356947	Strap	4
42	320158	Washer	2
43	1479898	Tail Light Assembly	2
43	1491816	Lens Assembly	1
43	1491810	Black String	1

©2006 HYSTER COMPANY

LIGHTS
FORK LIFT TRUCK

ITEM		PART NO.	DESCRIPTION	QTY
43		1491814	Wire Harness	1
44		1491811	Bulb (24 Volt)	1
45		1491813	Bulb (24 Volt)	2
46	**a**	1452315	Wire Harness (RH) (Work Light Extension) (☞ Figure 4-59)	1
46	**b**	1452316	Wire Harness (RH) (Work Light Extension) (☞ Figure 4-59)	1
47	**c**	1452324	Wire Harness (Jumper) (☞ Figure 4-44)	1
48		1452323	Wire Harness (Work Lights) (☞ Figure 4-58)	1
49		316833	Nut	4
50		1384605	Wire Harness (Rear Light) (☞ Figure 4-45)	1
51		136681	Capscrew	1
52		320159	Washer	3
53		137852	Strap Clamp	2
54		1356947	Strap	2
55		320161	Washer	2
56		1545532	Bracket	2
57		287854	Capscrew	10
58		292682	Lockwasher	4
59		137852	Strap Clamp	AR
60		1356947	Strap	AR
61		216877	Nut	4
62		292683	Lockwasher	4
63	**d**	1311425	Bracket	2
63	**e**	1460312	Bracket	2
64		292528	Capscrew	4
65		1452552	Wire Harness (LH) (Work Lights Extension) (☞ Figure 4-59)	1

FOOTNOTES:
a 2900 mm thru 5300 mm Lift
b 6100 mm thru 6900 mm Lift
c Without Front Drive Lights
d ⇒ S/N A214E-2318
e S/N A214E-2319 ⇒

©2006 HYSTER COMPANY

NOTES

LIGHTS (Figure 4-14)
ROTATING BEACON

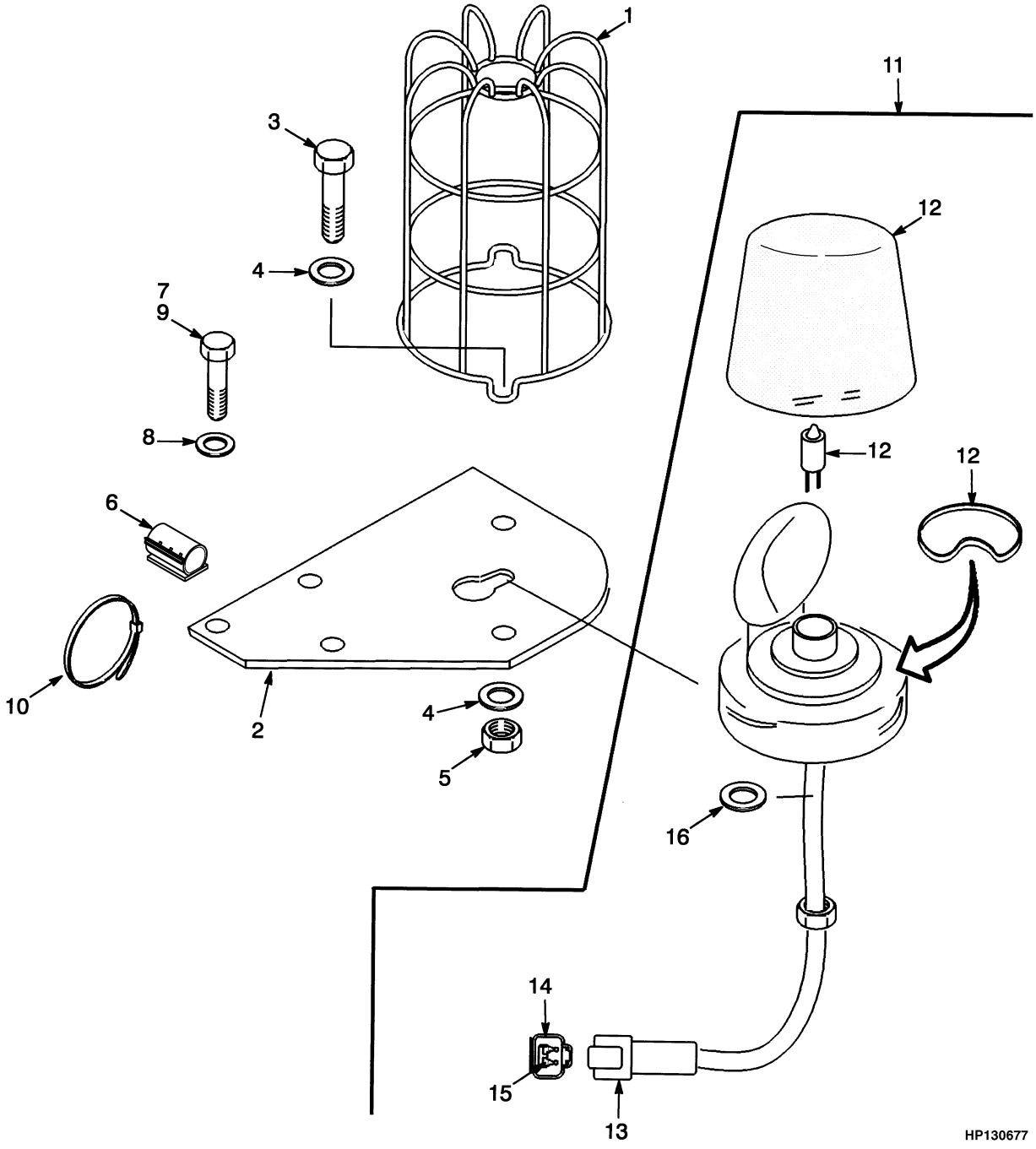

©2006 HYSTER COMPANY

LIGHTS
ROTATING BEACON

ITEM	PART NO.	DESCRIPTION	QTY
1	250095	Guard	1
2	1385512	Plate	1
3	302049	Screw	2
4	320156	Washer	4
5	302399	Nut	2
6	1301727	Clamp	1
7	176640	Capscrew	2
8	292681	Lockwasher	2
9	280472	Sealant	AR
9	358674	Sealant (Optional)	AR
10	137852	Strap Clamp	1
11	1385523	Rotating Beacon Assembly	1
12	1385521	Rotating Beacon	1
12	. . . . .	Lens	1
12	. . . . .	Belt	1
12	1453564	Bulb (24 Volt)	1
13	1385513	Wire Harness	1
13	1330419	Connector	1
14	1330424	Secondary Lock	1
15	1330438	Terminal (Socket)	2
16	320162	Washer	1

©2006 HYSTER COMPANY

WIRE HARNESS (Figure 4-15)
ATTACHMENT CONTROL
SHEET 1 OF 2
(⇒S/N A214E-1650)

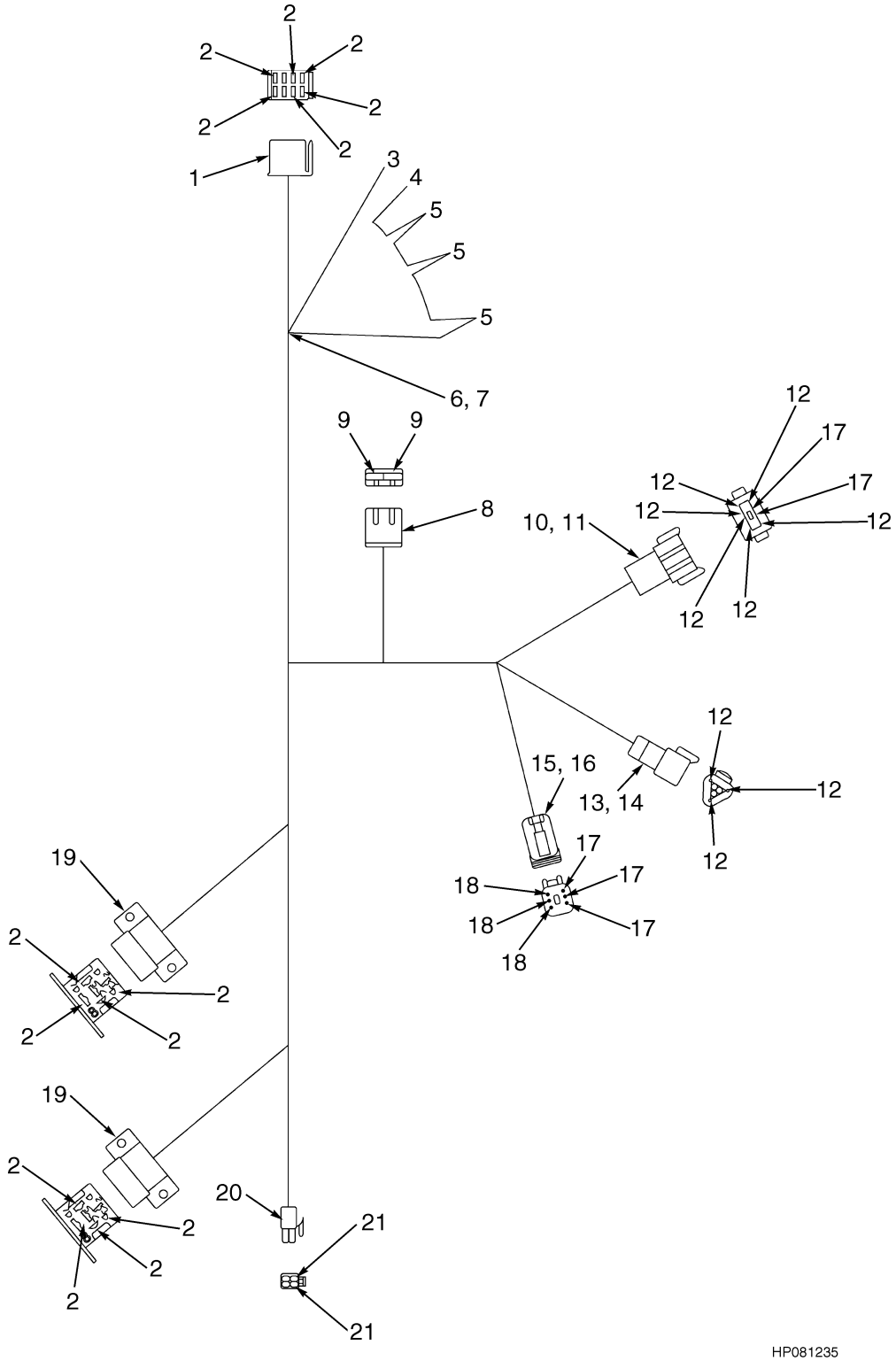

©2006 HYSTER COMPANY

WIRE HARNESS
ATTACHMENT CONTROL
SHEET 1 OF 2
(⇒S/N A214E-1650)

ITEM	PART NO.	DESCRIPTION	QTY
	1382874	Wire Harness	1
1	1301154	Housing	1
2	1331233	Blade	14
3	380121	Terminal	1
4	325789	Fitting	1
5	378451	Fitting	3
6	181046	Connector	1
7	134811	Terminal	1
8	346330	Connector Body	1
9	370730	Blade	2
10	1330413	Connector	1
11	1330418	Secondary Lock	1
12	1330437	Terminal (Pin)	9
13	1330410	Connector	1
14	1330415	Secondary Lock	1
15	1330422	Connector	1
16	1330428	Secondary Lock	1
17	1330439	Insulator	5
18	1330438	Terminal (Socket)	3
19	1301229	Connector Module	2
20	1361208	Connector	1
21	1361209	Socket	2

©2006 HYSTER COMPANY

WIRE HARNESS (Figure 4-16)
ATTACHMENT CONTROL
SHEET 2 OF 2
(⇒S/N A214E-1650)

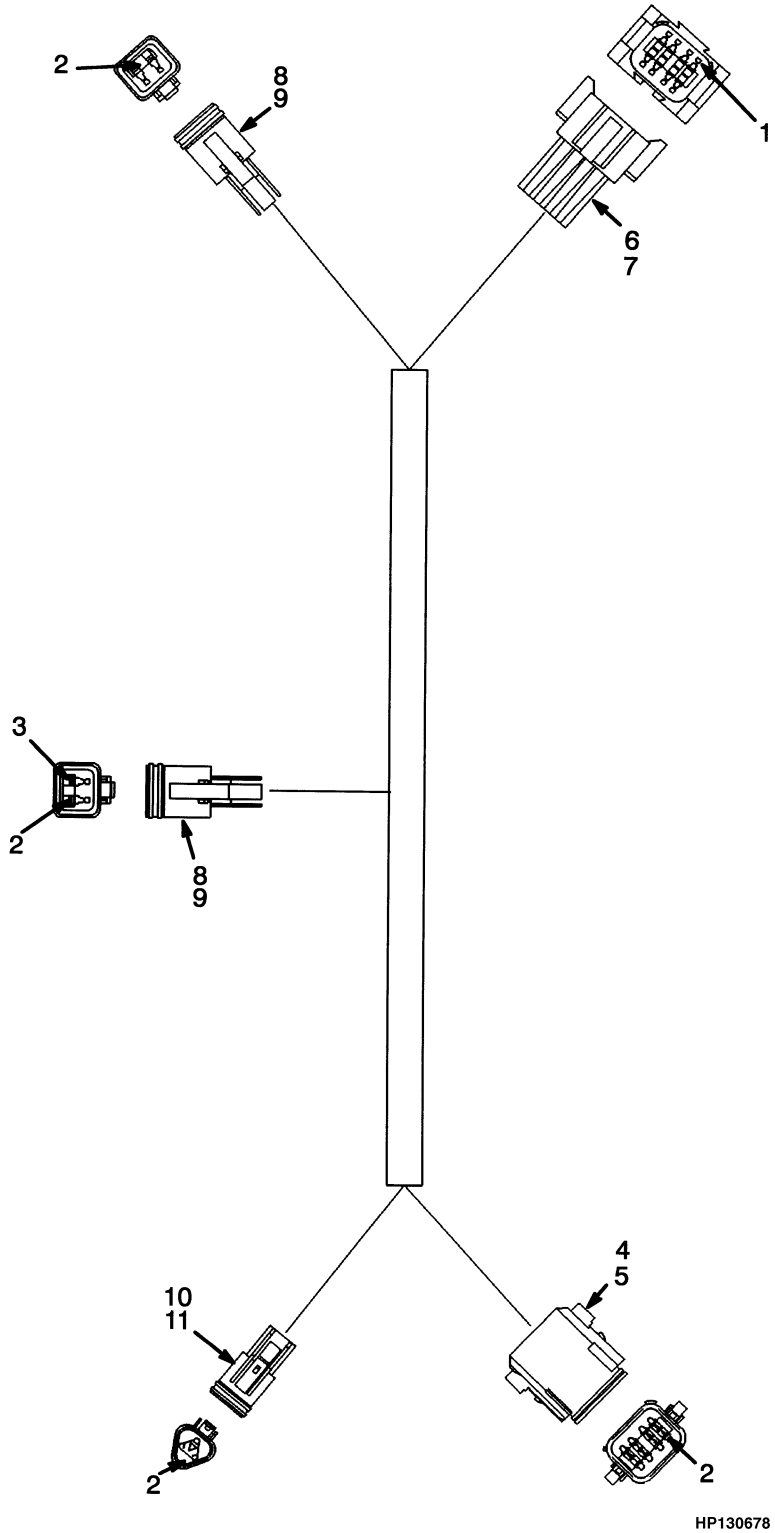

©2006 HYSTER COMPANY

WIRE HARNESS
ATTACHMENT CONTROL
SHEET 2 OF 2
(⇒S/N A214E-1650)

ITEM	PART NO.	DESCRIPTION	QTY
	1383863	Wire Harness	1
1	1330437	Terminal (Pin)	8
2	1330438	Terminal (Socket)	14
3	1330439	Insulator	1
4	1330423	Connector	1
5	1330429	Secondary Lock	1
6	1330413	Connector	1
7	1330418	Secondary Lock	1
8	1330419	Connector	2
9	1330424	Secondary Lock	2
10	1330420	Connector	1
11	1330426	Secondary Lock	1

©2006 HYSTER COMPANY

WIRE HARNESS (Figure 4-17)
ATTACHMENT CONTROL
(⇒S/N A214E-1806)

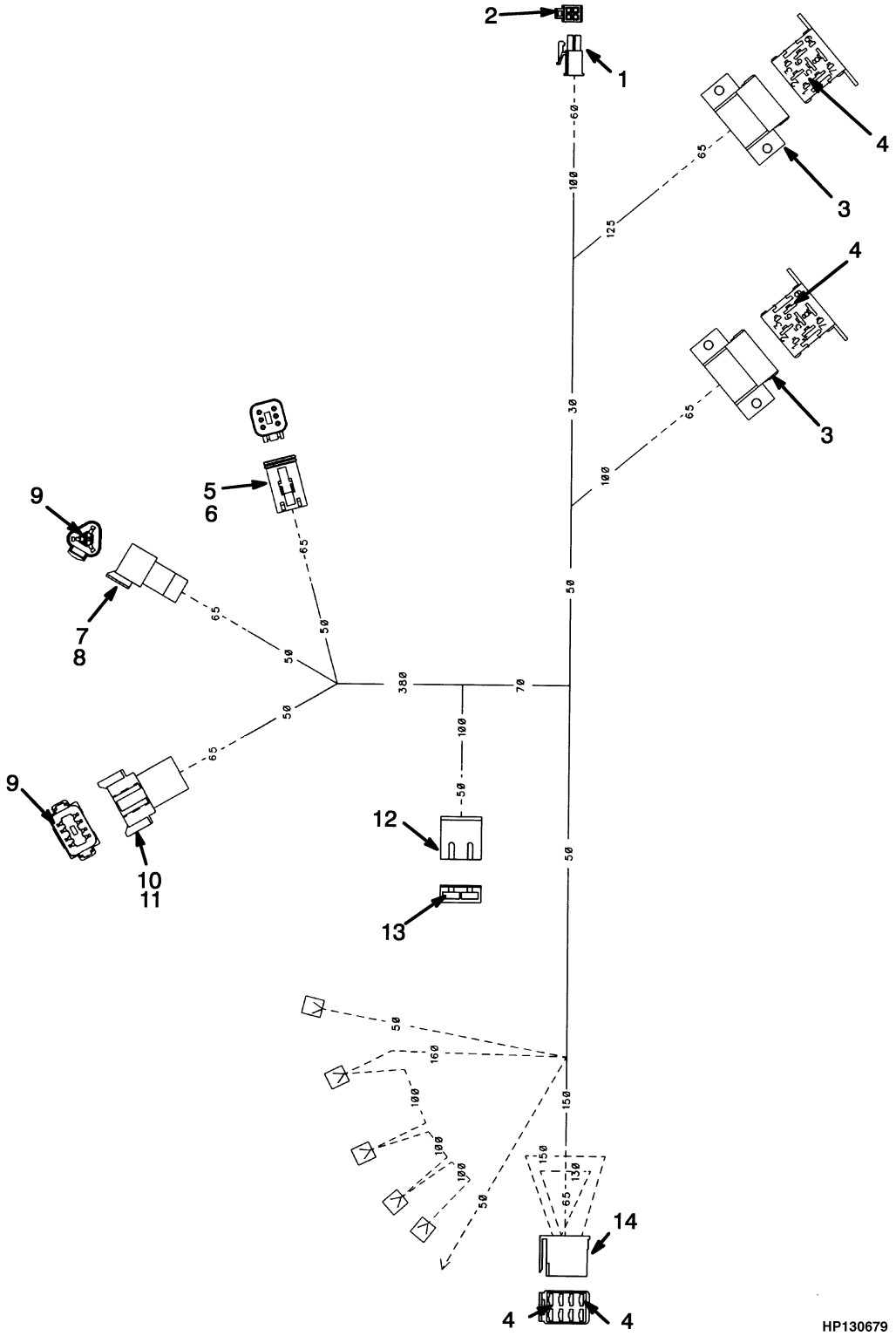

©2006 HYSTER COMPANY

WIRE HARNESS
ATTACHMENT CONTROL
(⇒S/N A214E-1806)

ITEM	PART NO.	DESCRIPTION	QTY
	1464283	Wire Harness	1
1	1361208	Connector	1
2	1361209	Socket	2
3	1301229	Connector Module	2
4	1331233	Blade	14
5	1330422	Connector	1
6	1330428	Secondary Lock	1
7	1330410	Connector	1
8	1330415	Secondary Lock	1
9	1330437	Terminal (Pin)	12
10	1330413	Connector	1
11	1330418	Secondary Lock	1
12	346330	Connector Body	1
13	370790	Fitting	2
14	1301154	Housing	1

©2006 HYSTER COMPANY

WIRE HARNESS (Figure 4-18)
ATTACHMENT CONTROL SWITCH
(S/N A214E-1807⇒)

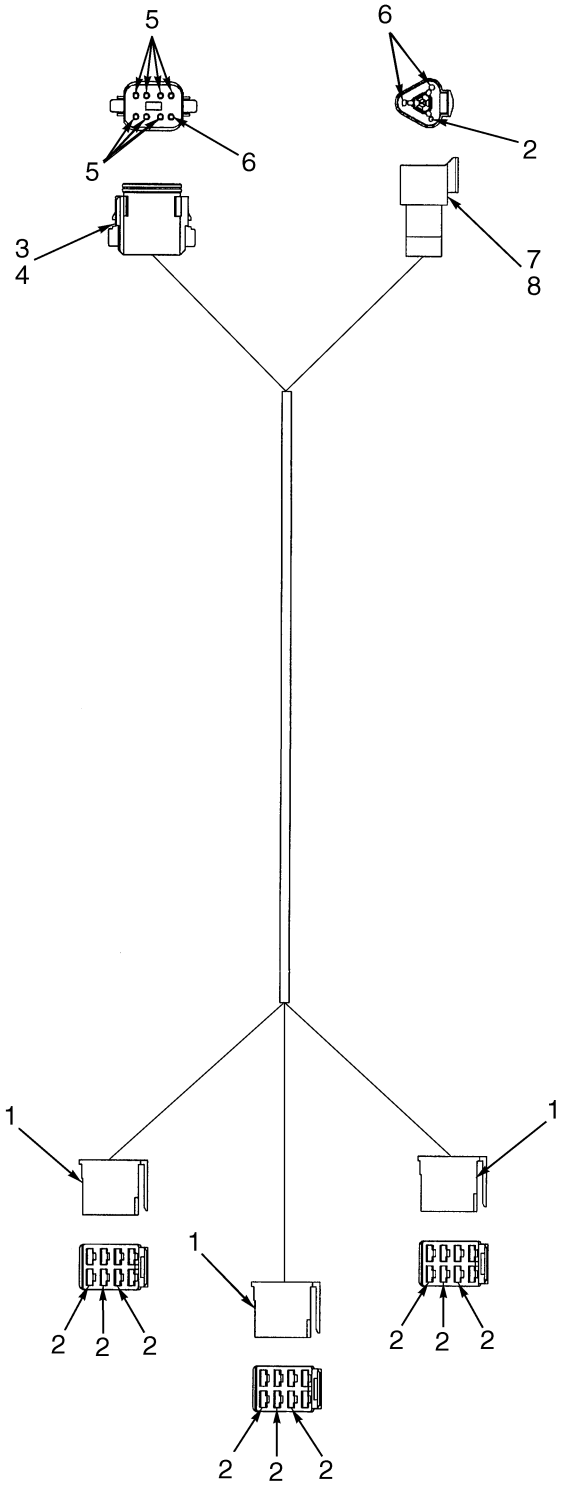

HP081231

©2006 HYSTER COMPANY

WIRE HARNESS
ATTACHMENT CONTROL SWITCH
(S/N A214E-1807⇒)

ITEM	PART NO.	DESCRIPTION	QTY
	1494384	Wire Harness	1
1	1301154	Housing (Attachments)	8
2	1331233	Blade	14
3	1330423	Connector (Front End)	1
4	1330429	Secondary Lock	1
5	1363886	Terminal (Socket)	1
6	1330439	Insulator	1
7	1330410	Connector (Chassis)	1
8	1330415	Secondary Lock	2

©2006 HYSTER COMPANY

WIRE HARNESS (Figure 4-19)
ATTACHMENT CONTROL SWITCH
(S/N A214E02078B⇔S/N A214E02194C)

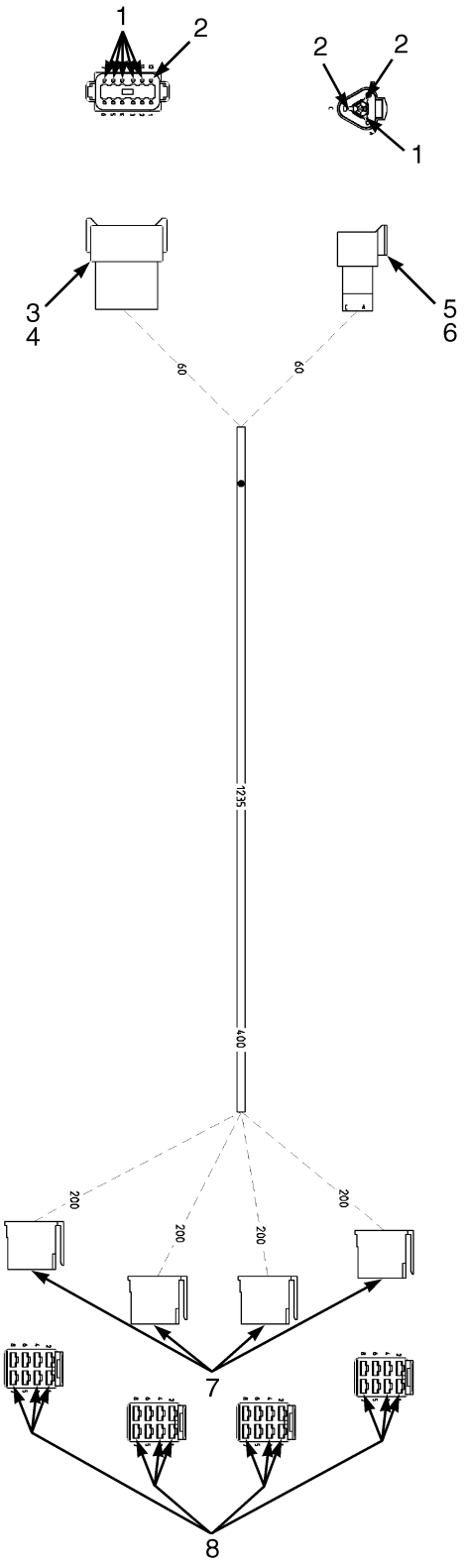

HP081707

©2006 HYSTER COMPANY

WIRE HARNESS
ATTACHMENT CONTROL SWITCH
(S/N A214E02078B⇔S/N A214E02194C)

ITEM	PART NO.	DESCRIPTION	QTY
	1574088	Wire Harness	1
1	1363885	Terminal (Pin)	9
2	1330439	Insulator	5
3	1352602	Connector	1
4	1352603	Secondary Lock	1
5	1330410	Connector	1
6	1330415	Secondary Lock	1
7	1301154	Housing	4
8	1331233	Blade	12

©2006 HYSTER COMPANY

WIRE HARNESS (Figure 4-20)
ATTACHMENT CONTROL SWITCH
(S/N A214E02194C⇒)

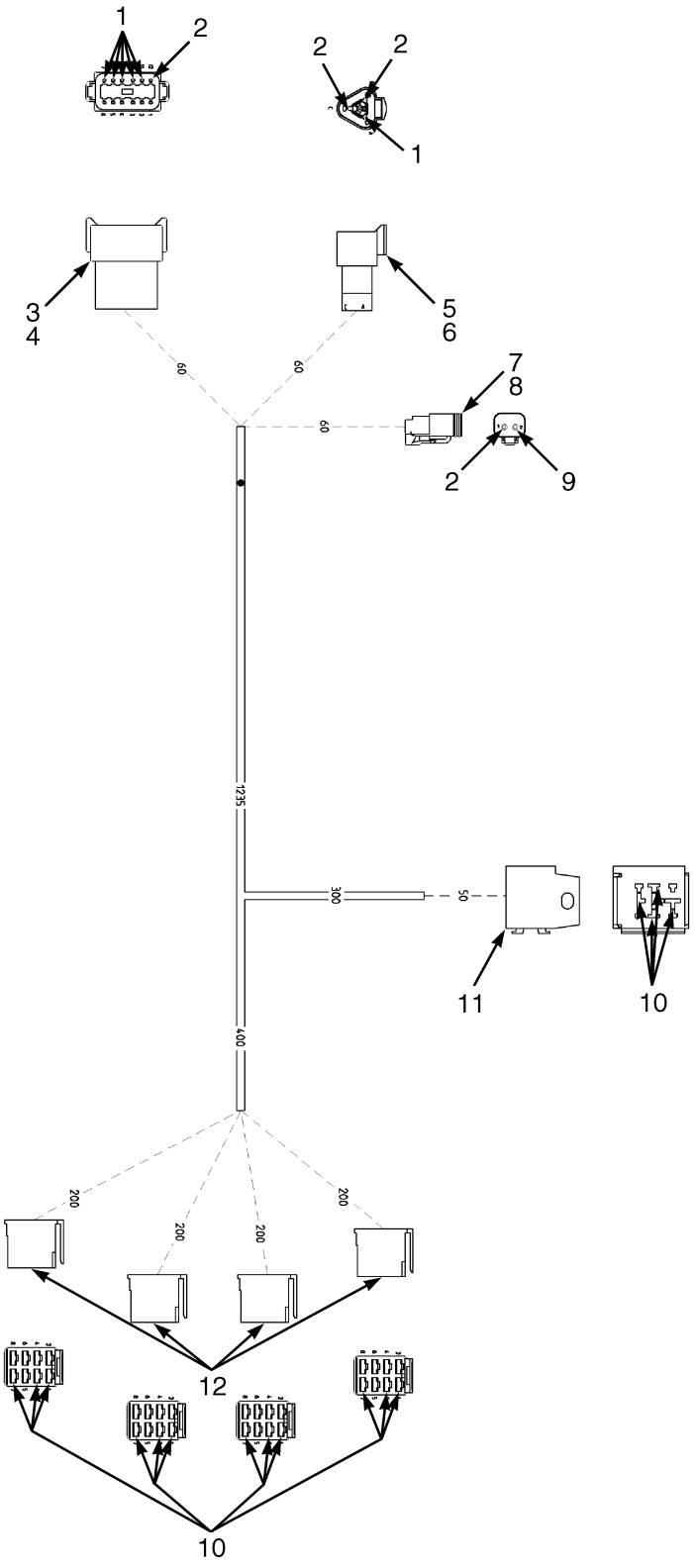

HP081685

©2006 HYSTER COMPANY

WIRE HARNESS
ATTACHMENT CONTROL SWITCH
(S/N A214E02194C⇒)

ITEM	PART NO.	DESCRIPTION	QTY
	1607978	Wire Harness	1
1	1363885	Terminal (Pin)	13
2	1330439	Insulator	4
3	1352602	Connector	1
4	1352603	Secondary Lock	1
5	1330410	Connector	1
6	1330415	Secondary Lock	1
7	1330419	Connector	1
8	1330424	Secondary Lock	1
9	1330438	Terminal (Socket)	2
10	1331233	Blade	16
11	1347224	Relay Socket	1
12	1330424	Secondary Lock	1

©2006 HYSTER COMPANY

WIRE HARNESS (Figure 4-21)
ATTACHMENT LIGHTS
(S/N A214E-1807⇒)

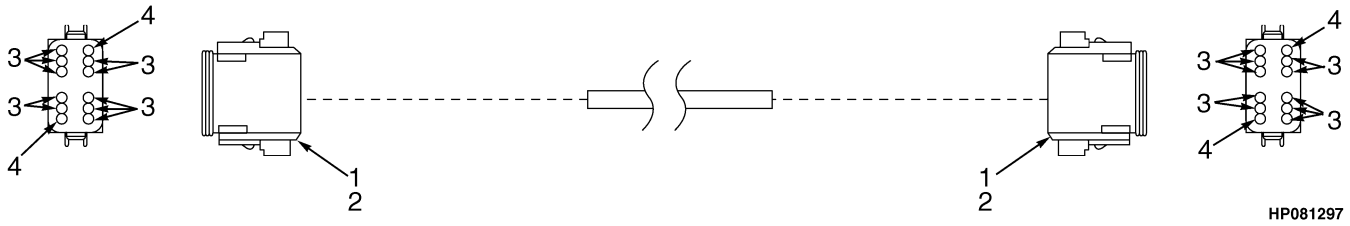

ITEM	PART NO.	DESCRIPTION	QTY
	1494294	Wire Harness	1
1	1351068	Connector	2
2	1351069	Lock	2
3	1363886	Terminal (Socket)	20
4	1330439	Insulator	4

©2006 HYSTER COMPANY

NOTES

WIRE HARNESS (Figure 4-22)
CAB
(⇒S/N A214E-1797)

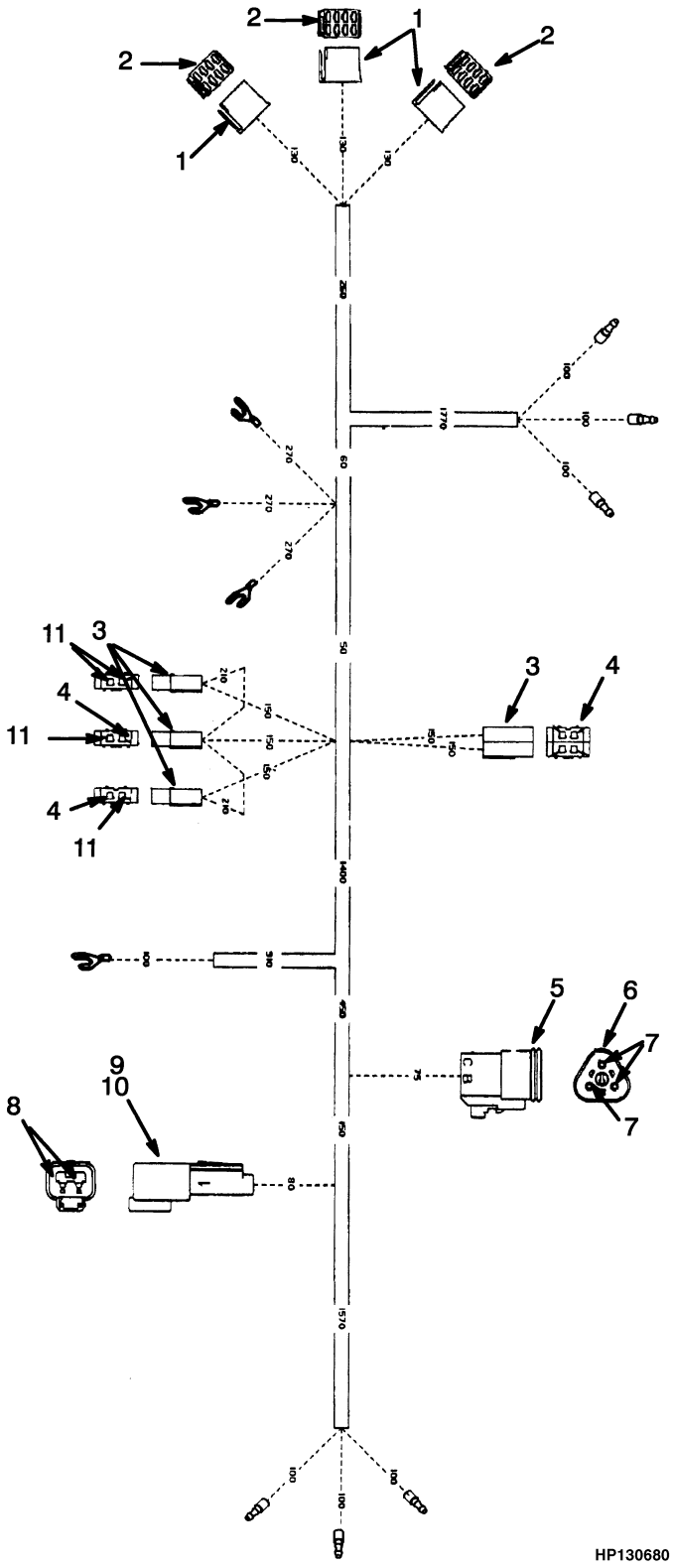

©2006 HYSTER COMPANY

WIRE HARNESS
CAB
(⇒S/N A214E-1797)

ITEM	PART NO.	DESCRIPTION	QTY
	1383844	Wire Harness	1
1	1301154	Housing	3
2	1331233	Blade	11
3	381846	Fuse Holder	5
4	381847	Terminal	6
5	1330420	Connector	1
6	1330424	Secondary Lock	1
7	1330438	Terminal (Socket)	3
8	1330437	Terminal (Pin)	2
9	1330409	Connector	1
10	1330414	Secondary Lock	1
11	1300231	Terminal	4

©2006 HYSTER COMPANY

WIRE HARNESS (Figure 4-23)
CAB
(S/N A214E-1798⇒)

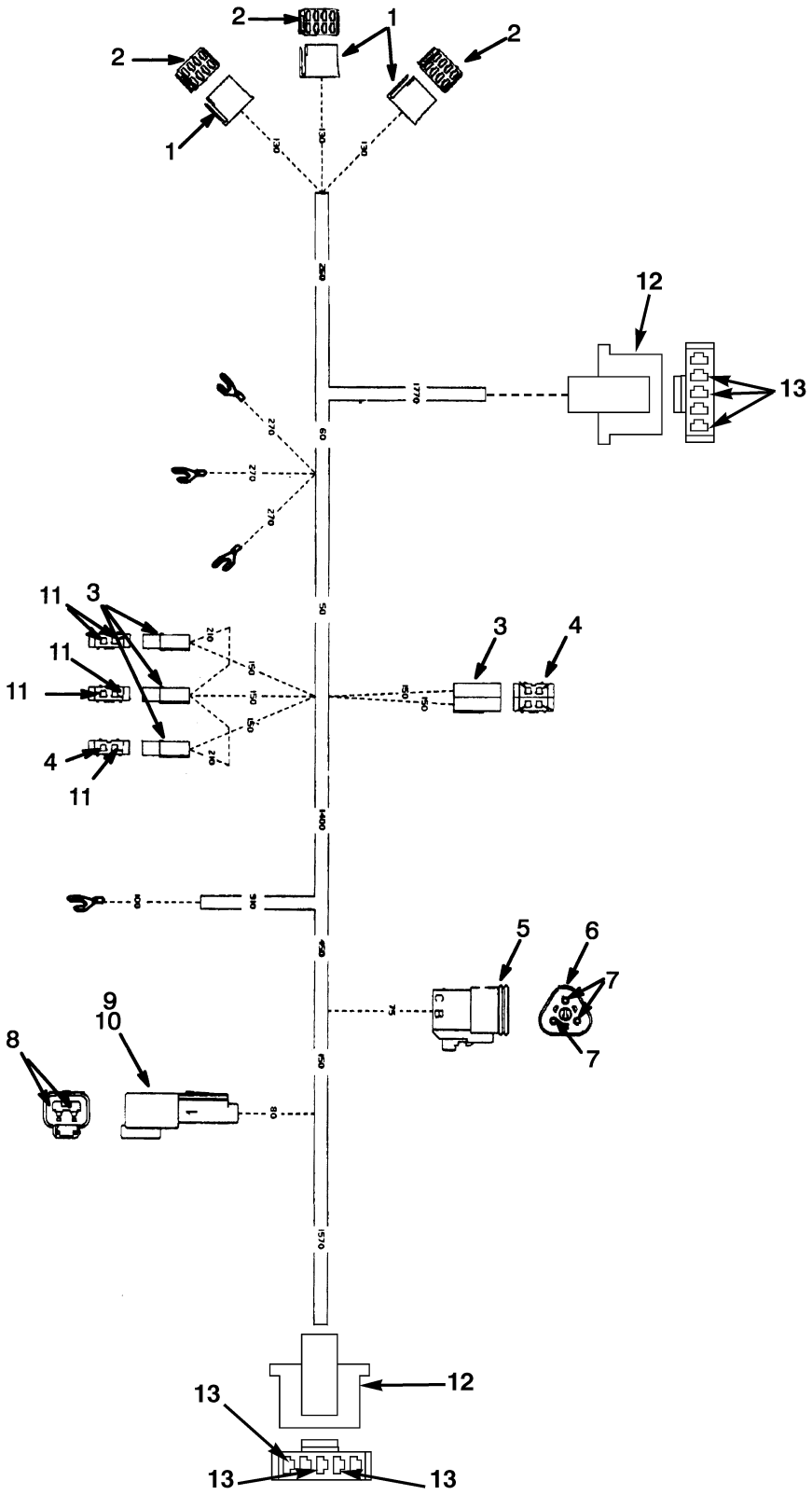

HP081229

©2006 HYSTER COMPANY

WIRE HARNESS
CAB
(S/N A214E-1798⇒)

ITEM	PART NO.	DESCRIPTION	QTY
	1499350	Wire Harness	1
1	1301154	Housing	3
2	1331233	Blade	12
3	381846	Fuse Holder	5
4	381847	Terminal	6
5	1330420	Connector	1
6	1330426	Secondary Lock	1
7	1363886	Terminal (Socket)	3
8	1363885	Terminal (Pin)	2
9	1330411	Connector	1
10	1330416	Secondary Lock	1
11	1300231	Terminal	5
12	1499072	Connector	2
13	1499073	Terminal	6

©2006 HYSTER COMPANY

WIRE HARNESS (Figure 4-24)
CARRIAGE CONTROL SWITCH

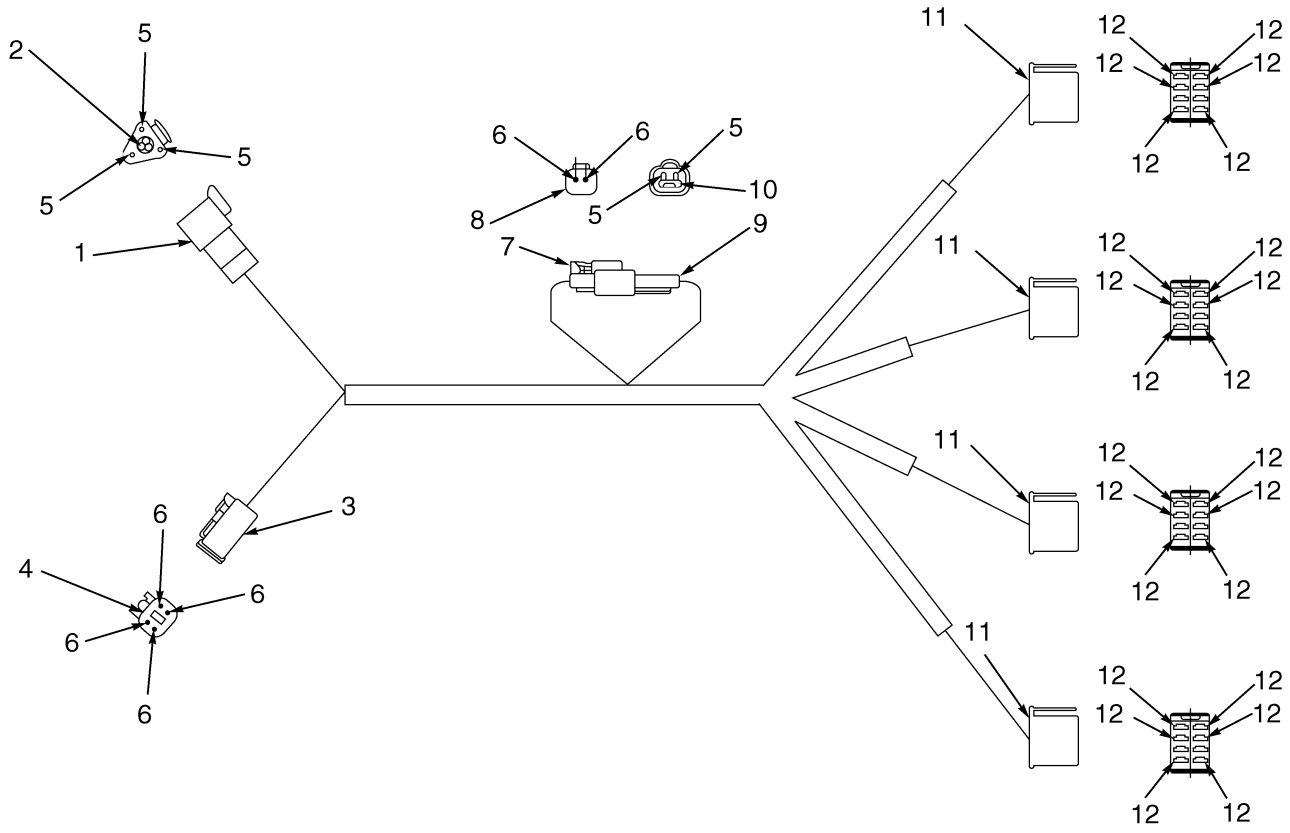

HP081234

©2006 HYSTER COMPANY

WIRE HARNESS
CARRIAGE CONTROL SWITCH

ITEM	PART NO.	DESCRIPTION	QTY
	1383841	Wire Harness	1
1	1330410	Connector	1
2	1330415	Secondary Lock	1
3	1330421	Connector	1
4	1330427	Secondary Lock	1
5	1330437	Terminal (Pin)	5
6	1330438	Terminal (Socket)	6
7	1330419	Connector	1
8	1330424	Secondary Lock	1
9	1330409	Connector	1
10	1330414	Secondary Lock	1
11	1301154	Housing	4
12	1331233	Blade	24

©2006 HYSTER COMPANY

WIRE HARNESS (Figure 4-25)
CHASSIS
EMPTY CONTAINER HANDLER

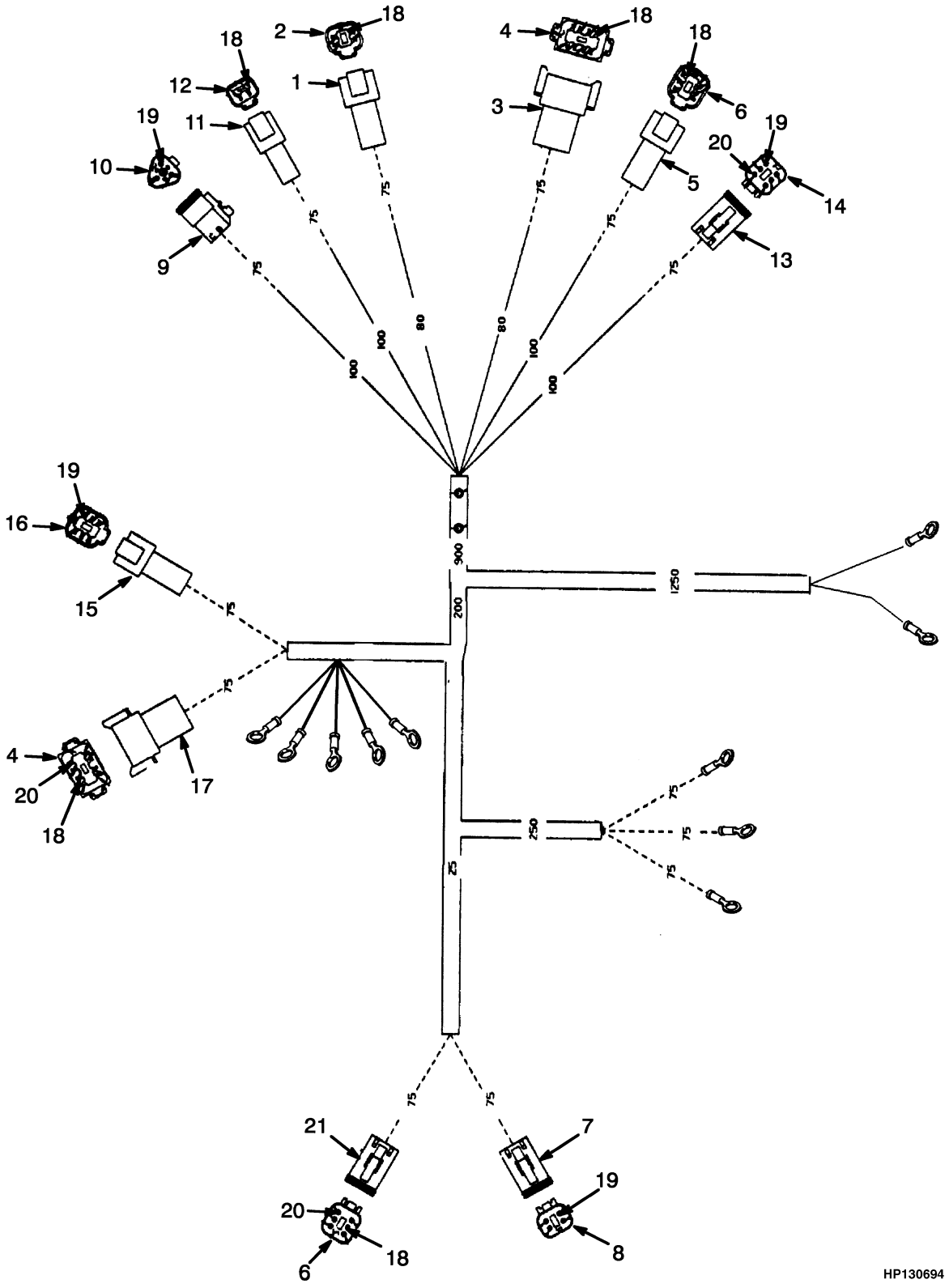

©2006 HYSTER COMPANY

WIRE HARNESS
CHASSIS
EMPTY CONTAINER HANDLER

ITEM	PART NO.	DESCRIPTION	QTY
	1383838	Wire Harness (Chassis)	1
1	1330411	Connector (Gauge Harness)	1
2	1330416	Secondary Lock	1
3	1330413	Connector (Operator Compartment Harness)	1
4	1330418	Secondary Lock	2
5	1330412	Connector (Operator Compartment Harness)	1
6	1330417	Secondary Lock	2
7	1330421	Connector (Hydraulic Compartment Harness)	1
8	1330427	Secondary Lock	1
9	1330420	Connector (Switch Harness)	1
10	1330426	Secondary Lock	1
11	1330409	Connector (Attachment Control Harness)	1
12	1330414	Secondary Lock	1
13	1330422	Connector (Operator Compartment Harness)	1
14	1330428	Secondary Lock	1
15	1330423	Connector (Engine Harness)	1
16	1330429	Secondary Lock	1
17	1330413	Connector (Engine Harness)	1
18	1330437	Terminal (Pin)	32
19	1330438	Terminal (Socket)	20
20	1330439	Insulator	3
21	1330412	Connector (Front Light Harness)	1

©2006 HYSTER COMPANY

WIRE HARNESS (Figure 4-26)
CHASSIS
FORK LIFT TRUCK

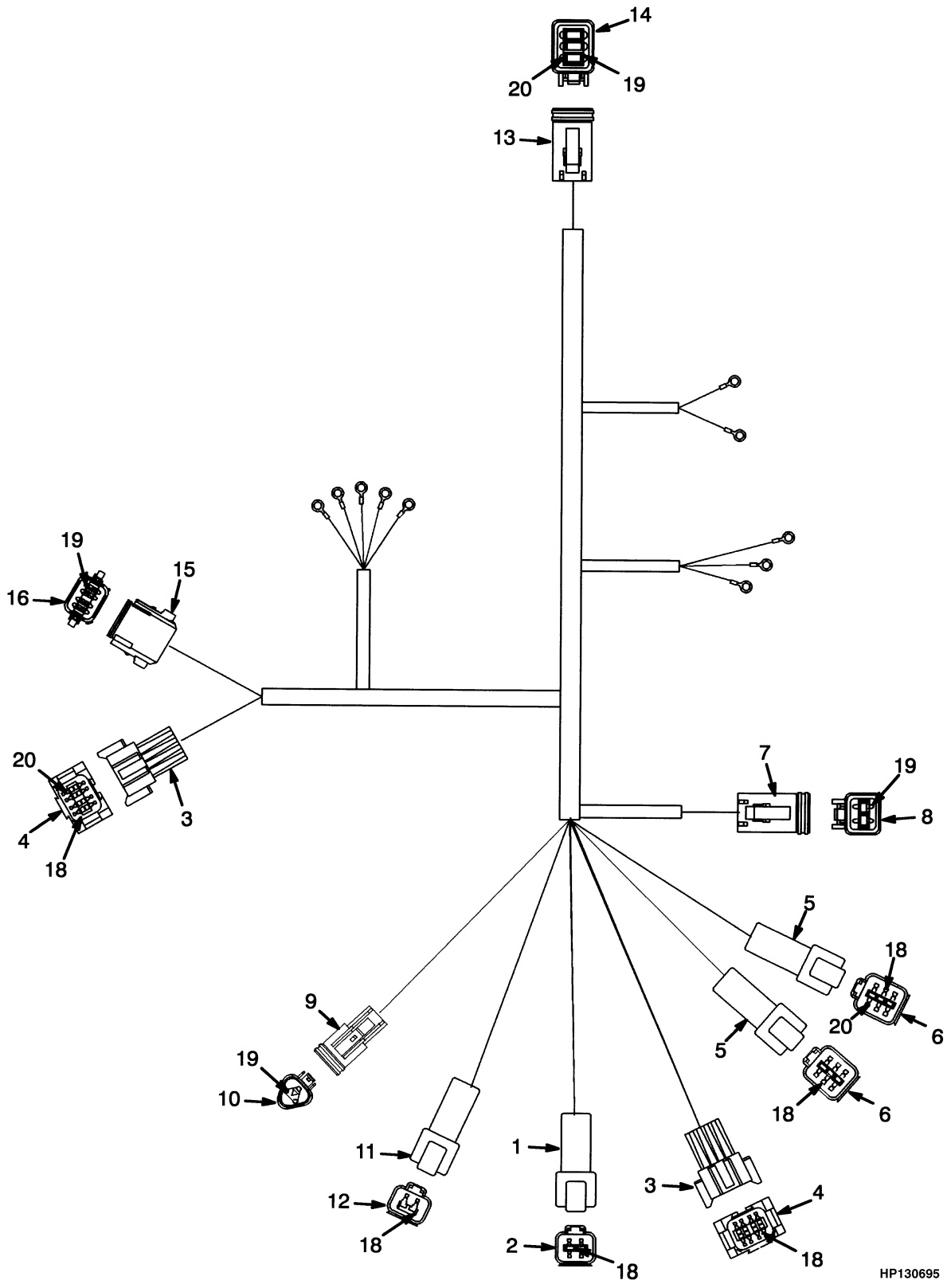

©2006 HYSTER COMPANY

WIRE HARNESS
CHASSIS
FORK LIFT TRUCK

ITEM	PART NO.	DESCRIPTION	QTY
	1385505	Wire Harness (Chassis)	1
1	1330411	Connector (Gauge Harness)	1
2	1330416	Secondary Lock	1
3	1330413	Connector (Operator Compartment Harness)	1
4	1330418	Secondary Lock	2
5	1330412	Connector (Operator Compartment Harness)	2
6	1330417	Secondary Lock	2
7	1330421	Connector (Hydraulic Compartment Harness)	1
8	1330427	Secondary Lock	1
9	1330420	Connector (Switch Harness)	1
10	1330426	Secondary Lock	1
11	1330409	Connector (Attachment Control Harness)	1
12	1330414	Secondary Lock	1
13	1330422	Connector (Rear Light)	1
14	1330428	Secondary Lock	1
15	1330423	Connector (Engine Harness)	1
16	1330429	Secondary Lock	1
17	1330413	Connector (Engine Harness)	1
18	1330437	Terminal (Pin)	32
19	1330438	Terminal (Socket)	20
20	1330439	Insulator	3

©2006 HYSTER COMPANY

WIRE HARNESS (Figure 4-27)
ENGINE
(⇒S/N A214E-1718)

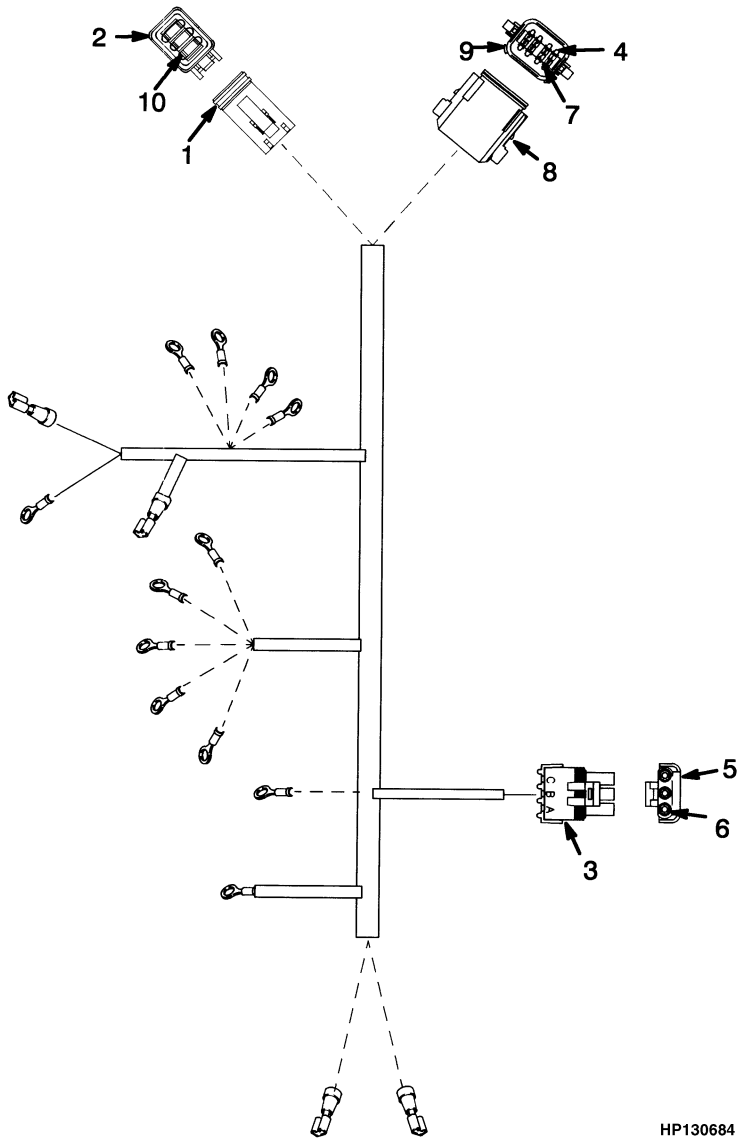

©2006 HYSTER COMPANY

WIRE HARNESS
ENGINE
(⇒S/N A214E-1718)

ITEM	PART NO.	DESCRIPTION	QTY
	1382838	Wire Harness	1
1	1330413	Connector (Chassis Wire Harness)	1
2	1330418	Secondary Lock	1
3	1323577	Connector (Chassis Wire Harness)	1
4	1330438	Terminal (Socket)	7
5	1336173	Terminal Socket	3
6	1323579	Seal	3
7	1330439	Insulator	1
8	1330423	Connector	1
9	1330429	Secondary Lock	1
10	1330437	Terminal (Pin)	8

©2006 HYSTER COMPANY

WIRE HARNESS (Figure 4-28)
ENGINE
(S/N A214E-1719⇒)

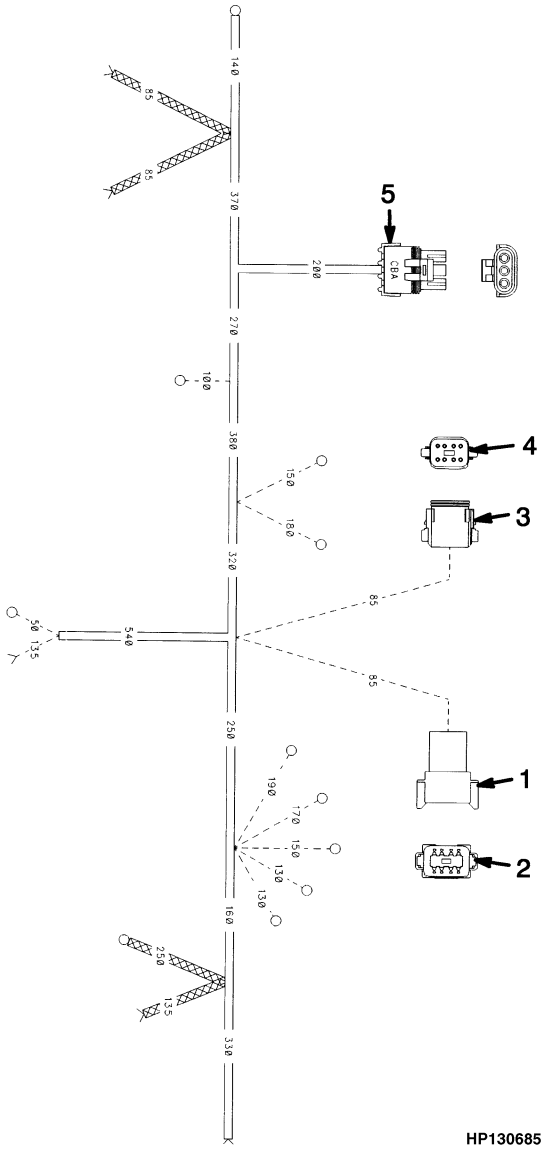

©2006 HYSTER COMPANY

WIRE HARNESS
ENGINE
(S/N A214E-1719⇒)

ITEM	PART NO.	DESCRIPTION	QTY
	1473974	Wire Harness	1
1	1330413	Connector	1
2	1330418	Secondary Lock	1
3	1330423	Connector	1
4	1330429	Secondary Lock	1
5	1323577	Connector	1

©2006 HYSTER COMPANY

WIRE HARNESS (Figure 4-29)
ENGINE
TIER II
(S/N A214E01950A⇒)

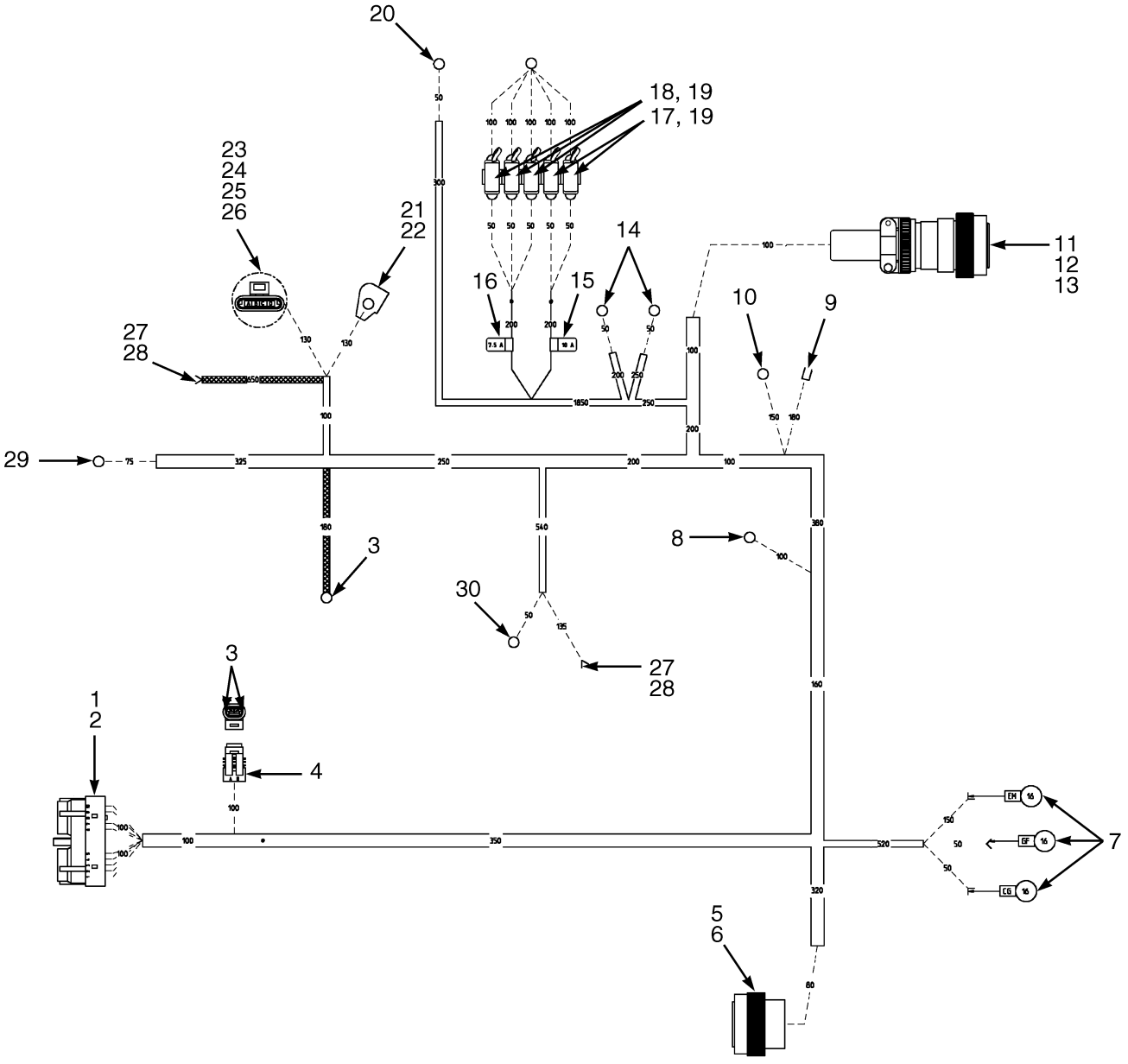

HP081687

©2006 HYSTER COMPANY

WIRE HARNESS
ENGINE
TIER II
(S/N A214E01950A⇒)

ITEM		PART NO.	DESCRIPTION	QTY
	a	1531383	Wire Harness (Engine)	1
	c	1537659	Wire Harness (Engine)	1
	d	1607648	Wire Harness (Engine)	1
1		1503633	Connector	1
2		1507725	Terminal Socket	16
3	**a**	1323576	Terminal	2
3	**b**	1354237	Terminal	2
4		1323586	Connector	1
5		1503634	Connector	1
6		1363886	Terminal (Socket)	11
7		325789	Fitting	3
8		160245	Fitting	1
9		148626	Spade	1
10		148616	Terminal	2
11		1495142	Connector Plug	1
12		1330438	Terminal (Socket)	23
13		1518112	Terminal (Socket)	6
14		806426	Terminal	2
15		1519577	Label (Fuse)	1
16		1519576	Label (Fuse)	1
17		370647	Fuse (10 Amp)	2
18		1300057	Fuse (7.5 Amp)	3
19		1480432	Fuse Holder	5
20		806427	Electrical Fitting	1
21		157065	Boot	1
22		806425	Terminal	1
23	**d**	1501919	Connector	1
24	**d**	1482663	Lock	1
25	**d**	1482668	Plug	3
26	**d**	1330356	Seal	1
27		370730	Blade	2
28		1301720	Connector Body	2
29		148617	Ring	1
30		129887	Ring	2

FOOTNOTES:
a ⇒ S/N A214E01950A
b S/N A214E01951A ⇒
c S/N A214E01951A⇔S/N A214E02180C
d S/N A214E02181C ⇒

WIRE HARNESS (Figure 4-30)
FRONT END EQUIPMENT
EMPTY CONTAINER HANDLER
(⇒S/N A214E-1806)

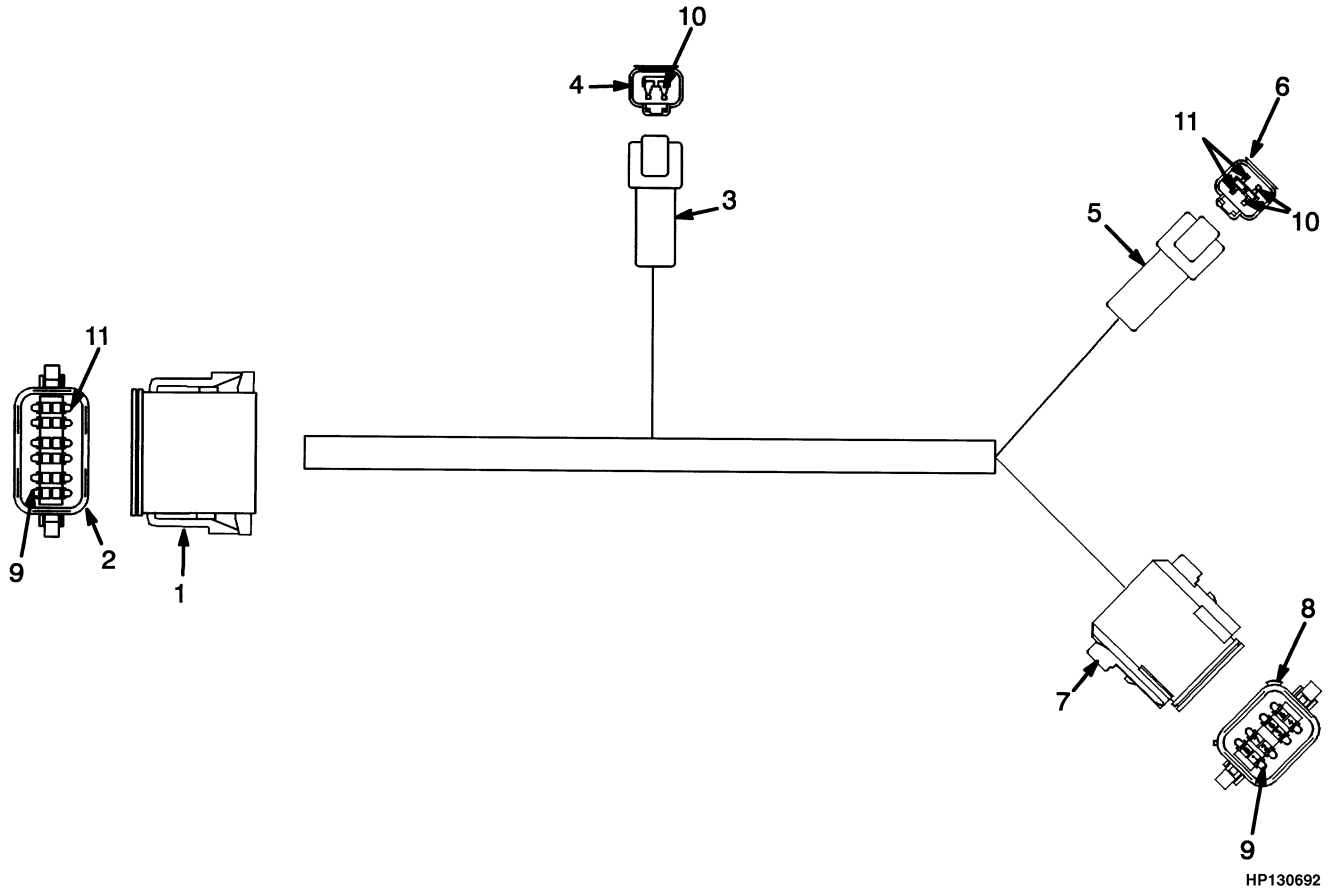

ITEM	PART NO.	DESCRIPTION	QTY
	1384479	Wire Harness	1
1	1351068	Connector (Front End Equipment)	1
2	1351069	Lock	1
3	1330409	Connector (Front Light Harness)	1
4	1330414	Secondary Lock	1
5	1330411	Connector (Switch Harness)	1
6	1330416	Secondary Lock	1
7	1330423	Connector (Attachment Control Harness)	1
8	1330429	Secondary Lock	1
9	1330438	Terminal (Socket)	20
10	1330437	Terminal (Pin)	6
11	1330439	Insulator	3

©2006 HYSTER COMPANY

NOTES

WIRE HARNESS (Figure 4-31)
FRONT END EQUIPMENT
EMPTY CONTAINER HANDLER
(S/N A214E-1807⇒)

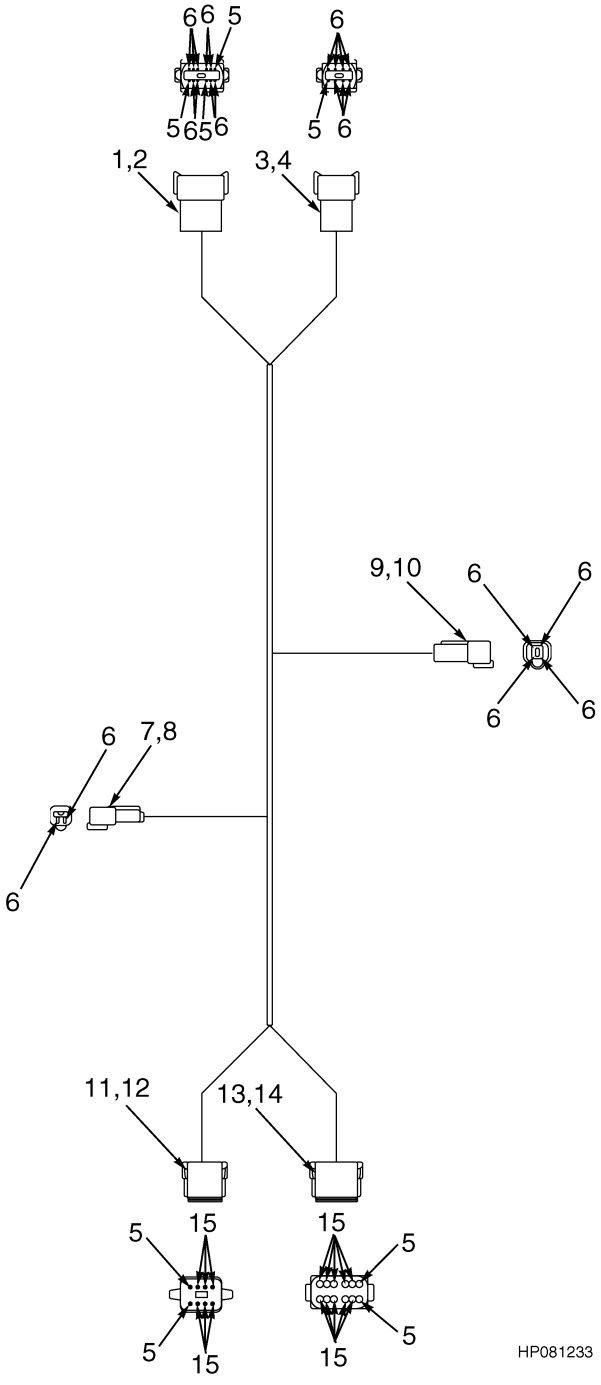

©2006 HYSTER COMPANY

WIRE HARNESS
FRONT END EQUIPMENT
EMPTY CONTAINER HANDLER
(S/N A214E-1807⇒)

ITEM	PART NO.	DESCRIPTION	QTY
	1495795	Wire Harness	1
1	1352602	Connector	1
2	1352603	Secondary Lock	1
3	1330413	Connector	1
4	1330418	Secondary Lock	1
5	1330439	Insulator	8
6	1363885	Terminal (Pin)	22
7	1330409	Connector	1
8	1330414	Secondary Lock	1
9	1330411	Connector	1
10	1330416	Secondary Lock	1
11	1330423	Connector	1
12	1330429	Secondary Lock	1
13	1351068	Connector	1
14	1351069	Lock	1
15	1363886	Terminal (Socket)	16

©2006 HYSTER COMPANY

WIRE HARNESS (Figure 4-32)
FRONT END EQUIPMENT
(S/N A214E02078B⇒)

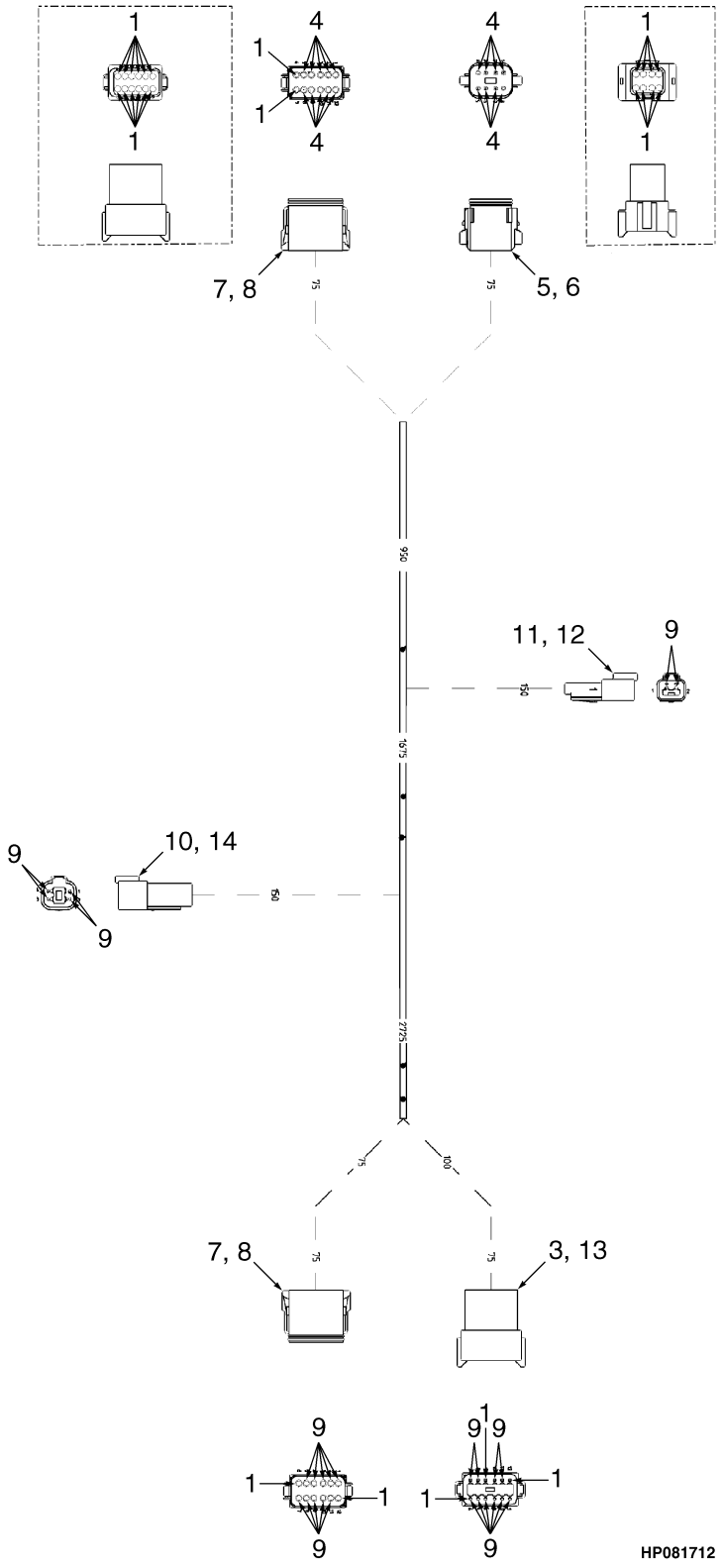

©2006 HYSTER COMPANY

WIRE HARNESS
FRONT END EQUIPMENT
(S/N A214E02078B⇒)

ITEM	PART NO.	DESCRIPTION	QTY
	1573932	Wire Harness (Front End)	1
1	1330439	Insulator	28
2	1363886	Terminal (Socket)	27
3	1330423	Connector	1
4	1330429	Secondary Lock	1
5	1351068	Connector	2
6	1351069	Lock	2
7	1363885	Terminal (Pin)	15
8	1330409	Connector	1
9	1330414	Secondary Lock	1
10	1330411	Connector	1
11	1330416	Secondary Lock	1
12	1352602	Connector	2
13	1352603	Secondary Lock	1
14	1330413	Connector	1

©2006 HYSTER COMPANY

WIRE HARNESS (Figure 4-33)
FRONT END EQUIPMENT
FORK LIFT TRUCK

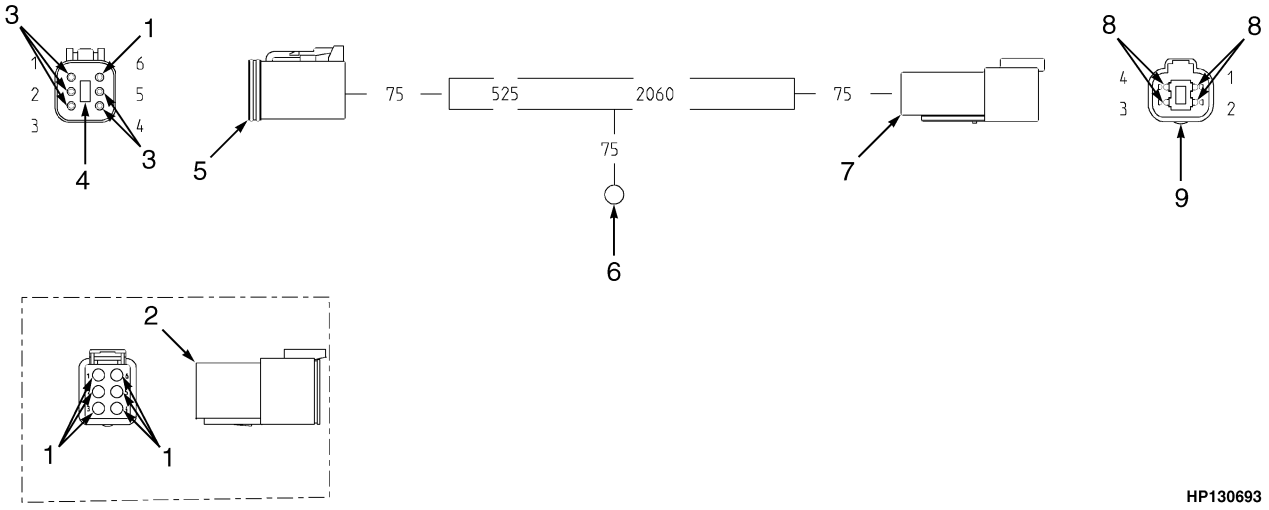

ITEM	PART NO.	DESCRIPTION	QTY
	1393786	Wire Harness	1
1	1330422	Connector (Front End Equipment)	1
2	1330428	Secondary Lock	1
3	1330411	Connector (Switch Harness)	1
4	1330416	Secondary Lock	1
5	1330438	Terminal (Socket)	5
6	1330437	Terminal (Pin)	4
7	1330439	Insulator	1

©2006 HYSTER COMPANY

WIRE HARNESS (Figure 4-34)
FRONT LIGHTS

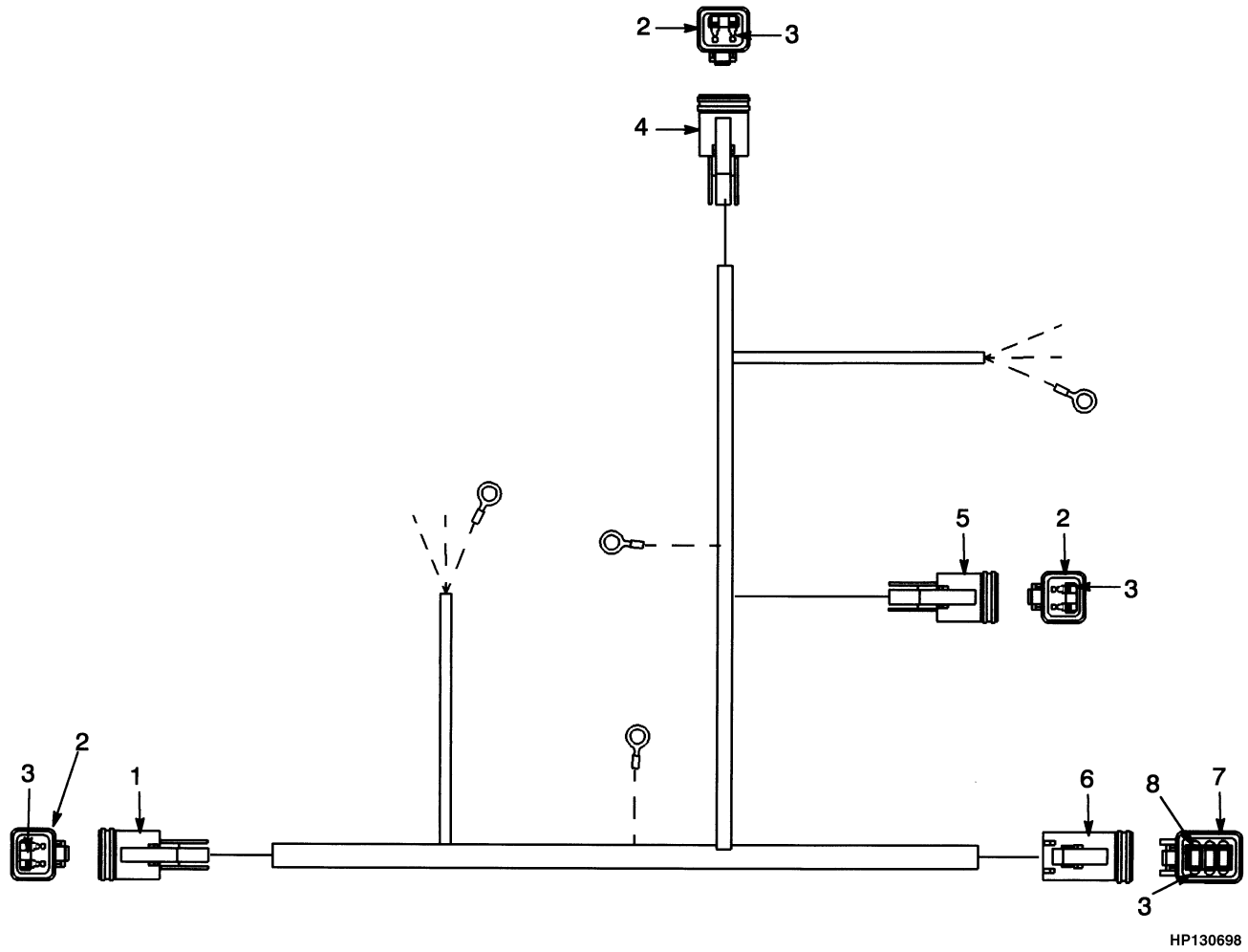

ITEM	PART NO.	DESCRIPTION	QTY
	1384616	Wire Harness	1
1	1330419	Connector (LH) (Front Drive Lights)	1
2	1330424	Secondary Lock	3
3	1330438	Terminal (Socket)	11
4	1330419	Connector (RH) (Front Drive Light)	1
5	1330419	Connector (Front End Equipment Harness)	1
6	1330422	Connector (Chassis Wire Harness)	1
7	1330428	Secondary Lock	1
8	1330439	Insulator	1

WIRE HARNESS (Figure 4-35)
HYDRAULIC
EMPTY CONTAINER HANDLER
(S/N A214E-1651⇔S/N A214E-1806)

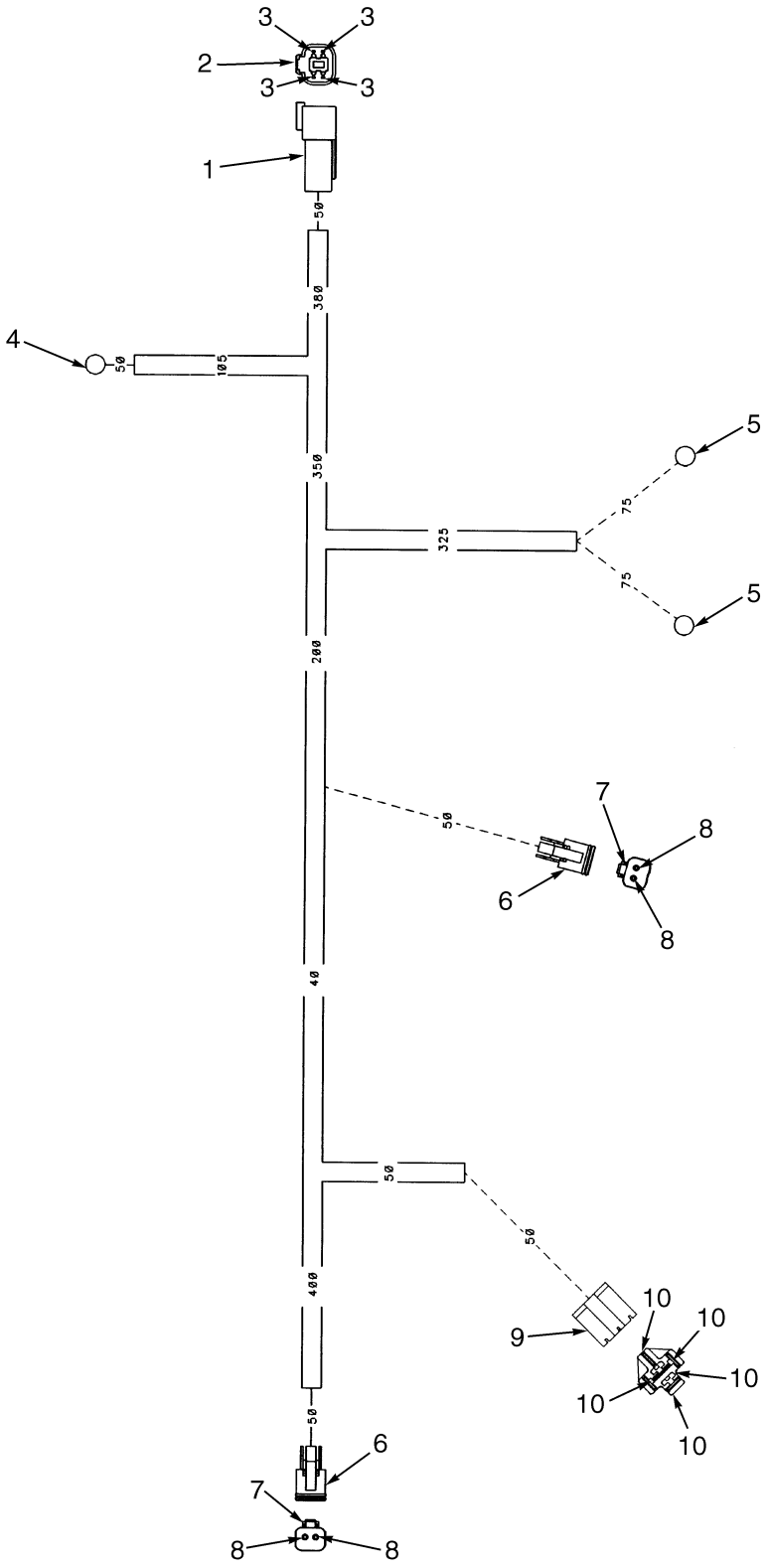

©2006 HYSTER COMPANY

WIRE HARNESS
HYDRAULIC
EMPTY CONTAINER HANDLER
(S/N A214E-1651⇔S/N A214E-1806)

ITEM	PART NO.	DESCRIPTION	QTY
	1464299	Wire Harness	1
1	1330411	Connector (Chassis Wire Harness)	1
2	1330416	Secondary Lock	1
3	1363885	Terminal (Pin)	4
4	148612	Fitting	1
5	129887	Ring	2
6	1330419	Connector (Park Brake Valve)	2
7	1330424	Secondary Lock	2
8	1363886	Terminal (Socket)	4
9	1301228	Connector Body	1
10	1331233	Blade	5

©2006 HYSTER COMPANY

WIRE HARNESS (Figure 4-36)
HYDRAULIC
EMPTY CONTAINER HANDLER
(S/N A214E-1807⇒)

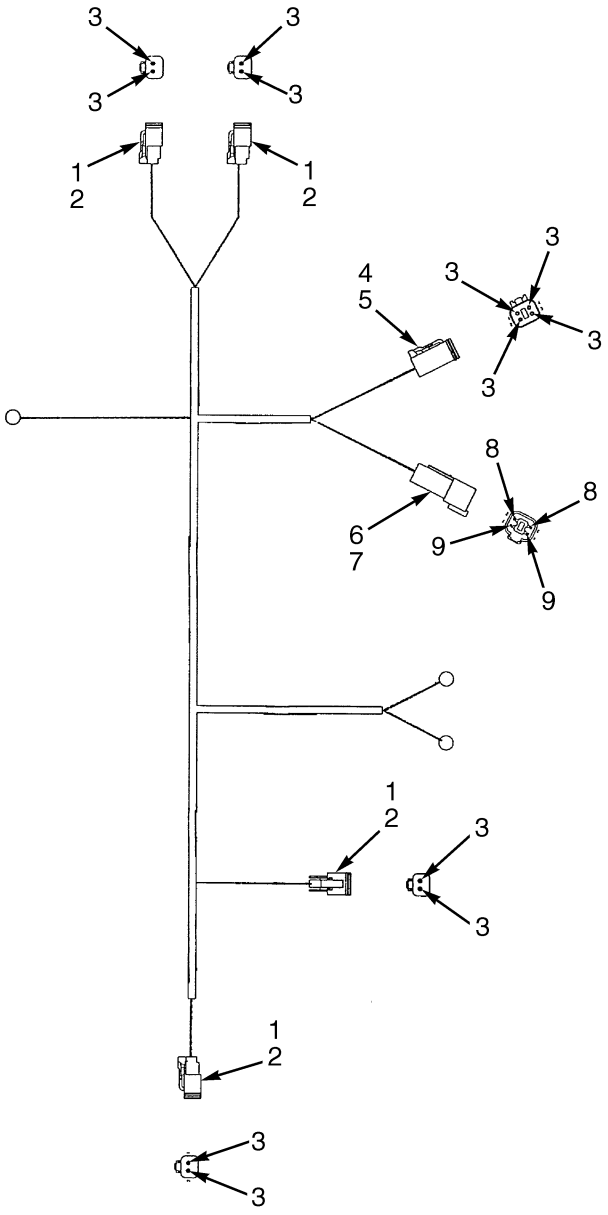

HP081232

©2006 HYSTER COMPANY

WIRE HARNESS
HYDRAULIC
EMPTY CONTAINER HANDLER
(S/N A214E-1807⇒)

ITEM	PART NO.	DESCRIPTION	QTY
	1504298	Wire harness	1
1	1330419	Connector	4
2	1330424	Secondary Lock	4
3	1363886	Terminal (Socket)	12
4	1330421	Connector	1
5	1330427	Secondary Lock	1
6	1330411	Connector	1
7	1330416	Secondary Lock	1
8	1363885	Terminal (Pin)	2
9	1330439	Insulator	2

©2006 HYSTER COMPANY

WIRE HARNESS (Figure 4-37)
HYDRAULIC
FORK LIFT TRUCK

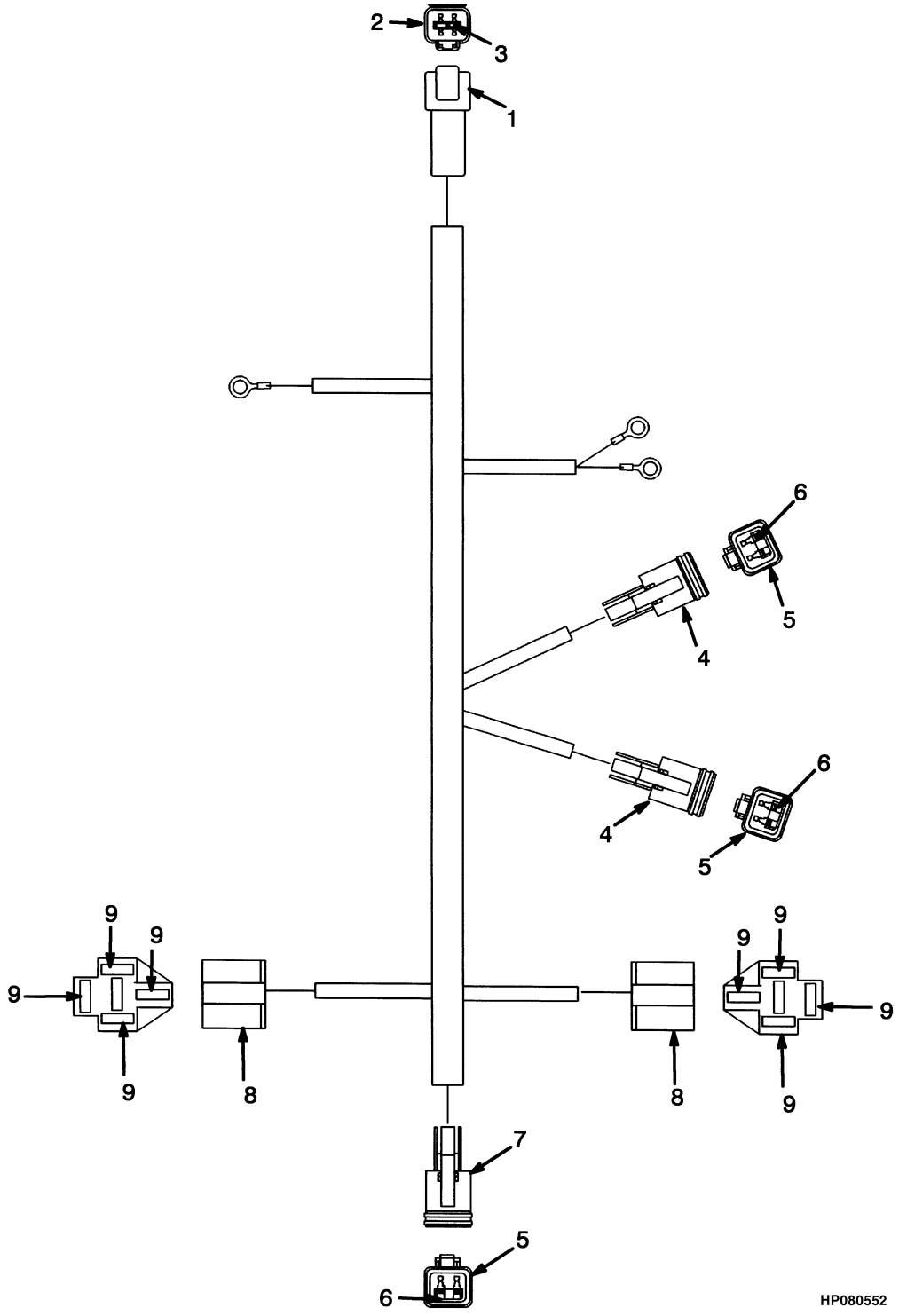

©2006 HYSTER COMPANY

WIRE HARNESS
HYDRAULIC
FORK LIFT TRUCK

ITEM	PART NO.	DESCRIPTION	QTY
	1383834	Wire Harness	1
1	1330411	Connector (Chassis Wire Harness)	1
2	1330416	Secondary Lock	1
3	1330437	Terminal (Pin)	4
4	1330419	Connector	2
5	1330424	Secondary Lock	3
6	1330438	Terminal (Socket)	6
7	1330419	Connector (Park Brake Valve)	1
8	1301228	Connector Body	2
9	1331233	Blade	8

©2006 HYSTER COMPANY

WIRE HARNESS (Figure 4-38)
MODULE
(⇒S/N A214E-1797)

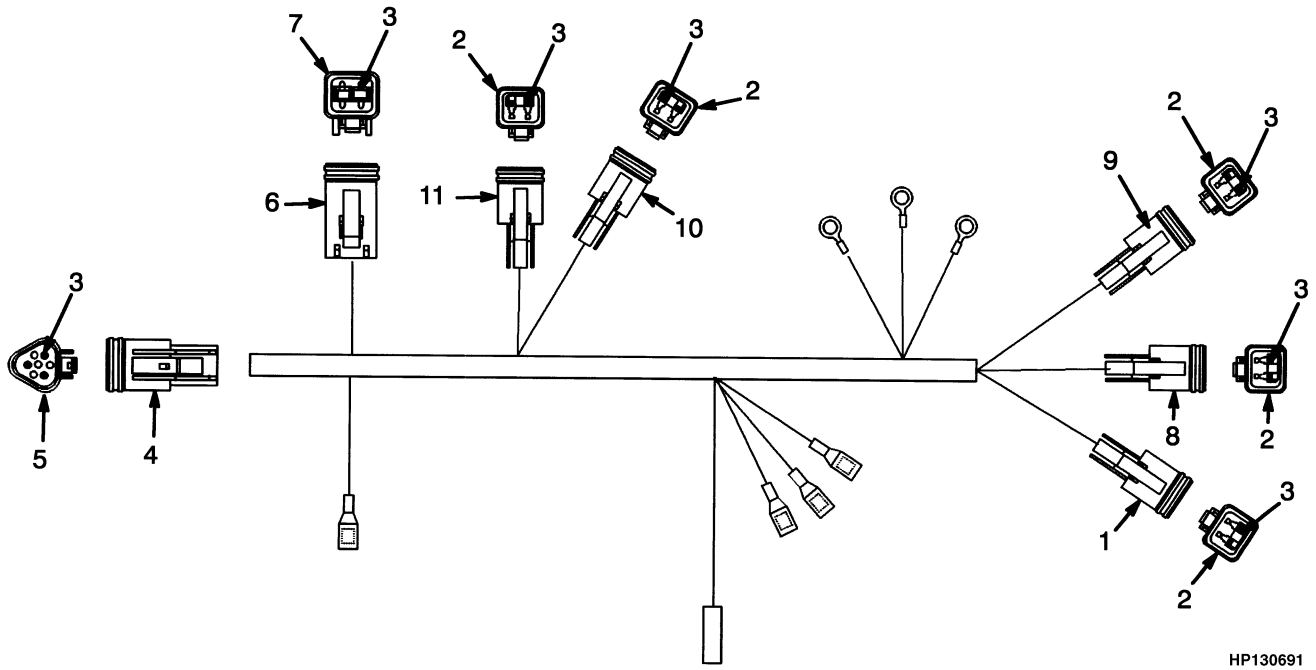

ITEM	PART NO.	DESCRIPTION	QTY
	1385514	Wire Harness	1
1	1330419	Connector (Strobe Light)	1
2	1330424	Secondary Lock	5
3	1330438	Terminal (Socket)	17
4	1330420	Connector (Operator Compartment Harness)	1
5	1330426	Secondary Lock	1
6	1330421	Connector (Cab Wire Harness)	1
7	1330427	Secondary Lock	1
8	1330419	Connector (LH) (Work Lights)	1
9	1330419	Connector (LH) (Rear Drive Lights)	1
10	1330419	Connector (RH) (Rear Drive Light)	1
11	1330419	Connector (RH) (Work Light)	1

©2006 HYSTER COMPANY

WIRE HARNESS (Figure 4-39)
MODULE
(S/N A214E-1798⇒)

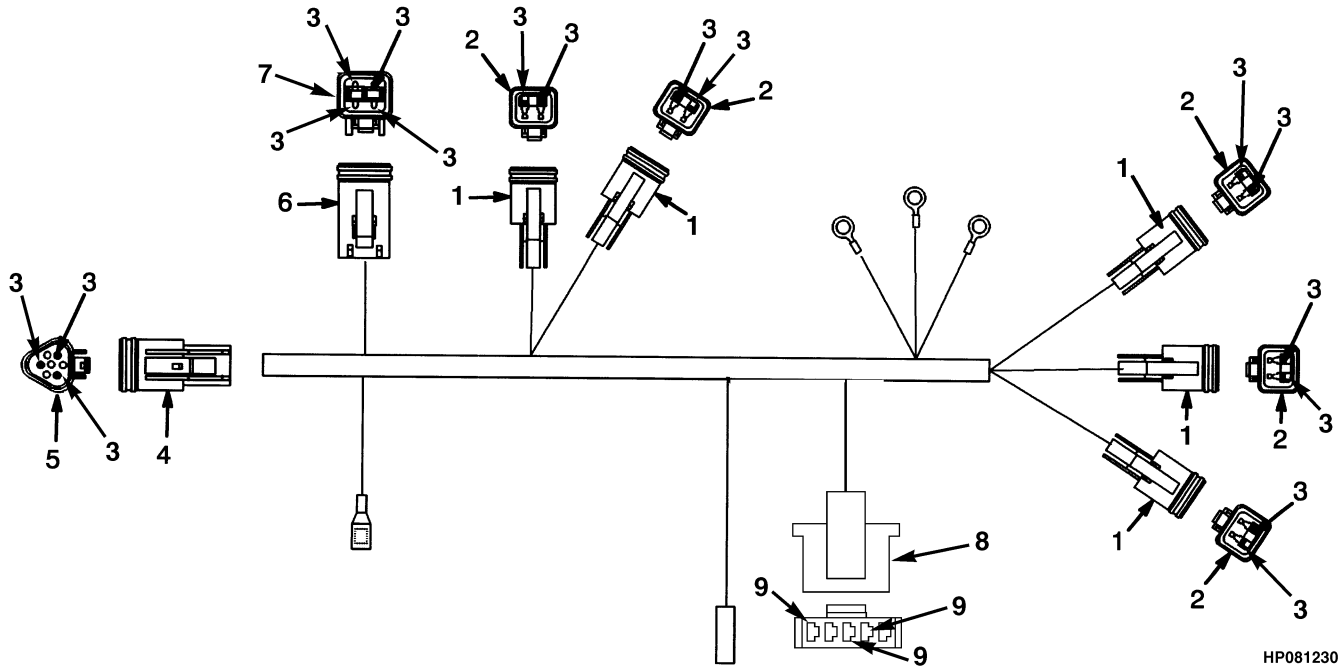

ITEM	PART NO.	DESCRIPTION	QTY
	1499351	Wire Harness	1
1	1330419	Connector	5
2	1330424	Secondary Lock	5
3	1363886	Terminal (Socket)	7
4	1330420	Connector	1
5	1330426	Secondary Lock	1
6	1330421	Connector	1
7	1330427	Secondary Lock	1
8	1499072	Connector	1
9	1499073	Terminal	1

WIRE HARNESS (Figure 4-40)
OPERATOR COMPARTMENT (TIER I)
SHEET 1 OF 2

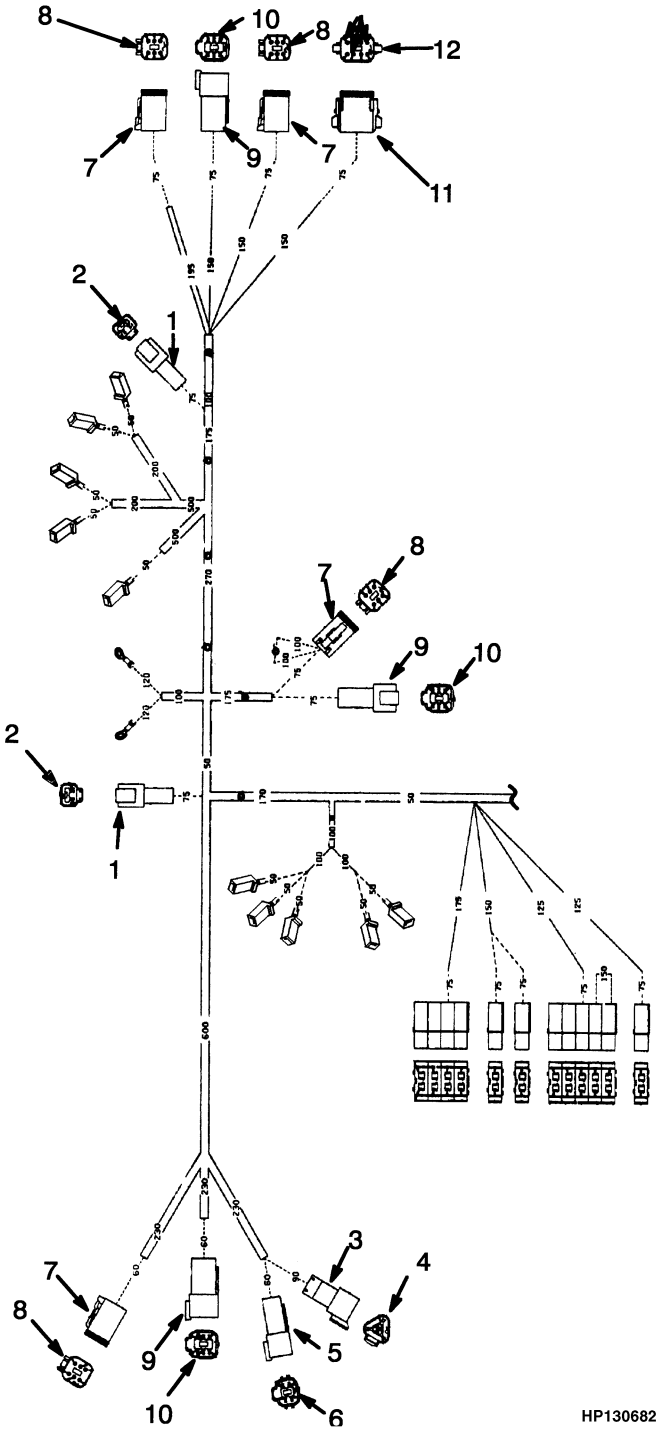

©2006 HYSTER COMPANY

WIRE HARNESS
OPERATOR COMPARTMENT (TIER I)
SHEET 1 OF 2

ITEM	PART NO.	DESCRIPTION	QTY
	1383845	Wire Harness	1
1	1330409	Connector	3
2	1330414	Secondary Lock	3
3	1330410	Connector	1
4	1330415	Secondary Lock	1
5	1330411	Connector	2
6	1330416	Secondary Lock	2
7	1330422	Connector	4
8	1330428	Secondary Lock	4
9	1330412	Connector	3
10	1330417	Secondary Lock	3
11	1330423	Connector	1
12	1330429	Secondary Lock	1

©2006 HYSTER COMPANY

WIRE HARNESS (Figure 4-41)
OPERATOR COMPARTMENT (TIER I)
SHEET 2 OF 2

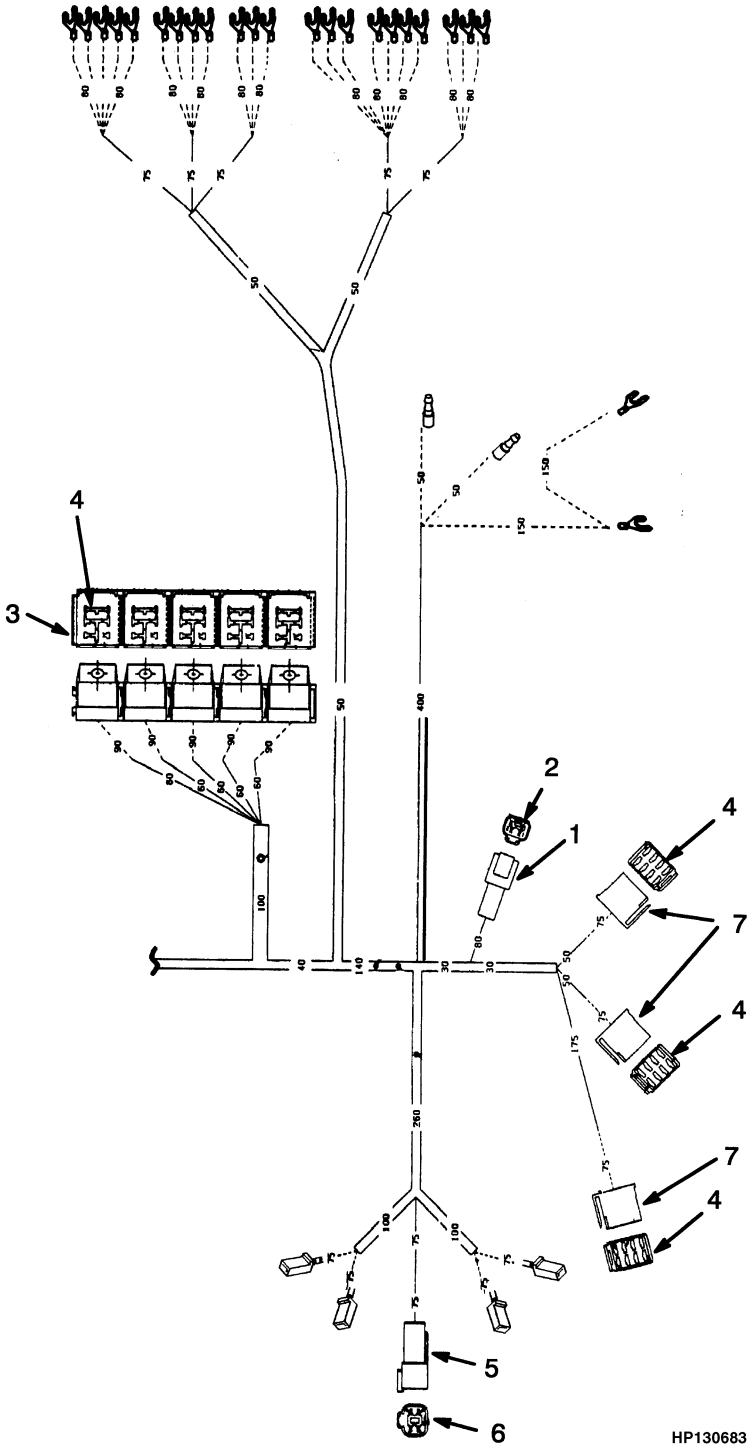

©2006 HYSTER COMPANY

WIRE HARNESS
OPERATOR COMPARTMENT (TIER I)
SHEET 2 OF 2

ITEM	PART NO.	DESCRIPTION	QTY
	1383845	Wire Harness	1
1	1330409	Connector	3
2	1330414	Secondary Lock	3
3	1347224	Relay Socket	3
4	1331233	Blade	4
5	1330411	Connector	1
6	1330416	Secondary Lock	1
7	1301154	Housing	3

©2006 HYSTER COMPANY

WIRE HARNESS (Figure 4-42)
OPERATOR COMPARTMENT (TIER II)
SHEET 1 0F 2
(S/N A214E01843Z⇒ (FLT), S/N A214E01849Z⇒ (ECH))

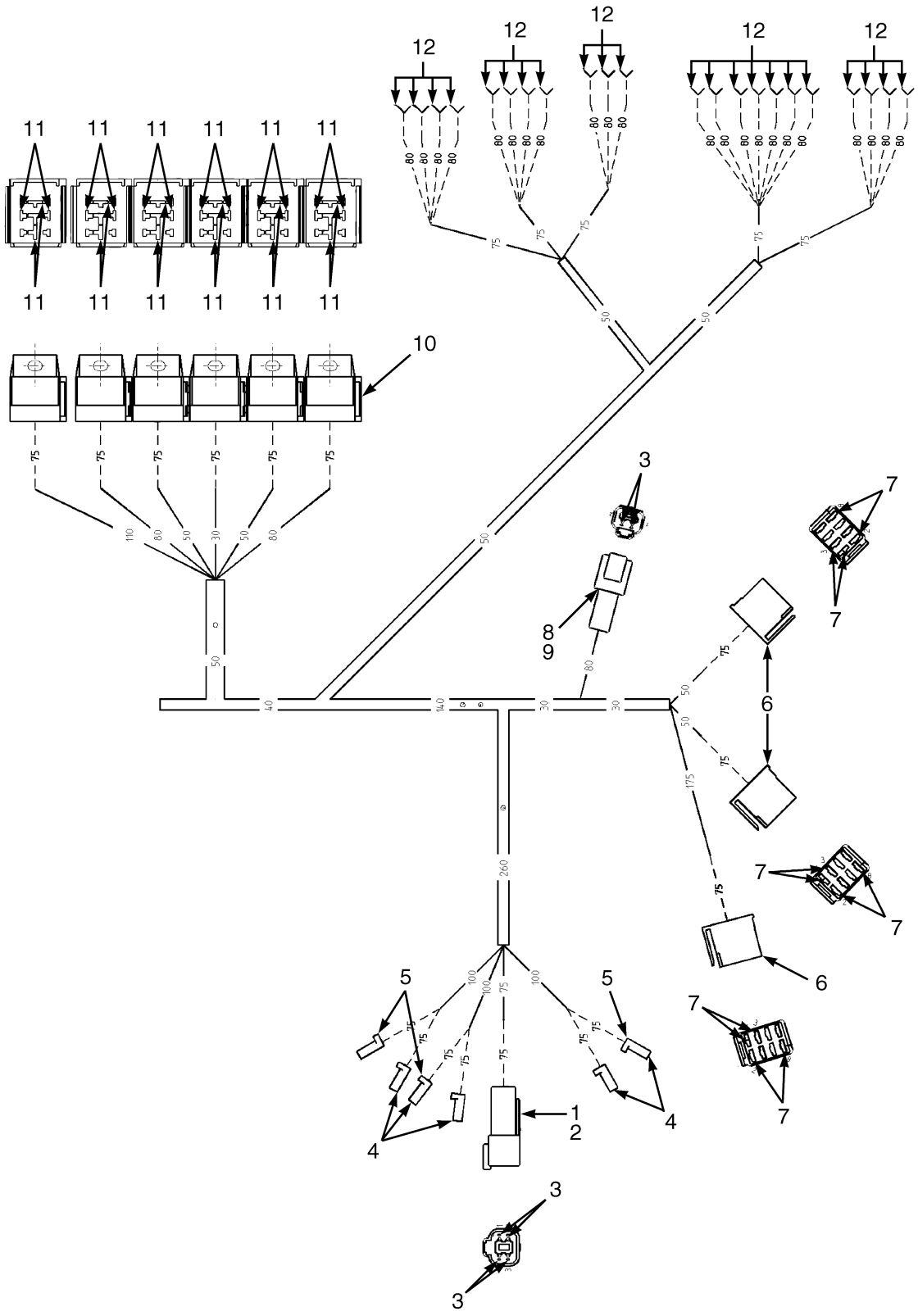

©2006 HYSTER COMPANY

WIRE HARNESS
OPERATOR COMPARTMENT (TIER II)
SHEET 1 0F 2
(S/N A214E01843Z⇒ (FLT), S/N A214E01849Z⇒ (ECH))

ITEM		PART NO.	DESCRIPTION	QTY
	a	1518275	Wire Harness	1
	b	1609035	Wire Harness	1
1		1330410	Connector	2
2		1330415	Secondary Lock	2
3		1330437	Terminal (Pin)	32
4		1330411	Connector	1
5		1330416	Secondary Lock	1
6		1330413	Connector	2
7		1330418	Secondary Lock	2
8		1330439	Insulator	6
9		1330422	Connector	3
10		1330428	Secondary Lock	3
11		1330438	Terminal (Socket)	27
12		134812	Terminal	10
13		1330409	Connector	2
14		1330414	Secondary Lock	2
15		381846	Fuse Holder	13
16		1300231	Terminal	16
17		381847	Terminal	20
18		129886	Terminal	2
19		148605	Fitting	3
20		148609	Fitting	1
21		181046	Connector	12
22		1330412	Connector	1
23		1330417	Secondary Lock	1
24		1330423	Connector	1
25		1330429	Secondary Lock	1
26		1330420	Connector	1
27		1330426	Secondary Lock	1

FOOTNOTES:
a ⇒ S/N A214E02193C
b S/N A214E02194C ⇒

©2006 HYSTER COMPANY

WIRE HARNESS (Figure 4-43)
OPERATOR COMPARTMENT (TIER II)
SHEET 2 OF 2
(S/N A214E1843Z⇒ (FLT), S/N A214E1849Z⇒ (ECH))

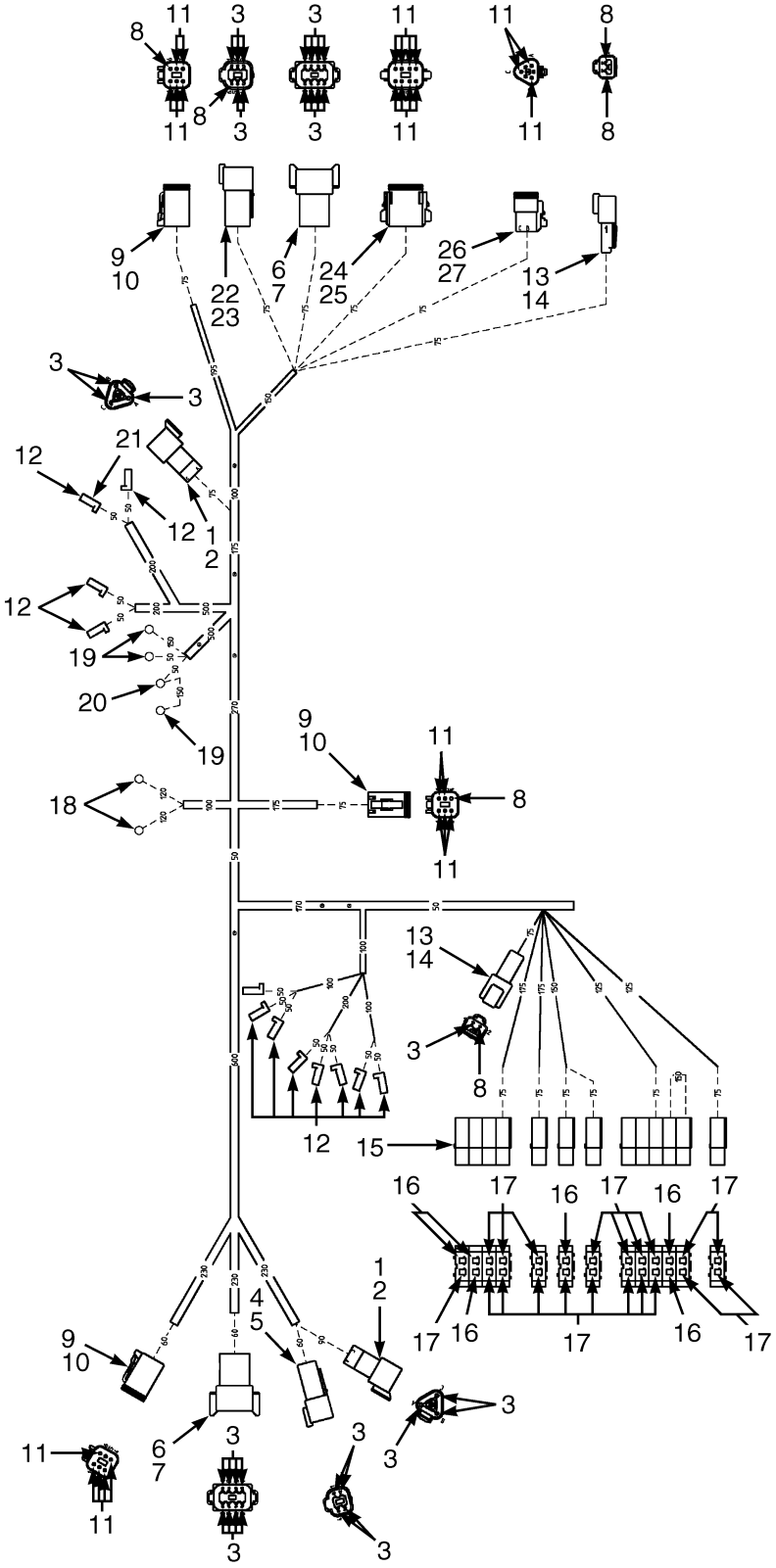

©2006 HYSTER COMPANY

WIRE HARNESS
OPERATOR COMPARTMENT (TIER II)
SHEET 2 OF 2
(S/N A214E1843Z⇒ (FLT), S/N A214E1849Z⇒ (ECH))

ITEM		PART NO.	DESCRIPTION	QTY
	a	1518275	Wire Harness	1
	b	1609035	Wire Harness	1
1		1330411	Connector	1
2		1330416	Secondary Lock	1
3		1330437	Terminal (Pin)	6
4		134812	Terminal	5
5		181046	Connector	6
6		1301154	Housing	3
7		1331233	Blade	13
8		1330409	Connector	1
9		1330414	Secondary Lock	1
10	**a**	1347224	Relay Socket	6
10	**b**	1347224	Relay Socket	5
11		1331233	Blade	25
12		148648	Connector	22

FOOTNOTES:
a ⇒ S/N A214E02193C
b S/N A214E02194C ⇒

©2006 HYSTER COMPANY

WIRE HARNESS (Figure 4-44)
OPERATOR COMPARTMENT TO MAST LIGHT JUMPER

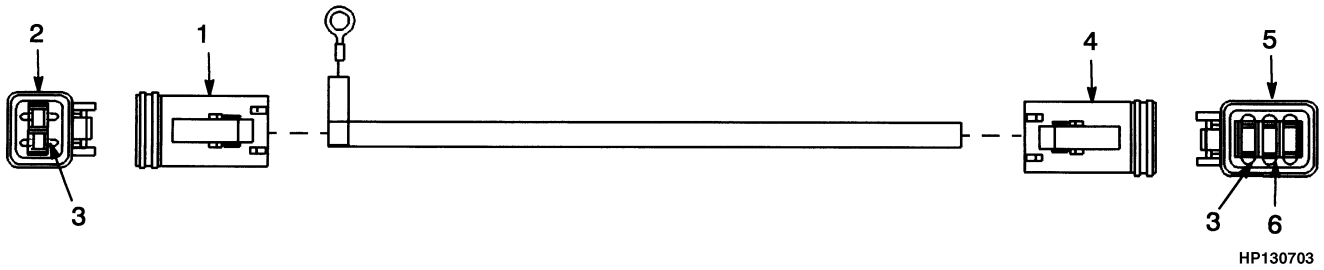

ITEM	PART NO.	DESCRIPTION	QTY
	1452324	Wire Harness	1
1	1330419	Connector	1
2	1330424	Secondary Lock	1
3	1330438	Terminal (Socket)	3
4	1330422	Connector	1
5	1330428	Secondary Lock	1
6	1330439	Insulator	5

©2006 HYSTER COMPANY

WIRE HARNESS (Figure 4-45)
REAR LIGHT

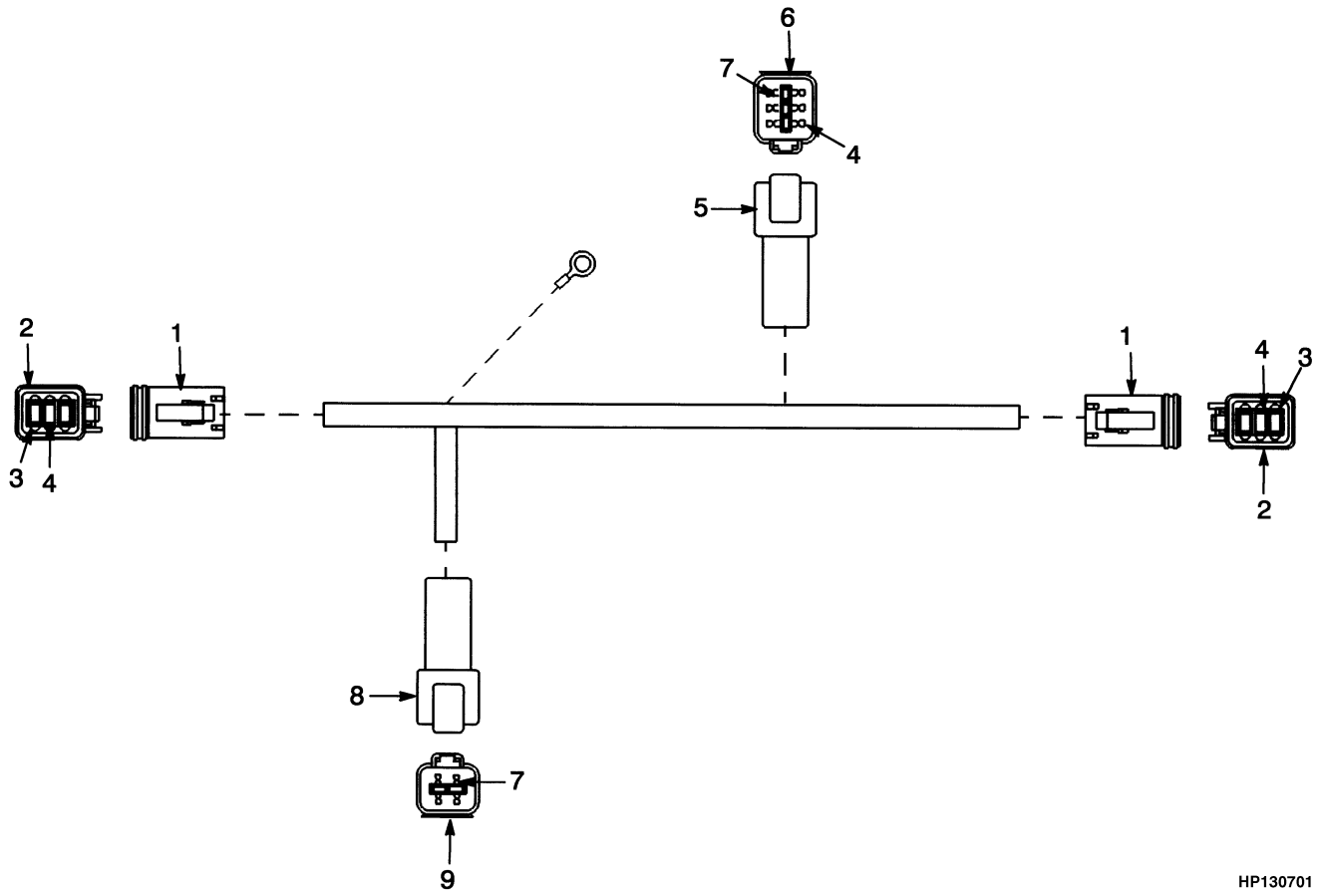

ITEM	PART NO.	DESCRIPTION	QTY
	1384605	Wire Harness	1
1	1330422	Connector (Brake and Back-Up Light)	2
2	1330429	Secondary Lock	2
3	1330438	Terminal (Socket)	10
4	1330439	Insulator	3
5	1330412	Connector (Operator Compartment Harness)	1
6	1330417	Secondary Lock	1
7	1330437	Terminal (Pin)	7
8	1330409	Connector (Back-Up Alarm)	1
9	1330414	Secondary Lock	1

WIRE HARNESS (Figure 4-46)
ROTATING BEACON

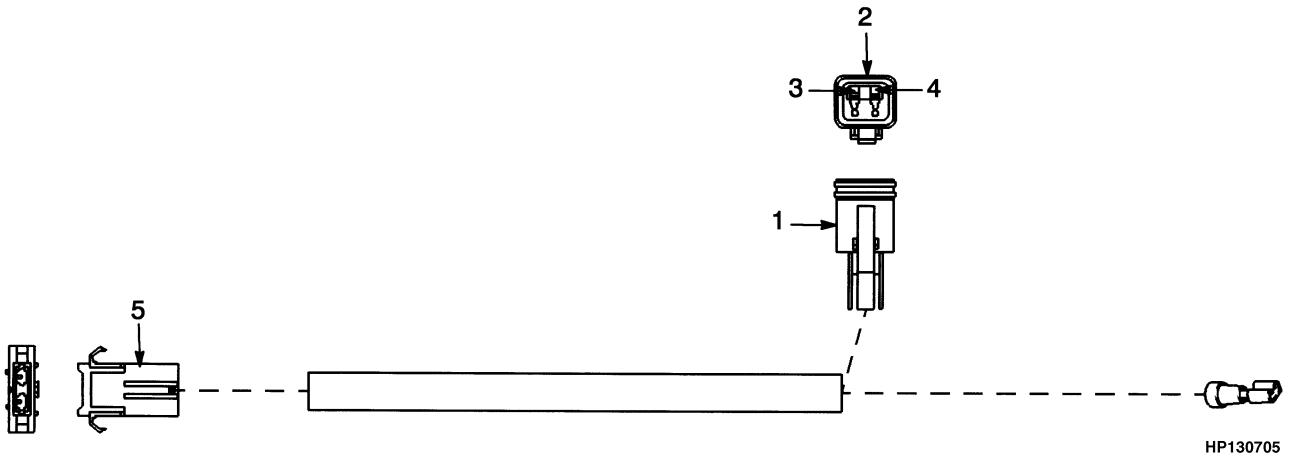

ITEM	PART NO.	DESCRIPTION	QTY
	1385513	Wire Harness	1
1	1330419	Connector	1
2	1330424	Secondary Lock	1
3	1330438	Terminal (Socket)	1
4	1330439	Insulator	1
5	381846	Fuse Holder	1

©2006 HYSTER COMPANY

NOTES

WIRE HARNESS (Figure 4-47)
STEERING POD

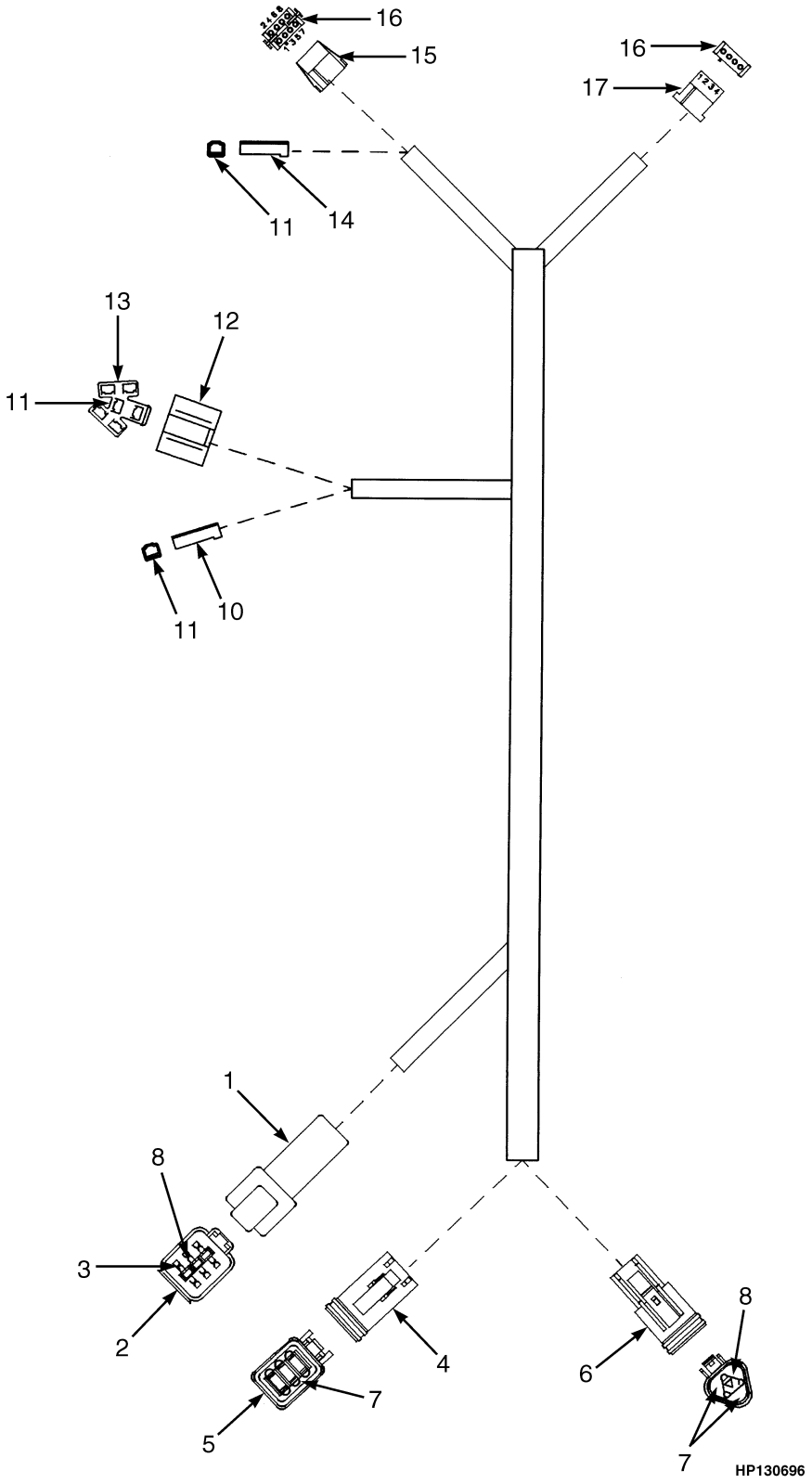

©2006 HYSTER COMPANY

WIRE HARNESS
STEERING POD

KEY:
A: Tier I Engine
B: Tier II Engine

ITEM	PART NO.	DESCRIPTION	QTY A	QTY B
	1385517	Wire Harness	1	..
	1518935	Wire Harness	..	1
1	1330412	Connector (Operator Compartment Harness)	1	1
2	1330417	Secondary Lock	1	1
3	1330437	Terminal (Pin)	5	..
3	1363885	Terminal (Pin)	..	6
4	1330422	Connector (Operator Compartment Harness)	1	..
4	1330423	Connector	..	1
5	1330428	Secondary Lock	1	..
5	1330429	Secondary Lock	..	1
6	1330420	Connector (Operator Compartment Harness)	1	1
7	1330438	Terminal (Socket)	8	..
7	1363886	Terminal (Socket)	..	10
8	1330439	Insulator	2	2
9	1330426	Secondary Lock	1	1
10	181046	Connector	1	1
11	134812	Terminal	5	3
12	370728	Connector	1	1
13	1322673	Blade	..	2
14	129889	Connector Body	1	1
15	370727	Connector	1	1
16	367968	Socket	11	11
17	367960	Connector	1	1

©2006 HYSTER COMPANY

WIRE HARNESS (Figure 4-48)
SWITCH LIGHTS

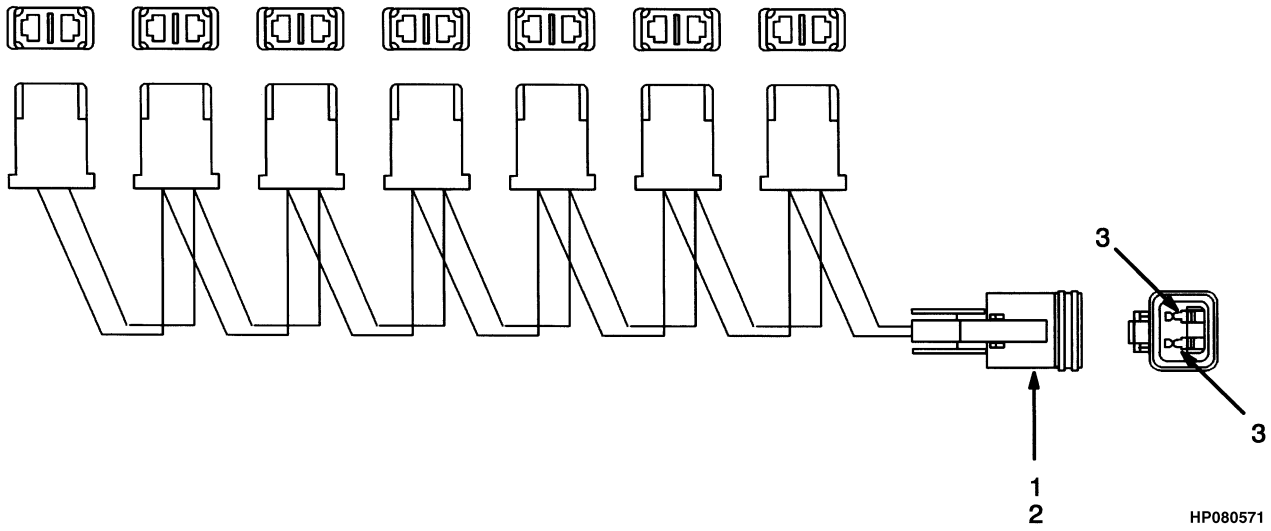

ITEM	PART NO.	DESCRIPTION	QTY
	1336790	Wire Harness	1
1	1330419	Connector	1
2	1330424	Secondary Lock	1
3	1330438	Terminal (Socket)	3

©2006 HYSTER COMPANY

WIRE HARNESS (Figure 4-49)
SWITCH
WARNING

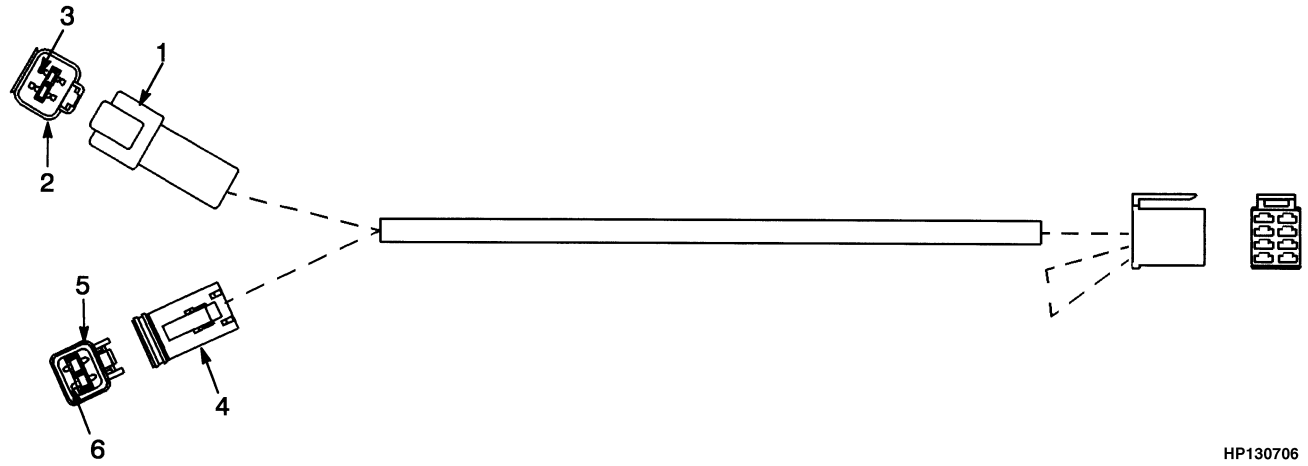

ITEM	PART NO.	DESCRIPTION	QTY
	1384495	Wire Harness	1
1	1330411	Connector	1
2	1330416	Secondary Lock	1
3	1330437	Terminal (Pin)	4
4	1330421	Connector	1
5	1330427	Secondary Lock	1
6	1330438	Terminal (Socket)	4

WIRE HARNESS (Figure 4-50)
TRANSMISSION

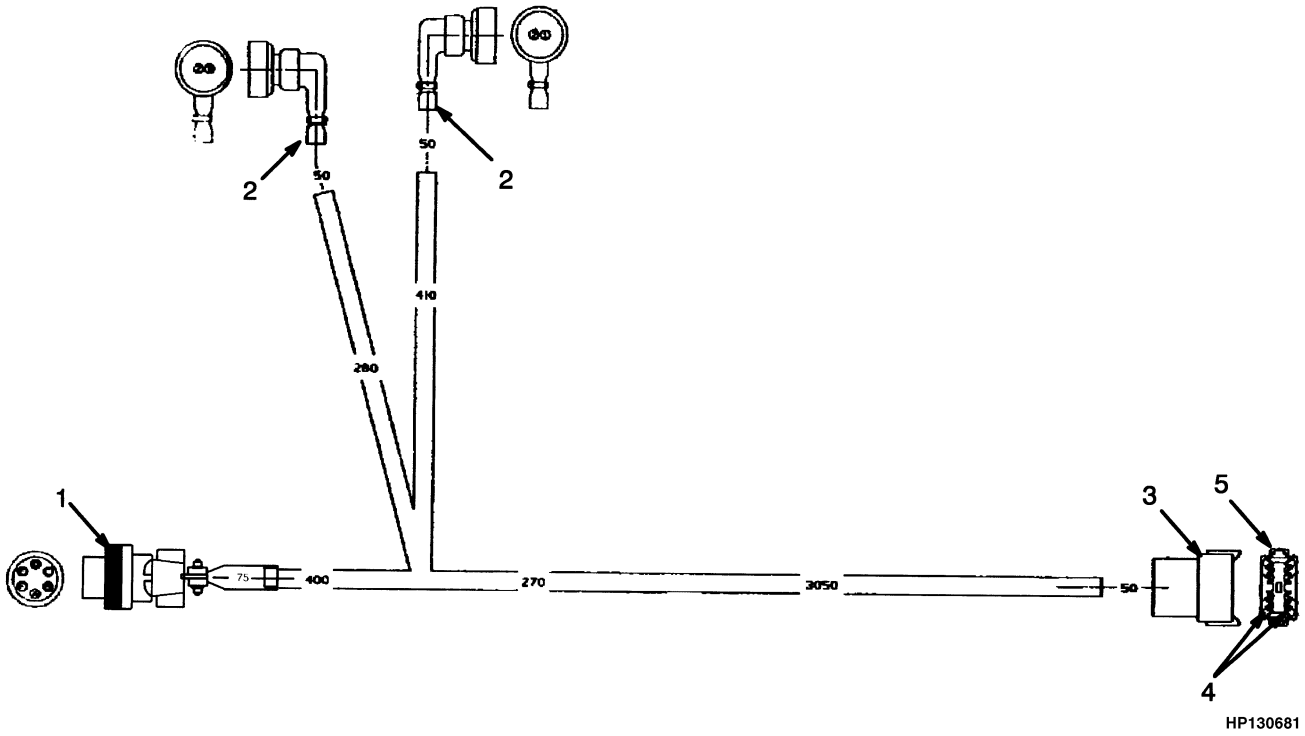

KEY:
A: Empty Container Handler
B: Fork Lift Truck

ITEM	PART NO.	DESCRIPTION	QTY A	QTY B
	1383832	Wire Harness	1	..
	1383833	Wire Harness	..	1
1	380109	Connector	1	1
2	1383810	Connector	2	2
3	1352602	Connector	1	1
4	1330437	Terminal (Pin)	10	10
5	1352603	Secondary Lock	1	1

©2006 HYSTER COMPANY

NOTES

WIRE HARNESS (Figure 4-51)
TRANSMISSION
(⇒S/N A214E-1615)

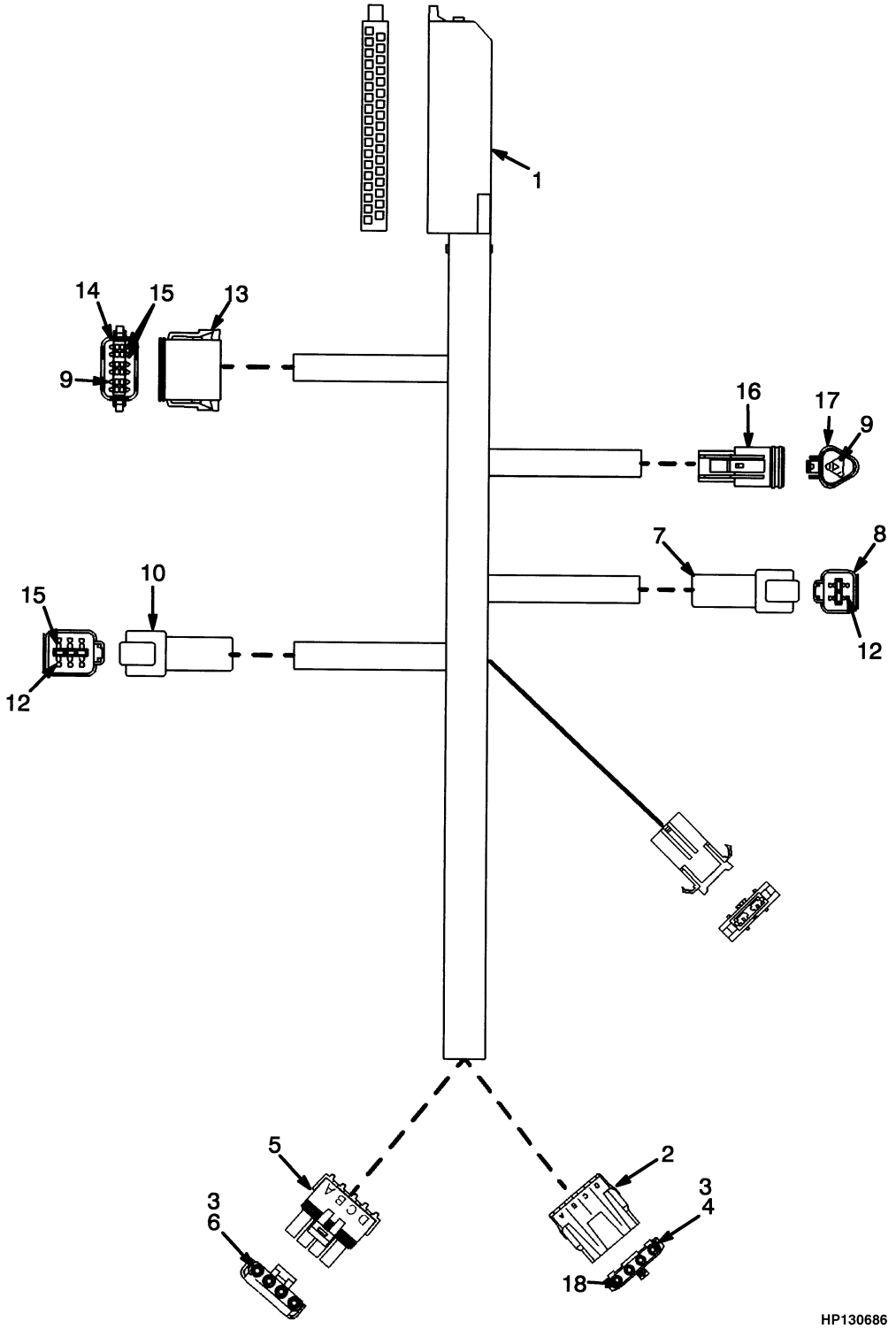

©2006 HYSTER COMPANY

WIRE HARNESS
TRANSMISSION
(⇒S/N A214E-1615)

ITEM	PART NO.	DESCRIPTION	QTY
	1383830	Wire Harness	1
1	1383808	Connector	1
2	1383803	Connector	1
3	1323579	Seal	7
4	1334999	Pin	3
5	1383804	Connector	1
6	1336173	Terminal Socket	4
7	1330411	Connector	1
8	1330416	Secondary Lock	1
9	1330438	Terminal (Socket)	13
10	1330412	Connector	1
11	1330417	Secondary Lock	1
12	1330437	Terminal (Pin)	9
13	1351068	Connector	1
14	1351069	Lock	1
15	1330439	Insulator	3
16	1330420	Connector	1
17	1330426	Secondary Lock	1
18	1327164	Plug	1
19	381846	Fuse Holder	1
20	381847	Terminal	1

©2006 HYSTER COMPANY

WIRE HARNESS (Figure 4-52)
TRANSMISSION
(S/N A214E1616⇔S/N A214E02193C)

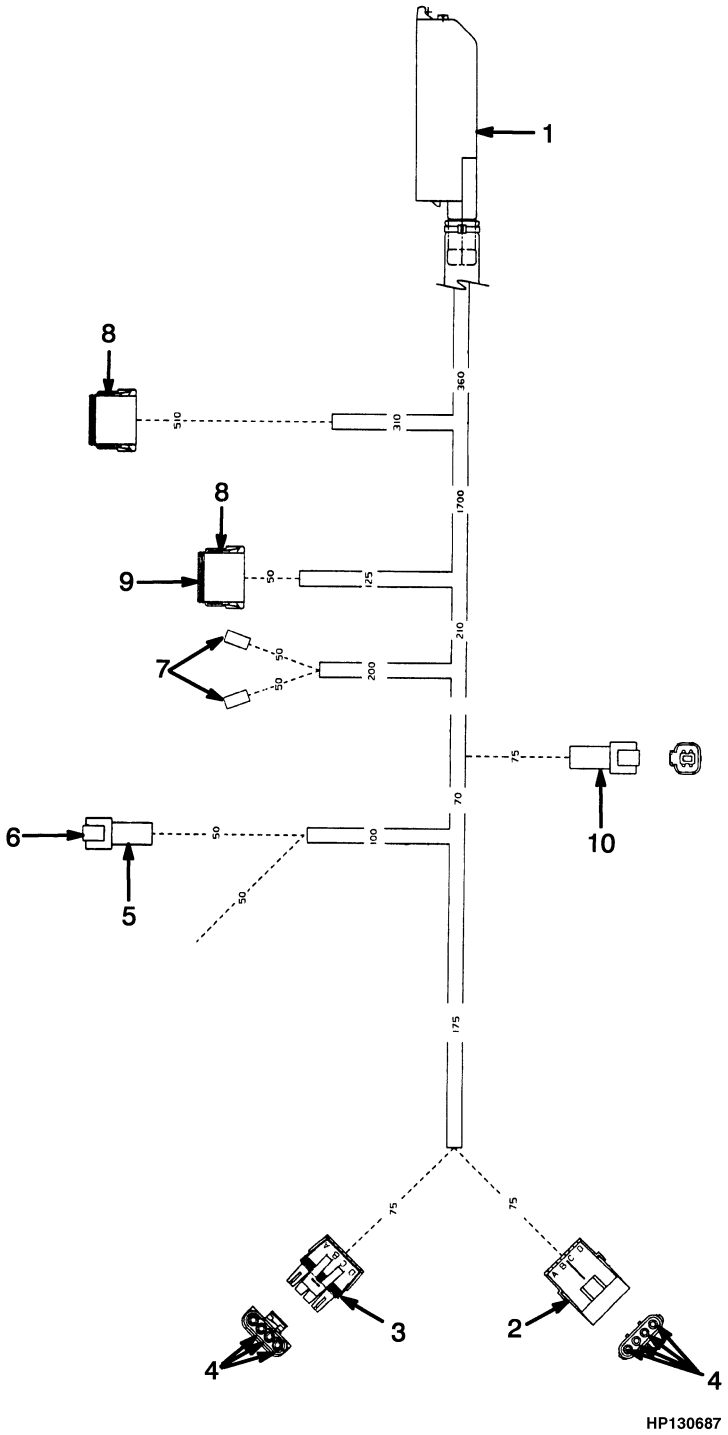

©2006 HYSTER COMPANY

WIRE HARNESS
TRANSMISSION
(S/N A214E1616⇔S/N A214E02193C)

ITEM	PART NO.	DESCRIPTION	QTY
	1457954	Wire Harness	1
1	1383808	Connector (Transmission)	1
2	1383803	Connector	1
3	1383804	Connector	1
4	1323579	Seal	7
5	1330412	Connector	1
6	1330417	Secondary Lock	1
7	134812	Terminal	2
8	1351068	Connector	2
9	1351069	Lock	1
10	1330411	Connector	1

©2006 HYSTER COMPANY

WIRE HARNESS (Figure 4-53)
TRANSMISSION CONTROL
(S/N A214E02194C⇒)

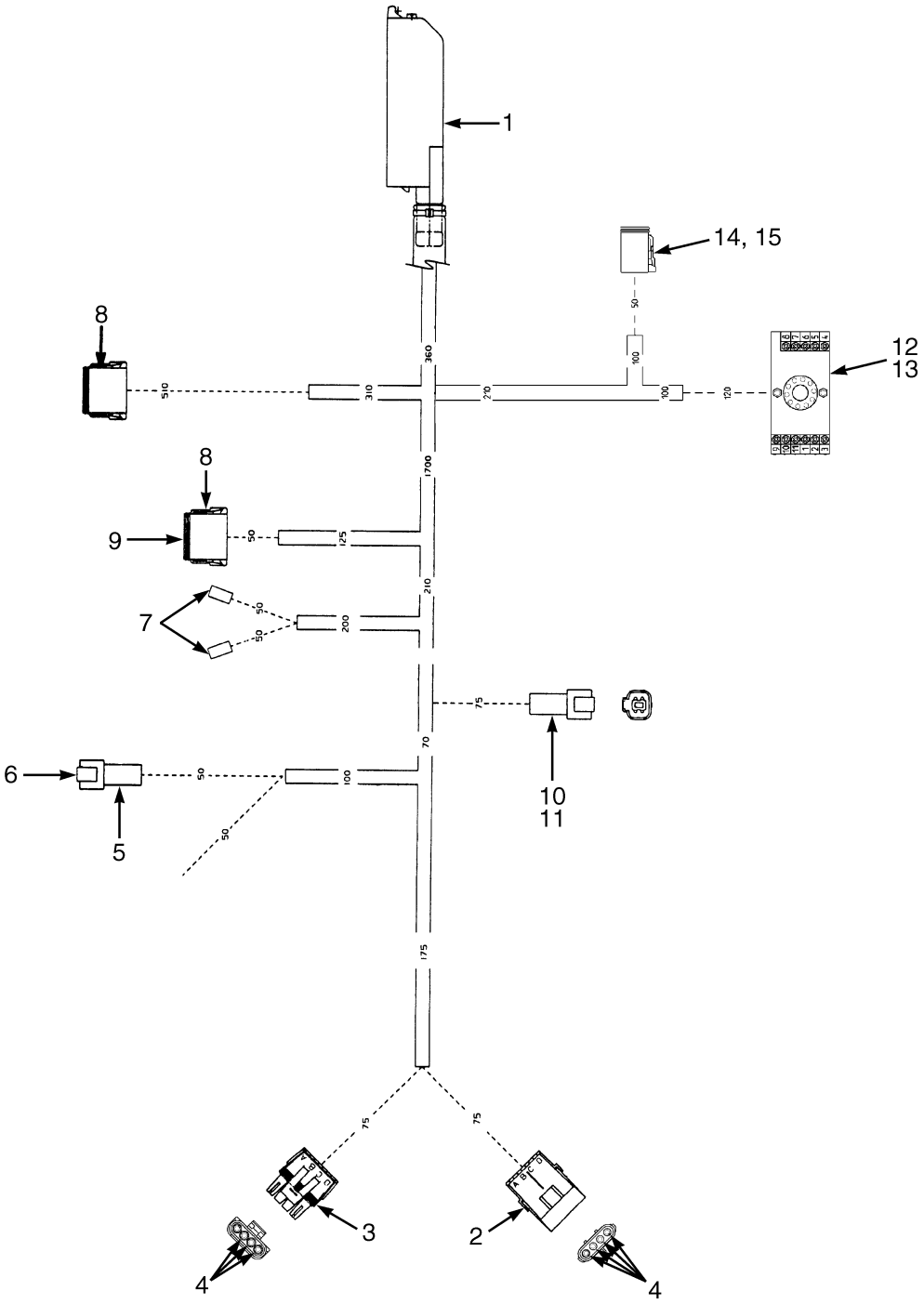

HP081682

©2006 HYSTER COMPANY

WIRE HARNESS
TRANSMISSION CONTROL
(S/N A214E02194C⇒)

ITEM	PART NO.	DESCRIPTION	QTY
	1606670	Wire Harness	1
1	1383808	Connector (Kit)	1
2	1383803	Connector	1
3	1383804	Connector	1
4	1323579	Seal	7
5	1330412	Connector	1
6	1330417	Secondary Lock	1
7	325789	Fitting	2
8	1351068	Connector	2
9	1351069	Lock	1
10	1330411	Connector	1
11	1330416	Secondary Lock	1
12	1608860	Socket (Relay)	1
13	833772	Pin	9
14	1330422	Connector	1
15	1330428	Secondary Lock	1

©2006 HYSTER COMPANY

WIRE HARNESS (Figure 4-54)
TURN SIGNAL

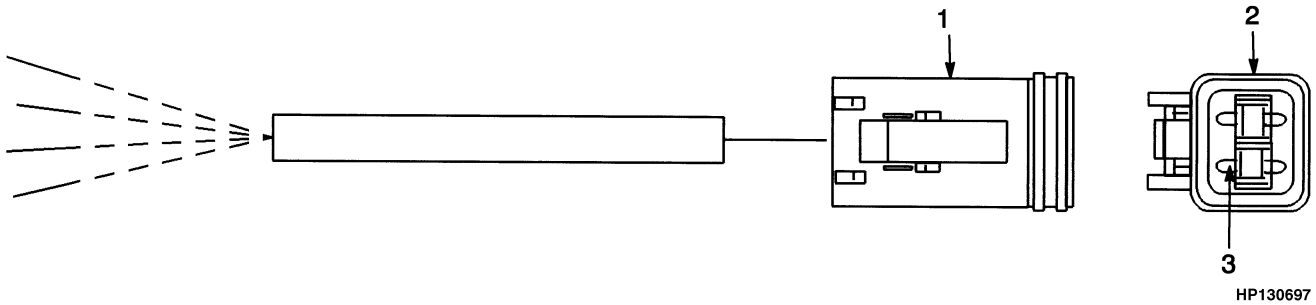

ITEM	PART NO.	DESCRIPTION	QTY
	1336789	Wire Harness (Turn Signal)	1
1	1330421	Connector	1
2	1330427	Secondary Lock	1
3	1330438	Terminal (Socket)	4

©2006 HYSTER COMPANY

WIRE HARNESS (Figure 4-55)
WINDSHIELD WASHER

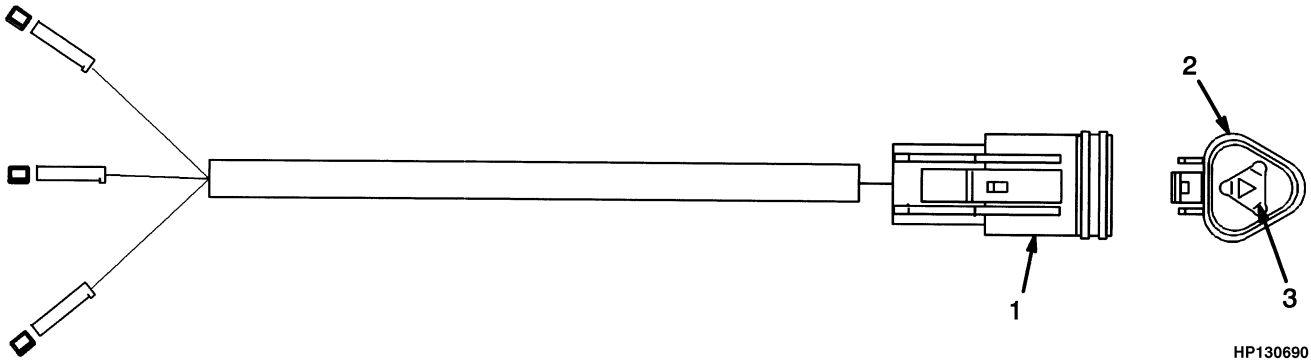

ITEM	PART NO.	DESCRIPTION	QTY
	1384602	Wire Harness	1
1	1330410	Connector (Cab Wire Harness)	1
2	1330415	Secondary Lock	1
3	1330437	Terminal (Pin)	3

WIRE HARNESS (Figure 4-56)
WORK LIGHTS

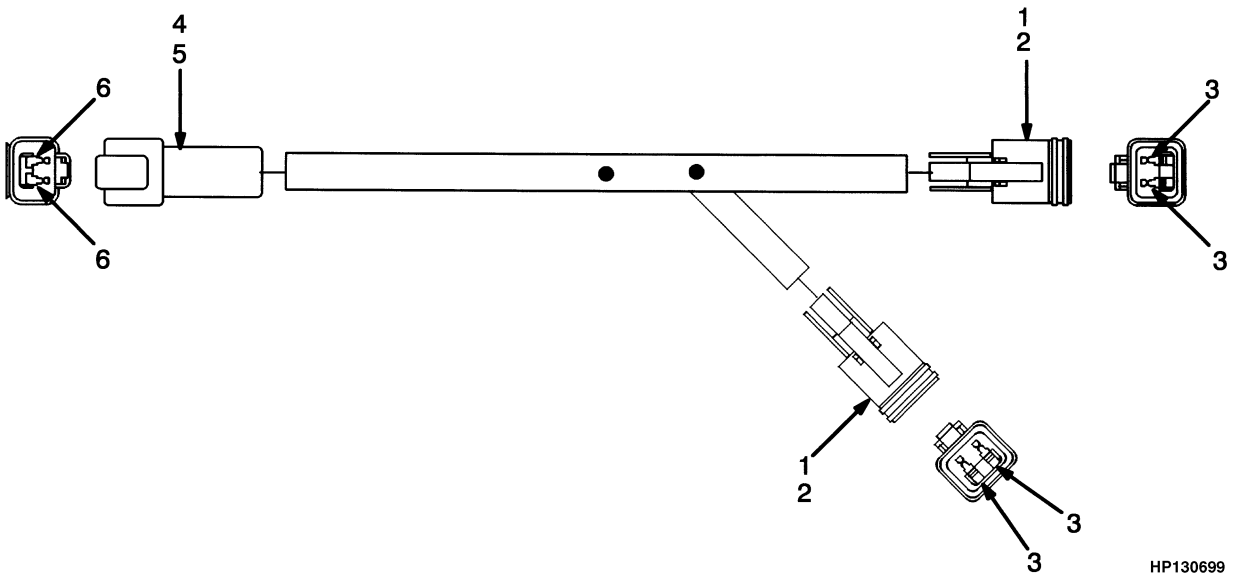

ITEM	PART NO.	DESCRIPTION	QTY
	1384606	Wire Harness	1
1	1330419	Connector (Work Lights)	2
2	1330424	Secondary Lock	2
3	1330438	Terminal (Socket)	4
4	1330409	Connector	1
5	1330414	Secondary Lock	1
6	1330437	Terminal (Pin)	2

©2006 HYSTER COMPANY

WIRE HARNESS (Figure 4-57)
WORK LIGHTS
EMPTY CONTAINER HANDLER

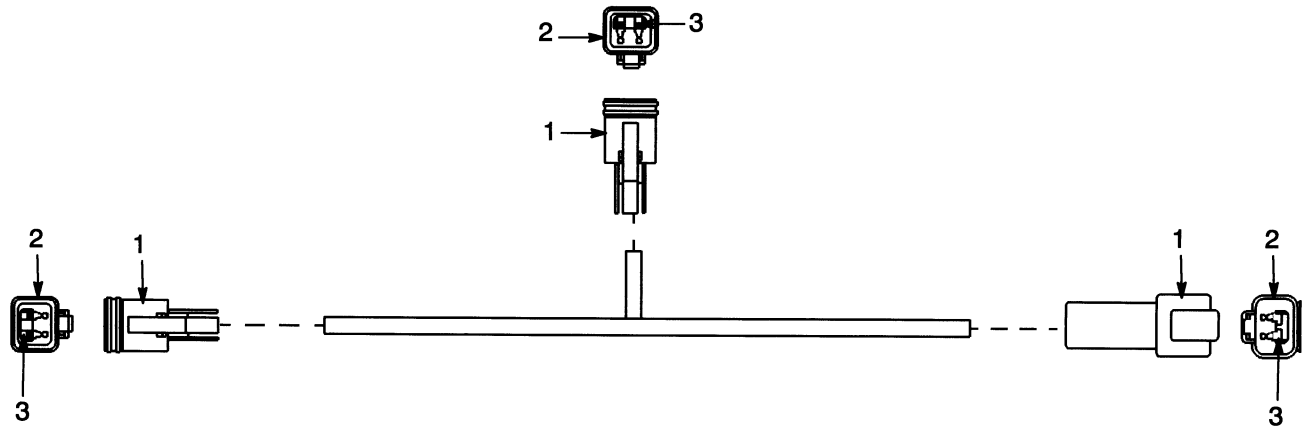

ITEM	PART NO.	DESCRIPTION	QTY
	1452319	Wire Harness	1
1	1330419	Connector	3
2	1330424	Secondary Lock	3
3	1330438	Terminal (Socket)	6

WIRE HARNESS (Figure 4-58)
WORK LIGHTS
FORK LIFT TRUCK

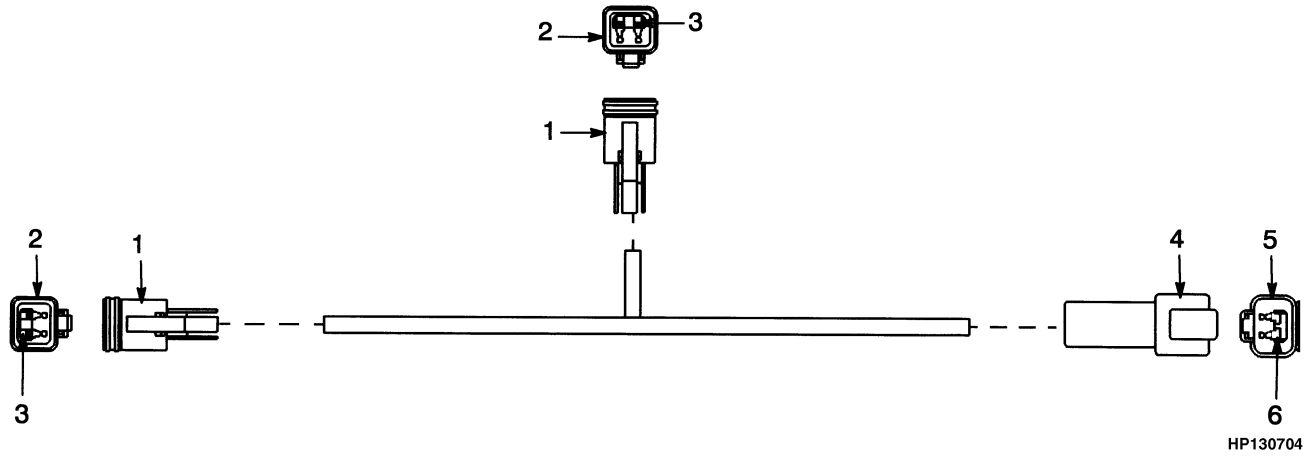

ITEM	PART NO.	DESCRIPTION	QTY
	1452323	Wire Harness	1
1	1330419	Connector	2
2	1330424	Secondary Lock	2
3	1330438	Terminal (Socket)	4
4	1330409	Connector	1
5	1330414	Secondary Lock	1
6	1330437	Terminal (Pin)	2

©2006 HYSTER COMPANY

WIRE HARNESS (Figure 4-59)
WORK LIGHTS EXTENSION
FORK LIFT TRUCK



ITEM		PART NO.	DESCRIPTION	QTY
	a	1452315	Wire Harness (RH)	1
		1452552	Wire Harness (LH)	1
	b	1452316	Wire Harness (RH)	1
1		1330409	Connector	1
2		1330414	Secondary Lock	1
3		1330437	Terminal (Pin)	2
4		1330419	Connector	1
5		1330424	Secondary Lock	1
6		1330438	Terminal (Socket)	2

FOOTNOTES:
a 2900 mm thru 5300 mm Lift
b 6100 mm thru 6900 mm Lift

WIRE HARNESS (Figure 4-60)
SELECTOR VALVE

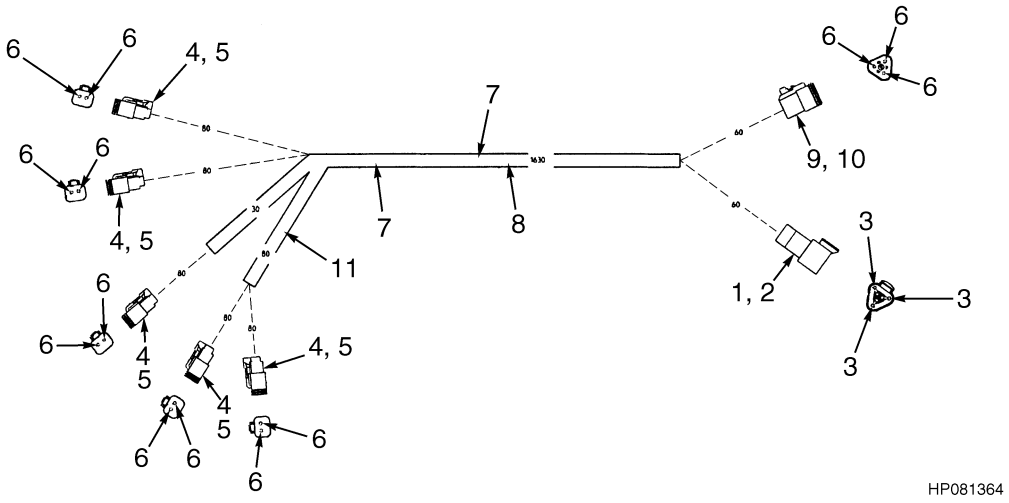

ITEM	PART NO.	DESCRIPTION	QTY
	1455636	Wire Harness (Selector Valve)	1
1	1330410	Connector	1
2	1330415	Secondary Lock	1
3	1330437	Terminal (Pin)	3
4	1330419	Connector	5
5	1330424	Secondary Lock	5
6	1330438	Terminal (Socket)	13
7	1345027	Splice	2
8	381919	Bulk Braiding	AR
9	1330420	Connector	1
10	1330426	Secondary Lock	1
11	1345026	Splice	1

©2006 HYSTER COMPANY

5 TRANSMISSION

SECTION 5
TRANSMISSION

DESCRIPTION **PAGE**

TRANSMISSION
CONTROL VALVE
⇒S/N A214E-1615 5-20
S/N A214E-1616⇒ 5-24
CONTROL VALVE ATTACHING PARTS 5-18
FORWARD AND SECOND SPEED CLUTCH
SHEET 2 OF 3 5-32
INPUT SHAFT 5-14
REVERSE AND FIRST CLUTCH
SHEET 1 OF 3 5-28
SHIFT LEVER 5-40
THIRD SPEED CLUTCH
SHEET 3 OF 3 5-36
TORQUE CONVERTER 5-17
TRANSMISSION ATTACHING PARTS
SHEET 1 OF 3 5-2
SHEET 2 OF 3
INCLUDES MOUNTING 5-6
SHEET 3 OF 3
OIL FILTER 5-8
TRANSMISSION HYDRAULIC LINES
⇒S/N A214E-1615 5-10
S/N A214E-1616⇒ 5-12

©2006 HYSTER COMPANY

TRANSMISSION ATTACHING PARTS (Figure 5-1)
SHEET 1 OF 3

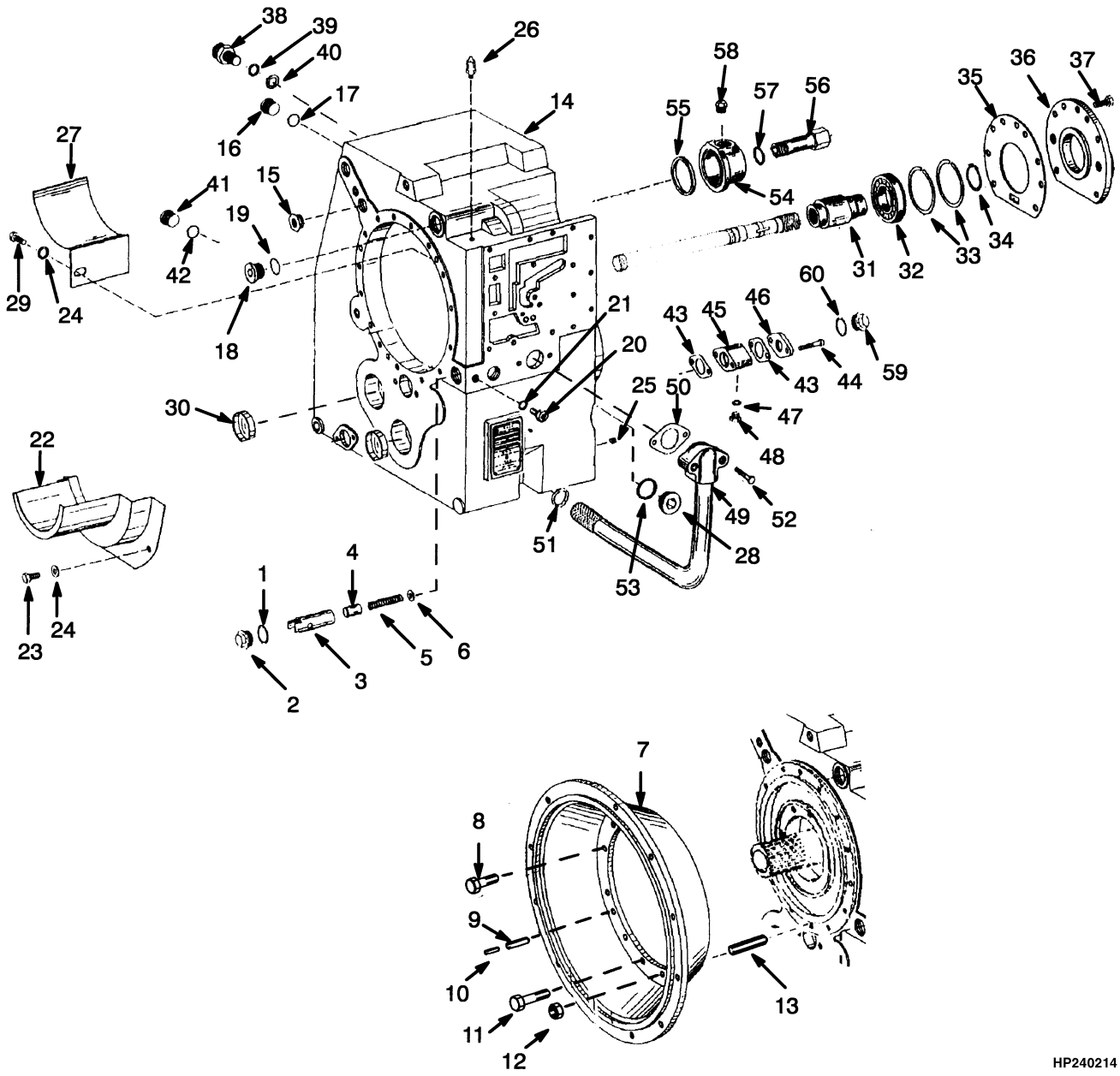

©2006 HYSTER COMPANY

TRANSMISSION ATTACHING PARTS
SHEET 1 OF 3

ITEM		PART NO.	DESCRIPTION	QTY
	b	1372980	Transmission	1
	c	1459006	Transmission	1
1		1390797	O-Ring	1
2		382818	Plug	1
3		1391015	Sleeve	1
4		1391016	Piston	1
5		1391017	Spring	1
6		1391018	Washer	1
7		1390069	Housing	1
8		1390070	Screw	12
9		1390071	Cotter Pin	2
10		1390072	Cotter Pin	2
11		1390080	Screw	2
12		136692	Nut	2
13	**b**	1390081	Stud	2
13	**c**	1467063	Stud	2
14		1390792	Housing	1
15		1390793	Bushing	1
16		1390794	Plug	1
17		1390795	O-Ring	1
18		1390796	Plug	1
19		1390797	O-Ring	1
20		1390798	Temperature Sensor	1
21		1390799	O-Ring	1
22		1390800	Plate	1
23		1390801	Screw	3
24	**b**	1390802	Washer	3
24	**c**	1467065	Washer	3
25		382810	Set Screw	2
26		1390805	Breather	1
27		1390806	Screen	1
28		1391022	Plug	1
29		1390809	Bolt	2
30		1390810	Cap	2
31		1390946	Driver	1
32		1390947	Bearing	1
33		1390948	Snap Ring	2
34		1390949	Retaining Ring	1
35		1390950	Gasket	1
36		1390951	Flange	1
37		287854	Capscrew	7
38		382828	Speed Sensor	2
39	**c**	1391020	Seal Ring	1
39	**b**	1391020	Seal Ring	2
40	**b**	1390968	O-Ring	1
40	**c**	1391020	Seal Ring	1
41		1391011	Plug	1
42		383412	Shim (0.061 in.)	1
42	**a**	383413	Shim (0.057 in.)	1
42	**a**	383414	Shim (0.047 in.)	1
42	**a**	383415	Shim (0.039 in.)	1

©2006 HYSTER COMPANY

TRANSMISSION ATTACHING PARTS
SHEET 1 OF 3

ITEM		PART NO.	DESCRIPTION	QTY
42	**a**	383416	Shim (0.079 in.)	1
42	**a**	383417	Shim (0.020 in.)	1
42	**a**	383418	Shim (0.012 in.)	1
42	**a**	383419	Shim (0.008 in.)	1
42	**a**	383420	Shim (0.063 in.)	1
42	**a**	383421	Shim (0.071 in.)	1
43		1390641	Gasket	1
44	**b**	292510	Capscrew	1
44	**c**	1466971	Screw	2
45	**b**	1391030	Filler Neck	1
46	**b**	1391028	Cover Plate	1
46	**c**	1466969	Cover	1
47	**b**	382779	Ring Seal	1
48	**b**	1391029	Plug	1
49		1391032	Tube	1
50		1391033	Gasket	1
51		1391034	O-Ring	1
52		1391035	Screw	2
53		1391021	O-Ring	1
54		1466961	End Cover	1
55		1466962	Gasket	1
56		1466963	Screw	1
57		1466965	O-Ring	1
58		1470294	Plug	1
58		1390797	O-Ring	1
59	**c**	1466972	Plug	1
60	**c**	1466973	Ring	1

FOOTNOTES:
a Optional
b ⇒ S/N A214E-1615
c S/N A214E-1616 ⇒

©2006 HYSTER COMPANY

NOTES

TRANSMISSION ATTACHING PARTS (Figure 5-2)
SHEET 2 OF 3
INCLUDES MOUNTING

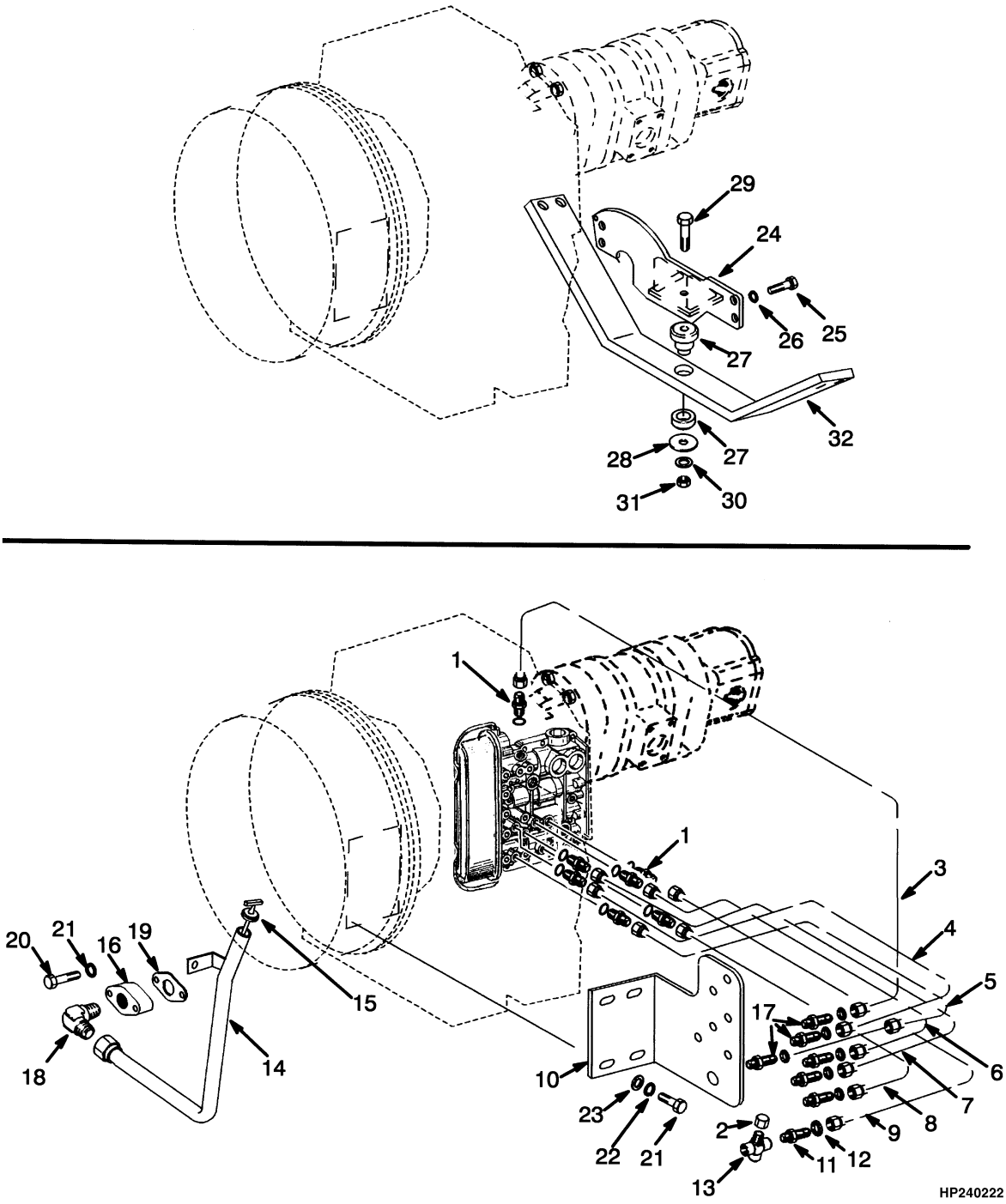

©2006 HYSTER COMPANY

TRANSMISSION ATTACHING PARTS
SHEET 2 OF 3
INCLUDES MOUNTING

ITEM		PART NO.	DESCRIPTION	QTY
1		1371383	Fitting	7
2		16923	Fitting	7
3		1390625	Tube	1
4		1390626	Tube	1
5		1390627	Tube	1
6		1390628	Tube	1
7		1390629	Tube	1
8		1390630	Tube	1
9		1390631	Tube	1
10		1390632	Bracket	1
11		1390633	Fitting	1
12		14758	Nut	1
13		1390634	Fitting	1
14	**a**	1390644	Tube	1
14	**b**	1457993	Tube	1
15	**a**	1390636	Dipstick	1
15	**b**	1458018	Dipstick	1
16		1390637	Flange	1
17		16445	Fitting	6
18		14512	Fitting	1
19		1390641	Gasket	3
20		292509	Capscrew	2
21		292681	Lockwasher	2
22		320161	Washer	2
23		292683	Lockwasher	2
24		1460299	Bracket	1
25		292580	Capscrew	4
26		292687	Lockwasher	4
27	**a**	1373270	Isolator	1
27	**b**	1464454	Isolator	1
28		1302938	Washer	1
29		292572	Capscrew	1
30		296426	Washer (Hardened)	1
31		316828	Nut	5
32		1381953	Mount	1

FOOTNOTES:
a ⇒ S/N A214E-1606
b S/N A214E-1607 ⇒

©2006 HYSTER COMPANY

TRANSMISSION ATTACHING PARTS (Figure 5-3)
SHEET 3 OF 3
OIL FILTER

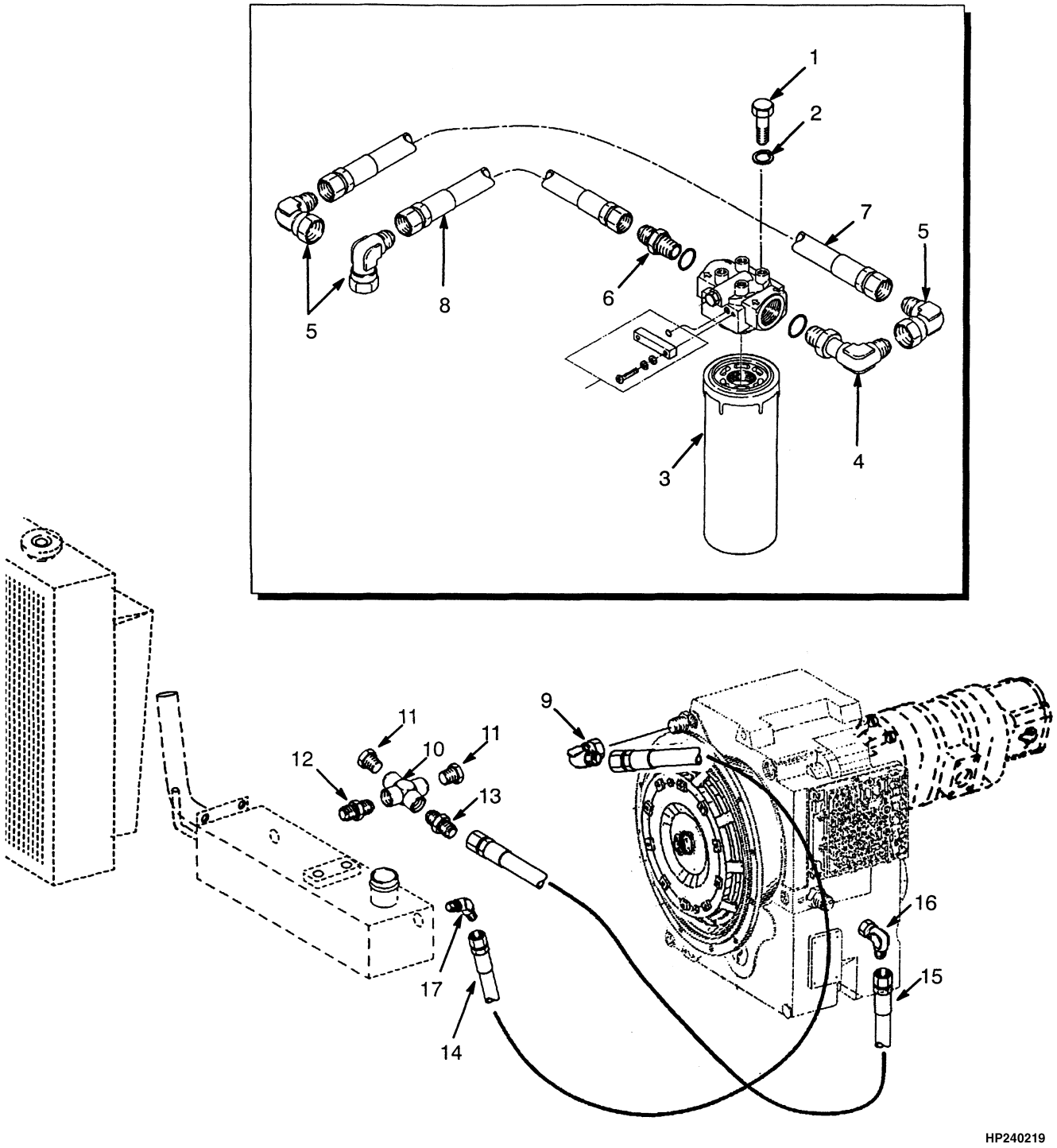

©2006 HYSTER COMPANY

TRANSMISSION ATTACHING PARTS
SHEET 3 OF 3
OIL FILTER

ITEM	PART NO.	DESCRIPTION	QTY
1	292514	Bolt	4
2	292682	Lockwasher	4
3	1373788	Filter Assembly	1
3	1377183	Head	1
3	2043981	Filter Element	1
4	222415	Fitting	1
4	16487	O-Ring	1
5	16992	Fitting	3
6	16544	Fitting	1
6	16487	O-Ring	1
7	1382749	Hose	1
8	1382743	Hose	1
9	16992	Fitting	2
10	12874	Fitting	1
11	12845	Fitting	2
12	12833	Fitting	1
13	14685	Fitting	1
14	1382859	Hose	1
15	1382854	Hose	1
16	17042	Fitting	1
17	14555	Fitting	1

©2006 HYSTER COMPANY

TRANSMISSION HYDRAULIC LINES (Figure 5-4)
(⇒S/N A214E-1615)

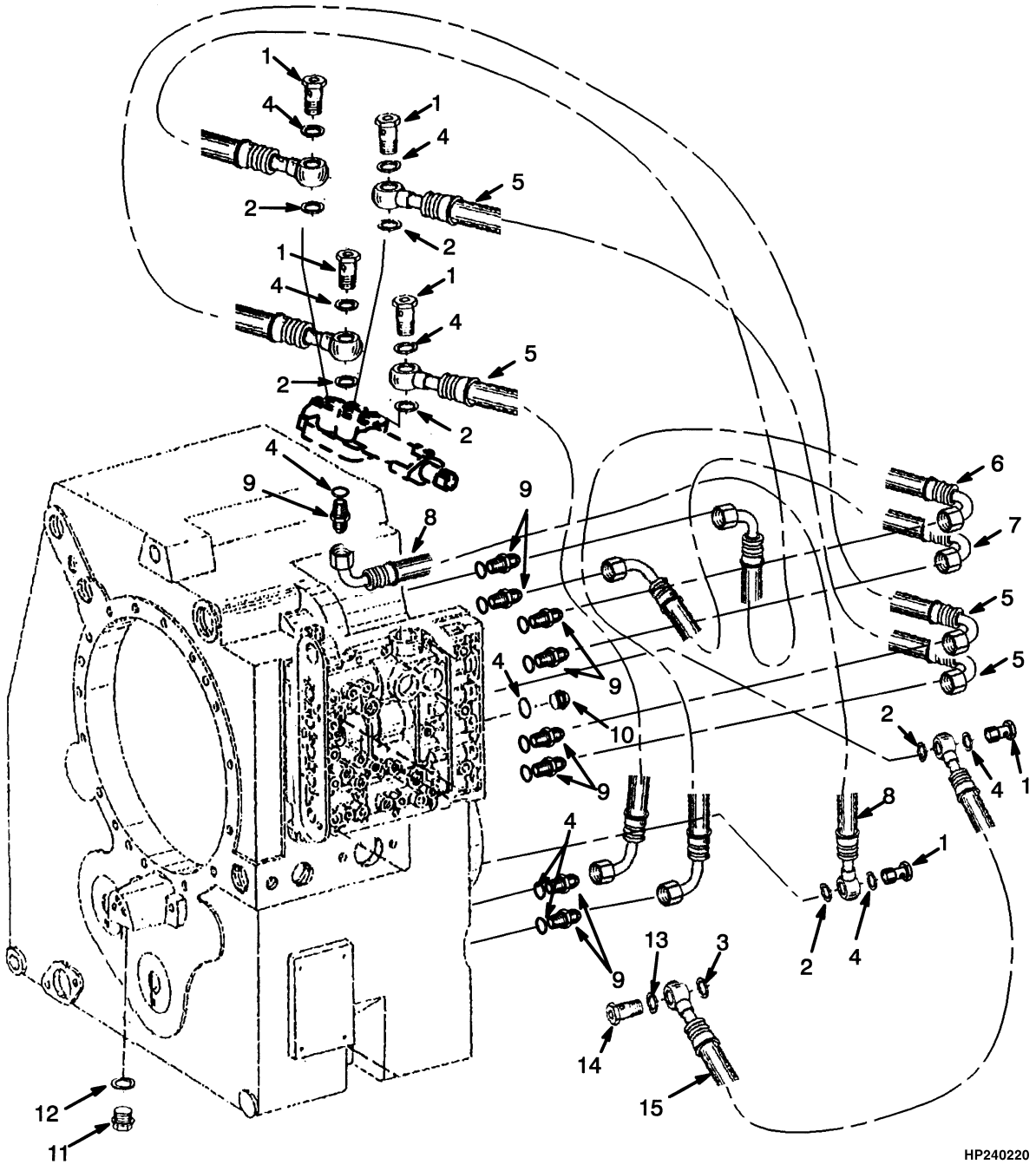

©2006 HYSTER COMPANY

TRANSMISSION HYDRAULIC LINES
(⇒S/N A214E-1615)

ITEM	PART NO.	DESCRIPTION	QTY
1	1391036	Bolt	5
2	1391037	O-Ring	6
3	1391038	O-Ring	1
4	1391039	O-Ring	16
5	1391040	Hose	3
6	382846	Hose	1
7	1391042	Hose	1
8	382847	Hose	1
9	382848	Fitting	8
10	1391045	Plug	1
11	1391044	Plug	1
12	382796	Ring Seal	1
13	1390799	O-Ring	1
14	1391046	Bolt	1
15	1391043	Hose	1

©2006 HYSTER COMPANY

TRANSMISSION HYDRAULIC LINES (Figure 5-5)
(S/N A214E-1616⇒)

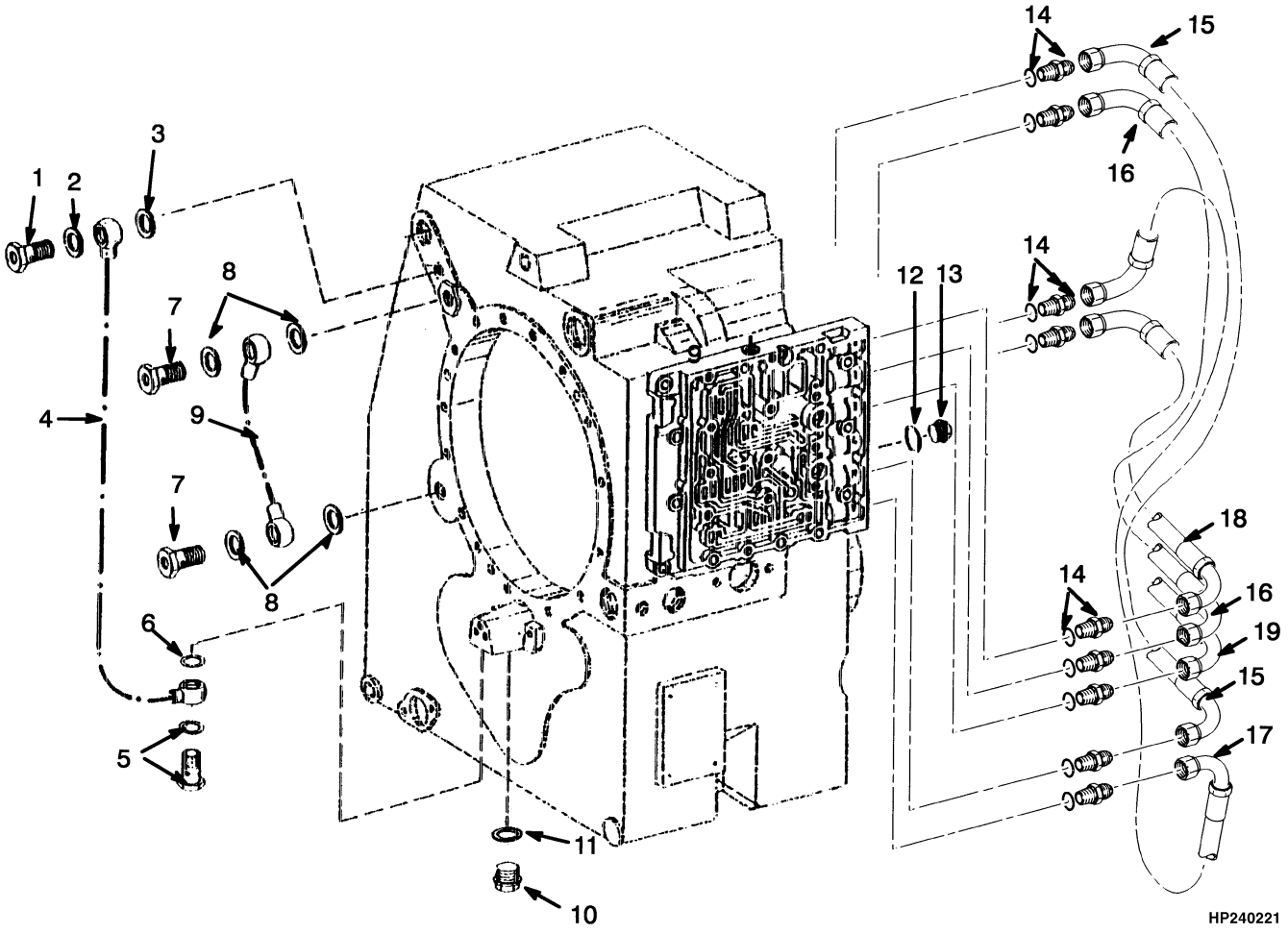

©2006 HYSTER COMPANY

TRANSMISSION HYDRAULIC LINES
(S/N A214E-1616⇒)

ITEM		PART NO.	DESCRIPTION	QTY
1		1391036	Bolt	1
2		1391039	O-Ring	3
3		1391037	O-Ring	3
4		1467034	Hose	1
5		1391046	Bolt	2
5		1390799	O-Ring	1
6		1391038	O-Ring	2
7		1466974	Bolt	3
8		382845	Ring Seal	4
9		1508513	Hose	1
10		382795	Plug	1
11		1390799	O-Ring	1
12		1391039	O-Ring	3
13		1466975	Plug	1
14		382848	Fitting	9
15		1459848	Hose	1
16		382846	Hose	1
17		1508513	Hose	1
17	**a**	1508512	Sleeve (Protecting)	1
18		1391042	Hose	1
19		1391043	Hose	1

FOOTNOTES:
a Not Illustrated

©2006 HYSTER COMPANY

TRANSMISSION (Figure 5-6)
INPUT SHAFT

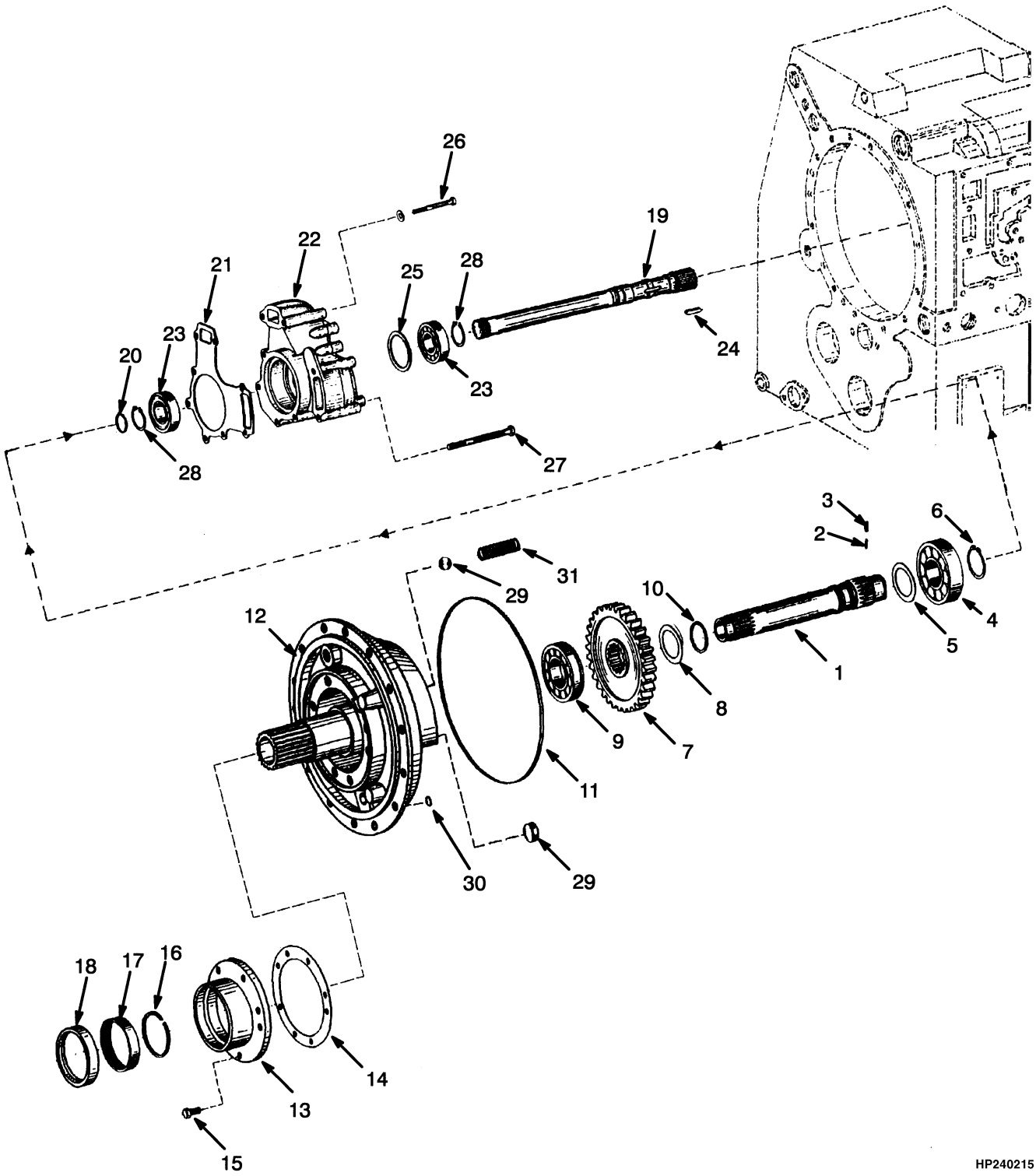

©2006 HYSTER COMPANY

TRANSMISSION
INPUT SHAFT

ITEM		PART NO.	DESCRIPTION	QTY
	b	1372980	Transmission	1
	c	1459006	Transmission	1
1		1390084	Shaft	1
2		1390085	Cotter Pin	1
3		1390086	Cotter Pin	1
4		1390087	Bearing	1
5		1392405	Shim (0.012 in.)	1
5	**a**	1392404	Shim (0.020 in.)	1
5	**a**	1392406	Shim (0.024 in.)	1
5	**a**	1392403	Shim (0.028 in.)	1
5	**a**	1392408	Shim (0.031 in.)	1
5	**a**	1392402	Shim (0.035 in.)	1
5	**a**	1392407	Shim (0.039 in.)	1
5	**a**	1392409	Shim (0.043 in.)	1
5	**a**	1392410	Shim (0.047 in.)	1
5	**a**	1392411	Shim (0.047 in.)	1
5	**a**	1392412	Shim (0.055 in.)	1
6		1390089	Retaining Ring	1
7		1390090	Spur Gear	1
8		1390091	Washer	1
9		1338881	Bearing	1
10		1390093	Retaining Ring	1
11		1390094	O-Ring	1
12		1390095	Flange	1
13		1390096	Cover	1
14		1390097	Gasket	1
15		1390098	Screw	8
16		1390099	Retaining Ring	1
17		1390776	Sleeve	1
18		1390777	Seal	1
19		1390778	Shaft	1
20		1390779	Retaining Ring	1
21		1390780	Gasket	1
22		1390781	Gear Pump	1
23		1390782	Bearing	1
24		1390783	Fitting	1
25		1385074	Shim (0.004 in.)	1
25		1385073	Shim (0.008 in.)	1
25		1390785	Shim (0.012 in.)	1
25		1385072	Shim (0.016 in.)	1
25		1385071	Shim (0.020 in.)	1
25		1385070	Shim (0.024 in.)	1
25		1385069	Shim (0.028 in.)	1
25		1390784	Shim (0.031 in.)	1
25		1385068	Shim (0.035 in.)	1
25		1385067	Shim (0.039 in.)	1
26	**b**	1390786	Screw	4
26	**c**	1467064	Screw	4
27		1390787	Screw	4
28		1390788	Retaining Ring	2
29		1390789	Cap	2

©2006 HYSTER COMPANY

TRANSMISSION
INPUT SHAFT

ITEM	PART NO.	DESCRIPTION	QTY
30	1390790	O-Ring	3
31	1391014	Spring	1

FOOTNOTES:
a Optional
b ⇒ S/N A214E-1615
c S/N A214E-1616 ⇒

©2006 HYSTER COMPANY

TRANSMISSION (Figure 5-7)
TORQUE CONVERTER

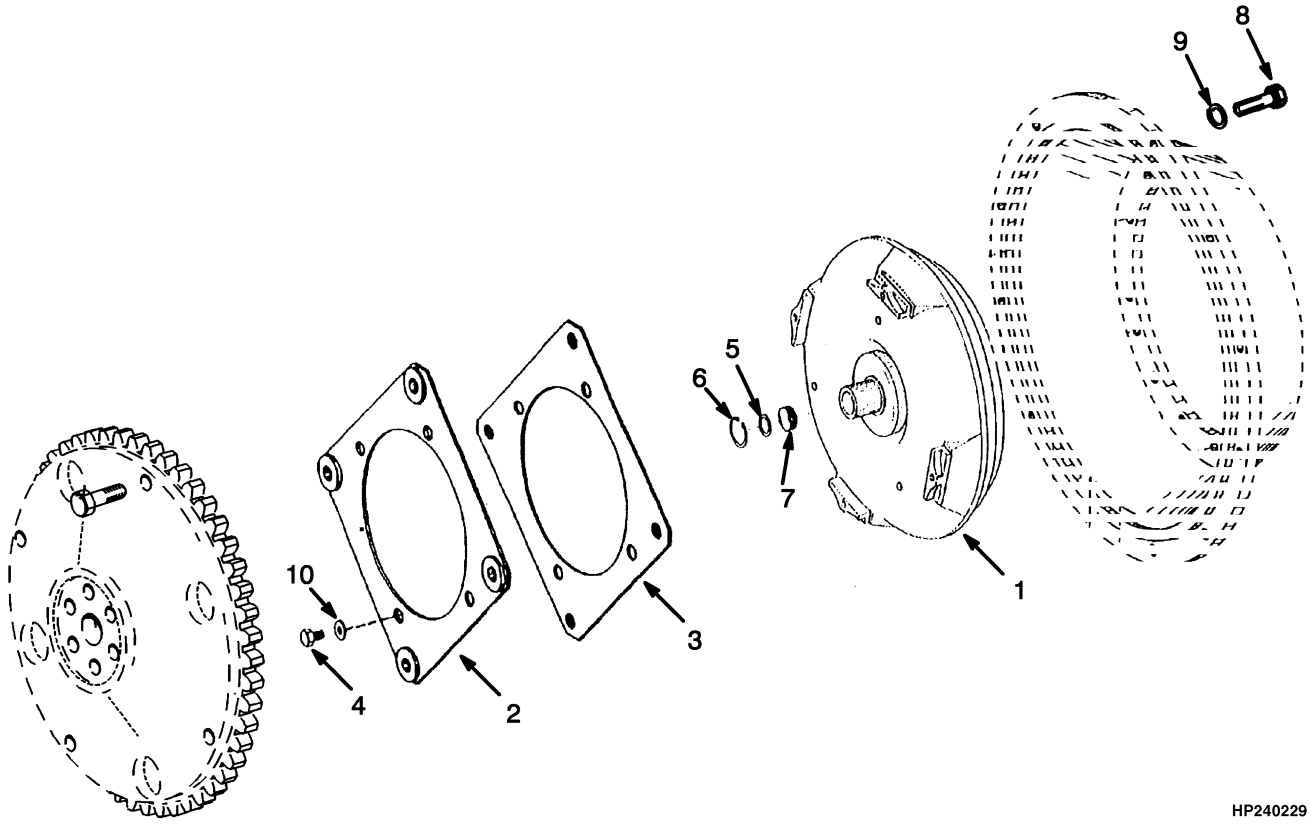

ITEM	PART NO.	DESCRIPTION	QTY
1	1390083	Torque Converter	1
2	1390073	Diaphragm	1
2	1495254	Screw Set	1
3	1390074	Diaphragm	1
4	1390075	Screw	4
5	1390079	Retaining Ring	1
6	1390078	O-Ring	1
7	1390077	Washer	2
8	136985	Capscrew	12
9	292682	Lockwasher	12
10	1390076	Washer	4

TRANSMISSION (Figure 5-8)
CONTROL VALVE ATTACHING PARTS

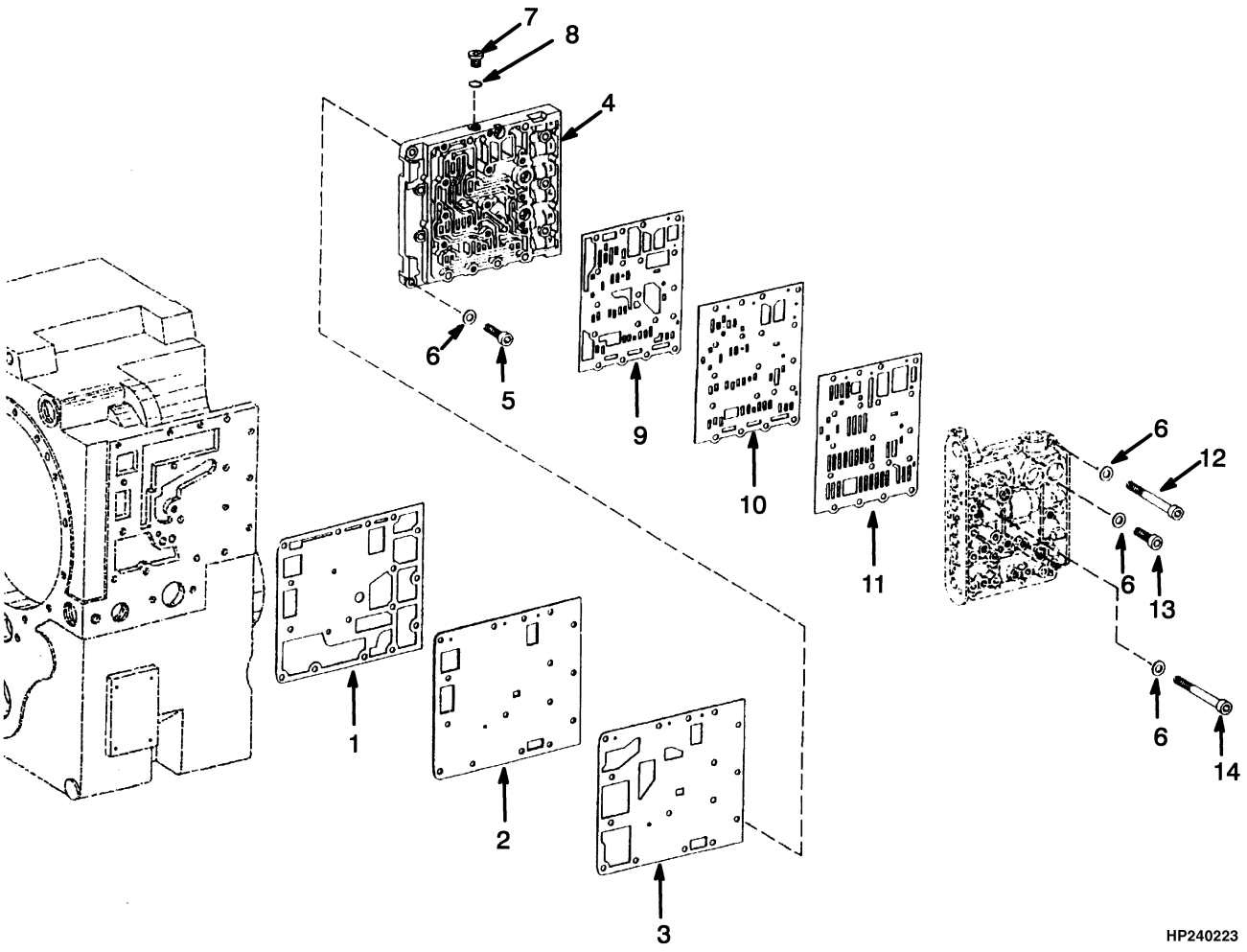

©2006 HYSTER COMPANY

TRANSMISSION
CONTROL VALVE ATTACHING PARTS

ITEM		PART NO.	DESCRIPTION	QTY
	a	1372980	Transmission	1
	b	1459006	Transmission	1
1		1390953	Gasket	1
2	**a**	1390954	Cover Plate	1
2	**b**	1466944	Cover Plate	1
3		1390955	Gasket	1
4		1390956	Plate	1
5		1500211	Capscrew	11
6		1390958	Washer	28
7		1390900	Plug	1
8		1390901	O-Ring	1
9		1390959	Gasket	1
10		1390960	Cover	1
11		1390961	Gasket	1
12		1500212	Capscrew	5
13		1500213	Capscrew	11
14		1500214	Capscrew	1

FOOTNOTES:
a ⇒ S/N A214E-1615
b S/N A214E-1616 ⇒

©2006 HYSTER COMPANY

TRANSMISSION (Figure 5-9)
CONTROL VALVE
(⇒S/N A214E-1615)

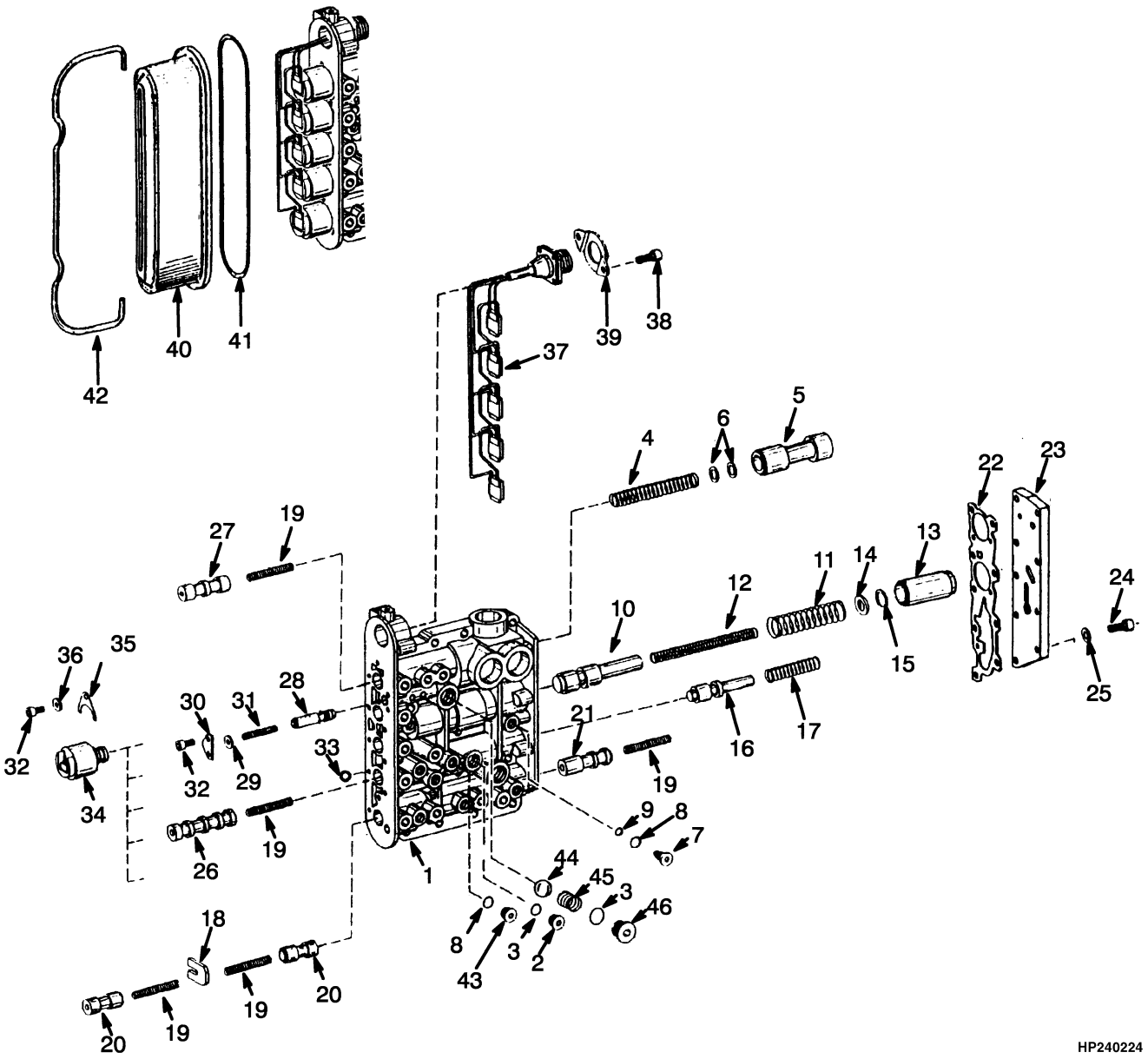

©2006 HYSTER COMPANY

TRANSMISSION
CONTROL VALVE
(⇒S/N A214E-1615)

ITEM		PART NO.	DESCRIPTION	QTY
		1372980	Transmission	1
1		1390966	Housing	1
2		1390967	Screw Sleeve	1
3		1390968	O-Ring	3
4		1390969	Spring	1
5		1390970	Piston	1
6		1318005	Shim	2
7		1390971	Orifice (0.024 in.)	1
7	**a**	1390973	Orifice (0.026 in.)	1
7	**a**	1385058	Orifice (0.028 in.)	1
7	**a**	1385059	Orifice (0.030 in.)	1
7	**a**	1390972	Orifice (0.031 in.)	1
7	**a**	1390974	Orifice (0.033 in.)	1
7	**a**	1393125	Orifice (0.035 in.)	1
7	**a**	1393126	Orifice (0.037 in.)	1
8		1390901	O-Ring	9
9		1390975	O-Ring	1
10		1390976	Piston	1
10		1466945	Ring Seal	1
11		1390977	Spring	1
11		1391022	Plug	1
12		1390978	Spring	1
13		1390979	Piston	1
14		1390980	Washer	1
15		1390981	Shim	1
15	**a**	1390982	Shim	1
15	**a**	1390983	Shim	1
16		1390984	Piston	1
17		1390985	Spring	1
18		1390986	Plate	1
19		1390987	Spring	1
19		1391023	Bushing	1
20		1390988	Piston	2
21		1390989	Piston	1
22		1390990	Gasket	1
23		1390991	Cover	1
24		1390027	Capscrew	9
25		1390992	Washer	9
26		1390993	Piston	1
27		1390994	Piston	1
28		1390995	Reduction Valve	1
29		1390996	Ring	1
30		1390997	Plate	1
31		1390998	Spring	1
32		382912	Capscrew	7
33		1390999	Ball	10
34		1391001	Solenoid Valve	5
35		1391002	Plate	5
36		1391003	Washer	5
37		1391004	Wire Harness	1

©2006 HYSTER COMPANY

TRANSMISSION
CONTROL VALVE
(⇒S/N A214E-1615)

ITEM	PART NO.	DESCRIPTION	QTY
38	1391005	Screw	2
39	1391006	Plate	1
40	1391007	Cover	1
41	1391008	O-Ring	1
42	1391009	Bracket	1
43	1390900	Plug	8
44	1391010	Ball	2
45	385420	Spring	2
46	1391011	Plug	2
47	1467000	Piston (20,5 mm)	1
47	1467001	Piston (21,5 mm)	1
48	1467002	Piston (21,0 mm)	1
49	1466948	Roller	1
50	1466947	Housing	1

FOOTNOTES:
a Optional

©2006 HYSTER COMPANY

NOTES

TRANSMISSION (Figure 5-10)
CONTROL VALVE
(S/N A214E-1616⇒)

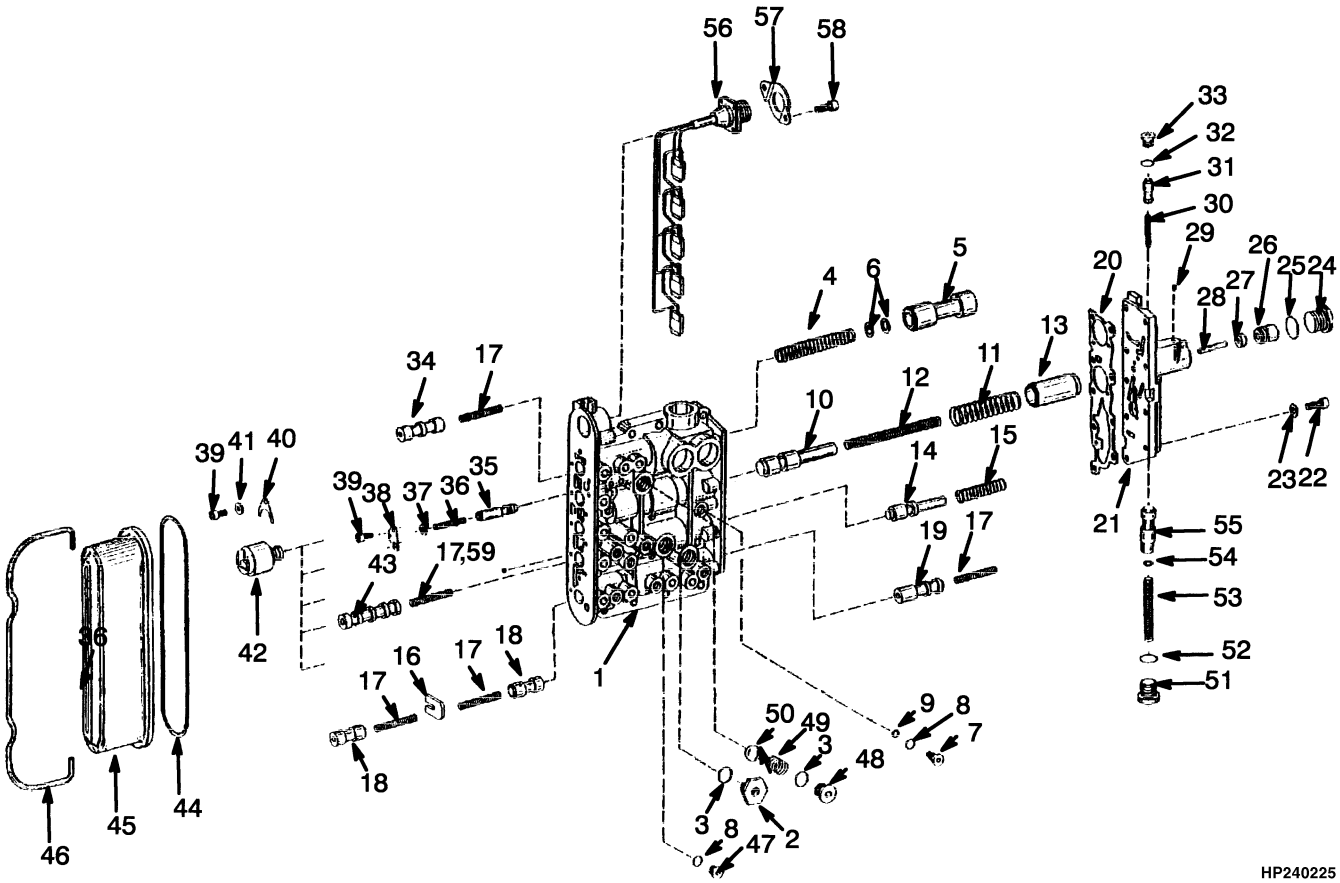

©2006 HYSTER COMPANY

TRANSMISSION
CONTROL VALVE
(S/N A214E-1616⇒)

ITEM		PART NO.	DESCRIPTION	QTY
		1574227	Control Valve Assembly	1
1		1390966	Housing	1
2		1390967	Screw Sleeve	1
3		1390968	O-Ring	3
4		1390969	Spring	1
5		1475350	Piston	1
6		1318005	Shim	2
7		1390971	Orifice (0.024 in.)	1
7	**b**	1390973	Orifice (0.026 in.)	1
7	**b**	1385058	Orifice (0.028 in.)	1
7	**b**	1385059	Orifice (0.030 in.)	1
7	**b**	1390972	Orifice (0.031 in.)	1
7	**b**	1390974	Orifice (0.033 in.)	1
7	**b**	1393125	Orifice (0.035 in.)	1
7	**b**	1393126	Orifice (0.037 in.)	1
8		1390901	O-Ring	9
9		1390975	O-Ring	1
10		1390976	Piston	1
10		1466945	Ring Seal	1
11		1390977	Spring	1
11	**a**	1391022	Plug	1
12		1390978	Spring	1
13		1390979	Piston	1
14		1390984	Piston	1
15		1390985	Spring	1
16		1390986	Plate	1
17		1390987	Spring	1
18		1390988	Piston	2
19		1390989	Piston	1
20		1390990	Gasket	1
21		1466947	Housing	1
22		1390027	Capscrew	9
23		1390992	Washer	9
24		1390794	Plug	1
25		1390975	O-Ring	1
26		1467000	Piston (20,5 mm)	1
26	**b**	1467001	Piston (21,5 mm)	1
26	**b**	1467002	Piston (21 mm)	1
27		1466949	Shim (0.079 in.)	1
27	**b**	1466950	Shim (0.118 in.)	1
27	**b**	1466951	Shim (0.157 in.)	1
27	**b**	1466952	Shim (0.236 in.)	1
27	**b**	1466953	Shim (0.315 in.)	1
28		1466948	Roller	1
29		1390999	Ball	5
30		1466955	Spring	1
31		1466954	Piston	1
32		1466957	O-Ring	1
33		1466956	Plug	1
34		1390994	Piston	1

©2006 HYSTER COMPANY

TRANSMISSION
CONTROL VALVE
(S/N A214E-1616⇒)

ITEM	PART NO.	DESCRIPTION	QTY
35	1466946	Reduction Valve	1
36	1390998	Spring	1
37	1390996	Ring	1
38	1390997	Plate	1
39	382912	Capscrew	7
40	1391002	Plate	5
41	1391003	Washer	5
42	1391001	Solenoid Valve	5
43	1390993	Piston	1
44	1391008	O-Ring	1
45	1391007	Cover	1
46	1391009	Bracket	1
47	1390900	Plug	8
48	1391011	Plug	2
49	385420	Spring	8
50	1391010	Ball	2
51	. . . . .	Plug	1
52	. . . . .	O-Ring	1
53	1466960	Spring	1
54	1466959	Shim (0.020 in.)	10
55	1466958	Piston	1
56	1391004	Wire Harness	1
57	1391006	Plate	1
58	1391005	Screw	2
59	1391023	Bushing	1

FOOTNOTES:
a Not Illustrated
b Optional

©2006 HYSTER COMPANY

NOTES

TRANSMISSION (Figure 5-11)
REVERSE AND FIRST CLUTCH
SHEET 1 OF 3

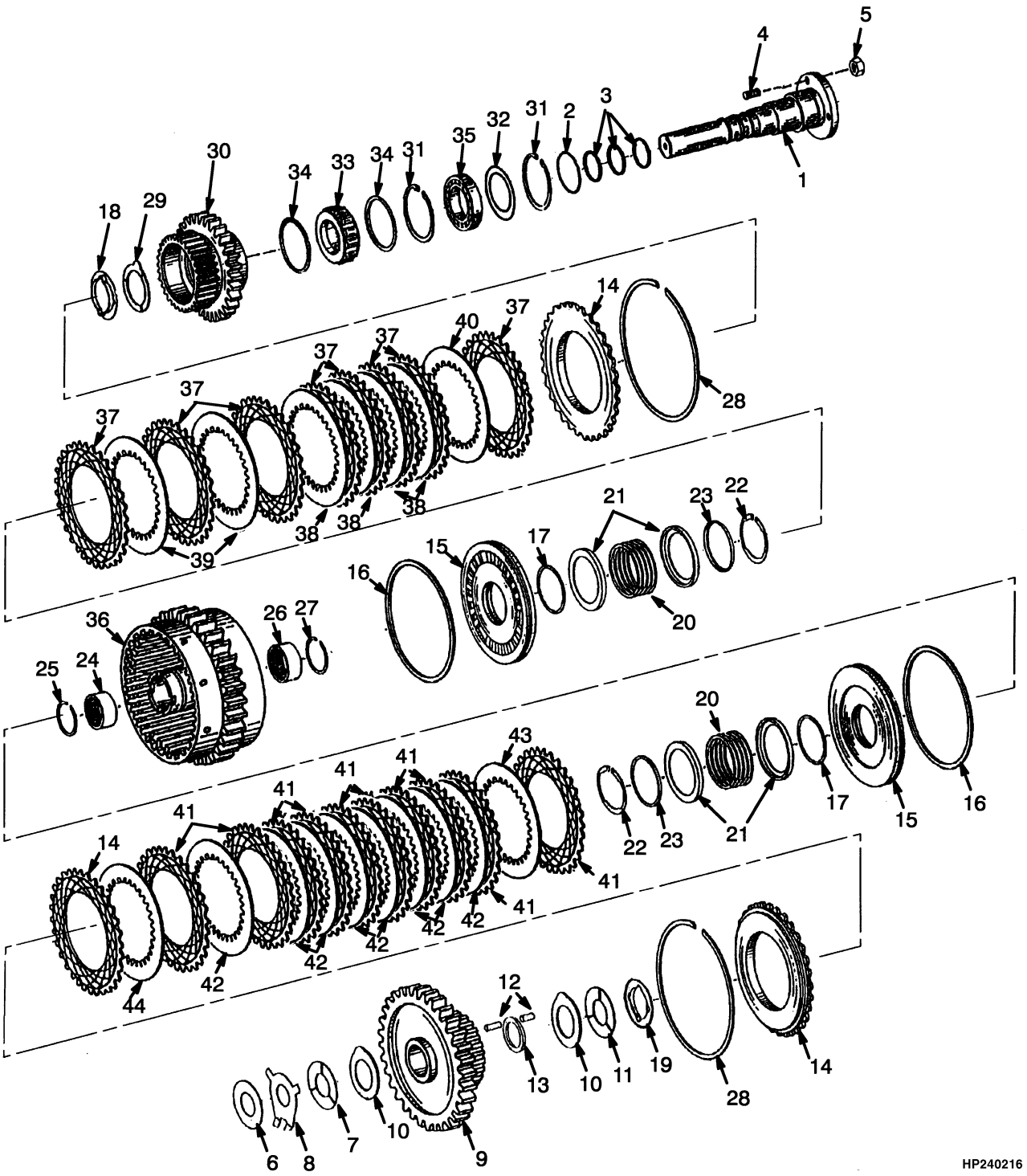

©2006 HYSTER COMPANY

TRANSMISSION
REVERSE AND FIRST CLUTCH
SHEET 1 OF 3

ITEM		PART NO.	DESCRIPTION	QTY
	b	1372980	Transmission	1
	c	1459006	Transmission	1
1		1390812	Shaft	1
2		1390813	O-Ring	1
3		1390814	Ring	3
4		1390815	Stud	2
5		239503	Nut	2
6		1390816	Shim (0.016 in.)	1
6	**a**	1392413	Shim (0.024 in.)	1
6	**a**	1392414	Shim (0.031 in.)	1
6	**a**	1390817	Shim (0.039 in.)	1
6	**a**	1392415	Shim (0.047 in.)	1
6	**a**	1390864	Shim (0.055 in.)	1
6	**a**	1392416	Shim (0.063 in.)	1
6	**a**	1392417	Shim (0.071 in.)	1
6	**a**	1392418	Shim (0.079 in.)	1
6	**a**	1392419	Shim (0.087 in.)	1
6	**a**	1392420	Shim (0.094 in.)	1
6	**a**	1392421	Shim (0.102 in.)	1
6	**a**	1392422	Shim (0.110 in.)	1
7		1390818	Thrust Washer	1
8		1390819	Thrust Washer	1
9		1390820	Spur Gear	1
10		1390821	Thrust Washer	2
11		1390822	Thrust Washer	1
12		1390823	Roller Set	1
13		1390824	Washer	1
14		1390825	Shim	2
15		1390826	Piston	1
16		1390827	Seal Ring	2
17		1390830	Seal Ring	2
18		1390828	Thrust Washer	1
19		1390829	Thrust Plate	1
20		1390831	Spring	2
21		1390832	Guide Ring	4
22		1390833	V-Ring	2
23		1390834	Guide Ring	4
24		1390835	Sleeve	1
25		1390836	Snap Ring	1
26		1390837	Sleeve	1
27		1390838	Snap Ring	2
28		1390839	Snap Ring (0.098 in.)	2
28	**a**	1385054	Snap Ring (0.091 in.)	2
28	**a**	1385055	Snap Ring (0.094 in.)	2
28	**a**	1385056	Snap Ring (0.087 in.)	2
28	**a**	1385057	Snap Ring (0.083 in.)	2
29		1390840	Thrust Washer	1
30		1390841	Spur Gear	1
31		1390842	Retaining Ring	2
32		1390843	Shim	1

©2006 HYSTER COMPANY

TRANSMISSION
REVERSE AND FIRST CLUTCH
SHEET 1 OF 3

ITEM		PART NO.	DESCRIPTION	QTY
32	**a**	1390844	Shim	1
32	**a**	1390845	Shim	1
32	**a**	1390846	Shim	1
32	**a**	1390847	Shim	1
32	**a**	1390848	Shim	1
32	**a**	382689	Shim	1
33		1390849	Roller Cage	1
34		1390850	Ring	2
35		1390852	Ball Bearing	1
36		1390853	Carrier Disc	1
37		1390854	Clutch Disc	5
38		1390855	Clutch Disc	4
39		1390856	Clutch Disc	2
40		1390856	Clutch Disc	1
41	**c**	1390854	Clutch Disc	12
41	**b**	1392401	Clutch Disc	12
42		1390855	Clutch Disc	9
43		1390856	Clutch Disc	1
44		1390855	Clutch Disc	1

FOOTNOTES:
a Optional
b ⇒ S/N A214E-1615
c S/N A214E-1616 ⇒

©2006 HYSTER COMPANY

NOTES

TRANSMISSION (Figure 5-12)
FORWARD AND SECOND SPEED CLUTCH
SHEET 2 OF 3

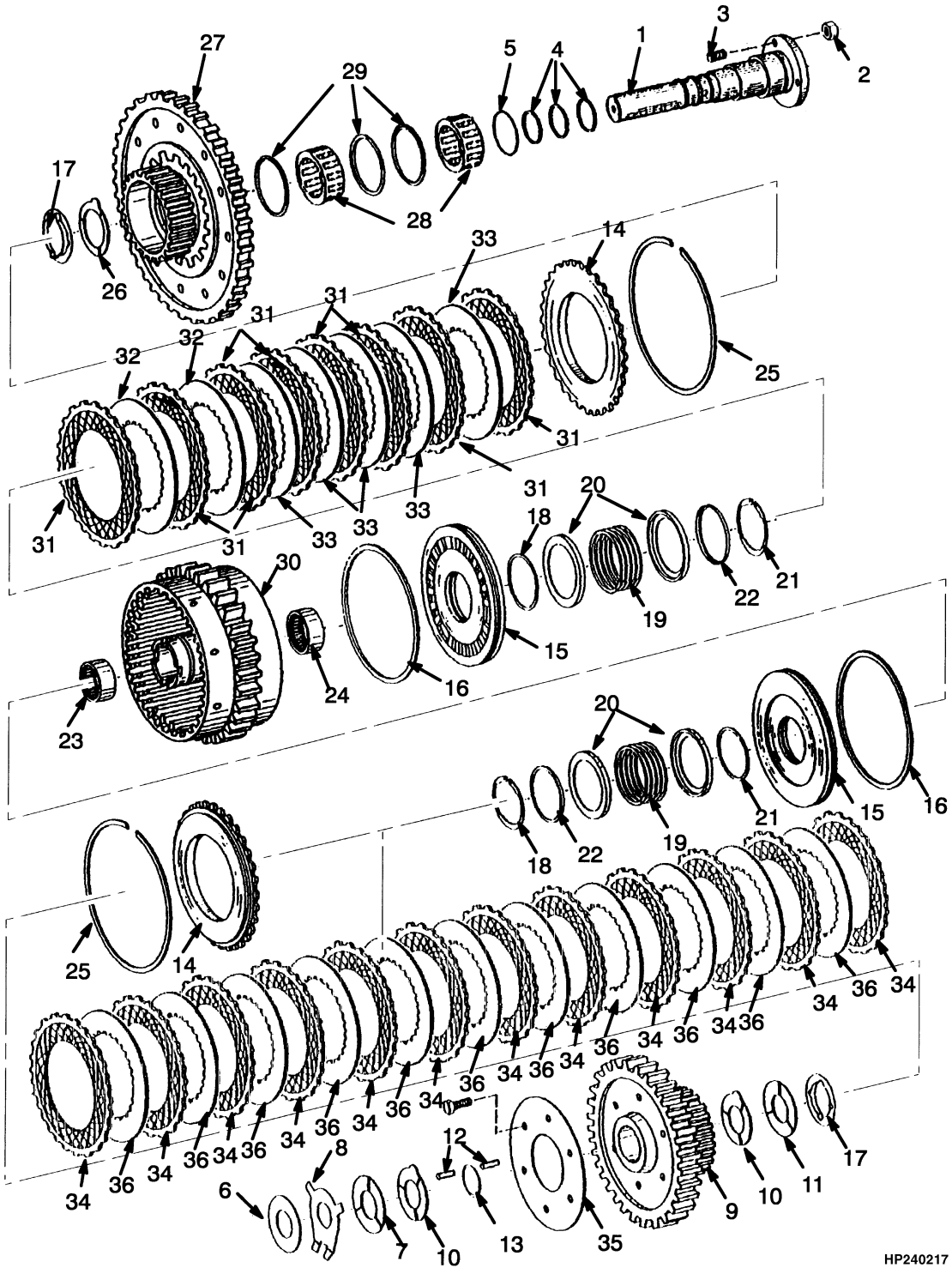

©2006 HYSTER COMPANY

TRANSMISSION
FORWARD AND SECOND SPEED CLUTCH
SHEET 2 OF 3

ITEM		PART NO.	DESCRIPTION	QTY
	b	1372980	Transmission	1
	c	1459006	Transmission	1
1		1390857	Shaft	1
2		239503	Nut	2
3		1390815	Stud	2
4		1390814	Ring	3
5		1390813	O-Ring	1
6		1390816	Shim (0.016 in.)	1
6	**a**	1392413	Shim (0.024 in.)	1
6	**a**	1392414	Shim (0.031 in.)	1
6	**a**	1390817	Shim (0.039 in.)	1
6	**a**	1392415	Shim (0.047 in.)	1
6	**a**	1390864	Shim (0.055 in.)	1
6	**a**	1392416	Shim (0.063 in.)	1
6	**a**	1392417	Shim (0.071 in.)	1
6	**a**	1392418	Shim (0.079 in.)	1
6	**a**	1392419	Shim (0.087 in.)	1
6	**a**	1392420	Shim (0.094 in.)	1
6	**a**	1392421	Shim (0.102 in.)	1
6	**a**	1392422	Shim (0.110 in.)	1
7		1390818	Thrust Washer	1
8		1390819	Thrust Washer	1
9		1390820	Spur Gear	1
10		1390821	Thrust Washer	2
11		1390822	Thrust Washer	1
12		1390823	Roller Set	1
13		1390824	Washer	1
14		1390825	Shim	2
15		1390826	Piston	2
16		1390827	Seal Ring	2
17		1390828	Thrust Washer	1
18		1390830	Seal Ring	2
19		1390831	Spring	2
20		1390832	Guide Ring	4
21		1390833	V-Ring	2
22		1390834	Guide Ring	2
23		1390835	Sleeve	2
24		1390837	Sleeve	2
25		1390839	Snap Ring (0.098 in.)	2
25	**a**	1385054	Snap Ring (0.091 in.)	2
25	**a**	1385055	Snap Ring (0.094 in.)	2
25	**a**	1385056	Snap Ring (0.087 in.)	2
25	**a**	1385057	Snap Ring (0.083 in.)	2
26		1390840	Thrust Washer	1
27		1390889	Gear	1
28		1390890	Roller Cage	1
29		1390850	Ring	3
30		1390892	Carrier Disc	1
31		1390854	Clutch Disc (External)	8
32		1390856	Clutch Disc (Internal)	5

©2006 HYSTER COMPANY

TRANSMISSION
FORWARD AND SECOND SPEED CLUTCH
SHEET 2 OF 3

ITEM		PART NO.	DESCRIPTION	QTY
33		1390855	Clutch Disc (Internal)	5
34	**c**	1390854	Clutch Disc (External)	12
34	**b**	1392401	Clutch Disc (External)	12
35		1390829	Thrust Plate	2
36		1390855	Clutch Disc (Internal)	10

FOOTNOTES:
a Optional
b ⇒ S/N A214E-1615
c S/N A214E-1616 ⇒

©2006 HYSTER COMPANY

NOTES

TRANSMISSION (Figure 5-13)
THIRD SPEED CLUTCH
SHEET 3 OF 3

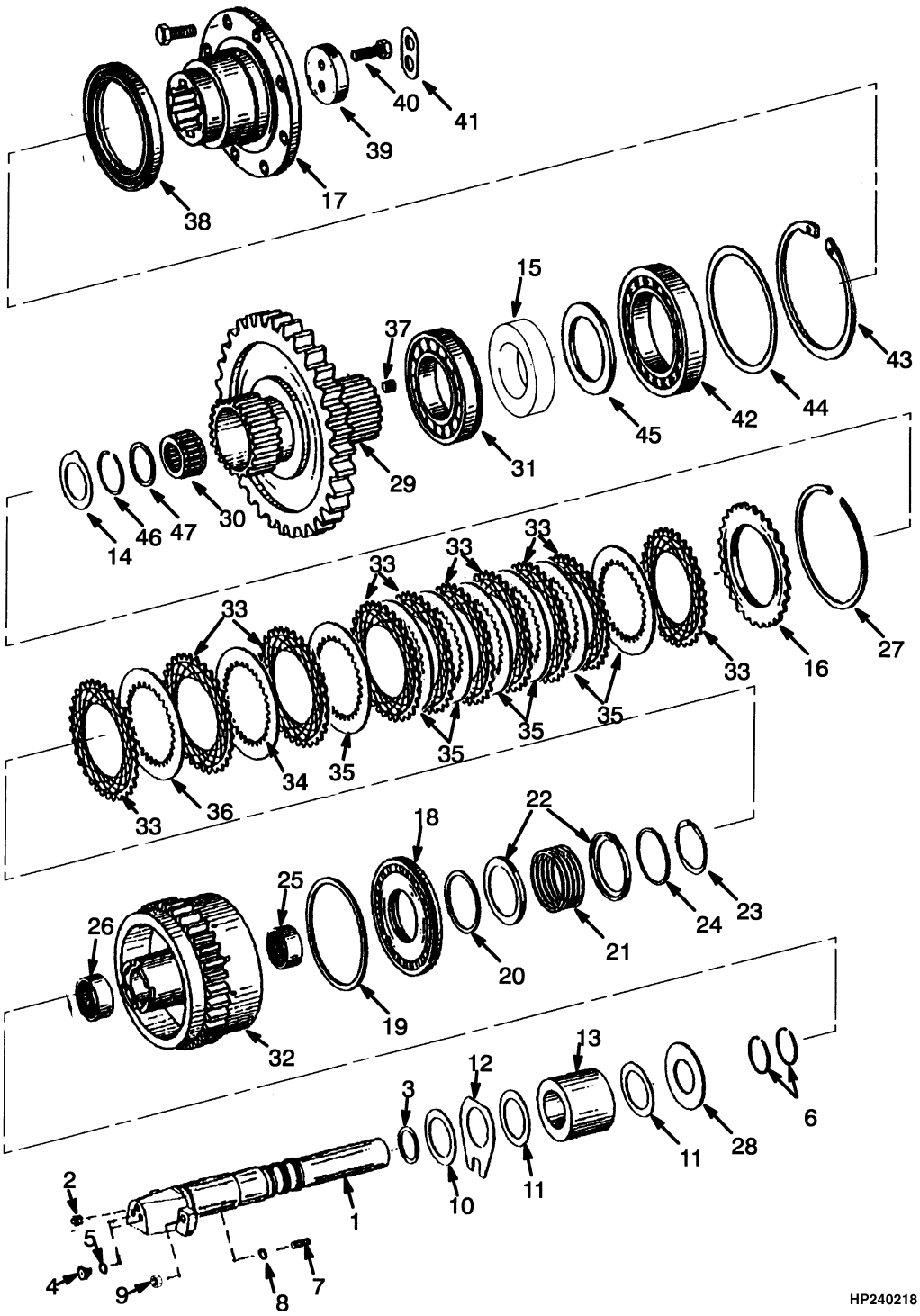

©2006 HYSTER COMPANY

TRANSMISSION
THIRD SPEED CLUTCH
SHEET 3 OF 3

ITEM		PART NO.	DESCRIPTION	QTY
	b	1372980	Transmission	1
	c	1459006	Transmission	1
1		1390897	Shaft	1
2		1390898	Ball	1
3		1390899	O-Ring	1
4		1390900	Plug	2
5		1390901	O-Ring	2
6		1390814	Ring	2
7		1390815	Stud	2
8		1390904	O-Ring	2
9		1390905	Nut	2
10		1390906	Shim (0.008 in.)	1
10	**a**	1392423	Shim (0.016 in.)	1
10	**a**	1390907	Shim (0.024 in.)	1
10	**a**	1392424	Shim (0.031 in.)	1
10	**a**	1390908	Shim (0.039 in.)	1
10	**a**	1392425	Shim (0.047 in.)	1
10	**a**	1392426	Shim (0.055 in.)	1
10	**a**	1392427	Shim (0.063 in.)	1
10	**a**	1392428	Shim (0.071 in.)	1
10	**a**	1392429	Shim (0.079 in.)	1
10	**a**	1392430	Shim (0.087 in.)	1
10	**a**	1392431	Shim (0.094 in.)	1
11		1390909	Washer	3
12		1390910	Washer	1
13		1390911	Bushing	1
14		1390912	Washer	1
15		1391023	Bushing	1
16		1390914	Shim	1
17		1390915	Flange	1
18		1599700	Piston	1
19		1390917	Seal	1
20		1390830	Seal Ring	1
21		1390831	Spring	1
22		1390832	Guide Ring	2
23		1390833	V-Ring	1
24		1390834	Guide Ring	1
25		1390835	Sleeve	1
26		1390921	Needle Sleeve	1
27		1390922	Snap Ring (0.088 in.)	1
27	**a**	1392432	Shim (0.091 in.)	1
27	**a**	1390923	Snap Ring (0.090 in.)	1
27	**a**	1392433	Shim (0.094 in.)	1
27	**a**	1392434	Shim (0.096 in.)	1
27	**a**	1390924	Snap Ring (0.098 in.)	1
28	**a**	1392435	Shim (0.086 in.)	1
28	**a**	1392436	Shim (0.085 in.)	1
28	**a**	1392437	Shim (0.086 in.)	1
29	**b**	1390925	Spur Gear	1
29	**c**	1466943	Spur Gear	1

©2006 HYSTER COMPANY

TRANSMISSION
THIRD SPEED CLUTCH
SHEET 3 OF 3

ITEM		PART NO.	DESCRIPTION	QTY
30		1390926	Needle Cage	1
31		1390927	Roller Bearing	1
32		1390928	Disc Carrier	1
33		1390929	Clutch Disc	10
34		1390930	Clutch Disc	2
35		1390931	Clutch Disc	7
36		1390932	Clutch Disc	2
37		1390933	Screw	2
38		1390934	Seal	1
39		1390935	Plate	1
40		1390936	Screw	2
41		1390937	Washer	1
42		1390938	Ball Bearing	1
43		1390939	Retainer Ring	1
44		1390940	Washer (0.049 in.)	1
44	**a**	1390941	Washer (0.031 in.)	1
44	**a**	1390942	Washer (0.043 in.)	1
44	**a**	1392438	Shim (0.039 in.)	1
44	**a**	1392439	Shim (0.035 in.)	1
45		1390943	Ring	1
46		382815	Snap Ring	1
47		1390944	Washer	1

FOOTNOTES:
a Optional
b ⇒ S/N A214E-1615
c S/N A214E-1616 ⇒

©2006 HYSTER COMPANY

NOTES

TRANSMISSION (Figure 5-14)
SHIFT LEVER

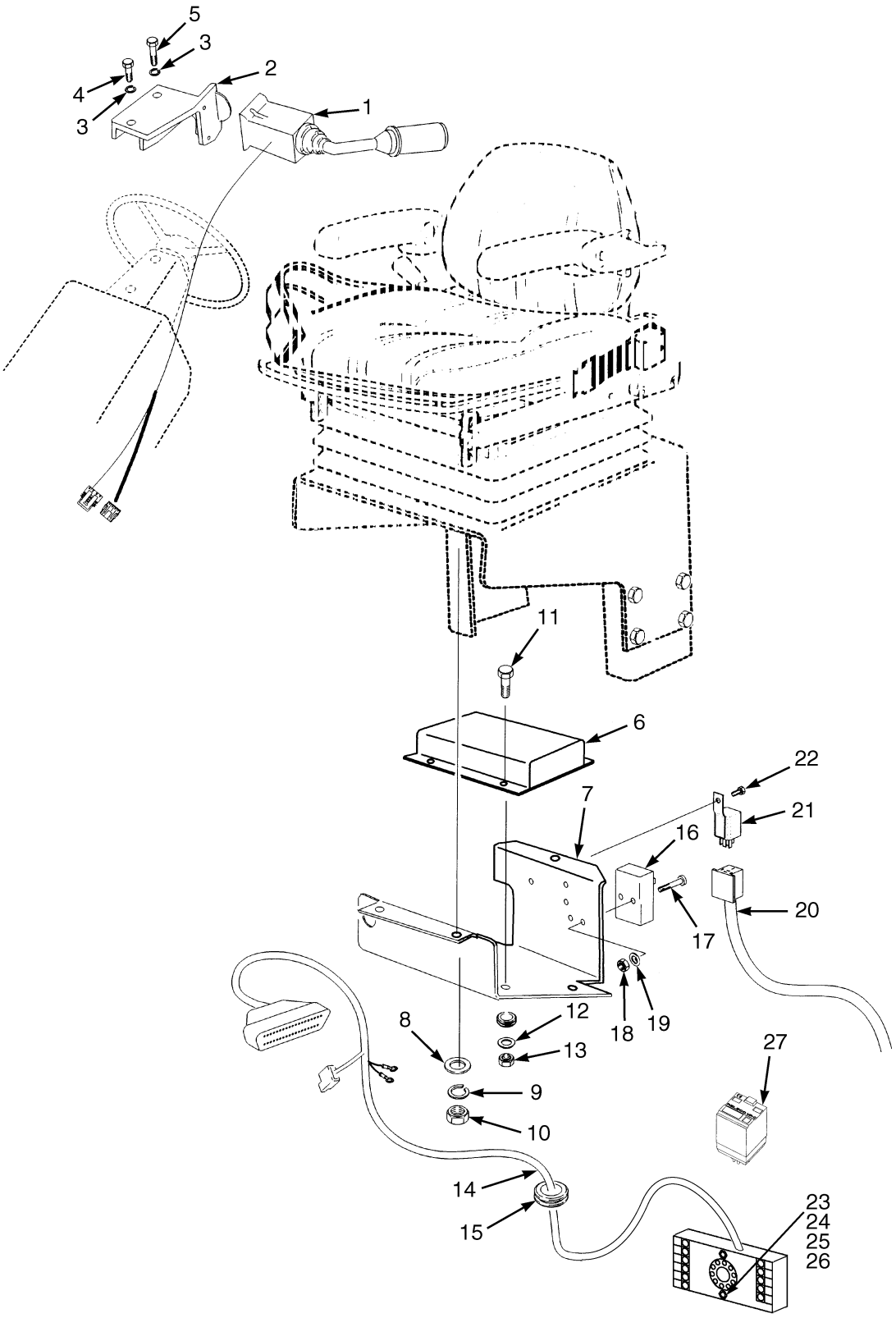

HP240226

©2006 HYSTER COMPANY

TRANSMISSION
SHIFT LEVER

ITEM		PART NO.	DESCRIPTION	QTY
1	**f**	1452639	Gear Selector	1
1		1452640	Label (Gear Selector)	1
1	**g**	1458578	Gear Selector	1
1		1458577	Label (Gear Selector)	1
2		1382868	Bracket	1
3		292682	Lockwasher	2
4		136749	Capscrew	1
5		176640	Capscrew	1
6	**f**	1372982	Control Unit	1
6	**h**	1459108	Control Unit	1
6	**i**	1488459	Control Unit	1
7		1465413	Plate	1
8		320156	Washer	3
9		292680	Lockwasher	3
10		136687	Nut	3
11		302244	Screw	3
12		292679	Lockwasher	3
13		292668	Nut	3
14	**f**	1383830	Wire Harness (Transmission) (☞ Figure 4-51)	1
14	**g**	1457954	Wire Harness (Transmission) (☞ Figure 4-52)	1
14	**e**	1606670	Wire Harness (Transmission) (☞ Figure 4-53)	1
15		303493	Grommet	1
16	**g**	1457201	Declutch Control	1
17	**g**	16724	Screw	2
18	**g**	15052	Nut	2
19	**g**	197067	Washer	2
20	**ad**	1384601	Wire Harness (Seat Switch)	1
20	**be**	1606669	Wire Harness (Seat Switch)	1
20	**cd**	1465377	Wire Harness (Seat Switch)	1
21		1307687	Relay	1
22		1301177	Screw	2
23		2084242	Capscrew	2
24		320152	Washer	2
25		292676	Lockwasher	2
26		292665	Nut	2
27		1608859	Relay (24 Volt)	1

FOOTNOTES:
a KAB Seat
b Operator Presense System
c Optional Grammer Seat
d ⇒ S/N A214E02193C
e S/N A214E02194C ⇒
f ⇒ S/N A214E-1615
g S/N A214E-1616 ⇒
h S/N A214E-1616⇔S/N A214E-1779Y
i S/N A214E-1780Y ⇒

©2006 HYSTER COMPANY

NOTES

6 DRIVE AXLE

SECTION 6
DRIVE AXLE

DESCRIPTION **PAGE**

BRAKE ASSEMBLY
DISC
S/N A214E-01995B⇒ (H450H)(FLT), S/N A214E-02001B⇒ (ECH), S/N A214E02034A⇒ (H360-400H FLT) 6-20
DIFFERENTIAL ASSEMBLY
⇒S/N A214E-01994B (H450H)(FLT), ⇒S/N A214E-02000B (ECH), ⇒S/N A214E02033A (H360-400H FLT) 6-10
S/N A214E-01995B⇒ (H450H)(FLT), S/N A214E-02001B⇒ (ECH), S/N A214E02034A⇒ (H360-400H FLT) 6-14
DRIVE AXLE
⇒S/N A214E-01994B (H450H)(FLT), ⇒S/N A214E-02000B (ECH), ⇒S/N A214E02033A (H360-400H FLT) 6-2
S/N A214E-01995B⇒ (H450H)(FLT), S/N A214E-02001B⇒ (ECH), S/N A214E02034A⇒ (H360-400H FLT) 6-6
PARK BRAKE
⇒S/N A214E-01994B (H450H)(FLT), ⇒S/N A214E-02000B (ECH), ⇒S/N A214E02033A (H360-400H FLT) 6-18
UNIVERSAL SHAFT 6-22

©2006 HYSTER COMPANY

DRIVE AXLE (Figure 6-1)

(⇒S/N A214E-01994B (H450H)(FLT), ⇒S/N A214E-02000B (ECH), ⇒S/N A214E02033A (H360-400H FLT))

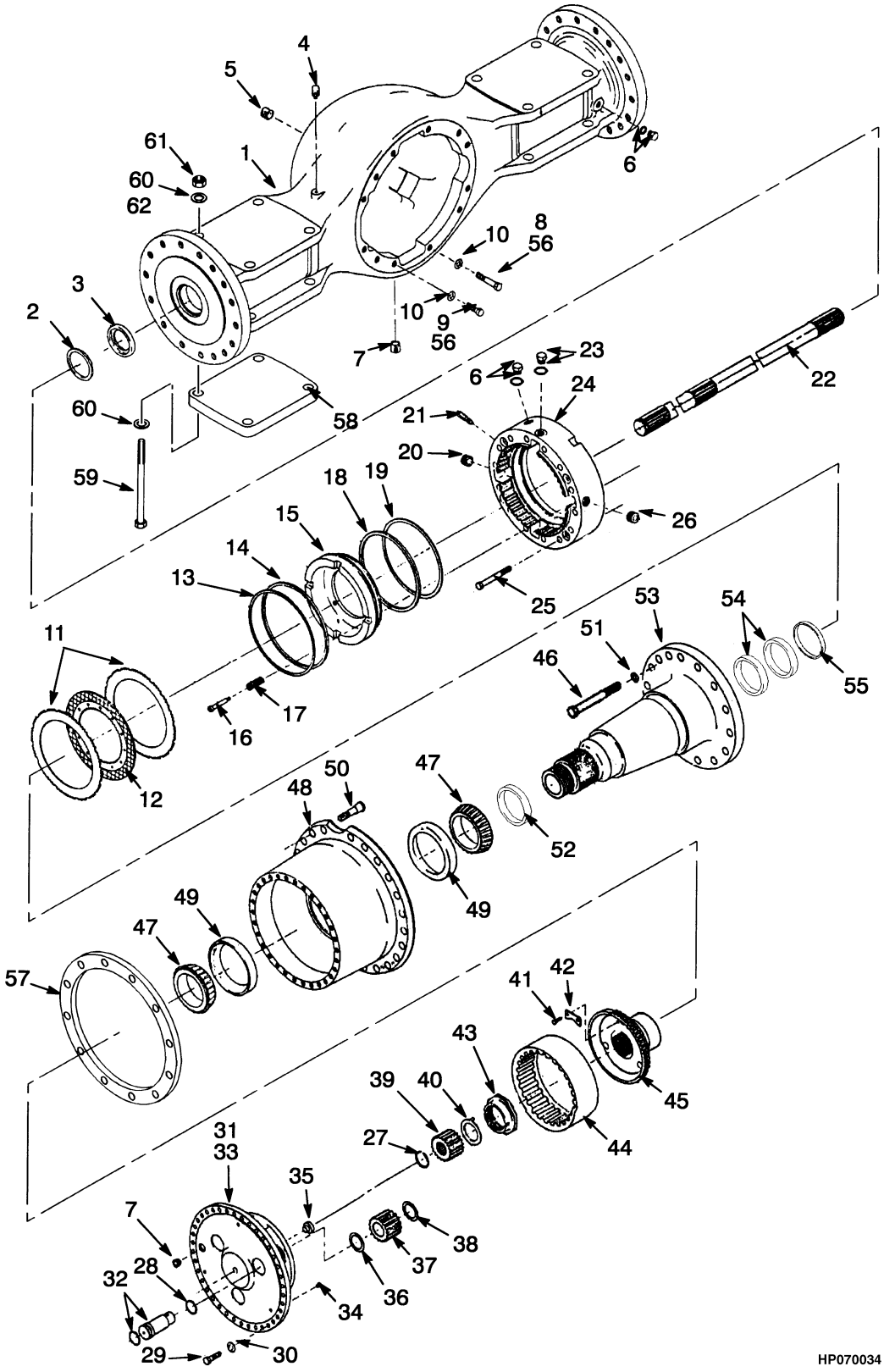

HP070034

©2006 HYSTER COMPANY

DRIVE AXLE
(⇒S/N A214E-01994B (H450H)(FLT), ⇒S/N A214E-02000B (ECH), ⇒S/N A214E02033A (H360-400H FLT))

KEY:
A: Fork Lift Truck (H450H)
B: Empty Container Handler
C: Fork Lift Truck (H360-400H)

ITEM		PART NO.	DESCRIPTION	QTY A	QTY B	QTY C
	j	1488357	Drive Axle	..	..	1
	e	1393845	Drive Axle	..	..	1
	f	1478758	Drive Axle	..	..	1
	g	1463599	Drive Axle	..	1	..
	h	1478759	Drive Axle	..	1	..
	k	1488360	Drive Axle	..	1	..
	l	1325791	Drive Axle	1	..	..
	m	1488359	Drive Axle	1	..	..
	p	1496796	Drive Axle	1	..	..
	p	1496795	Drive Axle	..	..	1
	p	1496797	Drive Axle	..	1	..
1		1382912	Housing	1	..	..
1		1452534	Housing	..	1	..
1		1453487	Housing	..	..	1
2	**d**	1482752	Bushing	..	2	..
3		1382913	Oil Seal	4	2	4
4	**c**	1613651	Breather	..	1	..
4		200445	Breather	1	1	1
5		15316	Fitting	1	..	1
6		1382915	Plug	2	2	2
6		1382916	O-Ring	1	1	1
7	**no**	1452535	Plug	..	2	..
7	**rs**	321293	Plug	3	3	3
8		1380784	Stud (Long)	4	4	4
8	**no**	329420	Capscrew	4	..	..
9	**no**	1347588	Screw	8	..	..
9		214195	Stud (Short)	8	8	8
10		86007	Washer	12	12	12
11	**noq**	1382885	Disc Brake	22	22	22
11	**rs**	1382885	Disc Brake	26	26	26
11	**rs**	1499566	Disc Brake	2	2	2
12	**noq**	1452826	Brake Friction Disc	20	20	20
12	**rs**	1452826	Brake Friction Disc	14	14	14
13		1382890	Back-Up Ring (Outer)	2	2	2
14		1382888	Quadrant Ring (Outer)	2	2	2
15		1382887	Piston	2	2	2
16		1382893	Capscrew	8	8	8
17		1382894	Spring	8	8	8
18		1382889	Quadrant Ring (Inner)	2	2	2
19		1382891	Back-Up Ring (Inner)	2	2	2
20		1382897	Magnetic Plug	2	2	2
21		1382896	Bleeder Screw	2	2	2
22		1453488	Axle Shaft (LH)	..	..	1
22		1453489	Axle Shaft (RH)	..	..	1

©2006 HYSTER COMPANY

DRIVE AXLE
(⇒S/N A214E-01994B (H450H)(FLT), ⇒S/N A214E-02000B (ECH), ⇒S/N A214E02033A (H360-400H FLT))

ITEM		PART NO.	DESCRIPTION	QTY A	QTY B	QTY C
22		1454959	Axle Shaft (RH)	1	..	..
22		1454960	Axle Shaft (LH)	1	..	..
22		1455997	Axle Shaft (LH)	..	1	..
22		1455998	Axle Shaft (RH)	..	1	..
23	c	1382901	Plug	4	4	4
23	d	1473840	Plug	4	4	4
23		1382902	O-Ring	1	1	1
24		1382884	Housing	2	2	2
25		1382895	Capscrew	8	8	8
26		1382898	Plug	2	2	2
26	d	15315	Fitting	..	2	..
27		208107	Snap Ring	2	2	2
28	d	1473838	Snap Ring	..	3	..
28	p	208107	Snap Ring	..	3	..
28	rs	1499594	Snap Ring	3	..	3
29	c	1346600	Capscrew	60	60	60
29	d	1473839	Capscrew	60	60	60
30		88587	Washer	60	60	60
31		1450863	Spider Assembly	2	2	2
32		1450865	Shaft	3	3	3
32		39383	O-Ring	1	1	1
33		1450864	Spider	1	1	1
34		273969	Button (Thrust)	3	3	3
35		1303551	Button (Thrust)	1	1	1
36		97638	Washer	3	3	3
37		1382570	Planet Gear	3	3	3
38		1450867	Washer	3	3	3
39		1382571	Gear	2	2	2
40		1382572	Washer	2	2	2
41	noq	1316326	Screw	4	4	4
41	rs	1499563	Capscrew	4	4	4
42	noq	1309912	Lock	2	2	2
43	noq	268915	Lug Nut	2	2	2
43	rs	1499564	Nut	2	2	2
44		1450868	Ring Gear	2	2	2
45		1382574	Hub	2	2	2
46		1382880	Capscrew	32	32	32
47		97623	Roller Bearing Cone	4	4	4
48		1382875	Hub	2	2	2
49		97626	Roller Bearing Cup	2	2	2
50		1511548	Stud (Wheel)	24	24	24
51		132451	Washer	32	32	32
52		199598	Oil Seal	2	2	2
53	noq	1382877	Spindle Assembly	2	2	2
53	rs	1499562	Spindle Assembly	2	2	2
54		1382913	Oil Seal	2	2	2
55		1382879	Spacer	1	1	1
56		358099	Nut	12	12	12
57		816552	Support	..	2	..

©2006 HYSTER COMPANY

DRIVE AXLE
(⇒S/N A214E-01994B (H450H)(FLT), ⇒S/N A214E-02000B (ECH), ⇒S/N A214E02033A (H360-400H FLT))

ITEM		PART NO.	DESCRIPTION	QTY A	QTY B	QTY C
58	**b**	1463254	Mounting Plate	..	2	..
59		1323889	Capscrew	8	..	8
59	**a**	1373440	Capscrew	..	8	..
59	**b**	1463253	Capscrew	..	8	..
59	**i**	1564722	Capscrew	..	8	..
60		221780	Washer	16	8	16
61		221720	Nut	8	..	8
61		221721	Nut	..	8	..
62	**b**	1463483	Washer	..	8	..
62	**a**	177953	Washer	..	8	..

FOOTNOTES:
a ⇒ S/N A214E-1624
b S/N A214E-1625 ⇒
c ⇒ S/N A214E-1634
d S/N A214E-1635 ⇒
e ⇒ S/N A214E-1725
f S/N A214E-1726⇔S/N A214E-1768
g ⇒ S/N A214E-1736
h S/N A214E-1737⇔S/N A214E-1766
i S/N A214E-1759 ⇒
j S/N A214E-1766⇔S/N A214E-1809
k S/N A214E-1769⇔S/N A214E-1808
l ⇒ S/N A214E-1779
m S/N A214E-1780⇔S/N A214E-1808
n ⇒ S/N A214E-1808
o ⇒ S/N A214E-1808 (H450H)
p S/N A214E-1808 ⇒
q ⇒ S/N A214E-1809 (H360H-H400H)
r S/N A214E-1809 ⇒ (H450H)
s S/N A214E-1810 ⇒ (H360H-H400H)

©2006 HYSTER COMPANY

DRIVE AXLE (Figure 6-2)

(S/N A214E-01995B⇒ (H450H)(FLT), S/N A214E-02001B⇒ (ECH), S/N A214E02034A⇒ (H360-400H FLT))

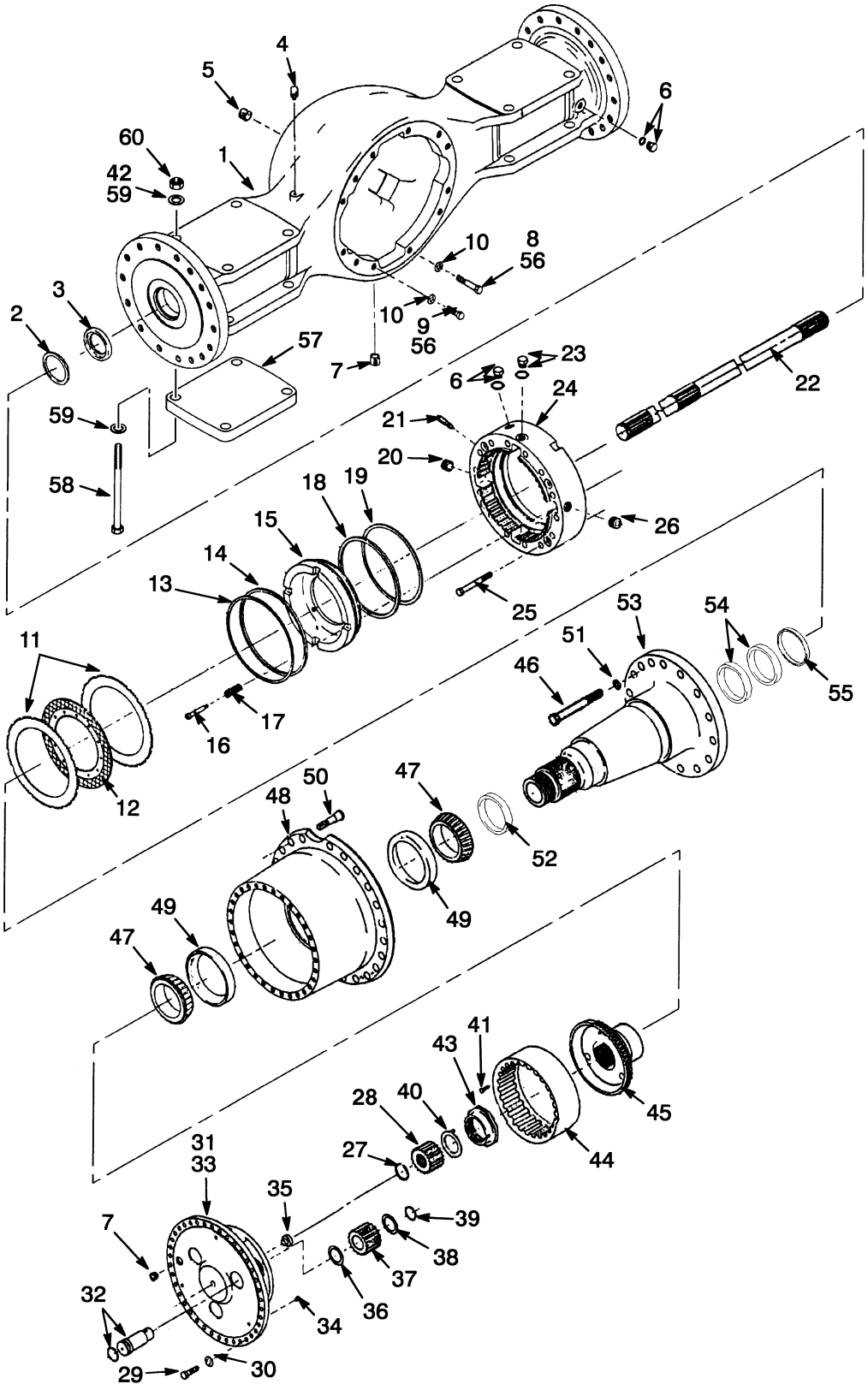

HP070105

©2006 HYSTER COMPANY

DRIVE AXLE

(S/N A214E-01995B⇒ (H450H)(FLT), S/N A214E-02001B⇒ (ECH), S/N A214E02034A⇒ (H360-400H FLT))

KEY:
A: Fork Lift Truck (H450H)
B: Empty Container Handler
C: Fork Lift Truck (H360-400H)

ITEM	PART NO.	DESCRIPTION	QTY A	QTY B	QTY C
	1538766	Drive Axle	1	..	..
	1539016	Drive Axle	..	1	..
	1538765	Drive Axle	..	..	1
1	1382912	Housing	1	..	..
1	1554742	Housing	..	1	..
1	1453487	Housing	..	..	1
2	1482752	Bushing	2	2	2
3	1382913	Oil Seal	2	2	2
4	1613651	Breather	1	1	..
4	200445	Breather	..	1	1
5	15316	Fitting	1	1	1
6	1382915	Plug	6	6	6
6	1382916	O-Ring	1	1	1
7	321293	Plug	3	3	3
8	1380784	Stud (Long)	4	4	4
9	214195	Stud (Short)	8	8	8
10	86007	Washer	12	12	12
11	1382885	Disc Brake	26	26	26
11	1499566	Disc Brake	2	2	2
12	1452826	Brake Friction Disc	14	14	14
13	1382890	Back-Up Ring (Outer)	2	2	2
14	1382888	Quadrant Ring (Outer)	2	2	2
15	1382887	Piston	2	2	2
16	1382893	Capscrew	8	8	8
17	1382894	Spring	8	8	8
18	1382889	Quadrant Ring (Inner)	2	2	2
19	1382891	Back-Up Ring (Inner)	2	2	2
20	1382897	Magnetic Plug	2	2	2
21	1382896	Bleeder Screw	2	2	2
22	1453488	Axle Shaft (LH)	..	..	1
22	1453489	Axle Shaft (RH)	..	..	1
22	1454959	Axle Shaft (RH)	1	..	..
22	1454960	Axle Shaft (LH)	1	..	..
22	1455997	Axle Shaft (LH)	..	1	..
22	1455998	Axle Shaft (RH)	..	1	..
23	1473840	Plug	4	4	4
23	1382902	O-Ring	1	1	1
24	1382884	Housing	2	2	2
25	1382895	Capscrew	8	8	8
26	1382898	Plug	2	2	2
27	208107	Snap Ring	2	2	2
28	1382571	Gear	2	2	2
29	1473839	Capscrew	60	60	60
30	88587	Washer	60	60	60

©2006 HYSTER COMPANY

DRIVE AXLE
(S/N A214E-01995B⇒ (H450H)(FLT), S/N A214E-02001B⇒ (ECH), S/N A214E02034A⇒ (H360-400H FLT))

ITEM	PART NO.	DESCRIPTION	QTY A	QTY B	QTY C
31	1450863	Spider Assembly	2	2	2
32	1450865	Shaft	3	3	3
32	39383	O-Ring	1	1	1
33	1450864	Spider	1	1	1
34	273969	Button (Thrust)	3	3	3
35	1303551	Button (Thrust)	1	1	1
36	97638	Washer	3	3	3
37	1382570	Planet Gear	3	3	3
38	1450867	Washer	3	3	3
39	1499594	Snap Ring	3	3	3
40	1382572	Washer	2	2	2
41	1547980	Screw	2	2	2
42	1463483	Washer	..	8	..
43	1499564	Nut	2	2	2
44	1450868	Ring Gear	2	2	2
45	1382574	Hub	2	2	2
46	1382880	Capscrew	32	32	32
47	97623	Roller Bearing Cone	4	4	4
48	1547982	Hub and Cup Assembly	2	2	2
49	97626	Roller Bearing Cup	2	2	2
50	1511548	Stud (Wheel)	..	24	..
50	1382876	Stud (Wheel)	24	..	24
51	132451	Washer	32	32	32
52	199598	Oil Seal	2	2	2
53	1499562	Spindle Assembly	2	2	2
54	1382913	Oil Seal	2	2	2
55	1382879	Spacer	1	1	1
56	358099	Nut	12	12	12
57	1463254	Mounting Plate	..	2	..
58	1564722	Capscrew	..	8	..
59	221780	Washer	16	8	16
60	221720	Nut	8	..	8
60	221721	Nut	..	8	..
61	383789	Thread Lock (Not Illustrated)	..	AR	..

©2006 HYSTER COMPANY

NOTES

DIFFERENTIAL ASSEMBLY (Figure 6-3)

(⇒S/N A214E-01994B (H450H)(FLT), ⇒S/N A214E-02000B (ECH), ⇒S/N A214E02033A (H360-400H FLT))

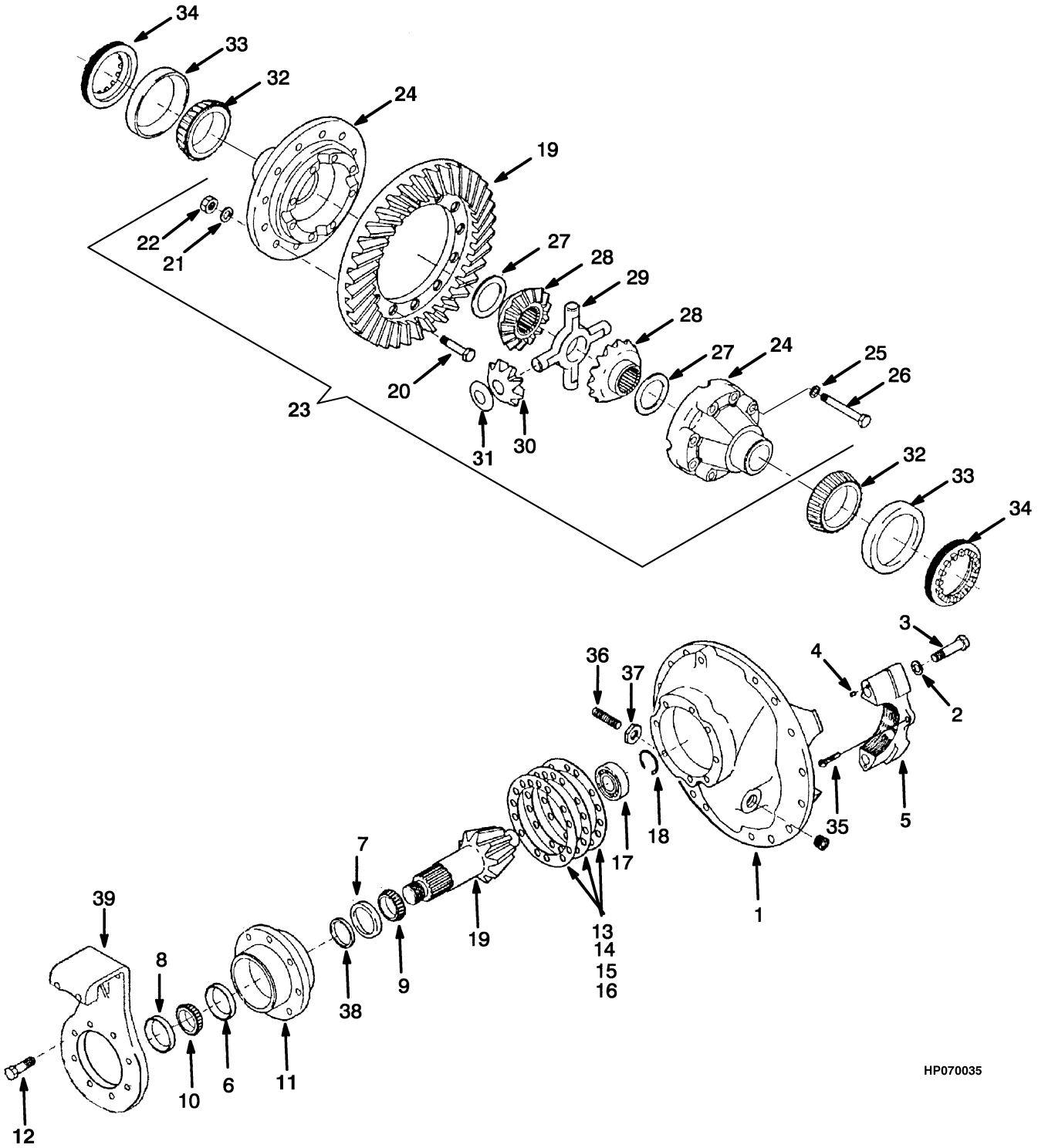

©2006 HYSTER COMPANY

DIFFERENTIAL ASSEMBLY
(⇒S/N A214E-01994B (H450H)(FLT), ⇒S/N A214E-02000B (ECH), ⇒S/N A214E02033A (H360-400H FLT))

KEY:
A: Fork Lift Truck (H450H)
B: Empty Container Handler
C: Fork Lift Truck (H360-400H)

ITEM		PART NO.	DESCRIPTION	QTY A	QTY B	QTY C
1		1380798	Carrier Assembly	1	1	1
2		1347770	Washer	4	4	4
3		293716	Capscrew	4	4	4
4		1380777	Ball	2	2	2
5		1502129	Cap	2	2	2
6		200972	Bearing Cup	1	1	1
7		30062	Bearing Cup	1	1	1
8		1374090	Oil Seal	1	1	1
9		1347774	Bearing Cone (Inner)	1	1	1
10		1347812	Bearing Cone (Outer)	1	1	1
11	**a**	1347772	Pinion	1	1	1
11	**b**	1499559	Cage	1	1	1
12		293654	Capscrew	8	8	8
13		1347814	Shim	1	1	1
14		1347815	Shim	1	1	1
15		1347816	Shim	1	1	1
16		1347817	Shim	1	1	1
17		296844	Bearing	1	1	1
18		240683	Snap Ring	1	1	1
19		1450858	Gear Set	1	..	..
19		1452505	Gear Set	..	1	1
20		1347822	Bolt	12	12	12
21		125428	Washer	12	12	12
22		1374550	Nut	12	12	12
23		1450859	Differential Assembly	1	1	1
24		1450860	Case Assembly	1	1	1
24		. . . . .	Case Half (LH)	1	1	1
24		. . . . .	Case Half (RH)	1	1	1
25		1450861	Washer	16	16	16
26		1347831	Capscrew	16	16	16
27		1380797	Washer	2	2	2
28		1382908	Side Gear	2	2	2
29		1374558	Spider Assembly	1	1	1
30		1382910	Pinion	4	4	4
31		200982	Washer	4	4	4
32		1475421	Roller Bearing Cone	2	2	2
33		1475420	Roller Bearing Cup	2	2	2
34		1347839	Bearing Ring	2	2	2
35		86008	Cotter Pin	2	2	2
36		1374097	Screw	1	1	1
37		1312616	Nut	1	1	1
38		. . . . .	Spacer	2	2	2
38		. . . . .	Spacer	2	2	2
38		. . . . .	Spacer	2	2	2

©2006 HYSTER COMPANY

DIFFERENTIAL ASSEMBLY
(⇒S/N A214E-01994B (H450H)(FLT), ⇒S/N A214E-02000B (ECH), ⇒S/N A214E02033A (H360-400H FLT))

ITEM	PART NO.	DESCRIPTION	QTY A	QTY B	QTY C
38	. . . . .	Spacer	2	2	2
38	. . . . .	Spacer	2	2	2
38	. . . . .	Spacer	2	2	2
38	. . . . .	Spacer	2	2	2
38	. . . . .	Spacer	2	2	2
38	. . . . .	Spacer	2	2	2
38	. . . . .	Spacer	2	2	2
38	. . . . .	Spacer	2	2	2
39	1489407	Adapter (Brake)	1	1	1
	1347813	Shim Kit (Includes Items 13-16)	1	1	1
	1374099	Bolt Kit (Includes Items 20-22)	1	1	1
	1393171	Differential Kit (Includes Items 27-31)	1	1	1
	1347800	Split Spacer Kit (Includes Item 38)	1	1	1

FOOTNOTES:

a ⇒ S/N A214E-1809 (14-16XM FLT: 1809, 18-20XM FLT: 1808, ECH: Pending)

b S/N A214E-1810 ⇒ (14-16XM FLT: 1810, 18-20XM FLT: 1809, ECH: Pending)

©2006 HYSTER COMPANY

NOTES

DIFFERENTIAL ASSEMBLY (Figure 6-4)

(S/N A214E-01995B⇒ (H450H)(FLT), S/N A214E-02001B⇒ (ECH), S/N A214E02034A⇒ (H360-400H FLT))

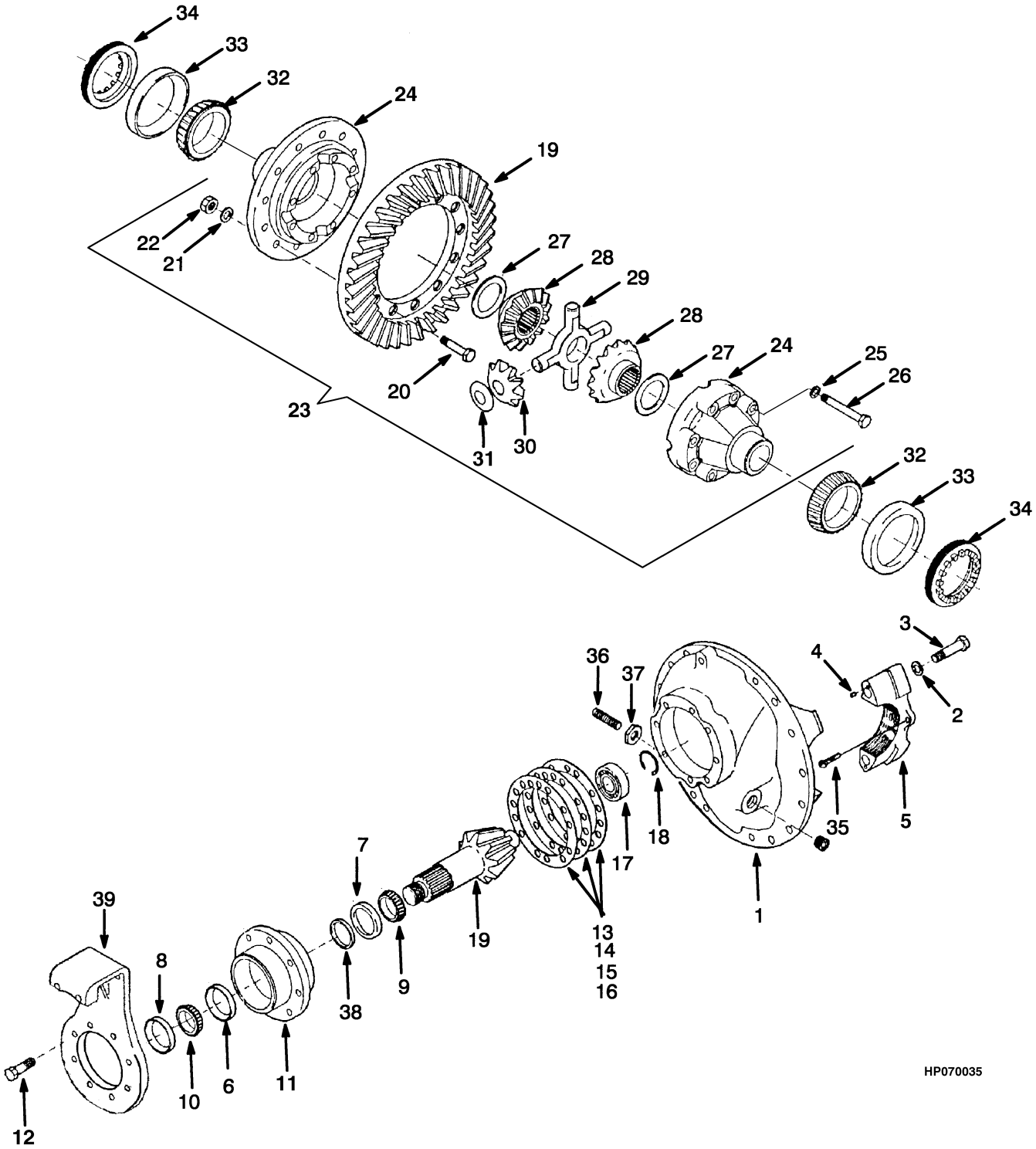

©2006 HYSTER COMPANY

DIFFERENTIAL ASSEMBLY

(S/N A214E-01995B⇒ (H450H)(FLT), S/N A214E-02001B⇒ (ECH), S/N A214E02034A⇒ (H360-400H FLT))

KEY:
A: Fork Lift Truck (H450H)
B: Empty Container Handler
C: Fork Lift Truck (H360-400H)

ITEM	PART NO.	DESCRIPTION	QTY A	QTY B	QTY C
1	1380798	Carrier Assembly	1	1	1
2	1347770	Washer	4	4	4
3	293716	Capscrew	4	4	4
4	1380777	Ball	2	2	2
5	1502129	Cap	2	2	2
6	200972	Bearing Cup	1	1	1
7	30062	Bearing Cup	1	1	1
8	1374090	Oil Seal	1	1	1
9	1347774	Bearing Cone (Inner)	1	1	1
10	1347812	Bearing Cone (Outer)	1	1	1
11	1347772	Pinion	1	1	1
12	1566125	Capscrew	8	8	8
13	1347814	Shim	1	1	1
14	1347815	Shim	1	1	1
15	1347816	Shim	1	1	1
16	1347817	Shim	1	1	1
17	296844	Bearing	1	1	1
18	240683	Snap Ring	1	1	1
19	1590041	Bevel Gear Assembly	1	..	..
19	1489411	Bevel Gear Assembly	..	1	1
20	1347822	Bolt	12	12	12
21	125428	Washer	12	12	12
22	1374550	Nut	12	12	12
23	1590042	Differential And Case Assembly	1	1	1
24	1590043	Case Assembly	1	1	1
24	. . . . .	Case Half (LH)	1	1	1
24	. . . . .	Case Half (RH)	1	1	1
25	1450861	Washer	16	16	16
26	1347831	Capscrew	16	16	16
27	1380797	Washer	2	2	2
28	1379753	Side Gear	2	2	2
29	1502130	Spider Assembly	1	1	1
30	1347835	Pinion	4	4	4
31	200982	Washer	4	4	4
32	1475421	Roller Bearing Cone	2	2	2
33	1475420	Roller Bearing Cup	2	2	2
34	1347839	Bearing Ring	2	2	2
35	1566126	Cotter Pin	2	2	2
36	1374097	Screw	1	1	1
37	1312616	Nut	1	1	1
38	. . . . .	Spacer	2	2	2
38	. . . . .	Spacer	2	2	2
38	. . . . .	Spacer	2	2	2
38	. . . . .	Spacer	2	2	2

©2006 HYSTER COMPANY

DIFFERENTIAL ASSEMBLY
(S/N A214E-01995B⇒ (H450H)(FLT), S/N A214E-02001B⇒ (ECH), S/N A214E02034A⇒ (H360-400H FLT))

ITEM	PART NO.	DESCRIPTION	QTY A	QTY B	QTY C
38	. . . . .	Spacer	2	2	2
38	. . . . .	Spacer	2	2	2
38	. . . . .	Spacer	2	2	2
38	. . . . .	Spacer	2	2	2
38	. . . . .	Spacer	2	2	2
38	. . . . .	Spacer	2	2	2
38	. . . . .	Spacer	2	2	2
39	1489407	Adapter (Brake)	1	1	1
	1347813	Shim Kit (Includes Items 13-16)	1	1	1
	1374099	Bolt Kit (Includes Items 20-22)	1	1	1
	1380796	Differential Kit (Includes Items 27-31)	1	1	1
	1347800	Split Spacer Kit (Includes Item 38)	1	1	1

©2006 HYSTER COMPANY

NOTES

PARK BRAKE (Figure 6-5)
(⇒S/N A214E-01994B (H450H)(FLT), ⇒S/N A214E-02000B (ECH), ⇒S/N A214E02033A (H360-400H FLT))

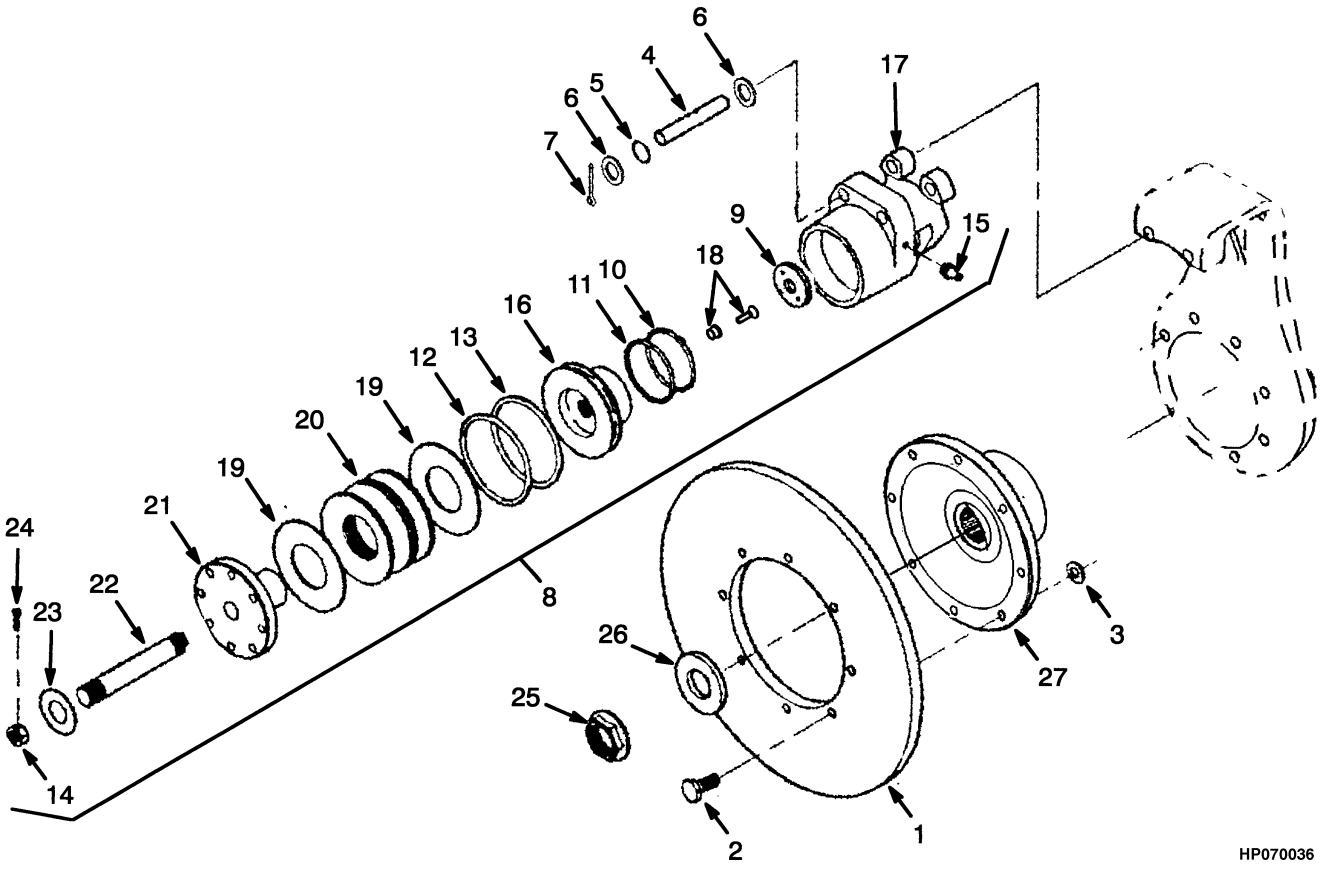

©2006 HYSTER COMPANY

PARK BRAKE
(⇒S/N A214E-01994B (H450H)(FLT), ⇒S/N A214E-02000B (ECH), ⇒S/N A214E02033A (H360-400H FLT))

ITEM		PART NO.	DESCRIPTION	QTY
1		1382918	Disc Brake	1
2	**b**	1473826	Capscrew	8
2	**a**	16815	Capscrew	8
3	**a**	221767	Washer	8
4		1332801	Pin	2
5		1332805	O-Ring	4
6		1379726	Washer	4
7		1355346	Cotter Pin	4
8		1452500	Park Brake	4
9		1339121	Brake Lining Assembly	2
10		1339119	Back-Up Ring	1
11		. . . . .	O-Ring	1
12		1339115	Back-Up Ring	1
13		1339116	O-Ring	1
14		15224	Cotter Pin	1
15		1309120	Bleeder Screw	1
16		1382922	Piston	1
17		1382923	Housing	1
18		1379750	Retainer	2
19		1339113	Washer	2
20		1339114	Spring	8
21		1382924	Cap	1
22		1382950	Stud	1
23		1312090	Washer	1
24		1343145	Nut	1
25		1357734	Nut	1
26		1312083	Washer	1
27	**a**	1382920	Yoke (Input)	1
27	**b**	1473823	Yoke (Input)	1
		1357735	Seal Kit (Includes Items 10-13)	1
		1452504	Piston and Cap Kit (Includes Items 14, 16, 18, 21-24)	1
		1452503	Piston Kit (Includes Items 16, 18)	1

FOOTNOTES:
a ⇒ S/N A214E-1634
b S/N A214E-1635 ⇒

©2006 HYSTER COMPANY

BRAKE ASSEMBLY (Figure 6-6)

DISC

(S/N A214E-01995B⇒ (H450H)(FLT), S/N A214E-02001B⇒ (ECH), S/N A214E02034A⇒ (H360-400H FLT))

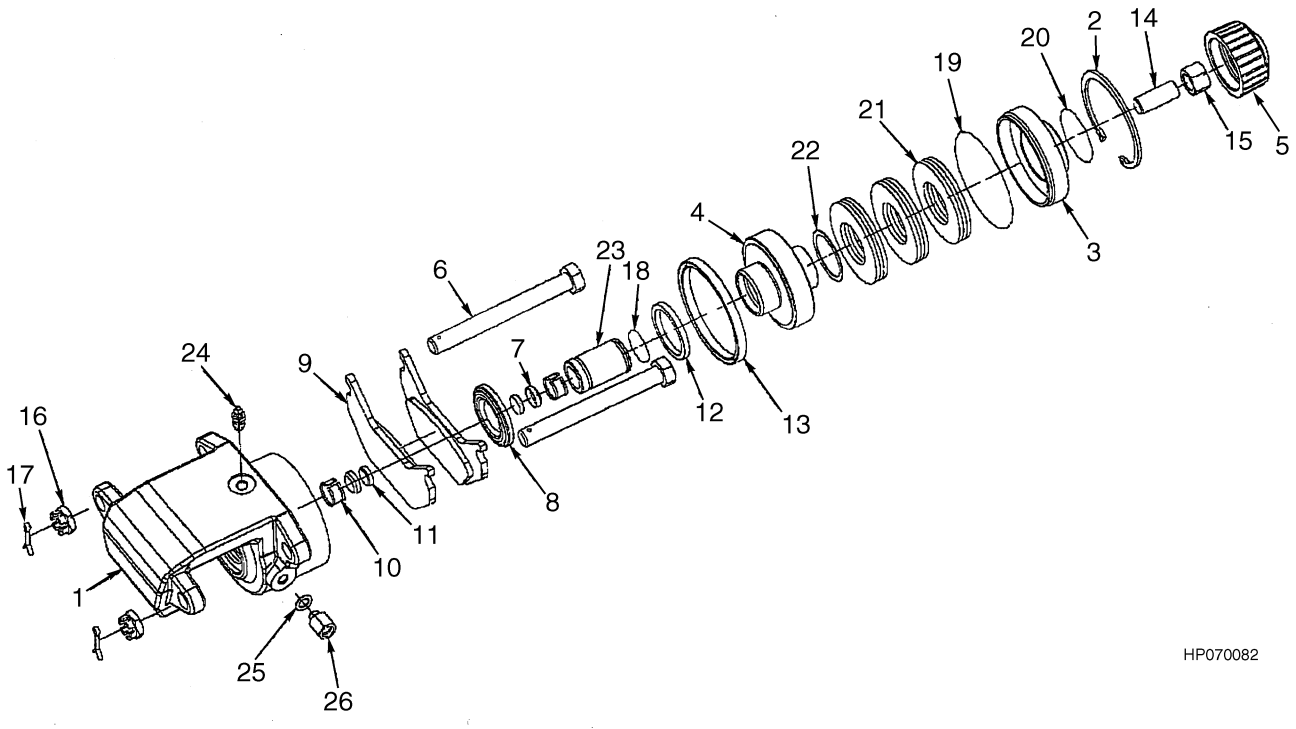

©2006 HYSTER COMPANY

BRAKE ASSEMBLY
DISC
(S/N A214E-01995B⇒ (H450H)(FLT), S/N A214E-02001B⇒ (ECH), S/N A214E02034A⇒ (H360-400H FLT))

ITEM	PART NO.	DESCRIPTION	QTY
	1489408	Park Brake Assembly (Disc)	1
1	1495623	Housing	1
2	1495624	Retaining Ring	1
3	1495625	Piston (Stop)	1
4	1495626	Piston	1
5	1495627	Cap	1
6	1495628	Bolt	2
7	1495629	Retaining Cup	2
8	1495630	Boot	1
9	1495631	Brake Pad	2
10	1495632	Sleeve (Friction)	2
11	1495633	Magnet	2
11	. . . . .	Retaining Ring	1
12	1495634	Seal (Cup)	1
13	1495635	Seal (Cup)	1
14	1495636	Screw	1
15	1495637	Locknut	1
16	1495638	Nut	2
17	1495639	Cotter Pin	2
18	1495640	Seal Ring	1
19	1495641	Seal Ring	1
20	1495642	Seal Ring	1
21	1495643	Spring (Disc)	6
22	1495644	Wear Plate	1
23	1495645	Ram	1
24	1495646	Bleeder Valve	1
25	1495647	Washer	1
26	1495648	Adapter	1
	1514331	Repair Kit (Includes Item)	1

©2006 HYSTER COMPANY

UNIVERSAL SHAFT (Figure 6-7)

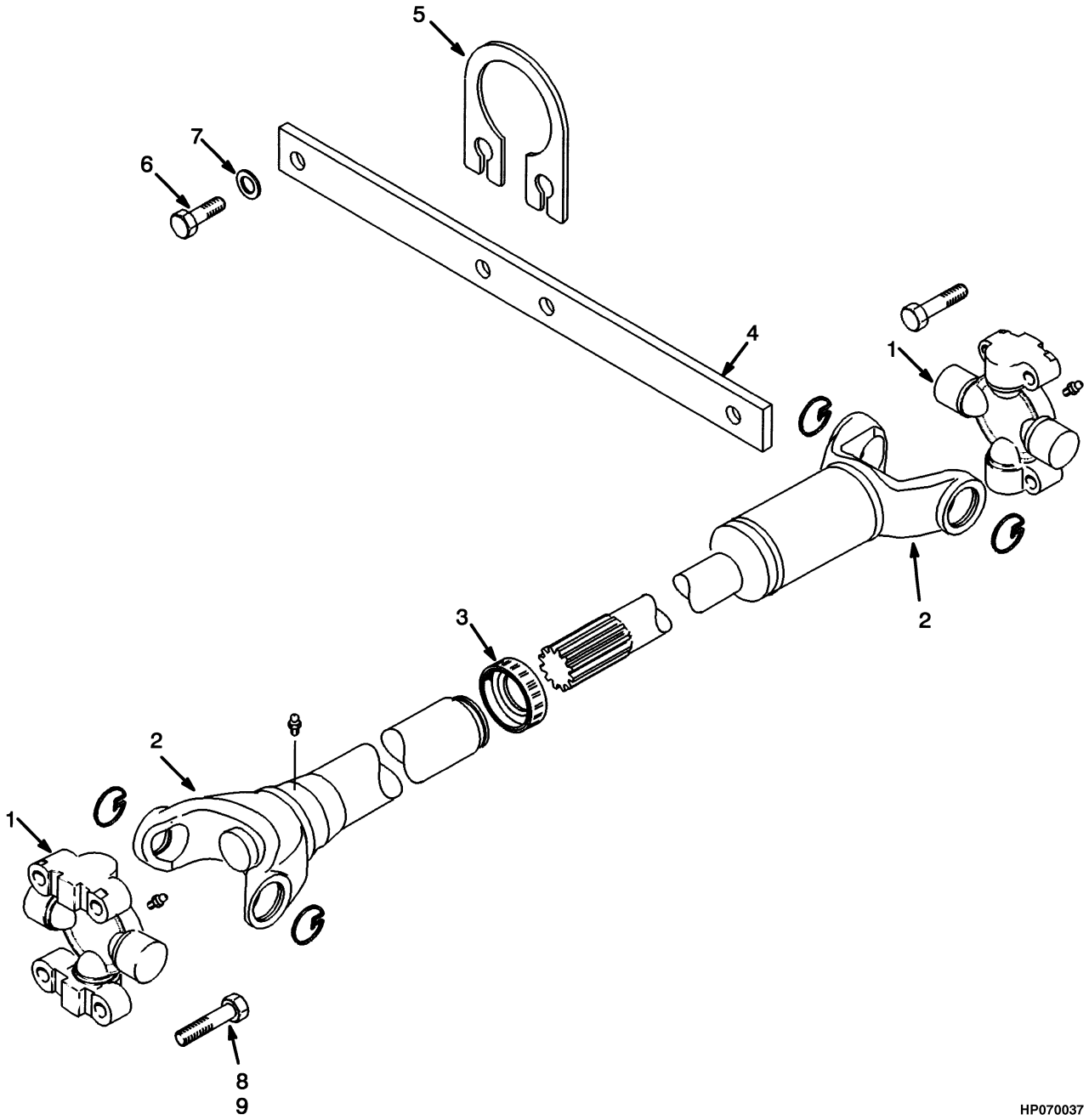

©2006 HYSTER COMPANY

UNIVERSAL SHAFT

KEY:
A: Empty Container Handler
B: Fork Lift Truck

ITEM	PART NO.	DESCRIPTION	QTY A	QTY B
	1373265	Drive Shaft	..	1
	1373662	Drive Shaft	1	..
1	1391055	Universal Joint	1	1
2	1391056	Yoke	1	1
3	1391057	Seal	1	1
4	1384620	Bar	1	1
5	1384621	Retainer	1	1
6	292562	Capscrew	4	4
7	320166	Washer	4	4
8	192544	Capscrew	8	8
9	264134	Sealant	AR	AR

©2006 HYSTER COMPANY

NOTES

7 STEERING SYSTEM

SECTION 7
STEERING SYSTEM

DESCRIPTION	PAGE
STEERING AXLE	7-18
STEERING CONTROL	
BLOCK VALVE	
⇒D/B 10/2003	7-16
STEERING CYLINDER	7-10
OPTIONAL	7-12
STEERING HOUSING AND CONTROL	7-2
STEERING HYDRAULICS	
EMPTY CONTAINER HANDLER	7-6
FORK LIFT TRUCK	7-8
STEERING PUMP	7-14

©2006 HYSTER COMPANY

STEERING HOUSING AND CONTROL (Figure 7-1)

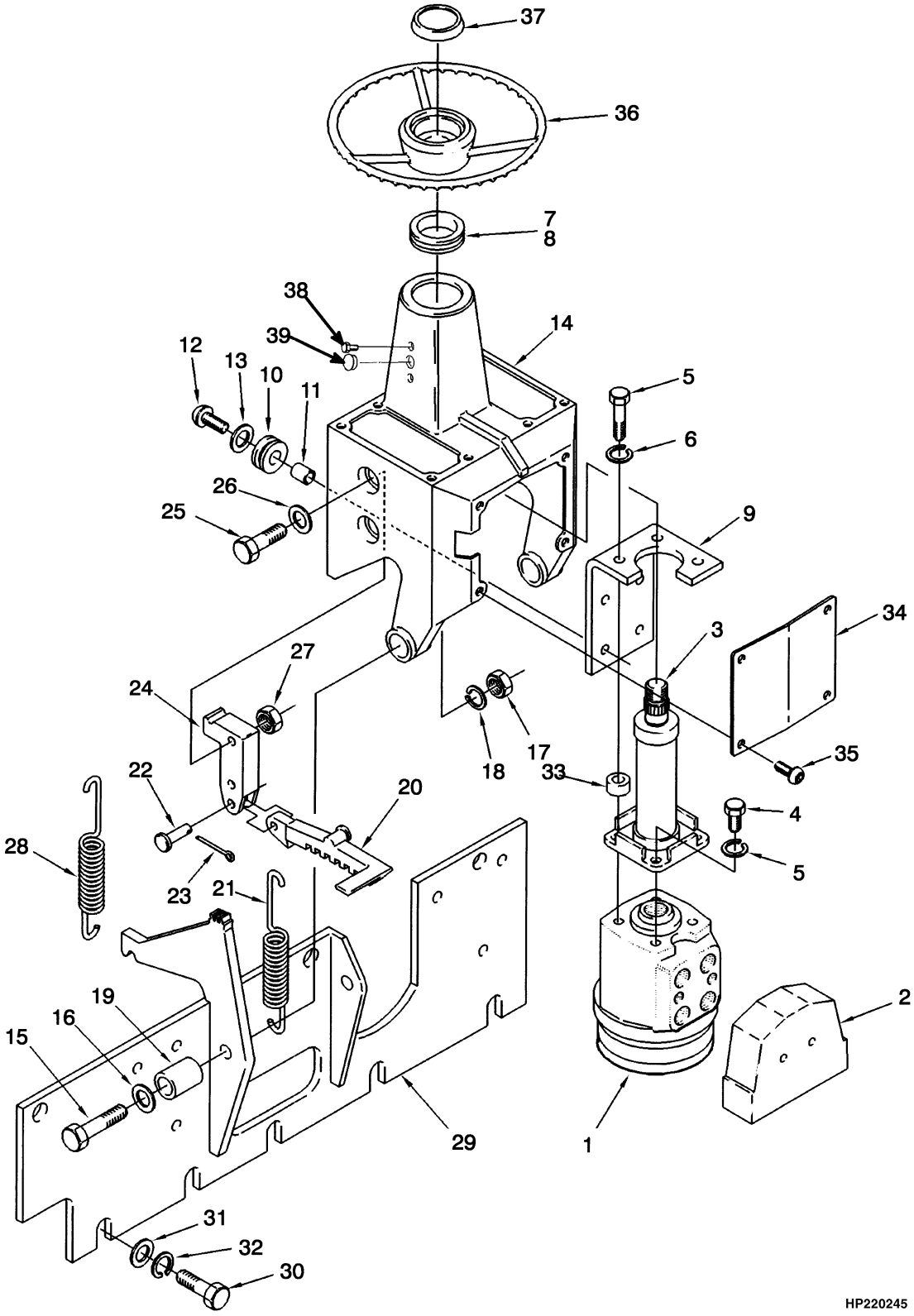

©2006 HYSTER COMPANY

STEERING HOUSING AND CONTROL

ITEM		PART NO.	DESCRIPTION	QTY
1		1524215	Steering Valve Assembly	1
1		1372990	Steering Pump (☞ Figure 7-6)	1
2		1524173	Block Valve Assembly	1
2		366066	Service Kit	1
2		1462890	O-Ring	4
2		1462891	Screw	2
3		1301422	Steering Column	1
3		345423	Nut	1
3		362816	Contact Terminal Kit	1
4		16597	Capscrew	1
5		16815	Capscrew	3
6		292682	Lockwasher	4
7		2005059	Grommet	1
8		362255	Grommet (Optional)	1
9		376504	Bracket	1
10		216735	Grommet	4
11		376505	Spacer	4
12		369242	Capscrew	4
13		1300117	Washer	4
14		376510	Steering Cover	1
15		292529	Capscrew	2
16		379697	Washer	2
17		216877	Nut	2
18		293782	Washer	2
19		376506	Spacer	2
20		324896	Latch	1
21		1301437	Spring	1
22		133683	Pin	1
23		15212	Cotter Pin	1
24		1301426	Bracket	1
25	**ac**	1326808	Capscrew	2
25	**bd**	379674	Capscrew	2
26	**ac**	296360	Washer	2
26	**bd**	375629	Washer	2
27	**ac**	329069	Nut	2
27	**bd**	313828	Nut	2
28		1301425	Spring	1
29		1325564	Plate	1
30		136681	Capscrew	8
31		320158	Washer	8
32		292681	Lockwasher	8
33		1300165	Spacer	3
34		1301676	Plate	1
35		1330574	Capscrew	4
36		1327895	Steering Wheel	1
37		371666	Horn Button	1
38		1307737	Fastener	1

©2006 HYSTER COMPANY

STEERING HOUSING AND CONTROL

ITEM	PART NO.	DESCRIPTION	QTY
39	1307736	Plug	1
	345421	Seal Kit (Includes Items 16-21)	1

FOOTNOTES:
a Empty Container Handler
b Fork Lift Truck
c ⇒ S/N A214E-1806
d S/N A214E-1807 ⇒

©2006 HYSTER COMPANY

NOTES

STEERING HYDRAULICS (Figure 7-2)
EMPTY CONTAINER HANDLER

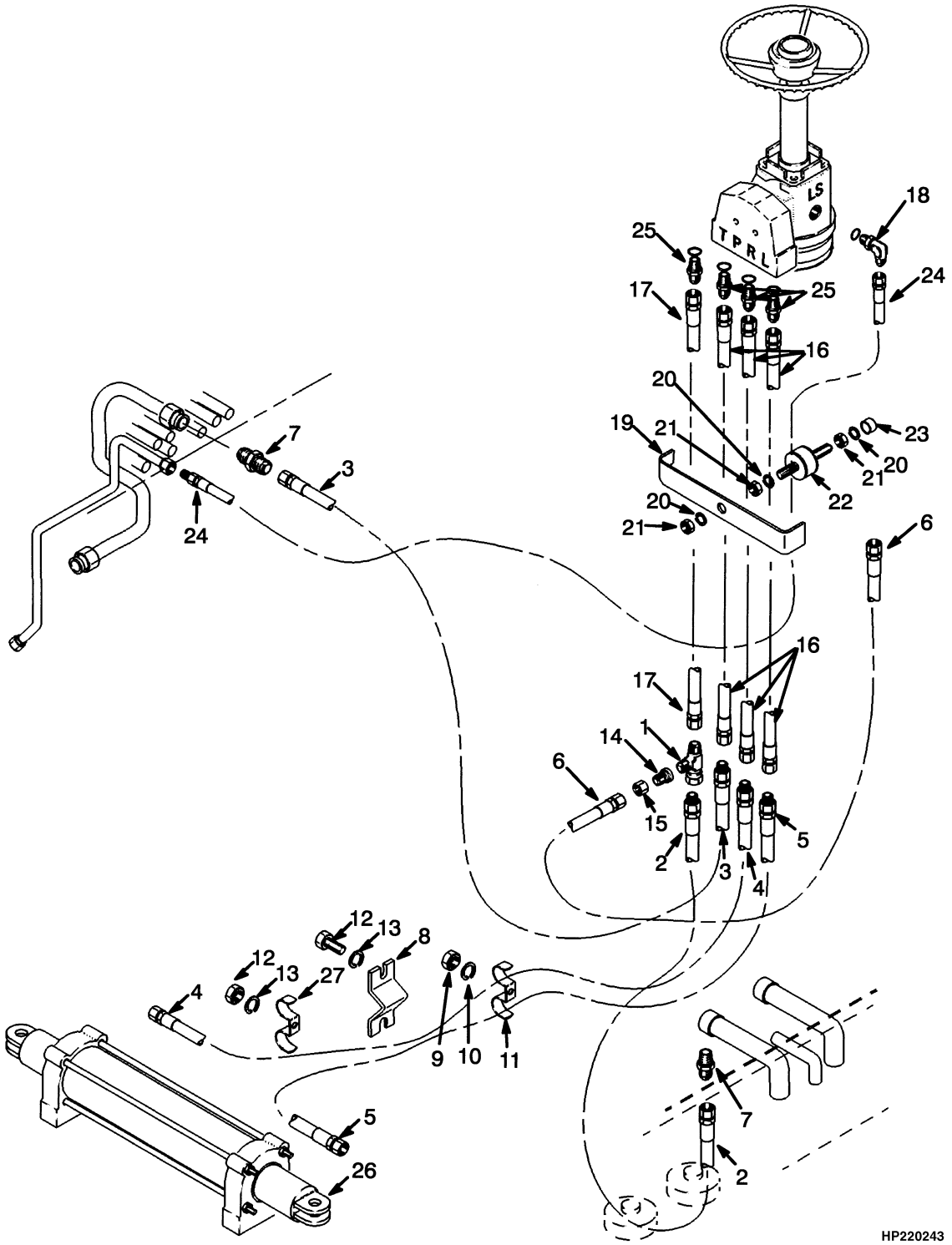

©2006 HYSTER COMPANY

STEERING HYDRAULICS
EMPTY CONTAINER HANDLER

ITEM		PART NO.	DESCRIPTION	QTY
1	**a**	17062	Fitting	1
1	**b**	222331	Fitting	1
2	**b**	1304709	Hose	1
2	**a**	1382420	Hose	1
3		1382421	Hose	1
4		1383851	Hose	1
5		1383852	Hose	1
6		1383859	Hose	1
7		17315	Fitting	1
8		1383854	Plate	1
9	**a**	302401	Locknut	2
9	**b**	302401	Locknut	5
10	**a**	320159	Washer	4
10	**b**	320159	Washer	7
11		398184	Clamp	4
12		287854	Capscrew	2
13		293781	Washer	2
14		17218	Fitting	1
15		17319	Fitting	1
16		1382407	Hose	3
17		1382723	Hose	3
18		16556	Fitting	1
19		1332941	Clamp	1
20		292681	Lockwasher	3
21		239503	Nut	3
22		1332940	Mount	1
23		1334491	Spacer	1
24		1382722	Hose	1
25		16541	Fitting	4
25		16484	O-Ring	1
26		1385591	Steer Cylinder (☞ Figure 7-4)	1
26		1393743	Steer Cylinder (Optional) (☞ Figure 7-5)	1
27	**b**	251994	Clamp	3

FOOTNOTES:
a ⇒ S/N A214E-1534
b S/N A214E-1535 ⇒

STEERING HYDRAULICS (Figure 7-3)
FORK LIFT TRUCK

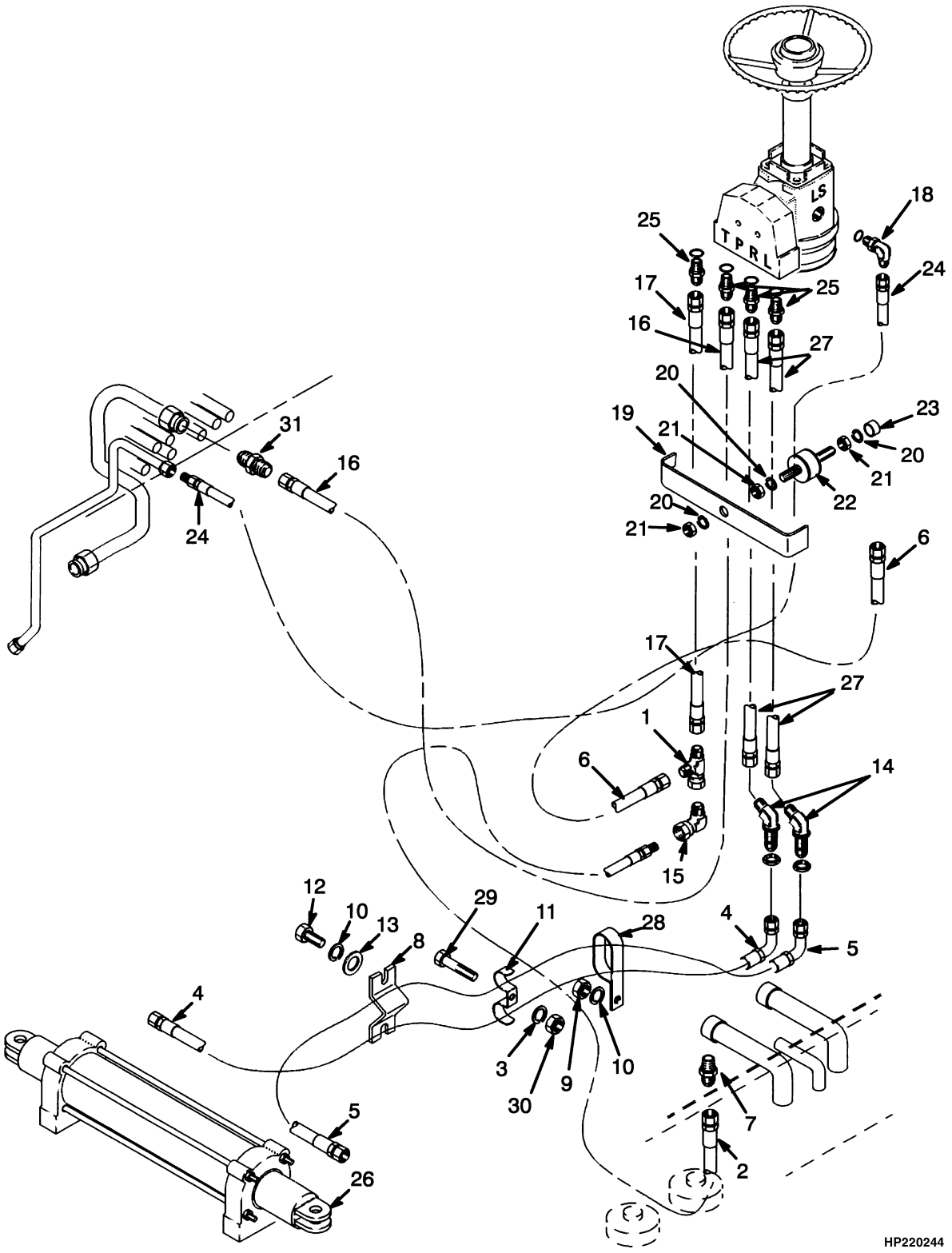

©2006 HYSTER COMPANY

STEERING HYDRAULICS
FORK LIFT TRUCK

ITEM		PART NO.	DESCRIPTION	QTY
1		222331	Fitting	1
2		274885	Hose	1
3		320161	Washer	2
4	**a**	1451969	Hose	1
4	**b**	1451536	Hose	1
5	**a**	1451968	Hose	1
5	**b**	1451537	Hose	1
6		1331025	Hose	1
7		17309	Fitting	1
8		1383854	Plate	1
9		302401	Locknut	1
10		320159	Washer	3
11		198691	Clamp	2
12		287854	Capscrew	2
13		292682	Lockwasher	2
14		16466	Fitting	2
15		16989	Fitting	1
16		1303432	Hose	1
17		1382723	Hose	1
18		16556	Fitting	1
18		16481	O-Ring	1
19		1332941	Clamp	1
20		292681	Lockwasher	3
21		239503	Nut	3
22		1332940	Mount	1
23		1334491	Spacer	1
24		1451538	Hose	1
25		16541	Fitting	4
25		16484	O-Ring	1
26		1385591	Steer Cylinder (☞ Figure 7-4)	1
26		1385590	Steer Cylinder (Optional) (☞ Figure 7-5)	1
27		299257	Hose	2
28		291994	Clamp	2
29		292528	Capscrew	2
30		302402	Locknut	2
31		1384649	Fitting	1

FOOTNOTES:
a H360H-400H
b H450H

©2006 HYSTER COMPANY

STEERING CYLINDER (Figure 7-4)

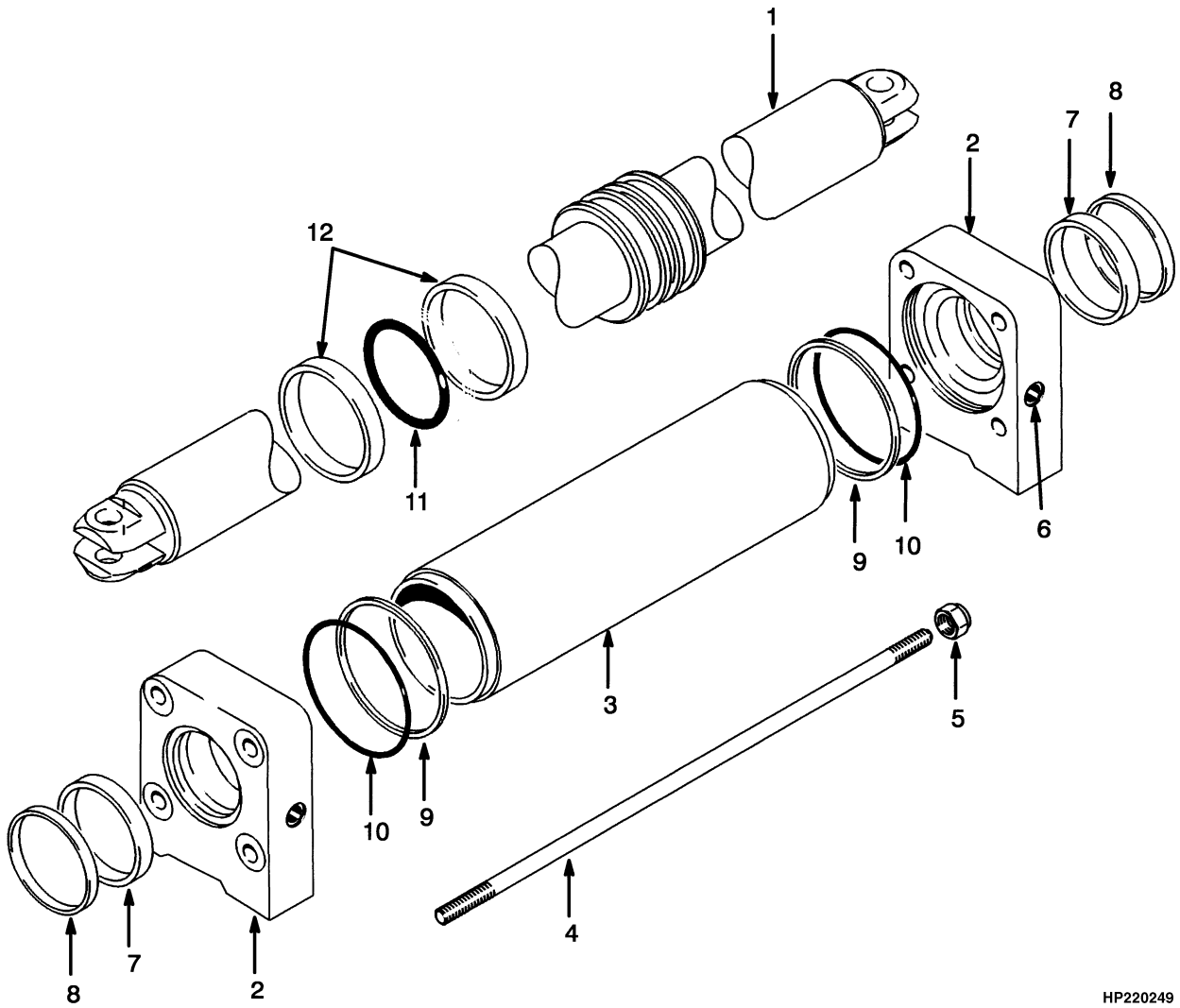

©2006 HYSTER COMPANY

STEERING CYLINDER

KEY:
A: Empty Container Handler
B: Fork Lift Truck

ITEM	PART NO.	DESCRIPTION	QTY A	QTY B
	1385590	Steer Cylinder	..	1
	1385591	Steer Cylinder	1	..
1	1391213	Rod	1	..
1	1391207	Rod	..	1
2	1391208	Cylinder Head	2	2
3	1391209	Cylinder Shell	..	1
3	1391214	Cylinder Shell	1	..
4	1391210	Tie Rod	..	4
4	1391215	Tie Rod	4	..
5	316829	Nut	8	8
6	1391212	Screw (Optional)	4	4
7	1385582	Rod Seal	2	2
8	1391407	Rod Wiper	2	2
9	1385583	Back-Up Ring	2	2
10	15894	O-Ring	2	2
11	1385587	O-Ring	1	1
12	1385586	Wear Ring	2	2
	1391406	Seal Kit (Includes Items 7-12)	1	1

©2006 HYSTER COMPANY

STEERING CYLINDER (Figure 7-5)
OPTIONAL

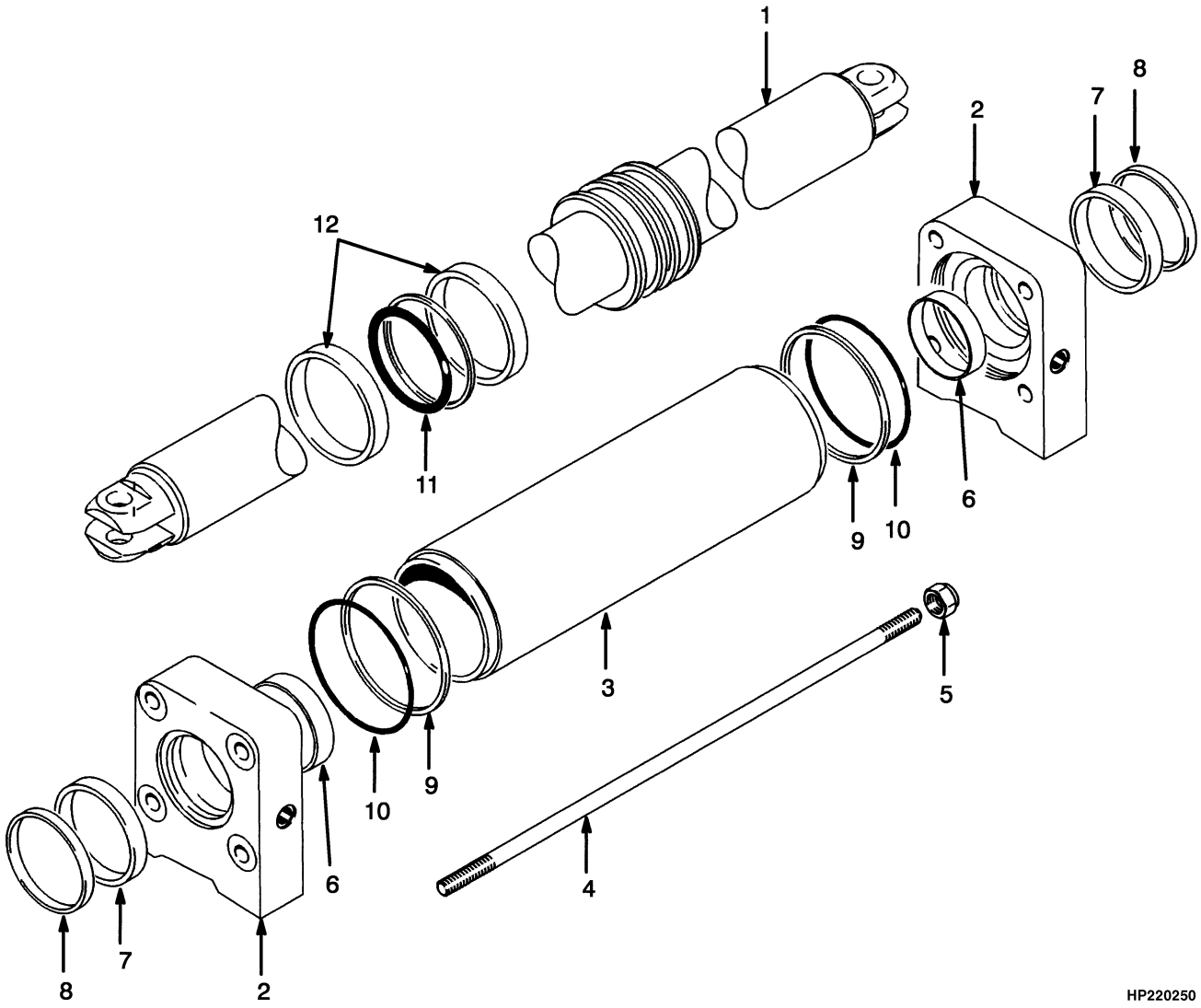

©2006 HYSTER COMPANY

STEERING CYLINDER
OPTIONAL

KEY:
A: Empty Container Handler
B: Fork Lift Truck

ITEM	PART NO.	DESCRIPTION	QTY A	QTY B
	1393742	Steer Cylinder	..	1
	1393743	Steer Cylinder	1	..
1	1453846	Rod	1	..
1	1453850	Rod	..	1
2	. . . . .	End Cap	2	2
3	1453847	Cylinder Shell	1	..
3	1453851	Cylinder Shell	..	1
4	1453848	Tie Rod	1	..
4	1453852	Tie Rod	..	1
5	316829	Nut	8	8
6	1453849	Bearing	2	2
7	1385582	Rod Seal	2	2
8	1391407	Rod Wiper	2	2
9	1385583	Back-Up Ring	2	2
10	15894	O-Ring	2	2
11	1385587	O-Ring	1	1
12	1385586	Wear Ring	2	2
	1391406	Seal Kit (Includes Items 7-12)	1	1

©2006 HYSTER COMPANY

STEERING PUMP (Figure 7-6)

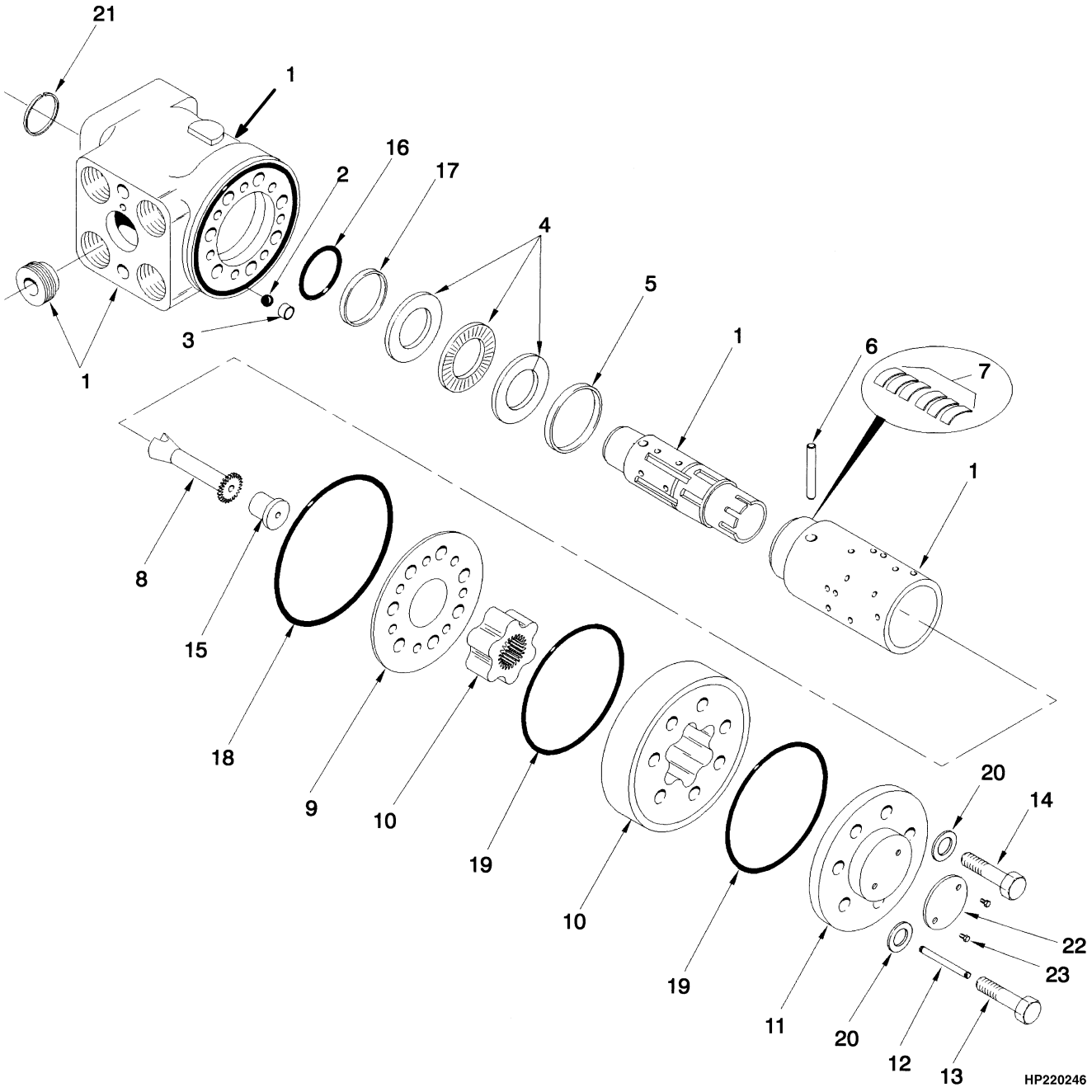

©2006 HYSTER COMPANY

STEERING PUMP

ITEM	PART NO.	DESCRIPTION	QTY
	1372990	Steering Pump	1
1	. . . . .	Housing	1
2	345408	Ball	1
3	345409	Bushing	1
4	345410	Bearing	1
5	345411	Ring	1
6	345412	Pin	1
7	1375018	Spring Set	1
8	1355326	Shaft	1
9	1357026	Plate	1
10	1382558	Gear Set	1
11	345424	Cover	1
12	. . . . .	Pin	1
13	1382559	Screw	1
14	1382560	Screw	6
15	1315781	Spacer	1
16	. . . . .	O-Ring	1
17	. . . . .	Ring	1
18	. . . . .	O-Ring	1
19	. . . . .	O-Ring	2
20	. . . . .	Washer	7
21	. . . . .	Ring	1
22	. . . . .	Nameplate	1
23	. . . . .	Screw	2
24	371345	Screw (Not Illustrated)	2
25	1375021	Relief Valve (Not Illustrated)	1
26	1382561	Spring (Not Illustrated)	1
	2032229	Seal Kit (Includes Items 16-21)	1

©2006 HYSTER COMPANY

STEERING CONTROL (Figure 7-7)
BLOCK VALVE
(⇒D/B 10/2003)

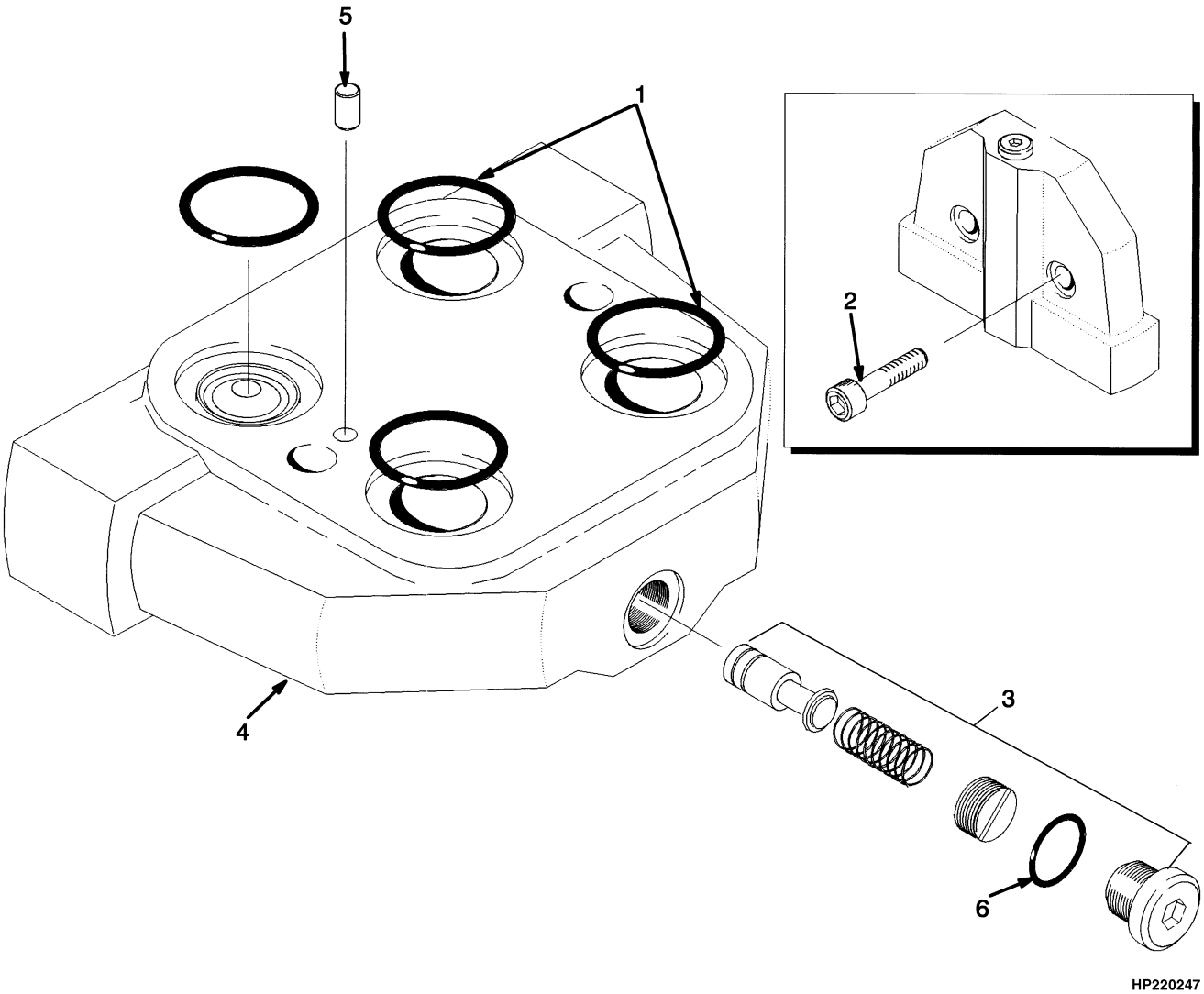

©2006 HYSTER COMPANY

STEERING CONTROL
BLOCK VALVE
(⇒D/B 10/2003)

ITEM	PART NO.	DESCRIPTION	QTY
	1524173	Block Valve Assembly	1
1	265732	O-Ring	4
2	. . . . .	Screw	2
3	366063	Relief Valve	1
4	. . . . .	Housing	1
5	366064	Pin	1
6	366065	Seal	1
	366066	Service Kit (Includes Items 1-2)	1

©2006 HYSTER COMPANY

STEERING AXLE (Figure 7-8)

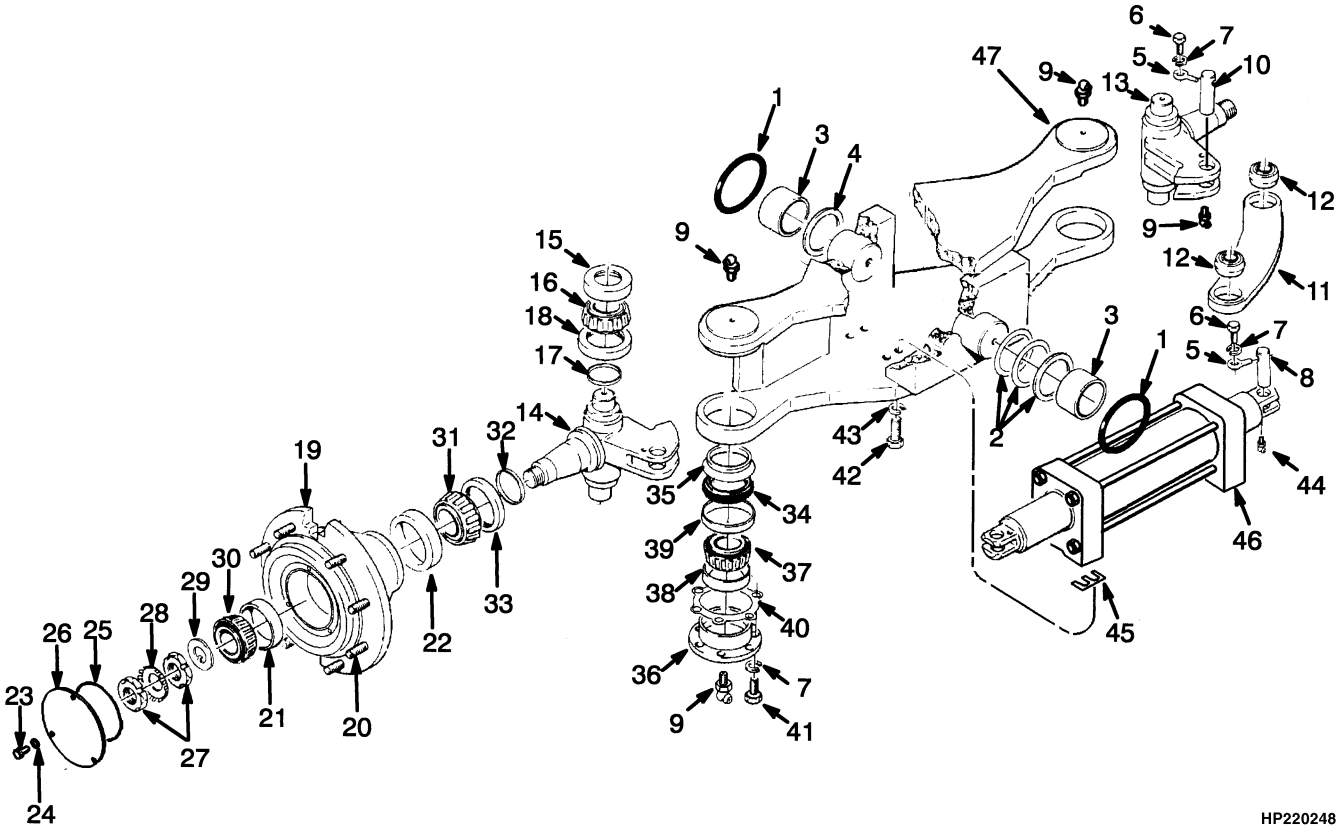

©2006 HYSTER COMPANY

STEERING AXLE

KEY:
A: Empty Container Handler
B: Fork Lift Truck

ITEM		PART NO.	DESCRIPTION	QTY A	QTY B
		1385588	Steering Axle	..	1
		1385589	Steering Axle	1	..
1		1381940	Ring Seal	1	1
2		159185	Shim	AR	AR
2		159186	Shim	AR	AR
3		1335871	Bushing	2	2
4		1335867	Washer	2	2
5		82270	Eye Bolt	4	4
6		292527	Capscrew	4	4
7		292683	Lockwasher	16	16
8		1385595	Pin	2	2
9		13963	Lube Fitting	8	8
10		1385596	Pin	2	2
11		1385599	Tie Rod	2	2
12		192683	Bushing	4	4
13	**c**	1385593	Spindle (LH)	1	1
13	**d**	816509	Spindle (LH)	1	1
14	**c**	1385592	Spindle (RH)	1	1
14	**d**	816508	Spindle (RH)	1	1
15		79483	Bearing Cup	2	2
16		1381932	Bearing Cone	2	2
17		1373687	Seal	4	4
18		1373689	Wear Sleeve	2	2
19		1325855	Hub	2	2
19		1325641	Hub	1	1
20		1373675	Stud	12	12
21		30077	Bearing Cup	1	1
22		230389	Bearing Cup	1	1
23		136985	Capscrew	6	6
24		292682	Lockwasher	6	6
25		90937	O-Ring	2	2
26		1325646	Cap	2	2
27	**a**	34056	Nut	4	4
27	**b**	1554047	Nut	2	2
28	**a**	34055	Lockwasher	2	2
29	**a**	1520839	Washer	2	2
29	**b**	1554048	Washer	2	2
30		30151	Bearing Cone	2	2
31		230390	Bearing Cone	2	2
32		37103	Oil Seal	2	2
33	**c**	1371398	Wear Sleeve	2	2
33	**d**	816504	Wear Sleeve	2	2
34		159180	Bearing Cone	2	2
35		1373688	Seal	2	2
36		1385598	Bearing Cap	2	2
37		159180	Bearing Cone	1	1

©2006 HYSTER COMPANY

STEERING AXLE

ITEM	PART NO.	DESCRIPTION	QTY A	QTY B
38	159179	Bearing Cup	1	1
39	1373689	Wear Sleeve	1	1
40	95033	Shim (0.005 in.)	AR	AR
40	95034	Shim (0.020 in.)	AR	AR
40	95166	Shim	AR	AR
41	246001	Capscrew	12	12
42	274044	Capscrew	8	8
43	292689	Lockwasher	8	8
44	16559	Fitting	2	2
44	16484	O-Ring	1	1
45	1382352	Shim	AR	AR
46	1385591	Steer Cylinder (☞ Figure 7-4)	1	..
46	1393743	Steer Cylinder (Optional) (☞ Figure 7-5)	1	..
46	1385590	Steer Cylinder (☞ Figure 7-4)	..	1
46	1393742	Steer Cylinder (Optional) (☞ Figure 7-5)	..	1
47	1391400	Steering Axle	..	1
47	1391401	Steering Axle	1	..

FOOTNOTES:
a ⇒ S/N A214E02112C
b S/N A214E02113C ⇒
c ⇒ S/N A214E-1667
d S/N A214E-1668 ⇒

©2006 HYSTER COMPANY

8 BRAKE SYSTEM

SECTION 8
BRAKE SYSTEM

DESCRIPTION **PAGE**

BRAKE CHECK VALVE
EMPTY CONTAINER HANDLER
⇒S/N A214E-1572 8-30
FORK LIFT TRUCK
⇒S/N A214E-1572 8-32
BRAKE LINES
EMPTY CONTAINER HANDLER
⇒S/N A214E-1572 8-2
S/N A214E-1573⇒ 8-4
FORK LIFT TRUCK
⇒S/N A214E-1572 8-8
S/N A214E01766Y⇒ 8-14
S/N A214E1573⇔S/N A214E1765Y 8-10
BRAKE PEDAL LINKAGE
EMPTY CONTAINER HANDLER 8-18
FORK LIFT TRUCK
⇒S/N A214E01765Y 8-22
S/N A214E01766Y⇒ 8-26
BRAKE SYSTEM
POWER BRAKE VALVE 8-34

©2006 HYSTER COMPANY

BRAKE LINES (Figure 8-1)
EMPTY CONTAINER HANDLER
(⇒S/N A214E-1572)

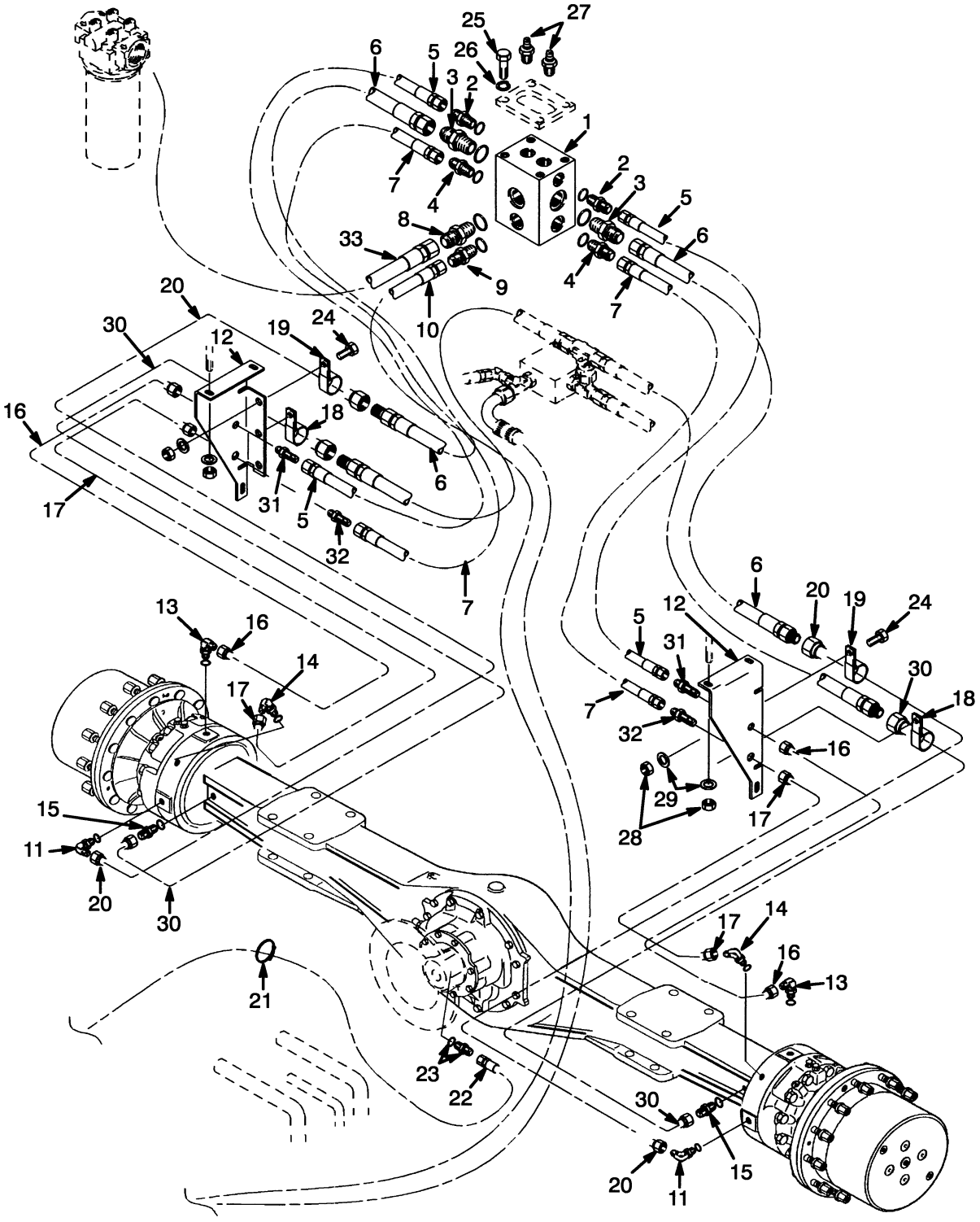

©2006 HYSTER COMPANY

BRAKE LINES
EMPTY CONTAINER HANDLER
(⇒S/N A214E-1572)

ITEM	PART NO.	DESCRIPTION	QTY
1	1382864	Manifold	1
2	16538	Fitting	2
2	16481	O-Ring	1
3	142682	Fitting	2
3	16485	O-Ring	1
4	16540	Fitting	2
4	16483	O-Ring	1
5	1324463	Hose	2
6	1452935	Hose	2
7	1383554	Hose	2
8	142500	Fitting	1
8	16486	O-Ring	1
9	16541	Fitting	1
9	16484	O-Ring	1
10	. . . . .	Hose (☞ Figure 8-6)	1
11	17197	Fitting	2
11	16484	O-Ring	1
12	1451440	Bracket (RH)	1
12	1451441	Bracket (LH)	1
13	16556	Fitting	2
13	16481	O-Ring	1
14	16558	Fitting	2
14	16483	O-Ring	1
15	154952	Fitting	2
15	16484	O-Ring	1
16	1452937	Tube (RH)	1
16	1452944	Tube (LH)	1
17	1452938	Tube (RH)	1
17	1452945	Tube (LH)	1
18	298132	Clamp	2
19	387316	Clamp	2
20	1452946	Tube	2
21	129563	Strap Clamp	AR
22	1451456	Hose	1
23	201779	Fitting	1
23	16481	O-Ring	1
24	136985	Capscrew	4
25	136749	Capscrew	4
26	292681	Lockwasher	4
27	267262	Plug	2
28	302401	Locknut	8
29	320160	Washer	8
30	1452993	Tube (LH)	1
30	1452994	Tube (RH)	1
31	16445	Fitting	2
32	16447	Fitting	2
33	1385280	Hose	1

©2006 HYSTER COMPANY

BRAKE LINES (Figure 8-2)
EMPTY CONTAINER HANDLER
(S/N A214E-1573⇒)

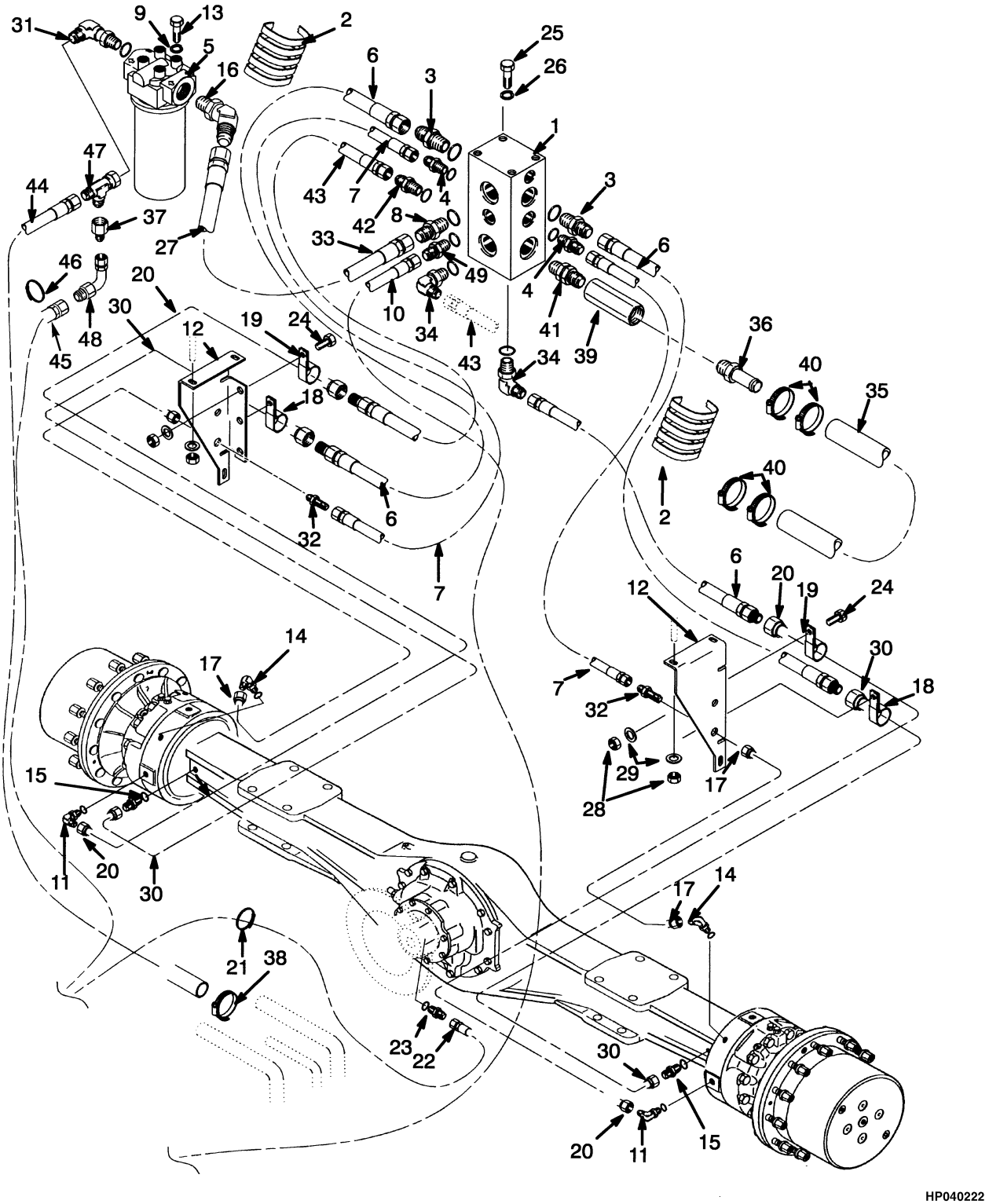

©2006 HYSTER COMPANY

BRAKE LINES
EMPTY CONTAINER HANDLER
(S/N A214E-1573⇒)

ITEM		PART NO.	DESCRIPTION	QTY
1	**c**	1459178	Manifold	1
1	**d**	1494906	Manifold	1
2		316596	Sleeve	2
3		16542	Fitting	2
3		16485	O-Ring	1
4		16540	Fitting	2
4		16483	O-Ring	1
5	**c**	2043084	Filter Assembly	1
5		1452905	Filter Head	1
5		2043981	Filter Element	1
6		1452935	Hose	2
7		1383554	Hose	2
8	**c**	142500	Fitting	1
8	**c**	16486	O-Ring	1
8	**d**	16544	Fitting	1
8	**d**	16487	O-Ring	1
9	**c**	292682	Lockwasher	4
10		1385567	Hose	1
11		17197	Fitting	2
11		16484	O-Ring	1
12		1451440	Bracket (RH)	1
12		1451441	Bracket (LH)	1
13	**c**	292514	Bolt	4
14		16558	Fitting	2
14		16483	O-Ring	1
15		154952	Fitting	2
15		16484	O-Ring	1
16	**c**	16571	Fitting	1
16		16487	O-Ring	1
17		1452938	Tube (RH)	1
17		1452945	Tube (LH)	1
18		298132	Clamp	2
19		128408	Clamp	2
20		1452946	Tube	2
21	**a**	129563	Strap Clamp	AR
21	**b**	173247	Clamp	1
22	**a**	1451456	Hose	1
22	**b**	2055142	Hose	1
23		239784	Fitting	1
23		16481	O-Ring	1
24		136985	Capscrew	4
25		136749	Capscrew	4
26		292681	Lockwasher	4
27		1385280	Hose	1
28		302401	Locknut	8
29		320160	Washer	8
30		1452993	Tube (LH)	1
30		1452994	Tube (RH)	1
31	**c**	222415	Fitting	1
31		16487	O-Ring	1

©2006 HYSTER COMPANY

BRAKE LINES
EMPTY CONTAINER HANDLER
(S/N A214E-1573⇒)

ITEM		PART NO.	DESCRIPTION	QTY
32		16447	Fitting	2
33	**c**	1385280	Hose	1
34		16561	Fitting	2
34		16486	O-Ring	2
35		130336	Hose	1
36		78459	Fitting	1
36		16983	O-Ring	1
37		222369	Fitting	1
38		127045	Clamp (Hose)	1
39		816232	Check Valve	1
40		369804	Clamp	4
41		1459254	Fitting	1
42		16543	Fitting	1
43	**d**	1452936	Hose	2
44		1493240	Hose	1
44	**c**	226352	Hose	1
45	**c**	1460408	Hose	1
45	**d**	1393740	Hose	1
46		129563	Strap Clamp	AR
47		17066	Fitting	1
48	**d**	16882	Fitting	1
49		16541	Fitting	1
49		16484	O-Ring	1

FOOTNOTES:
a ⇒ S/N A214E01842Z
b S/N A214E01843Z ⇒
c ⇒ S/N A214E-1804
d S/N A214E-1805 ⇒

©2006 HYSTER COMPANY

NOTES

BRAKE LINES (Figure 8-3)
FORK LIFT TRUCK
(⇒S/N A214E-1572)

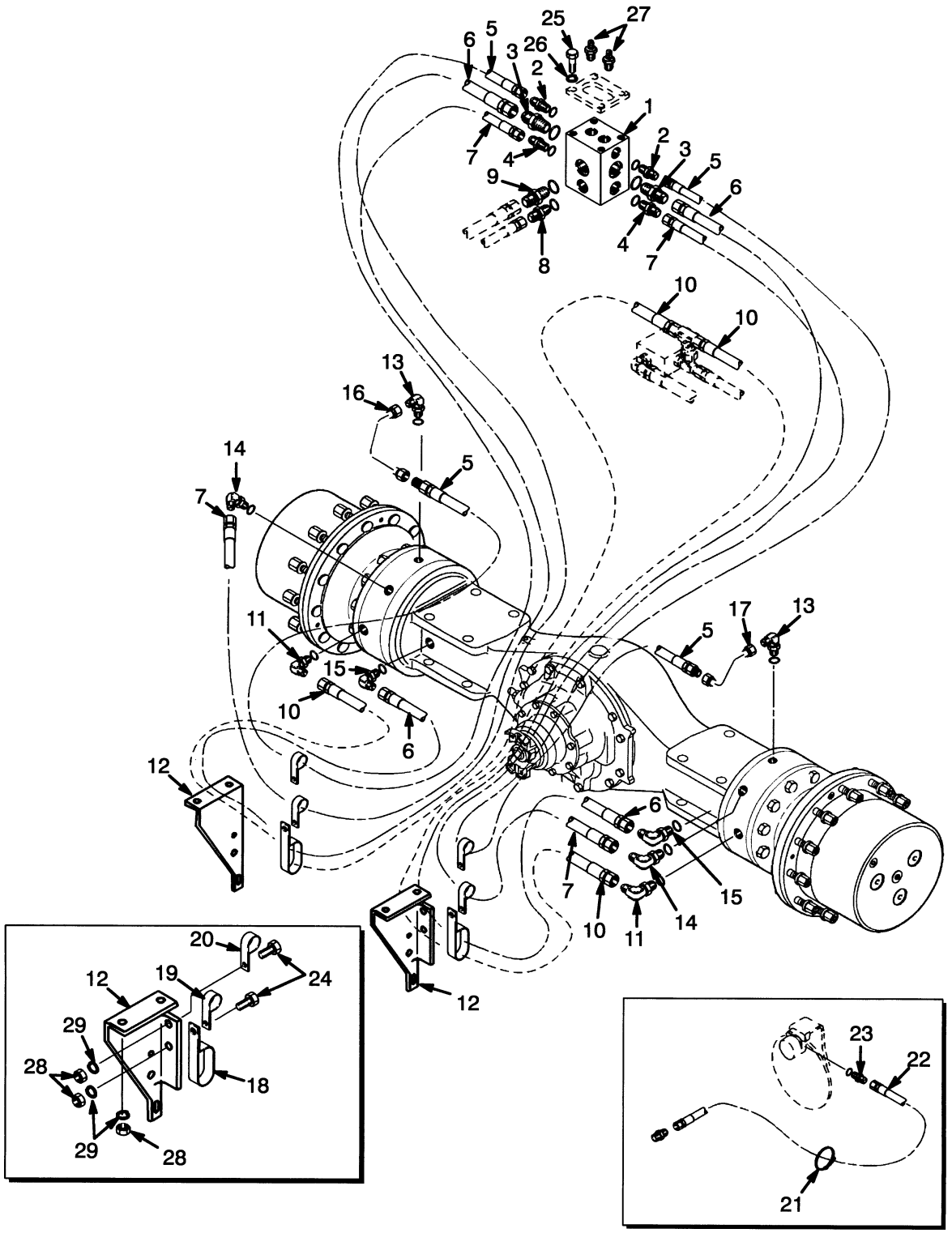

©2006 HYSTER COMPANY

BRAKE LINES
FORK LIFT TRUCK
(⇒S/N A214E-1572)

ITEM	PART NO.	DESCRIPTION	QTY
1	1382864	Manifold	1
2	16481	O-Ring	1
2	16538	Fitting	2
3	16485	O-Ring	1
3	142682	Fitting	2
4	16483	O-Ring	1
4	16540	Fitting	2
5	1451449	Hose	2
6	1451453	Hose	2
7	350521	Hose	2
8	16543	Fitting	1
8	16486	O-Ring	1
9	16541	Fitting	1
9	16484	O-Ring	1
10	1451455	Hose	2
11	16559	Fitting	2
11	16484	O-Ring	1
12	1451440	Bracket (RH)	1
12	1451441	Bracket (LH)	1
13	16556	Fitting	2
13	16481	O-Ring	1
14	16558	Fitting	2
14	16483	O-Ring	1
15	206150	Fitting	2
15	16484	O-Ring	1
16	1451444	Tube	1
17	1451445	Tube	1
18	212786	Clamp	2
19	153069	Clamp	2
20	128408	Clamp	2
21	129563	Strap Clamp	AR
22	1451456	Hose	1
23	201779	Fitting	1
23	16481	O-Ring	1
24	136985	Capscrew	4
25	136749	Capscrew	4
26	292681	Lockwasher	4
27	267262	Plug	2
28	302401	Locknut	8
29	320160	Washer	8

©2006 HYSTER COMPANY

BRAKE LINES (Figure 8-4)
FORK LIFT TRUCK
(S/N A214E1573⇔S/N A214E1765Y)

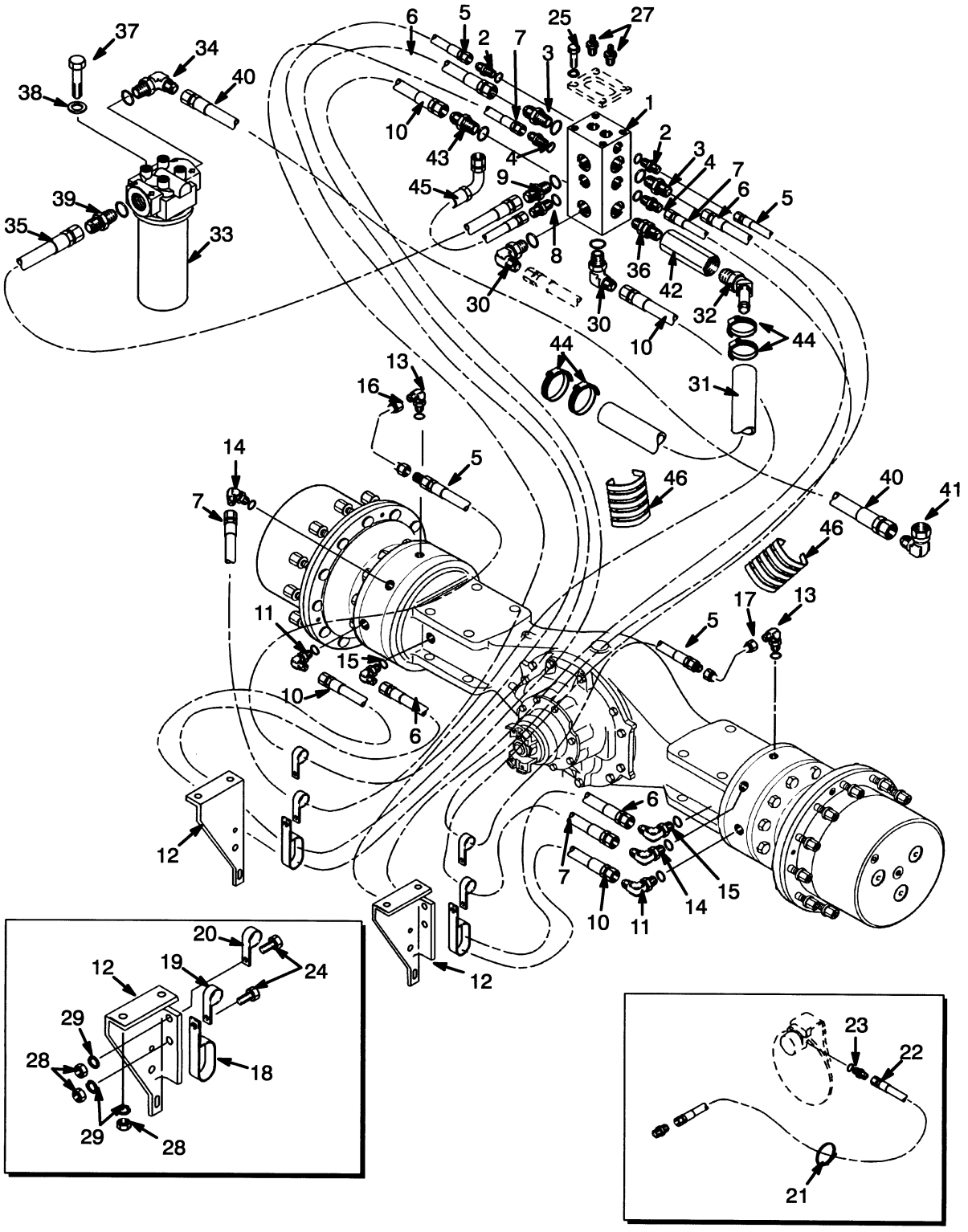

©2006 HYSTER COMPANY

BRAKE LINES
FORK LIFT TRUCK
(S/N A214E1573⇔S/N A214E1765Y)

ITEM		PART NO.	DESCRIPTION	QTY
1	**a**	1459178	Manifold	1
1	**b**	1494906	Manifold	1
2		16538	Fitting	4
2		16481	O-Ring	1
3		16542	Fitting	2
3		16485	O-Ring	1
4		16540	Fitting	5
4		16483	O-Ring	1
5		1451449	Hose	2
6		1451453	Hose	2
7		350521	Hose	2
8		16544	Fitting	1
8		16487	O-Ring	1
9		16541	Fitting	1
9		16484	O-Ring	1
10		1451455	Hose	2
11		16559	Fitting	2
11	**b**	16484	O-Ring	1
12		1451440	Bracket (RH)	1
12		1451441	Bracket (LH)	1
13		16556	Fitting	2
13		16481	O-Ring	1
14		16558	Fitting	3
14		16483	O-Ring	1
15		206150	Fitting	2
15		16484	O-Ring	1
16		1451444	Tube	1
17		1451445	Tube	1
18	**a**	212786	Clamp	2
18	**b**	255578	Clamp	2
19		153069	Clamp	2
20		128408	Clamp	2
21		129563	Strap Clamp	AR
22		1451456	Hose	1
23		239784	Fitting	1
23		16481	O-Ring	1
24		136985	Capscrew	4
25		136749	Capscrew	4
26		292681	Lockwasher	4
27		267262	Plug (Bleeder)	2
28		302401	Locknut	8
29		320160	Washer	8
30		16561	Fitting	2
30		16486	O-Ring	1
31		130336	Hose	1
32		201781	Fitting	1
32		16983	O-Ring	1
33	**a**	2043084	Filter Assembly	1
33		2043981	Filter Element	1
33		1452905	Filter Head	1

©2006 HYSTER COMPANY

BRAKE LINES
FORK LIFT TRUCK
(S/N A214E1573⇔S/N A214E1765Y)

ITEM		PART NO.	DESCRIPTION	QTY
34	**a**	16562	Fitting	1
34		16487	O-Ring	1
35	**a**	180979	Hose	1
35	**b**	147449	Hose	1
36		1459254	Fitting	1
37	**a**	292514	Bolt	4
38	**a**	292682	Lockwasher	4
39	**a**	83846	Fitting	1
39	**a**	16487	O-Ring	1
40	**a**	1451459	Hose	1
40	**a**	147449	Hose	1
41		16992	Fitting	1
42		816232	Check Valve	1
43	**a**	16543	Fitting	1
43	**b**	16544	Fitting	1
43	**b**	16487	O-Ring	1
44		369804	Clamp	4
45		1453070	Hose	1
46		316596	Sleeve	2

FOOTNOTES:
a ⇒ S/N A214E-1804Y
b S/N A214E-1805Y ⇒

©2006 HYSTER COMPANY

NOTES

BRAKE LINES (Figure 8-5)
FORK LIFT TRUCK
(S/N A214E01766Y⇒)

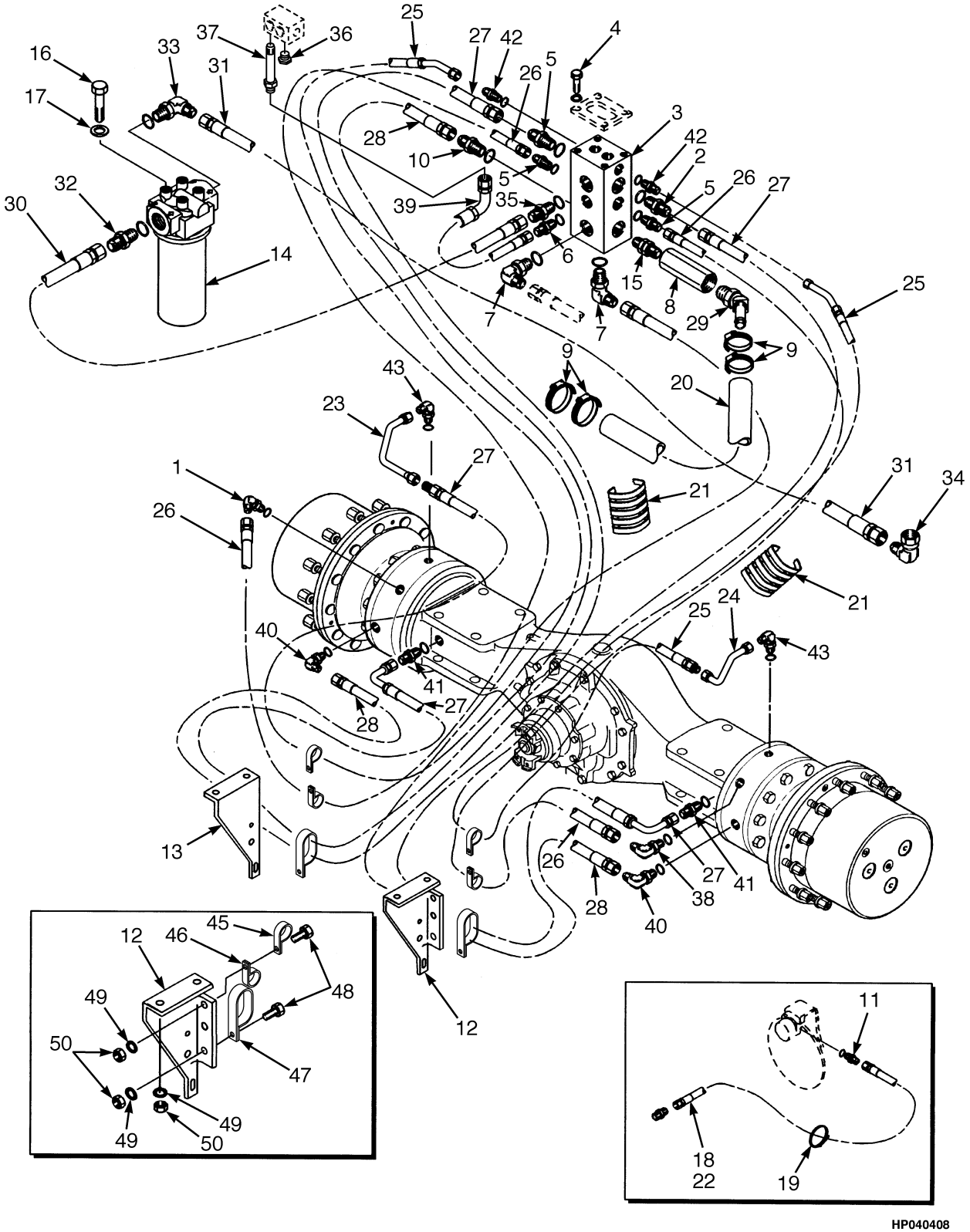

©2006 HYSTER COMPANY

BRAKE LINES
FORK LIFT TRUCK
(S/N A214E01766Y⇒)

ITEM		PART NO.	DESCRIPTION	QTY
1		16558	Fitting	3
1		16483	O-Ring	1
2		16540	Fitting	5
2		16483	O-Ring	1
3	**b**	1459178	Manifold	1
3	**c**	1494906	Manifold	1
4		267262	Plug (Bleeder)	2
5		142682	Fitting	2
5		16485	O-Ring	1
6		16541	Fitting	1
6		16484	O-Ring	1
7		16561	Fitting	2
7		16486	O-Ring	1
8		816232	Check Valve	1
9		369804	Clamp	4
10		16543	Fitting	1
10		16486	O-Ring	1
11		239784	Fitting	1
11		16481	O-Ring	1
12		1451440	Bracket	1
13		1451441	Bracket	1
14	**b**	2043084	Filter Assembly	1
14	**b**	2043981	Filter Element	1
14	**b**	1452905	Filter Head	1
15		1459254	Fitting	1
16	**b**	292514	Bolt	4
17	**b**	292682	Lockwasher	4
18	**d**	1451456	Hose	1
18	**e**	2055142	Hose	1
19		129563	Strap Clamp	AR
20		130336	Hose	1
21		316596	Sleeve	2
22		1464794	Identification Band	2
23		1451444	Tube	1
24		1451445	Tube	1
25		1451449	Hose	2
26		350521	Hose	2
27		1451453	Hose	2
28		1451455	Hose	2
29		201781	Fitting	1
29		16983	O-Ring	1
30	**b**	180979	Hose	1
30	**c**	147449	Hose	1
31	**b**	1451459	Hose	1
32	**b**	83846	Fitting	1
32		16487	O-Ring	1
33	**b**	16562	Fitting	1
33		16487	O-Ring	1
34		16992	Fitting	1
35	**b**	16543	Fitting	1

©2006 HYSTER COMPANY

BRAKE LINES
FORK LIFT TRUCK
(S/N A214E01766Y⇒)

ITEM		PART NO.	DESCRIPTION	QTY
35		16486	O-Ring	1
35	**c**	16544	Fitting	1
35		16487	O-Ring	1
36		14594	Plug	1
37		16549	Fitting	1
37		16483	O-Ring	1
38		16558	Fitting	1
38		16483	O-Ring	1
39		1453070	Hose	1
40		16559	Fitting	2
40		16484	O-Ring	1
41		206150	Fitting	2
41		16484	O-Ring	1
42		16538	Fitting	4
42		16481	O-Ring	4
43		16556	Fitting	2
43		16481	O-Ring	1
44	**a**	. . . . .	Fitting	2
45		128408	Clamp	2
46		153069	Clamp	2
47		255578	Clamp	2
48		136985	Capscrew	4
49		320160	Washer	8
50		302401	Locknut	8

FOOTNOTES:
a Not Illustrated
b ⇒ S/N A214E01804Y
c S/N A214E01805Y ⇒
d ⇒ S/N A214E01842Z
e S/N A214E01843Z ⇒

©2006 HYSTER COMPANY

NOTES

BRAKE PEDAL LINKAGE (Figure 8-6)
EMPTY CONTAINER HANDLER

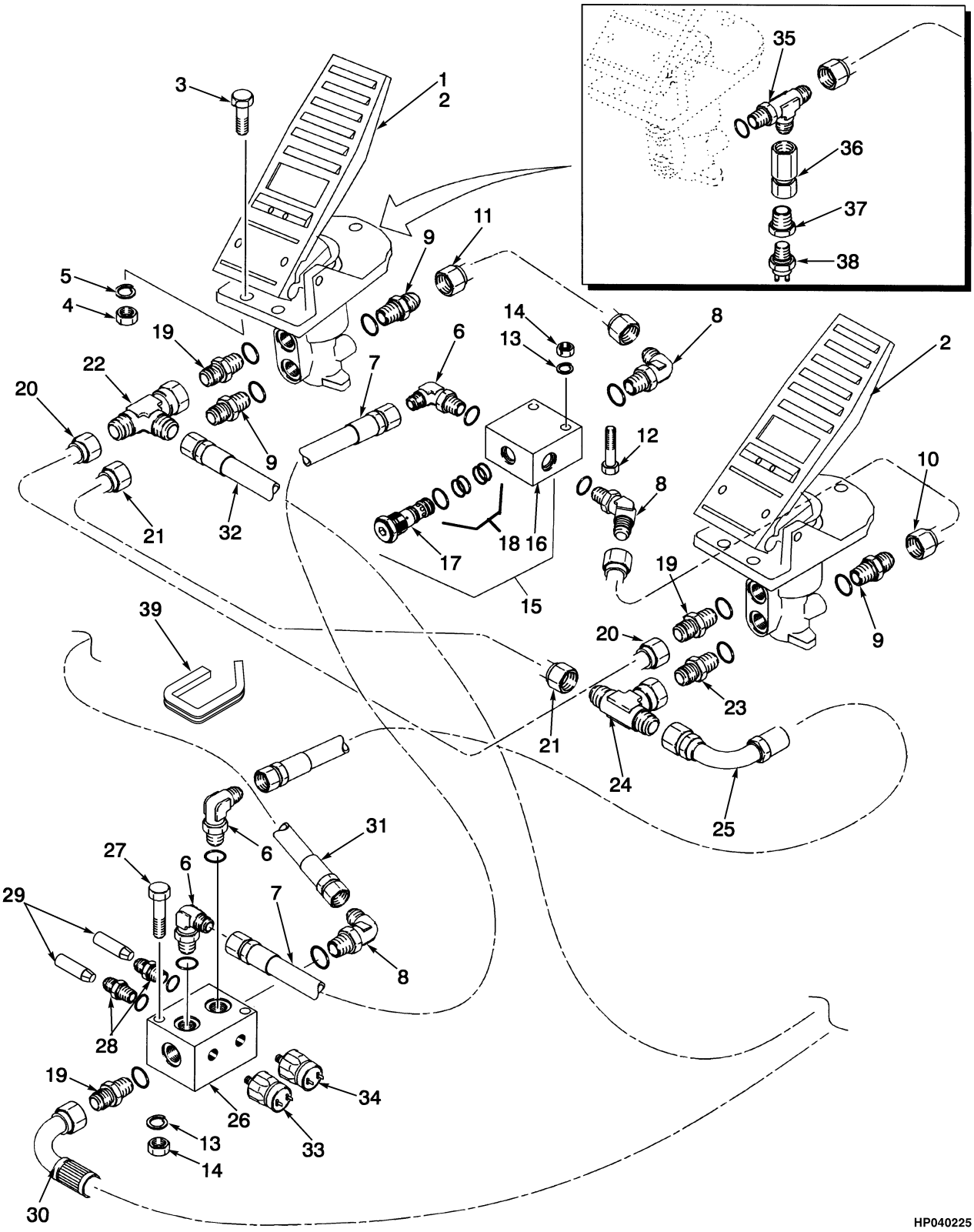

©2006 HYSTER COMPANY

BRAKE PEDAL LINKAGE
EMPTY CONTAINER HANDLER

ITEM		PART NO.	DESCRIPTION	QTY
1		1452593	Valve (Inching)	1
1		1345719	Valve (Inching)	1
2		1373604	Valve (Brake)	1
2		1345719	Valve (Brake)	2
2		1488532	Valve (Brake)	2
3		176640	Capscrew	6
4		302400	Locknut	6
5		320158	Washer	6
6		16558	Fitting	3
6		16483	O-Ring	1
7		1375381	Hose	1
8		16567	Fitting	3
8		16483	O-Ring	1
9		16540	Fitting	3
9		16483	O-Ring	1
10		1384510	Tube	1
11	**c**	1384511	Tube	1
11	**d**	1459041	Tube	1
12		292505	Capscrew	2
13		320156	Washer	4
14		302399	Nut	4
15		1330171	Shuttle Valve	1
16		1343161	Body	1
17		1343162	Cartridge	1
18		359756	Seal Kit	1
19		131460	Fitting	3
19		16483	O-Ring	1
20		1385569	Tube	1
21		1384509	Tube	1
22		17062	Fitting	1
23		16549	Fitting	1
23		16483	O-Ring	1
24		17049	Fitting	1
25		1384513	Hose	1
26		1384517	Manifold	1
27		292507	Capscrew	2
28		14591	Fitting	2
28		16481	O-Ring	1
29	**c**	16923	Fitting	2
29	**e**	816117	Fitting	2
30		1385567	Hose	1
31	**a**	1384514	Hose	1
31	**b**	2054689	Hose	1
32	**c**	1384515	Hose	1
32	**f**	145502	Hose	1
32	**g**	1460408	Hose	1
33		1332206	Pressure Switch (With Brake/Tail Lights)	1
33		14349	Fitting (Without Brake/Tail Lights)	1
34		1382440	Switch	1
35	**d**	16969	Fitting	1
36	**d**	1385632	Fitting	1

©2006 HYSTER COMPANY

BRAKE PEDAL LINKAGE
EMPTY CONTAINER HANDLER

ITEM		PART NO.	DESCRIPTION	QTY
37	**d**	12843	Fitting	1
38		1459042	Switch	1
38		1350955	Pressure Switch	1
39		1457097	Molding (Rubber)	2

FOOTNOTES:
a ⇒ S/N A214E01842Z
b S/N A214E01843Z ⇒
c ⇒ S/N A214E-1615
d S/N A214E-1616 ⇒
e S/N A214E1616⇔S/N A214E01805
f S/N A214E-1616⇔S/N A214E-1768
g S/N A214E-1769 ⇒

©2006 HYSTER COMPANY

NOTES

BRAKE PEDAL LINKAGE (Figure 8-7)
FORK LIFT TRUCK
(⇒S/N A214E01765Y)

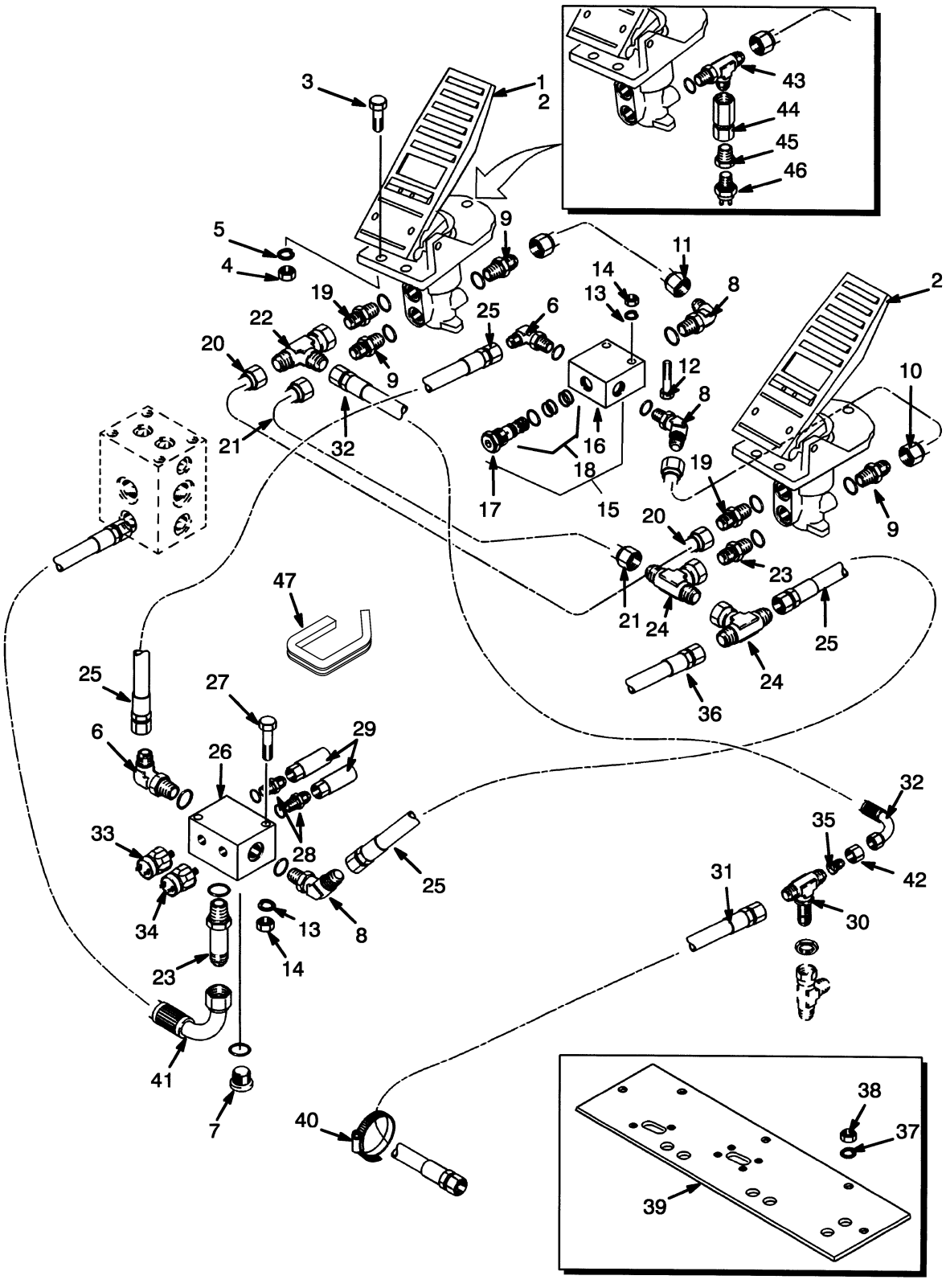

©2006 HYSTER COMPANY

BRAKE PEDAL LINKAGE
FORK LIFT TRUCK
(⇒S/N A214E01765Y)

ITEM		PART NO.	DESCRIPTION	QTY
1		1452593	Valve (Inching)	1
2		1373604	Valve (Brake)	1
2		1345719	Valve (Inching)	1
2		1345719	Valve (Brake)	2
3		176640	Capscrew	6
3		1488532	Valve (Brake)	2
4		302400	Locknut	6
5		320158	Washer	6
6		16558	Fitting	3
6		16483	O-Ring	1
7		1375381	Hose	1
8		16567	Fitting	3
8		16483	O-Ring	1
9		16540	Fitting	3
9		16483	O-Ring	1
10		1384510	Tube	1
11	**a**	1384511	Tube	1
11	**b**	1459041	Tube	1
12		292505	Capscrew	2
13		320156	Washer	4
14		302399	Nut	4
15		1330171	Shuttle Valve	1
16		1343161	Body	1
17		1343162	Cartridge	1
18		359756	Seal Kit	1
19		131460	Fitting	3
19		16483	O-Ring	1
20		1385569	Tube	1
21		1384509	Tube	1
22		17062	Fitting	1
23		16549	Fitting	1
23		16483	O-Ring	1
24		17049	Fitting	1
25		1384513	Hose	1
26		1384517	Manifold	1
27		292507	Capscrew	2
28		16538	Fitting	2
28		16481	O-Ring	1
29	**a**	16923	Fitting	2
29	**b**	816117	Fitting	2
30		1385567	Hose	1
31		1384514	Hose	1
32	**a**	1384515	Hose	1
32	**c**	145502	Hose	1
32	**d**	1460408	Hose	1
33		1332206	Pressure Switch (With Brake/Tail Lights)	1
33		14349	Fitting (Without Brake/Tail Lights)	1
34		1382440	Switch	1
35	**b**	16969	Fitting	1
36	**b**	1385632	Fitting	1

©2006 HYSTER COMPANY

BRAKE PEDAL LINKAGE
FORK LIFT TRUCK
(⇒S/N A214E01765Y)

ITEM		PART NO.	DESCRIPTION	QTY
37	**b**	12843	Fitting	1
38		1459042	Switch	1
38		1350955	Pressure Switch	1
39		1457097	Molding (Rubber)	2

FOOTNOTES:
a ⇒ S/N A214E-1615
b S/N A214E-1616 ⇒
c S/N A214E-1616⇔S/N A214E-1768
d S/N A214E-1769 ⇒

©2006 HYSTER COMPANY

NOTES

BRAKE PEDAL LINKAGE (Figure 8-8)
FORK LIFT TRUCK
(S/N A214E01766Y⇒)

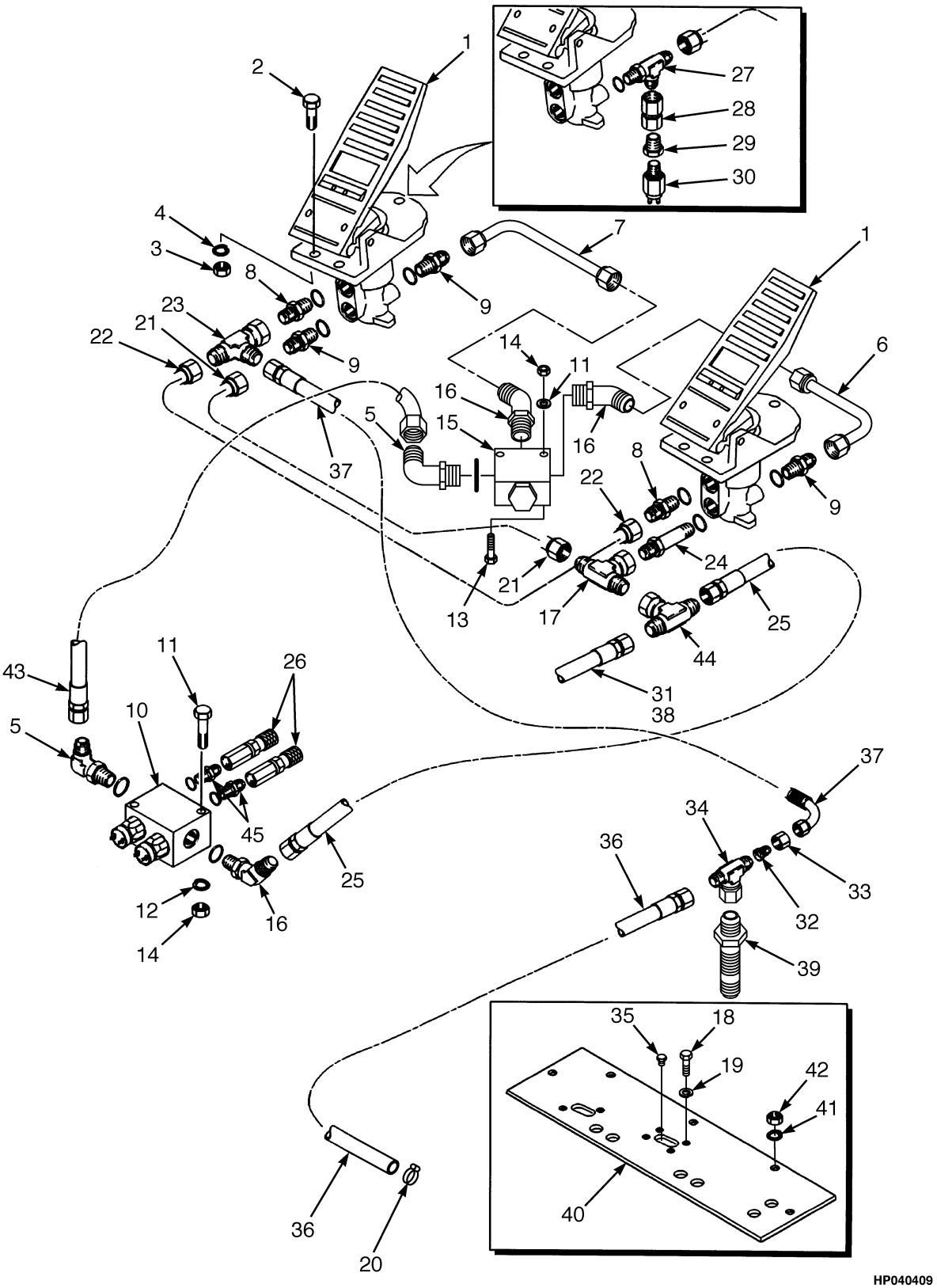

©2006 HYSTER COMPANY

BRAKE PEDAL LINKAGE
FORK LIFT TRUCK
(S/N A214E01766Y⇒)

ITEM		PART NO.	DESCRIPTION	QTY
1		1488532	Valve (Brake)	2
2		176640	Capscrew	6
3		302400	Locknut	6
4		320158	Washer	6
5		16558	Fitting	3
5		16483	O-Ring	1
6		1384510	Tube	1
7		1459041	Tube	1
8		131460	Fitting	2
8		16483	O-Ring	1
9		16540	Fitting	5
9		16483	O-Ring	1
10	**b**	1384517	Manifold	1
10	**c**	1454906	Manifold	1
11		292507	Capscrew	2
12		320156	Washer	4
13		292505	Capscrew	2
14		302399	Nut	4
15		1330171	Shuttle Valve	1
16		16567	Fitting	3
16		16483	O-Ring	1
17		17049	Fitting	1
18		136749	Capscrew	4
19		292681	Lockwasher	4
20		127045	Clamp (Hose)	1
21		1384509	Tube	1
22		1385569	Tube	1
23		17062	Fitting	1
24		16549	Fitting	1
24		16483	O-Ring	1
25		1375381	Hose	1
26	**d**	816117	Fitting	2
27		16969	Fitting	1
28		1385632	Fitting	1
29		12843	Fitting	1
30		1350955	Pressure Switch	1
31		1464623	Identification Band	2
32		222369	Fitting	1
33		14494	Fitting	1
34		17054	Fitting	1
35		267262	Plug (Bleeder)	2
36		1451921	Hose	1
37		1451458	Hose	1
38	**f**	1451461	Hose	1
38	**g**	2054633	Hose	1
39		16452	Fitting	1
40		1451350	Plate	1
41		320160	Washer	5
42		302401	Locknut	5
43		1375381	Hose	1

©2006 HYSTER COMPANY

BRAKE PEDAL LINKAGE
FORK LIFT TRUCK
(S/N A214E01766Y⇒)

ITEM		PART NO.	DESCRIPTION	QTY
44		17049	Fitting	1
45	**d**	16538	Fitting	4
45	**e**	16538	Fitting	2
45		16481	O-Ring	1
46	**ae**	14591	Fitting	2
46		16481	O-Ring	1

FOOTNOTES:
a Not Illustrated
b ⇒ S/N A214E01804Y
c S/N A214E01805Y ⇒
d ⇒ S/N A214E01806Y
e S/N A214E01807Y ⇒
f ⇒ S/N A214E01842Z
g S/N A214E01843Z ⇒

©2006 HYSTER COMPANY

NOTES

BRAKE CHECK VALVE (Figure 8-9)
EMPTY CONTAINER HANDLER
(⇒S/N A214E-1572)

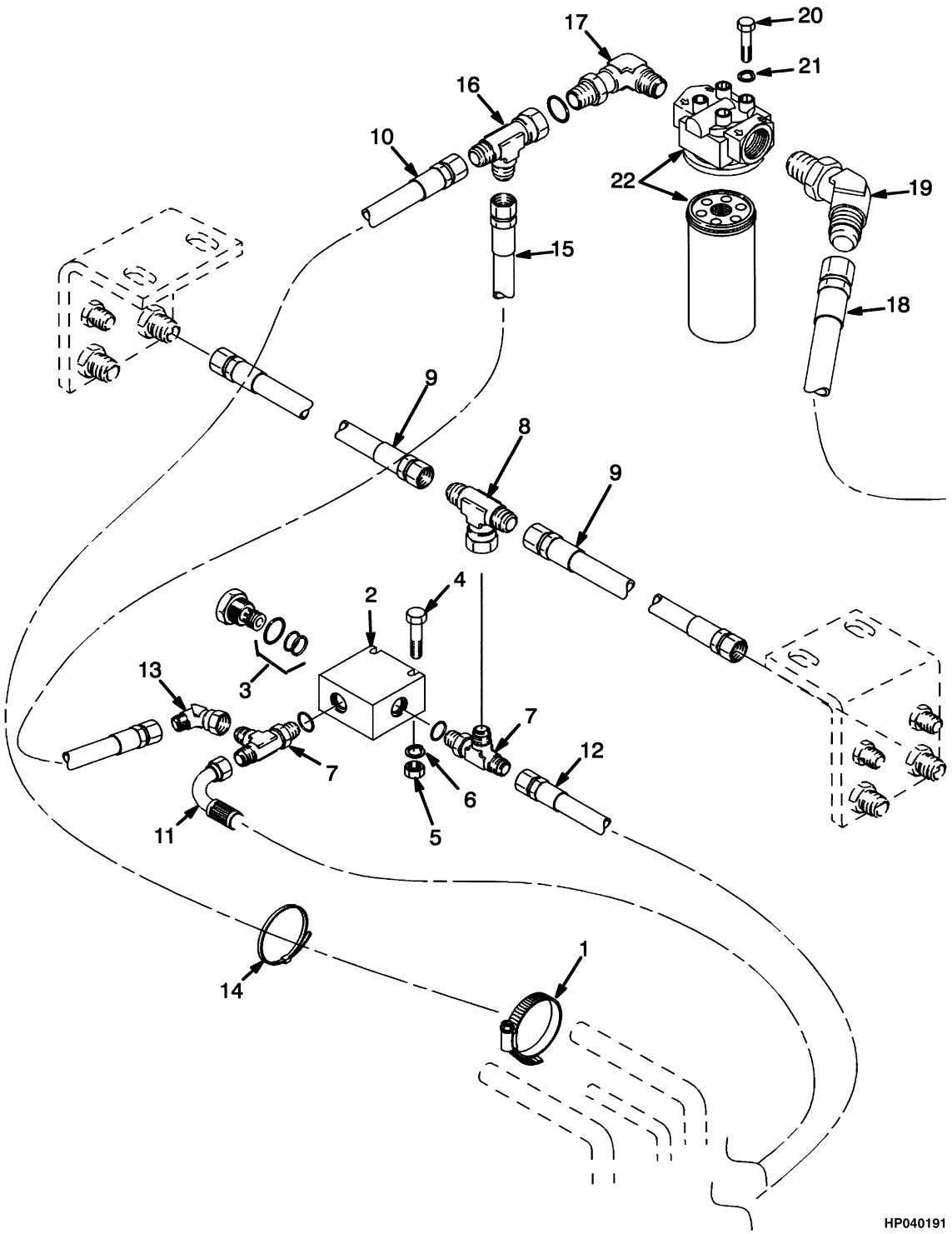

©2006 HYSTER COMPANY

BRAKE CHECK VALVE
EMPTY CONTAINER HANDLER
(⇒S/N A214E-1572)

ITEM	PART NO.	DESCRIPTION	QTY
1	127045	Clamp (Hose)	1
2	1373502	Check Valve	1
3	1384888	Seal Kit	1
4	136704	Capscrew	2
5	302400	Locknut	2
6	320158	Washer	2
7	222435	Fitting	2
7	16486	O-Ring	1
8	17052	Fitting	1
9	1452936	Hose	2
10	226352	Hose	1
11	1384515	Hose	1
12	1382855	Hose	1
13	17040	Fitting	1
14	129563	Strap Clamp	AR
15	147455	Hose	1
16	17782	Fitting	1
17	222415	Fitting	1
17	16487	O-Ring	1
18	1385280	Hose	1
19	16571	Fitting	1
19	16487	O-Ring	1
20	292514	Bolt	4
21	292682	Lockwasher	4
22	1451927	Filter	1

©2006 HYSTER COMPANY

BRAKE CHECK VALVE (Figure 8-10)
FORK LIFT TRUCK
(⇒S/N A214E-1572)

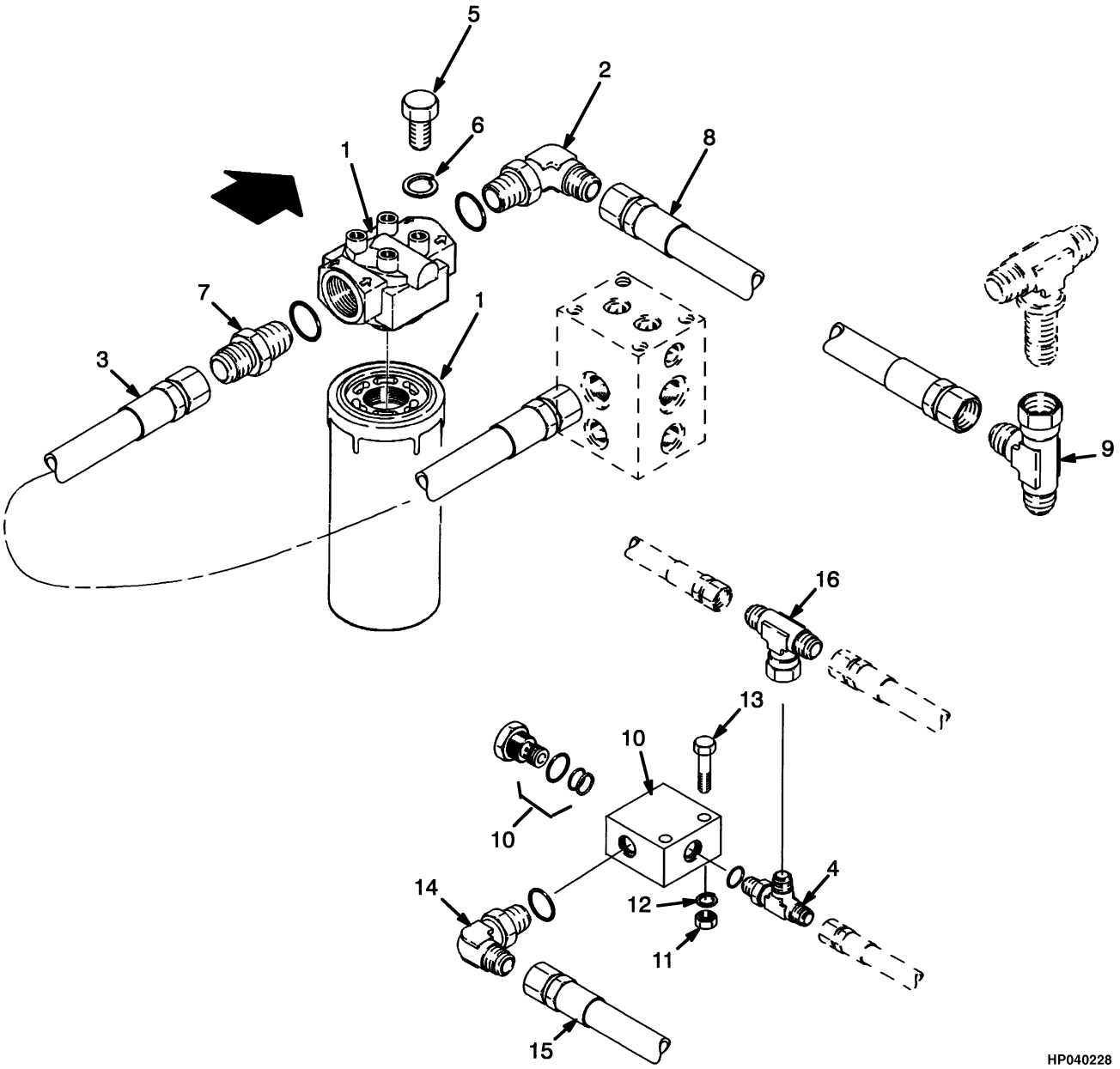

©2006 HYSTER COMPANY

BRAKE CHECK VALVE
FORK LIFT TRUCK
(⇒S/N A214E-1572)

ITEM	PART NO.	DESCRIPTION	QTY
1	1451927	Filter	1
1	1382725	Element	1
1	1452905	Filter Head	1
2	16562	Fitting	1
2	16487	O-Ring	1
3	180979	Hose	1
4	222435	Fitting	1
4	16486	O-Ring	1
5	292514	Bolt	4
6	292682	Lockwasher	4
7	83846	Fitting	1
7	16487	O-Ring	1
8	1451459	Hose	1
9	17782	Fitting	1
10	1373502	Check Valve	1
10	1384888	Seal Kit	1
11	302400	Locknut	2
12	320158	Washer	2
13	136704	Capscrew	2
14	16561	Fitting	1
14	16486	O-Ring	1
15	1451924	Hose	1
16	17052	Fitting	1

©2006 HYSTER COMPANY

BRAKE SYSTEM (Figure 8-11)
POWER BRAKE VALVE

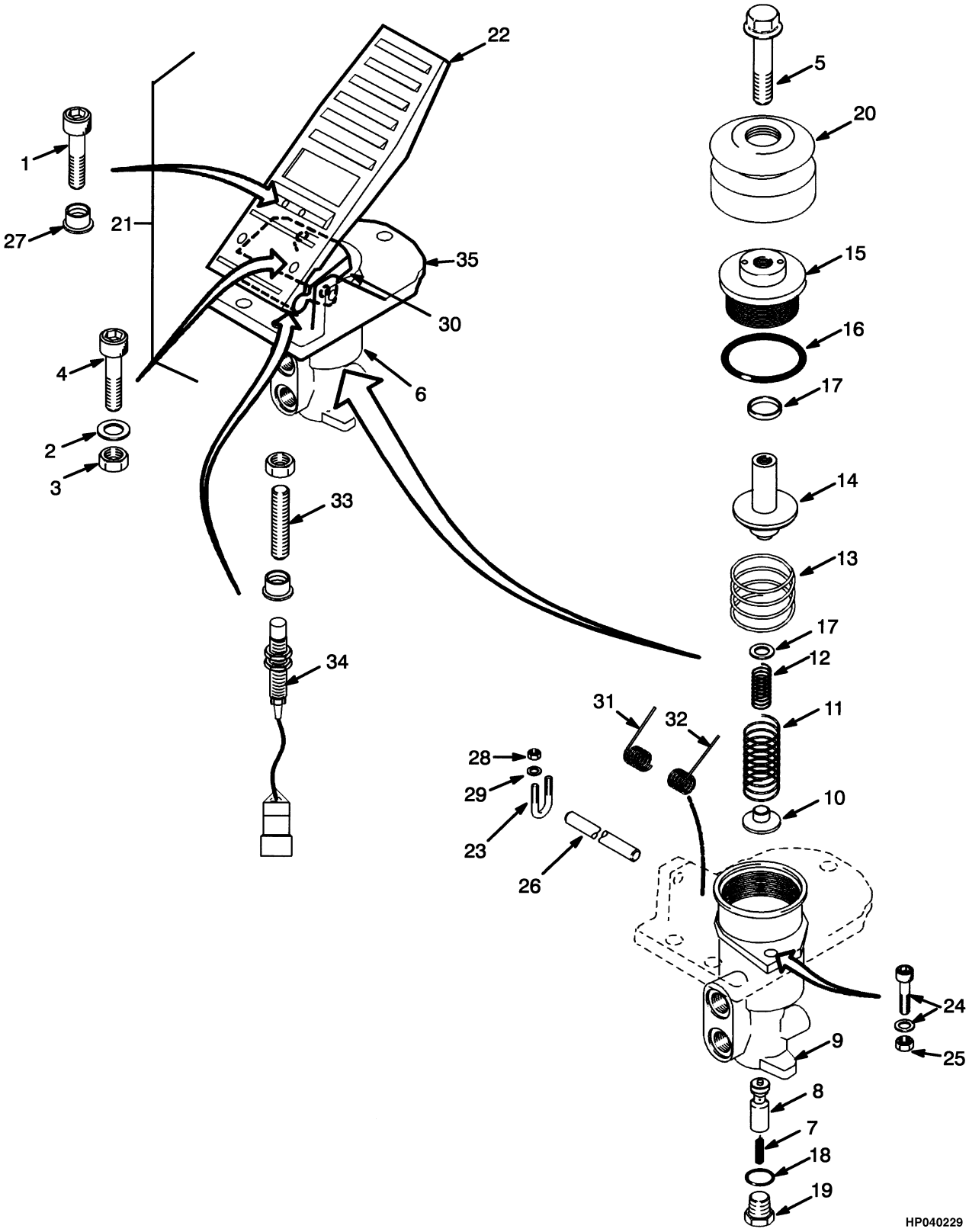

©2006 HYSTER COMPANY

BRAKE SYSTEM
POWER BRAKE VALVE

KEY:
A: Valve Assembly (Inching)
B: Valve Assembly (Brake)

ITEM		PART NO.	DESCRIPTION	QTY A	QTY B
	a	1452593	Valve	1	..
	b	1345719	Valve	1	..
	a	1373604	Valve	..	1
	bc	1345719	Valve	..	1
	fh	1488532	Valve (Brake)	..	1
1		. . . . .	Bolt	2	2
2		. . . . .	Washer	2	2
3		. . . . .	Nut	2	2
4		. . . . .	Screw	2	2
5		. . . . .	Bolt	1	1
6	**eg**	. . . . .	Valve	1	1
6	**fh**	1493237	Valve Subassembly	..	1
7		. . . . .	Spring	1	1
8		. . . . .	Spool	1	1
9		. . . . .	Body	1	1
10		. . . . .	Spring Seat	1	1
11		. . . . .	Spring	1	1
11	**eg**	1493238	Spring (Secondary)	..	1
12		. . . . .	Spring	1	1
12	**fh**	1493239	Spring (Staging)	..	1
13		. . . . .	Spring	1	1
14		. . . . .	Piston	1	1
15		. . . . .	Guide	1	1
16		. . . . .	Seal	1	1
17		. . . . .	Shim (0,025 mm)	1	1
17		. . . . .	Shim (0,010 mm)	1	1
17		. . . . .	Shim (0,005 mm)	1	1
18		. . . . .	O-Ring	1	1
19		. . . . .	Plug	1	1
20		. . . . .	Boot	1	1
21		1391729	Pedal Assembly	..	1
21	**d**	1453633	Pedal	1	..
22		. . . . .	Pedal	1	1
23		. . . . .	U-Bolt	2	2
24		. . . . .	Screw and Washer	1	1
25		. . . . .	Nut	1	1
26		. . . . .	Pin	1	1
27		. . . . .	Insert	3	3
28		. . . . .	Nut	6	6
29		. . . . .	Washer	6	6
30		. . . . .	Cam	1	1
31	**d**	1391751	Spring	1	..
32	**d**	1391752	Spring	1	..
33	**d**	1453634	Screw	1	..
34	**d**	1453663	Proximity Switch	1	..
35		1391741	Base	1	1

©2006 HYSTER COMPANY

BRAKE SYSTEM
POWER BRAKE VALVE

ITEM	PART NO.	DESCRIPTION	QTY A	QTY B
	1391745	Valve Repair Kit (Includes Items 1-5)	1	1
	1450390	Shim Kit (Includes Item 17)	..	1
	1391744	Seal Kit (Includes Items 16, 18)	..	1

FOOTNOTES:
a ⇒ S/N A214E-1591
b S/N A214E-1592 ⇒
c S/N A214E-1592⇔S/N ECN-68001
d ⇒ S/N A214E-1615
e ⇒ S/N A214E-1765 (14-16 FLT)
f S/N A214E-1766 ⇒ (14-16 FLT)
g ⇒ S/N A214E-1768 (16-18 ECH)
h S/N A214E-1769 ⇒ (16-18 FLT)

©2006 HYSTER COMPANY

9 HYDRAULIC SYSTEM

SECTION 9
HYDRAULIC SYSTEM

DESCRIPTION	PAGE
BRAKE COOLING SYSTEM	
ACCUMULATOR	9-76
EMPTY CONTAINER HANDLER	
⇒S/N A214E-1751	9-68
S/N A214E-1752⇒	9-70
FORK LIFT TRUCK	
⇒S/N A214E-1751	9-72
S/N A214E-1752⇒	9-74
HYDRAULIC CONTROL	
⇒S/N A214E-1842Z	9-34
S/N A214E-1843Z⇒	9-38
HYDRAULIC CONTROL VALVE	
ATTACHING PARTS	9-42
MAIN	9-44
HYDRAULIC DIRECTIONAL CONTROL VALVE	
EMPTY CONTAINER HANDLER	9-48
HYDRAULIC LINES	
AUXILIARY	
FORK LIFT TRUCK	9-31
CONTROL VALVE	
⇒S/N A214E-1806	9-24
SHEET 1 OF 2	
S/N A214E-1807⇒	9-26
SHEET 2 OF 2	9-28
LIFT	
FORK LIFT TRUCK	9-32
HYDRAULIC PILOT CONTROL SUPPLY VALVE	
EMPTY CONTAINER HANDLER	9-56
HYDRAULIC PILOT CONTROL VALVE	
EMPTY CONTAINER HANDLER	9-54
HYDRAULIC PUMP	
⇒S/N A214E-1534	9-60
S/N A214E-1535⇒	9-62
HYDRAULIC RELIEF VALVE	
TILT	
⇒D/B 04/2003	9-58
HYDRAULIC SOLENOID VALVE	
LIFT AND LOWERING INTERRUPT	
EMPTY CONTAINER HANDLER	
S/N A214E-01752X⇒	9-52
HYDRAULIC SOLENOID VALVE ATTACHING PARTS	
LIFT AND LOWERING INTERRUPT	
EMPTY CONTAINER HANDLER	
S/N A214E-01752X⇒	9-50
HYDRAULIC SUPPLY AND RETURN	
EMPTY CONTAINER HANDLER	
⇒S/N A214E-1534	9-4
S/N A214E-1535⇒	9-6
FORK LIFT TRUCK	
D/B 01/2003⇒	9-14

©2006 HYSTER COMPANY

SECTION 9
HYDRAULIC SYSTEM (Continued)

DESCRIPTION	PAGE
⇒D/B 12/2002	9-10
HYDRAULIC SYSTEM	
TILT CYLINDER	
EMPTY CONTAINER HANDLER	9-78
FORK LIFT TRUCK	9-80
HYDRAULIC TANK	
⇒S/N A214E-1534	9-64
S/N A214E-1535⇒	9-66
OIL COOLER AND ATTACHING PARTS	
EMPTY CONTAINER HANDLER	
TIER II ENGINE	9-18
FORK LIFT TRUCK	
TIER II ENGINE	9-20
TILT CYLINDER	
EMPTY CONTAINER HANDLER	9-82
FORK LIFT TRUCK	9-84

©2006 HYSTER COMPANY

NOTES

HYDRAULIC SUPPLY AND RETURN (Figure 9-1)
EMPTY CONTAINER HANDLER
(⇒S/N A214E-1534)

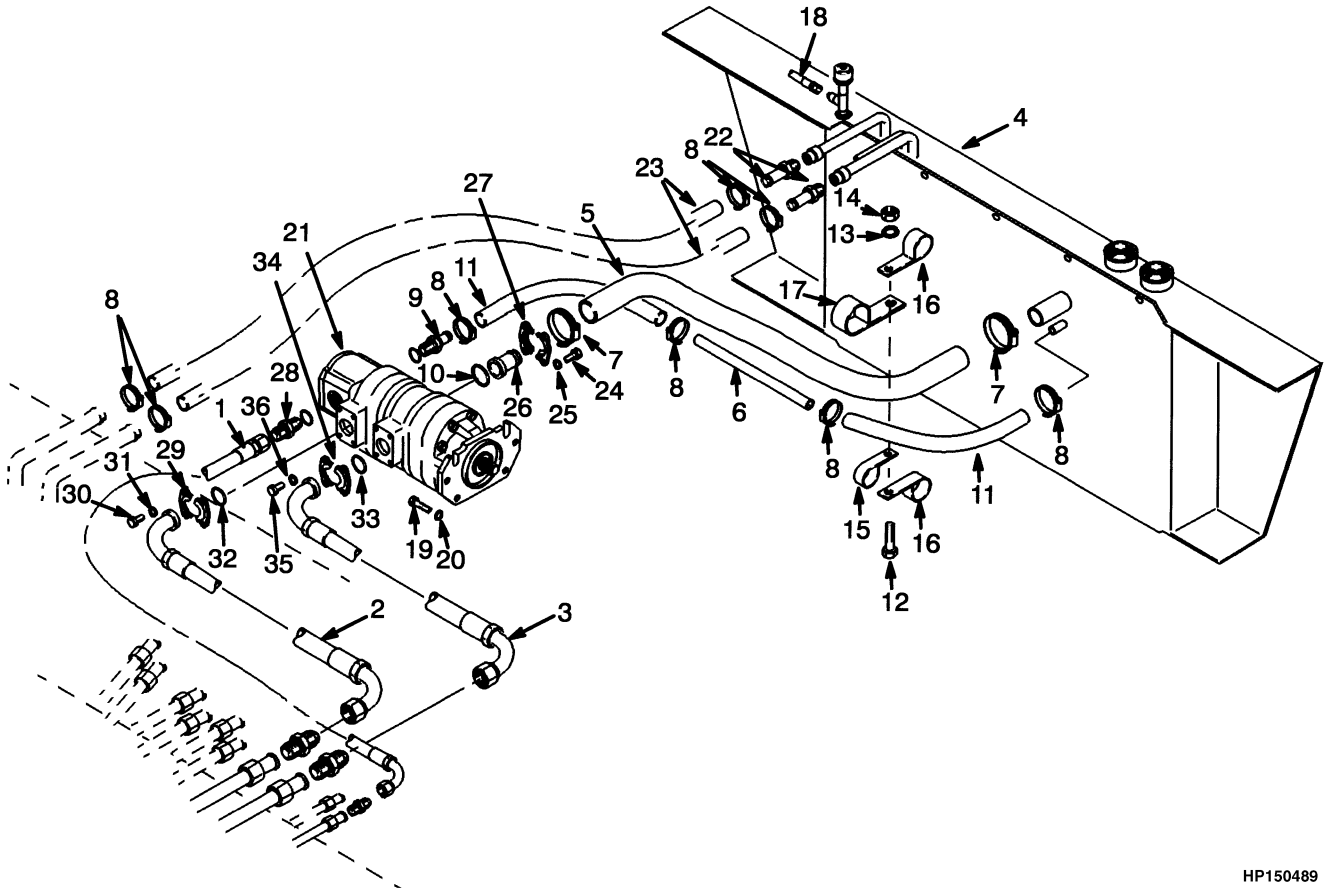

©2006 HYSTER COMPANY

HYDRAULIC SUPPLY AND RETURN
EMPTY CONTAINER HANDLER
(⇒S/N A214E-1534)

ITEM	PART NO.	DESCRIPTION	QTY
1	1382367	Hose	1
2	1382369	Hose	1
3	1382368	Hose	1
4	1381990	Hydraulic Tank (☞ Figure 9-24)	1
5	1345717	Hose	1
6	1390647	Tube	1
7	115696	Clamp	2
8	127045	Clamp (Hose)	8
9	128547	Fitting	1
9	16487	O-Ring	1
10	268619	O-Ring	1
11	1390643	Hose	2
12	292529	Capscrew	2
13	320161	Washer	2
14	302402	Locknut	2
15	1326948	Clamp	2
16	1384699	Clamp	4
17	1384698	Clamp	2
18	1385556	Hose	1
19	292544	Capscrew	2
20	292684	Lockwasher	2
21	1372993	Hydraulic Pump (☞ Figure 9-22)	1
22	144050	Fitting	2
23	980360	Hose	2
24	16085	Capscrew	4
25	15158	Lockwasher	4
26	88291	Flange (Split Half)	1
27	222554	Fitting	2
28	16909	Fitting	1
28	16485	O-Ring	1
29	190757	Flange (Split Half)	2
30	16815	Capscrew	4
31	15156	Lockwasher	4
32	199085	O-Ring	1
33	199917	O-Ring	1
34	17764	Flange (Split Half)	2
35	18558	Capscrew	4
36	15157	Lockwasher	4

©2006 HYSTER COMPANY

HYDRAULIC SUPPLY AND RETURN (Figure 9-2)
EMPTY CONTAINER HANDLER
(S/N A214E-1535⇒)

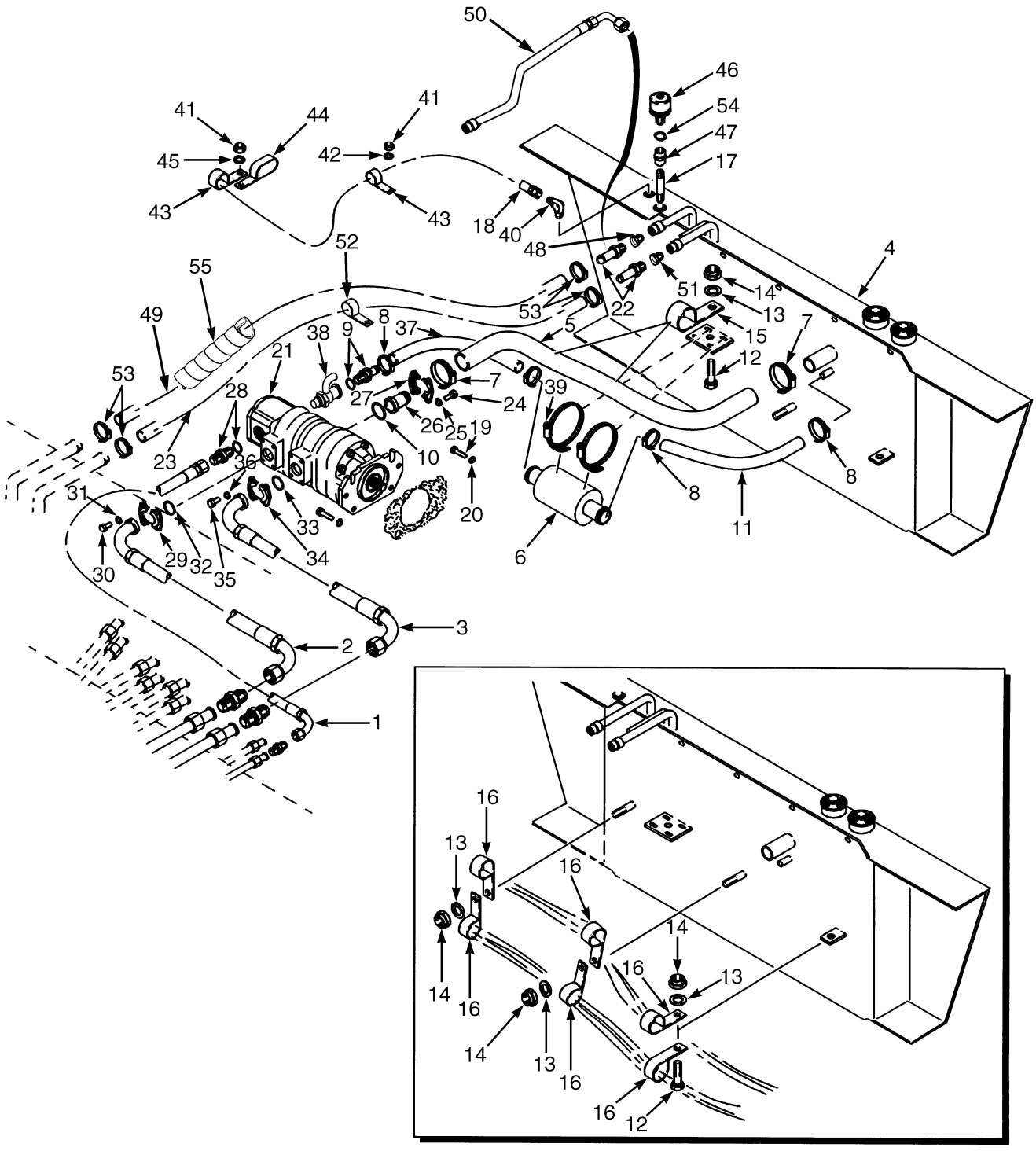

HP150490

©2006 HYSTER COMPANY

HYDRAULIC SUPPLY AND RETURN
EMPTY CONTAINER HANDLER
(S/N A214E-1535⇒)

ITEM		PART NO.	DESCRIPTION	QTY
1	**e**	1382369	Hose	1
1	**f**	1322079	Hose	1
2	**c**	1464431	Hose	1
2	**d**	2051855	Hose	1
2	**f**	2054702	Hose	1
3	**k**	1382368	Hose	1
3	**c**	1464430	Hose	1
3	**d**	2051854	Hose	1
3	**f**	2054703	Hose	1
4	**a**	1456475	Hydraulic Tank (☞ Figure 9-25)	1
4	**b**	1519694	Hydraulic Tank (☞ Figure 9-25)	1
4	**b**	1528536	Hydraulic Tank (☞ Figure 9-25)	1
5		1455170	Hose	1
6		1455411	Filter	1
7		115696	Clamp	2
8		369804	Clamp	8
9	**i**	222464	Fitting	1
9	**i**	16487	O-Ring	1
10		15882	O-Ring	1
11		1455172	Hose	2
12		292528	Capscrew	2
13		320161	Washer	2
14		302402	Locknut	2
15		1391432	Clamp	2
16		1384699	Clamp	6
17		15382	Fitting	1
18		301250	Hose	1
19		292544	Capscrew	2
20		292684	Lockwasher	2
21		1391499	Hydraulic Pump (☞ Figure 9-23)	1
22	**e**	144050	Fitting	2
22	**f**	141908	Fitting	2
23		980360	Hose	2
24		18602	Capscrew	4
25		15160	Lockwasher	4
26		222533	Fitting	1
27		222556	Fitting	2
28		16909	Fitting	1
28		16485	O-Ring	1
29		190757	Flange (Split Half)	2
30		16815	Capscrew	4
31		15156	Lockwasher	4
32		199085	O-Ring	1
33		199917	O-Ring	1
34		17764	Flange (Split Half)	2
35		18558	Capscrew	4
36		15157	Lockwasher	4
37		1455174	Hose	1
38	**i**	222494	Fitting	1
38	**j**	1459430	Fitting	1

©2006 HYSTER COMPANY

HYDRAULIC SUPPLY AND RETURN
EMPTY CONTAINER HANDLER
(S/N A214E-1535⇒)

ITEM		PART NO.	DESCRIPTION	QTY
39		227220	Clamp	2
40		17300	Fitting	1
41		302401	Locknut	4
42		320161	Washer	4
43		321487	Clamp	2
44		255578	Clamp	2
45		320159	Washer	4
46	**a**	353302	Breather	1
46	**b**	1475141	Breather	1
47		12829	Fitting	1
48		14676	Fitting	1
49	**e**	980938	Hose	1
49	**g**	1517325	Hose	1
49	**h**	139924	Hose	1
50	**e**	1516750	Hose	1
50	**f**	2054700	Hose	1
51		112470	Fitting	1
52		339530	Clamp	1
53	**f**	127045	Clamp (Hose)	8
54	**f**	888333	Seal Ring	1
55		316596	Sleeve	1

FOOTNOTES:
a Tier I Engine
b Tier II Engine
c S/N A214E-01659⇔S/N A214E-01821
d S/N A214E01822⇔S/N A214E01842Z
e ⇒ S/N A214E01842Z
f S/N A214E-01843Z ⇒
g S/N A214E01843Z⇔S/N A214E01848Z
h S/N A214E01849Z ⇒
i ⇒ S/N A214E-1572
j S/N A214E-1573 ⇒
k ⇒ S/N A214E-1658

©2006 HYSTER COMPANY

NOTES

HYDRAULIC SUPPLY AND RETURN (Figure 9-3)
FORK LIFT TRUCK
(⇒D/B 12/2002)

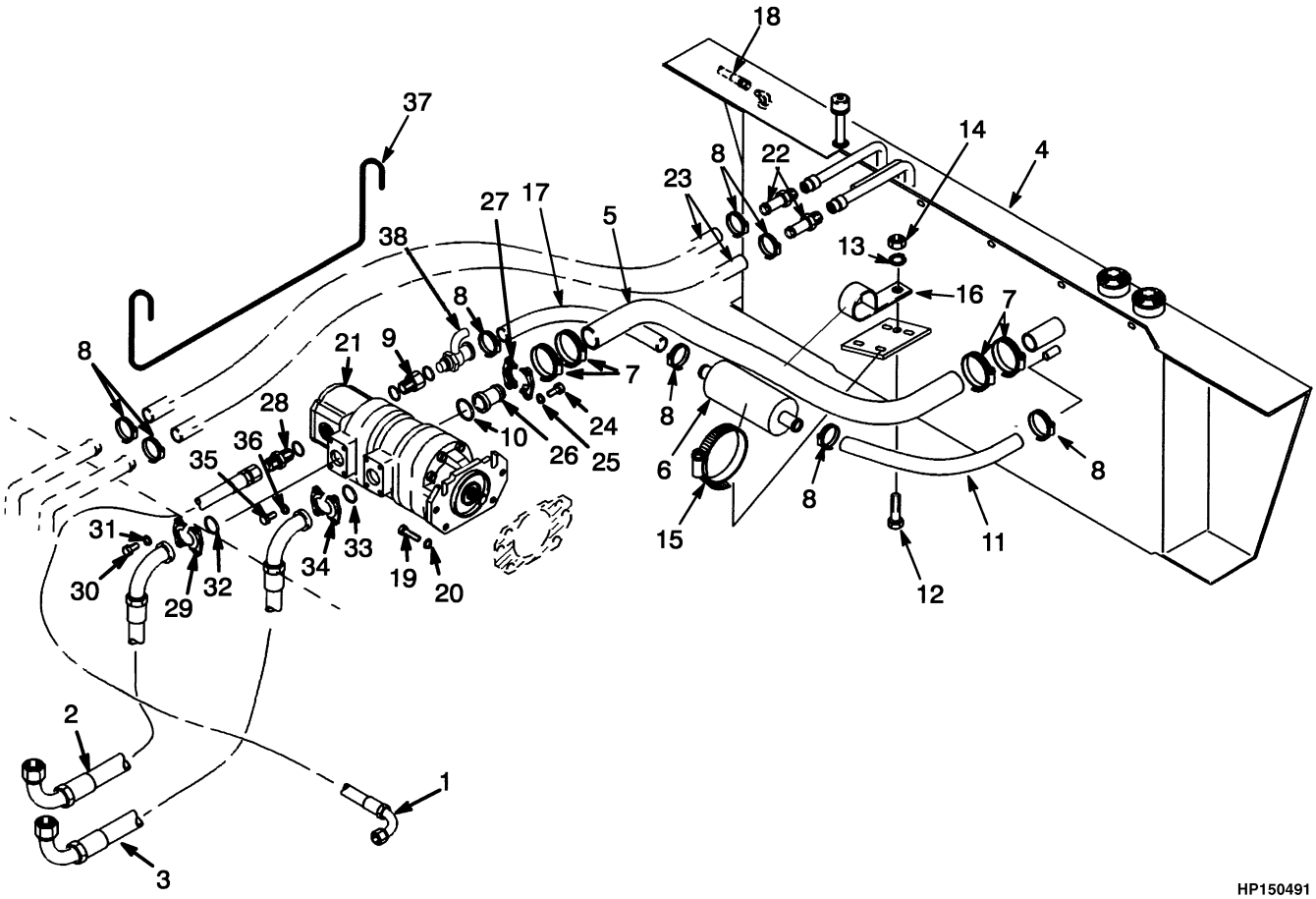

©2006 HYSTER COMPANY

HYDRAULIC SUPPLY AND RETURN
FORK LIFT TRUCK
(⇒D/B 12/2002)

ITEM		PART NO.	DESCRIPTION	QTY
1		1451523	Hose	1
2	**c**	1451524	Hose	1
2	**d**	1474761	Hose	1
3	**c**	1451525	Hose	1
3	**d**	1474762	Hose	1
4		1393841	Hydraulic Tank (H360-400H) (☞ Figure 9-25)	1
4		1393825	Hydraulic Tank (H450H) (☞ Figure 9-25)	1
5		1455169	Hose	1
6		1455411	Filter	1
7		115696	Clamp	4
8		369804	Clamp	8
9	**a**	222464	Fitting	1
9	**a**	16487	O-Ring	1
10		15882	O-Ring	1
11		1455172	Hose	1
12		292529	Capscrew	1
13		320161	Washer	1
14		302402	Locknut	1
15		227220	Clamp	2
16		1391432	Clamp	1
17		1455171	Hose	1
18		1453970	Hose	1
19		292544	Capscrew	2
20		292684	Lockwasher	2
21		. . . . .	Pump (☞ Figure 9-23)	1
22		144050	Fitting	2
23		1451600	Hose	2
24		18602	Capscrew	4
25		15160	Lockwasher	4
26		222556	Fitting	1
27		222533	Fitting	2
28		16909	Fitting	1
28		16485	O-Ring	1
29		190757	Flange (Split Half)	2
30		16815	Capscrew	4
31		15156	Lockwasher	4
32		199085	O-Ring	1
33		199917	O-Ring	1
34		17764	Flange (Split Half)	2
35		18558	Capscrew	4
36		15157	Lockwasher	4
37		1451836	Bracket	1
38	**a**	222494	Fitting	1
38		16983	O-Ring	1
38	**b**	1459430	Fitting	1

FOOTNOTES:
a ⇒ S/N A214E-1572
b S/N A214E-1573 ⇒

©2006 HYSTER COMPANY

HYDRAULIC SUPPLY AND RETURN
FORK LIFT TRUCK
(⇒D/B 12/2002)

c ⇒ S/N A214E-1658
d S/N A214E-1659 ⇒

©2006 HYSTER COMPANY

NOTES

HYDRAULIC SUPPLY AND RETURN (Figure 9-4)
FORK LIFT TRUCK
(D/B 01/2003⇒)

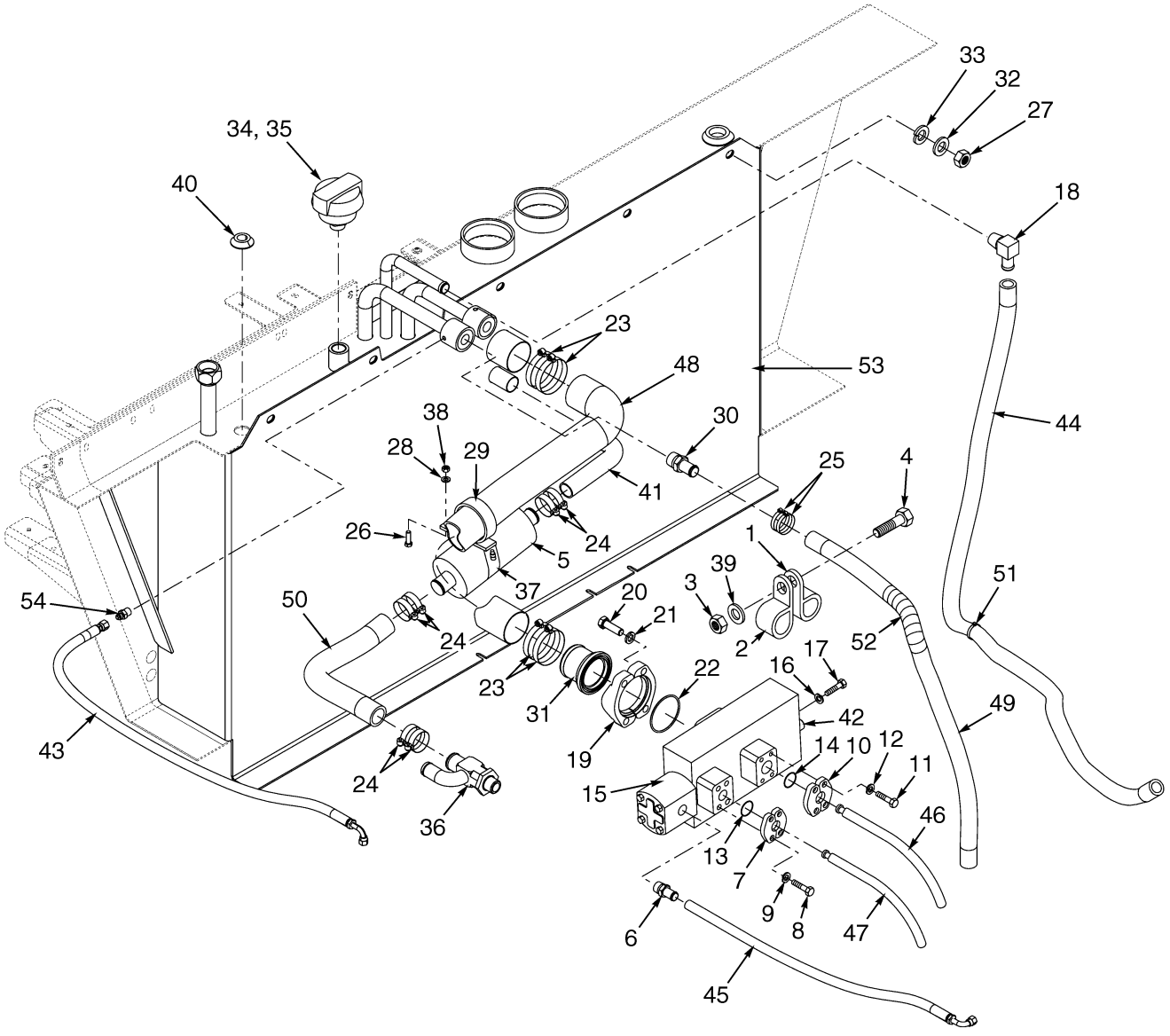

HP150879

©2006 HYSTER COMPANY

HYDRAULIC SUPPLY AND RETURN
FORK LIFT TRUCK
(D/B 01/2003⇒)

ITEM	PART NO.	DESCRIPTION	QTY
1	258590	Clamp	1
2	1384699	Clamp	1
3	302401	Locknut	1
4	287860	Capscrew	1
5	1455411	Filter	1
6	16909	Fitting	1
7	190757	Flange (Split Half)	2
8	16815	Capscrew	4
9	15156	Lockwasher	4
10	17764	Flange (Split Half)	2
11	18558	Capscrew	4
12	15157	Lockwasher	12
13	199085	O-Ring	1
14	199917	O-Ring	1
15	1391499	Hydraulic Pump (☞ Figure 9-23)	1
16	292684	Lockwasher	2
17	292544	Capscrew	2
18	112470	Fitting	1
19	222533	Fitting	2
20	18602	Capscrew	4
21	15160	Lockwasher	4
22	15882	O-Ring	1
23	115696	Clamp	4
24	369804	Clamp	8
25	127045	Clamp (Hose)	8
26	292528	Capscrew	1
27	216877	Nut	5
28	320161	Washer	1
29	1391432	Clamp	1
30	141908	Fitting	1
31	222556	Fitting	1
32	320162	Washer	5
33	292683	Lockwasher	5
34	1475141	Breather	1
35	888333	Seal Ring	1
36	1459430	Fitting	1
37	227220	Clamp	2
38	302402	Locknut	1
39	320160	Washer	2
40	17300	Fitting	1
41	1455172	Hose	1
42	264159	Adhesive	AR
43	2054636	Hose	1
44	66883	Hose	1
45	2054646	Hose	1
46	2051859	Hose	1
47	2055143	Hose	1
48	1455169	Hose	1
49	139924	Hose	1
50	1455171	Hose	1

©2006 HYSTER COMPANY

HYDRAULIC SUPPLY AND RETURN
FORK LIFT TRUCK
(D/B 01/2003⇒)

ITEM		PART NO.	DESCRIPTION	QTY
51		339530	Clamp	1
52		316596	Sleeve	1
53	**a**	1528534	Hydraulic Tank (H450H) (☞ Figure 9-25)	1
53	**b**	1560002	Hydraulic Tank (H450H) (☞ Figure 9-25)	1
53	**a**	1528535	Hydraulic Tank (H400-H450) (☞ Figure 9-25)	1
53	**b**	1560003	Hydraulic Tank (H400-H450) (☞ Figure 9-25)	1
54		14676	Fitting	1

FOOTNOTES:
a Tier I And Tier II Engine
b Tier II Engine

©2006 HYSTER COMPANY

NOTES

OIL COOLER AND ATTACHING PARTS (Figure 9-5)
EMPTY CONTAINER HANDLER
TIER II ENGINE

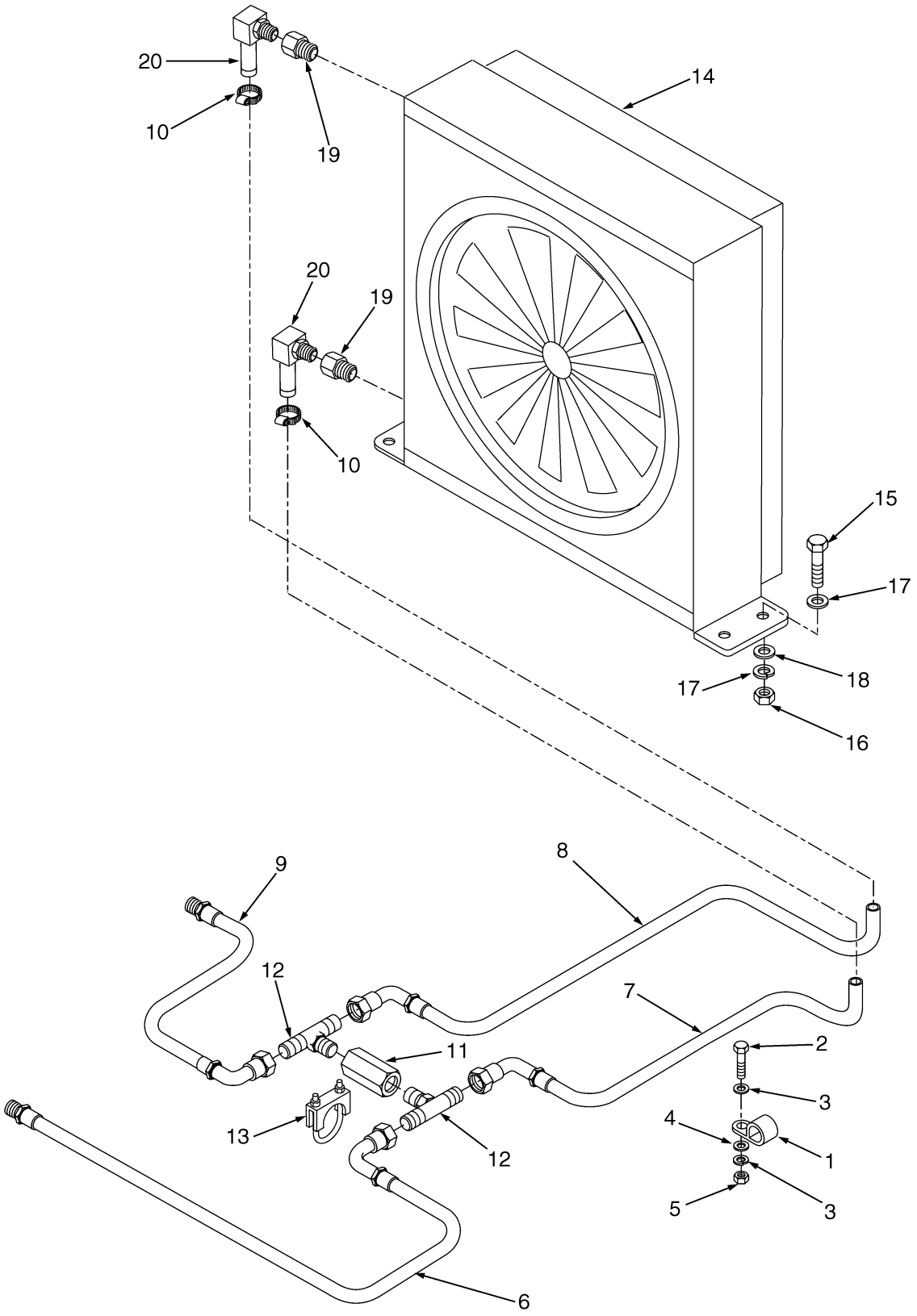

©2006 HYSTER COMPANY

OIL COOLER AND ATTACHING PARTS
EMPTY CONTAINER HANDLER
TIER II ENGINE

ITEM	PART NO.	DESCRIPTION	QTY
1	298829	Clamp	3
2	136985	Capscrew	3
3	320160	Washer	6
4	292682	Lockwasher	3
5	136692	Nut	3
6	1517972	Hose	1
7	1517973	Hose	1
8	1517974	Hose	1
9	1517975	Hose	1
10	127045	Clamp (Hose)	2
11	816232	Check Valve	1
12	16963	Fitting	2
13	30374	Clamp	1
14	1495139	Heat Exchanger Assembly	1
14	1384009	Core	1
14	1384010	Frame	1
14	1384011	Grill	1
14	1384012	Fan with Motor	1
14	1384013	Switch	1
14	1384014	Rubber Isolator	2
15	292509	Capscrew	4
16	329069	Nut	4
17	320157	Washer	8
18	292681	Lockwasher	4
19	1517982	Adapter	2
20	112470	Fitting	2

©2006 HYSTER COMPANY

OIL COOLER AND ATTACHING PARTS (Figure 9-6)

FORK LIFT TRUCK
TIER II ENGINE

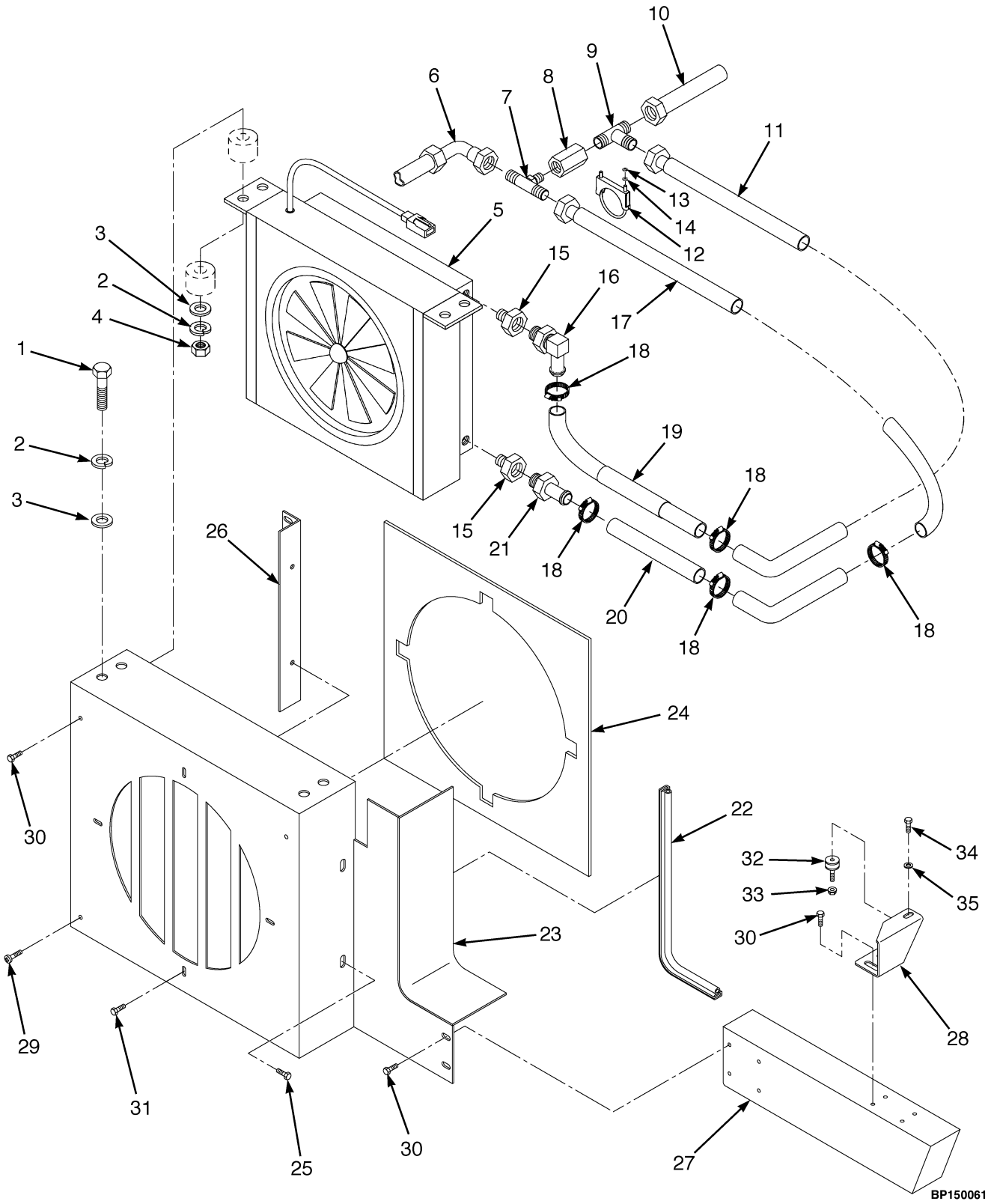

©2006 HYSTER COMPANY

OIL COOLER AND ATTACHING PARTS
FORK LIFT TRUCK
TIER II ENGINE

ITEM		PART NO.	DESCRIPTION	QTY
1		1518329	Capscrew	4
2		320157	Washer	4
3		292681	Lockwasher	4
4		302400	Locknut	4
5		1495139	Heat Exchanger Assembly	1
5		886391	Cooler	1
5		1384009	Core	1
5		1384010	Frame	1
5		1384011	Grill	1
5		1384012	Fan with Motor	1
5		1384013	Switch	1
5		1384014	Rubber Isolator	8
5		1330409	Connector	1
5		1330414	Secondary Lock	1
5		1330437	Terminal (Pin)	2
5		1569595	Spacer	4
5		1569596	Washer	8
6		1518316	Hose	1
7		16963	Fitting	1
8		816232	Check Valve	1
9		16974	Fitting	1
10		1518317	Hose	1
11		1518315	Hose	1
12		30374	Clamp	1
13		18515	Washer	2
14		15155	Lockwasher	2
15		1517982	Adapter	2
16		112470	Fitting	1
17		1518179	Hose	1
18		127045	Clamp (Hose)	12
19		246396	Hose	1
19		316596	Sleeve	1
20		214421	Hose	1
21		88195	Fitting	1
22	**a**	1556891	Trim Seal	1
23	**a**	1556876	Cover	1
24	**a**	1556882	Liner	1
25	**a**	1510117	Capscrew	4
26	**a**	1556873	Bracket	2
27	**a**	1556879	Cover	1
28	**a**	1556888	Bracket	1
29	**a**	1479870	Screw (Stop)	2
30	**a**	1527880	Capscrew	10
31	**a**	1527878	Capscrew	4
32	**a**	353453	Mount	1
33	**a**	1502543	Nut (Flange)	1

©2006 HYSTER COMPANY

OIL COOLER AND ATTACHING PARTS
FORK LIFT TRUCK
TIER II ENGINE

ITEM		PART NO.	DESCRIPTION	QTY
34	**a**	296164	Capscrew	1
35	**a**	320158	Washer	1

FOOTNOTES:
a S/N A214E02063E ⇒

©2006 HYSTER COMPANY

NOTES

HYDRAULIC LINES (Figure 9-7)
CONTROL VALVE
(⇒S/N A214E-1806)

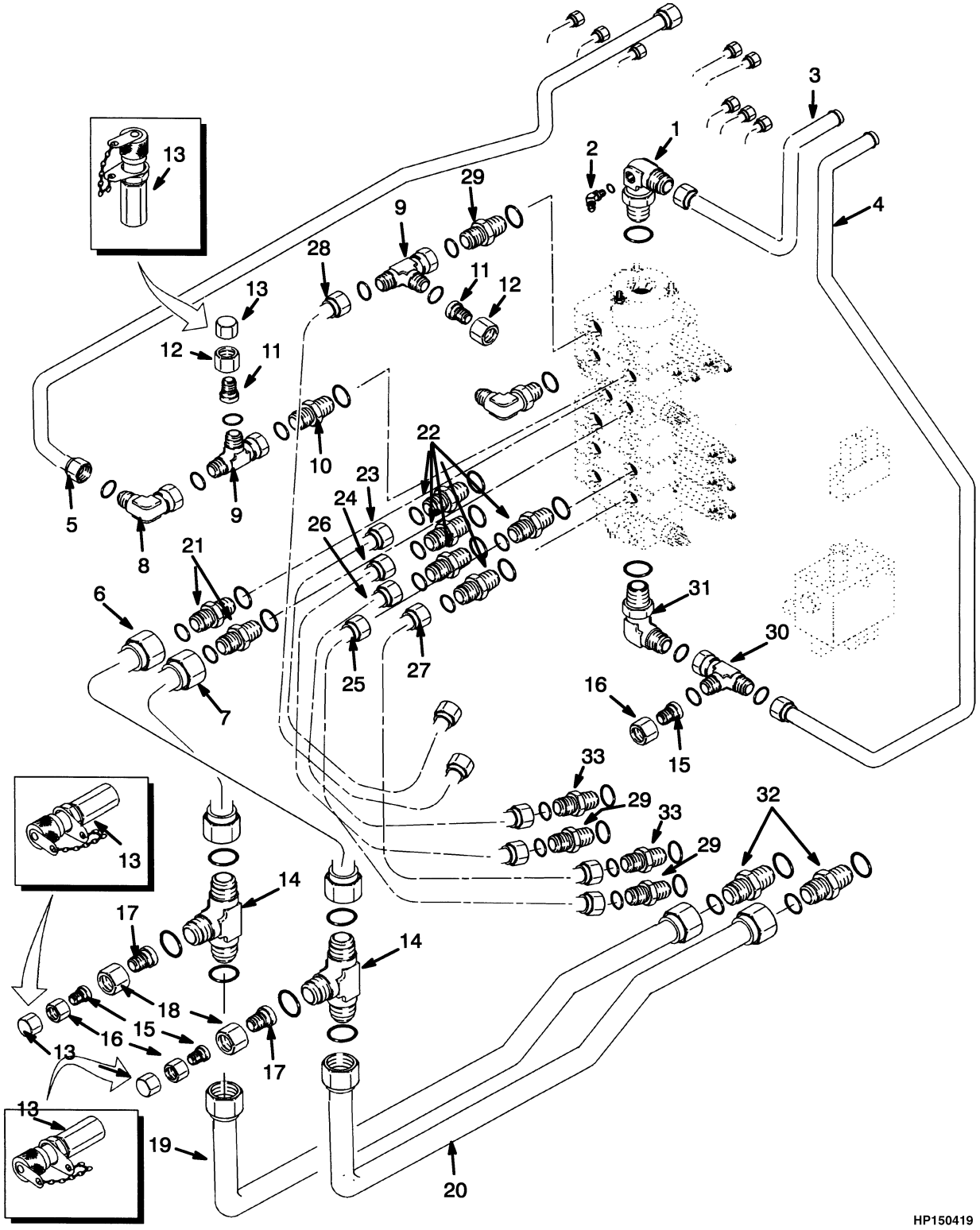

©2006 HYSTER COMPANY

HYDRAULIC LINES
CONTROL VALVE
(⇒S/N A214E-1806)

ITEM		PART NO.	DESCRIPTION	QTY
1		1384634	Fitting (Modified)	1
1		1331937	Fitting	1
2		16567	Fitting	1
2		16483	O-Ring	1
3		1373651	Tube	1
4		1373652	Tube	1
5		1393862	Tube	1
6		1373635	Tube	1
6		1464431	Hose	1
7	**b**	1373634	Tube	1
7	**c**	1464431	Hose	1
8		1373517	Fitting	1
9		1373682	Fitting	2
10		1373681	Fitting	1
10		16485	O-Ring	1
11		17779	Fitting	2
12		167261	Fitting	2
13	**b**	16923	Fitting	3
13	**c**	816117	Fitting	3
14		1373514	Fitting	2
14		16487	O-Ring	1
15		17777	Fitting	2
16		17319	Fitting	2
17		222369	Fitting	3
18		14494	Fitting	3
19	**a**	1382365	Tube	1
20	**a**	1382366	Tube	1
21	**b**	1373680	Fitting	2
21	**c**	142500	Fitting	2
21		16486	O-Ring	1
22		1373516	Fitting	6
23		1373629	Tube	1
24		1373630	Tube	1
25		1373631	Tube	1
26		1373632	Tube	1
27		1373633	Tube	1
28		1373628	Tube	1
29		1384649	Fitting	3
30		1337266	Fitting	1
31		1331937	Fitting	1
32	**a**	1336054	Fitting	2
33	**a**	1373515	Fitting	2

FOOTNOTES:
a Empty Container Handler
b ⇒ S/N A214E-1658
c S/N A214E-1659 ⇒

©2006 HYSTER COMPANY

HYDRAULIC LINES (Figure 9-8)
CONTROL VALVE
SHEET 1 OF 2
(S/N A214E-1807⇒)

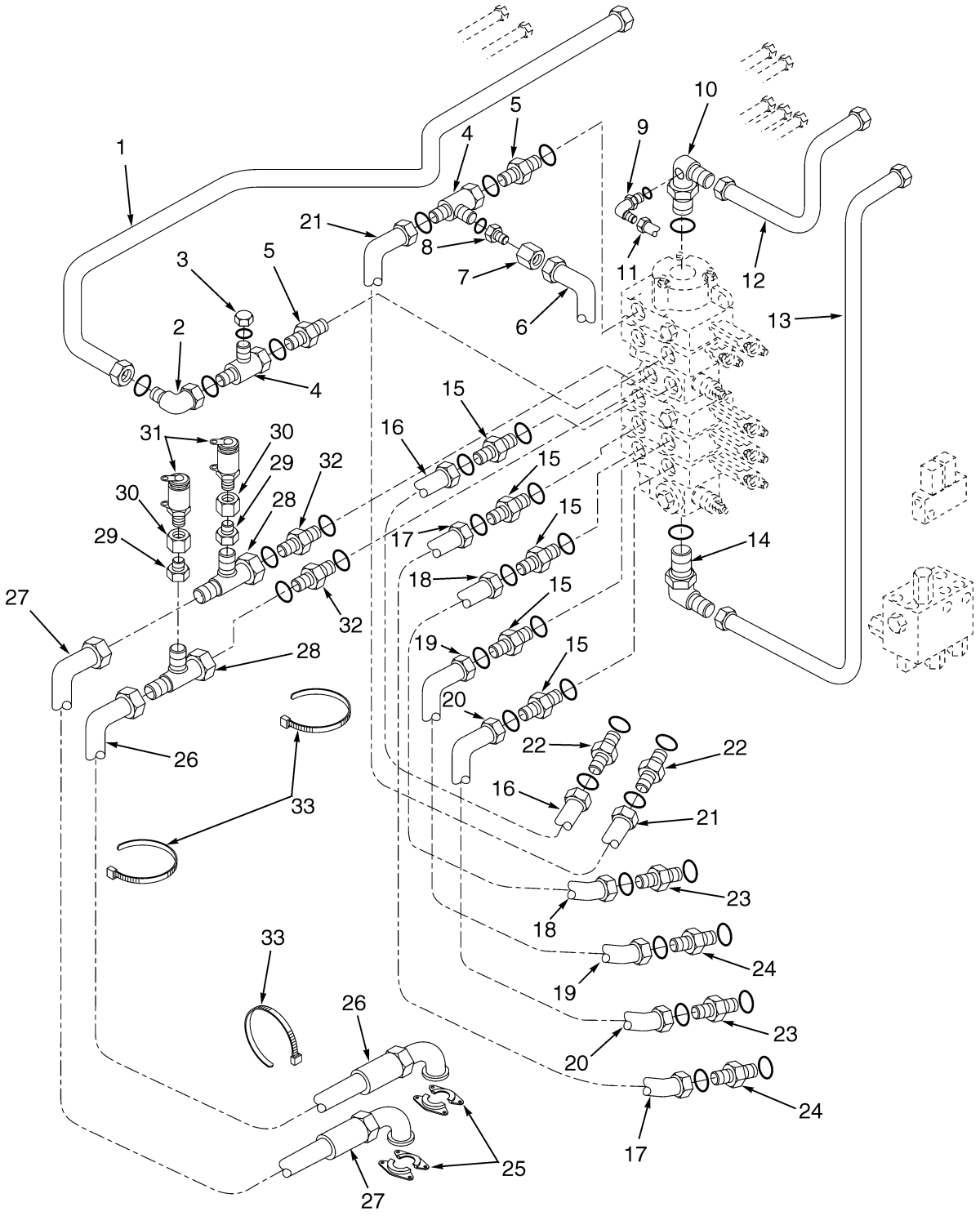

HP140003

©2006 HYSTER COMPANY

HYDRAULIC LINES
CONTROL VALVE
SHEET 1 OF 2
(S/N A214E-1807⇒)

ITEM	PART NO.	DESCRIPTION	QTY
1	1393862	Tube	1
2	1373517	Fitting	1
3	16926	Fitting	1
4	1373682	Fitting	2
5	1373681	Fitting	1
6	1464433	Hose	1
7	1676261	Fitting	1
8	17780	Fitting	1
9	16567	Fitting (Fork Lift Truck)	1
9	16483	O-Ring	1
10	1384634	Fitting (Modified)	1
10	1331937	Fitting	1
10	. . . . .	O-Ring	1
11	1393863	Tube (Fork Lift Truck)	1
12	1373651	Tube	1
13	1497239	Tube	1
14	1331937	Fitting	1
15	1373516	Fitting	6
16	1373629	Tube	1
17	1373630	Tube	1
18	1373632	Tube	1
19	1373631	Tube	1
20	1373633	Tube	1
21	1373628	Tube	1
22	1384503	Fitting	2
23	1384649	Fitting	2
24	1336054	Fitting	2
25	17764	Flange (Split Half)	4
26	1464430	Hose	1
26	1474761	Hose	1
27	1464431	Hose	1
27	1474762	Hose	1
28	17066	Fitting	2
29	1496458	Adapter	2
30	14494	Fitting	2
31	1473927	Fitting (Quick Disconnect)	2
32	142500	Fitting	2
32	16486	O-Ring	1
33	397676	Strap Clamp	3

©2006 HYSTER COMPANY

HYDRAULIC LINES (Figure 9-9)
CONTROL VALVE
SHEET 2 OF 2

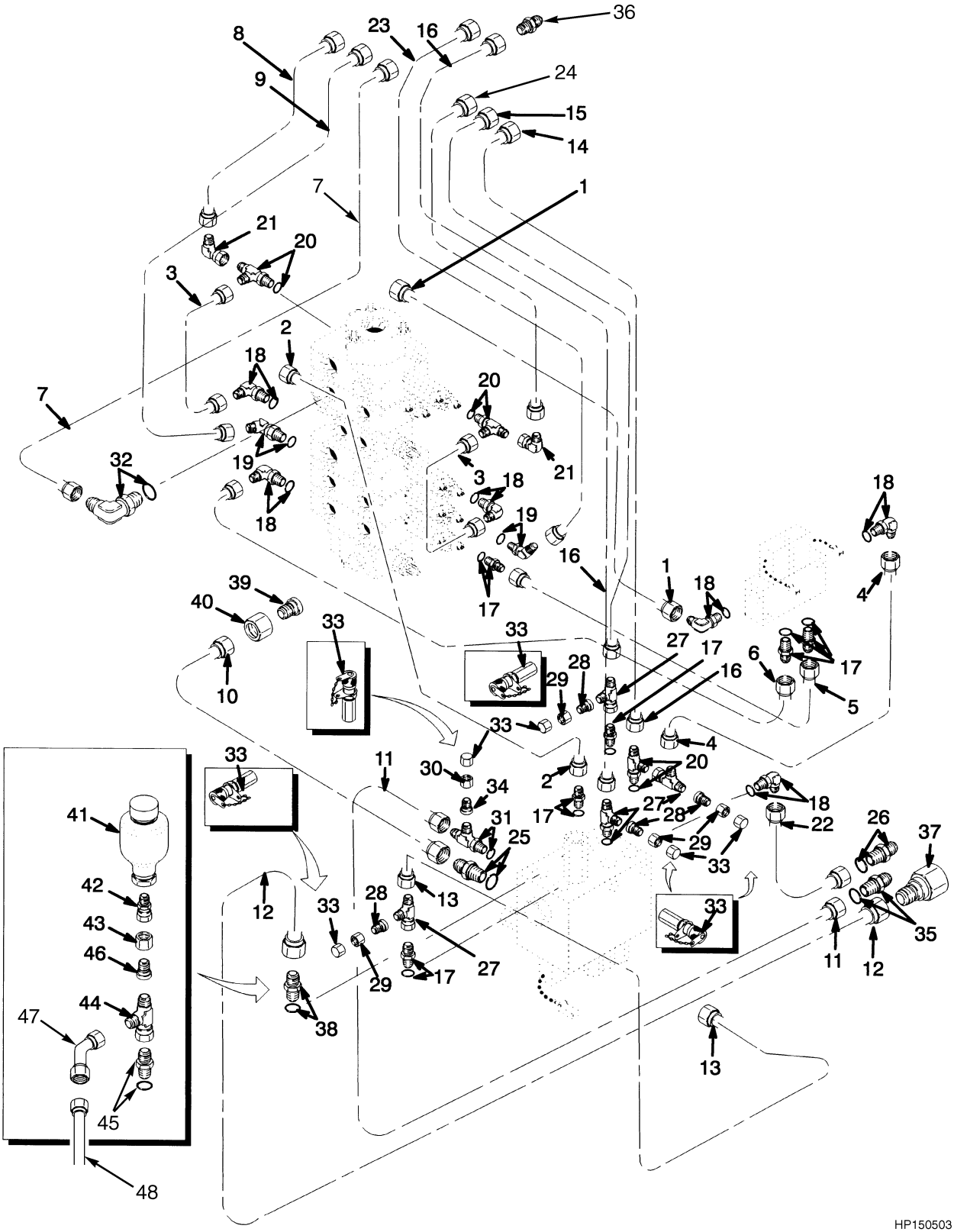

HP150503

©2006 HYSTER COMPANY

HYDRAULIC LINES
CONTROL VALVE
SHEET 2 OF 2

ITEM		PART NO.	DESCRIPTION	QTY
1		1393863	Tube	1
2	**a**	1373646	Tube	1
2	**b**	1464433	Hose	1
3		1373650	Tube	2
4		1373549	Tube	1
5		1390675	Hose	1
5		16883	Fitting	1
6		1373639	Tube	1
7		1373626	Tube	1
8		1373649	Tube	1
9		1373648	Tube	1
10		1373637	Tube	1
11		1373636	Tube	1
12	**a**	1373627	Tube	1
12	**c**	1464440	Hose	1
13	**a**	1373638	Tube	1
13	**b**	1464434	Hose	1
14		1373640	Tube	1
15		1373642	Tube	1
16		1373641	Tube	1
17		16540	Fitting	7
17		16483	O-Ring	1
18		16558	Fitting	6
18		16483	O-Ring	1
19		16567	Fitting	2
19		16483	O-Ring	1
20		16969	Fitting	3
20		16483	O-Ring	1
21		16883	Fitting	2
22		1373647	Tube	1
23		1373643	Tube	1
24		1373644	Tube	1
25		16541	Fitting	1
25		16484	O-Ring	1
26		14691	Fitting	1
27		17061	Fitting	4
28		17776	Fitting	4
29		14489	Fitting	4
30		17319	Fitting	1
31		16970	Fitting	1
31		16484	O-Ring	1
32		222400	Fitting	1
32		16485	O-Ring	1
33	**a**	16923	Fitting	5
33	**b**	816117	Fitting	5
34		17777	Fitting	1
35		14692	Fitting	1
36		14691	Fitting	1
37	**d**	222517	Fitting	1
38	**c**	16745	Fitting	1

©2006 HYSTER COMPANY

HYDRAULIC LINES
CONTROL VALVE
SHEET 2 OF 2

ITEM		PART NO.	DESCRIPTION	QTY
38		16484	O-Ring	1
39		222369	Fitting	1
40	**e**	14494	Fitting	1
41	**e**	1460394	Accumulator	1
42	**e**	1460396	Fitting	1
43	**e**	17778	Fitting	1
44	**e**	17063	Fitting	1
45	**e**	206150	Fitting	1
45		16484	O-Ring	1
46	**e**	14491	Fitting	1

FOOTNOTES:
a ⇒ S/N A214E-1658
b S/N A214E-1659 ⇒
c S/N A214E-1659⇔S/N A214E-1665
d S/N A214E-1665 ⇒
e ⇒ S/N A214E-1666

©2006 HYSTER COMPANY

HYDRAULIC LINES (Figure 9-10)
AUXILIARY
FORK LIFT TRUCK

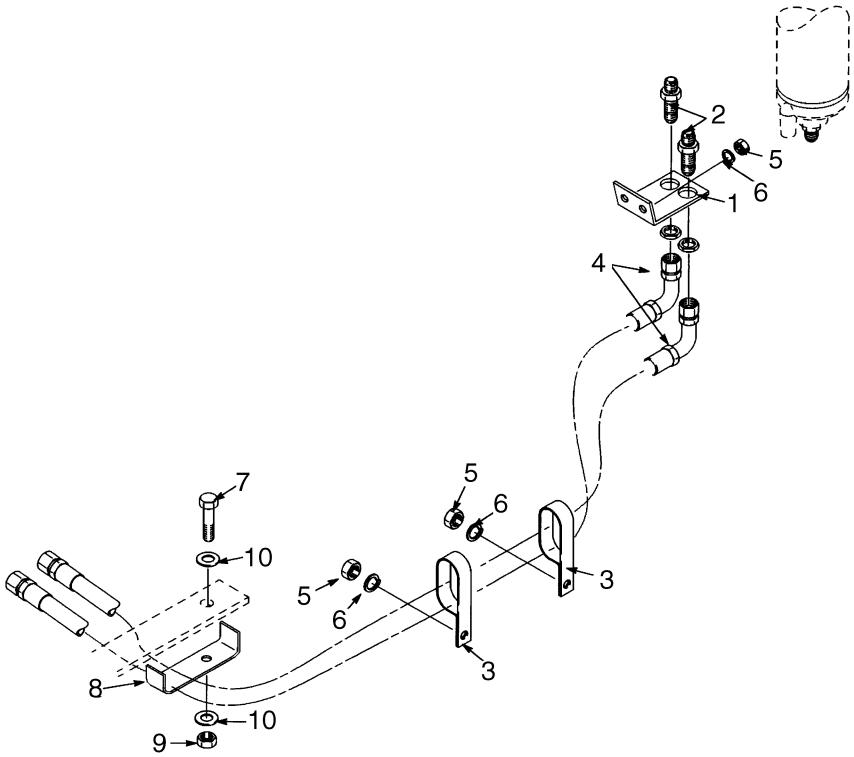

ITEM	PART NO.	DESCRIPTION	QTY
1	1384472	Plate	1
2	16449	Fitting	4
3	255578	Clamp	4
4	1452850	Hose	2
5	302401	Locknut	4
6	320159	Washer	4
7	292507	Capscrew	1
8	1384527	Bracket	1
9	302399	Nut	1
10	15127	Washer	2

©2006 HYSTER COMPANY

HYDRAULIC LINES (Figure 9-11)
LIFT
FORK LIFT TRUCK

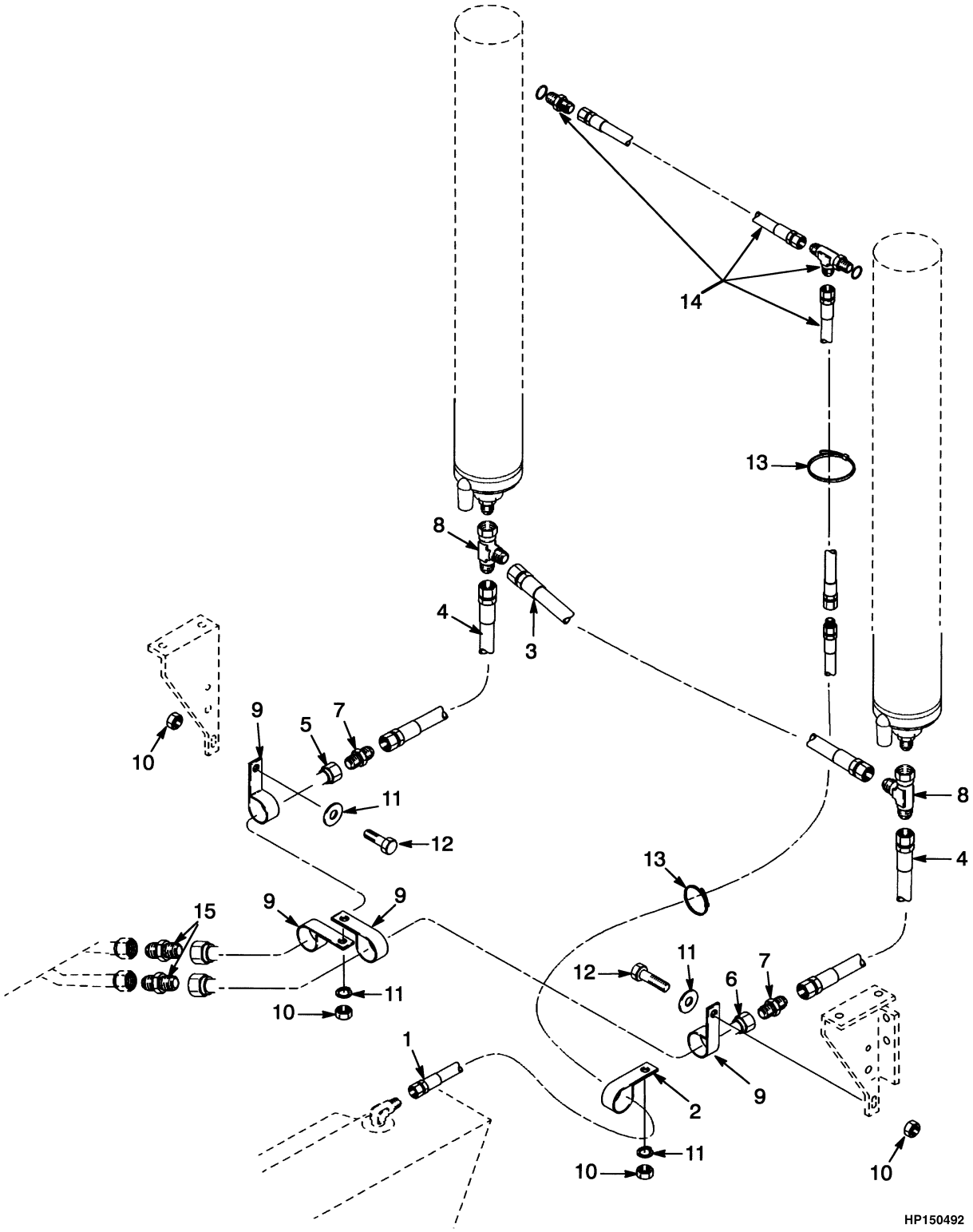

©2006 HYSTER COMPANY

HYDRAULIC LINES
LIFT
FORK LIFT TRUCK

ITEM	PART NO.	DESCRIPTION	QTY
1	1453970	Hose	1
2	321487	Clamp	1
3	1451819	Hose	1
4	816468	Hose (H450H)	2
4	1451820	Hose (H360-400H)	2
5	1451821	Tube	1
6	1451822	Tube	1
7	1336054	Fitting	2
8	1337266	Fitting	2
9	1310611	Clamp	6
10	302401	Locknut	5
11	320161	Washer	5
12	287860	Capscrew	2
13	323864	Strap Clamp	3
14	. . . . .	Main Lift (☞ Figure 10-3)	1
15	1384503	Fitting	2

©2006 HYSTER COMPANY

HYDRAULIC CONTROL (Figure 9-12)
(⇒S/N A214E-1842Z)

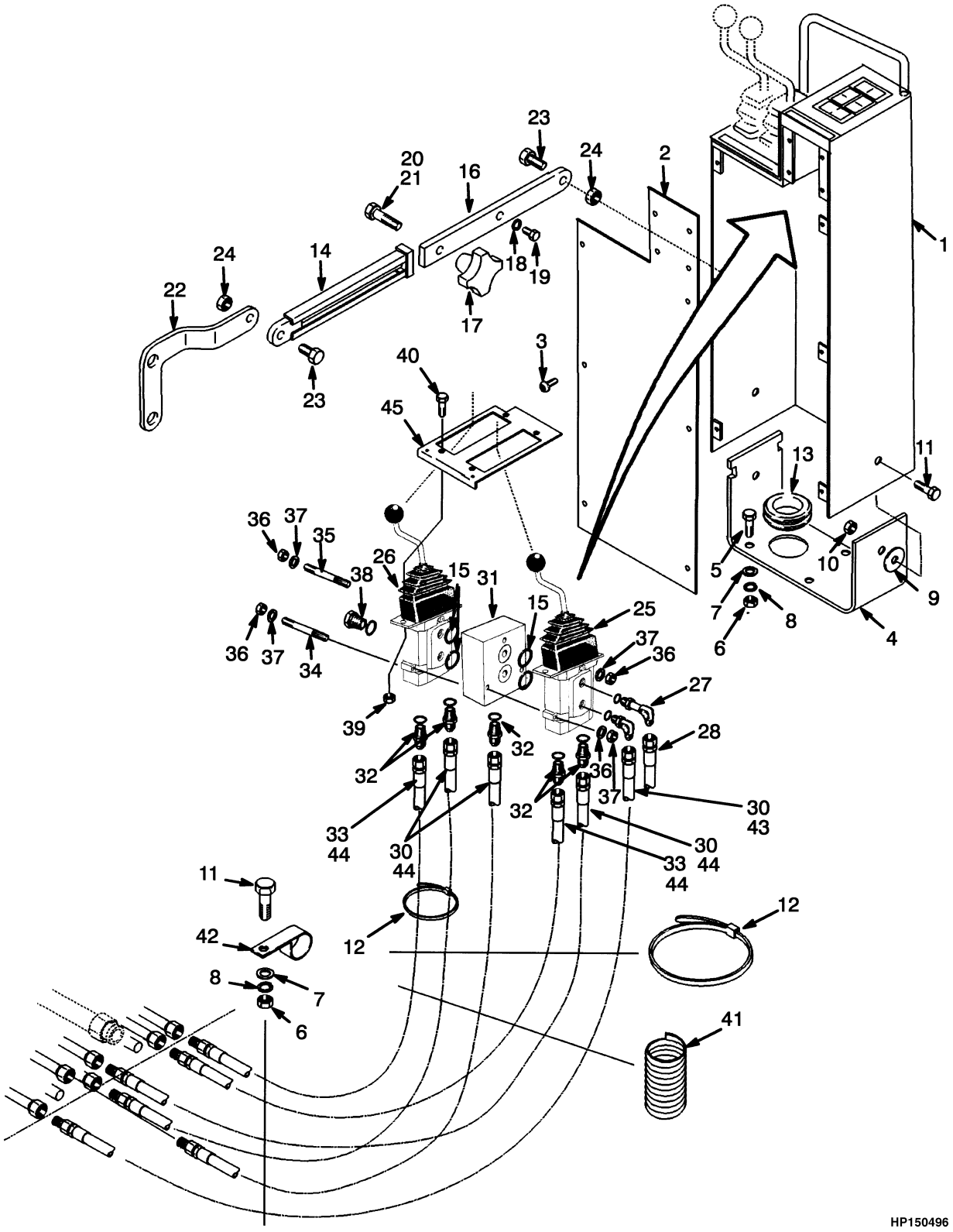

©2006 HYSTER COMPANY

HYDRAULIC CONTROL
(⇒S/N A214E-1842Z)

ITEM		PART NO.	DESCRIPTION	QTY
1		1454177	Hydraulic Control Pod	1
2		1454180	Cover	1
3		1301177	Screw	10
4		1307775	Bracket	1
5	**d**	136985	Capscrew	6
5	**c**	287854	Capscrew	4
6	**b**	136692	Nut	4
6	**a**	136692	Nut	8
7	**b**	320159	Washer	4
7	**a**	320159	Washer	8
8	**b**	292682	Lockwasher	4
8	**a**	292682	Lockwasher	8
9		334340	Washer	AR
10		316826	Nut	2
11	**ac**	136985	Capscrew	4
11	**ad**	287860	Capscrew	2
12		273775	Clamp (Strap)	2
13		1323052	Edge Trim	1
14		1310710	Channel	1
15		39767	O-Ring	4
16		1352202	Slide	1
17		334325	Knob	1
18		18425	Lockwasher	1
19		18097	Capscrew	1
20		16334	Capscrew	1
21		264134	Sealant	AR
22		1350014	Bracket	1
23		16805	Capscrew	2
24		145641	Nut	2
25		1373611	Valve (☞ Figure 9-20)	1
26		1390642	Valve (☞ Figure 9-20)	1
27		17222	Fitting	1
28		112886	Hose	1
28	**ad**	1331025	Hose	1
28	**ac**	1383859	Hose	1
29	**b**	16558	Fitting	1
30	**a**	1393860	Hose	4
31		1307772	Spacer	1
32		16540	Fitting	4
33	**a**	1393859	Hose	2
34		394101	Link	2
35		1355038	Link	1
36		15002	Nut	6
37		320155	Washer	AR
38		222443	Fitting	2
39		330100	Nut	4
40		380292	Capscrew	4
41		316596	Sleeve (Coil)	1
42	**a**	1384699	Clamp	2
43	**bc**	117860	Hose	1

©2006 HYSTER COMPANY

HYDRAULIC CONTROL
(⇒S/N A214E-1842Z)

ITEM		PART NO.	DESCRIPTION	QTY
44	**bc**	73462	Hose	5
45		1310715	Plate	1

FOOTNOTES:
a Empty Container Handler
b Fork Lift Truck
c ⇒ S/N A214E-1534
d S/N A214E-1535 ⇒

©2006 HYSTER COMPANY

NOTES

HYDRAULIC CONTROL (Figure 9-13)
(S/N A214E-1843Z⇒)

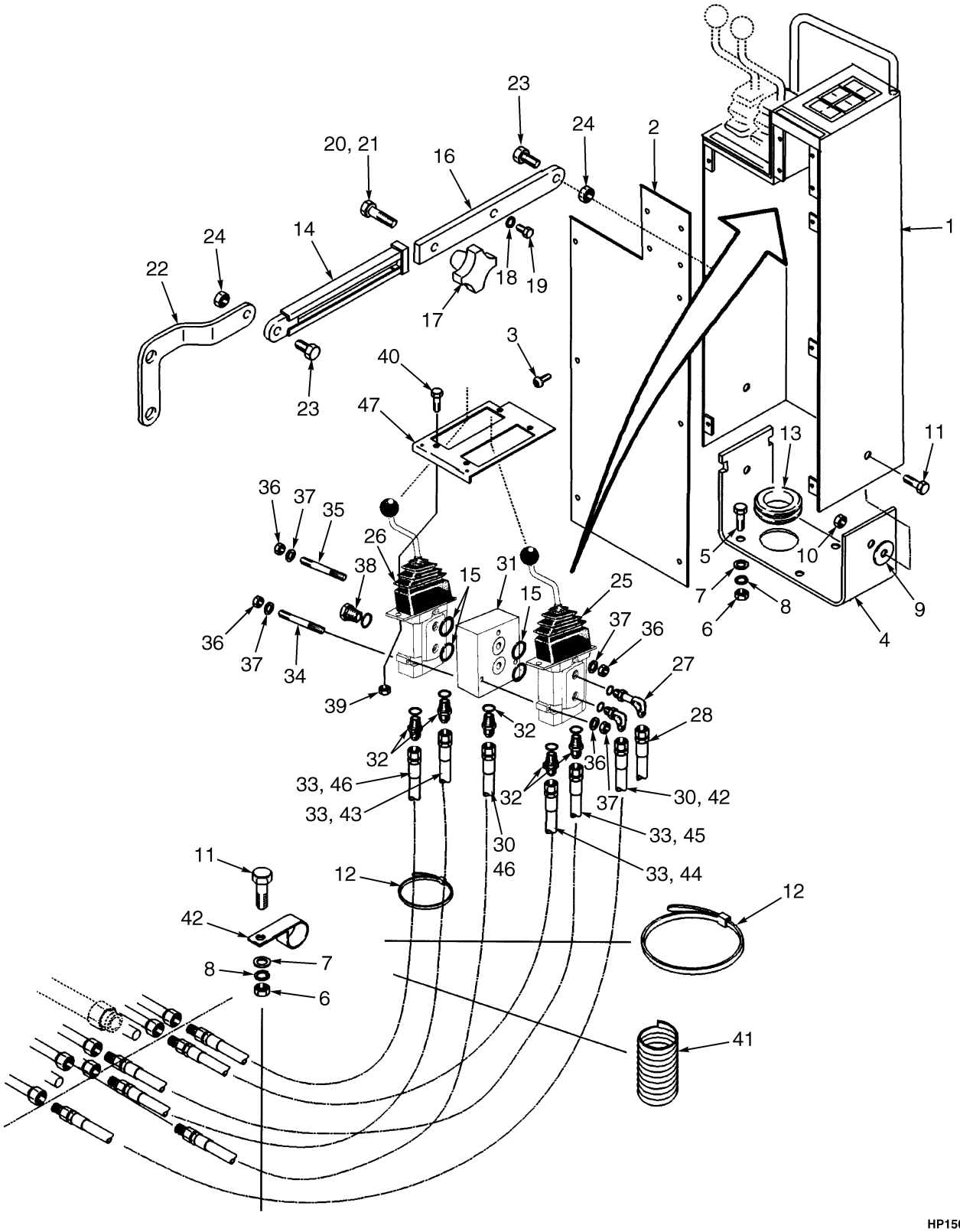

©2006 HYSTER COMPANY

HYDRAULIC CONTROL
(S/N A214E-1843Z⇒)

KEY:
A: Empty Container Handler
B: Fork Lift Truck

ITEM	PART NO.	DESCRIPTION	QTY A	QTY B
1	1454177	Hydraulic Control Pod	1	1
2	1454180	Cover	1	1
3	1301177	Screw	10	10
4	1307775	Bracket	1	1
5	136985	Capscrew	6	6
6	136692	Nut	4	4
7	320159	Washer	4	4
8	292682	Lockwasher	4	4
9	334340	Washer	AR	AR
10	316826	Nut	2	2
11	287860	Capscrew	2	2
12	273775	Clamp (Strap)	2	2
13	1323052	Edge Trim	1	1
14	1310710	Channel	1	1
15	39767	O-Ring	4	4
16	1352202	Slide	1	1
17	334325	Knob	1	1
18	18425	Lockwasher	1	1
19	18097	Capscrew	1	1
20	16334	Capscrew	1	1
21	264134	Sealant	AR	AR
22	1350014	Bracket	1	1
23	16805	Capscrew	2	2
24	145641	Nut	2	2
25	1373611	Valve (Operator Pilot)	1	1
26	1390642	Valve (Operator Pilot)	1	1
27	17222	Fitting	1	1
28	1331025	Hose	1	1
29	16558	Fitting	1	1
30	8516434	Hose	2	..
31	1307772	Spacer	1	1
32	16540	Fitting	5	5
33	2054688	Hose	4	..
34	394101	Link	2	2
35	1355038	Link	1	1
36	15002	Nut	6	6
37	320155	Washer	AR	AR
38	222443	Fitting	2	2
39	330100	Nut	4	4
40	380292	Capscrew	4	4
41	316596	Sleeve (Coil)	1	1
42	2054634	Hose	..	1
43	2054630	Hose	..	1
44	2054631	Hose	..	1
45	1319620	Hose	..	1

©2006 HYSTER COMPANY

HYDRAULIC CONTROL
(S/N A214E-1843Z⇒)

ITEM	PART NO.	DESCRIPTION	QTY A	QTY B
46	2054632	Hose	..	2
47	1310715	Plate	1	1

©2006 HYSTER COMPANY

NOTES

HYDRAULIC CONTROL VALVE (Figure 9-14)
ATTACHING PARTS

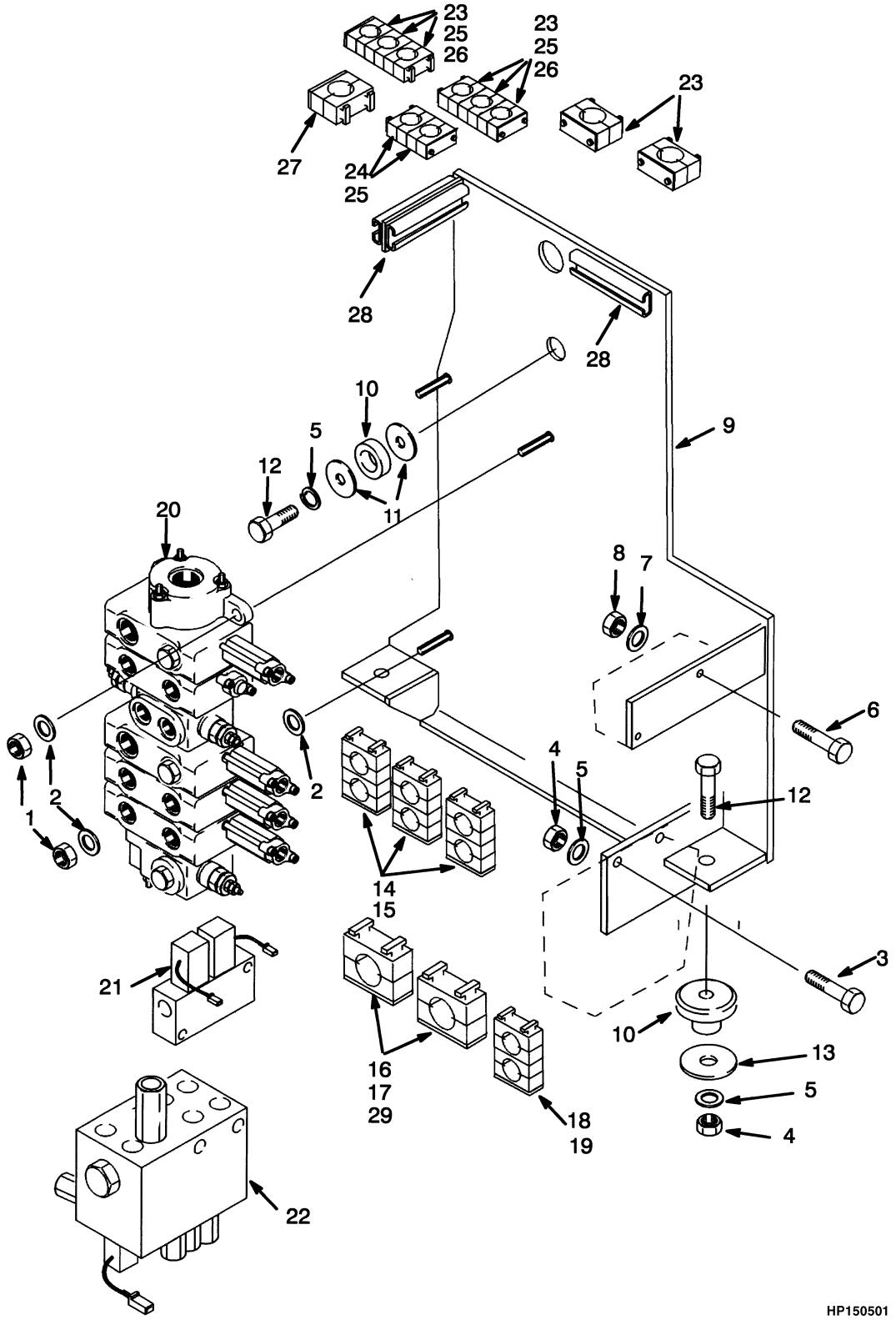

©2006 HYSTER COMPANY

HYDRAULIC CONTROL VALVE
ATTACHING PARTS

ITEM		PART NO.	DESCRIPTION	QTY
1		300937	Locknut	2
2		296422	Washer	3
3		292525	Capscrew	2
4		316826	Nut	5
5		296420	Washer	6
6		292506	Capscrew	2
7		296417	Lockwasher	2
8		313805	Nut	2
9		1452794	Mounting Plate	1
10		209067	Mount	3
11		320177	Washer	1
12		292517	Capscrew	3
13		284521	Washer	3
14		1373505	Clamp	3
15		1373506	Clamp	3
16	**a**	1373507	Clamp	2
17	**b**	1339480	Clamp	2
18	**c**	1373508	Clamp	1
18	**d**	1464615	Clamp	1
19	**c**	1373509	Clamp	1
19	**d**	1464617	Clamp	1
20		1372995	Valve (☞ Figure 9-15)	1
20		1474815	Valve (☞ Figure 9-15)	1
20		1479353	Valve (☞ Figure 9-15)	1
21		1373389	Valve (☞ Figure 9-16)	1
22		1487919	Valve (☞ Figure 9-20)	1
23		1339480	Clamp	2
24		1350862	Clamp	5
25		1373510	Clamp	3
26		1373511	Clamp	3
27		1331851	Clamp	1
28		1384635	Clamp	2
29		383789	Thread Lock	AR

FOOTNOTES:
a Empty Container Handler
b Fork Lift Truck
c ⇒ S/N A214E-1658
d S/N A214E-1659 ⇒

©2006 HYSTER COMPANY

HYDRAULIC CONTROL VALVE (Figure 9-15)
MAIN

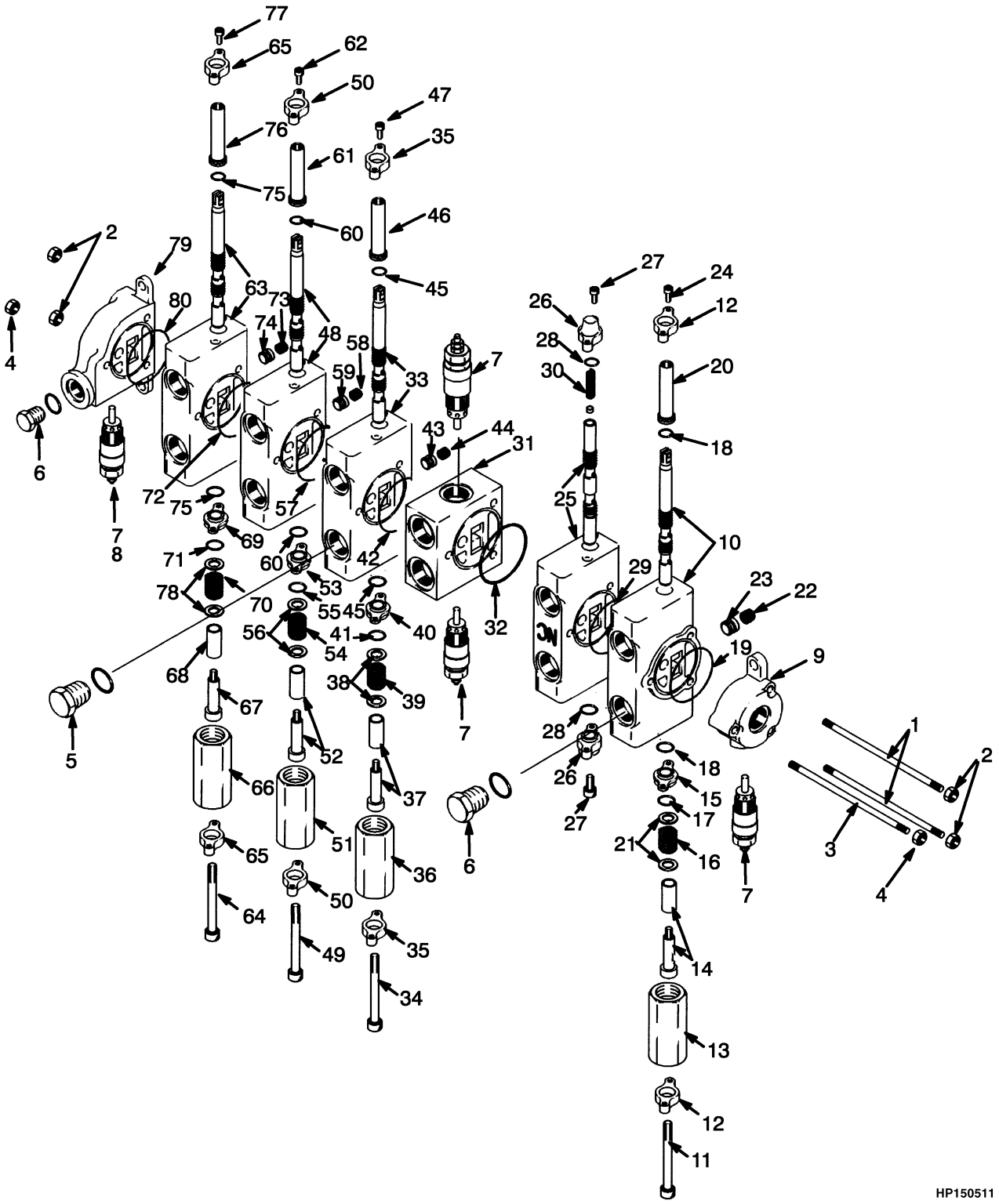

©2006 HYSTER COMPANY

HYDRAULIC CONTROL VALVE
MAIN

ITEM		PART NO.	DESCRIPTION	QTY
	c	1372995	Valve	1
	ad	1474815	Valve	1
	bd	1479353	Valve	1
1		1377238	Tie Rod	2
2		1320986	Nut	4
3		1377237	Tie Rod	1
4		1320983	Nut	2
5		199524	Plug	1
6		234888	Plug	2
7		1320979	Relief Valve	4
8		1321381	Seal Kit	1
8		16486	O-Ring	2
9		1377229	Outlet Section	1
9		. . . . .	Housing	1
10		1377228	Spool Section	1
10		. . . . .	Housing	1
10		. . . . .	Spool	1
10		. . . . .	Spool	1
11		1377213	Screw	2
12		1377214	Retainer	2
13		1377215	Cap	1
14		1377216	Screw	1
14		1377217	Spacer	1
15		1377219	Retainer	1
16	**c**	1377218	Spring	1
16	**d**	1484316	Spring	1
17		16487	O-Ring	1
18		39767	O-Ring	2
19		1320982	O-Ring	1
20		1377220	Cap	1
21		1383924	Washer	2
22		1320994	Spring	1
23		1320998	Poppet	1
24		16328	Capscrew	2
25		1377236	Spool Section	1
25		. . . . .	Housing	1
25		. . . . .	Spool	1
25		. . . . .	Screw Set	1
26		1455594	Cap	2
27		1455595	Capscrew	4
28		1455596	O-Ring	2
29		1320982	O-Ring	1
30		1377232	Spring	1
31		1383923	Mid Section	1
31		. . . . .	Housing	1
32		1320982	O-Ring	1
33		1377226	Spool Section	1
33		. . . . .	Housing	1
33		. . . . .	Spool	1
33		. . . . .	Spool	1
34		1377213	Screw	2

©2006 HYSTER COMPANY

HYDRAULIC CONTROL VALVE
MAIN

ITEM		PART NO.	DESCRIPTION	QTY
35		1377214	Retainer	2
36		1377215	Cap	1
37		1377216	Screw	1
37		1377217	Spacer	1
38		1383924	Washer	2
39	**c**	1377218	Spring	1
39	**d**	1484315	Spring	1
40		1377219	Retainer	1
41		16487	O-Ring	1
42		1320982	O-Ring	1
43		1320998	Poppet	1
44		1320994	Spring	1
45		39767	O-Ring	2
46		1377220	Cap	1
47		16328	Capscrew	2
48		1377224	Spool Section	1
48		. . . . .	Spool	1
48		. . . . .	Housing	1
49		1377213	Screw	2
50		1377214	Retainer	2
51		1377215	Cap	1
52		1377216	Screw	1
52		1377217	Spacer	1
53		1377219	Retainer	1
54	**c**	1377218	Spring	1
54	**d**	1484315	Spring	1
55		16487	O-Ring	1
56		1383924	Washer	2
57		1320982	O-Ring	1
58		1320994	Spring	1
59		1320998	Poppet	1
60		39767	O-Ring	2
61		1377220	Cap	1
62		16328	Capscrew	2
63	**b**	1377212	Spool Section	1
63	**ad**	1484314	Spool Section	1
63		. . . . .	Housing	1
63		. . . . .	Spool	1
64		1377213	Screw	2
65		1377214	Retainer	2
66		1377215	Cap	1
67		1377216	Screw	1
68		1377217	Spacer	4
69		1377219	Retainer	1
70	**c**	1456875	Spring	1
70	**d**	1484316	Spring	1
71		16487	O-Ring	1
72		1320982	O-Ring	1
73		1320994	Spring	1
74		1320998	Poppet	1
75		39767	O-Ring	2
76		1377220	Cap	1

©2006 HYSTER COMPANY

HYDRAULIC CONTROL VALVE
MAIN

ITEM	PART NO.	DESCRIPTION	QTY
77	16328	Capscrew	2
78	1383924	Washer	2
79	1320980	Outlet Section	1
79	. . . . .	Housing	1
80	1320982	O-Ring	1

FOOTNOTES:
a Empty Container Handler
b Fork Lift Truck
c ⇒ S/N A214E-1717
d S/N A214E-1718 ⇒

HYDRAULIC DIRECTIONAL CONTROL VALVE (Figure 9-16)
EMPTY CONTAINER HANDLER

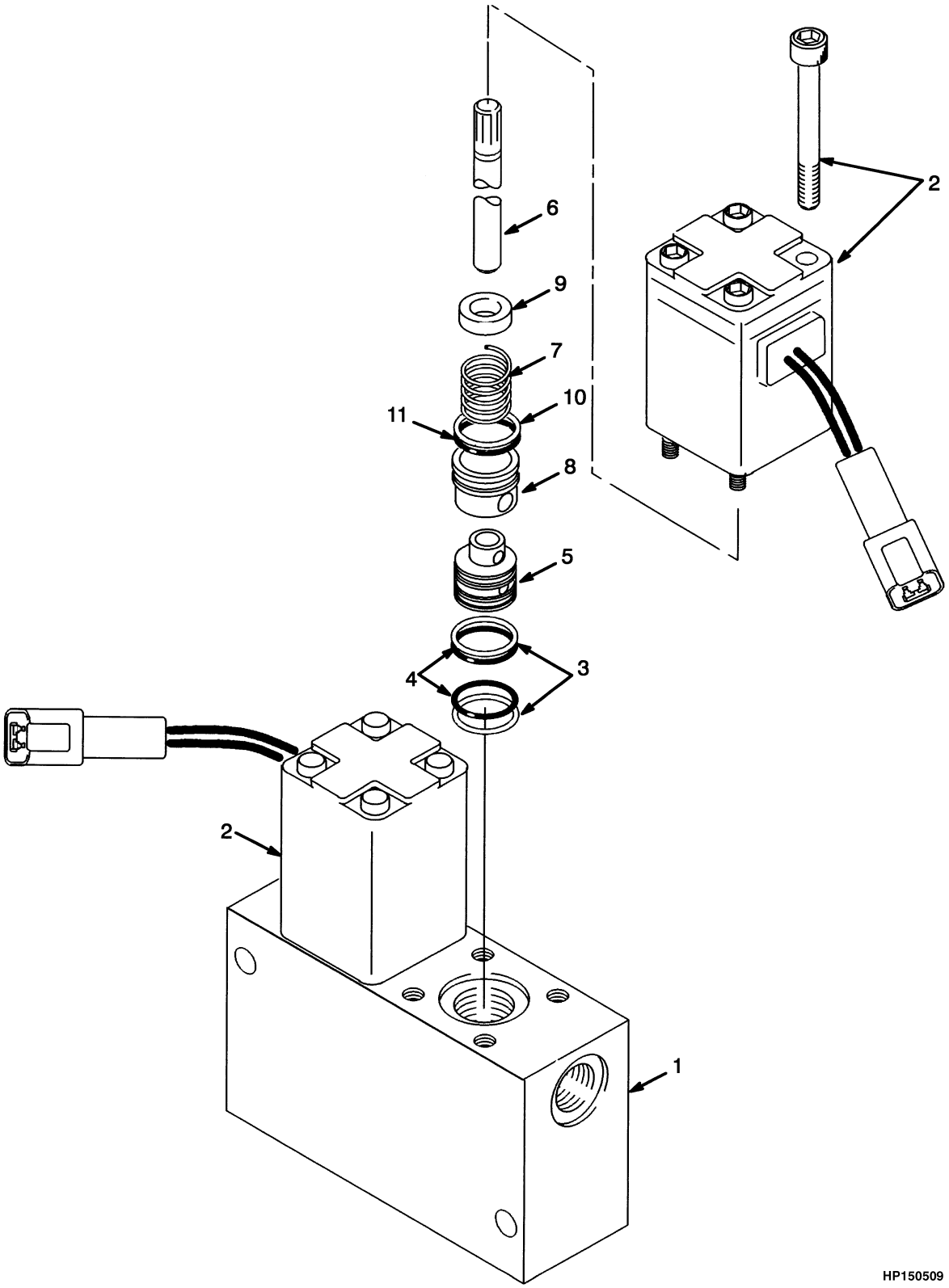

©2006 HYSTER COMPANY

HYDRAULIC DIRECTIONAL CONTROL VALVE
EMPTY CONTAINER HANDLER

ITEM	PART NO.	DESCRIPTION	QTY
	1373389	Valve	1
1	. . . . .	Housing	1
2	1377209	Solenoid Assembly	2
3	18921	Back-Up Ring	4
4	266519	O-Ring	4
5	1377204	Body	2
6	1377205	Shuttle	2
7	1377206	Spring	2
8	1377207	Spring Retainer	2
9	1377208	Spacer	2
10	1377202	Retaining Ring	2
11	1377203	O-Ring	2
	1456014	Seal Kit (Includes Items 3-4, 11)	1

©2006 HYSTER COMPANY

HYDRAULIC SOLENOID VALVE ATTACHING PARTS (Figure 9-17)
LIFT AND LOWERING INTERRUPT
EMPTY CONTAINER HANDLER
(S/N A214E-01752X⇒)

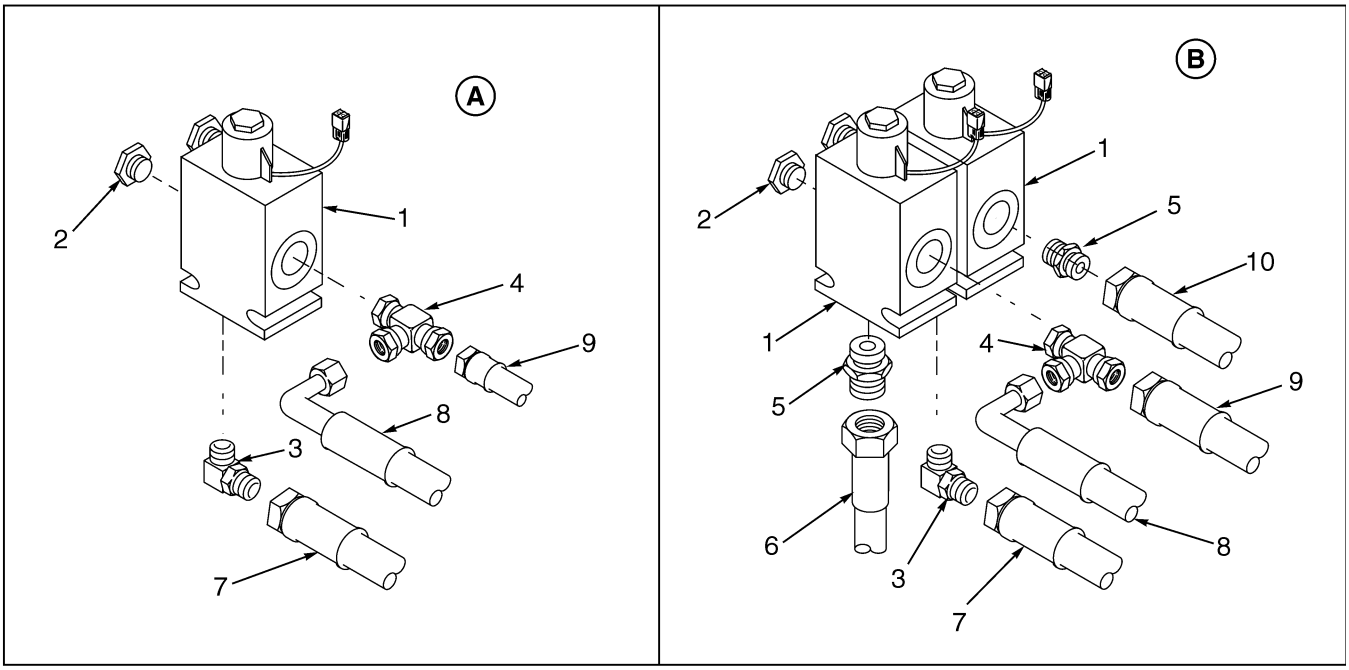

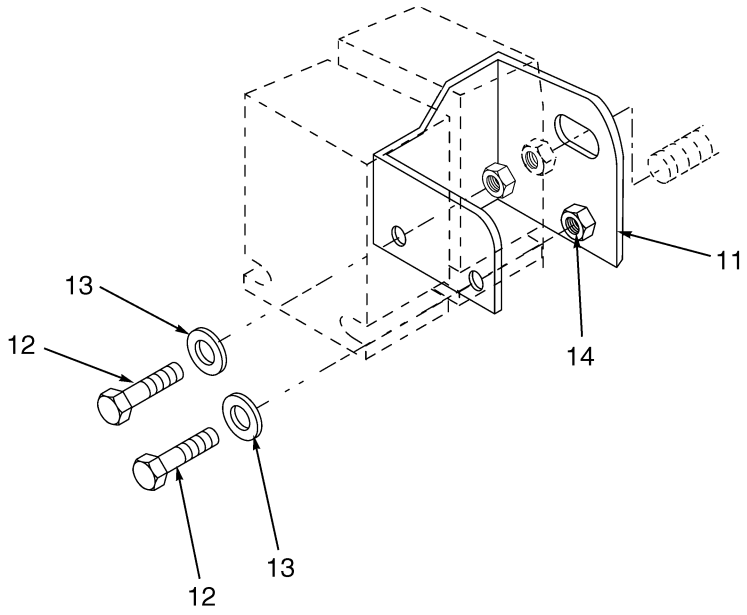

HP150857

©2006 HYSTER COMPANY

HYDRAULIC SOLENOID VALVE ATTACHING PARTS
LIFT AND LOWERING INTERRUPT
EMPTY CONTAINER HANDLER
(S/N A214E-01752X⇒)

KEY:
A: Lowering Interrupt
B: Lift and Lowering Interrupt

ITEM	PART NO.	DESCRIPTION	QTY A	QTY B
1	1383517	Solenoid Valve (☞ Figure 9-18)	1	2
2	222443	Fitting	1	2
3	16558	Fitting	1	1
4	16969	Fitting	1	1
5	16540	Fitting	..	2
6	816694	Hose	..	1
7	816691	Hose	1	1
8	816690	Hose	1	1
9	816692	Hose	1	1
10	816693	Hose	..	1
11	816597	Bracket	1	1
12	18471	Capscrew	2	..
12	18480	Capscrew	..	2
13	15127	Washer	2	2
14	15054	Nut	2	2

©2006 HYSTER COMPANY

HYDRAULIC SOLENOID VALVE (Figure 9-18)
LIFT AND LOWERING INTERRUPT
EMPTY CONTAINER HANDLER
(S/N A214E-01752X⇒)

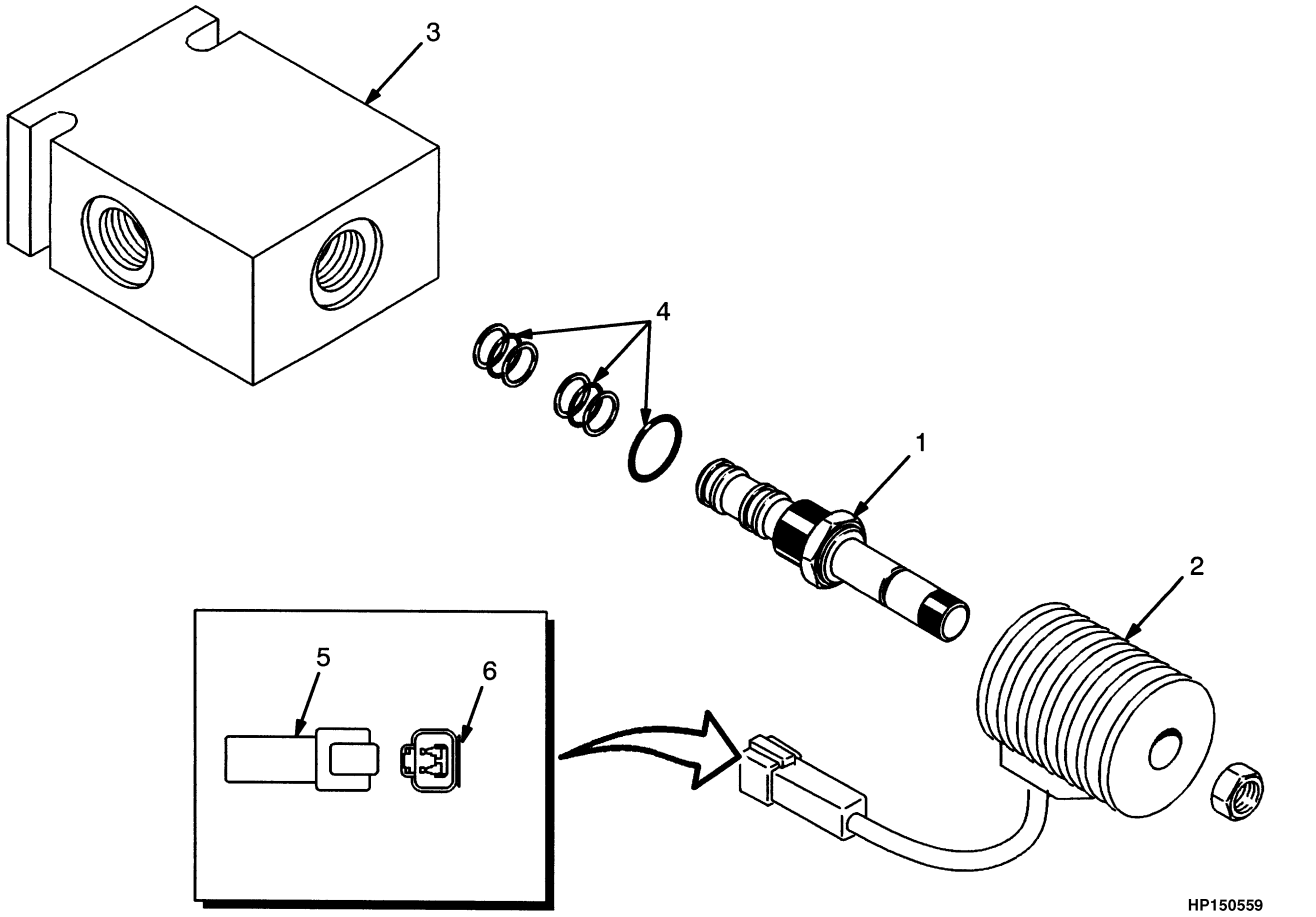

ITEM	PART NO.	DESCRIPTION	QTY
	1383517	Solenoid Valve	1
1	1388379	Actuator	1
2	1388380	Coil	1
2	1330409	Connector	1
2	1330414	Secondary Lock	1
3	1343161	Body	1
4	371172	Seal Kit	1
5	1330409	Connector	1
6	1330414	Secondary Lock	1

©2006 HYSTER COMPANY

NOTES

HYDRAULIC PILOT CONTROL VALVE (Figure 9-19)
EMPTY CONTAINER HANDLER

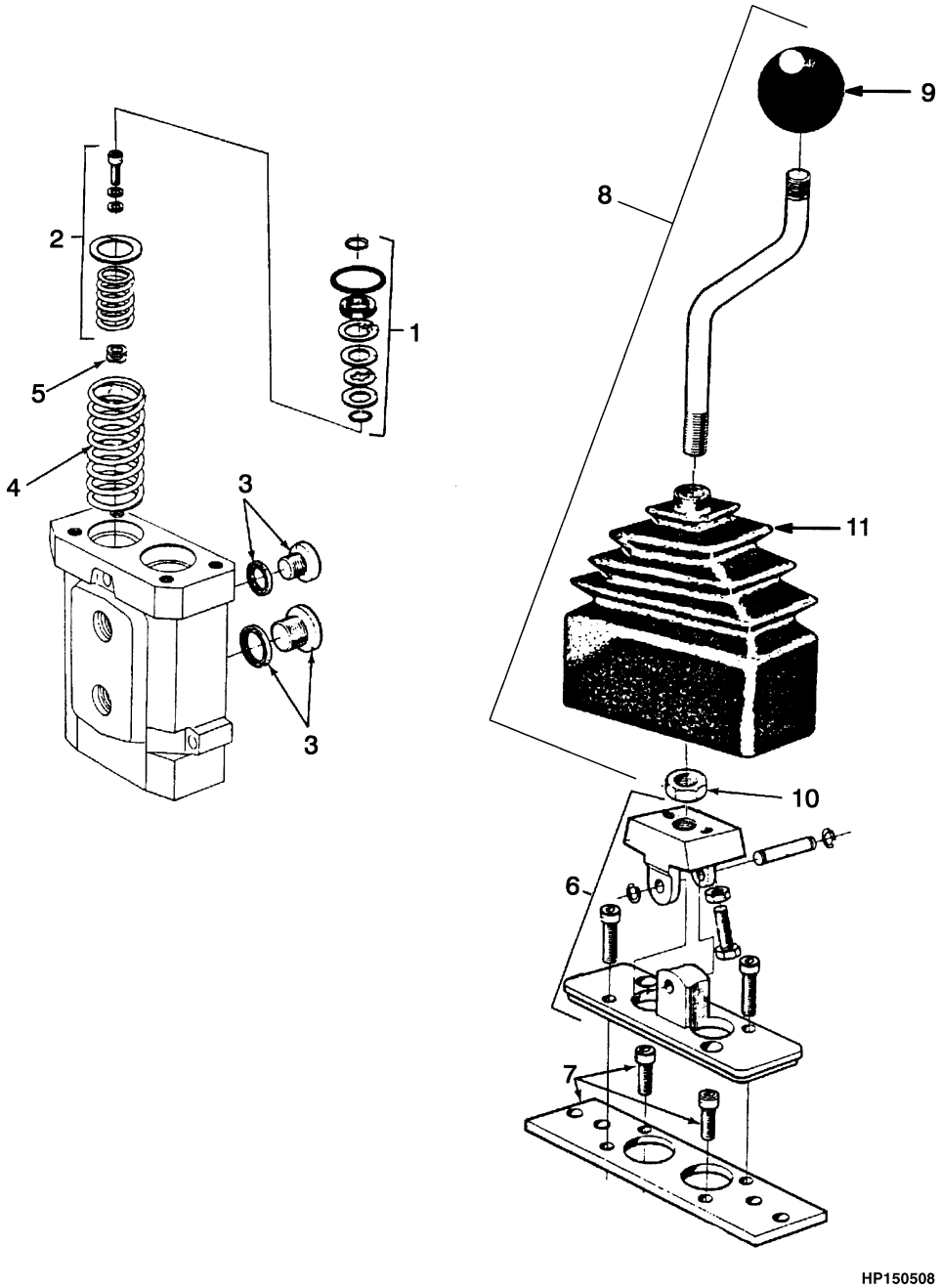

©2006 HYSTER COMPANY

HYDRAULIC PILOT CONTROL VALVE
EMPTY CONTAINER HANDLER

ITEM		PART NO.	DESCRIPTION	QTY
		1373611	Valve	1
		1390642	Valve	1
1		1328548	Pin Set	2
2	**a**	1393424	Spring	2
2	**b**	1453623	Spring Set	1
2	**b**	1453624	Spring Set	1
3		1318045	Plug Kit	1
4		1318025	Spring	2
5		1318026	Spacer	2
5		1318027	Spacer	2
6		1318047	Pressure Plate	1
7		1316395	Plate	1
8		1316397	Lever	1
9		345929	Knob	1
10		1316398	Nut	1
11		345735	Boot	1

FOOTNOTES:
a With Part Number 1373611 Only
b With Part Number 1390642 Only

©2006 HYSTER COMPANY

HYDRAULIC PILOT CONTROL SUPPLY VALVE (Figure 9-20)
EMPTY CONTAINER HANDLER

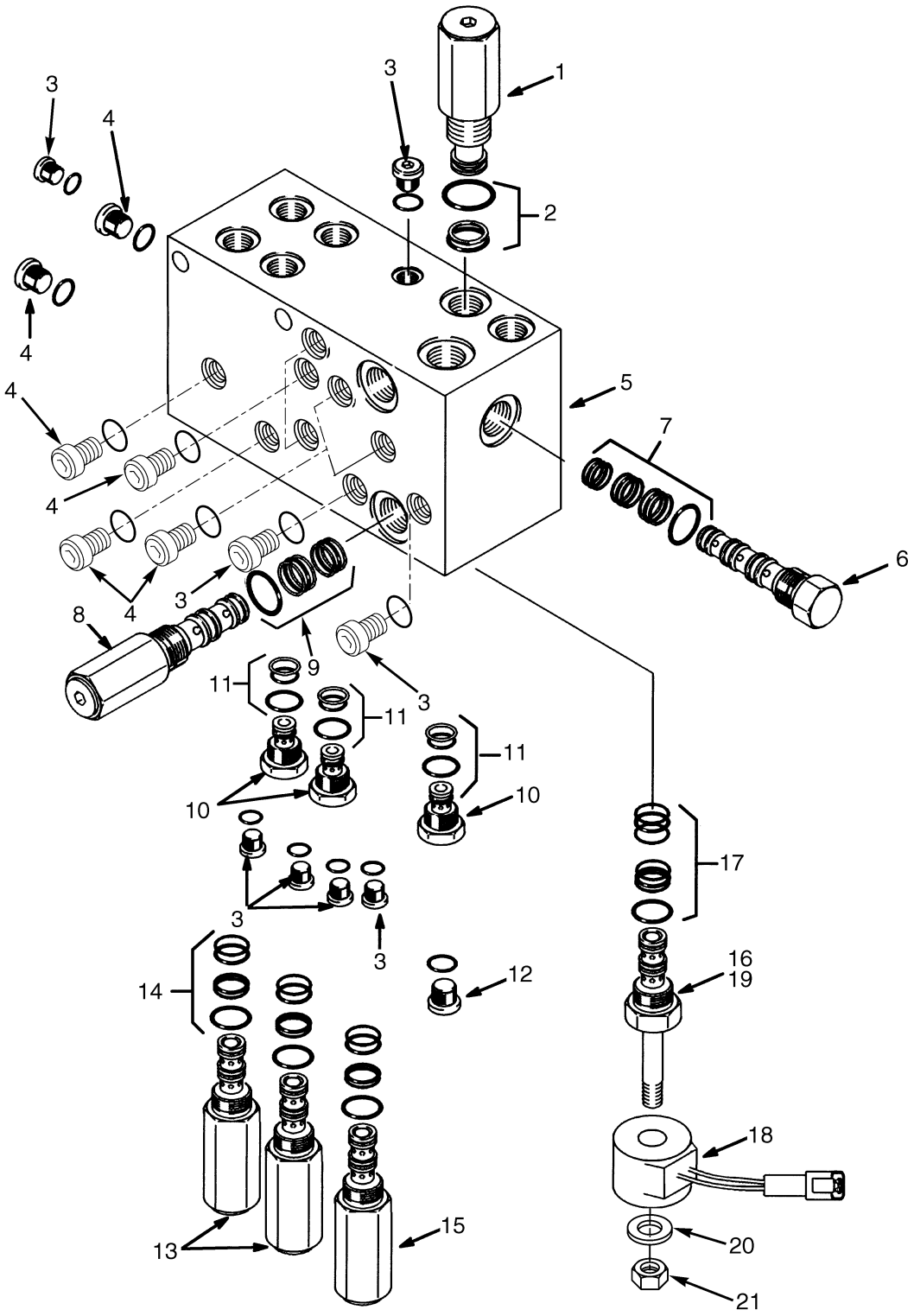

HP150858

©2006 HYSTER COMPANY

HYDRAULIC PILOT CONTROL SUPPLY VALVE
EMPTY CONTAINER HANDLER

ITEM		PART NO.	DESCRIPTION	QTY
		1487919	Valve	1
1		1491213	Relief Valve	1
2		323488	Seal Kit	1
3		1491210	Plug (Expansion)	18
4		1453148	Plug	10
5		1491211	Body	1
6		1453143	Flow Regulator	1
7		1382028	Seal Kit	1
8		1453140	Pressure Reduction Valve	3
9		371172	Seal Kit	1
10		323491	Check Valve	3
11		323488	Seal Kit	1
12		1453146	Plug	1
13		1453139	Pressure Reduction Valve	2
14		371172	Seal Kit	1
15		1491212	Valve	1
16		1453141	Solenoid Valve	AR
17		1453142	Seal Kit	1
18		1455820	Coil	1
19		383789	Thread Lock	17
20		1491209	Washer (Serrated)	1
21		. . . . .	Nut	1
22	**a**	323493	Plug	1

FOOTNOTES:
a Not Illustrated

HYDRAULIC RELIEF VALVE (Figure 9-21)
TILT
(⇒D/B 04/2003)

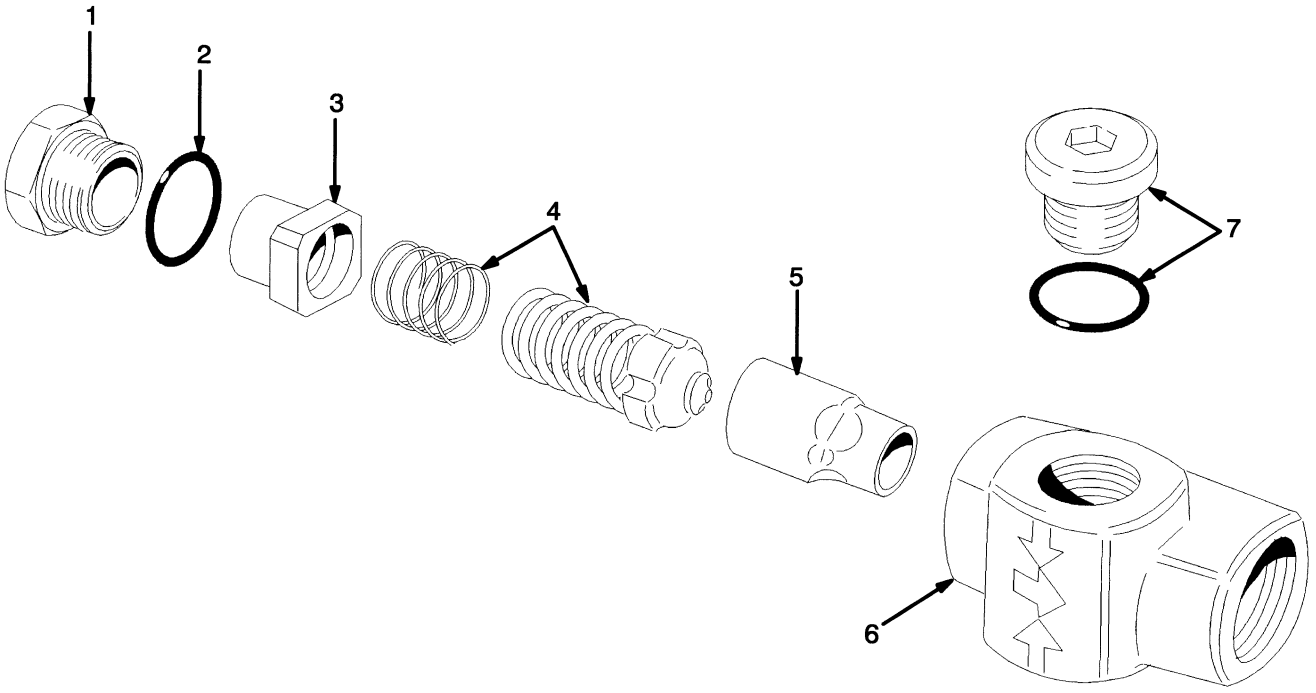

HP150499

ITEM	PART NO.	DESCRIPTION	QTY
	1346421	Relief Valve	4
1	1350997	Plug	1
2	1331081	O-Ring	1
3	1350710	Spacer	1
4	1350711	Cartridge	1
5	1350712	Housing	1
6	. . . . .	Body	1
7	222444	Fitting	1
7	16486	O-Ring	1

©2006 HYSTER COMPANY

NOTES

HYDRAULIC PUMP (Figure 9-22)
(⇒S/N A214E-1534)

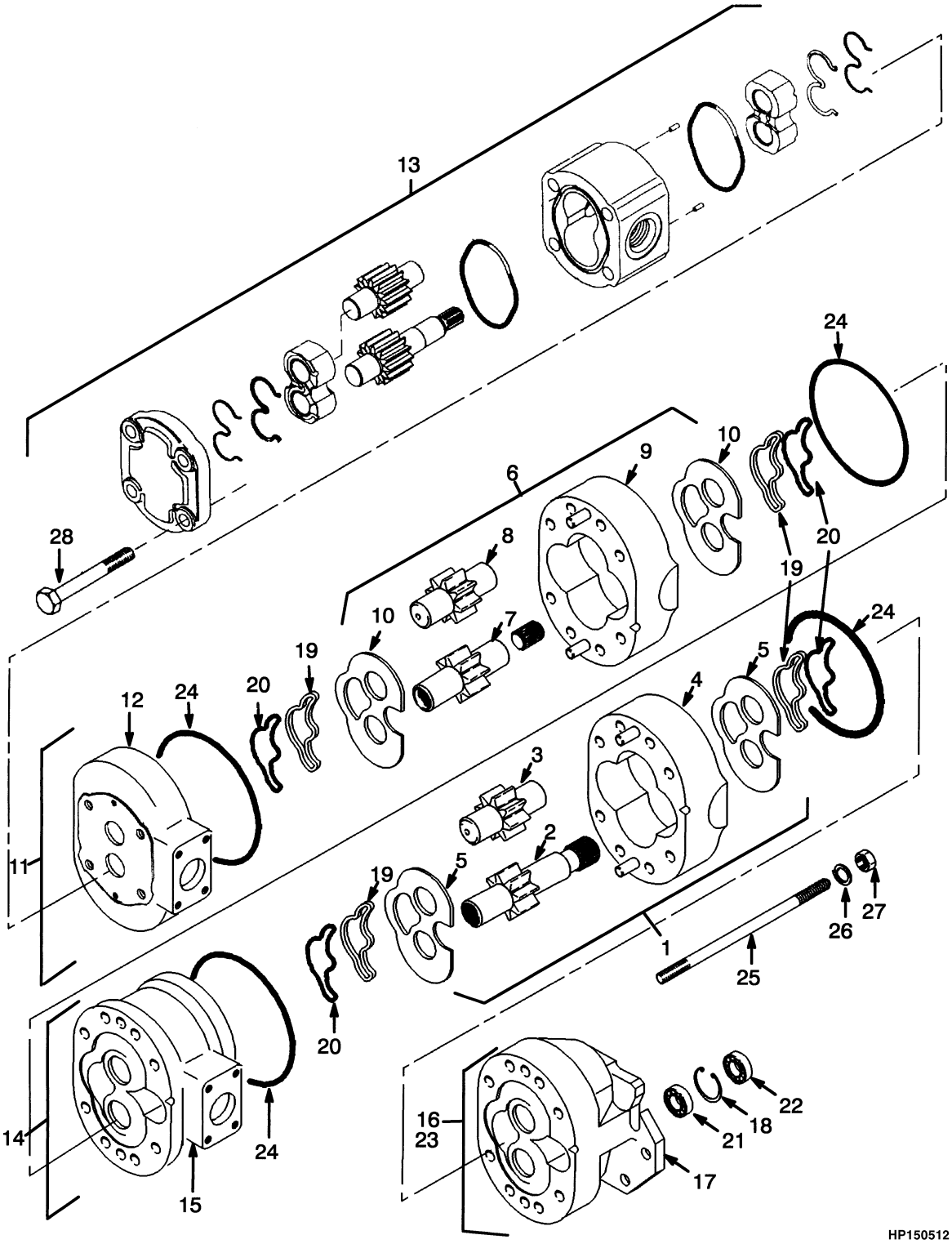

©2006 HYSTER COMPANY

HYDRAULIC PUMP
(⇒S/N A214E-1534)

ITEM	PART NO.	DESCRIPTION	QTY
	1372993	Hydraulic Pump	1
1	1382032	Displacement Kit (Front)	1
2	. . . . .	Drive Gear	1
3	. . . . .	Driven Gear	1
4	1382036	Center Section	1
5	1318609	Wear Plate	2
6	1382037	Displacement Kit (Rear)	1
7	. . . . .	Drive Gear	1
8	. . . . .	Driven Gear	1
9	1382040	Center Section	1
10	1318609	Wear Plate	1
11	1382041	Port Subassembly (Rear)	1
12	1382042	Port Section	1
13	1382044	Pump Subassembly	1
13	. . . . .	O-Ring	2
13	. . . . .	Back-Up Ring	2
13	. . . . .	E-Seal	2
13	2303239	Retaining Ring	1
13	. . . . .	Shaft Seal	1
14	1382045	Port Subassembly (Center)	1
15	1382046	Port Section	1
16	1382047	Cover Subassembly (Front)	1
17	1382048	Cover	1
18	1382051	Snap Ring	1
19	1342578	Retainer	4
20	1382053	Seal	4
21	1382054	Seal	1
22	1382055	Seal	1
23	294309	Plug	1
24	1382052	O-Ring	4
25	1450545	Stud	8
26	1318606	Washer	8
27	1450547	Nut	8
28	1450548	Bolt	4
	1382050	Seal Kit (Includes Items 18-23)	4

©2006 HYSTER COMPANY

HYDRAULIC PUMP (Figure 9-23)
(S/N A214E-1535⇒)

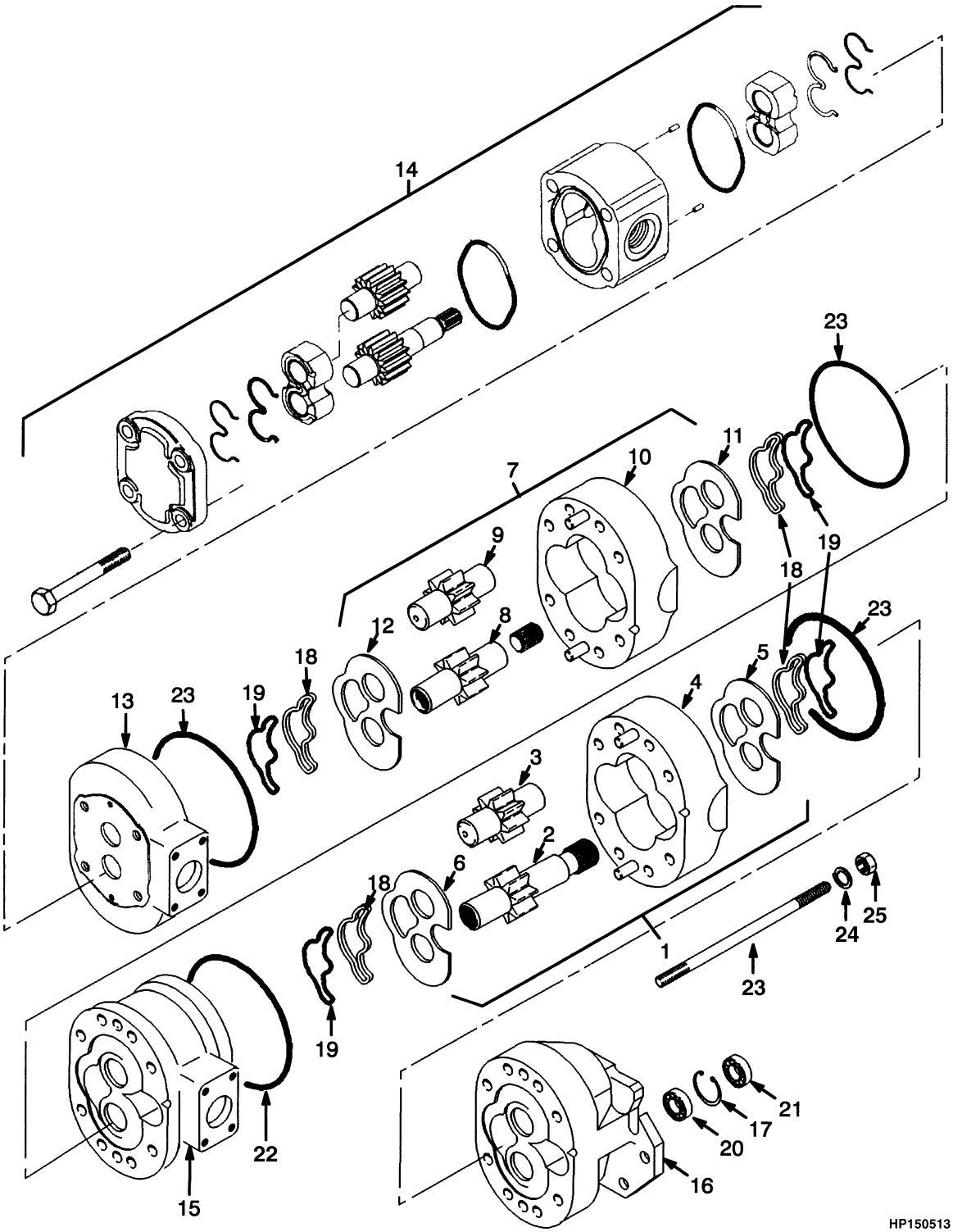

©2006 HYSTER COMPANY

HYDRAULIC PUMP
(S/N A214E-1535⇒)

ITEM	PART NO.	DESCRIPTION	QTY
	1391499	Hydraulic Pump	1
1	1456195	Section Kit (Front)	1
2	. . . . .	Drive Gear	1
3	. . . . .	Driven Gear	1
4	. . . . .	Section (Center)	1
5	1318617	Pressure Plate (Front)	2
6	1318613	Pressure Plate (Rear)	1
7	1456196	Section Kit (Rear)	1
8	. . . . .	Drive Gear	1
9	. . . . .	Driven Gear	1
10	. . . . .	Section (Center)	1
11	1318617	Pressure Plate (Front)	1
12	1318613	Pressure Plate (Rear)	1
13	1456198	Port Section Kit (Rear)	1
14	1456201	Pump Kit	1
15	1456199	Drive Port Kit (Center)	1
16	1456197	Cover Kit (Front)	1
17	1318619	Snap Ring	1
18	. . . . .	Seal	4
19	. . . . .	Seal	4
20	. . . . .	Seal	1
21	. . . . .	Seal	1
22	. . . . .	O-Ring	4
23	. . . . .	Stud	8
24	1318621	Lockwasher	8
25	221714	Nut	8
	1456194	Seal Kit (Includes Items 18-22)	1
	1456200	Stud Kit (Includes Items 23-25)	1

©2006 HYSTER COMPANY

HYDRAULIC TANK (Figure 9-24)
(⇒S/N A214E-1534)

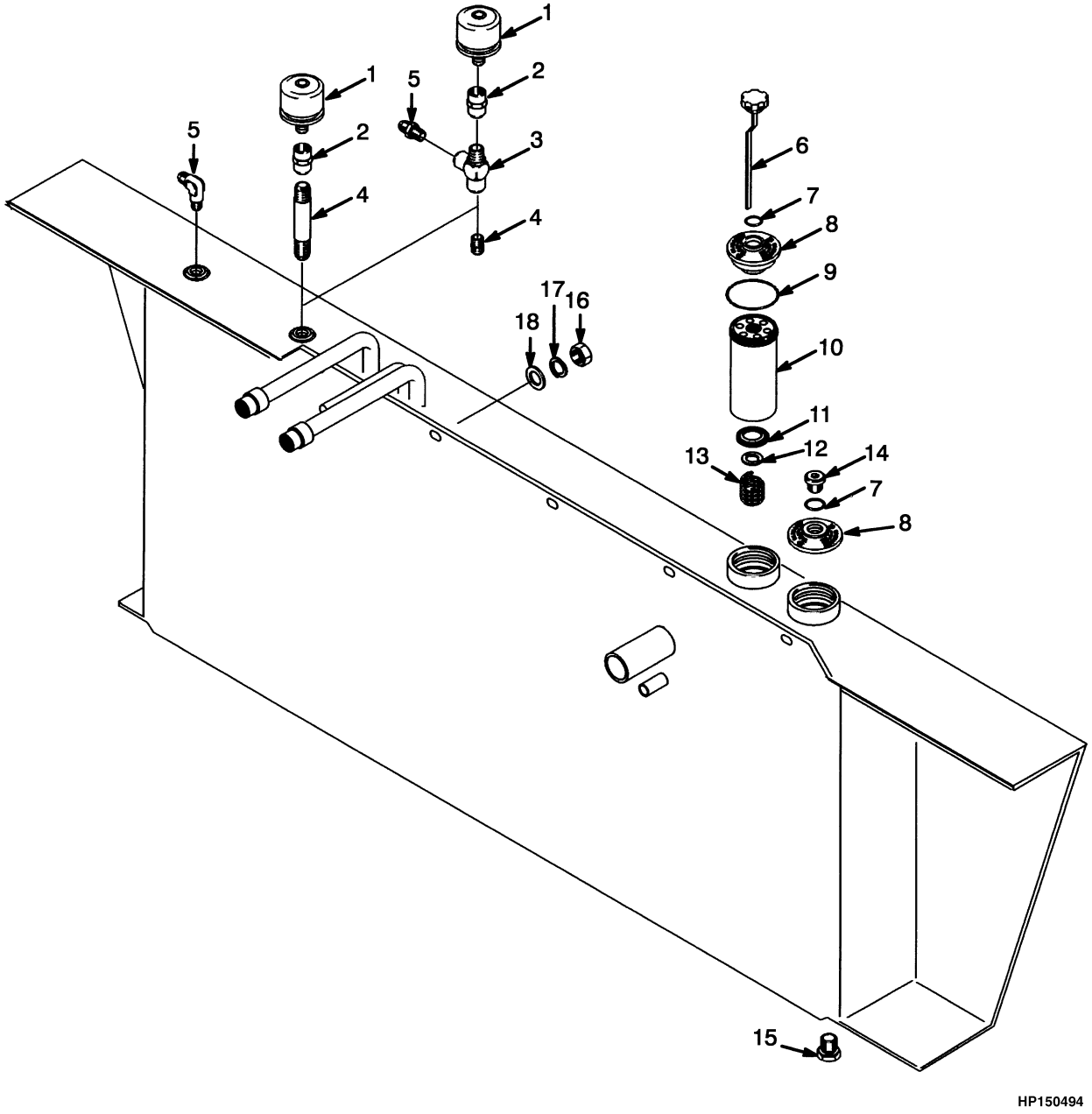

©2006 HYSTER COMPANY

HYDRAULIC TANK
(⇒S/N A214E-1534)

ITEM		PART NO.	DESCRIPTION	QTY
		1381990	Hydraulic Tank	1
1		353302	Breather	1
2		12829	Fitting	1
3	**a**	156696	Fitting	1
4	**b**	15382	Fitting	1
4	**a**	15384	Fitting	1
5	**b**	17300	Fitting	1
5	**a**	17345	Fitting	1
6		348368	Dipstick Assembly	1
7		16487	O-Ring	1
8		190787	Filter Head	2
9		39742	O-Ring	2
10		376066	Filter	2
11		181941	Seal	2
12		190785	Washer	2
13		190784	Spring	2
14		233683	Fitting	1
15		14388	Fitting	1
16		216877	Nut	5
17		320162	Washer	5
18		292683	Lockwasher	5

FOOTNOTES:
a Empty Container Handler
b Fork Lift Truck

©2006 HYSTER COMPANY

HYDRAULIC TANK (Figure 9-25)
(S/N A214E-1535⇒)

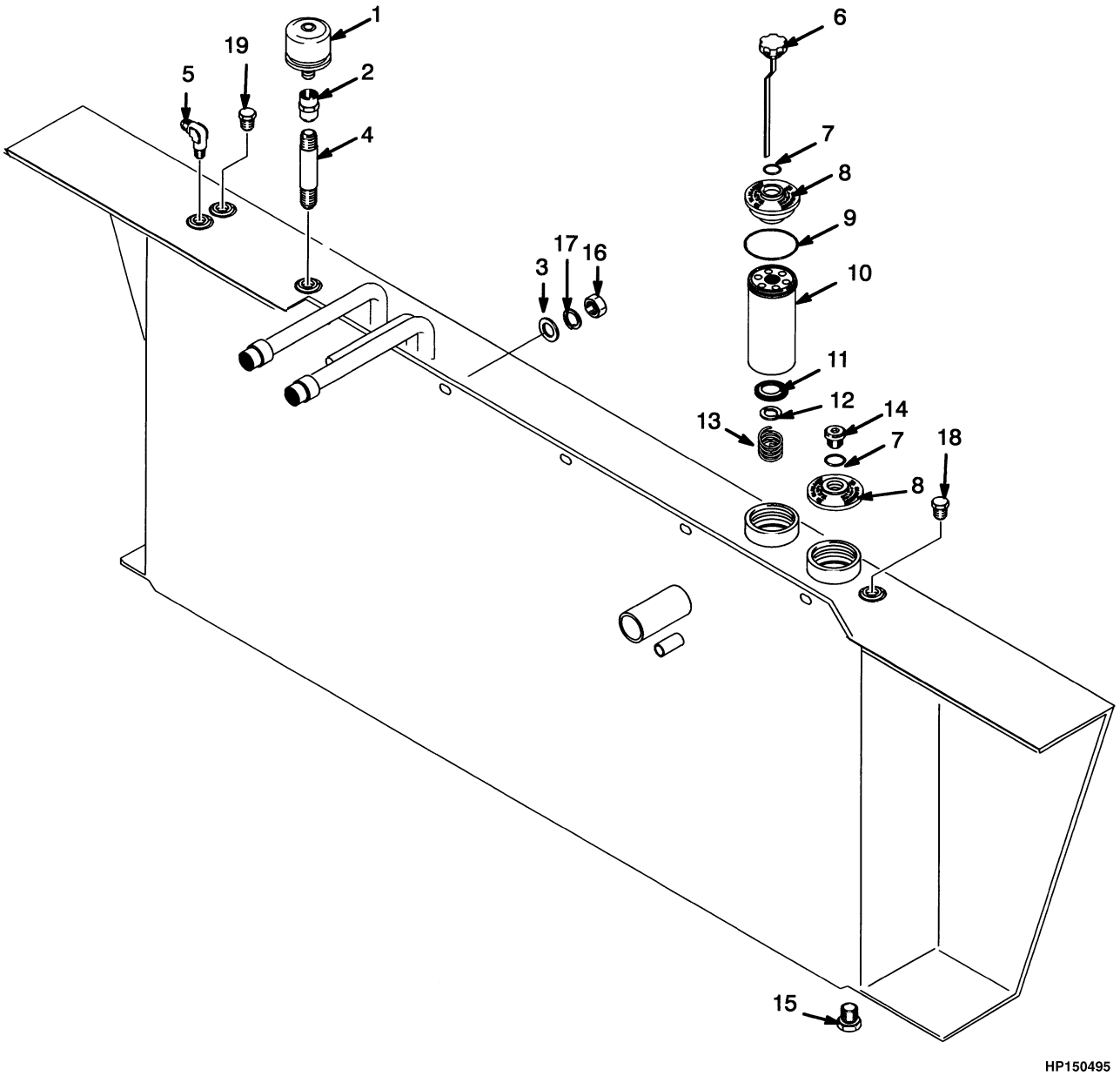

©2006 HYSTER COMPANY

HYDRAULIC TANK
(S/N A214E-1535⇒)

KEY:
A: Empty Container Handler
B: Fork Lift Truck

ITEM		PART NO.	DESCRIPTION	QTY A	QTY B
	b	1456475	Hydraulic Tank (H400H-EC5-H450H-EC6)	1	..
	c	1519694	Hydraulic Tank (H400H-EC5-H450H-EC6)	1	..
	a	1528536	Hydraulic Tank (H400H-EC5-H450H-EC6)	1	..
	b	1393841	Hydraulic Tank (H360-400H)	..	1
	a	1528535	Hydraulic Tank (H360-400H)	..	1
	c	1560003	Hydraulic Tank (H360-400H)	..	1
	a	1528534	Hydraulic Tank (H450H)	..	1
	c	1560002	Hydraulic Tank (H450H)	..	1
1	**b**	353302	Breather	1	1
1	**a**	1475141	Breather	1	1
1		1494312	Element	1	1
2		12829	Fitting	1	1
3		292683	Lockwasher	5	5
4		15382	Fitting	1	1
5		17300	Fitting	..	1
6		348368	Dipstick Assembly	1	1
7		16487	O-Ring	1	1
8		190787	Filter Head	2	2
9		39742	O-Ring	2	2
10	**d**	376066	Filter	2	2
10	**e**	2045122	Filter	2	2
11		181941	Seal	..	2
12		190785	Washer	..	2
13		190784	Spring	..	2
14		233683	Fitting	..	1
15	**f**	14388	Fitting	..	1
15	**g**	35503	Fitting	..	1
16		216877	Nut	5	5
17		320162	Washer	5	5
18	**f**	17637	Fitting	..	1
19	**g**	17636	Fitting	..	1

FOOTNOTES:
a Tier I And Tier II Engine
b Tier I Engine
c Tier II Engine
d ⇒ S/N A214E-1804
e S/N A214E-1805 ⇒
f ⇒ D/B 12/1998
g D/B 12/1998 ⇒

©2006 HYSTER COMPANY

BRAKE COOLING SYSTEM (Figure 9-26)
EMPTY CONTAINER HANDLER
(⇒S/N A214E-1751)

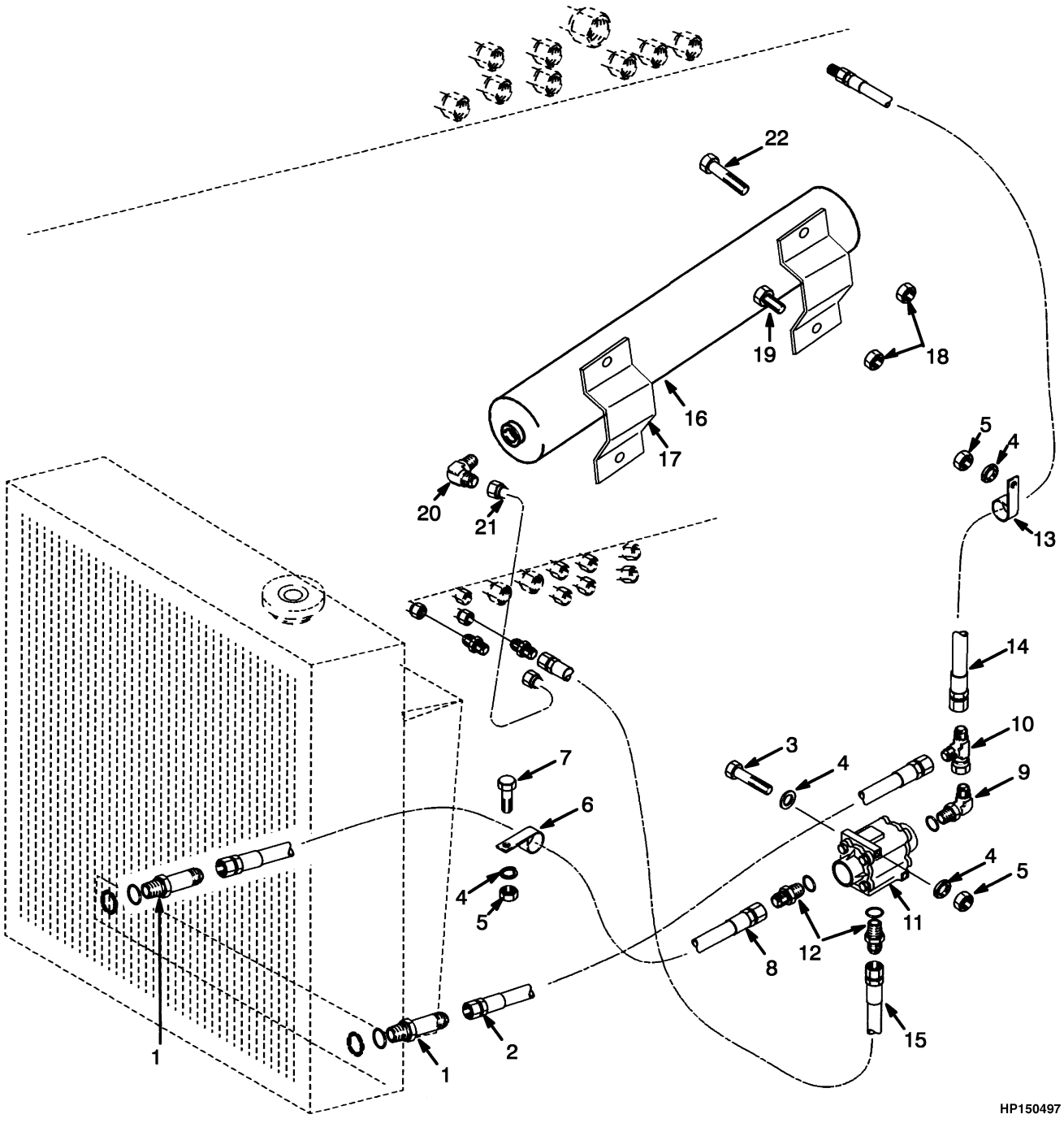

©2006 HYSTER COMPANY

BRAKE COOLING SYSTEM
EMPTY CONTAINER HANDLER
(⇒S/N A214E-1751)

ITEM		PART NO.	DESCRIPTION	QTY
1		16551	Fitting	2
1		16485	O-Ring	1
2		1385558	Hose	1
3		292525	Capscrew	2
4	**a**	320159	Washer	3
4	**b**	320159	Washer	6
5	**a**	302401	Locknut	3
5	**b**	302401	Locknut	4
6	**b**	255578	Clamp	1
6	**a**	398184	Clamp	1
7		287854	Capscrew	1
8		153049	Hose	1
9		201776	Fitting	1
9		16487	O-Ring	1
10		17064	Fitting	1
11		1388209	Valve	1
12		222383	Fitting	2
12		16487	O-Ring	1
13		1384699	Clamp	3
14	**c**	1382856	Hose	1
14	**d**	95578	Hose	1
15	**e**	1382855	Hose	1
15	**f**	1468074	Hose	1
16		1496496	Accumulator (☞ Figure 9-30)	1
17		1376844	Bracket	2
18		302402	Locknut	4
19		292528	Capscrew	2
20		110174	Fitting	1
21		1382861	Tube	1
22		292539	Capscrew	2

FOOTNOTES:
a ⇒ S/N A214E-1534
b S/N A214E-1535 ⇒
c ⇒ S/N A214E-1572
d S/N A214E-1573 ⇒
e ⇒ S/N A214E-1665
f S/N A214E-1666 ⇒

©2006 HYSTER COMPANY

BRAKE COOLING SYSTEM (Figure 9-27)
EMPTY CONTAINER HANDLER
(S/N A214E-1752⇒)

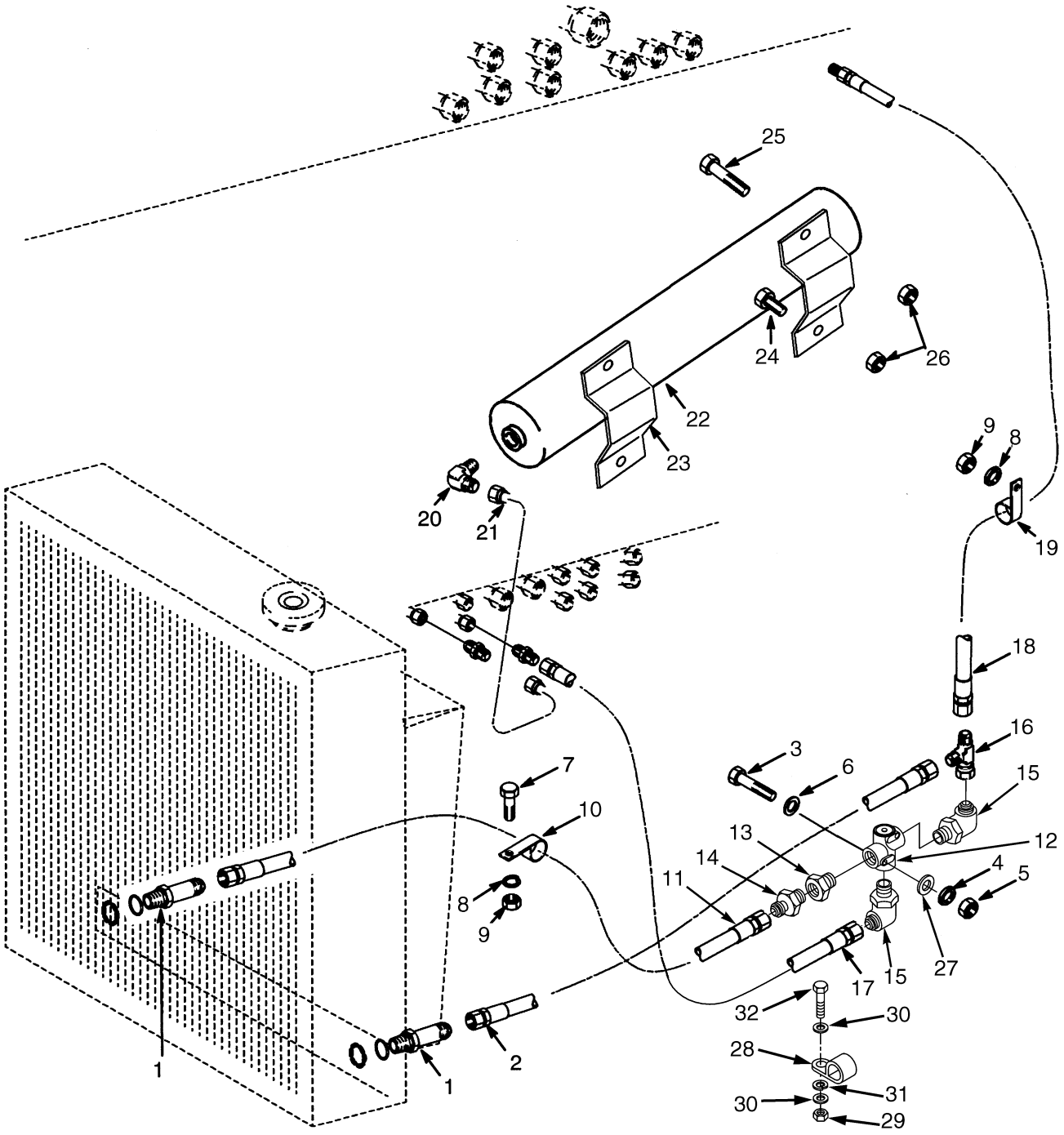

©2006 HYSTER COMPANY

BRAKE COOLING SYSTEM
EMPTY CONTAINER HANDLER
(S/N A214E-1752⇒)

ITEM	PART NO.	DESCRIPTION	QTY
1	16551	Fitting	2
2	1385558	Hose	2
3	136750	Capscrew	2
4	292681	Lockwasher	2
5	239503	Nut	2
6	320157	Washer	2
7	287854	Capscrew	1
8	320159	Washer	3
9	302401	Locknut	3
10	398184	Clamp	1
11	153049	Hose	1
12	1483901	Valve (Thermo By-Pass)	1
13	1483903	Fitting	1
14	1483904	Fitting	1
15	1483902	Fitting	2
16	17064	Fitting	1
17	1484331	Hose	1
18	95578	Hose	1
19	1384699	Clamp	4
20	110174	Fitting	1
21	1382861	Tube	1
22	1563795	Accumulator Assembly	1
22	1502879	Repair Kit	1
23	1376844	Bracket	2
24	292528	Capscrew	2
25	292539	Capscrew	2
26	302402	Locknut	4
27	1300165	Spacer	2

©2006 HYSTER COMPANY

BRAKE COOLING SYSTEM (Figure 9-28)
FORK LIFT TRUCK
(⇒S/N A214E-1751)

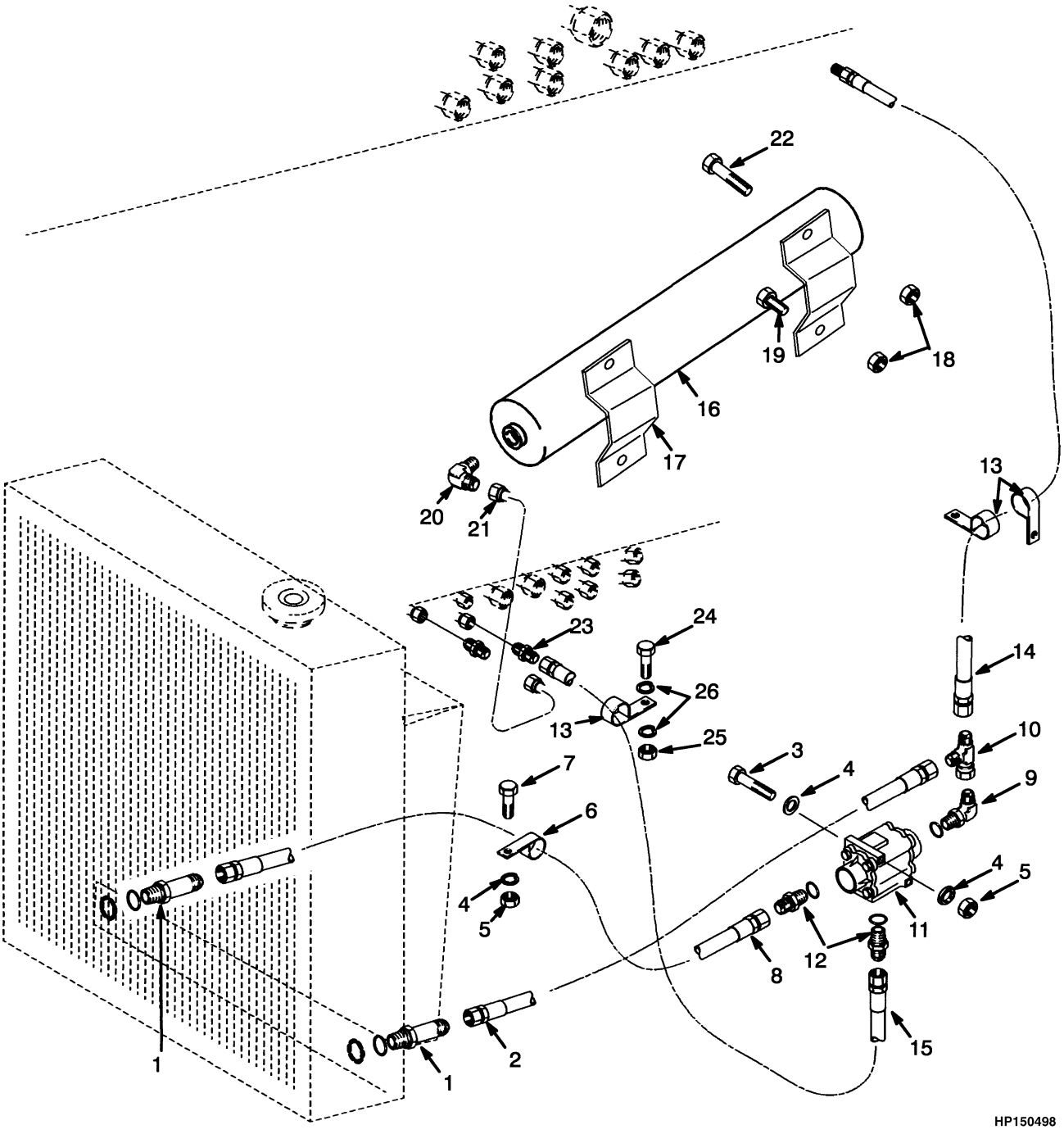

©2006 HYSTER COMPANY

BRAKE COOLING SYSTEM
FORK LIFT TRUCK
(⇒S/N A214E-1751)

ITEM		PART NO.	DESCRIPTION	QTY
1		16551	Fitting	2
1		16485	O-Ring	1
2		1385558	Hose	1
3		292525	Capscrew	2
4		320159	Washer	3
5		302401	Locknut	3
6		398184	Clamp	1
7		287854	Capscrew	1
8		153049	Hose	1
9		201776	Fitting	1
9		16487	O-Ring	1
10		17064	Fitting	1
11		1388209	Valve	1
12		222383	Fitting	2
12		16487	O-Ring	1
13		166112	Clamp	2
14	**a**	1451532	Hose	1
14	**b**	1460409	Hose	1
15	**c**	1451533	Hose	1
15	**d**	1468074	Hose	1
16		1496496	Accumulator (☞ Figure 9-30)	1
17		1376844	Bracket	2
18		302402	Locknut	4
19		292528	Capscrew	2
20		110174	Fitting	1
21		1382861	Tube	1
22		292539	Capscrew	2
23	**c**	17039	Fitting	1
24		292502	Capscrew	1
25		136687	Nut	1
26		296418	Washer	2

FOOTNOTES:
a ⇒ S/N A214E-1572
b S/N A214E-1573 ⇒
c ⇒ S/N A214E-1665
d S/N A214E-1666 ⇒

©2006 HYSTER COMPANY

BRAKE COOLING SYSTEM (Figure 9-29)
FORK LIFT TRUCK
(S/N A214E-1752⇒)

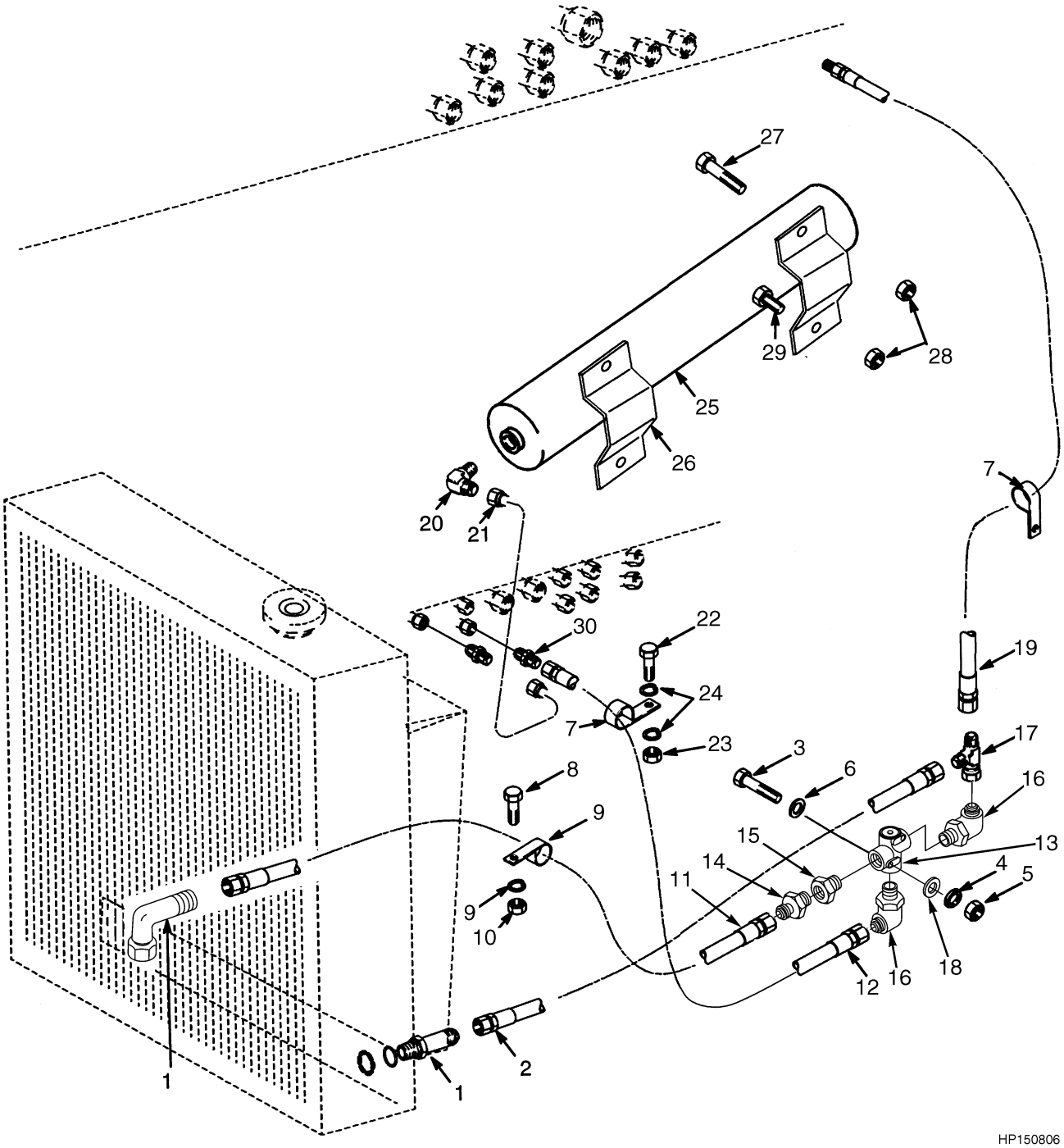

©2006 HYSTER COMPANY

BRAKE COOLING SYSTEM
FORK LIFT TRUCK
(S/N A214E-1752⇒)

ITEM	PART NO.	DESCRIPTION	QTY
1	16989	Fitting	1
2	1385558	Hose	1
3	136750	Capscrew	2
4	320157	Washer	2
5	239503	Nut	2
6	292681	Lockwasher	2
7	398184	Clamp	4
8	287854	Capscrew	1
9	320159	Washer	4
10	302401	Locknut	4
11	153049	Hose	1
12	1484331	Hose	1
13	1483901	Valve (Thermo By-Pass)	1
14	1483904	Fitting	1
15	1483903	Fitting	1
16	1483902	Fitting	2
17	17064	Fitting	1
18	1300165	Spacer	2
19	1460409	Hose	1
20	110174	Fitting	1
21	1382861	Tube	1
22	292502	Capscrew	1
23	136687	Nut	1
24	15127	Washer	2
25	1563795	Accumulator Assembly	1
25	1502879	Repair Kit	1
26	1376844	Bracket	2
27	292539	Capscrew	2
28	302402	Locknut	4
29	292528	Capscrew	2
30	17039	Fitting	1

©2006 HYSTER COMPANY

BRAKE COOLING SYSTEM (Figure 9-30)
ACCUMULATOR

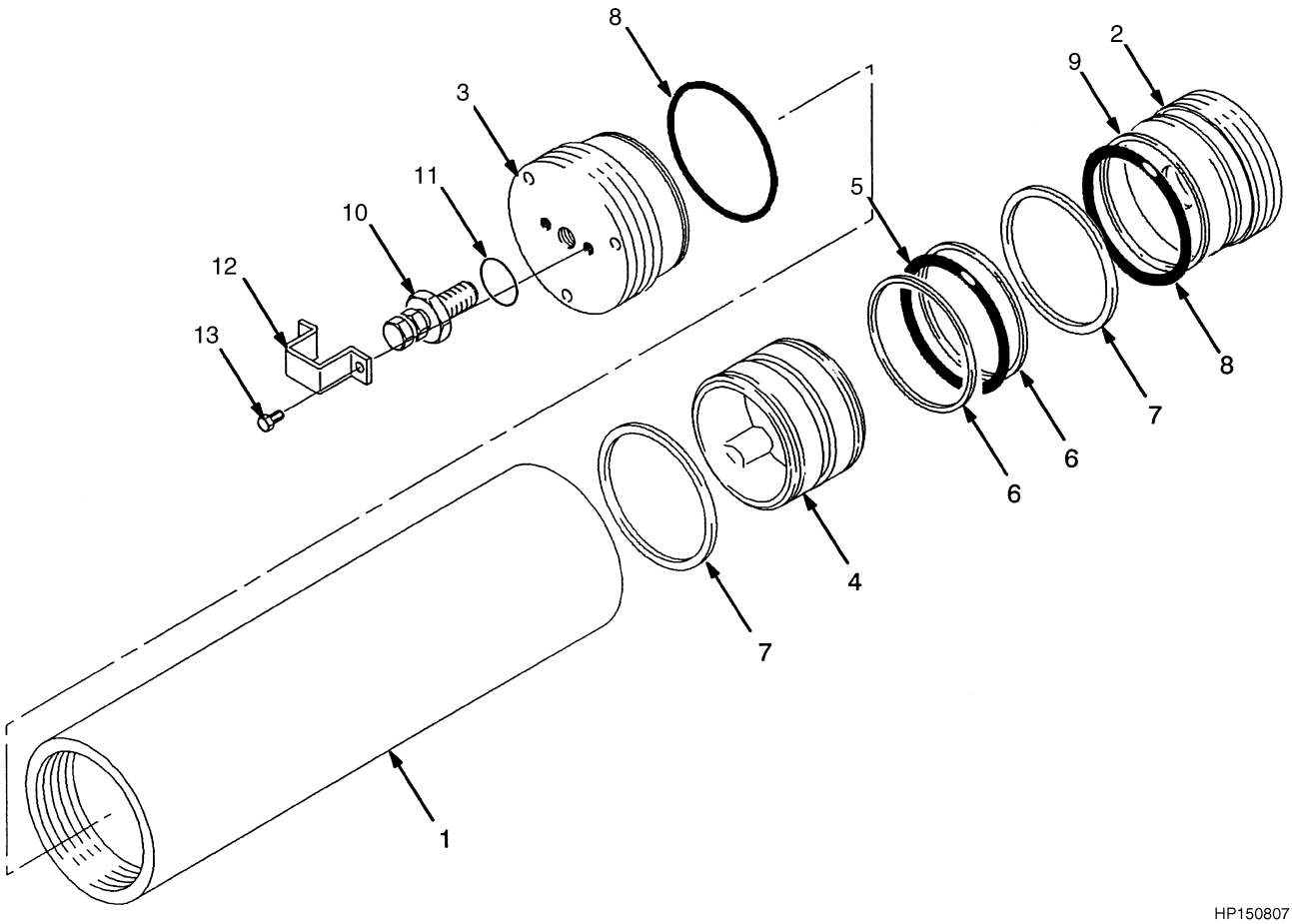

ITEM	PART NO.	DESCRIPTION	QTY
	1496496	Accumulator	1
1	. . . . .	Shell	1
2	1502881	End Cap (Hydraulic)	1
3	1502882	End Cap (Gasoline)	1
4	1502883	Piston	1
5	. . . . .	O-Ring	1
6	. . . . .	Back-Up Washer	2
7	1376933	Wear Ring	2
8	. . . . .	O-Ring	2
9	. . . . .	Back-Up Washer	2
10	. . . . .	Valve (Gasoline)	1
11	. . . . .	O-Ring	1
12	1376934	Protector	1
13	1502888	Screw	2
	1502879	Repair Kit (Includes Items 4-8, 10)	1

©2006 HYSTER COMPANY

NOTES

HYDRAULIC SYSTEM (Figure 9-31)
TILT CYLINDER
EMPTY CONTAINER HANDLER

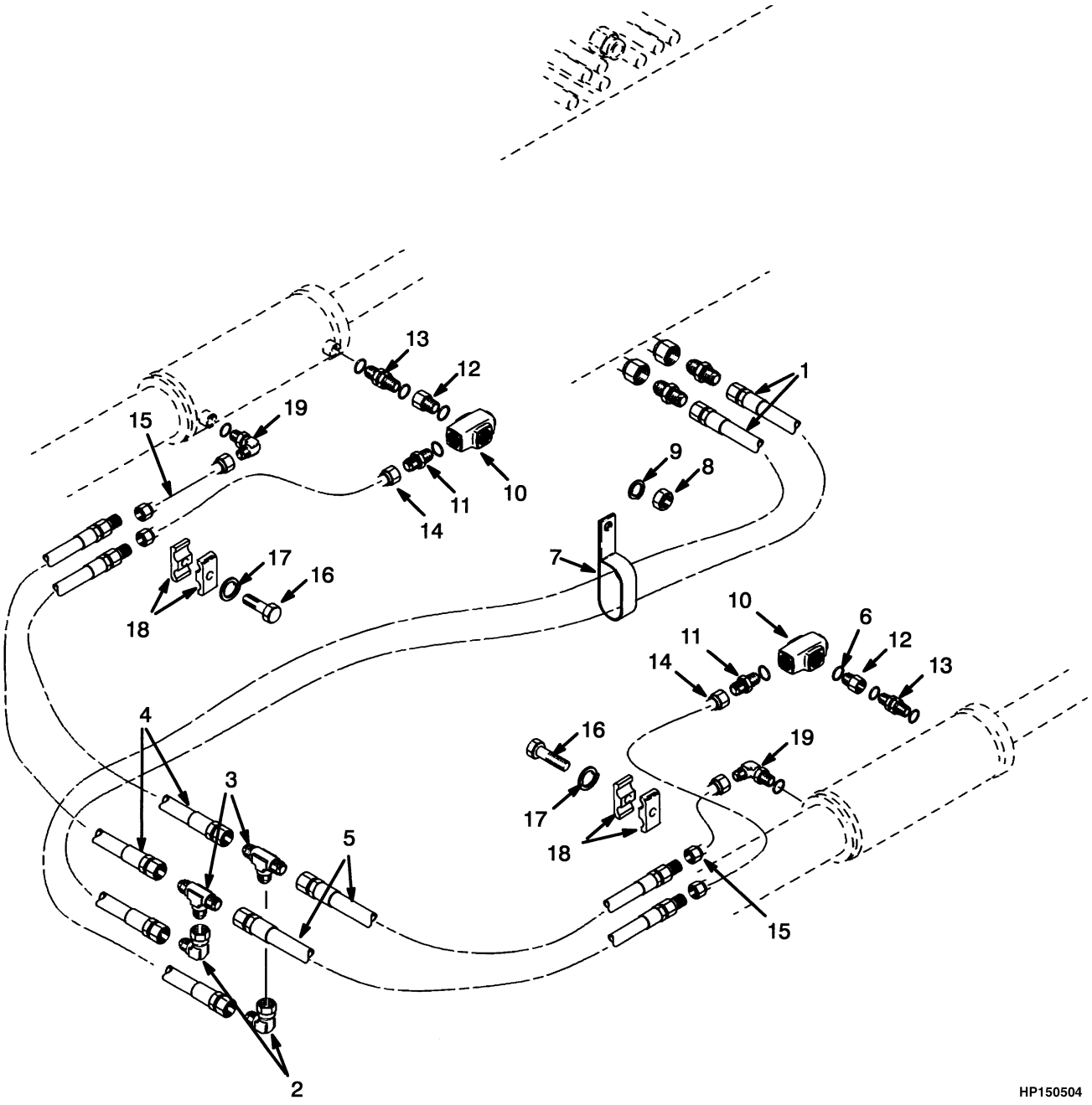

©2006 HYSTER COMPANY

HYDRAULIC SYSTEM
TILT CYLINDER
EMPTY CONTAINER HANDLER

ITEM		PART NO.	DESCRIPTION	QTY
1		1384467	Hose	2
2		16989	Fitting	2
3		16475	Fitting	2
4		1384468	Hose	2
5		1384469	Hose	2
6		15907	Washer	4
7		251994	Clamp	2
8		302401	Locknut	2
9		320159	Washer	2
10	**a**	1346421	Relief Valve (☞ Figure 9-21)	1
10	**b**	1564349	Relief Valve	1
11		16541	Fitting	2
11		16484	O-Ring	1
12		1336112	Adapter	2
13	**a**	222456	Fitting	2
13		16486	O-Ring	1
14		1391851	Tube	2
15		1391850	Tube	2
16		132861	Capscrew	4
17		292681	Lockwasher	4
18		219302	Clamp	8
19		193503	Plate	4
20		17167	Fitting	2
20		16484	O-Ring	1

FOOTNOTES:
a ⇒ S/N A214E02029B
b S/N A214E02030B ⇒

©2006 HYSTER COMPANY

HYDRAULIC SYSTEM (Figure 9-32)
TILT CYLINDER
FORK LIFT TRUCK

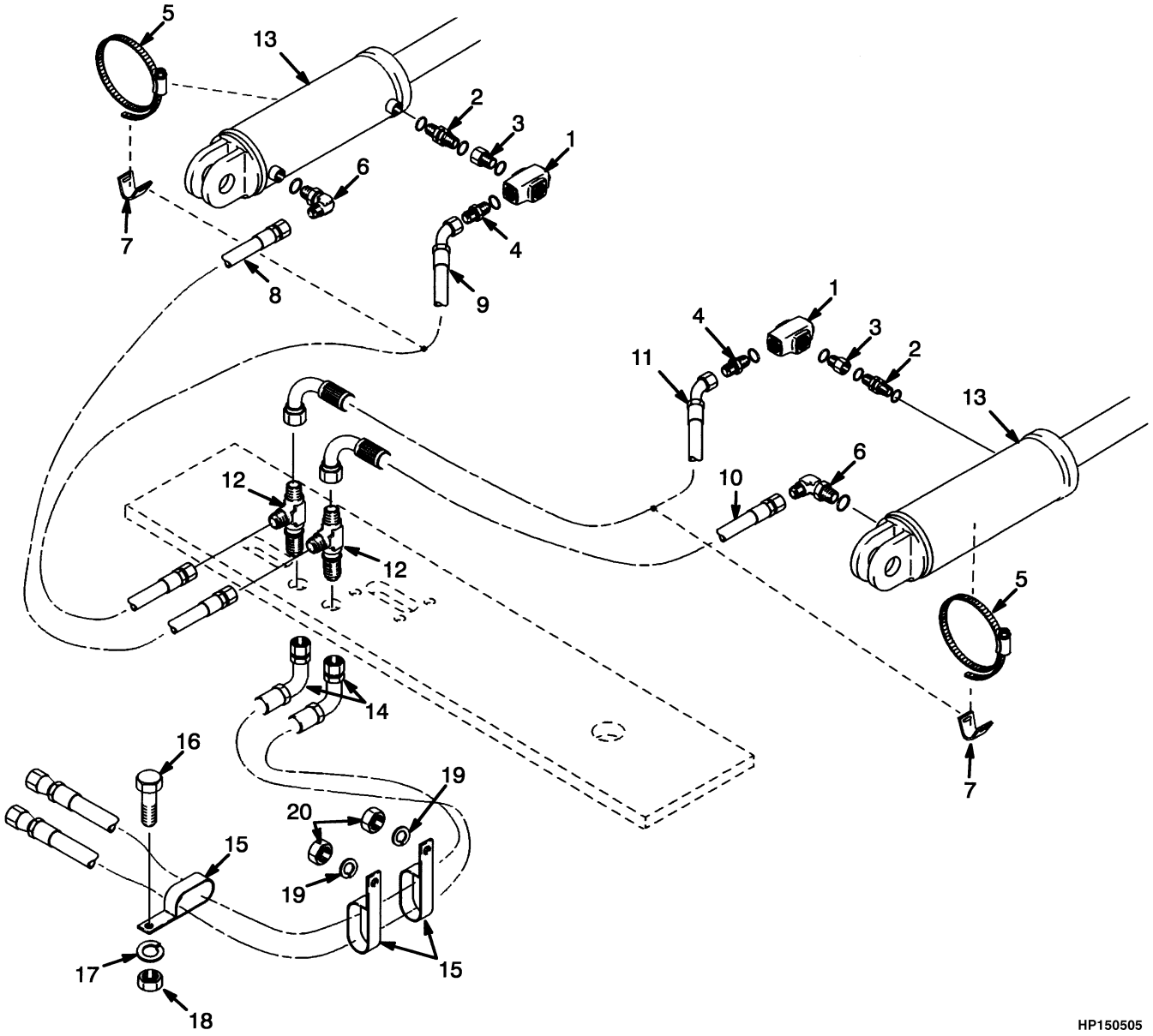

©2006 HYSTER COMPANY

HYDRAULIC SYSTEM
TILT CYLINDER
FORK LIFT TRUCK

ITEM		PART NO.	DESCRIPTION	QTY
1	**b**	1346421	Relief Valve (☞ Figure 9-21)	2
1	**c**	1564349	Relief Valve	2
2		1336112	Adapter	2
3	**e**	222456	Fitting	2
3		16486	O-Ring	1
4		16541	Fitting	2
4		16484	O-Ring	1
5		227221	Clamp	2
6		16559	Fitting	2
6		16484	O-Ring	1
7		87911	Clamp	2
8		1450799	Hose	1
9		1450798	Hose	1
10		1450800	Hose	1
11		1450801	Hose	1
12		1455225	Fitting	2
13	**d**	1391462	Tilt Cylinder (H360-400H) (☞ Figure 9-34)	2
13	**a**	1458338	Tilt Cylinder (H360-400H) (☞ Figure 9-34)	2
13		1391463	Tilt Cylinder (H450H) (☞ Figure 9-33)	2
14		1451564	Hose	2
15		251994	Clamp	3
16		292507	Capscrew	1
17		320156	Washer	1
18		302399	Nut	1
19		320157	Washer	2
20		302401	Locknut	2

FOOTNOTES:
a S/N A214-1551 ⇒
b ⇒ S/N A214E02029B
c S/N A214E02030B ⇒
d ⇒ S/N A214E-1550
e ⇒ D/B 03/2004

©2006 HYSTER COMPANY

TILT CYLINDER (Figure 9-33)
EMPTY CONTAINER HANDLER

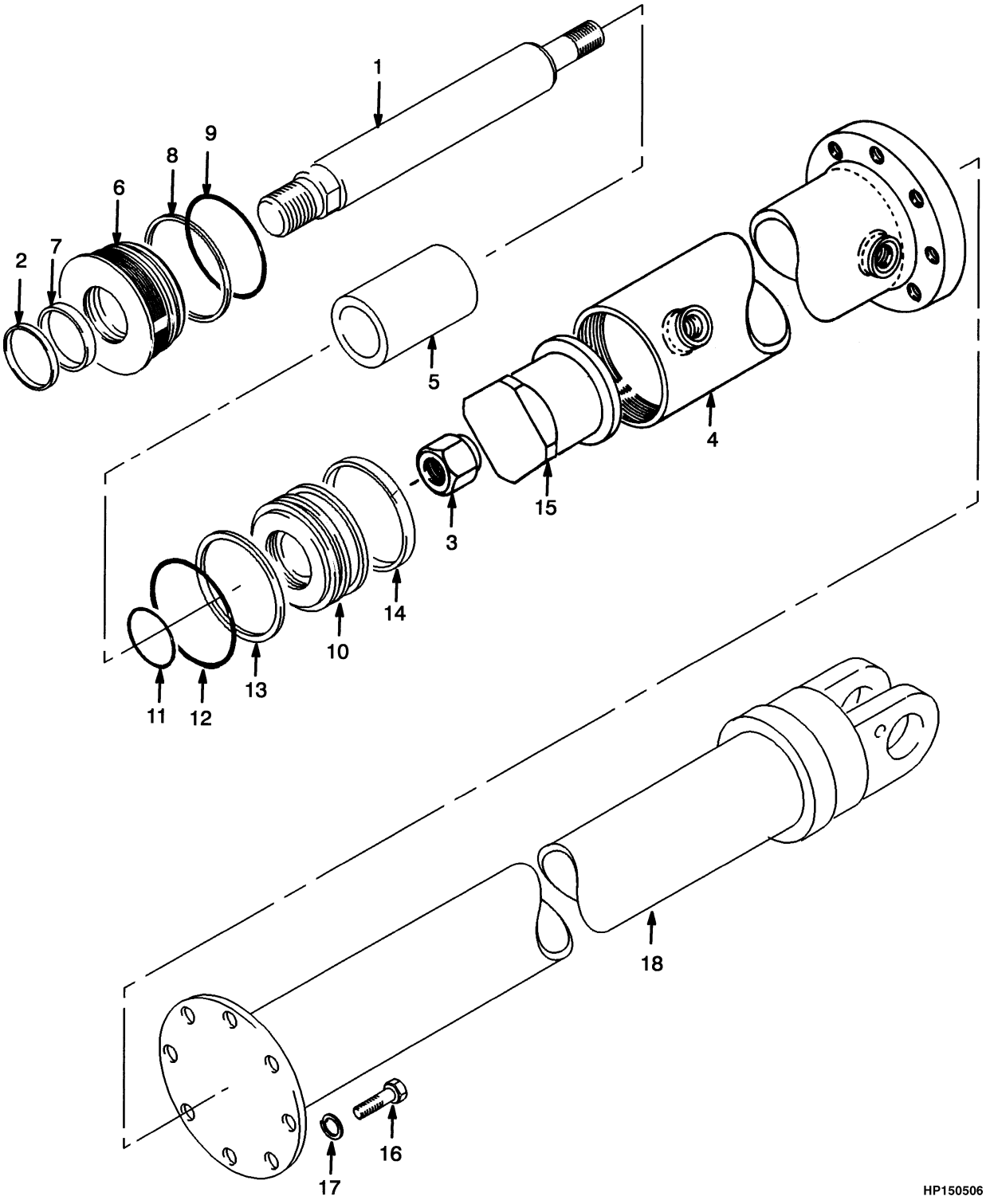

©2006 HYSTER COMPANY

TILT CYLINDER
EMPTY CONTAINER HANDLER

ITEM		PART NO.	DESCRIPTION	QTY
	f	1391457	Tilt Cylinder	1
	e	1498532	Tilt Cylinder (3° Forward/4° Back)	1
1	**g**	1453124	Rod	1
1	**e**	1498533	Rod (3° Forward/4° Back)	1
2	**c**	816578	Wiper Rod	1
2	**d**	376186	Rod Wiper	1
3		221377	Nut	1
4	**c**	1391461	Tube	1
4	**d**	1470757	Tube	1
5	**f**	1391460	Spacer	1
5	**g**	1453123	Spacer	1
5	**e**	1498530	Spacer (3° Forward/4° Back)	1
6	**c**	2013361	Plug	1
6	**d**	1470765	Gland	1
7	**c**	816580	Seal	1
7	**d**	358300	Seal	1
8	**c**	146803	Back-Up Ring	1
8	**d**	1476882	Back-Up Ring	1
9		55289	O-Ring	1
10		387248	Piston	1
11		198518	O-Ring	1
12		15890	O-Ring	1
13		387246	Seal Ring	1
14		387247	Guide Ring	1
15	**f**	1453110	Spacer	1
16	**a**	246001	Capscrew	16
16	**b**	293649	Capscrew	16
17		292683	Lockwasher	16
18	**a**	1391472	Tube	2
18	**b**	1459293	Tube	2
		387325	Seal Kit (Includes Items 2, 7-9, 11-14)	2
		1476917	Seal Kit (Includes Items 2, 7-9, 11-14)	2

FOOTNOTES:
a ⇒ S/N A214E-1576
b S/N A214E-1577 ⇒
c ⇒ S/N A214E-1724
d S/N A214E-1725 ⇒
e S/N A214E-1807 ⇒
f ⇒ D/B 05/1997
g D/B 05/1997 ⇒

©2006 HYSTER COMPANY

TILT CYLINDER (Figure 9-34)
FORK LIFT TRUCK

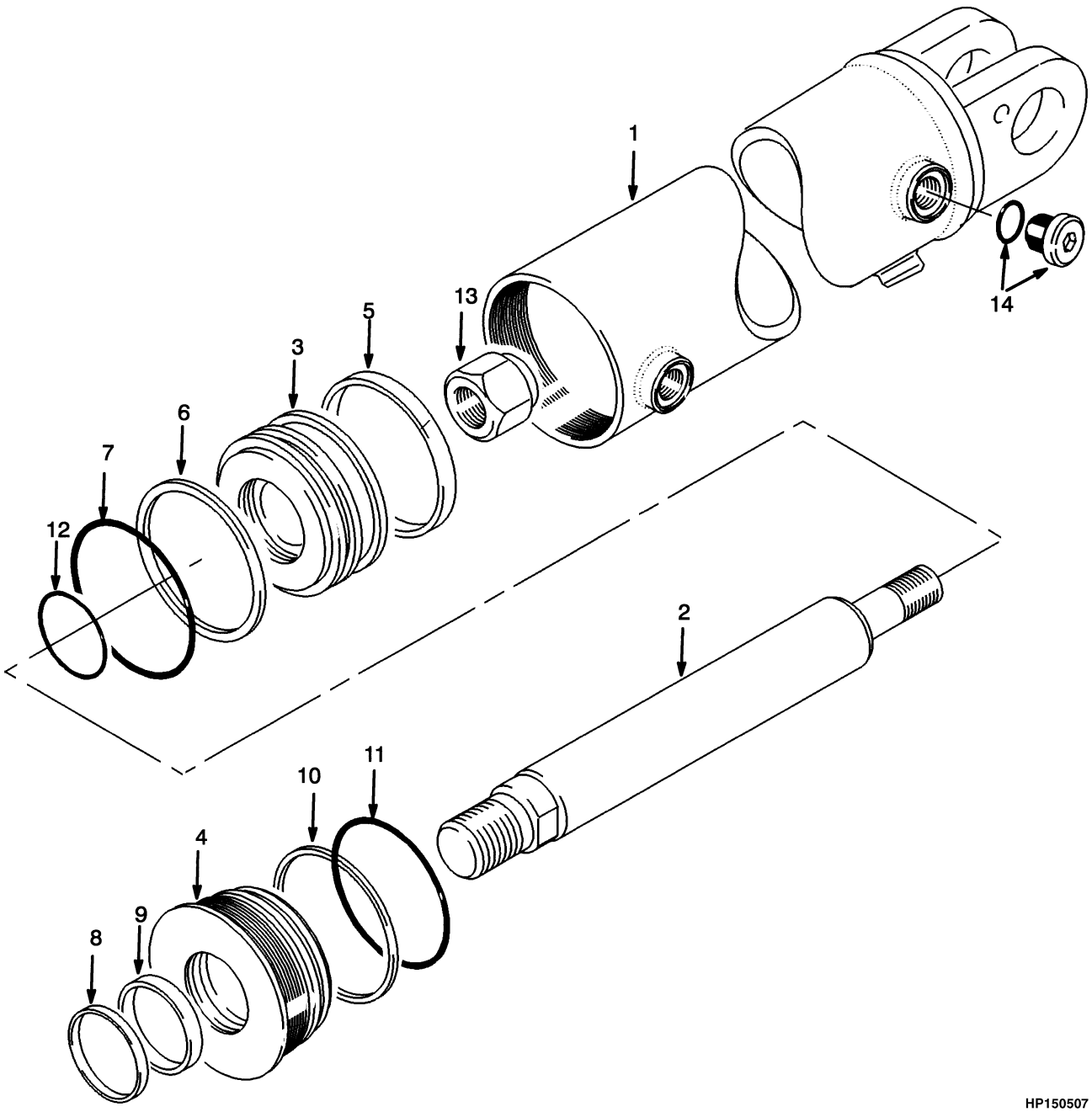

©2006 HYSTER COMPANY

TILT CYLINDER
FORK LIFT TRUCK

KEY:
A: H360-400H
B: H450H

ITEM		PART NO.	DESCRIPTION	QTY A	QTY B
	a	1391462	Tilt Cylinder	1	..
		1391463	Tilt Cylinder	..	1
	b	1458338	Tilt Cylinder	1	..
1	**a**	1391464	Tube	1	..
1		1391465	Tube	..	1
1	**b**	1458337	Tube	1	..
2	**a**	1391466	Rod	1	..
2		1391467	Rod	..	1
2	**b**	1458339	Rod	1	..
3		370175	Piston	1	1
4		370176	Gland	1	1
5		370196	Wear Ring	1	1
6		370197	Seal Ring	1	1
7		90207	O-Ring	1	1
8		225334	Rod Wiper	1	1
9		309062	Seal	1	1
10		53086	Back-Up Ring	1	1
11		15895	O-Ring	1	1
12		46388	O-Ring	1	1
13		1349793	Nut	1	1
14		14595	Fitting	2	..
14		16484	O-Ring	1	..
		1330134	Seal Kit (High Temperature) (Includes Items 5-6, 12)	1	1
		1308786	Seal Kit (Includes Items 5-12)	1	1

FOOTNOTES:
a ⇒ S/N A214E-1550
b S/N A214E-1551 ⇒

NOTES

10 MAST-TWO STAGE VISTA

SECTION 10
MAST-TWO STAGE VISTA

DESCRIPTION **PAGE**

CARRIAGE
HYDRAULIC SYSTEM
TWO STAGE VISTA 10-34
TWO STAGE VISTA 10-30
WITH QUICK DISCONNECT
TWO STAGE VISTA 10-32
FORK POSITIONER
SIDE-SHIFT CYLINDER - HOOK TYPE
TWO STAGE VISTA 10-36
HEADER HOSE
TWO STAGE VISTA 10-24
INNER MAST
TWO STAGE VISTA 10-6
LIFT CYLINDER
H360-400H
TWO STAGE VISTA
D/B 09/2004⇒ 10-18
⇒D/B 09/2004 10-16
H450H
TWO STAGE VISTA
D/B 09/2004⇒ 10-22
⇒D/B 09/2004 10-20
MAIN LIFT
TWO STAGE VISTA
SHEET 1 OF 2 10-10
SHEET 2 OF 2 10-13
MAST INSTALLATION
TWO STAGE VISTA 10-28
OUTER MAST
TWO STAGE VISTA 10-2
SOLENOID VALVE
TWO STAGE VISTA 10-38

©2006 HYSTER COMPANY

OUTER MAST (Figure 10-1)
TWO STAGE VISTA

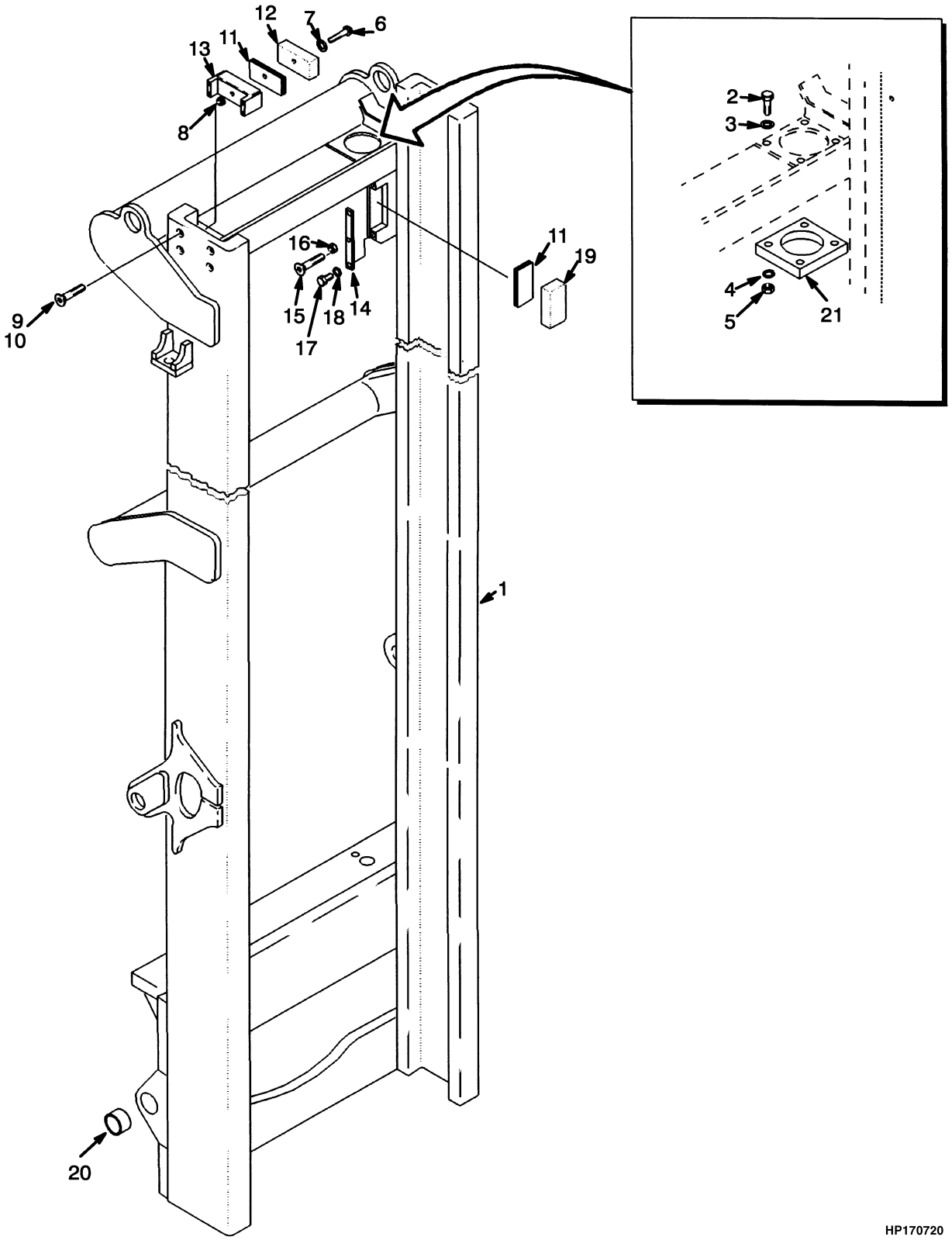

©2006 HYSTER COMPANY

OUTER MAST
TWO STAGE VISTA

H360-400H

ITEM	DESCRIPTION 1 2 3 4	LIFT HEIGHT TO BOTTOM OF FORKS			
		2900 mm (114.2 in.)	3650 mm (143.7 in.)	4550 mm (179.1 in.)	5300 mm (208.7 in.)
	Mast Group Number	-	-	-	-
	Mast Assembly	**b** 1372870 **c** 1458388	**b** 1370078 **c** 1458389	**b** 1370079 **c** 1458390	**b** 1370080 **c** 1458391
1	Outer Mast	**b** 1372808 **c** 1458378	**b** 1372808 **c** 1458379	**b** 1372809 **c** 1458380	**b** 1372810 **c** 1458381
21	Retainer	1391890	1391890	1391890	1391890

H360-400H (CONT.)

ITEM	DESCRIPTION 1 2 3 4	LIFT HEIGHT TO BOTTOM OF FORKS		
		6100 mm (240.2 in.)	6600 mm (259.8 in.)	6900 mm (271.7 in.)
	Mast Group Number	-	-	-
	Mast Assembly	**b** 1370081 **c** 1458392	**b** 1370082 **c** 1458393	**b** 1370083 **c** 1458394
1	Outer Mast	**b** 1372811 **c** 1458382	**b** 1372812 **c** 1458383	**b** 1372813 **c** 1458384
21	Retainer	1391890	1391890	1391890

H450H

ITEM	DESCRIPTION 1 2 3 4	LIFT HEIGHT TO BOTTOM OF FORKS			
		2900 mm (114.2 in.)	3650 mm (143.7 in.)	4550 mm (179.1 in.)	5300 mm (208.7 in.)
	Mast Group Number	-	-	-	-
	Mast Assembly	1372869	1370072	1370073	1370074
1	Outer Mast	1370084	1370084	1370085	1370086
21	Retainer	1391889	1391889	1391889	1391889

©2006 HYSTER COMPANY

OUTER MAST
TWO STAGE VISTA

H450H (CONT.)

ITEM	DESCRIPTION 1 2 3 4	LIFT HEIGHT TO BOTTOM OF FORKS 6100 mm (240.2 in.)	6600 mm (259.8 in.)	6900 mm (271.7 in.)
	Mast Group Number	-	-	-
	Mast Assembly	1370075	1370076	1370077
1	Outer Mast	1370087	1370088	1370089
21	Retainer	1391889	1391889	1391889

ITEM		PART NO.	DESCRIPTION	QTY
	a	. . . . .	Mast Assembly	1
1	**a**	. . . . .	Outer Mast	1
2		292531	Capscrew	8
3		320161	Washer	8
4		292683	Lockwasher	8
5		216877	Nut	8
6		1364272	Capscrew	4
7		320159	Washer	8
8		316836	Nut	4
9		296255	Capscrew	16
10		321197	Adhesive	AR
11		1325797	Shim (0.06 in.)	AR
11		1325798	Shim (0.002 in.)	AR
11		1372962	Shim (0.12 in.)	AR
12		1325785	Bearing Block	4
13		1325795	Bracket	4
14		1372958	Plate	2
15		302109	Screw	2
16		296128	Nut	2
17		287854	Capscrew	4
18		292682	Lockwasher	4
19		1372961	Bearing Block	2
20		321177	Bushing	2
21	**a**	. . . . .	Retainer	1

FOOTNOTES:
a Refer to Table
b ⇒ S/N A214E-1550
c S/N A214E-1551 ⇒

©2006 HYSTER COMPANY

NOTES

INNER MAST (Figure 10-2)
TWO STAGE VISTA

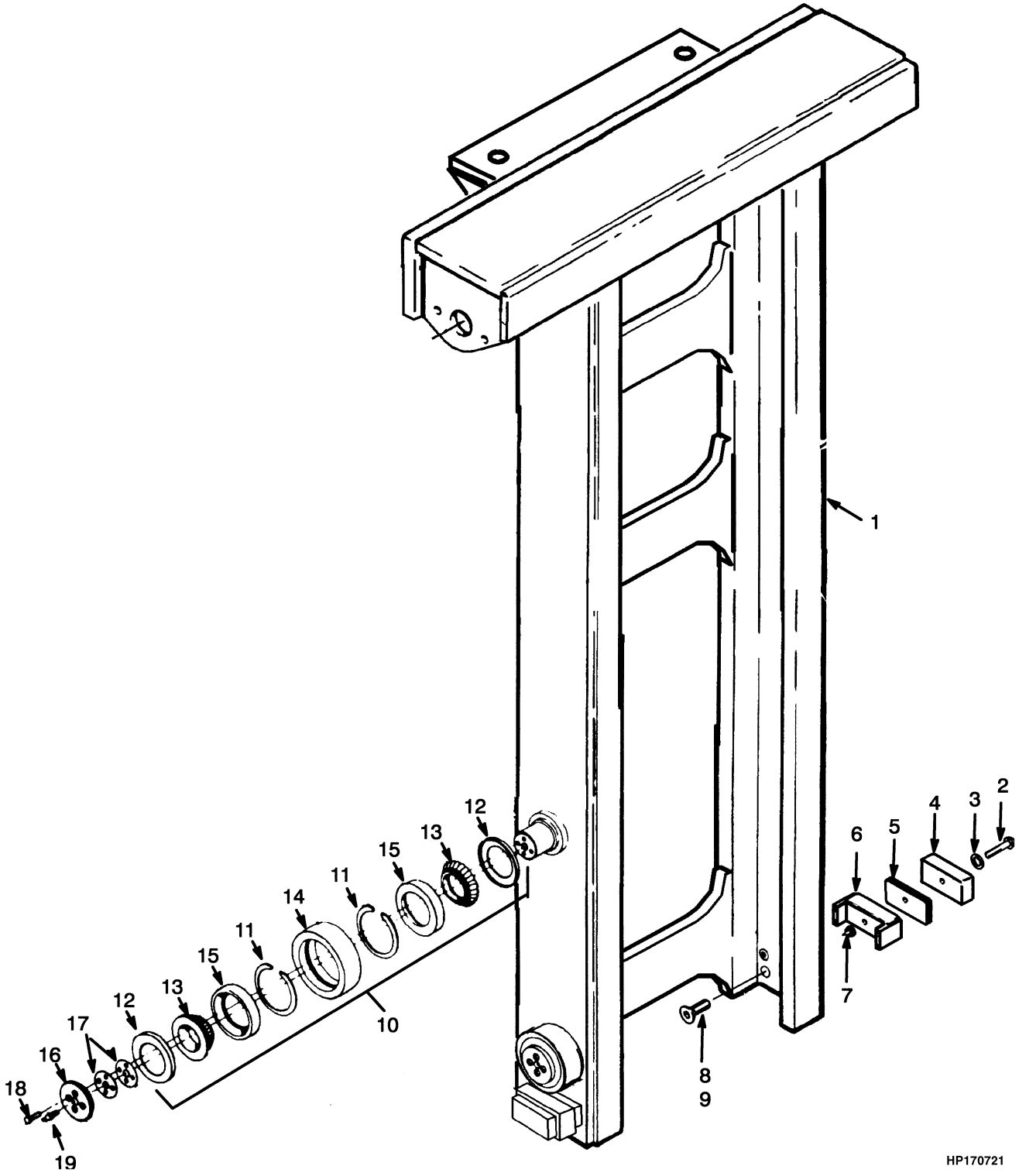

©2006 HYSTER COMPANY

INNER MAST
TWO STAGE VISTA

H360-400H

ITEM	DESCRIPTION 1 2 3 4	LIFT HEIGHT TO BOTTOM OF FORKS				
		2900 mm (114.2 in.)	2900 mm (114.2 in.)	3650 mm (143.7 in.)	3650 mm (143.7 in.)	4550 mm (179.1 in.)
	Mast Group Number	-	-	-	-	-
	Mast Assembly	**b** 1372870 **c** 1458388	----	**b** 1370078 **c** 1458389	----	**b** 1370079 **c** 1458390
1	Inner Mast	1372814	1372814	1372814	1372814	1372815

H360-400H (CONT.)

ITEM	DESCRIPTION 1 2 3 4	LIFT HEIGHT TO BOTTOM OF FORKS				
		4550 mm (179.1 in.)	5300 mm (208.7 in.)	5300 mm (208.7 in.)	6100 mm (240.2 in.)	6100 mm (240.2 in.)
	Mast Group Number	-	-	-	-	-
	Mast Assembly	----	**b** 1370080 **c** 1458391	----	**b** 1370081 **c** 1458392	----
1	Inner Mast	1372815	1372816	1372816	1372817	1372817

H360-400H (CONT.)

ITEM	DESCRIPTION 1 2 3 4	LIFT HEIGHT TO BOTTOM OF FORKS			
		6600 mm (259.8 in.)	6600 mm (259.8 in.)	6900 mm (271.7 in.)	6900 mm (271.7 in.)
	Mast Group Number	-	-	-	-
	Mast Assembly	**b** 1370082 **c** 1458393	----	**b** 1370083 **c** 1458394	----
1	Inner Mast	1372818	1372818	1372819	1372819

H450H

ITEM	DESCRIPTION 1 2 3 4	LIFT HEIGHT TO BOTTOM OF FORKS			
		2900 mm (114.2 in.)	3650 mm (143.7 in.)	4550 mm (179.1 in.)	5300 mm (208.7 in.)
	Mast Group Number	-	-	-	-
	Mast Assembly	1372869	1370072	1370073	1370074
1	Inner Mast	1373115	1373115	1373116	1373117

©2006 HYSTER COMPANY

INNER MAST
TWO STAGE VISTA

H450H (CONT.)

ITEM	DESCRIPTION 1 2 3 4	LIFT HEIGHT TO BOTTOM OF FORKS		
		6100 mm (240.2 in.)	6600 mm (259.8 in.)	6900 mm (271.7 in.)
	Mast Group Number	-	-	-
	Mast Assembly	1370075	1370076	1370077
1	Inner Mast	1373118	1373119	1373120

ITEM		PART NO.	DESCRIPTION	QTY
	a	. . . . .	Mast Assembly	1
1	**a**	. . . . .	Inner Mast	1
2		1364272	Capscrew	4
3		320159	Washer	4
4		1325785	Bearing Block	4
5		1325797	Shim (0.06 in.)	AR
5		1325798	Shim (0.002 in.)	AR
5		1372962	Shim (0.12 in.)	AR
6		1325795	Bracket	4
7		316836	Nut	8
8		296255	Capscrew	16
9		321197	Adhesive	AR
10		1325765	Roller Assembly	1
11		47478	Snap Ring	1
12		1325761	Shield	2
13		276228	Bearing Cone	2
14		1325756	Roller	1
15		392197	Bearing Cup	2
16		1325763	Shim	4
17		1325763	Shim	AR
17		1326764	Shim	AR
17		1373329	Shim	AR
18		132860	Capscrew	16
19		16001	Lube Fitting	4

FOOTNOTES:
a Refer to Table
b ⇒ S/N A214E-1550
c S/N A214E-1551 ⇒

©2006 HYSTER COMPANY

NOTES

MAIN LIFT (Figure 10-3)
TWO STAGE VISTA
SHEET 1 OF 2

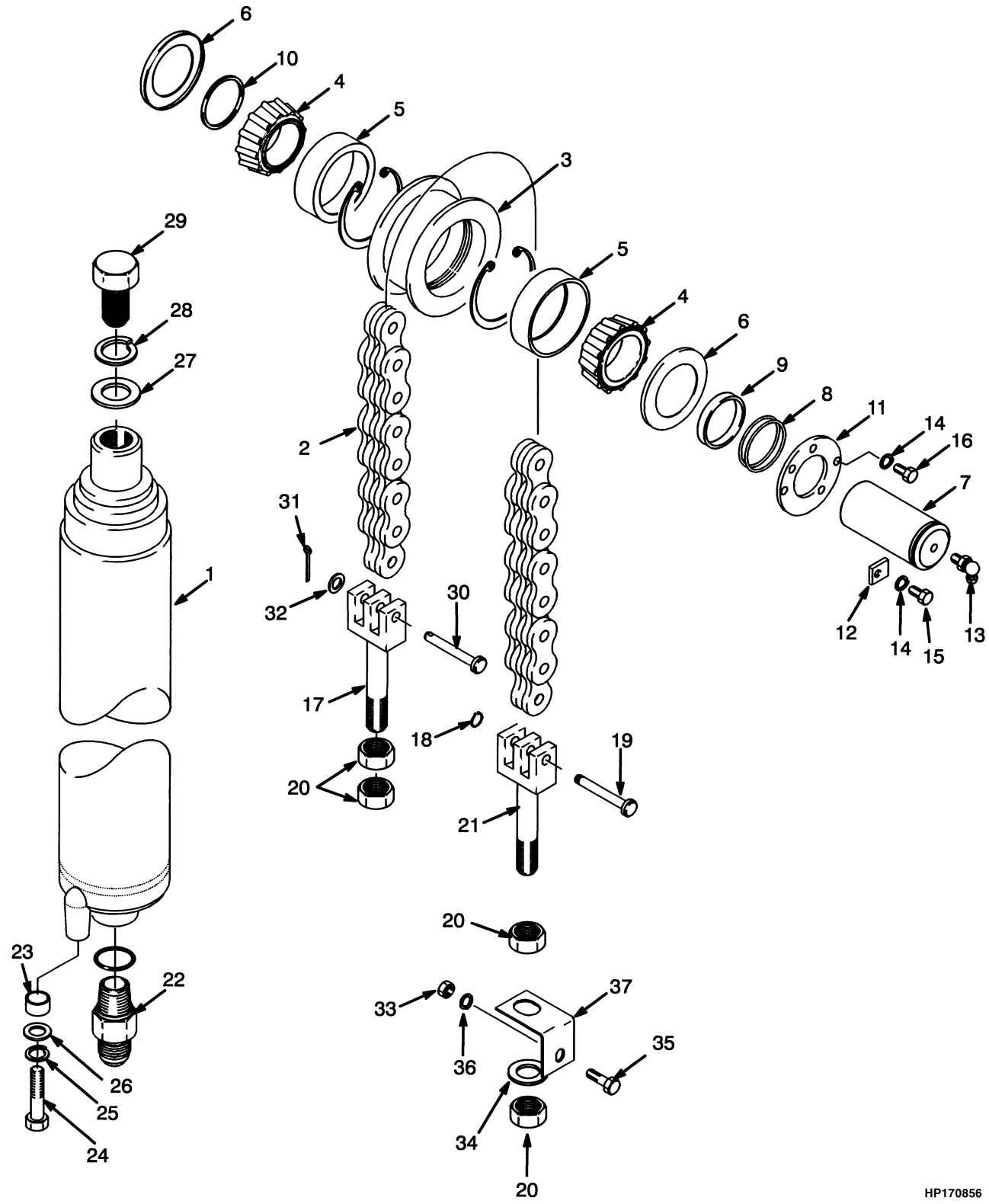

©2006 HYSTER COMPANY

MAIN LIFT
TWO STAGE VISTA
SHEET 1 OF 2

H360-400H

ITEM	DESCRIPTION 1 2 3 4	LIFT HEIGHT TO BOTTOM OF FORKS			
		2900 mm (114.2 in.)	3650 mm (143.7 in.)	4550 mm (179.1 in.)	5300 mm (208.7 in.)
	Mast Group Number	-	-	-	-
	Mast Assembly	**d** 1372870 **e** 1458388	**d** 1370078 **e** 1458389	**d** 1370079 **e** 1458390	**d** 1370080 **e** 1458391
2	Chain	1373181	1373181	1373180	330009

H360-400H (CONT.)

ITEM	DESCRIPTION 1 2 3 4	LIFT HEIGHT TO BOTTOM OF FORKS		
		6100 mm (240.2 in.)	6600 mm (259.8 in.)	6900 mm (271.7 in.)
	Mast Group Number	-	-	-
	Mast Assembly	**d** 1370081 **e** 1458392	**d** 1370082 **e** 1458393	**d** 1370083 **e** 1458394
2	Chain	1373182	330011	1373183

H450H

ITEM	DESCRIPTION 1 2 3 4	LIFT HEIGHT TO BOTTOM OF FORKS			
		2900 mm (114.2 in.)	3650 mm (143.7 in.)	4550 mm (179.1 in.)	5300 mm (208.7 in.)
	Mast Group Number	-	-	-	-
	Mast Assembly	1372869	1370072	1370073	1370074
2	Chain	330006	330006	1585369	1373358

H450H (CONT.)

ITEM	DESCRIPTION 1 2 3 4	LIFT HEIGHT TO BOTTOM OF FORKS		
		6100 mm (240.2 in.)	6600 mm (259.8 in.)	6900 mm (271.7 in.)
	Mast Group Number	-	-	-
	Mast Assembly	1370075	1370076	1370077
2	Chain	330010	1373359	1373360

ITEM	PART NO.	DESCRIPTION	QTY
	c	Mast Assembly	1
1	. . . . .	Lift Cylinder (☞ Figure 10-5, ☞ Figure 10-7)	2
2	**c**	Chain	2
3	1382449	Chain Sheave	2

©2006 HYSTER COMPANY

MAIN LIFT
TWO STAGE VISTA
SHEET 1 OF 2

ITEM		PART NO.	DESCRIPTION	QTY
4		392198	Bearing Cone	4
5		392197	Bearing Cup	4
6		1325761	Shield	4
7		1325766	Shaft	2
8		1325781	Shim	AR
8		1325782	Shim	AR
8		1325783	Shim	AR
9		1325767	Spacer	2
10		1325768	Spacer	2
11		1455951	Plate	2
12		1325784	Plate	2
13		16015	Lube Fitting	2
14		292683	Lockwasher	10
15		292527	Capscrew	8
16		292528	Capscrew	2
17		1455432	Chain Anchor	2
18		1194251	Snap Ring	4
19		334886	Pin	2
20		136405	Nut	8
21		1459350	Chain Anchor	2
22	**b**	346971	Control Valve	1
22	**a**	376681	Control Valve	1
22	**b**	16983	O-Ring	1
23	**a**	1300165	Spacer	2
24	**b**	136985	Capscrew	2
24	**a**	292515	Capscrew	2
25		292682	Lockwasher	2
26		1303391	Washer	2
27		15181	Washer	2
28		292687	Lockwasher	2
29		292580	Capscrew	2
30		1455467	Pin	2
31		15244	Cotter Pin	2
32		15136	Washer	2
33		216877	Nut	2
34		221786	Washer	4
35		287837	Capscrew	2
36		292683	Lockwasher	2
37		1460265	Bracket	2

FOOTNOTES:
a H360-400H
b H450H
c Refer to Table
d ⇒ S/N A214E-1550
e S/N A214E-1551 ⇒

©2006 HYSTER COMPANY

MAIN LIFT (Figure 10-4)
TWO STAGE VISTA
SHEET 2 OF 2

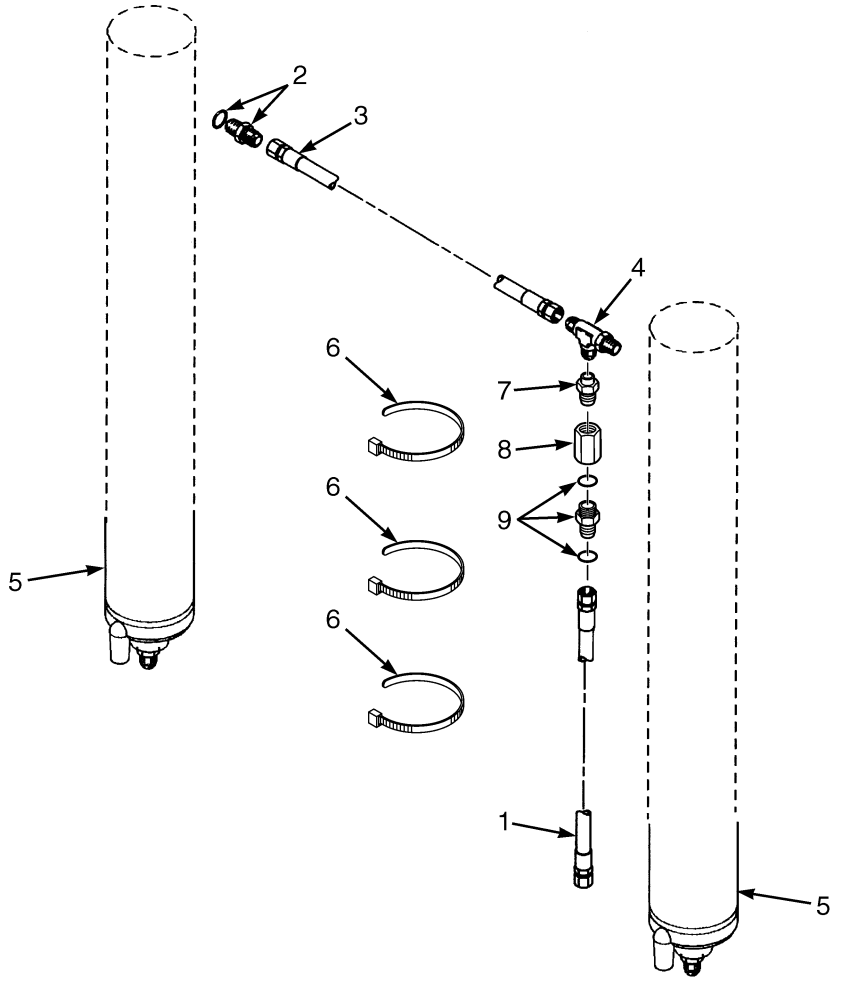

MAIN LIFT
TWO STAGE VISTA
SHEET 2 OF 2

H360-400H

ITEM	DESCRIPTION 1 2 3 4	LIFT HEIGHT TO BOTTOM OF FORKS			
		2900 mm (114.2 in.)	3650 mm (143.7 in.)	4550 mm (179.1 in.)	5300 mm (208.7 in.)
	Mast Group Number	-	-	-	-
	Mast Assembly	**b** 1372870 **c** 1458388	**b** 1370078 **c** 1458389	**b** 1370079 **c** 1458390	**b** 1370080 **c** 1458391
1	Hose	88300	88300	123045	252388

H360-400H (CONT.)

ITEM	DESCRIPTION 1 2 3 4	LIFT HEIGHT TO BOTTOM OF FORKS			
		6100 mm (240.2 in.)	6100 mm (240.2 in.)	6600 mm (259.8 in.)	6900 mm (271.7 in.)
	Mast Group Number	-	-	-	-
	Mast Assembly	**b** 1370081 **c** 1458392	----	**b** 1370082 **c** 1458393	**b** 1370083 **c** 1458394
1	Hose	159369	159369	116046	276638

H450H

ITEM	DESCRIPTION 1 2 3 4	LIFT HEIGHT TO BOTTOM OF FORKS			
		2900 mm (114.2 in.)	3650 mm (143.7 in.)	4550 mm (179.1 in.)	5300 mm (208.7 in.)
	Mast Group Number	-	-	-	-
	Mast Assembly	1372869	1370072	1370073	1370074
1	Hose	88300	88300	123045	252388

H450H (CONT.)

ITEM	DESCRIPTION 1 2 3 4	LIFT HEIGHT TO BOTTOM OF FORKS		
		6100 mm (240.2 in.)	6600 mm (259.8 in.)	6900 mm (271.7 in.)
	Mast Group Number	-	-	-
	Mast Assembly	1370075	1370076	1370077
1	Hose	159369	116046	276638

ITEM	PART NO.	DESCRIPTION	QTY
	a	Mast Assembly	1
1	**a**	Hose	1
2	131460	Fitting	2
2	16483	O-Ring	1
3	132009	Hose	1
4	17062	Fitting	1

See Service Manual for service procedures.
©2006 HYSTER COMPANY

MAIN LIFT
TWO STAGE VISTA
SHEET 2 OF 2

ITEM	PART NO.	DESCRIPTION	QTY
5	. . . . .	Lift Cylinder	1
6	273775	Clamp (Strap)	3
7	1595722	Adapter	1
8	1595723	Check Valve	1
9	16541	Fitting	1
9	16484	O-Ring	1

FOOTNOTES:
a Refer to Table
b ⇒ S/N A214E-1550
c S/N A214E-1551 ⇒

LIFT CYLINDER (Figure 10-5)
H360-400H
TWO STAGE VISTA
(⇒D/B 09/2004)

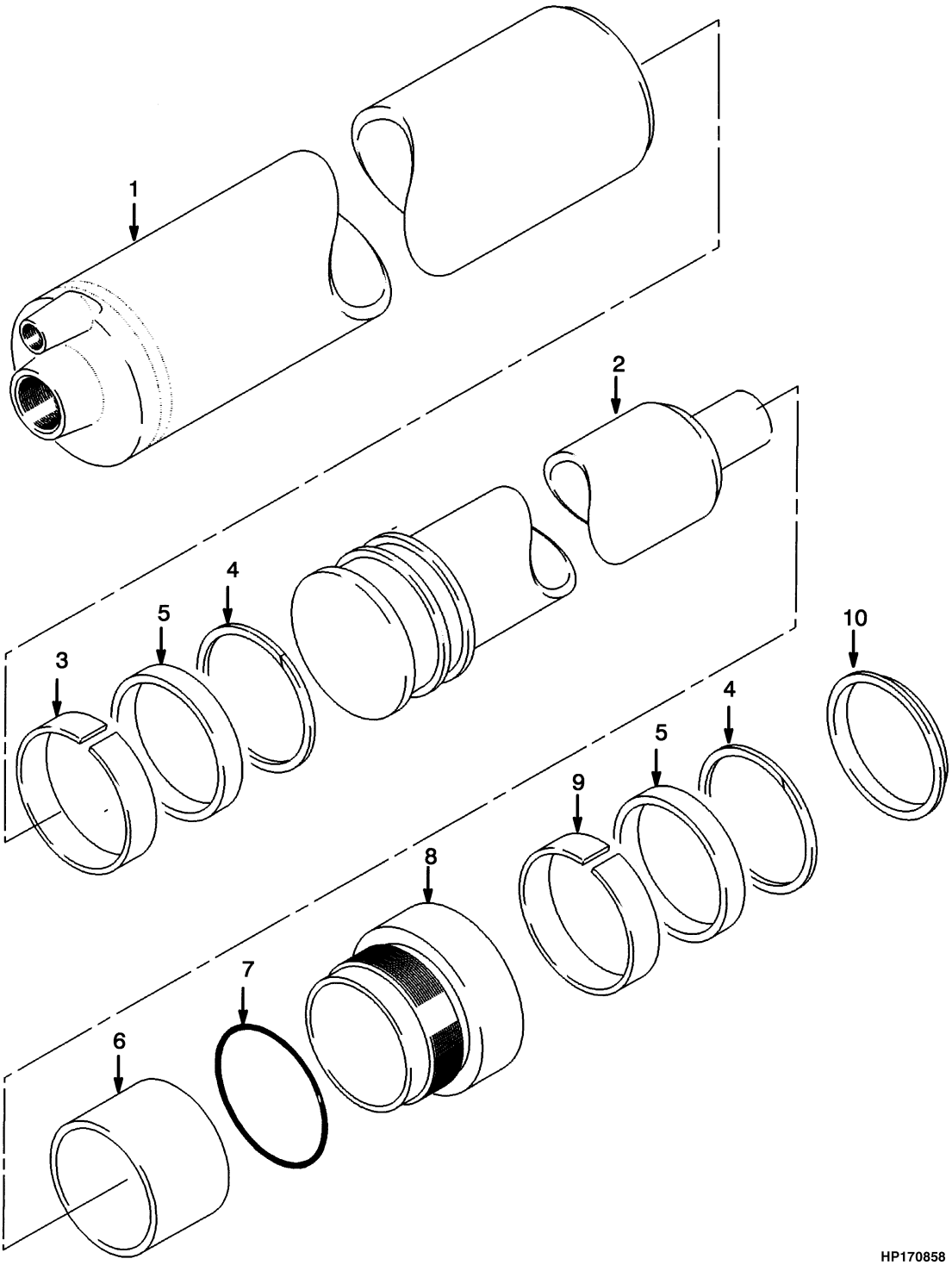

©2006 HYSTER COMPANY

LIFT CYLINDER
H360-400H
TWO STAGE VISTA
(⇒D/B 09/2004)

ITEM	DESCRIPTION 1 2 3 4	LIFT HEIGHT TO BOTTOM OF FORKS			
		2900 mm (114.2 in.)	3650 mm (143.7 in.)	4550 mm (179.1 in.)	5300 mm (208.7 in.)
	Mast Group Number	-	-	-	-
	Lift Cylinder	1385965	1385928	1385929	1385930
1	Tube	1385934	1385934	1385935	1385936
2	Rod	1385884	1385884	1385885	1385886

ITEM	DESCRIPTION 1 2 3 4	LIFT HEIGHT TO BOTTOM OF FORKS		
		6100 mm (240.2 in.)	6600 mm (259.8 in.)	6900 mm (271.7 in.)
	Mast Group Number	-	-	-
	Lift Cylinder	1385931	1385932	1459950
1	Tube	1385937	1385938	1385968
2	Rod	1385887	1385888	1385890

ITEM	PART NO.	DESCRIPTION	QTY
	a	Lift Cylinder	1
1	**a**	Tube	1
2	**a**	Rod	1
3	636954	Wear Ring	2
4	638224	Back-Up Ring	2
5	637166	Seal	2
6	816470	Spacer	1
7	362102	O-Ring	1
8	1328946	Retainer	1
9	318067	Wear Ring	1
10	815620	Wiper Ring	1
	1385958	Seal Kit (Includes Items 3-5, 7, 9-10)	1

FOOTNOTES:
a Refer to Table

LIFT CYLINDER (Figure 10-6)
H360-400H
TWO STAGE VISTA
(D/B 09/2004⇒)

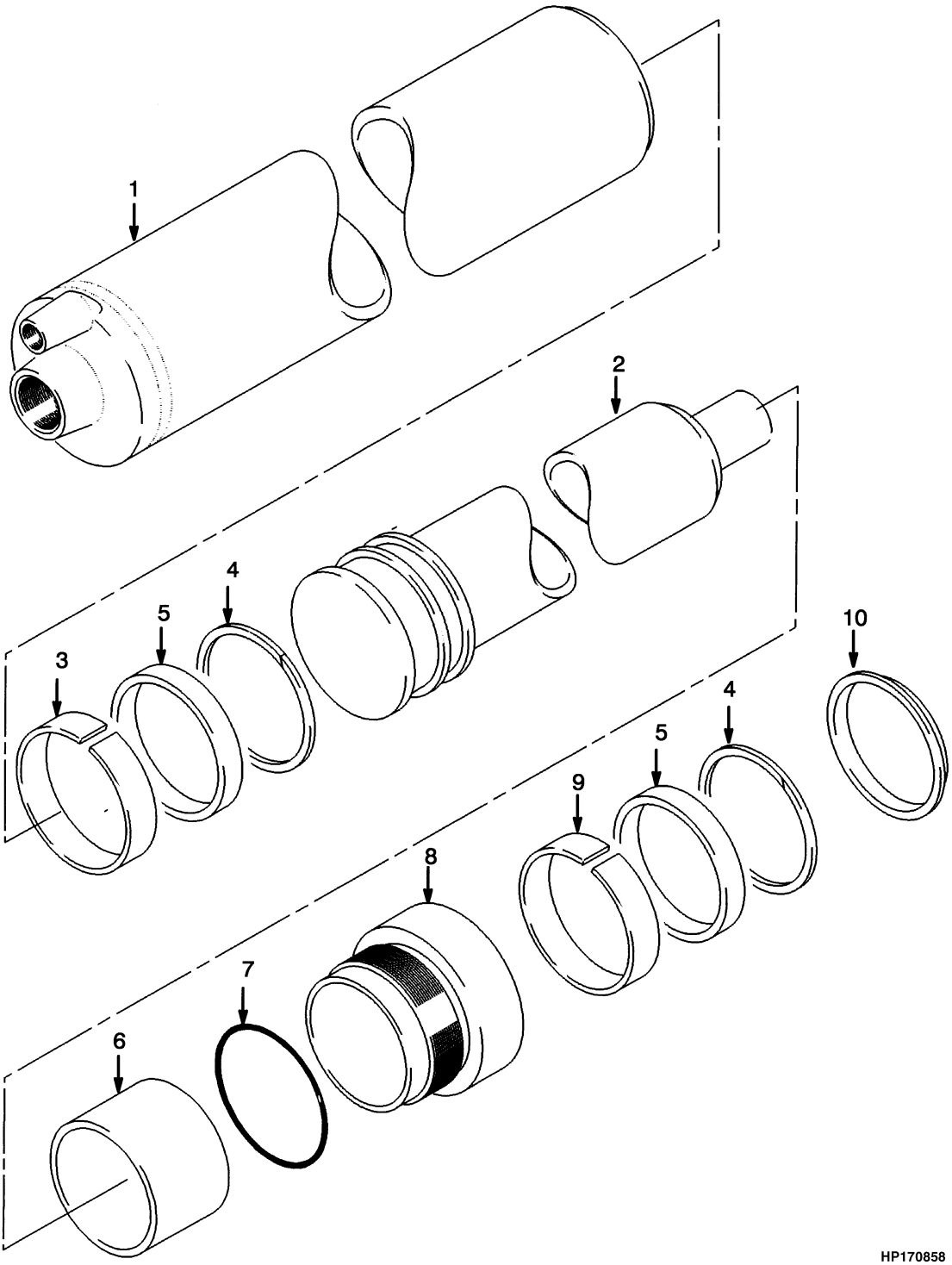

©2006 HYSTER COMPANY

LIFT CYLINDER
H360-400H
TWO STAGE VISTA
(D/B 09/2004⇒)

ITEM	DESCRIPTION 1 2 3 4	LIFT HEIGHT TO BOTTOM OF FORKS			
		2900 mm (114.2 in.)	3650 mm (143.7 in.)	4550 mm (179.1 in.)	5300 mm (208.7 in.)
	Mast Group Number	-	-	-	-
	Lift Cylinder	1594228	2071043	2071044	2071045
1	Tube	1385934	1385934	1385935	1385936
2	Rod Assembly	1568388	1568388	1568389	1568390

ITEM	DESCRIPTION 1 2 3 4	LIFT HEIGHT TO BOTTOM OF FORKS		
		6100 mm (240.2 in.)	6600 mm (259.8 in.)	6900 mm (271.7 in.)
	Mast Group Number	-	-	-
	Lift Cylinder	2071046	2071047	1594229
1	Tube	1385937	1385938	1385968
2	Rod Assembly	1568391	1568392	1594222

ITEM		PART NO.	DESCRIPTION	QTY
	c	. . . . .	Lift Cylinder	1
1	**c**	. . . . .	Tube	1
2	**c**	. . . . .	Rod Assembly	1
3		636954	Wear Ring	2
4		638224	Back-Up Ring	2
5		637166	Seal	2
6	**a**	816470	Spacer	1
6	**b**	387286	Spacer	1
7		362102	O-Ring	1
8		1328946	Retainer	1
9		318067	Wear Ring	1
10		815620	Wiper Ring	1
		1385958	Seal Kit (Includes Items 3-5, 7, 9-10)	1

FOOTNOTES:
a 2900 mm (114.2 in.) Lift Height
b 3650 mm (143.7 in.) Thru 6900 mm (271 in.) Lift Height
c Refer to Table

©2006 HYSTER COMPANY

LIFT CYLINDER (Figure 10-7)
H450H
TWO STAGE VISTA
(⇒D/B 09/2004)

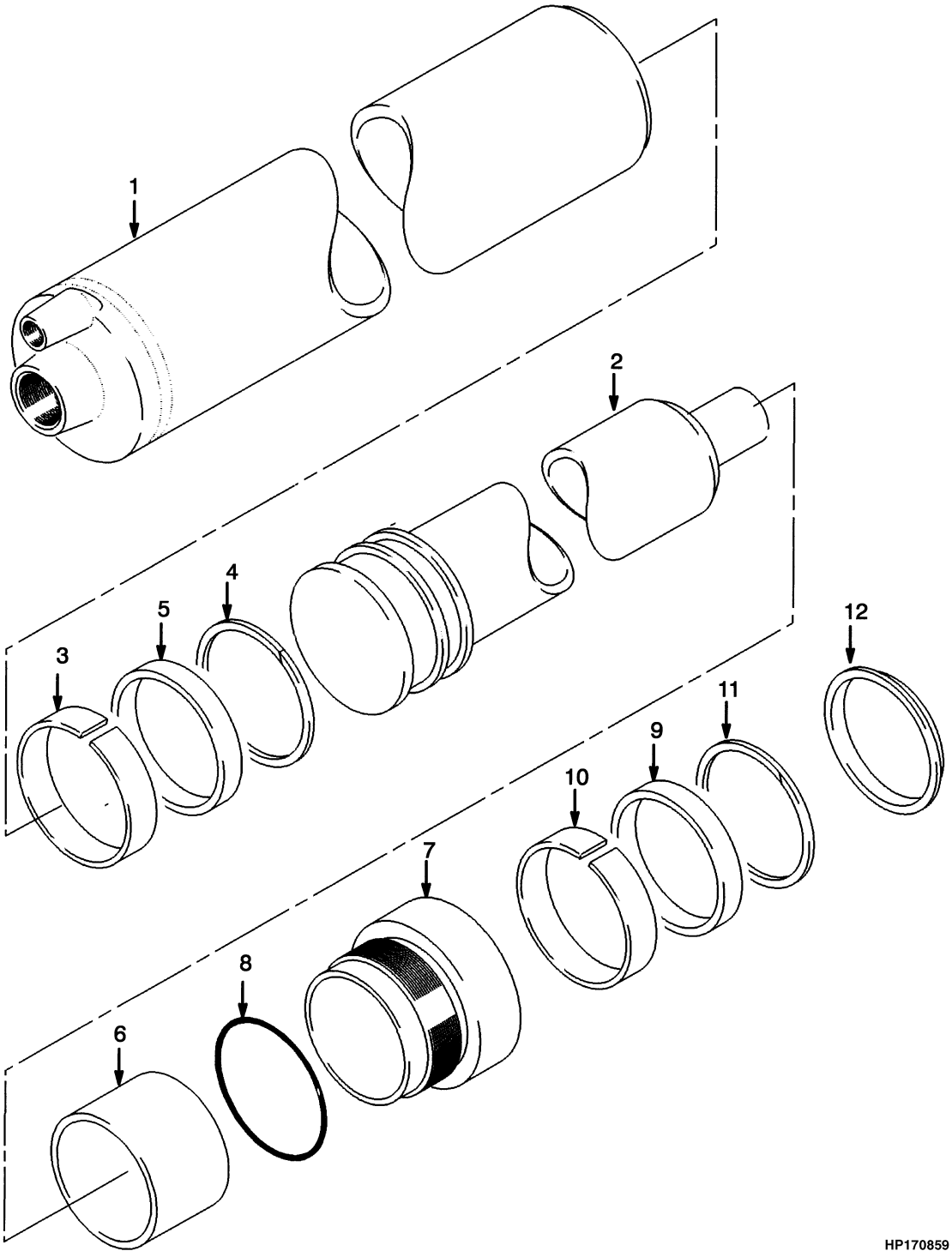

©2006 HYSTER COMPANY

LIFT CYLINDER
H450H
TWO STAGE VISTA
(⇒D/B 09/2004)

ITEM	DESCRIPTION 1 2 3 4	LIFT HEIGHT TO BOTTOM OF FORKS			
		2900 mm (114.2 in.)	3650 mm (143.7 in.)	4550 mm (179.1 in.)	5300 mm (208.7 in.)
	Mast Group Number	-	-	-	-
	Lift Cylinder	1385973	1385974	1388345	1388346
1	Tube	1372908	1372908	1372909	1372910
2	Rod	1388339	1388339	1388340	1388341

ITEM	DESCRIPTION 1 2 3 4	LIFT HEIGHT TO BOTTOM OF FORKS		
		6100 mm (240.2 in.)	6600 mm (259.8 in.)	6900 mm (271.7 in.)
	Mast Group Number	-	-	-
	Lift Cylinder	1388347	1388348	1459951
1	Tube	1372911	1372912	1372913
2	Rod	1388342	1388343	1388344

ITEM		PART NO.	DESCRIPTION	QTY
	a	. . . . .	Lift Cylinder	1
1	**a**	. . . . .	Tube	1
2	**a**	. . . . .	Rod	1
3		636956	Wear Ring	1
4		638224	Back-Up Ring	2
5		637166	Seal	2
6		387286	Spacer	1
7		1372921	Retainer	1
8		1372899	O-Ring	1
9		815620	Wiper Ring	1
10		318067	Wear Ring	1
11		637168	Seal	1
12		638256	Back-Up Ring	1
		1372922	Seal Kit (Includes Items 4-5, 8-12)	1

FOOTNOTES:
a Refer to Table

©2006 HYSTER COMPANY

LIFT CYLINDER (Figure 10-8)
H450H
TWO STAGE VISTA
(D/B 09/2004⇒)

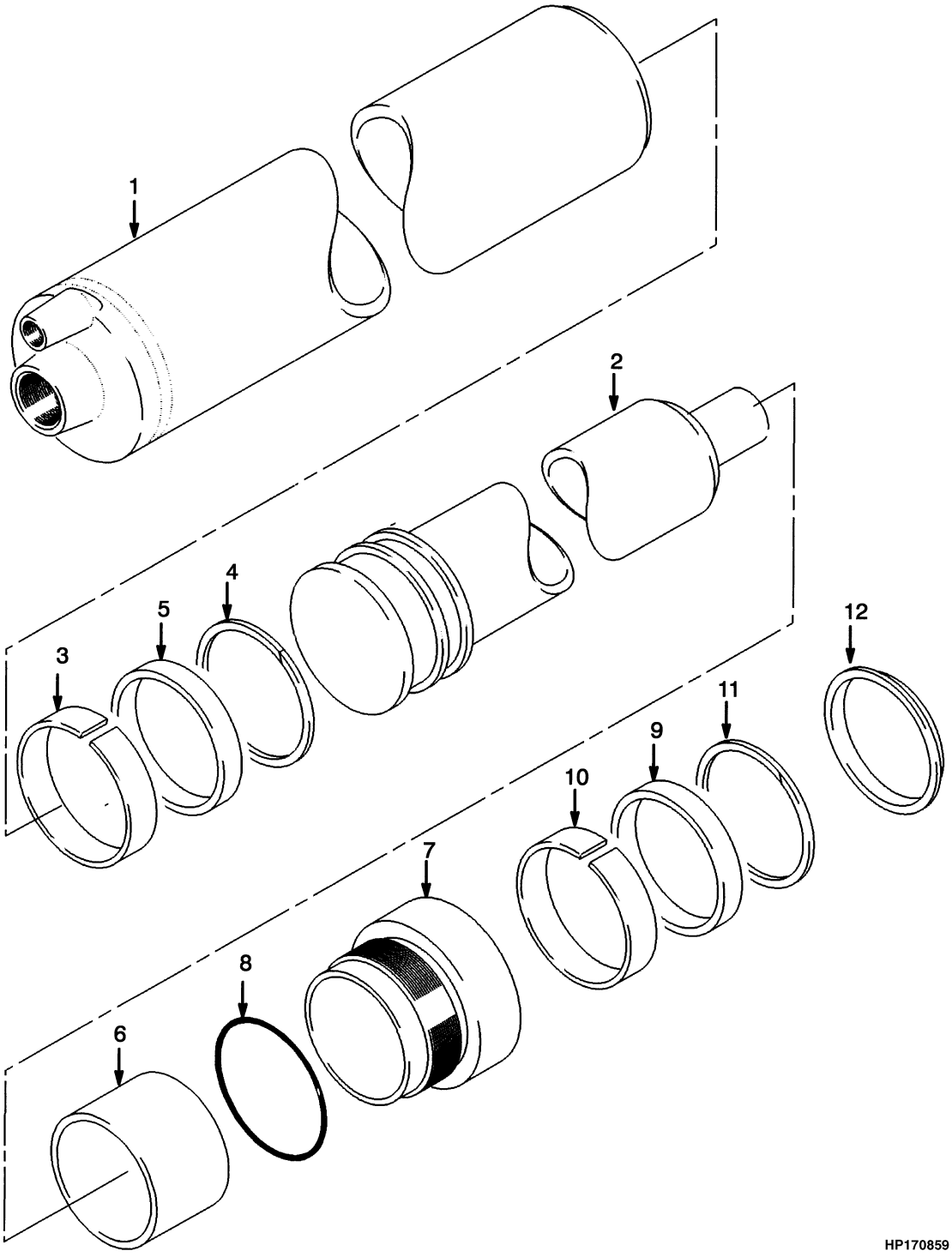

©2006 HYSTER COMPANY

LIFT CYLINDER
H450H
TWO STAGE VISTA
(D/B 09/2004⇒)

ITEM	DESCRIPTION 1 2 3 4	LIFT HEIGHT TO BOTTOM OF FORKS			
		2900 mm (114.2 in.)	3650 mm (143.7 in.)	4550 mm (179.1 in.)	5300 mm (208.7 in.)
	Mast Group Number	-	-	-	-
	Lift Cylinder	1594530	1594532	1594533	1594534
1	Tube	1372908	1372908	1372909	1372910
2	Rod	1594274	1594274	1594275	1594276

ITEM	DESCRIPTION 1 2 3 4	LIFT HEIGHT TO BOTTOM OF FORKS		
		6100 mm (240.2 in.)	6600 mm (259.8 in.)	6900 mm (271.7 in.)
	Mast Group Number	-	-	-
	Lift Cylinder	1594535	1594536	1594537
1	Tube	1372911	1372912	1372913
2	Rod	1594277	1594278	1594279

ITEM	PART NO.	DESCRIPTION	QTY
	a	Lift Cylinder	1
1	**a**	Tube	1
2	**a**	Rod	1
3	636956	Wear Ring	1
4	638224	Back-Up Ring	2
5	637166	Seal	2
6	387286	Spacer	1
7	1372921	Retainer	1
8	1372899	O-Ring	1
9	815620	Wiper Ring	1
10	318067	Wear Ring	1
11	637168	Seal	1
12	638256	Back-Up Ring	1
	1372922	Seal Kit (Includes Items 4-5, 8-12)	1

FOOTNOTES:
a Refer to Table

©2006 HYSTER COMPANY

HEADER HOSE (Figure 10-9)
TWO STAGE VISTA

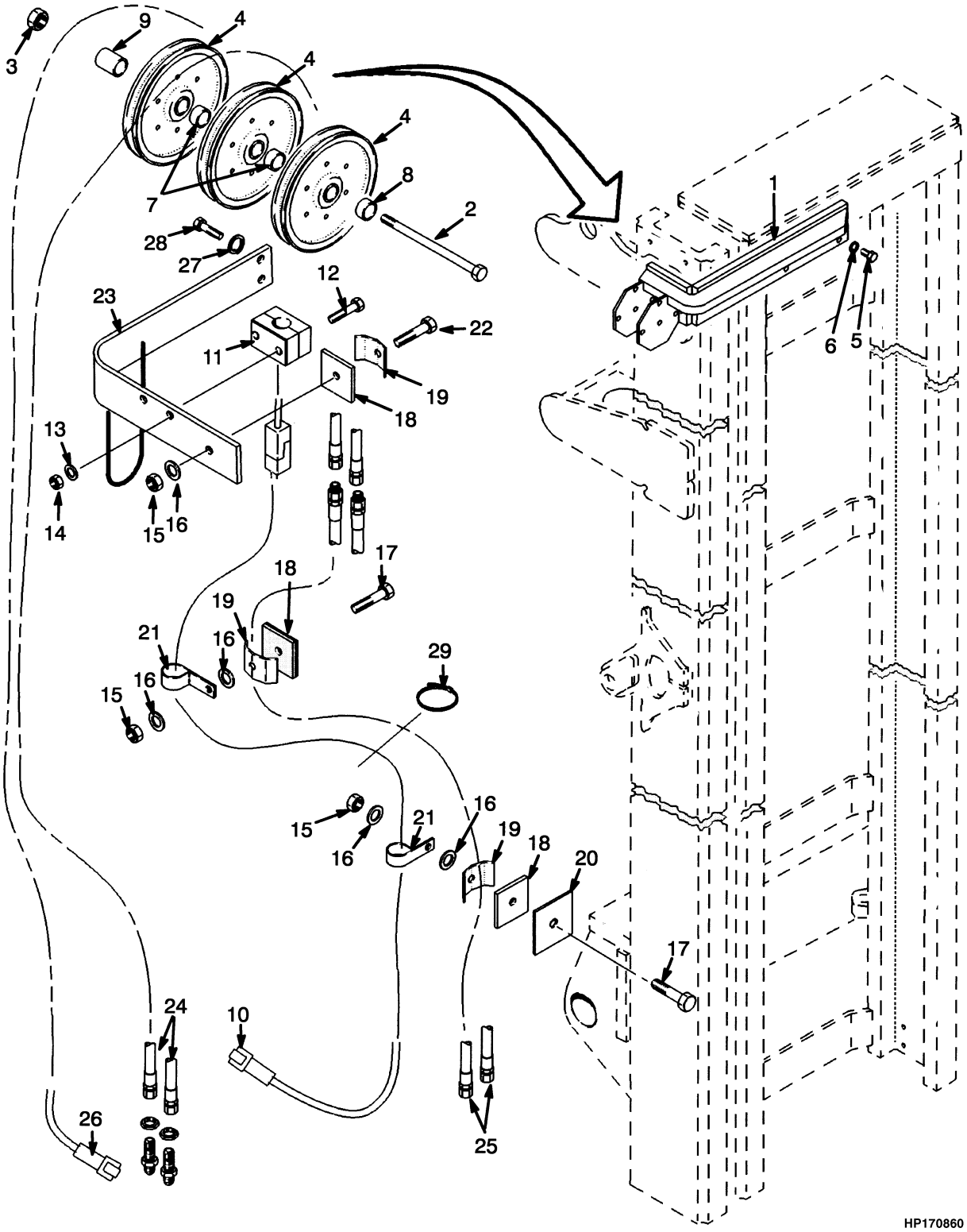

©2006 HYSTER COMPANY

HEADER HOSE
TWO STAGE VISTA

H360-400H

ITEM	DESCRIPTION 1 2 3 4	LIFT HEIGHT TO BOTTOM OF FORKS			
		2900 mm (114.2 in.)	3650 mm (143.7 in.)	4550 mm (179.1 in.)	5300 mm (208.7 in.)
	Mast Group Number	-	-	-	-
	Mast Assembly	**b** 1372870 **c** 1458388	**b** 1370078 **c** 1458389	**b** 1370079 **c** 1458390	**b** 1370080 **c** 1458391
10	Wire Harness	1452025	1452025	1452026	1452027
24	Hose	1451999	1451999	1452000	1452001
25	Hose	1452014	1452014	1452015	1452016
26	Wire Harness	1452036	1452036	1452037	1452038

H360-400H (CONT.)

ITEM	DESCRIPTION 1 2 3 4	LIFT HEIGHT TO BOTTOM OF FORKS		
		6100 mm (240.2 in.)	6600 mm (259.8 in.)	6900 mm (271.7 in.)
	Mast Group Number	-	-	-
	Mast Assembly	**b** 1370081 **c** 1458392	**b** 1370082 **c** 1458393	**b** 1370083 **c** 1458394
10	Wire Harness	1452028	1452029	1452030
24	Hose	1452002	1452003	1452004
25	Hose	1452017	1452018	1452019
26	Wire Harness	1452049	1452039	1452046

H450H

ITEM	DESCRIPTION 1 2 3 4	LIFT HEIGHT TO BOTTOM OF FORKS			
		2900 mm (114.2 in.)	3650 mm (143.7 in.)	4550 mm (179.1 in.)	5300 mm (208.7 in.)
	Mast Group Number	-	-	-	-
	Mast Assembly	1372869	1370072	1370073	1370074
10	Wire Harness	1452031	1452031	1452032	1452033
24	Hose	1452005	1452005	1452006	1452007
25	Hose	1452020	1452020	1452021	1452022
26	Wire Harness	1452042	1452042	1452043	1452044

©2006 HYSTER COMPANY

HEADER HOSE
TWO STAGE VISTA

H450H (CONT.)

ITEM	DESCRIPTION 1 2 3 4	LIFT HEIGHT TO BOTTOM OF FORKS		
		6100 mm (240.2 in.)	6600 mm (259.8 in.)	6900 mm (271.7 in.)
	Mast Group Number	-	-	-
	Mast Assembly	1370075	1370076	1370077
10	Wire Harness	1452029	1452034	1452035
24	Hose	1452008	1452009	1452003
25	Hose	1452018	1452023	1452024
26	Wire Harness	1452045	1452046	1452040

ITEM	PART NO.	DESCRIPTION	QTY
	a	Mast Assembly	1
1	1452256	Bracket	1
2	14999	Capscrew	4
3	221357	Nut	4
4	189451	Sheave	3
5	292581	Capscrew	4
6	292687	Lockwasher	4
7	280610	Spacer	2
8	1301650	Spacer	1
9	815932	Spacer	1
10	**a**	Wire Harness	1
11	1391418	Clamp	1
12	160549	Capscrew	2
13	15154	Lockwasher	2
14	221703	Nut	2
15	300937	Locknut	4
16	320161	Washer	7
17	292535	Capscrew	3
18	138929	Plate	4
19	343590	Clamp	4
20	1338037	Plate	3
21	391484	Clamp (Insulated)	3
22	292533	Capscrew	1
23	1373215	Bracket	1
24	**a**	Hose	2
25	**a**	Hose	2
26	**a**	Wire Harness	1
27	292683	Lockwasher	2
28	292528	Capscrew	2
29	397676	Strap Clamp	1

FOOTNOTES:
a Refer to Table
b ⇒ S/N A214E-1550
c S/N A214E-1551 ⇒

©2006 HYSTER COMPANY

NOTES

MAST INSTALLATION (Figure 10-10)
TWO STAGE VISTA

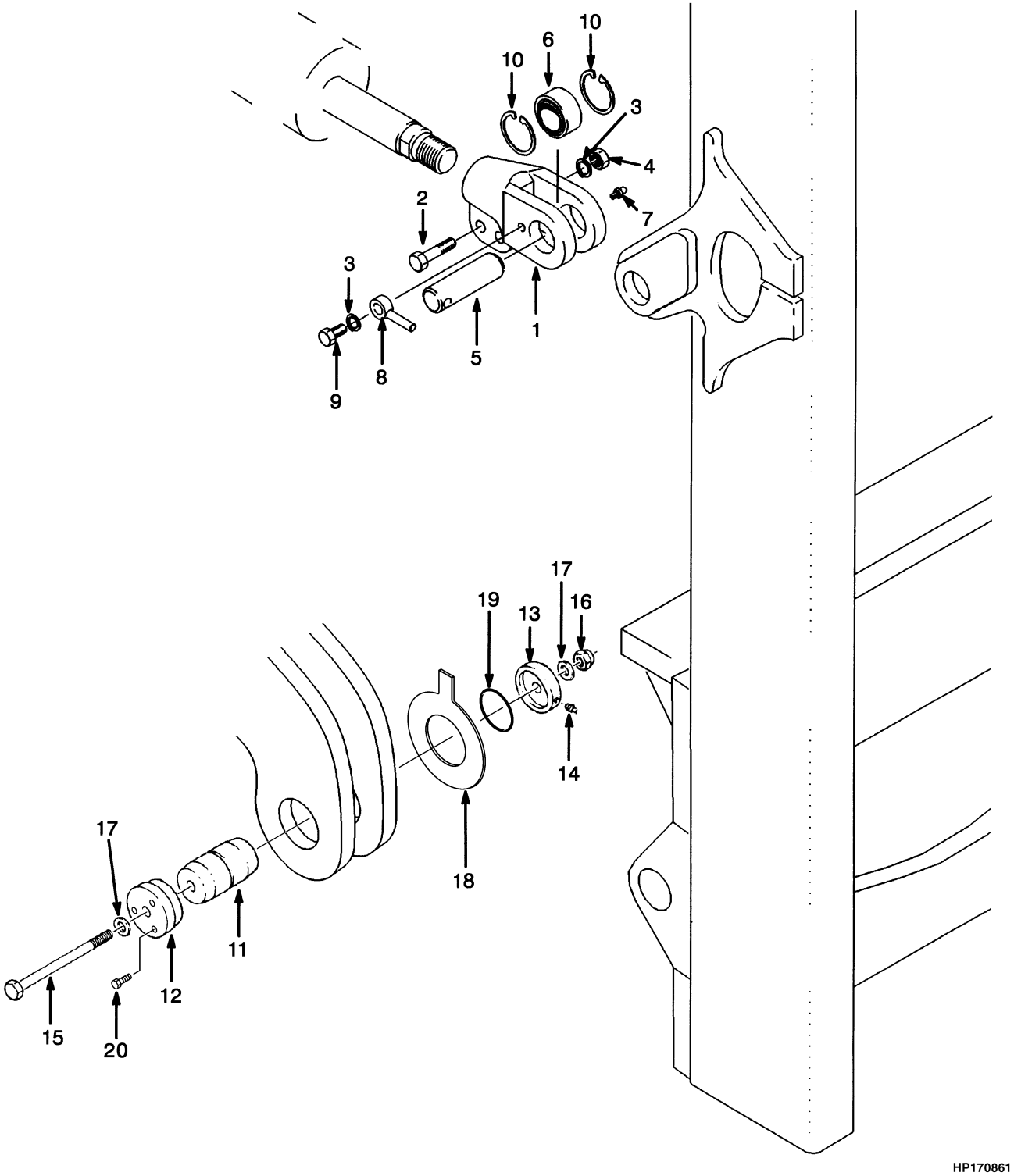

©2006 HYSTER COMPANY

MAST INSTALLATION
TWO STAGE VISTA

ITEM		PART NO.	DESCRIPTION	QTY
1		1391452	Rod End	2
2		292574	Capscrew	4
3		292685	Lockwasher	8
4		292600	Nut	4
5		1391522	Pin	4
6		1391500	Bushing	4
7		16001	Lube Fitting	4
8		1391523	Anchor	4
9		292562	Capscrew	4
10		67551	Snap Ring	8
11		1321890	Pin	2
12	**a**	1321891	Cap	2
12	**b**	1493562	Cap	2
13	**a**	1302172	Cap	2
13	**b**	1491763	Cap	2
14		16001	Lube Fitting	2
15	**a**	1302176	Capscrew	2
15	**b**	1355031	Capscrew	2
16	**a**	53163	Nut	2
16	**b**	248320	Nut	2
17		221777	Washer	4
18	**b**	1492331	Shim	1
19	**b**	39679	O-Ring	2
20	**b**	18191	Capscrew	6

FOOTNOTES:
a ⇒ S/N A214E-1776
b S/N A214E-1777 ⇒

©2006 HYSTER COMPANY

CARRIAGE (Figure 10-11)
TWO STAGE VISTA

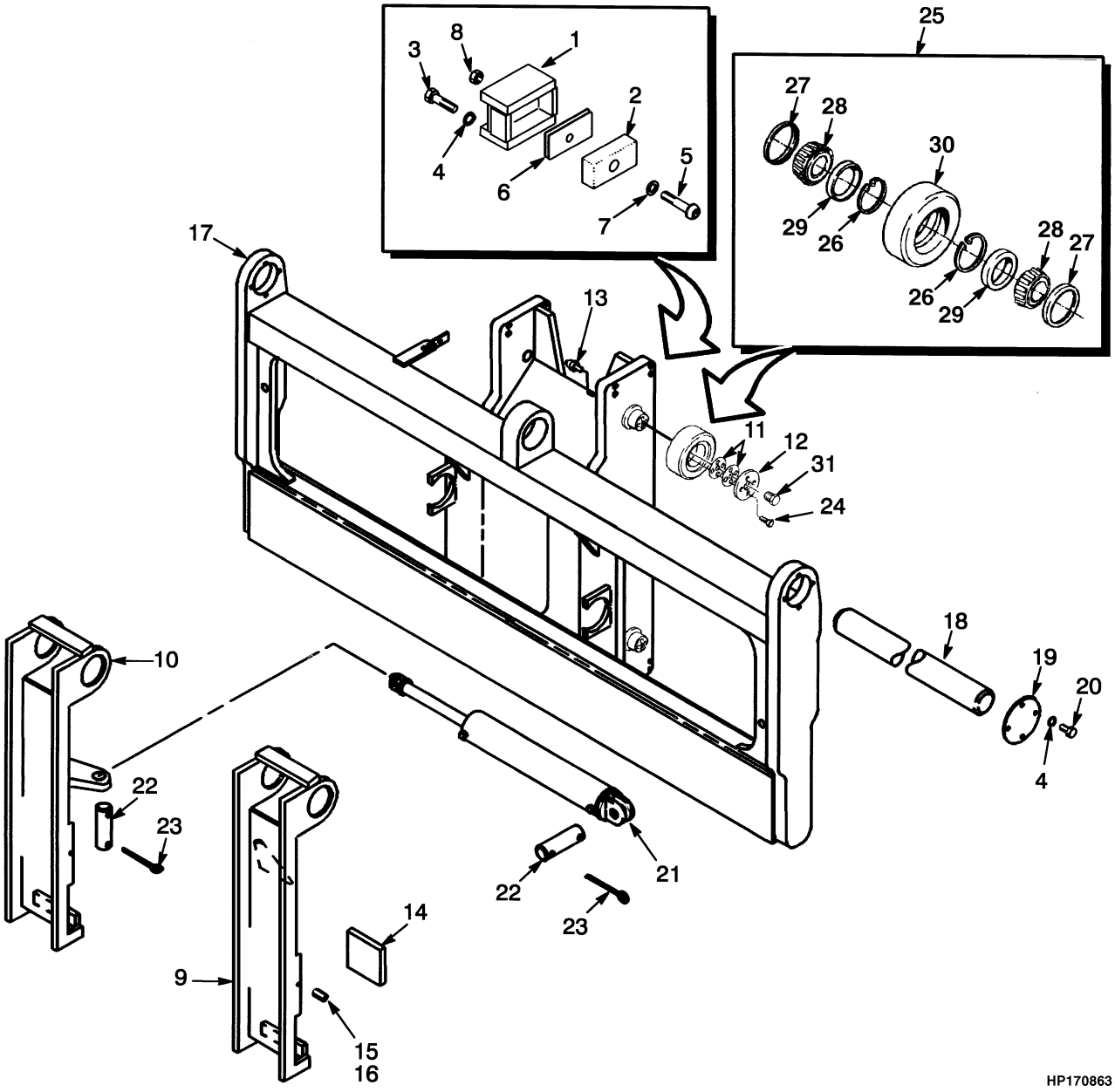

©2006 HYSTER COMPANY

CARRIAGE
TWO STAGE VISTA

KEY:
A: H400H
B: H450H

ITEM	PART NO.	DESCRIPTION	QTY A	QTY B
1	1325795	Bracket	4	4
2	1325785	Bearing Block	4	4
3	292529	Capscrew	16	16
4	292683	Lockwasher	24	24
5	1364272	Capscrew	4	4
6	1325797	Shim (0.06 in.)	AR	AR
6	1325798	Shim (0.002 in.)	AR	AR
6	1372962	Shim (0.12 in.)	AR	AR
7	320159	Washer	8	8
8	316836	Nut	4	4
9	1384489	Fork Positioner (LH) (☞ Figure 10-14)	..	1
9	1384497	Fork Positioner (LH) (☞ Figure 10-14)	1	..
10	1384490	Fork Positioner (RH) (☞ Figure 10-14)	..	1
10	1384498	Fork Positioner (RH) (☞ Figure 10-14)	1	..
11	1325763	Shim	AR	AR
11	1325764	Shim	AR	AR
11	1373329	Shim	AR	AR
12	1325760	Cap	4	4
13	16001	Lube Fitting	6	6
14	1373176	Bearing Block	2	2
15	302097	Screw	4	4
16	136687	Nut	4	4
17	1373204	Carriage	..	1
17	1373300	Carriage	1	..
18	1373175	Pin	..	2
18	1384483	Pin	2	..
19	1373196	Cover	2	2
20	292527	Capscrew	8	8
21	1390639	Cylinder Assembly	2	..
21	1390640	Cylinder Assembly	2	..
21	1458395	Cylinder Assembly	..	2
21	1458396	Cylinder Assembly	..	2
22	1373216	Pin	4	4
23	15237	Pin	8	8
24	293644	Capscrew	16	16
25	1325765	Roller Assembly	4	4
26	47478	Snap Ring	2	2
27	1325761	Shield	2	2
28	392197	Bearing Cup	2	2
29	276228	Bearing Cone	2	2
30	1325756	Roller	1	1
31	14349	Fitting	4	4

©2006 HYSTER COMPANY

CARRIAGE (Figure 10-12)
WITH QUICK DISCONNECT
TWO STAGE VISTA

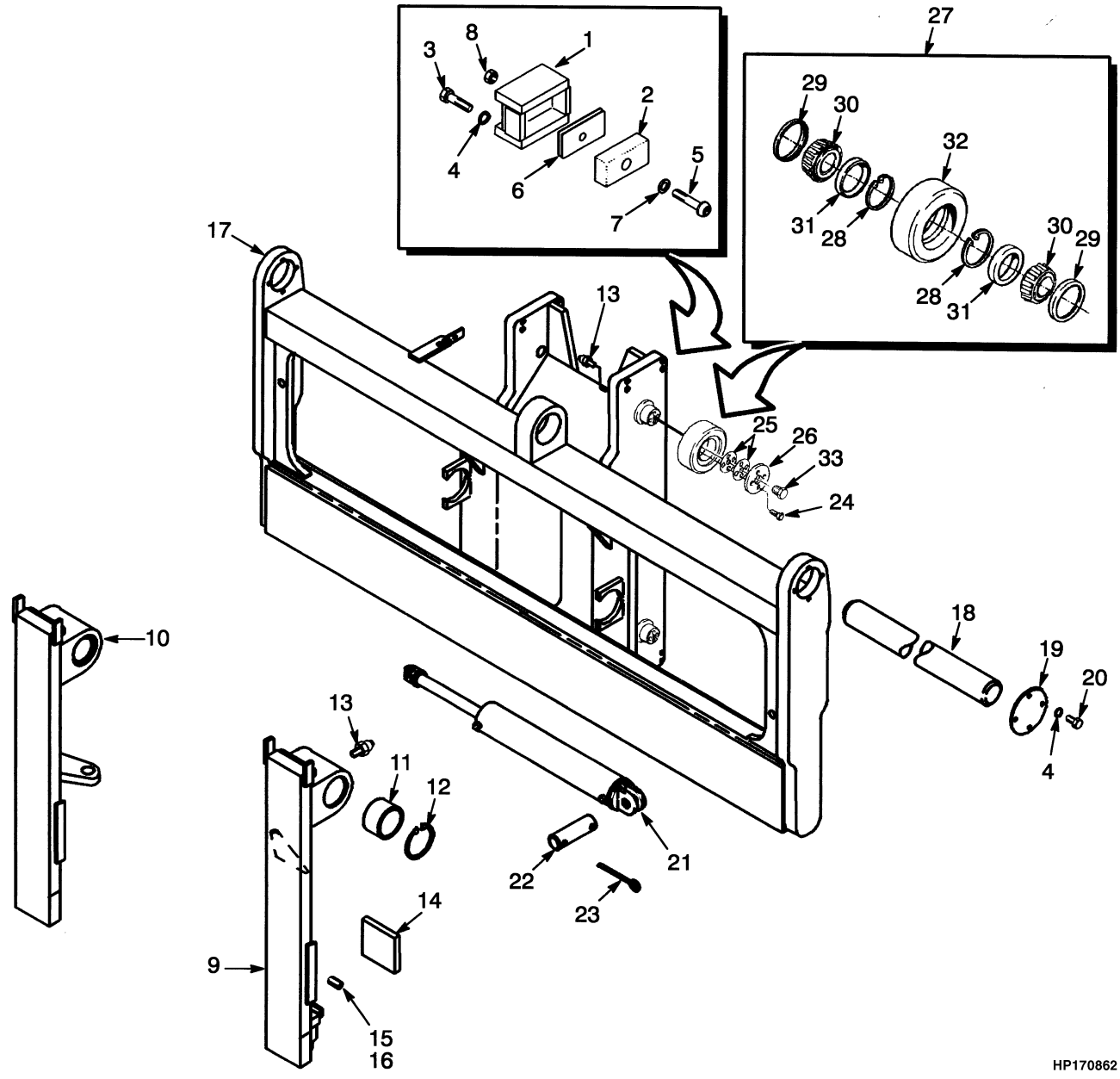

©2006 HYSTER COMPANY

CARRIAGE
WITH QUICK DISCONNECT
TWO STAGE VISTA

KEY:
A: H400H
B: H450H

ITEM	PART NO.	DESCRIPTION	QTY A	QTY B
1	1325795	Bracket	4	4
2	1325785	Bearing Block	4	4
3	292529	Capscrew	16	16
4	292683	Lockwasher	24	24
5	1364272	Capscrew	4	4
6	1325797	Shim (0.06 in.)	AR	AR
6	1325798	Shim (0.002 in.)	AR	AR
6	1372962	Shim (0.12 in.)	AR	AR
7	320159	Washer	8	8
8	316836	Nut	4	4
9	1373203	Fork Positioner (LH)	..	1
9	1373312	Fork Positioner (LH)	1	..
10	1373212	Fork Positioner (RH)	..	1
10	1373311	Fork Positioner (RH)	1	..
11	1373177	Bushing	4	4
12	334475	Snap Ring	4	4
13	16001	Lube Fitting	6	6
14	1373176	Bearing Block	2	2
15	302097	Screw	4	4
16	136687	Nut	4	4
17	1373204	Carriage	..	1
17	1373300	Carriage	1	..
18	1373175	Pin	..	2
18	1384483	Pin	2	..
19	1373196	Cover	2	2
20	292527	Capscrew	8	8
21	. . . . .	Cylinder	2	2
22	1373216	Pin	4	4
23	15237	Pin	8	8
24	293644	Capscrew	16	16
25	1325763	Shim	AR	AR
25	1325764	Shim	AR	AR
25	1373329	Shim	AR	AR
26	1325760	Cap	4	4
27	1325765	Roller Assembly	4	4
28	47478	Snap Ring	2	2
29	1325761	Shield	2	2
30	392197	Bearing Cup	2	2
31	276228	Bearing Cone	2	2
32	1325756	Roller	1	1
33	14349	Fitting	4	4

©2006 HYSTER COMPANY

CARRIAGE (Figure 10-13)
HYDRAULIC SYSTEM
TWO STAGE VISTA

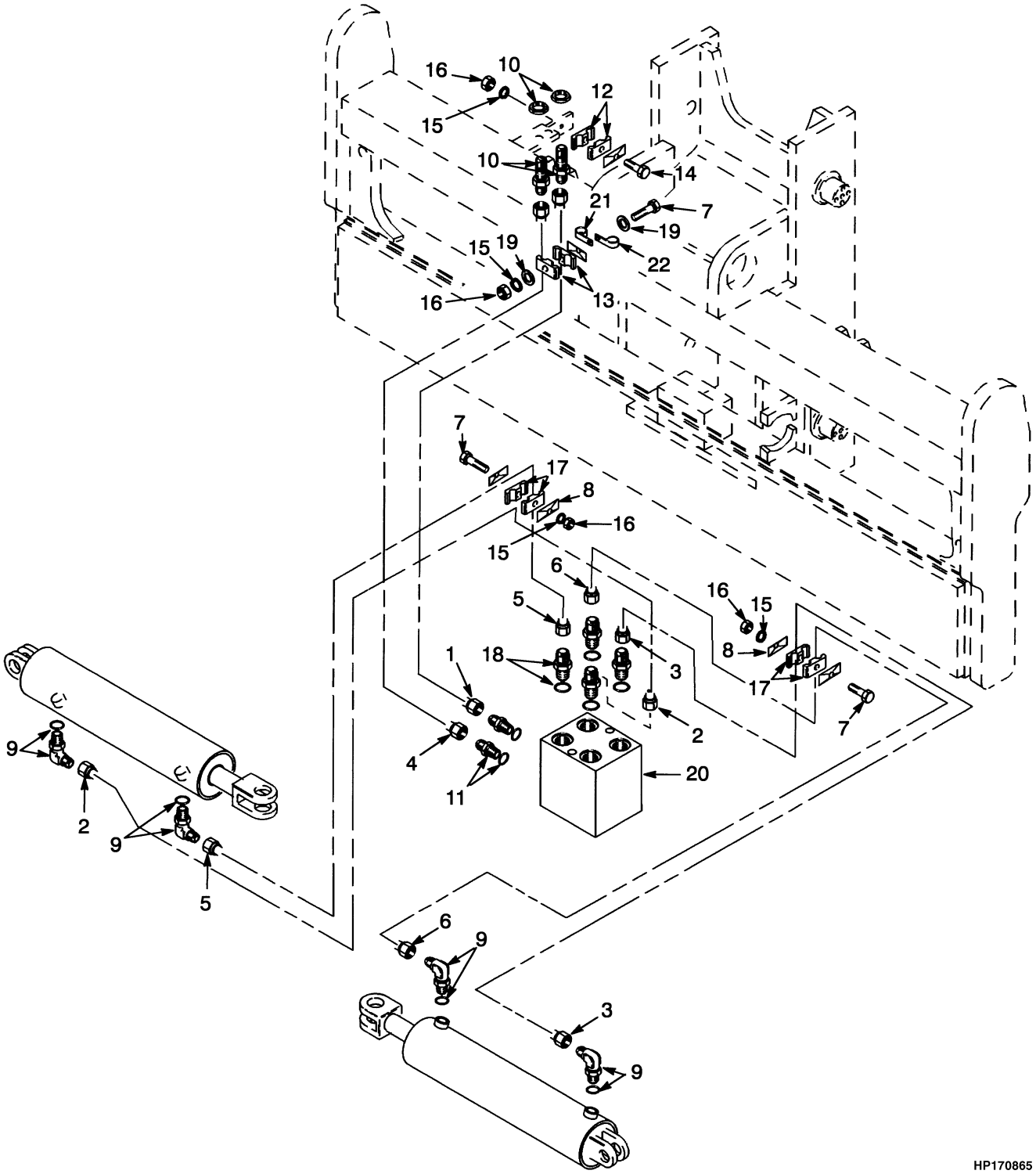

©2006 HYSTER COMPANY

CARRIAGE
HYDRAULIC SYSTEM
TWO STAGE VISTA

KEY:
A: H400H
B: H450H

ITEM	PART NO.	DESCRIPTION	QTY A	QTY B
1	1389399	Tube	1	..
1	1391897	Tube	..	1
2	1383865	Tube	1	..
2	1393805	Tube	..	1
3	1383866	Tube	1	..
3	1391899	Tube	..	1
4	1389398	Tube	1	..
4	1391887	Tube	..	1
5	1383868	Tube	1	..
5	1391898	Tube	..	1
6	1383869	Tube	1	..
6	1393804	Tube	..	1
7	136704	Capscrew	3	2
8	1393739	Cover	2	1
9	16559	Fitting	4	4
9	16484	O-Ring	1	1
10	16449	Fitting	2	2
11	16542	Fitting	2	2
11	16485	O-Ring	1	1
12	1373335	Clamp	1	1
13	1393803	Clamp	1	1
14	136703	Capscrew	..	1
14	292512	Capscrew	1	..
15	292681	Lockwasher	4	4
16	239503	Nut	4	4
17	1393802	Clamp	2	2
18	16909	Fitting	4	4
18	16485	O-Ring	1	1
19	320157	Washer	2	2
20	. . . . .	Solenoid Valve (☞ Figure 10-15)	1	1
21	154208	Clamp	1	1
22	379048	Clamp	2	2

FORK POSITIONER (Figure 10-14)
SIDE-SHIFT CYLINDER - HOOK TYPE
TWO STAGE VISTA

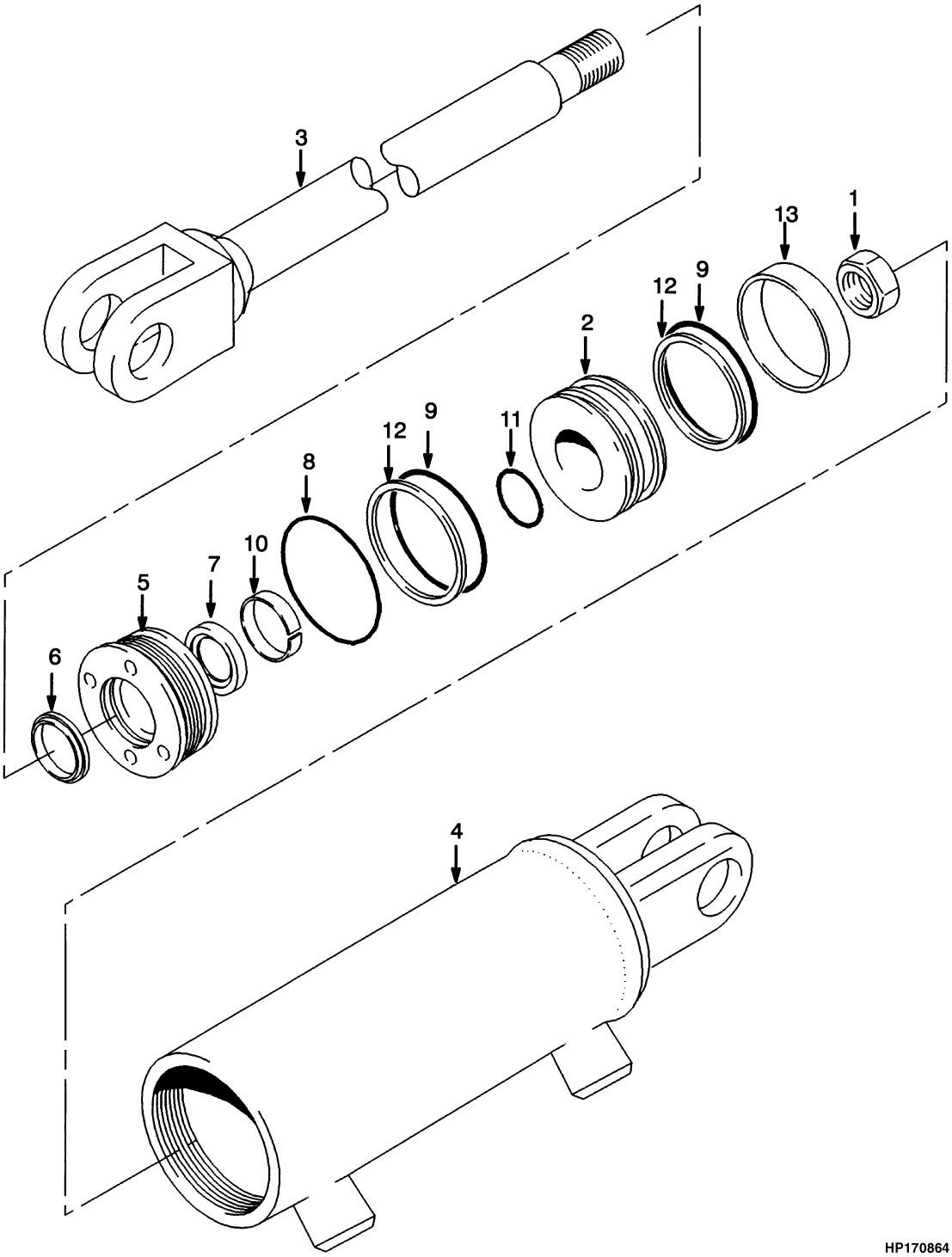

©2006 HYSTER COMPANY

FORK POSITIONER
SIDE-SHIFT CYLINDER - HOOK TYPE
TWO STAGE VISTA

KEY:
A: H400H
B: H450H

ITEM		PART NO.	DESCRIPTION	QTY A	QTY B
	a	1390639	Cylinder Assembly	..	1
	a	1390640	Cylinder Assembly	1	..
	bc	1458395	Cylinder Assembly	..	1
	bc	1458396	Cylinder Assembly	1	..
1		1393401	Nut	1	1
2		1393402	Piston	1	1
3		. . . . .	Rod	1	1
4		. . . . .	Shell	1	1
5		1393405	Gland	1	1
6		1393413	Wiper	1	1
7		1393412	Rod Wiper	1	1
8		1393411	Back-Up Ring	1	1
9		1393410	O-Ring	2	2
10		1393409	Wear Ring	1	1
11		1393408	O-Ring	1	1
12		1393407	Piston Seal	1	1
13		1393406	Wear Ring	2	2
		1393414	Seal Kit (Includes Items 6-13)	2	2

FOOTNOTES:
a With Pin Carriage
b With Quick Disconnect Carriage
c S/N A214E-1577 ⇒

©2006 HYSTER COMPANY

SOLENOID VALVE (Figure 10-15)
TWO STAGE VISTA

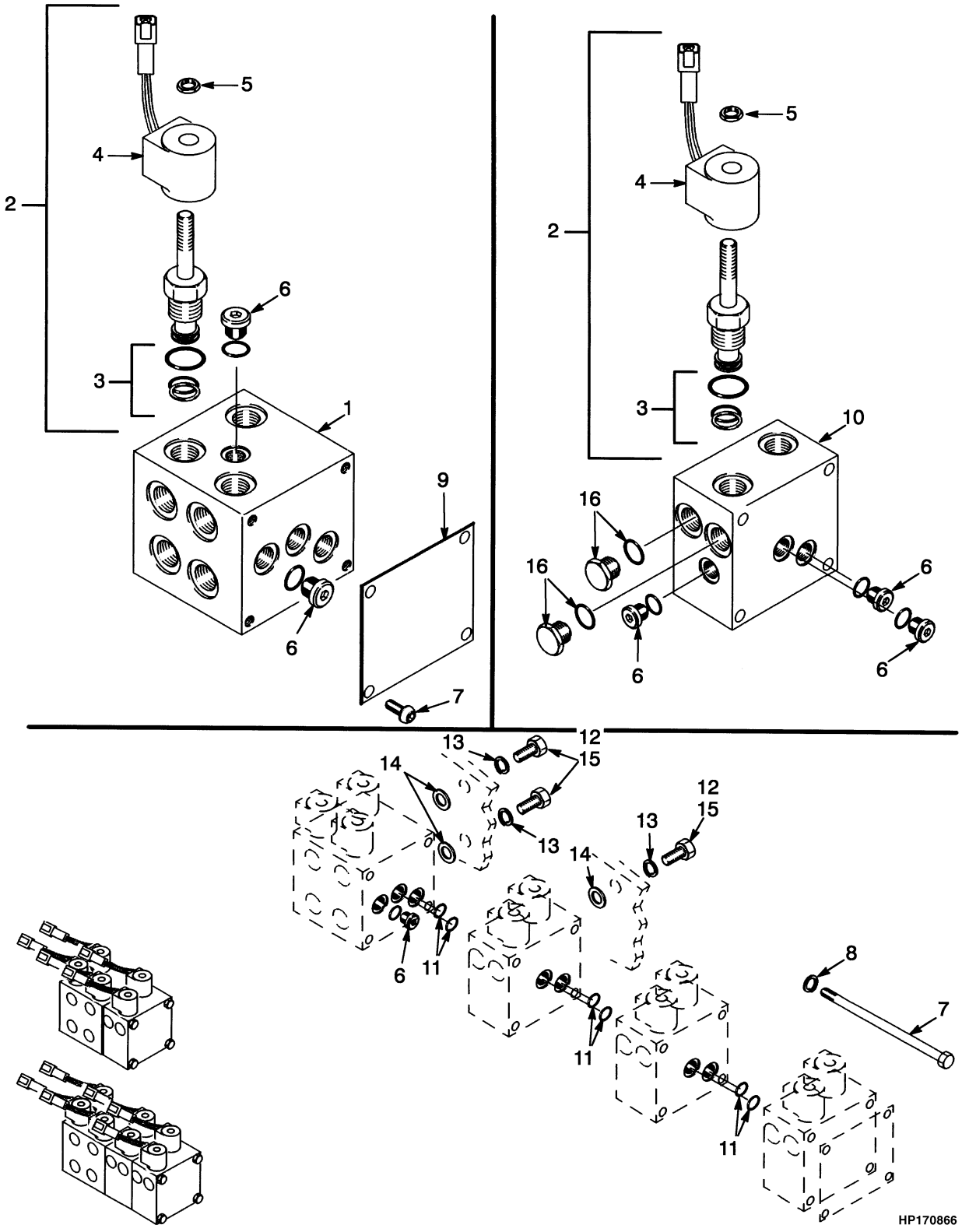

©2006 HYSTER COMPANY

SOLENOID VALVE
TWO STAGE VISTA

KEY:
A: Two Function
B: Three Function
C: Four Function
D: Five Function

ITEM	PART NO.	DESCRIPTION	QTY A	QTY B	QTY C	QTY D
	1372994	Valve	1	..	..	..
	1393729	Valve	..	1	..	..
	1393730	Valve	..	..	1	..
	1393731	Valve	..	..	..	1
1	. . . . .	Body	1	1	1	1
2	1452130	Cartridge (Includes Solenoid)	3	5	7	9
3	1452131	Seal Kit	1	1	1	1
4	1388380	Coil	1	1	1	1
4	1330409	Connector	1	1	1	1
4	1330414	Secondary Lock	1	1	1	1
5	1393164	Nut	1	1	1	1
6	1452132	Plug	3	6	9	12
7	1452133	Bolt Kit	..	..	..	1
7	1452136	Bolt Kit	..	1	..	..
7	1452137	Bolt Kit	..	..	1	..
7	1452138	Bolt	4	..	..	..
8	1452135	Washer	4	4	4	4
9	1452134	Cover	1	1	1	1
10	1393728	Valve (Auxiliary)	..	1	2	3
11	1452139	O-Ring	..	2	4	6
12	292509	Capscrew	2	3	3	3
13	292682	Lockwasher	2	3	3	3
14	320162	Washer	2	3	3	3
15	280472	Sealant (Adhesive)	AR	AR	AR	AR
16	16485	O-Ring	..	1	1	1
16	216590	Fitting	..	2	4	6

©2006 HYSTER COMPANY

NOTES

11 MAST WITH EMPTY CONTAINER HANDLER

SECTION 11
MAST WITH EMPTY CONTAINER HANDLER

DESCRIPTION **PAGE**

AUXILIARY ATTACHMENTS
EMPTY CONTAINER HANDLER..... 11-130
CARRIAGE
WITH MECHANICAL PILE SLOPE
SERIES 582 AND 588..... 11-78
CONTAINER ATTACHMENT INSTALLATION
582 AND 588 SERIES..... 11-76
DOUBLE HORIZONTAL TWIST LOCK HEAD ASSEMBLY
CONTAINER HANDLING ATTACHMENT (572)
S/N A214E-1807⇒..... 11-38
ELECTRICAL BOX MOUNT
582 AND 588 SERIES..... 11-80
ELECTRICAL SYSTEM
SERIES 582..... 11-110
SERIES 588..... 11-112
SPREADER 572 AND 573
S/N A214E-1807⇒..... 11-70
SPREADER 575
S/N A214E-1807⇒..... 11-72
SPREADER 578
S/N A214E-1807⇒..... 11-74
EMPTY HANDLER
EMPTY CONTAINER HANDLER
S/N A214E-1807⇒..... 11-28
END BEAM ASSEMBLY
SERIES 582..... 11-96
SERIES 588..... 11-100
EXTENSION BEAM ARRANGEMENT
SERIES 582 AND 588..... 11-94
EXTENSION CYLINDER
EMPTY CONTAINER HANDLER
⇒S/N A214E-1806..... 11-62
S/N A214E-1807⇒..... 11-64
EXTENSION CYLINDER ASSEMBLY
SERIES 582 AND 588..... 11-88
HEADER HOSE
EMPTY CONTAINER HANDLER
S/N A214E-01963A⇒..... 11-122
⇒S/N A214E-1578..... 11-116
S/N A214E-1579⇔S/N A214E-01962A..... 11-118
S/N A214E02078B⇒..... 11-126
HYDRAULIC SYSTEM
EMPTY CONTAINER HANDLER
SHEET 1 OF 2
⇒S/N A214E-1806..... 11-24
SHEET 2 OF 2
⇒S/N A214E-1806..... 11-26
SERIES 582..... 11-104
SERIES 588..... 11-106
SPREADER 572

©2006 HYSTER COMPANY

SECTION 11
MAST WITH EMPTY CONTAINER HANDLER (Continued)

DESCRIPTION	PAGE
S/N A214E-1807⇒	11-36
SPREADER 573	
S/N A214E-1807⇒	11-40
SPREADER 575	
S/N A214E-1807⇒	11-54
SPREADER 578	
S/N A214E-1807⇒	11-44
INNER MAST	
EMPTY CONTAINER HANDLER	11-6
LIFT CYLINDER	
EMPTY CONTAINER HANDLER	11-16
LIFT CYLINDER ATTACHING PARTS	
EMPTY CONTAINER HANDLER	11-18
MAIN LIFT	
EMPTY CONTAINER HANDLER	
⇒S/N A214E-1654	11-8
S/N A214E-1655⇒	11-12
MAST INSTALLATION	
EMPTY CONTAINER HANDLER	11-132
OUTER MAST	
EMPTY CONTAINER HANDLER	11-4
SENSORS	
SERIES 582	11-108
SIDE-SHIFT CYLINDER	
EMPTY CONTAINER HANDLER	
⇒S/N A214E-1806	11-66
S/N A214E-1807⇒	11-68
SIDE-SHIFT CYLINDER ASSEMBLY	
SERIES 588	11-114
SINGLE HORIZONTAL TWIST LOCK HEAD ASSEMBLY	
CONTAINER HANDLING ATTACHMENT (573)	
S/N A214E-1807⇒	11-42
SLAVE BEAM	
EMPTY CONTAINER HANDLER	
S/N A214E-1807⇒	11-34
SPRING LOADED HOOK HEAD ASSEMBLY	
CONTAINER HANDLING ATTACHMENT (575)	
S/N A214E-1807⇒	11-56
TWIST LOCK CYLINDER	
EMPTY CONTAINER HANDLER	
⇒S/N A214E-1806	11-50
S/N A214E-1807⇒	11-52
VALVE ASSEMBLY	
END BEAM	
CONTAINER HANDLING ATTACHMENT	
S/N A214E-1807⇒	11-60
HEAD	
SERIES 582	11-87
LH, EXTENSION, TWISTLOCK	
SERIES 582 AND 588	11-83

©2006 HYSTER COMPANY

SECTION 11
MAST WITH EMPTY CONTAINER HANDLER (Continued)

DESCRIPTION	PAGE
PILOT CHECK	
SERIES 582 AND 588	11-84
RH, EXTENSION, TWISTLOCK	
SERIES 582 AND 588	11-82
SIDE-SHIFT	
SERIES 582 AND 588	11-85
SPREADER	
CONTAINER HANDLING ATTACHMENT	
S/N A214E-1807⇒	11-58
SPREADER 575	
CONTAINER HANDLING ATTACHMENT	
S/N A214E-1807⇒	11-59
VERTICAL END BEAM	
EMPTY CONTAINER HANDLER	
⇒S/N A214E-1806	11-22
VERTICAL TWIST LOCK HEAD ASSEMBLY	
CONTAINER HANDLING ATTACHMENT (578)	
S/N A214E-1807⇒	11-46
WEAR PADS	
CONTAINER HANDLING ATTACHMENT (570)	
S/N A214E-1807⇒	11-32
END BEAM	
SERIES 582 AND 588	11-90
EXTENSION BEAM	
SERIES 582 AND 588	11-92
WEAR PLATES	
EMPTY CONTAINER HANDLER	
⇒S/N A214E-1806	11-20
WIRE HARNESS	
EMPTY CONTAINER HANDLER	
⇒S/N A214E-1806	11-134
HOOK ATTACHMENT	
S/N A214E-1807⇒	11-137
MAST	
⇒S/N A214E02077B	11-138
S/N A214E02078B⇒	11-140
TWIST LOCK	
S/N A214E-1807⇒	11-136

©2006 HYSTER COMPANY

OUTER MAST (Figure 11-1)
EMPTY CONTAINER HANDLER

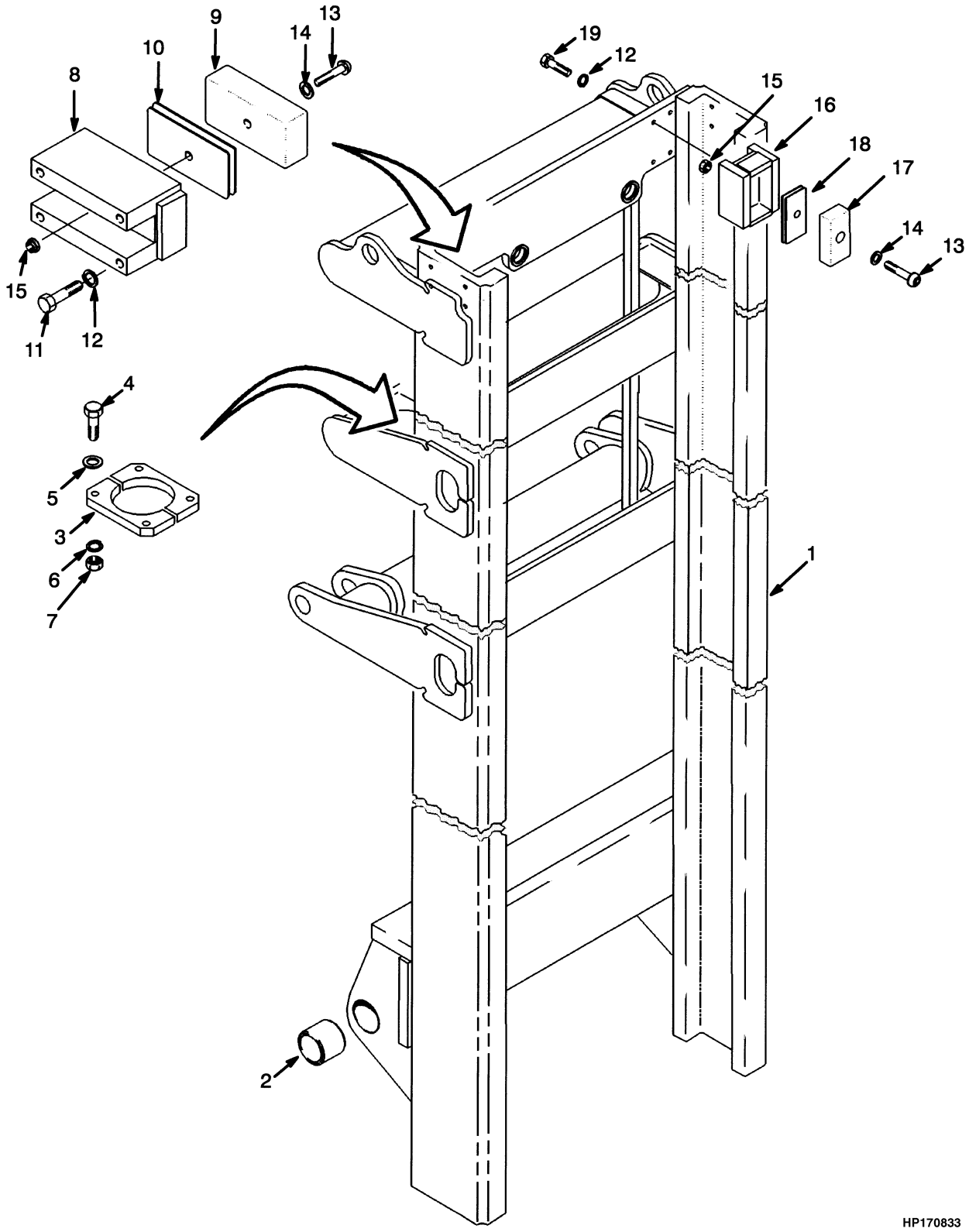

©2006 HYSTER COMPANY

OUTER MAST
EMPTY CONTAINER HANDLER

KEY:
A: H400H-EC5
B: H450H-EC6

ITEM		PART NO.	DESCRIPTION	QTY A	QTY B
	c	1373136	Mast Assembly	1	..
	d	1496375	Mast Assembly	1	..
	b	1544032	Mast Assembly	1	..
	c	1373137	Mast Assembly	..	1
	d	1496376	Mast Assembly	..	1
	b	1544033	Mast Assembly	..	1
1	**a**	1372821	Outer Mast	1	..
1	**b**	1544034	Outer Mast	1	..
1	**a**	1372822	Outer Mast	..	1
1	**b**	1544035	Outer Mast	..	1
2		321177	Bushing	2	2
3		1393726	Retainer	4	4
4		292535	Capscrew	8	8
5		320161	Washer	8	8
6		292683	Lockwasher	8	8
7		216877	Nut	8	8
8		1373051	Bracket	2	2
9		1373037	Bearing Block	2	2
10		1373031	Shim	AR	AR
10		1373032	Shim	AR	AR
10		1373033	Shim	AR	AR
11		292531	Capscrew	8	8
12		292683	Lockwasher	16	16
13		293619	Capscrew	6	6
14		320158	Washer	8	8
15		316835	Nut	6	6
16		1373050	Bracket	2	2
17		1373038	Bearing Block	2	2
18		1373034	Shim	AR	AR
18		1373035	Shim	AR	AR
18		1373036	Shim	AR	AR
19		246001	Capscrew	8	8

FOOTNOTES:
a ⇒ S/N A214E-01962A
b S/N A214E-01963A ⇒
c ⇒ S/N A214E-1806
d S/N A214E-1807⇔S/N A214E-01962A

©2006 HYSTER COMPANY

INNER MAST (Figure 11-2)
EMPTY CONTAINER HANDLER

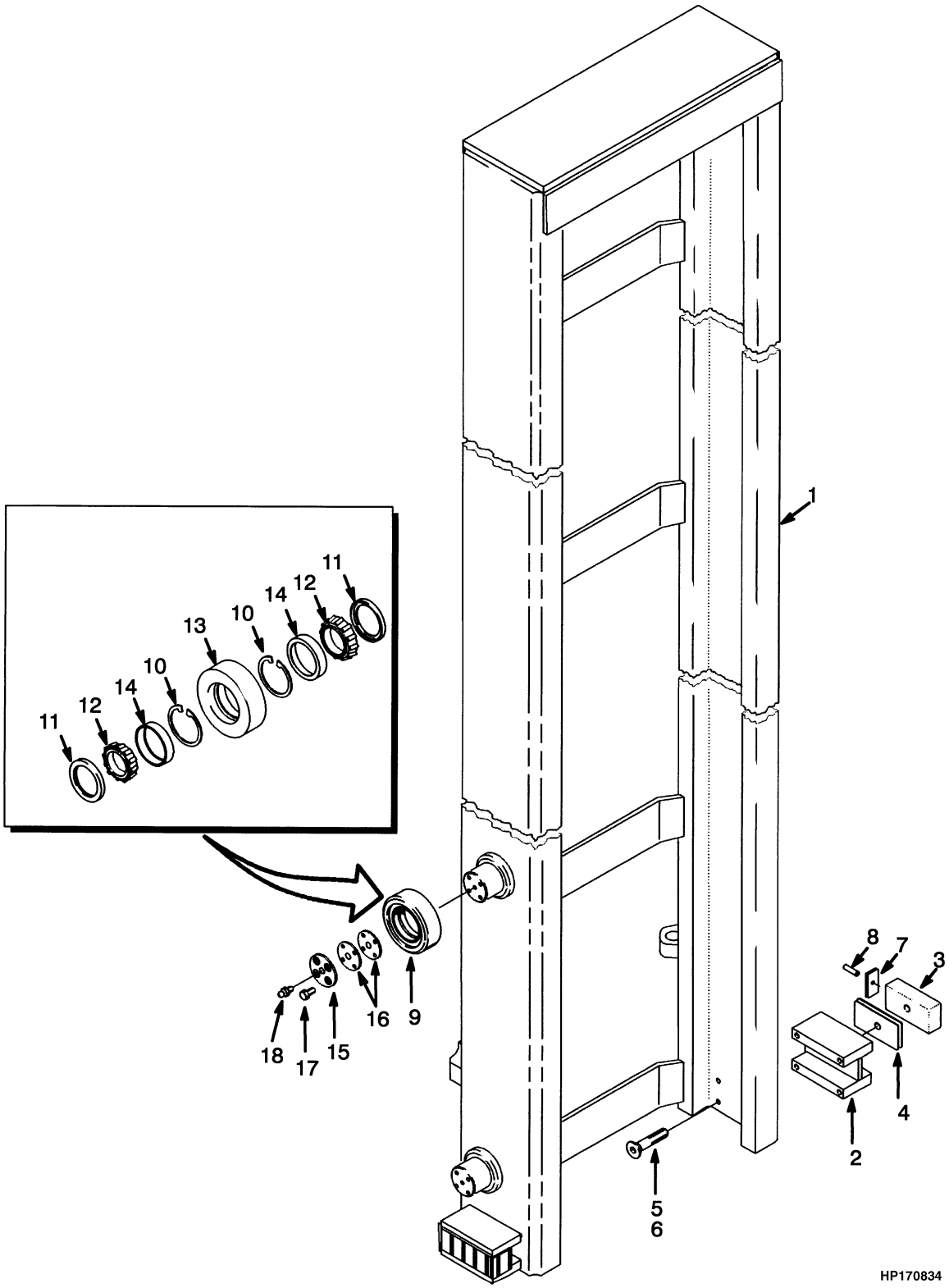

©2006 HYSTER COMPANY

INNER MAST
EMPTY CONTAINER HANDLER

KEY:
A: H400H-EC5
B: H450H-EC6

ITEM		PART NO.	DESCRIPTION	QTY A	QTY B
	c	1373136	Mast Assembly	1	..
	e	1496375	Mast Assembly	1	..
	a	1533944	Mast Assembly	1	..
	b	1544032	Mast Assembly	1	..
	c	1373137	Mast Assembly	..	1
	e	1496376	Mast Assembly	..	1
	a	1533945	Mast Assembly	..	1
	b	1544033	Mast Assembly	..	1
1		1372824	Inner Mast Assembly (545 in.)	1	..
1		1372825	Inner Mast Assembly (648 in.)	..	1
2		1373049	Bracket	2	2
3		1373039	Bearing Block	2	2
4		1373028	Shim	AR	AR
4		1373029	Shim	AR	AR
4		1373030	Shim	AR	AR
5		296255	Capscrew	4	4
6		321197	Adhesive	AR	AR
7		1373025	Shim	AR	AR
7		1373026	Shim	AR	AR
7		1373027	Shim	AR	AR
8		302468	Pin	2	2
9		1325765	Roller Assembly	4	4
10		47478	Snap Ring	2	2
11		1325761	Shield	2	2
12		276228	Bearing Cone	2	2
13		1325756	Roller	1	1
14		392197	Bearing Cup	2	2
15		1325760	Cap	4	4
16		1325763	Shim	AR	AR
16		1325764	Shim	AR	AR
16		1373329	Shim	AR	AR
17	**c**	132860	Capscrew	16	16
17	**d**	293644	Capscrew	16	16
18		16001	Lube Fitting	4	4

FOOTNOTES:
a ⇒ S/N A214E-01962A
b S/N A214E-01963A ⇒
c ⇒ S/N A214E-1806
d S/N A214E-1807 ⇒
e S/N A214E-1807⇔S/N A214E-01962A

©2006 HYSTER COMPANY

MAIN LIFT (Figure 11-3)
EMPTY CONTAINER HANDLER
(⇒S/N A214E-1654)

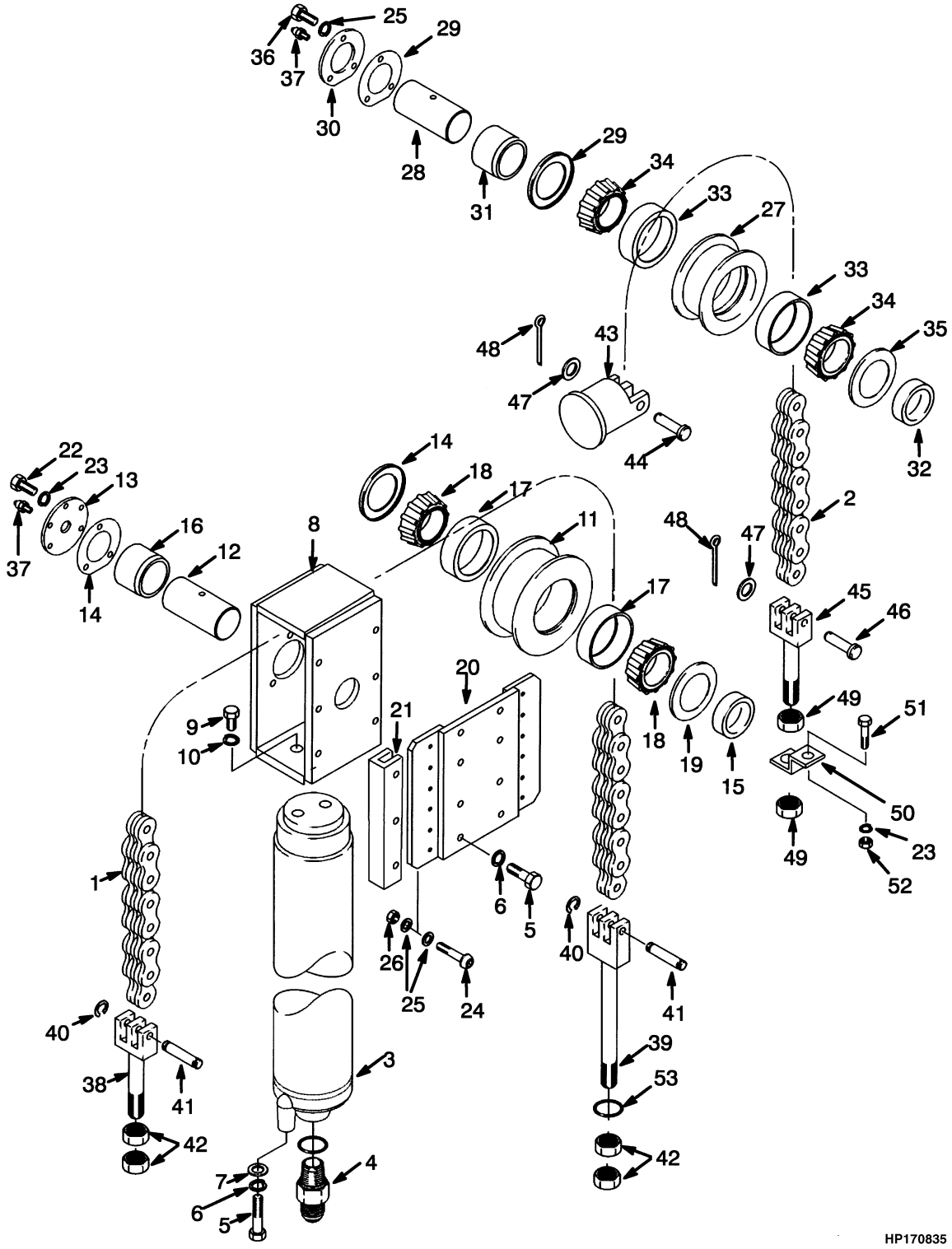

©2006 HYSTER COMPANY

MAIN LIFT
EMPTY CONTAINER HANDLER
(⇒S/N A214E-1654)

KEY:
A: H400H-EC5
B: H450H-EC6

ITEM		PART NO.	DESCRIPTION	QTY A	QTY B
	d	1373136	Mast Assembly	1	..
	d	1373137	Mast Assembly	..	1
1		198324	Chain	1	..
1		330303	Chain	..	1
2		1373054	Chain	1	..
2		1373055	Chain	..	1
3	**a**	1391487	Lift Cylinder (☞ Figure 11-5)	2	..
3	**a**	1391488	Lift Cylinder (☞ Figure 11-5)	..	2
4		376682	Control Valve	2	2
5		136985	Capscrew	12	12
6		292682	Lockwasher	12	12
7		1303391	Washer	2	2
8	**b**	1389410	Housing	2	2
8	**a**	1455347	Housing	2	2
9	**a**	292685	Lockwasher	4	4
9	**b**	292685	Lockwasher	8	8
10	**a**	292562	Capscrew	4	4
10	**b**	292562	Capscrew	8	8
11		1455301	Chain Sheave	2	2
12		1455487	Shaft	2	2
13		1455992	Plate	2	2
14		110931	Shim (0.005 in.)	AR	AR
14		110932	Shim (0.007 in.)	AR	AR
14		110933	Shim (0.020 in.)	AR	AR
15		159296	Spacer	2	2
16		159297	Spacer	2	2
17		159299	Bearing Cup	4	4
18		230408	Bearing Cone	4	4
19		159295	Oil Seal	4	4
20		1455396	Guide	2	2
21		1393735	Chain Guide	4	4
22		293645	Capscrew	10	10
23		292683	Lockwasher	14	14
24		1393738	Capscrew	24	24
25		320156	Washer	48	48
26		313805	Nut	24	24
27		1383552	Chain Sheave	2	2
28		1373010	Shaft	2	2
29		1373014	Shim	AR	AR
29		1373015	Shim	AR	AR
29		1373016	Shim	AR	AR
30		1372971	Cover Plate	2	2
31		1373011	Spacer	2	2
32		1373012	Spacer	2	2
33		167970	Bearing Cup	4	4

©2006 HYSTER COMPANY

MAIN LIFT
EMPTY CONTAINER HANDLER
(⇒S/N A214E-1654)

ITEM		PART NO.	DESCRIPTION	QTY A	QTY B
34		167971	Bearing Cone	4	4
35		3013841	Oil Seal	4	4
36		132860	Capscrew	6	6
37		16001	Lube Fitting	4	4
38		1455377	Chain Anchor	2	2
39		1455378	Chain Anchor	2	2
40		1194251	Snap Ring	8	8
41		1455490	Pin	4	4
42		136405	Nut	8	8
43		1372884	Chain Anchor	2	2
44		1373020	Pin	2	2
45		1373349	Chain Anchor	2	2
46		1303383	Pin	2	2
47		15146	Washer	4	4
48		15244	Cotter Pin	4	4
49		221725	Nut	4	4
50		132829	Lock Plate	2	2
51		292531	Capscrew	2	2
52		216877	Nut	2	2
53	**c**	1458125	Spacer	2	2

FOOTNOTES:
a ⇒ S/N A214E-1574
b S/N A214E-1575 ⇒
c S/N A214E-1577 ⇒ (ATT-2066V)
d ⇒ S/N A214E-1806

©2006 HYSTER COMPANY

NOTES

MAIN LIFT (Figure 11-4)
EMPTY CONTAINER HANDLER
(S/N A214E-1655⇒)

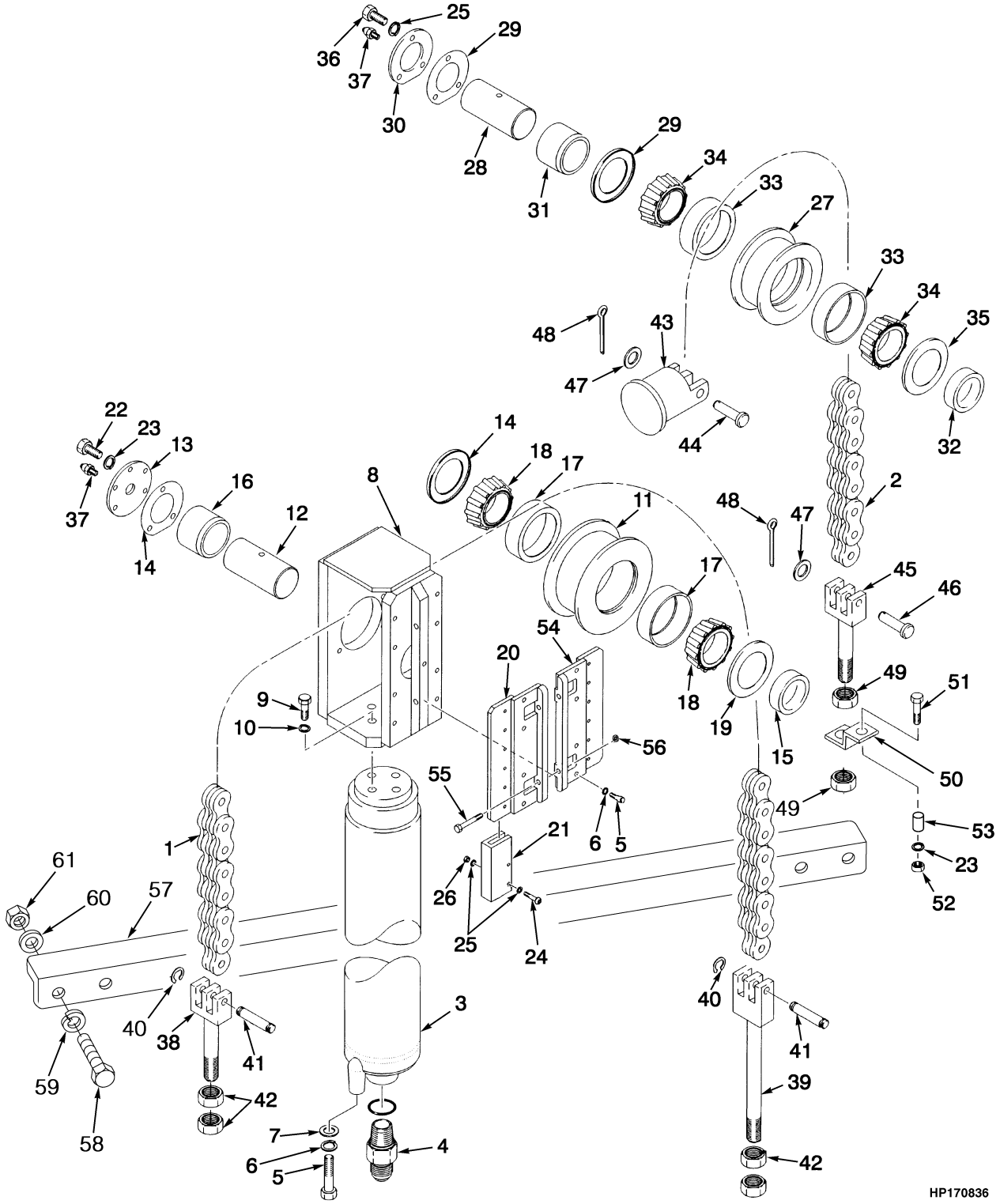

©2006 HYSTER COMPANY

MAIN LIFT
EMPTY CONTAINER HANDLER
(S/N A214E-1655⇒)

KEY:
A: H400H-EC5
B: H450H-EC6

ITEM		PART NO.	DESCRIPTION	QTY A	QTY B
	c	1496375	Mast Assembly	1	..
	f	1533944	Mast Assembly	1	..
	b	1544032	Mast Assembly	1	..
	c	1496376	Mast Assembly	..	1
	f	1533945	Mast Assembly	..	1
	b	1544033	Mast Assembly	..	1
1		198324	Chain	1	..
1		330303	Chain	..	1
2		1373054	Chain	1	..
2		1373055	Chain	..	1
3		1389408	Lift Cylinder (545 in.) (☞ Figure 11-5)	2	..
3		1389409	Lift Cylinder (648 in) (☞ Figure 11-5)	..	2
4		376682	Control Valve	2	2
5		136985	Capscrew	18	18
6		292682	Lockwasher	22	22
7		1303391	Washer	2	2
8		1465599	Housing (Chain Sheave)	2	2
9		292685	Lockwasher	8	8
10		292562	Capscrew	8	8
11		1455301	Chain Sheave	2	2
12		1455487	Shaft	2	2
13		1455992	Plate	2	2
14		110931	Shim (0.005 in.)	AR	AR
14		110932	Shim (0.007 in.)	AR	AR
14		110933	Shim (0.020 in.)	AR	AR
15		159296	Spacer	2	2
16		159297	Spacer	2	2
17		159299	Bearing Cup	4	4
18		230408	Bearing Cone	4	4
19		159295	Oil Seal	4	4
20		1465601	Guide (Front Sheave)	2	2
21		1393735	Chain Guide	4	4
22		293645	Capscrew	10	10
23		292683	Lockwasher	14	14
24		1393738	Capscrew	24	24
25		320156	Washer	48	48
26		313805	Nut	24	24
27		1383552	Chain Sheave	2	2
28		1373010	Shaft	2	2
29		1373014	Shim	AR	AR
29		1373015	Shim	AR	AR
29		1373016	Shim	AR	AR
30		1372971	Cover Plate	2	2
31		1373011	Spacer	2	2
32		1373012	Spacer	2	2

©2006 HYSTER COMPANY

MAIN LIFT
EMPTY CONTAINER HANDLER
(S/N A214E-1655⇒)

ITEM		PART NO.	DESCRIPTION	QTY A	QTY B
33		167970	Bearing Cup	4	4
34		167971	Bearing Cone	4	4
35	**a**	3013841	Oil Seal	4	4
35	**b**	1518209	Oil Seal	4	4
36		132860	Capscrew	6	6
37		16001	Lube Fitting	4	4
38	**a**	1460436	Chain Anchor (Short)	2	2
38	**b**	1507589	Chain Anchor (Short)	2	2
39		1460437	Chain Anchor (Long)	2	2
40		1194251	Snap Ring	8	8
41	**a**	1455490	Pin	4	4
41	**b**	1509182	Pin	2	2
41	**b**	1455490	Pin	2	2
42	**a**	136405	Nut	8	8
42	**b**	221295	Nut	4	4
42	**b**	136405	Nut	4	4
43	**a**	1372884	Chain Anchor	2	2
43	**b**	1534281	Chain Anchor	2	2
44		1373020	Pin	2	2
45	**d**	1373349	Chain Anchor	2	2
45	**e**	1494402	Chain Anchor	2	2
46		1303383	Pin	2	2
47		15146	Washer	4	4
48		15244	Cotter Pin	4	4
49		221725	Nut	4	4
49		221729	Nut	4	4
50	**d**	132829	Lock Plate	2	2
50	**e**	1495969	Lock Plate	4	4
51	**d**	292531	Capscrew	2	2
51	**e**	292538	Capscrew	2	2
52		216877	Nut	2	2
52		302402	Locknut	2	2
53	**d**	1458125	Spacer	2	2
53	**e**	1496053	Spacer	2	2
54		1465602	Guide (Rear Sheave)	2	2
55		136718	Capscrew	4	4
56		136692	Nut	4	4
57	**b**	1507696	Plate	2	2
58	**b**	292533	Capscrew	4	4
59	**b**	320161	Washer	4	4
60	**b**	292683	Lockwasher	4	4
61	**b**	216877	Nut	4	4
62		136405	Nut	4	4

FOOTNOTES:
a ⇒ S/N A214E-01962A
b S/N A214E-01963A ⇒
c S/N A214E-1655⇔S/N A214E-1806Y
d ⇒ S/N A214E-1806

©2006 HYSTER COMPANY

MAIN LIFT
EMPTY CONTAINER HANDLER
(S/N A214E-1655⇒)

e S/N A214E-1807 ⇒
f S/N A214E-1807Y⇔S/N A214E-01962A

LIFT CYLINDER (Figure 11-5)
EMPTY CONTAINER HANDLER

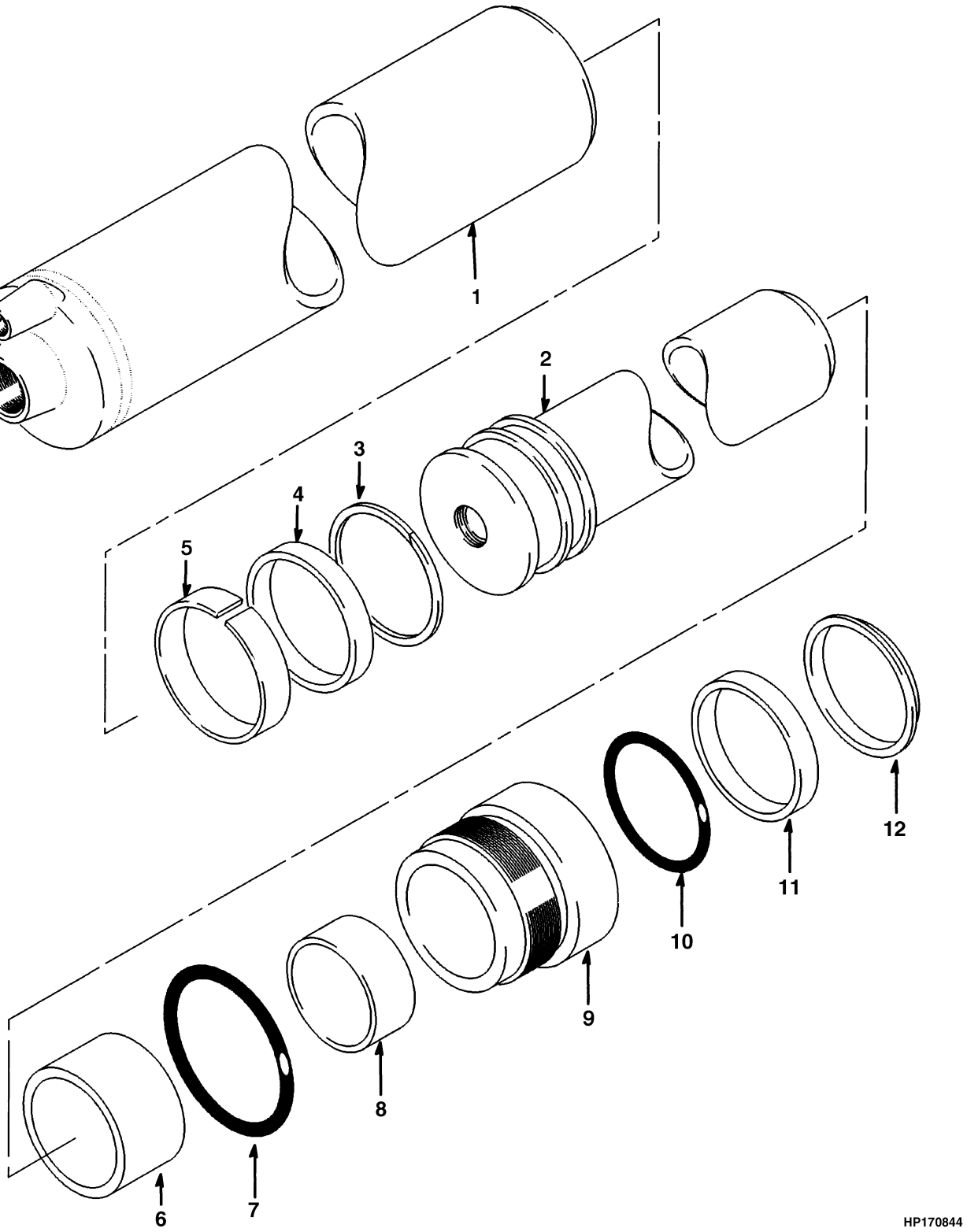

©2006 HYSTER COMPANY

LIFT CYLINDER
EMPTY CONTAINER HANDLER

KEY:
A: H400H-EC5
B: H450H-EC6

ITEM		PART NO.	DESCRIPTION	QTY A	QTY B
	ac	1391487	Lift Cylinder	1	..
	bd	1389408	Lift Cylinder (545 in.)	1	..
	ac	1391488	Lift Cylinder	..	1
	bd	1389409	Lift Cylinder (648 in)	..	1
1		1391481	Tube (545 in. Mast)	1	..
1		1391482	Tube (648 in. Mast)	..	1
2	**ac**	1391484	Rod Assembly	1	..
2		1391476	Piston	1	..
2		184818	Snap Ring	1	..
2	**bd**	1389405	Rod (545 in. Mast)	1	..
2		1391476	Piston	1	..
2		184818	Snap Ring	1	..
2	**ac**	1391485	Rod Assembly	..	1
2		1391476	Piston	..	1
2		184818	Snap Ring	..	1
2	**bd**	1389406	Rod (648 in. Mast)	..	1
2		1389403	Rod	..	1
2		1391476	Piston	..	1
2		184818	Snap Ring	..	1
3		638299	Back-Up Ring	1	1
4		637170	Seal	1	1
5		385133	Wear Ring	1	1
6		1451823	Spacer	1	1
7		1373127	O-Ring	1	1
8		636907	Wear Ring	1	1
9		1373126	Retainer	1	1
10		637168	Seal	1	1
11		638256	Back-Up Ring	1	1
12	**b**	1373129	Seal	1	1
		1391877	Seal Kit (Includes Items 4-5, 7-8, 10-12)	1	1

FOOTNOTES:
a ⇒ S/N A214E-1574
b S/N A214E-1575 ⇒
c ⇒ S/N A587E-2015
d S/N A587E-2016 ⇒

©2006 HYSTER COMPANY

LIFT CYLINDER ATTACHING PARTS (Figure 11-6)
EMPTY CONTAINER HANDLER

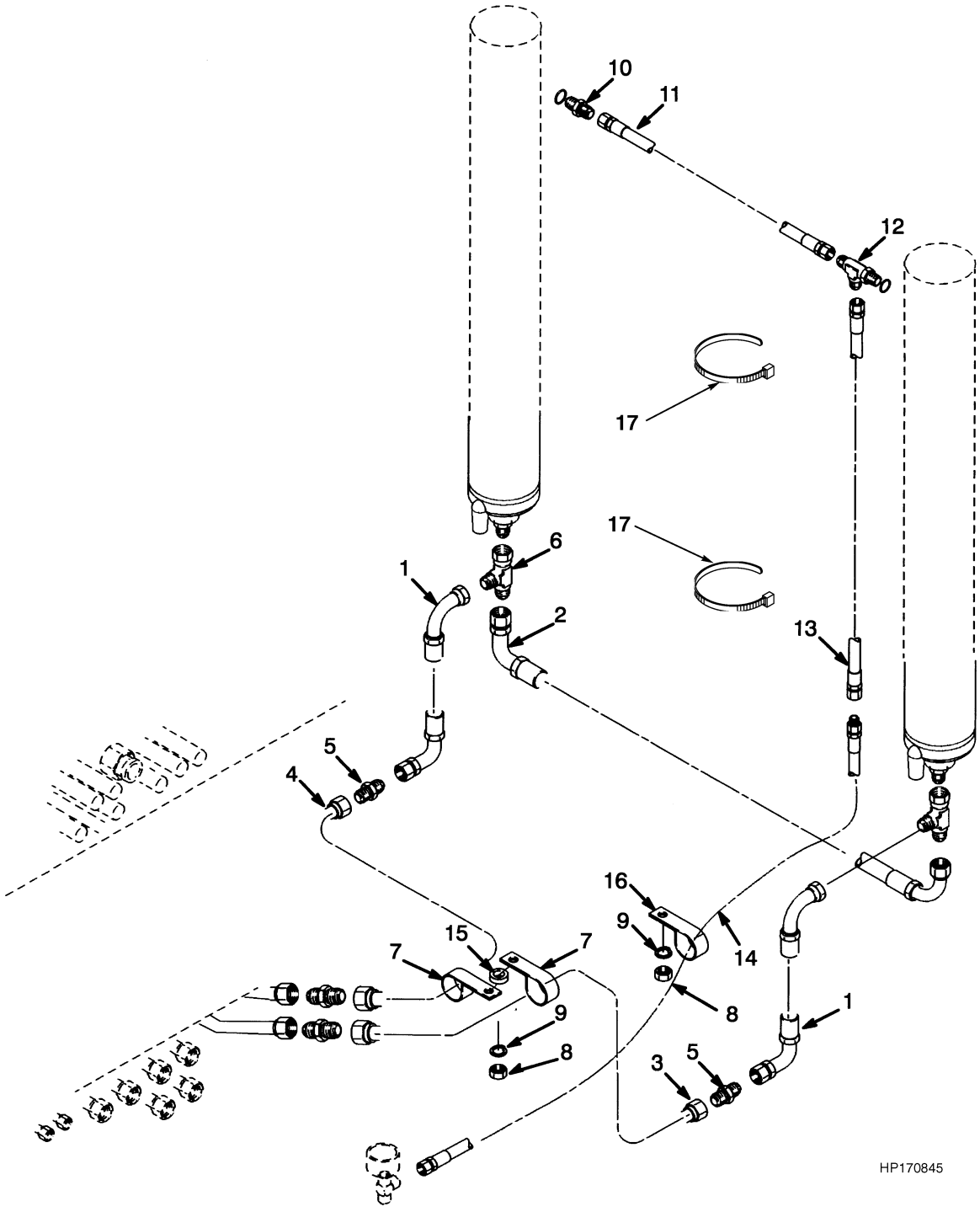

©2006 HYSTER COMPANY

LIFT CYLINDER ATTACHING PARTS
EMPTY CONTAINER HANDLER

ITEM		PART NO.	DESCRIPTION	QTY
1		1384484	Hose	1
2		1565736	Hose	2
3		1565737	Tube	1
3		14494	Fitting	2
3		1451834	Sleeve	2
4		1565738	Tube	1
4		14494	Fitting	2
4		1451834	Sleeve	2
5		1336054	Fitting	2
6		1337266	Fitting	2
7		1310611	Clamp	5
8	**a**	302401	Locknut	3
8	**b**	302401	Locknut	4
9	**a**	320161	Washer	3
9	**b**	320161	Washer	4
10		131460	Fitting	2
10		16483	O-Ring	1
11		252376	Hose	1
12		17062	Fitting	1
13		1393740	Hose (H450H-EC6)	1
13		300597	Hose (H400H-EC5)	1
14	**a**	1385556	Hose	1
14	**b**	301250	Hose	1
15		1300165	Spacer	3
16	**b**	321487	Clamp	1
17		273775	Clamp (Strap)	AR

FOOTNOTES:
a ⇒ S/N A214E-1534
b S/N A214E-1535 ⇒

©2006 HYSTER COMPANY

WEAR PLATES (Figure 11-7)
EMPTY CONTAINER HANDLER
(⇒S/N A214E-1806)

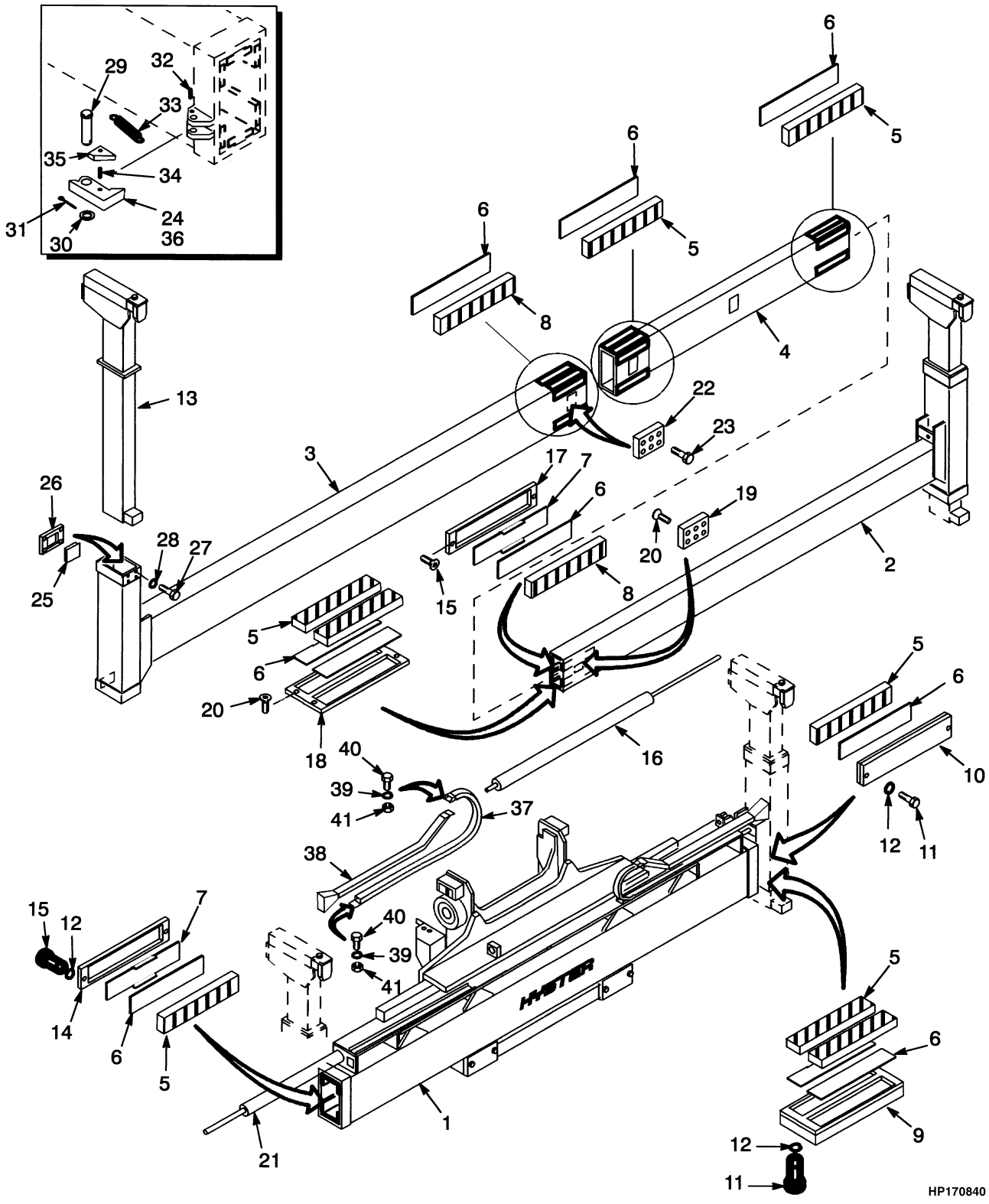

©2006 HYSTER COMPANY

WEAR PLATES
EMPTY CONTAINER HANDLER
(⇒S/N A214E-1806)

ITEM	PART NO.	DESCRIPTION	QTY
1	1453904	Beam (Main)	1
2	1453905	Beam (LH)	1
3	1453906	Beam (RH)	1
4	1453907	Beam	1
5	1453908	Plate	40
6	1453909	Shim	48
7	1453910	Plate	12
8	1453911	Plate	8
9	1453912	Plate	1
10	1453913	Block	6
11	1453914	Bolt	16
12	1453915	Washer	48
13	. . . . .	End Beam (Vertical)	2
14	1453916	Plate	8
15	1453917	Bolt	16
16	1392292	Side-Shift Cylinder (☞ Figure 11-29)	1
17	1453918	Frame	4
18	1453919	Plate	2
19	1392314	Lock Plate	2
20	1453920	Capscrew	28
21	1392290	Cylinder Assembly (☞ Figure 11-27)	2
22	1453921	Stopper	2
23	1453922	Bolt	12
24	1392296	Stopper	1
25	1392319	Plate	4
26	1392320	Plate	4
27	1453923	Capscrew	16
28	1453924	Washer	16
29	1392293	Pin	2
30	1392294	Ring	4
31	1392295	Cotter Pin	2
32	1392297	Retainer (Spring)	4
33	1392298	Spring	2
34	1392299	Retainer	2
35	1454066	Block	2
36	1392301	Stopper	1
37	1454061	Beam	2
38	1454053	Cable (RH)	1
38	1454055	Cable (LH)	1
39	1392324	Washer	12
40	1454063	Capscrew	8
41	1454064	Nut	8

©2006 HYSTER COMPANY

VERTICAL END BEAM (Figure 11-8)
EMPTY CONTAINER HANDLER
(⇒S/N A214E-1806)

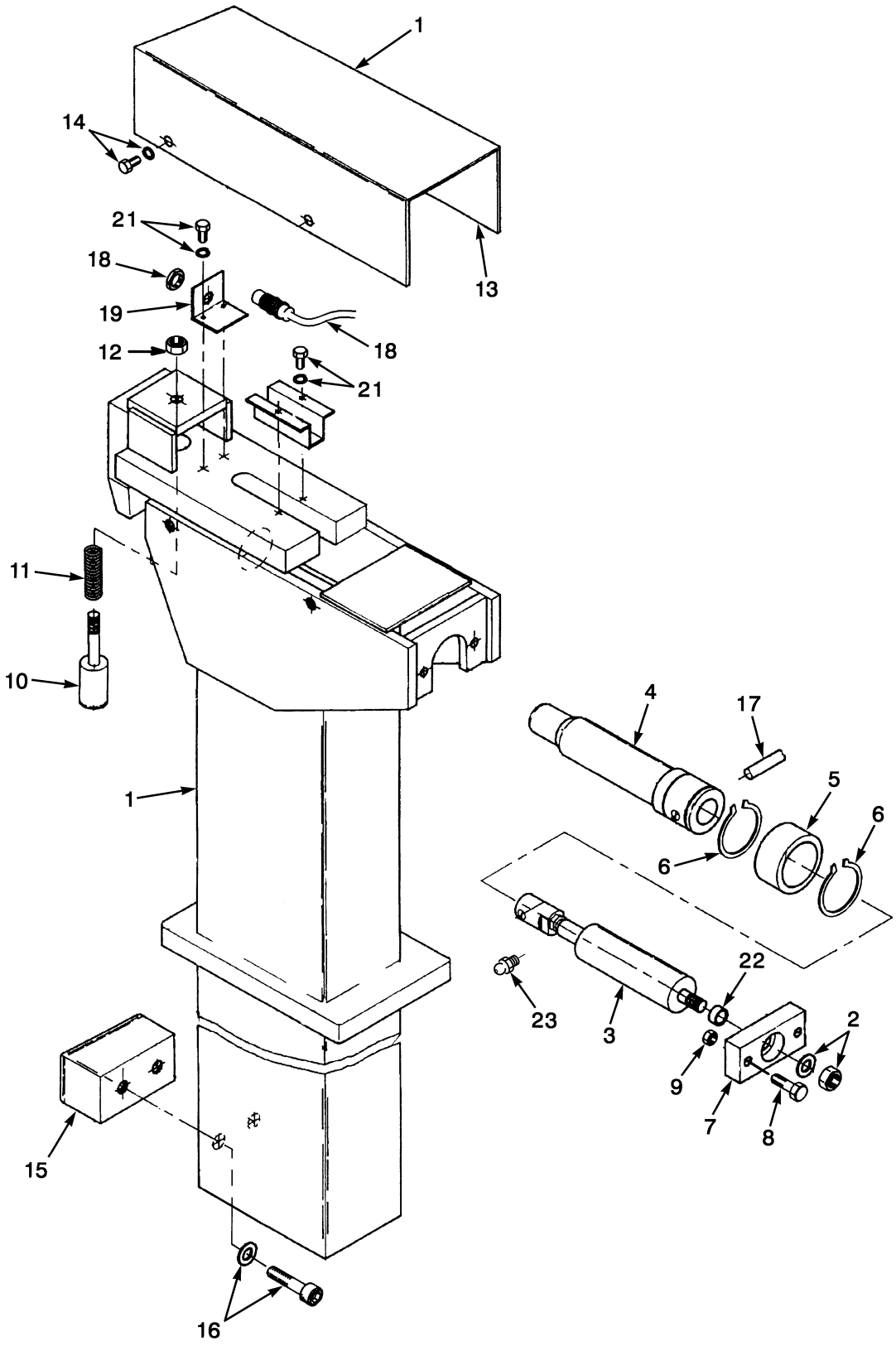

©2006 HYSTER COMPANY

VERTICAL END BEAM
EMPTY CONTAINER HANDLER
(⇒S/N A214E-1806)

ITEM	PART NO.	DESCRIPTION	QTY
	1453932	Locking Head Assembly	1
1	1453926	Beam	1
2	1392351	Nut	1
3	1392370	Cylinder (☞ Figure 11-20)	1
4	1484112	Lock Pin	1
5	1392372	Bushing	1
6	1392373	Snap Ring	2
6	1460908	Snap Ring	2
7	1392374	Plate	1
8	1392375	Bolt	2
8	292531	Capscrew	2
9	1392376	Nut	2
9	1460909	Nut	2
10	1392377	Pin	1
11	1392378	Spring	2
12	1453928	Nut	1
13	1392371	Pin	1
14	1453929	Bolt	4
14	1460914	Lockwasher	4
15	1453930	Block	1
16	1453931	Capscrew	2
16	292583	Capscrew	2
16	1460911	Washer	2
17	1453927	Axle	1
18	1453988	Switch	3
19	1460505	Bracket	1
20	1460506	Bracket	1
21	1460912	Bolt	4
21	1460913	Washer	4
22	1392366	Bushing	1
23	1484113	Lube Fitting	1

©2006 HYSTER COMPANY

HYDRAULIC SYSTEM (Figure 11-9)
EMPTY CONTAINER HANDLER
SHEET 1 OF 2
(⇒S/N A214E-1806)

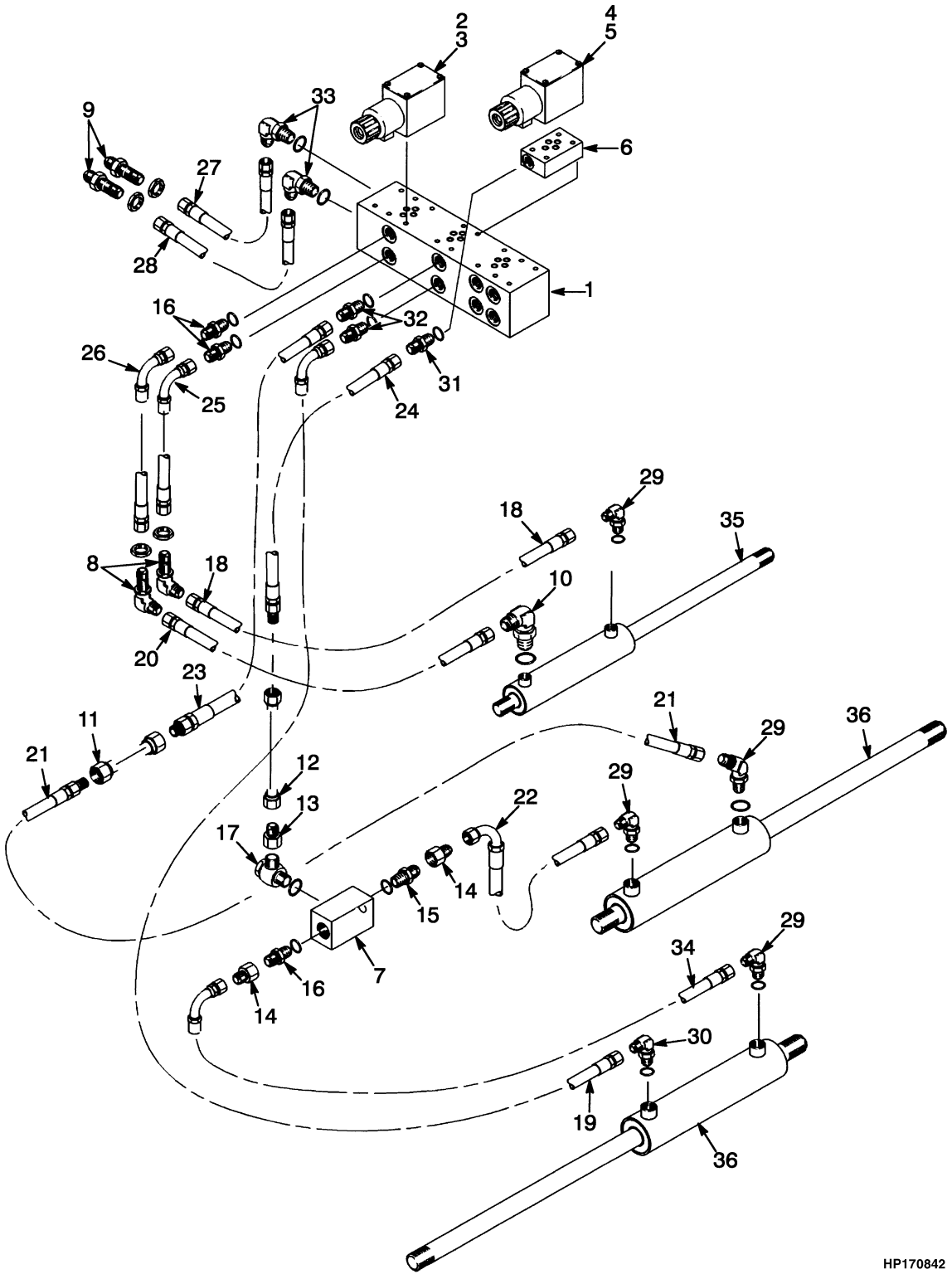

©2006 HYSTER COMPANY

HYDRAULIC SYSTEM
EMPTY CONTAINER HANDLER
SHEET 1 OF 2
(⇒S/N A214E-1806)

ITEM	PART NO.	DESCRIPTION	QTY
1	1454011	Manifold Valve	1
2	1454012	Solenoid	1
3	1454013	Coil (24 Volt)	1
4	1454014	Solenoid	1
5	1454015	Coil (24 Volt)	1
6	1454016	Check Valve	1
7	1454018	Flow Divider	1
8	1454020	Coupling	2
9	16449	Fitting	2
10	1454022	Fitting	3
11	. . . . .	Tube	1
12	1454023	Tube	1
13	. . . . .	Fitting	1
14	. . . . .	Fitting	2
15	1454025	Fitting	1
16	1454026	Fitting	3
17	. . . . .	Fitting	1
18	1454031	Hose	1
19	1454032	Hose	1
20	1454033	Hose	1
21	1454034	Hose	1
22	1454035	Hose	1
23	1454038	Hose	1
24	1454037	Hose	1
25	1454039	Hose	1
26	1454040	Hose	1
27	1454041	Hose	1
28	1454042	Hose	1
29	1454165	Fitting	4
30	1454166	Fitting	1
31	1454173	Fitting	1
32	1454174	Fitting	2
33	1454175	Fitting	2
34	1454036	Hose	1
35	6990502	Side-Shift Cylinder (☞ Figure 11-29)	1
36	1392290	Cylinder Assembly (☞ Figure 11-27)	2

©2006 HYSTER COMPANY

HYDRAULIC SYSTEM (Figure 11-10)
EMPTY CONTAINER HANDLER
SHEET 2 OF 2
(⇒S/N A214E-1806)

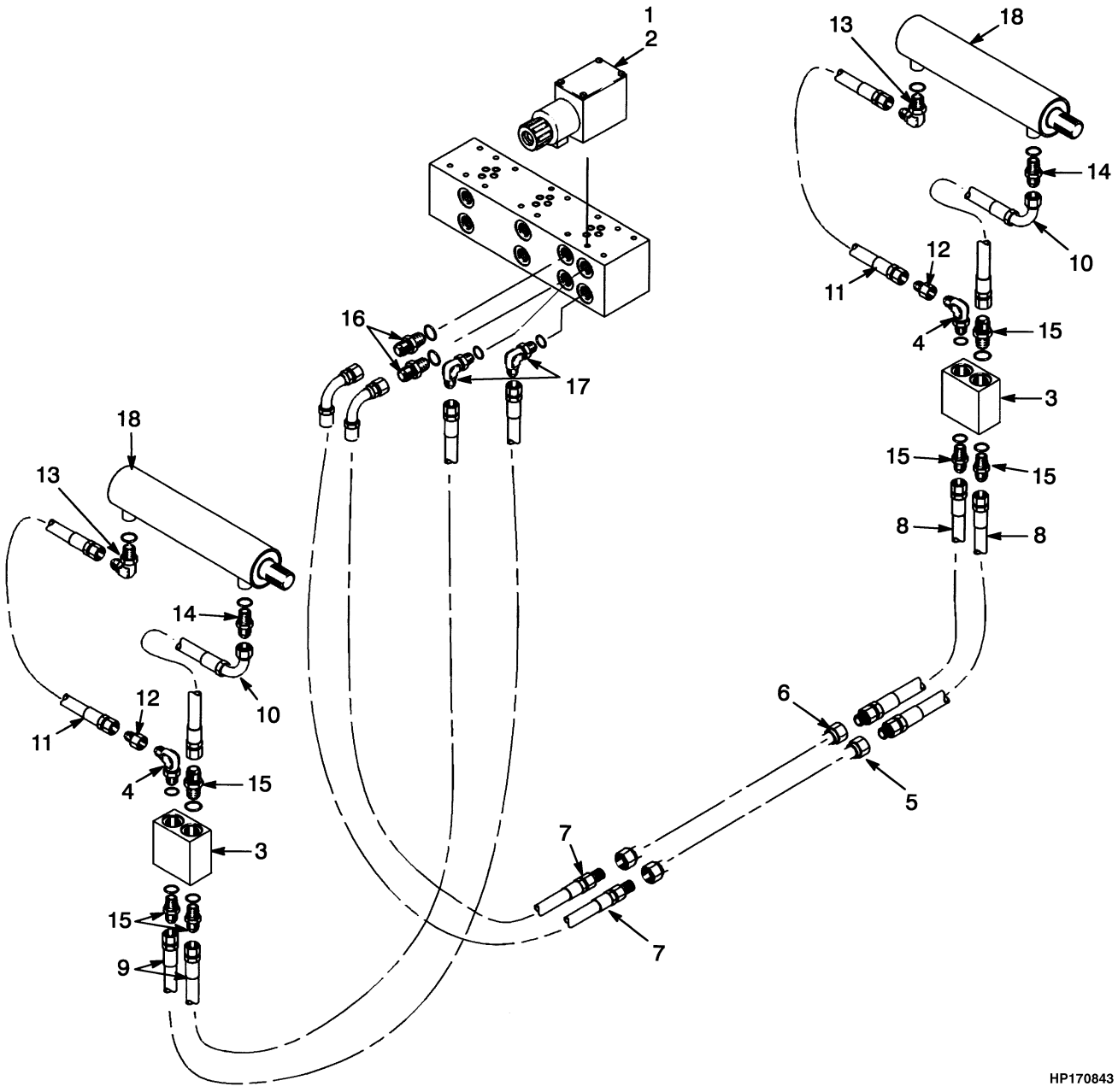

©2006 HYSTER COMPANY

HYDRAULIC SYSTEM
EMPTY CONTAINER HANDLER
SHEET 2 OF 2
(⇒S/N A214E-1806)

ITEM	PART NO.	DESCRIPTION	QTY
1	1454017	Solenoid	1
2	1454013	Coil (24 Volt)	1
3	1454019	Check Valve	2
4	1454022	Fitting	2
5	1454024	Tube	1
6	. . . . .	Tube	1
7	1454027	Hose	2
8	1454029	Hose	2
9	1454030	Hose	2
10	1454043	Hose	2
11	1454164	Hose	2
12	1454167	Fitting	2
13	1454168	Fitting	2
14	1454169	Fitting	2
15	1454170	Fitting	6
16	1454171	Fitting	2
17	1454172	Fitting	2
18	1392370	Cylinder (☞ Figure 11-20)	2

©2006 HYSTER COMPANY

EMPTY HANDLER (Figure 11-11)
EMPTY CONTAINER HANDLER
(S/N A214E-1807⇒)

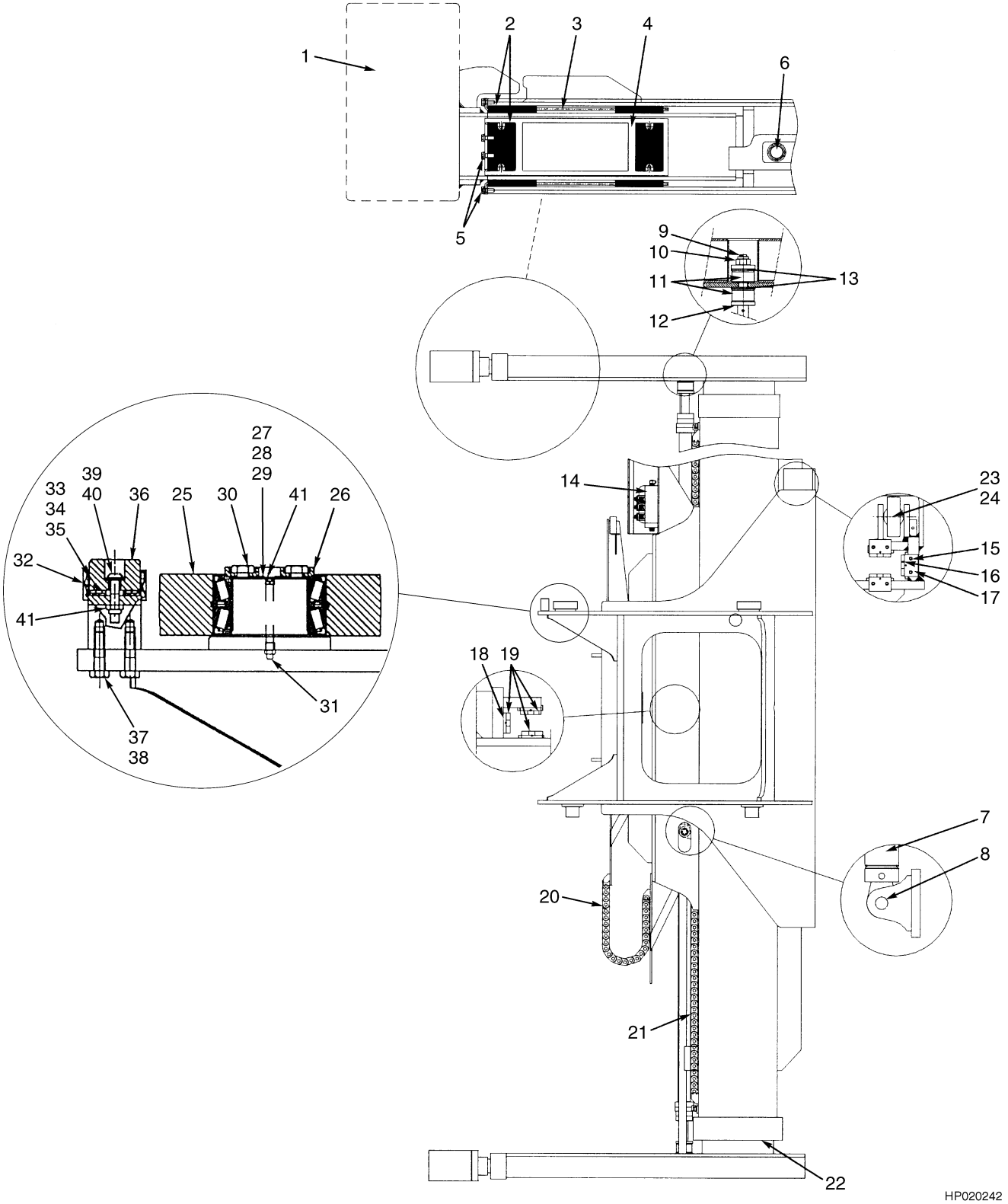

©2006 HYSTER COMPANY

EMPTY HANDLER
EMPTY CONTAINER HANDLER
(S/N A214E-1807⇒)

ITEM	PART NO.	DESCRIPTION	QTY
	. . . . .	Empty Handler Assembly	1
1	. . . . .	End Beam Assembly	2
2	6990438	Pad	16
3	6990439	Bracket	4
4	6990440	Bracket	4
5	6996011	Bolt	16
5	6996152	Washer	16
6	6990441	Pin	2
6	6996208	Bolt	2
6	302402	Locknut	2
7	6990334	Extension Cylinder Assembly	2
8	6990499	Pin	2
8	6996107	Bolt	2
8	302402	Locknut	2
9	302408	Nut	2
10	6990370	Washer	2
11	6990368	Bumper	4
12	6990367	Washer	2
13	6990369	Washer	8
14	6990497	Valve Assembly	1
15	6996221	Bolt	12
15	6996025	Lockwasher	12
16	6990500	Wear pad	6
17	6990501	Bracket	6
18	6990363	Bracket	6
18	6996451	Bolt	4
18	6996446	Bolt	8
18	6996025	Lockwasher	12
19	6990366	Wear pad	3
20	6990207	Chain	1
21	6990802	Flex Track (Chain)	2
22	. . . . .	Wear Pads	2
23	. . . . .	Side-Shift Cylinder	1
24	6990462	Pin	2
24	6996005	Bolt	2
24	6996007	Nut	2
25	1325765	Roller Assembly	4
26	1325760	Cap	4
27	1325763	Shim	AR
28	1325764	Shim	AR
29	1373329	Shim	AR
30	132860	Capscrew	16
31	16001	Lube Fitting	4
32	1325795	Bracket	4
33	1325797	Shim (0.06 in.)	AR
34	1325798	Shim (0.002 in.)	AR
35	1372962	Shim (0.12 in.)	AR
36	1325785	Bearing Block	4
37	287837	Capscrew	16
38	1364272	Capscrew	4

©2006 HYSTER COMPANY

EMPTY HANDLER
EMPTY CONTAINER HANDLER
(S/N A214E-1807⇒)

ITEM	PART NO.	DESCRIPTION	QTY
39	320159	Washer	8
40	316836	Nut	4
41	15483	Lube Fitting	4

©2006 HYSTER COMPANY

NOTES

WEAR PADS (Figure 11-12)
CONTAINER HANDLING ATTACHMENT (570)
(S/N A214E-1807⇒)

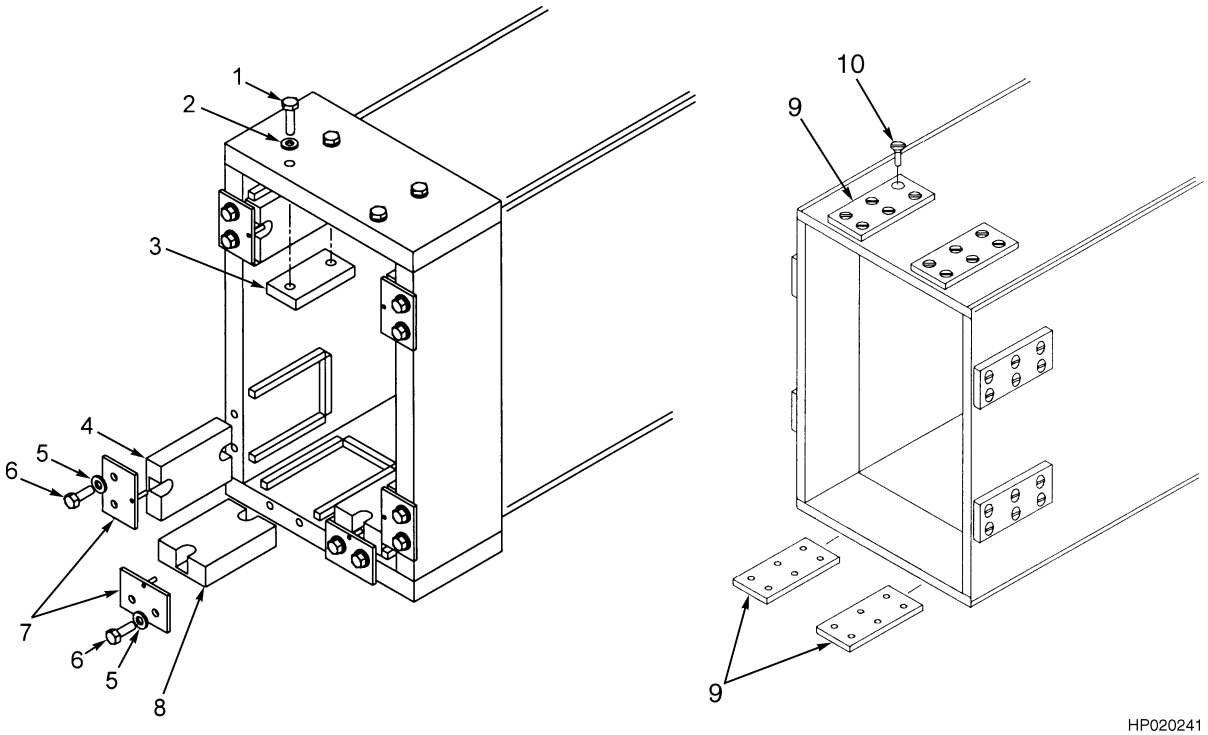

©2006 HYSTER COMPANY

WEAR PADS
CONTAINER HANDLING ATTACHMENT (570)
(S/N A214E-1807⇒)

ITEM	PART NO.	DESCRIPTION	QTY
1	292516	Capscrew	8
2	6996003	Lockwasher	8
3	1334634	Pad	4
4	1332310	Wear Pad	8
5	6996025	Lockwasher	30
6	132860	Capscrew	30
7	1332278	Bracket	12
8	1332300	Wear Pad	4
9	6990385	Wear Pad	8
10	6996452	Screw (Brass)	48

©2006 HYSTER COMPANY

SLAVE BEAM (Figure 11-13)
EMPTY CONTAINER HANDLER
(S/N A214E-1807⇒)

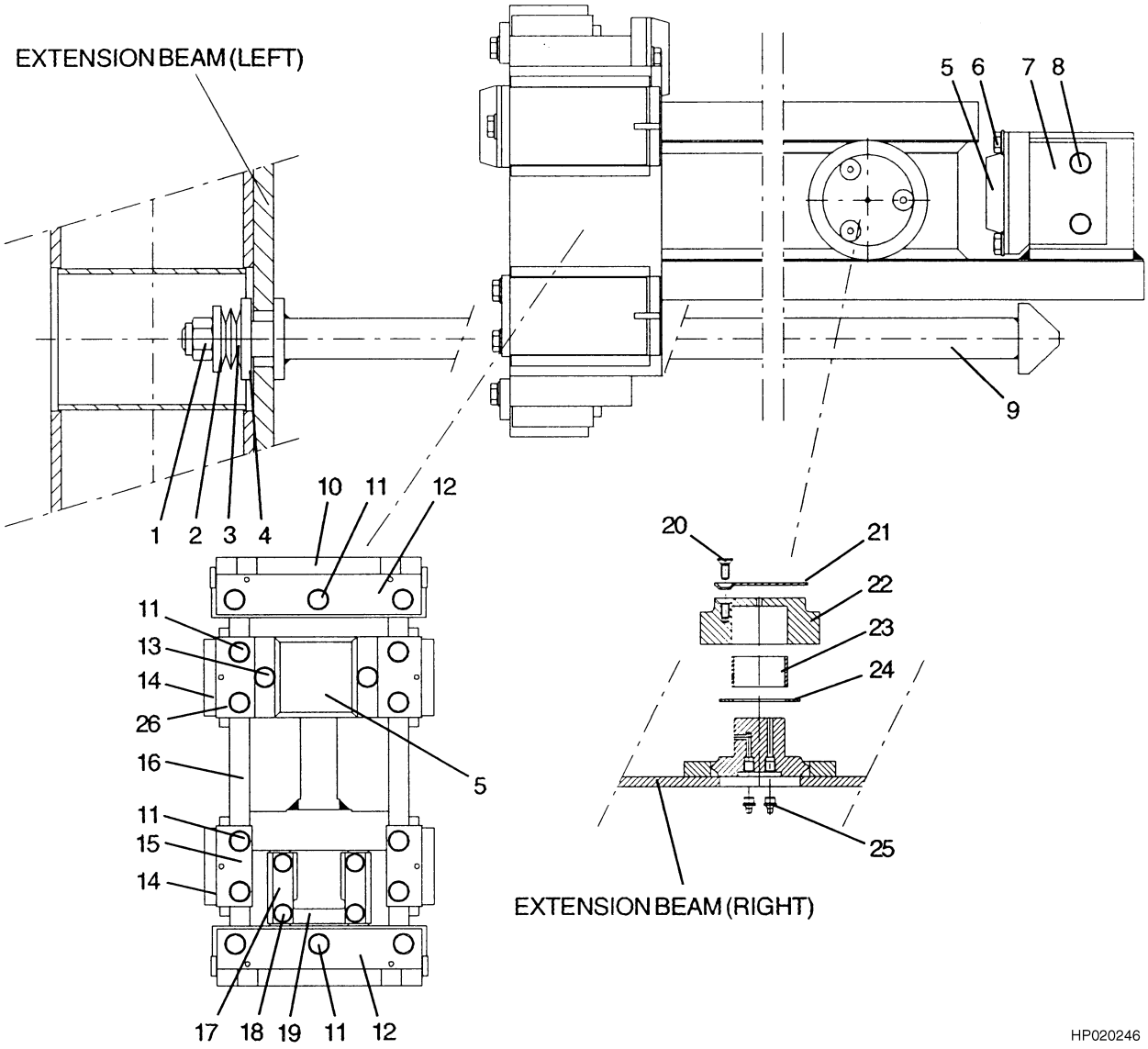

©2006 HYSTER COMPANY

SLAVE BEAM
EMPTY CONTAINER HANDLER
(S/N A214E-1807⇒)

ITEM	PART NO.	DESCRIPTION	QTY
	. . . . .	Slave Beam Assembly	1
1	6996191	Nut	1
2	6990371	Washer	1
3	6996450	Spring	4
4	6990372	Washer	1
5	6990373	Bumper	2
6	6996451	Bolt	2
6	6996025	Lockwasher	2
7	6990374	Bracket	1
8	6996449	Bolt	2
8	6996025	Lockwasher	2
9	6990492	Bar	2
10	1332315	Wear Pad	2
11	132860	Capscrew	14
11	6696025	Lockwasher	14
12	6990376	Bracket	12
13	6996221	Bolt	13
13	6996025	Lockwasher	13
14	1332310	Wear Pad	4
15	6990377	Bracket	2
16	6990378	Slave Beam	1
17	6990379	Bracket	2
18	292516	Capscrew	4
18	6996003	Lockwasher	4
19	6990380	Wear Pad	1
20	6996422	Screw (Brass)	12
21	6990381	Washer	4
22	6990382	Roller	4
23	6996155	Bushing	4
24	6990383	Washer	4
25	1329443	Lube Fitting (Grease)	8
26	6990384	Bracket	1

©2006 HYSTER COMPANY

HYDRAULIC SYSTEM (Figure 11-14)
SPREADER 572
(S/N A214E-1807⇒)

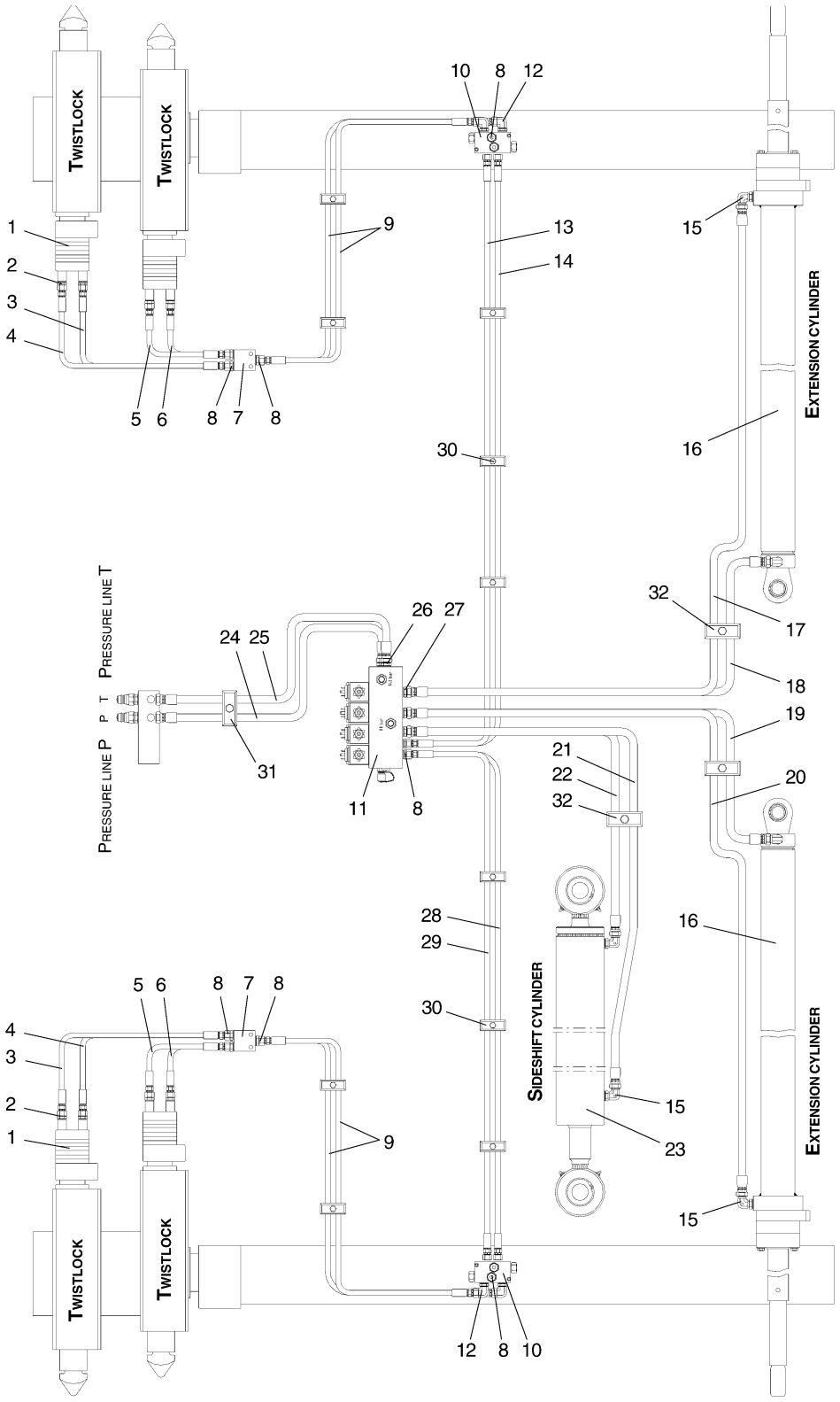

©2006 HYSTER COMPANY

HYDRAULIC SYSTEM
SPREADER 572
(S/N A214E-1807⇒)

ITEM	PART NO.	DESCRIPTION	QTY
1	6996443	Hydraulic Motor	4
1	6999025	Seal Kit	1
2	1470829	Fitting	8
2	1495111	O-Ring	1
3	6996516	Hose	2
4	6996517	Hose	2
5	6996513	Hose	2
6	6996512	Hose	2
7	6990507	Manifold	2
8	1470827	Fitting	20
8	1495111	O-Ring	1
9	6996536	Hose	4
10	6990497	Valve Assembly (☞ Figure 11-26)	2
11	6990504	Valve Assembly (☞ Figure 11-24)	1
12	6996518	Fitting	4
12	1495111	O-Ring	1
13	6996519	Hose	1
14	6996520	Hose	1
15	6996131	Fitting	6
15	1495113	O-Ring	1
16	6990334	Extension Cylinder Assembly (☞ Figure 11-28)	2
17	6996521	Hose	1
18	6996522	Hose	1
19	6996523	Hose	1
20	6996524	Hose	1
21	6996525	Hose	1
22	6996526	Hose	1
23	6990502	Side-Shift Cylinder (☞ Figure 11-30)	1
24	6996527	Hose	1
25	6996528	Hose	1
26	1470842	Fitting	4
26	1495113	O-Ring	1
27	1470841	Fitting	4
27	1495113	O-Ring	1
28	6996529	Hose	1
29	6996530	Hose	1
30	6996531	Hose Clamp	AR
31	6996532	Hose Clamp	AR
32	6996039	Clamp	AR

©2006 HYSTER COMPANY

DOUBLE HORIZONTAL TWIST LOCK HEAD ASSEMBLY (Figure 11-15)
CONTAINER HANDLING ATTACHMENT (572)
(S/N A214E-1807⇒)

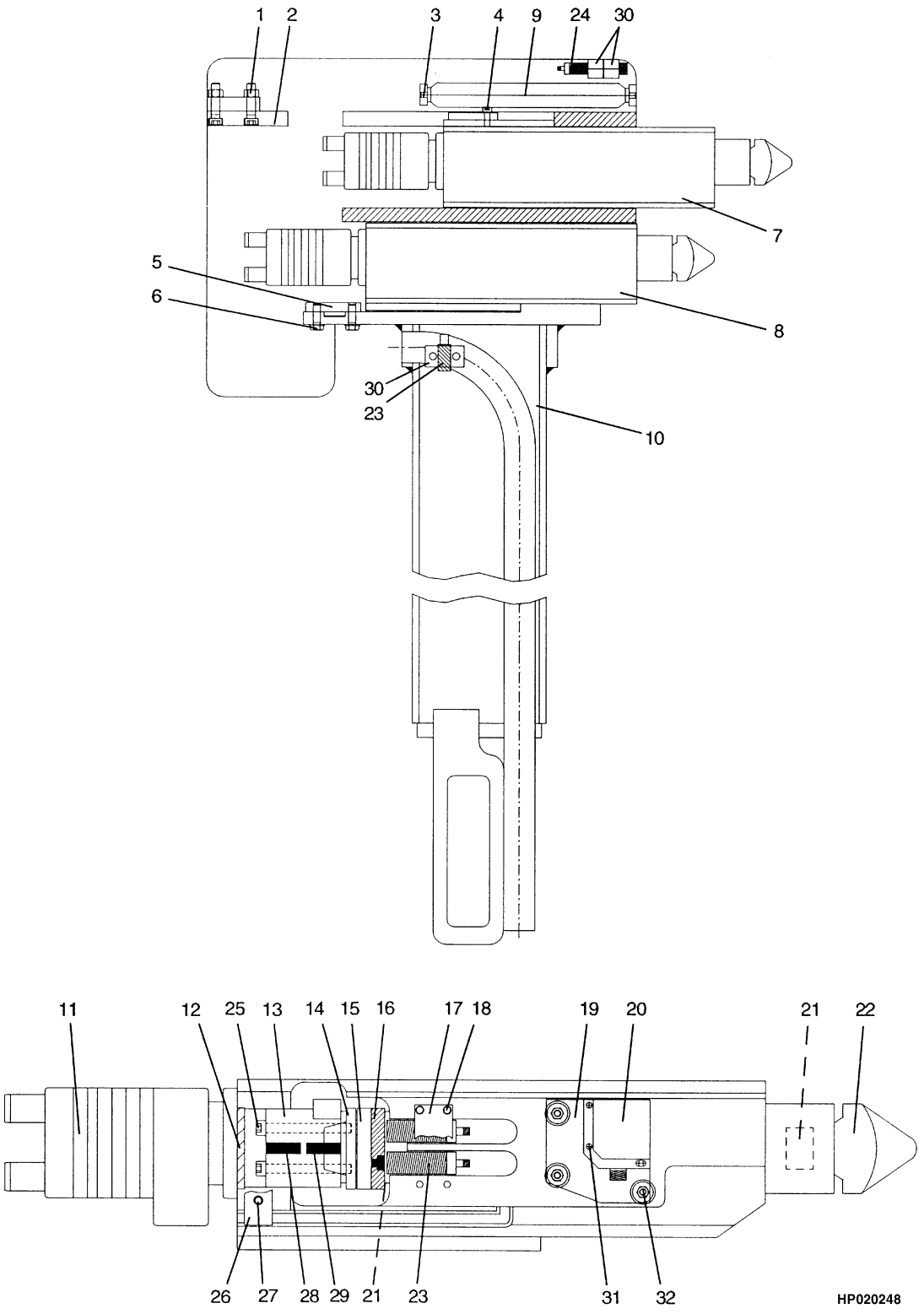

©2006 HYSTER COMPANY

DOUBLE HORIZONTAL TWIST LOCK HEAD ASSEMBLY
CONTAINER HANDLING ATTACHMENT (572)
(S/N A214E-1807⇒)

ITEM	PART NO.	DESCRIPTION	QTY
1	6996446	Bolt	8
1	302402	Locknut	8
2	6990412	Plate	2
3	6990413	Bracket	3
4	6990458	Arm	4
4	6996022	Lockwasher	4
5	6990415	Plate	2
6	6996011	Bolt	8
6	6996003	Lockwasher	8
7	6990495	Housing (Right Upper)	1
7	6990496	Housing (Left Upper)	1
8	6990483	Housing (RH) (Lower)	1
8	6990484	Housing (LH) (Lower)	1
9	6996440	Spring	2
10	6990420	End Beam (RH)	1
10	6990421	End Beam (LH)	1
11	6996443	Hydraulic Motor	4
11	6999025	Seal Kit	1
12	6990353	Ring	4
13	6990354	Sleeve	4
14	6990355	Collet	8
15	6990356	Ring	4
16	6990357	Ring	4
16	6996459	Screw (Allen)	8
17	6990358	Bracket	4
18	6996472	Bolt	16
19	6990485	Plate	4
20	6996500	Proximity Sensor	4
21	6996448	Bushing	8
22	6990360	Twistlock	4
23	6996330	Proximity Sensor	8
24	6996445	Sensor	1
25	6996460	Screw	16
26	6990453	Clamp	2
26	6990503	Clamp	2
27	6996514	Bolt	8
28	6996476	Key	4
29	6996477	Key	4
30	6996010	Clamp	4
31	293726	Screw (Allen)	12
32	6996501	Shock Absorber	12
32	6996502	Nut	12

©2006 HYSTER COMPANY

HYDRAULIC SYSTEM (Figure 11-16)
SPREADER 573
(S/N A214E-1807⇒)

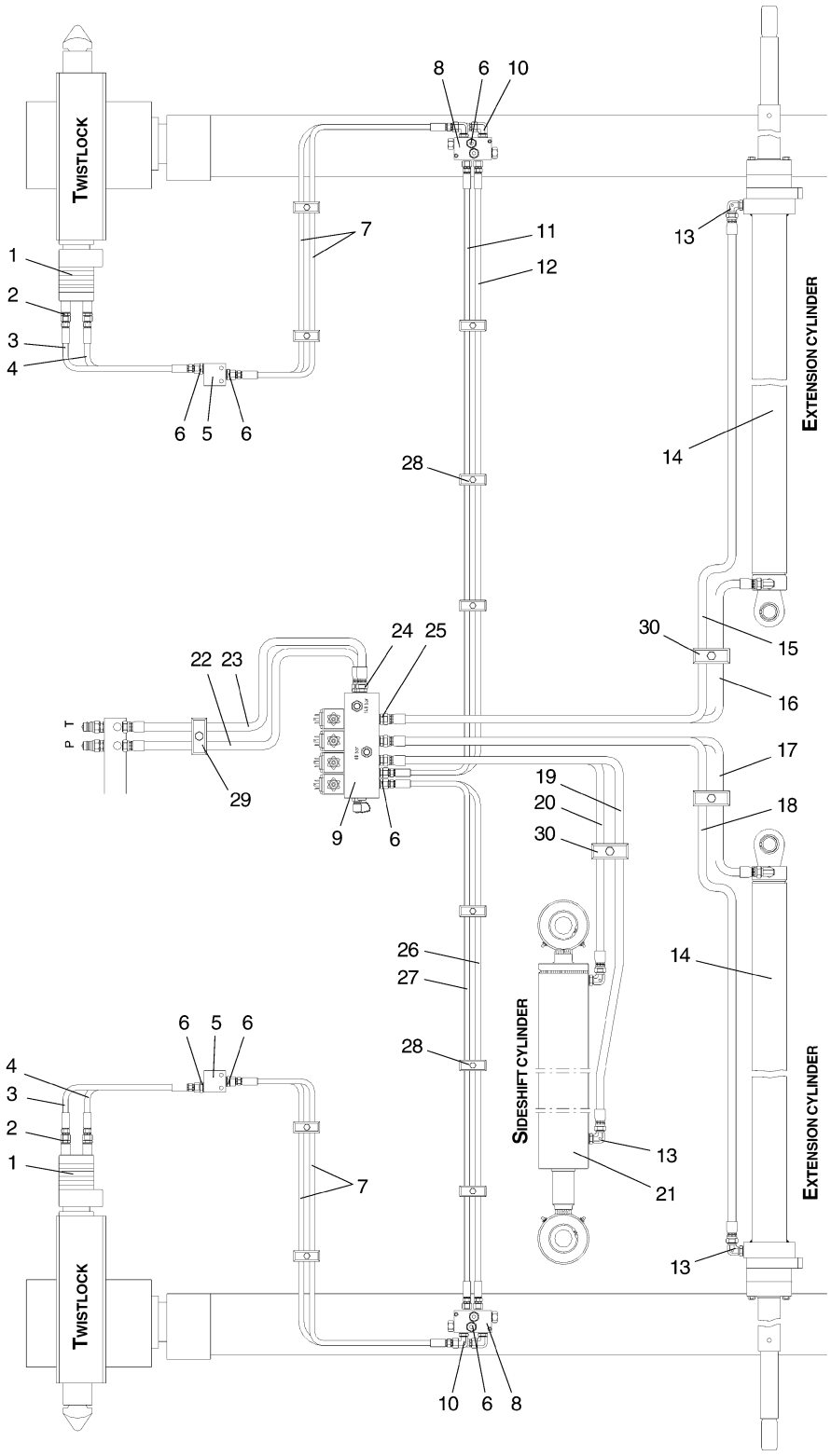

HP000749

©2006 HYSTER COMPANY

HYDRAULIC SYSTEM
SPREADER 573
(S/N A214E-1807⇒)

ITEM	PART NO.	DESCRIPTION	QTY
1	6996443	Hydraulic Motor	2
1	6999025	Seal Kit	1
2	1470829	Fitting	4
2	1495111	O-Ring	1
3	6996513	Hose	2
4	6996512	Hose	2
5	6990507	Manifold	2
6	1470827	Fitting	16
6	1495111	O-Ring	1
7	6996507	Hose	4
8	6990497	Valve Assembly (☞ Figure 11-26)	2
9	6990504	Valve Assembly (☞ Figure 11-24)	1
10	6996518	Fitting	4
10	1495111	O-Ring	1
11	6996519	Hose	1
12	6996520	Hose	1
13	6996131	Fitting	6
13	1495113	O-Ring	1
14	6990334	Extension Cylinder Assembly (☞ Figure 11-28)	2
15	6996521	Hose	1
16	6996522	Hose	1
17	6996523	Hose	1
18	6996524	Hose	1
19	6996525	Hose	1
20	6996526	Hose	1
21	6990502	Side-Shift Cylinder (☞ Figure 11-30)	1
22	6996527	Hose	1
23	6996528	Hose	1
24	1470842	Fitting	4
24	1495113	O-Ring	1
25	1470841	Fitting	4
25	1495113	O-Ring	1
26	6996529	Hose	1
27	6996530	Hose	1
28	6996531	Hose Clamp	AR
29	6996532	Hose Clamp	AR
30	6996039	Clamp	AR

©2006 HYSTER COMPANY

SINGLE HORIZONTAL TWIST LOCK HEAD ASSEMBLY (Figure 11-17)
CONTAINER HANDLING ATTACHMENT (573)
(S/N A214E-1807⇒)

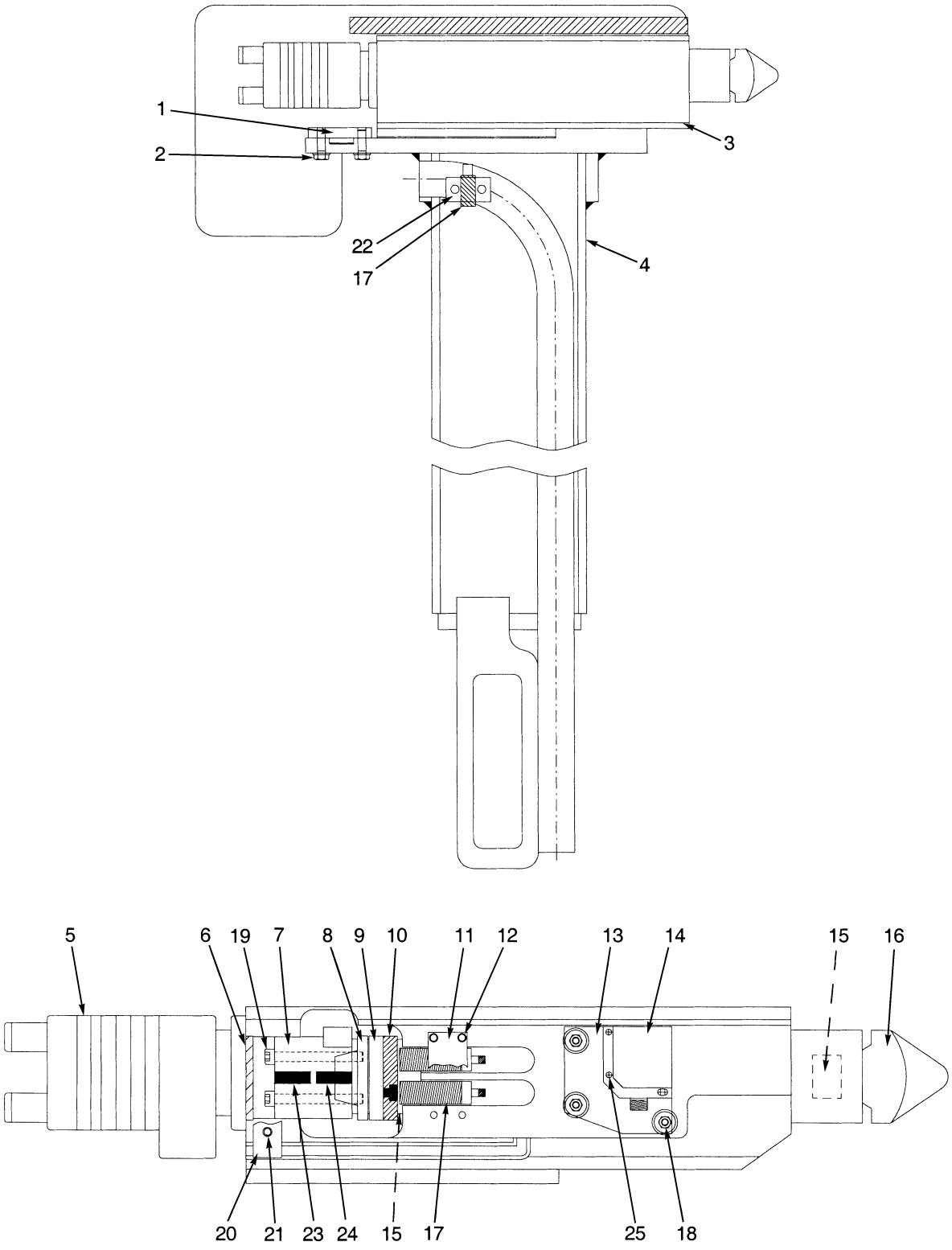

HP000616

©2006 HYSTER COMPANY

SINGLE HORIZONTAL TWIST LOCK HEAD ASSEMBLY
CONTAINER HANDLING ATTACHMENT (573)
(S/N A214E-1807⇒)

ITEM	PART NO.	DESCRIPTION	QTY
	. . . . .	End Beam Assembly	1
1	6990415	Plate	2
2	6996011	Bolt	8
2	6996003	Lockwasher	8
3	6990483	Housing (RH) (Lower)	1
3	6990484	Housing (LH) (Lower)	1
4	6990397	End Beam (RH)	1
4	6990410	End Beam (LH)	1
5	6996443	Hydraulic Motor	2
5	6999025	Seal Kit	1
6	6990353	Ring	2
7	6990354	Sleeve	2
8	6990355	Collet	2
9	6990356	Ring	2
10	6990357	Ring	2
10	6996459	Screw (Allen)	4
11	6990358	Bracket	2
12	6996472	Bolt	8
13	6990485	Plate	2
14	6996500	Proximity Sensor	4
15	6996448	Bushing	4
16	6990360	Twistlock	2
17	6996330	Proximity Sensor	6
18	6996501	Shock Absorber	6
18	6996502	Nut	6
19	6996460	Screw	8
20	6990453	Clamp (RH)	1
20	6990503	Clamp (LH)	1
21	6996514	Bolt	4
22	6996010	Clamp	2
22	6996475	Screw (Allen)	4
23	6996476	Key	2
24	6996477	Key	2
25	293726	Screw (Allen)	6

©2006 HYSTER COMPANY

HYDRAULIC SYSTEM (Figure 11-18)
SPREADER 578
(S/N A214E-1807⇒)

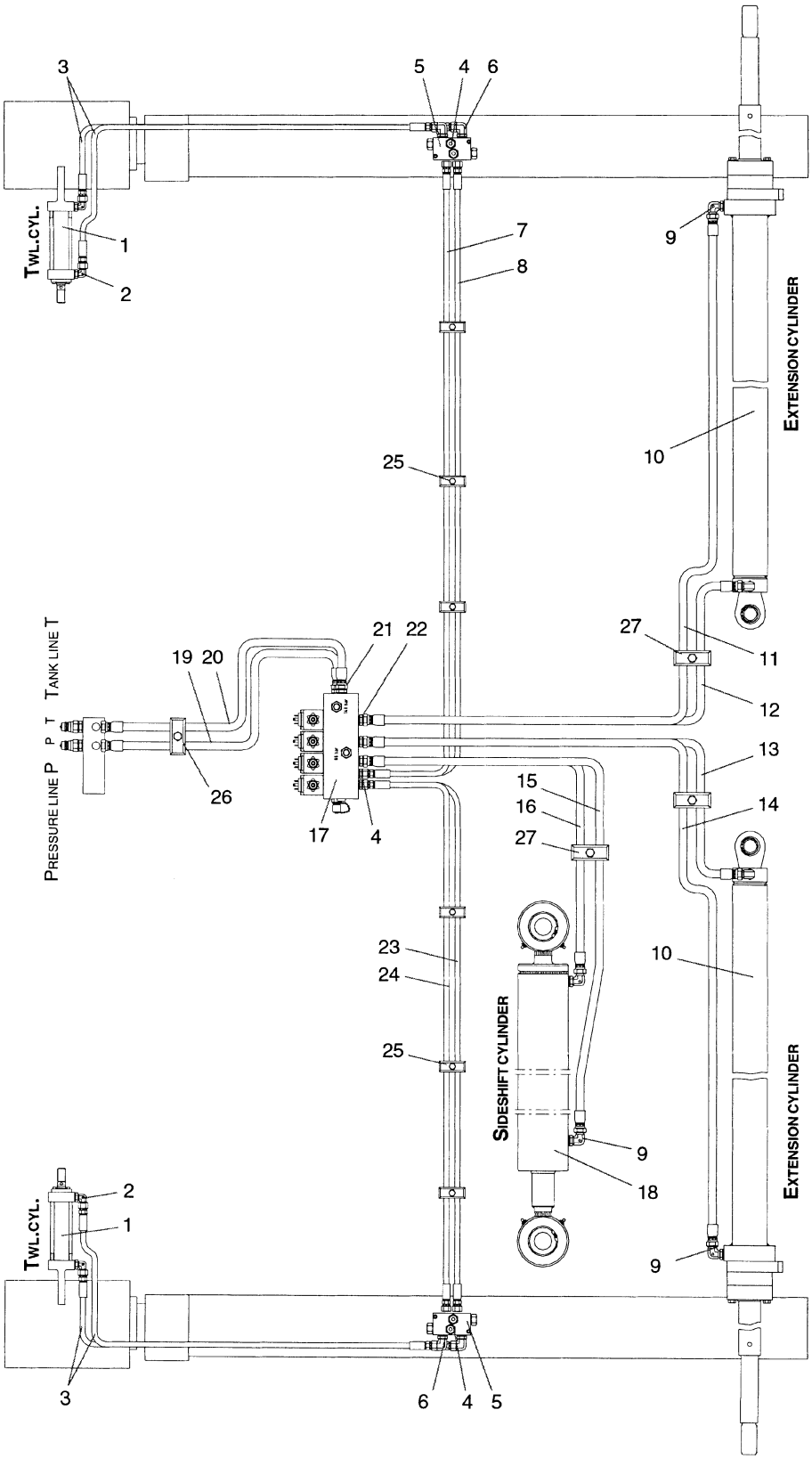

©2006 HYSTER COMPANY

HYDRAULIC SYSTEM
SPREADER 578
(S/N A214E-1807⇒)

ITEM	PART NO.	DESCRIPTION	QTY
1	6990423	Twist Lock Cylinder (☞ Figure 11-21)	2
2	6996045	Fitting	4
2	1495111	O-Ring	1
3	6996483	Hose	4
4	1470827	Fitting	8
4	1495111	O-Ring	1
5	6990497	Valve Assembly (☞ Figure 11-26)	2
6	6996518	Fitting	4
6	1495111	O-Ring	1
7	6996519	Hose	1
8	6996520	Hose	1
9	6996131	Fitting	6
9	1495113	O-Ring	1
10	6990334	Extension Cylinder Assembly (☞ Figure 11-28)	2
11	6996521	Hose	1
12	6996522	Hose	1
13	6996523	Hose	1
14	6996524	Hose	1
15	6996525	Hose	1
16	6996526	Hose	1
17	6990504	Valve Assembly (☞ Figure 11-24)	1
18	6990502	Side-Shift Cylinder (☞ Figure 11-30)	1
19	6996527	Hose	1
20	6996528	Hose	1
21	1470842	Fitting	4
21	1495113	O-Ring	1
22	1470841	Fitting	4
22	1495113	O-Ring	1
23	6996529	Hose	1
24	6996530	Hose	1
25	6996531	Hose Clamp	AR
26	6996532	Hose Clamp	AR
27	6996039	Clamp	AR

©2006 HYSTER COMPANY

VERTICAL TWIST LOCK HEAD ASSEMBLY (Figure 11-19)
CONTAINER HANDLING ATTACHMENT (578)
(S/N A214E-1807⇒)

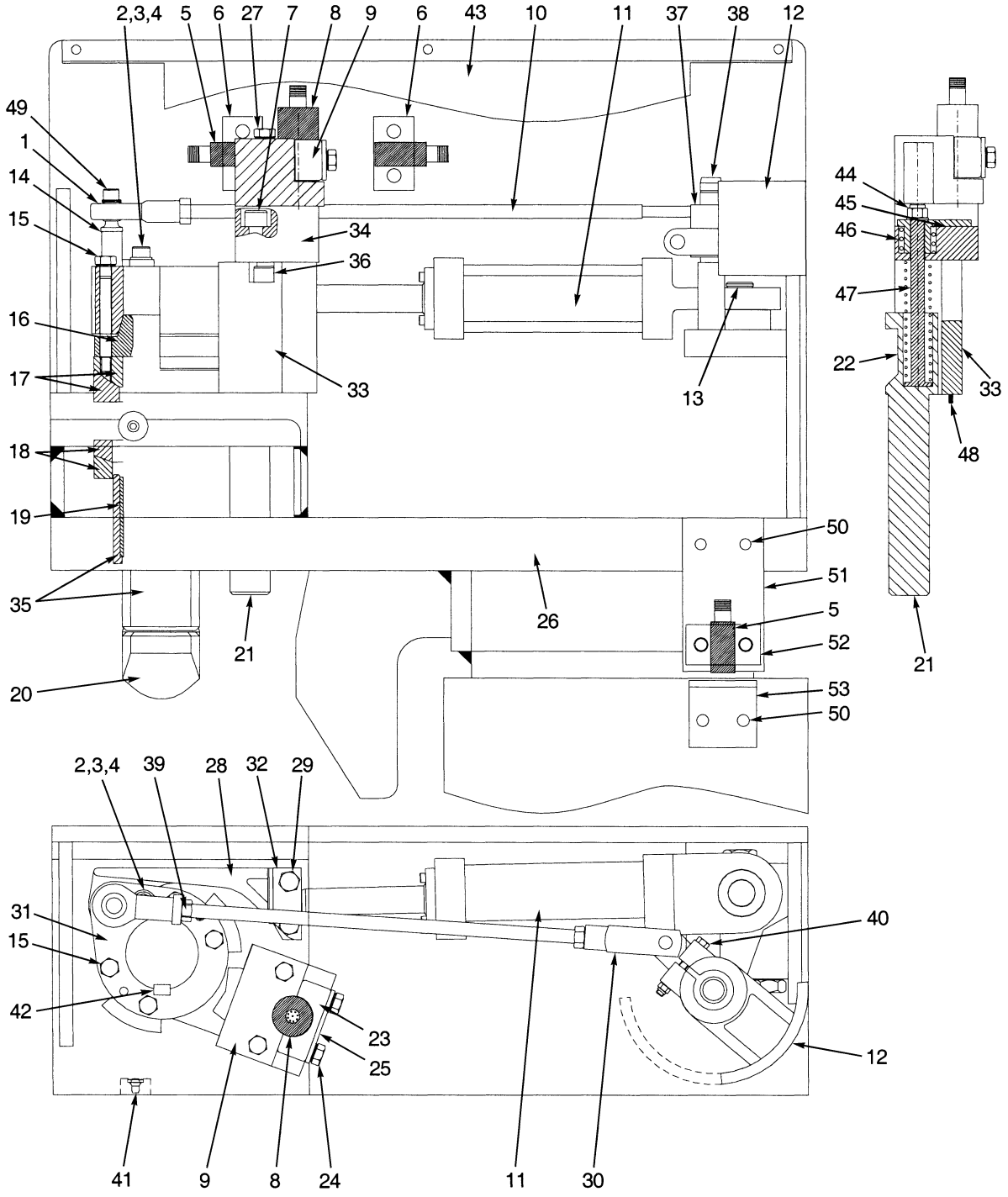

HP000614

©2006 HYSTER COMPANY

VERTICAL TWIST LOCK HEAD ASSEMBLY
CONTAINER HANDLING ATTACHMENT (578)
(S/N A214E-1807⇒)

ITEM	PART NO.	DESCRIPTION	QTY
	. . . . .	End Beam Assembly	1
1	6996479	Rod End	2
2	6996020	Ring Pin	2
3	6996021	Screw	2
4	6996022	Lockwasher	2
5	6996330	Proximity Sensor	6
6	6996010	Clamp	6
6	6990396	Spacer	4
6	6996455	Screw	4
7	6996318	Screw	4
8	6996082	Sensor	2
9	6990291	Bracket	2
10	6990461	Rod	2
11	6990423	Twist Lock Cylinder (☞ Figure 11-21)	2
12	6990004	Indicator	2
13	6996222	Snap Ring	2
14	6990454	Pin	2
15	6996023	Bolt	8
15	6996022	Lockwasher	8
16	6990013	Collet	2
17	6999024	Bearing (Upper)	2
18	6999002	Lower Bearing Kit (Lower)	2
19	6996019	Bushing	2
20	6990015	Twistlock	2
21	6990011	Pin	2
22	6996027	Spring	2
23	6996419	Clamp	2
24	6996186	Bolt	2
24	6996296	Lockwasher	2
25	6996420	Washer (Top)	2
26	6990407	Head (RH)	1
26	6990408	Head (LH)	1
27	6996478	Bolt	4
28	6990409	Rod End	2
29	292516	Capscrew	4
29	6996003	Lockwasher	4
29	6996007	Nut	4
30	6996481	Rod End	2
31	6990012	Crank (RH)	1
31	6990447	Crank (LH)	1
32	6990455	Flag (LH)	1
32	6990456	Flag (RH)	1
33	6990457	Bracket (Lower)	2
34	6990293	Bracket	2
35	6990014	Sleeve	2
36	6996026	Screw	4
37	6990458	Arm	2
38	302402	Locknut	2
38	6996069	Washer	2
38	6996457	Bushing	4

©2006 HYSTER COMPANY

VERTICAL TWIST LOCK HEAD ASSEMBLY
CONTAINER HANDLING ATTACHMENT (578)
(S/N A214E-1807⇒)

ITEM	PART NO.	DESCRIPTION	QTY
38	1329458	Washer (Nylon)	4
38	296426	Washer (Hardened)	2
39	302402	Locknut	4
40	6996004	Bolt	2
40	6996007	Nut	2
41	1329443	Lube Fitting (Grease)	2
42	6990017	Key	4
43	6990459	Cover (RH)	1
43	6990460	Cover (LH)	1
44	6996007	Nut	2
45	6990292	Sleeve (Indicator)	2
46	6996319	Spring	2
47	6990294	Rod	2
48	6996028	Roll Pin	4
49	6996482	Screw (Allen)	2
49	6996025	Lockwasher	2
50	6996063	Allen Screw	8
50	6996022	Lockwasher	8
51	6990481	Bracket	2
52	6996010	Clamp	2
52	6996475	Screw (Allen)	4
53	6990482	Indicator	2

©2006 HYSTER COMPANY

NOTES

TWIST LOCK CYLINDER (Figure 11-20)
EMPTY CONTAINER HANDLER
(⇒S/N A214E-1806)

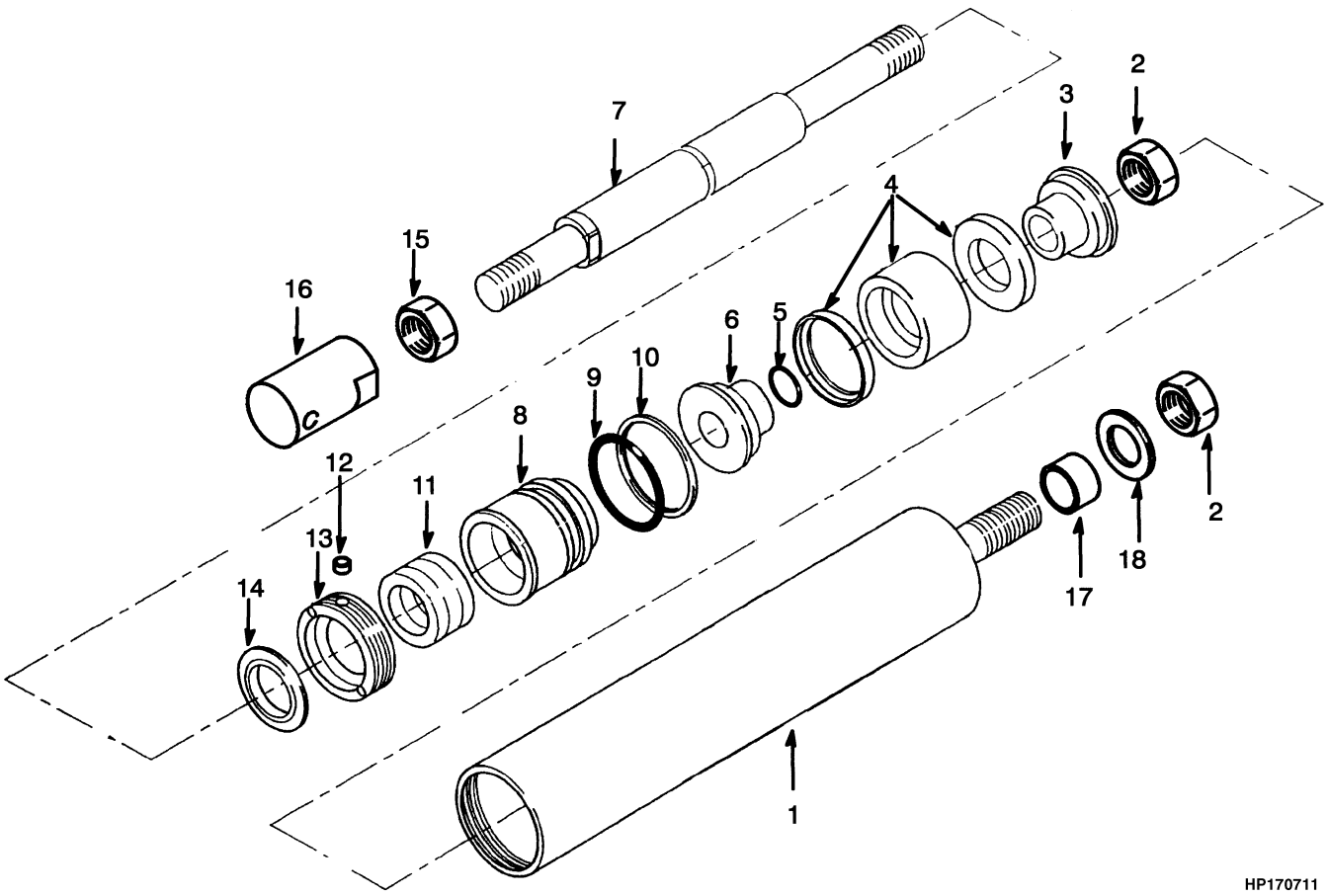

©2006 HYSTER COMPANY

TWIST LOCK CYLINDER
EMPTY CONTAINER HANDLER
(⇒S/N A214E-1806)

ITEM	PART NO.	DESCRIPTION	QTY
	1392370	Cylinder	1
1	1392350	Tube	1
2	1392351	Nut	2
3	1392352	Piston	1
4	1392353	Piston Packing	1
5	1392354	O-Ring	1
6	1392355	Piston	1
7	1392356	Rod	1
8	1392357	Retainer	1
9	1392358	O-Ring	1
10	1392359	Ring	1
11	1392360	Packing	1
12	1392361	Insert	1
13	1392362	Nut	1
14	1392363	Wiper	1
15	1392364	Nut	1
16	1392365	Rod End	1
17	1392366	Bushing	1
18	1392367	Washer	1
	1453954	Seal Kit (Includes Items 2, 4-5, 9-12, 14)	1

©2006 HYSTER COMPANY

TWIST LOCK CYLINDER (Figure 11-21)
EMPTY CONTAINER HANDLER
(S/N A214E-1807⇒)

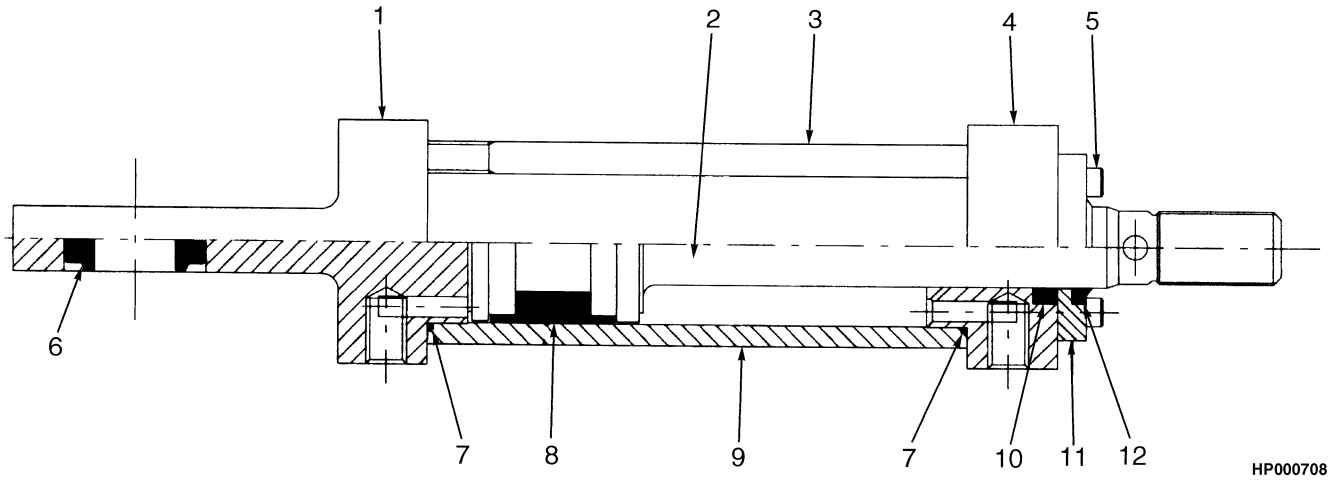

ITEM	PART NO.	DESCRIPTION	QTY
	6990423	Twist Lock Cylinder	1
1	. . . . .	Cylinder End	1
2	. . . . .	Rod	1
3	6996056	Screw	4
4	. . . . .	Cylinder Head	1
5	1329478	Screw (Allen)	4
6	1525491	Bearing	1
7	. . . . .	O-Ring	2
8	. . . . .	Seal Ring	1
9	. . . . .	Shell	1
10	. . . . .	Seal Ring	1
11	6990134	Washer	1
12	. . . . .	Wiper Ring	1
	6999015	Seal Kit (Includes Items 7-8, 10, 12)	1

©2006 HYSTER COMPANY

NOTES

HYDRAULIC SYSTEM (Figure 11-22)
SPREADER 575
(S/N A214E-1807⇒)

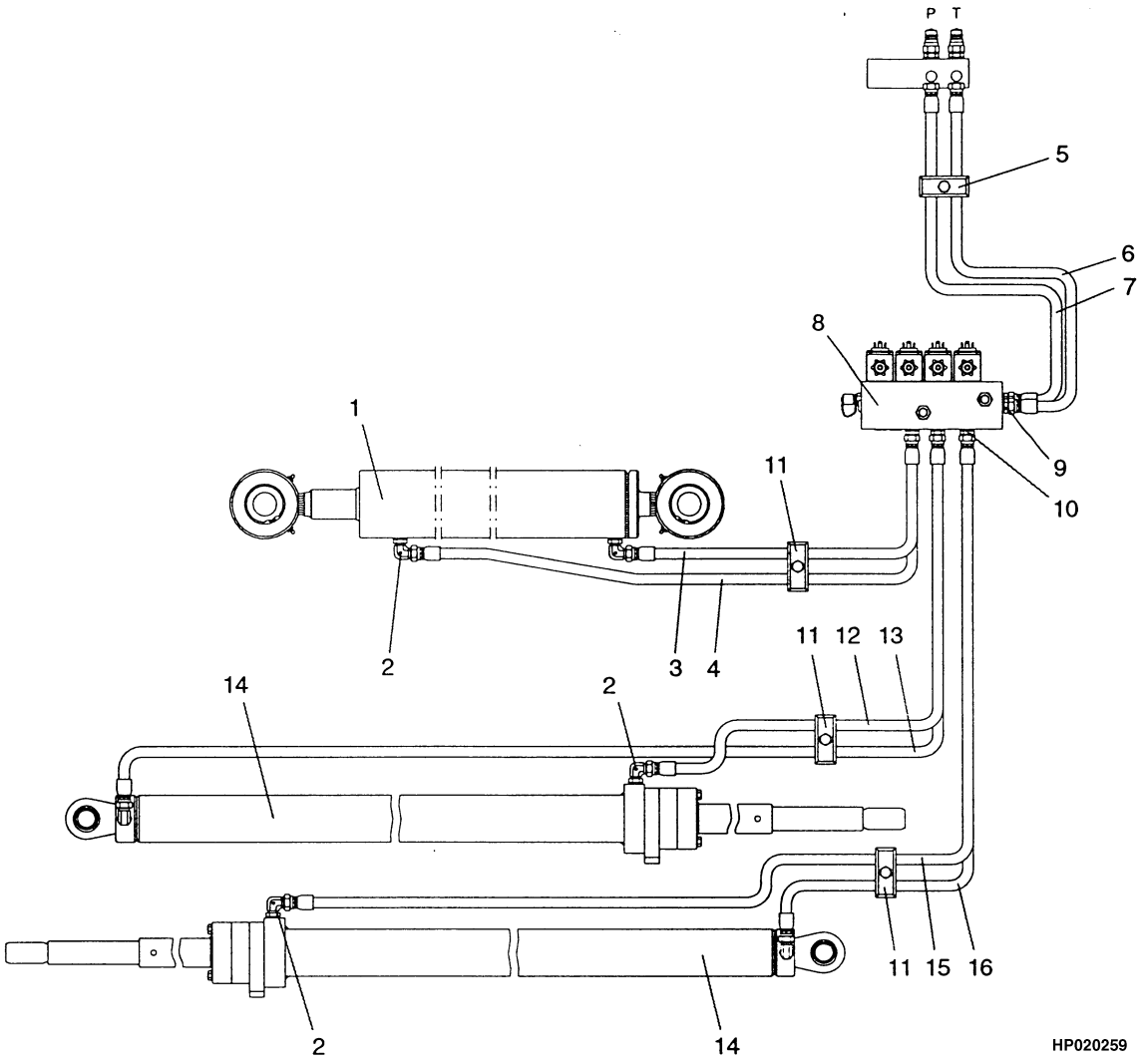

©2006 HYSTER COMPANY

HYDRAULIC SYSTEM
SPREADER 575
(S/N A214E-1807⇒)

ITEM	PART NO.	DESCRIPTION	QTY
1	6990502	Side-Shift Cylinder (☞ Figure 11-30)	1
2	6996131	Fitting	6
2	1495113	O-Ring	1
3	6996526	Hose	1
4	6996525	Hose	1
5	6996532	Hose Clamp	AR
6	6996528	Hose	6
7	6996527	Hose	7
8	6990506	Valve Assembly (☞ Figure 11-25)	1
9	1470842	Fitting	4
10	1470841	Fitting	4
11	6996039	Clamp	AR
12	6996524	Hose	1
13	6996523	Hose	1
14	6990334	Extension Cylinder Assembly (☞ Figure 11-28)	2
15	6996521	Hose	1
16	6996526	Hose	1

©2006 HYSTER COMPANY

SPRING LOADED HOOK HEAD ASSEMBLY (Figure 11-23)
CONTAINER HANDLING ATTACHMENT (575)
(S/N A214E-1807⇒)

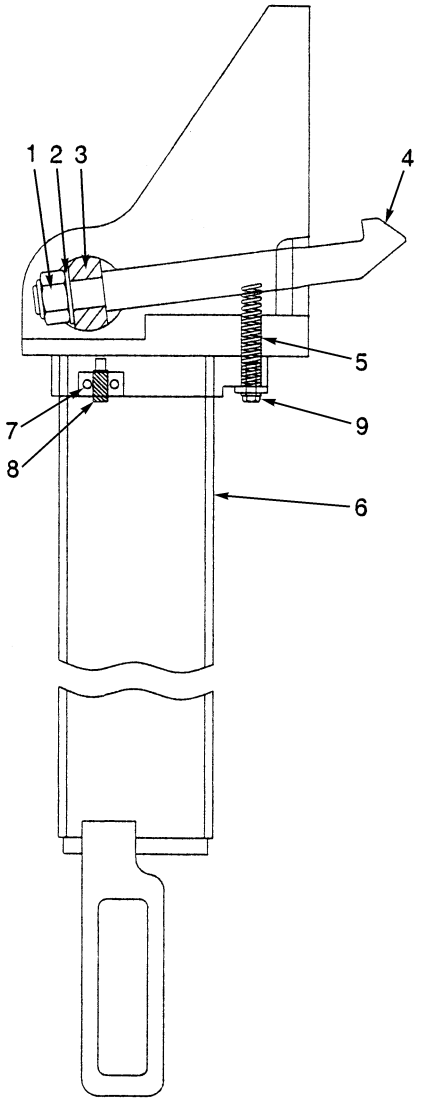

HP000615

©2006 HYSTER COMPANY

SPRING LOADED HOOK HEAD ASSEMBLY
CONTAINER HANDLING ATTACHMENT (575)
(S/N A214E-1807⇒)

ITEM	PART NO.	DESCRIPTION	QTY
	1495755	End Beam Assembly	1
1	302408	Nut	2
2	320181	Washer	2
3	6990411	Stubshaft	2
4	6996461	Hook	2
5	6996503	Spring	2
5	6996462	Spring	2
6	6990486	End Beam (RH)	1
6	6990487	End Beam (LH)	1
7	6990488	Plate	2
7	6996451	Bolt	4

©2006 HYSTER COMPANY

VALVE ASSEMBLY (Figure 11-24)
SPREADER
CONTAINER HANDLING ATTACHMENT
(S/N A214E-1807⇒)

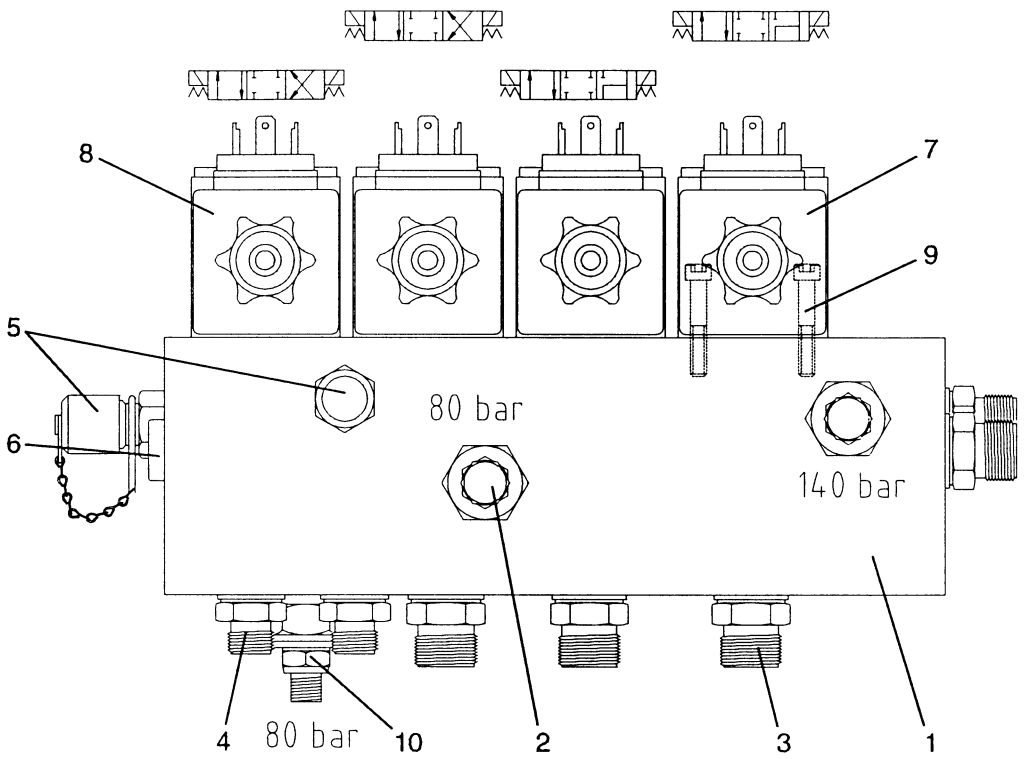

HP020245

ITEM	PART NO.	DESCRIPTION	QTY
	6990504	Valve Assembly	1
1	6990505	Manifold	1
2	6996032	Relief Valve	2
3	1470841	Fitting	8
4	6996045	Fitting	4
5	6996471	Gauge Adapter	2
6	6996182	Plug	1
7	1473482	Electro Valve (24 Volt DC)	2
7	6996293	Solenoid	2
7	6996468	Nut	2
8	6996043	Electro Valve (24 Volt DC)	2
8	6996293	Solenoid	2
8	6996468	Nut	2
9	6996122	Screw (Allen)	16
10	6996467	Valve (Pressure Reducing)	1
	6999023	Seal Kit (Includes Item 2)	1

©2006 HYSTER COMPANY

VALVE ASSEMBLY (Figure 11-25)
SPREADER 575
CONTAINER HANDLING ATTACHMENT
(S/N A214E-1807⇒)

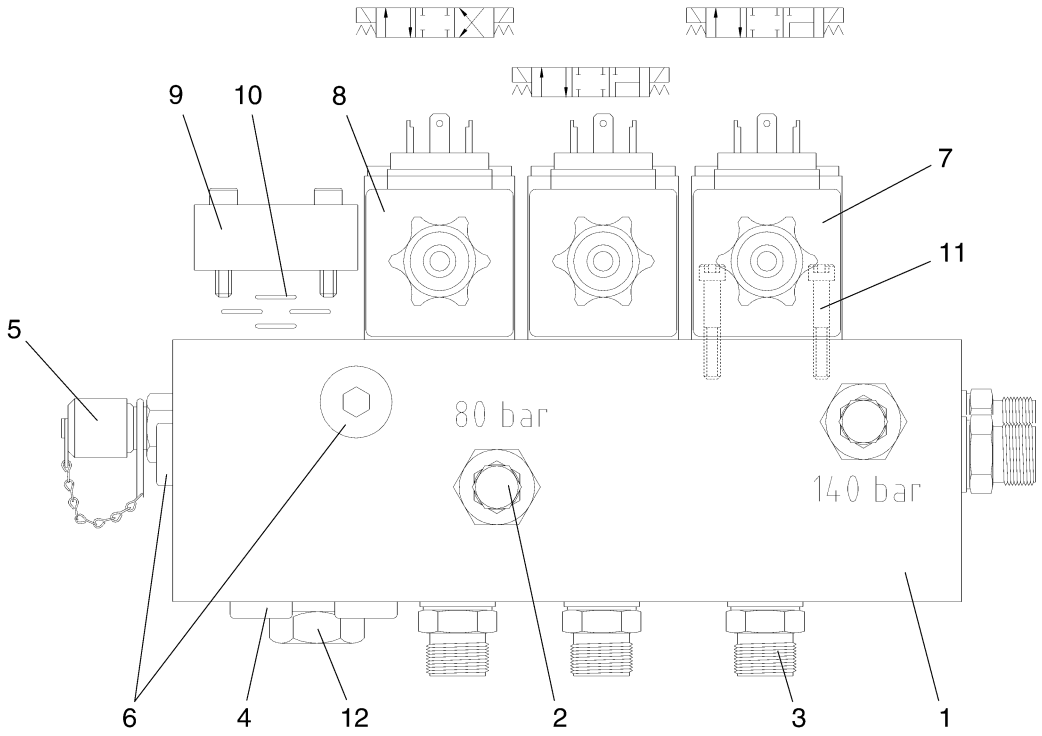

HP020249

ITEM	PART NO.	DESCRIPTION	QTY
	6990506	Valve Assembly	1
1	6990505	Manifold	1
2	6996032	Relief Valve	2
3	1470841	Fitting	8
4	6996040	Plug	4
5	6996471	Gauge Adapter	2
6	6996182	Plug	1
7	1473482	Electro Valve (24 Volt DC)	2
7	6996293	Solenoid	2
7	6996468	Nut	2
8	6996043	Electro Valve (24 Volt DC)	1
8	6996293	Solenoid	2
8	6996468	Nut	2
9	6996122	Screw (Allen)	16
9	6990021	Cover	1
10	6996515	Plug	1
10	6999028	O-Ring Kit	1
	6999023	Seal Kit (Includes Item 2)	1

©2006 HYSTER COMPANY

VALVE ASSEMBLY (Figure 11-26)
END BEAM
CONTAINER HANDLING ATTACHMENT
(S/N A214E-1807⇒)

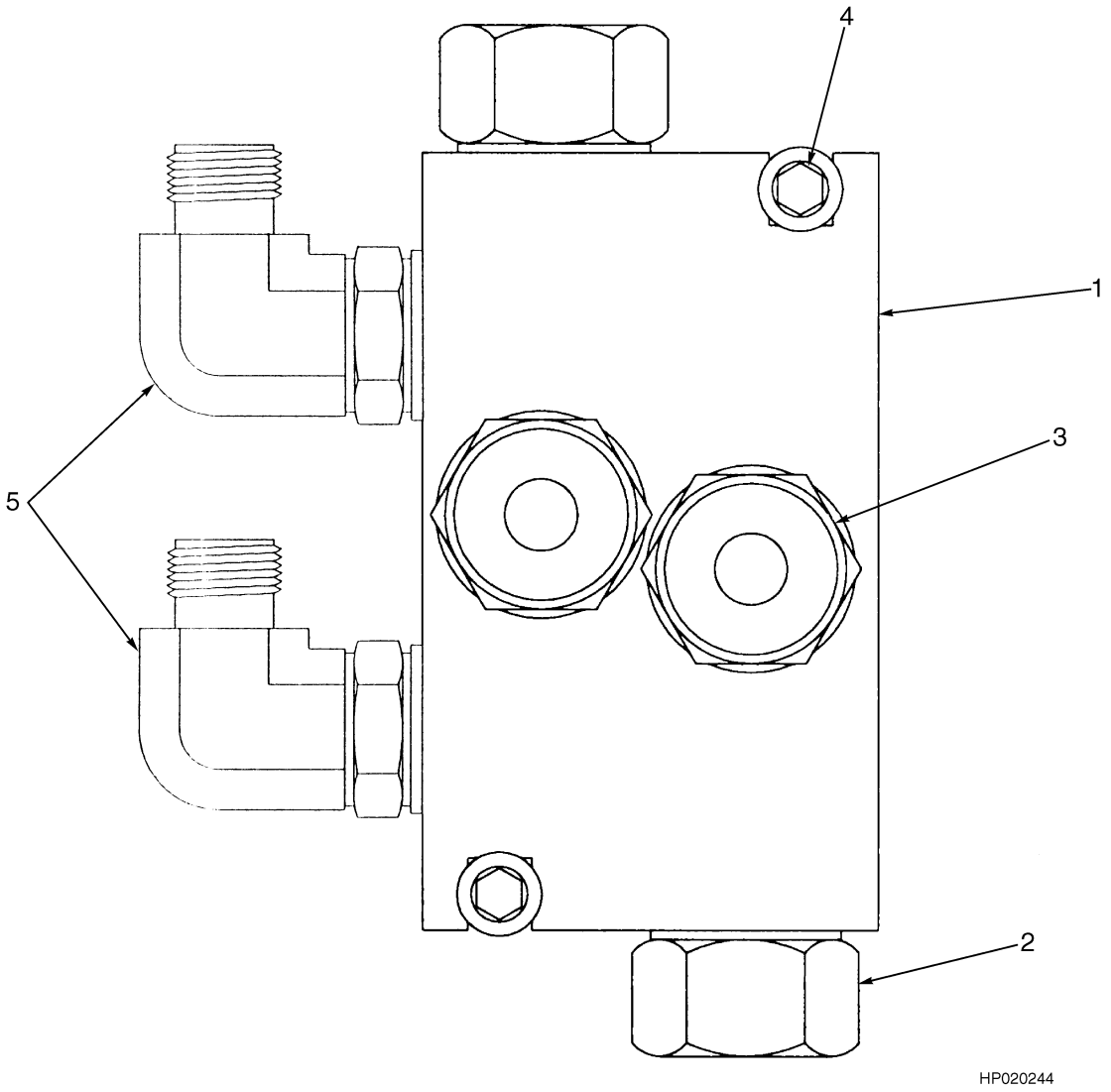

©2006 HYSTER COMPANY

VALVE ASSEMBLY
END BEAM
CONTAINER HANDLING ATTACHMENT
(S/N A214E-1807⇒)

ITEM	PART NO.	DESCRIPTION	QTY
1	6990497	Valve Assembly	1
1	6990083	Block	1
2	6996198	Check Valve	2
3	1495111	O-Ring	1
3	1470827	Fitting	4
4	6996192	Screw	2
5	1495111	O-Ring	1
5	6996045	Fitting	2
	6999030	Seal Kit (Includes Item 2)	1

©2006 HYSTER COMPANY

EXTENSION CYLINDER (Figure 11-27)
EMPTY CONTAINER HANDLER
(⇒S/N A214E-1806)

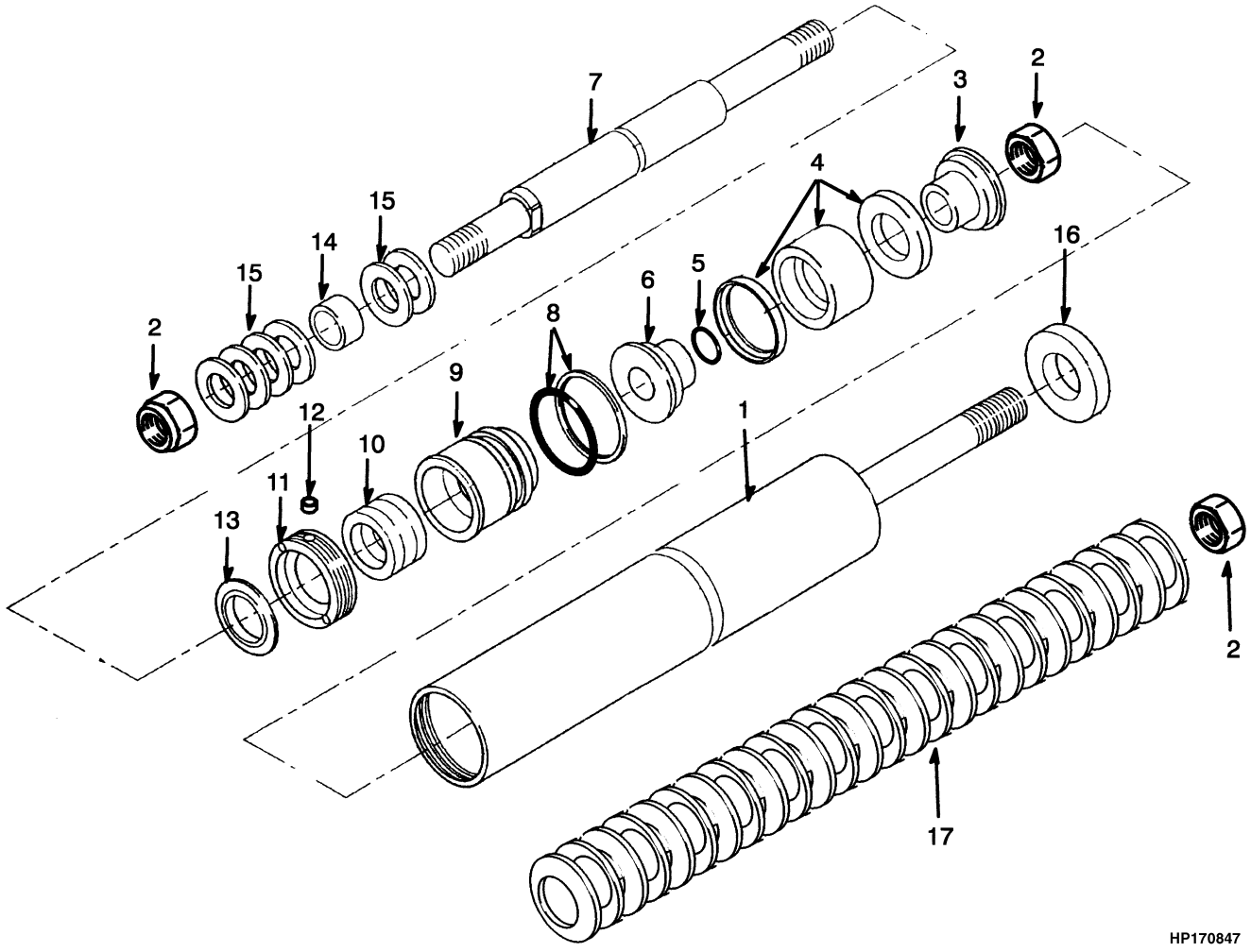

©2006 HYSTER COMPANY

EXTENSION CYLINDER
EMPTY CONTAINER HANDLER
(⇒S/N A214E-1806)

ITEM	PART NO.	DESCRIPTION	QTY
	1392290	Cylinder Assembly	1
1	1392335	Tube	1
2	1392336	Nut	3
3	1392337	Piston	1
4	1392387	Piston Packing	1
5	1392338	O-Ring	1
6	1392339	Piston	1
7	1392340	Rod	1
8	1392341	O-Ring	2
9	1392342	Retainer	1
10	1392386	Piston Packing	1
11	1392344	Nut	1
12	1392361	Insert	1
13	1392345	Wiper	1
14	1392346	Bushing	1
15	1392347	Ring	6
16	1392348	Ring	1
17	1392349	Disc	24
	1454046	Packing Set (Includes Items 2, 5, 8, 10, 12-13)	1

©2006 HYSTER COMPANY

EXTENSION CYLINDER (Figure 11-28)
EMPTY CONTAINER HANDLER
(S/N A214E-1807⇒)

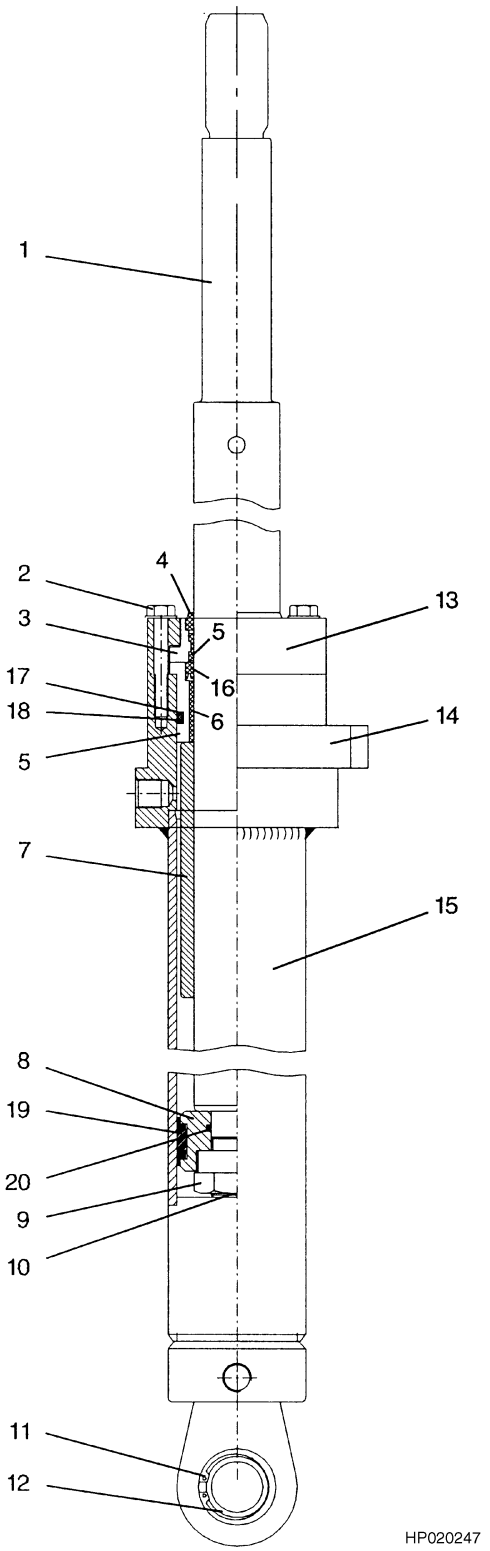

©2006 HYSTER COMPANY

EXTENSION CYLINDER
EMPTY CONTAINER HANDLER
(S/N A214E-1807⇒)

ITEM	PART NO.	DESCRIPTION	QTY
	6990334	Extension Cylinder Assembly	1
1	6990493	Piston Rod	1
2	6996307	Bolt	8
3	1473476	Washer	1
4	. . . . .	Wiper Ring	1
5	1384403	Bushing	1
6	1473477	Bushing	1
7	1473478	Spacer	1
8	1332346	Piston	2
9	1332344	Nut	1
10	302100	Screw	1
11	1332342	Snap Ring	1
12	356035	Bearing	1
13	6990332	Ring	1
14	6990333	Cylinder Guide	1
15	6990494	Shell	6
16	. . . . .	O-Ring	1
17	. . . . .	Piston Seal	1
18	. . . . .	O-Ring	1
19	. . . . .	O-Ring	1
20	. . . . .	Seal Ring	1
	1329440	Seal Kit (Includes Items 4, 16-20)	1

©2006 HYSTER COMPANY

SIDE-SHIFT CYLINDER (Figure 11-29)
EMPTY CONTAINER HANDLER
(⇒S/N A214E-1806)

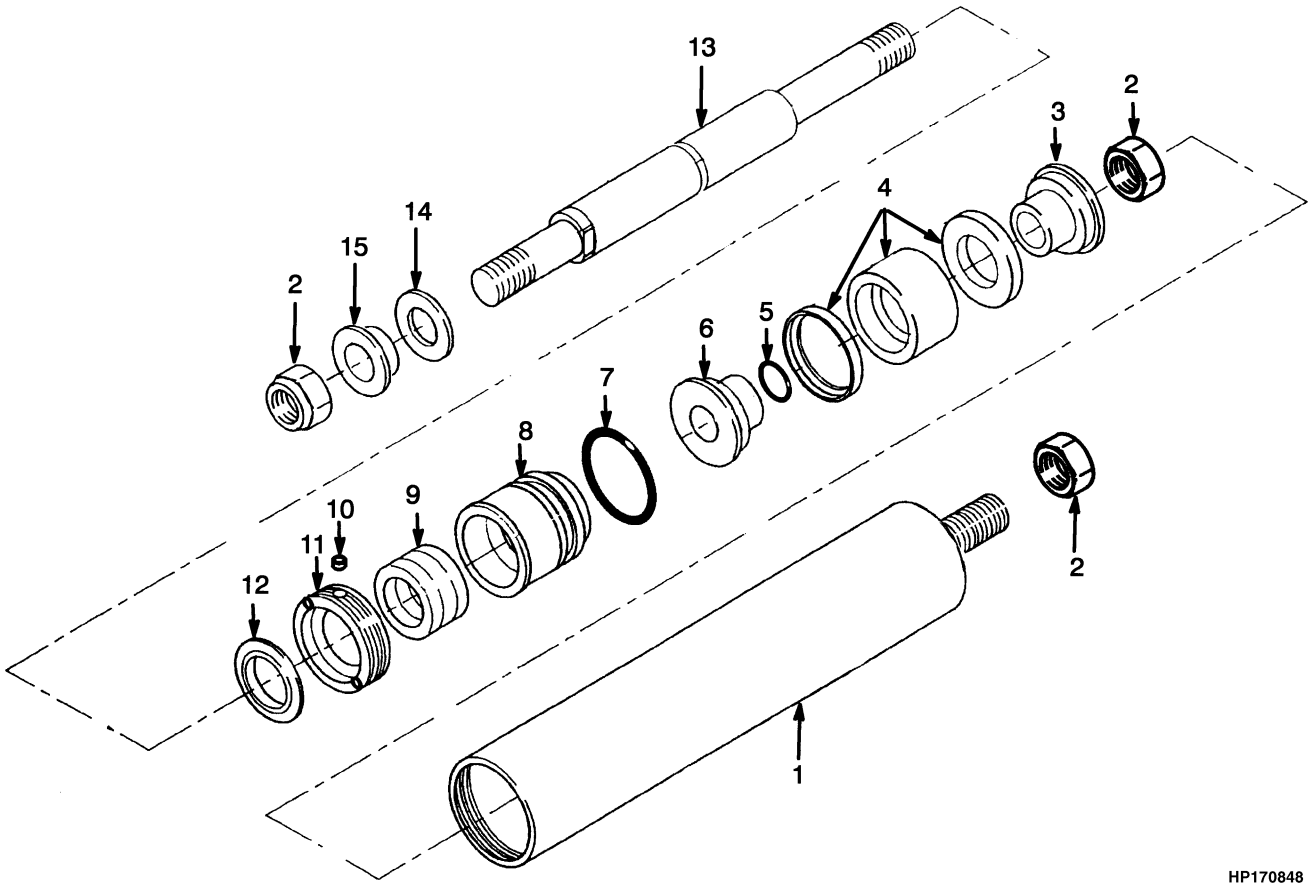

©2006 HYSTER COMPANY

SIDE-SHIFT CYLINDER
EMPTY CONTAINER HANDLER
(⇒S/N A214E-1806)

ITEM	PART NO.	DESCRIPTION	QTY
	1392292	Side-Shift Cylinder	1
1	1392327	Tube	1
2	. . . . .	Locknut	3
3	1392328	Piston	1
4	. . . . .	Piston Packing	1
5	. . . . .	O-Ring	1
6	1392329	Piston	1
7	. . . . .	O-Ring	1
8	1392331	Retainer	1
9	. . . . .	Rod Packing	1
10	. . . . .	Insert	1
11	1392332	Nut	1
12	. . . . .	Wiper	1
13	1392330	Rod	1
14	1392333	Ring	1
15	1392334	Bushing	1
	1392549	Packing Set (Includes Items 2, 4-5, 7, 9-10, 12)	1

©2006 HYSTER COMPANY

SIDE-SHIFT CYLINDER (Figure 11-30)
EMPTY CONTAINER HANDLER
(S/N A214E-1807⇒)

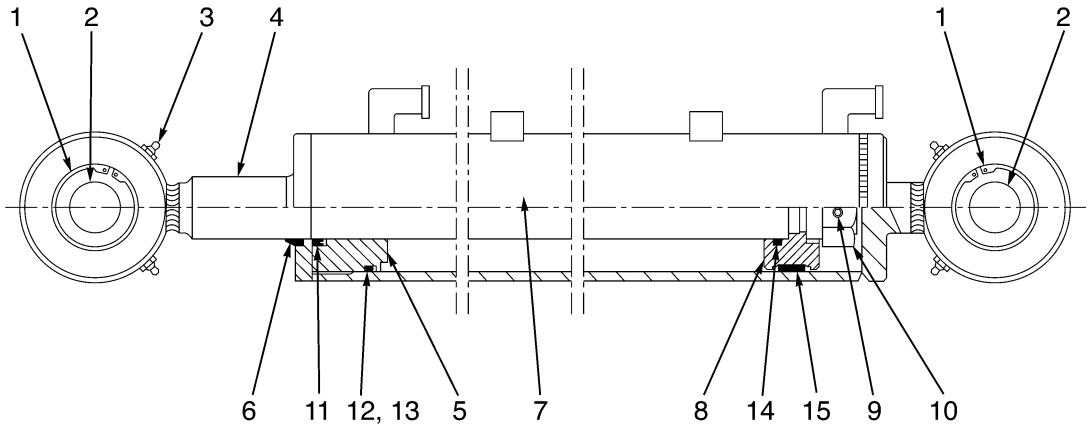

HP000624

ITEM	PART NO.	DESCRIPTION	QTY
	6990502	Side-Shift Cylinder	1
1	1329441	Snap Ring	2
2	1329442	Bushing	2
3	1329443	Lube Fitting	4
4	6990335	Rod (Piston)	1
5	1329445	Gland	1
7	. . . . .	Wiper Ring	1
7	6990336	Shell	1
8	1329447	Piston	1
9	302100	Screw	1
10	1329448	Nut	1
11	. . . . .	Seal (Piston)	1
12	. . . . .	O-Ring	1
13	. . . . .	Back-Up Ring	1
14	. . . . .	O-Ring	1
15	. . . . .	Seal (Rod)	1
	1329449	Seal Kit (Includes Items 11-15)	1

©2006 HYSTER COMPANY

NOTES

ELECTRICAL SYSTEM (Figure 11-31)
SPREADER 572 AND 573
(S/N A214E-1807⇒)

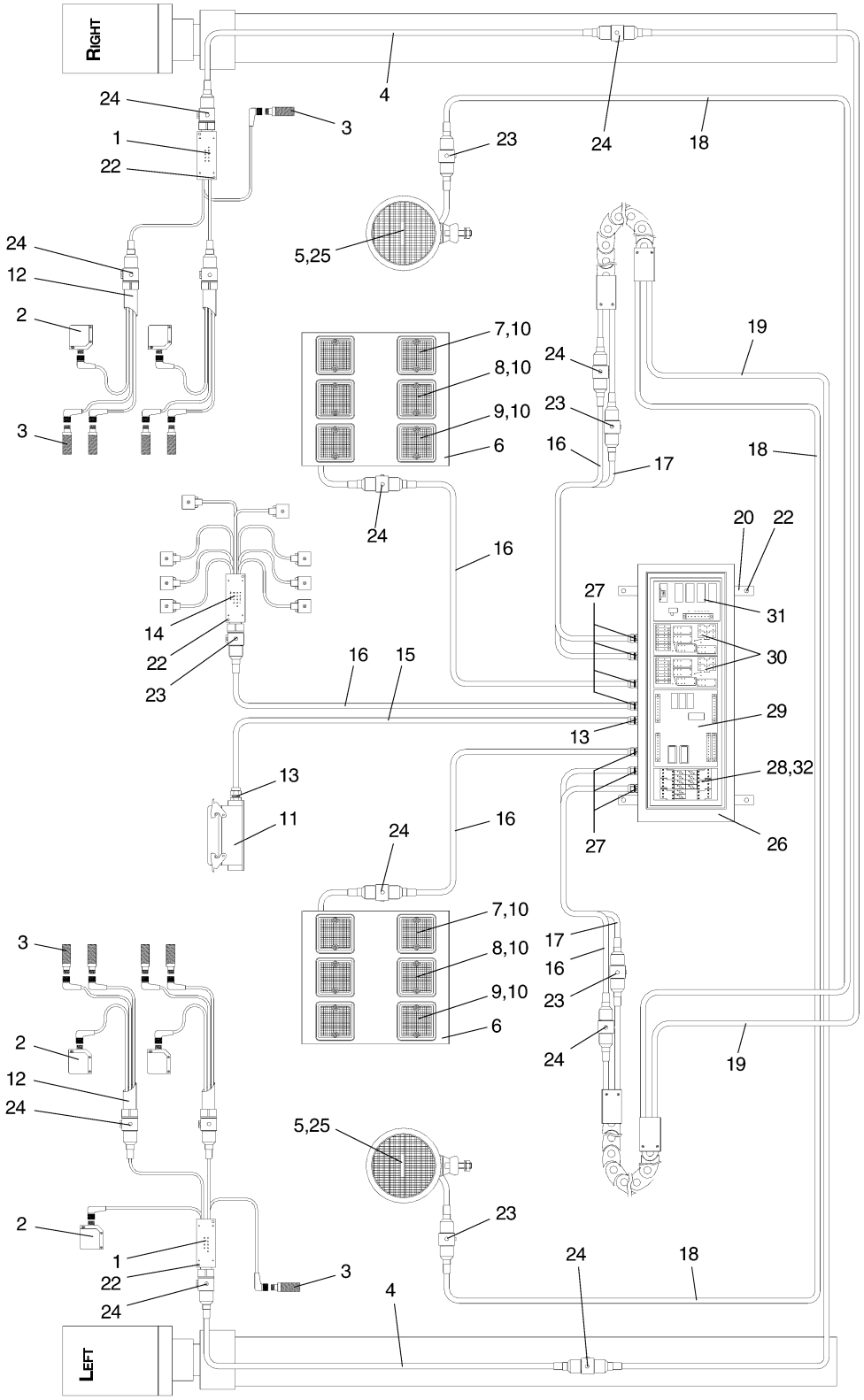

©2006 HYSTER COMPANY

ELECTRICAL SYSTEM
SPREADER 572 AND 573
(S/N A214E-1807⇒)

ITEM	PART NO.	DESCRIPTION	QTY
1	6999065	Cable Assembly	2
1	6990908	Interface Box	1
1	6991063	Cable	8
2	6996500	Proximity Sensor	5
3	6996330	Proximity Sensor	10
4	6990465	Cable (Electric)	2
5	6990466	Light	2
6	6990508	Bracket	2
7	6996498	Light (Green)	4
8	6996497	Light (Red)	4
9	6996496	Light (Amber)	4
10	6996453	Bulb	12
11	6996494	Housing	1
11	6996087	Insert	1
11	6996495	Cover	1
12	6990509	Wire Harness	4
13	6996533	Gland	2
13	6996534	Fitting	2
14	6990510	Box (Interface)	1
15	6996071	Cable (Electric)	1
16	6990511	Cable (Electric)	5
17	6990469	Cable (Electric)	2
18	6990512	Cable (Electric)	2
19	6990471	Cable	2
20	6990513	Bracket	2
21	1459409	Shock Absorber	4
21	302400	Locknut	4
22	6996129	Allen Screw	6
23	6996499	Cover	4
24	1334633	Cover	13
25	6996079	Bulb	2
26	6990614	Spreader Box	1
27	6996306	Gland	7
28	6990479	Card (Fuse)	1
29	6990498	Circuit Board	1
30	6990298	Circuit Board	2
31	6990063	Circuit Board	1
32	1498044	Fuse (5 Amp)	10

©2006 HYSTER COMPANY

ELECTRICAL SYSTEM (Figure 11-32)
SPREADER 575
(S/N A214E-1807⇒)

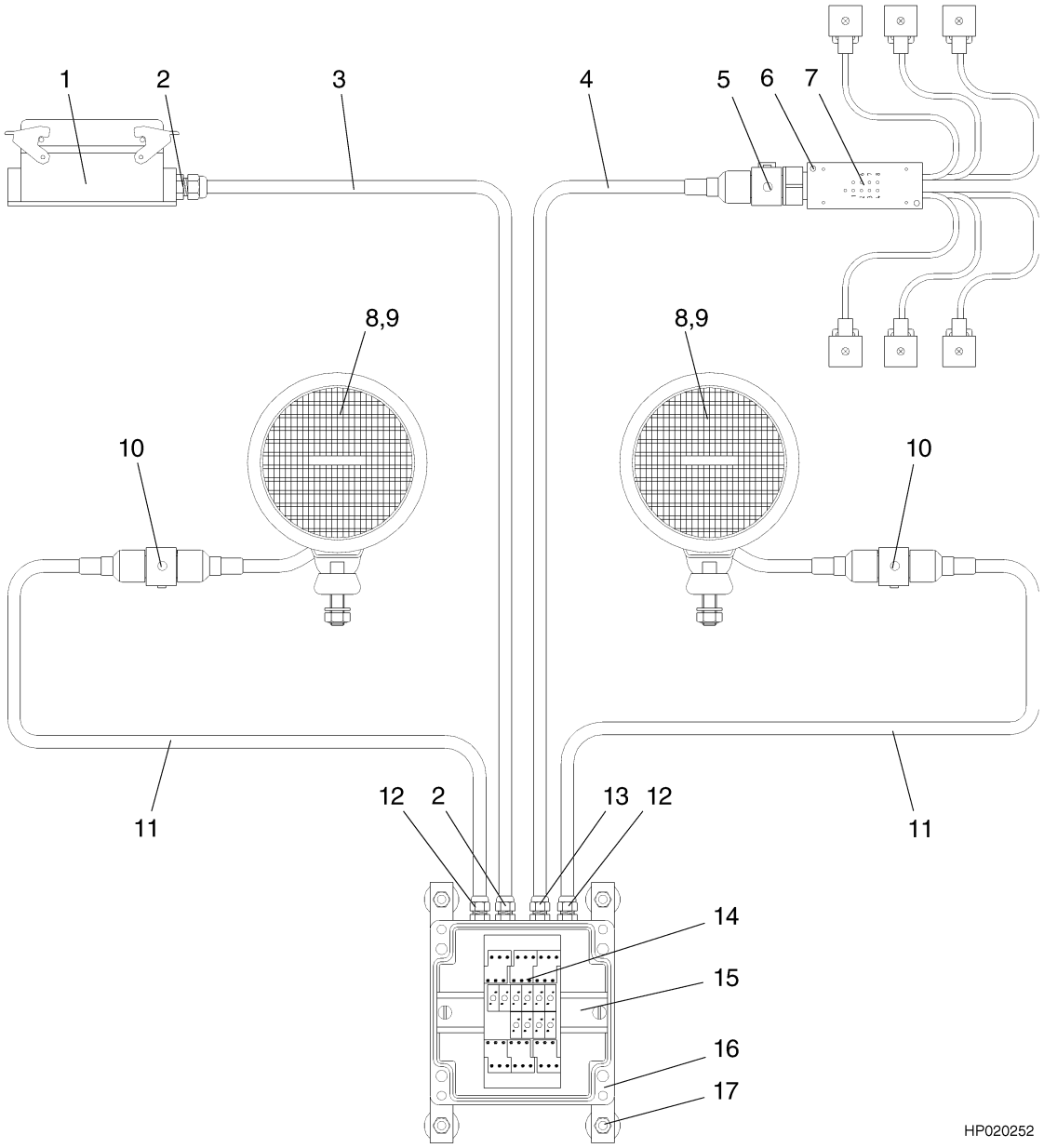

©2006 HYSTER COMPANY

ELECTRICAL SYSTEM
SPREADER 575
(S/N A214E-1807⇒)

ITEM	PART NO.	DESCRIPTION	QTY
1	6996494	Housing	1
1	6996087	Insert	1
1	6996495	Cover	1
2	6996533	Gland	2
2	6996534	Fitting	2
3	6996071	Cable (Electric)	1
4	6990511	Cable (Electric)	1
5	1334633	Cover	1
6	6996129	Allen Screw	2
7	6990490	Interface Box	1
8	6990466	Light (Working)	2
9	6996079	Bulb	2
10	6996499	Cover	2
11	6990512	Cable (Electric)	2
12	6996216	Gland	2
13	6996306	Gland	1
14	6990479	Card (Fuse)	1
15	6990515	Bracket	1
16	6990516	Box (Electric)	1
17	6990189	Bracket	2
17	1459409	Shock Absorber	4
17	302400	Locknut	4

©2006 HYSTER COMPANY

ELECTRICAL SYSTEM (Figure 11-33)
SPREADER 578
(S/N A214E-1807⇒)

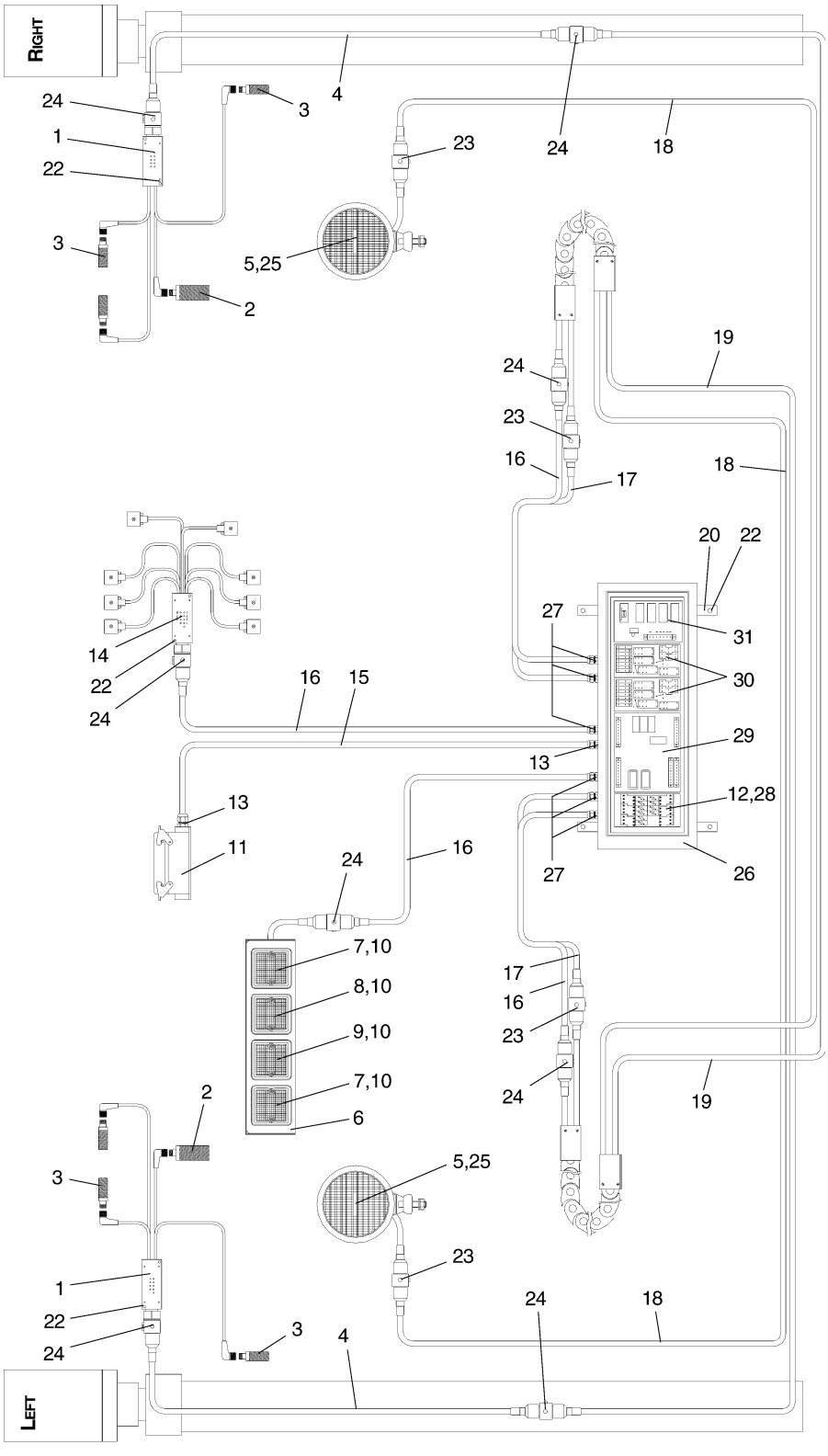

HP020255

©2006 HYSTER COMPANY

ELECTRICAL SYSTEM
SPREADER 578
(S/N A214E-1807⇒)

ITEM	PART NO.	DESCRIPTION	QTY
1	6990464	Box (Interface)	2
2	6996082	Sensor	2
3	6996330	Proximity Sensor	6
4	6990465	Cable (Electric)	2
5	6990466	Light (Working)	2
6	6990044	Panel	2
7	6996496	Light (Amber)	2
8	6996497	Light (Red)	1
9	6996498	Light (Green)	1
10	6996453	Bulb	4
11	6996494	Housing	1
11	6996087	Insert	1
11	6996495	Cover	1
12	1498044	Fuse (5 Amp)	10
13	6996533	Gland	2
13	6996534	Fitting	2
14	6990510	Box (Interface)	1
15	6996071	Cable (Electric)	1
16	6990511	Cable (Electric)	5
17	6990469	Cable (Electric)	2
18	6990512	Cable (Electric)	2
19	6990471	Cable	2
20	6990513	Bracket	2
21	1459409	Shock Absorber	4
21	302400	Locknut	4
22	6996129	Allen Screw	6
23	6996499	Cover	4
24	1334633	Cover	8
25	6996079	Bulb	2
26	6990614	Spreader Box	1
27	6996306	Gland	6
28	6990479	Card (Fuse)	1
29	6990498	Circuit Board	1
30	6990298	Circuit Board	2
31	6990063	Circuit Board	1

©2006 HYSTER COMPANY

CONTAINER ATTACHMENT INSTALLATION (Figure 11-34)
582 AND 588 SERIES

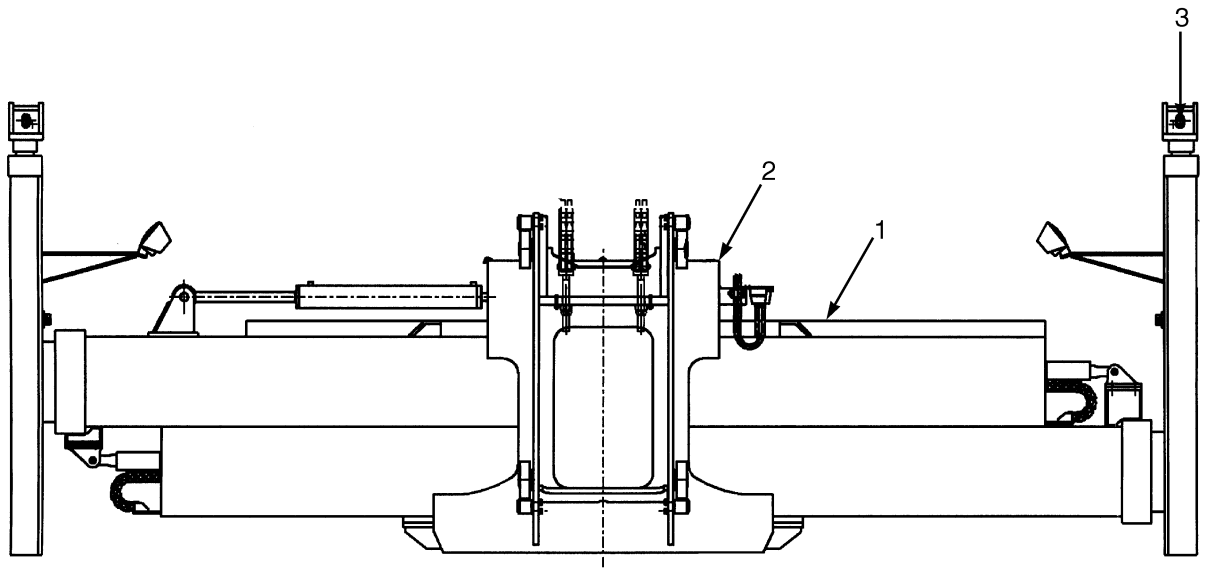

HP000890

©2006 HYSTER COMPANY

CONTAINER ATTACHMENT INSTALLATION
582 AND 588 SERIES

KEY:
A: 582 Series Attachment
B: 588 Series Attachment

ITEM	PART NO.	DESCRIPTION	QTY A	QTY B
	. . . . .	Container Handler Assembly	1	1
1	1570243	Basic Spreader	1	1
1	. . . . .	Extension Beam Assembly (☞ Figure 11-45)	1	1
1	. . . . .	Wear Pads (Extension Beam) (☞ Figure 11-44)	1	1
1	. . . . .	Wear Pads (End Beam) (☞ Figure 11-43)	1	1
2	1570245	Carriage Assembly (With Mechanical Pile Slope) (☞ Figure 11-35)	1	1
2	. . . . .	Carriage	1	1
3	1570249	Engagement (Double Horizontal Twist Locks)	1	..
3	1570254	Engagement (Vertical Twistlocks)	..	1
3	. . . . .	End Beam Assembly (☞ Figure 11-46)	1	..
3	. . . . .	End Beam Assembly (☞ Figure 11-47)	..	1
3	6990808	Extension Cylinder (☞ Figure 11-42)	1	1
3	6990744	Twistlock Valve (RH-External Twistlock) (☞ Figure 11-37)	1	1
3	6990742	Twistlock Valve (LH-External Twistlock) (☞ Figure 11-38)	1	1
3	6990745	Valve Assembly (Side-Shift) (☞ Figure 11-40)	1	1
3	6990817	Pilot Check Valve (Pilot Check) (☞ Figure 11-39)	1	1
3	6990608	Valve Assembly (Head) (☞ Figure 11-41)	1	1
3	. . . . .	Hydraulic System (☞ Figure 11-48)	1	..
3	. . . . .	Hydraulic System (☞ Figure 11-49)	..	1
3	. . . . .	Electrical System (☞ Figure 11-51)	1	..
3	. . . . .	Electrical System (☞ Figure 11-52)	..	1
3	. . . . .	Sensor Arrangement (☞ Figure 11-50)	1	..
3	. . . . .	Bracket (Electrical Box) (☞ Figure 11-36)	1	1
3	6990735	Sideshift Cylinder (☞ Figure 11-53)	..	1

©2006 HYSTER COMPANY

CARRIAGE (Figure 11-35)
WITH MECHANICAL PILE SLOPE
SERIES 582 AND 588

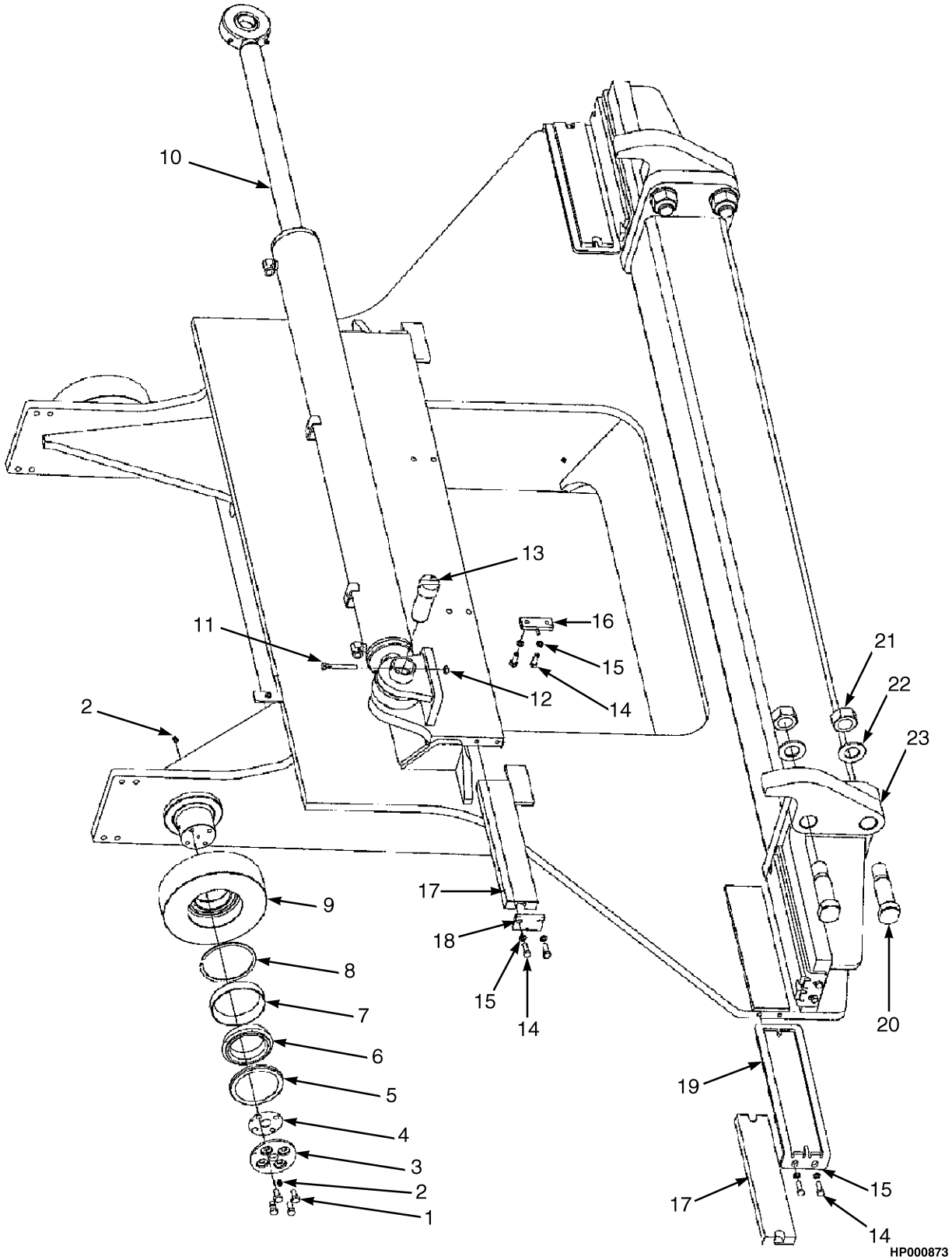

©2006 HYSTER COMPANY

CARRIAGE
WITH MECHANICAL PILE SLOPE
SERIES 582 AND 588

ITEM	PART NO.	DESCRIPTION	QTY
1	132860	Capscrew	16
2	1329443	Lube Fitting	8
3	1325760	Cap	4
4	1325763	Shim	1
4	1325764	Shim	1
4	1373329	Shim	1
5	1325761	Shield	2
6	276228	Bearing Cone	2
7	392197	Bearing Cup	2
8	47478	Snap Ring	2
9	1325756	Roller	1
10	6990735	Sideshift Cylinder	1
11	6996005	Bolt	2
12	6996007	Nut	2
13	6990462	Pin	2
14	6996011	Bolt	16
15	6996003	Lockwasher	16
16	6990363	Bracket	2
17	6990500	Wear pad	6
18	1332278	Bracket	2
19	6990796	Bracket	4
20	6990797	Bolt	4
21	302408	Nut	4
22	302181	Screw	4
23	6990798	Retainer (Hook)	2
	1325765	Roller Assembly (Includes Items 5-9)	4

©2006 HYSTER COMPANY

ELECTRICAL BOX MOUNT (Figure 11-36)
582 AND 588 SERIES

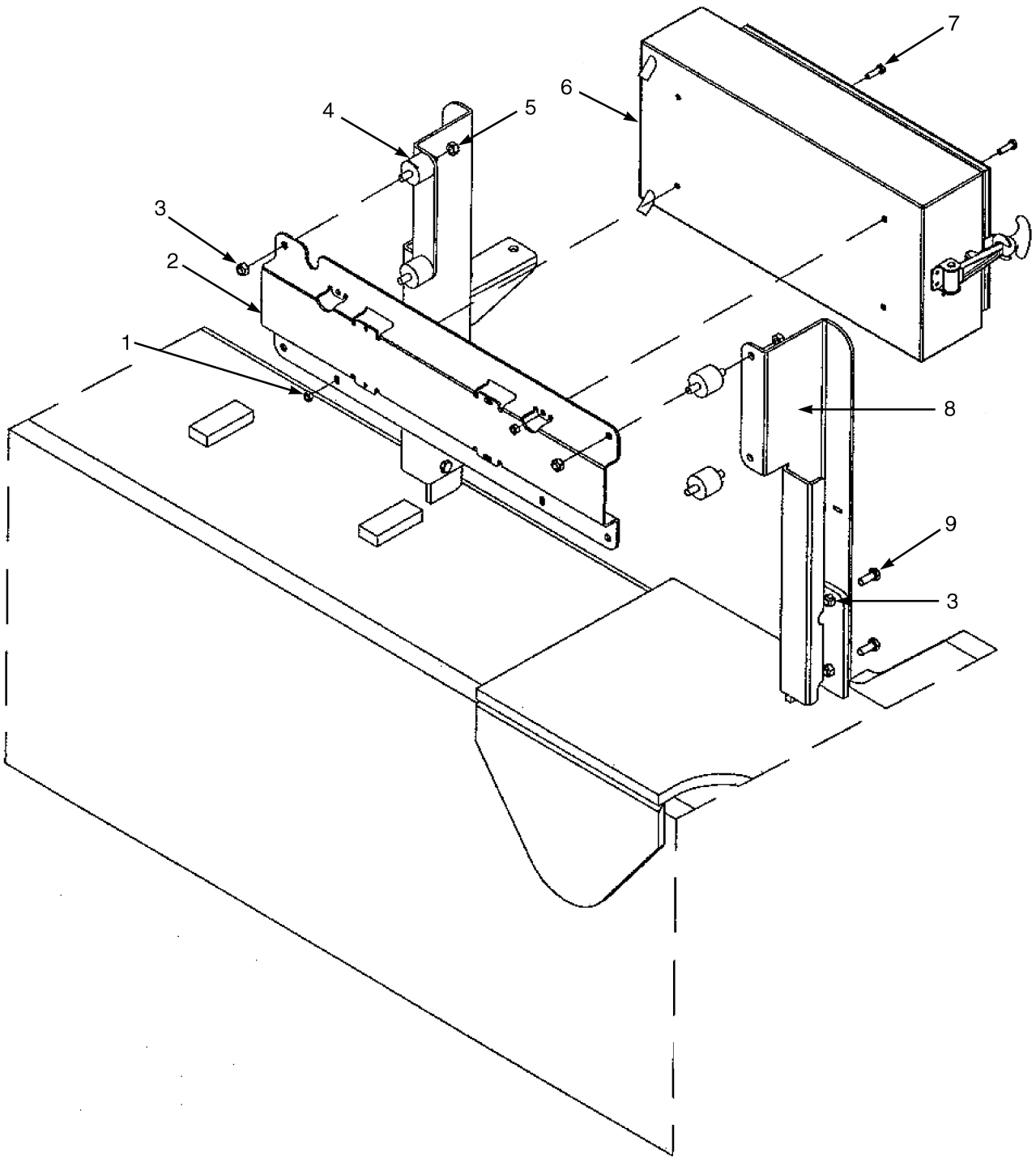

HP000874

ITEM	PART NO.	DESCRIPTION	QTY
1	6996301	Nut	4
2	6990820	Bracket	1
3	302400	Locknut	12
4	1459409	Shock Absorber	4

©2006 HYSTER COMPANY

ELECTRICAL BOX MOUNT
582 AND 588 SERIES

ITEM	PART NO.	DESCRIPTION	QTY
5	6990821	Bracket (RH)	1
6	6990614	Spreader Box	4
7	6996098	Bolt	4
8	6990822	Bracket (LH)	1
9	6996036	Bolt	4

©2006 HYSTER COMPANY

VALVE ASSEMBLY (Figure 11-37)
RH, EXTENSION, TWISTLOCK
SERIES 582 AND 588

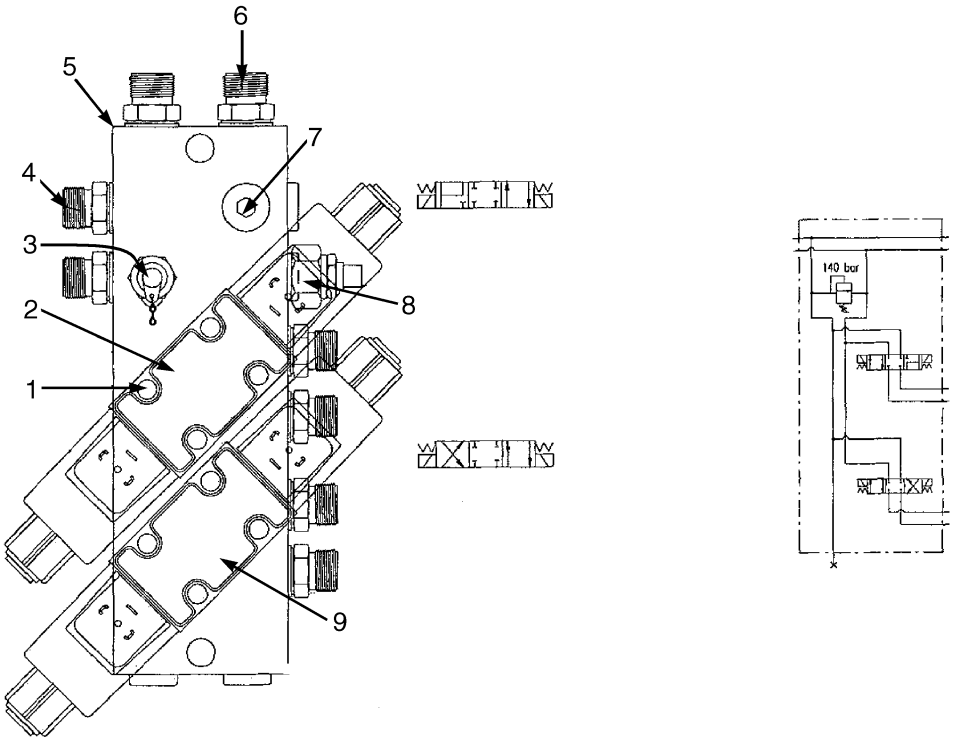

HP000875

ITEM	PART NO.	DESCRIPTION	QTY
	6990744	Twistlock Valve	1
1	6996122	Screw (Allen)	8
2	6996043	Electro Valve (24 Volt DC)	1
2	6996293	Solenoid	2
2	6996468	Nut	2
3	6996471	Gauge Adapter	1
4	1470841	Fitting	6
4	1495113	O-Ring	1
5	6990743	Valve Body	1
6	1470842	Fitting	1
6	1495113	O-Ring	2
7	6996182	Plug	1
8	6996598	Relief Valve	1
9	1473482	Electro Valve (24 Volt DC)	1
9	6996293	Solenoid	2
9	6996468	Nut	2

©2006 HYSTER COMPANY

VALVE ASSEMBLY (Figure 11-38)
LH, EXTENSION, TWISTLOCK
SERIES 582 AND 588

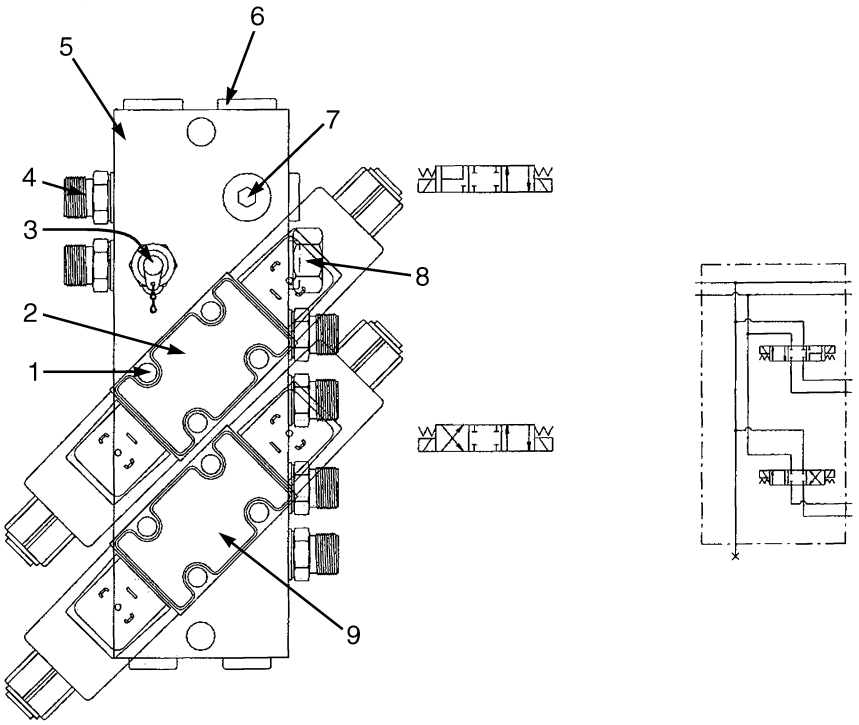

HP000876

ITEM	PART NO.	DESCRIPTION	QTY
	6990742	Twistlock Valve	1
1	6996122	Screw (Allen)	1
2	1473482	Electro Valve (24 Volt DC)	1
2	6996293	Solenoid	2
2	6996468	Nut	2
3	6996471	Gauge Adapter	1
4	1470841	Fitting	6
4	1495113	O-Ring	1
5	6990743	Valve Body	1
6	6996128	Plug	2
7	6996182	Plug	5
8	6996717	Plug	1
9	6996043	Electro Valve (24 Volt DC)	1
9	6996293	Solenoid	2
9	6996468	Nut	2

©2006 HYSTER COMPANY

VALVE ASSEMBLY (Figure 11-39)
PILOT CHECK
SERIES 582 AND 588

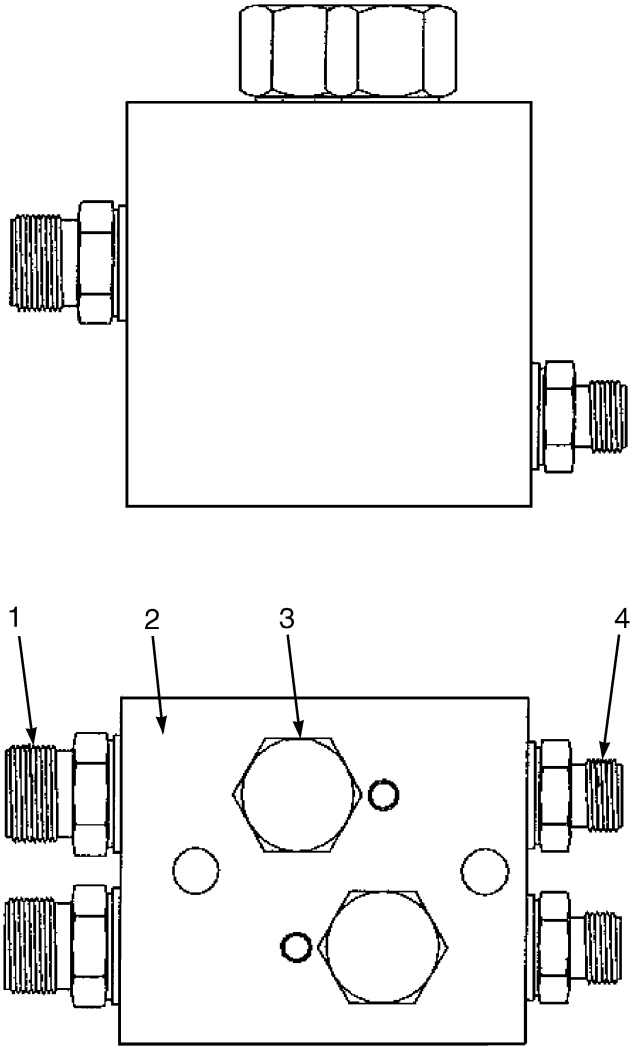

HP000877

ITEM	PART NO.	DESCRIPTION	QTY
	6990817	Pilot Check Valve	1
1	1470840	Fitting	2
1	1495113	O-Ring	1
2	6990818	Valve Body	1
3	6996198	Check Valve	1
3	6999030	Seal Kit	2
4	1470827	Fitting	2
4	1495111	O-Ring	1

©2006 HYSTER COMPANY

VALVE ASSEMBLY (Figure 11-40)
SIDE-SHIFT
SERIES 582 AND 588

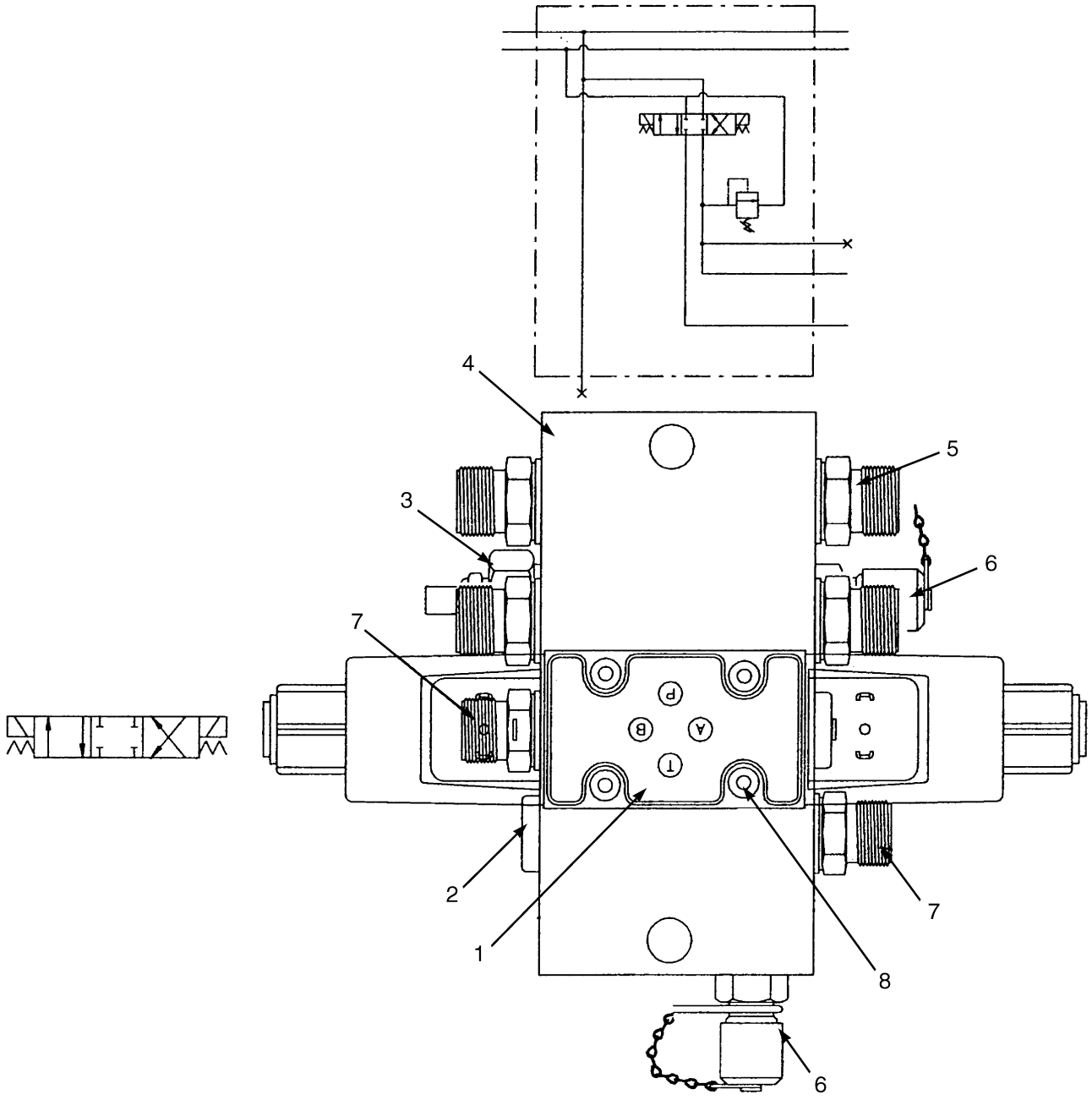

HP000878

ITEM	PART NO.	DESCRIPTION	QTY
	6990745	Valve Assembly	1
1	6996043	Electro Valve (24 Volt DC)	2
1	6996293	Solenoid	1
1	6996468	Nut	1
2	6996182	Plug	2
3	6996598	Relief Valve	1
4	6990746	Valve Body	1

VALVE ASSEMBLY
SIDE-SHIFT
SERIES 582 AND 588

ITEM	PART NO.	DESCRIPTION	QTY
5	1470842	Fitting	4
5	1495113	O-Ring	1
6	6996127	Adapter (Gauge)	2
7	1470841	Fitting	2
7	1495113	O-Ring	1
8	6996122	Screw (Allen)	4

©2006 HYSTER COMPANY

VALVE ASSEMBLY (Figure 11-41)
HEAD
SERIES 582

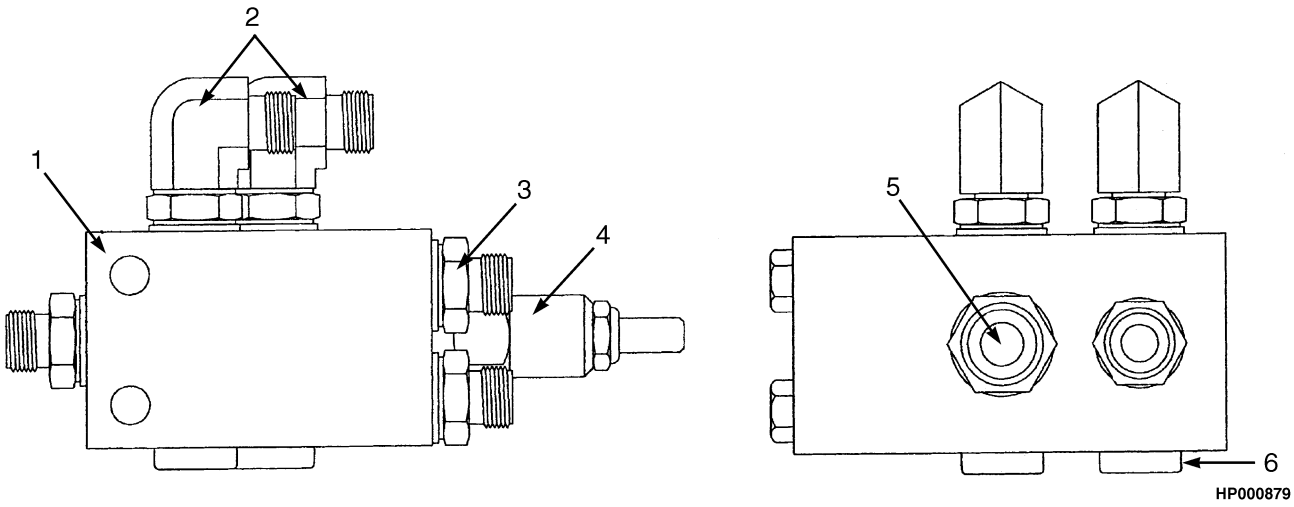

ITEM	PART NO.	DESCRIPTION	QTY
	6990608	Valve Assembly	1
1	6990609	Valve Body	1
2	6996045	Fitting	2
3	6996254	Fitting	5
4	6996658	Sequence Valve	1
5	6996659	Fitting	1
6	6996040	Plug	2

EXTENSION CYLINDER ASSEMBLY (Figure 11-42)
SERIES 582 AND 588

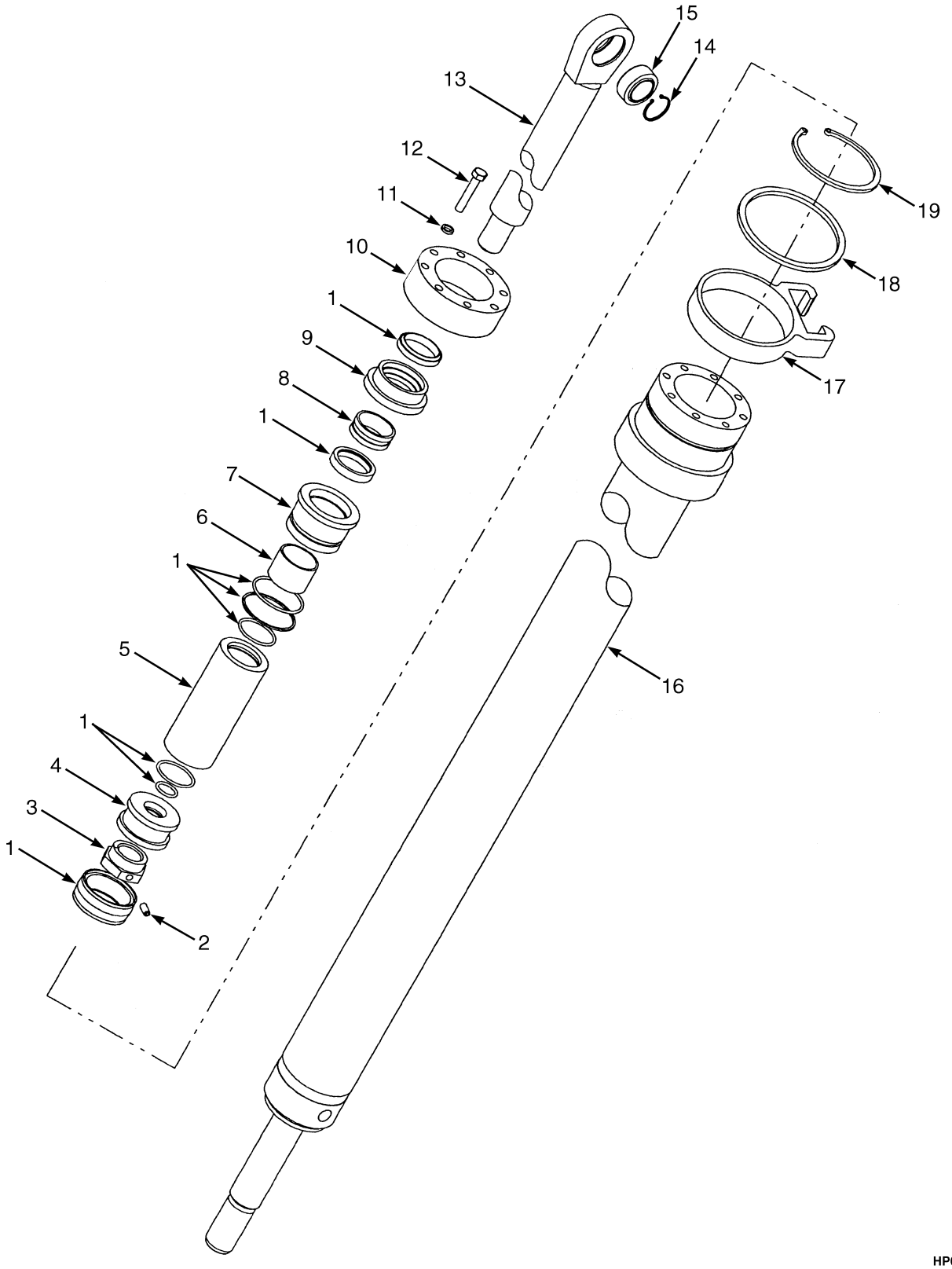

©2006 HYSTER COMPANY

EXTENSION CYLINDER ASSEMBLY
SERIES 582 AND 588

ITEM	PART NO.	DESCRIPTION	QTY
	6990808	Extension Cylinder	1
1	1473475	Seal Kit	1
2	302100	Screw	1
3	1332344	Nut	1
4	1332346	Piston	1
5	1473478	Spacer	1
6	1473477	Bushing	1
7	6990429	Gland	1
8	1384403	Bushing	1
9	1473476	Washer	1
10	6990332	Ring	1
11	6996022	Lockwasher	4
12	6996307	Bolt	4
13	6990804	Rod	1
14	1332342	Snap Ring	2
15	356035	Bearing	2
16	6990805	Shell	1
17	6990806	Guide	1
18	6990807	Ring	1
19	6996628	Snap Ring	1

©2006 HYSTER COMPANY

WEAR PADS (Figure 11-43)
END BEAM
SERIES 582 AND 588

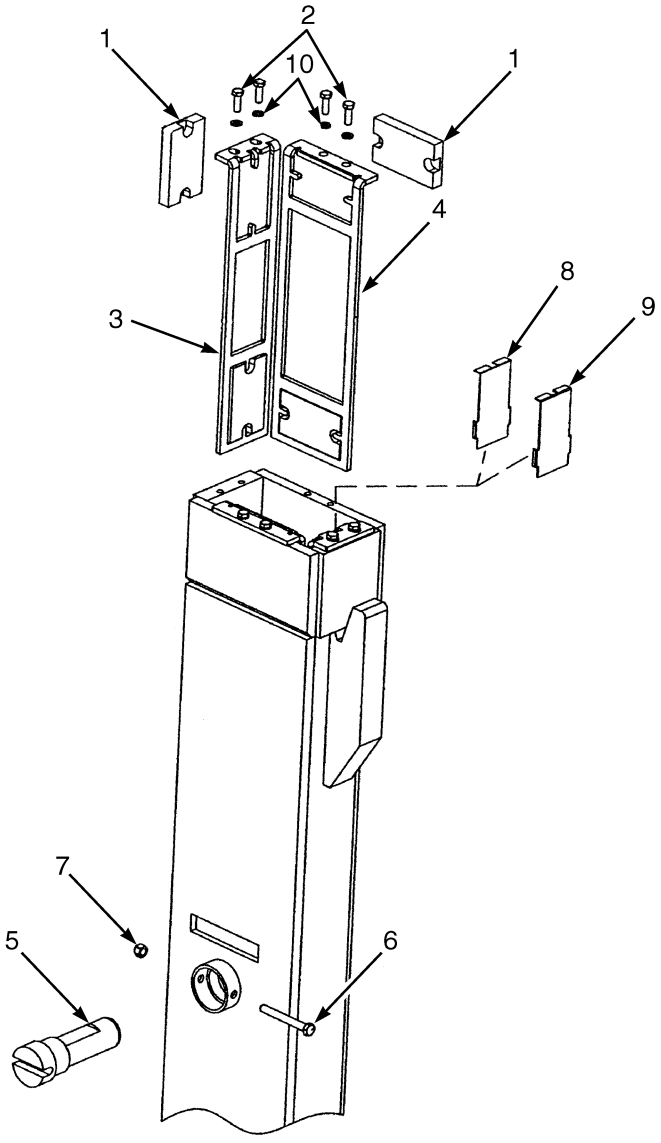

©2006 HYSTER COMPANY

WEAR PADS
END BEAM
SERIES 582 AND 588

ITEM	PART NO.	DESCRIPTION	QTY
1	6990629	Wear Pad	8
2	6996011	Bolt	8
3	6990439	Bracket	2
4	6990440	Bracket	2
5	6990441	Pin	1
6	6996208	Bolt	1
7	302402	Locknut	1
8	6990729	Shim (1.00 mm)	1
9	6990730	Shim (2.00 mm)	1
10	6996152	Washer	8

©2006 HYSTER COMPANY

WEAR PADS (Figure 11-44)
EXTENSION BEAM
SERIES 582 AND 588

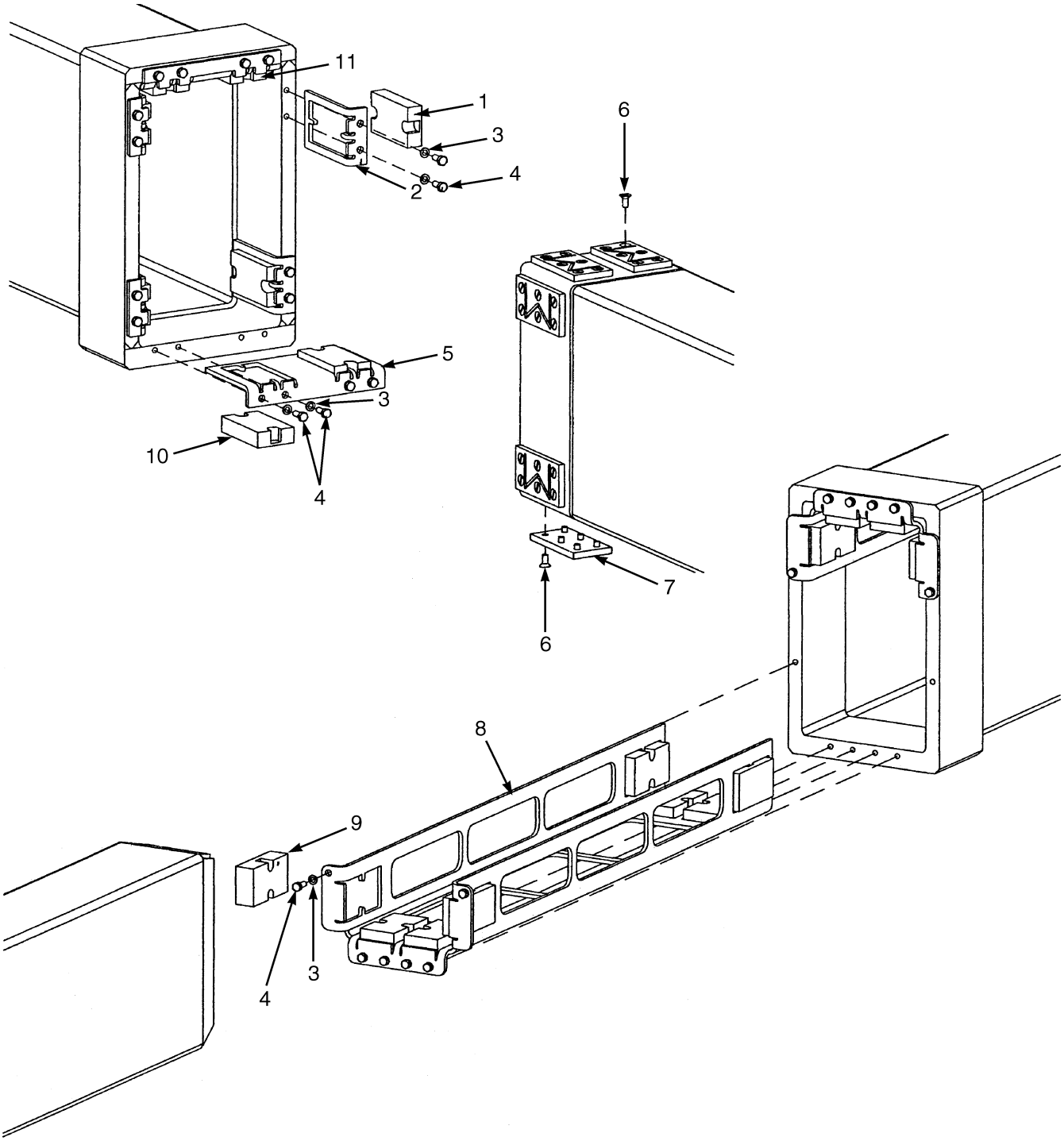

HP000882

©2006 HYSTER COMPANY

WEAR PADS
EXTENSION BEAM
SERIES 582 AND 588

ITEM	PART NO.	DESCRIPTION	QTY
1	6990596	Wear Pad (Side Frame)	4
2	6990436	Bracket	4
3	6996152	Washer	28
4	6996294	Bolt	28
5	6990736	Bracket	2
6	6996452	Screw (Brass)	48
7	6990385	Wear Pad	8
8	6990737	Bracket	2
9	6990738	Wear Pad	16
10	6990597	Wear Pad (Lower Frame)	2
11	6990629	Wear Pad	2

©2006 HYSTER COMPANY

EXTENSION BEAM ARRANGEMENT (Figure 11-45)
SERIES 582 AND 588

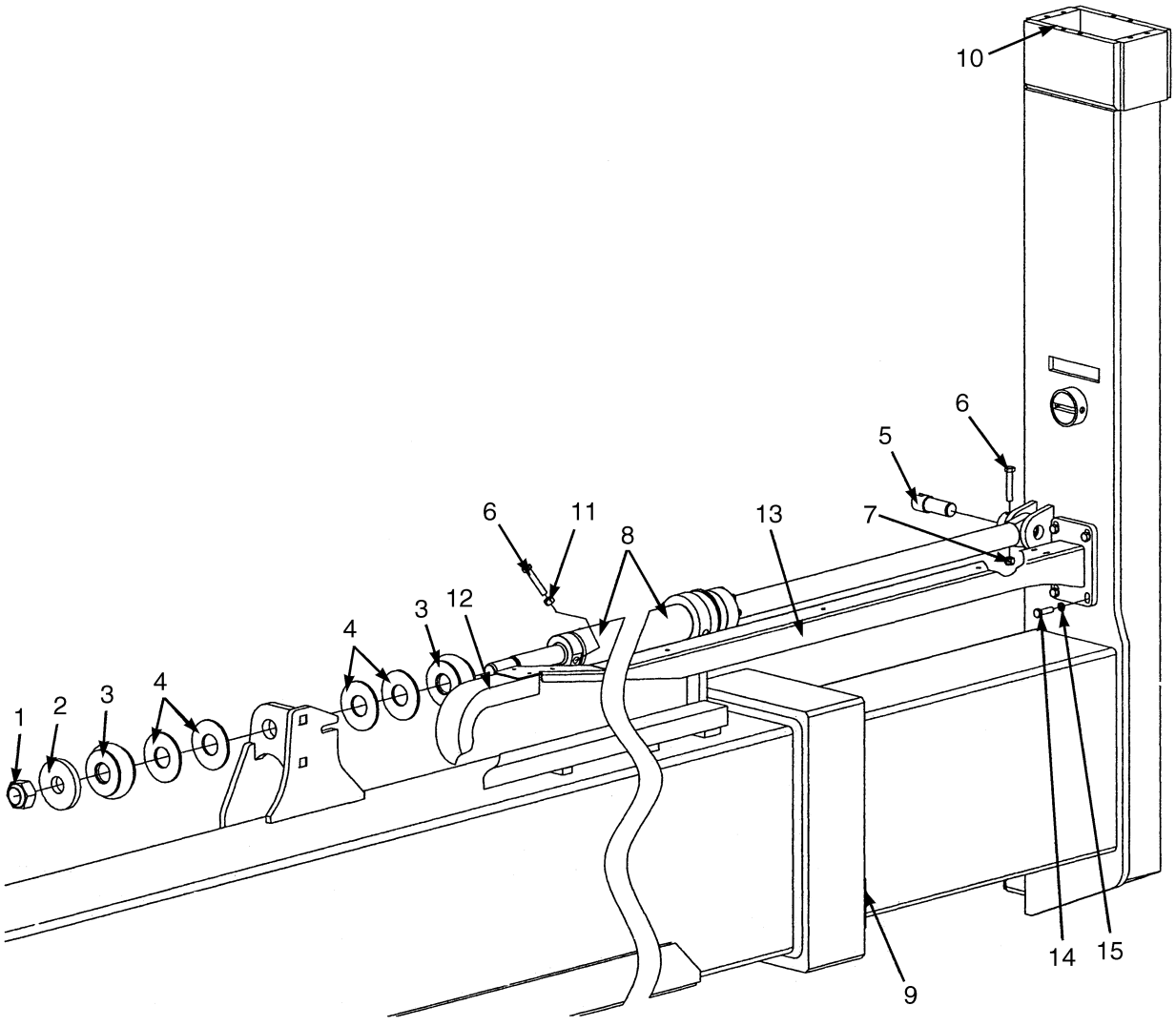

HP000883

©2006 HYSTER COMPANY

EXTENSION BEAM ARRANGEMENT
SERIES 582 AND 588

ITEM	PART NO.	DESCRIPTION	QTY
1	302408	Nut	1
2	6990370	Washer	1
3	6990368	Bumper	2
4	6990369	Washer	4
5	6990499	Pin	1
6	6996107	Bolt	1
7	302402	Locknut	1
8	6990808	Extension Cylinder	1
9	6990596	Wear Pad	1
10	6990629	Wear Pad	1
11	6996777	Nut	1
12	6990802	Flex Track (Chain)	1
12	6996295	Bolt	4
12	6996301	Nut	2
12	6996296	Lockwasher	2
13	6990803	Support	1
14	6996451	Bolt	4
15	6996025	Lockwasher	4

©2006 HYSTER COMPANY

END BEAM ASSEMBLY (Figure 11-46)
SERIES 582

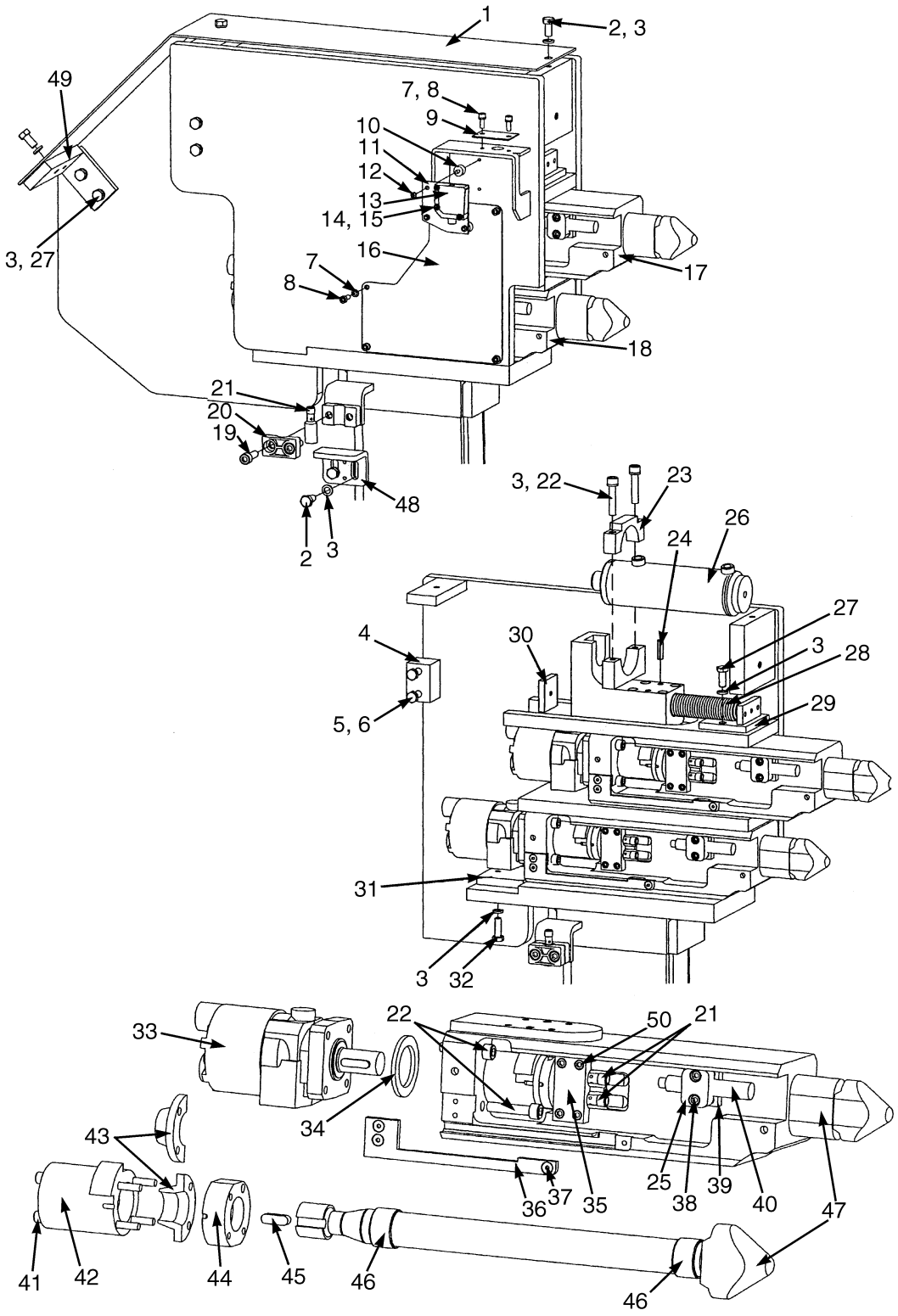

HP000884

©2006 HYSTER COMPANY

END BEAM ASSEMBLY
SERIES 582

ITEM	PART NO.	DESCRIPTION	QTY
1	6990759	Cover	1
2	292514	Bolt	5
3	6996003	Lockwasher	12
4	. . . . .	Block (Stop)	1
5	6996007	Nut	2
6	6996441	Bolt	2
7	6996296	Lockwasher	7
8	6996472	Bolt	7
9	6990555	Plate	1
10	6996501	Shock Absorber	3
11	6990485	Plate	1
12	6996502	Nut	3
12	6996051	Washer	3
13	6996854	Sensor	1
14	293726	Screw (Allen)	3
15	6996657	Washer	3
16	6990570	Cover	1
17	6990606	Housing (Upper Right Hand)	1
17	6990607	Housing (Upper Left Hand)	1
18	6990483	Housing (RH) (Lower) (Lower Right Hand)	1
18	6990484	Housing (LH) (Lower) (Lower Left Hand)	1
19	6996475	Screw (Allen)	2
20	6996010	Clamp	1
21	6996197	Sensor	5
22	6996732	Bolt	10
23	6990603	Clamp	1
24	6996654	Roll Pin	2
25	6996792	Clamp	2
26	6990604	Twistlock Cylinder	1
26	6999035	Seal Kit	1
27	6996014	Bolt	4
28	6996731	Spring	1
29	6990605	Spring Bracket	1
30	6990602	Washer	1
31	6990415	Plate	1
32	6996011	Bolt	2
33	6996443	Hydraulic Motor	2
33	6999025	Seal Kit	1
34	6990353	Ring	2
35	6990358	Bracket	2
36	6990453	Clamp	1
36	6990503	Clamp	1
37	6996514	Bolt	6
38	6996791	Bolt	4
39	6990520	Clamp	2
40	6990906	Sensor	2
41	6996861	Bolt	8
42	6990354	Sleeve	2
43	6990355	Collet	4
44	6990683	Ring	2
45	6996477	Key	2

©2006 HYSTER COMPANY

END BEAM ASSEMBLY
SERIES 582

ITEM	PART NO.	DESCRIPTION	QTY
46	6996448	Bushing	4
47	6990360	Twistlock	2
48	6990909	Indicator	1
49	6990758	Bracket	1

©2006 HYSTER COMPANY

NOTES

END BEAM ASSEMBLY (Figure 11-47)
SERIES 588

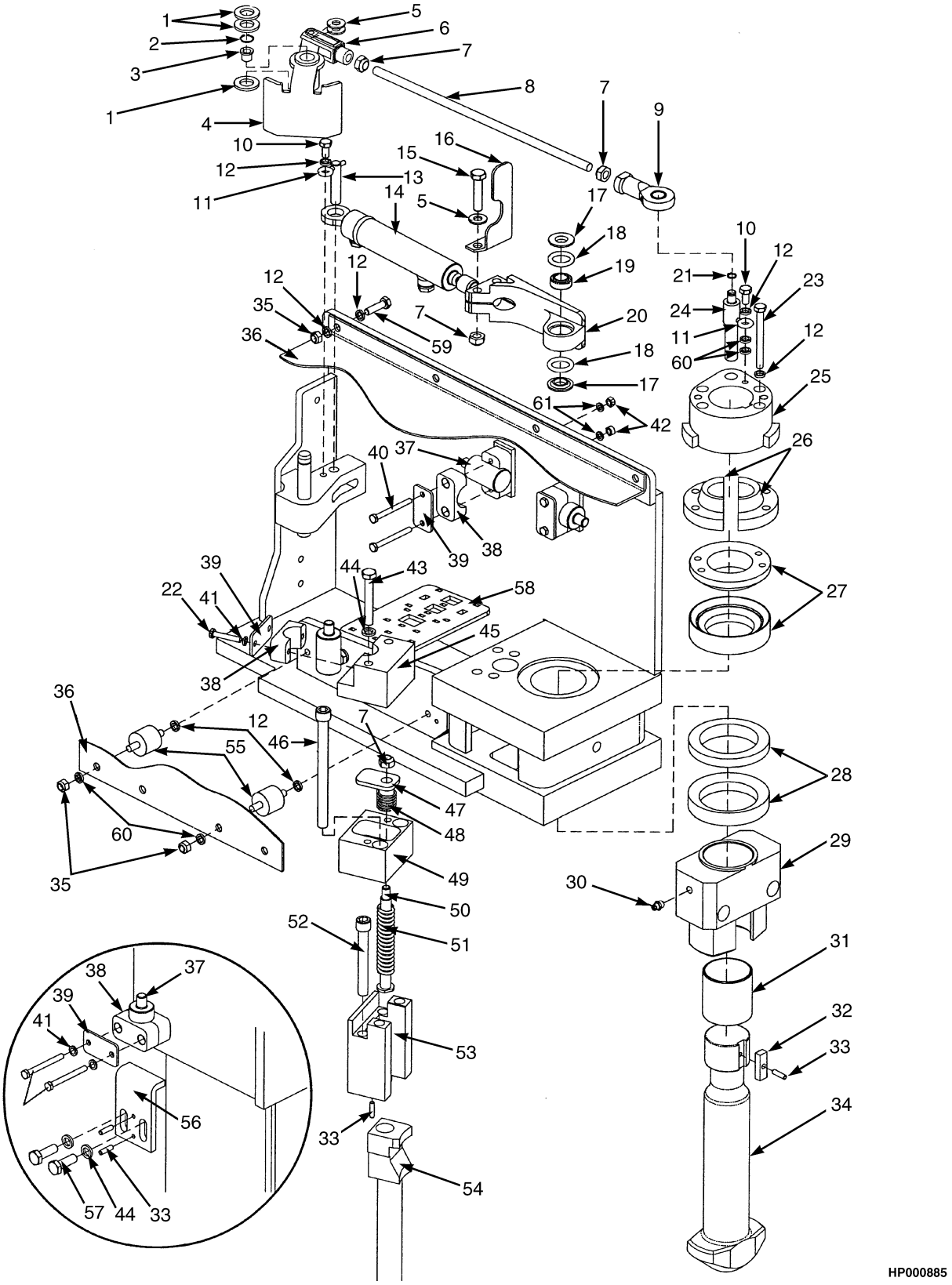

©2006 HYSTER COMPANY

END BEAM ASSEMBLY
SERIES 588

ITEM	PART NO.	DESCRIPTION	QTY
1	296426	Washer (Hardened)	3
2	6996648	Snap Ring	1
3	6996647	Bushing	1
4	6990701	Indicator	1
5	320159	Washer	4
6	6996227	Rod End	1
7	6996007	Nut	5
8	6990580	Rod	1
9	6996645	Rod End	1
10	6996036	Bolt	2
11	6996020	Ring Pin	1
12	6996022	Lockwasher	8
13	6990785	Pin	1
14	6990786	Twistlock Cylinder	1
15	292516	Capscrew	2
16	6990455	Flag (LH)	1
16	6990456	Flag (RH)	1
17	6996018	Washer	2
18	6996016	O-Ring	2
19	6996015	Ball Joint	1
20	6990409	Rod End	1
21	6996785	Snap Ring	1
22	6996186	Bolt	2
23	6996023	Bolt	4
24	6990787	Pin	1
25	6990012	Crank (RH)	1
25	6990447	Crank (LH)	1
26	6990013	Collet	1
27	6999001	Upper Bearing Kit	1
28	6999002	Lower Bearing Kit	1
29	6990014	Sleeve	1
30	1329443	Lube Fitting	1
31	6996019	Bushing	1
32	6990017	Key	1
33	6996028	Roll Pin	5
34	6990015	Twistlock	1
35	302400	Locknut	6
36	6990788	Cover	1
37	6990906	Sensor	4
38	6996419	Clamp	4
39	6996420	Washer	4
40	292516	Capscrew	6
41	6996296	Lockwasher	4
42	6996301	Nut	4
43	6996478	Bolt	2
44	6996003	Lockwasher	4
45	6990291	Bracket	1
46	6996318	Screw	2
47	6990292	Sleeve	1
48	6996724	Spring	1
49	6990293	Bracket	1

©2006 HYSTER COMPANY

END BEAM ASSEMBLY
SERIES 588

ITEM	PART NO.	DESCRIPTION	QTY
50	6990294	Rod	1
51	6996027	Spring	1
52	6996026	Screw	2
53	6990457	Bracket	1
54	6990011	Pin	1
55	1459409	Shock Absorber	2
56	6990789	Indicator	1
57	6996011	Bolt	2
58	6990812	Bracket	1
58	6996014	Bolt	2
59	6996185	Bolt	4
60	6996006	Washer	12
61	1329493	Washer	4

©2006 HYSTER COMPANY

NOTES

HYDRAULIC SYSTEM (Figure 11-48)
SERIES 582

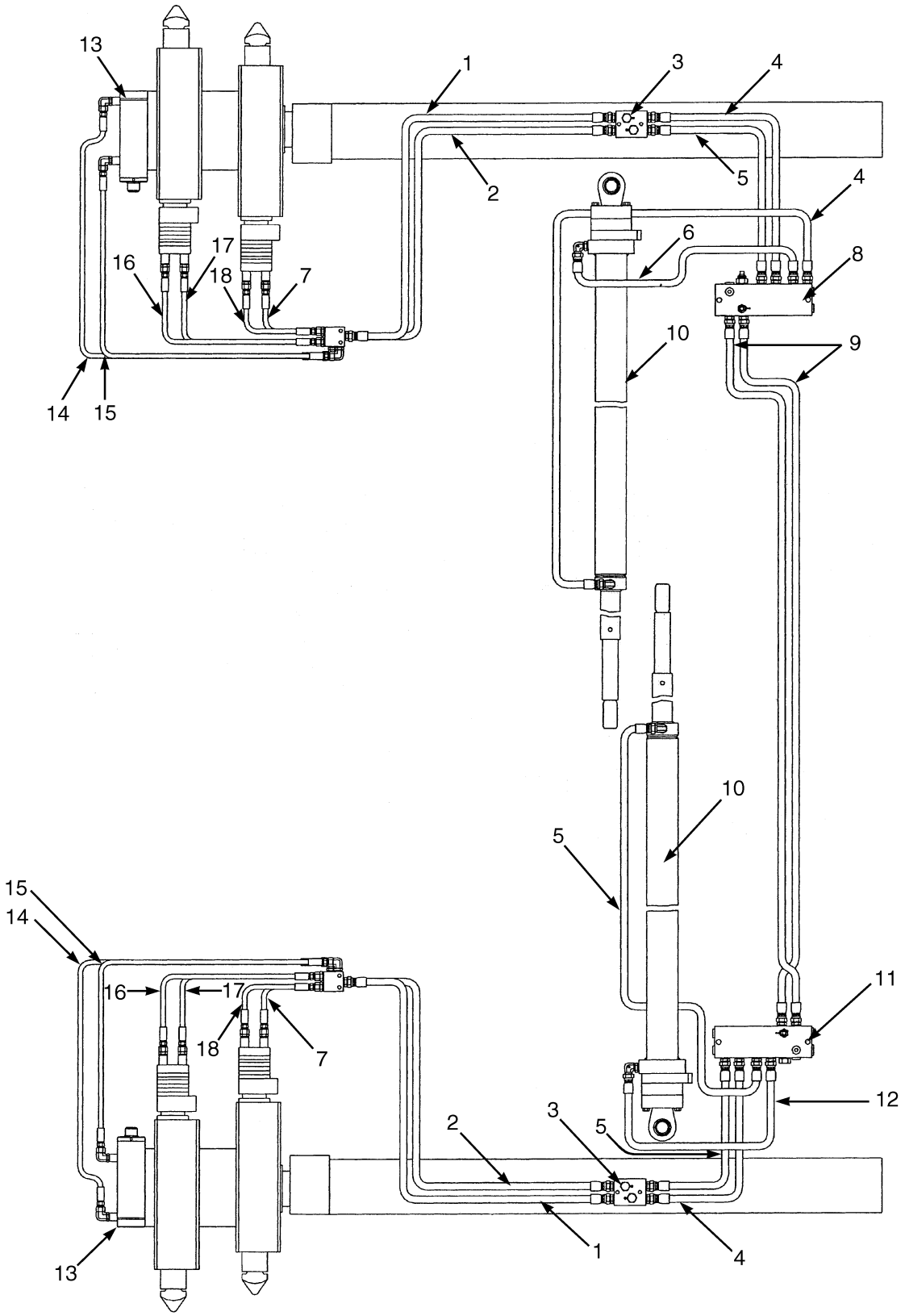

HP000886

©2006 HYSTER COMPANY

HYDRAULIC SYSTEM
SERIES 582

ITEM	PART NO.	DESCRIPTION	QTY
1	6996483	Hose	2
2	6996858	Hose	2
3	6990817	Pilot Check Valve (Pilot Check)	2
4	6996794	Hose	3
5	6996662	Hose	3
6	6996356	Hose	1
7	6996512	Hose	2
8	6990744	Twistlock Valve (RH, Extension, Twistlock)	1
9	6996857	Hose	2
10	6990808	Extension Cylinder	2
11	6990742	Twistlock Valve (LH, Extension, Twistlock)	1
12	6996415	Hose	1
13	6990604	Twistlock Cylinder (Twistlock)	2
13	6999035	Seal Kit	1
14	6996859	Hose	2
15	6996860	Hose	2
16	6996517	Hose	2
17	6996516	Hose	2
18	6996513	Hose	2

©2006 HYSTER COMPANY

HYDRAULIC SYSTEM (Figure 11-49)
SERIES 588

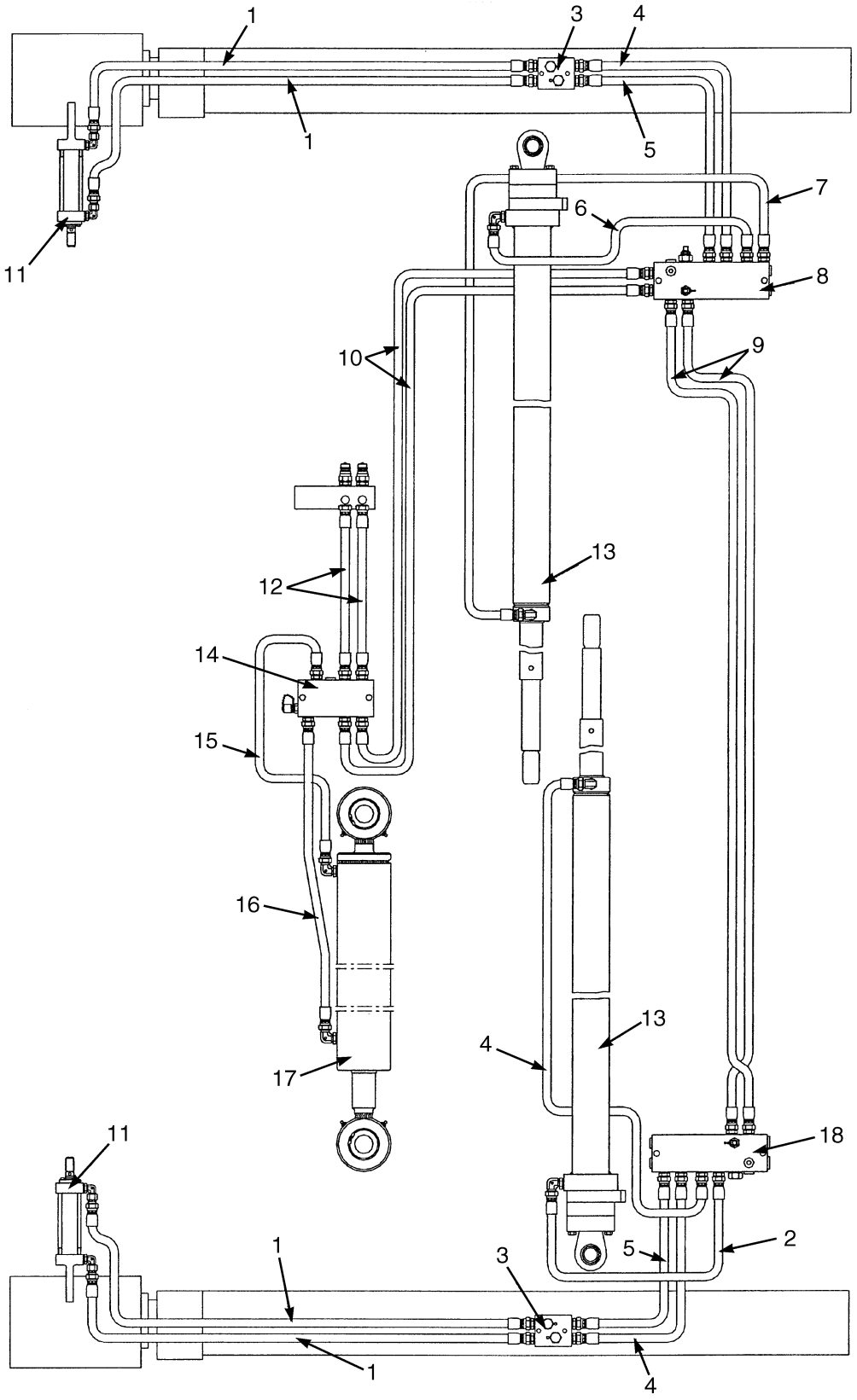

©2006 HYSTER COMPANY

HYDRAULIC SYSTEM
SERIES 588

ITEM	PART NO.	DESCRIPTION	QTY
1	6996355	Hose	2
2	6996415	Hose	1
3	6990817	Pilot Check Valve	2
4	6996794	Hose	3
5	6996662	Hose	2
6	6996377	Hose	1
7	6996795	Hose	1
8	6990744	Twistlock Valve	1
9	6996796	Hose	2
10	6996797	Hose	2
11	6990786	Twistlock Cylinder	2
12	6996607	Hose	2
13	6990808	Extension Cylinder	2
14	6990745	Valve Assembly	1
15	6996798	Hose	1
16	6996523	Hose	1
17	6990735	Sideshift Cylinder	1
18	6990742	Twistlock Valve	1

©2006 HYSTER COMPANY

SENSORS (Figure 11-50)
SERIES 582

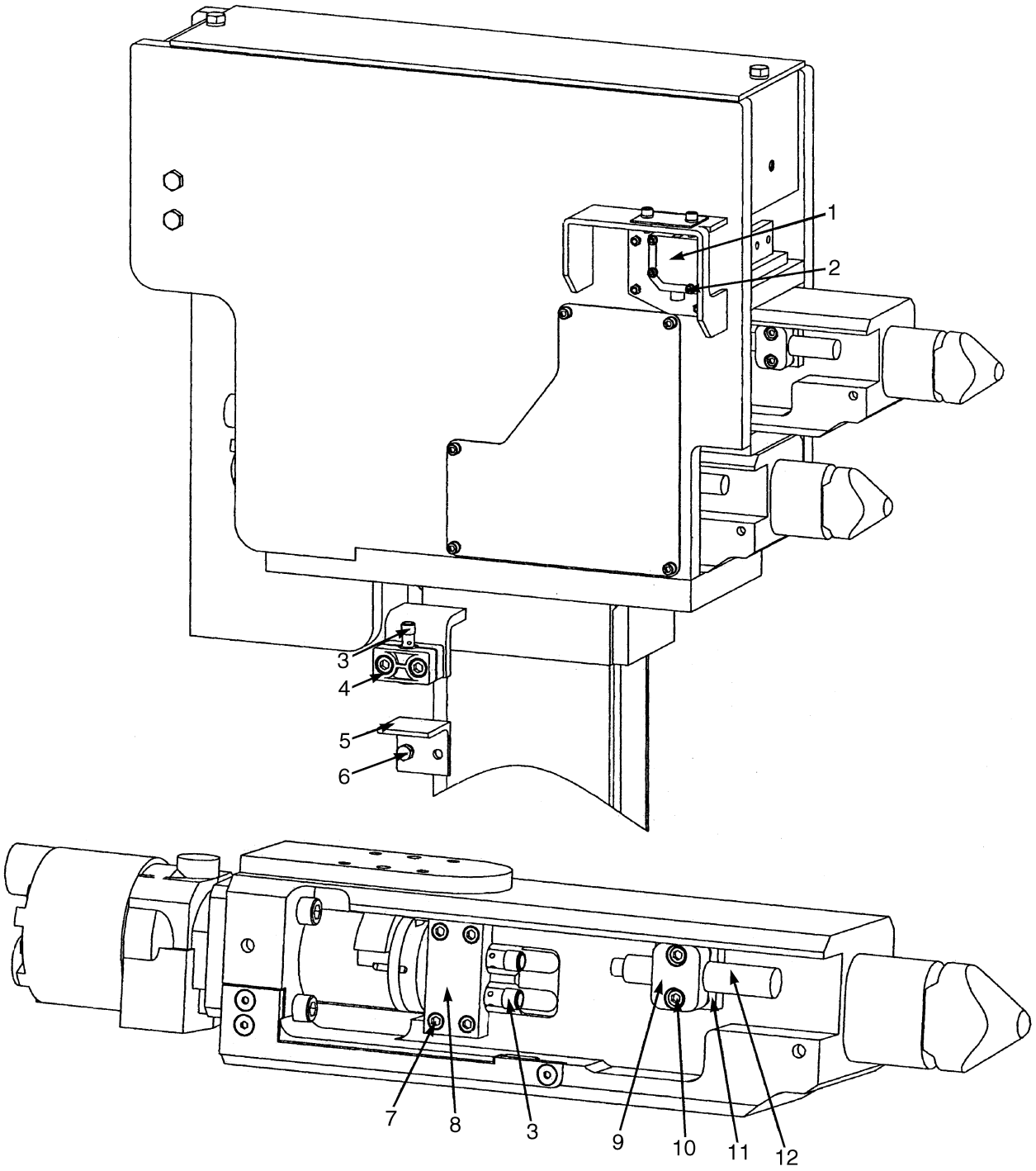

HP000888

©2006 HYSTER COMPANY

SENSORS
SERIES 582

ITEM	PART NO.	DESCRIPTION	QTY
1	6996854	Sensor	1
2	293726	Screw (Allen)	3
2	6996657	Washer	3
3	6996197	Sensor	5
4	6996010	Clamp	1
4	6996475	Screw (Allen)	2
5	6990909	Indicator	1
6	292514	Bolt	2
6	6996003	Lockwasher	2
7	6996473	Screw (Allen)	8
8	6990358	Bracket	2
9	6996792	Clamp	2
10	6996791	Bolt	4
11	6990520	Clamp	2
12	6990906	Sensor	2

©2006 HYSTER COMPANY

ELECTRICAL SYSTEM (Figure 11-51)
SERIES 582

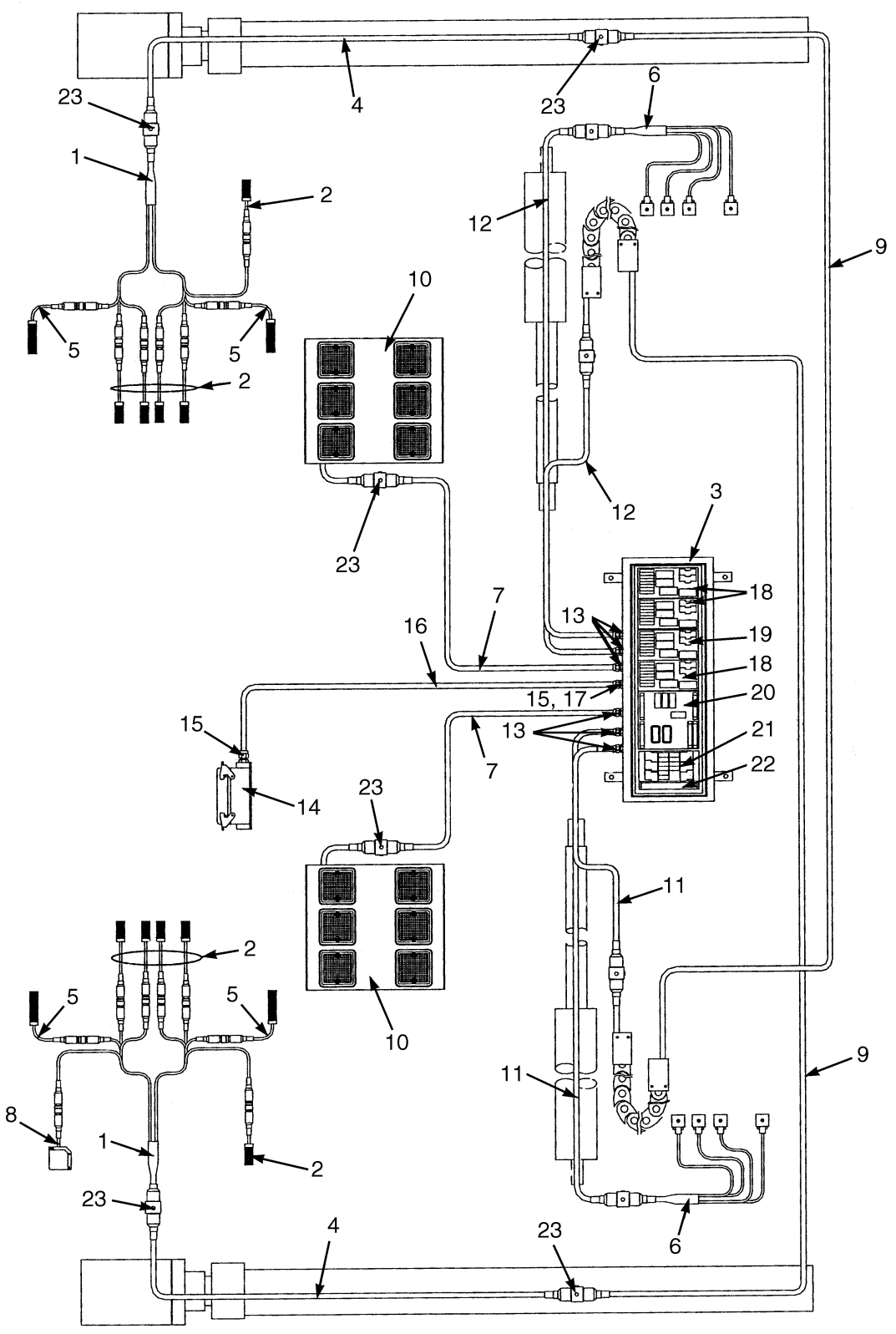

HP000889

©2006 HYSTER COMPANY

ELECTRICAL SYSTEM
SERIES 582

ITEM	PART NO.	DESCRIPTION	QTY
1	6990908	Interface Box	2
2	6996197	Sensor	10
3	6990614	Spreader Box	1
4	6990613	Cable	2
5	6990906	Sensor	4
6	6990724	Wire Harness	2
7	6990545	Cable	2
8	6996854	Sensor	1
9	6990471	Cable	2
10	6990653	Indicator Light Assembly	2
10	6996496	Light (Amber)	2
10	6996498	Light (Green)	2
10	6996497	Light (Red)	2
10	6996453	Bulb	1
10	6990389	Panel	1
11	6990517	Cable	2
12	6990468	Cable	2
13	6996578	Gland	6
13	6996579	Nut	6
14	6996623	Connector	1
14	6996087	Insert	1
14	6996495	Cover	1
15	6996580	Gland	2
15	6996581	Nut	1
16	6990686	Cable	1
17	6996582	Adapter	1
17	6996588	Nut	1
18	6990551	Circuit Board	3
19	6990298	Circuit Board	1
20	6990615	Circuit Board	1
21	6990479	Card (Fuse)	1
22	6996665	Relay (Time)	1
23	1334633	Cover	8

©2006 HYSTER COMPANY

ELECTRICAL SYSTEM (Figure 11-52)
SERIES 588

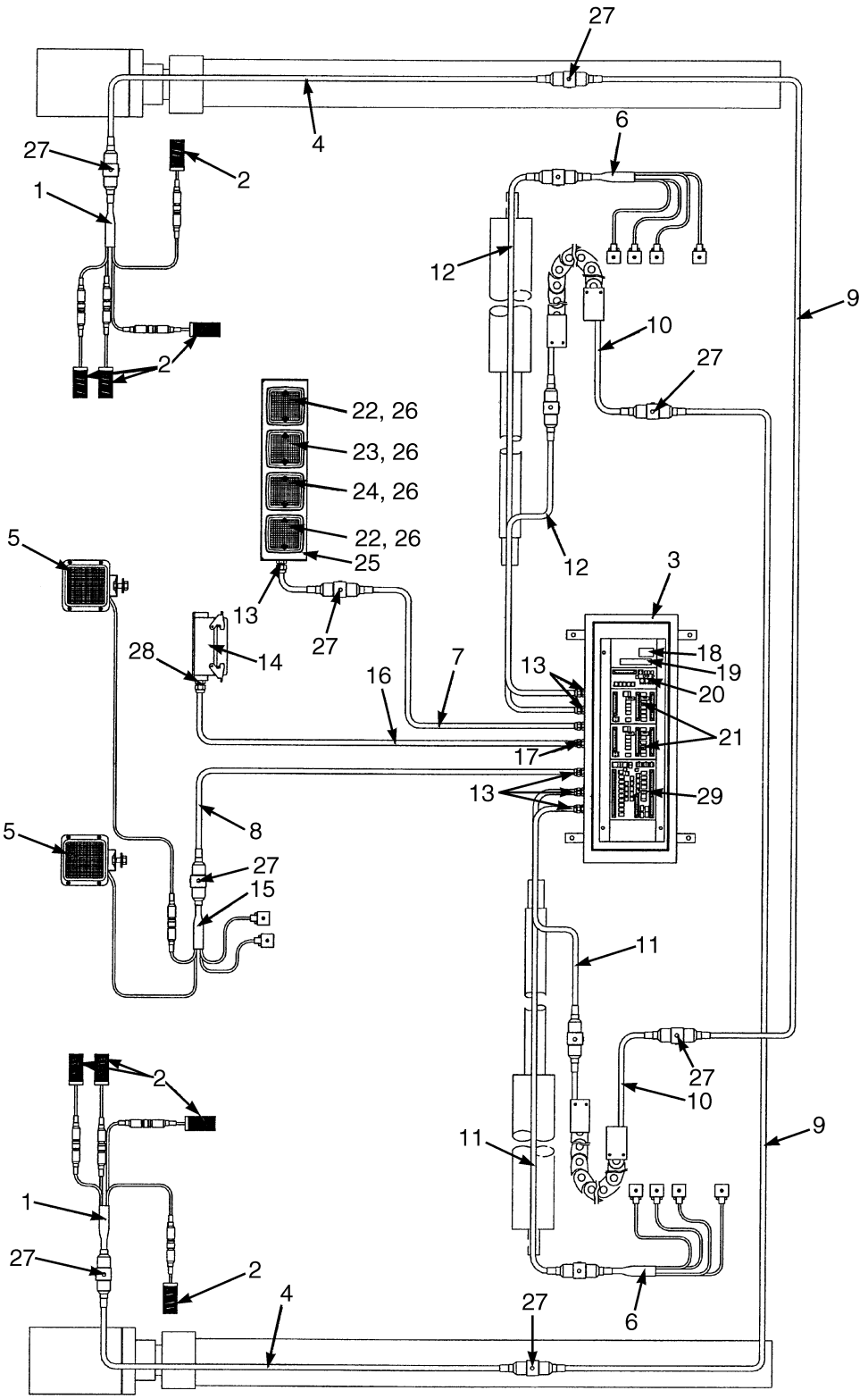

HP000891

©2006 HYSTER COMPANY

ELECTRICAL SYSTEM
SERIES 588

ITEM	PART NO.	DESCRIPTION	QTY
1	6990706	Cable	2
2	6996012	Switch	8
3	6990614	Spreader Box	1
4	6990613	Cable	2
5	6996753	Working Light	2
5	6996800	Bulb	1
6	6990724	Wire Harness	2
7	6990465	Cable (Electric)	1
8	6990511	Cable (Electric)	1
9	6990470	Cable	2
10	6990471	Cable	2
11	6990517	Cable	2
12	6990468	Cable	2
13	6996578	Gland	6
13	6996579	Nut	6
14	6996585	Housing	1
14	6996634	Cover	1
14	6996090	Insert	1
15	6990790	Harness (Interface)	1
16	6990718	Cable	1
17	6996587	Gland	1
17	6996588	Nut	1
18	6996730	Counter	1
18	6990791	Bracket	1
19	6996768	Relay	1
20	6990623	Printed Circuit Board	1
21	6990622	Printed Circuit Board	2
22	6996496	Light (Amber)	2
22	6996453	Bulb	1
23	6996497	Light (Red)	1
23	6996453	Bulb	1
24	6996498	Light (Green)	1
24	6996453	Bulb	1
25	6990044	Panel	1
26	6996453	Bulb	4
27	1334633	Cover	10
28	6996580	Gland	1
28	6996581	Nut	1
29	6990621	Printed Circuit Board	1

©2006 HYSTER COMPANY

SIDE-SHIFT CYLINDER ASSEMBLY (Figure 11-53)
SERIES 588

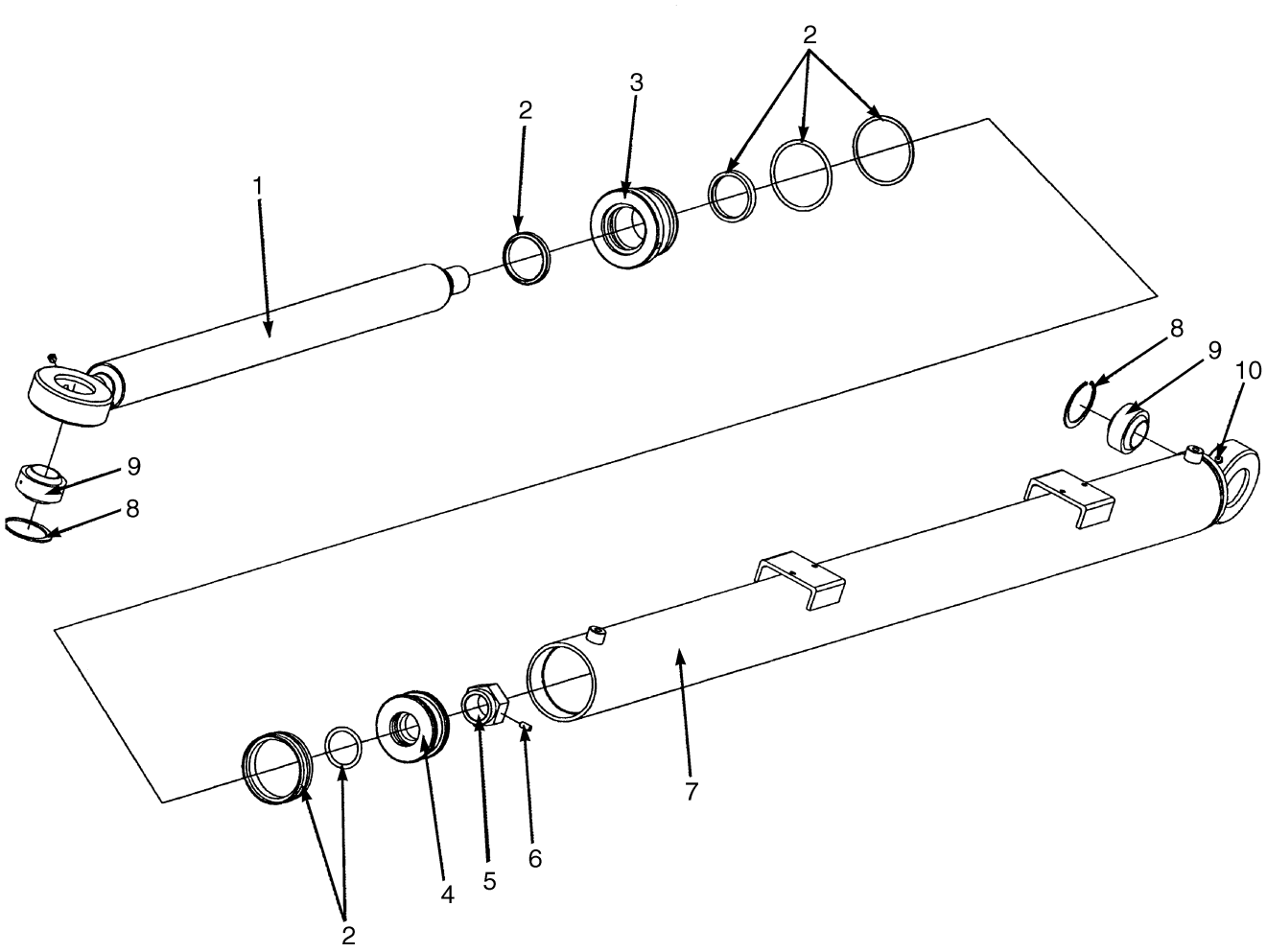

HP000892

ITEM	PART NO.	DESCRIPTION	QTY
	6990735	Sideshift Cylinder	1
1	6990335	Rod (Piston)	1
2	1329449	Seal Kit	1
3	1329445	Gland	1
4	1329447	Piston	1
5	1329448	Nut	1
6	302100	Screw	1
7	6990336	Shell	1
8	1329441	Snap Ring	2
9	1329442	Bushing	2
10	1329443	Lube Fitting	4

©2006 HYSTER COMPANY

NOTES

HEADER HOSE (Figure 11-54)
EMPTY CONTAINER HANDLER
(⇒S/N A214E-1578)

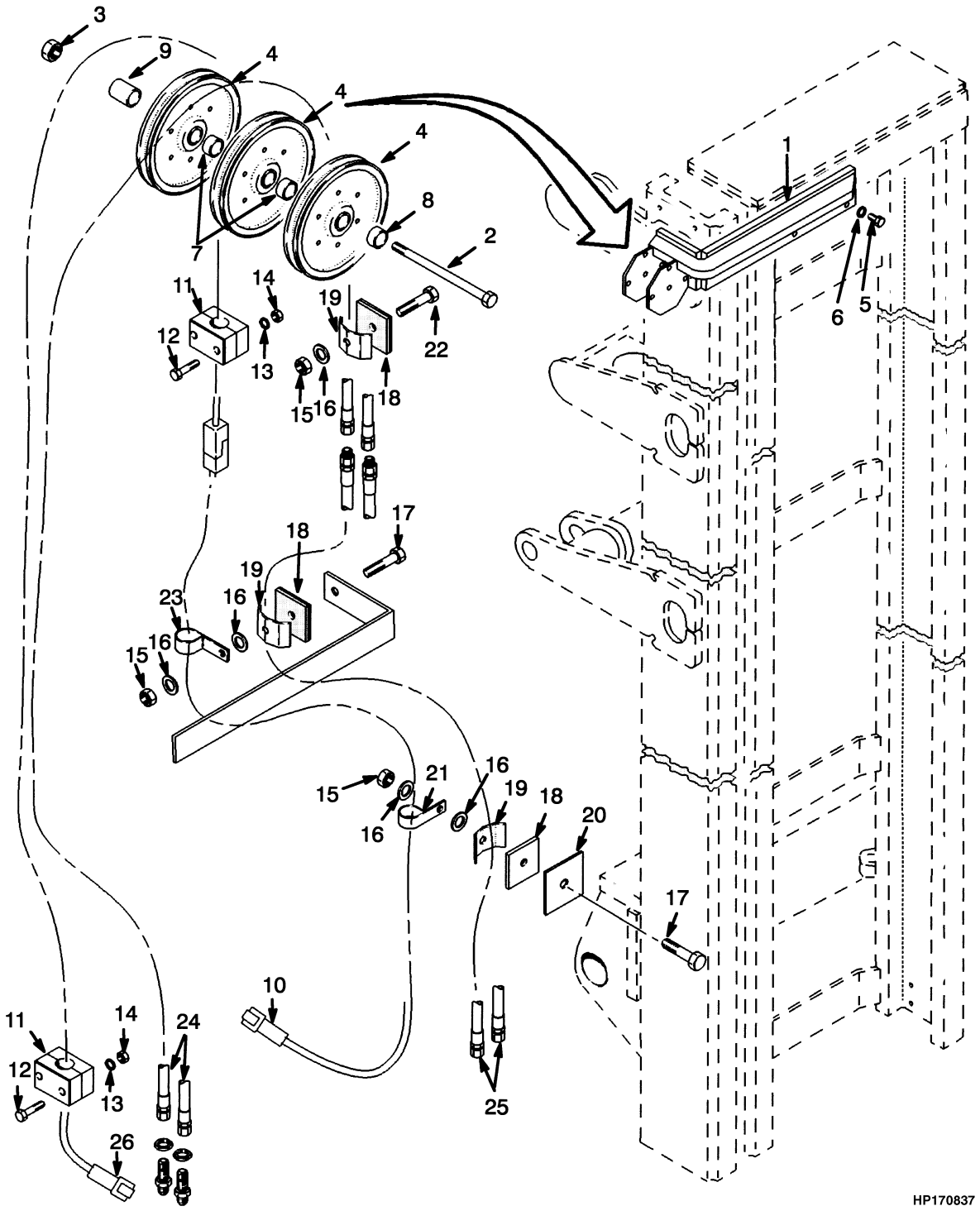

©2006 HYSTER COMPANY

HEADER HOSE
EMPTY CONTAINER HANDLER
(⇒S/N A214E-1578)

KEY:
A: H400H-EC
B: H450H-EC

ITEM	PART NO.	DESCRIPTION	QTY A	QTY B
	1373136	Mast Assembly	1	..
	1373137	Mast Assembly	..	1
1	1382729	Bracket	1	1
2	14999	Capscrew	4	4
3	221357	Nut	4	4
4	189451	Sheave	3	3
5	292581	Capscrew	4	4
6	292687	Lockwasher	4	4
7	280610	Spacer	2	2
8	1301650	Spacer	1	1
9	815932	Spacer	1	1
10	1385524	Wire Harness	..	1
10	1393827	Wire Harness	1	..
11	1391418	Clamp	1	1
12	221440	Capscrew	2	2
13	15154	Lockwasher	2	2
14	221703	Nut	2	2
15	300937	Locknut	7	7
16	320161	Washer	14	14
17	292535	Capscrew	6	6
18	138929	Plate	7	7
19	343590	Clamp	7	7
20	1338037	Plate	6	6
21	391484	Clamp (Insulated)	6	6
22	292533	Capscrew	1	1
23	1330603	Clamp	1	1
24	1452652	Hose	..	2
24	1452776	Hose	2	..
25	1391906	Hose	2	..
25	1391907	Hose	..	2
26	1383862	Wire Harness (☞ Figure 11-60)	1	..
26	1459675	Wire Harness (☞ Figure 11-60)	1	..
26	1393826	Wire Harness (☞ Figure 11-60)	..	1
26	1459676	Wire Harness (☞ Figure 11-60)	..	1
27	136704	Capscrew	2	2
28	239503	Nut	2	2
29	292681	Lockwasher	2	2

©2006 HYSTER COMPANY

HEADER HOSE (Figure 11-55)
EMPTY CONTAINER HANDLER
(S/N A214E-1579⇔S/N A214E-01962A)

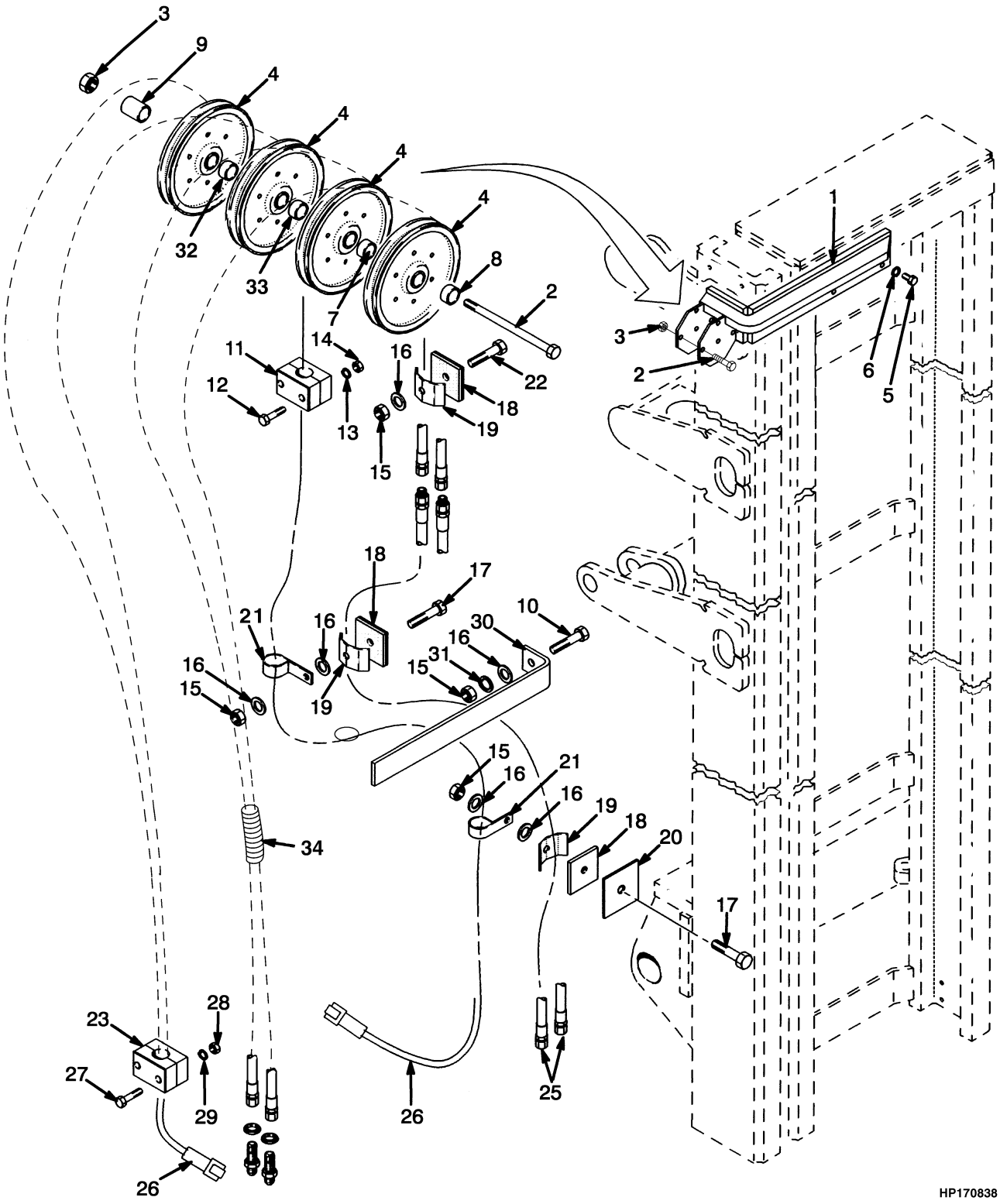

©2006 HYSTER COMPANY

HEADER HOSE
EMPTY CONTAINER HANDLER
(S/N A214E-1579⇔S/N A214E-01962A)

KEY:
A: H400H-EC
B: H450H-EC

ITEM		PART NO.	DESCRIPTION	QTY A	QTY B
	e	1373136	Mast Assembly	1	..
	c	1496375	Mast Assembly	1	..
	d	1533944	Mast Assembly	1	..
	e	1373137	Mast Assembly	..	1
		1496376	Mast Assembly	..	1
	c	1533945	Mast Assembly	..	1
1		1382729	Bracket	1	1
2		14999	Capscrew	4	4
3		221357	Nut	4	4
4	**e**	189451	Sheave	3	3
4	**bf**	189451	Sheave	4	4
5		292581	Capscrew	4	4
6		292687	Lockwasher	4	4
7	**e**	280610	Spacer	2	2
7	**bf**	280610	Spacer	1	1
8		1301650	Spacer	1	1
9	**a**	815932	Spacer	1	1
9	**b**	1502350	Spacer	1	1
10		246001	Capscrew	4	4
11		1391418	Clamp	1	1
11	**b**	1373335	Clamp	1	1
12		221440	Capscrew	2	2
13		15154	Lockwasher	2	2
14		221703	Nut	2	2
15		300937	Locknut	11	11
16		320161	Washer	18	18
17		292535	Capscrew	6	6
18		138929	Plate	7	7
19		1465369	Clamp	7	7
20		1338037	Plate	7	7
21		391484	Clamp (Insulated)	6	6
22		292533	Capscrew	1	1
23		1330603	Clamp	1	1
23	**b**	1373335	Clamp	1	1
24	**e**	1452776	Hose	2	..
24	**f**	1500979	Hose	2	..
24	**e**	1452652	Hose	..	2
24	**f**	1500980	Hose	..	2
25	**e**	1391907	Hose	..	2
25		1391906	Hose	2	..
26		1500977	Wire Harness (☞ Figure 11-61)	1	..
26		1500978	Wire Harness (☞ Figure 11-61)	..	1
26		1500975	Wire Harness (☞ Figure 11-62)	1	..
26		1500976	Wire Harness (☞ Figure 11-62)	..	1
27		136704	Capscrew	2	2

©2006 HYSTER COMPANY

HEADER HOSE
EMPTY CONTAINER HANDLER
(S/N A214E-1579⇔S/N A214E-01962A)

ITEM		PART NO.	DESCRIPTION	QTY A	QTY B
28		239503	Nut	2	2
29		292681	Lockwasher	2	2
30		1461600	Hose Retainer	4	4
31		292683	Lockwasher	4	4
32	**bf**	1502341	Spacer	1	1
33	**bf**	1502344	Spacer	1	1
34	**f**	316596	Sleeve	1	1

FOOTNOTES:
a With Hook Spreader
b With Twist Lock Spreader
c S/N A214E-01807⇔S/N A214E-01962A
d S/N A214E-01963A ⇒
e ⇒ S/N A214E-1806
f S/N A214E-1807 ⇒

©2006 HYSTER COMPANY

NOTES

HEADER HOSE (Figure 11-56)
EMPTY CONTAINER HANDLER
(S/N A214E-01963A⇒)

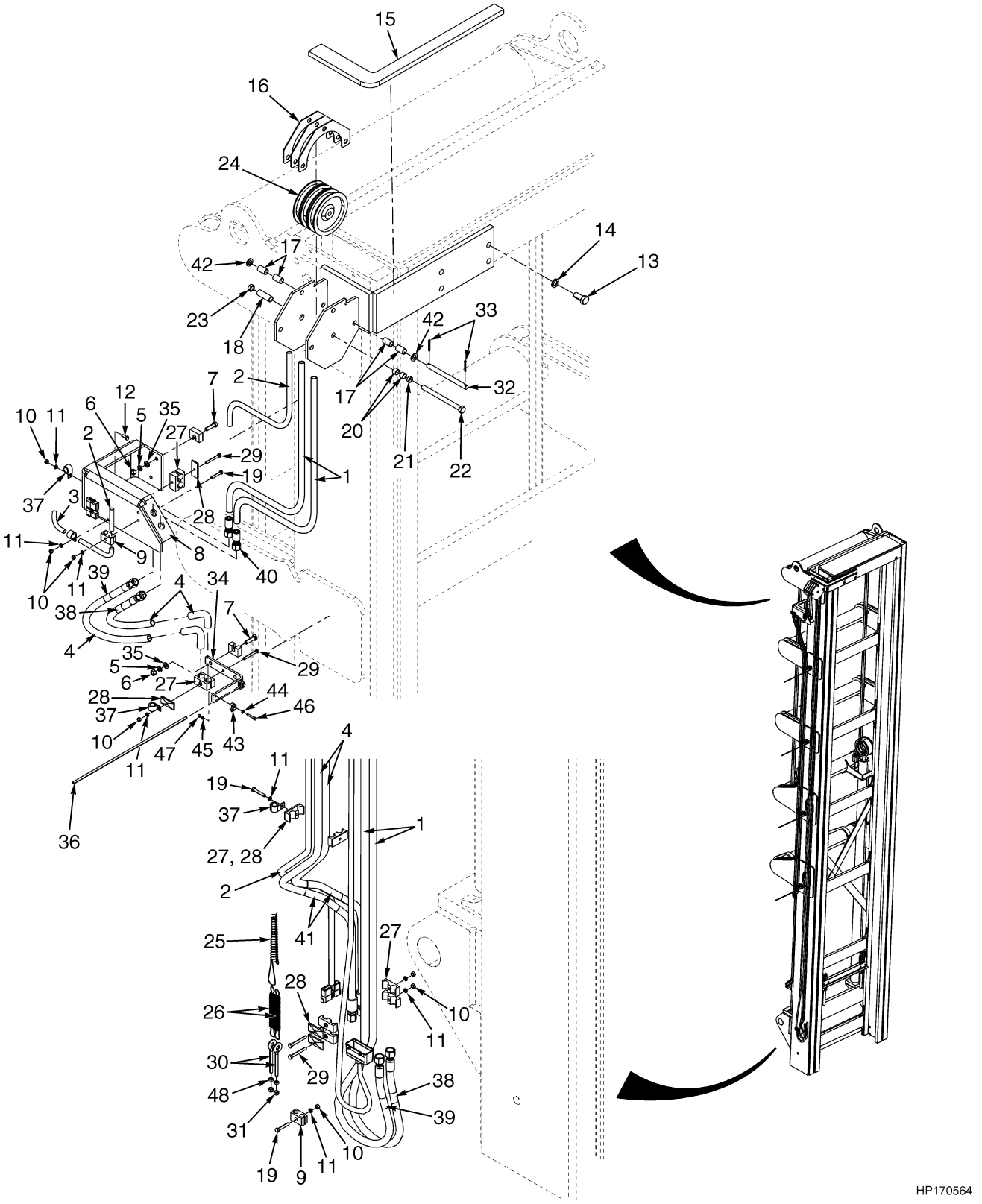

©2006 HYSTER COMPANY

HEADER HOSE
EMPTY CONTAINER HANDLER
(S/N A214E-01963A⇒)

KEY:
A: H400H-EC5
B: H450H-EC6

ITEM	PART NO.	DESCRIPTION	QTY A	QTY B
	1544032	Mast Assembly	1	..
	1544033	Mast Assembly	..	1
1	1541279	Hose	2	..
1	1541319	Hose	..	2
2	1541265	Mast Harness (☞ Figure 11-63)	1	..
2	1541266	Mast Harness (☞ Figure 11-63)	..	1
3	1541271	Wire Harness (Front End)	1	..
3	1541272	Wire Harness (Front End)	..	1
4	1541277	Hose	2	..
4	1541278	Hose	..	2
5	292683	Lockwasher	12	12
6	216877	Nut	12	12
7	287837	Capscrew	12	12
8	1539988	Plate	1	1
9	1393803	Clamp	3	3
10	239503	Nut	11	11
11	292681	Lockwasher	13	13
12	136749	Capscrew	1	1
13	292581	Capscrew	4	4
14	292687	Lockwasher	4	4
15	1541631	Bracket	1	1
16	1539992	Separator Plate (Seperator)	3	3
17	1540330	Spacer	12	12
18	815932	Spacer	1	1
19	292509	Capscrew	5	5
20	280610	Spacer	2	2
21	1301650	Spacer	1	1
22	14999	Capscrew	1	1
23	221357	Nut	1	1
24	189451	Sheave	3	3
25	1322039	Grip	1	1
26	1323166	Spring	2	2
27	1530667	Clamp	18	18
28	1530668	Cover	9	9
29	136703	Capscrew	7	7
30	313222	Eye Bolt	2	2
31	221707	Nut	4	4
32	1542033	Pin	3	3
33	15244	Cotter Pin	6	6
34	1543660	Guard (Hose)	5	5
35	320161	Washer	14	14
36	1539991	Rod	5	5
37	1347202	Clamp	8	8
38	1464622	Band	4	4
39	1464621	Band	4	4

©2006 HYSTER COMPANY

HEADER HOSE
EMPTY CONTAINER HANDLER
(S/N A214E-01963A⇒)

ITEM	PART NO.	DESCRIPTION	QTY A	QTY B
40	1528589	Fitting	2	2
41	316596	Sleeve	1	1
42	320165	Washer	6	6
43	1541140	Clamp	10	10
44	320156	Washer	20	20
45	292680	Lockwasher	8	8
46	287844	Capscrew	10	10
47	302399	Nut	10	10
48	15134	Washer	2	2

©2006 HYSTER COMPANY

NOTES

HEADER HOSE (Figure 11-57)
EMPTY CONTAINER HANDLER
(S/N A214E02078B⇒)

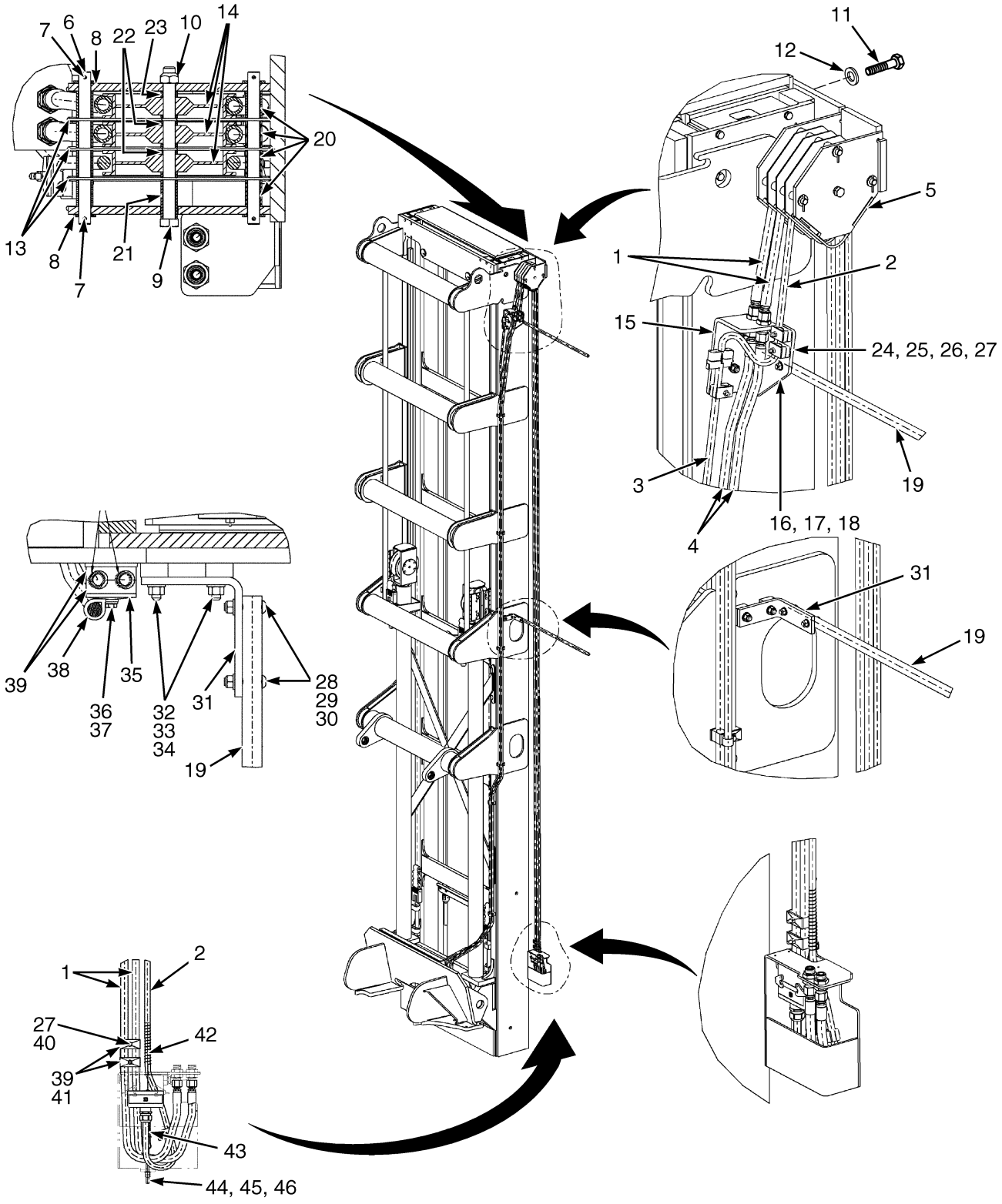

HP171376

©2006 HYSTER COMPANY

HEADER HOSE
EMPTY CONTAINER HANDLER
(S/N A214E02078B⇒)

KEY:
A: H400H-EC5
B: H450H-EC6

ITEM	PART NO.	DESCRIPTION	QTY A	QTY B
	1544032	Mast Assembly	1	..
	1544033	Mast Assembly	..	1
1	1541279	Hose	2	..
1	1541319	Hose	..	2
2	1571694	Wire Harness (Mast) (☞ Figure 11-64)	1	..
2	1571695	Wire Harness (Mast) (☞ Figure 11-64)	..	1
3	1541271	Wire Harness (Front End)	1	..
3	1541272	Wire Harness (Front End)	..	1
4	1541277	Hose	2	..
4	1541278	Hose	..	2
5	1581445	Bracket	1	1
6	1542033	Pin	3	2
7	15244	Cotter Pin	6	6
8	320165	Washer	6	6
9	14999	Capscrew	1	1
10	221357	Nut	1	1
11	292581	Capscrew	4	4
12	320169	Washer	4	4
13	1539992	Separator Plate	3	3
14	189451	Sheave	3	3
15	1587448	Forks Group	1	1
16	1364272	Capscrew	2	2
17	320159	Washer	2	2
18	302401	Locknut	2	2
19	1581547	Tube	2	2
20	1540330	Spacer	12	12
21	815932	Spacer	1	1
22	280610	Spacer	2	2
23	1301650	Spacer	1	1
24	1561747	Clamp	4	4
25	1533648	Plate (Cover)	4	4
26	136704	Capscrew	4	4
27	302400	Locknut	4	4
28	1364272	Capscrew	2	2
29	320159	Washer	2	2
30	302401	Locknut	2	2
31	1582217	Bracket	1	1
32	216877	Nut	4	4
33	246001	Capscrew	4	4
34	320161	Washer	4	4
35	1530668	Cover	8	8
36	320157	Washer	6	6
37	292509	Capscrew	6	6
38	1347202	Clamp	6	6
39	1530667	Clamp	16	16

©2006 HYSTER COMPANY

HEADER HOSE
EMPTY CONTAINER HANDLER
(S/N A214E02078B⇒)

ITEM	PART NO.	DESCRIPTION	QTY A	QTY B
40	136703	Capscrew	2	2
41	1530668	Cover	8	8
42	1322039	Grip	1	1
43	1323166	Spring	1	1
44	313222	Eye Bolt	1	1
45	221707	Nut	2	2
46	15134	Washer	1	1

©2006 HYSTER COMPANY

NOTES

AUXILIARY ATTACHMENTS (Figure 11-58)
EMPTY CONTAINER HANDLER

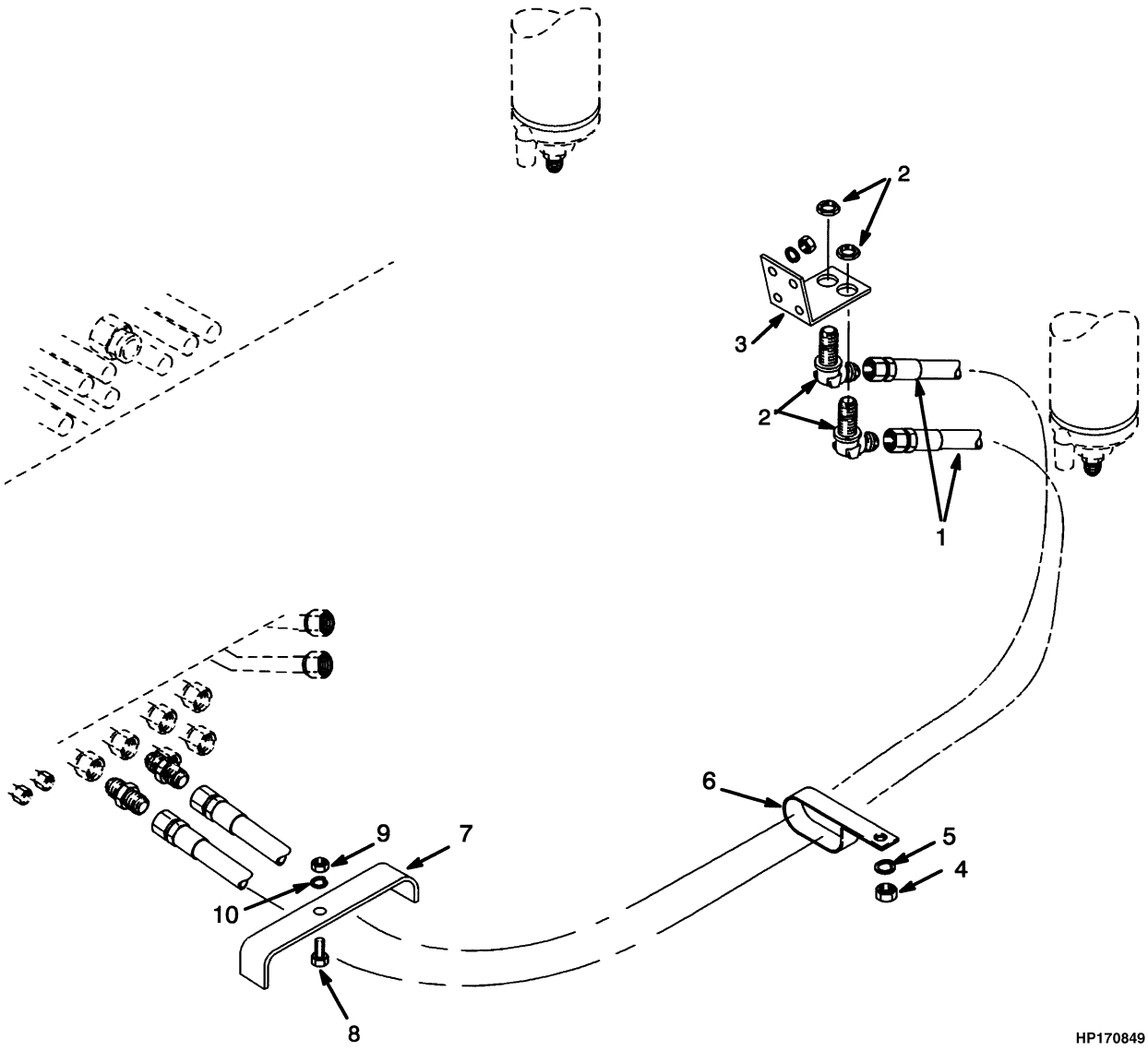

©2006 HYSTER COMPANY

AUXILIARY ATTACHMENTS
EMPTY CONTAINER HANDLER

ITEM		PART NO.	DESCRIPTION	QTY
1	**a**	1393905	Hose	2
1	**b**	1452850	Hose	2
2	**b**	16449	Fitting	2
2	**a**	16467	Fitting	2
3		1384472	Plate	1
4		302401	Locknut	4
5	**b**	320159	Washer	4
5	**a**	320161	Washer	4
6		255578	Clamp	2
7		1384527	Bracket	1
8	**a**	292505	Capscrew	1
8	**b**	292507	Capscrew	1
9		302399	Nut	1
10		320156	Washer	1

FOOTNOTES:
a ⇒ S/N A214E-1534
b S/N A214E-1535 ⇒

©2006 HYSTER COMPANY

MAST INSTALLATION (Figure 11-59)
EMPTY CONTAINER HANDLER

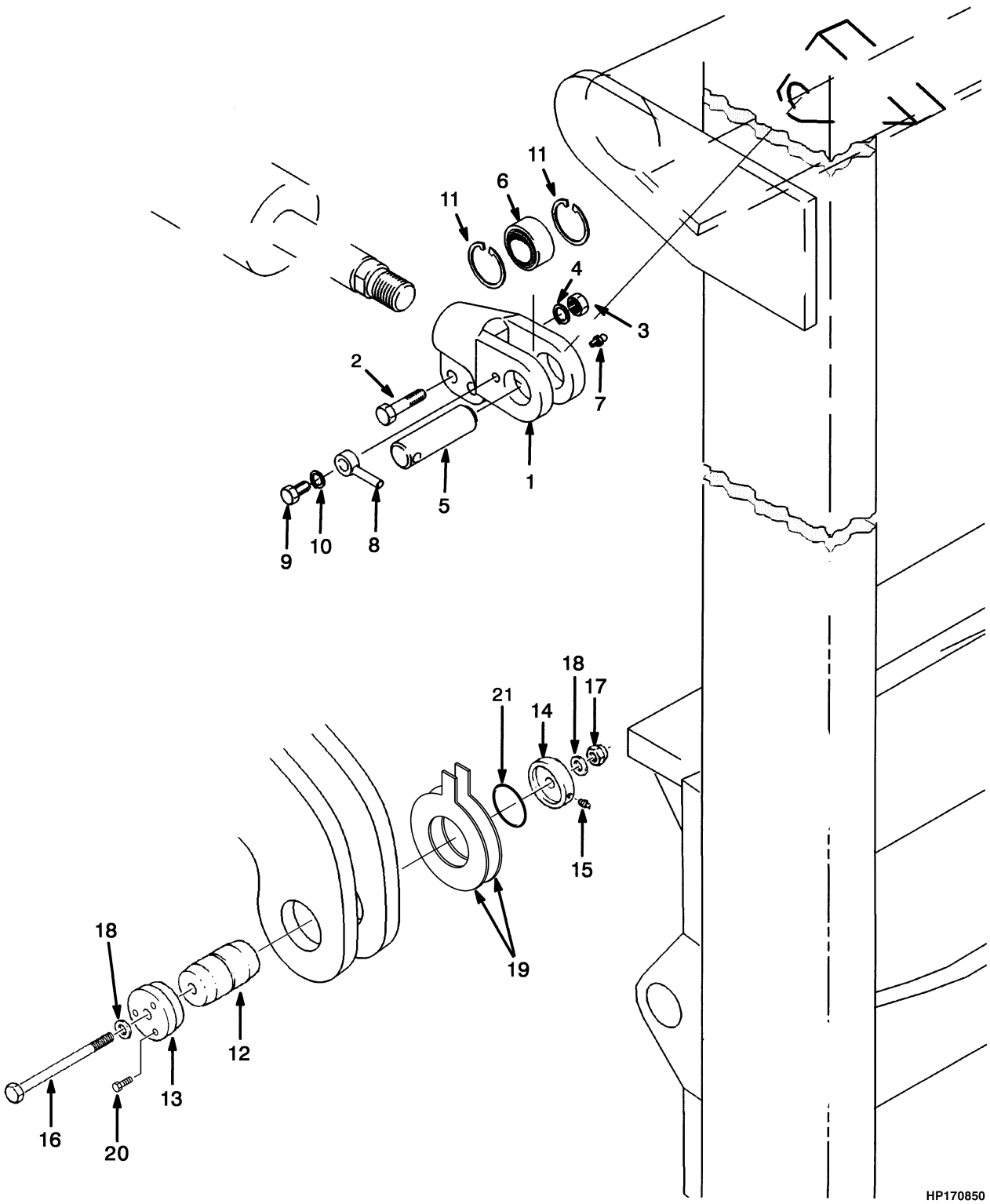

©2006 HYSTER COMPANY

MAST INSTALLATION
EMPTY CONTAINER HANDLER

ITEM		PART NO.	DESCRIPTION	QTY
1		1391451	Rod End	2
2		292574	Capscrew	4
3		292600	Nut	4
4		292685	Lockwasher	4
5		1391522	Pin	2
6		1391500	Bushing	4
7		16001	Lube Fitting	4
8		1391523	Anchor	4
9		292562	Capscrew	4
10		292685	Lockwasher	4
11		67551	Snap Ring	4
12		1321890	Pin	2
13	**a**	1321891	Cap	2
13	**b**	1493562	Cap	2
14	**a**	1302172	Cap	2
14	**b**	1491763	Cap	2
15		16001	Lube Fitting	1
16	**a**	1302176	Capscrew	2
16	**b**	1355031	Capscrew	2
17	**a**	53163	Nut	2
17	**b**	248320	Nut	2
18	**a**	221775	Washer	4
18	**b**	221777	Washer	4
19	**b**	1492331	Shim	2
20	**b**	18191	Capscrew	6
21	**b**	39679	O-Ring	2

FOOTNOTES:
a ⇒ S/N A214E-1776
b S/N A214E-1777 ⇒

©2006 HYSTER COMPANY

WIRE HARNESS (Figure 11-60)
EMPTY CONTAINER HANDLER
(⇒S/N A214E-1806)

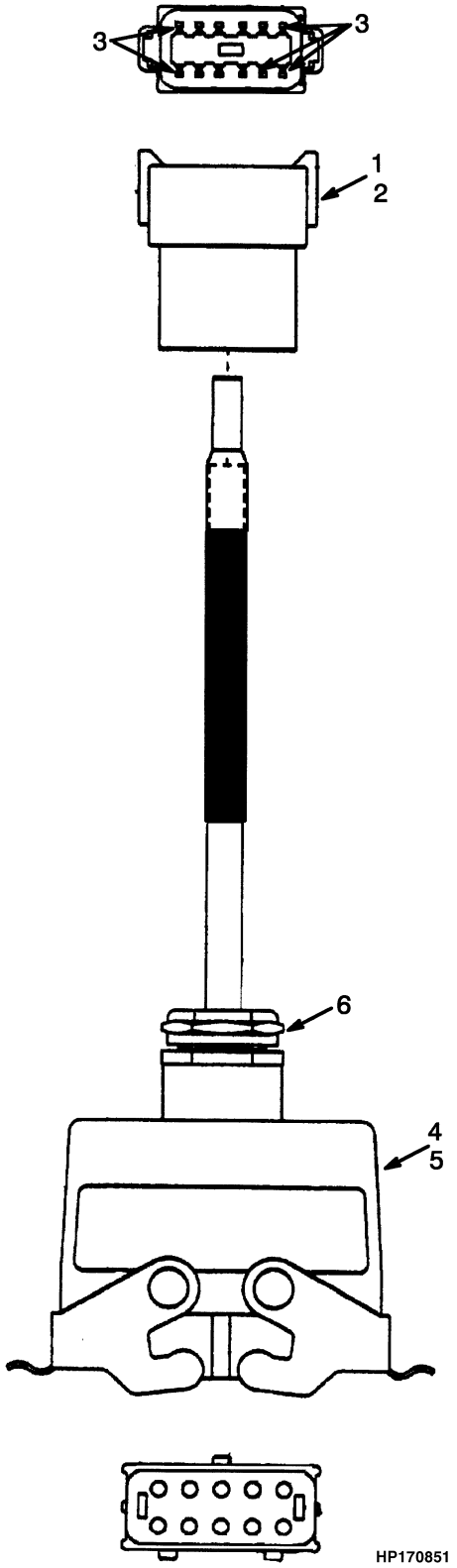

©2006 HYSTER COMPANY

WIRE HARNESS
EMPTY CONTAINER HANDLER
(⇒S/N A214E-1806)

KEY:
A: H400H-EC
B: H450H-EC

ITEM		PART NO.	DESCRIPTION	QTY A	QTY B
	a	1383862	Wire Harness	..	1
	a	1393826	Wire Harness	1	..
	b	1459675	Wire Harness	..	1
	b	1459676	Wire Harness	1	..
1		1352602	Connector	1	1
2		1352603	Secondary Lock	1	1
3		1330437	Terminal (Pin)	12	12
4		1383872	Plug	1	1
5		1383873	Hood	1	1
6		1384480	Cable Protector	1	1

FOOTNOTES:
a ⇒ S/N A214E-1578
b S/N A214E-1579 ⇒

©2006 HYSTER COMPANY

WIRE HARNESS (Figure 11-61)
TWIST LOCK
(S/N A214E-1807⇒)

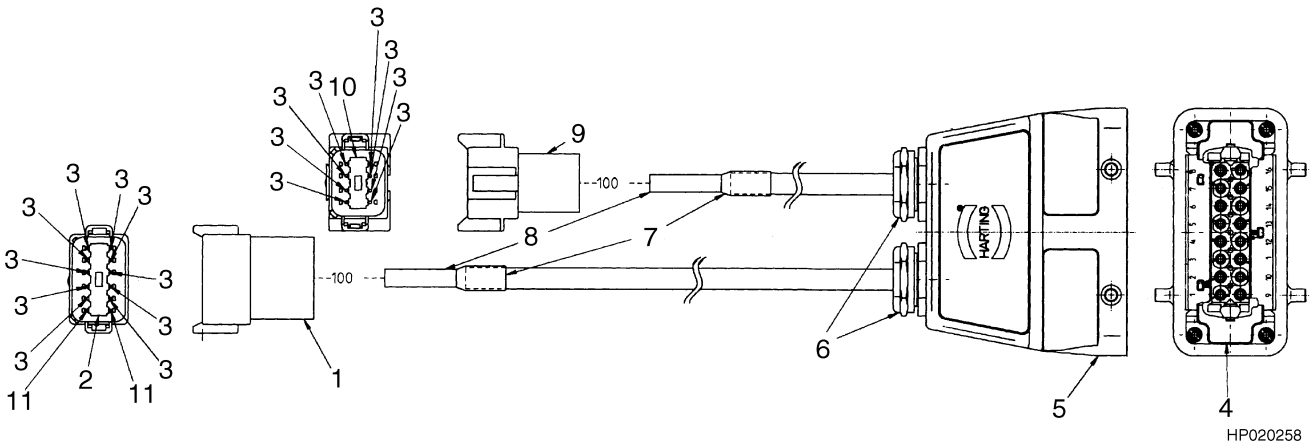

KEY:
A: H400H-EC5
B: H450H-EC6

ITEM		PART NO.	DESCRIPTION	QTY A	QTY B
	a	1500977	Wire Harness	1	..
	b	1500978	Wire Harness	..	1
1		1352602	Connector	1	1
2		1352603	Secondary Lock	1	1
3		1363885	Terminal (Pin)	18	18
4		885955	Insert	1	1
5		1496906	Hood	1	1
6		1460618	Fitting	2	2
7		222524	Tubing	AR	AR
8		381919	Bulk Braiding	AR	AR
9		1330413	Connector	1	1
10		1330418	Secondary Lock	1	1
11		1330439	Insulator	2	2

FOOTNOTES:
a ⇒ S/N A214E-1578
b S/N A214E-1579 ⇒

©2006 HYSTER COMPANY

WIRE HARNESS (Figure 11-62)
HOOK ATTACHMENT
(S/N A214E-1807⇒)

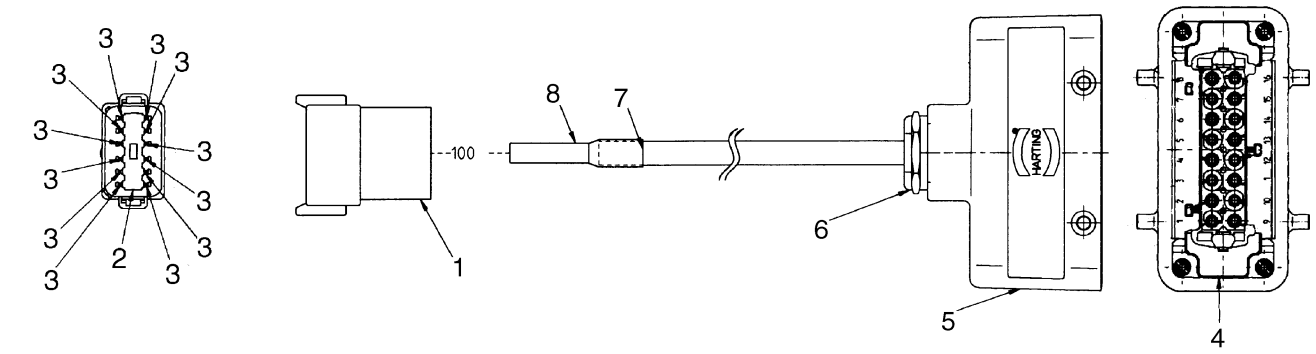

HP020257

KEY:
A: H400H-EC
B: H450H-EC

ITEM		PART NO.	DESCRIPTION	QTY A	QTY B
	a	1500975	Wire Harness	1	..
	b	1500976	Wire Harness	..	1
1		1352602	Connector	1	1
2		1352603	Secondary Lock	1	1
3		1363885	Terminal (Pin)	12	12
4		885955	Insert	1	1
5		1496907	Connector	1	1
6		1460618	Fitting	1	1
7		222524	Tubing	AR	AR
8		381919	Bulk Braiding	AR	AR

FOOTNOTES:
a ⇒ S/N A214E-1578
b S/N A214E-1579 ⇒

WIRE HARNESS (Figure 11-63)
MAST
(⇒S/N A214E02077B)

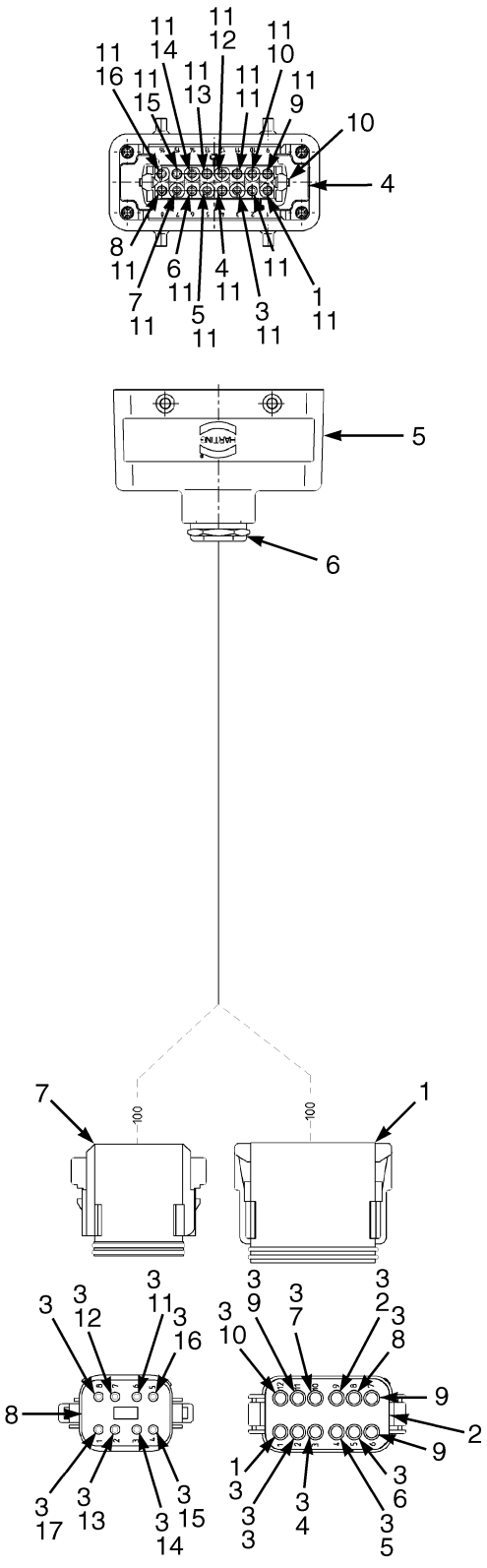

HP081711

©2006 HYSTER COMPANY

WIRE HARNESS
MAST
(⇒S/N A214E02077B)

KEY:
A: H400H-EC5
B: H450H-EC6

ITEM	PART NO.	DESCRIPTION	QTY A	QTY B
	1541265	Mast Harness	1	..
	1541266	Mast Harness	..	1
1	1351068	Connector	1	1
2	1351069	Lock	1	1
3	1363886	Terminal (Socket)	18	18
4	885955	Insert	1	1
5	1496907	Connector	1	1
6	888139	Fitting	1	1
7	1330423	Connector	1	1
8	1330429	Secondary Lock	1	1
9	1330439	Insulator	2	2
10	1491182	Pin	1	1
11	833772	Pin	16	16

©2006 HYSTER COMPANY

WIRE HARNESS (Figure 11-64)
MAST
(S/N A214E02078B⇒)

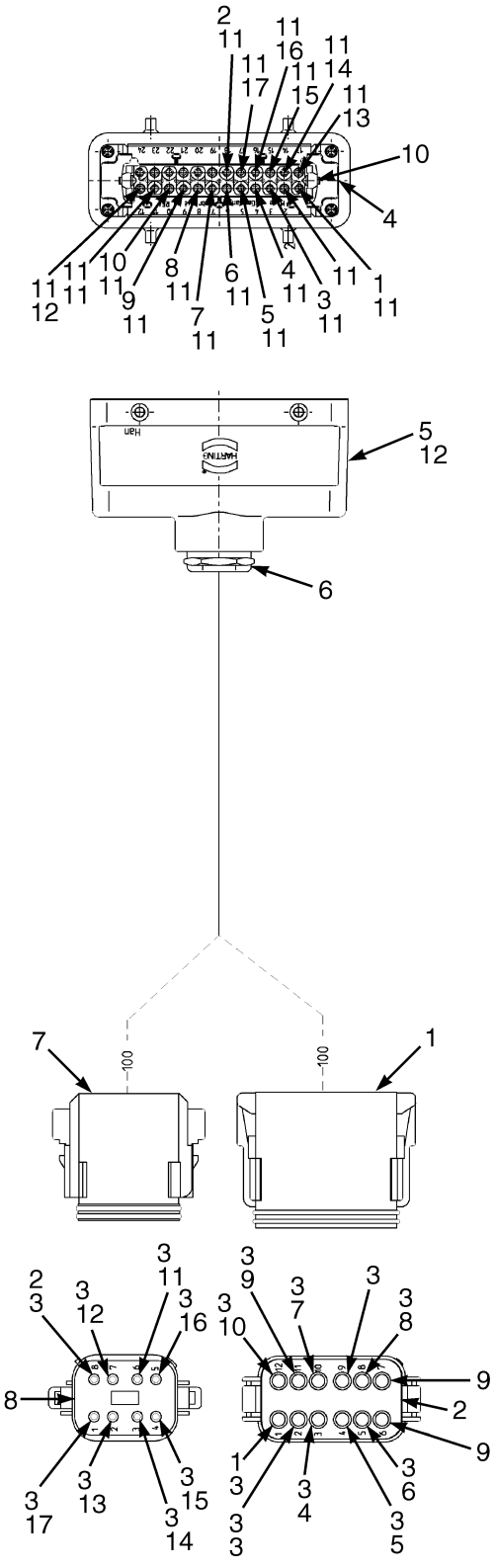

HP081710

©2006 HYSTER COMPANY

WIRE HARNESS
MAST
(S/N A214E02078B⇒)

KEY:
A: H400H-EC5
B: H450H-EC6

ITEM	PART NO.	DESCRIPTION	QTY A	QTY B
	1571694	Wire Harness (Mast)	1	..
	1571695	Wire Harness (Mast)	..	1
1	1351068	Connector	1	1
2	1351069	Lock	1	1
3	1363886	Terminal (Socket)	18	18
4	1572599	Insert	1	1
5	1572600	Connector Hood	1	1
6	1599346	Fitting	1	1
7	1330423	Connector	1	1
8	1330429	Secondary Lock	1	1
9	1330439	Insulator	2	2
10	1491182	Pin	1	1
11	833772	Pin	18	18
12	1610755	Cover	1	1

©2006 HYSTER COMPANY

NOTES

12 OPTIONS

SECTION 12
OPTIONS

DESCRIPTION **PAGE**

FORK
- HOOK TYPE 12-10
- PIN TYPE 12-8

WHEEL AND TIRE
- BIAS TIRE 12-2
- RADIAL TIRE 12-4
- SOLID TIRE
  - SMOOTH 12-6
- SOLID TIRE WITH TREAD 12-5

©2006 HYSTER COMPANY

WHEEL AND TIRE (Figure 12-1)
BIAS TIRE

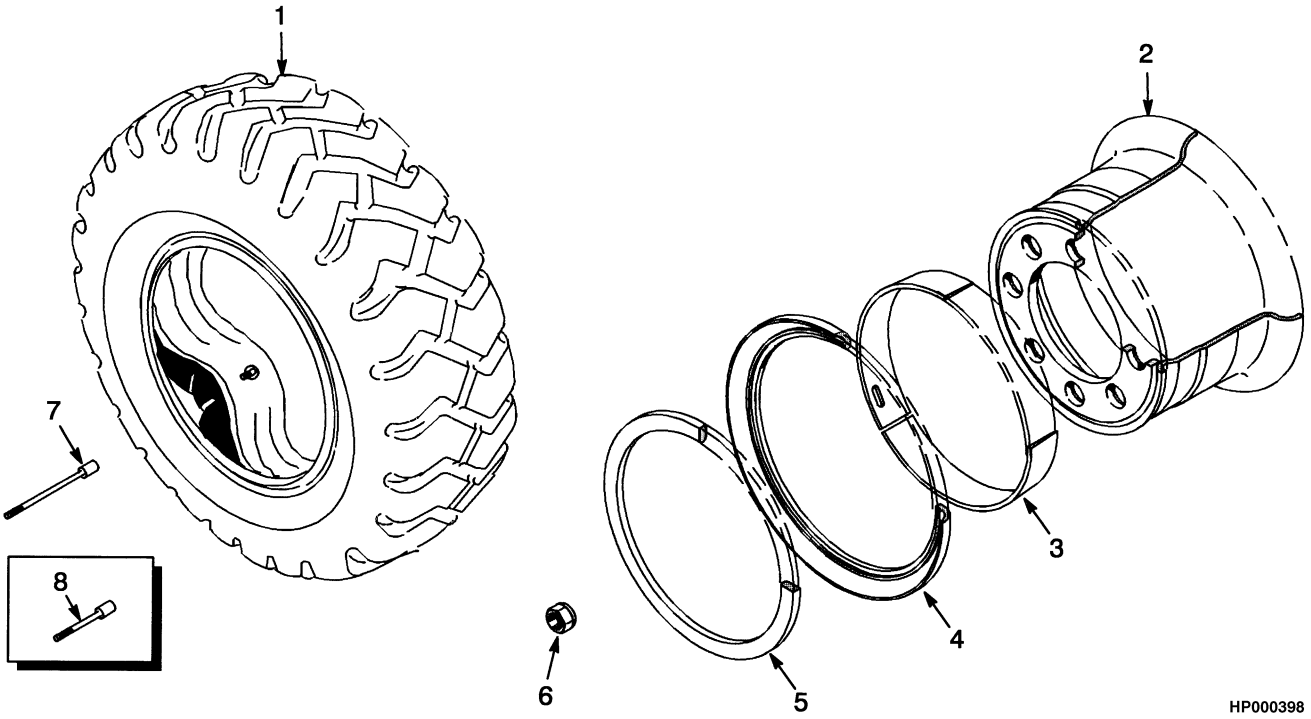

KEY:
A: H360-400H (12.00 x 24-20)
B: H450H (14.00 x 24-20)
C: H400H-EC (12.00 x 24-20)
D: H450H-EC (12.00 x 24-20)

ITEM		PART NO.	DESCRIPTION	QTY A	QTY B	QTY C	QTY D
1		1382381	Tire and Tube Assembly	6	..	6	6
1		130663	Tire and Tube Assembly	..	6	..	..
1		1382382	Tire	1	..	1	1
1		1382383	Tube	1	..	1	1
1		115586	Tire	..	1	..	..
1		115593	Tube	..	1	..	..
2		1385577	Wheel Assembly	..	6	..	..
2	**a**	1385578	Wheel Assembly	6	..	6	6
2	**b**	1534873	Wheel Assembly	6	..	6	6
2		1614372	Wheel Assembly	..	..	6	6
3	**a**	1391060	Flange Ring	1	1	1	1
3	**b**	1452916	Conical Ring	1	1	1	1
4		1466004	Side Ring	..	1	..	..
4	**a**	1466005	Side Ring	1	..	1	1
4	**b**	1538311	Side Ring	1	..	1	1
5		1637809	Lock Ring	..	1	..	..
5	**a**	1391065	Lock Ring	1	..	1	1
5	**b**	1538310	Lock Ring	1	..	1	1
6		376026	Lug Nut	48	48	48	48

©2006 HYSTER COMPANY

WHEEL AND TIRE
BIAS TIRE

ITEM	PART NO.	DESCRIPTION	QTY A	B	C	D
7	1303417	Valve Stem (Drive)	2	2	2	2
8	116265	Valve Stem (Steering)	2	2	2	2

FOOTNOTES:
a ⇒ S/N A214E-01922A
b S/N A214E-01923A ⇒

©2006 HYSTER COMPANY

WHEEL AND TIRE (Figure 12-2)
RADIAL TIRE

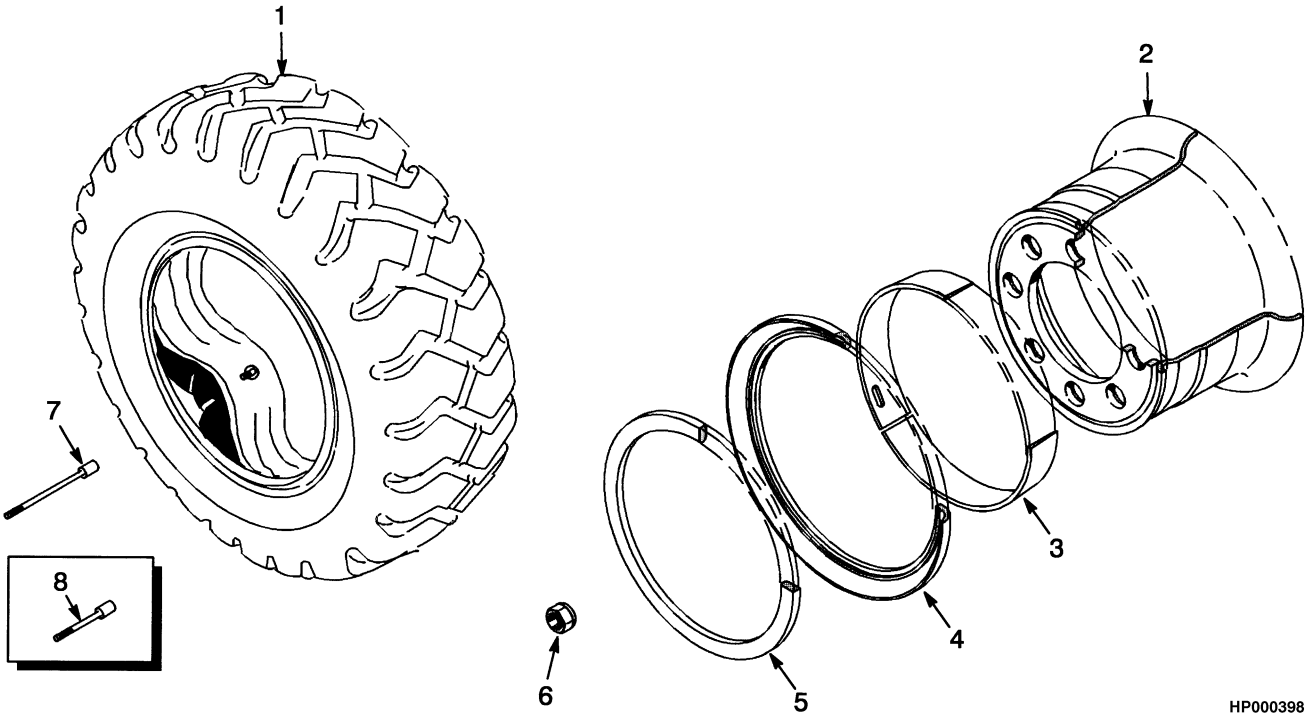

KEY:
A: H360-400H (12.00 x 24)
B: H450H (14.00 x 24)
C: H400H-EC (12.00 x 24)
D: H450H-EC (12.00 x 24)

ITEM	PART NO.	DESCRIPTION	QTY A	QTY B	QTY C	QTY D
1	1460448	Tire and Tube Assembly	6	..	6	6
1	1460451	Tire and Tube Assembly	..	6	..	..
1	1460398	Tire	1	..	1	1
1	1460403	Tire Flap	1	..	1	1
1	1460405	Tube	1	..	1	1
1	1376007	Washer (Valve Stem)	1	1	1	1
1	1460402	Tire	..	1	..	..
1	1460404	Tire Flap	..	1	..	..
1	1460406	Tube	..	1	..	..
2	1385577	Wheel Assembly	..	6	..	..
2	1534873	Wheel Assembly	6	..	6	6
3	1466004	Side Ring	..	1	..	..
3	1538311	Side Ring	1	..	1	1
4	1452916	Conical Ring	1	1	1	1
5	1637809	Lock Ring	..	1	..	..
5	1538310	Lock Ring	1	..	1	1
6	376026	Lug Nut	48	48	48	48
7	1303417	Valve Stem (Drive)	2	2	2	2
8	116265	Valve Stem (Steering)	2	2	2	2

©2006 HYSTER COMPANY

WHEEL AND TIRE (Figure 12-3)
SOLID TIRE WITH TREAD

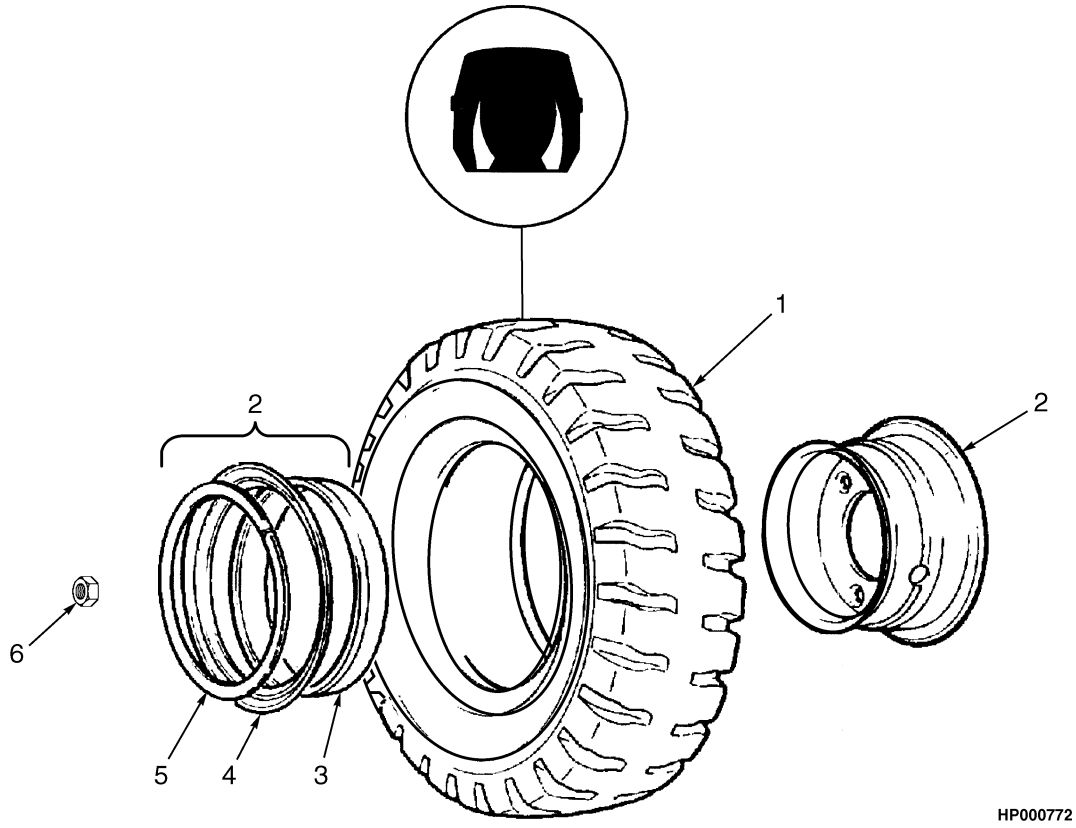

KEY:
A: H360H-400H (12.00 x 24-10)
B: H450H (14.00 x 24-10)
C: H400H-EC (12.00 x 24-10)

ITEM	PART NO.	DESCRIPTION	QTY A	QTY B	QTY C
1	1393796	Tire	6	..	6
1	1393797	Tire	..	6	..
2	1385579	Wheel Assembly	6	..	6
2	1385577	Wheel Assembly	..	6	..
2	1391646	Rim	1	..	1
2	1391058	Rim	..	1	..
3	1466004	Side Ring	1	1	1
4	1452916	Conical Ring	1	1	1
5	1637809	Lock Ring	1	1	1
6	376026	Lug Nut	48	48	48

©2006 HYSTER COMPANY

WHEEL AND TIRE (Figure 12-4)
SOLID TIRE
SMOOTH

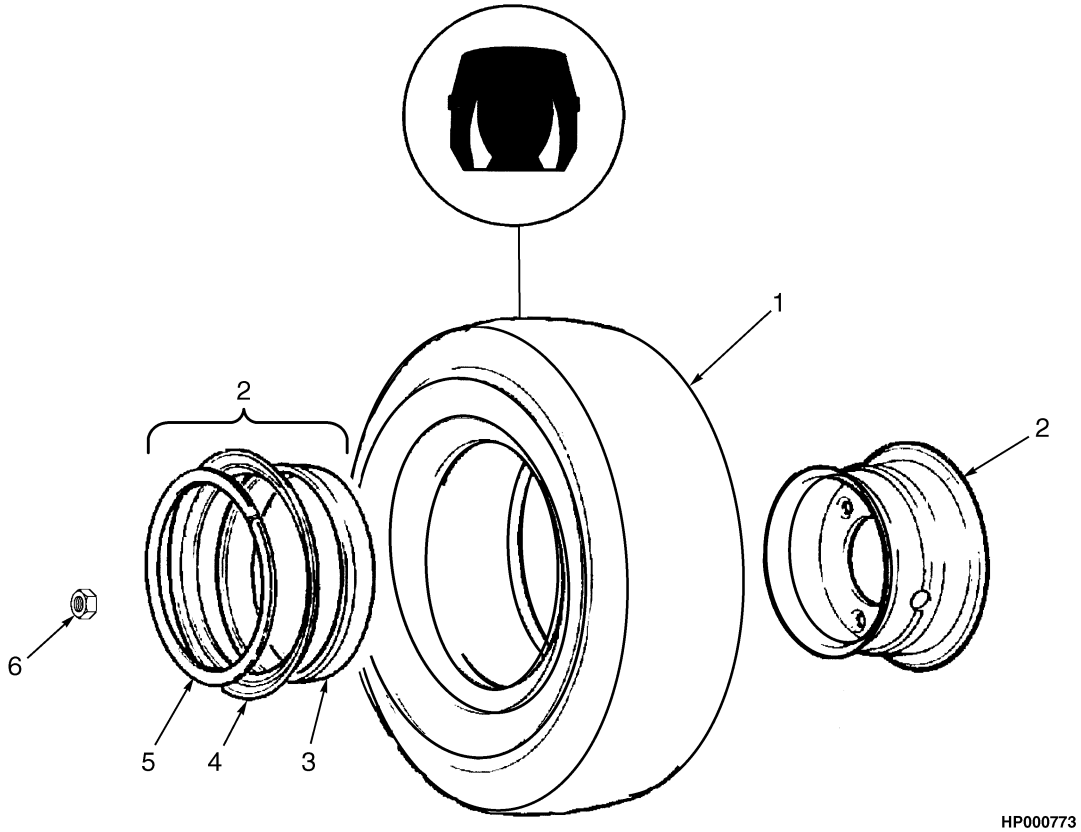

ITEM	PART NO.	DESCRIPTION	QTY
1	1393787	Tire	6
2	1451454	Wheel Assembly	6
2	1391646	Rim	6
3	1466004	Side Ring	1
4	1452916	Conical Ring	1
5	1637809	Lock Ring	1
6	376026	Lug Nut	48

©2006 HYSTER COMPANY

NOTES

FORK (Figure 12-5)
PIN TYPE

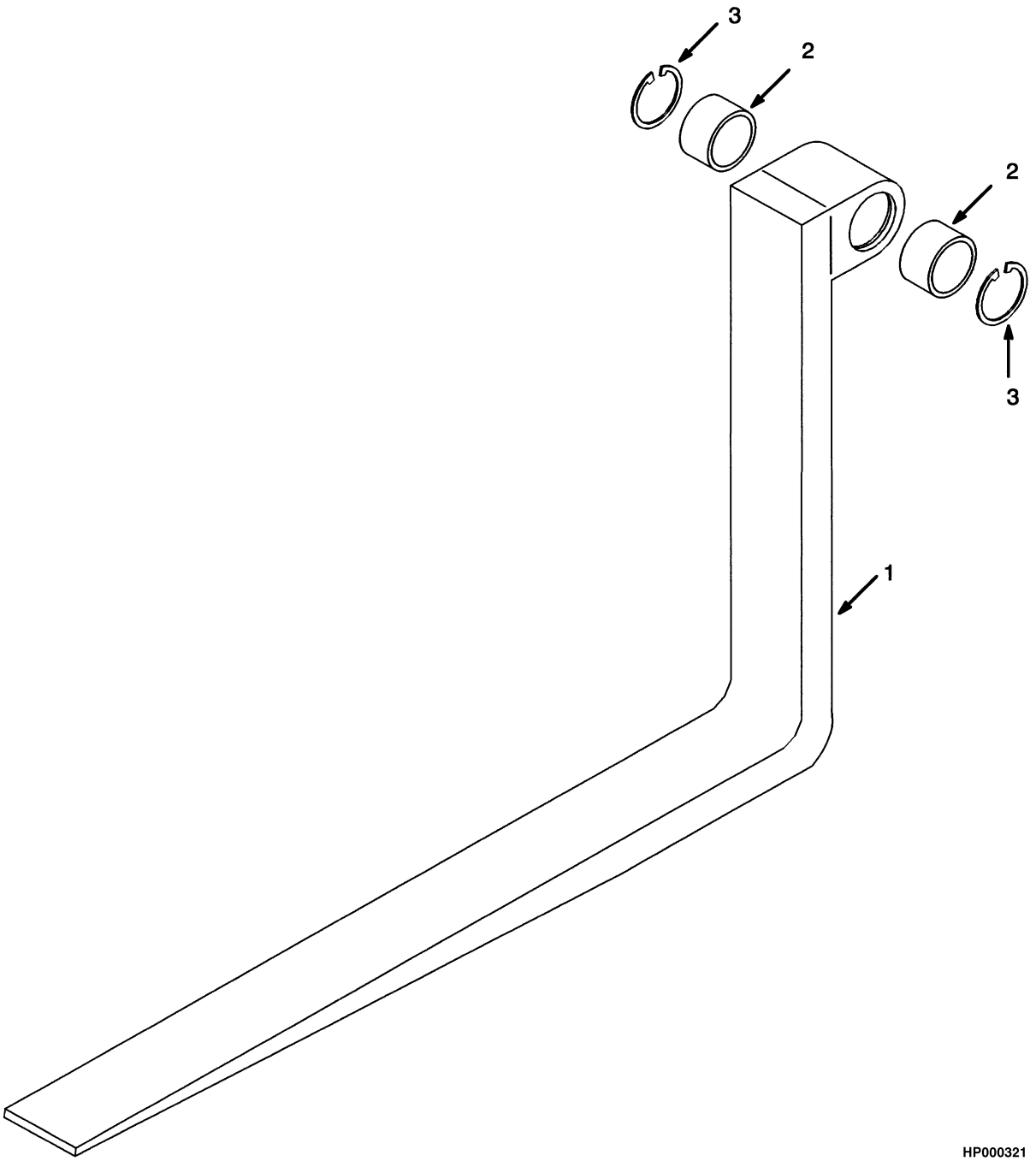

©2006 HYSTER COMPANY

FORK
PIN TYPE

KEY:
A: 7.8 x 3.9
B: 9.75 x 3.9

ITEM	PART NO.	DESCRIPTION	QTY A	QTY B
	1373320	Fork (60 in.)	2	..
	1373239	Fork (72 in.)	2	..
	1373346	Fork (84 in.)	2	..
	1373319	Fork (84 in.)	..	2
	1373238	Fork (96 in.)	2	..
	1373233	Fork (96 in.)	..	2
1	1373451	Fork (60 in.)	1	..
1	1373237	Fork (72 in.)	1	..
1	1373347	Fork (84 in.)	1	..
1	1373450	Fork (84 in.)	..	1
1	1373236	Fork (96 in.)	1	..
1	1373230	Fork (96 in.)	..	1
	1373177	Bushing (Includes Item)	1	..
3	1373284	Snap Ring	1	..

©2006 HYSTER COMPANY

FORK (Figure 12-6)
HOOK TYPE

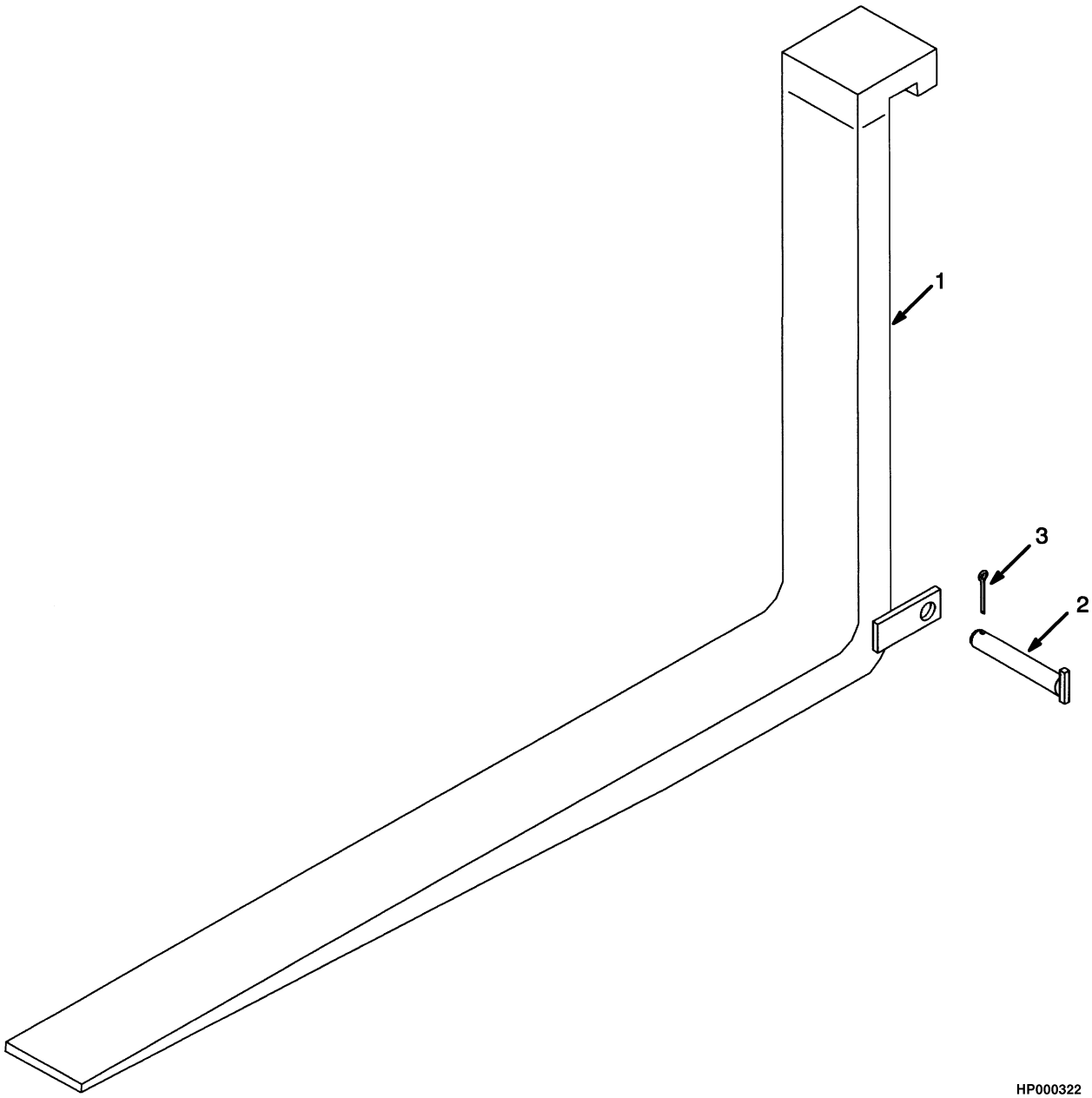

©2006 HYSTER COMPANY

FORK
HOOK TYPE

KEY:
A: H400H-EC
B: H450H-EC

ITEM	PART NO.	DESCRIPTION	QTY A	QTY B
1	1372954	Fork	2	..
1	1372952	Fork	..	2
2	1451183	Pin	2	..
2	1373174	Pin	..	2
3	15236	Cotter Pin	2	2

©2006 HYSTER COMPANY

NOTES

13 NUMERICAL INDEX

SECTION 13
NUMERICAL INDEX

PART NO.	PG	ITEM
125	3-9	10
126	3-9	11
12815	2-87	30
	2-91	29
	2-95	29
12829	9-8	47
	9-65	2
	9-67	2
12833	5-9	12
12843	8-19	37
	8-23	37
	8-27	29
12845	5-9	11
12874	5-9	10
13963	7-19	9
14349	8-19	33
	8-23	33
	10-31	31
	10-33	33
14388	1-42	44
	3-3	29
	3-7	11
	9-65	15
	9-67	15
14489	9-29	29
14491	9-30	46
14494	8-27	33
	9-25	18
	9-27	30
	9-30	40
	11-19	3
	11-19	4
14512	5-7	18
14555	5-9	17
14591	8-19	28
	8-28	46
14594	8-16	36
14595	9-85	14
14676	9-8	48
	9-16	54
14682	2-87	5
14685	5-9	13
14691	9-29	26
	9-29	36
14692	9-29	35
14758	5-7	12
14999	10-26	2
	11-117	2
	11-119	2
	11-123	22
	11-127	9
15002	3-9	7
	9-35	36
	9-39	36
15011	4-5	2
	4-9	2
15024	3-9	19
15049	4-22	65
15052	5-41	18
15054	3-9	4
	9-51	14
15055	1-35	7
	1-37	7
15086	2-103	24
15127	9-31	10
	9-51	13
	9-75	24
15134	2-101	13
	2-103	13
	2-103	17
	2-103	25
	2-105	13
	11-124	48
	11-128	46
15136	10-12	32
15146	11-10	47
	11-14	47
15152	1-19	10
	3-9	6
15154	3-9	3
	10-26	13
	11-117	13
	11-119	13
15155	1-38	65
	9-21	14
15156	2-101	14
	2-103	14
	2-105	14
	3-3	18
	3-7	10
	9-5	31
	9-7	31
	9-11	31
	9-15	9
15157	9-5	36
	9-7	36
	9-11	36
	9-15	12
15158	9-5	25
15160	9-7	25
	9-11	25
	9-15	21
15175	1-38	62
15176	2-101	19
	2-105	19
15181	10-12	27
15200	3-9	12
15212	7-3	23
15224	6-19	14
15236	12-11	3
15237	10-31	23
	10-33	23
15244	10-12	31
	11-10	48
	11-14	48
	11-123	33
	11-127	7
15315	6-4	26
15316	6-3	5
	6-7	5
15382	9-7	17
	9-65	4
	9-67	4
15384	9-65	4
15483	11-30	41
15882	9-7	10
	9-11	10
	9-15	22
15890	9-83	12
15894	7-11	10
	7-13	10
15895	9-85	11
15907	9-79	6
16001	10-8	19
	10-29	7
	10-29	14
	10-31	13
	10-33	13
	11-7	18
	11-10	37
	11-14	37
	11-29	31
	11-133	7
	11-133	15
16015	10-12	13
16073	4-25	23
16085	9-5	24
16165	2-91	31
	2-95	31
16186	4-5	44
16328	9-45	24
	9-46	47
	9-46	62
	9-46	77
16334	9-35	20
	9-39	20
16374	2-101	21
	2-103	19
	2-105	21
16445	5-7	17
	8-3	31
16447	8-3	32
	8-5	32
16449	9-31	2
	10-35	10
	11-25	9
	11-131	2
16452	8-27	39
16466	7-9	14
16467	11-131	2
16475	9-79	3
16481	7-9	18
	8-3	2
	8-3	13
	8-3	23
	8-5	23
	8-9	2
	8-9	13
	8-9	23
	8-11	2
	8-11	13
	8-11	23
	8-15	11
	8-16	42
	8-16	43
	8-19	28
	8-23	28
	8-28	45
	8-28	46
16483	8-3	4
	8-3	14
	8-5	4
	8-5	14
	8-9	4
	8-9	14
	8-11	4
	8-11	14
	8-15	1
	8-15	2
	8-16	37
	8-16	38
	8-19	6
	8-19	8
	8-19	9
	8-19	19
	8-19	23
	8-23	6
	8-23	8

©2006 HYSTER COMPANY

NUMERICAL INDEX (Continued)

PART NO.	PG	ITEM
	8-23	9
	8-23	19
	8-23	23
	8-27	5
	8-27	8
	8-27	9
	8-27	16
	8-27	24
	9-25	2
	9-27	9
	9-29	17
	9-29	18
	9-29	19
	9-29	20
	10-14	2
	11-19	10
16484	7-7	25
	7-9	25
	7-20	44
	8-3	9
	8-3	11
	8-3	15
	8-5	11
	8-5	15
	8-6	49
	8-9	9
	8-9	11
	8-9	15
	8-11	9
	8-11	11
	8-11	15
	8-15	6
	8-16	40
	8-16	41
	9-29	25
	9-29	31
	9-29	38
	9-30	45
	9-79	11
	9-79	20
	9-81	4
	9-81	6
	9-85	14
	10-15	9
	10-35	9
16485	8-3	3
	8-5	3
	8-9	3
	8-11	3
	8-15	5
	9-5	28
	9-7	28
	9-11	28
	9-25	10
	9-29	32
	9-69	1
	9-73	1
	10-35	11
	10-35	18
	10-39	16
16486	8-3	8
	8-5	8
	8-6	34
	8-9	8
	8-11	30
	8-15	7
	8-15	10
	8-15	35
	8-31	7
	8-33	4
	8-33	14
	9-25	21
	9-27	32
	9-45	8
	9-58	7
	9-79	13
	9-81	3
16487	5-9	4
	5-9	6
	8-5	8
	8-5	16
	8-5	31
	8-11	8
	8-12	34
	8-12	39
	8-12	43
	8-15	32
	8-15	33
	8-16	35
	8-31	17
	8-31	19
	8-33	2
	8-33	7
	9-5	9
	9-7	9
	9-11	9
	9-25	14
	9-45	17
	9-46	41
	9-46	55
	9-46	71
	9-65	7
	9-67	7
	9-69	9
	9-69	12
	9-73	9
	9-73	12
16538	8-3	2
	8-9	2
	8-11	2
	8-16	42
	8-23	28
	8-28	45
	8-28	45
16540	8-3	4
	8-5	4
	8-9	4
	8-11	4
	8-15	2
	8-19	9
	8-23	9
	8-27	9
	9-29	17
	9-35	32
	9-39	32
	9-51	5
16541	7-7	25
	7-9	25
	8-3	9
	8-6	49
	8-9	9
	8-11	9
	8-15	6
	9-29	25
	9-79	11
	9-81	4
	10-15	9
16542	8-5	3
	8-11	3
	10-35	11
16543	8-6	42
	8-9	8
	8-12	43
	8-15	10
	8-15	35
16544	5-9	6
	8-5	8
	8-11	8
	8-12	43
	8-16	35
16549	8-16	37
	8-19	23
	8-23	23
	8-27	24
16551	9-69	1
	9-71	1
	9-73	1
16556	7-7	18
	7-9	18
	8-3	13
	8-9	13
	8-11	13
	8-16	43
16558	8-3	14
	8-5	14
	8-9	14
	8-11	14
	8-15	1
	8-16	38
	8-19	6
	8-23	6
	8-27	5
	9-29	18
	9-35	29
	9-39	29
	9-51	3
16559	7-20	44
	8-9	11
	8-11	11
	8-16	40
	9-81	6
	10-35	9
16561	8-6	34
	8-11	30
	8-15	7
	8-33	14
16562	8-11	34
	8-15	33
	8-33	2
16567	8-19	8
	8-23	8
	8-27	16
	9-25	2
	9-27	9
	9-29	19
16571	8-5	16
	8-31	19
16597	7-3	4
16724	5-41	17
16743	4-22	64
16745	9-29	38
16750	1-19	9
16805	9-35	23
	9-39	23
16815	6-19	2
	7-3	5
	9-5	30
	9-7	30

©2006 HYSTER COMPANY

NUMERICAL INDEX (Continued)

PART NO.	PG	ITEM
	9-11	30
	9-15	8
16816	2-101	18
	2-105	18
16835	2-101	22
	2-103	20
	2-105	22
16882	8-6	48
16883	9-29	5
	9-29	21
16909	9-5	28
	9-7	28
	9-11	28
	9-15	6
	10-35	18
16923	5-7	2
	8-19	29
	8-23	29
	9-25	13
	9-29	33
16926	9-27	3
16963	9-19	12
	9-21	7
16969	8-19	35
	8-23	35
	8-27	27
	9-29	20
	9-51	4
16970	9-29	31
16974	9-21	9
16983	8-6	36
	8-11	32
	8-15	29
	9-11	38
	10-12	22
16989	7-9	15
	9-75	1
	9-79	2
16992	5-9	5
	5-9	9
	8-12	41
	8-15	34
17039	9-73	23
	9-75	30
17040	8-31	13
17042	5-9	16
17049	8-19	24
	8-23	24
	8-27	17
	8-27	44
17052	8-31	8
	8-33	16
17054	8-27	34
17061	9-29	27
17062	7-7	1
	8-19	22
	8-23	22
	8-27	23
	10-14	4
	11-19	12
17063	9-30	44
17064	9-69	10
	9-71	16
	9-73	10
	9-75	17
17066	8-6	47
	9-27	28
17167	9-79	20
17197	8-3	11
	8-5	11
17215	2-87	11
17217	2-87	13
17218	7-7	14
17222	9-35	27
	9-39	27
17300	9-8	40
	9-15	40
	9-65	5
	9-67	5
17309	7-9	7
17315	7-7	7
17319	7-7	15
	9-25	16
	9-29	30
17345	9-65	5
17352	2-91	34
	2-95	34
17636	9-67	19
17637	9-67	18
17764	9-5	34
	9-7	34
	9-11	34
	9-15	10
	9-27	25
17776	9-29	28
17777	9-25	15
	9-29	34
17778	9-30	43
17779	9-25	11
17780	9-27	8
17782	8-31	16
	8-33	9
18097	9-35	19
	9-39	19
18191	10-29	20
	11-133	20
18425	9-35	18
	9-39	18
18460	3-9	2
18471	9-51	12
18480	9-51	12
18496	1-38	63
18498	1-35	4
	1-37	4
18515	2-101	25
	2-103	23
	2-105	25
	9-21	13
18516	1-35	8
	1-37	8
18535	3-3	17
	3-7	9
18558	9-5	35
	9-7	35
	9-11	35
	9-15	11
18602	9-7	24
	9-11	24
	9-15	20
18901	1-41	39
18905	4-35	9
	4-39	9
18921	9-49	3
30062	6-11	7
	6-15	7
30077	7-19	21
30151	7-19	30
30374	9-19	13
	9-21	12
34055	7-19	28
34056	7-19	27
35503	9-67	15
37103	7-19	32
39383	6-4	32
	6-8	32
39679	10-29	19
	11-133	21
39742	9-65	9
	9-67	9
39767	9-35	15
	9-39	15
	9-45	18
	9-46	45
	9-46	60
	9-46	75
42598	3-3	14
46388	9-85	12
47478	10-8	11
	10-31	26
	10-33	28
	11-7	10
	11-79	8
53086	9-85	10
53163	10-29	16
	11-133	17
55289	9-83	9
63899	3-3	1
	3-7	27
66883	9-15	44
67551	10-29	10
	11-133	11
69815	2-87	12
73462	9-35	44
78459	8-6	36
79377	3-4	42
79483	7-19	15
82270	7-19	5
83846	8-12	39
	8-15	32
	8-33	7
86007	6-3	10
	6-7	10
86008	6-11	35
86520	1-47	23
87911	9-81	7
88195	9-21	21
88291	9-5	26
88300	10-14	1
88587	6-4	30
	6-7	30
90207	9-85	7
90937	7-19	25
95033	7-20	40
95034	7-20	40
95166	7-20	40
95578	9-69	14
	9-71	18
97623	6-4	47
	6-8	47
97626	6-4	49
	6-8	49
97638	6-4	36
	6-8	36
102990	4-25	5
	4-35	27
	4-39	27
110174	9-69	20
	9-71	20

©2006 HYSTER COMPANY

NUMERICAL INDEX (Continued)

PART NO.	PG	ITEM
	9-73	20
	9-75	20
110931	11-9	14
	11-13	14
110932	11-9	14
	11-13	14
110933	11-9	14
	11-13	14
111056	3-4	36
112470	9-8	51
	9-15	18
	9-19	20
	9-21	16
112886	9-35	28
112989	2-87	4
	2-91	22
	2-95	22
114268	2-91	30
	2-95	30
114312	1-47	18
114662	4-6	46
	4-9	27
115586	12-2	1
115593	12-2	1
115696	9-5	7
	9-7	7
	9-11	7
	9-15	23
116046	10-14	1
116091	2-101	23
	2-103	21
	2-105	23
116265	12-3	8
	12-4	8
117860	9-35	43
118807	2-87	15
	2-91	24
	2-95	24
119055	2-87	19
	2-91	26
	2-95	26
119236	2-87	31
	2-91	23
	2-95	23
123045	10-14	1
125428	6-11	21
	6-15	21
127045	8-6	38
	8-27	20
	8-31	1
	9-5	8
	9-8	53
	9-15	25
	9-19	10
	9-21	18
127238	2-87	6
127611	3-9	15
127852	1-41	44
128408	8-5	19
	8-9	20
	8-11	20
	8-16	45
128547	9-5	9
129563	4-36	56
	8-3	21
	8-5	21
	8-6	46
	8-9	21
	8-11	21
	8-15	19
	8-31	14
129684	3-4	35
	3-7	17
	3-7	17
129886	4-95	18
129887	4-73	30
	4-83	5
129889	4-103	14
130336	8-6	35
	8-11	31
	8-15	20
130443	3-9	26
130663	12-2	1
130845	1-41	38
	2-87	7
	2-91	32
	2-95	32
131460	8-19	19
	8-23	19
	8-27	8
	10-14	2
	11-19	10
131878	2-101	30
132009	10-14	3
132131	4-15	22
	4-29	12
132451	6-4	51
	6-8	51
132801	2-101	15
	2-105	15
132829	11-10	50
	11-14	50
132860	2-87	22
	2-87	22
	2-91	19
	2-95	19
	10-8	18
	11-7	17
	11-10	36
	11-14	36
	11-29	30
	11-33	6
	11-35	11
	11-79	1
132861	4-35	30
	4-39	30
	9-79	16
133683	7-3	22
134810	1-19	8
	4-21	23
134811	4-45	7
134812	4-95	12
	4-97	4
	4-103	11
	4-111	7
136405	10-12	20
	11-10	42
	11-14	42
	11-14	42
	11-14	62
136681	1-32	39
	1-41	8
	3-3	25
	3-9	29
	4-5	23
	4-9	12
	4-15	16
	4-19	6
	4-36	51
	4-40	51
	7-3	30
136687	1-9	20
	1-29	16
	1-31	7
	1-35	19
	1-37	19
	1-41	30
	1-47	3
	3-9	33
	3-9	39
	4-5	12
	4-15	7
	4-15	27
	4-21	13
	4-29	13
	5-41	10
	9-73	25
	9-75	23
	10-31	16
	10-33	16
136692	1-5	11
	1-5	21
	1-9	15
	1-19	27
	1-27	22
	1-29	20
	1-31	18
	1-35	27
	1-37	27
	1-47	15
	1-53	4
	1-55	17
	1-57	17
	1-63	36
	2-87	18
	2-88	36
	2-101	11
	2-103	11
	2-105	11
	3-4	38
	3-7	20
	3-7	20
	4-35	24
	4-39	24
	5-3	12
	9-19	5
	9-35	6
	9-35	6
	9-39	6
	11-14	56
136703	10-35	14
	11-123	29
	11-127	40
136704	3-4	46
	8-31	4
	8-33	13
	10-35	7
	11-117	27
	11-119	27
	11-127	26
136718	11-14	55
136749	1-9	8
	1-9	8
	1-9	22
	1-29	34
	1-35	33
	1-37	33
	2-79	34

©2006 HYSTER COMPANY

NUMERICAL INDEX (Continued)

PART NO.	PG	ITEM
	2-83	12
	2-88	40
	2-95	46
	3-9	31
	3-11	4
	4-21	29
	5-41	4
	8-3	25
	8-5	25
	8-9	25
	8-11	25
	8-27	18
	11-123	12
136750	9-71	3
	9-75	3
136985	1-29	24
	1-31	26
	1-53	2
	1-55	20
	1-57	20
	2-91	50
	3-4	40
	3-7	22
	3-7	22
	5-17	8
	7-19	23
	8-3	24
	8-5	24
	8-9	24
	8-11	24
	8-16	48
	9-19	2
	9-35	5
	9-35	11
	9-39	5
	10-12	24
	11-9	5
	11-13	5
137852	2-88	53
	3-11	7
	4-5	29
	4-9	16
	4-11	18
	4-15	21
	4-15	40
	4-19	9
	4-22	46
	4-25	7
	4-35	40
	4-36	53
	4-36	57
	4-39	40
	4-40	53
	4-40	59
	4-43	10
138929	10-26	18
	11-117	18
	11-119	18
139924	9-8	49
	9-15	49
141276	2-79	9
	2-84	8
141850	3-4	37
141908	9-7	22
	9-15	30
142500	8-3	8
	8-5	8
	9-25	21
	9-27	32
142682	8-3	3
	8-9	3
	8-15	5
144050	9-5	22
	9-7	22
	9-11	22
145502	8-19	32
	8-23	32
145639	3-9	27
145641	2-101	20
	2-103	18
	2-105	20
	9-35	24
	9-39	24
145824	2-79	20
	2-81	20
	2-83	22
146803	9-83	8
147449	8-12	35
	8-12	40
	8-15	30
147455	8-31	15
147983	2-79	24
	2-85	1
147985	2-79	25
	2-85	2
148605	4-95	19
148609	4-95	20
148612	4-83	4
148616	4-73	10
148617	4-73	29
148626	4-73	9
148648	4-97	12
149531	1-49	5
151551	2-79	6
	2-84	5
151554	2-79	3
	2-84	2
153049	9-69	8
	9-71	11
	9-73	8
	9-75	11
153069	8-9	19
	8-11	19
	8-16	46
154208	4-5	3
	4-36	47
	10-35	21
154594	2-91	33
	2-95	33
154952	8-3	15
	8-5	15
156478	2-79	14
	2-81	2
	2-83	2
156696	9-65	3
157065	4-73	21
159179	7-19	38
159180	7-19	34
	7-19	37
159185	7-19	2
159186	7-19	2
159295	11-9	19
	11-13	19
159296	11-9	15
	11-13	15
159297	11-9	16
	11-13	16
159299	11-9	17
	11-13	17
159369	10-14	1
160245	4-73	8
160549	10-26	12
163520	1-41	43
164289	2-91	35
	2-95	35
164488	3-9	38
	4-35	23
	4-39	23
164658	4-25	6
166112	9-73	13
166818	1-65	4
166857	2-92	55
	2-96	58
	3-3	15
	3-7	1
167261	9-25	12
167970	11-9	33
	11-13	33
167971	11-9	34
	11-14	34
168371	2-79	5
	2-84	4
168718	2-87	9
	3-4	44
169759	4-21	4
169775	4-22	67
169781	4-21	1
169784	4-22	60
169785	4-21	5
	4-22	55
	4-22	60
173247	8-5	21
175899	4-6	51
	4-11	23
176640	1-35	31
	1-37	31
	2-81	19
	2-83	21
	4-6	50
	4-16	49
	4-35	12
	4-39	12
	4-43	7
	5-41	5
	8-19	3
	8-23	3
	8-27	2
176910	3-3	11
177953	6-5	62
180979	8-12	35
	8-15	30
	8-33	3
181045	1-19	8
	4-21	23
181046	4-25	20
	4-45	6
	4-95	21
	4-97	5
	4-103	10
181941	9-65	11
	9-67	11
184818	11-17	2
	11-17	2
	11-17	2
	11-17	2
186304	4-21	25
189451	10-26	4
	11-117	4

©2006 HYSTER COMPANY

NUMERICAL INDEX (Continued)

PART NO.	PG	ITEM
	11-119	4
	11-119	4
	11-123	24
	11-127	14
190252	4-5	42
190383	4-6	59
190757	9-5	29
	9-7	29
	9-11	29
	9-15	7
190784	9-65	13
	9-67	13
190785	9-65	12
	9-67	12
190787	9-65	8
	9-67	8
192544	6-23	8
192683	7-19	12
193503	9-79	19
195769	3-13	4
196959	2-79	23
	2-81	21
	2-83	23
	2-85	
197067	4-35	15
	4-39	15
	5-41	19
197068	1-47	5
197070	1-49	6
197858	2-103	16
198324	11-9	1
	11-13	1
198518	9-83	11
198691	7-9	11
199085	9-5	32
	9-7	32
	9-11	32
	9-15	13
199524	9-45	5
199598	6-4	52
	6-8	52
199917	9-5	33
	9-7	33
	9-11	33
	9-15	14
200445	6-3	4
	6-7	4
200972	6-11	6
	6-15	6
200982	6-11	31
	6-15	31
201776	9-69	9
	9-73	9
201779	8-3	23
	8-9	23
201781	8-11	32
	8-15	29
201800	2-87	10
204223	4-6	60
	4-11	12
206027	4-22	60
206150	8-9	15
	8-11	15
	8-16	41
	9-30	45
208107	6-4	27
	6-4	28
	6-7	27
209067	9-43	10
212786	8-9	18
	8-11	18
214195	6-3	9
	6-7	9
214336	2-79	26
	2-85	3
214339	2-79	2
	2-84	1
214421	9-21	20
216590	10-39	16
216735	1-5	3
	1-13	3
	4-35	37
	4-39	37
	7-3	10
216877	2-87	23
	3-3	22
	3-7	15
	4-36	61
	4-40	61
	7-3	17
	9-15	27
	9-65	16
	9-67	16
	10-4	5
	10-12	33
	11-5	7
	11-10	52
	11-14	52
	11-14	61
	11-123	6
	11-127	32
217549	1-9	35
219302	3-3	10
	9-79	18
220499	3-9	5
221295	11-14	42
221357	10-26	3
	11-117	3
	11-119	3
	11-123	23
	11-127	10
221372	1-49	7
221377	9-83	3
221440	11-117	12
	11-119	12
221703	10-26	14
	11-117	14
	11-119	14
221707	11-123	31
	11-128	45
221714	9-63	25
221720	6-5	61
	6-8	60
221721	6-5	61
	6-8	60
221725	11-10	49
	11-14	49
221729	11-14	49
221767	3-9	32
	6-19	3
221775	11-133	18
221777	10-29	17
	11-133	18
221780	6-5	60
	6-8	59
221786	10-12	34
222029	1-38	55
	1-65	13
222331	7-7	1
	7-9	1
222369	8-6	37
	8-27	32
	9-25	17
	9-30	39
222383	9-69	12
	9-73	12
222400	9-29	32
222415	5-9	4
	8-5	31
	8-31	17
222435	8-31	7
	8-33	4
222443	9-35	38
	9-39	38
	9-51	2
222444	9-58	7
222456	9-79	13
	9-81	3
222464	9-7	9
	9-11	9
222473	3-3	32
	3-7	7
222482	1-42	44
222494	9-7	38
	9-11	38
222517	9-29	37
222524	11-136	7
	11-137	7
222533	9-7	26
	9-11	27
	9-15	19
222554	9-5	27
222556	9-7	27
	9-11	26
	9-15	31
223216	2-101	17
	2-103	15
	2-105	17
225334	9-85	8
226352	8-6	44
	8-31	10
226774	1-27	2
227096	4-29	8
227176	4-21	37
227220	2-79	21
	9-7	39
	9-11	15
	9-15	37
227221	2-79	27
	2-83	9
	9-81	5
230389	7-19	22
230390	7-19	31
230408	11-9	18
	11-13	18
231958	4-5	41
233683	9-65	14
	9-67	14
234888	9-45	6
238810	1-29	38
	1-32	42
239423	1-69	14
239503	1-29	21
	1-31	9
	1-35	34
	1-37	34
	1-41	9
	3-3	8

©2006 HYSTER COMPANY

NUMERICAL INDEX (Continued)

PART NO.	PG	ITEM
	3-9	43
	3-11	5
	4-5	26
	4-15	19
	4-16	50
	4-21	31
	4-29	17
	4-35	10
	4-39	10
	5-29	5
	5-33	2
	7-7	21
	7-9	21
	9-71	5
	9-75	5
	10-35	16
	11-117	28
	11-119	28
	11-123	10
239784	8-5	23
	8-11	23
	8-15	11
240683	6-11	18
	6-15	18
246001	1-5	2
	1-13	5
	2-92	54
	2-96	54
	3-3	12
	4-16	53
	7-20	41
	9-83	16
	11-5	19
	11-119	10
	11-127	33
246108	1-42	45
246396	9-21	19
248320	10-29	16
	11-133	17
250095	4-43	1
251099	3-9	34
251994	7-7	27
	9-79	7
	9-81	15
252376	11-19	11
252388	10-14	1
252793	2-79	4
	2-84	3
255578	1-42	54
	8-11	18
	8-16	47
	9-8	44
	9-31	3
	9-69	6
	11-131	6
258493	1-42	47
258590	9-15	1
261156	1-38	57
261158	1-9	38
264134	1-49	28
	6-23	9
	9-35	21
	9-39	21
264159	9-15	42
265732	7-17	1
265817	1-25	15
266519	9-49	4
267262	8-3	27
	8-9	27
	8-11	27
	8-15	4
	8-27	35
268619	9-5	10
268915	6-4	43
273775	2-87	27
	9-35	12
	9-39	12
	10-15	6
	11-19	17
273969	6-4	34
	6-8	34
274044	7-20	42
274885	7-9	2
275496	4-6	68
	4-11	22
275498	4-6	73
276228	10-8	13
	10-31	29
	10-33	31
	11-7	12
	11-79	6
276638	10-14	1
279740	4-25	8
279752	1-41	37
280472	1-17	34
	1-22	46
	1-31	24
	1-41	6
	4-43	9
	10-39	15
280610	10-26	7
	11-117	7
	11-119	7
	11-119	7
	11-123	20
	11-127	22
280644	1-21	34
284521	9-43	13
284847	3-9	1
	3-13	1
	3-15	
286767	4-6	55
	4-11	8
286901	4-35	7
	4-39	7
287136	2-87	29
287805	4-22	47
287816	3-9	21
	4-15	4
287817	4-29	6
287837	10-12	35
	11-29	37
	11-123	7
287844	11-124	46
287851	1-41	31
287854	1-5	8
	1-19	24
	1-29	12
	1-31	16
	1-31	16
	1-55	16
	1-57	16
	1-63	35
	2-79	19
	2-81	10
	2-87	16
	4-40	57
	5-3	37
	7-7	12
	7-9	12
	9-35	5
	9-69	7
	9-71	7
	9-73	7
	9-75	8
	10-4	17
287860	1-13	18
	4-35	26
	4-39	26
	9-15	4
	9-33	12
	9-35	11
	9-39	11
291994	7-9	28
292500	1-27	3
	1-29	17
	1-31	23
	4-25	22
292501	1-27	21
	1-29	13
	1-31	4
	1-35	18
	1-37	18
	1-41	28
	4-5	9
292502	9-73	24
	9-75	22
292503	1-9	17
292505	8-19	12
	8-23	12
	8-27	13
	11-131	8
292506	9-43	6
292507	8-19	27
	8-23	27
	8-27	11
	9-31	7
	9-81	16
	11-131	8
292508	3-3	7
292509	5-7	20
	9-19	15
	10-39	12
	11-123	19
	11-127	37
292510	5-4	44
292512	10-35	14
292513	4-5	31
	4-9	18
	4-19	11
292514	1-5	39
	2-92	53
	2-95	42
	5-9	1
	8-5	13
	8-12	37
	8-15	16
	8-31	20
	8-33	5
	11-97	2
	11-109	6
292515	2-88	55
	2-91	16
	2-95	16
	10-12	24
292516	11-33	1
	11-35	18
	11-47	29

©2006 HYSTER COMPANY

NUMERICAL INDEX (Continued)

PART NO.	PG	ITEM
	11-101	15
	11-101	40
292517	2-88	48
	9-43	12
292524	2-88	48
	2-91	28
	2-95	28
292525	9-43	3
	9-69	3
	9-73	3
292526	2-101	5
	2-103	5
	2-105	5
	4-5	4
	4-9	4
292527	1-31	32
	1-31	32
	2-91	20
	2-95	20
	7-19	6
	10-12	15
	10-31	20
	10-33	20
292528	2-99	5
	4-40	64
	7-9	29
	9-7	12
	9-15	26
	9-69	19
	9-71	24
	9-73	19
	9-75	29
	10-12	16
	10-26	28
292529	4-36	60
	7-3	15
	9-5	12
	9-11	12
	10-31	3
	10-33	3
292531	10-4	2
	11-5	11
	11-10	51
	11-14	51
	11-23	8
292533	10-26	22
	11-14	58
	11-117	22
	11-119	22
292535	1-5	43
	1-17	2
	1-21	1
	1-49	31
	10-26	17
	11-5	4
	11-117	17
	11-119	17
292538	11-14	51
292539	9-69	22
	9-71	25
	9-73	22
	9-75	27
292540	1-38	46
292544	9-5	19
	9-7	19
	9-11	19
	9-15	17
292562	6-23	6
	10-29	9
	11-9	10
	11-9	10
	11-13	10
	11-133	9
292563	1-5	33
292572	2-99	1
	5-7	29
292574	10-29	2
	11-133	2
292580	5-7	25
	10-12	29
292581	10-26	5
	11-117	5
	11-119	5
	11-123	13
	11-127	11
292583	11-23	16
292591	1-49	15
292597	1-49	23
292600	10-29	4
	11-133	3
292665	5-41	26
292668	1-35	21
	1-37	21
	1-47	12
	4-6	70
	4-35	17
	4-39	17
	5-41	13
292676	5-41	25
292679	1-9	28
	1-27	9
	1-35	22
	1-37	22
	1-41	41
	1-47	13
	4-5	21
	4-35	16
	4-39	16
	5-41	12
292680	1-9	19
	1-27	5
	1-29	15
	1-31	6
	1-35	16
	1-37	16
	1-41	29
	1-47	4
	3-9	22
	4-5	11
	4-15	6
	4-15	26
	4-29	7
	5-41	9
	11-124	45
292681	1-9	10
	1-9	10
	1-29	19
	1-29	36
	1-35	2
	1-37	2
	1-41	32
	2-79	33
	2-83	13
	2-88	44
	2-95	45
	3-3	26
	3-9	30
	3-11	6
	4-5	25
	4-9	14
	4-15	18
	4-16	48
	4-19	8
	4-22	48
	4-29	18
	4-35	11
	4-35	31
	4-39	11
	4-39	31
	4-43	8
	5-7	21
	7-3	32
	7-7	20
	7-9	20
	8-3	26
	8-5	26
	8-9	26
	8-11	26
	8-27	19
	9-19	18
	9-21	3
	9-71	4
	9-75	6
	9-79	17
	10-35	15
	11-117	29
	11-120	29
	11-123	11
292682	1-5	10
	1-9	14
	1-19	25
	1-29	22
	1-31	19
	1-35	29
	1-37	29
	1-53	3
	1-55	18
	1-57	18
	1-63	37
	2-79	18
	2-81	12
	2-88	45
	2-91	14
	2-92	52
	2-95	14
	2-96	52
	2-101	10
	2-103	10
	2-105	10
	3-4	39
	3-7	21
	3-7	21
	4-5	32
	4-9	19
	4-19	12
	4-35	25
	4-39	25
	4-40	58
	5-9	2
	5-17	9
	5-41	3
	7-3	6
	7-9	13
	7-19	24
	8-5	9
	8-12	38
	8-15	17
	8-31	21

©2006 HYSTER COMPANY

NUMERICAL INDEX (Continued)

PART NO.	PG	ITEM
	8-33	6
	9-19	4
	9-35	8
	9-35	8
	9-39	8
	10-4	18
	10-12	25
	10-39	13
	11-9	6
	11-13	6
292683	1-32	35
	1-32	35
	1-38	47
	2-87	24
	2-87	24
	2-91	18
	2-95	18
	2-101	6
	2-103	6
	2-105	6
	3-3	13
	3-7	13
	4-5	5
	4-9	5
	4-16	55
	4-36	46
	4-40	62
	5-7	23
	7-19	7
	9-15	33
	9-65	18
	9-67	3
	9-83	17
	10-4	4
	10-12	14
	10-12	36
	10-26	27
	10-31	4
	10-33	4
	11-5	6
	11-5	12
	11-9	23
	11-13	23
	11-14	60
	11-120	31
	11-123	5
292684	9-5	20
	9-7	20
	9-11	20
	9-15	16
292685	10-29	3
	11-9	9
	11-9	9
	11-13	9
	11-133	4
	11-133	10
292687	1-49	20
	1-49	25
	5-7	26
	10-12	28
	10-26	6
	11-117	6
	11-119	6
	11-123	14
292689	7-20	43
293619	11-5	13
293644	10-31	24
	10-33	24
	11-7	17
293645	11-9	22
	11-13	22
293649	9-83	16
293654	6-11	12
293716	6-11	3
	6-15	3
293726	11-39	31
	11-43	25
	11-97	14
	11-109	2
293779	3-9	37
293781	7-7	13
293782	3-9	13
	7-3	18
294309	9-61	23
296128	10-4	16
296150	1-10	47
296152	1-35	20
	1-37	20
296155	1-9	27
296164	9-21	34
296172	1-5	13
296174	1-13	14
296238	2-91	37
296255	10-4	9
	10-8	8
	11-7	5
296360	7-3	26
296380	4-21	30
296396	1-27	11
296408	4-5	28
	4-15	20
296417	9-43	7
296418	4-29	19
	9-73	26
296419	1-38	43
	3-3	27
296420	1-35	30
	1-37	30
	2-88	49
	2-91	27
	2-95	27
	9-43	5
296421	1-35	28
	1-37	28
296422	1-35	9
	1-37	9
	2-99	4
	9-43	2
296423	1-27	15
	2-88	52
	2-91	44
296426	2-99	7
	5-7	30
	11-48	38
	11-101	1
296431	1-49	12
	1-49	16
296464	1-27	10
296472	1-47	2
296844	6-11	17
	6-15	17
298132	4-9	3
	4-16	54
	8-3	18
	8-5	18
298829	9-19	1
298832	3-3	2
	3-7	27
299257	7-9	27
300088	1-35	38
	1-37	38
	2-88	39
300597	11-19	13
300937	1-5	5
	1-5	24
	1-6	46
	1-13	4
	1-17	5
	1-21	4
	1-31	33
	1-31	33
	9-43	1
	10-26	15
	11-117	15
	11-119	15
300939	1-5	45
	1-17	3
	1-21	2
301250	9-7	18
	11-19	14
302036	1-47	11
	4-35	14
	4-39	14
302048	4-5	34
	4-15	24
302049	4-43	3
302097	10-31	15
	10-33	15
302100	11-65	10
	11-68	9
	11-89	2
	11-114	6
302109	10-4	15
302181	11-79	22
302236	1-19	13
302244	1-41	40
	5-41	11
302248	1-27	8
	4-5	19
302256	1-27	12
302335	1-5	19
302343	1-5	25
302349	1-5	22
302399	4-6	58
	4-11	10
	4-43	5
	8-19	14
	8-23	14
	8-27	14
	9-31	9
	9-81	18
	11-124	47
	11-131	9
302400	1-38	53
	1-42	49
	2-81	18
	2-83	20
	2-91	39
	8-19	4
	8-23	4
	8-27	3
	8-31	5
	8-33	11
	9-21	4
	11-71	21
	11-73	17
	11-75	21
	11-80	3

NUMERICAL INDEX (Continued)

PART NO.	PG	ITEM
	11-101	35
	11-127	27
302401	1-25	20
	1-42	51
	1-47	26
	2-88	56
	2-91	13
	2-91	48
	2-95	13
	2-96	51
	4-5	16
	4-5	16
	4-9	10
	4-11	17
	4-11	17
	4-15	11
	4-15	39
	4-15	39
	4-35	36
	4-39	36
	7-7	9
	7-7	9
	7-9	9
	8-3	28
	8-5	28
	8-9	28
	8-11	28
	8-16	50
	8-27	42
	9-8	41
	9-15	3
	9-31	5
	9-33	10
	9-69	5
	9-69	5
	9-71	9
	9-73	5
	9-75	10
	9-79	8
	9-81	20
	11-19	8
	11-19	8
	11-127	18
	11-127	30
	11-131	4
302402	1-32	33
	1-50	33
	2-91	15
	2-91	49
	2-95	15
	2-96	53
	7-9	30
	9-5	14
	9-7	14
	9-11	14
	9-15	38
	9-69	18
	9-71	26
	9-73	18
	9-75	28
	11-14	52
	11-29	6
	11-29	8
	11-39	1
	11-47	38
	11-48	39
	11-91	7
	11-95	7
302408	11-29	9
	11-57	1
	11-79	21
	11-95	1
302468	11-7	8
302497	1-49	11
303493	5-41	15
306952	1-63	32
306954	1-63	20
306957	1-63	9
309062	9-85	9
309124	4-6	56
	4-11	9
309637	1-19	3
309666	1-27	13
309707	1-49	28
	1-49	28
310102	1-38	52
311245	3-3	1
	3-7	27
313222	11-123	30
	11-128	44
313805	9-43	8
	11-9	26
	11-13	26
313828	1-55	15
	1-57	15
	1-63	1
	7-3	27
314170	3-9	9
316596	2-92	56
	2-96	57
	3-4	43
	3-7	24
	8-5	2
	8-12	46
	8-15	21
	9-8	55
	9-16	52
	9-21	19
	9-35	41
	9-39	41
	11-120	34
	11-124	41
316826	1-5	38
	1-5	40
	1-13	16
	1-13	19
	9-35	10
	9-39	10
	9-43	4
316828	1-5	34
	2-99	8
	5-7	31
316829	1-49	9
	1-49	17
	7-11	5
	7-13	5
316833	4-36	49
	4-40	49
316835	1-25	14
	11-5	15
316836	1-29	11
	1-31	13
	10-4	8
	10-8	7
	10-31	8
	10-33	8
	11-30	40
318067	10-17	9
	10-19	9
	10-21	10
	10-23	10
318352	1-25	17
320152	5-41	24
320154	1-10	48
320155	1-9	29
	1-35	23
	1-37	23
	4-5	20
	9-35	37
	9-39	37
320156	1-9	18
	1-27	4
	1-29	14
	1-31	5
	1-35	17
	1-37	17
	1-41	3
	3-9	36
	3-9	44
	4-5	10
	4-11	11
	4-15	5
	4-15	25
	4-21	12
	4-25	21
	4-43	4
	5-41	8
	8-19	13
	8-23	13
	8-27	12
	9-81	17
	11-9	25
	11-13	25
	11-124	44
	11-131	10
320157	1-35	5
	1-37	5
	1-41	33
	2-88	41
	3-3	9
	3-11	8
	4-5	24
	4-9	13
	4-15	17
	4-16	51
	4-19	7
	4-21	11
	9-19	17
	9-21	2
	9-71	6
	9-75	4
	9-81	19
	10-35	19
	11-127	36
320158	1-9	9
	1-9	9
	1-9	23
	1-29	33
	1-32	40
	1-38	49
	2-79	32
	2-81	17
	2-83	14
	2-83	19
	2-91	38
	2-95	44
	3-9	42
	3-11	9

©2006 HYSTER COMPANY

NUMERICAL INDEX (Continued)

PART NO.	PG	ITEM
	4-35	42
	4-39	42
	7-3	31
	8-19	5
	8-23	5
	8-27	4
	8-31	6
	8-33	12
	9-22	35
	11-5	14
320159	1-5	9
	1-5	20
	1-14	21
	1-19	26
	1-29	23
	1-31	25
	1-31	25
	1-42	50
	1-47	10
	2-79	17
	2-81	11
	2-87	17
	2-88	37
	2-88	54
	2-91	21
	2-95	21
	2-101	9
	3-4	41
	3-7	23
	3-7	23
	4-5	15
	4-5	15
	4-5	33
	4-9	9
	4-11	16
	4-11	16
	4-15	10
	4-15	38
	4-15	38
	4-19	4
	4-35	28
	4-36	52
	4-39	28
	4-40	52
	7-7	10
	7-7	10
	7-9	10
	9-8	45
	9-31	6
	9-35	7
	9-35	7
	9-39	7
	9-69	4
	9-69	4
	9-71	8
	9-73	4
	9-75	9
	9-79	9
	10-4	7
	10-8	3
	10-31	7
	10-33	7
	11-29	39
	11-101	5
	11-127	17
	11-127	29
	11-131	5
320160	1-5	41
	1-9	13
	1-13	15
	1-25	21
	1-29	18
	1-29	35
	1-31	12
	1-31	12
	2-91	12
	2-91	47
	2-95	12
	2-95	50
	2-101	9
	2-103	9
	2-105	9
	8-3	29
	8-5	29
	8-9	29
	8-11	29
	8-16	49
	8-27	41
	9-15	39
	9-19	3
320161	1-14	22
	1-32	34
	1-32	34
	1-47	25
	4-6	63
	4-6	63
	4-11	15
	4-11	15
	4-15	37
	4-15	37
	4-36	55
	4-40	55
	5-7	22
	7-9	3
	9-5	13
	9-7	13
	9-8	42
	9-11	13
	9-15	28
	9-33	11
	10-4	3
	10-26	16
	11-5	5
	11-14	59
	11-19	9
	11-19	9
	11-117	16
	11-119	16
	11-123	35
	11-127	34
	11-131	5
320162	1-5	4
	1-5	23
	1-13	6
	1-13	6
	1-38	48
	1-49	32
	2-91	17
	2-95	17
	2-96	55
	2-101	12
	2-103	12
	2-105	12
	3-3	21
	3-7	14
	4-35	39
	4-39	39
	4-43	16
	9-15	32
	9-65	17
	9-67	17
	10-39	14
320165	11-124	42
	11-127	8
320166	1-31	17
	6-23	7
320169	11-127	12
320177	9-43	11
320181	11-57	2
321113	2-81	16
	2-83	18
321177	10-4	20
	11-5	2
321197	10-4	10
	10-8	9
	11-7	6
321293	6-3	7
	6-7	7
321487	9-8	43
	9-33	2
	11-19	16
323488	9-57	2
	9-57	11
323491	9-57	10
323493	9-57	22
323549	2-87	8
323864	1-42	46
	9-33	13
324896	7-3	20
325789	4-45	4
	4-73	7
	4-113	7
329067	1-5	31
	1-9	4
	1-21	36
	1-29	32
329069	7-3	27
	9-19	16
329420	6-3	8
330006	10-11	2
330009	10-11	2
330010	10-11	2
330011	10-11	2
330100	9-35	39
	9-39	39
330303	11-9	1
	11-13	1
331536	1-65	1
334325	9-35	17
	9-39	17
334340	9-35	9
	9-39	9
334475	10-33	12
334639	1-49	29
334886	10-12	19
335989	1-65	11
335991	1-65	12
339528	4-25	14
339530	9-8	52
	9-15	51
340044	4-25	4
343590	10-26	19
	11-117	19
344242	3-13	9
344244	3-13	6
344245	3-13	3
344246	3-13	5
344247	3-13	2

©2006 HYSTER COMPANY

NUMERICAL INDEX (Continued)

PART NO.	PG	ITEM
345400	3-13	10
345408	7-15	2
345409	7-15	3
345410	7-15	4
345411	7-15	5
345412	7-15	6
345421	7-4	40
345423	7-3	3
345424	7-15	11
345735	9-55	11
345929	9-55	9
346330	4-45	8
	4-49	12
346971	10-12	22
348368	9-65	6
	9-67	6
350521	8-9	7
	8-11	7
	8-15	26
353302	9-8	46
	9-65	1
	9-67	1
353379	4-35	29
	4-39	29
353453	9-21	32
356035	11-65	12
	11-89	15
358099	6-4	56
	6-8	56
358300	9-83	7
358674	4-35	32
	4-39	32
	4-43	9
359756	8-19	18
	8-23	18
362030	1-9	21
	1-29	9
	1-31	3
	1-35	15
	1-37	15
362102	10-17	7
	10-19	7
362255	7-3	8
362816	7-3	3
365344	1-27	14
366063	7-17	3
366064	7-17	5
366065	7-17	6
366066	7-3	2
	7-17	7
367251	1-35	6
	1-37	6
367960	4-103	17
367968	4-103	16
369242	1-17	14
	1-21	42
	4-35	3
	4-39	3
	7-3	12
369801	2-87	14
	2-91	25
	2-95	25
369804	8-6	40
	8-12	44
	8-15	9
	9-7	8
	9-11	8
	9-15	24
370009	4-6	57
	4-9	28
370175	9-85	3
370176	9-85	4
370196	9-85	5
370197	9-85	6
370471	4-22	52
370646	4-21	18
370647	4-21	17
	4-33	6
	4-73	17
370648	4-21	19
	4-33	1
370727	4-103	15
370728	4-103	12
370730	4-45	9
	4-73	27
370776	4-21	38
	4-29	9
370790	4-49	13
371172	9-52	4
	9-57	9
	9-57	14
371345	7-15	24
371666	7-3	37
373091	4-35	13
	4-39	13
374021	4-35	8
	4-39	8
375629	1-17	16
	1-22	43
	7-3	26
376026	12-2	6
	12-4	6
	12-5	6
	12-6	6
376064	1-25	2
376066	9-65	10
	9-67	10
376137	1-41	12
376186	9-83	2
376276	1-21	7
376319	1-49	4
376397	1-35	3
	1-37	3
	1-38	64
	2-101	24
	2-103	22
	2-105	24
376504	7-3	9
376505	7-3	11
376506	7-3	19
376510	7-3	14
376681	10-12	22
376682	11-9	4
	11-13	4
376840	1-25	18
376867	1-25	3
376868	1-25	4
376922	1-25	5
376947	1-17	28
	1-21	16
376948	1-17	30
	1-21	17
376949	1-17	29
	1-21	18
	4-31	6
378070	4-35	13
	4-39	13
378451	4-45	5
379048	10-35	22
379650	1-55	22
	4-21	27
379674	7-3	25
379675	4-35	4
	4-39	4
379697	7-3	16
379902	4-21	25
380109	4-106	1
380121	4-45	3
380292	9-35	40
	9-39	40
381846	4-21	17
	4-33	5
	4-59	3
	4-61	3
	4-95	15
	4-100	5
	4-109	19
381847	4-59	4
	4-61	4
	4-95	17
	4-109	20
381919	4-120	8
	11-136	8
	11-137	8
382689	5-30	32
382779	5-4	47
382795	5-13	10
382796	5-11	12
382810	5-3	25
382815	5-38	46
382818	5-3	2
382828	5-3	38
382845	5-13	8
382846	5-11	6
	5-13	16
382847	5-11	8
382848	5-11	9
	5-13	14
382912	5-21	32
	5-26	39
383412	5-3	42
383413	5-3	42
383414	5-3	42
383415	5-3	42
383416	5-3	42
383417	5-4	42
383418	5-4	42
383419	5-4	42
383420	5-4	42
383421	5-4	42
383789	2-99	9
	6-8	61
	9-43	29
	9-57	19
384014	4-35	18
	4-39	18
385133	11-17	5
385420	5-22	45
	5-26	49
385516	1-55	25
	1-57	24
387246	9-83	13
387247	9-83	14
387248	9-83	10
387286	10-19	6
	10-21	6
	10-23	6
387316	8-3	19

See Service Manual for service procedures.
©2006 HYSTER COMPANY

NUMERICAL INDEX (Continued)

PART NO.	PG	ITEM
387325	9-83	19
389688	1-65	3
389692	1-65	2
391484	10-26	21
	11-117	21
	11-119	21
392016	3-9	8
392197	10-8	15
	10-12	5
	10-31	28
	10-33	30
	11-7	14
	11-79	7
392198	10-11	4
392238	1-42	52
394101	9-35	34
	9-39	34
397676	4-5	7
	4-9	6
	4-11	1
	4-15	2
	4-19	3
	9-27	33
	10-26	29
398184	7-7	11
	9-69	6
	9-71	10
	9-73	6
	9-75	7
636907	11-17	8
636954	10-17	3
	10-19	3
636956	10-21	3
	10-23	3
637166	10-17	5
	10-19	5
	10-21	5
	10-23	5
637168	10-21	11
	10-23	11
	11-17	10
637170	11-17	4
638224	10-17	4
	10-19	4
	10-21	4
	10-23	4
638256	10-21	12
	10-23	12
	11-17	11
638299	11-17	3
806425	4-73	22
806426	4-73	14
806427	4-73	20
815597	1-10	49
815620	10-17	10
	10-19	10
	10-21	9
	10-23	9
815914	4-35	1
	4-39	1
815932	10-26	9
	11-117	9
	11-119	9
	11-123	18
	11-127	21
816045	1-19	17
816046	1-19	15
816117	8-19	29
	8-23	29
	8-27	26
	9-25	13
	9-29	33
816232	8-6	39
	8-12	42
	8-15	8
	9-19	11
	9-21	8
816372	1-19	19
816377	1-27	19
816378	1-27	18
816380	1-25	13
816441	4-5	13
	4-9	7
	4-15	8
816442	4-35	22
	4-39	22
816468	9-33	4
816470	10-17	6
	10-19	6
816504	7-19	33
816508	7-19	14
816509	7-19	13
816552	6-4	57
816578	9-83	2
816580	9-83	7
816590	3-3	3
816597	9-51	11
816690	9-51	8
816691	9-51	7
816692	9-51	9
816693	9-51	10
816694	9-51	6
833772	4-113	13
	11-139	11
	11-141	11
885955	11-136	4
	11-137	4
	11-139	4
886391	9-21	5
888012	1-67	8
	1-69	8
888139	11-139	6
888333	9-8	54
	9-15	35
919724	3-3	16
	3-7	8
931586	3-4	45
980360	9-5	23
	9-7	23
980938	9-8	49
1152816	4-29	10
1194251	10-12	18
	11-10	40
	11-14	40
1300057	4-21	40
	4-73	18
1300117	7-3	13
1300165	4-35	38
	4-39	38
	7-3	33
	9-71	27
	9-75	18
	10-12	23
	11-19	15
1300231	4-59	11
	4-61	11
	4-95	16
1300757	4-25	9
1301001	1-41	35
1301020	1-41	13
	1-45	
1301086	1-49	8
	1-49	21
	1-49	24
1301121	1-41	17
1301127	1-41	5
1301154	4-45	1
	4-49	14
	4-51	1
	4-53	7
	4-59	1
	4-61	1
	4-63	11
	4-93	7
	4-97	6
1301156	4-33	11
1301157	4-33	7
1301177	1-17	24
	1-21	22
	1-41	34
	5-41	22
	9-35	3
	9-39	3
1301189	1-17	23
	1-21	23
1301224	4-21	36
1301228	4-83	9
	4-87	8
1301229	4-45	19
	4-49	3
1301254	1-19	11
1301255	1-17	27
	1-21	25
1301263	1-17	19
1301264	1-17	20
1301282	4-21	21
1301284	1-41	42
	4-21	16
1301286	1-17	25
	1-21	26
1301292	1-17	33
	1-21	20
1301293	1-17	32
	1-21	19
1301296	4-21	14
1301297	1-21	37
1301310	1-41	7
1301323	1-41	4
1301326	1-41	1
1301372	1-25	8
1301374	1-25	10
1301375	1-25	11
	1-27	24
1301389	1-41	11
1301393	1-41	14
1301395	1-41	19
1301396	1-41	20
1301397	1-41	21
1301398	1-41	22
1301399	1-41	26
1301400	1-41	27
1301404	1-41	23
1301405	1-41	24
1301422	7-3	3
1301424	4-25	19
1301425	7-3	28
1301426	7-3	24
1301437	7-3	21

©2006 HYSTER COMPANY

NUMERICAL INDEX (Continued)

PART NO.	PG	ITEM
1301535	2-79	15
	2-81	8
1301587	1-41	10
1301589	1-41	25
1301593	4-25	3
1301598	1-41	36
1301613	4-21	28
1301617	4-33	11
1301619	4-33	7
1301640	4-21	32
1301645	4-22	57
1301650	10-26	8
	11-117	8
	11-119	8
	11-123	21
	11-127	23
1301676	7-3	34
1301685	1-47	8
1301686	1-47	17
1301700	1-5	15
	1-27	17
1301702	1-35	11
	1-37	11
1301703	1-35	10
	1-37	10
1301704	4-21	15
1301708	1-41	2
1301720	4-73	28
1301727	1-47	9
	4-43	6
1301739	4-21	26
1301783	1-19	8
1302109	1-29	37
	1-32	41
1302172	10-29	13
	11-133	14
1302176	10-29	15
	11-133	16
1302938	2-99	6
	5-7	28
1303383	11-10	46
	11-14	46
1303391	10-12	26
	11-9	7
	11-13	7
1303417	12-2	7
	12-4	7
1303432	7-9	16
1303551	6-4	35
	6-8	35
1304709	7-7	2
1304971	1-17	17
1306902	1-19	16
1306924	4-25	15
1307051	1-19	12
1307110	4-21	8
	4-22	53
	4-22	58
1307121	4-5	8
	4-15	3
	4-15	23
1307682	4-22	61
1307683	4-22	57
1307684	4-22	52
1307687	4-5	18
	4-22	43
	4-22	43
	4-29	11
	5-41	21
1307694	4-21	22
1307736	7-3	39
1307737	1-17	15
	1-21	21
	7-3	38
1307755	1-19	8
1307772	9-35	31
	9-39	31
1307775	9-35	4
	9-39	4
1308786	9-85	16
1309120	6-19	15
1309824	1-27	16
1309912	6-4	42
1310611	1-42	48
	9-33	9
	11-19	7
1310625	4-25	15
	4-29	5
1310627	4-33	7
	4-33	11
1310630	4-21	20
	4-33	2
1310638	4-35	19
	4-39	19
1310641	4-35	6
	4-39	6
1310688	4-21	3
1310692	4-21	6
	4-22	54
	4-22	59
1310710	9-35	14
	9-39	14
1310715	9-36	45
	9-40	47
1311217	1-19	14
1311260	1-47	16
1311267	1-47	1
1311268	4-11	29
	4-25	18
1311273	1-41	18
1311287	1-17	10
	1-22	45
1311288	1-17	9
	1-21	38
1311295	1-47	19
1311296	1-47	20
1311297	1-47	21
1311300	1-47	7
1311388	1-17	26
	1-21	24
1311403	4-6	71
	4-22	63
1311423	1-67	2
	1-69	2
1311425	4-40	63
1311430	1-21	31
1311432	1-21	28
1311433	1-21	29
1312083	6-19	26
1312090	6-19	23
1312226	1-19	8
1312450	1-27	16
1312616	6-11	37
	6-15	37
1313368	1-41	43
	1-42	47
1313733	1-45	1
1313734	1-45	2
1313735	1-45	4
1313736	1-45	5
1313737	1-45	6
1313744	1-45	3
1315641	1-63	2
1315643	1-59	2
1315781	7-15	15
1315872	4-21	23
	4-21	23
1316326	6-4	41
1316395	9-55	7
1316397	9-55	8
1316398	9-55	10
1316527	4-22	72
	4-25	15
	4-29	5
	4-31	2
	4-31	3
	4-31	4
	4-31	5
1316542	1-65	14
1316593	1-47	6
	4-25	17
1318005	5-21	6
	5-25	6
1318025	9-55	4
1318026	9-55	5
1318027	9-55	5
1318045	9-55	3
1318047	9-55	6
1318443	1-19	20
1318606	9-61	26
1318609	9-61	5
	9-61	10
1318613	9-63	6
	9-63	12
1318617	9-63	5
	9-63	11
1318619	9-63	17
1318621	9-63	24
1319177	1-27	7
1319190	4-6	45
	4-9	26
1319620	9-39	45
1320979	9-45	7
1320980	9-47	79
1320982	9-45	19
	9-45	29
	9-45	32
	9-46	42
	9-46	57
	9-46	72
	9-47	80
1320983	9-45	4
1320986	9-45	2
1320994	9-45	22
	9-46	44
	9-46	58
	9-46	73
1320998	9-45	23
	9-46	43
	9-46	59
	9-46	74
1321381	9-45	8
1321890	10-29	11
	11-133	12
1321891	10-29	12
	11-133	13
1322010	2-101	7
	2-103	7

See Service Manual for service procedures.
©2006 HYSTER COMPANY

NUMERICAL INDEX (Continued)

PART NO.	PG	ITEM
	2-105	7
1322039	11-123	25
	11-128	42
1322079	9-7	1
1322673	4-103	13
1323052	9-35	13
	9-39	13
1323115	1-55	23
	1-57	22
1323116	1-55	26
	1-57	25
1323117	1-55	24
	1-57	23
1323146	4-5	40
	4-19	16
1323166	11-123	26
	11-128	43
1323576	4-73	3
1323577	4-69	3
	4-71	5
1323579	4-69	6
	4-109	3
	4-111	4
	4-113	4
1323586	4-73	4
1323852	4-29	20
1323854	4-29	2
1323889	6-5	59
1324463	8-3	5
1324517	4-6	54
	4-11	7
1324577	1-17	13
	1-19	7
	1-22	48
	1-25	19
1325346	1-55	13
	1-57	13
1325519	1-5	44
	1-17	4
	1-21	3
1325548	1-41	16
1325550	1-21	6
1325557	1-5	30
	1-9	3
1325564	7-3	29
1325567	1-19	1
1325576	1-19	2
1325582	1-19	4
1325585	1-41	15
1325597	1-17	7
1325623	1-17	21
1325624	1-17	22
1325641	7-19	19
1325646	7-19	26
1325729	1-21	30
1325756	10-8	14
	10-31	30
	10-33	32
	11-7	13
	11-79	9
1325760	10-31	12
	10-33	26
	11-7	15
	11-29	26
	11-79	3
1325761	10-8	12
	10-12	6
	10-31	27
	10-33	29
	11-7	11
	11-79	5
1325763	10-8	16
	10-8	17
	10-31	11
	10-33	25
	11-7	16
	11-29	27
	11-79	4
1325764	10-31	11
	10-33	25
	11-7	16
	11-29	28
	11-79	4
1325765	10-8	10
	10-31	25
	10-33	27
	11-7	9
	11-29	25
	11-79	24
1325766	10-12	7
1325767	10-12	9
1325768	10-12	10
1325781	10-12	8
1325782	10-12	8
1325783	10-12	8
1325784	10-12	12
1325785	10-4	12
	10-8	4
	10-31	2
	10-33	2
	11-29	36
1325791	6-3	
1325795	10-4	13
	10-8	6
	10-31	1
	10-33	1
	11-29	32
1325797	10-4	11
	10-8	5
	10-31	6
	10-33	6
	11-29	33
1325798	10-4	11
	10-8	5
	10-31	6
	10-33	6
	11-29	34
1325855	7-19	19
1326071	4-35	35
	4-39	35
1326764	10-8	17
1326772	1-47	22
1326805	1-65	22
1326808	7-3	25
1326948	9-5	15
1327164	4-109	18
1327895	7-3	36
1328205	1-65	18
1328548	9-55	1
1328946	10-17	8
	10-19	8
1329440	11-65	21
1329441	11-68	1
	11-114	8
1329442	11-68	2
	11-114	9
1329443	11-35	25
	11-48	41
	11-68	3
	11-79	2
	11-101	30
	11-114	10
1329445	11-68	5
	11-114	3
1329447	11-68	8
	11-114	4
1329448	11-68	10
	11-114	5
1329449	11-68	16
	11-114	2
1329458	11-47	38
1329478	11-52	5
1329493	11-102	61
1330134	9-85	15
1330171	8-19	15
	8-23	15
	8-27	15
1330356	4-73	26
1330409	3-11	3
	4-35	20
	4-39	20
	4-59	9
	4-63	9
	4-65	11
	4-67	11
	4-74	3
	4-77	7
	4-79	8
	4-91	1
	4-93	1
	4-95	13
	4-97	8
	4-99	8
	4-116	4
	4-118	4
	4-119	1
	9-21	5
	9-52	2
	9-52	5
	10-39	4
1330410	4-45	13
	4-49	7
	4-51	7
	4-53	5
	4-55	5
	4-63	1
	4-91	3
	4-95	1
	4-115	1
	4-120	1
1330411	4-61	9
	4-65	1
	4-67	1
	4-74	5
	4-77	9
	4-79	10
	4-80	3
	4-83	1
	4-85	6
	4-87	1
	4-91	5
	4-93	5
	4-95	4
	4-97	1
	4-105	1
	4-109	7
	4-111	10
	4-113	10

©2006 HYSTER COMPANY

NUMERICAL INDEX (Continued)

PART NO.	PG	ITEM
1330412	4-65	5
	4-65	21
	4-67	5
	4-91	9
	4-95	22
	4-99	5
	4-103	1
	4-109	10
	4-111	5
	4-113	5
1330413	4-45	10
	4-47	6
	4-49	10
	4-65	3
	4-65	17
	4-67	3
	4-67	17
	4-69	1
	4-71	1
	4-77	3
	4-79	14
	4-95	6
	11-136	9
1330414	3-11	3
	4-35	20
	4-39	20
	4-59	10
	4-63	10
	4-65	12
	4-67	12
	4-74	4
	4-77	8
	4-79	9
	4-91	2
	4-93	2
	4-95	14
	4-97	9
	4-99	9
	4-116	5
	4-118	5
	4-119	2
	9-21	5
	9-52	2
	9-52	6
	10-39	4
1330415	4-45	14
	4-49	8
	4-51	8
	4-53	6
	4-55	6
	4-63	2
	4-91	4
	4-95	2
	4-115	2
	4-120	2
1330416	4-61	10
	4-65	2
	4-67	2
	4-74	6
	4-77	10
	4-79	11
	4-80	4
	4-83	2
	4-85	7
	4-87	2
	4-91	6
	4-93	6
	4-95	5
	4-97	2
	4-105	2
	4-109	8
	4-113	11
1330417	4-65	6
	4-67	6
	4-91	10
	4-95	23
	4-99	6
	4-103	2
	4-109	11
	4-111	6
	4-113	6
1330418	4-45	11
	4-47	7
	4-49	11
	4-65	4
	4-67	4
	4-69	2
	4-71	2
	4-77	4
	4-95	7
	11-136	10
1330419	4-43	13
	4-47	8
	4-55	7
	4-63	7
	4-81	1
	4-81	4
	4-81	5
	4-83	6
	4-85	1
	4-87	4
	4-87	7
	4-88	1
	4-88	8
	4-88	9
	4-88	10
	4-88	11
	4-89	1
	4-98	1
	4-100	1
	4-104	1
	4-116	1
	4-117	1
	4-118	1
	4-119	4
	4-120	4
1330420	4-47	10
	4-59	5
	4-61	5
	4-65	9
	4-67	9
	4-88	4
	4-89	4
	4-95	26
	4-103	6
	4-109	16
	4-120	9
1330421	4-63	3
	4-65	7
	4-67	7
	4-85	4
	4-88	6
	4-89	6
	4-105	4
	4-114	1
1330422	3-11	2
	4-45	15
	4-49	5
	4-65	13
	4-67	13
	4-80	1
	4-81	6
	4-91	7
	4-95	9
	4-98	4
	4-99	1
	4-103	4
	4-113	14
1330423	4-47	4
	4-51	3
	4-65	15
	4-67	15
	4-69	8
	4-71	3
	4-74	7
	4-77	11
	4-79	3
	4-91	11
	4-95	24
	4-103	4
	11-139	7
	11-141	7
1330424	4-43	14
	4-47	9
	4-55	8
	4-55	12
	4-59	6
	4-63	8
	4-81	2
	4-83	7
	4-85	2
	4-87	5
	4-88	2
	4-89	2
	4-98	2
	4-100	2
	4-104	2
	4-116	2
	4-117	2
	4-118	2
	4-119	5
	4-120	5
1330426	4-47	11
	4-61	6
	4-65	10
	4-67	10
	4-88	5
	4-89	5
	4-95	27
	4-103	9
	4-109	17
	4-120	10
1330427	4-63	4
	4-65	8
	4-67	8
	4-85	5
	4-88	7
	4-89	7
	4-105	5
	4-114	2
1330428	3-11	2
	4-45	16
	4-49	6
	4-65	14
	4-67	14
	4-80	2
	4-81	7
	4-91	8

©2006 HYSTER COMPANY

NUMERICAL INDEX (Continued)

PART NO.	PG	ITEM
	4-95	10
	4-98	5
	4-103	5
	4-113	15
1330429	4-47	5
	4-51	4
	4-65	16
	4-67	16
	4-69	9
	4-71	4
	4-74	8
	4-77	12
	4-79	4
	4-91	12
	4-95	25
	4-99	2
	4-103	5
	11-139	8
	11-141	8
1330437	4-45	12
	4-47	1
	4-49	9
	4-59	8
	4-63	5
	4-65	18
	4-67	18
	4-69	10
	4-74	10
	4-80	6
	4-87	3
	4-95	3
	4-97	3
	4-99	7
	4-103	3
	4-105	3
	4-106	4
	4-109	12
	4-115	3
	4-116	6
	4-118	6
	4-119	3
	4-120	3
	9-21	5
	11-135	3
1330438	4-43	15
	4-45	18
	4-47	2
	4-55	9
	4-59	7
	4-63	6
	4-65	19
	4-67	19
	4-69	4
	4-73	12
	4-74	9
	4-80	5
	4-81	3
	4-87	6
	4-88	3
	4-95	11
	4-98	3
	4-99	3
	4-100	3
	4-103	7
	4-104	3
	4-105	6
	4-109	9
	4-114	3
	4-116	3
	4-117	3
	4-118	3
	4-119	6
	4-120	6
1330439	4-45	17
	4-47	3
	4-51	6
	4-53	2
	4-55	2
	4-56	4
	4-65	20
	4-67	20
	4-69	7
	4-74	11
	4-77	5
	4-79	1
	4-80	7
	4-81	8
	4-85	9
	4-95	8
	4-98	6
	4-99	4
	4-100	4
	4-103	8
	4-109	15
	11-136	11
	11-139	9
	11-141	9
1330574	4-21	39
	7-3	35
1330576	1-65	16
1330603	11-117	23
	11-119	23
1330917	1-65	8
1330920	1-67	14
1331025	7-9	6
	9-35	28
	9-39	28
1331081	9-58	2
1331233	4-45	2
	4-49	4
	4-51	2
	4-53	8
	4-55	10
	4-59	2
	4-61	2
	4-63	12
	4-83	10
	4-87	9
	4-93	4
	4-97	7
	4-97	11
1331560	4-33	10
1331591	4-35	34
	4-39	34
1331592	4-35	34
	4-39	34
1331593	4-36	59
1331851	9-43	27
1331909	2-101	2
	2-103	2
	2-105	2
1331937	9-25	1
	9-25	31
	9-27	10
	9-27	14
1332206	8-19	33
	8-23	33
1332278	11-33	7
	11-79	18
1332300	11-33	8
1332310	11-33	4
	11-35	14
1332315	11-35	10
1332342	11-65	11
	11-89	14
1332344	11-65	9
	11-89	3
1332346	11-65	8
	11-89	4
1332801	6-19	4
1332805	6-19	5
1332940	7-7	22
	7-9	22
1332941	7-7	19
	7-9	19
1334461	1-55	4
	1-57	4
1334462	1-55	10
	1-57	10
1334463	1-57	5
1334464	1-55	8
	1-57	8
1334465	1-55	6
	1-57	6
1334466	1-55	9
	1-57	9
1334467	1-55	11
	1-57	11
1334468	1-55	7
1334470	1-55	3
1334491	7-7	23
	7-9	23
1334633	11-71	24
	11-73	5
	11-75	24
	11-111	23
	11-113	27
1334634	11-33	3
1334999	4-109	4
1335126	1-67	7
	1-69	7
1335137	1-65	20
1335575	1-55	12
1335578	1-57	3
1335579	1-55	5
1335867	7-19	4
1335871	7-19	3
1336054	9-25	32
	9-27	24
	9-33	7
	11-19	5
1336112	9-79	12
	9-81	2
1336173	4-69	5
	4-109	6
1336605	1-65	7
1336789	4-35	5
	4-39	5
	4-114	
1336790	4-33	3
	4-104	
1336796	4-21	7
1336898	3-7	26
1336912	1-5	32
	1-10	51
1336914	1-5	28
	1-9	1
1336986	1-21	32

NUMERICAL INDEX (Continued)

PART NO.	PG	ITEM
1337266	9-25	30
	9-33	8
	11-19	6
1338037	10-26	20
	11-117	20
	11-119	20
1338738	1-65	21
1338881	5-15	9
1339113	6-19	19
1339114	6-19	20
1339115	6-19	12
1339116	6-19	13
1339119	6-19	10
1339121	6-19	9
1339480	9-43	17
	9-43	23
1339828	1-69	15
1342578	9-61	19
1342664	1-21	35
1343145	6-19	24
1343161	8-19	16
	8-23	16
	9-52	3
1343162	8-19	17
	8-23	17
1345023	4-6	72
	4-11	26
1345026	4-120	11
1345027	4-120	7
1345675	1-38	56
1345717	9-5	5
1345719	8-19	1
	8-19	2
	8-23	2
	8-23	2
	8-35	
	8-35	
1345720	4-21	33
1345939	1-67	1
	1-69	1
1346421	9-58	
	9-79	10
	9-81	1
1346424	1-25	7
1346425	1-25	9
1346426	1-25	1
1346600	6-4	29
1346893	1-67	6
	1-69	6
1347202	11-123	37
	11-127	38
1347224	4-55	11
	4-93	3
	4-97	10
	4-97	10
1347588	6-3	9
1347770	6-11	2
	6-15	2
1347772	6-11	11
	6-15	11
1347774	6-11	9
	6-15	9
1347800	6-12	43
	6-16	43
1347812	6-11	10
	6-15	10
1347813	6-12	40
	6-16	40
1347814	6-11	13
	6-15	13
1347815	6-11	14
	6-15	14
1347816	6-11	15
	6-15	15
1347817	6-11	16
	6-15	16
1347822	6-11	20
	6-15	20
1347831	6-11	26
	6-15	26
1347835	6-15	30
1347839	6-11	34
	6-15	34
1349793	9-85	13
1350014	9-35	22
	9-39	22
1350710	9-58	3
1350711	9-58	4
1350712	9-58	5
1350862	9-43	24
1350911	1-42	53
	4-5	6
	4-19	2
1350914	4-5	30
	4-9	17
	4-19	10
1350955	8-20	38
	8-24	38
	8-27	30
1350997	9-58	1
1351068	4-56	1
	4-74	1
	4-77	13
	4-79	5
	4-109	13
	4-111	8
	4-113	8
	11-139	1
	11-141	1
1351069	4-56	2
	4-74	2
	4-77	14
	4-79	6
	4-109	14
	4-111	9
	4-113	9
	11-139	2
	11-141	2
1352190	1-67	5
	1-69	5
1352202	9-35	16
	9-39	16
1352602	4-53	3
	4-55	3
	4-77	1
	4-79	12
	4-106	3
	11-135	1
	11-136	1
	11-137	1
1352603	4-53	4
	4-55	4
	4-77	2
	4-79	13
	4-106	5
	11-135	2
	11-136	2
	11-137	2
1354237	4-73	3
1354812	3-13	7
1354813	3-13	8
	3-15	14
1355027	1-21	13
1355028	1-21	11
1355031	10-29	15
	11-133	16
1355038	9-35	35
	9-39	35
1355113	1-5	27
	1-9	5
1355326	7-15	8
1355346	6-19	7
1356943	1-27	2
1356947	1-47	24
	4-5	14
	4-5	14
	4-9	8
	4-11	2
	4-11	14
	4-11	14
	4-15	9
	4-15	36
	4-15	36
	4-22	51
	4-35	41
	4-36	54
	4-39	41
	4-40	54
	4-40	60
1356948	1-27	2
1357026	7-15	9
1357734	6-19	25
1357735	6-19	28
1358734	1-27	2
1360660	4-35	2
	4-39	2
1360777	1-27	7
1361087	1-10	46
	1-38	42
1361205	4-29	15
1361207	4-29	16
1361208	4-45	20
	4-49	1
1361209	4-45	21
	4-49	2
1362277	4-9	21
	4-19	13
1363885	4-35	20
	4-39	20
	4-53	1
	4-55	1
	4-61	8
	4-77	6
	4-79	7
	4-83	3
	4-85	8
	4-103	3
	11-136	3
	11-137	3
1363886	4-51	5
	4-56	3
	4-61	7
	4-73	6
	4-77	15
	4-79	2
	4-83	8
	4-85	3
	4-89	3

See Service Manual for service procedures.
©2006 HYSTER COMPANY

NUMERICAL INDEX (Continued)

PART NO.	PG	ITEM
	4-103	7
	11-139	3
	11-141	3
1364272	10-4	6
	10-8	2
	10-31	5
	10-33	5
	11-29	38
	11-127	16
	11-127	28
1364542	1-9	32
1367282	4-5	22
	4-15	15
1367342	2-88	46
1368151	1-41	10
1369496	1-27	6
1369520	1-19	22
1370072	10-4	
	10-8	
	10-11	
	10-14	
	10-26	
1370073	10-4	
	10-8	
	10-11	
	10-14	
	10-26	
1370074	10-4	
	10-8	
	10-11	
	10-14	
	10-26	
1370075	10-4	
	10-8	
	10-11	
	10-14	
	10-26	
1370076	10-4	
	10-8	
	10-11	
	10-14	
	10-26	
1370077	10-4	
	10-8	
	10-11	
	10-14	
	10-26	
1370078	10-4	
	10-8	
	10-11	
	10-14	
	10-26	
1370079	10-4	
	10-8	
	10-11	
	10-14	
	10-26	
1370080	10-4	
	10-8	
	10-11	
	10-14	
	10-26	
1370081	10-4	
	10-8	
	10-11	
	10-14	
	10-26	
1370082	10-4	
	10-8	
	10-11	
	10-14	
	10-26	
1370083	10-4	
	10-8	
	10-11	
	10-14	
	10-26	
1370084	10-4	1
1370085	10-4	1
1370086	10-4	1
1370087	10-4	1
1370088	10-4	1
1370089	10-4	1
1371383	5-7	1
1371398	7-19	33
1372808	10-4	1
1372809	10-4	1
1372810	10-4	1
1372811	10-4	1
1372812	10-4	1
1372813	10-4	1
1372814	10-8	1
1372815	10-8	1
1372816	10-8	1
1372817	10-8	1
1372818	10-8	1
1372819	10-8	1
1372821	11-5	1
1372822	11-5	1
1372824	11-7	1
1372825	11-7	1
1372869	10-4	
	10-8	
	10-11	
	10-14	
	10-26	
1372870	10-4	
	10-8	
	10-11	
	10-14	
	10-26	
1372884	11-10	43
	11-14	43
1372899	10-21	8
	10-23	8
1372908	10-21	1
	10-23	1
1372909	10-21	1
	10-23	1
1372910	10-21	1
	10-23	1
1372911	10-21	1
	10-23	1
1372912	10-21	1
	10-23	1
1372913	10-21	1
	10-23	1
1372921	10-21	7
	10-23	7
1372922	10-21	13
	10-23	13
1372952	12-11	1
1372954	12-11	1
1372958	10-4	14
1372961	10-4	19
1372962	10-4	11
	10-8	5
	10-31	6
	10-33	6
	11-29	35
1372971	11-9	30
	11-13	30
1372980	5-3	
	5-15	
	5-19	
	5-21	
	5-29	
	5-33	
	5-37	
1372982	5-41	6
1372990	7-3	1
	7-15	
1372993	9-5	21
	9-61	
1372994	10-39	
1372995	9-43	20
	9-45	
1373010	11-9	28
	11-13	28
1373011	11-9	31
	11-13	31
1373012	11-9	32
	11-13	32
1373014	11-9	29
	11-13	29
1373015	11-9	29
	11-13	29
1373016	11-9	29
	11-13	29
1373020	11-10	44
	11-14	44
1373025	11-7	7
1373026	11-7	7
1373027	11-7	7
1373028	11-7	4
1373029	11-7	4
1373030	11-7	4
1373031	11-5	10
1373032	11-5	10
1373033	11-5	10
1373034	11-5	18
1373035	11-5	18
1373036	11-5	18
1373037	11-5	9
1373038	11-5	17
1373039	11-7	3
1373049	11-7	2
1373050	11-5	16
1373051	11-5	8
1373054	11-9	2
	11-13	2
1373055	11-9	2
	11-13	2
1373115	10-8	1
1373116	10-8	1
1373117	10-8	1
1373118	10-8	1
1373119	10-8	1
1373120	10-8	1
1373126	11-17	9
1373127	11-17	7
1373129	11-17	12
1373136	11-5	
	11-7	
	11-9	
	11-117	
	11-119	
1373137	11-5	

NUMERICAL INDEX (Continued)

PART NO.	PG	ITEM
	11-7	
	11-9	
	11-117	
	11-119	
1373174	12-11	2
1373175	10-31	18
	10-33	18
1373176	10-31	14
	10-33	14
1373177	10-33	11
	12-9	2
1373180	10-11	2
1373181	10-11	2
1373182	10-11	2
1373183	10-11	2
1373196	10-31	19
	10-33	19
1373203	10-33	9
1373204	10-31	17
	10-33	17
1373212	10-33	10
1373215	10-26	23
1373216	10-31	22
	10-33	22
1373230	12-9	1
1373233	12-9	
1373236	12-9	1
1373237	12-9	1
1373238	12-9	
1373239	12-9	
1373265	6-23	
1373269	2-88	47
1373270	5-7	27
1373274	2-99	3
1373284	12-9	3
1373285	2-79	10
	2-81	6
1373292	2-79	22
	2-81	7
1373293	2-105	30
1373300	10-31	17
	10-33	17
1373311	10-33	10
1373312	10-33	9
1373319	12-9	
1373320	12-9	
1373329	10-8	17
	10-31	11
	10-33	25
	11-7	16
	11-29	29
	11-79	4
1373335	10-35	12
	11-119	11
	11-119	23
1373346	12-9	
1373347	12-9	1
1373349	11-10	45
	11-14	45
1373358	10-11	2
1373359	10-11	2
1373360	10-11	2
1373381	3-9	14
1373389	9-43	21
	9-49	
1373412	3-3	3
1373413	3-3	3
1373415	3-3	19
	3-7	2
1373416	3-3	20
	3-7	3
1373430	2-101	3
	2-103	3
	2-105	3
1373435	2-101	31
1373436	2-101	4
	2-103	4
	2-105	4
1373437	2-79	13
	2-81	9
1373440	6-5	59
1373446	2-79	12
	2-81	3
	2-83	3
1373448	2-79	10
	2-83	6
1373450	12-9	1
1373451	12-9	1
1373452	2-87	2
1373502	8-31	2
	8-33	10
1373505	9-43	14
1373506	9-43	15
1373507	9-43	16
1373508	9-43	18
1373509	9-43	19
1373510	9-43	25
1373511	9-43	26
1373514	9-25	14
1373515	9-25	33
1373516	9-25	22
	9-27	15
1373517	9-25	8
	9-27	2
1373527	1-35	13
1373540	1-35	1
1373541	1-35	1
1373547	1-35	37
	1-37	37
1373549	9-29	4
1373551	2-79	7
1373552	2-84	6
1373553	2-79	8
	2-84	7
1373556	2-79	1
	2-81	1
	2-83	1
	2-84	
1373563	2-79	29
	2-83	7
1373566	2-79	28
	2-83	8
1373570	1-49	1
1373571	1-49	2
1373572	1-49	3
1373573	1-49	13
1373574	1-49	26
1373585	3-3	5
1373586	3-3	6
1373604	8-19	2
	8-23	2
	8-35	
1373606	4-6	53
	4-11	6
1373611	9-35	25
	9-39	25
	9-55	
1373626	9-29	7
1373627	9-29	12
1373628	9-25	28
	9-27	21
1373629	9-25	23
	9-27	16
1373630	9-25	24
	9-27	17
1373631	9-25	25
	9-27	19
1373632	9-25	26
	9-27	18
1373633	9-25	27
	9-27	20
1373634	9-25	7
1373635	9-25	6
1373636	9-29	11
1373637	9-29	10
1373638	9-29	13
1373639	9-29	6
1373640	9-29	14
1373641	9-29	16
1373642	9-29	15
1373643	9-29	23
1373644	9-29	24
1373646	9-29	2
1373647	9-29	22
1373648	9-29	9
1373649	9-29	8
1373650	9-29	3
1373651	9-25	3
	9-27	12
1373652	9-25	4
1373653	1-35	36
1373654	1-35	36
1373655	1-35	26
1373656	1-35	26
1373657	1-35	39
	1-37	39
1373658	1-35	39
	1-37	39
1373659	1-35	40
	1-37	40
1373662	6-23	
1373675	7-19	20
1373680	9-25	21
1373681	9-25	10
	9-27	5
1373682	9-25	9
	9-27	4
1373684	3-3	23
	3-7	4
1373685	3-9	41
1373687	7-19	17
1373688	7-19	35
1373689	7-19	18
	7-20	39
1373690	1-19	23
1373691	1-21	5
1373701	1-19	21
1373710	1-65	5
1373718	1-17	1
1373725	1-19	21
1373727	1-47	7
1373728	1-47	23
1373739	1-5	17
1373740	1-5	17
1373743	1-35	12
1373744	1-37	12
1373746	1-5	37
1373747	1-5	36

©2006 HYSTER COMPANY

NUMERICAL INDEX (Continued)

PART NO.	PG	ITEM
1373750	1-49	14
1373760	1-49	10
1373761	1-49	27
1373773	1-49	18
1373788	5-9	3
1373791	3-3	28
	4-9	20
1373795	3-3	28
1374090	6-11	8
	6-15	8
1374097	6-11	36
	6-15	36
1374099	6-12	41
	6-16	41
1374428	1-27	2
1374550	6-11	22
	6-15	22
1374558	6-11	29
1374750	1-55	21
	1-57	21
1375018	7-15	7
1375021	7-15	25
1375232	3-4	37
1375381	8-19	7
	8-23	7
	8-27	25
	8-27	43
1375984	1-25	12
	1-27	23
1375985	1-25	12
	1-27	24
1376007	12-4	1
1376844	9-69	17
	9-71	23
	9-73	17
	9-75	26
1376933	9-76	7
1376934	9-76	12
1377183	5-9	3
1377187	4-21	23
1377189	4-21	23
1377202	9-49	10
1377203	9-49	11
1377204	9-49	5
1377205	9-49	6
1377206	9-49	7
1377207	9-49	8
1377208	9-49	9
1377209	9-49	2
1377212	9-46	63
1377213	9-45	11
	9-45	34
	9-46	49
	9-46	64
1377214	9-45	12
	9-45	35
	9-46	50
	9-46	65
1377215	9-45	13
	9-46	36
	9-46	51
	9-46	66
1377216	9-45	14
	9-46	37
	9-46	52
	9-46	67
1377217	9-45	14
	9-46	37
	9-46	52
	9-46	68
1377218	9-45	16
	9-46	39
	9-46	54
1377219	9-45	15
	9-46	40
	9-46	53
	9-46	69
1377220	9-45	20
	9-46	46
	9-46	61
	9-46	76
1377224	9-46	48
1377226	9-45	33
1377228	9-45	10
1377229	9-45	9
1377232	9-45	30
1377236	9-45	25
1377237	9-45	3
1377238	9-45	1
1377271	1-25	12
	1-25	12
1377702	1-25	12
	1-25	12
1377703	1-25	12
	1-25	12
1377704	1-25	12
	1-25	12
1377726	1-25	23
	1-27	1
1377727	1-25	23
	1-27	1
1377728	1-21	28
1377729	1-21	29
1379726	6-19	6
1379750	6-19	18
1379753	6-15	28
1380777	6-11	4
	6-15	4
1380784	6-3	8
	6-7	8
1380796	6-16	42
1380797	6-11	27
	6-15	27
1380798	6-11	1
	6-15	1
1381125	1-65	9
1381932	7-19	16
1381940	7-19	1
1381953	5-7	32
1381956	1-53	1
1381959	1-53	1
1381990	9-5	4
	9-65	1
1381998	4-29	
1382005	1-5	6
1382007	1-5	7
1382017	1-5	6
1382018	1-5	7
1382020	4-6	67
1382023	3-3	24
	3-7	12
1382028	9-57	7
1382032	9-61	1
1382036	9-61	4
1382037	9-61	6
1382040	9-61	9
1382041	9-61	11
1382042	9-61	12
1382044	9-61	13
1382045	9-61	14
1382046	9-61	15
1382047	9-61	16
1382048	9-61	17
1382050	9-61	29
1382051	9-61	18
1382052	9-61	24
1382053	9-61	20
1382054	9-61	21
1382055	9-61	22
1382332	1-35	24
	1-37	24
1382352	7-20	45
1382358	2-105	29
1382359	2-105	31
1382365	9-25	19
1382366	9-25	20
1382367	9-5	1
1382368	9-5	3
	9-7	3
1382369	9-5	2
	9-7	1
1382381	12-2	1
1382382	12-2	1
1382383	12-2	1
1382386	2-101	32
1382389	2-101	29
1382390	2-105	32
1382393	2-79	11
1382407	7-7	16
1382408	1-35	25
	1-37	25
1382420	7-7	2
1382421	7-7	3
1382440	8-19	34
	8-23	34
1382449	10-11	3
1382558	7-15	10
1382559	7-15	13
1382560	7-15	14
1382561	7-15	26
1382570	6-4	37
	6-8	37
1382571	6-4	39
	6-7	28
1382572	6-4	40
	6-8	40
1382574	6-4	45
	6-8	45
1382612	1-5	18
1382624	1-49	19
	1-49	28
1382634	1-29	1
1382649	1-5	26
	1-9	6
1382722	7-7	24
1382723	7-7	17
	7-9	17
1382725	8-33	1
1382729	11-117	1
	11-119	1
1382743	5-9	8
1382749	5-9	7
1382832	1-21	12
1382833	1-21	14
1382838	4-5	1
	4-69	
1382840	4-25	12
	4-29	4

NUMERICAL INDEX (Continued)

PART NO.	PG	ITEM
1382842	4-25	13
	4-29	3
1382843	4-25	12
	4-25	13
	4-29	3
	4-29	4
1382846	1-29	3
1382848	1-29	6
1382850	2-88	43
1382854	5-9	15
1382855	8-31	12
	9-69	15
1382856	9-69	14
1382859	5-9	14
1382861	9-69	21
	9-71	21
	9-73	21
	9-75	21
1382864	8-3	1
	8-9	1
1382867	4-35	20
	4-36	48
	4-39	20
1382868	5-41	2
1382874	4-29	14
	4-45	1
1382875	6-4	48
1382876	6-8	50
1382877	6-4	53
1382879	6-4	55
	6-8	55
1382880	6-4	46
	6-8	46
1382884	6-4	24
	6-7	24
1382885	6-3	11
	6-3	11
	6-7	11
1382887	6-3	15
	6-7	15
1382888	6-3	14
	6-7	14
1382889	6-3	18
	6-7	18
1382890	6-3	13
	6-7	13
1382891	6-3	19
	6-7	19
1382893	6-3	16
	6-7	16
1382894	6-3	17
	6-7	17
1382895	6-4	25
	6-7	25
1382896	6-3	21
	6-7	21
1382897	6-3	20
	6-7	20
1382898	6-4	26
	6-7	26
1382901	6-4	23
1382902	6-4	23
	6-7	23
1382908	6-11	28
1382910	6-11	30
1382912	6-3	1
	6-7	1
1382913	6-3	3
	6-4	54
	6-7	3
	6-8	54
1382915	6-3	6
	6-7	6
1382916	6-3	6
	6-7	6
1382918	6-19	1
1382920	6-19	27
1382922	6-19	16
1382923	6-19	17
1382924	6-19	21
1382950	6-19	22
1383517	9-51	1
	9-52	
1383552	11-9	27
	11-13	27
1383554	8-3	7
	8-5	7
1383803	4-109	2
	4-111	2
	4-113	2
1383804	4-109	5
	4-111	3
	4-113	3
1383808	4-109	1
	4-111	1
	4-113	1
1383810	4-106	2
1383830	4-22	49
	4-109	
	5-41	14
1383831	4-22	56
1383832	4-6	62
	4-15	35
	4-106	
1383833	4-6	62
	4-15	35
	4-106	
1383834	4-5	17
	4-87	
1383838	4-6	61
	4-65	
1383841	4-25	2
	4-31	7
	4-63	1
1383842	1-65	6
1383844	4-22	44
	4-59	
1383845	4-22	42
	4-91	
	4-93	
1383846	4-21	10
1383851	7-7	4
1383852	7-7	5
1383854	7-7	8
	7-9	8
1383855	1-21	10
1383856	1-21	15
1383859	7-7	6
	9-35	28
1383862	11-117	26
	11-135	
1383863	4-22	50
	4-47	
1383865	10-35	2
1383866	10-35	3
1383868	10-35	5
1383869	10-35	6
1383872	11-135	4
1383873	11-135	5
1383876	1-29	7
	1-31	21
1383879	1-29	2
1383897	3-3	29
	3-3	30
	3-7	5
1383923	9-45	31
1383924	9-45	21
	9-46	38
	9-46	56
	9-47	78
1384009	9-19	14
	9-21	5
1384010	9-19	14
	9-21	5
1384011	9-19	14
	9-21	5
1384012	9-19	14
	9-21	5
1384013	9-19	14
	9-21	5
1384014	9-19	14
	9-21	5
1384403	11-65	5
	11-89	8
1384467	9-79	1
1384468	9-79	4
1384469	9-79	5
1384472	9-31	1
	11-131	3
1384476	4-29	1
1384479	4-6	52
	4-74	
1384480	11-135	6
1384483	10-31	18
	10-33	18
1384484	11-19	1
1384489	10-31	9
1384490	10-31	10
1384495	4-33	9
	4-105	
1384497	10-31	9
1384498	10-31	10
1384503	9-27	22
	9-33	15
1384506	1-19	5
1384507	1-29	5
1384509	8-19	21
	8-23	21
	8-27	21
1384510	8-19	10
	8-23	10
	8-27	6
1384511	8-19	11
	8-23	11
1384513	8-19	25
	8-23	25
1384514	8-19	31
	8-23	31
1384515	8-19	32
	8-23	32
	8-31	11
1384517	8-19	26
	8-23	26
	8-27	10
1384527	9-31	8
	11-131	7
1384532	1-29	27
1384536	2-87	28

See Service Manual for service procedures.
©2006 HYSTER COMPANY

NUMERICAL INDEX (Continued)

PART NO.	PG	ITEM
1384546	2-101	26
	2-105	26
1384547	2-101	27
	2-105	27
1384601	5-41	20
1384602	1-47	27
	4-11	30
	4-16	52
	4-25	16
	4-115	
1384605	4-36	50
	4-40	50
	4-99	
1384606	4-35	33
	4-39	33
	4-116	
1384616	4-35	21
	4-39	21
	4-81	
1384620	6-23	4
1384621	6-23	5
1384627	1-35	14
1384634	9-25	1
	9-27	10
1384635	9-43	28
1384648	1-29	27
1384649	7-9	31
	9-25	29
	9-27	23
1384651	1-29	31
1384652	1-29	29
1384653	1-29	30
1384659	1-17	12
	1-19	6
	1-22	47
	1-25	22
1384661	1-9	11
	1-9	11
	1-9	34
	1-29	26
	1-38	44
	2-88	42
	2-95	43
1384667	1-29	25
	1-31	27
1384669	3-3	31
	3-7	6
1384676	2-79	30
	2-83	10
1384681	2-87	1
1384682	2-87	20
	2-91	2
	2-95	2
1384683	1-37	14
1384691	2-88	38
1384695	2-87	26
1384698	9-5	17
1384699	9-5	16
	9-7	16
	9-15	2
	9-35	42
	9-69	13
	9-71	19
1384888	8-31	3
	8-33	10
1385054	5-29	28
	5-33	25
1385055	5-29	28
	5-33	25
1385056	5-29	28
	5-33	25
1385057	5-29	28
	5-33	25
1385058	5-21	7
	5-25	7
1385059	5-21	7
	5-25	7
1385067	5-15	25
1385068	5-15	25
1385069	5-15	25
1385070	5-15	25
1385071	5-15	25
1385072	5-15	25
1385073	5-15	25
1385074	5-15	25
1385099	1-67	11
	1-69	11
1385130	1-67	12
	1-69	12
1385280	8-3	33
	8-5	27
	8-6	33
	8-31	18
1385504	4-5	36
1385505	4-6	61
	4-67	
1385508	4-25	11
1385510	4-25	10
1385512	4-43	2
1385513	4-33	4
	4-43	13
	4-100	
1385514	4-25	1
	4-88	
1385516	4-21	35
1385517	4-21	24
	4-103	
1385519	4-5	35
	4-15	28
1385521	4-43	12
1385523	4-43	11
1385524	11-117	10
1385535	1-9	24
	1-32	37
	2-79	31
	2-83	11
1385545	1-49	19
1385547	2-101	28
1385548	2-105	28
1385551	2-88	46
1385552	2-87	25
1385556	9-5	18
	11-19	14
1385558	9-69	2
	9-71	2
	9-73	2
	9-75	2
1385560	2-87	21
1385561	2-87	3
1385567	8-5	10
	8-19	30
	8-23	30
1385569	8-19	20
	8-23	20
	8-27	22
1385577	12-2	2
	12-4	2
	12-5	2
1385578	12-2	2
1385579	12-5	2
1385582	7-11	7
	7-13	7
1385583	7-11	9
	7-13	9
1385584	1-29	8
	1-31	8
	1-35	35
	1-37	35
1385586	7-11	12
	7-13	12
1385587	7-11	11
	7-13	11
1385588	7-19	
1385589	7-19	
1385590	7-9	26
	7-11	
	7-20	46
1385591	7-7	26
	7-9	26
	7-11	
	7-20	46
1385592	7-19	14
1385593	7-19	13
1385595	7-19	8
1385596	7-19	10
1385598	7-19	36
1385599	7-19	11
1385632	8-19	36
	8-23	36
	8-27	28
1385884	10-17	2
1385885	10-17	2
1385886	10-17	2
1385887	10-17	2
1385888	10-17	2
1385890	10-17	2
1385928	10-17	
1385929	10-17	
1385930	10-17	
1385931	10-17	
1385932	10-17	
1385934	10-17	1
	10-19	1
1385935	10-17	1
	10-19	1
1385936	10-17	1
	10-19	1
1385937	10-17	1
	10-19	1
1385938	10-17	1
	10-19	1
1385958	10-17	11
	10-19	11
1385965	10-17	
1385968	10-17	1
	10-19	1
1385973	10-21	
1385974	10-21	
1388209	9-69	11
	9-73	11
1388339	10-21	2
1388340	10-21	2
1388341	10-21	2
1388342	10-21	2
1388343	10-21	2
1388344	10-21	2
1388345	10-21	
1388346	10-21	

NUMERICAL INDEX (Continued)

PART NO.	PG	ITEM
1388347	10-21	
1388348	10-21	
1388379	9-52	1
1388380	9-52	2
	10-39	4
1389398	10-35	4
1389399	10-35	1
1389403	11-17	2
1389405	11-17	2
1389406	11-17	2
1389408	11-13	3
	11-17	
1389409	11-13	3
	11-17	
1389410	11-9	8
1390027	5-21	24
	5-25	22
1390069	5-3	7
1390070	5-3	8
1390071	5-3	9
1390072	5-3	10
1390073	5-17	2
1390074	5-17	3
1390075	5-17	4
1390076	5-17	10
1390077	5-17	7
1390078	5-17	6
1390079	5-17	5
1390080	5-3	11
1390081	5-3	13
1390083	5-17	1
1390084	5-15	1
1390085	5-15	2
1390086	5-15	3
1390087	5-15	4
1390089	5-15	6
1390090	5-15	7
1390091	5-15	8
1390093	5-15	10
1390094	5-15	11
1390095	5-15	12
1390096	5-15	13
1390097	5-15	14
1390098	5-15	15
1390099	5-15	16
1390625	5-7	3
1390626	5-7	4
1390627	5-7	5
1390628	5-7	6
1390629	5-7	7
1390630	5-7	8
1390631	5-7	9
1390632	5-7	10
1390633	5-7	11
1390634	5-7	13
1390636	5-7	15
1390637	5-7	16
1390639	10-31	21
	10-37	
1390640	10-31	21
	10-37	
1390641	5-4	43
	5-7	19
1390642	9-35	26
	9-39	26
	9-55	
1390643	9-5	11
1390644	5-7	14
1390647	9-5	6
1390675	9-29	5
1390722	2-79	16
1390776	5-15	17
1390777	5-15	18
1390778	5-15	19
1390779	5-15	20
1390780	5-15	21
1390781	5-15	22
1390782	5-15	23
1390783	5-15	24
1390784	5-15	25
1390785	5-15	25
1390786	5-15	26
1390787	5-15	27
1390788	5-15	28
1390789	5-15	29
1390790	5-15	30
1390792	5-3	14
1390793	5-3	15
1390794	5-3	16
	5-25	24
1390795	5-3	17
1390796	5-3	18
1390797	5-3	1
	5-3	19
	5-4	58
1390798	5-3	20
1390799	5-3	21
	5-11	13
	5-13	5
	5-13	11
1390800	5-3	22
1390801	5-3	23
1390802	5-3	24
1390805	5-3	26
1390806	5-3	27
1390809	5-3	29
1390810	5-3	30
1390812	5-29	1
1390813	5-29	2
	5-33	5
1390814	5-29	3
	5-33	4
	5-37	6
1390815	5-29	4
	5-33	3
	5-37	7
1390816	5-29	6
	5-33	6
1390817	5-29	6
	5-33	6
1390818	5-29	7
	5-33	7
1390819	5-29	8
	5-33	8
1390820	5-29	9
	5-33	9
1390821	5-29	10
	5-33	10
1390822	5-29	11
	5-33	11
1390823	5-29	12
	5-33	12
1390824	5-29	13
	5-33	13
1390825	5-29	14
	5-33	14
1390826	5-29	15
	5-33	15
1390827	5-29	16
	5-33	16
1390828	5-29	18
	5-33	17
1390829	5-29	19
	5-34	35
1390830	5-29	17
	5-33	18
	5-37	20
1390831	5-29	20
	5-33	19
	5-37	21
1390832	5-29	21
	5-33	20
	5-37	22
1390833	5-29	22
	5-33	21
	5-37	23
1390834	5-29	23
	5-33	22
	5-37	24
1390835	5-29	24
	5-33	23
	5-37	25
1390836	5-29	25
1390837	5-29	26
	5-33	24
1390838	5-29	27
1390839	5-29	28
	5-33	25
1390840	5-29	29
	5-33	26
1390841	5-29	30
1390842	5-29	31
1390843	5-29	32
1390844	5-29	32
1390845	5-30	32
1390846	5-30	32
1390847	5-30	32
1390848	5-30	32
1390849	5-30	33
1390850	5-30	34
	5-33	29
1390852	5-30	35
1390853	5-30	36
1390854	5-30	37
	5-30	41
	5-33	31
	5-34	34
1390855	5-30	38
	5-30	42
	5-30	44
	5-33	33
	5-34	36
1390856	5-30	39
	5-30	40
	5-30	43
	5-33	32
1390857	5-33	1
1390864	5-29	6
	5-33	6
1390889	5-33	27
1390890	5-33	28
1390892	5-33	30
1390897	5-37	1
1390898	5-37	2
1390899	5-37	3
1390900	5-19	7
	5-22	43
	5-26	47

©2006 HYSTER COMPANY

NUMERICAL INDEX (Continued)

PART NO.	PG	ITEM
	5-37	4
1390901	5-19	8
	5-21	8
	5-25	8
	5-37	5
1390904	5-37	8
1390905	5-37	9
1390906	5-37	10
1390907	5-37	10
1390908	5-37	10
1390909	5-37	11
1390910	5-37	12
1390911	5-37	13
1390912	5-37	14
1390914	5-37	16
1390915	5-37	17
1390917	5-37	19
1390921	5-37	26
1390922	5-37	27
1390923	5-37	27
1390924	5-37	27
1390925	5-37	29
1390926	5-37	30
1390927	5-38	31
1390928	5-38	32
1390929	5-38	33
1390930	5-38	34
1390931	5-38	35
1390932	5-38	36
1390933	5-38	37
1390934	5-38	38
1390935	5-38	39
1390936	5-38	40
1390937	5-38	41
1390938	5-38	42
1390939	5-38	43
1390940	5-38	44
1390941	5-38	44
1390942	5-38	44
1390943	5-38	45
1390944	5-38	47
1390946	5-3	31
1390947	5-3	32
1390948	5-3	33
1390949	5-3	34
1390950	5-3	35
1390951	5-3	36
1390953	5-19	1
1390954	5-19	2
1390955	5-19	3
1390956	5-19	4
1390958	5-19	6
1390959	5-19	9
1390960	5-19	10
1390961	5-19	11
1390966	5-21	1
	5-25	1
1390967	5-21	2
	5-25	2
1390968	5-3	40
	5-21	3
	5-25	3
1390969	5-21	4
	5-25	4
1390970	5-21	5
1390971	5-21	7
	5-25	7
1390972	5-21	7
	5-25	7
1390973	5-21	7
	5-25	7
1390974	5-21	7
	5-25	7
1390975	5-21	9
	5-25	9
	5-25	25
1390976	5-21	10
	5-25	10
1390977	5-21	11
	5-25	11
1390978	5-21	12
	5-25	12
1390979	5-21	13
	5-25	13
1390980	5-21	14
1390981	5-21	15
1390982	5-21	15
1390983	5-21	15
1390984	5-21	16
	5-25	14
1390985	5-21	17
	5-25	15
1390986	5-21	18
	5-25	16
1390987	5-21	19
	5-25	17
1390988	5-21	20
	5-25	18
1390989	5-21	21
	5-25	19
1390990	5-21	22
	5-25	20
1390991	5-21	23
1390992	5-21	25
	5-25	23
1390993	5-21	26
	5-26	43
1390994	5-21	27
	5-25	34
1390995	5-21	28
1390996	5-21	29
	5-26	37
1390997	5-21	30
	5-26	38
1390998	5-21	31
	5-26	36
1390999	5-21	33
	5-25	29
1391001	5-21	34
	5-26	42
1391002	5-21	35
	5-26	40
1391003	5-21	36
	5-26	41
1391004	5-21	37
	5-26	56
1391005	5-21	38
	5-26	58
1391006	5-22	39
	5-26	57
1391007	5-22	40
	5-26	45
1391008	5-22	41
	5-26	44
1391009	5-22	42
	5-26	46
1391010	5-22	44
	5-26	50
1391011	5-3	41
	5-22	46
	5-26	48
1391014	5-16	31
1391015	5-3	3
1391016	5-3	4
1391017	5-3	5
1391018	5-3	6
1391020	5-3	39
	5-3	39
	5-3	40
1391021	5-4	53
1391022	5-3	28
	5-21	11
	5-25	11
1391023	5-21	19
	5-26	59
	5-37	15
1391028	5-4	46
1391029	5-4	48
1391030	5-4	45
1391032	5-4	49
1391033	5-4	50
1391034	5-4	51
1391035	5-4	52
1391036	5-11	1
	5-13	1
1391037	5-11	2
	5-13	3
1391038	5-11	3
	5-13	6
1391039	5-11	4
	5-13	2
	5-13	12
1391040	5-11	5
1391042	5-11	7
	5-13	18
1391043	5-11	15
	5-13	19
1391044	5-11	11
1391045	5-11	10
1391046	5-11	14
	5-13	5
1391055	6-23	1
1391056	6-23	2
1391057	6-23	3
1391058	12-5	2
1391060	12-2	3
1391065	12-2	5
1391207	7-11	1
1391208	7-11	2
1391209	7-11	3
1391210	7-11	4
1391212	7-11	6
1391213	7-11	1
1391214	7-11	3
1391215	7-11	4
1391400	7-20	47
1391401	7-20	47
1391403	3-3	5
1391406	7-11	13
	7-13	13
1391407	7-11	8
	7-13	8
1391408	3-4	34
1391409	3-3	4
1391416	1-5	14
1391418	10-26	11
	11-117	11
	11-119	11

©2006 HYSTER COMPANY

NUMERICAL INDEX (Continued)

PART NO.	PG	ITEM
1391422	1-25	23
	1-27	1
1391423	1-25	23
	1-27	1
1391427	2-101	8
	2-103	8
	2-105	8
1391428	3-3	6
1391432	9-7	15
	9-11	16
	9-15	29
1391435	3-9	17
1391437	3-9	23
1391438	3-9	24
1391439	3-9	20
1391440	3-9	15
1391441	3-9	15
1391444	3-9	25
1391445	3-9	18
1391446	3-9	35
1391447	3-9	40
1391448	3-9	28
1391451	11-133	1
1391452	10-29	1
1391457	9-83	
1391460	9-83	5
1391461	9-83	4
1391462	9-81	13
	9-85	
1391463	9-81	13
	9-85	
1391464	9-85	1
1391465	9-85	1
1391466	9-85	2
1391467	9-85	2
1391472	9-83	18
1391476	11-17	2
	11-17	2
	11-17	2
	11-17	2
1391481	11-17	1
1391482	11-17	1
1391484	11-17	2
1391485	11-17	2
1391487	11-9	3
	11-17	
1391488	11-9	3
	11-17	
1391499	9-7	21
	9-15	15
	9-63	
1391500	10-29	6
	11-133	6
1391522	10-29	5
	11-133	5
1391523	10-29	8
	11-133	8
1391646	12-5	2
	12-6	2
1391729	8-35	21
1391741	8-35	35
1391744	8-36	38
1391745	8-35	36
1391751	8-35	31
1391752	8-35	32
1391850	9-79	15
1391851	9-79	14
1391863	4-5	37
	4-9	22
1391864	4-5	38
	4-15	30
1391865	4-5	39
1391877	11-17	13
1391887	10-35	4
1391889	10-4	21
1391890	10-4	21
1391897	10-35	1
1391898	10-35	5
1391899	10-35	3
1391900	2-87	34
1391906	11-117	25
	11-119	25
1391907	11-117	25
	11-119	25
1391910	1-27	20
1392290	11-21	21
	11-25	36
	11-63	
1392292	11-21	16
	11-67	
1392293	11-21	29
1392294	11-21	30
1392295	11-21	31
1392296	11-21	24
1392297	11-21	32
1392298	11-21	33
1392299	11-21	34
1392301	11-21	36
1392314	11-21	19
1392319	11-21	25
1392320	11-21	26
1392324	11-21	39
1392327	11-67	1
1392328	11-67	3
1392329	11-67	6
1392330	11-67	13
1392331	11-67	8
1392332	11-67	11
1392333	11-67	14
1392334	11-67	15
1392335	11-63	1
1392336	11-63	2
1392337	11-63	3
1392338	11-63	5
1392339	11-63	6
1392340	11-63	7
1392341	11-63	8
1392342	11-63	9
1392344	11-63	11
1392345	11-63	13
1392346	11-63	14
1392347	11-63	15
1392348	11-63	16
1392349	11-63	17
1392350	11-51	1
1392351	11-23	2
	11-51	2
1392352	11-51	3
1392353	11-51	4
1392354	11-51	5
1392355	11-51	6
1392356	11-51	7
1392357	11-51	8
1392358	11-51	9
1392359	11-51	10
1392360	11-51	11
1392361	11-51	12
	11-63	12
1392362	11-51	13
1392363	11-51	14
1392364	11-51	15
1392365	11-51	16
1392366	11-23	22
	11-51	17
1392367	11-51	18
1392370	11-23	3
	11-27	18
	11-51	
1392371	11-23	13
1392372	11-23	5
1392373	11-23	6
1392374	11-23	7
1392375	11-23	8
1392376	11-23	9
1392377	11-23	10
1392378	11-23	11
1392386	11-63	10
1392387	11-63	4
1392401	5-30	41
	5-34	34
1392402	5-15	5
1392403	5-15	5
1392404	5-15	5
1392405	5-15	5
1392406	5-15	5
1392407	5-15	5
1392408	5-15	5
1392409	5-15	5
1392410	5-15	5
1392411	5-15	5
1392412	5-15	5
1392413	5-29	6
	5-33	6
1392414	5-29	6
	5-33	6
1392415	5-29	6
	5-33	6
1392416	5-29	6
	5-33	6
1392417	5-29	6
	5-33	6
1392418	5-29	6
	5-33	6
1392419	5-29	6
	5-33	6
1392420	5-29	6
	5-33	6
1392421	5-29	6
	5-33	6
1392422	5-29	6
	5-33	6
1392423	5-37	10
1392424	5-37	10
1392425	5-37	10
1392426	5-37	10
1392427	5-37	10
1392428	5-37	10
1392429	5-37	10
1392430	5-37	10
1392431	5-37	10
1392432	5-37	27
1392433	5-37	27
1392434	5-37	27
1392435	5-37	28
1392436	5-37	28
1392437	5-37	28
1392438	5-38	44
1392439	5-38	44

©2006 HYSTER COMPANY

NUMERICAL INDEX (Continued)

PART NO.	PG	ITEM
1392549	11-67	16
1393125	5-21	7
	5-25	7
1393126	5-21	7
	5-25	7
1393157	2-87	1
1393158	2-87	1
1393159	2-87	1
1393164	10-39	5
1393166	2-87	1
1393171	6-12	42
1393401	10-37	1
1393402	10-37	2
1393405	10-37	5
1393406	10-37	13
1393407	10-37	12
1393408	10-37	11
1393409	10-37	10
1393410	10-37	9
1393411	10-37	8
1393412	10-37	7
1393413	10-37	6
1393414	10-37	14
1393424	9-55	2
1393726	11-5	3
1393728	10-39	10
1393729	10-39	
1393730	10-39	
1393731	10-39	
1393735	11-9	21
	11-13	21
1393738	11-9	24
	11-13	24
1393739	10-35	8
1393740	8-6	45
	11-19	13
1393741	1-65	15
1393742	7-13	
	7-20	46
1393743	7-7	26
	7-13	
	7-20	46
1393745	1-65	14
1393748	1-19	22
1393750	1-21	8
1393753	1-21	9
1393754	1-17	8
1393755	1-17	18
1393756	1-21	8
1393760	1-67	15
1393763	1-27	20
1393775	4-6	64
1393776	4-6	65
1393777	4-6	66
1393778	4-6	47
	4-11	3
1393779	4-21	35
1393781	4-21	34
1393784	4-22	45
1393785	4-5	27
1393786	4-6	52
	4-80	
1393787	12-6	1
1393788	4-5	43
	4-9	25
1393790	4-6	64
1393791	4-6	65
1393792	4-6	66
1393796	12-5	1
1393797	12-5	1
1393802	10-35	17
1393803	10-35	13
	11-123	9
1393804	10-35	6
1393805	10-35	2
1393825	9-11	4
1393826	11-117	26
	11-135	
1393827	11-117	10
1393833	1-17	31
	1-21	41
1393834	1-21	40
1393835	1-21	39
1393836	1-21	27
1393841	9-11	4
	9-67	
1393842	1-35	32
	1-37	32
1393843	1-35	32
	1-37	32
1393844	2-88	47
	2-91	9
	2-95	9
1393845	6-3	
1393850	1-9	16
1393852	1-9	7
1393853	1-9	7
1393854	1-9	7
1393855	1-9	7
1393856	1-9	12
1393858	1-9	16
1393859	9-35	33
1393860	9-35	30
1393861	1-29	28
1393862	9-25	5
	9-27	1
1393863	9-27	11
	9-29	1
1393871	1-9	37
1393872	1-9	40
1393876	1-38	45
1393878	1-38	50
1393894	2-87	33
1393895	2-87	32
1393905	11-131	1
1393906	1-37	41
1399106	3-7	19
1399115	3-7	18
1450390	8-36	37
1450545	9-61	25
1450547	9-61	27
1450548	9-61	28
1450757	1-31	14
1450759	1-29	10
	1-31	22
1450761	1-29	4
	1-31	15
1450762	1-31	10
1450769	1-13	1
1450770	1-13	2
1450783	1-13	1
1450784	1-13	2
1450798	9-81	9
1450799	9-81	8
1450800	9-81	10
1450801	9-81	11
1450810	1-67	9
	1-69	9
1450811	1-67	3
	1-69	3
1450812	1-67	4
	1-69	4
1450858	6-11	19
1450859	6-11	23
1450860	6-11	24
1450861	6-11	25
	6-15	25
1450863	6-4	31
	6-7	31
1450864	6-4	33
	6-8	33
1450865	6-4	32
	6-8	32
1450867	6-4	38
	6-8	38
1450868	6-4	44
	6-8	44
1450872	1-31	20
1450897	1-31	30
1450971	1-31	1
1450972	1-31	1
1451012	1-13	17
1451018	1-31	29
1451065	1-17	6
1451183	12-11	2
1451208	1-32	38
1451327	4-6	48
	4-11	28
	4-16	47
1451328	4-6	49
	4-11	28
	4-16	47
1451335	1-67	10
1451336	1-67	10
1451337	1-69	10
1451338	1-69	10
1451339	1-69	10
1451350	8-27	40
1451416	1-65	10
1451440	8-3	12
	8-5	12
	8-9	12
	8-11	12
	8-15	12
1451441	8-3	12
	8-5	12
	8-9	12
	8-11	12
	8-15	13
1451444	8-9	16
	8-11	16
	8-15	23
1451445	8-9	17
	8-11	17
	8-15	24
1451449	8-9	5
	8-11	5
	8-15	25
1451450	1-31	31
1451451	1-31	28
1451452	1-31	28
1451453	8-9	6
	8-11	6
	8-15	27
1451454	12-6	2
1451455	8-9	10
	8-11	10
	8-15	28

©2006 HYSTER COMPANY

NUMERICAL INDEX (Continued)

PART NO.	PG	ITEM
1451456	8-3	22
	8-5	22
	8-9	22
	8-11	22
	8-15	18
1451458	8-27	37
1451459	8-12	40
	8-15	31
	8-33	8
1451461	8-27	38
1451470	1-31	29
1451476	1-31	30
1451477	1-13	13
1451478	1-13	13
1451484	1-13	10
1451489	1-13	11
1451494	1-13	11
1451497	1-13	10
1451500	1-13	12
1451503	1-13	12
1451508	1-31	11
1451514	1-31	2
1451515	1-31	2
1451521	1-10	50
1451522	1-9	31
1451523	9-11	1
1451524	9-11	2
1451525	9-11	3
1451527	1-10	45
1451528	1-10	44
1451529	1-10	43
1451530	1-9	42
1451532	9-73	14
1451533	9-73	15
1451536	7-9	4
1451537	7-9	5
1451538	7-9	24
1451555	1-9	30
1451559	1-9	33
1451564	9-81	14
1451594	1-9	25
1451600	9-11	23
1451717	1-9	39
1451782	1-9	41
1451783	1-9	36
1451819	9-33	3
1451820	9-33	4
1451821	9-33	5
1451822	9-33	6
1451823	11-17	6
1451834	11-19	3
	11-19	4
1451836	9-11	37
1451921	8-27	36
1451924	8-33	15
1451927	8-31	22
	8-33	1
1451968	7-9	5
1451969	7-9	4
1451999	10-26	24
1452000	10-26	24
1452001	10-26	24
1452002	10-26	24
1452003	10-26	24
1452004	10-26	24
1452005	10-26	24
1452006	10-26	24
1452007	10-26	24
1452008	10-26	24
1452009	10-26	24
1452014	10-26	25
1452015	10-26	25
1452016	10-26	25
1452017	10-26	25
1452018	10-26	25
1452019	10-26	25
1452020	10-26	25
1452021	10-26	25
1452022	10-26	25
1452023	10-26	25
1452024	10-26	25
1452025	10-26	10
1452026	10-26	10
1452027	10-26	10
1452028	10-26	10
1452029	10-26	10
1452030	10-26	10
1452031	10-26	10
1452032	10-26	10
1452033	10-26	10
1452034	10-26	10
1452035	10-26	10
1452036	10-26	26
1452037	10-26	26
1452038	10-26	26
1452039	10-26	26
1452040	10-26	26
1452042	10-26	26
1452043	10-26	26
1452044	10-26	26
1452045	10-26	26
1452046	10-26	26
1452049	10-26	26
1452130	10-39	2
1452131	10-39	3
1452132	10-39	6
1452133	10-39	7
1452134	10-39	9
1452135	10-39	8
1452136	10-39	7
1452137	10-39	7
1452138	10-39	7
1452139	10-39	11
1452197	1-13	7
1452198	1-13	8
1452202	1-13	7
1452203	1-13	8
1452256	10-26	1
1452269	1-65	17
1452271	1-65	23
1452277	1-13	20
1452278	1-13	20
1452308	4-33	10
1452310	4-33	10
1452315	4-40	46
	4-119	
1452316	4-40	46
	4-119	
1452319	4-36	58
	4-117	
1452323	4-40	48
	4-118	
1452324	4-40	47
	4-98	
1452500	6-19	8
1452503	6-19	30
1452504	6-19	29
1452505	6-11	19
1452534	6-3	1
1452535	6-3	7
1452552	4-40	65
	4-119	
1452593	8-19	1
	8-23	1
	8-35	
1452639	5-41	1
1452640	5-41	1
1452652	11-117	24
	11-119	24
1452663	1-47	14
1452697	3-4	47
	3-7	25
1452699	3-4	36
1452700	3-4	37
1452776	11-117	24
	11-119	24
1452794	9-43	9
1452820	1-38	54
1452826	6-3	12
	6-3	12
	6-7	12
1452829	1-38	51
1452830	1-38	51
1452850	9-31	4
	11-131	1
1452905	8-5	5
	8-11	33
	8-15	14
	8-33	1
1452916	12-2	3
	12-4	4
	12-5	4
	12-6	4
1452935	8-3	6
	8-5	6
1452936	8-6	43
	8-31	9
1452937	8-3	16
1452938	8-3	17
	8-5	17
1452941	2-87	35
1452944	8-3	16
1452945	8-3	17
	8-5	17
1452946	8-3	20
	8-5	20
1452993	8-3	30
	8-5	30
1452994	8-3	30
	8-5	30
1453024	1-49	2
1453025	1-49	3
1453031	1-41	10
1453070	8-12	45
	8-16	39
1453110	9-83	15
1453123	9-83	5
1453124	9-83	1
1453139	9-57	13
1453140	9-57	8
1453141	9-57	16
1453142	9-57	17
1453143	9-57	6
1453146	9-57	12
1453148	9-57	4
1453421	1-17	11
	1-22	44
1453487	6-3	1

©2006 HYSTER COMPANY

NUMERICAL INDEX (Continued)

PART NO.	PG	ITEM
	6-7	1
1453488	6-3	22
	6-7	22
1453489	6-3	22
	6-7	22
1453564	4-43	12
1453566	2-88	50
1453567	2-88	51
1453623	9-55	2
1453624	9-55	2
1453633	8-35	21
1453634	8-35	33
1453663	8-35	34
1453734	2-88	35
1453739	1-49	11
1453780	2-87	32
1453781	2-87	33
1453798	1-55	
1453799	1-55	
1453800	1-55	14
	1-57	14
1453846	7-13	1
1453847	7-13	3
1453848	7-13	4
1453849	7-13	6
1453850	7-13	1
1453851	7-13	3
1453852	7-13	4
1453904	11-21	1
1453905	11-21	2
1453906	11-21	3
1453907	11-21	4
1453908	11-21	5
1453909	11-21	6
1453910	11-21	7
1453911	11-21	8
1453912	11-21	9
1453913	11-21	10
1453914	11-21	11
1453915	11-21	12
1453916	11-21	14
1453917	11-21	15
1453918	11-21	17
1453919	11-21	18
1453920	11-21	20
1453921	11-21	22
1453922	11-21	23
1453923	11-21	27
1453924	11-21	28
1453926	11-23	1
1453927	11-23	17
1453928	11-23	12
1453929	11-23	14
1453930	11-23	15
1453931	11-23	16
1453932	11-23	
1453954	11-51	19
1453970	9-11	18
	9-33	1
1453988	11-23	18
1454002	1-55	1
1454003	1-55	1
1454004	1-55	2
	1-57	2
1454006	1-55	3
1454011	11-25	1
1454012	11-25	2
1454013	11-25	3
	11-27	2
1454014	11-25	4
1454015	11-25	5
1454016	11-25	6
1454017	11-27	1
1454018	11-25	7
1454019	11-27	3
1454020	11-25	8
1454022	11-25	10
	11-27	4
1454023	11-25	12
1454024	11-27	5
1454025	11-25	15
1454026	11-25	16
1454027	11-27	7
1454029	11-27	8
1454030	11-27	9
1454031	11-25	18
1454032	11-25	19
1454033	11-25	20
1454034	11-25	21
1454035	11-25	22
1454036	11-25	34
1454037	11-25	24
1454038	11-25	23
1454039	11-25	25
1454040	11-25	26
1454041	11-25	27
1454042	11-25	28
1454043	11-27	10
1454046	11-63	18
1454053	11-21	38
1454055	11-21	38
1454061	11-21	37
1454063	11-21	40
1454064	11-21	41
1454066	11-21	35
1454087	1-49	30
1454164	11-27	11
1454165	11-25	29
1454166	11-25	30
1454167	11-27	12
1454168	11-27	13
1454169	11-27	14
1454170	11-27	15
1454171	11-27	16
1454172	11-27	17
1454173	11-25	31
1454174	11-25	32
1454175	11-25	33
1454177	4-31	1
	9-35	1
	9-39	1
1454180	9-35	2
	9-39	2
1454906	8-27	10
1454945	1-13	9
1454949	1-13	9
1454959	6-3	22
	6-7	22
1454960	6-4	22
	6-7	22
1455040	1-37	1
1455042	1-37	1
1455044	1-38	58
1455049	1-37	26
1455060	1-37	36
1455087	1-32	36
1455169	9-11	5
	9-15	48
1455170	9-7	5
1455171	9-11	17
	9-15	50
1455172	9-7	11
	9-11	11
	9-15	41
1455174	9-7	37
1455177	1-37	36
1455191	1-38	59
1455192	1-38	59
1455225	9-81	12
1455301	11-9	11
	11-13	11
1455347	11-9	8
1455377	11-10	38
1455378	11-10	39
1455396	11-9	20
1455411	9-7	6
	9-11	6
	9-15	5
1455432	10-12	17
1455466	1-37	13
1455467	10-12	30
1455487	11-9	12
	11-13	12
1455490	11-10	41
	11-14	41
	11-14	41
1455594	9-45	26
1455595	9-45	27
1455596	9-45	28
1455636	4-120	
1455801	2-105	26
1455820	9-57	18
1455851	4-6	69
1455951	10-12	11
1455992	11-9	13
	11-13	13
1455997	6-4	22
	6-7	22
1455998	6-4	22
	6-7	22
1456014	9-49	12
1456189	1-9	26
1456194	9-63	26
1456195	9-63	1
1456196	9-63	7
1456197	9-63	16
1456198	9-63	13
1456199	9-63	15
1456200	9-63	27
1456201	9-63	14
1456470	1-21	33
1456475	9-7	4
	9-67	
1456622	1-5	12
1456875	9-46	70
1457097	1-5	42
	1-10	52
	8-20	39
	8-24	39
1457201	5-41	16
1457954	4-22	49
	4-111	
	5-41	14
1457993	5-7	14
1458018	5-7	15
1458125	11-10	53
	11-14	53
1458337	9-85	1

NUMERICAL INDEX (Continued)

PART NO.	PG	ITEM
1458338	9-81	13
	9-85	
1458339	9-85	2
1458378	10-4	1
1458379	10-4	1
1458380	10-4	1
1458381	10-4	1
1458382	10-4	1
1458383	10-4	1
1458384	10-4	1
1458388	10-4	
	10-8	
	10-11	
	10-14	
	10-26	
1458389	10-4	
	10-8	
	10-11	
	10-14	
	10-26	
1458390	10-4	
	10-8	
	10-11	
	10-14	
	10-26	
1458391	10-4	
	10-8	
	10-11	
	10-14	
	10-26	
1458392	10-4	
	10-8	
	10-11	
	10-14	
	10-26	
1458393	10-4	
	10-8	
	10-11	
	10-14	
	10-26	
1458394	10-4	
	10-8	
	10-11	
	10-14	
	10-26	
1458395	10-31	21
	10-37	
1458396	10-31	21
	10-37	
1458577	5-41	1
1458578	5-41	1
1458609	1-19	18
1458768	1-65	24
1458892	2-101	29
1459006	5-3	
	5-15	
	5-19	
	5-29	
	5-33	
	5-37	
1459041	8-19	11
	8-23	11
	8-27	7
1459042	8-20	38
	8-24	38
1459108	5-41	6
1459178	8-5	1
	8-11	1
	8-15	3
1459254	8-6	41
	8-12	36
	8-15	15
1459293	9-83	18
1459350	10-12	21
1459409	11-71	21
	11-73	17
	11-75	21
	11-80	4
	11-102	55
1459430	9-7	38
	9-11	38
	9-15	36
1459675	11-117	26
	11-135	
1459676	11-117	26
	11-135	
1459839	3-3	6
1459840	3-3	5
1459841	3-3	6
1459842	3-3	4
1459848	5-13	15
1459950	10-17	
1459951	10-21	
1460265	10-12	37
1460299	5-7	24
1460312	4-40	63
1460394	9-30	41
1460396	9-30	42
1460398	12-4	1
1460402	12-4	1
1460403	12-4	1
1460404	12-4	1
1460405	12-4	1
1460406	12-4	1
1460408	8-6	45
	8-19	32
	8-23	32
1460409	9-73	14
	9-75	19
1460436	11-14	38
1460437	11-14	39
1460448	12-4	1
1460451	12-4	1
1460477	2-92	57
	2-96	56
1460505	11-23	19
1460506	11-23	20
1460618	11-136	6
	11-137	6
1460908	11-23	6
1460909	11-23	9
1460911	11-23	16
1460912	11-23	21
1460913	11-23	21
1460914	11-23	14
1461600	11-120	30
1462198	2-101	28
	2-103	26
1462536	2-87	26
1462572	2-87	26
1462890	7-3	2
1462891	7-3	2
1463253	6-5	59
1463254	6-4	58
	6-8	57
1463483	6-5	62
	6-8	42
1463599	6-3	
1464283	4-29	14
	4-49	
1464284	4-29	
1464299	4-5	17
	4-83	
1464430	9-7	3
	9-27	26
1464431	9-7	2
	9-25	6
	9-25	7
	9-27	27
1464433	9-27	6
	9-29	2
1464434	9-29	13
1464440	9-29	12
1464454	2-99	2
	5-7	27
1464456	2-99	5
1464615	9-43	18
1464617	9-43	19
1464621	11-123	39
1464622	11-123	38
1464623	8-27	31
1464794	8-15	22
1465369	11-119	19
1465374	1-5	29
	1-9	2
1465377	5-41	20
1465382	1-55	19
	1-57	19
1465401	1-59	
	1-63	
1465402	1-59	
	1-63	
1465413	5-41	7
1465470	1-29	5
1465599	11-13	8
1465601	11-13	20
1465602	11-14	54
1466004	12-2	4
	12-4	3
	12-5	3
	12-6	3
1466005	12-2	4
1466943	5-37	29
1466944	5-19	2
1466945	5-21	10
	5-25	10
1466946	5-25	35
1466947	5-22	50
	5-25	21
1466948	5-22	49
	5-25	28
1466949	5-25	27
1466950	5-25	27
1466951	5-25	27
1466952	5-25	27
1466953	5-25	27
1466954	5-25	31
1466955	5-25	30
1466956	5-25	33
1466957	5-25	32
1466958	5-26	55
1466959	5-26	54
1466960	5-26	53
1466961	5-4	54
1466962	5-4	55
1466963	5-4	56
1466965	5-4	57
1466969	5-4	46

©2006 HYSTER COMPANY

NUMERICAL INDEX (Continued)

PART NO.	PG	ITEM
1466971	5-4	44
1466972	5-4	59
1466973	5-4	60
1466974	5-13	7
1466975	5-13	13
1467000	5-22	47
	5-25	26
1467001	5-22	47
	5-25	26
1467002	5-22	48
	5-25	26
1467034	5-13	4
1467063	5-3	13
1467064	5-15	26
1467065	5-3	24
1468074	9-69	15
	9-73	15
1468319	4-27	11
1468677	1-67	4
	1-69	4
1470294	5-4	58
1470757	9-83	4
1470765	9-83	6
1470827	11-37	8
	11-41	6
	11-45	4
	11-61	3
	11-84	4
1470829	11-37	2
	11-41	2
1470840	11-84	1
1470841	11-37	27
	11-41	25
	11-45	22
	11-55	10
	11-58	3
	11-59	3
	11-82	4
	11-83	4
	11-86	7
1470842	11-37	26
	11-41	24
	11-45	21
	11-55	9
	11-82	6
	11-85	5
1473475	11-89	1
1473476	11-65	3
	11-89	9
1473477	11-65	6
	11-89	6
1473478	11-65	7
	11-89	5
1473482	11-58	7
	11-59	7
	11-82	9
	11-83	2
1473617	1-59	26
1473618	1-59	32
1473630	1-59	4
1473631	1-59	23
	1-59	31
	1-59	37
1473632	1-59	22
1473633	1-59	25
1473636	1-63	6
1473637	1-63	5
1473638	1-63	8
1473639	1-63	7
1473640	1-63	11
1473641	1-63	12
1473643	1-63	10
1473644	1-63	13
1473647	1-63	15
1473648	1-63	16
1473649	1-63	17
1473650	1-63	18
1473652	1-63	14
1473653	1-63	21
1473654	1-63	22
1473656	1-63	23
1473657	1-63	24
1473658	1-63	25
1473659	1-63	26
1473660	1-63	27
1473661	1-63	19
1473662	1-63	29
1473663	1-63	30
1473664	1-63	31
1473666	1-63	28
1473668	1-63	33
1473670	1-63	3
1473671	1-63	4
1473674	1-59	5
1473676	1-59	7
1473677	1-59	8
1473678	1-59	9
1473679	1-59	10
1473681	1-59	11
1473683	1-59	13
1473684	1-59	12
1473685	1-59	14
1473688	1-59	39
1473689	1-59	18
1473691	1-59	20
1473692	1-59	19
1473693	1-59	21
1473694	1-59	15
1473698	1-59	40
1473699	1-59	1
1473700	1-59	2
1473701	1-59	3
1473703	1-59	16
1473704	1-59	24
1473705	1-59	27
1473706	1-59	28
	1-59	33
1473707	1-59	29
1473708	1-59	30
	1-59	34
1473709	1-59	35
1473710	1-59	36
1473713	1-59	38
1473714	1-59	41
1473715	1-60	42
1473716	1-60	43
1473717	1-60	44
1473718	1-59	17
1473823	6-19	27
1473826	6-19	2
1473838	6-4	28
1473839	6-4	29
	6-7	29
1473840	6-4	23
	6-7	23
1473927	9-27	31
1473974	4-5	1
	4-71	
1474197	3-9	16
1474624	1-59	1
1474626	1-59	3
1474647	1-59	6
1474655	1-63	34
1474761	9-11	2
	9-27	26
1474762	9-11	3
	9-27	27
1474815	9-43	20
	9-45	
1475141	9-8	46
	9-15	34
	9-67	1
1475350	5-25	5
1475420	6-11	33
	6-15	33
1475421	6-11	32
	6-15	32
1476614	4-35	20
	4-39	20
1476852	4-19	18
1476882	9-83	8
1476917	9-83	20
1478758	6-3	
1478759	6-3	
1479105	4-22	68
1479227	4-22	69
1479353	9-43	20
	9-45	
1479453	3-3	33
1479477	1-65	25
1479870	9-21	29
1479898	4-35	43
	4-39	43
1480320	4-9	32
	4-16	46
1480333	2-87	26
	2-91	4
	2-95	4
1480334	2-87	25
	2-91	3
	2-95	3
1480432	4-73	19
1480539	4-22	66
1482663	4-73	24
1482668	4-73	25
1482752	6-3	2
	6-7	2
1483645	4-19	17
1483901	9-71	12
	9-75	13
1483902	9-71	15
	9-75	16
1483903	9-71	13
	9-75	15
1483904	9-71	14
	9-75	14
1484112	11-23	4
1484113	11-23	23
1484262	2-5	1
1484308	2-91	46
1484314	9-46	63
1484315	9-46	39
	9-46	54
1484316	9-45	16
	9-46	70
1484331	9-71	17
	9-75	12
1484685	4-15	12

©2006 HYSTER COMPANY

NUMERICAL INDEX (Continued)

PART NO.	PG	ITEM
1484686	4-15	13
1487908	4-21	2
1487919	9-43	22
	9-57	
1488357	6-3	
1488359	6-3	
1488360	6-3	
1488459	5-41	6
1488532	8-19	2
	8-23	3
	8-27	1
	8-35	
1489407	6-12	39
	6-16	39
1489408	6-21	
1489411	6-15	19
1489841	3-3	3
1491182	11-139	10
	11-141	10
1491209	9-57	20
1491210	9-57	3
1491211	9-57	5
1491212	9-57	15
1491213	9-57	1
1491763	10-29	13
	11-133	14
1491810	4-35	43
	4-39	43
1491811	4-36	44
	4-40	44
1491813	4-36	45
	4-40	45
1491814	4-35	43
	4-39	43
1491816	4-35	43
	4-39	43
1492331	10-29	18
	11-133	19
1493237	8-35	6
1493238	8-35	11
1493239	8-35	12
1493240	8-6	44
1493562	10-29	12
	11-133	13
1493615	1-49	22
1494294	4-56	1
1494312	9-67	1
1494384	4-22	50
	4-31	7
	4-51	
1494402	11-14	45
1494906	8-5	1
	8-11	1
	8-15	3
1495111	11-37	2
	11-37	8
	11-37	12
	11-41	2
	11-41	6
	11-41	10
	11-45	2
	11-45	4
	11-45	6
	11-61	3
	11-61	5
	11-84	4
1495113	11-37	15
	11-37	26
	11-37	27
	11-41	13
	11-41	24
	11-41	25
	11-45	9
	11-45	21
	11-45	22
	11-55	2
	11-82	4
	11-82	6
	11-83	4
	11-84	1
	11-86	5
	11-86	7
1495139	9-19	14
	9-21	5
1495142	4-73	11
1495149	4-22	70
1495254	5-17	2
1495623	6-21	1
1495624	6-21	2
1495625	6-21	3
1495626	6-21	4
1495627	6-21	5
1495628	6-21	6
1495629	6-21	7
1495630	6-21	8
1495631	6-21	9
1495632	6-21	10
1495633	6-21	11
1495634	6-21	12
1495635	6-21	13
1495636	6-21	14
1495637	6-21	15
1495638	6-21	16
1495639	6-21	17
1495640	6-21	18
1495641	6-21	19
1495642	6-21	20
1495643	6-21	21
1495644	6-21	22
1495645	6-21	23
1495646	6-21	24
1495647	6-21	25
1495648	6-21	26
1495755	11-57	1
1495795	4-6	52
	4-11	25
	4-16	44
	4-77	
1495969	11-14	50
1496053	11-14	53
1496375	11-5	
	11-7	
	11-13	
	11-119	
1496376	11-5	
	11-7	
	11-13	
	11-119	
1496458	9-27	29
1496496	9-69	16
	9-73	16
	9-76	1
1496795	6-3	
1496796	6-3	
1496797	6-3	
1496906	11-136	5
1496907	11-137	5
	11-139	5
1497239	9-27	13
1498044	11-71	32
	11-75	12
1498530	9-83	5
1498532	9-83	
1498533	9-83	1
1499043	1-65	15
1499053	4-9	11
	4-19	5
1499072	4-61	12
	4-89	8
1499073	4-61	13
	4-89	9
1499323	2-5	1
1499350	4-22	44
	4-61	
1499351	4-25	1
	4-89	1
1499559	6-11	11
1499562	6-4	53
	6-8	53
1499563	6-4	41
1499564	6-4	43
	6-8	43
1499566	6-3	11
	6-7	11
1499594	6-4	28
	6-8	39
1499598	4-21	21
1500211	5-19	5
1500212	5-19	12
1500213	5-19	13
1500214	5-19	14
1500965	1-67	16
1500975	11-119	26
	11-137	
1500976	11-119	26
	11-137	
1500977	11-119	26
	11-136	
1500978	11-119	26
	11-136	
1500979	11-119	24
1500980	11-119	24
1501919	4-73	23
1502129	6-11	5
	6-15	5
1502130	6-15	29
1502341	11-120	32
1502344	11-120	33
1502350	11-119	9
1502543	9-21	33
1502879	9-71	22
	9-75	25
	9-76	14
1502881	9-76	2
1502882	9-76	3
1502883	9-76	4
1502888	9-76	13
1503633	4-73	1
1503634	4-73	5
1504014	1-19	16
1504017	1-19	16
1504298	4-5	17
	4-11	24
	4-85	1
1504383	1-19	16
1504384	1-19	16
1504860	2-91	1
	2-95	1

See Service Manual for service procedures.
©2006 HYSTER COMPANY

NUMERICAL INDEX (Continued)

PART NO.	PG	ITEM
1506665	4-25	25
1506666	4-25	26
1506667	4-27	10
1506668	4-27	9
1506669	4-27	4
1506670	4-27	7
1506671	4-27	6
1506672	4-27	8
1506673	4-27	3
1506674	4-25	24
	4-27	
1506738	4-27	5
1507210	4-22	57
1507212	4-9	23
	4-15	31
	4-19	14
1507253	2-81	14
	2-83	16
1507260	2-81	13
	2-83	15
1507271	1-21	8
1507359	4-22	57
1507395	2-79	11
	2-81	5
	2-83	5
1507412	2-91	5
	2-95	5
1507416	2-91	7
	2-95	7
1507589	11-14	38
1507696	11-14	57
1507725	4-73	2
1508010	3-7	19
1508108	1-5	27
	1-9	5
1508250	1-5	32
	1-10	51
1508300	4-15	29
1508451	3-11	1
	3-17	
1508454	1-63	38
1508512	5-13	17
1508513	5-13	9
	5-13	17
1508583	2-95	38
1508584	2-95	39
1508986	4-9	24
	4-19	15
1509182	11-14	41
1509833	1-65	6
1509988	2-91	8
	2-95	8
1510117	9-21	25
1510220	4-11	32
1510388	2-91	10
	2-95	10
1510553	2-92	51
	2-95	36
1511548	6-4	50
	6-8	50
1511704	2-81	15
	2-83	17
1511952	2-7	13
	2-38	1
	2-66	1
	2-72	1
1511969	2-35	6
1511974	2-35	7
1511978	2-39	5
1511984	2-25	1
1511996	2-24	2
1512001	4-6	74
1512003	2-39	1
1512004	2-23	9
	2-29	2
	2-47	8
	2-48	2
1512006	2-39	4
1512012	2-59	10
1512015	2-40	4
1512024	2-40	5
1512025	2-40	7
1512026	2-40	2
1512027	2-40	3
1512029	2-40	1
1512033	2-39	2
	2-41	1
	2-57	1
1512046	2-27	1
1512047	2-27	2
1512048	2-27	3
1512050	2-27	5
1512051	2-23	10
1512052	2-27	9
1512053	2-27	7
1512056	2-27	8
1512097	2-76	4
1512106	2-36	3
1512107	2-36	4
1512112	2-57	5
1512118	2-57	7
1512119	2-57	4
1512120	2-57	11
1512130	2-7	17
	2-28	2
1512134	2-30	10
1512135	2-29	1
1512136	2-30	8
1512137	2-30	7
1512138	2-30	9
1512139	2-30	4
1512146	2-11	8
1512149	2-11	6
1512150	2-11	4
1512151	2-11	4
1512152	2-11	4
1512153	2-11	4
1512161	2-16	2
1512163	2-16	4
1512164	2-16	5
1512287	2-64	1
1512292	2-7	22
	2-38	2
	2-52	1
	2-72	2
1512295	2-19	3
	2-65	3
1512300	2-65	4
1512304	2-7	7
1512305	2-72	4
1512312	2-59	2
1512322	2-74	2
1512323	2-74	3
1512328	2-40	9
1512415	2-24	1
1512418	2-25	3
	2-56	1
1512425	2-40	8
1512432	2-27	10
1512433	2-27	4
1512440	2-35	2
1512444	2-36	1
1512445	2-36	2
1512448	2-57	2
1512452	2-57	12
1512453	2-57	3
1512456	2-34	1
1512463	2-59	4
1512464	2-59	5
1512466	2-95	37
1512467	2-95	40
1512503	2-39	3
	2-56	2
1512586	2-9	14
1512814	2-79	16
	2-81	4
	2-83	4
1513191	2-55	1
1513337	2-61	2
1513338	2-61	3
1513430	2-69	6
1513701	2-59	6
1513712	2-33	1
1513725	2-50	1
	2-51	2
1513749	2-33	4
1513751	2-51	3
1513760	2-50	3
1513769	2-68	2
1513772	2-57	6
1513780	2-33	3
1513789	2-50	8
	2-76	9
1513792	2-73	1
1513793	2-59	3
1513794	2-30	6
1513797	2-35	3
1513806	2-15	8
1513878	2-7	12
1514238	2-91	11
	2-95	11
1514331	6-21	27
1514339	2-7	16
	2-9	11
	2-68	3
1514354	2-13	10
1514360	2-75	2
1514371	2-43	1
	2-49	2
1514436	2-91	36
1514483	2-47	2
1514488	2-47	4
1514496	2-19	13
1514497	2-19	7
1514498	2-19	8
1514499	2-19	9
1514500	2-19	10
1514501	2-19	11
1514502	2-19	12
1514504	2-19	16
1514542	2-7	8
1514565	2-69	12
1514947	4-21	7
1514948	4-23	73
1515423	3-3	3
	3-7	26
1515424	3-3	3
	3-7	26

NUMERICAL INDEX (Continued)

PART NO.	PG	ITEM
1515694	2-76	2
1515787	2-55	2
1515895	2-41	3
1516593	1-38	60
1516594	1-38	61
1516750	9-8	50
1516751	2-91	6
	2-95	6
1516870	2-91	40
1516871	2-91	41
1516916	1-29	4
	1-31	15
1516935	1-35	12
1516936	1-37	12
1517010	2-7	14
	2-38	3
	2-41	2
1517011	2-7	15
	2-38	4
1517069	2-69	4
1517094	2-55	4
1517095	2-55	5
1517108	1-49	13
1517115	2-23	2
1517116	2-23	1
1517118	2-23	3
1517119	2-7	20
1517122	2-35	8
1517190	2-9	15
1517194	2-19	2
1517195	2-19	4
1517196	2-19	5
1517197	2-19	6
1517198	2-19	15
1517210	2-19	27
1517238	2-61	4
1517250	2-62	1
1517256	2-65	1
1517257	2-65	2
1517262	2-66	5
1517266	2-49	1
	2-76	1
1517268	2-68	1
1517269	2-69	9
1517270	2-69	8
1517295	2-75	1
1517299	2-76	3
1517325	9-8	49
1517485	2-91	42
1517544	3-7	16
1517563	2-91	43
1517566	2-91	45
1517589	2-95	49
1517638	2-95	47
1517674	2-95	48
1517676	1-37	13
1517678	2-95	41
1517972	9-19	6
1517973	9-19	7
1517974	9-19	8
1517975	9-19	9
1517976	1-19	16
1517982	9-19	19
	9-21	15
1518099	1-13	9
1518100	1-13	8
1518111	4-11	13
	4-15	34
1518112	4-73	13
1518171	1-13	7
1518179	9-21	17
1518209	11-14	35
1518275	4-22	42
	4-95	
	4-97	
1518315	9-21	11
1518316	9-21	6
1518317	9-21	10
1518322	1-13	9
1518323	1-13	8
1518324	1-13	7
1518329	9-21	1
1518935	4-21	24
	4-103	
1519013	4-15	14
1519026	4-11	13
	4-15	34
1519129	4-15	43
1519576	4-73	16
1519577	4-73	15
1519654	1-5	16
1519694	9-7	4
	9-67	
1520294	4-9	15
1520356	4-29	5
1520493	4-11	19
1520494	4-11	20
1520495	4-9	29
	4-11	21
	4-15	41
1520499	4-9	30
	4-15	42
1520540	4-16	43
1520839	7-19	29
1521153	4-9	31
1521310	4-11	4
	4-15	32
1521391	4-11	27
	4-16	45
1521392	4-11	27
	4-16	45
1521682	2-7	2
1521683	2-7	3
1521684	2-7	4
1521685	2-7	5
1521686	2-7	26
1521691	2-7	9
1521692	2-7	10
1521693	2-7	11
1521694	2-7	18
	2-59	1
1521695	2-7	19
1521696	2-7	21
1521697	2-7	23
1521700	2-13	1
1521705	2-13	12
1521706	2-13	13
1521707	2-13	14
1521708	2-13	15
1521709	2-13	16
1521710	2-13	17
1521711	2-51	1
1521712	2-51	4
1521713	2-20	1
1521810	2-35	1
1521811	2-35	4
1521812	2-35	5
1521813	2-35	9
1521814	2-35	11
1521827	2-39	6
1521828	2-39	7
1521831	2-40	6
1521832	1-65	5
1521837	2-42	5
1521838	2-42	6
1521839	2-42	8
1521841	2-43	3
1521843	2-43	4
1521844	2-43	5
1521845	2-43	6
1521846	2-43	8
1521847	2-43	7
1521852	2-47	1
1521854	2-47	6
1521855	2-47	7
1521857	2-47	9
1521858	2-47	10
1521860	2-48	1
1521861	2-48	4
1521862	2-48	7
1521863	2-48	6
1521864	2-48	5
1521867	2-49	5
1521868	2-49	6
1521870	2-49	8
1521871	2-49	9
1521872	2-49	10
1521873	2-49	11
1521875	2-50	2
1521876	2-50	4
1521878	2-50	5
1521879	2-50	5
1521880	2-50	7
1521884	2-52	2
1521886	2-53	4
1521888	2-54	1
1521889	2-54	2
1521891	2-55	3
1521893	2-56	3
1521894	2-56	4
1521895	2-56	5
1521897	2-57	9
1521899	2-34	2
1521901	2-9	1
1521902	2-59	8
1521908	2-23	11
1521909	2-9	2
1521912	2-9	4
1521913	2-9	5
1521914	2-9	3
1521915	2-9	7
1521916	2-9	6
1521919	2-9	16
1521921	2-19	14
1521922	2-19	17
1521923	2-19	18
1521924	2-19	19
1521925	2-19	20
1521926	2-19	29
1521927	2-19	30
1521928	2-19	21
1521930	2-19	23
1521931	2-19	24
1521932	2-19	25
1521936	2-15	4
1521937	2-15	10
1521938	2-72	3
1521939	2-15	12

©2006 HYSTER COMPANY

NUMERICAL INDEX (Continued)

PART NO.	PG	ITEM
1521943	2-15	2
1521944	2-15	1
1521949	2-65	5
1521954	2-66	2
1521955	2-66	3
1521956	2-66	4
1521957	2-66	6
1521958	2-67	8
1521960	2-69	5
1521961	2-69	7
1521962	2-69	10
1521963	2-69	11
1521965	2-70	1
1521966	2-70	2
1521967	2-70	3
1521969	2-72	5
1521970	2-72	7
1521971	2-72	6
1521973	2-73	2
1521975	2-74	1
1521980	2-76	6
1521981	2-76	7
1521982	2-76	8
1524173	7-3	2
	7-17	
1524215	7-3	1
1524551	2-57	13
	2-60	1
1524640	2-28	1
	2-33	2
1525240	4-5	17
	4-11	24
1525491	11-52	6
1526085	2-25	2
1526088	2-11	7
1526090	2-11	7
1526091	2-11	7
1526092	2-11	7
1526094	2-11	7
1526099	2-16	1
1526100	2-16	3
1526193	3-7	26
1526357	2-101	1
	2-103	1
	2-105	1
1527012	2-59	7
1527013	2-59	9
1527014	2-59	11
1527404	4-22	71
1527759	2-103	27
1527760	2-103	29
1527761	2-103	31
1527763	2-103	33
1527878	9-21	31
1527880	9-21	30
1528236	2-103	30
1528352	2-103	28
1528534	9-16	53
	9-67	
1528535	9-16	53
	9-67	
1528536	9-7	4
	9-67	
1528589	11-123	40
1528805	1-67	4
	1-69	4
1530667	11-123	27
	11-127	39
1530668	11-123	28
	11-127	35
	11-128	41
1531099	3-7	18
1531383	4-9	1
	4-11	31
	4-15	1
	4-19	1
	4-73	
1532089	2-103	32
1532095	2-101	16
	2-105	16
1532114	2-103	34
1532627	2-5	1
	2-7	
	2-9	
	2-11	
	2-13	
	2-15	
	2-16	
	2-19	
	2-20	
	2-23	
	2-24	
	2-25	
	2-27	
	2-28	
	2-29	
	2-33	
	2-34	
	2-35	
	2-36	
	2-37	
	2-38	
	2-39	
	2-40	
	2-41	
	2-43	
	2-44	
	2-47	
	2-48	
	2-49	
	2-50	
	2-51	
	2-52	
	2-54	
	2-55	
	2-56	
	2-57	
	2-59	
	2-60	
	2-61	
	2-62	
	2-63	
	2-64	
	2-65	
	2-66	
	2-68	
	2-70	
	2-72	
	2-73	
	2-74	
	2-75	
	2-76	
1533444	3-15	1
1533445	3-15	2
1533446	3-15	3
1533447	3-15	4
1533448	3-15	5
1533449	3-15	6
1533450	3-15	7
1533451	3-15	8
1533452	3-15	9
1533453	3-15	10
1533454	3-15	11
1533455	3-15	12
1533456	3-15	13
1533458	3-15	15
1533648	11-127	25
1533944	11-7	
	11-13	
	11-119	
1533945	11-7	
	11-13	
	11-119	
1534281	11-14	43
1534455	4-25	10
1534873	12-2	2
	12-4	2
1537659	4-9	1
	4-11	31
	4-15	1
	4-19	1
	4-73	
1538099	4-9	22
1538100	4-9	30
1538310	12-2	5
	12-4	5
1538311	12-2	4
	12-4	3
1538765	6-7	
1538766	6-7	
1539016	6-7	
1539988	11-123	8
1539991	11-123	36
1539992	11-123	16
	11-127	13
1540330	11-123	17
	11-127	20
1541140	11-124	43
1541265	11-123	2
	11-139	
1541266	11-123	2
	11-139	
1541271	11-123	3
	11-127	3
1541272	11-123	3
	11-127	3
1541277	11-123	4
	11-127	4
1541278	11-123	4
	11-127	4
1541279	11-123	1
	11-127	1
1541319	11-123	1
	11-127	1
1541631	11-123	15
1541787	1-13	1
1541788	1-13	2
1541789	1-13	1
1541790	1-13	2
1541791	1-5	1
1541792	1-5	1
1542033	11-123	32
	11-127	6
1543315	2-53	5
1543317	2-13	6
1543318	2-13	8
1543321	2-7	24
1543325	2-7	6

©2006 HYSTER COMPANY

NUMERICAL INDEX (Continued)

PART NO.	PG	ITEM
	2-9	10
1543359	2-43	2
	2-48	3
	2-49	4
1543362	2-27	6
1543424	2-30	3
1543430	2-30	5
1543435	2-23	8
	2-23	15
1543439	2-23	15
1543445	2-11	5
1543446	2-11	4
1543660	11-123	34
1544032	11-5	
	11-7	
	11-13	
	11-123	
	11-127	
1544033	11-5	
	11-7	
	11-13	
	11-123	
	11-127	
1544034	11-5	1
1544035	11-5	1
1545279	1-5	35
1545532	4-40	56
1547980	6-8	41
1547982	6-8	48
1551462	2-63	1
1552286	2-57	8
1552288	2-23	6
1552715	2-37	1
1552716	2-37	2
1552718	2-39	8
1553261	2-11	2
1553262	2-11	3
1553768	2-47	3
1553782	2-57	10
1553817	4-22	41
1553819	4-22	62
1553952	2-15	3
1553953	2-15	6
1553954	2-15	7
1553956	2-15	9
1553959	2-15	11
1553965	2-65	8
1553991	2-76	5
1554029	2-23	12
1554043	2-13	11
1554044	2-13	7
1554045	2-13	9
1554047	7-19	27
1554048	7-19	29
1554156	4-25	24
	4-27	12
1554742	6-7	1
1554855	1-13	10
1554857	1-13	11
1554858	1-13	12
1554865	1-31	30
1554866	1-31	29
1556299	1-31	30
1556302	1-31	29
1556304	1-13	12
1556306	1-13	11
1556307	1-13	10
1556873	9-21	26
1556876	9-21	23
1556879	9-21	27
1556882	9-21	24
1556888	9-21	28
1556891	9-21	22
1560002	9-16	53
	9-67	
1560003	9-16	53
	9-67	
1561538	1-42	55
1561747	11-127	24
1563795	9-71	22
	9-75	25
1564349	9-79	10
	9-81	1
1564722	6-5	59
	6-8	58
1564992	2-27	11
1565040	2-23	8
1565736	11-19	2
1565737	11-19	3
1565738	11-19	4
1566125	6-15	12
1566126	6-15	35
1568388	10-19	2
1568389	10-19	2
1568390	10-19	2
1568391	10-19	2
1568392	10-19	2
1569595	9-21	5
1569596	9-21	5
1570243	11-77	1
1570245	11-77	2
1570249	11-77	3
1570254	11-77	3
1571694	11-127	2
	11-141	
1571695	11-127	2
	11-141	
1571805	4-27	2
1571806	4-27	1
1572599	11-141	4
1572600	11-141	5
1573932	4-11	25
	4-16	44
	4-79	
1574088	4-22	50
	4-31	7
	4-53	
1574227	5-25	
1581445	11-127	5
1581547	11-127	19
1582217	11-127	31
1584540	2-27	11
1584542	2-47	5
1584544	2-44	1
1584546	2-49	3
1584547	2-49	7
1584549	2-53	3
1584814	2-11	9
1584815	2-11	9
1584816	2-11	9
1584817	2-11	5
1584818	2-11	5
1584819	2-11	5
1584820	2-11	5
1584909	2-19	6
1584910	2-19	1
1584911	2-19	22
1584912	2-19	26
1584914	2-19	28
1584921	2-9	17
1584922	2-9	8
1584923	2-9	9
1584932	2-15	
1584933	2-15	5
1584935	2-63	3
1584936	2-63	2
1584938	2-75	3
1584939	2-76	10
1584990	2-13	7
1584991	2-13	8
1584992	2-13	6
1584993	2-13	7
1584994	2-13	6
	2-13	8
1584995	2-13	6
1584996	2-13	7
1584997	2-13	8
1584998	2-13	6
	2-13	6
1584999	2-13	7
1585000	2-13	8
1585001	2-13	7
1585002	2-13	6
1585003	2-13	7
1585284	2-7	25
1585369	10-11	2
1587448	11-127	15
1587596	2-23	4
1589318	1-31	29
1589320	1-31	30
1589321	1-13	11
1589323	1-13	12
1589325	1-31	29
1589327	1-31	30
1589328	1-13	12
1589330	1-13	11
1590041	6-15	19
1590042	6-15	23
1590043	6-15	24
1594222	10-19	2
1594228	10-19	
1594229	10-19	
1594274	10-23	2
1594275	10-23	2
1594276	10-23	2
1594277	10-23	2
1594278	10-23	2
1594279	10-23	2
1594530	10-23	
1594532	10-23	
1594533	10-23	
1594534	10-23	
1594535	10-23	
1594536	10-23	
1594537	10-23	
1595164	1-25	6
1595722	10-15	7
1595723	10-15	8
1596647	2-42	4
1596648	2-53	6
1596649	2-65	7
1596650	2-9	18
	2-30	11
	2-55	6
	2-61	5
	2-65	9
	2-69	13
	2-71	4

See Service Manual for service procedures.
©2006 HYSTER COMPANY

NUMERICAL INDEX (Continued)

PART NO.	PG	ITEM
1597142	2-61	4
1597813	2-33	7
1597821	2-65	6
1597822	2-33	8
1597832	2-11	1
1597833	2-61	1
1598447	2-33	5
1598448	2-33	6
1599346	11-141	6
1599700	5-37	18
1602488	2-9	12
1602489	2-9	12
1602490	2-9	12
1602491	2-9	13
1602492	2-9	13
1602493	2-9	13
1606669	5-41	20
1606670	4-22	49
	4-113	
	5-41	14
1607648	4-9	1
	4-11	31
	4-15	1
	4-19	1
	4-73	
1607649	2-5	1
	2-7	
	2-9	
	2-11	
	2-13	
	2-15	
	2-16	
	2-19	
	2-20	
	2-23	
	2-24	
	2-25	
	2-27	
	2-28	
	2-29	
	2-33	
	2-34	
	2-35	
	2-36	
	2-37	
	2-38	
	2-39	
	2-40	
	2-41	
	2-44	
	2-47	
	2-48	
	2-49	
	2-50	
	2-51	
	2-52	
	2-54	
	2-55	
	2-56	
	2-57	
	2-59	
	2-60	
	2-61	
	2-62	
	2-63	
	2-64	
	2-65	
	2-66	
	2-68	
	2-70	
	2-72	
	2-73	
	2-74	
	2-75	
	2-76	
1607978	4-22	50
	4-31	7
	4-55	
1608859	5-41	27
1608860	4-113	12
1608893	4-21	35
1609035	4-22	42
	4-95	
	4-97	
1610755	11-141	12
1611639	1-57	
1611640	1-57	
1613651	6-3	4
	6-7	4
1613831	1-57	1
1613832	1-57	1
1613833	1-57	3
1613834	1-57	7
1613835	1-57	12
1614372	12-2	2
1619371	2-23	5
1619372	2-23	14
1637809	12-2	5
	12-4	5
	12-5	5
	12-6	5
1676261	9-27	7
2003859	4-33	8
2005059	7-3	7
2013361	9-83	6
2032229	7-15	27
2034459	1-67	13
2034460	1-69	13
2038590	1-65	19
2043084	8-5	5
	8-11	33
	8-15	14
2043634	4-11	5
	4-15	33
2043981	5-9	3
	8-5	5
	8-11	33
	8-15	14
2045122	9-67	10
2048776	1-49	30
2051854	9-7	3
2051855	9-7	2
2051859	9-15	46
2054630	9-39	43
2054631	9-39	44
2054632	9-39	46
2054633	8-27	38
2054634	9-39	42
2054636	9-15	43
2054646	9-15	45
2054688	9-39	33
2054689	8-19	31
2054700	9-8	50
2054702	9-7	2
2054703	9-7	3
2055142	8-5	22
	8-15	18
2055143	9-15	47
2071043	10-19	
2071044	10-19	
2071045	10-19	
2071046	10-19	
2071047	10-19	
2084159	1-65	26
2084242	5-41	23
2303239	9-61	13
3013841	11-10	35
	11-14	35
3047334	1-25	16
6696025	11-35	11
6990004	11-47	12
6990011	11-47	21
	11-102	54
6990012	11-47	31
	11-101	25
6990013	11-47	16
	11-101	26
6990014	11-47	35
	11-101	29
6990015	11-47	20
	11-101	34
6990017	11-48	42
	11-101	32
6990021	11-59	9
6990044	11-75	6
	11-113	25
6990063	11-71	31
	11-75	31
6990083	11-61	1
6990134	11-52	11
6990189	11-73	17
6990207	11-29	20
6990291	11-47	9
	11-101	45
6990292	11-48	45
	11-101	47
6990293	11-47	34
	11-101	49
6990294	11-48	47
	11-101	50
6990298	11-71	30
	11-75	30
	11-111	19
6990332	11-65	13
	11-89	10
6990333	11-65	14
6990334	11-29	7
	11-37	16
	11-41	14
	11-45	10
	11-55	14
	11-65	
6990335	11-68	4
	11-114	1
6990336	11-68	7
	11-114	7
6990353	11-39	12
	11-43	6
	11-97	34
6990354	11-39	13
	11-43	7
	11-97	42
6990355	11-39	14
	11-43	8
	11-97	43
6990356	11-39	15
	11-43	9
6990357	11-39	16

NUMERICAL INDEX (Continued)

PART NO.	PG	ITEM
	11-43	10
6990358	11-39	17
	11-43	11
	11-97	35
	11-109	8
6990360	11-39	22
	11-43	16
	11-98	47
6990363	11-29	18
	11-79	16
6990366	11-29	19
6990367	11-29	12
6990368	11-29	11
	11-95	3
6990369	11-29	13
	11-95	4
6990370	11-29	10
	11-95	2
6990371	11-35	2
6990372	11-35	4
6990373	11-35	5
6990374	11-35	7
6990376	11-35	12
6990377	11-35	15
6990378	11-35	16
6990379	11-35	17
6990380	11-35	19
6990381	11-35	21
6990382	11-35	22
6990383	11-35	24
6990384	11-35	26
6990385	11-33	9
	11-93	7
6990389	11-111	10
6990396	11-47	6
6990397	11-43	4
6990407	11-47	26
6990408	11-47	26
6990409	11-47	28
	11-101	20
6990410	11-43	4
6990411	11-57	3
6990412	11-39	2
6990413	11-39	3
6990415	11-39	5
	11-43	1
	11-97	31
6990420	11-39	10
6990421	11-39	10
6990423	11-45	1
	11-47	11
	11-52	1
6990429	11-89	7
6990436	11-93	2
6990438	11-29	2
6990439	11-29	3
	11-91	3
6990440	11-29	4
	11-91	4
6990441	11-29	6
	11-91	5
6990447	11-47	31
	11-101	25
6990453	11-39	26
	11-43	20
	11-97	36
6990454	11-47	14
6990455	11-47	32
	11-101	16
6990456	11-47	32
	11-101	16
6990457	11-47	33
	11-102	53
6990458	11-39	4
	11-47	37
6990459	11-48	43
6990460	11-48	43
6990461	11-47	10
6990462	11-29	24
	11-79	13
6990464	11-75	1
6990465	11-71	4
	11-75	4
	11-113	7
6990466	11-71	5
	11-73	8
	11-75	5
6990468	11-111	12
	11-113	12
6990469	11-71	17
	11-75	17
6990470	11-113	9
6990471	11-71	19
	11-75	19
	11-111	9
	11-113	10
6990479	11-71	28
	11-73	14
	11-75	28
	11-111	21
6990481	11-48	51
6990482	11-48	53
6990483	11-39	8
	11-43	3
6990484	11-39	8
	11-43	3
	11-97	18
6990485	11-39	19
	11-43	13
	11-97	11
6990486	11-57	6
6990487	11-57	6
6990488	11-57	7
6990490	11-73	7
6990492	11-35	9
6990493	11-65	1
6990494	11-65	15
6990495	11-39	7
6990496	11-39	7
6990497	11-29	14
	11-37	10
	11-41	8
	11-45	5
	11-61	1
6990498	11-71	29
	11-75	29
6990499	11-29	8
	11-95	5
6990500	11-29	16
	11-79	17
6990501	11-29	17
6990502	11-25	35
	11-37	23
	11-41	21
	11-45	18
	11-55	1
	11-68	
6990503	11-39	26
	11-43	20
	11-97	36
6990504	11-37	11
	11-41	9
	11-45	17
	11-58	1
6990505	11-58	1
	11-59	1
6990506	11-55	8
	11-59	1
6990507	11-37	7
	11-41	5
6990508	11-71	6
6990509	11-71	12
6990510	11-71	14
	11-75	14
6990511	11-71	16
	11-73	4
	11-75	16
	11-113	8
6990512	11-71	18
	11-73	11
	11-75	18
6990513	11-71	20
	11-75	20
6990515	11-73	15
6990516	11-73	16
6990517	11-111	11
	11-113	11
6990520	11-97	39
	11-109	11
6990545	11-111	7
6990551	11-111	18
6990555	11-97	9
6990570	11-97	16
6990580	11-101	8
6990596	11-93	1
	11-95	9
6990597	11-93	10
6990602	11-97	30
6990603	11-97	23
6990604	11-97	26
	11-105	13
6990605	11-97	29
6990606	11-97	17
6990607	11-97	17
6990608	11-77	3
	11-87	
6990609	11-87	1
6990613	11-111	4
	11-113	4
6990614	11-71	26
	11-75	26
	11-81	6
	11-111	3
	11-113	3
6990615	11-111	20
6990621	11-113	29
6990622	11-113	21
6990623	11-113	20
6990629	11-91	1
	11-93	11
	11-95	10
6990653	11-111	10
6990683	11-97	44
6990686	11-111	16
6990701	11-101	4
6990706	11-113	1
6990718	11-113	16

©2006 HYSTER COMPANY

NUMERICAL INDEX (Continued)

PART NO.	PG	ITEM
6990724	11-111	6
	11-113	6
6990729	11-91	8
6990730	11-91	9
6990735	11-77	3
	11-79	10
	11-107	17
	11-114	
6990736	11-93	5
6990737	11-93	8
6990738	11-93	9
6990742	11-77	3
	11-83	
	11-105	11
	11-107	18
6990743	11-82	5
	11-83	5
6990744	11-77	3
	11-82	
	11-105	8
	11-107	8
6990745	11-77	3
	11-85	
	11-107	14
6990746	11-85	4
6990758	11-98	49
6990759	11-97	1
6990785	11-101	13
6990786	11-101	14
	11-107	11
6990787	11-101	24
6990788	11-101	36
6990789	11-102	56
6990790	11-113	15
6990791	11-113	18
6990796	11-79	19
6990797	11-79	20
6990798	11-79	23
6990802	11-29	21
	11-95	12
6990803	11-95	13
6990804	11-89	13
6990805	11-89	16
6990806	11-89	17
6990807	11-89	18
6990808	11-77	3
	11-89	
	11-95	8
	11-105	10
	11-107	13
6990812	11-102	58
6990817	11-77	3
	11-84	
	11-105	3
	11-107	3
6990818	11-84	2
6990820	11-80	2
6990821	11-80	5
6990822	11-81	8
6990906	11-97	40
	11-101	37
	11-109	12
	11-111	5
6990908	11-71	1
	11-111	1
6990909	11-98	48
	11-109	5
6991063	11-71	1
6996003	11-33	2
	11-35	18
	11-39	6
	11-43	2
	11-47	29
	11-79	15
	11-97	3
	11-101	44
	11-109	6
6996004	11-48	40
6996005	11-29	24
	11-79	11
6996006	11-102	60
6996007	11-29	24
	11-47	29
	11-48	40
	11-48	44
	11-79	12
	11-97	5
	11-101	7
6996010	11-39	30
	11-43	22
	11-47	6
	11-48	52
	11-97	20
	11-109	4
6996011	11-29	5
	11-39	6
	11-43	2
	11-79	14
	11-91	2
	11-97	32
	11-102	57
6996012	11-113	2
6996014	11-97	27
	11-102	58
6996015	11-101	19
6996016	11-101	18
6996018	11-101	17
6996019	11-47	19
	11-101	31
6996020	11-47	2
	11-101	11
6996021	11-47	3
6996022	11-39	4
	11-47	4
	11-47	15
	11-48	50
	11-89	11
	11-101	12
6996023	11-47	15
	11-101	23
6996025	11-29	15
	11-29	18
	11-33	5
	11-35	6
	11-35	8
	11-35	13
	11-48	49
	11-95	15
6996026	11-47	36
	11-102	52
6996027	11-47	22
	11-102	51
6996028	11-48	48
	11-101	33
6996032	11-58	2
	11-59	2
6996036	11-81	9
	11-101	10
6996039	11-37	32
	11-41	30
	11-45	27
	11-55	11
6996040	11-59	4
	11-87	6
6996043	11-58	8
	11-59	8
	11-82	2
	11-83	9
	11-85	1
6996045	11-45	2
	11-58	4
	11-61	5
	11-87	2
6996051	11-97	12
6996056	11-52	3
6996063	11-48	50
6996069	11-47	38
6996071	11-71	15
	11-73	3
	11-75	15
6996079	11-71	25
	11-73	9
	11-75	25
6996082	11-47	8
	11-75	2
6996087	11-71	11
	11-73	1
	11-75	11
	11-111	14
6996090	11-113	14
6996098	11-81	7
6996107	11-29	8
	11-95	6
6996122	11-58	9
	11-59	9
	11-82	1
	11-83	1
	11-86	8
6996127	11-86	6
6996128	11-83	6
6996129	11-71	22
	11-73	6
	11-75	22
6996131	11-37	15
	11-41	13
	11-45	9
	11-55	2
6996152	11-29	5
	11-91	10
	11-93	3
6996155	11-35	23
6996182	11-58	6
	11-59	6
	11-82	7
	11-83	7
	11-85	2
6996185	11-102	59
6996186	11-47	24
	11-101	22
6996191	11-35	1
6996192	11-61	4
6996197	11-97	21
	11-109	3
	11-111	2
6996198	11-61	2
	11-84	3
6996208	11-29	6
	11-91	6

NUMERICAL INDEX (Continued)

PART NO.	PG	ITEM
6996216	11-73	12
6996221	11-29	15
	11-35	13
6996222	11-47	13
6996227	11-101	6
6996254	11-87	3
6996293	11-58	7
	11-58	8
	11-59	7
	11-59	8
	11-82	2
	11-82	9
	11-83	2
	11-83	9
	11-85	1
6996294	11-93	4
6996295	11-95	12
6996296	11-47	24
	11-95	12
	11-97	7
	11-101	41
6996301	11-80	1
	11-95	12
	11-101	42
6996306	11-71	27
	11-73	13
	11-75	27
6996307	11-65	2
	11-89	12
6996318	11-47	7
	11-101	46
6996319	11-48	46
6996330	11-39	23
	11-43	17
	11-47	5
	11-71	3
	11-75	3
6996355	11-107	1
6996356	11-105	6
6996377	11-107	6
6996415	11-105	12
	11-107	2
6996419	11-47	23
	11-101	38
6996420	11-47	25
	11-101	39
6996422	11-35	20
6996440	11-39	9
6996441	11-97	6
6996443	11-37	1
	11-39	11
	11-41	1
	11-43	5
	11-97	33
6996445	11-39	24
6996446	11-29	18
	11-39	1
6996448	11-39	21
	11-43	15
	11-97	46
6996449	11-35	8
6996450	11-35	3
6996451	11-29	18
	11-35	6
	11-57	7
	11-95	14
6996452	11-33	10
	11-93	6
6996453	11-71	10
	11-75	10
	11-111	10
	11-113	22
	11-113	23
	11-113	24
	11-113	26
6996455	11-47	6
6996457	11-47	38
6996459	11-39	16
	11-43	10
6996460	11-39	25
	11-43	19
6996461	11-57	4
6996462	11-57	5
6996467	11-58	10
6996468	11-58	7
	11-58	8
	11-59	7
	11-59	8
	11-82	2
	11-82	9
	11-83	2
	11-83	9
	11-85	1
6996471	11-58	5
	11-59	5
	11-82	3
	11-83	3
6996472	11-39	18
	11-43	12
	11-97	8
6996473	11-109	7
6996475	11-43	22
	11-48	52
	11-97	19
	11-109	4
6996476	11-39	28
	11-43	23
6996477	11-39	29
	11-43	24
	11-97	45
6996478	11-47	27
	11-101	43
6996479	11-47	1
6996481	11-47	30
6996482	11-48	49
6996483	11-45	3
	11-105	1
6996494	11-71	11
	11-73	1
	11-75	11
6996495	11-71	11
	11-73	1
	11-75	11
	11-111	14
6996496	11-71	9
	11-75	7
	11-111	10
	11-113	22
6996497	11-71	8
	11-75	8
	11-111	10
	11-113	23
6996498	11-71	7
	11-75	9
	11-111	10
	11-113	24
6996499	11-71	23
	11-73	10
	11-75	23
6996500	11-39	20
	11-43	14
	11-71	2
6996501	11-39	32
	11-43	18
	11-97	10
6996502	11-39	32
	11-43	18
	11-97	12
6996503	11-57	5
6996507	11-41	7
6996512	11-37	6
	11-41	4
	11-105	7
6996513	11-37	5
	11-41	3
	11-105	18
6996514	11-39	27
	11-43	21
	11-97	37
6996515	11-59	10
6996516	11-37	3
	11-105	17
6996517	11-37	4
	11-105	16
6996518	11-37	12
	11-41	10
	11-45	6
6996519	11-37	13
	11-41	11
	11-45	7
6996520	11-37	14
	11-41	12
	11-45	8
6996521	11-37	17
	11-41	15
	11-45	11
	11-55	15
6996522	11-37	18
	11-41	16
	11-45	12
6996523	11-37	19
	11-41	17
	11-45	13
	11-55	13
	11-107	16
6996524	11-37	20
	11-41	18
	11-45	14
	11-55	12
6996525	11-37	21
	11-41	19
	11-45	15
	11-55	4
6996526	11-37	22
	11-41	20
	11-45	16
	11-55	3
	11-55	16
6996527	11-37	24
	11-41	22
	11-45	19
	11-55	7
6996528	11-37	25
	11-41	23
	11-45	20
	11-55	6
6996529	11-37	28
	11-41	26

©2006 HYSTER COMPANY

NUMERICAL INDEX (Continued)

PART NO.	PG	ITEM
	11-45	23
6996530	11-37	29
	11-41	27
	11-45	24
6996531	11-37	30
	11-41	28
	11-45	25
6996532	11-37	31
	11-41	29
	11-45	26
	11-55	5
6996533	11-71	13
	11-73	2
	11-75	13
6996534	11-71	13
	11-73	2
	11-75	13
6996536	11-37	9
6996578	11-111	13
	11-113	13
6996579	11-111	13
	11-113	13
6996580	11-111	15
	11-113	28
6996581	11-111	15
	11-113	28
6996582	11-111	17
6996585	11-113	14
6996587	11-113	17
6996588	11-111	17
	11-113	17
6996598	11-82	8
	11-85	3
6996607	11-107	12
6996623	11-111	14
6996628	11-89	19
6996634	11-113	14
6996645	11-101	9
6996647	11-101	3
6996648	11-101	2
6996654	11-97	24
6996657	11-97	15
	11-109	2
6996658	11-87	4
6996659	11-87	5
6996662	11-105	5
	11-107	5
6996665	11-111	22
6996717	11-83	8
6996724	11-101	48
6996730	11-113	18
6996731	11-97	28
6996732	11-97	22
6996753	11-113	5
6996768	11-113	19
6996777	11-95	11
6996785	11-101	21
6996791	11-97	38
	11-109	10
6996792	11-97	25
	11-109	9
6996794	11-105	4
	11-107	4
6996795	11-107	7
6996796	11-107	9
6996797	11-107	10
6996798	11-107	15
6996800	11-113	5
6996854	11-97	13
	11-109	1
	11-111	8
6996857	11-105	9
6996858	11-105	2
6996859	11-105	14
6996860	11-105	15
6996861	11-97	41
6999001	11-101	27
6999002	11-47	18
	11-101	28
6999015	11-52	13
6999023	11-58	11
	11-59	11
6999024	11-47	17
6999025	11-37	1
	11-39	11
	11-41	1
	11-43	5
	11-97	33
6999028	11-59	10
6999030	11-61	6
	11-84	3
6999035	11-97	26
	11-105	13
6999065	11-71	1
8516434	9-39	30

NOTES

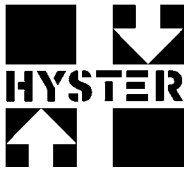
HYSTER