RUTHZIL TRATOR COMERCIAL DE PEÇAS LTDA 11 97083-6812 ROLANDO

PARTS MANUAL

HYSTER

H400-500HD-EC

(B214)

CUSTOMER EDITION

HYSTER

1627710
11/2010

©2010 HYSTER COMPANY

SECTIONS

1	FRAME
2	ENGINE ASSEMBLY
3	FUEL SYSTEM
4	ELECTRICAL SYSTEM
5	TRANSMISSION
6	DRIVE AXLE
7	STEERING SYSTEM
8	BRAKE SYSTEM
9	HYDRAULIC SYSTEM
10	MAST WITH EMPTY CONTAINER HANDLER
11	ATTACHMENTS
12	OPTIONS
13	FIELD CONVERSION KITS
14	NUMERICAL INDEX

This Parts Manual is divided into 14 major sections which are listed above. Quick reference to these sections can be made by placing the right thumb on the tab of the desired section, bending the book back and thumbing the pages to the corresponding tab.

TABLE OF CONTENTS

DESCRIPTION **PAGE**

A

ACCUMULATOR 9-44
AIR CONDITIONER
CLIMATE CONTROL CAB 1-128
WITH TWO-FAN CONDENSER SYSTEM 1-60
AIR CONDITIONER ASSEMBLY
WITH TWO-FAN CONDENSER SYSTEM 1-66
AIR CONDITIONER SYSTEM
CLIMATE CONTROL CAB 1-126
WITH TWO-FAN CONDENSER SYSTEM 1-59
AIR CONDITIONING COMPRESSOR
→ S/N B214E01668F 2-3
AIR DUCT
LOUVER, CLIMATE CONTROL CAB 1-120
AIR DUCT ASSEMBLY
AIR CONDITIONING - WITH TWO-FAN CONDENSER SYSTEM 1-64
HEATER - WITH TWO-FAN CONDENSER SYSTEM 1-74
AIR HEATER 2-4
AIR HORN
→ S/N B214E01745G (CLOSED CAB WITH HEATER)
→ S/N B214E01743G (CLOSED CAB WITH AIRCO) 1-112
S/N B214E01746G ↔ 12/2009 (CLOSED CAB WITH HEATER)
S/N B214E01744G ↔ 12/2009 (CLOSED CAB WITH AIRCO) 1-114
12/2009 → 1-116
AIR INTAKE CONNECTION 2-6
AIR INTAKE HOSE 2-7
AIR INTAKE MANIFOLD 2-8
AIR INTAKE SYSTEM
→ PENDING PER ECN 68546-19 3-4
PENDING PER ECN 68546-19 → 3-6
AIR TRANSFER CONNECTION 2-9
ALTERNATOR AND MOUNTING 4-129
ALTERNATOR SUPPORT AND WATER INLET
→ 11/2008 4-131
11/2008 → 4-132
ARMREST ASSEMBLY
HYDRAULIC LEVERS 1-104
JOYSTICK 1-106

B

BELT TENSIONER 2-10
BRAKE AND INCHING PEDAL LINKAGE 8-2
BRAKE HOSES AND ATTACHING PARTS
SHEET 1 OF 2 9-8
SHEET 2 OF 2 9-12
BRAKE TEMPERATURE SWITCH KIT 13-2
BRAKE VALVE
WET BRAKE 8-4

©2010 HYSTER COMPANY

TABLE OF CONTENTS (continued)

DESCRIPTION **PAGE**

C

CAB
ATTACHING PARTS ... 1-16
DOOR ATTACHING PARTS ... 1-50
FLOOR MATS ... 1-32
MAIN DOOR WINDOW - RIGHT AND LEFT HAND ... 1-48
PANELS ... 1-18
SHEET 1 OF 2 ... 1-4
SHEET 2 OF 2 ... 1-6
SOUND REDUCTION ... 1-28
SUNSHADE - TOP ... 1-29
SUNSHADE - REAR ... 1-30
TILT AND LATCH ASSEMBLY ... 1-34
TILT CYLINDER ... 1-42
TILT ELECTRIC PUMP ... 1-38
TILT HAND PUMP ... 1-40
CAB ASSEMBLY
CLIMATE CONTROL CAB ... 1-130
CAB DOOR
LEFT HAND ... 1-44
RIGHT HAND ... 1-46
CAB HEATER PLUMBING ... 2-12
CAB HOSES AND ATTACHING PARTS ... 9-6
CAB WINDOWS INSTALLATION ... 1-26
CAMSHAFT ... 2-14
CLIMATE CONTROL SYSTEM ... 1-124
COMBINATION VALVE
→ S/N B214E01585E ... 9-34
S/N B214E01586E → ... 9-36
COMPRESSOR ASSEMBLY
TWO-FAN SYSTEM ... 1-58
CONDENSER ASSEMBLY
THREE-FAN SYSTEM ... 1-82
WITH TWO-FAN CONDENSER SYSTEM ... 1-62
CONDITIONAL SPEED LIMITER
LIFT AND TILT (S/N B214E01777H →) ... 4-142
CONNECTING RODS AND PISTONS
→ 11/2008 ... 2-16
11/2008 → ... 2-18
CONSOLE
INDICATOR DISPLAY AND CONTROLS ... 4-10
RADIO ... 4-8
CONTROL PANEL
AIR CONDITIONER ... 4-14
HEATER ... 4-12
CONTROL PANEL ASSEMBLY
WITH TWO-FAN CONDENSER SYSTEM ... 1-68

©2010 HYSTER COMPANY

TABLE OF CONTENTS (continued)

DESCRIPTION	PAGE
CONTROL VALVE	
AUXILIARY SPOOL SECTION	9-30
LIFT SPOOL SECTION - 1A, 1B	9-24
LIFT SPOOL SECTION - 4A, 4B	9-32
MID-INLET SECTION	9-26
OUTLET SECTION	9-22
TILT SPOOL SECTION	9-28
CONTROL VALVE ASSEMBLY	9-21
COOLANT HEATER STARTING AID	2-20
COOLING SYSTEM	2-22
COUNTERWEIGHT	1-13
CRANKCASE BREATHER	2-24
CRANKSHAFT AND BEARINGS	
→ 11/2008	2-26
11/2008 →	2-30
CYLINDER BLOCK	
→ 11/2008	2-32
11/2008 →	2-34
CYLINDER HEAD	
→ 11/2008	2-36
11/2008 →	2-38
D	
DASH AND AIR DUCT ASSEMBLY	1-20
DC-DC CONVERTER AND ATTACHING PARTS	4-18
DELUXE SUSPENSION SEAT	1-90
DIFFERENTIAL CARRIER	
S/N B214E01528D → EXC. 1533	6-8
→ S/N B214E01527D INC. 1533	6-10
DIRECTIONAL AND MARKER LIGHTS	12-3
DRIVE AXLE ASSEMBLY	
→ S/N B214E01527D INC. 1533	6-2
S/N B214E01528D → EXC. 1533	6-4
DRIVE TIRE AND WHEEL	
BRIDGESTONE	6-13
GOODYEAR	6-18
MICHELIN	6-14
SOLID SMOOTH - MONARCH	6-16
SOLID TIRE WITH TREAD - BERGOUGNAN	6-15
DRIVE WHEEL AND TIRE	
SIMEX	6-17
E	
ELECTRIC HORN	4-147
ELECTRICAL SYSTEM	4-4

©2010 HYSTER COMPANY

TABLE OF CONTENTS (continued)

DESCRIPTION	PAGE
EMPTY CONTAINER HANDLER	
BEARING BLOCKS AND SHIMS - CARRIAGE	11-2
BEARING BLOCKS AND SHIMS - CARRIAGE	12-10
CARRIAGE WITH MECHANICAL PILE SLOPE - SERIES 582, 586 AND 588	11-4
CARRIAGE WITH POWER PILE SLOPE AND FLEX TRACK - SERIES 582 AND 586	11-6
ELECTRICAL BOX BRACKET - SERIES 582, 586, AND 588	11-8
ELECTRICAL SYSTEM - SERIES 586 AND 588	11-14
ELECTRICAL SYSTEM WITH MECHANICAL PILE SLOPE - SERIES 582	11-10
ELECTRICAL SYSTEM WITH POWER PILE SLOPE - SERIES 582	11-12
END BEAM HEAD - SERIES 582	11-16
END BEAM HEAD - SERIES 586	11-20
END BEAM HEAD - SERIES 588	11-24
END BEAM WEAR PADS - SERIES 582, 586, AND 588	11-28
EXTENSION BEAM - SERIES 582, 586, AND 588	11-30
EXTENSION BEAM WEAR PADS - SERIES 582, 586, AND 588	11-32
EXTENSION CYLINDER - SERIES 582, 586, AND 588	11-34
EXTENSION/TWISTLOCK VALVE - LEFT HAND, SERIES 582 AND 586	11-36
EXTENSION/TWISTLOCK VALVE - RIGHT HAND, SERIES 582	11-37
EXTENSION/TWISTLOCK VALVE - RIGHT HAND, SERIES 582, 586 AND 588	11-38
HEAD VALVE - SERIES 582	11-39
HYDRAULIC SYSTEM - SERIES 586	11-44
HYDRAULIC SYSTEM - SERIES 586 AND 588	11-46
HYDRAULIC SYSTEM WITH MECHANICAL PILE SLOPE - SERIES 582	11-40
HYDRAULIC SYSTEM WITH POWER PILE SLOPE - SERIES 582	11-42
INDICATION LIGHT BRACKET - SERIES 586	11-49
INDICATION LIGHT BRACKET - SERIES 588	11-50
INDICATION LIGHT BRACKET AND HOSE GUIDE - SERIES 582	11-48
PILOT CHECK VALVE - SERIES 582	11-51
PILOT CHECK VALVE - SERIES 582, 586 AND 588	11-52
SENSORS - SERIES 582	11-54
SIDE SHIFT CYLINDER - SERIES 582, 586, AND 588	11-56
SIDE SHIFT VALVE - SERIES 586 AND 588	11-60
SIDESHIFT VALVE WITH POWER PILE SLOPE - SERIES 582 AND 586	11-58
SPLASH GUARDS - SERIES 582, 586, AND 588	11-61
TILT CYLINDERS - SERIES 582, 586, AND 588	11-62
EMPTY SEAT ENGINE SHUTDOWN	
3/2010 →	12-12
ENGINE ASSEMBLY	2-40
ENGINE BLOCK HEATER	2-42
ENGINE CONTROL MODULE	
→ 11/2008	4-134
11/2008 →	4-136
ENGINE COOLANT VENT	2-44
ENGINE FUEL PRESSURE SENDER	13-2
ENGINE MOUNTS	2-48
ENGINE OIL COOLER	2-46
ETR MODULE WIRING	
→ 11/2008	4-138
11/2008 →	4-139

©2010 HYSTER COMPANY

TABLE OF CONTENTS (continued)

DESCRIPTION	PAGE
EXHAUST MANIFOLD	2-50
EXHAUST SYSTEM	2-52
F	
FAN DRIVE AND MOUNTING	2-54
FLOORPLATES AND COVERS	1-8
FLYWHEEL AND MOUNTING	2-55
FLYWHEEL HOUSING	
→ S/N 73037048 (ENGINE)	2-56
S/N 73037049 → (ENGINE)	2-58
FRONT GEAR COVER	2-60
FRONT LIGHTS	4-24
FUEL FILTER	3-14
FUEL FILTER PLUMBING	3-16
FUEL INJECTION PUMP	3-17
FUEL INJECTOR PLUMBING	3-20
FUEL INJECTORS	
→ 11/2008	3-22
11/2008 →	3-23
FUEL INLET FITTING	3-24
FUEL PLUMBING	
→ 11/2008	3-26
11/2008 →	3-28
FUEL SUPPLY SYSTEM	3-2
FUEL SYSTEM ACCESSORIES	3-30
G	
GEAR PUMP	9-42
H	
HANDRAIL	12-2
HEATED TOP WINDOW	
CLIMATE CONTROL CAB	12-11
HEATER AND AIR CONDITIONER ASSEMBLY	
WITH THREE-FAN CONDENSER SYSTEM	1-76
HEATER AND AIR CONDITIONER HOSES	
→ S/N B214E01668F	1-52
SHEET 1 (S/N B214E01669F →)	1-54
SHEET 2 (S/N B214E01669F →)	1-56
HEATER AND AIR CONDITIONER MOUNTING	
WITH THREE-FAN CONDENSER SYSTEM	1-78
HEATER AND AIR DUCT ASSEMBLY	
WITH TWO-FAN CONDENSER SYSTEM	1-69
HEATER ASSEMBLY	
WITH THREE-FAN CONDENSER SYSTEM	1-80
WITH TWO-FAN CONDENSER SYSTEM	1-72
HEATER SYSTEM	
WITH TWO-FAN CONDENSER SYSTEM	1-70
HOODS AND COVERS	1-10
HYDRAULIC HOSE ASSEMBLY	9-52

©2010 HYSTER COMPANY

TABLE OF CONTENTS (continued)

DESCRIPTION	PAGE
HYDRAULIC LEVER MODULATOR VALVE	9-54
HYDRAULIC LEVERS	9-50
HYDRAULIC OIL COOLER	9-48
HYDRAULIC SUPPLY AND RETURN	9-2
HYDRAULIC TANK	9-46
HYDRAULIC VALVE AND ATTACHING PARTS	9-38
J	
JOYSTICK ASSEMBLY	9-58
JOYSTICK CONTROL	9-56
JOYSTICK CONTROL MODULATOR VALVE	9-60
JUMP START AID	12-9
L	
LABELS	
EXTERIOR	1-84
HYDRAULIC CONTROLS	1-88
INTERIOR	1-86
LIFT ACCUMULATOR SYSTEM	9-20
LIFTING BRACKETS AND MOUNTING	2-61
LIGHT ASSEMBLY	
HALOGEN	4-22
HIGH INTENSITY DISCHARGE	4-23
LIGHT BAR AND MOUNT	
TWISTLOCK MODULE	4-20
LOCKABLE DISCONNECT SWITCH LEVER	12-6
LOCKOUT LEVER	4-7
LOUVER	
CLIMATE CONTROL CAB	1-118
LUBRICATING OIL PUMP	2-62
M	
MAIN VALVE HOSES	9-4
MAP READING LIGHT	12-5
MAST ASSEMBLY	
HEADER HOSES (→ S/N B214E01635F)	10-12
HEADER HOSES (S/N B214E01636F →)	10-16
INNER MAST	10-4
MAIN LIFT	10-6
MAIN LIFT CYLINDERS	10-10
MAST INSTALLATION	10-26
OUTER MAST	10-2
TILT CYLINDER HYDRAULICS (→ S/N B214E01707F)	10-20
TILT CYLINDER HYDRAULICS (S/N B214E01708F →)	10-22
TILT CYLINDERS	10-24
MAST HOSE SHEAVE KIT	13-2
MAST SUPPLY AND RETURN	9-16
MONOTROL PEDAL	3-12
MONOTROL PEDAL LINKAGE	3-10
MUDFLAPS	12-8

©2010 HYSTER COMPANY

TABLE OF CONTENTS (continued)

DESCRIPTION	PAGE
O	
OIL COOLER KIT	
OIL FILLER	2-63
OIL LEVEL GAUGE	2-64
OIL PAN	2-66
OVERHEAD GUARD	
WIRE MESH	1-14
P	
PARK BRAKE ASSEMBLY	8-8
PIVOT ARM ASSEMBLY	1-108
POWERED CAB TILT	1-36
PROXIMITY SWITCH ASSEMBLY	
S/N B214E01777H →	4-140
R	
RADIATOR AND COOLER ASSEMBLY	2-68
RADIO PREPARATION	1-110
REAR GEAR HOUSING	2-70
REAR GEAR TRAIN ACCESSORY MOUNTING COVER	2-71
REAR LIGHTS AND BACK-UP ALARM	4-26
REAR VIEW MIRRORS	12-7
RELAYS AND FUSES	
OPERATOR COMPARTMENT (→ 3/2008)	4-30
OPERATOR COMPARTMENT (3/2008 ↔ S/N B214E01776H)	4-34
OPERATOR COMPARTMENT (S/N B214E01777H →)	4-38
REMOTE OIL FILTER	2-72
ROCKER LEVERS	2-74
S	
SEAT ASSEMBLY	
CLIMATE CONTROL CAB	1-122
SECOND 12V SOCKET OPTION	
CLIMATE CONTROL CAB	4-146
STARTER MOTOR AND MOUNTING	2-76
STEER AXLE ASSEMBLY	7-10
STEER COLUMN	7-6
STEER COLUMN AND ATTACHING PARTS	7-2
STEER COLUMN ASSEMBLY	7-4
STEER CYLINDER	7-14
OPTIONAL	7-16
STEER PUMP ASSEMBLY	7-8
STEER TIRE AND WHEEL	
BRIDGESTONE	7-18
GOODYEAR	7-23
MICHELIN	7-19
SIMEX	7-22
SOLID SMOOTH - MONARCH	7-21
SOLID TIRE WITH TREAD - BERGOUGNAN	7-20
STEERING HOSES AND ATTACHING PARTS	9-18

©2010 HYSTER COMPANY

TABLE OF CONTENTS (continued)

DESCRIPTION	PAGE
STROBE LIGHT	12-4
SUSPENSION ASSEMBLY	
AIR	1-96
MECHANICAL	1-100
SUSPENSION SEAT	1-92
T	
THERMOSTAT	2-77
THROTTLE PEDAL AND LINKAGE	3-8
TORQUE CONVERTER COOLER PLUGS	2-78
TRAINING SEAT	1-132
TRANSMISSION ASSEMBLY	
CASE AND REAR COVER - TE-13 AND TE-17	5-36
CHARGING PUMP - TE-13 AND TE-17	5-24
CONTROL VALVE ASSEMBLY - TE-13 AND TE-17	5-30
CONTROL VALVE ATTACHING PARTS - TE-13 AND TE-17	5-28
CONVERTER HOUSING - TE-13 AND TE-17	5-4
DRIVE PLATES - TE-13 AND TE-17	5-6
FLUID INDICATOR AND ATTACHING PARTS - TE-13 AND TE-17	5-39
FORWARD AND THIRD SHAFT - TE-13 AND TE-17	5-18
GEARS - TE-13 AND TE-17	5-8
INPUT SHAFT AND FIRST CLUTCH - TE-13 AND TE-17	5-10
MODULATOR VALVE ASSEMBLY - TE-13 AND TE-17	5-34
OUTPUT SHAFT - TE-13 AND TE-17	5-26
PUMP DRIVE - TE-13 AND TE-17	5-22
REGULATOR VALVE ASSEMBLY - TE-13 AND TE-17	5-32
REVERSE AND SECOND CLUTCH - TE-13 AND TE-17	5-14
TE-13 AND TE-17	5-2
TORQUE CONVERTER - TE-13 AND TE-17	5-7
TRANSMISSION HOSES AND ATTACHING PARTS - TE-13 AND TE-17	5-44
UNIVERSAL SHAFT - TE-13 AND TE-17	5-41
TRANSMISSION CONTROLLER AND SHIFT LEVER	4-16
TRANSMISSION MOUNTING	
TE-13 AND TE-17	5-46
TURBOCHARGER	
→ 11/2008	2-80
11/2008 →	2-83
TURBOCHARGER PLUMBING	
→ 11/2008	2-84
11/2008 →	2-86
V	
VALVE COVER	
→ 11/2008	2-88
11/2008 →	2-90
VALVE TAPPETS	2-91
VIBRATION DAMPER	2-92

©2010 HYSTER COMPANY

TABLE OF CONTENTS (continued)

DESCRIPTION	PAGE
W	
WATER OUTLET CONNECTION	
11/2008 →	2-95
WATER PUMP	2-93
WATER PUMP DRIVE	2-94
WET BRAKE ASSEMBLY	8-6
WINDOW WIPER SYSTEM	
REAR AND ROOF WIPER KITS - AND FRONT WIPER OPTIONS	1-24
WASHER BOTTLE KIT	1-22
WIRE HARNESS	
AIR CONDITIONER EXTENSION (S/N B214E01669F ↔ 12/2009 (H500HD-EC)) (S/N B214E01669F ↔ 9/2010 (H400HD-H450HD-EC))	4-128
ARM REST	4-42
CAB LIGHTS	4-46
CAB SIDE CONSOLE - SHEET 1 OF 2 (→ 3/2008)	4-48
CAB SIDE CONSOLE - SHEET 2 OF 2 (→ 3/2008)	4-54
CAB SIDE CONSOLE - SHEET 1 OF 2 (3/2008 ↔ S/N B214E01776H)	4-58
CAB SIDE CONSOLE - SHEET 2 OF 2 (3/2008 ↔ S/N B214E01776H)	4-62
CAB SIDE CONSOLE - SHEET 1 OF 2 (S/N B214E01777H →)	4-66
CAB SIDE CONSOLE - SHEET 2 OF 2 (S/N B214E01777H →)	4-72
CAB UNDERFLOOR	4-76
CHASSIS - SHEET 1 OF 2 (S/N B214E01678F ↔ 3/2009 (4000 WB)) (S/N B214E01675F ↔ 3/2009 (4500 WB))	4-86
CHASSIS - SHEET 2 OF 2 (S/N B214E01678F ↔ 3/2009 (4000 WB)) (S/N B214E01675F ↔ 3/2009 (4500 WB))	4-90
CLOSED CAB	4-110
FRONT LIGHTS (→ S/N B214E01629F)	4-113
FRONT LIGHTS (S/N B214E01630F →)	4-114
HYDRAULIC RELAYS	4-115
LIFT INTERRUPT BYPASS	4-116
OIL COOLER (→ 9/2008)	4-118
OIL COOLER (S/N B214E01688F →)	4-120
POWERED CAB TILT	4-122
REAR WIPER EXTENSION	4-123
SEALED FUSE BOX	4-124
SIDE INDICATOR (S/N B214E01630F →)	4-127
SPEED LIMITER	4-144
STEERING COLUMN	4-125
WINDOW WASH PUMPS	4-126
WIRE HARNESS (CHASSIS)	
SHEET 1 OF 2 (→ S/N B214E01677F (4000 WB)) (→ S/N B214E01674F (4500 WB))	4-78
SHEET 1 OF 2 (3/2008 ↔ S/N B214E01776H)	4-94
SHEET 1 OF 2 (S/N B214E01777H →)	4-102
SHEET 2 OF 2 (→ S/N B214E01677F (4000 WB)) (→ S/N B214E01674F (4500 WB))	4-82
SHEET 2 OF 2 (3/2008 ↔ S/N B214E01776H)	4-98
SHEET 2 OF 2 (S/N B214E01777H →)	4-106
WORK LIGHTS	
HALOGEN AND HIGH INTENSITY DISCHARGE	4-28

©2010 HYSTER COMPANY

ABBREVIATIONS QUICK REFERENCE SHEET

Listed below are abbreviations used in parts manuals to denote the following expressions:

TERM	DEFINITION
Amp	Amperes
AR	As Required
BDI	Battery Discharge Indicators
BWI	Brush Wear Indicator
CE	Communicator End
CRE	Corrosive Environment
D/B	Date Break
dbA	Decibel "A" Scale
DE	Drive End
ECH	Empty Container Handler
ECH-3	Empty Container Handler - 3 High Stacking
ECH-4	Empty Container Handler - 4 High Stacking
ECH-5	Empty Container Handler - 5 High Stacking
ECH-6	Empty Container Handler - 6 High Stacking
ECH-7	Empty Container Handler - 7 High Stacking
ECM	Electronic Control Module
ECN	Engineering Change Notice
EEPROM	Electrically Erasable Programmable Read Only Memory
EPA	US Environmental Protection Agency
EPROM	Electrically Programmable Read Only Memory

TERM	DEFINITION
FRE	Freezer Environment
in.	inches
LPG	Liquefied Petroleum Gas
MAP	Manifold Absolute Pressure
mm	millimeters
MSTS	Microprocessor Spark Timing System
NPT	National Pipe Threads
O/S	Oversize
PTO	Power Take Off
RPM	Revolutions per Minute
S/N	Serial Number
TMM	Truck Management Module
UL Type D	Diesel-Powered Safety Rating
UL Type DS	Diesel-Powered Safety Rating
UL Type E	Battery-Powered Safety Rating
UL Type EE	Battery-Powered Safety Rating
UL Type ES	Battery-Powered Safety Rating
UL Type G	Gasoline-Powered Safety Rating
UL Type GS	Gasoline-Powered Safety Rating
UL Type LP	Gas-Powered Safety Rating
UL Type LPS	LP Gas-Powered Safety Rating
U/S	Undersize
UL	Underwriters Laboratory
V	Volts

©2010 HYSTER COMPANY

HOW TO USE THE ILLUSTRATED PARTS MANUAL

This parts manual describes and illustrates assemblies, subassemblies, and detail parts needed for service replacement.

The different constructions are indicated by keys and footnotes. The callouts correspond to descriptions found on the next page.

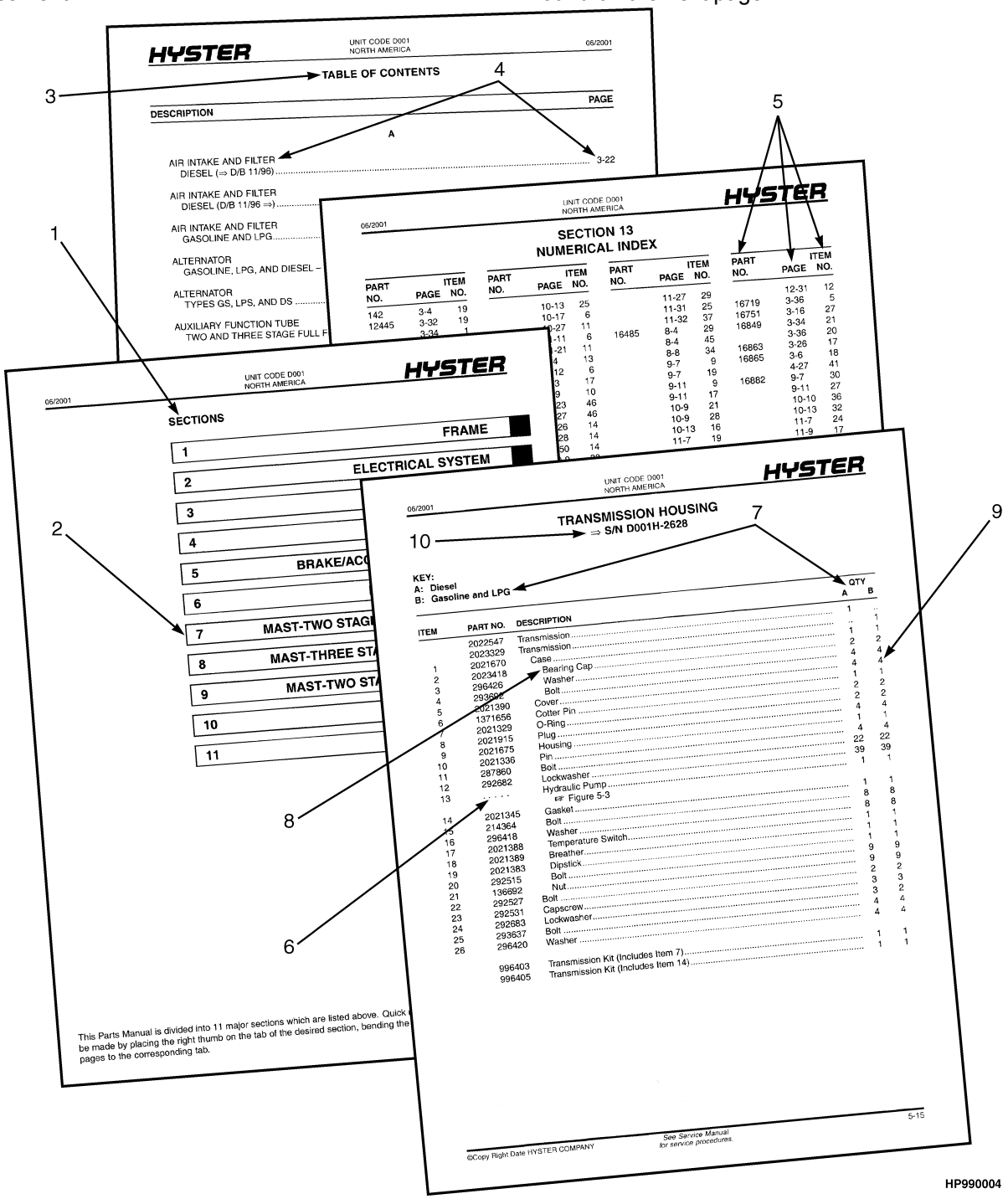

HOW TO FIND THE DESIRED PART NUMBER

WHEN THE PART NUMBER AND THE NEXT HIGHER ASSEMBLY IS NOT KNOWN:

1. Determine the function and application of the part required. Turn to the Sections Page. Choose the general area of reference most likely to include the part.
2. Turn to the section you chose. Use the Section Table of Contents to determine the assembly which would normally contain the part required. Then locate the part on the assembly breakdown page.

WHEN THE PART NUMBER IS NOT KNOWN AND THE NEXT HIGHER ASSEMBLY IS KNOWN:

3. Determine the assembly the required part is used on. Turn to the Table of Contents (Page i).
4. Locate the assembly the required part is used on and turn to the page indicated for that assembly. Then locate the part on the assembly breakdown page.

WHEN THE PART NUMBER IS KNOWN:

5. Use the Numerical Index (Page 14-1) to find the part number. Turn to the page listed and locate the part as indicated by the item number.

GENERAL:

The assembly breakdowns include part numbers, descriptions, quantities required, keys and footnotes to help in selecting correct parts.

6. Parts Supersession Information. Part numbers that have this history will be displayed in the parts list in the order that they were superseded (from oldest to newest). The superseded part numbers will be shown with a line through them.

   Five periods in the PART NO. column (. . . . .) indicate that the part is either *Not Serviced Separately* or there is a reference to another figure. A figure reference is denoted by a pointing hand followed by a figure number in the DESCRIPTION column (☞Figure 10)
7. Keys are used to show two or more similar assemblies, RH and LH assembly parts, etc. Select the appropriate key, "A", "B", "C", "D", or "E" and the corresponding quantity column to find the required parts. Two periods in the QTY column (..) indicate that the part is not used for that assembly.
8. Indented descriptions under the DESCRIPTION column are used to indicate assemblies and subparts of assemblies. In the example on the previous page, *BEARING CAP* (Item 2) is a subpart of the major assembly *CASE*.
9. Quantities shown are for one assembly. The quantities of the subpart *BEARING CAP* are indicated as two and two. This means two per *CASE* assembly.
10. Serial number breaks identify the most current parts information and are shown as follows:
    → S/N D001H2628
    Indicates last serial number affected.
    S/N D001H2629 →
    Indicates the first serial number affected.
    S/N D001H1553 ↔ S/N D001H3291
    Indicates a range of serial numbers affected.

    ECN numbers for pending serial numbers are shown to allow for the inclusion of the most current parts information and are identified as follows:
    → S/N Pending Per ECN 63243
    Indicates a pending serial number for last unit affected.
    S/N Pending Per ECN 63243 →
    Indicates a pending serial number for first unit affected.

    Date breaks are used to indicate when a change occurred but a subsequent serial number break was not recorded. This is an arbitrary date usually based on the ECN release and are identified as follows:
    → D/B 3/00
    Indicates that a change occurred sometime within that month for the item affected.
    D/B 3/00 →
    Indicates that a change occurred sometime within that month for the item affected.
    D/B 3/00 ↔ D/B 4/00
    Indicates a range of production dates of the item affected.

    Contact your local dealer for Hyster lift trucks for serial number information for items with a ECN or a date break.

ORDERING PARTS:

When ordering replacement parts, give the unit serial number, part number, name of part and quantity required.

For any further information on parts, service, or ordering, consult your local dealer for Hyster lift trucks.

©2010 HYSTER COMPANY

IDENTIFICATION OF TRUCK SERIAL NUMBERS

X OOO X OOOO X

(1) (2) (3) (4) (5)

(1) and (2) The first letter and three numbers indicate the truck unit code.

(3) The second letter indicates the plant of manufacture.

(4) The four or five digit number indicates the production sequence number of the truck.

(5) The final letter indicates the year of manufacture starting with "A" in 1957, 1980, and 2003. The letters "I", "O", and "Q" will not be used.

For pending serial numbers contact your local dealer for Hyster lift trucks.

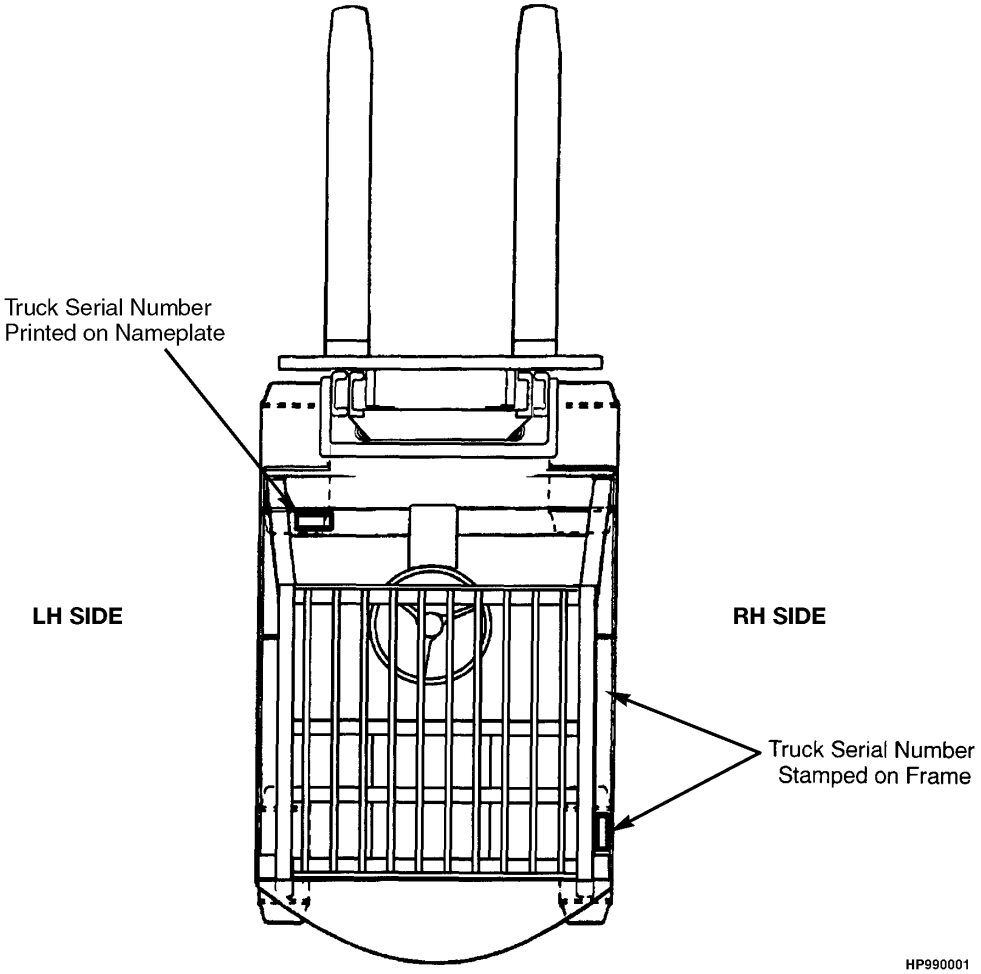

Parts referred to in this book as right or left hand parts are in accordance with the illustration above.

IDENTIFICATION OF MAST SERIAL NUMBERS

X OOO X OOOO OOOO

(1) (2) (3) (4) (5)

(1) and (2) The first letter and number indicates the mast unit code.

(3) The second letter indicates the plant of manufacture.

(4) The four or five digit number indicates the production sequence number of the mast.

(5) Carriage travel in millimeters stamped just below the serial number.

Mast Group identification consists of mast unit code (1) and (2) plus carriage travel (5).

For pending production sequence numbers contact your local dealer for Hyster lift trucks.

LIFT EQUIPMENT IDENTIFICATION

1. Fork part number, capacity rating, plant code letter, and date of manufacture are stamped approximately six inches below the top of most forks.
2. The carriage group number is stamped on the right hand side of the top crossmember (pin type) or on the back of the right hand end of the bottom crossmember (hook type). A date code has two letters in line with or below the carriage group number.
3. The mast identification number has a unit code, a letter indicating the plant of manufacture, and a serial number. Underneath the production sequence number is a four digit number that indicates the carriage travel in millimeters.
4. Tilt and lift cylinder group numbers are stamped on the cylinder shell.

   Always refer to the group, serial, or part number when ordering service parts.

   Modification of masts and carriages by SPED (Special Products Engineering Department) are identified by a model prefix code beginning with the letter "S". contact your dealer for Hyster lift trucks for information on these assemblies.

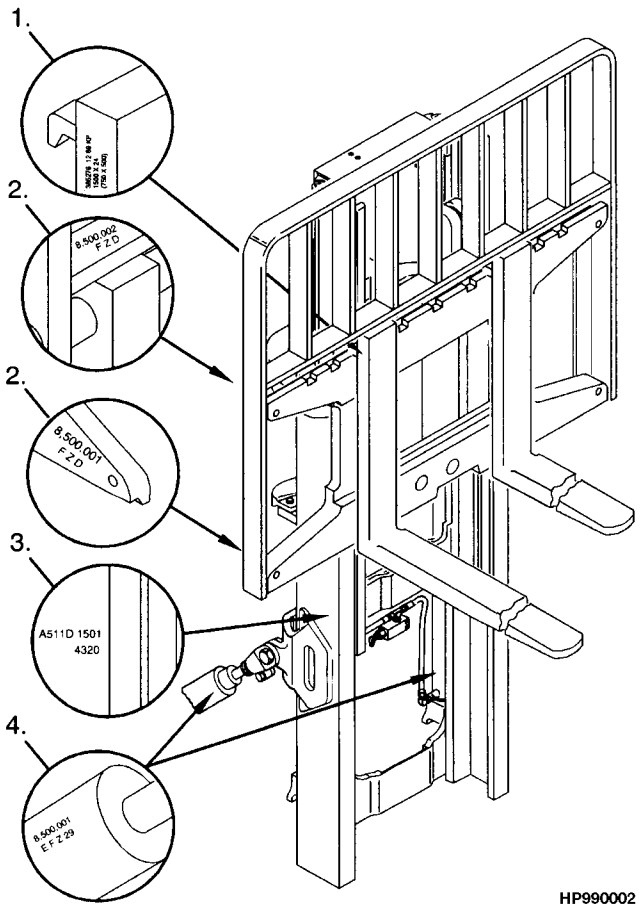

©2010 HYSTER COMPANY

IDENTIFICATION OF ATTACHMENT AND SIDE-SHIFT CARRIAGE SERIAL NUMBERS

X	OOO	X	OOOO
(1)	(2)	(3)	(4)

(1) and (2) The first letter and three numbers indicate the attachment unit code.

(3) The second letter indicates the plant of manufacture.

(4) The four or five digit number indicates the production sequence number.

For pending production sequence numbers contact your local dealer for Hyster lift trucks.

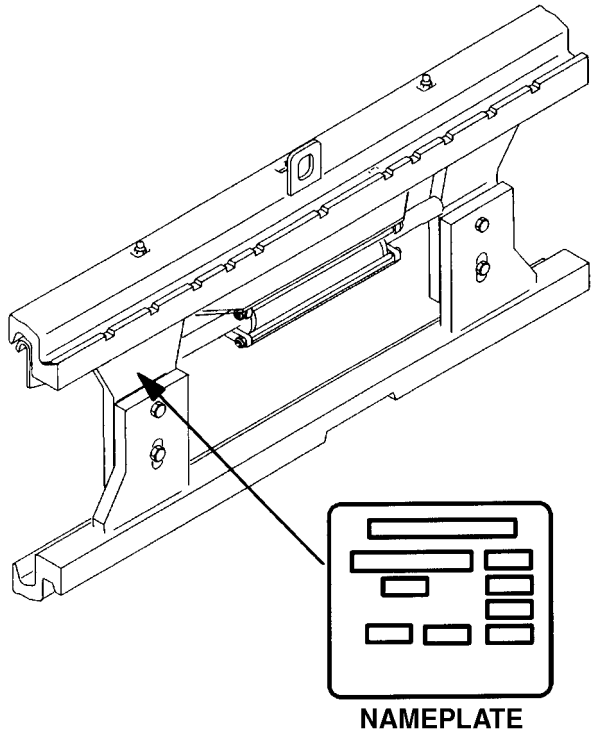

Side-shift carriages and attachments have nameplates. Use the serial number found on the nameplate to identify the attachment.

Always refer to the group, serial, or part number when ordering service parts.

Modifications of attachments and side-shift carriages by SPED (Special Products Engineering Department) are identified by a model prefix code beginning with the letter "S". Contact your dealer for Hyster lift trucks for information on these assemblies.

©2010 HYSTER COMPANY

PUBLICATIONS

Every new lift truck is provided with an OPERATING MANUAL. This manual has information that the operator must know for inspection and operation of the lift truck.

SERVICE MAINTENANCE MANUALS, which provide service and overhaul procedures, and PARTS MANUALS with complete replacement part identification, are available at a nominal fee from your Hyster dealer to assist users in effectively maintaining Hyster lift trucks in a safe, useful condition. See the list below for information on ordering specific publications for this model lift truck.

PUBLICATION	HYSTER PART NUMBER
Operating Manual	1625129
Service Manual (Complete)	1627712
Parts Manual	1627710

©2010 HYSTER COMPANY

1 FRAME

SECTION 1
FRAME

DESCRIPTION	PAGE
AIR CONDITIONER	
CLIMATE CONTROL CAB	1-128
WITH TWO-FAN CONDENSER SYSTEM	1-60
AIR CONDITIONER ASSEMBLY	
WITH TWO-FAN CONDENSER SYSTEM	1-66
AIR CONDITIONER SYSTEM	
CLIMATE CONTROL CAB	1-126
WITH TWO-FAN CONDENSER SYSTEM	1-59
AIR DUCT	
LOUVER, CLIMATE CONTROL CAB	1-120
AIR DUCT ASSEMBLY	
AIR CONDITIONING - WITH TWO-FAN CONDENSER SYSTEM	1-64
HEATER - WITH TWO-FAN CONDENSER SYSTEM	1-74
AIR HORN	
→ S/N B214E01745G (CLOSED CAB WITH HEATER)	
→ S/N B214E01743G (CLOSED CAB WITH AIRCO)	1-112
S/N B214E01746G ↔ 12/2009 (CLOSED CAB WITH HEATER)	
S/N B214E01744G ↔ 12/2009 (CLOSED CAB WITH AIRCO)	1-114
12/2009 →	1-116
ARMREST ASSEMBLY	
HYDRAULIC LEVERS	1-104
JOYSTICK	1-106
CAB	
ATTACHING PARTS	1-16
DOOR ATTACHING PARTS	1-50
FLOOR MATS	1-32
MAIN DOOR WINDOW - RIGHT AND LEFT HAND	1-48
PANELS	1-18
SHEET 1 OF 2	1-4
SHEET 2 OF 2	1-6
SOUND REDUCTION	1-28
SUNSHADE - TOP	1-29
SUNSHADE - REAR	1-30
TILT AND LATCH ASSEMBLY	1-34
TILT CYLINDER	1-42
TILT ELECTRIC PUMP	1-38
TILT HAND PUMP	1-40
CAB ASSEMBLY	
CLIMATE CONTROL CAB	1-130
CAB DOOR	
LEFT HAND	1-44
RIGHT HAND	1-46
CAB WINDOWS INSTALLATION	1-26
CLIMATE CONTROL SYSTEM	1-124
COMPRESSOR ASSEMBLY	
TWO-FAN SYSTEM	1-58
CONDENSER ASSEMBLY	
THREE-FAN SYSTEM	1-82
WITH TWO-FAN CONDENSER SYSTEM	1-62

©2010 HYSTER COMPANY

SECTION 1
FRAME

DESCRIPTION	PAGE
CONTROL PANEL ASSEMBLY	
WITH TWO-FAN CONDENSER SYSTEM	1-68
COUNTERWEIGHT	1-13
DASH AND AIR DUCT ASSEMBLY	1-20
DELUXE SUSPENSION SEAT	1-90
FLOORPLATES AND COVERS	1-8
HEATER AND AIR CONDITIONER ASSEMBLY	
WITH THREE-FAN CONDENSER SYSTEM	1-76
HEATER AND AIR CONDITIONER HOSES	
→ S/N B214E01668F	1-52
SHEET 1 (S/N B214E01669F →)	1-54
SHEET 2 (S/N B214E01669F →)	1-56
HEATER AND AIR CONDITIONER MOUNTING	
WITH THREE-FAN CONDENSER SYSTEM	1-78
HEATER AND AIR DUCT ASSEMBLY	
WITH TWO-FAN CONDENSER SYSTEM	1-69
HEATER ASSEMBLY	
WITH THREE-FAN CONDENSER SYSTEM	1-80
WITH TWO-FAN CONDENSER SYSTEM	1-72
HEATER SYSTEM	
WITH TWO-FAN CONDENSER SYSTEM	1-70
HOODS AND COVERS	1-10
LABELS	
EXTERIOR	1-84
HYDRAULIC CONTROLS	1-88
INTERIOR	1-86
LOUVER	
CLIMATE CONTROL CAB	1-118
OVERHEAD GUARD	
WIRE MESH	1-14
PIVOT ARM ASSEMBLY	1-108
POWERED CAB TILT	1-36
RADIO PREPARATION	1-110
SEAT ASSEMBLY	
CLIMATE CONTROL CAB	1-122
SUSPENSION ASSEMBLY	
AIR	1-96
MECHANICAL	1-100
SUSPENSION SEAT	1-92
TRAINING SEAT	1-132
WINDOW WIPER SYSTEM	
REAR AND ROOF WIPER KITS - AND FRONT WIPER OPTIONS	1-24
WASHER BOTTLE KIT	1-22

©2010 HYSTER COMPANY

NOTES

©2010 HYSTER COMPANY

CAB (FIGURE 1-1)
SHEET 1 OF 2

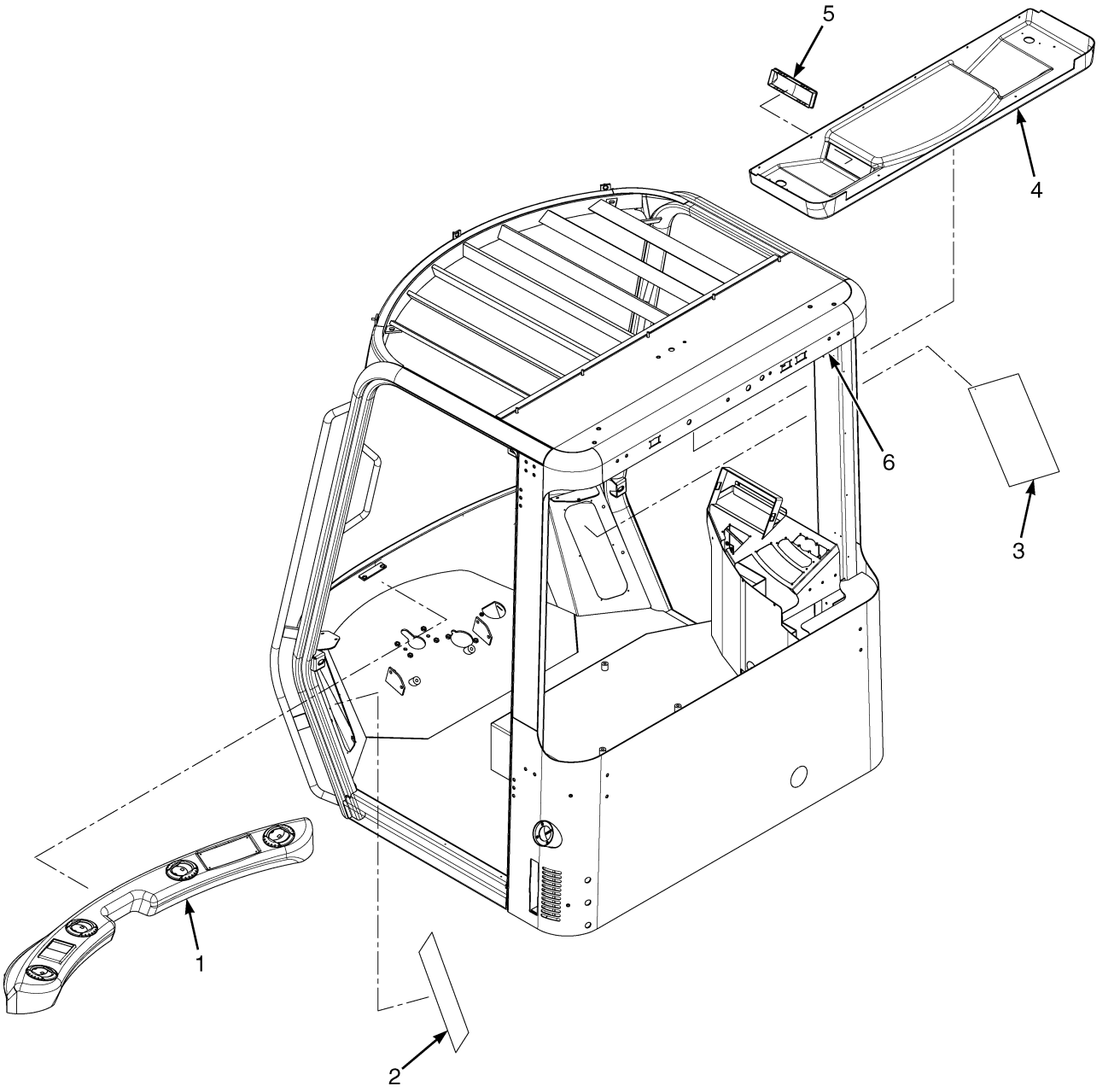

©2010 HYSTER COMPANY

CAB
SHEET 1 OF 2

ITEM	PART NO.	DESCRIPTION	QTY
1	1492200	Cover (Dash and Cap Assembly)	1
2	1493372	Foam (LH)	1
3	1493373	Foam (RH)	1
4	1492176	Console (Radio) (☞Figure 4-3)	1
5	1571628	Cover	1
6	1583941	Wire Harness (☞Figure 4-35)	1

©2010 HYSTER COMPANY

CAB (FIGURE 1-2)
SHEET 2 OF 2

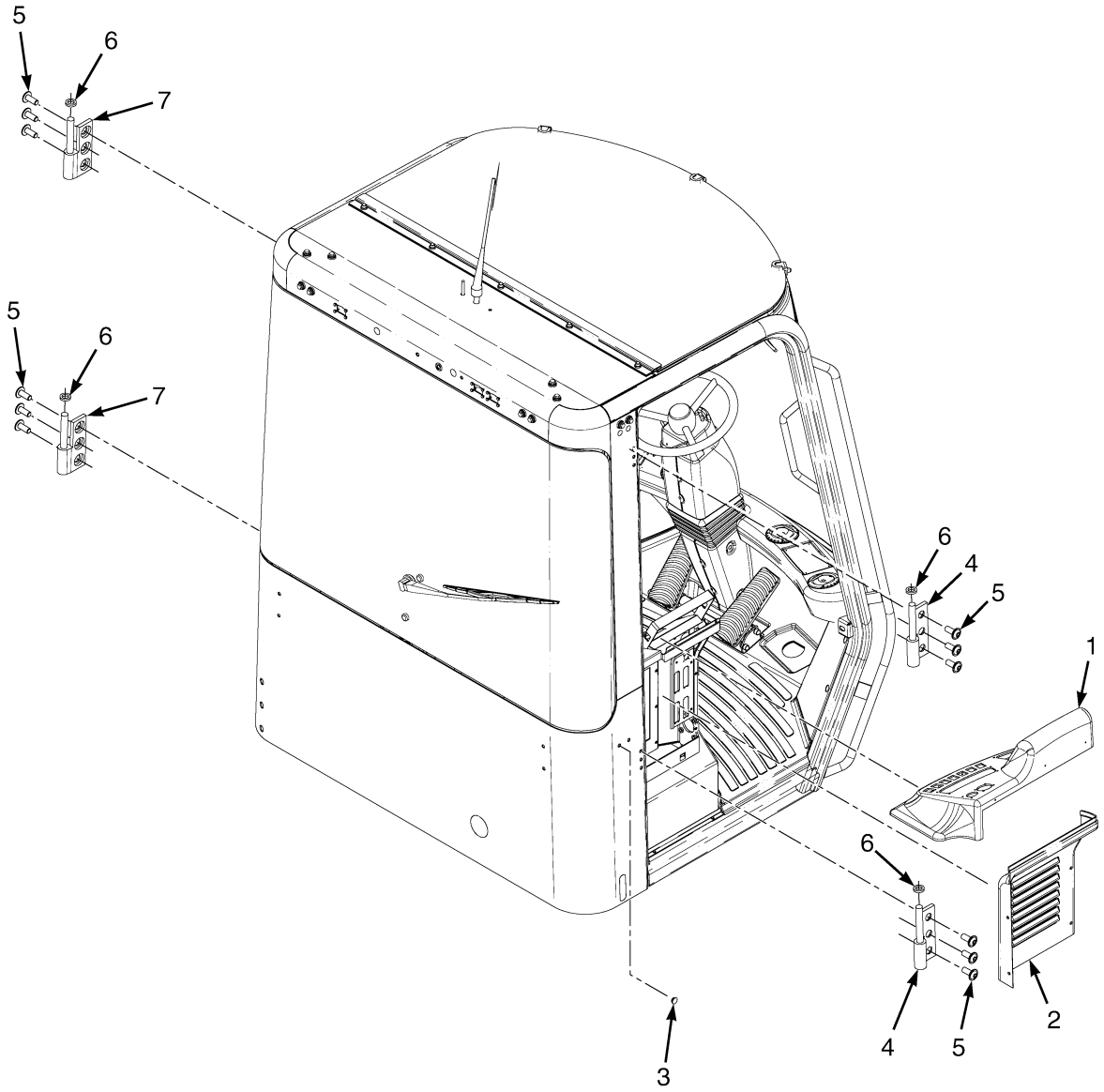

HP121290

©2010 HYSTER COMPANY

CAB
SHEET 2 OF 2

ITEM	PART NO.	DESCRIPTION	QTY
1	1601273	Console	1
2	1491028	Console (RH External)	1
3	4000817	Plug	4
4	1393474	Hinge (RH)	2
5	1493308	Bolt	12
6	1468312	Washer	4
7	1393473	Hinge (LH)	2

©2010 HYSTER COMPANY

FLOORPLATES AND COVERS (FIGURE 1-3)

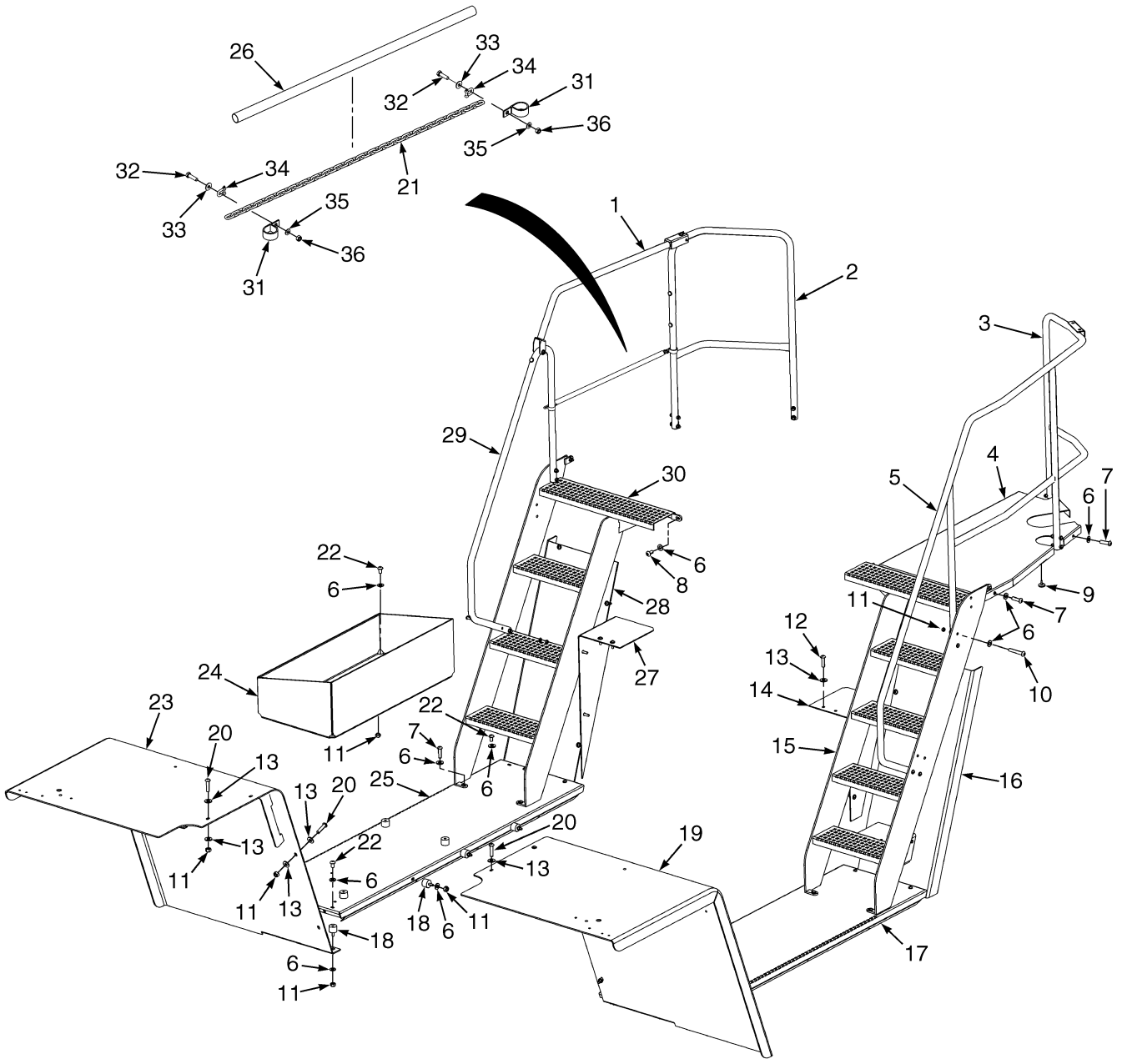

HP120936

©2010 HYSTER COMPANY

FLOORPLATES AND COVERS

KEY:
A: H400HD-EC, H440HDS-EC, H450HDS-EC
B: H450HD-EC, H500HD-EC

ITEM	PART NO.	DESCRIPTION	QTY A	QTY B
1	1617174	Hand Rail (RH)	1	1
2	1617179	Hand Rail (RH)	1	1
3	1593315	Hand Rail (LH)	1	1
4	1626105	Cover	1	1
5	1617057	Pipe (LH)	1	1
6	320159	Washer	92	92
7	296175	Capscrew	5	5
	296172	Capscrew	1	1
9	1450759	Button	10	10
10	1617108	Capscrew	18	18
11	302401	Locknut	55	55
12	296174	Capscrew	22	22
13	320160	Washer	52	52
14	1593304	Extension (LH)	1	..
14	1607331	Extension (LH)	..	1
15	1613500	Stairs (LH)	1	1
16	1617842	Fender (LH Rear)	1	1
17	1593279	Running Board (LH)	1	..
17	1593280	Running Board (LH)	..	1
18	1597192	Isolator	22	22
19	1593292	Fender (LH Front)	1	1
19	1593293	Fender (LH Front, Wide Axle Option)	1	1
20	296176	Capscrew	8	8
21	1151135	Chain	1	1
22	296171	Capscrew	12	12
23	1593297	Fender (RH Front)	1	1
23	1593298	Fender (RH Front, Wide Axle Option)	1	1
24	1617625	Storage Box (Optional)	1	1
25	1593284	Running Board (RH)	1	..
25	1593285	Running Board (RH)	..	1
26	222524	Heat Shrink	AR	AR
27	1593307	Extension (RH)	1	..
27	1607332	Extension (RH)	..	1
28	1593318	Fender (RH Rear)	1	1
29	1617173	Pipe (RH)	1	1
30	1613501	Stairs (RH)	1	1
31	210403	Clamp	2	2
32	176640	Bolt	2	2
33	320158	Washer	2	2
34	815848	Shackle	2	2
35	320157	Washer	2	2
36	302400	Nut	2	2
	239423	Anti-Slip Tread (Not Illustrated)	4	4

©2010 HYSTER COMPANY

HOODS AND COVERS (FIGURE 1-4)

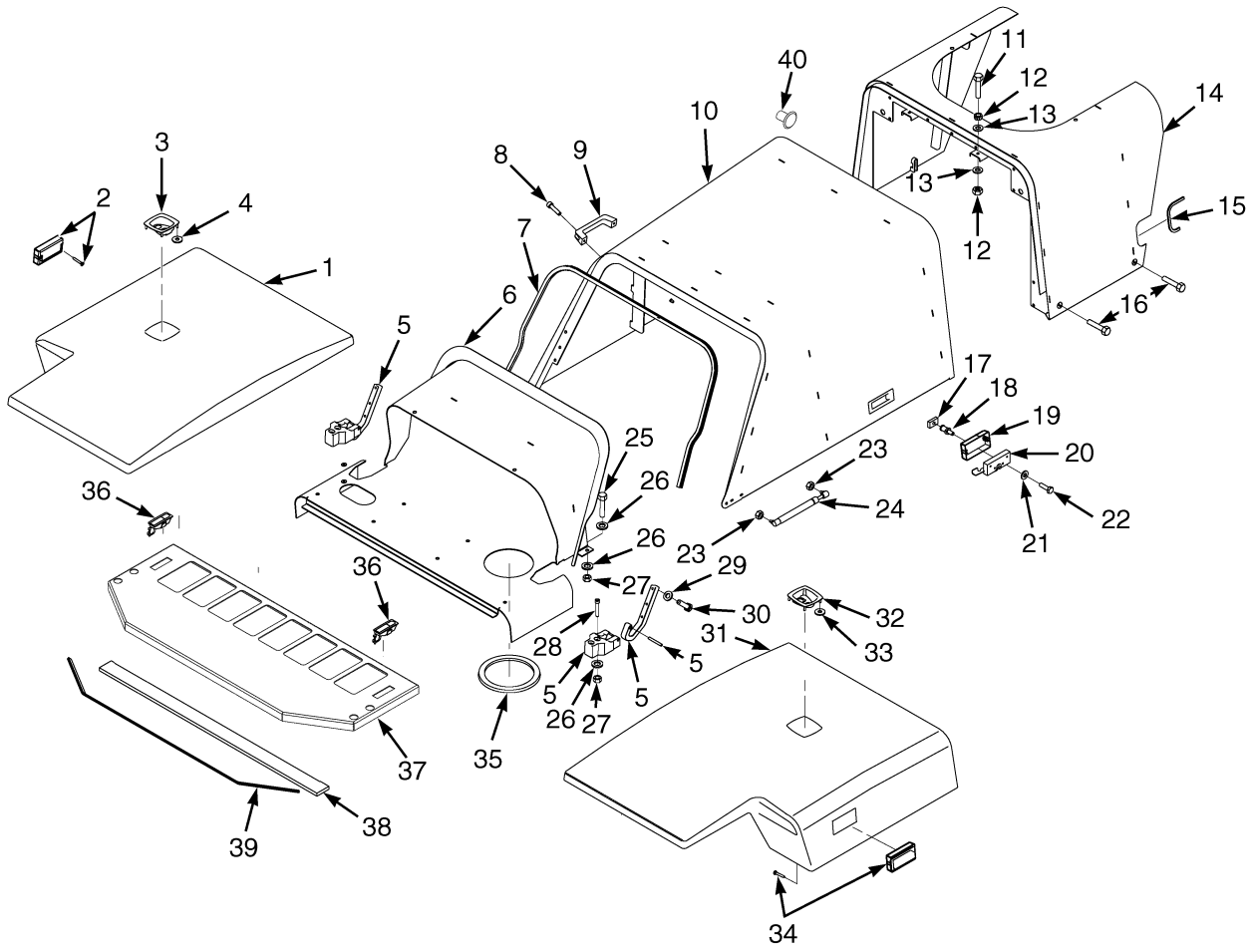

HP120937

©2010 HYSTER COMPANY

HOODS AND COVERS

ITEM	PART NO.	DESCRIPTION	QTY
1	1619389	Cover (RH Front)	1
1	1611400	Cover (RH Front)	1
2	1625694	Handle	1
2	. . . . .	Screw (Supplied With Handle)	2
3	1553504	Latch (Locking)	1
3	1640265	Handle (With Cup and Keys)	1
3	1640267	Kit-Hardware	1
4	1476421	Washer	4
5	1654628	Plug	4
5	1547969	Hinge	2
5	302381	Dowel	1
6	1611392	Hood	1
7	300088	Seal (Door)	AR
8	293796	Capscrew	2
9	362030	Handle	1
10	1583850	Hood	1
11	367251	Screw	2
12	15055	Nut	4
13	18515	Washer	4
14	1592819	Hood (H400HD-EC, H440HDS-EC, H450HDS-EC)	1
14	1592820	Hood (H450HD-EC, H500HD-EC)	1
15	1325935	Edge Protector	2
15	326004	Edge Protector (Bulk)	AR
16	296174	Capscrew	4
17	1504953	Block (Tapped)	1
18	1504955	Bolt	1
19	1595641	Handle	1
20	816107	Latch	1
21	15127	Washer	2
22	18462	Capscrew	2
23	239503	Nut	4
24	806667	Gas Spring	2
25	136985	Capscrew	4
26	320159	Washer	16
27	302401	Locknut	8
28	296032	Capscrew	2
29	320157	Washer	6
30	176640	Bolt	6
31	1619388	Cover (LH Front)	1
31	1611401	Cover (LH Front)	1
32	1553504	Latch (Locking)	1
32	1640265	Handle (With Cup and Keys)	1
32	1640267	Kit-Hardware	1
33	1476421	Washer	4
34	1625694	Handle	1
34	. . . . .	Screw (Supplied With Handle)	2
35	1330915	Trim	1
36	1530513	Latch	2
37	1643623	Cover (Oil Cooler)	1
38	1611399	Seal	1
39	1616457	Trim	2

©2010 HYSTER COMPANY

HOODS AND COVERS

ITEM	PART NO.	DESCRIPTION	QTY
40	1637098	Button (Unlock)	1

©2010 HYSTER COMPANY

COUNTERWEIGHT (FIGURE 1-5)

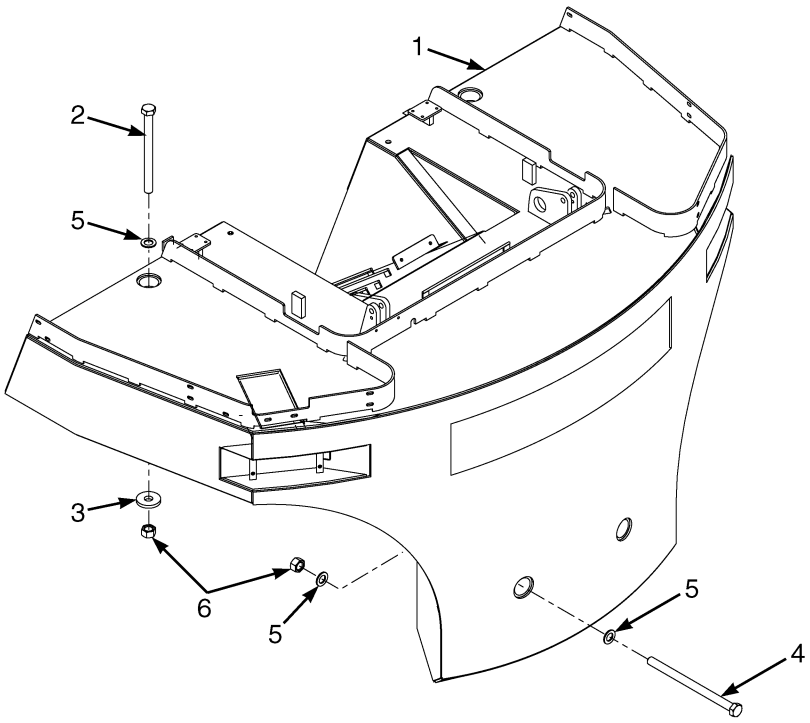

ITEM	PART NO.	DESCRIPTION	QTY
1	1548424	Counterweight (H500HD-EC)	1
1	1548423	Counterweight (H400-450HD-EC)	1
1	**a** 4014255	Counterweight (H500HD-EC, 4350 Wide Axle Option Only)	1
2	2079027	Capscrew	2
3	885189	Washer	2
4	885983	Capscrew	2
5	296438	Washer	6
6	292661	Nut	4

FOOTNOTES:

a PENDING PER ECN 68560-52 →

OVERHEAD GUARD (FIGURE 1-6)

WIRE MESH

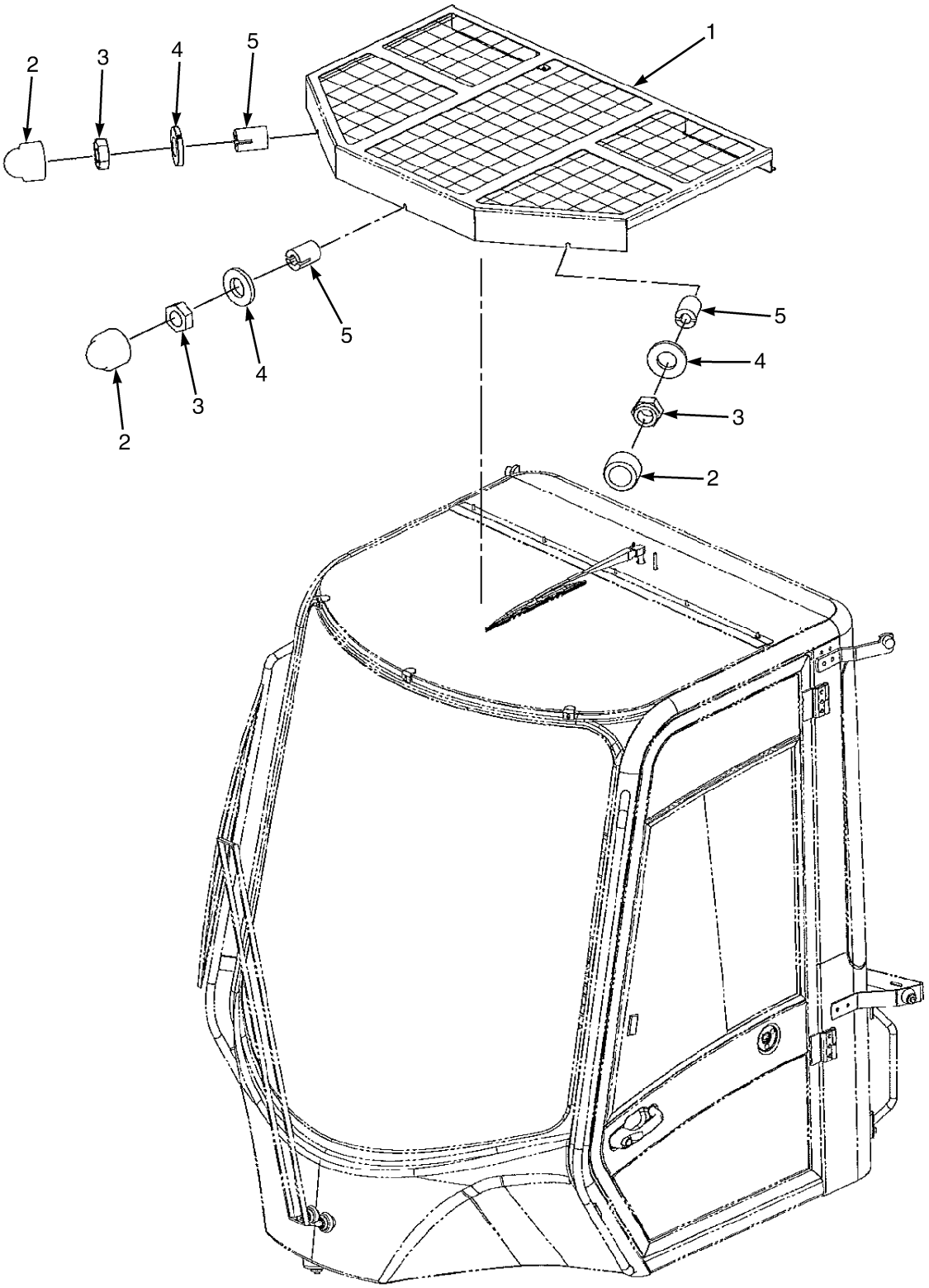

©2010 HYSTER COMPANY

OVERHEAD GUARD
WIRE MESH

ITEM	PART NO.	DESCRIPTION	QTY
	4004326	Guard Assembly	1
1	4006379	Overhead Guard	1
2	1493312	Cap (Capscrew Head)	3
3	4006381	Nut	3
3	1593336	Nut (Alternate Part)	3
4	1498338	Washer	3
5	4006380	Insert (Threaded)	3

©2010 HYSTER COMPANY

CAB (FIGURE 1-7)
ATTACHING PARTS

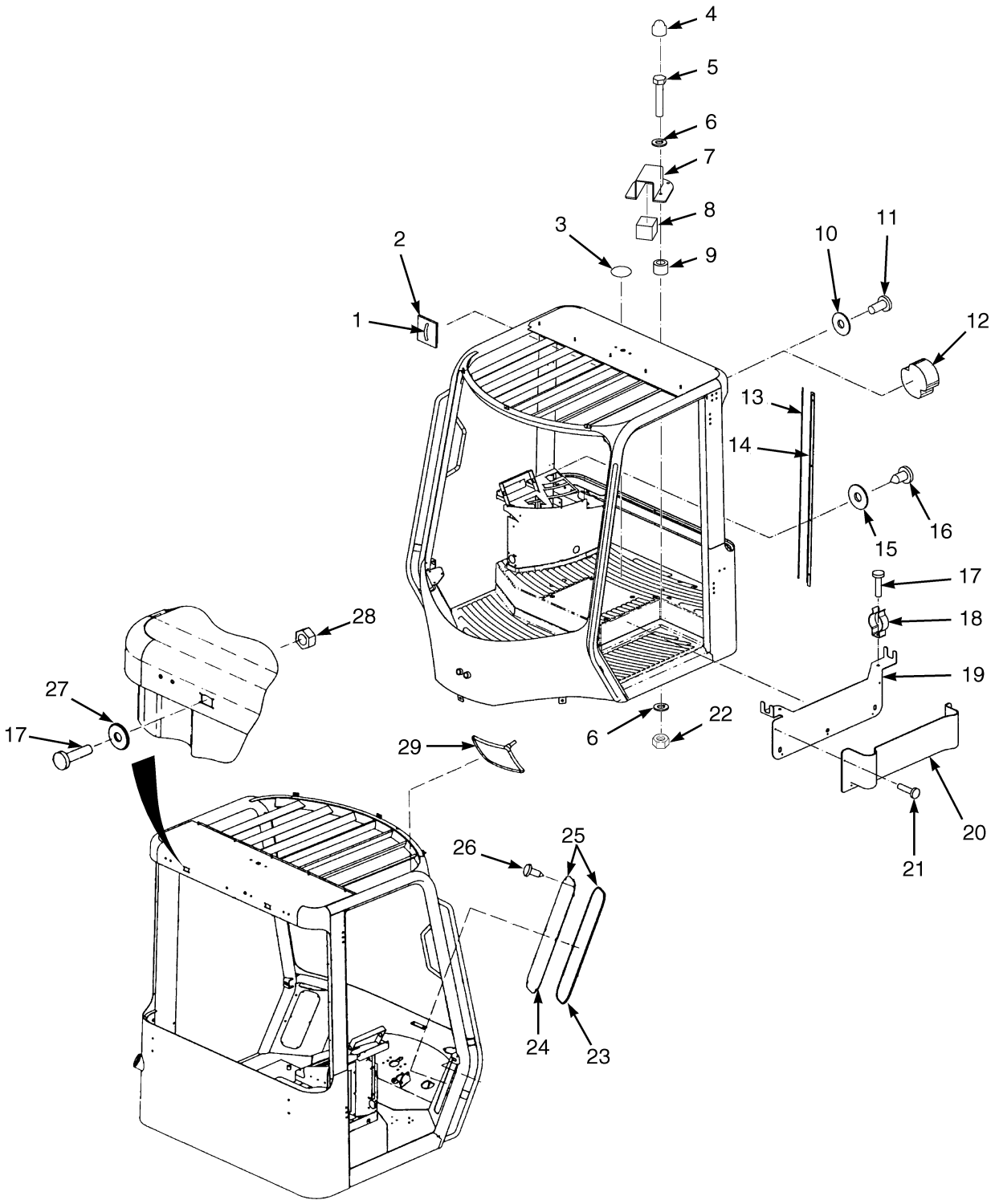

HP120993

©2010 HYSTER COMPANY

CAB
ATTACHING PARTS

ITEM	PART NO.	DESCRIPTION	QTY
1	1393499	Clamp	1
2	1558036	Clip	1
3	1498336	Edge Protector	AR
4	1493397	Cover (Capscrew Head)	4
5	1571802	Screw	4
6	320156	Washer	8
7	1571804	Bracket	1
8	1571803	Foam (Block)	1
9	1571841	Spacer	4
9	4001208	Bushing (Alternate Part)	4
10	1504942	Washer	12
11	1566044	Bolt	12
12	1558037	Seal	2
13	1492167	Trim-Bulk	AR
14	1492166	Cover	1
15	1492140	Washer	5
16	1468306	Screw	5
17	1498357	Screw	10
18	1498356	Clip	2
19	1498355	Bracket (Cup And Clip Board Holder)	1
20	1492133	Holder (Cup And Clip Board)	1
21	1498354	Rivet	5
22	316834	Nut	4
23	1498362	Seal	AR
24	1512822	Seal	AR
25	1492197	Plate (Air Duct Cover)	2
26	1498363	Screw	12
27	296415	Washer	8
28	292667	Nut	8
29	1493278	Mirror (Interior)	2

©2010 HYSTER COMPANY

CAB (FIGURE 1-8)
PANELS

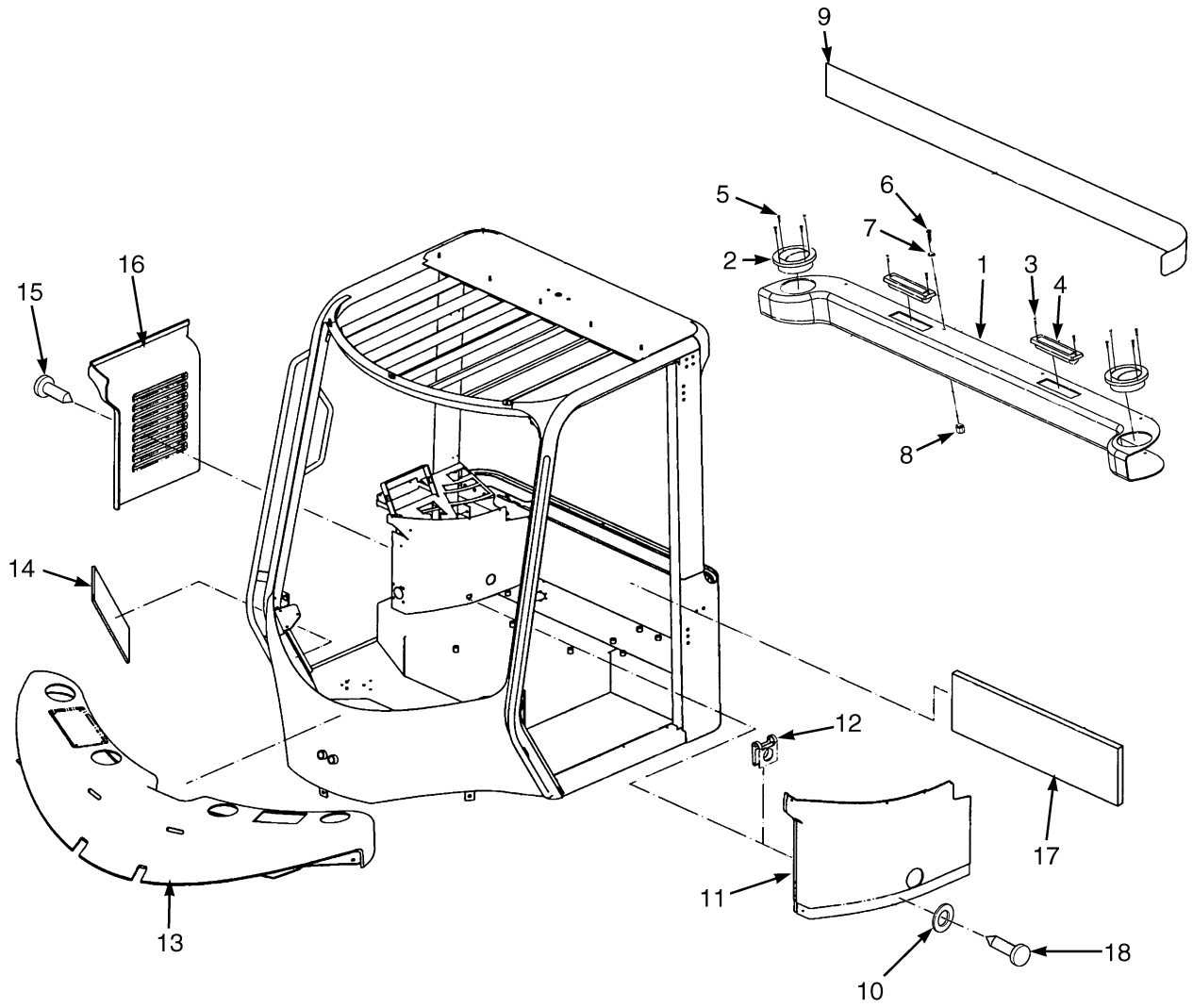

©2010 HYSTER COMPANY

CAB
PANELS

ITEM	PART NO.	DESCRIPTION	QTY
1	1492175	Duct (Rear)	1
1	1491495	Duct (Front Cover)	1
2	1598398	Louver (Air)	2
3	1468320	Screw	4
4	1492169	Louver	2
5	1654935	Screw	8
6	1468318	Screw	8
7	1492140	Washer	8
8	1492139	Nut	8
9	1493370	Foam	1
10	1492140	Washer	18
11	1491029	Console (RH Internal)	1
12	1492139	Nut	23
13	1492200	Cover (Dash and Cap Assembly)	1
14	1493372	Foam (LH)	1
14	1493373	Foam (RH)	1
15	1558042	Screw	4
16	1491028	Console (RH External)	1
17	1492173	Foam	1
18	1468318	Screw	19
	1641795	Label (Fuse Panel)	1

©2010 HYSTER COMPANY

DASH AND AIR DUCT ASSEMBLY (FIGURE 1-9)

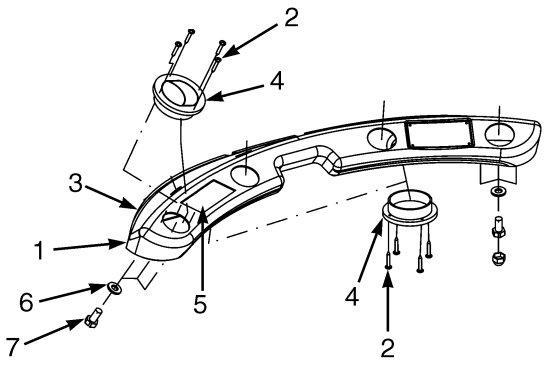

HP121130

ITEM	PART NO.	DESCRIPTION	QTY
	1492200	Cover (Dash and Cap Assembly)	1
1	1492195	Cover	1
2	1654935	Screw	24
3	1512822	Seal	AR
4	1598398	Louver (Air) (Round)	4
5	1492196	Ashtray	1
6	1468321	Washer (Plastic)	6
7	292501	Capscrew	6

©2010 HYSTER COMPANY

NOTES

©2010 HYSTER COMPANY

WINDOW WIPER SYSTEM (FIGURE 1-10)
WASHER BOTTLE KIT

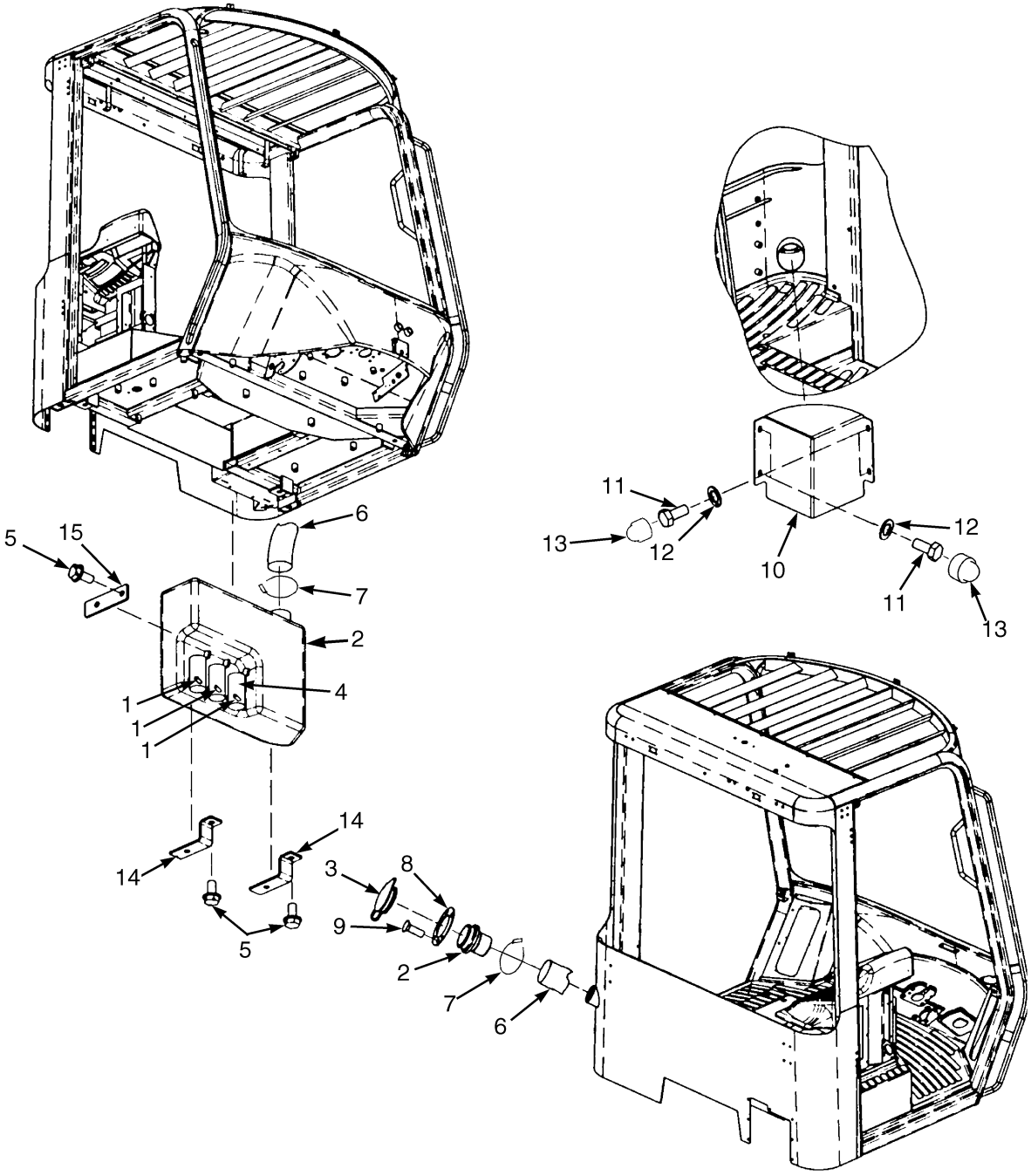

HP081758

©2010 HYSTER COMPANY

WINDOW WIPER SYSTEM
WASHER BOTTLE KIT

ITEM	PART NO.	DESCRIPTION	QTY
	1702285	Kit-Wiper (Washer Bottle)	1
1	1493337	Hose	AR
2	1626996	Reservoir Assembly (Window Washer)	1
3	1635026	Cap	1
4	1705156	Pump (Windshield Washer, 12V)	1
5	1566044	Bolt	3
6	1635020	Hose	1
7	1704396	Clamp	4
8	1635021	Washer	1
9	1635022	Screw	4
10	1635023	Cover	1
11	292500	Capscrew	4
12	1506738	Washer	4
13	1493397	Cover (Capscrew Head)	4
14	1635018	Bracket	2
15	1635019	Plate	1
	a 1301685	Check Valve	1
	a 1493336	Connector (Spray Nozzle)	1

FOOTNOTES:

a Not Illustrated

©2010 HYSTER COMPANY

WINDOW WIPER SYSTEM (FIGURE 1-11)
REAR AND ROOF WIPER KITS — AND FRONT WIPER OPTIONS

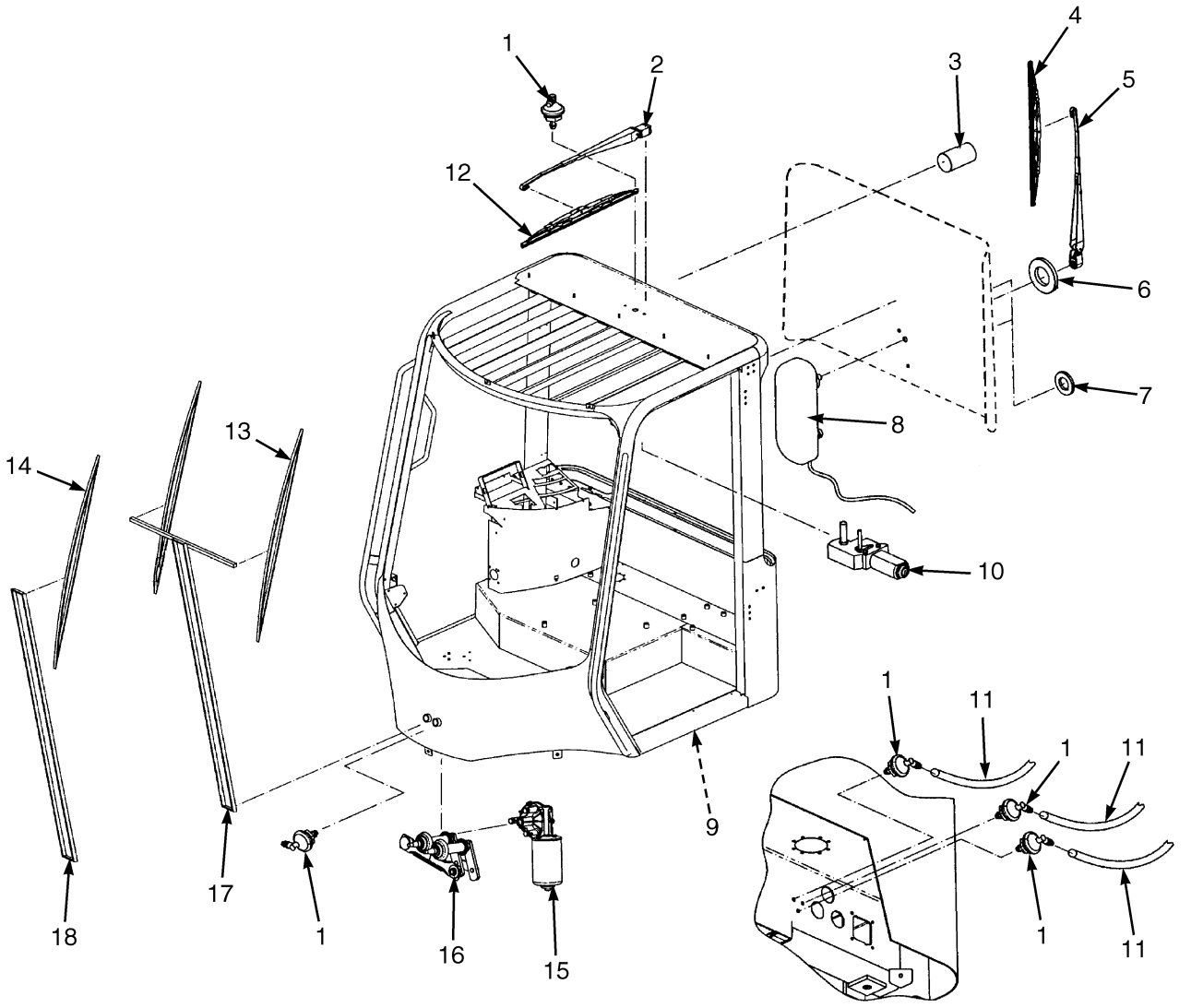

©2010 HYSTER COMPANY

WINDOW WIPER SYSTEM

REAR AND ROOF WIPER KITS – AND FRONT WIPER OPTIONS

ITEM	PART NO.	DESCRIPTION	QTY
1	1493336	Connector (Spray Nozzle)	6
2	1498347	Wiper Arm (Top)	1
3	1498344	Washer (Nozzle) (Dual Wiper)	1
4	1493340	Wiper Blade	1
5	1493341	Wiper Arm (Rear)	1
6	1558025	Washer	1
7	1554125	Washer	2
8	1493339	Wiper Motor (Rear)	1
8	1545170	Wire Harness (Rear Wiper) (☞Figure 4-43)	1
9	1547279	Wire Harness (Wash Pumps) (☞Figure 4-46)	1
10	1493344	Wiper Motor (Top)	1
11	1493337	Hose	AR
12	1498348	Wiper Blade (Top)	1
13	1573574	Wiper Blade (Dual Wiper)	2
14	1493335	Wiper Blade (Single Wiper)	1
15	1493332	Wiper Motor (Front)	1
16	1493333	Linkage (Front, Single Wiper)	1
16	4016648	Linkage (Front, Dual Wiper)	1
17	1573575	Wiper Arm (Dual Wiper)	1
18	1493334	Wiper Arm (Single Wiper)	1
19	1301685	Check Valve (Not Illustrated)	2
20	1704370	Sleeve (Not Illustrated)	1
	1702283	Kit-Wiper (Rear)	1
	1702284	Kit-Wiper (Roof)	1

©2010 HYSTER COMPANY

CAB WINDOWS INSTALLATION (FIGURE 1-12)

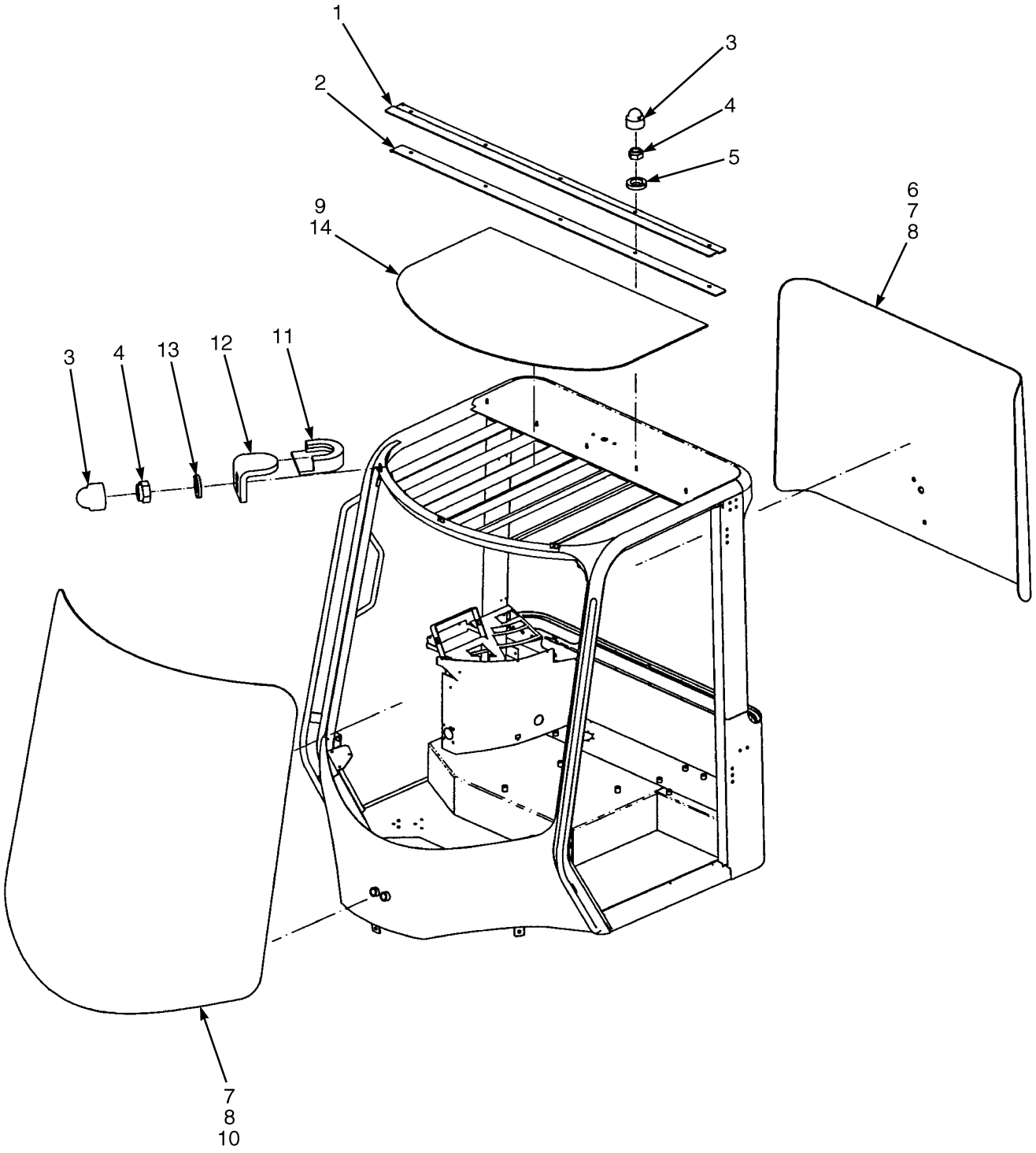

HP121291

©2010 HYSTER COMPANY

CAB WINDOWS INSTALLATION

ITEM	PART NO.	DESCRIPTION	QTY
1	1493328	Clip Window	1
2	1498341	Seal	1
3	1493397	Cover (Capscrew Head)	8
4	316834	Nut	8
5	1498342	Washer	5
6	1493324	Window (Rear)	1
7	~~1393465~~		
	1493321	Seal	AR
8	1393466	Seal (11.5 ft.)	1
9	1515337	Seal	AR
10	1493320	Window (Tempered)	1
11	1493329	Cover	3
12	1498343	Clip	3
13	320156	Washer	3
14	1493326	Window (Skylight) (Open Cab Construction)	1

©2010 HYSTER COMPANY

CAB (FIGURE 1-13)
SOUND REDUCTION

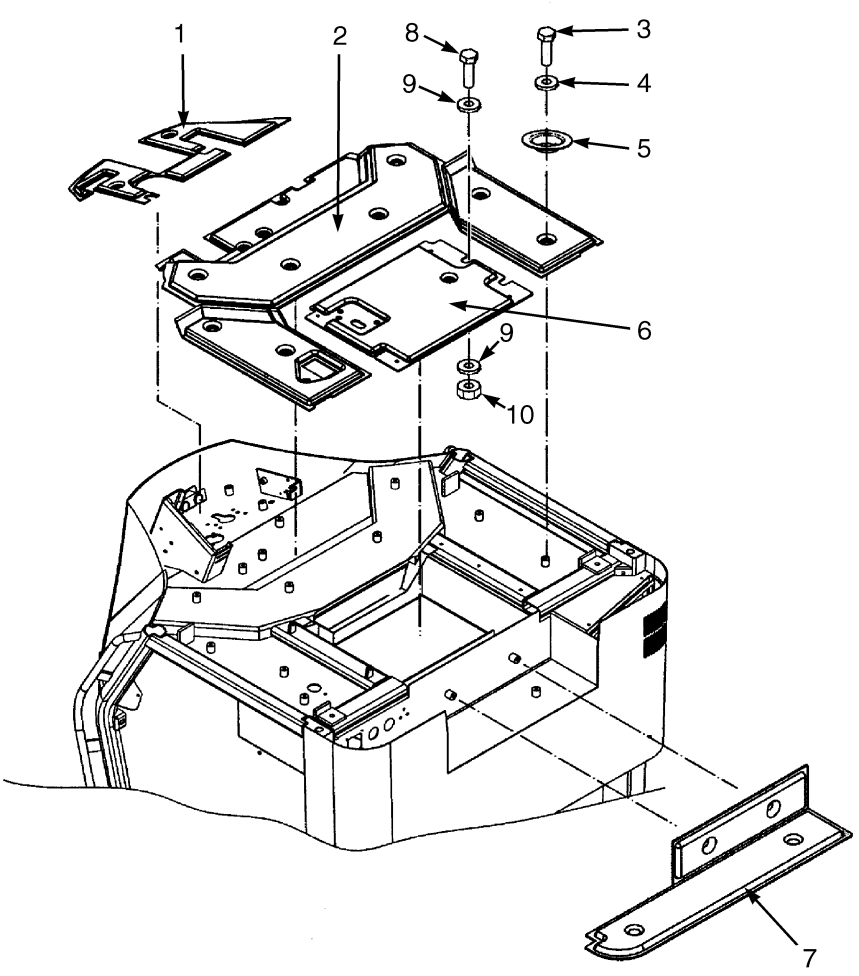

HP120781

ITEM	PART NO.	DESCRIPTION	QTY
1	1567942	Insulation (Front)	1
2	1648559	Insulation (Main)	1
3	292514	Capscrew	20
4	320160	Washer	20
5	1498373	Plate (Fixing) (Fixing)	20
6	1498372	Insulation (Heater)	1
7	1498371	Insulation (Rear)	1
8	1623364	Capscrew	4
9	296419	Washer	4
10	1468313	Nut	4
	1648560	Insulation (Main) (Not Illustrated)	1
	1648561	Insulation (Main) (Not Illustrated)	1

©2010 HYSTER COMPANY

CAB (FIGURE 1-14)
SUNSHADE — TOP

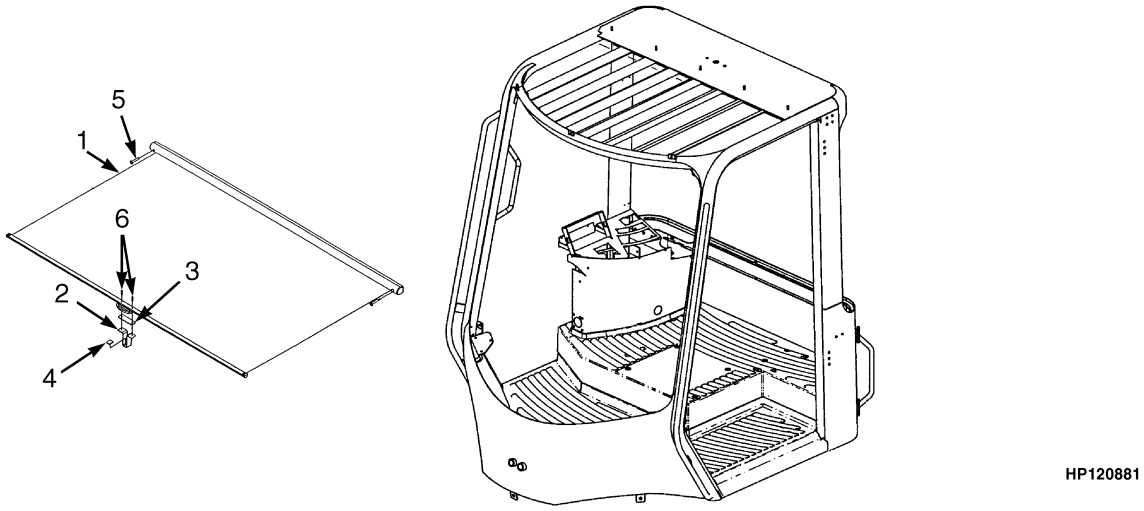

ITEM	PART NO.	DESCRIPTION	QTY
1	1506751	Sunshade	1
2	1506750	Clamp	1
3	1506749	Rubber Pad	1
4	1506748	Rubber Pad	1
5	1468318	Screw	2
6	1655365	Screw	2

CAB (FIGURE 1-15)
SUNSHADE — REAR

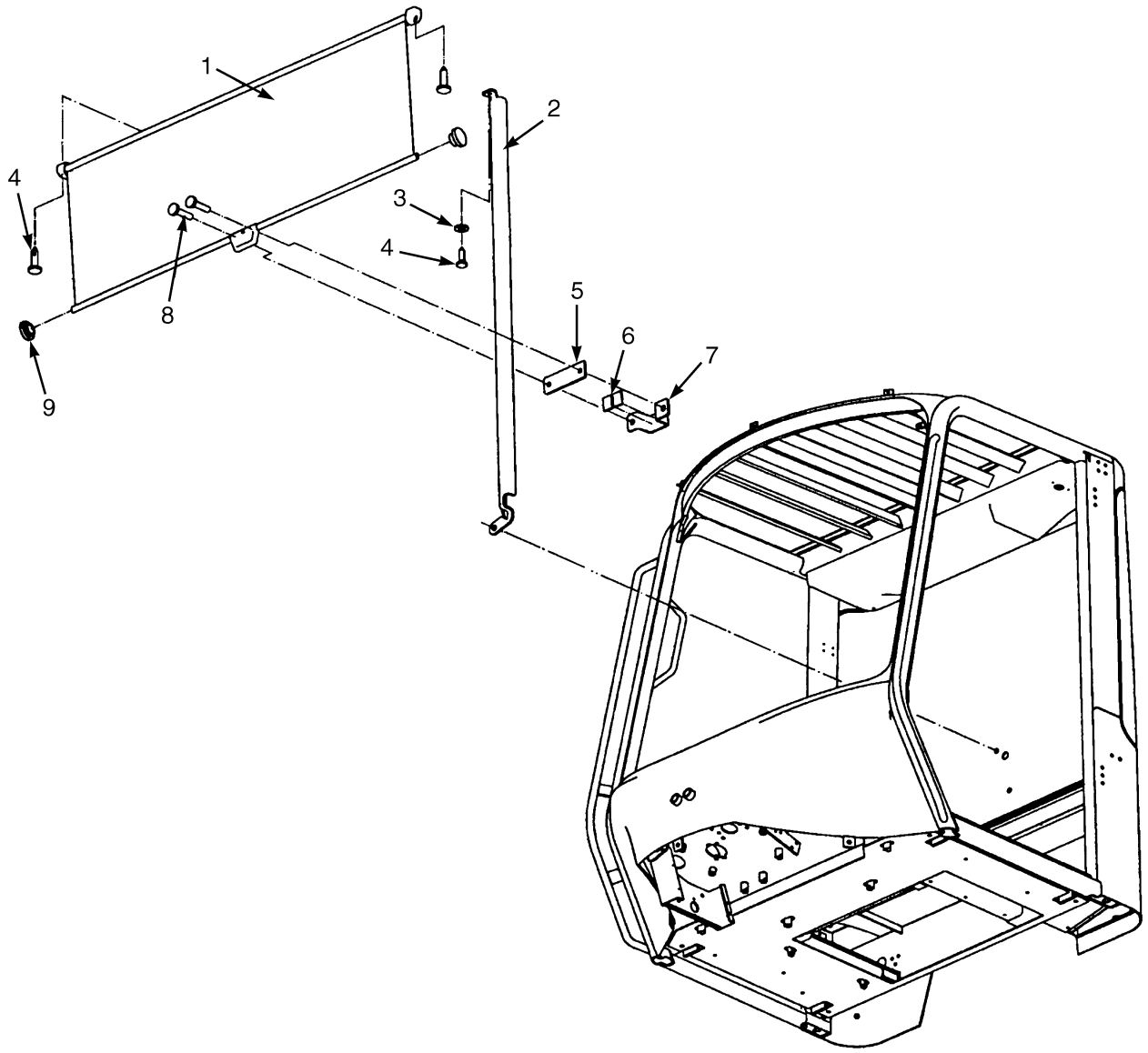

HP121030

©2010 HYSTER COMPANY

CAB

SUNSHADE – REAR

ITEM	PART NO.	DESCRIPTION	QTY
1	1506751	Sunshade	1
2	1644791	Bracket	1
3	296415	Washer	1
4	1468318	Screw	3
5	1506749	Rubber Pad	1
6	1506748	Rubber Pad	2
7	1644792	Bracket	1
8	1655365	Screw	2
9	1644793	Plug	2

©2010 HYSTER COMPANY

CAB (FIGURE 1-16)
FLOOR MATS

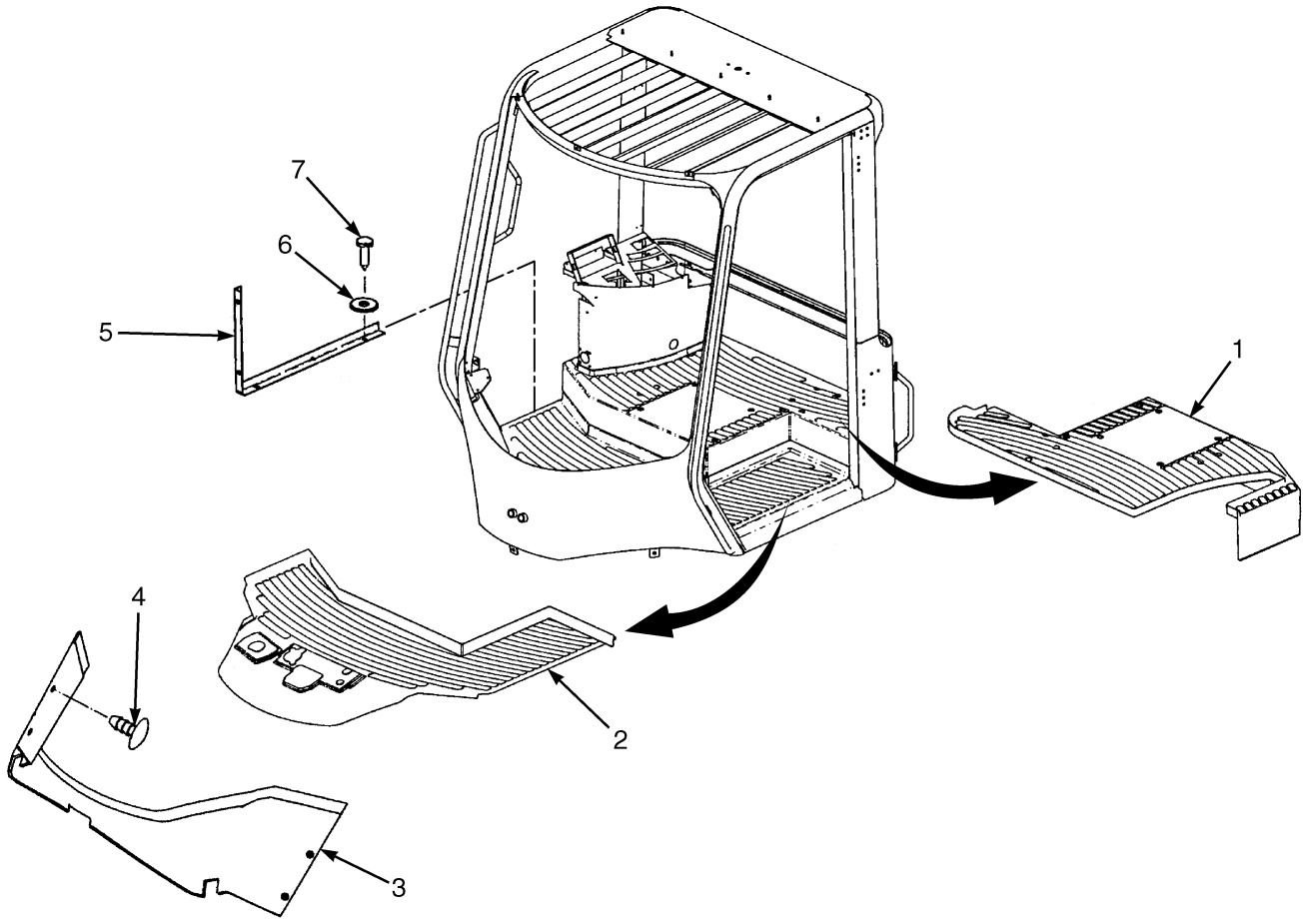

HP120784

ITEM	PART NO.	DESCRIPTION	QTY
1	1493282	Floormat (Seat)	1
2	1493281	Floormat (Main)	1
3	1493283	Floormat (Front Cowl)	1
4	1601929	Plug	4
5	1498365	Strip	1
6	1492140	Washer	4
7	1468318	Screw	4

©2010 HYSTER COMPANY

NOTES

©2010 HYSTER COMPANY

CAB (FIGURE 1-17)
TILT AND LATCH ASSEMBLY

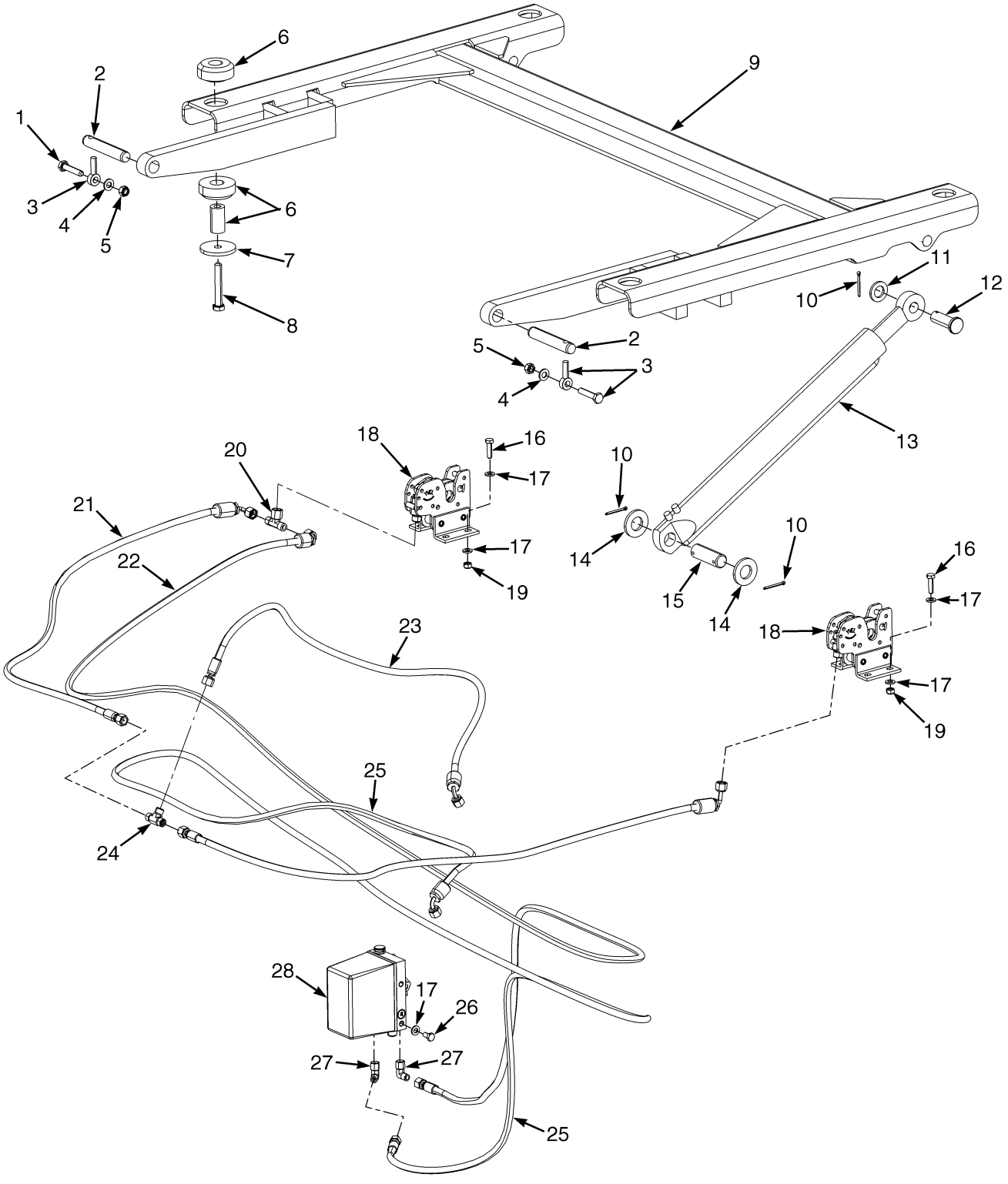

©2010 HYSTER COMPANY

CAB
TILT AND LATCH ASSEMBLY

ITEM	PART NO.	DESCRIPTION	QTY
1	296032	Capscrew	2
2	1599195	Shaft (Tilt)	2
3	195566	Anchor	2
4	320159	Washer	2
5	302401	Locknut	2
6	1486540	Mount (Cab)	4
7	300939	Washer	4
8	292535	Capscrew	4
9	1532455	Tilt Frame	1
9	1635999	Tilt frame	1
9	1493380	Bearing	2
10	15235	Cotter Pin	3
11	320169	Washer	1
12	1486630	Pin	1
13	2043194	Tilt Cylinder (Cab) (☞Figure 1-21)	1
14	320174	Washer	2
15	1619785	Pin	1
16	176640	Bolt	8
17	320157	Washer	18
18	1486539	Latch	2
19	302400	Nut	8
20	1488675	Fitting	1
21	1620074	Hose Assy	1
22	1619981	Hose Assy	1
23	1620078	Hose Assy	1
24	1522424	Fitting	1
25	1622237	Hose Assy	1
26	287851	Capscrew	2
27	1488676	Fitting	2
28	1486535	Hand Pump (☞Figure 1-20)	1

©2010 HYSTER COMPANY

POWERED CAB TILT (FIGURE 1-18)

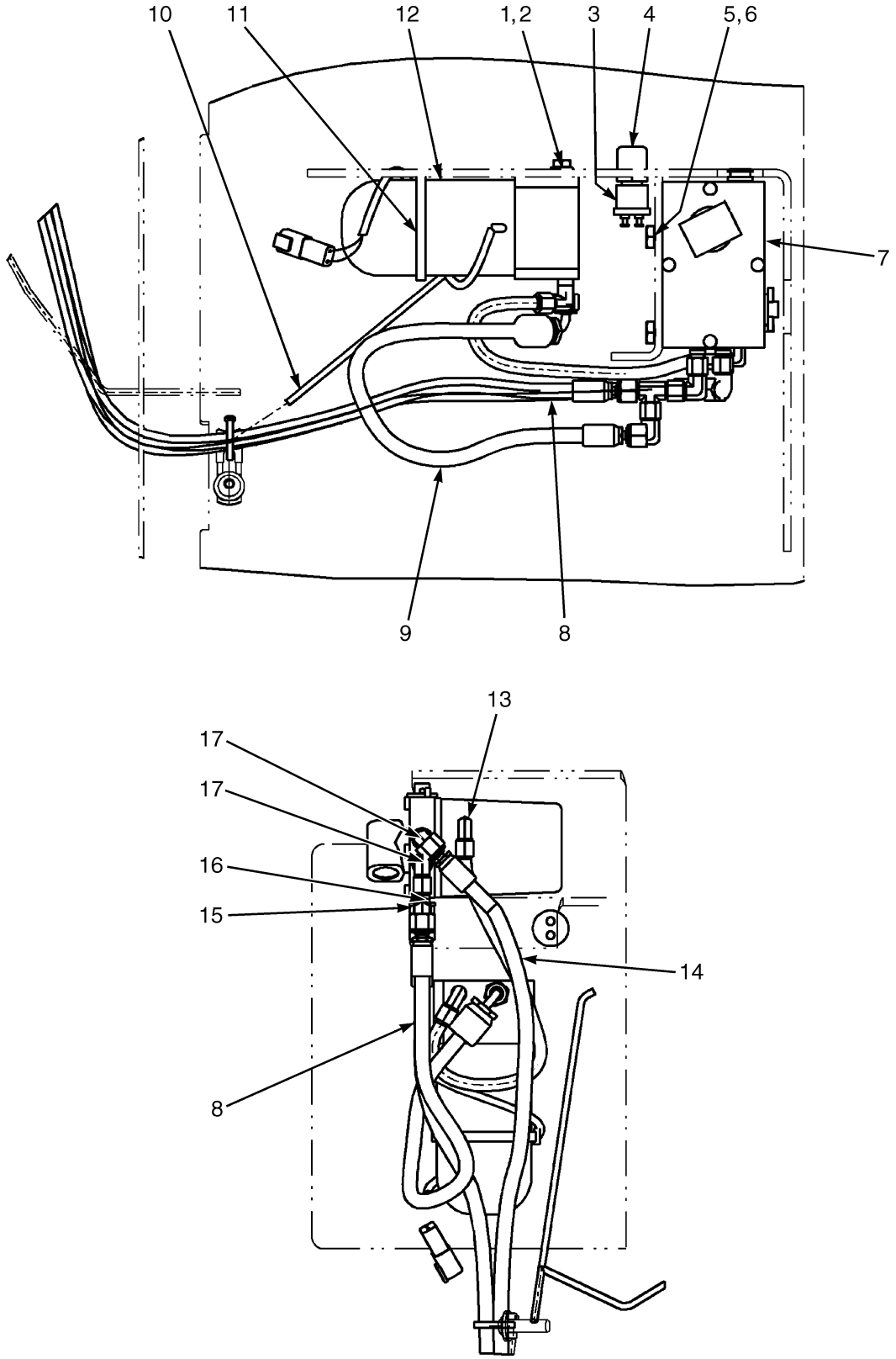

©2010 HYSTER COMPANY

POWERED CAB TILT

ITEM	PART NO.	DESCRIPTION	QTY
1	287851	Capscrew	2
2	320157	Washer	2
3	**a** 370776	Switch (Momentary)	1
3	**b** 1672504	Push Button Switch	1
4	1672505	Rain Cap	1
5	320159	Washer	2
6	292514	Capscrew	2
7	1486535	Hand Pump (☞Figure 1-20)	1
8	1622237	Hose Assy	1
9	1620141	Hose Assy	1
10	1597431	Wire Harness (Powered Cab Tilt) (☞Figure 4-42)	1
11	129563	Strap Clamp	1
12	1480186	Cab Tilt Pump Assembly	1
13	1496459	Fitting	2
14	1619981	Hose Assy	1
15	1488676	Fitting	1
16	1496296	Fitting	1
17	1488676	Fitting	2

FOOTNOTES:

a → S/N B214E01629F

b S/N B214E01630F →

©2010 HYSTER COMPANY

CAB (FIGURE 1-19)
TILT ELECTRIC PUMP

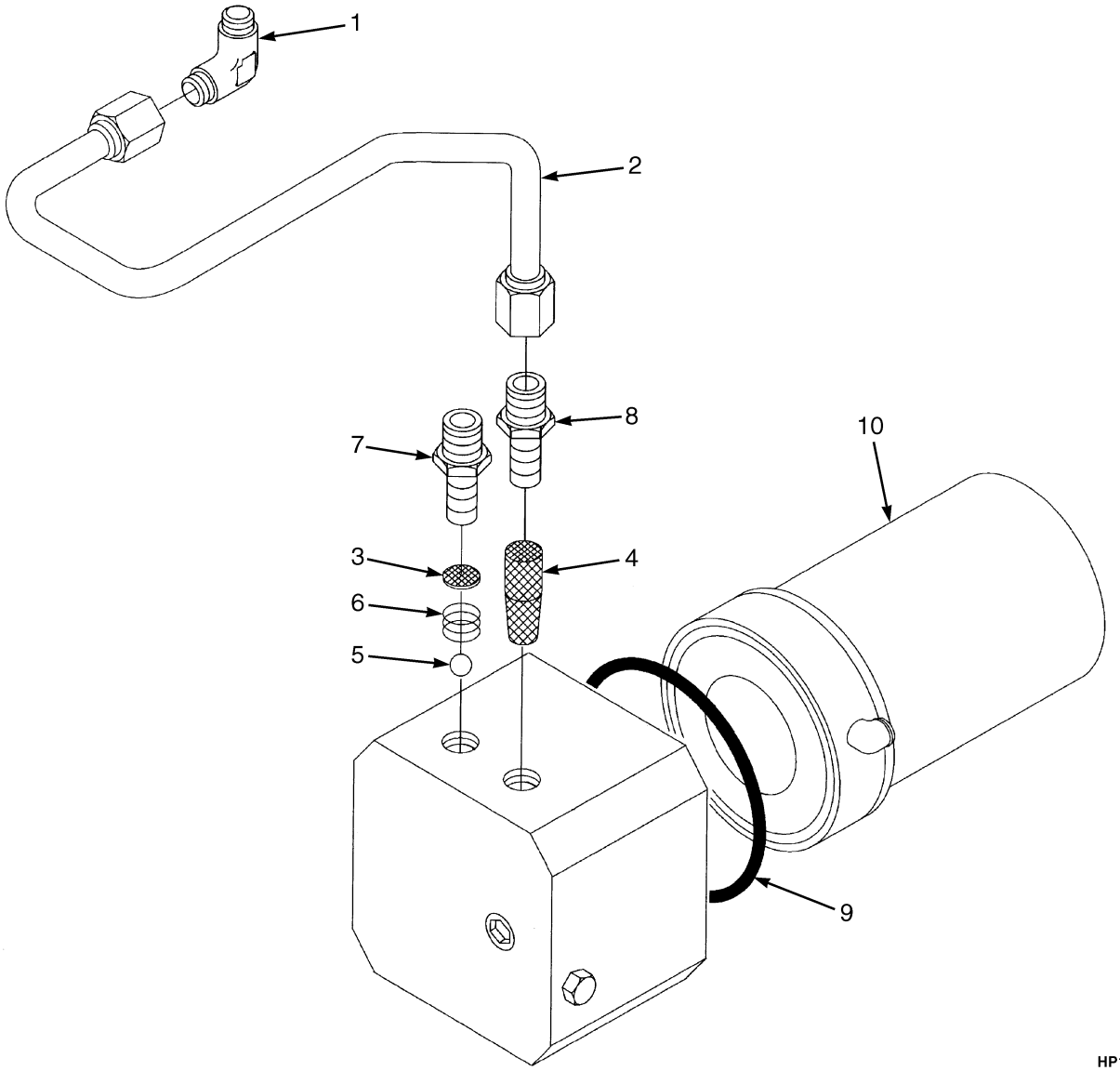

©2010 HYSTER COMPANY

CAB
TILT ELECTRIC PUMP

ITEM	PART NO.	DESCRIPTION	QTY
	1475732	Cab Tilt Pump (Electric)	1
1	1488729	Coupler	1
2	1488736	Hose	1
3	. . . . .	Filter	1
4	. . . . .	Screen	1
5	. . . . .	Ball	1
6	. . . . .	Spring	1
7	. . . . .	Coupler	1
8	. . . . .	Coupler	1
9	1488727	O-Ring	1
10	1488726	Electric Motor	1
	1488728	Kit-Repair Pump	1
	1488725	Kit-Motor	1

©2010 HYSTER COMPANY

CAB (FIGURE 1-20)
TILT HAND PUMP

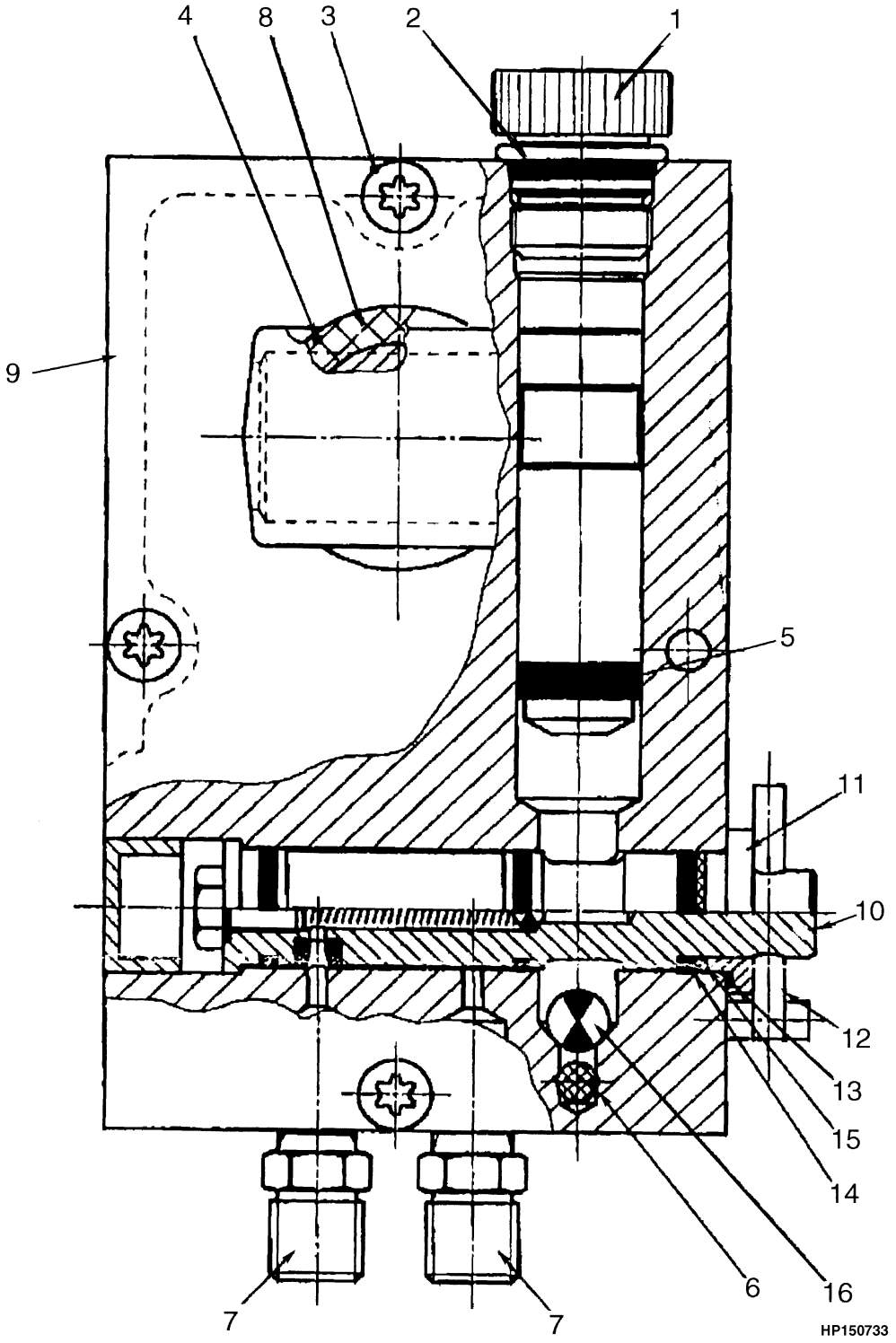

©2010 HYSTER COMPANY

CAB
TILT HAND PUMP

ITEM	PART NO.	DESCRIPTION	QTY
	1486535	Hand Pump	1
1	1488689	Plug (Fill)	1
2	. . . . .	O-Ring	1
3	. . . . .	Screw	4
4	. . . . .	Bearing	1
5	. . . . .	Seal	1
6	. . . . .	Filter	1
7	. . . . .	Coupler	2
8	. . . . .	O-Ring	1
9	. . . . .	Joint	1
10	. . . . .	Spool	1
11	. . . . .	Washer	1
12	. . . . .	Pin	1
13	. . . . .	O-Ring	1
14	. . . . .	O-Ring	1
15	. . . . .	Back-Up Ring	1
16	. . . . .	Ball	1
	1488704	Kit-Seal	1
	1488705	Kit-Seal	1

©2010 HYSTER COMPANY

CAB (FIGURE 1-21)
TILT CYLINDER

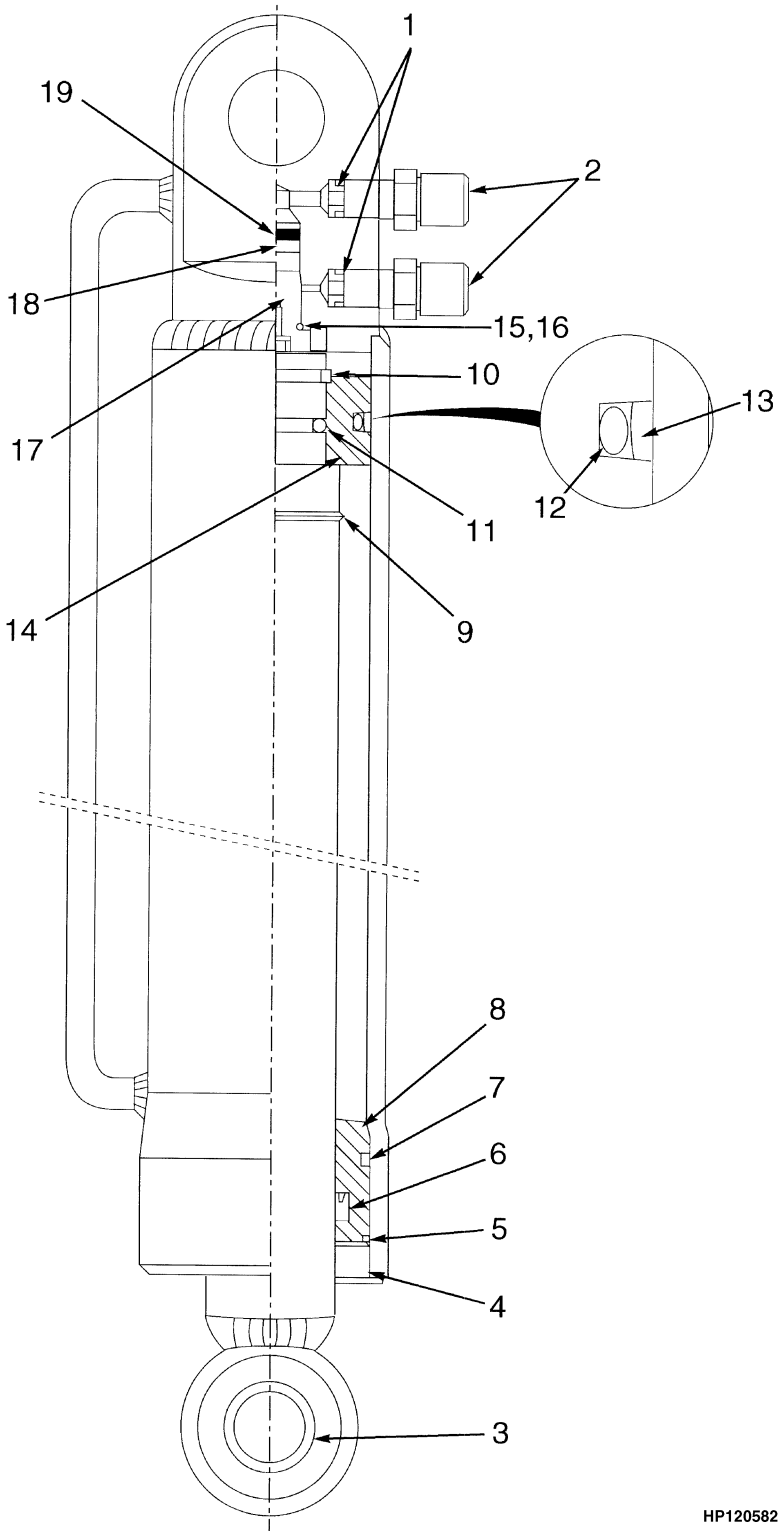

©2010 HYSTER COMPANY

CAB
TILT CYLINDER

ITEM	PART NO.	DESCRIPTION	QTY
	2043194	Tilt Cylinder (Cab)	1
1	1488735	Filter	2
2	1488703	Coupler	2
3	1488751	Spacer	2
4	. . . . .	Wiper	1
5	. . . . .	Retaining Ring (Bore)	1
6	. . . . .	U-Cup	1
7	. . . . .	O-Ring	1
8	. . . . .	Gland	1
9	. . . . .	Retaining Ring (Shaft)	1
10	. . . . .	Retaining Ring (Shaft)	1
11	. . . . .	O-Ring	1
12	. . . . .	O-Ring	1
13	. . . . .	Sleeve	1
14	. . . . .	Piston	1
15	. . . . .	Washer	1
16	. . . . .	O-Ring	1
17	. . . . .	Valve Seat Assembly	1
18	. . . . .	Pilot Piston Assembly	1
19	. . . . .	O-Ring	1
	1488752	Kit-Seal	1
	1665756	Kit-Service	1
	1488762	Kit-Service	1

©2010 HYSTER COMPANY

CAB DOOR (FIGURE 1-22)
LEFT HAND

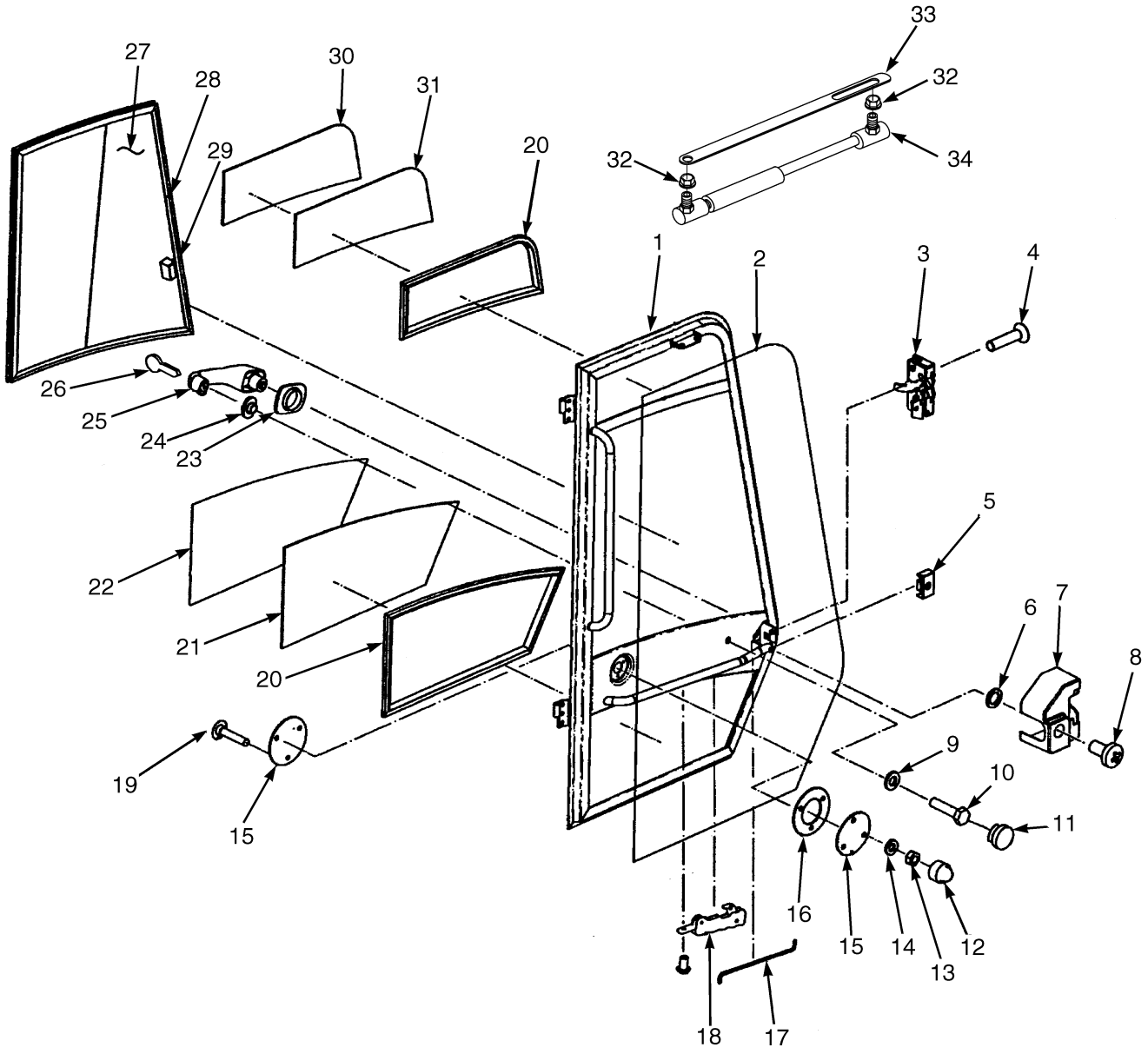

HP200116

©2010 HYSTER COMPANY

CAB DOOR
LEFT HAND

ITEM	PART NO.	DESCRIPTION	QTY
	1623264	Door (Cab, LH)	1
1	1623266	Door	1
2	1515337	Seal	AR
3	1558446	Latch	1
4	296229	Capscrew	2
5	1558302	Plate	1
6	1558303	Washer	1
7	1495438	Cover	1
8	1493308	Bolt	1
9	1468321	Washer (Plastic)	1
10	287816	Capscrew	1
11	1558300	Cap	1
12	1493397	Cover (Capscrew Head)	3
13	316834	Nut	3
14	1506738	Washer	3
15	1623267	Cover	2
16	1495454	Seal	1
17	1558447	Piston Rod (Connector)	1
18	1558305	Lock	1
19	1514234	Capscrew	3
20	1558299	Bulk Seal	4
21	1558442	Window (Door) (Lower)	1
22	1558443	Seal (Lower LH)	1
23	1495372	Seal	1
24	1495431	Seal	1
25	1495371	Handle (Push Button)	1
26	1593629	Key (For Cab Door Grip)	1
27	1644794	Window (Main) (☞Figure 1-24)	1
28	1558294	Seal	AR
29	~~1623270~~		
	1692918	Kit-Repair Sliding Window (Sliding Window)	AR
30	1558445	Seal (Upper LH)	1
31	1558444	Sliding Window (Door) (Upper)	1
32	1657626	Bushing	2
33	1657627	Bracket	1
34	1598397	Gas Spring	1

©2010 HYSTER COMPANY

CAB DOOR (FIGURE 1-23)
RIGHT HAND

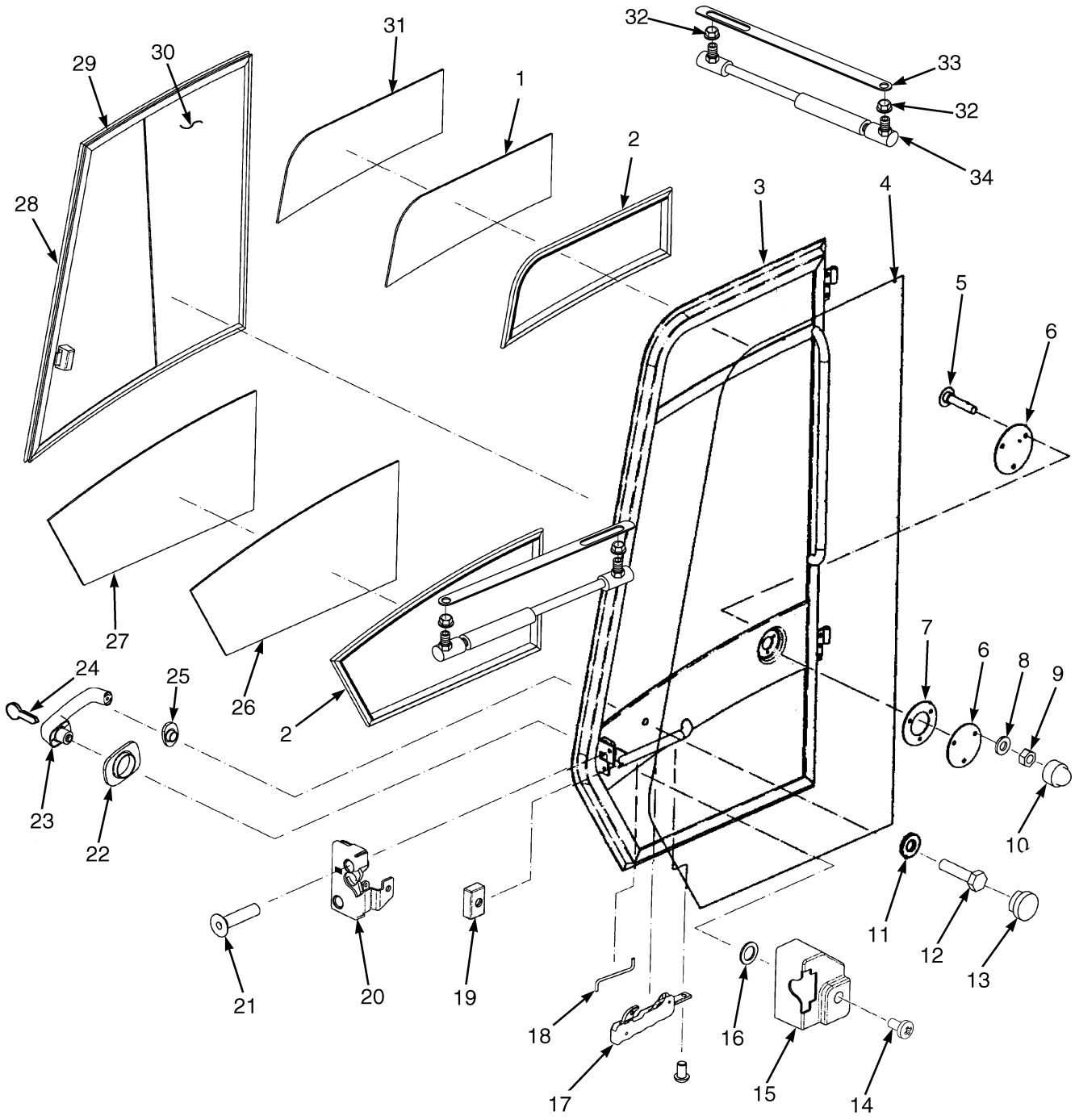

HP200117

©2010 HYSTER COMPANY

CAB DOOR
RIGHT HAND

ITEM	PART NO.	DESCRIPTION	QTY
	1634997	Door (Cab, RH)	1
1	1558297	Sliding Window (Upper)	1
2	1558299	Bulk Seal	AR
3	1623268	Door	1
4	1515337	Seal	AR
5	1514234	Capscrew	3
6	1623267	Cover	2
7	1495454	Seal	1
8	1506738	Washer	3
9	316834	Nut	3
10	1493397	Cover (Capscrew Head)	3
11	1468321	Washer (Plastic)	1
12	287816	Capscrew	1
13	1558300	Cap	1
14	1493308	Bolt	1
15	1495435	Cover	1
16	1558303	Washer	1
17	1558305	Lock (Door Handle)	1
18	1558306	Piston Rod (Connector)	1
19	1558302	Plate (Door Handle)	1
20	1558301	Latch	1
21	296229	Capscrew	2
22	1495372	Seal	1
23	1495371	Handle (Push Button)	1
24	1593629	Key (For Cab Door Grip)	1
25	1495431	Seal	1
26	1558295	Window (Lower)	1
27	1558296	Frame (Lower RH)	1
28	~~1623270~~		
	1692918	Kit-Repair Sliding Window (Sliding Window)	AR
29	1558294	Seal	AR
30	1644795	Window (Main) (☞Figure 1-24)	1
31	1558298	Frame (Upper RH)	1
32	1657626	Bushing	2
33	1657627	Bracket	1
34	1598397	Gas Spring	1

©2010 HYSTER COMPANY

CAB (FIGURE 1-24)
MAIN DOOR WINDOW — RIGHT AND LEFT HAND

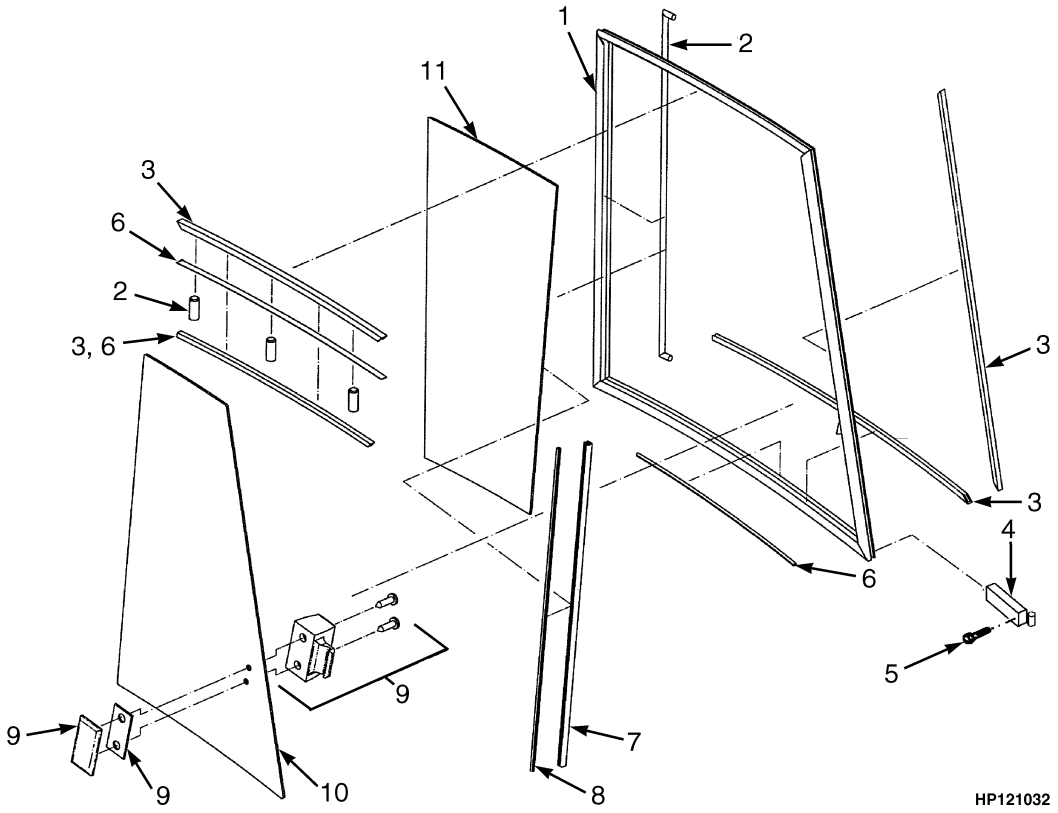

KEY:
A: Right Hand
B: Left Hand

ITEM	PART NO.	DESCRIPTION	QTY A	QTY B
	1644795	Window (Main)	1	..
	1644794	Window (Main)	..	1
1	1644803	Frame (Sliding Window)	1	..
1	1644796	Frame (Sliding Window)	..	1
2	**a** 1641640	Strip Seal	AR	AR
3	**a** 1644804	Seal	AR	AR
4	~~1644801~~			
	4009782	Guide	4	4
5	1644802	Screw	4	4
6	**a** 1641637	Seal	AR	AR
7	1644799	Guard (Window)	1	1
8	**a** 1644800	Seal	AR	AR
9	1483226	Latch (Sliding Window)	2	2
10	1644806	Glass	1	..
10	1644797	Glass	..	1
11	1644805	Glass	1	..
11	1644798	Glass	..	1

©2010 HYSTER COMPANY

FOOTNOTES:

a Sold by the foot

©2010 HYSTER COMPANY

CAB (FIGURE 1-25)
DOOR ATTACHING PARTS

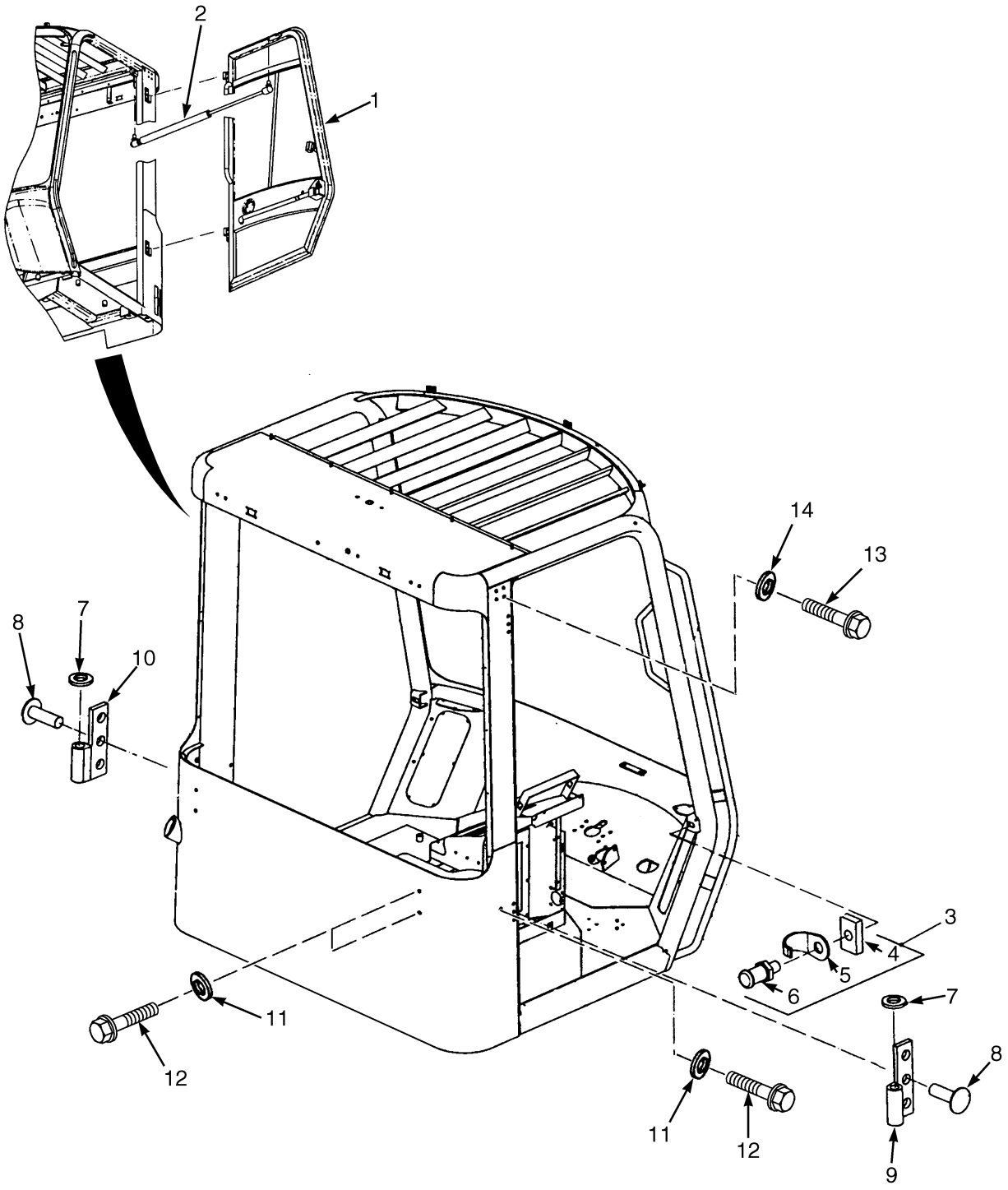

HP120989

©2010 HYSTER COMPANY

CAB
DOOR ATTACHING PARTS

ITEM	PART NO.	DESCRIPTION	QTY
1	1623264	Door (Cab, LH) (LH)	1
2	1598397	Gas Spring	1
3	1493318	Capscrew (Striker)	2
4	1504953	Block (Tapped)	1
5	1504954	Guard	1
6	1504955	Bolt	1
7	1468312	Washer	4
8	1493308	Bolt	12
9	1393474	Hinge (RH)	2
10	1393473	Hinge (LH)	2
11	1504942	Washer	8
12	1566041	Screw	8
13	1566041	Screw	4
14	1504942	Washer	4

©2010 HYSTER COMPANY

HEATER AND AIR CONDITIONER HOSES (FIGURE 1-26)

(→ S/N B214E01668F)

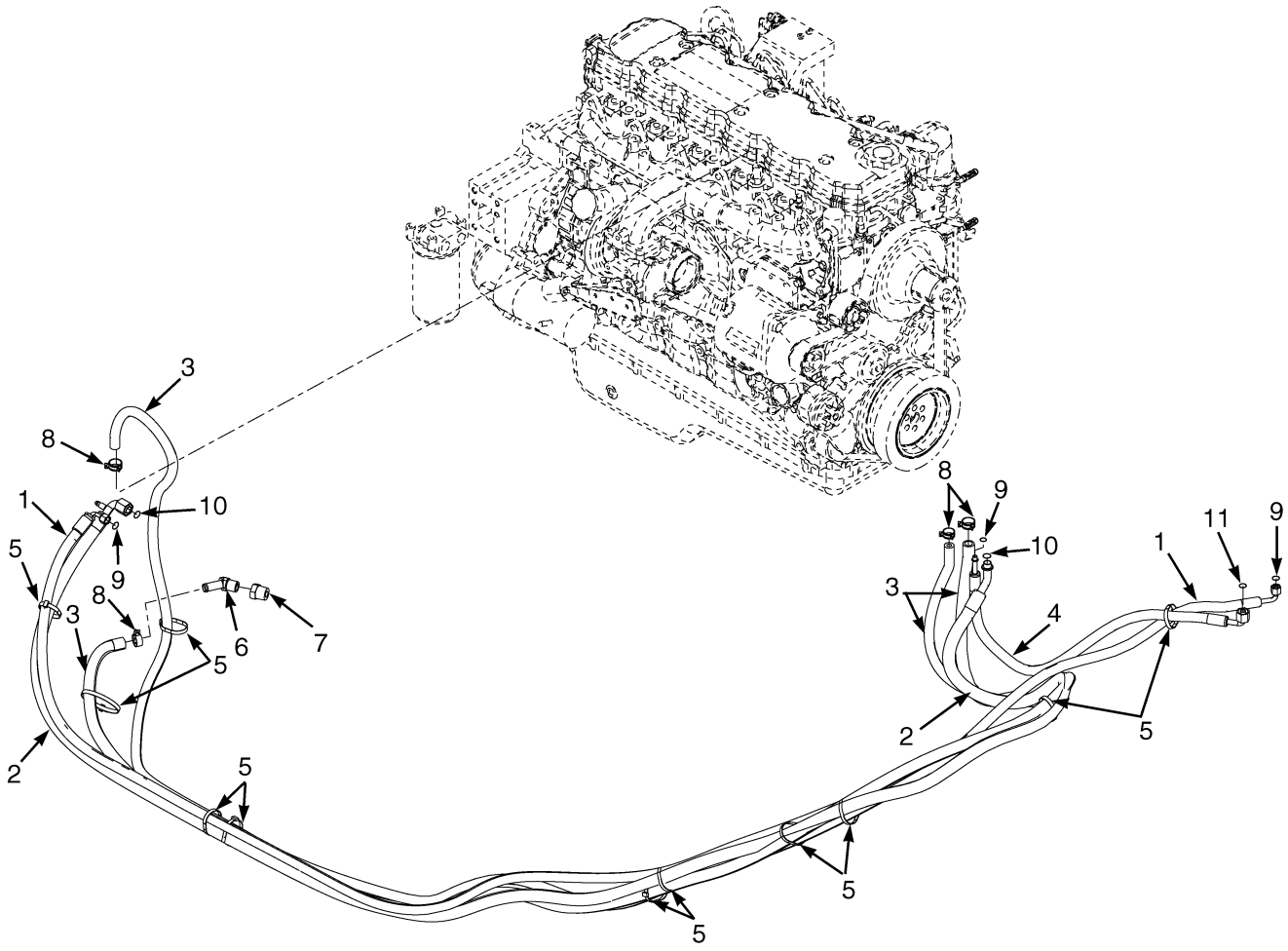

HP121089

©2010 HYSTER COMPANY

HEATER AND AIR CONDITIONER HOSES

(→ S/N B214E01668F)

KEY:
A: H450HD-EC, H500HD-EC
B: H400HD-EC, H440HDS-EC, H450HDS-EC

ITEM	PART NO.	DESCRIPTION	QTY A	QTY B
1	1622602	Hose (Air Conditioner)	1	..
1	1622563	Hose (Air Conditioner)	..	1
2	**a** 1622603	Hose Assy (Refrigerant)	1	..
2	**b** 1656593	Hose Assy (Refrigerant)	1	..
2	**a** 1622574	Hose Assy (Refrigerant)	..	1
2	**b** 1656596	Hose Assy (Refrigerant)	..	1
3	1585499	Hose (Heater)	2	..
3	175875	Hose (Heater)	..	2
4	**a** 1622564	Hose (Air Conditioner)	1	1
4	**b** 1656595	Hose Assy (Air Conditioner)	1	1
5	129563	Strap Clamp	11	11
6	12845	Fitting	1	1
7	127852	Fitting	1	1
8	1502008	Hose Clamp	4	4
9	**a** 1487118	O-Ring	3	3
10	**a** 1487125	O-Ring	2	2
11	**a** 1487122	O-Ring	1	1

FOOTNOTES:

a → S/N B214E01541D

b S/N B214E01542D ↔ S/N B214E01668F

©2010 HYSTER COMPANY

HEATER AND AIR CONDITIONER HOSES (FIGURE 1-27)

SHEET 1 (S/N B214E01669F →)

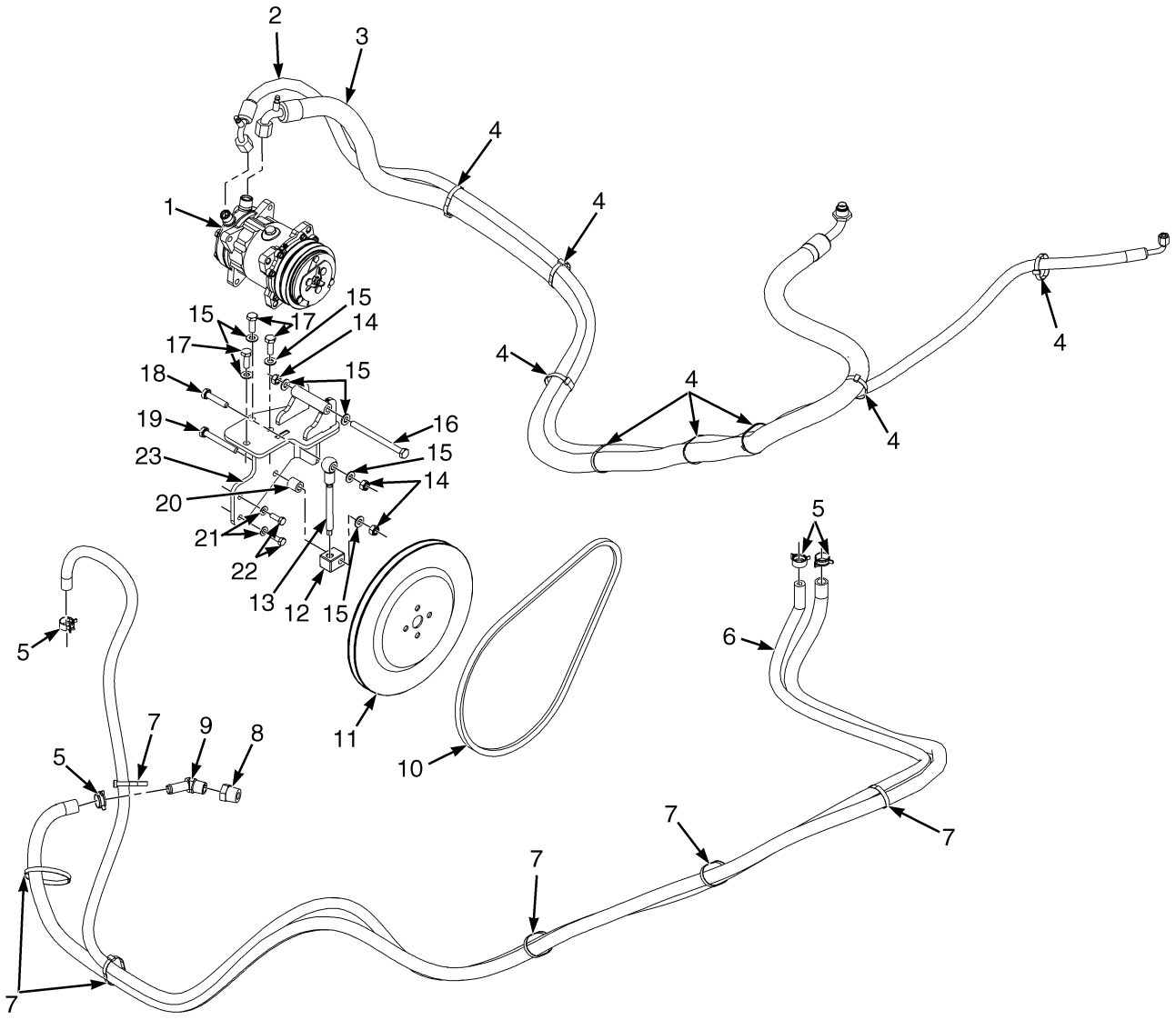

HP120763

©2010 HYSTER COMPANY

HEATER AND AIR CONDITIONER HOSES

SHEET 1 (S/N B214E01669F →)

KEY:
A: H450HD-EC, H500HD-EC
B: H400HD-EC, H440HDS-EC, H450HDS-EC

ITEM	PART NO.	DESCRIPTION	QTY A	QTY B
1	1689914	Compressor Assembly (☞Figure 1-29)	1	1
2	1692244	Hose	..	1
2	1692243	Hose	1	..
3	1692242	Hose	..	1
3	1692245	Hose	1	..
4	129563	Strap Clamp	8	8
5	1502008	Hose Clamp	4	4
6	175875	Hose	2	2
7	129563	Strap Clamp	6	6
8	127852	Fitting	1	1
9	12845	Fitting	1	1
10	118135	V-Belt	1	1
11	1649268	Pulley	1	1
12	1532482	Adjuster	1	1
13	1532484	Link	1	1
14	302401	Locknut	3	3
15	320159	Washer	8	8
16	1390281	Capscrew	1	1
17	136985	Capscrew	3	3
18	292517	Capscrew	1	1
19	292522	Capscrew	1	1
20	1650539	Spacer	1	1
21	320157	Washer	2	2
22	136749	Screw	2	2
23	1650537	Bracket	1	1

©2010 HYSTER COMPANY

HEATER AND AIR CONDITIONER HOSES (FIGURE 1-28)

SHEET 2 (S/N B214E01669F →)

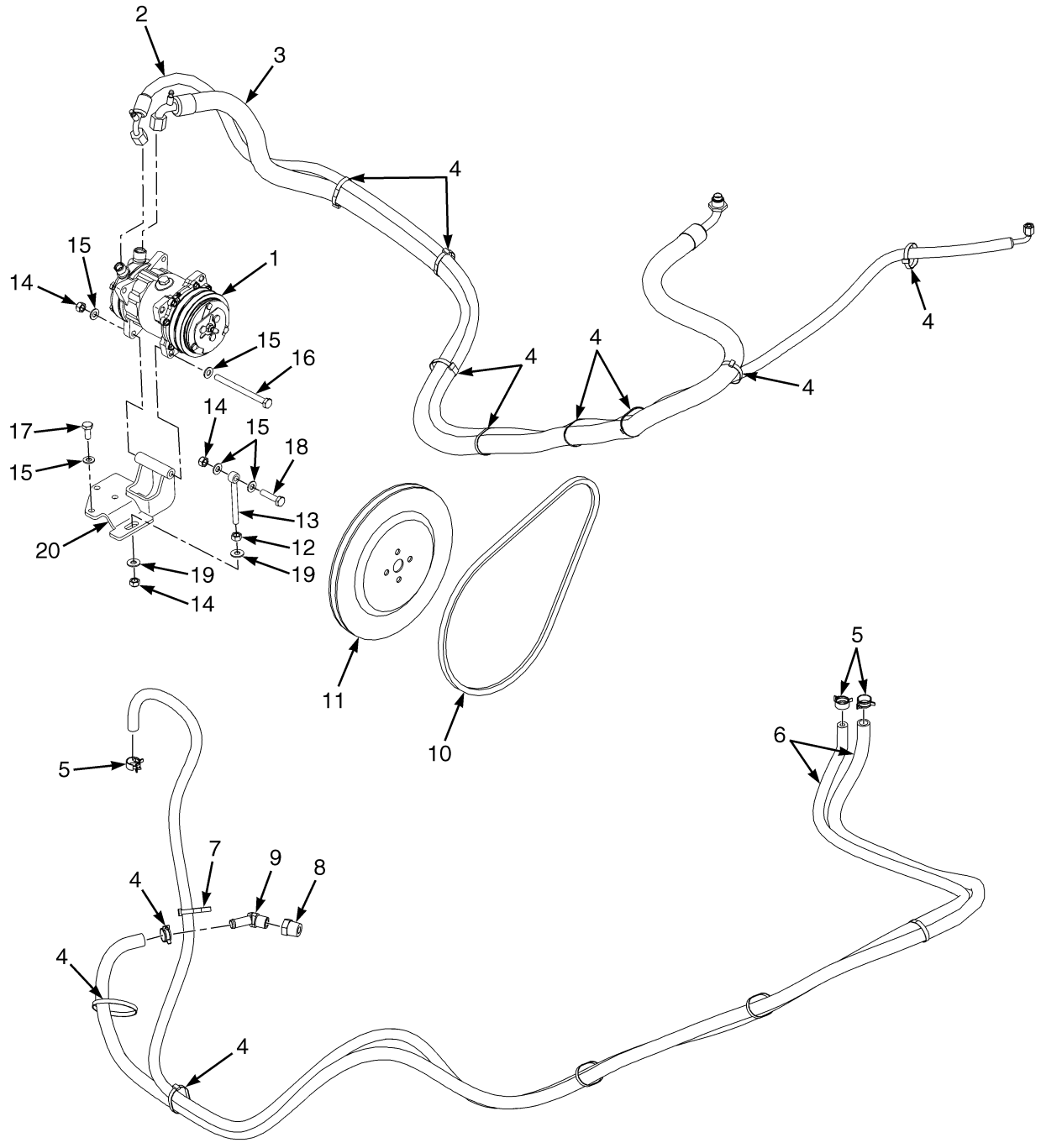

HP121227

©2010 HYSTER COMPANY

HEATER AND AIR CONDITIONER HOSES

SHEET 2 (S/N B214E01669F →)

KEY:
A: H450HD-EC, H500HD-EC
B: H400HD-EC, H440HDS-EC, H450HDS-EC

ITEM	PART NO.	DESCRIPTION	QTY A	QTY B
1	1689914	Compressor Assembly	1	1
2	1692244	Hose	..	1
2	1692243	Hose	1	..
3	1692242	Hose	..	1
3	1692245	Hose	1	..
4	129563	Strap Clamp	8	8
5	1502008	Hose Clamp	4	4
6	175875	Hose	2	2
7	129563	Strap Clamp	6	6
8	127852	Fitting	1	1
9	12845	Fitting	1	1
10	118135	V-Belt	1	1
11	1649268	Pulley	1	1
12	136692	Nut	1	1
13	1686686	Eyebolt	1	1
14	302401	Locknut	3	3
15	320159	Washer	7	7
16	1390281	Capscrew	1	1
17	287854	Capscrew	3	3
18	292516	Capscrew	1	1
19	320160	Washer	2	2
20	1686670	Bracket Wldmt	1	1

©2010 HYSTER COMPANY

COMPRESSOR ASSEMBLY (FIGURE 1-29)
TWO-FAN SYSTEM

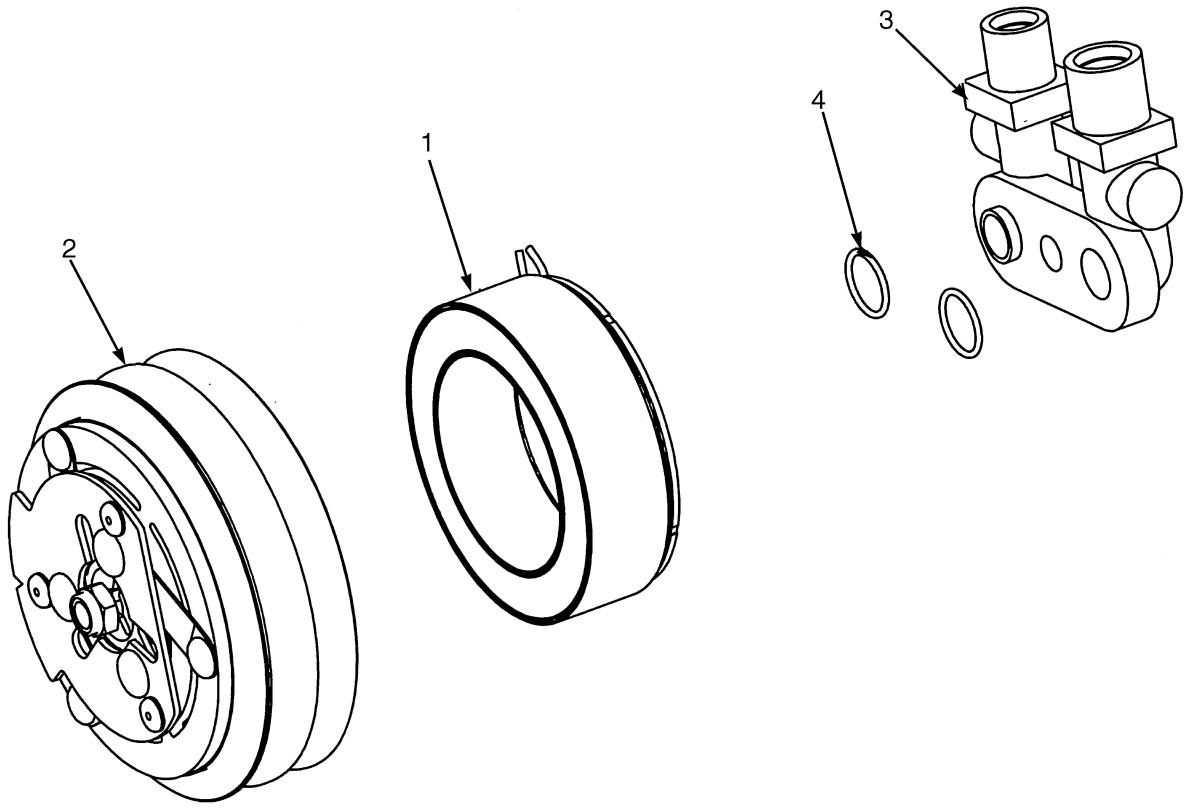

HP121196

ITEM	PART NO.	DESCRIPTION	QTY
	1689914	Compressor Assembly	1
1	4001309	Coil	1
2	4001308	Clutch Assy	1
3	4001307	Manifold	1
4	4001306	O-Ring	2

©2010 HYSTER COMPANY

AIR CONDITIONER SYSTEM (FIGURE 1-30)
WITH TWO-FAN CONDENSER SYSTEM

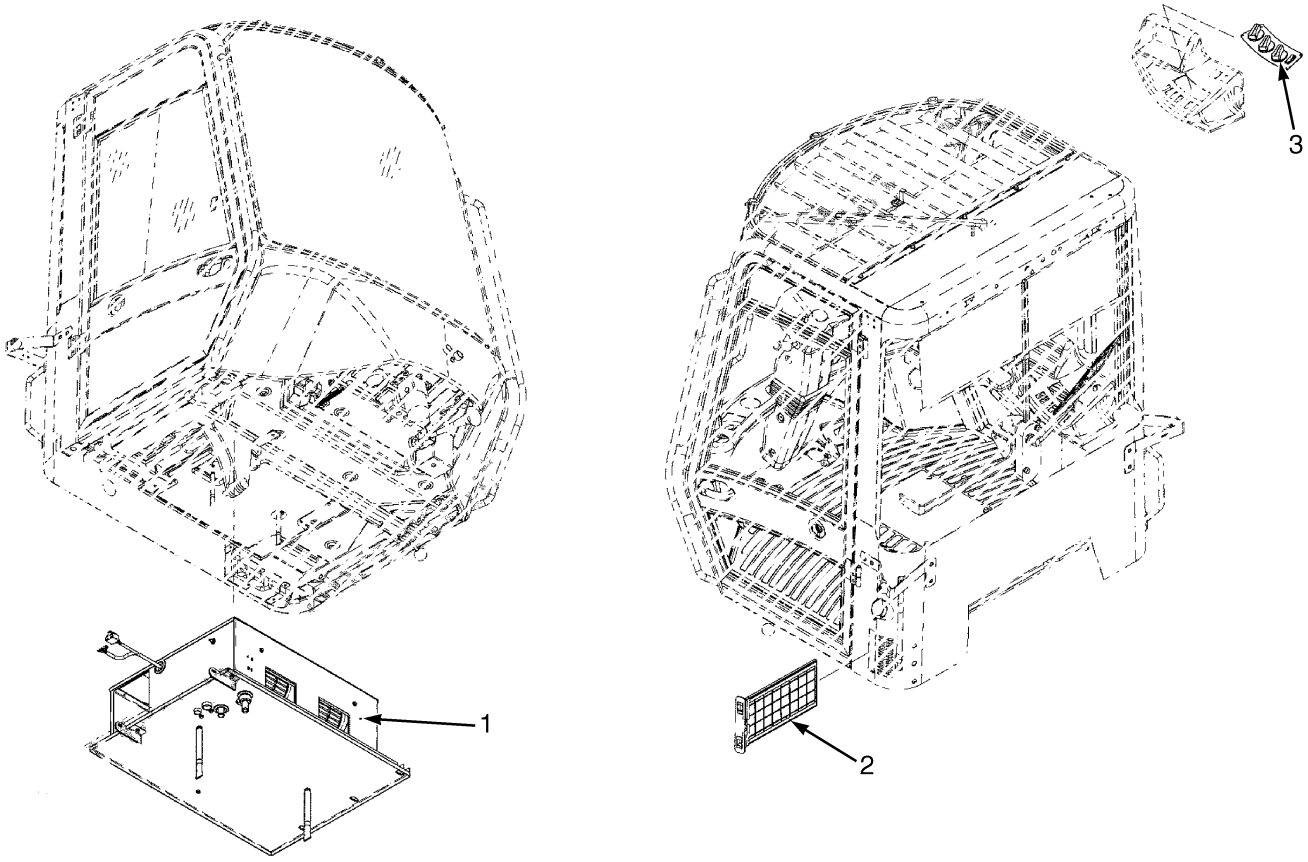

HP121182

ITEM	PART NO.	DESCRIPTION	QTY
	1702289	Air Conditioner	1
1	1702562	Air Conditioner Assembly (☞Figure 1-34).....	1
2	1493276	Air Filter	1
3	1702563	Control Panel Assembly (☞Figure 1-35).....	1

AIR CONDITIONER (FIGURE 1-31)
WITH TWO-FAN CONDENSER SYSTEM

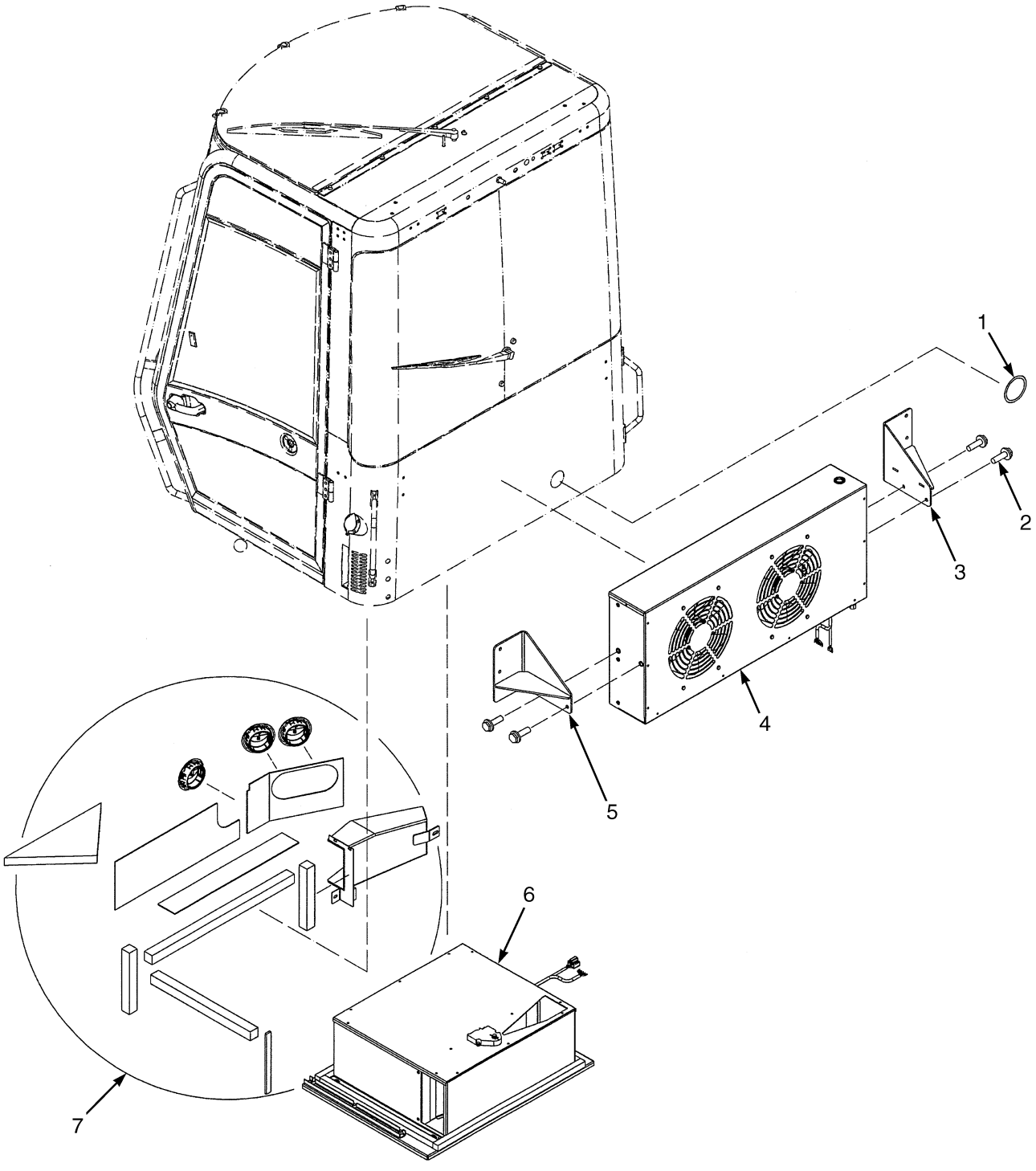

©2010 HYSTER COMPANY

AIR CONDITIONER
WITH TWO-FAN CONDENSER SYSTEM

ITEM	PART NO.	DESCRIPTION	QTY
	1696079	Air Conditioner	1
1	1492167	Trim-Bulk	AR
2	1566044	Bolt	4
3	4004837	Bracket Wldmt (RH)	1
4	1702290	Condenser Assembly (Includes Hose)	1
4	4002498	Condenser (☞Figure 1-32)	1
4	. . . . .	Hose	1
5	4004827	Bracket Wldmt (LH)	1
6	1702289	Air Conditioner (☞Figure 1-30)	1
7	1702293	Air Duct Assembly (☞Figure 1-33)	1

©2010 HYSTER COMPANY

CONDENSER ASSEMBLY (FIGURE 1-32)
WITH TWO-FAN CONDENSER SYSTEM

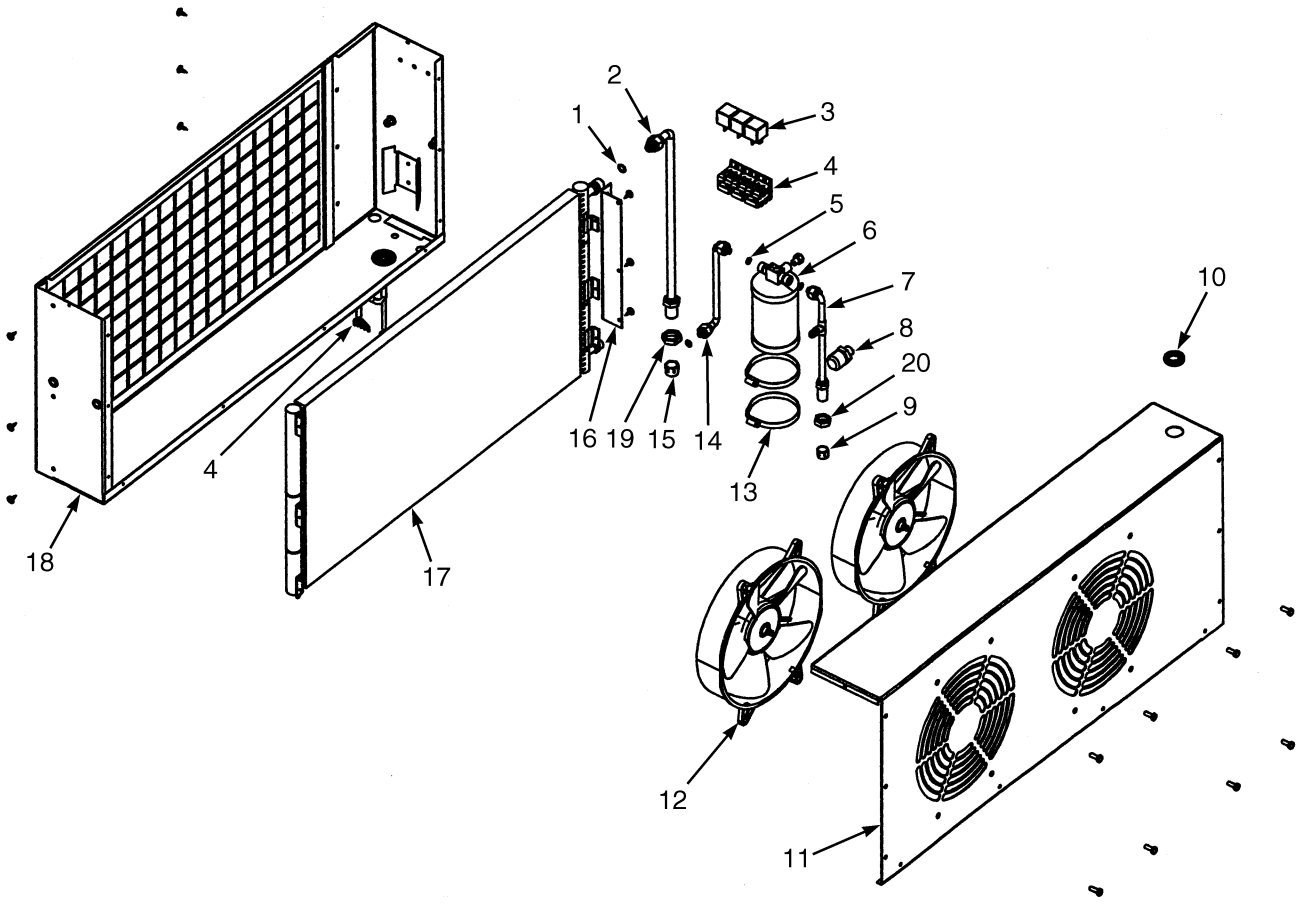

HP121206

©2010 HYSTER COMPANY

CONDENSER ASSEMBLY
WITH TWO-FAN CONDENSER SYSTEM

ITEM	PART NO.	DESCRIPTION	QTY
	4002498	Condenser	1
1	1487122	O-Ring	1
2	4002507	Tube Assy	1
3	4004770	Relay	3
4	4002500	Wire Harness	1
5	1487118	O-Ring	3
6	1693804	Air Dryer	1
6	1695629	Relief Valve	1
7	4002501	Tube Assy	1
8	1514712	Pressure Switch (2 Step)	1
9	4002508	Cap	1
10	4002510	Grommet	1
11	4002505	Cover	1
12	1564433	Fan (24 Volt)	2
13	4002504	Clamp	2
14	4002502	Tube Assy	1
15	4002509	Cap	1
16	4002503	Bracket	1
17	4003079	Condenser	1
18	4002506	Case	1
19	. . . . .	Locknut	1
20	. . . . .	Locknut	1

©2010 HYSTER COMPANY

AIR DUCT ASSEMBLY (FIGURE 1-33)
AIR CONDITIONING — WITH TWO-FAN CONDENSER SYSTEM

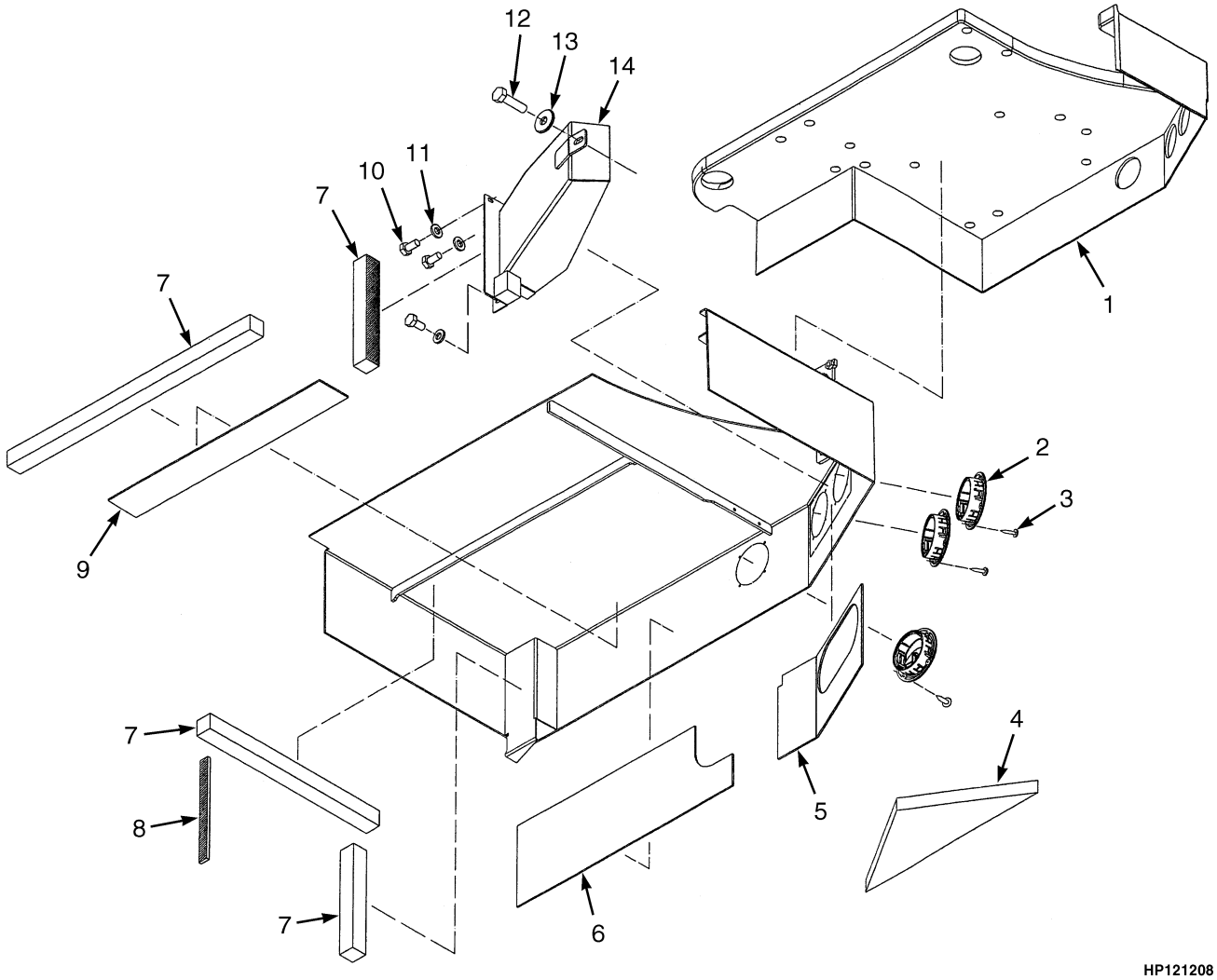

©2010 HYSTER COMPANY

AIR DUCT ASSEMBLY

AIR CONDITIONING – WITH TWO-FAN CONDENSER SYSTEM

ITEM	PART NO.	DESCRIPTION	QTY
	1702293	Air Duct Assembly	1
1	. . . . .	Floormat	1
2	1598398	Louver (Air)	3
3	1492163	Screw	12
4	. . . . .	Insulation	1
5	. . . . .	Insulation	1
6	. . . . .	Insulation	1
7	4000919	Foam	AR
8	4000920	Foam	AR
9	. . . . .	Insulation	1
10	4000918	Screw	3
11	320156	Washer	3
12	292501	Capscrew	1
13	1476421	Washer	1
14	. . . . .	Air Duct	1

©2010 HYSTER COMPANY

AIR CONDITIONER ASSEMBLY (FIGURE 1-34)
WITH TWO-FAN CONDENSER SYSTEM

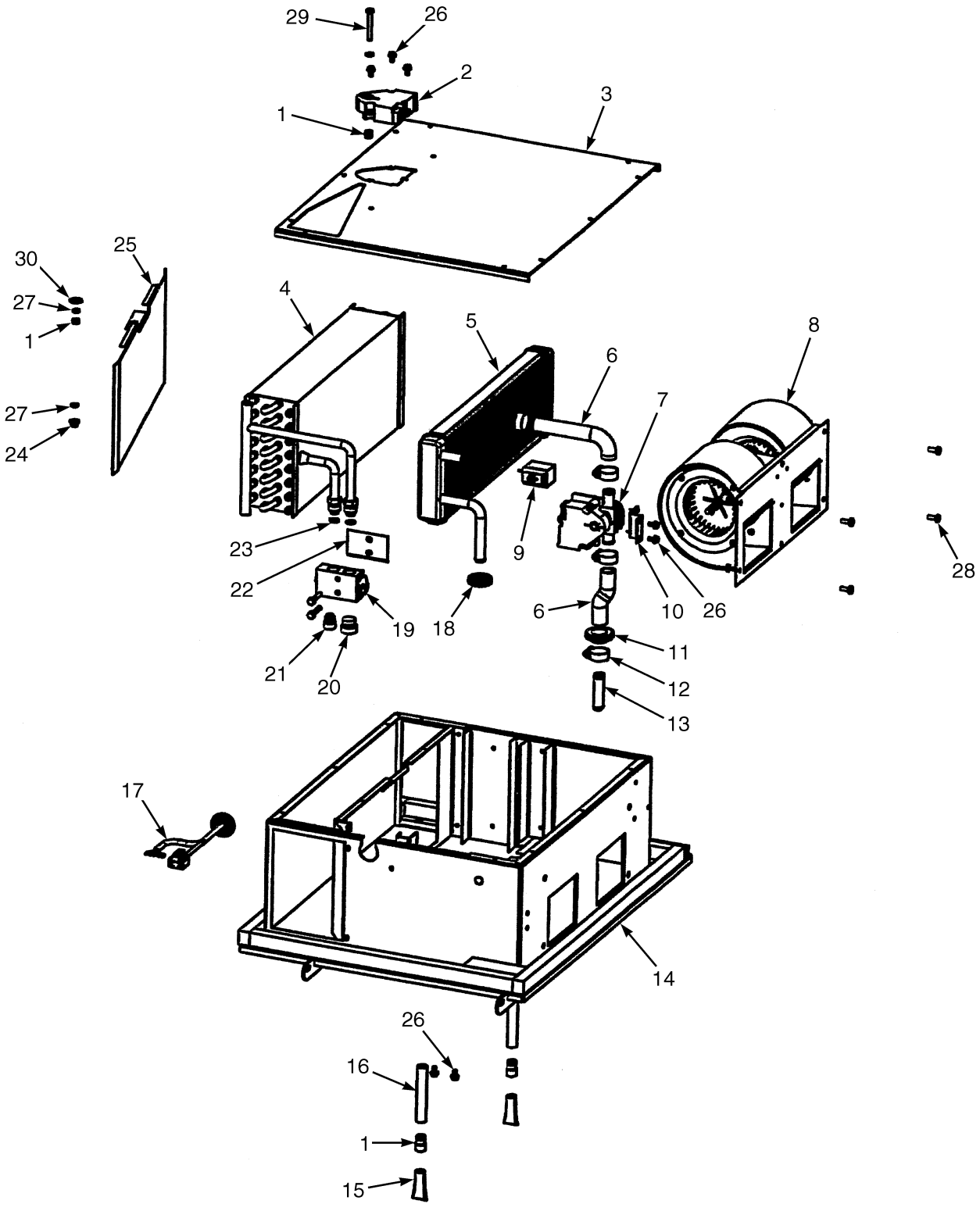

HP121205

©2010 HYSTER COMPANY

AIR CONDITIONER ASSEMBLY
WITH TWO-FAN CONDENSER SYSTEM

ITEM	PART NO.	DESCRIPTION	QTY
	1702562	Air Conditioner Assembly	1
1	4003095	Connector	2
2	4003081	Actuator (Motor)	1
3	4003085	Cover	1
4	4003090	Coil (Evaporator)	1
5	4003091	Core (Heater Coil)	1
6	4003089	Hose	1
7	1510538	Valve (Motorized)	1
8	4003083	Blower	1
9	4003082	Thermostat	1
10	4003098	Bracket	1
11	1487953	Grommet	1
12	1487950	Hose Clamp	4
13	1487952	Tube (Copper)	1
14	4003084	Case	1
15	4003094	Drain Valve	2
16	4003096	Hose	2
17	4003097	Wire Harness	1
18	4003088	Grommet	1
19	1487945	Valve (Block)	1
20	4003093	Plug	1
21	4003092	Plug	1
22	4003087	Bracket	1
23	1487122	O-Ring	1
24	1487963	Bushing	1
25	4003086	Cover Plate (Flapper)	1
26	. . . . .	Bolt	7
27	. . . . .	Washer	5
28	. . . . .	Bolt	4
29	. . . . .	Bolt	1
30	. . . . .	Lockwasher	1
	a 1510542	Wire Harness	1

FOOTNOTES:

a Not Illustrated

©2010 HYSTER COMPANY

CONTROL PANEL ASSEMBLY (FIGURE 1-35)
WITH TWO-FAN CONDENSER SYSTEM

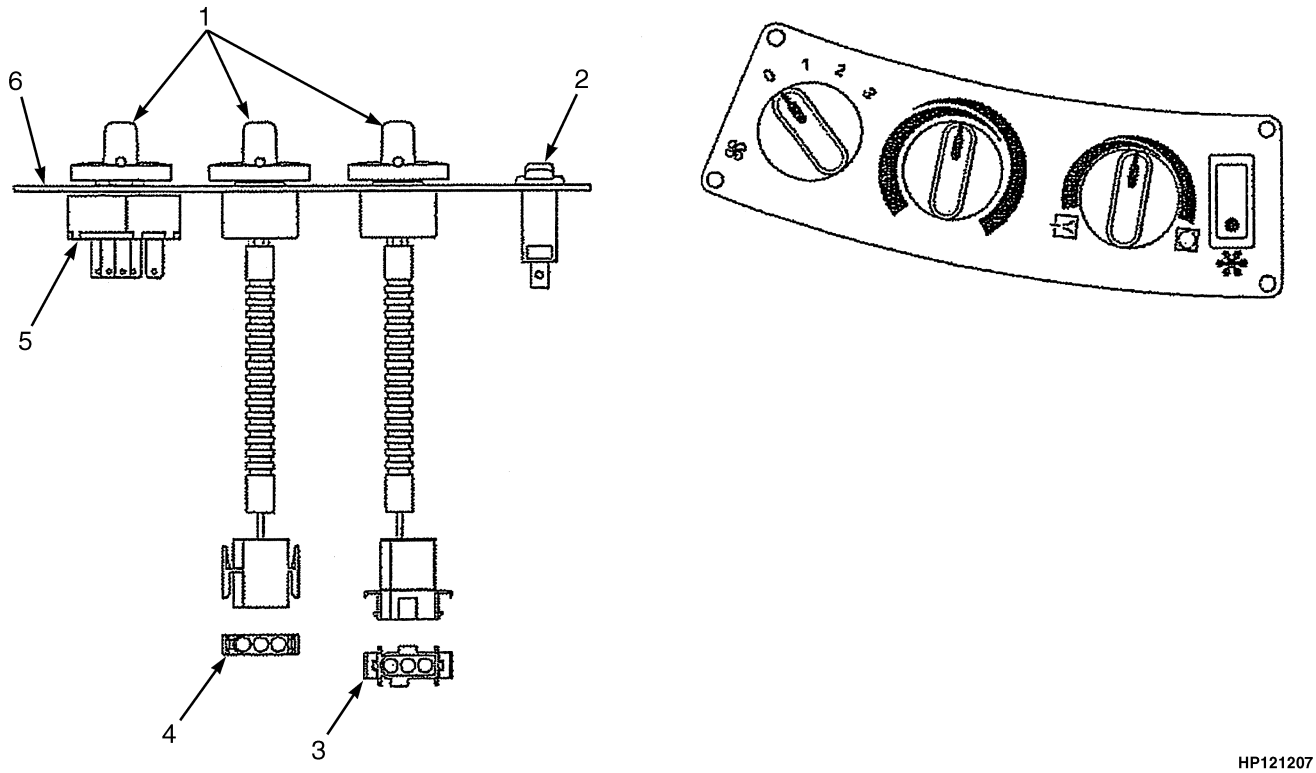

HP121207

ITEM	PART NO.	DESCRIPTION	QTY
	1702563	Control Panel Assembly	1
1	1487957	Knob	3
2	4004308	Switch	1
3	4004309	Potentiometer	1
4	4004310	Potentiometer	1
5	1487956	Switch , Blower (with Nut)	1
6	4004307	Control	1

©2010 HYSTER COMPANY

HEATER AND AIR DUCT ASSEMBLY (FIGURE 1-36)
WITH TWO-FAN CONDENSER SYSTEM

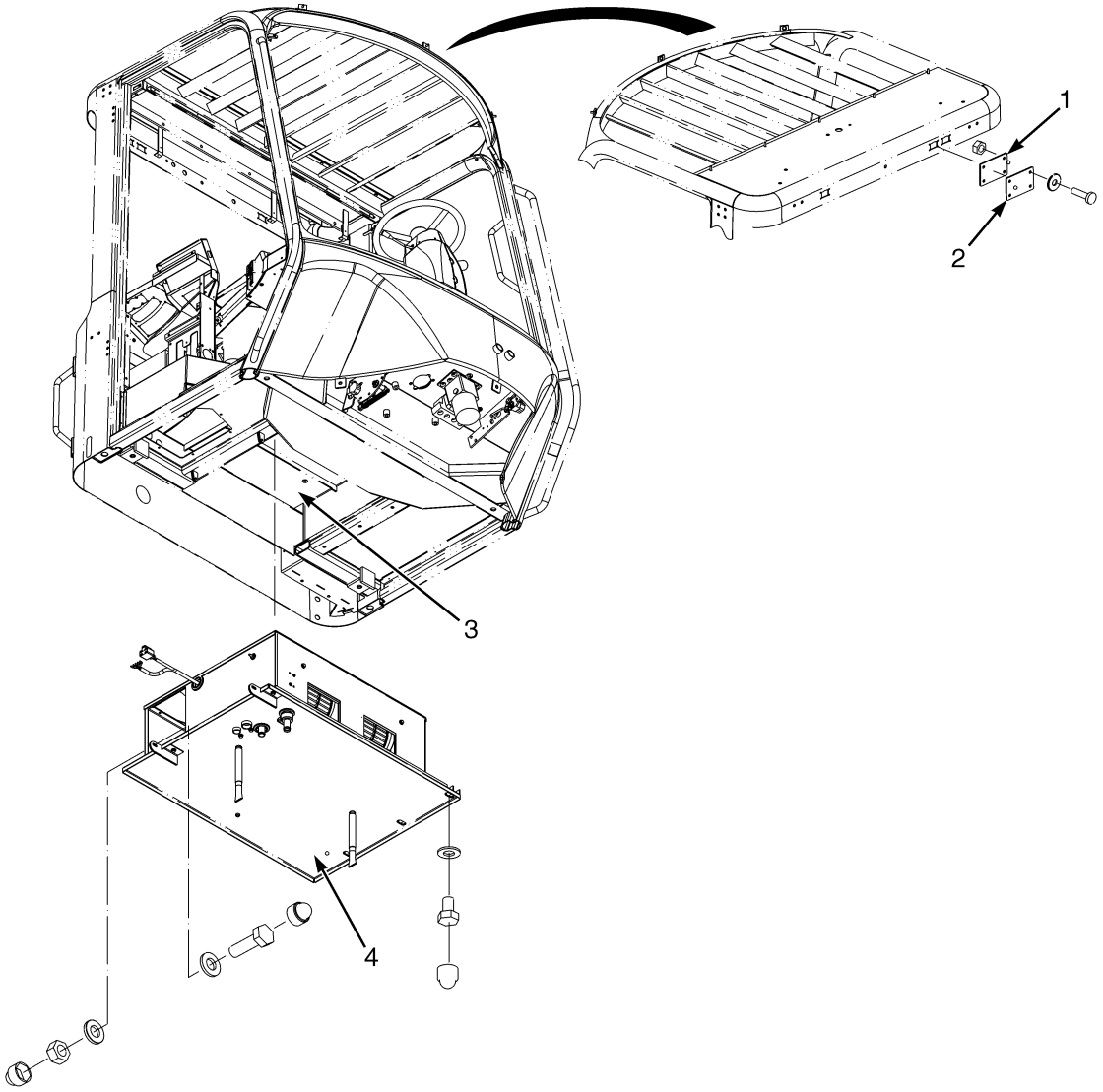

HP200122

ITEM	PART NO.	DESCRIPTION	QTY
	1696084	Heater and Air Duct Assembly and Air Duct Assembly	1
1	1635008	Seal	1
2	1635007	Plate	1
3	4000400	Air Duct Assembly (☞Figure 1-39)	1
4	4000399	Heater Assembly (☞Figure 1-37)	1

©2010 HYSTER COMPANY

HEATER SYSTEM (FIGURE 1-37)
WITH TWO-FAN CONDENSER SYSTEM

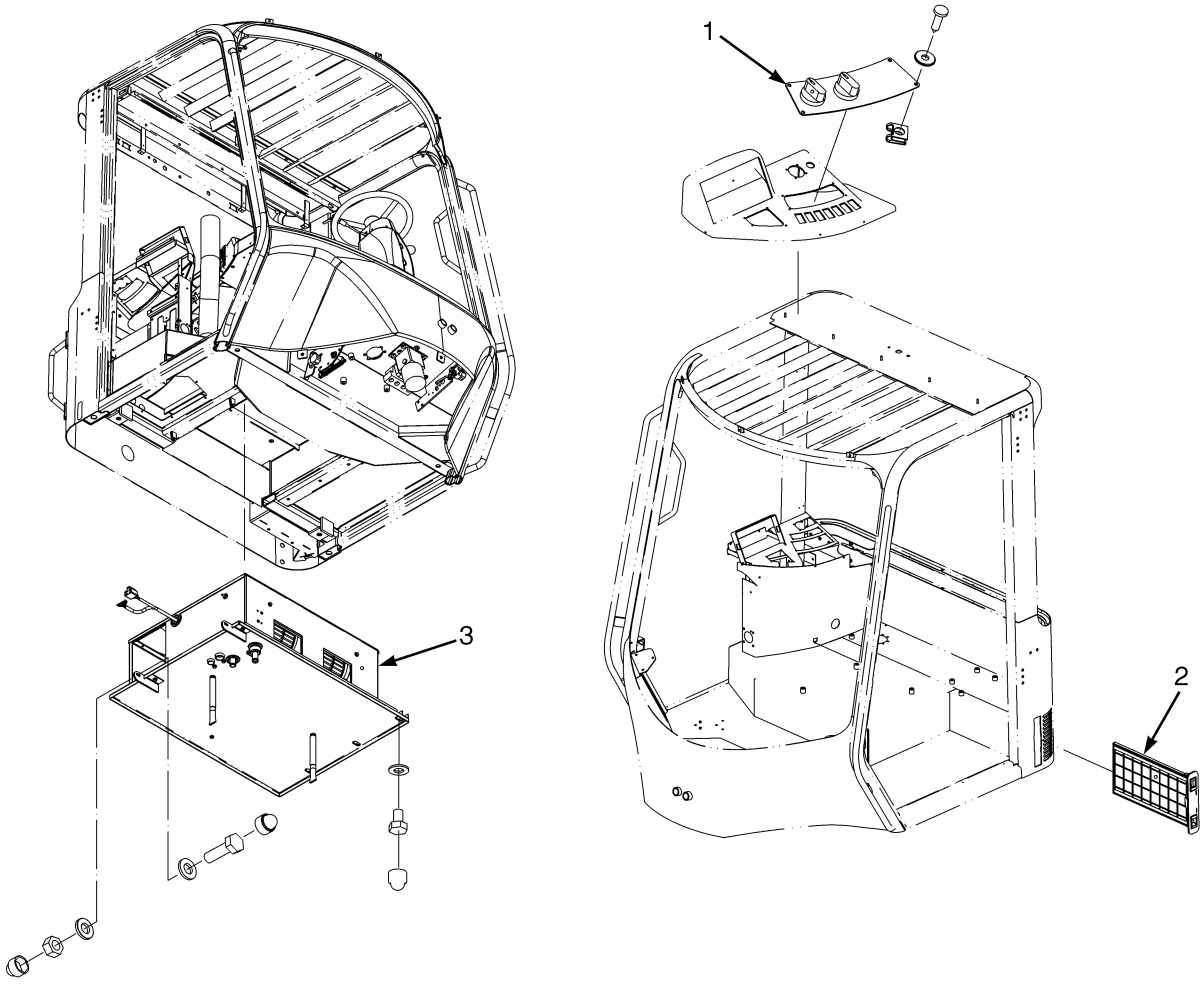

HP200120

ITEM	PART NO.	DESCRIPTION	QTY
	4000399	Heater Assembly	1
1	4000916	Heater Control Panel Assembly	1
2	1493276	Air Filter	1
3	4000915	Heater Assembly (☞Figure 1-38).....	1

©2010 HYSTER COMPANY

NOTES

©2010 HYSTER COMPANY

HEATER ASSEMBLY (FIGURE 1-38)
WITH TWO-FAN CONDENSER SYSTEM

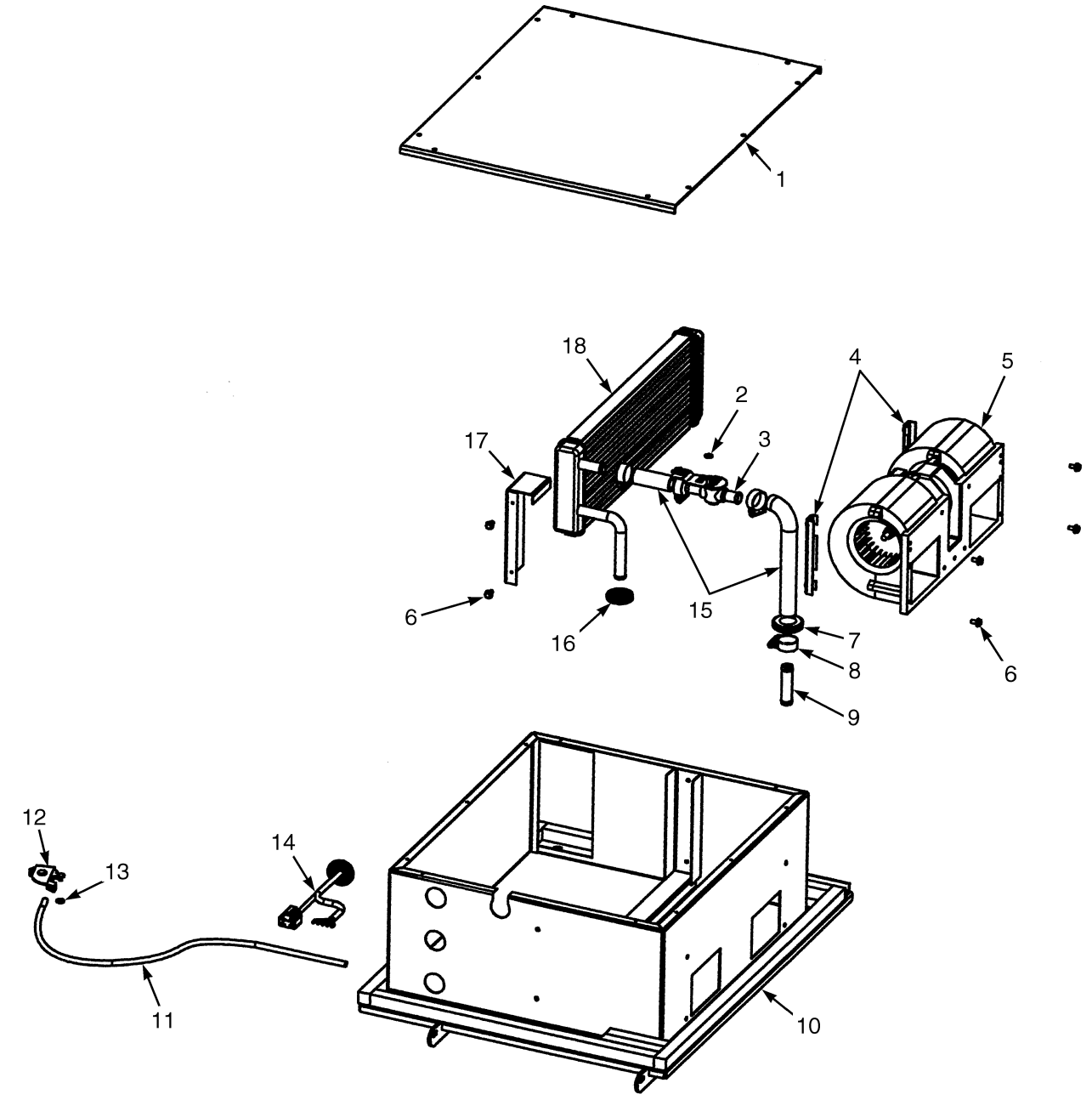

HP121213

©2010 HYSTER COMPANY

HEATER ASSEMBLY
WITH TWO-FAN CONDENSER SYSTEM

ITEM	PART NO.	DESCRIPTION	QTY
	4000915	Heater Assembly	1
1	4004928	Cover	1
2	4004933	Washer	1
3	1487947	Control Valve (Air Conditioning)	1
4	4004930	Bracket (Blower)	2
5	4004929	Blower	1
6	. . . . .	Bolt	6
7	1487953	Grommet	1
8	1487950	Hose Clamp	4
9	1487952	Tube (Copper)	1
10	4004926	Case	1
11	4004931	Heater Control Cable - MCC A/C System	1
12	1487959	Switch (180 deg)	1
13	4004932	Washer	1
14	4004934	Wire Harness	1
15	4003089	Hose	1
16	4003088	Grommet	1
17	4004927	Bracket (Heater)	1
18	4003091	Core (Heater Coil)	1

©2010 HYSTER COMPANY

AIR DUCT ASSEMBLY (FIGURE 1-39)
HEATER — WITH TWO-FAN CONDENSER SYSTEM

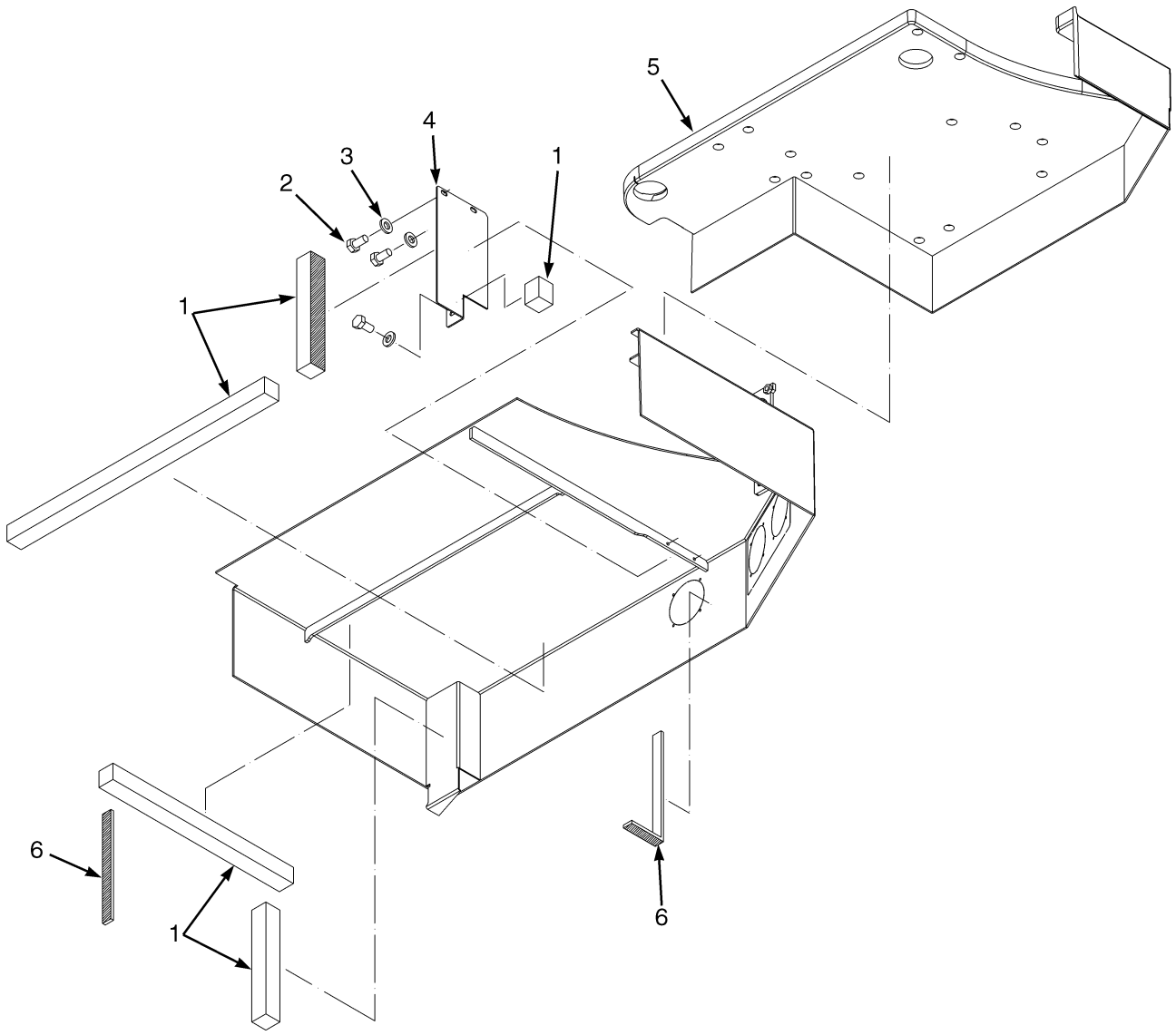

HP200121

©2010 HYSTER COMPANY

AIR DUCT ASSEMBLY

HEATER – WITH TWO-FAN CONDENSER SYSTEM

ITEM	PART NO.	DESCRIPTION	QTY
	4000400	Air Duct Assembly	1
1	4000919	Foam	AR
2	4000918	Screw	3
3	320156	Washer	3
4	4000917	Cover Plate (Heater)	1
5	1493282	Floormat (Seat)	1
6	4000920	Foam	AR

©2010 HYSTER COMPANY

HEATER AND AIR CONDITIONER ASSEMBLY (FIGURE 1-40)
WITH THREE-FAN CONDENSER SYSTEM

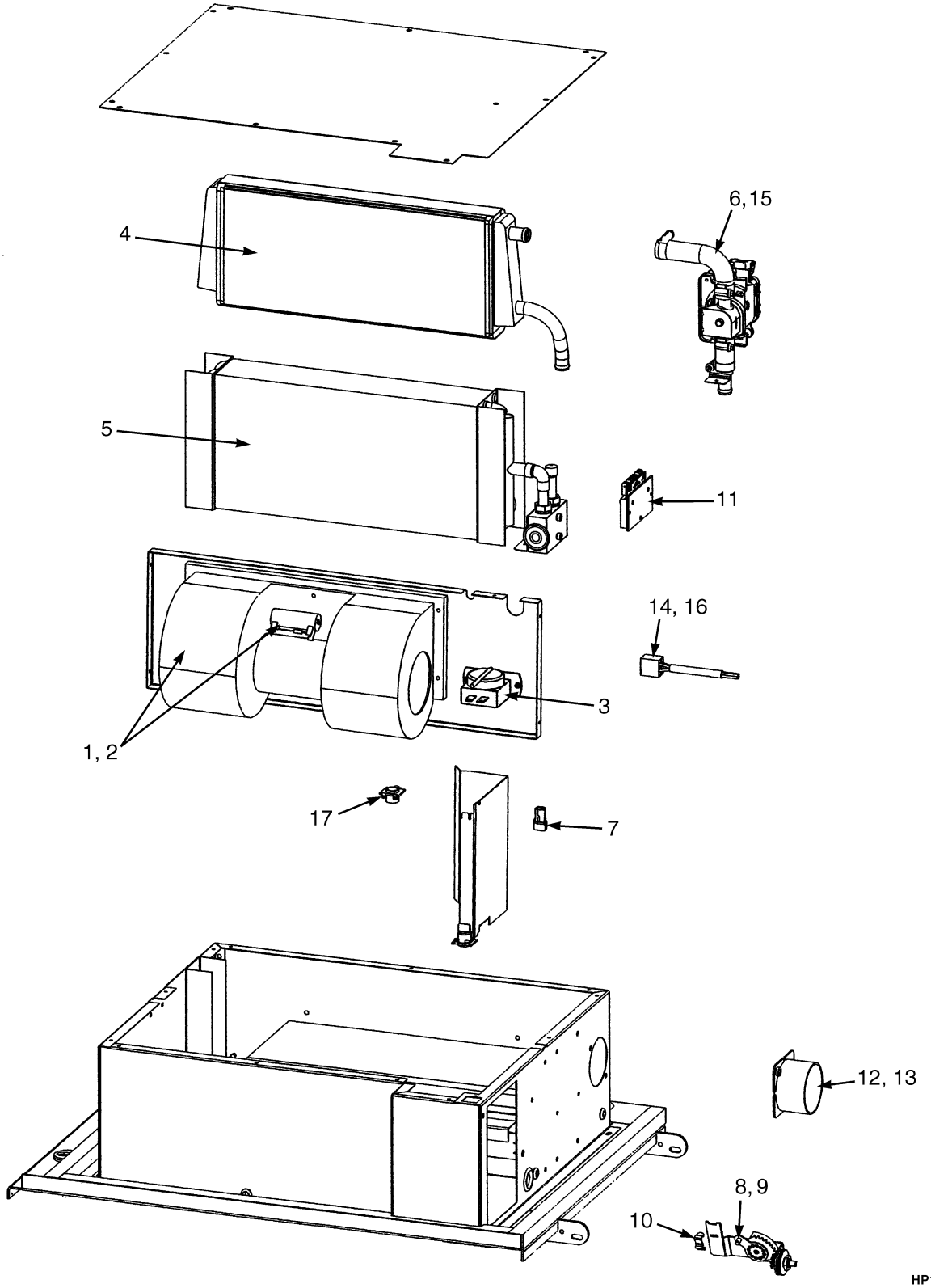

©2010 HYSTER COMPANY

HEATER AND AIR CONDITIONER ASSEMBLY
WITH THREE-FAN CONDENSER SYSTEM

ITEM	PART NO.	DESCRIPTION	QTY
	a 1558045	Kit-Heater and Airco	1
	b 1656599	Kit-Heater and Airco	1
1	1560537	Blower	1
2	1453031	Resistor	1
3	1560538	Thermostat	1
4	1560539	Core	1
5	**a** 1560540	Evaporator Core	1
5	**b** 1674584	Evaporator Core	1
6	1656600	Water Valve Assy	1
6	. . . . .	Motor (Water Valve)	1
6	. . . . .	Coupling	1
6	. . . . .	Water Valve	1
6	1560544	Hose (90 degree)	1
6	1560545	Hose (Straight)	1
7	1560553	Clip	1
8	1560554	Push-Pull Cable	1
9	1560555	Valve	1
10	1560556	Clip	1
11	**a** 1560546	Controller (Water Valve)	1
11	**b** 1656603	Controller (Water Valve)	1
12	1560547	Adapter	1
13	1560548	Rivet	1
14	1560549	Wire Harness	1
15	**a** 1560550	Wire Harness	1
15	**b** 1656604	Wire Harness	1
16	1560551	Connector	1
17	1560552	Bearing	1
	b 1656601	Kit-Controller (Water)	1

FOOTNOTES:

a → S/N B214E01541D

b S/N B214E01542D →

©2010 HYSTER COMPANY

HEATER AND AIR CONDITIONER MOUNTING (FIGURE 1-41)
WITH THREE-FAN CONDENSER SYSTEM

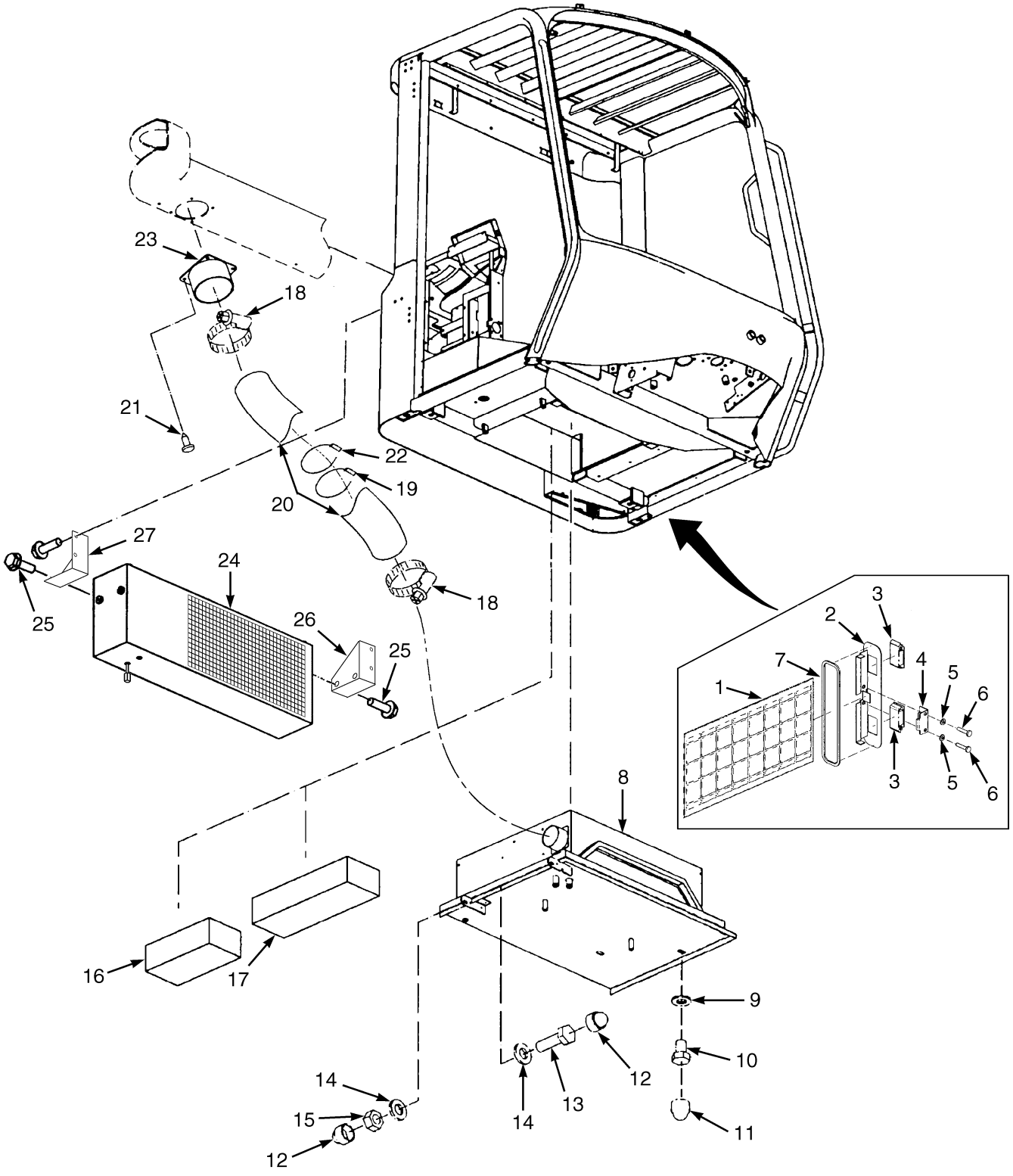

HP121000

©2010 HYSTER COMPANY

HEATER AND AIR CONDITIONER MOUNTING
WITH THREE-FAN CONDENSER SYSTEM

ITEM	PART NO.	DESCRIPTION	QTY
1	1558028	Air Filter	1
2	1590815	Cover (Filter) Assembly	1
2	1590822	Cover (Filter)	1
3	1590821	Catch	2
4	1590820	Bracket	1
5	1492253	Washer	2
6	1492231	Screw	2
7	1558294	Seal	AR
8	1558032	Heater (☞Figure 1-42)	1
8	**a** 1558045	Kit-Heater and Airco (☞Figure 1-40)	1
8	**b** 1656599	Kit-Heater and Airco (☞Figure 1-40)	1
9	320160	Washer	3
10	292513	Capscrew	3
11	1493312	Cap (Capscrew Head)	3
12	1493397	Cover (Capscrew Head)	4
13	292501	Capscrew	2
14	320156	Washer	4
15	316834	Nut	2
16	1558029	Foam	1
17	1493394	Foam	1
18	1493393	Clip	2
19	1393499	Clamp	4
20	1603503	Hose	1
21	1468319	Screw	4
22	1506825	Strap Clamp	2
23	1603502	Flange	1
24	1637660	Wire Harness	1
24	2076655	Condenser (☞Figure 1-43)	1
25	1566041	Screw	4
26	1623421	Bracket (RH)	1
27	1623420	Bracket (LH)	11
	2098895	Wire Harness (Heater Adapter)	1

FOOTNOTES:

a → S/N B214E01541D

b S/N B214E01542D →

©2010 HYSTER COMPANY

HEATER ASSEMBLY (FIGURE 1-42)
WITH THREE-FAN CONDENSER SYSTEM

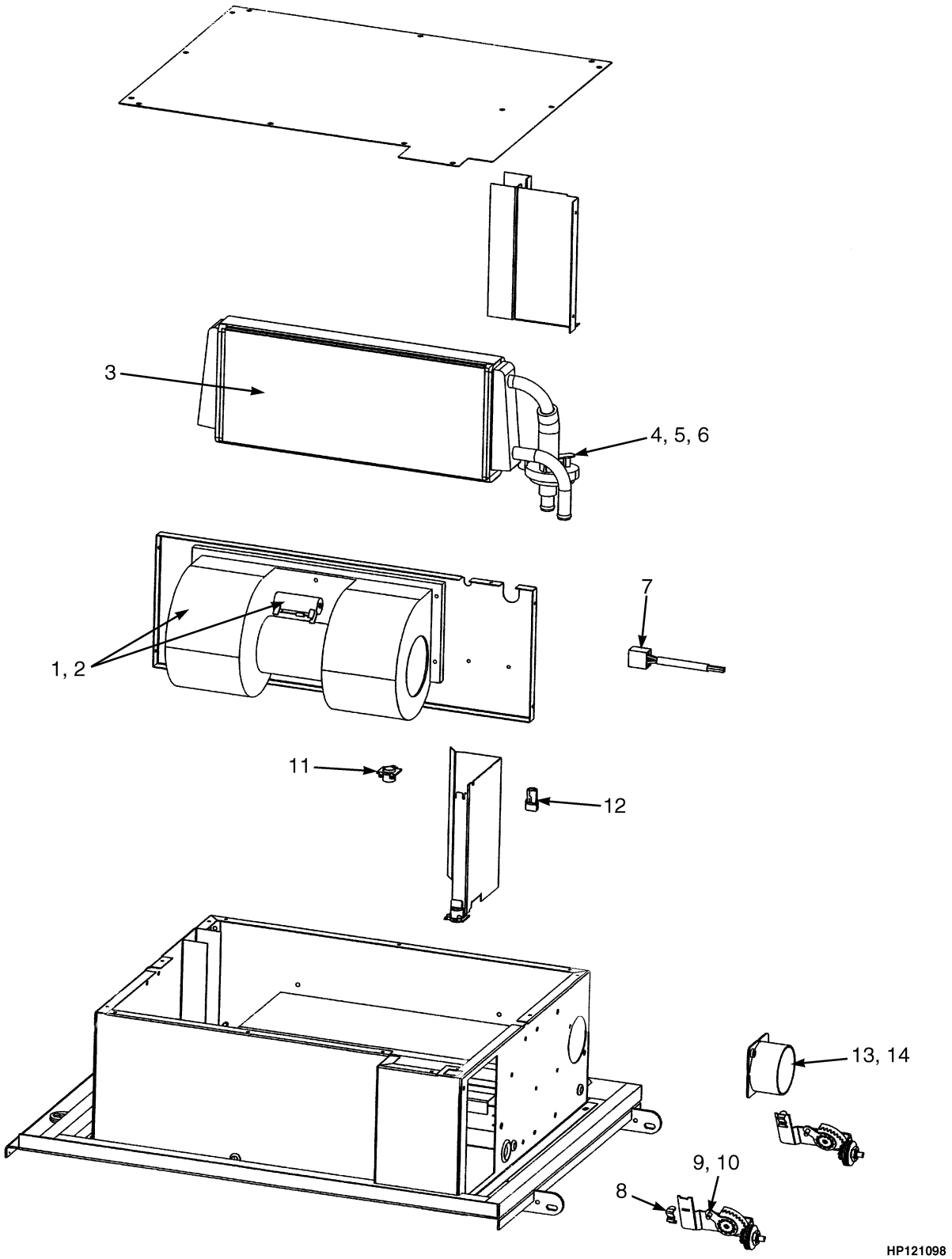

©2010 HYSTER COMPANY

HEATER ASSEMBLY
WITH THREE-FAN CONDENSER SYSTEM

ITEM	PART NO.	DESCRIPTION	QTY
	1558032	Heater	1
1	1560537	Blower	1
2	1453031	Resistor	1
3	1560623	Core (Heater)	1
4	1560624	Hose (Water Valve)	1
5	1560625	Drain Valve	1
6	1560554	Push-Pull Cable	1
7	1560627	Wire Harness	1
8	1560556	Clip	1
9	1560626	Push-Pull Cable	1
10	1560555	Valve	1
11	1560552	Bearing	1
12	1560553	Clip	1
13	1560547	Adapter (Hose)	1
14	1560548	Rivet	1

©2010 HYSTER COMPANY

CONDENSER ASSEMBLY (FIGURE 1-43)
THREE-FAN SYSTEM

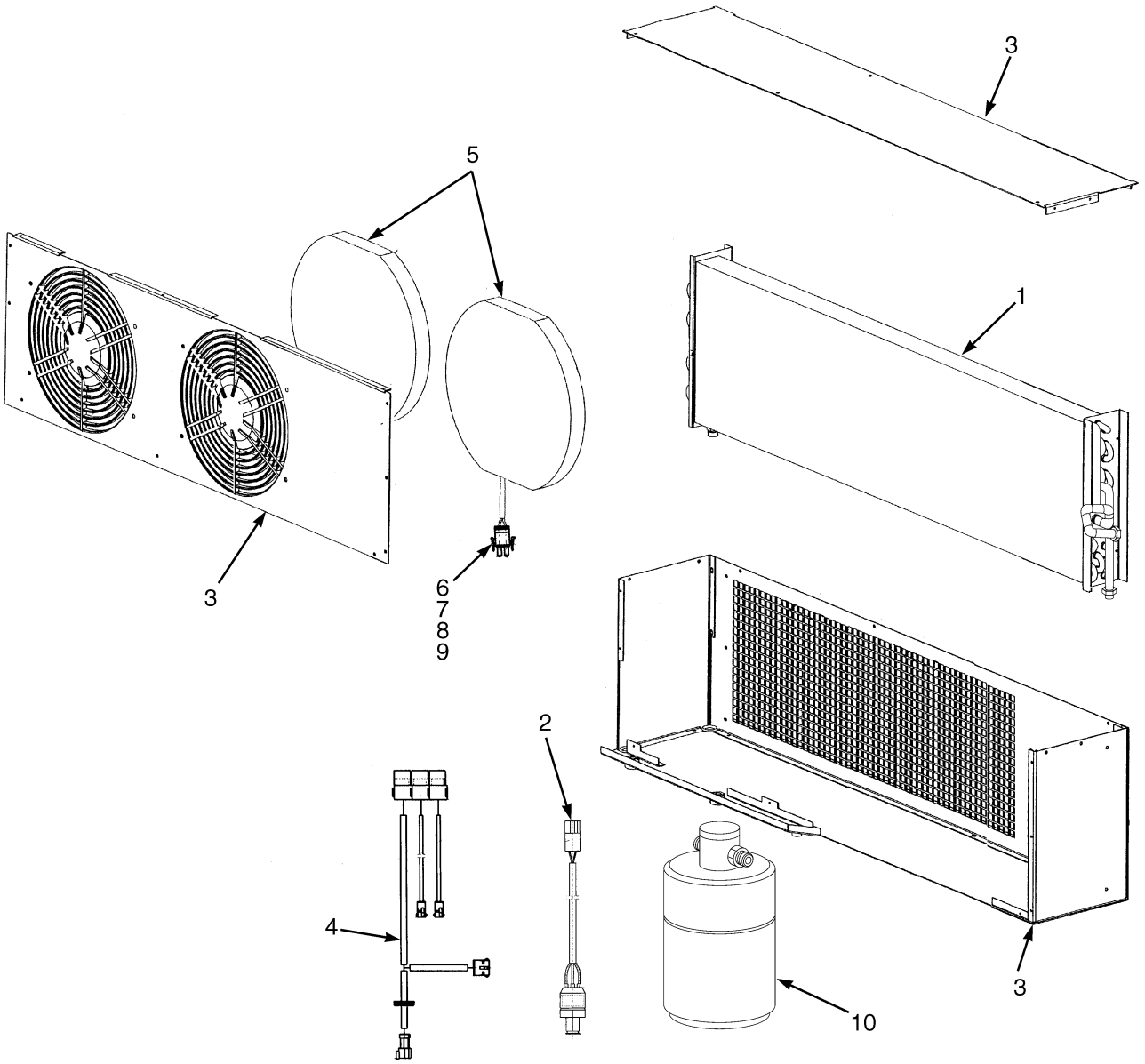

HP121004

©2010 HYSTER COMPANY

CONDENSER ASSEMBLY
THREE-FAN SYSTEM

ITEM	PART NO.	DESCRIPTION	QTY
	2076655	Condenser	1
1	1637657	Condenser	1
2	1637659	Switch (Pressure)	1
3	. . . . .	Housing (Condenser)	1
4	1637660	Wire Harness (Air Conditioning Relay)	1
5	1550923	Fan (24 Volt)	2
5	1637675	Connector Body	1
5	1637676	Contact	2
5	1637677	Seal	1
5	1637678	Seal	1
6	1637675	Connector Body	1
7	1637676	Contact	2
8	1637677	Seal	1
9	1637678	Seal	1
10	1637658	Tank	1

©2010 HYSTER COMPANY

LABELS (FIGURE 1-44)
EXTERIOR

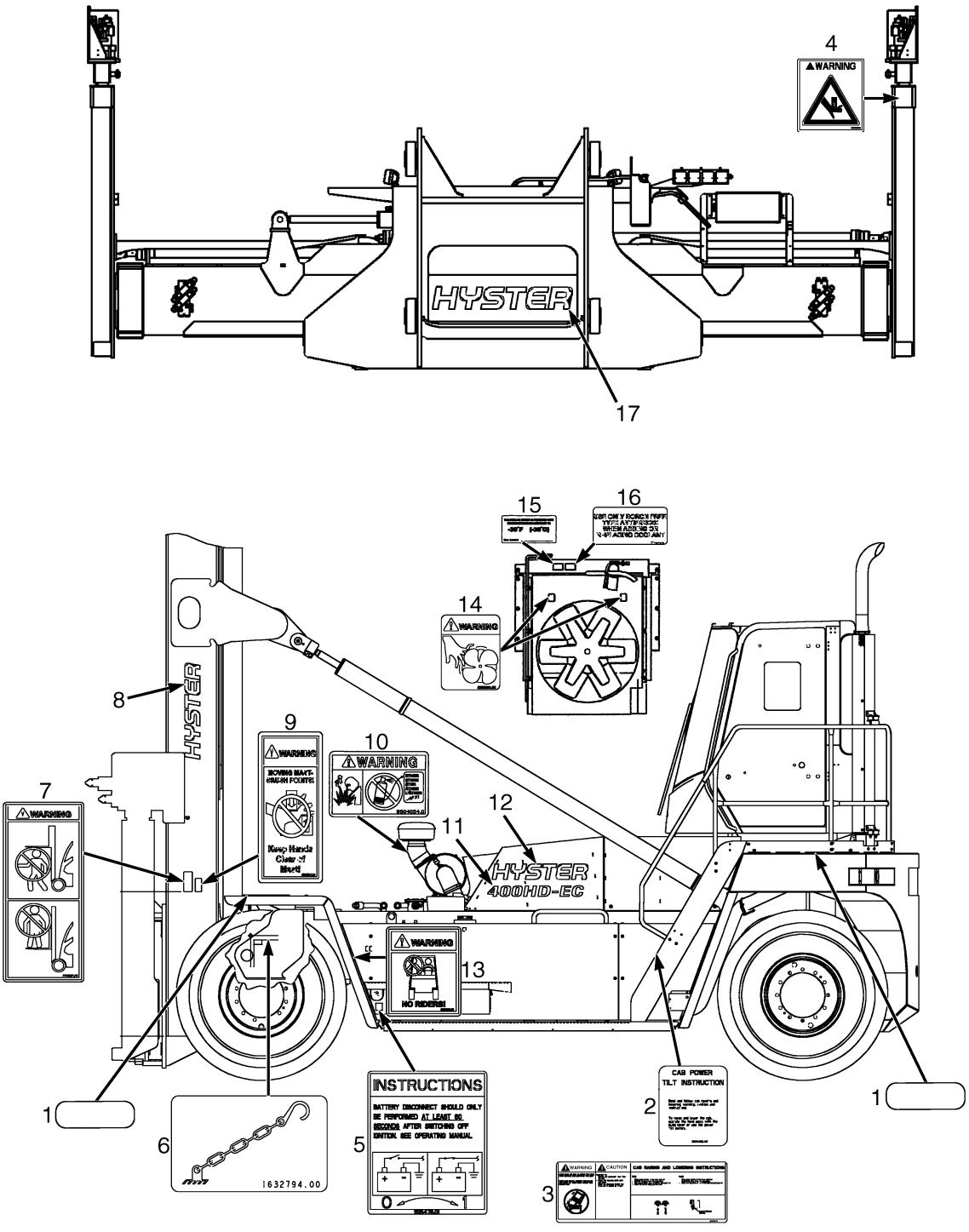

HP121012

©2010 HYSTER COMPANY

LABELS
EXTERIOR

ITEM	PART NO.	DESCRIPTION	QTY
1	239423	Anti-Slip Tread	6
2	2044002	Label (Power Tilt)	1
3	2085723	Label (Cab Tilt Warning)	1
4	1545062	Label (Pinch Point)	2
5	1515475	Label (Battery Disconnect)	1
6	2090765	Label (Tie Down)	4
7	1335126	Label (Mast Warning)	2
8	1450810	Label (Hyster)	2
9	1346893	Label (Mast Warning)	2
10	2034459	Label (Ether Warning)	1
11	1622861	Label (400HD-EC)	2
11	1652899	Label (440HDS-EC)	2
11	1639716	Label (450HDS-EC)	2
11	1622862	Label (450HD-EC)	2
11	1622863	Label (500HD-EC)	2
12	888012	Label (Hyster)	2
13	1330920	Label (No Riders)	2
14	1345939	Label (Fan Warning)	3
15	1354165	Label (Antifreeze)	1
16	1375676	Label (Boron-Free Antifreeze)	1
17	1393760	Label (Hyster)	1

©2010 HYSTER COMPANY

LABELS (FIGURE 1-45)
INTERIOR

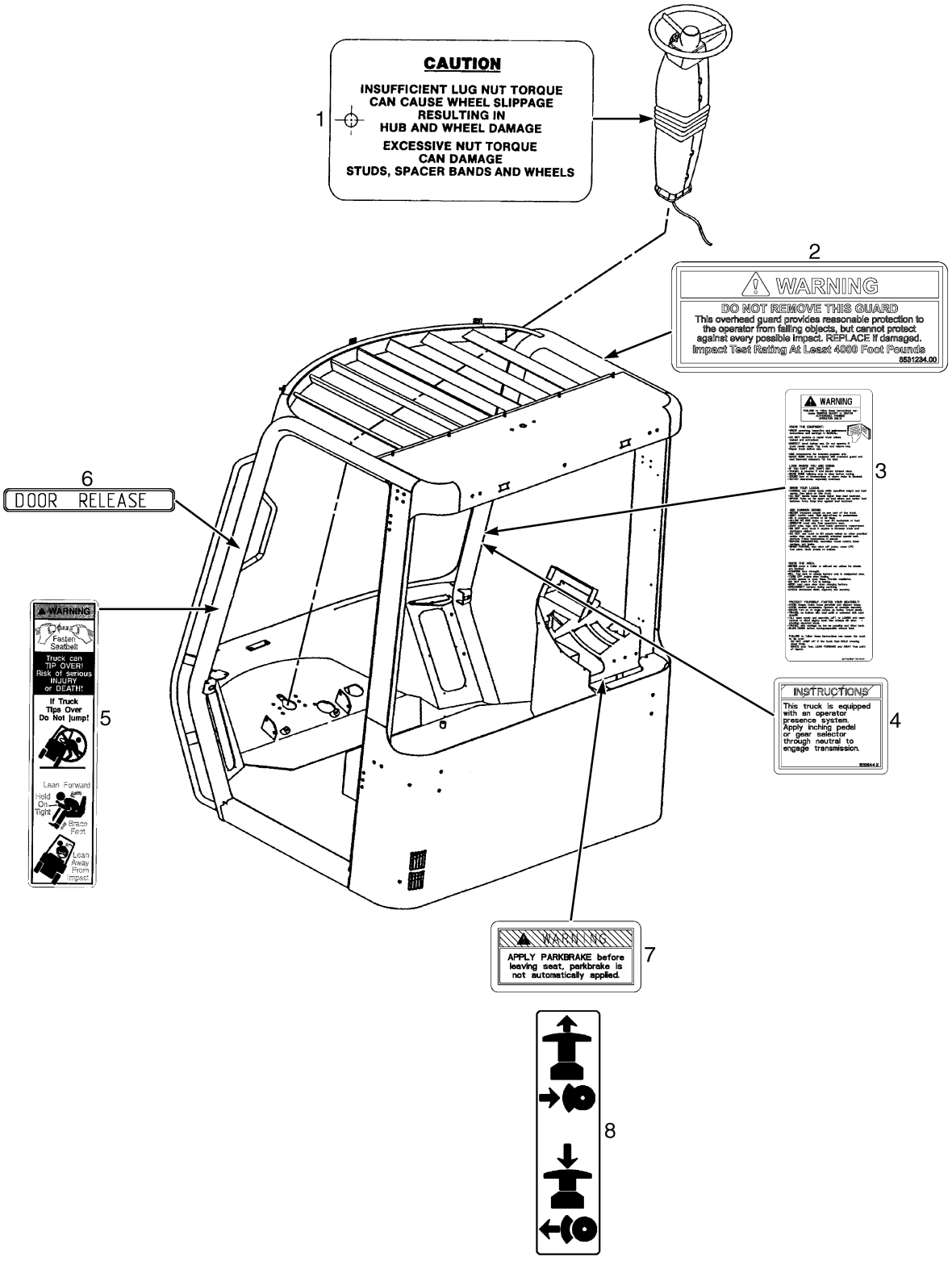

HP121013

©2010 HYSTER COMPANY

LABELS
INTERIOR

ITEM	PART NO.	DESCRIPTION	QTY
1	322668	Label (Lug Nut Torque)	1
1	137852	Strap Clamp	1
2	**b**	Label-Impact Warning	1
3	2043479	Label (Operator Warning)	1
4	2084159	Label (Operator Presence)	1
5	1330917	Label (Operator Restraint)	2
6	1451416	Label (Door Release)	2
7	1335146	Label (Park Brake Warning)	1
8	2044400	Label (Park Brake)	1
	a 389688	Nameplate	1
	a 1513947	Rivet (Plastic)	4
	c 1328205	Label (Operator Manual)	1
	1534660	Label (Patents and Trademarks)	1

FOOTNOTES:

a Dash Panel
b Please Contact Your Local Hyster Dealer
c Seat

©2010 HYSTER COMPANY

LABELS (FIGURE 1-46)
HYDRAULIC CONTROLS

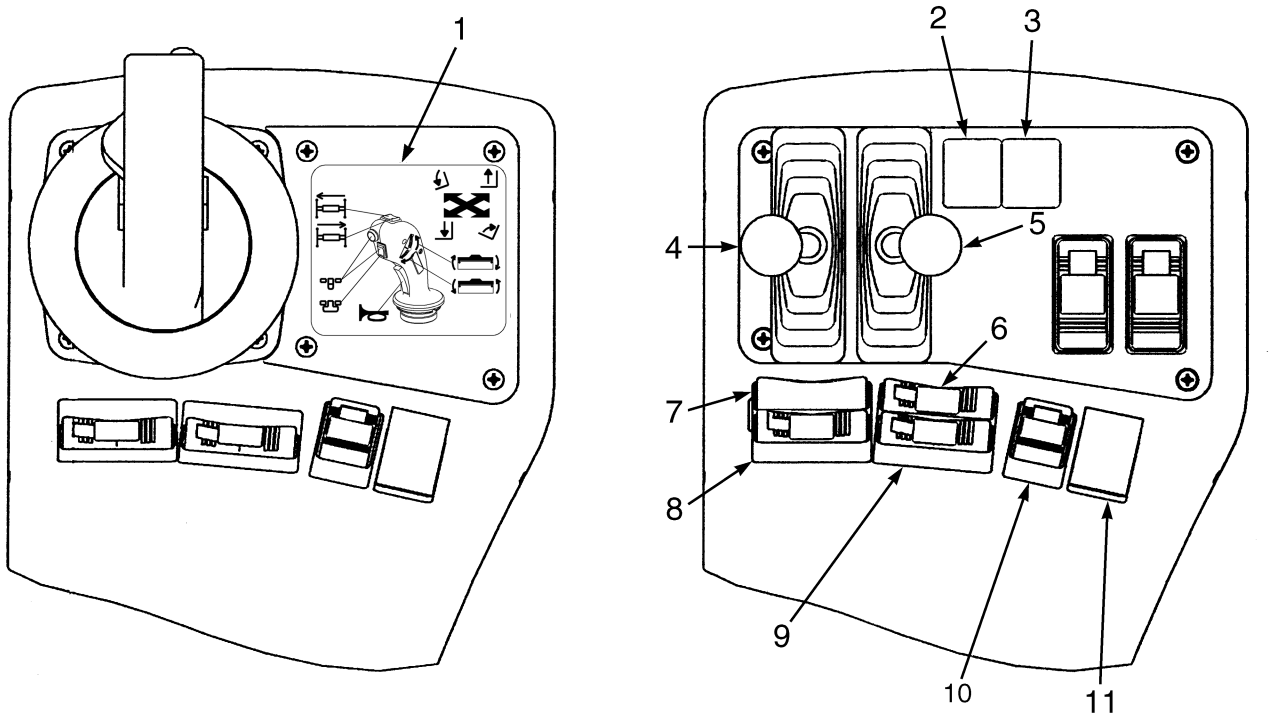

HP260022

KEY:
A: Joystick Controls
B: Joystick Controls (With Hooks)
C: Lever Controls
D: Lever Controls (With Hooks)

ITEM	PART NO.	DESCRIPTION	QTY A	QTY B	QTY C	QTY D
1	1658849	Label (Joystick)	1	1	..	..
2	1301411	Label (Hoist)	..	..	1	1
3	1301410	Label (Tilt)	..	..	1	1
4	. . . . .	Lift/Lower Control	..	..	1	1
5	. . . . .	Tilt Control	..	..	1	1
6	2043476	Label (Extend and Retract)	..	..	1	1
7	. . . . .	Blank	..	..	1	1
8	2068981	Label (Slewing And Power Pile Slope)	..	..	1	1
9	2043470	Label (Side-Shift)	..	..	1	1
10	2046600	Label (Twist Lock And Unlock)	..	..	1	..
11	. . . . .	Horn Switch	..	..	1	1

©2010 HYSTER COMPANY

NOTES

©2010 HYSTER COMPANY

DELUXE SUSPENSION SEAT (FIGURE 1-47)

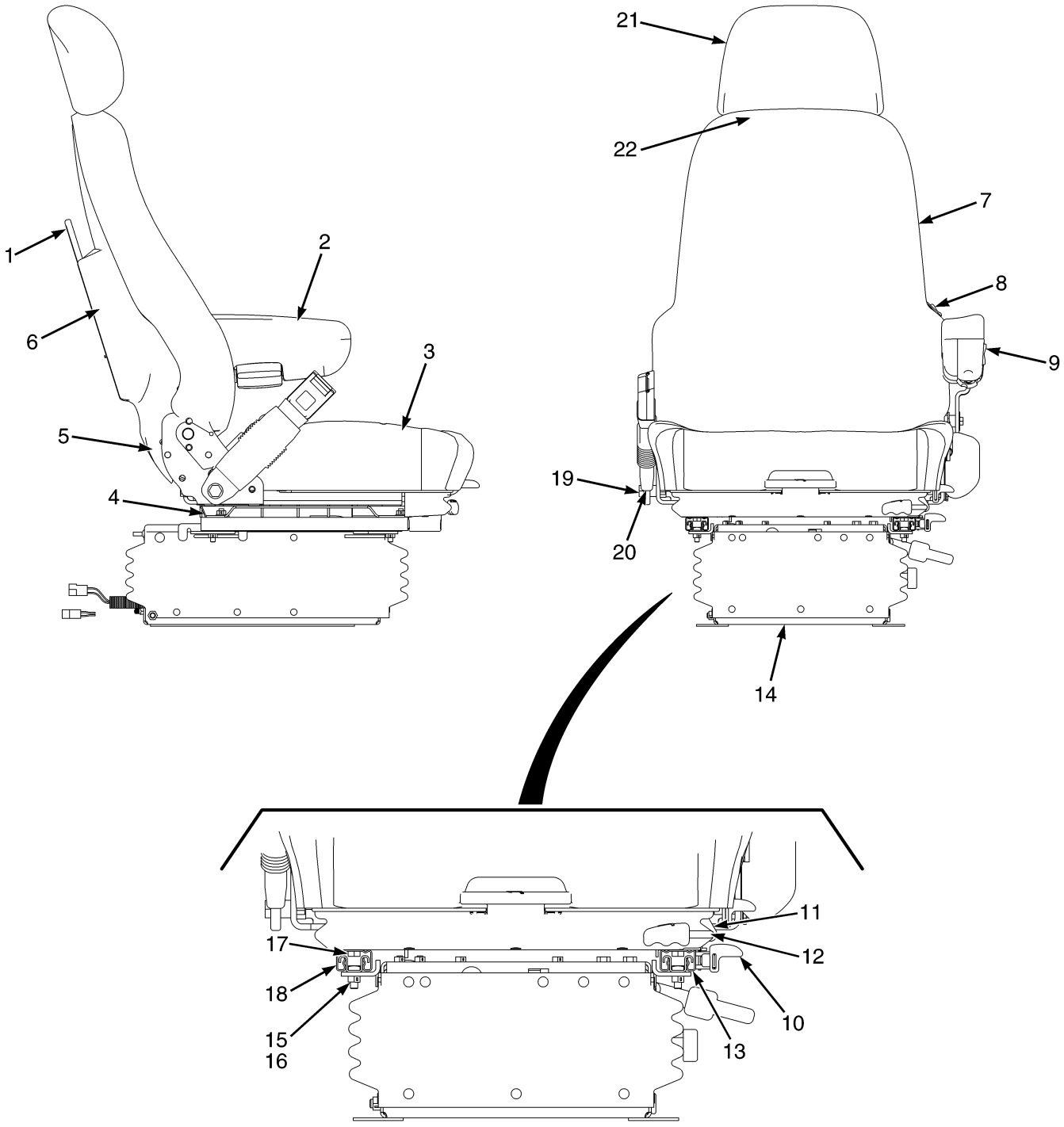

©2010 HYSTER COMPANY

DELUXE SUSPENSION SEAT

ITEM	PART NO.	DESCRIPTION	QTY
	4006338	Seat-Full Suspension Assembly (Deluxe)	1
1	1482948	Box (Book)	1
2	4007739	Kit-Armrest (Left Hand)	1
3	4007748	Seat Cushion	1
4	1482994	Plate (Adapter)	1
5	4007741	Kit -Seat Top	1
6	1482925	Plate (Book Box)	1
7	4007740	Cushion (Back)	1
8	4007749	Switch (Electric Air Lumbar)	1
8	4007747	Plug (Lumbar)	1
9	4007750	Switch (Valve)	1
10	4007745	Knob (Slide Lever)	1
10	1482979	Lever (Slide)	1
11	4007746	Rod (Latch)	1
12	1615125	Roll Pin	1
13	1482999	Seat Rail	1
14	4007751	Kit-Suspension	1
15	1482990	Bolt	4
16	1482917	Locknut	13
17	1482951	Bolt	8
18	1483000	Seat Rail	1
19	292528	Capscrew	2
20	1615064	Spacer	1
21	4007742	Headrest	1
22	1615149	Guide Assembly	2
	a 1482949	Screw (Pan Head)	4
	a 1584643	Screw (Truss Head)	4
	a 4007743	Knob (Recliner)	1
	a 4007744	Knob (Slide)	1
	a 1482981	Locknut	1
	a 1482997	Bracket (Support)	1
	a 1482980	Washer (0.05 mm)	1
	a 1482995	Washer (0.07 mm)	9
	a 1615063	Washer (0.08 mm)	6

FOOTNOTES:

a Not Illustrated

©2010 HYSTER COMPANY

SUSPENSION SEAT (FIGURE 1-48)

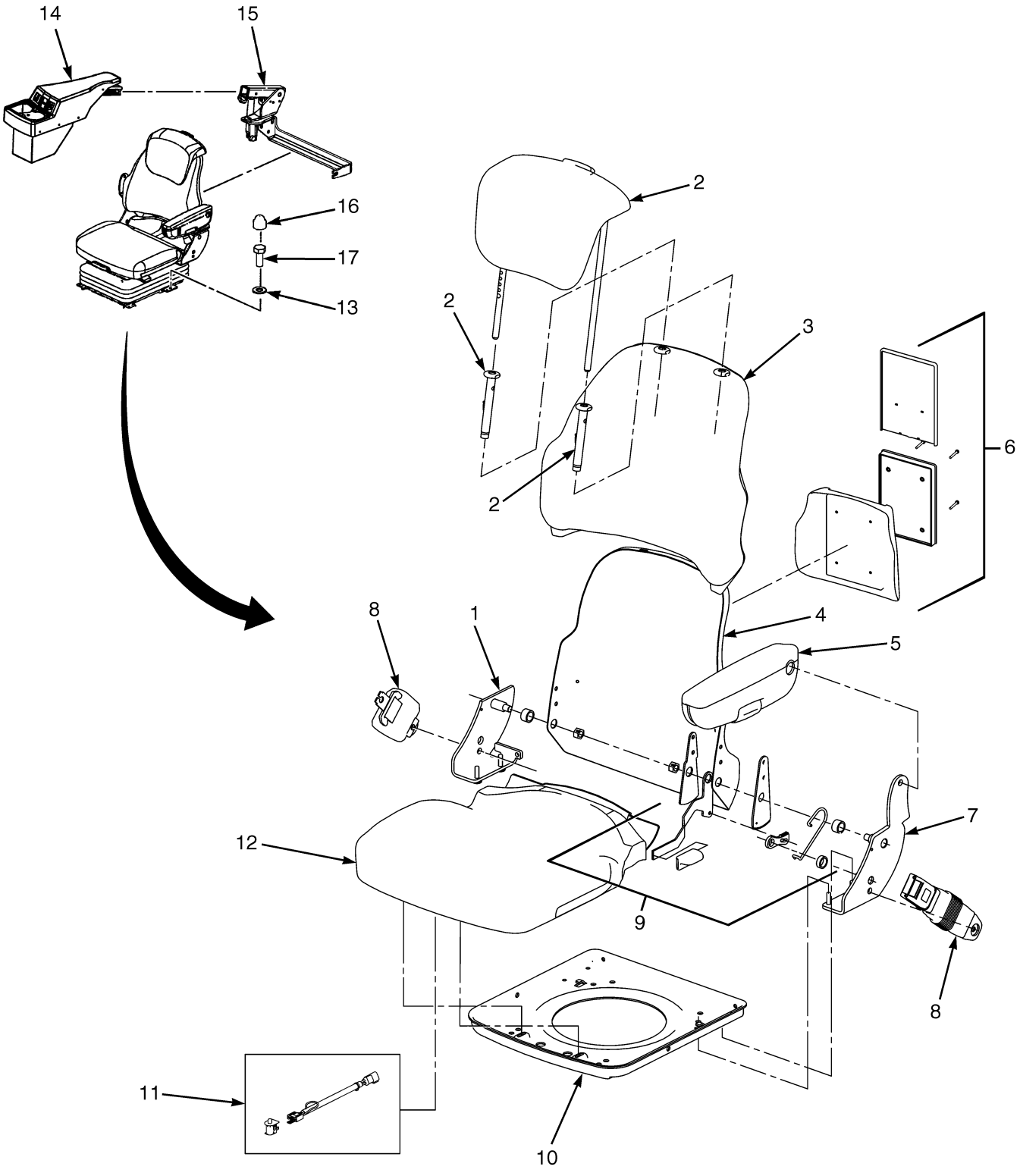

©2010 HYSTER COMPANY

SUSPENSION SEAT

KEY:
A: Fabric Cover
B: Vinyl Cover

ITEM	PART NO.	DESCRIPTION	QTY A	QTY B
	b 1603522	Seat-Full Suspension (Mechanical Suspension) (Fabric Cover)	1	..
	1603521	Seat-Full Suspension (Mechanical Suspension) (Vinyl Cover)	..	1
	b 1603524	Seat-Full Suspension (Air Suspension) (Fabric Cover)	1	..
	1603523	Seat-Full Suspension (Air Suspension) (Vinyl Cover)	..	1
	1482798	Seat-Full Suspension (With Armrest)	1	..
	1482954	Seat-Full Suspension (With Armrest)	..	1
	a 1482915	Spacer	1	1
	a 292528	Capscrew	1	1
	a 1482917	Locknut	4	4
	a 1615073	Bolt	4	4
1	1482974	Kit-Bracket (RH)	1	1
1	1482806	Bracket	1	1
1	1482917	Locknut	3	3
1	1482951	Bolt	1	1
1	1482919	Locknut	2	2
1	1482924	Screw	2	2
1	1482952	Clip	2	2
1	1482953	Strap Clamp	1	1
2	1615147	Kit-Back/Headrest Cushion	1	..
2	**c** 1574082	Headrest	1	..
2	**d** 1692151	Seat Cushion	1	..
2	1615149	Guide Assembly	2	..
2	1615150	Kit-Back/Headrest Cushion	..	1
2	1574081	Cushion	..	1
2	1615149	Guide Assembly	..	2
3	1482957	Seat Back Cushion Assy, Cloth	1	..
3	1482802	Cushion	1	..
3	1482924	Screw	2	..
3	1482958	Seat Back Cushion Assy, Vinyl	..	1
3	1482955	Seat Cushion	..	1
3	1482924	Screw	..	2
4	1482959	Kit-Back Pan	1	1
4	1615056	Pan	1	1
4	1482917	Locknut	8	8
4	1482919	Locknut	2	2
4	1482924	Screw	2	2
4	1615057	Bolt	1	1
4	1482913	Connector	6	6
5	1482960	Armrest (LH)	1	1
5	1482804	Armrest	1	1
5	1482919	Locknut	1	1
5	292528	Capscrew	1	1
5	1482920	Washer	2	2
5	1482961	Screw	1	1
6	1467522	Information Case	1	1
6	1470155	Information Case (Kit) (Alternate Part)	1	1

©2010 HYSTER COMPANY

SUSPENSION SEAT

KEY:
A: Fabric Cover
B: Vinyl Cover

ITEM	PART NO.	DESCRIPTION	QTY A	QTY B
6	1482925	Plate (Book Box)	1	1
6	1482948	Box (Book)	1	1
6	1482949	Screw	4	4
6	1482950	Cover	1	1
7	1482969	Kit-Bracket (LH)	1	1
7	1482805	Bracket	1	1
7	1482917	Locknut	3	3
7	1615057	Bolt	1	1
7	292528	Capscrew	1	1
7	1482919	Locknut	2	2
7	1482924	Screw	2	2
7	1482910	Nut	1	1
7	1482952	Clip	2	2
7	1482961	Screw	1	1
7	1482953	Strap Clamp	1	1
8	1615062	Kit-Seat Belt	1	1
8	292528	Capscrew	1	1
8	246001	Capscrew	1	1
8	1615063	Washer	3	3
8	1615064	Spacer	2	2
9	1482970	Kit-Recliner	1	1
9	1467531	Knob	1	1
9	1482904	Lever	1	1
9	1482905	Plate	1	1
9	1482906	Latch	1	1
9	1482907	Cover	1	1
9	1482908	Spring	1	1
9	1482909	Spring	1	1
9	1482919	Locknut	2	2
9	1615057	Bolt	1	1
10	1482971	Kit-Seat Pan	1	1
10	1482801	Seat Pan	1	1
10	1482917	Locknut	12	12
10	1482951	Bolt	6	6
10	1482952	Clip	2	2
10	1482953	Strap Clamp	1	1
10	1615057	Bolt	2	2
10	1482919	Locknut	2	2
11	1615066	Kit-Operator Presence System	1	1
11	1615067	Switch (Operator Presence System)	1	1
11	1615068	Wire Harness (Operator Presence System)	1	1
11	1482953	Strap Clamp	2	2
11	1482952	Clip	2	2
12	1615158	Seat Cushion	1	..
12	1482803	Seat Cushion	1	..
12	1482952	Clip	2	..

See Service Manual for service procedures.
©2010 HYSTER COMPANY

SUSPENSION SEAT

KEY:
A: Fabric Cover
B: Vinyl Cover

ITEM	PART NO.	DESCRIPTION	QTY A	QTY B
12	1482953	Strap Clamp	1	..
12	1615055	Seat Cushion	..	1
12	1482952	Clip	..	2
12	1482953	Strap Clamp	..	1
13	1558035	Lockwasher	4	4
14	1623187	Armrest (Hydraulic Lever)	1	1
14	1634996	Armrest (Joystick) (☞Figure 1-52)	1	1
15	1571627	Armrest	1	1
16	1476584	Cover (Capscrew Head)	4	4
17	136681	Capscrew	4	4
	1561530	Kit-Back/Headrest Cushion	1	..
	1615152	Kit-Cushion	..	1
	a 1687037	Kit-Weight Adjuster	1	1

FOOTNOTES:

a Not Illustrated
b Used with Closed Cab Only
c → 12/2008
d S/N B214E01716G →

©2010 HYSTER COMPANY

SUSPENSION ASSEMBLY (FIGURE 1-49)
AIR

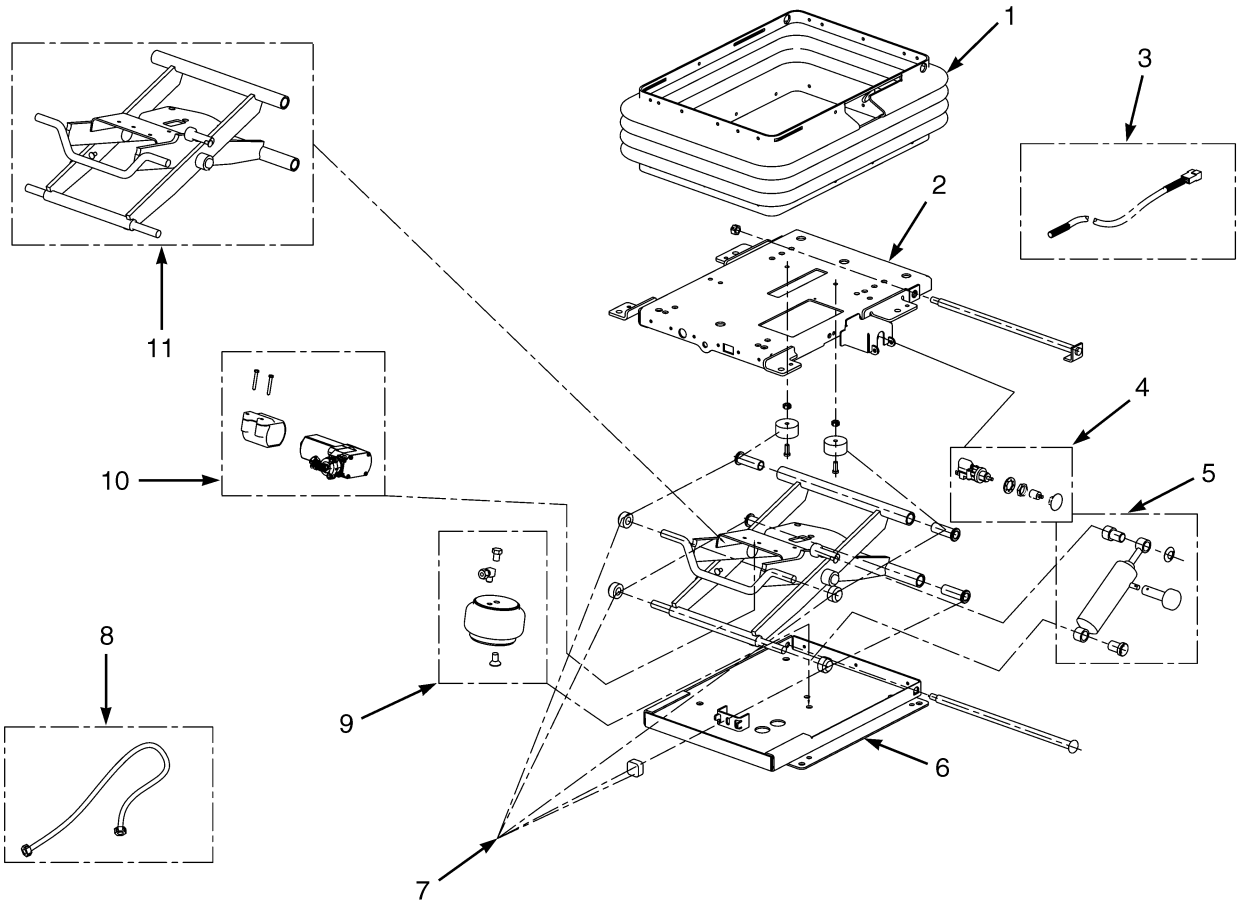

BP120136

©2010 HYSTER COMPANY

SUSPENSION ASSEMBLY
AIR

ITEM	PART NO.	DESCRIPTION	QTY
	1482989	Suspension (Air)	1
1	1483005	Kit-Suspension Boot	1
1	1483006	Boot	1
1	1483003	Clip	22
1	1483004	Nut	3
2	1483042	Kit-Housing (Upper)	1
2	1483043	Housing (Upper)	1
2	1483009	Shaft	1
2	1483010	Nut	1
2	. . . . .	Plug	1
2	1483047	Roll Pin	1
2	1483003	Clip	11
2	1482917	Locknut	4
2	1482990	Bolt	4
2	. . . . .	Bearing	2
3	1483040	Wire Harness Service Kit	1
3	1483041	Wire Harness	1
3	1482953	Strap Clamp	1
3	1483003	Clip	1
3	1483004	Nut	1
4	1615107	Valve (Air)	1
4	. . . . .	Valve Body	1
4	1615109	Lockwasher	1
4	1615110	Nut	1
4	. . . . .	Knob (Air Valve)	1
4	1615111	Connector	1
4	1483047	Roll Pin	2
4	1615105	Handle (Control Valve)	1
4	1615106	Knob (Air Control Valve)	1
5	1483049	Gas Spring Kit	1
5	1615129	Shock Absorber	1
5	. . . . .	Fastener	1
5	1615124	Knob (Adjuster)	1
5	1615125	Roll Pin	1
5	1615126	Bushing (Shock) (Upper)	1
5	1615127	Bushing (Shock) (Lower)	1
5	1615128	Spring	1
6	1483050	Kit-Housing (Lower)	1
6	1483051	Housing (Lower)	1
6	1483009	Shaft	1
6	1483010	Nut	1
6	1483029	Rubber Bellow	3
6	1483003	Clip	9
6	1483004	Nut	3
6	1615131	Bumper (Rubber)	1
6	1483058	Screw	1
7	1483052	Kit-Bearing (Suspension)	1
7	1483031	Roller	4
7	1483053	Bumper	2
7	1483054	Screw	2

©2010 HYSTER COMPANY

SUSPENSION ASSEMBLY
AIR

ITEM	PART NO.	DESCRIPTION	QTY
7	1483055	Nut	2
7	. . . . .	Bearing	4
7	1482990	Bolt	4
7	1483010	Nut	2
7	1483003	Clip	9
7	1483004	Nut	3
7	1482953	Strap Clamp	1
7	1615132	Bumper	2
7	1615126	Bushing	1
7	1615127	Bushing	1
7	. . . . .	Fastener	1
7	1482980	Washer	4
8	1483061	Kit-Air Hose	1
8	1483062	Hose	1
8	1615111	Connector	1
8	1483060	Fitting	1
8	1615138	Cap	1
8	1615139	O-Ring	1
9	1483056	Kit-Spring (Air)	1
9	1483057	Spring	1
9	1483058	Screw	1
9	1483059	Bolt	1
9	1483060	Fitting	1
9	1615136	Clip	1
9	1483062	Hose	1
9	1483003	Clip	10
9	1483004	Nut	3
9	1615137	Screw	1
10	1528714	Kit-Compressor	1
10	1615140	Compressor (24 Volt)	1
10	1615141	Bracket (Plastic)	1
10	1483067	Screw	2
10	1483062	Hose	1
10	1615111	Connector	1
10	1483060	Fitting	1
11	1615143	Kit-Service Susp Scissors	1
11	1615144	Scissor	1
11	1615126	Bushing (Shock) (Upper)	1
11	1615127	Bushing (Shock) (Lower)	1
11	1483031	Roller	4
11	. . . . .	Bearing	4
11	. . . . .	Fastener	1

©2010 HYSTER COMPANY

NOTES

©2010 HYSTER COMPANY

SUSPENSION ASSEMBLY (FIGURE 1-50)
MECHANICAL

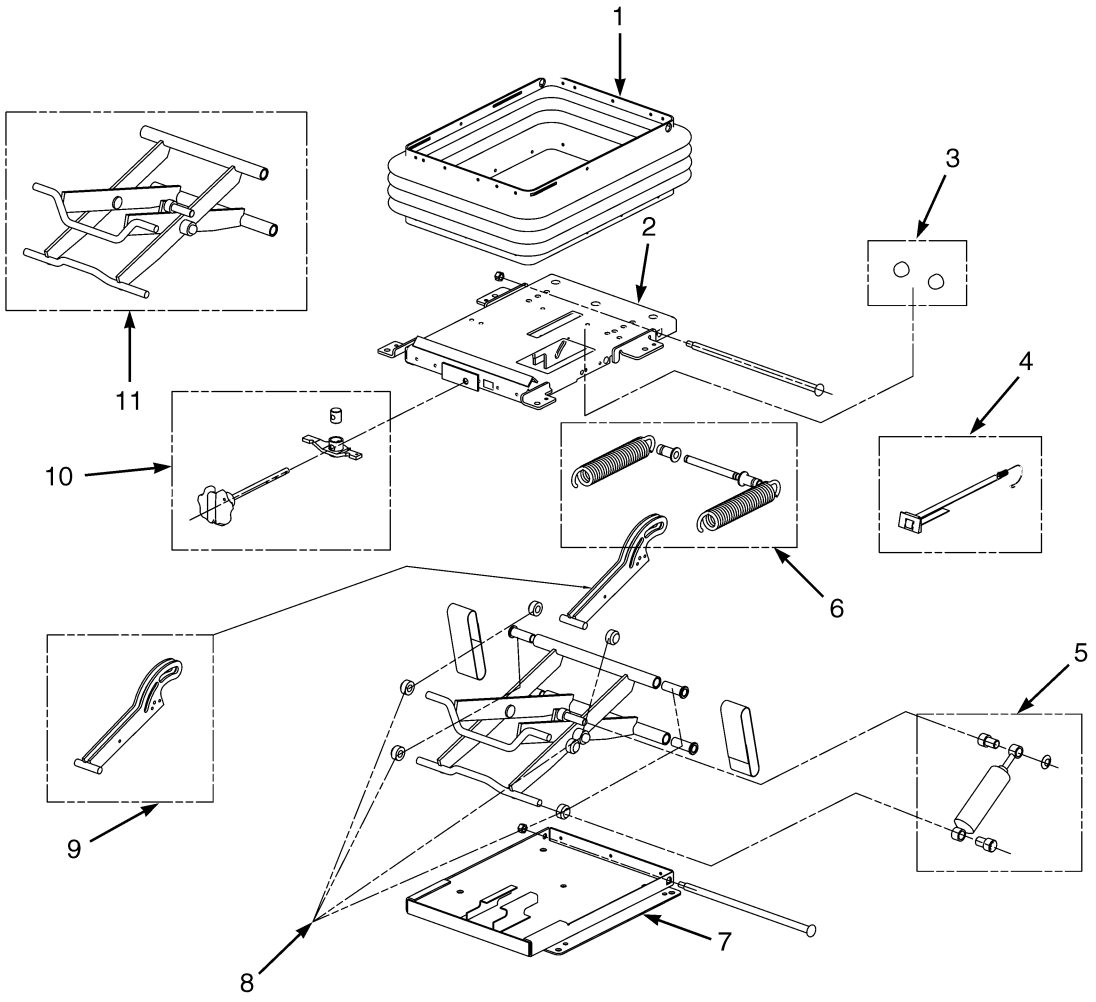

BP120179

©2010 HYSTER COMPANY

SUSPENSION ASSEMBLY
MECHANICAL

ITEM	PART NO.	DESCRIPTION	QTY
	1482992	Suspension (Mechanical)	1
1	1483001	Kit-Suspension Boot	1
1	1483002	Boot	1
1	1483003	Clip	18
1	1483004	Nut	3
2	1483007	Kit-Housing (Upper)	1
2	1483008	Housing	1
2	1483009	Shaft	1
2	1483010	Nut	1
2	1483003	Clip	9
2	1483011	Roll Pin	1
2	1482917	Locknut	4
2	1482990	Bolt	4
2	1615075	Pin	2
2	1615076	Pin	1
2	1615077	Clip	4
2	1615078	Clip	2
2	1615079	Cam Follower	1
3	1483012	Kit-Bumper	1
3	1483013	Spring	2
3	1483388	Nut	2
4	1483020	Tape	1
4	1483021	Spring	1
4	1483022	Tape	1
4	1483023	Guide	1
4	1483014	Rivet	1
5	1483024	Gas Spring	1
5	1483025	Shock Absorber	1
5	. . . . .	Fastener	1
5	1483026	Bushing	2
5	1615126	Bushing (Alternate Part)	2
6	1483015	Kit-Spring	1
6	1483016	Spring	2
6	. . . . .	Retaining Ring	2
6	1483017	Bushing	2
6	1483018	Spacer	2
6	1483019	Spring	1
7	1483027	Kit-Housing (Lower)	1
7	1483028	Housing	1
7	1483009	Shaft	1
7	1483010	Nut	1
7	1483029	Rubber Bellow	3
7	1483003	Clip	9
7	1483004	Nut	3
7	1483031	Roller	4
8	1483030	Kit-Bearing	1
8	1483031	Roller	6
8	. . . . .	Bearing	4
8	1483026	Bushing	2
8	1615126	Bushing (Alternate Part)	2

©2010 HYSTER COMPANY

SUSPENSION ASSEMBLY
MECHANICAL

ITEM	PART NO.	DESCRIPTION	QTY
9	1483032	Arm	1
9	1483033	Arm	1
9	1615075	Pin	2
9	1615076	Pin	1
9	1615077	Clip	4
9	. . . . .	Retaining Ring	2
9	1615078	Clip	2
9	1615079	Cam Follower	1
9	1483018	Spacer	2
9	. . . . .	Bearing	2
9	1483031	Roller	2
10	1483034	Knob	1
10	1483036	Knob	1
10	1483011	Roll Pin	1
11	1483037	Kit-Service Susp Scissors	1
11	1483039	Scissor	1
11	1483031	Roller	4
11	. . . . .	Bearing	4
11	1483026	Bushing	2
11	1615126	Bushing (Alternate Part)	2
11	1483010	Nut	2
11	. . . . .	Fastener	1

©2010 HYSTER COMPANY

NOTES

©2010 HYSTER COMPANY

ARMREST ASSEMBLY (FIGURE 1-51)
HYDRAULIC LEVERS

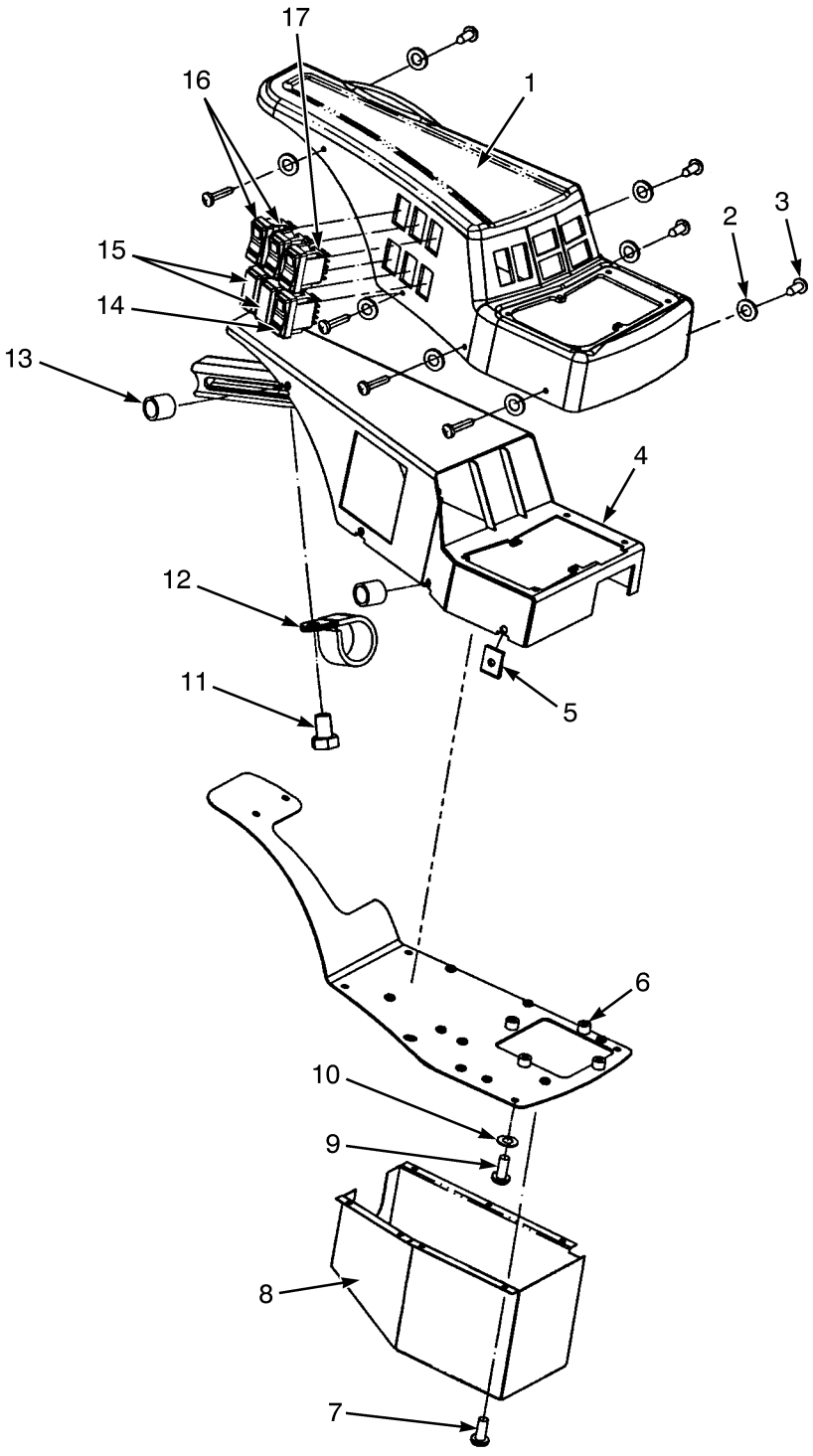

HP121194

©2010 HYSTER COMPANY

ARMREST ASSEMBLY
HYDRAULIC LEVERS

ITEM	PART NO.	DESCRIPTION	QTY
	1623187	Armrest	1
1	1637451	Cover	1
2	1492140	Washer	8
3	1468319	Screw	8
4	1637449	Frame	1
5	1492139	Nut	8
6	1637450	Plate	1
7	302023	Screw	7
8	1637391	Cover	1
9	1637393	Screw	6
10	1468321	Washer (Plastic)	6
11	1571775	Screw	1
12	1493486	Clamp	1
13	1571776	Washer	2
14	2043354	Switch (Window Washer)	1
15	1498383	Plug (Switch)	2
16	2043353	Switch (Top And Rear)	2
17	2043352	Switch (Front)	1

©2010 HYSTER COMPANY

ARMREST ASSEMBLY (FIGURE 1-52)
JOYSTICK

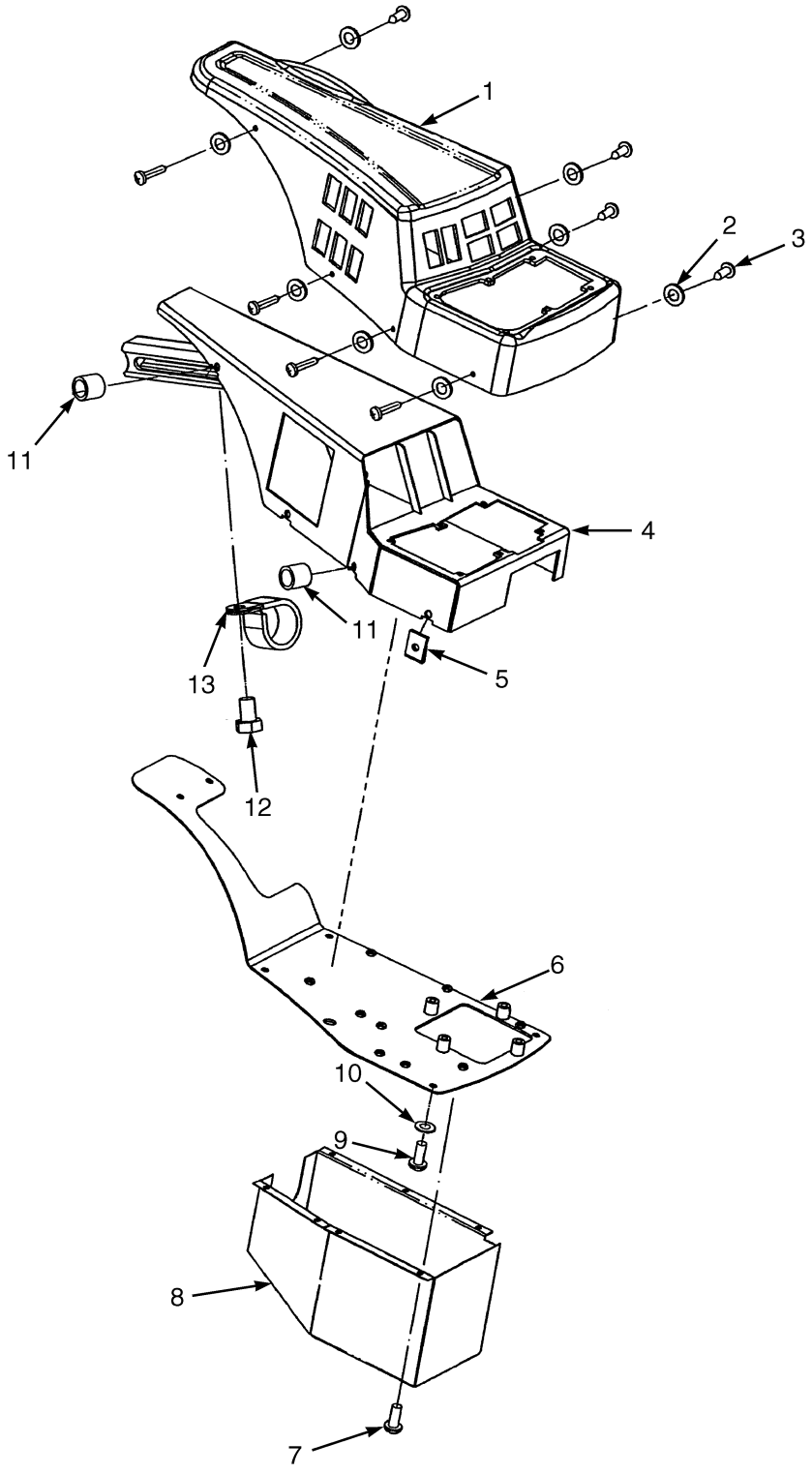

HP120992

©2010 HYSTER COMPANY

ARMREST ASSEMBLY
JOYSTICK

ITEM	PART NO.	DESCRIPTION	QTY
	1634996	Armrest	1
1	1637392	Cover (Armrest)	1
2	1492140	Washer	8
3	1468319	Screw	8
4	1637395	Frame (Armrest)	1
5	1492139	Nut	8
6	1637394	Plate	1
7	302023	Screw	7
8	1637391	Cover (Joystick)	1
9	1637393	Screw	6
10	1468321	Washer (Plastic)	6
11	1571776	Washer	2
12	1571775	Screw	1
13	1493486	Clamp	1

©2010 HYSTER COMPANY

PIVOT ARM ASSEMBLY (FIGURE 1-53)

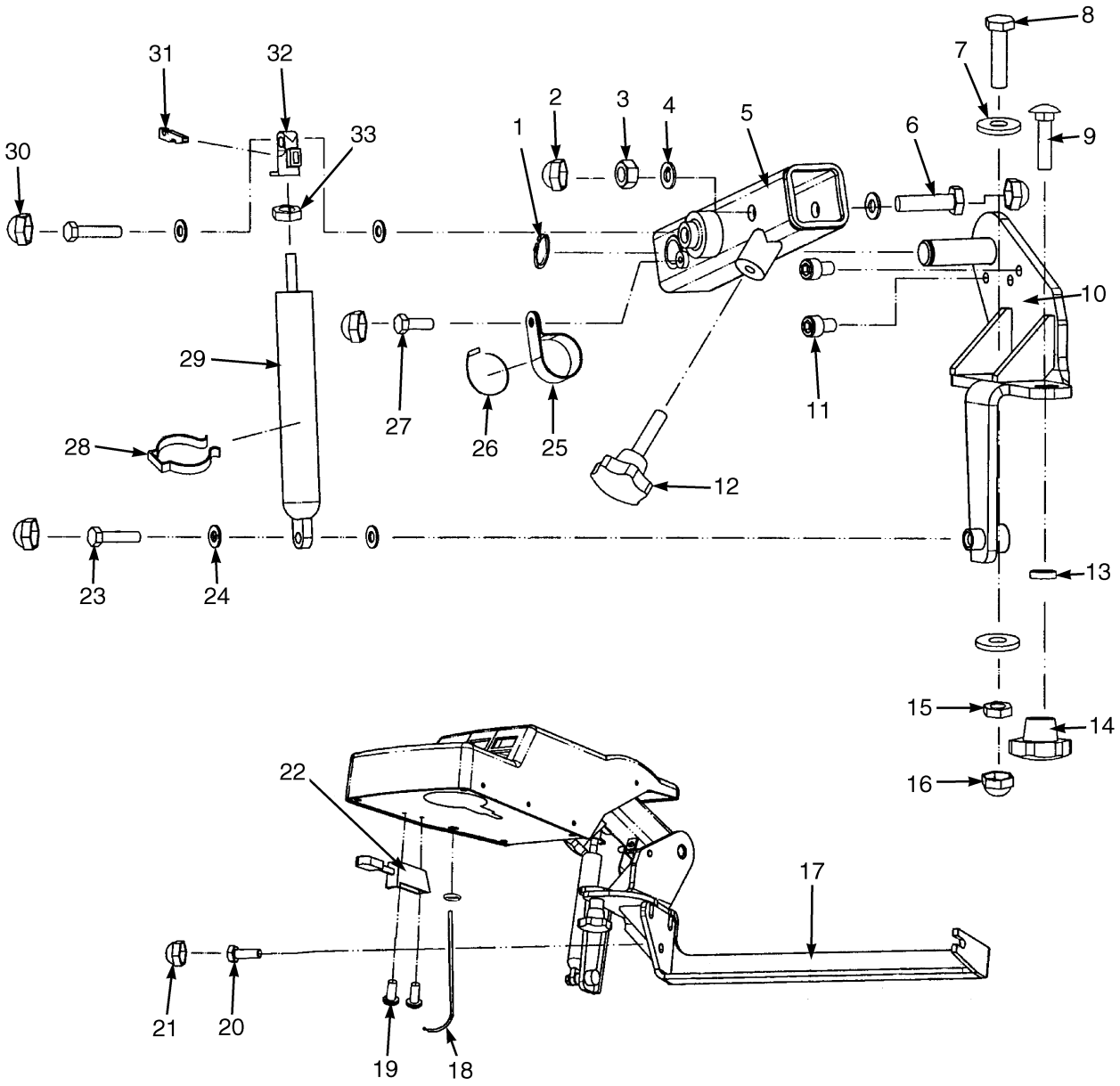

HP120779

©2010 HYSTER COMPANY

PIVOT ARM ASSEMBLY

ITEM	PART NO.	DESCRIPTION	QTY
	1571627	Armrest	1
1	1498385	Retaining Ring	1
2	1493397	Cover (Capscrew Head)	2
3	316834	Nut	1
4	1476421	Washer	2
5	1534475	Tube	1
6	1506669	Screw	1
7	1571029	Washer	3
8	287837	Capscrew	1
9	1493499	Screw	1
10	1534474	Console	1
11	296010	Capscrew	2
12	1493494	Knob (Star Grip)	1
13	1498338	Washer	2
14	1534476	Knob	1
15	1506827	Nut	1
16	1493474	Cover (Capscrew Head)	1
17	1534481	Console	1
18	1530386	Cable	1
19	1498357	Screw	2
20	136985	Capscrew	3
21	1493312	Cap (Capscrew Head)	3
22	1571030	Lever Assembly (Armrest Release)	1
23	132861	Capscrew	2
24	296419	Washer	4
25	1493498	Clamp	1
26	1506825	Strap Clamp	2
27	287805	Capscrew	1
28	1498356	Clip	1
29	1530385	Gas Spring	1
30	1476584	Cover (Capscrew Head)	3
31	1534477	Lever (Release)	1
32	1534425	Rod End	1
33	1539034	Nut	1

©2010 HYSTER COMPANY

RADIO PREPARATION (FIGURE 1-54)

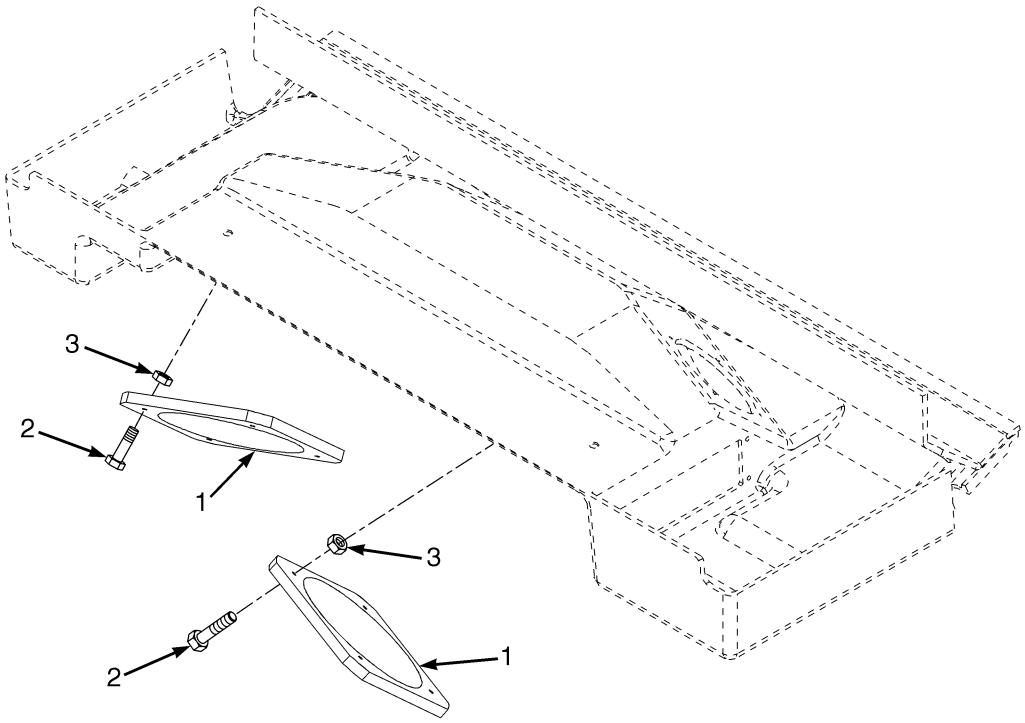

BP120665

ITEM	PART NO.	DESCRIPTION	QTY
1	1598421	Cover (Speaker)	2
2	1703737	Screw	8
3	1492139	Nut	8
	a 4009587	Loudspeaker	2
	a 4009588	Antenna	1

FOOTNOTES:

a Not Illustrated

©2010 HYSTER COMPANY

NOTES

©2010 HYSTER COMPANY

AIR HORN (FIGURE 1-55)

(→ S/N B214E01745G (CLOSED CAB WITH HEATER)) (→ S/N B214E01743G (CLOSED CAB WITH AIRCO))

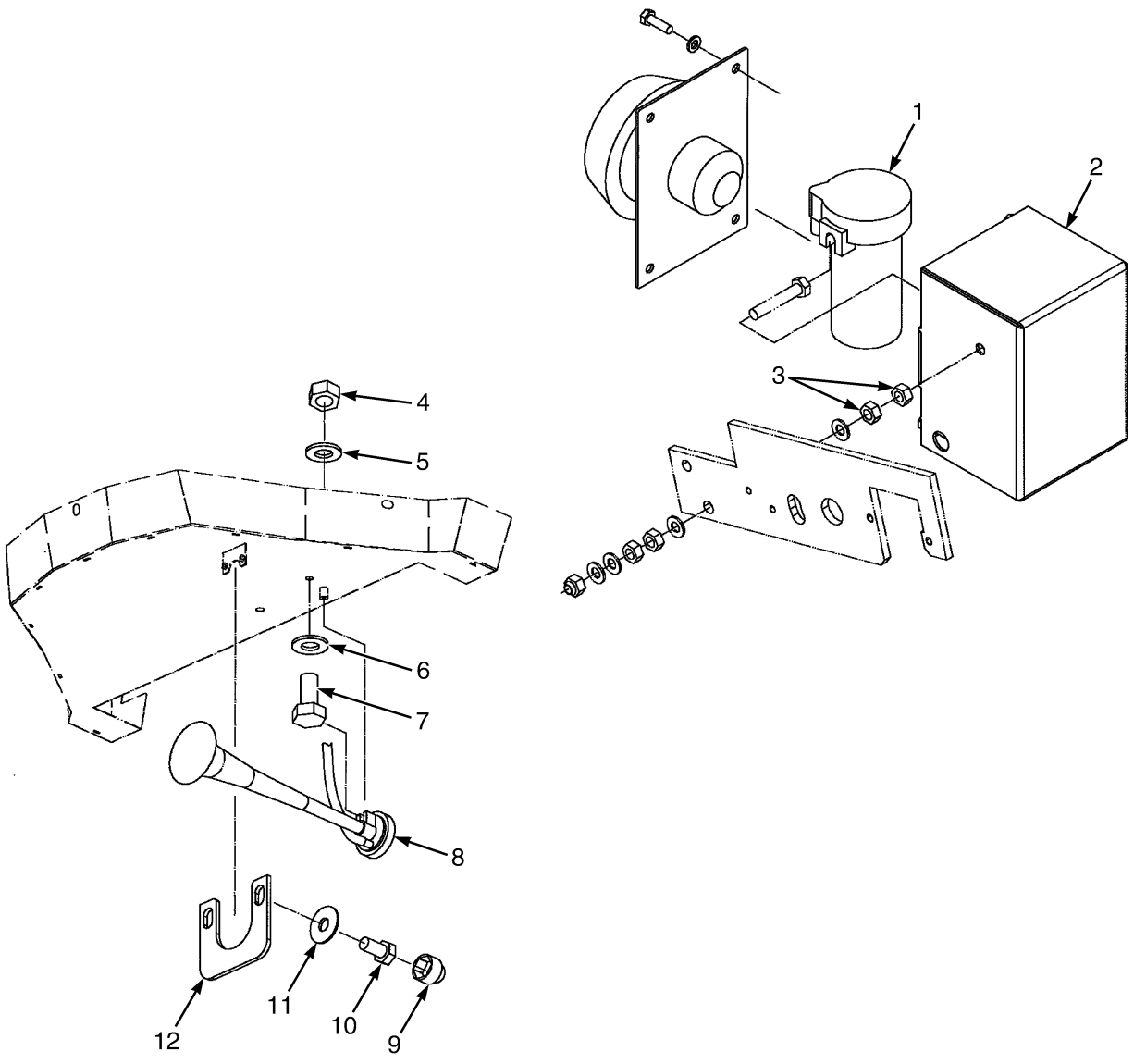

©2010 HYSTER COMPANY

AIR HORN

(→ S/N B214E01745G (CLOSED CAB WITH HEATER)) (→ S/N B214E01743G (CLOSED CAB WITH AIRCO))

ITEM	PART NO.	DESCRIPTION	QTY
1	1571816	Compressor	1
2	1671620	Kit-Service (Air Horn Compressor Box)	1
3	239503	Nut	2
4	316834	Nut	1
5	1476421	Washer	1
6	1534479	Grommet	1
7	1571817	Screw	1
8	1571818	Horn	1
9	1493397	Cover (Capscrew Head)	2
10	292501	Capscrew	2
11	1506738	Washer	2
12	1571815	Bracket	1

©2010 HYSTER COMPANY

AIR HORN (FIGURE 1-56)

(S/N B214E01746G ↔ 12/2009 (CLOSED CAB WITH HEATER))
(S/N B214E01744G ↔ 12/2009 (CLOSED CAB WITH AIRCO))

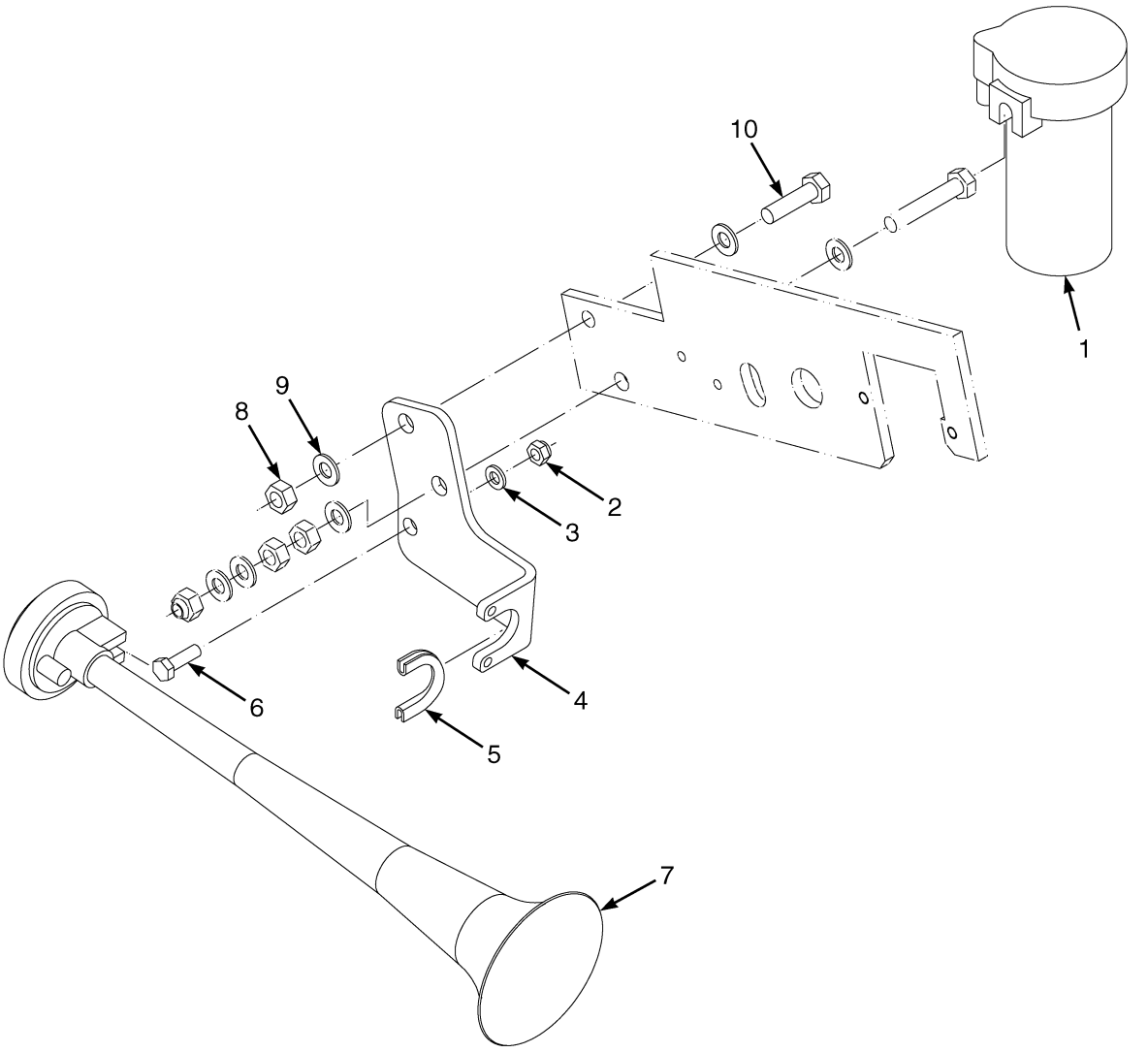

©2010 HYSTER COMPANY

AIR HORN

(S/N B214E01746G ↔ 12/2009 (CLOSED CAB WITH HEATER))
(S/N B214E01744G ↔ 12/2009 (CLOSED CAB WITH AIRCO))

ITEM	PART NO.	DESCRIPTION	QTY
1	1571816	Compressor	1
2	316834	Nut	1
3	320156	Washer	1
4	1635011	Plate	1
5	1492167	Trim-Bulk	AR
6	292501	Capscrew	4
7	1571818	Horn	1
8	239503	Nut	2
9	320158	Washer	3
10	136749	Screw	1

©2010 HYSTER COMPANY

AIR HORN (FIGURE 1-57)

(12/2009 →)

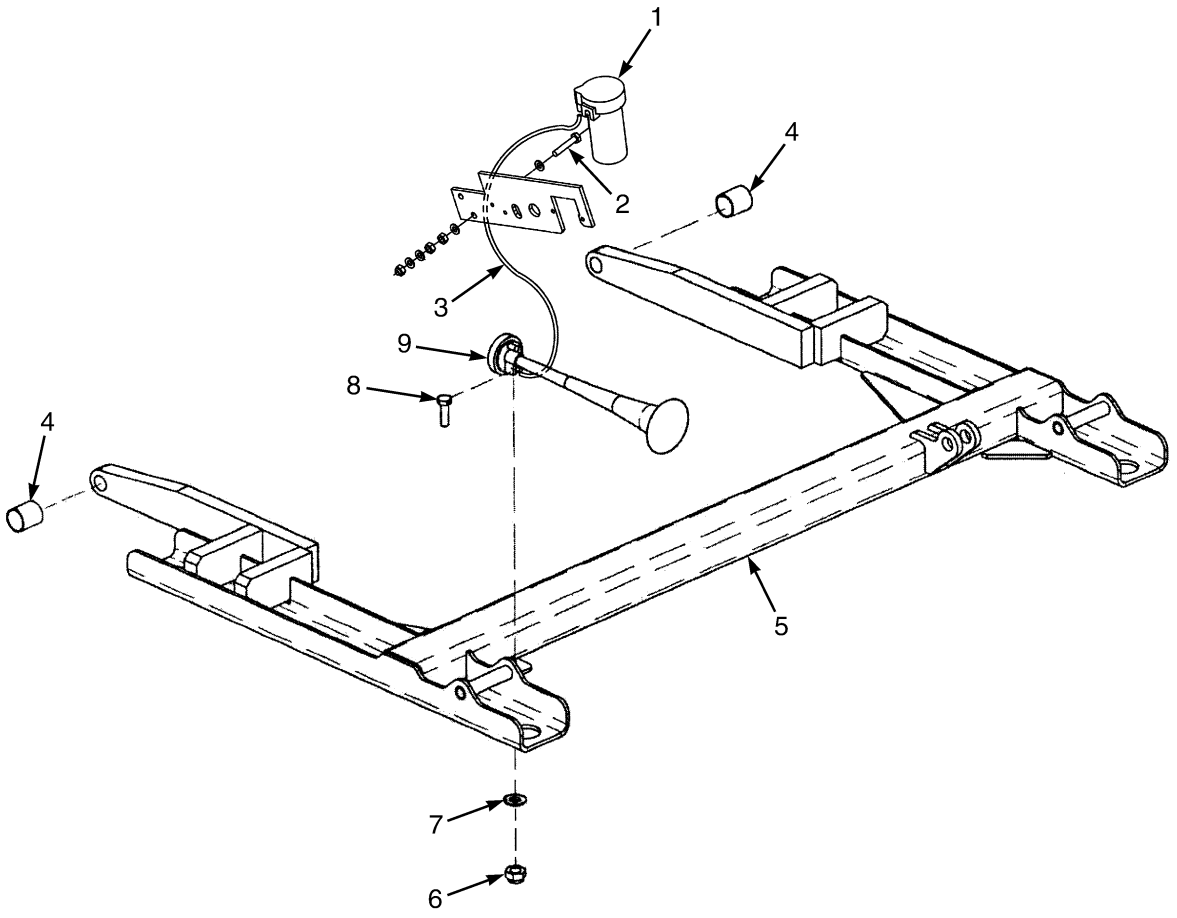

©2010 HYSTER COMPANY

AIR HORN

(12/2009 →)

ITEM	PART NO.	DESCRIPTION	QTY
1	1571816	Compressor	1
2	1558038	Screw	1
3	4016715	Hose	AR
4	1493380	Bearing	2
5	1635999	Tilt frame	1
6	316834	Nut	1
7	320156	Washer	1
8	292501	Capscrew	2
9	1571818	Horn	1

©2010 HYSTER COMPANY

LOUVER (FIGURE 1-58)
CLIMATE CONTROL CAB

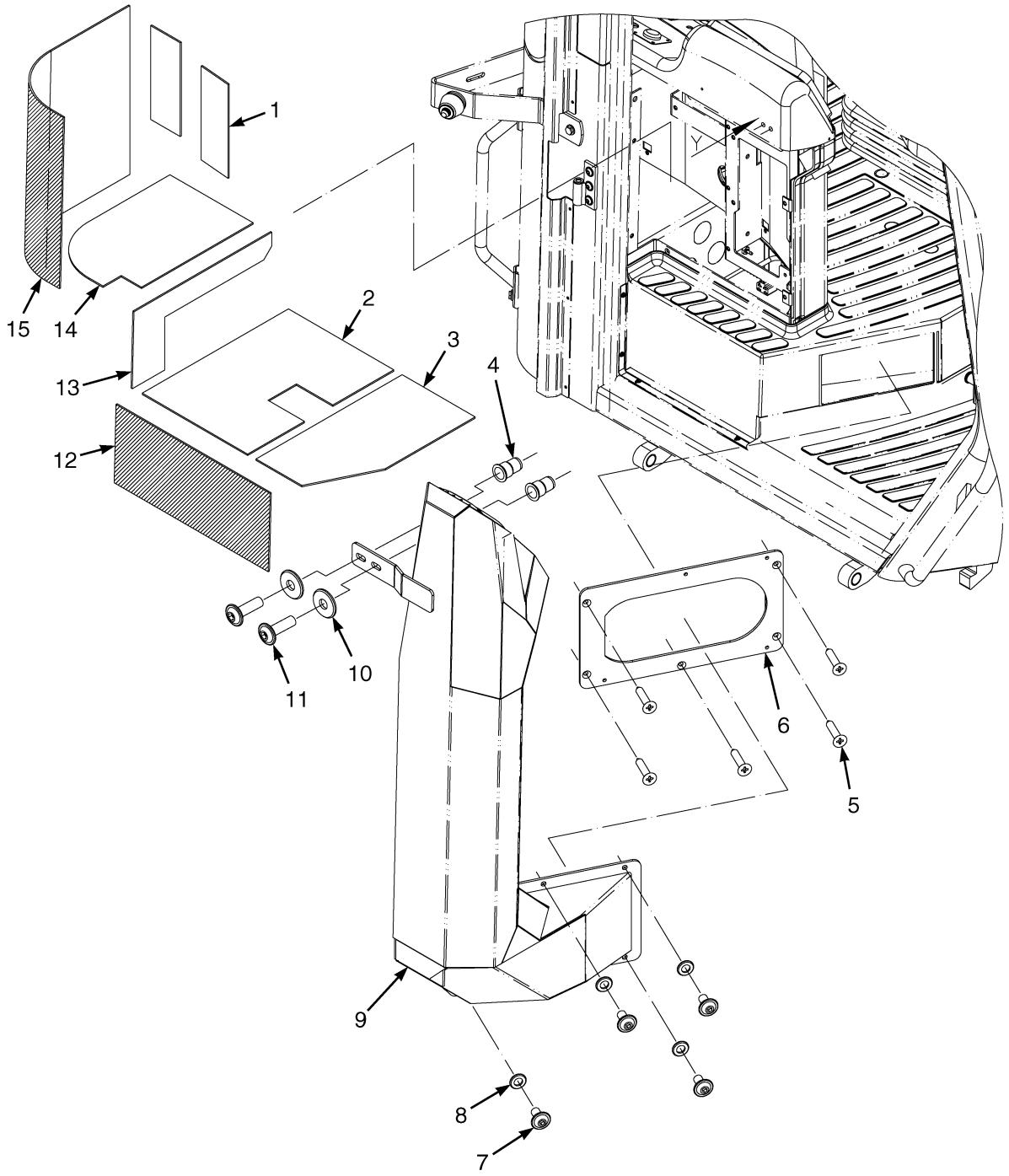

©2010 HYSTER COMPANY

LOUVER
CLIMATE CONTROL CAB

ITEM	PART NO.	DESCRIPTION	QTY
1	4021193	Insulation Mat (Air Duct)	2
2	4021205	Insulation Mat (Rear Floor Plate)	1
3	4021206	Insulation Mat (Front Floor Plate)	1
4	4021199	Nut	2
5	4021197	Screw	5
6	4021207	Adapter	1
7	4021198	Screw	4
8	1508258	Washer	4
9	4021196	Air Duct (☞Figure 1-59)	1
10	1468321	Washer (Plastic)	2
11	4021200	Screw	2
12	4021204	Insulation Mat (RH Floor Plate)	1
13	4021203	Insulation	1
14	4021202	Insulation Mat (Top Floor Plate)	1
15	4021201	Insulation Mat (Rear Panel)	1

©2010 HYSTER COMPANY

AIR DUCT (FIGURE 1-59)
LOUVER, CLIMATE CONTROL CAB

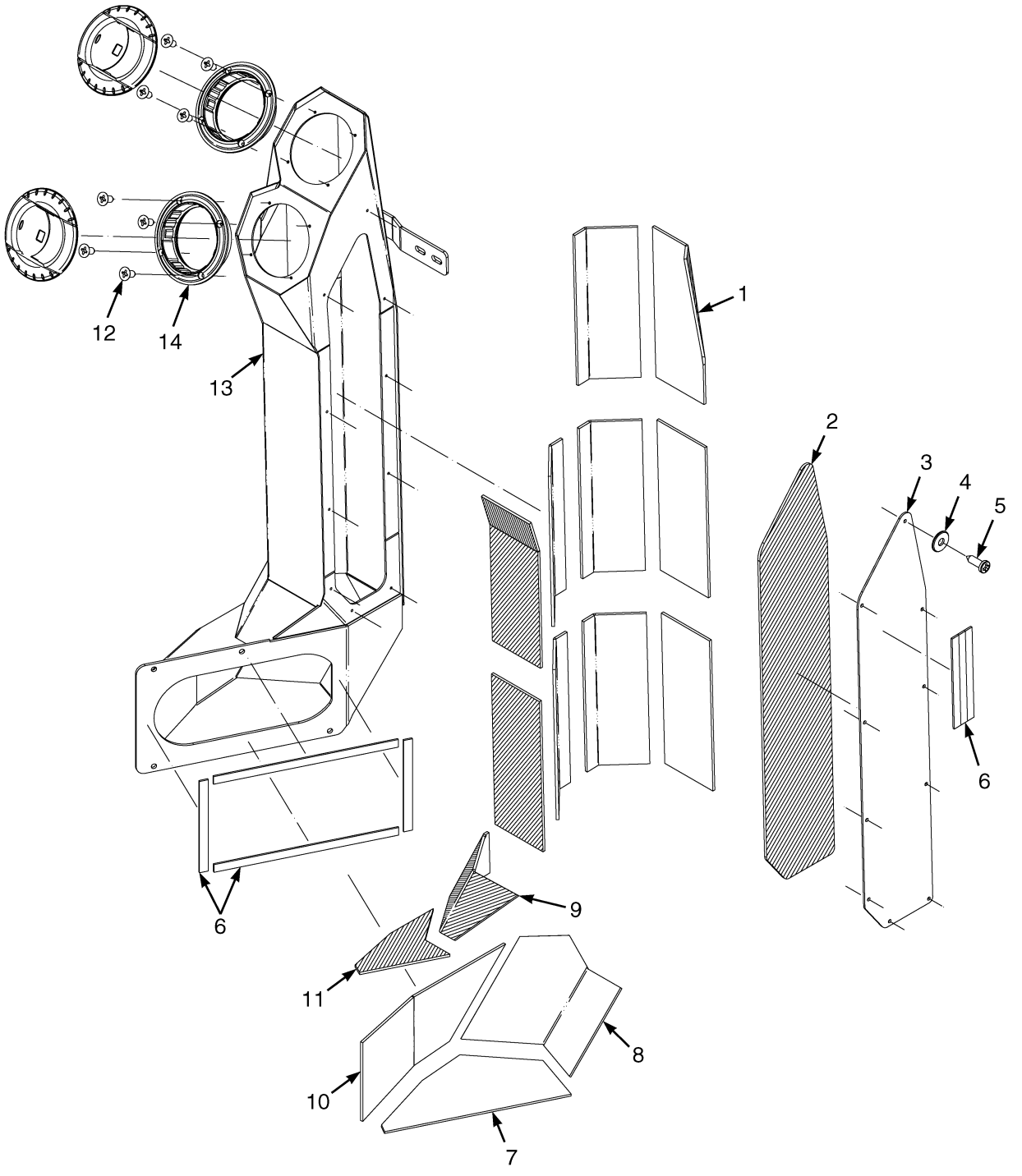

©2010 HYSTER COMPANY

AIR DUCT
LOUVER, CLIMATE CONTROL CAB

ITEM	PART NO.	DESCRIPTION	QTY
	4021196	Air Duct	1
1	4021193	Insulation Mat (Air Duct)	10
2	4021187	Insulation Mat (Air Duct Cover)	1
3	4021186	Cover Plate	1
4	1492140	Washer	10
5	4021188	Screw	10
6	4021195	Seal	AR
7	4021189	Insulation Mat (Air Cowl, Bottom)	1
8	4021192	Insulation Mat (Air Cowl, RH)	1
9	4021194	Insulation Mat (Air Cowl, Top)	1
10	4021190	Insulation Mat (Air Cowl, LH)	1
11	4021191	Insulation Mat (Air Cowl, Top)	1
12	1498363	Screw	8
13	4021185	Air Duct	1
14	1598398	Louver (Air)	2

©2010 HYSTER COMPANY

SEAT ASSEMBLY (FIGURE 1-60)
CLIMATE CONTROL CAB

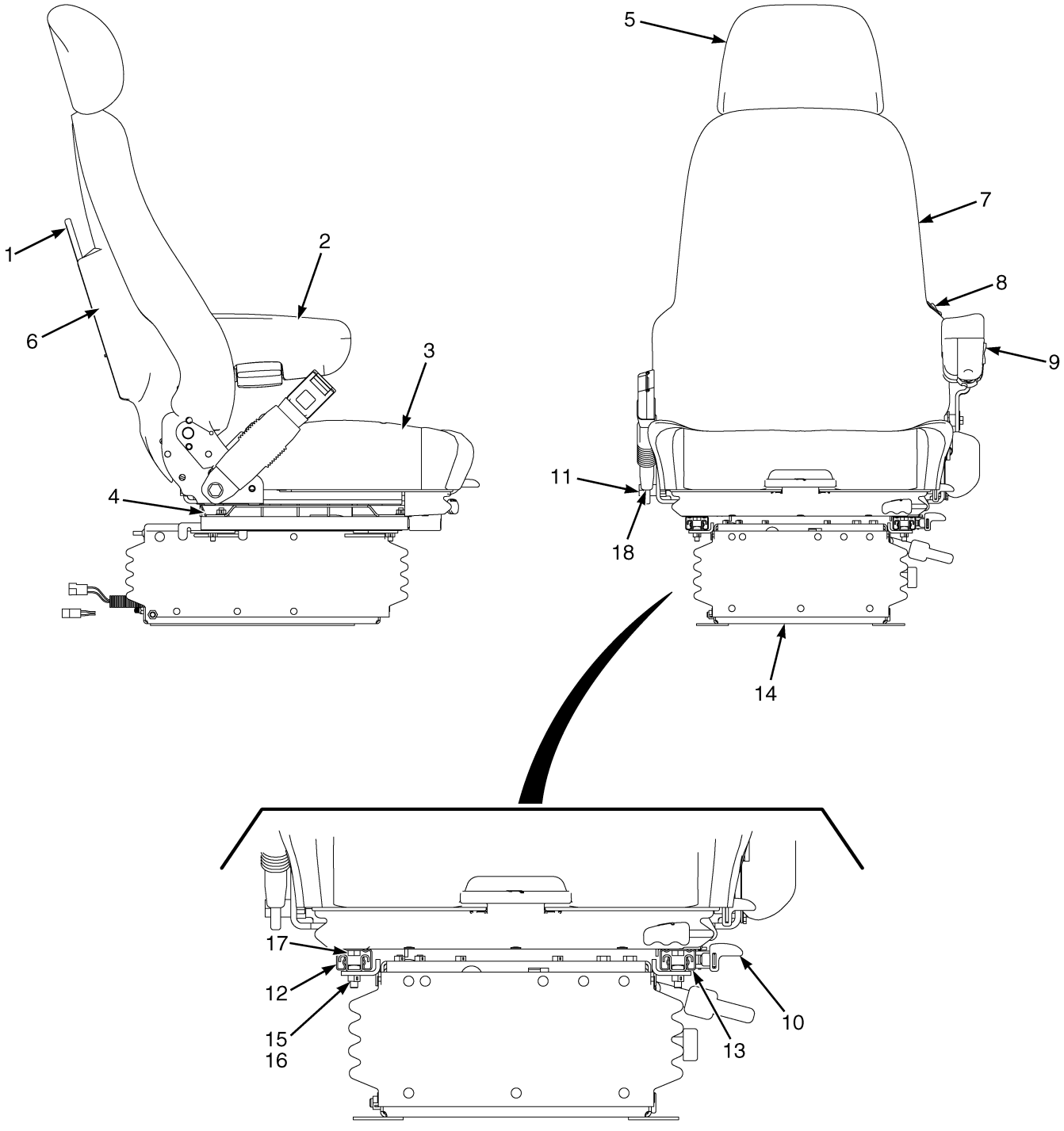

©2010 HYSTER COMPANY

SEAT ASSEMBLY
CLIMATE CONTROL CAB

ITEM	PART NO.	DESCRIPTION	QTY
	4013486	Seat Assy	1
1	1482948	Box (Book)	1
2	4021118	Kit-Armrest	1
2	4021119	Switch	1
3	4007748	Seat Cushion	1
4	1482994	Plate (Adapter)	1
5	4007742	Headrest	1
6	1482925	Plate (Book Box)	1
7	4021120	Seat Cushion	1
8	4007749	Switch (Electric Air Lumbar)	1
9	4007750	Switch (Valve)	1
10	4007744	Knob (Slide)	1
10	1482979	Lever (Slide)	1
10	4021125	Washer	3
11	292528	Capscrew	2
12	1483000	Seat Rail	1
13	1482999	Seat Rail	1
13	1482981	Locknut	1
13	1482980	Washer (0.05 mm)	1
14	4020678	Kit-Suspension	1
15	1482990	Bolt	4
16	1482917	Locknut	13
17	1482951	Bolt	8
17	1482997	Bracket (Support)	1
17	1482995	Washer (0.07 mm)	9
18	1615064	Spacer	1
	a 1615063	Washer (0.08 mm)	6
	1482998	Kit-Seat Rail	1

FOOTNOTES:

a Not Illustrated

©2010 HYSTER COMPANY

CLIMATE CONTROL SYSTEM (FIGURE 1-61)

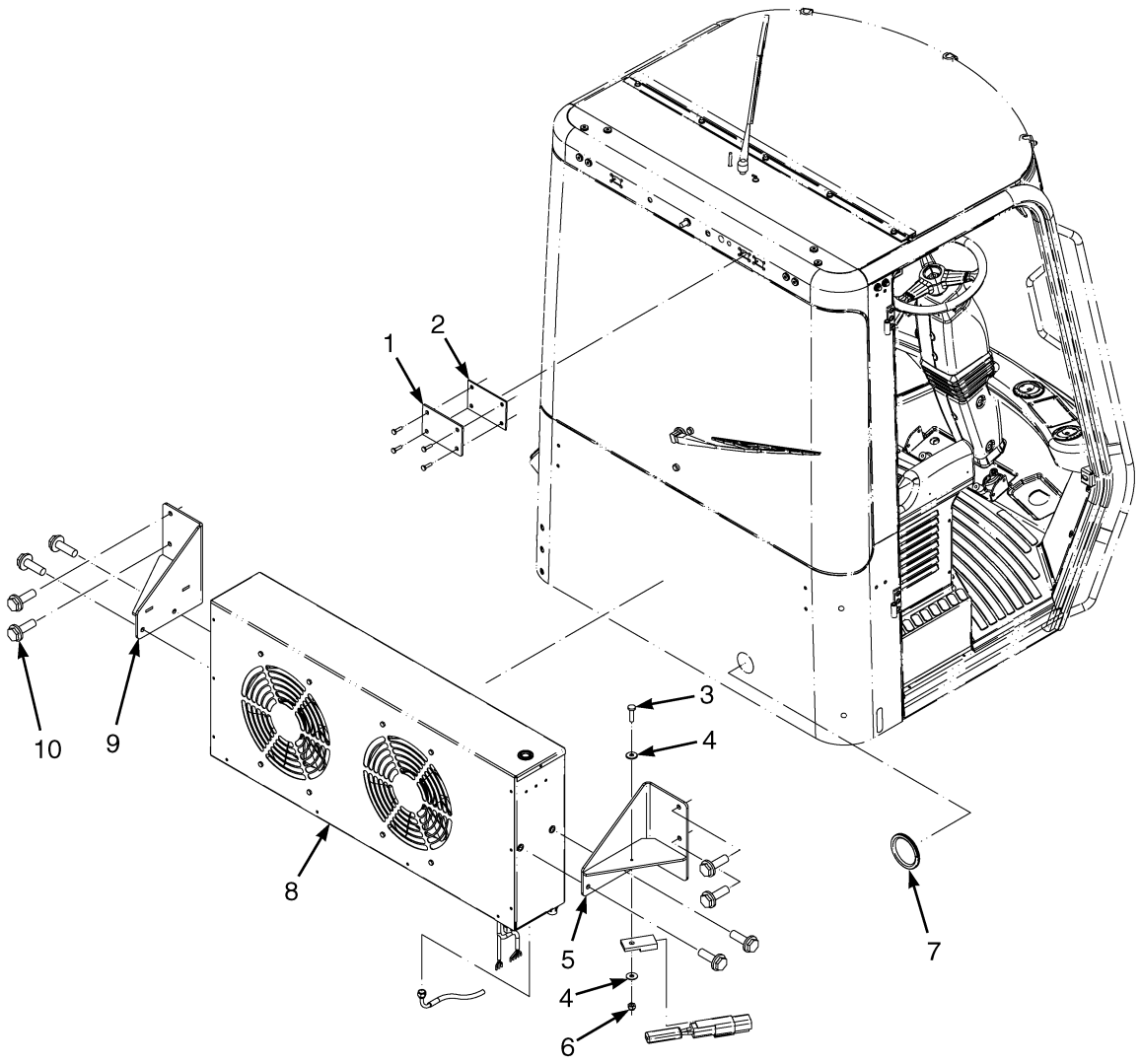

©2010 HYSTER COMPANY

CLIMATE CONTROL SYSTEM

ITEM	PART NO.	DESCRIPTION	QTY
1	1635007	Plate	1
2	1635008	Seal	1
3	1498357	Screw	1
4	1492140	Washer	2
5	4004837	Bracket Wldmt (RH)	1
6	4009594	Nut	1
7	1492167	Trim-Bulk	AR
8	1702290	Condenser Assembly (Includes Hose)	1
8	. . . . .	Hose	1
8	4002498	Condenser (☞Figure 1-32)	1
9	4004827	Bracket Wldmt (LH)	1
10	1566044	Bolt	4
	a 4009593	Air Conditioner System (☞Figure 1-62)	1
	a 1702293	Air Duct Assembly (☞Figure 1-33)	1

FOOTNOTES:

a Not Illustrated

©2010 HYSTER COMPANY

AIR CONDITIONER SYSTEM (FIGURE 1-62)
CLIMATE CONTROL CAB

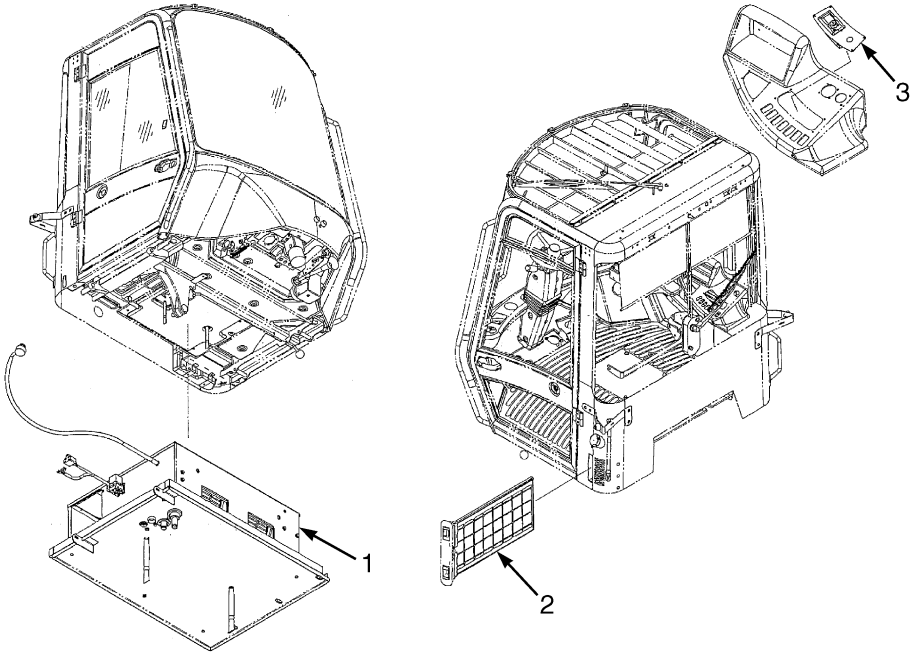

HP121282

ITEM	PART NO.	DESCRIPTION	QTY
	4009593	Air Conditioner System	1
1	4009597	Air Conditioner (☞Figure 1-63)	1
2	1493276	Air Filter	1
3	4009598	Control Panel	1
3	4020900	Washer	1
3	4021342	Control Unit	1
3	4020899	Plate	1

©2010 HYSTER COMPANY

NOTES

©2010 HYSTER COMPANY

AIR CONDITIONER (FIGURE 1-63)
CLIMATE CONTROL CAB

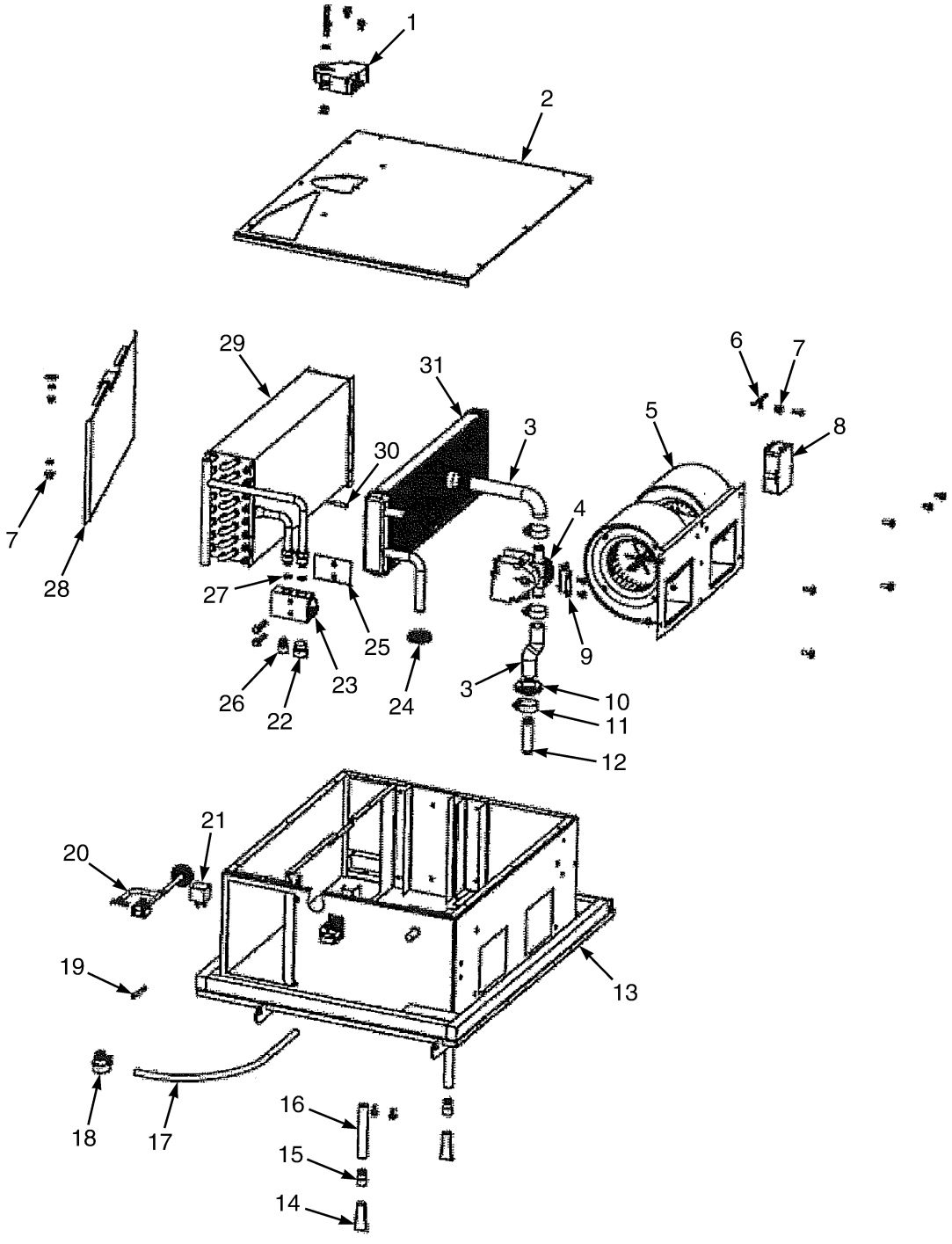

©2010 HYSTER COMPANY

AIR CONDITIONER
CLIMATE CONTROL CAB

ITEM	PART NO.	DESCRIPTION	QTY
	4009597	Air Conditioner	1
1	4003081	Actuator (Motor)	1
2	4003085	Cover	1
3	4003089	Hose	1
4	4020873	Valve (Heater)	1
5	4003083	Blower	1
6	4020876	Sensor (After Coil)	1
7	1487963	Bushing	2
8	4020875	Motor (Drive Board)	1
9	4003098	Bracket	1
10	1487953	Grommet	1
11	1487950	Hose Clamp	4
12	1487952	Tube (Copper)	1
13	4003084	Case	1
14	4003094	Drain Valve	2
15	4003095	Connector	2
16	4020874	Hose	2
17	4020881	Sensor (Hose)	1
18	4020879	Sensor (Cab)	1
19	4020878	Sensor (Outside)	1
20	4020877	Wire Harness (ECC)	1
21	1496800	Relay (24 Volt)	1
22	4003093	Plug	1
23	1487945	Valve (Block)	1
24	4003088	Grommet	1
25	4003087	Bracket	1
26	4003092	Plug	1
27	1487122	O-Ring	2
28	4003086	Cover Plate (Flapper)	1
29	4003090	Coil (Evaporator)	1
30	4020880	Sensor (De-Icing)	1
31	4003091	Core (Heater Coil)	1

©2010 HYSTER COMPANY

CAB ASSEMBLY (FIGURE 1-64)
CLIMATE CONTROL CAB

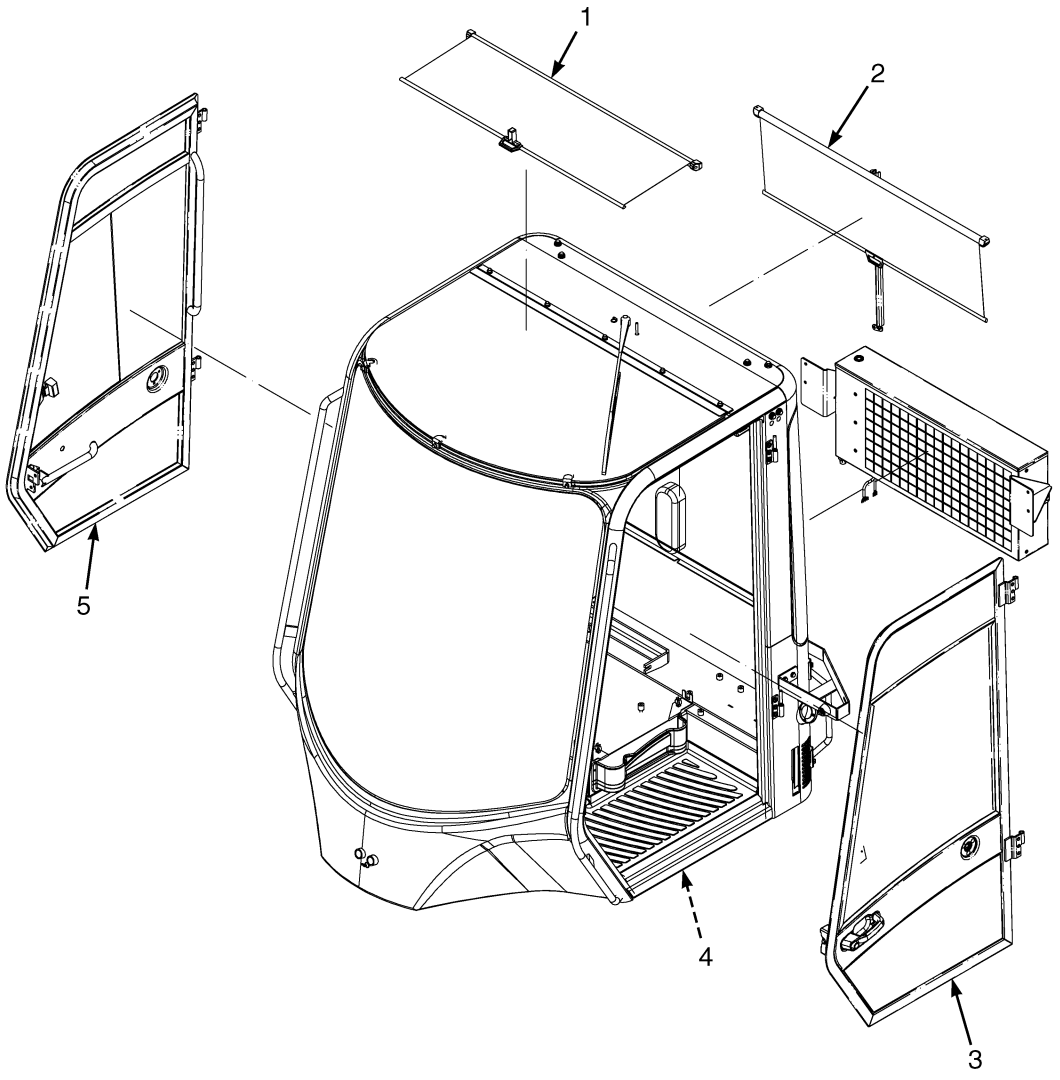

HP121284

©2010 HYSTER COMPANY

CAB ASSEMBLY
CLIMATE CONTROL CAB

ITEM	PART NO.	DESCRIPTION	QTY
1	. . . . .	Top Sunshade (☞Figure 1-14)	1
2	. . . . .	Rear Sunshade (☞Figure 1-15)	1
3	1623264	Door (Cab, LH)	1
4	. . . . .	Climate Control System (☞Figure 1-61)	1
5	1634997	Door (Cab, RH)	1

©2010 HYSTER COMPANY

TRAINING SEAT (FIGURE 1-65)

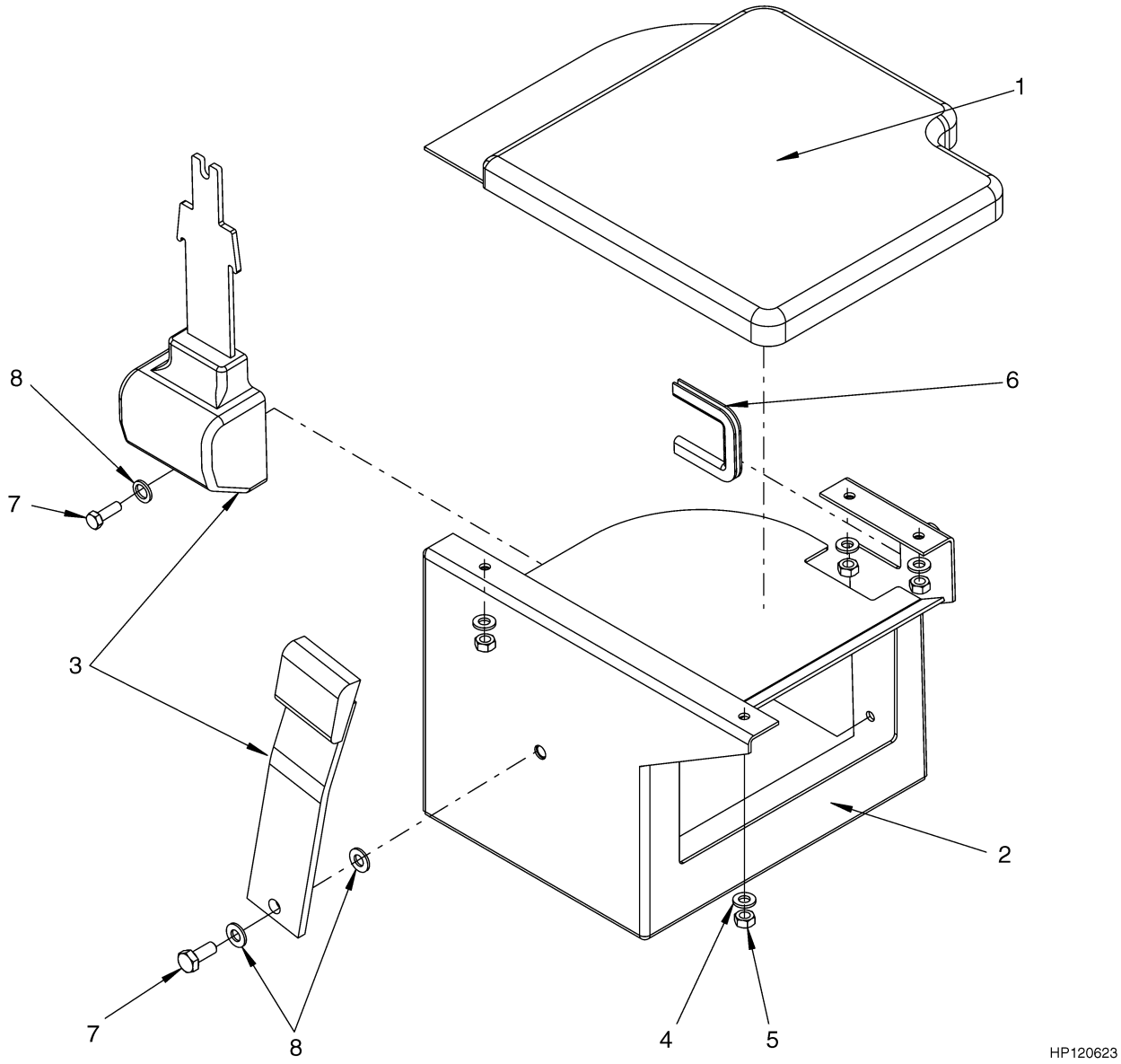

ITEM	PART NO.	DESCRIPTION	QTY
	1497822	Seat-Non Suspension	1
1	1499936	Cover (Top)	1
2	1506677	Seat Assy (Bottom)	1
3	1461081	Kit-Seat Belt	1
4	320156	Washer	4
5	136687	Nut	4
6	1498336	Edge Protector	AR
7	293628	Capscrew	2
8	1498338	Washer	3

©2010 HYSTER COMPANY

2 ENGINE ASSEMBLY

SECTION 2
ENGINE ASSEMBLY

DESCRIPTION **PAGE**

AIR CONDITIONING COMPRESSOR
→ S/N B214E01668F 2-3
AIR HEATER 2-4
AIR INTAKE CONNECTION 2-6
AIR INTAKE HOSE 2-7
AIR INTAKE MANIFOLD 2-8
AIR TRANSFER CONNECTION 2-9
BELT TENSIONER 2-10
CAB HEATER PLUMBING 2-12
CAMSHAFT 2-14
CONNECTING RODS AND PISTONS
→ 11/2008 2-16
11/2008 → 2-18
COOLANT HEATER STARTING AID 2-20
COOLING SYSTEM 2-22
CRANKCASE BREATHER 2-24
CRANKSHAFT AND BEARINGS
→ 11/2008 2-26
11/2008 → 2-30
CYLINDER BLOCK
→ 11/2008 2-32
11/2008 → 2-34
CYLINDER HEAD
→ 11/2008 2-36
11/2008 → 2-38
ENGINE ASSEMBLY 2-40
ENGINE BLOCK HEATER 2-42
ENGINE COOLANT VENT 2-44
ENGINE MOUNTS 2-48
ENGINE OIL COOLER 2-46
EXHAUST MANIFOLD 2-50
EXHAUST SYSTEM 2-52
FAN DRIVE AND MOUNTING 2-54
FLYWHEEL AND MOUNTING 2-55
FLYWHEEL HOUSING
→ S/N 73037048 (ENGINE) 2-56
S/N 73037049 → (ENGINE) 2-58
FRONT GEAR COVER 2-60
LIFTING BRACKETS AND MOUNTING 2-61
LUBRICATING OIL PUMP 2-62
OIL FILLER 2-63
OIL LEVEL GAUGE 2-64
OIL PAN 2-66
RADIATOR AND COOLER ASSEMBLY 2-68
REAR GEAR HOUSING 2-70
REAR GEAR TRAIN ACCESSORY MOUNTING COVER 2-71
REMOTE OIL FILTER 2-72
ROCKER LEVERS 2-74
STARTER MOTOR AND MOUNTING 2-76

©2010 HYSTER COMPANY

SECTION 2
ENGINE ASSEMBLY

DESCRIPTION	PAGE
THERMOSTAT	2-77
TORQUE CONVERTER COOLER PLUGS	2-78
TURBOCHARGER	
→ 11/2008	2-80
11/2008 →	2-83
TURBOCHARGER PLUMBING	
→ 11/2008	2-84
11/2008 →	2-86
VALVE COVER	
→ 11/2008	2-88
11/2008 →	2-90
VALVE TAPPETS	2-91
VIBRATION DAMPER	2-92
WATER OUTLET CONNECTION	
11/2008 →	2-95
WATER PUMP	2-93
WATER PUMP DRIVE	2-94

©2010 HYSTER COMPANY

AIR CONDITIONING COMPRESSOR (FIGURE 2-1)

(→ S/N B214E01668F)

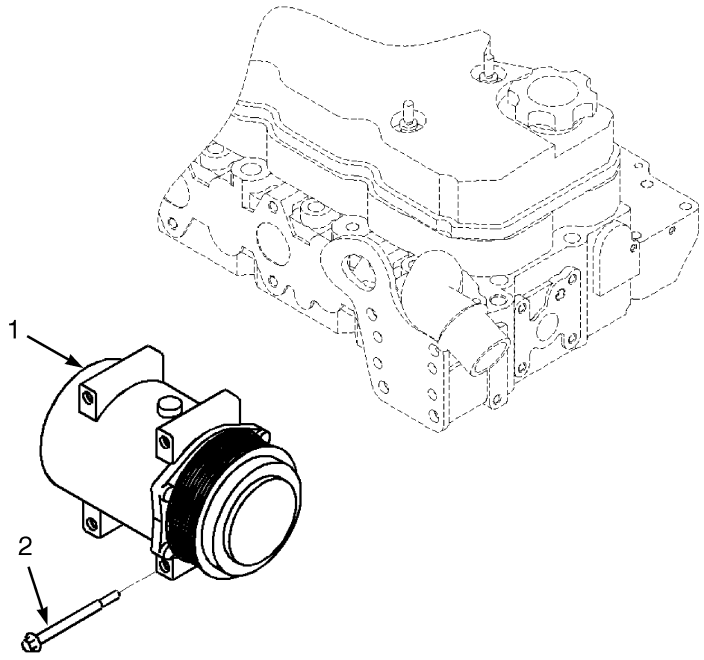

HP091330

ITEM	PART NO.	DESCRIPTION	QTY
	1613301	Engine Assy-Diesel (Tier III 190 HP) (With Air Conditioning)	1
	1559624	Engine Assy-Diesel (Tier III 220 HP) (With Air Conditioning)	1
1	1635358	Compressor	1
2	1513841	Screw	3

©2010 HYSTER COMPANY

AIR HEATER (FIGURE 2-2)

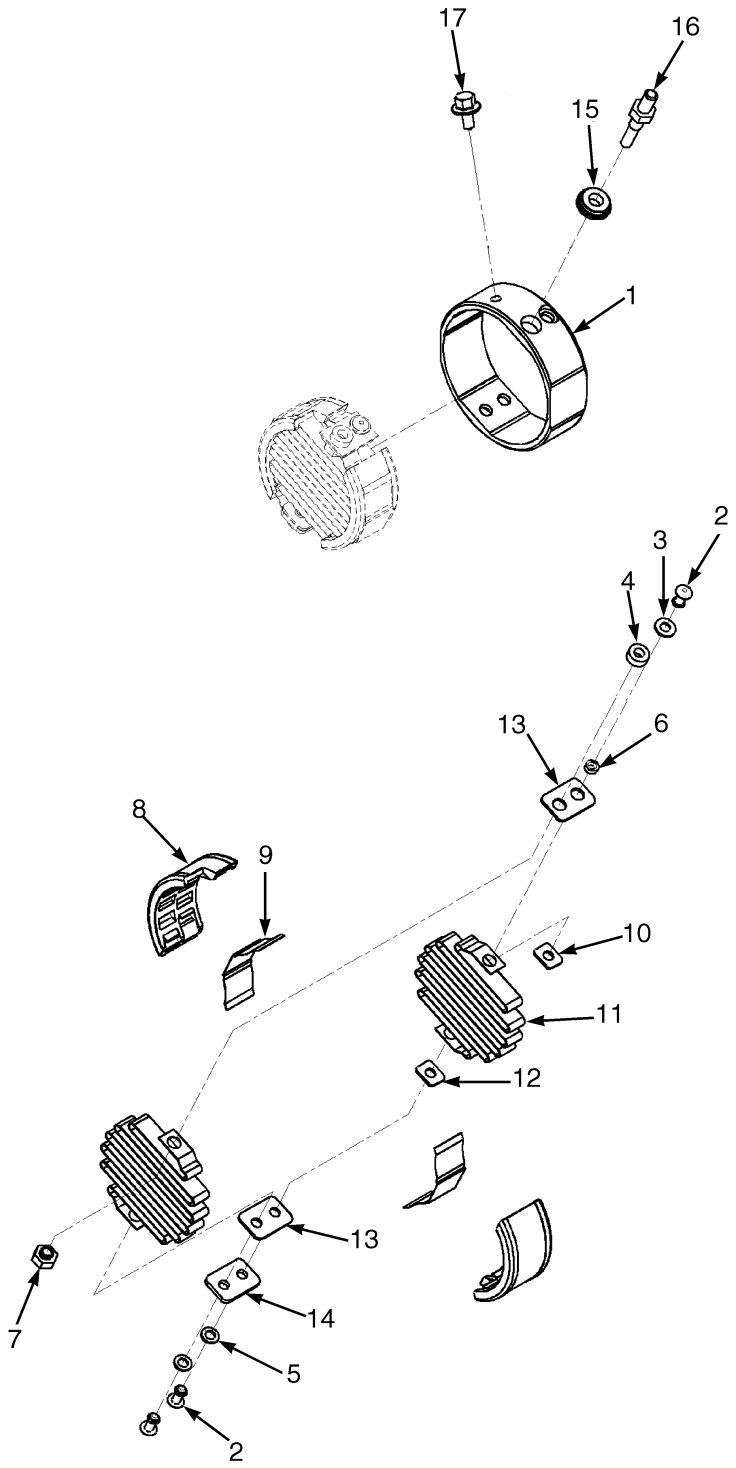

HP091438

©2010 HYSTER COMPANY

AIR HEATER

ITEM	PART NO.	DESCRIPTION	QTY
	a 1613301	Engine Assy-Diesel (Tier III 190 HP) (With Air Conditioning)	1
	b 1613486	Engine Assy-Diesel (Tier III 190 HP) (Without Air Conditioning)	1
	c 1692949	Engine Assy (Without Air Conditioning)	1
	a 1559624	Engine Assy-Diesel (Tier III 220 HP) (With Air Conditioning)	1
	b 1613484	Engine Assy-Diesel (Tier III 220 HP) (Without Air Conditioning)	1
	c 1692948	Engine Assy (Without Air Conditioning)	1
	. . . . .	Air Heater Assembly	1
	1661077	Starting Aid	1
1	1661078	Housing	1
2	. . . . .	Rivet	3
3	. . . . .	Washer	2
4	1661082	Washer	1
5	. . . . .	Washer	1
6	. . . . .	Washer	2
7	. . . . .	Adapter	1
8	. . . . .	Retainer	2
9	. . . . .	Leaf Spring	2
10	. . . . .	Washer	1
11	. . . . .	Heating Element	2
12	1661080	Retainer	1
13	1661081	Washer	2
14	1661079	Washer	1
15	1635363	Retainer	1
16	1661074	Capscrew	1
17	1513836	Screw	1

FOOTNOTES:

a → S/N B214E01668F
b S/N B214E01669F ↔ 11/2008
c 11/2008 →

©2010 HYSTER COMPANY

AIR INTAKE CONNECTION (FIGURE 2-3)

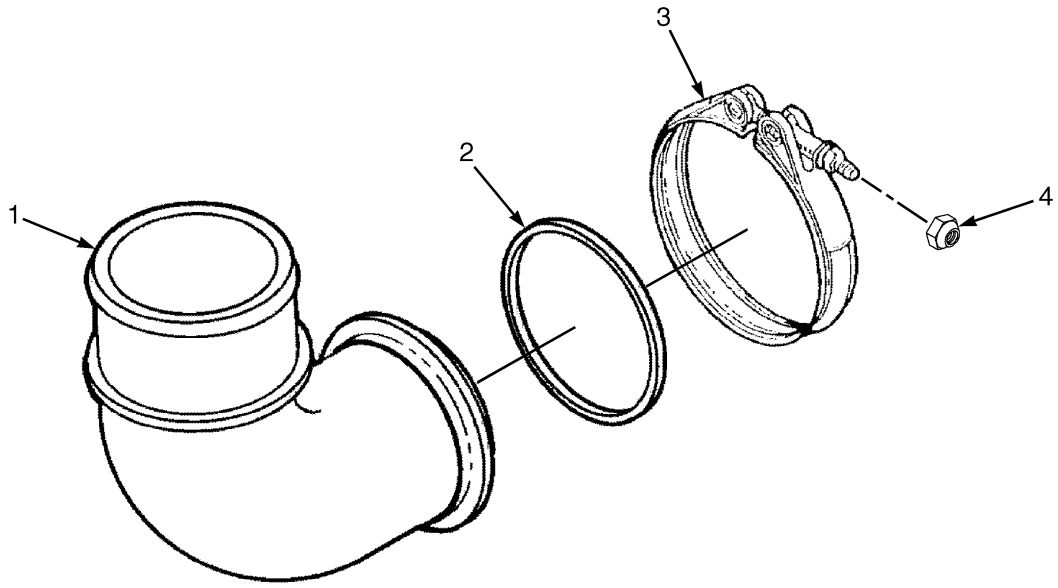

HP091346

ITEM	PART NO.	DESCRIPTION	QTY
	a 1613301	Engine Assy-Diesel (Tier III 190 HP) (With Air Conditioning)	1
	b 1613486	Engine Assy-Diesel (Tier III 190 HP) (Without Air Conditioning)	1
	c 1692949	Engine Assy (Without Air Conditioning)	1
	a 1559624	Engine Assy-Diesel (Tier III 220 HP) (With Air Conditioning)	1
	b 1613484	Engine Assy-Diesel (Tier III 220 HP) (Without Air Conditioning)	1
	c 1692948	Engine Assy (Without Air Conditioning)	1
1	1635412	Pipe (Air Transfer)	1
2	1635251	O-Ring	1
3	1635320	Clamp	1
4	1517094	Locknut	1

FOOTNOTES:

a → S/N B214E01668F
b S/N B214E01669F ↔ 11/2008
c 11/2008 →

©2010 HYSTER COMPANY

AIR INTAKE HOSE (FIGURE 2-4)

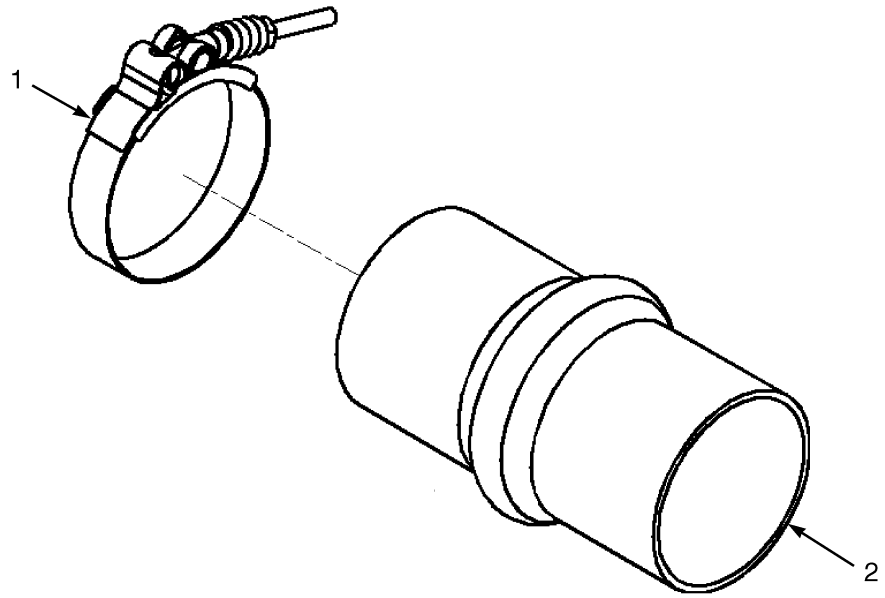

HP091345

ITEM	PART NO.	DESCRIPTION	QTY
	a 1613301	Engine Assy-Diesel (Tier III 190 HP) (With Air Conditioning)	1
	b 1613486	Engine Assy-Diesel (Tier III 190 HP) (Without Air Conditioning)	1
	c 1692949	Engine Assy (Without Air Conditioning)	1
	a 1559624	Engine Assy-Diesel (Tier III 220 HP) (With Air Conditioning)	1
	b 1613484	Engine Assy-Diesel (Tier III 220 HP) (Without Air Conditioning)	1
	c 1692948	Engine Assy (Without Air Conditioning)	1
1	1521889	Clamp	8
2	1521888	Hose	4

FOOTNOTES:

a → S/N B214E01668F
b S/N B214E01669F ↔ 11/2008
c 11/2008 →

AIR INTAKE MANIFOLD (FIGURE 2-5)

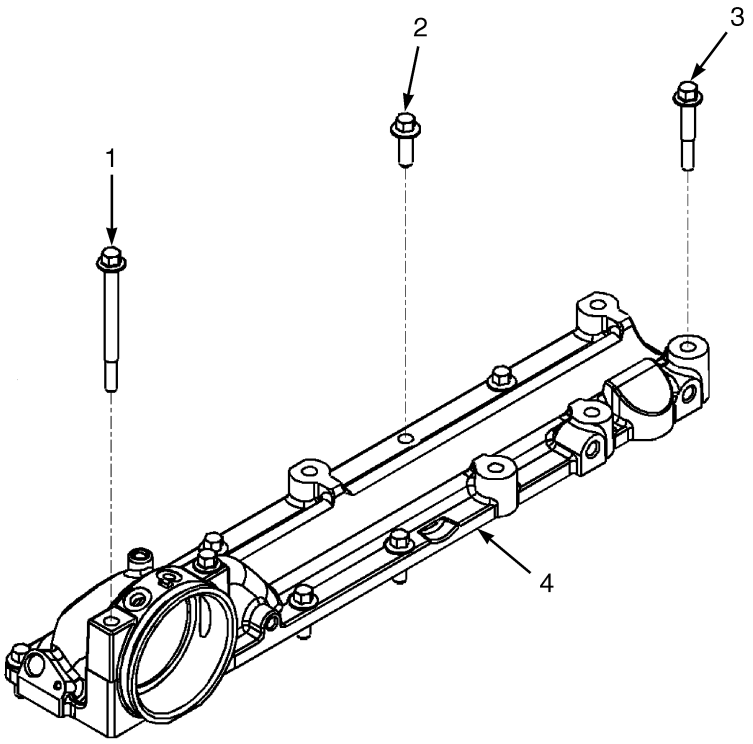

HP091348

ITEM	PART NO.	DESCRIPTION	QTY
	b 1613301	Engine Assy-Diesel (Tier III 190 HP) (With Air Conditioning)	1
	c 1613486	Engine Assy-Diesel (Tier III 190 HP) (Without Air Conditioning)	1
	d 1692949	Engine Assy (Without Air Conditioning)	1
	b 1559624	Engine Assy-Diesel (Tier III 220 HP) (With Air Conditioning)	1
	c 1613484	Engine Assy-Diesel (Tier III 220 HP) (Without Air Conditioning)	1
	d 1692948	Engine Assy (Without Air Conditioning)	1
1	**a** 1635257	Capscrew	2
1	**d** 1512296	Capscrew	2
2	1512295	Capscrew	7
3	1513725	Capscrew	1
4	1635411	Manifold	1
4	1707047	Intake Manifold (Alternate Part)	1

FOOTNOTES:

a → 11/2008
b → S/N B214E01668F
c S/N B214E01669F ↔ 11/2008
d 11/2008 →

©2010 HYSTER COMPANY

AIR TRANSFER CONNECTION (FIGURE 2-6)

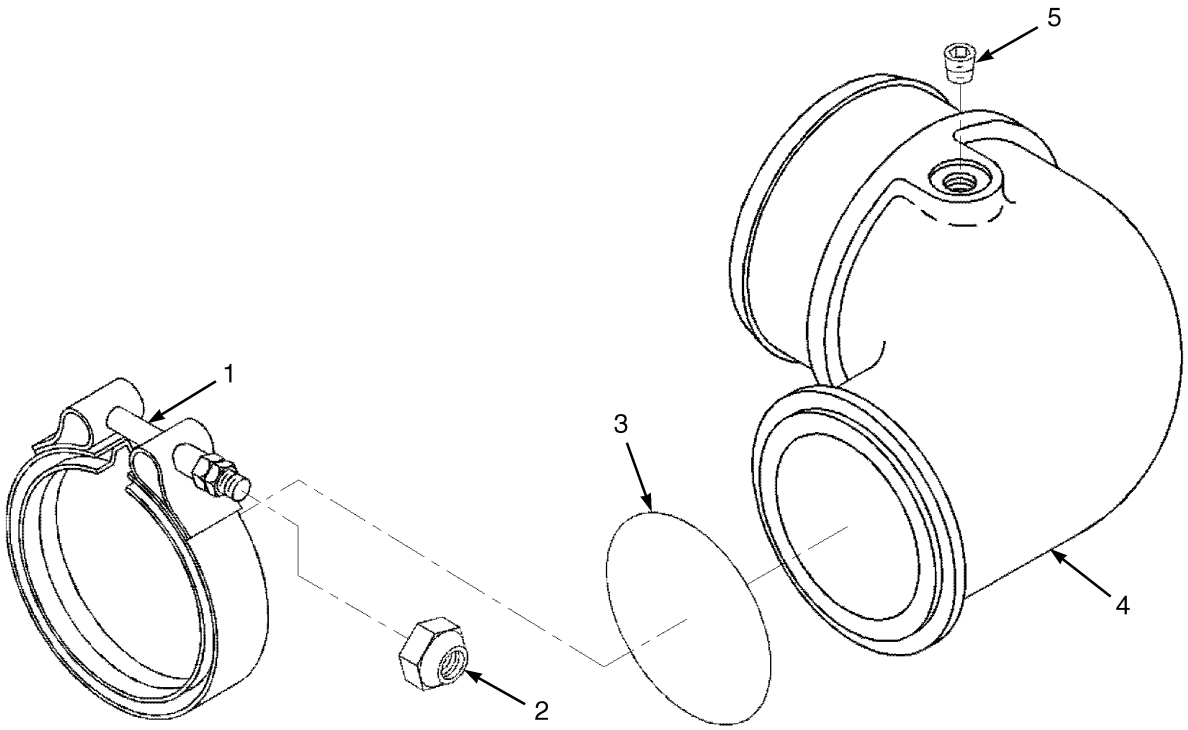

HP091349

ITEM	PART NO.	DESCRIPTION	QTY
	a 1613301	Engine Assy-Diesel (Tier III 190 HP) (With Air Conditioning)	1
	b 1613486	Engine Assy-Diesel (Tier III 190 HP) (Without Air Conditioning)	1
	c 1692949	Engine Assy (Without Air Conditioning)	1
	a 1559624	Engine Assy-Diesel (Tier III 220 HP) (With Air Conditioning)	1
	b 1613484	Engine Assy-Diesel (Tier III 220 HP) (Without Air Conditioning)	1
	c 1692948	Engine Assy (Without Air Conditioning)	1
1	1597806	Clamp	1
2	1517094	Locknut	1
3	1515787	O-Ring	1
4	1521891	Pipe	1
5	1513191	Fitting	1

FOOTNOTES:

a → S/N B214E01668F
b S/N B214E01669F ↔ 11/2008
c 11/2008 →

©2010 HYSTER COMPANY

BELT TENSIONER (FIGURE 2-7)

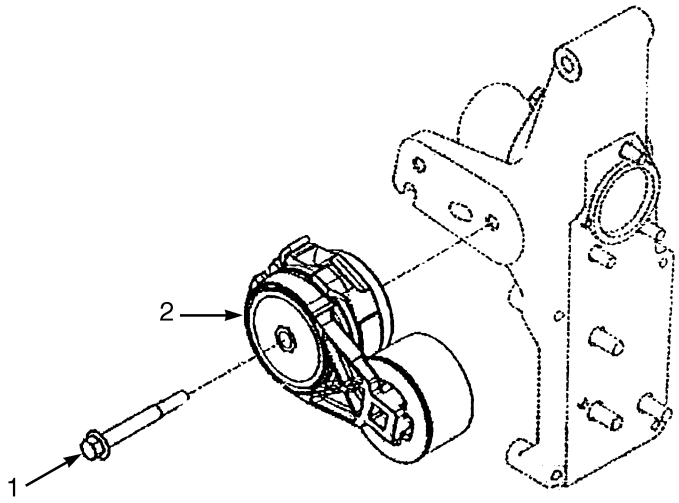

HP091364

ITEM	PART NO.	DESCRIPTION	QTY
	a 1613301	Engine Assy-Diesel (Tier III 190 HP) (With Air Conditioning)	1
	b 1613486	Engine Assy-Diesel (Tier III 190 HP) (Without Air Conditioning)	1
	c 1692949	Engine Assy (Without Air Conditioning)	1
	a 1559624	Engine Assy-Diesel (Tier III 220 HP) (With Air Conditioning)	1
	b 1613484	Engine Assy-Diesel (Tier III 220 HP) (Without Air Conditioning)	1
	c 1692948	Engine Assy (Without Air Conditioning)	1
1	1521938	Capscrew	1
2	1635318	Belt Tensioner	1

FOOTNOTES:

a → S/N B214E01668F
b S/N B214E01669F ↔ 11/2008
c 11/2008 →

©2010 HYSTER COMPANY

NOTES

©2010 HYSTER COMPANY

CAB HEATER PLUMBING (FIGURE 2-8)

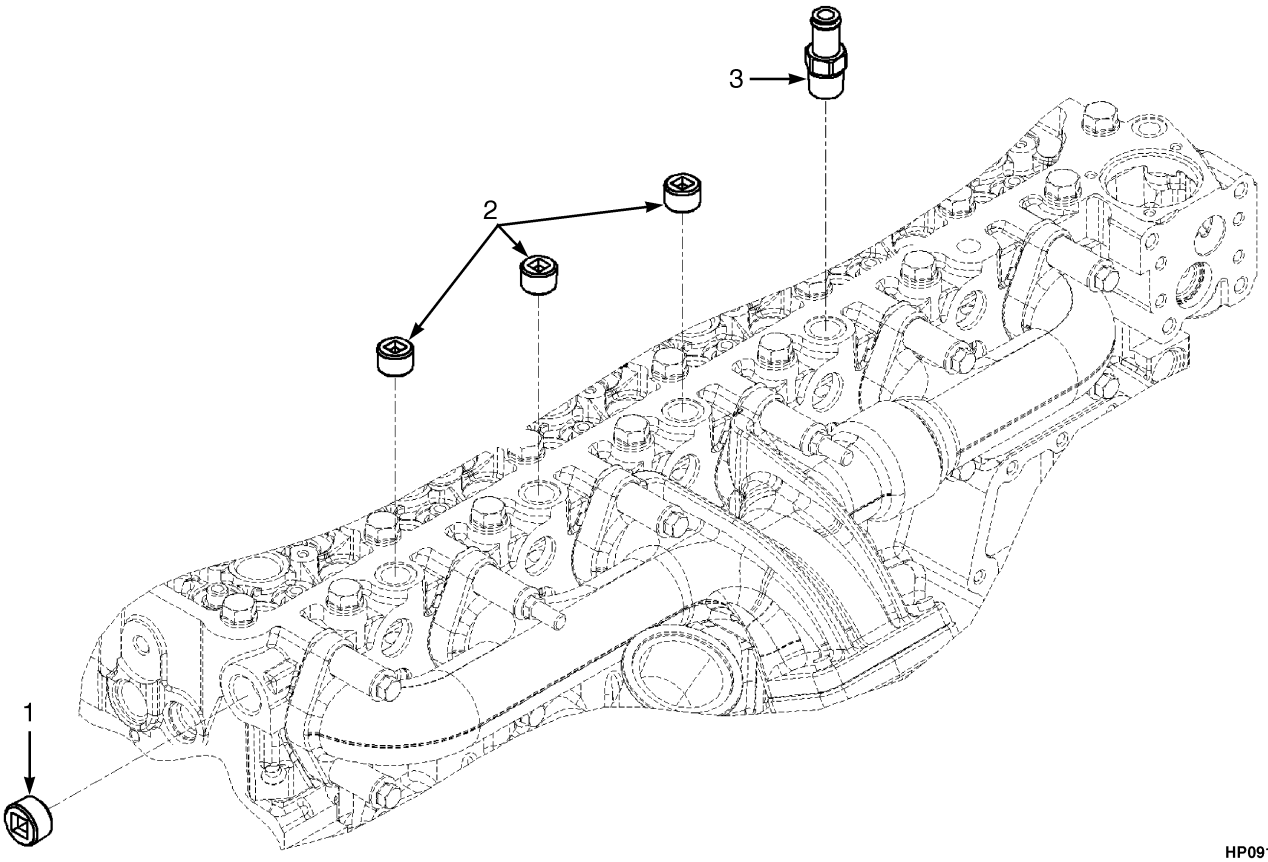

©2010 HYSTER COMPANY

CAB HEATER PLUMBING

ITEM	PART NO.	DESCRIPTION	QTY
	b 1613301	Engine Assy-Diesel (Tier III 190 HP) (With Air Conditioning)	1
	c 1613486	Engine Assy-Diesel (Tier III 190 HP) (Without Air Conditioning)	1
	d 1692949	Engine Assy (Without Air Conditioning)	1
	b 1559624	Engine Assy-Diesel (Tier III 220 HP) (With Air Conditioning)	1
	c 1613484	Engine Assy-Diesel (Tier III 220 HP) (Without Air Conditioning)	1
	d 1692948	Engine Assy (Without Air Conditioning)	1
1	**a** 1512292	Plug	1
1	**d** 1644095	Fitting	1
2	**a** 1511952	Fitting	3
2	**d** 1689641	Plug	3
3	**a** 1521882	Coupling	1
3	**d** 1702101	Coupling	1

FOOTNOTES:

a → 11/2008
b → S/N B214E01668F
c S/N B214E01669F ↔ 11/2008
d 11/2008 →

©2010 HYSTER COMPANY

CAMSHAFT (FIGURE 2-9)

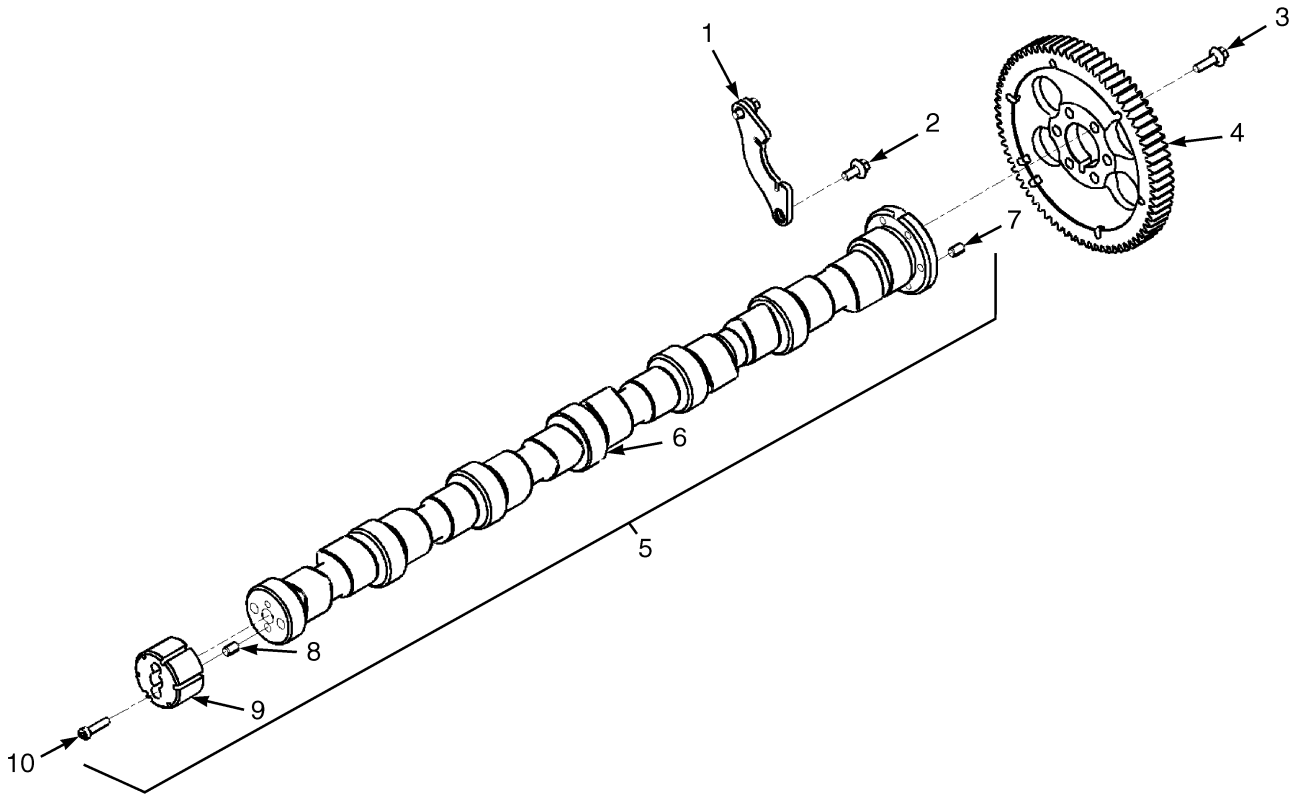

ITEM	PART NO.	DESCRIPTION	QTY
	b 1613301	Engine Assy-Diesel (Tier III 190 HP) (With Air Conditioning)	1
	c 1613486	Engine Assy-Diesel (Tier III 190 HP) (Without Air Conditioning)	1
	d 1692948	Engine Assy (Without Air Conditioning)	1
	b 1559624	Engine Assy-Diesel (Tier III 220 HP) (With Air Conditioning)	1
	c 1613484	Engine Assy-Diesel (Tier III 220 HP) (Without Air Conditioning)	1
	d 1692949	Engine Assy (Without Air Conditioning)	1
1	1635369	Plate	1
2	1513749	Capscrew	2
3	~~1691854~~		
	1597807	Capscrew (Flange)	6
4	**a** 1635275	Gear	1
4	**d** 4010356	Gear	1
5	. . . . .	Camshaft Assembly	1
6	1635340	Camshaft	1
7	1514346	Dowel	1
8	1635269	Ring	1
9	1635272	Indicator	1
10	1635362	Capscrew	2

FOOTNOTES:

a → 11/2008
b → S/N B214E01668F
c S/N B214E01669F ↔ 11/2008
d 11/2008 →

©2010 HYSTER COMPANY

NOTES

©2010 HYSTER COMPANY

CONNECTING RODS AND PISTONS (FIGURE 2-10)
(→ 11/2008)

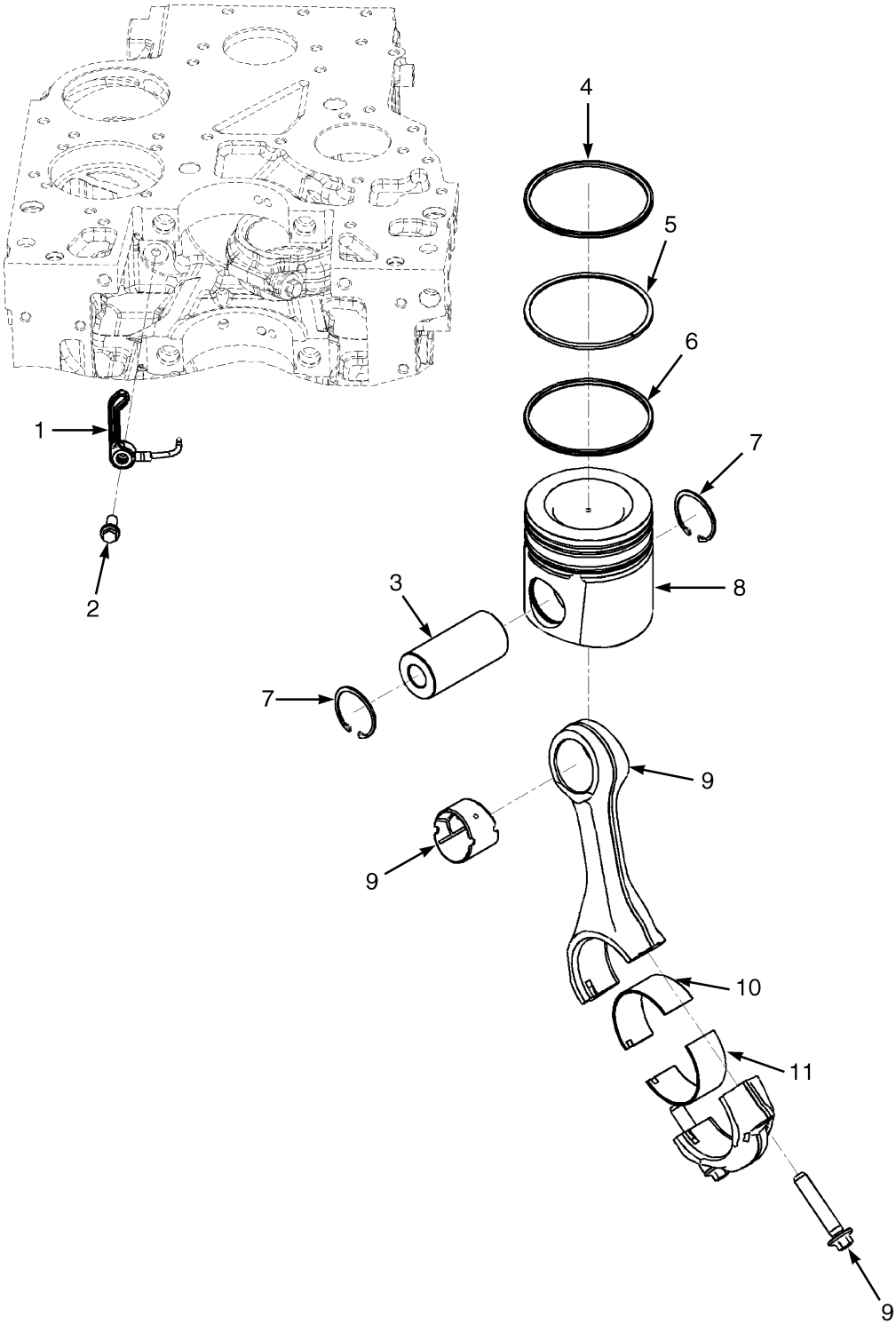

HP091352

©2010 HYSTER COMPANY

CONNECTING RODS AND PISTONS

(→ 11/2008)

ITEM	PART NO.	DESCRIPTION	QTY
	a 1613301	Engine Assy-Diesel (Tier III 190 HP) (With Air Conditioning)	1
	b 1613486	Engine Assy-Diesel (Tier III 190 HP) (Without Air Conditioning)	1
	a 1559624	Engine Assy-Diesel (Tier III 220 HP) (With Air Conditioning)	1
	b 1613484	Engine Assy-Diesel (Tier III 220 HP) (Without Air Conditioning)	1
1	1635293	Nozzle (Piston Cooling)	6
2	1635282	Screw (Banjo Connector)	6
3	1635400	Pin	6
4	1635409	Piston Ring	6
5	1635316	Piston Ring	6
6	1638703	Piston Ring	6
7	1512146	Retaining Ring	12
8	1635406	Piston	6
8	1635408	Piston (O/S 0.50 mm)	AR
9	1618590	Piston Rod	6
9	. . . . .	Connecting Rod	1
9	1553261	Capscrew	2
9	1553262	Bushing	1
10	1635295	Bearing (Standard) (Upper)	6
10	1512150	Bearing (.010 in.) (Upper)	AR
10	1512151	Bearing (.020 in.) (Upper)	AR
10	1512152	Bearing (.030 in.) (Upper)	AR
10	1512153	Bearing (.040 in.) (Upper)	AR
11	1543445	Bearing (Standard) (Lower)	6
11	1584817	Bearing (.010 in.) (Lower)	AR
11	1584818	Bearing (.020 in.) (Lower)	AR
11	1584819	Bearing (.030 in.) (Lower)	AR
11	1584820	Bearing (.040 in.) (Lower)	AR

FOOTNOTES:

a → S/N B214E01668F

b S/N B214E01669F ↔ 11/2008

©2010 HYSTER COMPANY

CONNECTING RODS AND PISTONS (FIGURE 2-11)
(11/2008 →)

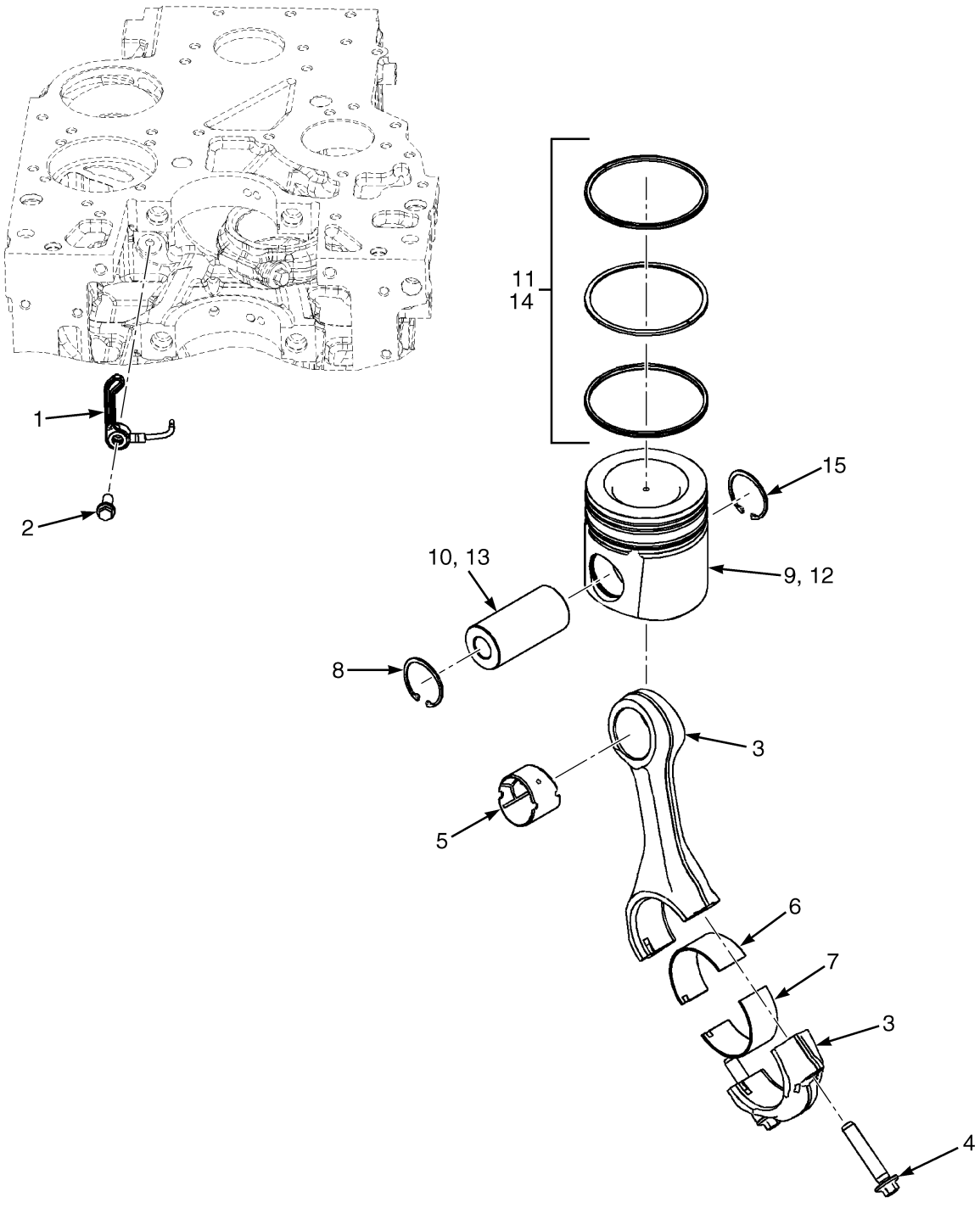

©2010 HYSTER COMPANY

CONNECTING RODS AND PISTONS

(11/2008 →)

ITEM	PART NO.	DESCRIPTION	QTY
	1692949	Engine Assy	1
	1692948	Engine Assy	1
1	1661211	Nozzle (Piston Cooling)	6
2	1635282	Screw (Banjo Connector)	6
3	1696686	Rod (Assembly)	6
4	1553261	Capscrew	2
5	1553262	Bushing	1
6	1635295	Bearing (Standard)	6
6	1638419	Bearing (.010 in.)	AR
6	1638420	Bearing (.020 in.)	AR
6	1638421	Bearing (.030 in.)	AR
6	1638422	Bearing (.040 in.)	AR
7	1543446	Bearing (Standard)	6
7	1584817	Bearing (.010 in.)	AR
7	1584818	Bearing (.020 in.)	AR
7	1584819	Bearing (.030 in.)	AR
7	1584820	Bearing (.040 in.)	AR
8	1512146	Retaining Ring	12
9	1661209	Kit-Piston (Standard)	6
9	. . . . .	Piston	1
10	1635400	Pin	1
11	1661210	Kit-Piston Ring	1
12	4009308	Kit-Piston (0.50 mm O/S)	AR
12	. . . . .	Piston	1
13	1635400	Pin	1
14	4009310	Piston Ring	1
15	1512146	Retaining Ring	2

©2010 HYSTER COMPANY

COOLANT HEATER STARTING AID (FIGURE 2-12)

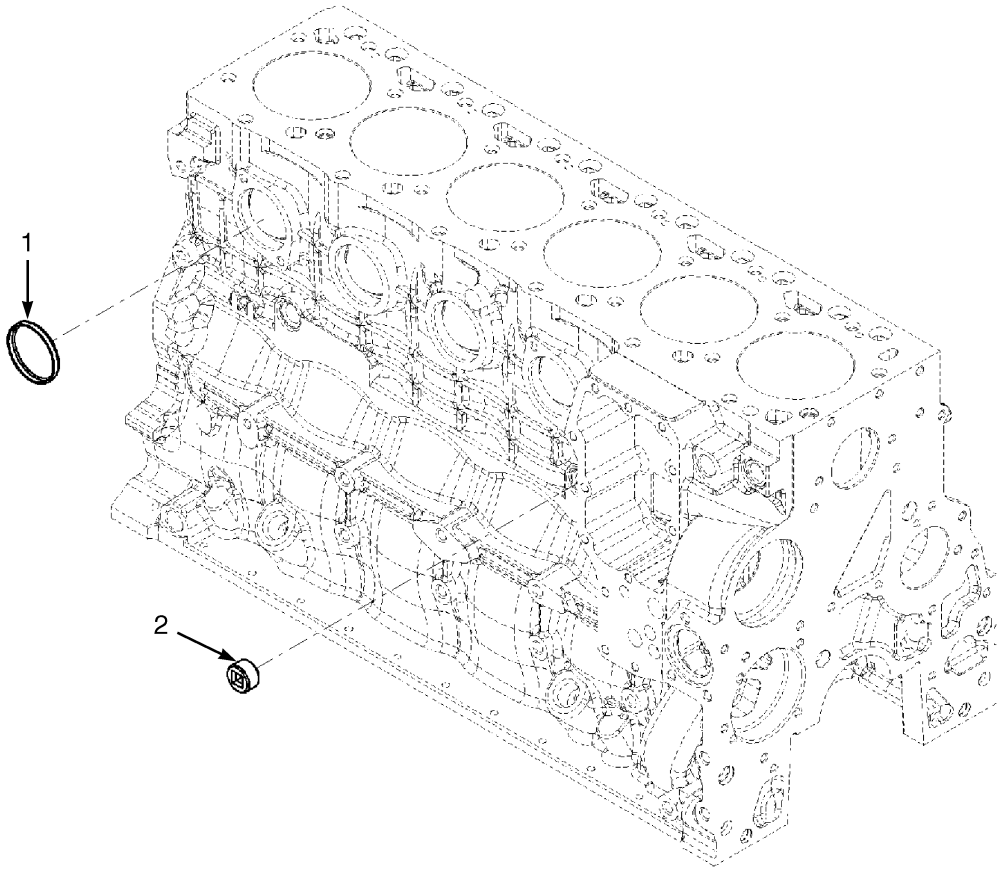

HP091331

ITEM	PART NO.	DESCRIPTION	QTY
	b 1613301	Engine Assy-Diesel (Tier III 190 HP) (With Air Conditioning)	1
	c 1613486	Engine Assy-Diesel (Tier III 190 HP) (Without Air Conditioning)	1
	d 1692949	Engine Assy (Without Air Conditioning)	1
	b 1559624	Engine Assy-Diesel (Tier III 220 HP) (With Air Conditioning)	1
	c 1613484	Engine Assy-Diesel (Tier III 220 HP) (Without Air Conditioning)	1
	d 1692948	Engine Assy (Without Air Conditioning)	1
1	**a** 1514542	Plug (Expansion)	1
1	**d** 1661086	Plug (Expansion)	1
2	**a** 1512292	Plug	1
2	**d** 1644095	Fitting	1

FOOTNOTES:

a → 11/2008
b → S/N B214E01668F
c S/N B214E01669F ↔ 11/2008
d 11/2008 →

©2010 HYSTER COMPANY

NOTES

©2010 HYSTER COMPANY

COOLING SYSTEM (FIGURE 2-13)

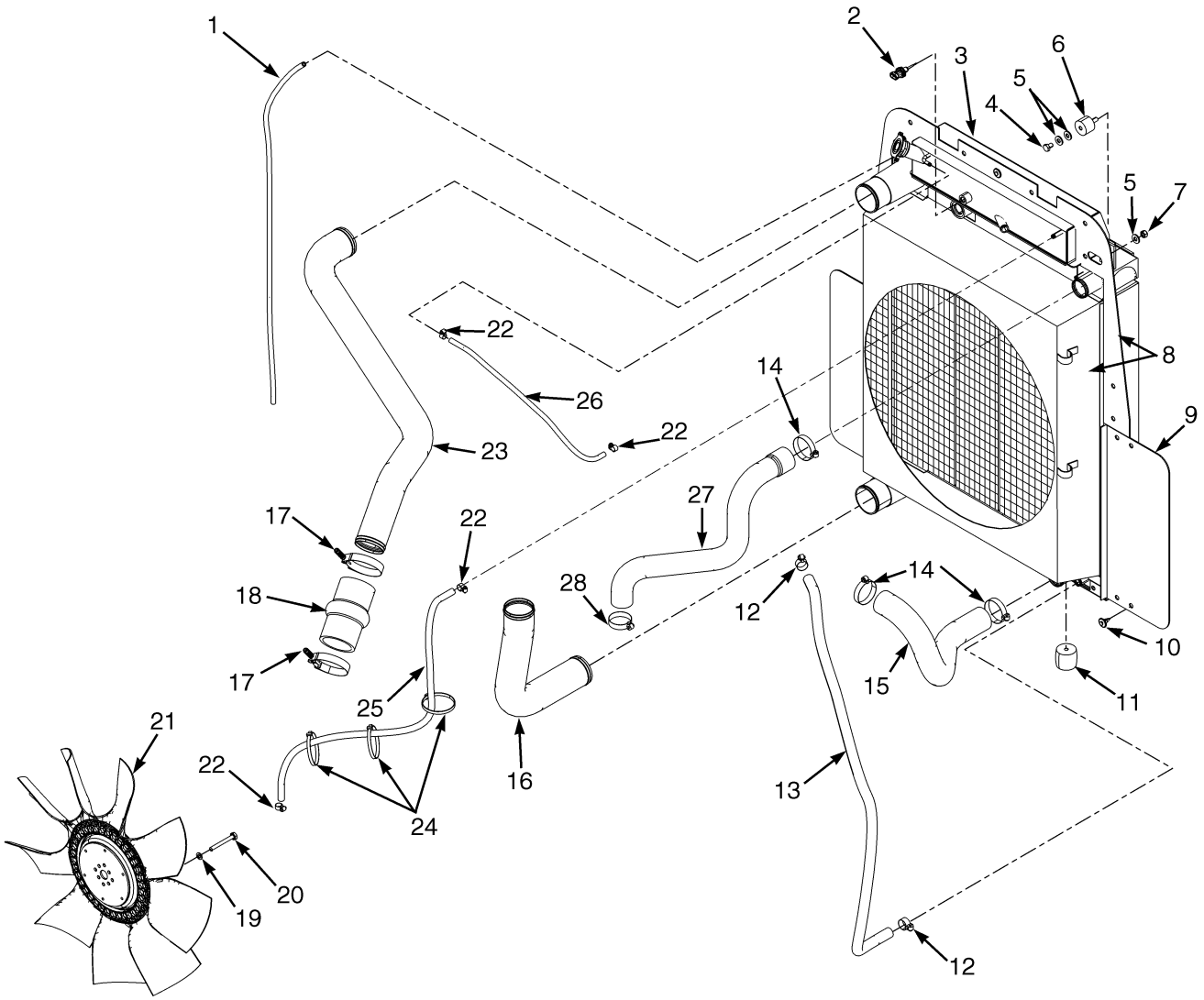

©2010 HYSTER COMPANY

COOLING SYSTEM

ITEM	PART NO.	DESCRIPTION	QTY
1	2082967	Hose	1
2	1531404	Sensor (Low Coolant Level)	1
3	1592826	Seal	1
4	292513	Capscrew	2
5	320160	Washer	4
6	1597192	Isolator	2
7	302401	Locknut	4
8	. . . . .	Radiator And Coolers Assembly (☞Figure 2-38)	1
9	1598543	Seal	2
10	1484308	Rivet	19
11	376649	Isolator	2
12	130845	Clamp	2
13	174166	Hose	1
14	112989	Hose Clamp	3
15	1592801	Radiator Hose	1
16	1592830	Tube (Charge)	1
17	1521889	Clamp	8
18	1521888	Hose	4
19	~~388049~~		
	292682	Lockwasher	4
20	292522	Capscrew	4
21	1598544	Fan	1
22	168718	Clamp	4
23	1592831	Tube (Charge)	1
24	129563	Strap Clamp	3
25	85765	Hose	1
26	392800	Hose	1
27	1592800	Radiator Hose	1
28	119236	Clamp	1

©2010 HYSTER COMPANY

CRANKCASE BREATHER (FIGURE 2-14)

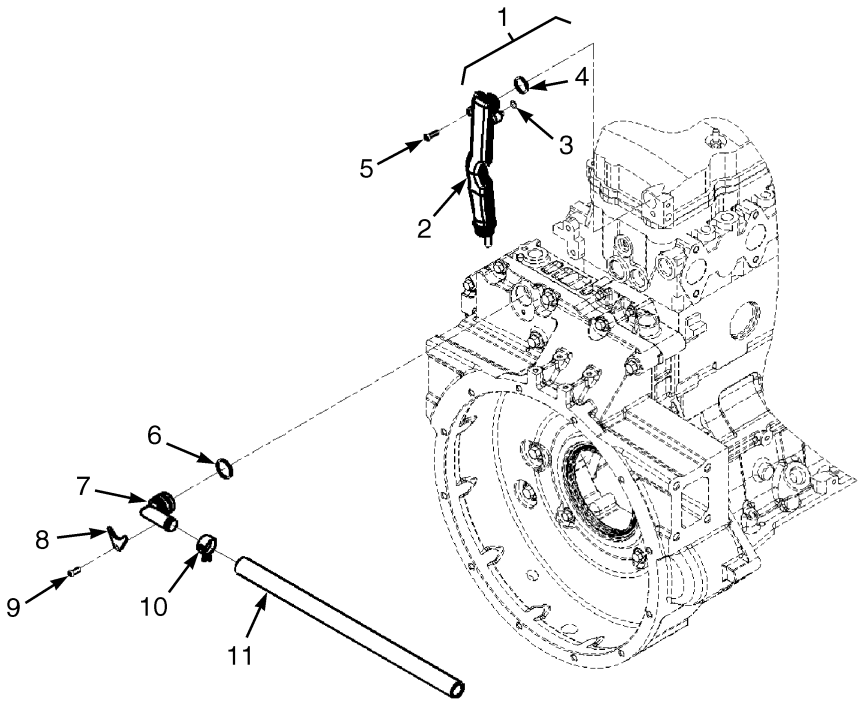

HP091329

ITEM	PART NO.	DESCRIPTION	QTY
	a 1613301	Engine Assy-Diesel (Tier III 190 HP) (With Air Conditioning)	1
	b 1613486	Engine Assy-Diesel (Tier III 190 HP) (Without Air Conditioning)	1
	c 1692949	Engine Assy (Without Air Conditioning)	1
	a 1559624	Engine Assy-Diesel (Tier III 220 HP) (With Air Conditioning)	1
	b 1613484	Engine Assy-Diesel (Tier III 220 HP) (Without Air Conditioning)	1
	c 1692948	Engine Assy (Without Air Conditioning)	1
1	1635298	Tube Assy	1
2	1635291	Tube Assy	1
3	1635281	O-Ring	2
4	1632984	O-Ring	1
5	1637795	Capscrew	1
6	1635227	O-Ring	1
7	1635286	Breather	1
8	1635382	Plate	1
9	1635383	Capscrew	1
9	1661085	Capscrew (Alternate Part)	1
10	1635259	Hose Clamp	1
11	1511972	Hose	1

FOOTNOTES:

a → S/N B214E01668F
b S/N B214E01669F ↔ 11/2008
c 11/2008 →

©2010 HYSTER COMPANY

NOTES

©2010 HYSTER COMPANY

CRANKSHAFT AND BEARINGS (FIGURE 2-15)
(→ 11/2008)

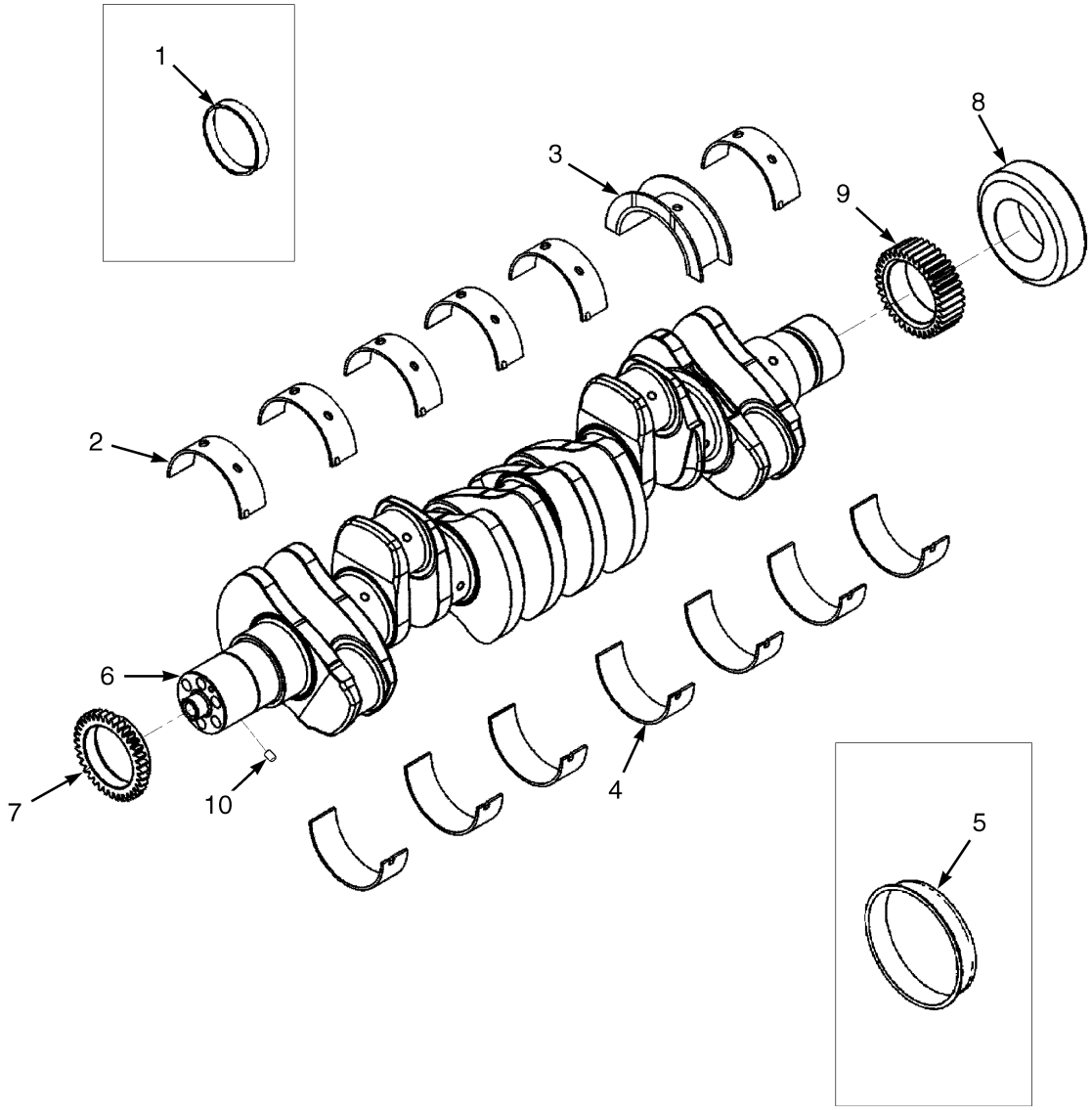

HP091328

©2010 HYSTER COMPANY

CRANKSHAFT AND BEARINGS

(→ 11/2008)

ITEM	PART NO.	DESCRIPTION	QTY
	a 1613301	Engine Assy-Diesel (Tier III 190 HP) (With Air Conditioning)	1
	b 1613486	Engine Assy-Diesel (Tier III 190 HP) (Without Air Conditioning)	1
	a 1559624	Engine Assy-Diesel (Tier III 220 HP) (With Air Conditioning)	1
	b 1613484	Engine Assy-Diesel (Tier III 220 HP) (Without Air Conditioning)	1
1	1554045	Kit-Wear Sleeve (Front)	1
2	1543318	Bearing (Standard) (Upper)	7
2	1696675	Bearing (Standard) (Alternate Part)	7
2	1584991	Bearing (.010 in.) (Upper)	7
2	1584994	Bearing (.020 in.) (Upper)	7
2	1707622	Bearing (0.50 mm O/S) (Upper) (Alternate Part)	7
2	1584997	Bearing (.030 in.) (Upper)	7
2	4007468	Bearing (0.75 mm O/S) (Alternate Part)	7
2	1584998	Bearing (.040 in.) (Upper)	7
2	1708513	Bearing (1.00 mm O/S) (Upper) (Alternate Part)	7
3	1543316	Thrust Bearing (Standard) (Upper)	1
3	1707004	Thrust Bearing (Standard) (Upper) (Alternate Part)	1
3	1584990	Crankshaft Bearing (0.010 in.) (Upper)	1
3	1584993	Thrust Bearing (0.020 in.) (Upper)	1
3	1707621	Thrust Bearing (0.50 mm O/S) (Upper) (Alternate Part)	1
3	1584996	Thrust Bearing (0.030 in.) (Upper)	1
3	1584999	Thrust Bearing (0.040 in.) (Upper)	1
3	1708512	Thrust Bearing (1.00 mm O/S) (Upper) (Alternate Part)	1
3	1707004	Thrust Bearing (Standard) (Alternate Part)	1
3	4007945	Thrust Bearing (0.75 mm O/S) (Alternate Part)	1
4	1543317	Bearing (Standard) (Lower)	6
4	1696674	Bearing (Standard) (Alternate Part)	6
4	1585002	Bearing (0.25 mm O/S) (Lower)	6
4	1584992	Bearing (0.50 mm O/S) (Lower)	6
4	1707620	Bearing (0.50 mm O/S) (Lower) (Alternate Part)	6
4	1584995	Bearing (0.75 mm O/S) (Lower)	6
4	1585000	Bearing (1.00 mm O/S) (Lower)	6
4	1708511	Bearing (1.00 mm O/S) (Lower) (Alternate Part)	6
4	4007946	Bearing (0.75 mm O/S) (Alternate Part)	6
5	1514354	Kit-Wear Sleeve (Rear)	1
6	1635310	Crankshaft	1
6	1635289	Crankshaft	1
7	. . . . .	Gear	1
8	. . . . .	Collar	1
9	1635273	Gear	1
10	1514346	Dowel	1
	1635243	Thrust Bearing (0.50 mm Oversize) (Optional)	1
	1635244	Thrust Bearing (1.00 mm Oversize) (Optional)	1
	1635239	Kit-Crankshaft Bearing (Standard)	1
	4007469	Bearing Set (Standard) (Alternate Part)	1
	1521705	Bearing Set (.010 in.)	1
	1708510	Bearing Set (1.00 mm O/S) (Alternate Part)	1
	4007075	Bearing Set (0.25 mm O/S) (Alternate Part)	1
	1521706	Bearing Set (.020 in.)	1
	1707619	Bearing Set (0.50 mm O/S) (Alternate Part)	1

©2010 HYSTER COMPANY

CRANKSHAFT AND BEARINGS

(→ 11/2008)

ITEM	PART NO.	DESCRIPTION	QTY
	1521707	Bearing Set (.030 in.)	1
	4007466	Bearing Set (0.75 mm O/S) (Alternate Part)	1
	1521708	Bearing Set (.040 in.)	1
	1708510	Bearing Set (1.00 mm O/S) (Alternate Part)	1

FOOTNOTES:

a → S/N B214E01668F

b S/N B214E01669F ↔ 11/2008

©2010 HYSTER COMPANY

NOTES

©2010 HYSTER COMPANY

CRANKSHAFT AND BEARINGS (FIGURE 2-16)
(11/2008 →)

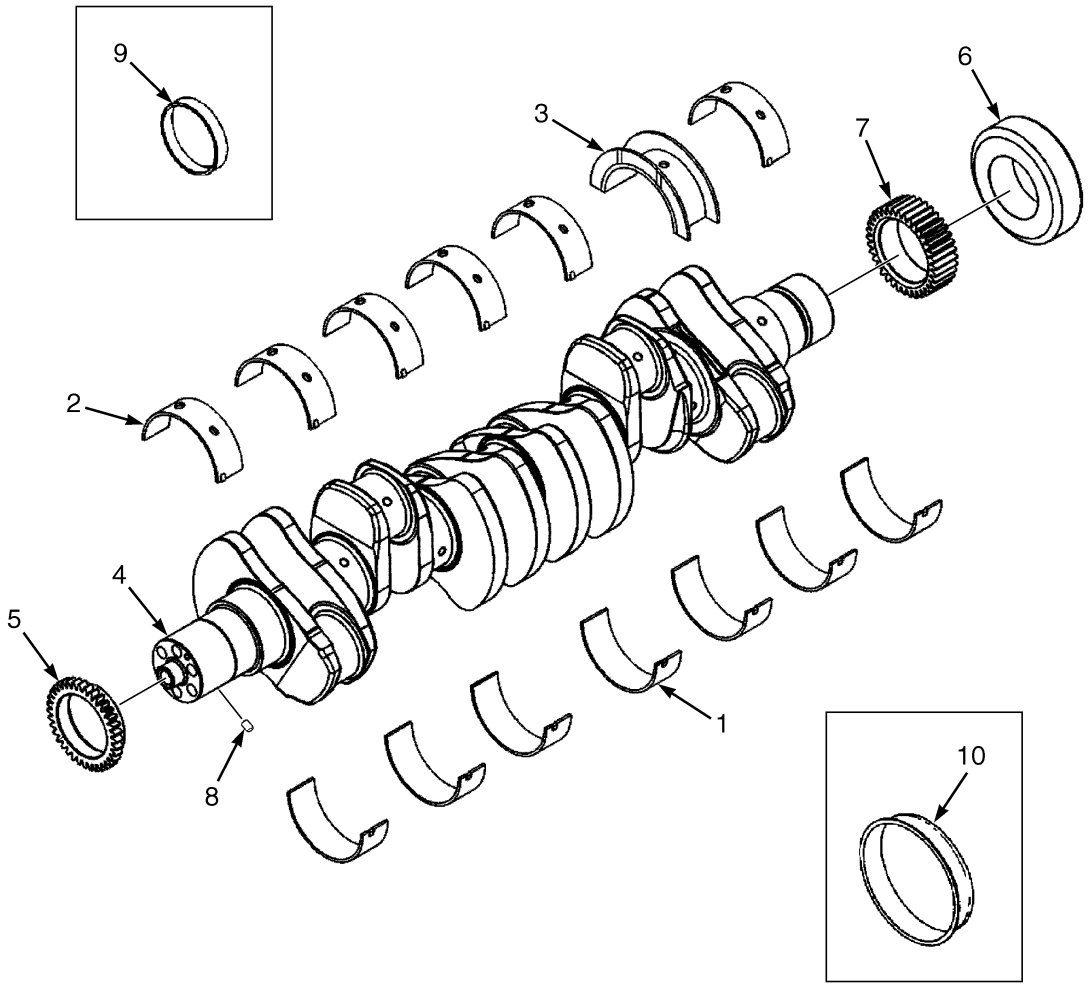

HP091427

©2010 HYSTER COMPANY

CRANKSHAFT AND BEARINGS

(11/2008 →)

ITEM	PART NO.	DESCRIPTION	QTY
	1692949	Engine Assy	1
	1692948	Engine Assy	1
	4007469	Bearing Set (Standard)	1
	4007075	Bearing Set (0.25 mm O/S)	1
	1707619	Bearing Set (0.50 mm O/S)	1
	4007466	Bearing Set (0.75 mm O/S)	1
	1708510	Bearing Set (1.00 mm O/S)	1
1	1696675	Bearing (Standard) (Lower)	7
1	4007465	Bearing (0.25 mm O/S) (Lower)	7
1	1707622	Bearing (0.50 mm O/S) (Lower)	7
1	4007468	Bearing (0.75 mm O/S) (Lower)	7
1	1708513	Bearing (1.00 mm O/S) (Lower)	7
2	1696674	Bearing (Standard) (Upper)	6
2	1585002	Bearing (0.25 mm O/S) (Upper)	6
2	1707620	Bearing (0.50 mm O/S) (Upper)	6
2	4007946	Bearing (0.75 mm O/S) (Upper)	6
2	1708511	Bearing (1.00 mm O/S) (Upper)	6
3	1707004	Thrust Bearing (Standard)	1
3	4007464	Thrust Bearing (0.25 mm O/S)	1
3	1707621	Thrust Bearing (0.50 mm O/S)	1
3	4007945	Thrust Bearing (0.75 mm O/S)	1
3	1708512	Thrust Bearing (1.00 mm O/S)	1
4	1701989	Crankshaft	1
4	1701994	Crankshaft	1
5	1701995	Gear	1
6	. . . . .	Collar	1
7	. . . . .	Gear	1
8	1661441	Dowel	1
9	1514354	Kit-Wear Sleeve (Rear)	1
10	1554045	Kit-Wear Sleeve (Front)	1

©2010 HYSTER COMPANY

CYLINDER BLOCK (FIGURE 2-17)

(→ 11/2008)

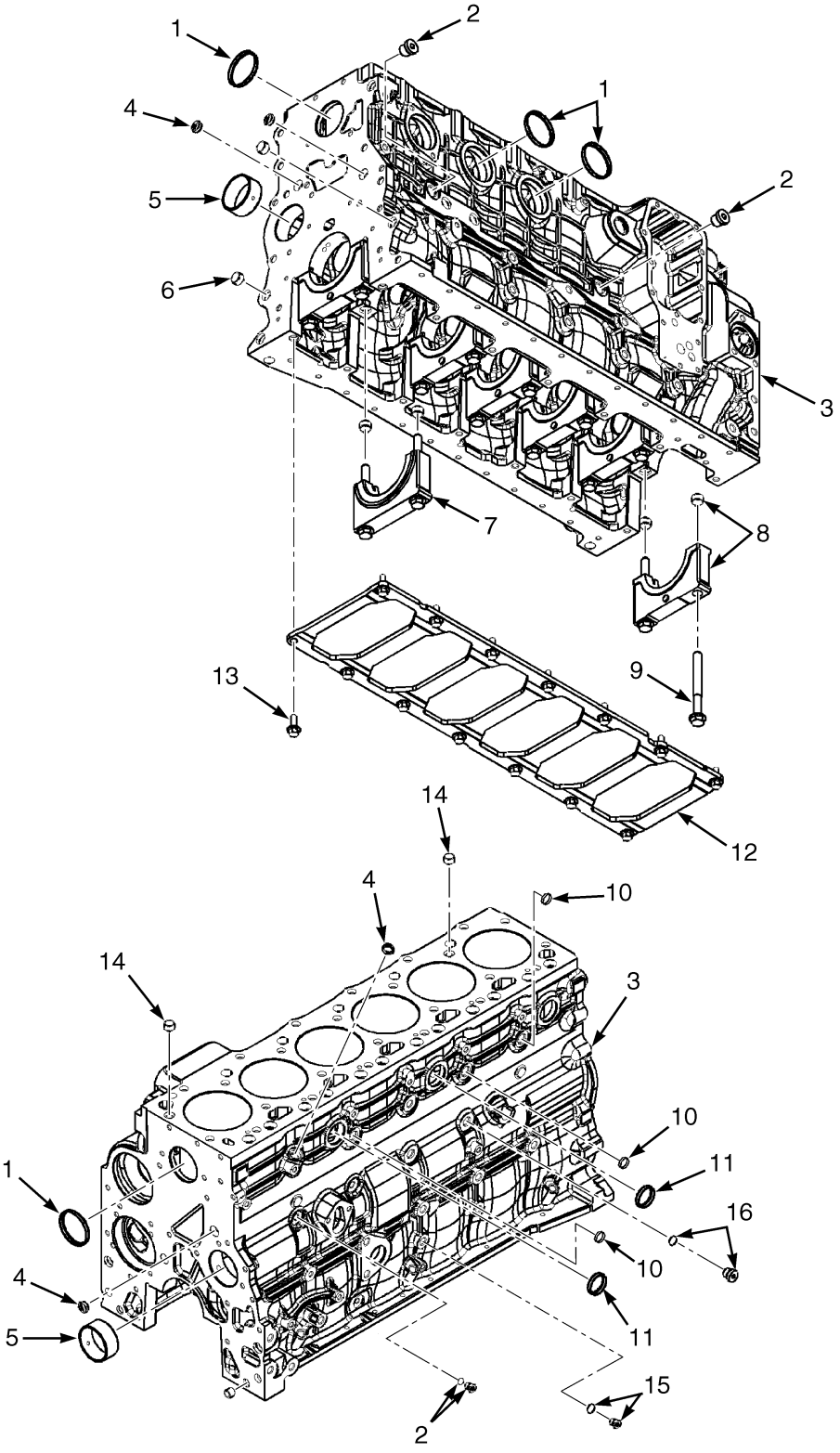

HP091326

©2010 HYSTER COMPANY

CYLINDER BLOCK

(→ 11/2008)

ITEM	PART NO.	DESCRIPTION	QTY
	a 1613301	Engine Assy-Diesel (Tier III 190 HP) (With Air Conditioning)	1
	b 1613486	Engine Assy-Diesel (Tier III 190 HP) (Without Air Conditioning)	1
	a 1559624	Engine Assy-Diesel (Tier III 220 HP) (With Air Conditioning)	1
	b 1613484	Engine Assy-Diesel (Tier III 220 HP) (Without Air Conditioning)	1
1	1618178	Plug	4
2	1515897	Plug Assembly	2
2	1605750	Sealing Ring	1
2	1515897	Plug Assembly (Alternate Part)	1
3	. . . . .	Cylinder Block	1
4	1512304	Plug	3
5	1521682	Bushing	2
6	1521685	Ring	AR
7	1635308	Cap (Main Bearing)	1
7	. . . . .	Cap	1
7	1521685	Ring	2
8	1635307	Cap (Main Bearing)	6
8	. . . . .	Cap	1
8	1521685	Ring	2
9	1521683	Capscrew	14
10	1512585	Plug	3
11	1513788	Plug	3
12	1635423	Plate (Stiffener)	1
13	1512503	Capscrew	14
14	1521691	Ring	2
15	1517010	Plug Assembly	1
15	1517011	O-Ring	1
16	1585283	Plug	1
16	1517119	O-Ring	1

FOOTNOTES:

a → S/N B214E01668F

b S/N B214E01669F ↔ 11/2008

©2010 HYSTER COMPANY

CYLINDER BLOCK (FIGURE 2-18)

(11/2008 →)

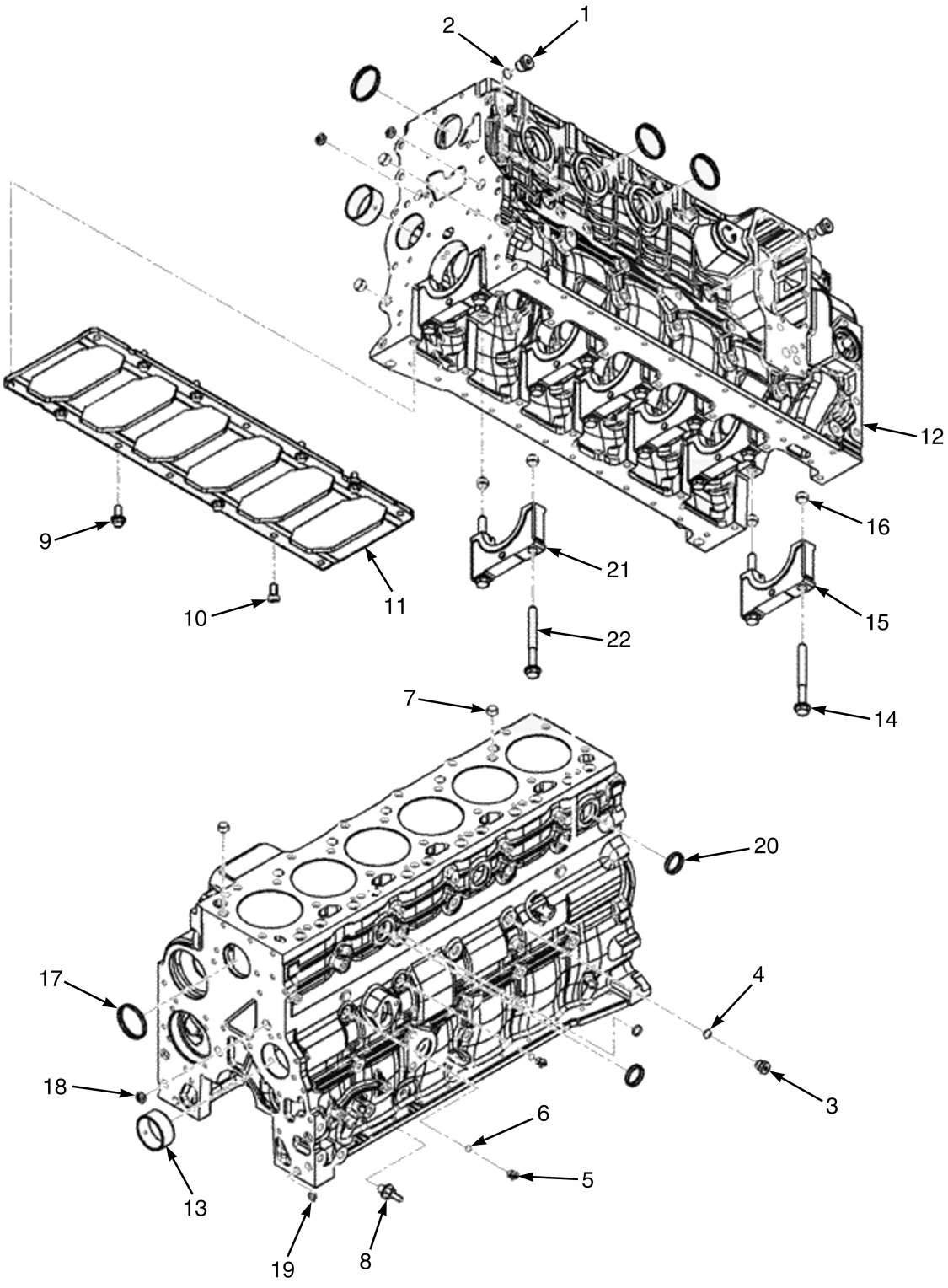

HP091465

©2010 HYSTER COMPANY

CYLINDER BLOCK
(11/2008 →)

ITEM	PART NO.	DESCRIPTION	QTY
	1692949	Engine Assy	1
	1692948	Engine Assy	1
1	1515897	Plug Assembly	2
2	1515898	O-Ring	1
3	1521695	Plug Assembly	1
4	1517119	O-Ring	1
5	1517010	Plug Assembly	1
6	1517011	O-Ring	1
7	1521691	Ring	2
8	1661440	Capscrew	2
9	1512503	Capscrew	10
10	1640824	Capscrew	1
11	1635423	Plate (Stiffener)	1
12	4006371	Cylinder Block	1
12	4006372	Cylinder Block	1
13	1521682	Bushing	2
14	1521683	Capscrew	14
15	1635307	Cap (Main Bearing)	6
16	1521685	Ring	2
17	1661086	Plug	4
18	1512585	Plug	3
19	1512304	Plug	2
20	1513788	Plug	3
21	1635308	Cap (Main Bearing)	1
22	1521685	Ring	2

©2010 HYSTER COMPANY

CYLINDER HEAD (FIGURE 2-19)
(→ 11/2008)

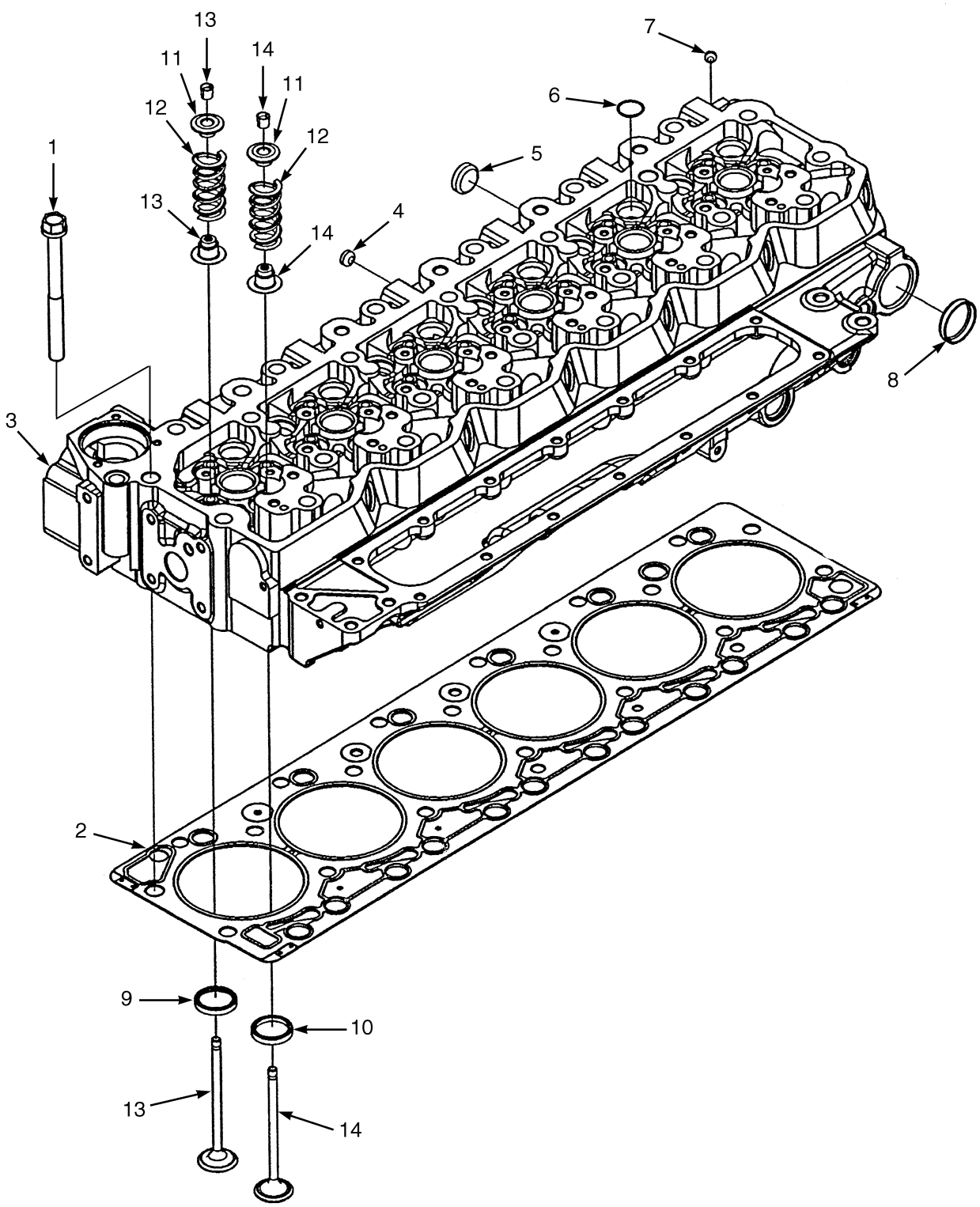

HP131323

©2010 HYSTER COMPANY

CYLINDER HEAD

(→ 11/2008)

ITEM	PART NO.	DESCRIPTION	QTY
	a 1613301	Engine Assy-Diesel (Tier III 190 HP) (With Air Conditioning)	1
	b 1613486	Engine Assy-Diesel (Tier III 190 HP) (Without Air Conditioning)	1
	c 1692949	Engine Assy (Without Air Conditioning)	1
	a 1559624	Engine Assy-Diesel (Tier III 220 HP) (With Air Conditioning)	1
	b 1613484	Engine Assy-Diesel (Tier III 220 HP) (Without Air Conditioning)	1
	c 1692948	Engine Assy (Without Air Conditioning)	1
1	1521901	Screw	26
2	1635407	Gasket	1
3	1635322	Cylinder Head	1
3	1635321	Cylinder Head	1
4	1521919	Plug	2
5	1512585	Plug	13
6	1514339	Plug	11
7	1512586	Plug	7
8	1517190	Plug	2
9	1584925	Insert (Intake Valve)	12
10	1635464	Insert (Exhaust Valve)	12
11	1521915	Retainer	24
12	1661289	Spring	24
13	1521913	Kit-Valve (Intake)	12
13	1521914	Keeper	24
13	1584922	Seal (Valve Stem)	12
13	1521913	Kit-Valve (Intake)	12
14	1635346	Kit-Exhaust Valve	12
14	1521914	Keeper	24
14	1584923	Seal (Valve Stem)	12
14	1635290	Exhaust Valve	12

FOOTNOTES:

a → S/N B214E01668F

b S/N B214E01669F ↔ 11/2008

c 11/2008 →

©2010 HYSTER COMPANY

CYLINDER HEAD (FIGURE 2-20)

(11/2008 →)

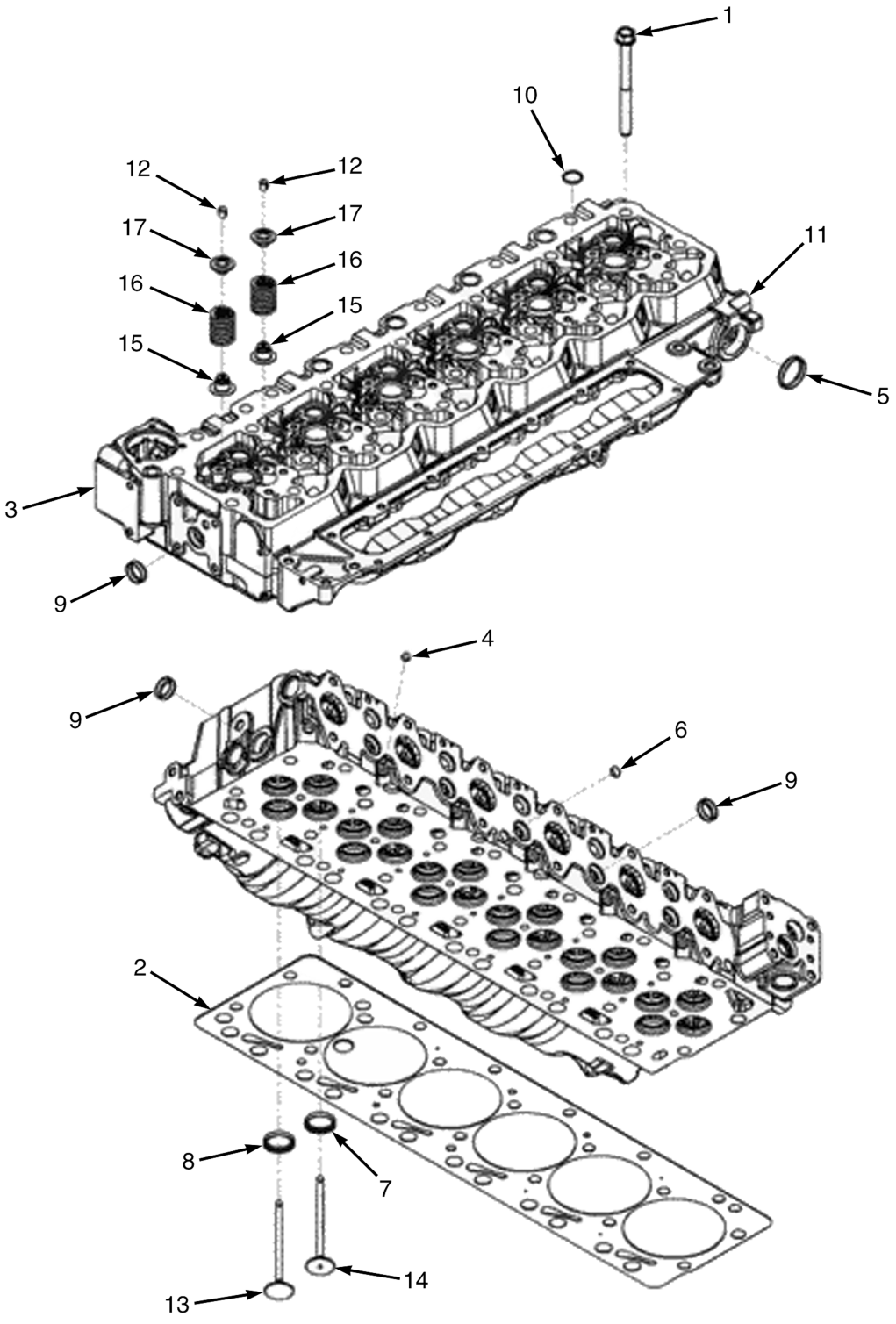

HP091469

©2010 HYSTER COMPANY

CYLINDER HEAD
(11/2008 →)

ITEM	PART NO.	DESCRIPTION	QTY
	1692948	Engine Assy	1
	1692949	Engine Assy	1
1	1521901	Screw	26
2	1635407	Gasket	1
3	1661288	Cylinder Head Assembly	1
4	1512586	Plug	7
5	1517190	Plug	2
6	1521919	Plug	2
7	1584925	Insert	12
8	1635464	Insert	12
9	1512585	Plug	13
10	1514339	Plug	11
11	. . . . .	Cylinder Head	1
12	1521914	Keeper	24
13	1553872	Exhaust Valve	12
14	1553873	Intake Valve	12
15	1584922	Seal (Valve Stem)	12
16	1661289	Spring	24
17	1521915	Retainer	24
	1521913	Kit-Valve (Intake)	12
	1521912	Kit-Valve (Exhaust)	12

©2010 HYSTER COMPANY

ENGINE ASSEMBLY (FIGURE 2-21)

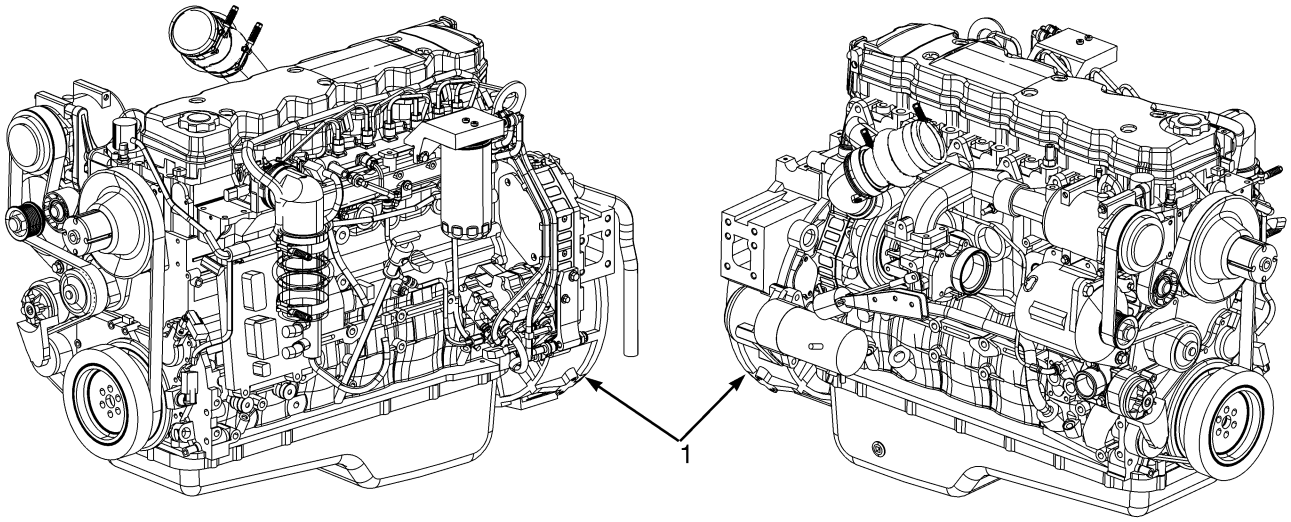

HP091238

ITEM	PART NO.	DESCRIPTION	QTY
1	**a** 1613301	Engine Assy-Diesel (Tier III 190 HP) (With Air Conditioning)	1
1	**b** 1613486	Engine Assy-Diesel (Tier III 190 HP) (Without Air Conditioning)	1
1	**c** 1692949	Engine Assy (Without Air Conditioning)	1
1	**a** 1559624	Engine Assy-Diesel (Tier III 220 HP) (With Air Conditioning)	1
1	**b** 1613484	Engine Assy-Diesel (Tier III 220 HP) (Without Air Conditioning)	1
1	**c** 1692948	Engine Assy (Without Air Conditioning)	1

FOOTNOTES:

a → S/N B214E01668F
b S/N B214E01669F ↔ 11/2008
c 11/2008 →

©2010 HYSTER COMPANY

NOTES

©2010 HYSTER COMPANY

ENGINE BLOCK HEATER (FIGURE 2-22)

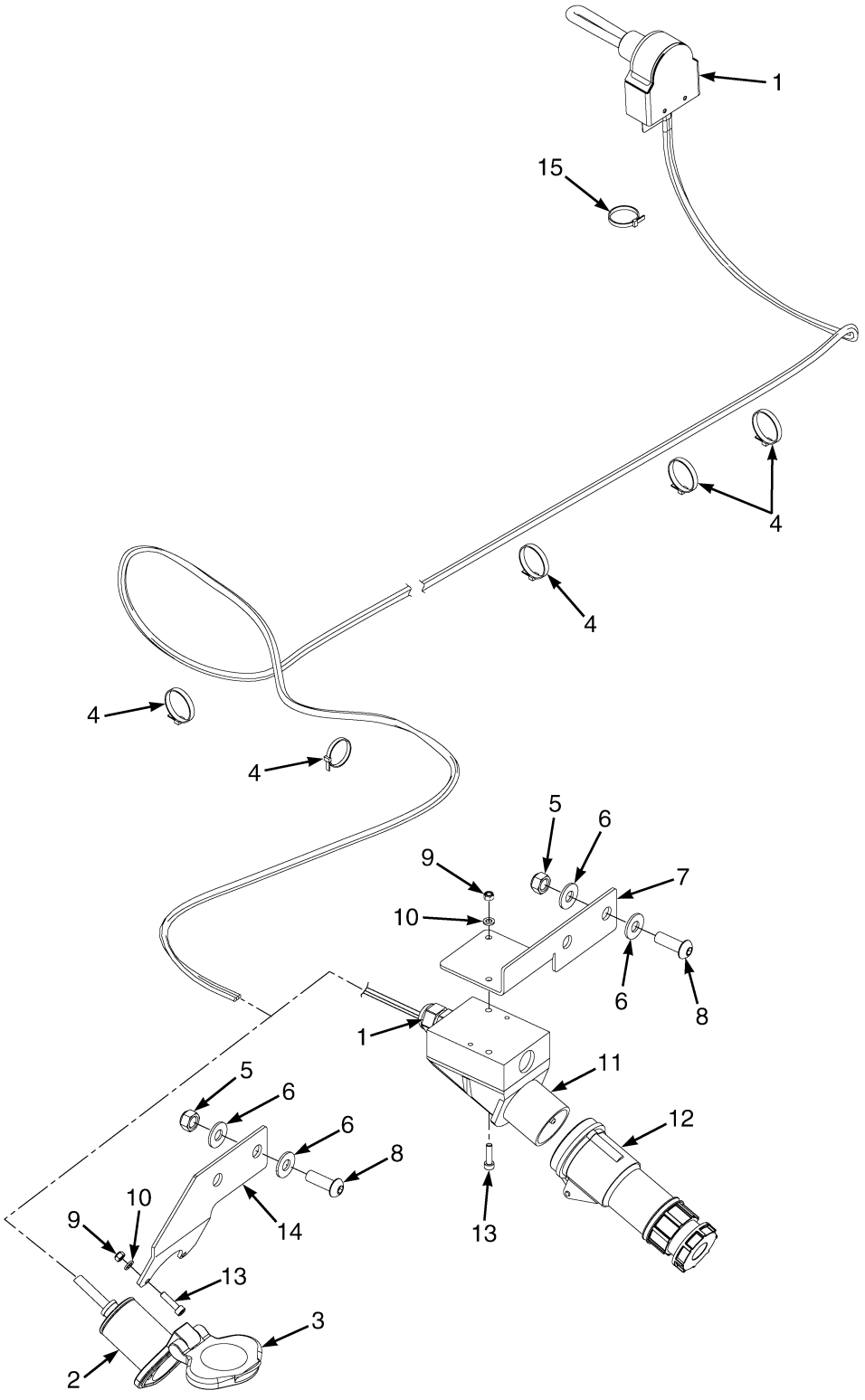

HP091409

©2010 HYSTER COMPANY

ENGINE BLOCK HEATER

KEY:
A: 120 Volt
B: 220 Volt

ITEM	PART NO.	DESCRIPTION	QTY A	QTY B
1	1625540	Heater	1	..
1	1625944	Heater	..	1
1	1628959	Heat Shield	1	1
1	1628960	Cable	1	..
1	1628965	Cable	..	1
1	1628961	Clamp	1	1
1	1628962	Heater	1	..
1	1628966	Heater	..	1
1	1628967	Gland	..	1
2	1628964	Housing	1	..
3	1628963	Cover	1	..
4	137852	Strap Clamp	5	5
5	302401	Locknut	2	2
6	1581558	Washer	4	4
7	1650570	Plate	..	1
8	1597444	Capscrew	2	2
9	302398	Locknut	2	2
10	320155	Washer	2	2
11	1507089	Connector (220 Volt, Male)	..	1
12	1507090	Connector (220 Volt, Female)	..	1
13	293744	Screw	2	2
14	1650569	Plate	1	..
15	114312	Strap Clamp	1	1

©2010 HYSTER COMPANY

ENGINE COOLANT VENT (FIGURE 2-23)

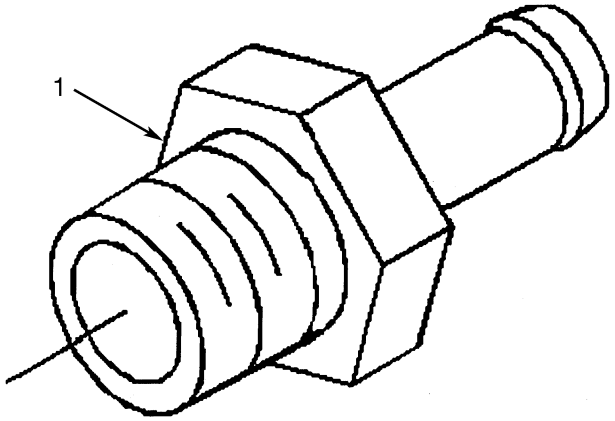

ITEM	PART NO.	DESCRIPTION	QTY
	a 1613301	Engine Assy-Diesel (Tier III 190 HP) (With Air Conditioning)	1
	b 1613486	Engine Assy-Diesel (Tier III 190 HP) (Without Air Conditioning)	1
	c 1692949	Engine Assy (Without Air Conditioning)	1
	a 1559624	Engine Assy-Diesel (Tier III 220 HP) (With Air Conditioning)	1
	b 1613484	Engine Assy-Diesel (Tier III 220 HP) (Without Air Conditioning)	1
	c 1692948	Engine Assy (Without Air Conditioning)	1
1	1517250	Fitting	1

FOOTNOTES:

a → S/N B214E01668F
b S/N B214E01669F ↔ 11/2008
c 11/2008 →

©2010 HYSTER COMPANY

NOTES

©2010 HYSTER COMPANY

ENGINE OIL COOLER (FIGURE 2-24)

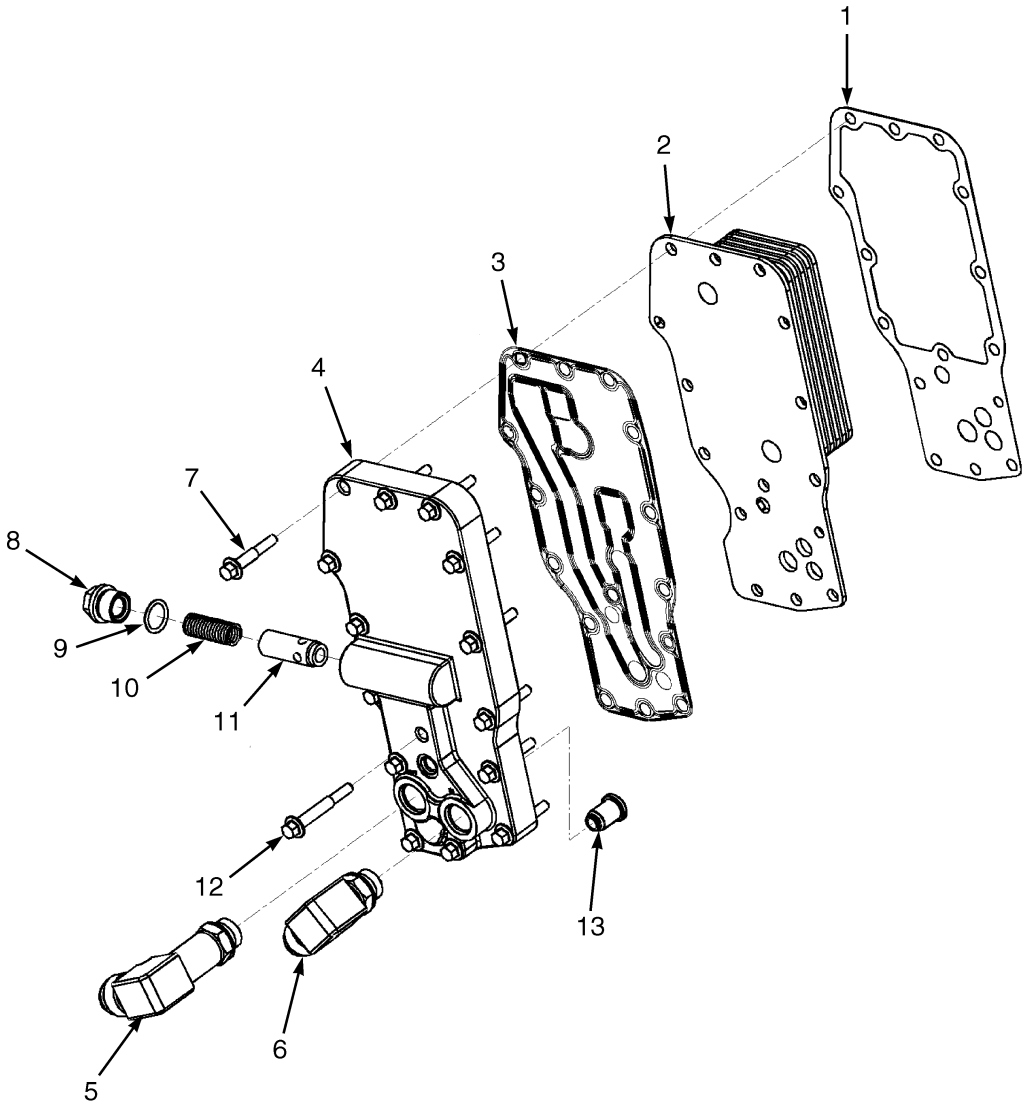

HP091321

©2010 HYSTER COMPANY

ENGINE OIL COOLER

ITEM	PART NO.	DESCRIPTION	QTY
	c 1613301	Engine Assy-Diesel (Tier III 190 HP) (With Air Conditioning)	1
	d 1613486	Engine Assy-Diesel (Tier III 190 HP) (Without Air Conditioning)	1
	e 1692949	Engine Assy (Without Air Conditioning)	1
	c 1559624	Engine Assy-Diesel (Tier III 220 HP) (With Air Conditioning)	1
	d 1613484	Engine Assy-Diesel (Tier III 220 HP) (Without Air Conditioning)	1
	e 1692948	Engine Assy (Without Air Conditioning)	1
1	**e** 1662313	Gasket	1
2	1635314	Oil Cooler	1
3	**e** 1702102	Gasket	1
4	1635339	Filter Head	1
5	1635245	Fitting	1
6	1635248	Fitting	1
7	1512111	Capscrew	12
8	1512453	Plug	1
9	1512118	O-Ring	1
10	1512112	Spring	1
11	1512119	Plunger	1
12	1543421	Capscrew	3
13	1513772	Relief Valve (Pressure)	1
	ab 1635458	Kit-Gasket	1

FOOTNOTES:

a Includes Cooler Core Gasket (Qty. 1) and Filter Head Gasket (Qty.1)
b → 11/2008
c → S/N B214E01668F
d S/N B214E01669F ↔ 11/2008
e 11/2008 →

©2010 HYSTER COMPANY

ENGINE MOUNTS (FIGURE 2-25)

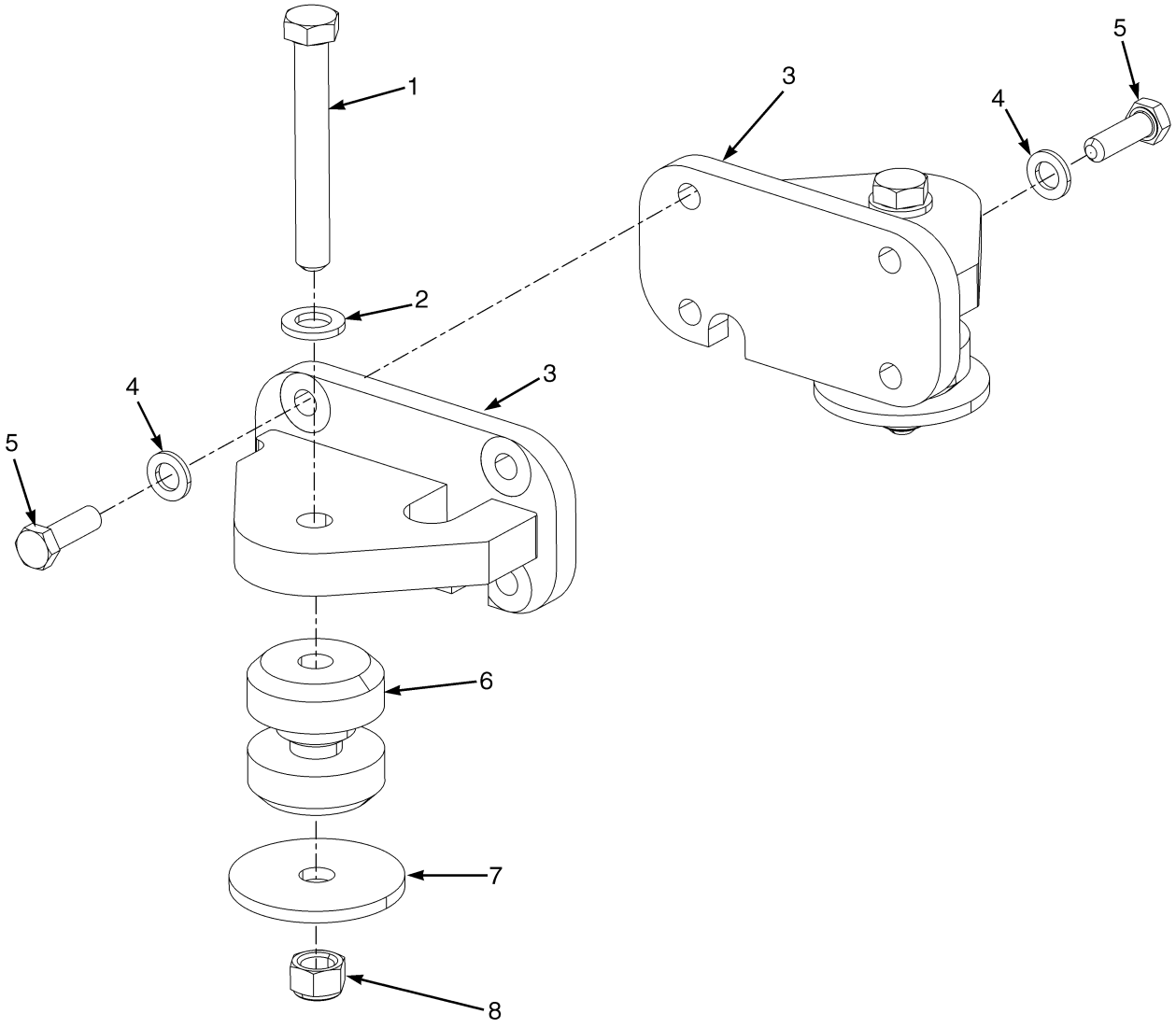

HP091367

ITEM	PART NO.	DESCRIPTION	QTY
1	292573	Capscrew	2
2	320165	Washer	2
3	1559655	Bracket	2
4	296422	Washer	8
5	1464456	Capscrew	8
6	1464454	Isolator	2
7	1302938	Washer	2
8	302404	Locknut	2

©2010 HYSTER COMPANY

NOTES

©2010 HYSTER COMPANY

EXHAUST MANIFOLD (FIGURE 2-26)

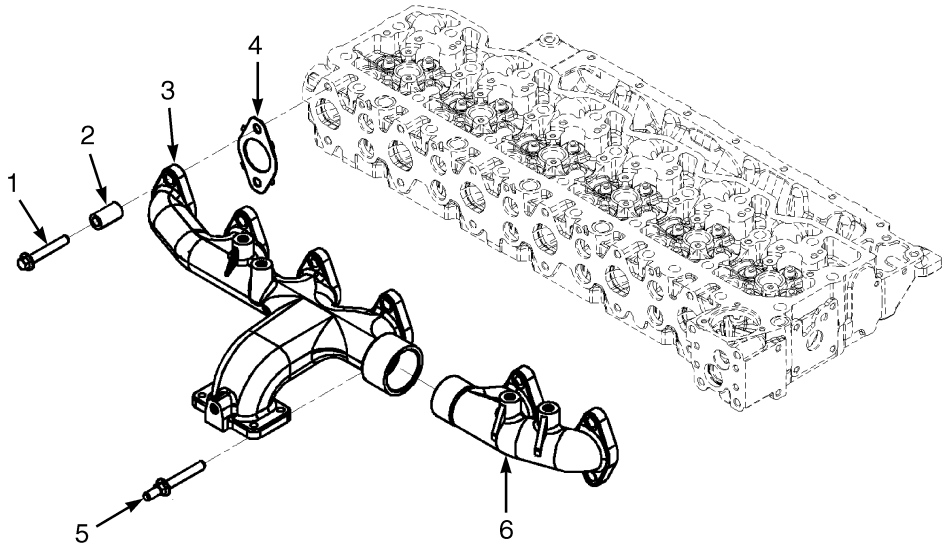

HP091334

©2010 HYSTER COMPANY

EXHAUST MANIFOLD

ITEM	PART NO.	DESCRIPTION	QTY
	a 1613301	Engine Assy-Diesel (Tier III 190 HP) (With Air Conditioning)	1
	b 1613486	Engine Assy-Diesel (Tier III 190 HP) (Without Air Conditioning)	1
	c 1692949	Engine Assy (Without Air Conditioning)	1
	a 1559624	Engine Assy-Diesel (Tier III 220 HP) (With Air Conditioning)	1
	b 1613484	Engine Assy-Diesel (Tier III 220 HP) (Without Air Conditioning)	1
	c 1692948	Engine Assy (Without Air Conditioning)	1
1	1517257	Screw	11
2	1517256	Spacer	12
3	1635373	Exhaust Manifold	1
4	1521952	Gasket	6
5	1565045	Capscrew	1
6	1635374	Exhaust Manifold	1
6	1702188	Exhaust Manifold (Alternate Part)	1

FOOTNOTES:

a → S/N B214E01668F
b S/N B214E01669F ↔ 11/2008
c 11/2008 →

©2010 HYSTER COMPANY

EXHAUST SYSTEM (FIGURE 2-27)

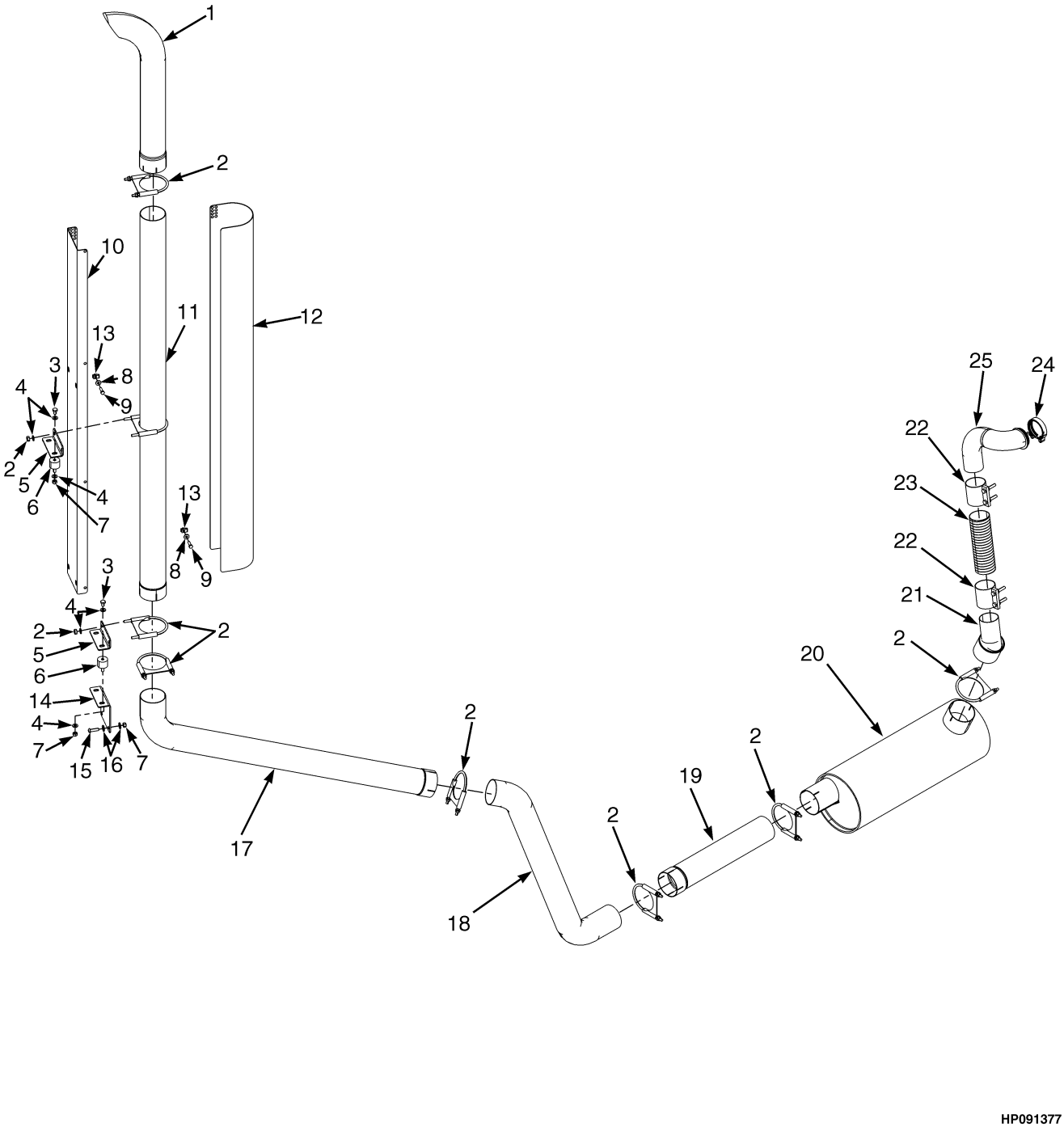

HP091377

©2010 HYSTER COMPANY

EXHAUST SYSTEM

ITEM	PART NO.	DESCRIPTION	QTY
1	1616289	Exhaust Pipe	1
2	1391427	Clamp	8
3	292513	Capscrew	4
4	320159	Washer	20
5	1616156	Bracket	2
6	1597192	Isolator	4
7	302401	Locknut	6
8	320158	Washer	8
9	176640	Bolt	8
10	1532480	Exhaust Shield	1
11	1597195	Exhaust Pipe	1
12	1532479	Exhaust Shield	1
13	1385535	Nut	8
14	1616092	Bracket	1
15	296175	Capscrew	2
16	320160	Washer	4
17	1590002	Exhaust Pipe	1
18	1532461	Exhaust Pipe	1
19	1548426	Exhaust Pipe	1
20	1612047	Muffler	1
21	1615789	Tube	1
22	270826	Clamp	2
23	1544774	Flex Tube	1
24	1373430	Clamp	1
25	1615841	Tube	1

©2010 HYSTER COMPANY

FAN DRIVE AND MOUNTING (FIGURE 2-28)

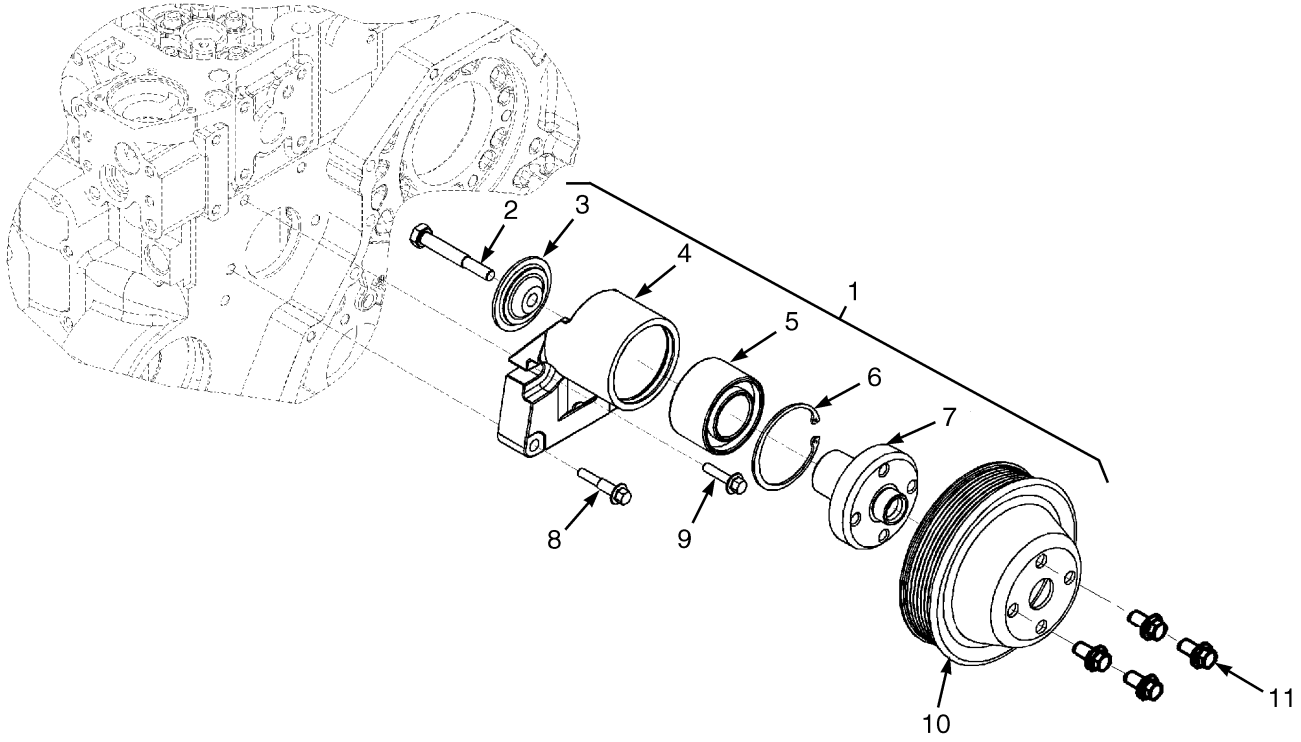

HP091335

ITEM	PART NO.	DESCRIPTION	QTY
	b 1613301	Engine Assy-Diesel (Tier III 190 HP) (With Air Conditioning)	1
	c 1613486	Engine Assy-Diesel (Tier III 190 HP) (Without Air Conditioning)	1
	d 1692949	Engine Assy (Without Air Conditioning)	1
	b 1559624	Engine Assy-Diesel (Tier III 220 HP) (With Air Conditioning)	1
	c 1613484	Engine Assy-Diesel (Tier III 220 HP) (Without Air Conditioning)	1
	d 1692948	Engine Assy (Without Air Conditioning)	1
	. . . . .	Fan Drive Assembly	1
1	1512424	Fan Mount	1
2	1512027	Capscrew	1
3	1512025	Hub	1
4	. . . . .	Support	1
5	1512015	Ball Bearing	1
6	1512026	Retaining Ring	2
7	1512024	Hub (Fan)	1
8	1512029	Screw	2
9	1635220	Capscrew	2
10	**a** 1635258	Fan Pulley	1
10	**d** 4009311	Fan Pulley (Alternate Part)	1
11	1512328	Capscrew	4

FOOTNOTES:

a → 11/2008
b → S/N B214E01668F
c S/N B214E01669F ↔ 11/2008
d 11/2008 →

©2010 HYSTER COMPANY

FLYWHEEL AND MOUNTING (FIGURE 2-29)

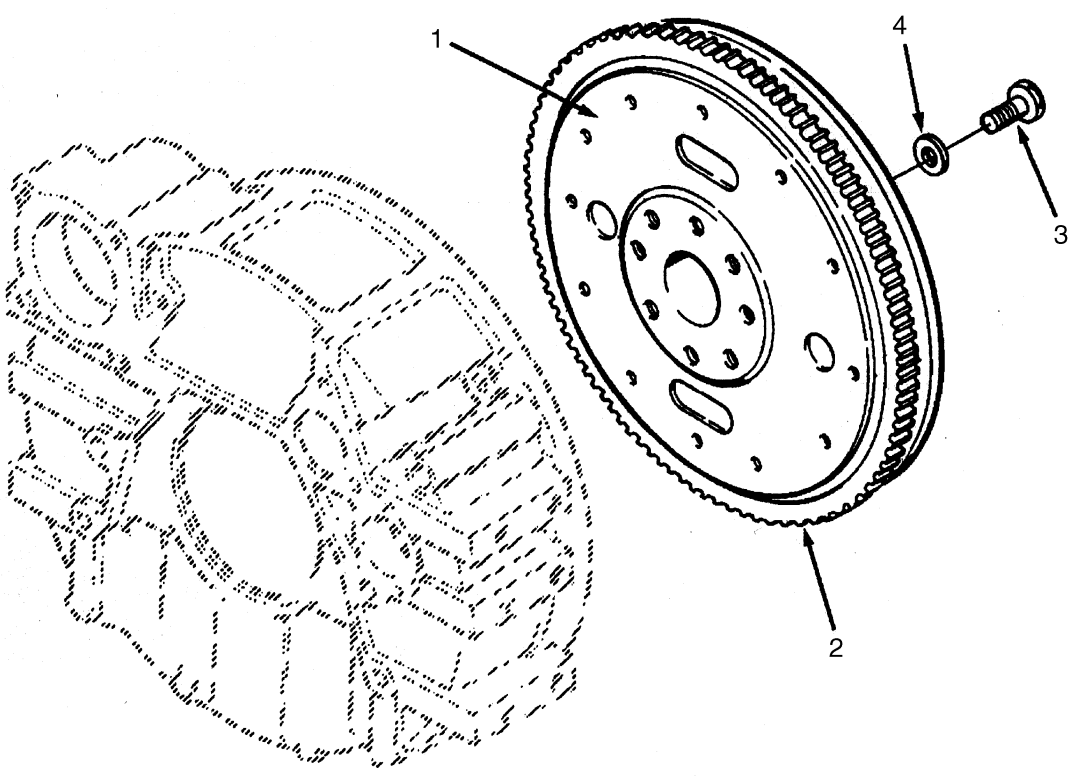

HP090879

ITEM	PART NO.	DESCRIPTION	QTY
	a 1613301	Engine Assy-Diesel (Tier III 190 HP) (With Air Conditioning)	1
	b 1613486	Engine Assy-Diesel (Tier III 190 HP) (Without Air Conditioning)	1
	c 1692949	Engine Assy (Without Air Conditioning)	1
	a 1559624	Engine Assy-Diesel (Tier III 220 HP) (With Air Conditioning)	1
	b 1613484	Engine Assy-Diesel (Tier III 220 HP) (Without Air Conditioning)	1
	c 1692948	Engine Assy (Without Air Conditioning)	1
1	1598354	Flywheel Assembly	1
2	1512445	Ring Gear	1
3	1512106	Capscrew	8
4	1512107	Washer	8

FOOTNOTES:

a → S/N B214E01668F
b S/N B214E01669F ↔ 11/2008
c 11/2008 →

©2010 HYSTER COMPANY

FLYWHEEL HOUSING (FIGURE 2-30)
(→ S/N 73037048 (ENGINE))

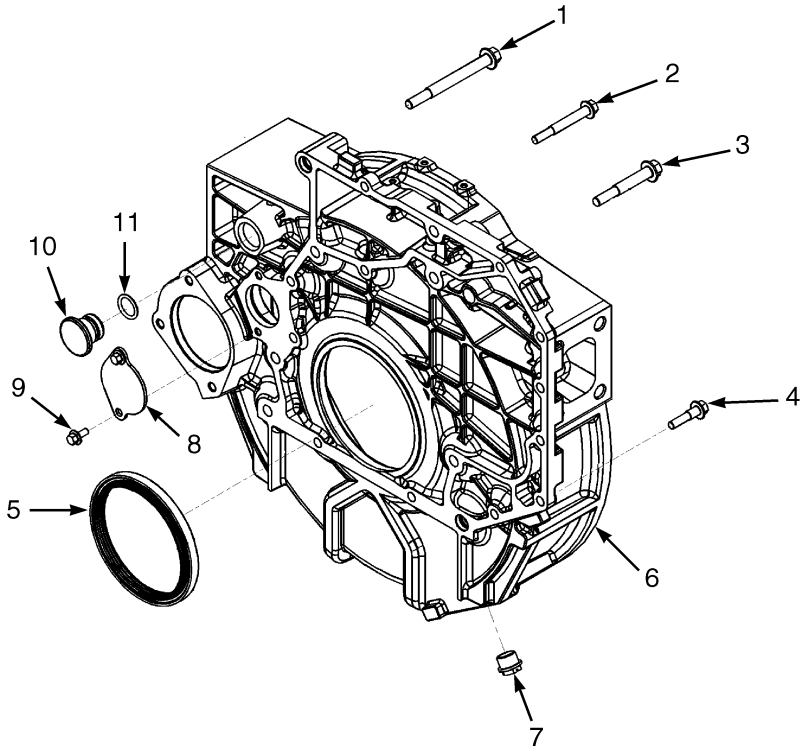

HP091338

ITEM	PART NO.	DESCRIPTION	QTY
	b 1613301	Engine Assy-Diesel (Tier III 190 HP) (With Air Conditioning)	1
	c 1613486	Engine Assy-Diesel (Tier III 190 HP) (Without Air Conditioning)	1
	d 1692949	Engine Assy (Without Air Conditioning)	1
	b 1559624	Engine Assy-Diesel (Tier III 220 HP) (With Air Conditioning)	1
	c 1613484	Engine Assy-Diesel (Tier III 220 HP) (Without Air Conditioning)	1
	d 1692948	Engine Assy (Without Air Conditioning)	1
1	1635228	Capscrew	2
2	1521938	Capscrew	2
3	1511981	Capscrew	6
4	1635255	Capscrew	10
5	**a** 1564993	Oil Seal	1
5	**d** 1696745	Oil Seal	1
6	1635452	Flywheel Housing Assembly	1
6	**a** 1635302	Flywheel Housing	1
6	**d** 1661089	Flywheel Housing	1
7	1512046	Plug	1
8	1635256	Plate	1
9	1511970	Capscrew	2
10	1512047	Fitting	1
11	1512048	O-Ring	1
	a 1564992	Kit-Seal (Crankshaft)	AR
14	**d** 1696691	Kit-Seal (Crankshaft)	AR

©2010 HYSTER COMPANY

FOOTNOTES:

a → 11/2008
b → S/N B214E01668F
c S/N B214E01669F ↔ 11/2008
d 11/2008 →

©2010 HYSTER COMPANY

FLYWHEEL HOUSING (FIGURE 2-31)

(S/N 73037049 → (ENGINE))

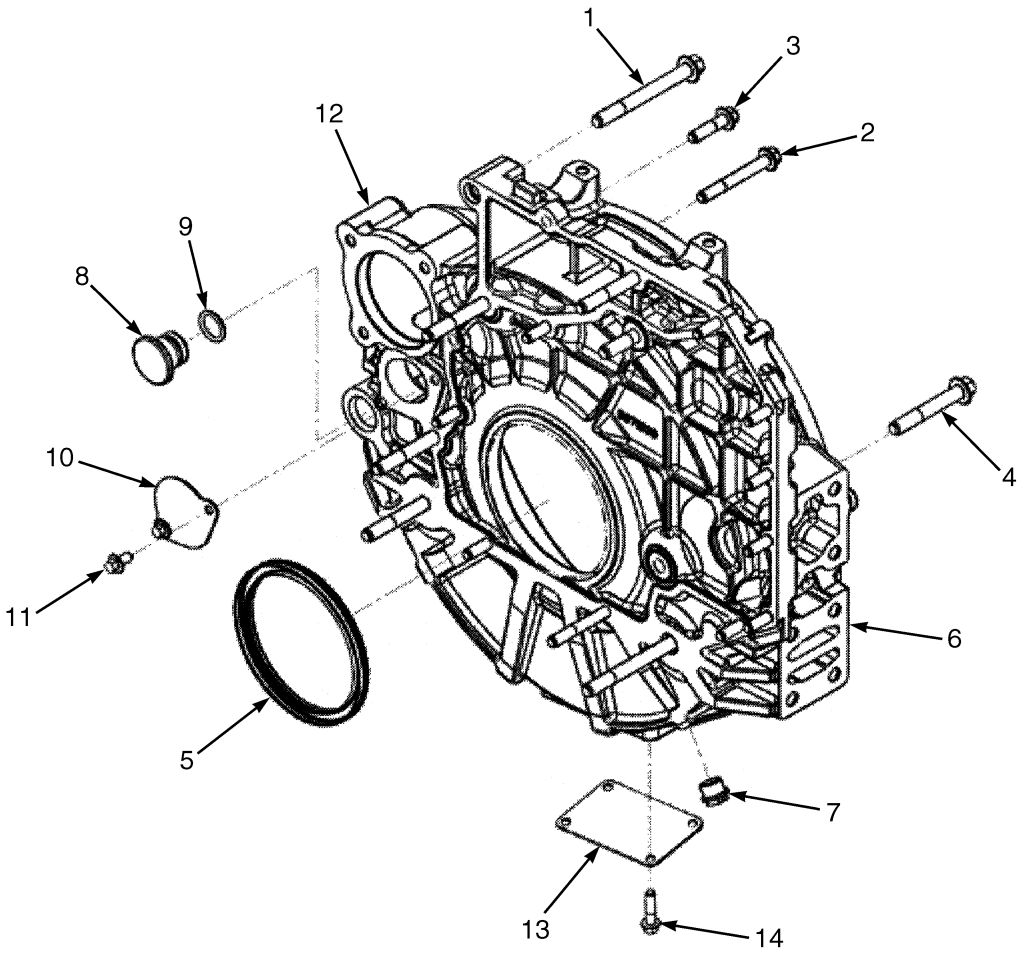

BP090445

©2010 HYSTER COMPANY

FLYWHEEL HOUSING
(S/N 73037049 → (ENGINE))

ITEM	PART NO.	DESCRIPTION	QTY
	1692949	Engine Assy	1
	1692948	Engine Assy	1
1	1635228	Capscrew	2
2	1512316	Screw	2
3	1635255	Capscrew	9
4	1511981	Capscrew	6
5	. . . . .	Oil Seal	1
6	4022316	Flywheel Housing Assembly	1
7	1512046	Plug	4
8	1512047	Fitting	1
9	1512048	O-Ring	1
10	1635256	Plate	1
11	1511970	Capscrew	2
12	4022317	Flywheel Housing	1
13	1512054	Cover Plate	1
14	1512433	Screw	1
	1696691	Kit-Seal (Includes Seal Installation Tools)	AR

©2010 HYSTER COMPANY

FRONT GEAR COVER (FIGURE 2-32)

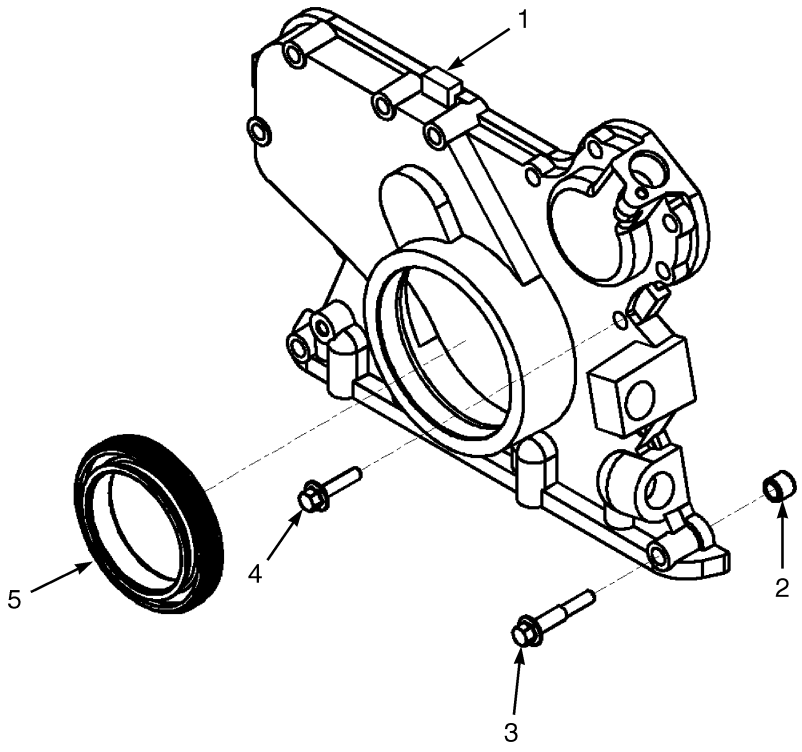

HP091342

ITEM	PART NO.	DESCRIPTION	QTY
	b 1613301	Engine Assy-Diesel (Tier III 190 HP) (With Air Conditioning)	1
	c 1613486	Engine Assy-Diesel (Tier III 190 HP) (Without Air Conditioning)	1
	d 1692949	Engine Assy (Without Air Conditioning)	1
	b 1559624	Engine Assy-Diesel (Tier III 220 HP) (With Air Conditioning)	1
	c 1613484	Engine Assy-Diesel (Tier III 220 HP) (Without Air Conditioning)	1
	d 1692948	Engine Assy (Without Air Conditioning)	1
1	**a** 1635285	Cover	1
1	**d** 1661070	Cover	1
2	1635266	Ring	2
3	1512111	Capscrew	6
4	1512423	Capscrew	7
5	1635350	Oil Seal	1

FOOTNOTES:

a → 11/2008
b → S/N B214E01668F
c S/N B214E01669F ↔ 11/2008
d 11/2008 →

©2010 HYSTER COMPANY

LIFTING BRACKETS AND MOUNTING (FIGURE 2-33)

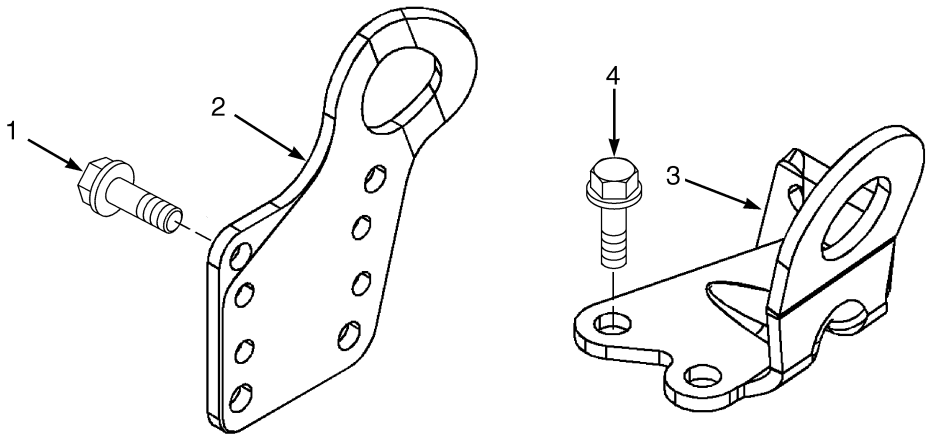

HP091347

ITEM	PART NO.	DESCRIPTION	QTY
	b 1613301	Engine Assy-Diesel (Tier III 190 HP) (With Air Conditioning)	1
	c 1613486	Engine Assy-Diesel (Tier III 190 HP) (Without Air Conditioning)	1
	d 1692949	Engine Assy (Without Air Conditioning)	1
	b 1559624	Engine Assy-Diesel (Tier III 220 HP) (With Air Conditioning)	1
	c 1613484	Engine Assy-Diesel (Tier III 220 HP) (Without Air Conditioning)	1
	d 1692948	Engine Assy (Without Air Conditioning)	1
1	1635229	Capscrew	4
2	1635357	Bracket	1
3	**a** 1635396	Bracket	1
3	**d** 1661444	Bracket	1
4	**a** 1512418	Capscrew	2
4	**d** 1661145	Capscrew	2

FOOTNOTES:

a → 11/2008
b → S/N B214E01668F
c S/N B214E01669F ↔ 11/2008
d 11/2008 →

©2010 HYSTER COMPANY

LUBRICATING OIL PUMP (FIGURE 2-34)

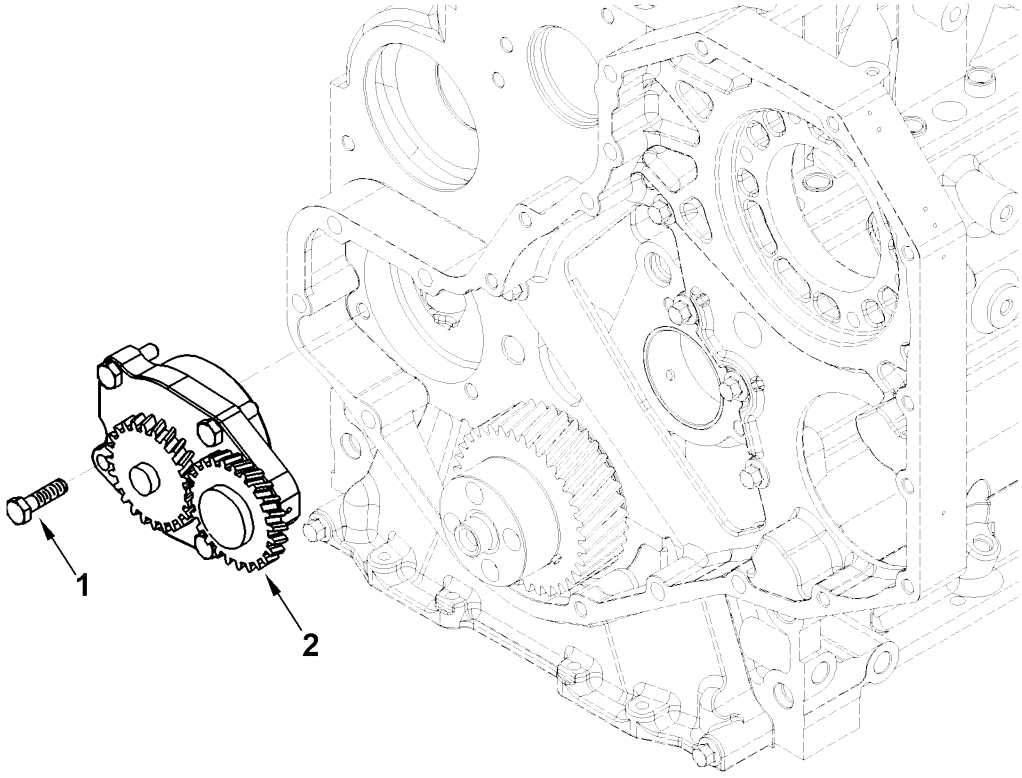

HP091122

ITEM	PART NO.	DESCRIPTION	QTY
	b 1613301	Engine Assy-Diesel (Tier III 190 HP) (With Air Conditioning)	1
	c 1613486	Engine Assy-Diesel (Tier III 190 HP) (Without Air Conditioning)	1
	d 1692949	Engine Assy (Without Air Conditioning)	1
	b 1559624	Engine Assy-Diesel (Tier III 220 HP) (With Air Conditioning)	1
	c 1613484	Engine Assy-Diesel (Tier III 220 HP) (Without Air Conditioning)	1
	d 1692948	Engine Assy (Without Air Conditioning)	1
1	1512456	Capscrew	4
2	**a** 1635299	Oil Pump	1
2	**d** 1702103	Oil Pump	1

FOOTNOTES:

a → 11/2008
b → S/N B214E01668F
c S/N B214E01669F ↔ 11/2008
d 11/2008 →

©2010 HYSTER COMPANY

OIL FILLER (FIGURE 2-35)

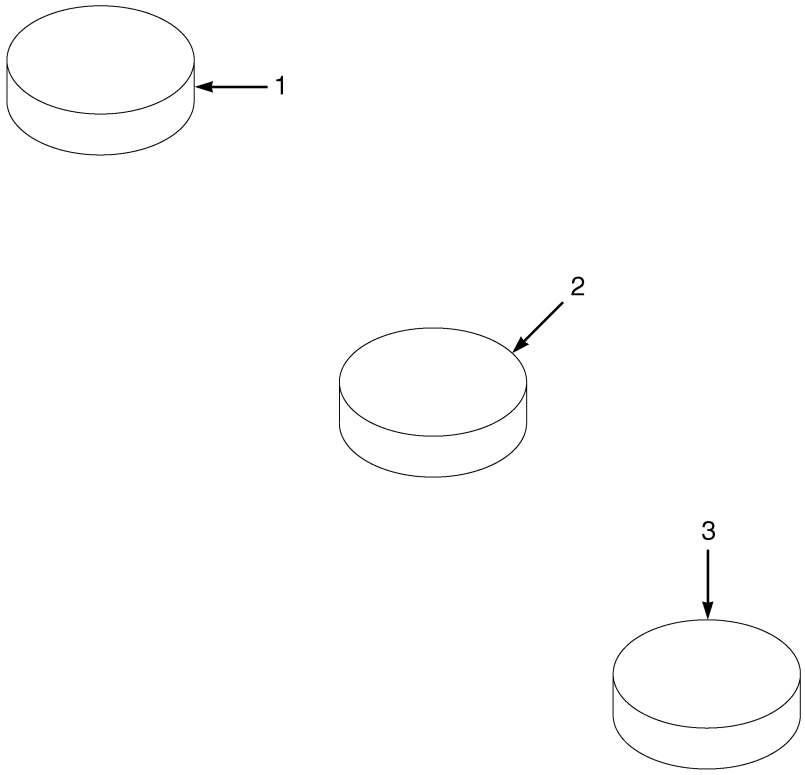

HP091357

ITEM	PART NO.	DESCRIPTION	QTY
	b 1613301	Engine Assy-Diesel (Tier III 190 HP) (With Air Conditioning)	1
	c 1613486	Engine Assy-Diesel (Tier III 190 HP) (Without Air Conditioning)	1
	d 1692949	Engine Assy (Without Air Conditioning)	1
	b 1559624	Engine Assy-Diesel (Tier III 220 HP) (With Air Conditioning)	1
	c 1613484	Engine Assy-Diesel (Tier III 220 HP) (Without Air Conditioning)	1
	d 1692948	Engine Assy (Without Air Conditioning)	1
1	**a** 1635224	Plug	1
2	1521694	Plug	1
3	1514339	Plug	1

FOOTNOTES:

a → 11/2008
b → S/N B214E01668F
c S/N B214E01669F ↔ 11/2008
d 11/2008 →

©2010 HYSTER COMPANY

OIL LEVEL GAUGE (FIGURE 2-36)



HP091351

ITEM	PART NO.	DESCRIPTION	QTY
	a 1613301	Engine Assy-Diesel (Tier III 190 HP) (With Air Conditioning)	1
	b 1613486	Engine Assy-Diesel (Tier III 190 HP) (Without Air Conditioning)	1
	c 1692949	Engine Assy (Without Air Conditioning)	1
	a 1559624	Engine Assy-Diesel (Tier III 220 HP) (With Air Conditioning)	1
	b 1613484	Engine Assy-Diesel (Tier III 220 HP) (Without Air Conditioning)	1
	c 1692948	Engine Assy (Without Air Conditioning)	1
1	1512130	Plug (Expansion)	4
2	1635319	Dipstick	1
3	1635309	Dipstick Tube	1

FOOTNOTES:

a → S/N B214E01668F
b S/N B214E01669F ↔ 11/2008
c 11/2008 →

©2010 HYSTER COMPANY

NOTES

©2010 HYSTER COMPANY

OIL PAN (FIGURE 2-37)

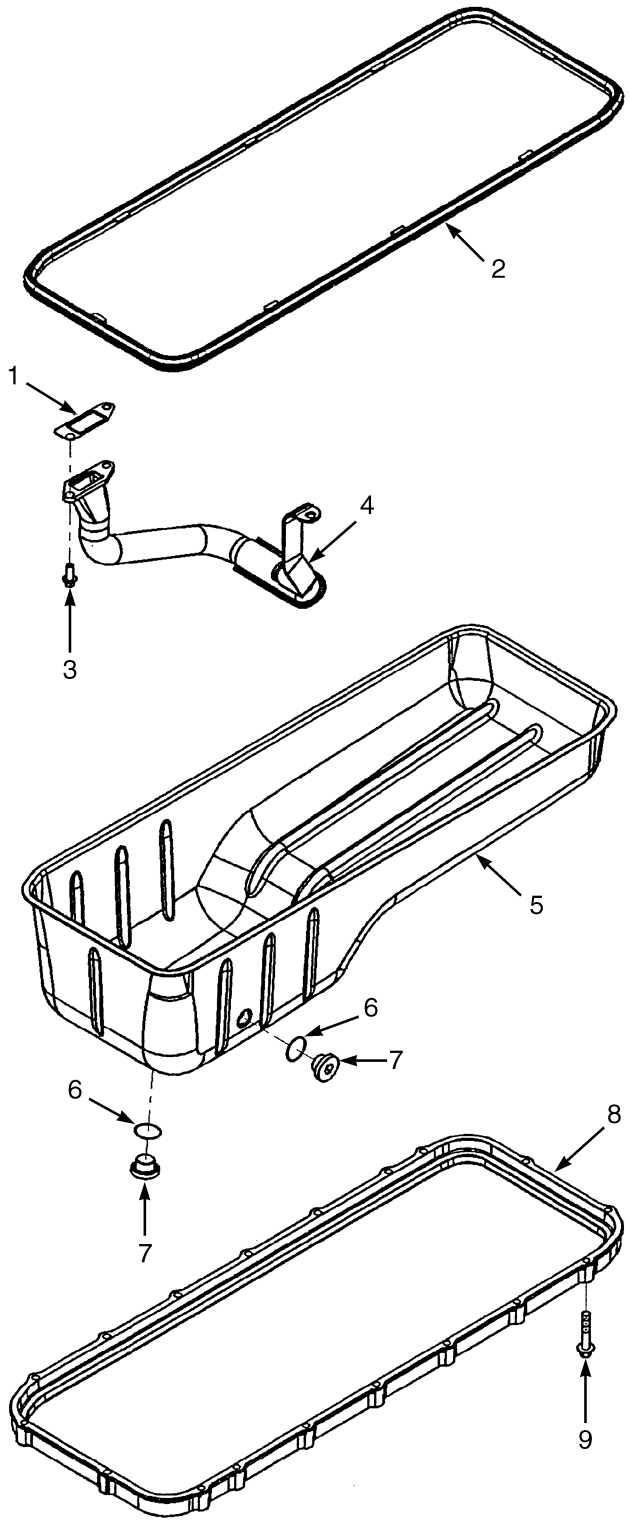

HP091356

©2010 HYSTER COMPANY

OIL PAN

ITEM	PART NO.	DESCRIPTION	QTY
	b 1613301	Engine Assy-Diesel (Tier III 190 HP) (With Air Conditioning)	1
	c 1613486	Engine Assy-Diesel (Tier III 190 HP) (Without Air Conditioning)	1
	d 1692949	Engine Assy (Without Air Conditioning)	1
	b 1559624	Engine Assy-Diesel (Tier III 220 HP) (With Air Conditioning)	1
	c 1613484	Engine Assy-Diesel (Tier III 220 HP) (Without Air Conditioning)	1
	d 1692948	Engine Assy (Without Air Conditioning)	1
1	1635375	Gasket	1
2	**a** ~~1635372~~		
	1702106	Gasket	1
2	**d** ~~1635372~~		
	1702106	Gasket	1
3	1635225	Capscrew	2
4	**a** 1635336	Tube (Oil Suction)	1
4	**d** 1702104	Tube (Oil Suction)	1
5	1635461	Oil Pan Assembly	1
5	1635462	Oil Pan	1
6	1635234	Sealing Ring (Sealing)	2
7	1635233	Plug	2
8	1635371	Adapter	1
9	1512111	Capscrew	18

FOOTNOTES:

a → 11/2008
b → S/N B214E01668F
c S/N B214E01669F ↔ 11/2008
d 11/2008 →

©2010 HYSTER COMPANY

RADIATOR AND COOLER ASSEMBLY (FIGURE 2-38)

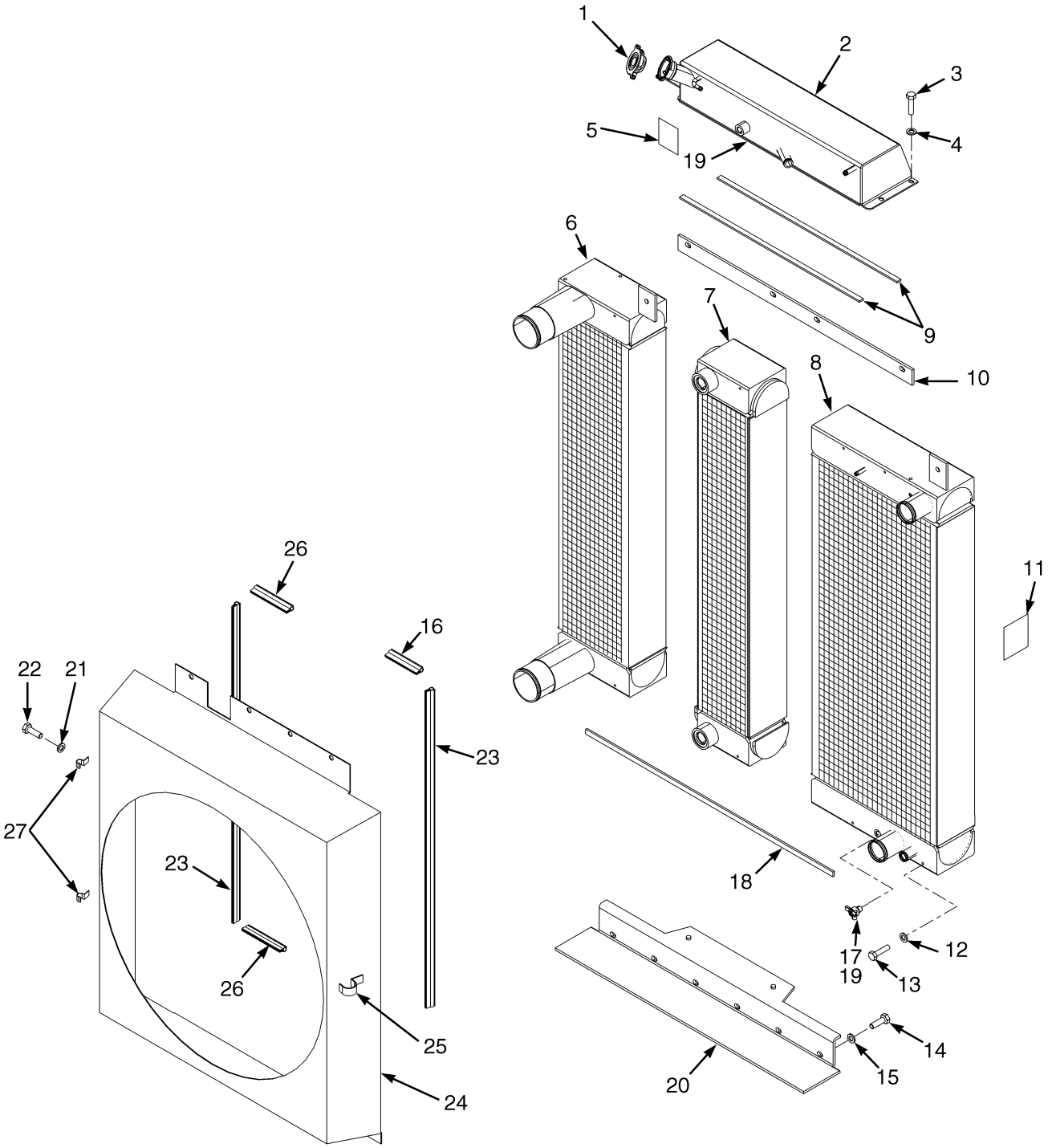

©2010 HYSTER COMPANY

RADIATOR AND COOLER ASSEMBLY

ITEM	PART NO.	DESCRIPTION	QTY
	1592783	Radiator	1
1	1636909	Radiator Cap	1
2	1636885	Tank	1
3	1636904	Bolt	4
4	1636903	Washer	4
5	. . . . .	Nameplate	1
6	1636882	Cooler (Air Charge)	1
7	1636880	Oil Cooler (Transmission Oil)	1
8	1636881	Radiator	1
9	1661553	Gasket (Foam)	2
10	1636887	Plate	1
11	. . . . .	Nameplate	1
12	1636905	Washer	8
13	1636906	Bolt	8
14	1636898	Bolt	10
15	1636897	Washer	10
16	1636890	Gasket (Rubber)	1
17	1636908	Drain Valve	1
18	1661554	Gasket (Rubber)	1
19	1636907	Fitting	2
20	1636886	Baseplate	1
21	1660346	Washer	3
22	1636900	Bolt	3
23	1661552	Gasket (Rubber)	2
24	1636884	Shroud	1
25	1661550	Clip	1
26	1661551	Gasket (Rubber)	1
27	1661549	Clip	2

©2010 HYSTER COMPANY

REAR GEAR HOUSING (FIGURE 2-39)

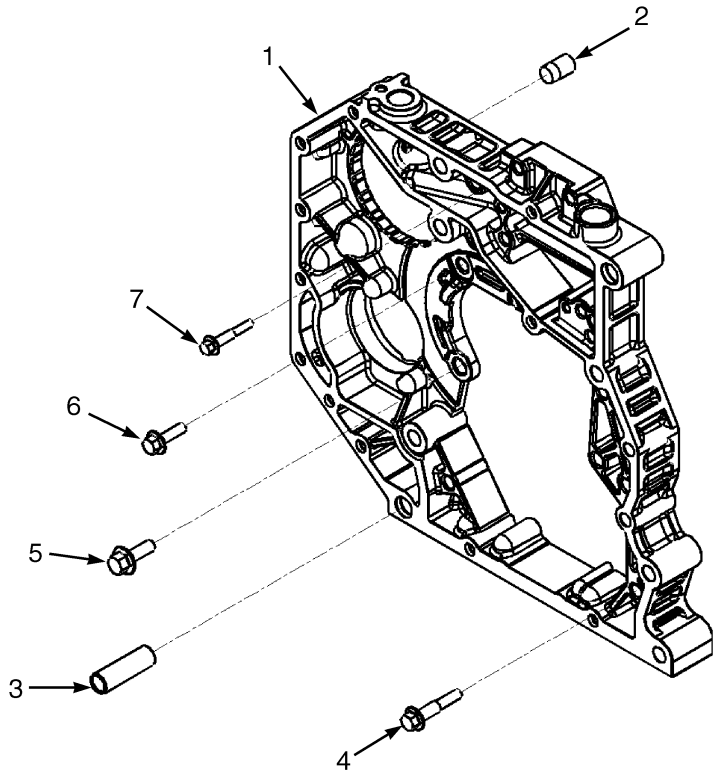

HP091327

ITEM	PART NO.	DESCRIPTION	QTY
	c 1613301	Engine Assy-Diesel (Tier III 190 HP) (With Air Conditioning)	1
	d 1613486	Engine Assy-Diesel (Tier III 190 HP) (Without Air Conditioning)	1
	e 1692949	Engine Assy (Without Air Conditioning)	1
	c 1559624	Engine Assy-Diesel (Tier III 220 HP) (With Air Conditioning)	1
	d 1613484	Engine Assy-Diesel (Tier III 220 HP) (Without Air Conditioning)	1
	e 1692948	Engine Assy (Without Air Conditioning)	1
1	**b** 1635297	Housing	1
1	**e** 1661084	Housing	1
2	1635395	Insert	2
3	1635270	Ring (Dowel)	2
4	1635260	Capscrew	3
5	1511953	Capscrew	1
6	1511977	Capscrew	2
7	1512111	Capscrew	4
	ae 1635384	Clip	1

FOOTNOTES:

a Not Illustrated
b → 11/2008
c → S/N B214E01668F
d S/N B214E01669F ↔ 11/2008
e 11/2008 →

©2010 HYSTER COMPANY

REAR GEAR TRAIN ACCESSORY MOUNTING COVER (FIGURE 2-40)

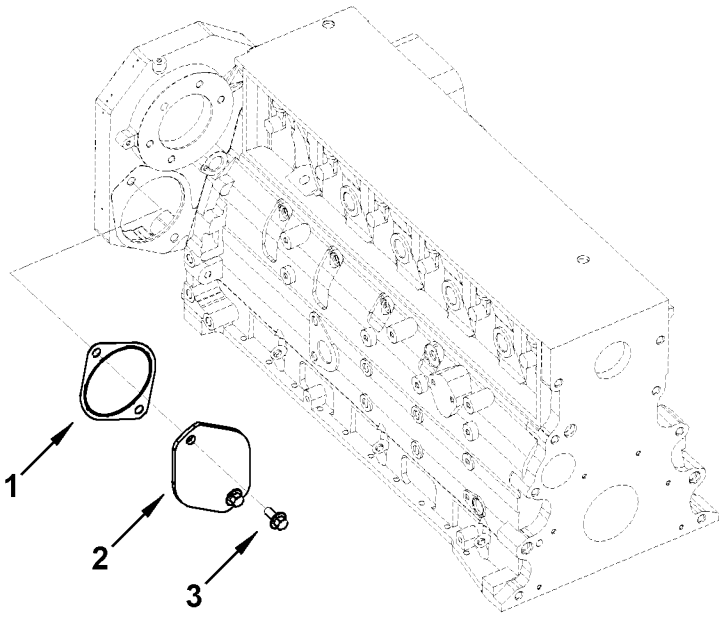

HP091117

ITEM	PART NO.	DESCRIPTION	QTY
	a 1613301	Engine Assy-Diesel (Tier III 190 HP) (With Air Conditioning)	1
	b 1613486	Engine Assy-Diesel (Tier III 190 HP) (Without Air Conditioning)	1
	c 1692949	Engine Assy (Without Air Conditioning)	1
	a 1559624	Engine Assy-Diesel (Tier III 220 HP) (With Air Conditioning)	1
	b 1613484	Engine Assy-Diesel (Tier III 220 HP) (Without Air Conditioning)	1
	c 1692948	Engine Assy (Without Air Conditioning)	1
1	1635367	Gasket	1
2	1512417	Cover Plate	1
3	1511953	Capscrew	2

FOOTNOTES:

a → S/N B214E01668F
b S/N B214E01669F ↔ 11/2008
c 11/2008 →

©2010 HYSTER COMPANY

REMOTE OIL FILTER (FIGURE 2-41)

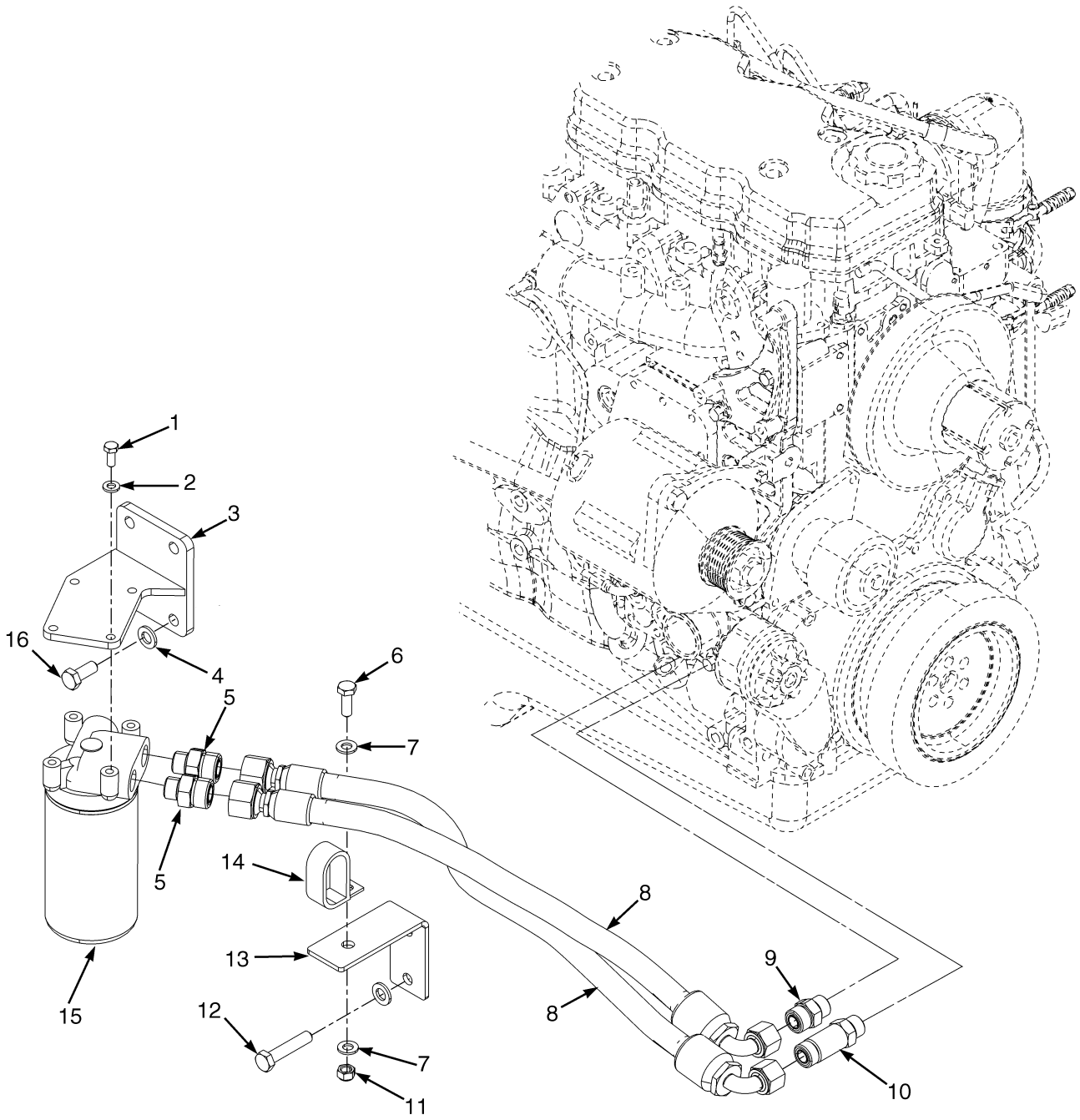

HP091368

©2010 HYSTER COMPANY

REMOTE OIL FILTER

ITEM	PART NO.	DESCRIPTION	QTY
1	136681	Capscrew	4
2	320157	Washer	4
3	1615711	Bracket Wldmt	1
4	320161	Washer	10
5	1486754	Fitting	2
6	136985	Capscrew	1
7	320159	Washer	2
8	1616293	Hose Assy	2
9	1486749	Fitting	1
10	1528596	Fitting	1
11	302401	Locknut	1
12	292531	Capscrew	2
13	1638200	Spacer	1
14	1396346	Clamp	1
15	1635389	Filter Head	1
15	1635301	Fitting	1
15	1524551	Oil Filter	1
16	292527	Capscrew	4

©2010 HYSTER COMPANY

ROCKER LEVERS (FIGURE 2-42)

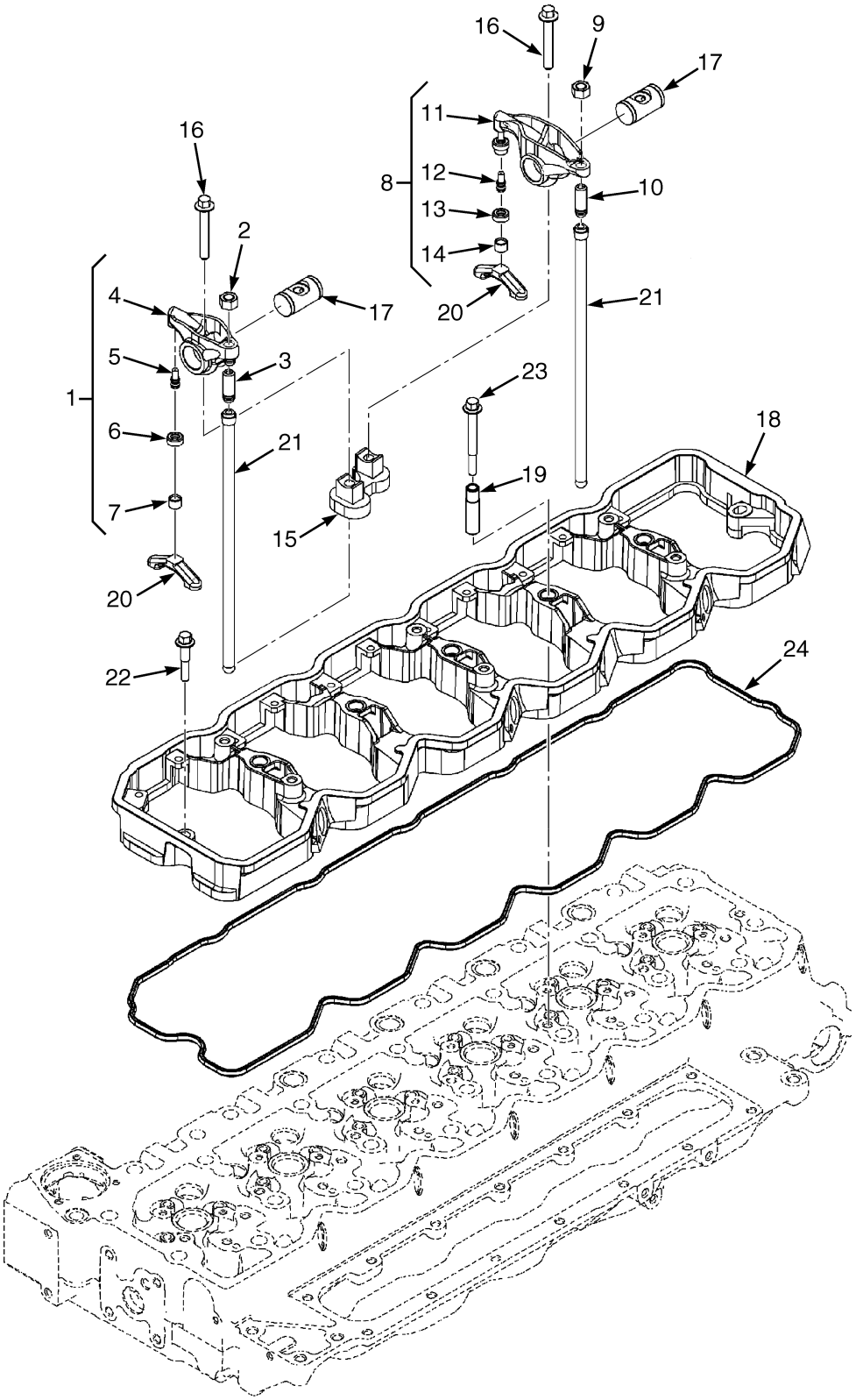

HP091355

©2010 HYSTER COMPANY

ROCKER LEVERS

ITEM	PART NO.	DESCRIPTION	QTY
	. . . . .	Lever Assembly	1
1	1521939	Rocker (Exhaust)	1
1	. . . . .	Rocker Lever	1
2	1517246	Nut	1
3	1553956	Screw	1
4	. . . . .	Lever	1
5	. . . . .	Ball	1
6	. . . . .	Retainer	1
7	. . . . .	Socket	1
8	1521937	Rocker (Intake)	1
8	. . . . .	Rocker Lever	1
9	1517246	Nut	1
10	1553956	Screw	1
11	. . . . .	Lever	1
12	. . . . .	Ball	1
13	. . . . .	Retainer	1
14	. . . . .	Socket	1
15	1584933	Support	2
15	1553952	Capscrew	2
15	1635388	Rocker Shaft	2
16	1553952	Capscrew	2
17	1635388	Rocker Shaft	2
18	4010868	Housing	1
19	. . . . .	Sleeve	5
20	1521944	Valve (Crosshead)	12
21	1521943	Push Rod	12
22	1513725	Capscrew	2
23	1635254	Capscrew	5
24	1635378	Gasket	1

©2010 HYSTER COMPANY

STARTER MOTOR AND MOUNTING (FIGURE 2-43)

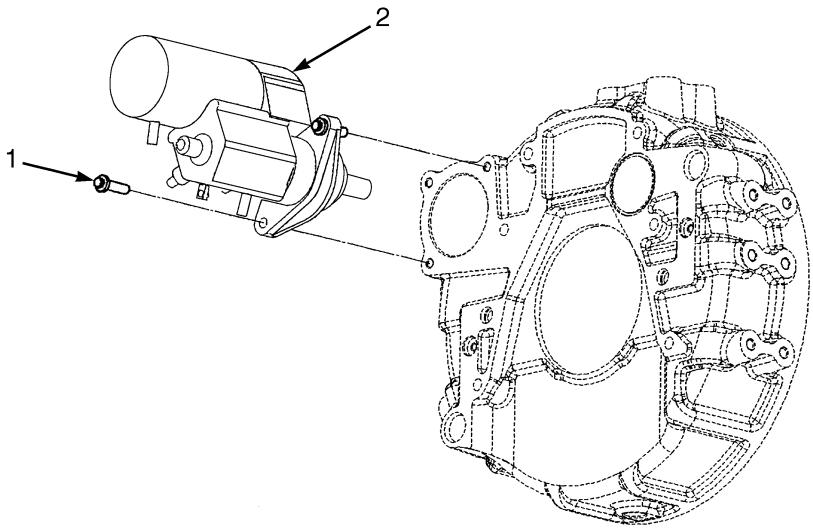

HP091365

ITEM	PART NO.	DESCRIPTION	QTY
	a 1613301	Engine Assy-Diesel (Tier III 190 HP) (With Air Conditioning)	1
	b 1613486	Engine Assy-Diesel (Tier III 190 HP) (Without Air Conditioning)	1
	c 1692949	Engine Assy (Without Air Conditioning)	1
	a 1559624	Engine Assy-Diesel (Tier III 220 HP) (With Air Conditioning)	1
	b 1613484	Engine Assy-Diesel (Tier III 220 HP) (Without Air Conditioning)	1
	c 1692948	Engine Assy (Without Air Conditioning)	1
1	1588828	Capscrew	2
2	1552880	Starter	1
2	1702183	Reman Starter Motor (Alternate Part)	1

FOOTNOTES:

a → S/N B214E01668F
b S/N B214E01669F ↔ 11/2008
c 11/2008 →

©2010 HYSTER COMPANY

THERMOSTAT (FIGURE 2-44)

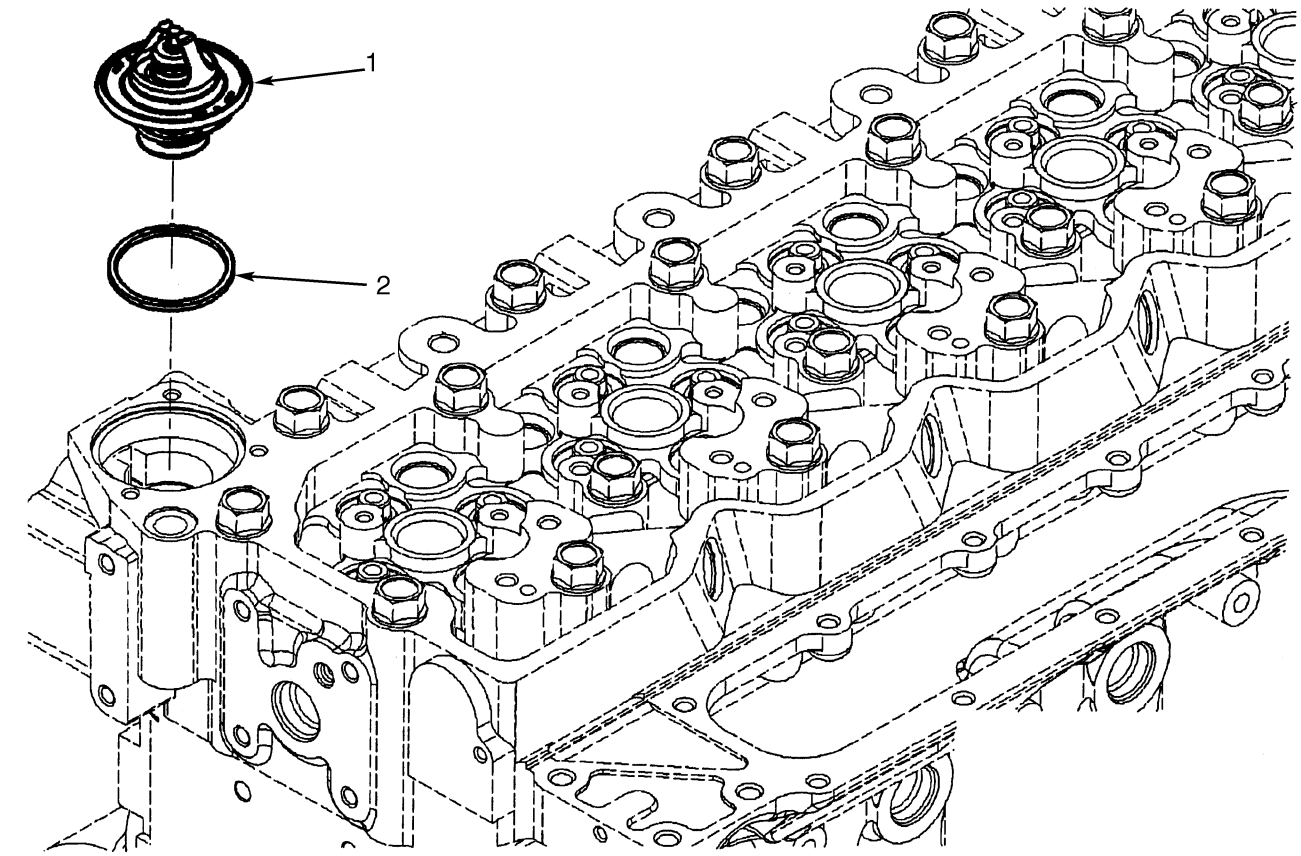

HP090893

ITEM	PART NO.	DESCRIPTION	QTY
	a 1613301	Engine Assy-Diesel (Tier III 190 HP) (With Air Conditioning)	1
	b 1613486	Engine Assy-Diesel (Tier III 190 HP) (Without Air Conditioning)	1
	c 1692949	Engine Assy (Without Air Conditioning)	1
	a 1559624	Engine Assy-Diesel (Tier III 220 HP) (With Air Conditioning)	1
	b 1613484	Engine Assy-Diesel (Tier III 220 HP) (Without Air Conditioning)	1
	c 1692948	Engine Assy (Without Air Conditioning)	1
1	1635397	Thermostat Assembly	1
2	1552716	Seal	1

FOOTNOTES:

a → S/N B214E01668F
b S/N B214E01669F ↔ 11/2008
c 11/2008 →

©2010 HYSTER COMPANY

TORQUE CONVERTER COOLER PLUGS (FIGURE 2-45)

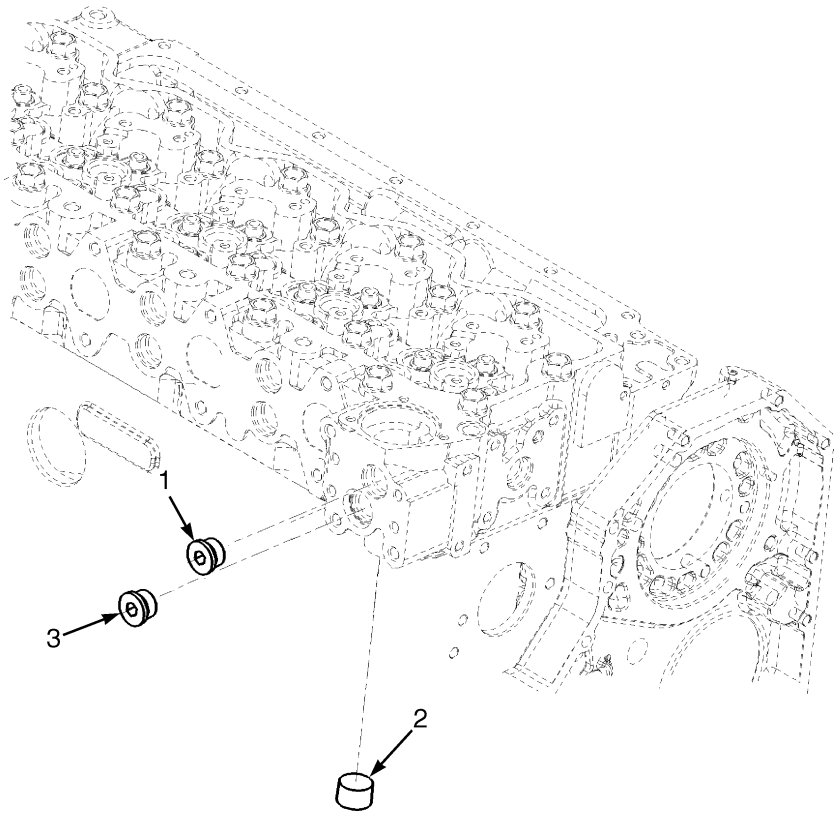

HP091359

ITEM	PART NO.	DESCRIPTION	QTY
	b 1613301	Engine Assy-Diesel (Tier III 190 HP) (With Air Conditioning)	1
	c 1613486	Engine Assy-Diesel (Tier III 190 HP) (Without Air Conditioning)	1
	d 1692949	Engine Assy (Without Air Conditioning)	1
	b 1559624	Engine Assy-Diesel (Tier III 220 HP) (With Air Conditioning)	1
	c 1613484	Engine Assy-Diesel (Tier III 220 HP) (Without Air Conditioning)	1
	d 1692948	Engine Assy (Without Air Conditioning)	1
1	**a** 1635330	Plug	1
1	**d** 1644095	Fitting	1
2	1512292	Plug	1
3	1589584	Plug Assembly	1

FOOTNOTES:

a → 11/2008
b → S/N B214E01668F
c S/N B214E01669F ↔ 11/2008
d 11/2008 →

©2010 HYSTER COMPANY

NOTES

©2010 HYSTER COMPANY

TURBOCHARGER (FIGURE 2-46)

(→ 11/2008)

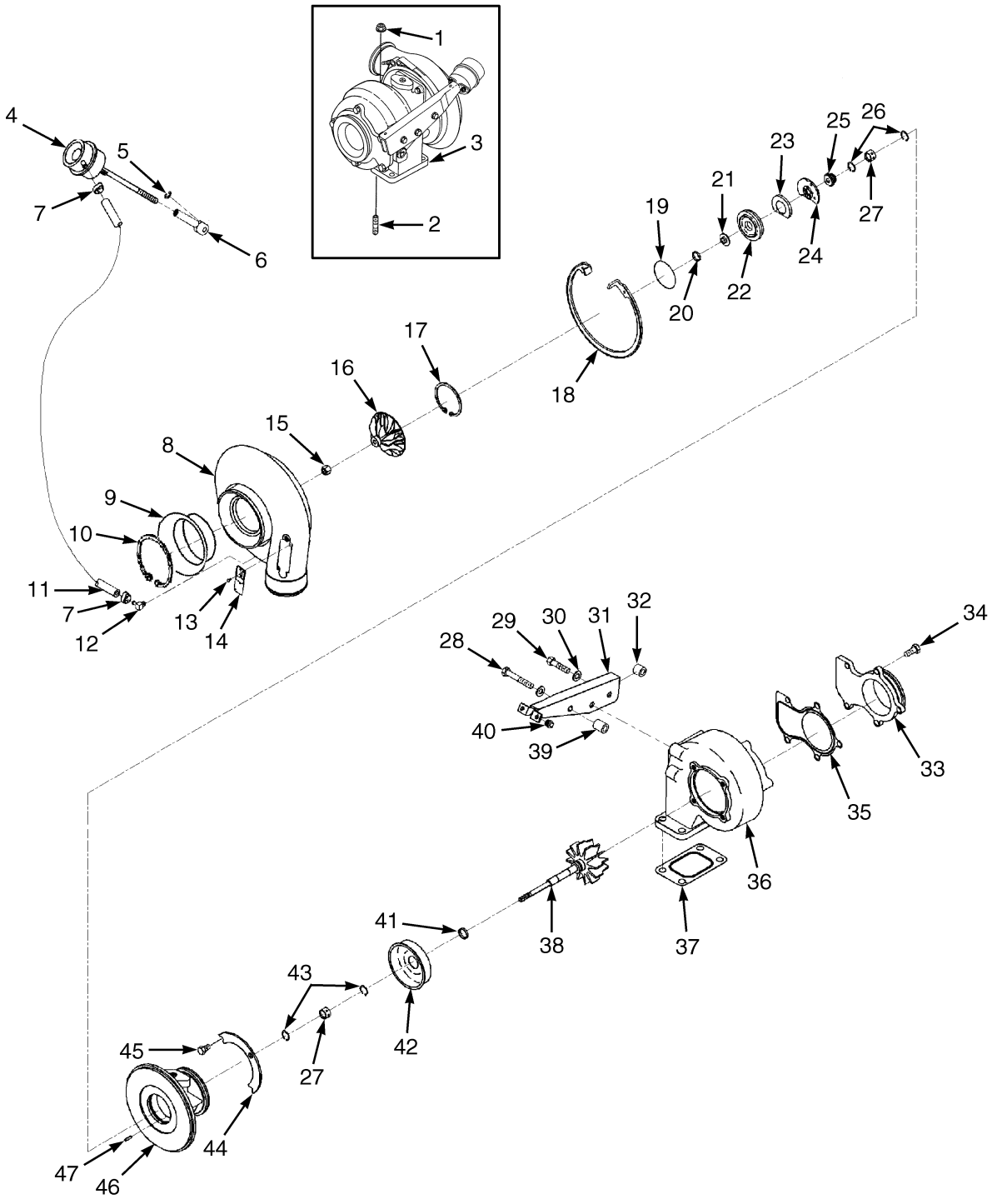

HP091324

©2010 HYSTER COMPANY

TURBOCHARGER

(→ 11/2008)

ITEM	PART NO.	DESCRIPTION	QTY
	a 1613301	Engine Assy-Diesel (Tier III 190 HP) (With Air Conditioning)	1
	b 1613486	Engine Assy-Diesel (Tier III 190 HP) (Without Air Conditioning)	1
	a 1559624	Engine Assy-Diesel (Tier III 220 HP) (With Air Conditioning)	1
	b 1613484	Engine Assy-Diesel (Tier III 220 HP) (Without Air Conditioning)	1
1	1513338	Nut	4
2	1513337	Stud	1
3	. . . . .	Turbocharger (Assembly)	1
3	1635344	Turbocharger	1
4	. . . . .	Actuator	1
5	1517220	Retaining Ring	1
6	1517219	Link	1
7	1517233	Hose Clamp	2
8	. . . . .	Housing	1
9	1614478	Baffle	1
10	1614477	Retaining Ring	1
11	1517235	Hose	1
12	1517218	Coupling	1
13	1513318	Screw	2
14	. . . . .	Dataplate	1
15	1543734	Locknut	1
16	. . . . .	Impeller	1
17	1517216	Retaining Ring	1
18	1517230	Retaining Ring	1
19	1517221	O-Ring	1
20	1513333	Sealing Ring	1
21	1517228	Collar	1
22	1517223	Plate (Oil Seal)	1
23	1517217	Baffle	1
24	1543733	Thrust Bearing (Turbine)	1
25	1517224	Oil Seal	1
26	1517237	Retaining Ring	4
27	1517212	Bearing	2
28	1543732	Setscrew	1
29	1517231	Screw	2
30	1517213	Washer	3
31	. . . . .	Bracket (Actuator)	1
32	1517225	Spacer	3
33	1598436	Adapter	1
34	1517222	Setscrew	5
35	1588093	Gasket (Adapter)	1
36	1635241	Housing	1
37	1654762	Gasket	4
38	1543711	Shaft	1
39	1517226	Spacer	1
40	1635572	Nut	2
41	1513332	Sealing Ring	1
42	1517214	Heat Shield	1
43	1517237	Retaining Ring	2
44	1517232	Plate	2
45	1513334	Capscrew	4

©2010 HYSTER COMPANY

TURBOCHARGER

(→ 11/2008)

ITEM	PART NO.	DESCRIPTION	QTY
46	. . . . .	Housing	1
47	1513328	Roll Pin	1

FOOTNOTES:

a → S/N B214E01668F

b S/N B214E01669F ↔ 11/2008

©2010 HYSTER COMPANY

TURBOCHARGER (FIGURE 2-47)

(11/2008 →)

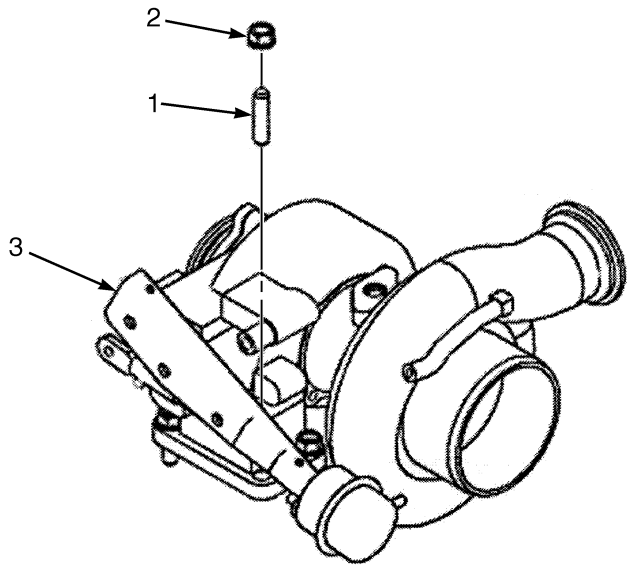

ITEM	PART NO.	DESCRIPTION	QTY
	1692949	Engine Assy	1
	1692948	Engine Assy	1
1	1513337	Stud	4
2	1513338	Nut	4
3	1661394	Kit-Turbocharger	1
3	1517069	O-Ring	1
3	1513430	O-Ring	1
3	1654762	Gasket	1
3	. . . . .	Turbocharger	1
3	1661396	Gasket	1
	a 4008980	Kit-Repair Turbocharger	1

FOOTNOTES:

a Not Illustrated

©2010 HYSTER COMPANY

TURBOCHARGER PLUMBING (FIGURE 2-48)

(→ 11/2008)

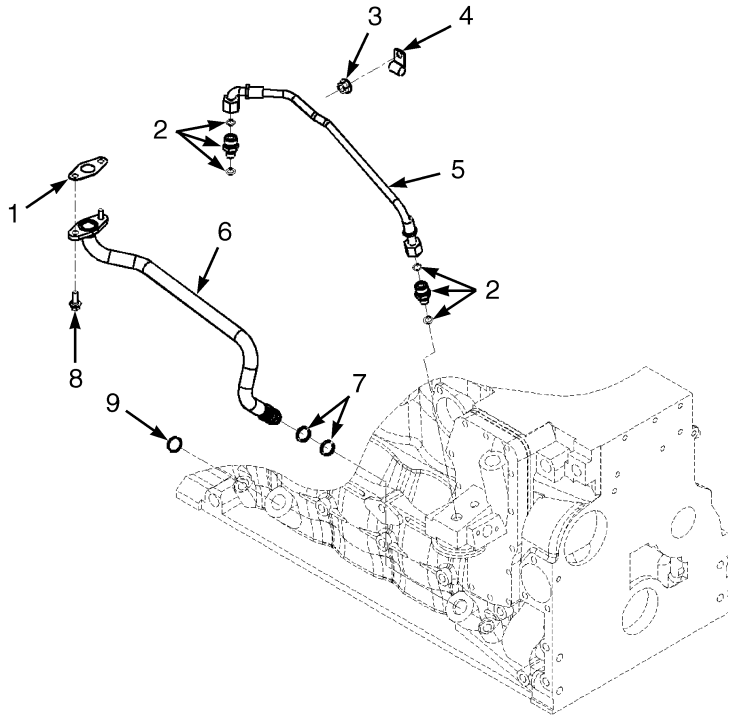

HP091360

ITEM	PART NO.	DESCRIPTION	QTY
	a 1613301	Engine Assy-Diesel (Tier III 190 HP) (With Air Conditioning)	1
	b 1613486	Engine Assy-Diesel (Tier III 190 HP) (Without Air Conditioning)	1
	a 1559624	Engine Assy-Diesel (Tier III 220 HP) (With Air Conditioning)	1
	b 1613484	Engine Assy-Diesel (Tier III 220 HP) (Without Air Conditioning)	1
1	1635354	Gasket	1
2	1521960	Connector Assembly	2
2	1517069	O-Ring	1
2	1513430	O-Ring	1
2	. . . . .	Connector	1
3	1635230	Nut	1
4	1588106	Clamp	1
5	1635232	Hose	1
6	1635235	Tube (Turbo Oil Drain)	1
7	1514571	Seal	2
8	1512004	Capscrew	2
9	1514339	Plug	1

FOOTNOTES:

a → S/N B214E01668F

b S/N B214E01669F ↔ 11/2008

©2010 HYSTER COMPANY

NOTES

©2010 HYSTER COMPANY

TURBOCHARGER PLUMBING (FIGURE 2-49)

(11/2008 →)

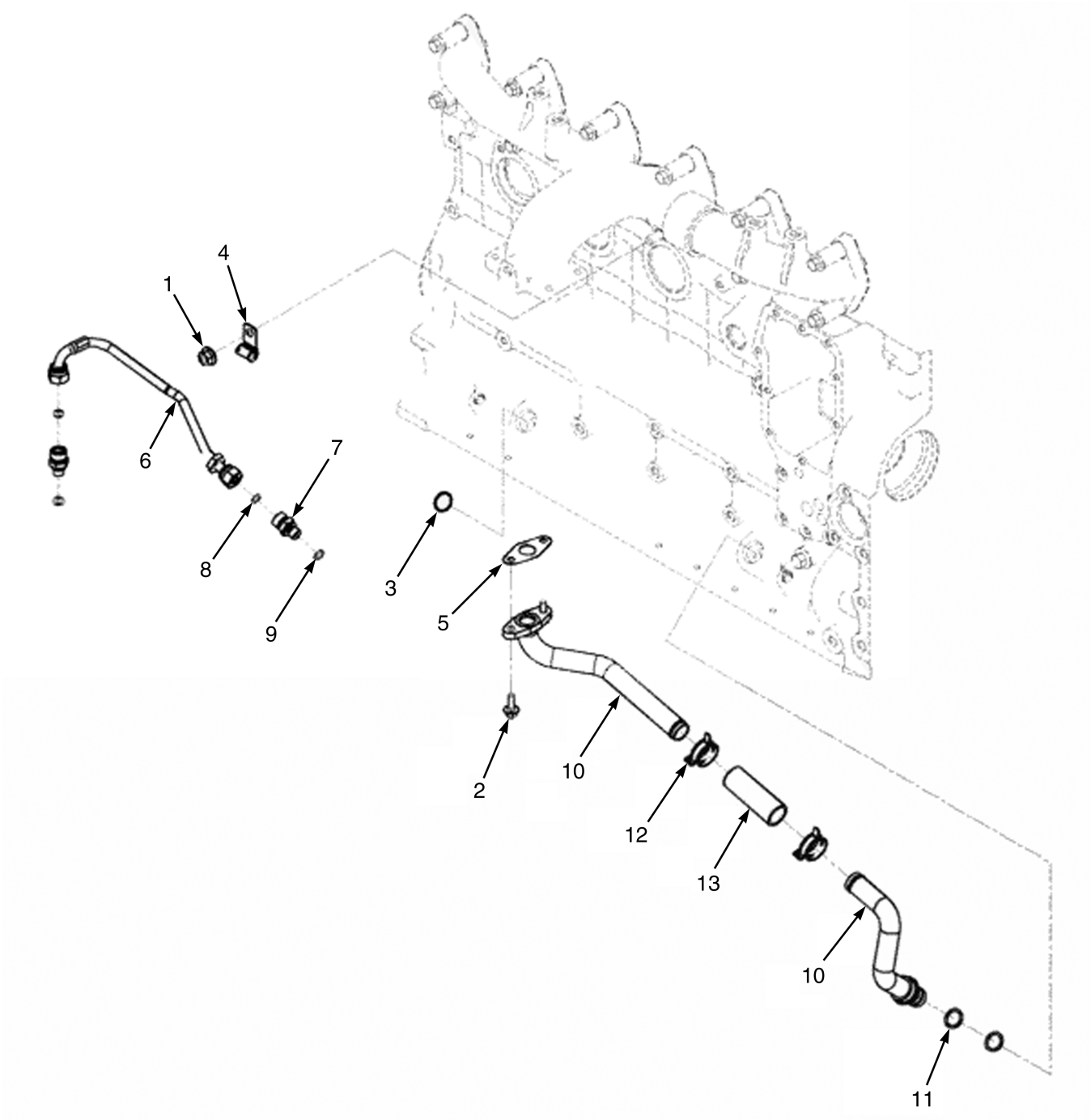

HP091251

©2010 HYSTER COMPANY

TURBOCHARGER PLUMBING

(11/2008 →)

ITEM	PART NO.	DESCRIPTION	QTY
	1692949	Engine Assy	1
	1692948	Engine Assy	1
1	1635230	Nut	1
2	1512004	Capscrew	2
3	1514339	Plug	1
4	1588106	Clamp	1
5	1635354	Gasket	1
6	1661071	Hose	1
7	1702184	Connector Assembly	2
7	. . . . .	Connector	1
8	1513430	O-Ring	1
9	1517069	O-Ring	1
10	1707005	Tube Assy	1
10	. . . . .	Connection	2
11	1514571	Seal	2
12	1513701	Hose Clamp	2
13	1517269	Hose	1

©2010 HYSTER COMPANY

VALVE COVER (FIGURE 2-50)

(→ 11/2008)

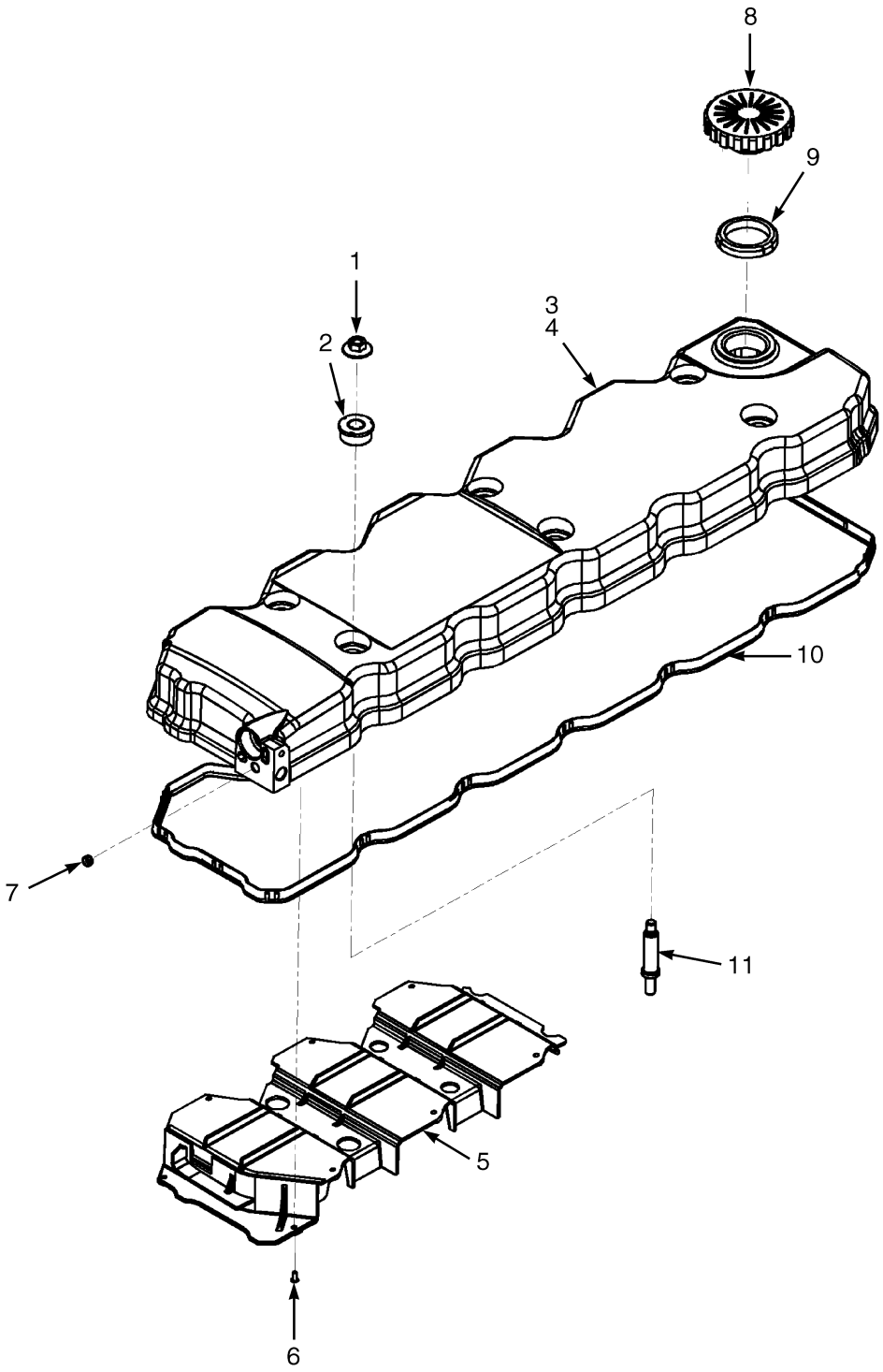

HP091333

©2010 HYSTER COMPANY

VALVE COVER
(→ 11/2008)

ITEM	PART NO.	DESCRIPTION	QTY
	a 1613301	Engine Assy-Diesel (Tier III 190 HP) (With Air Conditioning)	1
	b 1613486	Engine Assy-Diesel (Tier III 190 HP) (Without Air Conditioning)	1
	a 1559624	Engine Assy-Diesel (Tier III 220 HP) (With Air Conditioning)	1
	b 1613484	Engine Assy-Diesel (Tier III 220 HP) (Without Air Conditioning)	1
1	1635356	Nut	6
2	1635379	Isolator	6
3	1636524	Cover	1
4	1636527	Cover	1
5	1636526	Baffle	1
6	. . . . .	Rivet	8
7	1521919	Plug	1
8	1635360	Cap Assembly	1
9	1635361	Gasket	1
10	1635377	Gasket (Valve Cover)	1
11	1635368	Stud	6

FOOTNOTES:

a → S/N B214E01668F

b S/N B214E01669F ↔ 11/2008

©2010 HYSTER COMPANY

VALVE COVER (FIGURE 2-51)

(11/2008 →)

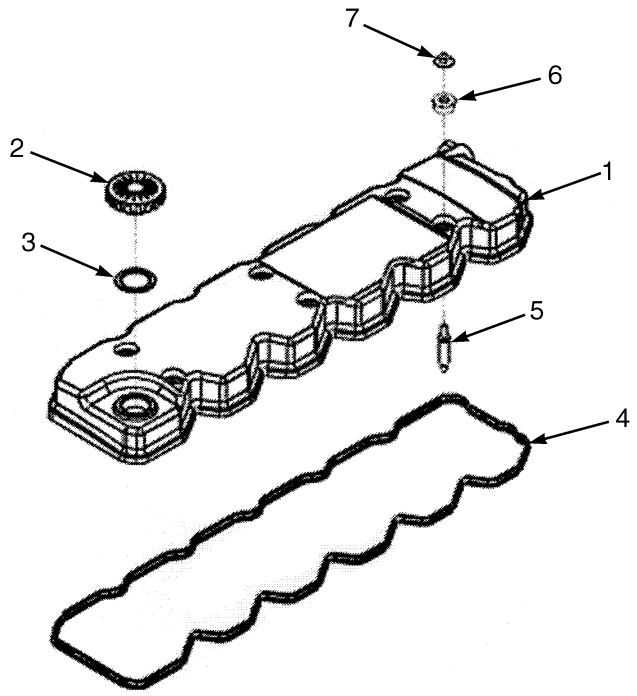

HP091453

ITEM	PART NO.	DESCRIPTION	QTY
	1692949	Engine Assy	1
	1692948	Engine Assy	1
1	1661437	Cover	1
2	1635360	Cap Assembly	1
2	. . . . .	Cap	1
2	. . . . .	Baffle	1
3	1635361	Gasket	1
4	1635377	Gasket (Valve Cover)	1
5	1635368	Stud	6
6	1635379	Isolator	6
7	1635356	Nut	6

©2010 HYSTER COMPANY

VALVE TAPPETS (FIGURE 2-52)

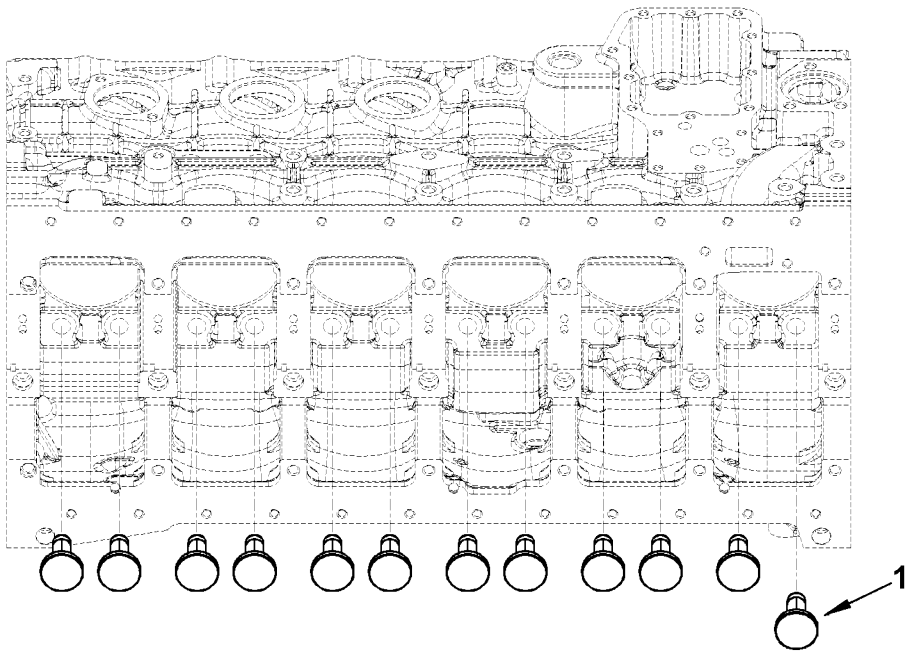

HP091133

ITEM	PART NO.	DESCRIPTION	QTY
	a 1613301	Engine Assy-Diesel (Tier III 190 HP) (With Air Conditioning)	1
	b 1613486	Engine Assy-Diesel (Tier III 190 HP) (Without Air Conditioning)	1
	c 1692949	Engine Assy (Without Air Conditioning)	1
	a 1559624	Engine Assy-Diesel (Tier III 220 HP) (With Air Conditioning)	1
	b 1613484	Engine Assy-Diesel (Tier III 220 HP) (Without Air Conditioning)	1
	c 1692948	Engine Assy (Without Air Conditioning)	1
1	1635265	Tappet	12

FOOTNOTES:

a → S/N B214E01668F
b S/N B214E01669F ↔ 11/2008
c 11/2008 →

©2010 HYSTER COMPANY

VIBRATION DAMPER (FIGURE 2-53)

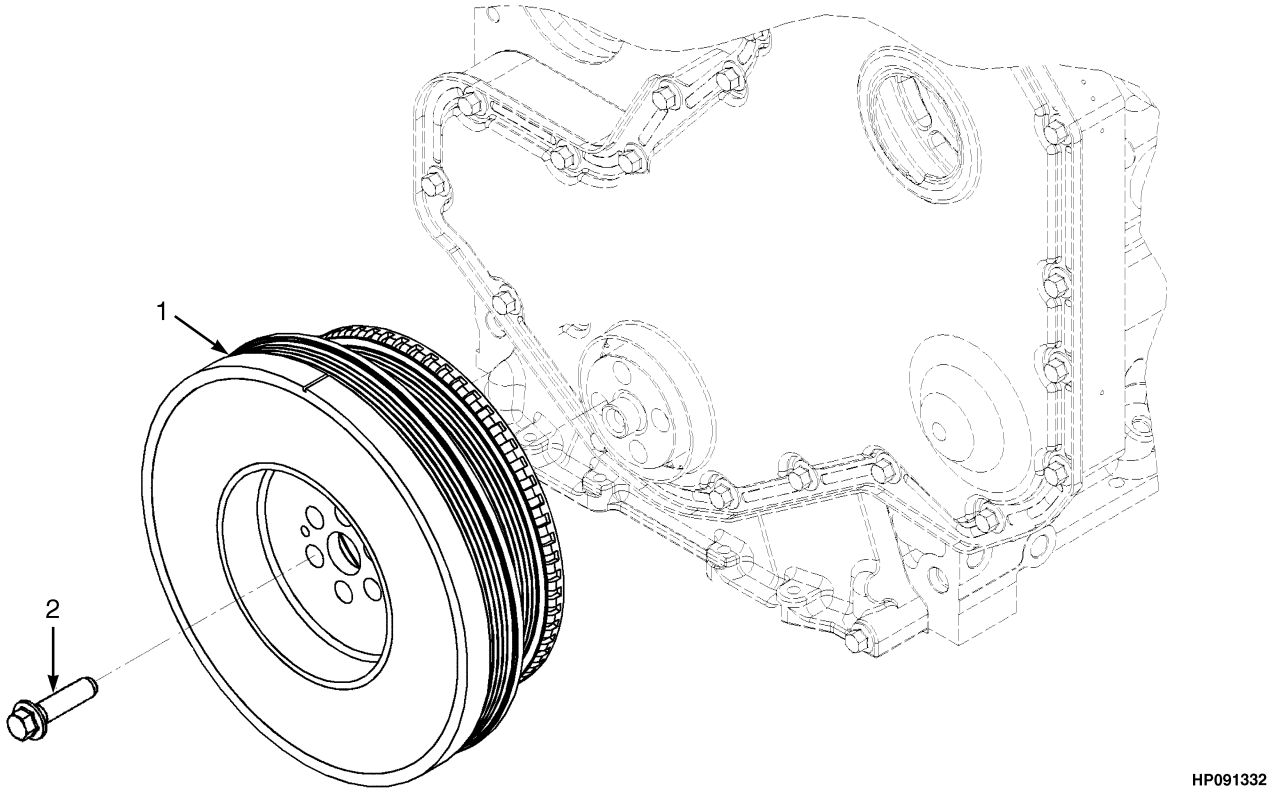

ITEM	PART NO.	DESCRIPTION	QTY
	b 1613301	Engine Assy-Diesel (Tier III 190 HP) (With Air Conditioning)	1
	c 1613486	Engine Assy-Diesel (Tier III 190 HP) (Without Air Conditioning)	1
	d 1692949	Engine Assy (Without Air Conditioning)	1
	b 1559624	Engine Assy-Diesel (Tier III 220 HP) (With Air Conditioning)	1
	c 1613484	Engine Assy-Diesel (Tier III 220 HP) (Without Air Conditioning)	1
	d 1692948	Engine Assy (Without Air Conditioning)	1
1	1635328	Vibration Damper	1
2	**a** 1635366	Capscrew	6
2	**d** 1637802	Screw	6

FOOTNOTES:

a → 11/2008
b → S/N B214E01668F
c S/N B214E01669F ↔ 11/2008
d 11/2008 →

©2010 HYSTER COMPANY

WATER PUMP (FIGURE 2-54)

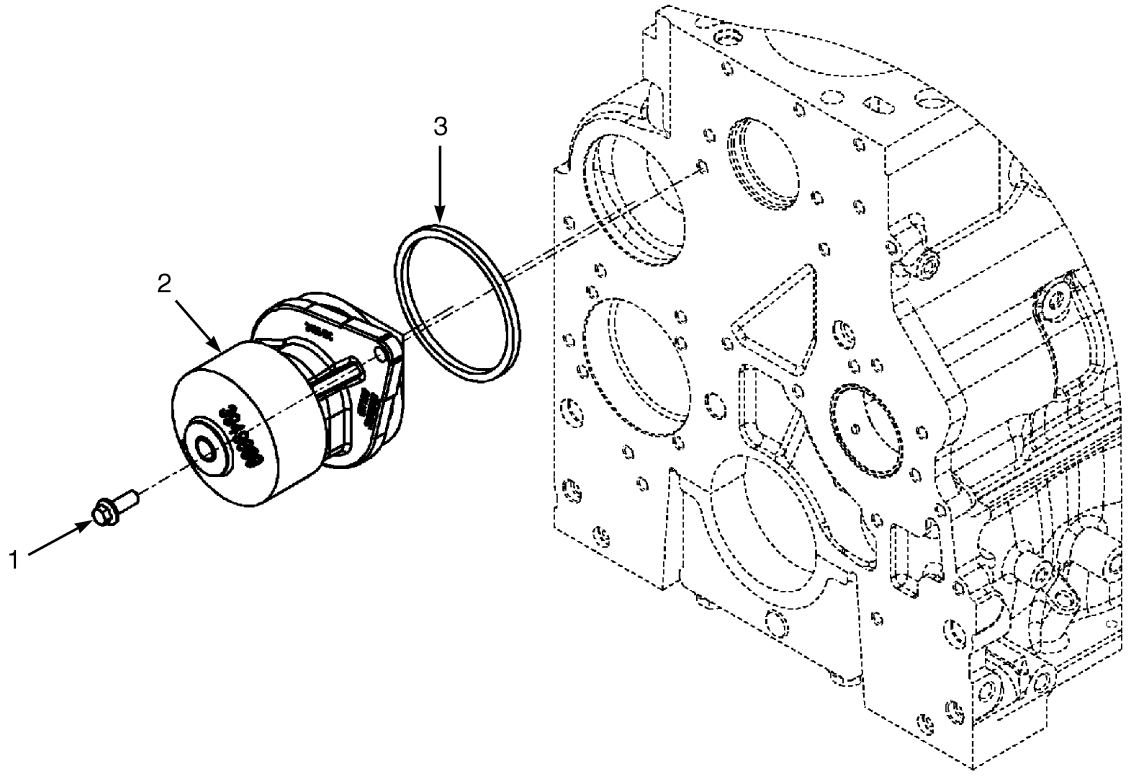

HP091363

ITEM	PART NO.	DESCRIPTION	QTY
	a 1613301	Engine Assy-Diesel (Tier III 190 HP) (With Air Conditioning)	1
	b 1613486	Engine Assy-Diesel (Tier III 190 HP) (Without Air Conditioning)	1
	c 1692949	Engine Assy (Without Air Conditioning)	1
	a 1559624	Engine Assy-Diesel (Tier III 220 HP) (With Air Conditioning)	1
	b 1613484	Engine Assy-Diesel (Tier III 220 HP) (Without Air Conditioning)	1
	c 1692948	Engine Assy (Without Air Conditioning)	1
1	~~1691854~~		
	1597807	Capscrew (Flange)	2
2	1635242	Water Pump	1
2	1703491	Water Pump (Alternate Part)	1
3	1512322	Sealing Ring	1

FOOTNOTES:

a → S/N B214E01668F
b S/N B214E01669F ↔ 11/2008
c 11/2008 →

WATER PUMP DRIVE (FIGURE 2-55)

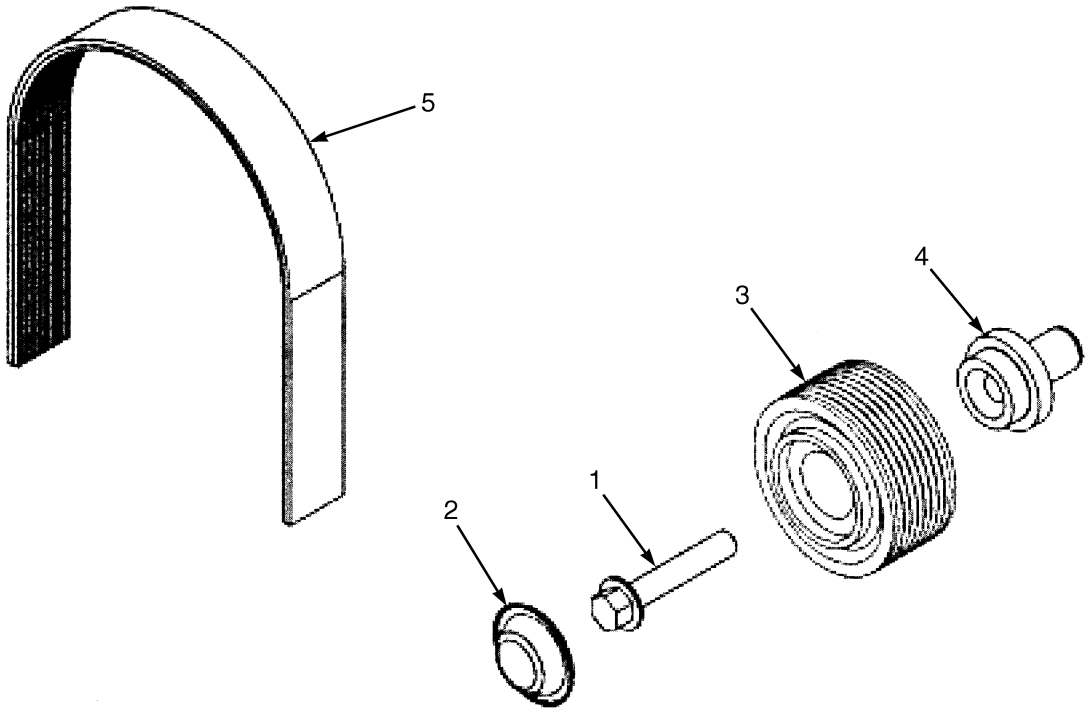

ITEM	PART NO.	DESCRIPTION	QTY
	a 1613301	Engine Assy-Diesel (Tier III 190 HP) (With Air Conditioning)	1
	b 1613486	Engine Assy-Diesel (Tier III 190 HP) (Without Air Conditioning)	1
	d 1692949	Engine Assy (Without Air Conditioning)	1
	a 1559624	Engine Assy-Diesel (Tier III 220 HP) (With Air Conditioning)	1
	b 1613484	Engine Assy-Diesel (Tier III 220 HP) (Without Air Conditioning)	1
	d 1692948	Engine Assy (Without Air Conditioning)	1
1	1517257	Screw	1
2	1635261	Dust Shield	1
3	1635337	Idler Pulley	1
4	1635262	Drive Shaft	1
5	**a** 1635300	V-Belt (Serpentine V Ribbed) (With Air Conditioning)	1
5	**c** 1687622	V-Belt (Multi-V Flat Belt) (Without Air Conditioning)	1

FOOTNOTES:

a → S/N B214E01668F
b S/N B214E01669F ↔ 11/2008
c S/N B214E01669F →
d 11/2008 →

©2010 HYSTER COMPANY

WATER OUTLET CONNECTION (FIGURE 2-56)

(11/2008 →)

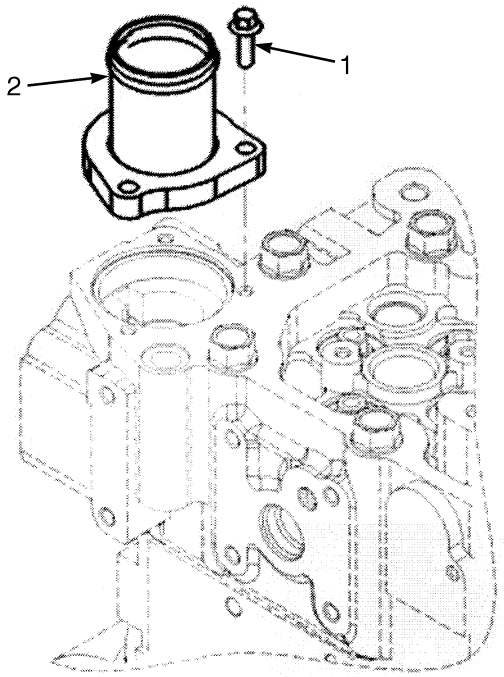

HP091454

ITEM	PART NO.	DESCRIPTION	QTY
	1692949	Engine Assy	1
	1692948	Engine Assy	1
1	1513792	Capscrew	3
2	1521973	Water Outlet	1

NOTES

©2010 HYSTER COMPANY

3 FUEL SYSTEM

SECTION 3
FUEL SYSTEM

DESCRIPTION **PAGE**

AIR INTAKE SYSTEM
→ PENDING PER ECN 68546-19 3-4
PENDING PER ECN 68546-19 → 3-6
FUEL FILTER 3-14
FUEL FILTER PLUMBING 3-16
FUEL INJECTION PUMP 3-17
FUEL INJECTOR PLUMBING 3-20
FUEL INJECTORS
→ 11/2008 3-22
11/2008 → 3-23
FUEL INLET FITTING 3-24
FUEL PLUMBING
→ 11/2008 3-26
11/2008 → 3-28
FUEL SUPPLY SYSTEM 3-2
FUEL SYSTEM ACCESSORIES 3-30
MONOTROL PEDAL 3-12
MONOTROL PEDAL LINKAGE 3-10
THROTTLE PEDAL AND LINKAGE 3-8

©2010 HYSTER COMPANY

FUEL SUPPLY SYSTEM (FIGURE 3-1)

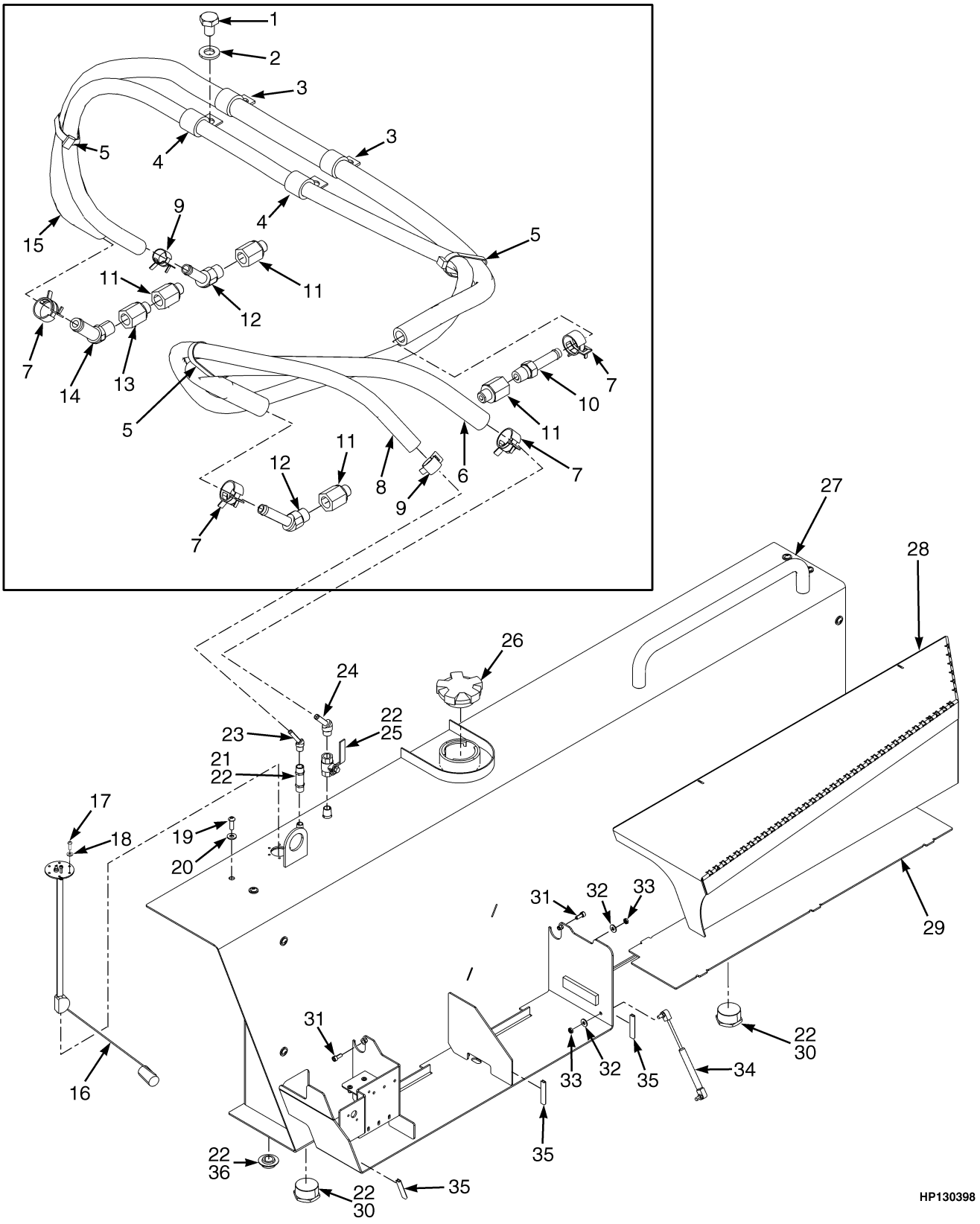

©2010 HYSTER COMPANY

FUEL SUPPLY SYSTEM

ITEM	PART NO.	DESCRIPTION	QTY
1	292513	Capscrew	4
2	320159	Washer	4
3	166285	Clamp	1
4	128408	Clamp	2
5	129563	Strap Clamp	3
6	1367370	Hose	1
7	1502006	Hose Clamp	4
8	1629167	Hose	1
9	1502003	Hose Clamp	2
10	17352	Fitting	1
11	1547766	Adapter (Male)	4
12	16694	Fitting	2
13	12855	Fitting	1
14	17194	Fitting	1
15	1389525	Hose	1
16	**ab** 1590001	Fuel Sender	1
16	**cd** 1676875	Fuel Sender	1
17	293743	Capscrew	6
18	320155	Washer	6
19	296174	Capscrew	8
20	320160	Washer	8
21	1628436	Check Valve	1
22	264134	Loctite	AR
23	1359667	Fitting	1
24	17177	Fitting	1
25	1384669	Drain Valve	1
26	1569867	Fuel Cap (Non-Locking)	1
26	1569866	Fuel Cap (Locking)	1
27	1544886	Fuel Tank	1
27	239536	Compound	AR
28	1608997	Step	1
29	1611156	Cover (Battery Box)	1
30	17639	Fitting	2
31	1529665	Capscrew	2
32	320158	Washer	2
33	329069	Nut	2
34	1532341	Gas Spring	1
35	325980	Trim	3
36	35503	Fitting	1

FOOTNOTES:

a → S/N B214E01674F (4500 WB)
b → S/N B214E01677F (4000 WB)
c S/N B214E01675F → (4500 WB)
d S/N B214E01678F → (4000 WB)

©2010 HYSTER COMPANY

AIR INTAKE SYSTEM (FIGURE 3-2)

(→ PENDING PER ECN 68546-19)

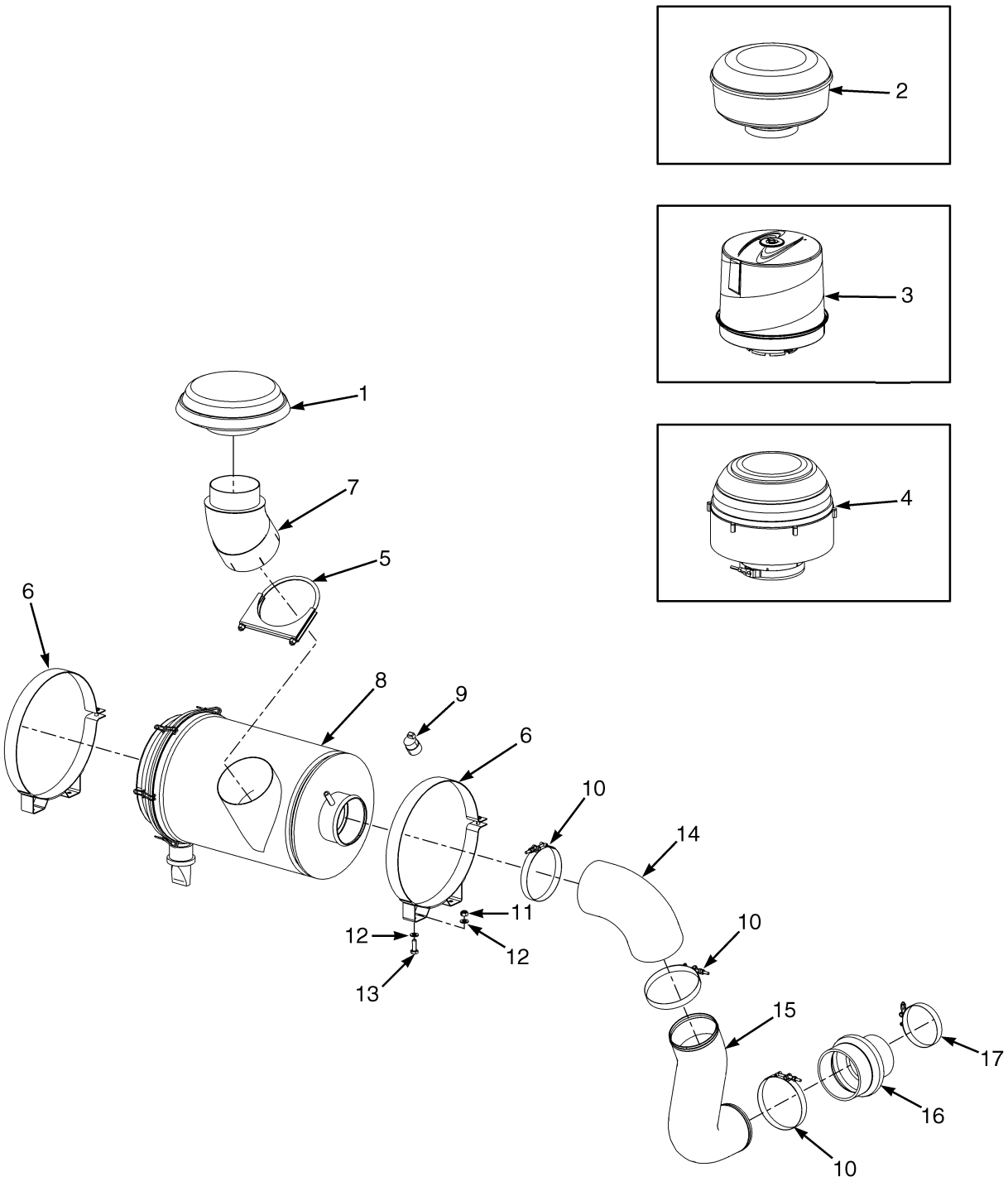

©2010 HYSTER COMPANY

AIR INTAKE SYSTEM

(→ PENDING PER ECN 68546-19)

ITEM	PART NO.	DESCRIPTION	QTY
1	145824	Hood	1
2	196959	Pre-Cleaner (Bowl Type) (Option)	1
2	147983	Cover	1
2	147985	Body	1
2	214336	Sleeve	1
2	227220	Clamp	1
3	**a** 1614193	Pre-Cleaner (Topspin) (Option)	1
4	1638785	Pre-Cleaner (Sy-Klone Type) (Option)	1
4	1656996	Clamp (T-Bolt)	1
4	1656997	Insert (Rubber)	1
5	1373437	Clamp	1
6	1506773	Clamp	2
7	1614876	Air Duct	1
8	1507391	Air Filter	1
8	1506806	Air Filter	1
8	1507234	Filter Element (Altered)	1
8	1507230	Filter Element	1
8	1507235	Filter Element (Safety, Inner) (Safety)	1
8	1507231	Filter Element (Safety) (Safety)	1
9	1486218	Switch (Vacuum)	1
10	1518717	Clamp	3
11	302401	Locknut	4
12	320159	Washer	8
13	136985	Capscrew	4
14	1312201	Elbow	1
15	1673973	Tube (Air Intake)	1
16	1623149	Reducer	1
17	1507394	Clamp	1

FOOTNOTES:

a → 9/2006

©2010 HYSTER COMPANY

AIR INTAKE SYSTEM (FIGURE 3-3)
(PENDING PER ECN 68546-19 →)

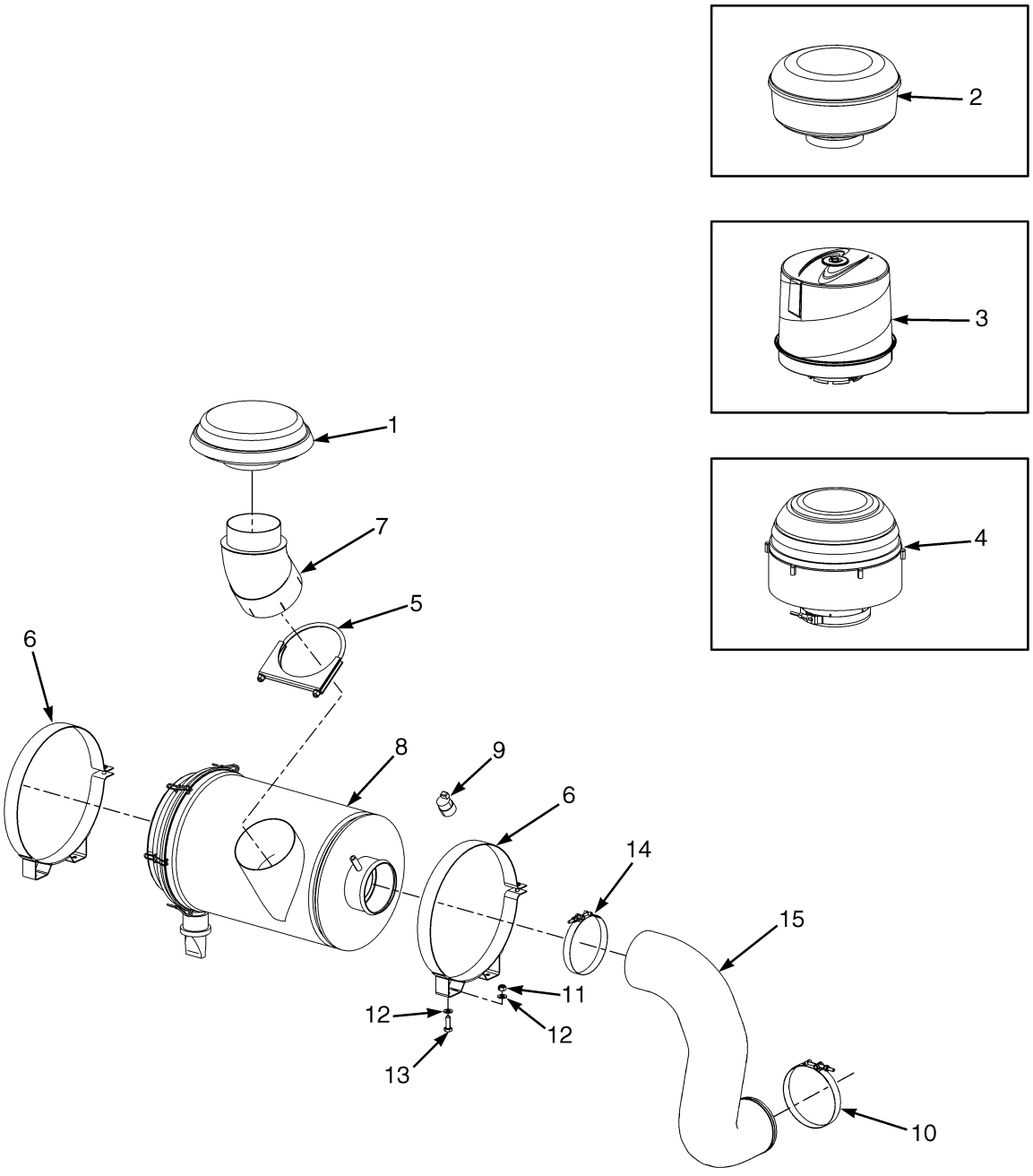

HP130308

©2010 HYSTER COMPANY

AIR INTAKE SYSTEM
(PENDING PER ECN 68546-19 →)

ITEM	PART NO.	DESCRIPTION	QTY
1	145824	Hood	1
2	196959	Pre-Cleaner (Bowl Type) (Option)	1
2	147983	Cover	1
2	147985	Body	1
2	214336	Sleeve	1
2	227220	Clamp	1
3	**a** 1614193	Pre-Cleaner (Topspin) (Option)	1
4	1638785	Pre-Cleaner (Sy-Klone Type) (Option)	1
4	1656996	Clamp (T-Bolt)	1
4	1656997	Insert (Rubber)	1
5	1373437	Clamp	1
6	1506773	Clamp	2
7	1614876	Air Duct	1
8	1507391	Air Filter	1
8	1506806	Air Filter	1
8	1507234	Filter Element (Altered)	1
8	1507230	Filter Element	1
8	1507235	Filter Element (Safety, Inner) (Safety)	1
8	1507231	Filter Element (Safety) (Safety)	1
9	1486218	Switch (Vacuum)	1
10	1512814	Clamp	1
11	302401	Locknut	4
12	320159	Washer	8
13	136985	Capscrew	4
14	1507362	Clamp	1
15	1707464	Hose (Air Intake)	1

FOOTNOTES:

a → 9/2006

©2010 HYSTER COMPANY

THROTTLE PEDAL AND LINKAGE (FIGURE 3-4)

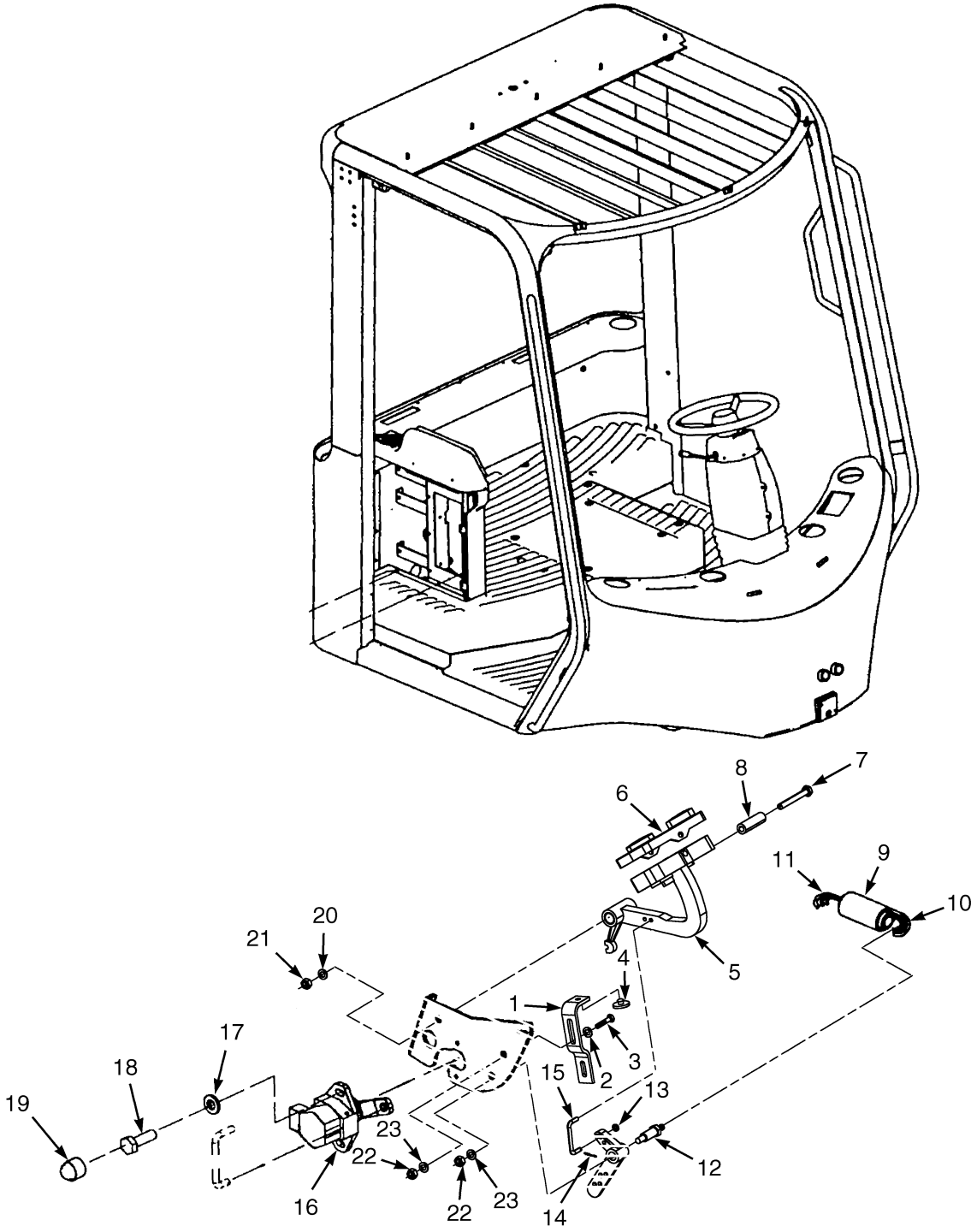

HP130396

©2010 HYSTER COMPANY

THROTTLE PEDAL AND LINKAGE

ITEM	PART NO.	DESCRIPTION	QTY
1	1494675	Bracket (Pedal Stop)	1
2	1468323	Washer	1
3	136749	Screw	1
4	353195	Bumper	1
5	352499	Pedal (Accelerator) (Forward and Reverse Lever)	1
5	1352575	Monotrol Pedal Assembly (Monotrol)	1
6	352885	Rubber Pad	1
7	1558053	Bolt	1
8	325708	Tube Assy (Pivot)	1
9	1558049	Spring	1
10	353142	Spring	1
11	353143	Spring	1
12	352485	Shaft	1
13	320156	Washer	1
14	15200	Cotter Pin	1
15	353129	Rod	1
16	2076661	Sensor (Throttle and Inching)	1
17	1558055	Washer	2
18	1558054	Screw	2
19	1493397	Cover (Capscrew Head)	2
20	1558052	Washer	3
21	302401	Locknut	2
22	316835	Nut	1
23	320158	Washer	1

©2010 HYSTER COMPANY

MONOTROL PEDAL LINKAGE (FIGURE 3-5)

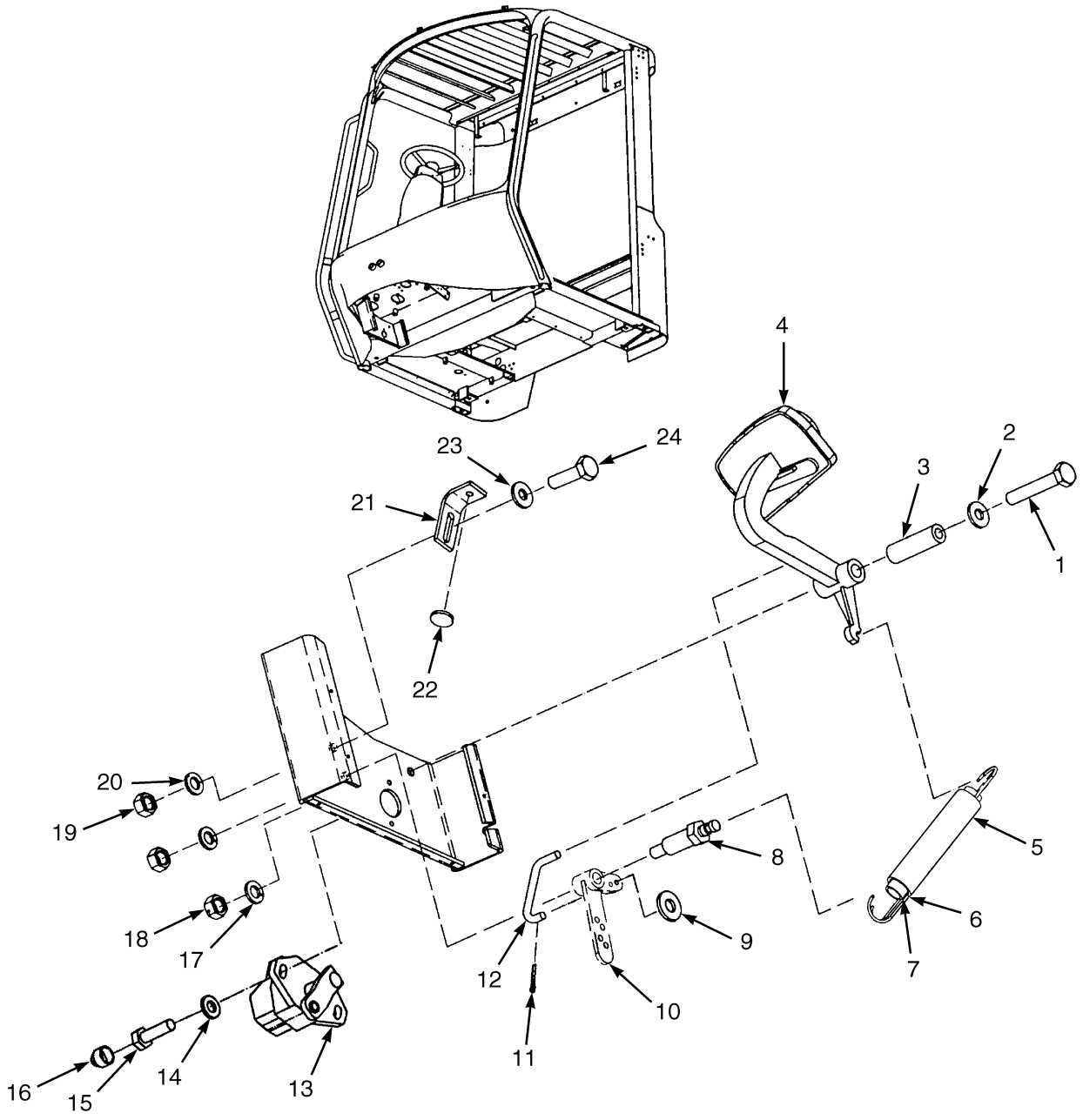

HP130397

©2010 HYSTER COMPANY

MONOTROL PEDAL LINKAGE

ITEM	PART NO.	DESCRIPTION	QTY
1	292523	Capscrew	1
2	320160	Washer	1
3	353141	Tube Assy (Pivot)	1
4	1352575	Monotrol Pedal Assembly (☞Figure 3-6)	1
5	1558049	Spring	1
6	353142	Spring	1
7	353143	Spring	1
8	352485	Shaft	1
9	320156	Washer	1
10	353164	Crank	1
11	15200	Cotter Pin	1
12	353129	Rod	1
13	2076661	Sensor (Throttle and Inching)	1
14	1492253	Washer	2
15	292501	Capscrew	2
16	1493397	Cover (Capscrew Head)	2
17	~~388049~~		
	292682	Lockwasher	2
18	136692	Nut	2
19	316835	Nut	1
20	320158	Washer	1
21	1494675	Bracket (Pedal Stop)	1
22	353195	Bumper	1
23	1468323	Washer	1
24	136749	Screw	1

©2010 HYSTER COMPANY

MONOTROL PEDAL (FIGURE 3-6)

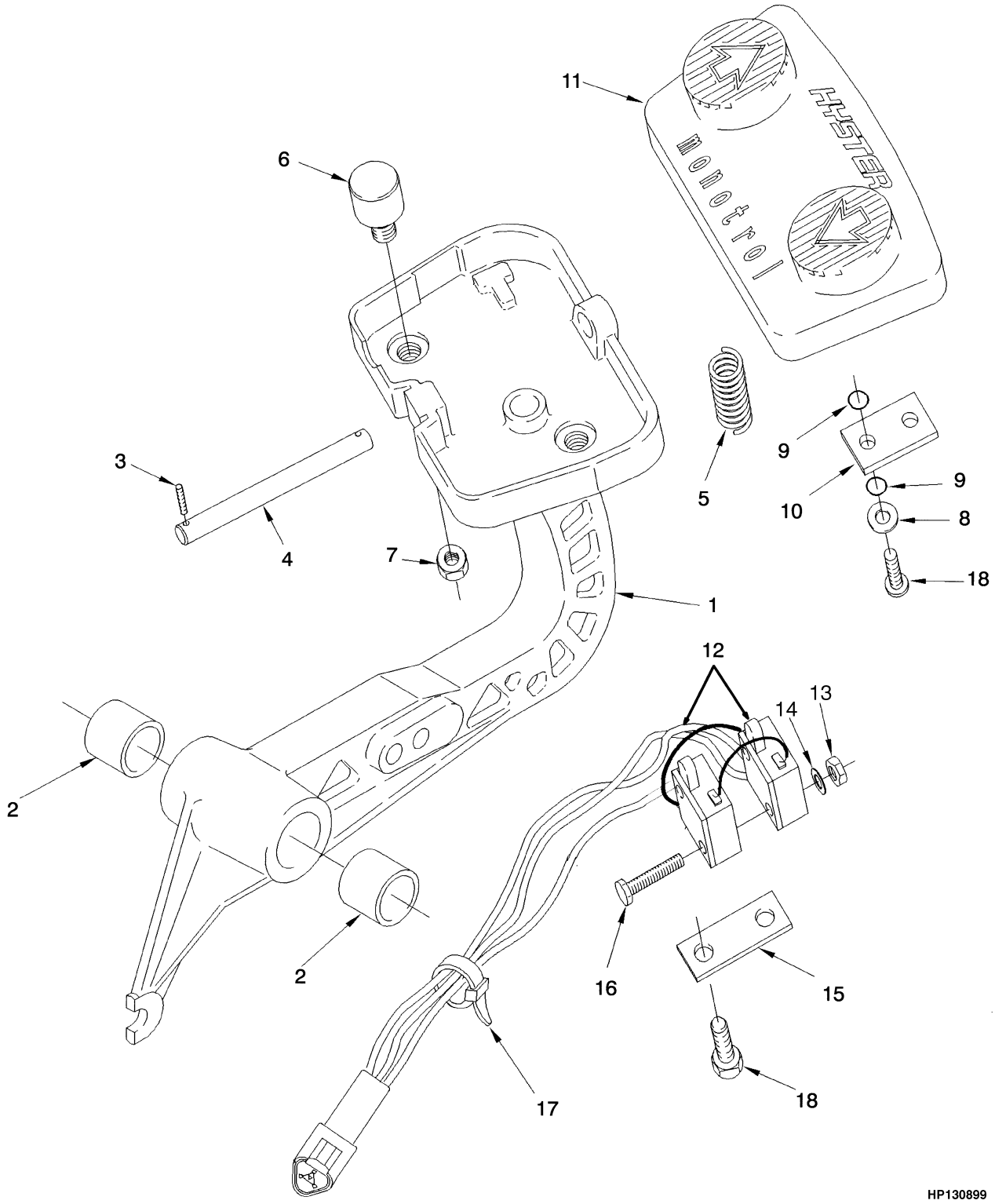

©2010 HYSTER COMPANY

MONOTROL PEDAL

ITEM	PART NO.	DESCRIPTION	QTY
	1352575	Monotrol Pedal Assembly	1
1	353397	Pedal	1
2	135685	Bushing	2
3	220932	Setscrew	2
4	353154	Pin	1
5	353168	Spring	1
6	353441	Magnet Assembly	2
6	353422	Magnet	1
7	353432	Nut	1
8	353448	Washer	4
9	57568	O-Ring	8
10	359207	Plate	2
11	353175	Pad Assembly	1
12	1352090	Switch Assembly	1
13	16865	Nut	2
14	53162	Lockwasher	2
15	353165	Retainer	1
16	220434	Screw	2
17	114312	Strap Clamp	3
18	352969	Screw	6

©2010 HYSTER COMPANY

FUEL FILTER (FIGURE 3-7)

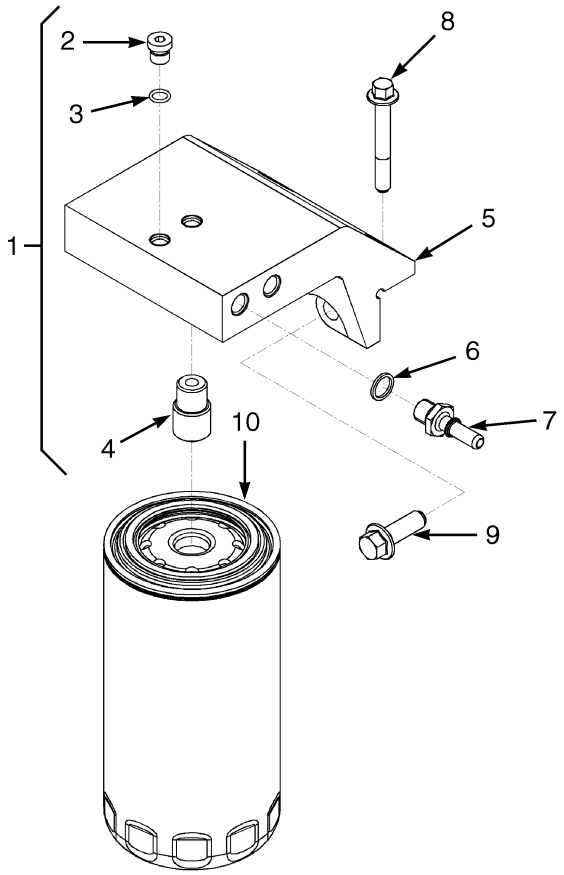

HP091336

ITEM	PART NO.	DESCRIPTION	QTY
	a 1613301	Engine Assy-Diesel (Tier III 190 HP) (With Air Conditioning)	1
	b 1613486	Engine Assy-Diesel (Tier III 190 HP) (Without Air Conditioning)	1
	c 1692949	Engine Assy (Without Air Conditioning)	1
	a 1559624	Engine Assy-Diesel (Tier III 220 HP) (With Air Conditioning)	1
	b 1613484	Engine Assy-Diesel (Tier III 220 HP) (Without Air Conditioning)	1
	c 1692948	Engine Assy (Without Air Conditioning)	1
1	1635413	Filter Head	1
2	1517010	Plug Assembly	2
3	1517011	O-Ring	1
4	1635376	Adapter	1
5	1635451	Head	1
6	1635355	Sealing Ring	2
7	1635399	Connector (Quick Disconnect)	2
8	1543421	Capscrew	2
9	1511977	Capscrew	2
10	1635370	Fuel Filter	1
10	2104697	Fuel Filter (Alternate Part)	1

©2010 HYSTER COMPANY

FOOTNOTES:

a → S/N B214E01668F
b S/N B214E01669F ↔ 11/2008
c 11/2008 →

©2010 HYSTER COMPANY

FUEL FILTER PLUMBING (FIGURE 3-8)

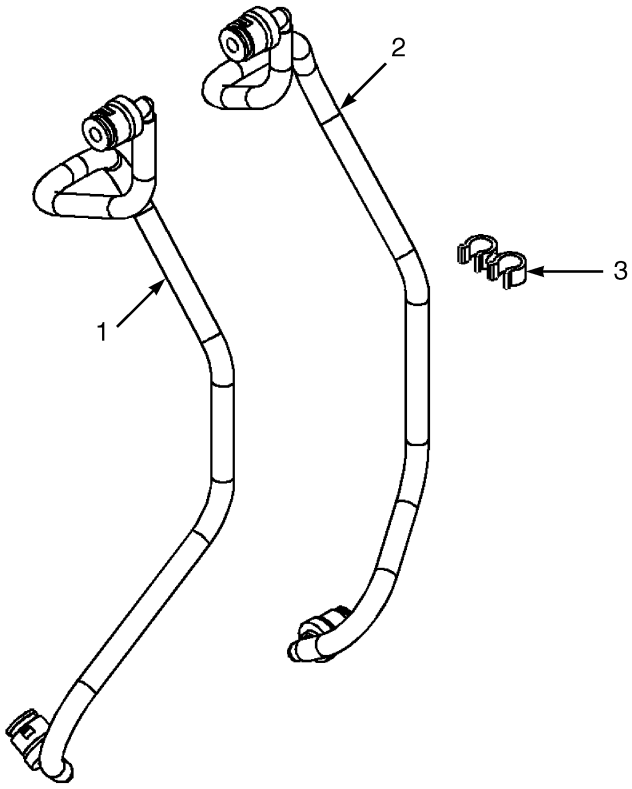

HP091337

ITEM	PART NO.	DESCRIPTION	QTY
	a 1613301	Engine Assy-Diesel (Tier III 190 HP) (With Air Conditioning)	1
	b 1613486	Engine Assy-Diesel (Tier III 190 HP) (Without Air Conditioning)	1
	c 1692949	Engine Assy (Without Air Conditioning)	1
	a 1559624	Engine Assy-Diesel (Tier III 220 HP) (With Air Conditioning)	1
	b 1613484	Engine Assy-Diesel (Tier III 220 HP) (Without Air Conditioning)	1
	c 1692948	Engine Assy (Without Air Conditioning)	1
1	1635390	Tube Assy (Fuel Supply)	1
2	1635391	Tube Assy (Fuel Supply)	1
3	1635381	Clip	1

FOOTNOTES:

a → S/N B214E01668F
b S/N B214E01669F ↔ 11/2008
c 11/2008 →

©2010 HYSTER COMPANY

FUEL INJECTION PUMP (FIGURE 3-9)

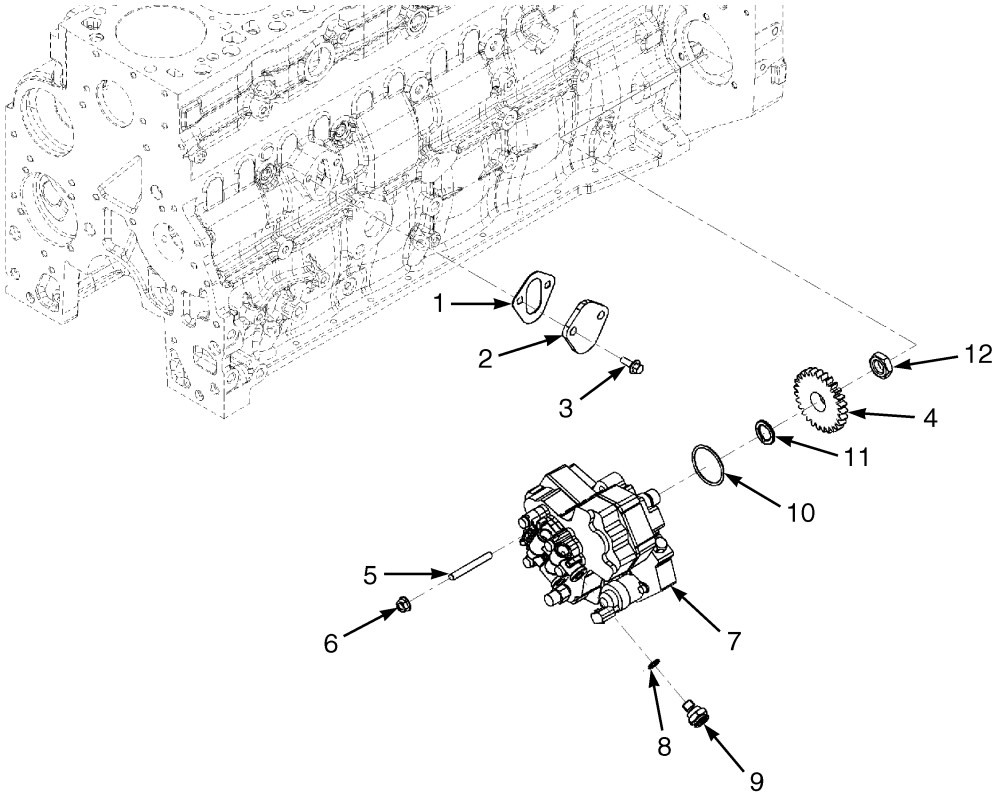

HP091340

ITEM	PART NO.	DESCRIPTION	QTY
	b 1613301	Engine Assy-Diesel (Tier III 190 HP) (With Air Conditioning)	1
	c 1613486	Engine Assy-Diesel (Tier III 190 HP) (Without Air Conditioning)	1
	d 1692949	Engine Assy (Without Air Conditioning)	1
	b 1559624	Engine Assy-Diesel (Tier III 220 HP) (With Air Conditioning)	1
	c 1613484	Engine Assy-Diesel (Tier III 220 HP) (Without Air Conditioning)	1
	d 1692948	Engine Assy (Without Air Conditioning)	1
1	1513743	Gasket (Cover Plate)	1
2	1517110	Cover Plate	1
3	1512004	Capscrew	2
4	1635276	Gear	1
5	1635267	Stud	3
6	1513712	Nut	3
7	**d** 1702093	Fuel Pump Assembly	1
7	**a** 1635313	Injection Pump Assembly	1
7	1702094	Fuel Pump	1
8	1635355	Sealing Ring	1
9	1635311	Connector (Quick Disconnect)	1
10	1635222	O-Ring	1
11	1635349	Spring Washer	1
12	1635348	Nut	1

©2010 HYSTER COMPANY

FOOTNOTES:

a → 11/2008
b → S/N B214E01668F
c S/N B214E01669F ↔ 11/2008
d 11/2008 →

©2010 HYSTER COMPANY

NOTES

©2010 HYSTER COMPANY

FUEL INJECTOR PLUMBING (FIGURE 3-10)

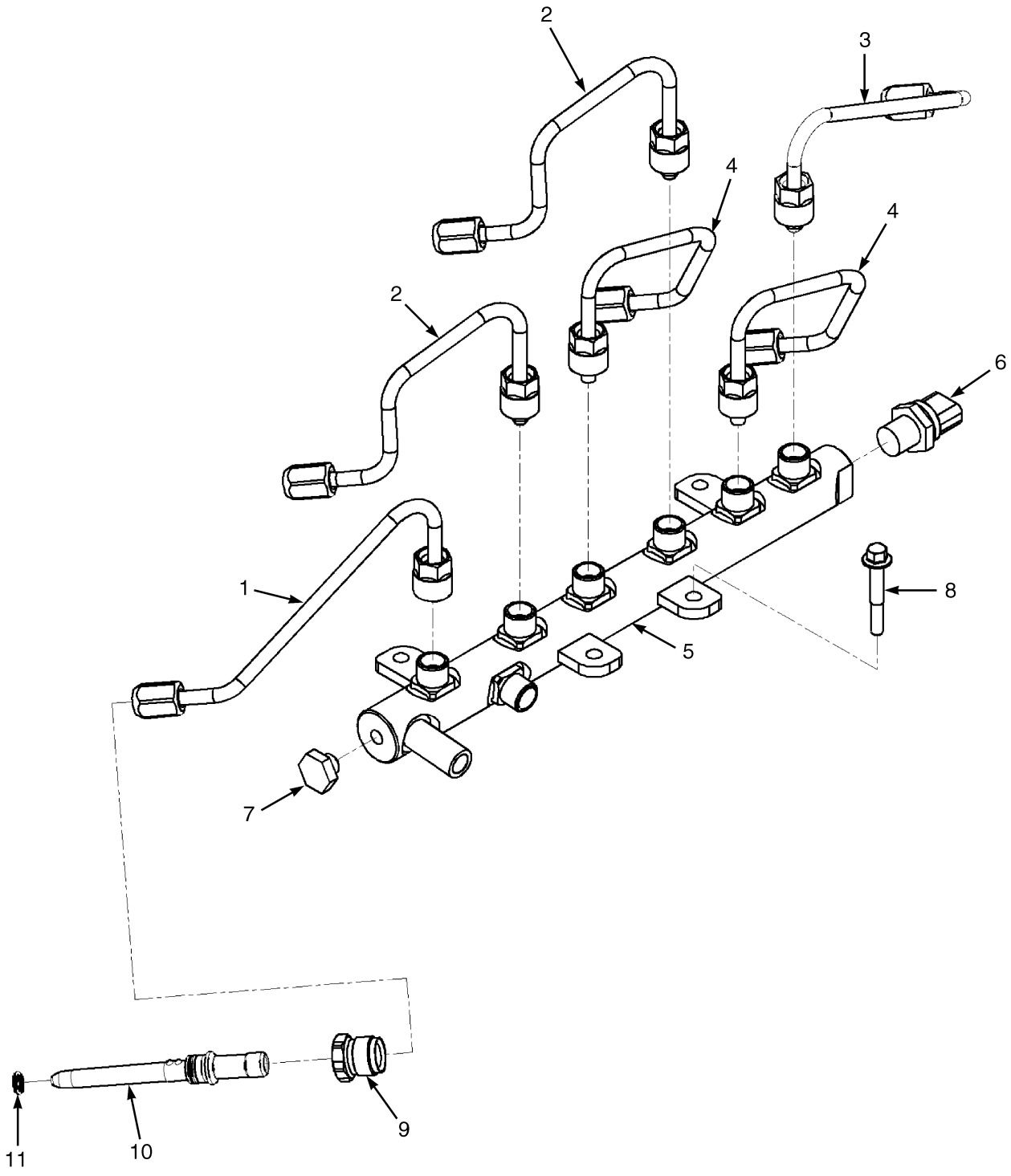

©2010 HYSTER COMPANY

FUEL INJECTOR PLUMBING

ITEM	PART NO.	DESCRIPTION	QTY
	b 1613301	Engine Assy-Diesel (Tier III 190 HP) (With Air Conditioning)	1
	c 1613486	Engine Assy-Diesel (Tier III 190 HP) (Without Air Conditioning)	1
	d 1692949	Engine Assy (Without Air Conditioning)	1
	b 1559624	Engine Assy-Diesel (Tier III 220 HP) (With Air Conditioning)	1
	c 1613484	Engine Assy-Diesel (Tier III 220 HP) (Without Air Conditioning)	1
	d 1692948	Engine Assy (Without Air Conditioning)	1
1	1635332	Tube Assy (Fuel Supply)	1
2	1635333	Tube Assy (Fuel Supply)	2
3	1635335	Tube Assy (Fuel Supply)	1
4	1635334	Tube Assy (Fuel Supply)	2
5	1635327	Manifold	1
5	1635338	Manifold	1
6	1635304	Sensor	1
7	1635305	Relief Valve	1
8	**a** 1513725	Capscrew	4
8	**d** 1512494	Screw	4
9	1635264	Retainer	6
10	**d** 1661292	Fitting Assembly	1
11	1637934	O-Ring	1

FOOTNOTES:

a → 11/2008
b → S/N B214E01668F
c S/N B214E01669F ↔ 11/2008
d 11/2008 →

©2010 HYSTER COMPANY

FUEL INJECTORS (FIGURE 3-11)

(→ 11/2008)

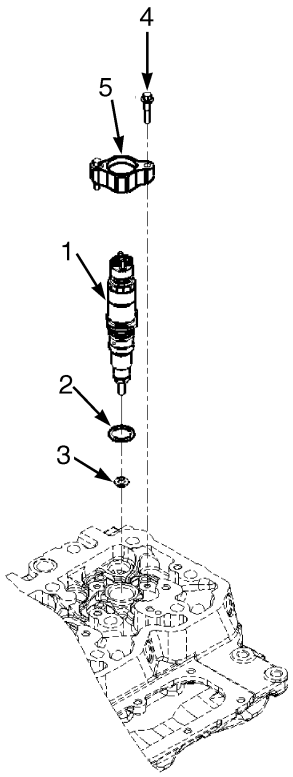

HP091354

ITEM	PART NO.	DESCRIPTION	QTY
	a 1613301	Engine Assy-Diesel (Tier III 190 HP) (With Air Conditioning)	1
	b 1613486	Engine Assy-Diesel (Tier III 190 HP) (Without Air Conditioning)	1
	a 1559624	Engine Assy-Diesel (Tier III 220 HP) (With Air Conditioning)	1
	b 1613484	Engine Assy-Diesel (Tier III 220 HP) (Without Air Conditioning)	1
	1632993	Injector	6
1	1649738	Injector	1
2	1635352	O-Ring	1
3	1584914	Seal	1
4	1513791	Screw	12
5	1635317	Clamp	6

FOOTNOTES:

a → S/N B214E01668F

b S/N B214E01669F ↔ 11/2008

©2010 HYSTER COMPANY

FUEL INJECTORS (FIGURE 3-12)
(11/2008 →)

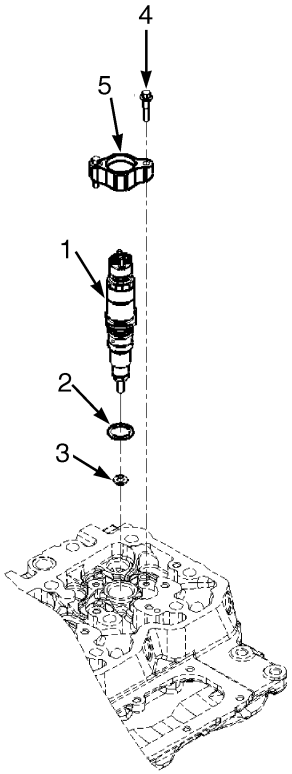

HP091354

ITEM	PART NO.	DESCRIPTION	QTY
	1692949	Engine Assy	1
	1692948	Engine Assy	1
1	4018919	Injector	6
2	1662311	O-Ring	1
3	1662312	Seal	1
4	1513791	Screw	12
5	1635317	Clamp	6

©2010 HYSTER COMPANY

FUEL INLET FITTING (FIGURE 3-13)

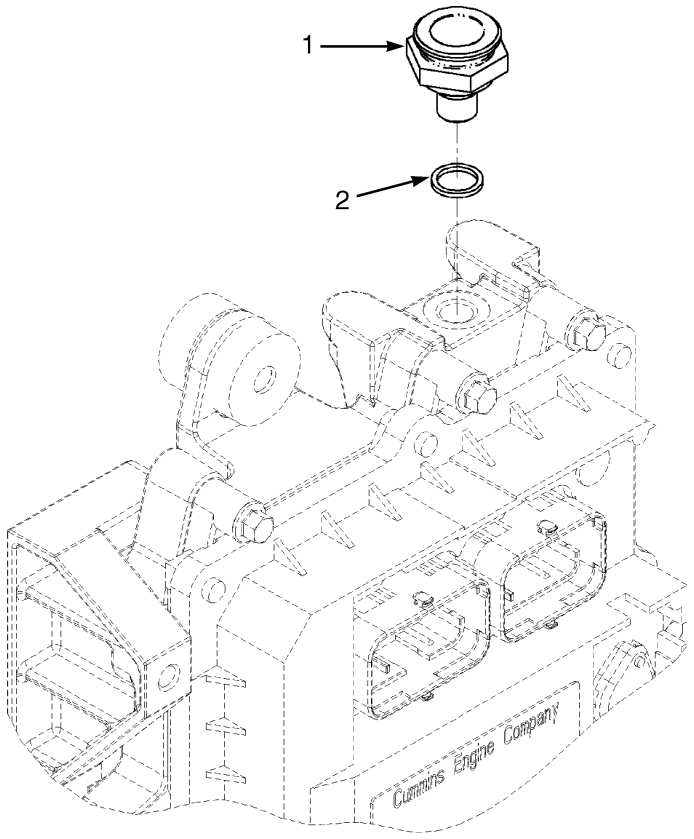

HP091339

ITEM	PART NO.	DESCRIPTION	QTY
	a 1613301	Engine Assy-Diesel (Tier III 190 HP) (With Air Conditioning)	1
	b 1613486	Engine Assy-Diesel (Tier III 190 HP) (Without Air Conditioning)	1
	c 1692949	Engine Assy (Without Air Conditioning)	1
	a 1559624	Engine Assy-Diesel (Tier III 220 HP) (With Air Conditioning)	1
	b 1613484	Engine Assy-Diesel (Tier III 220 HP) (Without Air Conditioning)	1
	c 1692948	Engine Assy (Without Air Conditioning)	1
1	1635364	Connector (Quick Disconnect)	1
2	1635355	Sealing Ring	1

FOOTNOTES:

a → S/N B214E01668F
b S/N B214E01669F ↔ 11/2008
c 11/2008 →

©2010 HYSTER COMPANY

NOTES

©2010 HYSTER COMPANY

FUEL PLUMBING (FIGURE 3-14)

(→ 11/2008)

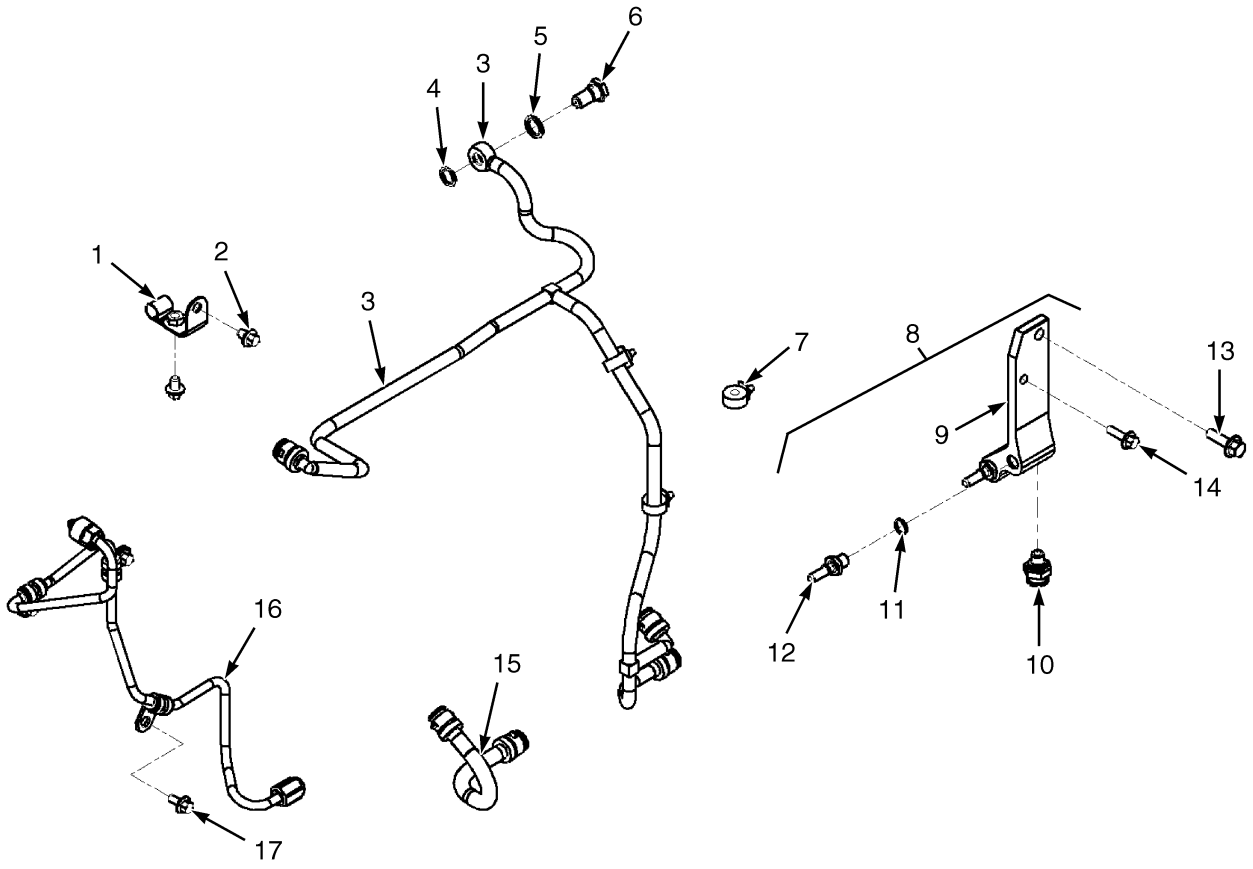

HP091320

©2010 HYSTER COMPANY

FUEL PLUMBING

(→ 11/2008)

ITEM	PART NO.	DESCRIPTION	QTY
	a 1613301	Engine Assy-Diesel (Tier III 190 HP) (With Air Conditioning)	1
	b 1613486	Engine Assy-Diesel (Tier III 190 HP) (Without Air Conditioning)	1
	a 1559624	Engine Assy-Diesel (Tier III 220 HP) (With Air Conditioning)	1
	b 1613484	Engine Assy-Diesel (Tier III 220 HP) (Without Air Conditioning)	1
1	1635326	Bracket	1
2	1606569	Capscrew	2
3	1635398	Tube Assy (Fuel Drain)	1
3	1702096	Tube Assembly (Fuel Drain) (Alternate Part)	1
4	1543359	Sealing Ring	1
5	1584546	Sealing Ring	1
6	1635279	Check Valve	1
7	1635384	Clip	3
8	1635393	Adapter	1
9	1635392	Adapter	1
10	1635365	Connector (Quick Disconnect)	1
11	1635355	Sealing Ring (Sealing)	2
12	1635399	Connector (Quick Disconnect)	2
13	1511977	Capscrew	1
14	1512005	Capscrew	1
15	1635394	Tube Assy (Fuel Supply)	1
16	1635410	Tube Assy (Fule Supply)	1
17	1511970	Capscrew	3

FOOTNOTES:

a → S/N B214E01668F

b S/N B214E01669F ↔ 11/2008

©2010 HYSTER COMPANY

FUEL PLUMBING (FIGURE 3-15)

(11/2008 →)

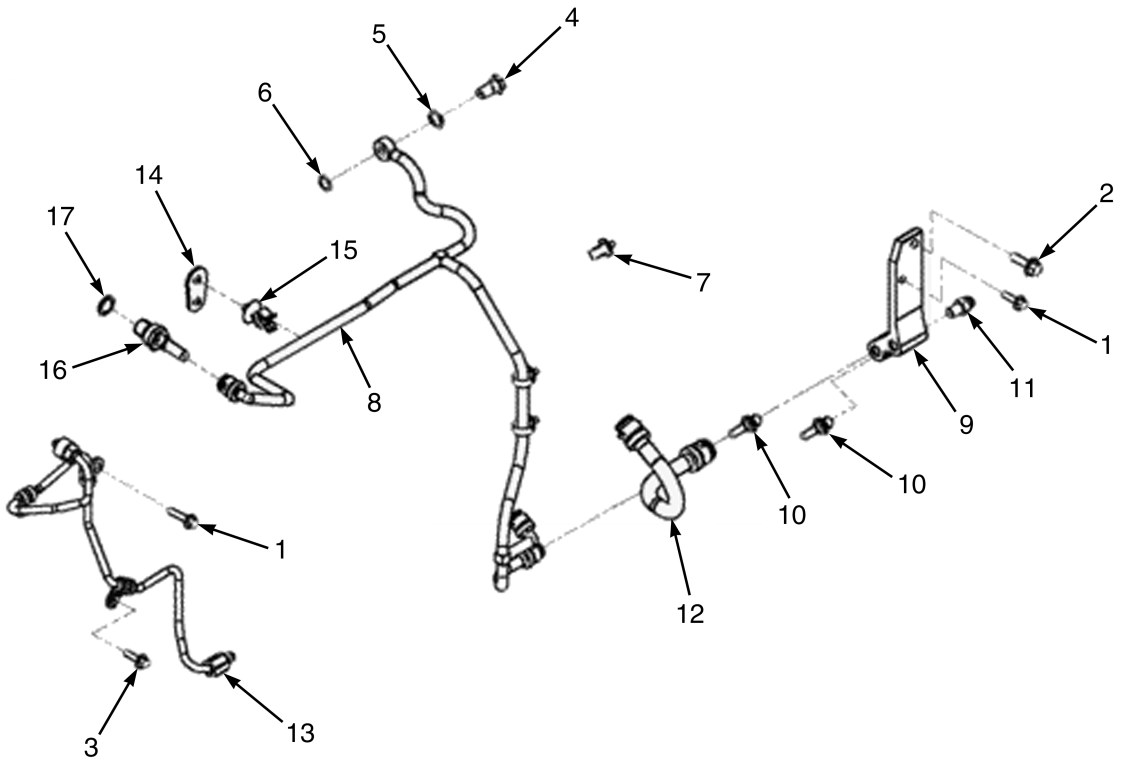

HP091373

©2010 HYSTER COMPANY

FUEL PLUMBING

(11/2008 →)

ITEM	PART NO.	DESCRIPTION	QTY
	1692949	Engine Assy	1
	1692948	Engine Assy	1
1	1511970	Capscrew	3
2	1512005	Capscrew	1
3	1511977	Capscrew	1
4	1635279	Check Valve	1
5	1543359	Sealing Ring	1
6	1511998	Sealing Ring	1
7	1635384	Clip	4
8	1702096	Tube Assembly (Fuel Drain)	1
9	1702097	Adapter Assembly	1
9	. . . . .	Adapter	1
10	1635399	Connector (Quick Disconnect)	2
11	1635365	Connector (Quick Disconnect)	1
12	1635394	Tube Assy	1
13	1635410	Tube Assy	1
14	1702098	Brace Assembly	1
14	. . . . .	Brace	1
15	1702100	Clip	1
16	4009252	Connector	1
17	1635355	Sealing Ring	1

©2010 HYSTER COMPANY

FUEL SYSTEM ACCESSORIES (FIGURE 3-16)

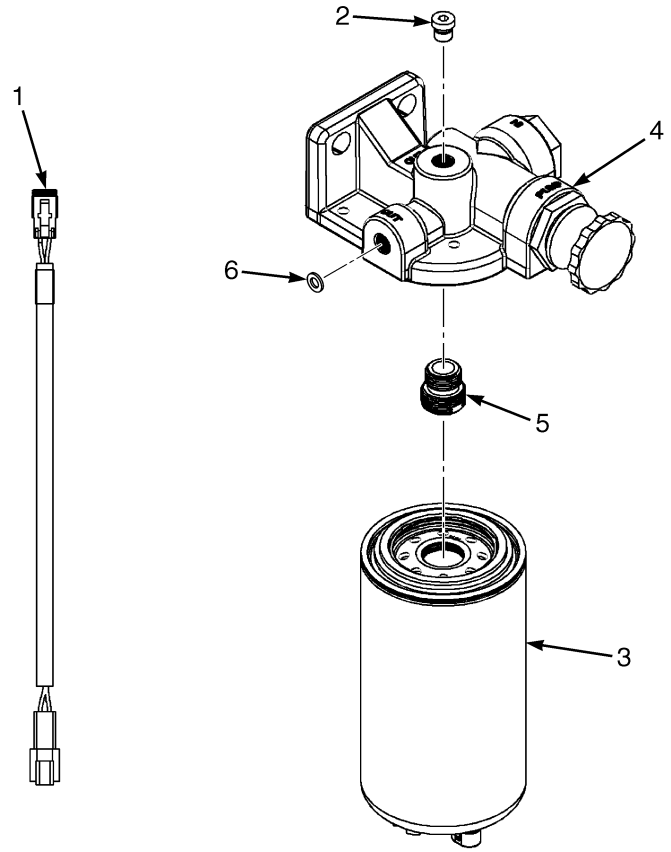

HP091468

ITEM	PART NO.	DESCRIPTION	QTY
	b 1613301	Engine Assy-Diesel (Tier III 190 HP) (With Air Conditioning)	1
	c 1613486	Engine Assy-Diesel (Tier III 190 HP) (Without Air Conditioning)	1
	d 1692949	Engine Assy (Without Air Conditioning)	1
	b 1559624	Engine Assy-Diesel (Tier III 220 HP) (With Air Conditioning)	1
	c 1613484	Engine Assy-Diesel (Tier III 220 HP) (Without Air Conditioning)	1
	d 1692948	Engine Assy (Without Air Conditioning)	1
1	1635271	Wire Harness (Fuel System Accessories)	1
1	1703492	Wire Harness (Alternate Part)	1
2	**a** 1635329	Plug	1
2	**d** 1661144	Plug	1
3	1635454	Fuel Filter Assy	1
3	1635303	Fuel Filter	1
4	1635424	Filter Head	1
5	1635312	Adapter	1
6	**d** 1644166	Sealing Ring	1

FOOTNOTES:

a → 11/2008
b → S/N B214E01668F
c S/N B214E01669F ↔ 11/2008
d 11/2008 →

©2010 HYSTER COMPANY

4 ELECTRICAL SYSTEM

SECTION 4
ELECTRICAL SYSTEM

DESCRIPTION **PAGE**

ALTERNATOR AND MOUNTING 4-129
ALTERNATOR SUPPORT AND WATER INLET
→ 11/2008 4-131
11/2008 → 4-132
CONDITIONAL SPEED LIMITER
LIFT AND TILT (S/N B214E01777H →) 4-142
CONSOLE
INDICATOR DISPLAY AND CONTROLS 4-10
RADIO 4-8
CONTROL PANEL
AIR CONDITIONER 4-14
HEATER 4-12
DC-DC CONVERTER AND ATTACHING PARTS 4-18
ELECTRIC HORN 4-147
ELECTRICAL SYSTEM 4-4
ENGINE CONTROL MODULE
→ 11/2008 4-134
11/2008 → 4-136
ETR MODULE WIRING
→ 11/2008 4-138
11/2008 → 4-139
FRONT LIGHTS 4-24
LIGHT ASSEMBLY
HALOGEN 4-22
HIGH INTENSITY DISCHARGE 4-23
LIGHT BAR AND MOUNT
TWISTLOCK MODULE 4-20
LOCKOUT LEVER 4-7
PROXIMITY SWITCH ASSEMBLY
S/N B214E01777H → 4-140
REAR LIGHTS AND BACK-UP ALARM 4-26
RELAYS AND FUSES
OPERATOR COMPARTMENT (→ 3/2008) 4-30
OPERATOR COMPARTMENT (3/2008 ↔ S/N B214E01776H) 4-34
OPERATOR COMPARTMENT (S/N B214E01777H →) 4-38
SECOND 12V SOCKET OPTION
CLIMATE CONTROL CAB 4-146
TRANSMISSION CONTROLLER AND SHIFT LEVER 4-16
WIRE HARNESS
AIR CONDITIONER EXTENSION (S/N B214E01669F ↔ 12/2009 (H500HD-EC))
(S/N B214E01669F ↔ 9/2010 (H400HD-H450HD-EC)) 4-128
ARM REST 4-42
CAB LIGHTS 4-46
CAB SIDE CONSOLE - SHEET 1 OF 2 (→ 3/2008) 4-48
CAB SIDE CONSOLE - SHEET 2 OF 2 (→ 3/2008) 4-54
CAB SIDE CONSOLE - SHEET 1 OF 2 (3/2008 ↔ S/N B214E01776H) 4-58
CAB SIDE CONSOLE - SHEET 2 OF 2 (3/2008 ↔ S/N B214E01776H) 4-62
CAB SIDE CONSOLE - SHEET 1 OF 2 (S/N B214E01777H →) 4-66
CAB SIDE CONSOLE - SHEET 2 OF 2 (S/N B214E01777H →) 4-72

©2010 HYSTER COMPANY

SECTION 4
ELECTRICAL SYSTEM

DESCRIPTION **PAGE**

CAB UNDERFLOOR 4-76
CHASSIS - SHEET 1 OF 2 (S/N B214E01678F ↔ 3/2009 (4000 WB))
(S/N B214E01675F ↔ 3/2009 (4500 WB)) 4-86
CHASSIS - SHEET 2 OF 2 (S/N B214E01678F ↔ 3/2009 (4000 WB))
(S/N B214E01675F ↔ 3/2009 (4500 WB)) 4-90
CLOSED CAB 4-110
FRONT LIGHTS (→ S/N B214E01629F) 4-113
FRONT LIGHTS (S/N B214E01630F →) 4-114
HYDRAULIC RELAYS 4-115
LIFT INTERRUPT BYPASS 4-116
OIL COOLER (→ 9/2008) 4-118
OIL COOLER (S/N B214E01688F →) 4-120
POWERED CAB TILT 4-122
REAR WIPER EXTENSION 4-123
SEALED FUSE BOX 4-124
SIDE INDICATOR (S/N B214E01630F →) 4-127
SPEED LIMITER 4-144
STEERING COLUMN 4-125
WINDOW WASH PUMPS 4-126
WIRE HARNESS (CHASSIS)
SHEET 1 OF 2 (→ S/N B214E01677F (4000 WB)) (→ S/N B214E01674F (4500 WB)) 4-78
SHEET 1 OF 2 (3/2008 ↔ S/N B214E01776H) 4-94
SHEET 1 OF 2 (S/N B214E01777H →) 4-102
SHEET 2 OF 2 (→ S/N B214E01677F (4000 WB)) (→ S/N B214E01674F (4500 WB)) 4-82
SHEET 2 OF 2 (3/2008 ↔ S/N B214E01776H) 4-98
SHEET 2 OF 2 (S/N B214E01777H →) 4-106
WORK LIGHTS
HALOGEN AND HIGH INTENSITY DISCHARGE 4-28

©2010 HYSTER COMPANY

NOTES

©2010 HYSTER COMPANY

ELECTRICAL SYSTEM (FIGURE 4-1)

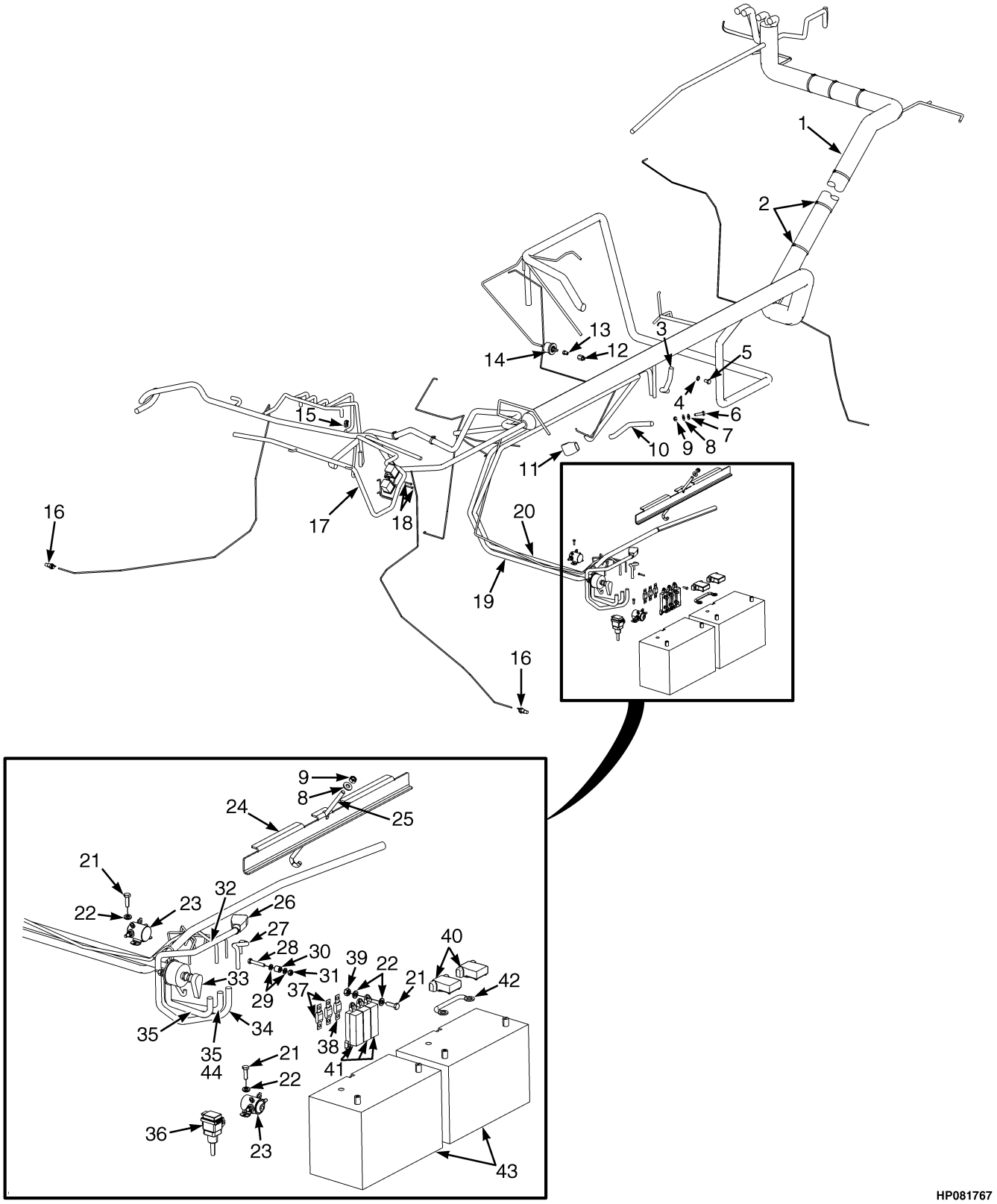

©2010 HYSTER COMPANY

ELECTRICAL SYSTEM

ITEM	PART NO.	DESCRIPTION	QTY
1	**e** 1614190	Wire Harness (Chassis) (H400HD-H450HD-EC) (☞Figure 4-27, ☞Figure 4-28)	1
1	**i** 1676308	Wire Harness (Chassis) (H400HD-H450HD-EC) (☞Figure 4-29, ☞Figure 4-30)	1
1	**j** 1700345	Wire Harness (Chassis) (H400HD-H450HD-EC) (☞Figure 4-31, ☞Figure 4-32)	1
1	4007875	Wire Harness (Chassis) (H400HD-H450HD-EC) (☞Figure 4-33, ☞Figure 4-34)	1
1	**d** 1614191	Wire Harness (Chassis) (H500HD-EC) (☞Figure 4-27, ☞Figure 4-28)	1
1	**h** 1676309	Wire Harness (Chassis) (H500HD-EC) (☞Figure 4-29, ☞Figure 4-30)	1
1	**j** 1700346	Wire Harness (Chassis) (H500HD-EC) (☞Figure 4-31, ☞Figure 4-32)	1
1	4007876	Wire Harness (Chassis) (H500HD-EC) (☞Figure 4-33, ☞Figure 4-34)	1
2	129563	Strap Clamp	AR
3	**de** 1632762	Wire	1
4	**de** 320161	Washer	1
5	**de** 292526	Capscrew	1
6	292515	Capscrew	1
7	296407	Lockwasher	1
8	320160	Washer	2
9	302401	Locknut	2
10	1597592	Battery Cable	1
10	117970	Battery Cable	1
10	275498	Conduit	1
10	148795	Terminal	2
11	370009	Boot	1
12	1605818	Adapter	1
13	16187	Fitting	1
13	1566965	Sealant	AR
14	1652018	Pressure Sender (Oil)	1
15	1490242	Connector	1
16	**de** 2043634	Switch (Temperature) (Brake)	1
16	**mk** 1671513	Switch (Temperature) (Brake)	2
17	**c** 1614188	Wire Harness (Oil Cooler) (☞Figure 4-40)	1
17	**l** 1677616	Wire Harness (Oil Cooler) (Oil Cooler) (☞Figure 4-41)	1
18	2070686	Capscrew	1
19	1608760	Battery Cable	1
20	1608763	Battery Cable	1
21	292501	Capscrew	10
22	320156	Washer	17
23	1307121	Switch (Magnetic, 24V)	2
24	1607623	Battery Hold Down	1
25	1531070	Link	1
26	321158	Boot	1
27	1608548	Jumper	1
28	2072353	Capscrew	1
29	320155	Washer	2
30	1534793	Spacer	2
31	302398	Locknut	1
32	1608762	Battery Cable Assembly	1
32	148792	Terminal	1
32	148795	Terminal	1

©2010 HYSTER COMPANY

ELECTRICAL SYSTEM

ITEM	PART NO.	DESCRIPTION	QTY
32	1357269	Battery Cable	1
32	275498	Conduit	1
32	4002122	Battery Cable (Alternate Part)	1
33	1324518	Switch (Disconnect)	1
33	1585160	Lever (Lockable Disconnect Switch) (☞Figure 4-2)	1
34	1597595	Jumper	1
34	1627709	Jumper (Alternate Part)	1
35	4002125	Cable Assy (Alternate Part)	1
35	806426	E-Ring	1
35	1354497	E-Ring	1
35	1627709	Jumper	1
36	**b** 1597430	Fuse Box (Sealed) (☞Figure 4-44)	1
36	**n** 4016659	Fuse Box (Sealed) (☞Figure 4-44)	1
37	1617618	Fuse (100 Amp)	2
38	1617617	Fuse (125 Amp)	1
39	302399	Nut	7
40	257241	Boot	2
41	1617615	Fuse Holder	3
42	1357269	Battery Cable	1
42	148778	Terminal	1
42	148779	Terminal	1
42	1608761	Battery Cable Assembly	1
42	275498	Conduit	1
43	1399332	Start Battery Wet	2
44	4002124	Cable Assy (Alternate Part)	1
44	806426	E-Ring	1
44	1354497	E-Ring	1
	ade 1652017	Wire	1
	a 148607	E-Ring	1
	a 148648	Terminal	1
	a 1500912	Clip	1
	amk 12858	Fitting	2
	afg 1700297	Wire Harness (Air Conditioner Extension)	1
	ao 1490242	Connector (Chassis Harness) (H500HD-EC)	1

FOOTNOTES:

a Not Illustrated
b → 10/2010
c → 9/2008
d → S/N B214E01674F (4500 WB)
e → S/N B214E01677F (4000 WB)
f S/N B214E01669F ↔ 12/2009 (H500HD-EC)
g S/N B214E01669F ↔ 9/2010 (H400HD-H450HD-EC)
h S/N B214E01675F ↔ 3/2009 (4500 WB)
i S/N B214E01678F ↔ 3/2009 (4000 WB)
j 3/2009 ↔ S/N B214E01776H
k S/N B214E01678F → (4000 WB)
l S/N B214E01688F →
m S/N B214E01675F → (4500 WB)
n 10/2010 →
o 12/2009 →

©2010 HYSTER COMPANY

LOCKOUT LEVER (FIGURE 4-2)

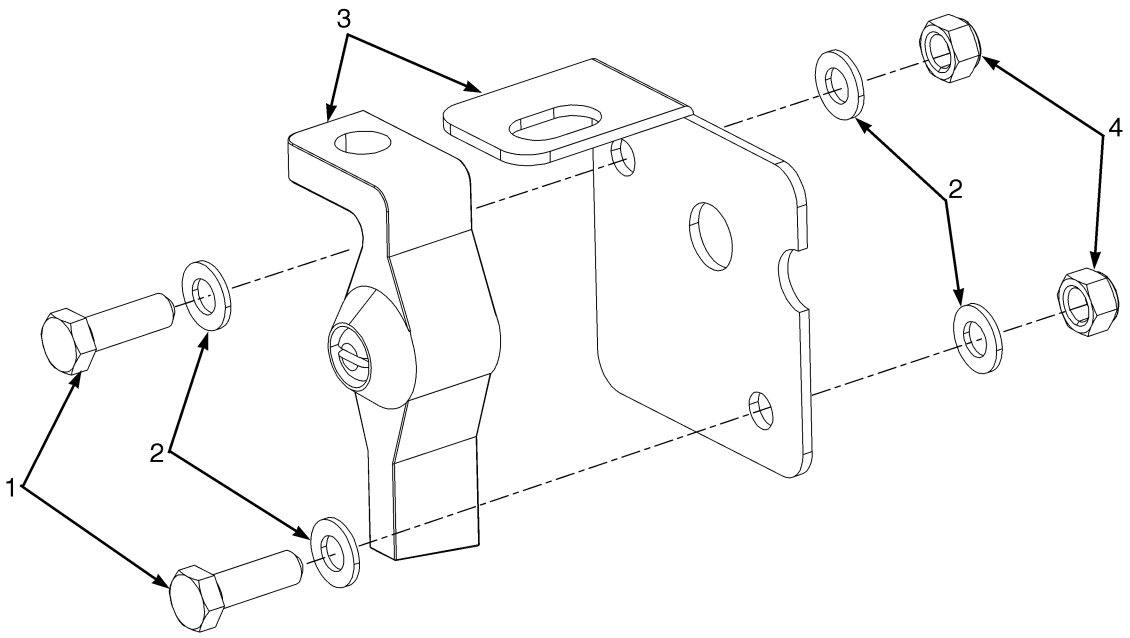

BP080730

ITEM	PART NO.	DESCRIPTION	QTY
1	2044515	Capscrew	2
2	320155	Washer	4
3	1585160	Lever (Lockable Disconnect Switch)	1
4	302398	Locknut	2

CONSOLE (FIGURE 4-3)
RADIO

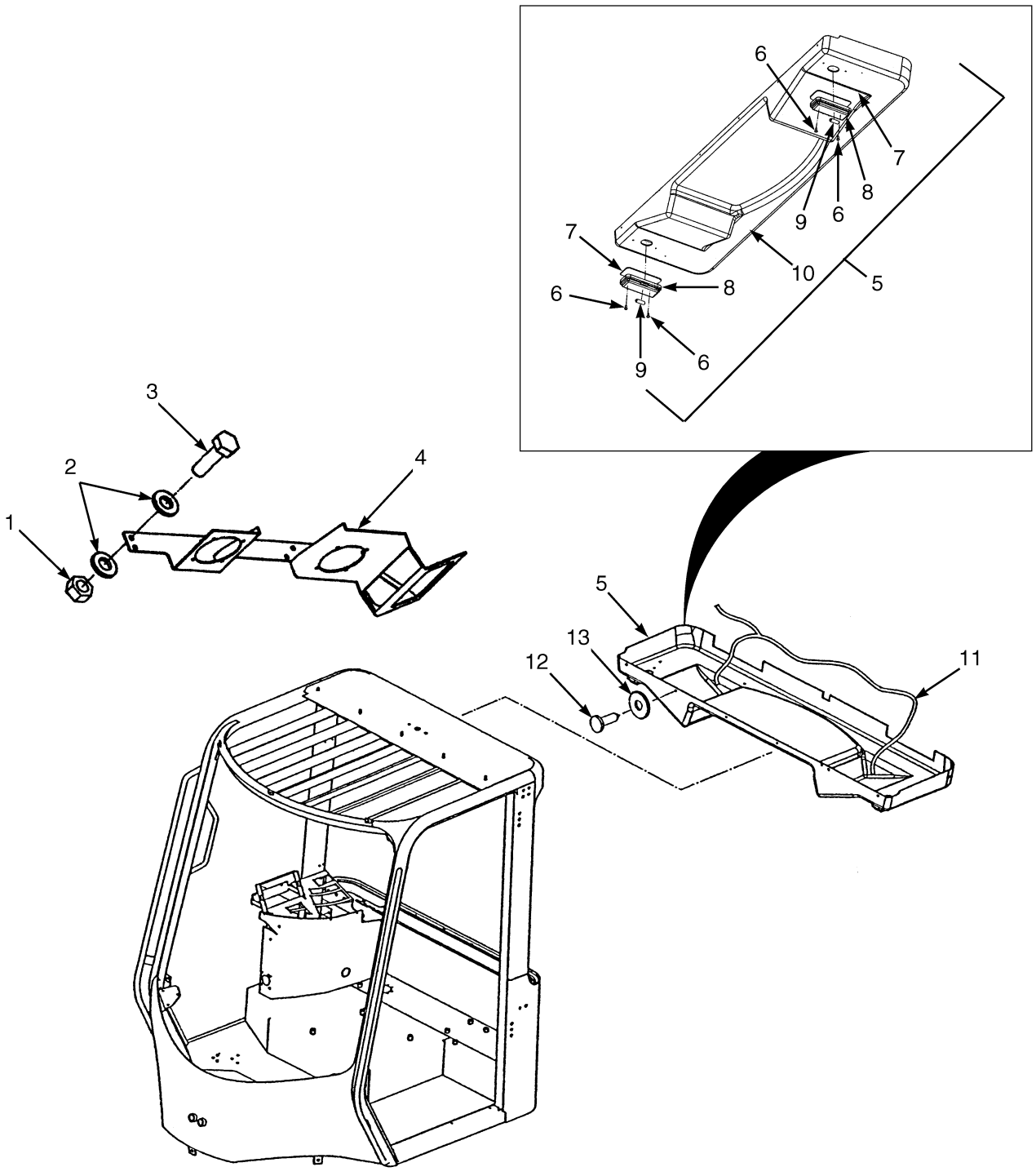

HP081317

©2010 HYSTER COMPANY

CONSOLE
RADIO

ITEM	PART NO.	DESCRIPTION	QTY
1	136692	Nut	4
2	320160	Washer	8
3	287854	Capscrew	4
4	1566762	Bracket (Radio Console) (Radio Console)	1
5	1492176	Console (Radio)	1
6	1492163	Screw	4
7	1566767	Bracket	2
8	1393528	Dome Light	2
9	887317	Bulb	2
10	1491468	Headliner	1
11	1583941	Wire Harness (☞Figure 4-35)	1
12	1468310	Screw	10
13	1492140	Washer	10

©2010 HYSTER COMPANY

CONSOLE (FIGURE 4-4)
INDICATOR DISPLAY AND CONTROLS

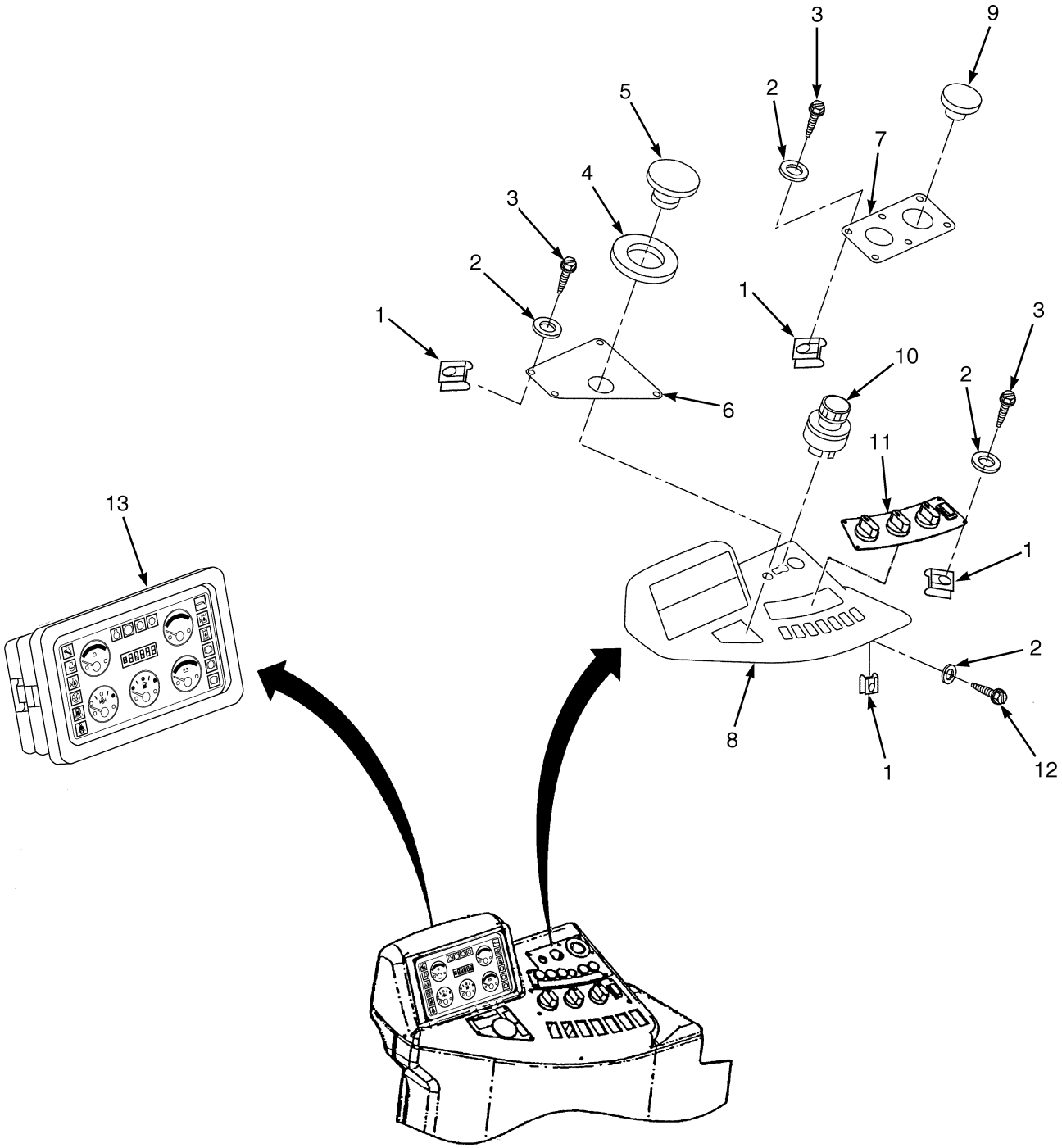

HP081769

©2010 HYSTER COMPANY

CONSOLE

INDICATOR DISPLAY AND CONTROLS

ITEM	PART NO.	DESCRIPTION	QTY
1	1492139	Nut	23
2	1492140	Washer	18
3	1468319	Screw	19
4	1492149	Washer	1
5	1523533	Switch (Park Brake)	1
6	1492147	Plate (Park Brake)	1
7	1566771	Plate (Ignition)	1
8	1601273	Console	1
9	1601935	Plug	1
10	379902	Ignition Switch	1
10	1337197	Key Set	1
10	186304	Key	2
11	1558033	Control Panel (Heater) (☞Figure 4-5)	1
11	1615364	Control Panel (Heater and Air Conditioner) (☞Figure 4-6)	1
12	1492141	Screw	4
13	~~2091418~~		
	4608026	Instrument Cluster (Diesel Engine)	1

©2010 HYSTER COMPANY

CONTROL PANEL (FIGURE 4-5)
HEATER

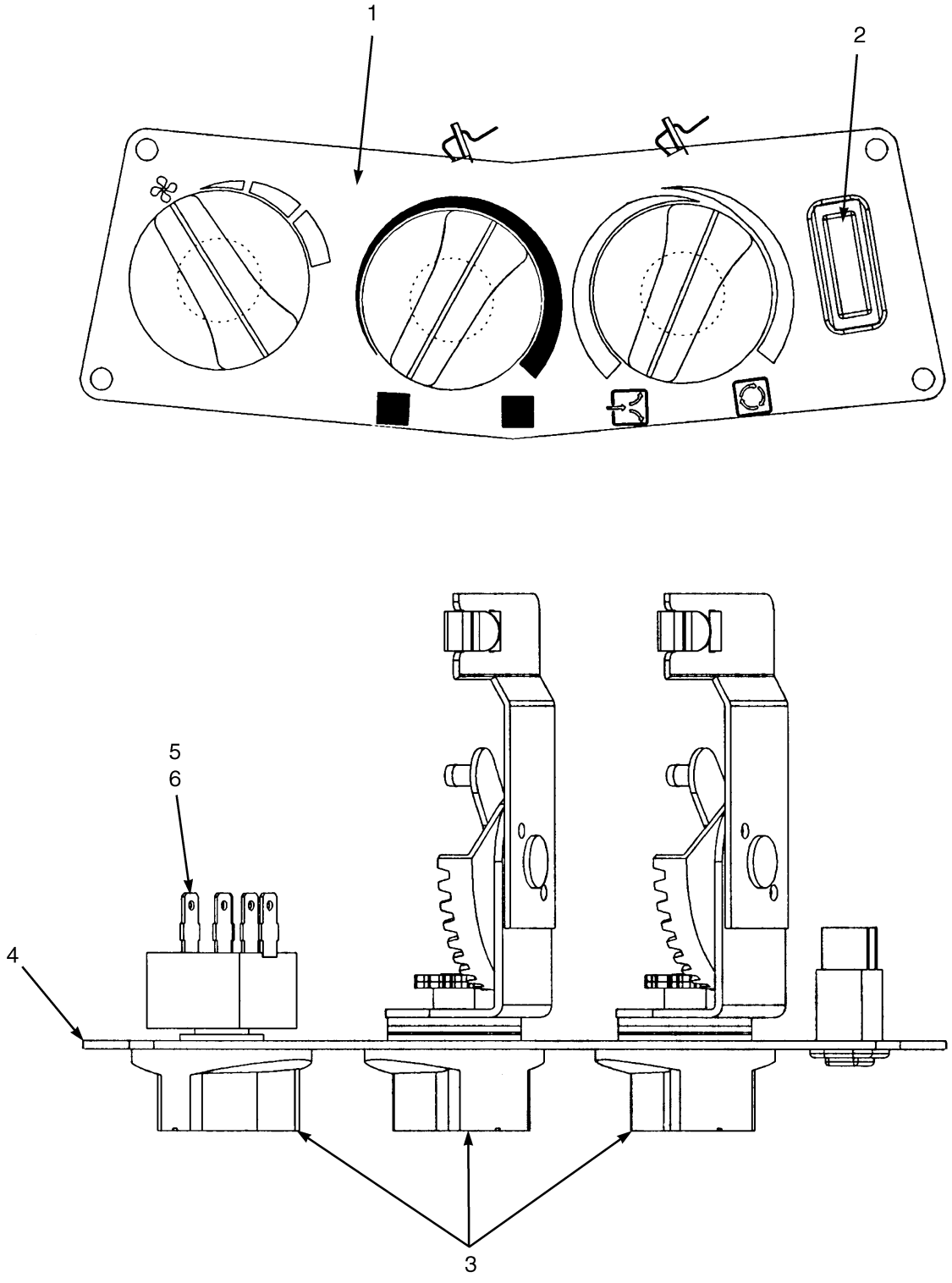

©2010 HYSTER COMPANY

CONTROL PANEL
HEATER

ITEM	PART NO.	DESCRIPTION	QTY
	1558033	Control Panel (Heater)	1
1	. . . . .	Decal	1
2	1566216	Plug	1
3	1566210	Knob	3
4	. . . . .	Mounting Plate	1
5	1566206	Nut	1
6	1566205	Switch (Fan Speed)	1

©2010 HYSTER COMPANY

CONTROL PANEL (FIGURE 4-6)
AIR CONDITIONER

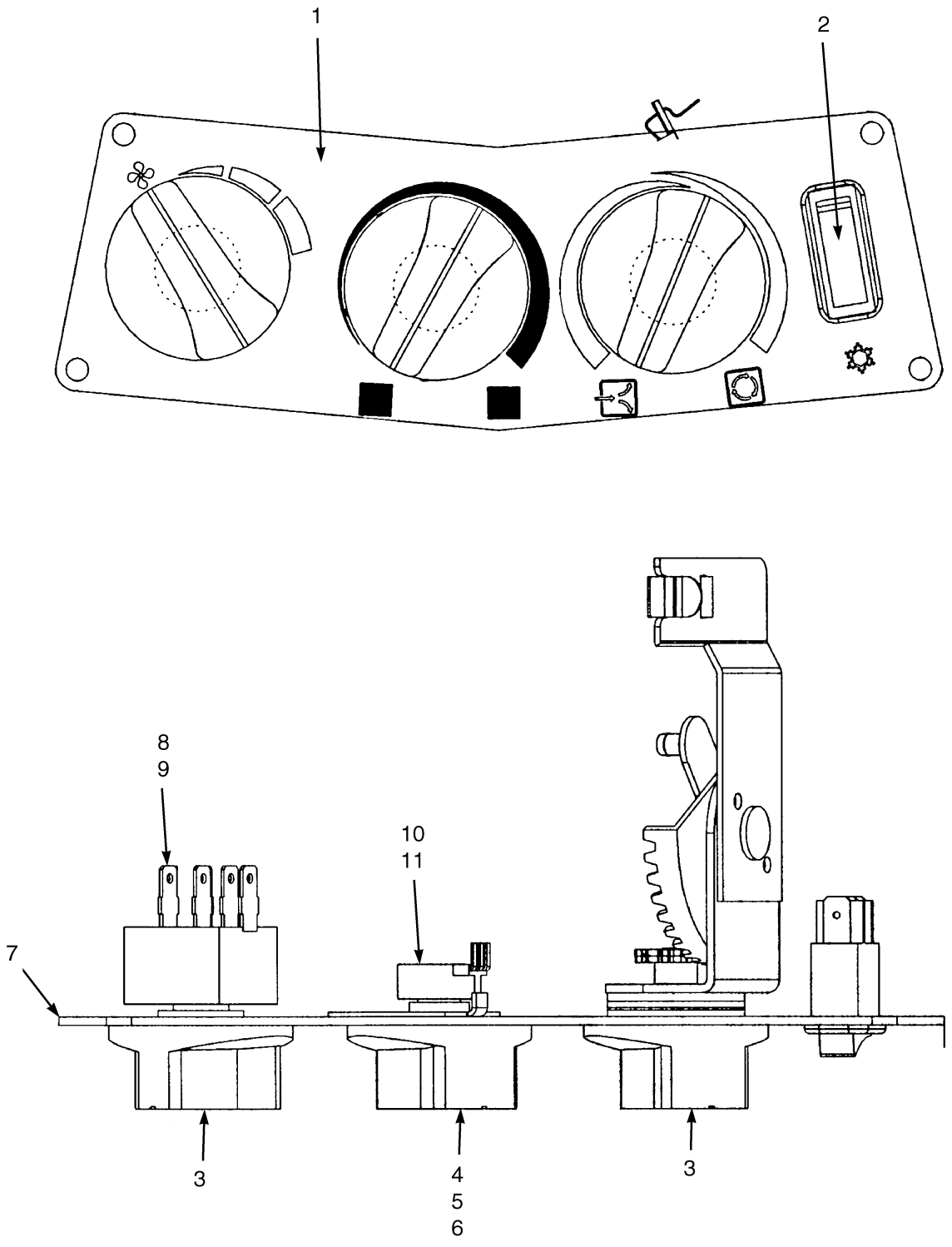

©2010 HYSTER COMPANY

CONTROL PANEL
AIR CONDITIONER

ITEM	PART NO.	DESCRIPTION	QTY
	1615364	Control Panel (Heater and Air Conditioner)	1
1	. . . . .	Decal	1
2	1566208	Switch (Air Conditioner)	1
3	1566210	Knob (Fan Switch)	2
4	1566211	Knob (Potentiometer)	1
5	1566212	O-Ring	1
6	1566213	Washer	1
7	1615950	Mounting Plate (Mounting)	1
8	1566205	Switch (Fan Speed)	1
9	1566206	Nut	1
10	1615363	Potentiometer	1
11	1566209	Wire Harness	1
	227129	Screw (Not Illustrated)	2

©2010 HYSTER COMPANY

TRANSMISSION CONTROLLER AND SHIFT LEVER (FIGURE 4-7)

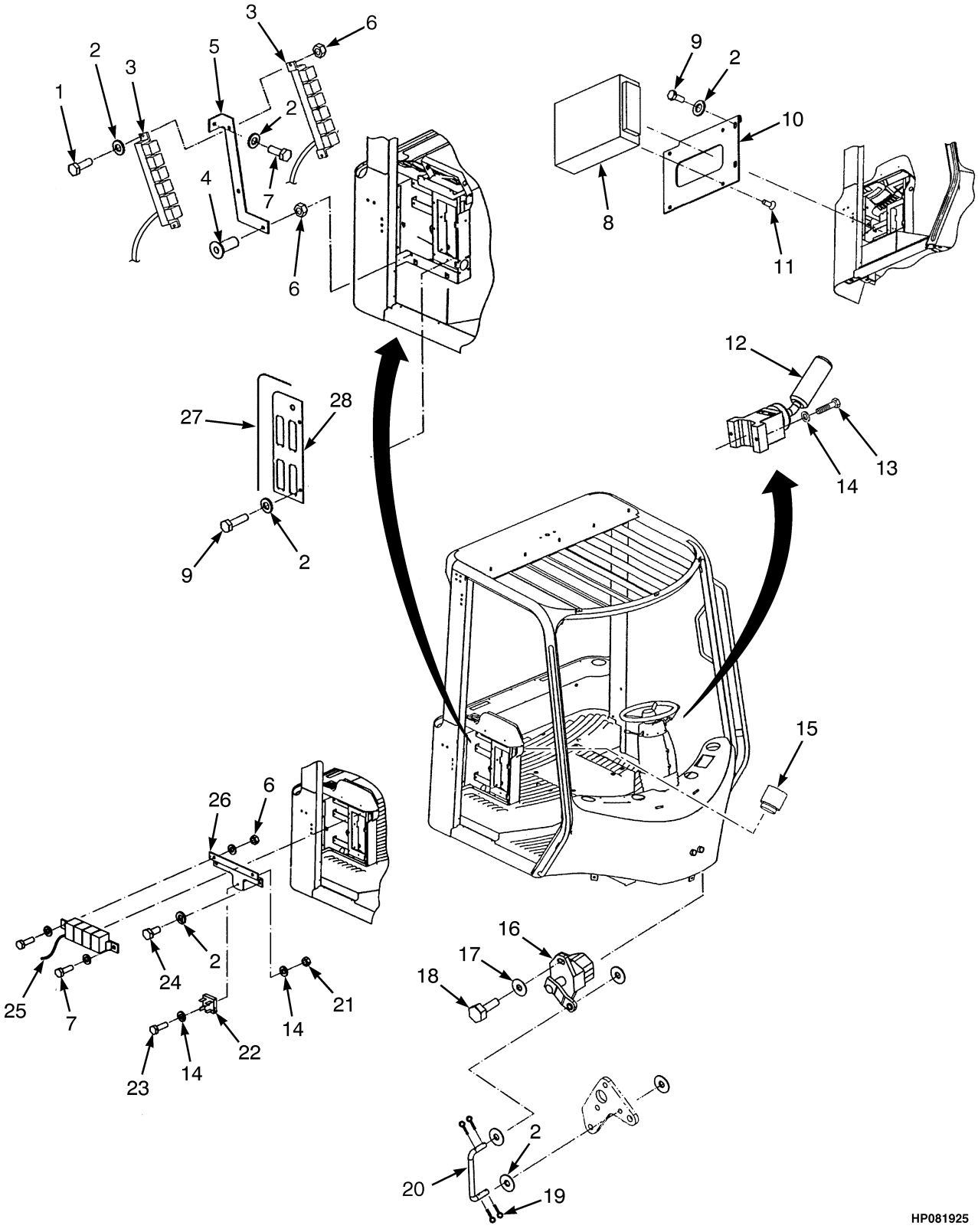

©2010 HYSTER COMPANY

TRANSMISSION CONTROLLER AND SHIFT LEVER

ITEM	PART NO.	DESCRIPTION	QTY
1	292501	Capscrew	3
2	320156	Washer	13
3	**c** 1637438	Wire Harness (Cab Side Console) (☞Figure 4-20, ☞Figure 4-21)	1
3	**g** 1689714	Wire Harness (Cab Side Console) (☞Figure 4-22, ☞Figure 4-23)	1
3	**i** 4007284	Wire Harness (Cab Side Console) (☞Figure 4-24, ☞Figure 4-25)	1
4	1558041	Screw	1
5	1492146	Bracket Wldmt (Relay)	1
6	316834	Nut	5
7	292501	Capscrew	3
8	**d** 1595146	Controller , Transmission (APC 200) (TE13)	1
8	**b** 1595144	Controller , Transmission (APC 200) (TE17)	1
8	**f** 2095403	Controller , Transmission (APC 200) (TE17)	1
8	**h** 1688529	Controller , Transmission (APC 211) (TE-17 ECH)	1
8	**h** 1688528	Controller , Transmission (APC 211) (TE-13 ECH)	1
9	292500	Capscrew	4
10	1558050	Bracket	1
11	1567941	Screw	4
12	1567082	Shifter (Forward And Reverse)	1
12	1600223	Shifter (With Monotrol)	1
13	1558054	Screw	2
14	1558055	Washer	4
15	1393781	Back-Up Alarm (Slow Pulse)	1
16	2076661	Sensor (Throttle and Inching)	1
17	1492253	Washer	2
18	292502	Capscrew	2
19	15200	Cotter Pin	4
20	1571269	Rod	1
21	316833	Nut	1
22	1301224	Diode Block	1
23	1623284	Bolt	1
24	306955	Bumper	2
25	1637440	Wire Harness (Hydraulic Relays) (☞Figure 4-38)	1
26	1623285	Bracket	1
27	1492167	Trim-Bulk	AR
28	1623188	Bracket (Fuse Holder)	1
	ae 1690080	Label (Fuse Panel)	1
	ai 4009794	Label (Fuse Panel)	1

FOOTNOTES:

a Not Illustrated
b → 12/2006
c → 3/2008
d → S/N B214E01688F
e → S/N B214E01776H
f 12/2006 ↔ S/N B214E01688F
g 3/2008 ↔ S/N B214E01776H
h S/N B214E01689F →
i S/N B214E01777H →

©2010 HYSTER COMPANY

DC-DC CONVERTER AND ATTACHING PARTS (FIGURE 4-8)

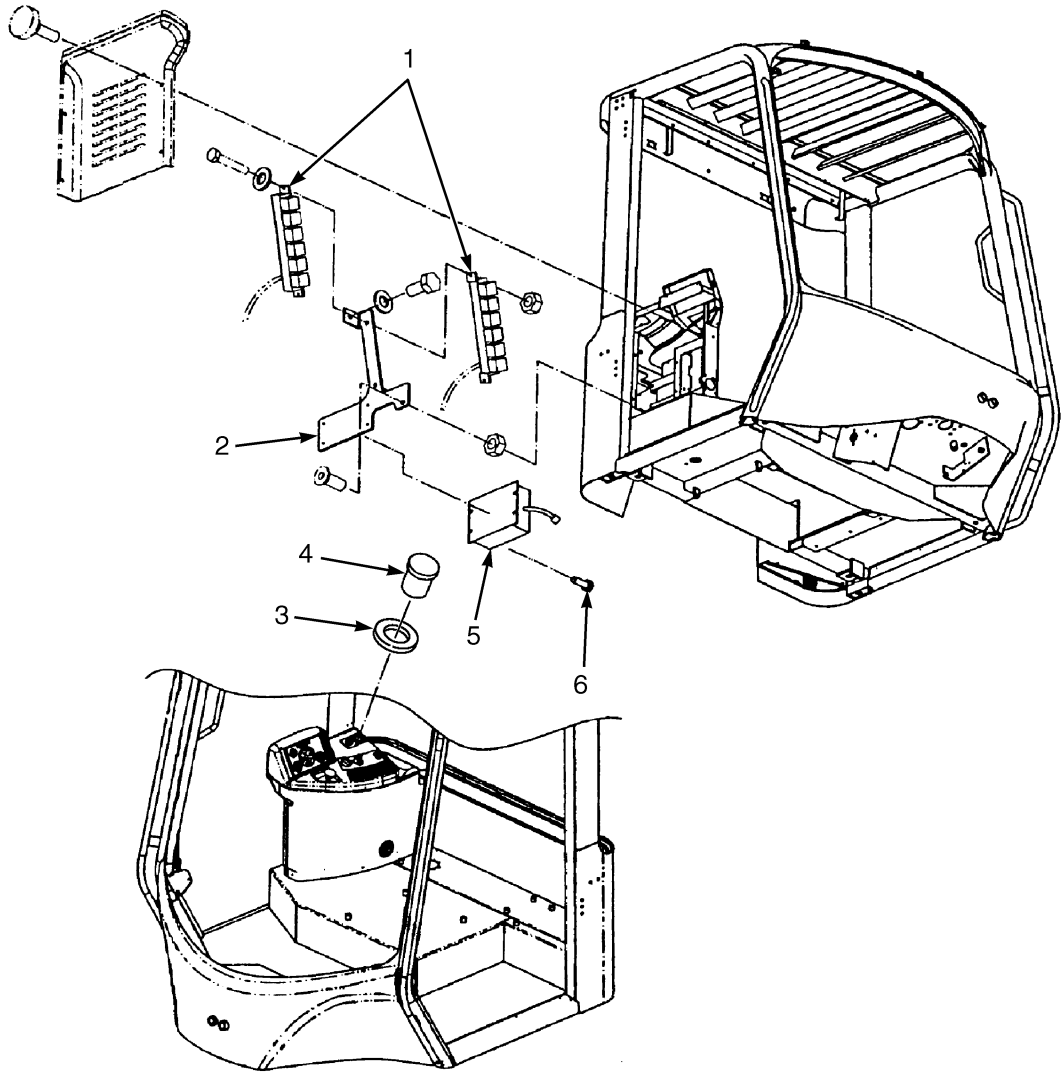

HP200115

ITEM	PART NO.	DESCRIPTION	QTY
1	**a** 1637438	Wire Harness (Cab Side Console) (☞Figure 4-20, ☞Figure 4-21).....	1
1	**b** 1689714	Wire Harness (Cab Side Console) (☞Figure 4-22, ☞Figure 4-23).....	1
1	**c** 4007284	Wire Harness (Cab Side Console) (☞Figure 4-24, ☞Figure 4-25).....	1
2	1566765	Bracket	1
3	1558027	Label (12V)	1
4	1566764	Socket (12 Volt)	1
5	2055678	DC-DC Converter	1
5	2100569	DC-DC Converter (Alternate Part)	1
6	1571789	Screw	4
6	4001205	Screw (Alternate Part)	4

©2010 HYSTER COMPANY

FOOTNOTES:

a → 3/2008
b 3/2008 ↔ S/N B214E01776H
c S/N B214E01777H →

LIGHT BAR AND MOUNT (FIGURE 4-9)
TWISTLOCK MODULE

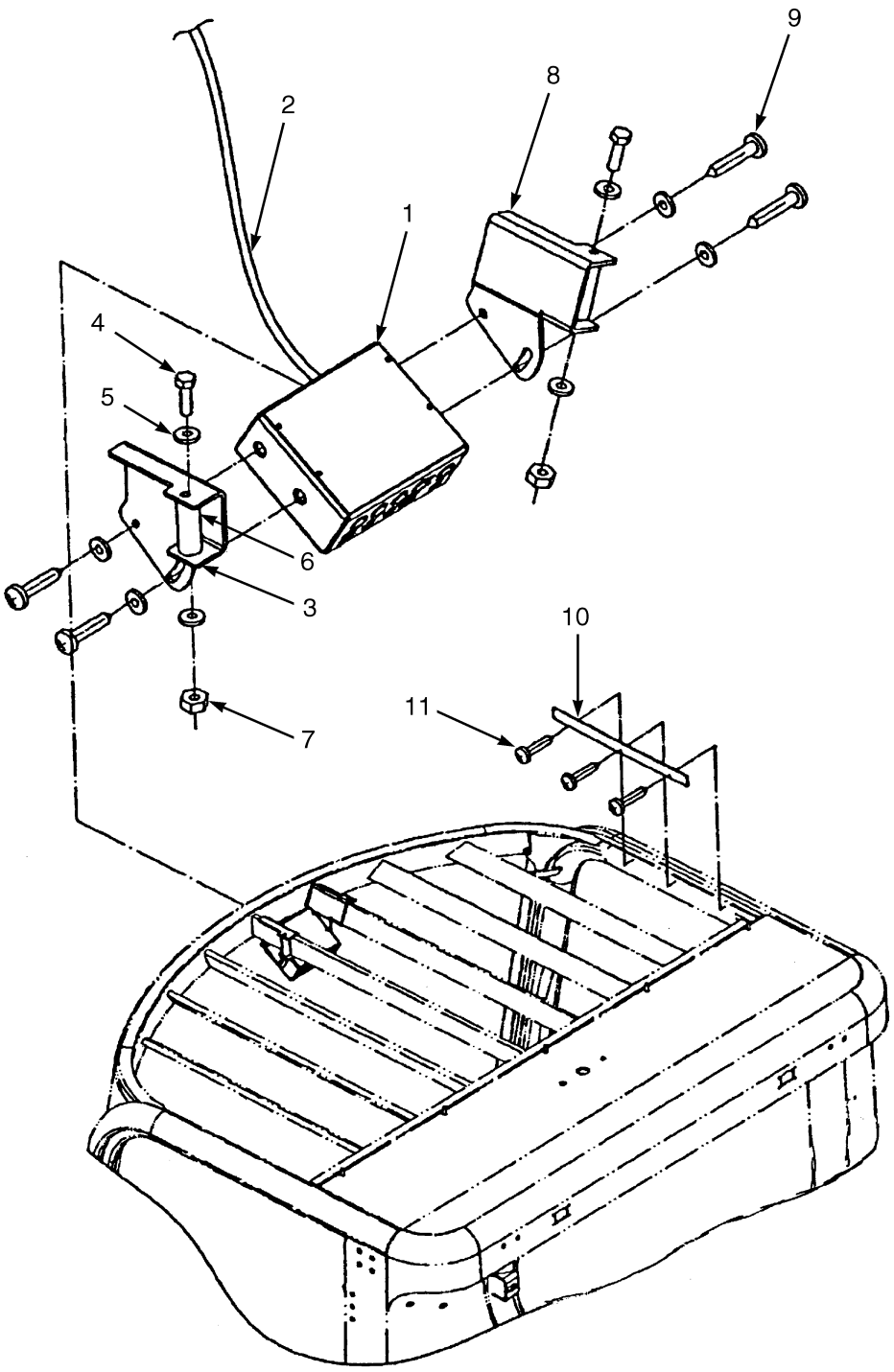

HP081545

©2010 HYSTER COMPANY

LIGHT BAR AND MOUNT
TWISTLOCK MODULE

ITEM	PART NO.	DESCRIPTION	QTY
	1506674	Control Box (Twistlock)	1
1	1571806	Bar	1
1	1554156	Key Set (Not Illustrated)	1
2	1571805	Wire Harness (Light Bar)	1
3	1506673	Bracket (LH)	1
4	1506669	Screw	2
5	1492253	Washer	8
6	1506671	Plate	2
7	1506670	Nut	2
8	1506672	Bracket (RH)	1
9	1506668	Screw	4
10	1506667	Plate	1
11	1468319	Screw	3

©2010 HYSTER COMPANY

LIGHT ASSEMBLY (FIGURE 4-10)
HALOGEN

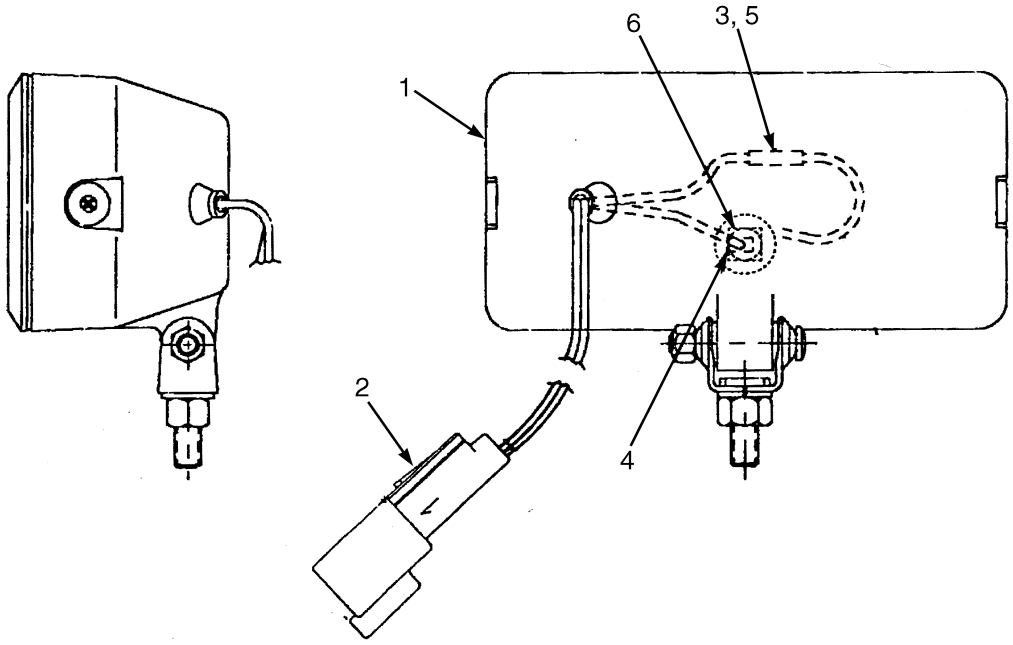

HP082009

ITEM	PART NO.	DESCRIPTION	QTY
	1336780	Light	1
1	1310667	Light	1
1	1318323	Lens	1
1	1323975	Housing	1
2	1336781	Wire	1
2	1330409	Connector	1
2	1330414	Connector (Secondary Lock)	1
2	1330437	Terminal (Pin)	1
3	325789	Terminal	1
4	367540	Terminal (Female)	1
5	133481	Heat Shrink	AR
6	1310668	Bulb	1

©2010 HYSTER COMPANY

LIGHT ASSEMBLY (FIGURE 4-11)
HIGH INTENSITY DISCHARGE

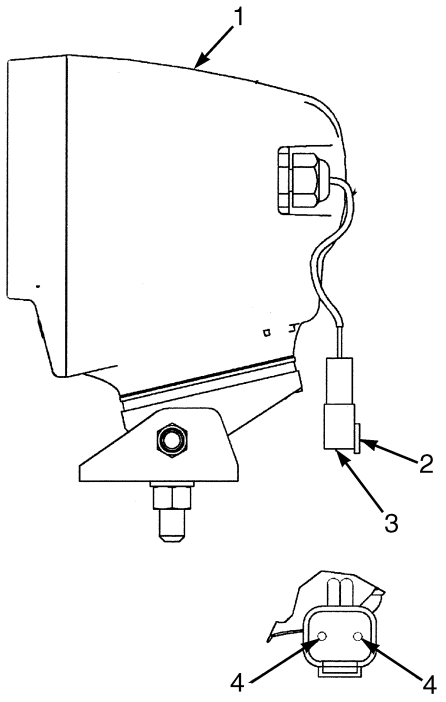

HP082010

ITEM	PART NO.	DESCRIPTION	QTY
	1571585	Work Light Assembly (High Intensity Discharge)	1
1	1571581	Work Light	1
1	1581488	Wire Harness	1
1	1581489	Work Light	1
1	1581490	Ballast	1
1	1700209	Ballast (Alternate Part)	1
1	1581491	Fuse	1
1	1581492	Fuse (20 Amp)	1
2	1330409	Connector	1
3	1330414	Connector (Secondary Lock)	1
4	1330435	Terminal	2

©2010 HYSTER COMPANY

FRONT LIGHTS (FIGURE 4-12)

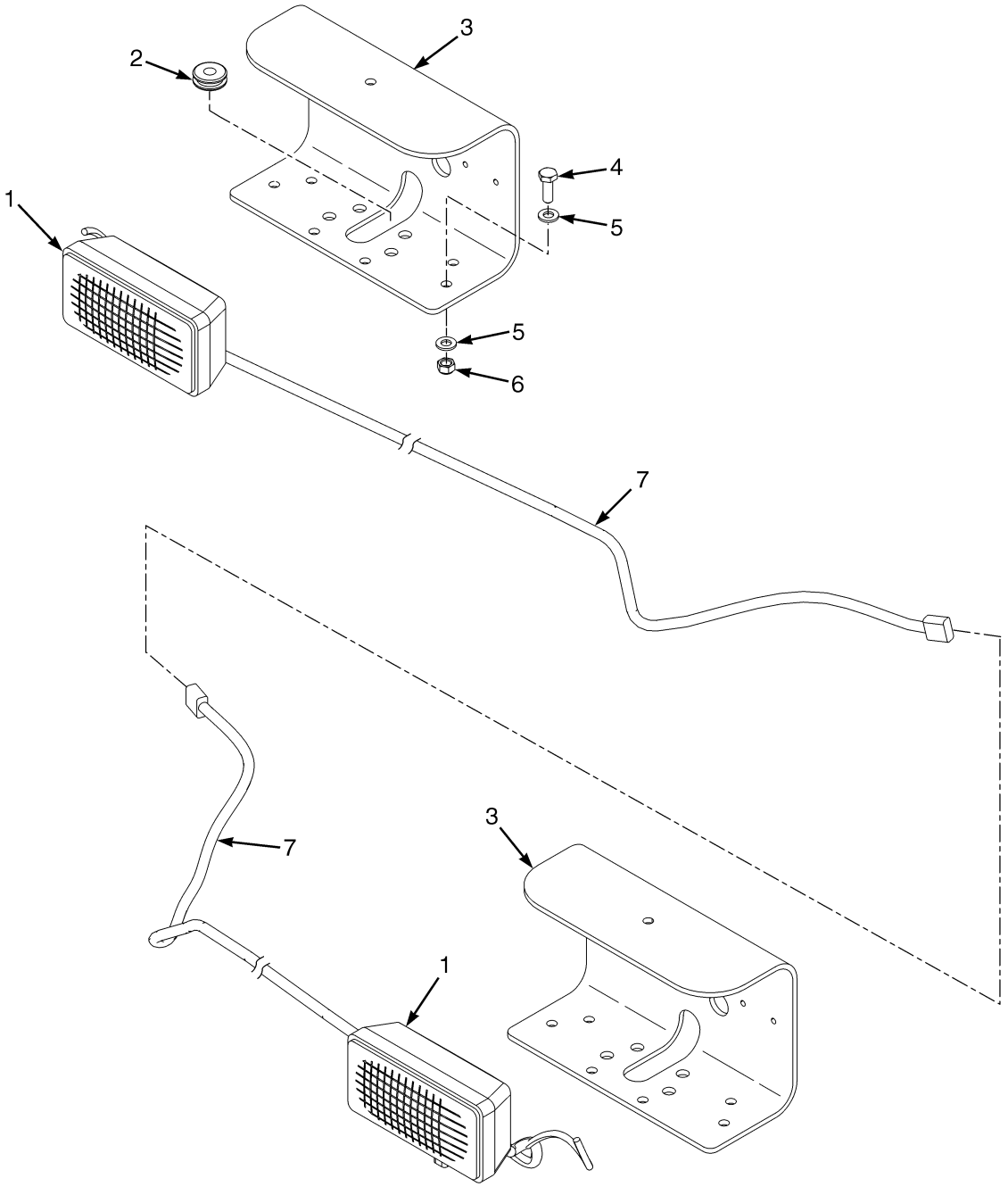

©2010 HYSTER COMPANY

FRONT LIGHTS

ITEM	PART NO.	DESCRIPTION	QTY
1	1336780	Light Assembly (Halogen) (☞Figure 4-10)	2
1	1664559	Work Light (Halogen) (Alternate Part)	1
1	1310668	Bulb	1
2	339969	Grommet	2
3	1545532	Bracket	2
4	136985	Capscrew	4
5	320159	Washer	8
6	302401	Locknut	4
7	**a** 1545181	Wire Harness (Front Lights) (☞Figure 4-36)	2
7	**b** 1672817	Wire Harness (Front Lights) (☞Figure 4-37)	2
	2052775	Switch (Not Illustrated)	1

FOOTNOTES:

a → S/N B214E01629F

b S/N B214E01630F →

©2010 HYSTER COMPANY

REAR LIGHTS AND BACK-UP ALARM (FIGURE 4-13)

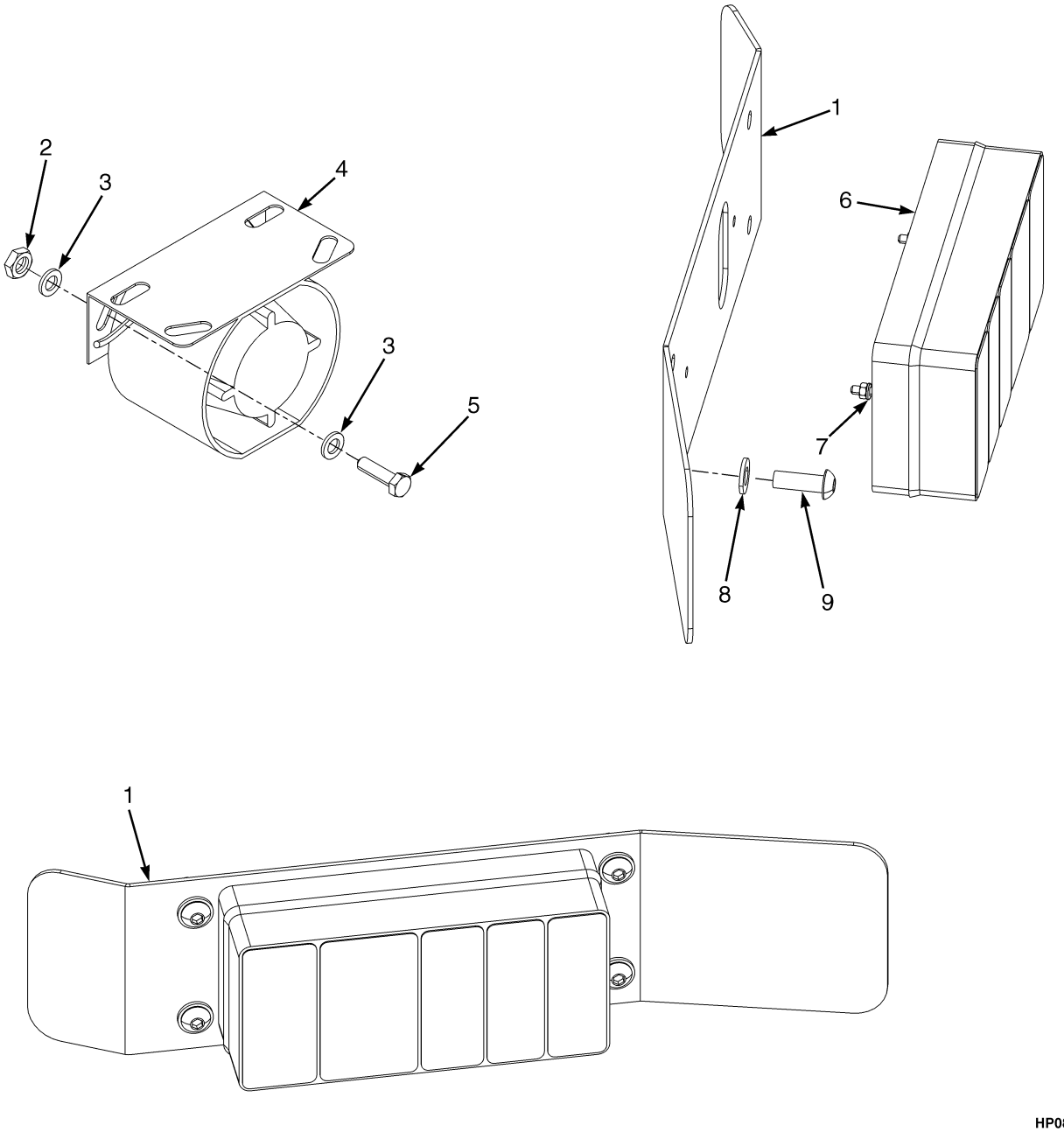

HP081820

©2010 HYSTER COMPANY

REAR LIGHTS AND BACK-UP ALARM

ITEM	PART NO.	DESCRIPTION	QTY
1	1638832	Plate	2
2	302400	Nut	2
3	320157	Washer	4
4	**a** 1367282	Back-Up Alarm	1
4	**a** 1367281	Alarm	1
4	**b** 1646834	Back-Up Alarm Assembly	1
4	**b** 1646833	Alarm	1
4	1330419	Connector	1
4	1330424	Connector (Secondary Lock)	1
4	1330438	Terminal (Socket)	2
4	67470	Conduit (Non Metallic)	AR
5	176640	Bolt	2
6	1479898	Rear Light	2
6	1491816	Rear Light	1
6	1491810	Strap Clamp	1
6	~~1491811~~		
	345355	Bulb	1
6	~~1491813~~		
	887334	Bulb	1
6	1491814	Wire Harness	1
7	320155	Washer	4
8	320159	Washer	8
9	296174	Capscrew	8
	2052775	Switch (Not Illustrated)	1

FOOTNOTES:

a → S/N B214E01629F

b S/N B214E01630F →

©2010 HYSTER COMPANY

WORK LIGHTS (FIGURE 4-14)
HALOGEN AND HIGH INTENSITY DISCHARGE

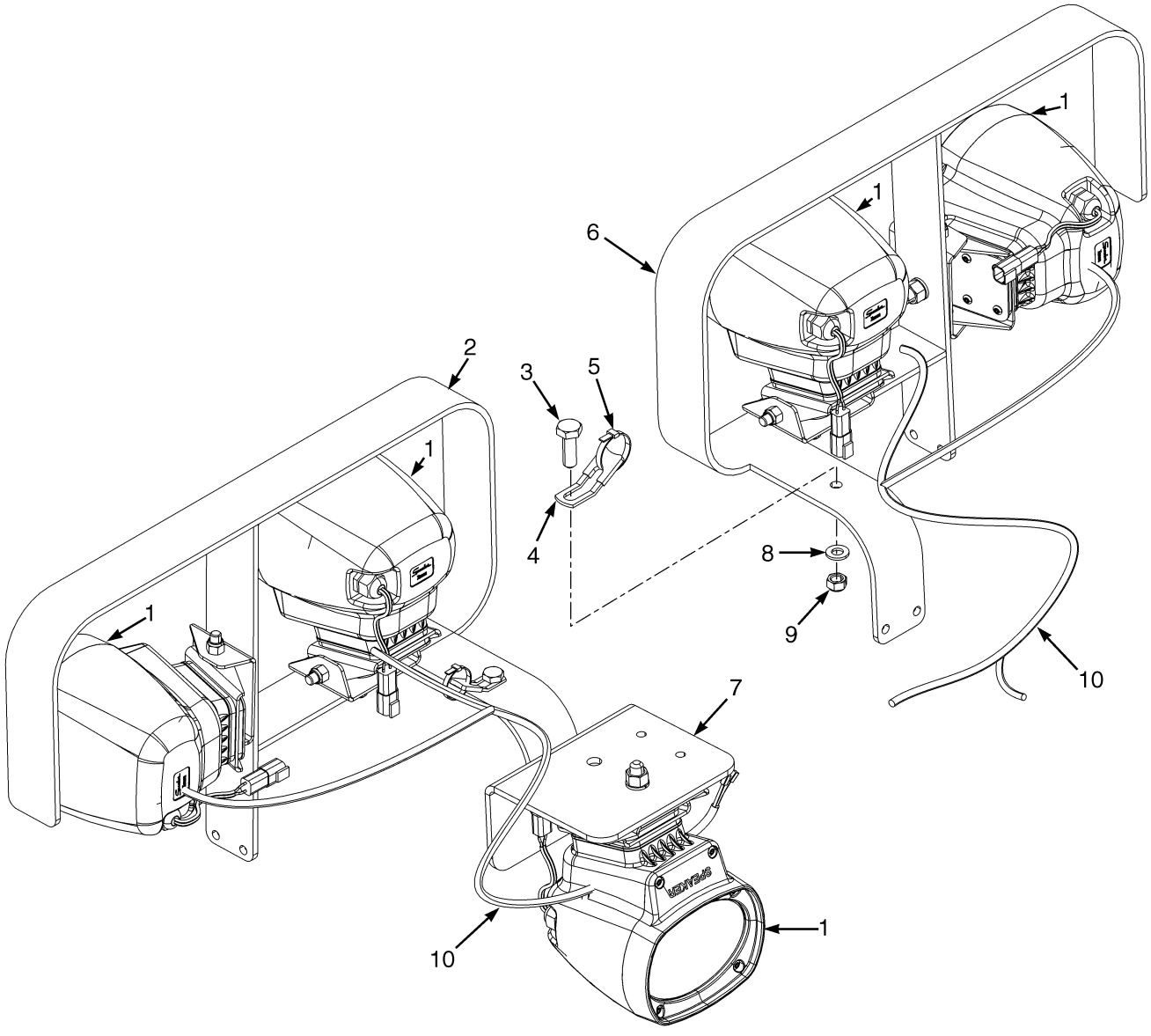

HP081818

©2010 HYSTER COMPANY

WORK LIGHTS
HALOGEN AND HIGH INTENSITY DISCHARGE

ITEM	PART NO.	DESCRIPTION	QTY
1	1336780	Light Assembly (Halogen) (☞Figure 4-10)	6
1	**d** 1571585	Work Light Assembly (High Intensity Discharge) (Alternate Part) (☞Figure 4-11)	5
1	**e** 1610936	Work Light (High Intensity Discharge)	1
1	1635114	Bulb	1
1	1664559	Work Light (Halogen) (Alternate Part)	1
1	1310668	Bulb	1
2	**cd** 1580951	Bracket Wldmt (LH)	1
2	**ae** 1480231	Bracket Wldmt (LH)	1
2	**c** 1660765	Bracket Wldmt (LH) (Alternate Part)	1
3	136985	Capscrew	2
4	1356947	Strap	2
5	137852	Strap Clamp	2
6	**cd** 1580952	Bracket Wldmt (RH)	1
6	**ae** 1480232	Bracket Wldmt (RH)	1
6	**c** 1660766	Bracket Wldmt (RH) (Alternate Part)	1
7	1480201	Plate	1
8	320159	Washer	2
9	302401	Locknut	2
10	1545172	Wire Harness (Cab Lights) (☞Figure 4-19)	2
	b 2052775	Switch	1

FOOTNOTES:

a Halogen Lights
b Not Illustrated
c With Halogen and HID Lights
d → S/N B214E01629F
e S/N B214E01630F →

©2010 HYSTER COMPANY

RELAYS AND FUSES (FIGURE 4-15)

OPERATOR COMPARTMENT (→ 3/2008)

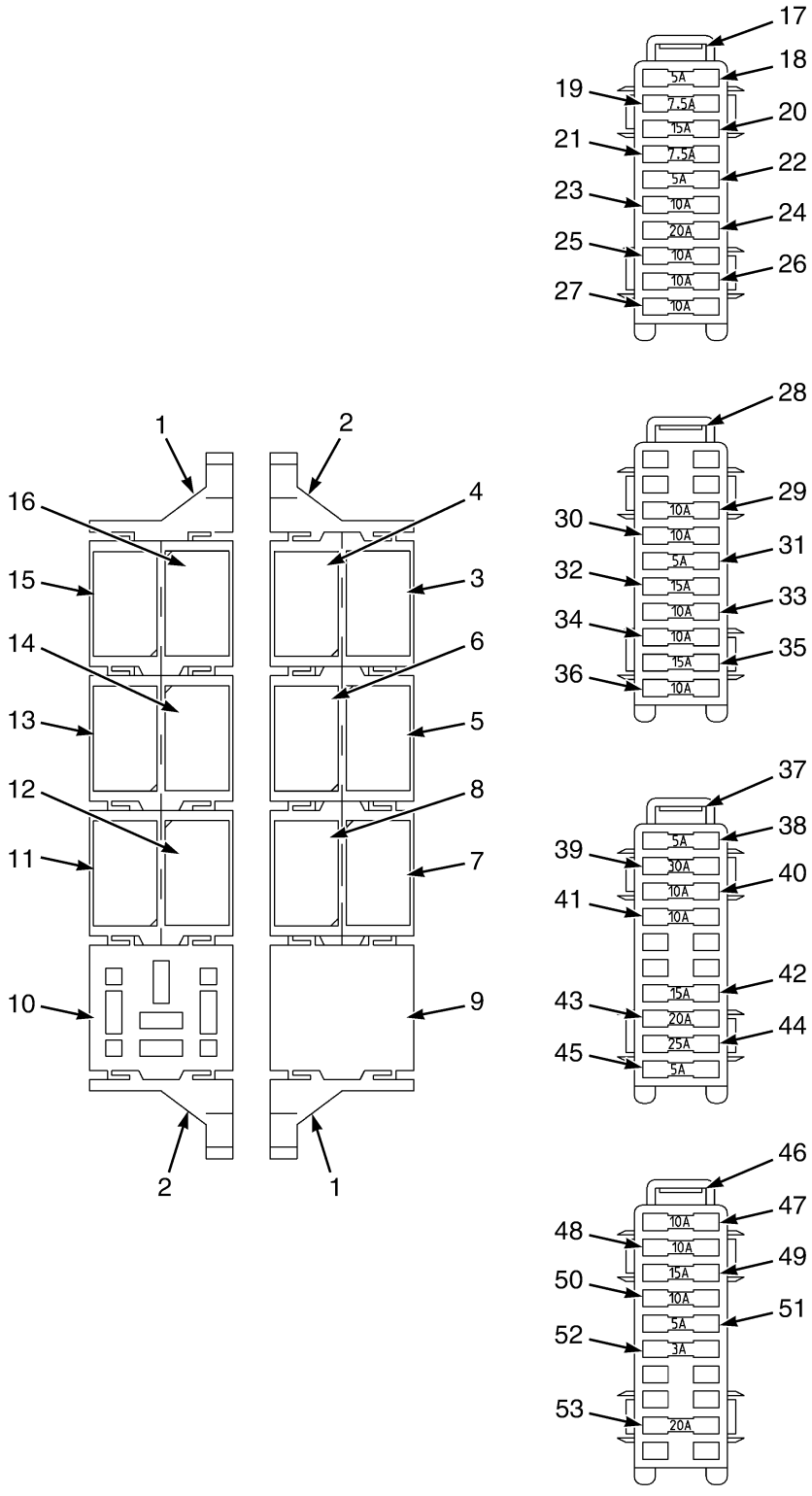

©2010 HYSTER COMPANY

RELAYS AND FUSES

OPERATOR COMPARTMENT (→ 3/2008)

ITEM	PART NO.	DESCRIPTION	QTY
	1637438	Wire Harness (Cab Side Console) (☞Figure 4-20, ☞Figure 4-21)	1
1	1484715	Clip (Passive Side Mount)	2
2	1484714	Clip (Active Side Mount)	2
3	1484683	Relay (Base) (Lights and Flood Lights)	1
3	. . . . .	Lights	1
3	1490249	Connector (1-Way)	2
3	1570602	Terminal (Socket)	2
4	. . . . .	Flood Lights	1
4	1490249	Connector (1-Way)	2
4	1570602	Terminal (Socket)	2
5	1484683	Relay (Base) (Start Inhibit and Neutral)	1
5	. . . . .	Start Inhibit	1
5	1570602	Terminal (Socket)	2
5	1489957	Connector (1-Way)	2
6	. . . . .	Neutral	1
6	1570602	Terminal (Socket)	2
6	1489957	Connector (1-Way)	2
7	1484683	Relay (Base) (Lower Interrupt and Reverse Light/Alarm)	1
7	. . . . .	Lower Interrupt	1
7	1489957	Connector (1-Way)	1
7	1570602	Terminal (Socket)	3
8	. . . . .	Reverse Light/Alarm	1
8	1489957	Connector (1-Way)	2
8	1570602	Terminal (Socket)	2
9	1484684	Single Mini Relay Base (Main Power)	1
9	1610952	Terminal	2
9	1489957	Connector (1-Way)	2
10	1484684	Single Mini Relay Base (D1 Flasher)	1
10	1489957	Connector (1-Way)	3
11	. . . . .	(Blank)	1
12	. . . . .	(Blank)	1
13	1484683	Relay (Base) (Override and 12V)	1
13	. . . . .	Override	1
13	1489957	Connector (1-Way)	2
13	1570602	Terminal (Socket)	2
14	. . . . .	12V	1
14	1489957	Connector (1-Way)	2
14	1570602	Terminal (Socket)	2
15	1484683	Relay (Base) (Seat Switch and Horn)	1
15	. . . . .	Seat Switch	1
15	1489957	Connector (1-Way)	2
15	1570602	Terminal (Socket)	2
16	. . . . .	Horn	1
16	1489957	Connector (1-Way)	1
16	1570602	Terminal (Socket)	2
16	1389479	Terminal	2
17	1484681	Fuse Box (10-Way) (Fuse Box 1, Hydraulics and Transmission)	1
17	1484682	Fuse Box	1
17	1490250	Terminal (2-Way)	2
17	1389479	Terminal	7

©2010 HYSTER COMPANY

RELAYS AND FUSES

OPERATOR COMPARTMENT (→ 3/2008)

ITEM	PART NO.	DESCRIPTION	QTY
17	1489957	Connector (1-Way)	8
17	1496884	Terminal (3-Way)	3
18	370646	Fuse (5 Amp) (Charge Ind. Lamp and ECM)	1
19	1300057	Fuse (7.5 Amp) (Transmission)	1
20	1310630	Fuse (15 Amp) (Attachment Controls)	1
21	1300057	Fuse (7.5 Amp) (Transmission B+)	1
22	370646	Fuse (5 Amp) (Park Brake Solenoid)	1
23	370647	Fuse (10 Amp) (Converter)	1
24	370648	Fuse (20 Amp) (Cab Tilt Power Assist)	1
25	370647	Fuse (10 Amp) (Front Screen Washer And Wiper)	1
26	370647	Fuse (10 Amp) (Roof Screen Washer And Wiper)	1
27	370647	Fuse (10 Amp) (Rear Screen Washer And Wiper)	1
28	1484681	Fuse Box (10-Way) (Fuse Box 2, Lights)	1
28	1484682	Fuse Box	1
28	1489957	Connector (1-Way)	8
28	1490250	Terminal (2-Way)	5
28	1389479	Terminal	3
29	370647	Fuse (10 Amp) (Stop Lights)	1
30	370647	Fuse (10 Amp) (Headlights)	1
31	370646	Fuse (5 Amp) (Interior Lights)	1
32	1310630	Fuse (15 Amp) (Attachment Lights)	1
33	370647	Fuse (10 Amp) (Turn Signal Lights)	1
34	370647	Fuse (10 Amp) (Side/Tail Lights)	1
35	1310630	Fuse (15 Amp) (Rear Drive Lights)	1
36	370647	Fuse (10 Amp) (Reverse Lights/Alarm and Strobe)	1
37	1484681	Fuse Box (10-Way) (Fuse Box 3, Engine)	1
37	1484682	Fuse Box	1
37	1489957	Connector (1-Way)	9
37	1490249	Connector (1-Way)	3
37	1496884	Terminal (3-Way)	3
37	1389479	Terminal	1
38	370646	Fuse (5 Amp) (Engine Start)	1
39	370648	Fuse (20 Amp) (Flood Lights)	1
40	370647	Fuse (10 Amp) (Instrumentation)	1
41	370647	Fuse (10 Amp) (Horn)	1
42	1310630	Fuse (15 Amp) (Suspension Seat Compressor)	1
43	370648	Fuse (20 Amp) (Heater/Air Conditioning/Ventilation)	1
44	1300134	Fuse (25 Amp) (Oil Cooler)	1
45	370646	Fuse (5 Amp) (Reverse Lights/Alarm)	1
46	1484681	Fuse Box (10-Way) (Fuse Box 4, 12 Volt)	1
46	1484682	Fuse Box	1
46	1490250	Terminal (2-Way)	2
46	1490249	Connector (1-Way)	1
46	1489957	Connector (1-Way)	9
46	1389479	Terminal	2
47	370647	Fuse (10 Amp) (12V Power Socket)	1
48	1337828	Fuse (3 Amp) (Radio/CB/Intercom)	1
49	1310630	Fuse (15 Amp) (Air Conditioning)	1
50	370647	Fuse (10 Amp) (Hazard Flashers)	1
51	370646	Fuse (5 Amp) (Strobe B+)	1

See Service Manual for service procedures.
©2010 HYSTER COMPANY

RELAYS AND FUSES

OPERATOR COMPARTMENT (→ 3/2008)

ITEM	PART NO.	DESCRIPTION	QTY
52	1337828	Fuse (3 Amp) (12V)	1
53	370648	Fuse (20 Amp) (24V Power Socket)	1

©2010 HYSTER COMPANY

RELAYS AND FUSES (FIGURE 4-16)
OPERATOR COMPARTMENT (3/2008 ↔ S/N B214E01776H)

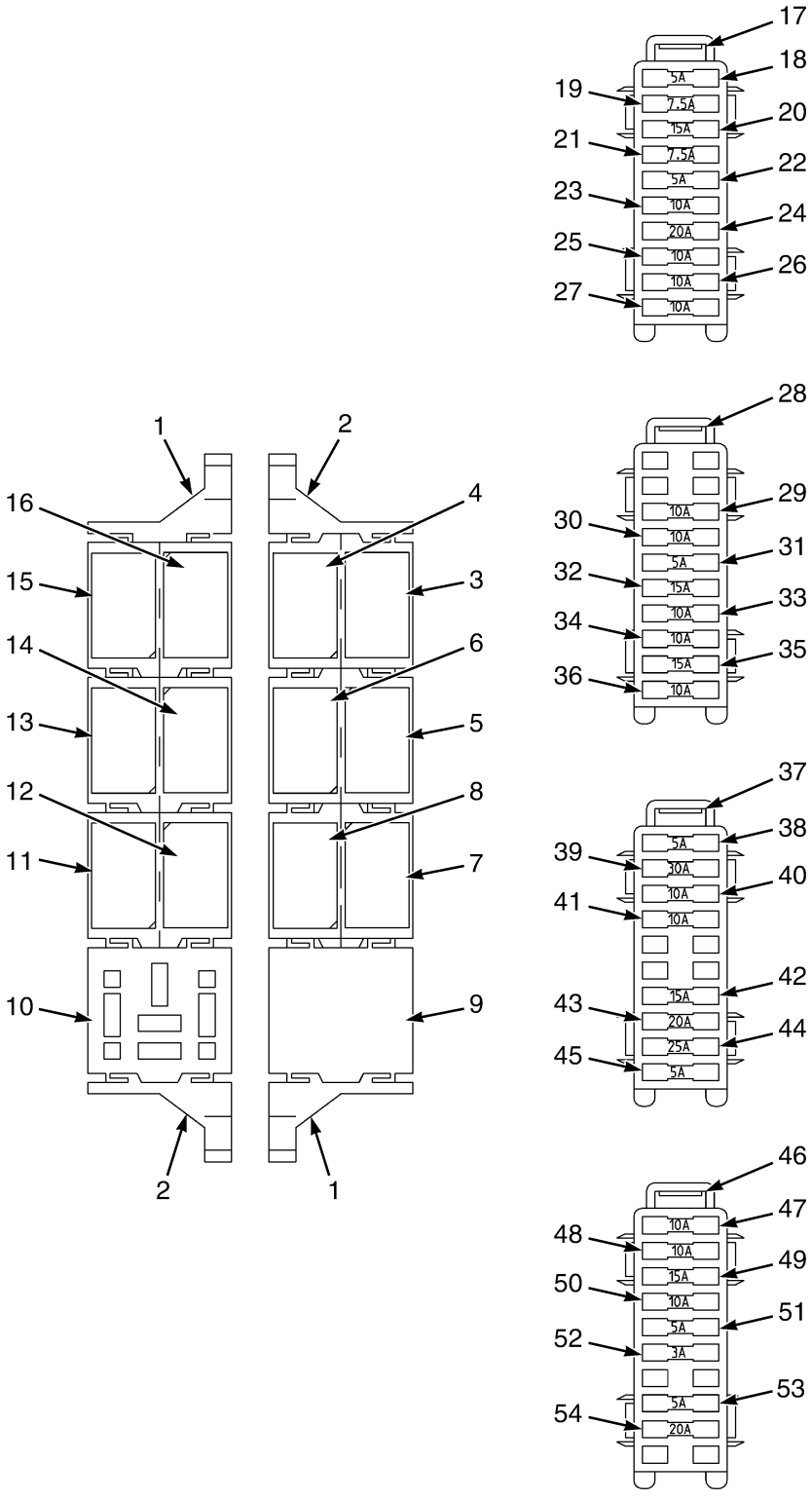

HP082090

©2010 HYSTER COMPANY

RELAYS AND FUSES

OPERATOR COMPARTMENT (3/2008 ↔ S/N B214E01776H)

ITEM	PART NO.	DESCRIPTION	QTY
	1689714	Wire Harness (Cab Side Console) (☞Figure 4-22, ☞Figure 4-23)	1
1	1484715	Clip (Passive Side Mount)	2
2	1484714	Clip (Active Side Mount)	2
3	1484683	Relay (Base) (Lights and Flood Lights)	1
3	. . . . .	Lights	1
3	1490249	Connector (1-Way)	2
3	1570602	Terminal (Socket)	2
4	. . . . .	Flood Lights	1
4	1490249	Connector (1-Way)	2
4	1570602	Terminal (Socket)	2
5	1484683	Relay (Base) (Start Inhibit and Neutral)	1
5	. . . . .	Start Inhibit	1
5	1570602	Terminal (Socket)	2
5	1489957	Connector (1-Way)	2
6	. . . . .	Neutral	1
6	1570602	Terminal (Socket)	2
6	1489957	Connector (1-Way)	2
7	1484683	Relay (Base) (Lower Interrupt and Reverse Light/Alarm)	1
7	. . . . .	Lower Interrupt	1
7	1489957	Connector (1-Way)	1
7	1570602	Terminal (Socket)	3
8	. . . . .	Reverse Light/Alarm	1
8	1489957	Connector (1-Way)	2
8	1570602	Terminal (Socket)	2
9	1484684	Single Mini Relay Base (Main Power)	1
9	1610952	Terminal	2
9	1489957	Connector (1-Way)	2
10	1484684	Single Mini Relay Base (D1 Flasher)	1
10	1489957	Connector (1-Way)	3
11	1484683	Relay (Base) (Unlock Twistlock Interrupt and Ignition)	1
11	. . . . .	Unlock Twistlock Interrupt	1
11	1489957	Connector (1-Way)	2
11	1570602	Terminal (Socket)	2
12	. . . . .	Ignition	1
12	1389479	Terminal	2
12	1570602	Terminal (Socket)	2
13	1484683	Relay (Base) (Override and 12V)	1
13	. . . . .	Override	1
13	1489957	Connector (1-Way)	2
13	1570602	Terminal (Socket)	2
14	. . . . .	12V	1
14	1489957	Connector (1-Way)	2
14	1570602	Terminal (Socket)	2
15	1484683	Relay (Base) (Seat Switch and Horn)	1
15	. . . . .	Seat Switch	1
15	1489957	Connector (1-Way)	2
15	1570602	Terminal (Socket)	2
16	. . . . .	Horn	1
16	1489957	Connector (1-Way)	1
16	1570602	Terminal (Socket)	2

©2010 HYSTER COMPANY

RELAYS AND FUSES

OPERATOR COMPARTMENT (3/2008 ↔ S/N B214E01776H)

ITEM	PART NO.	DESCRIPTION	QTY
16	1389479	Terminal	2
17	1484681	Fuse Box (10-Way) (Fuse Box 1, Hydraulics and Transmission)	1
17	1484682	Fuse Box	1
17	1490250	Terminal (2-Way)	2
17	1389479	Terminal	7
17	1489957	Connector (1-Way)	8
17	1496884	Terminal (3-Way)	3
18	370646	Fuse (5 Amp) (ECM)	1
19	1300057	Fuse (7.5 Amp) (Transmission)	1
20	1310630	Fuse (15 Amp) (Attachment Controls)	1
21	1300057	Fuse (7.5 Amp) (Transmission B+)	1
22	370646	Fuse (5 Amp) (Park Brake Solenoid)	1
23	370647	Fuse (10 Amp) (Converter)	1
24	370648	Fuse (20 Amp) (Cab Tilt Power Assist)	1
25	370647	Fuse (10 Amp) (Front Screen Washer And Wiper)	1
26	370647	Fuse (10 Amp) (Roof Screen Washer And Wiper)	1
27	370647	Fuse (10 Amp) (Rear Screen Washer And Wiper)	1
28	1484681	Fuse Box (10-Way) (Fuse Box 2, Lights)	1
28	1484682	Fuse Box	1
28	1489957	Connector (1-Way)	8
28	1490250	Terminal (2-Way)	5
28	1389479	Terminal	3
29	370647	Fuse (10 Amp) (Stop Lights)	1
30	370647	Fuse (10 Amp) (Headlights)	1
31	370646	Fuse (5 Amp) (Interior Lights)	1
32	1310630	Fuse (15 Amp) (Attachment Lights)	1
33	370647	Fuse (10 Amp) (Turn Signal Lights)	1
34	370647	Fuse (10 Amp) (Side/Tail Lights)	1
35	1310630	Fuse (15 Amp) (Rear Drive Lights)	1
36	370647	Fuse (10 Amp) (Reverse Lights/Alarm and Strobe)	1
37	1484681	Fuse Box (10-Way) (Fuse Box 3, Engine)	1
37	1484682	Fuse Box	1
37	1489957	Connector (1-Way)	9
37	1490249	Connector (1-Way)	3
37	1496884	Terminal (3-Way)	3
37	1389479	Terminal	1
38	370646	Fuse (5 Amp) (Engine Start)	1
39	1320669	Fuse (30 Amp) (Flood Lights)	1
40	370647	Fuse (10 Amp) (Instrumentation)	1
41	370647	Fuse (10 Amp) (Horn)	1
42	1310630	Fuse (15 Amp) (Suspension Seat Compressor)	1
43	370648	Fuse (20 Amp) (Heater/Air Conditioning/Ventilation)	1
44	1300134	Fuse (25 Amp) (Oil Cooler)	1
45	370646	Fuse (5 Amp) (Reverse Lights/Alarm)	1
46	1484681	Fuse Box (10-Way) (Fuse Box 4, 12 Volt)	1
46	1484682	Fuse Box	1
46	1490250	Terminal (2-Way)	2
46	1490249	Connector (1-Way)	1
46	1489957	Connector (1-Way)	9
46	1389479	Terminal	2

©2010 HYSTER COMPANY

RELAYS AND FUSES

OPERATOR COMPARTMENT (3/2008 ↔ S/N B214E01776H)

ITEM	PART NO.	DESCRIPTION	QTY
47	370647	Fuse (10 Amp) (12V Power Socket)	1
48	370647	Fuse (10 Amp) (Radio/CB/Intercom)	1
49	1310630	Fuse (15 Amp) (Air Conditioning)	1
50	370647	Fuse (10 Amp) (Hazard Flashers)	1
51	370646	Fuse (5 Amp) (Strobe B+)	1
52	1337828	Fuse (3 Amp) (12V)	1
53	370646	Fuse (5 Amp) (Pre-Excitation)	1
54	370648	Fuse (20 Amp) (24V Power Socket)	1

©2010 HYSTER COMPANY

RELAYS AND FUSES (FIGURE 4-17)
OPERATOR COMPARTMENT (S/N B214E01777H →)

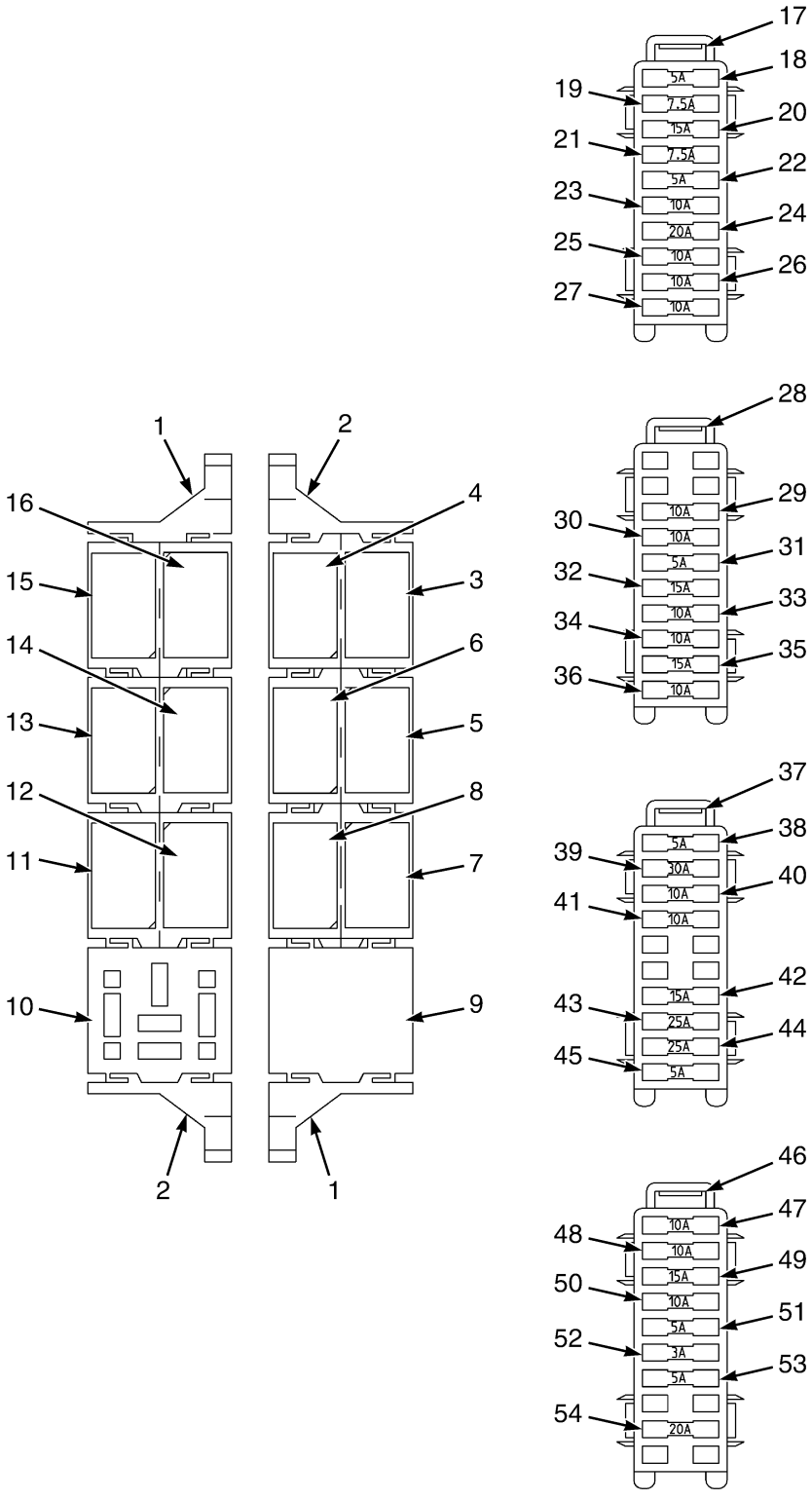

©2010 HYSTER COMPANY

RELAYS AND FUSES

OPERATOR COMPARTMENT (S/N B214E01777H →)

ITEM	PART NO.	DESCRIPTION	QTY
	4007284	Wire Harness (Cab Side Console)	1
1	1484715	Clip (Passive Side Mount)	2
2	1484714	Clip (Active Side Mount)	2
3	1484683	Relay (Base) (Lights and Flood Lights)	1
3	. . . . .	Lights	1
3	1490249	Connector (1-Way)	2
3	1570602	Terminal (Socket)	2
4	. . . . .	Flood Lights	1
4	1490249	Connector (1-Way)	2
4	1570602	Terminal (Socket)	2
5	1484683	Relay (Base) (Start Inhibit and Neutral)	1
5	. . . . .	Start Inhibit	1
5	1570602	Terminal (Socket)	2
5	1489957	Connector (1-Way)	2
6	. . . . .	Neutral	1
6	1570602	Terminal (Socket)	2
6	1489957	Connector (1-Way)	2
7	1484683	Relay (Base) (Lower Interrupt and Reverse Light/Alarm)	1
7	. . . . .	Lower Interrupt	1
7	1489957	Connector (1-Way)	1
7	1570602	Terminal (Socket)	3
8	. . . . .	Reverse Light/Alarm	1
8	1489957	Connector (1-Way)	2
8	1570602	Terminal (Socket)	2
9	1484684	Single Mini Relay Base (Main Power)	1
9	1610952	Terminal	2
9	1489957	Connector (1-Way)	2
10	1484684	Single Mini Relay Base (D1 Flasher)	1
10	1489957	Connector (1-Way)	3
11	1484683	Relay (Base) (Unlock Twistlock Interrupt and Ignition)	1
11	. . . . .	Unlock Twistlock Interrupt	1
11	1489957	Connector (1-Way)	2
11	1570602	Terminal (Socket)	2
12	. . . . .	Ignition	1
12	1389479	Terminal	2
12	1570602	Terminal (Socket)	2
13	1484683	Relay (Base) (Override and 12V)	1
13	. . . . .	Override	1
13	1489957	Connector (1-Way)	2
13	1570602	Terminal (Socket)	2
14	. . . . .	12V	1
14	1489957	Connector (1-Way)	2
14	1570602	Terminal (Socket)	2
15	1484683	Relay (Base) (Seat Switch and Horn)	1
15	. . . . .	Seat Switch	1
15	1489957	Connector (1-Way)	2
15	1570602	Terminal (Socket)	2
16	. . . . .	Horn	1
16	1489957	Connector (1-Way)	1
16	1570602	Terminal (Socket)	2

©2010 HYSTER COMPANY

RELAYS AND FUSES

OPERATOR COMPARTMENT (S/N B214E01777H →)

ITEM	PART NO.	DESCRIPTION	QTY
16	1389479	Terminal	2
17	1484681	Fuse Box (10-Way) (Fuse Box 1, Hydraulics and Transmission)	1
17	1484682	Fuse Box	1
17	1490250	Terminal (2-Way)	2
17	1389479	Terminal	7
17	1489957	Connector (1-Way)	8
17	1496884	Terminal (3-Way)	3
18	370646	Fuse (5 Amp) (ECM)	1
19	1300057	Fuse (7.5 Amp) (Transmission)	1
20	1310630	Fuse (15 Amp) (Attachment Controls)	1
21	1300057	Fuse (7.5 Amp) (Transmission B+)	1
22	370646	Fuse (5 Amp) (Park Brake Solenoid)	1
23	370647	Fuse (10 Amp) (Converter)	1
24	370648	Fuse (20 Amp) (Cab Tilt Power Assist)	1
25	370647	Fuse (10 Amp) (Front Screen Washer And Wiper)	1
26	370647	Fuse (10 Amp) (Roof Screen Washer And Wiper)	1
27	370647	Fuse (10 Amp) (Rear Screen Washer And Wiper)	1
28	1484681	Fuse Box (10-Way) (Fuse Box 2, Lights)	1
28	1484682	Fuse Box	1
28	1489957	Connector (1-Way)	8
28	1490250	Terminal (2-Way)	5
28	1389479	Terminal	3
29	370647	Fuse (10 Amp) (Stop Lights)	1
30	370647	Fuse (10 Amp) (Headlights)	1
31	370646	Fuse (5 Amp) (Interior Lights)	1
32	1310630	Fuse (15 Amp) (Attachment Lights)	1
33	370647	Fuse (10 Amp) (Turn Signal Lights)	1
34	370647	Fuse (10 Amp) (Side/Tail Lights)	1
35	1310630	Fuse (15 Amp) (Rear Drive Lights)	1
36	370647	Fuse (10 Amp) (Reverse Lights/Alarm and Strobe)	1
37	1484681	Fuse Box (10-Way) (Fuse Box 3, Engine)	1
37	1484682	Fuse Box	1
37	1489957	Connector (1-Way)	9
37	1490249	Connector (1-Way)	3
37	1496884	Terminal (3-Way)	3
37	1389479	Terminal	1
38	370646	Fuse (5 Amp) (Engine Start)	1
39	1320669	Fuse (30 Amp) (Flood Lights)	1
40	370647	Fuse (10 Amp) (Instrumentation)	1
41	370647	Fuse (10 Amp) (Horn)	1
42	1310630	Fuse (15 Amp) (Suspension Seat Compressor)	1
43	1300134	Fuse (25 Amp) (Heater/Air Conditioning/Ventilation)	1
44	1300134	Fuse (25 Amp) (Oil Cooler)	1
45	370646	Fuse (5 Amp) (Reverse Lights/Alarm)	1
46	1484681	Fuse Box (10-Way) (Fuse Box 4, 12 Volt)	1
46	1484682	Fuse Box	1
46	1490250	Terminal (2-Way)	2
46	1490249	Connector (1-Way)	1
46	1489957	Connector (1-Way)	9
46	1389479	Terminal	2

©2010 HYSTER COMPANY

RELAYS AND FUSES

OPERATOR COMPARTMENT (S/N B214E01777H →)

ITEM	PART NO.	DESCRIPTION	QTY
47	370647	Fuse (10 Amp) (12V Power Socket)	1
48	370647	Fuse (10 Amp) (Radio/CB/Intercom)	1
49	1310630	Fuse (15 Amp) (Air Conditioning)	1
50	370647	Fuse (10 Amp) (Hazard Flashers)	1
51	370646	Fuse (5 Amp) (Strobe B+)	1
52	1337828	Fuse (3 Amp) (12V)	1
53	370646	Fuse (5 Amp) (Seat Switch)	1
54	370648	Fuse (20 Amp) (24V Power Socket)	1

©2010 HYSTER COMPANY

WIRE HARNESS (FIGURE 4-18)
ARM REST

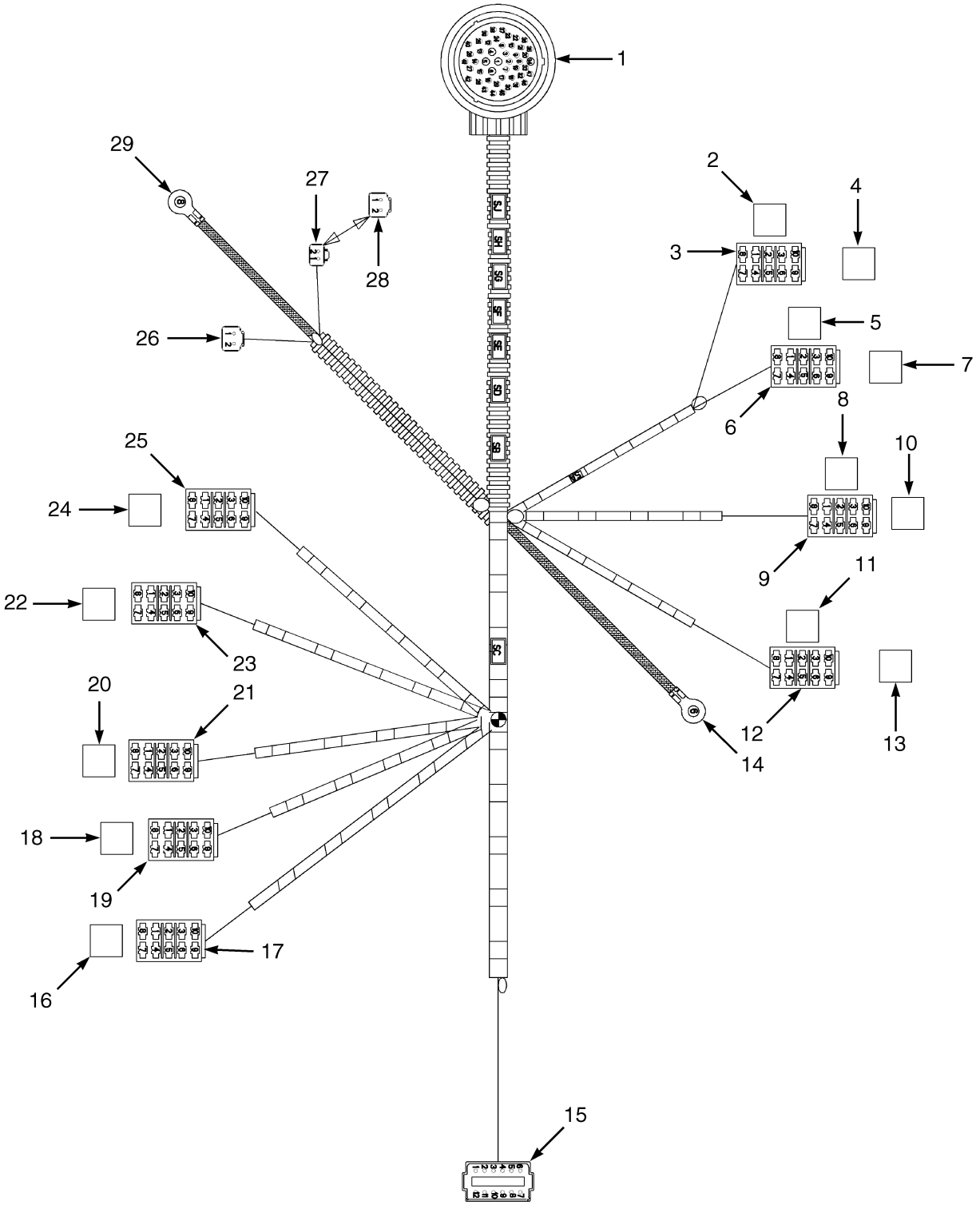

HP081774

©2010 HYSTER COMPANY

WIRE HARNESS
ARM REST

ITEM	PART NO.	DESCRIPTION	QTY
	1637439	Wire Harness (Arm Rest)	1
1	. . . . .	Connector Assembly (Side Console)	1
1	1484554	Connector	1
1	1330438	Terminal (Socket)	5
1	1463141	Terminal (Socket)	23
1	1484377	Plug	19
2	1570611	Label (Front Wiper)	1
3	. . . . .	Connector Assembly (Front Window Wiper Switch)	1
3	1484555	Switch (10-Way)	1
3	1484556	Terminal	5
4	1570608	Label (Front)	1
5	1570614	Label (Wash)	1
6	. . . . .	Connector Assembly (Front Window Washer Switch)	1
6	1484555	Switch (10-Way)	1
6	1484556	Terminal	2
7	1570609	Label (Roof)	1
8	1570612	Label (Rear/Roof Wash Wipe)	1
9	. . . . .	Connector Assembly (Roof Window Washer/Wiper)	1
9	1484555	Switch (10-Way)	1
9	1484556	Terminal	4
9	233141	Terminal	1
10	1570609	Label (Roof)	1
11	1570612	Label (Rear/Roof Wash Wipe)	1
12	. . . . .	Connector Assembly (Rear Window Washer/Wiper)	1
12	1484555	Switch (10-Way)	1
12	1484556	Terminal	2
12	233141	Terminal	4
13	1570610	Label (Rear)	1
14	1506885	Ring	1
15	. . . . .	Connector Assembly (Joystick)	1
15	1500925	Connector	1
15	1352603	Connector	1
15	1330437	Terminal (Pin)	12
16	1570613	Label (Twist Lock)	1
17	. . . . .	Connector Assembly Twist Lock Switch)	1
17	1484555	Switch (10-Way)	1
17	1484556	Terminal	3
18	1570617	Label (Horn Switch)	1
19	. . . . .	Connector Assembly (Horn)	1
19	1484556	Terminal	2
20	. . . . .	Decal	1
21	. . . . .	Connector Assembly (Extend/Retract Switch)	1
21	1484555	Switch (10-Way)	1
21	1484556	Terminal	3
22	. . . . .	Decal	1
23	. . . . .	Connector Assembly (Pile Slope Switch)	1
23	1484555	Switch (10-Way)	1
23	1484556	Terminal	3
24	. . . . .	Decal	1
25	. . . . .	Connector Assembly (Side Shift Switch)	1

©2010 HYSTER COMPANY

WIRE HARNESS
ARM REST

ITEM	PART NO.	DESCRIPTION	QTY
25	1484556	Terminal	3
26	. . . . .	Connector Assembly (Operator Presence)	1
26	1493465	Connector	1
26	1330414	Connector (Secondary Lock)	1
26	1330437	Terminal (Pin)	2
27	. . . . .	Connector Assembly (Suspension Seat)	1
27	1490242	Connector	1
27	1490243	Connector	1
27	1330438	Terminal (Socket)	2
28	1493465	Connector (Insert)	1
29	1493459	Ring (Seat Ground)	1

©2010 HYSTER COMPANY

NOTES

©2010 HYSTER COMPANY

WIRE HARNESS (FIGURE 4-19)
CAB LIGHTS

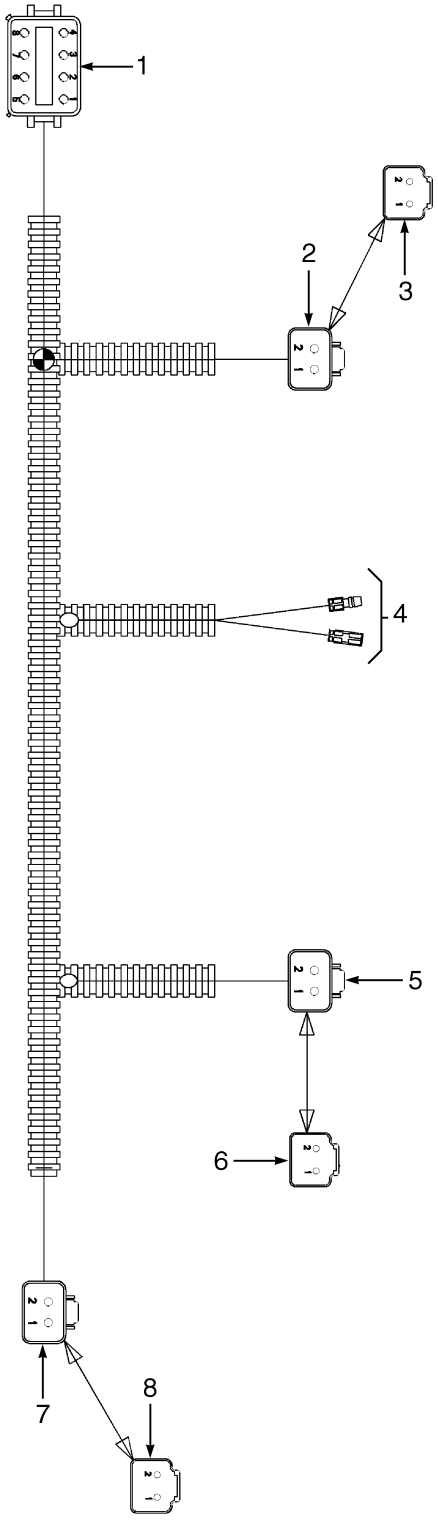

HP081823

©2010 HYSTER COMPANY

WIRE HARNESS
CAB LIGHTS

ITEM	PART NO.	DESCRIPTION	QTY
	1545172	Wire Harness (Cab Lights)	1
1	. . . . .	Connector Assembly (Cab)	1
1	1502625	Connector	1
1	1502626	Connector	1
1	1330438	Terminal (Socket)	4
1	1330439	Plug	3
1	1363886	Terminal (Socket)	1
2	. . . . .	Connector Assembly (Rear Drivelight)	1
2	1490242	Connector	1
2	1490243	Connector	1
2	1330438	Terminal (Socket)	2
3	. . . . .	Insert	1
3	1493465	Connector	1
3	1330439	Plug	2
4	. . . . .	Connector Set (Beacon/Strobe)	1
4	1493444	Terminal	1
4	1493445	Cover (Socket Terminal)	1
4	1497358	Terminal	1
4	1497287	Cover	1
5	. . . . .	Connector Assembly (Inner Front Floodlight)	1
5	1490242	Connector	1
5	1490243	Connector	2
5	1330438	Terminal (Socket)	1
6	. . . . .	Insert	1
6	1493465	Connector	1
6	1330439	Plug	1
7	. . . . .	Connector Assembly (Outer Front Floodlight)	1
7	1490242	Connector	1
7	1490243	Connector	1
7	1330438	Terminal (Socket)	2
8	. . . . .	Insert	1
8	1493465	Connector	1
8	1330439	Plug	1

©2010 HYSTER COMPANY

WIRE HARNESS (FIGURE 4-20)

CAB SIDE CONSOLE — SHEET 1 OF 2 (→ 3/2008)

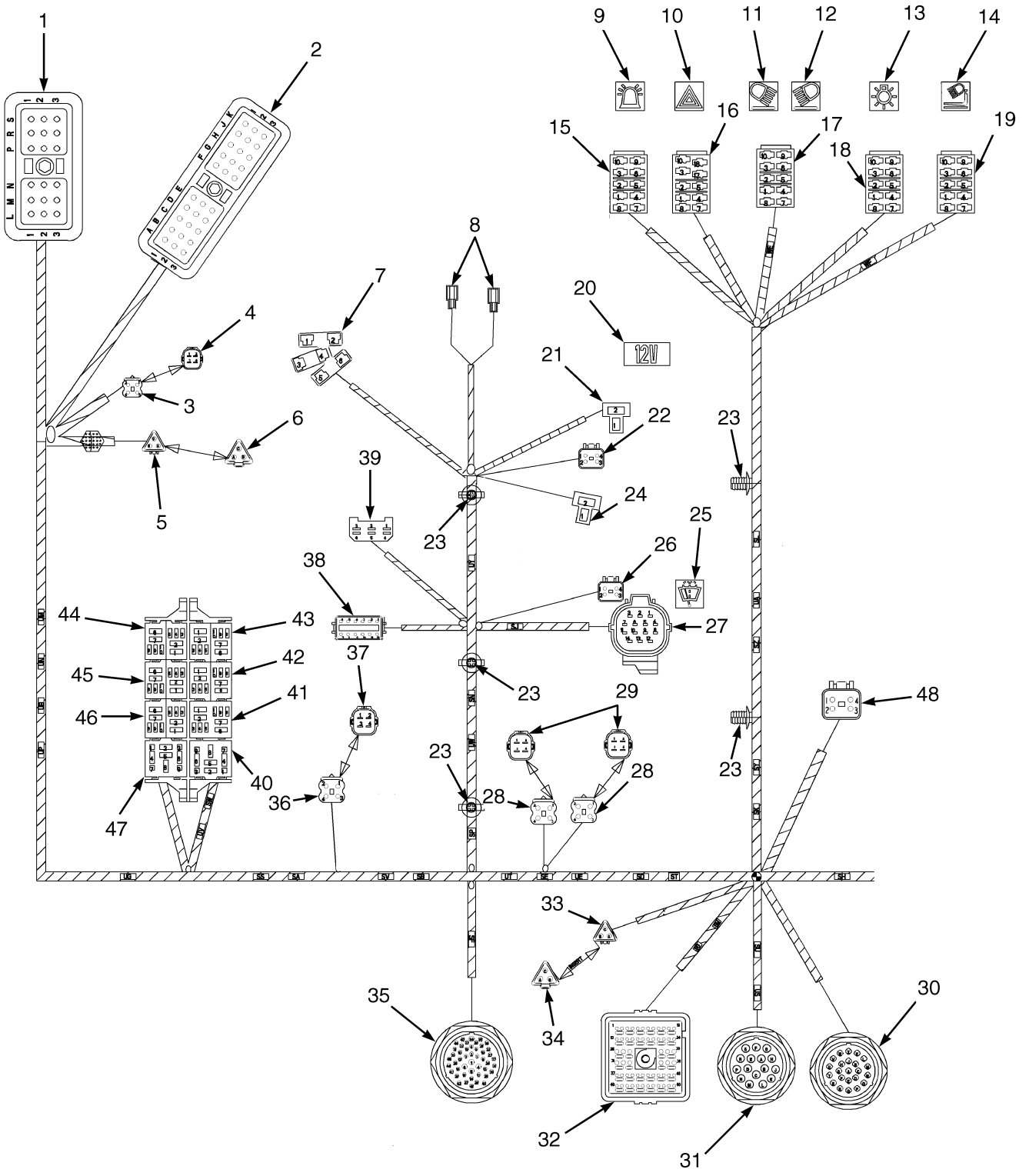

HP081772

©2010 HYSTER COMPANY

WIRE HARNESS

CAB SIDE CONSOLE – SHEET 1 OF 2 (→ 3/2008)

ITEM	PART NO.	DESCRIPTION	QTY
	1637438	Wire Harness (Cab Side Console)	1
1	. . . . .	Connector Assembly (Transmission Controller J1)	1
1	1602433	Connector	1
1	1323581	Plug	5
1	1323576	Terminal	13
2	. . . . .	Connector Assembly (Transmission Controller J2)	1
2	1607842	Connector (30 Way)	1
2	1323576	Terminal	28
2	1323581	Plug	2
3	. . . . .	Connector Assembly (Resistors)	1
3	1610950	Housing (Sealed) (4-Way)	1
3	1484656	Terminal (Socket)	4
3	1610954	Seal	4
4	1610949	Resistor (Insert)	1
5	. . . . .	Connector Assembly (Terminating Reststor)	1
5	1484397	Connector (3-Way)	1
5	1610944	Lock	1
5	1518112	Terminal (Socket)	2
5	1330437	Terminal (Pin)	1
6	1607772	Connector (Termination) (Insert)	1
7	. . . . .	Connector Assembly (Start Switch)	1
7	370728	Connector Body	1
7	1484375	Terminal	3
8	. . . . .	Connector Assembly (Pre-Excitation)	2
8	1624103	Terminal	1
8	1610947	Receptacle	1
9	1570639	Label (Beacon Switch)	1
10	1570638	Label (Hazard Light)	1
11	1497362	Label (Rear Worklight Switch)	1
12	1497361	Label (Front Worklight Switch)	1
13	1570641	Label (Roadlight Switch)	1
14	1570643	Label (Mast And Attachment Worklight)	1
15	. . . . .	Connector Assembly (Beacon Switch)	1
15	1484555	Switch (10-Way)	1
15	1484556	Terminal	4
16	. . . . .	Connector Assembly (Hazard Light Switch)	1
16	1484675	Switch	1
16	233141	Terminal	1
16	1484556	Terminal	7
17	. . . . .	Connector Assembly (Flood And Rear Drive Light Switch)	1
17	1484555	Switch (10-Way)	1
17	1484556	Terminal	4
18	. . . . .	Connector Assembly Marker And Front Light Switch)	1
18	1484555	Switch (10-Way)	1
18	1484556	Terminal	4
19	. . . . .	Connector Assembly (Attachment Light Switch)	1
19	1484555	Switch (10-Way)	1
19	233141	Terminal	2
20	1570645	Label (12 Volt)	1
21	. . . . .	Connector Assembly (12 V Accessory Socket)	1

©2010 HYSTER COMPANY

WIRE HARNESS

CAB SIDE CONSOLE – SHEET 1 OF 2 (→ 3/2008)

ITEM	PART NO.	DESCRIPTION	QTY
21	1465378	Connector Body	1
21	1484556	Terminal	2
22	. . . . .	Connector Assembly (Heater Switch)	1
22	1489056	Hose Assy	1
22	1489657	Connector	1
22	1363886	Terminal (Socket)	2
22	1330438	Terminal (Socket)	2
23	1500927	Clip	1
24	. . . . .	Connector Assembly (Map Light)	1
24	1465378	Connector Body	1
24	1484556	Terminal	2
25	1570644	Label (Rear Wash/Wipe Switch)	1
26	. . . . .	Connector Assembly (Rear Wiper)	1
26	1489656	Connector (4-Way)	1
26	1489657	Connector	1
26	1330438	Terminal (Socket)	4
27	. . . . .	Connector Assembly (Cabin Roof)	1
27	1484654	Connector (14-Way)	1
27	1484655	Retainer (Socket)	1
27	1484708	Terminal (Socket)	4
27	1484595	Seal	4
27	1484656	Terminal (Socket)	9
27	1484597	Seal	9
27	1484611	Seal (Blanking)	1
28	. . . . .	Connector Assembly (Diodes)	1
28	1610950	Housing (Sealed) (4-Way)	1
28	1484656	Terminal (Socket)	4
28	1610954	Seal	4
29	1610953	Diode (Insert)	1
30	. . . . .	Connector Assembly (Attachment Signals)	1
30	1500919	Connector	1
30	1484685	Locknut	1
30	1484686	Washer (Spring)	1
30	1330437	Terminal (Pin)	1
30	1484377	Plug	22
31	. . . . .	Connector Assembly (Powertrain Power)	1
31	1484665	Housing	1
31	1484686	Washer (Spring)	1
31	1484685	Locknut	1
31	1484709	Terminal (Pin)	15
31	1330439	Plug	1
32	. . . . .	Connector Assembly (Powertrain Signals)	1
32	1484363	Housing (Socket)	1
32	1484662	Key (Retainer Pin)	1
32	1610945	Terminal	2
32	1484377	Plug	6
32	1463140	Terminal (Pin)	40
32	1330437	Terminal (Pin)	7
32	1330439	Plug	5
33	. . . . .	Connector Assembly (DC-DC Converter)	1

©2010 HYSTER COMPANY

WIRE HARNESS

CAB SIDE CONSOLE – SHEET 1 OF 2 (→ 3/2008)

ITEM	PART NO.	DESCRIPTION	QTY
33	1484397	Connector (3-Way)	1
33	1330426	Connector	1
33	1330438	Terminal (Socket)	3
34	1493466	Connector (Insert)	1
35	. . . . .	Connector Assembly (Armrest Wire Harness)	1
35	1484664	Housing	1
35	1484685	Locknut	1
35	1484686	Washer (Spring)	1
35	1330437	Terminal (Pin)	4
35	1484377	Plug	19
35	1463140	Terminal (Pin)	24
36	. . . . .	Connector Assembly (Flyback Diodes)	1
36	1610950	Housing (Sealed) (4-Way)	1
36	1484656	Terminal (Socket)	2
36	1610954	Seal	2
36	1610941	Seal (Dummy)	2
37	1610951	Diode (Insert)	1
38	. . . . .	Connector Assembly (Indicator Display)	1
38	1493428	Connector (12-Way)	1
38	1500913	Connector	1
38	1330438	Terminal (Socket)	10
38	1330439	Plug	2
39	. . . . .	Connector Assembly (Front Wiper Timer)	1
39	1484676	Housing (Socket)	1
39	1484556	Terminal	6
40	. . . . .	Relay Base (Main Power)	1
40	1484684	Single Mini Relay Base	1
40	1610952	Terminal	2
40	1489957	Connector (1-Way)	2
41	. . . . .	Relay Base (Lower Interrupt)	1
41	1484683	Relay (Base)	1
41	1489957	Connector (1-Way)	3
41	1570602	Terminal (Socket)	5
42	. . . . .	Relay Base (Start Inhibit)	1
42	1484683	Relay (Base)	1
42	1489957	Connector (1-Way)	4
42	1570602	Terminal (Socket)	4
43	. . . . .	Relay Base (Flood Lights)	1
43	1484683	Relay (Base)	1
43	1490249	Connector (1-Way)	4
43	1570602	Terminal (Socket)	4
44	. . . . .	Relay Base (Seat Switch)	1
44	1484683	Relay (Base)	1
44	1489957	Connector (1-Way)	3
44	1570602	Terminal (Socket)	5
45	. . . . .	Relay Base (Override)	1
45	1484683	Relay (Base)	1
45	1489957	Connector (1-Way)	4
45	1570602	Terminal (Socket)	4
46	. . . . .	Relay Base (Spare)	1

©2010 HYSTER COMPANY

WIRE HARNESS

CAB SIDE CONSOLE – SHEET 1 OF 2 (→ 3/2008)

ITEM	PART NO.	DESCRIPTION	QTY
46	1484683	Relay (Base)	1
47	. . . . .	Relay Base (Directional Flasher)	1
47	1484684	Single Mini Relay Base	1
47	1489957	Connector (1-Way)	3
48	. . . . .	Connector Assembly (Wash Pumps)	1
48	1489656	Connector (4-Way)	1
48	1489657	Connector	1
48	1330438	Terminal (Socket)	4

©2010 HYSTER COMPANY

NOTES

©2010 HYSTER COMPANY

WIRE HARNESS (FIGURE 4-21)

CAB SIDE CONSOLE — SHEET 2 OF 2 (→ 3/2008)

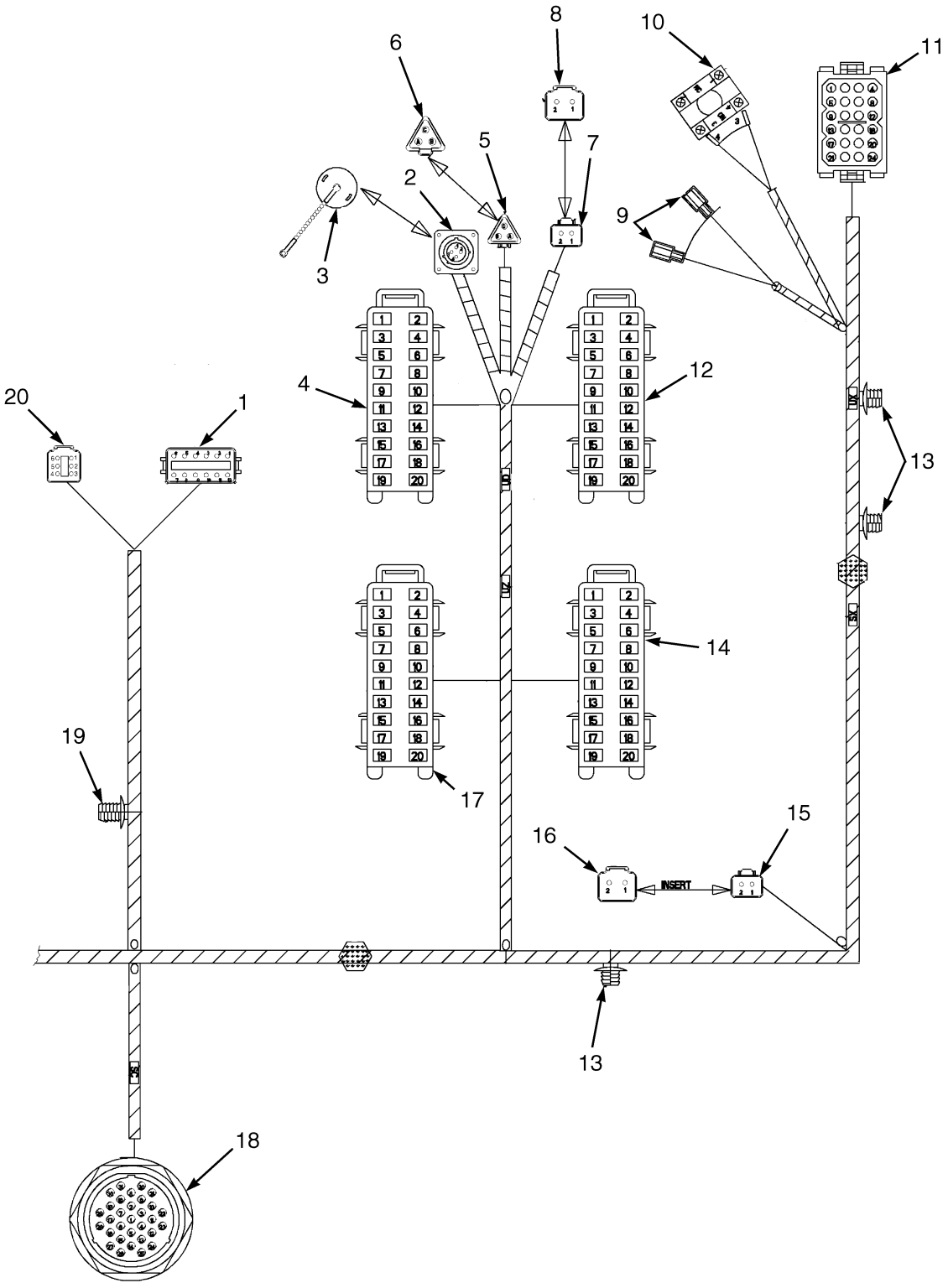

©2010 HYSTER COMPANY

WIRE HARNESS

CAB SIDE CONSOLE – SHEET 2 OF 2 (→ 3/2008)

ITEM	PART NO.	DESCRIPTION	QTY
	1637438	Wire Harness (Cab Side Console)	1
1	. . . . .	Connector Assembly (Hydraulic Relays)	1
1	1493428	Connector (12-Way)	1
1	1500913	Connector	1
1	1330438	Terminal (Socket)	12
2	. . . . .	Connector Assembly (Transmission Diagnostics)	1
2	1490246	Terminal (Socket)	3
2	1506762	Housing (4-Way)	1
3	1607843	Cap (Insert)	1
4	. . . . .	Fuse Box (Hydraulics And Transmission) (☞Figure 4-15)	1
5	. . . . .	Connector Assembly (Diagnostics)	1
5	1484397	Connector (3-Way)	1
5	1610944	Lock	1
5	1518112	Terminal (Socket)	2
5	1330439	Plug	1
6	1493466	Connector (Insert)	1
7	. . . . .	Connector Assembly (Service Power)	1
7	1490242	Connector	1
7	1490243	Connector	1
7	1363886	Terminal (Socket)	2
8	. . . . .	Connector Assembly (Insert)	1
8	1493465	Connector	1
8	1330439	Plug	2
9	. . . . .	Connector Assembly (Buzzer)	1
9	1624103	Terminal	1
9	1610947	Receptacle	1
10	. . . . .	Connector Assembly (Park Brake Switch)	1
10	1500928	Switch (2-way)	1
10	1484394	Crimp Ferrule	4
10	1561756	Cover (Lower)	1
10	1567676	Cover (Upper)	1
10	1570606	Strap Clamp	1
11	. . . . .	Connector Assembly (Instrument Cluster)	1
11	1484677	Plug (24-Way)	1
11	1484716	Terminal	15
12	. . . . .	Fuse Box (Lights) (☞Figure 4-15)	1
13	1490245	Clip	1
14	. . . . .	Fuse Box) (12 V) (☞Figure 4-15)	1
15	. . . . .	Connector Assembly (24 V Accessory Socket)	1
15	1490242	Connector	1
15	1490243	Connector	1
15	1363886	Terminal (Socket)	2
16	1493465	Connector (Insert)	1
17	. . . . .	Fuse Box (Engine) (☞Figure 4-15)	1
18	. . . . .	Connector Assembly (Cab Underfloor)	1
18	1484666	Housing	1
18	1484685	Locknut	1
18	1484686	Washer (Spring)	1
18	1330437	Terminal (Pin)	23
18	1330439	Plug	7

©2010 HYSTER COMPANY

WIRE HARNESS

CAB SIDE CONSOLE – SHEET 2 OF 2 (→ 3/2008)

ITEM	PART NO.	DESCRIPTION	QTY
18	1484712	Terminal (Pin)	1
19	1500927	Clip	1
20	. . . . .	Connector Assembly (Hydraulic Relays)	1
20	1493430	Connector	1
20	1529052	Connector	1
20	1330438	Terminal (Socket)	6

©2010 HYSTER COMPANY

NOTES

©2010 HYSTER COMPANY

WIRE HARNESS (FIGURE 4-22)

CAB SIDE CONSOLE — SHEET 1 OF 2 (3/2008 ↔ S/N B214E01776H)

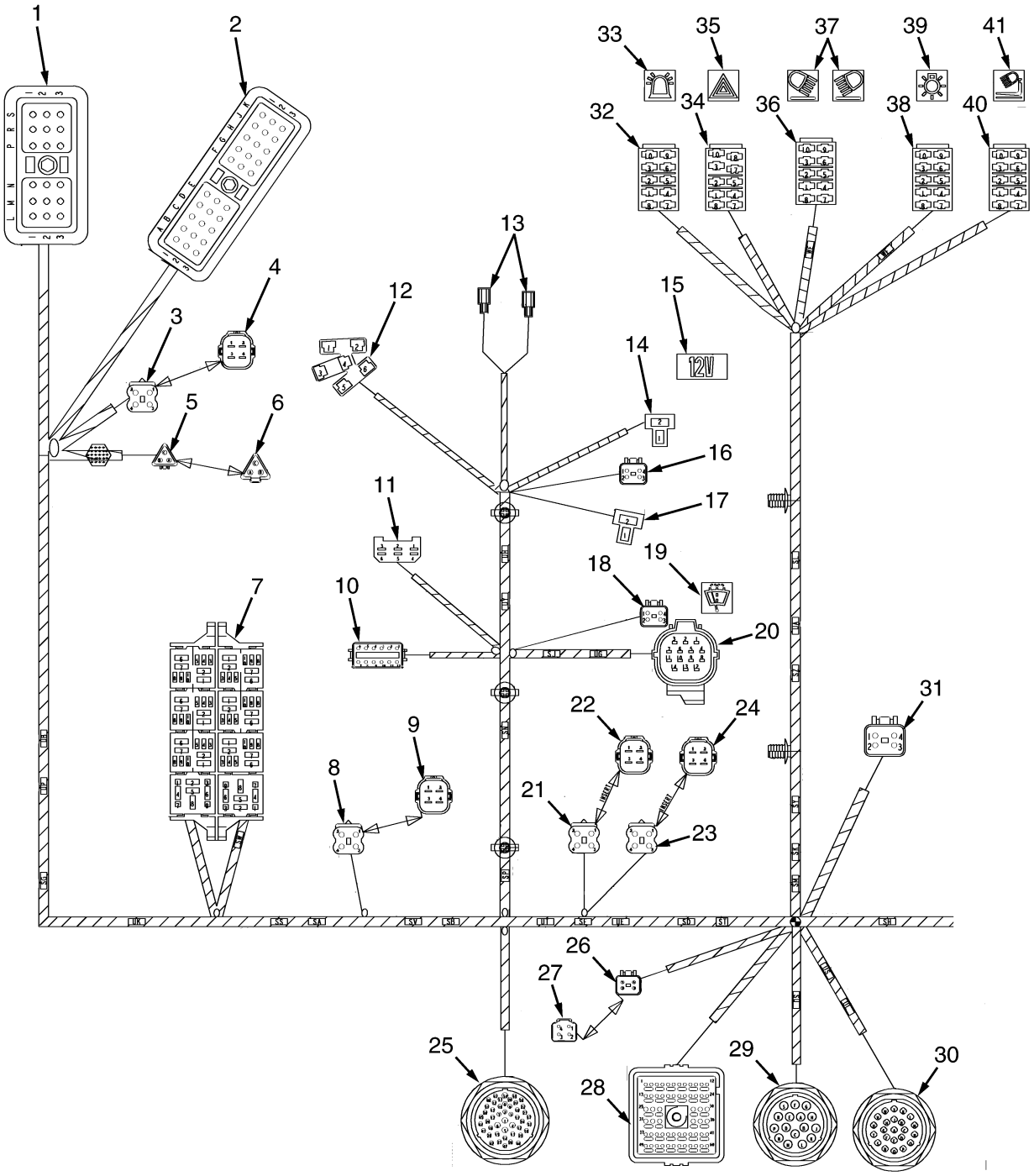

HP081994

©2010 HYSTER COMPANY

WIRE HARNESS

CAB SIDE CONSOLE – SHEET 1 OF 2 (3/2008 ↔ S/N B214E01776H)

ITEM	PART NO.	DESCRIPTION	QTY
	1689714	Wire Harness (Cab Side Console)	1
1	. . . . .	Connector Assembly (Transmission Controller)	1
1	1607782	Connector (18-Way)	1
1	1323581	Plug	4
1	1323576	Terminal	14
2	. . . . .	Connector Assembly (Transmission Controller)	1
2	1607842	Connector (30 Way)	1
2	1323576	Terminal	30
3	. . . . .	Connector Assembly (Resistors)	1
3	1610950	Housing (Sealed) (4-Way)	1
3	1484656	Terminal (Socket)	4
3	1610954	Seal	4
4	. . . . .	Connector Assembly (Insert)	1
4	1610949	Resistor	1
5	. . . . .	Connector Assembly (Terminating Resistors)	1
5	1484397	Connector (3-Way)	1
5	1610944	Lock	1
5	1518112	Terminal (Socket)	2
5	1330439	Plug	1
6	. . . . .	Connector Assembly (Insert)	1
6	1607772	Connector (Termination)	1
7	. . . . .	Connector Assembly (Relays) (☞Figure 4-16)	1
8	. . . . .	Connector Assembly (Diodes)	1
8	1610950	Housing (Sealed) (4-Way)	1
8	1484656	Terminal (Socket)	2
8	1610954	Seal	2
8	1610941	Seal (Dummy)	2
9	. . . . .	Connector Assembly (Insert)	1
9	1610951	Diode	1
10	. . . . .	Connector Assembly (ECH Display)	1
10	1493428	Connector (12-Way)	1
10	1500913	Connector	1
10	1330438	Terminal (Socket)	10
10	1330439	Plug	2
11	. . . . .	Connector Assembly (Front Wiper Timer)	1
11	1484676	Housing (Socket)	1
11	1484556	Terminal	6
12	. . . . .	Connector Assembly (Start Switch)	1
12	1484660	Housing (Ignition Switch)	1
12	1484375	Terminal	4
13	. . . . .	Connector Assembly (Pre-Excitation)	1
13	1624103	Terminal	2
13	1610947	Receptacle	2
14	. . . . .	Connector Assembly (12 Volt Accessory)	1
14	1465378	Connector Body	1
14	1484556	Terminal	2
15	1570645	Label (12 Volt)	1
16	. . . . .	Connector Assembly (Heater)	1
16	1489656	Connector (4-Way)	1
16	1489657	Connector	1

©2010 HYSTER COMPANY

WIRE HARNESS

CAB SIDE CONSOLE – SHEET 1 OF 2 (3/2008 ↔ S/N B214E01776H)

ITEM	PART NO.	DESCRIPTION	QTY
16	1363886	Terminal (Socket)	2
16	1330438	Terminal (Socket)	2
17	. . . . .	Connector Assembly (Map Light)	1
17	1465378	Connector Body	1
17	1484556	Terminal	2
18	. . . . .	Connector Assembly (Rear Wiper)	1
18	1489656	Connector (4-Way)	1
18	1489657	Connector	1
18	1330438	Terminal (Socket)	4
19	1570644	Label (Rear Wash/Wipe Switch) (Rear Wiper)	1
20	. . . . .	Connector Assembly (Cab Roof)	1
20	1484654	Connector (14-Way)	1
20	1484655	Retainer (Socket)	1
20	1484708	Terminal (Socket)	4
20	1484595	Seal	4
20	1484656	Terminal (Socket)	9
20	1484597	Seal	9
20	1484611	Seal (Blanking)	1
21	. . . . .	Connector Assembly (Diodes)	1
21	1610950	Housing (Sealed) (4-Way)	1
21	1484656	Terminal (Socket)	4
21	1610954	Seal	4
22	. . . . .	Connector Assembly (Insert)	1
22	1610953	Diode	1
23	. . . . .	Connector Assembly (Diodes)	1
23	1610950	Housing (Sealed) (4-Way)	1
23	1484656	Terminal (Socket)	4
23	1482659	Seal (Rubber)	2
23	1610954	Seal	2
24	. . . . .	Connector Assembly (Insert)	1
24	1610953	Diode	1
25	. . . . .	Connector Assembly (Armrest)	1
25	1484664	Housing	1
25	1484685	Locknut	1
25	1484686	Washer (Spring)	1
25	1330437	Terminal (Pin)	4
25	1484377	Plug	19
25	1463140	Terminal (Pin)	24
26	. . . . .	Connector Assembly (Converter)	1
26	1514602	Connector	1
26	1514603	Connector	1
26	1493434	Terminal (Socket)	3
26	1330439	Plug	1
27	. . . . .	Connector Assembly (Insert)	1
27	1514597	Connector	1
27	1330439	Plug	3
28	. . . . .	Connector Assembly (Powertrain Signals)	1
28	1484363	Housing (Socket)	1
28	1484662	Key (Retainer Pin)	1
28	1610945	Terminal	2

©2010 HYSTER COMPANY

WIRE HARNESS

CAB SIDE CONSOLE – SHEET 1 OF 2 (3/2008 ↔ S/N B214E01776H)

ITEM	PART NO.	DESCRIPTION	QTY
28	1484377	Plug	6
28	1463140	Terminal (Pin)	40
28	1330437	Terminal (Pin)	7
28	1330439	Plug	5
29	. . . . .	Connector Assembly (Engine Power)	1
29	1484665	Housing	1
29	1484686	Washer (Spring)	1
29	1484685	Locknut	1
29	1484709	Terminal (Pin)	15
29	1330439	Plug	1
30	. . . . .	Connector Assembly (Attachment Signals)	1
30	1500919	Connector	1
30	1484685	Locknut	1
30	1484686	Washer (Spring)	1
30	1330437	Terminal (Pin)	22
30	1484377	Plug	1
31	. . . . .	Connector Assembly (Wash Pumps)	1
31	1489656	Connector (4-Way)	1
31	1489657	Connector	1
31	1330438	Terminal (Socket)	4
32	. . . . .	Connector Assembly (Beacon)	1
32	1484555	Switch (10-Way)	1
32	1484556	Terminal	4
33	1570639	Label (Beacon Switch)	1
34	. . . . .	Connector Assembly (Hazard)	1
34	1484675	Switch	1
34	1484556	Terminal	7
34	233141	Terminal	1
35	1570638	Label (Hazard Light)	1
36	. . . . .	Connector Assembly (Flood/Rear Drive)	1
36	1484555	Switch (10-Way)	1
36	1484556	Terminal	4
37	1497361	Label (Front Worklight Switch)	1
37	1497362	Label (Rear Worklight Switch)	1
38	. . . . .	Connector Assembly (Tail/Front Drive)	1
38	1484555	Switch (10-Way)	1
38	1484556	Terminal	4
39	1570641	Label (Roadlight Switch)	1
40	. . . . .	Connector Assembly (Attachment Lights)	1
40	1484555	Switch (10-Way)	1
40	233141	Terminal	2
41	1570643	Label (Mast And Attachment Worklight)	1

©2010 HYSTER COMPANY

WIRE HARNESS (FIGURE 4-23)

CAB SIDE CONSOLE — SHEET 2 OF 2 (3/2008 ↔ S/N B214E01776H)

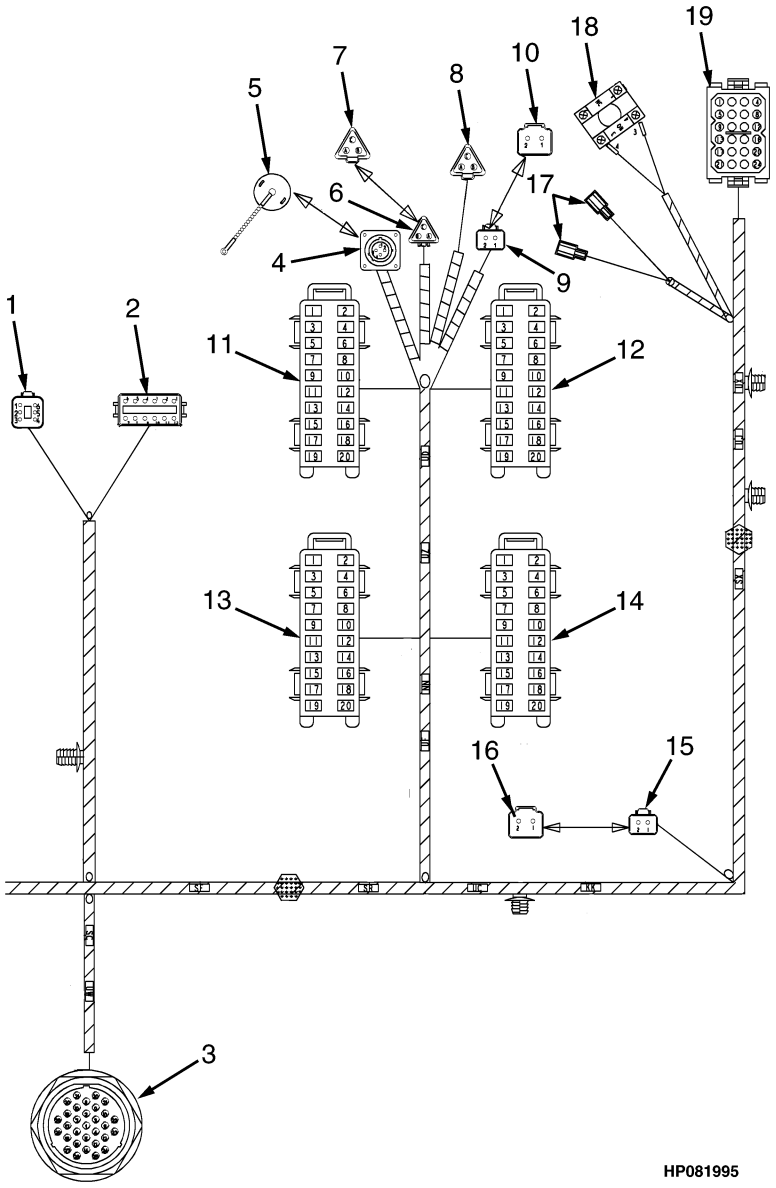

©2010 HYSTER COMPANY

WIRE HARNESS

CAB SIDE CONSOLE – SHEET 2 OF 2 (3/2008 ↔ S/N B214E01776H)

ITEM	PART NO.	DESCRIPTION	QTY
	1689714	Wire Harness (Cab Side Console)	1
1	. . . . .	Connector Assembly (Hydraulic Relays)	1
1	1493430	Connector	1
1	1529052	Connector	1
1	1330438	Terminal (Socket)	6
2	. . . . .	Connector Assembly (Hydraulic Relays)	1
2	1493428	Connector (12-Way)	1
2	1500913	Connector	1
2	1330438	Terminal (Socket)	12
3	. . . . .	Connector Assembly (Cab Floor)	1
3	1484666	Housing	1
3	1484685	Locknut	1
3	1484686	Washer (Spring)	1
3	1330437	Terminal (Pin)	23
3	1330439	Plug	7
3	1484712	Terminal (Pin)	1
4	. . . . .	Connector Assembly (Transmission Diagnostic)	1
4	1484555	Switch (10-Way)	1
4	1490246	Terminal (Socket)	3
5	. . . . .	Connector Assembly (Insert)	1
5	1607843	Cap	1
6	. . . . .	Connector Assembly (Diagnostic Plug)	1
6	1484397	Connector (3-Way)	1
6	1610944	Lock	1
6	1518112	Terminal (Socket)	2
6	1330439	Plug	1
6	1500912	Clip	1
7	. . . . .	Connector Assembly (Insert)	1
7	1493466	Connector	1
7	1330439	Plug	3
8	. . . . .	Connector Assembly (Light Jumper)	1
8	1493466	Connector	1
8	1330415	Connector	1
8	1330438	Terminal (Socket)	3
9	. . . . .	Connector Assembly (Service Power)	1
9	1490242	Connector	1
9	1490243	Connector	1
9	1363886	Terminal (Socket)	2
10	. . . . .	Connector Assembly (Insert)	1
10	1493465	Connector	1
10	1330439	Plug	2
11	. . . . .	Fuse Box (One) (☞Figure 4-16)	1
12	. . . . .	Fuse Box (Two) (☞Figure 4-16)	1
13	. . . . .	Fuse Box (Three) (☞Figure 4-16)	1
14	. . . . .	Fuse Box (Four) (☞Figure 4-16)	1
15	. . . . .	Connector Assembly (24 Volt Accessory)	1
15	1490242	Connector	1
15	1490243	Connector	1
15	1363886	Terminal (Socket)	2
16	. . . . .	Connector Assembly (Insert)	1

©2010 HYSTER COMPANY

WIRE HARNESS

CAB SIDE CONSOLE – SHEET 2 OF 2 (3/2008 ↔ S/N B214E01776H)

ITEM	PART NO.	DESCRIPTION	QTY
16	1493465	Connector	1
16	1330439	Plug	2
17	. . . . .	Connector Assembly (Buzzer)	1
17	1624103	Terminal	2
17	1610947	Receptacle	2
18	. . . . .	Connector Assembly (Park Brake)	1
18	1658852	Connector (Two Way Switch Element)	1
18	1484394	Crimp Ferrule	4
19	. . . . .	Connector Assembly (Instrument Cluster)	1
19	1484677	Plug (24-Way)	1
19	1484716	Terminal	15

©2010 HYSTER COMPANY

NOTES

©2010 HYSTER COMPANY

WIRE HARNESS (FIGURE 4-24)

CAB SIDE CONSOLE — SHEET 1 OF 2 (S/N B214E01777H →)

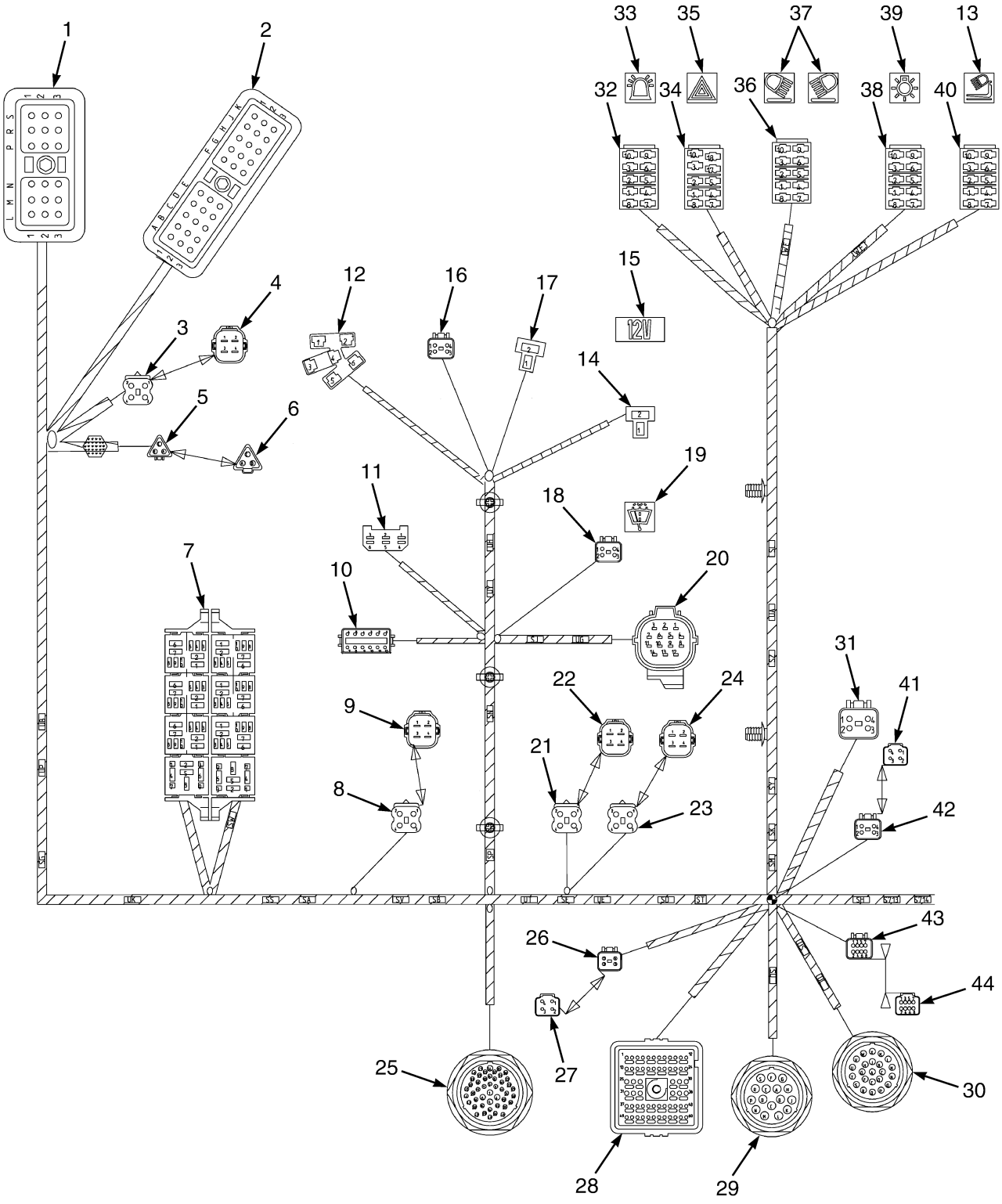

©2010 HYSTER COMPANY

WIRE HARNESS

CAB SIDE CONSOLE – SHEET 1 OF 2 (S/N B214E01777H →)

ITEM	PART NO.	DESCRIPTION	QTY
	4007284	Wire Harness (Cab Side Console)	1
1	. . . . .	Connector Assembly (Transmission Controller)	1
1	1607782	Connector (18-Way)	1
1	1323581	Plug	4
1	1323576	Terminal	14
2	. . . . .	Connector Assembly (Transmission Controller)	1
2	1607842	Connector (30 Way)	1
2	1323576	Terminal	30
3	. . . . .	Connector Assembly (Resistors)	1
3	1610950	Housing (Sealed) (4-Way)	1
3	1484656	Terminal (Socket)	4
3	1610954	Seal	4
4	. . . . .	Connector Assembly (Insert)	1
4	1610949	Resistor	1
5	. . . . .	Connector Assembly (Terminating Resistors)	1
5	1484397	Connector (3-Way)	1
5	1610944	Lock	1
5	1518112	Terminal (Socket)	2
5	1330439	Plug	1
6	. . . . .	Connector Assembly (Insert)	1
6	1607772	Connector (Termination)	1
7	. . . . .	Relays and Fuses	1
8	. . . . .	Connector Assembly (Diodes)	1
8	1610950	Housing (Sealed) (4-Way)	1
8	1484656	Terminal (Socket)	2
8	1610954	Seal	2
8	1610941	Seal (Dummy)	2
9	. . . . .	Connector Assembly (Insert)	1
9	1610951	Diode	1
10	. . . . .	Connector Assembly (ECH Display)	1
10	1493428	Connector (12-Way)	1
10	1500913	Connector	1
10	1330438	Terminal (Socket)	10
10	1330439	Plug	2
11	. . . . .	Connector Assembly (Front Wiper Timer)	1
11	1484676	Housing (Socket)	1
11	1484556	Terminal	6
12	. . . . .	Connector Assembly (Start Switch)	1
12	1484660	Housing (Ignition Switch)	1
12	1484375	Terminal	4
13	1570643	Label (Mast And Attachment Worklight)	1
14	. . . . .	Connector Assembly (12 Volt Accessory)	1
14	1465378	Connector Body	1
14	1484556	Terminal	2
15	1570645	Label (12 Volt)	1
16	. . . . .	Connector Assembly (Heater)	1
16	1489656	Connector (4-Way)	1
16	1489657	Connector	1
16	1363886	Terminal (Socket)	2
16	1330438	Terminal (Socket)	2

©2010 HYSTER COMPANY

WIRE HARNESS

CAB SIDE CONSOLE – SHEET 1 OF 2 (S/N B214E01777H →)

ITEM	PART NO.	DESCRIPTION	QTY
17	. . . . .	Connector Assembly (Map Light)	1
17	1465378	Connector Body	1
17	1484556	Terminal	2
18	. . . . .	Connector Assembly (Rear Wiper)	1
18	1489656	Connector (4-Way)	1
18	1489657	Connector	1
18	1330438	Terminal (Socket)	4
19	1570644	Label (Rear Wash/Wipe Switch) (Rear Wiper)	1
20	. . . . .	Connector Assembly (Cab Roof)	1
20	1484654	Connector (14-Way)	1
20	1484655	Retainer (Socket)	1
20	1484708	Terminal (Socket)	4
20	1484595	Seal	4
20	1484656	Terminal (Socket)	9
20	1484597	Seal	9
20	1484611	Seal (Blanking)	1
21	. . . . .	Connector Assembly (Diodes)	1
21	1610950	Housing (Sealed) (4-Way)	1
21	1484656	Terminal (Socket)	4
21	1610954	Seal	4
22	. . . . .	Connector Assembly (Insert)	1
22	1610953	Diode	1
23	. . . . .	Connector Assembly (Diodes)	1
23	1610950	Housing (Sealed) (4-Way)	1
23	1484656	Terminal (Socket)	4
23	1482659	Seal (Rubber)	2
23	1610954	Seal	2
24	. . . . .	Connector Assembly (Insert)	1
24	1610953	Diode	1
25	. . . . .	Connector Assembly (Armrest)	1
25	1484664	Housing	1
25	1484685	Locknut	1
25	1484686	Washer (Spring)	1
25	1330437	Terminal (Pin)	4
25	1484377	Plug	19
25	1463140	Terminal (Pin)	24
26	. . . . .	Connector Assembly (Converter)	1
26	1514602	Connector	1
26	1514603	Connector	1
26	1493434	Terminal (Socket)	3
26	1330439	Plug	1
27	. . . . .	Connector Assembly (Insert)	1
27	1514597	Connector	1
27	1330439	Plug	3
28	. . . . .	Connector Assembly (Powertrain Signals)	1
28	1484363	Housing (Socket)	1
28	1484662	Key (Retainer Pin)	1
28	1610945	Terminal	2
28	1484377	Plug	6
28	1463140	Terminal (Pin)	40

©2010 HYSTER COMPANY

WIRE HARNESS

CAB SIDE CONSOLE – SHEET 1 OF 2 (S/N B214E01777H →)

ITEM	PART NO.	DESCRIPTION	QTY
28	1330437	Terminal (Pin)	7
28	1330439	Plug	5
29	. . . . .	Connector Assembly (Engine Power)	1
29	1484665	Housing	1
29	1484686	Washer (Spring)	1
29	1484685	Locknut	1
29	1484709	Terminal (Pin)	15
29	1330439	Plug	1
30	. . . . .	Connector Assembly (Attachment Signals)	1
30	1500919	Connector	1
30	1484685	Locknut	1
30	1484686	Washer (Spring)	1
30	1330437	Terminal (Pin)	22
30	1484377	Plug	1
31	. . . . .	Connector Assembly (Wash Pumps)	1
31	1489656	Connector (4-Way)	1
31	1489657	Connector	1
31	1330438	Terminal (Socket)	4
32	. . . . .	Connector Assembly (Beacon)	1
32	1484555	Switch (10-Way)	1
32	1484556	Terminal	4
33	1570639	Label (Beacon Switch)	1
34	. . . . .	Connector Assembly (Hazard)	1
34	1484675	Switch	1
34	1484556	Terminal	7
34	233141	Terminal	1
35	1570638	Label (Hazard Light)	1
36	. . . . .	Connector Assembly (Flood/Rear Drive)	1
36	1484555	Switch (10-Way)	1
36	1484556	Terminal	4
37	1497361	Label (Front Worklight Switch)	1
37	1497362	Label (Rear Worklight Switch)	1
38	. . . . .	Connector Assembly (Tail/Front Drive)	1
38	1484555	Switch (10-Way)	1
38	1484556	Terminal	4
39	1570641	Label (Roadlight Switch)	1
40	. . . . .	Connector Assembly (Attachment Lights)	1
40	1484555	Switch (10-Way)	1
40	233141	Terminal	2
41	. . . . .	Connector Assembly (Insert)	1
41	1489656	Connector (4-Way)	1
41	1489657	Connector	1
41	1330437	Terminal (Pin)	2
42	. . . . .	Connector Assembly (Empty Seat Engine Shutdown)	1
42	1489656	Connector (4-Way)	1
42	1489657	Connector	1
42	1330438	Terminal (Socket)	4
43	. . . . .	Connector Assembly (Container Positioner Speed Reduction)	1
43	1330429	Connector	1
43	4013375	Socket	1

©2010 HYSTER COMPANY

WIRE HARNESS

CAB SIDE CONSOLE – SHEET 1 OF 2 (S/N B214E01777H →)

ITEM	PART NO.	DESCRIPTION	QTY
43	1330438	Terminal (Socket)	7
44	. . . . .	Connector Assembly (Insert)	1
44	1330418	Connector	1
44	1623050	Housing	1
44	1330437	Terminal (Pin)	4

©2010 HYSTER COMPANY

NOTES

©2010 HYSTER COMPANY

WIRE HARNESS (FIGURE 4-25)

CAB SIDE CONSOLE — SHEET 2 OF 2 (S/N B214E01777H →)

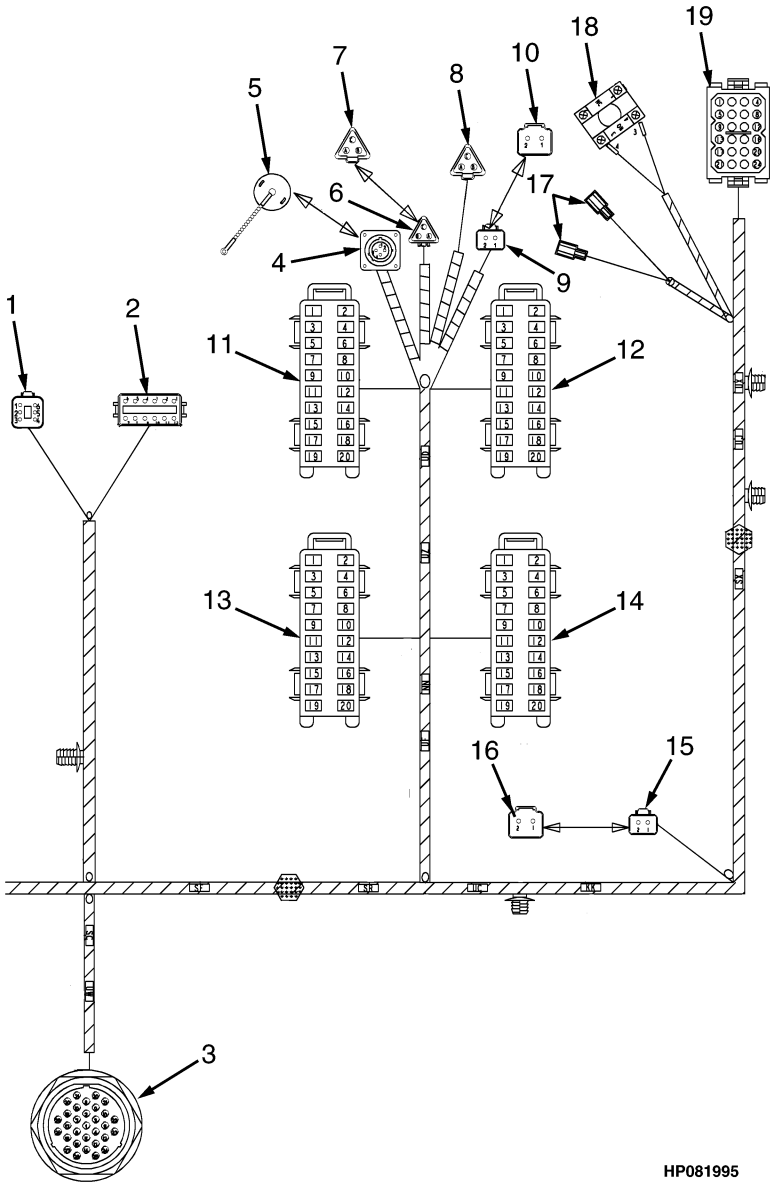

©2010 HYSTER COMPANY

WIRE HARNESS

CAB SIDE CONSOLE – SHEET 2 OF 2 (S/N B214E01777H →)

ITEM	PART NO.	DESCRIPTION	QTY
	4007284	Wire Harness (Cab Side Console)	1
1	. . . . .	Connector Assembly (Hydraulic Relays)	1
1	1493430	Connector	1
1	1529052	Connector	1
1	1330438	Terminal (Socket)	6
2	. . . . .	Connector Assembly (Hydraulic Relays)	1
2	1493428	Connector (12-Way)	1
2	1500913	Connector	1
2	1330438	Terminal (Socket)	12
3	. . . . .	Connector Assembly (Cab Floor)	1
3	1484666	Housing	1
3	1484685	Locknut	1
3	1484686	Washer (Spring)	1
3	1330437	Terminal (Pin)	23
3	1330439	Plug	7
3	1484712	Terminal (Pin)	1
4	. . . . .	Connector Assembly (Transmission Diagnostic)	1
4	1484555	Switch (10-Way)	1
4	1490246	Terminal (Socket)	3
5	. . . . .	Connector Assembly (Insert)	1
5	1607843	Cap	1
6	. . . . .	Connector Assembly (Diagnostic Plug)	1
6	1484397	Connector (3-Way)	1
6	1610944	Lock	1
6	1518112	Terminal (Socket)	2
6	1330439	Plug	1
6	1500912	Clip	1
7	. . . . .	Connector Assembly (Insert)	1
7	1493466	Connector	1
7	1330439	Plug	3
8	. . . . .	Connector Assembly (Light Jumper)	1
8	1493466	Connector	1
8	1330415	Connector	1
8	1330438	Terminal (Socket)	3
9	. . . . .	Connector Assembly (Service Power)	1
9	1490242	Connector	1
9	1490243	Connector	1
9	1363886	Terminal (Socket)	2
10	. . . . .	Connector Assembly (Insert)	1
10	1493465	Connector	1
10	1330439	Plug	2
11	. . . . .	Fuse Box (One)	1
12	. . . . .	Fuse Box (Two)	1
13	. . . . .	Fuse Box (Three)	1
14	. . . . .	Fuse Box (Four)	1
15	. . . . .	Connector Assembly (24 Volt Accessory)	1
15	1490242	Connector	1
15	1490243	Connector	1
15	1363886	Terminal (Socket)	2
16	. . . . .	Connector Assembly (Insert)	1

©2010 HYSTER COMPANY

WIRE HARNESS

CAB SIDE CONSOLE – SHEET 2 OF 2 (S/N B214E01777H →)

ITEM	PART NO.	DESCRIPTION	QTY
16	1493465	Connector	1
16	1330439	Plug	2
17	. . . . .	Connector Assembly (Buzzer)	1
17	1624103	Terminal	2
17	1610947	Receptacle	2
18	. . . . .	Connector Assembly (Park Brake)	1
18	1658852	Connector (Two Way Switch Element)	1
18	1484394	Crimp Ferrule	4
19	. . . . .	Connector Assembly (Instrument Cluster)	1
19	1484677	Plug (24-Way)	1
19	1484716	Terminal	15

©2010 HYSTER COMPANY

NOTES

©2010 HYSTER COMPANY

WIRE HARNESS (FIGURE 4-26)
CAB UNDERFLOOR

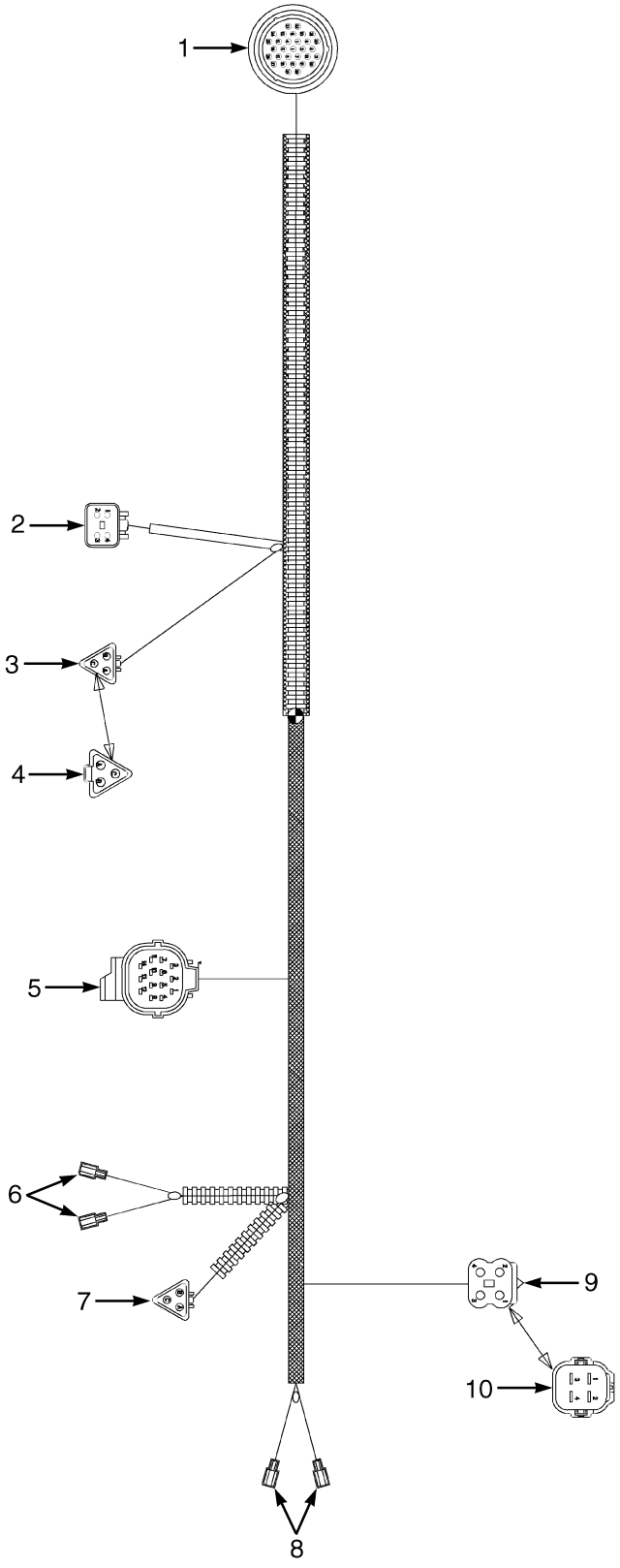

HP081768

©2010 HYSTER COMPANY

WIRE HARNESS
CAB UNDERFLOOR

ITEM	PART NO.	DESCRIPTION	QTY
	1601825	Wire Harness (Cab Underfloor)	1
1	. . . . .	Connector Assembly (Cab Side Console)	1
1	1484650	Connector (Socket)	1
1	1330438	Terminal (Socket)	21
1	1330439	Plug	7
1	1363886	Terminal (Socket)	1
2	. . . . .	Connector Assembly (Front Wiper)	1
2	1489656	Connector (4-Way)	1
2	1489657	Connector	1
2	1330438	Terminal (Socket)	4
3	. . . . .	Connector Assembly (Monotrol Pedal)	1
3	1484397	Connector (3-Way)	1
3	1463194	Connector	1
3	1330438	Terminal (Socket)	3
4	1493466	Connector (Insert)	1
5	. . . . .	Connector Assembly (Steering Column)	1
5	1484654	Connector (14-Way)	1
5	1484655	Retainer (Socket)	1
5	1484656	Terminal (Socket)	14
5	1484597	Seal	14
6	. . . . .	Connector Assembly (Inching Switch)	2
6	1624103	Terminal	1
6	1610947	Receptacle	1
7	. . . . .	Connector Assembly (Inching Pedal)	1
7	1484397	Connector (3-Way)	1
7	1463194	Connector	1
7	1330438	Terminal (Socket)	3
8	. . . . .	Connector Assembly (Horn)	2
8	1624103	Terminal	1
8	1610947	Receptacle	1
9	. . . . .	Connector Assembly (Horn Diode)	1
9	1610950	Housing (Sealed) (4-Way)	1
9	1484611	Seal (Blanking)	2
9	1484656	Terminal (Socket)	2
9	1484597	Seal	2
10	1610953	Diode (Insert)	1

©2010 HYSTER COMPANY

WIRE HARNESS (CHASSIS) (FIGURE 4-27)

SHEET 1 OF 2 (→ S/N B214E01677F (4000 WB)) (→ S/N B214E01674F (4500 WB))

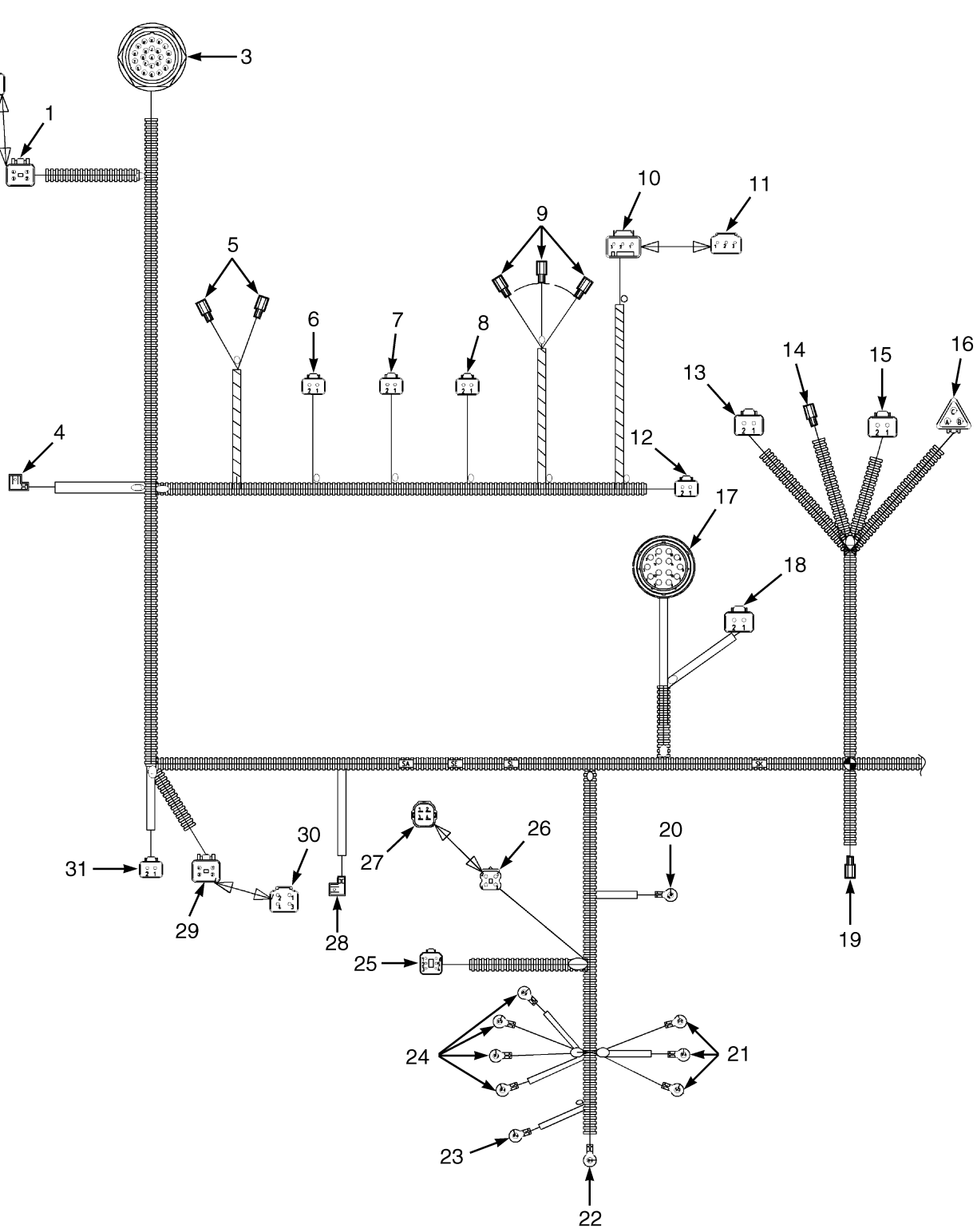

©2010 HYSTER COMPANY

WIRE HARNESS (CHASSIS)

SHEET 1 OF 2 (→ S/N B214E01677F (4000 WB)) (→ S/N B214E01674F (4500 WB))

ITEM	PART NO.	DESCRIPTION	QTY
	1614190	Wire Harness (Chassis) (4000 WB)	1
	1614191	Wire Harness (Chassis) (4500 WB)	1
1	. . . . .	Connector Assembly (RH Front Lamp)	1
1	1489656	Connector (4-Way)	1
1	1489657	Connector	1
1	1363886	Terminal (Socket)	1
1	1330438	Terminal (Socket)	3
2	1489655	Connector (4 Way)	1
3	. . . . .	Connector Assembly (Front End)	1
3	1632862	Housing	1
3	1484685	Locknut	1
3	1484686	Washer (Spring)	1
3	1330437	Terminal (Pin)	17
3	1363885	Terminal (Pin)	1
3	1330439	Plug	1
4	. . . . .	Connector Assembly (RH Brake Hub Temperature)	1
4	1493437	Terminal	1
4	1493438	Cover	1
5	. . . . .	Connector Assembly (Brake Light Switch)	2
5	1484598	Terminal	1
5	1484651	Cover	1
6	. . . . .	Connector Assembly (Park Brake Solenoid)	1
6	1490242	Connector	1
6	1490243	Connector	1
6	1330438	Terminal (Socket)	2
7	. . . . .	Connector Assembly (Lift)	1
7	1490242	Connector	1
7	1490243	Connector	1
7	1330438	Terminal (Socket)	2
8	. . . . .	Connector Assembly (Low)	1
8	1490242	Connector	1
8	1490243	Connector	1
8	1330438	Terminal (Socket)	2
9	. . . . .	Connector Assembly	3
9	1484598	Terminal	1
9	1484651	Cover	1
10	. . . . .	Connector Assembly (Alternate Idle Sensor)	1
10	1633692	Housing	1
10	. . . . .	Retainer	1
10	1463141	Terminal (Socket)	3
11	1463180	Connector	1
12	. . . . .	Connector Assembly (Auxiliary B)	1
12	1490242	Connector	1
12	1490243	Connector	1
12	1330438	Terminal (Socket)	2
13	. . . . .	Connector Assembly (Output Speed)	1
13	1490242	Connector	1
13	1490243	Connector	1
13	1518112	Terminal (Socket)	2
14	. . . . .	Connector Assembly (Transmission Temperature Switch)	1

©2010 HYSTER COMPANY

WIRE HARNESS (CHASSIS)

SHEET 1 OF 2 (→ S/N B214E01677F (4000 WB)) (→ S/N B214E01674F (4500 WB))

ITEM	PART NO.	DESCRIPTION	QTY
14	1484598	Terminal	1
14	1484651	Cover	1
15	. . . . .	Connector Assembly (Turbine Speed)	1
15	1490242	Connector	1
15	1490243	Connector	1
15	1518112	Terminal (Socket)	2
16	. . . . .	Connector Assembly (Engine Speed)	1
16	1484397	Connector (3-Way)	1
16	1463194	Connector	1
16	1518112	Terminal (Socket)	3
17	. . . . .	Connector Assembly (Valve)	1
17	1632868	Connector	1
17	1607771	Boot	1
17	1632869	Socket	14
18	. . . . .	Connector Assembly (Drum Speed)	1
18	1490242	Connector	1
18	1490243	Connector	1
18	1518112	Terminal (Socket)	2
19	. . . . .	Connector Assembly (Fuel Sender)	1
19	1484598	Terminal	1
19	1484651	Cover	1
20	. . . . .	Connector Assembly (Master Disconnect)	1
20	1493455	Ring	1
20	1484598	Terminal	1
21	. . . . .	Connector Assembly (Grid Heater Relay)	1
21	1610971	Ring	1
21	1493448	E-Ring	2
21	1484383	Heat Shrink	3
22	. . . . .	Connector Assembly (+24V)	1
22	1610883	Terminal	1
22	1516237	Heat Shrink	1
23	. . . . .	Connector Assembly (Alternator Fuse)	1
23	1610971	Ring	1
23	1484383	Heat Shrink	1
24	. . . . .	Connector Assembly (Starter Relay)	4
24	1493459	Ring	2
24	1493448	E-Ring	2
24	1484383	Heat Shrink	4
25	. . . . .	Connector Assembly (Fuse Box)	1
25	1493430	Connector	1
25	1529052	Connector	1
25	1330438	Terminal (Socket)	2
25	1363886	Terminal (Socket)	4
26	. . . . .	Connector Assembly (Diode)	1
26	1610950	Housing (Sealed) (4-Way)	1
26	1484656	Terminal (Socket)	4
26	1610954	Seal	2
26	1482659	Seal (Rubber)	2
27	1610953	Diode	1
28	. . . . .	Connector Assembly	1

©2010 HYSTER COMPANY

WIRE HARNESS (CHASSIS)

SHEET 1 OF 2 (→ S/N B214E01677F (4000 WB)) (→ S/N B214E01674F (4500 WB))

ITEM	PART NO.	DESCRIPTION	QTY
28	1493437	Terminal	1
28	1493438	Cover	1
29	. . . . .	Connector Assembly (Front Lamps)	1
29	1489656	Connector (4-Way)	1
29	1489657	Connector	1
29	1363886	Terminal (Socket)	1
29	1330438	Terminal (Socket)	3
30	1489655	Connector (4 Way)	1
31	. . . . .	Connector Assembly (Hydraulic Cooler)	1
31	1545202	Connector	1
31	1546697	Connector	1
31	1493434	Terminal (Socket)	2

©2010 HYSTER COMPANY

WIRE HARNESS (CHASSIS) (FIGURE 4-28)

SHEET 2 OF 2 (→ S/N B214E01677F (4000 WB)) (→ S/N B214E01674F (4500 WB))

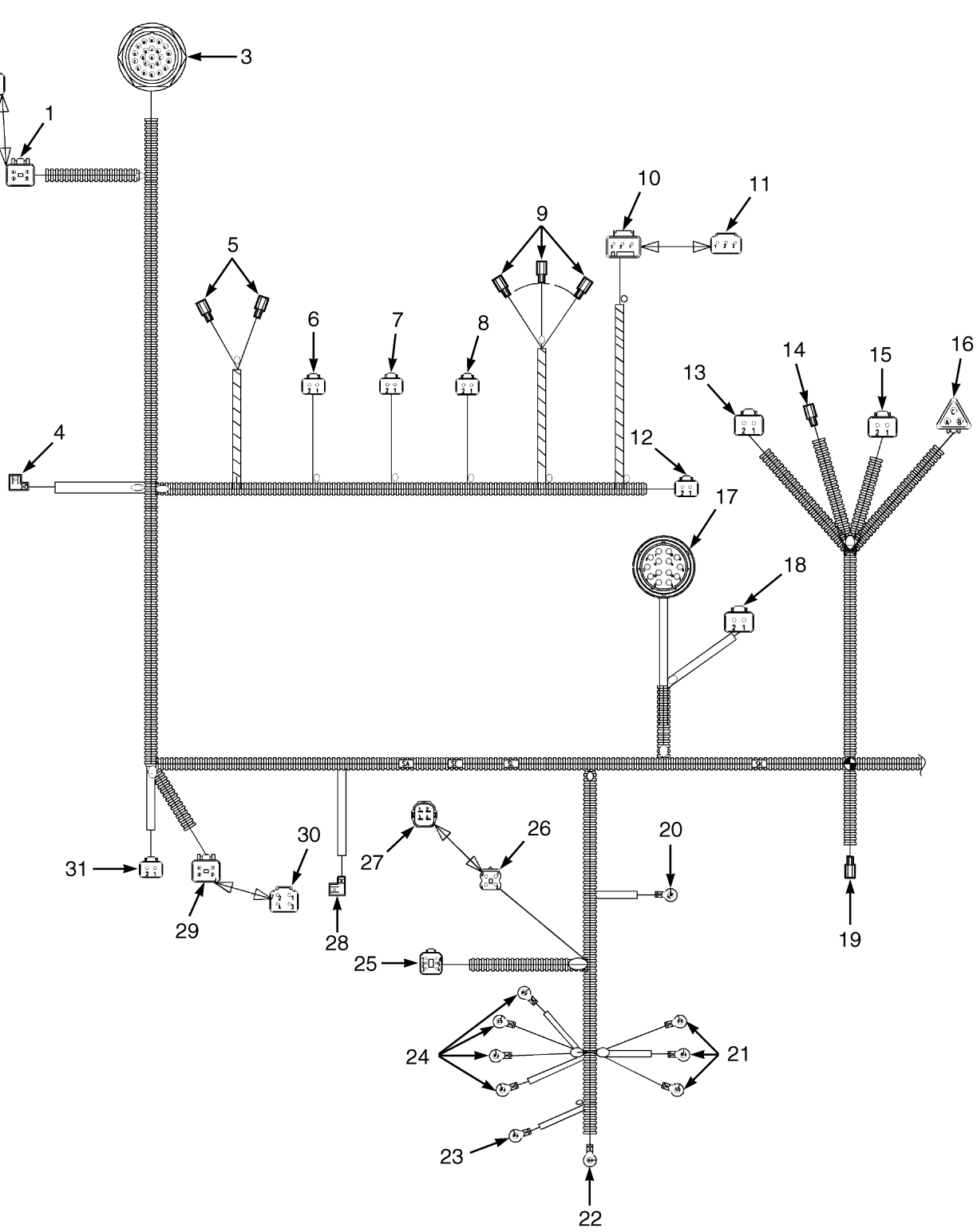

©2010 HYSTER COMPANY

WIRE HARNESS (CHASSIS)

SHEET 2 OF 2 (→ S/N B214E01677F (4000 WB)) (→ S/N B214E01674F (4500 WB))

ITEM	PART NO.	DESCRIPTION	QTY
	1614190	Wire Harness (Chassis) (4000 WB)	1
	1614191	Wire Harness (Chassis) (4500 WB)	1
1	. . . . .	Connector Assembly (Powertrain Signals)	1
1	1493431	Housing (Socket)	1
1	1493432	Retainer (Socket)	1
1	1507725	Terminal	2
1	1484377	Plug	6
1	1463141	Terminal (Socket)	47
1	1330439	Plug	5
2	. . . . .	Connector Assembly (Attachment Signals)	1
2	1502627	Connector (Socket)	1
2	1330438	Terminal (Socket)	21
2	1363886	Terminal (Socket)	1
2	1330439	Plug	1
3	. . . . .	Connector Assembly (Powertrain Power)	1
3	1493433	Housing (Socket)	1
3	1330439	Plug	1
3	1493434	Terminal (Socket)	15
4	. . . . .	Connector Assembly (RH Rear Lamp)	1
4	1493430	Connector	1
4	1529052	Connector	1
4	1330439	Plug	1
4	1330438	Terminal (Socket)	5
5	. . . . .	Connector Assembly (Air Conditioning Condensor)	1
5	1493430	Connector	1
5	1529052	Connector	1
5	1363886	Terminal (Socket)	2
5	1330438	Terminal (Socket)	3
5	1330439	Plug	1
6	1525589	Connector	1
7	. . . . .	Connector Assembly (Accelerator Pedal)	1
7	1484397	Connector (3-Way)	1
7	1463194	Connector	1
7	1330438	Terminal (Socket)	3
8	. . . . .	Connector Assembly (Alarm Diode)	1
8	1610950	Housing (Sealed) (4-Way)	2
8	1610941	Seal (Dummy)	2
8	1482659	Seal (Rubber)	2
9	1611029	Diode (1-Way)	1
10	. . . . .	Connector Assembly (LH Rear Lamp)	1
10	1493430	Connector	1
10	1529052	Connector	1
10	1330438	Terminal (Socket)	5
10	1330439	Plug	1
11	. . . . .	Connector Assembly (Reverse Alarm)	1
11	1493465	Connector	1
11	1330414	Connector (Secondary Lock)	1
11	1330437	Terminal (Pin)	2
12	. . . . .	Connector Assembly (Cab Tilt Power)	1
12	1490242	Connector	1

©2010 HYSTER COMPANY

WIRE HARNESS (CHASSIS)

SHEET 2 OF 2 (→ S/N B214E01677F (4000 WB)) (→ S/N B214E01674F (4500 WB))

ITEM	PART NO.	DESCRIPTION	QTY
12	1490243	Connector	1
12	1363886	Terminal (Socket)	2
13	1493465	Connector	1
14	. . . . .	Connector Assembly (Terminating Resistor)	1
14	1484397	Connector (3-Way)	1
14	1610944	Lock	1
14	1518112	Terminal (Socket)	2
14	1330439	Plug	1
15	1607772	Connector (Termination)	1
16	. . . . .	Connector Assembly (ECM)	1
16	1632864	Housing	1
16	1507725	Terminal	10
16	1484383	Heat Shrink	40
17	. . . . .	Connector Assembly (Grid Heater)	1
17	1610970	Ring	1
17	1484383	Heat Shrink	1
18	. . . . .	Connector Assembly (Engine Oil Pressure)	1
18	1493448	E-Ring	1
18	1484383	Heat Shrink	1
19	. . . . .	Connector Assembly (Diagnostics)	1
19	1632866	Connector	1
19	1632867	Cap	1
19	1502712	Terminal (Pin)	6
19	1330439	Plug	3
20	. . . . .	Connector Assembly (Engine)	1
20	1632865	Connector	1
20	1514603	Connector	1
20	1493434	Terminal (Socket)	2
20	1330439	Plug	2
21	. . . . .	Connector Assembly (Ground)	1
21	1493455	Ring	1
21	1569985	Terminal (Ring)	1
21	1493443	Heat Shrink	2
22	. . . . .	Connector Assembly (Coolant Level)	1
22	. . . . .	Housing	1
22	1330281	Terminal	2
22	1402888	Seal	2
23	. . . . .	Connector Assembly (Alternator Signals)	1
23	1501919	Connector	1
23	1482663	Connector	1
23	1498498	Fitting	3
23	1330355	Terminal	1
23	1330356	Seal	1
24	. . . . .	Connector Assembly (AC)	1
24	2067917	Connector (1 Way)	1
24	2787349	Terminal	1
24	2060555	Wire Seal	1
25	. . . . .	Connector Assembly (Alternator +VE)	1
25	1493442	Boot	1
25	1610971	Ring	1

©2010 HYSTER COMPANY

WIRE HARNESS (CHASSIS)

SHEET 2 OF 2 (→ S/N B214E01677F (4000 WB)) (→ S/N B214E01674F (4500 WB))

ITEM	PART NO.	DESCRIPTION	QTY
25	1484383	Heat Shrink	1
26	. . . . .	Connector Assembly (Starter Solenoid)	1
26	1502921	Ring	1
26	1484383	Heat Shrink	1
27	. . . . .	Connector Assembly (Air Filter)	1
27	1493435	Connector (2-Way)	1
27	1493436	Terminal (Socket)	2
27	1479109	Seal	2

©2010 HYSTER COMPANY

WIRE HARNESS (FIGURE 4-29)

CHASSIS — SHEET 1 OF 2 (S/N B214E01678F ↔ 3/2009 (4000 WB)) (S/N B214E01675F ↔ 3/2009 (4500 WB))

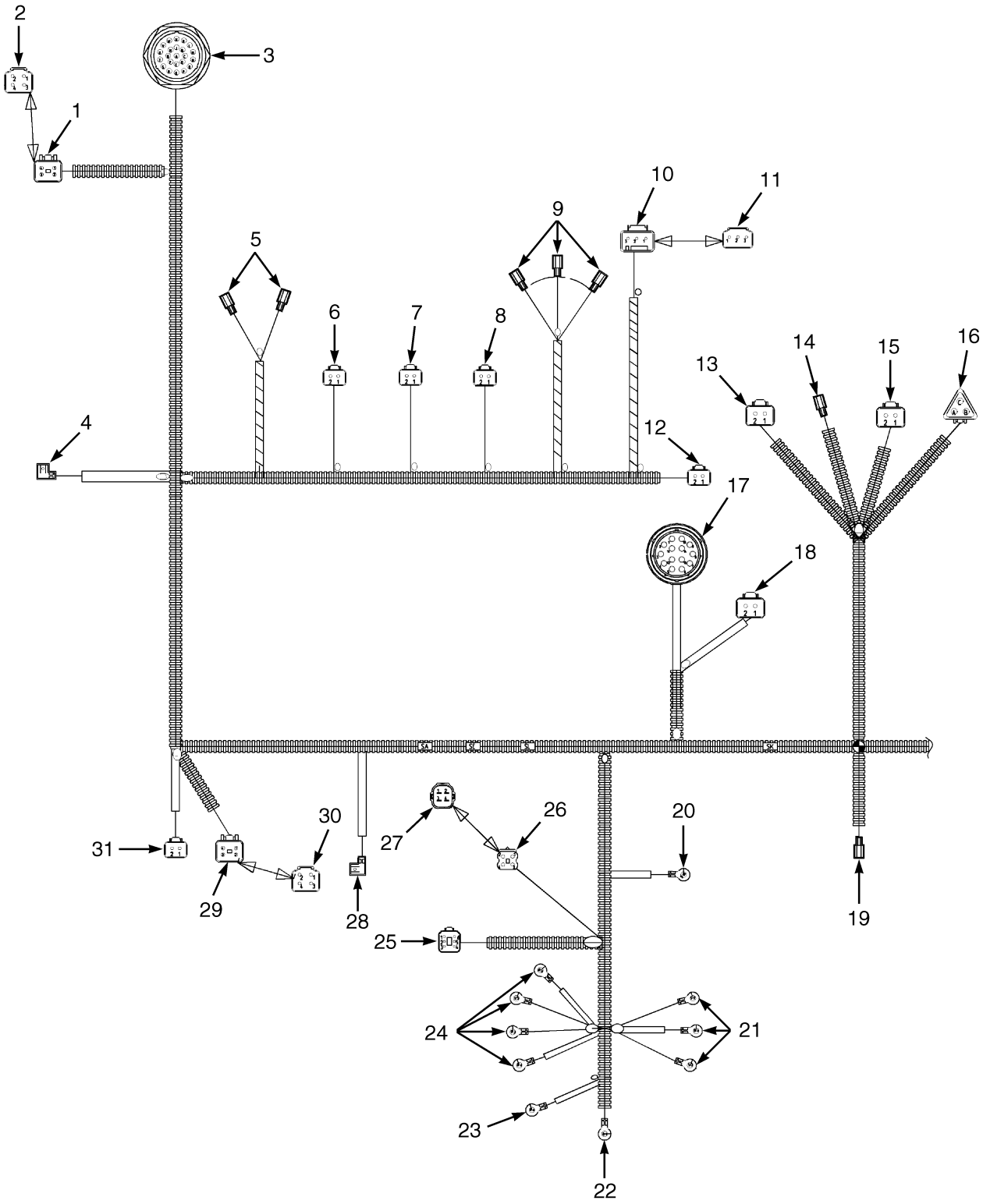

©2010 HYSTER COMPANY

WIRE HARNESS

CHASSIS – SHEET 1 OF 2 (S/N B214E01678F ↔ 3/2009 (4000 WB)) (S/N B214E01675F ↔ 3/2009 (4500 WB))

ITEM	PART NO.	DESCRIPTION	QTY
	1676308	Wire Harness (Chassis) (H400HD-H450HD-EC)	1
	1676309	Wire Harness (Chassis) (H500HD-EC)	1
1	. . . . .	Connector Assembly (RH Front Lamp)	1
1	1489656	Connector (4-Way)	1
1	1489657	Connector	1
1	1363886	Terminal (Socket)	1
1	1330438	Terminal (Socket)	3
2	1489655	Connector (4 Way) (Insert)	1
3	. . . . .	Connector Assembly (Front End)	1
3	1632862	Housing	1
3	1484685	Locknut	1
3	1484686	Washer (Spring)	1
3	1330437	Terminal (Pin)	17
3	1363885	Terminal (Pin)	1
3	1330439	Plug	5
4	. . . . .	Connector Assembly (RH Brake Hub Temperature)	1
4	1490242	Connector	1
4	1490243	Connector	1
4	1330438	Terminal (Socket)	2
5	. . . . .	Connector Assembly (Brake Light Switch)	2
5	1484598	Terminal	1
5	1484651	Cover	1
6	. . . . .	Connector Assembly (Park Brake Solenoid)	1
6	1490242	Connector	1
6	1490243	Connector	1
6	1330438	Terminal (Socket)	2
7	. . . . .	Connector Assembly (Lift)	1
7	1490242	Connector	1
7	1490243	Connector	1
7	1330438	Terminal (Socket)	2
8	. . . . .	Connector Assembly (Low)	1
8	1490242	Connector	1
8	1490243	Connector	1
8	1330438	Terminal (Socket) (Low Brake Pressure)	2
9	. . . . .	Connector Assembly (Low Brake Pressure)	3
9	1484598	Terminal	1
9	1484651	Cover	1
10	. . . . .	Connector Assembly (Alternate Idle Sensor)	1
10	1633692	Housing	1
10	. . . . .	Retainer	1
10	1463141	Terminal (Socket)	3
11	1463180	Connector (Insert)	1
12	. . . . .	Connector Assembly (Auxiliary B)	1
12	1490242	Connector	1
12	1490243	Connector	1
12	1330438	Terminal (Socket)	2
13	. . . . .	Connector Assembly (Output Speed)	1
13	1490242	Connector	1
13	1490243	Connector	1

©2010 HYSTER COMPANY

WIRE HARNESS

CHASSIS – SHEET 1 OF 2 (S/N B214E01678F ↔ 3/2009 (4000 WB)) (S/N B214E01675F ↔ 3/2009 (4500 WB))

ITEM	PART NO.	DESCRIPTION	QTY
13	1518112	Terminal (Socket)	2
14	. . . . .	Connector Assembly (Transmission Temperature Switch)	1
14	1484598	Terminal	1
14	1484651	Cover	1
15	. . . . .	Connector Assembly (Turbine Speed)	1
15	1490242	Connector	1
15	1490243	Connector	1
15	1518112	Terminal (Socket)	2
16	. . . . .	Connector Assembly (Engine Speed)	1
16	1484397	Connector (3-Way)	1
16	1463194	Connector	1
16	1518112	Terminal (Socket)	3
17	. . . . .	Connector Assembly (Valve)	1
17	1632868	Connector	1
17	1607771	Boot	1
17	1632869	Socket	14
18	. . . . .	Connector Assembly (Drum Speed)	1
18	1490242	Connector	1
18	1490243	Connector	1
18	1518112	Terminal (Socket)	2
19	. . . . .	Connector Assembly (Fuel Sender)	1
19	1484598	Terminal	2
19	1484651	Cover	2
20	. . . . .	Connector Assembly (Master Disconnect)	1
20	1493455	Ring	1
20	1484598	Terminal	1
21	. . . . .	Connector Assembly (Grid Heater Relay)	1
21	1610971	Ring	1
21	1493448	E-Ring	2
21	1484383	Heat Shrink	3
22	. . . . .	Connector Assembly (+24V)	1
22	1610883	Terminal	1
22	1516237	Heat Shrink	1
23	. . . . .	Connector Assembly (Alternator Fuse)	1
23	1610971	Ring	1
23	1484383	Heat Shrink	1
24	. . . . .	Connector Assembly (Starter Relay)	4
24	1493459	Ring	2
24	1493448	E-Ring	2
24	1484383	Heat Shrink	4
25	. . . . .	Connector Assembly (Fuse Box)	1
25	1493430	Connector	1
25	1529052	Connector	1
25	1330438	Terminal (Socket)	2
25	1363886	Terminal (Socket)	4
26	. . . . .	Connector Assembly (Diode)	1
26	1610950	Housing (Sealed) (4-Way)	1
26	1484656	Terminal (Socket)	4
26	1610954	Seal	2

©2010 HYSTER COMPANY

WIRE HARNESS

CHASSIS – SHEET 1 OF 2 (S/N B214E01678F ↔ 3/2009 (4000 WB)) (S/N B214E01675F ↔ 3/2009 (4500 WB))

ITEM	PART NO.	DESCRIPTION	QTY
26	1482659	Seal (Rubber)	2
27	1610953	Diode (Insert)	1
28	. . . . .	Connector Assembly (LH Brake Hub Temperature)	1
28	1490242	Connector	1
28	1490243	Connector	1
28	1330438	Terminal (Socket)	2
29	. . . . .	Connector Assembly (Front Lamps)	1
29	1489656	Connector (4-Way)	1
29	1489657	Connector	1
29	1363886	Terminal (Socket)	1
29	1330438	Terminal (Socket)	3
30	1489655	Connector (4 Way) (Insert)	1
31	. . . . .	Connector Assembly (Hydraulic Cooler)	1
31	1545202	Connector	1
31	1546697	Connector	1
31	1493434	Terminal (Socket)	2

©2010 HYSTER COMPANY

WIRE HARNESS (FIGURE 4-30)

CHASSIS — SHEET 2 OF 2 (S/N B214E01678F ↔ 3/2009 (4000 WB)) (S/N B214E01675F ↔ 3/2009 (4500 WB))

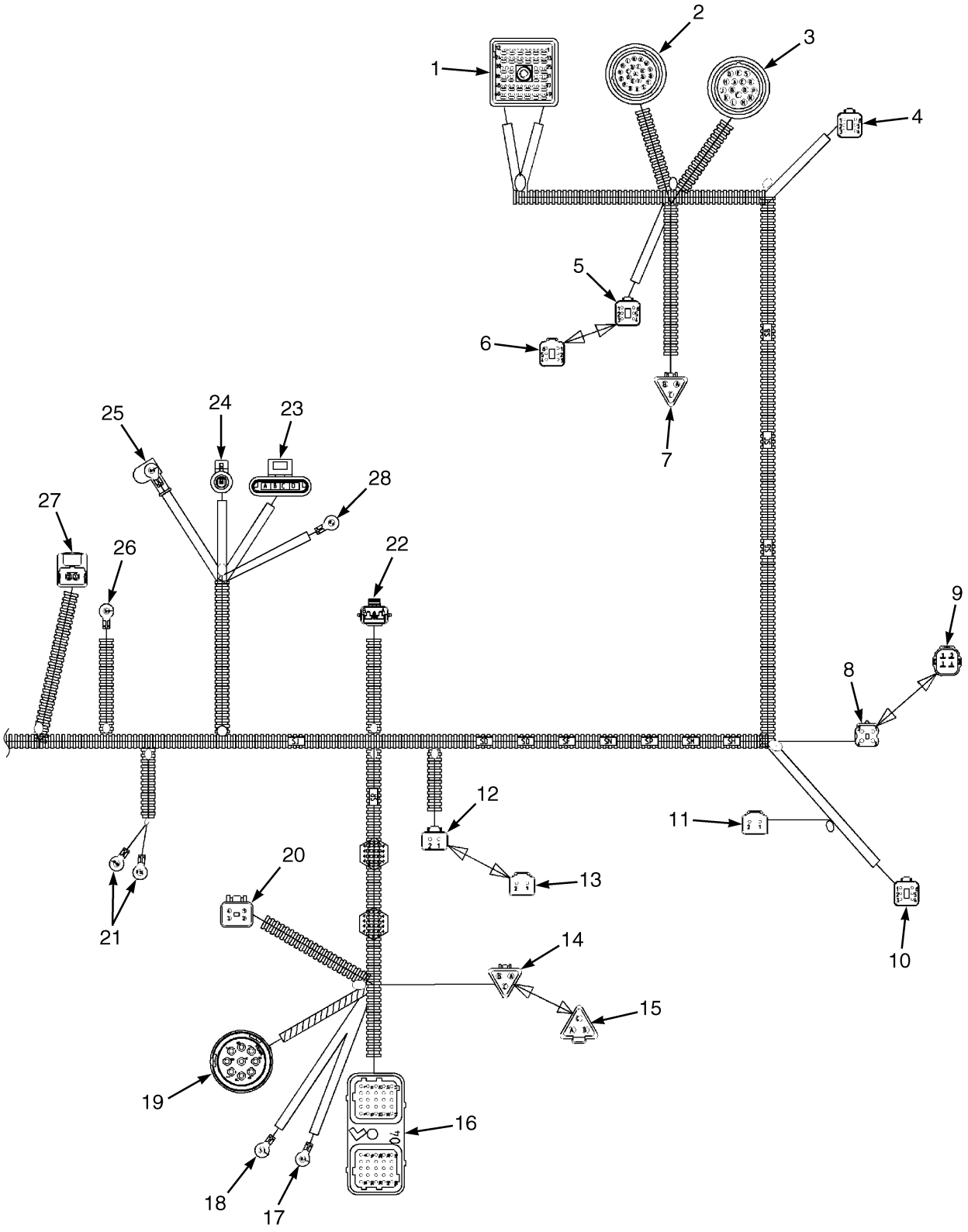

HP082037

©2010 HYSTER COMPANY

WIRE HARNESS

CHASSIS – SHEET 2 OF 2 (S/N B214E01678F ↔ 3/2009 (4000 WB)) (S/N B214E01675F ↔ 3/2009 (4500 WB))

ITEM	PART NO.	DESCRIPTION	QTY
	1676308	Wire Harness (Chassis) (H400HD-H450HD-EC)	1
	1676309	Wire Harness (Chassis) (H500HD-EC)	1
1	. . . . .	Connector Assembly (Powertrain Signals)	1
1	1493431	Housing (Socket)	1
1	1493432	Retainer (Socket)	1
1	1507725	Terminal	2
1	1484377	Plug	6
1	1463141	Terminal (Socket)	47
1	1330439	Plug	5
2	. . . . .	Connector Assembly (Attachment Signals)	1
2	1502627	Connector (Socket)	1
2	1330438	Terminal (Socket)	21
2	1363886	Terminal (Socket)	1
2	1330439	Plug	1
3	. . . . .	Connector Assembly (Powertrain Power)	1
3	1493433	Housing (Socket)	1
3	1330439	Plug	1
3	1493434	Terminal (Socket)	15
4	. . . . .	Connector Assembly (RH Rear Lamp)	1
4	1493430	Connector	1
4	1529052	Connector	1
4	1330439	Plug	1
4	1330438	Terminal (Socket)	5
5	. . . . .	Connector Assembly (Air Conditioning Condensor)	1
5	1493430	Connector	1
5	1529052	Connector	1
5	1363886	Terminal (Socket)	2
5	1330438	Terminal (Socket)	3
5	1330439	Plug	1
6	1525589	Connector (Insert)	1
7	. . . . .	Connector Assembly (Accelerator Pedal)	1
7	1484397	Connector (3-Way)	1
7	1463194	Connector	1
7	1330438	Terminal (Socket)	3
8	. . . . .	Connector Assembly (Alarm Diode)	1
8	1610950	Housing (Sealed) (4-Way)	1
8	1610941	Seal (Dummy)	2
8	1482659	Seal (Rubber)	2
9	1611029	Diode (1-Way) (Insert)	1
10	. . . . .	Connector Assembly (LH Rear Lamp)	1
10	1493430	Connector	1
10	1529052	Connector	1
10	1330438	Terminal (Socket)	5
10	1330439	Plug	1
11	. . . . .	Connector Assembly (Reverse Alarm)	1
11	1493465	Connector	1
11	1330414	Connector (Secondary Lock)	1
11	1330437	Terminal (Pin)	2
12	. . . . .	Connector Assembly (Cab Tilt Power)	1

©2010 HYSTER COMPANY

WIRE HARNESS

CHASSIS – SHEET 2 OF 2 (S/N B214E01678F ↔ 3/2009 (4000 WB)) (S/N B214E01675F ↔ 3/2009 (4500 WB))

ITEM	PART NO.	DESCRIPTION	QTY
12	1490242	Connector	1
12	1490243	Connector	1
12	1363886	Terminal (Socket)	2
13	1493465	Connector (Insert)	1
14	. . . . .	Connector Assembly (Terminating Resistor)	1
14	1484397	Connector (3-Way)	1
14	1610944	Lock	1
14	1518112	Terminal (Socket)	2
14	1330439	Plug	1
15	1607772	Connector (Termination) (Insert)	1
16	. . . . .	Connector Assembly (ECM)	1
16	1632864	Housing	1
16	1507725	Terminal	10
16	1484377	Plug	40
17	. . . . .	Connector Assembly (Grid Heater)	1
17	1610970	Ring	1
17	1484383	Heat Shrink	1
18	. . . . .	Connector Assembly (Engine Oil Pressure)	1
18	1493448	E-Ring	1
18	1484383	Heat Shrink	1
18	1484598	Terminal	1
18	1484651	Cover	1
19	. . . . .	Connector Assembly (Diagnostics)	1
19	1632866	Connector	1
19	1632867	Cap	1
19	1502712	Terminal (Pin)	6
19	1330439	Plug	3
20	. . . . .	Connector Assembly (Engine)	1
20	1632865	Connector	1
20	1514603	Connector	1
20	1493434	Terminal (Socket)	2
20	1330439	Plug	2
21	. . . . .	Connector Assembly (Ground)	1
21	1493455	Ring	1
21	1569985	Terminal (Ring)	2
21	1493443	Heat Shrink	3
22	. . . . .	Connector Assembly (Coolant Level)	1
22	. . . . .	Housing	1
22	1330281	Terminal	2
22	1402888	Seal	2
23	. . . . .	Connector Assembly (Alternator Signals)	1
23	1501919	Connector	1
23	1482663	Connector	1
23	1498498	Fitting	3
23	1330355	Terminal	1
23	1330356	Seal	1
24	. . . . .	Connector Assembly (AC)	1
24	2067917	Connector (1 Way)	1
24	2787349	Terminal	1

©2010 HYSTER COMPANY

WIRE HARNESS

CHASSIS – SHEET 2 OF 2 (S/N B214E01678F ↔ 3/2009 (4000 WB)) (S/N B214E01675F ↔ 3/2009 (4500 WB))

ITEM	PART NO.	DESCRIPTION	QTY
24	2060555	Wire Seal	1
25	. . . . .	Connector Assembly (Alternator +VE)	1
25	1493442	Boot	1
25	1610971	Ring	1
25	1484383	Heat Shrink	1
26	. . . . .	Connector Assembly (Starter Solenoid)	1
26	1502921	Ring	1
26	1484383	Heat Shrink	1
27	. . . . .	Connector Assembly (Air Filter)	1
27	1493435	Connector (2-Way)	1
27	1493436	Terminal (Socket)	2
27	1479109	Seal	2
28	. . . . .	Connector Assembly (Alternator Ground)	1
28	1610970	Ring	1
28	1484383	Heat Shrink	1

©2010 HYSTER COMPANY

WIRE HARNESS (CHASSIS) (FIGURE 4-31)

SHEET 1 OF 2 (3/2008 ↔ S/N B214E01776H)

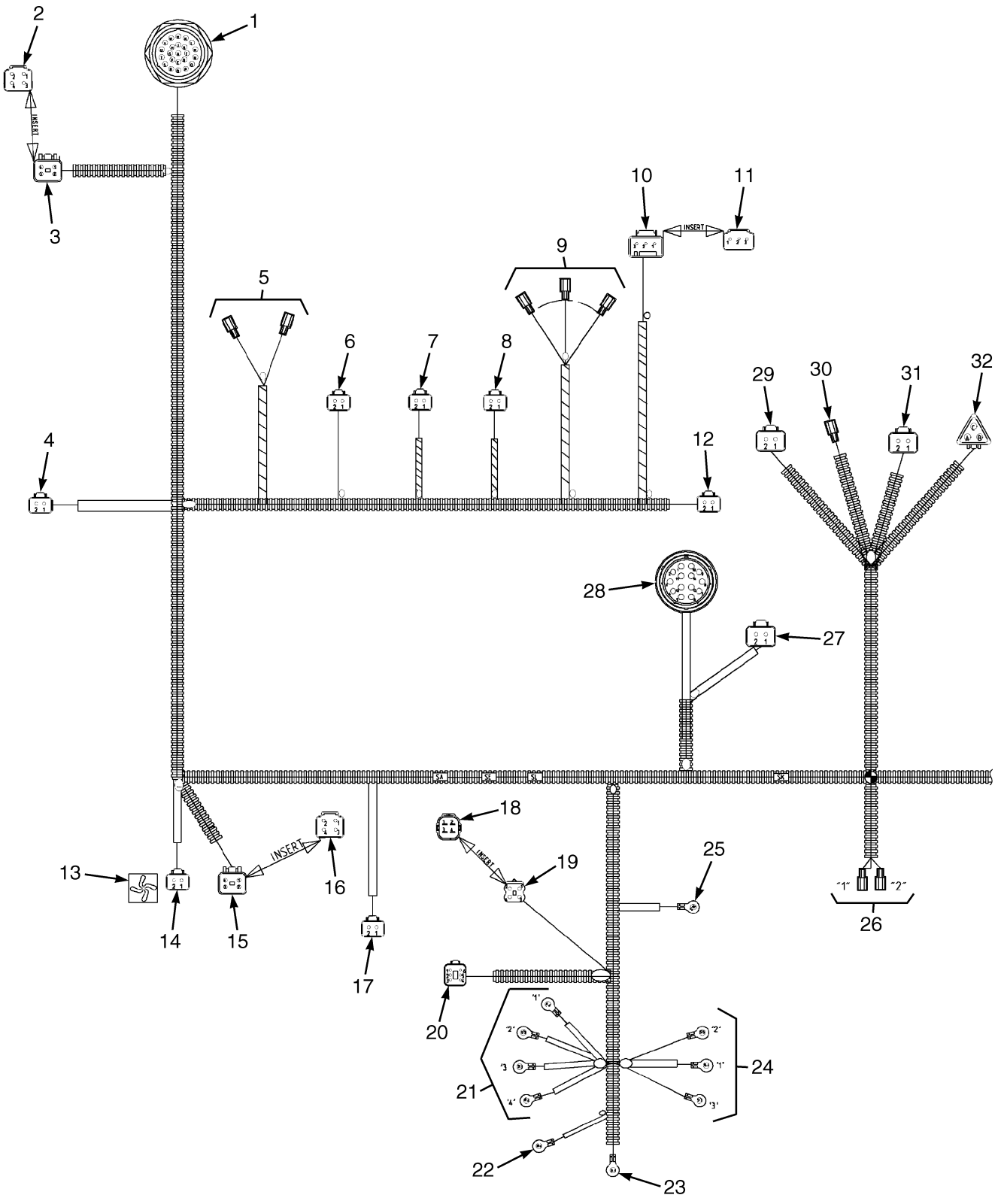

©2010 HYSTER COMPANY

WIRE HARNESS (CHASSIS)

SHEET 1 OF 2 (3/2008 ↔ S/N B214E01776H)

ITEM	PART NO.	DESCRIPTION	QTY
	1700345	Wire Harness (Chassis) (H400HD-H450HD-EC)	1
	1700346	Wire Harness (Chassis) (H500HD-EC)	1
1	. . . . .	Connector Assembly (Front End)	1
1	1632862	Housing	1
1	1484685	Locknut	1
1	1484686	Washer (Spring)	1
1	1330437	Terminal (Pin)	18
1	1632863	Cap	1
2	. . . . .	Connector Assembly (Insert)	1
2	1489655	Connector (4 Way)	1
3	. . . . .	Connector Assembly (Front Lamps RH)	1
3	1489656	Connector (4-Way)	1
3	1489657	Connector	1
3	1363886	Terminal (Socket)	1
3	1330438	Terminal (Socket)	3
4	. . . . .	Connector Assembly (RH Hub Brake Temperature)	1
4	1330438	Terminal (Socket)	2
4	1490242	Connector	1
4	1490243	Connector	1
5	. . . . .	Connector Assembly (Brake Light Switch)	1
5	1484598	Terminal	2
5	1484651	Cover	2
6	. . . . .	Connector Assembly (Park Brake Solenoid)	1
6	1330438	Terminal (Socket)	2
6	1490242	Connector	1
6	1490243	Connector	1
7	. . . . .	Connector Assembly (Lift)	1
7	1330438	Terminal (Socket)	2
7	1490242	Connector	1
7	1490243	Connector	1
8	. . . . .	Connector Assembly (Low)	1
8	1330438	Terminal (Socket)	2
8	1490242	Connector	1
8	1490243	Connector	1
9	. . . . .	Connector Assembly (Low Brake Pressure)	1
9	1484598	Terminal	3
9	1484651	Cover	3
10	. . . . .	Connector Assembly (Alternate Idle Sensor)	1
10	1633692	Housing	1
10	1493464	Connector	1
10	1463141	Terminal (Socket)	3
11	. . . . .	Connector Assembly (Insert)	1
11	1463180	Connector	1
11	1484377	Plug	3
12	. . . . .	Connector Assembly (Auxiliary B)	1
12	1330438	Terminal (Socket)	2
12	1490242	Connector	1
12	1490243	Connector	1
13	1607775	Label (Fan Decal)	1
14	. . . . .	Connector Assembly (Hydraulic Cooler)	1

©2010 HYSTER COMPANY

WIRE HARNESS (CHASSIS)

SHEET 1 OF 2 (3/2008 ↔ S/N B214E01776H)

ITEM	PART NO.	DESCRIPTION	QTY
14	1545202	Connector	1
14	1546697	Connector	1
14	1493434	Terminal (Socket)	2
15	. . . . .	Connector Assembly (Front Lamps LH)	1
15	1489656	Connector (4-Way)	1
15	1489657	Connector	1
15	1363886	Terminal (Socket)	1
15	1330438	Terminal (Socket)	3
16	. . . . .	Connector Assembly (Insert)	1
16	1489655	Connector (4 Way)	1
16	1330439	Plug	4
17	. . . . .	Connector Assembly (LH Hub Brake Temperature)	1
17	1330438	Terminal (Socket)	2
17	1490242	Connector	1
17	1490243	Connector	1
18	. . . . .	Connector Assembly (Insert)	1
18	1610953	Diode	1
19	. . . . .	Connector Assembly (Diode)	1
19	1610950	Housing (Sealed) (4-Way)	1
19	1484656	Terminal (Socket)	4
19	1610954	Seal	2
19	1482659	Seal (Rubber)	2
20	. . . . .	Connector Assembly (Fuse Box)	1
20	1493430	Connector	1
20	1529052	Connector	1
20	1363886	Terminal (Socket)	4
21	. . . . .	Connector Assembly (Starter Relay)	1
21	1493459	Ring	2
21	1493448	E-Ring	2
22	. . . . .	Connector Assembly (Fuse Alternator)	1
22	1610971	Ring	1
23	. . . . .	Connector Assembly (+24 Volt)	1
23	1610883	Terminal	1
24	. . . . .	Connector Assembly (Grid Heater Relay)	1
24	1610971	Ring	1
24	1493448	E-Ring	2
25	. . . . .	Connector Assembly (Master Disconnect)	1
25	1493455	Ring	1
26	. . . . .	Connector Assembly (Fuel Sender)	1
26	1484598	Terminal	2
26	1484651	Cover	2
27	. . . . .	Connector Assembly (Drum Speed)	1
27	1490242	Connector	1
27	1490243	Connector	1
27	1518112	Terminal (Socket)	2
28	. . . . .	Connector Assembly (Valve)	1
28	1632868	Connector	1
28	1607771	Boot	1
28	1632869	Socket	14
29	. . . . .	Connector Assembly (Output Speed)	1

©2010 HYSTER COMPANY

WIRE HARNESS (CHASSIS)

SHEET 1 OF 2 (3/2008 ↔ S/N B214E01776H)

ITEM	PART NO.	DESCRIPTION	QTY
29	1490242	Connector	1
29	1490243	Connector	1
29	1518112	Terminal (Socket)	2
30	. . . . .	Connector Assembly (Transmission Temperature Switch)	1
30	1484598	Terminal	1
30	1484651	Cover	1
31	. . . . .	Connector Assembly (Turbine Speed)	1
31	1490242	Connector	1
31	1490243	Connector	1
31	1518112	Terminal (Socket)	2
32	. . . . .	Connector Assembly (Engine Speed)	1
32	1518112	Terminal (Socket)	3
32	1484397	Connector (3-Way)	1
32	1463194	Connector	1

©2010 HYSTER COMPANY

WIRE HARNESS (CHASSIS) (FIGURE 4-32)

SHEET 2 OF 2 (3/2008 ↔ S/N B214E01776H)

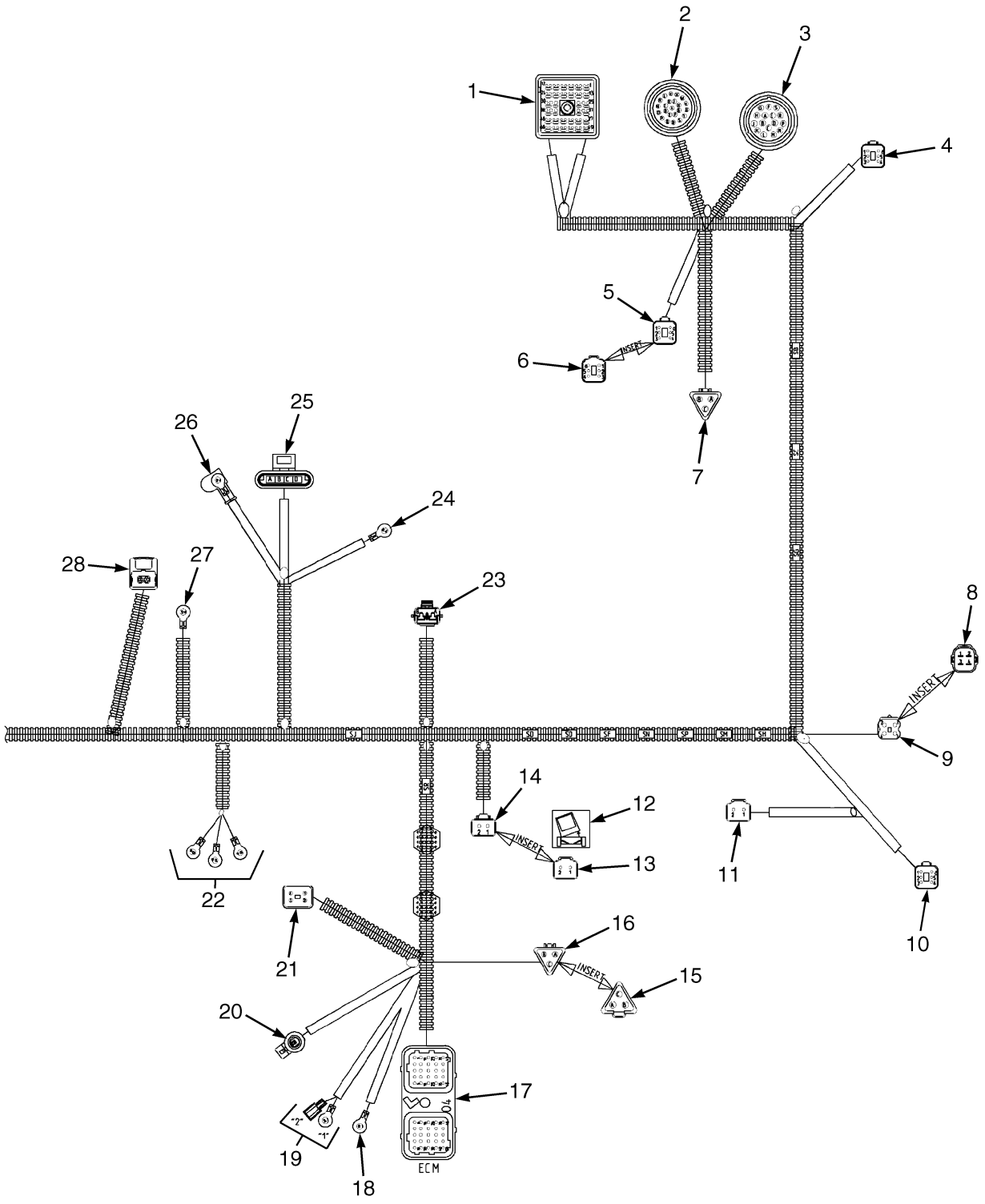

©2010 HYSTER COMPANY

WIRE HARNESS (CHASSIS)

SHEET 2 OF 2 (3/2008 ↔ S/N B214E01776H)

ITEM	PART NO.	DESCRIPTION	QTY
	1700345	Wire Harness (Chassis) (H400HD-H450HD-EC)	1
	1700346	Wire Harness (Chassis) (H500HD-EC)	1
1	. . . . .	Connector Assembly (Powertrain Signals)	1
1	1493431	Housing (Socket)	1
1	1493432	Retainer (Socket)	1
1	1507725	Terminal	2
1	1463141	Terminal (Socket)	47
2	. . . . .	Connector Assembly (Attachment Signals)	1
2	1502627	Connector (Socket)	1
2	1330438	Terminal (Socket)	22
3	. . . . .	Connector Assembly (Powertrain Power)	1
3	1493433	Housing (Socket)	1
3	1493434	Terminal (Socket)	15
4	. . . . .	Connector Assembly (RH Rear Lamp)	1
4	1493430	Connector	1
4	1529052	Connector	1
4	1330438	Terminal (Socket)	5
5	. . . . .	Connector Assembly (Air Conditioner Condenser)	1
5	1493430	Connector	1
5	1529052	Connector	1
5	1363886	Terminal (Socket)	2
5	1330438	Terminal (Socket)	3
6	. . . . .	Connector Assembly (Insert)	1
6	1525589	Connector	1
6	1330439	Plug	6
7	. . . . .	Connector Assembly (Accelerator Pedal)	1
7	1484397	Connector (3-Way)	1
7	1463194	Connector	1
7	1330438	Terminal (Socket)	3
8	. . . . .	Connector Assembly (Insert)	1
8	1546697	Connector	1
9	. . . . .	Connector Assembly (Diode)	1
9	1610950	Housing (Sealed) (4-Way)	1
9	1610941	Seal (Dummy)	2
9	1484656	Terminal (Socket)	2
9	1482659	Seal (Rubber)	2
10	. . . . .	Connector Assembly (LH Rear Lamp)	1
10	1493430	Connector	1
10	1529052	Connector	1
10	1330438	Terminal (Socket)	5
11	. . . . .	Connector Assembly (Reverse Alarm)	1
11	1493465	Connector	1
11	1330414	Connector (Secondary Lock)	1
11	1330437	Terminal (Pin)	2
12	1605545	Label (Cab Tilt Switch) (Cab Tilt)	1
13	. . . . .	Connector Assembly (Insert)	1
13	1493465	Connector	1
13	1330439	Plug	2
14	. . . . .	Connector Assembly (Cab Tilt Power)	1
14	1490242	Connector	1

©2010 HYSTER COMPANY

WIRE HARNESS (CHASSIS)

SHEET 2 OF 2 (3/2008 ↔ S/N B214E01776H)

ITEM	PART NO.	DESCRIPTION	QTY
14	1490243	Connector	1
14	1363886	Terminal (Socket)	2
15	. . . . .	Connector Assembly (Insert)	1
15	1607772	Connector (Termination)	1
16	. . . . .	Connector Assembly (Terminating Resistor)	1
16	1484397	Connector (3-Way)	1
16	1610944	Lock	1
16	1518112	Terminal (Socket)	2
17	. . . . .	Connector Assembly (ECM)	1
17	1632864	Housing	1
17	1507725	Terminal	8
18	. . . . .	Connector Assembly (Grid Heater)	1
18	1610970	Ring	1
19	. . . . .	Connector Assembly (Engine Oil Pressure)	1
19	1493448	E-Ring	1
19	1484598	Terminal	1
19	1484651	Cover	1
20	. . . . .	Connector Assembly (Air Conditioner)	1
20	1659116	Terminal	1
20	1659115	Connector	1
20	1330281	Terminal	1
20	1323579	Seal	1
21	. . . . .	Connector Assembly (Engine)	1
21	1632865	Connector	1
21	1514603	Connector	1
21	1493434	Terminal (Socket)	2
22	. . . . .	Connector Assembly (Ground)	1
22	1493455	Ring	2
22	1569985	Terminal (Ring)	1
23	. . . . .	Connector Assembly (Coolant Level)	1
23	1329152	Plug	1
23	1330281	Terminal	2
23	1402888	Seal	2
24	. . . . .	Connector Assembly (Alternator Ground)	1
24	1610970	Ring	1
25	. . . . .	Connector Assembly (Alternator Signals)	1
25	1501919	Connector	1
25	1482663	Connector	1
25	1330355	Terminal	1
25	1330356	Seal	1
26	. . . . .	Connector Assembly (Alternator VE+)	1
26	1493442	Boot	1
26	1610971	Ring	1
27	. . . . .	Connector Assembly (Starter Solenoid)	1
27	1502921	Ring	1
28	. . . . .	Connector Assembly (Air Filter)	1
28	1493435	Connector (2-Way)	1
28	1479109	Seal	2
28	1493436	Terminal (Socket)	2

©2010 HYSTER COMPANY

NOTES

©2010 HYSTER COMPANY

WIRE HARNESS (CHASSIS) (FIGURE 4-33)

SHEET 1 OF 2 (S/N B214E01777H →)

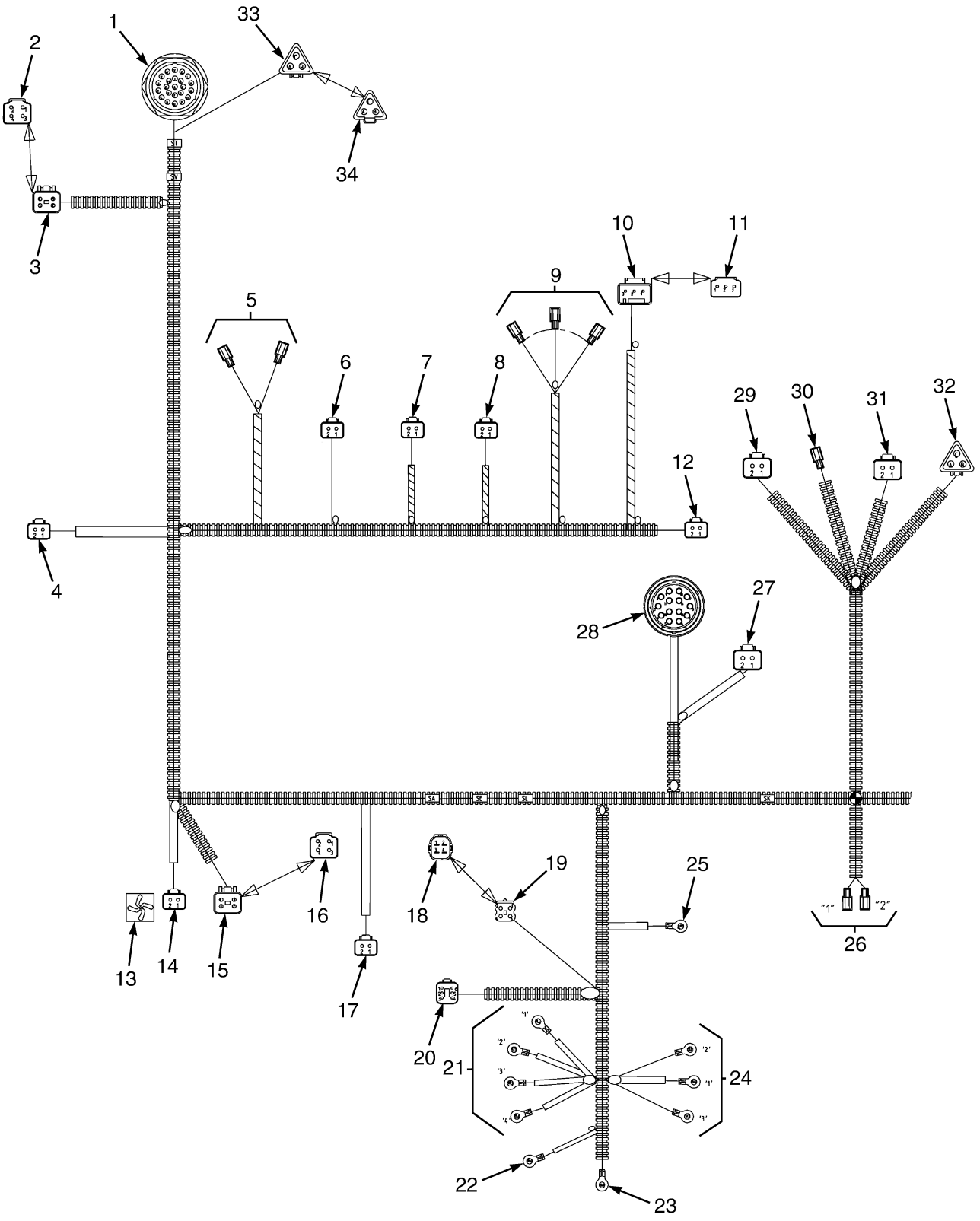

©2010 HYSTER COMPANY

WIRE HARNESS (CHASSIS)

SHEET 1 OF 2 (S/N B214E01777H →)

ITEM	PART NO.	DESCRIPTION	QTY
	4007875	Wire Harness (Chassis) (H400HD-H450HD-EC)	1
	4007876	Wire Harness (Chassis) (H500HD-EC)	1
1	. . . . .	Connector Assembly (Front End)	1
1	1632862	Housing	1
1	1484685	Locknut	1
1	1484686	Washer (Spring)	1
1	1330437	Terminal (Pin)	18
1	1632863	Cap	1
2	. . . . .	Connector Assembly (Insert)	1
2	1489655	Connector (4 Way)	1
3	. . . . .	Connector Assembly (Front Lamps RH)	1
3	1489656	Connector (4-Way)	1
3	1489657	Connector	1
3	1363886	Terminal (Socket)	1
3	1330438	Terminal (Socket)	3
4	. . . . .	Connector Assembly (RH Hub Brake Temperature)	1
4	1330438	Terminal (Socket)	2
4	1490242	Connector	1
4	1490243	Connector	1
5	. . . . .	Connector Assembly (Brake Light Switch)	1
5	1484598	Terminal	2
5	1484651	Cover	2
6	. . . . .	Connector Assembly (Park Brake Solenoid)	1
6	1330438	Terminal (Socket)	2
6	1490242	Connector	1
6	1490243	Connector	1
7	. . . . .	Connector Assembly (Lift)	1
7	1330438	Terminal (Socket)	2
7	1490242	Connector	1
7	1490243	Connector	1
8	. . . . .	Connector Assembly (Low)	1
8	1330438	Terminal (Socket)	2
8	1490242	Connector	1
8	1490243	Connector	1
9	. . . . .	Connector Assembly (Low Brake Pressure)	1
9	1484598	Terminal	3
9	1484651	Cover	3
10	. . . . .	Connector Assembly (Alternate Idle Sensor)	1
10	1633692	Housing	1
10	1493464	Connector	1
10	1463141	Terminal (Socket)	3
11	. . . . .	Connector Assembly (Insert)	1
11	1463180	Connector	1
11	1484377	Plug	3
12	. . . . .	Connector Assembly (Auxiliary B)	1
12	1330438	Terminal (Socket)	2
12	1490242	Connector	1
12	1490243	Connector	1
13	1607775	Label (Fan Decal)	1
14	. . . . .	Connector Assembly (Hydraulic Cooler)	1

©2010 HYSTER COMPANY

WIRE HARNESS (CHASSIS)

SHEET 1 OF 2 (S/N B214E01777H →)

ITEM	PART NO.	DESCRIPTION	QTY
14	1545202	Connector	1
14	1546697	Connector	1
14	1493434	Terminal (Socket)	2
15	. . . . .	Connector Assembly (Front Lamps LH)	1
15	1489656	Connector (4-Way)	1
15	1489657	Connector	1
15	1363886	Terminal (Socket)	1
15	1330438	Terminal (Socket)	3
16	. . . . .	Connector Assembly (Insert)	1
16	1489655	Connector (4 Way)	1
16	1330439	Plug	4
17	. . . . .	Connector Assembly (LH Hub Brake Temperature)	1
17	1330438	Terminal (Socket)	2
17	1490242	Connector	1
17	1490243	Connector	1
18	. . . . .	Connector Assembly (Insert)	1
18	1610953	Diode	1
19	. . . . .	Connector Assembly (Diode)	1
19	1610950	Housing (Sealed) (4-Way)	1
19	1484656	Terminal (Socket)	4
19	1610954	Seal	2
19	1482659	Seal (Rubber)	2
20	. . . . .	Connector Assembly (Fuse Box)	1
20	1493430	Connector	1
20	1529052	Connector	1
20	1363886	Terminal (Socket)	4
21	. . . . .	Connector Assembly (Starter Relay)	1
21	1493459	Ring	2
21	1493448	E-Ring	2
22	. . . . .	Connector Assembly (Fuse Alternator)	1
22	1610971	Ring	1
23	. . . . .	Connector Assembly (+24 Volt)	1
23	1610883	Terminal	1
24	. . . . .	Connector Assembly (Grid Heater Relay)	1
24	1610971	Ring	1
24	1493448	E-Ring	2
25	. . . . .	Connector Assembly (Master Disconnect)	1
25	1493455	Ring	1
26	. . . . .	Connector Assembly (Fuel Sender)	1
26	1484598	Terminal	2
26	1484651	Cover	2
27	. . . . .	Connector Assembly (Drum Speed)	1
27	1490242	Connector	1
27	1490243	Connector	1
27	1518112	Terminal (Socket)	2
28	. . . . .	Connector Assembly (Valve)	1
28	1632868	Connector	1
28	1607771	Boot	1
28	1632869	Socket	14
29	. . . . .	Connector Assembly (Output Speed)	1

©2010 HYSTER COMPANY

WIRE HARNESS (CHASSIS)

SHEET 1 OF 2 (S/N B214E01777H →)

ITEM	PART NO.	DESCRIPTION	QTY
29	1490242	Connector	1
29	1490243	Connector	1
29	1518112	Terminal (Socket)	2
30	. . . . .	Connector Assembly (Transmission Temperature Switch)	1
30	1484598	Terminal	1
30	1484651	Cover	1
31	. . . . .	Connector Assembly (Turbine Speed)	1
31	1490242	Connector	1
31	1490243	Connector	1
31	1518112	Terminal (Socket)	2
32	. . . . .	Connector Assembly (Engine Speed)	1
32	1518112	Terminal (Socket)	3
32	1484397	Connector (3-Way)	1
32	1463194	Connector	1
33	. . . . .	Connector Assembly (Lift and Tilt Sensor)	1
33	1484397	Connector (3-Way)	1
33	1463194	Connector	1
33	1330438	Terminal (Socket)	3
34	. . . . .	Connector Assembly (Insert)	1
34	1493466	Connector	1
34	1330439	Plug	1

©2010 HYSTER COMPANY

WIRE HARNESS (CHASSIS) (FIGURE 4-34)

SHEET 2 OF 2 (S/N B214E01777H →)

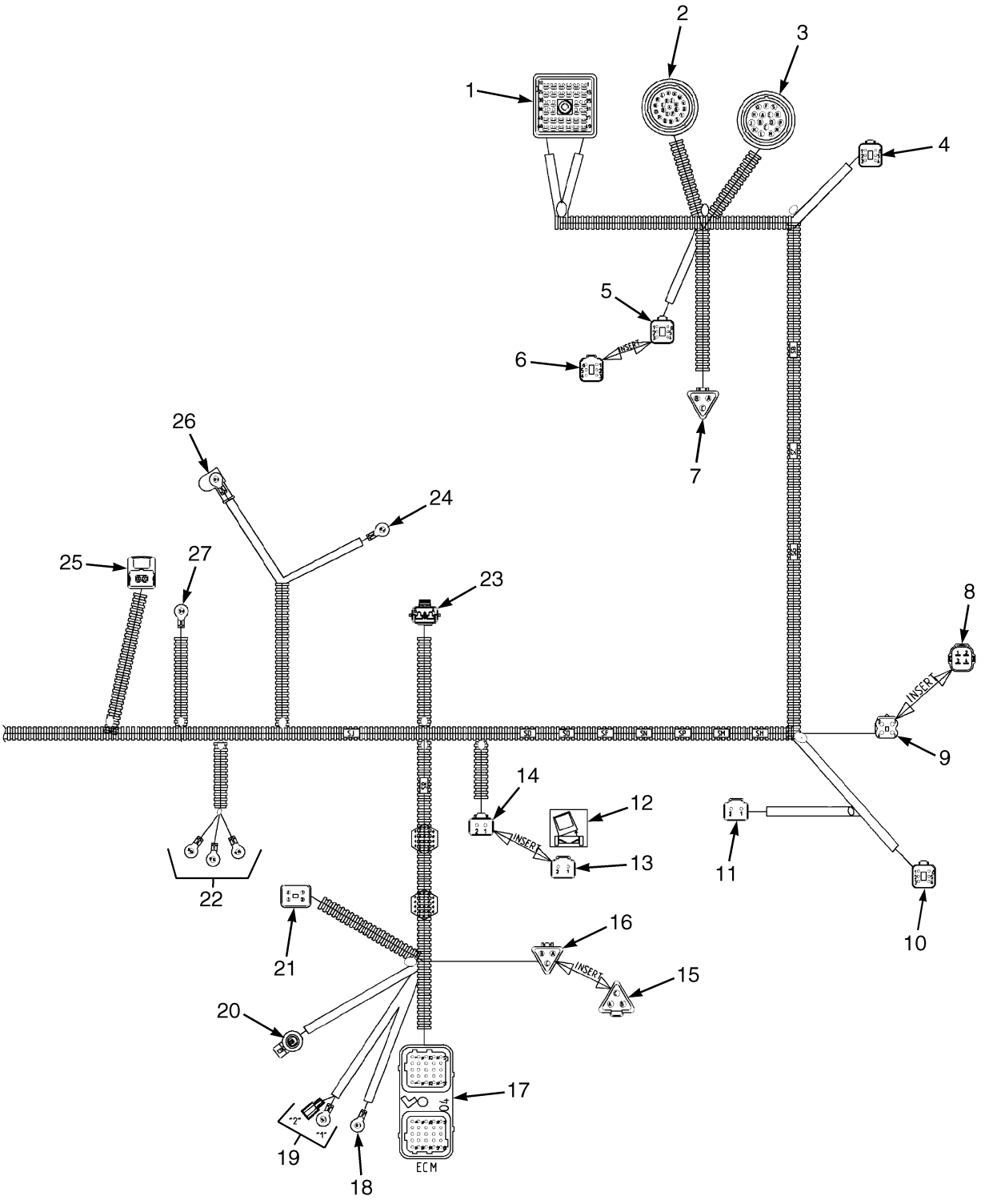

©2010 HYSTER COMPANY

WIRE HARNESS (CHASSIS)

SHEET 2 OF 2 (S/N B214E01777H →)

ITEM	PART NO.	DESCRIPTION	QTY
	4007875	Wire Harness (Chassis) (H400HD-H450HD-EC)	1
	4007876	Wire Harness (Chassis) (H500HD-EC)	1
1	. . . . .	Connector Assembly (Powertrain Signals)	1
1	1493431	Housing (Socket)	1
1	1493432	Retainer (Socket)	1
1	1507725	Terminal	2
1	1463141	Terminal (Socket)	47
2	. . . . .	Connector Assembly (Attachment Signals)	1
2	1502627	Connector (Socket)	1
2	1330438	Terminal (Socket)	22
3	. . . . .	Connector Assembly (Powertrain Power)	1
3	1493433	Housing (Socket)	1
3	1493434	Terminal (Socket)	15
4	. . . . .	Connector Assembly (RH Rear Lamp)	1
4	1493430	Connector	1
4	1529052	Connector	1
4	1330438	Terminal (Socket)	5
5	. . . . .	Connector Assembly (Air Conditioner Condenser)	1
5	1493430	Connector	1
5	1529052	Connector	1
5	1363886	Terminal (Socket)	2
5	1330438	Terminal (Socket)	3
6	. . . . .	Connector Assembly (Insert)	1
6	1525589	Connector	1
6	1330439	Plug	6
7	. . . . .	Connector Assembly (Accelerator Pedal)	1
7	1484397	Connector (3-Way)	1
7	1463194	Connector	1
7	1330438	Terminal (Socket)	3
8	. . . . .	Connector Assembly (Insert)	1
8	1546697	Connector	1
9	. . . . .	Connector Assembly (Diode)	1
9	1610950	Housing (Sealed) (4-Way)	1
9	1610941	Seal (Dummy)	2
9	1484656	Terminal (Socket)	2
9	1482659	Seal (Rubber)	2
10	. . . . .	Connector Assembly (LH Rear Lamp)	1
10	1493430	Connector	1
10	1529052	Connector	1
10	1330438	Terminal (Socket)	5
11	. . . . .	Connector Assembly (Reverse Alarm)	1
11	1493465	Connector	1
11	1330414	Connector (Secondary Lock)	1
11	1330437	Terminal (Pin)	2
12	1605545	Label (Cab Tilt Switch) (Cab Tilt)	1
13	. . . . .	Connector Assembly (Insert)	1
13	1493465	Connector	1
13	1330439	Plug	2
14	. . . . .	Connector Assembly (Cab Tilt Power)	1
14	1490242	Connector	1

©2010 HYSTER COMPANY

WIRE HARNESS (CHASSIS)

SHEET 2 OF 2 (S/N B214E01777H →)

ITEM	PART NO.	DESCRIPTION	QTY
14	1490243	Connector	1
14	1363886	Terminal (Socket)	2
15	. . . . .	Connector Assembly (Insert)	1
15	1607772	Connector (Termination)	1
16	. . . . .	Connector Assembly (Terminating Resistor)	1
16	1484397	Connector (3-Way)	1
16	1610944	Lock	1
16	1518112	Terminal (Socket)	2
17	. . . . .	Connector Assembly (ECM)	1
17	1632864	Housing	1
17	1507725	Terminal	8
18	. . . . .	Connector Assembly (Grid Heater)	1
18	1610970	Ring	1
19	. . . . .	Connector Assembly (Engine Oil Pressure)	1
19	1493448	E-Ring	1
19	1484598	Terminal	1
19	1484651	Cover	1
20	. . . . .	Connector Assembly (Air Conditioner)	1
20	1659116	Terminal	1
20	1659115	Connector	1
20	1330281	Terminal	1
20	1323579	Seal	1
21	. . . . .	Connector Assembly (Engine)	1
21	1632865	Connector	1
21	1514603	Connector	1
21	1493434	Terminal (Socket)	2
22	. . . . .	Connector Assembly (Ground)	1
22	1493455	Ring	2
22	1569985	Terminal (Ring)	1
23	. . . . .	Connector Assembly (Coolant Level)	1
23	1329152	Plug	1
23	1330281	Terminal	2
23	1402888	Seal	2
24	. . . . .	Connector Assembly (Alternator Ground)	1
24	1610970	Ring	1
25	. . . . .	Connector Assembly (Air Filter)	1
25	1493435	Connector (2-Way)	1
25	1479109	Seal	2
25	1493436	Terminal (Socket)	2
26	. . . . .	Connector Assembly (Alternator VE+)	1
26	1493442	Boot	1
26	1610971	Ring	1
27	. . . . .	Connector Assembly (Starter Solenoid)	1
27	1502921	Ring	1

©2010 HYSTER COMPANY

NOTES

©2010 HYSTER COMPANY

WIRE HARNESS (FIGURE 4-35)
CLOSED CAB

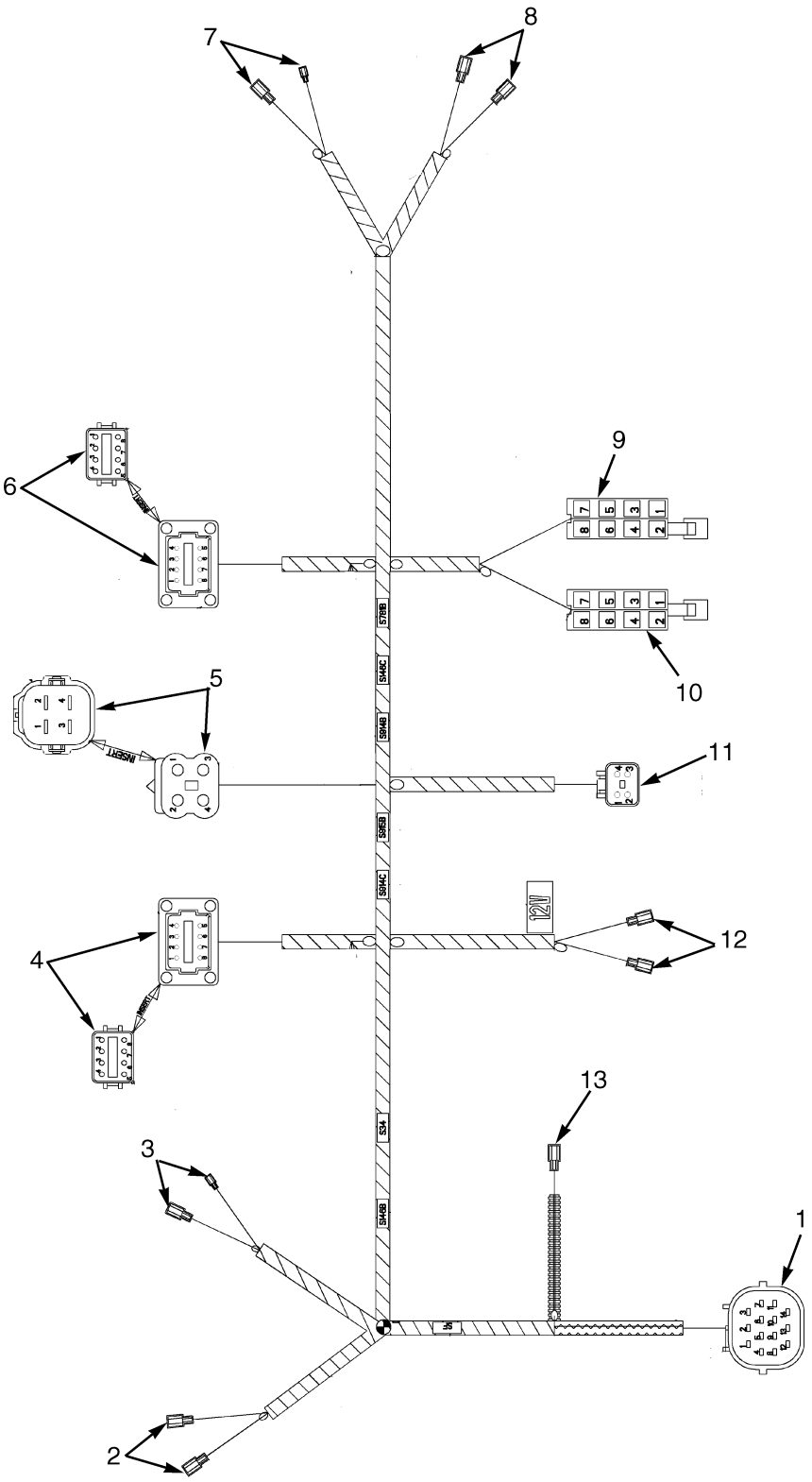

©2010 HYSTER COMPANY

WIRE HARNESS
CLOSED CAB

ITEM	PART NO.	DESCRIPTION	QTY
	1583941	Wire Harness	1
1	. . . . .	Connector Assembly (Cab Connection)	1
1	1484592	Connector	1
1	1484593	Retainer	1
1	1484611	Seal (Blanking)	1
1	1484594	Terminal (Pin)	4
1	1484595	Seal	4
1	1484596	Terminal (Pin)	9
1	1484597	Seal	9
2	. . . . .	Connector Assembly (RH Interior Light)	1
2	1610948	Receptacle	2
2	1610947	Receptacle	2
3	. . . . .	Connector Assembly (RH Speaker)	1
3	1610948	Receptacle	1
3	1610947	Receptacle	1
3	1484600	Terminal	1
3	1484383	Heat Shrink	1
4	. . . . .	Connector Assembly (RH Cab Lights)	1
4	1570603	Housing	1
4	1330418	Connector	1
4	1330437	Terminal (Pin)	4
4	1330439	Plug	3
4	1363885	Terminal (Pin)	1
4	1330439	Plug	8
4	1570601	Gasket	1
4	1624336	Housing	1
5	. . . . .	Connector Assembly (Diode)	1
5	1610950	Housing (Sealed) (4-Way)	1
5	1610941	Seal (Dummy)	2
5	1484656	Terminal (Socket)	2
5	1482659	Seal (Rubber)	2
5	1546697	Connector	1
6	. . . . .	Connector Assembly (LH Cab Lights)	1
6	1570603	Housing	1
6	1330418	Connector	1
6	1363885	Terminal (Pin)	1
6	1330437	Terminal (Pin)	4
6	1330439	Plug	3
6	1330439	Plug	8
6	1570601	Gasket	1
6	1624336	Housing	1
7	. . . . .	Connector Assembly (LH Speaker)	1
7	1610948	Receptacle	1
7	1610947	Receptacle	1
7	1484600	Terminal	1
7	1484383	Heat Shrink	1
8	. . . . .	Connector Assembly (LH Interior Light)	1
8	1610948	Receptacle	2
8	1610947	Receptacle	2
9	. . . . .	Connector Assembly (Radio Power)	1

©2010 HYSTER COMPANY

WIRE HARNESS
CLOSED CAB

ITEM	PART NO.	DESCRIPTION	QTY
9	1484609	Housing (Socket)	1
9	1484719	Terminal	3
9	1570645	Label (12 Volt)	1
10	. . . . .	Connector Assembly (Radio Speakers)	1
10	1484608	Housing (Socket)	1
10	1484610	Terminal	4
11	. . . . .	Connector Assembly (Roof Wiper)	1
11	1489656	Connector (4-Way)	1
11	1489657	Connector	1
11	1634082	Terminal (Socket)	4
12	. . . . .	Connector Assembly (Radio Comms)	1
12	1610948	Receptacle	2
12	1610947	Receptacle	2
12	1570645	Label (12 Volt)	1
13	. . . . .	Connector Assembly (Ventilation Fan)	1
13	1610948	Receptacle	1
13	1610947	Receptacle	1

©2010 HYSTER COMPANY

WIRE HARNESS (FIGURE 4-36)
FRONT LIGHTS (→ S/N B214E01629F)

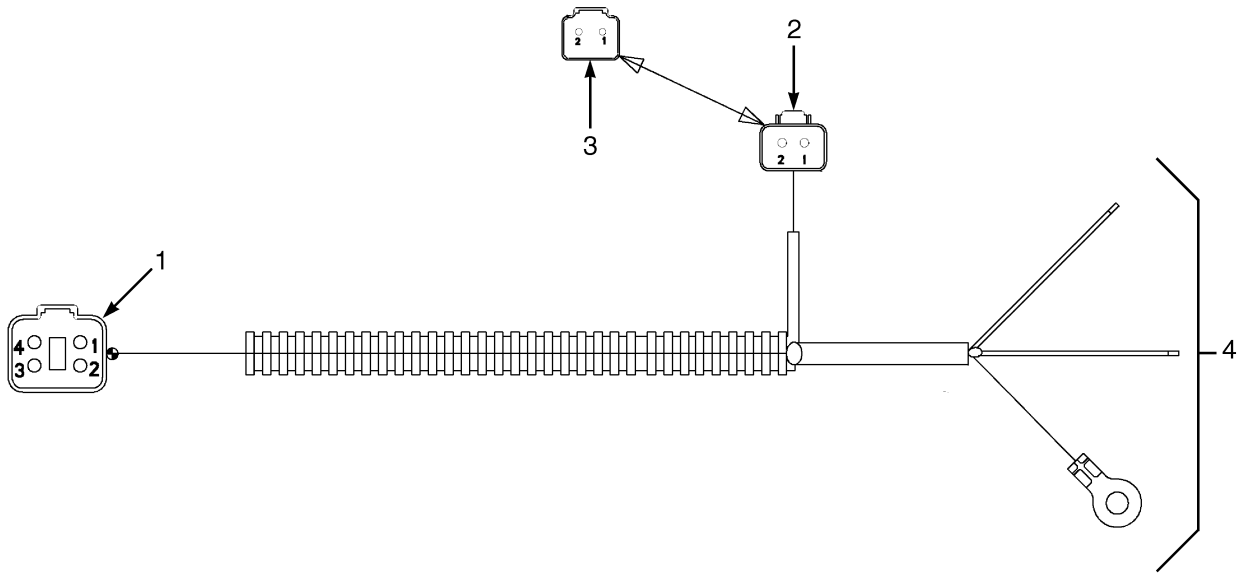

HP081825

ITEM	PART NO.	DESCRIPTION	QTY
	1545181	Wire Harness (Front Lights)	1
1	. . . . .	Connector Assembly	1
1	1489655	Connector (4 Way)	1
1	1330416	Connector	1
1	1363885	Terminal (Pin)	1
1	1330437	Terminal (Pin)	3
2	. . . . .	Connector Assembly	1
2	1490242	Connector	1
2	1490243	Connector	1
2	1330438	Terminal (Socket)	2
3	. . . . .	Insert	1
3	1493465	Connector	1
3	1330439	Plug	2
4	. . . . .	Connector Set	1
4	1484394	Crimp Ferrule	2
4	1493448	E-Ring	1
4	1484383	Heat Shrink	1

©2010 HYSTER COMPANY

WIRE HARNESS (FIGURE 4-37)
FRONT LIGHTS (S/N B214E01630F →)

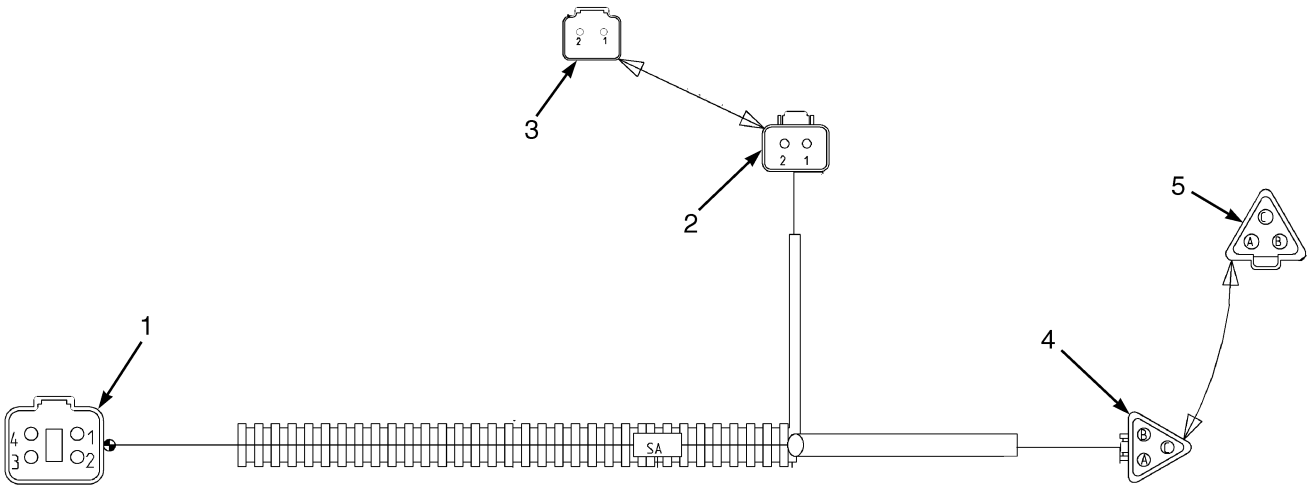

HP081958

ITEM	PART NO.	DESCRIPTION	QTY
	1672817	Wire Harness (Front Lights)	1
1	. . . . .	Connector Assembly (Frame)	1
1	1489655	Connector (4 Way)	1
1	1330416	Connector	1
1	1330437	Terminal (Pin)	4
2	. . . . .	Connector Assembly (RH/LH Drive Light)	1
2	1490242	Connector	1
2	1490243	Connector	1
2	1330438	Terminal (Socket)	2
3	. . . . .	Connector Assembly (Insert)	1
3	1493465	Connector	1
3	1330439	Plug	2
4	. . . . .	Connector Assembly (Side Indicator)	1
4	1484397	Connector (3-Way)	1
4	1463194	Connector	1
4	1330438	Terminal (Socket)	3
5	. . . . .	Connector Assembly (Insert)	1
5	1493466	Connector	1
5	1330439	Plug	3

©2010 HYSTER COMPANY

WIRE HARNESS (FIGURE 4-38)
HYDRAULIC RELAYS

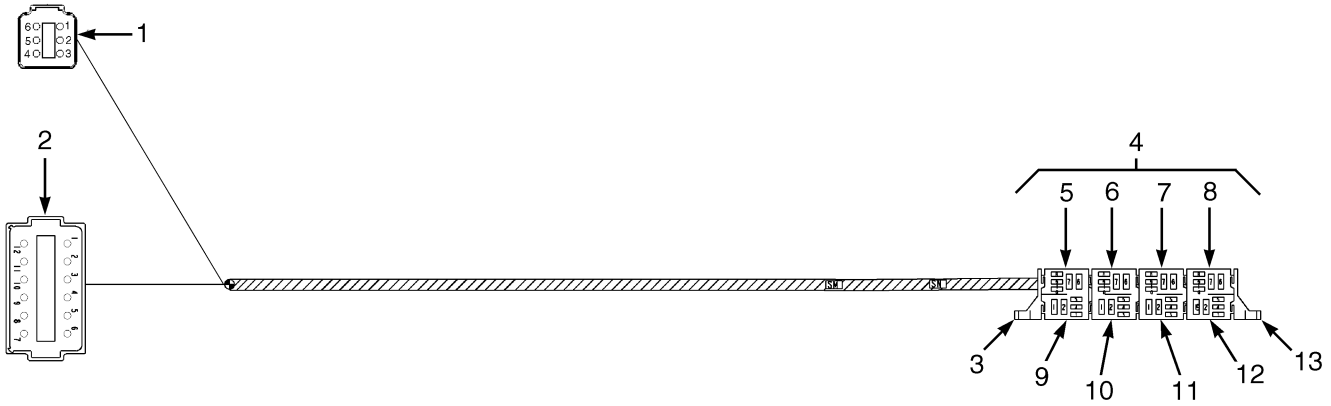

HP081821

ITEM	PART NO.	DESCRIPTION	QTY
	1637440	Wire Harness (Hydraulic Relays)	1
1	. . . . .	Connector Assembly (Cab Side Console Harness)	1
1	1500914	Housing	1
1	1330417	Connector	1
1	1330437	Terminal (Pin)	6
2	. . . . .	Connector Assembly (Cab Side Console Harness)	1
2	1500925	Connector	1
2	1352603	Connector	1
2	1330437	Terminal (Pin)	12
3	1484714	Clip	1
4	1484683	Relay (Base)	4
4	1489957	Connector (1-Way)	2
4	1570602	Terminal (Socket)	2
5	1489960	Relay (24 Volt) (Extension)	1
6	1489960	Relay (24 Volt) (Retraction)	1
7	1489960	Relay (24 Volt) (Lock Twistlock)	1
8	1489960	Relay (24 Volt) (Unlock Twistlock)	1
9	1489960	Relay (24 Volt) (LH Side-Shift)	1
10	1489960	Relay (24 Volt) (RH Side-Shift)	1
11	1489960	Relay (24 Volt) (LH Tilt Up)	1
12	1489960	Relay (24 Volt) (RH Tilt-Up)	1
13	1484715	Clip	1

©2010 HYSTER COMPANY

WIRE HARNESS (FIGURE 4-39)
LIFT INTERRUPT BYPASS

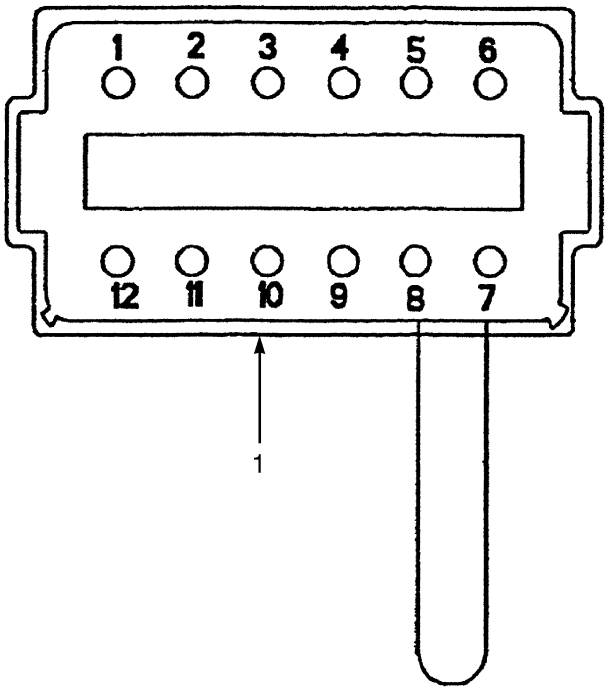

HP081779

ITEM	PART NO.	DESCRIPTION	QTY
	1591211	Wire Harness (Lift Interrupt Byass)	1
1	. . . . .	TL Indicator Box	1
1	1330437	Terminal (Pin)	2
1	1330439	Plug	10
1	1352603	Connector	1
1	1500925	Connector	1

©2010 HYSTER COMPANY

NOTES

©2010 HYSTER COMPANY

WIRE HARNESS (FIGURE 4-40)
OIL COOLER (→ 9/2008)

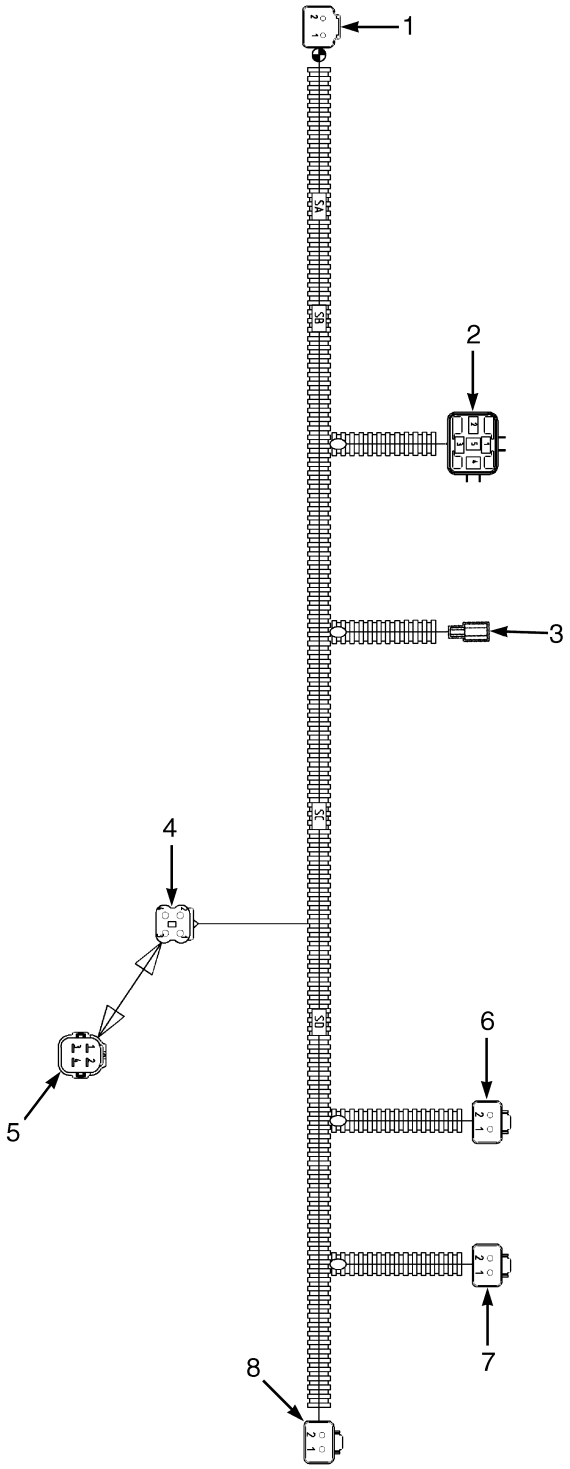

HP081776

©2010 HYSTER COMPANY

WIRE HARNESS

OIL COOLER (→ 9/2008)

ITEM	PART NO.	DESCRIPTION	QTY
	1614188	Wire Harness (Oil Cooler)	1
1	. . . . .	Connector Assembly (Frame)	1
1	1607749	Housing	1
1	1480188	Connector	1
1	1484709	Terminal (Pin)	2
2	. . . . .	Relay Base (Cooler Relay)	1
2	1607524	Socket	1
2	1484715	Clip	1
2	1607527	Cover	1
2	1607532	Seal	4
2	1607528	Seal	1
2	1607525	Terminal	2
2	1607529	Terminal	2
2	1655227	Relay	1
3	. . . . .	Connector Assembly (Thermostat)	1
3	1610948	Receptacle	1
3	1610947	Receptacle	1
4	. . . . .	Connector Assembly (Suppression Diode)	1
4	1484656	Terminal (Socket)	2
4	1482659	Seal (Rubber)	2
4	1610950	Housing (Sealed) (4-Way)	1
4	1610941	Seal (Dummy)	2
5	1610953	Diode (Insert)	1
6	. . . . .	Connector Assembly (Fan Right)	1
6	1616227	Housing	1
6	1490243	Connector	1
6	1363886	Terminal (Socket)	2
7	. . . . .	Connector Assembly (Fan Middle)	1
7	1616227	Housing	1
7	1490243	Connector	1
7	1363886	Terminal (Socket)	2
8	. . . . .	Connector Assembly (Fan Left)	1
8	1616227	Housing	1
8	1490243	Connector	1
8	1363886	Terminal (Socket)	2

©2010 HYSTER COMPANY

WIRE HARNESS (FIGURE 4-41)

OIL COOLER (S/N B214E01688F →)

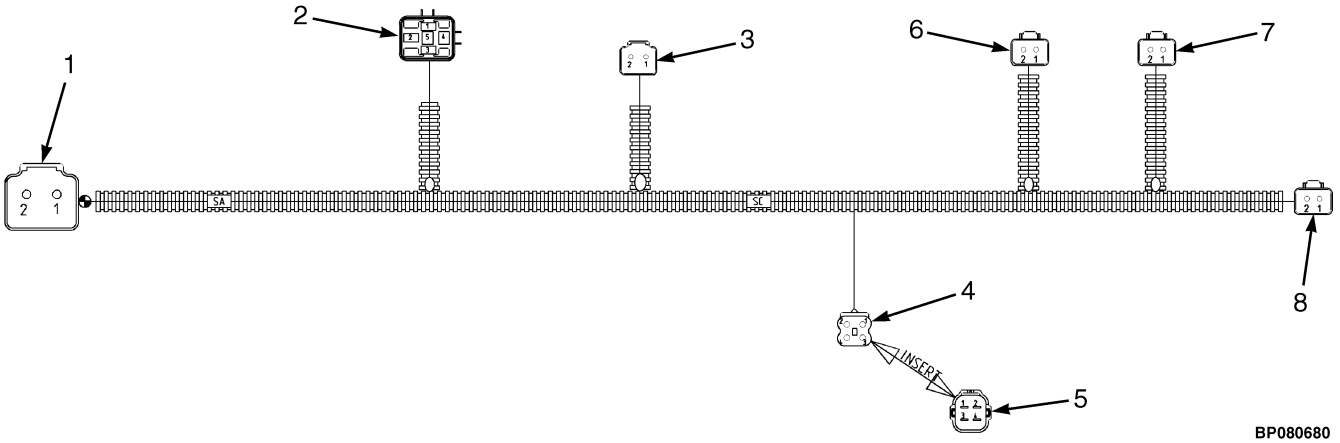

BP080680

ITEM	PART NO.	DESCRIPTION	QTY
	1677616	Wire Harness (Oil Cooler)	1
1	. . . . .	Connector Assembly (Frame)	1
1	1607749	Housing	1
1	1480188	Connector	1
1	1484709	Terminal (Pin)	2
2	. . . . .	Relay Base (Cooler Relay)	1
2	1607524	Socket	1
2	1484715	Clip	1
2	1607527	Cover	1
2	1607532	Seal	4
2	1607528	Seal	1
2	1607525	Terminal	2
2	1607529	Terminal	2
2	1655227	Relay	1
3	. . . . .	Connector Assembly (Temperature Switch)	1
3	1330437	Terminal (Pin)	2
3	1493465	Connector	1
3	1330414	Connector (Secondary Lock)	1
4	. . . . .	Connector Assembly (Suppression Diode)	1
4	1484656	Terminal (Socket)	2
4	1482659	Seal (Rubber)	2
4	1610950	Housing (Sealed) (4-Way)	1
4	1610941	Seal (Dummy)	2
5	1610953	Diode (Insert)	1
6	. . . . .	Connector Assembly (Fan Right)	1
6	1616227	Housing	1
6	1490243	Connector	1
6	1363886	Terminal (Socket)	2
7	. . . . .	Connector Assembly (Fan Middle)	1
7	1616227	Housing	1
7	1490243	Connector	1
7	1363886	Terminal (Socket)	2
8	. . . . .	Connector Assembly (Fan Left)	1
8	1616227	Housing	1
8	1490243	Connector	1

©2010 HYSTER COMPANY

ITEM	PART NO.	DESCRIPTION	QTY
8	1363886	Terminal (Socket)	2

©2010 HYSTER COMPANY

WIRE HARNESS (FIGURE 4-42)
POWERED CAB TILT

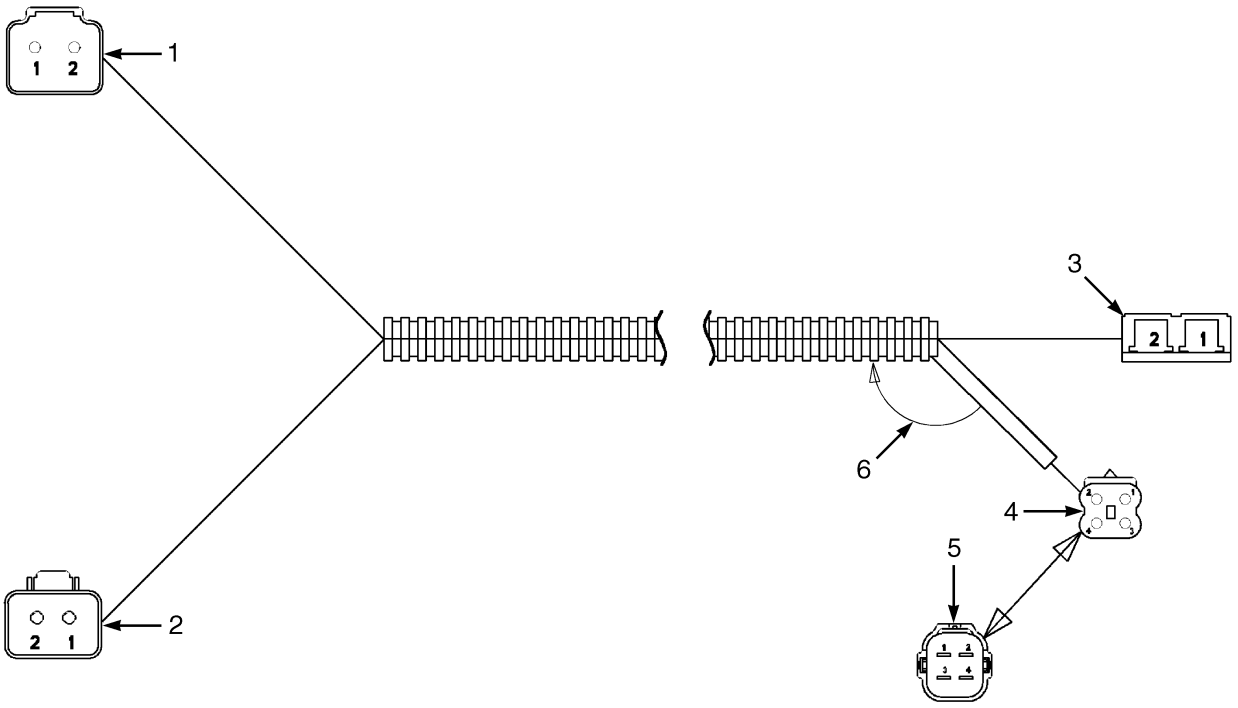

HP081759

ITEM	PART NO.	DESCRIPTION	QTY
	1597431	Wire Harness (Powered Cab Tilt)	1
1	. . . . .	Connector Assembly (Frame Harness)	1
1	1493465	Connector	1
1	1330414	Connector (Secondary Lock)	1
1	1363885	Terminal (Pin)	2
2	. . . . .	Connector Assembly (Tilt Pump)	1
2	1545202	Connector	1
2	1546697	Connector	1
2	1493434	Terminal (Socket)	2
3	. . . . .	Connector Assembly (Tilt Switch)	1
3	346330	Connector Body	1
3	1484375	Terminal	2
4	. . . . .	Connector Assembly (Pump Diode)	1
4	1610950	Housing (Sealed) (4-Way)	1
4	1610941	Seal (Dummy)	2
4	1484656	Terminal (Socket)	2
4	1610954	Seal	2
5	1611029	Diode (1-Way)	1
6	1569981	Tape	AR

©2010 HYSTER COMPANY

WIRE HARNESS (FIGURE 4-43)
REAR WIPER EXTENSION

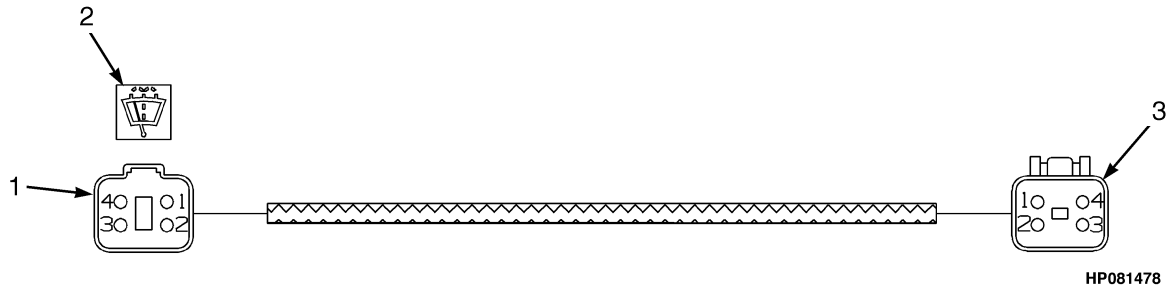

ITEM	PART NO.	DESCRIPTION	QTY
	2043546	Wire Harness (Rear Wiper)	1
1	. . . . .	Connector Assembly (Side Console)	1
1	1489655	Connector (4 Way)	1
1	1330416	Connector	1
1	1330437	Terminal (Pin)	4
2	1570644	Label (Rear Wash/Wipe Switch) (Washer And Wiper)	1
3	. . . . .	Connector Assembly (Rear Wiper Motor)	1
3	1489656	Connector (4-Way)	1
3	1489657	Connector	1
3	1330438	Terminal (Socket)	4

©2010 HYSTER COMPANY

WIRE HARNESS (FIGURE 4-44)
SEALED FUSE BOX

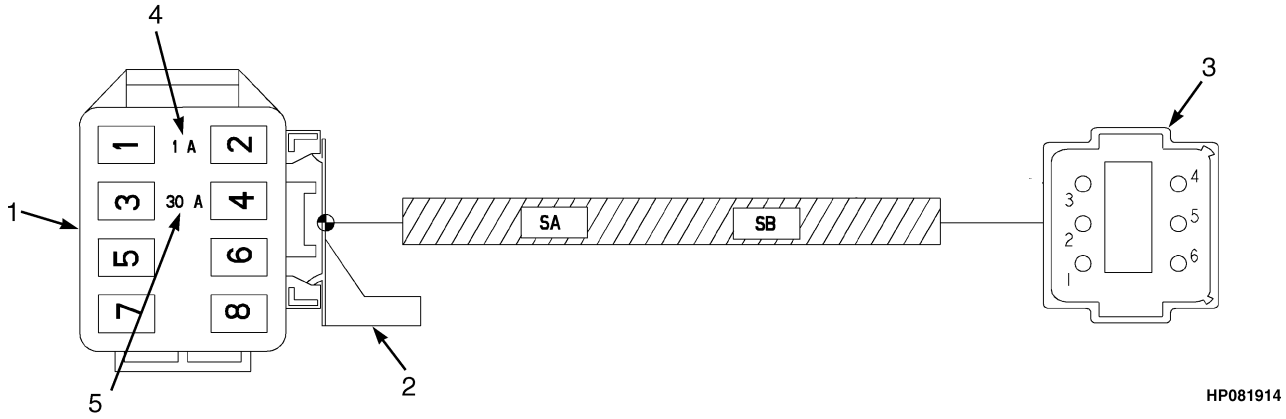

ITEM	PART NO.	DESCRIPTION	QTY
	b 1597430	Fuse Box (Sealed)	1
	c 4016659	Fuse Box (Sealed)	1
1	. . . . .	Connector Assembly (Fuse Carrier)	1
1	1573113	Fuse Box	1
1	1573114	Cover	1
1	1573115	Terminal	2
1	1607778	Terminal	2
2	1484715	Clip	1
3	. . . . .	Connector Assembly (Frame Connector)	1
3	1525589	Connector	1
3	1330417	Connector	1
3	1502712	Terminal (Pin)	2
3	1363885	Terminal (Pin)	4
4	1378661	Fuse (1 Amp)	1
5	1320669	Fuse (30 Amp)	1
	a 1607526	Boot	1
	ac 4609580	Label (Fuse Box)	1

FOOTNOTES:

a Not Illustrated
b → 10/2010
c 10/2010 →

©2010 HYSTER COMPANY

WIRE HARNESS (FIGURE 4-45)
STEERING COLUMN

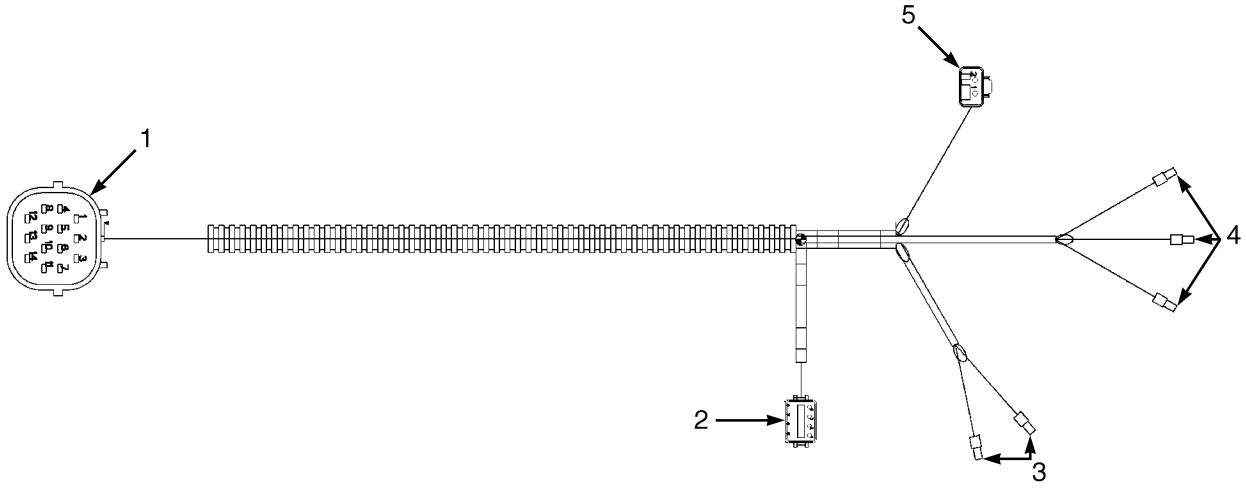

HP081770

ITEM	PART NO.	DESCRIPTION	QTY
	1595149	Wire Harness (Steering Column)	1
1	. . . . .	Connector Assembly (Cabin)	1
1	1484592	Connector	1
1	1484593	Retainer	1
1	1484596	Terminal (Pin)	14
1	1484597	Seal	14
2	. . . . .	Connector Assembly (Transmission Lever)	1
2	1502625	Connector	1
2	1502626	Connector	1
2	1330438	Terminal (Socket)	8
3	. . . . .	Connector Assembly (Master Warning)	2
3	1484394	Crimp Ferrule	1
4	. . . . .	Connector Assembly (Direction Indicator Switch)	3
4	1484394	Crimp Ferrule	1
5	. . . . .	Connector Assembly (Horn Button)	1
5	1484557	Connector	1
5	1484558	Connector	1
5	1463141	Terminal (Socket)	1
5	1484377	Plug	1

©2010 HYSTER COMPANY

WIRE HARNESS (FIGURE 4-46)
WINDOW WASH PUMPS

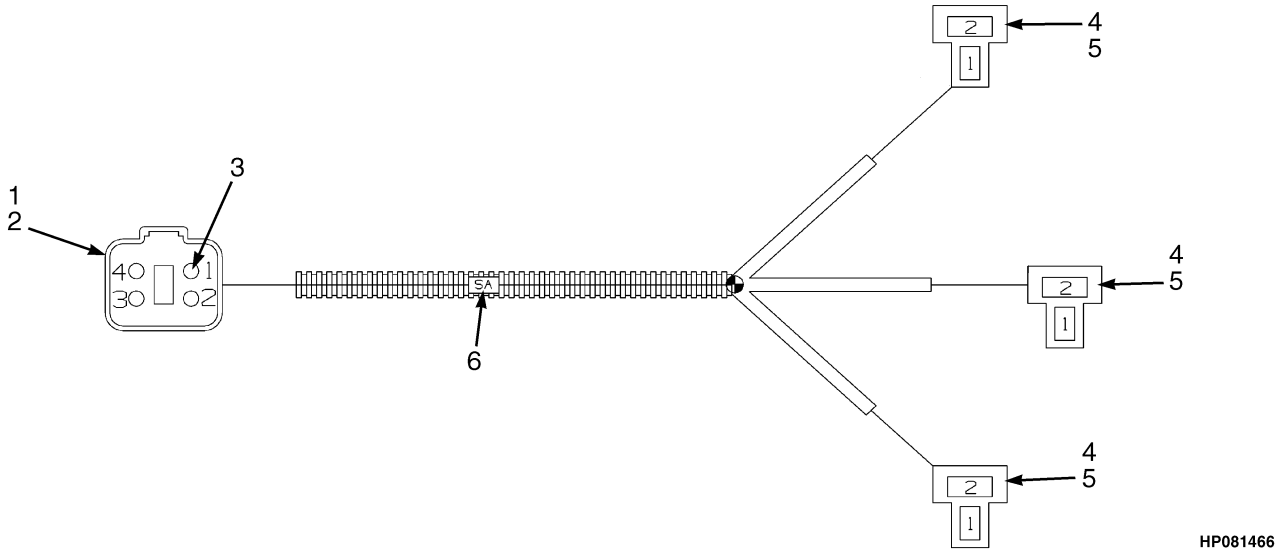

HP081466

ITEM	PART NO.	DESCRIPTION	QTY
	1547279	Wire Harness (Wash Pumps)	1
1	1489655	Connector (4 Way)	1
2	1330416	Connector	1
3	1330437	Terminal (Pin)	4
4	1484395	Housing (Socket)	3
5	1484396	Terminal	6
6	1493450	Heat Shrink	1

©2010 HYSTER COMPANY

WIRE HARNESS (FIGURE 4-47)
SIDE INDICATOR (S/N B214E01630F →)

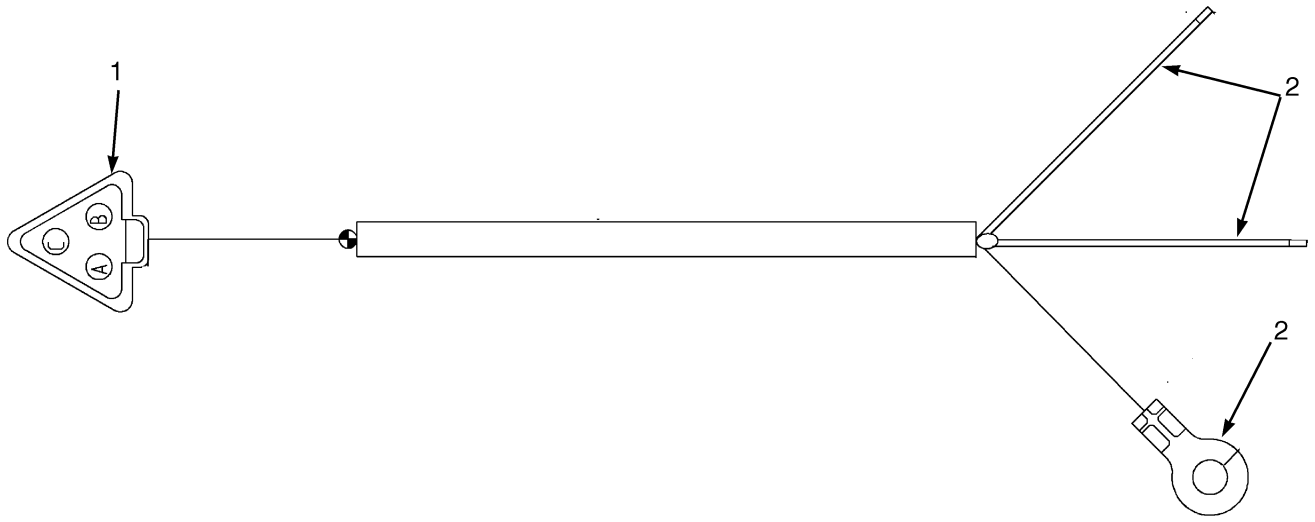

HP081959

ITEM	PART NO.	DESCRIPTION	QTY
	1672818	Wire Harness (Side Indicator)	1
1	. . . . .	Connector Assembly (Front Drive Light)	1
1	1493466	Connector	1
1	1330415	Connector	1
1	1330437	Terminal (Pin)	3
2	. . . . .	Connector Assembly (RH/LH Indicators)	1
2	1484394	Crimp Ferrule	2
2	1493448	E-Ring	1

©2010 HYSTER COMPANY

WIRE HARNESS (FIGURE 4-48)

AIR CONDITIONER EXTENSION (S/N B214E01669F ↔ 12/2009 (H500HD-EC)) (S/N B214E01669F ↔ 9/2010 (H400HD-H450HD-EC))

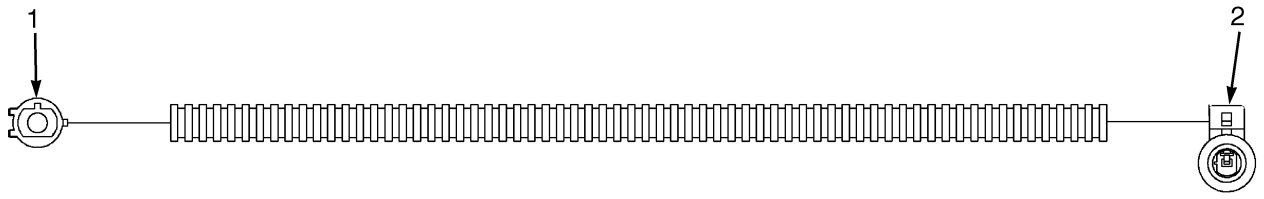

HP081535

ITEM	PART NO.	DESCRIPTION	QTY
	1700297	Wire Harness (Air Conditioner Extension)	1
1	. . . . .	Connector Assembly (Frame)	1
1	2067918	Connector (1 Way)	1
1	2060555	Wire Seal	1
1	1701250	Wire Harness	1
2	. . . . .	Connector Assembly (Air Conditioner)	1
2	1659115	Connector	1
2	1659116	Terminal	1
2	1330281	Terminal	1
2	1323579	Seal	1

©2010 HYSTER COMPANY

ALTERNATOR AND MOUNTING (FIGURE 4-49)

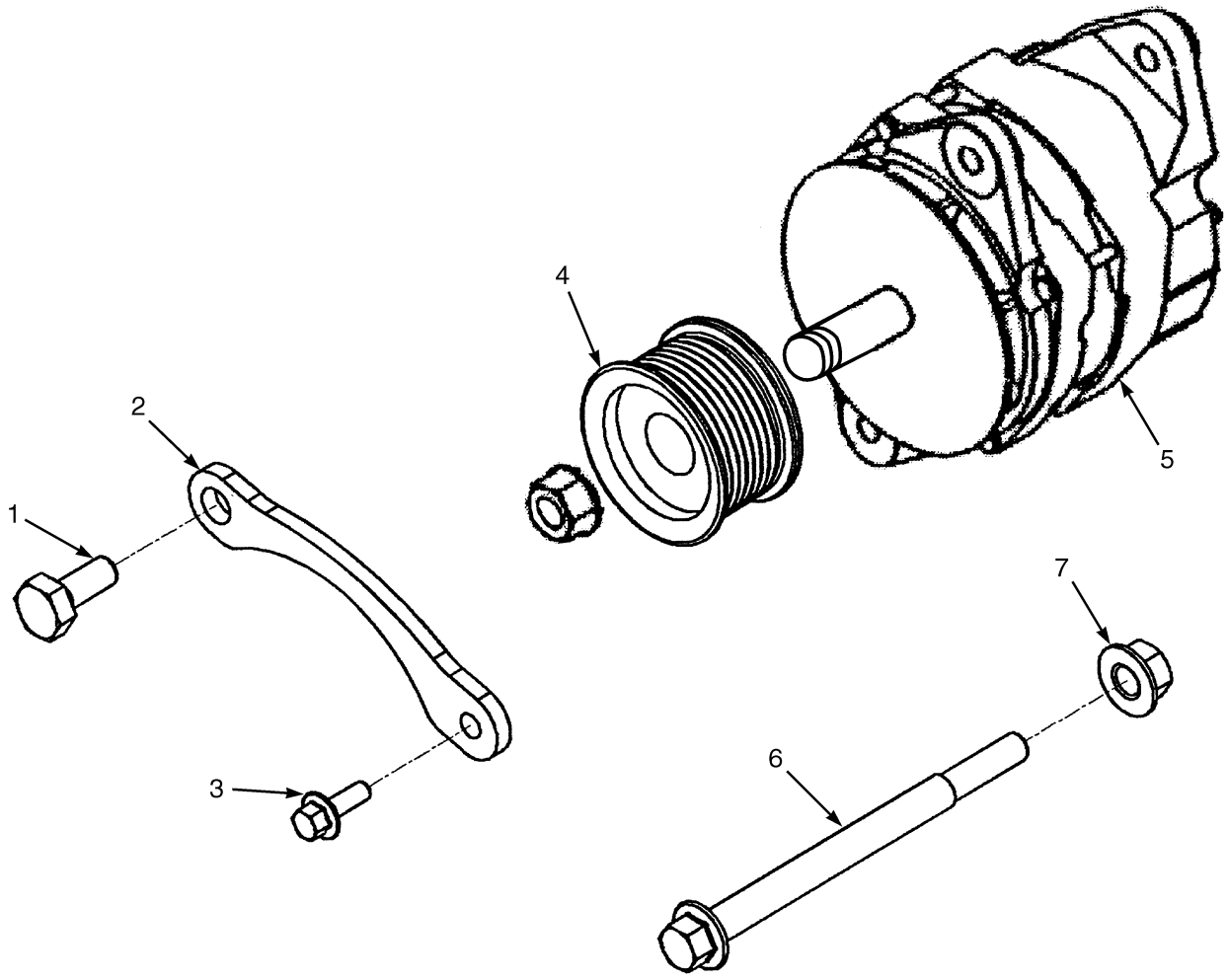

HP091366

ITEM	PART NO.	DESCRIPTION	QTY
	c 1613301	Engine Assy-Diesel (Tier III 190 HP) (With Air Conditioning)	1
	e 1613486	Engine Assy-Diesel (Tier III 190 HP) (Without Air Conditioning)	1
	f 1692949	Engine Assy (Without Air Conditioning)	1
	c 1559624	Engine Assy-Diesel (Tier III 220 HP) (With Air Conditioning)	1
	e 1613484	Engine Assy-Diesel (Tier III 220 HP) (Without Air Conditioning)	1
	f 1692948	Engine Assy (Without Air Conditioning)	1
1	1512003	Capscrew	1
2	1635404	Brace	1
3	**b** 1512004	Capscrew	1
3	**f** 1512005	Capscrew	1
4	1512009	Pulley	1
5	**a** 1588820	Alternator	1
5	**d** 1649349	Alternator	1
5	**f** ~~1693006~~ 4020872	Alternator	1
6	1512006	Capscrew	1
7	1511978	Nut	1

©2010 HYSTER COMPANY

FOOTNOTES:

a → 10/2006
b → 11/2008
c → S/N B214E01668F
d 11/2006 ↔ 11/2008
e S/N B214E01669F ↔ 11/2008
f 11/2008 →

©2010 HYSTER COMPANY

ALTERNATOR SUPPORT AND WATER INLET (FIGURE 4-50)

(→ 11/2008)

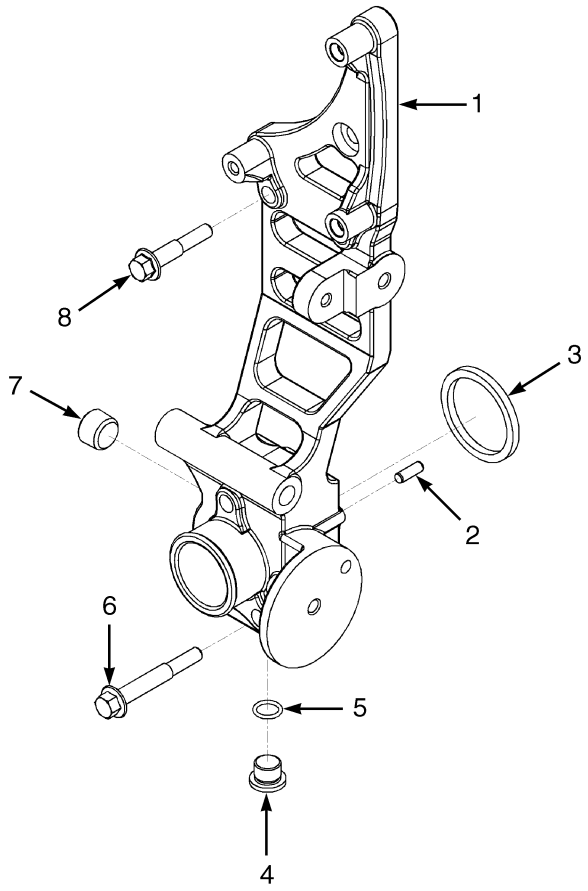

HP091361

ITEM	PART NO.	DESCRIPTION	QTY
	a 1613301	Engine Assy-Diesel (Tier III 190 HP) (With Air Conditioning)	1
	b 1613486	Engine Assy-Diesel (Tier III 190 HP) (Without Air Conditioning)	1
	a 1559624	Engine Assy-Diesel (Tier III 220 HP) (With Air Conditioning)	1
	b 1613484	Engine Assy-Diesel (Tier III 220 HP) (Without Air Conditioning)	1
1	1635403	Water Inlet	1
1	1666567	Water Inlet	1
2	1632983	Dowel	2
3	1512305	O-Ring	1
4	1615763	Plug	1
5	1515895	O-Ring	1
6	1614515	Capscrew	3
7	1511952	Fitting	1
8	1517003	Capscrew	3

FOOTNOTES:

a → S/N B214E01668F

b S/N B214E01669F ↔ 11/2008

©2010 HYSTER COMPANY

ALTERNATOR SUPPORT AND WATER INLET (FIGURE 4-51)

(11/2008 →)

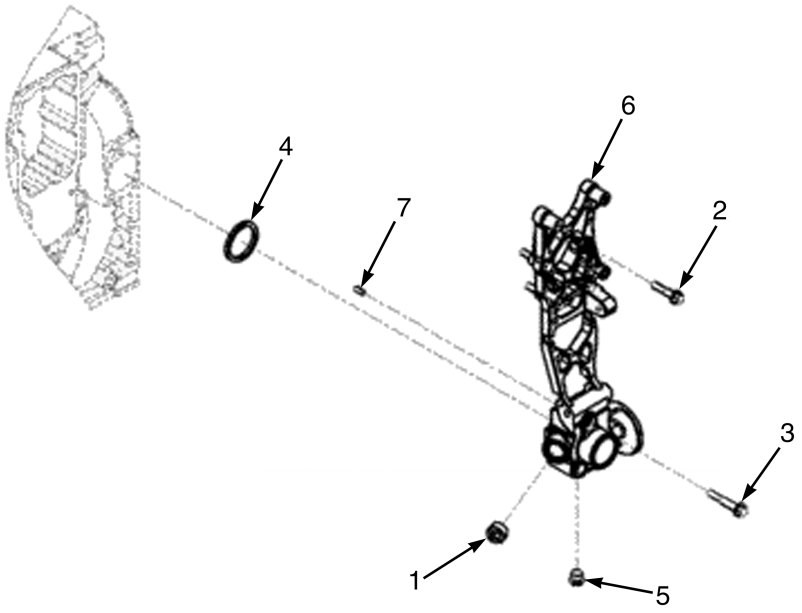

HP091253

ITEM	PART NO.	DESCRIPTION	QTY
	1692949	Engine Assy	1
	1692948	Engine Assy	1
1	1512292	Plug	1
2	1702189	Capscrew	2
3	1515840	Screw	5
4	1512305	O-Ring	1
5	1661398	Plug	1
6	1702190	Tube Assy	1
6	1666567	Water Inlet	1
7	1632983	Dowel	1

©2010 HYSTER COMPANY

NOTES

©2010 HYSTER COMPANY

ENGINE CONTROL MODULE (FIGURE 4-52)

(→ 11/2008)

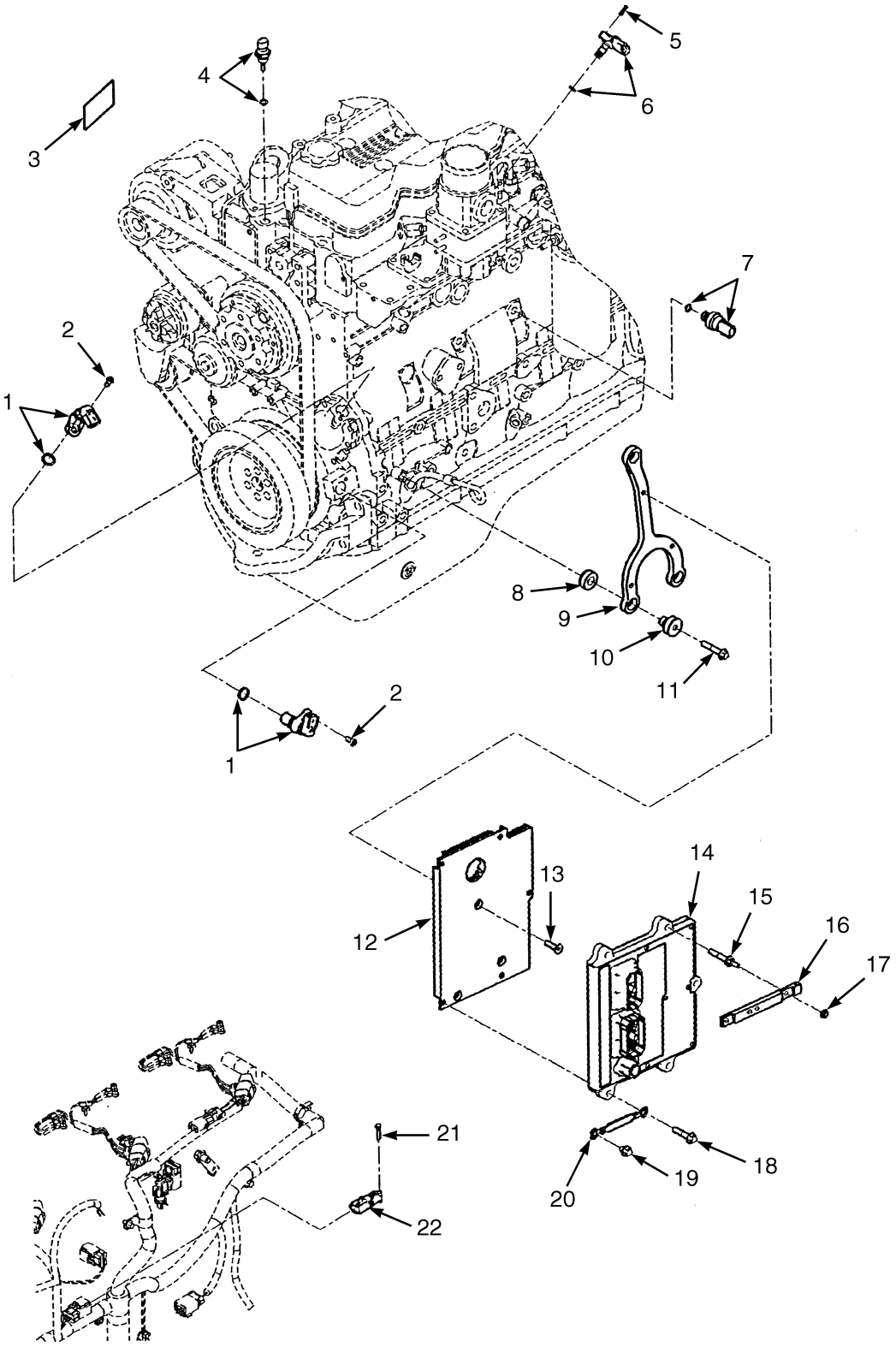

HP091322

©2010 HYSTER COMPANY

ENGINE CONTROL MODULE

(→ 11/2008)

ITEM	PART NO.	DESCRIPTION	QTY
	a 1613301	Engine Assy-Diesel (Tier III 190 HP) (With Air Conditioning)	1
	b 1613486	Engine Assy-Diesel (Tier III 190 HP) (Without Air Conditioning)	1
	a 1559624	Engine Assy-Diesel (Tier III 220 HP) (With Air Conditioning)	1
	b 1613484	Engine Assy-Diesel (Tier III 220 HP) (Without Air Conditioning)	1
1	1635457	Sensor Assembly (Camshaft Position)	2
1	1635240	Sensor	1
1	1635342	O-Ring	1
2	1543437	Capscrew	2
3	1635359	Data Plate	1
4	1565040	Temperature Sensor	1
4	1691873	Sensor Assembly (Temperature) (Alternate Part)	1
4	1543435	O-Ring	1
5	1635280	Capscrew	2
6	1661205	Sensor Assembly (Pressure And Temperature)	1
6	. . . . .	Pressure And Temperature Sensor	1
6	1635387	O-Ring	1
7	1543439	Air Intake Pressure Sensor Assembly	1
7	1543440	Pressure Switch	1
7	1543435	O-Ring	1
8	1635277	Isolator	3
9	1635323	Bracket	1
10	1635278	Isolator	3
11	1512111	Capscrew	3
12	1635324	Support	1
13	1614461	Capscrew (Flat Head)	3
14	1635421	Electronic Control Module	1
15	1635422	Capscrew	3
16	1635315	Bracket (Sensor)	1
17	1513793	Nut	2
18	1565007	Capscrew	2
19	1517266	Capscrew	1
20	1635325	Wire	1
21	1514504	Capscrew	1
22	1635345	Sensor (Pressure)	1

FOOTNOTES:

a → S/N B214E01668F

b S/N B214E01669F ↔ 11/2008

©2010 HYSTER COMPANY

ENGINE CONTROL MODULE (FIGURE 4-53)

(11/2008 →)

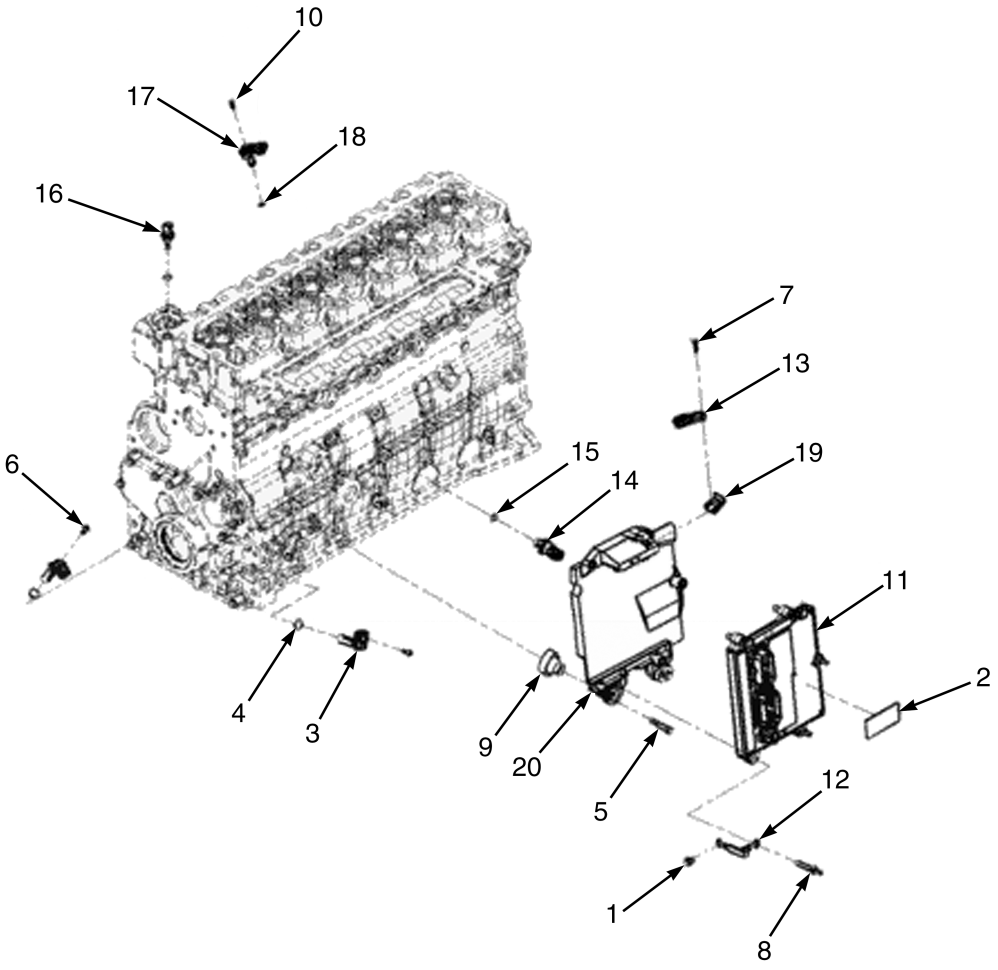

HP091255

©2010 HYSTER COMPANY

ENGINE CONTROL MODULE

(11/2008 →)

ITEM	PART NO.	DESCRIPTION	QTY
	1692949	Engine Assy	1
	1692948	Engine Assy	1
1	1517266	Capscrew	1
2	1517120	Data Plate	1
3	1635457	Sensor Assembly (Camshaft Position)	2
3	1635240	Sensor	1
4	1635342	O-Ring	1
5	1512111	Capscrew	6
6	1543437	Capscrew	2
7	1514504	Capscrew	1
8	1635422	Capscrew	4
9	4009315	Isolator	3
10	1635280	Capscrew	1
11	1635421	Electronic Control Module	1
12	1635325	Wire	1
13	1635345	Sensor (Pressure)	1
14	1543439	Air Intake Pressure Sensor Assembly	1
14	. . . . .	Pressure Switch	1
15	1543435	O-Ring	1
16	1691873	Sensor Assembly (Temperature)	1
16	. . . . .	Temperature Sensor	1
16	1543435	O-Ring	1
17	1661205	Sensor Assembly (Pressure And Temperature)	1
17	. . . . .	Temperature Sensor	1
18	1635387	O-Ring	1
19	. . . . .	Clip	1
20	4009316	Bracket (ETR Control Module)	1

©2010 HYSTER COMPANY

ETR MODULE WIRING (FIGURE 4-54)
(→ 11/2008)

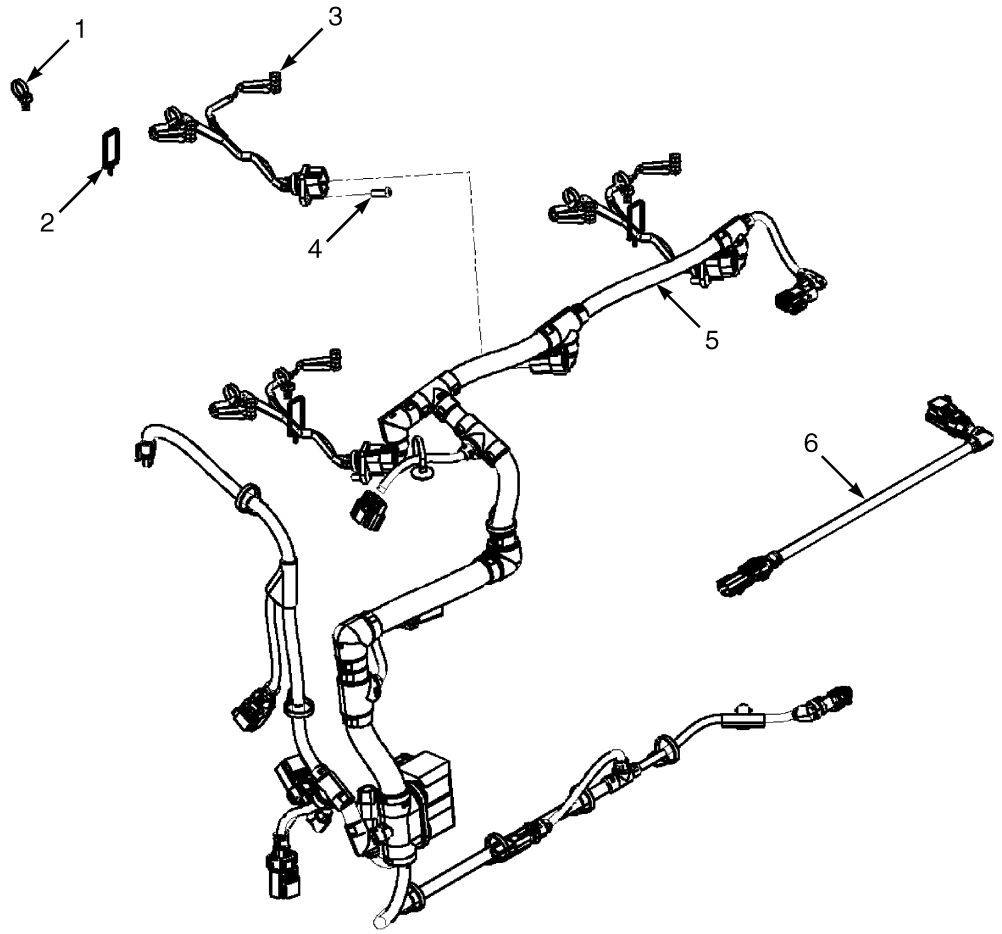

HP091358

ITEM	PART NO.	DESCRIPTION	QTY
	a 1613301	Engine Assy-Diesel (Tier III 190 HP) (With Air Conditioning)	1
	b 1613486	Engine Assy-Diesel (Tier III 190 HP) (Without Air Conditioning)	1
	a 1559624	Engine Assy-Diesel (Tier III 220 HP) (With Air Conditioning)	1
	b 1613484	Engine Assy-Diesel (Tier III 220 HP) (Without Air Conditioning)	1
1	1635238	Clip	6
2	1635347	Clip	3
3	1635237	Wire Harness	3
4	1635383	Capscrew	3
4	1661085	Capscrew (Alternate Part)	1
5	1635401	Wire Harness	1
6	1635418	Wire Harness	1

FOOTNOTES:

a → S/N B214E01668F

b S/N B214E01669F ↔ 11/2008

©2010 HYSTER COMPANY

ETR MODULE WIRING (FIGURE 4-55)
(11/2008 →)

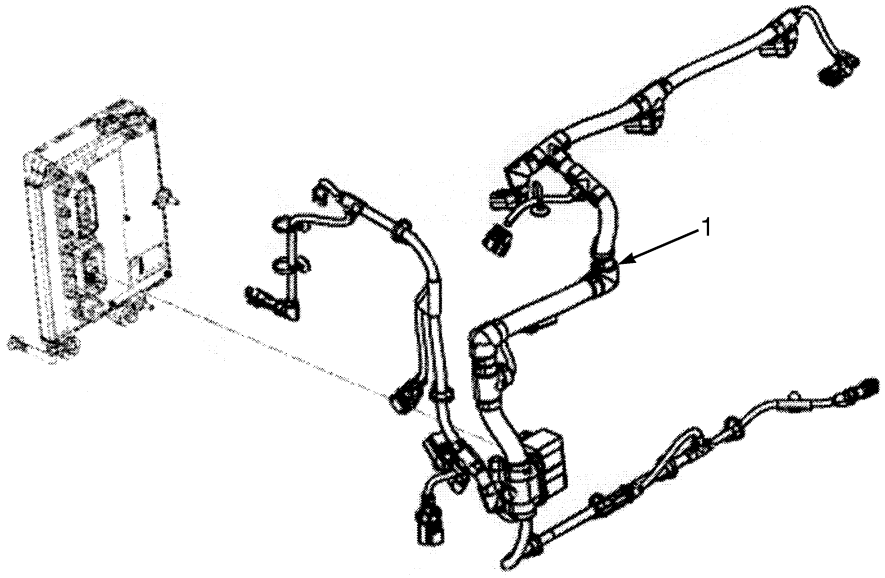

ITEM	PART NO.	DESCRIPTION	QTY
	1692949	Engine Assy	1
	1692948	Engine Assy	1
1	1702191	Wire Harness	1
	a 1513712	Nut	1

FOOTNOTES:

a Not Illustrated

PROXIMITY SWITCH ASSEMBLY (FIGURE 4-56)

(S/N B214E01777H →)

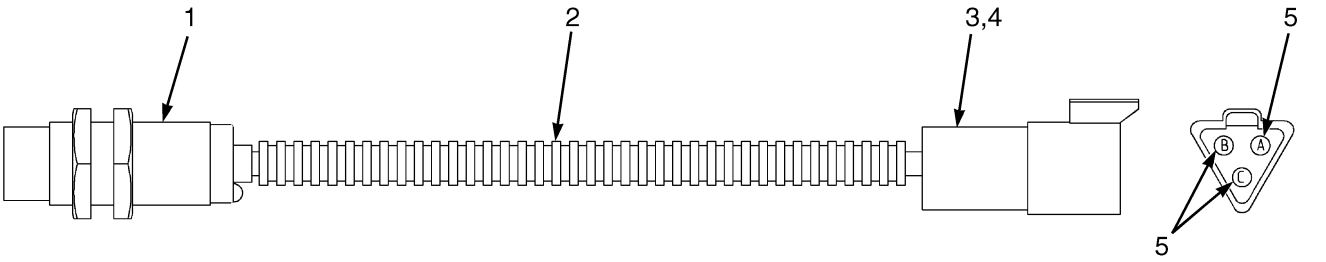

HP081988

ITEM	PART NO.	DESCRIPTION	QTY
	1675826	Switch Assembly (Proximity)	1
2	67470	Conduit (Non Metallic)	AR
3	1493466	Connector	1
4	1330415	Connector	1
5	1463140	Terminal (Pin)	3

©2010 HYSTER COMPANY

NOTES

©2010 HYSTER COMPANY

CONDITIONAL SPEED LIMITER (FIGURE 4-57)

LIFT AND TILT (S/N B214E01777H →)

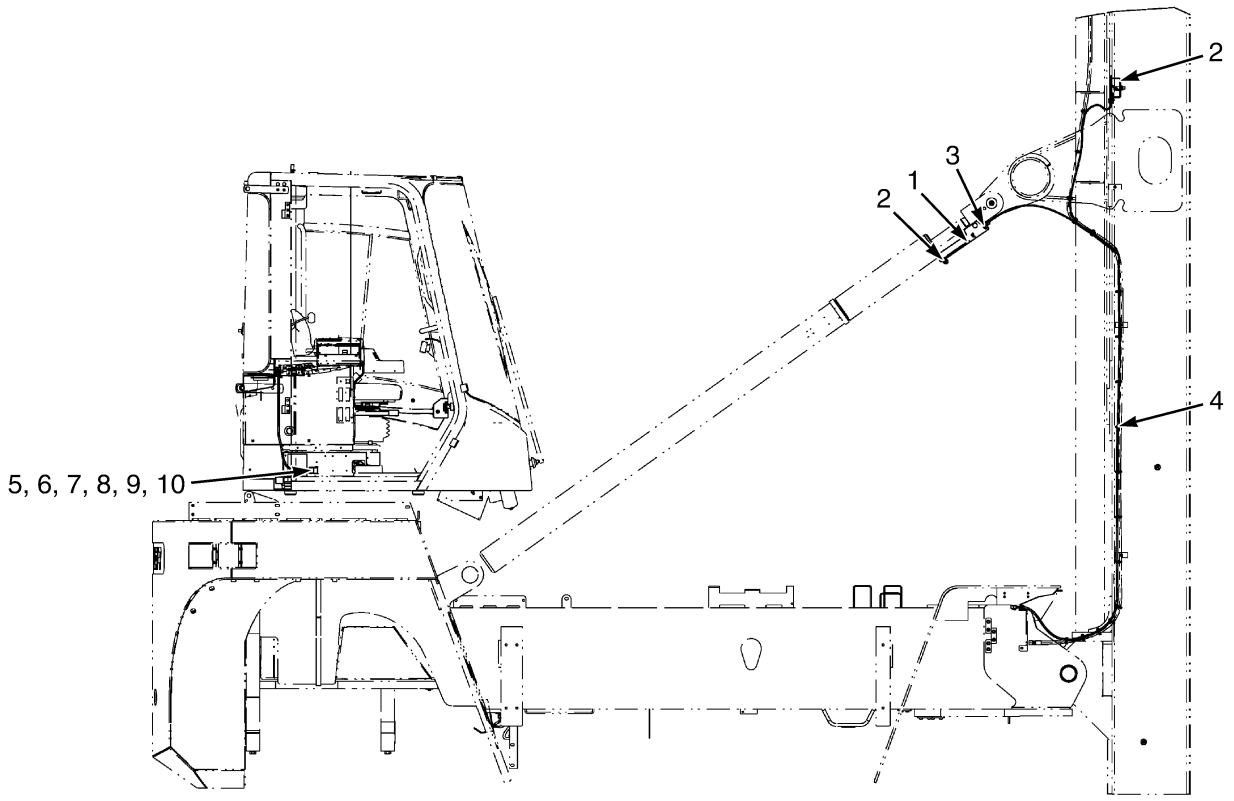

HP082092

©2010 HYSTER COMPANY

CONDITIONAL SPEED LIMITER

LIFT AND TILT (S/N B214E01777H →)

ITEM	PART NO.	DESCRIPTION	QTY
1	4004547	Bracket (Proximity Switch Tilt)	1
2	1675826	Switch Assembly (Proximity) (☞Figure 4-56)	2
3	**a** 4004711	Wire Harness (Proximity Switch Lift and Tilt)	1
3	**c** 4023356	Wire Harness (Proximity Switch Lift and Tilt)	1
3	**a** 1330437	Terminal (Pin)	9
3	**c** 1330437	Terminal (Pin) (C72)	3
3	**a** 1330415	Connector	3
3	**c** 1330415	Connector (C72)	1
3	**a** 1493466	Connector	3
3	**c** 1493466	Connector (C72)	1
3	**c** 1484397	Connector (3-Way) (C01, C02)	2
3	**c** 1330426	Connector (C01, C02)	2
3	**c** 1330438	Terminal (Socket) (C02, C02)	6
4	129563	Strap Clamp	20
5	**b** 4010630	Wire Harness (Container Positioner Speed Reduction)	1
5	1489957	Connector (1-Way)	8
5	1330437	Terminal (Pin)	7
5	1484683	Relay (Base)	1
5	1330418	Connector	1
5	1623050	Housing	1
6	**d** 4014284	Wire Harness (Container Positioner Speed Reduction)	1
6	1500925	Connector	1
6	1484683	Relay (Base)	1
7	1489960	Relay (24 Volt)	2
8	1484715	Clip	1
9	320156	Washer	1
10	148962	Capscrew	1

FOOTNOTES:

a → 10/2010
b → S/N B214E01776H
c 10/2010 →
d S/N B214E01777H →

©2010 HYSTER COMPANY

WIRE HARNESS (FIGURE 4-58)
SPEED LIMITER

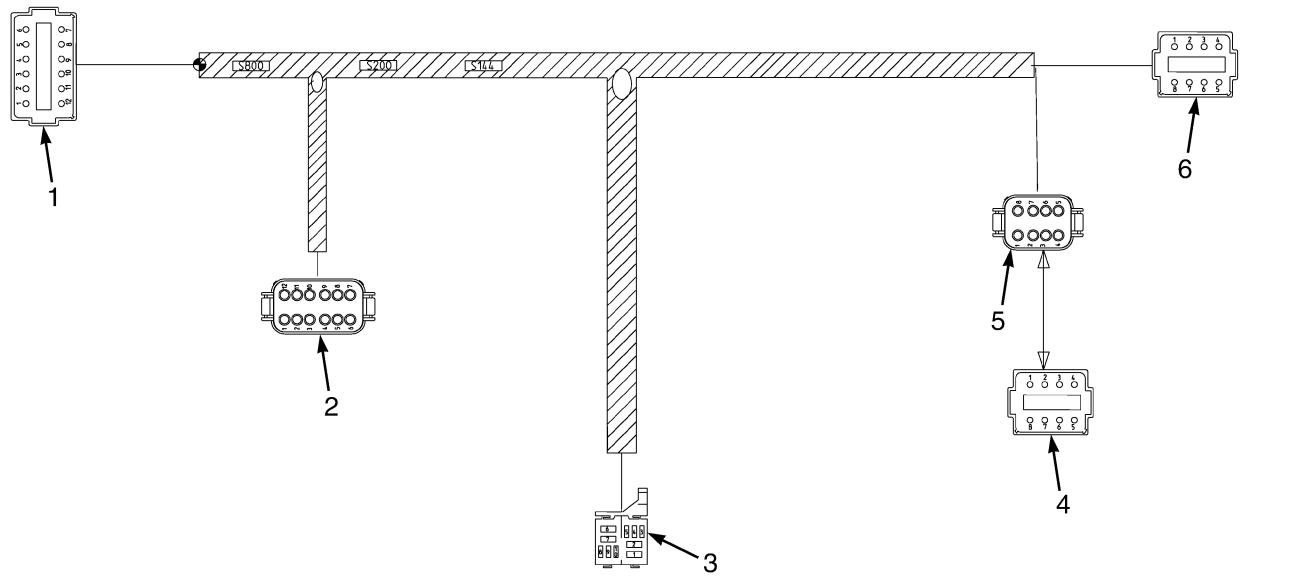

HP082102

ITEM	PART NO.	DESCRIPTION	QTY
	4014634	Wire Harness (Speed Limiter)	1
1	. . . . .	Connector Assembly (CRP100 Twist Module)	1
1	1500925	Connector	1
1	1352603	Connector	1
1	1330437	Terminal (Pin)	12
2	. . . . .	Connector Assembly (CPS400 Twist Module)	1
2	1493428	Connector (12-Way)	1
2	1500913	Connector	1
2	1330438	Terminal (Socket)	12
3	. . . . .	Connector Assembly (CPS300 Switch Relays 1 and 2)	1
3	1484683	Relay (Base)	1
3	1484715	Clip	1
3	1489957	Connector (1-Way) (Switch Relay 1)	2
3	1489957	Connector (1-Way) (Switch Relay 2)	2
3	1570602	Terminal (Socket) (Switch Relay 1)	3
3	1570602	Terminal (Socket) (Switch Relay 2)	2
4	. . . . .	Connector Assembly (CRP500 Relays Jumper)	1
4	1623050	Housing	1
4	1330418	Connector	1
4	1330437	Terminal (Pin)	2
4	1330439	Plug	6
5	. . . . .	Connector Assembly (CPS600 Speed Limiter Relays)	1
5	1502625	Connector	1
5	1502626	Connector	1
5	1330439	Plug	1
5	1330438	Terminal (Socket)	7

©2010 HYSTER COMPANY

ITEM	PART NO.	DESCRIPTION	QTY
6	. . . . .	Connector Assembly (CRP200 Speed Limiter Relays)	1
6	1623050	Housing	1
6	1330418	Connector	1
6	1330439	Plug	1
6	1330437	Terminal (Pin)	7

©2010 HYSTER COMPANY

SECOND 12V SOCKET OPTION (FIGURE 4-59)
CLIMATE CONTROL CAB

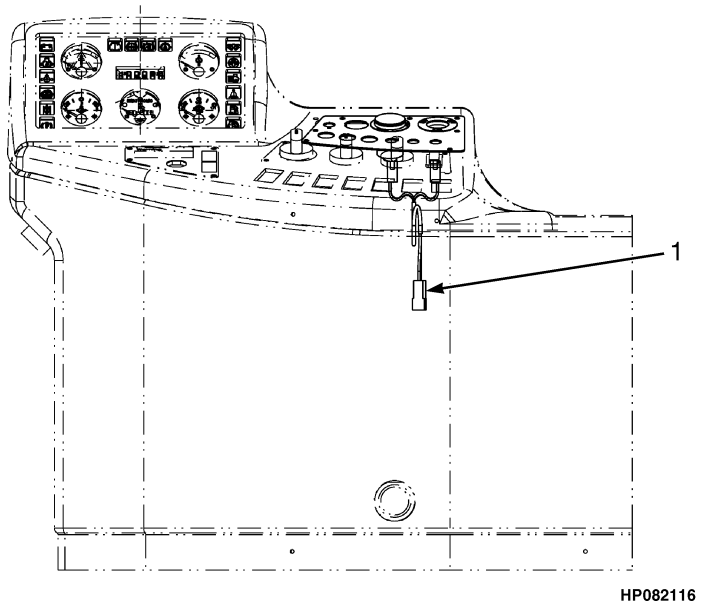

ITEM	PART NO.	DESCRIPTION	QTY
1	**a** 4011627	Power Supply (Second 12V Socket)	1
1	1558027	Label (12V)	1
1	4011628	Wire Harness	1
1	1566764	Socket (12 Volt)	1

FOOTNOTES:

a Use with DC-DC Converter 2100569

©2010 HYSTER COMPANY

ELECTRIC HORN (FIGURE 4-60)

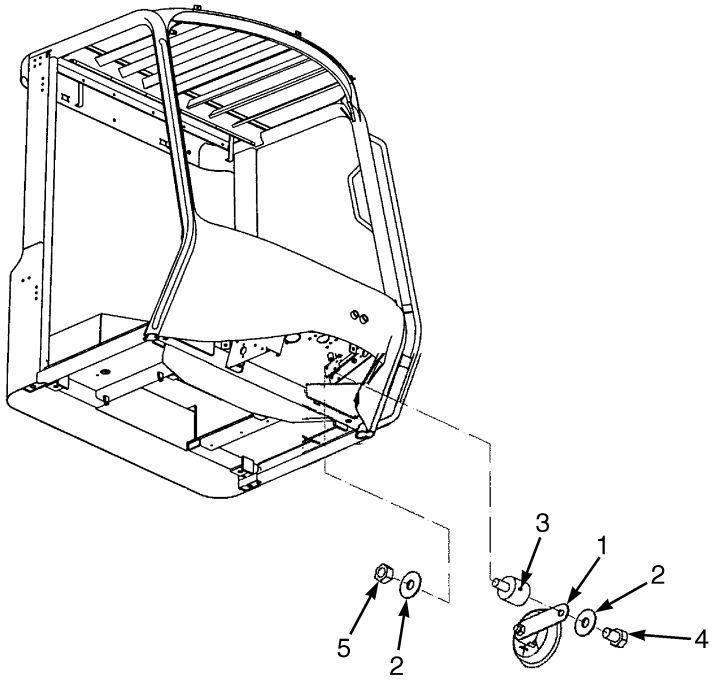

HP082066

ITEM	PART NO.	DESCRIPTION	QTY
1	1483425	Horn (24 Volt)	1
2	320158	Washer	2
3	353453	Mount	1
4	287805	Capscrew	1
5	316835	Nut	1

NOTES

©2010 HYSTER COMPANY

5 TRANSMISSION

SECTION 5
TRANSMISSION

DESCRIPTION	PAGE
TRANSMISSION ASSEMBLY	
CASE AND REAR COVER - TE-13 AND TE-17	5-36
CHARGING PUMP - TE-13 AND TE-17	5-24
CONTROL VALVE ASSEMBLY - TE-13 AND TE-17	5-30
CONTROL VALVE ATTACHING PARTS - TE-13 AND TE-17	5-28
CONVERTER HOUSING - TE-13 AND TE-17	5-4
DRIVE PLATES - TE-13 AND TE-17	5-6
FLUID INDICATOR AND ATTACHING PARTS - TE-13 AND TE-17	5-39
FORWARD AND THIRD SHAFT - TE-13 AND TE-17	5-18
GEARS - TE-13 AND TE-17	5-8
INPUT SHAFT AND FIRST CLUTCH - TE-13 AND TE-17	5-10
MODULATOR VALVE ASSEMBLY - TE-13 AND TE-17	5-34
OUTPUT SHAFT - TE-13 AND TE-17	5-26
PUMP DRIVE - TE-13 AND TE-17	5-22
REGULATOR VALVE ASSEMBLY - TE-13 AND TE-17	5-32
REVERSE AND SECOND CLUTCH - TE-13 AND TE-17	5-14
TE-13 AND TE-17	5-2
TORQUE CONVERTER - TE-13 AND TE-17	5-7
TRANSMISSION HOSES AND ATTACHING PARTS - TE-13 AND TE-17	5-44
UNIVERSAL SHAFT - TE-13 AND TE-17	5-41
TRANSMISSION MOUNTING	
TE-13 AND TE-17	5-46

©2010 HYSTER COMPANY

TRANSMISSION ASSEMBLY (FIGURE 5-1)
TE-13 AND TE-17

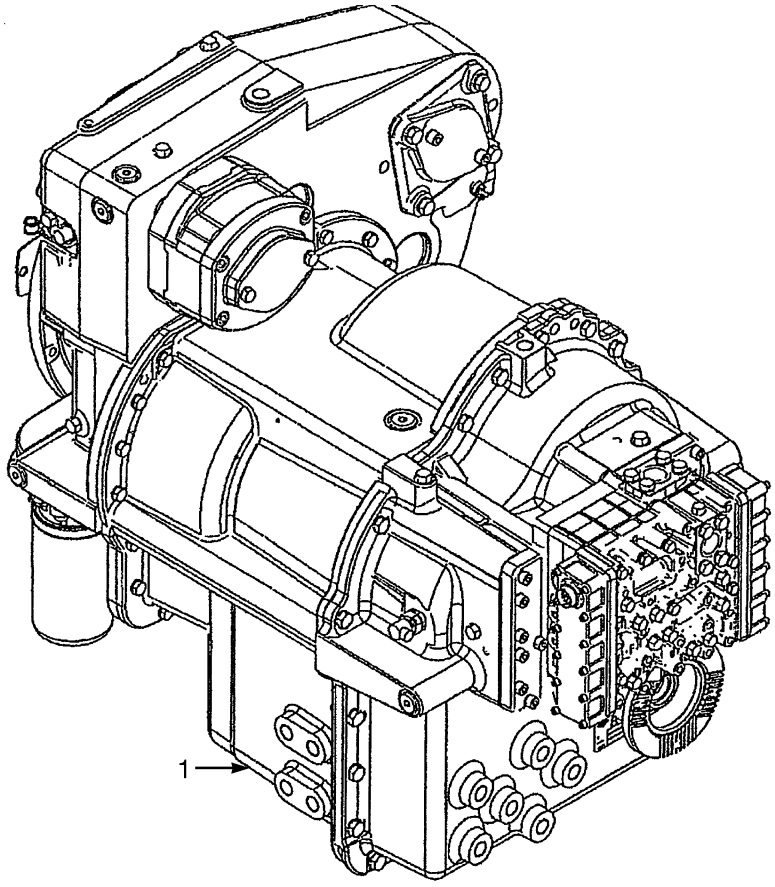

HP240539

ITEM	PART NO.	DESCRIPTION	QTY
1	**a** 1644533	Transmission Assy (TE-13)	1
1	**b** 1689351	Transmission Assy (TE-13)	1
1	**c** 1704582	Transmission Assy (TE-13)	1
1	**a** 1644532	Transmission Assy (TE-17)	1
1	**b** 1689343	Transmission Assy (TE-17)	1
1	**c** 1704583	Transmission Assy (TE-17)	1

FOOTNOTES:

a → S/N B214E01646F

b S/N B214E01647F ↔ S/N B214E01708F INC. 01710, 01721-01722

c S/N B214E01709F → EXC. 01710, 01721-01722

©2010 HYSTER COMPANY

NOTES

©2010 HYSTER COMPANY

TRANSMISSION ASSEMBLY (FIGURE 5-2)
CONVERTER HOUSING — TE-13 AND TE-17

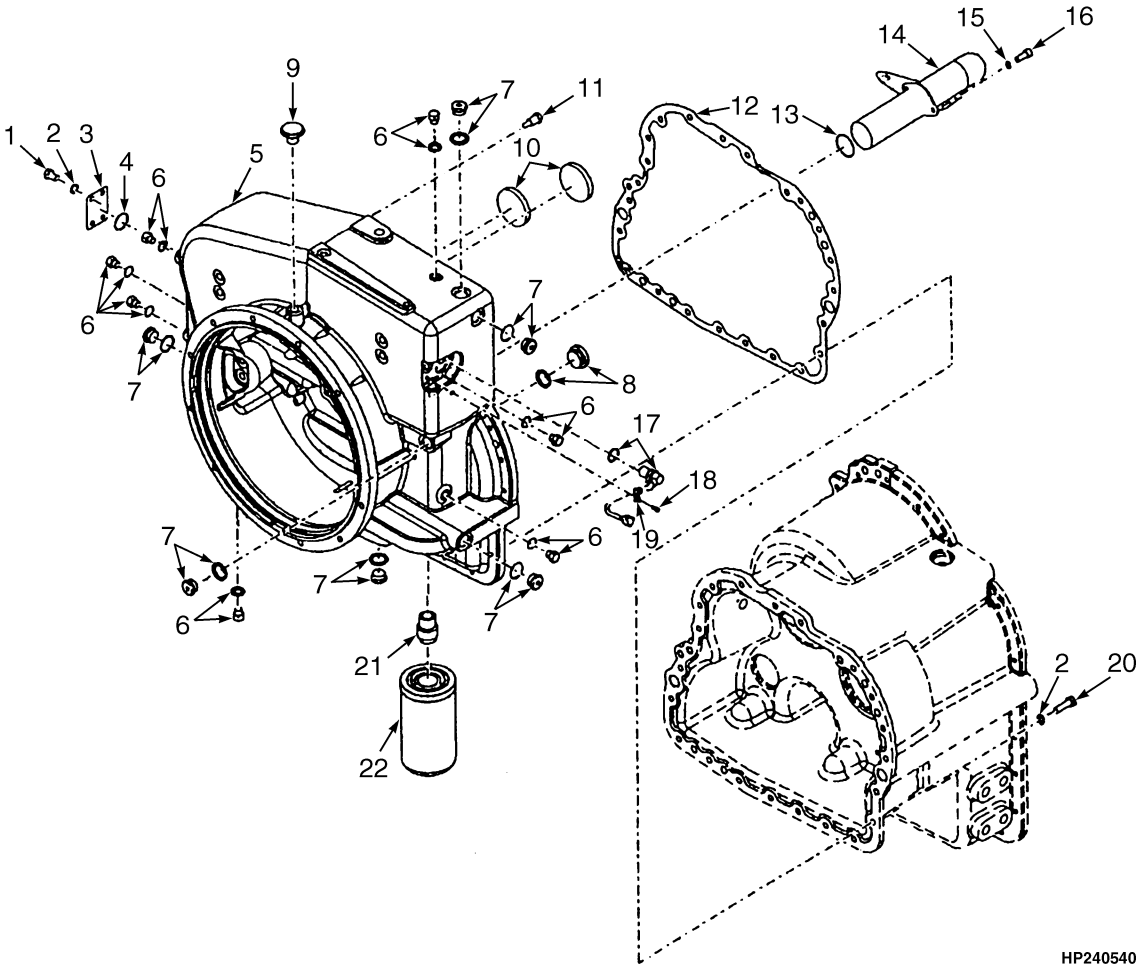

©2010 HYSTER COMPANY

TRANSMISSION ASSEMBLY
CONVERTER HOUSING – TE-13 AND TE-17

ITEM	PART NO.	DESCRIPTION	QTY
	a 1644533	Transmission Assy (TE-13)	1
	b 1689351	Transmission Assy (TE-13)	1
	c 1704582	Transmission Assy (TE-13)	1
	a 1644532	Transmission Assy (TE-17)	1
	b 1689343	Transmission Assy (TE-17)	1
	c 1704583	Transmission Assy (TE-17)	1
1	1612313	Capscrew	4
2	1612314	Lockwasher	25
3	1612311	Cover	1
4	1624376	O-Ring	1
5	1624367	Converter Housing	1
5	1688729	Converter Housing Assembly (Alternate Part)	1
6	1624369	Plug	6
6	1624370	O-Ring	1
7	1624368	Plug	6
7	1612905	O-Ring	1
7	1612293	Plug (Expansion)	6
8	1624371	Plug	1
8	1624372	O-Ring	1
9	330527	Breather	1
10	1624375	Plug	2
11	1556912	Sensor (Converter Oil Temperature)	1
12	1624373	Gasket	1
13	1624386	O-Ring	1
14	1624387	Tube Assy	1
15	1624385	Lockwasher	5
16	1624388	Screw	2
17	1624377	Sensor-Speed	1
17	1579011	O-Ring	1
18	1556910	Capscrew	1
19	1624389	Clamp (Speed Sensor)	1
20	1624374	Capscrew	21
21	1624381	Adapter	1
21	1612863	Adapter (Alternate Part)	1
22	1646444	Transmission Filter	1
22	1556992	Transmission Filter (Alternate Part)	1
	1624366	Kit-Seal	1
31	4013868	Kit-Seal	1

FOOTNOTES:

a → S/N B214E01646F

b S/N B214E01647F ↔ S/N B214E01708F INC. 01710, 01721-01722

c S/N B214E01709F → EXC. 01710, 01721-01722

©2010 HYSTER COMPANY

TRANSMISSION ASSEMBLY (FIGURE 5-3)
DRIVE PLATES — TE-13 AND TE-17

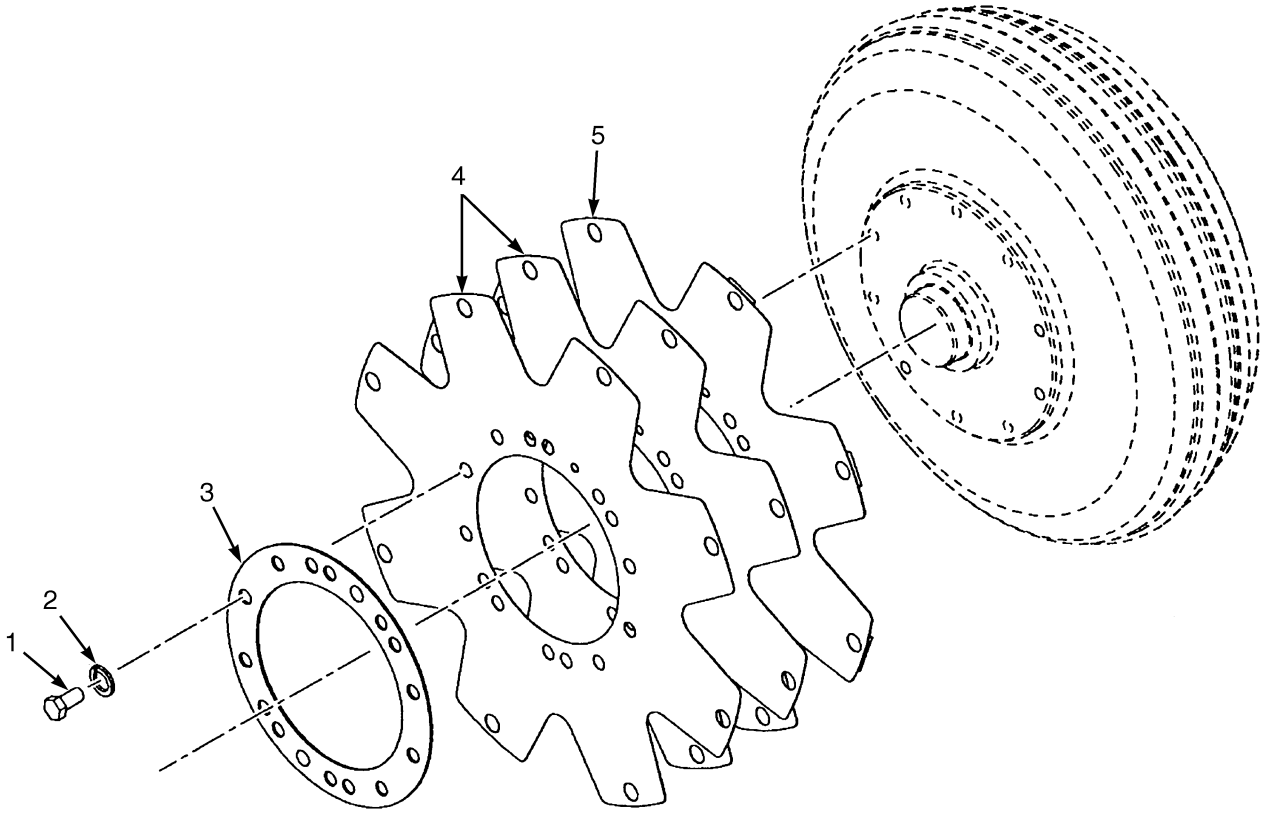

HP240533

ITEM	PART NO.	DESCRIPTION	QTY
	a 1644533	Transmission Assy (TE-13)	1
	b 1689351	Transmission Assy (TE-13)	1
	c 1704582	Transmission Assy (TE-13)	1
	a 1644532	Transmission Assy (TE-17)	1
	b 1689343	Transmission Assy (TE-17)	1
	c 1704583	Transmission Assy (TE-17)	1
	1624630	Kit-Drive Plate Torque Conv	1
1	1314285	Screw	10
2	15156	Lockwasher	10
3	1312373	Back-Up Ring	1
4	4006398	Drive Plate	2
5	4006399	Drive Plate (With Welded Nuts)	1

FOOTNOTES:

a → S/N B214E01646F

b S/N B214E01647F ↔ S/N B214E01708F INC. 01710, 01721-01722

c S/N B214E01709F → EXC. 01710, 01721-01722

©2010 HYSTER COMPANY

TRANSMISSION ASSEMBLY (FIGURE 5-4)
TORQUE CONVERTER — TE-13 AND TE-17

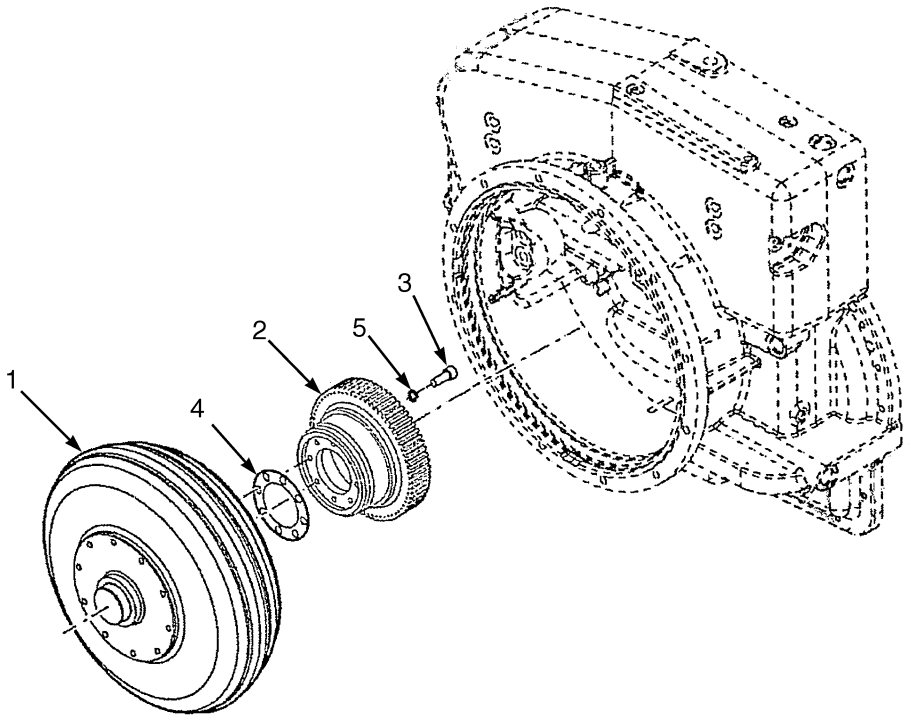

HP240574

KEY:
A: TE-13 Transmission
B: TE-17 Transmission

ITEM	PART NO.	DESCRIPTION	QTY A	QTY B
	a 1644533	Transmission Assy (TE-13)	1	..
	b 1689351	Transmission Assy (TE-13)	1	..
	c 1704582	Transmission Assy (TE-13)	1	..
	a 1644532	Transmission Assy (TE-17)	..	1
	b 1689343	Transmission Assy (TE-17)	..	1
	c 1704583	Transmission Assy (TE-17)	..	1
	1646447	Torque Converter	1	..
	1646553	Torque Converter Assembly	..	1
1	. . . . .	Housing	1	1
2	1646448	Gear	1	..
2	1624417	Gear	..	1
3	1624418	Screw	8	8
4	1624419	Gasket	1	1
5	1624385	Lockwasher	1	1

FOOTNOTES:

a → S/N B214E01646F
b S/N B214E01647F ↔ S/N B214E01708F INC. 01710, 01721-01722
c S/N B214E01709F → EXC. 01710, 01721-01722

©2010 HYSTER COMPANY

TRANSMISSION ASSEMBLY (FIGURE 5-5)
GEARS — TE-13 AND TE-17

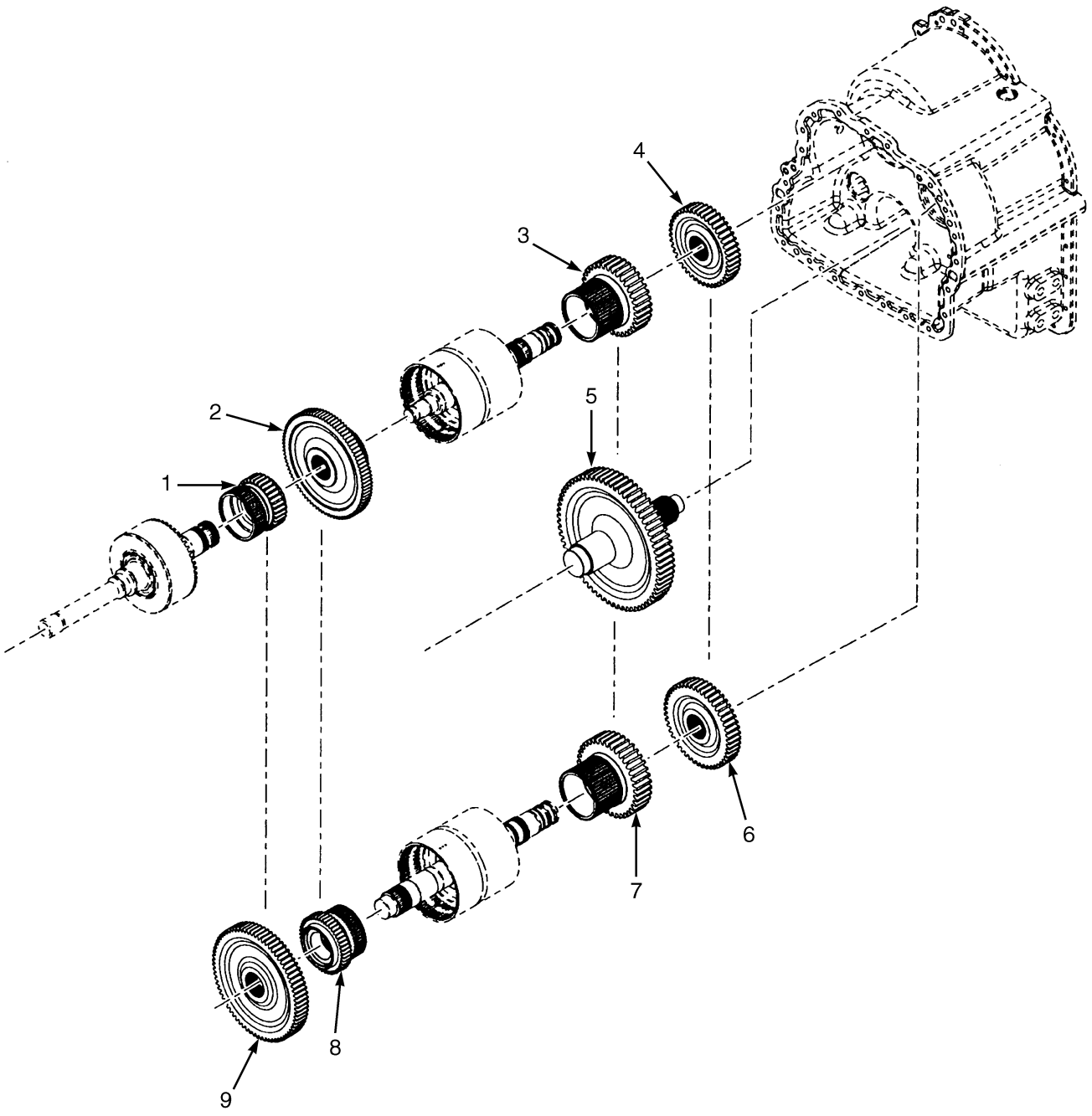

HP240537

©2010 HYSTER COMPANY

TRANSMISSION ASSEMBLY

GEARS – TE-13 AND TE-17

ITEM	PART NO.	DESCRIPTION	QTY
	a 1644533	Transmission Assy (TE-13)	1
	b 1689351	Transmission Assy (TE-13)	1
	c 1704582	Transmission Assy (TE-13)	1
	a 1644532	Transmission Assy (TE-17)	1
	b 1689343	Transmission Assy (TE-17)	1
	c 1704583	Transmission Assy (TE-17)	1
1	1624445	Gear (First Clutch)	1
2	1624447	Gear (Second Clutch)	1
3	1624449	Gear (Reverse Clutch)	1
4	1624452	Gear (Reverse Shaft)	1
5	1624451	Shaft (Output Shaft)	1
6	1624392	Gear (Forward Shaft)	1
7	1624450	Gear (Forward Clutch)	1
8	1624448	Gear (Third Clutch)	1
9	1624446	Gear (Third Shaft)	1

FOOTNOTES:

a → S/N B214E01646F

b S/N B214E01647F ↔ S/N B214E01708F INC. 01710, 01721-01722

c S/N B214E01709F → EXC. 01710, 01721-01722

©2010 HYSTER COMPANY

TRANSMISSION ASSEMBLY (FIGURE 5-6)
INPUT SHAFT AND FIRST CLUTCH — TE-13 AND TE-17

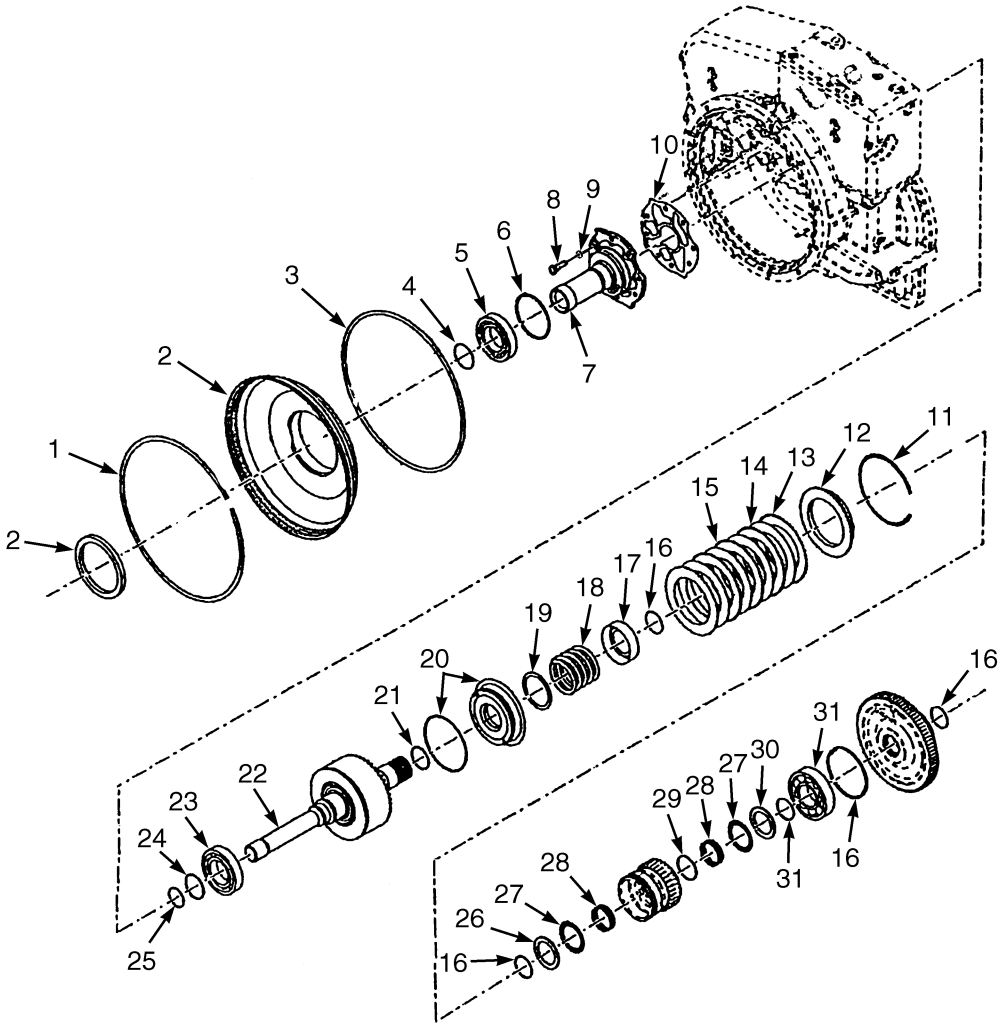

HP240542

©2010 HYSTER COMPANY

TRANSMISSION ASSEMBLY

INPUT SHAFT AND FIRST CLUTCH – TE-13 AND TE-17

ITEM	PART NO.	DESCRIPTION	QTY
	a 1644533	Transmission Assy (TE-13)	1
	b 1689351	Transmission Assy (TE-13)	1
	c 1704582	Transmission Assy (TE-13)	1
	a 1644532	Transmission Assy (TE-17)	1
	b 1689343	Transmission Assy (TE-17)	1
	c 1704583	Transmission Assy (TE-17)	1
1	1312376	Retaining Ring	1
2	1624458	Baffle	1
2	1624457	Oil Seal	1
3	1624459	O-Ring	1
3	4012199	O-Ring (Alternate Part)	1
4	1624460	Snap Ring	1
5	1624461	Bearing	1
6	1646450	Piston Ring	1
7	1646451	Support (Stator)	1
7	1646452	Bushing	1
8	1624374	Capscrew	8
9	1612314	Lockwasher	8
10	1624464	Gasket	1
11	1624479	Snap Ring	1
12	1624597	Plate (TE-13)	1
12	1624478	Plate (TE-17)	1
13	1624477	Separator Plate (Inner)	4
14	1624476	Friction Disk (Outer)	3
15	1624475	Disk (Outer Half)	2
16	1624474	Snap Ring (External)	4
17	1624473	Spring	1
18	1624472	Return Spring (Return)	1
19	1624471	Spacer	1
20	1624470	Piston	1
20	. . . . .	Screen	1
20	1624469	Seal	1
21	1624468	Piston Ring	1
22	1624467	Clutch Housing (First)	1
23	330542	Bearing	1
24	1624466	Piston Ring	1
25	1624465	Piston Ring	1
26	1624484	Thrust Washer (Roller)	1
27	1624481	Needle Bearing	2
28	1624482	Bearing	2
29	1624483	Spacer	2
30	1624480	Thrust Washer	2
31	1624423	Bearing	1
32	1624425	Snap Ring	1
	1624366	Kit-Seal	1
34	4013868	Kit-Seal	1

©2010 HYSTER COMPANY

FOOTNOTES:

a → S/N B214E01646F
b S/N B214E01647F ↔ S/N B214E01708F INC. 01710, 01721-01722
c S/N B214E01709F → EXC. 01710, 01721-01722

©2010 HYSTER COMPANY

NOTES

©2010 HYSTER COMPANY

TRANSMISSION ASSEMBLY (FIGURE 5-7)
REVERSE AND SECOND CLUTCH — TE-13 AND TE-17

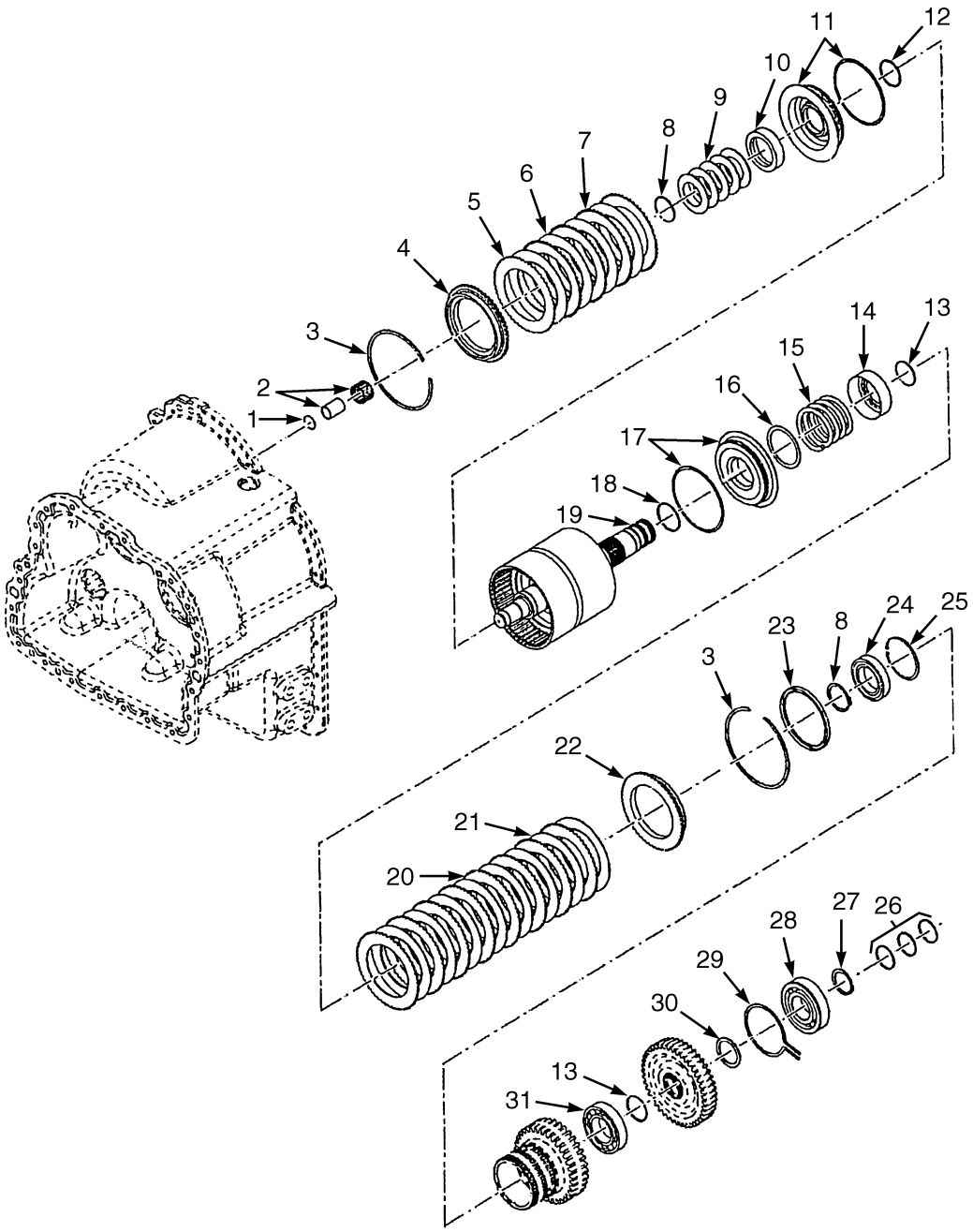

HP240543

©2010 HYSTER COMPANY

TRANSMISSION ASSEMBLY
REVERSE AND SECOND CLUTCH – TE-13 AND TE-17

ITEM	PART NO.	DESCRIPTION	QTY
	a 1644533	Transmission Assy (TE-13)	1
	b 1689351	Transmission Assy (TE-13)	1
	c 1704582	Transmission Assy (TE-13)	1
	a 1644532	Transmission Assy (TE-17)	1
	b 1689343	Transmission Assy (TE-17)	1
	c 1704583	Transmission Assy (TE-17)	1
1	1624575	Piston Ring	1
2	1624576	Bearing	1
2	1624577	Bearing	1
3	1624479	Snap Ring	2
4	1624578	Plate	1
5	1624475	Disk (Outer Half, Second)	2
6	1624477	Separator Plate (Inner, Second	6
7	1624476	Friction Disk (Outer, Second)	5
8	1566652	Retaining Ring	2
9	1624587	Spring (Includes Five Washers)	1
9	1705539	Spring (Alternate Part)	1
10	1624579	Spacer	1
11	1624470	Piston	1
11	. . . . .	Screen	1
11	1624469	Seal	1
12	1624468	Piston Ring	1
13	1624474	Snap Ring (External)	2
14	1624582	Retainer	1
15	1624472	Return Spring (Return)	1
16	1624471	Spacer	1
17	1624581	Piston (Forward And Reverse)	1
17	. . . . .	Screen	1
17	1624469	Seal (Outer)	1
18	1624466	Piston Ring	1
19	1624580	Clutch Housing	1
20	1624583	Separator Plate (Outer, Reverse)	8
21	1624584	Friction Disk (Inner, Reverse)	8
22	1646454	Plate (TE-13)	1
22	1624478	Plate (TE-17)	1
23	1612503	Seal	1
24	1612507	Bearing	1
25	1612530	Snap Ring	1
26	1624586	Piston Ring	3
27	1311814	Snap Ring	1
28	1624585	Ball Bearing	1
29	1311719	Ring	1
30	1311716	Washer	1
31	1612508	Bearing	1
	1624366	Kit-Seal	1
33	4013868	Kit-Seal	1

©2010 HYSTER COMPANY

FOOTNOTES:

a → S/N B214E01646F
b S/N B214E01647F ↔ S/N B214E01708F INC. 01710, 01721-01722
c S/N B214E01709F → EXC. 01710, 01721-01722

©2010 HYSTER COMPANY

NOTES

©2010 HYSTER COMPANY

TRANSMISSION ASSEMBLY (FIGURE 5-8)
FORWARD AND THIRD SHAFT — TE-13 AND TE-17

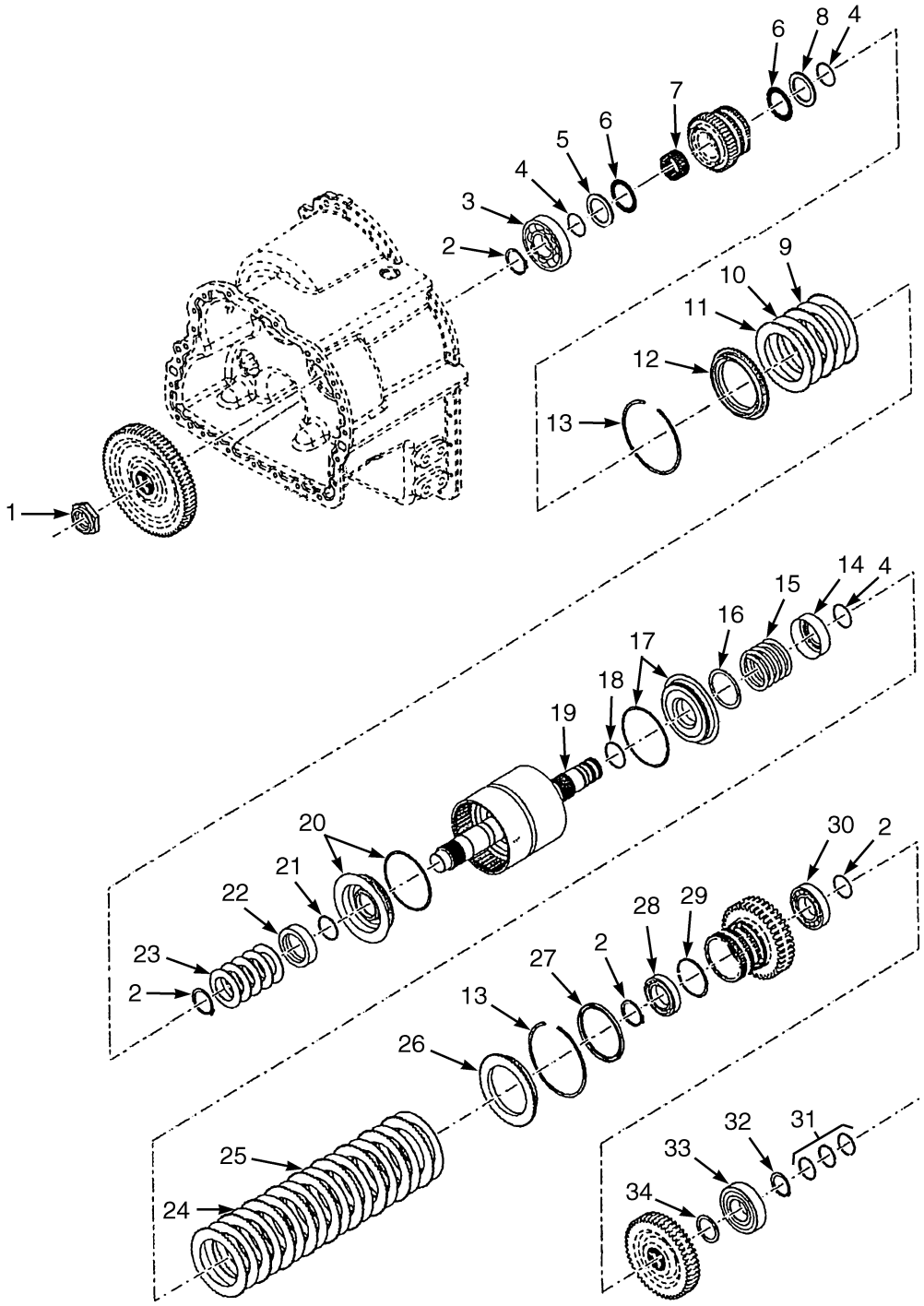

HP240544

©2010 HYSTER COMPANY

TRANSMISSION ASSEMBLY
FORWARD AND THIRD SHAFT – TE-13 AND TE-17

ITEM	PART NO.	DESCRIPTION	QTY
	a 1644533	Transmission Assy (TE-13)	1
	b 1689351	Transmission Assy (TE-13)	1
	c 1704582	Transmission Assy (TE-13)	1
	a 1644532	Transmission Assy (TE-17)	1
	b 1689343	Transmission Assy (TE-17)	1
	c 1704583	Transmission Assy (TE-17)	1
1	1504393	Nut	1
2	1566652	Retaining Ring	3
3	1624423	Bearing	1
4	1624474	Snap Ring (External)	4
5	1624480	Thrust Washer	1
6	1624481	Needle Bearing	2
7	1624596	Needle Bearing (Roller)	1
8	1624484	Thrust Washer	1
9	1624476	Friction Disk (Outer, Third)	1
10	1624477	Separator Plate (Inner, Third)	2
11	1624475	Disk (Outer Half, Third)	2
12	1624597	Plate (TE-13)	1
12	1624597	Plate (TE-17)(Third)	1
13	1624479	Snap Ring	2
14	1624582	Retainer	1
15	1624472	Return Spring (Return)	1
16	1624471	Spacer	1
17	1624581	Piston (Forward And Reverse)	1
17	. . . . .	Screen	1
17	1624469	Seal (Outer)	2
18	1624466	Piston Ring	1
19	1624599	Clutch Housing	1
20	1624470	Piston	1
20	. . . . .	Screen	1
20	1624469	Seal	1
21	1624468	Piston Ring	1
22	1624579	Spacer	1
23	1624598	Spring (Includes Five Washers)	1
24	1624584	Friction Disk (Inner, Reverse)	9
25	1624583	Separator Plate (Outer, Reverse)	9
26	1624578	Plate (Forward)	1
27	1612503	Seal	1
28	1612507	Bearing	1
29	1612530	Snap Ring	1
30	1612508	Bearing	1
31	1624586	Piston Ring	3
32	1311814	Snap Ring	1
33	43310	Bearing	1
34	1311716	Washer	1
	1624366	Kit-Seal	1

©2010 HYSTER COMPANY

FOOTNOTES:

a → S/N B214E01646F
b S/N B214E01647F ↔ S/N B214E01708F INC. 01710, 01721-01722
c S/N B214E01709F → EXC. 01710, 01721-01722

©2010 HYSTER COMPANY

NOTES

©2010 HYSTER COMPANY

TRANSMISSION ASSEMBLY (FIGURE 5-9)
PUMP DRIVE — TE-13 AND TE-17

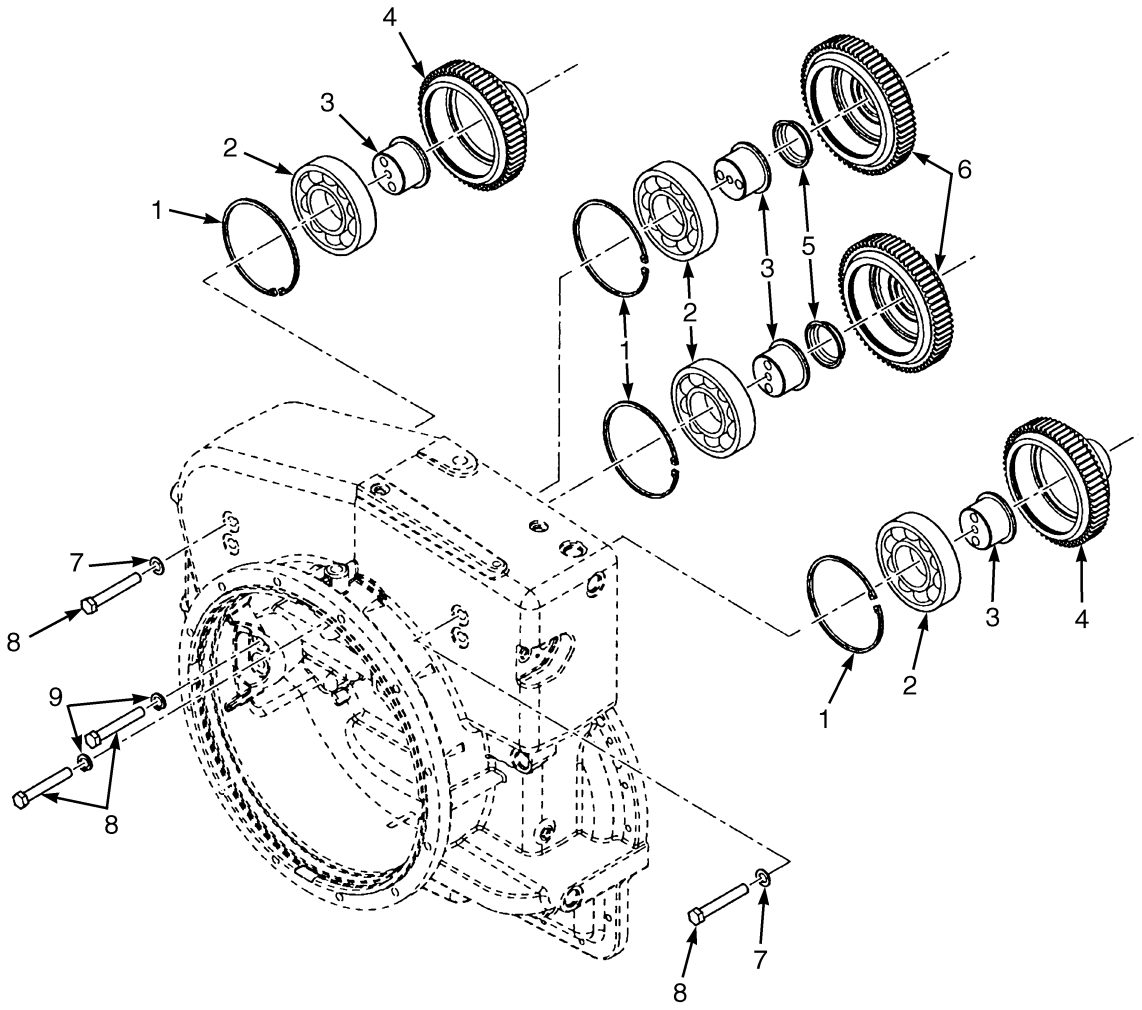

HP240536

©2010 HYSTER COMPANY

TRANSMISSION ASSEMBLY
PUMP DRIVE – TE-13 AND TE-17

ITEM	PART NO.	DESCRIPTION	QTY
	a 1644533	Transmission Assy (TE-13)	1
	b 1689351	Transmission Assy (TE-13)	1
	c 1704582	Transmission Assy (TE-13)	1
	a 1644532	Transmission Assy (TE-17)	1
	b 1689343	Transmission Assy (TE-17)	1
	c 1704583	Transmission Assy (TE-17)	1
1	1624425	Snap Ring	4
2	1624423	Bearing	4
3	1624424	Support (Pump Drive Bearing)	4
4	1624422	Gear (Pump Drive)	2
5	1624427	Plug	2
6	1624421	Gear (Pump Drive Idler)	2
7	1612365	Sealing Ring (Seal)	4
7	1492679	Washer (Alternate Part)	4
8	1624426	Capscrew	8
9	1612870	Lockwasher	4
	1624366	Kit-Seal	1

FOOTNOTES:

a → S/N B214E01646F

b S/N B214E01647F ↔ S/N B214E01708F INC. 01710, 01721-01722

c S/N B214E01709F → EXC. 01710, 01721-01722

©2010 HYSTER COMPANY

TRANSMISSION ASSEMBLY (FIGURE 5-10)
CHARGING PUMP — TE-13 AND TE-17

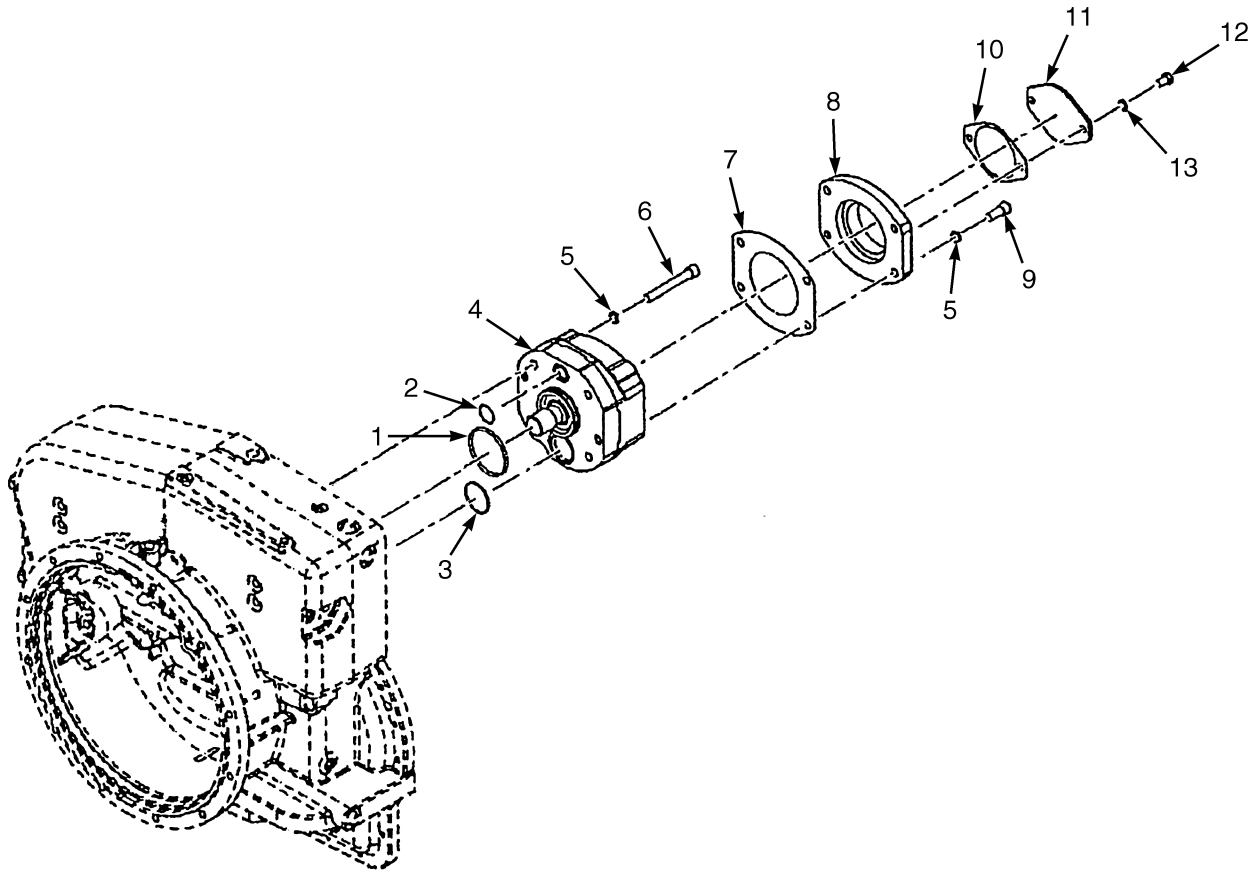

HP240545

ITEM	PART NO.	DESCRIPTION	QTY
	a 1644533	Transmission Assy (TE-13)	1
	b 1689351	Transmission Assy (TE-13)	1
	c 1704582	Transmission Assy (TE-13)	1
	a 1644532	Transmission Assy (TE-17)	1
	b 1689343	Transmission Assy (TE-17)	1
	c 1704583	Transmission Assy (TE-17)	1
1	1624608	O-Ring	1
2	1624607	O-Ring	1
3	1624609	O-Ring	1
4	1624600	Pump	1
5	1624602	Lockwasher	8
6	1624601	Capscrew	4
7	1624604	Gasket	1
8	1624603	Adapter	1
9	1624605	Screw	4
10	1556954	Gasket	1
11	1556955	Cover	1
12	1624606	Capscrew	4
13	1612870	Lockwasher	4

©2010 HYSTER COMPANY

ITEM	PART NO.	DESCRIPTION	QTY
	1624366	Kit-Seal	1
15	4013868	Kit-Seal	1

FOOTNOTES:

a → S/N B214E01646F

b S/N B214E01647F ↔ S/N B214E01708F INC. 01710, 01721-01722

c S/N B214E01709F → EXC. 01710, 01721-01722

©2010 HYSTER COMPANY

TRANSMISSION ASSEMBLY (FIGURE 5-11)
OUTPUT SHAFT — TE-13 AND TE-17

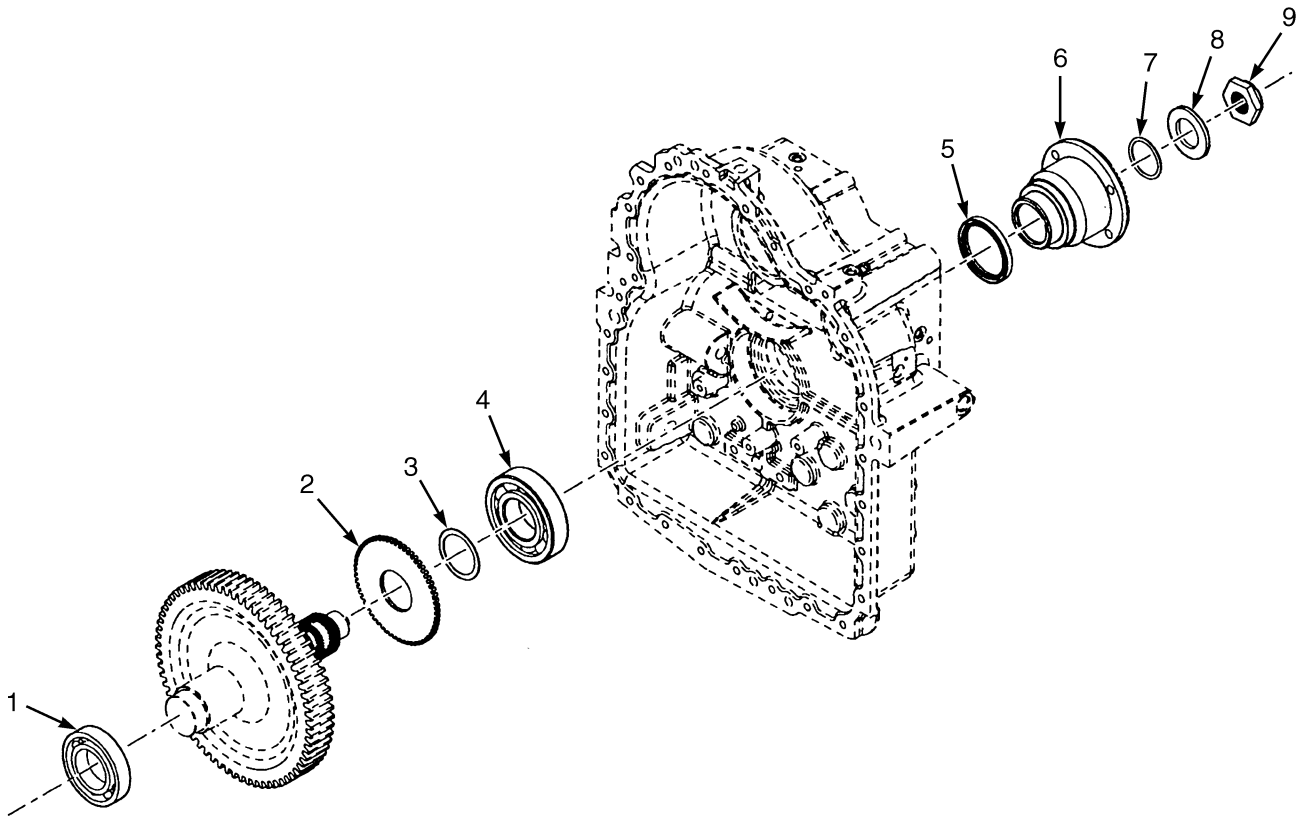

HP240535

ITEM	PART NO.	DESCRIPTION	QTY
	a 1644533	Transmission Assy (TE-13)	1
	b 1689351	Transmission Assy (TE-13)	1
	c 1704582	Transmission Assy (TE-13)	1
	a 1644532	Transmission Assy (TE-17)	1
	b 1689343	Transmission Assy (TE-17)	1
	c 1704583	Transmission Assy (TE-17)	1
1	330542	Bearing (Impeller Hub)	1
2	1624614	Gear (Speed Sensor)	1
3	1624615	Spacer	1
4	1624612	Bearing	1
5	1624613	Seal	1
6	1624610	Flange (Output)	1
7	1384799	O-Ring	1
8	1624611	Washer (Flange)	1
9	385456	Nut (Output Shaft)	1

©2010 HYSTER COMPANY

FOOTNOTES:

a → S/N B214E01646F

b S/N B214E01647F ↔ S/N B214E01708F INC. 01710, 01721-01722

c S/N B214E01709F → EXC. 01710, 01721-01722

©2010 HYSTER COMPANY

TRANSMISSION ASSEMBLY (FIGURE 5-12)
CONTROL VALVE ATTACHING PARTS — TE-13 AND TE-17

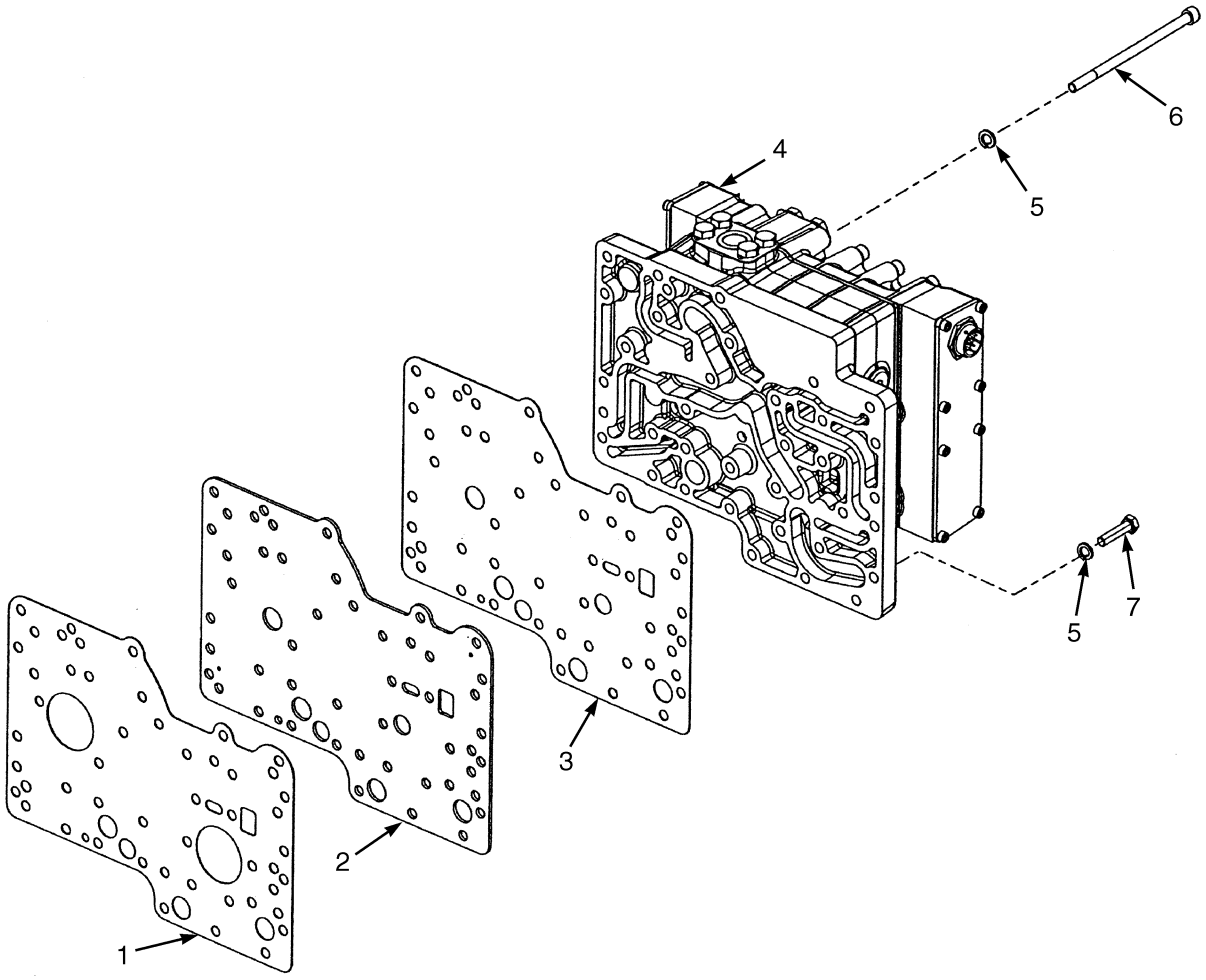

HP240546

ITEM	PART NO.	DESCRIPTION	QTY
	a 1644533	Transmission Assy (TE-13)	1
	b 1689351	Transmission Assy (TE-13)	1
	c 1704582	Transmission Assy (TE-13)	1
	a 1644532	Transmission Assy (TE-17)	1
	b 1689343	Transmission Assy (TE-17)	1
	c 1704583	Transmission Assy (TE-17)	1
1	1624616	Gasket	1
2	1624618	Plate	1
3	1624617	Gasket	1
4	1624365	Valve (☞Figure 5-13)	1
5	1590532	Lockwasher	35
6	1624619	Screw (Note position and length)	20
7	1624620	Capscrew (Note position and length)	11
7	1624621	Capscrew (Note position and length)	4

©2010 HYSTER COMPANY

FOOTNOTES:

a → S/N B214E01646F

b S/N B214E01647F ↔ S/N B214E01708F INC. 01710, 01721-01722

c S/N B214E01709F → EXC. 01710, 01721-01722

©2010 HYSTER COMPANY

TRANSMISSION ASSEMBLY (FIGURE 5-13)
CONTROL VALVE ASSEMBLY — TE-13 AND TE-17

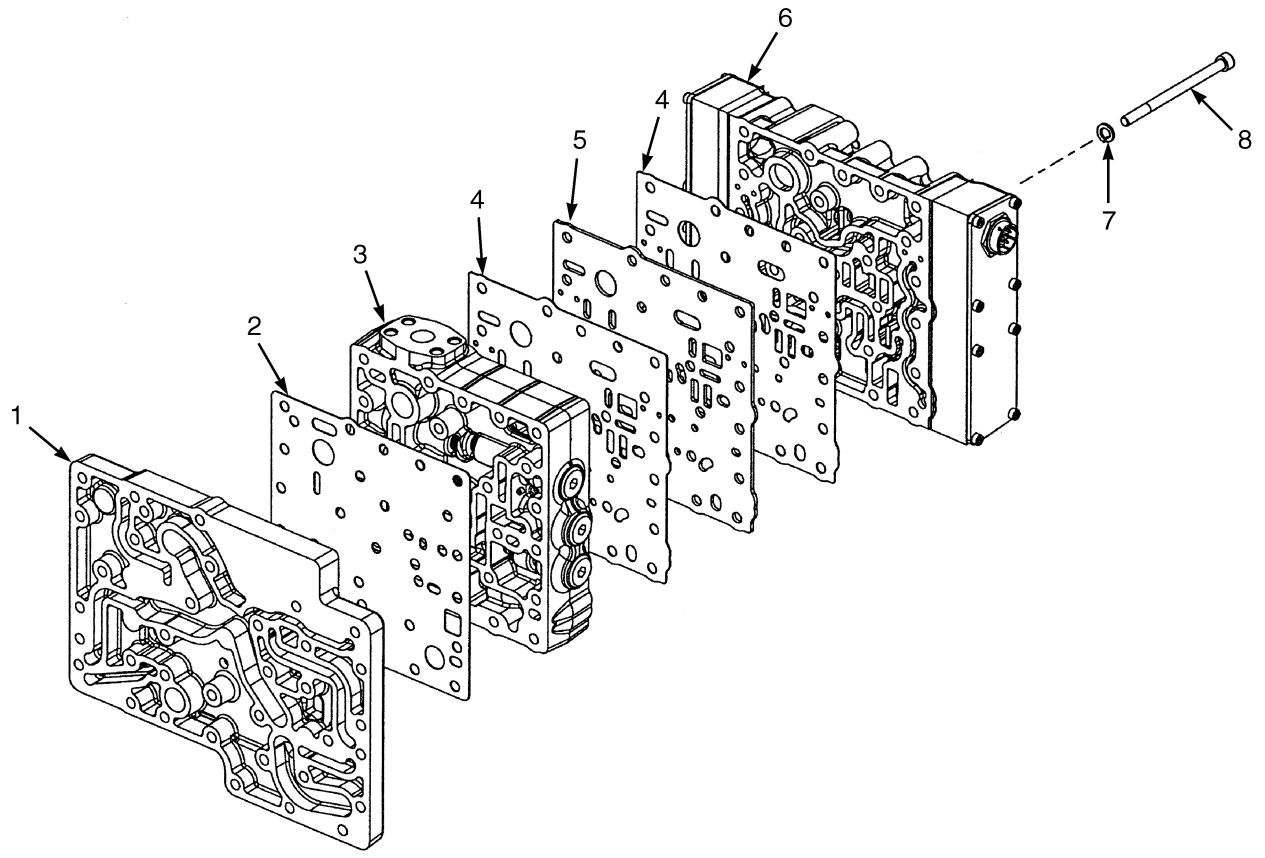

HP240547

ITEM	PART NO.	DESCRIPTION	QTY
	a 1644533	Transmission Assy (TE-13)	1
	b 1689351	Transmission Assy (TE-13)	1
	c 1704582	Transmission Assy (TE-13)	1
	a 1644532	Transmission Assy (TE-17)	1
	b 1689343	Transmission Assy (TE-17)	1
	c 1704583	Transmission Assy (TE-17)	1
	1624361	Control Valve Assy (Transmission)	1
	. . . . .	Control Valve Assembly	1
1	1624637	Plate	1
2	1624638	Gasket	1
3	1624363	Regulator Valve Assembly (☞Figure 5-14)	1
4	1624639	Gasket	2
5	1624740	Separator Plate	1
6	1624364	Modulator Valve Assembly (☞Figure 5-15)	1
7	1590532	Lockwasher	7
8	1624641	Screw	7

©2010 HYSTER COMPANY

FOOTNOTES:

a → S/N B214E01646F

b S/N B214E01647F ↔ S/N B214E01708F INC. 01710, 01721-01722

c S/N B214E01709F → EXC. 01710, 01721-01722

©2010 HYSTER COMPANY

TRANSMISSION ASSEMBLY (FIGURE 5-14)
REGULATOR VALVE ASSEMBLY — TE-13 AND TE-17

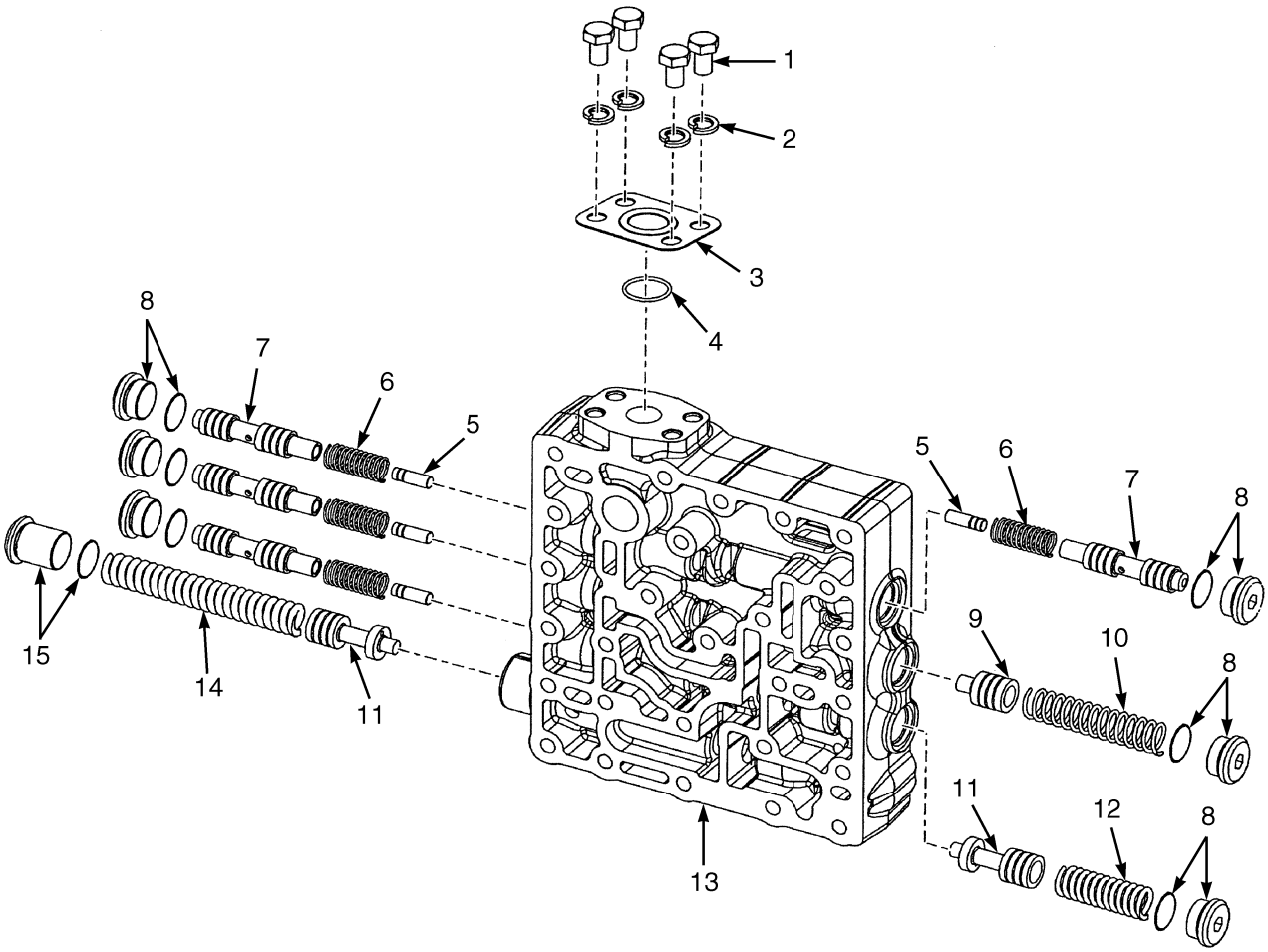

HP240548

©2010 HYSTER COMPANY

TRANSMISSION ASSEMBLY

REGULATOR VALVE ASSEMBLY – TE-13 AND TE-17

ITEM	PART NO.	DESCRIPTION	QTY
	a 1644533	Transmission Assy (TE-13)	1
	b 1689351	Transmission Assy (TE-13)	1
	c 1704582	Transmission Assy (TE-13)	1
	a 1644532	Transmission Assy (TE-17)	1
	b 1689343	Transmission Assy (TE-17)	1
	c 1704583	Transmission Assy (TE-17)	1
1	1612313	Capscrew	4
2	1612314	Lockwasher	4
3	1612311	Cover	1
4	1612312	O-Ring	1
5	. . . . .	Spool (Pressure Intensifier)	4
6	1646501	Spring (Booster)	4
7	. . . . .	Piston (Pressure Intensifier)	4
8	1624368	Plug	8
8	1612905	O-Ring	1
9	. . . . .	Spool (Converter Bypass)	1
10	1646502	Spring (Bypass)	1
11	. . . . .	Spool (Regulator)	2
12	1646503	Spring (Safety Valve)	1
13	. . . . .	Body	1
14	1646500	Spring (Pressure Regulator)	1
15	1624631	Plug	1
15	1612905	O-Ring	1
	1624366	Kit-Seal	1

FOOTNOTES:

a → S/N B214E01646F

b S/N B214E01647F ↔ S/N B214E01708F INC. 01710, 01721-01722

c S/N B214E01709F → EXC. 01710, 01721-01722

©2010 HYSTER COMPANY

TRANSMISSION ASSEMBLY (FIGURE 5-15)
MODULATOR VALVE ASSEMBLY — TE-13 AND TE-17

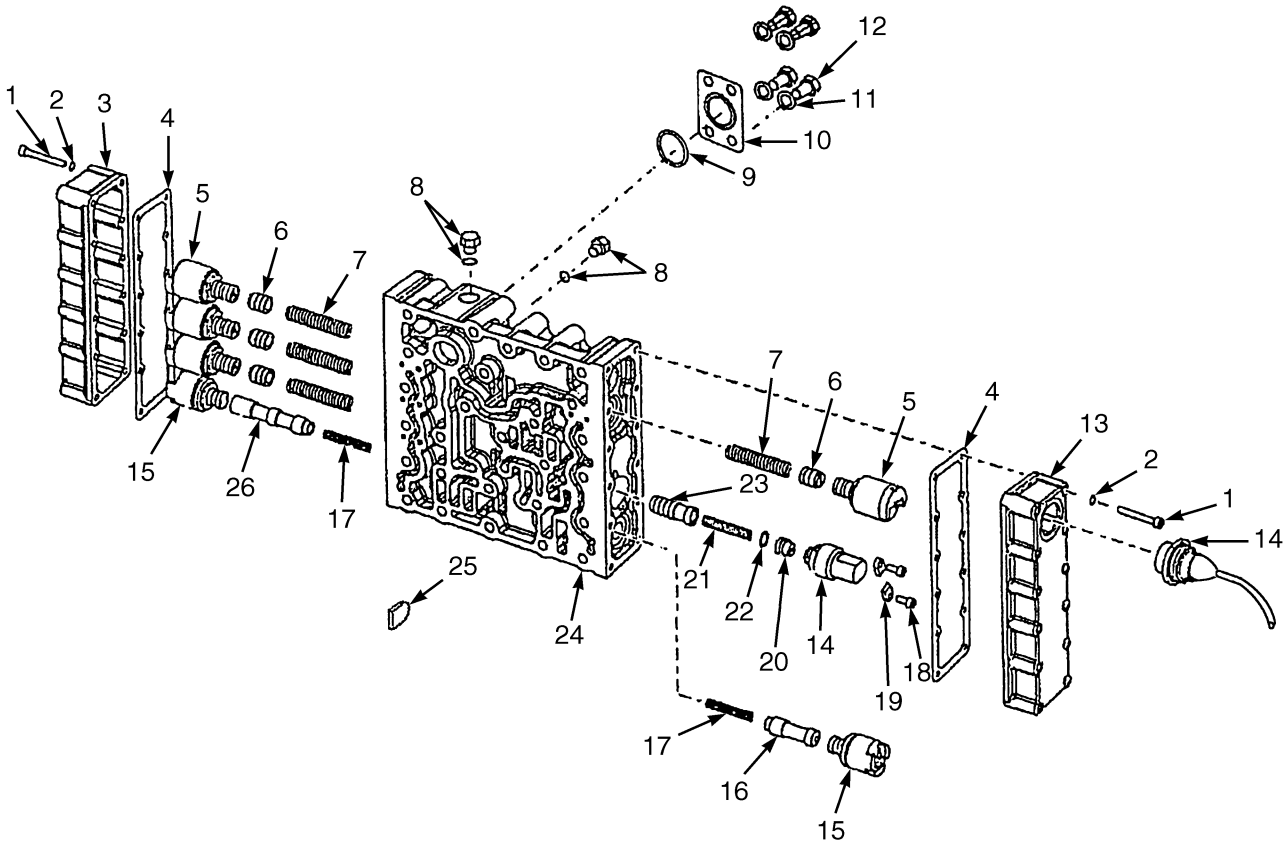

HP240549

©2010 HYSTER COMPANY

TRANSMISSION ASSEMBLY

MODULATOR VALVE ASSEMBLY – TE-13 AND TE-17

ITEM	PART NO.	DESCRIPTION	QTY
	a 1644533	Transmission Assy (TE-13)	1
	b 1689351	Transmission Assy (TE-13)	1
	c 1704582	Transmission Assy (TE-13)	1
	a 1644532	Transmission Assy (TE-17)	1
	b 1689343	Transmission Assy (TE-17)	1
	c 1704583	Transmission Assy (TE-17)	1
1	1624636	Capscrew	24
2	1557011	Lockwasher	24
3	. . . . .	Cover (Solenoids)	1
4	1624634	Gasket	2
5	1565474	Solenoid (VFS)	4
6	. . . . .	Spool (Accumulator)	4
7	1641841	Spring (Accumulator)	4
8	1557007	Plug	12
8	1557008	O-Ring	1
9	1612312	O-Ring	1
10	1612311	Cover	1
11	1612314	Lockwasher	4
12	1612313	Capscrew	4
13	. . . . .	Cover (Connector Solenoids)	1
14	1624635	Wire Harness (Modulator)	1
15	1579141	Solenoid (12V)	2
16	. . . . .	Spool (Total Neutral)	1
17	1646498	Spring (Selector Valve)	2
18	. . . . .	Screw	2
19	. . . . .	Clamp (Pressure Switch)	2
20	1624633	Stop (Reducer Spool)	1
21	1641838	Spring (Pressure Reducer)	1
22	1612687	O-Ring	1
22	382628	O-Ring (Alternate Part)	1
23	. . . . .	Spool (Pressure Reducer)	1
24	. . . . .	Body	1
25	1585091	Pin	1
26	. . . . .	Spool (First And Third)	1
	1624366	Kit-Seal	1
28	4013868	Kit-Seal	1

FOOTNOTES:

a → S/N B214E01646F

b S/N B214E01647F ↔ S/N B214E01708F INC. 01710, 01721-01722

c S/N B214E01709F → EXC. 01710, 01721-01722

©2010 HYSTER COMPANY

TRANSMISSION ASSEMBLY (FIGURE 5-16)
CASE AND REAR COVER — TE-13 AND TE-17

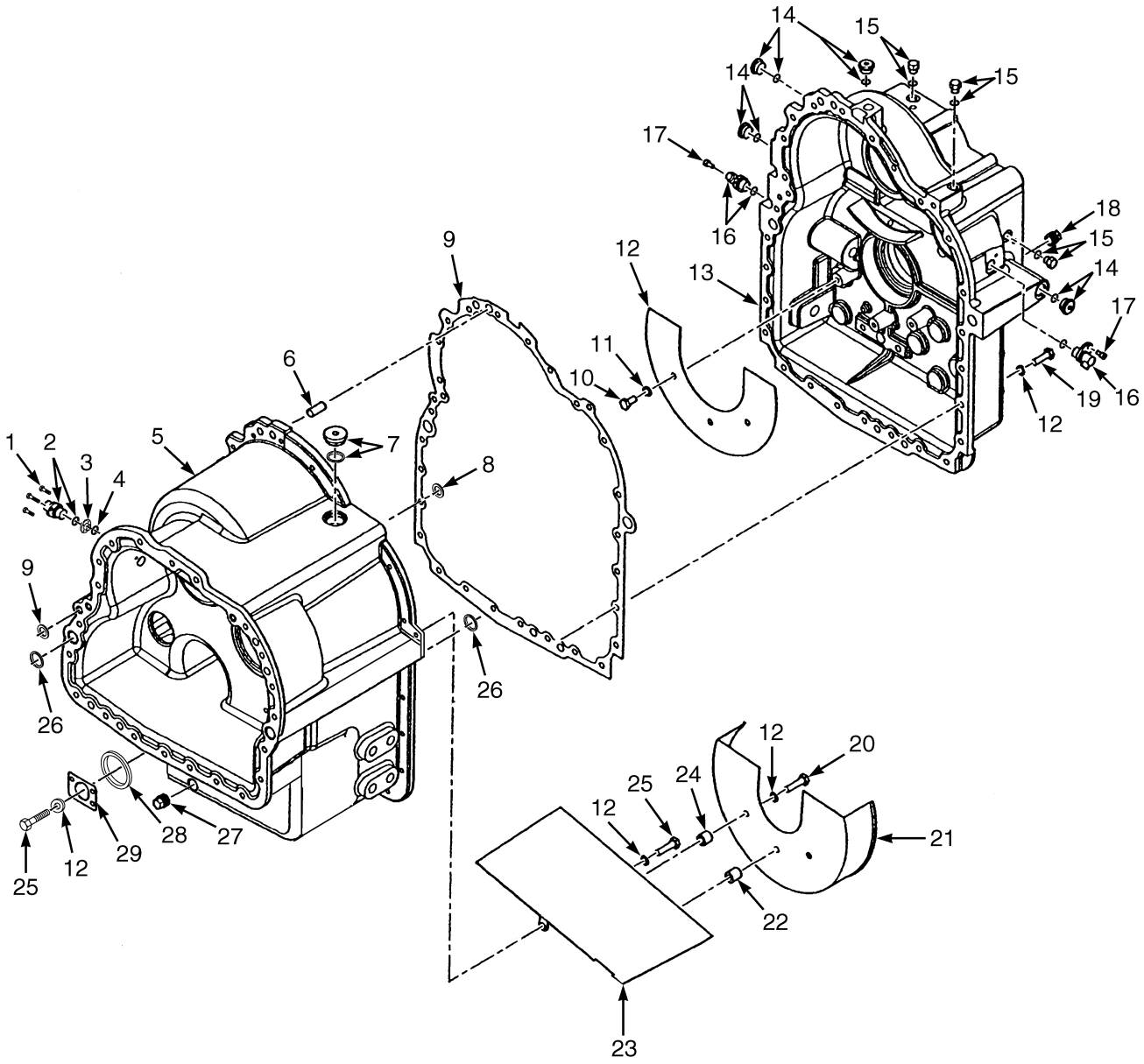

HP240538

©2010 HYSTER COMPANY

TRANSMISSION ASSEMBLY
CASE AND REAR COVER – TE-13 AND TE-17

ITEM	PART NO.	DESCRIPTION	QTY
	a 1644533	Transmission Assy (TE-13)	1
	c 1689351	Transmission Assy (TE-13)	1
	d 1704582	Transmission Assy (TE-13)	1
	a 1644532	Transmission Assy (TE-17)	1
	c 1689343	Transmission Assy (TE-17)	1
	d 1704583	Transmission Assy (TE-17)	1
1	1624397	Capscrew	1
2	1624395	Sensor (Speed)	1
2	1579011	O-Ring	1
2	1624397	Capscrew	1
3	1624396	Bushing	1
4	1624394	O-Ring	1
5	**b** 1624390	Case	1
5	**d** 1705537	Case	1
6	1579009	Pin	4
7	1624371	Plug	1
7	1624372	O-Ring	1
8	1612687	O-Ring	6
8	382628	O-Ring (Alternate Part)	6
9	1624391	Gasket	1
10	1624413	Capscrew	3
11	1612314	Lockwasher	37
12	1624410	Cover (Oil Baffle)	1
13	1624398	Cover	1
14	1624368	Plug	5
14	1612905	O-Ring	1
14	1612293	Plug (Expansion) (Not Illustrated)	5
15	1624369	Plug	3
15	1624370	O-Ring	1
16	1624393	Sensor (Speed)	2
16	1579011	O-Ring	1
17	1556910	Capscrew	2
18	. . . . .	Plug	1
19	1624374	Capscrew	26
20	1624412	Capscrew	3
21	1624409	Baffle	1
22	1624399	Spacer	1
23	1624411	Baffle	1
24	1624400	Spacer	2
25	1612313	Capscrew	5
26	1624376	O-Ring	1
27	1612332	Drain Plug (Magnetic)	1
28	1530745	O-Ring	4
29	1612311	Cover (Shipping)	1
	1612347	Bracket (Not Illustrated)	4
	1624366	Kit-Seal	1
32	4013868	Kit-Seal	1

©2010 HYSTER COMPANY

FOOTNOTES:

a → S/N B214E01646F
b → S/N B214E01708F INC. 01710, 01721-01722
c S/N B214E01647F ↔ S/N B214E01708F INC. 01710, 01721-01722
d S/N B214E01709F → EXC. 01710, 01721-01722

©2010 HYSTER COMPANY

TRANSMISSION ASSEMBLY (FIGURE 5-17)
FLUID INDICATOR AND ATTACHING PARTS — TE-13 AND TE-17

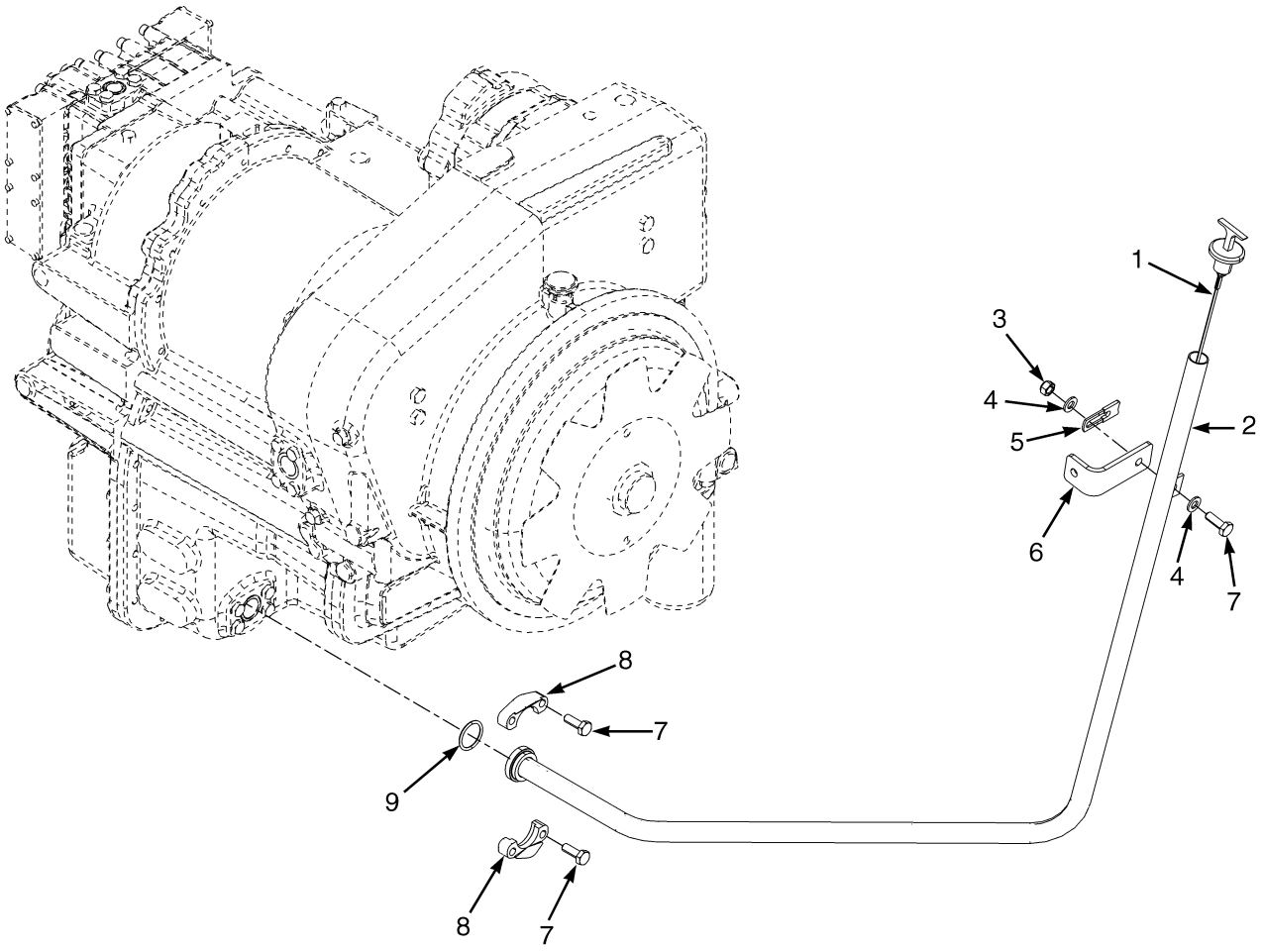

HP240555

ITEM	PART NO.	DESCRIPTION	QTY
	c 1644533	Transmission Assy (TE-13)	1
	d 1689351	Transmission Assy (TE-13)	1
	e 1704582	Transmission Assy (TE-13)	1
	c 1644532	Transmission Assy (TE-17)	1
	d 1689343	Transmission Assy (TE-17)	1
	e 1704583	Transmission Assy (TE-17)	1
1	2056545	Dipstick	1
2	**b** 1603296	Tube Wldmt-Cylinder	1
2	**f** 1683736	Dipstick Tube	1
3	302401	Locknut	1
4	320159	Washer	2
5	1345023	Strap	1
6	1603298	Bracket	1
7	136985	Capscrew	5

©2010 HYSTER COMPANY

ITEM	PART NO.	DESCRIPTION	QTY
8	190757	Clamp (Split Half)	2
9	169787	O-Ring	1
	a 88194	Clamp	1

FOOTNOTES:

a Not Illustrated
b → S/N B214E01642F
c → S/N B214E01646F
d S/N B214E01647F ↔ S/N B214E01708F INC. 01710, 01721-01722
e S/N B214E01709F → EXC. 01710, 01721-01722
f S/N B214E01643F →

©2010 HYSTER COMPANY

TRANSMISSION ASSEMBLY (FIGURE 5-18)
UNIVERSAL SHAFT — TE-13 AND TE-17

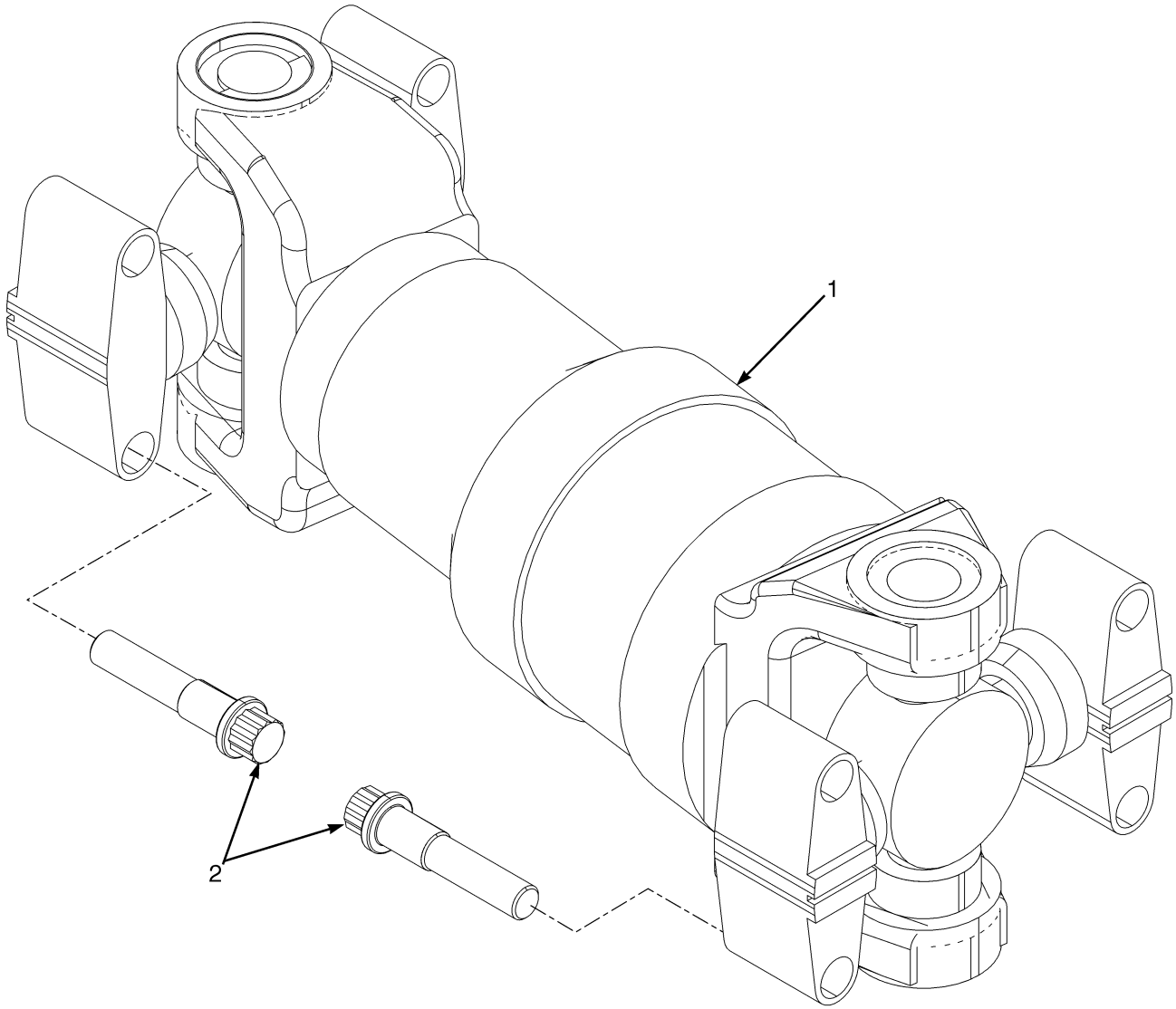

HP240553

ITEM	PART NO.	DESCRIPTION	QTY
	a 1644533	Transmission Assy (TE-13)	1
	b 1689351	Transmission Assy (TE-13)	1
	c 1704582	Transmission Assy (TE-13)	1
	a 1644532	Transmission Assy (TE-17)	1
	b 1689343	Transmission Assy (TE-17)	1
	c 1704583	Transmission Assy (TE-17)	1
1	1590542	Universal Joint	1
1	1478794	Sleeve	1

©2010 HYSTER COMPANY

ITEM	PART NO.	DESCRIPTION	QTY
1	1478795	Kit-Shaft	1
2	177051	Capscrew	8

FOOTNOTES:

a → S/N B214E01646F

b S/N B214E01647F ↔ S/N B214E01708F INC. 01710, 01721-01722

c S/N B214E01709F → EXC. 01710, 01721-01722

©2010 HYSTER COMPANY

NOTES

©2010 HYSTER COMPANY

TRANSMISSION ASSEMBLY (FIGURE 5-19)
TRANSMISSION HOSES AND ATTACHING PARTS — TE-13 AND TE-17

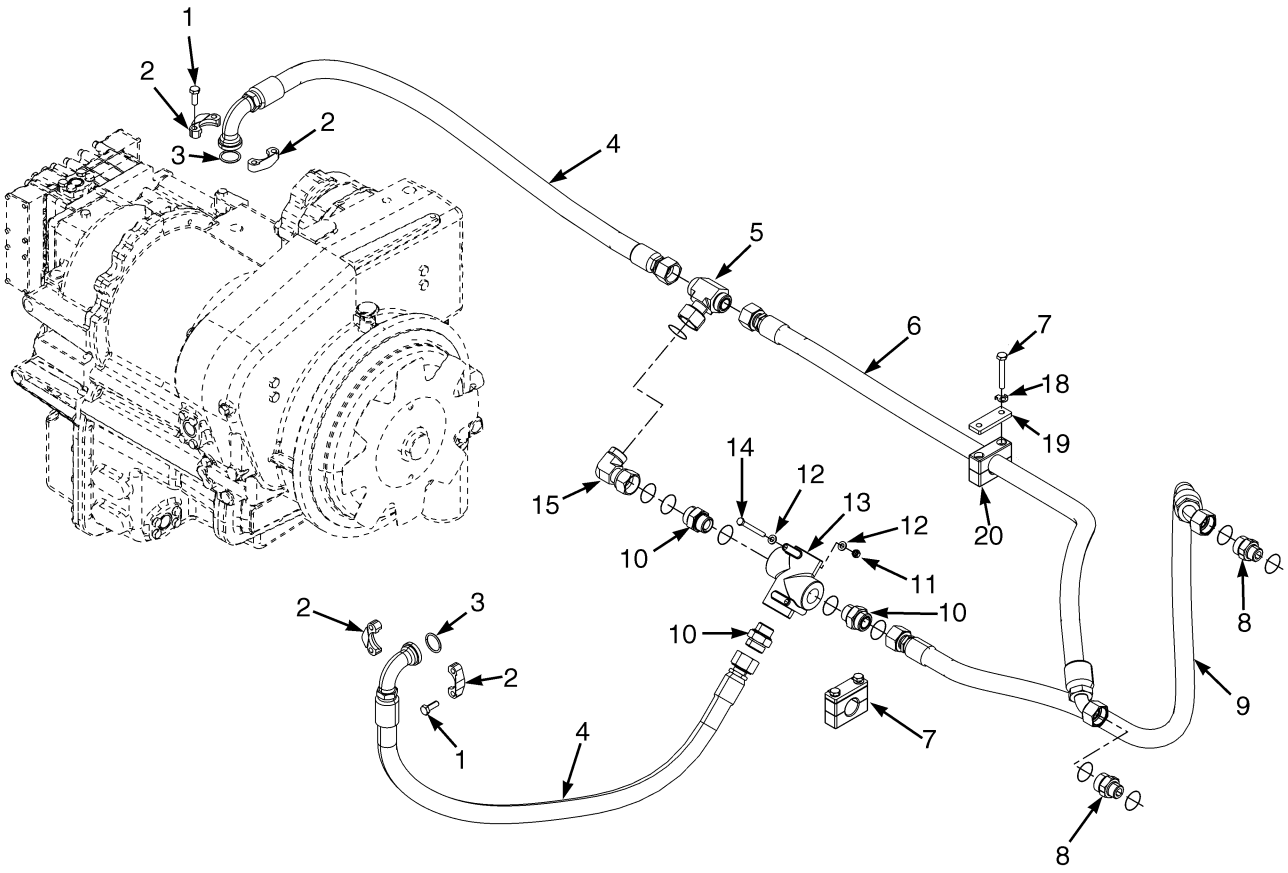

HP240554

©2010 HYSTER COMPANY

TRANSMISSION ASSEMBLY

TRANSMISSION HOSES AND ATTACHING PARTS – TE-13 AND TE-17

ITEM	PART NO.	DESCRIPTION	QTY
	a 1644533	Transmission Assy (TE-13)	1
	b 1689351	Transmission Assy (TE-13)	1
	c 1704582	Transmission Assy (TE-13)	1
	a 1644532	Transmission Assy (TE-17)	1
	b 1689343	Transmission Assy (TE-17)	1
	c 1704583	Transmission Assy (TE-17)	1
1	136985	Capscrew	8
2	190757	Clamp (Split Half)	4
3	169787	O-Ring	2
4	1606281	Hose Assy	2
5	1482400	Fitting	1
5	1527820	O-Ring	2
6	1605273	Hose Assy	1
7	292521	Capscrew	4
8	1486758	Fitting	2
8	16486	O-Ring	1
8	1527820	O-Ring	1
9	1605274	Hose Assy	1
10	1470852	Fitting	3
10	. . . . .	O-Ring	1
10	. . . . .	Seal	1
11	302400	Nut	2
12	320157	Washer	4
13	1564843	By-Pass Valve	1
14	287750	Capscrew	2
15	1473936	Fitting	1
15	1527820	O-Ring	1
18	1533662	Lockwasher	4
19	1560006	Cover Plate (Cover)	2
20	1533657	Clamp	2

FOOTNOTES:

a → S/N B214E01646F

b S/N B214E01647F ↔ S/N B214E01708F INC. 01710, 01721-01722

c S/N B214E01709F → EXC. 01710, 01721-01722

©2010 HYSTER COMPANY

TRANSMISSION MOUNTING (FIGURE 5-20)
TE-13 AND TE-17

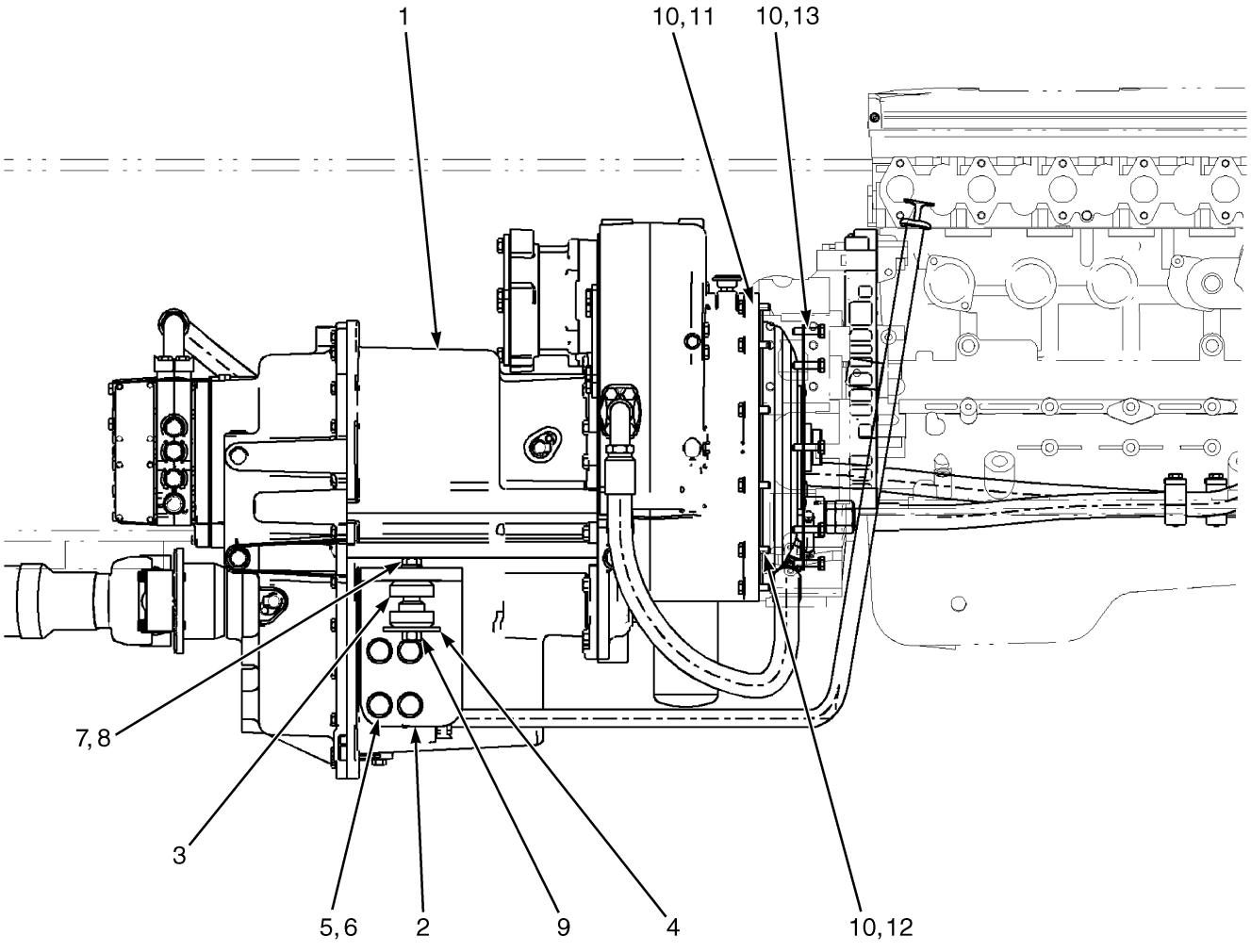

HP240585

©2010 HYSTER COMPANY

TRANSMISSION MOUNTING

TE-13 AND TE-17

ITEM	PART NO.	DESCRIPTION	QTY
1	**a** 1644533	Transmission Assy (TE-13)	1
1	**b** 1689351	Transmission Assy (TE-13)	1
1	**c** 1704582	Transmission Assy (TE-13)	1
1	**a** 1644532	Transmission Assy (TE-17)	1
1	**b** 1689343	Transmission Assy (TE-17)	1
1	**c** 1704583	Transmission Assy (TE-17)	1
2	1559626	Bracket (RH)	1
2	1559627	Bracket (LH)	1
3	1464454	Isolator	2
4	1302938	Washer	2
5	320169	Washer	8
6	292582	Capscrew	8
7	320165	Washer	2
8	292572	Capscrew	2
9	302404	Locknut	2
10	~~388049~~		
	292682	Lockwasher	20
11	292515	Capscrew	11
12	287860	Capscrew	1
13	1347119	Capscrew	8

FOOTNOTES:

a → S/N B214E01646F

b S/N B214E01647F ↔ S/N B214E01708F INC. 01710, 01721-01722

c S/N B214E01709F → EXC. 01710, 01721-01722

©2010 HYSTER COMPANY

NOTES

©2010 HYSTER COMPANY

6 DRIVE AXLE

SECTION 6
DRIVE AXLE

DESCRIPTION	PAGE
DIFFERENTIAL CARRIER	
S/N B214E01528D → EXC. 1533	6-8
→ S/N B214E01527D INC. 1533	6-10
DRIVE AXLE ASSEMBLY	
→ S/N B214E01527D INC. 1533	6-2
S/N B214E01528D → EXC. 1533	6-4
DRIVE TIRE AND WHEEL	
BRIDGESTONE	6-13
GOODYEAR	6-18
MICHELIN	6-14
SOLID SMOOTH - MONARCH	6-16
SOLID TIRE WITH TREAD - BERGOUGNAN	6-15
DRIVE WHEEL AND TIRE	
SIMEX	6-17

©2010 HYSTER COMPANY

DRIVE AXLE ASSEMBLY (FIGURE 6-1)

(→ S/N B214E01527D INC. 1533)

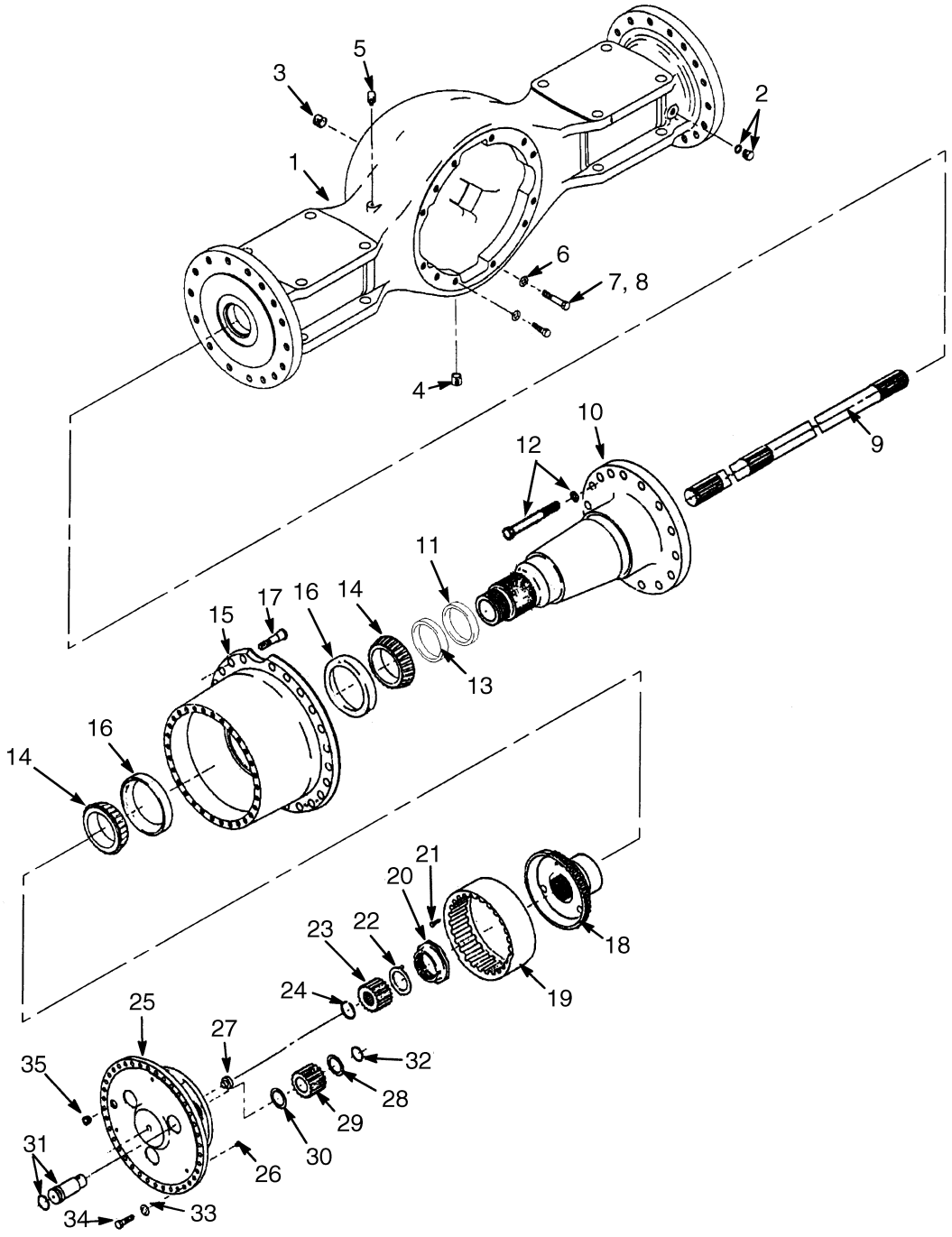

HP070134

©2010 HYSTER COMPANY

DRIVE AXLE ASSEMBLY

(→ S/N B214E01527D INC. 1533)

ITEM	PART NO.	DESCRIPTION	QTY
	1583870	Drive Axle	1
	1619103	Kit-Housing	1
1	1619104	Housing	1
2	1384877	Plug	2
3	15316	Fitting	1
4	321293	Plug	1
5	1613651	Breather	1
6	86007	Washer	12
7	1380784	Stud	4
8	214195	Bolt	8
9	1619109	Axle Shaft (LH)	1
9	1619108	Axle Shaft (RH)	1
10	1619110	Spindle	2
11	1619112	Sleeve (Oil Seal)	2
12	1619116	Screw	28
12	1619118	O-Ring	1
13	1489420	Seal	2
14	210084	Bearing Cone	2
15	1619124	Hub	2
16	30258	Bearing Cup	2
17	1511548	Wheel Stud	24
18	1382574	Hub	2
19	1450868	Gear	2
20	1499564	Nut	2
21	1547980	Screw	2
22	1382572	Thrust Washer	2
23	1382571	Gear	2
24	208107	Snap Ring	2
25	1619126	Spider	2
25	1619127	O-Ring	1
25	1619128	Spider	1
26	273969	Button (Thrust)	3
27	1619130	Thrust Washer	3
28	1450867	Thrust Washer	3
29	1382570	Gear	3
30	97638	Washer	3
31	1450865	Shaft	3
32	1499594	Snap Ring	3
33	88587	Washer	60
34	1473839	Capscrew	60
35	321293	Plug	2

©2010 HYSTER COMPANY

DRIVE AXLE ASSEMBLY (FIGURE 6-2)

(S/N B214E01528D → EXC. 1533)

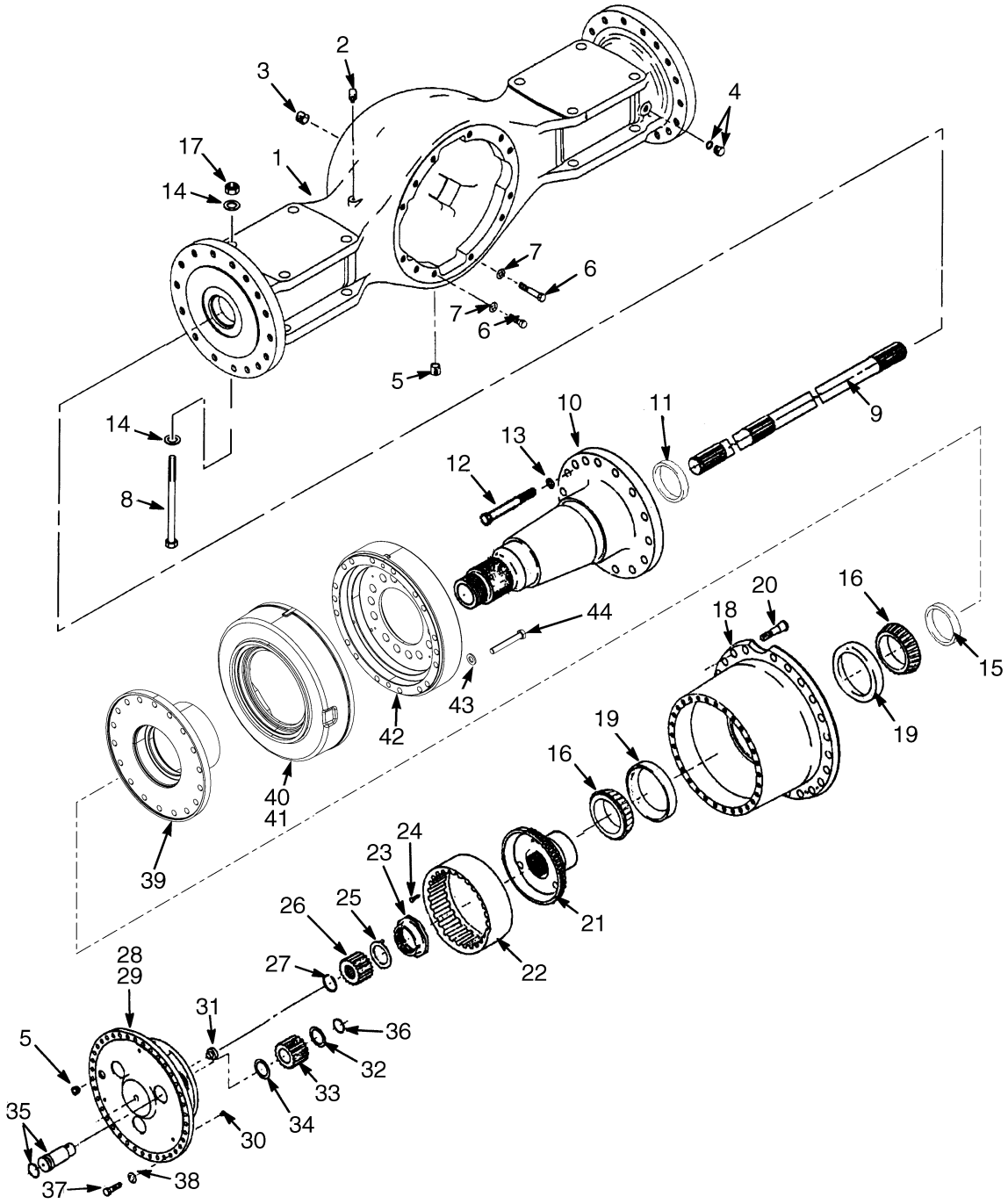

HP070129

©2010 HYSTER COMPANY

DRIVE AXLE ASSEMBLY

(S/N B214E01528D → EXC. 1533)

KEY:
A: Standard Drive Axle
B: Wide Axle Option Drive Axle

ITEM	PART NO.	DESCRIPTION	QTY A	QTY B
	1653385	Drive Axle	1	..
	4002325	Drive Axle (Wide Axle Option)	..	1
1	1654813	Housing (Drive Axle)	1	..
1	1687531	Drive Axle Housing	..	1
2	1613651	Breather	1	1
3	15316	Fitting	1	..
4	1384877	Plug	2	..
4	1384878	Rod	1	..
4	1384879	Spring Guide	1	..
4	1384880	Spring	1	..
4	1384881	Roll Pin	1	..
5	321293	Plug	3	3
6	1497903	Screw	12	12
6	1642107	Screw	4	4
7	125428	Washer	16	16
8	2079027	Capscrew	8	8
9	1619108	Axle Shaft (RH)	1	..
9	1619109	Axle Shaft (LH)	1	..
9	1687532	Axle Shaft (RH)	..	1
9	1687533	Axle Shaft (LH)	..	1
10	1619110	Spindle	2	2
11	1619112	Sleeve (Oil Seal)	1	1
12	1619116	Screw	28	28
13	1619118	O-Ring	28	28
14	296438	Washer	20	20
15	1489420	Seal	2	2
16	210084	Bearing Cone	4	4
17	292661	Nut	8	8
18	1619124	Hub	2	2
19	30258	Bearing Cup	2	2
20	1511548	Wheel Stud	24	24
21	1382574	Hub	2	2
22	1450868	Gear	2	2
23	1499564	Nut	2	2
24	1547980	Screw	2	2
25	1382572	Thrust Washer	2	2
26	1382571	Gear	2	2
27	208107	Snap Ring	2	2
28	1619126	Spider	2	2
28	1619127	O-Ring	1	1
29	1619128	Spider	1	1
30	273969	Button (Thrust)	3	3
31	1619130	Thrust Washer	3	3
32	1450867	Thrust Washer	3	3
33	1382570	Gear	3	3

©2010 HYSTER COMPANY

DRIVE AXLE ASSEMBLY

(S/N B214E01528D → EXC. 1533)

KEY:
A: Standard Drive Axle
B: Wide Axle Option Drive Axle

ITEM	PART NO.	DESCRIPTION	QTY A	QTY B
34	97638	Washer	3	3
35	1450865	Shaft	3	3
36	1499594	Snap Ring	3	3
37	1473839	Capscrew	60	60
38	88587	Washer	60	60
39	1619119	Brake Driver	2	2
40	1619136	Housing (Brake) (☞Figure 8-3)	2	2
41	. . . . .	Wet Brake Assembly	2	2
42	1619132	Housing (Piston)	2	2
43	1482765	Washer	36	36
44	1619122	Capscrew	36	36
	a 1619115	O-Ring	2	2
	a 1619113	Screw (Special)	4	4
	a 1619114	O-Ring	4	4
	a 1619120	Oil Seal	2	2
	a 1619121	O-Ring	2	2

FOOTNOTES:

a Not Illustrated

©2010 HYSTER COMPANY

NOTES

©2010 HYSTER COMPANY

DIFFERENTIAL CARRIER (FIGURE 6-3)

(S/N B214E01528D → EXC. 1533)

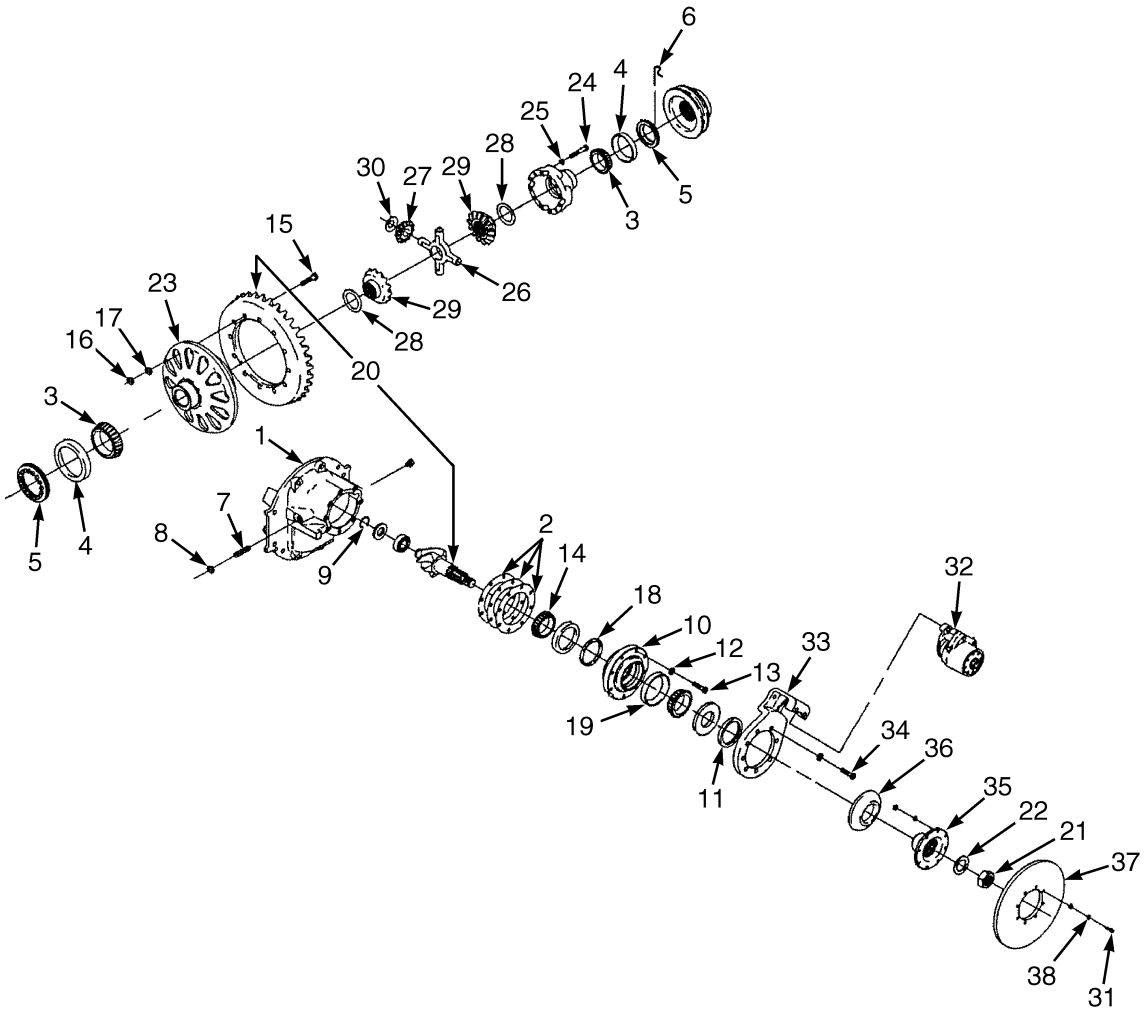

HP070133

©2010 HYSTER COMPANY

DIFFERENTIAL CARRIER
(S/N B214E01528D → EXC. 1533)

ITEM	PART NO.	DESCRIPTION	QTY
	1653385	Drive Axle	1
	4002325	Drive Axle (Wide Axle Option)	1
	1654807	Carrier	1
1	1642096	Carrier and Cap Assy	1
3	1475421	Bearing Cone	2
4	1475420	Bearing Cup	2
4	1642097	Kit-Shim	1
5	1347839	Ring (Ring)	2
6	1566126	Cotter Pin	2
7	1374097	Screw	1
8	1312616	Locknut	1
9	240683	Snap Ring	1
10	1347772	Pinion (Cage Assembly)	1
10	200972	Bearing Cup (Tapered)	1
10	30062	Bearing Cup	1
11	1642099	Oil Seal	1
12	1450861	Washer	8
13	1566125	Capscrew	8
14	1347774	Bearing Cone (Inner)	1
15	1374099	Kit-Hardware	1
15	1347822	Bolt	12
16	1374550	Nut	12
17	125428	Washer	12
18	1347800	Kit-Spacer	1
19	1347812	Bearing Cone (Outer)	1
20	1642150	Gear and Pinion	1
21	1357734	Locknut	1
22	1312083	Washer	1
23	1642101	Differential Housing Assembly	1
24	1347831	Capscrew	16
25	1450861	Washer	16
26	1642102	Kit-Differential	1
26	1502130	Spider	1
27	1347835	Pinion	4
28	1642103	Thrust Washer	2
29	1379753	Gear	2
30	1642104	Thrust Washer	4
31	1554341	Capscrew	8
32	1561604	Brake Assembly (Park Brake) (☞Figure 8-4)	1
33	1489407	Adapter (Brake)	1
34	293654	Capscrew	5
35	1554339	Flange	1
36	221355	Locknut	8
37	1554340	Brake Disk	1
38	88587	Washer	16
	a 296844	Bearing (Bevel Pinion, Rear)	1

FOOTNOTES:

a Not Illustrated

©2010 HYSTER COMPANY

DIFFERENTIAL CARRIER (FIGURE 6-4)

(→ S/N B214E01527D INC. 1533)

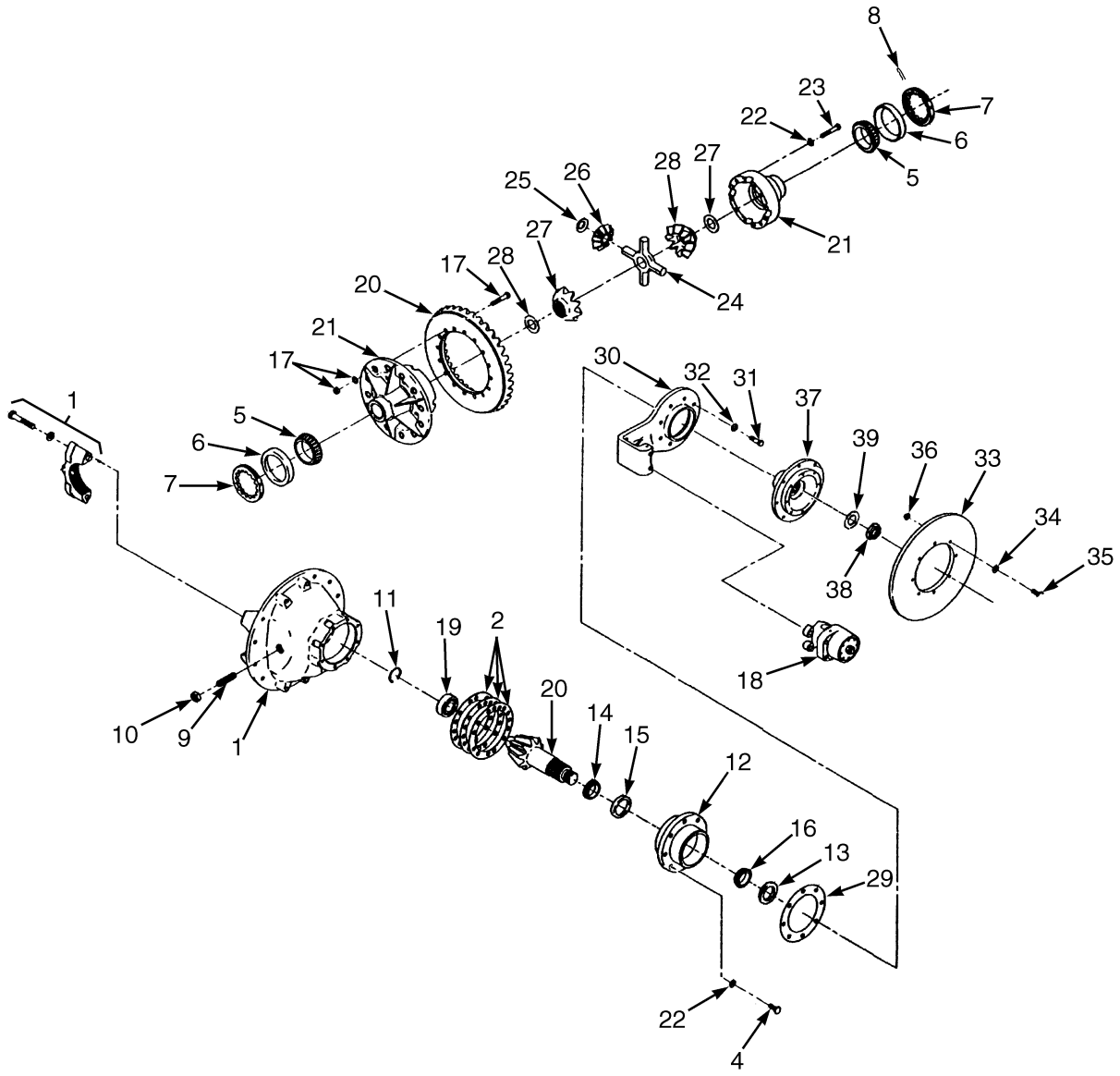

HP070128

©2010 HYSTER COMPANY

DIFFERENTIAL CARRIER
(→ S/N B214E01527D INC. 1533)

ITEM	PART NO.	DESCRIPTION	QTY
	1583870	Drive Axle	1
	1619098	Differential Carrier	1
	1619099	Carrier	1
	1654807	Carrier (Alternate Part)	1
1	1374096	Carrier	1
1	16602	Screw (Not Illustrated)	2
2	1374552	Kit-Shim	1
3	1450861	Washer	8
4	1347819	Capscrew	8
5	1475421	Bearing Cone	2
6	1475420	Bearing Cup	2
7	1347839	Ring	2
8	1566126	Cotter Pin	2
9	1374097	Screw	1
10	1312616	Locknut	1
11	240683	Snap Ring	1
12	1541614	Cage	1
12	200972	Bearing Cup (Tapered)	1
12	30062	Bearing Cup	1
13	1642099	Oil Seal	1
14	1347774	Bearing Cone	1
15	1347800	Kit-Spacer	1
16	1347812	Bearing Cone	1
17	1374099	Kit-Hardware	1
17	125428	Washer	12
17	1347822	Bolt	12
17	1374550	Nut	12
18	1561604	Brake Assembly (Park Brake) (☞Figure 8-4)	1
19	296844	Bearing	1
20	1498257	Bevel Gear	1
20	1357734	Locknut	1
20	1312083	Washer	1
21	1347827	Differential Housing	1
21	. . . . .	Case-Flange	1
21	. . . . .	Case-Plain	1
22	1450861	Washer	16
23	1347831	Capscrew	16
24	1619100	Kit-Differential	1
24	1502130	Spider	1
25	1619101	Thrust Washer	4
26	1347835	Pinion	4
27	1379753	Gear	2
28	~~1379752~~		
	1380797	Thrust Washer	2
29	1619102	Spacer	1
30	1541613	Adapter	1
31	293654	Capscrew	8
32	1450861	Washer	8
33	1554340	Brake Disk	1
34	88587	Washer	8

©2010 HYSTER COMPANY

DIFFERENTIAL CARRIER
(→ S/N B214E01527D INC. 1533)

ITEM	PART NO.	DESCRIPTION	QTY
35	221573	Capscrew	8
36	221354	Locknut	8
37	1554339	Flange	1
38	1357734	Locknut	1
39	1312083	Washer	1

©2010 HYSTER COMPANY

DRIVE TIRE AND WHEEL (FIGURE 6-5)
BRIDGESTONE

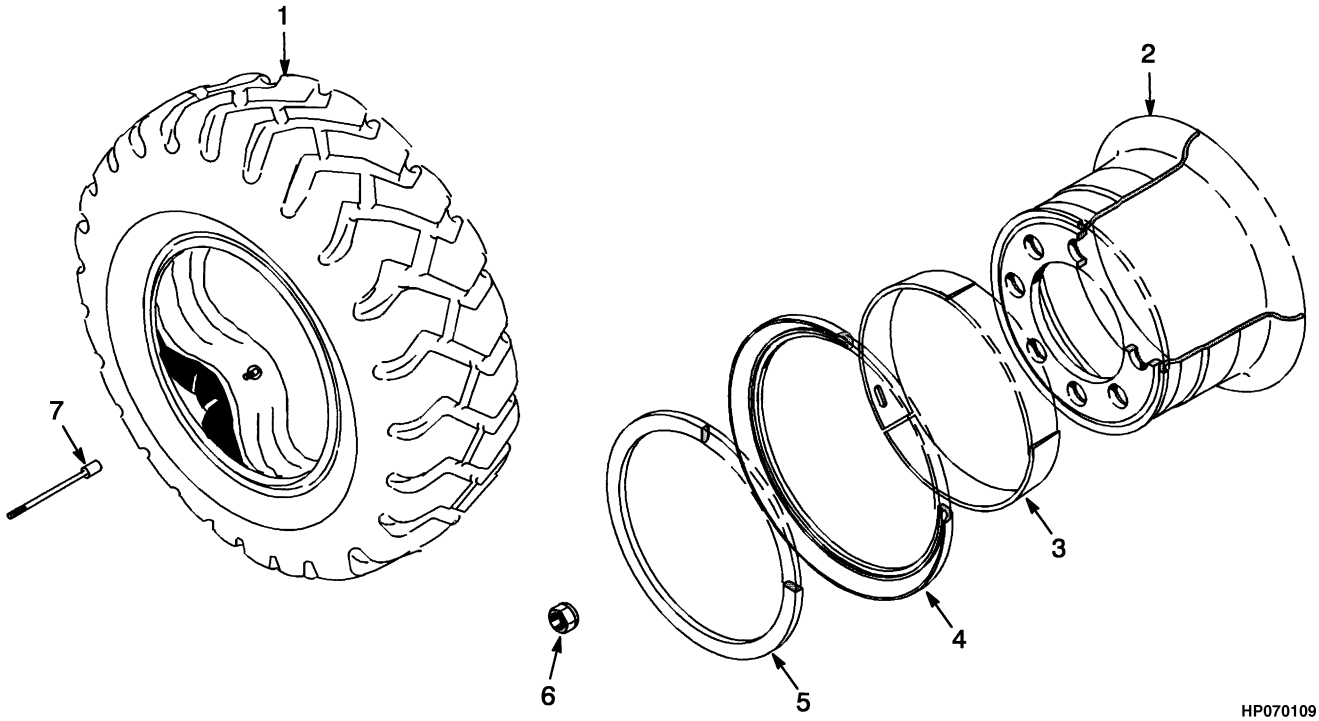

KEY:
A: 12.00 x 24-20 Bridgestone
B: 14.00 x 24-20 Bridgestone

ITEM	PART NO.	DESCRIPTION	QTY A	QTY B
1	1382381	Pneumatic Tire	4	..
1	1486210	Pneumatic Tire	..	4
1	1382382	Pneumatic Tire	1	..
1	1382383	Pneumatic Tire	1	..
1	115586	Pneumatic Tire	..	1
1	1485936	Tube	..	1
2	1385577	Wheel Assy	..	4
2	1614372	Wheel Assy	4	..
3	1452916	Ring (Conical)	1	1
4	1466004	Ring (Side)	..	1
4	1538311	Ring	1	..
5	1637809	Lockring	..	1
5	1538310	Wheel Lock Ring	1	..
6	376026	Wheel Nut	48	48
7	1303417	Valve Stem (Drive)	2	2

DRIVE TIRE AND WHEEL (FIGURE 6-6)

MICHELIN

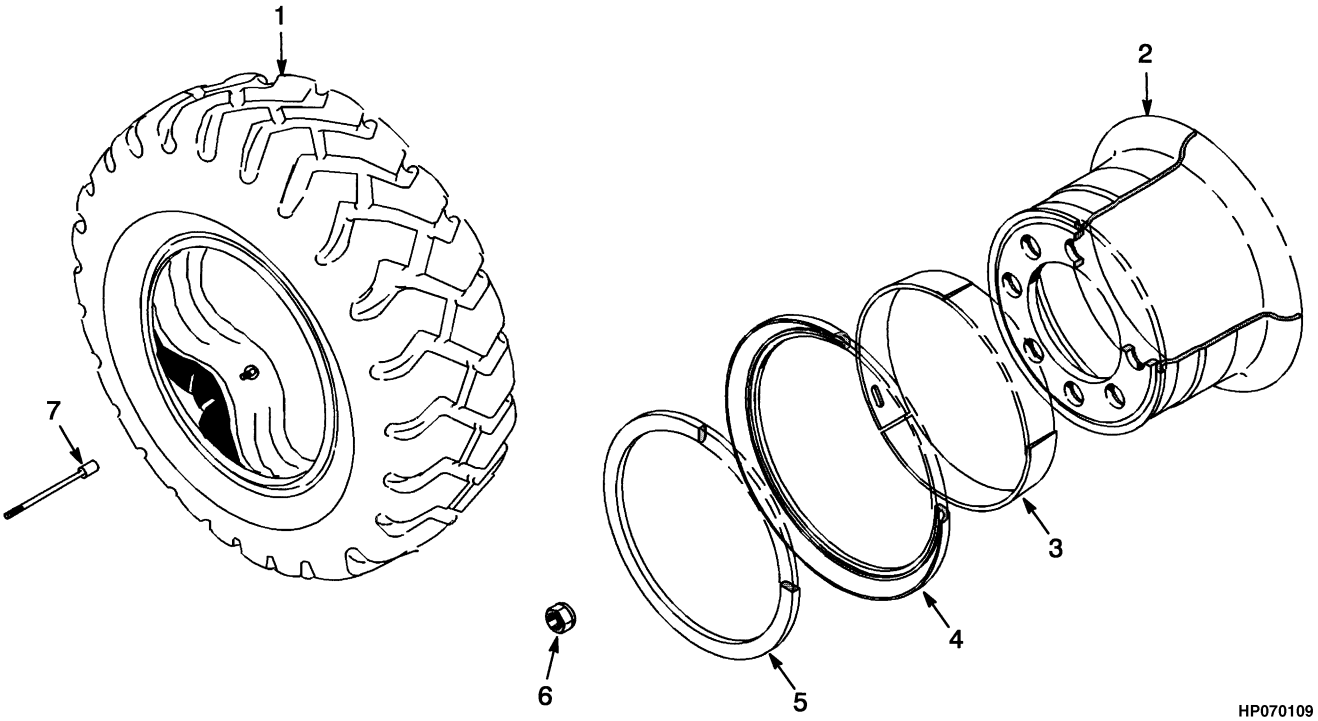

KEY:
A: 12.00 x 24
B: 14.00 x 24

ITEM	PART NO.	DESCRIPTION	QTY A	QTY B
1	1460448	Pneumatic Tire	4	..
1	1460451	Pneumatic Tire	..	4
1	1460398	Pneumatic Tire	1	..
1	1460405	Tube	1	..
1	1460402	Pneumatic Tire	..	1
1	1460406	Tube	..	1
2	1385577	Wheel Assy	..	4
2	1614372	Wheel Assy	4	..
3	1466004	Ring (Side)	..	1
3	1538311	Ring	1	..
4	1452916	Ring (Conical)	1	1
5	1637809	Lockring	..	1
5	1538310	Wheel Lock Ring	1	..
6	376026	Wheel Nut	48	48
7	1303417	Valve Stem (Drive)	2	2

©2010 HYSTER COMPANY

DRIVE TIRE AND WHEEL (FIGURE 6-7)
SOLID TIRE WITH TREAD — BERGOUGNAN

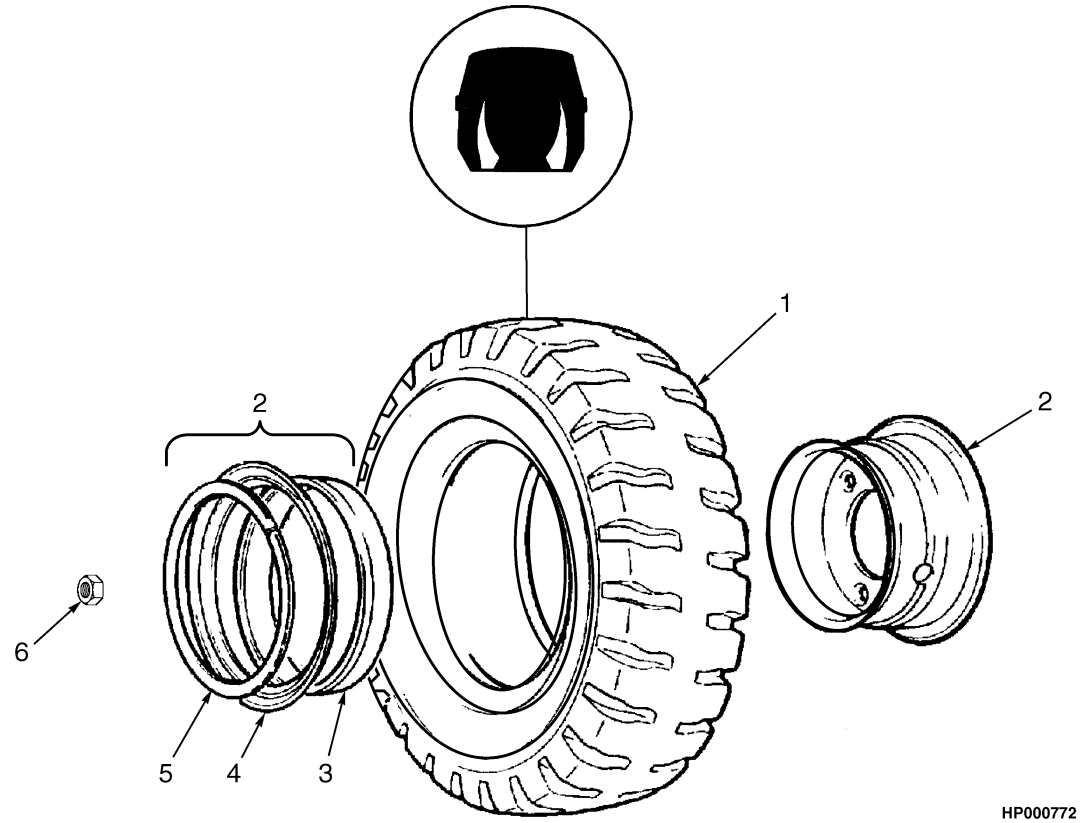

ITEM	PART NO.	DESCRIPTION	QTY
1	1393797	Pneumatic Tire (Solid) (14.00 x 24 x 10)	4
2	1391058	Rim	1
2	1385577	Wheel Assy	4
3	1466004	Ring (Side)	1
4	1452916	Ring (Conical)	1
5	1637809	Lockring	1
6	376026	Wheel Nut	48

©2010 HYSTER COMPANY

DRIVE TIRE AND WHEEL (FIGURE 6-8)
SOLID SMOOTH — MONARCH

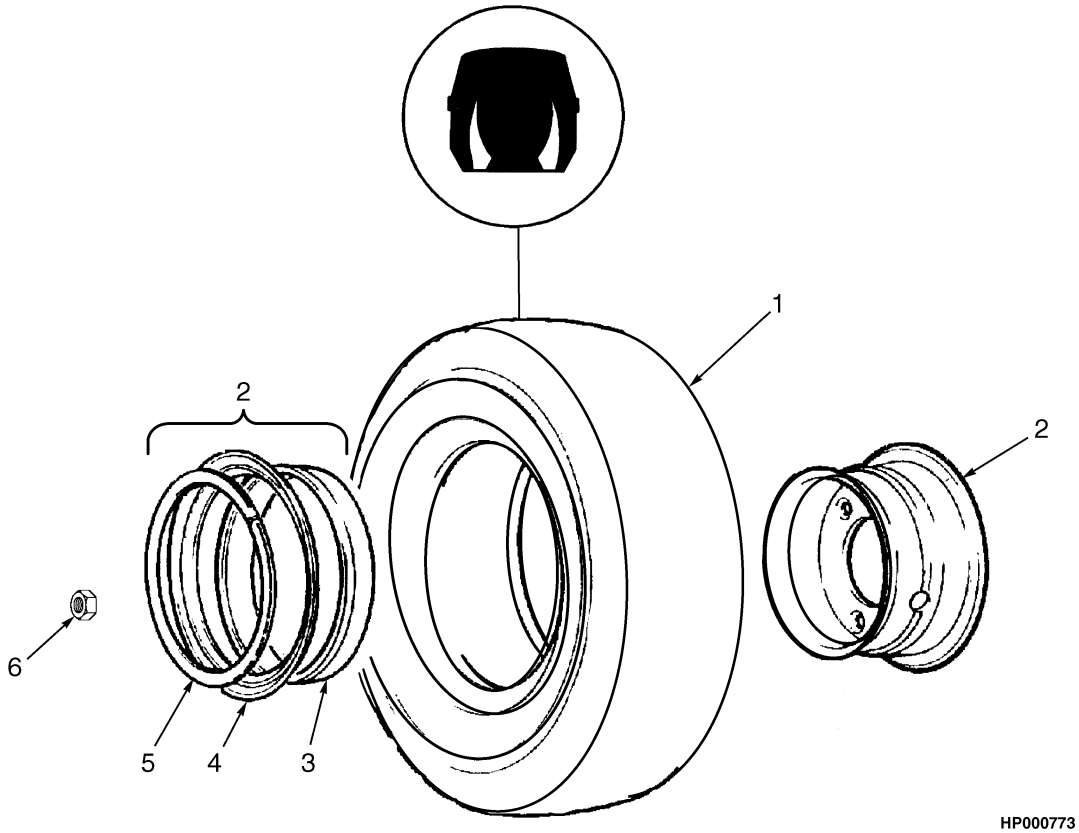

ITEM	PART NO.	DESCRIPTION	QTY
1	1393787	Pneumatic Tire	4
2	1451454	Rim	4
2	1391646	Rim	1
3	1466004	Ring (Side)	1
4	1452916	Ring (Conical)	1
5	1637809	Lockring	1
6	376026	Wheel Nut	48
	816552	Support (Not Illustrated)	2

©2010 HYSTER COMPANY

DRIVE WHEEL AND TIRE (FIGURE 6-9)

SIMEX

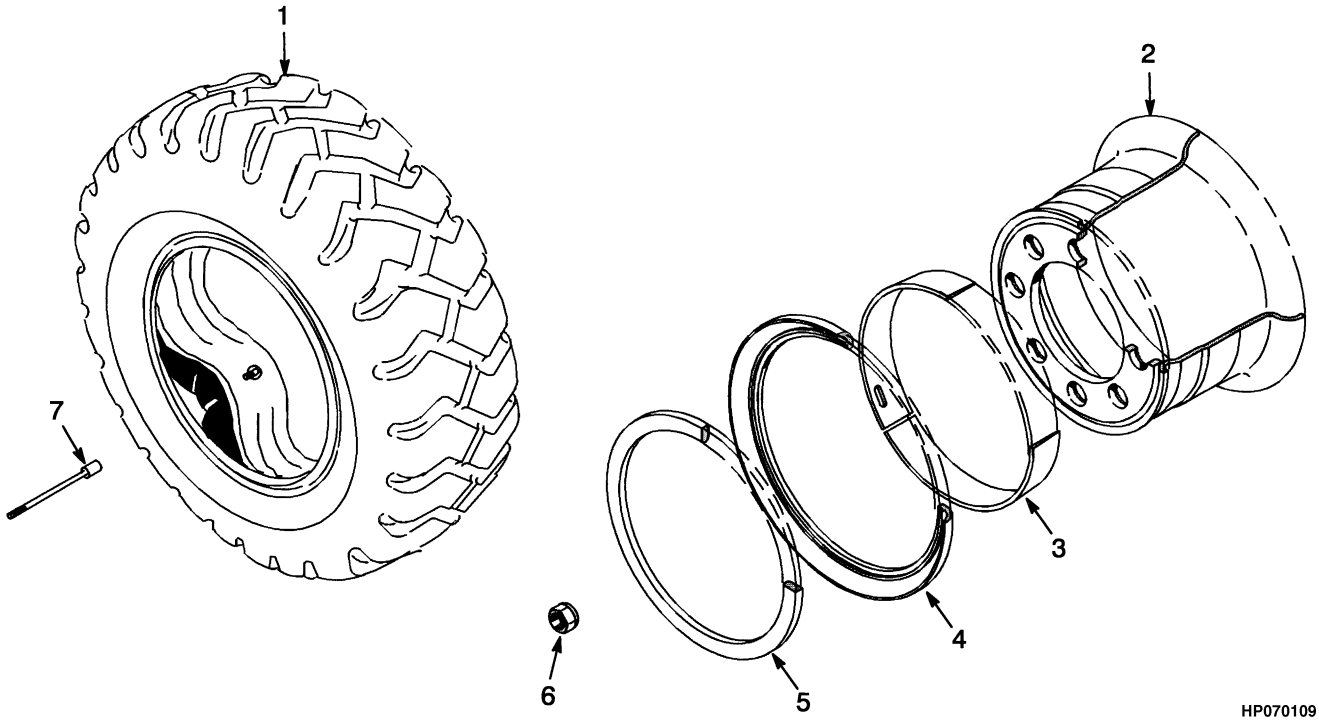

KEY:
A: 12.00 x 24 - 20
B: 14.00 x 24 - 28

ITEM	PART NO.	DESCRIPTION	QTY A	QTY B
1	1641217	Pneumatic Tire	1	..
1	1641218	Pneumatic Tire	..	1
1	1641098	Pneumatic Tire	1	..
1	1641099	Pneumatic Tire	..	1
1	1382383	Pneumatic Tire	1	..
1	1485936	Tube	..	1
2	1614372	Wheel Assy	1	..
2	1391557	Wheel Rim	..	1
2	1620002	Rim	1	..
2	1391058	Rim	..	1
3	1452916	Ring (Conical)	1	1
4	1538311	Ring	1	..
4	1466004	Ring (Side)	..	1
5	1538310	Wheel Lock Ring	1	..
5	1637809	Lockring	..	1
6	376026	Wheel Nut	24	24
7	1303417	Valve Stem	2	2

©2010 HYSTER COMPANY

DRIVE TIRE AND WHEEL (FIGURE 6-10)
GOODYEAR

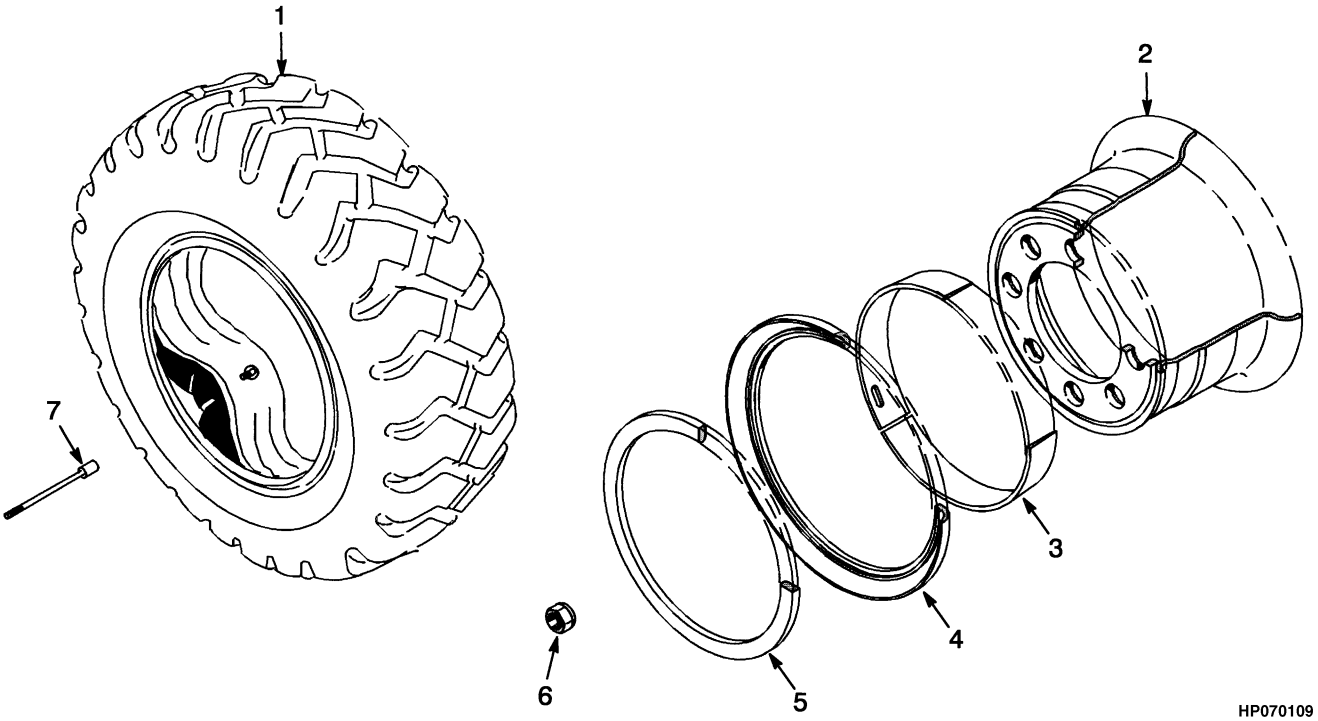

ITEM	PART NO.	DESCRIPTION	QTY
1	1628907	Pneumatic Tire	2
1	1628735	Pneumatic Tire	1
1	1485936	Tube	1
2	1385577	Wheel Assy	2
2	1391058	Rim	1
3	1452916	Ring (Conical)	1
4	1466004	Ring (Side)	1
5	1637809	Lockring	1
6	376026	Wheel Nut	24
7	1303417	Valve Stem	2

©2010 HYSTER COMPANY

7 STEERING SYSTEM

SECTION 7
STEERING SYSTEM

DESCRIPTION	PAGE
STEER AXLE ASSEMBLY	7-10
STEER COLUMN	7-6
STEER COLUMN AND ATTACHING PARTS	7-2
STEER COLUMN ASSEMBLY	7-4
STEER CYLINDER	7-14
OPTIONAL	7-16
STEER PUMP ASSEMBLY	7-8
STEER TIRE AND WHEEL	
BRIDGESTONE	7-18
GOODYEAR	7-23
MICHELIN	7-19
SIMEX	7-22
SOLID SMOOTH - MONARCH	7-21
SOLID TIRE WITH TREAD - BERGOUGNAN	7-20

©2010 HYSTER COMPANY

STEER COLUMN AND ATTACHING PARTS (FIGURE 7-1)

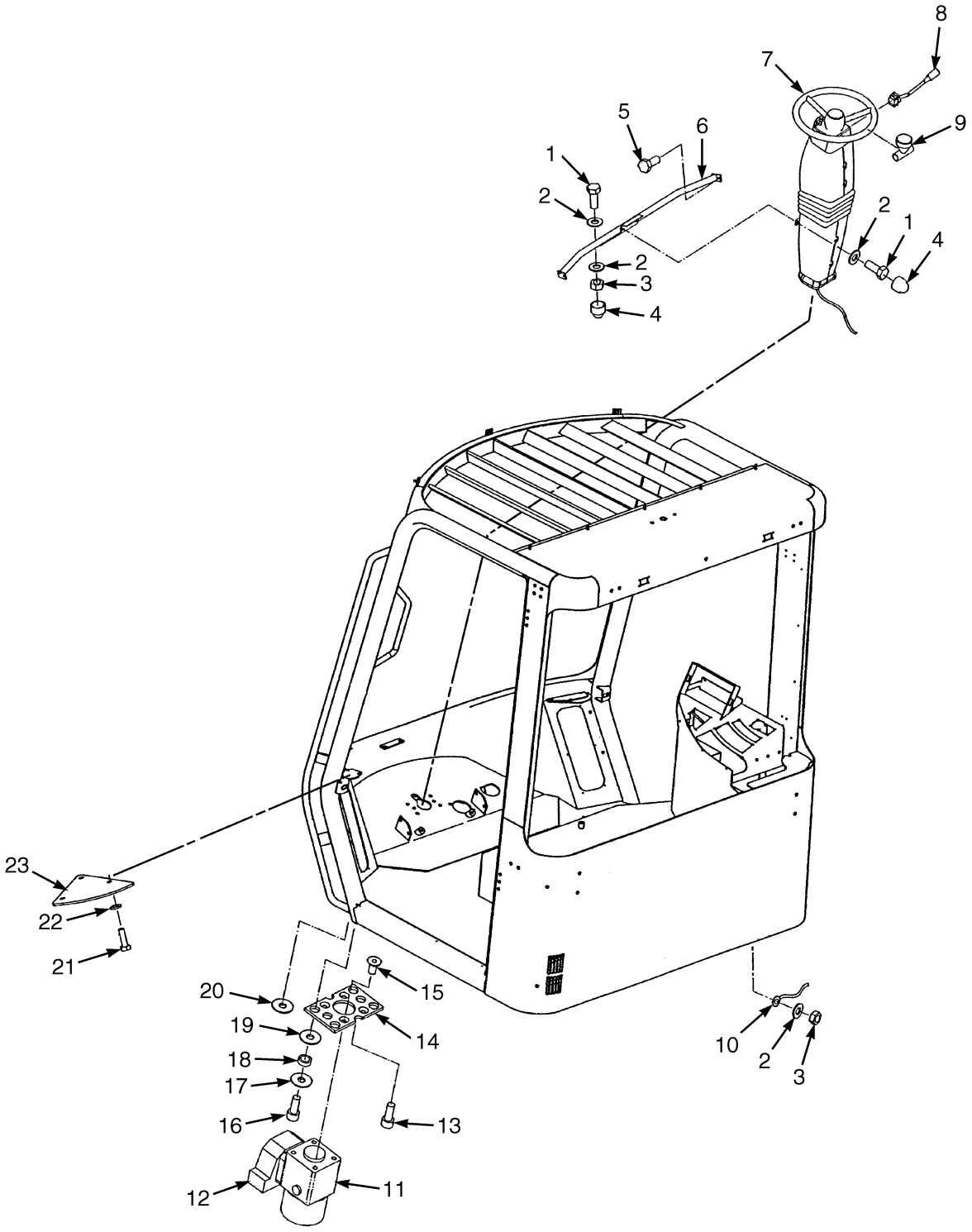

HP220433

©2010 HYSTER COMPANY

STEER COLUMN AND ATTACHING PARTS

ITEM	PART NO.	DESCRIPTION	QTY
1	136681	Capscrew	4
2	320158	Washer	7
3	239503	Nut	3
4	1476584	Cover (Capscrew Head)	4
5	1566041	Screw	2
6	1492237	Support (Column)	1
7	1492260	Steering Column Assembly	1
8	1510787	Switch	1
8	1514033	Switch (Turn Signal)	1
8	2003859	Flasher	1
8	1566411	Screw	2
9	895468	Wheelspinner	1
9	~~4011373~~		
	1700342	Wheelspinner	1
10	1492214	Wire (Ground)	1
11	1524215	Steering Valve	1
12	1524173	Valve Block	1
12	366066	Kit-Repair Valve	1
13	296025	Capscrew	2
14	1477228	Plate (Steering Pump)	1
15	16080	Capscrew	4
16	296012	Capscrew	4
17	1300117	Washer	4
18	376505	Spacer	4
19	216735	Grommet	4
20	1504406	Grommet	1
21	292501	Capscrew	6
22	1468321	Washer (Plastic)	6
23	1492236	Plate (Front Duct)	2
	1506825	Strap Clamp (Not Illustrated)	1

©2010 HYSTER COMPANY

STEER COLUMN ASSEMBLY (FIGURE 7-2)

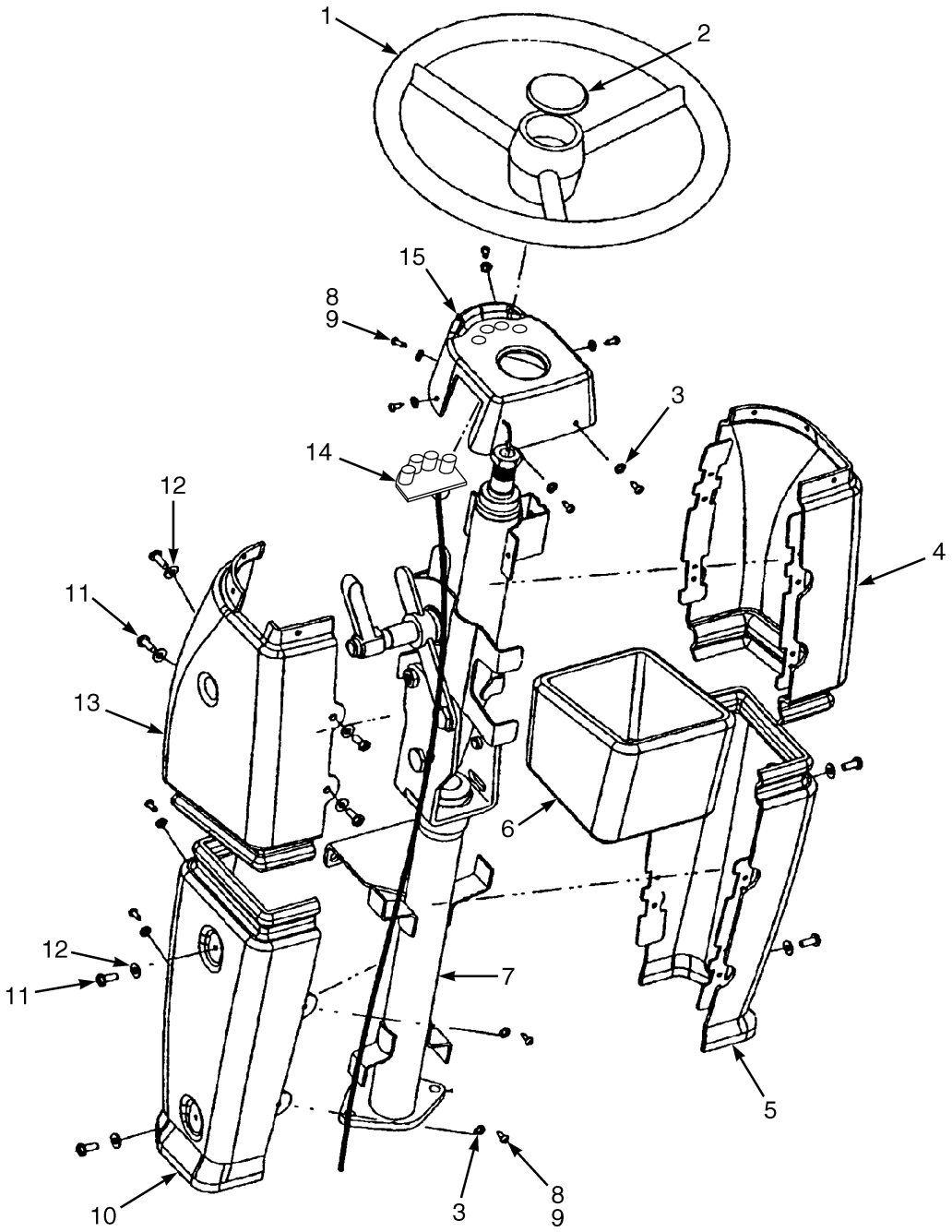

HP220447

©2010 HYSTER COMPANY

STEER COLUMN ASSEMBLY

ITEM	PART NO.	DESCRIPTION	QTY
	1492260	Steering Column Assembly	1
1	1700341	Steering Wheel (Standard)	1
1	1329250	Steering Wheel (Optional)	1
2	371666	Horn Button	1
3	1492140	Washer	10
4	1489846	Cover (Upper RH)	1
5	1489848	Cover (Lower RH)	1
6	1492252	Cover (Boot)	1
7	2043287	Steering Column	1
8	1468319	Screw	10
9	1492139	Nut	10
10	1489847	Cover (Lower LH)	1
11	302047	Screw	8
12	1506738	Washer	8
13	1489845	Cover (Upper LH)	1
14	1520542	Warning Light (With Circuit Board)	1
15	1520541	Cover (Upper)	1
	a 1690843	Wheel Side Ring	2

FOOTNOTES:

a Not Illustrated

©2010 HYSTER COMPANY

STEER COLUMN (FIGURE 7-3)

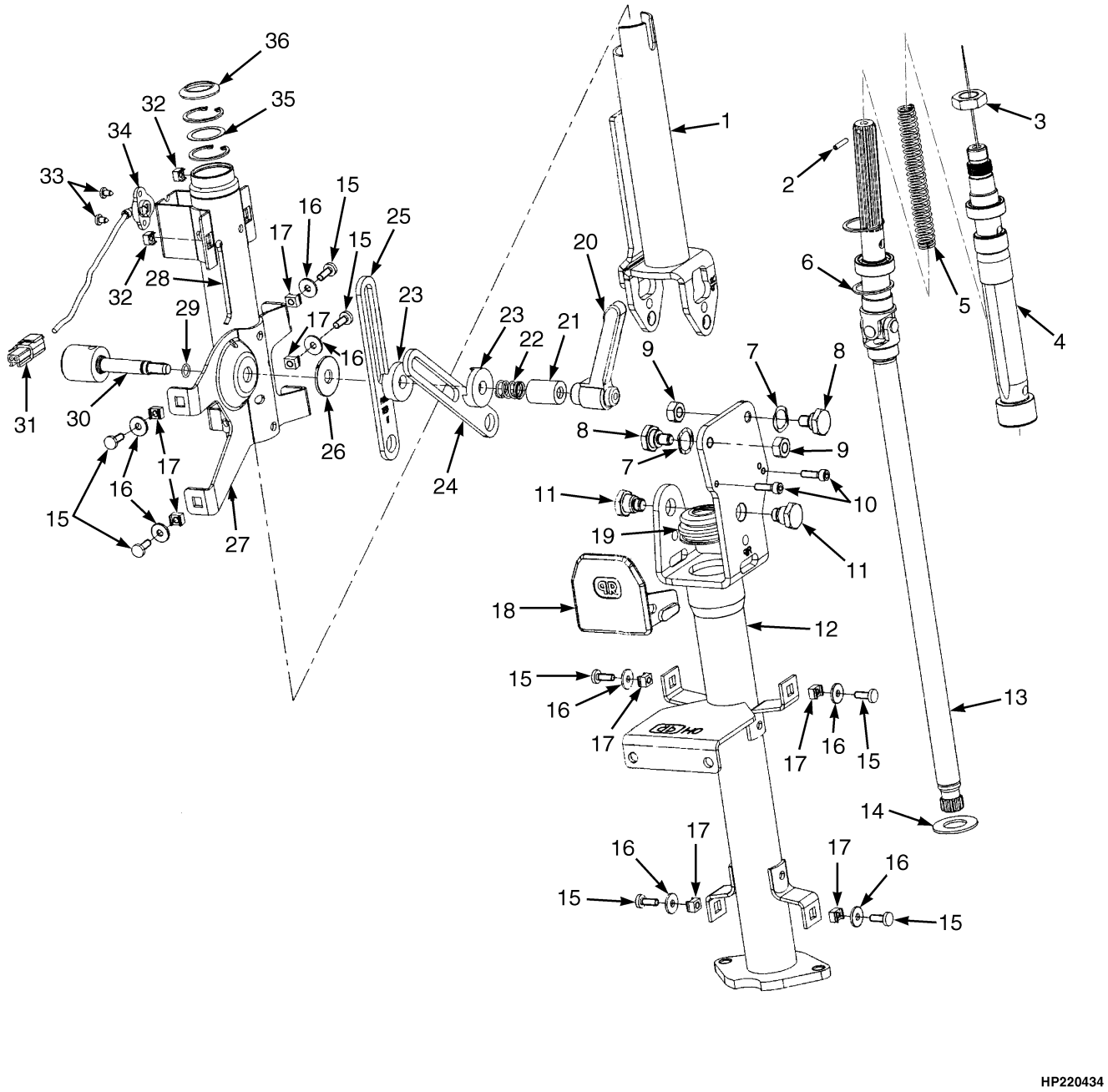

©2010 HYSTER COMPANY

STEER COLUMN

ITEM	PART NO.	DESCRIPTION	QTY
	2043287	Steering Column	1
1	1487124	Pipe (Upper)	1
2	1479473	Pin	1
3	1388428	Nut	1
4	1487107	Shaft (Upper)	1
5	1487131	Spring	1
6	1388434	Snap Ring	4
7	1504861	O-Ring	2
8	1487111	Screw	2
9	1504862	Nut (Zinc Plated)	2
10	1487132	Screw	2
11	1487108	Screw	2
12	1487103	Pipe (Lower)	1
13	1487126	Shaft (Lower)	1
14	1504865	Support	1
15	1487123	Screw	8
16	1487121	Washer	8
17	1487110	Nut	8
18	1487133	Bracket	1
19	1487109	Boot	1
20	1388438	Handle	1
21	1487114	Spacer	1
22	1487130	Spring	1
23	1487112	Nut (Stop)	2
24	1487105	Lever (Back)	1
25	1487106	Lever (Front)	1
26	1487115	Washer	1
27	1487104	Support	1
28	1487120	Cotter Pin	1
29	1504867	Ring	1
30	1504864	Regulator	1
31	1504868	Connector	1
32	1504866	Nut	2
33	1487129	Screw	2
34	1504863	Support	1
35	1388435	Ring	1
36	1388436	Boot	1

©2010 HYSTER COMPANY

STEER PUMP ASSEMBLY (FIGURE 7-4)

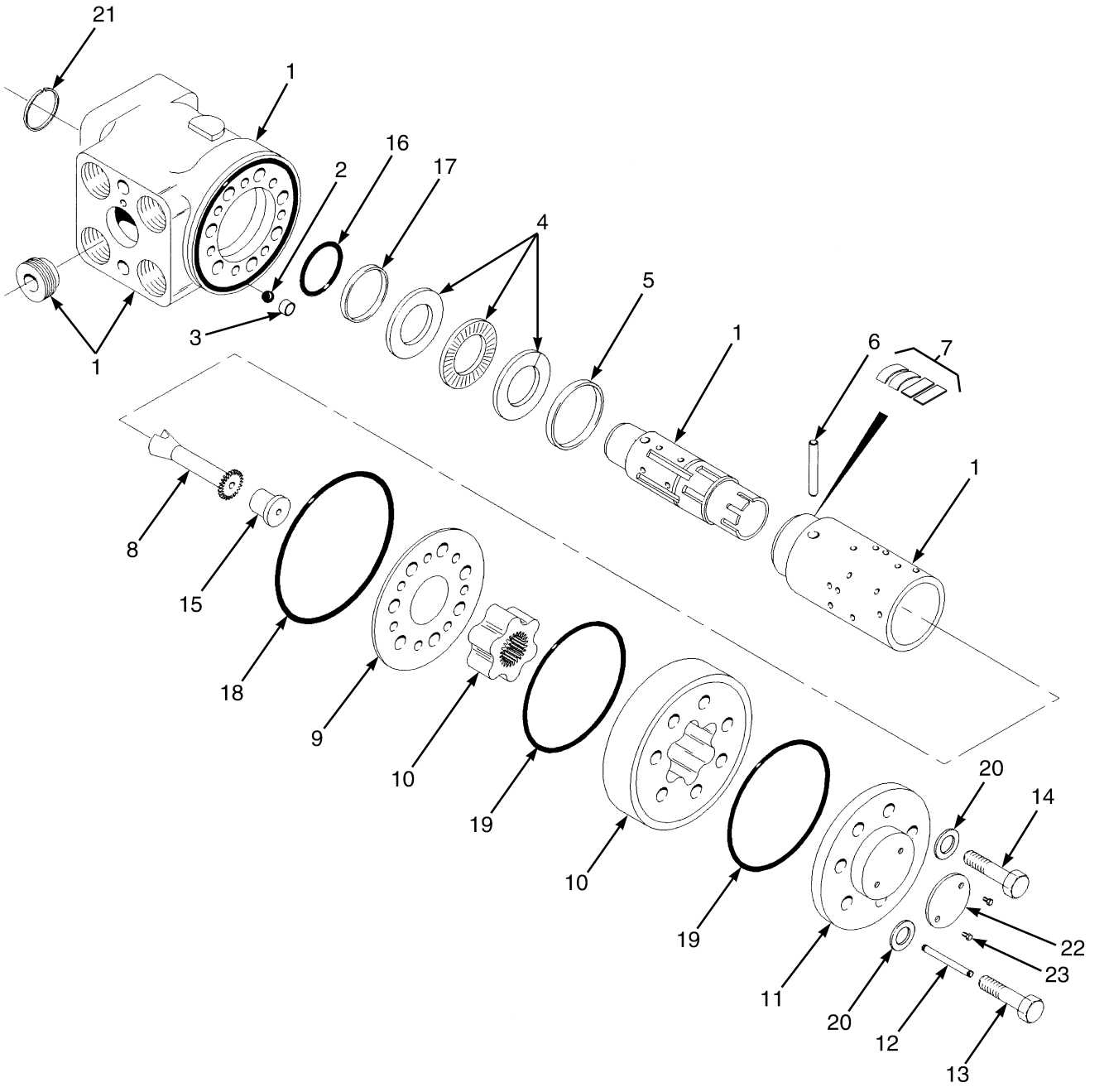

HP220246

©2010 HYSTER COMPANY

STEER PUMP ASSEMBLY

ITEM	PART NO.	DESCRIPTION	QTY
	1372990	Steering Pump	1
1	. . . . .	Housing	1
2	345408	Ball	1
3	345409	Bushing	1
4	345410	Bearing Set	1
5	345411	Ring	1
6	345412	Pin	1
7	1375018	Kit-Spring	1
8	1355326	Shaft	1
9	1357026	Plate	1
10	1382558	Gear Set	1
11	345424	End Cover	1
12	. . . . .	Pin	1
13	1382559	Screw	1
14	1382560	Screw	6
15	1315781	Spacer	1
16	. . . . .	O-Ring	1
17	. . . . .	Ring	1
18	. . . . .	O-Ring	1
19	. . . . .	O-Ring	2
20	. . . . .	Washer	7
21	. . . . .	Ring	1
22	. . . . .	Nameplate	1
23	. . . . .	Screw	2
	371345	Screw (Not Illustrated)	2
	1375021	Relief Valve (Not Illustrated)	1
	1382561	Spring (Not Illustrated)	1
	2032229	Kit-Seal	1

©2010 HYSTER COMPANY

STEER AXLE ASSEMBLY (FIGURE 7-5)

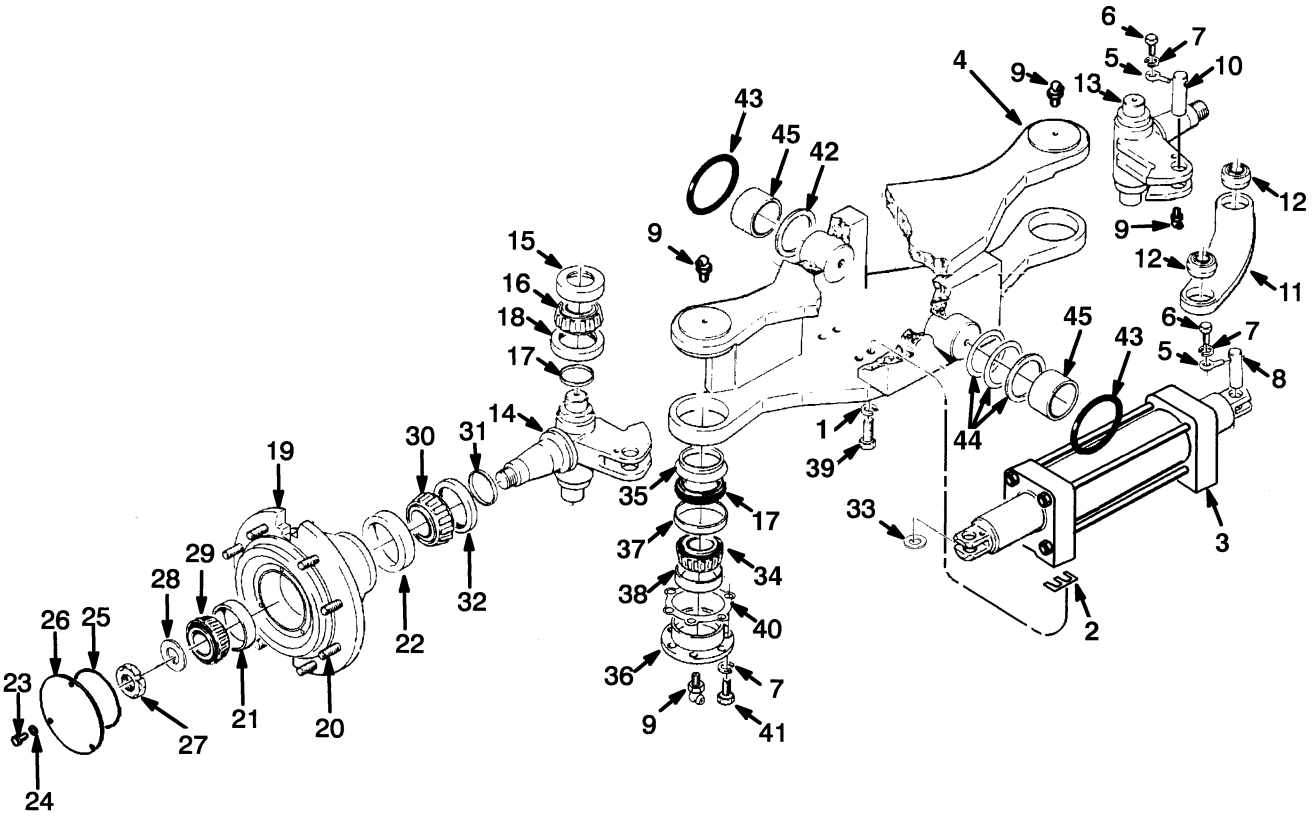

©2010 HYSTER COMPANY

STEER AXLE ASSEMBLY

ITEM	PART NO.	DESCRIPTION	QTY
	1601924	Steering Axle Assembly	1
	4004442	Steering Axle (Reduced Stroke)	1
1	296434	Washer	8
2	1382352	Shim	AR
3	1393742	Steering Cylinder (Optional) (☞Figure 7-7)	1
3	1385590	Steering Cylinder (☞Figure 7-6)	1
4	1391400	Steering Axle (Frame)	1
5	82270	Eyebolt	4
6	292527	Capscrew	4
7	320161	Washer	16
8	1385595	Pin	2
9	13963	Grease Fitting	8
10	1385596	Pin	2
11	1385599	Tie Rod Assembly	2
11	1385594	Tie Rod	1
12	192683	Bushing	4
13	1601921	Spindle (LH)	1
14	1601922	Spindle (RH)	1
15	79483	Bearing Cup	2
16	1381932	Bearing Cone	2
17	1373687	Seal (Grease)	4
18	1373689	Wear Sleeve	2
19	1601923	Wheel Hub Assembly	2
19	**b** 1684549	Wheel Hub	1
19	**a** 1601925	Wheel Hub	1
20	1373675	Wheel Stud	12
21	159179	Bearing Cup	1
22	230389	Bearing Cup	1
23	136985	Capscrew	6
24	~~388049~~		
	292682	Lockwasher	6
25	90937	O-Ring	2
26	1325646	Plate	2
27	1554047	Nut	2
28	1554048	Washer	2
29	339490	Bearing Cone	2
30	230390	Bearing Cone	2
31	37103	Seal	2
32	1603975	Bushing	2
33	1385576	Seal	8
34	159180	Bearing Cone	2
35	1373688	Dust Seal (Dust)	2
36	1385598	Bearing Cap Assembly	2
36	1385597	Bearing Cap	1
37	1373689	Wear Sleeve	1
38	159179	Bearing Cup	1
39	274044	Capscrew	8
40	95033	Shim (0.005 in.)	AR
40	95034	Shim (0.020 in.)	AR
40	95166	Shim	AR
41	246001	Capscrew	12

©2010 HYSTER COMPANY

STEER AXLE ASSEMBLY

ITEM	PART NO.	DESCRIPTION	QTY
42	1335867	Thrust Washer	2
43	1381940	Seal	1
44	159185	Shim	AR
44	159186	Shim	AR
44	1674006	Shim	AR
45	1335871	Bushing	2

FOOTNOTES:

a → S/N B214E01614E

b S/N B214E01615E →

©2010 HYSTER COMPANY

NOTES

©2010 HYSTER COMPANY

STEER CYLINDER (FIGURE 7-6)

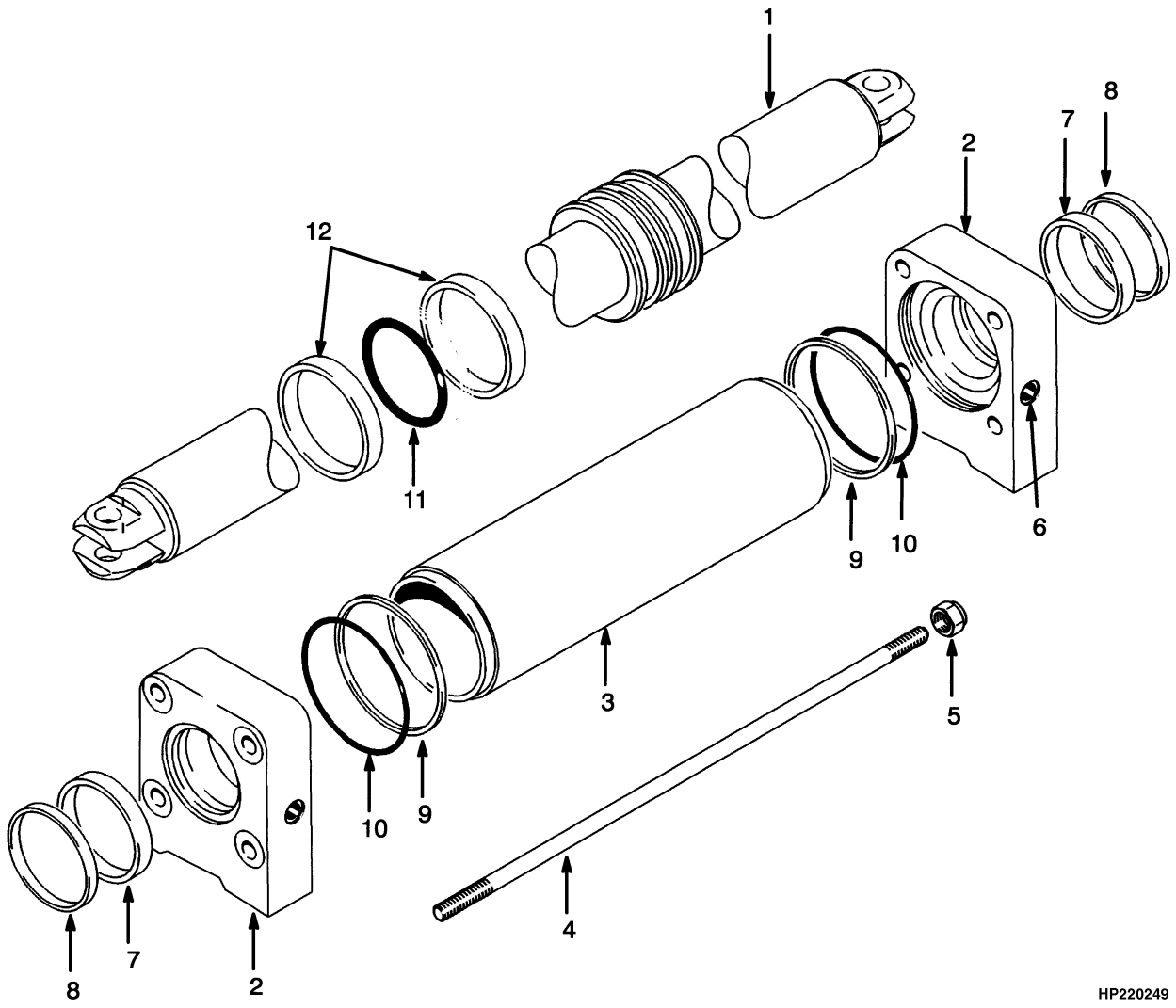

©2010 HYSTER COMPANY

STEER CYLINDER

ITEM	PART NO.	DESCRIPTION	QTY
	1385590	Steering Cylinder	1
1	1391207	Piston Rod	1
2	1391208	Cylinder Head	2
3	1391209	Tube Wldmt-Cylinder	1
4	1391210	Tie Rod	4
5	1391211	Nut	8
6	1391212	Screw (Optional)	4
7	1385582	Rod Seal	2
8	1391407	Rod Wiper	2
9	1385583	Back-Up Ring	2
10	15894	O-Ring	2
11	1385587	Seal	1
12	1385586	Wear Ring	2
	1391406	Kit-Seal	1

©2010 HYSTER COMPANY

STEER CYLINDER (FIGURE 7-7)
OPTIONAL

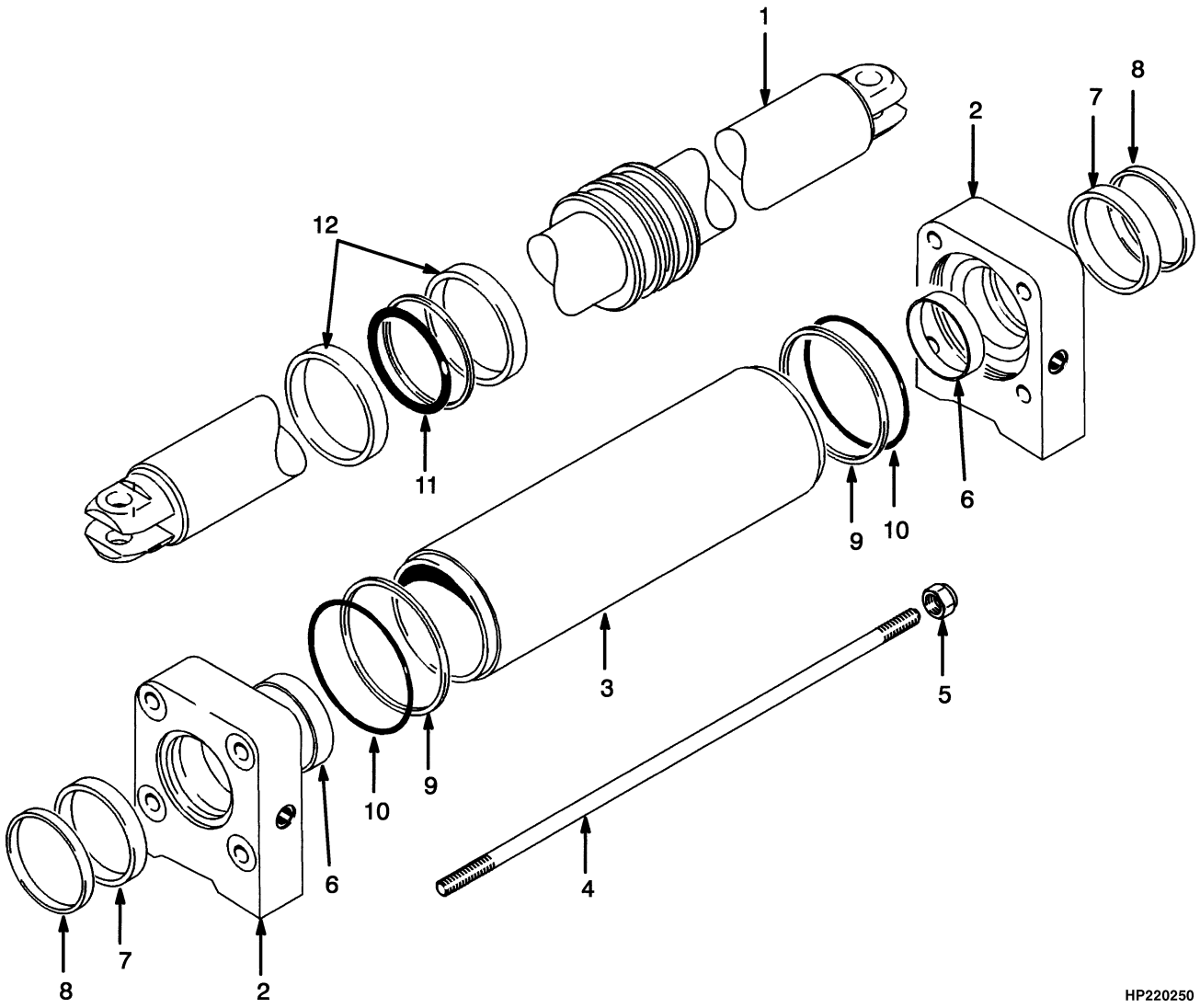

©2010 HYSTER COMPANY

STEER CYLINDER
OPTIONAL

ITEM	PART NO.	DESCRIPTION	QTY
	1393742	Steering Cylinder	1
1	1453850	Rod Assy	1
2	. . . . .	End Cap	2
3	1453851	Tube Wldmt-Cylinder	1
4	1453852	Tie Rod	1
5	316829	Nut	8
6	1453849	Bearing	2
7	1385582	Rod Seal	2
8	1391407	Rod Wiper	2
9	1385583	Back-Up Ring	2
10	15894	O-Ring	2
11	1385587	Seal	1
12	1385586	Wear Ring	2
	1391406	Kit-Seal	1

©2010 HYSTER COMPANY

STEER TIRE AND WHEEL (FIGURE 7-8)

BRIDGESTONE

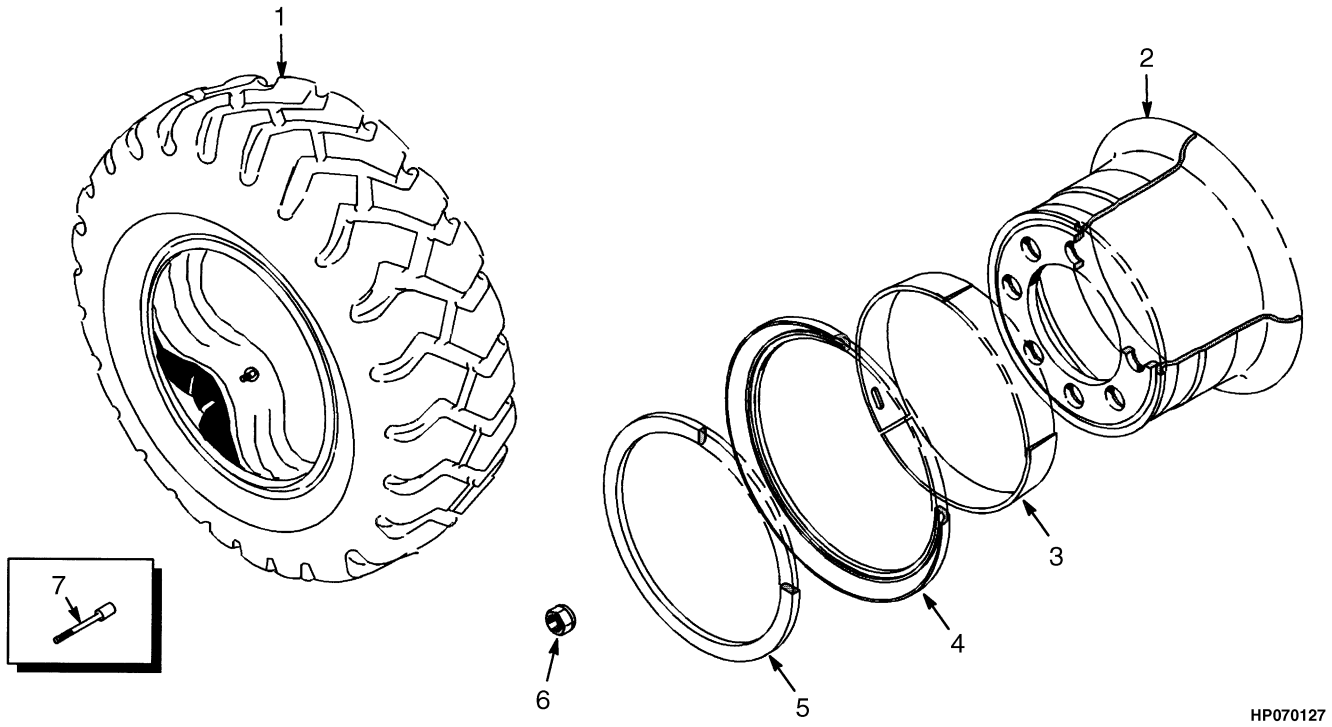

KEY:
A: 12.00 x 24-20 Bridgestone
B: 14.00 x 24-20 Bridgestone

ITEM	PART NO.	DESCRIPTION	QTY A	QTY B
1	1382381	Pneumatic Tire	2	..
1	1486210	Pneumatic Tire	..	2
1	1382382	Pneumatic Tire	1	..
1	1382383	Pneumatic Tire	1	..
1	115586	Pneumatic Tire	..	1
1	1485936	Tube	..	1
2	1385577	Wheel Assy	..	2
2	1614372	Wheel Assy	2	..
3	1452916	Ring (Conical)	1	1
4	1466004	Ring (Side)	..	1
4	1538311	Ring	1	..
5	1637809	Lockring	..	1
5	1538310	Wheel Lock Ring	1	..
6	376026	Wheel Nut	24	24
7	116265	Valve Stem Extension	2	2

©2010 HYSTER COMPANY

STEER TIRE AND WHEEL (FIGURE 7-9)
MICHELIN

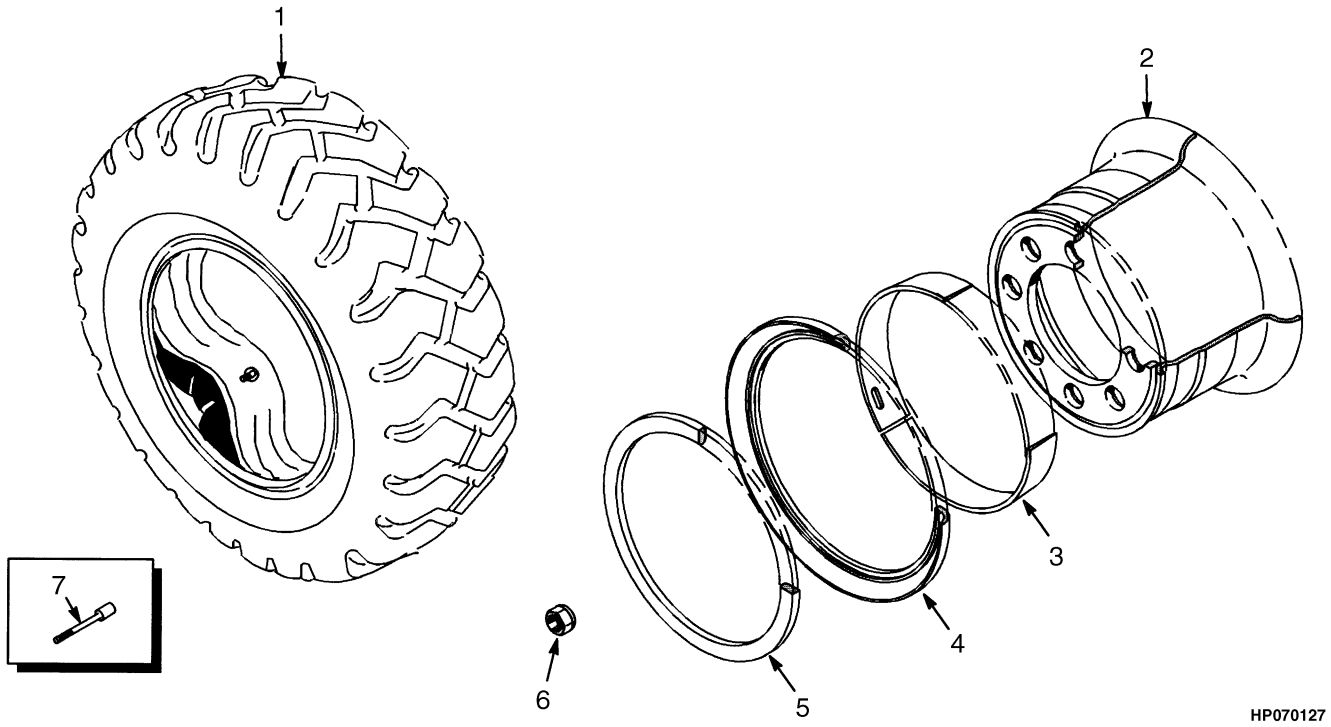

KEY:
A: 12.00 x 24
B: 14.00 x 24

ITEM	PART NO.	DESCRIPTION	QTY A	QTY B
1	1460448	Pneumatic Tire	2	..
1	1460451	Pneumatic Tire	..	2
1	1460398	Pneumatic Tire	1	..
1	1460405	Tube	1	..
1	1460402	Pneumatic Tire	..	1
1	1460406	Tube	..	1
2	1385577	Wheel Assy	..	4
2	1614372	Wheel Assy	4	..
3	1466004	Ring (Side)	..	1
3	1538311	Ring	1	..
4	1452916	Ring (Conical)	1	1
5	1637809	Lockring	..	1
5	1538310	Wheel Lock Ring	1	..
6	376026	Wheel Nut	24	24
7	1303417	Valve Stem	2	2

©2010 HYSTER COMPANY

STEER TIRE AND WHEEL (FIGURE 7-10)

SOLID TIRE WITH TREAD — BERGOUGNAN

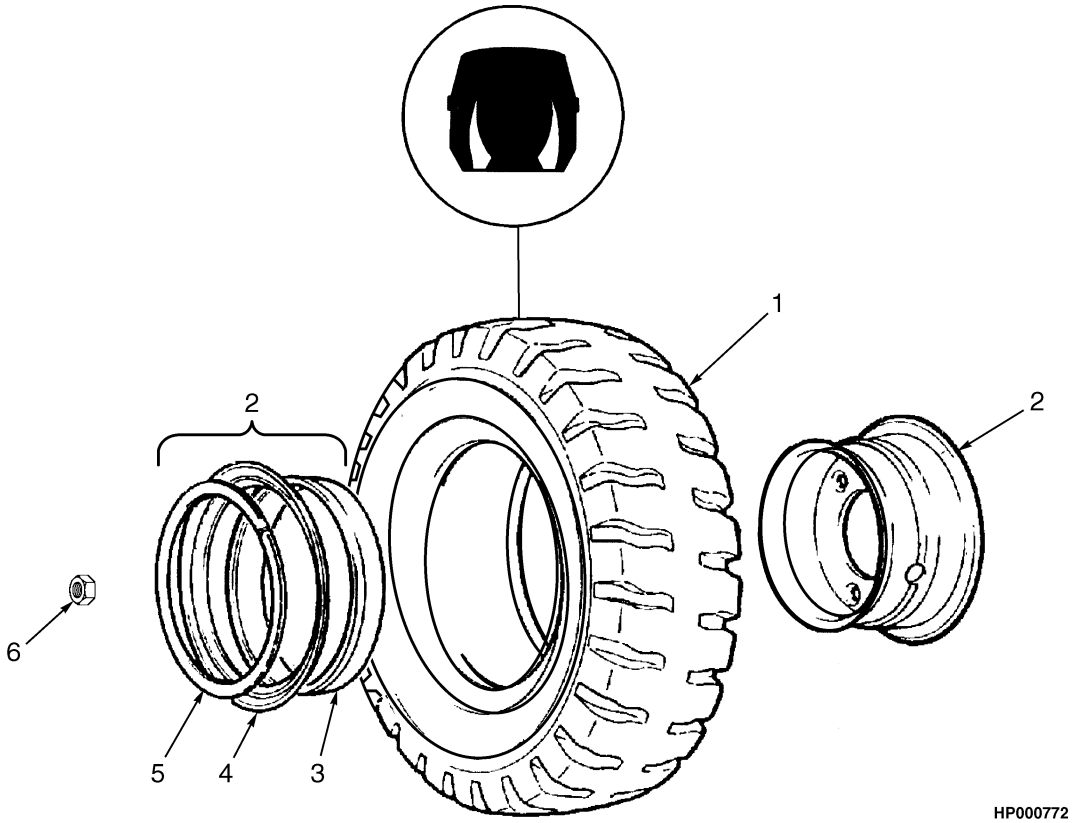

ITEM	PART NO.	DESCRIPTION	QTY
1	1393797	Pneumatic Tire (Solid) (14.00 x 24 x 10)	2
2	1391058	Rim	1
2	1385577	Wheel Assy	2
3	1466004	Ring (Side)	1
4	1452916	Ring (Conical)	1
5	1637809	Lockring	1
6	376026	Wheel Nut	24

©2010 HYSTER COMPANY

STEER TIRE AND WHEEL (FIGURE 7-11)
SOLID SMOOTH — MONARCH

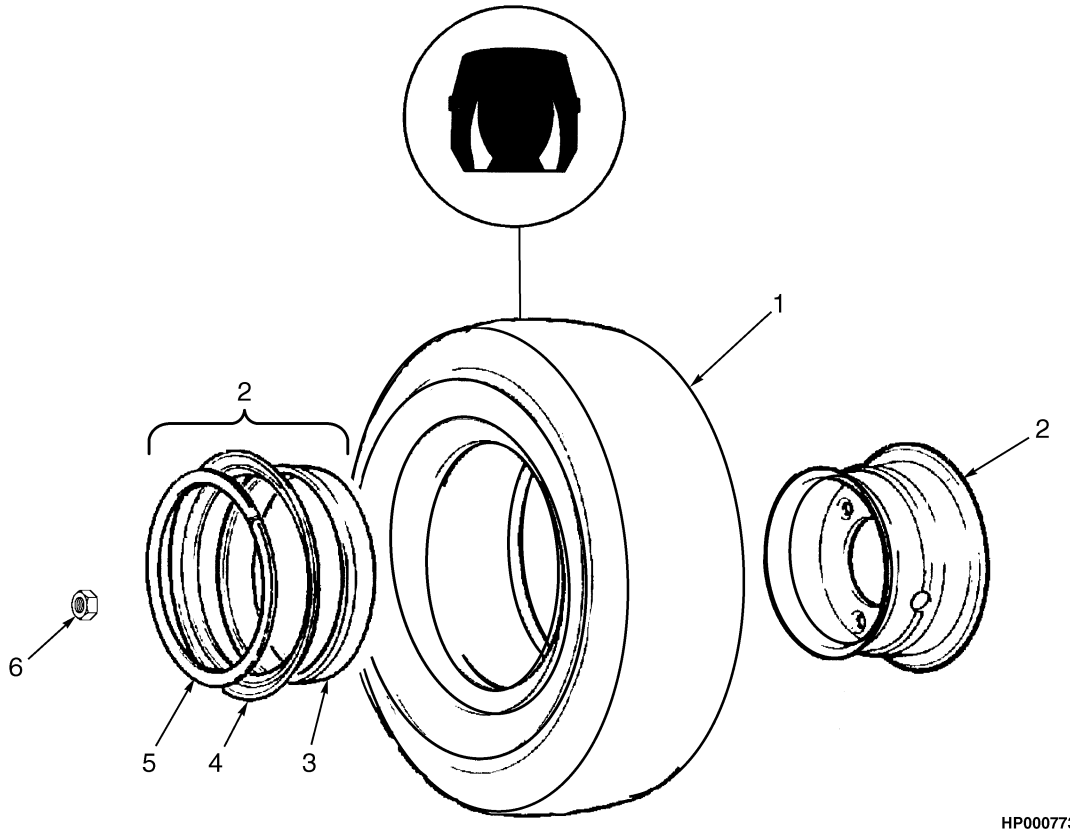

ITEM	PART NO.	DESCRIPTION	QTY
1	1393787	Pneumatic Tire	2
2	1451454	Rim	2
2	1391646	Rim	1
3	1466004	Ring (Side)	1
4	1452916	Ring (Conical)	1
5	1637809	Lockring	1
6	376026	Wheel Nut	24

©2010 HYSTER COMPANY

STEER TIRE AND WHEEL (FIGURE 7-12)

SIMEX

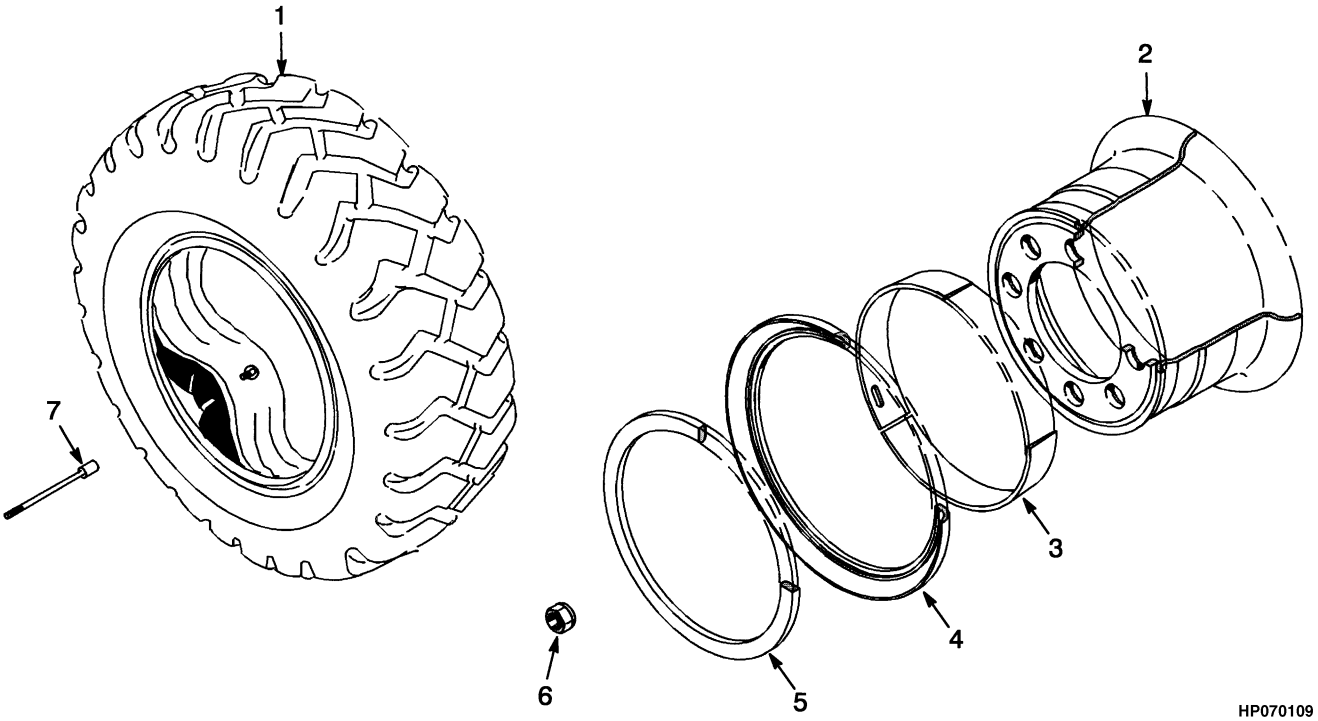

KEY:
A: 12.00 X 24 -- 20, FLT and ECH
B: 14.00 X 24 -- 28, FLT Only

ITEM	PART NO.	DESCRIPTION	QTY A	QTY B
1	1641217	Pneumatic Tire	2	..
1	1641218	Pneumatic Tire	..	2
1	1641098	Pneumatic Tire	1	..
1	1641099	Pneumatic Tire	..	1
1	1382383	Pneumatic Tire	1	..
1	1485936	Tube	..	1
2	1614372	Wheel Assy	2	..
2	1391557	Wheel Rim	..	2
2	1620002	Rim	1	..
2	1391058	Rim	..	1
3	1452916	Ring (Conical)	1	1
4	1538311	Ring	1	..
4	1466004	Ring (Side)	..	1
5	1538310	Wheel Lock Ring	1	..
5	1637809	Lockring	..	1
6	376026	Wheel Nut	24	24
7	116265	Valve Stem Extension	2	2

©2010 HYSTER COMPANY

STEER TIRE AND WHEEL (FIGURE 7-13)
GOODYEAR

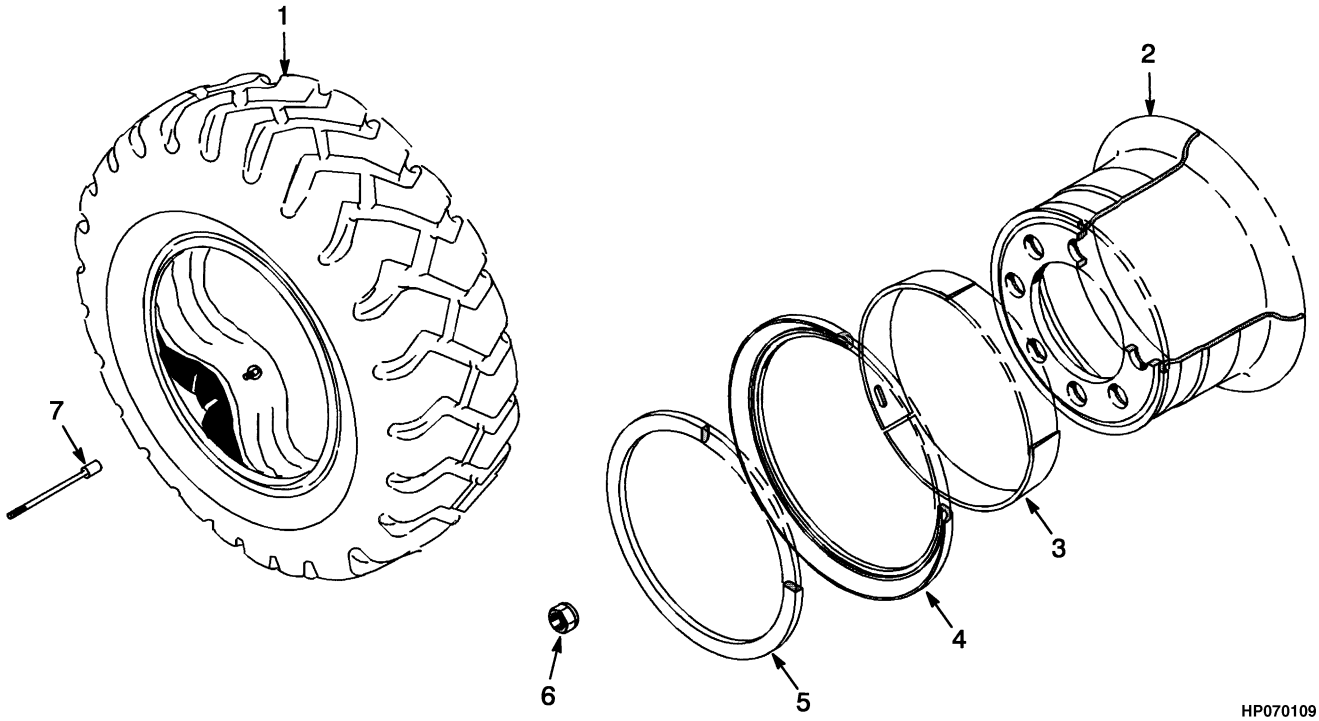

ITEM	PART NO.	DESCRIPTION	QTY
1	1628907	Pneumatic Tire	2
1	1628735	Pneumatic Tire	1
1	1485936	Tube	1
2	1385577	Wheel Assy	2
2	1391058	Rim	1
3	1452916	Ring (Conical)	1
4	1466004	Ring (Side)	1
5	1637809	Lockring	1
6	376026	Wheel Nut	24
7	1303417	Valve Stem	2

NOTES

©2010 HYSTER COMPANY

8 BRAKE SYSTEM

SECTION 8
BRAKE SYSTEM

DESCRIPTION	PAGE
BRAKE AND INCHING PEDAL LINKAGE	8-2
BRAKE VALVE	
WET BRAKE	8-4
PARK BRAKE ASSEMBLY	8-8
WET BRAKE ASSEMBLY	8-6

©2010 HYSTER COMPANY

BRAKE AND INCHING PEDAL LINKAGE (FIGURE 8-1)

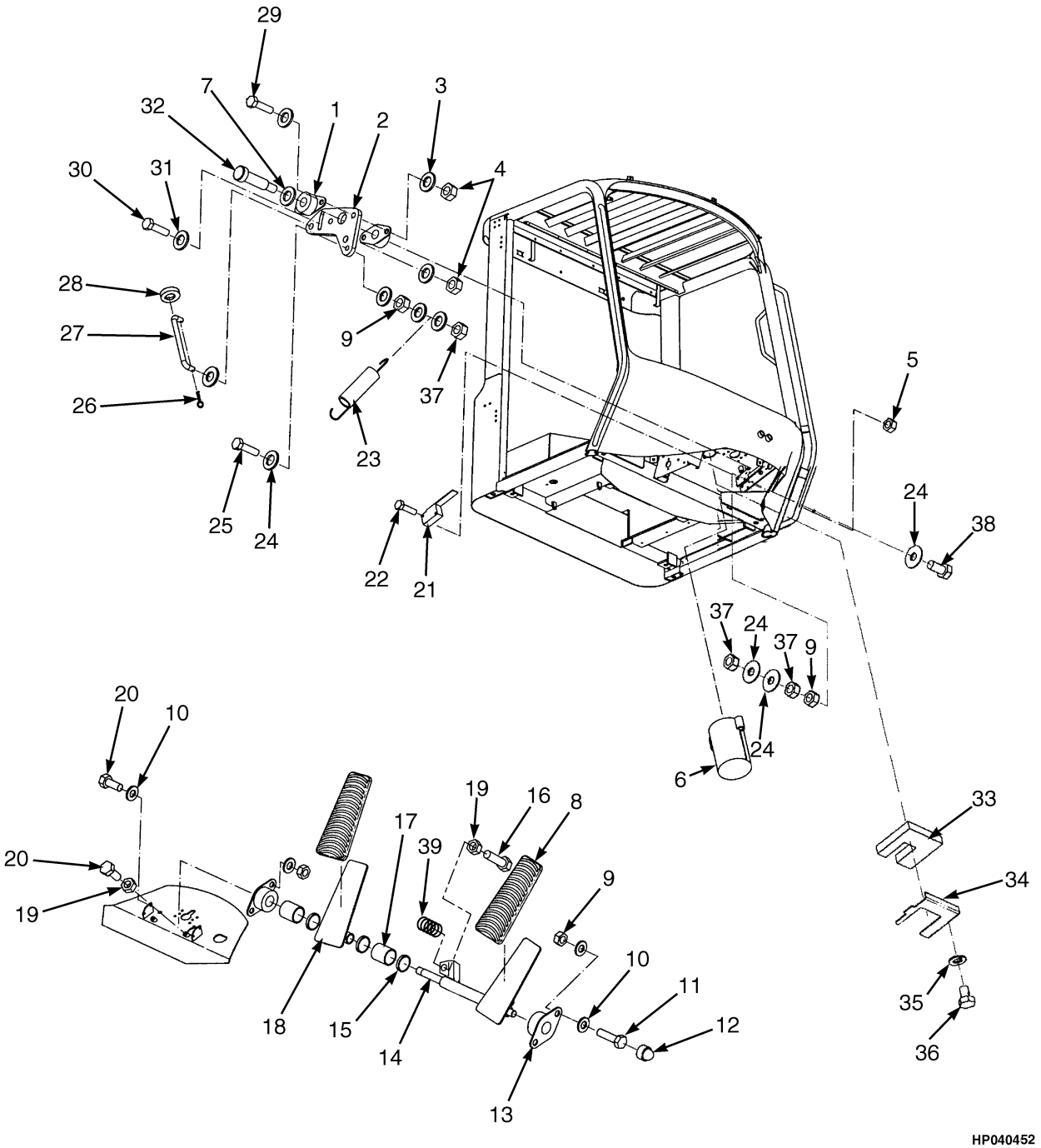

©2010 HYSTER COMPANY

BRAKE AND INCHING PEDAL LINKAGE

ITEM	PART NO.	DESCRIPTION	QTY
1	313860	Flange	2
2	1571631	Plate	1
3	320156	Washer	4
4	316834	Nut	3
5	1492221	Nut	2
6	1487209	Brake Valve (☞Figure 8-2)	1
7	1493386	Washer	1
8	1520596	Cover (Pedal)	2
9	239503	Nut	5
10	320158	Washer	8
11	136681	Capscrew	4
12	1476584	Cover (Capscrew Head)	4
13	1492225	Bearing	2
14	1491015	Shaft (Brake Pedal)	1
15	1520841	Shim	3
16	1706985	Screw	1
17	1493380	Bearing	2
18	1491016	Inching Pedal	1
19	136692	Nut	3
20	136985	Capscrew	2
21	374159	Switch	1
22	302014	Screw	2
23	1498387	Spring	1
23	4001209	Return Spring (Alternate Part)	1
24	320158	Washer	3
25	1558040	Screw	1
26	15212	Cotter Pin	2
27	1491020	Rod (Inching Pedal)	1
28	1558039	Grommet	1
29	292501	Capscrew	2
30	292502	Capscrew	1
31	1476421	Washer	2
32	340213	Capscrew	1
33	1623197	Foam (Throttle Pedal)	1
34	1623196	Bracket (Holding)	1
35	1506738	Washer	1
36	1623195	Capscrew	1
37	316835	Nut	2
38	1558038	Screw	1
39	1677891	Spring (Inching/Brake Pedal)	1
39	4000982	Spring (Alternate Part)	1

©2010 HYSTER COMPANY

BRAKE VALVE (FIGURE 8-2)
WET BRAKE

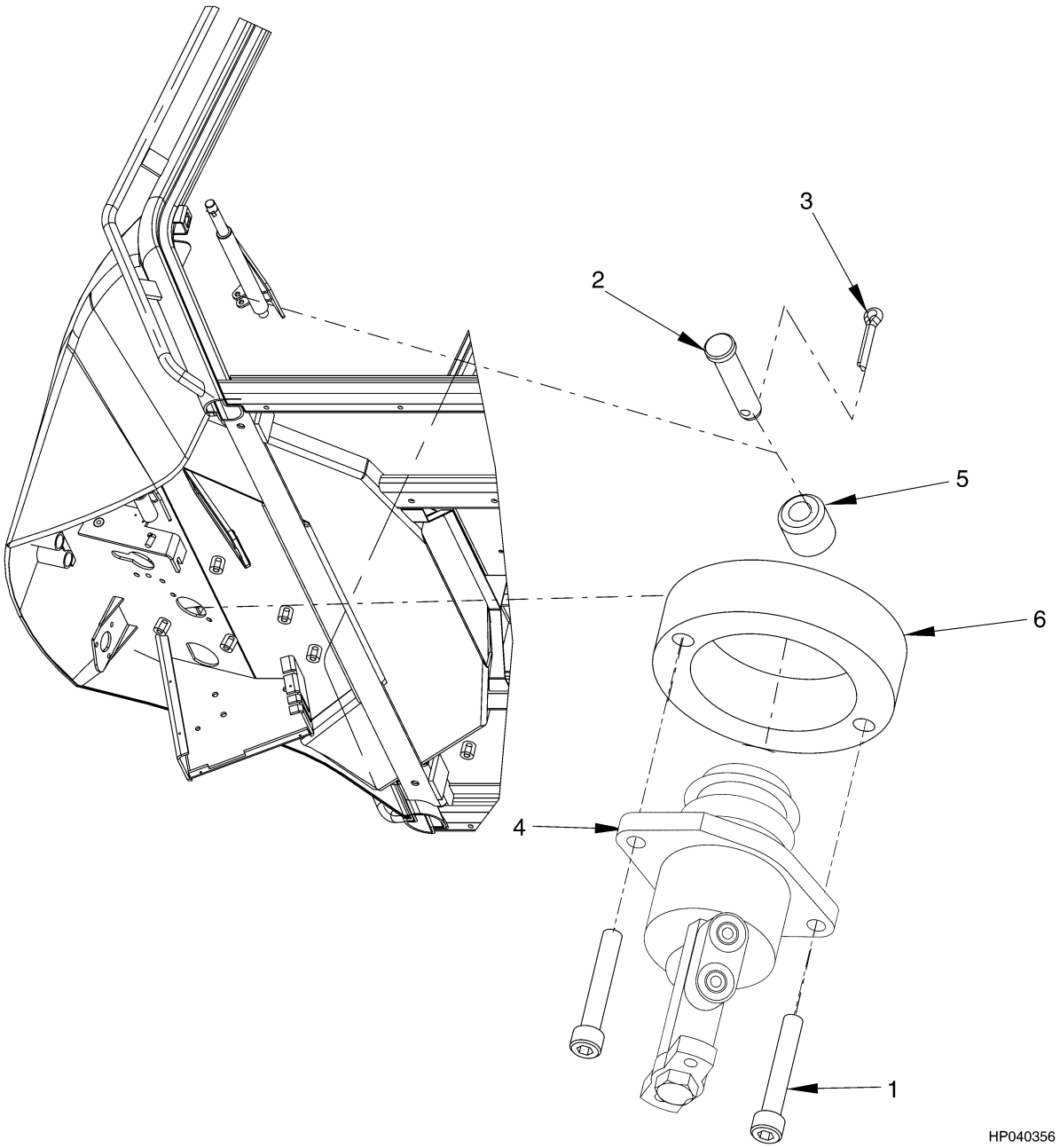

©2010 HYSTER COMPANY

BRAKE VALVE
WET BRAKE

ITEM	PART NO.	DESCRIPTION	QTY
1	296012	Capscrew	2
2	327591	Pin	1
3	15212	Cotter Pin	1
4	1487209	Brake Valve	1
4	1391744	Kit-Seal	1
4	1391745	Kit-Hardware	1
4	1450390	Kit-Shim	1
5	1480674	Roller	1
6	1487208	Spacer	1

©2010 HYSTER COMPANY

WET BRAKE ASSEMBLY (FIGURE 8-3)

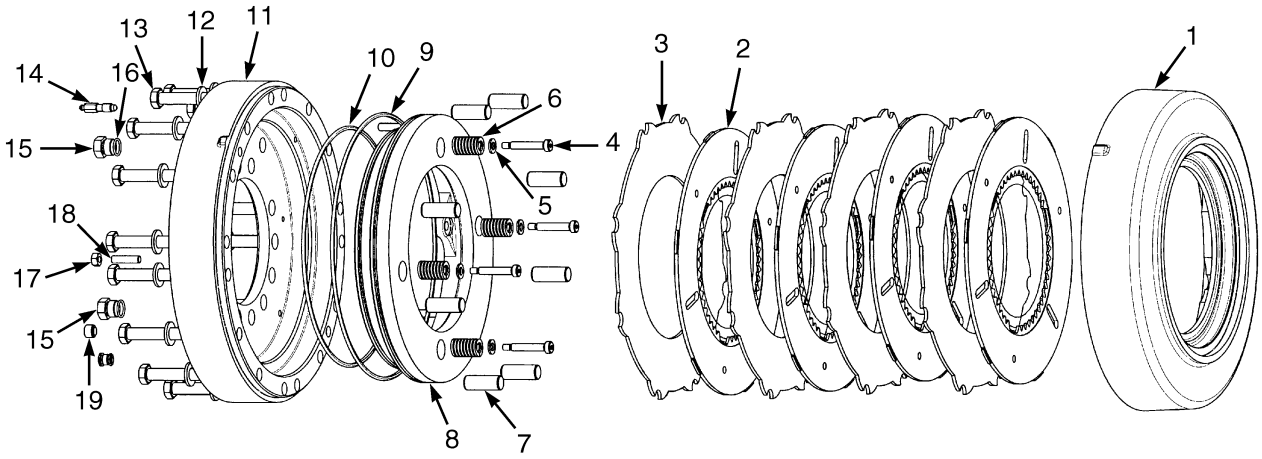

HP040453

©2010 HYSTER COMPANY

WET BRAKE ASSEMBLY

ITEM	PART NO.	DESCRIPTION	QTY
	1653385	Drive Axle	1
	1583870	Drive Axle (ECH)	1
	4002325	Drive Axle (Wide Axle Option)	1
	1619131	Brake Assembly	1
1	1619132	Housing (Piston)	2
2	1489440	Friction Disk	10
3	1489439	Separator Plate (Brake)	14
4	1619134	Screw	8
5	1313879	Washer	8
6	1619133	Return Spring	8
7	1619137	Dowel	16
8	1619135	Piston	2
9	1489427	Piston Seal (Outer)	2
10	1489428	Piston Seal (Inner)	2
11	1619136	Housing (Brake)	2
12	1482765	Washer	36
13	1619491	Capscrew	36
14	1384861	Bleeder Screw	4
15	1384859	Plug	4
16	1382902	O-Ring	1
17	1489430	Nut	6
18	1489429	Screw	6
19	1384864	Plug (Magnetic)	2

©2010 HYSTER COMPANY

PARK BRAKE ASSEMBLY (FIGURE 8-4)

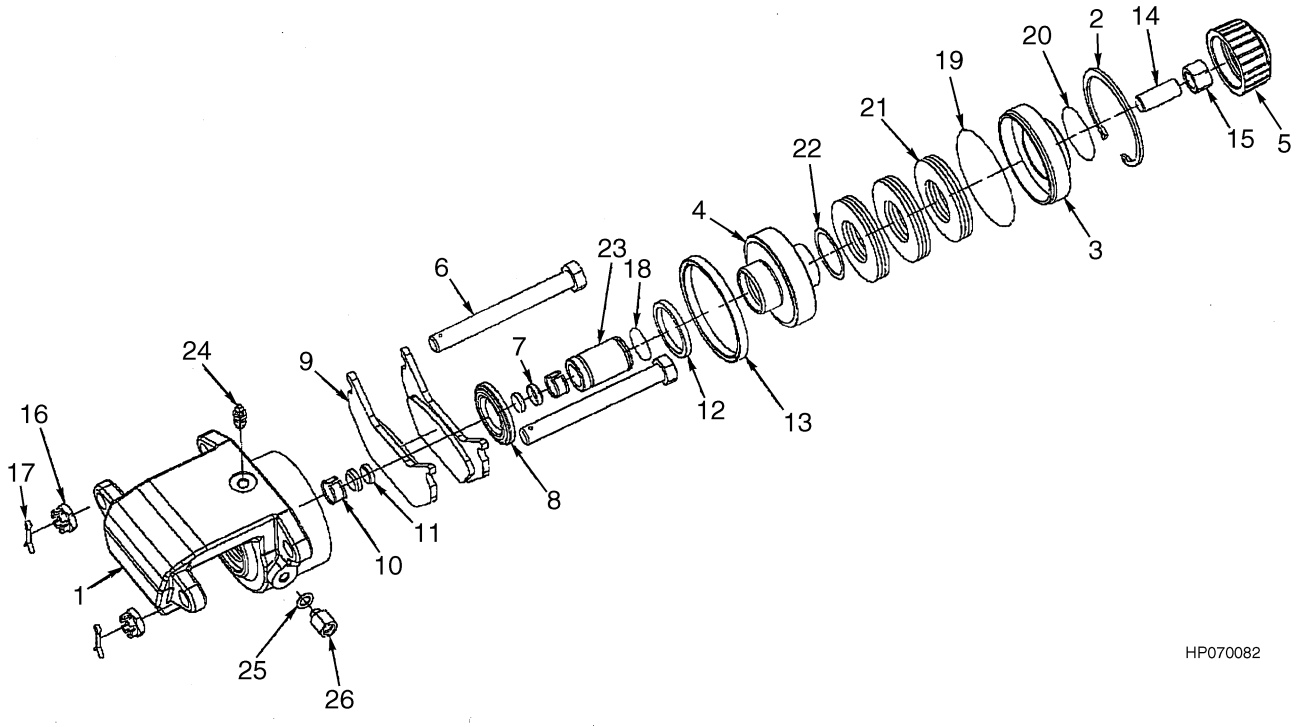

©2010 HYSTER COMPANY

PARK BRAKE ASSEMBLY

ITEM	PART NO.	DESCRIPTION	QTY
	1583870	Drive Axle (ECH)	1
	1653385	Drive Axle	1
	4002325	Drive Axle (Wide Axle Option)	1
	1561604	Brake Assembly (Park Brake)	1
1	1495623	Housing	1
2	1495624	Retaining Ring	1
3	1495625	Piston (Stop)	1
4	1495626	Piston	1
5	1495627	Cap	1
6	1495628	Bolt	2
7	1495629	Cup	2
8	1495630	Boot	1
9	1495631	Brake Lining	2
10	1495632	Sleeve (Friction)	2
11	1495633	Magnet	2
11	. . . . .	Retaining Ring	1
12	1495634	Seal (Cup)	1
13	1495635	Seal (Cup)	1
14	1495636	Setscrew	1
15	1495637	Locknut	1
16	1495638	Nut	2
17	1495639	Cotter Pin	2
18	1495640	O-Ring	1
19	1495641	O-Ring	1
20	1495642	O-Ring	1
21	1495643	Disk Spring	6
22	1495644	Wear Plate	1
23	1495645	Cylinder Rod	1
24	1495646	Bleeder Valve	1
25	1495647	Washer	1
26	1495648	Adapter	1
	1514331	Kit-Repair Parking Brake	1

©2010 HYSTER COMPANY

NOTES

©2010 HYSTER COMPANY

9 HYDRAULIC SYSTEM

SECTION 9
HYDRAULIC SYSTEM

DESCRIPTION	PAGE
ACCUMULATOR	9-44
BRAKE HOSES AND ATTACHING PARTS	
SHEET 1 OF 2	9-8
SHEET 2 OF 2	9-12
CAB HOSES AND ATTACHING PARTS	9-6
COMBINATION VALVE	
→ S/N B214E01585E	9-34
S/N B214E01586E →	9-36
CONTROL VALVE	
AUXILIARY SPOOL SECTION	9-30
LIFT SPOOL SECTION - 1A, 1B	9-24
LIFT SPOOL SECTION - 4A, 4B	9-32
MID-INLET SECTION	9-26
OUTLET SECTION	9-22
TILT SPOOL SECTION	9-28
CONTROL VALVE ASSEMBLY	9-21
GEAR PUMP	9-42
HYDRAULIC HOSE ASSEMBLY	9-52
HYDRAULIC LEVER MODULATOR VALVE	9-54
HYDRAULIC LEVERS	9-50
HYDRAULIC OIL COOLER	9-48
HYDRAULIC SUPPLY AND RETURN	9-2
HYDRAULIC TANK	9-46
HYDRAULIC VALVE AND ATTACHING PARTS	9-38
JOYSTICK ASSEMBLY	9-58
JOYSTICK CONTROL	9-56
JOYSTICK CONTROL MODULATOR VALVE	9-60
LIFT ACCUMULATOR SYSTEM	9-20
MAIN VALVE HOSES	9-4
MAST SUPPLY AND RETURN	9-16
STEERING HOSES AND ATTACHING PARTS	9-18

©2010 HYSTER COMPANY

HYDRAULIC SUPPLY AND RETURN (FIGURE 9-1)

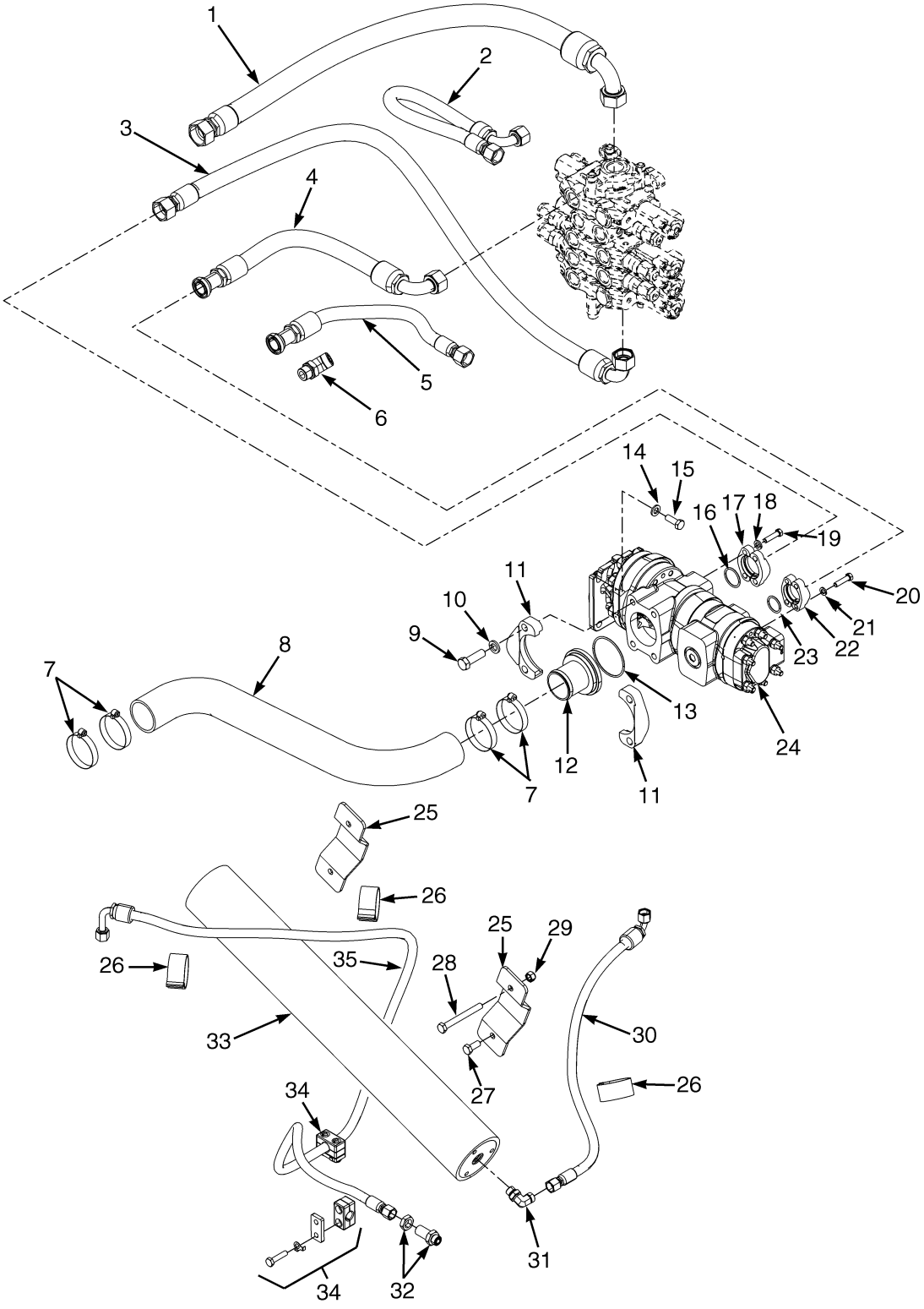

©2010 HYSTER COMPANY

HYDRAULIC SUPPLY AND RETURN

ITEM	PART NO.	DESCRIPTION	QTY
1	1605800	Hose Assy	1
2	1600801	Hose Assy	1
3	1600798	Hose Assy	1
4	1642123	Hose Assy	1
5	1600799	Hose Assy	1
6	1516208	Fitting	1
7	1394008	Hose Clamp	4
8	1589992	Hose	1
9	18602	Capscrew	4
10	15160	Washer	4
11	222533	Fitting (Flange)	2
12	222555	Fitting	1
13	15882	O-Ring	1
14	320161	Washer	4
15	292528	Capscrew	4
16	199917	O-Ring	1
17	17764	Clamp (Split Half) (Flange)	2
18	15157	Lockwasher	4
19	18558	Capscrew	4
20	16815	Capscrew	4
21	15156	Lockwasher	4
22	190757	Clamp (Split Half)	2
23	199085	O-Ring	1
24	1611559	Pump (☞Figure 9-19)	1
24	251979	Lubricant	AR
24	264159	Adhesive	AR
25	1376844	Bracket	2
26	1557756	Strap (Static)	3
27	292527	Capscrew	2
28	292539	Capscrew	2
29	302402	Locknut	4
30	1603102	Hose Assy	1
31	1473897	Fitting	1
31	1527817	O-Ring	1
31	16484	O-Ring	1
32	816591	Fitting (Includes Nut)	1
33	1563795	Accumulator (☞Figure 9-20)	1
33	4023234	Accumulator (Alternate Part) (Not Serviceable)	1
34	1617039	Clamp	2
34	1617042	Cover Plate	2
34	1533662	Lockwasher	4
34	292516	Capscrew	4
35	1605804	Hose Assy	1

©2010 HYSTER COMPANY

MAIN VALVE HOSES (FIGURE 9-2)

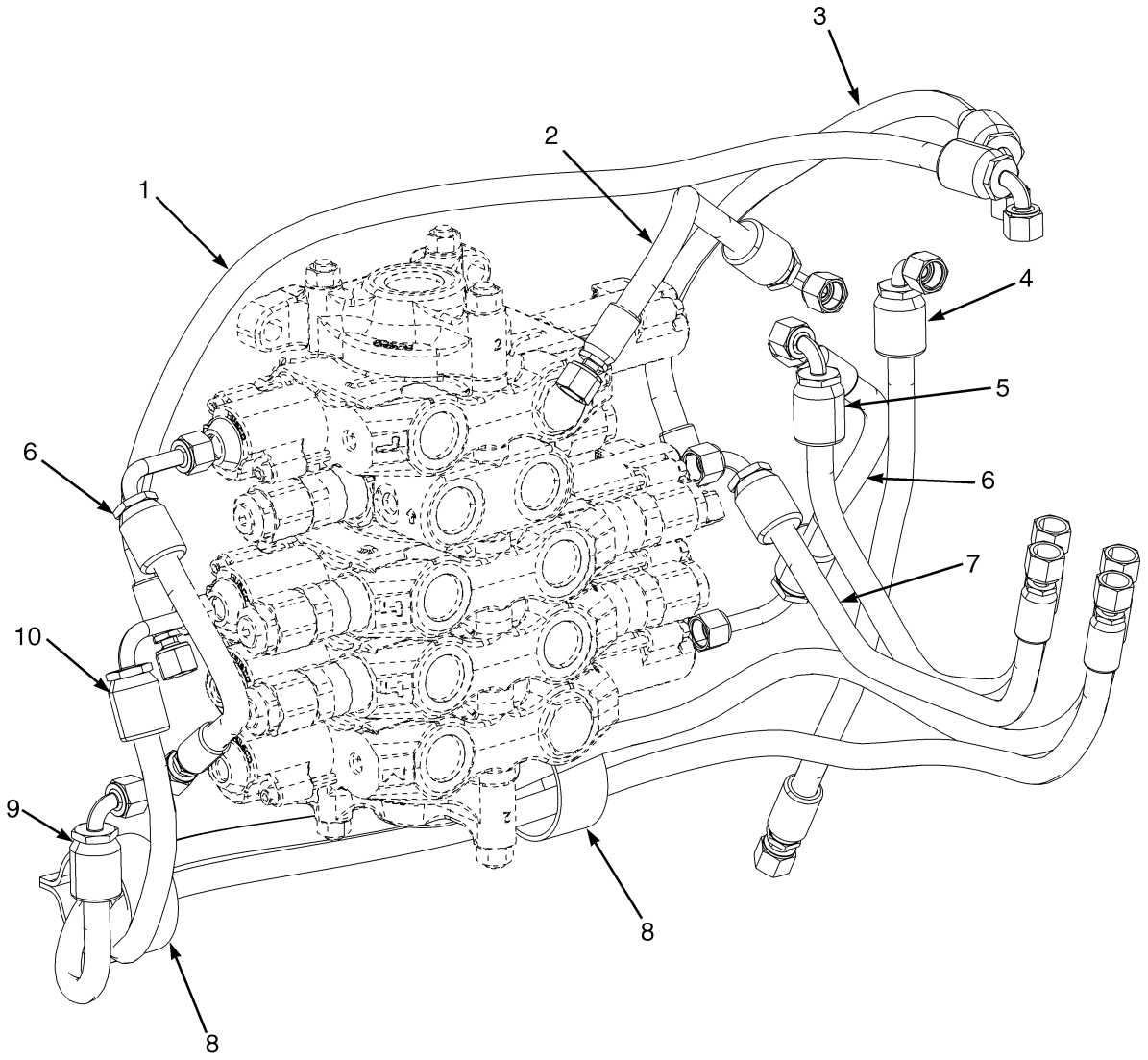

HP151068

©2010 HYSTER COMPANY

MAIN VALVE HOSES

ITEM	PART NO.	DESCRIPTION	QTY
1	1603084	Hose Assy (Main Valve To Combination Valve)	1
2	1603904	Hose Assy (Main Valve To Combination Valve)	1
3	1603081	Hose Assy (Main Valve To Combination Valve)	1
4	1605801	Hose Assy (Combination Valve To Filter)	1
5	1603078	Hose Assy (Main Valve To Combination Valve)	1
6	1603085	Hose Assy (Main Valve Shunts)	2
7	1603080	Hose Assy (Main Valve To Combination Valve)	1
8	1557756	Strap (Static)	2
9	1602453	Hose Assy (Main Valve To Combination Valve)	1
10	1603083	Hose Assy (Main Valve To Combination Valve)	1

©2010 HYSTER COMPANY

CAB HOSES AND ATTACHING PARTS (FIGURE 9-3)

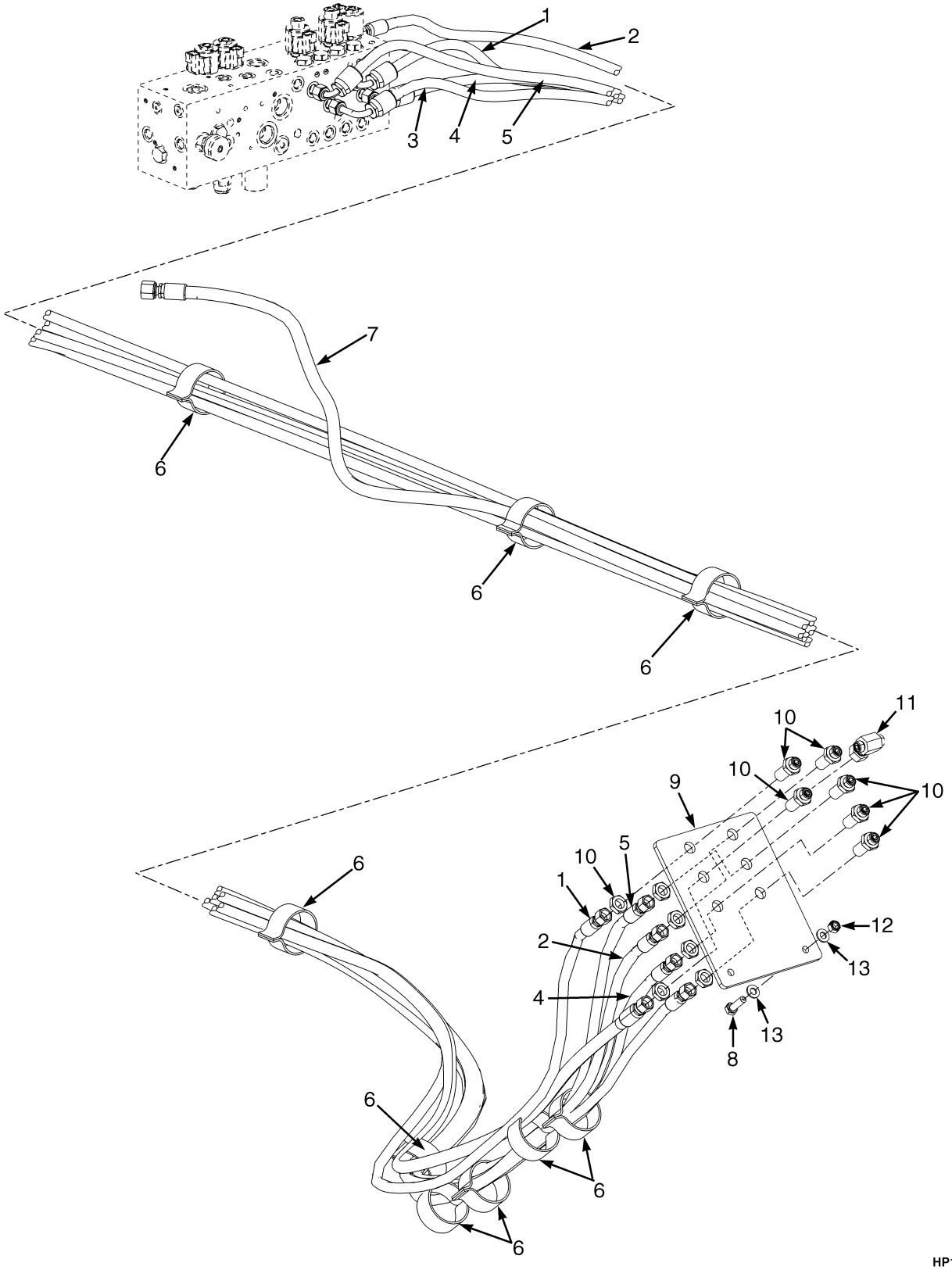

©2010 HYSTER COMPANY

CAB HOSES AND ATTACHING PARTS

KEY:
A: H400HD-EC, H440HDS-EC, H450HDS-EC
B: H450HD-EC, H500HD-EC

ITEM	PART NO.	DESCRIPTION	QTY A	QTY B
1	1603093	Hose Assy	1	..
1	1603098	Hose Assy	..	1
2	1618930	Hose Assy	1	..
2	1603909	Hose Assy	..	1
3	1618935	Hose Assy	1	..
3	1603099	Hose Assy	..	1
4	1603095	Hose Assy	1	..
4	1603100	Hose Assy	..	1
5	1603092	Hose Assy	1	..
5	1603097	Hose Assy	..	1
6	1557756	Strap (Static)	9	9
7	1603096	Hose Assy	1	..
7	1603101	Hose Assy	..	1
8	287860	Capscrew	2	2
9	1590009	Plate	1	1
10	1528573	Fitting (Includes Nut)	6	6
11	1487097	Fitting	1	1
12	302401	Locknut	2	2
13	320159	Washer	4	4

©2010 HYSTER COMPANY

BRAKE HOSES AND ATTACHING PARTS (FIGURE 9-4)

SHEET 1 OF 2

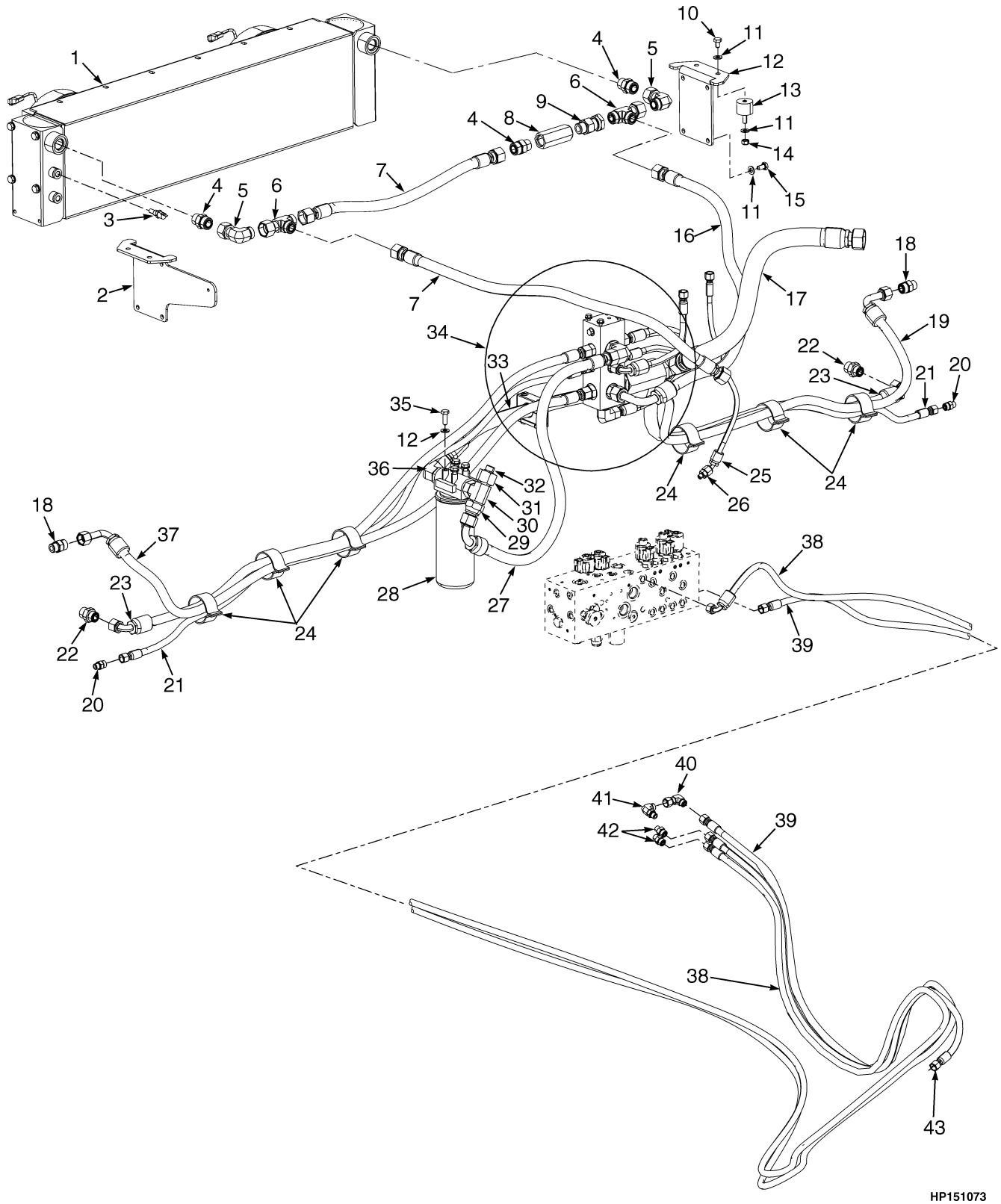

©2010 HYSTER COMPANY

BRAKE HOSES AND ATTACHING PARTS
SHEET 1 OF 2

KEY:
A: H400HD-EC, H440HDS-EC, H450HDS-EC
B: H450HD-EC, H500HD-EC

ITEM	PART NO.	DESCRIPTION	QTY A	QTY B
1	1636658	Oil Cooler Assembly (☞Figure 9-22)	1	1
2	1626816	Bracket	1	1
3	**a** 1613946	Switch	1	1
3	**b** 1675801	Switch	1	1
4	1473888	Fitting	4	4
4	1527817	O-Ring	1	1
5	1486774	Fitting	2	2
5	16982	O-Ring	1	1
5	16486	O-Ring	1	1
6	1473892	Fitting	2	2
6	16982	O-Ring	1	1
7	1625706	Hose Assy	2	2
8	1625633	Check Valve	1	1
9	1640846	Fitting	1	1
9	252729	O-Ring	1	1
9	16485	O-Ring	1	1
10	292513	Capscrew	4	4
11	320159	Washer	20	20
12	1616290	Plate	1	1
13	1597192	Isolator	4	4
14	302401	Locknut	4	4
15	292513	Capscrew	8	8
16	1600802	Hose Assy	1	1
17	1625705	Hose Assy	1	1
18	1486749	Fitting	2	2
18	252729	O-Ring	1	1
18	16485	O-Ring	1	1
19	1605798	Hose Assy	1	1
19	4002425	Hose Assy (Wide Axle Option)	1	1
20	1486740	Fitting	2	2
20	16486	O-Ring	1	1
20	16481	O-Ring	1	1
21	1605796	Hose Assy	2	2
21	4002423	Hose Assy (Wide Axle Option)	2	2
22	1486751	Fitting	2	2
22	1527818	O-Ring	1	1
22	1527820	O-Ring	1	1
23	1605795	Hose Assy	2	2
23	4002422	Hose Assy (Wide Axle Option)	2	2
24	1557756	Strap (Static)	6	6
25	1605799	Hose Assy	1	1
26	1486741	Fitting	1	1
26	1527816	O-Ring	1	1
26	16481	O-Ring	1	1
27	1603091	Hose Assy	1	1

©2010 HYSTER COMPANY

BRAKE HOSES AND ATTACHING PARTS
SHEET 1 OF 2

KEY:
A: H400HD-EC, H440HDS-EC, H450HDS-EC
B: H450HD-EC, H500HD-EC

ITEM	PART NO.	DESCRIPTION	QTY A	QTY B
28	2043084	Hydraulic Filter	1	1
28	2043981	Filter Element	1	1
28	. . . . .	Filter Head	1	1
29	1487155	Fitting	1	1
29	16982	O-Ring	1	1
30	1532652	Fitting	1	1
30	1527820	O-Ring	1	1
30	16487	O-Ring	1	1
31	1487169	Fitting	1	1
32	1487153	Fitting	1	1
32	1527817	O-Ring	1	1
33	1625704	Hose Assy	1	1
34	. . . . .	Manifold Connections (☞Figure 9-5)	AR	AR
35	136985	Capscrew	7	7
36	1487075	Fitting	1	1
36	1527820	O-Ring	1	1
36	16487	O-Ring	1	1
37	1605797	Hose Assy	1	1
37	4002424	Hose Assy (Wide Axle Option)	1	1
38	1618928	Hose Assy	1	..
38	1603906	Hose Assy	..	1
39	1618929	Hose Assy	1	..
39	1603905	Hose Assy	..	1
40	1473895	Fitting	1	1
40	1527817	O-Ring	2	2
41	1487063	Fitting	1	1
41	1527816	O-Ring	1	1
41	1527813	O-Ring	1	1
42	1486740	Fitting	2	2
42	16486	O-Ring	1	1
42	16481	O-Ring	1	1
43	1635505	Hose Assy	1	1

FOOTNOTES:

a → 9/2008

b S/N B214E01688F →

©2010 HYSTER COMPANY

NOTES

©2010 HYSTER COMPANY

BRAKE HOSES AND ATTACHING PARTS (FIGURE 9-5)
SHEET 2 OF 2

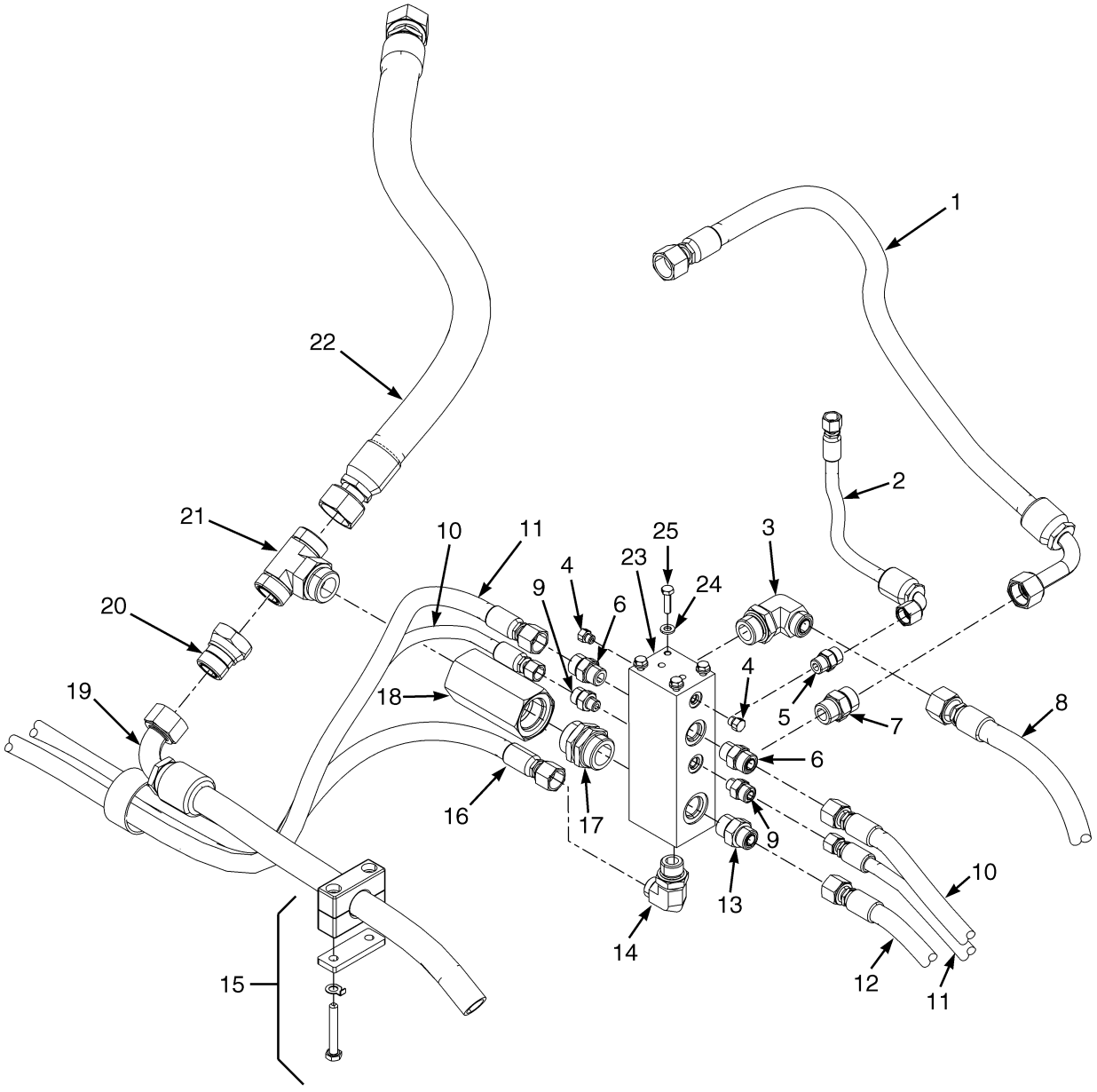

HP151071

©2010 HYSTER COMPANY

BRAKE HOSES AND ATTACHING PARTS
SHEET 2 OF 2

ITEM	PART NO.	DESCRIPTION	QTY
1	1600802	Hose Assy	1
2	1605790	Hose Assy	1
3	1487073	Fitting	1
3	280154	O-Ring	1
3	16487	O-Ring	1
4	14591	Plug	2
4	16481	O-Ring	1
5	1473887	Fitting	1
5	16484	O-Ring	1
6	1486749	Fitting	2
6	16485	O-Ring	1
6	252729	O-Ring	1
7	1473888	Fitting	1
7	16486	O-Ring	1
7	1527817	O-Ring	1
8	1603091	Hose Assy	1
9	1486745	Fitting	2
9	16483	O-Ring	1
9	265731	O-Ring	1
10	1605795	Hose Assy	2
10	4002422	Hose Assy (Wide Axle Option)	2
11	1605796	Hose Assy	2
11	4002423	Hose Assy (Wide Axle Option)	2
12	1605797	Hose Assy	1
12	4002424	Hose Assy (Wide Axle Option)	1
13	1486751	Fitting	1
13	1527818	O-Ring	1
13	1527820	O-Ring	1
14	1487069	Fitting	1
14	16486	O-Ring	1
14	1527819	O-Ring	1
15	1533656	Clamp	1
15	1560006	Cover Plate (Cover)	1
15	1533662	Lockwasher	2
15	292521	Capscrew	2
16	1605798	Hose Assy	1
16	4002425	Hose Assy (Wide Axle Option)	1
17	1459254	Fitting	1
17	. . . . .	O-Ring	2
18	816232	Check Valve	1
19	1625704	Hose Assy	1
20	1487158	Fitting	1
20	244167	O-Ring	1
21	1532653	Fitting	1
21	16983	O-Ring	1
21	1527821	O-Ring	2
22	1625705	Hose Assy	1
23	1494906	Manifold	1
24	320157	Washer	4
25	176640	Bolt	4

©2010 HYSTER COMPANY

BRAKE HOSES AND ATTACHING PARTS
SHEET 2 OF 2

ITEM	PART NO.	DESCRIPTION	QTY
54	1527817	O-Ring	1

©2010 HYSTER COMPANY

NOTES

©2010 HYSTER COMPANY

MAST SUPPLY AND RETURN (FIGURE 9-6)

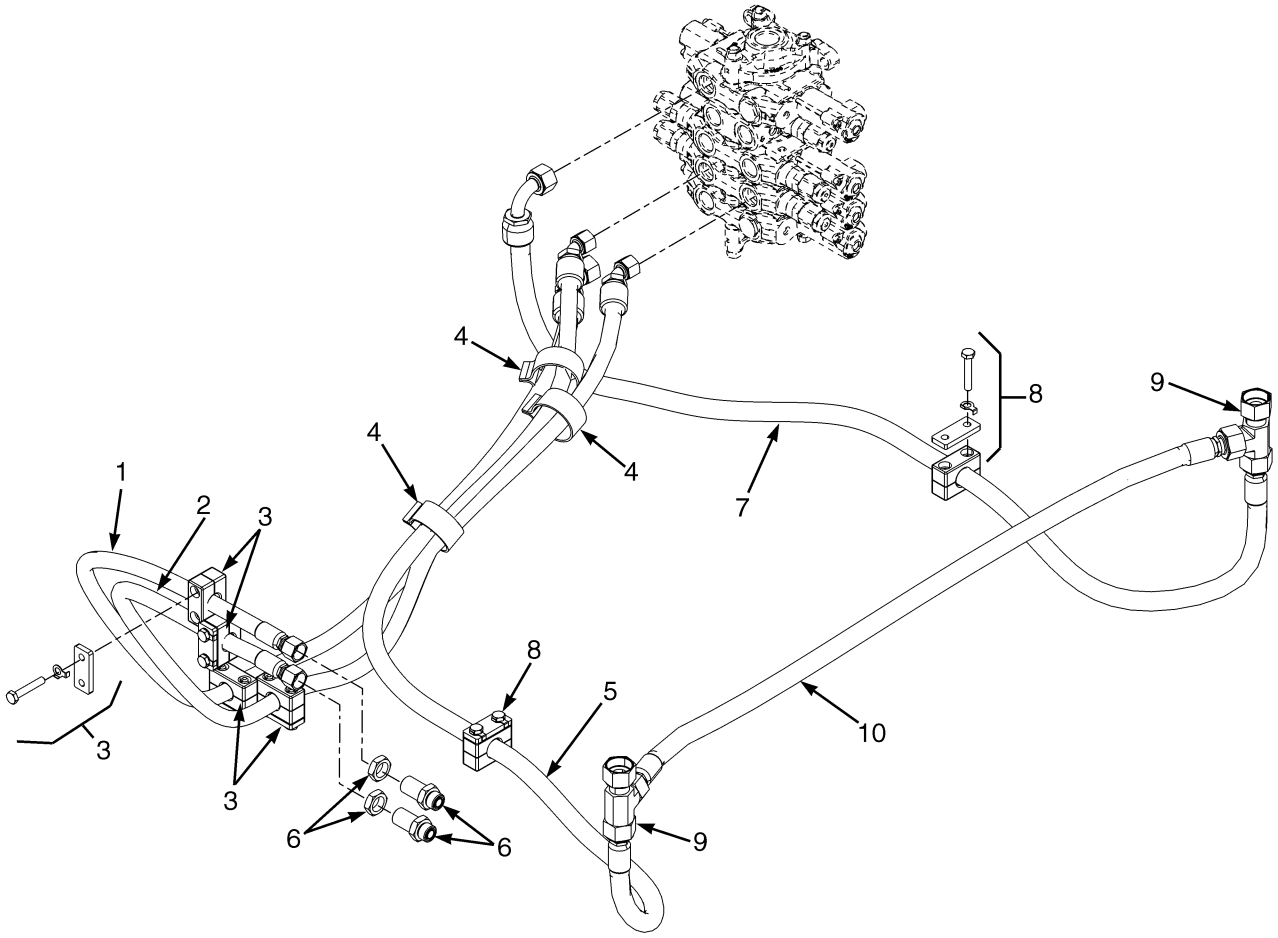

HP151063

©2010 HYSTER COMPANY

MAST SUPPLY AND RETURN

ITEM	PART NO.	DESCRIPTION	QTY
1	1603911	Hose Assy	1
2	1603910	Hose Assy	1
3	1612403	Clamp	4
3	292522	Capscrew	4
3	320159	Washer	4
3	1653932	Plate	2
4	1557756	Strap (Static)	3
5	1652593	Hose Assy	1
6	1498506	Fitting (Includes Nut)	2
6	252729	O-Ring	2
7	1652594	Hose Assy	1
8	1533655	Clamp	2
8	292519	Capscrew	2
8	1533662	Lockwasher	2
8	1560005	Cover Plate	1
9	1487099	Fitting	2
9	244167	O-Ring	2
10	1624700	Hose Assy	1
	a 1564897	Strap Clamp (Yellow)	1
	a 1564900	Strap Clamp (Green)	3
	a 302401	Locknut	4

FOOTNOTES:

a Not Illustrated

©2010 HYSTER COMPANY

STEERING HOSES AND ATTACHING PARTS (FIGURE 9-7)

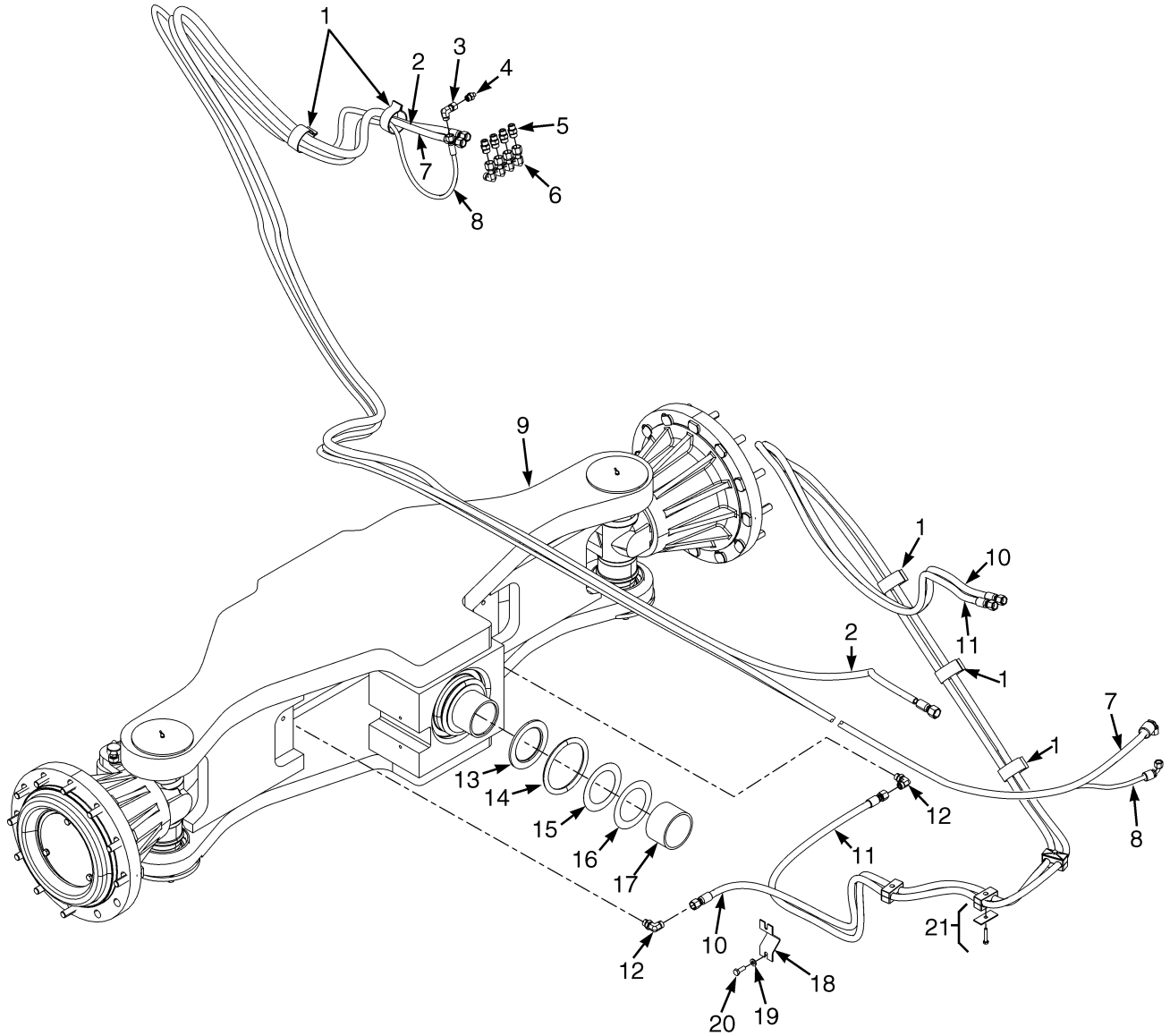

HP151082

©2010 HYSTER COMPANY

STEERING HOSES AND ATTACHING PARTS

ITEM	PART NO.	DESCRIPTION	QTY
1	1557756	Strap (Static)	4
2	**a** 1618932	Hose Assy	1
2	**b** 1603908	Hose Assy	1
2	1564897	Strap Clamp	2
3	1473895	Fitting	1
3	1527816	O-Ring	1
4	1486741	Fitting	1
4	1527816	O-Ring	1
4	16481	O-Ring	1
5	1473887	Fitting	4
5	1527817	O-Ring	1
5	16484	O-Ring	1
6	1486772	Fitting	4
6	1527817	O-Ring	1
7	**a** 1618931	Hose Assy	1
7	**b** 1603907	Hose Assy	1
7	1564899	Strap Clamp	2
8	**a** 1618933	Hose Assy	1
8	**b** 1603090	Hose Assy	1
8	1564901	Strap Clamp	2
9	1601924	Steering Axle Assembly	1
9	4004442	Steering Axle (Reduced Stroke)	1
10	1606391	Hose Assy	1
10	1564898	Strap Clamp	2
11	1606392	Hose Assy	1
11	1564902	Strap Clamp	2
12	1473897	Fitting	2
12	1527817	O-Ring	1
12	16484	O-Ring	1
13	1335867	Thrust Washer	2
14	1381940	Seal	2
15	159185	Shim	AR
16	159186	Shim	AR
17	1335871	Bushing	2
18	1383854	Plate	1
19	320159	Washer	2
20	136985	Capscrew	2
21	1533664	Clamp	3
21	1533649	Cover Plate	3
21	214364	Capscrew	3

FOOTNOTES:

a 4000 Steering

b 4500 Steering

©2010 HYSTER COMPANY

LIFT ACCUMULATOR SYSTEM (FIGURE 9-8)

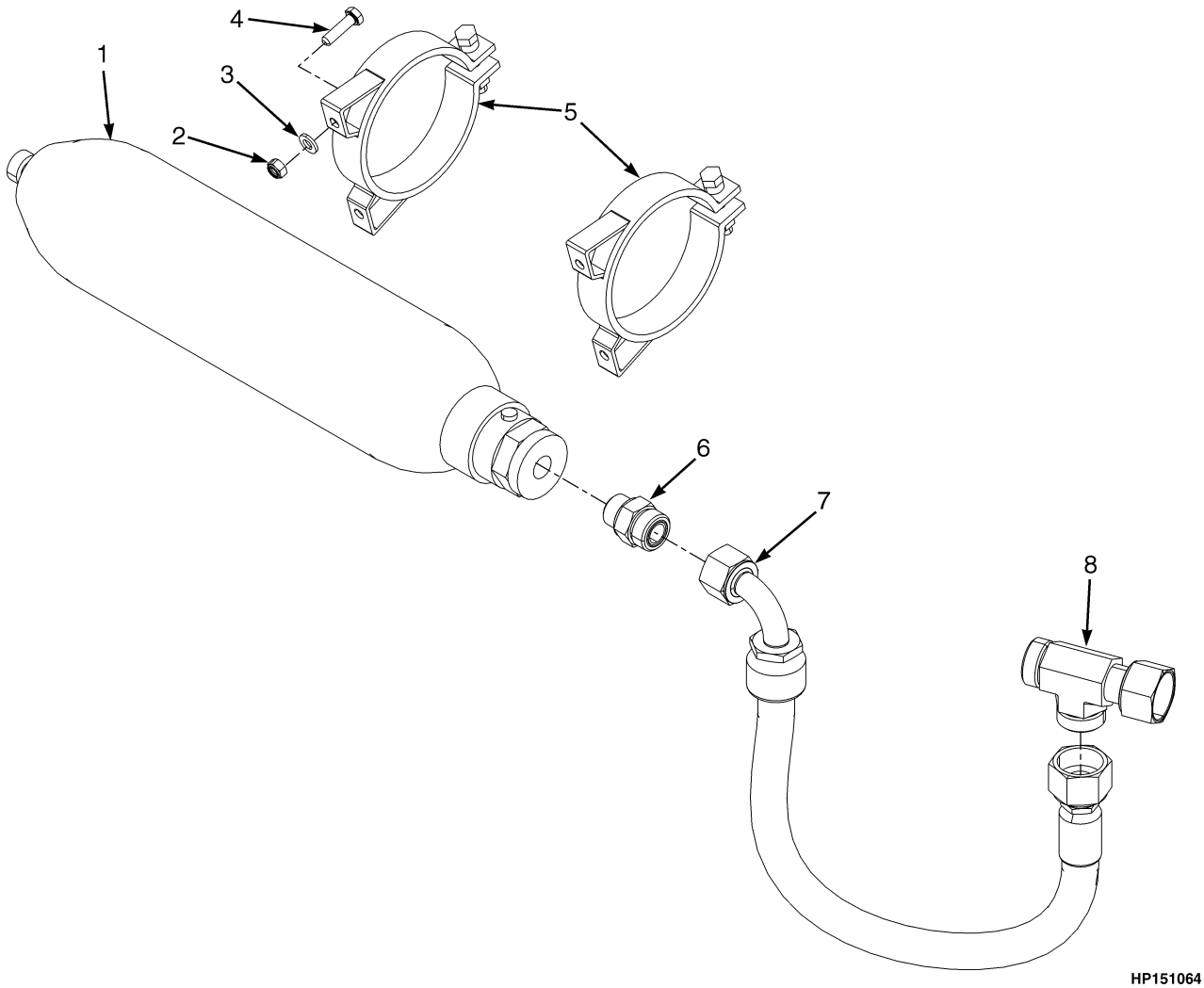

ITEM	PART NO.	DESCRIPTION	QTY
1	1616994	Accumulator	1
2	302400	Nut	4
3	320157	Washer	4
4	136681	Capscrew	4
5	1590014	Clamp	2
6	1554710	Fitting	1
7	1624701	Hose Assy	1
8	1487099	Fitting	1
8	252729	O-Ring	2

©2010 HYSTER COMPANY

CONTROL VALVE ASSEMBLY (FIGURE 9-9)

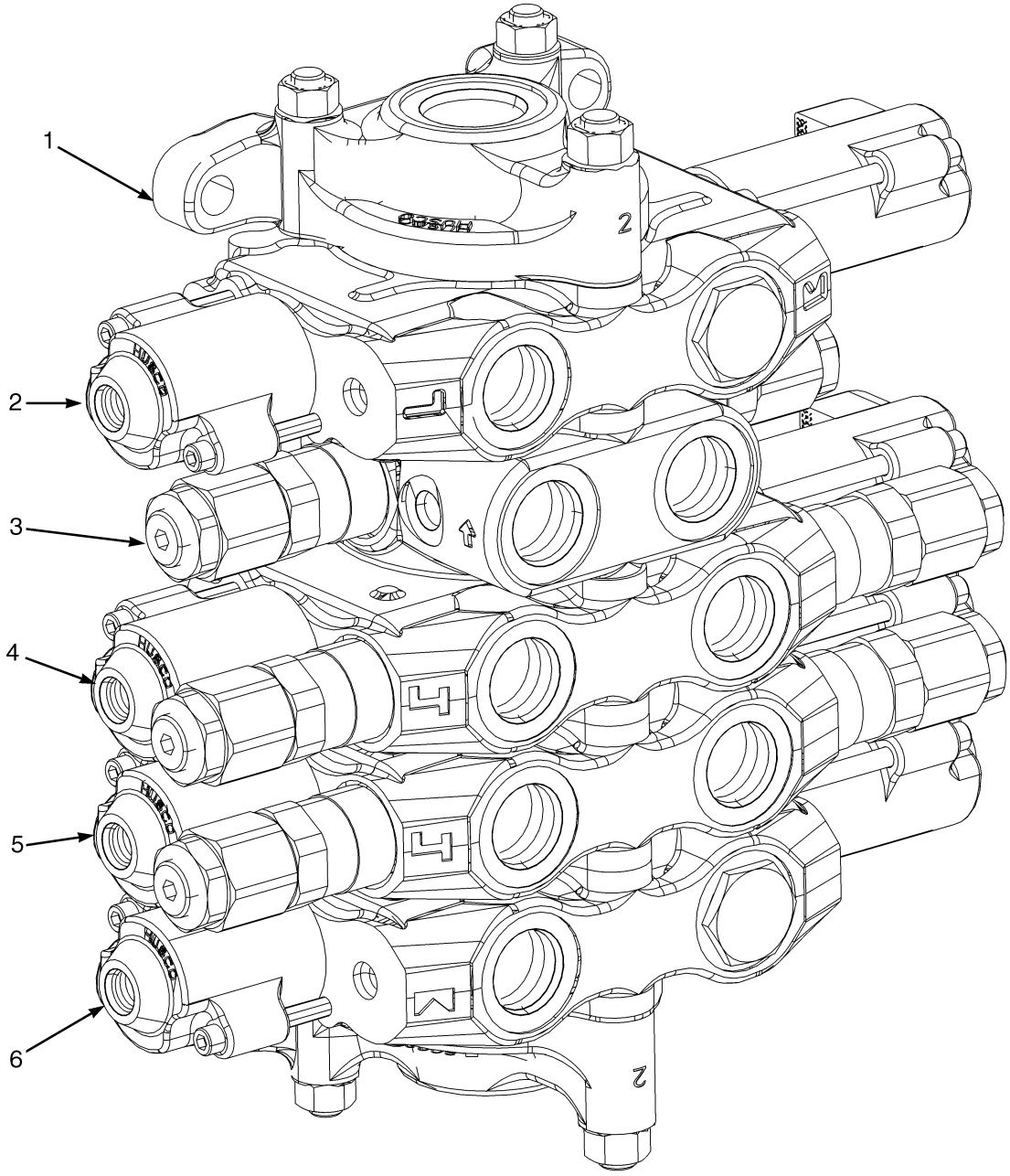

HP140024

ITEM	PART NO.	DESCRIPTION	QTY
	1595791	Hydraulic Control Valve (Main Hydraulic)	2
1	1377229	Valve Section (☞Figure 9-10).....	1
2	1632310	Valve Section (1A, 1B) (☞Figure 9-11).....	1
3	1632311	Valve Section (☞Figure 9-12).....	1
4	1632312	Valve Section (☞Figure 9-13).....	1
5	1632313	Valve Section (☞Figure 9-14).....	1
6	1632314	Valve Section (4A, 4B) (☞Figure 9-15).....	1

©2010 HYSTER COMPANY

CONTROL VALVE (FIGURE 9-10)
OUTLET SECTION

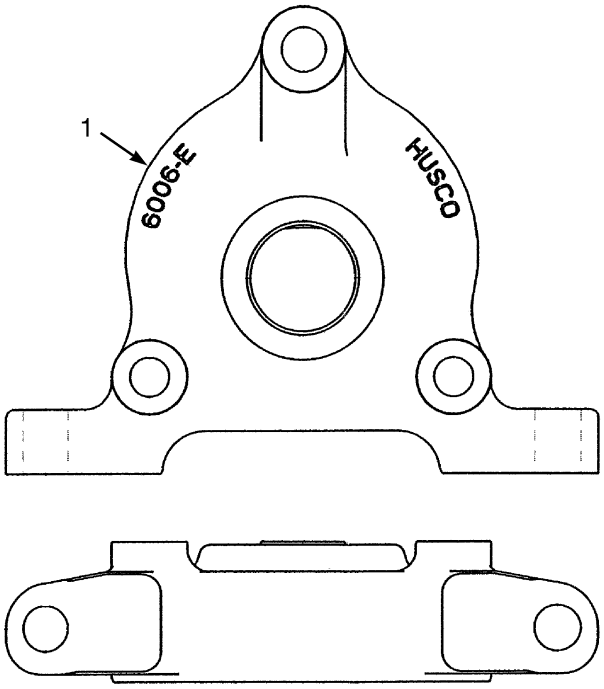

HP140025

ITEM	PART NO.	DESCRIPTION	QTY
1	1377229	Valve Section	1

©2010 HYSTER COMPANY

NOTES

©2010 HYSTER COMPANY

CONTROL VALVE (FIGURE 9-11)
LIFT SPOOL SECTION — 1A, 1B

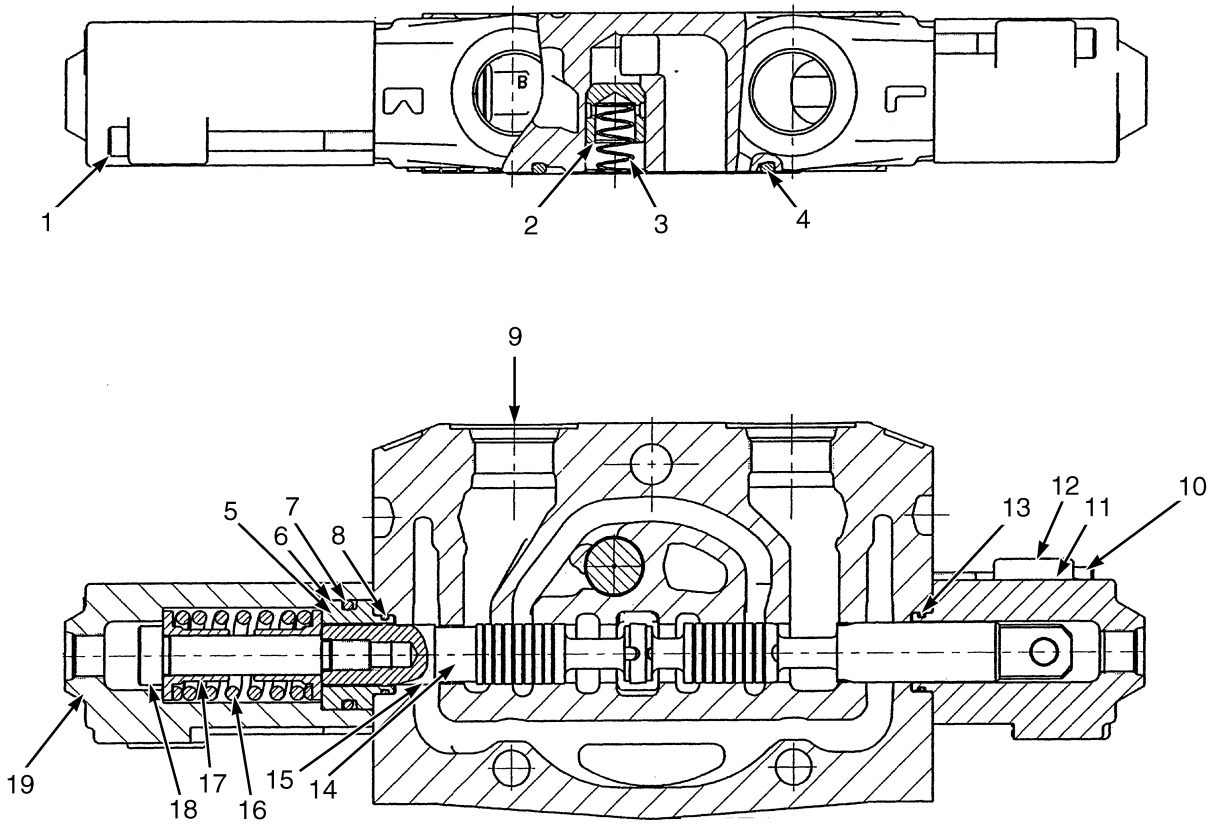

HP140026

©2010 HYSTER COMPANY

CONTROL VALVE
LIFT SPOOL SECTION – 1A, 1B

ITEM	PART NO.	DESCRIPTION	QTY
	1632310	Valve Section (1A, 1B)	1
1	1635036	Capscrew	2
2	1320998	Poppet	1
3	1320994	Spring	1
4	1320982	O-Ring	1
5	1635028	Retainer	1
6	. . . . .	Retainer	1
7	15865	O-Ring	1
8	39767	O-Ring	1
9	. . . . .	Housing	1
10	1635034	Capscrew	1
11	1635032	Cap	1
12	1635033	Cap	1
13	39767	O-Ring	1
14	. . . . .	Spool Assembly	1
15	. . . . .	Spool	1
16	1377216	Screw	1
17	1635031	Spring Seat	2
18	1484316	Spring	1
19	1635035	Cap	1
	1632308	Kit-Seal	1

©2010 HYSTER COMPANY

CONTROL VALVE (FIGURE 9-12)
MID-INLET SECTION

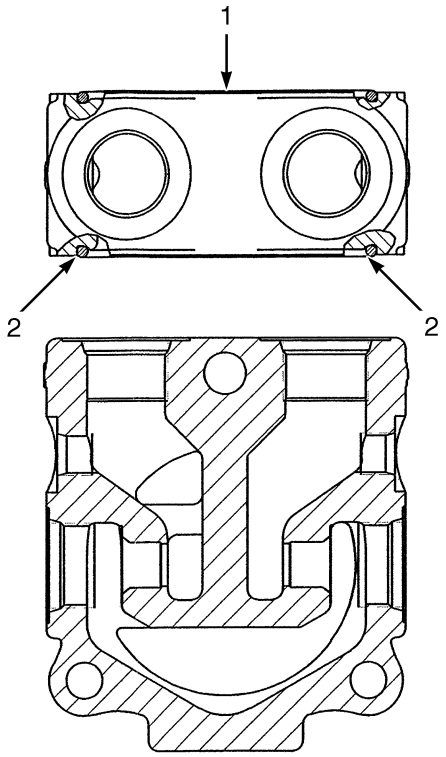

HP140027

ITEM	PART NO.	DESCRIPTION	QTY
1	1632311	Valve Section	1
2	1320982	O-Ring	2
	a 1632315	Relief Valve	1
	1632318	Kit-Seal	1
	a 1632316	Relief Valve	1
	1632318	Kit-Seal	1
	1632308	Kit-Seal	1

FOOTNOTES:

a Not Illustrated

©2010 HYSTER COMPANY

NOTES

©2010 HYSTER COMPANY

CONTROL VALVE (FIGURE 9-13)
TILT SPOOL SECTION

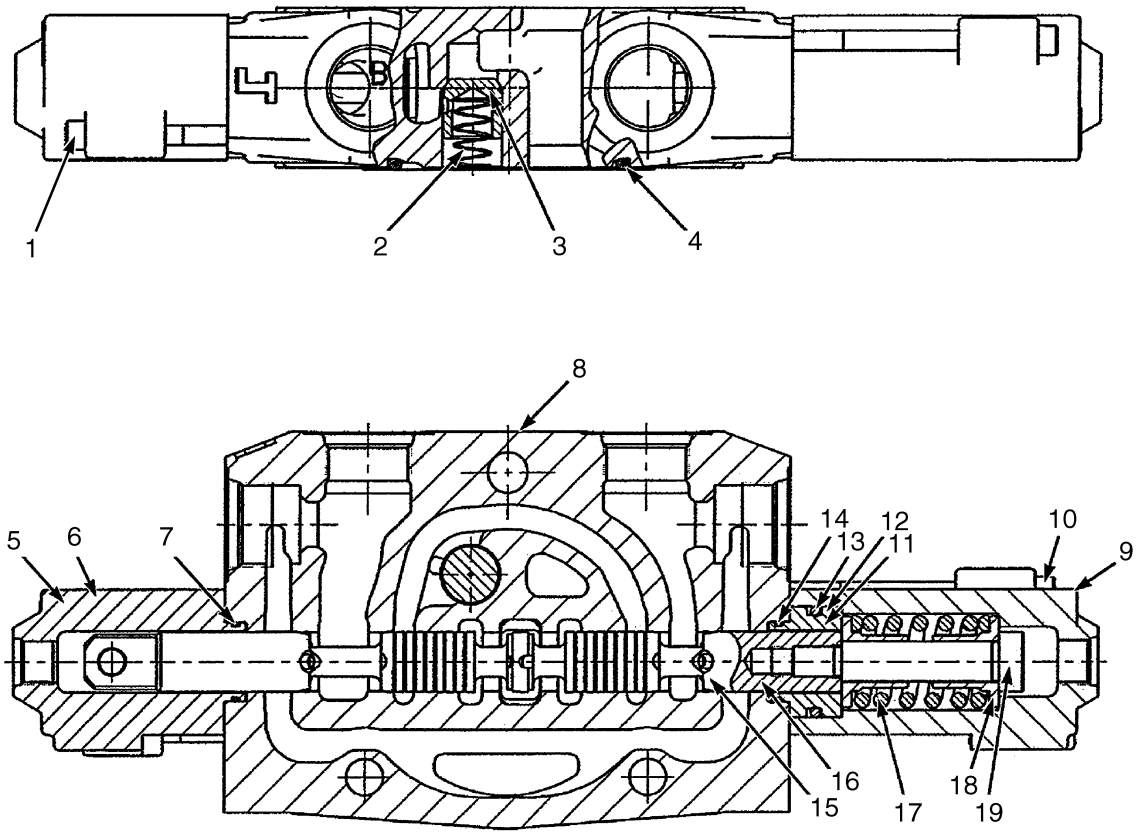

HP40028

©2010 HYSTER COMPANY

CONTROL VALVE
TILT SPOOL SECTION

ITEM	PART NO.	DESCRIPTION	QTY
	1632312	Valve Section	1
1	1635034	Capscrew	2
2	1320994	Spring	1
3	1320998	Poppet	1
4	1320982	O-Ring	1
5	1635032	Cap	1
6	1635033	Cap	1
7	39767	O-Ring	1
8	. . . . .	Housing	1
9	1635035	Cap	1
10	1635036	Capscrew	2
11	1635028	Retainer	1
12	. . . . .	Retainer	1
13	15865	O-Ring	1
14	39767	O-Ring	1
15	. . . . .	Spool Assembly	1
16	. . . . .	Spool	1
17	1484315	Spring	1
18	1635031	Spring Seat	2
19	1377216	Screw	1
	a 1632317	Relief Valve	2
	1632318	Kit-Seal	1
	1632308	Kit-Seal	1

FOOTNOTES:

a Not Illustrated

©2010 HYSTER COMPANY

CONTROL VALVE (FIGURE 9-14)
AUXILIARY SPOOL SECTION

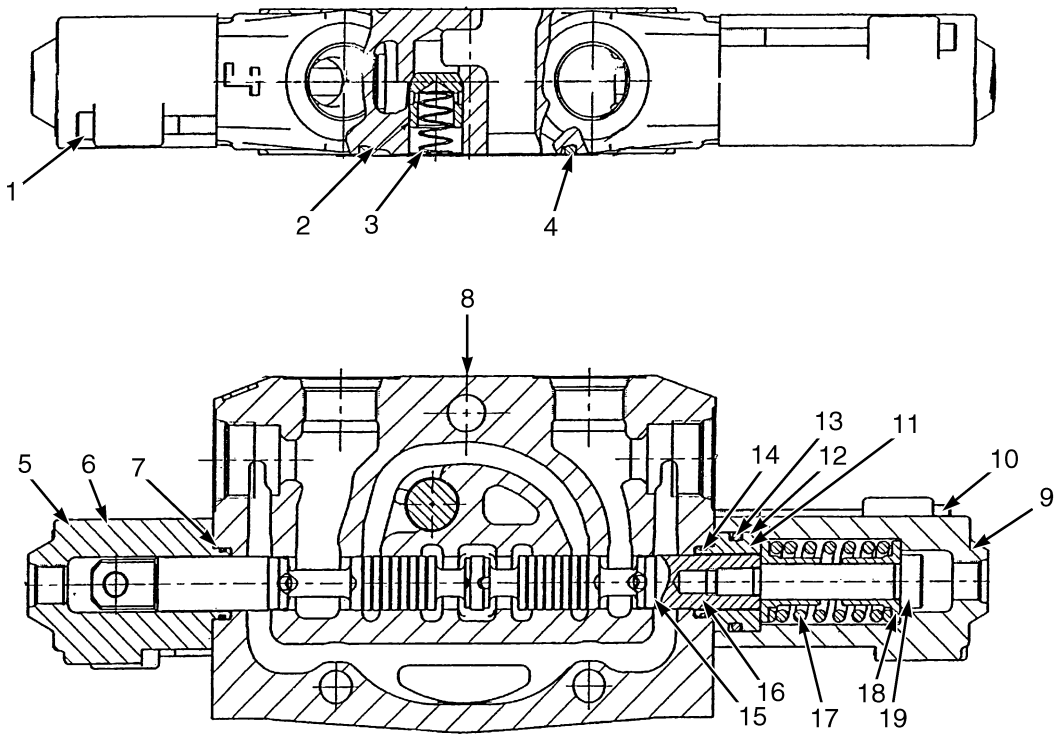

HP140029

©2010 HYSTER COMPANY

CONTROL VALVE
AUXILIARY SPOOL SECTION

ITEM	PART NO.	DESCRIPTION	QTY
	1632313	Valve Section	1
1	1635034	Capscrew	2
2	1320998	Poppet	1
3	1320994	Spring	1
4	1320982	O-Ring	1
5	1635032	Cap	1
6	1635033	Cap	1
7	39767	O-Ring	1
8	. . . . .	Housing	1
9	1635035	Cap	1
10	1635036	Capscrew	2
11	1635028	Retainer	1
12	. . . . .	Retainer	1
13	15865	O-Ring	1
14	39767	O-Ring	1
15	. . . . .	Spool Assembly	1
16	. . . . .	Spool	1
17	1484316	Spring	1
18	1635031	Spring Seat	2
19	1377216	Screw	1
	a 1632317	Relief Valve	2
	1632318	Kit-Seal	1
	1632308	Kit-Seal	1

FOOTNOTES:

a Not Illustrated

©2010 HYSTER COMPANY

CONTROL VALVE (FIGURE 9-15)
LIFT SPOOL SECTION — 4A, 4B

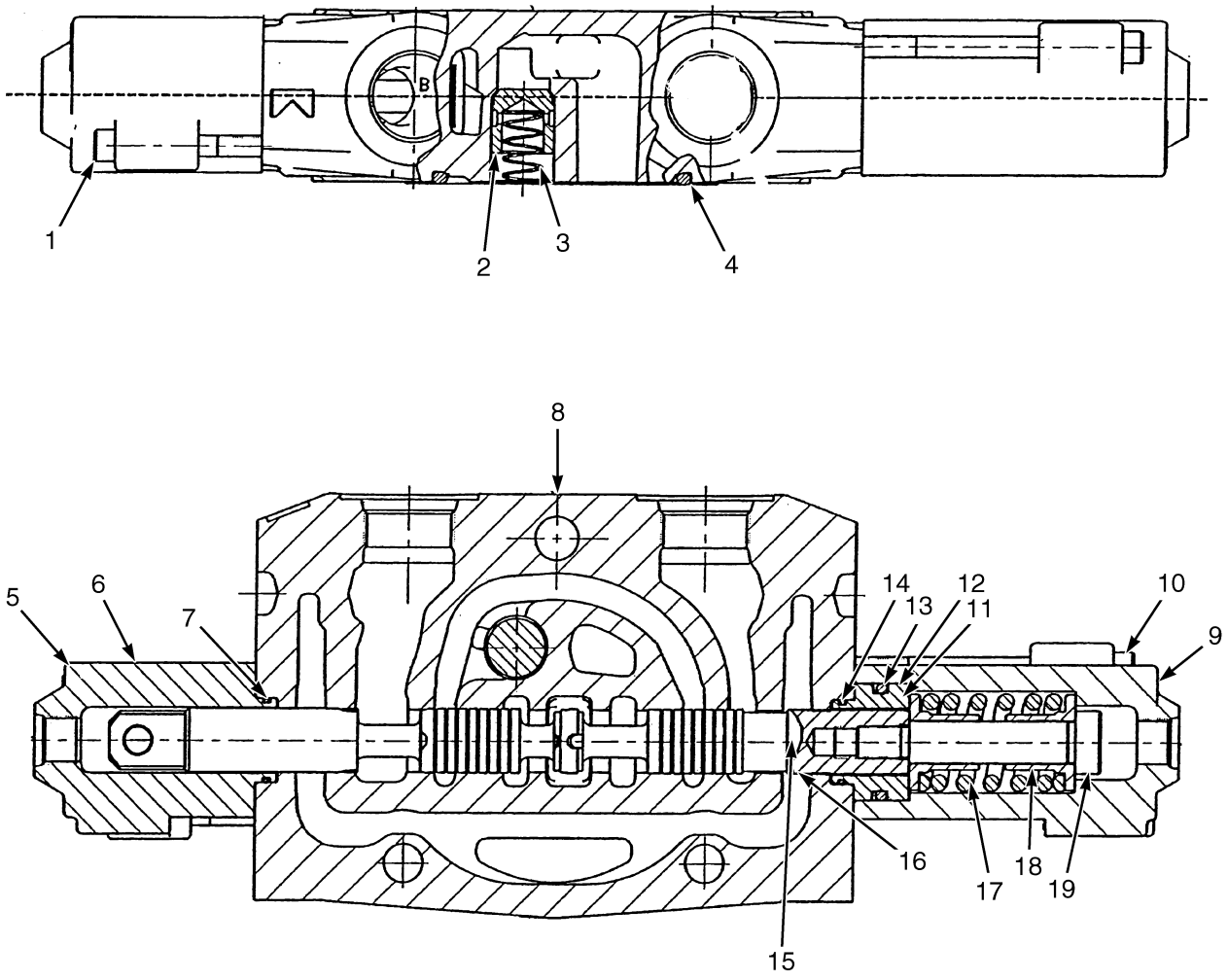

HP140030

©2010 HYSTER COMPANY

CONTROL VALVE
LIFT SPOOL SECTION – 4A, 4B

ITEM	PART NO.	DESCRIPTION	QTY
	1632314	Valve Section (4A, 4B)	1
1	1635034	Capscrew	2
2	1320998	Poppet	1
3	1320994	Spring	1
4	1320982	O-Ring	1
5	1635032	Cap	1
6	1635033	Cap	1
7	39767	O-Ring	1
8	. . . . .	Housing	1
9	1635035	Cap	1
10	1635036	Capscrew	2
11	1635028	Retainer	1
12	. . . . .	Retainer	1
13	15865	O-Ring	1
14	39767	O-Ring	1
15	. . . . .	Spool Assembly	1
16	. . . . .	Spool	1
17	1484316	Spring	1
18	1635031	Spring Seat	2
19	1377216	Screw	1
	1632308	Kit-Seal	1

©2010 HYSTER COMPANY

COMBINATION VALVE (FIGURE 9-16)

(→ S/N B214E01585E)

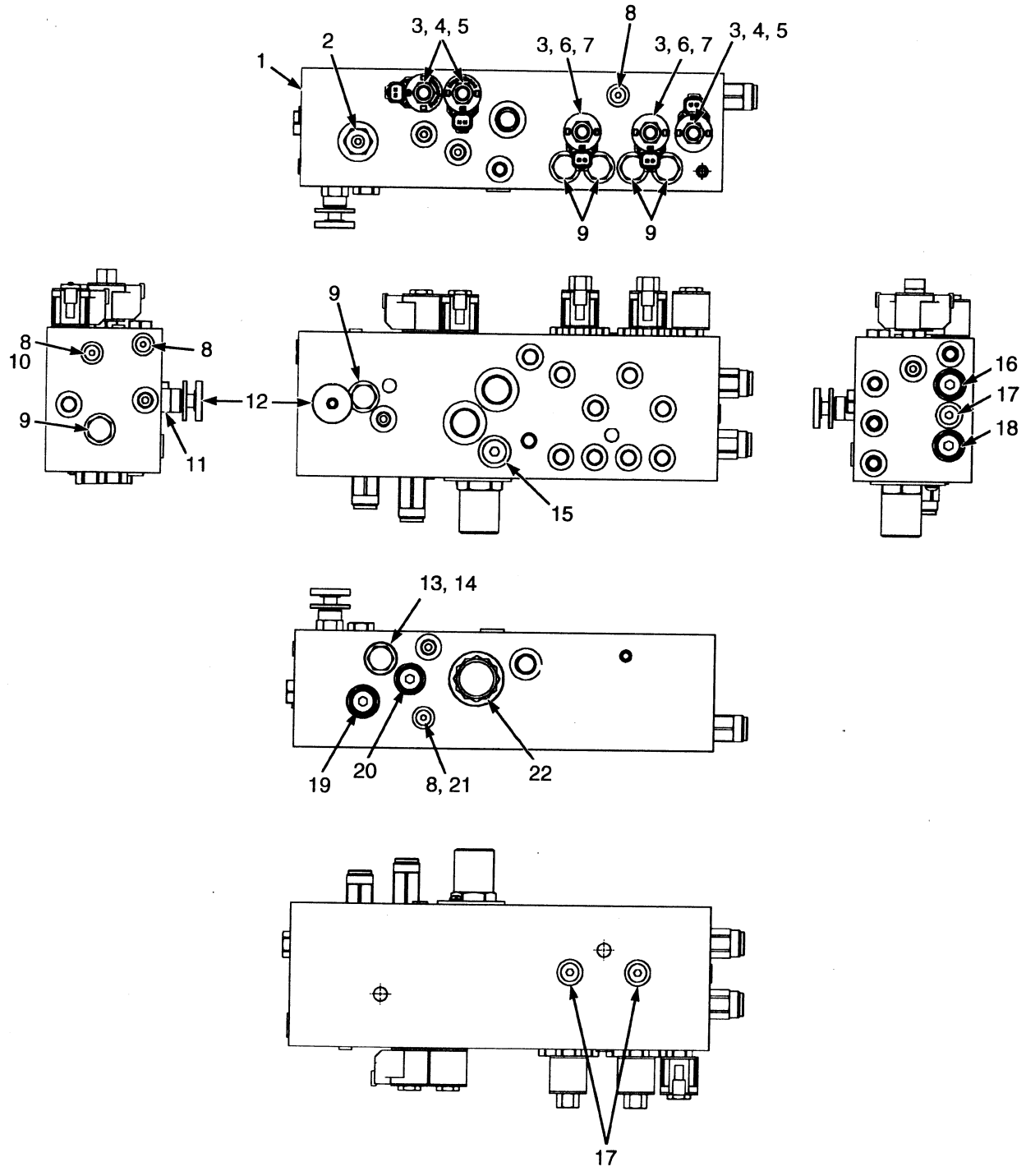

HP140031

©2010 HYSTER COMPANY

COMBINATION VALVE
(→ S/N B214E01585E)

ITEM	PART NO.	DESCRIPTION	QTY
	1613512	Hydraulic Control Valve (Combination)	1
1	. . . . .	Housing	1
2	1618465	Filter	1
3	1618471	Coil	5
4	1618479	Solenoid Valve	3
4	1618485	Kit-Valve	1
5	~~1615769~~		
	1701394	Locknut	3
6	1618478	Solenoid Valve	2
6	1517906	Kit-Seal	1
7	1618486	Nut	2
8	222442	Fitting	4
8	204128	Plug	1
8	16481	O-Ring	1
9	1618469	Hydraulic Control Valve	6
9	1517906	Kit-Seal	1
10	1618467	Plug	1
11	1618472	Valve (Needle)	1
11	1618482	Kit-Valve	1
12	1618487	Kit-Knob	1
13	1618466	Fitting	1
14	1618477	Cartridge	1
14	1517906	Kit-Seal	1
15	235691	Fitting	1
15	16484	O-Ring	1
16	1618473	Pressure Valve	1
16	1618483	Kit-Valve	1
17	222443	Fitting	3
17	16483	O-Ring	1
18	1618474	Pressure Valve	1
18	1618483	Kit-Valve	1
19	1618475	Pressure Valve	1
19	1618483	Kit-Valve	1
20	1618476	Pilot Valve (Unload Pilot)	1
20	1618484	Kit-Valve	1
21	1618468	Hydraulic Control Valve	1
21	1618480	Kit-Seal	1
22	1618470	Flow Valve	1
22	1618481	Kit-Seal	1

©2010 HYSTER COMPANY

COMBINATION VALVE (FIGURE 9-17)

(S/N B214E01586E →)

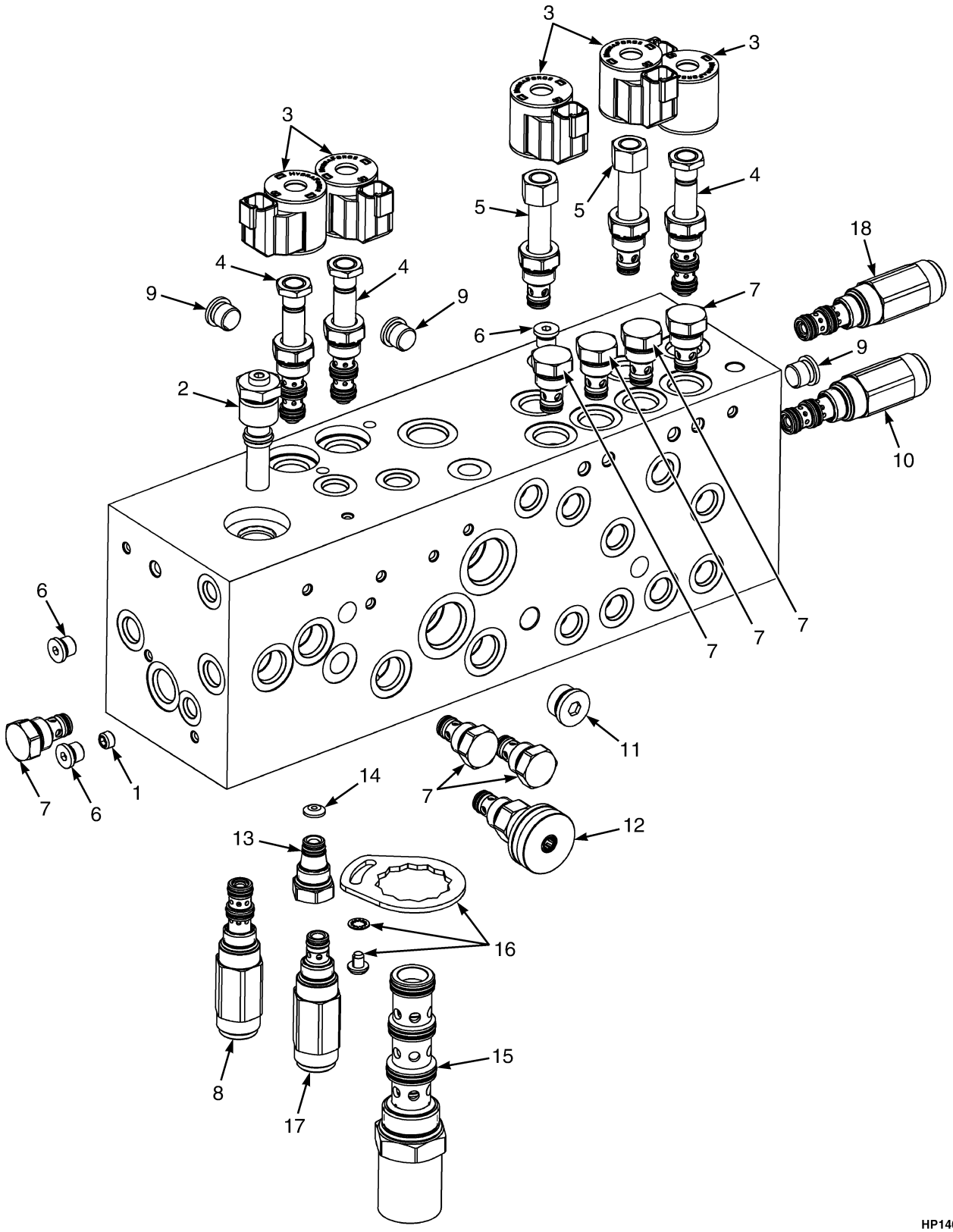

©2010 HYSTER COMPANY

COMBINATION VALVE
(S/N B214E01586E →)

ITEM	PART NO.	DESCRIPTION	QTY
	1641992	Valve (Combination)	1
1	1658804	Plug	1
2	1656340	Filter	1
3	1618471	Coil	5
4	1618479	Solenoid Valve	3
4	1618485	Kit-Valve	1
5	1618478	Solenoid Valve	2
5	1517906	Kit-Seal	1
6	222442	Fitting	4
6	204128	Plug	1
6	16481	O-Ring	1
7	1618469	Hydraulic Control Valve	7
7	1517906	Kit-Seal	1
8	1658799	Pressure Valve (Pressure Control)	1
8	1618483	Kit-Valve	1
9	222443	Fitting	3
9	16483	O-Ring	1
10	1658800	Pressure Valve (Pressure Control)	1
10	1618483	Kit-Valve	1
11	235691	Fitting	1
12	1618472	Valve (Needle)	1
12	1618482	Kit-Valve	1
13	1618477	Cartridge	1
13	1517906	Kit-Seal	1
14	1618466	Fitting	1
15	1658803	Flow Valve (Flow Control)	1
15	1657113	Kit-Seal	1
16	1656354	Lockplate Kit	1
17	1618476	Pilot Valve (Unload Pilot)	1
17	1618484	Kit-Valve	1
18	1658801	Pressure Valve (Pressure Control)	1
18	1618483	Kit-Valve	1

©2010 HYSTER COMPANY

HYDRAULIC VALVE AND ATTACHING PARTS (FIGURE 9-18)

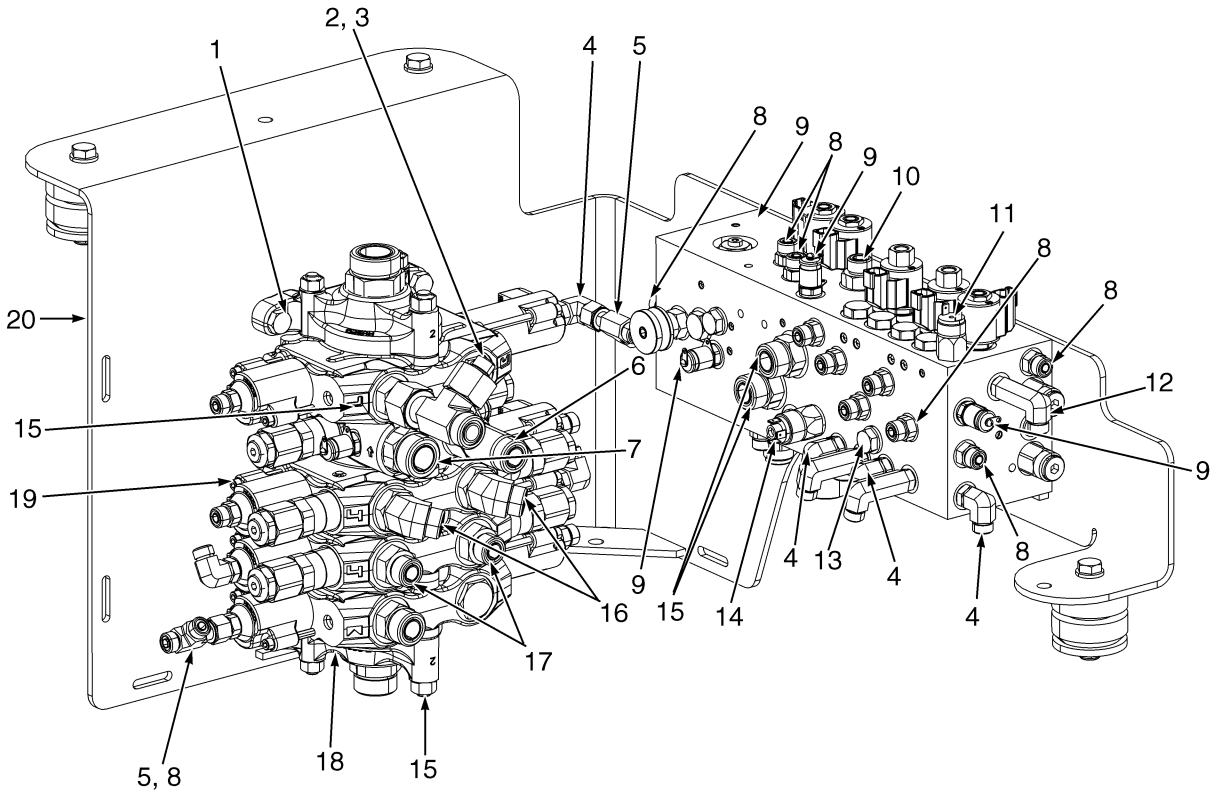

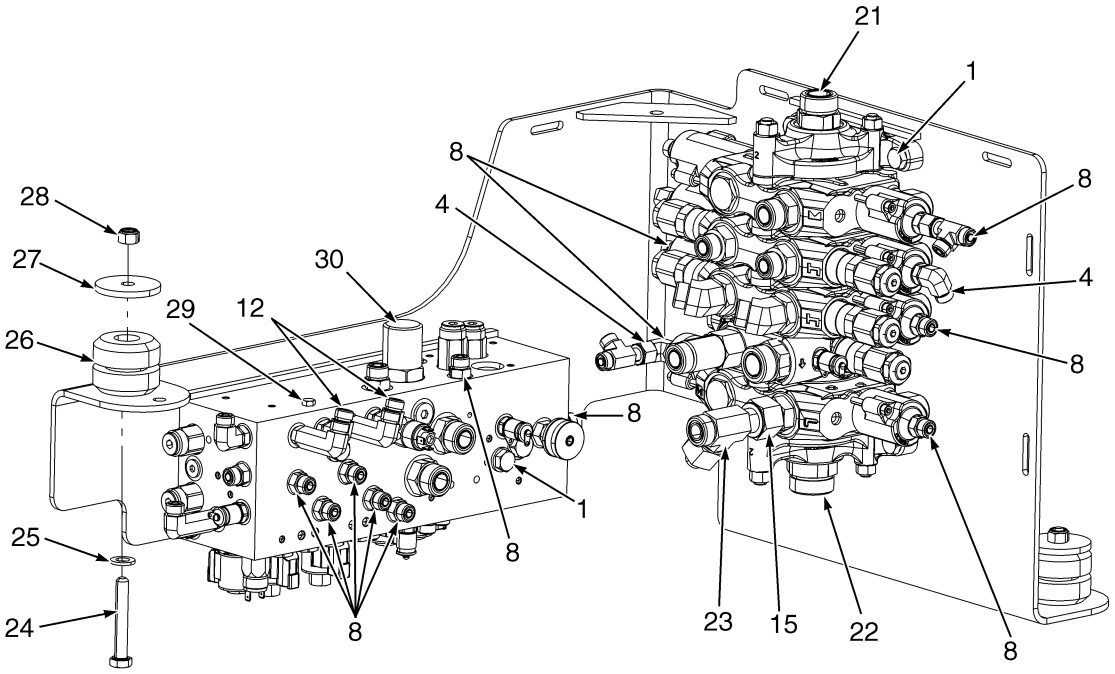

HP151067

©2010 HYSTER COMPANY

HYDRAULIC VALVE AND ATTACHING PARTS

ITEM	PART NO.	DESCRIPTION	QTY
1	246001	Capscrew	4
2	1487166	Fitting	1
3	1487149	Fitting	1
3	1527816	O-Ring	1
4	1487063	Fitting	6
4	1527816	O-Ring	1
4	1527813	O-Ring	1
5	1487097	Fitting	2
5	16483	O-Ring	1
6	1528597	Fitting	1
6	16982	O-Ring	1
6	16486	O-Ring	1
7	1486758	Fitting	1
7	1527820	O-Ring	1
7	16486	O-Ring	1
8	1486740	Fitting	17
8	16481	O-Ring	1
8	16486	O-Ring	1
9	**a** 1613512	Hydraulic Control Valve (Combination) (☞Figure 9-16)	1
9	**b** 1641992	Valve (Combination) (☞Figure 9-17)	1
10	1486746	Fitting	1
10	1527817	O-Ring	1
10	16485	O-Ring	1
11	1332206	Pressure Switch (Wet Brake) (Light Switch)	1
12	1486558	Fitting	3
12	1527816	O-Ring	1
12	16483	O-Ring	1
13	287814	Capscrew	2
14	1476739	Pressure Switch (Pressure)	1
15	1473888	Fitting	4
15	1527817	O-Ring	1
15	16486	O-Ring	1
16	1516207	Fitting	2
16	1527818	O-Ring	1
16	16486	O-Ring	1
17	1486751	Fitting	2
17	1527818	O-Ring	1
17	1527820	O-Ring	1
18	1595791	Hydraulic Control Valve (Main Hydraulic) (☞Figure 9-9)	1
19	1473927	Quick Disconnect Fitting	5
20	1624900	Bracket	1
21	1473889	Fitting	1
21	244167	O-Ring	1
21	16479	O-Ring	1
22	1486761	Fitting	1
22	1527821	O-Ring	1
22	16487	O-Ring	1
23	1473892	Fitting	1
23	16982	O-Ring	2
24	292535	Capscrew	3
25	320161	Washer	5

©2010 HYSTER COMPANY

HYDRAULIC VALVE AND ATTACHING PARTS

ITEM	PART NO.	DESCRIPTION	QTY
26	1486540	Mount (Cab)	3
27	300939	Washer	3
28	302402	Locknut	3
29	14349	Fitting (Pipe Plug)	1
30	1473887	Fitting	1
30	1527817	O-Ring	1
30	16484	O-Ring	1

FOOTNOTES:

a → S/N B214E01585E

b S/N B214E01586E →

©2010 HYSTER COMPANY

NOTES

©2010 HYSTER COMPANY

GEAR PUMP (FIGURE 9-19)

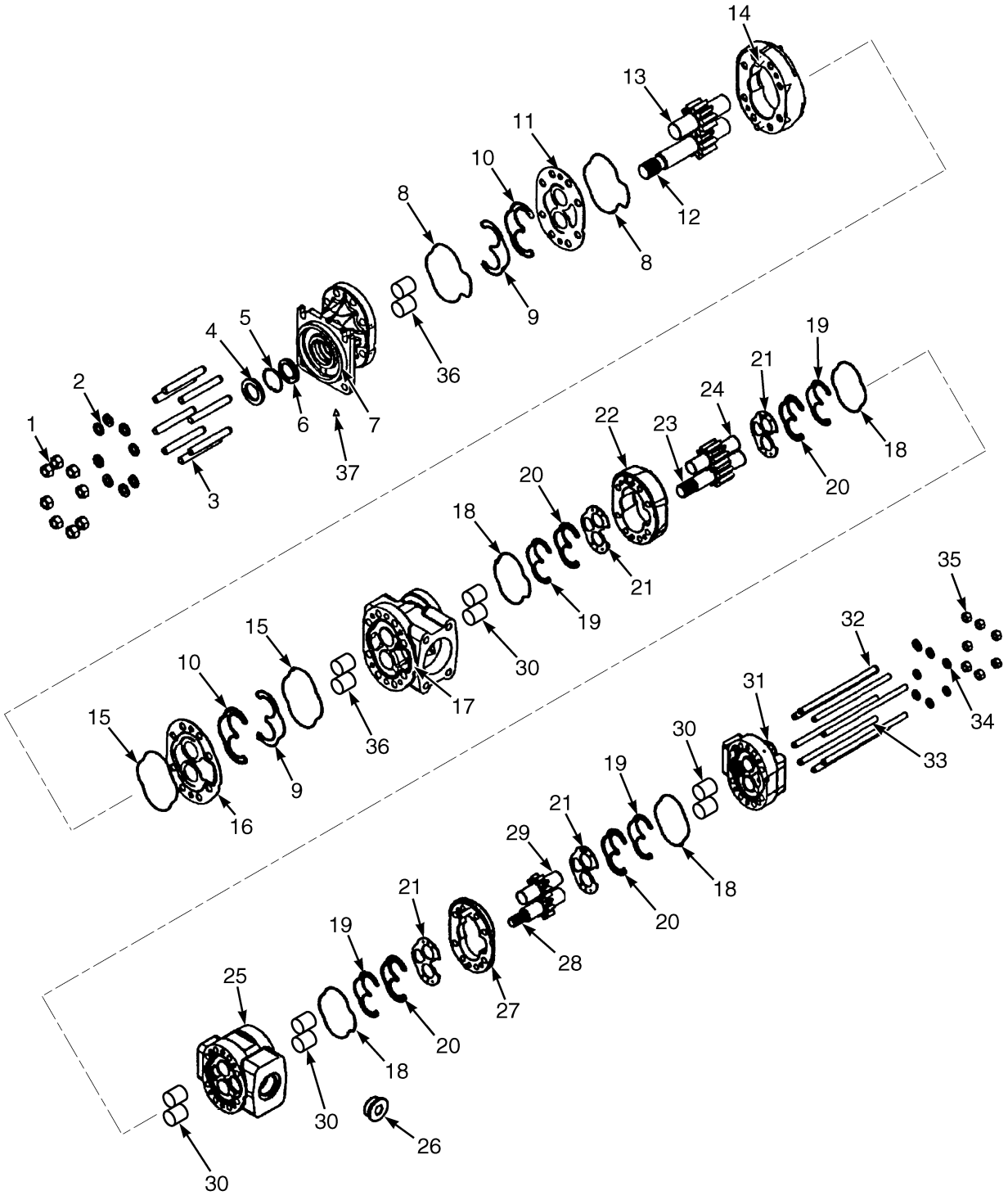

HP151017

©2010 HYSTER COMPANY

GEAR PUMP

ITEM	PART NO.	DESCRIPTION	QTY
	1611559	Pump	1
1	221714	Nut	8
2	1318621	Lockwasher	8
3	1615043	Stud	8
4	. . . . .	Seal	1
5	1318619	Retaining Ring	1
6	. . . . .	Seal	1
7	1319579	Cover	1
8	1615051	O-Ring	2
9	1456204	Seal	2
10	. . . . .	Retainer	4
11	1318617	Wear Plate	1
12	1605425	Drive Gear (Shaft)	1
13	. . . . .	Driven Gear	1
14	. . . . .	Center Section	1
15	1615159	O-Ring	2
16	1318613	Wear Plate	1
17	. . . . .	Port Section (Common Inlet)	1
18	1382052	O-Ring	4
19	1382053	Seal	4
20	. . . . .	Retainer	4
21	1318609	Wear Plate	4
22	. . . . .	Center Section	1
23	. . . . .	Drive Gear (Center)	1
24	. . . . .	Driven Gear	1
25	. . . . .	Port Section	1
26	1600532	Plug	1
27	. . . . .	Center Section	1
28	. . . . .	Drive Gear (Rear)	1
29	. . . . .	Driven Gear (Rear)	1
30	. . . . .	Bushing	8
31	1615040	Cover (Rear)	1
32	1615044	Stud	4
33	1615045	Stud	4
33	4000386	Stud (Alternate Part)	4
34	1318606	Washer	8
35	1450547	Nut	8
36	4000383	Bushing	4
37	294309	Plug	1
	a 4000384	Label (Nameplate)	1
	a 4000385	Screw (Nameplate Mounting)	2
	1615054	Kit-Seal	1

FOOTNOTES:

a Not Illustrated

©2010 HYSTER COMPANY

ACCUMULATOR (FIGURE 9-20)

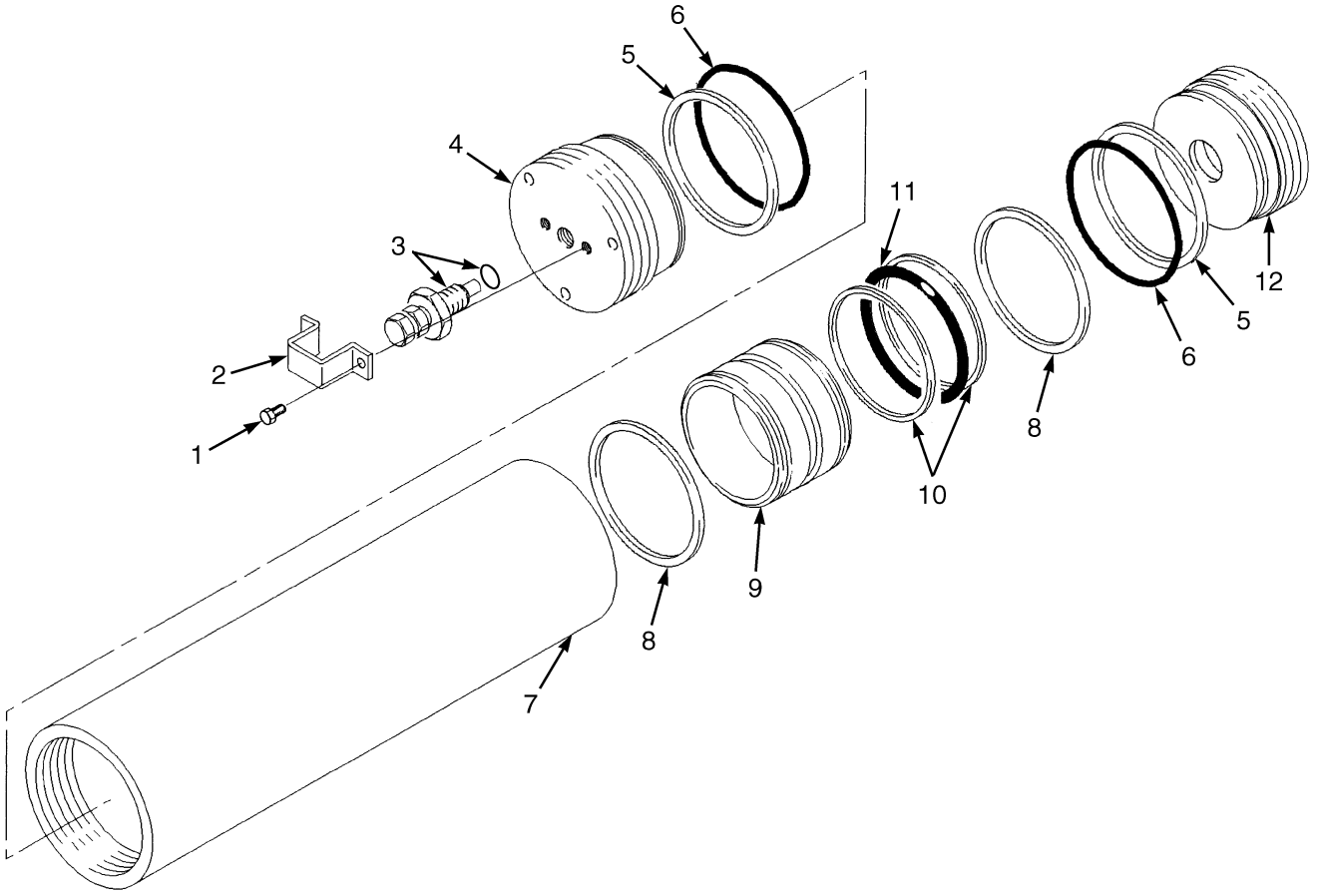

HP151066

ITEM	PART NO.	DESCRIPTION	QTY
	1563795	Accumulator	1
	4023234	Accumulator (Alternate Part) (Not Serviceable)	1
1	. . . . .	Capscrew	2
2	. . . . .	Protector	1
3	. . . . .	Gas Valve	1
3	1502887	O-Ring	1
4	. . . . .	Front End Cap	1
5	. . . . .	Back Up Ring	2
6	. . . . .	O-Ring	2
7	. . . . .	Shell	1
8	1376933	Ring (Teflon)	2
9	. . . . .	Piston	1
10	1376929	Back-Up Ring	2
11	. . . . .	O-Ring	1
12	. . . . .	Rear End Cap	1
	1502879	Kit-Accumulator	1

©2010 HYSTER COMPANY

NOTES

©2010 HYSTER COMPANY

HYDRAULIC TANK (FIGURE 9-21)

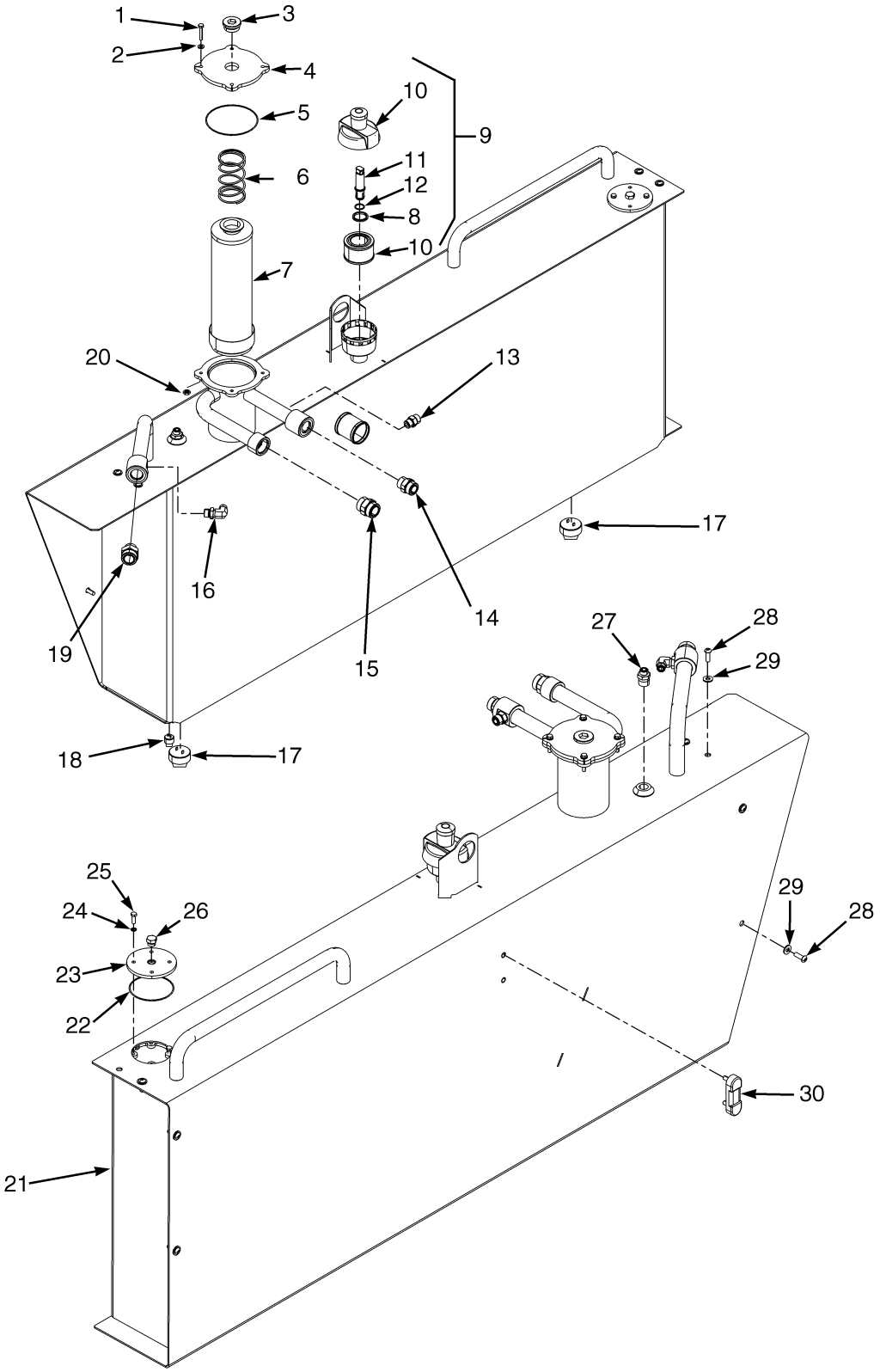

©2010 HYSTER COMPANY

HYDRAULIC TANK

ITEM	PART NO.	DESCRIPTION	QTY
1	214364	Capscrew	4
2	320157	Washer	8
3	1538936	Plug	1
4	1528456	Filter Head	1
5	39756	O-Ring	1
6	1533477	Spring	1
7	2059720	Hydraulic Filter	1
8	888333	Seal	1
9	1564721	Breather (With Indicator and Sandpipe)	1
10	1494312	Filter Element	1
11	1563867	Pipe	1
12	39373	O-Ring	1
13	1486749	Fitting	1
13	252729	O-Ring	1
13	16485	O-Ring	1
14	1473889	Fitting	1
14	244167	O-Ring	1
14	16479	O-Ring	1
15	1473924	Fitting	1
15	1527821	O-Ring	1
15	16983	O-Ring	1
16	1487065	Fitting	1
16	265731	O-Ring	1
16	16485	O-Ring	1
17	222261	Fitting	2
17	264159	Adhesive	AR
18	35503	Fitting	1
19	1486761	Fitting	1
19	1527821	O-Ring	1
19	16487	O-Ring	1
20	302400	Nut	4
21	1544889	Hydraulic Tank	1
22	39743	O-Ring	1
23	1536288	Cover	1
24	1536311	Sealing Ring	4
25	136749	Screw	4
26	14595	Plug Assembly	1
26	199524	Plug	1
26	16484	O-Ring	1
27	1488413	Fitting	1
27	. . . . .	O-Ring	1
28	296174	Capscrew	8
29	320160	Washer	8
30	1528144	Indicator	1

©2010 HYSTER COMPANY

HYDRAULIC OIL COOLER (FIGURE 9-22)

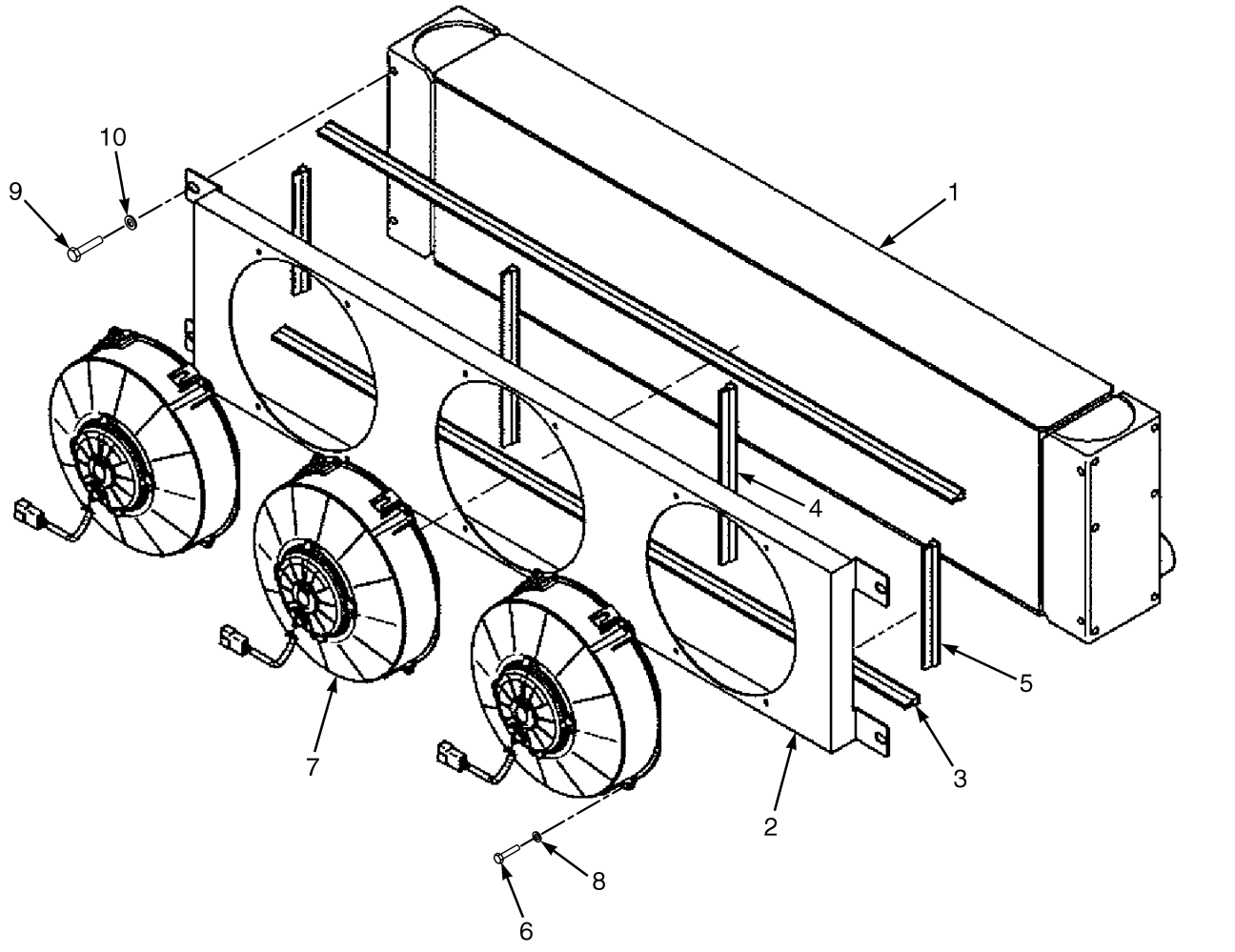

©2010 HYSTER COMPANY

HYDRAULIC OIL COOLER

ITEM	PART NO.	DESCRIPTION	QTY
	1636658	Oil Cooler Assembly	1
1	4009850	Oil Cooler	1
2	1660345	Shroud	1
3	1660341	Gasket (Rubber)	2
4	1660342	Gasket (Rubber)	2
5	1660343	Gasket (Rubber)	2
6	1636906	Bolt	12
7	1636870	Fan	3
8	1660346	Washer	12
9	1660347	Bolt	4
10	1636897	Washer	4

©2010 HYSTER COMPANY

HYDRAULIC LEVERS (FIGURE 9-23)

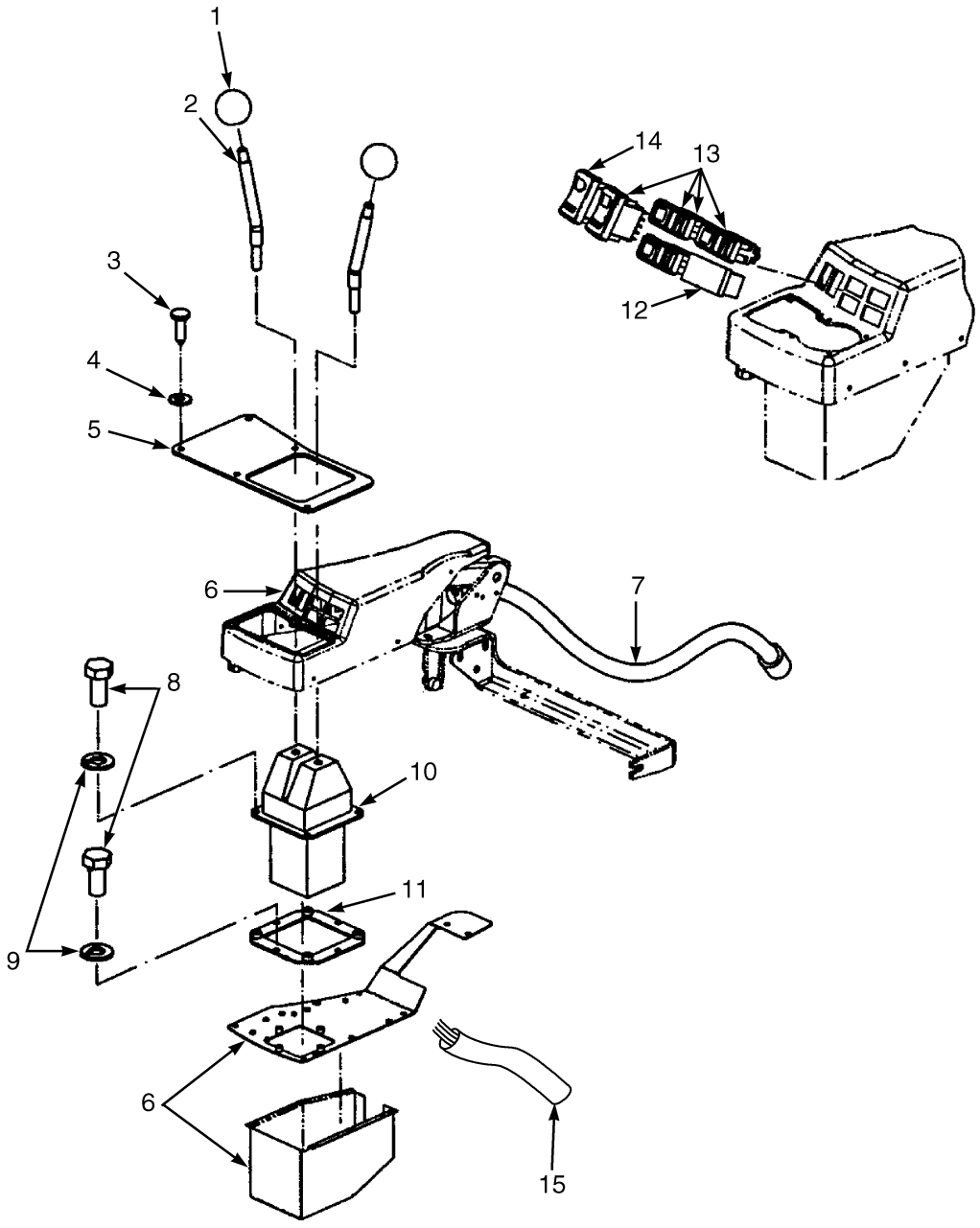

HP151120

©2010 HYSTER COMPANY

HYDRAULIC LEVERS

ITEM	PART NO.	DESCRIPTION	QTY
1	1623287	Knob	2
2	1623286	Lever	2
3	1571789	Screw	6
4	1492140	Washer	6
5	1623288	Plate	1
6	1623187	Armrest	1
7	1637439	Wire Harness (Arm Rest)	1
8	292500	Capscrew	8
9	320156	Washer	8
10	1539567	Pilot Valve (☞Figure 9-25)	1
11	1623289	Gasket	1
12	**a** 1498383	Plug (Switch)	1
12	**b** 1498383	Plug (Switch)	2
13	**a** 2054005	Switch	4
13	**b** 2054005	Switch	3
14	2043344	Switch (Horn)	1
15	1555977	Hose Assy (☞Figure 9-24)	1

FOOTNOTES:

a With ECH

b With Hook

©2010 HYSTER COMPANY

HYDRAULIC HOSE ASSEMBLY (FIGURE 9-24)

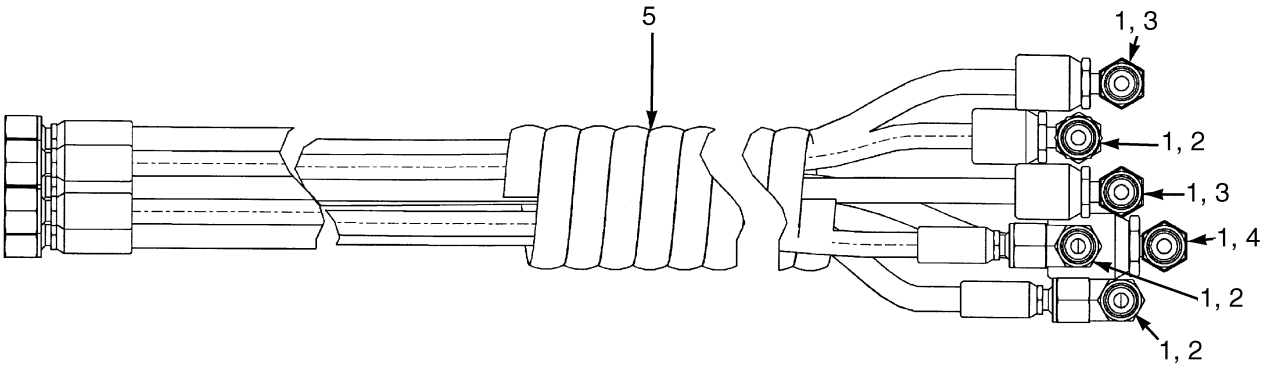

ITEM	PART NO.	DESCRIPTION	QTY
	1555977	Hose Assy	1
1	1486740	Fitting	3
2	1555973	Hose Assy	1
3	1555974	Hose Assy	2
4	1555975	Hose Assy	1
5	1555981	Hose Guard	1

©2010 HYSTER COMPANY

NOTES

©2010 HYSTER COMPANY

HYDRAULIC LEVER MODULATOR VALVE (FIGURE 9-25)

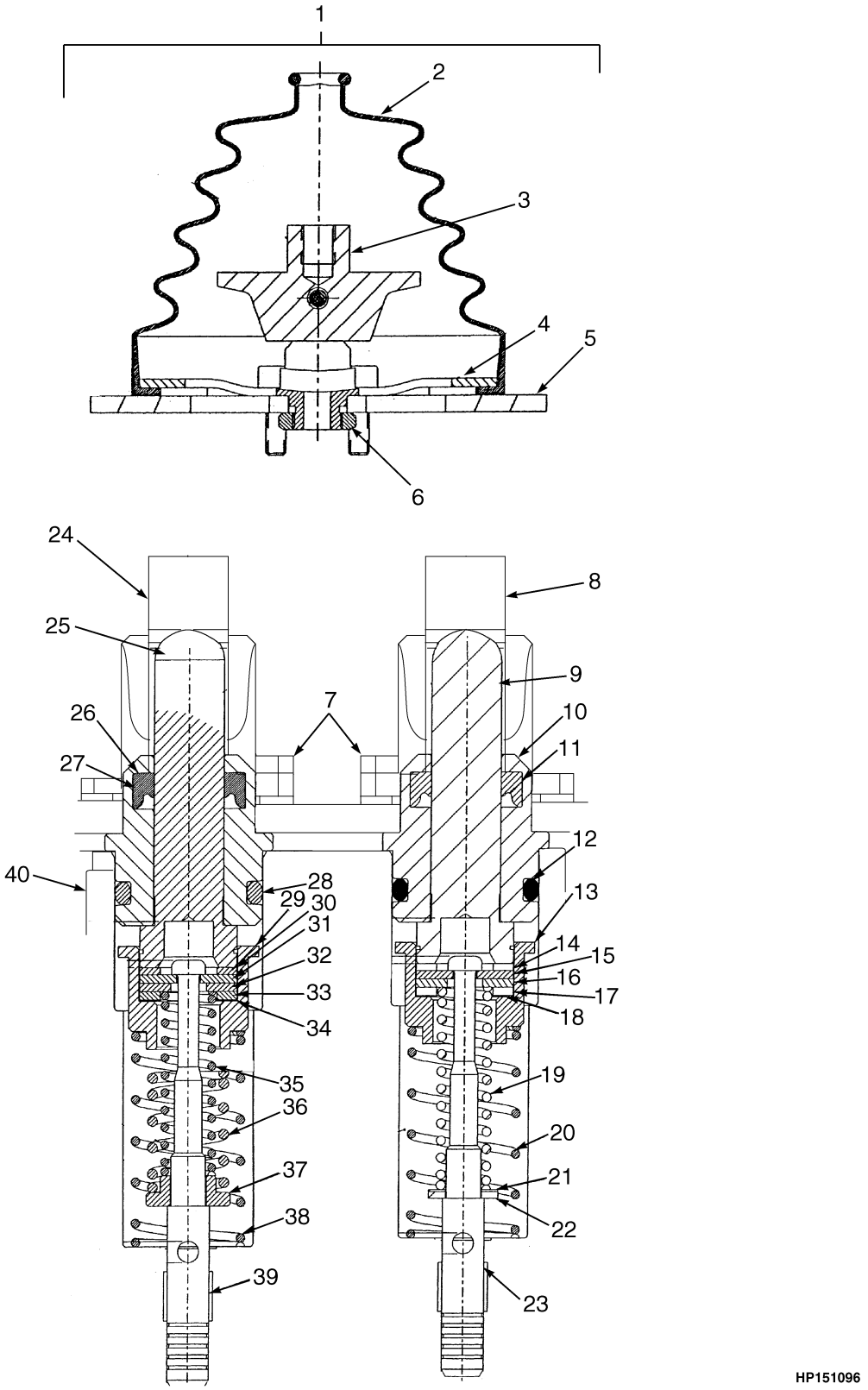

©2010 HYSTER COMPANY

HYDRAULIC LEVER MODULATOR VALVE

ITEM	PART NO.	DESCRIPTION	QTY
	1539567	Pilot Valve	1
1	1643573	Lever Mechanism	1
2	1643582	Boot	2
3	1643580	Universal Joint	2
4	1643581	Plate	2
5	1643583	Mounting Plate	1
6	1643578	Nut (Special)	2
7	1643579	Capscrew	4
8	1643577	Spool (Tilt)	1
9	1643591	Plunger	1
10	1643588	Bearing	1
11	1643589	Seal (Plunger)	1
12	1643590	O-Ring	1
13	1643598	Spring Seat	1
14	1643592	Washer	1
15	1643593	Retaining Ring	1
16	1643594	Washer	1
17	1643595	Washer	1
18	1643596	Washer	1
19	1643608	Spring	1
20	1643602	Spring	1
21	1643607	Washer	1
22	1643606	Washer	1
23	1643597	Spool	1
24	1643576	Spool (Raise/Lower)	1
25	1643591	Plunger	1
26	1643588	Bearing	1
27	1643589	Seal (Plunger)	1
28	1643590	O-Ring	1
29	1643598	Spring Seat	1
30	1643592	Washer	1
31	1643593	Retaining Ring	1
32	1643594	Washer	1
33	1643595	Washer	1
34	1643596	Washer	1
35	1643600	Spring	1
36	1643601	Spring	1
37	1643599	Spring Seat	1
38	1643602	Spring	1
39	1643597	Spool	1
40	. . . . .	Housing	1
	. . . . .	Name Plate	1

©2010 HYSTER COMPANY

JOYSTICK CONTROL (FIGURE 9-26)

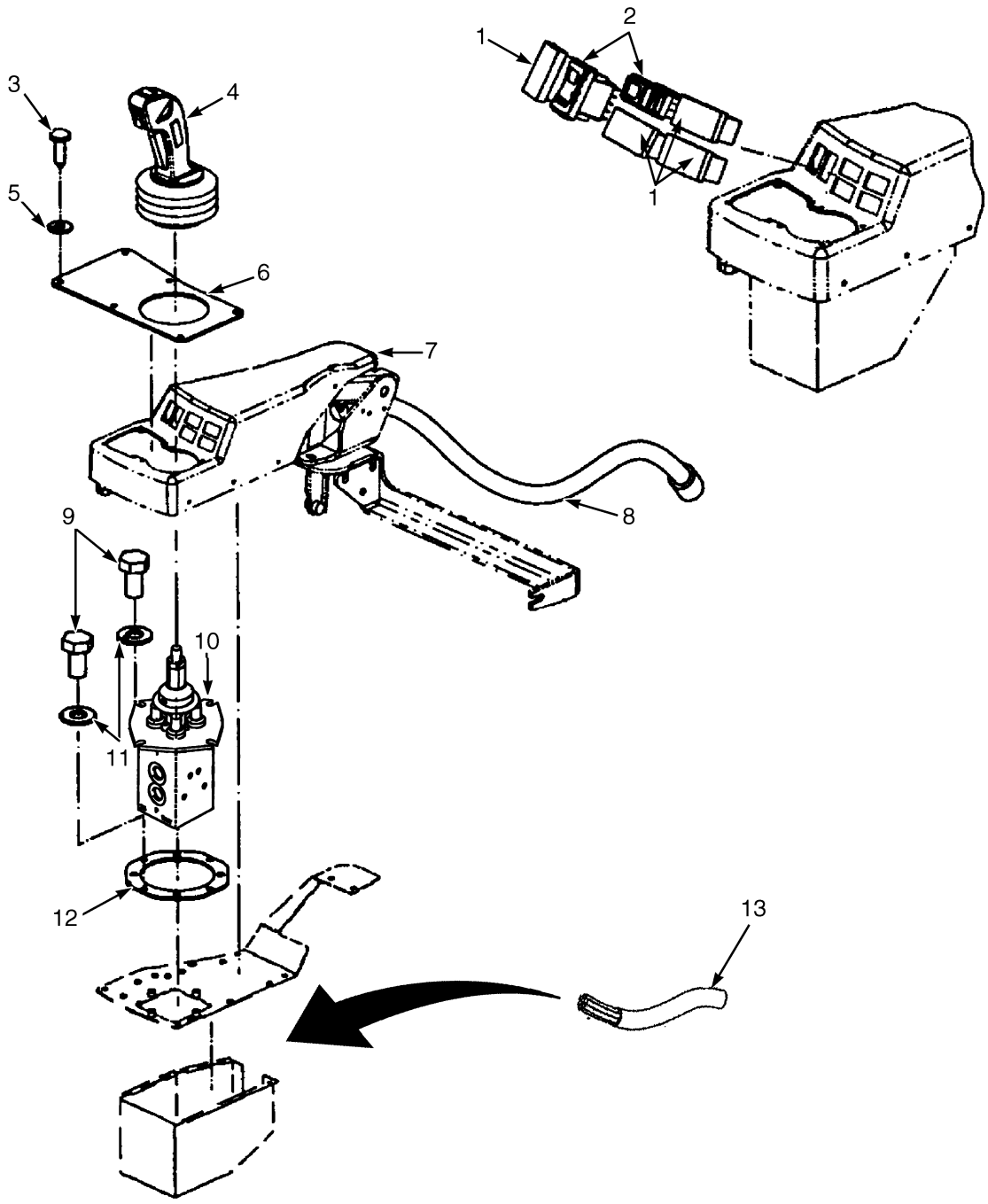

HP151097

©2010 HYSTER COMPANY

JOYSTICK CONTROL

ITEM	PART NO.	DESCRIPTION	QTY
1	**a** 1498383	Plug (Switch)	6
1	**b** 1498383	Plug (Switch)	5
2	**b** 2054005	Switch	1
3	1498357	Screw	6
4	1658825	Joystick	1
5	1492140	Washer	6
6	1623282	Plate	1
7	1623187	Armrest	1
8	1637439	Wire Harness (Arm Rest)	1
9	292500	Capscrew	8
10	1601859	Pilot Valve (☞Figure 9-28)	1
11	320156	Washer	8
12	1623283	Gasket (Adapter)	1
13	1555977	Hose Assy (☞Figure 9-24)	1

FOOTNOTES:

a With ECH

b With Hook

©2010 HYSTER COMPANY

JOYSTICK ASSEMBLY (FIGURE 9-27)

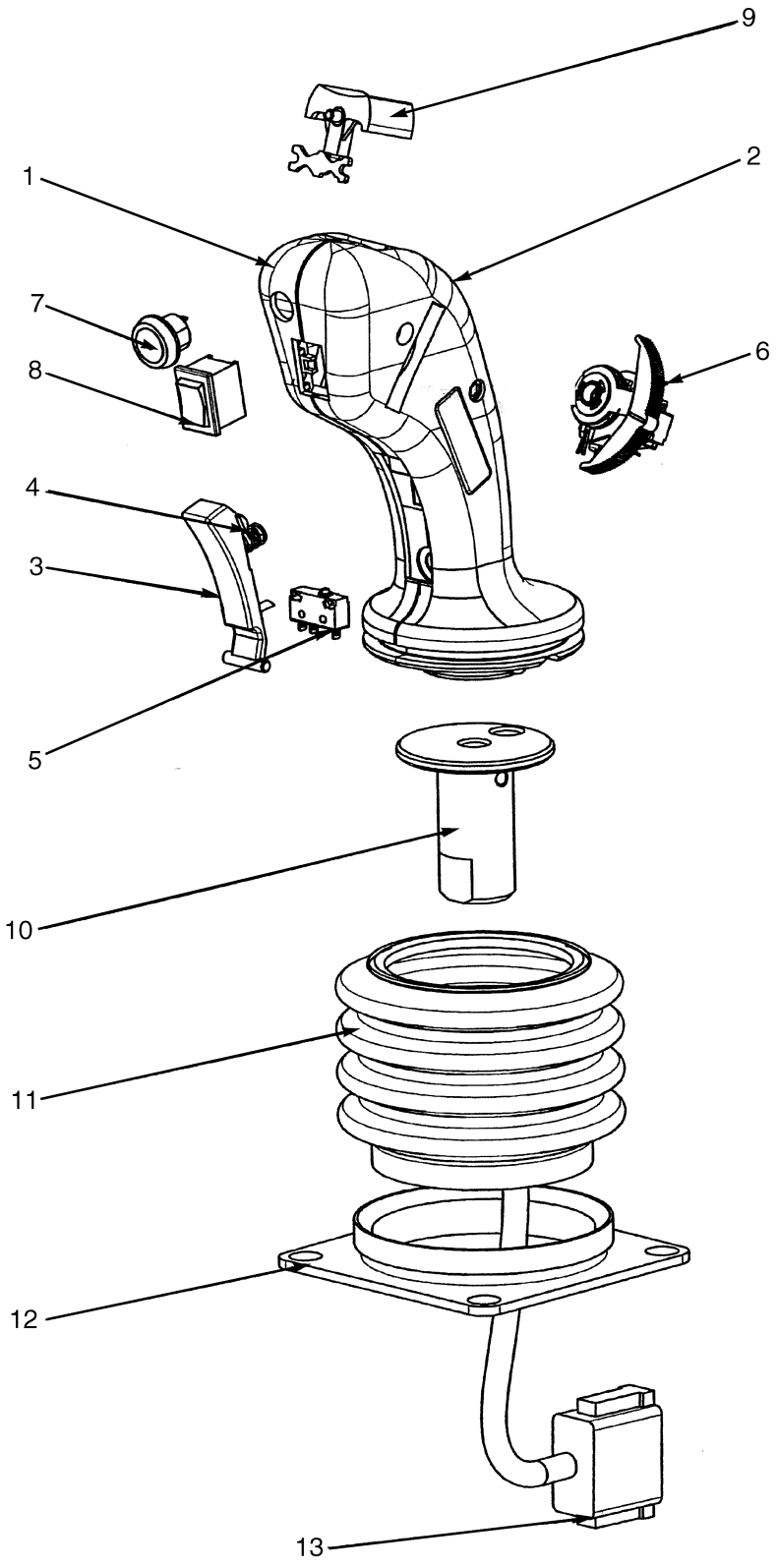

©2010 HYSTER COMPANY

JOYSTICK ASSEMBLY

ITEM	PART NO.	DESCRIPTION	QTY
	1658825	Joystick	1
1	1662493	Grip (RH)	1
2	1662492	Grip (LH)	1
3	1584824	Trigger	1
4	1584825	Spring	1
5	1584826	Microswitch	1
6	1635698	Switch (Rocker)	1
7	1662134	Button	1
8	1635692	Rocker (Rocker)	1
9	1662489	Switch	1
10	1662132	Receptacle	1
11	1584846	Boot	1
12	1662131	Mounting Plate	1
13	1662130	Connector	1

©2010 HYSTER COMPANY

JOYSTICK CONTROL MODULATOR VALVE (FIGURE 9-28)

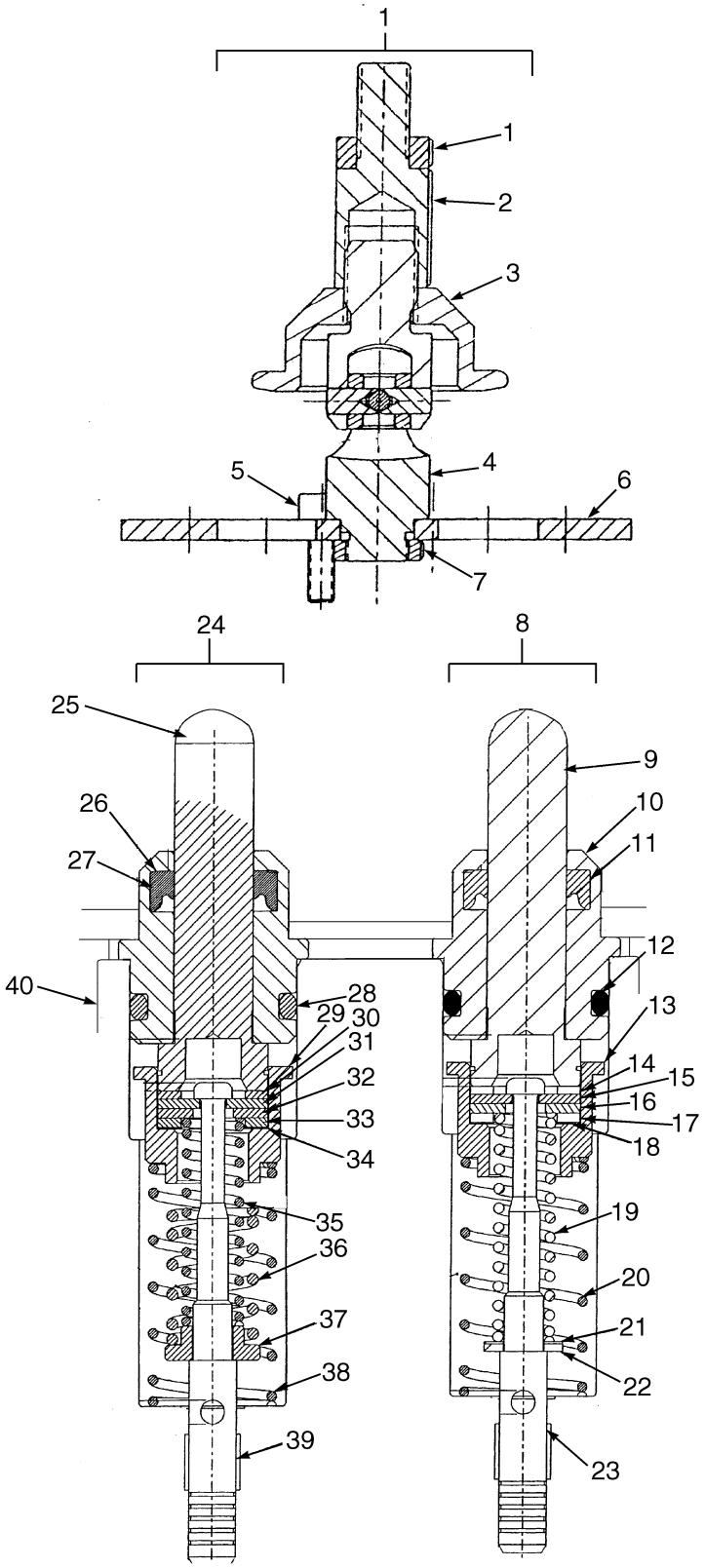

©2010 HYSTER COMPANY

JOYSTICK CONTROL MODULATOR VALVE

ITEM	PART NO.	DESCRIPTION	QTY
	1601859	Pilot Valve	1
1	1643614	Lever Mechanism	1
1	1643619	Nut	1
2	1643618	Adapter	1
3	1643617	Plate	1
4	1643616	Universal Joint	1
5	1643579	Capscrew	3
6	1643615	Mounting Plate	1
7	1643578	Nut (Special)	1
8	1643577	Spool (Tilt)	1
9	1643591	Plunger	1
10	1643588	Bearing	1
11	1643589	Seal (Plunger)	1
12	1643590	O-Ring	1
13	1643598	Spring Seat	1
14	1643592	Washer	1
15	1643593	Retaining Ring	1
16	1643594	Washer	1
17	1643595	Washer	1
18	1643596	Washer	1
19	1643608	Spring	1
20	1643602	Spring	1
21	1643607	Washer	1
22	1643606	Washer	1
23	1643597	Spool	1
24	1643576	Spool (Raise/Lower)	1
25	1643591	Plunger	1
26	1643588	Bearing	1
27	1643589	Seal (Plunger)	1
28	1643590	O-Ring	1
29	1643598	Spring Seat	1
30	1643592	Washer	1
31	1643593	Retaining Ring	1
32	1643594	Washer	1
33	1643595	Washer	1
34	1643596	Washer	1
35	1643600	Spring	1
36	1643601	Spring	1
37	1643599	Spring Seat	1
38	1643602	Spring	1
39	1643597	Spool	1
40	. . . . .	Housing	1
	. . . . .	Name Plate	1

©2010 HYSTER COMPANY

NOTES

©2010 HYSTER COMPANY

10 MAST WITH EMPTY CONTAINER HANDLER

SECTION 10
MAST WITH EMPTY CONTAINER HANDLER

DESCRIPTION	PAGE
MAST ASSEMBLY	
HEADER HOSES (→ S/N B214E01635F)	10-12
HEADER HOSES (S/N B214E01636F →)	10-16
INNER MAST	10-4
MAIN LIFT	10-6
MAIN LIFT CYLINDERS	10-10
MAST INSTALLATION	10-26
OUTER MAST	10-2
TILT CYLINDER HYDRAULICS (→ S/N B214E01707F)	10-20
TILT CYLINDER HYDRAULICS (S/N B214E01708F →)	10-22
TILT CYLINDERS	10-24

©2010 HYSTER COMPANY

MAST ASSEMBLY (FIGURE 10-1)
OUTER MAST

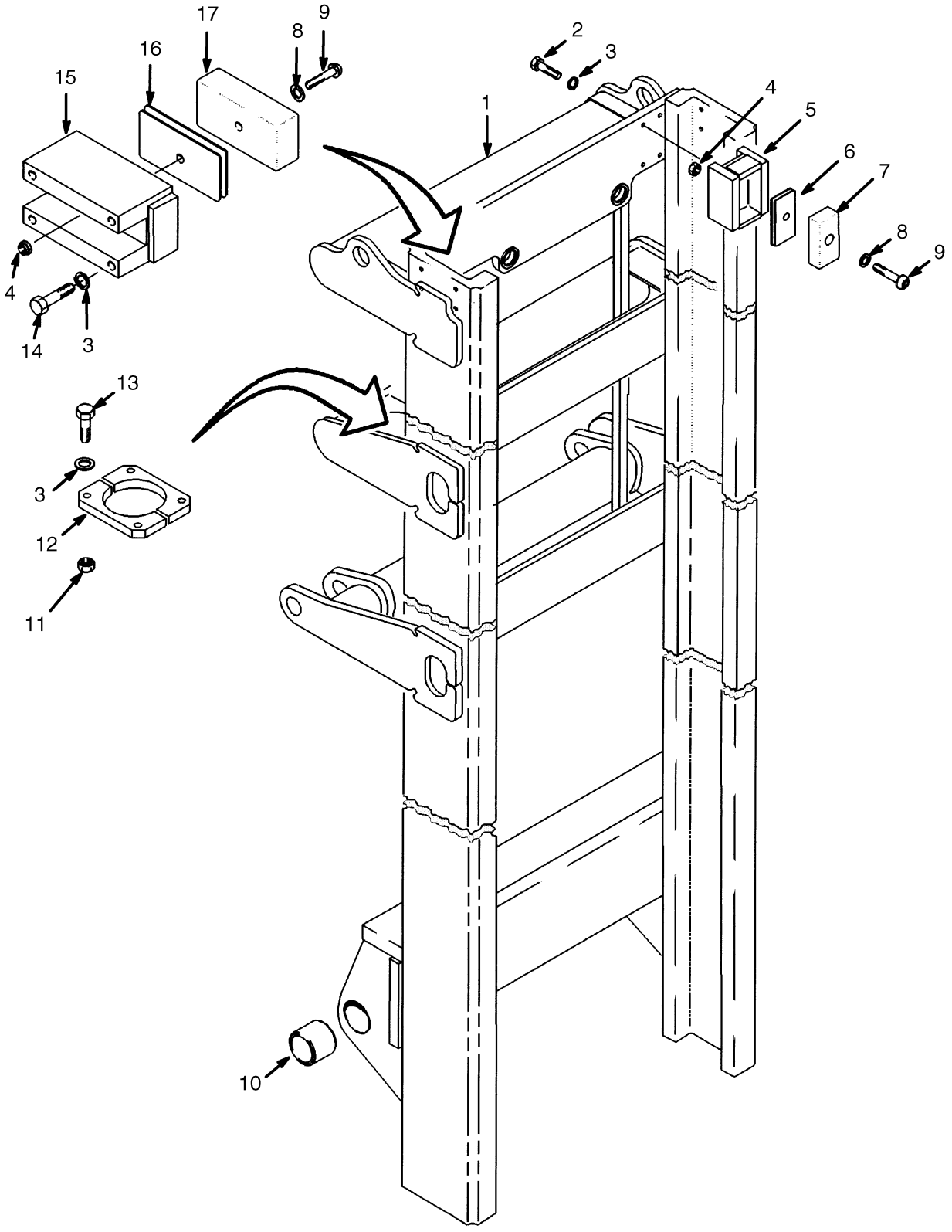

HP171378

©2010 HYSTER COMPANY

MAST ASSEMBLY
OUTER MAST

KEY:
A: H400HD-EC
B: H450-500HD-EC

ITEM	PART NO.	DESCRIPTION	QTY A	QTY B
	1589984	Mast Assy (545 in.)	1	..
	1589985	Mast Assy (648 in.)	..	1
1	1589966	Outer Mast (545 in.)	1	..
1	**a** 1589967	Outer Mast (648 in.)	..	1
1	**b** 1702921	Outer Mast (648 in.)	..	1
2	246001	Capscrew	8	8
3	320161	Washer	8	8
4	302401	Locknut	6	6
5	1373051	Bracket Wldmt	2	2
6	1373034	Shim	AR	AR
6	1373035	Shim	AR	AR
6	1373036	Shim	AR	AR
7	1373038	Block	2	2
8	320159	Washer	8	8
9	1364272	Capscrew	6	6
10	321177	Bushing	2	2
11	302402	Locknut	18	18
12	1393726	Retainer	4	4
13	292535	Capscrew	8	8
14	292531	Capscrew	8	8
15	1373050	Bracket Wldmt	2	2
16	1373031	Shim	AR	AR
16	1373032	Shim	AR	AR
16	1373033	Shim	AR	AR
17	1373037	Block	2	2

FOOTNOTES:

a → S/N B214E01722G

b S/N B214E01723G →

©2010 HYSTER COMPANY

MAST ASSEMBLY (FIGURE 10-2)

INNER MAST

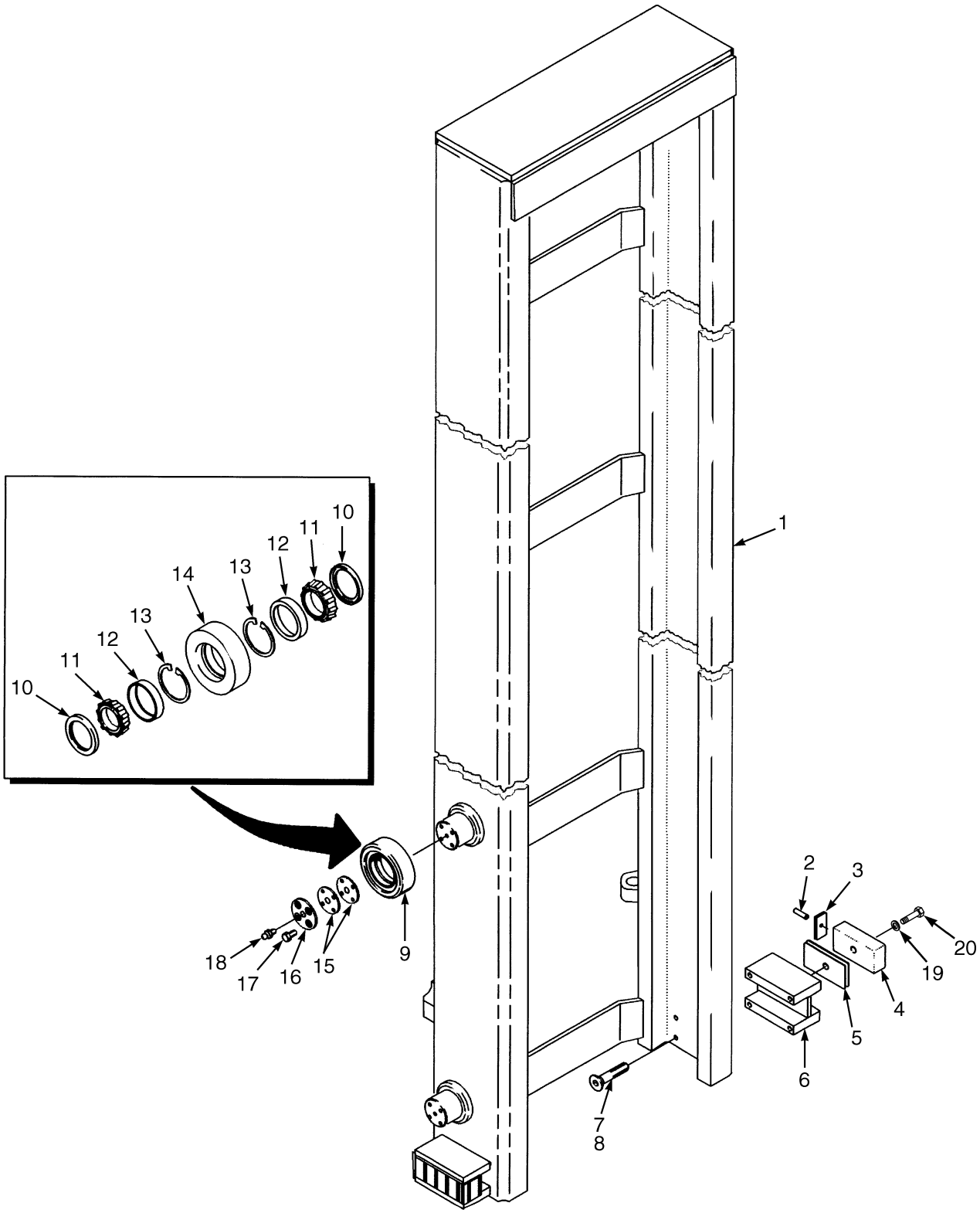

©2010 HYSTER COMPANY

MAST ASSEMBLY
INNER MAST

KEY:
A: H400HD-EC
B: H450-500HD-EC

ITEM	PART NO.	DESCRIPTION	QTY A	QTY B
	1589984	Mast Assy (545 in.)	1	..
	1589985	Mast Assy (648 in.)	..	1
1	1372824	Inner Mast (545 in.)	1	..
1	1372825	Inner Mast (648 in.)	..	1
2	302468	Roll Pin	2	2
3	1373025	Shim	AR	AR
3	1373026	Shim	AR	AR
3	1373027	Shim	AR	AR
4	1373039	Bearing	2	2
5	1373028	Shim	AR	AR
5	1373029	Shim	AR	AR
5	1373030	Shim	AR	AR
6	1373049	Bracket Wldmt	2	2
7	296255	Capscrew	8	8
8	321197	Loctite	AR	AR
9	1325765	Load Roller	4	4
10	1325761	Shield	2	2
11	276228	Bearing Cone	2	2
12	392197	Bearing Cup	2	2
13	47478	Snap Ring	2	2
14	1325756	Roller	1	1
15	1325763	Shim	AR	AR
15	1325764	Shim	AR	AR
15	1373329	Shim	AR	AR
16	1609687	Cap	4	4
17	293644	Capscrew	16	16
18	16001	Grease Fitting	4	4

©2010 HYSTER COMPANY

MAST ASSEMBLY (FIGURE 10-3)
MAIN LIFT

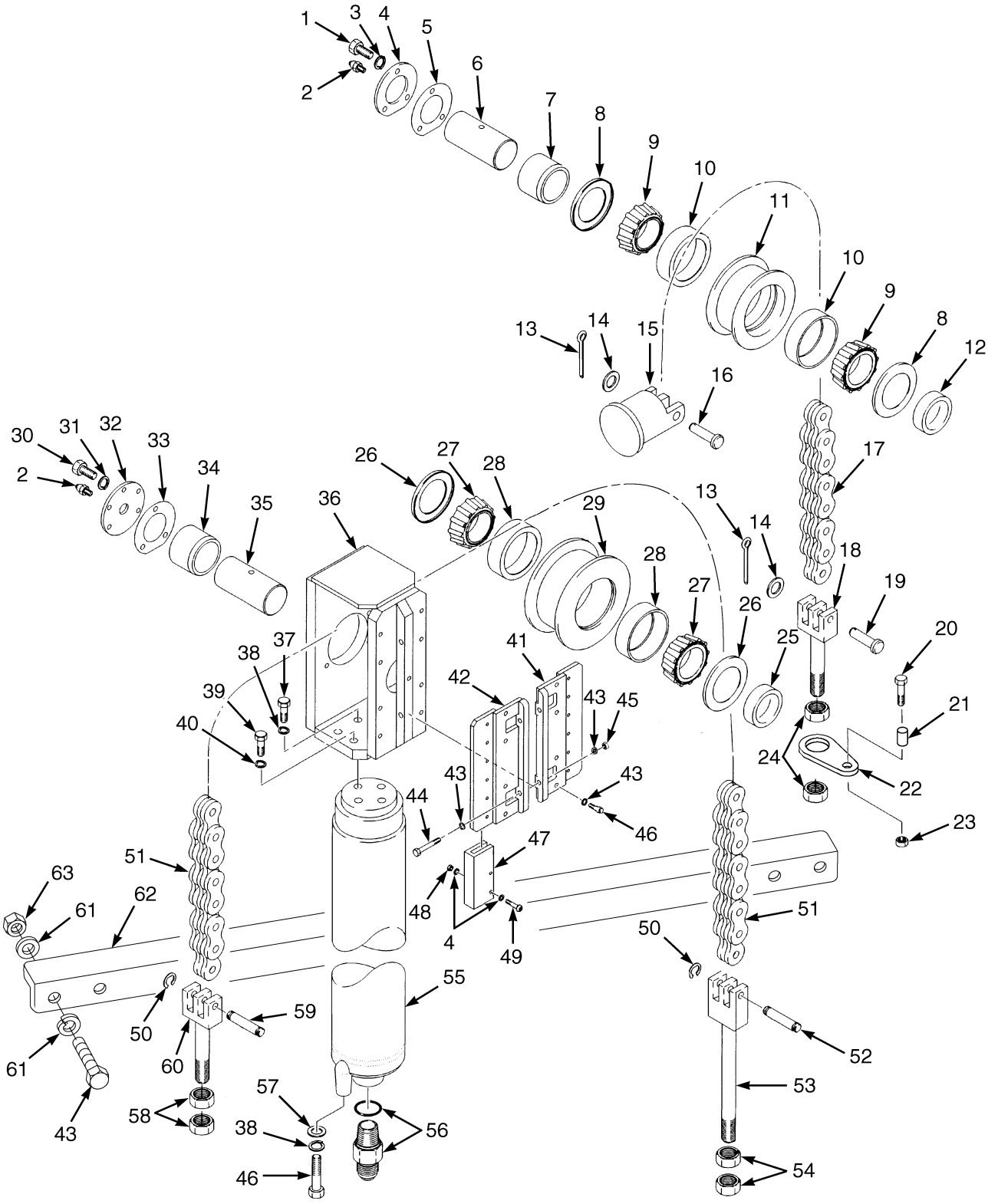

©2010 HYSTER COMPANY

MAST ASSEMBLY
MAIN LIFT

KEY:
A: H400HD-EC
B: H450-500HD-EC

ITEM	PART NO.	DESCRIPTION	QTY A	QTY B
	1589984	Mast Assy (545 in.)	1	..
	1589985	Mast Assy (648 in.)	..	1
1	132860	Capscrew	6	6
2	16001	Grease Fitting	4	4
3	320156	Washer	48	48
4	1372971	Plate	2	2
5	1373014	Shim	AR	AR
5	1373015	Shim	AR	AR
5	1373016	Shim	AR	AR
6	1373010	Shaft	2	2
7	1373011	Spacer	2	2
8	1518209	Oil Seal	4	4
9	167971	Bearing Cone	4	4
10	167970	Bearing Cup	4	4
11	1383552	Chain Sheave	2	2
12	1373012	Spacer	2	2
13	15244	Cotter Pin	4	4
14	15146	Washer	4	4
15	1534281	Chain Anchor	2	2
15	251979	Lubricant	AR	AR
16	1373020	Pin	2	2
17	**a** 1651354	Chain	1	..
17	**b** 1651349	Leaf Chain - Fixed Length	1	..
17	4008678	Leaf Chain - Fixed Length (Optional)	1	..
17	4008677	Leaf Chain - Fixed Length (Optional)	1	..
17	**a** 1651355	Chain	..	1
17	**b** 1657415	Leaf Chain - Fixed Length	..	1
17	4008680	Leaf Chain - Fixed Length (Optional)	..	1
17	4008679	Leaf Chain - Fixed Length (Optional)	..	1
18	1494402	Chain Anchor	2	2
18	251979	Lubricant	AR	AR
19	1303383	Pin	2	2
20	292538	Capscrew	2	2
21	1496053	Spacer	2	2
22	1495969	Lockplate	4	4
23	302402	Locknut	2	2
24	221729	Nut	4	4
25	159296	Spacer	2	2
26	159295	Oil Seal	4	4
27	230408	Bearing Cone	4	4
28	159299	Bearing Cup	4	4
29	1455301	Chain Sheave	2	2
30	293645	Capscrew	10	10
31	320161	Washer	14	14
32	1455992	Cover Plate	2	2

©2010 HYSTER COMPANY

MAST ASSEMBLY
MAIN LIFT

KEY:
A: H400HD-EC
B: H450-500HD-EC

ITEM	PART NO.	DESCRIPTION	QTY A	QTY B
33	110931	Shim (0.005 in.)	AR	AR
33	110932	Shim (0.007 in.)	AR	AR
33	110933	Shim (0.020 in.)	AR	AR
34	159297	Spacer	2	2
35	1455487	Shaft	2	2
36	1465599	Housing (Chain Sheave)	2	2
37	292562	Capscrew	8	8
38	320161	Washer	18	18
39	292535	Capscrew	8	8
40	320165	Washer	8	8
41	1465602	Guide (Rear Sheave)	2	2
42	1465601	Guide (Front Sheave)	2	2
43	~~388049~~			
	292682	Lockwasher	20	20
44	136718	Capscrew	4	4
45	302401	Locknut	4	4
46	136985	Capscrew	16	16
47	1393735	Chain Guide	4	4
48	313805	Nut	24	24
49	1393738	Capscrew	24	24
50	1194251	Snap Ring	8	8
51	**a** 1651356	Chain	1	..
51	**b** 1651350	Leaf Chain - Fixed Length	1	..
51	4009987	Leaf Chain - Fixed Length (Optional)	1	..
51	4009986	Leaf Chain - Fixed Length (Optional)	1	..
51	**a** 1651357	Chain	..	1
51	**b** 1657414	Leaf Chain - Fixed Length	..	1
51	4009771	Leaf Chain - Fixed Length (Optional)	..	1
51	4009770	Leaf Chain - Fixed Length (Optional)	..	1
52	1455490	Pin	2	2
53	1460437	Chain Anchor (Long)	2	2
53	251979	Lubricant	AR	AR
54	136405	Nut	4	4
55	1389408	Cylinder Assy (☞Figure 10-4)	2	..
55	1389409	Cylinder Assy (☞Figure 10-4)	..	2
56	2043537	Lowering Control Valve	2	2
56	16983	O-Ring	1	1
56	244167	O-Ring	1	1
57	1303391	Washer	2	2
58	221295	Nut	4	4
59	1509182	Pin	2	2
60	1507589	Chain Anchor (Short)	2	2
60	251979	Lubricant	AR	AR
61	320159	Washer	4	4
62	1507696	Plate	2	2

©2010 HYSTER COMPANY

MAST ASSEMBLY
MAIN LIFT

KEY:
A: H400HD-EC
B: H450-500HD-EC

ITEM	PART NO.	DESCRIPTION	QTY A	QTY B
63	302401	Locknut	4	4

FOOTNOTES:

a → S/N B214E01680F

b S/N B214E01681F →

MAST ASSEMBLY (FIGURE 10-4)
MAIN LIFT CYLINDERS

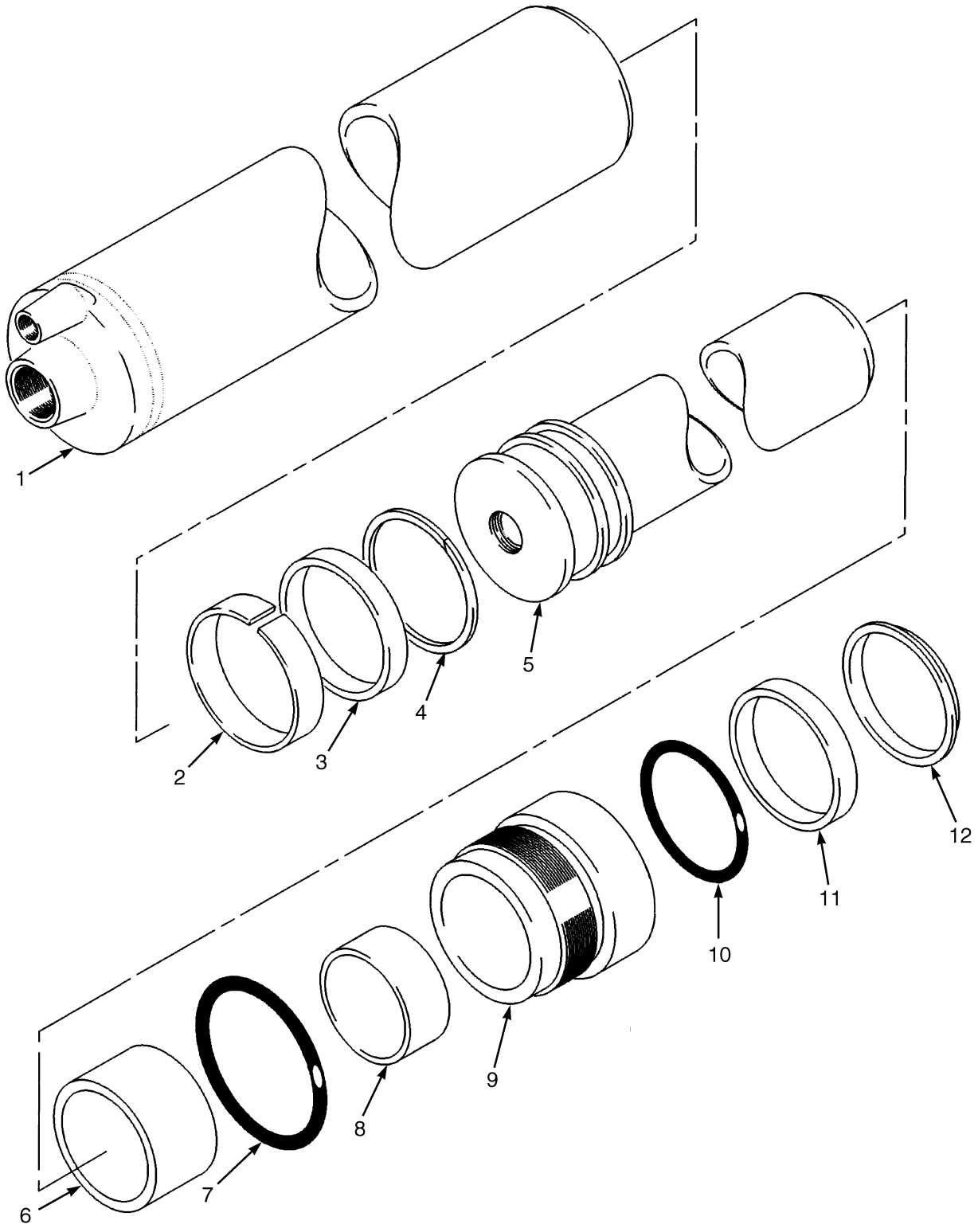

HP171381

©2010 HYSTER COMPANY

MAST ASSEMBLY
MAIN LIFT CYLINDERS

KEY:
A: H400HD-EC
B: H450-500HD-EC

ITEM	PART NO.	DESCRIPTION	QTY A	QTY B
	1389408	Cylinder Assy	1	..
	1389409	Cylinder Assy	..	1
1	1391481	Tube Wldmt-Cylinder	1	..
1	1391482	Tube Wldmt-Cylinder	..	1
2	385133	Wear Ring	1	1
3	637170	Rod Seal	1	1
4	638299	Back-Up Ring	1	1
5	1389405	Cylinder Rod	1	..
5	1389406	Cylinder Rod	..	1
6	1451823	Spacer	1	1
7	1373127	O-Ring	1	1
8	636907	Wear Ring	1	1
9	1373126	Retainer	1	1
10	637168	Rod Seal	1	1
11	638256	Back-Up Ring	1	1
12	1373129	Rod Seal	1	1
	1391877	Kit-Seal	1	1

©2010 HYSTER COMPANY

MAST ASSEMBLY (FIGURE 10-5)

HEADER HOSES (→ S/N B214E01635F)

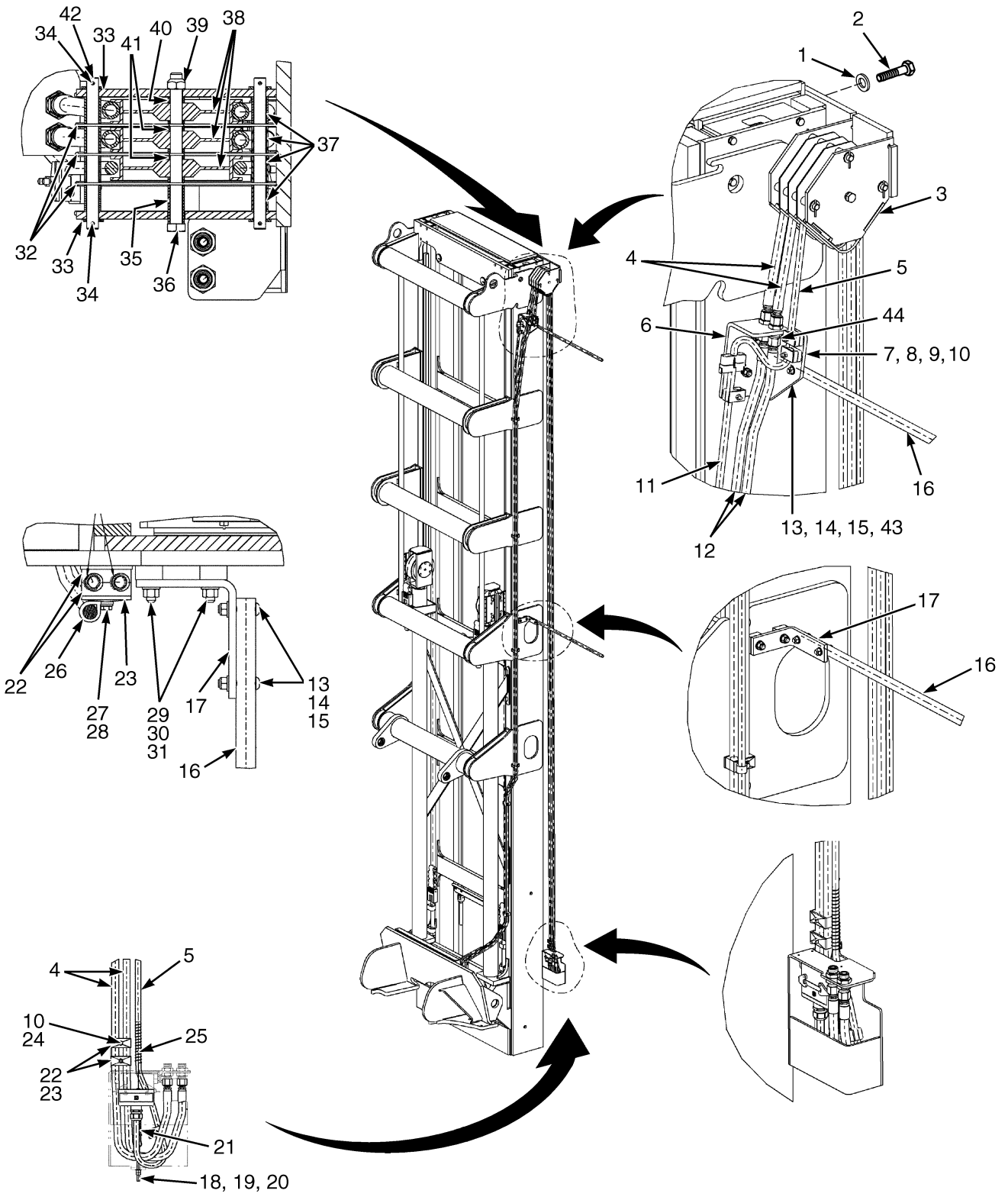

HP171382

©2010 HYSTER COMPANY

MAST ASSEMBLY

HEADER HOSES (→ S/N B214E01635F)

KEY:
A: H400HD-EC, H450HDS-EC
B: H450HD-EC, H500HD-EC

ITEM	PART NO.	DESCRIPTION	QTY A	QTY B
	1589984	Mast Assy (545 in.)	1	..
	1589985	Mast Assy (648 in.)	..	1
1	320169	Washer	4	4
2	292581	Capscrew	4	4
3	1581445	Bracket Wldmt	1	1
4	1541279	Hose Assy	2	..
4	1541319	Hose Assy	..	2
5	1571694	Wire Harness (Mast)	1	..
5	1571695	Wire Harness (Mast)	..	1
6	1581448	Plate	1	1
7	1561747	Clamp	4	4
8	1533648	Plate (Cover)	4	4
9	136704	Capscrew	4	4
10	302400	Nut	6	6
11	1597369	Wire Harness (Front End Equipment)	1	..
11	1597370	Wire Harness (Front End Equipment)	..	1
12	1622555	Hose Assy	2	..
12	1622556	Hose Assy	..	2
13	1364272	Capscrew	6	6
14	320159	Washer	12	12
15	302401	Locknut	4	4
16	1581547	Tube	2	2
17	1582217	Plate	1	1
18	313222	Eyebolt	1	1
19	221707	Nut	2	2
20	15134	Washer	1	1
21	1323166	Spring	1	1
22	1533665	Clamp	16	16
23	1530668	Cover Plate	8	8
23	1533649	Cover Plate (Alternate Part)	8	8
24	136703	Capscrew	2	2
25	1322039	Cable	1	1
26	1347202	Clamp	6	6
27	320157	Washer	6	6
28	292509	Capscrew	6	6
29	302402	Locknut	4	4
30	246001	Capscrew	4	4
31	320161	Washer	4	4
32	1539992	Separator Plate	3	3
33	320165	Washer	6	6
34	15244	Cotter Pin	6	6
35	815932	Spacer	1	1
36	14999	Capscrew	1	1
37	1540330	Spacer	12	12
38	189451	Hose Sheave	3	3

©2010 HYSTER COMPANY

MAST ASSEMBLY

HEADER HOSES (→ S/N B214E01635F)

KEY:
A: H400HD-EC, H450HDS-EC
B: H450HD-EC, H500HD-EC

ITEM	PART NO.	DESCRIPTION	QTY A	QTY B
39	221357	Locknut	1	1
40	1301650	Spacer	1	1
41	280610	Spacer	2	2
42	1542033	Pin	3	3
43	1593336	Nut	2	2
44	1498506	Fitting (Includes Nut)	2	2
44	252729	O-Ring	2	2

©2010 HYSTER COMPANY

NOTES

©2010 HYSTER COMPANY

MAST ASSEMBLY (FIGURE 10-6)

HEADER HOSES (S/N B214E01636F →)

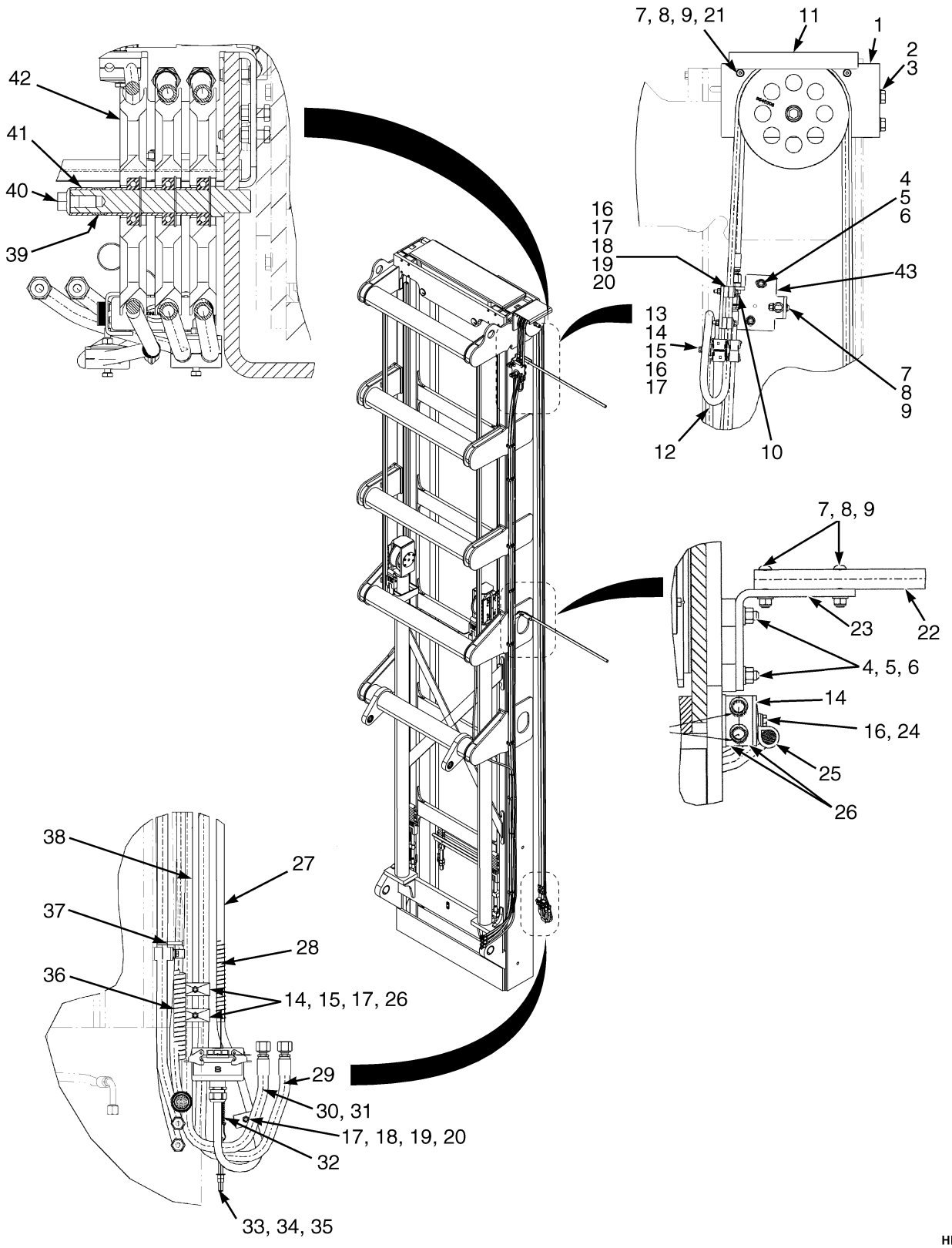

HP290011

©2010 HYSTER COMPANY

MAST ASSEMBLY

HEADER HOSES (S/N B214E01636F →)

KEY:
A: H400HD-EC, H450HDS-EC
B: H450HD-EC, H500HD-EC

ITEM	PART NO.	DESCRIPTION	QTY A	QTY B
	1589984	Mast Assy (545 in.)	1	..
	1589985	Mast Assy (648 in.)	..	1
1	1653927	Bracket Wldmt	1	1
2	320169	Washer	4	4
3	292581	Capscrew	4	4
4	246001	Capscrew	4	4
5	320161	Washer	10	10
6	302402	Locknut	4	4
7	1364272	Capscrew	6	6
8	320159	Washer	12	12
9	302401	Locknut	6	6
10	1498506	Fitting (Includes Nut)	2	2
11	1676840	Plate	1	1
12	1597369	Wire Harness (Front End Equipment)	1	..
12	1597370	Wire Harness (Front End Equipment)	..	1
13	1533664	Clamp	1	1
14	1530668	Cover Plate	9	9
14	1533649	Cover Plate (Alternate Part)	9	9
15	136703	Capscrew	3	3
16	320157	Washer	9	9
17	302400	Nut	6	6
18	136704	Capscrew	3	3
19	1533648	Plate (Cover)	3	3
20	1629234	Clamp	3	3
21	1593336	Nut	2	2
22	1581547	Tube	2	2
23	1582217	Plate	1	1
24	292509	Capscrew	6	6
25	1347202	Clamp	6	6
26	1533665	Clamp	8	8
27	1571694	Wire Harness (Mast)	1	..
27	1571695	Wire Harness (Mast)	..	1
28	1322039	Cable	1	1
29	1564897	Strap Clamp	4	4
30	1564900	Strap Clamp	4	4
31	1637433	Hose Assy	2	..
31	1637435	Hose Assy	..	2
32	1323166	Spring	1	1
33	313222	Eyebolt	1	1
34	15134	Washer	1	1
35	221707	Nut	2	2
36	316596	Sleeve (Coil)	1	1
36	237953	Sleeve	AR	AR
37	129563	Strap Clamp	3	3
38	1677797	Hose Assy	2	..

©2010 HYSTER COMPANY

MAST ASSEMBLY

HEADER HOSES (S/N B214E01636F →)

KEY:
A: H400HD-EC, H450HDS-EC
B: H450HD-EC, H500HD-EC

ITEM	PART NO.	DESCRIPTION	QTY A	QTY B
38	1677798	Hose Assy	..	2
39	1677910	Spacer	1	1
40	1527890	Capscrew	1	1
41	1651884	Spacer	4	4
42	1653711	Sheave Assembly	3	3
42	152837	Ball Bearing	1	1
42	~~1502093~~ 12921	Snap Ring	1	1
42	1651882	Hose Sheave (Alternate Part)	3	3
43	1657231	Bracket	1	1

©2010 HYSTER COMPANY

NOTES

©2010 HYSTER COMPANY

MAST ASSEMBLY (FIGURE 10-7)
TILT CYLINDER HYDRAULICS (→ S/N B214E01707F)

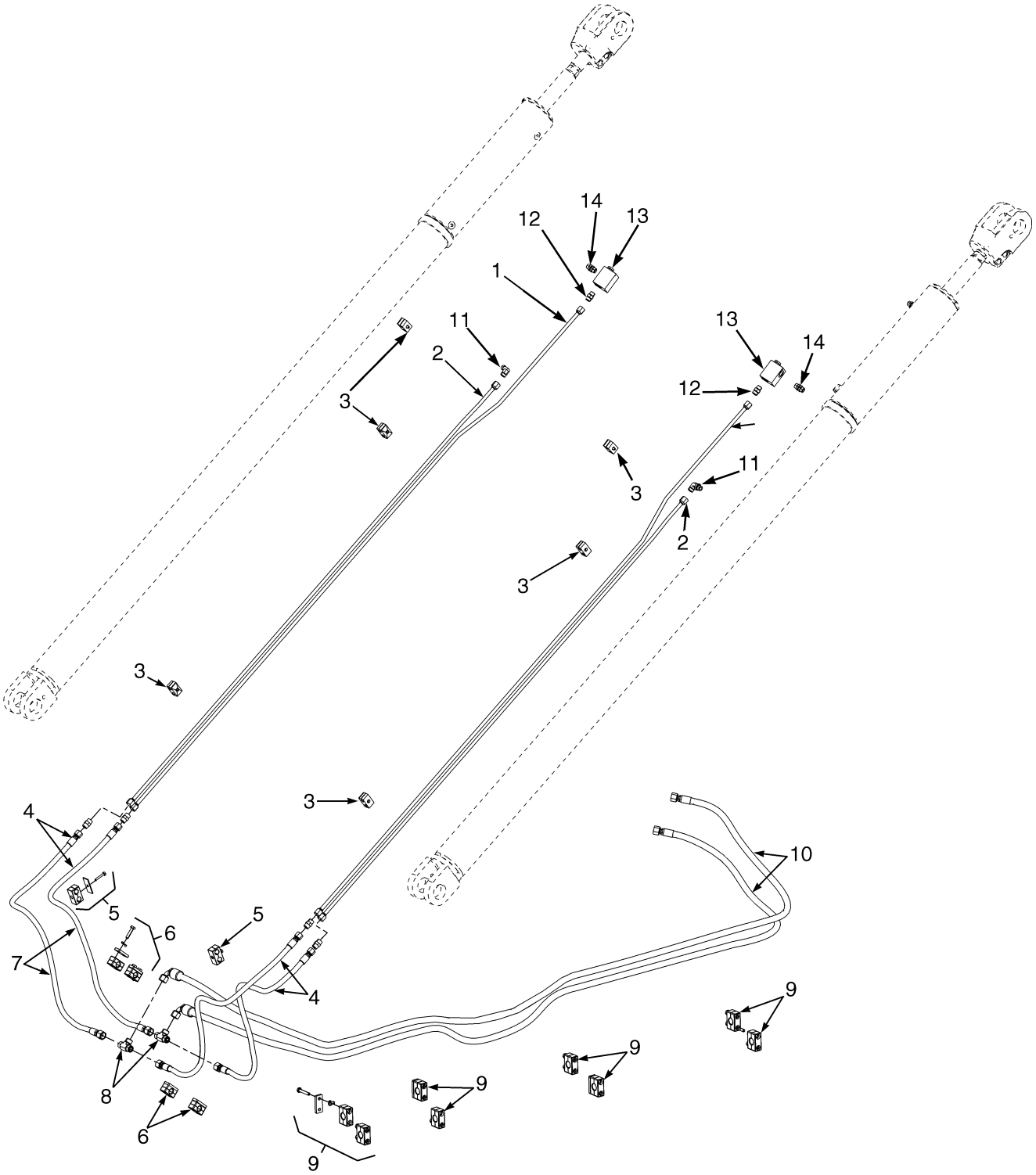

©2010 HYSTER COMPANY

MAST ASSEMBLY

TILT CYLINDER HYDRAULICS (→ S/N B214E01707F)

KEY:
A: H400HD-EC, H450HDS-EC
B: H450HD-EC, H500HD-EC

ITEM	PART NO.	DESCRIPTION	QTY A	QTY B
1	1605267	Tube	2	..
1	1605270	Tube	..	2
2	1605268	Tube	2	..
2	1605271	Tube	..	2
3	1393802	Clamp	6	6
4	1522435	Fitting	4	4
5	214364	Capscrew	2	2
5	1533649	Cover Plate	2	2
5	1533664	Clamp	3	3
6	292516	Capscrew	8	8
6	1617042	Cover Plate	4	4
6	1617039	Clamp	4	4
7	1603104	Hose Assy	4	4
8	1522427	Fitting	2	2
9	292519	Capscrew	16	16
9	1533662	Lockwasher	24	24
9	1560005	Cover Plate	8	8
9	1612403	Clamp	8	8
10	1618934	Hose Assy	2	..
10	1603106	Hose Assy	..	2
11	1473879	Shuttle Valve	2	2
12	1473887	Fitting	2	2
13	1564349	Relief Valve	2	2
14	1336112	Fitting	2	2
	a 1557756	Strap (Static)	1	1

FOOTNOTES:

a Not Illustrated

©2010 HYSTER COMPANY

MAST ASSEMBLY (FIGURE 10-8)

TILT CYLINDER HYDRAULICS (S/N B214E01708F →)

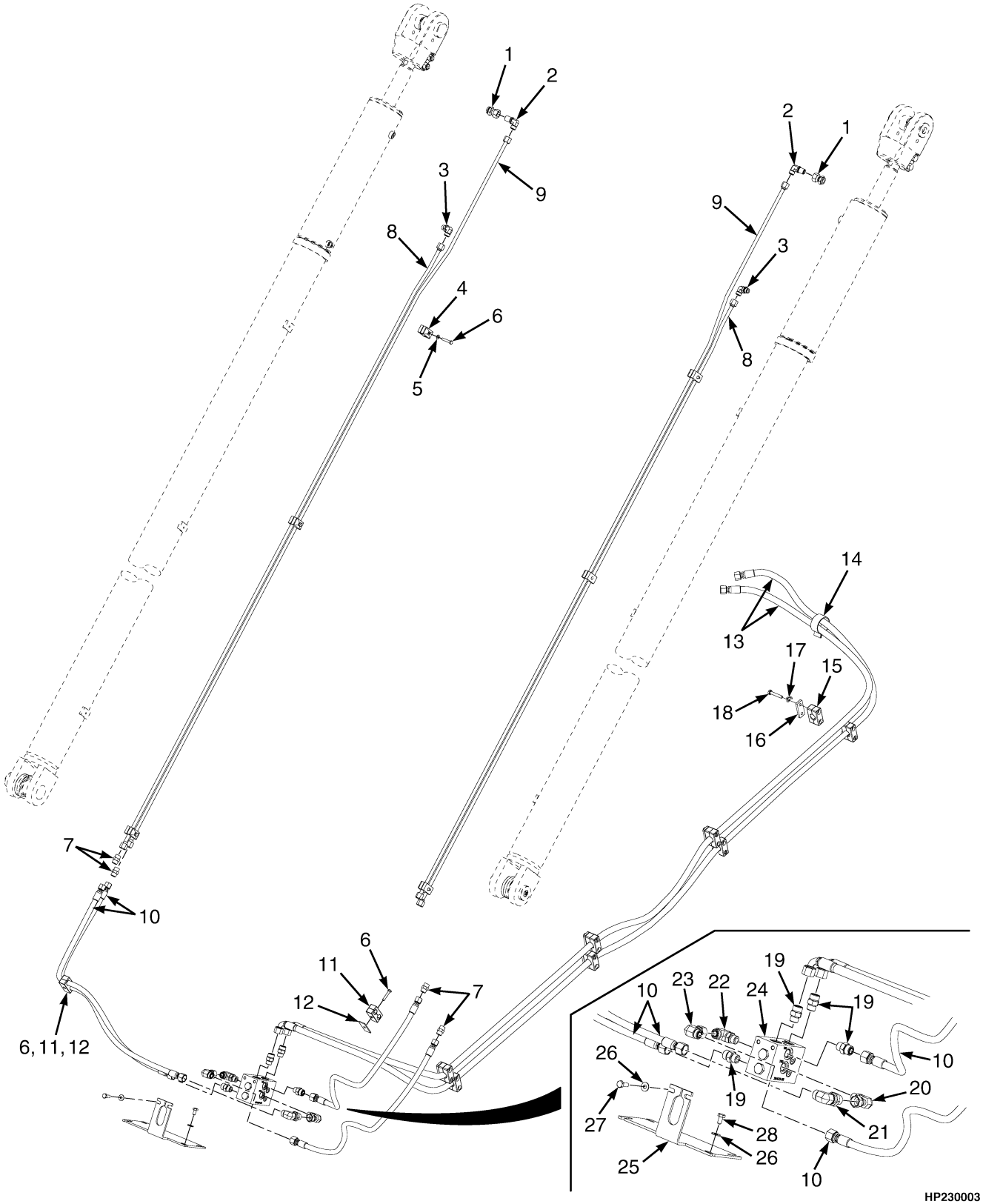

©2010 HYSTER COMPANY

MAST ASSEMBLY

TILT CYLINDER HYDRAULICS (S/N B214E01708F →)

KEY:
A: H400HD-EC, H450HDS-EC
B: H450HD-EC, H500HD-EC

ITEM	PART NO.	DESCRIPTION	QTY A	QTY B
1	**a** 1622610	Fitting	2	2
2	**a** 1528580	Fitting (Includes Nut)	2	2
2	**b** 1473897	Fitting	2	2
3	1473897	Fitting	2	2
4	1393802	Clamp	6	6
5	320157	Washer	6	6
6	214364	Capscrew	8	8
7	1522435	Fitting	4	4
8	1605271	Tube	..	2
8	1605268	Tube	2	..
9	**a** 1605270	Tube	..	2
9	**a** 1605267	Tube	2	..
9	**b** 4024318	Tube Assy	..	2
9	**b** 4024317	Tube Assy	2	..
10	1603104	Hose Assy	4	4
11	1533664	Clamp	2	2
12	1533649	Cover Plate	2	2
13	1603106	Hose Assy	..	2
13	1618934	Hose Assy	2	..
14	1557756	Strap (Static)	1	1
15	1612403	Clamp	8	8
16	1560005	Cover Plate	8	8
17	1533662	Lockwasher	16	16
18	292519	Capscrew	16	16
19	1486749	Fitting	4	4
20	1486580	Fitting	1	1
21	1528581	Fitting	1	1
22	1487067	Fitting	1	1
23	1486773	Fitting	1	1
24	1676516	Valve (Counterbalance)	1	1
25	1692958	Plate	1	1
26	320160	Washer	6	6
27	136985	Capscrew	2	2
28	292514	Capscrew	4	4

FOOTNOTES:

a → 11/2010

b 11/2010 →

©2010 HYSTER COMPANY

MAST ASSEMBLY (FIGURE 10-9)
TILT CYLINDERS

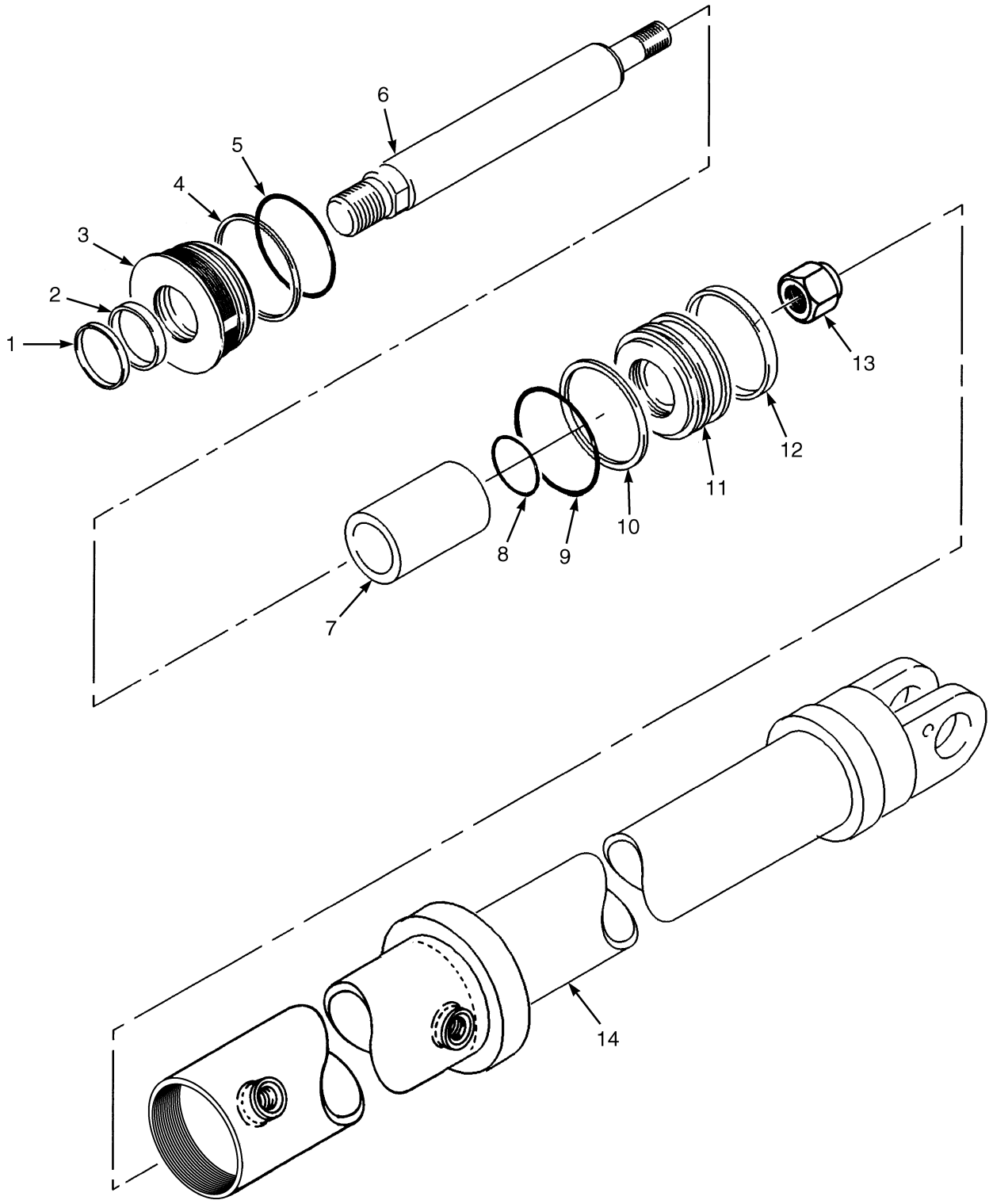

HP171383

©2010 HYSTER COMPANY

MAST ASSEMBLY
TILT CYLINDERS

KEY:
A: H400HD-EC, H450HDS-EC (4° Forward/4° Back)
B: H450HD-EC, H500HD-EC (3° Forward/4° Back)

ITEM	PART NO.	DESCRIPTION	QTY A	QTY B
	1627262	Tilt Cylinder	2	..
	1627263	Tilt Cylinder	..	2
1	376186	Rod Wiper	1	1
2	358300	Rod Seal	1	1
3	1470765	Gland	1	1
4	1476882	Back-Up Ring	1	1
5	55289	O-Ring	1	1
6	1589969	Piston Rod	1	1
7	1627258	Spacer	1	..
7	1627259	Spacer	..	1
8	198518	O-Ring	1	1
9	15890	O-Ring	1	1
10	387246	Sealing Ring	1	1
11	387248	Piston	1	1
12	387247	Wear Ring	1	1
13	221377	Locknut	1	1
14	1589981	Tube	1	..
14	1627439	Tube	..	1

©2010 HYSTER COMPANY

MAST ASSEMBLY (FIGURE 10-10)
MAST INSTALLATION

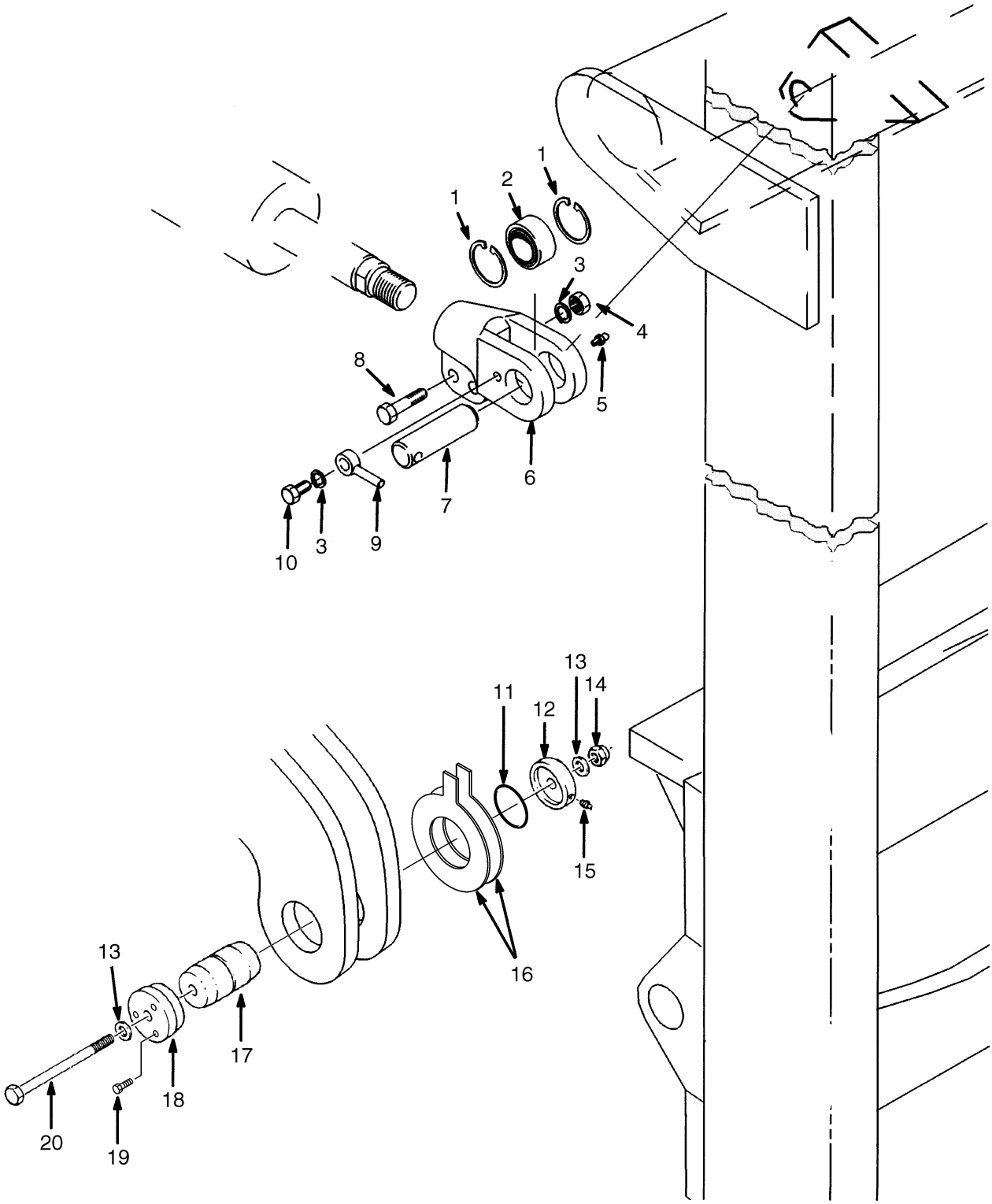

HP171377

©2010 HYSTER COMPANY

MAST ASSEMBLY
MAST INSTALLATION

ITEM	PART NO.	DESCRIPTION	QTY
1	67551	Snap Ring	4
2	1391500	Bushing	4
3	320165	Washer	8
4	302404	Locknut	4
5	16001	Grease Fitting	4
6	1391451	Rod End	2
7	1391522	Pin	2
8	292574	Capscrew	4
9	1391523	Anchor	4
10	292562	Capscrew	4
10	251099	Loctite	AR
11	39679	O-Ring	2
12	1491763	Cap	2
13	221777	Washer	4
14	248320	Wheel Nut	2
15	16001	Grease Fitting	1
16	1492331	Shim	2
17	1321890	Pin	2
18	1493562	Cap	2
19	18191	Capscrew	6
20	1355031	Capscrew	2

©2010 HYSTER COMPANY

NOTES

©2010 HYSTER COMPANY

11 ATTACHMENTS

SECTION 11
ATTACHMENTS

DESCRIPTION **PAGE**

EMPTY CONTAINER HANDLER
- BEARING BLOCKS AND SHIMS - CARRIAGE 11-2
- CARRIAGE WITH MECHANICAL PILE SLOPE - SERIES 582, 586 AND 588 11-4
- CARRIAGE WITH POWER PILE SLOPE AND FLEX TRACK - SERIES 582 AND 586 11-6
- ELECTRICAL BOX BRACKET - SERIES 582, 586, AND 588 11-8
- ELECTRICAL SYSTEM - SERIES 586 AND 588 11-14
- ELECTRICAL SYSTEM WITH MECHANICAL PILE SLOPE - SERIES 582 11-10
- ELECTRICAL SYSTEM WITH POWER PILE SLOPE - SERIES 582 11-12
- END BEAM HEAD - SERIES 582 11-16
- END BEAM HEAD - SERIES 586 11-20
- END BEAM HEAD - SERIES 588 11-24
- END BEAM WEAR PADS - SERIES 582, 586, AND 588 11-28
- EXTENSION BEAM - SERIES 582, 586, AND 588 11-30
- EXTENSION BEAM WEAR PADS - SERIES 582, 586, AND 588 11-32
- EXTENSION CYLINDER - SERIES 582, 586, AND 588 11-34
- EXTENSION/TWISTLOCK VALVE - LEFT HAND, SERIES 582 AND 586 11-36
- EXTENSION/TWISTLOCK VALVE - RIGHT HAND, SERIES 582 11-37
- EXTENSION/TWISTLOCK VALVE - RIGHT HAND, SERIES 582, 586 AND 588 11-38
- HEAD VALVE - SERIES 582 11-39
- HYDRAULIC SYSTEM - SERIES 586 11-44
- HYDRAULIC SYSTEM - SERIES 586 AND 588 11-46
- HYDRAULIC SYSTEM WITH MECHANICAL PILE SLOPE - SERIES 582 11-40
- HYDRAULIC SYSTEM WITH POWER PILE SLOPE - SERIES 582 11-42
- INDICATION LIGHT BRACKET - SERIES 586 11-49
- INDICATION LIGHT BRACKET - SERIES 588 11-50
- INDICATION LIGHT BRACKET AND HOSE GUIDE - SERIES 582 11-48
- PILOT CHECK VALVE - SERIES 582 11-51
- PILOT CHECK VALVE - SERIES 582, 586 AND 588 11-52
- SENSORS - SERIES 582 11-54
- SIDE SHIFT CYLINDER - SERIES 582, 586, AND 588 11-56
- SIDE SHIFT VALVE - SERIES 586 AND 588 11-60
- SIDESHIFT VALVE WITH POWER PILE SLOPE - SERIES 582 AND 586 11-58
- SPLASH GUARDS - SERIES 582, 586, AND 588 11-61
- TILT CYLINDERS - SERIES 582, 586, AND 588 11-62

©2010 HYSTER COMPANY

EMPTY CONTAINER HANDLER (FIGURE 11-1)

BEARING BLOCKS AND SHIMS — CARRIAGE

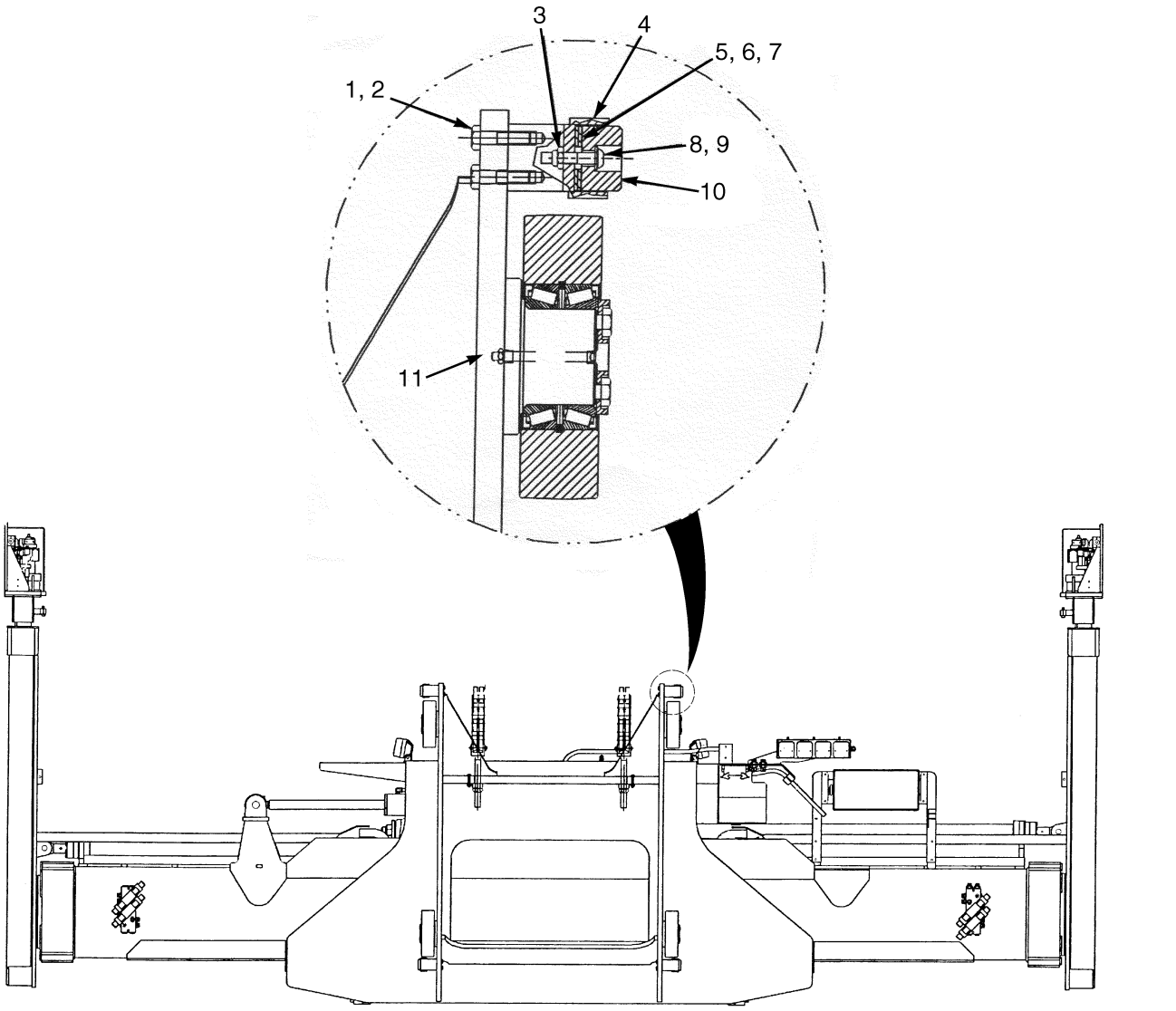

020398

ITEM	PART NO.	DESCRIPTION	QTY
1	287837	Capscrew	16
2	320161	Washer	16
3	302401	Locknut	4
4	1325795	Bracket Wldmt	4
5	1325797	Shim (0.06 in.)	AR
6	1325798	Shim (0.002 in.)	AR
7	1372962	Shim (0.12 in.)	AR
8	1364272	Capscrew	4
9	320159	Washer	8
10	1325785	Bearing	4
11	15483	Fitting	4

©2010 HYSTER COMPANY

NOTES

©2010 HYSTER COMPANY

EMPTY CONTAINER HANDLER (FIGURE 11-2)

CARRIAGE WITH MECHANICAL PILE SLOPE — SERIES 582, 586 AND 588

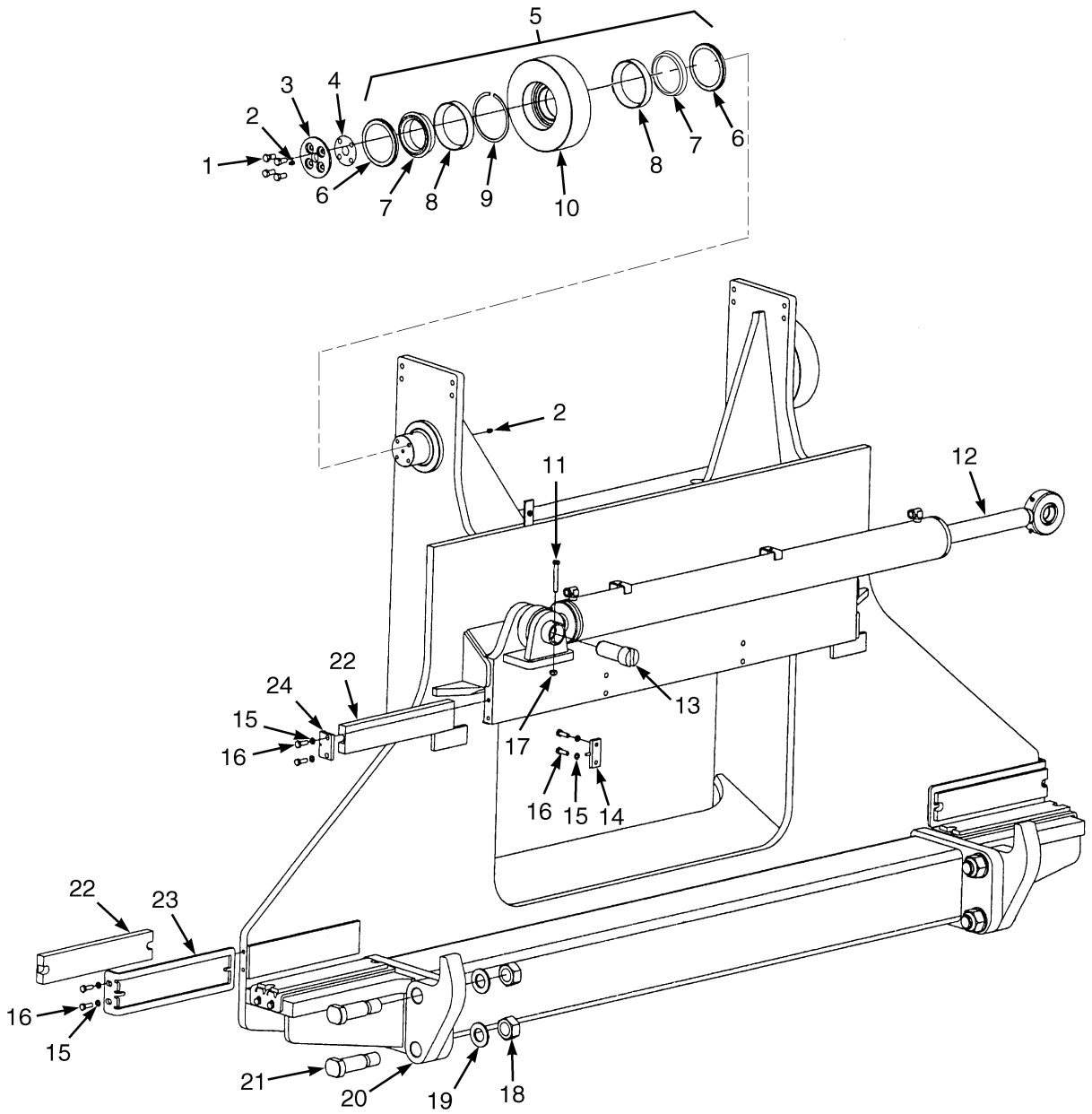

HP020366

©2010 HYSTER COMPANY

EMPTY CONTAINER HANDLER

CARRIAGE WITH MECHANICAL PILE SLOPE – SERIES 582, 586 AND 588

ITEM	PART NO.	DESCRIPTION	QTY
1	132860	Capscrew	16
2	1329443	Fitting	8
3	1609687	Cap	4
4	1325763	Shim	1
4	1325764	Shim	1
4	1373329	Shim	1
5	1325765	Load Roller	4
6	1325761	Shield	2
7	276228	Bearing Cone	2
8	392197	Bearing Cup	2
9	47478	Snap Ring	2
10	1325756	Roller	1
11	6996005	Bolt	2
12	6990735	Sideshift Cylinder (☞Figure 11-29)	1
13	6990462	Pin	2
14	6990363	Bracket	2
15	6996003	Lockwasher	16
16	6996011	Bolt	16
17	6996007	Nut	2
18	302408	Locknut	4
19	320181	Washer	4
20	6990798	Retainer (Hook)	2
21	6990797	Bolt	4
22	6990500	Wear pad	6
23	6990796	Bracket	4
24	1332278	Bracket	2

©2010 HYSTER COMPANY

EMPTY CONTAINER HANDLER (FIGURE 11-3)
CARRIAGE WITH POWER PILE SLOPE AND FLEX TRACK — SERIES 582 AND 586

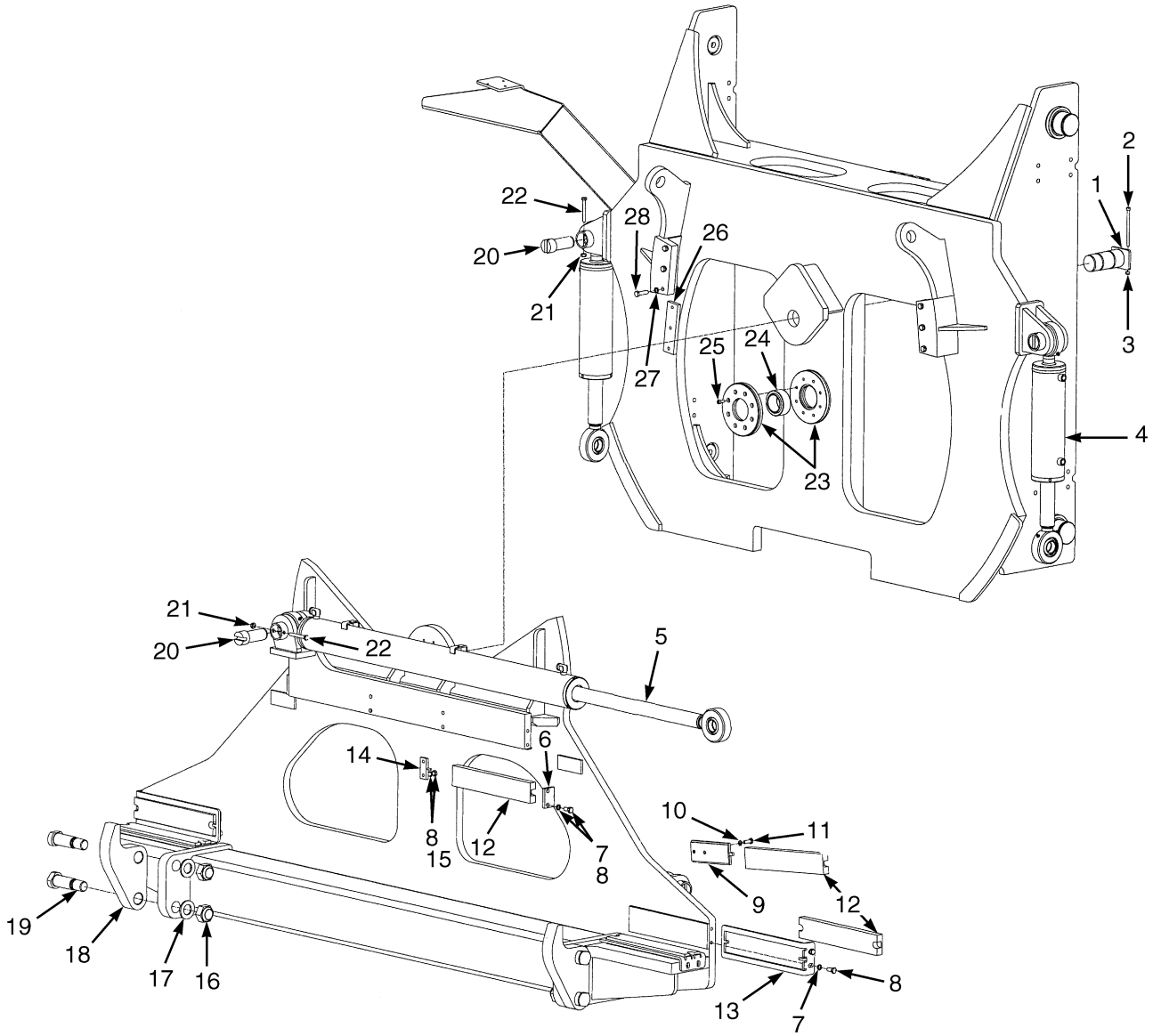

HP020385

©2010 HYSTER COMPANY

EMPTY CONTAINER HANDLER

CARRIAGE WITH POWER PILE SLOPE AND FLEX TRACK – SERIES 582 AND 586

ITEM	PART NO.	DESCRIPTION	QTY
1	6990984	Pin	1
2	6996278	Screw	1
3	302400	Nut	1
4	6990739	Tilt Cylinder	2
5	6990735	Sideshift Cylinder (☞Figure 11-29)	1
6	1332278	Bracket	2
7	6996025	Lockwasher	16
8	132860	Capscrew	12
9	6990987	Retainer	2
10	6996003	Lockwasher	4
11	6996011	Bolt	4
12	6990923	Wear Pad (Plastic)	8
13	6990796	Bracket	4
14	6990363	Bracket	2
15	6996761	Bolt	4
16	302408	Locknut	4
17	320181	Washer	4
18	6990798	Retainer (Hook)	2
19	6990797	Bolt	4
20	6990462	Pin	6
21	6996007	Nut	6
22	6996005	Bolt	6
23	6990986	Washer (Rubber)	2
24	6996914	Ball Joint	1
25	6996458	Bolt	16
26	6990985	Wear Pad (Plastic)	2
27	6996102	Washer	6
28	6996913	Bolt	6
	a 6991182	Chain (Includes Brackets)	1
	a 6996295	Bolt	4
	a 6996942	Bolt	4
	a 1329493	Washer	8
	a 6996301	Nut	8

FOOTNOTES:

a Not Illustrated

©2010 HYSTER COMPANY

EMPTY CONTAINER HANDLER (FIGURE 11-4)
ELECTRICAL BOX BRACKET — SERIES 582, 586, AND 588

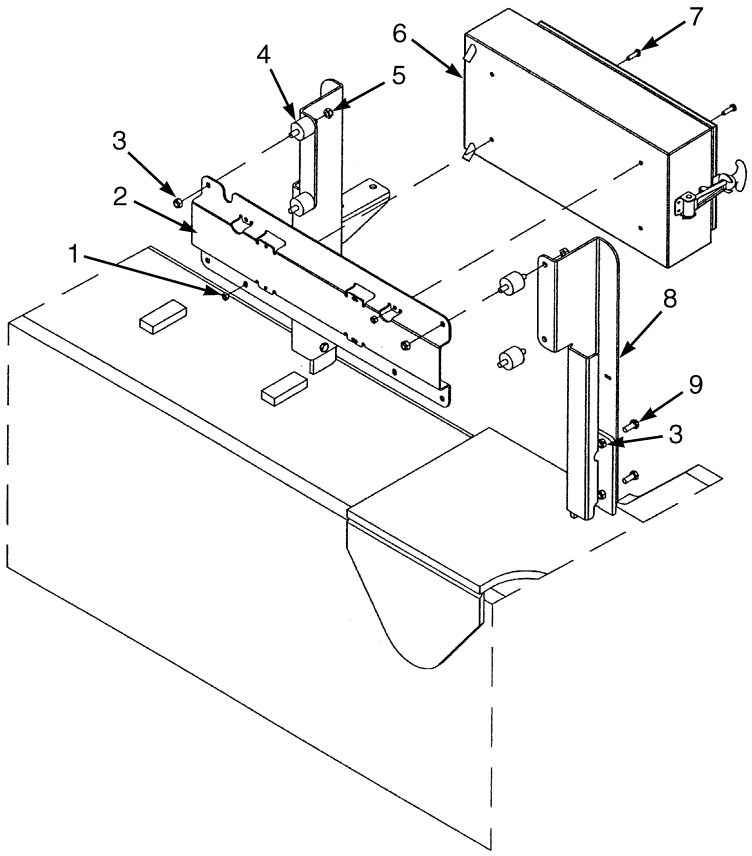

HP020380

ITEM	PART NO.	DESCRIPTION	QTY
1	6996301	Nut	4
2	6990964	Bracket	1
3	302400	Nut	12
4	1459409	Shock Absorber	4
5	6990965	Bracket (Right)	1
6	6990614	Box	1
7	6996098	Bolt	4
8	6990966	Bracket (Left)	1
9	6996036	Bolt	4

©2010 HYSTER COMPANY

NOTES

©2010 HYSTER COMPANY

EMPTY CONTAINER HANDLER (FIGURE 11-5)
ELECTRICAL SYSTEM WITH MECHANICAL PILE SLOPE — SERIES 582

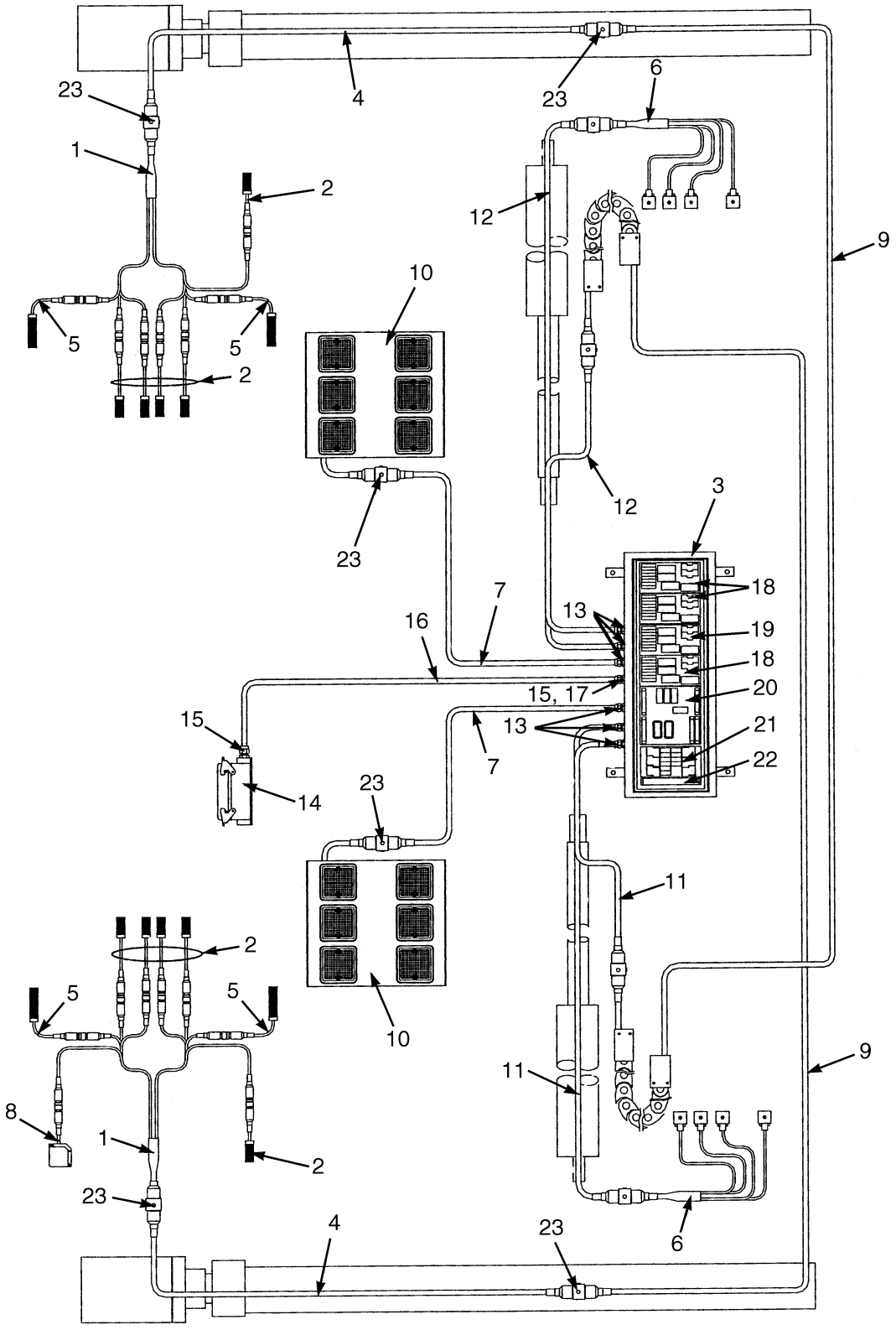

HP000889

©2010 HYSTER COMPANY

EMPTY CONTAINER HANDLER

ELECTRICAL SYSTEM WITH MECHANICAL PILE SLOPE – SERIES 582

ITEM	PART NO.	DESCRIPTION	QTY
1	6990908	Box	2
2	6996197	Sensor	10
3	6990614	Box	1
4	6990613	Cable Assy	2
5	6990906	Sensor	4
6	6990724	Cable	2
7	6990545	Cable Assy	2
8	6996854	Sensor	1
9	6990471	Cable Assy	2
10	6990653	Indicator Light	2
10	6996496	Indicator Light (Amber)	2
10	6996498	Indicator Light (Green)	2
10	6996497	Indicator Light (Red)	2
10	6996453	Bulb	1
10	6990389	Panel	1
11	6990517	Cable Assy	2
12	6990468	Cable Assy	2
13	6996578	Gland	6
13	6996579	Nut	6
14	6996623	Connector	1
14	6996087	Insert	1
14	6996495	Cover	1
15	6996580	Gland	2
15	6996581	Nut	1
16	6990686	Cable	1
17	6996582	Adapter	1
17	6996588	Nut	1
18	6990551	Printed Circuit Board	3
19	6990298	Printed Circuit Board	1
20	6990615	Printed Circuit Board	1
21	6990479	Fuse Holder (Fuse)	1
22	6996665	Relay (Time)	1
23	1334633	Bracket	8

©2010 HYSTER COMPANY

EMPTY CONTAINER HANDLER (FIGURE 11-6)
ELECTRICAL SYSTEM WITH POWER PILE SLOPE — SERIES 582

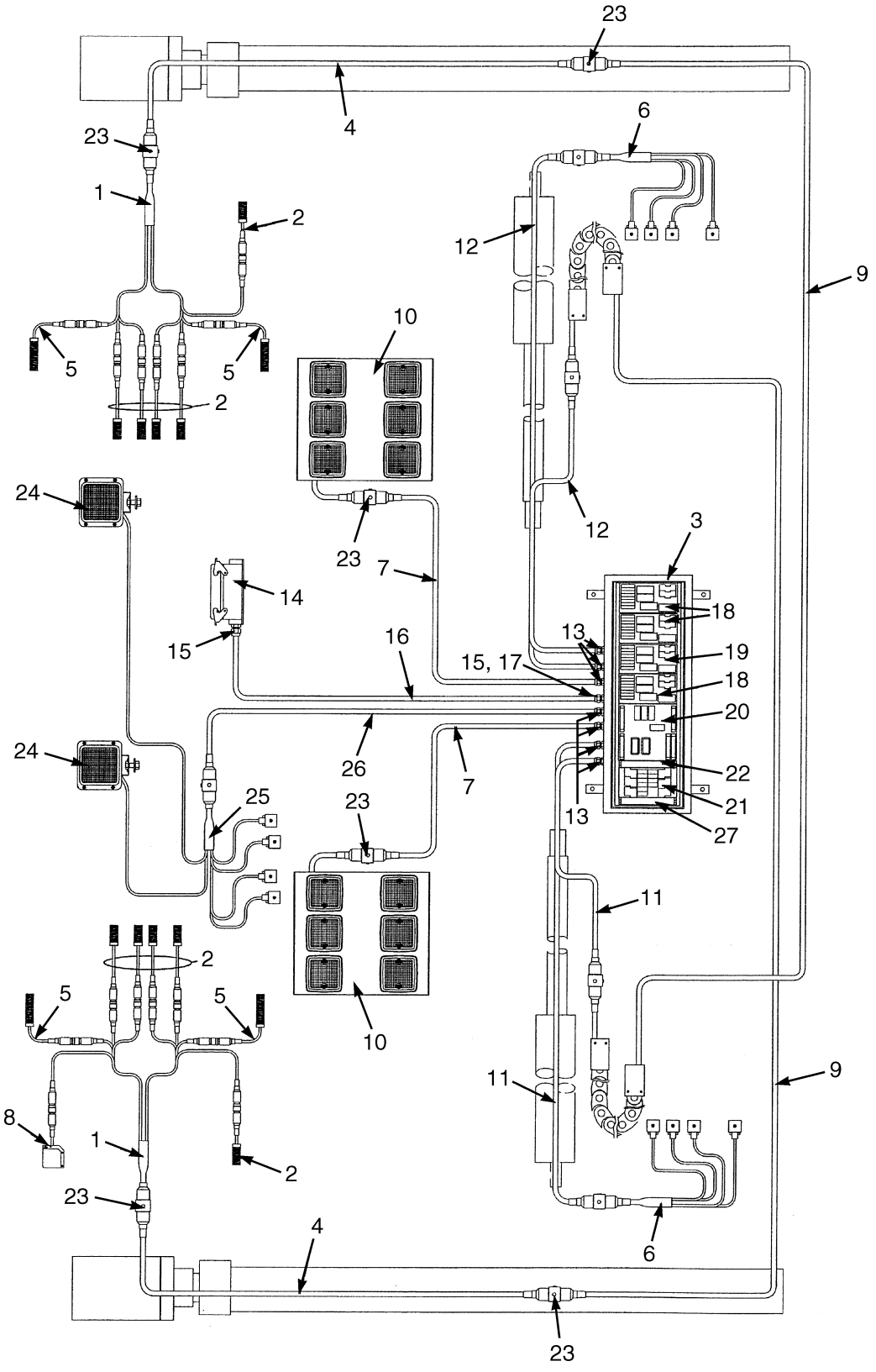

©2010 HYSTER COMPANY

EMPTY CONTAINER HANDLER

ELECTRICAL SYSTEM WITH POWER PILE SLOPE – SERIES 582

ITEM	PART NO.	DESCRIPTION	QTY
1	6990908	Box	2
2	6996197	Sensor	10
3	6990614	Box	1
4	6990990	Cable Assy	2
4	6990991	Cable	2
5	6990906	Sensor	4
6	6990724	Cable	2
7	6990545	Cable Assy	2
8	6996854	Sensor	1
9	6990934	Cable Assy	2
10	6990653	Indicator Light	2
11	6990545	Cable Assy	2
12	6990560	Cable Assy	2
13	6996578	Gland	7
13	6996579	Nut	7
14	6996585	Connector Body	1
14	6996634	Cover	1
14	6996090	Insert	1
15	6996580	Gland	2
15	6996581	Nut	1
16	6990718	Cable Assy	1
17	6996582	Adapter	1
17	6996588	Nut	1
18	6990551	Printed Circuit Board	3
19	6990298	Printed Circuit Board	1
20	6990615	Printed Circuit Board	1
21	6990479	Fuse Holder (Fuse)	1
22	6996665	Relay	1
23	1334633	Bracket	1
24	6996753	Work Light	2
25	6990721	Cable	1
26	6990517	Cable Assy	1
27	6996313	Relay	1

©2010 HYSTER COMPANY

EMPTY CONTAINER HANDLER (FIGURE 11-7)
ELECTRICAL SYSTEM — SERIES 586 AND 588

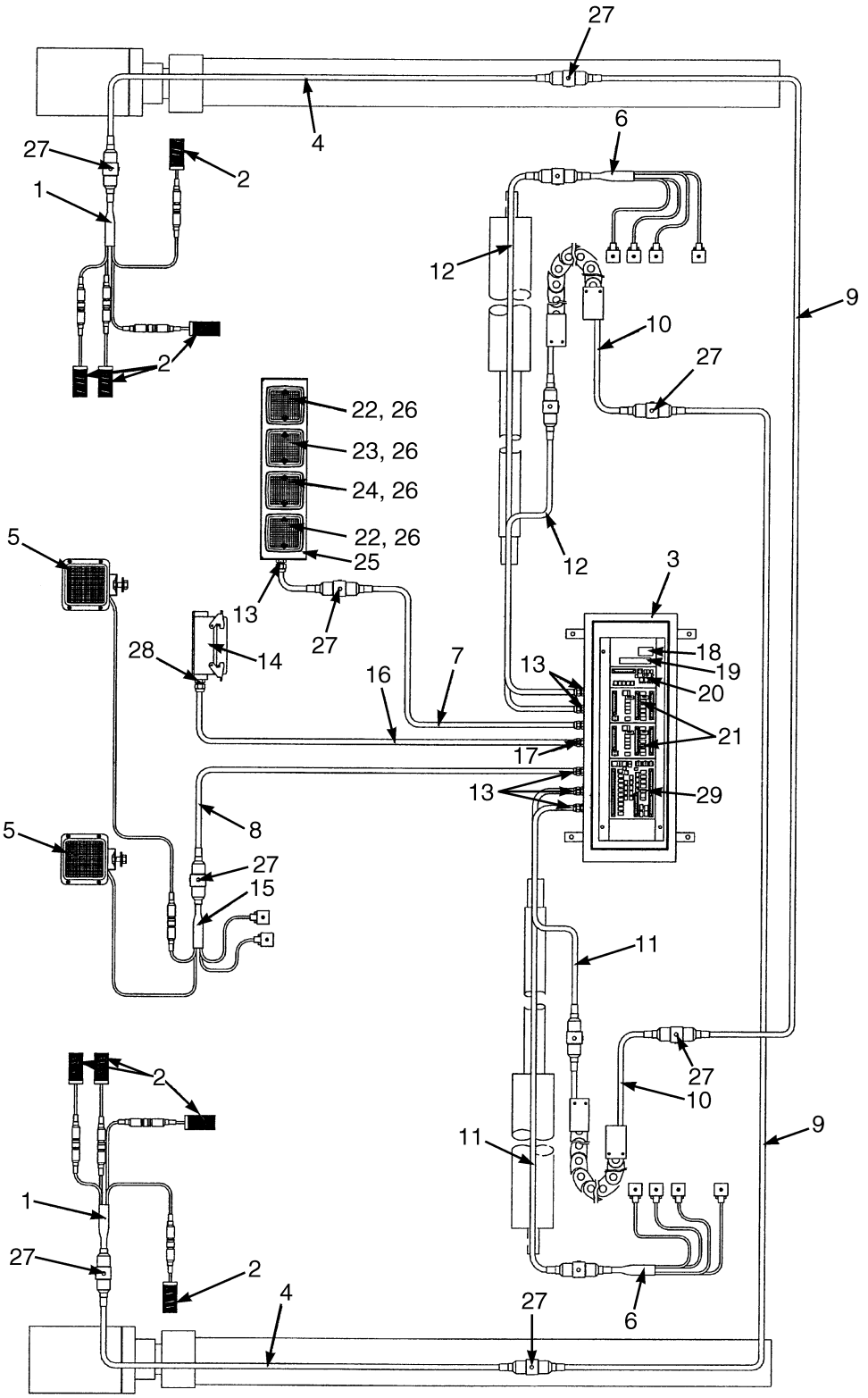

HP000891

©2010 HYSTER COMPANY

EMPTY CONTAINER HANDLER
ELECTRICAL SYSTEM – SERIES 586 AND 588

ITEM	PART NO.	DESCRIPTION	QTY
1	6990706	Cable Assy	2
2	6996012	Switch	8
3	6990614	Box	1
4	6990613	Cable Assy	2
5	6996753	Work Light	2
5	6996800	Bulb	1
6	6990724	Cable	2
7	6990465	Cable Assy (Electric)	1
8	6990511	Cable (Electric)	1
9	6990470	Cable Assy	2
10	6990471	Cable Assy	2
11	6990517	Cable Assy	2
12	6990468	Cable Assy	2
13	6996578	Gland	6
13	6996579	Nut	6
14	6996585	Connector Body	1
14	6996634	Cover	1
14	6996090	Insert	1
15	6990790	Cable Assy (Interface)	1
15	6990721	Cable (With Sidetilt Option)	1
16	6990718	Cable Assy	1
17	6996587	Gland	1
17	6996588	Nut	1
18	6996730	Counter	1
18	6990791	Bracket	1
19	6996768	Relay	1
20	6990623	Printed Circuit Board	1
21	6990622	Printed Circuit Board	2
22	6996496	Indicator Light (Amber)	2
22	6996453	Bulb	1
23	6996497	Indicator Light (Red)	1
23	6996453	Bulb	1
24	6996498	Indicator Light (Green)	1
24	6996453	Bulb	1
25	6990044	Light Panel	1
26	6996453	Bulb	4
27	1334633	Bracket	10
28	6996580	Gland	1
28	6996581	Nut	1
29	6990621	Printed Circuit Board	1

©2010 HYSTER COMPANY

EMPTY CONTAINER HANDLER (FIGURE 11-8)

END BEAM HEAD — SERIES 582

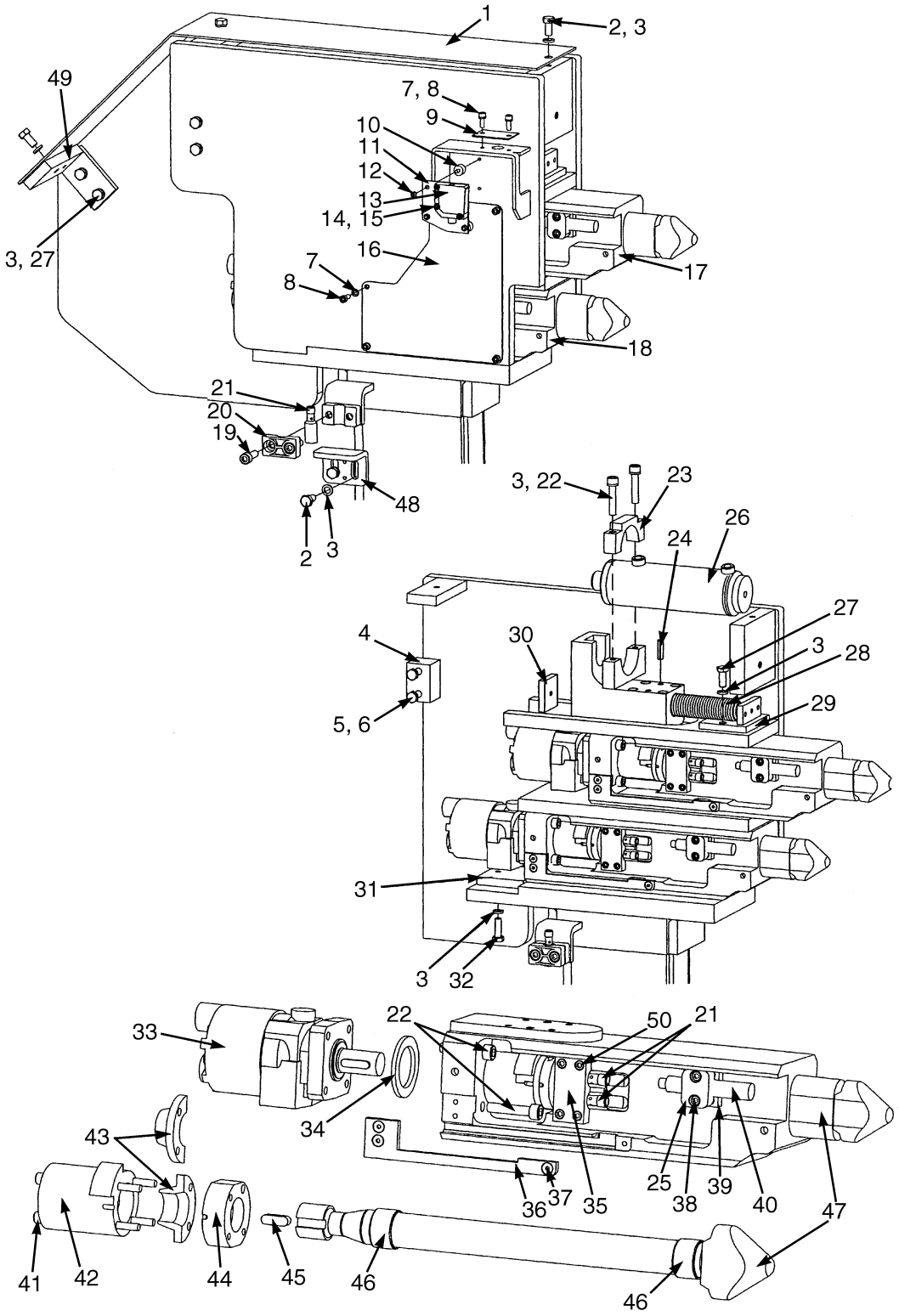

HP000884

©2010 HYSTER COMPANY

EMPTY CONTAINER HANDLER
END BEAM HEAD – SERIES 582

ITEM	PART NO.	DESCRIPTION	QTY
1	6990759	Cover	1
2	292514	Capscrew	5
3	6996003	Lockwasher	12
4	6990601	Block	1
5	6996007	Nut	7
6	6996441	Bolt	7
7	6996296	Lockwasher	1
8	6996472	Bolt	3
9	6990555	Plate	1
10	6996501	Shock Absorber	3
11	6990485	Plate	1
12	6996502	Nut	3
12	6996051	Washer	3
13	6996854	Sensor	3
14	293726	Capscrew	1
15	6996657	Washer	5
16	6990570	Plate	1
17	6990606	Housing (Upper RH)	1
17	6990607	Housing (Upper LH	1
18	6990483	Housing (RH) (Lower)	1
18	6990484	Housing (LH) (Lower)	1
19	6996475	Bolt (Allen)	2
20	6996010	Clamp	1
21	6996197	Sensor (☞Figure 11-28)	10
22	6996732	Bolt	1
23	6990603	Clamp	2
24	6996654	Roll Pin	1
25	6996792	Clamp	4
26	6990604	Cylinder Assy	1
26	6999035	Kit-Seal	1
27	6996014	Bolt	1
28	6996731	Spring	8
29	6990605	Bracket	1
30	6990602	Washer	6
31	6990415	Plate	2
32	6996011	Bolt	2
33	6996443	Hydraulic Motor	4
33	6999025	Kit-Seal	1
34	6990353	Ring	2
35	6990358	Bracket	2
36	6990453	Hose Clamp (RH)	2
36	6990503	Hose Clamp (LH)	1
37	6996514	Bolt	4
38	6996791	Bolt	2
39	6990520	Clamp	2
40	6990906	Sensor (☞Figure 11-28)	2
41	6996861	Bolt	8
42	6990354	Sleeve	4
43	6990355	Collar	2
44	6990683	Ring	2

©2010 HYSTER COMPANY

EMPTY CONTAINER HANDLER
END BEAM HEAD – SERIES 582

ITEM	PART NO.	DESCRIPTION	QTY
45	6996477	Key	2
46	6996448	Bushing	1
47	6990360	Twistlock	2
48	6990909	Indicator	2
49	6990758	Bracket	1
50	6996473	Bolt (Allen)	1

©2010 HYSTER COMPANY

NOTES

©2010 HYSTER COMPANY

EMPTY CONTAINER HANDLER (FIGURE 11-9)

END BEAM HEAD — SERIES 586

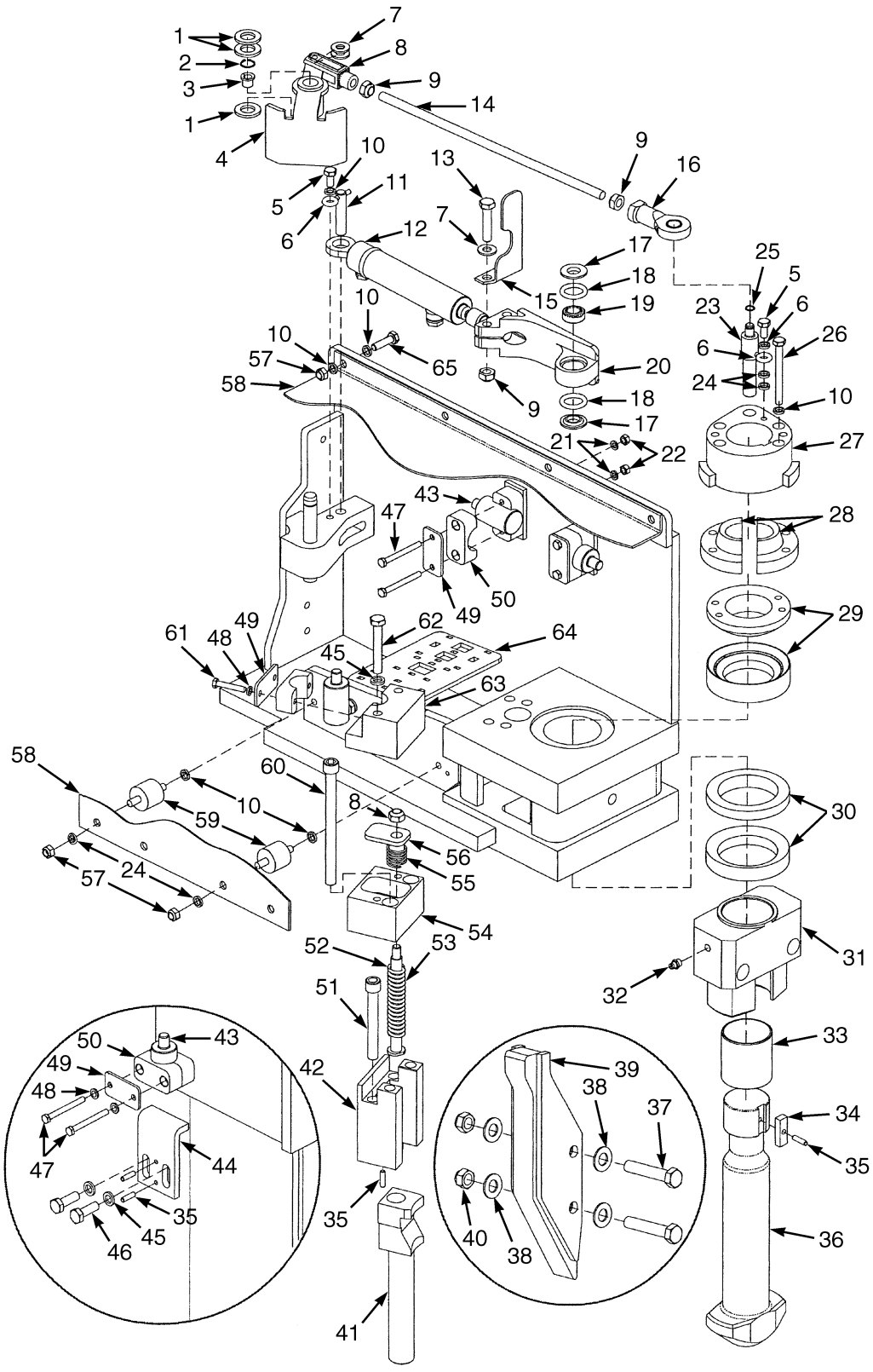

©2010 HYSTER COMPANY

EMPTY CONTAINER HANDLER
END BEAM HEAD – SERIES 586

ITEM	PART NO.	DESCRIPTION	QTY
1	296426	Washer	3
2	6996648	Snap Ring	1
3	6996647	Bushing	1
4	6990701	Indicator	1
5	6996036	Bolt	2
6	6996020	Pin	1
7	320159	Washer	3
8	6996227	Rod End	1
9	6996007	Nut	5
10	6996022	Lockwasher	8
11	6990785	Pin	1
12	6991313	Cylinder Assy	2
12	6991323	Kit-Seal	1
13	292516	Capscrew	2
14	6990580	Rod	1
15	6990455	Indicator (LH)	1
15	6990456	Indicator (RH)	1
16	6996645	Rod End	1
17	6996018	Washer	2
18	6996016	O-Ring	2
19	6996015	Ball Joint	1
20	6990409	Tie Rod	1
21	1329493	Washer	4
22	6996301	Nut	4
23	6990787	Pin	1
24	6996006	Washer	12
25	6996785	Snap Ring	1
26	6996023	Bolt	4
27	6990012	Crank (RH)	1
27	6990447	Crank (LH)	1
28	6990013	Collar	1
29	6999001	Bearing (Upper)	1
30	6999002	Bearing (Lower)	1
31	6990014	Sleeve	1
32	1329443	Fitting	1
33	6996019	Bushing	1
34	6990017	Key	1
35	6996028	Roll Pin	5
36	6990015	Twistlock	1
37	6996760	Bolt	2
38	6996759	Washer	4
39	6990713	Spacer	1
40	6996191	Nut	2
41	6990011	Pin	1
42	6990457	Bracket	1
43	. . . . .	Sensor	4
44	6990789	Indicator	1
45	6996003	Lockwasher	4
46	6996011	Bolt	2
47	292516	Capscrew	6

©2010 HYSTER COMPANY

EMPTY CONTAINER HANDLER

END BEAM HEAD – SERIES 586

ITEM	PART NO.	DESCRIPTION	QTY
48	6996296	Lockwasher	4
49	6996420	Washer	4
50	6996419	Clamp	4
51	6996026	Screw	2
52	6996027	Spring	1
53	6990294	Pin	1
54	6990293	Bracket	1
55	6996724	Spring	1
56	6990292	Sleeve	1
57	302400	Nut	6
58	6990996	Cover	1
59	1459409	Shock Absorber	2
60	6996318	Bolt	2
61	6996186	Bolt	2
62	6996478	Bolt	2
63	6990291	Bracket	1
64	6990812	Bracket	1
64	6996014	Bolt	2
64	6996003	Lockwasher	2
65	6996185	Bolt	4

©2010 HYSTER COMPANY

NOTES

©2010 HYSTER COMPANY

EMPTY CONTAINER HANDLER (FIGURE 11-10)

END BEAM HEAD — SERIES 588

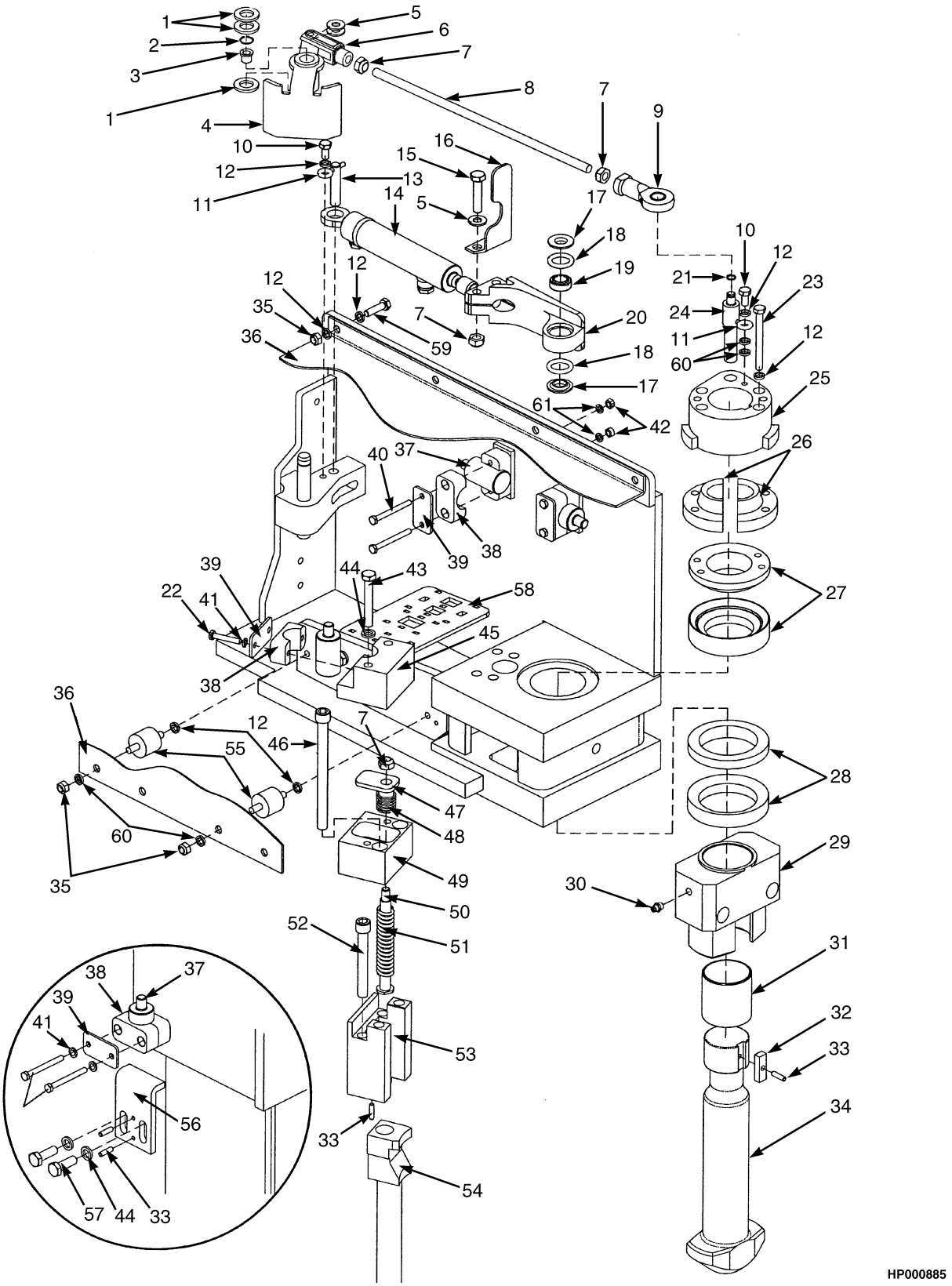

©2010 HYSTER COMPANY

EMPTY CONTAINER HANDLER
END BEAM HEAD – SERIES 588

ITEM	PART NO.	DESCRIPTION	QTY
1	296426	Washer	3
2	6996648	Snap Ring	1
3	6996647	Bushing	1
4	6990701	Indicator	1
5	320159	Washer	4
6	6996227	Rod End	1
7	6996007	Nut	5
8	6990580	Rod	1
9	6996645	Rod End	1
10	6996036	Bolt	2
11	6996020	Pin	1
12	6996022	Lockwasher	8
13	6990785	Pin	1
14	6991313	Cylinder Assy	2
14	6991323	Kit-Seal	1
15	292516	Capscrew	2
16	6990455	Indicator (LH)	1
16	6990456	Indicator (RH)	1
17	6996018	Washer	2
18	6996016	O-Ring	2
19	6996015	Ball Joint	1
20	6990409	Tie Rod	1
21	6996785	Snap Ring	1
22	6996186	Bolt	2
23	6996023	Bolt	4
24	6990787	Pin	1
25	6990012	Crank (RH)	1
25	6990447	Crank (LH)	1
26	6990013	Collar	1
27	6999001	Bearing	1
28	6999002	Bearing	1
29	6990014	Sleeve	1
30	1329443	Fitting	1
31	6996019	Bushing	1
32	6990017	Key	1
33	6996028	Roll Pin	5
34	6990015	Twistlock	1
35	302400	Nut	6
36	6990788	Cover	1
37	6990906	Sensor	4
38	6996419	Clamp	4
39	6996420	Washer	4
40	292516	Capscrew	6
41	6996296	Lockwasher	4
42	6996301	Nut	4
43	6996478	Bolt	2
44	6996003	Lockwasher	4
45	6990291	Bracket	1
46	6996318	Bolt	2
47	6990292	Sleeve	1

©2010 HYSTER COMPANY

EMPTY CONTAINER HANDLER
END BEAM HEAD – SERIES 588

ITEM	PART NO.	DESCRIPTION	QTY
48	6996724	Spring	1
49	6990293	Bracket	1
50	6990294	Pin	1
51	6996027	Spring	1
52	6996026	Screw	2
53	6990457	Bracket	1
54	6990011	Pin	1
55	1459409	Shock Absorber	2
56	6990789	Indicator	1
57	6996011	Bolt	2
58	6990812	Bracket	1
58	6996014	Bolt	2
59	6996185	Bolt	4
60	6996006	Washer	12
61	1329493	Washer	4

©2010 HYSTER COMPANY

NOTES

©2010 HYSTER COMPANY

EMPTY CONTAINER HANDLER (FIGURE 11-11)
END BEAM WEAR PADS — SERIES 582, 586, AND 588

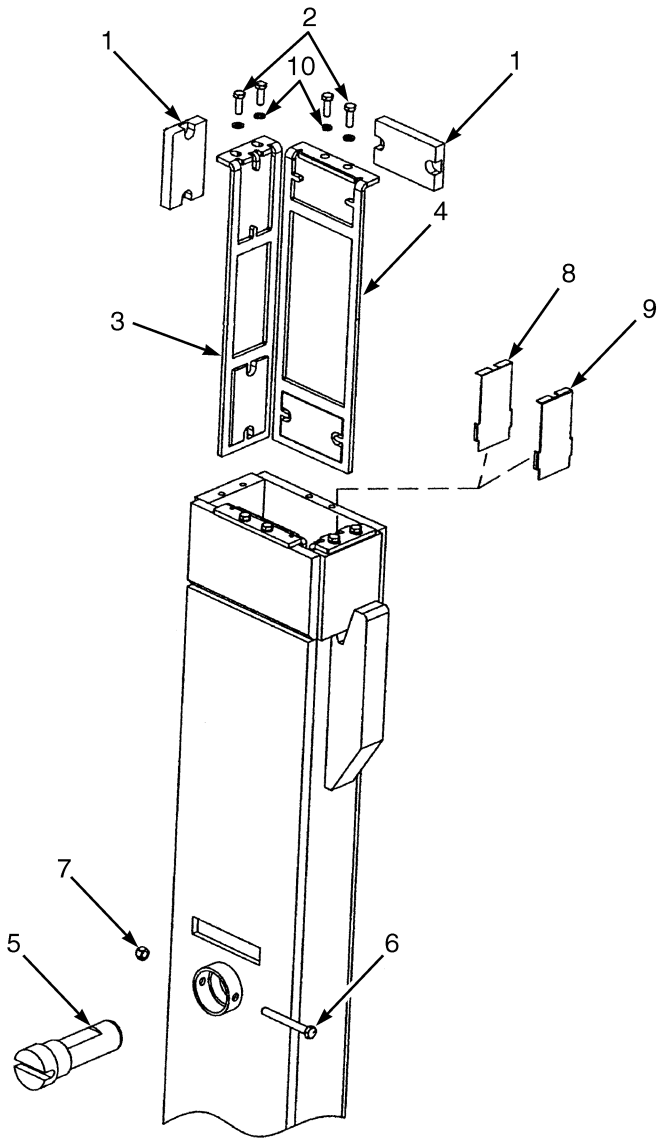

©2010 HYSTER COMPANY

EMPTY CONTAINER HANDLER

END BEAM WEAR PADS – SERIES 582, 586, AND 588

ITEM	PART NO.	DESCRIPTION	QTY
1	6990629	Wear Pad	8
2	6996011	Bolt	8
3	6990439	Bracket	2
4	6990440	Bracket	2
5	6990441	Pin	1
6	6996208	Bolt	1
7	302402	Locknut	1
8	6990729	Shim (1.00 mm)	1
9	6990730	Shim (2.00 mm)	1
10	6996152	Washer	8

©2010 HYSTER COMPANY

EMPTY CONTAINER HANDLER (FIGURE 11-12)

EXTENSION BEAM — SERIES 582, 586, AND 588

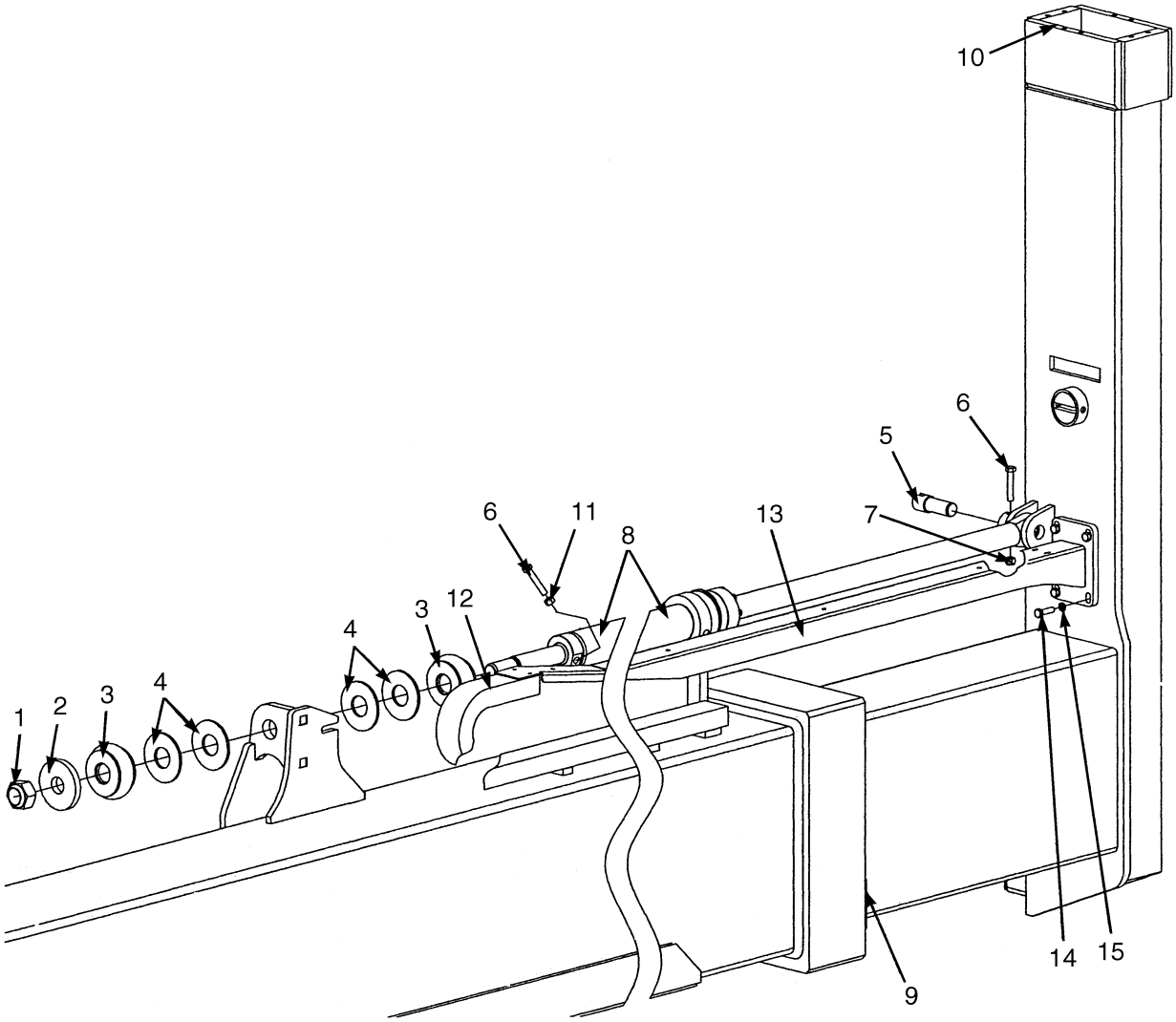

HP000883

©2010 HYSTER COMPANY

EMPTY CONTAINER HANDLER
EXTENSION BEAM – SERIES 582, 586, AND 588

ITEM	PART NO.	DESCRIPTION	QTY
1	302408	Locknut	1
2	6990370	Washer	1
3	6990368	Buffer	2
4	6990369	Washer	4
5	6990499	Pin	1
6	6996107	Bolt	1
7	302402	Locknut	1
8	6990808	Extension Cylinder (☞Figure 11-14)	1
9	6990596	Wear Pad (☞Figure 11-13)	1
10	6990629	Wear Pad (☞Figure 11-11)	1
11	6996777	Nut	1
12	6990802	Cable Guide (Chain)	1
12	6996295	Bolt	4
12	6996301	Nut	2
12	6996296	Lockwasher	2
13	6990803	Support	1
14	6996451	Bolt	4
15	6996025	Lockwasher	4

©2010 HYSTER COMPANY

EMPTY CONTAINER HANDLER (FIGURE 11-13)
EXTENSION BEAM WEAR PADS — SERIES 582, 586, AND 588

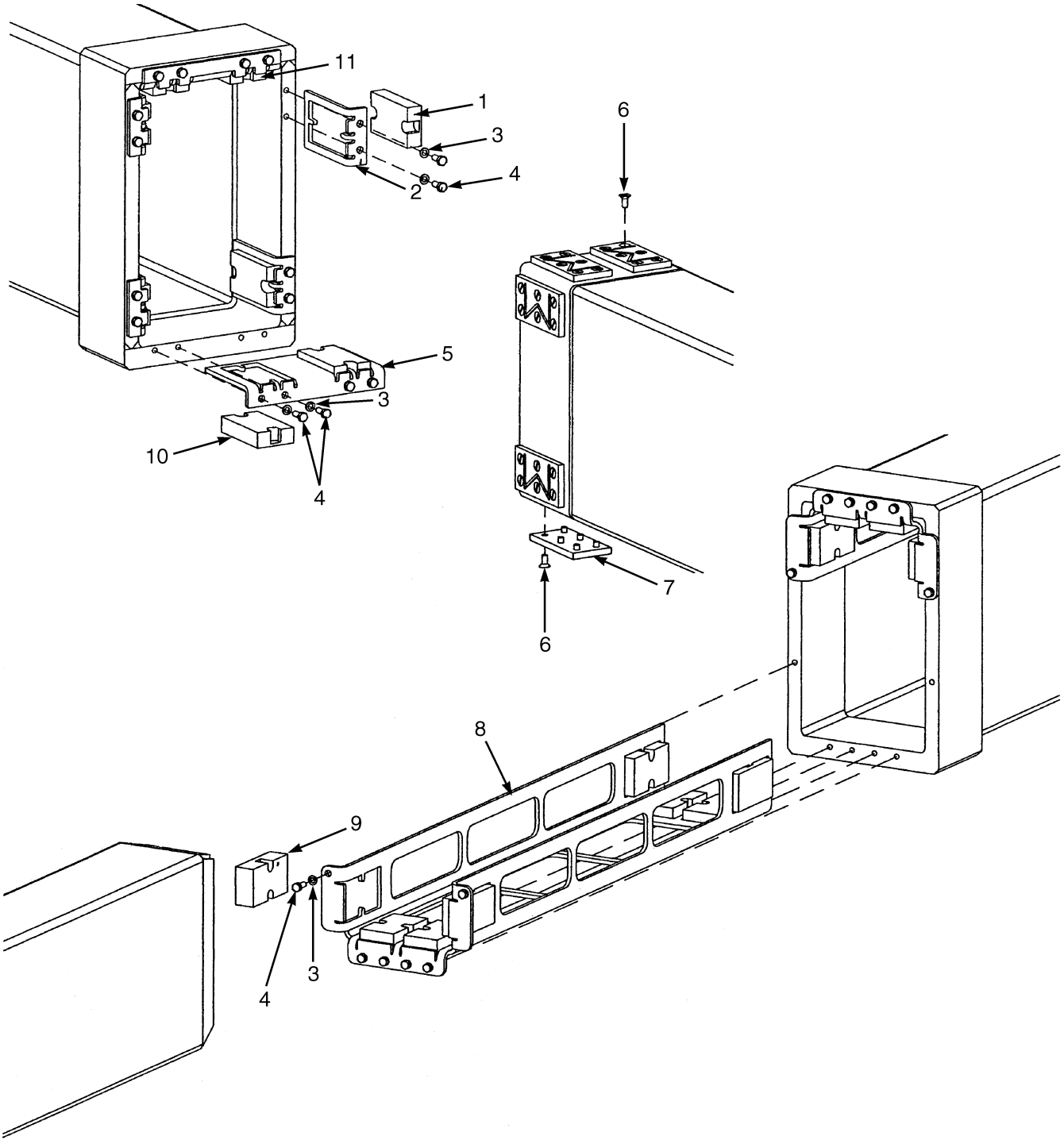

HP000882

©2010 HYSTER COMPANY

EMPTY CONTAINER HANDLER

EXTENSION BEAM WEAR PADS – SERIES 582, 586, AND 588

ITEM	PART NO.	DESCRIPTION	QTY
1	6990596	Wear Pad (Main Frame)	4
2	6990436	Bracket	4
3	6996152	Washer	28
4	6996294	Bolt	28
5	6990736	Bracket	2
6	6996452	Screw (Brass)	48
7	6990385	Wear Pad	8
8	6990737	Bracket	2
9	6990738	Wear Pad	16
10	6990597	Wear Pad (Large Extension Beam)	2
11	6990629	Wear Pad (Main Frame)	2

©2010 HYSTER COMPANY

EMPTY CONTAINER HANDLER (FIGURE 11-14)

EXTENSION CYLINDER — SERIES 582, 586, AND 588

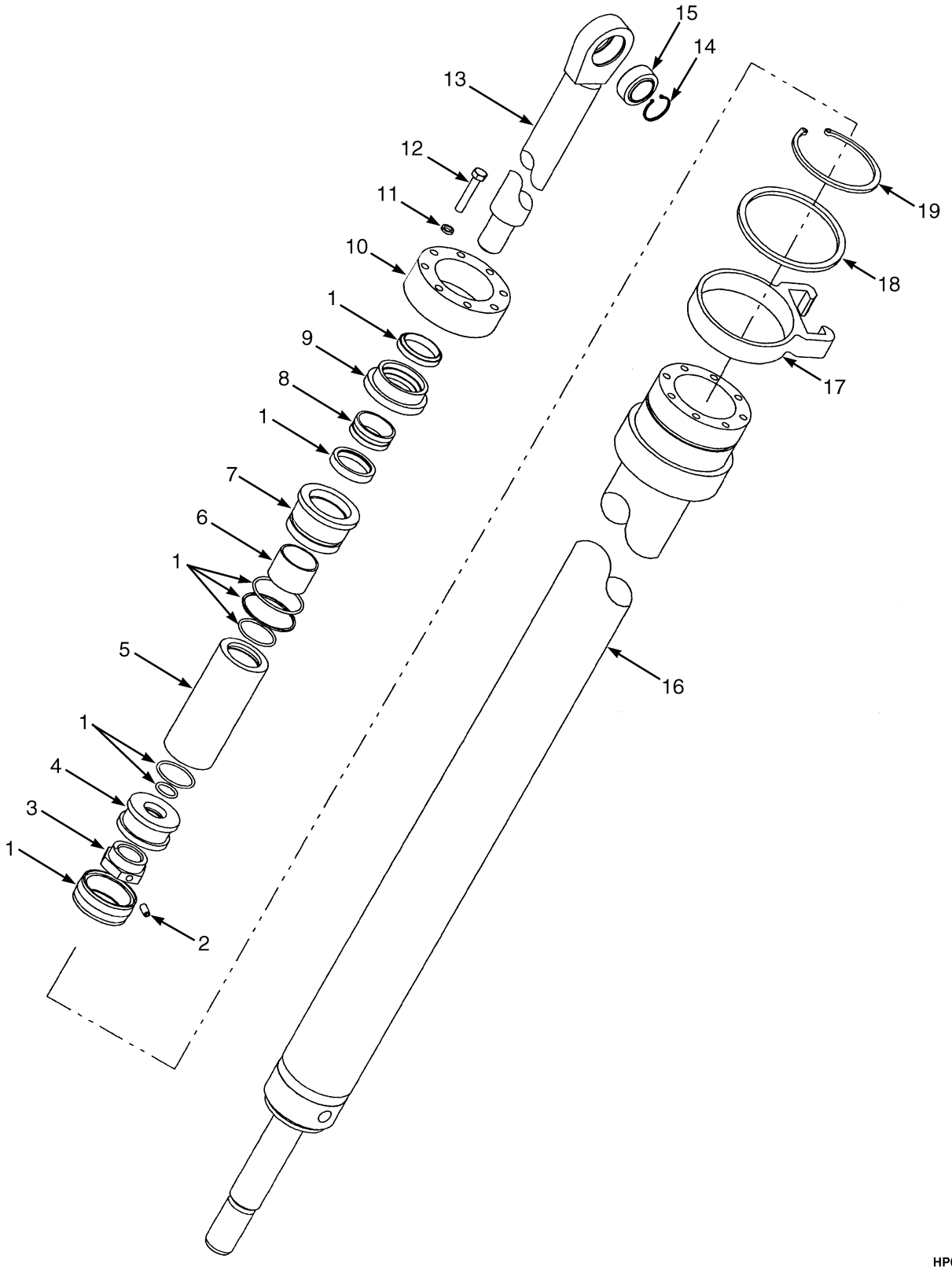

HP000880

©2010 HYSTER COMPANY

EMPTY CONTAINER HANDLER

EXTENSION CYLINDER – SERIES 582, 586, AND 588

ITEM	PART NO.	DESCRIPTION	QTY
	6990808	Extension Cylinder	1
1	1473475	Kit-Seal	1
2	302100	Setscrew	1
3	1332344	Nut	1
4	1332346	Piston	1
5	1473478	Spacer	1
6	1473477	Bushing	1
7	6990429	Gland	1
8	1384403	Bushing	1
9	1473476	Washer	1
10	6990332	Ring	1
11	6996022	Lockwasher	4
12	6996307	Bolt	4
13	6990804	Cylinder Rod	1
14	1332342	Snap Ring	2
15	356035	Bushing	2
16	6990805	Tube Wldmt-Cylinder	1
17	6990806	Guide	1
18	6990807	Ring	1
19	6996628	Snap Ring	1

©2010 HYSTER COMPANY

EMPTY CONTAINER HANDLER (FIGURE 11-15)
EXTENSION/TWISTLOCK VALVE — LEFT HAND, SERIES 582 AND 586

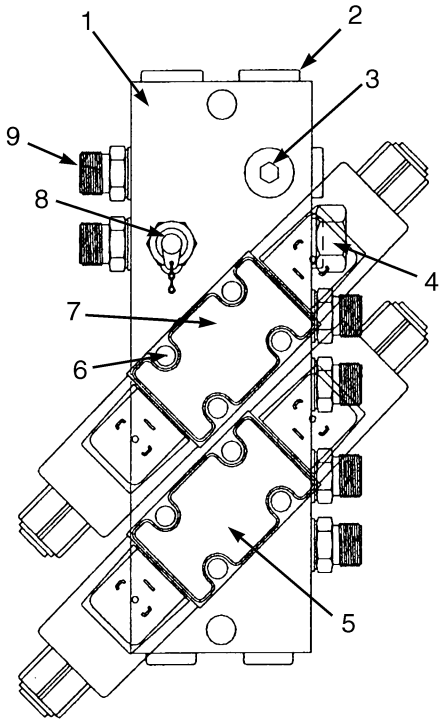

HP020382

ITEM	PART NO.	DESCRIPTION	QTY
	6990742	Valve	1
1	6990743	Valve Block	1
2	6996128	Plug	2
3	6996182	Plug	5
4	6996717	Plug	1
5	6996043	Solenoid Valve (24 Volt DC)	1
5	6996293	Solenoid	2
5	6991559	Solenoid (Alternate Part)	2
5	6996468	Nut	2
5	6999028	Kit-O-Ring	1
6	6996122	Screw (Allen)	8
7	1473482	Valve (24 Volt DC)	1
7	6996293	Solenoid	2
7	6991559	Solenoid (Alternate Part)	2
7	6996468	Nut	2
7	6999028	Kit-O-Ring	1
8	6996471	Adapter	1
9	6996047	Fitting	6
9	265731	O-Ring	1

©2010 HYSTER COMPANY

EMPTY CONTAINER HANDLER (FIGURE 11-16)
EXTENSION/TWISTLOCK VALVE — RIGHT HAND, SERIES 582

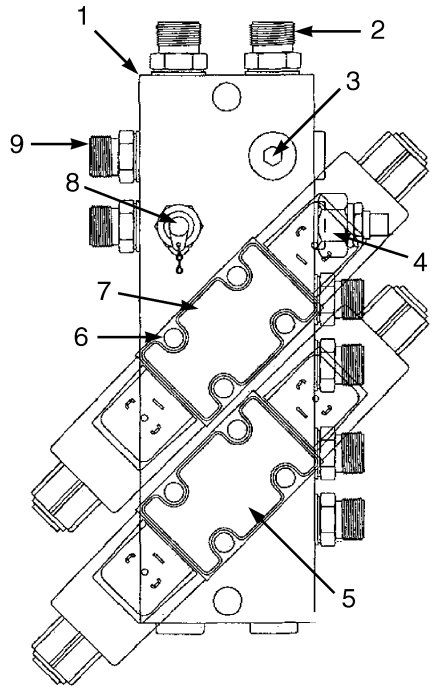

HP020390

ITEM	PART NO.	DESCRIPTION	QTY
	6990744	Valve	1
1	6990743	Valve Block	1
2	1473491	Fitting	1
2	1495113	O-Ring	2
3	6996182	Plug	1
4	6996598	Relief Valve	1
5	1473482	Valve (24 Volt DC)	1
5	6996293	Solenoid	2
5	6991559	Solenoid (Alternate Part)	2
5	6996468	Nut	2
5	6999028	Kit-O-Ring	1
6	6996122	Screw (Allen)	8
7	1473482	Valve (24 Volt DC)	1
7	6996293	Solenoid	2
7	6991559	Solenoid (Alternate Part)	2
7	6996468	Nut	2
8	6996471	Adapter	1
9	1470841	Fitting	6
9	1495113	O-Ring	1

©2010 HYSTER COMPANY

EMPTY CONTAINER HANDLER (FIGURE 11-17)
EXTENSION/TWISTLOCK VALVE — RIGHT HAND, SERIES 582, 586 AND 588

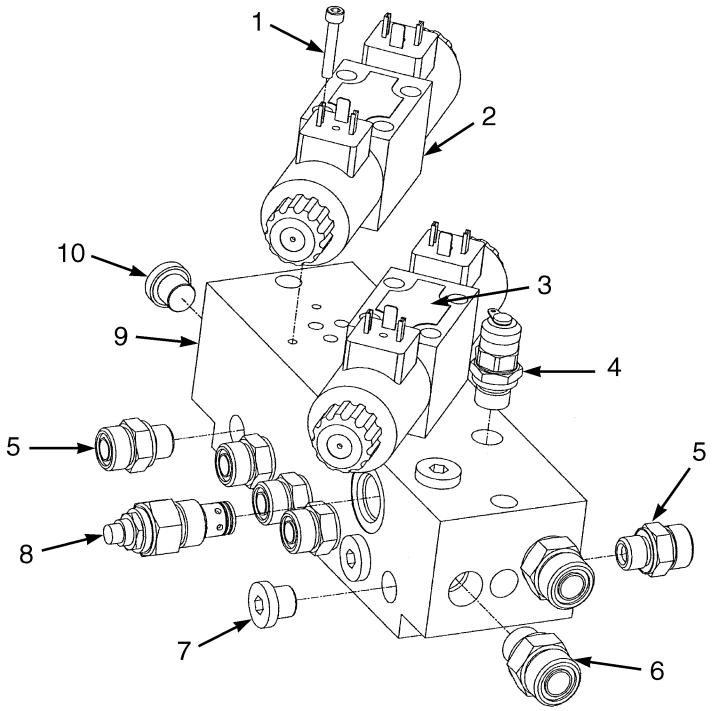

HP020383

ITEM	PART NO.	DESCRIPTION	QTY
	6990962	Valve	1
1	6996122	Screw (Allen)	8
2	1473482	Valve (24 Volt DC)	1
2	6996293	Solenoid	2
2	6991559	Solenoid (Alternate Part)	2
2	6996468	Nut	2
2	6999028	Kit-O-Ring	1
3	6996043	Solenoid Valve (24 Volt DC)	1
3	6996293	Solenoid	2
3	6991559	Solenoid (Alternate Part)	2
3	6996468	Nut	2
3	6999028	Kit-O-Ring	1
4	6996471	Adapter	1
5	1470841	Fitting	6
5	265731	O-Ring	1
6	6996431	Fitting	2
6	252729	O-Ring	1
7	6996182	Plug	4
8	6996598	Relief Valve	1
9	6990743	Valve Block	1
10	6996128	Plug	2

©2010 HYSTER COMPANY

EMPTY CONTAINER HANDLER (FIGURE 11-18)

HEAD VALVE — SERIES 582

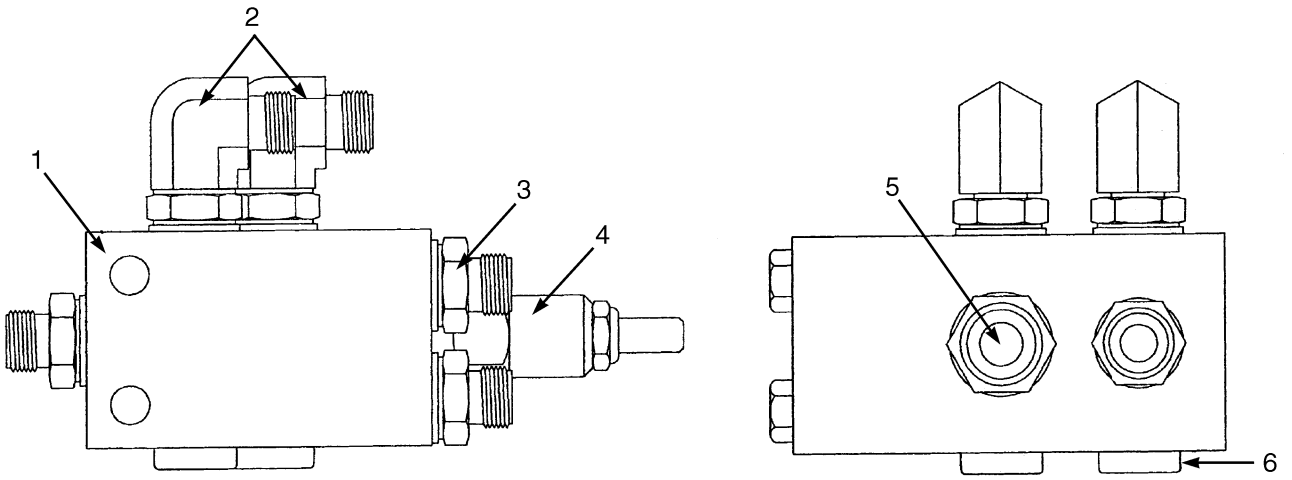

ITEM	PART NO.	DESCRIPTION	QTY
	6990989	Valve	1
1	6990609	Valve Block	1
2	6996045	Fitting	2
2	1626113	Fitting (Alternate Part)	2
3	1470827	Fitting	5
4	6996658	Sequence Valve	1
5	6996659	Fitting	1
6	6996040	Plug	2

©2010 HYSTER COMPANY

EMPTY CONTAINER HANDLER (FIGURE 11-19)

HYDRAULIC SYSTEM WITH MECHANICAL PILE SLOPE — SERIES 582

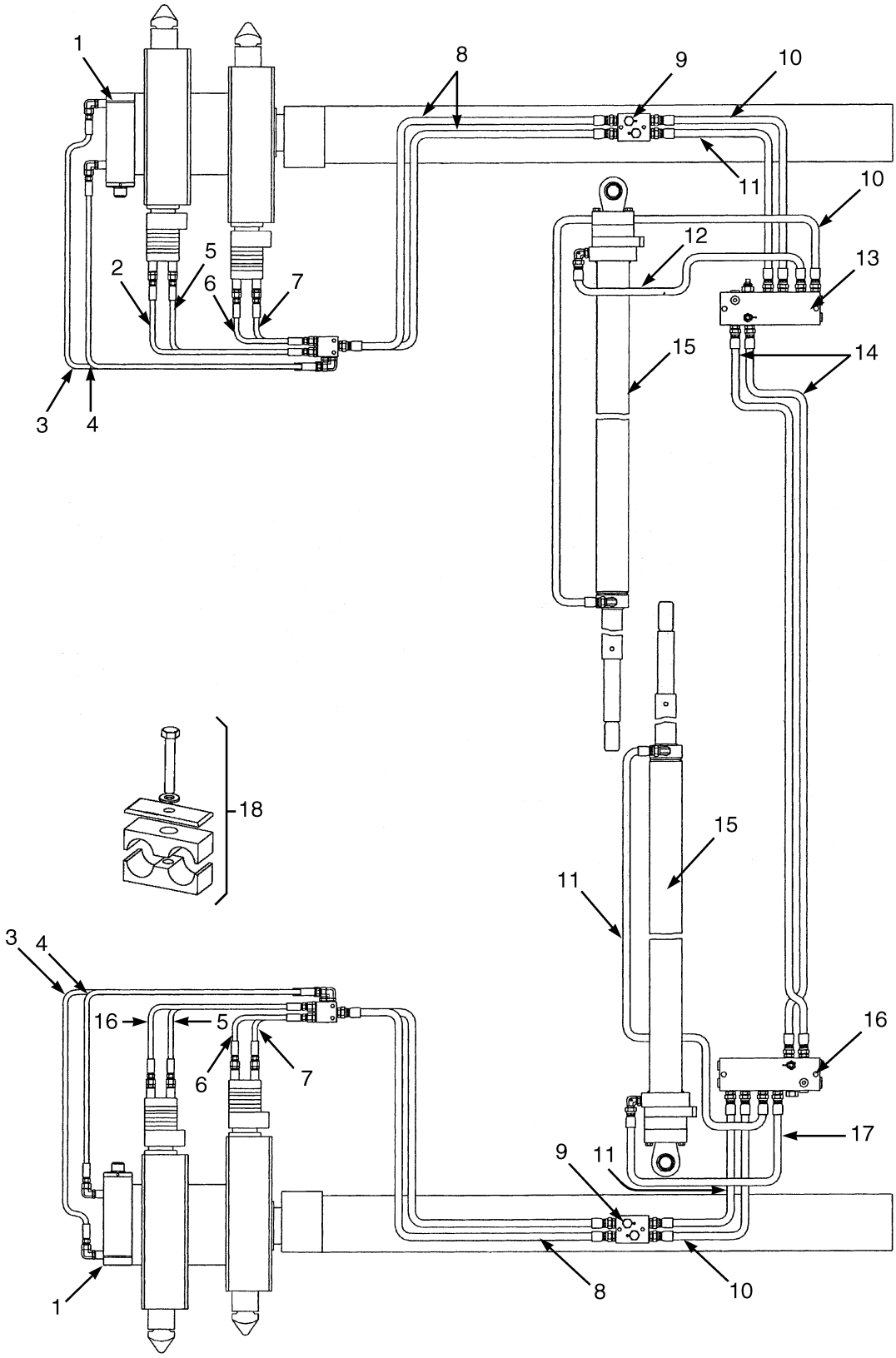

HP020389

©2010 HYSTER COMPANY

EMPTY CONTAINER HANDLER

HYDRAULIC SYSTEM WITH MECHANICAL PILE SLOPE – SERIES 582

ITEM	PART NO.	DESCRIPTION	QTY
1	6990604	Cylinder Assy	2
1	6999035	Kit-Seal	2
2	6996517	Hose Assy	2
3	6996859	Hose Assy	2
4	6996860	Hose Assy	2
5	6996516	Hose Assy	2
6	6996513	Hose Assy	2
7	6996512	Hose Assy	2
8	6996483	Hose Assy	2
9	6990817	Valve (☞Figure 11-26)	2
10	6996794	Hose Assy	3
11	6996662	Hose Assy	3
12	6996356	Hose Assy	1
13	6990744	Valve (RH Extension) (☞Figure 11-16)	1
14	6996857	Hose Assy	2
15	6990808	Extension Cylinder	2
16	6990742	Valve (LH Extension) (☞Figure 11-15)	1
17	6996415	Hose	1
18	**a** 6999036	Kit-Clamp (0.250 in.)	AR
18	**a** 6999055	Kit-Clamp (0.375 in for 15.5 mm dia. hose)	AR
18	**a** 6999037	Kit-Clamp (0.375 in. for 17.4 mm dia. hose)	AR
18	**a** 6999038	Kit-Clamp (0.500 in.)	AR
18	**a** 6999039	Kit-Clamp (0.625 in.)	AR
18	**a** 6999040	Kit-Clamp (0.750 in.)	AR

FOOTNOTES:

a Each kit includes one clamp assembly.

©2010 HYSTER COMPANY

EMPTY CONTAINER HANDLER (FIGURE 11-20)

HYDRAULIC SYSTEM WITH POWER PILE SLOPE — SERIES 582

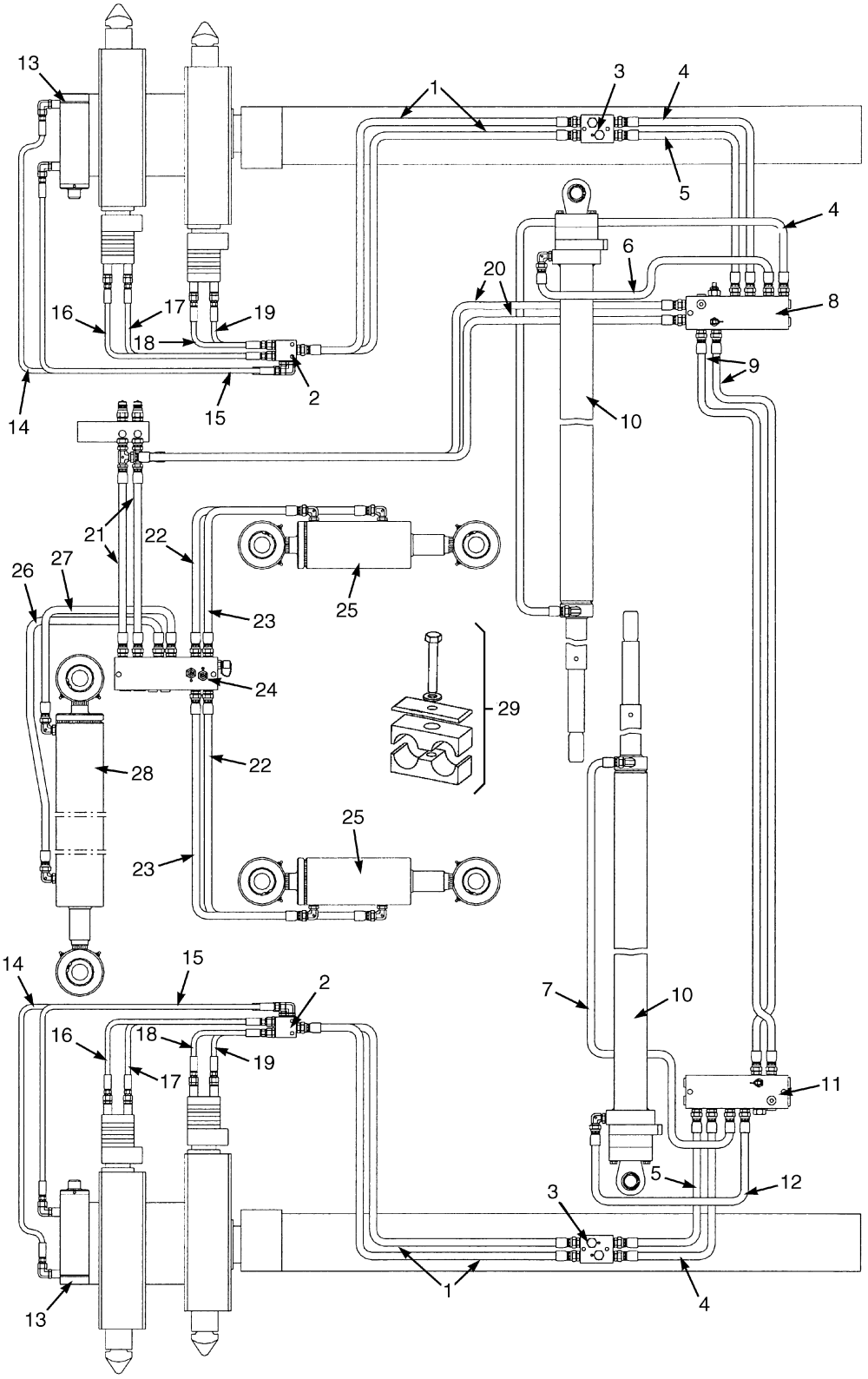

HP020412

©2010 HYSTER COMPANY

EMPTY CONTAINER HANDLER
HYDRAULIC SYSTEM WITH POWER PILE SLOPE – SERIES 582

ITEM	PART NO.	DESCRIPTION	QTY
1	6996483	Hose Assy	4
2	6990989	Valve	2
3	6990958	Check Valve	2
4	6996794	Hose Assy	3
5	6996662	Hose Assy	2
6	6996356	Hose Assy	1
7	6996662	Hose Assy	1
8	6990744	Valve	1
9	6996857	Hose Assy	2
10	6990808	Extension Cylinder	2
11	6990962	Valve	1
12	6996415	Hose	1
13	6990604	Cylinder Assy	2
14	6996859	Hose Assy	2
15	6996860	Hose Assy	2
16	6996517	Hose Assy	2
17	6996516	Hose Assy	2
18	6996513	Hose Assy	2
19	6996512	Hose Assy	2
20	6996917	Hose	2
21	6996918	Hose	2
22	6996919	Hose	2
23	6996368	Hose Assy	2
24	6990988	Valve	1
25	6990739	Tilt Cylinder	2
26	6996136	Hose Assy	1
27	6996920	Hose	1
28	6990735	Sideshift Cylinder	1
29	**a** 6999036	Kit-Clamp (0.250 in.)	AR
29	**a** 6999055	Kit-Clamp (0.375 in for 15.5 mm dia. hose)	AR
29	**a** 6999037	Kit-Clamp (0.375 in. for 17.4 mm dia. hose)	AR
29	**a** 6999038	Kit-Clamp (0.500 in.)	AR
29	**a** 6999039	Kit-Clamp (0.625 in.)	AR
29	**a** 6999040	Kit-Clamp (0.750 in.)	AR

FOOTNOTES:

a Each kit includes one clamp assembly.

©2010 HYSTER COMPANY

EMPTY CONTAINER HANDLER (FIGURE 11-21)

HYDRAULIC SYSTEM — SERIES 586

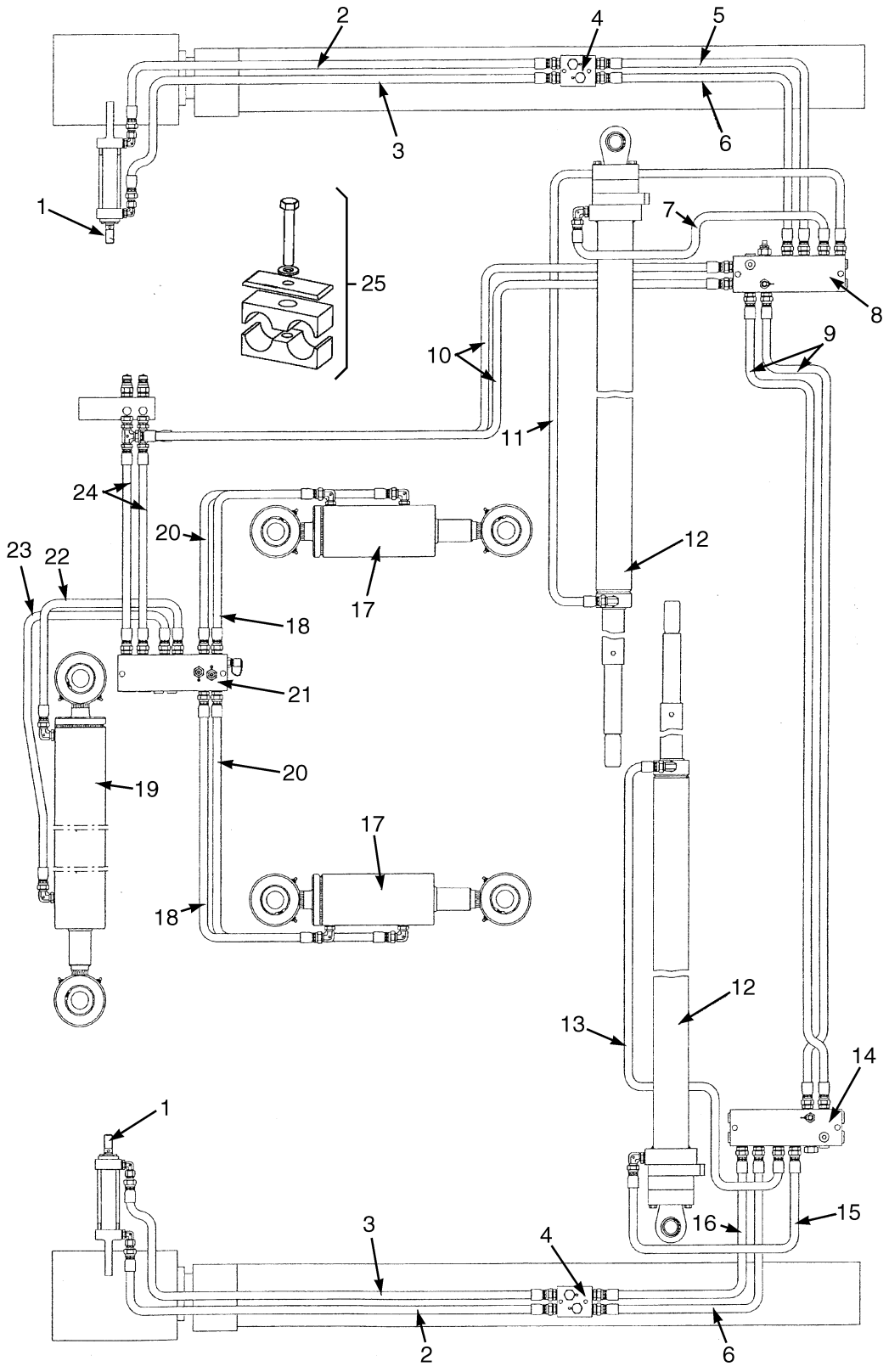

©2010 HYSTER COMPANY

EMPTY CONTAINER HANDLER
HYDRAULIC SYSTEM – SERIES 586

ITEM	PART NO.	DESCRIPTION	QTY
1	6991313	Cylinder Assy	2
1	6991323	Kit-Seal	1
2	6990734	Cable Assy	2
3	6996355	Hose Assy	2
4	6990958	Check Valve (☞Figure 11-27)	2
5	6996893	Hose	1
6	6996894	Hose	2
7	6996884	Hose Assy	1
8	6990962	Valve (Right Hand Extension) (☞Figure 11-17)	1
9	6996886	Hose	2
10	6996917	Hose	2
11	6996895	Hose	1
12	6990808	Extension Cylinder (☞Figure 11-14)	2
13	6996885	Hose	1
14	6990742	Valve (Left hand Extension)	1
15	6996890	Hose	1
16	6997035	Hose Assy	1
17	6990739	Tilt Cylinder (☞Figure 11-33)	2
18	6996368	Hose Assy	2
19	6990735	Sideshift Cylinder (☞Figure 11-29)	1
20	6997036	Hose Assy	2
21	6990988	Valve (☞Figure 11-30)	1
22	6996920	Hose	1
23	6996136	Hose Assy	1
24	6996918	Hose	2
25	**a** 6999036	Kit-Clamp (0.250 in.)	AR
25	**a** 6999055	Kit-Clamp (0.375 in for 15.5 mm dia. hose)	AR
25	**a** 6999037	Kit-Clamp (0.375 in. for 17.4 mm dia. hose)	AR
25	**a** 6999038	Kit-Clamp (0.500 in.)	AR
25	**a** 6999039	Kit-Clamp (0.625 in.)	AR
25	**a** 6999040	Kit-Clamp (0.750 in.)	AR

FOOTNOTES:

a Each kit includes one clamp assembly.

©2010 HYSTER COMPANY

EMPTY CONTAINER HANDLER (FIGURE 11-22)

HYDRAULIC SYSTEM — SERIES 586 AND 588

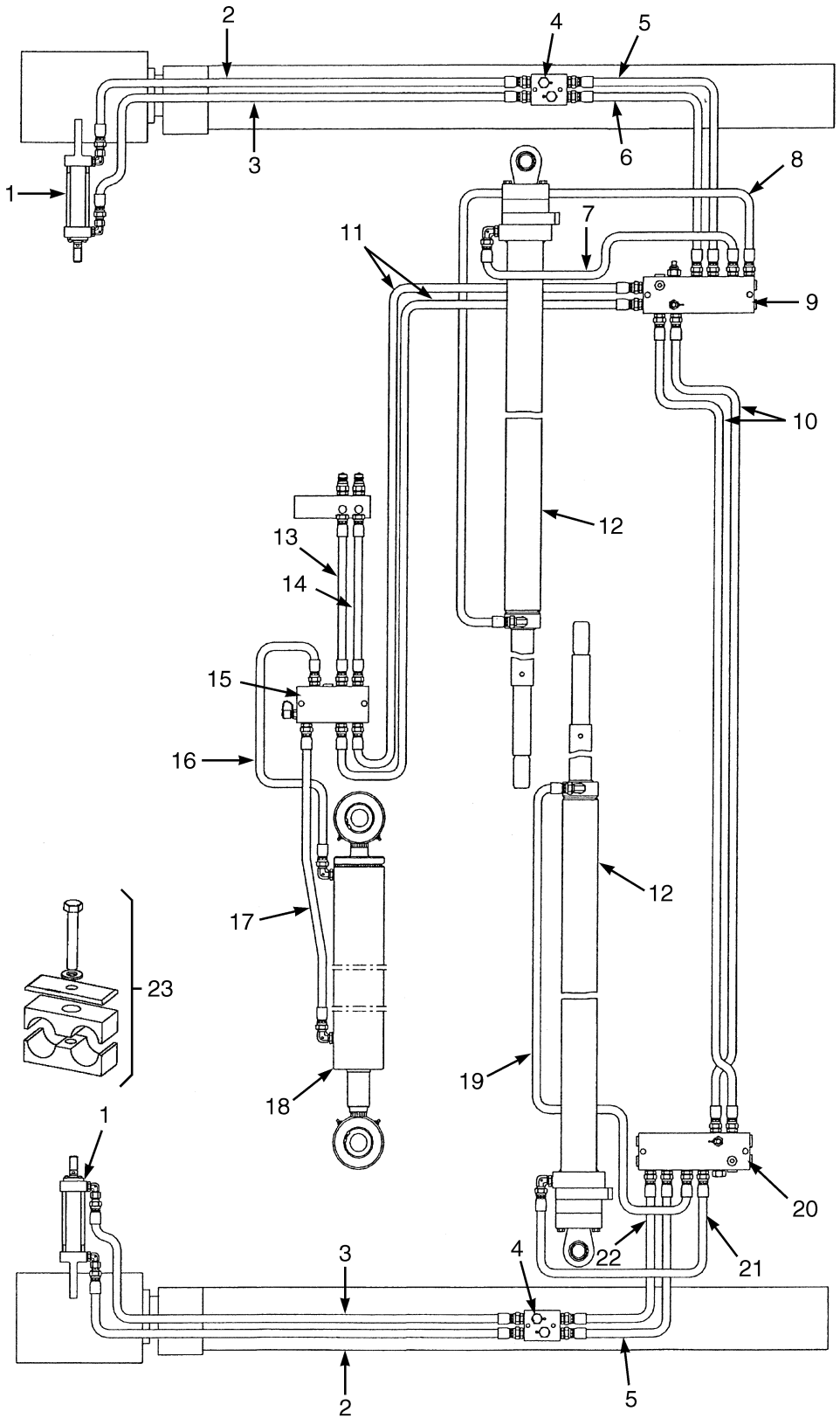

HP020387

©2010 HYSTER COMPANY

EMPTY CONTAINER HANDLER
HYDRAULIC SYSTEM – SERIES 586 AND 588

ITEM	PART NO.	DESCRIPTION	QTY
1	6991313	Cylinder Assy	2
1	6991323	Kit-Seal	1
2	6996882	Hose Assy	2
3	6996883	Hose Assy	3
4	6990958	Check Valve (☞Figure 11-27)	2
5	6996662	Hose Assy	1
6	6996521	Hose Assy	1
7	6996884	Hose Assy	1
8	6996891	Hose	1
9	6990962	Valve (RH Extension) (☞Figure 11-17)	1
10	6996886	Hose	2
11	6996887	Hose	2
12	6990808	Extension Cylinder (☞Figure 11-14)	2
13	6996492	Hose Assy	1
14	6996888	Hose	1
15	6990963	Valve (☞Figure 11-31)	1
16	6996889	Hose Assy	1
17	6996485	Hose Assy	1
18	6990735	Sideshift Cylinder (☞Figure 11-29)	1
19	6996885	Hose	1
20	6990742	Valve (LH Extension)	1
21	6996890	Hose	1
22	6996526	Hose Assy	1
23	**a** 6999036	Kit-Clamp (0.250 in.)	AR
23	**a** 6999055	Kit-Clamp (0.375 in for 15.5 mm dia. hose)	AR
23	**a** 6999037	Kit-Clamp (0.375 in. for 17.4 mm dia. hose)	AR
23	**a** 6999038	Kit-Clamp (0.500 in.)	AR
23	**a** 6999039	Kit-Clamp (0.625 in.)	AR
23	**a** 6999040	Kit-Clamp (0.750 in.)	AR

FOOTNOTES:

a Each kit includes one clamp assembly.

©2010 HYSTER COMPANY

EMPTY CONTAINER HANDLER (FIGURE 11-23)
INDICATION LIGHT BRACKET AND HOSE GUIDE — SERIES 582

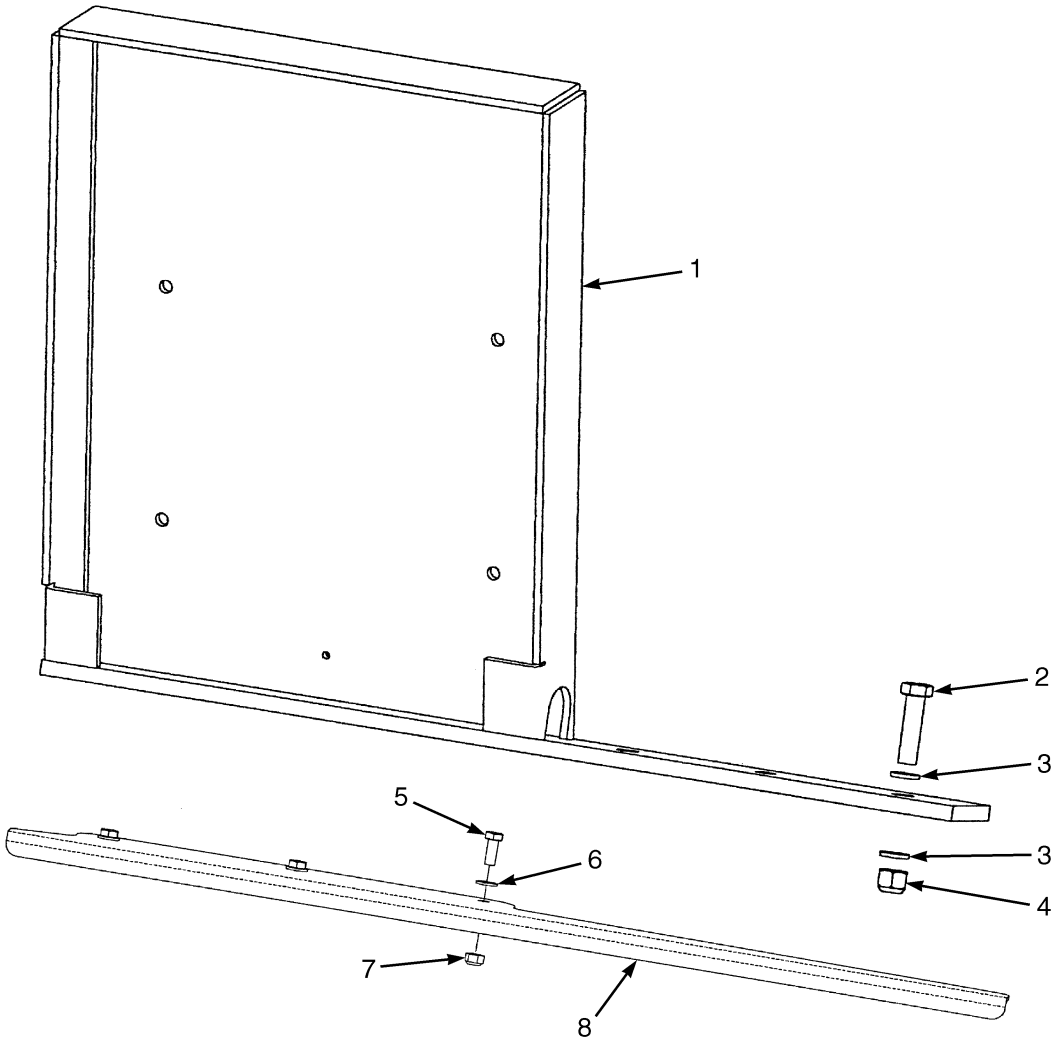

HP020394

KEY:
A: Bracket
B: Hose Guide

ITEM	PART NO.	DESCRIPTION	QTY A	QTY B
1	6990610	Bracket (LH)	1	..
1	6990611	Bracket (RH)	1	..
2	6996112	Bolt	6	..
3	6996245	Washer	12	..
4	302402	Locknut	6	..
5	6996036	Bolt	..	3
6	6996006	Washer	..	3
7	302400	Nut	..	3
8	6990992	Hose Guide	..	1

©2010 HYSTER COMPANY

EMPTY CONTAINER HANDLER (FIGURE 11-24)
INDICATION LIGHT BRACKET — SERIES 586

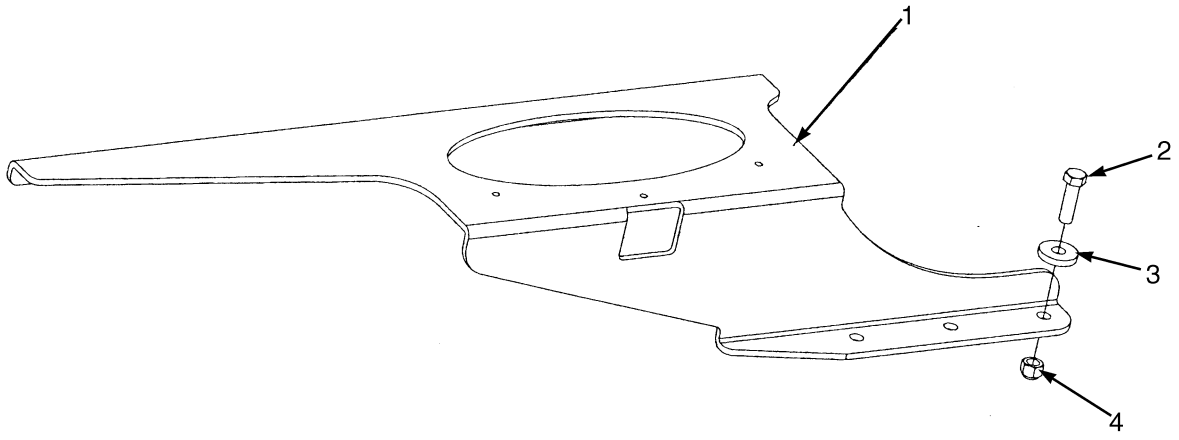

HP020396

ITEM	PART NO.	DESCRIPTION	QTY
1	6991192	Bracket	1
2	6996451	Bolt	3
3	6996102	Washer	3
4	302402	Locknut	3

EMPTY CONTAINER HANDLER (FIGURE 11-25)
INDICATION LIGHT BRACKET — SERIES 588

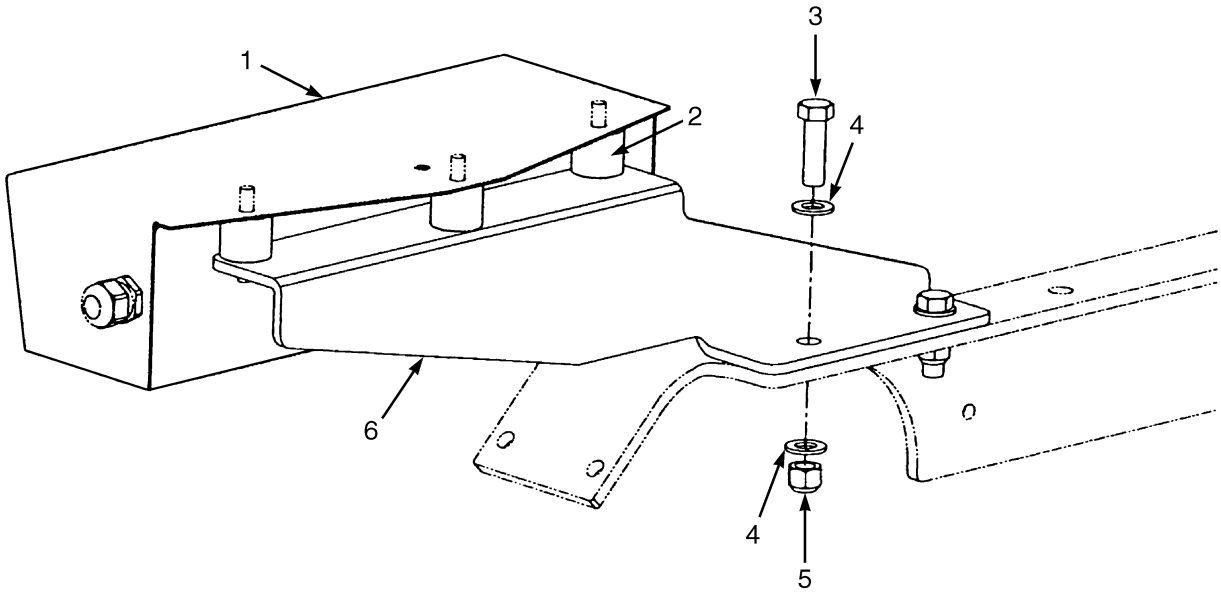

HP020379

ITEM	PART NO.	DESCRIPTION	QTY
1	. . . . .	Indication Light	1
2	1459409	Shock Absorber	3
3	6996451	Bolt	2
4	6996003	Lockwasher	4
5	302402	Locknut	2
6	6990819	Bracket	1

©2010 HYSTER COMPANY

EMPTY CONTAINER HANDLER (FIGURE 11-26)

PILOT CHECK VALVE — SERIES 582

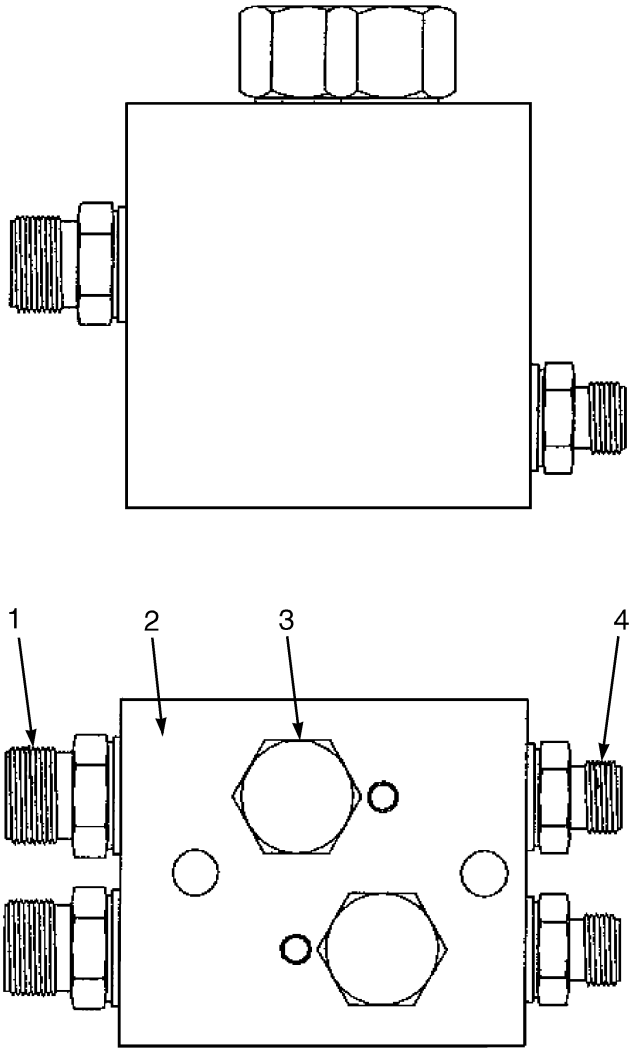

HP000877

ITEM	PART NO.	DESCRIPTION	QTY
	6990817	Valve	1
1	1470840	Fitting	2
1	1495113	O-Ring	1
2	6990818	Valve Block	1
3	6996198	Check Valve	1
3	6999030	Kit-Seal	2
4	1470827	Fitting	2
4	1495111	O-Ring	1

EMPTY CONTAINER HANDLER (FIGURE 11-27)
PILOT CHECK VALVE — SERIES 582, 586 AND 588

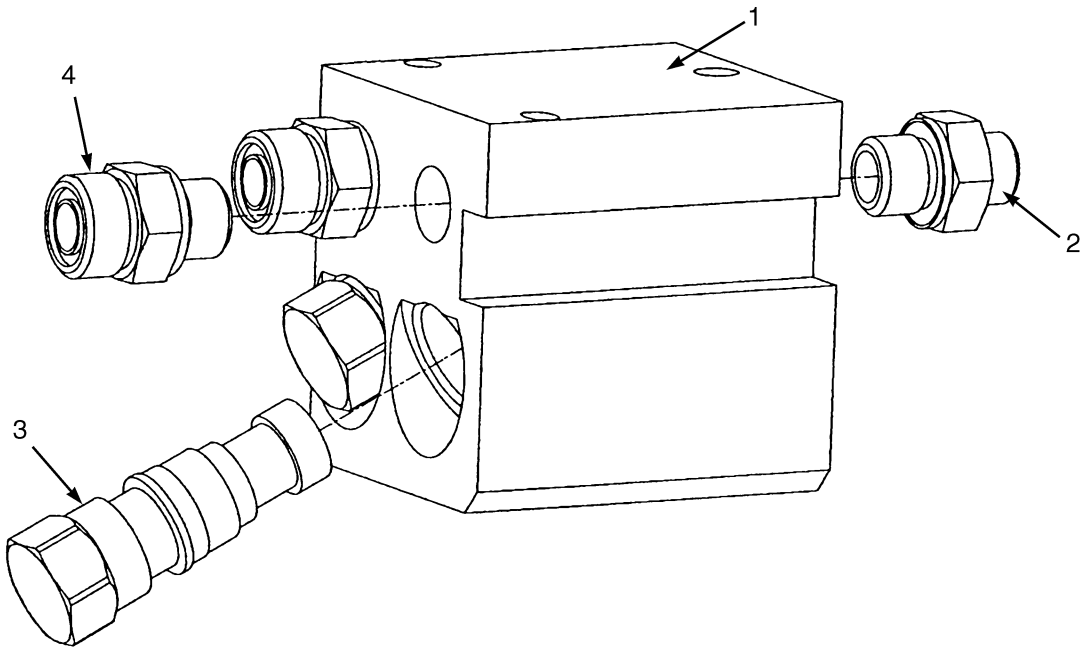

HP020384

ITEM	PART NO.	DESCRIPTION	QTY
	6990958	Check Valve	1
1	6990932	Valve Block	1
2	1470828	Fitting	1
2	1527813	O-Ring	1
3	6996198	Check Valve	1
3	6999030	Kit-Seal	1
4	1470841	Fitting	2
4	265731	O-Ring	1

©2010 HYSTER COMPANY

NOTES

©2010 HYSTER COMPANY

EMPTY CONTAINER HANDLER (FIGURE 11-28)
SENSORS — SERIES 582

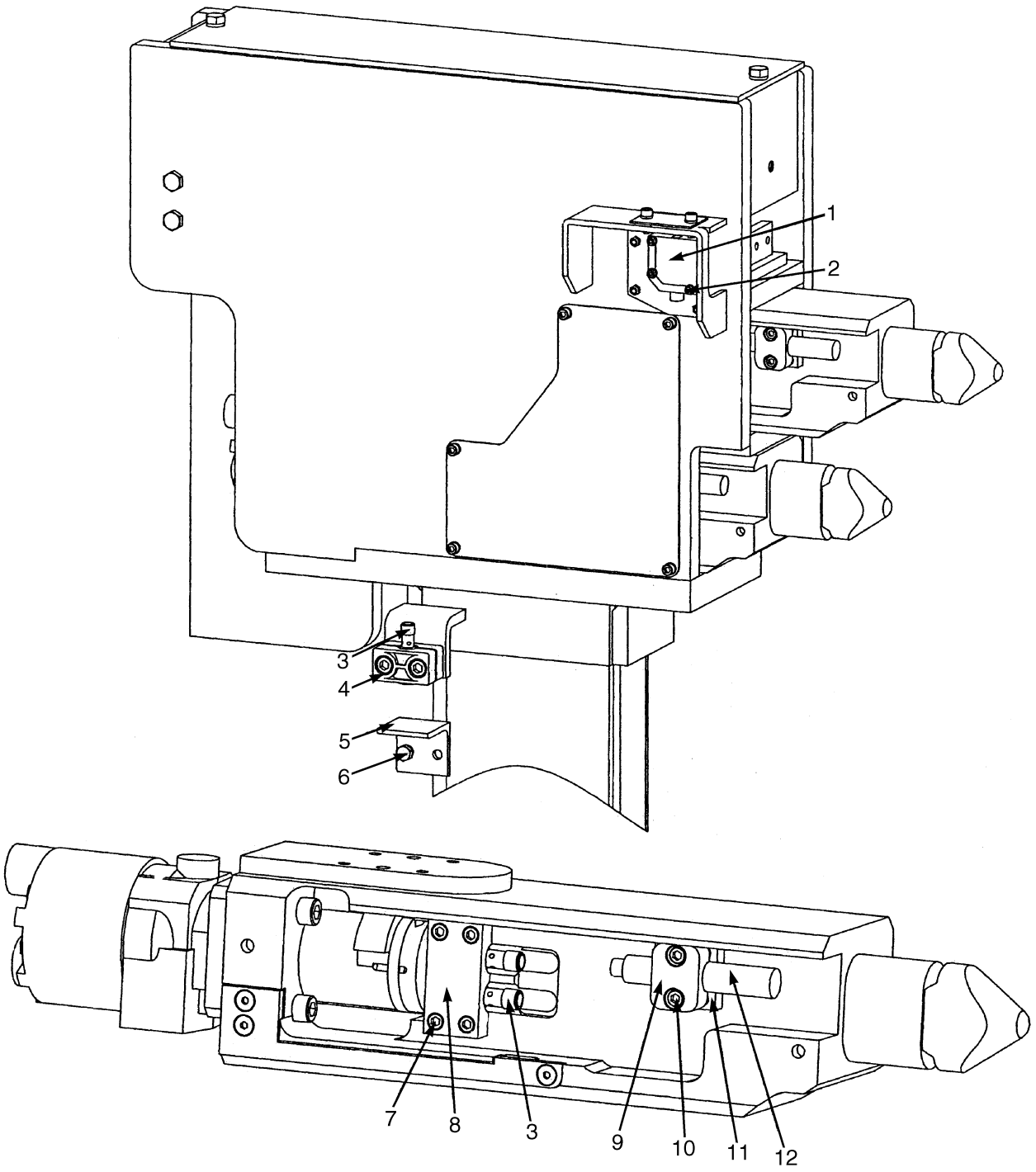

HP000888

©2010 HYSTER COMPANY

EMPTY CONTAINER HANDLER
SENSORS – SERIES 582

ITEM	PART NO.	DESCRIPTION	QTY
1	6996854	Sensor	1
2	293726	Capscrew	3
2	6996657	Washer	3
3	6996197	Sensor	5
4	6996010	Clamp	1
4	6996475	Bolt (Allen)	2
5	6990909	Indicator	1
6	292514	Capscrew	2
6	6996003	Lockwasher	2
7	6996473	Bolt (Allen)	8
8	6990358	Bracket	2
9	6996792	Clamp	2
10	6996791	Bolt	4
11	6990520	Clamp	2
12	6990906	Sensor	2

©2010 HYSTER COMPANY

EMPTY CONTAINER HANDLER (FIGURE 11-29)

SIDE SHIFT CYLINDER — SERIES 582, 586, AND 588

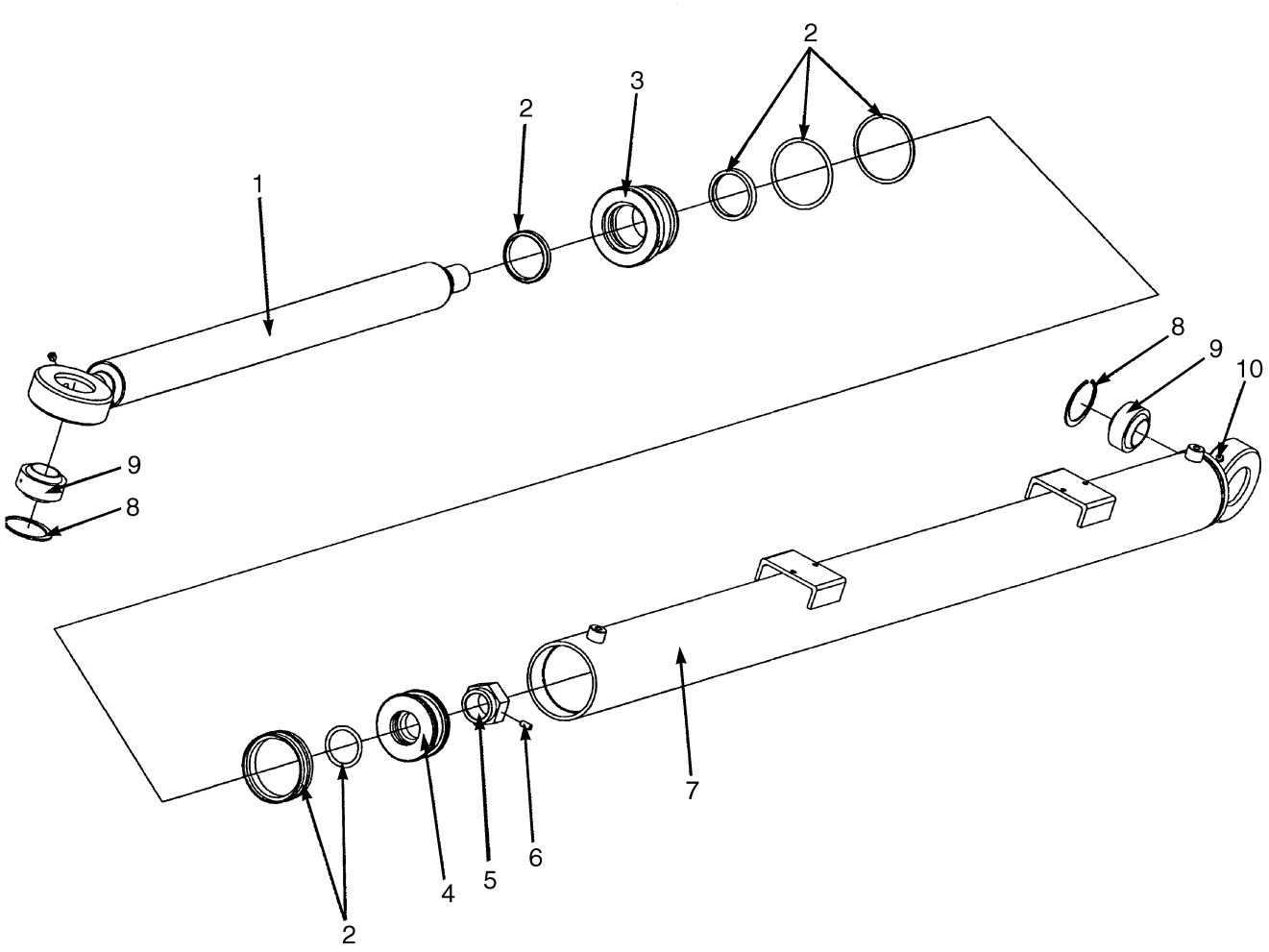

HP000892

ITEM	PART NO.	DESCRIPTION	QTY
	6990735	Sideshift Cylinder	1
1	6990335	Piston Rod (Piston)	1
2	1329449	Kit-Seal	1
3	1329445	End Cap	1
4	1329447	Piston	1
5	1329448	Nut	1
6	302100	Setscrew	1
7	6990336	Tube Wldmt-Cylinder	1
8	1329441	Snap Ring	2
9	1329442	Bushing	2
10	1329443	Fitting	4

©2010 HYSTER COMPANY

NOTES

©2010 HYSTER COMPANY

EMPTY CONTAINER HANDLER (FIGURE 11-30)
SIDESHIFT VALVE WITH POWER PILE SLOPE — SERIES 582 AND 586

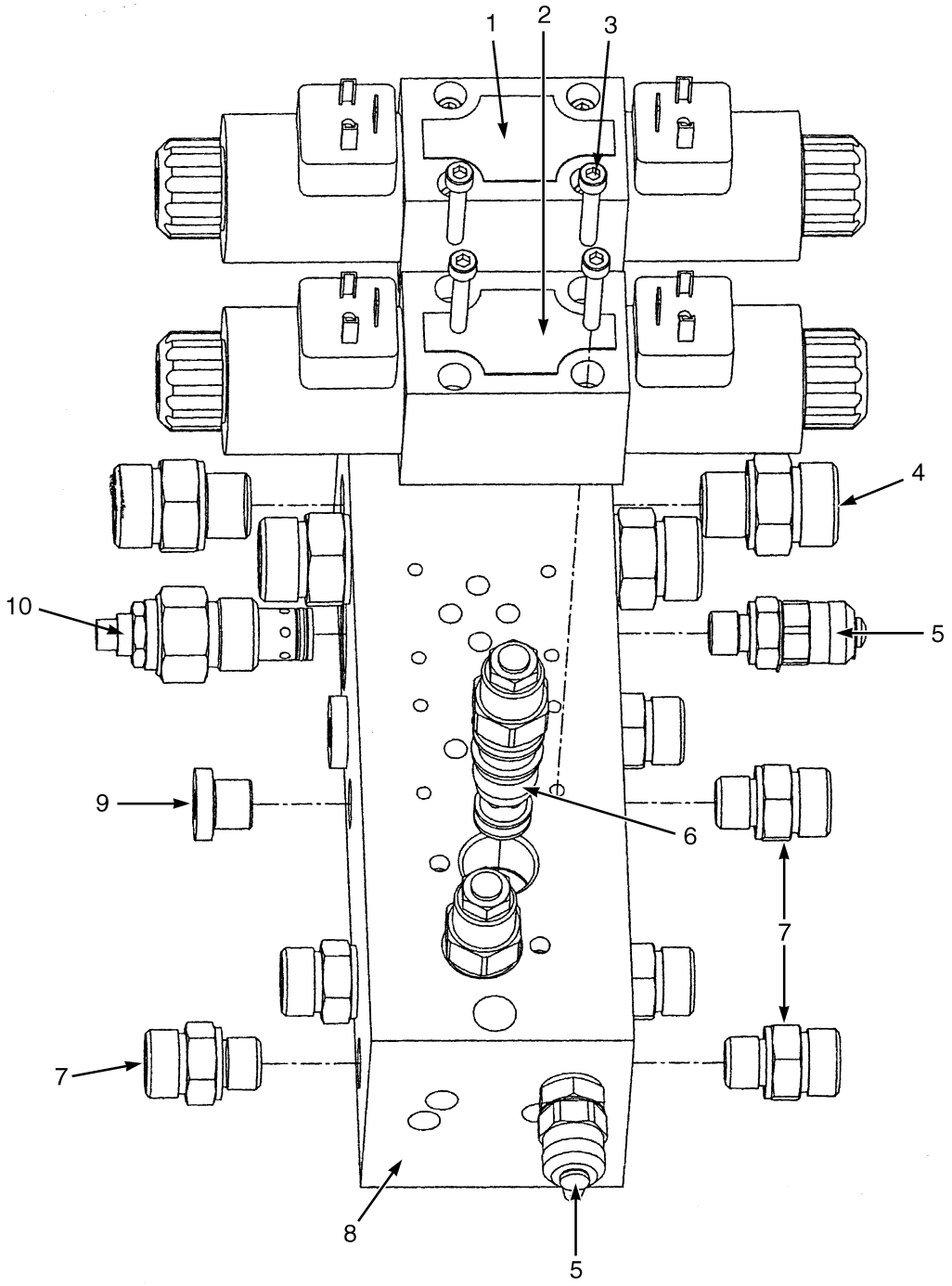

HP020392

©2010 HYSTER COMPANY

EMPTY CONTAINER HANDLER

SIDESHIFT VALVE WITH POWER PILE SLOPE – SERIES 582 AND 586

ITEM	PART NO.	DESCRIPTION	QTY
	6990988	Valve (With Power Pile Slope)	1
1	6996043	Solenoid Valve (24 Volt DC)	1
1	6996293	Solenoid	4
1	6991559	Solenoid (Alternate Part)	4
1	6996468	Nut	4
1	6999028	Kit-O-Ring	2
2	6996041	Solenoid Valve (24 Volt)	1
2	6996293	Solenoid	4
2	6991559	Solenoid (Alternate Part)	4
2	6996468	Nut	4
2	6999028	Kit-O-Ring	2
3	6996122	Screw (Allen)	8
4	6996431	Fitting	4
4	252729	O-Ring	1
5	6996127	Adapter (Gauge)	2
6	6996272	Fitting	2
7	1470841	Fitting	6
7	265731	O-Ring	1
8	6990748	Valve Block	1
9	6996182	Plug	2
10	6996598	Relief Valve	1
	6996128	Plug (Not Illustrated)	2

©2010 HYSTER COMPANY

EMPTY CONTAINER HANDLER (FIGURE 11-31)
SIDE SHIFT VALVE — SERIES 586 AND 588

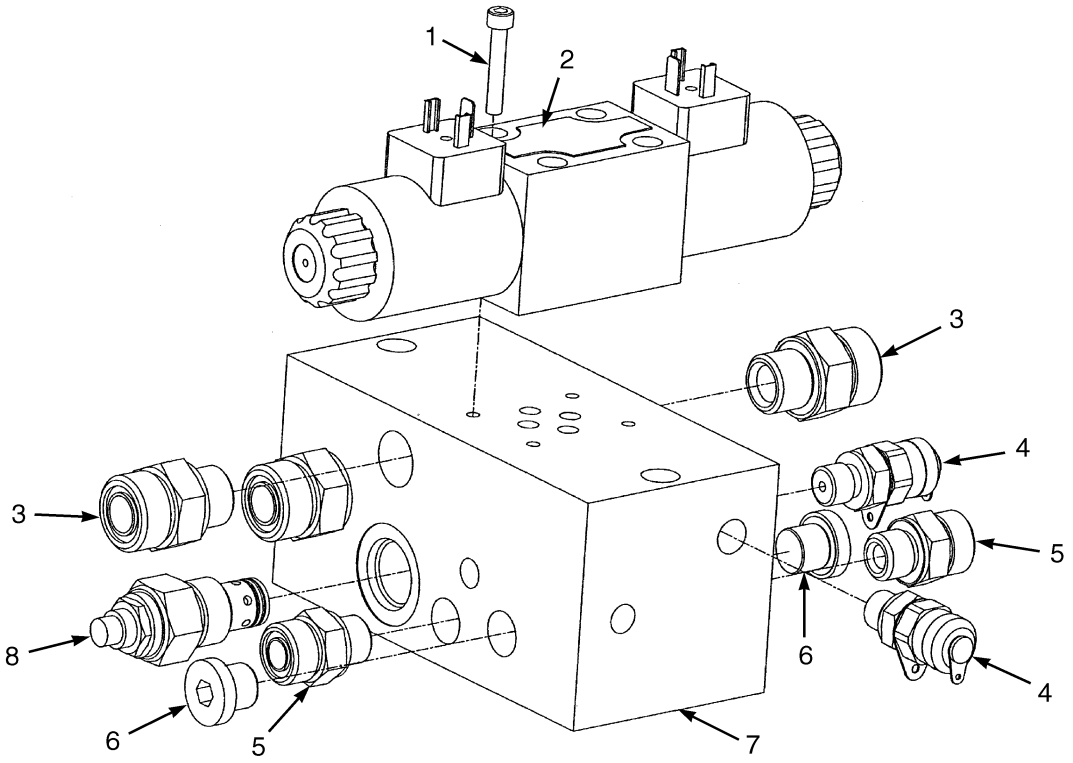

HP020367

ITEM	PART NO.	DESCRIPTION	QTY
	6990963	Valve	1
1	6996122	Screw (Allen)	4
2	6996043	Solenoid Valve (24 Volt DC)	1
2	6996293	Solenoid	2
2	6991559	Solenoid (Alternate Part)	2
2	6996468	Nut	2
2	6999028	Kit-O-Ring	1
3	6996431	Fitting	4
3	252729	O-Ring	1
4	6996127	Adapter (Gauge)	2
5	1470841	Fitting	6
5	265731	O-Ring	1
6	6996182	Plug	2
7	6990746	Valve Block	1
8	6996598	Relief Valve	1

©2010 HYSTER COMPANY

EMPTY CONTAINER HANDLER (FIGURE 11-32)

SPLASH GUARDS — SERIES 582, 586, AND 588

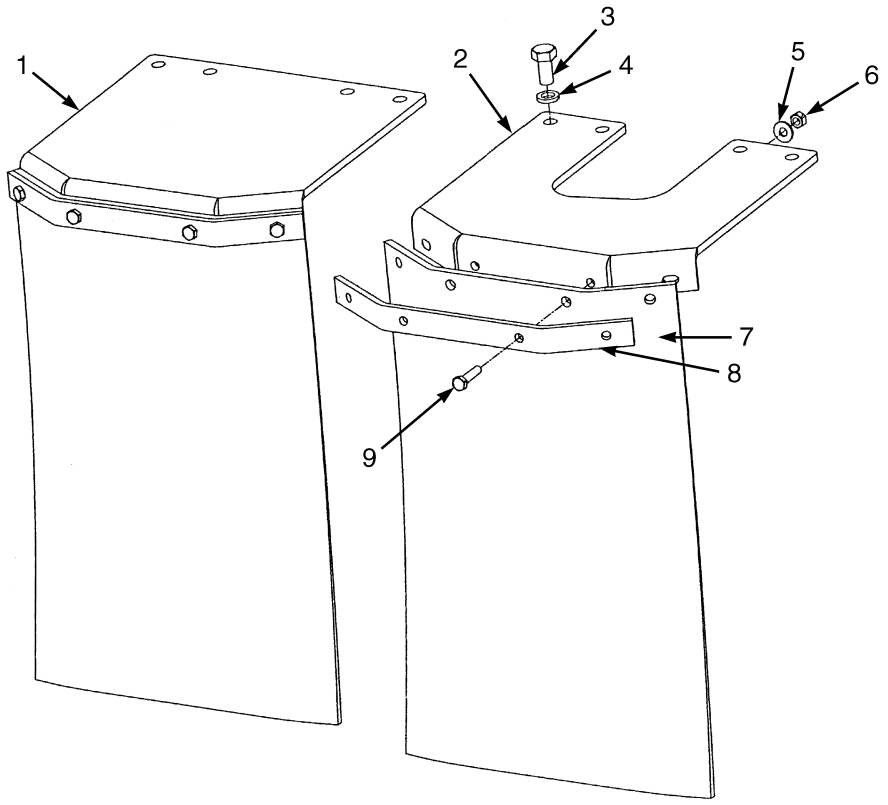

HP020376

ITEM	PART NO.	DESCRIPTION	QTY
1	6991066	Bracket	1
2	6991067	Bracket	1
3	292514	Capscrew	8
4	6996003	Lockwasher	8
5	6996171	Washer	8
6	6996301	Nut	8
7	6991068	Cover (Rubber)	2
8	6991069	Clamp	2
9	6996942	Bolt	8

©2010 HYSTER COMPANY

EMPTY CONTAINER HANDLER (FIGURE 11-33)

TILT CYLINDERS — SERIES 582, 586, AND 588

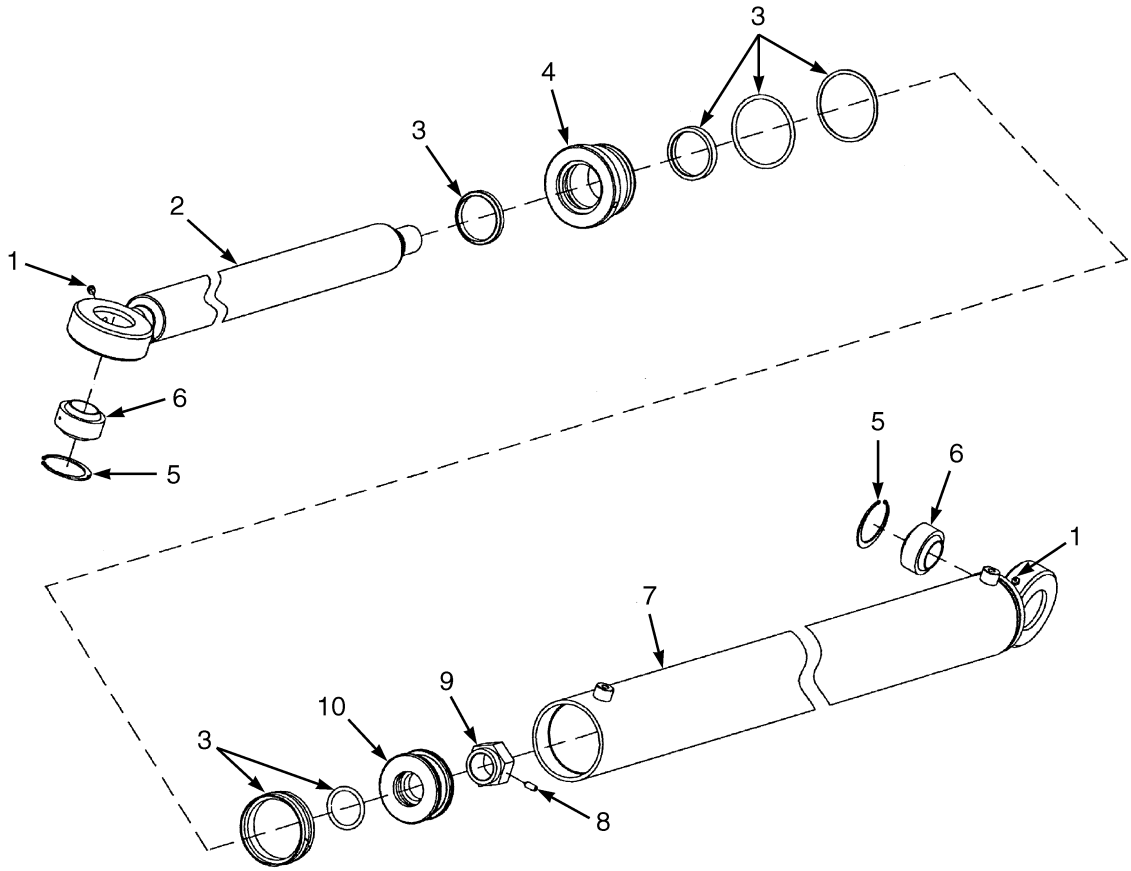

HP020388

ITEM	PART NO.	DESCRIPTION	QTY
	6990739	Tilt Cylinder	1
1	1329443	Fitting	4
2	6990740	Piston Rod	1
3	1329449	Kit-Seal	1
4	1329445	End Cap	1
5	1329441	Snap Ring	2
6	1329442	Bushing	2
7	6990741	Tube Wldmt-Cylinder	1
8	302100	Setscrew	1
9	1329448	Nut	1
10	1329447	Piston	1

©2010 HYSTER COMPANY

12 OPTIONS

SECTION 12
OPTIONS

DESCRIPTION	PAGE
DIRECTIONAL AND MARKER LIGHTS	12-3
EMPTY CONTAINER HANDLER	
BEARING BLOCKS AND SHIMS - CARRIAGE	12-10
EMPTY SEAT ENGINE SHUTDOWN	
3/2010 →	12-12
HANDRAIL	12-2
HEATED TOP WINDOW	
CLIMATE CONTROL CAB	12-11
JUMP START AID	12-9
LOCKABLE DISCONNECT SWITCH LEVER	12-6
MAP READING LIGHT	12-5
MUDFLAPS	12-8
REAR VIEW MIRRORS	12-7
STROBE LIGHT	12-4

©2010 HYSTER COMPANY

HANDRAIL (FIGURE 12-1)

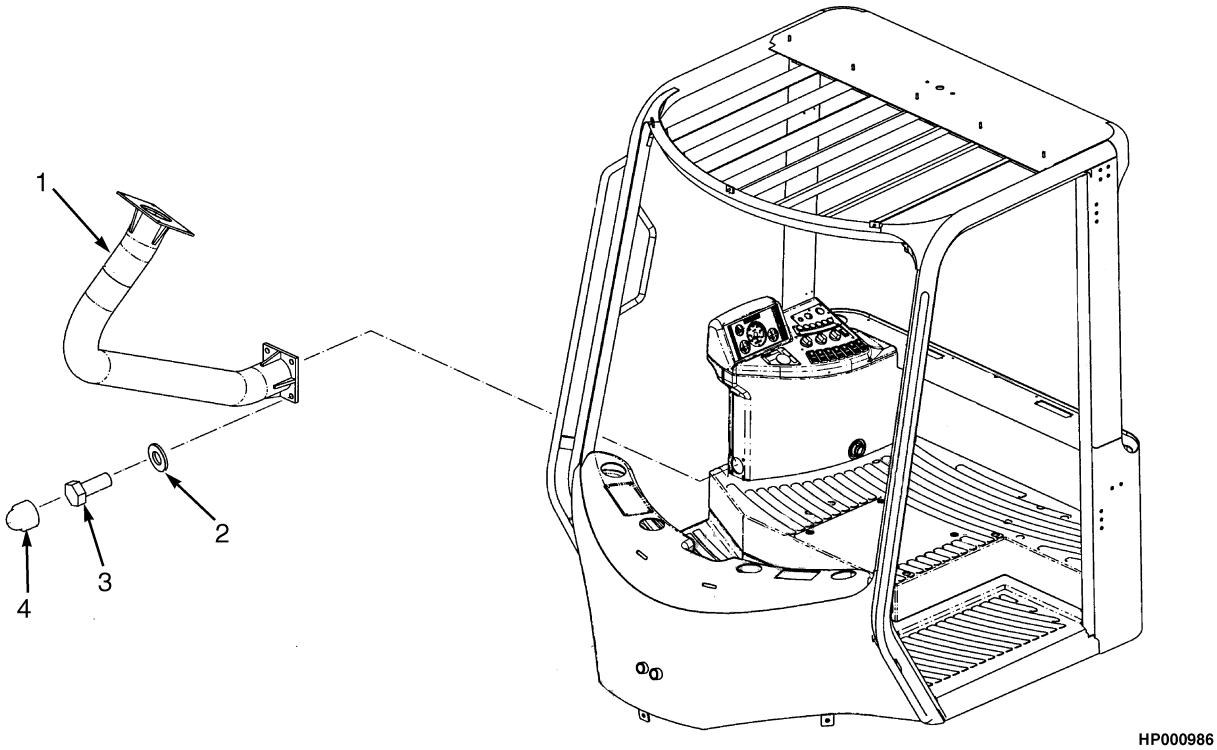

HP000986

ITEM	PART NO.	DESCRIPTION	QTY
1	1571812	Handle	1
2	296419	Washer	4
3	136749	Screw	4
4	1476584	Cover (Capscrew Head)	4

©2010 HYSTER COMPANY

DIRECTIONAL AND MARKER LIGHTS (FIGURE 12-2)

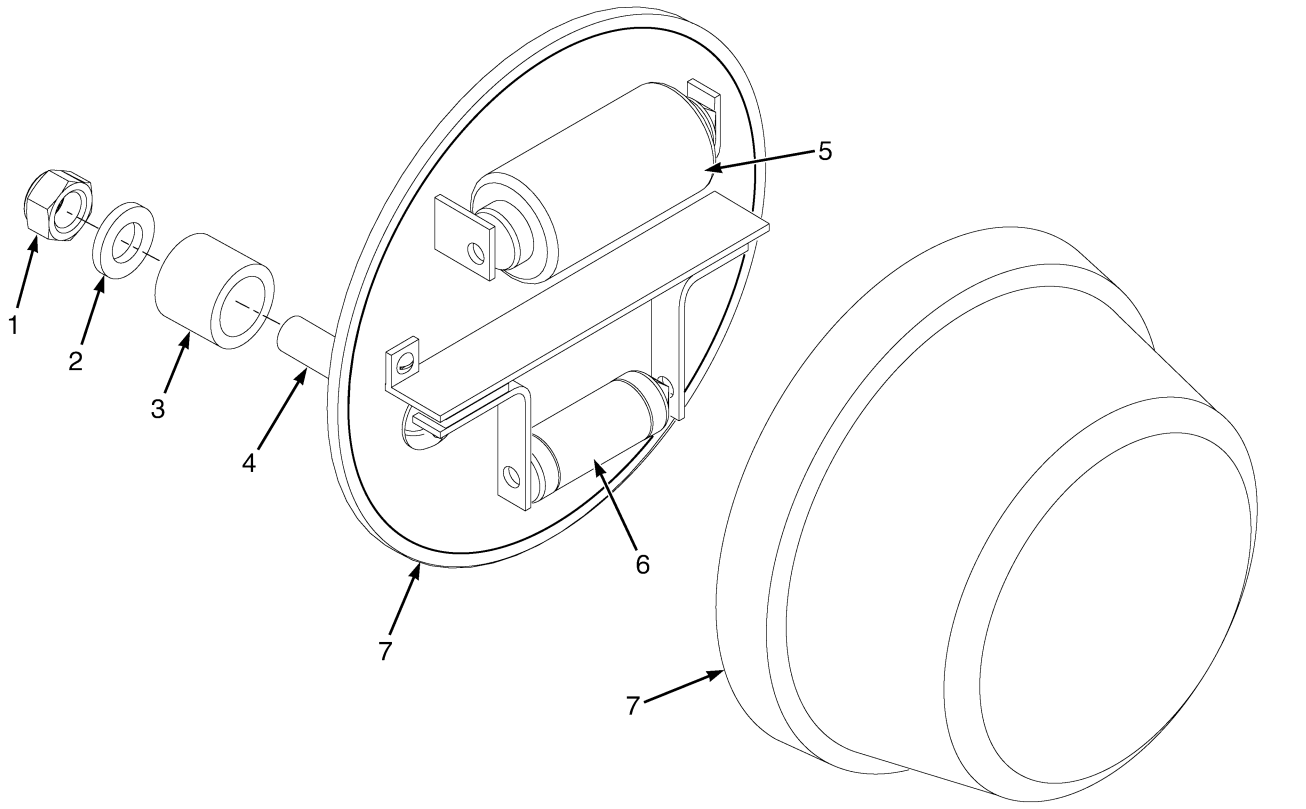

HP000951

ITEM	PART NO.	DESCRIPTION	QTY
1	302398	Locknut	4
2	320155	Washer	4
3	376505	Spacer	4
4	296155	Capscrew	4
5	1310638	Bulb (Directional)	2
6	384014	Bulb (Marker)	2
7	373091	Turn Signal Light	2
	a 2043351	Switch	1
	ab 1672818	Wire Harness (Side Indicator)	2
	a 2104177	Jumper (Ignition)	1

FOOTNOTES:

a Not Illustrated

b S/N B214E01630F →

©2010 HYSTER COMPANY

STROBE LIGHT (FIGURE 12-3)

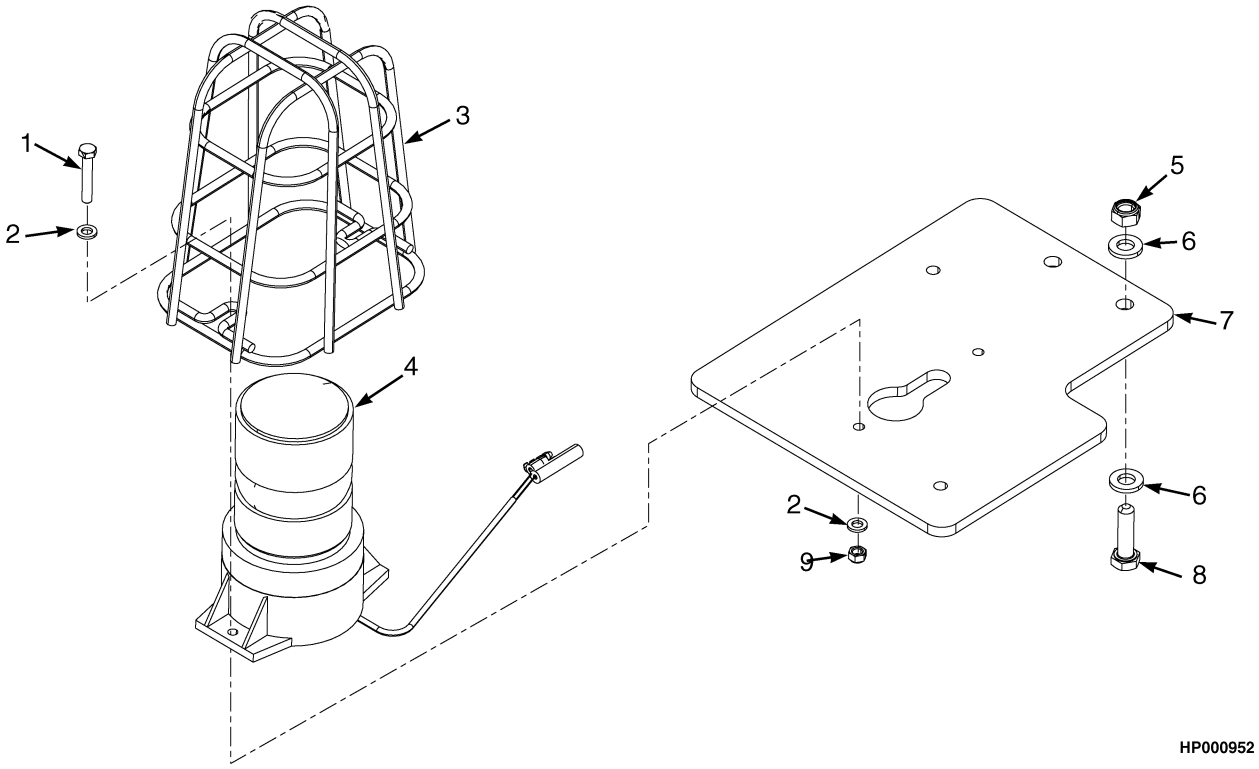

ITEM	PART NO.	DESCRIPTION	QTY
1	2072353	Capscrew	2
2	320155	Washer	4
3	1302024	Guard	1
4	1616202	Strobe Light Assembly	1
4	1616213	Strobe Light	1
4	1636383	Lens (Amber)	1
4	1636384	Bulb (12 to 80 Volts DC)	1
4	1324307	Cable Seal	1
4	1324308	Terminal	1
4	1324309	Sleeve	1
4	1324310	Terminal	1
5	302400	Nut	2
6	320157	Washer	4
7	1480236	Bracket	1
8	176640	Bolt	2
9	302398	Locknut	2
	1581404	Switch (Not Illustrated)	1
	1545521	Wire Harness (Rotating Beacon Adapter) (Not Illustrated)	1

©2010 HYSTER COMPANY

MAP READING LIGHT (FIGURE 12-4)

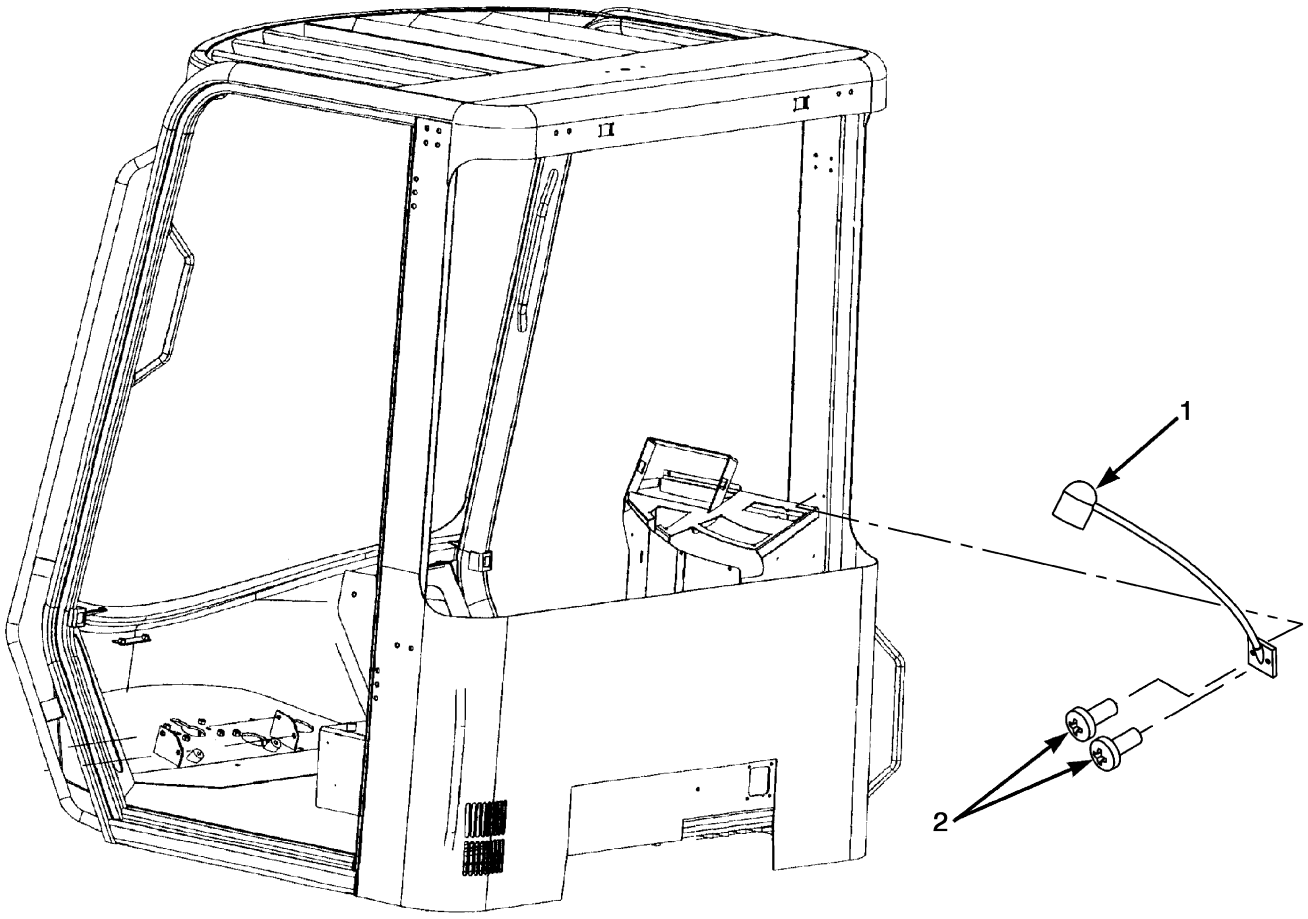

HP000929

ITEM	PART NO.	DESCRIPTION	QTY
	. . . . .	Map Reading Light	1
1	1506682	Map Light	1
1	1516559	Bulb	1
2	1468318	Screw	2

LOCKABLE DISCONNECT SWITCH LEVER (FIGURE 12-5)

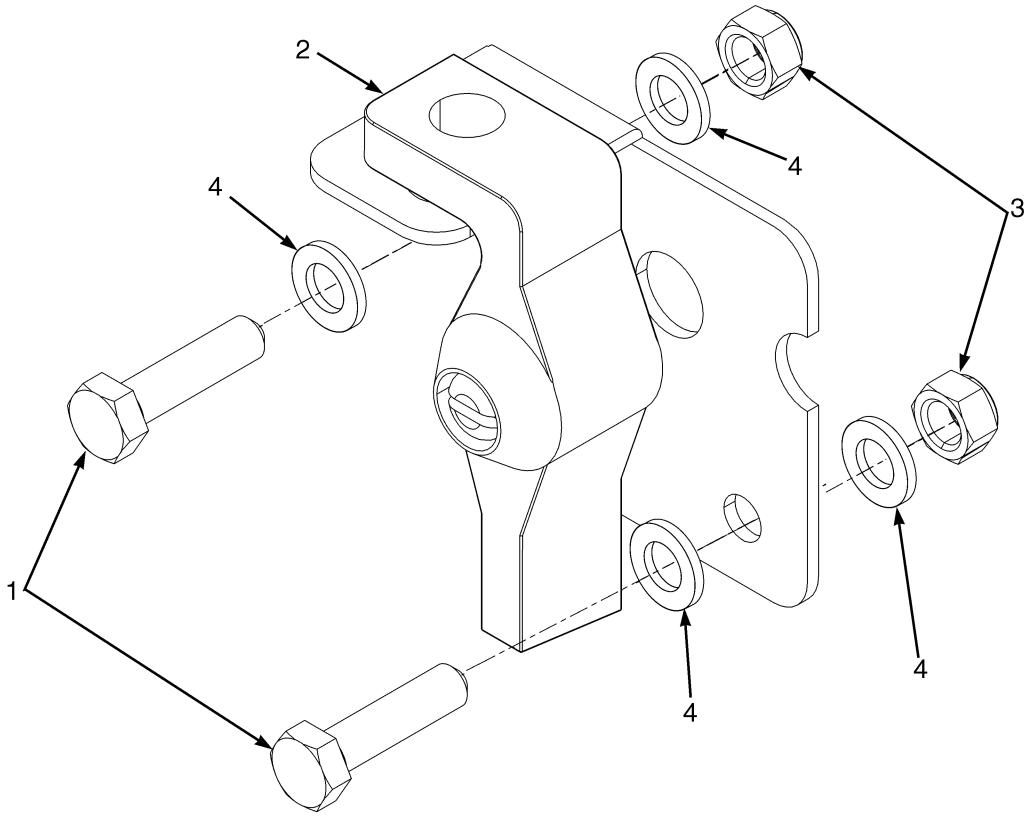

HP000974

ITEM	PART NO.	DESCRIPTION	QTY
1	1585160	Lever (Lockable Disconnect Switch)	1
2	2072354	Capscrew	2
3	302398	Locknut	2
4	320155	Washer	4

©2010 HYSTER COMPANY

REAR VIEW MIRRORS (FIGURE 12-6)

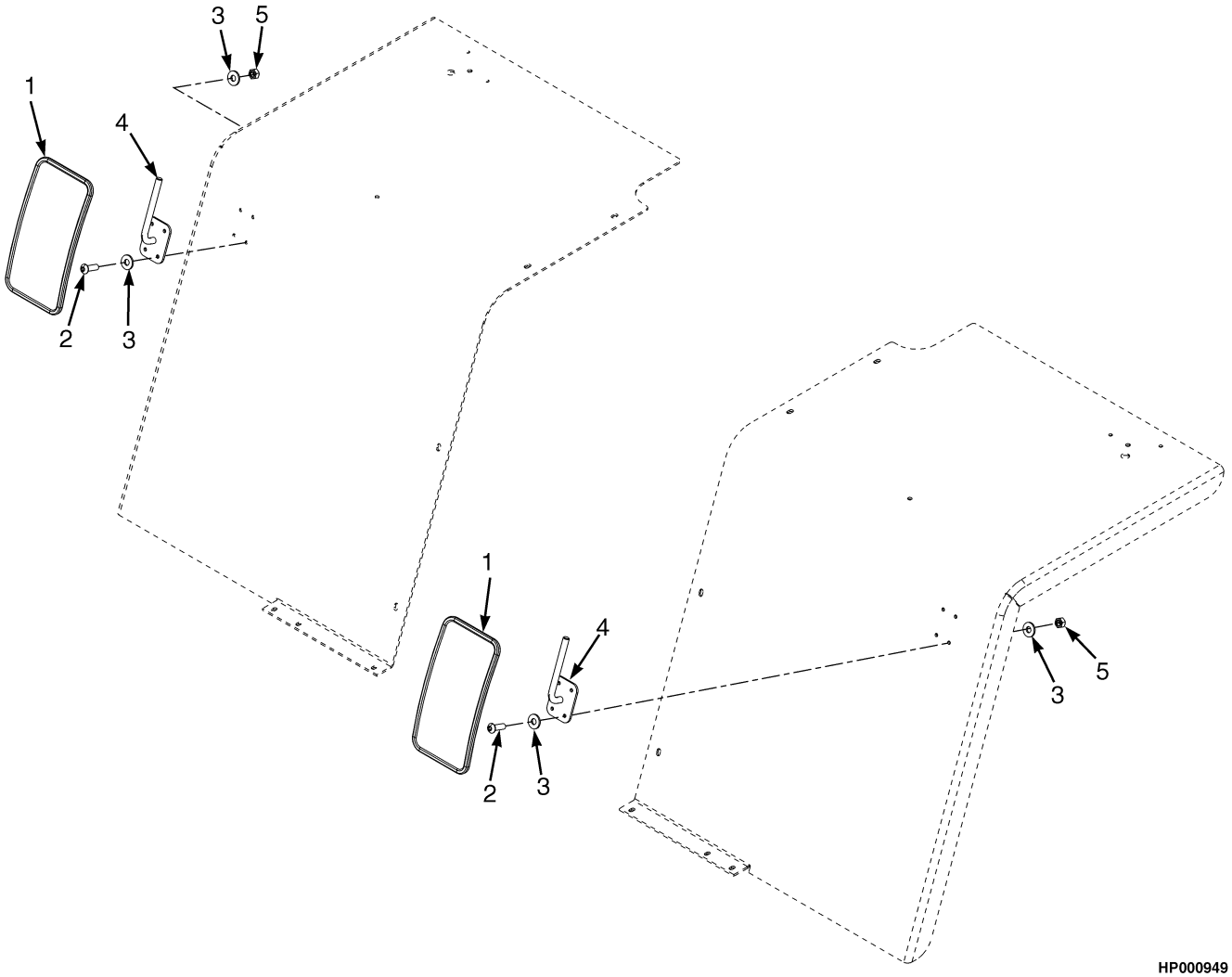

HP000949

ITEM	PART NO.	DESCRIPTION	QTY
1	886835	Mirror	2
1	1705832	Mirror (Alternate Part)	2
2	296167	Capscrew	8
3	320158	Washer	16
4	1598029	Bracket Wldmt	2
5	302400	Nut	8

MUDFLAPS (FIGURE 12-7)

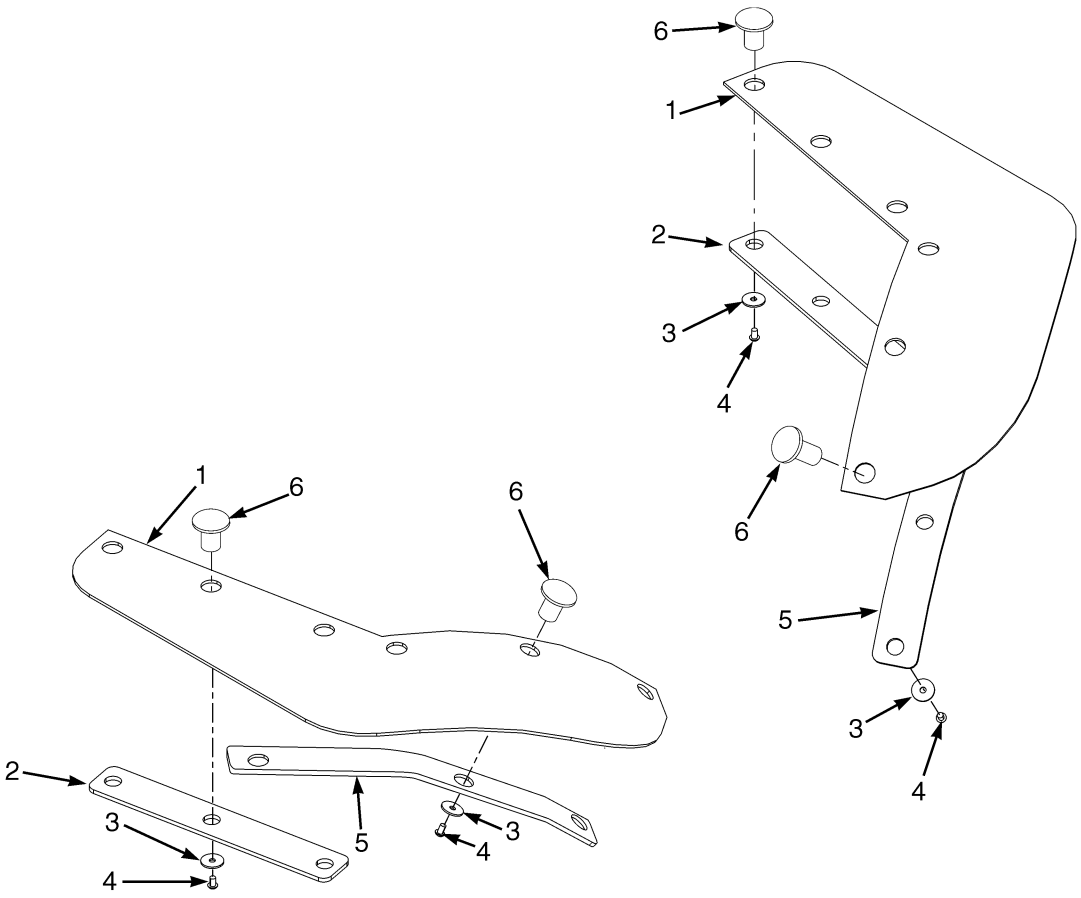

ITEM	PART NO.	DESCRIPTION	QTY
1	1639875	Mud Flap	2
2	1639876	Plate	2
3	1639878	Washer	12
4	296171	Capscrew	12
5	1639877	Plate	2
6	1599242	Plug	12

©2010 HYSTER COMPANY

JUMP START AID (FIGURE 12-8)

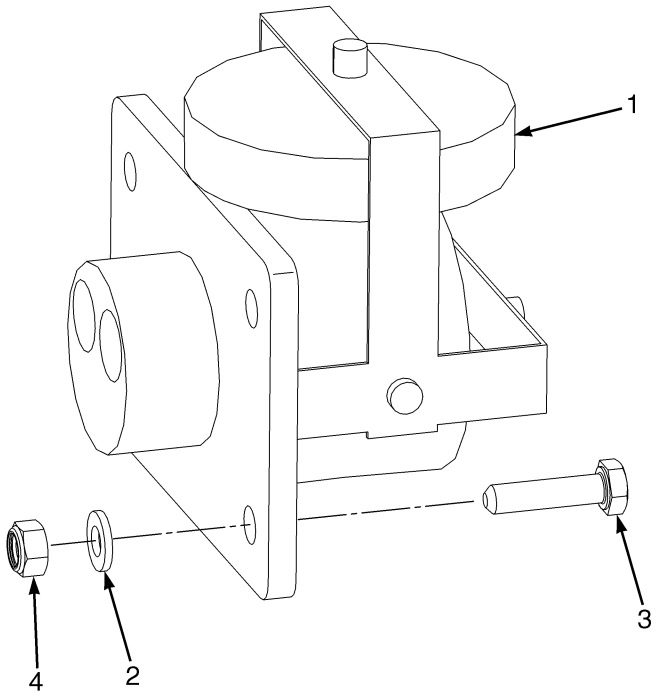

HP082022

ITEM	PART NO.	DESCRIPTION	QTY
1	4002186	Connector	1
2	320156	Washer	8
3	287816	Capscrew	4
4	302399	Nut	4

EMPTY CONTAINER HANDLER (FIGURE 12-9)
BEARING BLOCKS AND SHIMS — CARRIAGE

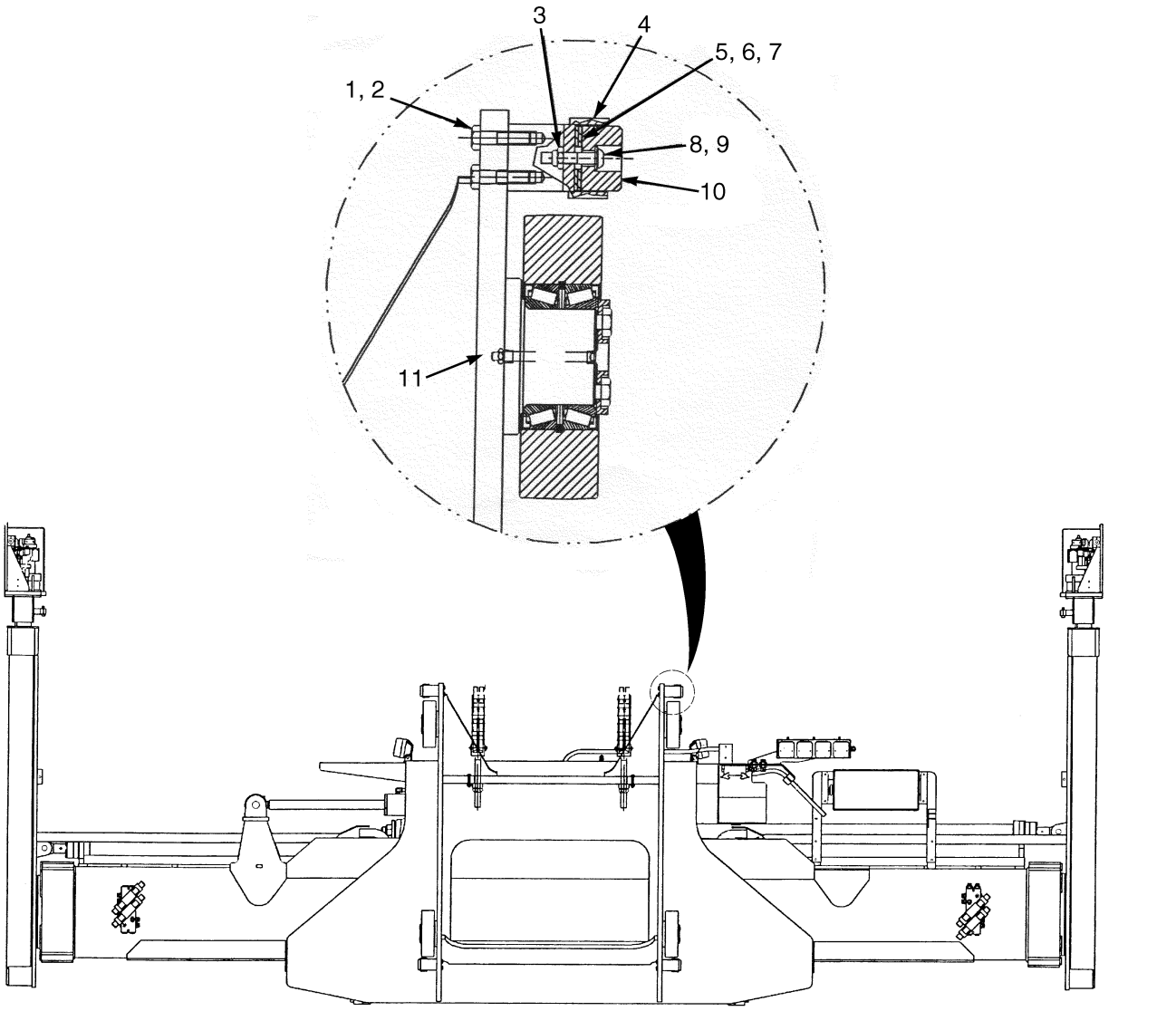

020398

ITEM	PART NO.	DESCRIPTION	QTY
1	287837	Capscrew	16
2	320161	Washer	16
3	302401	Locknut	4
4	1325795	Bracket Wldmt	4
5	1325797	Shim (0.06 in.)	AR
6	1325798	Shim (0.002 in.)	AR
7	1372962	Shim (0.12 in.)	AR
8	1364272	Capscrew	4
9	320159	Washer	8
10	1325785	Bearing	4
11	15483	Fitting	4

©2010 HYSTER COMPANY

HEATED TOP WINDOW (FIGURE 12-10)
CLIMATE CONTROL CAB

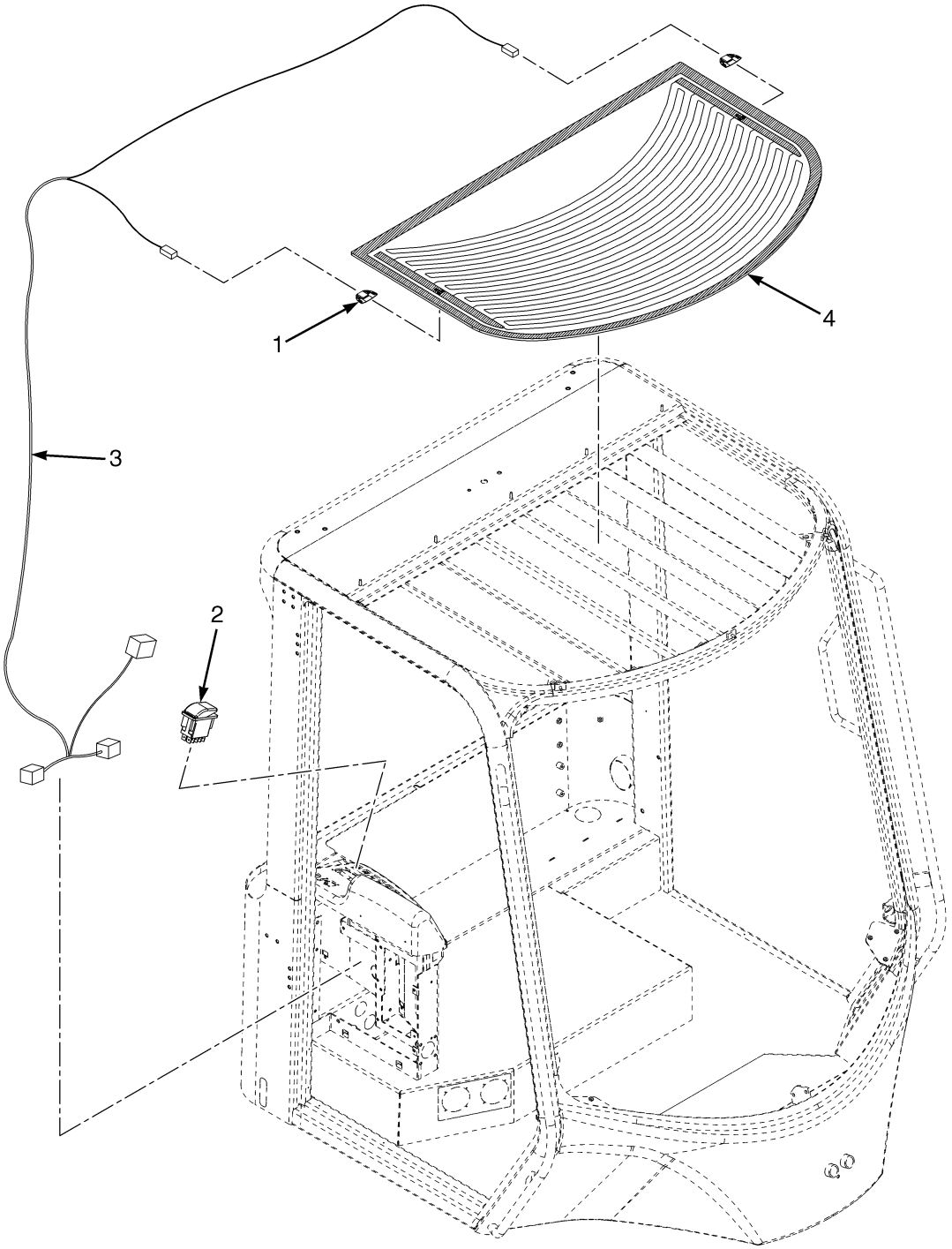

HP000993

ITEM	PART NO.	DESCRIPTION	QTY
1	4016098	Clip	2
2	4013895	Switch	1
3	4016097	Wire Harness	1
4	4016096	Window	1

©2010 HYSTER COMPANY

EMPTY SEAT ENGINE SHUTDOWN (FIGURE 12-11)

(3/2010 →)

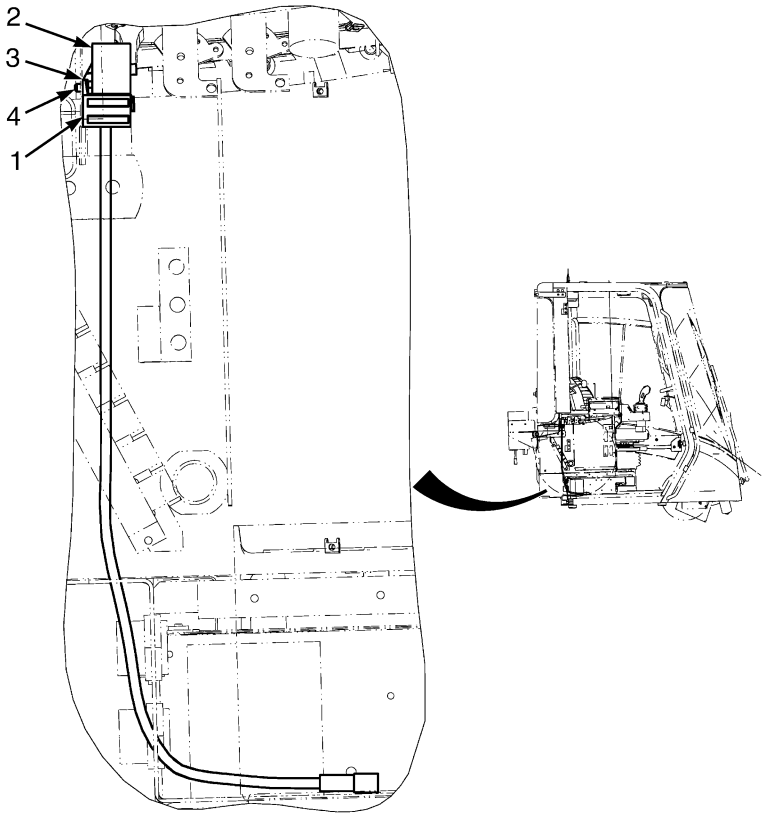

HP000893

ITEM	PART NO.	DESCRIPTION	QTY
1	4006988	Wire Harness	1
2	4006987	Relay	1
3	320156	Washer	1
4	292500	Capscrew	1

©2010 HYSTER COMPANY

13 FIELD CONVERSION KITS

SECTION 13
FIELD CONVERSION KITS

DESCRIPTION	PAGE
BRAKE TEMPERATURE SWITCH KIT	13-2
ENGINE FUEL PRESSURE SENDER	13-2
MAST HOSE SHEAVE KIT	13-2
OIL COOLER KIT	
TEMPERATURE SWITCH	13-2

©2010 HYSTER COMPANY

OIL COOLER KIT
TEMPERATURE SWITCH

DESCRIPTION	PART NUMBER
Kit-Oil Cooler	1687119

MAST HOSE SHEAVE KIT

DESCRIPTION	PART NUMBER
Kit-Sheave	1670695

ENGINE FUEL PRESSURE SENDER

DESCRIPTION	PART NUMBER
Pressure Sender (Engine/Fuel)	1684024

BRAKE TEMPERATURE SWITCH KIT

DESCRIPTION	PART NUMBER
Kit-Brake (Temperature Switch)	1671611

©2010 HYSTER COMPANY

14 NUMERICAL INDEX

SECTION 14
NUMERICAL INDEX

PART NO.	PAGE	ITEM
12845	1-53	6
	1-55	9
	1-57	9
12855	3-3	13
12858	4-6	
12921	10-18	42
13963	7-11	9
14349	9-40	29
14591	9-13	4
14595	9-47	26
14999	10-13	36
15055	1-11	12
15127	1-11	21
15134	10-13	20
	10-17	34
15146	10-7	14
15156	5-6	2
	9-3	21
15157	9-3	18
15160	9-3	10
15200	3-9	14
	3-11	11
	4-17	19
15212	8-3	26
	8-5	3
15235	1-35	10
15244	10-7	13
	10-13	34
15316	6-3	3
	6-5	3
15483	11-2	11
	12-10	11
15865	9-25	7
	9-29	13
	9-31	13
	9-33	13
15882	9-3	13
15890	10-25	9
15894	7-15	10
	7-17	10
16001	10-5	18
	10-7	2
	10-27	5
	10-27	15
16080	7-3	15
16187	4-5	13
16479	9-39	21
	9-47	14
16481	9-9	20
	9-9	26
	9-10	42
	9-13	4
	9-19	4
	9-35	8
	9-37	6
	9-39	8
16483	9-13	9
	9-35	17
	9-37	9
	9-39	5
	9-39	12
16484	9-3	31
	9-13	5
	9-19	5
	9-19	12
	9-35	15
	9-40	30
	9-47	26
16485	9-9	9
	9-9	18
	9-13	6
	9-39	10
	9-47	13
	9-47	16
16486	5-45	8
	9-9	5
	9-9	20
	9-10	42
	9-13	7
	9-13	14
	9-39	6
	9-39	7
	9-39	8
	9-39	15
	9-39	16
16487	9-10	30
	9-10	36
	9-13	3
	9-39	22
	9-47	19
16602	6-11	1
16694	3-3	12
16815	9-3	20
16865	3-13	13
16982	9-9	5
	9-9	6
	9-10	29
	9-39	6
	9-39	23
16983	9-13	21
	9-47	15
	10-8	56
17177	3-3	24
17194	3-3	14
17352	3-3	10
17639	3-3	30
17764	9-3	17
18191	10-27	19
18462	1-11	22
18515	1-11	13
18558	9-3	19
18602	9-3	9
30062	6-9	10
	6-11	12
30258	6-3	16
	6-5	19
35503	3-3	36
	9-47	18
37103	7-11	31
39373	9-47	12
39679	10-27	11
39743	9-47	22
39756	9-47	5
39767	9-25	8
	9-25	13
	9-29	7
	9-29	14
	9-31	7
	9-31	14
	9-33	7
	9-33	14
43310	5-19	33
47478	10-5	13
	11-5	9
53162	3-13	14
55289	10-25	5
57568	3-13	9
67470	4-27	4
	4-140	2
67551	10-27	1
79483	7-11	15
82270	7-11	5
85765	2-23	25
86007	6-3	6
88194	5-40	
88587	6-3	33
	6-6	38
	6-9	38
	6-11	34
90937	7-11	25
95033	7-11	40
95034	7-11	40
95166	7-11	40
97638	6-3	30
	6-6	34
110931	10-8	33
110932	10-8	33
110933	10-8	33
112989	2-23	14
114312	2-43	15
	3-13	17
115586	6-13	1
	7-18	1
116265	7-18	7
	7-22	7
117970	4-5	10
118135	1-55	10
	1-57	10
119236	2-23	28
125428	6-5	7
	6-9	17
	6-11	17
127852	1-53	7
	1-55	8
	1-57	8
128408	3-3	4
129563	1-37	11
	1-53	5
	1-55	4
	1-55	7
	1-57	4
	1-57	7
	2-23	24
	3-3	5
	4-5	2
	4-143	4
	10-17	37
130845	2-23	12
132860	10-7	1
	11-5	1
	11-7	8
132861	1-109	23
133481	4-22	5
135685	3-13	2
136405	10-8	54
136681	1-95	17

©2010 HYSTER COMPANY

NUMERICAL INDEX (continued)

PART NO.	PAGE	ITEM
	2-73	1
	7-3	1
	8-3	11
	9-20	4
136687	1-132	5
136692	1-57	12
	3-11	18
	4-9	1
	8-3	19
136703	10-13	24
	10-17	15
136704	10-13	9
	10-17	18
136718	10-8	44
136749	1-55	22
	1-115	10
	3-9	3
	3-11	24
	9-47	25
	12-2	3
136985	1-11	25
	1-55	17
	1-109	20
	2-73	6
	3-5	13
	3-7	13
	4-25	4
	4-29	3
	5-39	7
	5-45	1
	7-11	23
	8-3	20
	9-10	35
	9-19	20
	10-8	46
	10-23	27
137852	1-87	1
	2-43	4
	4-29	5
145824	3-5	1
	3-7	1
147983	3-5	2
	3-7	2
147985	3-5	2
	3-7	2
148607	4-6	
148648	4-6	
148778	4-6	42
148779	4-6	42
148792	4-5	32
148795	4-5	10
	4-5	32
148962	4-143	10
152837	10-18	42
159179	7-11	21
	7-11	38
159180	7-11	34
159185	7-12	44
	9-19	15
159186	7-12	44
	9-19	16
159295	10-7	26
159296	10-7	25
159297	10-8	34
159299	10-7	28
166285	3-3	3
167970	10-7	10
167971	10-7	9
168718	2-23	22
169787	5-40	9
	5-45	3
174166	2-23	13
175875	1-53	3
	1-55	6
	1-57	6
176640	1-9	32
	1-11	30
	1-35	16
	2-53	9
	4-27	5
	9-13	25
	12-4	8
177051	5-42	2
186304	4-11	10
189451	10-13	38
190757	5-40	8
	5-45	2
	9-3	22
192683	7-11	12
195566	1-35	3
196959	3-5	2
	3-7	2
198518	10-25	8
199085	9-3	23
199524	9-47	26
199917	9-3	16
200972	6-9	10
	6-11	12
204128	9-35	8
	9-37	6
208107	6-3	24
	6-5	27
210084	6-3	14
	6-5	16
210403	1-9	31
214195	6-3	8
214336	3-5	2
	3-7	2
214364	9-19	21
	9-47	1
	10-21	5
	10-23	6
216735	7-3	19
220434	3-13	16
220932	3-13	3
221295	10-8	58
221354	6-12	36
221355	6-9	36
221357	10-14	39
221377	10-25	13
221573	6-12	35
221707	10-13	19
	10-17	35
221714	9-43	1
221729	10-7	24
221777	10-27	13
222261	9-47	17
222442	9-35	8
	9-37	6
222443	9-35	17
	9-37	9
222524	1-9	26
222533	9-3	11
222555	9-3	12
227129	4-15	
227220	3-5	2
	3-7	2
230389	7-11	22
230390	7-11	30
230408	10-7	27
233141	4-43	9
	4-43	12
	4-49	16
	4-49	19
	4-61	34
	4-61	40
	4-69	34
	4-69	40
235691	9-35	15
	9-37	11
237953	10-17	36
239423	1-9	
	1-85	1
239503	1-11	23
	1-113	3
	1-115	8
	7-3	3
	8-3	9
239536	3-3	27
240683	6-9	9
	6-11	11
244167	9-13	20
	9-17	9
	9-39	21
	9-47	14
	10-8	56
246001	1-94	8
	7-11	41
	9-39	1
	10-3	2
	10-13	30
	10-17	4
248320	10-27	14
251099	10-27	10
251979	9-3	24
	10-7	15
	10-7	18
	10-8	53
	10-8	60
252729	9-9	9
	9-9	18
	9-13	6
	9-17	6
	9-20	8
	9-47	13
	10-14	44
	11-38	6
	11-59	4
	11-60	3
257241	4-6	40
264134	3-3	22
264159	9-3	24
	9-47	17
265731	9-13	9
	9-47	16
	11-36	9
	11-38	5
	11-52	4
	11-59	7
	11-60	5
270826	2-53	22
273969	6-3	26
	6-5	30
274044	7-11	39
275498	4-5	10
	4-6	32
	4-6	42
276228	10-5	11

See Service Manual for service procedures.
©2010 HYSTER COMPANY

NUMERICAL INDEX (continued)

PART NO.	PAGE	ITEM
	11-5	7
280154	9-13	3
280610	10-14	41
287750	5-45	14
287805	1-109	27
	4-147	4
287814	9-39	13
287816	1-45	10
	1-47	12
	12-9	3
287837	1-109	8
	11-2	1
	12-10	1
287851	1-35	26
	1-37	1
287854	1-57	17
	4-9	3
287860	5-47	12
	9-7	8
292500	1-23	11
	4-17	9
	9-51	8
	9-57	9
	12-12	4
292501	1-20	7
	1-65	12
	1-79	13
	1-113	10
	1-115	6
	1-117	8
	3-11	15
	4-5	21
	4-17	1
	4-17	7
	7-3	21
	8-3	29
292502	4-17	18
	8-3	30
292509	10-13	28
	10-17	24
292513	1-79	10
	2-23	4
	2-53	3
	3-3	1
	9-9	10
	9-9	15
292514	1-28	3
	1-37	6
	10-23	28
	11-17	2
	11-55	6
	11-61	3
292515	4-5	6
	5-47	11
292516	1-57	18
	9-3	34
	10-21	6
	11-21	13
	11-21	47
	11-25	15
	11-25	40
292517	1-55	18
292519	9-17	8
	10-21	9
	10-23	18
292521	5-45	7
	9-13	15
292522	1-55	19
	2-23	20
	9-17	3
292523	3-11	1
292526	4-5	5
292527	2-73	16
	7-11	6
	9-3	27
292528	1-91	19
	1-93	
	1-93	5
	1-94	7
	1-94	8
	1-123	11
	9-3	15
292531	2-73	12
	10-3	14
292535	1-35	8
	9-39	24
	10-3	13
	10-8	39
292538	10-7	20
292539	9-3	28
292562	10-8	37
	10-27	10
292572	5-47	8
292573	2-48	1
292574	10-27	8
292581	10-13	2
	10-17	3
292582	5-47	6
292661	1-13	6
	6-5	17
292667	1-17	28
292682	2-23	19
	3-11	17
	5-47	10
	7-11	24
	10-8	43
293628	1-132	7
293644	10-5	17
293645	10-7	30
293654	6-9	34
	6-11	31
293726	11-17	14
	11-55	2
293743	3-3	17
293744	2-43	13
293796	1-11	8
294309	9-43	37
296010	1-109	11
296012	7-3	16
	8-5	1
296025	7-3	13
296032	1-11	28
	1-35	1
296155	12-3	4
296167	12-7	2
296171	1-9	22
	12-8	4
296172	1-9	
296174	1-9	12
	1-11	16
	3-3	19
	4-27	9
	9-47	28
296175	1-9	7
	2-53	15
296176	1-9	20
296229	1-45	4
	1-47	21
296255	10-5	7
296407	4-5	7
296415	1-17	27
	1-31	3
296419	1-28	9
	1-109	24
	12-2	2
296422	2-48	4
296426	11-21	1
	11-25	1
296434	7-11	1
296438	1-13	5
	6-5	14
296844	6-9	
	6-11	19
300088	1-11	7
300939	1-35	7
	9-40	27
302014	8-3	22
302023	1-105	7
	1-107	7
302047	7-5	11
302100	11-35	2
	11-56	6
	11-62	8
302381	1-11	5
302398	2-43	9
	4-5	31
	4-7	4
	12-3	1
	12-4	9
	12-6	3
302399	4-6	39
	12-9	4
302400	1-9	36
	1-35	19
	4-27	2
	5-45	11
	9-20	2
	9-47	20
	10-13	10
	10-17	17
	11-7	3
	11-8	3
	11-22	57
	11-25	35
	11-48	7
	12-4	5
	12-7	5
302401	1-9	11
	1-11	27
	1-35	5
	1-55	14
	1-57	14
	2-23	7
	2-43	5
	2-53	7
	2-73	11
	3-5	11
	3-7	11
	3-9	21
	4-5	9
	4-25	6
	4-29	9
	5-39	3
	9-7	12
	9-9	14
	9-17	
	10-3	4
	10-8	45

©2010 HYSTER COMPANY

NUMERICAL INDEX (continued)

PART NO.	PAGE	ITEM
	10-9	63
	10-13	15
	10-17	9
	11-2	3
	12-10	3
302402	9-3	29
	9-40	28
	10-3	11
	10-7	23
	10-13	29
	10-17	6
	11-29	7
	11-31	7
	11-48	4
	11-49	4
	11-50	5
302404	2-48	8
	5-47	9
	10-27	4
302408	11-5	18
	11-7	16
	11-31	1
302468	10-5	2
306955	4-17	24
313222	10-13	18
	10-17	33
313805	10-8	48
313860	8-3	1
316596	10-17	36
316829	7-17	5
316833	4-17	21
316834	1-17	22
	1-27	4
	1-45	13
	1-47	9
	1-79	15
	1-109	3
	1-113	4
	1-115	2
	1-117	6
	4-17	6
	8-3	4
316835	3-9	22
	3-11	19
	4-147	5
	8-3	37
320155	2-43	10
	3-3	18
	4-5	29
	4-7	2
	4-27	7
	12-3	2
	12-4	2
	12-6	4
320156	1-17	6
	1-27	13
	1-65	11
	1-75	3
	1-79	14
	1-115	3
	1-117	7
	1-132	4
	3-9	13
	3-11	9
	4-5	22
	4-17	2
	4-143	9
	8-3	3
	9-51	9
	9-57	11
	10-7	3
	12-9	2
	12-12	3
320157	1-9	35
	1-11	29
	1-35	17
	1-37	2
	1-55	21
	2-73	2
	4-27	3
	5-45	12
	9-13	24
	9-20	3
	9-47	2
	10-13	27
	10-17	16
	10-23	5
	12-4	6
320158	1-9	33
	1-115	9
	2-53	8
	3-3	32
	3-9	23
	3-11	20
	4-147	2
	7-3	2
	8-3	10
	8-3	24
	12-7	3
320159	1-9	6
	1-11	26
	1-35	4
	1-37	5
	1-55	15
	1-57	15
	2-53	4
	2-73	7
	3-3	2
	3-5	12
	3-7	12
	4-25	5
	4-27	8
	4-29	8
	5-39	4
	9-7	13
	9-9	11
	9-17	3
	9-19	19
	10-3	8
	10-8	61
	10-13	14
	10-17	8
	11-2	9
	11-21	7
	11-25	5
	12-10	9
320160	1-9	13
	1-28	4
	1-57	19
	1-79	9
	2-23	5
	2-53	16
	3-3	20
	3-11	2
	4-5	8
	4-9	2
	9-47	29
	10-23	26
320161	2-73	4
	4-5	4
	7-11	7
	9-3	14
	9-39	25
	10-3	3
	10-7	31
	10-8	38
	10-13	31
	10-17	5
	11-2	2
	12-10	2
320165	2-48	2
	5-47	7
	10-8	40
	10-13	33
	10-27	3
320169	1-35	11
	5-47	5
	10-13	1
	10-17	2
320174	1-35	14
320181	11-5	19
	11-7	17
321158	4-5	26
321177	10-3	10
321197	10-5	8
321293	6-3	4
	6-3	35
	6-5	5
322668	1-87	1
325708	3-9	8
325789	4-22	3
325980	3-3	35
326004	1-11	15
327591	8-5	2
329069	3-3	33
330527	5-5	9
330542	5-11	23
	5-26	1
339490	7-11	29
339969	4-25	2
340213	8-3	32
345355	4-27	6
345408	7-9	2
345409	7-9	3
345410	7-9	4
345411	7-9	5
345412	7-9	6
345424	7-9	11
346330	4-122	3
352485	3-9	12
	3-11	8
352499	3-9	5
352885	3-9	6
352969	3-13	18
353129	3-9	15
	3-11	12
353141	3-11	3
353142	3-9	10
	3-11	6
353143	3-9	11
	3-11	7
353154	3-13	4
353164	3-11	10
353165	3-13	15
353168	3-13	5
353175	3-13	11
353195	3-9	4
	3-11	22

©2010 HYSTER COMPANY

NUMERICAL INDEX (continued)

PART NO.	PAGE	ITEM
353397	3-13	1
353422	3-13	6
353432	3-13	7
353441	3-13	6
353448	3-13	8
353453	4-147	3
356035	11-35	15
358300	10-25	2
359207	3-13	10
362030	1-11	9
366066	7-3	12
367251	1-11	11
367540	4-22	4
370009	4-5	11
370646	4-32	18
	4-32	22
	4-32	31
	4-32	38
	4-32	45
	4-32	51
	4-36	18
	4-36	22
	4-36	31
	4-36	38
	4-36	45
	4-37	51
	4-37	53
	4-40	18
	4-40	22
	4-40	31
	4-40	38
	4-40	45
	4-41	51
	4-41	53
370647	4-32	23
	4-32	25
	4-32	26
	4-32	27
	4-32	29
	4-32	30
	4-32	33
	4-32	34
	4-32	36
	4-32	40
	4-32	41
	4-32	47
	4-32	50
	4-36	23
	4-36	25
	4-36	26
	4-36	27
	4-36	29
	4-36	30
	4-36	33
	4-36	34
	4-36	36
	4-36	40
	4-36	41
	4-37	47
	4-37	48
	4-37	50
	4-40	23
	4-40	25
	4-40	26
	4-40	27
	4-40	29
	4-40	30
	4-40	33
	4-40	34
	4-40	36
	4-40	40
	4-41	47
	4-41	48
	4-41	50
370648	4-32	24
	4-32	39
	4-32	43
	4-33	53
	4-36	24
	4-36	43
	4-37	54
	4-40	24
	4-41	54
370728	4-49	7
370776	1-37	3
371345	7-9	
371666	7-5	2
373091	12-3	7
374159	8-3	21
376026	6-13	6
	6-14	6
	6-15	6
	6-16	6
	6-17	6
	6-18	6
	7-18	6
	7-19	6
	7-20	6
	7-21	6
	7-22	6
	7-23	6
376186	10-25	1
376505	7-3	18
	12-3	3
376649	2-23	11
379902	4-11	10
382628	5-35	22
	5-37	8
384014	12-3	6
385133	10-11	2
385456	5-26	9
387246	10-25	10
387247	10-25	12
387248	10-25	11
389688	1-87	
392197	10-5	12
	11-5	8
392800	2-23	26
636907	10-11	8
637168	10-11	10
637170	10-11	3
638256	10-11	11
638299	10-11	4
806426	4-6	35
	4-6	44
806667	1-11	24
815848	1-9	34
815932	10-13	35
816107	1-11	20
816232	9-13	18
816552	6-16	
816591	9-3	32
885189	1-13	3
885983	1-13	4
886835	12-7	1
887317	4-9	9
887334	4-27	6
888012	1-85	12
888333	9-47	8
895468	7-3	9
1151135	1-9	21
1194251	10-8	50
1300057	4-32	19
	4-32	21
	4-36	19
	4-36	21
	4-40	19
	4-40	21
1300117	7-3	17
1300134	4-32	44
	4-36	44
	4-40	43
	4-40	44
1301224	4-17	22
1301410	1-88	3
1301411	1-88	2
1301650	10-14	40
1301685	1-23	
	1-25	19
1302024	12-4	3
1302938	2-48	7
	5-47	4
1303383	10-7	19
1303391	10-8	57
1303417	6-13	7
	6-14	7
	6-17	7
	6-18	7
	7-19	7
	7-23	7
1307121	4-5	23
1310630	4-32	20
	4-32	32
	4-32	35
	4-32	42
	4-32	49
	4-36	20
	4-36	32
	4-36	35
	4-36	42
	4-37	49
	4-40	20
	4-40	32
	4-40	35
	4-40	42
	4-41	49
1310638	12-3	5
1310667	4-22	1
1310668	4-22	6
	4-25	1
	4-29	1
1311716	5-15	30
	5-19	34
1311719	5-15	29
1311814	5-15	27
	5-19	32
1312083	6-9	22
	6-11	20
	6-12	39
1312201	3-5	14
1312373	5-6	3
1312376	5-11	1
1312616	6-9	8
	6-11	10
1313879	8-7	5
1314285	5-6	1
1315781	7-9	15

©2010 HYSTER COMPANY

NUMERICAL INDEX (continued)

PART NO.	PAGE	ITEM
1318323	4-22	1
1318606	9-43	34
1318609	9-43	21
1318613	9-43	16
1318617	9-43	11
1318619	9-43	5
1318621	9-43	2
1319579	9-43	7
1320669	4-36	39
	4-40	39
	4-124	5
1320982	9-25	4
	9-26	2
	9-29	4
	9-31	4
	9-33	4
1320994	9-25	3
	9-29	2
	9-31	3
	9-33	3
1320998	9-25	2
	9-29	3
	9-31	2
	9-33	2
1321890	10-27	17
1322039	10-13	25
	10-17	28
1323166	10-13	21
	10-17	32
1323576	4-49	1
	4-49	2
	4-59	1
	4-59	2
	4-67	1
	4-67	2
1323579	4-100	20
	4-108	20
	4-128	2
1323581	4-49	1
	4-49	2
	4-59	1
	4-67	1
1323975	4-22	1
1324307	12-4	4
1324308	12-4	4
1324309	12-4	4
1324310	12-4	4
1324518	4-6	33
1325646	7-11	26
1325756	10-5	14
	11-5	10
1325761	10-5	10
	11-5	6
1325763	10-5	15
	11-5	4
1325764	10-5	15
	11-5	4
1325765	10-5	9
	11-5	5
1325785	11-2	10
	12-10	10
1325795	11-2	4
	12-10	4
1325797	11-2	5
	12-10	5
1325798	11-2	6
	12-10	6
1325935	1-11	15
1328205	1-87	
1329152	4-100	23
	4-108	23
1329250	7-5	1
1329441	11-56	8
	11-62	5
1329442	11-56	9
	11-62	6
1329443	11-5	2
	11-21	32
	11-25	30
	11-56	10
	11-62	1
1329445	11-56	3
	11-62	4
1329447	11-56	4
	11-62	10
1329448	11-56	5
	11-62	9
1329449	11-56	2
	11-62	3
1329493	11-7	
	11-21	21
	11-26	61
1330281	4-84	22
	4-92	22
	4-100	20
	4-100	23
	4-108	20
	4-108	23
	4-128	2
1330355	4-84	23
	4-92	23
	4-100	25
1330356	4-84	23
	4-92	23
	4-100	25
1330409	4-22	2
	4-23	2
1330414	4-22	2
	4-23	3
	4-44	26
	4-83	11
	4-91	11
	4-99	11
	4-107	11
	4-120	3
	4-122	1
1330415	4-63	8
	4-73	8
	4-127	1
	4-140	4
	4-143	3
	4-143	3
1330416	4-113	1
	4-114	1
	4-123	1
	4-126	2
1330417	4-115	1
	4-124	3
1330418	4-70	44
	4-111	4
	4-111	6
	4-143	5
	4-144	4
	4-145	6
1330419	4-27	4
1330424	4-27	4
1330426	4-51	33
	4-143	3
1330429	4-69	43
1330435	4-23	4
1330437	4-22	2
	4-43	15
	4-44	26
	4-49	5
	4-50	30
	4-50	32
	4-51	35
	4-55	18
	4-60	25
	4-61	28
	4-61	30
	4-63	3
	4-68	25
	4-69	28
	4-69	30
	4-69	41
	4-70	44
	4-73	3
	4-79	3
	4-83	11
	4-87	3
	4-91	11
	4-95	1
	4-99	11
	4-103	1
	4-107	11
	4-111	4
	4-111	6
	4-113	1
	4-114	1
	4-115	1
	4-115	2
	4-116	1
	4-120	3
	4-123	1
	4-126	3
	4-127	1
	4-143	3
	4-143	3
	4-143	5
	4-144	1
	4-144	4
	4-145	6
1330438	4-27	4
	4-43	1
	4-44	27
	4-47	1
	4-47	2
	4-47	5
	4-47	7
	4-50	22
	4-50	26
	4-51	33
	4-51	38
	4-52	48
	4-55	1
	4-56	20
	4-59	10
	4-60	16
	4-60	18
	4-61	31
	4-63	1
	4-63	2
	4-63	8
	4-67	10
	4-67	16
	4-68	18
	4-69	31

©2010 HYSTER COMPANY

NUMERICAL INDEX (continued)

PART NO.	PAGE	ITEM
	4-69	42
	4-70	43
	4-73	1
	4-73	2
	4-73	8
	4-77	1
	4-77	2
	4-77	3
	4-77	7
	4-79	1
	4-79	6
	4-79	7
	4-79	8
	4-79	12
	4-80	25
	4-81	29
	4-83	2
	4-83	4
	4-83	5
	4-83	7
	4-83	10
	4-87	1
	4-87	4
	4-87	6
	4-87	7
	4-87	8
	4-87	12
	4-88	25
	4-89	28
	4-89	29
	4-91	2
	4-91	4
	4-91	5
	4-91	7
	4-91	10
	4-95	3
	4-95	4
	4-95	6
	4-95	7
	4-95	8
	4-95	12
	4-96	15
	4-96	17
	4-99	2
	4-99	4
	4-99	5
	4-99	7
	4-99	10
	4-103	3
	4-103	4
	4-103	6
	4-103	7
	4-103	8
	4-103	12
	4-104	15
	4-104	17
	4-105	33
	4-107	2
	4-107	4
	4-107	5
	4-107	7
	4-107	10
	4-113	2
	4-114	2
	4-114	4
	4-123	3
	4-125	2
	4-143	3
	4-144	2
	4-144	5
1330439	4-47	1
	4-47	3
	4-47	6
	4-47	8
	4-50	31
	4-50	32
	4-51	38
	4-55	5
	4-55	8
	4-55	18
	4-59	5
	4-59	10
	4-60	26
	4-60	27
	4-61	28
	4-61	29
	4-63	3
	4-63	6
	4-63	7
	4-63	10
	4-64	16
	4-67	5
	4-67	10
	4-68	26
	4-68	27
	4-69	28
	4-69	29
	4-73	3
	4-73	6
	4-73	7
	4-74	16
	4-77	1
	4-79	3
	4-83	1
	4-83	2
	4-83	3
	4-83	4
	4-83	5
	4-83	10
	4-84	14
	4-84	19
	4-84	20
	4-87	3
	4-91	1
	4-91	2
	4-91	3
	4-91	4
	4-91	5
	4-91	10
	4-92	14
	4-92	19
	4-92	20
	4-96	16
	4-99	6
	4-99	13
	4-104	16
	4-105	34
	4-107	6
	4-107	13
	4-111	4
	4-111	4
	4-111	6
	4-111	6
	4-113	3
	4-114	3
	4-114	5
	4-116	1
	4-144	4
	4-144	5
	4-145	6
1330915	1-11	35
1330917	1-87	5
1330920	1-85	13
1332206	9-39	11
1332278	11-5	24
	11-7	6
1332342	11-35	14
1332344	11-35	3
1332346	11-35	4
1334633	11-11	23
	11-13	23
	11-15	27
1335126	1-85	7
1335146	1-87	7
1335867	7-12	42
	9-19	13
1335871	7-12	45
	9-19	17
1336112	10-21	14
1336780	4-22	
	4-25	1
	4-29	1
1336781	4-22	2
1337197	4-11	10
1337828	4-32	48
	4-33	52
	4-37	52
	4-41	52
1345023	5-39	5
1345939	1-85	14
1346893	1-85	9
1347119	5-47	13
1347202	10-13	26
	10-17	25
1347772	6-9	10
1347774	6-9	14
	6-11	14
1347800	6-9	18
	6-11	15
1347812	6-9	19
	6-11	16
1347819	6-11	4
1347822	6-9	15
	6-11	17
1347827	6-11	21
1347831	6-9	24
	6-11	23
1347835	6-9	27
	6-11	26
1347839	6-9	5
	6-11	7
1352090	3-13	12
1352575	3-9	5
	3-11	4
	3-13	
1352603	4-43	15
	4-115	2
	4-116	1
	4-144	1
1354165	1-85	15
1354497	4-6	35
	4-6	44
1355031	10-27	20
1355326	7-9	8
1356947	4-29	4
1357026	7-9	9
1357269	4-6	32

©2010 HYSTER COMPANY

NUMERICAL INDEX (continued)

PART NO.	PAGE	ITEM
	4-6	42
1357734	6-9	21
	6-11	20
	6-12	38
1359667	3-3	23
1363885	4-79	3
	4-87	3
	4-111	4
	4-111	6
	4-113	1
	4-122	1
	4-124	3
1363886	4-47	1
	4-50	22
	4-55	7
	4-55	15
	4-60	16
	4-63	9
	4-63	15
	4-67	16
	4-73	9
	4-73	15
	4-77	1
	4-79	1
	4-80	25
	4-81	29
	4-83	2
	4-83	5
	4-84	12
	4-87	1
	4-88	25
	4-89	29
	4-91	2
	4-91	5
	4-92	12
	4-95	3
	4-96	15
	4-96	20
	4-99	5
	4-100	14
	4-103	3
	4-104	15
	4-104	20
	4-107	5
	4-108	14
	4-119	6
	4-119	7
	4-119	8
	4-120	6
	4-120	7
	4-121	8
1364272	10-3	9
	10-13	13
	10-17	7
	11-2	8
	12-10	8
1367281	4-27	4
1367282	4-27	4
1367370	3-3	6
1372824	10-5	1
1372825	10-5	1
1372962	11-2	7
	12-10	7
1372971	10-7	4
1372990	7-9	
1373010	10-7	6
1373011	10-7	7
1373012	10-7	12
1373014	10-7	5
1373015	10-7	5
1373016	10-7	5
1373020	10-7	16
1373025	10-5	3
1373026	10-5	3
1373027	10-5	3
1373028	10-5	5
1373029	10-5	5
1373030	10-5	5
1373031	10-3	16
1373032	10-3	16
1373033	10-3	16
1373034	10-3	6
1373035	10-3	6
1373036	10-3	6
1373037	10-3	17
1373038	10-3	7
1373039	10-5	4
1373049	10-5	6
1373050	10-3	15
1373051	10-3	5
1373126	10-11	9
1373127	10-11	7
1373129	10-11	12
1373329	10-5	15
	11-5	4
1373430	2-53	24
1373437	3-5	5
	3-7	5
1373675	7-11	20
1373687	7-11	17
1373688	7-11	35
1373689	7-11	18
	7-11	37
1374096	6-11	1
1374097	6-9	7
	6-11	9
1374099	6-9	15
	6-11	17
1374550	6-9	16
	6-11	17
1374552	6-11	2
1375018	7-9	7
1375021	7-9	
1375676	1-85	16
1376844	9-3	25
1376929	9-44	10
1376933	9-44	8
1377216	9-25	16
	9-29	19
	9-31	19
	9-33	19
1377229	9-21	1
	9-22	1
1378661	4-124	4
1379753	6-9	29
	6-11	27
1380784	6-3	7
1380797	6-11	28
1381932	7-11	16
1381940	7-12	43
	9-19	14
1382052	9-43	18
1382053	9-43	19
1382352	7-11	2
1382381	6-13	1
	7-18	1
1382382	6-13	1
	7-18	1
1382383	6-13	1
	6-17	1
	7-18	1
	7-22	1
1382558	7-9	10
1382559	7-9	13
1382560	7-9	14
1382561	7-9	
1382570	6-3	29
	6-5	33
1382571	6-3	23
	6-5	26
1382572	6-3	22
	6-5	25
1382574	6-3	18
	6-5	21
1382902	8-7	16
1383552	10-7	11
1383854	9-19	18
1384403	11-35	8
1384669	3-3	25
1384799	5-26	7
1384859	8-7	15
1384861	8-7	14
1384864	8-7	19
1384877	6-3	2
	6-5	4
1384878	6-5	4
1384879	6-5	4
1384880	6-5	4
1384881	6-5	4
1385535	2-53	13
1385576	7-11	33
1385577	6-13	2
	6-14	2
	6-15	2
	6-18	2
	7-18	2
	7-19	2
	7-20	2
	7-23	2
1385582	7-15	7
	7-17	7
1385583	7-15	9
	7-17	9
1385586	7-15	12
	7-17	12
1385587	7-15	11
	7-17	11
1385590	7-11	3
	7-15	
1385594	7-11	11
1385595	7-11	8
1385596	7-11	10
1385597	7-11	36
1385598	7-11	36
1385599	7-11	11
1388428	7-7	3
1388434	7-7	6
1388435	7-7	35
1388436	7-7	36
1388438	7-7	20
1389405	10-11	5
1389406	10-11	5
1389408	10-8	55
	10-11	
1389409	10-8	55
	10-11	
1389479	4-31	16
	4-31	17

See Service Manual for service procedures.
©2010 HYSTER COMPANY

NUMERICAL INDEX (continued)

PART NO.	PAGE	ITEM
	4-32	28
	4-32	37
	4-32	46
	4-35	12
	4-36	16
	4-36	17
	4-36	28
	4-36	37
	4-36	46
	4-39	12
	4-40	16
	4-40	17
	4-40	28
	4-40	37
	4-40	46
1389525	3-3	15
1390281	1-55	16
	1-57	16
1391058	6-15	2
	6-17	2
	6-18	2
	7-20	2
	7-22	2
	7-23	2
1391207	7-15	1
1391208	7-15	2
1391209	7-15	3
1391210	7-15	4
1391211	7-15	5
1391212	7-15	6
1391400	7-11	4
1391406	7-15	
	7-17	
1391407	7-15	8
	7-17	8
1391427	2-53	2
1391451	10-27	6
1391481	10-11	1
1391482	10-11	1
1391500	10-27	2
1391522	10-27	7
1391523	10-27	9
1391557	6-17	2
	7-22	2
1391646	6-16	2
	7-21	2
1391744	8-5	4
1391745	8-5	4
1391877	10-11	
1393466	1-27	8
1393473	1-7	7
	1-51	10
1393474	1-7	4
	1-51	9
1393499	1-17	1
	1-79	19
1393528	4-9	8
1393726	10-3	12
1393735	10-8	47
1393738	10-8	49
1393742	7-11	3
	7-17	
1393760	1-85	17
1393781	4-17	15
1393787	6-16	1
	7-21	1
1393797	6-15	1
	7-20	1
1393802	10-21	3
	10-23	4
1394008	9-3	7
1396346	2-73	14
1399332	4-6	43
1402888	4-84	22
	4-92	22
	4-100	23
	4-108	23
1450390	8-5	4
1450547	9-43	35
1450759	1-9	9
1450810	1-85	8
1450861	6-9	12
	6-9	25
	6-11	3
	6-11	22
	6-11	32
1450865	6-3	31
	6-6	35
1450867	6-3	28
	6-5	32
1450868	6-3	19
	6-5	22
1451416	1-87	6
1451454	6-16	2
	7-21	2
1451823	10-11	6
1452916	6-13	3
	6-14	4
	6-15	4
	6-16	4
	6-17	3
	6-18	3
	7-18	3
	7-19	4
1453031	1-77	2
	1-81	2
1453849	7-17	6
1453850	7-17	1
1453851	7-17	3
1453852	7-17	4
1455301	10-7	29
1455487	10-8	35
1455490	10-8	52
1455992	10-7	32
1456204	9-43	9
1459254	9-13	17
1459409	11-8	4
	11-22	59
	11-26	55
	11-50	2
1460398	6-14	1
	7-19	1
1460402	6-14	1
	7-19	1
1460405	6-14	1
	7-19	1
1460406	6-14	1
	7-19	1
1460437	10-8	53
1460448	6-14	1
	7-19	1
1460451	6-14	1
	7-19	1
1461081	1-132	3
1463140	4-50	32
	4-51	35
	4-60	25
	4-61	28
	4-68	25
	4-68	28
	4-140	5
1463141	4-43	1
	4-79	10
	4-83	1
	4-87	10
	4-91	1
	4-95	10
	4-99	1
	4-103	10
	4-107	1
	4-125	5
1463180	4-79	11
	4-87	11
	4-95	11
	4-103	11
1463194	4-77	3
	4-77	7
	4-80	16
	4-83	7
	4-88	16
	4-91	7
	4-97	32
	4-99	7
	4-105	32
	4-105	33
	4-107	7
	4-114	4
1464454	2-48	6
	5-47	3
1464456	2-48	5
1465378	4-50	21
	4-50	24
	4-59	14
	4-60	17
	4-67	14
	4-68	17
1465599	10-8	36
1465601	10-8	42
1465602	10-8	41
1466004	6-13	4
	6-14	3
	6-15	3
	6-16	3
	6-17	4
	6-18	4
	7-18	4
	7-19	3
	7-20	3
	7-21	3
	7-22	4
	7-23	4
1467522	1-93	6
1467531	1-94	9
1468306	1-17	16
1468310	4-9	12
1468312	1-7	6
	1-51	7
1468313	1-28	10
1468318	1-19	6
	1-19	18
	1-29	5
	1-31	4
	1-32	7
	12-5	2

©2010 HYSTER COMPANY

NUMERICAL INDEX (continued)

PART NO.	PAGE	ITEM
1468319	1-79	21
	1-105	3
	1-107	3
	4-11	3
	4-21	11
	7-5	8
1468320	1-19	3
1468321	1-20	6
	1-45	9
	1-47	11
	1-105	10
	1-107	10
	1-119	10
	7-3	22
1468323	3-9	2
	3-11	23
1470155	1-93	6
1470765	10-25	3
1470827	11-39	3
	11-51	4
1470828	11-52	2
1470840	11-51	1
1470841	11-37	9
	11-38	5
	11-52	4
	11-59	7
	11-60	5
1470852	5-45	10
1473475	11-35	1
1473476	11-35	9
1473477	11-35	6
1473478	11-35	5
1473482	11-36	7
	11-37	5
	11-37	7
	11-38	2
1473491	11-37	2
1473839	6-3	34
	6-6	37
1473879	10-21	11
1473887	9-13	5
	9-19	5
	9-40	30
	10-21	12
1473888	9-9	4
	9-13	7
	9-39	15
1473889	9-39	21
	9-47	14
1473892	9-9	6
	9-39	23
1473895	9-10	40
	9-19	3
1473897	9-3	31
	9-19	12
	10-23	2
	10-23	3
1473924	9-47	15
1473927	9-39	19
1473936	5-45	15
1475420	6-9	4
	6-11	6
1475421	6-9	3
	6-11	5
1475732	1-39	
1476421	1-11	4
	1-11	33
	1-65	13
	1-109	4
	1-113	5
	8-3	31
1476584	1-95	16
	1-109	30
	7-3	4
	8-3	12
	12-2	4
1476739	9-39	14
1476882	10-25	4
1477228	7-3	14
1478794	5-41	1
1478795	5-42	1
1479109	4-85	27
	4-93	27
	4-100	28
	4-108	25
1479473	7-7	2
1479898	4-27	6
1480186	1-37	12
1480188	4-119	1
	4-120	1
1480201	4-29	7
1480231	4-29	2
1480232	4-29	6
1480236	12-4	7
1480674	8-5	5
1482400	5-45	5
1482659	4-60	23
	4-68	23
	4-80	26
	4-83	8
	4-89	26
	4-91	8
	4-96	19
	4-99	9
	4-104	19
	4-107	9
	4-111	5
	4-119	4
	4-120	4
1482663	4-84	23
	4-92	23
	4-100	25
1482765	6-6	43
	8-7	12
1482798	1-93	
1482801	1-94	10
1482802	1-93	3
1482803	1-94	12
1482804	1-93	5
1482805	1-94	7
1482806	1-93	1
1482904	1-94	9
1482905	1-94	9
1482906	1-94	9
1482907	1-94	9
1482908	1-94	9
1482909	1-94	9
1482910	1-94	7
1482913	1-93	4
1482915	1-93	
1482917	1-91	16
	1-93	
	1-93	1
	1-93	4
	1-94	7
	1-94	10
	1-97	2
	1-101	2
	1-123	16
1482919	1-93	1
	1-93	4
	1-93	5
	1-94	7
	1-94	9
	1-94	10
1482920	1-93	5
1482924	1-93	1
	1-93	3
	1-93	3
	1-93	4
	1-94	7
1482925	1-91	6
	1-94	6
	1-123	6
1482948	1-91	1
	1-94	6
	1-123	1
1482949	1-91	
	1-94	6
1482950	1-94	6
1482951	1-91	17
	1-93	1
	1-94	10
	1-123	17
1482952	1-93	1
	1-94	7
	1-94	10
	1-94	11
	1-94	12
	1-95	12
1482953	1-93	1
	1-94	7
	1-94	10
	1-94	11
	1-95	12
	1-95	12
	1-97	3
	1-98	7
1482954	1-93	
1482955	1-93	3
1482957	1-93	3
1482958	1-93	3
1482959	1-93	4
1482960	1-93	5
1482961	1-93	5
	1-94	7
1482969	1-94	7
1482970	1-94	9
1482971	1-94	10
1482974	1-93	1
1482979	1-91	10
	1-123	10
1482980	1-91	
	1-98	7
	1-123	13
1482981	1-91	
	1-123	13
1482989	1-97	
1482990	1-91	15
	1-97	2
	1-98	7
	1-101	2
	1-123	15
1482992	1-101	
1482994	1-91	4
	1-123	4
1482995	1-91	
	1-123	17

See Service Manual for service procedures.
©2010 HYSTER COMPANY

NUMERICAL INDEX (continued)

PART NO.	PAGE	ITEM
1482997	1-91	
	1-123	17
1482998	1-123	
1482999	1-91	13
	1-123	13
1483000	1-91	18
	1-123	12
1483001	1-101	1
1483002	1-101	1
1483003	1-97	1
	1-97	2
	1-97	3
	1-97	6
	1-98	7
	1-98	9
	1-101	1
	1-101	2
	1-101	7
1483004	1-97	1
	1-97	3
	1-97	6
	1-98	7
	1-98	9
	1-101	1
	1-101	7
1483005	1-97	1
1483006	1-97	1
1483007	1-101	2
1483008	1-101	2
1483009	1-97	2
	1-97	6
	1-101	2
	1-101	7
1483010	1-97	2
	1-97	6
	1-98	7
	1-101	2
	1-101	7
	1-102	11
1483011	1-101	2
	1-102	10
1483012	1-101	3
1483013	1-101	3
1483014	1-101	4
1483015	1-101	6
1483016	1-101	6
1483017	1-101	6
1483018	1-101	6
	1-102	9
1483019	1-101	6
1483020	1-101	4
1483021	1-101	4
1483022	1-101	4
1483023	1-101	4
1483024	1-101	5
1483025	1-101	5
1483026	1-101	5
	1-101	8
	1-102	11
1483027	1-101	7
1483028	1-101	7
1483029	1-97	6
	1-101	7
1483030	1-101	8
1483031	1-97	7
	1-98	11
	1-101	7
	1-101	8
	1-102	9
	1-102	11
1483032	1-102	9
1483033	1-102	9
1483034	1-102	10
1483036	1-102	10
1483037	1-102	11
1483039	1-102	11
1483040	1-97	3
1483041	1-97	3
1483042	1-97	2
1483043	1-97	2
1483047	1-97	2
	1-97	4
1483049	1-97	5
1483050	1-97	6
1483051	1-97	6
1483052	1-97	7
1483053	1-97	7
1483054	1-97	7
1483055	1-98	7
1483056	1-98	9
1483057	1-98	9
1483058	1-97	6
	1-98	9
1483059	1-98	9
1483060	1-98	8
	1-98	9
	1-98	10
1483061	1-98	8
1483062	1-98	8
	1-98	9
	1-98	10
1483067	1-98	10
1483226	1-48	9
1483388	1-101	3
1483425	4-147	1
1484308	2-23	10
1484315	9-29	17
1484316	9-25	18
	9-31	17
	9-33	17
1484363	4-50	32
	4-60	28
	4-68	28
1484375	4-49	7
	4-59	12
	4-67	12
	4-122	3
1484377	4-43	1
	4-50	30
	4-50	32
	4-51	35
	4-60	25
	4-61	28
	4-61	30
	4-68	25
	4-68	28
	4-69	30
	4-83	1
	4-91	1
	4-92	16
	4-95	11
	4-103	11
	4-125	5
1484383	4-80	21
	4-80	23
	4-80	24
	4-84	16
	4-84	17
	4-84	18
	4-85	25
	4-85	26
	4-88	21
	4-88	23
	4-88	24
	4-92	17
	4-92	18
	4-93	25
	4-93	26
	4-93	28
	4-111	3
	4-111	7
	4-113	4
1484394	4-55	10
	4-64	18
	4-74	18
	4-113	4
	4-125	3
	4-125	4
	4-127	2
1484395	4-126	4
1484396	4-126	5
1484397	4-49	5
	4-51	33
	4-55	5
	4-59	5
	4-63	6
	4-67	5
	4-73	6
	4-77	3
	4-77	7
	4-80	16
	4-83	7
	4-84	14
	4-88	16
	4-91	7
	4-92	14
	4-97	32
	4-99	7
	4-100	16
	4-105	32
	4-105	33
	4-107	7
	4-108	16
	4-114	4
	4-143	3
1484554	4-43	1
1484555	4-43	3
	4-43	6
	4-43	9
	4-43	12
	4-43	17
	4-43	21
	4-43	23
	4-49	15
	4-49	17
	4-49	18
	4-49	19
	4-61	32
	4-61	36
	4-61	38
	4-61	40
	4-63	4
	4-69	32
	4-69	36
	4-69	38
	4-69	40
	4-73	4
1484556	4-43	3

©2010 HYSTER COMPANY

NUMERICAL INDEX (continued)

PART NO.	PAGE	ITEM
	4-43	6
	4-43	9
	4-43	12
	4-43	17
	4-43	19
	4-43	21
	4-43	23
	4-44	25
	4-49	15
	4-49	16
	4-49	17
	4-49	18
	4-50	21
	4-50	24
	4-51	39
	4-59	11
	4-59	14
	4-60	17
	4-61	32
	4-61	34
	4-61	36
	4-61	38
	4-67	11
	4-67	14
	4-68	17
	4-69	32
	4-69	34
	4-69	36
	4-69	38
1484557	4-125	5
1484558	4-125	5
1484592	4-111	1
	4-125	1
1484593	4-111	1
	4-125	1
1484594	4-111	1
1484595	4-50	27
	4-60	20
	4-68	20
	4-111	1
1484596	4-111	1
	4-125	1
1484597	4-50	27
	4-60	20
	4-68	20
	4-77	5
	4-77	9
	4-111	1
	4-125	1
1484598	4-79	5
	4-79	9
	4-80	14
	4-80	19
	4-80	20
	4-87	5
	4-87	9
	4-88	14
	4-88	19
	4-88	20
	4-92	18
	4-95	5
	4-95	9
	4-96	26
	4-97	30
	4-100	19
	4-103	5
	4-103	9
	4-104	26
	4-105	30
	4-108	19
1484600	4-111	3
	4-111	7
1484608	4-112	10
1484609	4-112	9
1484610	4-112	10
1484611	4-50	27
	4-60	20
	4-68	20
	4-77	9
	4-111	1
1484650	4-77	1
1484651	4-79	5
	4-79	9
	4-80	14
	4-80	19
	4-87	5
	4-87	9
	4-88	14
	4-88	19
	4-92	18
	4-95	5
	4-95	9
	4-96	26
	4-97	30
	4-100	19
	4-103	5
	4-103	9
	4-104	26
	4-105	30
	4-108	19
1484654	4-50	27
	4-60	20
	4-68	20
	4-77	5
1484655	4-50	27
	4-60	20
	4-68	20
	4-77	5
1484656	4-49	3
	4-50	27
	4-50	28
	4-51	36
	4-59	3
	4-59	8
	4-60	20
	4-60	21
	4-60	23
	4-67	3
	4-67	8
	4-68	20
	4-68	21
	4-68	23
	4-77	5
	4-77	9
	4-80	26
	4-88	26
	4-96	19
	4-99	9
	4-104	19
	4-107	9
	4-111	5
	4-119	4
	4-120	4
	4-122	4
1484660	4-59	12
	4-67	12
1484662	4-50	32
	4-60	28
	4-68	28
1484664	4-51	35
	4-60	25
	4-68	25
1484665	4-50	31
	4-61	29
	4-69	29
1484666	4-55	18
	4-63	3
	4-73	3
1484675	4-49	16
	4-61	34
	4-69	34
1484676	4-51	39
	4-59	11
	4-67	11
1484677	4-55	11
	4-64	19
	4-74	19
1484681	4-31	17
	4-32	28
	4-32	37
	4-32	46
	4-36	17
	4-36	28
	4-36	37
	4-36	46
	4-40	17
	4-40	28
	4-40	37
	4-40	46
1484682	4-31	17
	4-32	28
	4-32	37
	4-32	46
	4-36	17
	4-36	28
	4-36	37
	4-36	46
	4-40	17
	4-40	28
	4-40	37
	4-40	46
1484683	4-31	3
	4-31	5
	4-31	7
	4-31	13
	4-31	15
	4-35	3
	4-35	5
	4-35	7
	4-35	11
	4-35	13
	4-35	15
	4-39	3
	4-39	5
	4-39	7
	4-39	11
	4-39	13
	4-39	15
	4-51	41
	4-51	42
	4-51	43
	4-51	44
	4-51	45
	4-52	46
	4-115	4
	4-143	5
	4-143	6
	4-144	3

See Service Manual for service procedures.
©2010 HYSTER COMPANY

NUMERICAL INDEX (continued)

PART NO.	PAGE	ITEM
1484684	4-31	9
	4-31	10
	4-35	9
	4-35	10
	4-39	9
	4-39	10
	4-51	40
	4-52	47
1484685	4-50	30
	4-50	31
	4-51	35
	4-55	18
	4-60	25
	4-61	29
	4-61	30
	4-63	3
	4-68	25
	4-69	29
	4-69	30
	4-73	3
	4-79	3
	4-87	3
	4-95	1
	4-103	1
1484686	4-50	30
	4-50	31
	4-51	35
	4-55	18
	4-60	25
	4-61	29
	4-61	30
	4-63	3
	4-68	25
	4-69	29
	4-69	30
	4-73	3
	4-79	3
	4-87	3
	4-95	1
	4-103	1
1484708	4-50	27
	4-60	20
	4-68	20
1484709	4-50	31
	4-61	29
	4-69	29
	4-119	1
	4-120	1
1484712	4-56	18
	4-63	3
	4-73	3
1484714	4-31	2
	4-35	2
	4-39	2
	4-115	3
1484715	4-31	1
	4-35	1
	4-39	1
	4-115	13
	4-119	2
	4-120	2
	4-124	2
	4-143	8
	4-144	3
1484716	4-55	11
	4-64	19
	4-74	19
1484719	4-112	9
1485936	6-13	1
	6-17	1
	6-18	1
	7-18	1
	7-22	1
	7-23	1
1486210	6-13	1
	7-18	1
1486218	3-5	9
	3-7	9
1486535	1-35	28
	1-37	7
	1-41	
1486539	1-35	18
1486540	1-35	6
	9-40	26
1486558	9-39	12
1486580	10-23	20
1486630	1-35	12
1486740	9-9	20
	9-10	42
	9-39	8
	9-52	1
1486741	9-9	26
	9-19	4
1486745	9-13	9
1486746	9-39	10
1486749	2-73	9
	9-9	18
	9-13	6
	9-47	13
	10-23	19
1486751	9-9	22
	9-13	13
	9-39	17
1486754	2-73	5
1486758	5-45	8
	9-39	7
1486761	9-39	22
	9-47	19
1486772	9-19	6
1486773	10-23	23
1486774	9-9	5
1487063	9-10	41
	9-39	4
1487065	9-47	16
1487067	10-23	22
1487069	9-13	14
1487073	9-13	3
1487075	9-10	36
1487097	9-7	11
	9-39	5
1487099	9-17	9
	9-20	8
1487103	7-7	12
1487104	7-7	27
1487105	7-7	24
1487106	7-7	25
1487107	7-7	4
1487108	7-7	11
1487109	7-7	19
1487110	7-7	17
1487111	7-7	8
1487112	7-7	23
1487114	7-7	21
1487115	7-7	26
1487118	1-53	9
	1-63	5
1487120	7-7	28
1487121	7-7	16
1487122	1-53	11
	1-63	1
	1-67	23
	1-129	27
1487123	7-7	15
1487124	7-7	1
1487125	1-53	10
1487126	7-7	13
1487129	7-7	33
1487130	7-7	22
1487131	7-7	5
1487132	7-7	10
1487133	7-7	18
1487149	9-39	3
1487153	9-10	32
1487155	9-10	29
1487158	9-13	20
1487166	9-39	2
1487169	9-10	31
1487208	8-5	6
1487209	8-3	6
	8-5	4
1487945	1-67	19
	1-129	23
1487947	1-73	3
1487950	1-67	12
	1-73	8
	1-129	11
1487952	1-67	13
	1-73	9
	1-129	12
1487953	1-67	11
	1-73	7
	1-129	10
1487956	1-68	5
1487957	1-68	1
1487959	1-73	12
1487963	1-67	24
	1-129	7
1488413	9-47	27
1488675	1-35	20
1488676	1-35	27
	1-37	15
	1-37	17
1488689	1-41	1
1488703	1-43	2
1488704	1-41	
1488705	1-41	
1488725	1-39	
1488726	1-39	10
1488727	1-39	9
1488728	1-39	
1488729	1-39	1
1488735	1-43	1
1488736	1-39	2
1488751	1-43	3
1488752	1-43	
1488762	1-43	
1489056	4-50	22
1489407	6-9	33
1489420	6-3	13
	6-5	15
1489427	8-7	9
1489428	8-7	10
1489429	8-7	18
1489430	8-7	17
1489439	8-7	3
1489440	8-7	2
1489655	4-79	2
	4-81	30

©2010 HYSTER COMPANY

NUMERICAL INDEX (continued)

PART NO.	PAGE	ITEM
	4-87	2
	4-89	30
	4-95	2
	4-96	16
	4-103	2
	4-104	16
	4-113	1
	4-114	1
	4-123	1
	4-126	1
1489656	4-50	26
	4-52	48
	4-59	16
	4-60	18
	4-61	31
	4-67	16
	4-68	18
	4-69	31
	4-69	41
	4-69	42
	4-77	2
	4-79	1
	4-81	29
	4-87	1
	4-89	29
	4-95	3
	4-96	15
	4-103	3
	4-104	15
	4-112	11
	4-123	3
1489657	4-50	22
	4-50	26
	4-52	48
	4-59	16
	4-60	18
	4-61	31
	4-67	16
	4-68	18
	4-69	31
	4-69	41
	4-69	42
	4-77	2
	4-79	1
	4-81	29
	4-87	1
	4-89	29
	4-95	3
	4-96	15
	4-103	3
	4-104	15
	4-112	11

PART NO.	PAGE	ITEM
	4-123	3
1489845	7-5	13
1489846	7-5	4
1489847	7-5	10
1489848	7-5	5
1489957	4-31	5
	4-31	6
	4-31	7
	4-31	8
	4-31	9
	4-31	10
	4-31	13
	4-31	14
	4-31	15
	4-31	16
	4-32	17
	4-32	28
	4-32	37
	4-32	46
	4-35	5
	4-35	6
	4-35	7
	4-35	8
	4-35	9
	4-35	10
	4-35	11
	4-35	13
	4-35	14
	4-35	15
	4-35	16
	4-36	17
	4-36	28
	4-36	37
	4-36	46
	4-39	5
	4-39	6
	4-39	7
	4-39	8
	4-39	9
	4-39	10
	4-39	11
	4-39	13
	4-39	14
	4-39	15
	4-39	16
	4-40	17
	4-40	28
	4-40	37
	4-40	46
	4-51	40
	4-51	41
	4-51	42

PART NO.	PAGE	ITEM
	4-51	44
	4-51	45
	4-52	47
	4-115	4
	4-143	5
	4-144	3
	4-144	3
1489960	4-115	5
	4-115	6
	4-115	7
	4-115	8
	4-115	9
	4-115	10
	4-115	11
	4-115	12
	4-143	7
1490242	4-5	15
	4-6	
	4-44	27
	4-47	2
	4-47	5
	4-47	7
	4-55	7
	4-55	15
	4-63	9
	4-63	15
	4-73	9
	4-73	15
	4-79	6
	4-79	7
	4-79	8
	4-79	12
	4-79	13
	4-80	15
	4-80	18
	4-83	12
	4-87	4
	4-87	6
	4-87	7
	4-87	8
	4-87	12
	4-87	13
	4-88	15
	4-88	18
	4-89	28
	4-92	12
	4-95	4
	4-95	6
	4-95	7
	4-95	8
	4-95	12
	4-96	17

PART NO.	PAGE	ITEM
	4-96	27
	4-97	29
	4-97	31
	4-99	14
	4-103	4
	4-103	6
	4-103	7
	4-103	8
	4-103	12
	4-104	17
	4-104	27
	4-105	29
	4-105	31
	4-107	14
	4-113	2
	4-114	2
1490243	4-44	27
	4-47	2
	4-47	5
	4-47	7
	4-55	7
	4-55	15
	4-63	9
	4-63	15
	4-73	9
	4-73	15
	4-79	6
	4-79	7
	4-79	8
	4-79	12
	4-79	13
	4-80	15
	4-80	18
	4-84	12
	4-87	4
	4-87	6
	4-87	7
	4-87	8
	4-87	12
	4-87	13
	4-88	15
	4-88	18
	4-89	28
	4-92	12
	4-95	4
	4-95	6
	4-95	7
	4-95	8
	4-95	12
	4-96	17
	4-96	27
	4-97	29

See Service Manual for service procedures.
©2010 HYSTER COMPANY

NUMERICAL INDEX (continued)

PART NO.	PAGE	ITEM
	4-97	31
	4-100	14
	4-103	4
	4-103	6
	4-103	7
	4-103	8
	4-103	12
	4-104	17
	4-104	27
	4-105	29
	4-105	31
	4-108	14
	4-113	2
	4-114	2
	4-119	6
	4-119	7
	4-119	8
	4-120	6
	4-120	7
	4-120	8
1490245	4-55	13
1490246	4-55	2
	4-63	4
	4-73	4
1490249	4-31	3
	4-31	4
	4-32	37
	4-32	46
	4-35	3
	4-35	4
	4-36	37
	4-36	46
	4-39	3
	4-39	4
	4-40	37
	4-40	46
	4-51	43
1490250	4-31	17
	4-32	28
	4-32	46
	4-36	17
	4-36	28
	4-36	46
	4-40	17
	4-40	28
	4-40	46
1491015	8-3	14
1491016	8-3	18
1491020	8-3	27
1491028	1-7	2
	1-19	16
1491029	1-19	11
1491468	4-9	10
1491495	1-19	1
1491763	10-27	12
1491810	4-27	6
1491814	4-27	6
1491816	4-27	6
1492133	1-17	20
1492139	1-19	8
	1-19	12
	1-105	5
	1-107	5
	1-110	3
	4-11	1
	7-5	9
1492140	1-17	15
	1-19	7
	1-19	10
	1-32	6
	1-105	2
	1-107	2
	1-121	4
	1-125	4
	4-9	13
	4-11	2
	7-5	3
	9-51	4
	9-57	5
1492141	4-11	12
1492146	4-17	5
1492147	4-11	6
1492149	4-11	4
1492163	1-65	3
	4-9	6
1492166	1-17	14
1492167	1-17	13
	1-61	1
	1-115	5
	1-125	7
	4-17	27
1492169	1-19	4
1492173	1-19	17
1492175	1-19	1
1492176	1-5	4
	4-9	5
1492195	1-20	1
1492196	1-20	5
1492197	1-17	25
1492200	1-5	1
	1-19	13
	1-20	
1492214	7-3	10
1492221	8-3	5
1492225	8-3	13
1492231	1-79	6
1492236	7-3	23
1492237	7-3	6
1492252	7-5	6
1492253	1-79	5
	3-11	14
	4-17	17
	4-21	5
1492260	7-3	7
	7-5	
1492331	10-27	16
1492679	5-23	7
1493276	1-59	2
	1-70	2
	1-126	2
1493278	1-17	29
1493281	1-32	2
1493282	1-32	1
	1-75	5
1493283	1-32	3
1493308	1-7	5
	1-45	8
	1-47	14
	1-51	8
1493312	1-15	2
	1-79	11
	1-109	21
1493318	1-51	3
1493320	1-27	10
1493321	1-27	7
1493324	1-27	6
1493326	1-27	14
1493328	1-27	1
1493329	1-27	11
1493332	1-25	15
1493333	1-25	16
1493334	1-25	18
1493335	1-25	14
1493336	1-23	
	1-25	1
1493337	1-23	1
	1-25	11
1493339	1-25	8
1493340	1-25	4
1493341	1-25	5
1493344	1-25	10
1493370	1-19	9
1493372	1-5	2
	1-19	14
1493373	1-5	3
	1-19	14
1493380	1-35	9
	1-117	4
	8-3	17
1493386	8-3	7
1493393	1-79	18
1493394	1-79	17
1493397	1-17	4
	1-23	13
	1-27	3
	1-45	12
	1-47	10
	1-79	12
	1-109	2
	1-113	9
	3-9	19
	3-11	16
1493428	4-51	38
	4-55	1
	4-59	10
	4-63	2
	4-67	10
	4-73	2
	4-144	2
1493430	4-56	20
	4-63	1
	4-73	1
	4-80	25
	4-83	4
	4-83	5
	4-83	10
	4-88	25
	4-91	4
	4-91	5
	4-91	10
	4-96	20
	4-99	4
	4-99	5
	4-99	10
	4-104	20
	4-107	4
	4-107	5
	4-107	10
1493431	4-83	1
	4-91	1
	4-99	1
	4-107	1
1493432	4-83	1
	4-91	1
	4-99	1
	4-107	1
1493433	4-83	3
	4-91	3

©2010 HYSTER COMPANY

NUMERICAL INDEX (continued)

PART NO.	PAGE	ITEM
	4-99	3
	4-107	3
1493434	4-60	26
	4-68	26
	4-81	31
	4-83	3
	4-84	20
	4-89	31
	4-91	3
	4-92	20
	4-96	14
	4-99	3
	4-100	21
	4-104	14
	4-107	3
	4-108	21
	4-122	2
1493435	4-85	27
	4-93	27
	4-100	28
	4-108	25
1493436	4-85	27
	4-93	27
	4-100	28
	4-108	25
1493437	4-79	4
	4-81	28
1493438	4-79	4
	4-81	28
1493442	4-84	25
	4-93	25
	4-100	26
	4-108	26
1493443	4-84	21
	4-92	21
1493444	4-47	4
1493445	4-47	4
1493448	4-80	21
	4-80	24
	4-84	18
	4-88	21
	4-88	24
	4-92	18
	4-96	21
	4-96	24
	4-100	19
	4-104	21
	4-104	24
	4-108	19
	4-113	4
	4-127	2
1493450	4-126	6
1493455	4-80	20
	4-84	21
	4-88	20
	4-92	21
	4-96	25
	4-100	22
	4-104	25
	4-108	22
1493459	4-44	29
	4-80	24
	4-88	24
	4-96	21
	4-104	21
1493464	4-95	10
	4-103	10
1493465	4-44	26
	4-44	28
	4-47	3
	4-47	6
	4-47	8
	4-55	8
	4-55	16
	4-63	10
	4-64	16
	4-73	10
	4-74	16
	4-83	11
	4-84	13
	4-91	11
	4-92	13
	4-99	11
	4-99	13
	4-107	11
	4-107	13
	4-113	3
	4-114	3
	4-120	3
	4-122	1
1493466	4-51	34
	4-55	6
	4-63	7
	4-63	8
	4-73	7
	4-73	8
	4-77	4
	4-105	34
	4-114	5
	4-127	1
	4-140	3
	4-143	3
	4-143	3
1493474	1-109	16
1493486	1-105	12
	1-107	13
1493494	1-109	12
1493498	1-109	25
1493499	1-109	9
1493562	10-27	18
1494312	9-47	10
1494402	10-7	18
1494675	3-9	1
	3-11	21
1494906	9-13	23
1495111	11-51	4
1495113	11-37	2
	11-37	9
	11-51	1
1495371	1-45	25
	1-47	23
1495372	1-45	23
	1-47	22
1495431	1-45	24
	1-47	25
1495435	1-47	15
1495438	1-45	7
1495454	1-45	16
	1-47	7
1495623	8-9	1
1495624	8-9	2
1495625	8-9	3
1495626	8-9	4
1495627	8-9	5
1495628	8-9	6
1495629	8-9	7
1495630	8-9	8
1495631	8-9	9
1495632	8-9	10
1495633	8-9	11
1495634	8-9	12
1495635	8-9	13
1495636	8-9	14
1495637	8-9	15
1495638	8-9	16
1495639	8-9	17
1495640	8-9	18
1495641	8-9	19
1495642	8-9	20
1495643	8-9	21
1495644	8-9	22
1495645	8-9	23
1495646	8-9	24
1495647	8-9	25
1495648	8-9	26
1495969	10-7	22
1496053	10-7	21
1496296	1-37	16
1496459	1-37	13
1496800	1-129	21
1496884	4-32	17
	4-32	37
	4-36	17
	4-36	37
	4-40	17
	4-40	37
1497287	4-47	4
1497358	4-47	4
1497361	4-49	12
	4-61	37
	4-69	37
1497362	4-49	11
	4-61	37
	4-69	37
1497822	1-132	
1497903	6-5	6
1498257	6-11	20
1498336	1-17	3
	1-132	6
1498338	1-15	4
	1-109	13
	1-132	8
1498341	1-27	2
1498342	1-27	5
1498343	1-27	12
1498344	1-25	3
1498347	1-25	2
1498348	1-25	12
1498354	1-17	21
1498355	1-17	19
1498356	1-17	18
	1-109	28
1498357	1-17	17
	1-109	19
	1-125	3
	9-57	3
1498362	1-17	23
1498363	1-17	26
	1-121	12
1498365	1-32	5
1498371	1-28	7
1498372	1-28	6
1498373	1-28	5
1498383	1-105	15
	9-51	12
	9-51	12
	9-57	1
	9-57	1

See Service Manual for service procedures.
©2010 HYSTER COMPANY

NUMERICAL INDEX (continued)

PART NO.	PAGE	ITEM
1498385	1-109	1
1498387	8-3	23
1498498	4-84	23
	4-92	23
1498506	9-17	6
	10-14	44
	10-17	10
1499564	6-3	20
	6-5	23
1499594	6-3	32
	6-6	36
1499936	1-132	1
1500912	4-6	
	4-63	6
	4-73	6
1500913	4-51	38
	4-55	1
	4-59	10
	4-63	2
	4-67	10
	4-73	2
	4-144	2
1500914	4-115	1
1500919	4-50	30
	4-61	30
	4-69	30
1500925	4-43	15
	4-115	2
	4-116	1
	4-143	6
	4-144	1
1500927	4-50	23
	4-56	19
1500928	4-55	10
1501919	4-84	23
	4-92	23
	4-100	25
1502003	3-3	9
1502006	3-3	7
1502008	1-53	8
	1-55	5
	1-57	5
1502130	6-9	26
	6-11	24
1502625	4-47	1
	4-125	2
	4-144	5
1502626	4-47	1
	4-125	2
	4-144	5
1502627	4-83	2
	4-91	2
	4-99	2
	4-107	2
1502712	4-84	19
	4-92	19
	4-124	3
1502879	9-44	
1502887	9-44	3
1502921	4-85	26
	4-93	26
	4-100	27
	4-108	27
1504393	5-19	1
1504406	7-3	20
1504861	7-7	7
1504862	7-7	9
1504863	7-7	34
1504864	7-7	30
1504865	7-7	14
1504866	7-7	32
1504867	7-7	29
1504868	7-7	31
1504942	1-17	10
	1-51	11
	1-51	14
1504953	1-11	17
	1-51	4
1504954	1-51	5
1504955	1-11	18
	1-51	6
1506667	4-21	10
1506668	4-21	9
1506669	1-109	6
	4-21	4
1506670	4-21	7
1506671	4-21	6
1506672	4-21	8
1506673	4-21	3
1506674	4-21	
1506677	1-132	2
1506682	12-5	1
1506738	1-23	12
	1-45	14
	1-47	8
	1-113	11
	7-5	12
	8-3	35
1506748	1-29	4
	1-31	6
1506749	1-29	3
	1-31	5
1506750	1-29	2
1506751	1-29	1
	1-31	1
1506762	4-55	2
1506773	3-5	6
	3-7	6
1506806	3-5	8
	3-7	8
1506825	1-79	22
	1-109	26
	7-3	
1506827	1-109	15
1506885	4-43	14
1507089	2-43	11
1507090	2-43	12
1507230	3-5	8
	3-7	8
1507231	3-5	8
	3-7	8
1507234	3-5	8
	3-7	8
1507235	3-5	8
	3-7	8
1507362	3-7	14
1507391	3-5	8
	3-7	8
1507394	3-5	17
1507589	10-8	60
1507696	10-8	62
1507725	4-83	1
	4-84	16
	4-91	1
	4-92	16
	4-99	1
	4-100	17
	4-107	1
	4-108	17
1508258	1-119	8
1509182	10-8	59
1510538	1-67	7
1510542	1-67	
1510787	7-3	8
1511548	6-3	17
	6-5	20
1511952	2-13	2
	4-131	7
1511953	2-70	5
	2-71	3
1511970	2-56	9
	2-59	11
	3-27	17
	3-29	1
1511972	2-24	11
1511977	2-70	6
	3-14	9
	3-27	13
	3-29	3
1511978	4-129	7
1511981	2-56	3
	2-59	4
1511998	3-29	6
1512003	4-129	1
1512004	2-84	8
	2-87	2
	3-17	3
	4-129	3
1512005	3-27	14
	3-29	2
	4-129	3
1512006	4-129	6
1512009	4-129	4
1512015	2-54	5
1512024	2-54	7
1512025	2-54	3
1512026	2-54	6
1512027	2-54	2
1512029	2-54	8
1512046	2-56	7
	2-59	7
1512047	2-56	10
	2-59	8
1512048	2-56	11
	2-59	9
1512054	2-59	13
1512106	2-55	3
1512107	2-55	4
1512111	2-47	7
	2-60	3
	2-67	9
	2-70	7
	4-135	11
	4-137	5
1512112	2-47	10
1512118	2-47	9
1512119	2-47	11
1512130	2-64	1
1512146	2-17	7
	2-19	8
	2-19	15
1512150	2-17	10
1512151	2-17	10
1512152	2-17	10
1512153	2-17	10
1512292	2-13	1
	2-20	2
	2-78	2

©2010 HYSTER COMPANY

NUMERICAL INDEX (continued)

PART NO.	PAGE	ITEM
	4-132	1
1512295	2-8	2
1512296	2-8	1
1512304	2-33	4
	2-35	19
1512305	4-131	3
	4-132	4
1512316	2-59	2
1512322	2-93	3
1512328	2-54	11
1512417	2-71	2
1512418	2-61	4
1512423	2-60	4
1512424	2-54	1
1512433	2-59	14
1512445	2-55	2
1512453	2-47	8
1512456	2-62	1
1512494	3-21	8
1512503	2-33	13
	2-35	9
1512585	2-33	10
	2-35	18
	2-37	5
	2-39	9
1512586	2-37	7
	2-39	4
1512814	3-7	10
1512822	1-17	24
	1-20	3
1513191	2-9	5
1513318	2-81	13
1513328	2-82	47
1513332	2-81	41
1513333	2-81	20
1513334	2-81	45
1513337	2-81	2
	2-83	1
1513338	2-81	1
	2-83	2
1513430	2-83	3
	2-84	2
	2-87	8
1513701	2-87	12
1513712	3-17	6
	4-139	
1513725	2-8	3
	2-75	22
	3-21	8
1513743	3-17	1
1513749	2-14	2
1513772	2-47	13
1513788	2-33	11
	2-35	20
1513791	3-22	4
	3-23	4
1513792	2-95	1
1513793	4-135	17
1513836	2-5	17
1513841	2-3	2
1513947	1-87	
1514033	7-3	8
1514234	1-45	19
	1-47	5
1514331	8-9	
1514339	2-37	6
	2-39	10
	2-63	3
	2-84	9
	2-87	3
1514346	2-14	7
	2-27	10
1514354	2-27	5
	2-31	9
1514504	4-135	21
	4-137	7
1514542	2-20	1
1514571	2-84	7
	2-87	11
1514597	4-60	27
	4-68	27
1514602	4-60	26
	4-68	26
1514603	4-60	26
	4-68	26
	4-84	20
	4-92	20
	4-100	21
	4-108	21
1514712	1-63	8
1515337	1-27	9
	1-45	2
	1-47	4
1515475	1-85	5
1515787	2-9	3
1515840	4-132	3
1515895	4-131	5
1515897	2-33	2
	2-33	2
	2-35	1
1515898	2-35	2
1516207	9-39	16
1516208	9-3	6
1516237	4-80	22
	4-88	22
1516559	12-5	1
1517003	4-131	8
1517010	2-33	15
	2-35	5
	3-14	2
1517011	2-33	15
	2-35	6
	3-14	3
1517069	2-83	3
	2-84	2
	2-87	9
1517094	2-6	4
	2-9	2
1517110	3-17	2
1517119	2-33	16
	2-35	4
1517120	4-137	2
1517190	2-37	8
	2-39	5
1517212	2-81	27
1517213	2-81	30
1517214	2-81	42
1517216	2-81	17
1517217	2-81	23
1517218	2-81	12
1517219	2-81	6
1517220	2-81	5
1517221	2-81	19
1517222	2-81	34
1517223	2-81	22
1517224	2-81	25
1517225	2-81	32
1517226	2-81	39
1517228	2-81	21
1517230	2-81	18
1517231	2-81	29
1517232	2-81	44
1517233	2-81	7
1517235	2-81	11
1517237	2-81	26
	2-81	43
1517246	2-75	2
	2-75	9
1517250	2-44	1
1517256	2-51	2
1517257	2-51	1
	2-94	1
1517266	4-135	19
	4-137	1
1517269	2-87	13
1517906	9-35	6
	9-35	9
	9-35	14
	9-37	5
	9-37	7
	9-37	13
1518112	4-49	5
	4-55	5
	4-59	5
	4-63	6
	4-67	5
	4-73	6
	4-79	13
	4-80	15
	4-80	16
	4-80	18
	4-84	14
	4-88	13
	4-88	15
	4-88	16
	4-88	18
	4-92	14
	4-96	27
	4-97	29
	4-97	31
	4-97	32
	4-100	16
	4-104	27
	4-105	29
	4-105	31
	4-105	32
	4-108	16
1518209	10-7	8
1518717	3-5	10
1520541	7-5	15
1520542	7-5	14
1520596	8-3	8
1520841	8-3	15
1521682	2-33	5
	2-35	13
1521683	2-33	9
	2-35	14
1521685	2-33	6
	2-33	7
	2-33	8
	2-35	16
	2-35	22
1521691	2-33	14
	2-35	7
1521694	2-63	2
1521695	2-35	3
1521705	2-27	
1521706	2-27	

©2010 HYSTER COMPANY

NUMERICAL INDEX (continued)

PART NO.	PAGE	ITEM
1521707	2-28	
1521708	2-28	
1521882	2-13	3
1521888	2-7	2
	2-23	18
1521889	2-7	1
	2-23	17
1521891	2-9	4
1521901	2-37	1
	2-39	1
1521912	2-39	
1521913	2-37	13
	2-37	13
	2-39	
1521914	2-37	13
	2-37	14
	2-39	12
1521915	2-37	11
	2-39	17
1521919	2-37	4
	2-39	6
	2-89	7
1521937	2-75	8
1521938	2-10	1
	2-56	2
1521939	2-75	1
1521943	2-75	21
1521944	2-75	20
1521952	2-51	4
1521960	2-84	2
1521973	2-95	2
1522424	1-35	24
1522427	10-21	8
1522435	10-21	4
	10-23	7
1523533	4-11	5
1524173	7-3	12
1524215	7-3	11
1524551	2-73	15
1525589	4-83	6
	4-91	6
	4-99	6
	4-107	6
	4-124	3
1527813	9-10	41
	9-39	4
	11-52	2
1527816	9-9	26
	9-10	41
	9-19	3
	9-19	4
	9-39	3
	9-39	4
	9-39	12
1527817	9-3	31
	9-9	4
	9-10	32
	9-10	40
	9-13	7
	9-14	54
	9-19	5
	9-19	6
	9-19	12
	9-39	10
	9-39	15
	9-40	30
1527818	9-9	22
	9-13	13
	9-39	16
	9-39	17
1527819	9-13	14
1527820	5-45	5
	5-45	8
	5-45	15
	9-9	22
	9-10	30
	9-10	36
	9-13	13
	9-39	7
	9-39	17
1527821	9-13	21
	9-39	22
	9-47	15
	9-47	19
1527890	10-18	40
1528144	9-47	30
1528456	9-47	4
1528573	9-7	10
1528580	10-23	2
1528581	10-23	21
1528596	2-73	10
1528597	9-39	6
1528714	1-98	10
1529052	4-56	20
	4-63	1
	4-73	1
	4-80	25
	4-83	4
	4-83	5
	4-83	10
	4-88	25
	4-91	4
	4-91	5
	4-91	10
	4-96	20
	4-99	4
	4-99	5
	4-99	10
	4-104	20
	4-107	4
	4-107	5
	4-107	10
1529665	3-3	31
1530385	1-109	29
1530386	1-109	18
1530513	1-11	36
1530668	10-13	23
	10-17	14
1530745	5-37	28
1531070	4-5	25
1531404	2-23	2
1532341	3-3	34
1532455	1-35	9
1532461	2-53	18
1532479	2-53	12
1532480	2-53	10
1532482	1-55	12
1532484	1-55	13
1532652	9-10	30
1532653	9-13	21
1533477	9-47	6
1533648	10-13	8
	10-17	19
1533649	9-19	21
	10-13	23
	10-17	14
	10-21	5
	10-23	12
1533655	9-17	8
1533656	9-13	15
1533657	5-45	20
1533662	5-45	18
	9-3	34
	9-13	15
	9-17	8
	10-21	9
	10-23	17
1533664	9-19	21
	10-17	13
	10-21	5
	10-23	11
1533665	10-13	22
	10-17	26
1534281	10-7	15
1534425	1-109	32
1534474	1-109	10
1534475	1-109	5
1534476	1-109	14
1534477	1-109	31
1534479	1-113	6
1534481	1-109	17
1534660	1-87	
1534793	4-5	30
1536288	9-47	23
1536311	9-47	24
1538310	6-13	5
	6-14	5
	6-17	5
	7-18	5
	7-19	5
	7-22	5
1538311	6-13	4
	6-14	3
	6-17	4
	7-18	4
	7-19	3
	7-22	4
1538936	9-47	3
1539034	1-109	33
1539567	9-51	10
	9-55	
1539992	10-13	32
1540330	10-13	37
1541279	10-13	4
1541319	10-13	4
1541613	6-11	30
1541614	6-11	12
1542033	10-14	42
1543316	2-27	3
1543317	2-27	4
1543318	2-27	2
1543359	3-27	4
	3-29	5
1543421	2-47	12
	3-14	8
1543435	4-135	4
	4-135	7
	4-137	15
	4-137	16
1543437	4-135	2
	4-137	6
1543439	4-135	7
	4-137	14
1543440	4-135	7
1543445	2-17	11
1543446	2-19	7
1543711	2-81	38
1543732	2-81	28

©2010 HYSTER COMPANY

NUMERICAL INDEX (continued)

PART NO.	PAGE	ITEM
1543733	2-81	24
1543734	2-81	15
1544774	2-53	23
1544886	3-3	27
1544889	9-47	21
1545062	1-85	4
1545170	1-25	8
1545172	4-29	10
	4-47	
1545181	4-25	7
	4-113	
1545202	4-81	31
	4-89	31
	4-96	14
	4-104	14
	4-122	2
1545521	12-4	
1545532	4-25	3
1546697	4-81	31
	4-89	31
	4-96	14
	4-99	8
	4-104	14
	4-107	8
	4-111	5
	4-122	2
1547279	1-25	9
	4-126	
1547766	3-3	11
1547969	1-11	5
1547980	6-3	21
	6-5	24
1548423	1-13	1
1548424	1-13	1
1548426	2-53	19
1550923	1-83	5
1552716	2-77	2
1552880	2-76	2
1553261	2-17	9
	2-19	4
1553262	2-17	9
	2-19	5
1553504	1-11	3
	1-11	32
1553872	2-39	13
1553873	2-39	14
1553952	2-75	15
	2-75	16
1553956	2-75	3
	2-75	10
1554045	2-27	1
	2-31	10
1554047	7-11	27
1554048	7-11	28
1554125	1-25	7
1554156	4-21	1
1554339	6-9	35
	6-12	37
1554340	6-9	37
	6-11	33
1554341	6-9	31
1554710	9-20	6
1555973	9-52	2
1555974	9-52	3
1555975	9-52	4
1555977	9-51	15
	9-52	
	9-57	13
1555981	9-52	5
1556910	5-5	18
	5-37	17
1556912	5-5	11
1556954	5-24	10
1556955	5-24	11
1556992	5-5	22
1557007	5-35	8
1557008	5-35	8
1557011	5-35	2
1557756	9-3	26
	9-5	8
	9-7	6
	9-9	24
	9-17	4
	9-19	1
	10-21	
	10-23	14
1558025	1-25	6
1558027	4-18	3
	4-146	1
1558028	1-79	1
1558029	1-79	16
1558032	1-79	8
	1-81	
1558033	4-11	11
	4-13	
1558035	1-95	13
1558036	1-17	2
1558037	1-17	12
1558038	1-117	2
	8-3	38
1558039	8-3	28
1558040	8-3	25
1558041	4-17	4
1558042	1-19	15
1558045	1-77	
	1-79	8
1558049	3-9	9
	3-11	5
1558050	4-17	10
1558052	3-9	20
1558053	3-9	7
1558054	3-9	18
	4-17	13
1558055	3-9	17
	4-17	14
1558294	1-45	28
	1-47	29
	1-79	7
1558295	1-47	26
1558296	1-47	27
1558297	1-47	1
1558298	1-47	31
1558299	1-45	20
	1-47	2
1558300	1-45	11
	1-47	13
1558301	1-47	20
1558302	1-45	5
	1-47	19
1558303	1-45	6
	1-47	16
1558305	1-45	18
	1-47	17
1558306	1-47	18
1558442	1-45	21
1558443	1-45	22
1558444	1-45	31
1558445	1-45	30
1558446	1-45	3
1558447	1-45	17
1559624	2-3	
	2-5	
	2-6	
	2-7	
	2-8	
	2-9	
	2-10	
	2-13	
	2-14	
	2-17	
	2-20	
	2-24	
	2-27	
	2-33	
	2-37	
	2-40	1
	2-44	
	2-47	
	2-51	
	2-54	
	2-55	
	2-56	
	2-60	
	2-61	
	2-62	
	2-63	
	2-64	
	2-67	
	2-70	
	2-71	
	2-76	
	2-77	
	2-78	
	2-81	
	2-84	
	2-89	
	2-91	
	2-92	
	2-93	
	2-94	
	3-14	
	3-16	
	3-17	
	3-21	
	3-22	
	3-24	
	3-27	
	3-30	
	4-129	
	4-131	
	4-135	
	4-138	
1559626	5-47	2
1559627	5-47	2
1559655	2-48	3
1560005	9-17	8
	10-21	9
	10-23	16
1560006	5-45	19
	9-13	15
1560537	1-77	1
	1-81	1
1560538	1-77	3
1560539	1-77	4
1560540	1-77	5
1560544	1-77	6
1560545	1-77	6
1560546	1-77	11

See Service Manual for service procedures.
©2010 HYSTER COMPANY

NUMERICAL INDEX (continued)

PART NO.	PAGE	ITEM
1560547	1-77	12
	1-81	13
1560548	1-77	13
	1-81	14
1560549	1-77	14
1560550	1-77	15
1560551	1-77	16
1560552	1-77	17
	1-81	11
1560553	1-77	7
	1-81	12
1560554	1-77	8
	1-81	6
1560555	1-77	9
	1-81	10
1560556	1-77	10
	1-81	8
1560623	1-81	3
1560624	1-81	4
1560625	1-81	5
1560626	1-81	9
1560627	1-81	7
1561530	1-95	
1561604	6-9	32
	6-11	18
	8-9	
1561747	10-13	7
1561756	4-55	10
1563795	9-3	33
	9-44	
1563867	9-47	11
1564349	10-21	13
1564433	1-63	12
1564721	9-47	9
1564843	5-45	13
1564897	9-17	
	9-19	2
	10-17	29
1564898	9-19	10
1564899	9-19	7
1564900	9-17	
	10-17	30
1564901	9-19	8
1564902	9-19	11
1564992	2-56	
1564993	2-56	5
1565007	4-135	18
1565040	4-135	4
1565045	2-51	5
1565474	5-35	5
1566041	1-51	12
	1-51	13
	1-79	25
	7-3	5
1566044	1-17	11
	1-23	5
	1-61	2
	1-125	10
1566125	6-9	13
1566126	6-9	6
	6-11	8
1566205	4-13	6
	4-15	8
1566206	4-13	5
	4-15	9
1566208	4-15	2
1566209	4-15	11
1566210	4-13	3
	4-15	3
1566211	4-15	4
1566212	4-15	5
1566213	4-15	6
1566216	4-13	2
1566411	7-3	8
1566652	5-15	8
	5-19	2
1566762	4-9	4
1566764	4-18	4
	4-146	1
1566765	4-18	2
1566767	4-9	7
1566771	4-11	7
1566965	4-5	13
1567082	4-17	12
1567676	4-55	10
1567941	4-17	11
1567942	1-28	1
1569866	3-3	26
1569867	3-3	26
1569981	4-122	6
1569985	4-84	21
	4-92	21
	4-100	22
	4-108	22
1570601	4-111	4
	4-111	6
1570602	4-31	3
	4-31	4
	4-31	5
	4-31	6
	4-31	7
	4-31	8
	4-31	13
	4-31	14
	4-31	15
	4-31	16
	4-35	3
	4-35	4
	4-35	5
	4-35	6
	4-35	7
	4-35	8
	4-35	11
	4-35	12
	4-35	13
	4-35	14
	4-35	15
	4-35	16
	4-39	3
	4-39	4
	4-39	5
	4-39	6
	4-39	7
	4-39	8
	4-39	11
	4-39	12
	4-39	13
	4-39	14
	4-39	15
	4-39	16
	4-51	41
	4-51	42
	4-51	43
	4-51	44
	4-51	45
	4-115	4
	4-144	3
	4-144	3
1570603	4-111	4
	4-111	6
1570606	4-55	10
1570608	4-43	4
1570609	4-43	7
	4-43	10
1570610	4-43	13
1570611	4-43	2
1570612	4-43	8
	4-43	11
1570613	4-43	16
1570614	4-43	5
1570617	4-43	18
1570638	4-49	10
	4-61	35
	4-69	35
1570639	4-49	9
	4-61	33
	4-69	33
1570641	4-49	13
	4-61	39
	4-69	39
1570643	4-49	14
	4-61	41
	4-67	13
1570644	4-50	25
	4-60	19
	4-68	19
	4-123	2
1570645	4-49	20
	4-59	15
	4-67	15
	4-112	9
	4-112	12
1571029	1-109	7
1571030	1-109	22
1571269	4-17	20
1571581	4-23	1
1571585	4-23	
	4-29	1
1571627	1-95	15
	1-109	
1571628	1-5	5
1571631	8-3	2
1571694	10-13	5
	10-17	27
1571695	10-13	5
	10-17	27
1571775	1-105	11
	1-107	12
1571776	1-105	13
	1-107	11
1571789	4-18	6
	9-51	3
1571802	1-17	5
1571803	1-17	8
1571804	1-17	7
1571805	4-21	2
1571806	4-21	1
1571812	12-2	1
1571815	1-113	12
1571816	1-113	1
	1-115	1
	1-117	1
1571817	1-113	7
1571818	1-113	8
	1-115	7
	1-117	9
1571841	1-17	9
1573113	4-124	1

©2010 HYSTER COMPANY

NUMERICAL INDEX (continued)

PART NO.	PAGE	ITEM
1573114	4-124	1
1573115	4-124	1
1573574	1-25	13
1573575	1-25	17
1574081	1-93	2
1574082	1-93	2
1579009	5-37	6
1579011	5-5	17
	5-37	2
	5-37	16
1579141	5-35	15
1580951	4-29	2
1580952	4-29	6
1581404	12-4	
1581445	10-13	3
1581448	10-13	6
1581488	4-23	1
1581489	4-23	1
1581490	4-23	1
1581491	4-23	1
1581492	4-23	1
1581547	10-13	16
	10-17	22
1581558	2-43	6
1582217	10-13	17
	10-17	23
1583850	1-11	10
1583870	6-3	
	6-11	
	8-7	
	8-9	
1583941	1-5	6
	4-9	11
	4-111	
1584546	3-27	5
1584643	1-91	
1584817	2-17	11
	2-19	7
1584818	2-17	11
	2-19	7
1584819	2-17	11
	2-19	7
1584820	2-17	11
	2-19	7
1584824	9-59	3
1584825	9-59	4
1584826	9-59	5
1584846	9-59	11
1584914	3-22	3
1584922	2-37	13
	2-39	15
1584923	2-37	14
1584925	2-37	9
	2-39	7
1584933	2-75	15
1584990	2-27	3
1584991	2-27	2
1584992	2-27	4
1584993	2-27	3
1584994	2-27	2
1584995	2-27	4
1584996	2-27	3
1584997	2-27	2
1584998	2-27	2
1584999	2-27	3
1585000	2-27	4
1585002	2-27	4
	2-31	2
1585091	5-35	25
1585160	4-6	33
	4-7	3
	12-6	1
1585283	2-33	16
1585499	1-53	3
1588093	2-81	35
1588106	2-84	4
	2-87	4
1588820	4-129	5
1588828	2-76	1
1589584	2-78	3
1589966	10-3	1
1589967	10-3	1
1589969	10-25	6
1589981	10-25	14
1589984	10-3	
	10-5	
	10-7	
	10-13	
	10-17	
1589985	10-3	
	10-5	
	10-7	
	10-13	
	10-17	
1589992	9-3	8
1590001	3-3	16
1590002	2-53	17
1590009	9-7	9
1590014	9-20	5
1590532	5-28	5
	5-30	7
1590542	5-41	1
1590815	1-79	2
1590820	1-79	4
1590821	1-79	3
1590822	1-79	2
1591211	4-116	
1592783	2-69	
1592800	2-23	27
1592801	2-23	15
1592819	1-11	14
1592820	1-11	14
1592826	2-23	3
1592830	2-23	16
1592831	2-23	23
1593279	1-9	17
1593280	1-9	17
1593284	1-9	25
1593285	1-9	25
1593292	1-9	19
1593293	1-9	19
1593297	1-9	23
1593298	1-9	23
1593304	1-9	14
1593307	1-9	27
1593315	1-9	3
1593318	1-9	28
1593336	1-15	3
	10-14	43
	10-17	21
1593629	1-45	26
	1-47	24
1595144	4-17	8
1595146	4-17	8
1595149	4-125	
1595641	1-11	19
1595791	9-21	
	9-39	18
1597192	1-9	18
	2-23	6
	2-53	6
	9-9	13
1597195	2-53	11
1597369	10-13	11
	10-17	12
1597370	10-13	11
	10-17	12
1597430	4-6	36
	4-124	
1597431	1-37	10
	4-122	
1597444	2-43	8
1597592	4-5	10
1597595	4-6	34
1597806	2-9	1
1597807	2-14	3
	2-93	1
1598029	12-7	4
1598354	2-55	1
1598397	1-45	34
	1-47	34
	1-51	2
1598398	1-19	2
	1-20	4
	1-65	2
	1-121	14
1598421	1-110	1
1598436	2-81	33
1598543	2-23	9
1598544	2-23	21
1599195	1-35	2
1599242	12-8	6
1600223	4-17	12
1600532	9-43	26
1600798	9-3	3
1600799	9-3	5
1600801	9-3	2
1600802	9-9	16
	9-13	1
1601273	1-7	1
	4-11	8
1601825	4-77	
1601859	9-57	10
	9-61	
1601921	7-11	13
1601922	7-11	14
1601923	7-11	19
1601924	7-11	
	9-19	9
1601925	7-11	19
1601929	1-32	4
1601935	4-11	9
1602433	4-49	1
1602453	9-5	9
1603078	9-5	5
1603080	9-5	7
1603081	9-5	3
1603083	9-5	10
1603084	9-5	1
1603085	9-5	6
1603090	9-19	8
1603091	9-9	27
	9-13	8
1603092	9-7	5
1603093	9-7	1
1603095	9-7	4
1603096	9-7	7
1603097	9-7	5

See Service Manual for service procedures.
©2010 HYSTER COMPANY

NUMERICAL INDEX (continued)

PART NO.	PAGE	ITEM
1603098	9-7	1
1603099	9-7	3
1603100	9-7	4
1603101	9-7	7
1603102	9-3	30
1603104	10-21	7
	10-23	10
1603106	10-21	10
	10-23	13
1603296	5-39	2
1603298	5-39	6
1603502	1-79	23
1603503	1-79	20
1603521	1-93	
1603522	1-93	
1603523	1-93	
1603524	1-93	
1603904	9-5	2
1603905	9-10	39
1603906	9-10	38
1603907	9-19	7
1603908	9-19	2
1603909	9-7	2
1603910	9-17	2
1603911	9-17	1
1603975	7-11	32
1605267	10-21	1
	10-23	9
1605268	10-21	2
	10-23	8
1605270	10-21	1
	10-23	9
1605271	10-21	2
	10-23	8
1605273	5-45	6
1605274	5-45	9
1605425	9-43	12
1605545	4-99	12
	4-107	12
1605750	2-33	2
1605790	9-13	2
1605795	9-9	23
	9-13	10
1605796	9-9	21
	9-13	11
1605797	9-10	37
	9-13	12
1605798	9-9	19
	9-13	16
1605799	9-9	25
1605800	9-3	1
1605801	9-5	4
1605804	9-3	35
1605818	4-5	12
1606281	5-45	4
1606391	9-19	10
1606392	9-19	11
1606569	3-27	2
1607331	1-9	14
1607332	1-9	27
1607524	4-119	2
	4-120	2
1607525	4-119	2
	4-120	2
1607526	4-124	
1607527	4-119	2
	4-120	2
1607528	4-119	2
	4-120	2
1607529	4-119	2
	4-120	2
1607532	4-119	2
	4-120	2
1607623	4-5	24
1607749	4-119	1
	4-120	1
1607771	4-80	17
	4-88	17
	4-96	28
	4-104	28
1607772	4-49	6
	4-59	6
	4-67	6
	4-84	15
	4-92	15
	4-100	15
	4-108	15
1607775	4-95	13
	4-103	13
1607778	4-124	1
1607782	4-59	1
	4-67	1
1607842	4-49	2
	4-59	2
	4-67	2
1607843	4-55	3
	4-63	5
	4-73	5
1608548	4-5	27
1608760	4-5	19
1608761	4-6	42
1608762	4-5	32
1608763	4-5	20
1608997	3-3	28
1609687	10-5	16
	11-5	3
1610883	4-80	22
	4-88	22
	4-96	23
	4-104	23
1610936	4-29	1
1610941	4-51	36
	4-59	8
	4-67	8
	4-83	8
	4-91	8
	4-99	9
	4-107	9
	4-111	5
	4-119	4
	4-120	4
	4-122	4
1610944	4-49	5
	4-55	5
	4-59	5
	4-63	6
	4-67	5
	4-73	6
	4-84	14
	4-92	14
	4-100	16
	4-108	16
1610945	4-50	32
	4-60	28
	4-68	28
1610947	4-49	8
	4-55	9
	4-59	13
	4-64	17
	4-74	17
	4-77	6
	4-77	8
	4-111	2
	4-111	3
	4-111	7
	4-111	8
	4-112	12
	4-112	13
	4-119	3
1610948	4-111	2
	4-111	3
	4-111	7
	4-111	8
	4-112	12
	4-112	13
	4-119	3
1610949	4-49	4
	4-59	4
	4-67	4
1610950	4-49	3
	4-50	28
	4-51	36
	4-59	3
	4-59	8
	4-60	21
	4-60	23
	4-67	3
	4-67	8
	4-68	21
	4-68	23
	4-77	9
	4-80	26
	4-83	8
	4-88	26
	4-91	8
	4-96	19
	4-99	9
	4-104	19
	4-107	9
	4-111	5
	4-119	4
	4-120	4
	4-122	4
1610951	4-51	37
	4-59	9
	4-67	9
1610952	4-31	9
	4-35	9
	4-39	9
	4-51	40
1610953	4-50	29
	4-60	22
	4-60	24
	4-68	22
	4-68	24
	4-77	10
	4-80	27
	4-89	27
	4-96	18
	4-104	18
	4-119	5
	4-120	5
1610954	4-49	3
	4-50	28
	4-51	36
	4-59	3
	4-59	8
	4-60	21

©2010 HYSTER COMPANY

NUMERICAL INDEX (continued)

PART NO.	PAGE	ITEM
	4-60	23
	4-67	3
	4-67	8
	4-68	21
	4-68	23
	4-80	26
	4-88	26
	4-96	19
	4-104	19
	4-122	4
1610970	4-84	17
	4-92	17
	4-93	28
	4-100	18
	4-100	24
	4-108	18
	4-108	24
1610971	4-80	21
	4-80	23
	4-84	25
	4-88	21
	4-88	23
	4-93	25
	4-96	22
	4-96	24
	4-100	26
	4-104	22
	4-104	24
	4-108	26
1611029	4-83	9
	4-91	9
	4-122	5
1611156	3-3	29
1611392	1-11	6
1611399	1-11	38
1611400	1-11	1
1611401	1-11	31
1611559	9-3	24
	9-43	
1612047	2-53	20
1612293	5-5	7
	5-37	14
1612311	5-5	3
	5-33	3
	5-35	10
	5-37	29
1612312	5-33	4
	5-35	9
1612313	5-5	1
	5-33	1
	5-35	12
	5-37	25
1612314	5-5	2
	5-11	9
	5-33	2
	5-35	11
	5-37	11
1612332	5-37	27
1612347	5-37	
1612365	5-23	7
1612403	9-17	3
	10-21	9
	10-23	15
1612503	5-15	23
	5-19	27
1612507	5-15	24
	5-19	28
1612508	5-15	31
	5-19	30
1612530	5-15	25
	5-19	29
1612687	5-35	22
	5-37	8
1612863	5-5	21
1612870	5-23	9
	5-24	13
1612905	5-5	7
	5-33	8
	5-33	15
	5-37	14
1613301	2-3	
	2-5	
	2-6	
	2-7	
	2-8	
	2-9	
	2-10	
	2-13	
	2-14	
	2-17	
	2-20	
	2-24	
	2-27	
	2-33	
	2-37	
	2-40	1
	2-44	
	2-47	
	2-51	
	2-54	
	2-55	
	2-56	
	2-60	
	2-61	
	2-62	
	2-63	
1613484	2-5	
	2-6	
	2-7	
	2-8	
	2-9	
	2-10	
	2-13	
	2-14	
	2-17	
	2-20	
	2-24	
	2-27	
	2-33	
	2-37	
	2-40	1
	2-44	
	2-47	
	2-51	
	2-54	
	2-55	
	2-56	
	2-60	
	2-61	
	2-62	
	2-63	
	2-64	
	2-67	
	2-70	
	2-71	
	2-76	
	2-77	
	2-78	
	2-81	
	2-84	
	2-89	
	2-91	
	2-92	
	2-93	
	2-94	
	3-14	
	3-16	
	3-17	
	3-21	
	3-22	
	3-24	
	3-27	
	3-30	
	4-129	
	4-131	
	4-135	
	4-138	
1613486	2-5	
	2-6	
	2-7	
	2-8	
	2-9	
	2-10	
	2-13	
	2-14	
	2-17	
	2-20	
	2-24	
	2-27	
	2-33	
	2-37	
	2-40	1
	2-44	
	2-47	
	2-51	
	2-54	
	2-55	
	2-56	
	2-60	
	2-61	
	2-62	
	2-63	

©2010 HYSTER COMPANY

NUMERICAL INDEX (continued)

PART NO.	PAGE	ITEM
	2-64	
	2-67	
	2-70	
	2-71	
	2-76	
	2-77	
	2-78	
	2-81	
	2-84	
	2-89	
	2-91	
	2-92	
	2-93	
	2-94	
	3-14	
	3-16	
	3-17	
	3-21	
	3-22	
	3-24	
	3-27	
	3-30	
	4-129	
	4-131	
	4-135	
	4-138	
1613500	1-9	15
1613501	1-9	30
1613512	9-35	
	9-39	9
1613651	6-3	5
	6-5	2
1613946	9-9	3
1614188	4-5	17
	4-119	
1614190	4-5	1
	4-79	
	4-83	
1614191	4-5	1
	4-79	
	4-83	
1614193	3-5	3
	3-7	3
1614372	6-13	2
	6-14	2
	6-17	2
	7-18	2
	7-19	2
	7-22	2
1614461	4-135	13
1614477	2-81	10
1614478	2-81	9
1614515	4-131	6
1614876	3-5	7
	3-7	7
1615040	9-43	31
1615043	9-43	3
1615044	9-43	32
1615045	9-43	33
1615051	9-43	8
1615054	9-43	
1615055	1-95	12
1615056	1-93	4
1615057	1-93	4
	1-94	7
	1-94	9
	1-94	10
1615062	1-94	8
1615063	1-91	
	1-94	8
	1-123	
1615064	1-91	20
	1-94	8
	1-123	18
1615066	1-94	11
1615067	1-94	11
1615068	1-94	11
1615073	1-93	
1615075	1-101	2
	1-102	9
1615076	1-101	2
	1-102	9
1615077	1-101	2
	1-102	9
1615078	1-101	2
	1-102	9
1615079	1-101	2
	1-102	9
1615105	1-97	4
1615106	1-97	4
1615107	1-97	4
1615109	1-97	4
1615110	1-97	4
1615111	1-97	4
	1-98	8
	1-98	10
1615124	1-97	5
1615125	1-91	12
	1-97	5
1615126	1-97	5
	1-98	7
	1-98	11
	1-101	5
	1-101	8
	1-102	11
1615127	1-97	5
	1-98	7
	1-98	11
1615128	1-97	5
1615129	1-97	5
1615131	1-97	6
1615132	1-98	7
1615136	1-98	9
1615137	1-98	9
1615138	1-98	8
1615139	1-98	8
1615140	1-98	10
1615141	1-98	10
1615143	1-98	11
1615144	1-98	11
1615147	1-93	2
1615149	1-91	22
	1-93	2
	1-93	2
1615150	1-93	2
1615152	1-95	
1615158	1-94	12
1615159	9-43	15
1615363	4-15	10
1615364	4-11	11
	4-15	
1615711	2-73	3
1615763	4-131	4
1615789	2-53	21
1615841	2-53	25
1615950	4-15	7
1616092	2-53	14
1616156	2-53	5
1616202	12-4	4
1616213	12-4	4
1616227	4-119	6
	4-119	7
	4-119	8
	4-120	6
	4-120	7
	4-120	8
1616289	2-53	1
1616290	9-9	12
1616293	2-73	8
1616457	1-11	39
1616994	9-20	1
1617039	9-3	34
	10-21	6
1617042	9-3	34
	10-21	6
1617057	1-9	5
1617108	1-9	10
1617173	1-9	29
1617174	1-9	1
1617179	1-9	2
1617615	4-6	41
1617617	4-6	38
1617618	4-6	37
1617625	1-9	24
1617842	1-9	16
1618178	2-33	1
1618465	9-35	2
1618466	9-35	13
	9-37	14
1618467	9-35	10
1618468	9-35	21
1618469	9-35	9
	9-37	7
1618470	9-35	22
1618471	9-35	3
	9-37	3
1618472	9-35	11
	9-37	12
1618473	9-35	16
1618474	9-35	18
1618475	9-35	19
1618476	9-35	20
	9-37	17
1618477	9-35	14
	9-37	13
1618478	9-35	6
	9-37	5
1618479	9-35	4
	9-37	4
1618480	9-35	21
1618481	9-35	22
1618482	9-35	11
	9-37	12
1618483	9-35	16
	9-35	18
	9-35	19
	9-37	8
	9-37	10
	9-37	18
1618484	9-35	20
	9-37	17
1618485	9-35	4
	9-37	4
1618486	9-35	7
1618487	9-35	12
1618590	2-17	9
1618928	9-10	38
1618929	9-10	39

©2010 HYSTER COMPANY

See Service Manual for service procedures.

NUMERICAL INDEX (continued)

PART NO.	PAGE	ITEM
1618930	9-7	2
1618931	9-19	7
1618932	9-19	2
1618933	9-19	8
1618934	10-21	10
	10-23	13
1618935	9-7	3
1619098	6-11	
1619099	6-11	
1619100	6-11	24
1619101	6-11	25
1619102	6-11	29
1619103	6-3	
1619104	6-3	1
1619108	6-3	9
	6-5	9
1619109	6-3	9
	6-5	9
1619110	6-3	10
	6-5	10
1619112	6-3	11
	6-5	11
1619113	6-6	
1619114	6-6	
1619115	6-6	
1619116	6-3	12
	6-5	12
1619118	6-3	12
	6-5	13
1619119	6-6	39
1619120	6-6	
1619121	6-6	
1619122	6-6	44
1619124	6-3	15
	6-5	18
1619126	6-3	25
	6-5	28
1619127	6-3	25
	6-5	28
1619128	6-3	25
	6-5	29
1619130	6-3	27
	6-5	31
1619131	8-7	
1619132	6-6	42
	8-7	1
1619133	8-7	6
1619134	8-7	4
1619135	8-7	8
1619136	6-6	40
	8-7	11
1619137	8-7	7
1619388	1-11	31
1619389	1-11	1
1619491	8-7	13
1619785	1-35	15
1619981	1-35	22
	1-37	14
1620002	6-17	2
	7-22	2
1620074	1-35	21
1620078	1-35	23
1620141	1-37	9
1622237	1-35	25
	1-37	8
1622555	10-13	12
1622556	10-13	12
1622563	1-53	1
1622564	1-53	4
1622574	1-53	2
1622602	1-53	1
1622603	1-53	2
1622610	10-23	1
1622861	1-85	11
1622862	1-85	11
1622863	1-85	11
1623050	4-70	44
	4-143	5
	4-144	4
	4-145	6
1623149	3-5	16
1623187	1-95	14
	1-105	
	9-51	6
	9-57	7
1623188	4-17	28
1623195	8-3	36
1623196	8-3	34
1623197	8-3	33
1623264	1-45	
	1-51	1
	1-131	3
1623266	1-45	1
1623267	1-45	15
	1-47	6
1623268	1-47	3
1623282	9-57	6
1623283	9-57	12
1623284	4-17	23
1623285	4-17	26
1623286	9-51	2
1623287	9-51	1
1623288	9-51	5
1623289	9-51	11
1623364	1-28	8
1623420	1-79	27
1623421	1-79	26
1624103	4-49	8
	4-55	9
	4-59	13
	4-64	17
	4-74	17
	4-77	6
	4-77	8
1624336	4-111	4
	4-111	6
1624361	5-30	
1624363	5-30	3
1624364	5-30	6
1624365	5-28	4
1624366	5-5	
	5-11	
	5-15	
	5-19	
	5-23	
	5-25	
	5-33	
	5-35	
	5-37	
1624367	5-5	5
1624368	5-5	7
	5-33	8
	5-37	14
1624369	5-5	6
	5-37	15
1624370	5-5	6
	5-37	15
1624371	5-5	8
	5-37	7
1624372	5-5	8
	5-37	7
1624373	5-5	12
1624374	5-5	20
	5-11	8
	5-37	19
1624375	5-5	10
1624376	5-5	4
	5-37	26
1624377	5-5	17
1624381	5-5	21
1624385	5-5	15
	5-7	5
1624386	5-5	13
1624387	5-5	14
1624388	5-5	16
1624389	5-5	19
1624390	5-37	5
1624391	5-37	9
1624392	5-9	6
1624393	5-37	16
1624394	5-37	4
1624395	5-37	2
1624396	5-37	3
1624397	5-37	1
	5-37	2
1624398	5-37	13
1624399	5-37	22
1624400	5-37	24
1624409	5-37	21
1624410	5-37	12
1624411	5-37	23
1624412	5-37	20
1624413	5-37	10
1624417	5-7	2
1624418	5-7	3
1624419	5-7	4
1624421	5-23	6
1624422	5-23	4
1624423	5-11	31
	5-19	3
	5-23	2
1624424	5-23	3
1624425	5-11	32
	5-23	1
1624426	5-23	8
1624427	5-23	5
1624445	5-9	1
1624446	5-9	9
1624447	5-9	2
1624448	5-9	8
1624449	5-9	3
1624450	5-9	7
1624451	5-9	5
1624452	5-9	4
1624457	5-11	2
1624458	5-11	2
1624459	5-11	3
1624460	5-11	4
1624461	5-11	5
1624464	5-11	10
1624465	5-11	25
1624466	5-11	24
	5-15	18
	5-19	18
1624467	5-11	22
1624468	5-11	21
	5-15	12
	5-19	21

See Service Manual for service procedures.
©2010 HYSTER COMPANY

NUMERICAL INDEX (continued)

PART NO.	PAGE	ITEM
1624469	5-11	20
	5-15	11
	5-15	17
	5-19	17
	5-19	20
1624470	5-11	20
	5-15	11
	5-19	20
1624471	5-11	19
	5-15	16
	5-19	16
1624472	5-11	18
	5-15	15
	5-19	15
1624473	5-11	17
1624474	5-11	16
	5-15	13
	5-19	4
1624475	5-11	15
	5-15	5
	5-19	11
1624476	5-11	14
	5-15	7
	5-19	9
1624477	5-11	13
	5-15	6
	5-19	10
1624478	5-11	12
	5-15	22
1624479	5-11	11
	5-15	3
	5-19	13
1624480	5-11	30
	5-19	5
1624481	5-11	27
	5-19	6
1624482	5-11	28
1624483	5-11	29
1624484	5-11	26
	5-19	8
1624575	5-15	1
1624576	5-15	2
1624577	5-15	2
1624578	5-15	4
	5-19	26
1624579	5-15	10
	5-19	22
1624580	5-15	19
1624581	5-15	17
	5-19	17
1624582	5-15	14
	5-19	14
1624583	5-15	20
	5-19	25
1624584	5-15	21
	5-19	24
1624585	5-15	28
1624586	5-15	26
	5-19	31
1624587	5-15	9
1624596	5-19	7
1624597	5-11	12
	5-19	12
	5-19	12
1624598	5-19	23
1624599	5-19	19
1624600	5-24	4
1624601	5-24	6
1624602	5-24	5
1624603	5-24	8
1624604	5-24	7
1624605	5-24	9
1624606	5-24	12
1624607	5-24	2
1624608	5-24	1
1624609	5-24	3
1624610	5-26	6
1624611	5-26	8
1624612	5-26	4
1624613	5-26	5
1624614	5-26	2
1624615	5-26	3
1624616	5-28	1
1624617	5-28	3
1624618	5-28	2
1624619	5-28	6
1624620	5-28	7
1624621	5-28	7
1624630	5-6	
1624631	5-33	15
1624633	5-35	20
1624634	5-35	4
1624635	5-35	14
1624636	5-35	1
1624637	5-30	1
1624638	5-30	2
1624639	5-30	4
1624641	5-30	8
1624700	9-17	10
1624701	9-20	7
1624740	5-30	5
1624900	9-39	20
1625540	2-43	1
1625633	9-9	8
1625694	1-11	2
	1-11	34
1625704	9-10	33
	9-13	19
1625705	9-9	17
	9-13	22
1625706	9-9	7
1625944	2-43	1
1626105	1-9	4
1626113	11-39	2
1626816	9-9	2
1626996	1-23	2
1627258	10-25	7
1627259	10-25	7
1627262	10-25	
1627263	10-25	
1627439	10-25	14
1627709	4-6	34
	4-6	35
1628436	3-3	21
1628735	6-18	1
	7-23	1
1628907	6-18	1
	7-23	1
1628959	2-43	1
1628960	2-43	1
1628961	2-43	1
1628962	2-43	1
1628963	2-43	3
1628964	2-43	2
1628965	2-43	1
1628966	2-43	1
1628967	2-43	1
1629167	3-3	8
1629234	10-17	20
1632308	9-25	
	9-26	
	9-29	
	9-31	
	9-33	
1632310	9-21	2
	9-25	
1632311	9-21	3
	9-26	1
1632312	9-21	4
	9-29	
1632313	9-21	5
	9-31	
1632314	9-21	6
	9-33	
1632315	9-26	
1632316	9-26	
1632317	9-29	
	9-31	
1632318	9-26	
	9-26	
	9-29	
	9-31	
1632762	4-5	3
1632862	4-79	3
	4-87	3
	4-95	1
	4-103	1
1632863	4-95	1
	4-103	1
1632864	4-84	16
	4-92	16
	4-100	17
	4-108	17
1632865	4-84	20
	4-92	20
	4-100	21
	4-108	21
1632866	4-84	19
	4-92	19
1632867	4-84	19
	4-92	19
1632868	4-80	17
	4-88	17
	4-96	28
	4-104	28
1632869	4-80	17
	4-88	17
	4-96	28
	4-104	28
1632983	4-131	2
	4-132	7
1632984	2-24	4
1632993	3-22	
1633692	4-79	10
	4-87	10
	4-95	10
	4-103	10
1634082	4-112	11
1634996	1-95	14
	1-107	
1634997	1-47	
	1-131	5
1635007	1-69	2
	1-125	1
1635008	1-69	1
	1-125	2
1635011	1-115	4
1635018	1-23	14

©2010 HYSTER COMPANY

NUMERICAL INDEX (continued)

PART NO.	PAGE	ITEM
1635019	1-23	15
1635020	1-23	6
1635021	1-23	8
1635022	1-23	9
1635023	1-23	10
1635026	1-23	3
1635028	9-25	5
	9-29	11
	9-31	11
	9-33	11
1635031	9-25	17
	9-29	18
	9-31	18
	9-33	18
1635032	9-25	11
	9-29	5
	9-31	5
	9-33	5
1635033	9-25	12
	9-29	6
	9-31	6
	9-33	6
1635034	9-25	10
	9-29	1
	9-31	1
	9-33	1
1635035	9-25	19
	9-29	9
	9-31	9
	9-33	9
1635036	9-25	1
	9-29	10
	9-31	10
	9-33	10
1635114	4-29	1
1635220	2-54	9
1635222	3-17	10
1635224	2-63	1
1635225	2-67	3
1635227	2-24	6
1635228	2-56	1
	2-59	1
1635229	2-61	1
1635230	2-84	3
	2-87	1
1635232	2-84	5
1635233	2-67	7
1635234	2-67	6
1635235	2-84	6
1635237	4-138	3
1635238	4-138	1
1635239	2-27	
1635240	4-135	1
	4-137	3
1635241	2-81	36
1635242	2-93	2
1635243	2-27	
1635244	2-27	
1635245	2-47	5
1635248	2-47	6
1635251	2-6	2
1635254	2-75	23
1635255	2-56	4
	2-59	3
1635256	2-56	8
	2-59	10
1635257	2-8	1
1635258	2-54	10
1635259	2-24	10
1635260	2-70	4
1635261	2-94	2
1635262	2-94	4
1635264	3-21	9
1635265	2-91	1
1635266	2-60	2
1635267	3-17	5
1635269	2-14	8
1635270	2-70	3
1635271	3-30	1
1635272	2-14	9
1635273	2-27	9
1635275	2-14	4
1635276	3-17	4
1635277	4-135	8
1635278	4-135	10
1635279	3-27	6
	3-29	4
1635280	4-135	5
	4-137	10
1635281	2-24	3
1635282	2-17	2
	2-19	2
1635285	2-60	1
1635286	2-24	7
1635289	2-27	6
1635290	2-37	14
1635291	2-24	2
1635293	2-17	1
1635295	2-17	10
	2-19	6
1635297	2-70	1
1635298	2-24	1
1635299	2-62	2
1635300	2-94	5
1635301	2-73	15
1635302	2-56	6
1635303	3-30	3
1635304	3-21	6
1635305	3-21	7
1635307	2-33	8
	2-35	15
1635308	2-33	7
	2-35	21
1635309	2-64	3
1635310	2-27	6
1635311	3-17	9
1635312	3-30	5
1635313	3-17	7
1635314	2-47	2
1635315	4-135	16
1635316	2-17	5
1635317	3-22	5
	3-23	5
1635318	2-10	2
1635319	2-64	2
1635320	2-6	3
1635321	2-37	3
1635322	2-37	3
1635323	4-135	9
1635324	4-135	12
1635325	4-135	20
	4-137	12
1635326	3-27	1
1635327	3-21	5
1635328	2-92	1
1635329	3-30	2
1635330	2-78	1
1635332	3-21	1
1635333	3-21	2
1635334	3-21	4
1635335	3-21	3
1635336	2-67	4
1635337	2-94	3
1635338	3-21	5
1635339	2-47	4
1635340	2-14	6
1635342	4-135	1
	4-137	4
1635344	2-81	3
1635345	4-135	22
	4-137	13
1635346	2-37	14
1635347	4-138	2
1635348	3-17	12
1635349	3-17	11
1635350	2-60	5
1635352	3-22	2
1635354	2-84	1
	2-87	5
1635355	3-14	6
	3-17	8
	3-24	2
	3-27	11
	3-29	17
1635356	2-89	1
	2-90	7
1635357	2-61	2
1635358	2-3	1
1635359	4-135	3
1635360	2-89	8
	2-90	2
1635361	2-89	9
	2-90	3
1635362	2-14	10
1635363	2-5	15
1635364	3-24	1
1635365	3-27	10
	3-29	11
1635366	2-92	2
1635367	2-71	1
1635368	2-89	11
	2-90	5
1635369	2-14	1
1635370	3-14	10
1635371	2-67	8
1635373	2-51	3
1635374	2-51	6
1635375	2-67	1
1635376	3-14	4
1635377	2-89	10
	2-90	4
1635378	2-75	24
1635379	2-89	2
	2-90	6
1635381	3-16	3
1635382	2-24	8
1635383	2-24	9
	4-138	4
1635384	2-70	
	3-27	7
	3-29	7
1635387	4-135	6
	4-137	18
1635388	2-75	15
	2-75	17
1635389	2-73	15
1635390	3-16	1
1635391	3-16	2

See Service Manual for service procedures.
©2010 HYSTER COMPANY

NUMERICAL INDEX (continued)

PART NO.	PAGE	ITEM
1635392	3-27	9
1635393	3-27	8
1635394	3-27	15
	3-29	12
1635395	2-70	2
1635396	2-61	3
1635397	2-77	1
1635398	3-27	3
1635399	3-14	7
	3-27	12
	3-29	10
1635400	2-17	3
	2-19	10
	2-19	13
1635401	4-138	5
1635403	4-131	1
1635404	4-129	2
1635406	2-17	8
1635407	2-37	2
	2-39	2
1635408	2-17	8
1635409	2-17	4
1635410	3-27	16
	3-29	13
1635411	2-8	4
1635412	2-6	1
1635413	3-14	1
1635418	4-138	6
1635421	4-135	14
	4-137	11
1635422	4-135	15
	4-137	8
1635423	2-33	12
	2-35	11
1635424	3-30	4
1635451	3-14	5
1635452	2-56	6
1635454	3-30	3
1635457	4-135	1
	4-137	3
1635458	2-47	
1635461	2-67	5
1635462	2-67	5
1635464	2-37	10
	2-39	8
1635505	9-10	43
1635572	2-81	40
1635692	9-59	8
1635698	9-59	6
1635999	1-35	9
	1-117	5
1636383	12-4	4
1636384	12-4	4
1636524	2-89	3
1636526	2-89	5
1636527	2-89	4
1636658	9-9	1
	9-49	
1636870	9-49	7
1636880	2-69	7
1636881	2-69	8
1636882	2-69	6
1636884	2-69	24
1636885	2-69	2
1636886	2-69	20
1636887	2-69	10
1636890	2-69	16
1636897	2-69	15
	9-49	10
1636898	2-69	14
1636900	2-69	22
1636903	2-69	4
1636904	2-69	3
1636905	2-69	12
1636906	2-69	13
	9-49	6
1636907	2-69	19
1636908	2-69	17
1636909	2-69	1
1637098	1-12	40
1637391	1-105	8
	1-107	8
1637392	1-107	1
1637393	1-105	9
	1-107	9
1637394	1-107	6
1637395	1-107	4
1637433	10-17	31
1637435	10-17	31
1637438	4-17	3
	4-18	1
	4-31	
	4-49	
	4-55	
1637439	4-43	
	9-51	7
	9-57	8
1637440	4-17	25
	4-115	
1637449	1-105	4
1637450	1-105	6
1637451	1-105	1
1637657	1-83	1
1637658	1-83	10
1637659	1-83	2
1637660	1-79	24
	1-83	4
1637675	1-83	5
	1-83	6
1637676	1-83	5
	1-83	7
1637677	1-83	5
	1-83	8
1637678	1-83	5
	1-83	9
1637795	2-24	5
1637802	2-92	2
1637809	6-13	5
	6-14	5
	6-15	5
	6-16	5
	6-17	5
	6-18	5
	7-18	5
	7-19	5
	7-20	5
	7-21	5
	7-22	5
	7-23	5
1637934	3-21	11
1638200	2-73	13
1638419	2-19	6
1638420	2-19	6
1638421	2-19	6
1638422	2-19	6
1638703	2-17	6
1638785	3-5	4
	3-7	4
1638832	4-27	1
1639716	1-85	11
1639875	12-8	1
1639876	12-8	2
1639877	12-8	5
1639878	12-8	3
1640265	1-11	3
	1-11	32
1640267	1-11	3
	1-11	32
1640824	2-35	10
1640846	9-9	9
1641098	6-17	1
	7-22	1
1641099	6-17	1
	7-22	1
1641217	6-17	1
	7-22	1
1641218	6-17	1
	7-22	1
1641637	1-48	6
1641640	1-48	2
1641795	1-19	
1641838	5-35	21
1641841	5-35	7
1641992	9-37	
	9-39	9
1642096	6-9	1
1642097	6-9	4
1642099	6-9	11
	6-11	13
1642101	6-9	23
1642102	6-9	26
1642103	6-9	28
1642104	6-9	30
1642107	6-5	6
1642123	9-3	4
1642150	6-9	20
1643573	9-55	1
1643576	9-55	24
	9-61	24
1643577	9-55	8
	9-61	8
1643578	9-55	6
	9-61	7
1643579	9-55	7
	9-61	5
1643580	9-55	3
1643581	9-55	4
1643582	9-55	2
1643583	9-55	5
1643588	9-55	10
	9-55	26
	9-61	10
	9-61	26
1643589	9-55	11
	9-55	27
	9-61	11
	9-61	27
1643590	9-55	12
	9-55	28
	9-61	12
	9-61	28
1643591	9-55	9
	9-55	25
	9-61	9
	9-61	25
1643592	9-55	14
	9-55	30
	9-61	14

©2010 HYSTER COMPANY

NUMERICAL INDEX (continued)

PART NO.	PAGE	ITEM
	9-61	30
1643593	9-55	15
	9-55	31
	9-61	15
	9-61	31
1643594	9-55	16
	9-55	32
	9-61	16
	9-61	32
1643595	9-55	17
	9-55	33
	9-61	17
	9-61	33
1643596	9-55	18
	9-55	34
	9-61	18
	9-61	34
1643597	9-55	23
	9-55	39
	9-61	23
	9-61	39
1643598	9-55	13
	9-55	29
	9-61	13
	9-61	29
1643599	9-55	37
	9-61	37
1643600	9-55	35
	9-61	35
1643601	9-55	36
	9-61	36
1643602	9-55	20
	9-55	38
	9-61	20
	9-61	38
1643606	9-55	22
	9-61	22
1643607	9-55	21
	9-61	21
1643608	9-55	19
	9-61	19
1643614	9-61	1
1643615	9-61	6
1643616	9-61	4
1643617	9-61	3
1643618	9-61	2
1643619	9-61	1
1643623	1-11	37
1644095	2-13	1
	2-20	2
	2-78	1
1644166	3-30	6
1644532	5-2	1
	5-5	
	5-6	
	5-7	
	5-9	
	5-11	
	5-15	
	5-19	
	5-23	
	5-24	
	5-26	
	5-28	
	5-30	
	5-33	
	5-35	
	5-37	
	5-39	
	5-41	
	5-45	
	5-47	1
1644533	5-2	1
	5-5	
	5-6	
	5-7	
	5-9	
	5-11	
	5-15	
	5-19	
	5-23	
	5-24	
	5-26	
	5-28	
	5-30	
	5-33	
	5-35	
	5-37	
	5-39	
	5-41	
	5-45	
	5-47	1
1644791	1-31	2
1644792	1-31	7
1644793	1-31	9
1644794	1-45	27
	1-48	
1644795	1-47	30
	1-48	
1644796	1-48	1
1644797	1-48	10
1644798	1-48	11
1644799	1-48	7
1644800	1-48	8
1644802	1-48	5
1644803	1-48	1
1644804	1-48	3
1644805	1-48	11
1644806	1-48	10
1646444	5-5	22
1646447	5-7	
1646448	5-7	2
1646450	5-11	6
1646451	5-11	7
1646452	5-11	7
1646454	5-15	22
1646498	5-35	17
1646500	5-33	14
1646501	5-33	6
1646502	5-33	10
1646503	5-33	12
1646553	5-7	
1646833	4-27	4
1646834	4-27	4
1648559	1-28	2
1648560	1-28	
1648561	1-28	
1649268	1-55	11
	1-57	11
1649349	4-129	5
1649738	3-22	1
1650537	1-55	23
1650539	1-55	20
1650569	2-43	14
1650570	2-43	7
1651349	10-7	17
1651350	10-8	51
1651354	10-7	17
1651355	10-7	17
1651356	10-8	51
1651357	10-8	51
1651882	10-18	42
1651884	10-18	41
1652017	4-6	
1652018	4-5	14
1652593	9-17	5
1652594	9-17	7
1652899	1-85	11
1653385	6-5	
	6-9	
	8-7	
	8-9	
1653711	10-18	42
1653927	10-17	1
1653932	9-17	3
1654628	1-11	5
1654762	2-81	37
	2-83	3
1654807	6-9	
	6-11	
1654813	6-5	1
1654935	1-19	5
	1-20	2
1655227	4-119	2
	4-120	2
1655365	1-29	6
	1-31	8
1656340	9-37	2
1656354	9-37	16
1656593	1-53	2
1656595	1-53	4
1656596	1-53	2
1656599	1-77	
	1-79	8
1656600	1-77	6
1656601	1-77	
1656603	1-77	11
1656604	1-77	15
1656996	3-5	4
	3-7	4
1656997	3-5	4
	3-7	4
1657113	9-37	15
1657231	10-18	43
1657414	10-8	51
1657415	10-7	17
1657626	1-45	32
	1-47	32
1657627	1-45	33
	1-47	33
1658799	9-37	8
1658800	9-37	10
1658801	9-37	18
1658803	9-37	15
1658804	9-37	1
1658825	9-57	4
	9-59	
1658849	1-88	1
1658852	4-64	18
	4-74	18
1659115	4-100	20
	4-108	20
	4-128	2
1659116	4-100	20
	4-108	20
	4-128	2
1660341	9-49	3
1660342	9-49	4

See Service Manual for service procedures.
©2010 HYSTER COMPANY

NUMERICAL INDEX (continued)

PART NO.	PAGE	ITEM
1660343	9-49	5
1660345	9-49	2
1660346	2-69	21
	9-49	8
1660347	9-49	9
1660765	4-29	2
1660766	4-29	6
1661070	2-60	1
1661071	2-87	6
1661074	2-5	16
1661077	2-5	
1661078	2-5	1
1661079	2-5	14
1661080	2-5	12
1661081	2-5	13
1661082	2-5	4
1661084	2-70	1
1661085	2-24	9
	4-138	4
1661086	2-20	1
	2-35	17
1661089	2-56	6
1661144	3-30	2
1661145	2-61	4
1661205	4-135	6
	4-137	17
1661209	2-19	9
1661210	2-19	11
1661211	2-19	1
1661288	2-39	3
1661289	2-37	12
	2-39	16
1661292	3-21	10
1661394	2-83	3
1661396	2-83	3
1661398	4-132	5
1661437	2-90	1
1661440	2-35	8
1661441	2-31	8
1661444	2-61	3
1661549	2-69	27
1661550	2-69	25
1661551	2-69	26
1661552	2-69	23
1661553	2-69	9
1661554	2-69	18
1662130	9-59	13
1662131	9-59	12
1662132	9-59	10
1662134	9-59	7
1662311	3-23	2
1662312	3-23	3
1662313	2-47	1
1662489	9-59	9
1662492	9-59	2
1662493	9-59	1
1664559	4-25	1
	4-29	1
1665756	1-43	
1666567	4-131	1
	4-132	6
1671513	4-5	16
1671620	1-113	2
1672504	1-37	3
1672505	1-37	4
1672817	4-25	7
	4-114	
1672818	4-127	
	12-3	
1673973	3-5	15
1674006	7-12	44
1674584	1-77	5
1675801	9-9	3
1675826	4-140	
	4-143	2
1676308	4-5	1
	4-87	
	4-91	
1676309	4-5	1
	4-87	
	4-91	
1676516	10-23	24
1676840	10-17	11
1676875	3-3	16
1677616	4-5	17
	4-120	
1677797	10-17	38
1677798	10-18	38
1677891	8-3	39
1677910	10-18	39
1683736	5-39	2
1684549	7-11	19
1686670	1-57	20
1686686	1-57	13
1687037	1-95	
1687531	6-5	1
1687532	6-5	9
1687533	6-5	9
1687622	2-94	5
1688528	4-17	8
1688529	4-17	8
1688729	5-5	5
1689343	5-2	1
	5-5	
	5-6	
	5-7	
	5-9	
	5-11	
	5-15	
	5-19	
	5-23	
	5-24	
	5-26	
	5-28	
	5-30	
	5-33	
	5-35	
	5-37	
	5-39	
	5-41	
	5-45	
	5-47	1
1689351	5-2	1
	5-5	
	5-6	
	5-7	
	5-9	
	5-11	
	5-15	
	5-19	
	5-23	
	5-24	
	5-26	
	5-28	
	5-30	
	5-33	
	5-35	
	5-37	
	5-39	
	5-41	
	5-45	
	5-47	1
1689641	2-13	2
1689714	4-17	3
	4-18	1
	4-35	
	4-59	
	4-63	
1689914	1-55	1
	1-57	1
	1-58	
1690080	4-17	
1690843	7-5	
1691873	4-135	4
	4-137	16
1692151	1-93	2
1692242	1-55	3
	1-57	3
1692243	1-55	2
	1-57	2
1692244	1-55	2
	1-57	2
1692245	1-55	3
	1-57	3
1692918	1-45	29
	1-47	28
1692948	2-5	
	2-6	
	2-7	
	2-8	
	2-9	
	2-10	
	2-13	
	2-14	
	2-19	
	2-20	
	2-24	
	2-31	
	2-35	
	2-37	
	2-39	
	2-40	1
	2-44	
	2-47	
	2-51	
	2-54	
	2-55	
	2-56	
	2-59	
	2-60	
	2-61	
	2-62	
	2-63	
	2-64	
	2-67	
	2-70	
	2-71	
	2-76	
	2-77	
	2-78	
	2-83	
	2-87	
	2-90	
	2-91	
	2-92	
	2-93	
	2-94	
	2-95	

©2010 HYSTER COMPANY

NUMERICAL INDEX (continued)

PART NO.	PAGE	ITEM
	3-14	
	3-16	
	3-17	
	3-21	
	3-23	
	3-24	
	3-29	
	3-30	
	4-129	
	4-132	
	4-137	
	4-139	
1692949	2-5	
	2-6	
	2-7	
	2-8	
	2-9	
	2-10	
	2-13	
	2-14	
	2-19	
	2-20	
	2-24	
	2-31	
	2-35	
	2-37	
	2-39	
	2-40	1
	2-44	
	2-47	
	2-51	
	2-54	
	2-55	
	2-56	
	2-59	
	2-60	
	2-61	
	2-62	
	2-63	
	2-64	
	2-67	
	2-70	
	2-71	
	2-76	
	2-77	
	2-78	
	2-83	
	2-87	
	2-90	
	2-91	
	2-92	
	2-93	
	2-94	
	2-95	
	3-14	
	3-16	
	3-17	
	3-21	
	3-23	
	3-24	
	3-29	
	3-30	
	4-129	
	4-132	
	4-137	
	4-139	
1692958	10-23	25
1693804	1-63	6
1695629	1-63	6
1696079	1-61	
1696084	1-69	
1696674	2-27	4
	2-31	2
1696675	2-27	2
	2-31	1
1696686	2-19	3
1696691	2-56	14
	2-59	
1696745	2-56	5
1700209	4-23	1
1700297	4-6	
	4-128	
1700341	7-5	1
1700342	7-3	9
1700345	4-5	1
	4-95	
	4-99	
1700346	4-5	1
	4-95	
	4-99	
1701250	4-128	1
1701394	9-35	5
1701989	2-31	4
1701994	2-31	4
1701995	2-31	5
1702093	3-17	7
1702094	3-17	7
1702096	3-27	3
	3-29	8
1702097	3-29	9
1702098	3-29	14
1702100	3-29	15
1702101	2-13	3
1702102	2-47	3
1702103	2-62	2
1702104	2-67	4
1702106	2-67	2
	2-67	2
1702183	2-76	2
1702184	2-87	7
1702188	2-51	6
1702189	4-132	2
1702190	4-132	6
1702191	4-139	1
1702283	1-25	
1702284	1-25	
1702285	1-23	
1702289	1-59	
	1-61	6
1702290	1-61	4
	1-125	8
1702293	1-61	7
	1-65	
	1-125	
1702562	1-59	1
	1-67	
1702563	1-59	3
	1-68	
1702921	10-3	1
1703491	2-93	2
1703492	3-30	1
1703737	1-110	2
1704370	1-25	20
1704396	1-23	7
1704582	5-2	1
	5-5	
	5-6	
	5-7	
	5-9	
	5-11	
	5-15	
	5-19	
	5-23	
	5-24	
	5-26	
	5-28	
	5-30	
	5-33	
	5-35	
	5-37	
	5-39	
	5-41	
	5-45	
	5-47	1
1704583	5-2	1
	5-5	
	5-6	
	5-7	
	5-9	
	5-11	
	5-15	
	5-19	
	5-23	
	5-24	
	5-26	
	5-28	
	5-30	
	5-33	
	5-35	
	5-37	
	5-39	
	5-41	
	5-45	
	5-47	1
1705156	1-23	4
1705537	5-37	5
1705539	5-15	9
1705832	12-7	1
1706985	8-3	16
1707004	2-27	3
	2-27	3
	2-31	3
1707005	2-87	10
1707047	2-8	4
1707464	3-7	15
1707619	2-27	
	2-31	
1707620	2-27	4
	2-31	2
1707621	2-27	3
	2-31	3
1707622	2-27	2
	2-31	1
1708510	2-27	
	2-28	
	2-31	
1708511	2-27	4
	2-31	2
1708512	2-27	3
	2-31	3
1708513	2-27	2
	2-31	1
2003859	7-3	8
2032229	7-9	
2034459	1-85	10
2043084	9-10	28
2043194	1-35	13
	1-43	

See Service Manual for service procedures.
©2010 HYSTER COMPANY

NUMERICAL INDEX (continued)

PART NO.	PAGE	ITEM
2043287	7-5	7
	7-7	
2043344	9-51	14
2043351	12-3	
2043352	1-105	17
2043353	1-105	16
2043354	1-105	14
2043470	1-88	9
2043476	1-88	6
2043479	1-87	3
2043537	10-8	56
2043546	4-123	
2043634	4-5	16
2043981	9-10	28
2044002	1-85	2
2044400	1-87	8
2044515	4-7	1
2046600	1-88	10
2052775	4-25	
	4-27	
	4-29	
2054005	9-51	13
	9-51	13
	9-57	2
2055678	4-18	5
2056545	5-39	1
2059720	9-47	7
2060555	4-84	24
	4-93	24
	4-128	1
2067917	4-84	24
	4-92	24
2067918	4-128	1
2068981	1-88	8
2070686	4-5	18
2072353	4-5	28
	12-4	1
2072354	12-6	2
2076655	1-79	24
	1-83	
2076661	3-9	16
	3-11	13
	4-17	16
2079027	1-13	2
	6-5	8
2082967	2-23	1
2084159	1-87	4
2085723	1-85	3
2090765	1-85	6
2095403	4-17	8
2098895	1-79	
2100569	4-18	5
2104177	12-3	
2104697	3-14	10
2787349	4-84	24
	4-92	24
4000383	9-43	36
4000384	9-43	
4000385	9-43	
4000386	9-43	33
4000399	1-69	4
	1-70	
4000400	1-69	3
	1-75	
4000817	1-7	3
4000915	1-70	3
	1-73	
4000916	1-70	1
4000917	1-75	4
4000918	1-65	10
	1-75	2
4000919	1-65	7
	1-75	1
4000920	1-65	8
	1-75	6
4000982	8-3	39
4001205	4-18	6
4001208	1-17	9
4001209	8-3	23
4001306	1-58	4
4001307	1-58	3
4001308	1-58	2
4001309	1-58	1
4002122	4-6	32
4002124	4-6	44
4002125	4-6	35
4002186	12-9	1
4002325	6-5	
	6-9	
	8-7	
	8-9	
4002422	9-9	23
	9-13	10
4002423	9-9	21
	9-13	11
4002424	9-10	37
	9-13	12
4002425	9-9	19
	9-13	16
4002498	1-61	4
	1-63	
	1-125	8
4002500	1-63	4
4002501	1-63	7
4002502	1-63	14
4002503	1-63	16
4002504	1-63	13
4002505	1-63	11
4002506	1-63	18
4002507	1-63	2
4002508	1-63	9
4002509	1-63	15
4002510	1-63	10
4003079	1-63	17
4003081	1-67	2
	1-129	1
4003082	1-67	9
4003083	1-67	8
	1-129	5
4003084	1-67	14
	1-129	13
4003085	1-67	3
	1-129	2
4003086	1-67	25
	1-129	28
4003087	1-67	22
	1-129	25
4003088	1-67	18
	1-73	16
	1-129	24
4003089	1-67	6
	1-73	15
	1-129	3
4003090	1-67	4
	1-129	29
4003091	1-67	5
	1-73	18
	1-129	31
4003092	1-67	21
	1-129	26
4003093	1-67	20
	1-129	22
4003094	1-67	15
	1-129	14
4003095	1-67	1
	1-129	15
4003096	1-67	16
4003097	1-67	17
4003098	1-67	10
	1-129	9
4004307	1-68	6
4004308	1-68	2
4004309	1-68	3
4004310	1-68	4
4004326	1-15	
4004442	7-11	
	9-19	9
4004547	4-143	1
4004711	4-143	3
4004770	1-63	3
4004827	1-61	5
	1-125	9
4004837	1-61	3
	1-125	5
4004926	1-73	10
4004927	1-73	17
4004928	1-73	1
4004929	1-73	5
4004930	1-73	4
4004931	1-73	11
4004932	1-73	13
4004933	1-73	2
4004934	1-73	14
4006338	1-91	
4006371	2-35	12
4006372	2-35	12
4006379	1-15	1
4006380	1-15	5
4006381	1-15	3
4006398	5-6	4
4006399	5-6	5
4006987	12-12	2
4006988	12-12	1
4007075	2-27	
	2-31	
4007284	4-17	3
	4-18	1
	4-39	
	4-67	
	4-73	
4007464	2-31	3
4007465	2-31	1
4007466	2-28	
	2-31	
4007468	2-27	2
	2-31	1
4007469	2-27	
	2-31	
4007739	1-91	2
4007740	1-91	7
4007741	1-91	5
4007742	1-91	21
	1-123	5
4007743	1-91	
4007744	1-91	
	1-123	10
4007745	1-91	10
4007746	1-91	11

©2010 HYSTER COMPANY

NUMERICAL INDEX (continued)

PART NO.	PAGE	ITEM
4007747	1-91	8
4007748	1-91	3
	1-123	3
4007749	1-91	8
	1-123	8
4007750	1-91	9
	1-123	9
4007751	1-91	14
4007875	4-5	1
	4-103	
	4-107	
4007876	4-5	1
	4-103	
	4-107	
4007945	2-27	3
	2-31	3
4007946	2-27	4
	2-31	2
4008677	10-7	17
4008678	10-7	17
4008679	10-7	17
4008680	10-7	17
4008980	2-83	
4009252	3-29	16
4009308	2-19	12
4009310	2-19	14
4009311	2-54	10
4009315	4-137	9
4009316	4-137	20
4009587	1-110	
4009588	1-110	
4009593	1-125	
	1-126	
4009594	1-125	6
4009597	1-126	1
	1-129	
4009598	1-126	3
4009770	10-8	51
4009771	10-8	51
4009782	1-48	4
4009794	4-17	
4009850	9-49	1
4009986	10-8	51
4009987	10-8	51
4010356	2-14	4
4010630	4-143	5
4010868	2-75	18
4011627	4-146	1
4011628	4-146	1
4012199	5-11	3
4013375	4-69	43
4013486	1-123	
4013868	5-5	31
	5-11	34
	5-15	33
	5-25	15
	5-35	28
	5-37	32
4013895	12-11	2
4014255	1-13	1
4014284	4-143	6
4014634	4-144	
4016096	12-11	4
4016097	12-11	3
4016098	12-11	1
4016648	1-25	16
4016659	4-6	36
	4-124	
4016715	1-117	3
4018919	3-23	1
4020678	1-123	14
4020872	4-129	5
4020873	1-129	4
4020874	1-129	16
4020875	1-129	8
4020876	1-129	6
4020877	1-129	20
4020878	1-129	19
4020879	1-129	18
4020880	1-129	30
4020881	1-129	17
4020899	1-126	3
4020900	1-126	3
4021118	1-123	2
4021119	1-123	2
4021120	1-123	7
4021125	1-123	10
4021185	1-121	13
4021186	1-121	3
4021187	1-121	2
4021188	1-121	5
4021189	1-121	7
4021190	1-121	10
4021191	1-121	11
4021192	1-121	8
4021193	1-119	1
	1-121	1
4021194	1-121	9
4021195	1-121	6
4021196	1-119	9
	1-121	
4021197	1-119	5
4021198	1-119	7
4021199	1-119	4
4021200	1-119	11
4021201	1-119	15
4021202	1-119	14
4021203	1-119	13
4021204	1-119	12
4021205	1-119	2
4021206	1-119	3
4021207	1-119	6
4021342	1-126	3
4022316	2-59	6
4022317	2-59	12
4023234	9-3	33
	9-44	
4023356	4-143	3
4024317	10-23	9
4024318	10-23	9
4608026	4-11	13
4609580	4-124	
6990011	11-21	41
	11-26	54
6990012	11-21	27
	11-25	25
6990013	11-21	28
	11-25	26
6990014	11-21	31
	11-25	29
6990015	11-21	36
	11-25	34
6990017	11-21	34
	11-25	32
6990044	11-15	25
6990291	11-22	63
	11-25	45
6990292	11-22	56
	11-25	47
6990293	11-22	54
	11-26	49
6990294	11-22	53
	11-26	50
6990298	11-11	19
	11-13	19
6990332	11-35	10
6990335	11-56	1
6990336	11-56	7
6990353	11-17	34
6990354	11-17	42
6990355	11-17	43
6990358	11-17	35
	11-55	8
6990360	11-18	47
6990363	11-5	14
	11-7	14
6990368	11-31	3
6990369	11-31	4
6990370	11-31	2
6990385	11-33	7
6990389	11-11	10
6990409	11-21	20
	11-25	20
6990415	11-17	31
6990429	11-35	7
6990436	11-33	2
6990439	11-29	3
6990440	11-29	4
6990441	11-29	5
6990447	11-21	27
	11-25	25
6990453	11-17	36
6990455	11-21	15
	11-25	16
6990456	11-21	15
	11-25	16
6990457	11-21	42
	11-26	53
6990462	11-5	13
	11-7	20
6990465	11-15	7
6990468	11-11	12
	11-15	12
6990470	11-15	9
6990471	11-11	9
	11-15	10
6990479	11-11	21
	11-13	21
6990483	11-17	18
6990484	11-17	18
6990485	11-17	11
6990499	11-31	5
6990500	11-5	22
6990503	11-17	36
6990511	11-15	8
6990517	11-11	11
	11-13	26
	11-15	11
6990520	11-17	39
	11-55	11
6990545	11-11	7
	11-13	7
	11-13	11
6990551	11-11	18
	11-13	18
6990555	11-17	9
6990560	11-13	12
6990570	11-17	16

©2010 HYSTER COMPANY

NUMERICAL INDEX (continued)

PART NO.	PAGE	ITEM
6990580	11-21	14
	11-25	8
6990596	11-31	9
	11-33	1
6990597	11-33	10
6990601	11-17	4
6990602	11-17	30
6990603	11-17	23
6990604	11-17	26
	11-41	1
	11-43	13
6990605	11-17	29
6990606	11-17	17
6990607	11-17	17
6990609	11-39	1
6990610	11-48	1
6990611	11-48	1
6990613	11-11	4
	11-15	4
6990614	11-8	6
	11-11	3
	11-13	3
	11-15	3
6990615	11-11	20
	11-13	20
6990621	11-15	29
6990622	11-15	21
6990623	11-15	20
6990629	11-29	1
	11-31	10
	11-33	11
6990653	11-11	10
	11-13	10
6990683	11-17	44
6990686	11-11	16
6990701	11-21	4
	11-25	4
6990706	11-15	1
6990713	11-21	39
6990718	11-13	16
	11-15	16
6990721	11-13	25
	11-15	15
6990724	11-11	6
	11-13	6
	11-15	6
6990729	11-29	8
6990730	11-29	9
6990734	11-45	2
6990735	11-5	12
	11-7	5
	11-43	28
	11-45	19
	11-47	18
	11-56	
6990736	11-33	5
6990737	11-33	8
6990738	11-33	9
6990739	11-7	4
	11-43	25
	11-45	17
	11-62	
6990740	11-62	2
6990741	11-62	7
6990742	11-36	
	11-41	16
	11-45	14
	11-47	20
6990743	11-36	1
	11-37	1
	11-38	9
6990744	11-37	
	11-41	13
	11-43	8
6990746	11-60	7
6990748	11-59	8
6990758	11-18	49
6990759	11-17	1
6990785	11-21	11
	11-25	13
6990787	11-21	23
	11-25	24
6990788	11-25	36
6990789	11-21	44
	11-26	56
6990790	11-15	15
6990791	11-15	18
6990796	11-5	23
	11-7	13
6990797	11-5	21
	11-7	19
6990798	11-5	20
	11-7	18
6990802	11-31	12
6990803	11-31	13
6990804	11-35	13
6990805	11-35	16
6990806	11-35	17
6990807	11-35	18
6990808	11-31	8
	11-35	
	11-41	15
	11-43	10
	11-45	12
	11-47	12
6990812	11-22	64
	11-26	58
6990817	11-41	9
	11-51	
6990818	11-51	2
6990819	11-50	6
6990906	11-11	5
	11-13	5
	11-17	40
	11-25	37
	11-55	12
6990908	11-11	1
	11-13	1
6990909	11-18	48
	11-55	5
6990923	11-7	12
6990932	11-52	1
6990934	11-13	9
6990958	11-43	3
	11-45	4
	11-47	4
	11-52	
6990962	11-38	
	11-43	11
	11-45	8
	11-47	9
6990963	11-47	15
	11-60	
6990964	11-8	2
6990965	11-8	5
6990966	11-8	8
6990984	11-7	1
6990985	11-7	26
6990986	11-7	23
6990987	11-7	9
6990988	11-43	24
	11-45	21
	11-59	
6990989	11-39	
	11-43	2
6990990	11-13	4
6990991	11-13	4
6990992	11-48	8
6990996	11-22	58
6991066	11-61	1
6991067	11-61	2
6991068	11-61	7
6991069	11-61	8
6991182	11-7	
6991192	11-49	1
6991313	11-21	12
	11-25	14
	11-45	1
	11-47	1
6991323	11-21	12
	11-25	14
	11-45	1
	11-47	1
6991559	11-36	5
	11-36	7
	11-37	5
	11-37	7
	11-38	2
	11-38	3
	11-59	1
	11-59	2
	11-60	2
6996003	11-5	15
	11-7	10
	11-17	3
	11-21	45
	11-22	64
	11-25	44
	11-50	4
	11-55	6
	11-61	4
6996005	11-5	11
	11-7	22
6996006	11-21	24
	11-26	60
	11-48	6
6996007	11-5	17
	11-7	21
	11-17	5
	11-21	9
	11-25	7
6996010	11-17	20
	11-55	4
6996011	11-5	16
	11-7	11
	11-17	32
	11-21	46
	11-26	57
	11-29	2
6996012	11-15	2
6996014	11-17	27
	11-22	64
	11-26	58
6996015	11-21	19
	11-25	19
6996016	11-21	18
	11-25	18
6996018	11-21	17

©2010 HYSTER COMPANY

NUMERICAL INDEX (continued)

PART NO.	PAGE	ITEM
	11-25	17
6996019	11-21	33
	11-25	31
6996020	11-21	6
	11-25	11
6996022	11-21	10
	11-25	12
	11-35	11
6996023	11-21	26
	11-25	23
6996025	11-7	7
	11-31	15
6996026	11-22	51
	11-26	52
6996027	11-22	52
	11-26	51
6996028	11-21	35
	11-25	33
6996036	11-8	9
	11-21	5
	11-25	10
	11-48	5
6996040	11-39	6
6996041	11-59	2
6996043	11-36	5
	11-38	3
	11-59	1
	11-60	2
6996045	11-39	2
6996047	11-36	9
6996051	11-17	12
6996087	11-11	14
6996090	11-13	14
	11-15	14
6996098	11-8	7
6996102	11-7	27
	11-49	3
6996107	11-31	6
6996112	11-48	2
6996122	11-36	6
	11-37	6
	11-38	1
	11-59	3
	11-60	1
6996127	11-59	5
	11-60	4
6996128	11-36	2
	11-38	10
	11-59	
6996136	11-43	26
	11-45	23
6996152	11-29	10
	11-33	3
6996171	11-61	5
6996182	11-36	3
	11-37	3
	11-38	7
	11-59	9
	11-60	6
6996185	11-22	65
	11-26	59
6996186	11-22	61
	11-25	22
6996191	11-21	40
6996197	11-11	2
	11-13	2
	11-17	21
	11-55	3
6996198	11-51	3
	11-52	3
6996208	11-29	6
6996227	11-21	8
	11-25	6
6996245	11-48	3
6996272	11-59	6
6996278	11-7	2
6996293	11-36	5
	11-36	7
	11-37	5
	11-37	7
	11-38	2
	11-38	3
	11-59	1
	11-59	2
	11-60	2
6996294	11-33	4
6996295	11-7	
	11-31	12
6996296	11-17	7
	11-22	48
	11-25	41
	11-31	12
6996301	11-7	
	11-8	1
	11-21	22
	11-25	42
	11-31	12
	11-61	6
6996307	11-35	12
6996313	11-13	27
6996318	11-22	60
	11-25	46
6996355	11-45	3
6996356	11-41	12
	11-43	6
6996368	11-43	23
	11-45	18
6996415	11-41	17
	11-43	12
6996419	11-22	50
	11-25	38
6996420	11-22	49
	11-25	39
6996431	11-38	6
	11-59	4
	11-60	3
6996441	11-17	6
6996443	11-17	33
6996448	11-18	46
6996451	11-31	14
	11-49	2
	11-50	3
6996452	11-33	6
6996453	11-11	10
	11-15	22
	11-15	23
	11-15	24
	11-15	26
6996458	11-7	25
6996468	11-36	5
	11-36	7
	11-37	5
	11-37	7
	11-38	2
	11-38	3
	11-59	1
	11-59	2
	11-60	2
6996471	11-36	8
	11-37	8
	11-38	4
6996472	11-17	8
6996473	11-18	50
	11-55	7
6996475	11-17	19
	11-55	4
6996477	11-18	45
6996478	11-22	62
	11-25	43
6996483	11-41	8
	11-43	1
6996485	11-47	17
6996492	11-47	13
6996495	11-11	14
6996496	11-11	10
	11-15	22
6996497	11-11	10
	11-15	23
6996498	11-11	10
	11-15	24
6996501	11-17	10
6996502	11-17	12
6996512	11-41	7
	11-43	19
6996513	11-41	6
	11-43	18
6996514	11-17	37
6996516	11-41	5
	11-43	17
6996517	11-41	2
	11-43	16
6996521	11-47	6
6996526	11-47	22
6996578	11-11	13
	11-13	13
	11-15	13
6996579	11-11	13
	11-13	13
	11-15	13
6996580	11-11	15
	11-13	15
	11-15	28
6996581	11-11	15
	11-13	15
	11-15	28
6996582	11-11	17
	11-13	17
6996585	11-13	14
	11-15	14
6996587	11-15	17
6996588	11-11	17
	11-13	17
	11-15	17
6996598	11-37	4
	11-38	8
	11-59	10
	11-60	8
6996623	11-11	14
6996628	11-35	19
6996634	11-13	14
	11-15	14
6996645	11-21	16
	11-25	9
6996647	11-21	3
	11-25	3
6996648	11-21	2
	11-25	2
6996654	11-17	24

See Service Manual for service procedures.
©2010 HYSTER COMPANY

NUMERICAL INDEX (continued)

PART NO.	PAGE	ITEM
6996657	11-17	15
	11-55	2
6996658	11-39	4
6996659	11-39	5
6996662	11-41	11
	11-43	5
	11-43	7
	11-47	5
6996665	11-11	22
	11-13	22
6996717	11-36	4
6996724	11-22	55
	11-26	48
6996730	11-15	18
6996731	11-17	28
6996732	11-17	22
6996753	11-13	24
	11-15	5
6996759	11-21	38
6996760	11-21	37
6996761	11-7	15
6996768	11-15	19
6996777	11-31	11
6996785	11-21	25
	11-25	21
6996791	11-17	38
	11-55	10
6996792	11-17	25
	11-55	9
6996794	11-41	10
	11-43	4
6996800	11-15	5
6996854	11-11	8
	11-13	8
	11-17	13
	11-55	1
6996857	11-41	14
	11-43	9
6996859	11-41	3
	11-43	14
6996860	11-41	4
	11-43	15
6996861	11-17	41
6996882	11-47	2
6996883	11-47	3
6996884	11-45	7
	11-47	7
6996885	11-45	13
	11-47	19
6996886	11-45	9
	11-47	10
6996887	11-47	11
6996888	11-47	14
6996889	11-47	16
6996890	11-45	15
	11-47	21
6996891	11-47	8
6996893	11-45	5
6996894	11-45	6
6996895	11-45	11
6996913	11-7	28
6996914	11-7	24
6996917	11-43	20
	11-45	10
6996918	11-43	21
	11-45	24
6996919	11-43	22
6996920	11-43	27
	11-45	22
6996942	11-7	
	11-61	9
6997035	11-45	16
6997036	11-45	20
6999001	11-21	29
	11-25	27
6999002	11-21	30
	11-25	28
6999025	11-17	33
6999028	11-36	5
	11-36	7
	11-37	5
	11-38	2
	11-38	3
	11-59	1
	11-59	2
	11-60	2
6999030	11-51	3
	11-52	3
6999035	11-17	26
	11-41	1
6999036	11-41	18
	11-43	29
	11-45	25
	11-47	23
6999037	11-41	18
	11-43	29
	11-45	25
	11-47	23
6999038	11-41	18
	11-43	29
	11-45	25
	11-47	23
6999039	11-41	18
	11-43	29
	11-45	25
	11-47	23
6999040	11-41	18
	11-43	29
	11-45	25
	11-47	23
6999055	11-41	18
	11-43	29
	11-45	25
	11-47	23

©2010 HYSTER COMPANY

NUMERICAL INDEX (continued)

NOTES

©2010 HYSTER COMPANY


HYSTER