RUTHZIL TRATOR COMERCIAL DE PEÇAS LTDA 11 97083-6812 ROLANDO

PARTS MANUAL

HYSTER

FORTIS®

H40FT, H50FT, H60FT, H70FT (L177)

CUSTOMER EDITION

HYSTER

1599949
05/2013

©2013 HYSTER COMPANY

SECTIONS

1	FRAME
2	ENGINE ASSEMBLY - GM
3	ENGINE ASSEMBLY - MAZDA
4	ENGINE ASSEMBLY - YANMAR
5	FUEL SYSTEM - DIESEL
6	FUEL SYSTEM - GAS/LPG
7	ELECTRICAL SYSTEM
8	TRANSMISSION
9	DRIVE AXLE
10	STEERING SYSTEM
11	BRAKE SYSTEM
12	HYDRAULIC SYSTEM
13	MAST-TWO STAGE LIMITED FREE-LIFT
14	MAST-TWO STAGE FULL FREE-LIFT
15	MAST-THREE STAGE FULL FREE-LIFT
16	OPTIONS
17	FIELD CONVERSION KITS

This Parts Manual is divided into 18 major sections which are listed above. Quick reference to these sections can be made by placing the right thumb on the tab of the desired section, bending the book back and thumbing the pages to the corresponding tab.

18 NUMERICAL INDEX

This Parts Manual is divided into 18 major sections which are listed above. Quick reference to these sections can be made by placing the right thumb on the tab of the desired section, bending the book back and thumbing the pages to the corresponding tab.

TABLE OF CONTENTS

DESCRIPTION **PAGE**

A

ACCUMULATOR AND ATTACHING PARTS 16-12
ADD ON OPTION KITS 17-12
ADD ON OPTIONS
AIR FILTER ASSEMBLY
GASOLINE AND LPG 6-18
YANMAR 2.6L AND 3.3L DIESEL 5-6
AIR INTAKE SYSTEM
DIESEL - YANMAR 2.6L AND 3.3L (→ S/N L177B14427E) 5-2
DIESEL - YANMAR 2.6L AND 3.3L (S/N L177B14428E →) 5-4
GASOLINE AND LPG - GM 2.4L (→ S/N L177B15327E) 6-4
GASOLINE AND LPG - GM 2.4L (S/N L177B19203E →) 6-6
MAZDA 2.0L AND 2.2L LPG - 2006 EMISSION COMPLIANT ENGINES (→ S/N L177B15512E) 6-12
MAZDA 2.0L AND 2.2L LPG - 2007-2010 EMISSION COMPLIANT ENGINES (S/N L177B15326E →) 6-16
MAZDA 2.0L AND 2.2L, GASOLINE - 2006 EMISSION COMPLIANT ENGINES (→ S/N L177B15326E) 6-8
MAZDA 2.0L AND 2.2L, GASOLINE - 2007-2010 EMISSION COMPLIANT ENGINES (S/N L177B16207E →) 6-14
PRE-CLEANER AND DUCT - MAZDA 2.0L AND 2.2L 6-10
ALTERNATOR AND MOUNTING
GM 2.4L - GASOLINE AND LPG 2-31
YANMAR 2.6L AND 3.3L - DIESEL 7-39
ARMREST ASSEMBLY
MINI-LEVER MODULES - SEMI-SUSPENSION SEAT WITH HIP RESTRAINTS 1-108
MINI-LEVER MODULES 1-110
ASSEMBLED ENGINE
GASOLINE AND LPG - GM 2.4L (SHEET 2 OF 4) 2-22
GM 2.4L, GASOLINE AND LPG - SHEET 1 OF 4 2-18
GM 2.4L, GASOLINE AND LPG - SHEET 3 OF 4 2-24
GM 2.4L, GASOLINE AND LPG - SHEET 4 OF 4 2-26
MAZDA 2.0L AND 2.2L, GASOLINE AND LPG, 2007-2010 EMISSION COMPLIANT ENGINES (S/N L177B15327E → (2.2L GAS)) (S/N L177B15512E → 2.0L GAS AND LPG) (S/N L177B16207E → (2.2L LPG)) (S/N L177V01501F →) 3-60
AUXILIARY ONE AND TWO
MANUAL CONTROL VALVE - THREE AND FOUR FUNCTION (→ S/N L177B17861E (3 FUNCTION LOW RELIEF))
(→ S/N L177B18169E (4 FUNCTION LOW RELIEF))
(→ S/N L177B18729E (3 FUNCTION HIGH RELIEF))
(→ S/N L177B18808E (4 FUNCTION HIGH RELIEF)) 12-44
MANUAL CONTROL VALVE - THREE AND FOUR FUNCTION (S/N L177B17862E → (3 FUNCTION LOW RELIEF))
(S/N L177B18170E → (4 FUNCTION LOW RELIEF))
(S/N L177B18730E → (3 FUNCTION HIGH RELIEF))
(S/N L177B18809E → (4 FUNCTION HIGH RELIEF)) 12-46
AUXILIARY TUBE EXTENSION KITS 17-10
AUXILIARY TUBE EXTENSIONS
TWO AND THREE STAGE FULL FREE-LIFT (→ S/N D508V27242H) (→ S/N D509V02103H) (→ S/N D563V11350H) (→ S/N D564V02121H) 16-50

©2013 HYSTER COMPANY

TABLE OF CONTENTS (continued)

DESCRIPTION **PAGE**

TWO AND THREE STAGE FULL FREE-LIFT (S/N D508V27243H →) (S/N D509V02104H →) (S/N D563V11351H →) (S/N D564V02122H →) 16-54
TWO AND THREE STAGE FULL FREE-LIFT - E-HYDRAULICS WITH QUICK DISCONNECT FITTINGS (S/N D508V27243H →) (S/N D509V02104H →) (S/N D563V11351H →) (S/N D564V02122H →) 16-56
TWO STAGE LIMITED FREE-LIFT (→ S/N D507V02972H) (→ S/N D562V02053H) 16-36
TWO STAGE LIMITED FREE-LIFT - WITHOUT QUICK DISCONNECT FITTINGS (S/N D507V02973H →) (S/N D562V02054H →) 16-38
TWO STAGE LIMITED FREE-LIFT - MANUAL HYDRAULICS WITH QUICK DISCONNECT FITTINGS (S/N D507V02973H →) (S/N D562V02054H →) 16-40
TWO STAGE LIMITED FREE-LIFT - E-HYDRAULICS WITH QUICK DISCONNECT FITTINGS (S/N D507V02973H →) (S/N D562V02054H →) 16-42
TWO STAGE LIMITED FREE-LIFT - WITH ISS CARRIAGE AND WITHOUT QUICK DISCONNECT FITTINGS (S/N D507V02973H →) (S/N D562V02054H →) 16-44
TWO STAGE LIMITED FREE-LIFT - WITH ISS CARRIAGE AND MANUAL HYDRAULICS WITH QUICK DISCONNECT FITTINGS (S/N D507V02973H →) (S/N D562V02054H →) 16-46
TWO STAGE LIMITED FREE-LIFT - WITH ISS CARRIAGE AND E-HYDRAULICS WITH QUICK DISCONNECT FITTINGS (S/N D507V02973H →) (S/N D562V02054H →) 16-48
AXLE HOUSING
WET BRAKE 9-4

B

BACK-UP ALARM 16-6
BATTERY CABLES
GM 2.4L - GASOLINE AND LPG 7-42
BEVEL GEAR
WET BRAKE 9-6
BRAKE ASSEMBLY
DRY BRAKE 11-10
BRAKE COOLING SYSTEM
SINGLE AND DUAL PEDAL - WET BRAKE (→ S/N L177B15745E) 11-14
SINGLE AND DUAL PEDAL - WET BRAKE (S/N L177B15746E ↔ S/N L177V03122G) 11-16
SINGLE AND DUAL PEDAL WET BRAKE - WITH ALUMINUM TRANSMISSION (S/N L177V03123G →) 11-18
BRAKE LINKAGE
DUAL PEDAL - DRY BRAKE (→ S/N L177V04756H) 11-6
DUAL PEDAL - DRY BRAKE (S/N L177V04757H →) 11-8
DUAL PEDAL - WET BRAKE (→ S/N L177V03122G) 11-26
DUAL PEDAL - WET BRAKE (S/N L177V03123G →) 11-30
SINGLE PEDAL - DRY BRAKE (→ S/N L177V04756H) 11-2
SINGLE PEDAL - DRY BRAKE (S/N L177V04757H →) 11-4
SINGLE PEDAL - WET BRAKE (→ S/N L177V03122G) 11-20
SINGLE PEDAL - WET BRAKE (S/N L177V03123G →) 11-24
BRAKE MASTER CYLINDER ASSEMBLY
DRY BRAKE 11-13
WET BRAKE (→ S/N L177V03122G) 11-32
WET BRAKE (S/N L177V04757H →) 11-34
BRAKE PEDAL CONVERSION KITS 17-2

©2013 HYSTER COMPANY

TABLE OF CONTENTS (continued)

DESCRIPTION **PAGE**

C

CAB
S/N L177B11273D → 1-30
AIR CONDITIONER 1-42
CONDENSER ASSEMBLY - CAB (WITH A/C) 1-56
FRAME AND ATTACHING PARTS (→ S/N L177B11272D) 1-72
FRAME AND ATTACHING PARTS (S/N L177B11273D →) 1-76
FRAME AND ATTACHING PARTS - CAB WITH A/C 1-80
HEATER 1-44
INTERIOR PANELS (→ S/N L177B11272D) 1-64
INTERIOR PANELS (S/N L177B11273D →) 1-66
LH DOOR (→ S/N L177B11272D) 1-36
LH DOOR (S/N L177B11273D →) 1-38
RH DOOR AND HEATER ASSEMBLY (S/N L177B11273D →) 1-46
SLIDING REAR WINDOW 1-52
WINDOWS AND WINDOW WIPER SYSTEM (→ S/N L177B11272D) 1-54
WINDOWS AND WINDOW WIPER SYSTEM (S/N L177B11273D →) 1-58
WITH A/C 1-32
CAB ATTACHING PARTS
WITH A/C 1-34
CAB DOORS
PVC 1-50
CAB WITH STEEL DOORS
HEATER - WITHOUT AIR CONDITIONING 1-41
CAM POSITION SENSOR
GM 2.4L GASOLINE AND LPG - 2010 SERIES 2-47
CAMSHAFT AND DRIVE GEAR
YANMAR 2.6L AND 3.3L - DIESEL 4-26
CAMSHAFT AND VALVES
MAZDA 2.0L AND 2.2L, GASOLINE AND LPG, 2006 EMISSION COMPLIANT ENGINES (→ S/N L177B15326E (2.2L GAS)) (→ S/N L177B16206E (2.2L LPG)) (S/N L177B15512E → 2.0L GAS AND LPG) 3-34
MAZDA 2.0L AND 2.2L, GASOLINE AND LPG, 2007-2010 EMISSION COMPLIANT ENGINES (S/N L177B15327E → 2.2L GAS) (S/N L177B15512E → (2.0L GAS AND LPG)) (S/N L177B16207E → (2.2L LPG)) (S/N L177V01501F →) 3-66
CAMSHAFT, CYLINDER HEAD AND MANIFOLDS
GM 2.4L (→ S/N L177B05989D (LPG)) (→ S/N L177B06541D GAS) 2-36
GM 2.4L ENGINE (S/N L177B05990D → (LPG)) (S/N L177B06542D → GAS) 2-40
CARBURETOR
MAZDA 2.0L AND 2.2L LPG - 2006 EMISSION COMPLIANT ENGINES (→ S/N L177B15511E 2.0 LPG) (→ S/N L177B16206E (2.2L LPG)) 3-56
MAZDA 2.0L AND 2.2L LPG - 2006 EMISSION COMPLIANT ENGINES (→ S/N L177B15511E 2.0 LPG) (→ S/N L177B16206E (2.2L LPG)) 6-42
CARRIAGE
THREE STAGE FULL FREE-LIFT 15-32
TWO STAGE FULL FREE-LIFT 14-22
TWO STAGE LIMITED FREE-LIFT 13-18

©2013 HYSTER COMPANY

TABLE OF CONTENTS (continued)

DESCRIPTION	PAGE
CONTROL VALVE	
TRANSMISSION (→ S/N L177B19874E (HIGH PRESSURE IDLE)) (→ S/N L177B19274E (LOW PRESSURE IDLE))	8-74
CONTROL VALVE ASSEMBLY	
S/N L177B19875E → (HIGH PRESSURE IDLE) S/N L177B19275E → (LOW PRESSURE IDLE)	8-76
MANUAL CONTROL - THREE AND FOUR FUNCTION	12-32
CONTROL VALVE LOCKOUT GROUP	
MANUAL CONTROL VALVE (S/N L177V03025G →)	12-36
COOLING MANIFOLD AND ATTACHING PARTS	
GM 2.4L - GASOLINE AND LPG	2-30
COOLING REPAIR KITS	17-2
COOLING SYSTEM	
GM 2.4L, GASOLINE AND LPG, SQUARE WAVE RADIATOR - WITH INTERNAL OIL COOLER (→ S/N L177B14568E)	2-2
GM 2.4L, GASOLINE AND LPG, SQUARE WAVE RADIATOR - WITH INTERNAL OIL COOLER (S/N L177B14569E →) (S/N L177V01501F →)	2-4
GM 2.4L, GASOLINE AND LPG, SQUARE WAVE RADIATOR - WITH EXTERNAL OIL COOLER (→ S/N L177B14568E)	2-6
GM 2.4L, GASOLINE AND LPG, SQUARE WAVE RADIATOR - WITH EXTERNAL OIL COOLER (S/N L177B14569E →) (S/N L177V01501F →)	2-8
MAZDA 2.0L AND 2.2L, GASOLINE AND LPG, SERPENTINE RADIATOR - BASIC POWERSHIFT TRANSMISSION (→ S/N L177B14568E)	3-4
MAZDA 2.0L AND 2.2L, GASOLINE AND LPG, SERPENTINE RADIATOR - BASIC POWERSHIFT TRANSMISSION (S/N L177B14569E →) (S/N L177V01501F →)	3-6
MAZDA 2.0L AND 2.2L, GASOLINE AND LPG, SQUARE WAVE RADIATOR - ELECTRONIC CONTROL TRANSMISSION, WITH INTERNAL OIL COOLER (→ S/N L177B14568E)	3-8
MAZDA 2.0L AND 2.2L, GASOLINE AND LPG, SQUARE WAVE RADIATOR - BASIC POWERSHIFT TRANSMISSION (→ S/N L177B14568E)	3-10
MAZDA 2.0L AND 2.2L, GASOLINE AND LPG, SQUARE WAVE RADIATOR - BASIC POWERSHIFT TRANSMISSION (S/N L177B14569E →) (S/N L177V01501F →)	3-12
MAZDA 2.0L AND 2.2L, GASOLINE AND LPG, SQUARE WAVE RADIATOR - ELECTRONIC TRANSMISSION, WITH EXTERNAL OIL COOLER (→ S/N L177B14568E)	3-14
MAZDA 2.0L AND 2.2L, GASOLINE AND LPG, SQUARE WAVE RADIATOR - ELECTRONIC TRANSMISSION, EXTERNAL OIL COOLER, OR WET BRAKE (S/N L177B14569E →) (S/N L177V01501F →)	3-16
YANMAR 2.6L AND 3.3L, DIESEL, SQUARE WAVE RADIATOR - WITH INTERNAL OIL COOLER (→ S/N L177B14568E)	4-2
YANMAR 2.6L AND 3.3L, DIESEL, SQUARE WAVE RADIATOR - WITH INTERNAL OIL COOLER (S/N L177B14569E →) (S/N L177V01501F →)	4-4
YANMAR 2.6L AND 3.3L, DIESEL, SQUARE WAVE RADIATOR - WITH EXTERNAL OIL COOLER (→ S/N L177B14568E)	4-6
YANMAR 2.6L AND 3.3L, DIESEL, SQUARE WAVE RADIATOR - WITH EXTERNAL OIL COOLER (S/N L177B14569E →) (S/N L177V01501F →)	4-8
COUNTER/REVERSE CLUTCH	
SINGLE SPEED TRANSMISSION (→ S/N L177B13245E)	8-68
SINGLE SPEED TRANSMISSION (S/N L177B13246E →)	8-70
SINGLE SPEED TRANSMISSION (S/N T141M001501 →) (S/N T148M001501 →)	8-72
COUNTERWEIGHTS	
→ 4/2007	1-24

©2013 HYSTER COMPANY

TABLE OF CONTENTS (continued)

DESCRIPTION	PAGE
4/2007 →	1-26
COWL ELECTRICAL	
ELECTRO-HYDRAULIC	7-8
MANUAL HYDRAULIC - WITH OPERATOR PRESENCE SYSTEM	7-10
COWL MOUNT	1-22
CRANKSHAFT AND PISTONS	
MAZDA 2.0L AND 2.2L, GASOLINE AND LPG, 2006 EMISSION COMPLIANT ENGINES (→ S/N L177B15326E (2.2L GAS)) (→ S/N L177B16206E (2.2L LPG)) (S/N L177B15512E → 2.0L GAS AND LPG)	3-36
MAZDA 2.0L AND 2.2L, GASOLINE AND LPG, 2007-2010 EMISSION COMPLIANT ENGINES (S/N L177B15327E → (2.2L GAS)) (S/N L177B15512E → (2.0L GAS AND LPG)) (S/N L177B16207E → (2.2L LPG)) (S/N L177V01501F →)	3-74
YANMAR 2.6L AND 3.3L - DIESEL	4-28
CRANKSHAFT, PISTONS AND OIL PAN	
GM 2.4L - GASOLINE AND LPG	2-44
CYLINDER BLOCK	
MAZDA 2.0L AND 2.2L, GASOLINE AND LPG, 2006 EMISSION COMPLIANT ENGINES (→ S/N L177B15326E 2.2L GAS) (→ S/N L177B16206E (2.2L LPG)) (S/N L177B15512E → 2.0L GAS AND LPG)	3-32
MAZDA 2.0L AND 2.2L, GASOLINE AND LPG, 2007-2010 EMISSION COMPLIANT ENGINES (S/N L177B15327E → (2.2L GAS)) (S/N L177B15512E → (2.0L GAS AND LPG)) (S/N L177B16207E → (2.2L LPG)) (S/N L177V01501F →)	3-64
YANMAR 2.6 AND 3.3L - DIESEL	4-30
CYLINDER HEAD	
MAZDA 2.0L AND 2.2L, GASOLINE AND LPG, 2006 EMISSION COMPLIANT ENGINES (→ S/N L177B15326E 2.2L GAS) (→ S/N L177B16206E 2.2L LPG) (S/N L177B15512E → 2.0L GAS AND LPG)	3-30
MAZDA 2.0L AND 2.2L, GASOLINE AND LPG, 2007-2010 EMISSION COMPLIANT ENGINES (→ S/N L177B15327E 2.2L GAS) (S/N L177B15512E → 2.0L GAS AND LPG) (S/N L177B16207E → 2.2L LPG) (S/N L177V01501F →)	3-62
YANMAR 2.6L AND 3.3L - DIESEL	4-22
D	
DELAY VALVE	
MAZDA 2.0L AND 2.2L LPG (→ S/N L177B11511E (2.0L LPG)) (S/N L177B11108D ↔ S/N L177B16206E 2.2L LPG)	3-58
MAZDA 2.0L AND 2.2L LPG (→ S/N L177B11511E (2.0L LPG)) (S/N L177B11108D ↔ S/N L177B16206E 2.2L LPG)	6-44
DIFFERENTIAL	
DRY BRAKE	9-26
DRY BRAKES	9-24
WET BRAKE	9-8
DIRECTIONAL CONTROL CONVERSION	17-3
DISTRIBUTOR	
MAZDA 2.0L AND 2.2L, GASOLINE AND LPG - 2006 EMISSION COMPLIANT ENGINES (S/N L177B15327E →) (S/N L177B16207E →) (S/N L177B15512E →)	7-21
DRIVE AXLE	
SHEET 1 OF 3	9-18
SHEET 2 OF 3	9-20

©2013 HYSTER COMPANY

TABLE OF CONTENTS (continued)

DESCRIPTION	PAGE
SHEET 3 OF 3	9-22
DRIVE AXLE AND ATTACHING PARTS	
WET BRAKE	9-2
DRIVE TIRE AND WHEEL	
PNEUMATIC RADIAL	9-30
SINGLE	9-28
WIDE TREAD	9-29
DUAL DRIVE WHEELS AND TIRES	9-32
E	
E-HYDRAULIC CONTROL CONVERSION KITS	
ELECTRICAL SYSTEM	
CHASSIS	7-4
ELECTRONIC CONTROL LEVERS	
MINI-LEVER MODULE (FOUR FUNCTION) - DATE CODE 0725 THRU 0743	7-62
MINI-LEVER MODULE (FOUR FUNCTION) - DATE CODE 0744	7-68
MINI-LEVER MODULES - DATE CODE 0724	7-58
MINI-LEVER MODULES (THREE FUNCTION) - DATE CODE 0725 THRU 0743	7-60
MINI-LEVER MODULES (THREE FUNCTION) - DATE CODE 0744	7-64
ELECTRONIC LEVER LABELS	
AUXILIARY DUAL FUNCTION	1-120
AUXILIARY SINGLE FUNCTION	1-118
ELECTRONIC PRESSURE REGULATOR ASSEMBLY	
MAZDA 2.0L AND 2.2L LPG - 2007 EMISSION COMPLIANT	
ENGINES (S/N L177B15327E ↔ 2/2008 (ENGINE ESSY MAZDA 2.2L EGI W/ECES))	6-72
MAZDA 2.0L AND 2.2L LPG - 2007-2010 EMISSION COMPLIANT ENGINES (2/2008 →)	6-74
ELECTRONIC PRESSURE REGULATOR KIT	
MAZDA 2.0L AND 2.2L LPG - 2007-2010 EMISSION COMPLIANT	
ENGINES (S/N L177B16207E → (ENGINE ESSY MAZDA 2.2L LPG W/ECES))	6-76
EMISSION CONTROL SYSTEM	
MAZDA 2.0L AND 2.2L LPG - 2006 EMISSION COMPLIANT	
ENGINES (→ S/N L177B15511E 2.0L LPG) (→ S/N L177B16206E (2.2L LPG))	3-48
MAZDA 2.0L AND 2.2L LPG - 2006 EMISSION COMPLIANT	
ENGINES (→ S/N L177B15511E 2.0L LPG) (→ S/N L177B16206E (2.2L LPG))	6-38
MAZDA 2.0L AND 2.2L, GASOLINE - 2007-2010 EMISSION COMPLIANT	
ENGINES (S/N L177B15512E → (2.0L GAS)) (S/N L177B15327E → (2.2L GAS)) (S/N L177V01501F →)	3-68
EMISSIONS LINES	
MAZDA 2.0L AND 2.2L, GASOLINE - 2006 EMISSION COMPLIANT	
ENGINES (→ S/N L177B15326E (2.2L GAS)) (→ S/N L177B15511E 2.0 GAS)	3-54
MAZDA 2.0L AND 2.2L, GASOLINE - 2006 EMISSION COMPLIANT	
ENGINES (→ S/N L177B15326E (2.2L GAS)) (→ S/N L177B15511E 2.0 GAS)	6-40
ENGINE CONTROL MODULE	
MAZDA 2.0L AND 2.2L LPG - 2007-2010 EMISSION COMPLIANT ENGINES (S/N L177B15327E →) (S/N L177B16207E →) (S/N L177B15512E →)	7-36
MAZDA 2.0L AND 2.2L, GASOLINE - 2007-2010 EMISSION COMPLIANT	
ENGINES (S/N L177B15327E →) (S/N L177B16207E →) (S/N L17715512E →)	7-35

©2013 HYSTER COMPANY

TABLE OF CONTENTS (continued)

DESCRIPTION	PAGE
ENGINE COOLING	
MAZDA 2.0L AND 2.2L, GASOLINE AND LPG - 2006 EMISSION COMPLIANT ENGINES (→ S/N L177B15326E (2.2L GAS)) (→ S/N L177B16206E (2.2L LPG)) (S/N L177B15512E → 2.0L GAS AND LPG)	3-40
YANMAR 2.6L AND 3.3L - DIESEL	4-32
ENGINE COOLING SYSTEM	
MAZDA 2.0L AND 2.2L, GASOLINE AND LPG, (2007-2010 SERIES) (S/N L177B15327E → (2.2L GAS)) (S/N L177B15512E → (2.0L GAS AND LPG)) (S/N L177B16207E → 2.2L LPG) (S/N L177V01501F →)	3-86
ENGINE ELECTRICAL COMPONENTS	
MAZDA 2.0L AND 2.2L, GASOLINE AND LPG - 2006 EMISSION COMPLIANT ENGINES (S/N L177B15327E →) (S/N L177B16207E →) (S/N L177B15512E →)	7-18
MAZDA 2.0L AND 2.2L, GASOLINE AND LPG - 2007-2010 EMISSION COMPLIANT ENGINES (S/N L177B15327E →) (S/N L177B16207E →) (S/N L177B15512E →)	7-22
ENGINE ELECTRICAL SYSTEM	
MAZDA 2.0L AND 2.2L LPG - SHEET 1 OF 2	7-28
MAZDA 2.0L AND 2.2L, GASOLINE - SHEET 1 OF 2	7-24
MAZDA 2.0L AND 2.2L, GASOLINE AND LPG, SHEET 2 OF 2 - 2007 EMISSION COMPLIANT ENGINES (S/N L177B15327E →) (S/N L177B16207E →) (S/N L177B15512E →)	7-32
YANMAR DIESEL	7-44
ENGINE FUEL SYSTEM	
MAZDA 2.0L AND 2.2L, GASOLINE AND LPG, 2007-2010 EMISSION COMPLIANT ENGINES (S/N L177B15327E → (2.2L GAS)) (S/N L177B15512E → (2.0L GAS AND LPG)) (S/N L177B16207E → (2.2L LPG)) (S/N L177V01501F →)	3-72
ENGINE FUEL SYSTEM AND INTAKE MANIFOLD	
MAZDA 2.0L AND 2.2L, GASOLINE, 2006 EMISSION COMPLIANT ENGINES (→ S/N L177B15326E 2.2L GAS) (→ S/N L177B15511E 2.0L GAS)	3-44
MAZDA 2.0L AND 2.2L, GASOLINE, 2006 EMISSION COMPLIANT ENGINES (→ S/N L177B15326E 2.2L GAS) (→ S/N L177B15511E 2.0L GAS)	6-36
ENGINE MOUNTING	
GM 2.4L ENGINE	2-17
YANMAR 2.6 AND 3.3L	4-12
ENGINE SAFETY ELECTRICAL SYSTEM	
GM 2.4L - GASOLINE AND LPG	7-52
WITH SEALED ALTERNATOR WIRE HARNESS - MAZDA - GASOLINE AND LPG	7-48
EXHAUST MANIFOLD	
MAZDA 2.0L AND 2.2L, GASOLINE AND LPG, 2006 EMISSION COMPLIANT ENGINES (→ S/N L177B15326E (2.2L GAS)) (→ S/N L177B15511E (2.0 GAS AND LPG)) (→ S/N L177B16206E (2.2L LPG))	3-43
MAZDA 2.0L AND 2.2L, GASOLINE AND LPG, 2007-2010EMISSION COMPLIANT ENGINES (S/N L177B15327E → (2.2L GAS)) (S/N L177B15512E → (2.0 GAS AND LPG)) (S/N L177B16207E → 2.2L LPG) (S/N L177V01501F →)	3-76
EXHAUST SYSTEM	
GM 2.4L GASOLINE AND LPG	2-10
GM 2.4L GASOLINE AND LPG - 2010 SERIES	2-14
YANMAR 2.6L AND 3.3L - DIESEL	4-10
EXHAUST SYSTEM WITH CATALYTIC CONVERTER	
MAZDA 2.0L AND 2.2L, GASOLINE AND LPG - 2006 EMISSION COMPLIANT ENGINES (→ S/N L177B15326E)	3-18

©2013 HYSTER COMPANY

TABLE OF CONTENTS (continued)

DESCRIPTION	PAGE
MAZDA 2.0L AND 2.2L, GASOLINE AND LPG - 2007-2010 EMISSION COMPLIANT ENGINES (S/N L177B15327E →) (S/N L177V01501F →)	3-20
F	
FAN ASSEMBLY	
GM 2.4L ENGINE	2-28
MAZDA 2.0L	3-23
YANMAR 2.6 AND 3.3L	4-13
FENDER EXTENSIONS	1-20
FIRE EXTINGUISHER	16-10
FLOORPLATES AND COVERS	
→ S/N L177B22303F	1-12
S/N L177B22304F →	1-16
FLYWHEEL AND HOUSING	
GM 2.4L - GASOLINE AND LPG (→ S/N L177V02181F)	2-32
GM 2.4L GASOLINE AND LPG (S/N L177V02182F →)	2-34
MAZDA 2.0 L AND 2.2 L - GASOLINE AND LPG (S/N L177B11118D →) (S/N L177V01501F →)	3-28
MAZDA 2.0L AND 2.2L - GASOLINE AND LPG (→ S/N L177B11107D)	3-26
YANMAR 2.6L AND 3.3L - DIESEL	4-16
FORK ASSEMBLY KITS	17-13
FORKS	1-122
OPTIONAL	1-124
FREE-LIFT	
THREE STAGE FULL FREE-LIFT	15-18
TWO STAGE FULL FREE-LIFT	14-12
FREE-LIFT CYLINDER	
THREE STAGE FULL FREE-LIFT	15-22
TWO STAGE FULL FREE-LIFT	14-15
FUEL FILTER AND WATER SEPARATOR	
YANMAR 2.6L AND 3.3L - DIESEL	5-12
FUEL INJECTION SYSTEM	
YANMAR 2.6L AND 3.3L - DIESEL	5-10
FUEL PUMP AND ATTACHING PARTS	
MAZDA 2.0L AND 2.2L/GM 2.4L - GASOLINE	6-62
FUEL PUMP AND SENDER	
MAZDA 2.0L AND 2.2L, GASOLINE - 2007-2010 EMISSION COMPLIANT ENGINES (S/N L177B16207E →)	6-64
FUEL REGULATOR	
LPG - GM 2.4L	6-34
FUEL SUPPLY SYSTEM	
MAZDA 2.0L AND 2.2L LPG - 2007 EMISSION COMPLIANT ENGINES (S/N L177B15512E ↔ S/N L177V04793H (2.0L ENGINE)) (S/N L177B16207E ↔ S/N L177V04794H (2.2L ENGINE))	6-56
MAZDA 2.0L AND 2.2L LPG - 2007-2010 EMISSION COMPLIANT ENGINES (S/N L177V04794H → EXC. 04821, 04804)	6-58
MAZDA 2.0L AND 2.2L, GASOLINE - 2007 EMISSION COMPLIANT ENGINES (S/N L177B15326E ↔ S/N L177B15511E (2.0L ENGINE)) (S/N L177B15326E ↔ S/N L177B16206E (2.2L ENGINE))	6-54

©2013 HYSTER COMPANY

TABLE OF CONTENTS (continued)

DESCRIPTION	PAGE
FUEL SYSTEM	
GM 2.4L - GASOLINE	6-20
GM 2.4L - LPG (→ S/N L177V02219F)	6-22
GM 2.4L - LPG (S/N L177V02202F ↔ S/N L177V04793H EXC. 04777, 04792)	6-24
GM 2.4L - LPG (S/N L177V04794H → EXC. 04804, 04821)	6-26
MAZDA 2.0L AND 2.2L LPG - 2006 EMISSION COMPLIANT ENGINES (→ S/N L177B16207E)	6-48
MAZDA 2.0L AND 2.2L LPG - 2007-2010 EMISSION COMPLIANT ENGINES (S/N L177B15512E →)	6-52
MAZDA 2.0L AND 2.2L, GASOLINE - 2006 EMISSION COMPLIANT ENGINES (→ S/N L177B16206E)	6-46
MAZDA 2.0L AND 2.2L, GASOLINE - 2007-2010 EMISSION COMPLIANT ENGINES (S/N L177B15511E →)	6-51
YANMAR 2.6L AND 3.3L - DIESEL	5-8
FUEL SYSTEM HOSES AND ATTACHING PARTS	
MAZDA 2.0L AND 2.2L LPG - 2007-2010 EMISSION COMPLIANT ENGINES	6-60
FUEL SYSTEM SENSORS	
MAZDA 2.0L AND 2.2L LPG - 2007-2010 EMISSION COMPLIANT ENGINES (S/N L177B15327E →) (S/N L177B16207E →) (S/N L177B15512E →)	7-38
MAZDA 2.0L AND 2.2L, GASOLINE - 2007-2010 EMISSION COMPLIANT ENGINES (S/N L177B15327E →) (S/N L177B16207E →) (S/N L177B15512E →)	7-37
FULL SUSPENSION SEAT	
MANUAL AND ELECTRO-HYDRAULIC — SWIVEL AND NON SWIVEL - SHEET 1 OF 3 (S/N L177V04458H → INC. 04450)	1-100
SHEET 2 OF 3 (S/N L177V04458H → INC. 04450)	1-104
WITH AND WITHOUT ELECTRONIC CONTROLS (S/N L177B01401 ↔ S/N L177B01501)	1-90
WITH AND WITHOUT ELECTRONIC CONTROLS (S/N L177B01501 ↔ S/N L177B008481D)	1-92
WITH AND WITHOUT ELECTRONIC CONTROLS - WITH LIMITED BACK TILT (S/N L177B08482D ↔ S/N L177V04457H)	1-94
FULL SUSPENSION SWIVEL SEAT	
WITH AND WITHOUT ELECTRONIC CONTROLS (→ 7/2006)	1-96
WITH AND WITHOUT ELECTRONIC CONTROLS (7/2006 ↔ S/N L177V04457H)	1-98
G	
GEAR HOUSING	
YANMAR 2.6L AND 3.3L - DIESEL	4-18
GEAR PUMP ASSEMBLY	
HIGH PRESSURE	12-14
LOW PRESSURE - GEAR DRIVE OPTION	12-10
LOW PRESSURE - CHAIN DRIVE OPTION	12-12
GM LPG REGULATOR DRAIN KIT	16-34
H	
HAND LEVERS	
FOUR FUNCTION - WITH DETENTED LEVERS	12-26
FOUR FUNCTION - WITHOUT DETENTED LEVERS	12-30
THREE FUNCTION - WITH DETENTED LEVERS	12-22
THREE FUNCTION - WITHOUT DETENTED LEVERS	12-24

©2013 HYSTER COMPANY

TABLE OF CONTENTS (continued)

DESCRIPTION	PAGE
HEADER HOSE CONVERSION KITS	
HEADER HOSES	
THREE STAGE FULL FREE-LIFT (→ S/N D508V27872H) (→ S/N D563V11658H)	15-24
THREE STAGE FULL FREE-LIFT (S/N D508V27873H →) (S/N D563V11659H →)	15-28
TWO STAGE FULL FREE-LIFT	14-18
TWO STAGE LIMITED FREE-LIFT	13-14
HEATER HOSES	
GM, GASOLINE	1-130
GM, LPG	1-131
MAZDA, GASOLINE	1-128
MAZDA, LPG	1-129
YANMAR DIESEL	1-132
HOOD ASSEMBLY	
→ S/N L177B19391E	1-4
S/N L177B19392E ↔ 1/2009	1-6
1/2009 →	1-8
HYDRAULIC CONTROL CONVERSIONS	17-4
HYDRAULIC CONTROL VALVE	
ELECTRO HYDRAULIC POPPET VALVES - LIFT AND LOWER	12-58
ELECTRONIC CONTROL - THREE AND FOUR FUNCTION (→ S/N L177B18806E)	12-50
ELECTRONIC VALVE ASSEMBLY - THREE AND FOUR FUNCTION (S/N L177B18807E →)	12-52
ELECTRONIC VALVE AUXILIARY ONE SECTION - THREE AND FOUR FUNCTION	12-62
ELECTRONIC VALVE AUXILIARY TWO SECTION - FOUR FUNCTION	12-64
ELECTRONIC VALVE INLET SECTION - THREE AND FOUR FUNCTION (S/N L177B18807E → INC. 08807, 09603, 08238, 08262)	12-56
ELECTRONIC VALVE OUTLET SECTION - THREE AND FOUR FUNCTION	12-66
ELECTRONIC VALVE TILT SECTION - THREE AND FOUR FUNCTION	12-60
HYDRAULIC FILTER	12-16
HYDRAULIC HOSES	
LIFT, TILT, AND AUXILIARY	12-18
HYDRAULIC OIL COOLER KITS	17-13
HYDRAULIC SUPPLY AND RETURN	
WITH ALUMINUM TRANSMISSION - WITH GEAR DRIVE	12-6
WITH ALUMINUM TRANSMISSION - WITH CHAIN DRIVE	12-8
WITH IRON TRANSMISSION	12-4
I	
IMPACT SENSOR	7-12
INNER MAST	
THREE STAGE FULL FREE-LIFT	15-8
TWO STAGE FULL FREE-LIFT	14-4
TWO STAGE LIMITED FREE-LIFT	13-4
INPUT/FORWARD CLUTCH	
SINGLE SPEED TRANSMISSION (→ S/N L177B134120E)	8-62
SINGLE SPEED TRANSMISSION (S/N L177B13421E →)	8-64
SINGLE SPEED TRANSMISSION (S/N T141M001501 →) (S/N T148M001501 →)	8-66
INSTRUMENT CLUSTER	7-55
INTAKE AND EXHAUST MANIFOLD	
YANMAR 2.6L AND 3.3L - DIESEL	4-14

©2013 HYSTER COMPANY

TABLE OF CONTENTS (continued)

DESCRIPTION **PAGE**

INTAKE MANIFOLD
MAZDA 2.0L AND 2.2L LPG - 2006 EMISSION COMPLIANT
ENGINES (→ S/N L177B15511E 2.0L LPG) (→ S/N L177B16205E (2.2L LPG)) 3-46
MAZDA 2.0L AND 2.2L LPG - 2007-2010 EMISSION COMPLIANT
ENGINES (S/N L177B15512E → 2.0L LPG) (S/N L177B16207E → (2.2L LPG)) (S/N L177V01501F →) 3-80
MAZDA 2.0L AND 2.2L, GASOLINE - 2007-2010 EMISSION COMPLIANT
ENGINES (S/N L177B15327E → 2.2L GAS) (S/N L177B15512E → 2.0L GAS) (S/N L177V01501F →) 3-78
INTEGRAL SIDE-SHIFT
FORK POSITIONER - TWO STAGE LIMITED FREE-LIFT 16-28
FORK POSITIONER - THREE STAGE FULL FREE-LIFT 16-30
INTEGRAL SIDE-SHIFT ASSEMBLY
THREE STAGE FULL FREE-LIFT 16-18
TWO STAGE FULL FREE-LIFT 16-22
TWO STAGE LIMITED FREE-LIFT 16-14
INTEGRAL SIDE-SHIFT CYLINDER 16-32
INTEGRAL SIDE-SHIFT HYDRAULIC HOSES
TWO AND THREE STAGE FULL FREE-LIFT 16-25
TWO STAGE LIMITED FREE-LIFT 16-26
INTERMEDIATE MAST
THREE STAGE FULL FREE-LIFT 15-4

L

LABELS
EXTERIOR 1-114
HYDRAULIC CONTROL LABELS - CONTROL LEVER 1-134
INTERIOR 1-116
LIGHT KITS 17-11
LIGHTS
STOP, TAIL, TURN, BACKUP, AND STROBE - WITH CAB 7-74
STOP, TAIL, TURN, BACKUP, AND STROBE - WITH OVERHEAD GUARD 7-76
LOAD BACKREST EXTENSION 1-126
LOAD WEIGH ELECTRICAL 7-82
LPG BRACKET ASSEMBLY
EZXCHANGE (→ 4/2007) 6-86
EZXCHANGE (4/2007 →) 6-90
SWING OUT BRACKET (→ 11/2007) 6-78
SWING OUT BRACKET (11/2007 →) (→ 1/2013) 6-80
LPG TANK BRACKET
SWING OUT (1/2013 →) 6-84
LUBRICATION SYSTEM
YANMAR 2.6L AND 3.3L - DIESEL 4-34

M

MAIN LIFT
THREE STAGE FULL FREE-LIFT 15-10
TWO STAGE FULL FREE-LIFT 14-6
TWO STAGE LIMITED FREE-LIFT 13-6

©2013 HYSTER COMPANY

TABLE OF CONTENTS (continued)

DESCRIPTION	PAGE
MAIN LIFT CYLINDER	
LEFT HAND - TWO STAGE FULL FREE-LIFT	14-10
RIGHT HAND - TWO STAGE FULL FREE-LIFT	14-8
MAIN LIFT CYLINDERS	
THREE STAGE FULL FREE-LIFT	15-14
TWO STAGE LIMITED FREE-LIFT	13-10
MAP SENSOR	
MAZDA 2.0L AND 2.2L, LPG - 2007-2010 EMISSION COMPLIANT ENGINES (S/N L177B15512E → 2.0L LPG) (S/N L177B16207E → (2.2L LPG)) (S/N L177V01501F →)	3-70
MAST ELECTRICAL	7-80
MINI LEVER MODULE LABELS	
HYDRAULIC CONTROL FUNCTIONS	1-112
MINI-LEVER CONTROLS	
WITH ARMREST - THREE FUNCTION (S/N L177V04458H → INC. 04450)	7-70
WITH ARMREST - FOUR FUNCTION (S/N L177V04458H → INC. 04450)	7-72
MIRRORS	
WITH CAB	16-8
WITH OVERHEAD GUARD	16-9
MISCELLANEOUS CONVERSION KITS	17-13
MIXER AND THROTTLE BODY ASSEMBLY	
MAZDA 2.0L AND 2.2L LPG - 2007 EMISSION COMPLIANT ENGINES (S/N L177B15327E ↔ 2/2008)	6-68
MAZDA 2.0L AND 2.2L LPG - 2007-2010 EMISSION COMPLIANT ENGINES (2/2008 →)	6-70
MONOTROL PEDAL ASSEMBLY	
→ S/N L177V11233K	6-98
YANMAR 2.6L AND 3.3L DIESEL (→ S/N L177V11233K)	5-20
N	
NON SUSPENSION SEAT	
WITHOUT ELECTRONIC CONTROLS (S/N L177B01501 ↔ S/N L177V04457H EXC. 04450)	1-68
WITHOUT ELECTRONIC CONTROLS (S/N L177V04458H → INC. 04450)	1-70
WITHOUT ELECTRONIC CONTROLS - OPTIONAL	1-74
NON-SUSPENSION SEAT	
WITHOUT ELECTRONIC CONTROLS (S/N L177B01401 ↔ S/N L177B01501)	1-62
O	
OIL PAN	
YANMAR 2.6L AND 3.3L - DIESEL	4-20
OIL PUMP AND FILTER	
MAZDA 2.0L AND 2.2L, GASOLINE AND LPG, 2006 EMISSION COMPLIANT ENGINES (→ S/N L177B15326E (2.2L GAS)) (→ S/N L177B16206E (2.2L LPG)) (S/N L177B15512E → 2.0 GAS AND LPG)	3-52
MAZDA 2.0L AND 2.2L, GASOLINE AND LPG, 2007-2010 EMISSION COMPLIANT ENGINES (S/N L177B15327E → (2.2L GAS)) (S/N L177B15512E → 2.0 GAS AND LPG) (S/N L177B16207E → (2.2L LPG)) (S/N L177V01501F →)	3-84
OUTER MAST	
THREE STAGE FULL FREE-LIFT	15-2
TWO STAGE FULL FREE-LIFT	14-2

©2013 HYSTER COMPANY

TABLE OF CONTENTS (continued)

DESCRIPTION	PAGE
TWO STAGE LIMITED FREE-LIFT	13-2
OUTLET SECTION	
ELECTRONIC CONTROL VALVE - THREE AND FOUR FUNCTION	12-68
MANUAL CONTROL VALVE - THREE AND FOUR FUNCTION	12-48
OVERHEAD GUARD	1-28
P	
PARK BRAKE ASSEMBLY	
→ S/N L177V04756H	11-36
S/N L177V04757H →	11-38
PARKING BRAKE	
WET BRAKE	9-10
POWER DISTRIBUTION MODULE	
→ S/N L177B08959D	7-14
S/N L177B08960D →	7-16
R	
RAIN TOP	
1/2013 →	1-136
RETURN TO SET TILT KITS	17-3
S	
SEALED ALTERNATOR AND MOUNTING	
YANMAR 2.6 AND 3.3L	7-40
SEAT ATTACHING PARTS	
NOT INCLUDED WITH SEAT - SHEET 3 OF 3 (S/N L177V04458H → INC. 04450)	1-106
SEAT CONVERSION KITS	17-2
SEMI-SUSPENSION SEAT	
WITH AND WITHOUT ELECTRONIC CONTROLS (S/N L177B01401 ↔ S/N L177B01501)	1-78
WITH AND WITHOUT ELECTRONIC CONTROLS (S/N L177B01501 ↔ 7/2006)	1-82
WITH AND WITHOUT ELECTRONIC CONTROLS (7/2006 ↔ S/N L177V04457H)	1-84
WITH AND WITHOUT ELECTRONIC CONTROLS (S/N L177V04458H → INC. 04450)	1-88
STATOR SUPPORT HOUSING	8-60
STEER AXLE	10-12
STEER CYLINDER	10-14
STEER TIRES AND WHEELS	
H40-50FT	10-16
H40-70FT	10-18
STEERING COLUMN AND ATTACHING PARTS	
DIESEL	10-3
GASOLINE AND LPG	10-2
STEERING COLUMN ASSEMBLY	
GASOLINE AND LPG	10-4
ISOLATED, DIESEL	10-6
STEERING CONTROL UNIT	10-8
STEERING LINES	10-10
STROBE LIGHT	
→ S/N L177B18988E	16-2
LED (S/N L177B18989E →)	16-4

©2013 HYSTER COMPANY

TABLE OF CONTENTS (continued)

DESCRIPTION **PAGE**

T

THROTTLE BODY AND ATTACHING PARTS
GM 2.4L - GASOLINE 6-28
GM 2.4L - LPG 6-30
GM 2.4L GASOLINE AND LPG - 2010 SERIES 6-32
MAZDA 2.0L AND 2.2L, GASOLINE - 2007-2010 EMISSION COMPLIANT ENGINES 6-66
THROTTLE CABLE ASSEMBLY
MAZDA 2.0L AND 2.2L - GASOLINE 6-94
MAZDA 2.0L AND 2.2L - LPG 6-96
YANMAR 2.6L AND 3.3L - DIESEL 5-14
THROTTLE PEDAL ASSEMBLY AND ATTACHING PARTS
MONOTROL (S/N L177V11234K →) 5-24
MONOTROL 6-102
STANDARD PEDAL 5-22
STANDARD PEDAL 6-100
THROTTLE POSITION SENSOR AND ATTACHING PARTS
YANMAR 2.6L AND 3.3L DIESEL (→ S/N L177V05112H) 5-16
YANMAR 2.6L AND 3.3L DIESEL (S/N L177V05113H →) 5-18
TILT CYLINDER AND MAST INSTALLATION 12-70
TILT CYLINDERS
H40-50FT 12-72
H60-70FT 12-74
TIMING GEAR COVER AND OIL PAN
MAZDA 2.0L AND 2.2L, GASOLINE AND LPG - 2007-2010 EMISSION COMPLIANT ENGINES (S/N L177B15327E → (2.2L GAS)) (S/N L177B15512E → (2.0 GAS AND LPG)) (S/N L177B16207E → (2.2L LPG)) (S/N L177V01501F →) 3-82
MAZDA 2.0L AND 2.2L, GASOLINE AND LPG, 2006 EMISSION COMPLIANT ENGINES (→ S/N L177B15326E (2.2L GAS)) (→ S/N L177B16206E (2.2L LPG)) (S/N L177B15512E → 2.0L GAS AND LPG) 3-50
TORQUE CONVERTER 8-12
TORQUE CONVERTER HOUSING AND ATTACHING PARTS
SINGLE SPEED (S/N T141M001501 →) 8-52
SINGLE SPEED - ALUMINUM CHAIN DRIVE (2/2011 →) 8-58
TRANSMISSION
SINGLE SPEED, THREE PIECE HOUSING, DRY BRAKE - SHEET 1 OF 2 (S/N L177B10030D ↔ S/N L177B15791E) 8-38
SINGLE SPEED, THREE PIECE HOUSING, DRY BRAKE - SHEET 2 OF 2 (S/N L177B10030D ↔ S/N L177B15791E) 8-42
SINGLE SPEED, THREE PIECE HOUSING, WET AND DRY BRAKE - SHEET 1 0F 2 (→ S/N L177B10029D (DRY BRAKE)) (→ S/N L177B15745E (WET BRAKE)) 8-32
SINGLE SPEED, THREE PIECE HOUSING, WET AND DRY BRAKE - SHEET 2 OF 2 (→ S/N L177B10029D (DRY BRAKE)) (→ L177B15745E WET BRAKE) 8-36
SINGLE SPEED, WET AND DRY BRAKE - SHEET 1 OF 2 (S/N L177B15792E → (T133M0001501, DRY BRAKE)) (S/N L177B15746E → (T134M0001501, WET BRAKE)) 8-44
SINGLE SPEED, WET AND DRY BRAKE - SHEET 2 OF 2 (S/N L177B15792E → (DRY BRAKE)) (S/N L177B15746E → (WET BRAKE)) 8-46

©2013 HYSTER COMPANY

TABLE OF CONTENTS (continued)

DESCRIPTION	PAGE
TRANSMISSION COOLING	
MAZDA 2.0L AND 2.2L, GASOLINE AND LPG - SERPENTINE AND SQUARE WAVE WITH INTERNAL OIL COOLER (→ S/N L177V02742F)	8-16
MAZDA 2.0L AND 2.2L, LPG - SERPENTINE AND SQUARE WAVE (S/N L177V02743F →)	8-18
MAZDA 2.0L AND 2.2L, LPG - WITH AIR COOLER (S/N L177V02743F →)	8-20
MAZDA 2.0L AND 2.2L/GM 2.4L, GASOLINE AND LPG - SQUARE WAVE WITH EXTERNAL OIL COOLER (→ S/N L177V02742F)	8-14
YANMAR 2.6L AND 3.3L DIESEL AND GM 2.4L LPG - SQUARE WAVE WITH INTERNAL OIL COOLER (S/N L177B29084G →)	8-24
YANMAR 2.6L AND 3.3L DIESEL AND GM 2.4L LPG - SQUARE WAVE WITHOUT AIR COOLER (S/N L177V02743F ↔ S/N L177B31603H)	8-26
YANMAR 2.6L AND 3.3L DIESEL AND GM 2.4L LPG - SQUARE WAVE WITHOUT AIR COOLER (S/N L177B31604H →)	8-30
YANMAR 2.6L AND 3.3L DIESEL AND GM 2.4L GASOLINE AND LPG - SQUARE WAVE WITH INTERNAL OIL COOLER (→ S/N L177V02742F)	8-22
TRANSMISSION ELECTRICAL SYSTEM	7-78
TRANSMISSION HOUSING AND ASSEMBLY	
SINGLE SPEED (S/N T141M001501 →)	8-50
SINGLE SPEED - ALUMINUM CHAIN DRIVE (2/2011 →)	8-54
TRANSMISSION MOUNT	
SINGLE SPEED - THREE PIECE HOUSING	8-4
SINGLE SPEED - TWO PIECE HOUSING (S/N T133M001501 →) (S/N T134M001501 →)	8-6
SINGLE SPEED (S/N T141M001501 →)	8-8
SINGLE SPEED - ALUMINUM CHAIN DRIVE (2/2011 →)	8-10
TREAD CONVERSION KITS	17-11
V	
VALVE ASSEMBLY, LIFT AND LOWER	
ELECTRONIC CONTROL VALVE - THREE AND FOUR FUNCTION (→ S/N L177B18806E EXC. 08807, 09603, 08238, 08262)	12-54
VALVE ASSEMBLY, LIFT AND TILT	
MANUAL CONTROL VALVE - THREE AND FOUR FUNCTION (→ S/N L177B18729E (3 FUNCTION HIGH RELIEF)) (→ S/N L177B17862E (3 FUNCTION LOW RELIEF)) (→ S/N L177B18169E (4 FUNCTION LOW RELIEF)) (→ S/N L177B18808E (4 FUNCTION HIGH RELIEF))	12-38
MANUAL CONTROL VALVE - THREE AND FOUR FUNCTION (S/N L177B17862E ↔ S/N L177V03752G (3 FUNCTION LOW RELIEF)) (S/N L177B18730E ↔ S/N L177V03752G (3 FUNCTION HIGH RELIEF))) (S/N L177B18170E ↔ S/N L177V03752G (4 FUNCTION LOW RELIEF)) (S/N L177B18809E ↔ S/N L177V03752G (4 FUNCTION HIGH RELIEF))	12-40
MANUAL CONTROL VALVE - THREE AND FOUR FUNCTION (S/N L177V03752G →)	12-42
W	
WEATHER PROTECTION KITS	17-2
WET BRAKES	9-12
WHEEL HUB	
WET BRAKE	9-14

©2013 HYSTER COMPANY

TABLE OF CONTENTS (continued)

DESCRIPTION	PAGE
WIRE HARNESS	
ALTERNATOR	7-324
COWL WITH FORWARD/REVERSE - WITH HYDRAULIC PUMP SOLENOID (S/N L117B28589G →) (→ S/N L177V04756H)	7-308
COWL WITH FORWARD/REVERSE LEVER - WITHOUT RETURN TO SET TILT (→ S/N L177V04756H)	7-300
COWL WITH FORWARD/REVERSE LEVER - WITHOUT RETURN TO SET TILT (S/N L177V04757H →)	7-304
COWL WITH FORWARD/REVERSE LEVER - WITH HYDRAULIC PUMP SOLENOID (S/N L177V04757H →)	7-316
COWL WITH MONOTROL PEDAL - WITH RETURN TO SET TILT (→ S/N L177V04756H)	7-292
COWL WITH MONOTROL PEDAL - WITH RETURN TO SET TILT (S/N L177V04757H →)	7-296
COWL WITH MONOTROL PEDAL - WITH HYDRAULIC PUMP SOLENOID (S/N L117B28589G →) (→ S/N L177V04756H)	7-312
COWL WITH MONOTROL PEDAL - WITH HYDRAULIC PUMP SOLENOID (S/N L177V04757H →)	7-320
ELECTRONIC CONTROL VALVE - THREE FUNCTION	7-266
ELECTRONIC CONTROL VALVE - FOUR FUNCTION	7-270
ENGINE - GM 2.4L, GASOLINE (→ S/N L177B14822E)	7-226
ENGINE - GM 2.4L, GASOLINE (S/N L177B14823E ↔ S/N L177V04179H)	7-230
ENGINE - GM 2.4L, LPG (→ S/N L177B14822E)	7-238
ENGINE - GM 2.4L, LPG (S/N L177B14823E ↔ S/N L177B23560F)	7-242
ENGINE - YANMAR 2.6L AND 3.3L, DIESEL (S/N L177B11118D →)	7-254
ENGINE - YANMAR 2.6L AND 3.3L, DIESEL (→ S/N L177B11117D)	7-258
FUSED STARTER - GM 2.4L 2010 SERIES	7-264
GASOLINE ENGINE - MAZDA 2.0L AND 2.2L (→ S/N L177B11117D)	7-194
GASOLINE ENGINE - MAZDA 2.0L AND 2.2L (S/N L177B11118D ↔ S/N L177B15326E)	7-196
GM 2.4L ENGINE, LPG - WITH LOW FUEL SENSOR (S/N L177B23561F ↔ S/N L177V04385H)	7-246
HYDRAULIC COOLER	7-290
LIGHTS - WITH OVERHEAD GUARD (→ S/N L177B11224D)	7-272
LIGHTS - WITH OVERHEAD GUARD (S/N L177B11225D →)	7-274
LIGHTS (6/2007 →)	7-276
LPG ENGINE - MAZDA 2.0L AND 2.2L (→ S/N L177B11117D)	7-200
LPG ENGINE - MAZDA 2.0L AND 2.2L (S/N L177B11118D ↔ S/N L177B16207E 2.2L) (S/N L177B11118D ↔ S/N L177B15512E 2.0L)	7-202
RH CHASSIS - MAZDA 2.0L AND 2.2L, GASOLINE AND LPG (→ 1/2006)	7-84
RH CHASSIS - MAZDA 2.0L AND 2.2L (→ S/N L177B11117D)	7-88
RH CHASSIS - MAZDA 2.0L AND 2.2L (S/N L177B11118D ↔ S/N L177B15327E 2.2L GASOLINE ENGINE) (→ S/N L177B15512E 2.0L LPG ENGINE) (→ S/N L177B16207E 2.2L LPG ENGINE)	7-94
RH CHASSIS - MAZDA 2.0L AND 2.2L (S/N L177B15327E ↔ 10/2008 (2.2L GASOLINE ENGINE)) (S/N L177B16207E ↔ 10/2008 (2.2L LPG ENGINE)) (S/N L177B15512E ↔ 10/2008 (2.0L LPG ENGINE))	7-100
RH CHASSIS - MAZDA 2.0L AND 2.2L (10/2008 ↔ S/N L177V05175H)	7-106
RH CHASSIS - MAZDA 2.0L AND 2.2L (S/N L177V05176H →)	7-112
RH CHASSIS - MAZDA 2.0L AND 2.2L (1/2013 →)	7-118
RH CHASSIS - GM 2.4L, GASOLINE AND LPG (→ 12/2005)	7-124
RH CHASSIS - GM 2.4L (→ S/N L177B11117D)	7-128
RH CHASSIS - GM 2.4L (S/N L177B11118D ↔ 1/2007)	7-134
RH CHASSIS - GM 2,4L (1/2007 ↔ 10/2008)	7-140

©2013 HYSTER COMPANY

TABLE OF CONTENTS (continued)

DESCRIPTION	PAGE
RH CHASSIS - GM 2.4L (10/2008 ↔ S/N L177V05175H)	7-146
RH CHASSIS - GM 2.4L (S/N L177V05176H →)	7-152
RH CHASSIS - GM 2.4L (1/2013 →)	7-158
RH CHASSIS - YANMAR 2.6L AND 3.3L, DIESEL (→ 2/2006)	7-164
RH CHASSIS - YANMAR 2.6L AND 3.3L, DIESEL (→ 8/2006)	7-168
RH CHASSIS - YANMAR 2.6L AND 3.3L, DIESEL (8/2006 ↔ S/N L177B31165H)	7-174
RH CHASSIS - YANMAR 2.6L AND 3.3L, DIESEL (S/N L177B31166H →)	7-180
RH CHASSIS - YANMAR 2.6L AND 3.3L, DIESEL (1/2013 →)	7-186
SEALED ALTERNATOR - GM 2.4L, GASOLINE AND LPG	7-261
SEALED ALTERNATOR - YANMAR 2.6L AND 3.3L, DIESEL	7-268
SEAT JUMPER (→ S/N L177V04457H EXC. 04450)	7-192
TRANSMISSION - SINGLE SPEED (S/N L177B11118D →)	7-278
TRANSMISSION - SINGLE SPEED (→ S/N L177B11117D)	7-280
TRANSMISSION - DUAL SPEED (→ S/N L177B11117D)	7-282
TRANSMISSION - SINGLE SPEED	7-286
TRANSMISSION - DUAL SPEED (S/N L177B11118D →)	7-288
WIRE HARNESS (ENGINE)	
GM 2.4L GASOLINE (S/N L177V04180H →)	7-234
GM 2.4L, LPG (S/N L177V04386H →)	7-250
MAZDA 2.0L AND 2.2L LPG - 2007-2009 EMISSION COMPLIANT ENGINES (S/N L177B16207E → 2.2L LPG) (S/N L177B15512E → 2.0L LPG)	7-214
MAZDA 2.0L AND 2.2L LPG - 2010 SERIES	7-220
MAZDA 2.0L AND 2.2L, GASOLINE - 2007-2009 EMISSION COMPLIANT ENGINES (S/N L177B15327E →)	7-204
MAZDA 2.0L AND 2.2L, GASOLINE - 2010 SERIES	7-210
WIRE HARNESS (SEALED ALTERNATOR)	
MAZDA 2.0L AND 2.2L, GASOLINE AND LPG - 2007 EMISSION COMPLIANT ENGINES (S/N L177B15327E →) (S/N L177B16207E →) (S/N L177B15512E →)	7-263
WIRE HARNESS ADAPTER	
LOW FUEL PRESSURE	7-323

©2013 HYSTER COMPANY

ABBREVIATIONS QUICK REFERENCE SHEET

Listed below are abbreviations used in parts manuals to denote the following expressions:

TERM	DEFINITION
Amp	Amperes
AR	As Required
BDI	Battery Discharge Indicators
BWI	Brush Wear Indicator
CE	Communicator End
CRE	Corrosive Environment
D/B	Date Break
dbA	Decibel "A" Scale
DE	Drive End
ECH	Empty Container Handler
ECH-3	Empty Container Handler - 3 High Stacking
ECH-4	Empty Container Handler - 4 High Stacking
ECH-5	Empty Container Handler - 5 High Stacking
ECH-6	Empty Container Handler - 6 High Stacking
ECH-7	Empty Container Handler - 7 High Stacking
ECM	Electronic Control Module
ECN	Engineering Change Notice
EEPROM	Electrically Erasable Programmable Read Only Memory
EPA	US Environmental Protection Agency
EPROM	Electrically Programmable Read Only Memory

TERM	DEFINITION
FRE	Freezer Environment
in.	inches
LPG	Liquefied Petroleum Gas
MAP	Manifold Absolute Pressure
mm	millimeters
MSTS	Microprocessor Spark Timing System
NPT	National Pipe Threads
O/S	Oversize
PTO	Power Take Off
RPM	Revolutions per Minute
S/N	Serial Number
TMM	Truck Management Module
UL Type D	Diesel-Powered Safety Rating
UL Type DS	Diesel-Powered Safety Rating
UL Type E	Battery-Powered Safety Rating
UL Type EE	Battery-Powered Safety Rating
UL Type ES	Battery-Powered Safety Rating
UL Type G	Gasoline-Powered Safety Rating
UL Type GS	Gasoline-Powered Safety Rating
UL Type LP	Gas-Powered Safety Rating
UL Type LPS	LP Gas-Powered Safety Rating
U/S	Undersize
UL	Underwriters Laboratory
V	Volts

©2013 HYSTER COMPANY

HOW TO USE THE ILLUSTRATED PARTS MANUAL

This parts manual describes and illustrates assemblies, subassemblies, and detail parts needed for service replacement.

The different constructions are indicated by keys and footnotes. The callouts correspond to descriptions found on the next page.

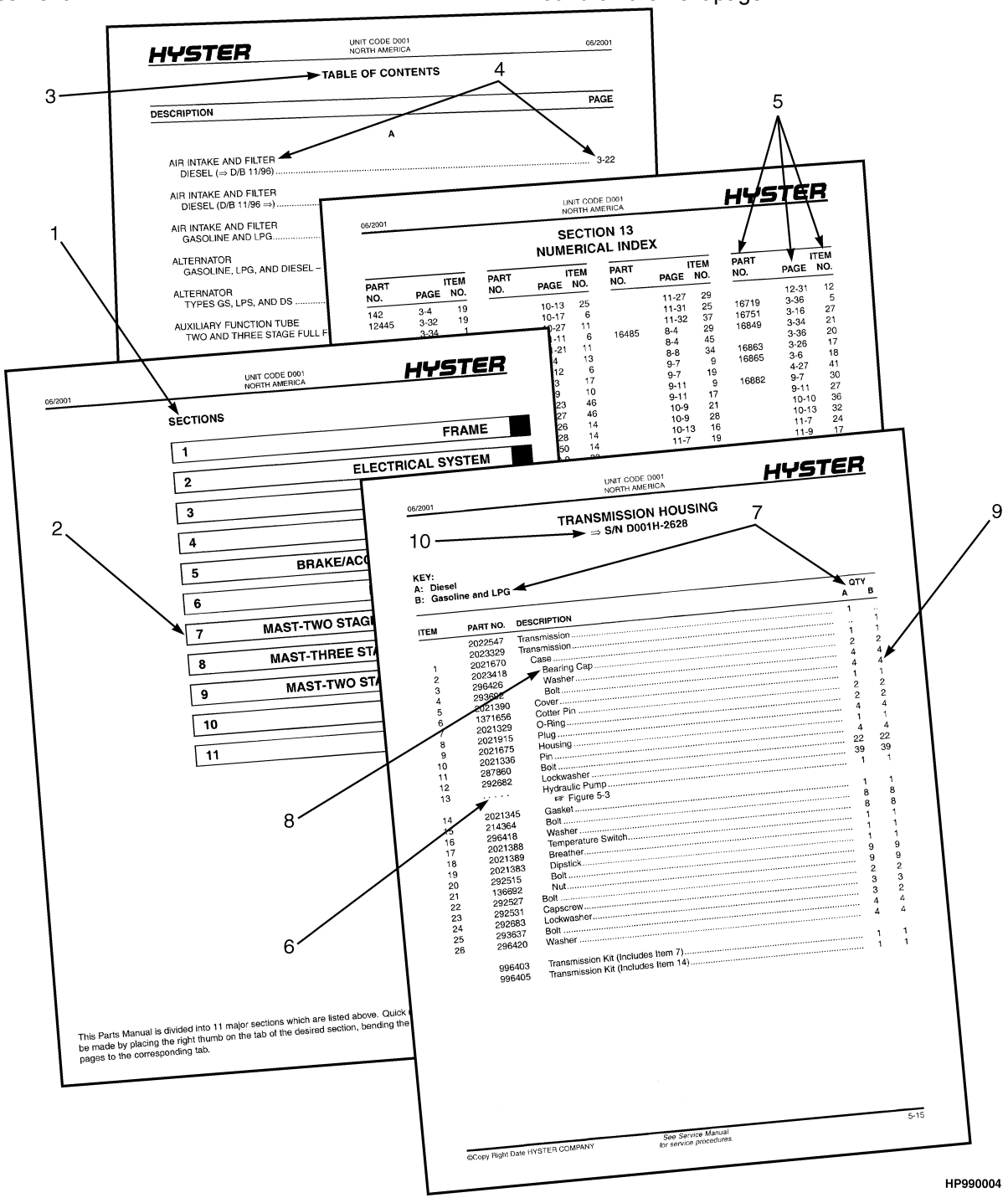

HOW TO FIND THE DESIRED PART NUMBER

WHEN THE PART NUMBER AND THE NEXT HIGHER ASSEMBLY IS NOT KNOWN:

1. Determine the function and application of the part required. Turn to the Sections Page. Choose the general area of reference most likely to include the part.
2. Turn to the section you chose. Use the Section Table of Contents to determine the assembly which would normally contain the part required. Then locate the part on the assembly breakdown page.

WHEN THE PART NUMBER IS NOT KNOWN AND THE NEXT HIGHER ASSEMBLY IS KNOWN:

3. Determine the assembly the required part is used on. Turn to the Table of Contents (Page i).
4. Locate the assembly the required part is used on and turn to the page indicated for that assembly. Then locate the part on the assembly breakdown page.

WHEN THE PART NUMBER IS KNOWN:

5. Use the Numerical Index (Page 18-1) to find the part number. Turn to the page listed and locate the part as indicated by the item number.

GENERAL:

The assembly breakdowns include part numbers, descriptions, quantities required, keys and footnotes to help in selecting correct parts.

6. Parts Supersession Information. Part numbers that have this history will be displayed in the parts list in the order that they were superseded (from oldest to newest). The superseded part numbers will be shown with a line through them.

   Five periods in the PART NO. column (. . . . .) indicate that the part is either *Not Serviced Separately* or there is a reference to another figure. A figure reference is denoted by a pointing hand followed by a figure number in the DESCRIPTION column (☞Figure 10)
7. Keys are used to show two or more similar assemblies, RH and LH assembly parts, etc. Select the appropriate key, "A", "B", "C", "D", or "E" and the corresponding quantity column to find the required parts. Two periods in the QTY column (..) indicate that the part is not used for that assembly.
8. Indented descriptions under the DESCRIPTION column are used to indicate assemblies and subparts of assemblies. In the example on the previous page, *BEARING CAP* (Item 2) is a subpart of the major assembly *CASE*.
9. Quantities shown are for one assembly. The quantities of the subpart *BEARING CAP* are indicated as two and two. This means two per *CASE* assembly.
10. Serial number breaks identify the most current parts information and are shown as follows:
    → S/N D001H2628
    Indicates last serial number affected.
    S/N D001H2629 →
    Indicates the first serial number affected.
    S/N D001H1553 ↔ S/N D001H3291
    Indicates a range of serial numbers affected.

    ECN numbers for pending serial numbers are shown to allow for the inclusion of the most current parts information and are identified as follows:
    → S/N Pending Per ECN 63243
    Indicates a pending serial number for last unit affected.
    S/N Pending Per ECN 63243 →
    Indicates a pending serial number for first unit affected.

    Date breaks are used to indicate when a change occurred but a subsequent serial number break was not recorded. This is an arbitrary date usually based on the ECN release and are identified as follows:
    → D/B 3/00
    Indicates that a change occurred sometime within that month for the item affected.
    D/B 3/00 →
    Indicates that a change occurred sometime within that month for the item affected.
    D/B 3/00 ↔ D/B 4/00
    Indicates a range of production dates of the item affected.

    Contact your local dealer for Hyster lift trucks for serial number information for items with a ECN or a date break.

ORDERING PARTS:

When ordering replacement parts, give the unit serial number, part number, name of part and quantity required.

For any further information on parts, service, or ordering, consult your local dealer for Hyster lift trucks.

©2013 HYSTER COMPANY

IDENTIFICATION OF TRUCK SERIAL NUMBERS

X OOO X OOOO X

(1) (2) (3) (4) (5)

(1) and (2) The first letter and three numbers indicate the truck unit code.

(3) The second letter indicates the plant of manufacture.

(4) The four or five digit number indicates the production sequence number of the truck.

(5) The final letter indicates the year of manufacture starting with "A" in 1957, 1980, and 2003. The letters "I", "O", and "Q" will not be used.

For pending serial numbers contact your local dealer for Hyster lift trucks.

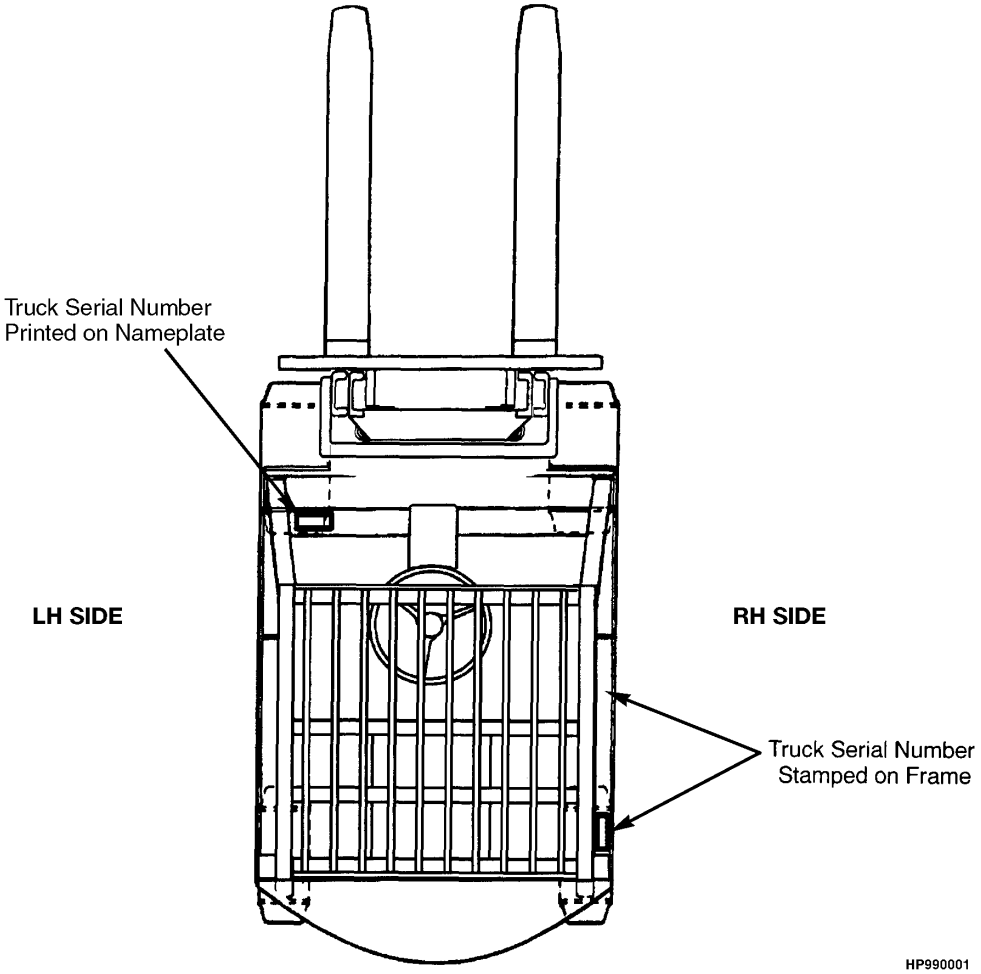

Parts referred to in this book as right or left hand parts are in accordance with the illustration above.

IDENTIFICATION OF MAST SERIAL NUMBERS

X OOO X OOOO OOOO

(1) (2) (3) (4) (5)

(1) and (2) The first letter and number indicates the mast unit code.

(3) The second letter indicates the plant of manufacture.

(4) The four or five digit number indicates the production sequence number of the mast.

(5) Carriage travel in millimeters stamped just below the serial number.

Mast Group identification consists of mast unit code (1) and (2) plus carriage travel (5).

For pending production sequence numbers contact your local dealer for Hyster lift trucks.

LIFT EQUIPMENT IDENTIFICATION

1. Fork part number, capacity rating, plant code letter, and date of manufacture are stamped approximately six inches below the top of most forks.
2. The carriage group number is stamped on the right hand side of the top crossmember (pin type) or on the back of the right hand end of the bottom crossmember (hook type). A date code has two letters in line with or below the carriage group number.
3. The mast identification number has a unit code, a letter indicating the plant of manufacture, and a serial number. Underneath the production sequence number is a four digit number that indicates the carriage travel in millimeters.
4. Tilt and lift cylinder group numbers are stamped on the cylinder shell.

   Always refer to the group, serial, or part number when ordering service parts.

   Modification of masts and carriages by SPED (Special Products Engineering Department) are identified by a model prefix code beginning with the letter "S". contact your dealer for Hyster lift trucks for information on these assemblies.

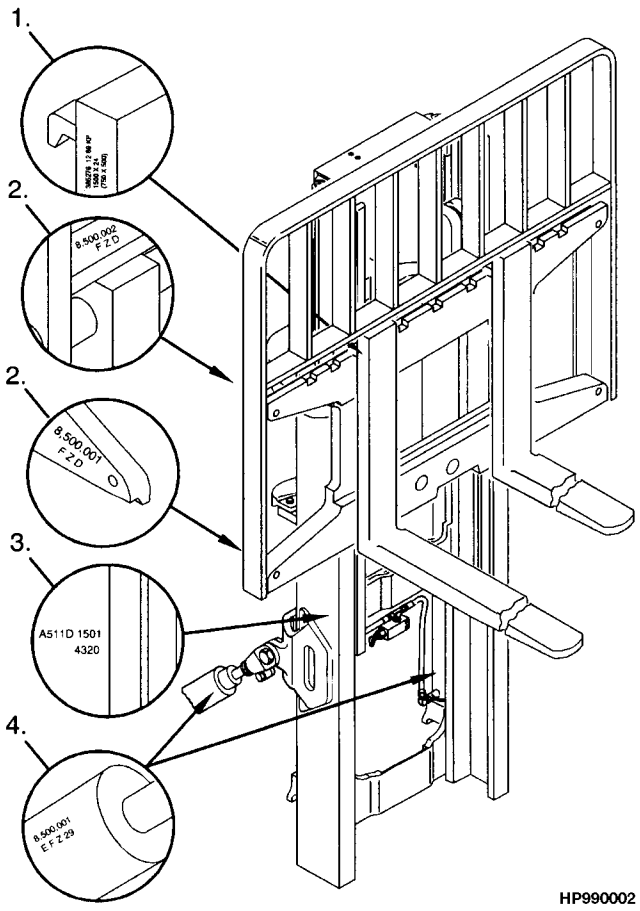

©2013 HYSTER COMPANY

IDENTIFICATION OF ATTACHMENT AND SIDE-SHIFT CARRIAGE SERIAL NUMBERS

X OOO X OOOO

(1) (2) (3) (4)

(1) and (2) The first letter and three numbers indicate the attachment unit code.

(3) The second letter indicates the plant of manufacture.

(4) The four or five digit number indicates the production sequence number.

For pending production sequence numbers contact your local dealer for Hyster lift trucks.

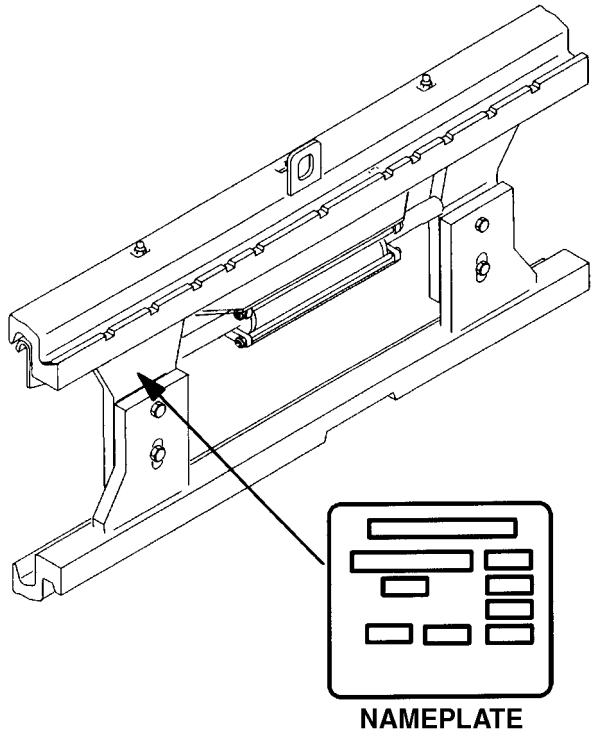

Side-shift carriages and attachments have nameplates. Use the serial number found on the nameplate to identify the attachment.

Always refer to the group, serial, or part number when ordering service parts.

Modifications of attachments and side-shift carriages by SPED (Special Products Engineering Department) are identified by a model prefix code beginning with the letter "S". Contact your dealer for Hyster lift trucks for information on these assemblies.

©2013 HYSTER COMPANY

PUBLICATIONS

Every new lift truck is provided with an OPERATING MANUAL. This manual has information that the operator must know for inspection and operation of the lift truck.

SERVICE MAINTENANCE MANUALS, which provide service and overhaul procedures, and PARTS MANUALS with complete replacement part identification, are available at a nominal fee from your Hyster dealer to assist users in effectively maintaining Hyster lift trucks in a safe, useful condition. See the list below for information on ordering specific publications for this model lift truck.

PUBLICATION	HYSTER PART NUMBER
Operating Manual	1580499
Service Manual (Complete)	1599956
Parts Manual	1599949

©2013 HYSTER COMPANY

1 FRAME

SECTION 1
FRAME

DESCRIPTION	PAGE
ARMREST ASSEMBLY	
MINI-LEVER MODULES - SEMI-SUSPENSION SEAT WITH HIP RESTRAINTS	1-108
MINI-LEVER MODULES	1-110
CAB	
S/N L177B11273D →	1-30
AIR CONDITIONER	1-42
CONDENSER ASSEMBLY - CAB (WITH A/C)	1-56
FRAME AND ATTACHING PARTS (→ S/N L177B11272D)	1-72
FRAME AND ATTACHING PARTS (S/N L177B11273D →)	1-76
FRAME AND ATTACHING PARTS - CAB WITH A/C	1-80
HEATER	1-44
INTERIOR PANELS (→ S/N L177B11272D)	1-64
INTERIOR PANELS (S/N L177B11273D →)	1-66
LH DOOR (→ S/N L177B11272D)	1-36
LH DOOR (S/N L177B11273D →)	1-38
RH DOOR AND HEATER ASSEMBLY (S/N L177B11273D →)	1-46
SLIDING REAR WINDOW	1-52
WINDOWS AND WINDOW WIPER SYSTEM (→ S/N L177B11272D)	1-54
WINDOWS AND WINDOW WIPER SYSTEM (S/N L177B11273D →)	1-58
WITH A/C	1-32
CAB ATTACHING PARTS	
WITH A/C	1-34
CAB DOORS	
PVC	1-50
CAB WITH STEEL DOORS	
HEATER - WITHOUT AIR CONDITIONING	1-41
COUNTERWEIGHTS	
→ 4/2007	1-24
4/2007 →	1-26
COWL MOUNT	1-22
ELECTRONIC LEVER LABELS	
AUXILIARY DUAL FUNCTION	1-120
AUXILIARY SINGLE FUNCTION	1-118
FENDER EXTENSIONS	1-20
FLOORPLATES AND COVERS	
→ S/N L177B22303F	1-12
S/N L177B22304F →	1-16
FORKS	1-122
OPTIONAL	1-124
FULL SUSPENSION SEAT	
MANUAL AND ELECTRO-HYDRAULIC — SWIVEL AND NON SWIVEL - SHEET 1 OF 3 (S/N L177V04458H → INC. 04450)	1-100
SHEET 2 OF 3 (S/N L177V04458H → INC. 04450)	1-104
WITH AND WITHOUT ELECTRONIC CONTROLS (S/N L177B01401 ↔ S/N L177B01501)	1-90
WITH AND WITHOUT ELECTRONIC CONTROLS (S/N L177B01501 ↔ S/N L177B008481D)	1-92
WITH AND WITHOUT ELECTRONIC CONTROLS - WITH LIMITED BACK TILT (S/N L177B08482D ↔ S/N L177V04457H)	1-94
FULL SUSPENSION SWIVEL SEAT	
WITH AND WITHOUT ELECTRONIC CONTROLS (→ 7/2006)	1-96

©2013 HYSTER COMPANY

SECTION 1
FRAME

DESCRIPTION	PAGE
WITH AND WITHOUT ELECTRONIC CONTROLS (7/2006 ↔ S/N L177V04457H)	1-98
HEATER HOSES	
GM, GASOLINE	1-130
GM, LPG	1-131
MAZDA, GASOLINE	1-128
MAZDA, LPG	1-129
YANMAR DIESEL	1-132
HOOD ASSEMBLY	
→ S/N L177B19391E	1-4
S/N L177B19392E ↔ 1/2009	1-6
1/2009 →	1-8
LABELS	
EXTERIOR	1-114
HYDRAULIC CONTROL LABELS - CONTROL LEVER	1-134
INTERIOR	1-116
LOAD BACKREST EXTENSION	1-126
MINI LEVER MODULE LABELS	
HYDRAULIC CONTROL FUNCTIONS	1-112
NON SUSPENSION SEAT	
WITHOUT ELECTRONIC CONTROLS (S/N L177B01501 ↔ S/N L177V04457H EXC. 04450)	1-68
WITHOUT ELECTRONIC CONTROLS (S/N L177V04458H → INC. 04450)	1-70
WITHOUT ELECTRONIC CONTROLS - OPTIONAL	1-74
NON-SUSPENSION SEAT	
WITHOUT ELECTRONIC CONTROLS (S/N L177B01401 ↔ S/N L177B01501)	1-62
OVERHEAD GUARD	1-28
RAIN TOP	
1/2013 →	1-136
SEAT ATTACHING PARTS	
NOT INCLUDED WITH SEAT - SHEET 3 OF 3 (S/N L177V04458H → INC. 04450)	1-106
SEMI-SUSPENSION SEAT	
WITH AND WITHOUT ELECTRONIC CONTROLS (S/N L177B01401 ↔ S/N L177B01501)	1-78
WITH AND WITHOUT ELECTRONIC CONTROLS (S/N L177B01501 ↔ 7/2006)	1-82
WITH AND WITHOUT ELECTRONIC CONTROLS (7/2006 ↔ S/N L177V04457H)	1-84
WITH AND WITHOUT ELECTRONIC CONTROLS (S/N L177V04458H → INC. 04450)	1-88

©2013 HYSTER COMPANY

NOTES

©2013 HYSTER COMPANY

HOOD ASSEMBLY (FIGURE 1-1)

(→ S/N L177B19391E)

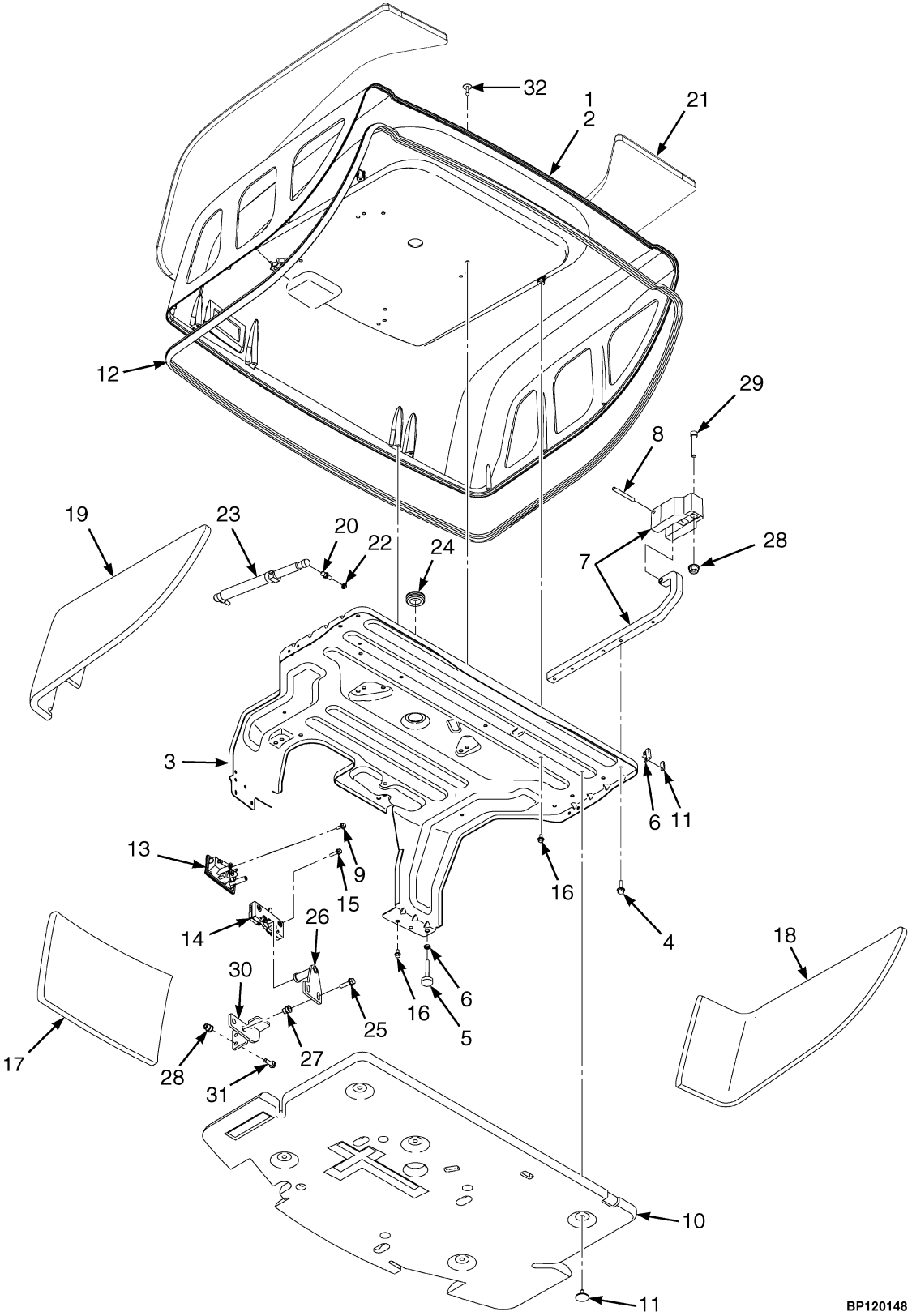

©2013 HYSTER COMPANY

HOOD ASSEMBLY
(→ S/N L177B19391E)

ITEM	PART NO.	DESCRIPTION	QTY
1	**a** 1616772	Hood (Low Noise)	1
1	**ab** 1616776	Hood (Vented)	1
1	**b** 1616774	Hood (LPG and Diesel)	1
2	**a** 1616770	Hood (Low Noise)	1
2	**b** 1616764	Hood	1
2	**ab** 1616768	Hood (Vented)	1
3	1544846	Hood Reinforcement	1
4	1510113	Capscrew	10
5	1585581	Bumper (Hood)	2
6	329069	Nut	4
7	1548618	Hinge	2
8	302380	Dowel	2
9	1527876	Capscrew	2
10	1624018	Hood Liner	1
11	1304971	Fastener	4
12	1580652	Seal	1
13	1582287	Handle	1
14	1582286	Latch	1
15	1527878	Capscrew	4
16	1534417	Capscrew	6
17	**a** 1552010	Hood Liner (Front Panel) (Low Noise)	1
18	**a** 1552011	Hood Liner (LH Panel) (Low Noise)	1
19	**a** 1552012	Hood Liner (RH Panel) (Low Noise)	1
20	**b** 1563369	Ball Stud	4
20	**a** 1563369	Ball Stud	3
20	**a** 1606659	Ball Stud	1
21	1595232	Sound Liner	1
22	329069	Nut	2
23	**b** 1563497	Gas Spring	2
23	**a** 1610854	Gas Spring (Locking) (Left Hand)	1
23	**a** 1610853	Gas Spring (Right Hand)	1
24	1561015	Grommet	1
25	1527881	Capscrew	2
26	1584617	Striker Bolt	1
27	1460477	Nut	4
28	1530244	Insert	4
29	296032	Capscrew	4
30	1623905	Bracket	1
31	1583611	Capscrew	2
32	1347045	Fastener	8
33	1531557	Insert	2
	1585592	Plug (Not Illustrated)	1

FOOTNOTES:

a With Cab

b With Overhead Guard

©2013 HYSTER COMPANY

HOOD ASSEMBLY (FIGURE 1-2)

(S/N L177B19392E ↔ 1/2009)

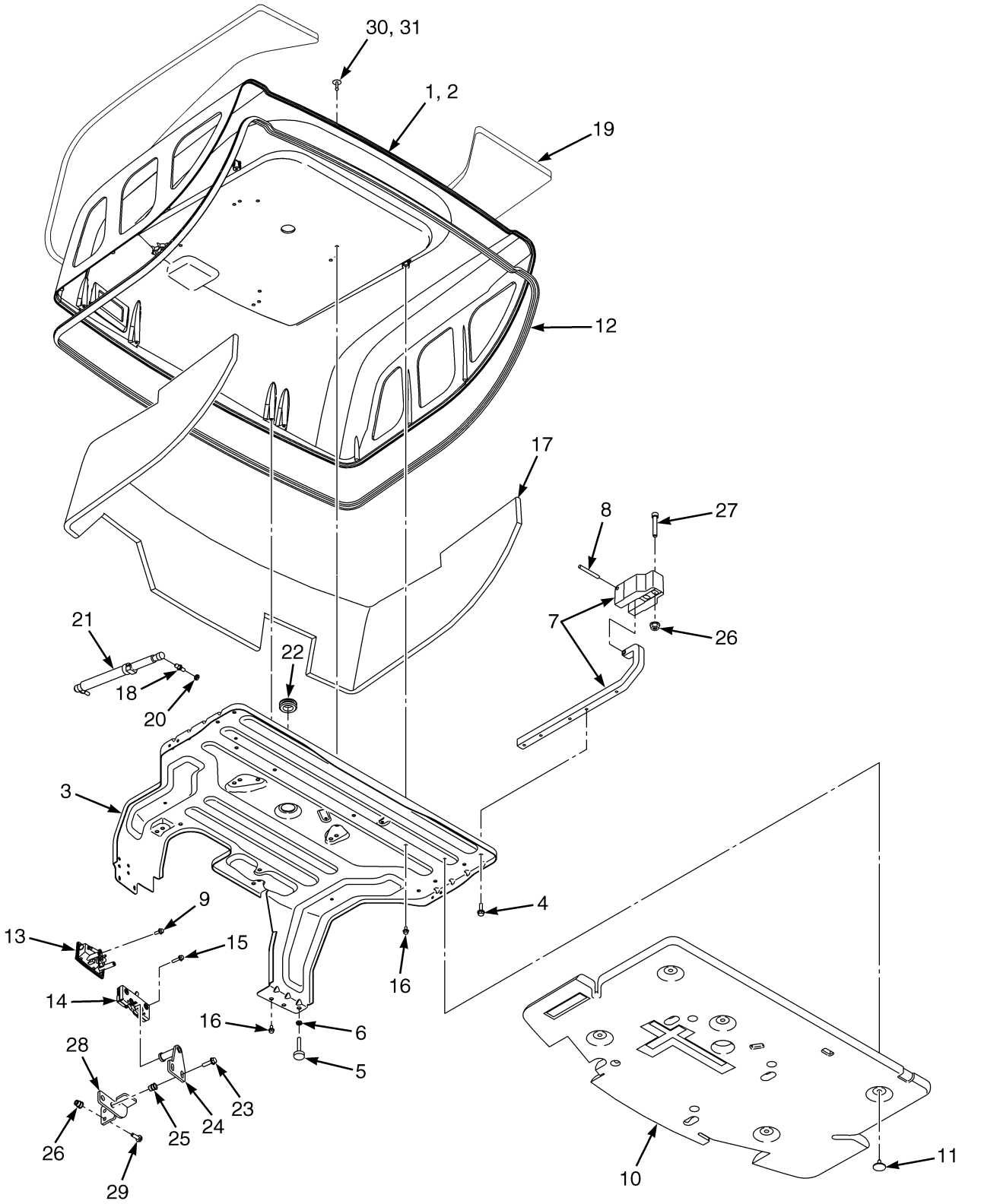

BP120436

©2013 HYSTER COMPANY

HOOD ASSEMBLY
(S/N L177B19392E ↔ 1/2009)

ITEM	PART NO.	DESCRIPTION	QTY
1	**d** 1616774	Hood (Diesel)	1
1	**c** 1616772	Hood (Low Noise) (Gasoline and LPG)	1
1	**d** 1670049	Hood (Gasoline and LPG)	1
1	**d** 1670050	Hood (Vented) (Gasoline and LPG)	1
1	**ab** 1616776	Hood (Vented)	1
2	**c** 1616770	Hood (Low Noise)	1
2	**d** 1616764	Hood	1
2	**cd** 1616768	Hood (Vented)	1
3	1544846	Hood Reinforcement	1
4	1527880	Capscrew	10
5	1585581	Bumper (Hood)	2
6	329069	Nut	4
7	1548618	Hinge	2
8	302380	Dowel	2
9	1527876	Capscrew	2
10	1624018	Hood Liner	1
11	1304971	Fastener	4
12	1580652	Seal	1
13	1582287	Handle	1
14	1582286	Latch	1
15	1527878	Capscrew	4
16	1534417	Capscrew	6
17	**c** 1676836	Hood Liner (Low Noise)	1
18	**d** 1563369	Ball Stud	4
18	**c** 1563369	Ball Stud	3
18	**c** 1606659	Ball Stud	1
19	1595232	Sound Liner	1
19	1707793	Blanket (Low Noise Option)	1
20	329069	Nut	2
21	**d** 1563497	Gas Spring	2
21	**c** 1610854	Gas Spring (Locking) (Left Hand)	1
21	**c** 1610853	Gas Spring (Right Hand)	1
22	1561015	Grommet	1
23	1527881	Capscrew	2
24	1584617	Striker Bolt	1
25	1460477	Nut	4
25	296032	Capscrew	1
26	1530243	Insert	4
27	296032	Capscrew	4
28	1623905	Bracket	1
29	1583611	Capscrew	2
30	1347045	Fastener	8
31	1531557	Insert	2
	1585592	Plug (Not Illustrated)	1

FOOTNOTES:

a Diesel with Overhead Guard
b Gasoline and LPG with Cab
c With Cab
d With Overhead Guard

©2013 HYSTER COMPANY

HOOD ASSEMBLY (FIGURE 1-3)

(1/2009 →)

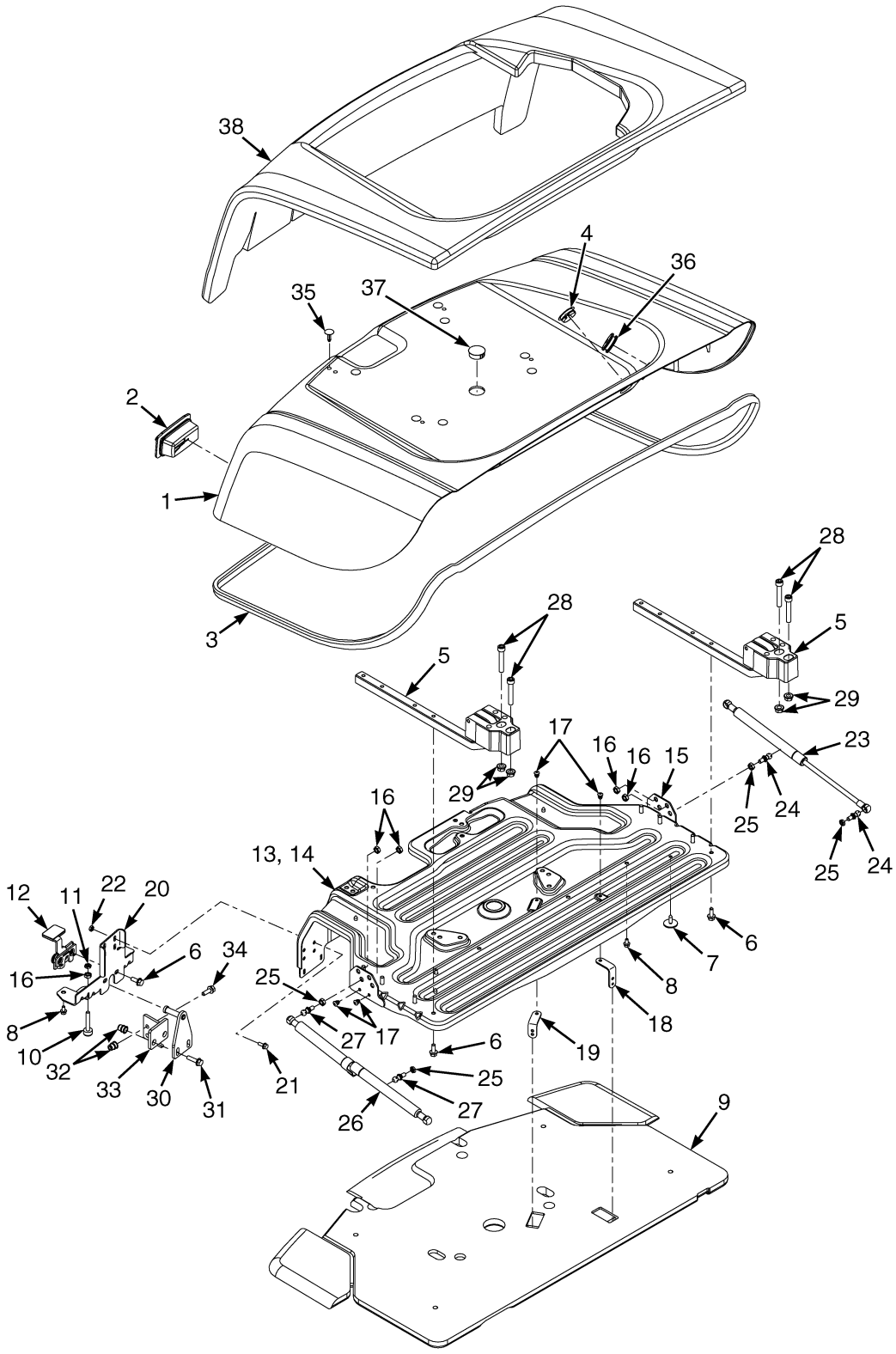

BP120681

©2013 HYSTER COMPANY

HOOD ASSEMBLY

(1/2009 →)

ITEM	PART NO.	DESCRIPTION	QTY
	f 1676395	Hood (Diesel)	1
	n 4007715	Hood (Diesel)	1
	q 4016188	Hood (Diesel)	1
	e 1676396	Hood (Low Noise)	1
	m 4007711	Hood (Low Noise)	1
	q 4016184	Hood (Low Noise)	1
	d 1676397	Hood (Gas and LPG)	1
	k 4007716	Hood (Gas and LPG)	1
	p 4016189	Hood (Gas and LPG)	1
	e 1676398	Hood (Vented) (Gas and LPG)	1
	l 4007717	Hood (Vented) (Gas and LPG)	1
	p 4016190	Hood (Vented) (Gas and LPG)	1
	h 1676399	Hood (Vented) (Diesel)	1
	o 4007718	Hood (Vented) (Diesel)	1
	p 4016191	Hood (Vented) (Diesel)	1
1	**c** 1616764	Hood	1
1	**j** 4007549	Hood	1
1	**p** 4015888	Hood	1
1	**e** 1616768	Hood (Vented)	1
1	**i** 4007562	Hood (Vented)	1
1	**p** 4016100	Hood (Vented)	1
2	1666732	Boot	1
3	1580652	Seal	1
4	1616379	Plug (Yellow)	2
5	1548618	Hinge	2
6	1527880	Capscrew	10
7	1304971	Fastener	4
8	1534417	Capscrew	6
9	**a** 1624018	Hood Liner	1
9	1676836	Hood Liner (Low Noise)	1
10	1585581	Bumper (Hood)	2
11	329069	Nut	2
12	1387170	Latch	1
13	1676406	Seat Pan	1
13	4025274	Hood Reinforcement (Alternate Part)	1
14	1608876	Reinforcement	1
15	1608877	Bracket	2
16	364868	Nut	8
17	1608879	Capscrew	6
18	1585590	Bracket	1
19	1582370	Bracket	1
20	1672560	Plate	1
21	1527876	Capscrew	4
22	1324360	Nut	4
23	1563497	Gas Spring	1
24	1563369	Ball Stud	2
25	329069	Nut	2
26	1563497	Gas Spring	1
26	**b** 4011435	Gas Spring	1
27	1563369	Ball Stud	2

©2013 HYSTER COMPANY

HOOD ASSEMBLY

(1/2009 →)

ITEM	PART NO.	DESCRIPTION	QTY
27	**b** 4011397	Ball Stud	2
28	296032	Capscrew	4
29	1460477	Nut	4
30	1674131	Striker Bolt	1
31	1527881	Capscrew	2
32	1530243	Insert	2
33	1674030	Hood Support	1
34	1583611	Capscrew	2
35	1347045	Fastener	8
36	1561015	Grommet	1
36	4031944	Grommet (Alternate Part)	1
37	1585592	Plug	1
38	**g** 1595232	Sound Liner	1
38	**g** 1707793	Blanket (Low Noise Hood)	1
38	**r** 4009731	Blanket	1
38	**r** 4009733	Blanket (Low Noise Hood)	1

FOOTNOTES:

a Used with Diesel Hoods
b With lift and latch option
c → S/N L177V04064G
d → S/N L177V04065G
e → S/N L177V04119H
f → S/N L177V04146H
g → S/N L177V04489H
h → S/N L177V04797H
i S/N L117V04120H ↔ S/N L177V04457H
j S/N L177V04065G ↔ S/N L177V04457H
k S/N L177V04066G ↔ S/N L177V04457H
l S/N L177V04120H ↔ S/N L177V04457H
m S/N L177V04120H ↔ S/N L177V04457H EXC. 04450
n S/N L177V04147H ↔ S/N L177V04457H EXC. 04450
o S/N L177V04798H ↔ S/N L177V04457H
p S/N L177V04458H →
q S/N L177V04458H → INC. 04450
r S/N L177V04490H →

©2013 HYSTER COMPANY

NOTES

©2013 HYSTER COMPANY

FLOORPLATES AND COVERS (FIGURE 1-4)

(→ S/N L177B22303F)

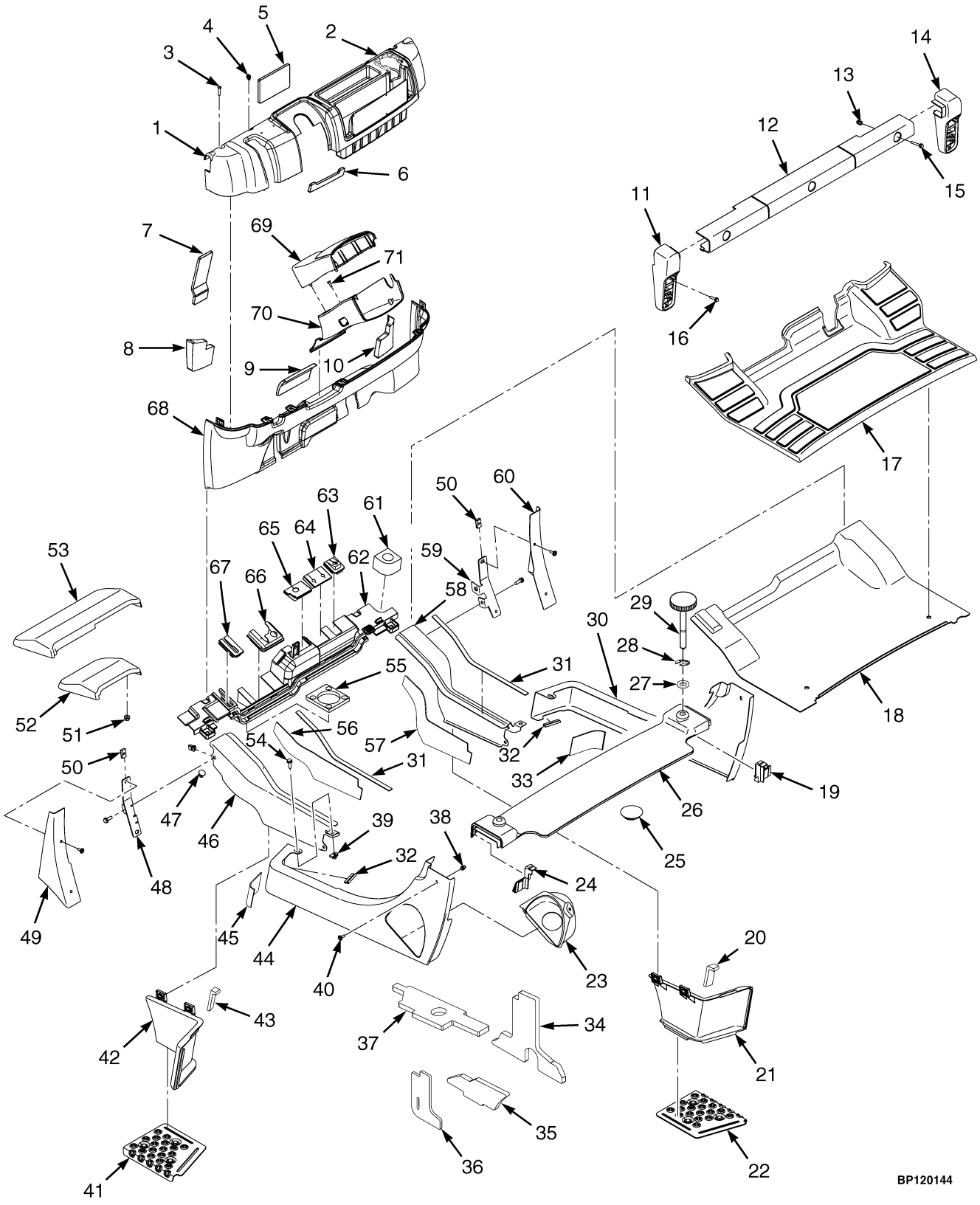

©2013 HYSTER COMPANY

FLOORPLATES AND COVERS

(→ S/N L177B22303F)

KEY:
A: With Cab
B: With Overhead Guard

ITEM	PART NO.	DESCRIPTION	QTY A	QTY B
1	1517420	Dash Panel (Manual Valve)	1	1
1	1517421	Dash Panel (Electronic Valve)	1	1
2	2070975	Cup Holder	1	1
3	2071261	Capscrew	5	5
4	2065667	Clip	6	6
5	1616484	Sound Liner	1	..
6	1616483	Sound Liner	1	..
7	1616485	Sound Liner	1	..
8	1616480	Sound Liner	1	..
9	1616482	Sound Liner (Foam)	1	..
10	1616481	Sound Liner	1	..
11	2056822	Tail Light Base (LH)	1	1
12	2069203	Cover (Rear)	..	1
13	1531001	Insert	5	8
14	2056823	Tail Light Base (RH)	1	1
15	1540643	Capscrew	3	3
16	1586495	Capscrew	4	4
17	2071262	Floormat	1	1
18	1573774	Floorplate	1	1
19	2071198	Seal (RH)	1	1
20	1596624	Seal (RH)	1	1
21	1574277	Panel (RH)	1	1
22	1544415	Plate (RH)	1	1
23	1517656	Shield (Gasoline and Diesel)	1	1
24	2071197	Seal (LH)	1	1
25	2021395	Cap (LPG)	1	1
26	1547466	Cover	..	1
26	1547467	Seal (LH)	..	1
26	1547468	Seal (RH)	..	1
27	320157	Washer	..	2
28	353206	Retaining Ring	..	2
29	1588247	Screw	..	2
30	1527946	Panel (RH)	1	1
31	1564529	Seal	2	2
32	1582072	Trim Seal	2	2
33	1597058	Damping Sheet (RH Rear Panel)	1	1
34	1609707	Sound Liner	1	..
35	1609709	Sound Liner	1	..
36	1609708	Sound Liner	1	..
37	1609706	Sound Liner (Diesel)	1	..
38	1531558	Insert	6	6
39	1480237	Nut (Gasoline and Diesel)	23	23
39	1480237	Nut (LPG)	21	21
40	1530019	Screw	6	6
41	1544413	Plate (LH)	1	1

©2013 HYSTER COMPANY

FLOORPLATES AND COVERS

(→ S/N L177B22303F)

KEY:
A: With Cab
B: With Overhead Guard

ITEM	PART NO.	DESCRIPTION	QTY A	QTY B
42	1574275	Panel (LH)	1	1
43	1596625	Seal (LH)	1	1
44	1527939	Panel (Rear LH) (LH, Gasoline and Diesel)	1	1
44	1527940	Panel (Rear LH) (LH, LPG)	1	1
45	1597052	Damping Sheet (LH Rear Panel)	1	1
46	1540860	Panel (LH)	1	1
47	1581079	Plug	4	4
48	1590145	Bracket (LH) (Fender Cover)	1	1
49	1563881	Cover (LH) (Fender)	1	1
50	1350215	Nut	4	4
51	1544153	Locknut (Standard Tread, Wide Tread)	4	4
51	1544153	Locknut (Dual Tread)	6	6
52	2069008	Mud Flap (Standard Tread)	2	2
53	2069544	Mud Flap (LH, Wide Tread)	1	1
53	2069545	Mud Flap (RH, Wide Tread)	1	1
53	2069550	Mud Flap (LH, Dual Tread)	1	1
53	2069954	Mud Flap (RH, Dual Tread)	1	1
54	1583611	Capscrew (Gasoline and Diesel)	23	23
54	1583611	Capscrew (LPG)	21	21
55	1579837	Seal (Wet Brake)	1	1
55	1580093	Seal (Dry Brake)	1	1
56	1597051	Damping Sheet (LH Front Panel)	1	1
57	1597070	Damping Sheet (RH Front Panel)	1	1
58	1540870	Panel (RH)	1	1
59	1590147	Bracket (RH) (Fender Cover)	1	1
60	1563883	Cover (RH) (Fender)	1	1
61	1530135	Grommet (RH)	1	1
62	1618992	Plate	1	1
62	1529427	Seal	1	1
63	2069464	Seal	1	..
64	2065799	Seal (Manual Valve)	1	..
64	2065826	Seal (Electronic Valve)	1	..
65	2065798	Seal (Manual Valve)	1	..
65	2065827	Seal (Electronic Valve)	1	..
66	2065797	Seal	1	..
67	2065796	Seal	1	..
68	2071595	Panel (Single Brake Pedal)	1	1
68	2071596	Panel (Dual Brake Pedal)	1	1
69	2065668	Cover (Steering Column) (Upper)	1	1
70	2065666	Cover (Steering Column Lower)	1	1
71	2027655	Screw	2	2

©2013 HYSTER COMPANY

NOTES

©2013 HYSTER COMPANY

FLOORPLATES AND COVERS (FIGURE 1-5)

(S/N L177B22304F →)

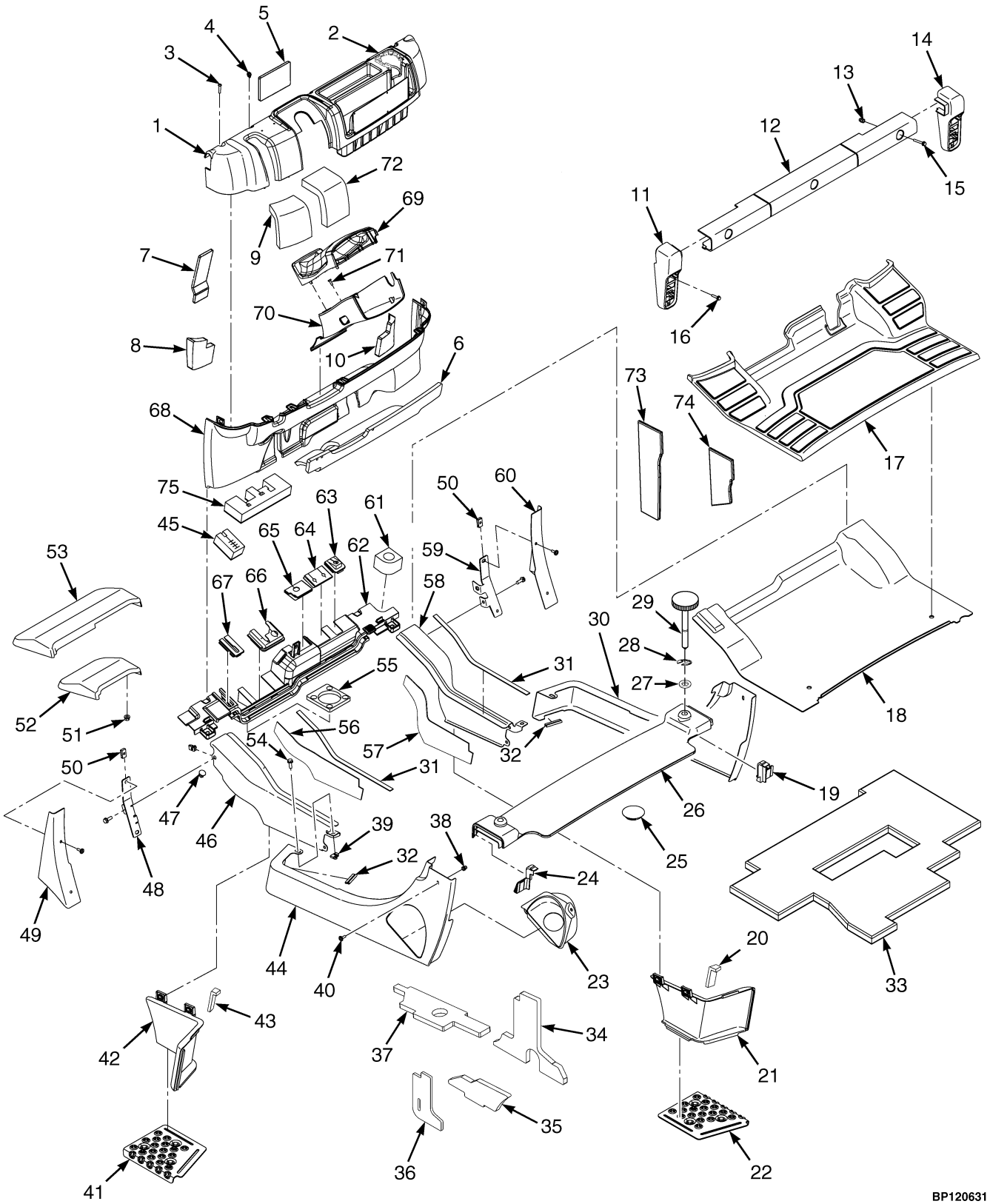

©2013 HYSTER COMPANY

FLOORPLATES AND COVERS

(S/N L177B22304F →)

KEY:
A: With Cab
B: With Overhead Guard

ITEM	PART NO.	DESCRIPTION	QTY A	QTY B
1	1517420	Dash Panel (Manual Valve)	1	1
1	1517421	Dash Panel (Electronic Valve)	1	1
2	2070975	Cup Holder	1	1
3	2071261	Capscrew	5	5
4	2065667	Clip	6	6
5	1616484	Sound Liner	1	..
6	1672722	Sound Liner	1	..
7	1616485	Sound Liner	1	..
8	1616480	Sound Liner	1	..
9	1672723	Sound Liner	1	..
10	1616481	Sound Liner	1	..
11	**f** 2056822	Tail Light Base (LH)	1	1
11	**i** 2107958	Tail Light Base (LH)	1	1
12	2069203	Cover (Rear)	..	1
13	1531001	Insert	..	8
13	1531001	Insert	5	..
14	**f** 2056823	Tail Light Base (RH)	1	1
14	**i** 2107957	Tail Light Base (RH)	1	1
15	1540643	Capscrew	3	3
16	1586495	Capscrew	4	4
17	2071262	Floormat	1	1
18	1573774	Floorplate	1	1
19	2071198	Seal (RH)	1	1
20	1596624	Seal (RH)	1	1
21	**e** 1574277	Panel (RH)	1	1
21	**h** 2102559	Step Panel (RH)	1	1
22	1544415	Plate (RH)	1	1
22	1393879	Nut	3	3
23	**a** 1517656	Shield	1	1
24	2071197	Seal (LH)	1	1
25	**b** 2021395	Cap	1	1
26	1547466	Cover	..	1
26	1547467	Seal (LH)	..	1
26	1547468	Seal (RH)	..	1
27	320157	Washer	..	2
28	353206	Retaining Ring	..	2
29	1588247	Screw	..	2
30	**d** 1527946	Panel (RH)	1	1
30	**g** 4027451	Panel (RH)	1	1
31	1564529	Seal	2	2
32	1582072	Trim Seal	2	2
33	**c** 1707678	Liner	1	..
34	1609707	Sound Liner	1	..
35	1609709	Sound Liner	1	..
36	1609708	Sound Liner	1	..

©2013 HYSTER COMPANY

FLOORPLATES AND COVERS

(S/N L177B22304F →)

KEY:
A: With Cab
B: With Overhead Guard

ITEM	PART NO.	DESCRIPTION	QTY A	QTY B
37	1609706	Sound Liner (Diesel)	1	..
38	1531558	Insert	6	6
39	**a** 1480237	Nut	23	23
39	**b** 1480237	Nut	21	21
40	1530019	Screw	6	6
41	1544413	Plate (LH)	1	1
42	**e** 1574275	Panel (LH)	1	1
42	**h** 2102558	Step Panel (LH)	1	1
43	1596625	Seal (LH)	1	1
44	**ad** 1527939	Panel (Rear LH)	1	1
44	**ag** 4027456	Panel (Rear LH)	1	1
44	**bd** 1527940	Panel (Rear LH)	1	1
44	**bg** 4027457	Panel (Rear LH)	1	1
45	1705878	Liner	1	..
46	1540860	Panel (LH)	1	1
47	1581079	Plug	4	4
48	1590145	Bracket (LH) (Fender Cover)	1	1
49	1563881	Cover (LH) (Fender)	1	1
50	1350215	Nut	4	4
51	1544153	Locknut (Standard Tread, Wide Tread)	4	4
51	1544153	Locknut (Dual Tread)	6	6
52	2069008	Mud Flap (Standard Tread)	2	2
53	2069544	Mud Flap (LH, Wide Tread)	1	1
53	2069545	Mud Flap (RH, Wide Tread)	1	1
53	2069550	Mud Flap (LH, Dual Tread)	1	1
53	2069954	Mud Flap (RH, Dual Tread)	1	1
54	**a** 1583611	Capscrew	23	23
54	**b** 1583611	Capscrew	21	21
55	1691216	Seal (Wet Brake)	1	1
55	1580093	Seal (Dry Brake)	1	1
56	1597051	Damping Sheet (LH Front Panel)	1	1
57	1597070	Damping Sheet (RH Front Panel)	1	1
58	1540870	Panel (RH)	1	1
59	1590147	Bracket (RH) (Fender Cover)	1	1
60	1563883	Cover (RH) (Fender)	1	1
61	1530135	Grommet (RH)	1	1
62	1618992	Plate	1	1
62	1529427	Seal	1	1
63	2069464	Seal	1	..
64	2065799	Seal (Manual Valve)	1	..
64	2065826	Seal (Electronic Valve)	1	..
65	2065798	Seal (Manual Valve)	1	..
65	2065827	Seal (Electronic Valve)	1	..
66	2065797	Seal	1	..
67	2065796	Seal	1	..

©2013 HYSTER COMPANY

FLOORPLATES AND COVERS

(S/N L177B22304F →)

KEY:
A: With Cab
B: With Overhead Guard

ITEM	PART NO.	DESCRIPTION	QTY A	QTY B
68	2071595	Panel (Single Brake Pedal)	1	1
68	2071596	Panel (Dual Brake Pedal)	1	1
69	2098330	Cover (Steering Column Upper)	1	1
70	2065666	Cover (Steering Column Lower) (Lower)	1	1
71	2027655	Screw	2	2
72	1672724	Sound Liner	1	..
73	**c** 1708834	Liner	1	..
74	**c** 1708835	Liner	1	..
75	1705891	Liner (Dry Brake)	1	..
75	1705892	Liner (Wet Brake)	1	..

FOOTNOTES:

a Gasoline and Diesel
b LPG
c With DLX option only.
d → 1/2013
e → S/N L177V01799F INC. 01808, 01811, 01813-01816, 01821 EXC. 01710, 01728, 01732, 01754, 01757, 01760, 01762, 01789
f → S/N L177V03255G
g 1/2013 →
h S/N L177V01800F → INC. 01710, 01728, 01732, 01754, 01757, 01760, 01762, 01789 EXC. 01808, 01811, 01813-01816, 01821
i S/N L177V03265G →

©2013 HYSTER COMPANY

FENDER EXTENSIONS (FIGURE 1-6)

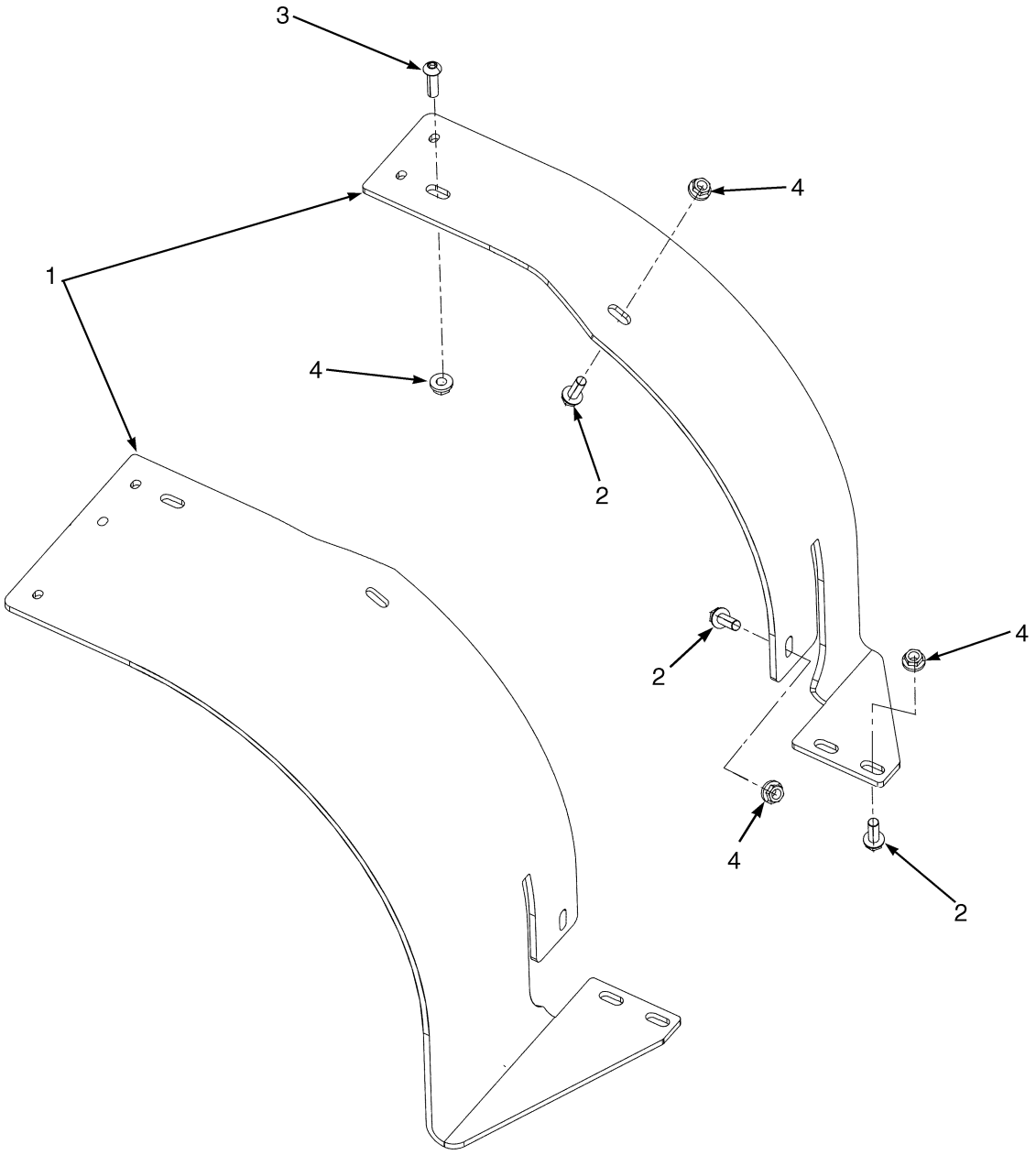

HP120835

©2013 HYSTER COMPANY

FENDER EXTENSIONS

ITEM	PART NO.	DESCRIPTION	QTY
1	1562359	Fender (Wide Width) (LH)	1
1	1562361	Fender (Dual) (LH)	1
1	1562360	Fender (Wide Width) (RH)	1
1	1562362	Fender (Dual) (RH)	1
2	1586630	Capscrew	8
3	2076289	Capscrew	2
4	1586432	Nut	10

©2013 HYSTER COMPANY

COWL MOUNT (FIGURE 1-7)

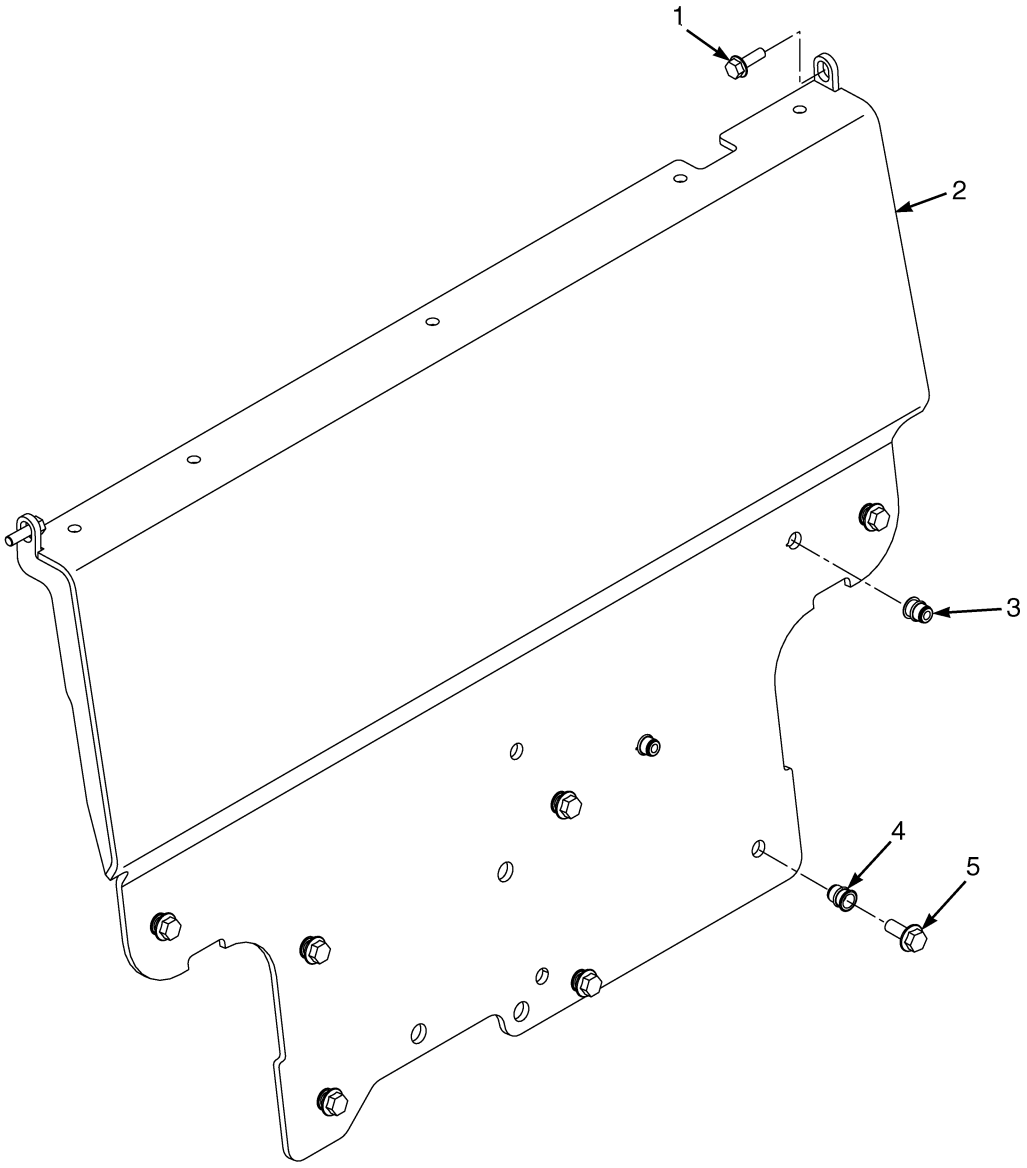

HP120730

©2013 HYSTER COMPANY

COWL MOUNT

ITEM	PART NO.	DESCRIPTION	QTY
1	1583611	Capscrew	2
1	1510113	Capscrew (Optional)	2
2	**a** 1586815	Cowl	1
2	**c** 1686711	Cowl	1
2	**bd** 1699988	Cowl	1
2	**e** 4014340	Cowl	1
3	1530243	Insert	2
4	1640776	Insert	7
4	1581567	Nut (Optional)	7
4	320160	Washer (Optional)	7
5	1605990	Capscrew	7

FOOTNOTES:

a → S/N L177V01662F
b → S/N L177V05175H
c S/N L177V01663F ↔ S/N L177V04756H
d S/N L177V04757H →
e S/N L177V05176H →

©2013 HYSTER COMPANY

COUNTERWEIGHTS (FIGURE 1-8)
(→ 4/2007)

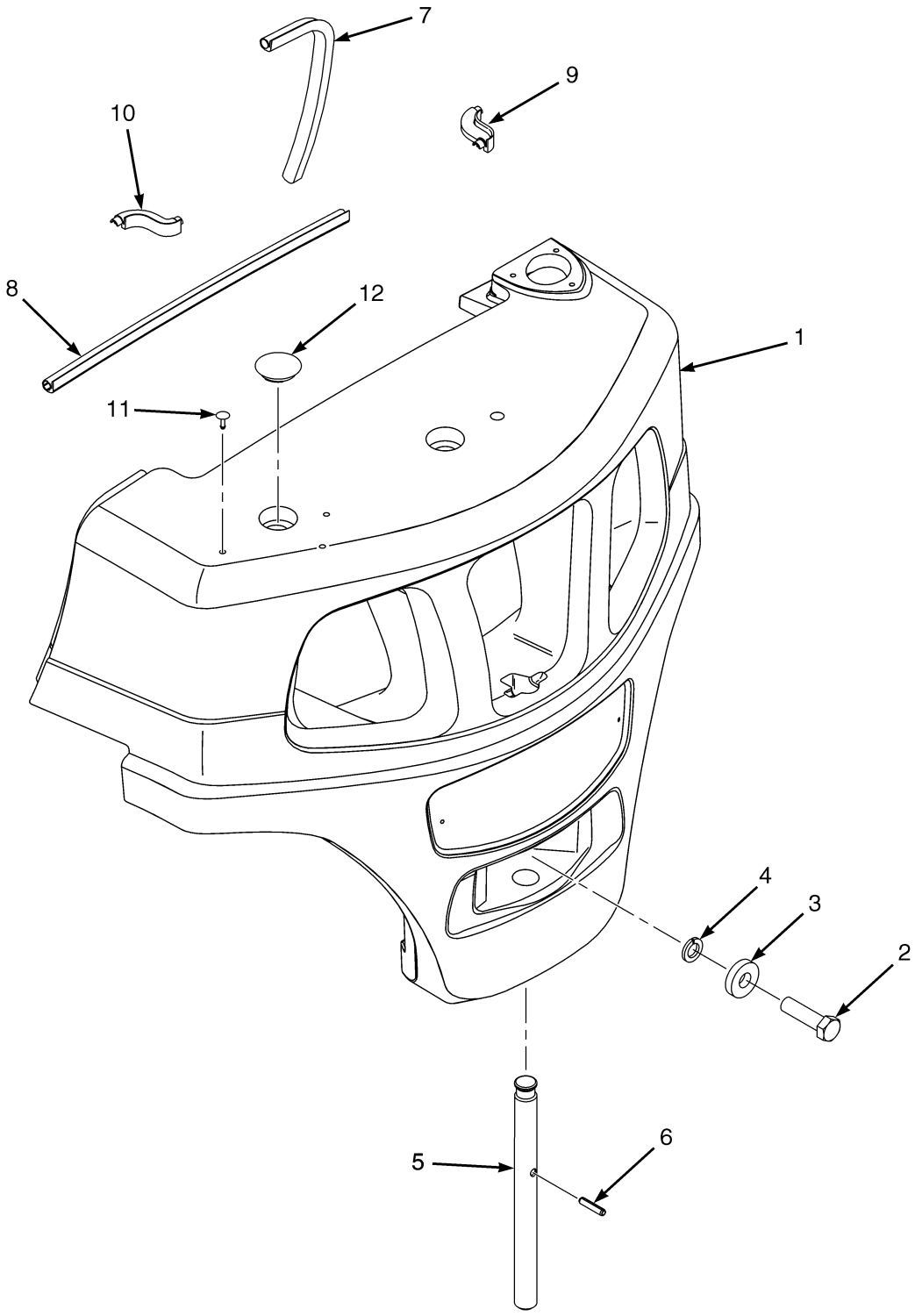

©2013 HYSTER COMPANY

COUNTERWEIGHTS

(→ 4/2007)

ITEM	PART NO.	DESCRIPTION	QTY
1	1533597	Counterweight (H40FT)	1
1	1533598	Counterweight (H50FT)	1
1	1533599	Counterweight (H60FT)	1
1	1533601	Counterweight (H70FT)	1
2	**a** 292608	Capscrew	1
2	**b** 292613	Capscrew (6 in.)	1
3	1375214	Washer	1
4	292689	Washer	1
5	1533596	Tow Pin	1
6	302492	Roll Pin	1
7	1590279	Seal (Counterweight)	1
8	1590280	Seal (Counterweight) (Top)	1
9	1590152	Seal (RH)	1
10	1590153	Seal (LH)	1
11	1347045	Fastener	4
12	2021395	Cap	2

FOOTNOTES:

a H40FT

b H50-70FT

©2013 HYSTER COMPANY

COUNTERWEIGHTS (FIGURE 1-9)

(4/2007 →)

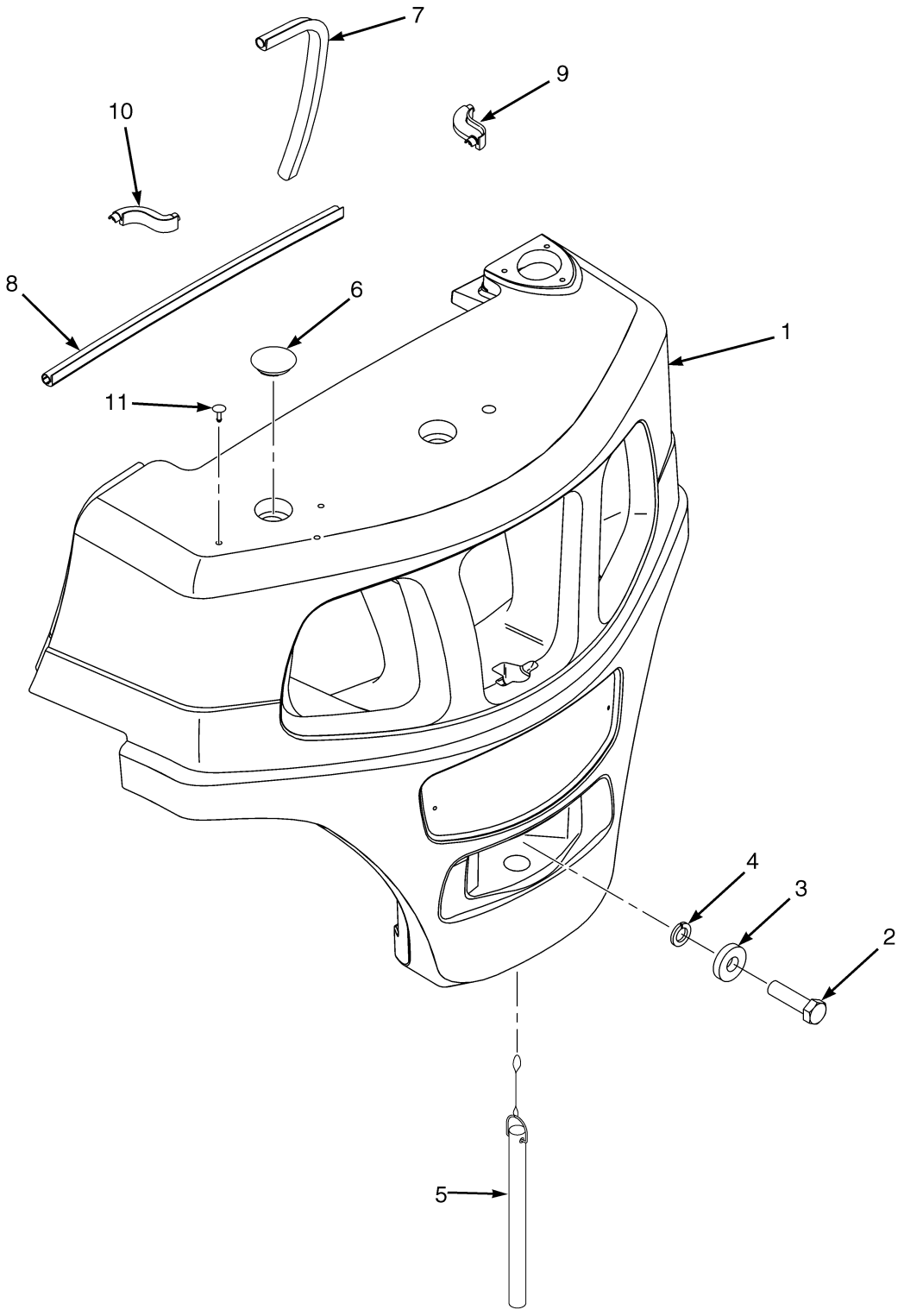

©2013 HYSTER COMPANY

COUNTERWEIGHTS

(4/2007 →)

ITEM	PART NO.	DESCRIPTION	QTY
1	1649733	Counterweight (H40FT)	1
1	1649734	Counterweight (H50FT)	1
1	1649735	Counterweight (H60FT)	1
1	1649736	Counterweight (H70FT)	1
2	292608	Capscrew (H40FT)	1
2	292613	Capscrew (6 in.) (H50-70FT)	1
3	1375214	Washer	1
4	292689	Washer	1
5	1643947	Tow Pin	1
6	2021395	Cap	1
7	1590279	Seal (Counterweight)	1
8	1590280	Seal (Counterweight)	1
9	1590152	Seal (RH)	1
10	1590153	Seal (LH)	1
11	2098153	Fastener	1

©2013 HYSTER COMPANY

OVERHEAD GUARD (FIGURE 1-10)

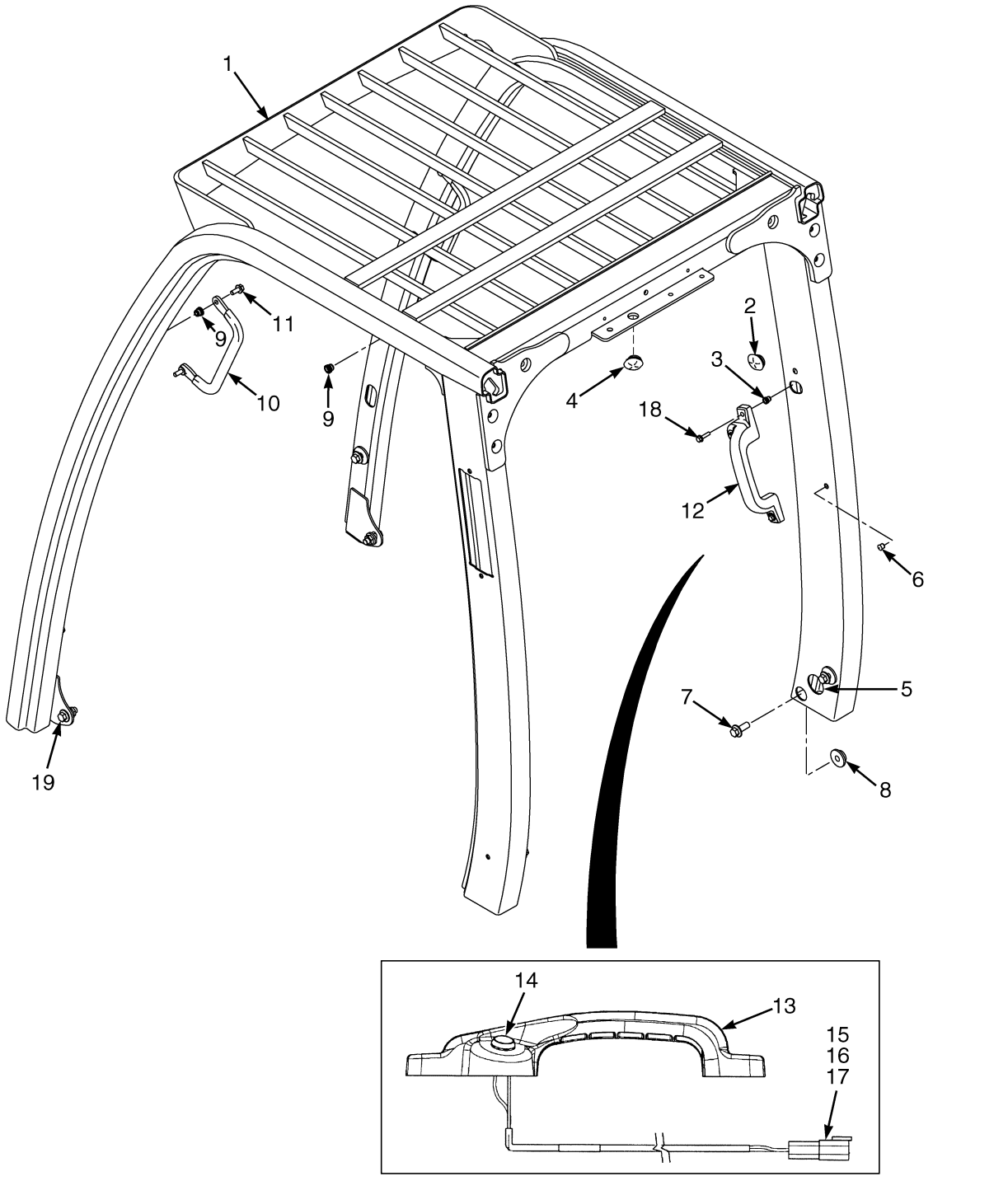

HP120756

©2013 HYSTER COMPANY

OVERHEAD GUARD

ITEM	PART NO.	DESCRIPTION	QTY
1	1599204	Overhead Guard (Tall) (85 in.)	1
1	**a** 1599210	Overhead Guard (Short) (82 in.)	1
1	**c** 4051346	Overhead Guard (Tall 85 in.)	1
1	**ac** 4051347	Overhead Guard (Short 82 in.)	1
2	1558219	Grommet	2
3	1531558	Insert	2
4	1560671	Grommet	1
5	1527395	Grommet	1
6	1494888	Plug	2
7	1527888	Capscrew (M12 x 1.75 x 35)	6
7	1566853	Capscrew (M12 x 1.75 x 40 Optional)	6
8	~~1370949~~		
	1528888	Nut (Shoulder)	2
9	1531557	Insert	4
10	1536813	Handle (Grab)	1
11	1583611	Capscrew	2
12	2070223	Handle (Assembly) (RH, Rear)	1
13	2069454	Handle	1
14	1566726	Push Button Switch (Horn)	1
15	1493465	Connector (2 Pin)	1
16	1330414	Connector (Secondary Lock)	1
17	1330437	Terminal (Pin)	2
18	1586495	Capscrew	2
19	4035130	Capscrew	2
	b 1599415	Plug	1

FOOTNOTES:

a Not Available with Full Suspension Seat
b Not Illustrated
c 1/2013 →

©2013 HYSTER COMPANY

CAB (FIGURE 1-11)
(S/N L177B11273D →)

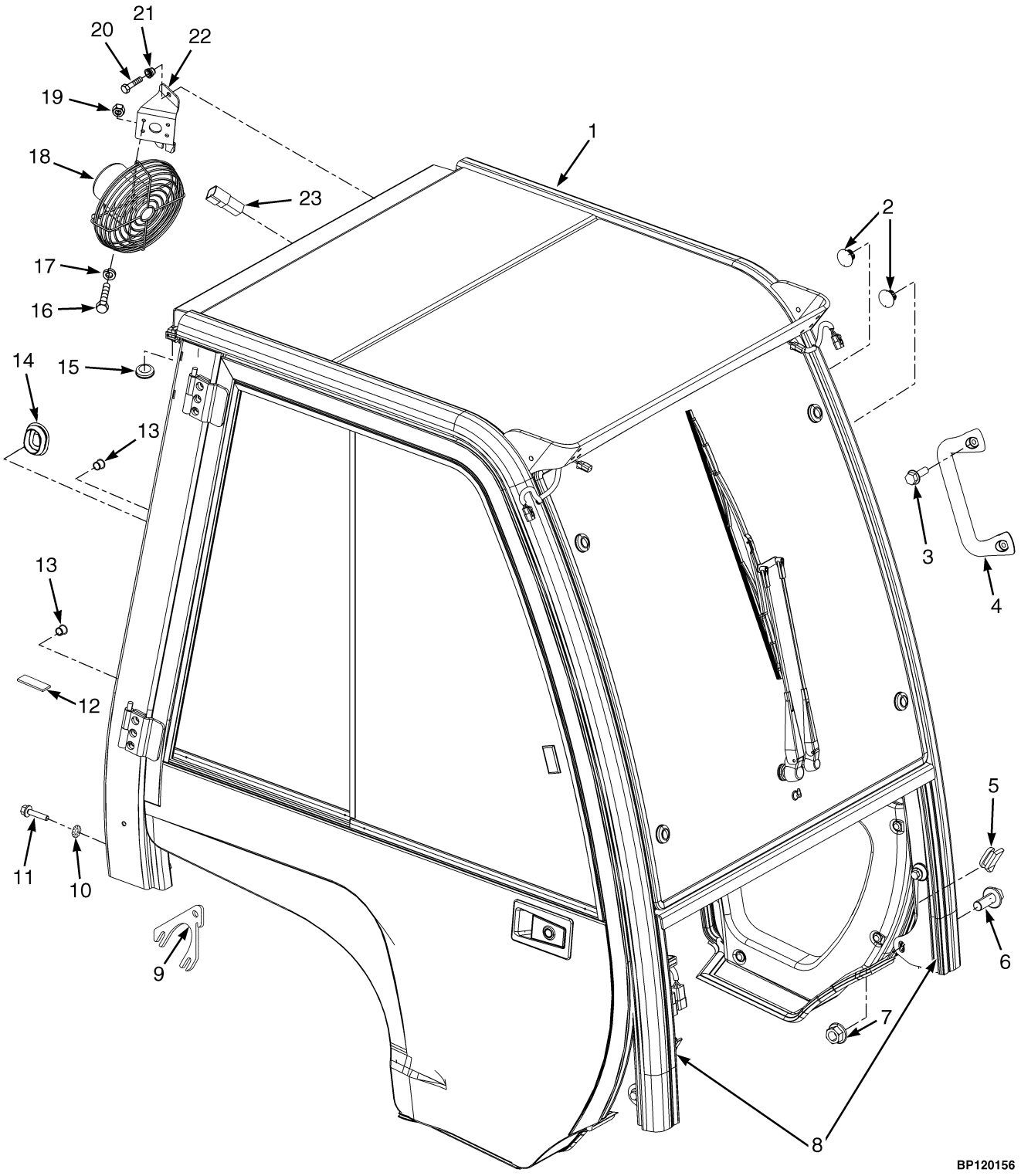

©2013 HYSTER COMPANY

CAB

(S/N L177B11273D →)

KEY:
A: With Steel Doors
B: With PVC Doors

ITEM	PART NO.	DESCRIPTION	QTY A	QTY B
1	**b** 1641493	Cab (With Steel Doors) (☞Figure 1-15, ☞Figure 1-19, ☞Figure 1-24, ☞Figure 1-27, ☞Figure 1-32)	1	..
1	**c** 4049136	Cab (With Steel Doors)	1	..
1	4049138	Cab (With PVC Doors) (☞Figure 1-24, ☞Figure 1-27, ☞Figure 1-32, ☞Figure 1-20)	..	1
2	1574301	Plug	6	8
3	1583611	Capscrew	8	4
4	1536813	Handle (Grab)	1	1
5	1589787	Seal	2	2
6	1527888	Capscrew	8	8
7	~~1370949~~			
	1528888	Nut (Shoulder)	2	2
8	4040607	Seal	2	2
9	1636853	Shim	2	2
10	296359	Washer	6	6
11	296157	Capscrew	6	6
12	1614686	Strip Seal (LH)	1	1
12	1614687	Strip Seal (RH)	1	1
13	1494888	Plug	4	2
14	1599415	Plug	1	1
15	1560671	Grommet	1	1
16	1565125	Screw	4	..
17	292678	Lockwasher	4	..
18	1359562	Fan Assembly	1	..
18	1311213	Fan	1	..
18	1330409	Connector	1	..
18	1330414	Connector (Secondary Lock)	1	..
18	1330437	Terminal (Pin)	2	..
19	1463912	Nut	4	..
20	1583611	Capscrew	2	..
21	1531557	Insert	2	..
22	1613734	Bracket	1	..
23	1351681	Connector	1	1
	a 1636647	Shim	AR	AR
	a 2070996	Grommet	1	1

FOOTNOTES:

a Not Illustrated
b S/N L177B11273D ↔ S/N L177B16119E
c S/N L177B16120E →

©2013 HYSTER COMPANY

CAB (FIGURE 1-12)
WITH A/C

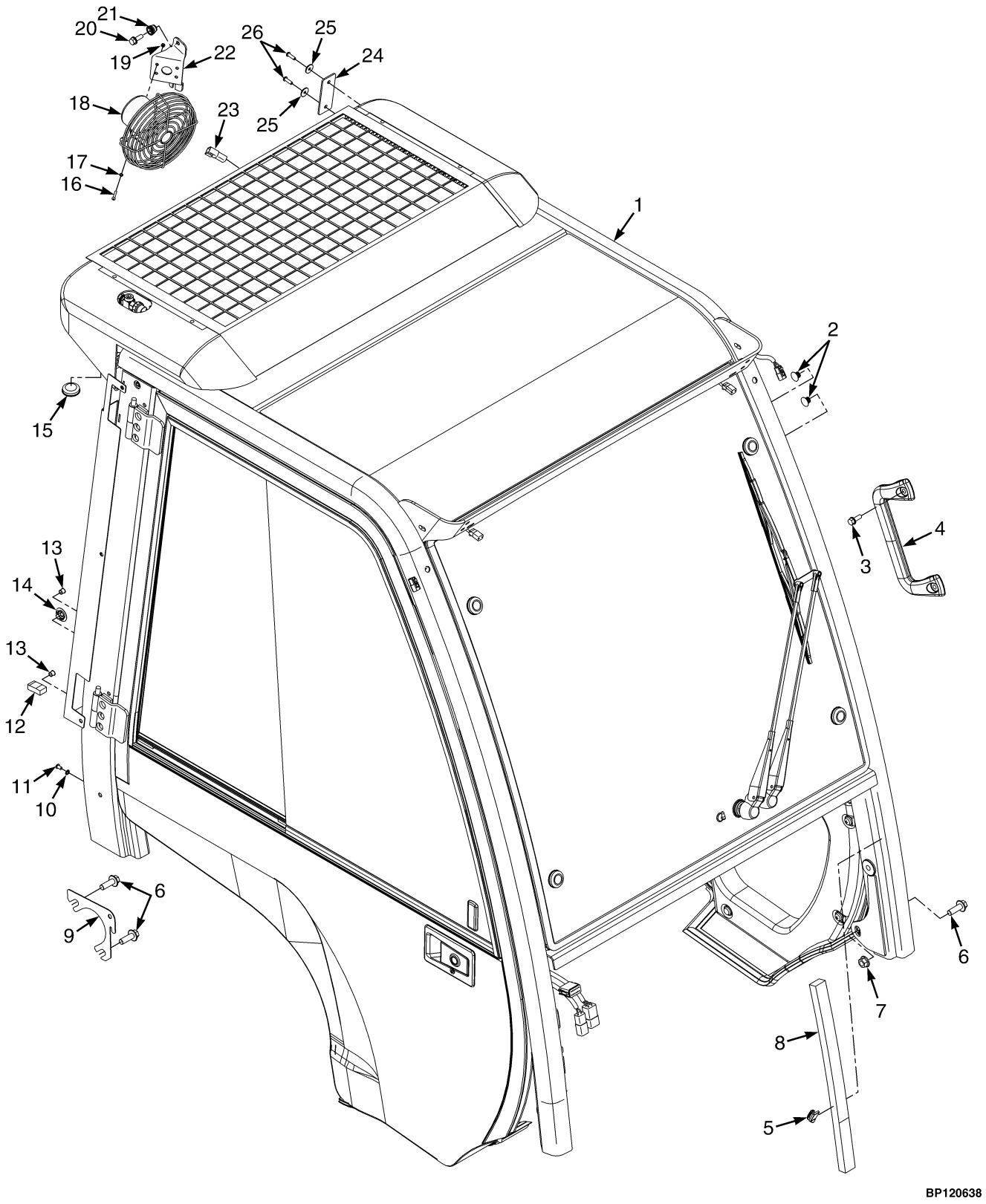

©2013 HYSTER COMPANY

CAB
WITH A/C

ITEM	PART NO.	DESCRIPTION	QTY
1	4049137	Cab	1
2	1574301	Plug	6
3	1583611	Capscrew	4
4	1536813	Handle (Grab)	1
5	1589787	Seal	2
6	1527888	Capscrew	8
7	~~1370949~~		
	1528888	Nut (Shoulder)	2
8	4040607	Seal	2
9	1636853	Shim	2
10	296359	Washer	6
11	296157	Capscrew	6
12	1614686	Strip Seal (LH)	1
12	1614687	Strip Seal (RH)	1
13	1494888	Plug	4
14	1599415	Plug	1
15	1560671	Grommet	1
16	1565125	Screw	4
17	292678	Lockwasher	4
18	1359562	Fan Assembly	1
18	1311213	Fan	1
18	1330409	Connector	1
18	1330414	Connector (Secondary Lock)	1
18	1330437	Terminal (Pin)	2
19	1463912	Nut	4
20	1583611	Capscrew	2
21	1531557	Insert	2
22	1613734	Bracket	1
23	1351681	Connector	1
24	1690075	Plate	2
25	1709980	Washer	4
26	1710006	Capscrew	4
	a 1636647	Shim	AR

FOOTNOTES:

a Not Illustrated

©2013 HYSTER COMPANY

CAB ATTACHING PARTS (FIGURE 1-13)
WITH A/C

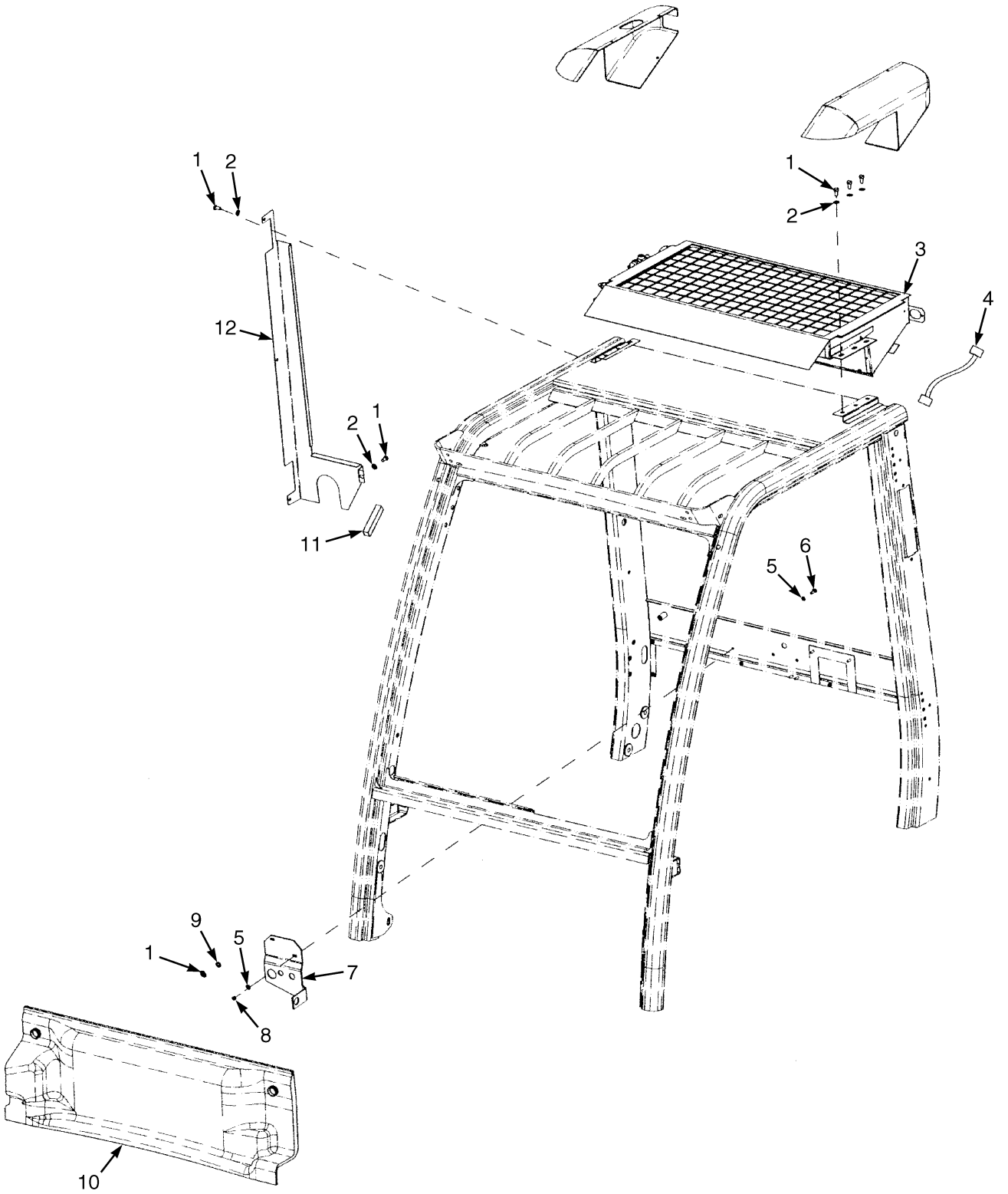

BP120640

©2013 HYSTER COMPANY

CAB ATTACHING PARTS
WITH A/C

ITEM	PART NO.	DESCRIPTION	QTY
	4049137	Cab	1
1	287851	Capscrew	9
2	320158	Washer	10
3	4007135	Condenser (☞Figure 1-23)	1
4	1701960	Wire Harness	2
5	320156	Washer	4
6	292501	Capscrew	2
7	1701959	Grommet	1
8	136687	Nut	2
9	239503	Nut	1
10	1688200	Cover	1
11	1498336	Edge Protector	1
12	1701958	Cover	1

©2013 HYSTER COMPANY

CAB (FIGURE 1-14)
LH DOOR (→ S/N L177B11272D)

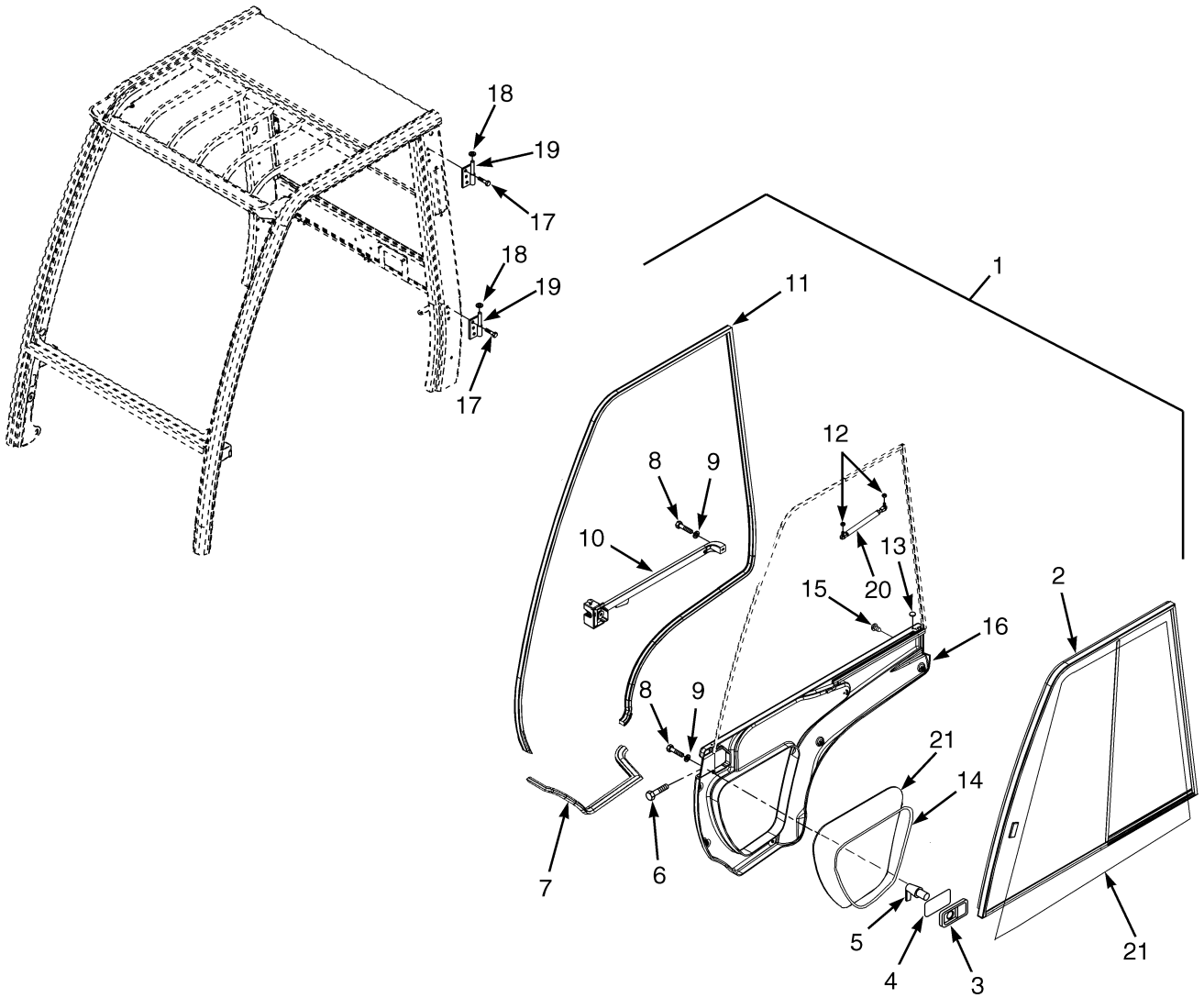

HP120861

©2013 HYSTER COMPANY

CAB

LH DOOR (→ S/N L177B11272D)

ITEM	PART NO.	DESCRIPTION	QTY
	1519232	Cab	1
1	1598417	Door Assembly (LH)	1
2	1598396	Sliding Window (LH)	1
3	1598393	Grip (Without Key)	1
4	1598394	Shim	1
5	1598392	Lever	1
6	296229	Capscrew	2
7	1393539	Seal	AR
8	302047	Screw	5
9	320156	Washer	5
10	1393479	Door Handle	1
11	1515337	Seal	AR
12	316835	Nut	2
13	1598390	Plug	2
14	1598397	Gas Spring	1
15	1598389	Fastener	5
16	1598391	Cover	1
17	1598395	Window	1
18	1468312	Washer	2
19	1503958	Hinge	2
20	1493308	Bolt	6

©2013 HYSTER COMPANY

CAB (FIGURE 1-15)
LH DOOR (S/N L177B11273D →)

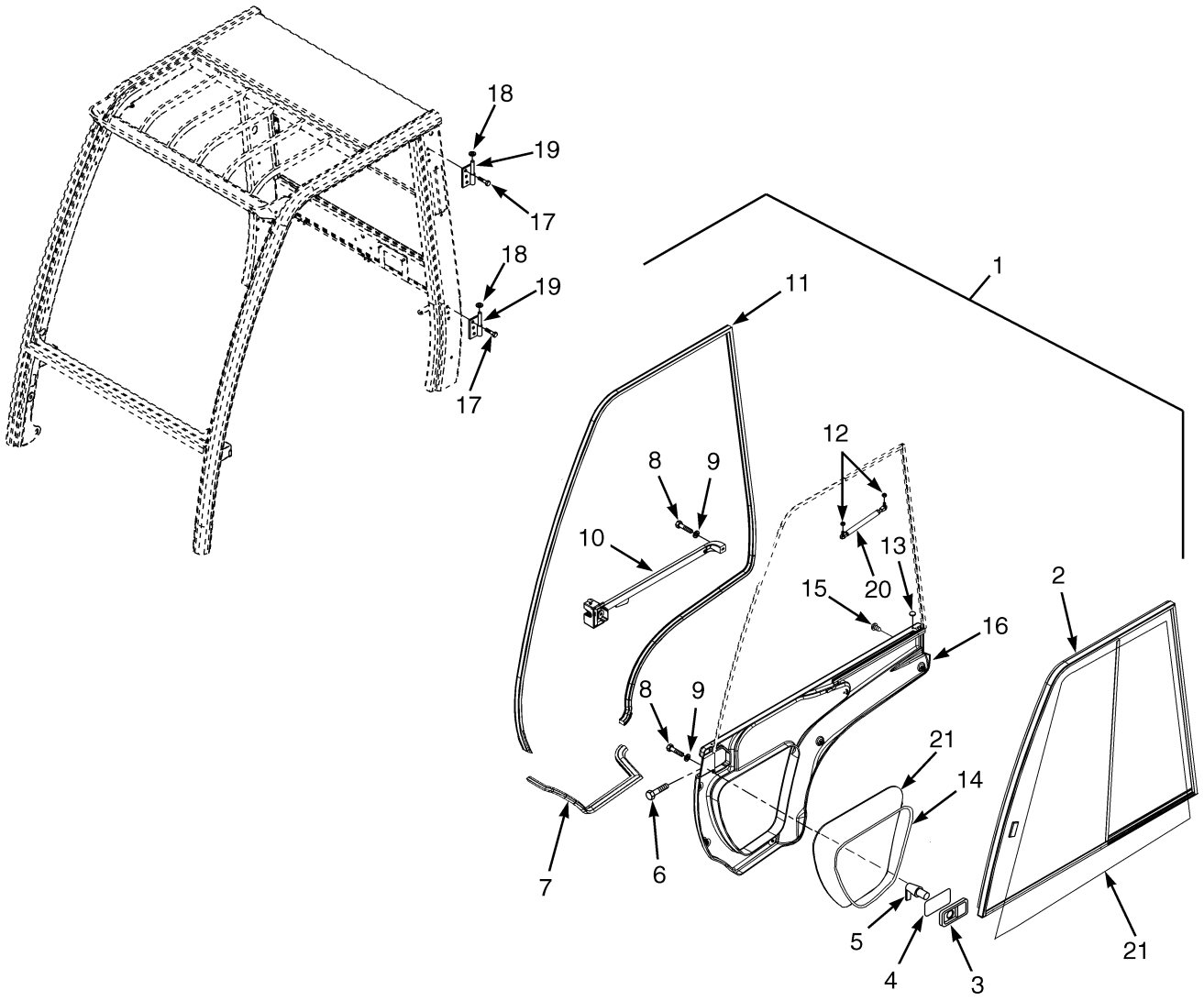

HP120861

©2013 HYSTER COMPANY

CAB

LH DOOR (S/N L177B11273D →)

KEY:
A: Standard Cab
B: Cab with A/C

ITEM	PART NO.	DESCRIPTION	QTY A	QTY B
	c 1641493	Cab (With Steel Doors)	1	..
	d 4049136	Cab (With Steel Doors)	1	..
	4049137	Cab (With A/C)	..	1
1	1690931	Door	1	..
1	1598417	Door Assembly (LH)	..	1
1	1651814	Door Frame Weldment (LH)	..	1
2	**b** 1598396	Sliding Window	1	..
2	**b** 1483226	Latch (Sliding Window)	1	..
2	**d** 1653967	Sliding Window	1	1
2	**d** ~~1653969~~ 4013559	Latch (Mounted From Inside)	1	1
2	4024323	Front Window	1	..
2	4013558	Latch (Mounted from Outside)	1	1
2	~~1644801~~ 4009782	Guide	4	4
3	1598393	Grip (Without Key)	1	1
4	1598394	Shim	1	1
5	1598392	Lever	1	1
6	296229	Capscrew	2	2
7	1393539	Seal	AR	..
7	1623391	Seal	..	AR
8	302047	Screw	5	3
8	1623393	Capscrew	..	2
9	320156	Washer	5	3
9	1651739	Rivet	..	2
10	1393479	Door Handle	1	1
11	1515337	Seal	AR	..
11	1393463	Seal	..	AR
12	316835	Nut	2	1
12	302400	Nut (Alternate Part)	2	2
12	1393472	Ball Stud	..	1
12	4009902	Ball Stud (Alternate Part)	2	2
13	1598390	Plug	2	..
13	1558034	Button	..	2
14	1598395	Window (Door, Lower, LH)	1	1
15	1598389	Fastener	5	3
15	1651739	Rivet	..	2
16	**b** 1598391	Cover (Door, LH)	1	..
16	**d** 1653973	Cover (Door, LH)	1	1
17	1493308	Bolt	12	..
17	1674103	Screw	..	12
18	1468312	Washer	2	..
19	1503958	Hinge (LH)	2	..
20	1598397	Gas Spring	1	1
21	1558294	Seal	AR	..

©2013 HYSTER COMPANY

CAB

LH DOOR (S/N L177B11273D →)

KEY:
A: Standard Cab
B: Cab with A/C

ITEM	PART NO.	DESCRIPTION	QTY A	QTY B
	a 1598390	Plug	5	..
	a 1593629	Key (For Cab Door Grip)	2	1
	a 1506825	Strap Clamp	..	1

FOOTNOTES:

a Not Illustrated
b → S/N L177B16119E
c S/N L177B11273D ↔ S/N L177B16119E
d S/N L177B16120E →

©2013 HYSTER COMPANY

CAB WITH STEEL DOORS (FIGURE 1-16)
HEATER — WITHOUT AIR CONDITIONING

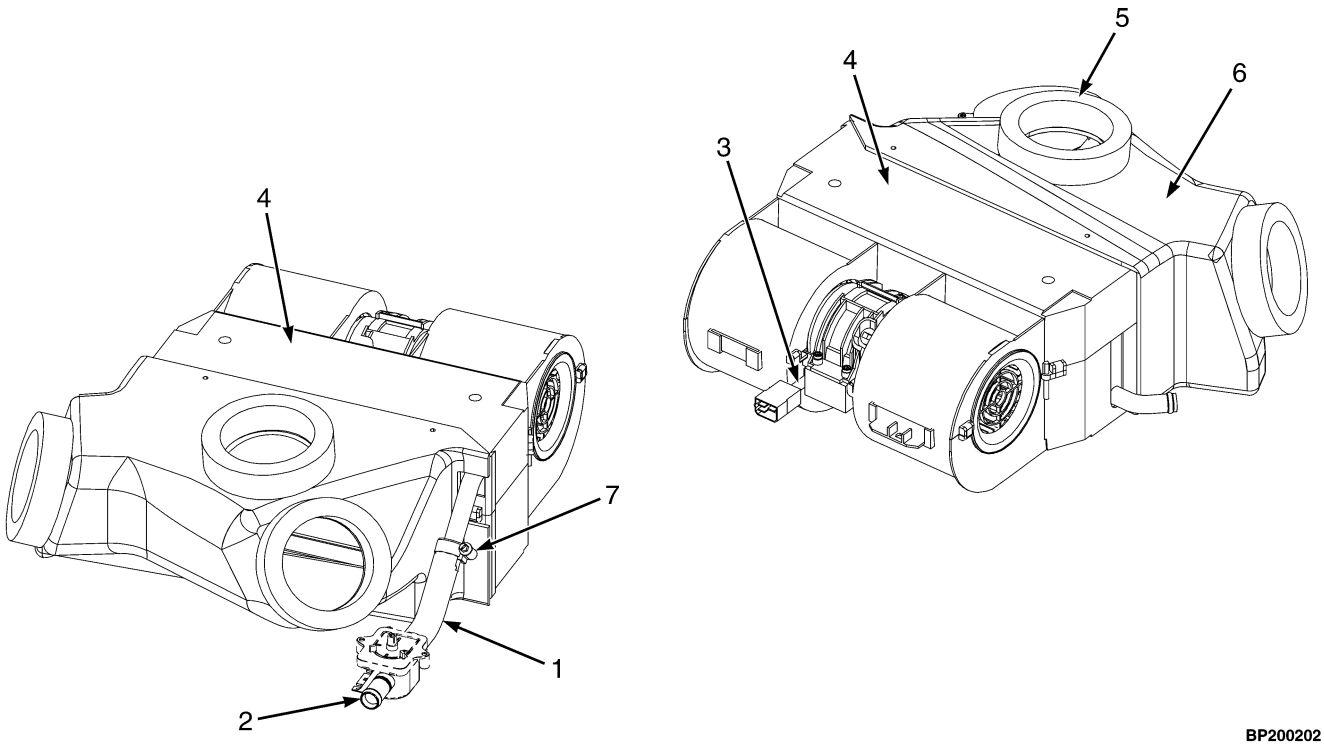

BP200202

ITEM	PART NO.	DESCRIPTION	QTY
	1598404	Heater Assembly (Sub Assembly)	1
1	1598674	Hose	AR
2	1598672	Valve (Water)	1
3	1598671	Wire Harness	1
4	1598675	Heater	1
4	4066968	Heater	1
4	4066969	Fan	1
4	1560643	Clamp	1
4	4066970	Resistor	1
4	4066971	Heat Exchanger	1
5	4066966	Valve	3
6	4066964	Vent	1
7	4066967	Clamp	2
	a 4066965	Valve	1
	a 1598673	Switch (Blower)	1
	a 1623402	Clip (Hose Clamp)	2

FOOTNOTES:

a Not Illustrated

©2013 HYSTER COMPANY

CAB (FIGURE 1-17)
AIR CONDITIONER

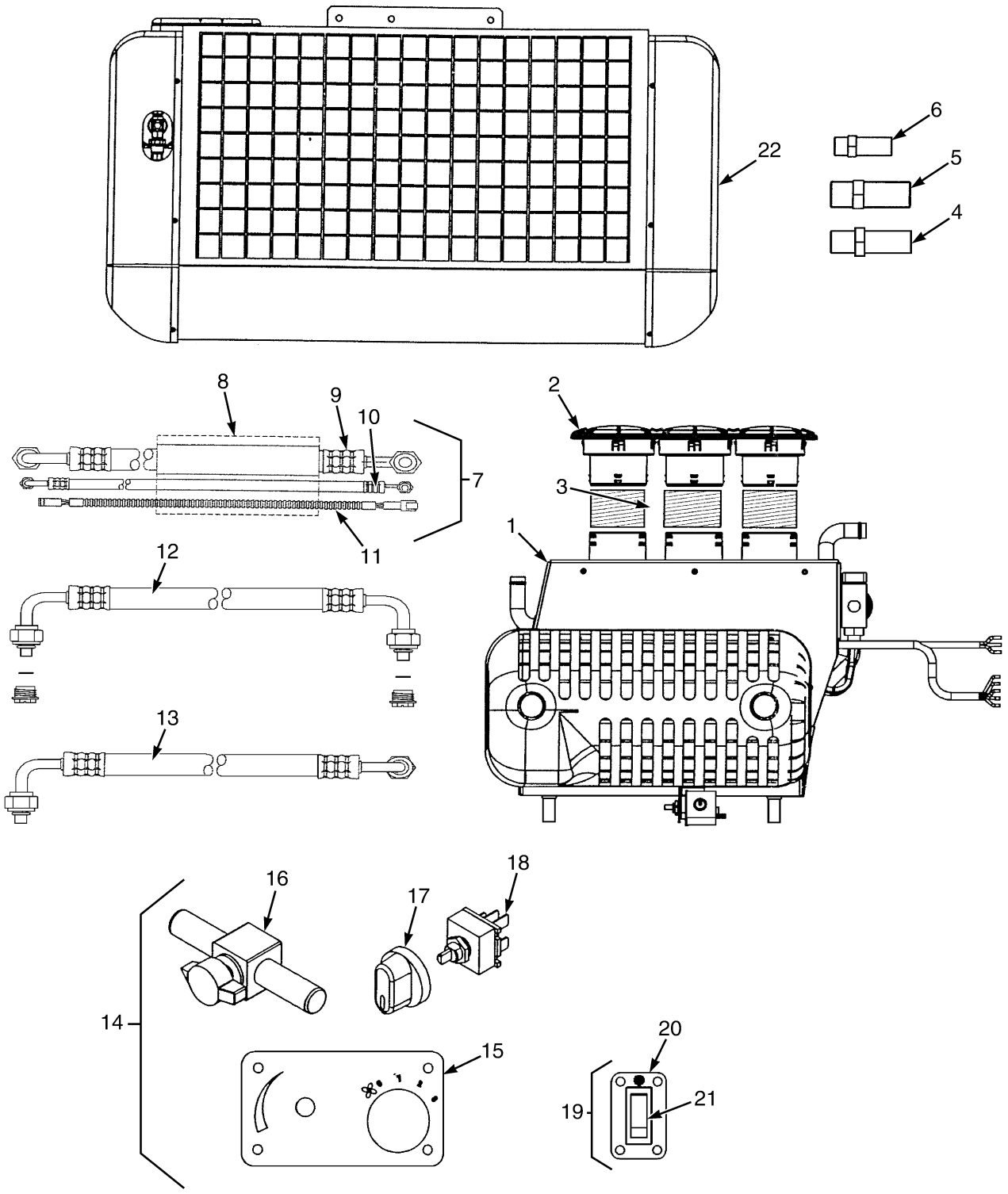

BP120634

©2013 HYSTER COMPANY

CAB
AIR CONDITIONER

ITEM	PART NO.	DESCRIPTION	QTY
	1701967	Air Conditioner	1
1	4004149	Heater (☞Figure 1-18)	1
2	4004150	Louver	3
3	4004154	Hose	3
4	4004153	Fitting	1
5	4004152	Fitting	1
6	4004151	Fitting	1
7	4004155	Hose	1
8	4004157	Wrap	1
9	4004158	Hose Assy	1
10	4004159	Hose Assy	1
11	4004156	Wire Harness	1
12	4004160	Hose Assy	1
13	4004161	Hose Assy	1
14	4004162	Control Panel	1
15	4004163	Panel	1
16	~~4004164~~		
	4044163	Valve	1
17	1487957	Knob	1
18	1487956	Switch , Blower (with Nut)	1
19	4004166	Control Panel	1
20	4004167	Panel	1
21	4004168	Switch	1
22	4004165	Condenser (☞Figure 1-23)	1

©2013 HYSTER COMPANY

CAB (FIGURE 1-18)
HEATER

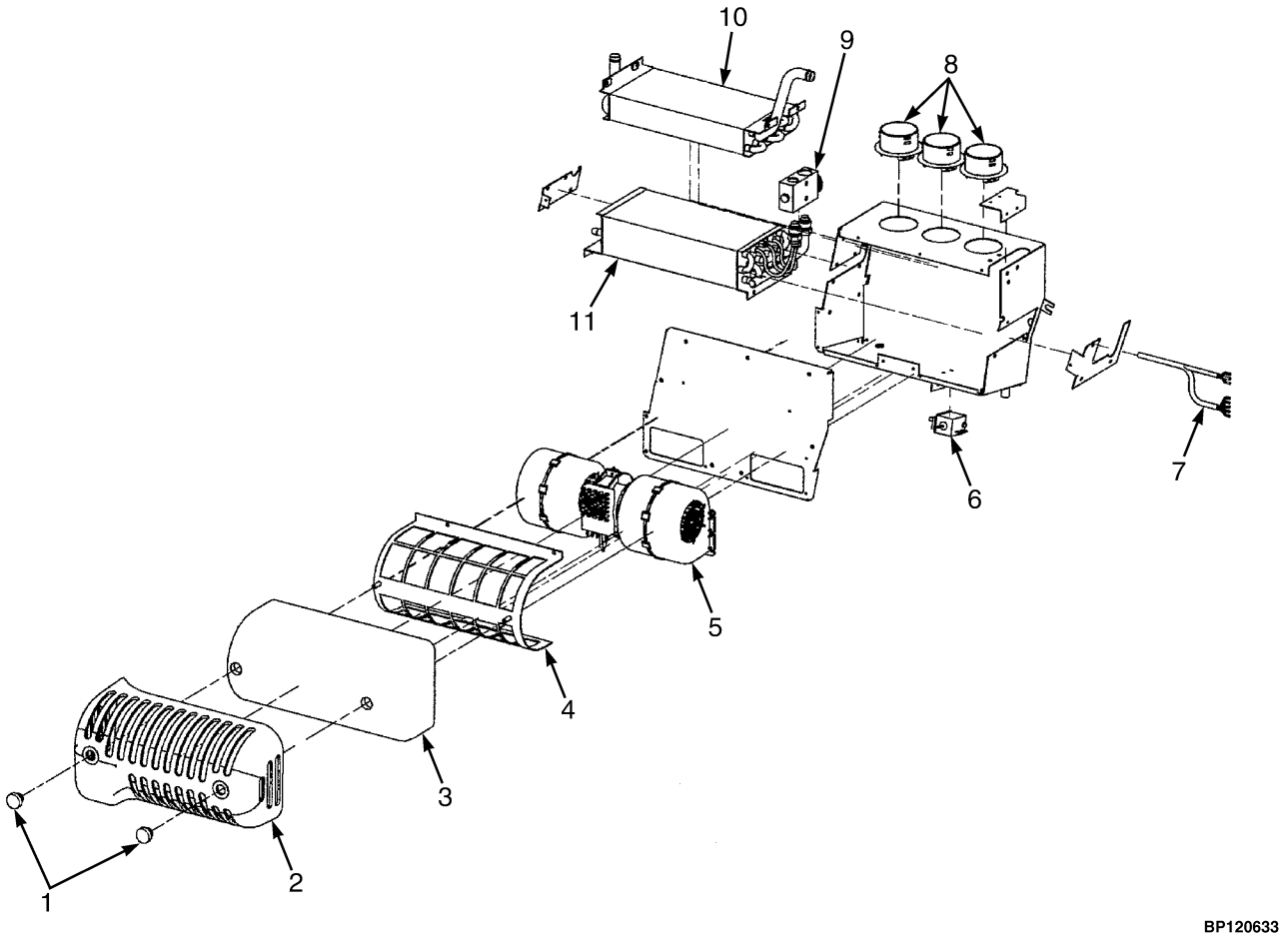

©2013 HYSTER COMPANY

CAB
HEATER

ITEM	PART NO.	DESCRIPTION	QTY
	4004149	Heater	1
1	4004065	Knob	2
2	4004045	Cover	1
3	4004060	Filter	1
4	4004059	Filter	1
5	1661971	Heater (Blower)	1
6	4003082	Thermostat	1
7	~~4004061~~		
	4060157	Wire Harness	1
8	4004066	Hose Adapter	3
9	1487945	Valve (Block)	1
10	4004062	Heater	1
11	4004063	Evaporator	1

©2013 HYSTER COMPANY

CAB (FIGURE 1-19)

RH DOOR AND HEATER ASSEMBLY (S/N L177B11273D →)

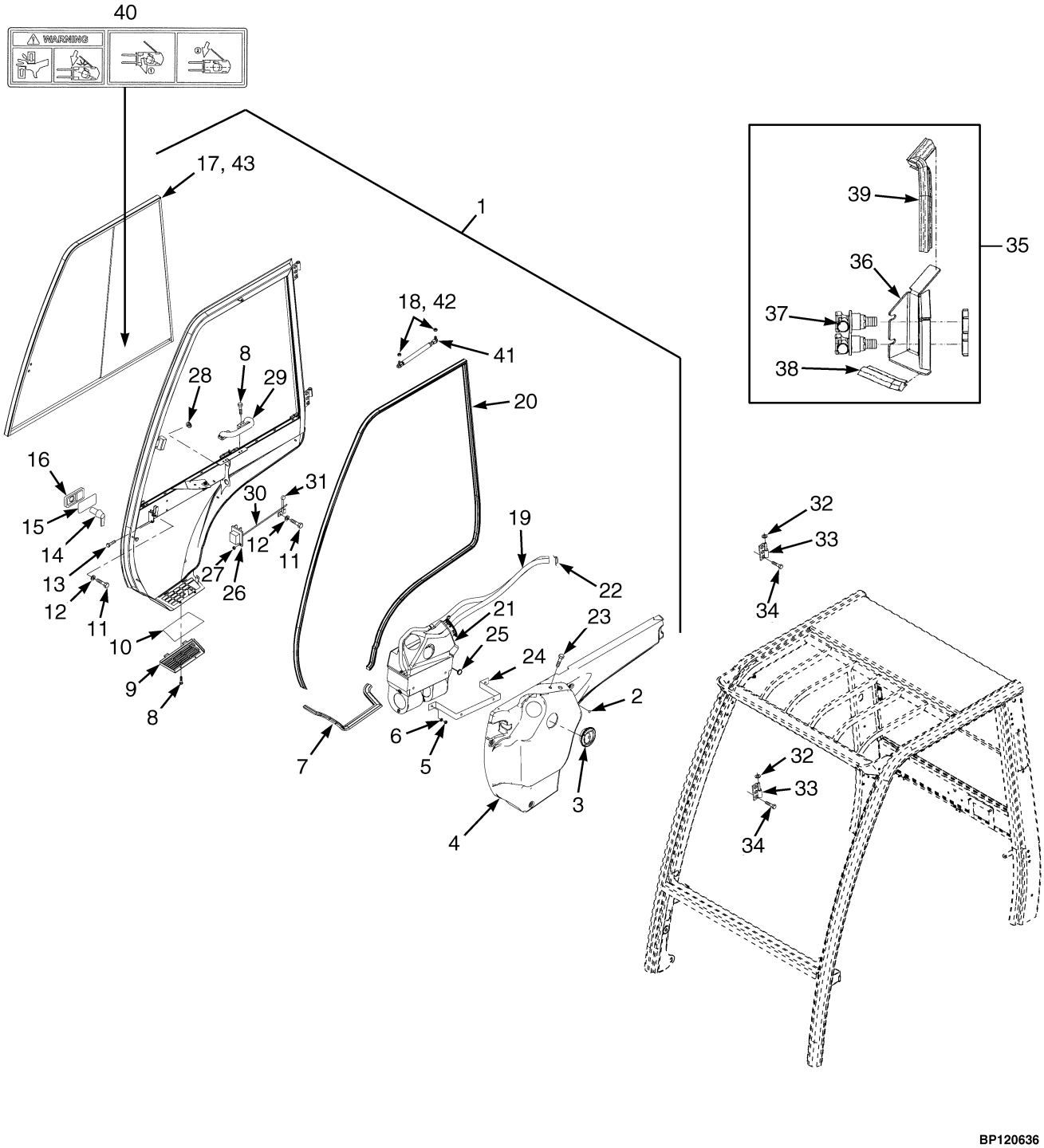

©2013 HYSTER COMPANY

CAB

RH DOOR AND HEATER ASSEMBLY (S/N L177B11273D →)

KEY:
A: Standard Cab
B: Cab With A/C

ITEM	PART NO.	DESCRIPTION	QTY A	QTY B
	d 1641493	Cab (With Steel Doors)	1	..
	e 4049136	Cab (With Steel Doors)	1	..
	4049137	Cab (With A/C)	..	1
1	**c** 1598416	Door Assembly (RH)	1	..
1	**e** 1690932	Door (RH)	1	..
1	1652426	Door (RH) (Weldment)	1	..
1	1701961	Door Assembly with Air Conditioner (RH) (RH)	..	1
2	1598389	Fastener	6	3
3	1598398	Louver (Air)	3	3
4	**c** 1598407	Cover (Door, RH)	1	..
4	**e** 1653972	Cover (Door, RH)	1	..
4	1701964	Cover (Door, RH)	..	1
5	239503	Nut	2	2
6	320158	Washer	2	4
7	1393539	Seal	AR	..
7	1623391	Seal	..	AR
8	1598399	Screw	6	2
8	1701962	Screw	..	4
9	1598401	Bracket	1	1
10	1598400	Filter	1	1
11	302047	Screw	6	4
11	1623393	Capscrew	..	2
12	320156	Washer	6	6
13	296229	Capscrew	2	2
14	1598411	Lever	1	1
15	1598394	Shim	1	1
16	1598393	Grip (Without Key)	1	1
17	**c** 1598413	Sliding Window	1	..
17	**c** 1483226	Latch (Sliding Window)	1	..
17	**e** 1653970	Sliding Window	1	1
17	**e** ~~1653969~~ 4013559	Latch (Mounted from inside)	1	1
17	4024323	Front Window	1	..
17	4013558	Latch (Mounted from Outside)	1	1
17	~~1644801~~ 4009782	Guide	4	4
18	316835	Nut	2	2
18	302400	Nut (Alternate Part)	2	2
19	1623400	Hose	AR	AR
20	1515337	Seal	AR	..
20	1393463	Seal	..	AR
21	1598404	Heater Assembly (☞Figure 1-16)	1	1
21	1701967	Air Conditioner	..	1
22	1393499	Clamp	1	1
22	1674073	Clamp	..	4

©2013 HYSTER COMPANY

CAB

RH DOOR AND HEATER ASSEMBLY (S/N L177B11273D →)

KEY:
A: Standard Cab
B: Cab With A/C

ITEM	PART NO.	DESCRIPTION	QTY A	QTY B
23	1468318	Screw	4	4
24	1598669	Bracket	1	..
24	1701965	Bracket	..	1
25	1598390	Plug	5	..
26	1598412	Latch (RH) (RH)	1	1
27	1598408	Nut	2	2
28	1579116	Grommet	2	..
28	1646729	Grommet	..	2
29	~~1598406~~			
	4070545	Handle	1	1
30	1598409	Bar	1	1
31	1598410	Lever	1	1
32	1468312	Washer	2	2
33	1503959	Hinge (RH)	2	2
34	1493308	Bolt	12	12
35	1641494	Bulkhead	1	1
36	1643584	Bracket	1	1
37	~~1670529~~			
	1598327	Connector (Female)	2	2
38	1393539	Seal	AR	AR
39	1515337	Seal	AR	AR
40	**a** 2081868	Label (Electronic Hydraulics)	1	1
41	1598414	Gas Spring	1	1
42	1393472	Ball Stud	..	1
42	4009902	Ball Stud (Alternate Part)	2	2
43	1558294	Seal	..	AR
	b 1593629	Key (For Cab Door Grip)	2	2
	b 1654298	Knob (Water Valve) (For use with p/n 1598672)	1	1
	be 1674109	Kit-Repair (Glue)	1	..
	b 1506825	Strap Clamp	..	1
	b 1598670	Fitting (Male)	..	2

FOOTNOTES:

a Electronic Hydraulics Only
b Not Illustrated
c → S/N L177B16119E
d S/N L177B12273D ↔ S/N L177B16119E
e S/N L177B16120E →

©2013 HYSTER COMPANY

NOTES

©2013 HYSTER COMPANY

CAB DOORS (FIGURE 1-20)
PVC

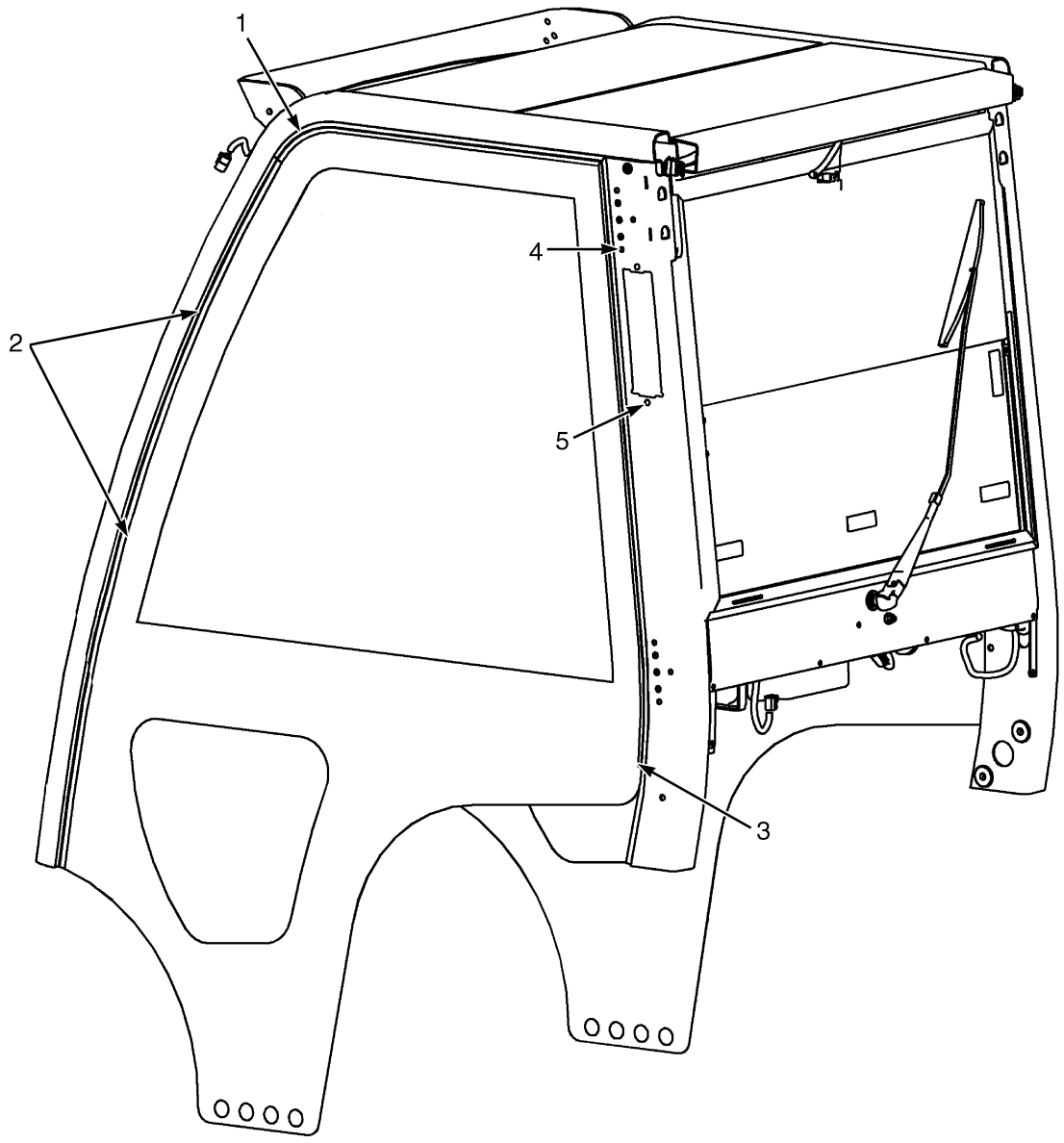

BP120196

©2013 HYSTER COMPANY

CAB DOORS
PVC

KEY:
A: Right Hand
B: Left Hand

ITEM	PART NO.	DESCRIPTION	QTY A	QTY B
	4049138	Cab	1	1
	1627180	Door Pvc	1	..
	1627176	Door Pvc	..	1
1	1627178	Molding (Top) (RH)	1	..
1	1627174	Molding (Top) (LH)	..	1
2	1627179	Molding (Front) (RH)	1	..
2	1627175	Molding (Front) (LH)	..	1
3	1627177	Molding (Back) (RH)	1	..
3	1627173	Molding (Back) (LH)	..	1
4	1363916	Plug	12	12
5	1599415	Plug	1	1
	1627172	Screw (Not Illustrated)	10	10

©2013 HYSTER COMPANY

CAB (FIGURE 1-21)
SLIDING REAR WINDOW

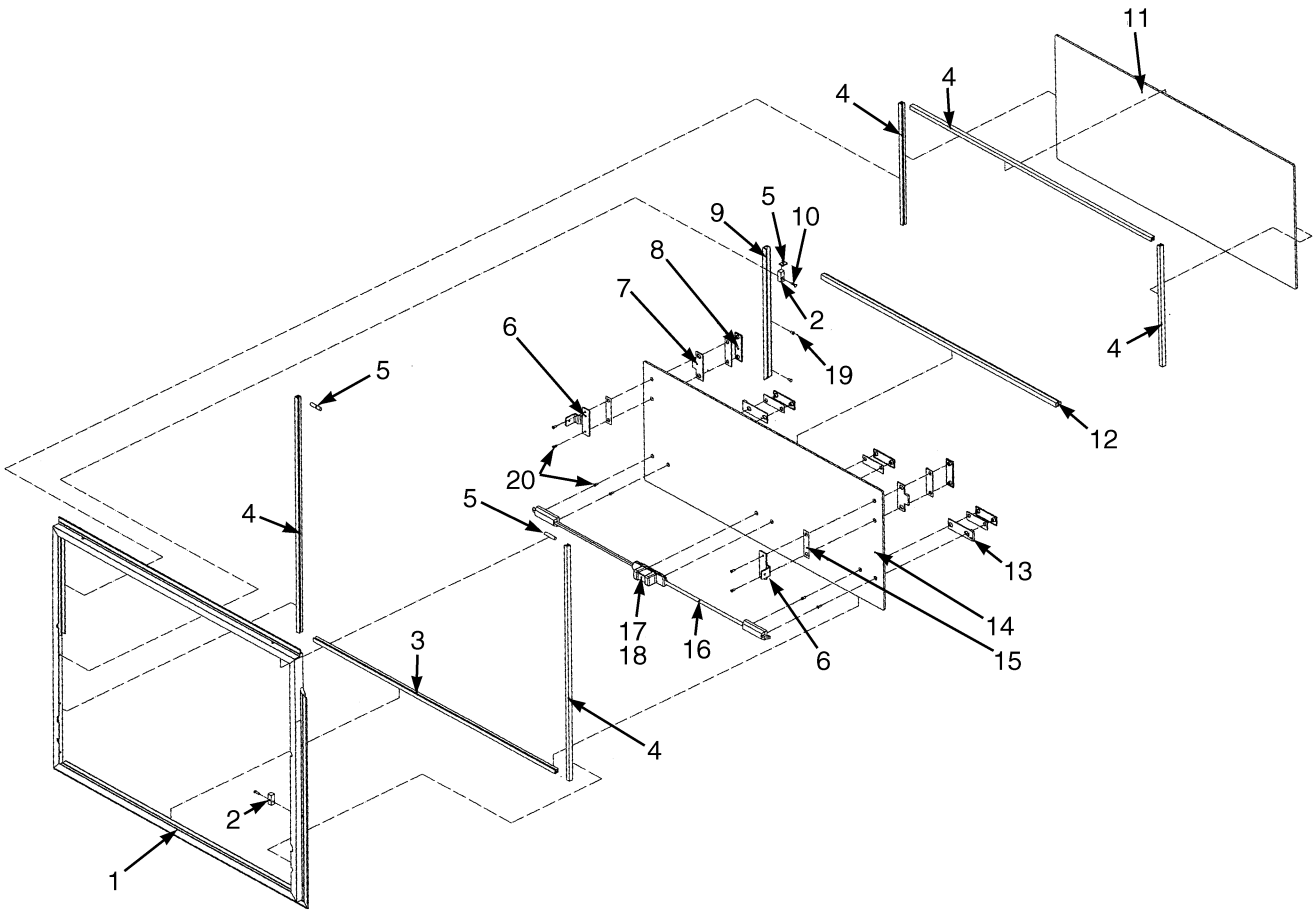

BP120365

©2013 HYSTER COMPANY

CAB
SLIDING REAR WINDOW

ITEM	PART NO.	DESCRIPTION	QTY
	1598290	Sliding Window	1
1	1670441	Frame	1
2	1670443	Bushing	2
3	1670424	Guide	1
4	1641637	Seal	AR
5	1641640	Strip Seal	AR
6	1670427	Stop	2
7	1670428	Pad	2
8	1670429	Plate	2
9	1670442	Rail	1
10	1670421	Screw	2
11	1670425	Glass (Rear Glass)	1
12	1670444	Seal	1
13	1670423	Pad	2
14	1670426	Glass (Sliding Glass)	1
15	1670440	Pad	2
16	1615813	Bar	2
17	1615998	Latch (Contains one center, two end latches and springs)	1
18	1615999	Spring	2
19	1670422	Screw	2
20	1670430	Screw	8

©2013 HYSTER COMPANY

CAB (FIGURE 1-22)
WINDOWS AND WINDOW WIPER SYSTEM (→ S/N L177B11272D)

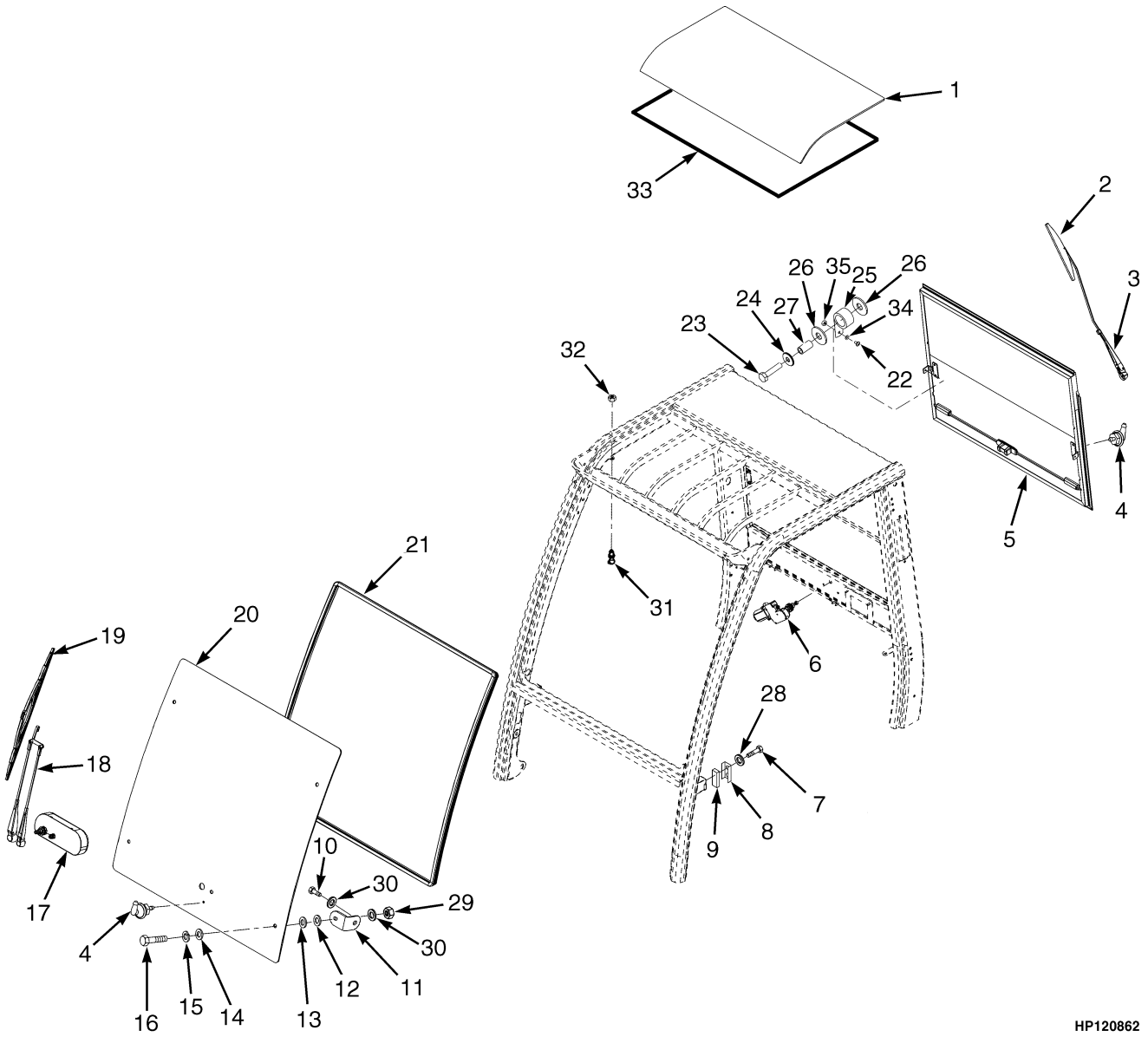

©2013 HYSTER COMPANY

CAB

WINDOWS AND WINDOW WIPER SYSTEM (→ S/N L177B11272D)

ITEM	PART NO.	DESCRIPTION	QTY
	1519232	Cab (Assembly)	1
1	1598293	Window	1
2	1598297	Wiper Blade	1
3	1598296	Wiper Arm	1
4	1493336	Connector (Spray Nozzle)	2
5	1598290	Sliding Window (Rear)	1
6	1598295	Wiper Motor (Rear)	1
7	1598300	Striker Bolt	2
8	1393541	Guard	2
9	1393488	Block	2
10	1493308	Bolt	4
11	1598210	Bracket	4
12	1598211	Washer	4
13	1468317	Washer	4
14	1468316	Washer	4
15	1468315	Washer	4
16	1468314	Screw	4
17	1598294	Wiper Motor (Front)	1
18	1598298	Wiper Arm (Front)	1
19	1598299	Wiper Blade (Front)	1
20	1598209	Front Window	1
21	1581657	Seal	AR
22	302019	Screw	2
23	1598291	Capscrew	2
24	1558052	Washer	2
25	1598302	Spring	2
26	1598301	Bushing	4

©2013 HYSTER COMPANY

CAB (FIGURE 1-23)
CONDENSER ASSEMBLY — CAB (WITH A/C)

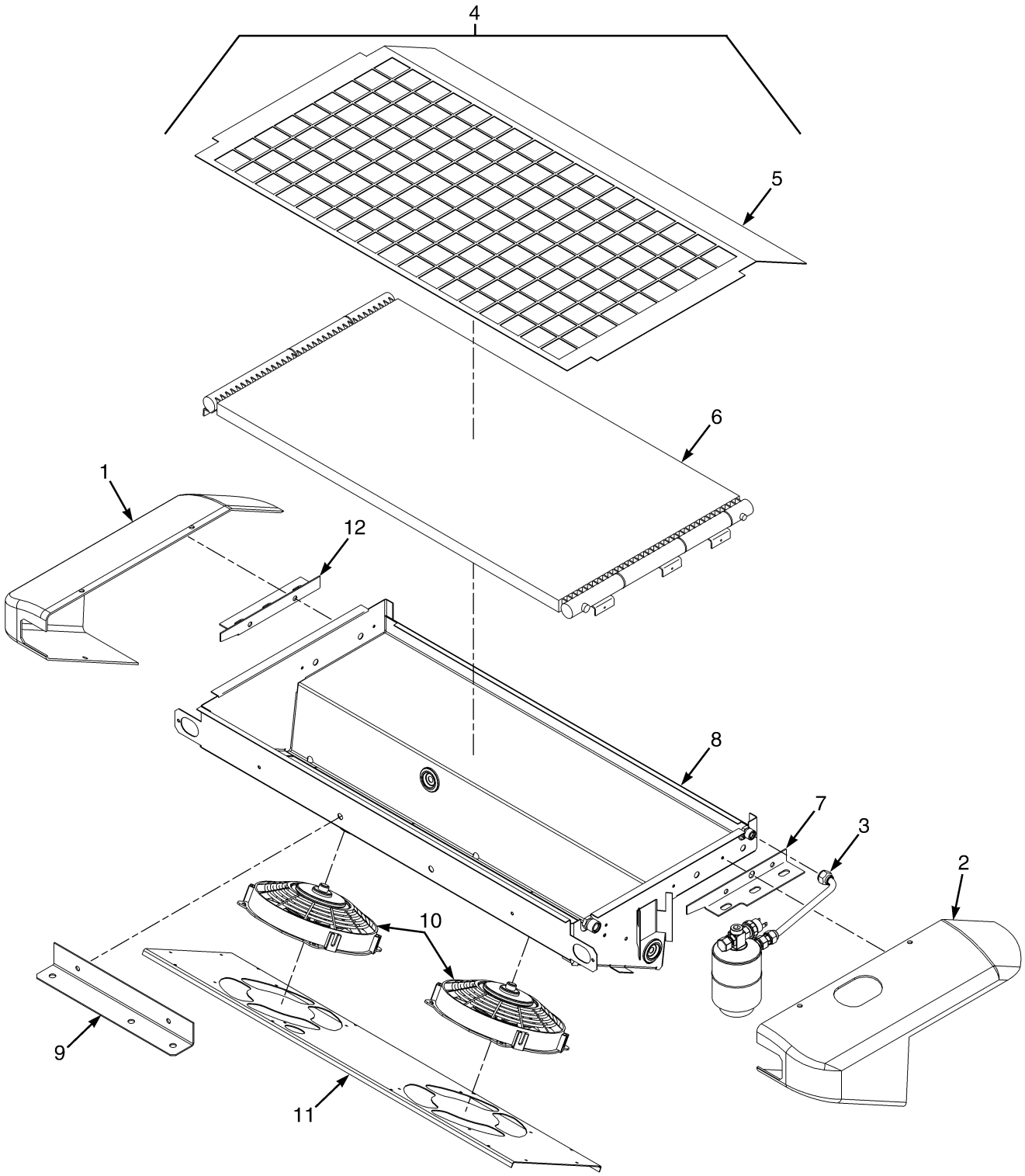

BP120637

©2013 HYSTER COMPANY

CAB

CONDENSER ASSEMBLY – CAB (WITH A/C)

ITEM	PART NO.	DESCRIPTION	QTY
1	4007133	Cover	1
2	4007132	Cover	1
3	4007134	Air Dryer	1
4	4007135	Condenser (Assembly)	1
5	4007145	Cover	1
6	4003079	Condenser	1
7	4007141	Bracket	1
8	4007139	Case	1
9	4007140	Bracket	1
10	4007138	Fan	2
11	4007143	Plate	1
12	4007144	Bracket	1
	a 4007142	Relay	1
	a 4002509	Cap	1
	a 4007147	Clip	1
	a 4002504	Clamp	1
	a 4007209	Wire Harness	1
	a 4007210	Wire Harness	1
	a 4007211	Wire Harness	1
	a 4007212	Filter	1
	a 4007213	Fuse	1

FOOTNOTES:

a Not Illustrated

©2013 HYSTER COMPANY

CAB (FIGURE 1-24)
WINDOWS AND WINDOW WIPER SYSTEM (S/N L177B11273D →)

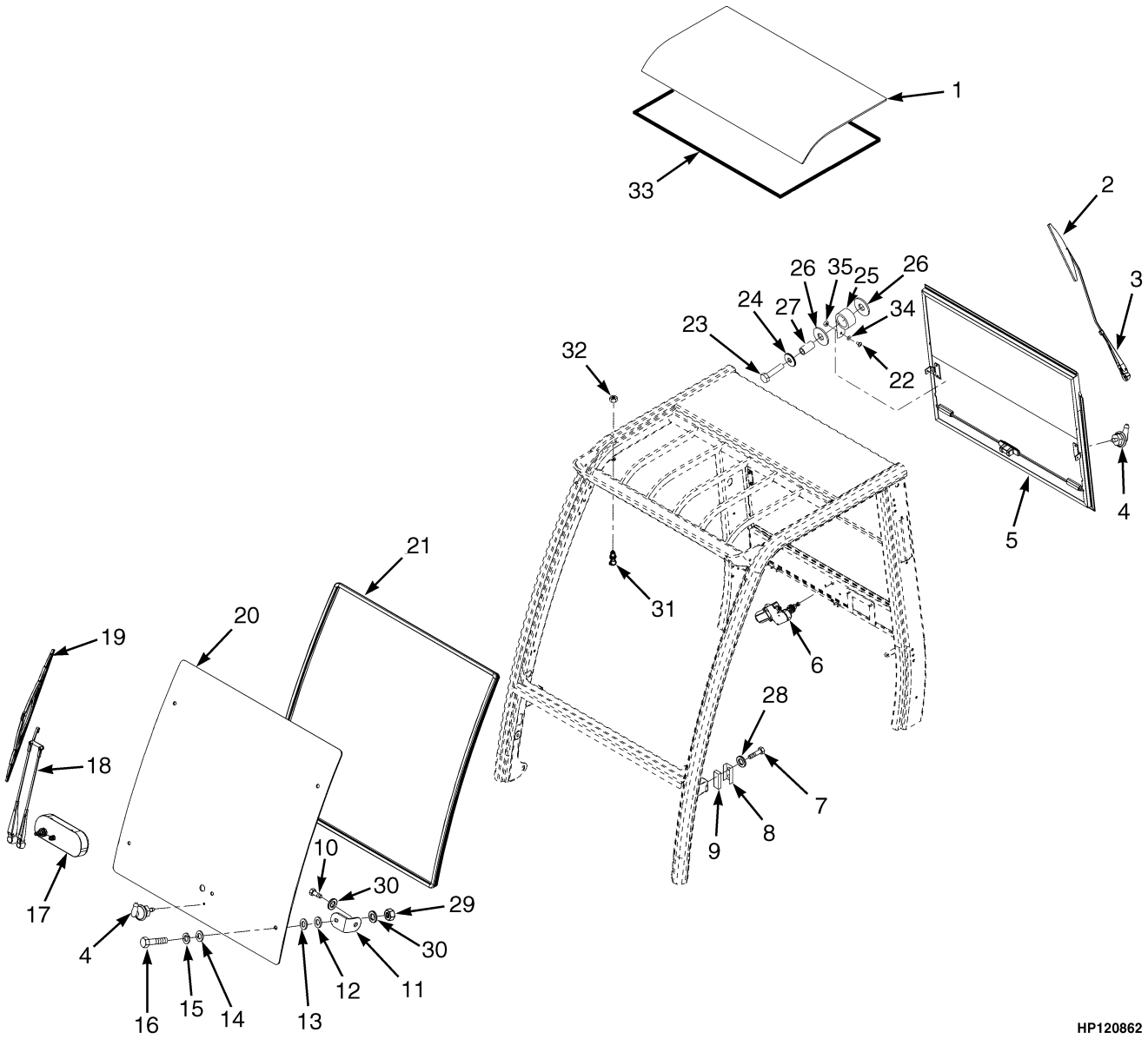

©2013 HYSTER COMPANY

CAB

WINDOWS AND WINDOW WIPER SYSTEM (S/N L177B11273D →)

ITEM	PART NO.	DESCRIPTION	QTY
	d 1641493	Cab (With Steel Doors)	1
	e 4049136	Cab (With Steel Doors)	1
	4049138	Cab (With PVC Doors)	1
	4049137	Cab (With A/C)	1
1	1598293	Window (Roof)	1
2	1598297	Wiper Blade (Rear)	1
3	1598296	Wiper Arm (Rear)	1
4	1493336	Connector (Spray Nozzle)	2
5	1598290	Sliding Window (Rear)	1
5	1615998	Latch (Contains one center, two end latches and springs)	1
5	1615999	Spring	2
5	1615813	Bar	1
6	1598295	Wiper Motor (Rear)	1
6	1645316	Kit-Wiper Motor	1
6	1645317	Kit-Wiper Motor	1
7	1639003	Striker Bolt	2
7	**a** 1653630	Striker Bolt	1
8	1393541	Guard	2
8	**a** 1674101	Spacer	2
9	1504953	Block (Tapped)	2
10	1623364	Capscrew	4
11	1598210	Bracket	4
12	1598211	Washer	4
13	1468317	Washer	4
14	1468316	Washer	4
15	1468315	Washer	4
16	1468314	Screw	4
17	**b** 1598294	Wiper Motor (Front)	1
17	**b** 1645315	Kit-Front Wiper Motor Mounting	1
17	**c** 1669224	Wiper Motor (Front)	1
18	**b** 1598298	Wiper Arm (Front)	1
18	**c** 1690933	Wiper Arm (Front)	1
19	**b** 1598299	Wiper Blade (Front)	1
19	**c** ~~1493340~~		
	1690934	Wiper Blade (Front)	1
20	**b** 1598209	Front Window	1
20	**c** 1667630	Front Window	1
21	1495441	Seal	AR
22	302019	Screw	2
23	1598291	Capscrew	2
24	1558052	Washer	2
25	1598302	Spring	2
26	1598301	Bushing	4
27	1623366	Sleeve	2
28	1571029	Washer	2
29	239503	Nut	4
30	320158	Washer	4
31	1393472	Ball Stud	2
32	316835	Nut	2
33	1623377	Seal	AR

©2013 HYSTER COMPANY

CAB

WINDOWS AND WINDOW WIPER SYSTEM (S/N L177B11273D →)

ITEM	PART NO.	DESCRIPTION	QTY
33	**a** 1674088	Seal	AR
34	296415	Washer	2
35	292667	Nut	2
	1674109	Kit-Repair (Glue)	AR
	1667632	Cover	1

FOOTNOTES:

a Cab with A/C only
b Center Mounted Wiper Motor
c Off Center Mounted Wiper Motor
d S/N L177B12273D ↔ S/N L177B16119E
e S/N L177B16120E →

©2013 HYSTER COMPANY

NOTES

©2013 HYSTER COMPANY

NON-SUSPENSION SEAT (FIGURE 1-25)

WITHOUT ELECTRONIC CONTROLS (S/N L177B01401 ↔ S/N L177B01501)

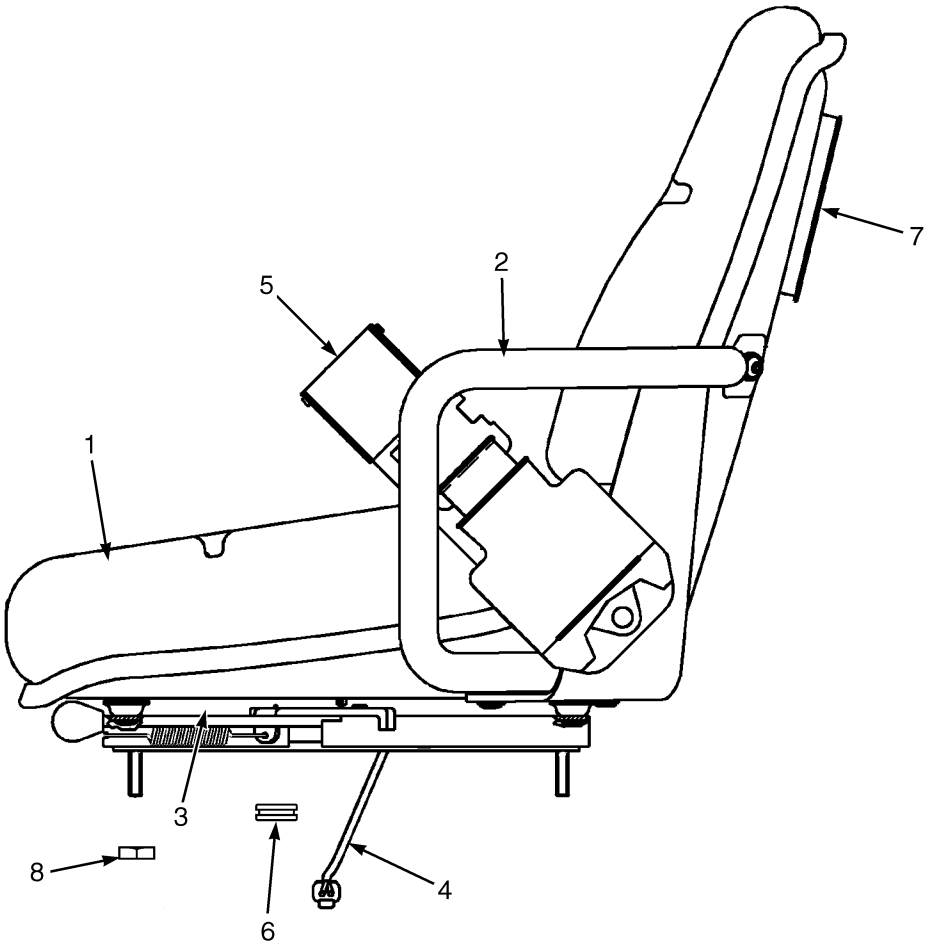

BP120096

©2013 HYSTER COMPANY

NON-SUSPENSION SEAT

WITHOUT ELECTRONIC CONTROLS (S/N L177B01401 ↔ S/N L177B01501)

ITEM	PART NO.	DESCRIPTION	QTY
	1585987	Seat-Non Suspension (Vinyl)	1
	1585988	Seat-Non Suspension (Cloth)	1
1	1563351	Kit-Seat Cushion (Vinyl)	1
1	1563222	Kit-Seat Cushion (Cloth)	1
1	1563215	Sensor (Operator Presence) (Not Illustrated)	1
2	1563217	Hip Restraint (RH)	1
2	1563216	Hip Restraint (LH)	1
3	1459173	Kit-Seat Rail	1
4	2089673	Wire Harness	1
5	1470158	Kit-Seat Belt	1
6	392238	Grommet	1
7	1584060	Box	1
8	191941	Nut	4

©2013 HYSTER COMPANY

CAB (FIGURE 1-26)
INTERIOR PANELS (→ S/N L177B11272D)

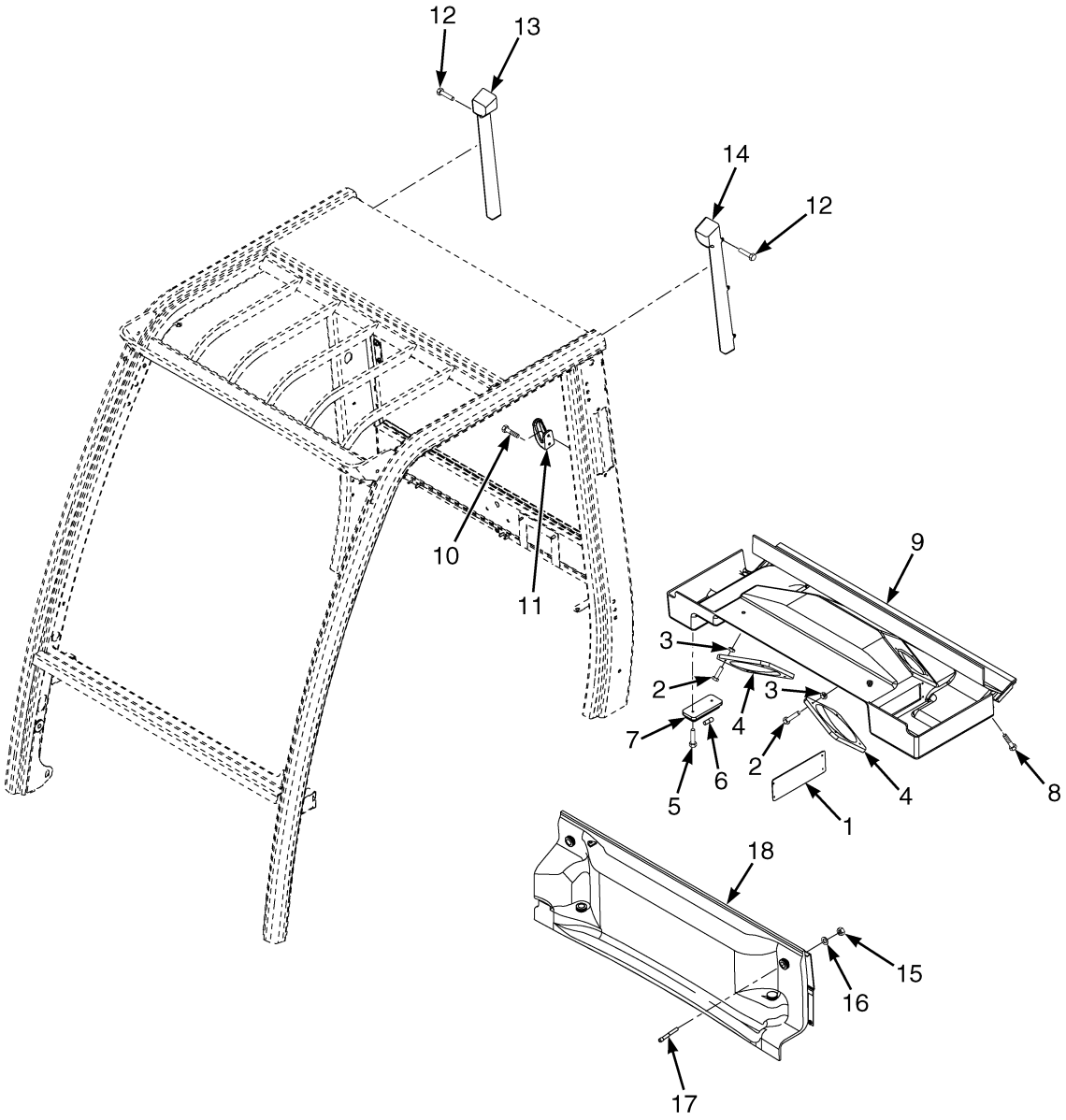

BP200217

©2013 HYSTER COMPANY

CAB

INTERIOR PANELS (→ S/N L177B11272D)

ITEM	PART NO.	DESCRIPTION	QTY
	1519232	Cab (Assembly)	1
1	1571628	Cover	1
2	1468320	Screw	8
3	1598420	Nut	8
4	1598421	Cover (Speaker)	2
5	1468319	Screw	2
6	1393527	Bulb	1
7	1393528	Dome Light	1
8	1493308	Bolt	4
9	1598422	Headliner	1
10	1598423	Screw	2
11	1393458	Hanger	1
12	1468319	Screw	6
13	1598424	Support (RH)	1
14	1598425	Support (LH)	1
15	1598426	Nut	4
16	320158	Washer	4
17	1598427	Capscrew	4
18	1598428	Cover	1

©2013 HYSTER COMPANY

CAB (FIGURE 1-27)
INTERIOR PANELS (S/N L177B11273D →)

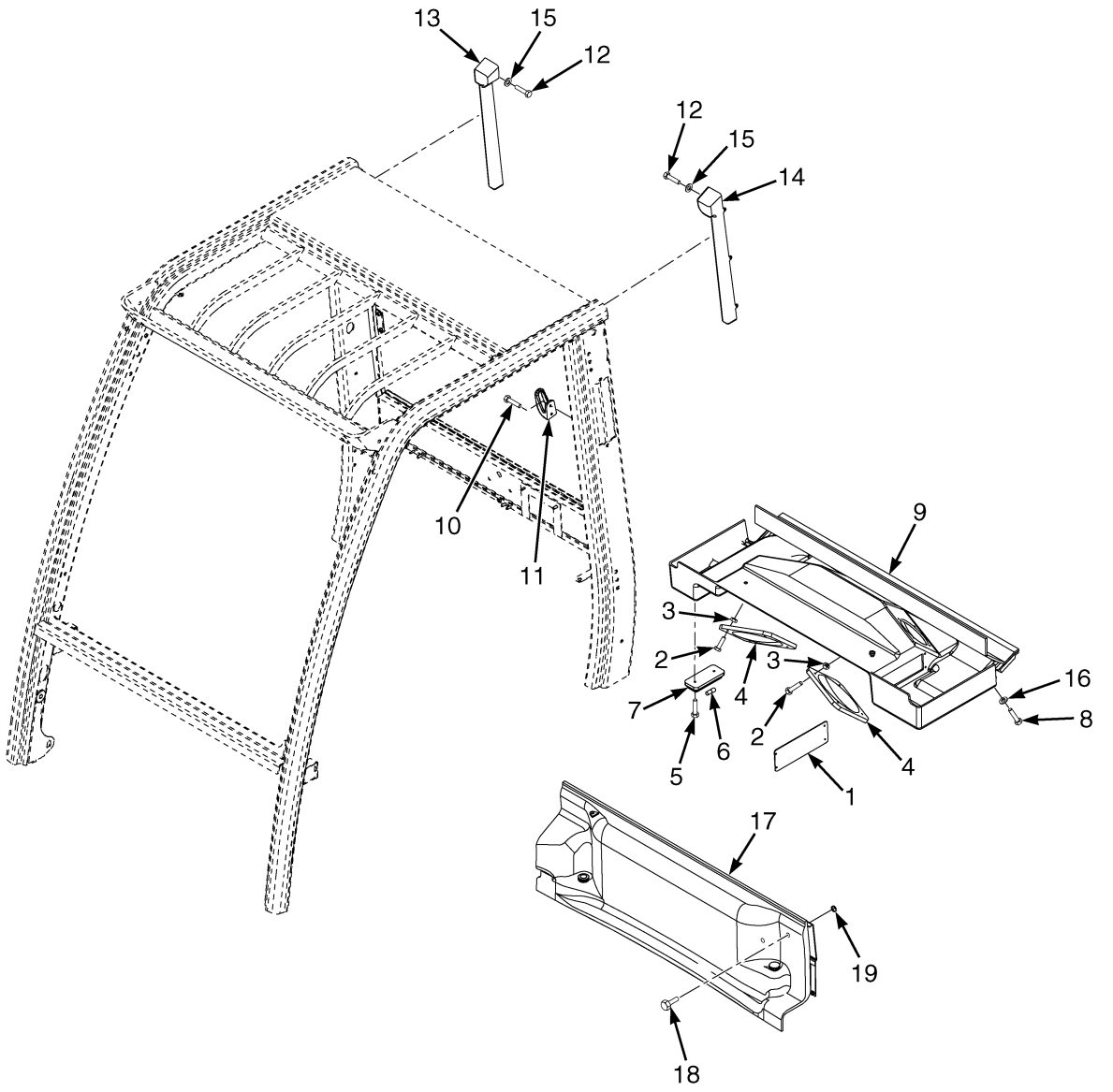

©2013 HYSTER COMPANY

CAB

INTERIOR PANELS (S/N L177B11273D →)

ITEM	PART NO.	DESCRIPTION	QTY
	a 1641493	Cab (With Steel Doors)	1
	b 4049136	Cab (With Steel Doors)	1
	4049138	Cab (With PVC Doors)	1
	4049137	Cab (With A/C)	1
1	1571628	Cover (Radio)	1
2	1468320	Screw	8
3	1598420	Nut	8
4	1598421	Cover (Speaker) (Speakers)	2
5	1468319	Screw	2
6	1393527	Bulb	1
7	1393528	Dome Light	1
8	1623364	Capscrew	4
9	1598422	Headliner	1
10	1623370	Screw	2
11	1393458	Hanger	1
12	1468319	Screw	6
13	1598424	Support (RH)	1
14	1598425	Support (LH)	1
15	296415	Washer	6
16	296419	Washer	4
17	1641054	Cover	1
18	1598427	Capscrew	2
18	4009578	Screw (Alternate Part)	2
19	1623396	Fastener	2
19	1651739	Rivet (Alternate Part)	2

FOOTNOTES:

a S/N L177B12273D ↔ S/N L177B16119E

b S/N L177B16120E →

NON SUSPENSION SEAT (FIGURE 1-28)

WITHOUT ELECTRONIC CONTROLS (S/N L177B01501 ↔ S/N L177V04457H EXC. 04450)

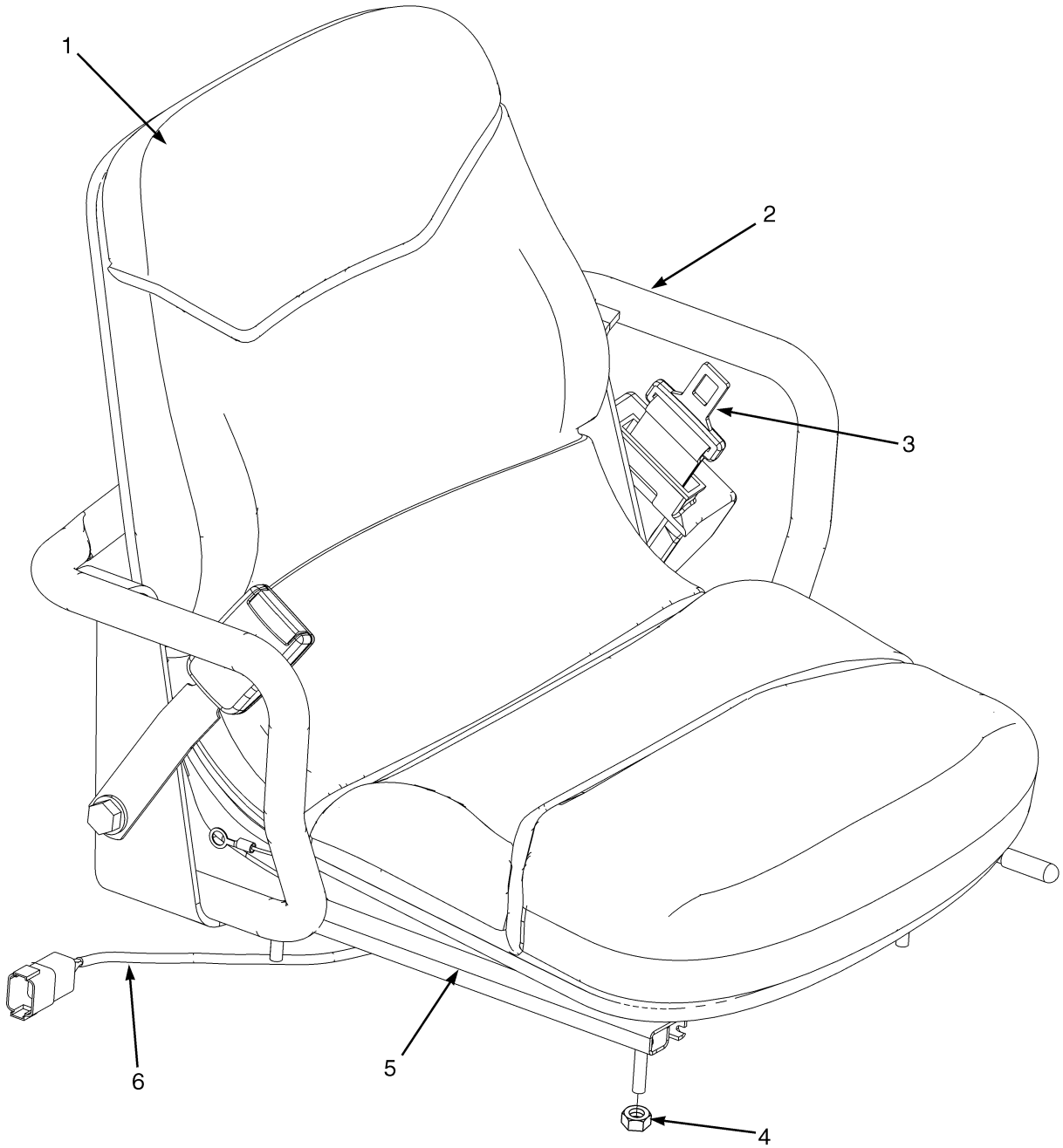

BP120126

©2013 HYSTER COMPANY

NON SUSPENSION SEAT

WITHOUT ELECTRONIC CONTROLS (S/N L177B01501 ↔ S/N L177V04457H EXC. 04450)

ITEM	PART NO.	DESCRIPTION	QTY
	b 1593433	Seat-Non Suspension (Vinyl)	1
	d 2102122	Seat-Non Suspension Assembly (Vinyl)	1
	e 2103360	Seat-Non Suspension (Vinyl)	1
	1593434	Seat-Non Suspension (Cloth) (Cloth)	1
1	1563351	Kit-Seat Cushion (Vinyl)	1
1	1563222	Kit-Seat Cushion (Cloth)	1
1	**c** 1563215	Sensor (Operator Presence)	1
1	**e** 1709876	Sensor (Operator Presence)	1
	a 4002682	Bracket (Operator Presence Sensor)	1
2	1563217	Hip Restraint (RH)	1
2	1563216	Hip Restraint (LH)	1
3	1598504	Kit-Seat Belt (Black)	1
3	1636120	Kit-Red Seat Belt	1
4	**c** 191941	Nut	4
4	**e** 302400	Nut	1
5	**c** 1459173	Kit-Seat Rail	1
5	**e** 1690996	Kit-Seat Rail	1
6	1591652	Wire Harness	1
	a 335988	Information Case	1
	a 335991	Cover (Information Case)	1
	a 4002682	Bracket (OPS)	1
	a 1677286	Stud	4

FOOTNOTES:

a Not Illustrated
b → S/N L177V01609F INC. 01633, 01661
c → S/N L177V03001G INC. 03140, 03145, 03149
d S/N L177V01610F → EXC. 01633, 01661
e S/N L177V03002G → EXC. 03140, 03145, 03149

©2013 HYSTER COMPANY

NON SUSPENSION SEAT (FIGURE 1-29)

WITHOUT ELECTRONIC CONTROLS (S/N L177V04458H → INC. 04450)

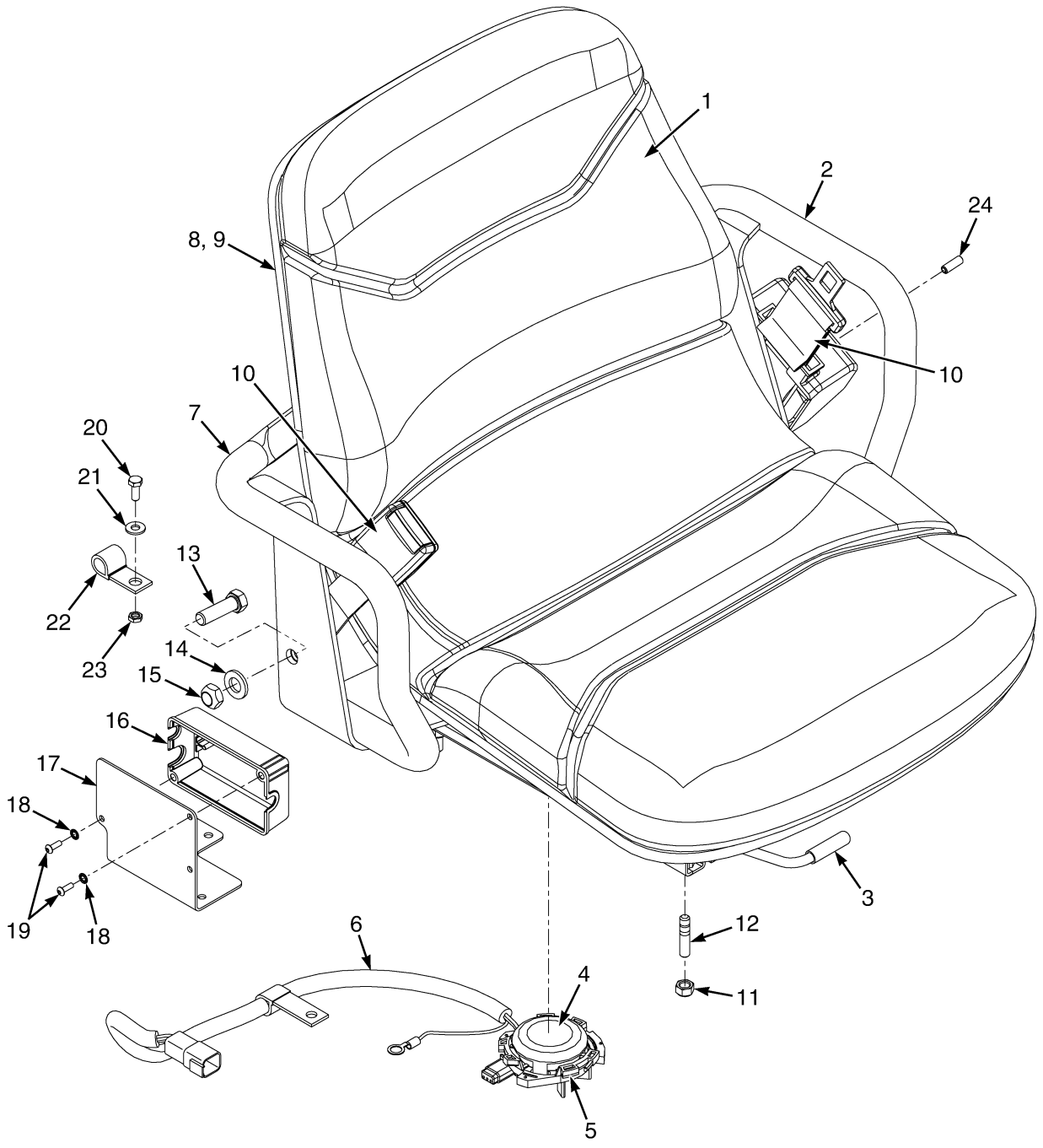

©2013 HYSTER COMPANY

NON SUSPENSION SEAT

WITHOUT ELECTRONIC CONTROLS (S/N L177V04458H → INC. 04450)

ITEM	PART NO.	DESCRIPTION	QTY
	4603376	Seat-Non Suspension (Vinyl)	1
1	1563351	Kit-Seat Cushion (Vinyl)	1
2	1563216	Hip Restraint (LH)	1
3	1690996	Kit-Seat Rail	1
4	1709876	Sensor (Operator Presence)	1
5	4002682	Bracket (Operator Presence Sensor)	1
6	4013095	Wire Harness	1
7	1563217	Hip Restraint (RH)	1
8	1584060	Box	1
9	1482950	Cover	1
10	1598504	Kit-Seat Belt (Black)	1
10	1636120	Kit-Red Seat Belt	1
11	313828	Nut	4
12	1677286	Stud	4
13	221536	Capscrew	2
14	1581852	Washer	6
15	221353	Locknut	2
16	2107969	Cover (Seat-Side Electrical)	1
17	4007891	Cover Plate	1
18	296357	Washer	2
19	1694830	Capscrew	2
20	292500	Capscrew	2
21	15127	Washer	1
22	272133	Clamp	1
23	1593334	Nut	2

©2013 HYSTER COMPANY

CAB (FIGURE 1-30)
FRAME AND ATTACHING PARTS (→ S/N L177B11272D)

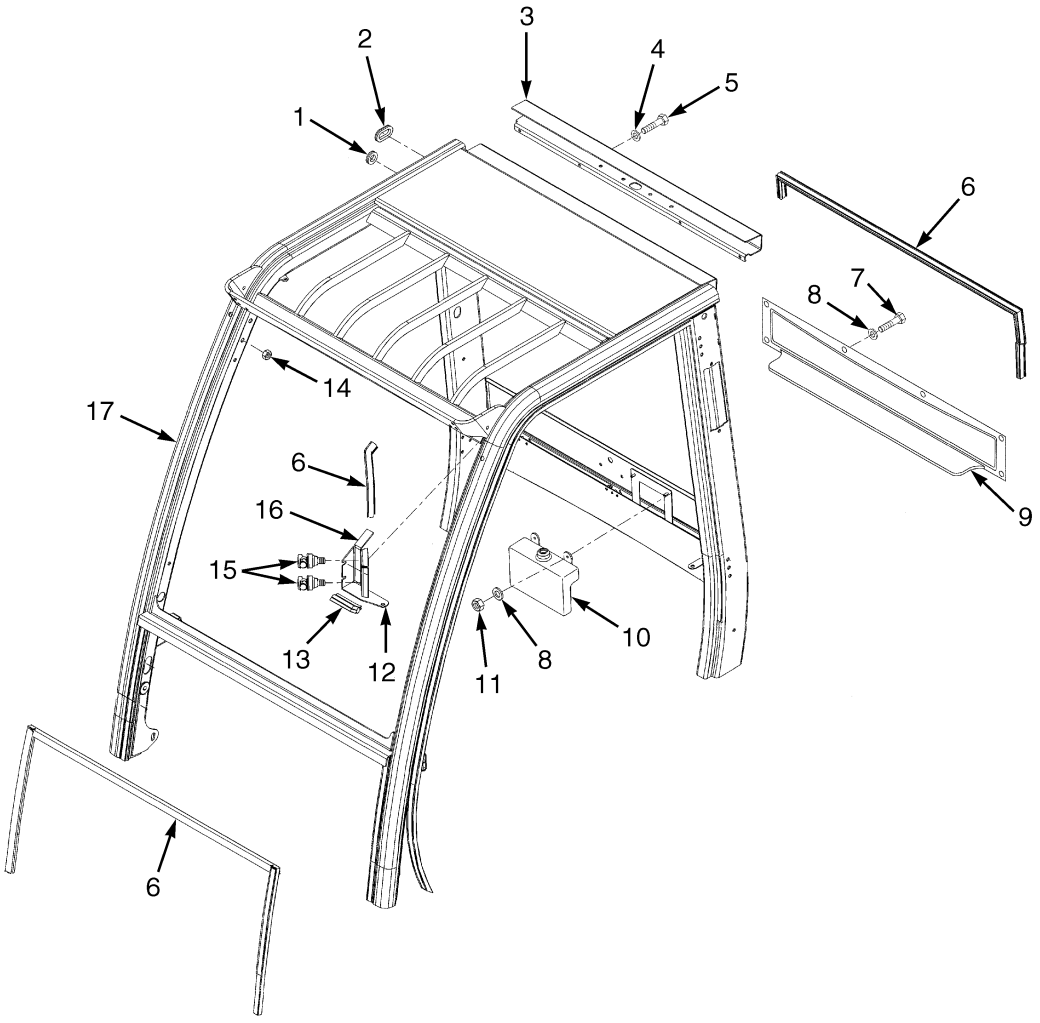

©2013 HYSTER COMPANY

CAB

FRAME AND ATTACHING PARTS (→ S/N L177B11272D)

ITEM	PART NO.	DESCRIPTION	QTY
	1519232	Cab (Assembly)	1
1	1579116	Grommet	3
2	1598332	Grommet	2
3	1598321	Cover	1
4	320158	Washer	4
5	136681	Capscrew	4
6	1515337	Seal	AR
7	1571775	Screw	5
8	320156	Washer	7
9	. . . . .	Cover (Rear)	1
10	1598329	Reservoir (Washer Bottle with Pump)	1
11	136687	Nut	2
12	1598323	Screw	2
13	1393539	Seal	AR
14	1468308	Nut	6
15	~~1670529~~		
	1598327	Connector (Female)	2
16	1598325	Bracket	1
17	. . . . .	Frame	1

©2013 HYSTER COMPANY

NON SUSPENSION SEAT (FIGURE 1-31)
WITHOUT ELECTRONIC CONTROLS — OPTIONAL

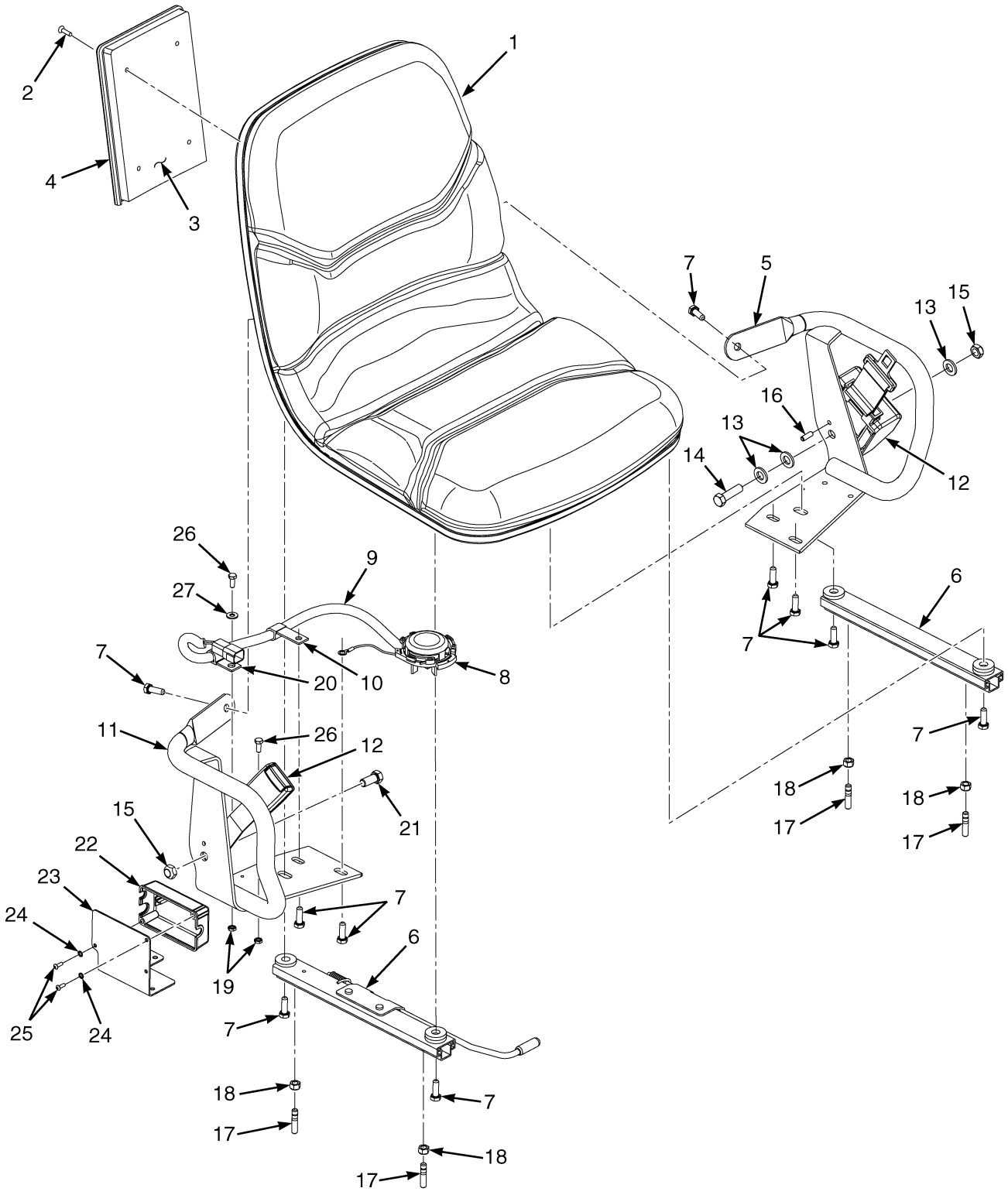

©2013 HYSTER COMPANY

NON SUSPENSION SEAT
WITHOUT ELECTRONIC CONTROLS – OPTIONAL

ITEM	PART NO.	DESCRIPTION	QTY
	4615812	Seat-Non Suspension (Vinyl)	1
1	4615813	Seat-Non Suspension (Base)	1
2	296463	Screw	4
3	4030278	Box (Operator Manual Storage)	1
4	4030279	Cover (Manual Storage Box)	1
5	. . . . .	Hip Restraint (LH)	1
6	4618438	Seat Rail (Assembly)	2
7	136749	Screw	10
8	4615811	Sensor (Operator Presence) (Operator Presence)	1
9	4615969	Wire Harness (Operator Presence System)	1
10	1479453	Clamp	1
11	. . . . .	Hip Restraint (RH)	1
12	1598504	Kit-Seat Belt (Black)	1
12	1636120	Kit-Red Seat Belt	1
13	1581852	Washer	3
14	221536	Capscrew	1
15	221353	Locknut	2
16	19901	Roll Pin	1
17	1677286	Stud	4
18	313828	Nut	4
19	1593334	Nut	2
20	272133	Clamp	1
21	221530	Capscrew	1
22	2107969	Cover (Seat-Side Electrical)	1
23	4007891	Cover Plate	1
24	296357	Washer	2
25	1694830	Capscrew	2
26	292500	Capscrew	2
27	15127	Washer	1

©2013 HYSTER COMPANY

CAB (FIGURE 1-32)
FRAME AND ATTACHING PARTS (S/N L177B11273D →)

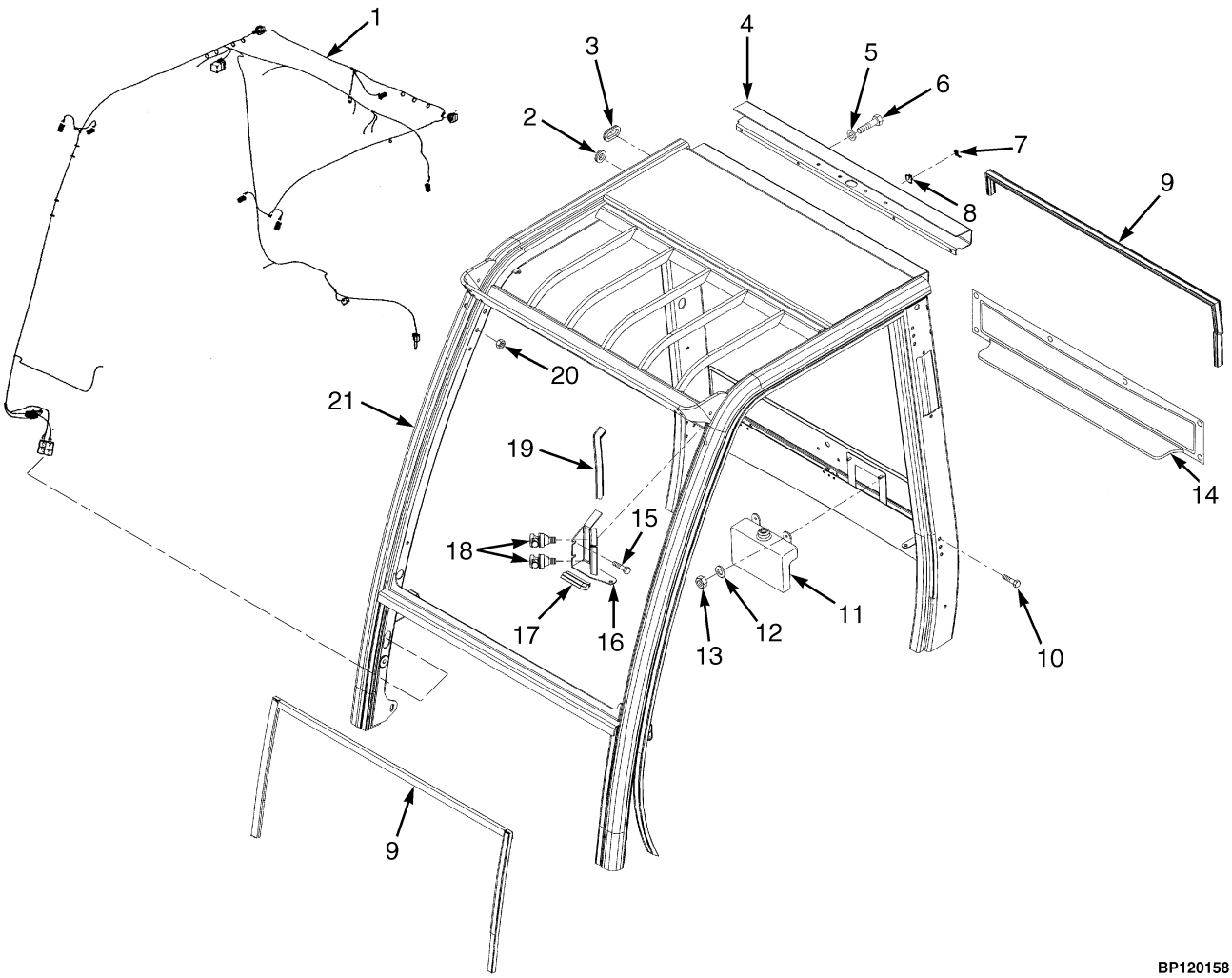

©2013 HYSTER COMPANY

CAB

FRAME AND ATTACHING PARTS (S/N L177B11273D →)

ITEM	PART NO.	DESCRIPTION	QTY
	b 1641493	Cab (With Steel Doors)	1
	c 4049136	Cab (With Steel Doors)	1
	4049138	Cab (With PVC Doors)	1
1	1598333	Wire Harness	1
1	2044712	Relay (30 Amp)	1
2	1579116	Grommet	2
3	1598332	Grommet	3
4	1639004	Cover (Cable)	1
5	320158	Washer	4
6	136681	Capscrew	4
7	1558036	Clip	3
8	1393499	Clamp	3
9	1515337	Seal	AR
10	1493308	Bolt	12
11	1598329	Reservoir (Washer Bottle with Pump)	1
12	320156	Washer	7
13	136687	Nut	2
14	1598668	Cover (Rear)	1
15	**a** 1583611	Capscrew	2
16	**a**	Heater Hose Bulkhead	1
16	**a** 1643584	Bracket	1
16	**a** 1393539	Seal	AR
17	1515337	Seal	AR
18	~~1670529~~		
	1598327	Connector (Female)	2
19	1614926	Strip Seal	1
20	1468308	Nut	6
21	. . . . .	Frame	1

FOOTNOTES:

a With PVC Doors
b S/N L177B12273D ↔ S/N L177B16119E
c S/N L177B16120E →

©2013 HYSTER COMPANY

SEMI-SUSPENSION SEAT (FIGURE 1-33)

WITH AND WITHOUT ELECTRONIC CONTROLS (S/N L177B01401 ↔ S/N L177B01501)

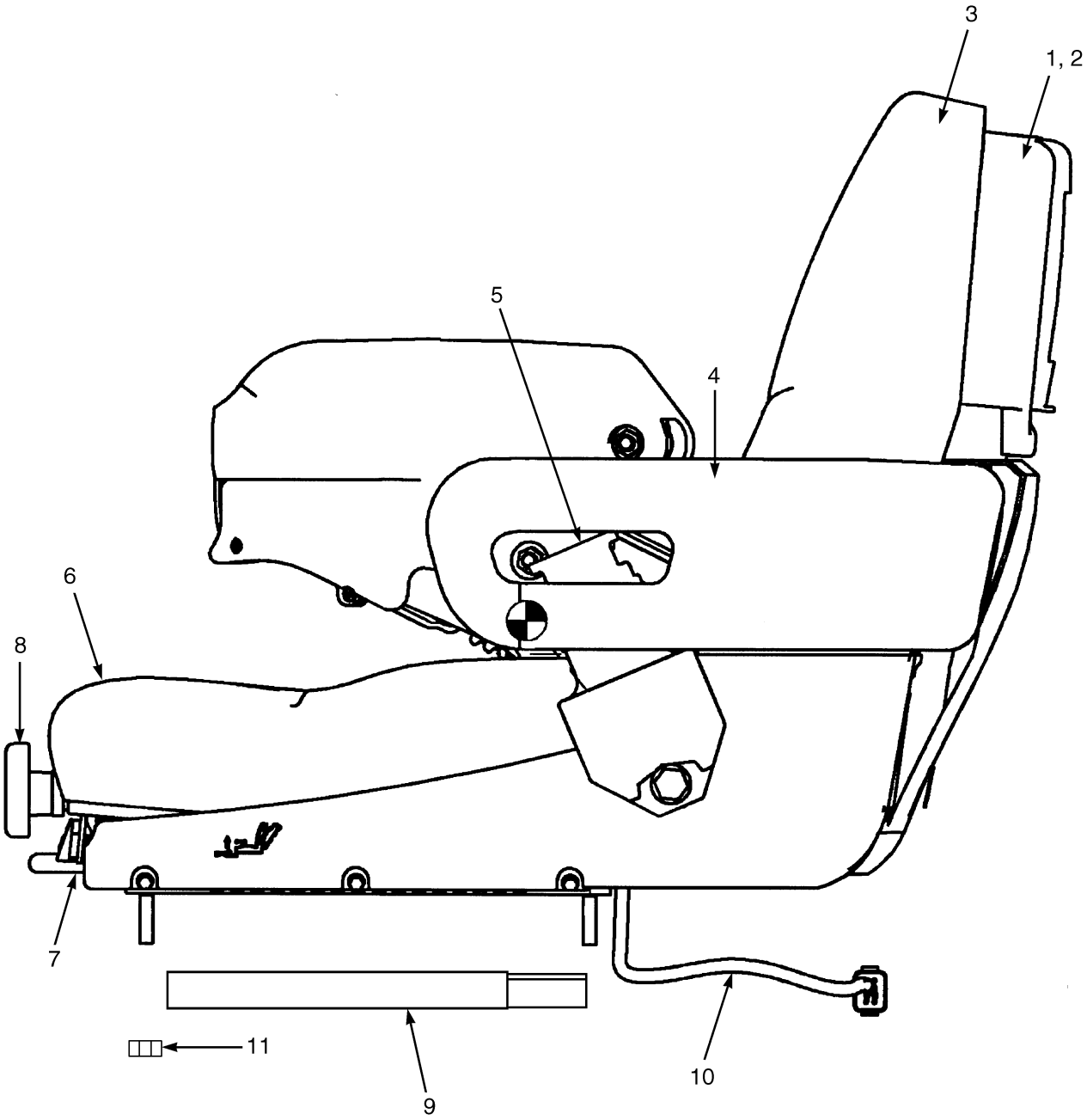

BP120087

©2013 HYSTER COMPANY

SEMI-SUSPENSION SEAT

WITH AND WITHOUT ELECTRONIC CONTROLS (S/N L177B01401 ↔ S/N L177B01501)

KEY:
A: Without Arm Controls
B: With Arm Controls

ITEM	PART NO.	DESCRIPTION	QTY A	QTY B
1	1585989	Seat-Semi Suspension (Vinyl)	1	..
1	1585990	Seat-Semi Suspension (Cloth)	1	..
1	1585981	Seat-Semi Suspension (Vinyl)	..	1
1	1585982	Seat-Semi Suspension (Cloth)	..	1
2	1362058	Kit-Manual Holder	1	1
	a 1374190	Cover (Manual Cover)	1	1
3	1382111	Seat Cushion (Back Cushion) (Vinyl)	1	1
3	1382113	Seat Cushion (Back Cushion) (Cloth)	1	1
4	1563224	Hip Restraint (LH) (LH)	1	1
4	1563225	Hip Restraint (RH) (RH)	1	..
5	1470158	Kit-Seat Belt	1	1
6	1382112	Seat Cushion (Vinyl)	..	1
6	1382114	Seat Cushion (Cloth)	..	1
7	1483023	Guide	1	1
8	1563227	Knob	1	1
9	1459173	Kit-Seat Rail	1	1
10	2075428	Wire Harness (With Electronic Controls)	..	1
10	2089673	Wire Harness (With Hip Restraints)	1	..
11	191941	Nut	4	4
	a 1563211	Knob (Electronic Control Arm)	..	1
	a 1362049	Kit-Shock Absorber	1	1
	a 1563215	Sensor (Operator Presence)	1	1
	a 1563210	Cap (Electronic Control Arm)	..	1

FOOTNOTES:

a Not Illustrated

©2013 HYSTER COMPANY

CAB (FIGURE 1-34)
FRAME AND ATTACHING PARTS — CAB WITH A/C

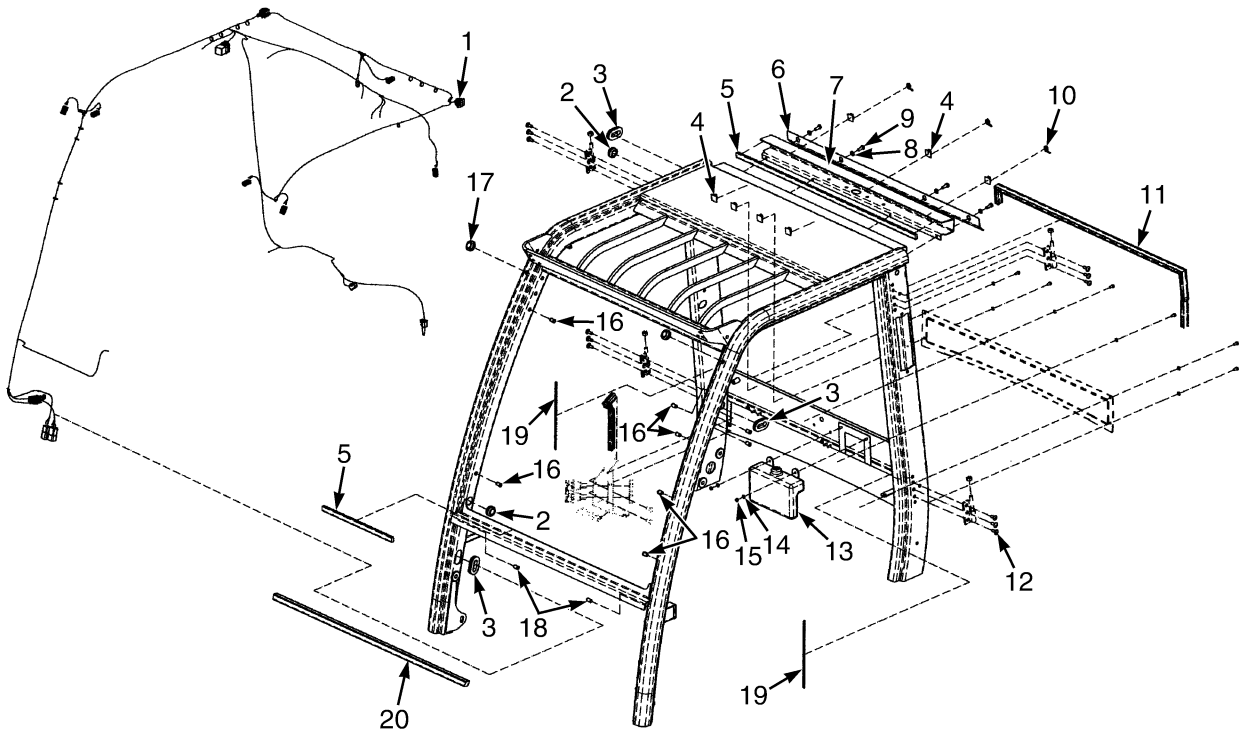

©2013 HYSTER COMPANY

CAB

FRAME AND ATTACHING PARTS – CAB WITH A/C

ITEM	PART NO.	DESCRIPTION	QTY
	1598415	Cab	1
1	1598333	Wire Harness	1
2	1646729	Grommet	2
3	1598332	Grommet	3
4	1558036	Clip	7
5	1646726	Seal	AR
6	1690936	Cover	1
7	1639004	Cover	1
8	. . . . .	Washer	4
9	136681	Capscrew	4
10	1393499	Clamp	3
11	1515337	Seal	AR
12	1674103	Screw	12
13	1598329	Reservoir (Washer Bottle with Pump)	1
13	~~1705156~~		
	1635025	Pump	1
14	320156	Washer	2
15	136687	Nut	2
16	1674102	Rivet	9
17	1646728	Sleeve	2
18	. . . . .	Nut	1
19	1692589	Adhesive	AR
20	1674106	Seal	AR

©2013 HYSTER COMPANY

SEMI-SUSPENSION SEAT (FIGURE 1-35)

WITH AND WITHOUT ELECTRONIC CONTROLS (S/N L177B01501 ↔ 7/2006)

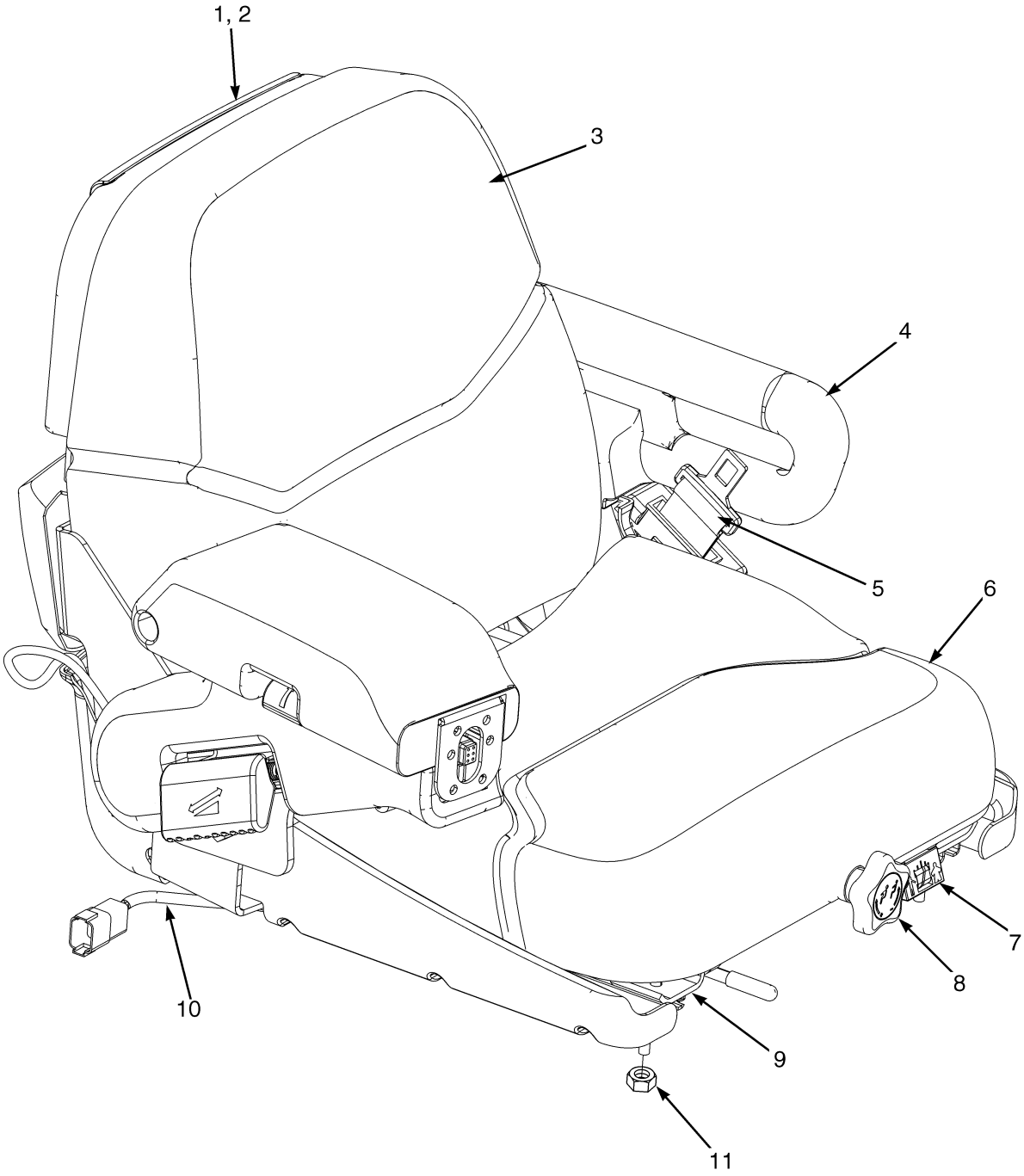

BP120128

©2013 HYSTER COMPANY

SEMI-SUSPENSION SEAT

WITH AND WITHOUT ELECTRONIC CONTROLS (S/N L177B01501 ↔ 7/2006)

KEY:
A: Without Arm Controls
B: With Arm Controls

ITEM	PART NO.	DESCRIPTION	QTY A	QTY B
1	1593435	Seat-Semi Suspension (Vinyl) (Vinyl)	1	..
1	1593436	Seat-Semi Suspension (Cloth) (Cloth)	1	..
1	1593427	Seat-Semi Suspension (Vinyl) (Vinyl)	..	1
1	1593428	Seat-Semi Suspension (Cloth) (Cloth)	..	1
2	1362058	Kit-Manual Holder	1	1
2	1374190	Cover (Manual Cover)	1	1
3	1382111	Seat Cushion (Back Cushion) (Vinyl)	1	1
3	1382113	Seat Cushion (Back Cushion) (Cloth)	1	1
4	1563224	Hip Restraint (LH) (LH)	1	1
4	1563225	Hip Restraint (RH) (RH)	1	..
5	1598504	Kit-Seat Belt (Black)	1	1
5	1636120	Kit-Red Seat Belt	1	1
6	1382112	Seat Cushion (Vinyl)	1	1
6	1382114	Seat Cushion (Cloth)	1	1
7	1483023	Guide	1	1
8	1563227	Knob	1	1
9	1459173	Kit-Seat Rail	1	1
10	2075428	Wire Harness (With Electronic Controls)	..	1
10	1591652	Wire Harness (With Hip Restraints)	1	..
11	191941	Nut	4	4
	a 1563211	Knob (Electronic Control Arm)	..	1
	a 1362049	Kit-Shock Absorber	1	1
	a 1563215	Sensor (Operator Presence)	1	1
	a 1563210	Cap (Electronic Control Arm)	..	1

FOOTNOTES:

a Not Illustrated

©2013 HYSTER COMPANY

SEMI-SUSPENSION SEAT (FIGURE 1-36)

WITH AND WITHOUT ELECTRONIC CONTROLS (7/2006 ↔ S/N L177V04457H)

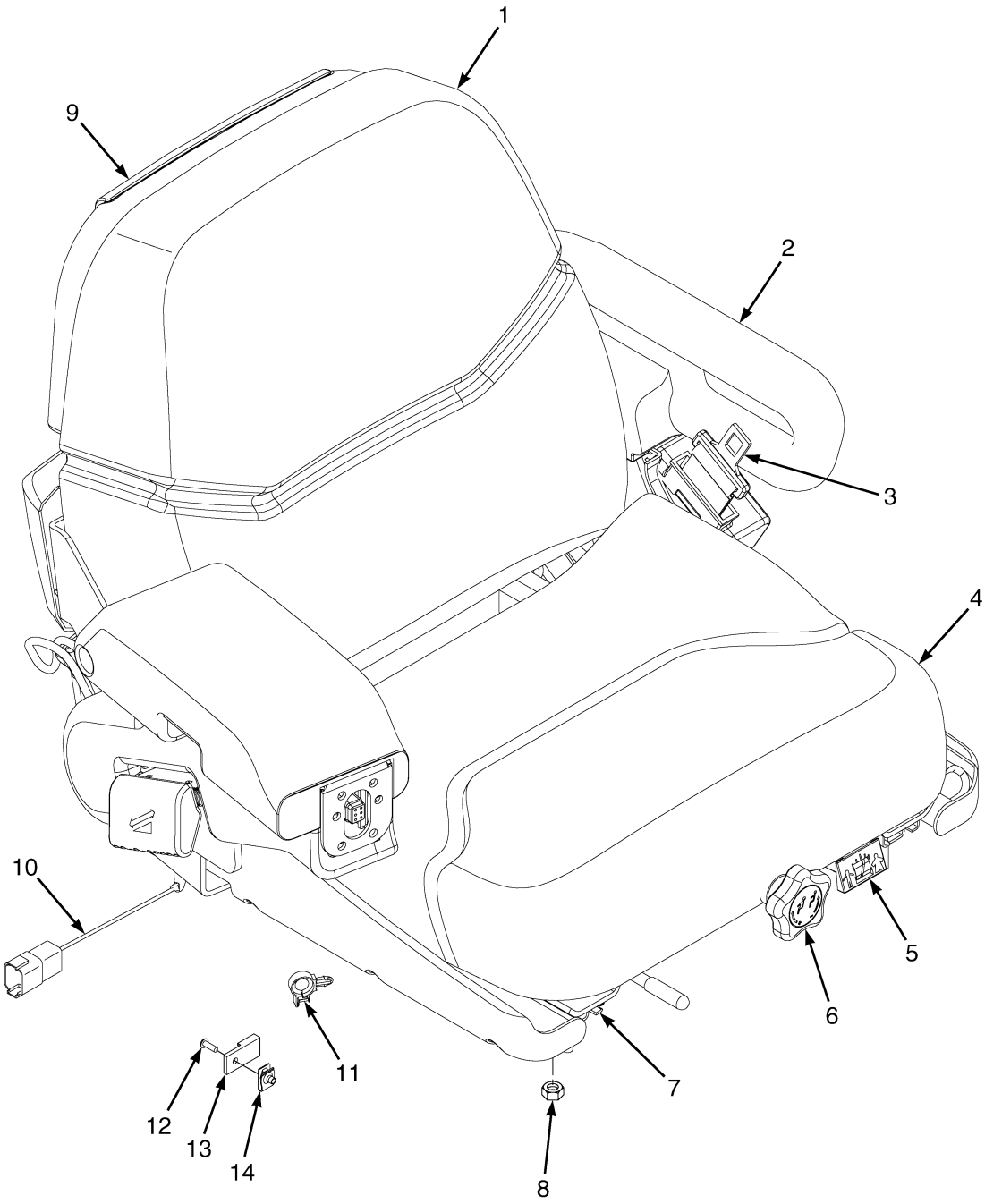

BP120290

©2013 HYSTER COMPANY

SEMI-SUSPENSION SEAT

WITH AND WITHOUT ELECTRONIC CONTROLS (7/2006 ↔ S/N L177V04457H)

KEY:
A: With Hip Restraints
B: With Electronic Control Arm

ITEM	PART NO.	DESCRIPTION	QTY A	QTY B
	1593435	Seat-Semi Suspension (Vinyl)	1	..
	c 2102126	Seat-Semi Suspension (Vinyl)	1	..
	e 2103364	Seat-Semi Suspension (Vinyl)	1	..
	1593436	Seat-Semi Suspension (Cloth)	1	..
	c 2102127	Seat-Semi Suspension (Cloth)	1	..
	e 2103365	Seat-Semi Suspension (Cloth)	1	..
	2085193	Seat-Semi Suspension (Vinyl)	..	1
	b 2102128	Seat-Semi Suspension (Vinyl)	..	1
	e 2103366	Seat-Semi Suspension (Vinyl)	..	1
	2085194	Seat-Semi Suspension (Cloth)	..	1
	d 2102129	Seat-Semi Suspension (Cloth)	..	1
	e 2103367	Seat-Semi Suspension (Cloth)	..	1
1	1382111	Seat Cushion (Back Cushion) (Vinyl)	1	1
1	1382113	Seat Cushion (Back Cushion) (Cloth)	1	1
2	1563224	Hip Restraint (LH) (LH)	1	1
2	1563225	Hip Restraint (RH) (RH)	1	..
3	1598504	Kit-Seat Belt (Black)	1	1
3	1636120	Kit-Red Seat Belt	1	1
4	1382112	Seat Cushion (Vinyl)	1	1
4	1382114	Seat Cushion (Cloth)	1	1
4	1563215	Sensor (Operator Presence)	1	1
4	1709876	Sensor (Operator Presence)	1	1
	a 4002682	Bracket (Operator Presence Sensor)	1	1
5	1483023	Guide	1	1
6	1563227	Knob	1	1
7	1459173	Kit-Seat Rail	1	1
7	1690995	Kit-Seat Rail	1	1
8	191941	Nut	4	4
8	302400	Nut	1	1
9	1362058	Kit-Manual Holder	1	1
9	1374190	Cover (Manual Cover)	1	1
10	1591652	Wire Harness	1	..
10	1654891	Wire Harness	..	1
11	1500901	Clip	1	1
12	296149	Capscrew	1	1
13	1500912	Clip	1	1
14	1537551	Nut (Clip)	1	1
	a 1362049	Kit-Shock Absorber	1	1
	a 1647532	Foam for Right hand Forearm Cushion/Rest	..	1
	a 1563211	Knob (Electronic Control Arm)	..	1
	1677286	Stud	4	4

©2013 HYSTER COMPANY

FOOTNOTES:

a Not Illustrated
b → S/N L177V01610F
c → S/N L177V01633F
d → S/N L177V01661F
e S/N L177V03002G → EXC. 03104, 03145, 03149

©2013 HYSTER COMPANY

NOTES

©2013 HYSTER COMPANY

SEMI-SUSPENSION SEAT (FIGURE 1-37)

WITH AND WITHOUT ELECTRONIC CONTROLS (S/N L177V04458H → INC. 04450)

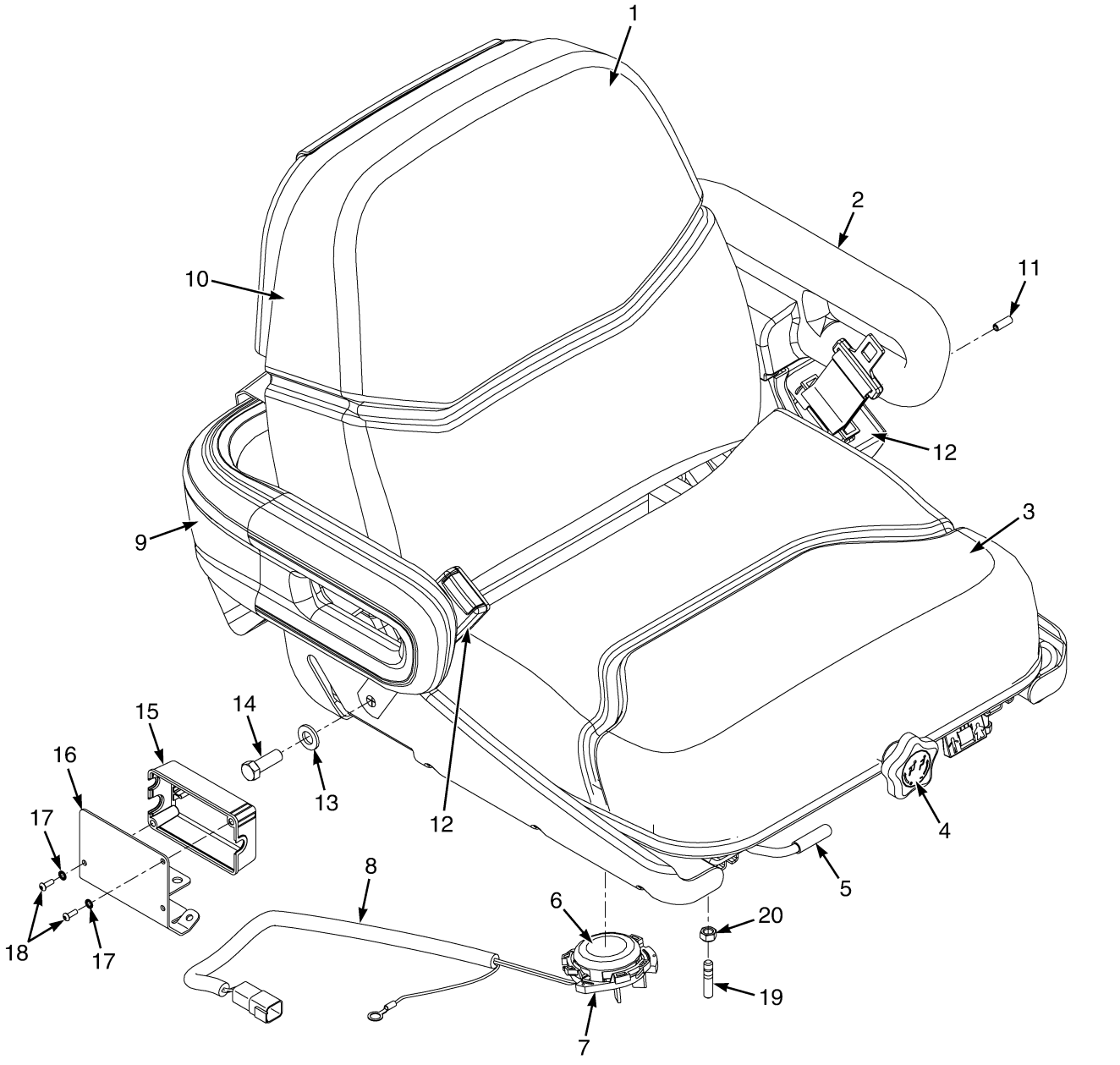

©2013 HYSTER COMPANY

SEMI-SUSPENSION SEAT

WITH AND WITHOUT ELECTRONIC CONTROLS (S/N L177V04458H → INC. 04450)

KEY:
A: With Hip Restraints
B: With Electronic Control Arm

ITEM	PART NO.	DESCRIPTION	QTY A	QTY B
	4601836	Seat-Semi Suspension (Vinyl)	1	..
	4601837	Seat-Semi Suspension (Cloth)	1	..
	4005807	Seat-Semi Suspension (Vinyl)	..	1
	4005808	Seat-Semi Suspension (Cloth)	..	1
1	1382111	Seat Cushion (Back Cushion) (Vinyl)	1	1
1	1382113	Seat Cushion (Back Cushion) (Cloth)	1	1
2	1563224	Hip Restraint (LH) (LH)	1	..
3	1382112	Seat Cushion (Vinyl)	1	1
3	1382114	Seat Cushion (Cloth)	1	1
4	1563227	Knob	1	1
5	1690995	Kit-Seat Rail	1	1
6	1709876	Sensor (Operator Presence)	1	1
7	4002682	Bracket (Operator Presence Sensor)	1	1
8	4013095	Wire Harness	1	1
9	1563225	Hip Restraint (RH) (RH)	1	..
9	4005010	Armrest (Slider for Mini Lever) (RH) (☞Figure 1-46)	..	1
10	1362058	Kit-Manual Holder	1	1
10	1374190	Cover (Manual Cover)	1	1
11	19901	Roll Pin	1	1
12	1598504	Kit-Seat Belt (Black)	1	1
12	1636120	Kit-Red Seat Belt	1	1
13	1581852	Washer	4	4
14	221533	Capscrew	2	2
15	2107969	Cover (Seat-Side Electrical)	1	1
16	4008420	Cover Plate	1	..
17	296357	Washer	2	2
18	1694830	Capscrew	2	2
19	1677286	Stud	4	4
20	313828	Nut	4	4
	a 221530	Capscrew	..	1
	a 221353	Locknut	..	1
	a 1362049	Kit-Shock Absorber	1	1

FOOTNOTES:

a Not Illustrated

©2013 HYSTER COMPANY

FULL SUSPENSION SEAT (FIGURE 1-38)

WITH AND WITHOUT ELECTRONIC CONTROLS (S/N L177B01401 ↔ S/N L177B01501)

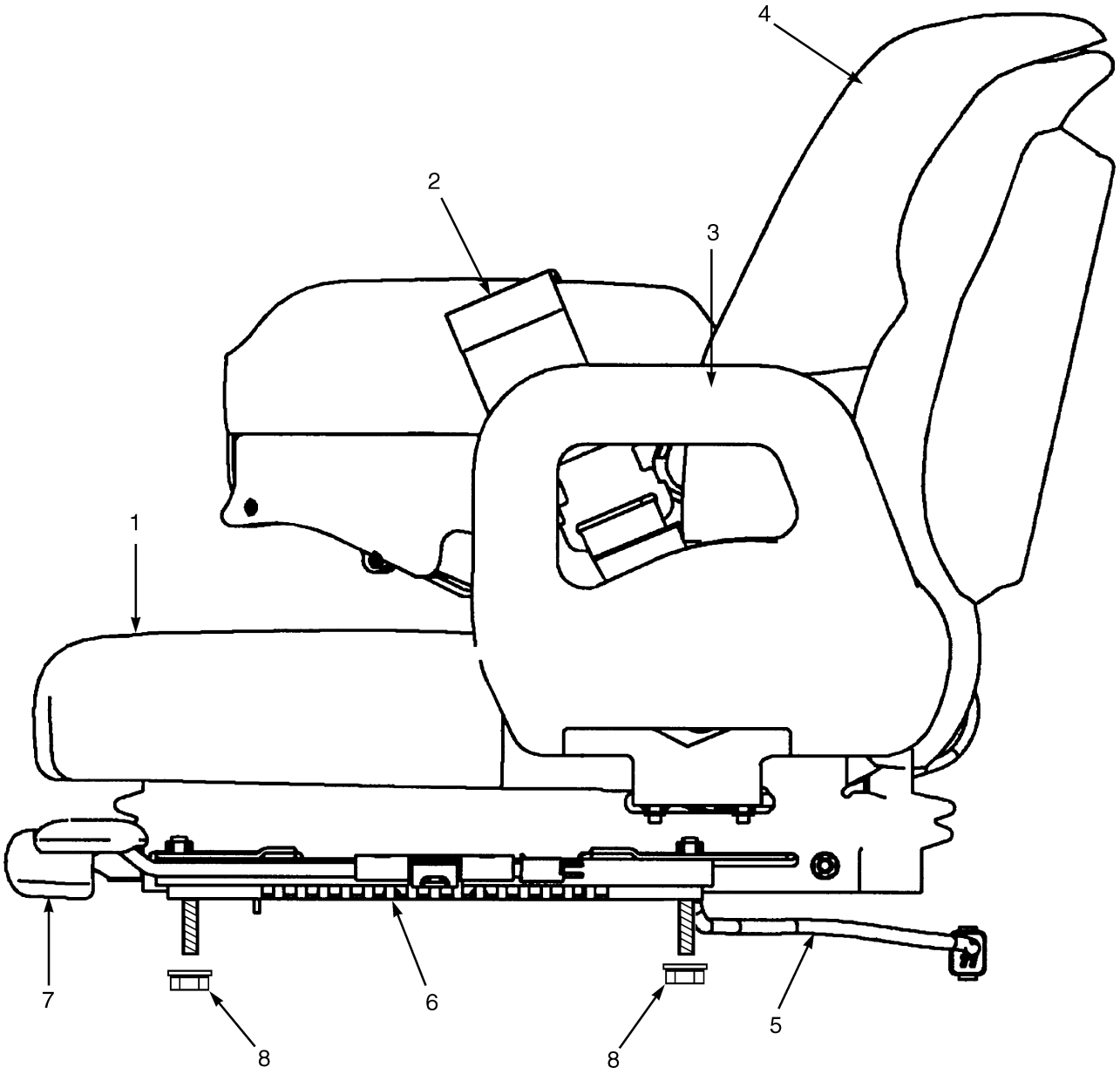

BP120092

©2013 HYSTER COMPANY

FULL SUSPENSION SEAT

WITH AND WITHOUT ELECTRONIC CONTROLS (S/N L177B01401 ↔ S/N L177B01501)

KEY:

A: Full Suspension (Vinyl)
B: Full Suspension (Cloth)
C: Full Suspension (Vinyl with Electronic Control Arm)
D: Full Suspension (Cloth with Electronic Control Arm)

ITEM	PART NO.	DESCRIPTION	QTY A	B	C	D
	1585979	Seat-Full Suspension (Vinyl)	1	..	..	..
	1585980	Seat-Full Suspension (Cloth)	..	1	..	..
	1585983	Seat-Full Suspension (Vinyl)	..	..	1	..
	1585984	Seat-Full Suspension (Cloth)	..	..	..	1
1	1563207	Seat Cushion (Vinyl) (Vinyl)	1	..	1	..
1	1566453	Seat Cushion (Cloth) (Cloth)	..	1	..	1
2	1470158	Kit-Seat Belt	1	1	1	1
3	1470157	Hip Restraint (LH)	1	1	1	1
3	1470156	Hip Restraint (RH)	1	1	..	..
4	1470152	Seat Cushion (Back Cushion) (Vinyl)	1	..	1	..
4	1470153	Seat Cushion (Back Cushion) (Cloth)	..	1	..	1
5	2089673	Wire Harness	1	1	..	..
5	2075428	Wire Harness	..	..	1	1
5	1563208	Sensor (Operator Presence)	1	1	1	1
6	1470161	Kit-Seat Rail	1	1	1	1
7	1470163	Kit-Weight Adjuster	1	1	1	1
7	1584631	Knob	1	1	1	1
7	1600126	Handle	1	1	1	1
8	191941	Nut	4	4	4	4
	a 1483828	Kit-Gas Spring (Mounted to the rear of the seat)	1	1	1	1
	a 1563210	Cap (Electronic Control Arm)	..	..	1	1
	a 1563211	Knob (Electronic Control Arm)	..	..	1	1
	a 1467529	Kit-Spring	1	1	1	1
	a 1627639	Weight Adjust Rack	1	1	1	1
	a 1467525	Kit-Bumper	1	1	1	1
	a 1467523	Kit-Boot	1	1	1	1
	a 1467526	Kit-Shaft and Bearing	1	1	1	1
	a 1467524	Kit-Bearing	1	1	1	1
	a 1467527	Kit-Weight Adjuster Indicator	1	1	1	1

FOOTNOTES:

a Not Illustrated

©2013 HYSTER COMPANY

FULL SUSPENSION SEAT (FIGURE 1-39)

WITH AND WITHOUT ELECTRONIC CONTROLS (S/N L177B01501 ↔ S/N L177B008481D)

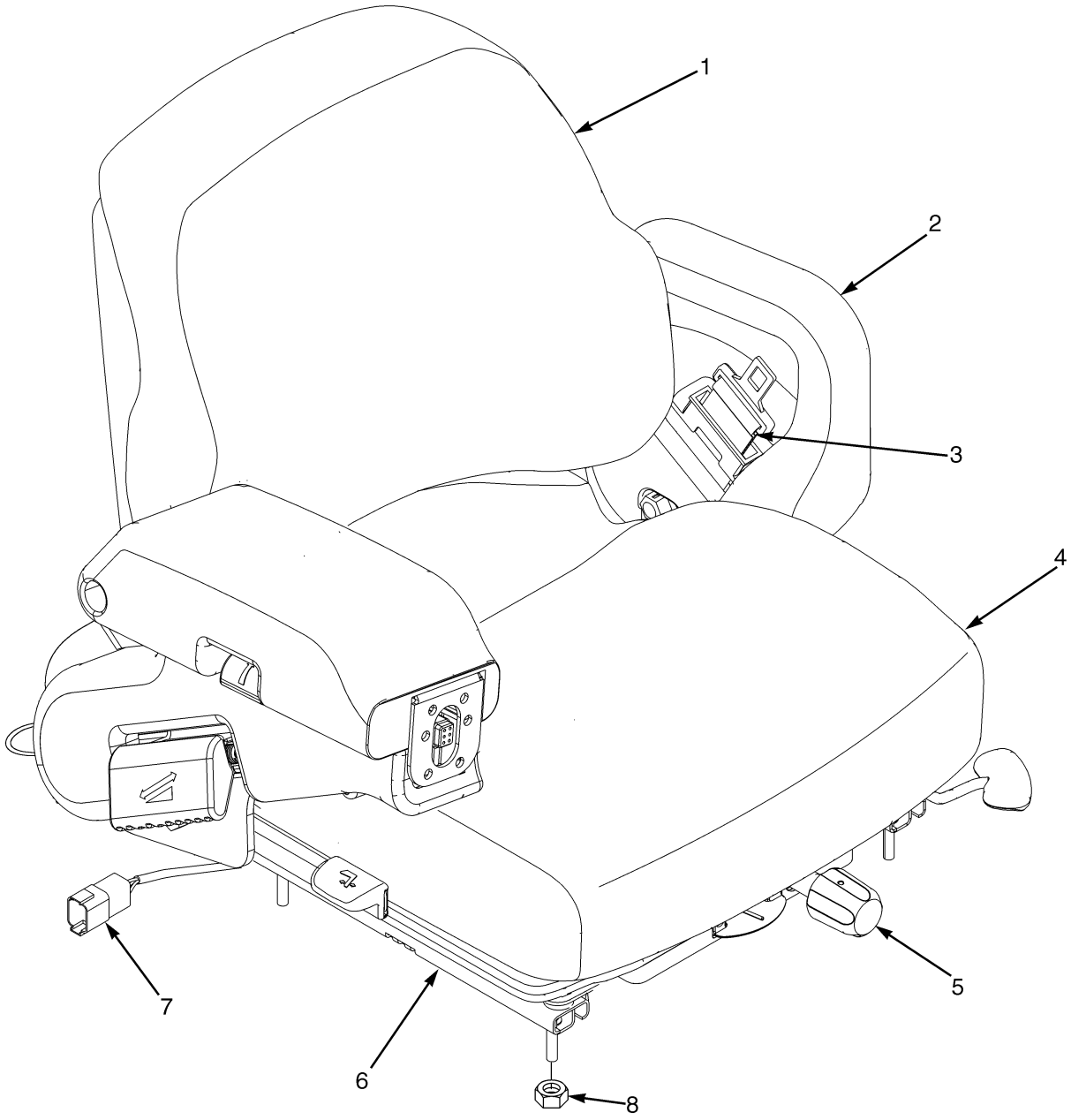

BP120127

©2013 HYSTER COMPANY

FULL SUSPENSION SEAT

WITH AND WITHOUT ELECTRONIC CONTROLS (S/N L177B01501 ↔ S/N L177B008481D)

KEY:

A: Full Suspension (Vinyl)
B: Full Suspension (Cloth)
C: Full Suspension (Vinyl with Electronic Control Arm)
D: Full Suspension (Cloth with Electronic Control Arm)

ITEM	PART NO.	DESCRIPTION	QTY A	B	C	D
	1593425	Seat-Full Suspension (Vinyl)	1	..	..	..
	1593426	Seat-Full Suspension (Cloth)	..	1	..	..
	1593429	Seat-Full Suspension (Vinyl)	..	..	1	..
	1593430	Seat-Full Suspension (Cloth)	..	..	..	1
1	1470152	Seat Cushion (Back Cushion) (Vinyl)	1	..	1	..
1	1470153	Seat Cushion (Back Cushion) (Cloth)	..	1	..	1
2	1470157	Hip Restraint (LH)	1	1	1	1
2	1470156	Hip Restraint (RH)	1	1	..	..
3	1598504	Kit-Seat Belt (Black)	1	1	1	1
3	1636120	Kit-Red Seat Belt	1	1	1	1
4	1563207	Seat Cushion (Vinyl)	1	..	1	..
4	1566453	Seat Cushion (Cloth)	..	1	..	1
	a 1563208	Sensor (Operator Presence)	1	1	1	1
5	1470163	Kit-Weight Adjuster	1	1	1	1
5	1584631	Knob	1	1	1	1
5	1600126	Handle	1	1	1	1
6	1470161	Kit-Seat Rail	1	1	1	1
7	2089673	Wire Harness	1	1	..	..
7	2075428	Wire Harness	..	..	1	1
8	191941	Nut	4	4	4	4
	a 1647611	Kit-Gas Spring	..	..	1	..
	a 1483828	Kit-Gas Spring (Mounted to the rear of the seat)	1	1	1	1
	a 1563210	Cap (Electronic Control Arm)	..	..	1	1
	a 1563211	Knob (Electronic Control Arm)	..	..	1	1
	a 1467529	Kit-Spring	1	1	..	..
	a 1627639	Weight Adjust Rack	1	1	..	..
	a 1467525	Kit-Bumper	1	1	..	..
	a 1467523	Kit-Boot	1	1	..	..
	a 1467526	Kit-Shaft and Bearing	1	1	..	..
	a 1467524	Kit-Bearing	1	1	..	..
	a 1467527	Kit-Weight Adjuster Indicator	1	1	..	..
	a 1470155	Information Case (Kit)	1	1	..	..

FOOTNOTES:

a Not Illustrated

©2013 HYSTER COMPANY

FULL SUSPENSION SEAT (FIGURE 1-40)

WITH AND WITHOUT ELECTRONIC CONTROLS — WITH LIMITED BACK TILT (S/N L177B08482D ↔ S/N L177V04457H)

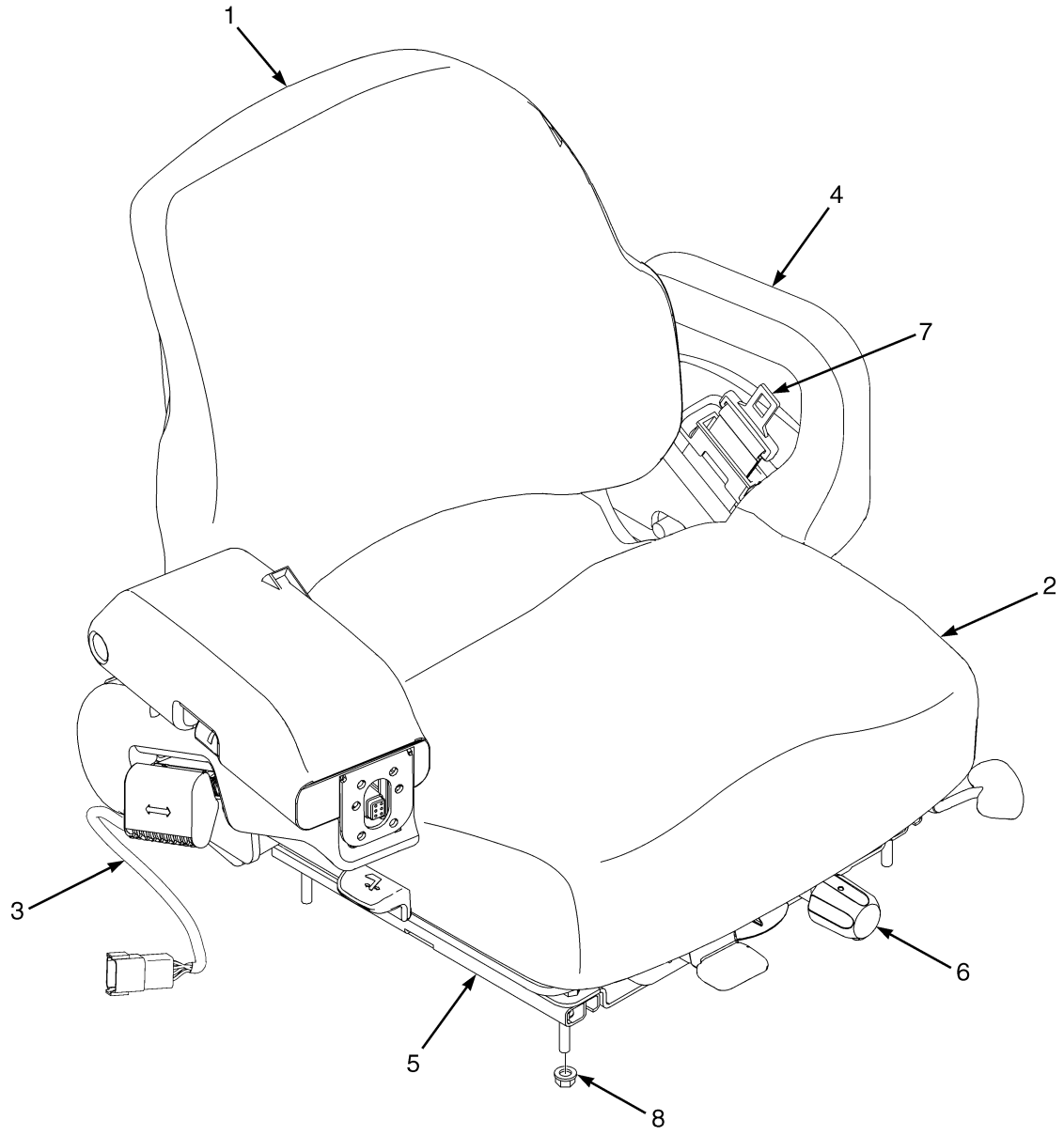

BP120193

©2013 HYSTER COMPANY

FULL SUSPENSION SEAT

WITH AND WITHOUT ELECTRONIC CONTROLS – WITH LIMITED BACK TILT

(S/N L177B08482D ↔ S/N L177V04457H)

KEY:
A: With Hip Restraints
B: With Electronic Controls

ITEM	PART NO.	DESCRIPTION	QTY A	QTY B
	1593425	Seat-Full Suspension (Vinyl)	1	..
	1593426	Seat-Full Suspension (Cloth)	1	..
	2084981	Seat-Full Suspension (Vinyl)	..	1
	2084982	Seat-Full Suspension (Cloth)	..	1
1	1470153	Seat Cushion (Back Cushion) (Cloth)	1	..
1	1470152	Seat Cushion (Back Cushion) (Vinyl)	..	1
2	1566453	Seat Cushion (Cloth)	1	..
2	1563207	Seat Cushion (Vinyl)	..	1
2	1563208	Sensor (Operator Presence)	1	1
3	1591652	Wire Harness	1	..
3	1654891	Wire Harness	..	1
4	1470157	Hip Restraint (LH)	1	1
4	1470156	Hip Restraint (RH)	1	..
5	1470161	Kit-Seat Rail	1	1
6	1470163	Kit-Weight Adjuster	1	1
6	1584631	Knob	1	1
6	1600126	Handle	1	1
7	1598504	Kit-Seat Belt (Black)	1	1
7	1636120	Kit-Red Seat Belt	1	1
8	191941	Nut	4	4
	a 1467529	Kit-Spring	1	1
	a 1470159	Kit-Seat Suspension	1	1
	a 1467524	Kit-Bearing	1	1
	a 1467523	Kit-Boot	1	1
	a 1467527	Kit-Weight Adjuster Indicator	1	1
	a 1467526	Kit-Shaft and Bearing	1	1
	a 1470163	Kit-Weight Adjuster Handle	1	1
	a 1470155	Information Case (Kit)	1	..

FOOTNOTES:

a Not Illustrated

©2013 HYSTER COMPANY

FULL SUSPENSION SWIVEL SEAT (FIGURE 1-41)
WITH AND WITHOUT ELECTRONIC CONTROLS (→ 7/2006)

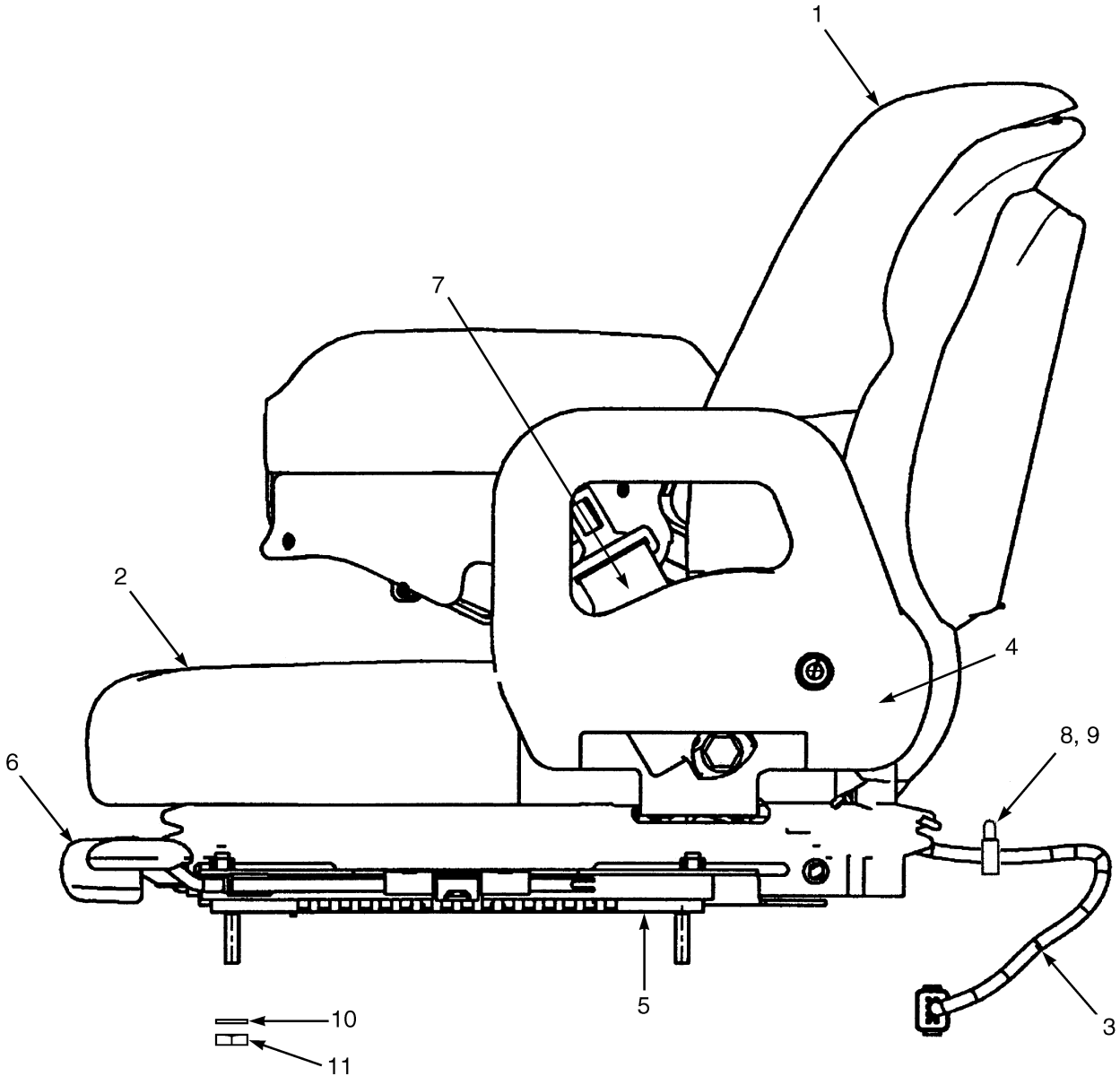

HP120853

©2013 HYSTER COMPANY

FULL SUSPENSION SWIVEL SEAT

WITH AND WITHOUT ELECTRONIC CONTROLS (→ 7/2006)

KEY:

A: Full Suspension (Vinyl)
B: Full Suspension (Cloth)
C: Full Suspension (Vinyl with Electronic Control Arm)
D: Full Suspension (Cloth with Electronic Control Arm)

ITEM	PART NO.	DESCRIPTION	QTY A	B	C	D
	1593437	Seat-Full Suspension (Vinyl)	1	..	..	..
	1593438	Seat-Full Suspension (Cloth)	..	1	..	..
	1593439	Seat-Full Suspension (Vinyl)	..	..	1	..
	1593440	Seat-Full Suspension (Cloth)	..	..	..	1
1	1470152	Seat Cushion (Back Cushion) (Vinyl)	1	..	1	..
1	1470153	Seat Cushion (Back Cushion) (Cloth)	..	1	..	1
2	1563207	Seat Cushion (Vinyl)	1	..	1	..
2	1566453	Seat Cushion (Cloth)	..	1	..	1
3	2075428	Wire Harness	..	..	1	1
3	1591652	Wire Harness	1	1	..	..
3	1563208	Sensor (Operator Presence)	1	1	1	1
4	1470157	Hip Restraint (LH)	1	1	1	1
5	1470161	Kit-Seat Rail	1	1	1	1
6	1470163	Kit-Weight Adjuster	1	1	1	1
6	1584631	Knob	1	1	1	1
6	1600126	Handle	1	1	1	1
7	1598504	Kit-Seat Belt (Black)	1	1	1	1
7	1636120	Kit-Red Seat Belt	1	1	1	1
8	1537551	Nut (Clip)	1	1	1	1
9	296149	Capscrew	1	1	1	1
10	320158	Washer	4	4	4	4
11	145639	Locknut	4	4	4	4
	b 1470156	Hip Restraint (RH)	1	1	..	..
	b 1483828	Kit-Gas Spring (Mounted to the rear of the seat)	1	1	1	1
	b 1563210	Cap (Electronic Control Arm)	..	..	1	1
	b 1563211	Knob (Electronic Control Arm)	..	..	1	1
	a 1546689	Lever (Swivel Release)	1	1	1	1
	a 1467529	Kit-Spring	1	1	1	1
	a 1627639	Weight Adjust Rack	1	1	1	1
	a 1467525	Kit-Bumper	1	1	1	1
	a 1467523	Kit-Boot	1	1	1	1
	a 1467526	Kit-Shaft and Bearing	1	1	1	1
	a 1467524	Kit-Bearing	1	1	1	1
	a 1467527	Kit-Weight Adjuster Indicator	1	1	1	1
	1470155	Information Case (Kit)	1	1	..	..

FOOTNOTES:

a Not Illustrated

b Not Illustrated, included with seat

©2013 HYSTER COMPANY

FULL SUSPENSION SWIVEL SEAT (FIGURE 1-42)

WITH AND WITHOUT ELECTRONIC CONTROLS (7/2006 ↔ S/N L177V04457H)

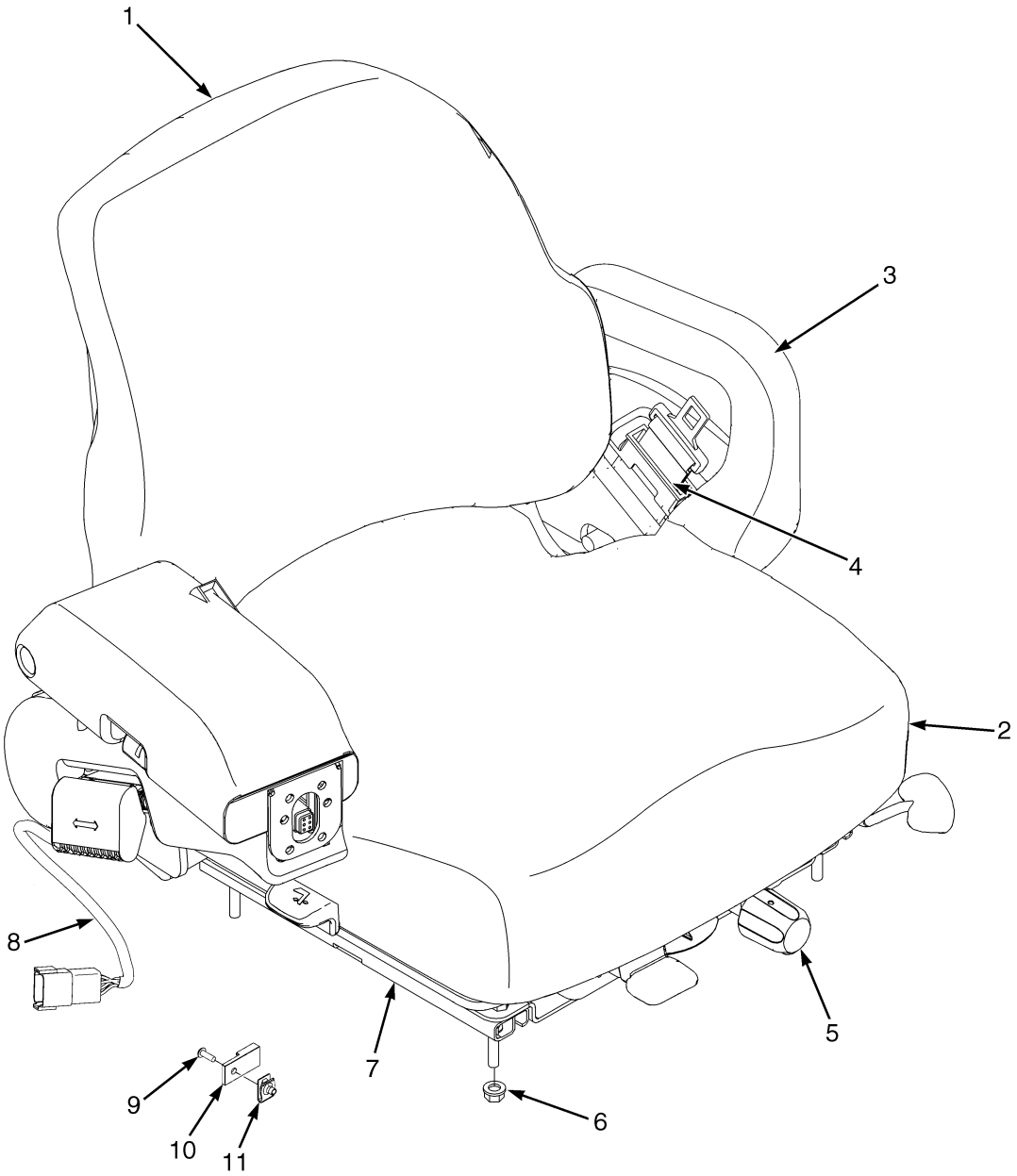

BP120291

©2013 HYSTER COMPANY

FULL SUSPENSION SWIVEL SEAT

WITH AND WITHOUT ELECTRONIC CONTROLS (7/2006 ↔ S/N L177V04457H)

KEY:
A: With Hip Restraints
B: With Electronic Controls

ITEM	PART NO.	DESCRIPTION	QTY A	QTY B
	1593437	Seat-Full Suspension (Vinyl)	1	..
	1593438	Seat-Full Suspension (Cloth)	1	..
	2085188	Seat-Full Suspension (Vinyl)	..	1
	2085190	Seat Assy -Full Suspension (Cloth)	..	1
1	1470152	Seat Cushion (Back Cushion) (Vinyl)	1	1
1	1470153	Seat Cushion (Back Cushion) (Cloth)	1	1
2	1563207	Seat Cushion (Vinyl)	1	1
2	1566453	Seat Cushion (Cloth)	1	1
2	1563208	Sensor (Operator Presence)	1	1
3	1470157	Hip Restraint (LH)	1	1
3	1470156	Hip Restraint (RH)	1	..
4	1598504	Kit-Seat Belt (Black)	1	1
4	1636120	Kit-Red Seat Belt	1	1
5	1470163	Kit-Weight Adjuster	1	..
5	1600126	Handle	1	1
5	1584631	Knob	1	1
6	191941	Nut	4	4
7	1470161	Kit-Seat Rail	1	1
8	1591652	Wire Harness	1	..
8	1654891	Wire Harness	..	1
9	296149	Capscrew	1	1
10	1500912	Clip	1	1
11	1537551	Nut (Clip)	1	1
	a 1483828	Kit-Gas Spring (Mounted to the rear of the seat)	1	..
	a 1546689	Lever (Swivel Release)	1	1
	a 1563211	Knob (Electronic Control Arm)	..	1
	a 1483828	Kit-Gas Spring (Mounted to the rear of the seat)	1	1
	a 1467529	Kit-Spring	1	1
	a 1684395	Kit-Swivel Seat Full Susp	1	1
	a 1627639	Weight Adjust Rack	1	1
	a 1467523	Kit-Boot	1	1
	a 1467527	Kit-Weight Adjuster Indicator	1	1
	a 1467526	Kit-Shaft and Bearing	1	1
	a 1467524	Kit-Bearing	1	1
	a 1467525	Kit-Bumper	1	1
	a 1647532	Foam for Right hand Forearm Cushion/Rest (Electronic Control Arm Cap)	..	1
	a 1470155	Information Case (Kit)	1	..

FOOTNOTES:

a Not Illustrated

©2013 HYSTER COMPANY

FULL SUSPENSION SEAT (FIGURE 1-43)

MANUAL AND ELECTRO-HYDRAULIC — SWIVEL AND NON SWIVEL — SHEET 1 OF 3 (S/N L177V04458H → INC. 04450)

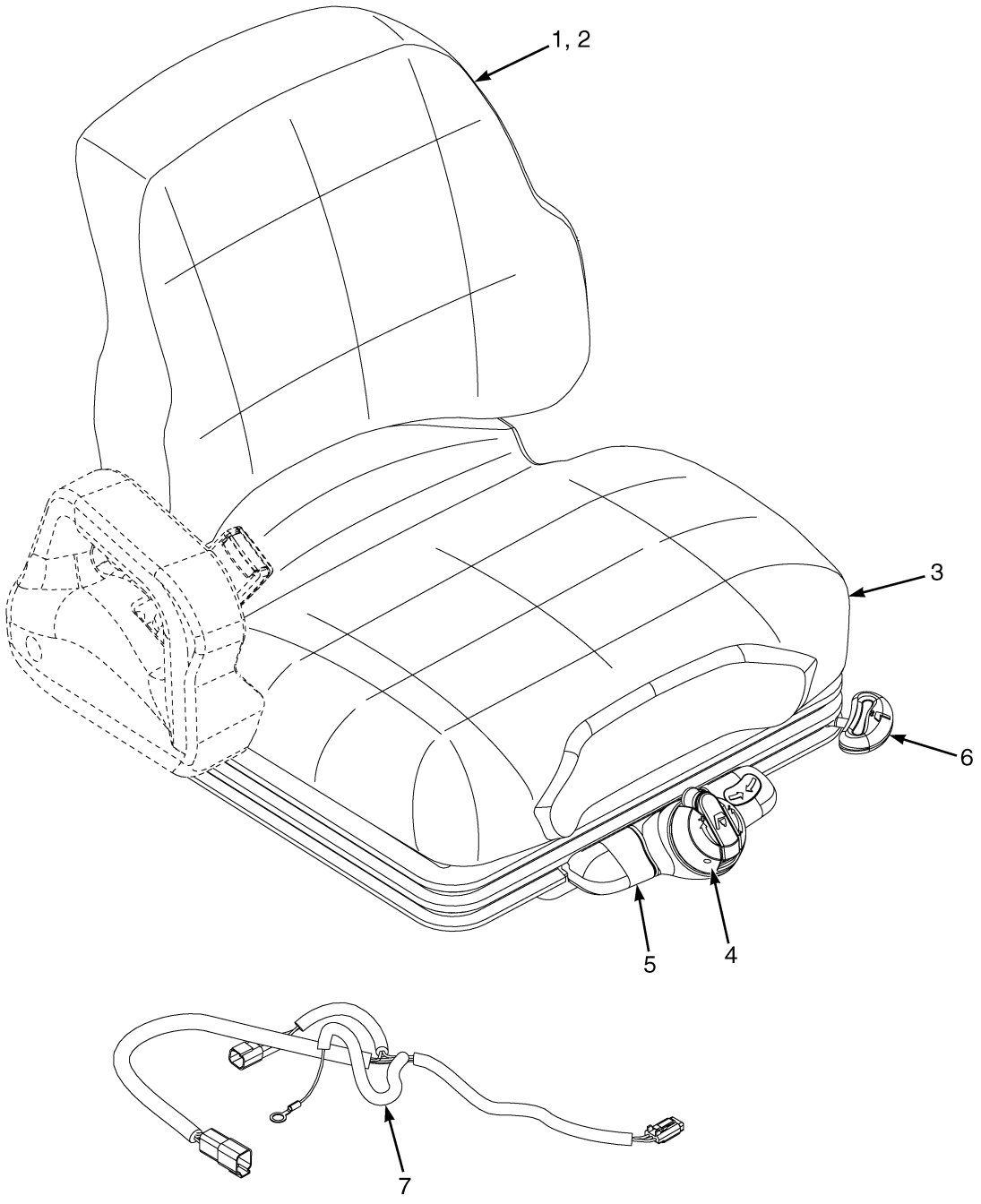

BP121050

©2013 HYSTER COMPANY

FULL SUSPENSION SEAT

MANUAL AND ELECTRO-HYDRAULIC — SWIVEL AND NON SWIVEL – SHEET 1 OF 3

(S/N L177V04458H → INC. 04450)

ITEM	PART NO.	DESCRIPTION	QTY
	4603382	Seat-Full Suspension (Vinyl) (Non-Swivel)	1
	4603383	Seat-Full Suspension (Cloth) (Non-Swivel)	1
	~~2101604~~		
	4603384	Seat-Full Suspension (Vinyl) (Swivel)	1
	~~2101605~~		
	4603385	Seat-Full Suspension (Cloth) (Swivel)	1
1	**b** 1703900	Kit-Cushion (Seat and Back, Cloth)	1
1	**b** 1703903	Kit-Cushion (Seat and Back, Vinyl)	1
2	**b** 1703901	Kit-Cushion (Back Cushion, Vinyl)	1
2	**b** 1703898	Kit-Cushion (Back Cushion, Cloth)	1
2	. . . . .	Back Cushion	1
2	. . . . .	Screw	2
3	**b** 1703902	Kit-Seat Cushion (Vinyl)	1
3	**b** 1703899	Kit-Seat Cushion (Cloth)	1
3	. . . . .	Seat Cushion	1
3	. . . . .	Spring	2
3	. . . . .	Cotter Pin	2
4	**b** 1703892	Kit-Weight Adjuster	1
4	. . . . .	Knob	1
4	. . . . .	Bushing	1
4	. . . . .	Washer	1
4	. . . . .	Pin	1
5	**b** 1703893	Kit-Service (Front Panel) (Non Swivel)	1
5	. . . . .	Front Panel	1
5	. . . . .	Socket Head Capscrew	2
5	. . . . .	Roll Pin	1
5	**b** 1703894	Kit-Service (Front Panel) (With Swivel)	1
5	. . . . .	Front Panel	1
5	. . . . .	Knob	1
5	. . . . .	Socket Head Capscrew	1
5	. . . . .	Roll Pin	2
6	**b** 1703904	Kit-Seat Rail (With Swivel)	1
6	4043082	Kit-Seat Rail (Non Swivel)	1
6	. . . . .	Locking Rail	1
6	. . . . .	Slave Rail	1
6	. . . . .	Bolt	4
6	. . . . .	Nut	4
7	**b** 4013095	Wire Harness	1
	bc 1470155	Information Case (Kit)	1
	bc 4027341	Bracket (Angle Controller)	1
	bc 4046492	Lever Spring Pull	1
	b 1563208	Sensor (Operator Presence)	1
	a 4036586	Kit Non Swivel Set	1
	a 4036587	Kit Swivel Set	1

©2013 HYSTER COMPANY

FOOTNOTES:

a Also Includes Tether and 1703891 Kit-Recliner on Sheet 2
b Included with seat
c Not Illustrated

©2013 HYSTER COMPANY

NOTES

©2013 HYSTER COMPANY

FULL SUSPENSION SEAT (FIGURE 1-44)

SHEET 2 OF 3 (S/N L177V04458H → INC. 04450)

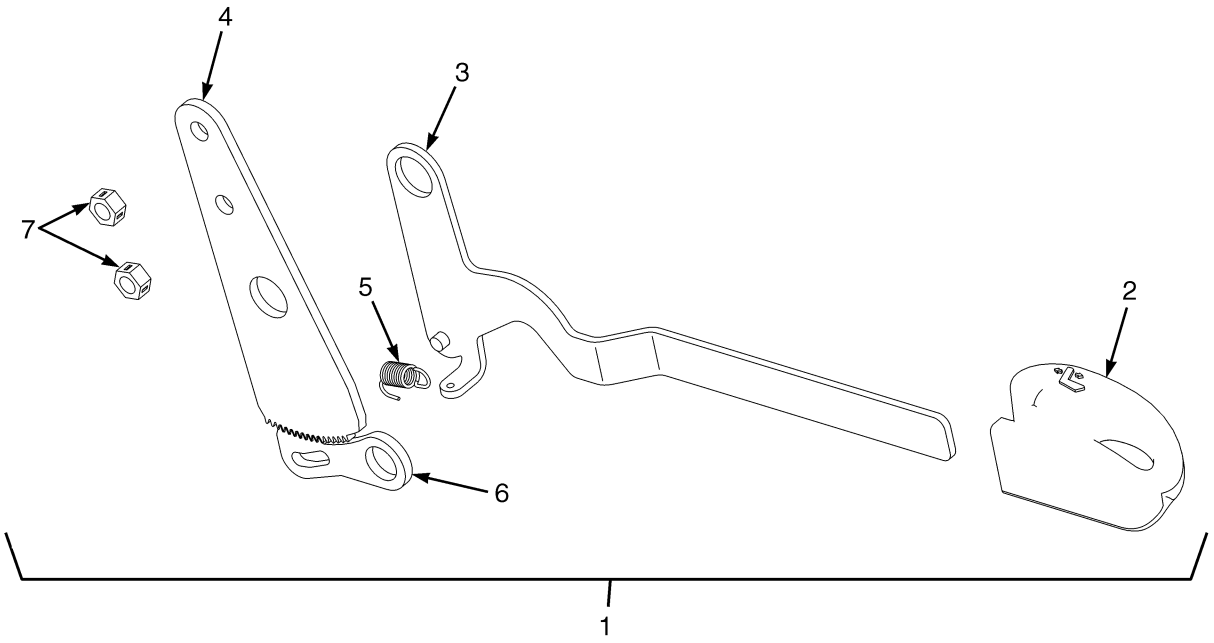

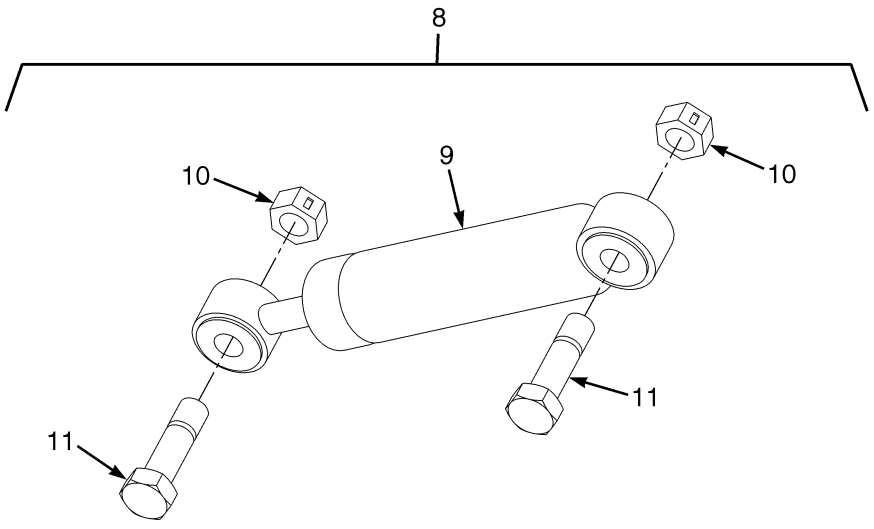

BP120646

©2013 HYSTER COMPANY

FULL SUSPENSION SEAT

SHEET 2 OF 3 (S/N L177V04458H → INC. 04450)

ITEM	PART NO.	DESCRIPTION	QTY
1	**b** 1703891	Kit-Recliner (Back Seat Adjustment)	1
2	. . . . .	Knob	1
3	. . . . .	Lever	1
4	1482905	Plate	1
5	. . . . .	Spring	1
6	1482906	Latch	1
7	1367150	Nut	2
8	**a** 1703890	Kit-Damper Service	1
9	1584632	Damper	1
10	1367150	Nut	2
11	1584638	Bolt	2

FOOTNOTES:

a Included with Seat

b Included with Seat and Non Swivel/Swivel Sets

©2013 HYSTER COMPANY

SEAT ATTACHING PARTS (FIGURE 1-45)

NOT INCLUDED WITH SEAT — SHEET 3 OF 3 (S/N L177V04458H → INC. 04450)

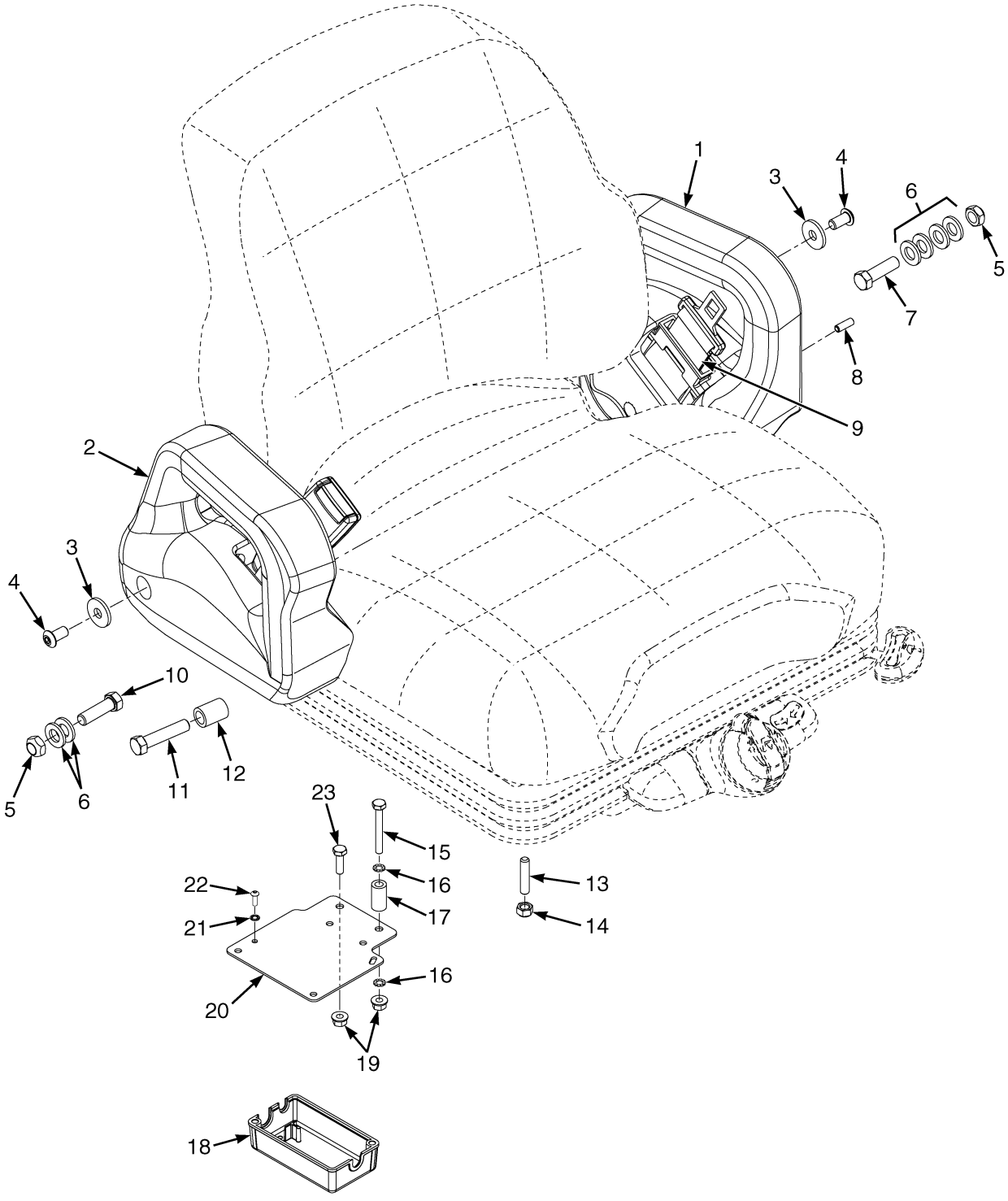

©2013 HYSTER COMPANY

SEAT ATTACHING PARTS

NOT INCLUDED WITH SEAT – SHEET 3 OF 3 (S/N L177V04458H → INC. 04450)

KEY:
A: With Mini Levers
B: With Manual Levers

ITEM	PART NO.	DESCRIPTION	QTY A	QTY B
1	4612911	Armrest (Left-Hand Side)	1	1
2	2099951	Armrest (RH) (☞Figure 1-47)	..	1
2	4005010	Armrest (Slider for Mini Lever) (☞Figure 1-47)	1	..
2	. . . . .	Mini-Lever Modules (☞Figure 7-29, ☞Figure 7-30)	1	..
3	1512536	Washer	1	..
3	4007319	Spacer	1	2
4	18735	Screw	1	..
4	18738	Capscrew	1	2
5	221353	Locknut	2	2
6	1581852	Washer	3	3
7	221536	Capscrew	1	1
8	19901	Roll Pin	1	1
9	1598504	Kit-Seat Belt (Black)	1	1
9	1636120	Kit-Red Seat Belt	1	1
10	221530	Capscrew	..	1
11	221542	Capscrew	1	..
12	1694700	Spacer	1	..
13	1677286	Stud	4	4
14	313828	Nut	4	4
15	18471	Capscrew	1	2
16	296379	Washer	1	2
17	4007318	Spacer	1	2
18	2107969	Cover (Seat-Side Electrical)	1	1
19	169874	Nut	2	4
20	4004776	Cover Plate	1	1
21	296357	Washer	2	2
22	1694830	Capscrew	2	2
23	18462	Capscrew	1	2
	a 114312	Strap Clamp	1	1
	1703895	Kit-Service Internal Tether-80 MM Travel	1	1
	1703896	Kit-Service Internal Tether-56 MM Travel	1	1
	1703897	Kit-Service Internal Tether-40 MM Travel	1	1

FOOTNOTES:

a Not Illustrated

©2013 HYSTER COMPANY

ARMREST ASSEMBLY (FIGURE 1-46)

MINI-LEVER MODULES — SEMI-SUSPENSION SEAT WITH HIP RESTRAINTS

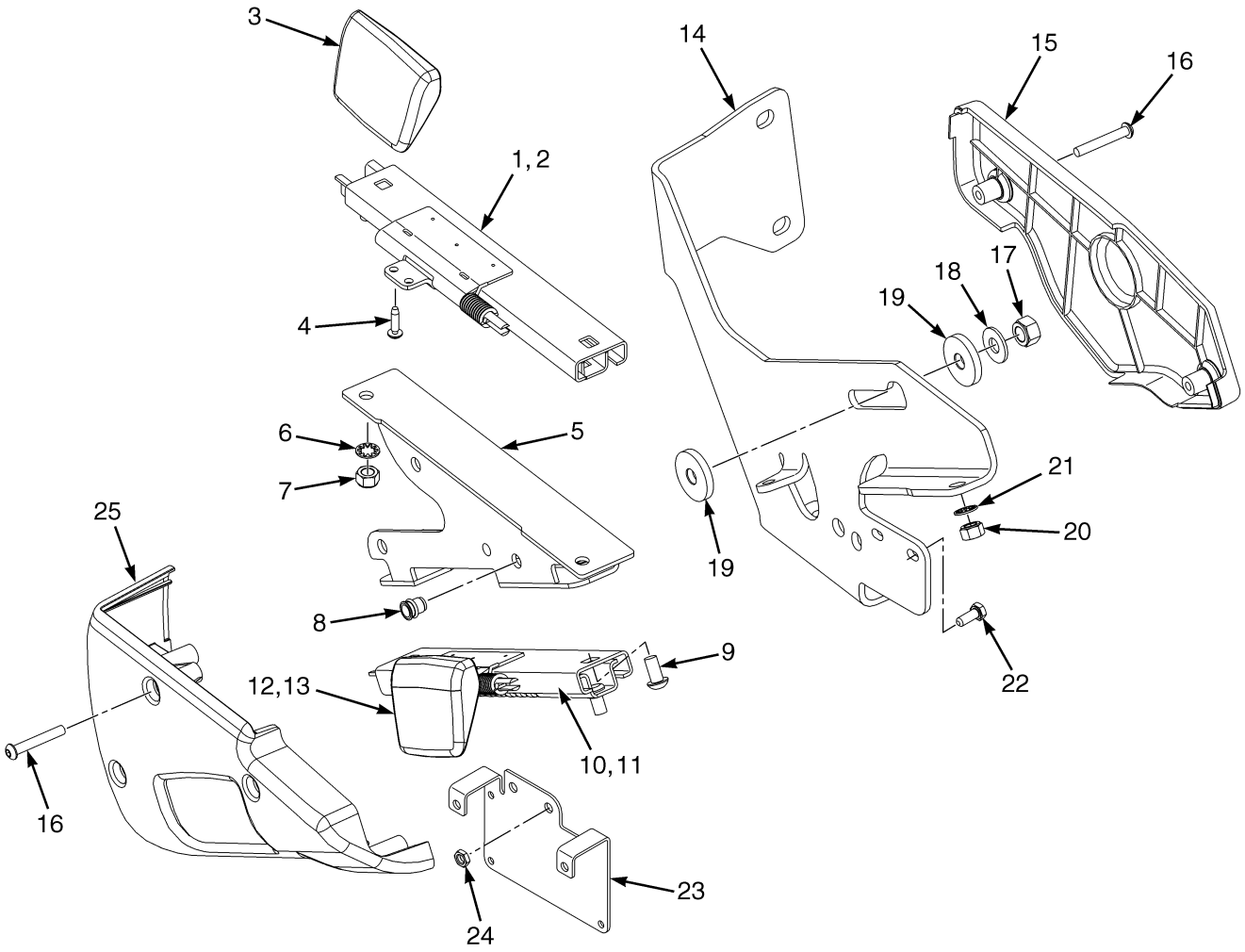

©2013 HYSTER COMPANY

ARMREST ASSEMBLY

MINI-LEVER MODULES – SEMI-SUSPENSION SEAT WITH HIP RESTRAINTS

ITEM	PART NO.	DESCRIPTION	QTY
	4005010	Armrest (Slider for Mini Lever)	1
1	. . . . .	Slider Assembly	1
2	1661511	Armrest (Slider)	1
3	1655865	Handle (Slider)	1
4	227157	Screw	2
5	4007052	Bracket Wldmt	1
6	296360	Washer	4
7	313828	Nut	4
8	1531558	Insert	3
9	296165	Capscrew	2
10	. . . . .	Slider Assembly	1
11	1661511	Armrest (Slider)	1
12	1655865	Handle (Slider)	1
13	227157	Screw	2
14	4004775	Bracket	1
15	4603493	Cover	1
16	2062875	Capscrew	5
17	316826	Nut	1
18	320160	Washer	1
19	1650640	Washer	2
20	313828	Nut	2
21	296360	Washer	2
22	292500	Capscrew	2
23	4005805	Cover Plate	1
24	1593334	Nut	2
25	4603492	Cover	1

©2013 HYSTER COMPANY

ARMREST ASSEMBLY (FIGURE 1-47)
MINI-LEVER MODULES

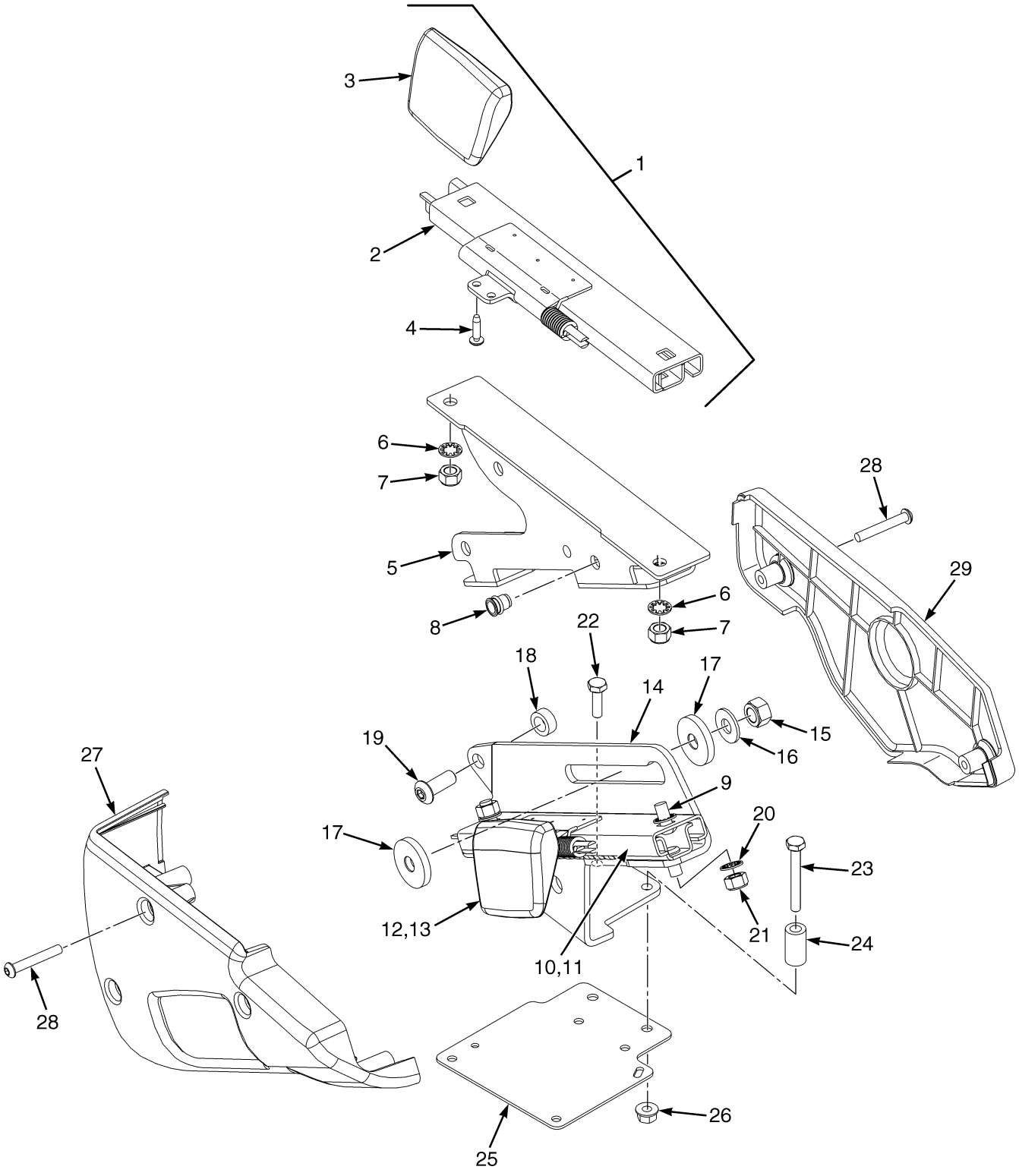

BP120701

©2013 HYSTER COMPANY

ARMREST ASSEMBLY
MINI-LEVER MODULES

ITEM	PART NO.	DESCRIPTION	QTY
	4005010	Armrest (Slider for Mini Lever)	1
1	. . . . .	Slider Assembly	1
2	1661511	Armrest (Slider)	1
3	1655865	Handle (Slider)	1
4	227157	Screw	2
5	4007052	Bracket Wldmt	1
6	296360	Washer	4
7	313828	Nut	4
8	1531558	Insert	3
9	296165	Capscrew	2
10	. . . . .	Slider Assembly	1
11	1661511	Armrest (Slider)	1
12	1655865	Handle (Slider)	1
13	227157	Screw	2
14	4004775	Bracket	1
15	316826	Nut	1
16	320160	Washer	1
17	1650640	Washer	2
18	4007319	Spacer	1
19	18738	Capscrew	1
20	296360	Washer	2
21	313828	Nut	2
22	18462	Capscrew	1
23	18471	Capscrew	1
24	4007318	Spacer	1
25	4004776	Cover Plate	1
26	169874	Nut	2
27	4603492	Cover	1
28	2062875	Capscrew	5
29	4603493	Cover	1

©2013 HYSTER COMPANY

MINI LEVER MODULE LABELS (FIGURE 1-48)
HYDRAULIC CONTROL FUNCTIONS

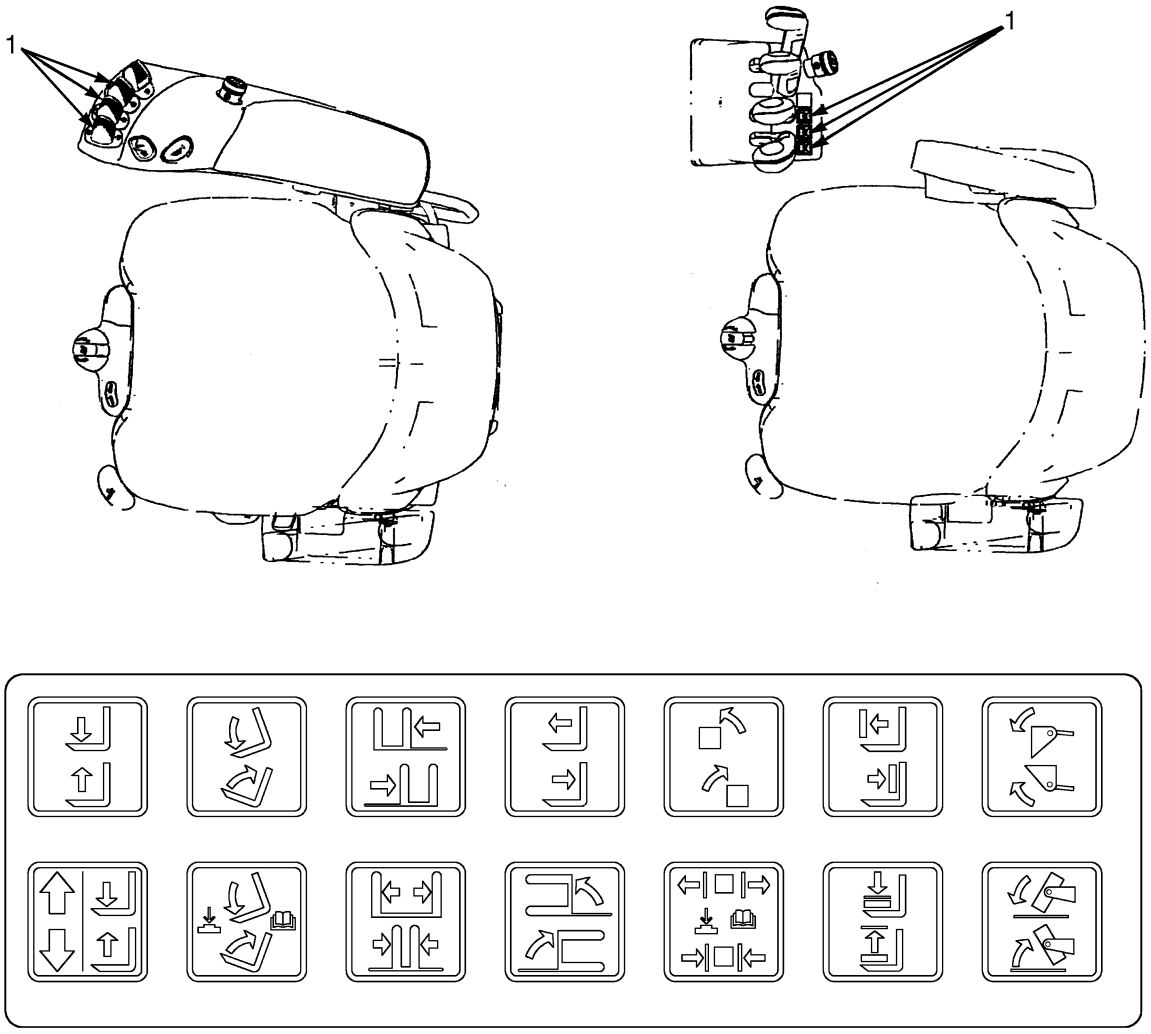

BP120427

©2013 HYSTER COMPANY

MINI LEVER MODULE LABELS
HYDRAULIC CONTROL FUNCTIONS

ITEM	PART NO.	DESCRIPTION	QTY
1	2102640	Label	1

©2013 HYSTER COMPANY

LABELS (FIGURE 1-49)
EXTERIOR

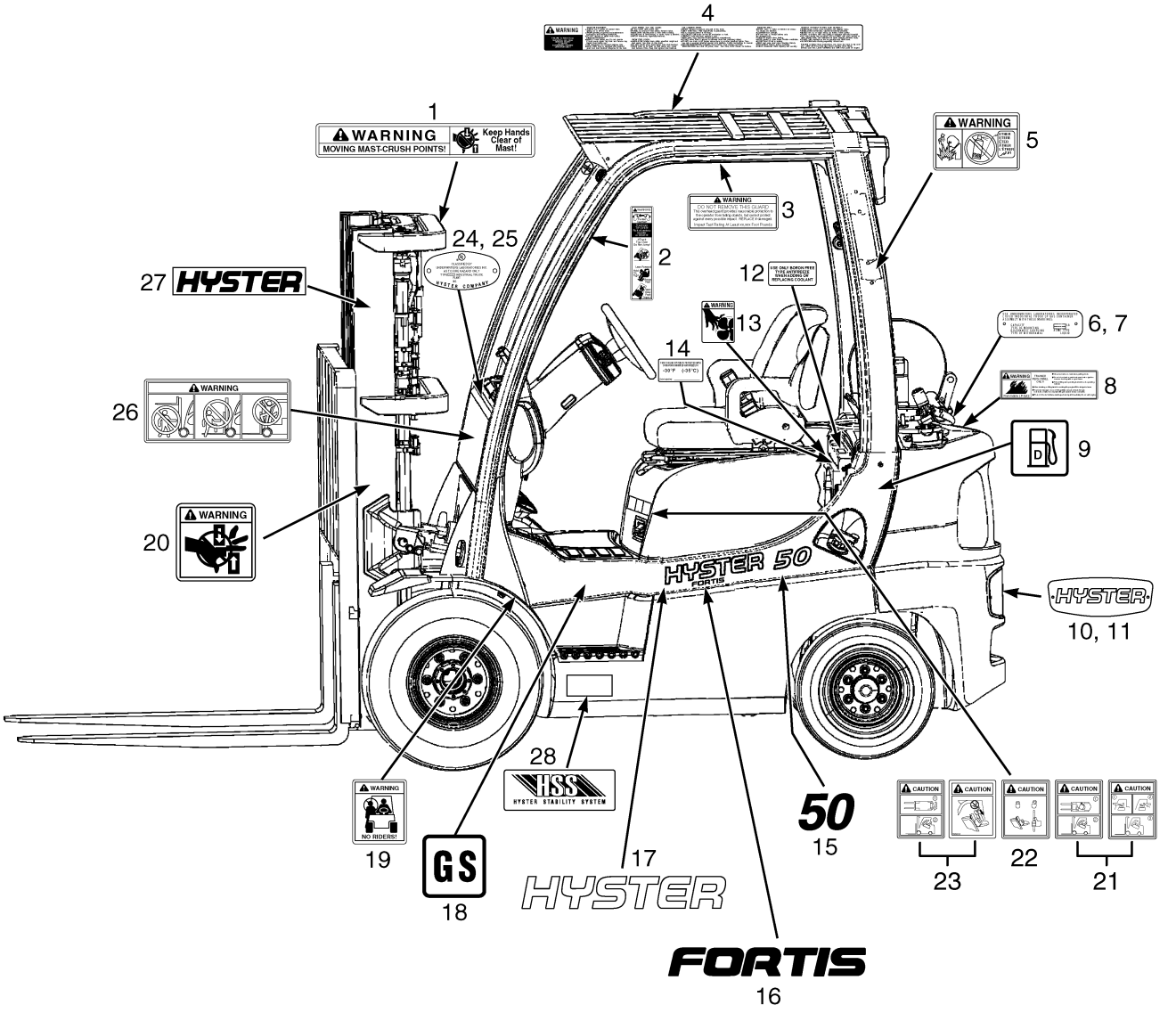

HP120855

©2013 HYSTER COMPANY

LABELS
EXTERIOR

ITEM	PART NO.	DESCRIPTION	QTY
1	1330919	Label (Mast Warning)	1
2	1330917	Label (Operator Restraint)	2
3	**a**	Label (Impact Rating)	1
4	2073197	Label (Operator Warning)	1
5	**b** 2034459	Label (Ether Warning)	1
6	1501258	Nameplate (LP Tank)	1
7	170658	Rivet	4
8	1354171	Label (Flammable LPG)	1
9	2074255	Label (Unleaded Fuel Only)	1
9	2074256	Label (Fuel Fill)	1
10	**e** 1583609	Plate (Hyster Logo)	1
10	**f** 1677428	Label (Hyster Logo)	1
11	**e** 1566951	Fastener	2
12	1375676	Label (Boron-Free Antifreeze)	1
13	1345939	Label (Fan Warning)	2
14	1354165	Label (Antifreeze)	2
15	1586444	Label (Model 40)	2
15	1586447	Label (Model 50)	2
15	1586448	Label (Model 60)	2
15	1586449	Label (Model 70)	2
16	1586439	Label (Fortis)	2
17	1586440	Label (Hyster)	2
18	154065	Label (Type GS)	2
18	154066	Label (Type LPS)	2
18	154067	Label (Type DS)	2
19	1330920	Label (No Riders)	2
20	1335129	Label (Pinch Point)	2
21	**d** 2075615	Label (Hood Opening)	1
21	2082679	Label (Electronic Arm Caution)	1
22	2075418	Label (Locking Gas Spring)	1
23	2074741	Label (Joystick Warning)	1
23	**c** 2076169	Label (Swivel Seat)	1
24	**a**	Inspection Plate	1
25	170658	Rivet	2
26	2075656	Label (Mast Warning)	2
27	1562353	Label (Hyster)	2
	2109698	Label (Hydraulic Fluid Warning) (Not Illustrated)	1
30	4035750	Label (Stability System) (Stability System)	2

FOOTNOTES:

a Contact Your Local Hyster Dealer
b Diesel Only
c For Vehicles With Swivel Seat Only
d LPG Only
e → S/N L177V01522F
f S/N L177V01523F →

©2013 HYSTER COMPANY

LABELS (FIGURE 1-50)
INTERIOR

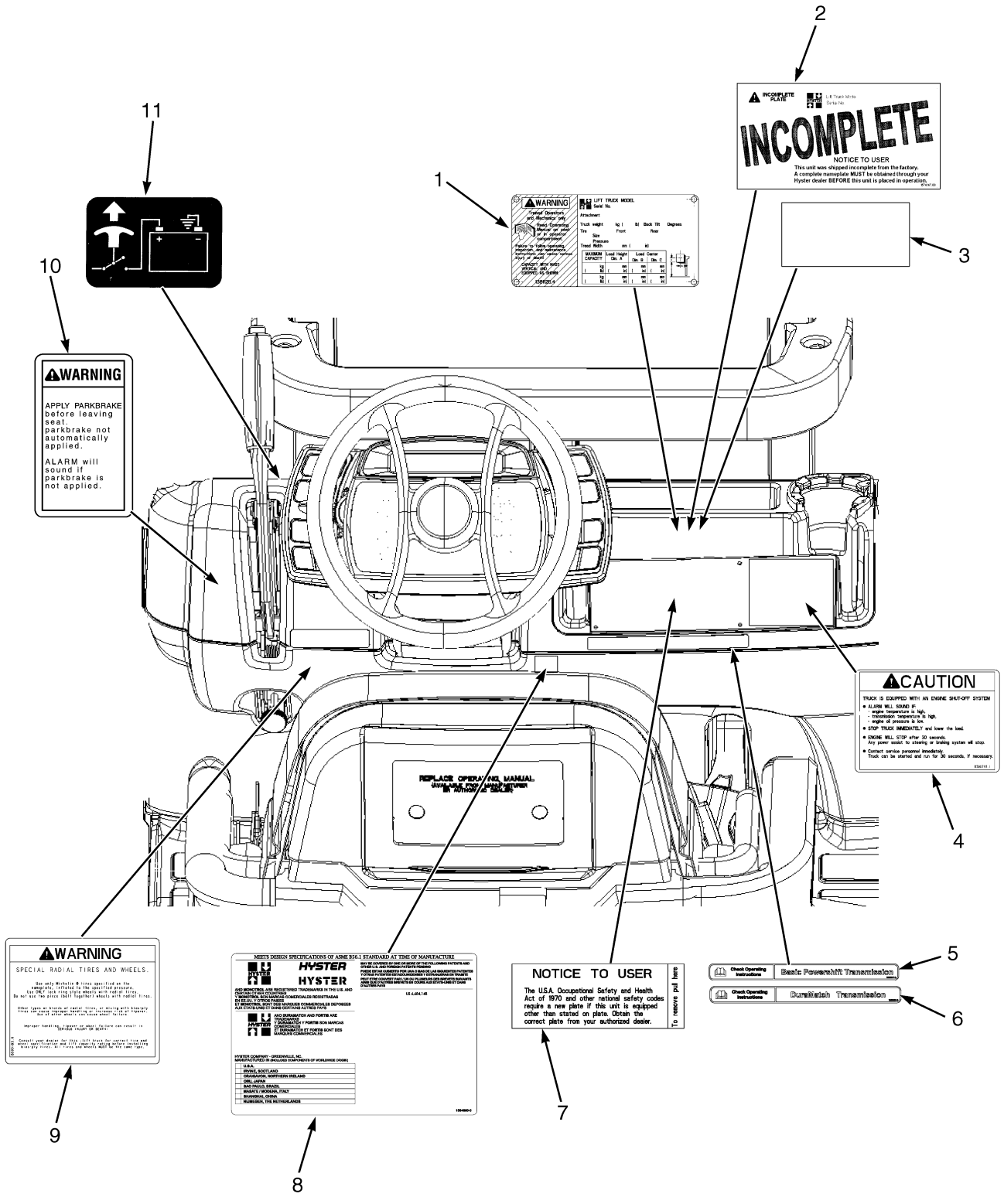

HP120856

©2013 HYSTER COMPANY

LABELS
INTERIOR

ITEM	PART NO.	DESCRIPTION	QTY
1	**b**	Nameplate	1
1	170658	Rivet	4
1	2307400	Rivet (Optional)	4
2	1574147	Nameplate (Incomplete Truck)	1
3	389688	Nameplate Cover	1
4	1385102	Label (Drive Train Protection)	1
5	**a** 1589377	Label (Basic Powershift Transmission)	1
6	**c** 1589397	Label (DuraMatch Transmission)	1
7	1335137	Nameplate (Complete Truck)	1
8	1534660	Label (Patents and Trademarks)	1
8	~~1374549~~ 4612320	Label Radial Tire Warning	1
10	2074210	Label (Park Brake Warning)	1
11	1324480	Label (Battery Switch)	1

FOOTNOTES:

a Basic Transmission
b Contact Your Local Hyster Dealer
c Electric Transmission

©2013 HYSTER COMPANY

ELECTRONIC LEVER LABELS (FIGURE 1-51)

AUXILIARY SINGLE FUNCTION

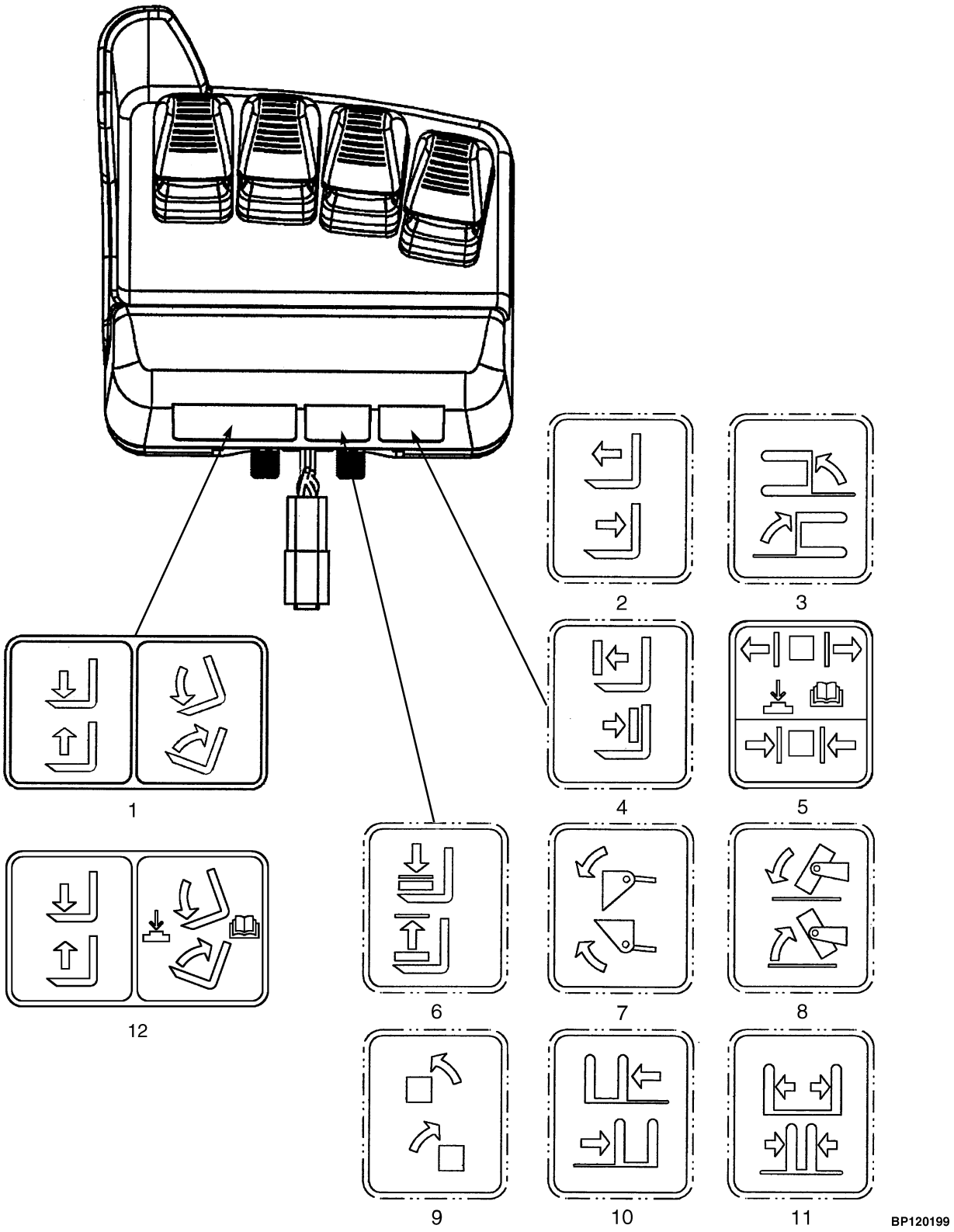

©2013 HYSTER COMPANY

ELECTRONIC LEVER LABELS
AUXILIARY SINGLE FUNCTION

ITEM	PART NO.	DESCRIPTION	QTY
1	1581055	Label (Hoist and Tilt)	1
2	2073115	Label (Reach)	1
3	2073114	Label (Swing)	1
4	2073118	Label (Push/Pull)	1
5	2085877	Label (Clamp)	1
6	2073116	Label (Load Stabilizer)	1
7	2073117	Label (Scoop)	1
8	2073119	Label (Upender)	1
9	2073121	Label (Rotate)	1
10	2073122	Label (Side-Shift)	1
11	2073123	Label (Fork Spread)	1
12	2085875	Label (Hoist and Tilt with Return to Set Tilt)	1

©2013 HYSTER COMPANY

ELECTRONIC LEVER LABELS (FIGURE 1-52)

AUXILIARY DUAL FUNCTION

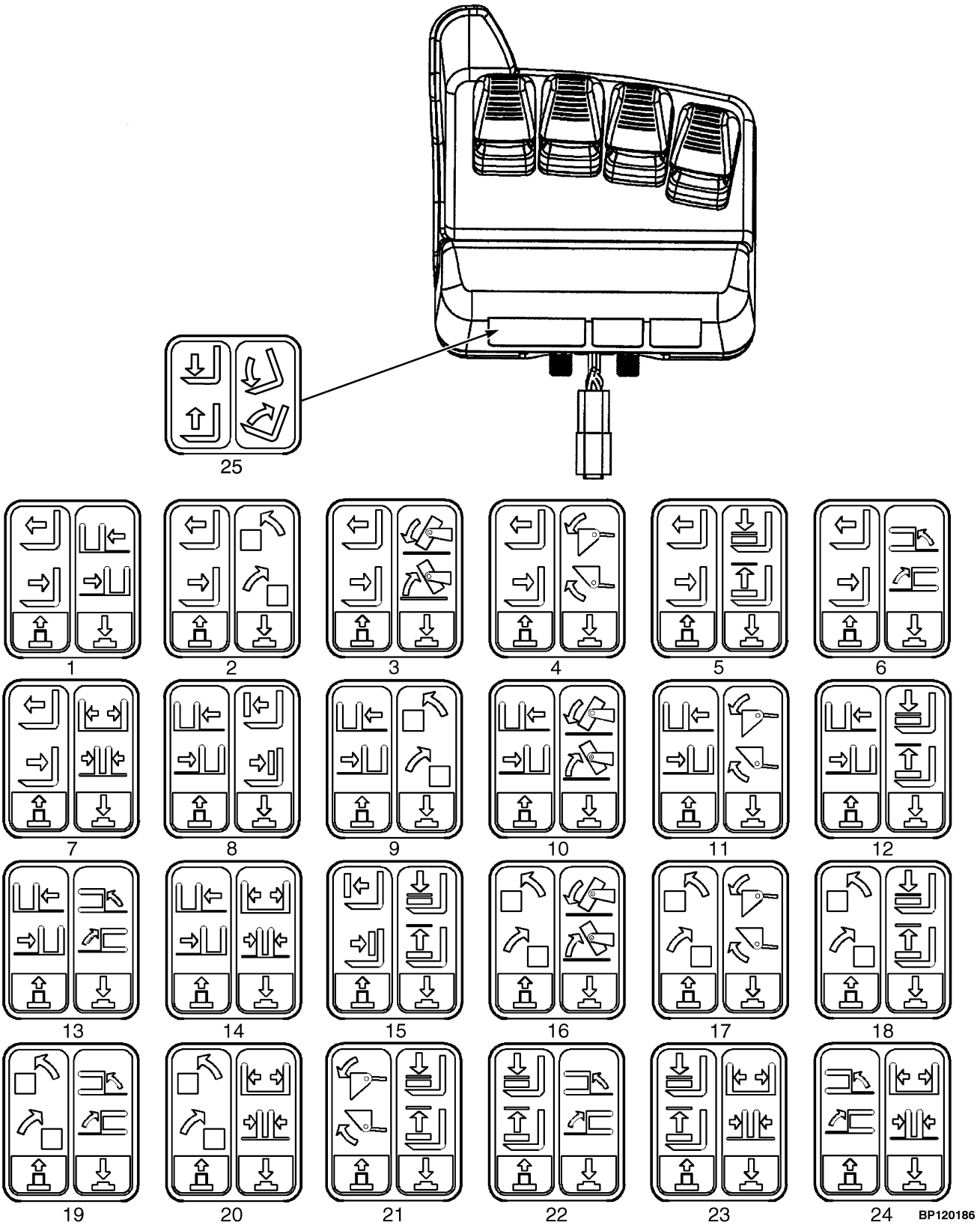

©2013 HYSTER COMPANY

ELECTRONIC LEVER LABELS
AUXILIARY DUAL FUNCTION

ITEM	PART NO.	DESCRIPTION	QTY
1	2081229	Label (Reach/Side-Shift)	1
2	2081230	Label (Reach/Rotate)	1
3	2081231	Label (Reach/Upender)	1
4	2081232	Label (Reach/Scoop)	1
5	2081233	Label (Reach/Load Stabilizer)	1
6	2081234	Label (Reach/Swing)	1
7	2081235	Label (Reach/Fork Spread)	1
8	2081236	Label (Side-Shift/Push or Pull)	1
9	2081237	Label (Side-Shift/Rotate)	1
10	2081238	Label (Side-Shift/Upender)	1
11	2081239	Label (Side-Shift/Scoop)	1
12	2081240	Label (Side-Shift/Load)	1
13	2081241	Label (Side-Shift/Swing)	1
14	2081242	Label (Side-Shift/Fork Spread)	1
15	2081243	Label (Push or Pull/Load)	1
16	2081244	Label (Rotate/Upender)	1
17	2081245	Label (Rotate/Scoop)	1
18	2081246	Label (Rotate/Load Stabilizer)	1
19	2081247	Label (Rotate/Swing)	1
20	2081248	Label (Rotate/Fork Spreader)	1
21	2081249	Label (Scoop/Load Stabilizer)	1
22	2081250	Label (Load Stabilizer/Swing)	1
23	2081251	Label (Load Stabilizer/Fork Spread)	1
24	2081252	Label (Swing/Fork Spread)	1
25	1581055	Label (Hoist and Tilt)	1

©2013 HYSTER COMPANY

FORKS (FIGURE 1-53)

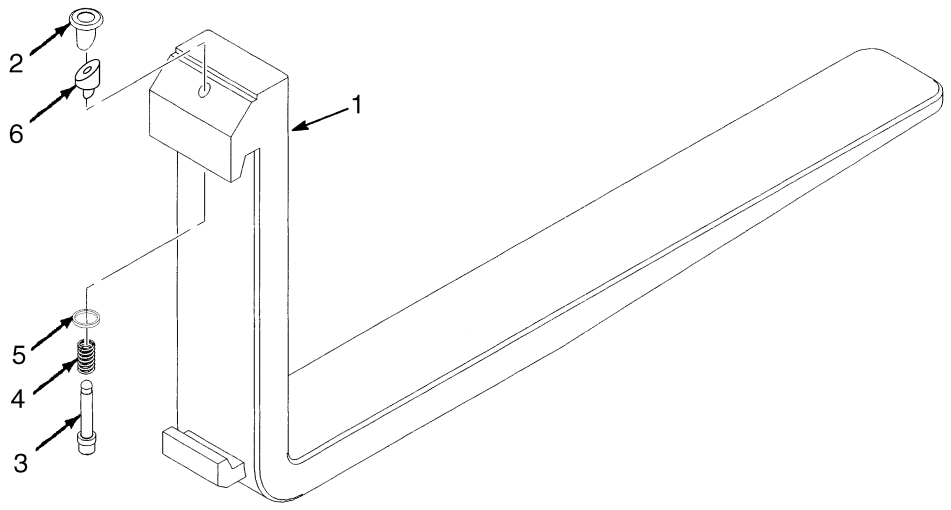

BP290003

KEY:
A: Standard Class II (100 mm x 40 mm) (4 in. x 1.5 in.)
B: Polished Full Bottom Taper, Class II (125 mm x 40 mm) (5 in. x 1.5 in.)
C: Standard Class III (125 mm x 50 mm) (5 in. x 2 in.)
D: Polished Full Bottom Taper, Class III (180 mm x 45 mm) (7 in. x 1.8 in.)

			QTY			
ITEM	**PART NO.**	**DESCRIPTION**	**A**	**B**	**C**	**D**
1	384211	Fork (36 in.)	2	..	..	..
1	1308093	Fork (40 in.)	2	..	..	..
1	384213	Fork (42 in.)	2	..	..	..
1	384214	Fork (48 in.)	2	..	..	..
1	384215	Fork (54 in.)	2	..	..	..
1	384216	Fork (60 in.)	2	..	..	..
1	1338087	Fork (36 in.)	..	2	..	..
1	1338088	Fork (42 in.)	..	2	..	..
1	1338089	Fork (48 in.)	..	2	..	..
1	367419	Fork (36 in.)	..	..	2	..
1	367420	Fork (42 in.)	..	..	2	..
1	367421	Fork (48 in.)	..	..	2	..
1	367422	Fork (54 in.)	..	..	2	..
1	367423	Fork (60 in.)	..	..	2	..
1	367424	Fork (72 in.)	..	..	2	..
1	1338097	Fork (42 in.)	..	..	..	2
1	1338098	Fork (47.5 in.)	..	..	..	2
1	1332745	Fork (54 in.)	..	..	..	2
2	1523732	Knob	1	1	1	1
3	1523733	Pin	1	1	..	..
3	1523737	Pin	..	..	1	1
4	1500782	Spring	1	1	..	..

©2013 HYSTER COMPANY

KEY:

A: Standard Class II (100 mm x 40 mm) (4 in. x 1.5 in.)
B: Polished Full Bottom Taper, Class II (125 mm x 40 mm) (5 in. x 1.5 in.)
C: Standard Class III (125 mm x 50 mm) (5 in. x 2 in.)
D: Polished Full Bottom Taper, Class III (180 mm x 45 mm) (7 in. x 1.8 in.)

ITEM	PART NO.	DESCRIPTION	QTY A	B	C	D
4	1500784	Spring	..	..	1	1
5	**a** 1477166	Washer	1	1	1	1
6	**a** 1477167	Wedge Band	1	1	..	..
6	1477237	Wedge Band	..	..	1	1
7	1523734	Pin (Not Illustrated)	1	1	1	1
	1523735	Kit-Latch	2	2	..	..
	1523739	Kit-Latch (Class III)	..	..	2	2

FOOTNOTES:

a Refer to Latch Kit Installation Instructions

©2013 HYSTER COMPANY

FORKS (FIGURE 1-54)
OPTIONAL

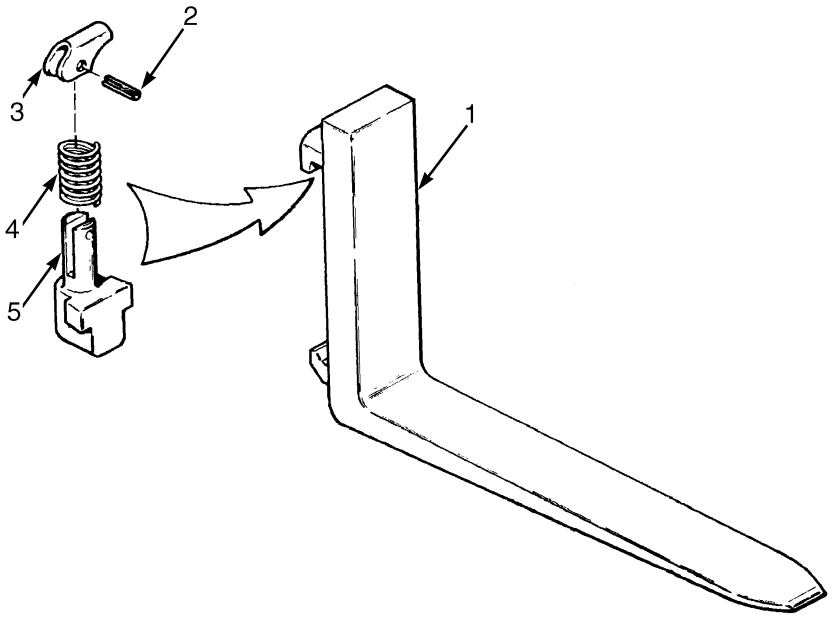

HP120793

KEY:
A: 100 mm x 40 mm (4 in. x 1.5 in.) Standard Taper (H40-50FT)
B: 125 mm x 40 mm (5 in. x 1.5 in.) Polished, Full Bottom Taper (H40-50FT)
C: 125 mm x 50 mm (5 in. x 2 in.) Standard Taper (H60-70FT)
D: 180 mm x 45 mm (7 in. x 1.75 in.) Polished, Full Bottom Taper (H60-70FT)

			QTY			
ITEM	**PART NO.**	**DESCRIPTION**	**A**	**B**	**C**	**D**
1	1378786	Fork (36 in.)	2	..	..	..
1	1378788	Fork (42 in.)	2	..	..	..
1	1378789	Fork (48 in.)	2	..	..	..
1	1378790	Fork (54 in.)	2	..	..	..
1	1378807	Fork (36 in.)	..	2	..	..
1	1378808	Fork (42 in.)	..	2	..	..
1	1378809	Fork (48 in.)	..	2	..	..
1	1378732	Fork (36 in.)	..	..	2	..
1	1378733	Fork (42 in.)	..	..	2	..
1	1378734	Fork (48 in.)	..	..	2	..
1	1378735	Fork (54 in.)	..	..	2	..
1	1378736	Fork (60 in.)	..	..	2	..
1	1378737	Fork (72 in.)	..	..	2	..
1	1381816	Fork (42 in.)	..	..	..	2
1	1381817	Fork (47.5 in.)	..	..	..	2
1	1550764	Fork (54 in.)	..	..	..	2
2	302450	Roll Pin	1	1	1	1
3	1378763	Latch	1	1	1	1
4	1378762	Spring	1	1	1	1
5	1378760	Pin	1	1	..	..
5	1378761	Fork (Pin)	..	..	1	1
	1378765	Kit-Latch (Class II)	1	1	..	..

©2013 HYSTER COMPANY

KEY:
A: 100 mm x 40 mm (4 in. x 1.5 in.) Standard Taper (H40-50FT)
B: 125 mm x 40 mm (5 in. x 1.5 in.) Polished, Full Bottom Taper (H40-50FT)
C: 125 mm x 50 mm (5 in. x 2 in.) Standard Taper (H60-70FT)
D: 180 mm x 45 mm (7 in. x 1.75 in.) Polished, Full Bottom Taper (H60-70FT)

			QTY			
ITEM	**PART NO.**	**DESCRIPTION**	**A**	**B**	**C**	**D**
	1378766	Kit-Latch (Class III And IV)	..	..	1	1

LOAD BACKREST EXTENSION (FIGURE 1-55)

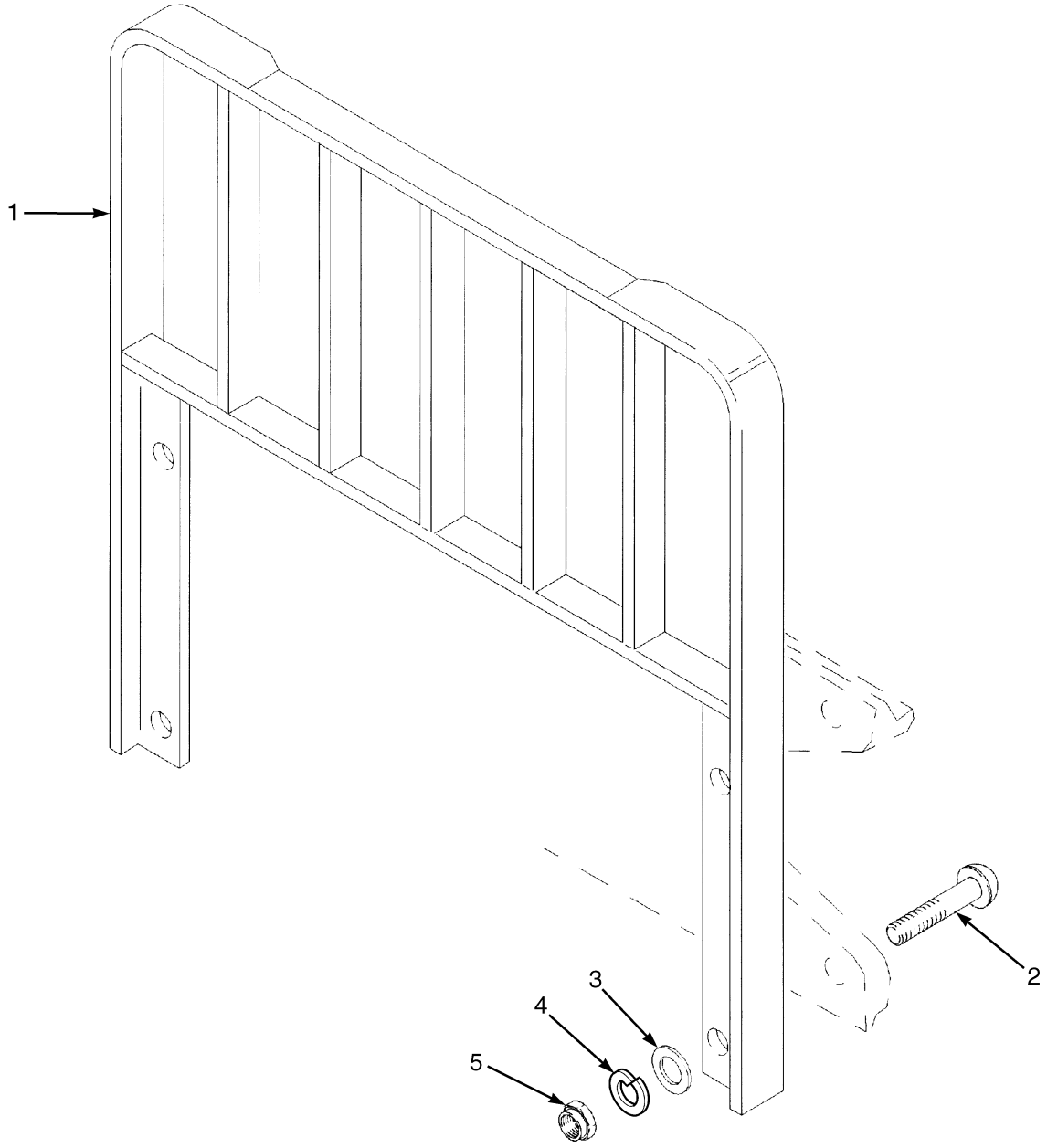

HP120836

©2013 HYSTER COMPANY

LOAD BACKREST EXTENSION

KEY:
A: For Use With Standard Carriage Only
B: For Use With Integral Side-Shift Carriage Only

ITEM	PART NO.	DESCRIPTION	QTY A	QTY B
1	1663467	Load Backrest (1219 mm) (Class III)	1	1
1	1663460	Load Backrest (42 in.) (Class III)	1	1
1	1663424	Load Backrest (54 in.) (1370 mm) (Class III)	1	1
1	1663443	Load Backrest (42 in) (Class II)	1	..
1	1663450	Load Backrest (1219 mm) (Class II)	1	..
1	1663443	Load Backrest (42 in) (Class II)	..	1
1	1663450	Load Backrest (1219 mm) (Class II)	..	1
2	2034347	Capscrew	..	4
2	**a** 1343990	Capscrew	4	4
2	**b** 1354923	Capscrew	4	4
3	296423	Washer	4	4
4	292683	Lockwasher	4	4
5	300937	Nut	4	4

FOOTNOTES:

a For Use On 42" Class III, 42" Class II Standard Carriage, And 48" Class II Standard Carriage Only

b For Use On 48" Class III Only

©2013 HYSTER COMPANY

HEATER HOSES (FIGURE 1-56)

MAZDA, GASOLINE

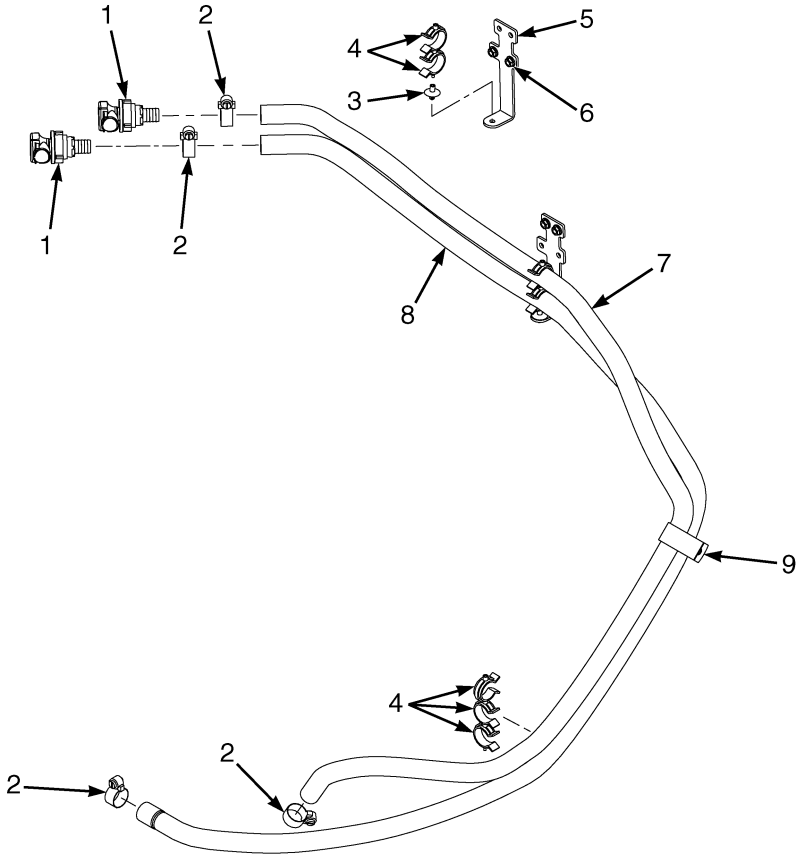

BP120966

ITEM	PART NO.	DESCRIPTION	QTY
1	~~1670529~~		
	1598327	Connector (Female)	2
2	130845	Clamp	4
3	1543842	Clamp	2
4	1569465	Clamp (Swivel)	7
5	1588833	Bracket	2
6	~~1307884~~		
	1514429	Nut	4
7	2071001	Hose	1
8	2071002	Hose	1
9	1562648	Clip	1

©2013 HYSTER COMPANY

HEATER HOSES (FIGURE 1-57)

MAZDA, LPG

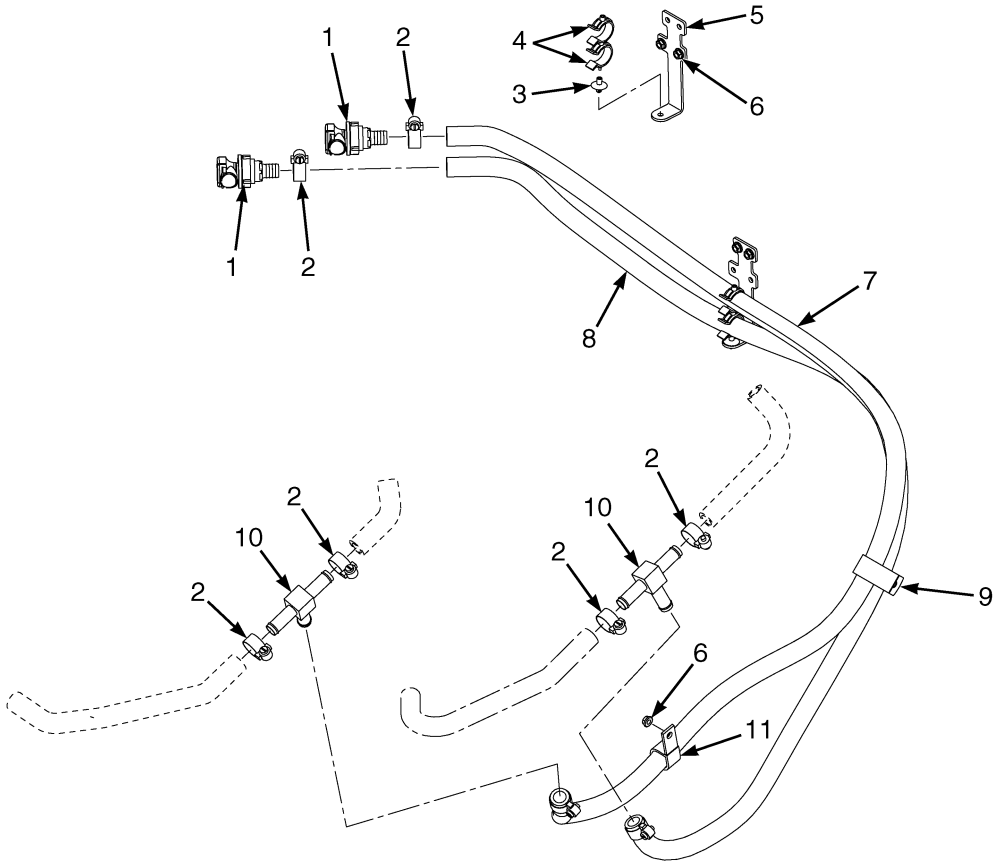

BP120967

ITEM	PART NO.	DESCRIPTION	QTY
1	~~1670529~~		
	1598327	Connector (Female)	2
2	130845	Clamp	8
3	1543842	Clamp	2
4	1569465	Clamp (Swivel)	4
5	1588833	Bracket	2
6	~~1307884~~		
	1514429	Nut	5
7	2098119	Hose	1
8	2098120	Hose	1
9	1562648	Clip	1
10	366000	Fitting	2
11	140612	Hose Clamp	1

©2013 HYSTER COMPANY

HEATER HOSES (FIGURE 1-58)
GM, GASOLINE

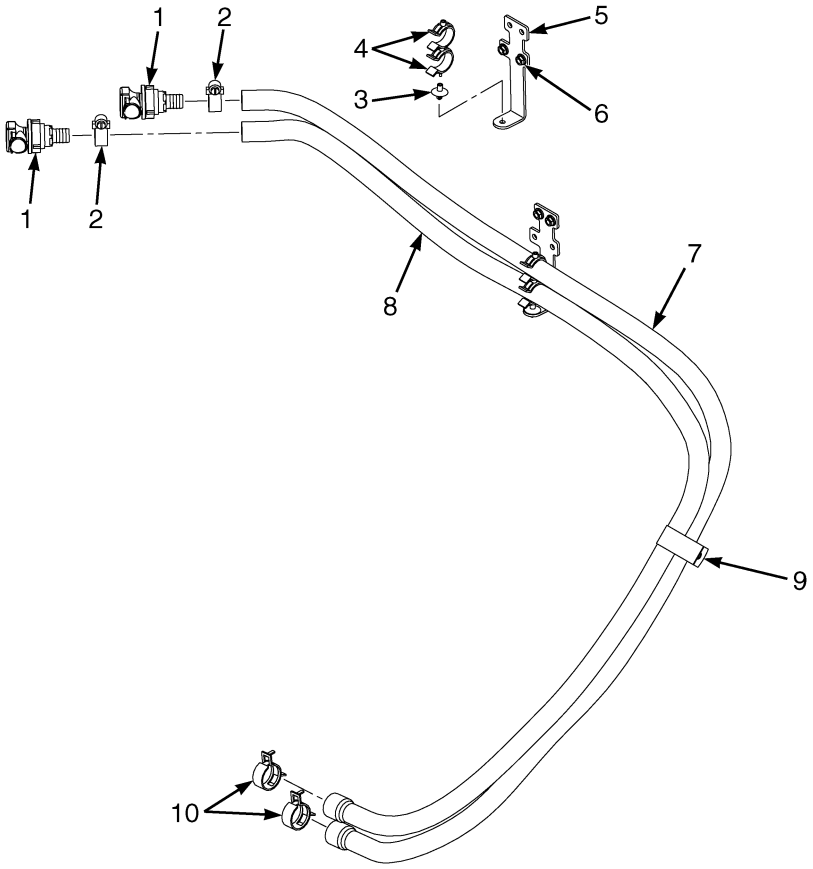

ITEM	PART NO.	DESCRIPTION	QTY
1	~~1670529~~		
	1598327	Connector (Female)	2
2	130845	Clamp	2
3	1543842	Clamp	2
4	1569465	Clamp (Swivel)	4
5	1588833	Bracket	2
6	~~1307884~~		
	1514429	Nut	4
7	2075659	Hose	1
8	2070770	Hose	1
9	1562648	Clip	1
10	1501997	Hose Clamp	2

©2013 HYSTER COMPANY

HEATER HOSES (FIGURE 1-59)

GM, LPG

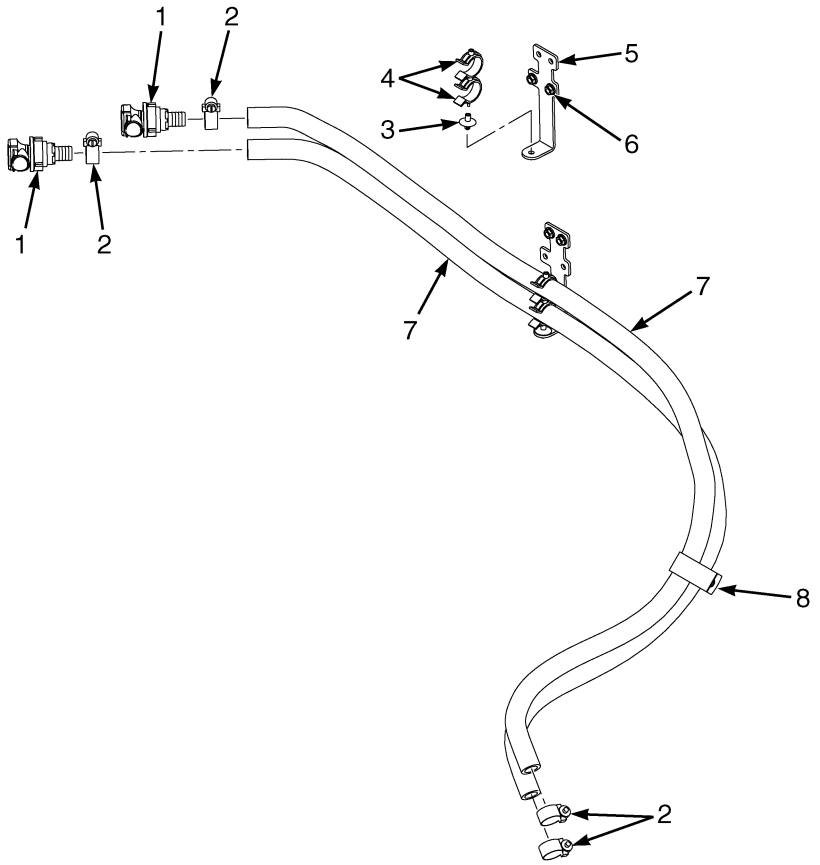

BM120969

ITEM	PART NO.	DESCRIPTION	QTY
1	~~1670529~~		
	1598327	Connector (Female)	2
2	130845	Clamp	4
3	1543842	Clamp	2
4	1569465	Clamp (Swivel)	4
5	1588833	Bracket	2
6	~~1307884~~		
	1514429	Nut	4
7	2070783	Hose	2
8	1562648	Clip	1

HEATER HOSES (FIGURE 1-60)

YANMAR DIESEL

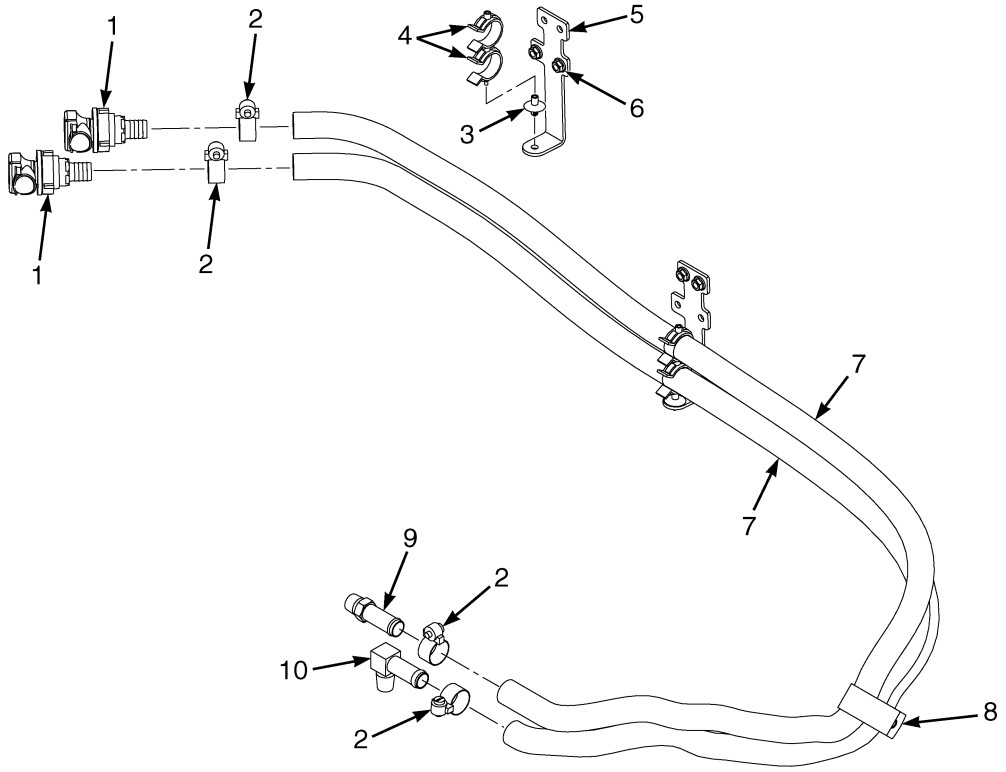

BP120970

ITEM	PART NO.	DESCRIPTION	QTY
1	~~1670529~~		
	1598327	Connector (Female)	2
2	130845	Clamp	4
3	1543842	Clamp	2
4	1569465	Clamp (Swivel)	5
5	1588833	Bracket	2
6	~~1307884~~		
	1514429	Nut	4
7	2070769	Hose	2
8	1562648	Clip	1
9	138710	Fitting	1
10	125305	Fitting	1
	a 1502061	Clamp	1
	a 1612617	Clamp	1

FOOTNOTES:

a Not Illustrated

©2013 HYSTER COMPANY

NOTES

©2013 HYSTER COMPANY

LABELS (FIGURE 1-61)
HYDRAULIC CONTROL LABELS — CONTROL LEVER

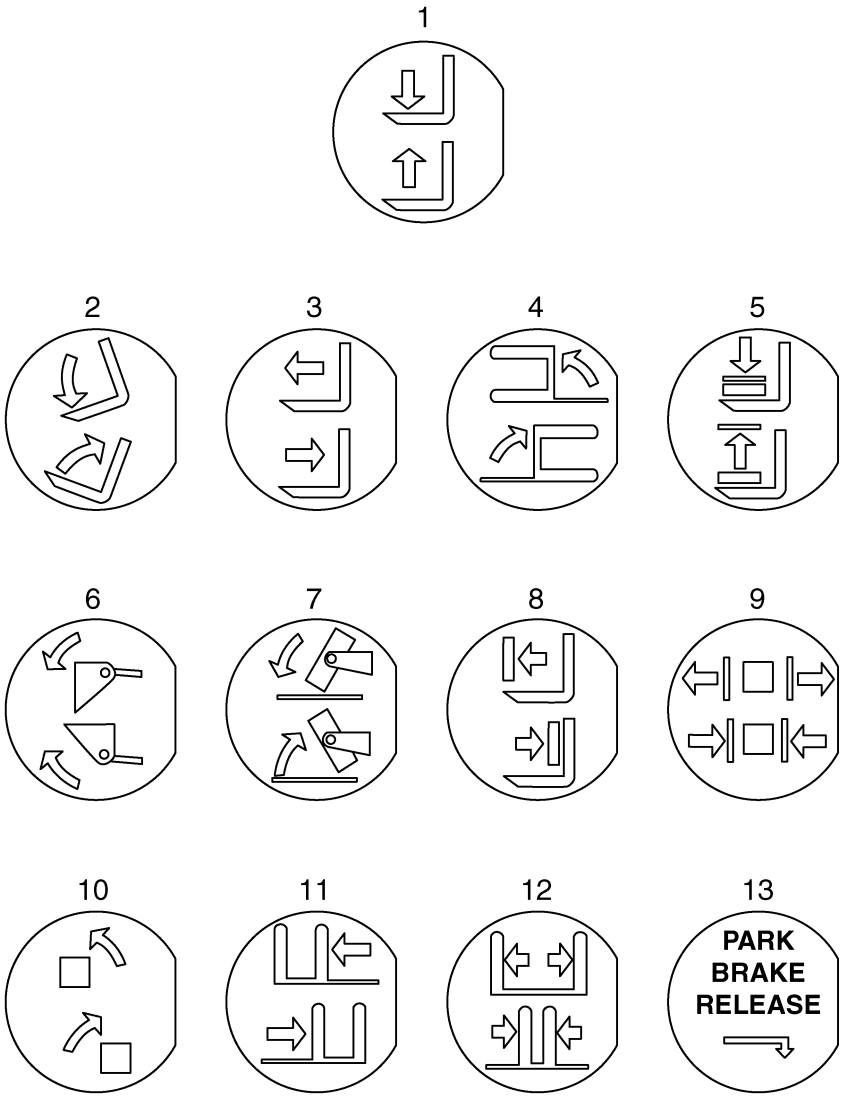

BP120880

©2013 HYSTER COMPANY

LABELS

HYDRAULIC CONTROL LABELS – CONTROL LEVER

ITEM	PART NO.	DESCRIPTION	QTY
1	~~2070296~~		
	4034931	Lens with label (Hoist)	1
2	~~2070297~~		
	4034932	Lens with label (Tilt)	1
3	4034933	Lens with label (Reach)	1
4	4034934	Lens with label (Swing)	1
5	4034935	Lens with label (Load Stabilizer)	1
6	4034936	Lens with label (Scoop)	1
7	4034937	Lens with label (Upender)	1
8	4034938	Lens with Label (Push and Pull)	1
9	4034939	Lens with label (Clamp)	1
10	4034940	Lens with label (Rotate)	1
11	~~2070306~~		
	4034941	Lens with label (Side-Shift)	1
12	4034942	Lens with Label (Fork Spread)	1
13	4034943	Lens with label (Park Brake Release)	1

©2013 HYSTER COMPANY

RAIN TOP (FIGURE 1-62)

(1/2013 →)

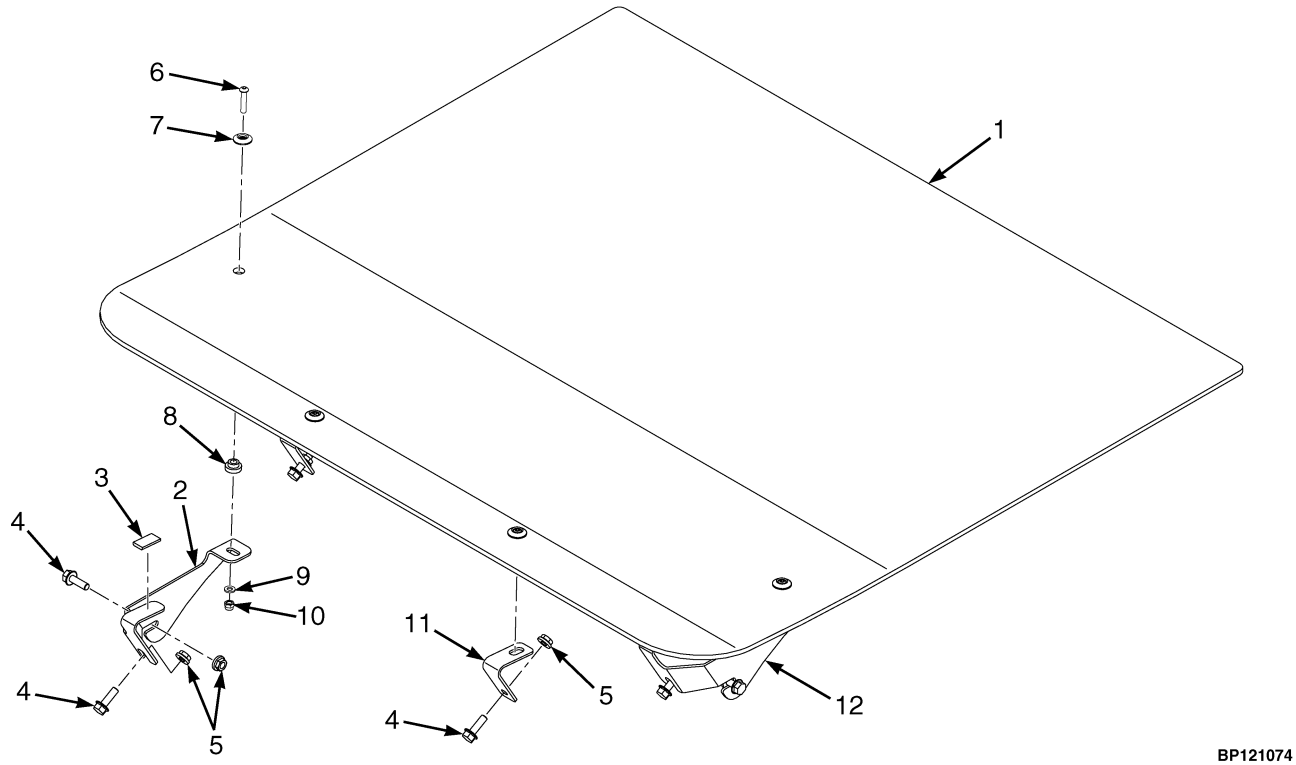

BP121074

ITEM	PART NO.	DESCRIPTION	QTY
1	4051334	Roof Panel	1
2	4050312	Bracket	1
3	4050311	Seal	2
4	4043638	Capscrew	6
5	1586430	Nut	6
6	1710007	Capscrew	4
7	1709980	Washer	4
8	261395	Bushing	4
9	1673754	Washer	4
10	4050426	Locknut	4
11	4050343	Bracket	2
12	4050313	Bracket	1

©2013 HYSTER COMPANY

2 ENGINE ASSEMBLY - GM

SECTION 2
ENGINE ASSEMBLY - GM

DESCRIPTION	PAGE
ALTERNATOR AND MOUNTING	
GM 2.4L - GASOLINE AND LPG	2-31
ASSEMBLED ENGINE	
GASOLINE AND LPG - GM 2.4L (SHEET 2 OF 4)	2-22
GM 2.4L, GASOLINE AND LPG - SHEET 1 OF 4	2-18
GM 2.4L, GASOLINE AND LPG - SHEET 3 OF 4	2-24
GM 2.4L, GASOLINE AND LPG - SHEET 4 OF 4	2-26
CAM POSITION SENSOR	
GM 2.4L GASOLINE AND LPG - 2010 SERIES	2-47
CAMSHAFT, CYLINDER HEAD AND MANIFOLDS	
GM 2.4L (→ S/N L177B05989D (LPG)) (→ S/N L177B06541D GAS)	2-36
GM 2.4L ENGINE (S/N L177B05990D → (LPG)) (S/N L177B06542D → GAS)	2-40
COOLING MANIFOLD AND ATTACHING PARTS	
GM 2.4L - GASOLINE AND LPG	2-30
COOLING SYSTEM	
GM 2.4L, GASOLINE AND LPG, SQUARE WAVE RADIATOR - WITH INTERNAL OIL COOLER (→ S/N L177B14568E)	2-2
GM 2.4L, GASOLINE AND LPG, SQUARE WAVE RADIATOR - WITH INTERNAL OIL COOLER (S/N L177B14569E →) (S/N L177V01501F →)	2-4
GM 2.4L, GASOLINE AND LPG, SQUARE WAVE RADIATOR - WITH EXTERNAL OIL COOLER (→ S/N L177B14568E)	2-6
GM 2.4L, GASOLINE AND LPG, SQUARE WAVE RADIATOR - WITH EXTERNAL OIL COOLER (S/N L177B14569E →) (S/N L177V01501F →)	2-8
CRANKSHAFT, PISTONS AND OIL PAN	
GM 2.4L - GASOLINE AND LPG	2-44
ENGINE MOUNTING	
GM 2.4L ENGINE	2-17
EXHAUST SYSTEM	
GM 2.4L GASOLINE AND LPG	2-10
GM 2.4L GASOLINE AND LPG - 2010 SERIES	2-14
FAN ASSEMBLY	
GM 2.4L ENGINE	2-28
FLYWHEEL AND HOUSING	
GM 2.4L - GASOLINE AND LPG (→ S/N L177V02181F)	2-32
GM 2.4L GASOLINE AND LPG (S/N L177V02182F →)	2-34

©2013 HYSTER COMPANY

COOLING SYSTEM (FIGURE 2-1)

GM 2.4L, GASOLINE AND LPG, SQUARE WAVE RADIATOR — WITH INTERNAL OIL COOLER (→ S/N L177B14568E)

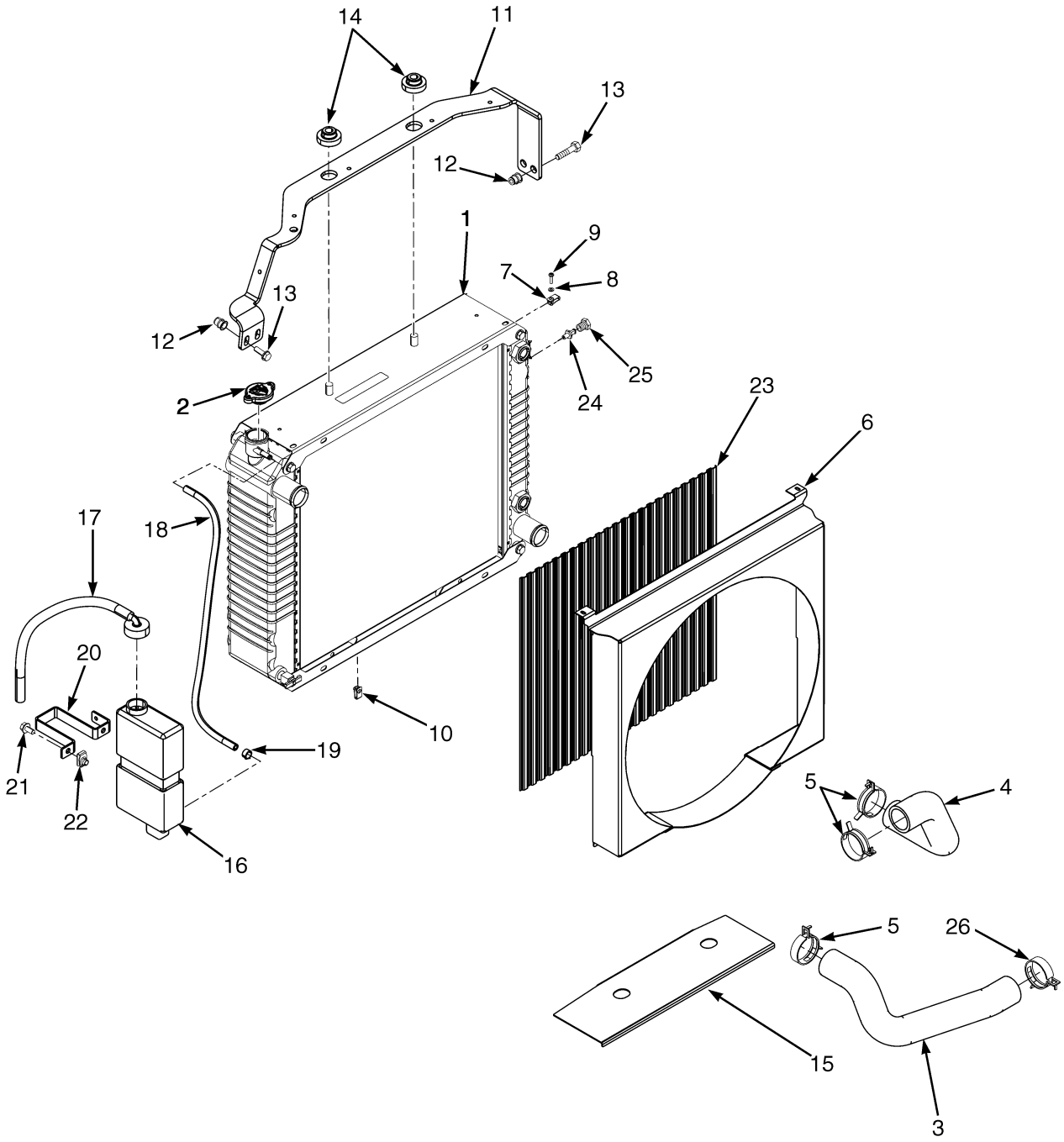

BP060028

©2013 HYSTER COMPANY

COOLING SYSTEM

GM 2.4L, GASOLINE AND LPG, SQUARE WAVE RADIATOR – WITH INTERNAL OIL COOLER (→ S/N L177B14568E)

ITEM	PART NO.	DESCRIPTION	QTY
1	2069552	Radiator	1
1	1569079	Drain Valve (w/Thread Wrap)	1
2	1352140	Radiator Cap	1
3	2087370	Hose (Lower)	1
4	2085103	Radiator Hose (Upper)	1
5	1502001	Hose Clamp	3
6	1626129	Shroud	1
7	320154	Washer	2
8	1535257	Nut	2
9	302023	Screw	2
10	1329271	Clip	2
11	1611852	Bracket	1
12	1530243	Insert	4
13	1583611	Capscrew	4
14	1529787	Isolator	4
15	1565692	Exhaust Shield	1
16	1347026	Reservoir	1
17	345455	Outlet Assembly	1
17	336550	Bushing	1
17	345453	Outlet (Reservoir)	1
17	345454	Cap	1
17	339735	Hose	1
18	1567674	Hose	1
19	369815	Clamp	2
20	1531167	Bracket	1
21	1527879	Capscrew	2
22	1480237	Nut	2
23	1582078	Screen	1
24	1531404	Sensor (Low Coolant Level)	1
25	**a** 14385	Fitting	1
26	1527982	Hose Clamp	2

FOOTNOTES:

a Without Low Coolant Level Sensor

©2013 HYSTER COMPANY

COOLING SYSTEM (FIGURE 2-2)

GM 2.4L, GASOLINE AND LPG, SQUARE WAVE RADIATOR — WITH INTERNAL OIL COOLER (S/N L177B14569E →) (S/N L177V01501F →)

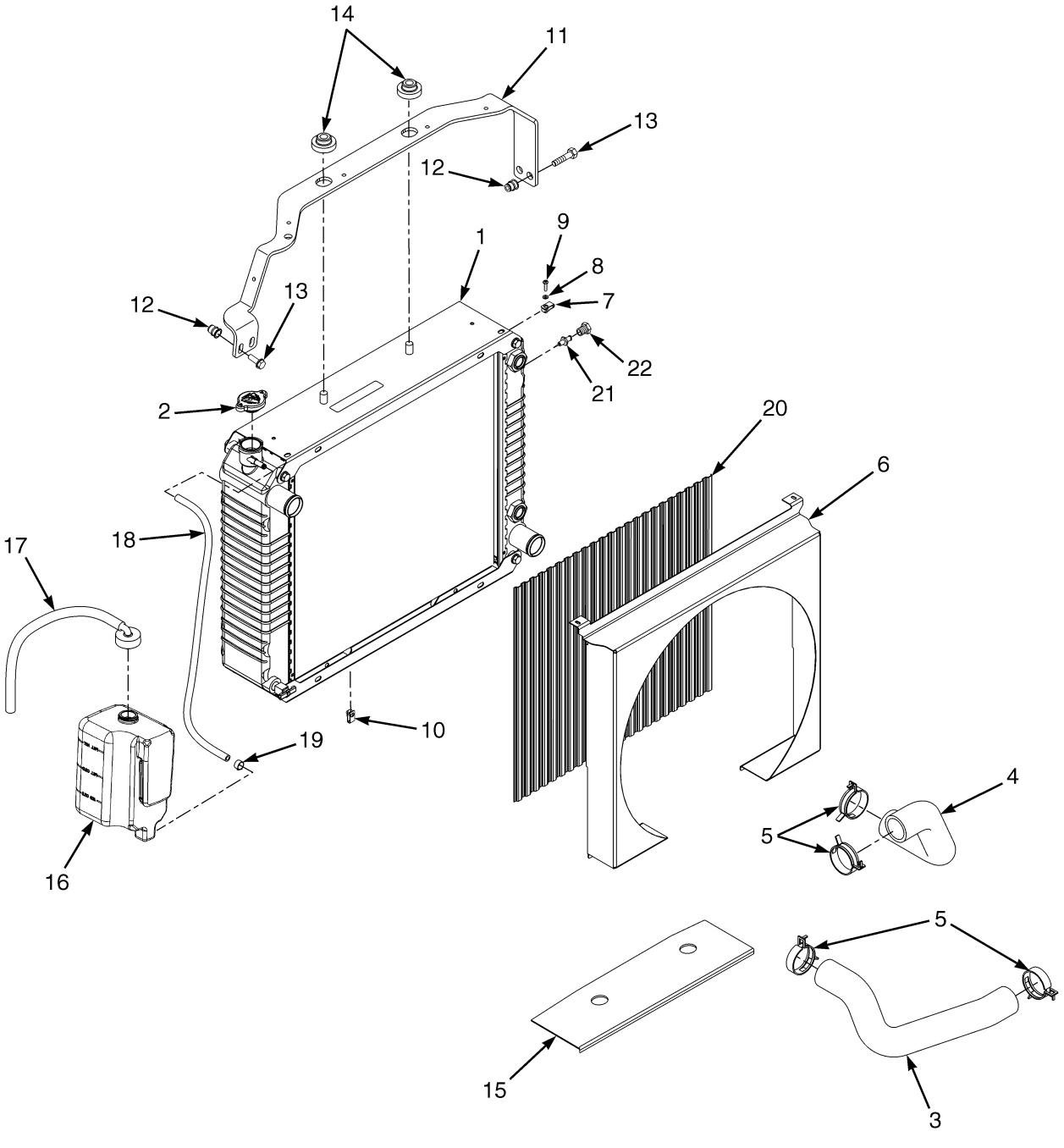

©2013 HYSTER COMPANY

COOLING SYSTEM

GM 2.4L, GASOLINE AND LPG, SQUARE WAVE RADIATOR – WITH INTERNAL OIL COOLER (S/N L177B14569E →) (S/N L177V01501F →)

ITEM	PART NO.	DESCRIPTION	QTY
1	**b** 2069552	Radiator	1
1	**b** 1569079	Drain Valve (w/Thread Wrap)	1
1	**c** 4603552	Radiator (Assembly)	1
1	**c** 4038260	Radiator	1
1	**c** 4038264	Drain Valve	1
1	**c** 4038265	Nut	2
1	**c** 4038266	Bolt	8
2	1352140	Radiator Cap	1
3	2087370	Hose (Lower)	1
4	2085103	Radiator Hose (Upper)	1
5	369804	Clamp	4
6	1582076	Shroud	1
7	1535257	Nut	2
8	320154	Washer	2
9	302023	Screw	2
10	1329271	Clip	2
11	1611852	Bracket	1
12	1530243	Insert	4
13	1583611	Capscrew	4
14	1529787	Isolator	4
15	1565692	Exhaust Shield	1
16	1633307	Reservoir	1
17	345455	Outlet Assembly	1
17	336550	Bushing	1
17	345453	Outlet (Reservoir)	1
17	345454	Cap	1
17	339735	Hose	1
18	1567674	Hose	1
19	369815	Clamp	2
20	1582078	Screen	1
21	1531404	Sensor (Low Coolant Level)	1
22	**a** 14385	Fitting	1

FOOTNOTES:

a Without Low Coolant Level Sensor
b → S/N L177V09356K EXC. 09188
c S/N L177V09357K → INC. 09188

©2013 HYSTER COMPANY

COOLING SYSTEM (FIGURE 2-3)

GM 2.4L, GASOLINE AND LPG, SQUARE WAVE RADIATOR — WITH EXTERNAL OIL COOLER (→ S/N L177B14568E)

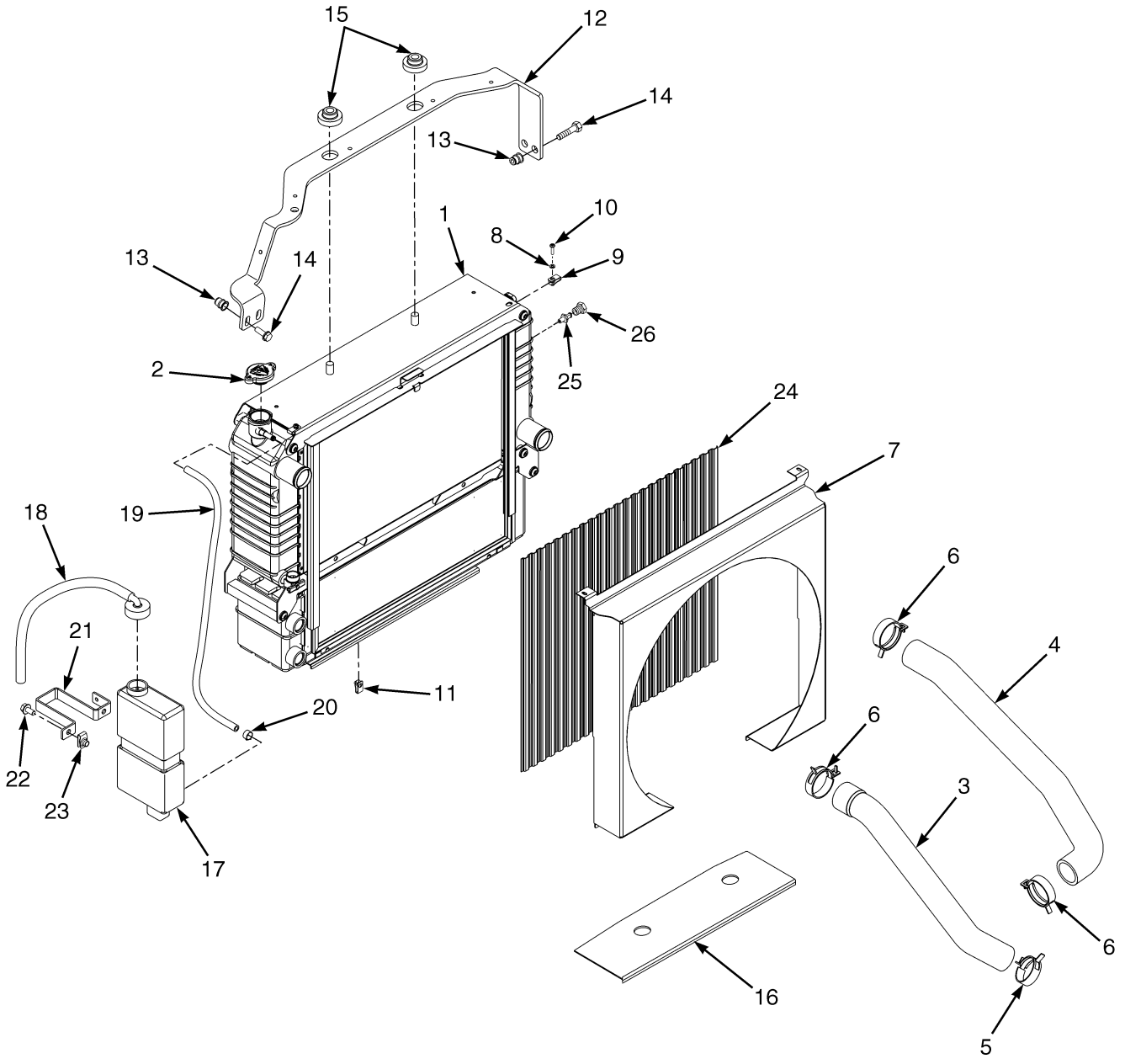

HP060042

©2013 HYSTER COMPANY

COOLING SYSTEM

GM 2.4L, GASOLINE AND LPG, SQUARE WAVE RADIATOR – WITH EXTERNAL OIL COOLER (→ S/N L177B14568E)

ITEM	PART NO.	DESCRIPTION	QTY
1	2074790	Radiator Assembly (Includes Oil Cooler)	1
1	1569079	Drain Valve (w/Thread Wrap)	1
1	1590972	Radiator	1
1	1590918	Oil Cooler	1
1	1597765	Washer	4
1	1597766	Screw	4
1	1597763	Drain Valve (Optional)	1
2	1352140	Radiator Cap	1
3	2085268	Radiator Hose (Lower)	1
4	2085103	Radiator Hose (Upper)	1
5	1527982	Hose Clamp	1
6	1502001	Hose Clamp	3
7	1582076	Shroud	1
8	320154	Washer	2
9	1535257	Nut	2
10	302023	Screw	2
11	1551663	Clip	2
12	1611852	Bracket	1
13	1530243	Insert	4
14	1583611	Capscrew	4
15	1529787	Isolator	4
16	1565692	Exhaust Shield	1
17	1347026	Reservoir	1
18	345455	Outlet Assembly	1
18	336550	Bushing	1
18	345453	Outlet (Reservoir)	1
18	345454	Cap	1
18	339735	Hose	1
19	1567674	Hose	1
20	369815	Clamp	2
21	1531167	Bracket	1
22	1527879	Capscrew	2
23	1480237	Nut	2
24	1582078	Screen	1
25	1531404	Sensor (Low Coolant Level)	1
26	**a** 14385	Fitting	1

FOOTNOTES:

a Without Low Coolant Level Sensor

©2013 HYSTER COMPANY

COOLING SYSTEM (FIGURE 2-4)

GM 2.4L, GASOLINE AND LPG, SQUARE WAVE RADIATOR — WITH EXTERNAL OIL COOLER (S/N L177B14569E →) (S/N L177V01501F →)

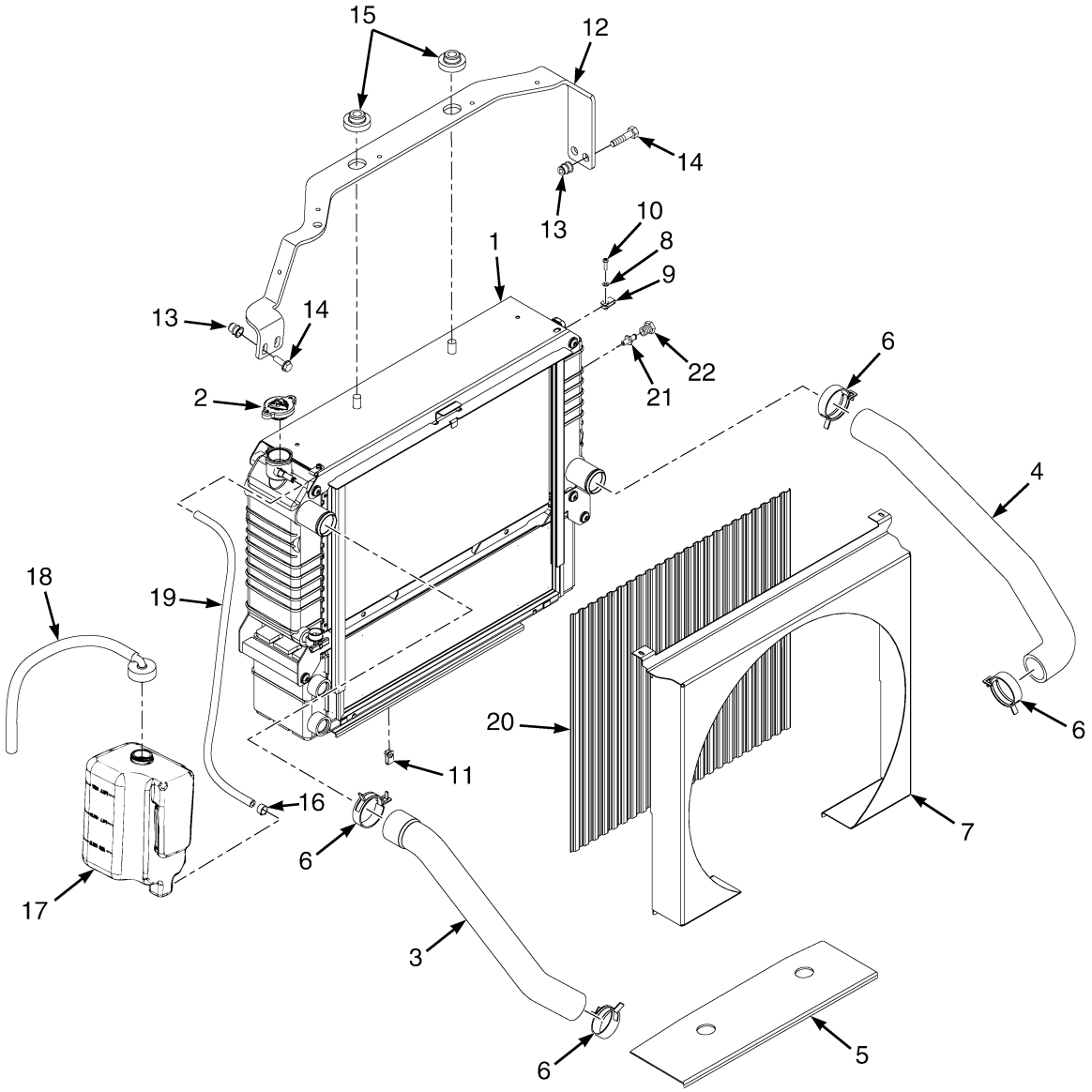

BP060049

©2013 HYSTER COMPANY

COOLING SYSTEM

GM 2.4L, GASOLINE AND LPG, SQUARE WAVE RADIATOR – WITH EXTERNAL OIL COOLER (S/N L177B14569E →) (S/N L177V01501F →)

ITEM	PART NO.	DESCRIPTION	QTY
1	**b** 2074790	Radiator Assembly (Includes Oil Cooler)	1
1	**b** 1569079	Drain Valve (w/Thread Wrap)	1
1	**b** 1590972	Radiator	1
1	**b** 1590918	Oil Cooler	1
1	**b** 1597765	Washer	4
1	**b** 1597766	Screw	4
1	**b** 1597763	Drain Valve (Optional)	1
1	**c** 4603554	Radiator (Assembly)	1
1	**c** 4038258	Radiator	1
1	**c** 4038263	Oil Cooler	1
1	**c** 4038264	Drain Valve	1
1	**c** 4038265	Nut	2
1	**c** 4038266	Bolt	8
1	**c** 4038267	Bolt	4
2	1352140	Radiator Cap	1
3	2085103	Radiator Hose (Upper)	1
4	2085268	Radiator Hose (Lower)	1
5	1565692	Exhaust Shield	1
6	369804	Clamp	4
7	1582076	Shroud	1
8	320154	Washer	2
9	1535257	Nut	2
10	302023	Screw	2
11	1551663	Clip	2
12	1611852	Bracket	1
13	1530243	Insert	4
14	1583611	Capscrew	4
15	1529787	Isolator	4
16	369815	Clamp	2
17	1633307	Reservoir	1
18	345455	Outlet Assembly	1
18	336550	Bushing	1
18	345453	Outlet (Reservoir)	1
18	345454	Cap	1
18	339735	Hose	1
19	1567674	Hose	1
20	1582078	Screen	1
21	1531404	Sensor (Low Coolant Level)	1
22	**a** 14385	Fitting	1

FOOTNOTES:

a Without Low Coolant Level Sensor
b → S/N L177V09071J
c S/N L177V09072J →

©2013 HYSTER COMPANY

EXHAUST SYSTEM (FIGURE 2-5)

GM 2.4L GASOLINE AND LPG

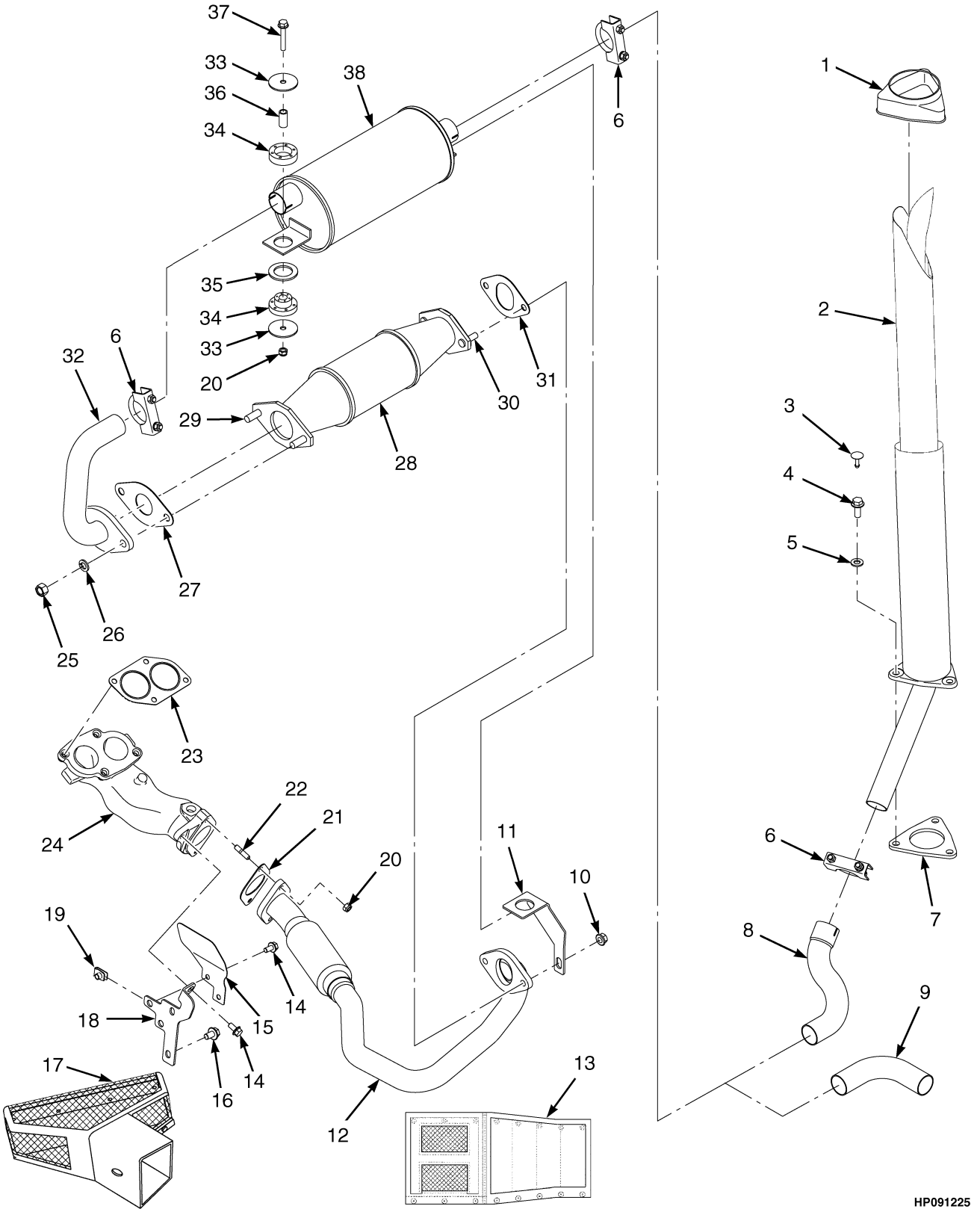

©2013 HYSTER COMPANY

EXHAUST SYSTEM
GM 2.4L GASOLINE AND LPG

KEY:
A: With Catalytic Converter
B: Without Catalytic Converter
C: With Safety Option

ITEM	PART NO.	DESCRIPTION	QTY A	QTY B	QTY C
1	2021394	Cover	1	1	1
2	1646827	Tail Pipe	1	1	1
3	1347045	Fastener	1	1	1
4	1510117	Capscrew	1	1	1
5	320159	Washer	1	1	1
6	68968	Clamp	3	3	3
6	63117	Clamp (Alternate Part)	3	3	3
7	1533639	Cover	1	1	1
8	1533863	Exhaust Pipe (Overhead)	1	1	1
9	1589312	Exhaust Pipe (Counterweight)	1	1	1
10	1460477	Nut	2	..	2
11	1532523	Bracket	1	..	1
12	1546731	Exhaust Pipe	1	..	1
12	1566522	Exhaust Pipe (Not Illustrated)	..	1	..
13	**a** 2084004	Wrap	1	1	1
14	1527879	Capscrew	1	1	..
15	1587069	Exhaust Shield	1	1	..
16	1528778	Capscrew	1	1	..
17	**a** 1569982	Wrap (Manifold)	1	1	1
18	1587068	Bracket	1	1	..
19	1480237	Nut	1	1	..
20	1582222	Locknut	4	4	4
21	1566528	Gasket	1	1	..
21	4018959	Gasket (Alternate Part)	1	1	..
22	1567831	Stud (Exhaust)	2	2	..
23	1582139	Gasket	1	1	..
24	1583713	Adapter	1	1	..
25	1469405	Nut	2	..	2
26	292683	Lockwasher	2	..	2
27	1469379	Gasket	1	..	1
28	2059689	Catalytic Converter	1	..	1
29	1495501	Bolt	2	..	2
30	1495502	Bolt	2	..	2
31	1547712	Gasket	1	..	1
32	1534174	Exhaust Pipe	1	..	..
33	**b** 1528938	Washer	4	4	4
34	**b** 1528930	Mount	2	2	2
34	**c** 1709996	Isolator	4	4	4
35	**b** 1532585	Washer	1	..	..
36	**b** 1528934	Spacer	2	2	2
36	**c** 1708371	Spacer	2	2	2
37	1510115	Capscrew	2	2	2
38	2060957	Muffler (Crimped)	1	1	..
38	2056524	Muffler (Welded)	1	1	1

©2013 HYSTER COMPANY

FOOTNOTES:

a Paper Industry Applications
b → S/N L177V04023G
c S/N L177V04024G →

©2013 HYSTER COMPANY

NOTES

©2013 HYSTER COMPANY

EXHAUST SYSTEM (FIGURE 2-6)

GM 2.4L GASOLINE AND LPG — 2010 SERIES

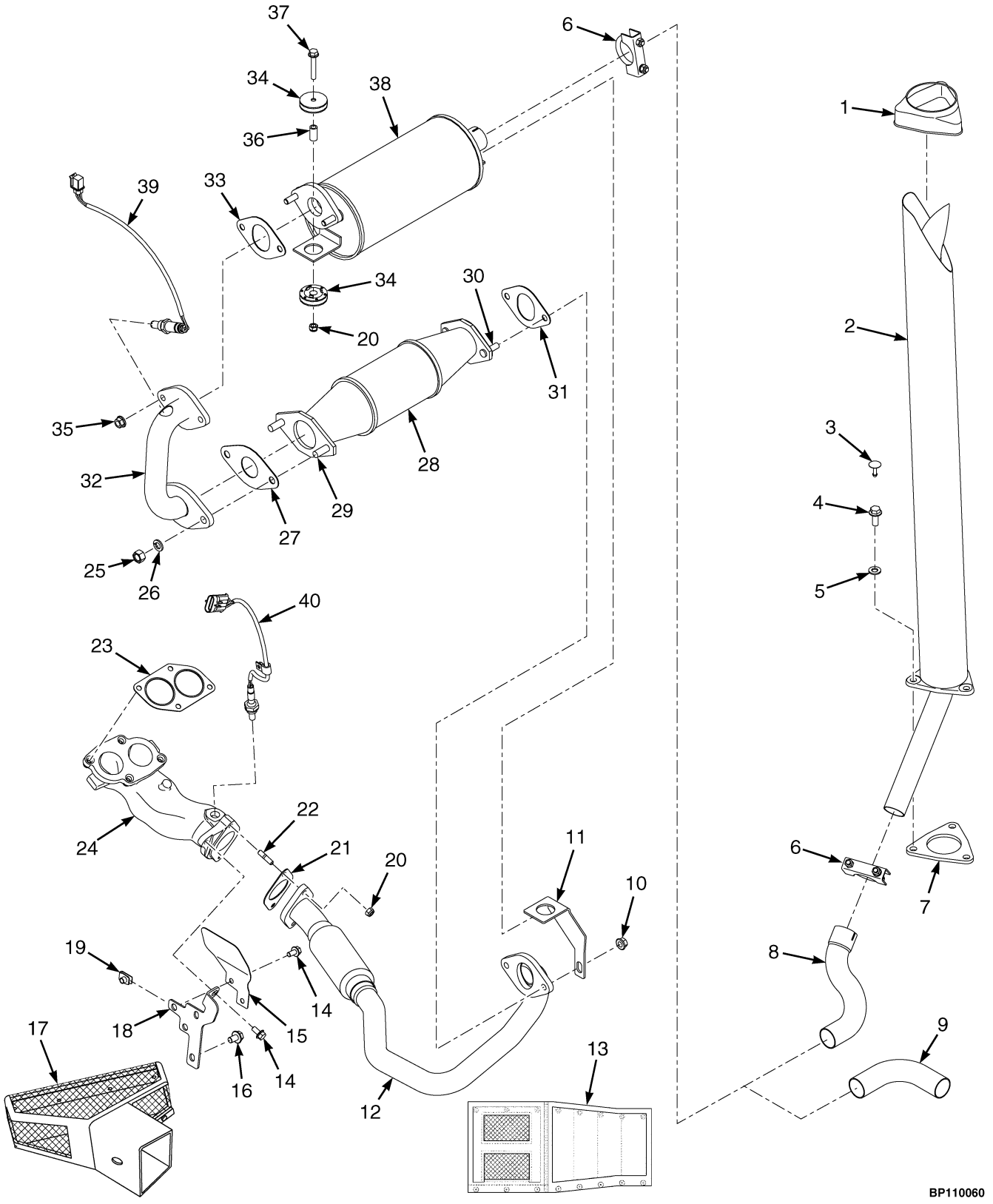

©2013 HYSTER COMPANY

EXHAUST SYSTEM
GM 2.4L GASOLINE AND LPG – 2010 SERIES

KEY:
A: With Catalytic Converter
B: Without Catalytic Converter
C: With Safety Option

ITEM	PART NO.	DESCRIPTION	QTY A	QTY B	QTY C
1	2021394	Cover	1	1	1
2	1646827	Tail Pipe	1	1	1
3	1347045	Fastener	1	1	1
4	1510117	Capscrew	1	1	1
5	320159	Washer	1	1	1
6	**d** 68968	Clamp	2	2	2
6	**e** 63117	Clamp	2	2	2
7	1533639	Cover	1	1	1
8	1533863	Exhaust Pipe (Overhead)	1	1	1
9	1589312	Exhaust Pipe (Counterweight)	1	1	1
10	1460477	Nut	2	..	2
11	1532523	Bracket	1	..	1
12	1546731	Exhaust Pipe	1	..	1
12	1566522	Exhaust Pipe (Not Illustrated)	..	1	..
13	**c** 2084004	Wrap	1	1	1
14	1527879	Capscrew	1	1	..
15	1587069	Exhaust Shield	1	1	..
16	1528778	Capscrew	1	1	..
17	**c** 1569982	Wrap (Manifold)	1	1	1
18	1587068	Bracket	1	1	..
19	1480237	Nut	1	1	..
20	1582222	Locknut	4	4	4
21	1566528	Gasket	1	1	..
21	4018959	Gasket (Alternate Part)	1	1	..
22	1567831	Stud (Exhaust)	2	2	..
23	1582139	Gasket	1	1	..
24	1583713	Adapter	1	1	..
25	1469405	Nut	2	..	2
26	292683	Lockwasher	2	..	2
27	1469379	Gasket	1	..	1
28	4601151	Catalytic Converter	1	..	1
29	1495501	Bolt	2	..	2
30	1495502	Bolt	2	..	2
31	1547712	Gasket	1	..	1
32	1636409	Exhaust Pipe	1	..	..
33	1547712	Gasket	2	..	..
34	1709996	Isolator	4	4	4
35	1460477	Nut	4	..	..
36	1708371	Spacer	2	2	2
37	1510115	Capscrew	2	2	2
38	2089895	Muffler (Crimped)	1	1	..
38	2089894	Muffler (Welded)	1	1	1
39	**a** 4006802	Sensor (Oxygen)	1	..	..
	b 1557546	Oxygen Sensor (With Wire Harness) (2010 Series)	1	1	1

©2013 HYSTER COMPANY

FOOTNOTES:

a From Radiator to Exhaust Pipe
b Located in Adapter
c Paper Industry Applications
d → S/N L177B30004H
e S/N L177B30005H →

©2013 HYSTER COMPANY

ENGINE MOUNTING (FIGURE 2-7)

GM 2.4L ENGINE

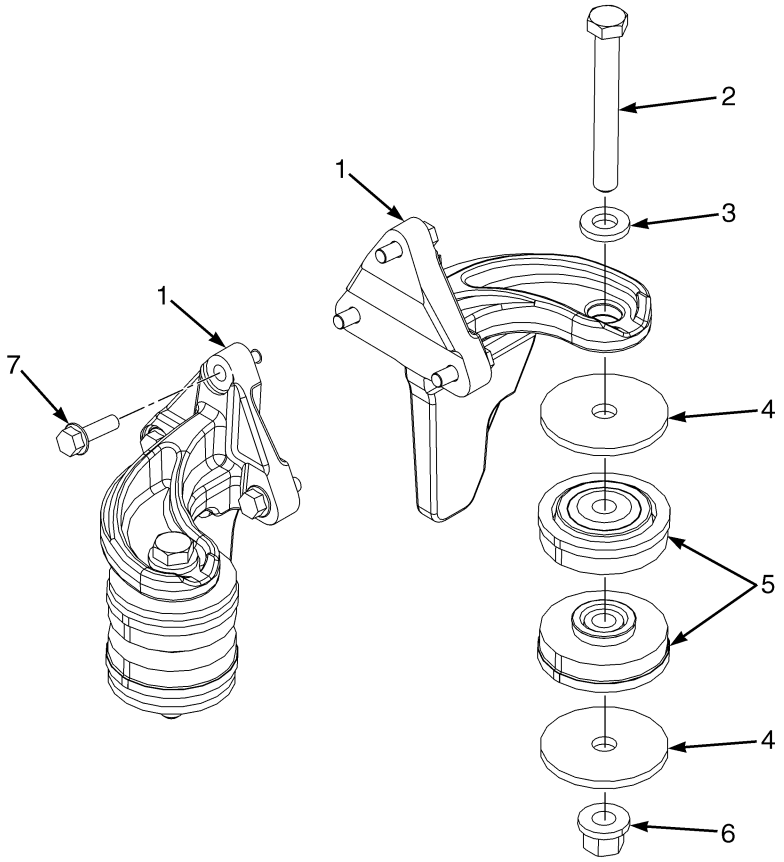

BP090420

ITEM	PART NO.	DESCRIPTION	QTY
1	1558184	Mount (LH)	1
1	1558186	Mount (RH)	1
2	293698	Capscrew	2
3	1504075	Washer	2
4	1557737	Washer	4
5	2069951	Isolator	4
6	1565453	Nut (Flange)	2
7	1565195	Capscrew	6

©2013 HYSTER COMPANY

ASSEMBLED ENGINE (FIGURE 2-8)

GM 2.4L, GASOLINE AND LPG — SHEET 1 OF 4

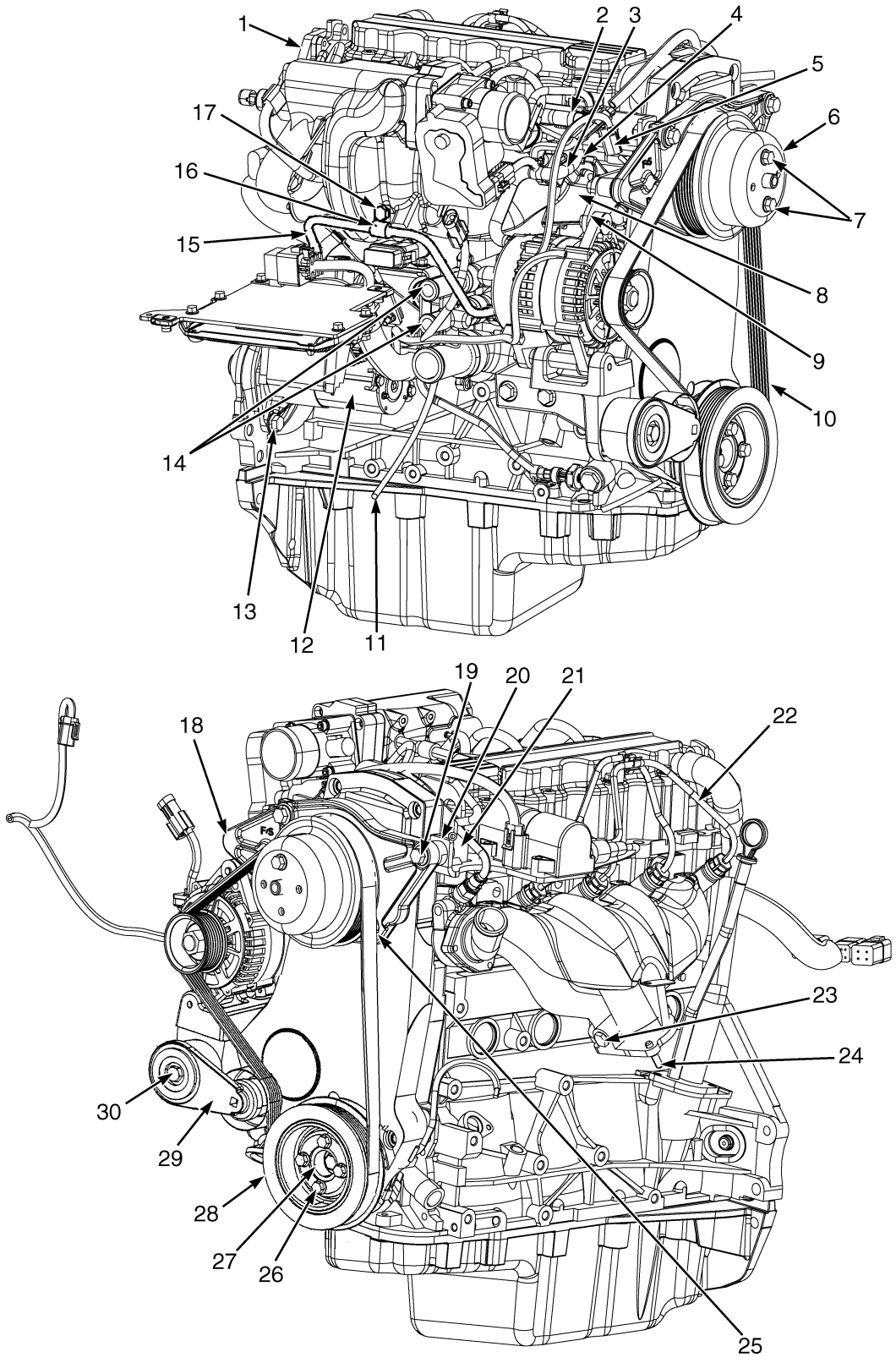

©2013 HYSTER COMPANY

ASSEMBLED ENGINE

GM 2.4L, GASOLINE AND LPG – SHEET 1 OF 4

KEY:
A: Gasoline
B: LPG

ITEM	PART NO.	DESCRIPTION	QTY A	QTY B
1	**c** 1501695	Engine Assy-Lpg (GM 2.4L) (2005)	1	1
1	**e** 1603004	Long Block (GM 2.4L) (2006)	1	1
1	**g** 1649486	Engine Assy (GM 2.4L) (2007)(2008)	1	1
1	4006369	Engine Assy (GM 2.4L) (2009)	1	1
1	4006383	Engine Assy (GM 2.4L) (2010 Series)	1	1
2	1543933	Fitting	1	..
3	168718	Clamp	1	..
4	1543900	Hose	1	..
5	1376727	Clamp (Insulated)	2	..
6	**d** 2085256	Fan Pulley (Fan)	1	1
6	**f** 2083821	Fan Pulley	1	1
7	293625	Capscrew	4	4
7	**b** 296418	Washer	4	4
8	2067504	Bracket	1	..
9	1547984	Plate	1	1
10	2070039	V-Belt (Micro V)	1	1
11	1589520	Tube	1	..
12	1548620	Starter	1	1
12	1551845	Solenoid	1	1
12	1551846	Bolt	2	2
13	1510117	Capscrew	3	2
14	1532513	Cap	2	2
15	1589366	Tube	1	..
16	130845	Clamp	2	2
17	1529366	Capscrew	1	1
18	**b** 1618408	Fan Mount	1	1
18	**g** 1616288	Fan Mount	1	1
19	1527886	Capscrew	3	3
20	1625323	Bracket Wldmt	1	1
21	1460477	Nut	2	2
22	**b** 2067623	Kit-Ignition Cable (Spark Plug)	1	1
22	**g** 2089846	Kit-Ignition Cable (Spark Plug)	1	1
23	1396518	Plug	1	1
23	1509103	Ring (Copper)	1	1
23	1509104	Plug	1	1
24	1567831	Stud (Exhaust)	4	4
25	1527885	Capscrew	2	2
26	1527881	Capscrew	4	4
27	1531254	Spacer (Pulley)	1	1
28	1580793	Crankshaft Pulley	1	1
29	2090303	Belt Tensioner	1	1
30	292521	Capscrew	1	1
	a 4014812	Bolt (Engine Lift Bracket)	1	1

©2013 HYSTER COMPANY

FOOTNOTES:

a Not Illustrated
b → 1/2007
c → S/N L177B05906D
d → S/N L177B12346D
e S/N L177B05907D ↔ 1/2007
f S/N L177B12347D →
g 1/2007 →

©2013 HYSTER COMPANY

NOTES

©2013 HYSTER COMPANY

ASSEMBLED ENGINE (FIGURE 2-9)
GASOLINE AND LPG — GM 2.4L (SHEET 2 OF 4)

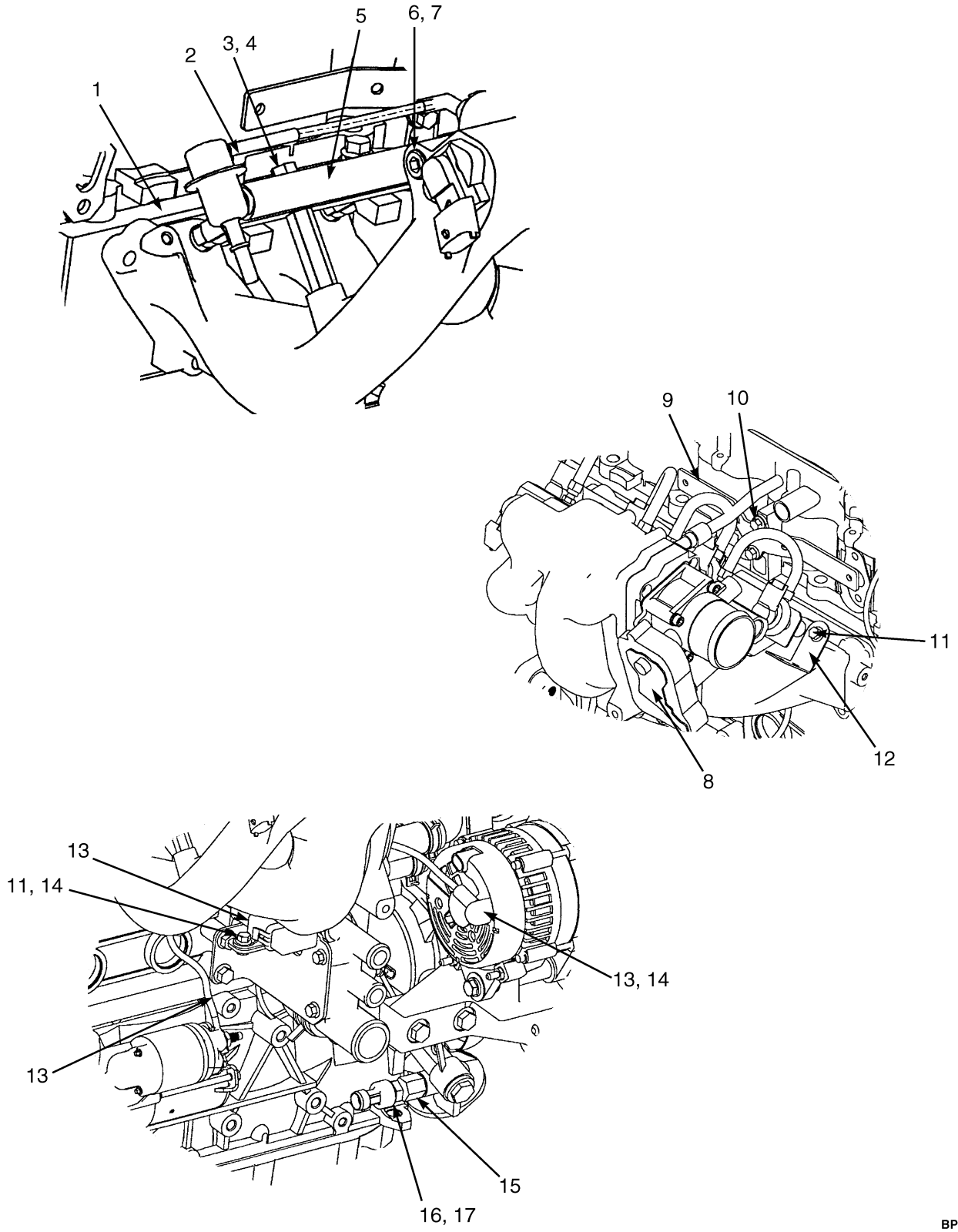

©2013 HYSTER COMPANY

ASSEMBLED ENGINE

GASOLINE AND LPG – GM 2.4L (SHEET 2 OF 4)

KEY:
A: Gasoline
B: LPG

ITEM	PART NO.	DESCRIPTION	QTY A	QTY B
1	**a** 1501695	Engine Assy-Lpg (GM 2.4L) (2005)	1	1
1	**b** 1603004	Long Block (GM 2.4L) (2006)	1	1
1	**c** 1649486	Engine Assy (GM 2.4L) (2007-2008)	1	1
1	4006369	Engine Assy (GM 2.4L) (2009)	1	1
1	4006383	Engine Assy (GM 2.4L) (2010 Series)	1	1
2	1548394	Extension (Fuel Rail)	1	..
3	1554837	Tube	1	..
4	1527881	Capscrew	2	..
5	1548395	Fuel Rail (Gasoline)	1	..
6	1528617	Plug	1	..
7	246108	Sealant	AR	..
8	2056702	Throttle Body (Gasoline)	1	..
8	. . . . .	LPG Fuel System	..	1
9	2056355	Bracket	1	1
9	4604044	Bracket (2010 Series)	1	1
10	1527876	Capscrew	2	2
11	1534417	Capscrew	3	3
12	1569776	Bracket	1	1
13	2057865	Wire Harness (Alternator, Starter)	1	1
13	148614	E-Ring	1	1
13	148615	E-Ring	1	1
13	1566146	Boot	1	1
13	1543553	Fuse Holder	1	1
13	1454829	Fuse (60 Amp)	1	1
13	1454862	Cover (With Seal)	1	1
13	1520543	Terminal	2	2
13	1454827	Seal	2	2
14	~~1307884~~			
	1514429	Nut	5	5
15	1585083	Adapter	1	1
15	1585084	O-Ring	1	1
15	1585085	Retaining Ring	1	1
16	1566654	Pressure Transducer Sensor (Oil Pressure)	1	1
17	246108	Sealant	AR	AR

FOOTNOTES:

a → S/N L177B05906D
b S/N L177B05907D ↔ 1/2007
c 1/2007 →

©2013 HYSTER COMPANY

ASSEMBLED ENGINE (FIGURE 2-10)

GM 2.4L, GASOLINE AND LPG — SHEET 3 OF 4

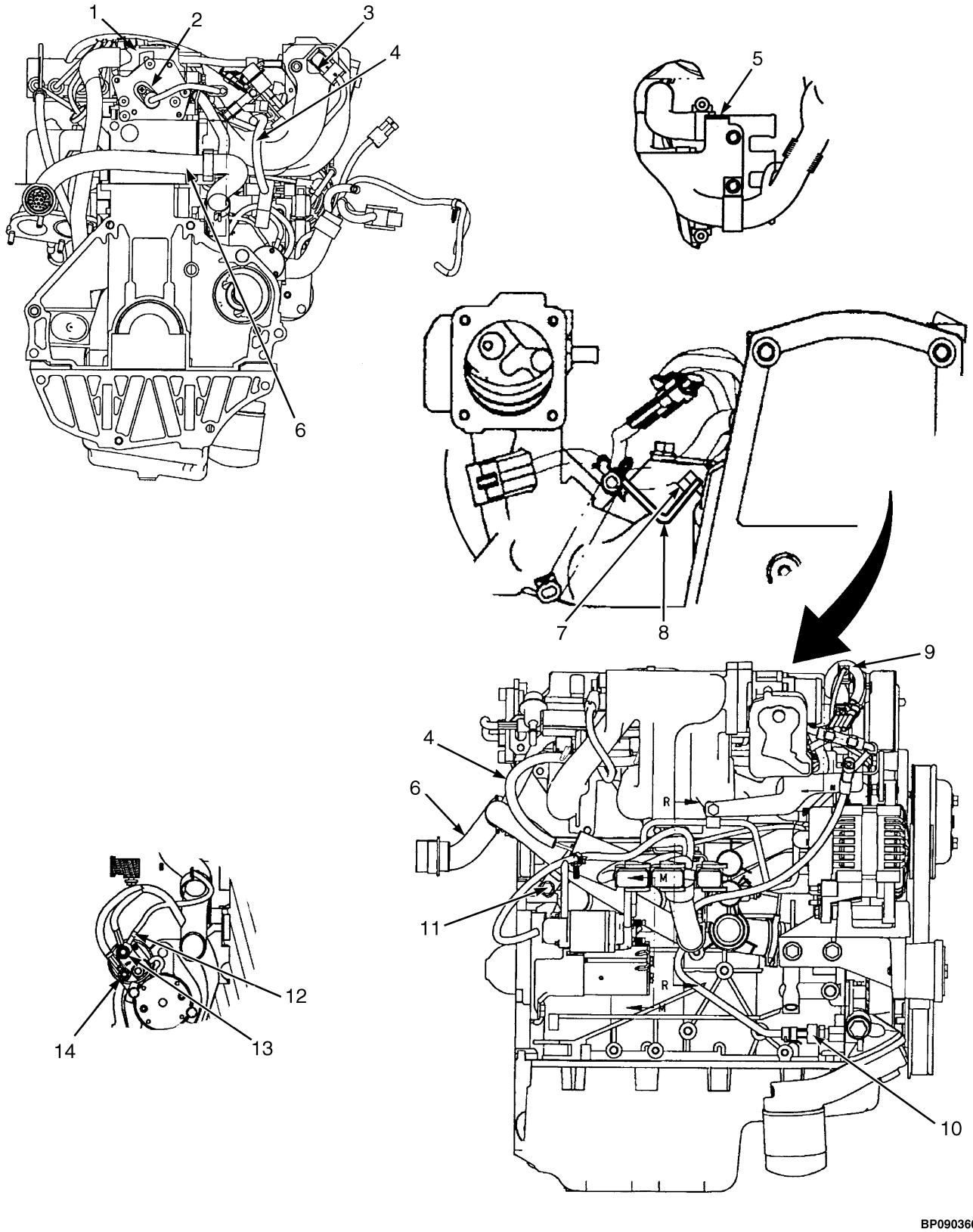

©2013 HYSTER COMPANY

ASSEMBLED ENGINE

GM 2.4L, GASOLINE AND LPG – SHEET 3 OF 4

KEY:
A: Gasoline
B: LPG

ITEM	PART NO.	DESCRIPTION	QTY A	QTY B
1	**a** 1501695	Engine Assy-Lpg (GM 2.4L) (2005)	1	1
1	**f** 1603004	Long Block (GM 2.4L) (2006)	1	1
1	**i** 1649486	Engine Assy (GM 2.4L) (2007-2008)	1	1
1	4006369	Engine Assy (GM 2.4L) (2009)	1	1
1	4006383	Engine Assy (GM 2.4L) (2010 Series)	1	1
2	1581796	Kit-Sensor (Up Through 2009)	1	1
2	4031346	Camshaft Position Sensor (2010 Series)	1	1
3	1584472	Sensor (MAP)	1	1
4	1554838	Wire Harness (Injector)	1	1
5	2055232	Bracket	1	1
6	**b** 2053096	Wire Harness (Engine, GM 2.4L, Gasoline) (☞Figure 7-64)	1	..
6	**d** 2089065	Wire Harness (Engine, GM 2.4L, Gasoline) (☞Figure 7-65)	1	..
6	**g** 4601156	Wire Harness (Engine, GM 2.4L, Gasoline) (☞Figure 7-66)	1	..
6	**b** 2053099	Wire Harness (Engine, GM 2.4L, LPG) (☞Figure 7-67)	..	1
6	**c** 2089064	Wire Harness (Engine, GM 2.4L, LPG) (☞Figure 7-68)	..	1
6	**e** 4601529	Wire Harness (Engine, GM 2.4L, LPG) (☞Figure 7-69)	..	1
6	**h** 4601157	Wire Harness (Engine, GM 2.4L, LPG) (☞Figure 7-70)	..	1
7	1534417	Capscrew	3	3
8	1569776	Bracket	1	1
9	2068357	Wire Harness (Ignition Coil)	1	1
10	1566654	Pressure Transducer Sensor (Oil Pressure)	1	1
11	1527879	Capscrew	2	2
12	2057865	Wire Harness (Alternator, Starter)	1	1
13	~~1307884~~			
	1514429	Nut	5	5
14	1593335	Nut	1	1

FOOTNOTES:

a → S/N L177B05906D
b → S/N L177B14822E
c S/N L177B14823E ↔ S/N L177B23560F
d S/N L177B14823E ↔ S/N L177V04179H
e S/N L177B23561F ↔ S/N L177V04385H
f S/N L177B59070D ↔ 1/2007
g S/N L177V04180H →
h S/N L177V04386H →
i 1/2007 →

©2013 HYSTER COMPANY

ASSEMBLED ENGINE (FIGURE 2-11)

GM 2.4L, GASOLINE AND LPG — SHEET 4 OF 4

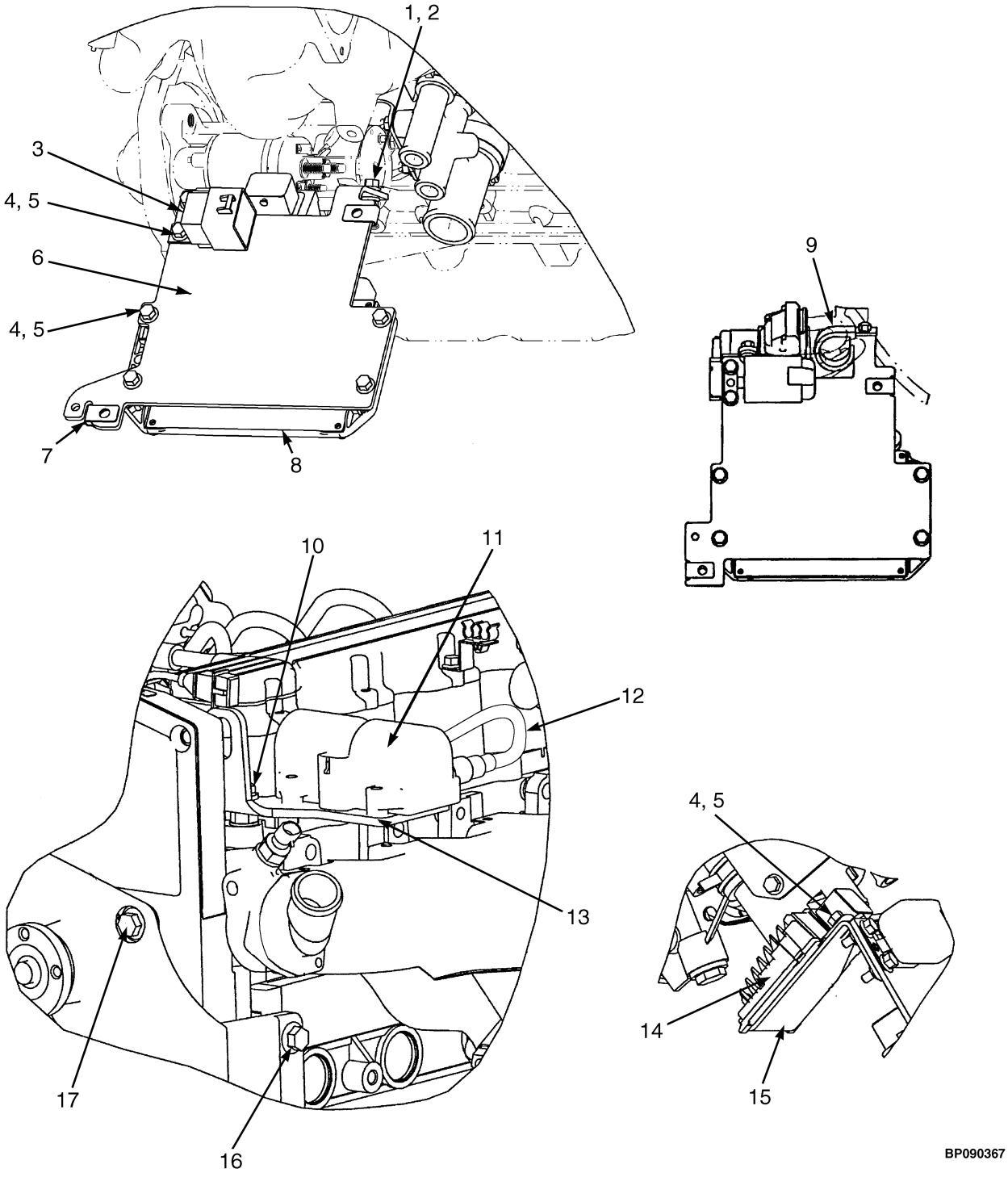

©2013 HYSTER COMPANY

ASSEMBLED ENGINE

GM 2.4L, GASOLINE AND LPG – SHEET 4 OF 4

KEY:
A: Gasoline
B: LPG

ITEM	PART NO.	DESCRIPTION	QTY A	QTY B
	j 1501695	Engine Assy-Lpg (GM 2.4L) (2005)	1	1
	g 1603004	Long Block (GM 2.4L) (2006)	1	1
	i 1649486	Engine Assy (GM 2.4L) (2007-2008)	1	1
	4006369	Engine Assy (GM 2.4L) (2009)	1	1
	4006383	Engine Assy (GM 2.4L) (2010 Series)	1	1
1	1527877	Capscrew	1	1
2	~~1307884~~			
	1514429	Nut	1	1
3	**a** 1330301	Relay (Power Latch)	1	1
3	**b** 1461743	Relay (Fuel Pump)	1	1
4	1527877	Capscrew	7	7
5	~~1307884~~			
	1514429	Nut	6	6
6	1582162	Plate	1	1
7	1480237	Nut	2	2
8	**j** 2077555	Engine Control Module	1	..
8	**g** 2087196	Engine Control Module	1	..
8	**h** 2089067	Engine Control Module	1	..
8	4603960	Engine Control Module (2010 Series)	1	..
8	**j** 2077554	Engine Control Module	..	1
8	**i** 2087197	Engine Control Module	..	1
8	**h** 2089066	Engine Control Module	..	1
8	**c** 4603961	Engine Control Module (2010 Series)	..	1
8	**d** 4603962	Engine Control Module (2010 Series)	..	1
9	. . . . .	Clamp (Supplied With Engine)	1	1
10	1460477	Nut	2	2
11	1584523	Ignition Coil	1	1
12	**e** 2067623	Kit-Ignition Cable (Spark Plug)	1	1
12	**i** 2089846	Kit-Ignition Cable (Spark Plug)	1	1
13	1536719	Bracket (Coil)	1	1
14	**j** 2059248	Module (Injector Drive)	1	1
14	**f** 2082657	Module (Injector Driver)	1	1
15	1582163	Bracket	1	1
16	1510117	Capscrew	2	2
17	1527885	Capscrew	1	1

FOOTNOTES:

a Used on Engine Up to 2007
b Used On Engines 2007 and Up
c With Catalytic Converter
d Without Catalytic Converter
e → 1/2007
f → S/N L177B05907D
g S/N L177B05907D ↔ 1/2007
h S/N L177B14823E →
i 1/2007 →
j S/N L177B05906D →

©2013 HYSTER COMPANY

FAN ASSEMBLY (FIGURE 2-12)
GM 2.4L ENGINE

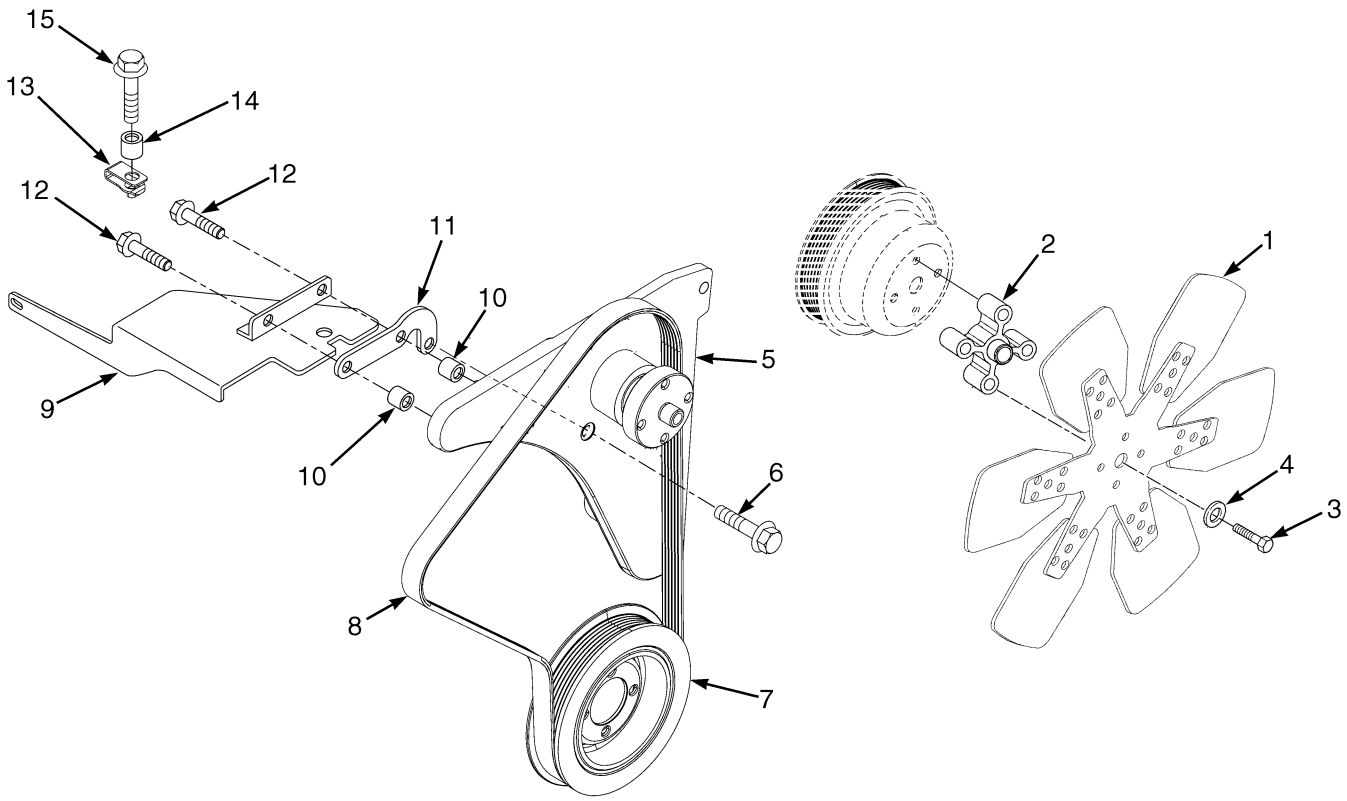

BP090216

©2013 HYSTER COMPANY

FAN ASSEMBLY
GM 2.4L ENGINE

ITEM	PART NO.	DESCRIPTION	QTY
1	1375642	Fan	1
2	**b** 1616049	Spacer	1
2	**c** 1539154	Spacer	1
3	**b** 1566505	Capscrew	4
3	**c** 293623	Capscrew	4
4	296418	Washer	4
5	**b** 1618408	Fan Mount	1
5	**c** 1616288	Fan Mount	1
5	**c** 2029116	Shaft Bearing (Fan)	1
5	**c**	Hub	1
6	1527880	Capscrew	1
7	1580793	Crankshaft Pulley	1
8	2070039	V-Belt (Micro V)	1
9	**a** 2084601	Bracket	1
10	**b** 2084600	Spacer	2
11	**b** 2084599	Bracket	1
11	4011406	Bracket Wldmt (2010 Series)	1
12	1510116	Capscrew	2
13	**a** 1480237	Nut	1
14	**a** 2084616	Spacer	1
15	**a** 1510115	Capscrew	1
	1632261	Kit-Fan Drive	1

FOOTNOTES:

a Gasoline Only
b → S/N L177B12346D
c S/N L177B12347D →

©2013 HYSTER COMPANY

COOLING MANIFOLD AND ATTACHING PARTS (FIGURE 2-13)

GM 2.4L — GASOLINE AND LPG

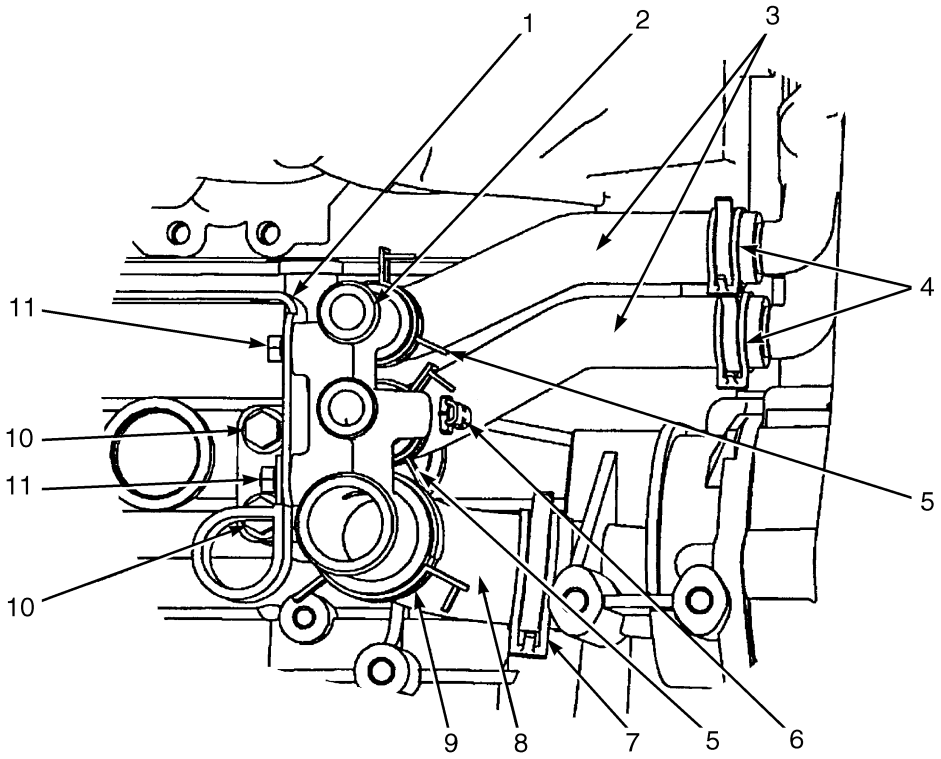

HP091295

ITEM	PART NO.	DESCRIPTION	QTY
	b 1501695	Engine Assy-Lpg (GM 2.4L) (2005)	1
	c 1603004	Long Block (GM 2.4L) (2006)	1
	d 1649486	Engine Assy (GM 2.4L) (2007-2008)	1
	4006369	Engine Assy (GM 2.4L) (2009)(Alternate Part)	1
	4006383	Engine Assy (GM 2.4L) (2010 Series)	1
1	2055232	Bracket	1
2	**a** 1554921	Manifold (Coolant)	1
2	**d** 1638705	Manifold (Coolant)	1
3	2056732	Hose (Heater)	2
4	**a** 1502009	Hose Clamp	2
4	**d** 130845	Clamp	4
5	**a** 1501997	Hose Clamp	2
5	**d** 369804	Clamp	2
6	**a** 15329	Drain Valve (Drain)	1
7	**a** 1527982	Hose Clamp	1
8	2055298	Radiator Hose (Radiator)	1
9	**a** 1502001	Hose Clamp	1
10	1527879	Capscrew	2
11	1534417	Capscrew	2

FOOTNOTES:

a → 12/2006
b → S/N L177B05906D
c S/N L177B05907D ↔ 12/2006
d 1/2007 →

©2013 HYSTER COMPANY

ALTERNATOR AND MOUNTING (FIGURE 2-14)

GM 2.4L — GASOLINE AND LPG

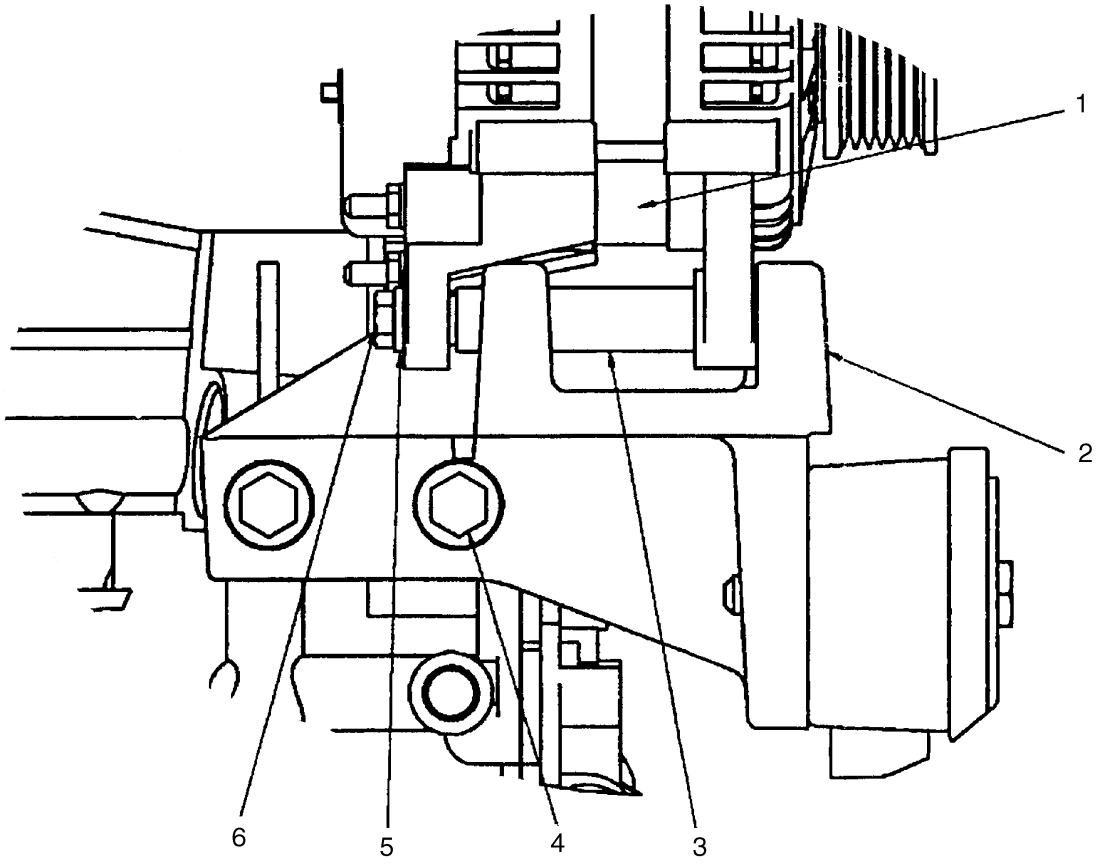

BP090151

ITEM	PART NO.	DESCRIPTION	QTY
1	~~4019177~~		
	1534017	Alternator	1
1	1394001	Alternator (Sealed) (☞Figure 7-21)	1
2	1554816	Bracket	1
2	4011403	Bracket (Alternator) (2010 Series)	1
3	1554814	Spacer	1
4	1527892	Capscrew	4
5	320157	Washer	1
6	1307994	Capscrew	1

©2013 HYSTER COMPANY

FLYWHEEL AND HOUSING (FIGURE 2-15)

GM 2.4L — GASOLINE AND LPG (→ S/N L177V02181F)

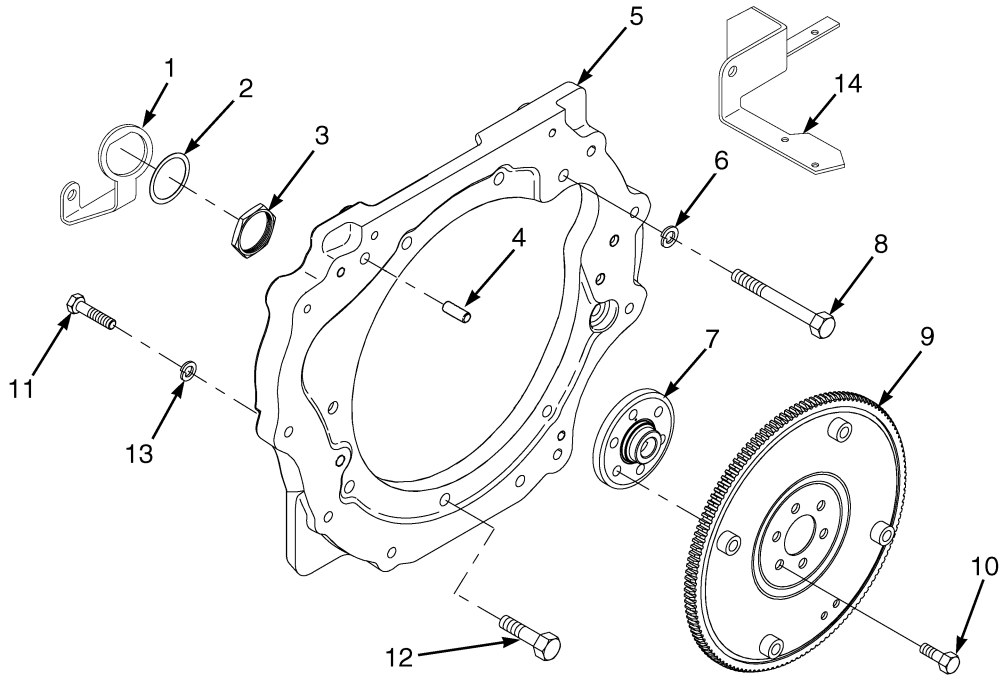

HP091237

ITEM	PART NO.	DESCRIPTION	QTY
1	**a** 1624204	Bracket (Electrical Connector)	1
1	**b** 1654415	Bracket (Electrical Connector)	1
2	1539086	Lockwasher	1
3	1539085	Locknut (Starter mtg. Bolt)	1
4	303150	Dowel	2
5	1553267	Flywheel Housing	1
6	292683	Lockwasher	11
7	1588963	Adapter	1
8	292539	Capscrew	1
9	1605988	Flywheel	1
10	309740	Capscrew	6
11	292517	Capscrew	6
12	246001	Capscrew	10
13	~~388049~~		
	292682	Lockwasher	6
14	**a** 1622886	Bracket	1
14	**b** 1653569	Bracket	1
	b 1512403	Capscrew	4

FOOTNOTES:

a → S/N L177B15745E

b S/N L177B15746E →

©2013 HYSTER COMPANY

NOTES

©2013 HYSTER COMPANY

FLYWHEEL AND HOUSING (FIGURE 2-16)

GM 2.4L GASOLINE AND LPG (S/N L177V02182F →)

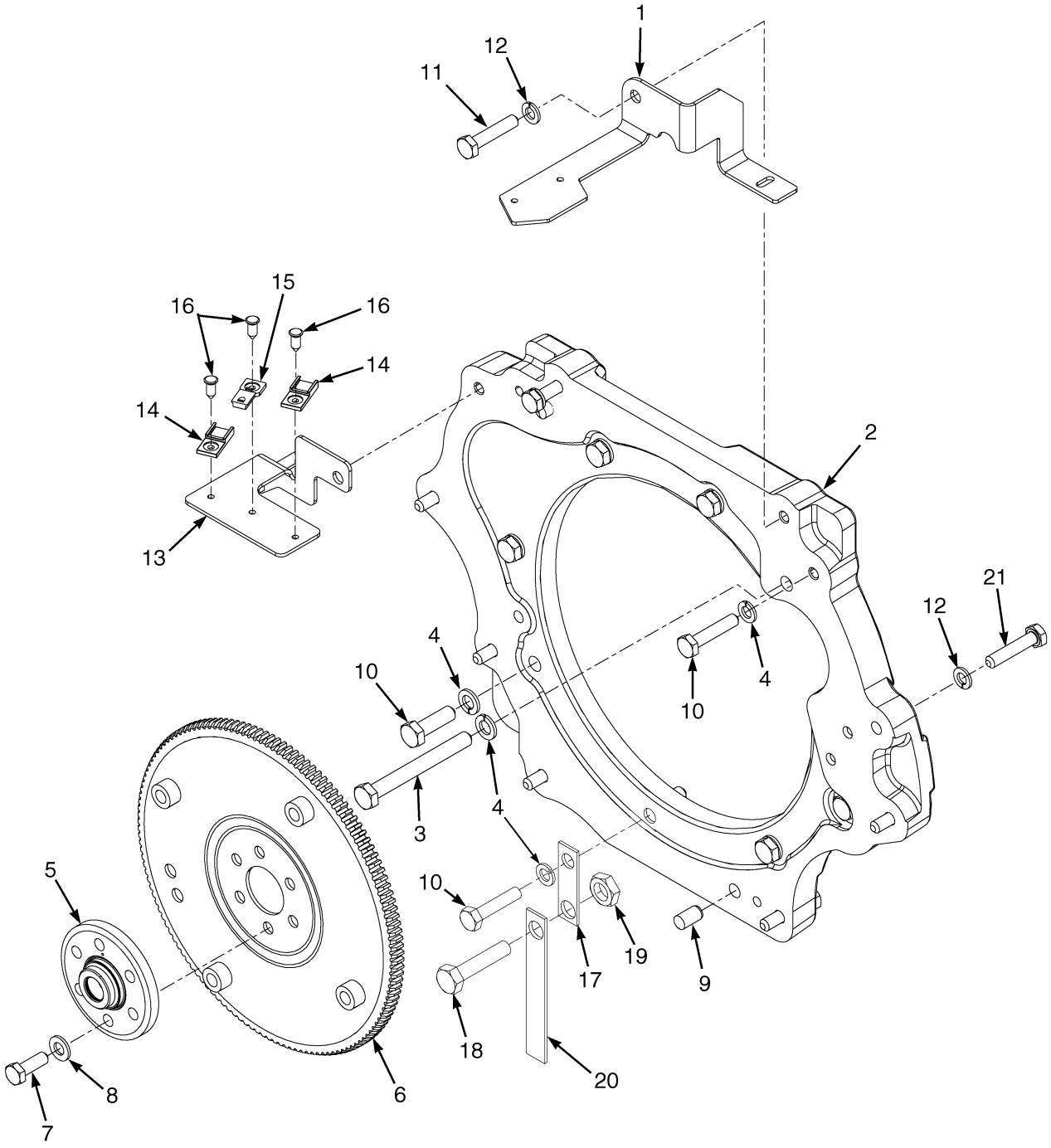

©2013 HYSTER COMPANY

FLYWHEEL AND HOUSING

GM 2.4L GASOLINE AND LPG (S/N L177V02182F →)

ITEM	PART NO.	DESCRIPTION	QTY
1	1653569	Bracket	1
2	1696276	Flywheel Housing	1
3	292539	Capscrew (Starter Bolt)	1
4	292683	Lockwasher	11
5	1588963	Adapter	1
6	1605988	Flywheel	1
7	309740	Capscrew	6
8	296420	Washer	6
9	352406	Dowel	2
10	246001	Capscrew	10
11	292516	Capscrew	4
12	~~388049~~		
	292682	Lockwasher	10
13	1623093	Bracket	1
14	1500912	Clip	2
15	1531480	Clip	1
16	1582464	Fastener	3
17	1565832	Bracket	1
18	1586013	Capscrew	1
19	1460477	Nut	1
20	240072	Static Strap	1
21	292517	Capscrew	6

©2013 HYSTER COMPANY

CAMSHAFT, CYLINDER HEAD AND MANIFOLDS (FIGURE 2-17)

GM 2.4L (→ S/N L177B05989D (LPG)) (→ S/N L177B06541D GAS)

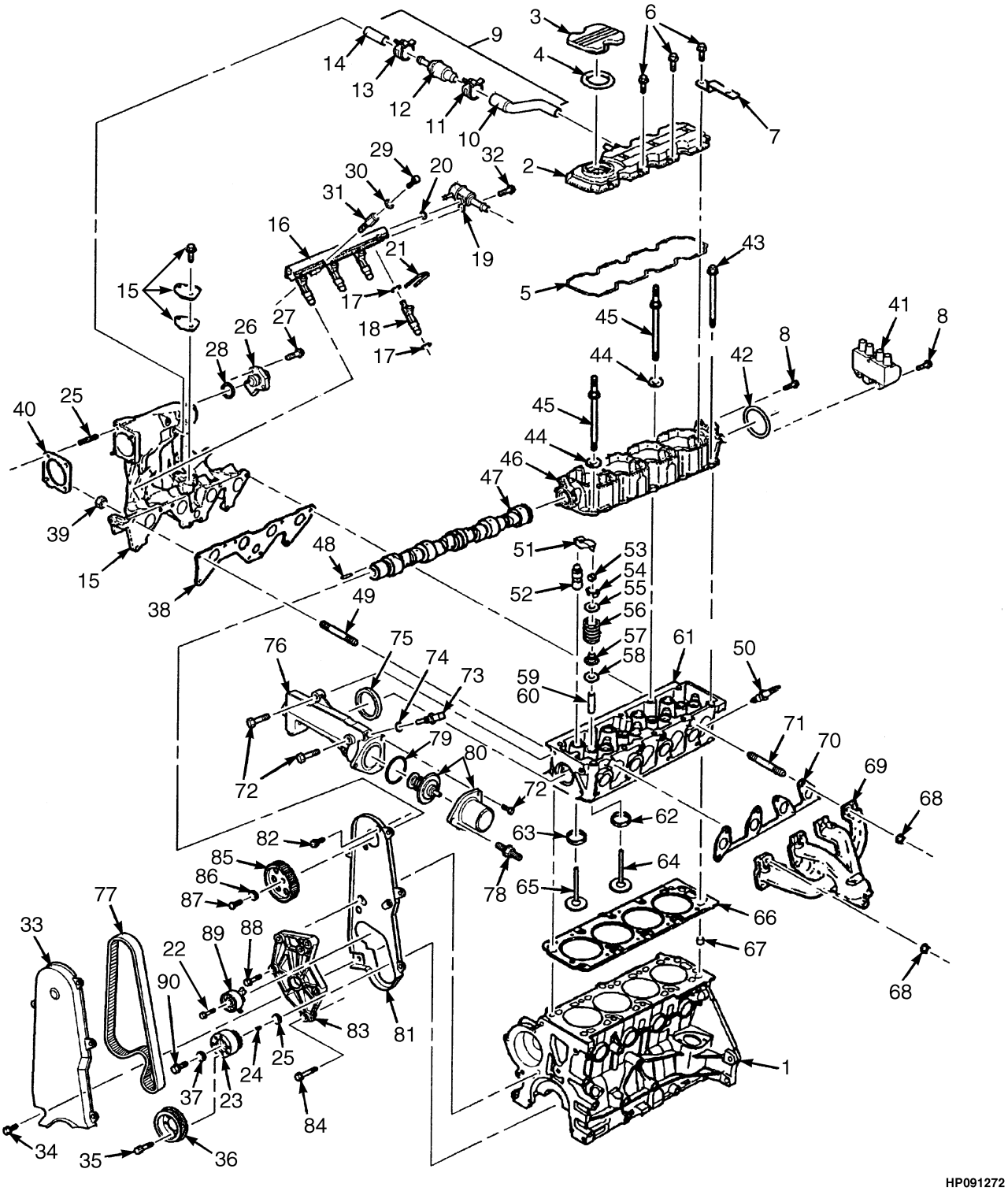

©2013 HYSTER COMPANY

CAMSHAFT, CYLINDER HEAD AND MANIFOLDS

GM 2.4L (→ S/N L177B05989D (LPG)) (→ S/N L177B06541D GAS)

ITEM	PART NO.	DESCRIPTION	QTY
1	1501695	Engine Assy-Lpg (GM 2.4L)	1
2	1584492	Cover	1
3	1584493	Cap	1
4	1584495	Seal	1
5	1584497	Gasket	1
6	1593665	Bolt	8
7	1584532	Bracket	1
8	1584490	Screw	8
9	1584266	Hose Assy (PCV)	1
10	1584445	Hose	1
11	1584451	Clamp (RH)	1
12	1584442	Pcv Valve	1
13	1584444	Clamp (LH)	1
14	1584267	Hose	1
15	. . . . .	Cover	1
15	. . . . .	Gasket	1
15	1584465	Intake Manifold	1
15	1597703	Bolt	1
16	1581795	Fuel Rail (LPG)	1
16	1548395	Fuel Rail (Gasoline)	1
16	1597699	Rail	1
17	. . . . .	Seal	2
18	1597701	Injector	4
19	1597702	Regulator	1
20	1597704	Seal	1
21	1597700	Retainer	4
22	1584498	Screw	1
23	1584502	Sprocket	1
24	1584504	Key	1
25	1584505	Spacer	1
26	1584472	Sensor (MAP)	1
27	. . . . .	Bolt	2
28	. . . . .	Seal	1
29	. . . . .	Bolt	4
30	. . . . .	Washer	4
31	1548394	Extension (Fuel Rail)	4
32	. . . . .	Bolt	1
33	1584458	Cover (Timing Belt)	1
34	~~1584452~~		
	4014813	Bolt	5
35	1584520	Screw	4
36	1580793	Crankshaft Pulley	1
37	1584506	Washer	1
38	1584464	Gasket	1
39	. . . . .	Nut	4
40	. . . . .	Gasket	1
41	1584523	Ignition Coil	1
42	1584488	Seal	1
43	1584206	Bolt	6
44	1584208	Washer	4

©2013 HYSTER COMPANY

CAMSHAFT, CYLINDER HEAD AND MANIFOLDS

GM 2.4L (→ S/N L177B05989D (LPG)) (→ S/N L177B06541D GAS)

ITEM	PART NO.	DESCRIPTION	QTY
45	1584207	Stud	7
46	1584479	Housing Assembly-Cam Shaft	1
46	1584696	Seal (Camshaft)	1
47	1584480	Camshaft	1
48	1584481	Pin	1
49	1584203	Stud	9
50	1584123	Spark Plug	4
51	1584519	Rocker Arm	8
52	1584508	Valve Lifter	8
53	1584511	Valve Seat	8
54	1584202	Valve Stop	16
55	1584201	Retainer	8
56	1584200	Spring	8
57	1584199	Seal	8
58	1584197	Valve Seat	8
59	1584193	Guide	8
60	1593654	Guide (0.25 O/S)	8
61	1584188	Cylinder Head	1
62	. . . . .	Exhaust Valve Seat	4
63	. . . . .	Intake Valve Seat	4
64	1584196	Exhaust Valve	4
65	1584195	Inlet Valve (Intake)	4
66	1584141	Cylinder Head Gasket	1
67	1584182	Pin	4
68	1584474	Nut	8
69	1584478	Exhaust Manifold	1
70	1584475	Gasket	1
71	1584204	Stud	8
72	1584462	Screw	4
73	1584140	Sensor (Engine Coolant)	1
74	. . . . .	Seal	1
75	1584463	Seal	1
76	1584459	Housing	1
77	1584507	Timing Belt	1
78	1584460	Stud	1
79	1584122	Seal	1
80	1584121	Thermostat	1
81	1584453	Cover	1
82	302047	Screw	4
83	1584521	Adapter	1
84	1584244	Bolt	2
85	1584491	Sprocket	1
86	1593662	Washer	2
87	1584498	Screw	1
88	1584522	Screw	1
89	1584509	Belt Tensioner	1
90	1584503	Screw	1
	a 1584476	Heat Shield (Exhaust Manifold)	1

©2013 HYSTER COMPANY

FOOTNOTES:

a Not illustrated

©2013 HYSTER COMPANY

CAMSHAFT, CYLINDER HEAD AND MANIFOLDS (FIGURE 2-18)

GM 2.4L ENGINE (S/N L177B05990D → (LPG)) (S/N L177B06542D → GAS)

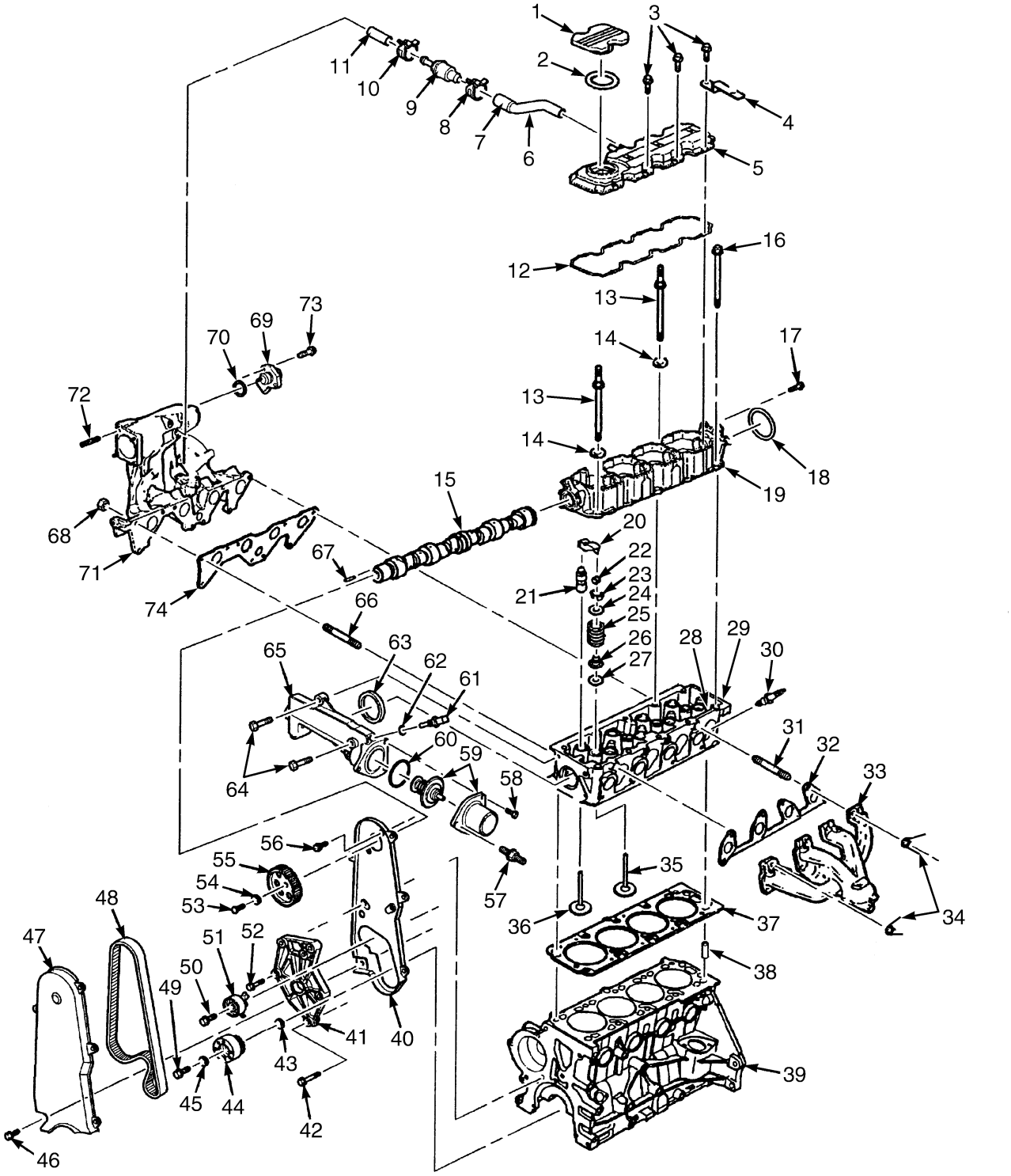

©2013 HYSTER COMPANY

CAMSHAFT, CYLINDER HEAD AND MANIFOLDS

GM 2.4L ENGINE (S/N L177B05990D → (LPG)) (S/N L177B06542D → GAS)

ITEM	PART NO.	DESCRIPTION	QTY
	bc 1501695	Engine Assy-Lpg (GM 2.4L) (2005)	1
	de 1603004	Long Block (GM 2.4L) (2006)	1
	f 1649486	Engine Assy (GM 2.4L) (2007-2008)	1
	4006369	Engine Assy (GM 2.4L) (2009)(Alternate Part)	1
	4006383	Engine Assy (GM 2.4L) (2010 Series)	1
1	1584493	Cap	1
2	1584495	Seal	1
3	1593665	Bolt	8
3	4014811	Bolt (2010 Series)	6
4	1584532	Bracket	1
5	1584492	Cover	1
6	1584266	Hose Assy (PCV)	1
7	1584445	Hose	1
8	1584451	Clamp (RH)	1
9	1584442	Pcv Valve	1
10	1584444	Clamp (LH)	1
11	1584267	Hose	1
12	1584497	Gasket	1
13	1584207	Stud	4
14	1584208	Washer	4
15	1584480	Camshaft	1
15	4014817	Camshaft (2010 Series)	1
16	1584206	Bolt	6
17	1584490	Screw	4
18	1584488	Seal	1
19	1584479	Housing Assembly-Cam Shaft	1
19	1584696	Seal (Camshaft)	1
19	4014810	Housing (Camshaft) (2010 Series)	1
20	1584519	Rocker Arm	8
21	1584508	Valve Lifter	8
22	1584511	Valve Seat	8
23	1584202	Valve Stop	16
24	1584201	Retainer	8
25	1584200	Spring	8
26	1584199	Seal	8
27	1584197	Valve Seat (Intake)	8
27	1584198	Rotator (Exhaust)	4
28	1584256	Valve (Oil Filter Bypass)	1
29	1584188	Cylinder Head	1
30	1584123	Spark Plug	4
31	1584204	Stud	8
32	1584475	Gasket	1
33	1584478	Exhaust Manifold	1
34	1584474	Nut	8
35	1584196	Exhaust Valve	4
35	1702642	Exhaust Valve (Alternate Part)	4
36	1584195	Inlet Valve (Intake)	4
37	1584141	Cylinder Head Gasket	1
38	1584182	Pin	1
39	. . . . .	Cylinder Block	1

©2013 HYSTER COMPANY

CAMSHAFT, CYLINDER HEAD AND MANIFOLDS

GM 2.4L ENGINE (S/N L177B05990D → (LPG)) (S/N L177B06542D → GAS)

ITEM	PART NO.	DESCRIPTION	QTY
39	1584175	Plug	1
40	1584453	Cover	1
41	1584521	Adapter	1
42	1584244	Bolt	2
43	1584505	Spacer	2
44	1584502	Sprocket	1
45	1584506	Washer	1
46	~~1584452~~		
	4014813	Bolt	5
46	~~1584452~~		
	4014813	Bolt (2010 Series)	5
47	1584458	Cover (Timing Belt)	1
48	1584507	Timing Belt	1
49	1584503	Screw	1
50	1584510	Screw	1
51	1584509	Belt Tensioner	1
52	1584522	Screw	1
53	1584498	Screw	1
53	4014814	Bolt (2010 Series)	1
54	1593662	Washer	2
55	1584491	Sprocket	1
56	302047	Screw	4
57	1584460	Stud	1
58	1584462	Screw	2
59	1584121	Thermostat	1
60	1584122	Seal	1
61	1584140	Sensor (Engine Coolant)	1
62	. . . . .	Seal	1
63	1584463	Seal	1
64	1584462	Screw	2
65	1584459	Housing	1
66	1584203	Stud	9
67	1584481	Pin	1
68	1584474	Nut	9
69	1584472	Sensor (MAP)	1
70	. . . . .	Seal	1
71	1584465	Intake Manifold	1
72	. . . . .	Stud	4
73	. . . . .	Bolt	2
74	1584464	Gasket	1
	1661438	Short Block (GM 2.4L)	1
	1659839	Cylinder Head (Complete)	1
	1702643	Cylinder Head (Complete) (Alternate Part)	1
	a 1584477	Screw	5
	a 1584476	Heat Shield (Exhaust Manifold)	1

©2013 HYSTER COMPANY

FOOTNOTES:

a Not Illustrated
b → S/N L177B05989D LPG
c → S/N L177B06541D Gasoline
d S/N L177B05990D ↔ 12/2006 LPG
e S/N L177B06542D ↔ 12/2006 Gas
f 1/2007 →

©2013 HYSTER COMPANY

CRANKSHAFT, PISTONS AND OIL PAN (FIGURE 2-19)

GM 2.4L — GASOLINE AND LPG

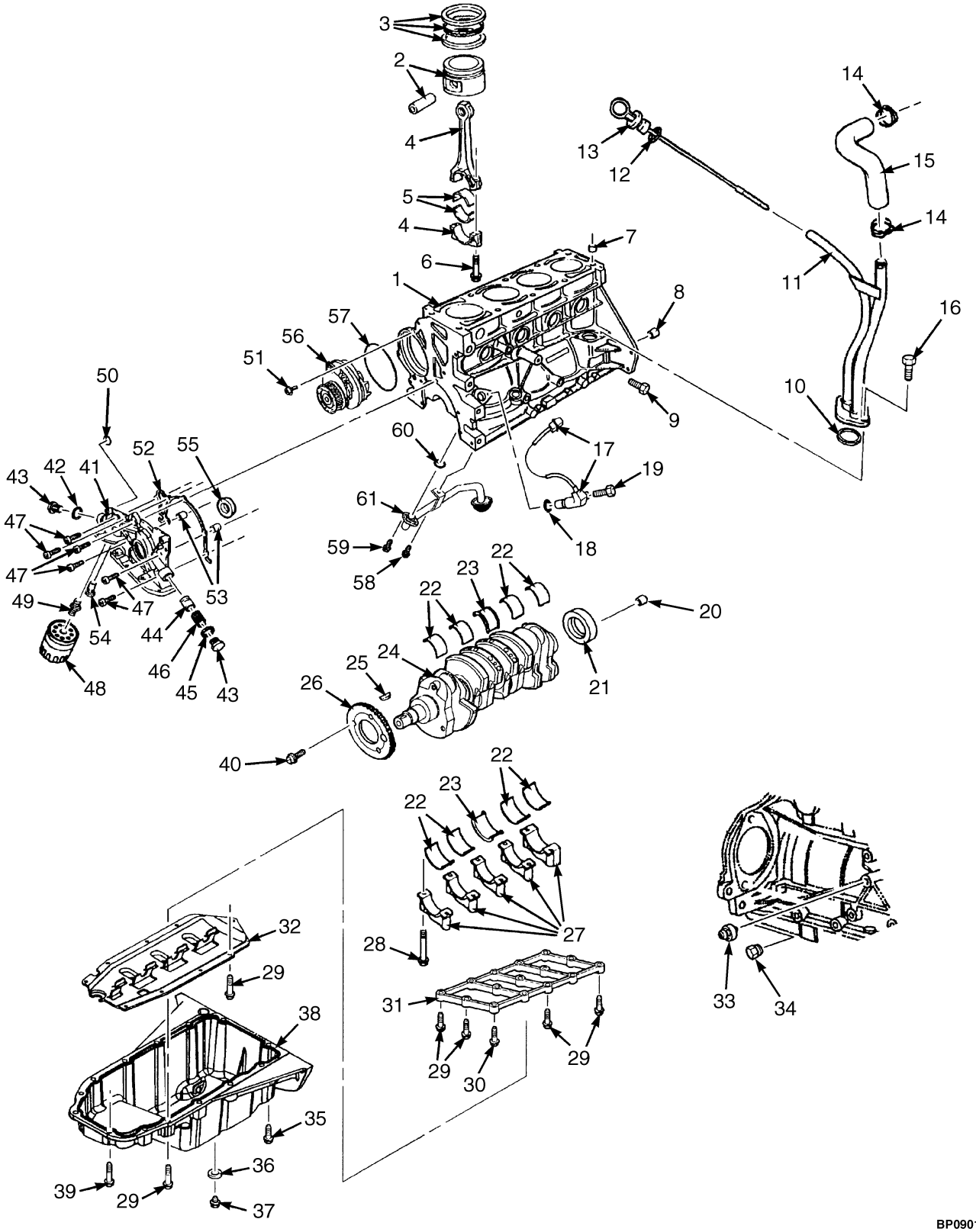

BP090164

©2013 HYSTER COMPANY

CRANKSHAFT, PISTONS AND OIL PAN
GM 2.4L – GASOLINE AND LPG

ITEM	PART NO.	DESCRIPTION	QTY
1	**cd** 1501695	Engine Assy-Lpg (GM 2.4L) (2005)	1
1	**ef** 1603004	Long Block (GM 2.4L) (2006)	1
1	**i** 1649486	Engine Assy (GM 2.4L) (2007-2008)	1
1	4006369	Engine Assy (GM 2.4L) (2009)(Alternate Part)	1
	4006383	Engine Assy (GM 2.4L) (2010 Series)	1
2	1593657	Piston and Pin (Standard)	4
3	1593658	Kit-Piston Ring	1
4	1584232	Piston Rod	4
4	1584239	Bolt	2
5	1584248	Piston Rod Bearing (Standard)	4
5	1584662	Kit-Bearing (0.25 O/S)	4
6	1584239	Bolt	8
7	1584182	Pin	4
8	1584183	Pin	2
9	. . . . .	Plug	1
10	1584447	Gasket	1
11	**cd** 1584446	Tube	1
11	**hg** 1632225	Tube	1
12	. . . . .	Seal (CR/ SHF RR OIL)	1
13	**cd** 1584265	Dipstick	1
13	**hg** 1632226	Indicator	1
14	1584451	Clamp (RH)	2
15	1584450	Hose	1
16	1584449	Screw	2
17	1584514	Sensor (Crankshaft Position)	1
18	. . . . .	Seal	1
19	1584227	Bolt	4
20	. . . . .	Bearing	1
21	1584533	Seal (CR/SHF RR OIL)	1
21	4014809	Oil Seal (2010 Series)	1
22	. . . . .	Crankshaft Bearing	8
23	. . . . .	Thrust Bearing	2
24	1584209	Crankshaft	1
25	1584504	Key	1
26	1584222	Gear	1
27	. . . . .	Cap	4
28	1584178	Screw	10
29	1584243	Bolt	24
30	1593653	Bolt	1
31	1584185	Plate	1
32	1584241	Baffle	1
33	1593661	Sensor (Knock)	1
34	1358026	Plug	1
35	1584242	Bolt	2
36	1597697	Oil Seal	1
37	1597698	Drain Plug	1
38	**b** 1584240	Oil Pan	1
39	1584244	Bolt	4
40	1584227	Bolt	4
41	1584247	Oil Pump	1

©2013 HYSTER COMPANY

CRANKSHAFT, PISTONS AND OIL PAN
GM 2.4L – GASOLINE AND LPG

ITEM	PART NO.	DESCRIPTION	QTY
42	1584262	Seal	1
43	1584257	Bolt	2
44	1584254	Valve	1
45	1584261	Gasket	1
46	1584255	Spring	1
47	1584245	Bolt	6
48	1584120	Oil Filter	1
49	1584252	Fitting	1
50	1584187	Washer	1
50	4014816	Seal (2010 Series)	1
51	1584455	Screw	3
52	1584246	Gasket	2
53	1584184	Pin	1
54	1584256	Valve (Oil Filter Bypass)	1
55	1584260	Seal (CR/SHF FRT OIL)	1
56	1584456	Water Pump	1
57	1584457	Seal	1
58	1584243	Bolt	1
59	1593660	Bolt	2
60	1584263	Seal	3
61	1584264	Pipe (Oil Pump Suction)	1
ahg	1584251	Cover (Oil Pump)	1
ahg	1584253	Bolt (Oil Pump Cover)	5
	1661438	Short Block (GM 2.4L)	1
a	1584477	Screw	5
	~~1593655~~		
	1584618	Kit-Crankshaft Bearing (Standard)	1
	~~1593656~~		
	1584619	Kit-Bearing (0.25 O/S)	1
	1584138	Sealant (For Oil Pan)	1

FOOTNOTES:

a Not Illustrated
b Use Oil Pan Sealer 1584138
c → S/N L177B05989D LPG
d → S/N L177B06541D (Gasoline)
e S/N L177B05990D ↔ 12/2007 LPG
f S/N L177B06542D ↔ 12/2006 Gasoline
g S/N L177B06542D → (Gasoline)
h S/N L177B05990D → LPG
i 1/2007 →

©2013 HYSTER COMPANY

CAM POSITION SENSOR (FIGURE 2-20)
GM 2.4L GASOLINE AND LPG — 2010 SERIES

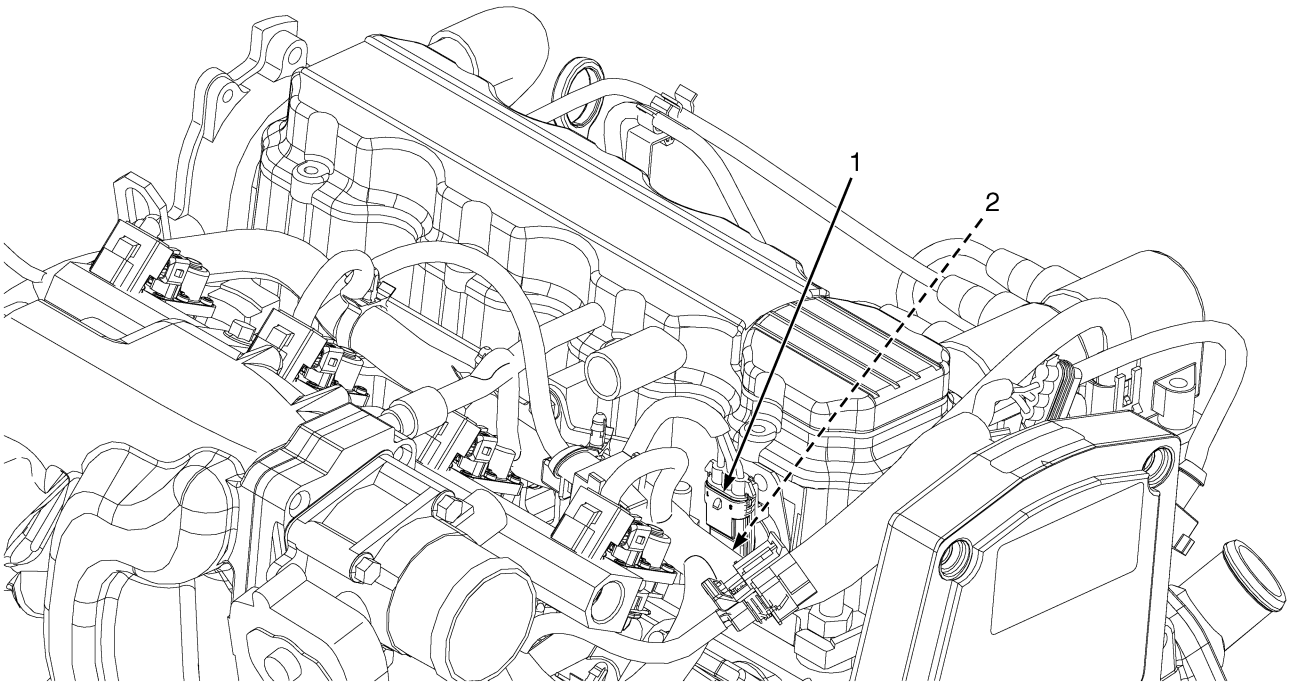

BP090456

ITEM	PART NO.	DESCRIPTION	QTY
1	4031346	Camshaft Position Sensor	1
2	~~1584452~~		
	4014813	Bolt	2

NOTES

©2013 HYSTER COMPANY

3 ENGINE ASSEMBLY - MAZDA

SECTION 3
ENGINE ASSEMBLY - MAZDA

DESCRIPTION **PAGE**

ASSEMBLED ENGINE
MAZDA 2.0L AND 2.2L, GASOLINE AND LPG, 2007-2010 EMISSION COMPLIANT ENGINES (S/N L177B15327E → (2.2L GAS)) (S/N L177B15512E → 2.0L GAS AND LPG) (S/N L177B16207E → (2.2L LPG)) (S/N L177V01501F →) 3-60
CAMSHAFT AND VALVES
MAZDA 2.0L AND 2.2L, GASOLINE AND LPG, 2006 EMISSION COMPLIANT ENGINES (→ S/N L177B15326E (2.2L GAS)) (→ S/N L177B16206E (2.2L LPG)) (S/N L177B15512E → 2.0L GAS AND LPG) 3-34
MAZDA 2.0L AND 2.2L, GASOLINE AND LPG, 2007-2010 EMISSION COMPLIANT ENGINES (S/N L177B15327E → 2.2L GAS) (S/N L177B15512E → (2.0L GAS AND LPG)) (S/N L177B16207E → (2.2L LPG)) (S/N L177V01501F →) 3-66
CARBURETOR
MAZDA 2.0L AND 2.2L LPG - 2006 EMISSION COMPLIANT ENGINES (→ S/N L177B15511E 2.0 LPG) (→ S/N L177B16206E (2.2L LPG)) 3-56
COOLING SYSTEM
MAZDA 2.0L AND 2.2L, GASOLINE AND LPG, SERPENTINE RADIATOR - BASIC POWERSHIFT TRANSMISSION (→ S/N L177B14568E) 3-4
MAZDA 2.0L AND 2.2L, GASOLINE AND LPG, SERPENTINE RADIATOR - BASIC POWERSHIFT TRANSMISSION (S/N L177B14569E →) (S/N L177V01501F →) 3-6
MAZDA 2.0L AND 2.2L, GASOLINE AND LPG, SQUARE WAVE RADIATOR - ELECTRONIC CONTROL TRANSMISSION, WITH INTERNAL OIL COOLER (→ S/N L177B14568E) 3-8
MAZDA 2.0L AND 2.2L, GASOLINE AND LPG, SQUARE WAVE RADIATOR - BASIC POWERSHIFT TRANSMISSION (→ S/N L177B14568E) 3-10
MAZDA 2.0L AND 2.2L, GASOLINE AND LPG, SQUARE WAVE RADIATOR - BASIC POWERSHIFT TRANSMISSION (S/N L177B14569E →) (S/N L177V01501F →) 3-12
MAZDA 2.0L AND 2.2L, GASOLINE AND LPG, SQUARE WAVE RADIATOR - ELECTRONIC TRANSMISSION, WITH EXTERNAL OIL COOLER (→ S/N L177B14568E) 3-14
MAZDA 2.0L AND 2.2L, GASOLINE AND LPG, SQUARE WAVE RADIATOR - ELECTRONIC TRANSMISSION, EXTERNAL OIL COOLER, OR WET BRAKE (S/N L177B14569E →) (S/N L177V01501F →) 3-16
CRANKSHAFT AND PISTONS
MAZDA 2.0L AND 2.2L, GASOLINE AND LPG, 2006 EMISSION COMPLIANT ENGINES (→ S/N L177B15326E (2.2L GAS)) (→ S/N L177B16206E (2.2L LPG)) (S/N L177B15512E → 2.0L GAS AND LPG) 3-36
MAZDA 2.0L AND 2.2L, GASOLINE AND LPG, 2007-2010 EMISSION COMPLIANT ENGINES (S/N L177B15327E → (2.2L GAS)) (S/N L177B15512E → (2.0L GAS AND LPG)) (S/N L177B16207E → (2.2L LPG)) (S/N L177V01501F →) 3-74
CYLINDER BLOCK
MAZDA 2.0L AND 2.2L, GASOLINE AND LPG, 2006 EMISSION COMPLIANT ENGINES (→ S/N L177B15326E 2.2L GAS) (→ S/N L177B16206E (2.2L LPG)) (S/N L177B15512E → 2.0L GAS AND LPG) 3-32
MAZDA 2.0L AND 2.2L, GASOLINE AND LPG, 2007-2010 EMISSION COMPLIANT ENGINES (S/N L177B15327E → (2.2L GAS)) (S/N L177B15512E → (2.0L GAS AND LPG)) (S/N L177B16207E → (2.2L LPG)) (S/N L177V01501F →) 3-64
CYLINDER HEAD
MAZDA 2.0L AND 2.2L, GASOLINE AND LPG, 2006 EMISSION COMPLIANT ENGINES (→ S/N L177B15326E 2.2L GAS) (→ S/N L177B16206E 2.2L LPG) (S/N L177B15512E → 2.0L GAS AND LPG) 3-30

©2013 HYSTER COMPANY

SECTION 3
ENGINE ASSEMBLY - MAZDA

DESCRIPTION **PAGE**

MAZDA 2.0L AND 2.2L, GASOLINE AND LPG, 2007-2010 EMISSION COMPLIANT ENGINES (→ S/N L177B15327E 2.2L GAS) (S/N L177B15512E → 2.0L GAS AND LPG) (S/N L177B16207E → 2.2L LPG) (S/N L177V01501F →) 3-62
DELAY VALVE
MAZDA 2.0L AND 2.2L LPG (→ S/N L177B11511E (2.0L LPG)) (S/N L177B11108D ↔ S/N L177B16206E 2.2L LPG) 3-58
EMISSION CONTROL SYSTEM
MAZDA 2.0L AND 2.2L LPG - 2006 EMISSION COMPLIANT ENGINES (→ S/N L177B15511E 2.0L LPG) (→ S/N L177B16206E (2.2L LPG)) 3-48
MAZDA 2.0L AND 2.2L, GASOLINE - 2007-2010 EMISSION COMPLIANT ENGINES (S/N L177B15512E → (2.0L GAS)) (S/N L177B15327E → (2.2L GAS)) (S/N L177V01501F →) 3-68
EMISSIONS LINES
MAZDA 2.0L AND 2.2L, GASOLINE - 2006 EMISSION COMPLIANT ENGINES (→ S/N L177B15326E (2.2L GAS)) (→ S/N L177B15511E 2.0 GAS) 3-54
ENGINE COOLING
MAZDA 2.0L AND 2.2L, GASOLINE AND LPG - 2006 EMISSION COMPLIANT ENGINES (→ S/N L177B15326E (2.2L GAS)) (→ S/N L177B16206E (2.2L LPG)) (S/N L177B15512E → 2.0L GAS AND LPG) 3-40
ENGINE COOLING SYSTEM
MAZDA 2.0L AND 2.2L, GASOLINE AND LPG, (2007-2010 SERIES) (S/N L177B15327E → (2.2L GAS)) (S/N L177B15512E → (2.0L GAS AND LPG)) (S/N L177B16207E → 2.2L LPG) (S/N L177V01501F →) 3-86
ENGINE FUEL SYSTEM
MAZDA 2.0L AND 2.2L, GASOLINE AND LPG, 2007-2010 EMISSION COMPLIANT ENGINES (S/N L177B15327E → (2.2L GAS)) (S/N L177B15512E → (2.0L GAS AND LPG)) (S/N L177B16207E → (2.2L LPG)) (S/N L177V01501F →) 3-72
ENGINE FUEL SYSTEM AND INTAKE MANIFOLD
MAZDA 2.0L AND 2.2L, GASOLINE, 2006 EMISSION COMPLIANT ENGINES (→ S/N L177B15326E 2.2L GAS) (→ S/N L177B15511E 2.0L GAS) 3-44
ENGINE MOUNTING 3-24
EXHAUST MANIFOLD
MAZDA 2.0L AND 2.2L, GASOLINE AND LPG, 2006 EMISSION COMPLIANT ENGINES (→ S/N L177B15326E (2.2L GAS)) (→ S/N L177B15511E (2.0 GAS AND LPG)) (→ S/N L177B16206E (2.2L LPG)) 3-43
MAZDA 2.0L AND 2.2L, GASOLINE AND LPG, 2007-2010EMISSION COMPLIANT ENGINES (S/N L177B15327E → (2.2L GAS)) (S/N L177B15512E → (2.0 GAS AND LPG)) (S/N L177B16207E → 2.2L LPG) (S/N L177V01501F →) 3-76
EXHAUST SYSTEM WITH CATALYTIC CONVERTER
MAZDA 2.0L AND 2.2L, GASOLINE AND LPG - 2006 EMISSION COMPLIANT ENGINES (→ S/N L177B15326E) 3-18
MAZDA 2.0L AND 2.2L, GASOLINE AND LPG - 2007-2010 EMISSION COMPLIANT ENGINES (S/N L177B15327E →) (S/N L177V01501F →) 3-20
FAN ASSEMBLY
MAZDA 2.0L 3-23
FLYWHEEL AND HOUSING
MAZDA 2.0 L AND 2.2 L - GASOLINE AND LPG (S/N L177B11118D →) (S/N L177V01501F →) 3-28
MAZDA 2.0L AND 2.2L - GASOLINE AND LPG (→ S/N L177B11107D) 3-26

©2013 HYSTER COMPANY

SECTION 3
ENGINE ASSEMBLY - MAZDA

DESCRIPTION	PAGE
INTAKE MANIFOLD	
MAZDA 2.0L AND 2.2L LPG - 2006 EMISSION COMPLIANT ENGINES (→ S/N L177B15511E 2.0L LPG) (→ S/N L177B16205E (2.2L LPG))	3-46
MAZDA 2.0L AND 2.2L LPG - 2007-2010 EMISSION COMPLIANT ENGINES (S/N L177B15512E → 2.0L LPG) (S/N L177B16207E → (2.2L LPG)) (S/N L177V01501F →)	3-80
MAZDA 2.0L AND 2.2L, GASOLINE - 2007-2010 EMISSION COMPLIANT ENGINES (S/N L177B15327E → 2.2L GAS) (S/N L177B15512E → 2.0L GAS) (S/N L177V01501F →)	3-78
MAP SENSOR	
MAZDA 2.0L AND 2.2L, LPG - 2007-2010 EMISSION COMPLIANT ENGINES (S/N L177B15512E → 2.0L LPG) (S/N L177B16207E → (2.2L LPG)) (S/N L177V01501F →)	3-70
OIL PUMP AND FILTER	
MAZDA 2.0L AND 2.2L, GASOLINE AND LPG, 2006 EMISSION COMPLIANT ENGINES (→ S/N L177B15326E (2.2L GAS)) (→ S/N L177B16206E (2.2L LPG)) (S/N L177B15512E → 2.0 GAS AND LPG)	3-52
MAZDA 2.0L AND 2.2L, GASOLINE AND LPG, 2007-2010 EMISSION COMPLIANT ENGINES (S/N L177B15327E → (2.2L GAS)) (S/N L177B15512E → 2.0 GAS AND LPG) (S/N L177B16207E → (2.2L LPG)) (S/N L177V01501F →)	3-84
TIMING GEAR COVER AND OIL PAN	
MAZDA 2.0L AND 2.2L, GASOLINE AND LPG - 2007-2010 EMISSION COMPLIANT ENGINES (S/N L177B15327E → (2.2L GAS)) (S/N L177B15512E → (2.0 GAS AND LPG)) (S/N L177B16207E → (2.2L LPG)) (S/N L177V01501F →)	3-82
MAZDA 2.0L AND 2.2L, GASOLINE AND LPG, 2006 EMISSION COMPLIANT ENGINES (→ S/N L177B15326E (2.2L GAS)) (→ S/N L177B16206E (2.2L LPG)) (S/N L177B15512E → 2.0L GAS AND LPG)	3-50

©2013 HYSTER COMPANY

COOLING SYSTEM (FIGURE 3-1)

MAZDA 2.0L AND 2.2L, GASOLINE AND LPG, SERPENTINE RADIATOR — BASIC POWERSHIFT TRANSMISSION (→ S/N L177B14568E)

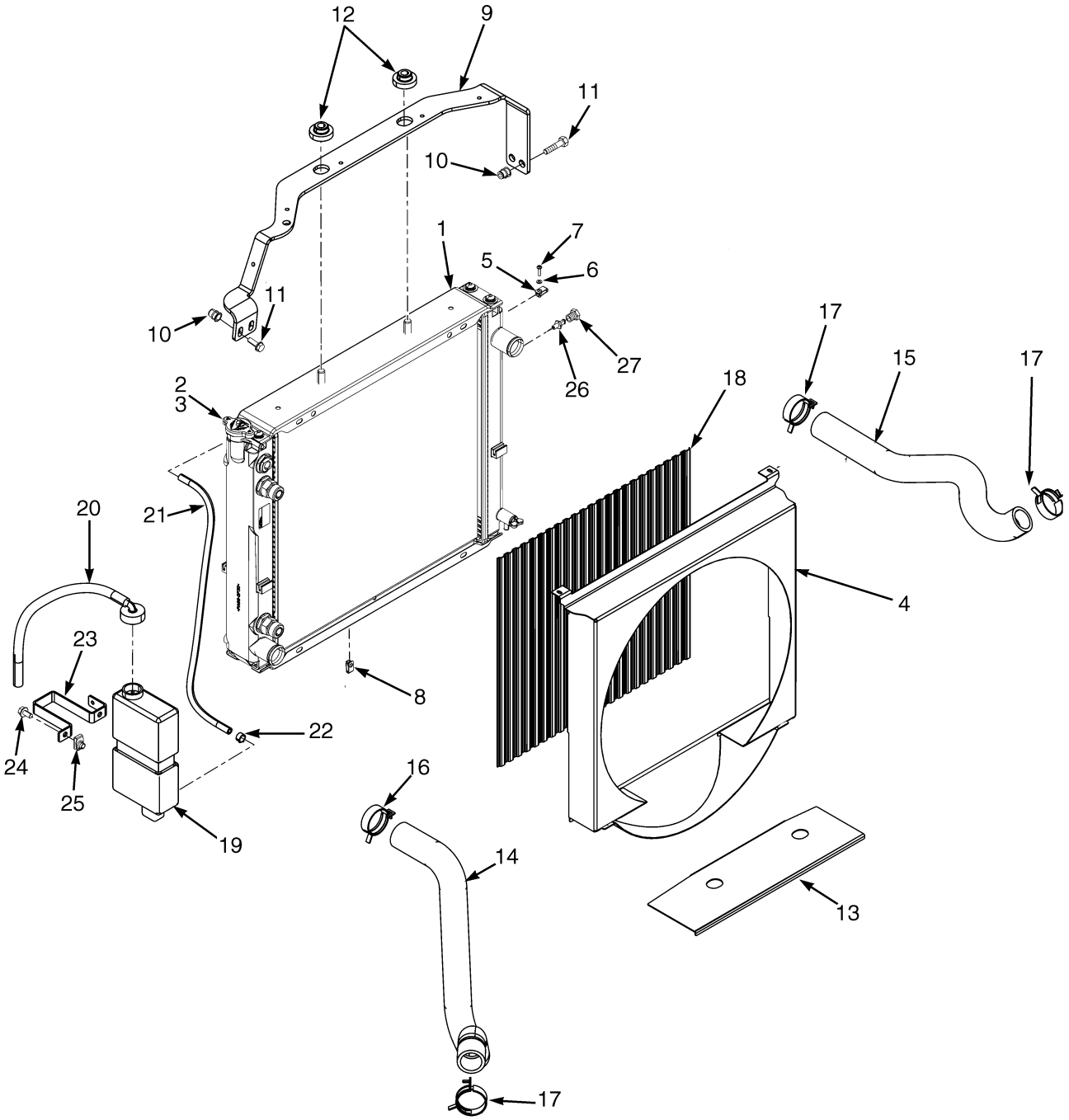

HP060039

©2013 HYSTER COMPANY

COOLING SYSTEM

MAZDA 2.0L AND 2.2L, GASOLINE AND LPG, SERPENTINE RADIATOR – BASIC POWERSHIFT TRANSMISSION (→ S/N L177B14568E)

ITEM	PART NO.	DESCRIPTION	QTY
1	2054879	Radiator	1
2	1528495	Drain Plug	1
3	1352140	Radiator Cap	1
4	1593356	Shroud	1
5	1535257	Nut	2
6	320154	Washer	2
7	302023	Screw	2
8	1329271	Clip	2
9	1588508	Bracket (Radiator)	1
10	1530243	Insert	4
11	1583611	Capscrew	4
12	1529787	Isolator	4
13	1565691	Exhaust Shield	1
14	2069698	Radiator Hose (Lower)	1
15	**a** 2085255	Hose (Upper)	1
15	**b** 2085041	Radiator Hose (Upper)	1
16	1501999	Hose Clamp	1
17	1527982	Hose Clamp	3
18	1548497	Screen	1
19	1347026	Reservoir	1
20	345455	Outlet Assembly	1
20	336550	Bushing	1
20	345453	Outlet (Reservoir)	1
20	345454	Cap	1
20	339735	Hose	1
21	1567674	Hose	1
22	369815	Clamp	2
23	1531167	Bracket	1
24	1527879	Capscrew	2
25	1480237	Nut	2
26	1531404	Sensor (Low Coolant Level)	1
27	**c** 14385	Fitting	1

FOOTNOTES:

a Gasoline Engines Only
b LPG Engines Only
c Without Low Coolant Level Sensor

©2013 HYSTER COMPANY

COOLING SYSTEM (FIGURE 3-2)

MAZDA 2.0L AND 2.2L, GASOLINE AND LPG, SERPENTINE RADIATOR — BASIC POWERSHIFT TRANSMISSION (S/N L177B14569E →) (S/N L177V01501F →)

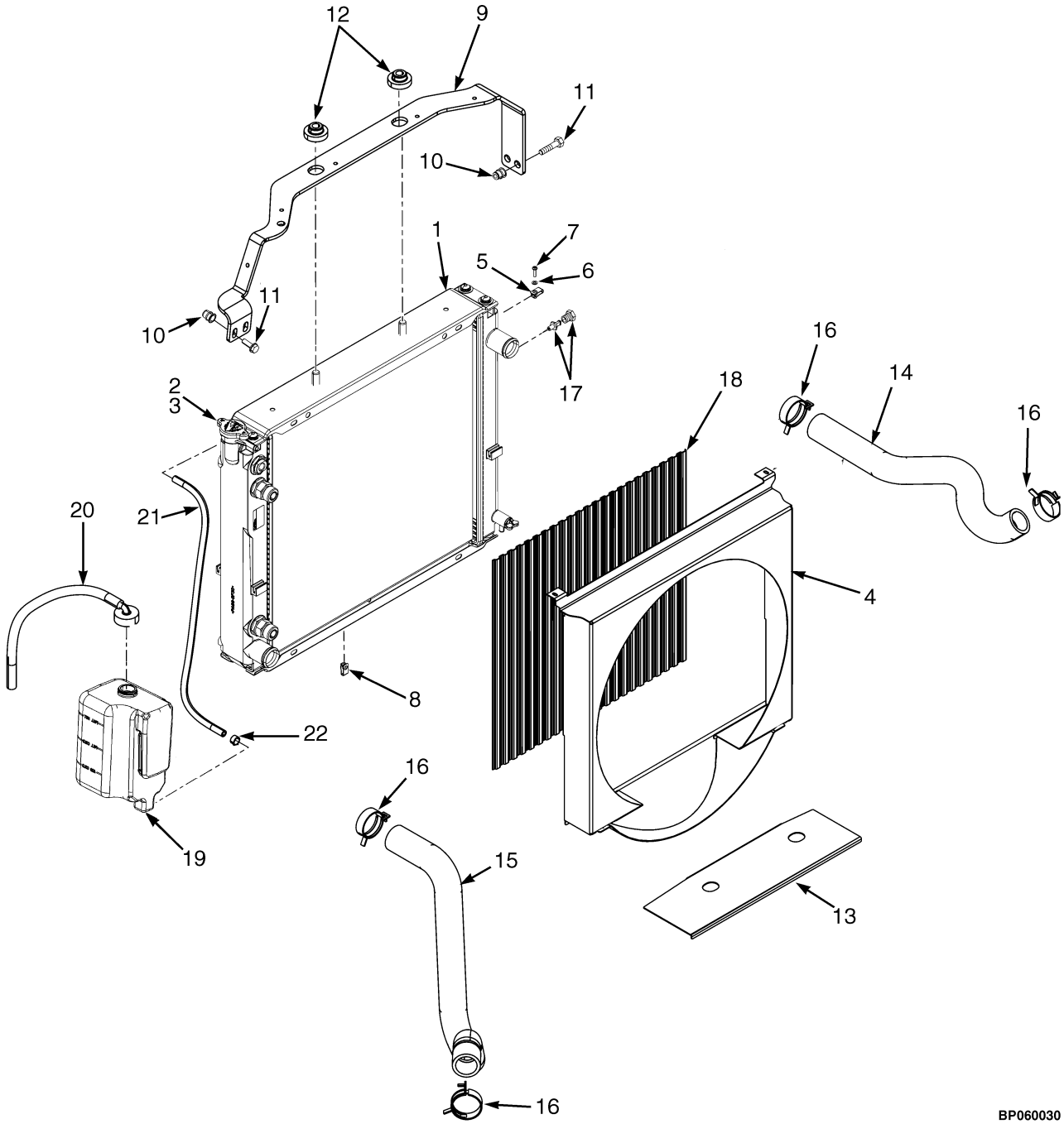

©2013 HYSTER COMPANY

COOLING SYSTEM

MAZDA 2.0L AND 2.2L, GASOLINE AND LPG, SERPENTINE RADIATOR – BASIC POWERSHIFT TRANSMISSION (S/N L177B14569E →) (S/N L177V01501F →)

ITEM	PART NO.	DESCRIPTION	QTY
1	2054879	Radiator	1
2	1528495	Drain Plug	1
3	1352140	Radiator Cap	1
4	1593356	Shroud	1
5	1535257	Nut	2
6	320154	Washer	2
7	302023	Screw	2
8	1329271	Clip	2
9	1588508	Bracket (Radiator)	1
10	1530243	Insert	4
11	1583611	Capscrew	4
12	1529787	Isolator	4
13	1565691	Exhaust Shield	1
14	**a** 2085255	Hose (Upper)	1
14	**b** 2085041	Radiator Hose (Upper)	1
15	**d** 2069698	Radiator Hose (Lower)	1
15	**e** 2088675	Radiator Hose (Lower)	1
16	369804	Clamp	4
17	1531404	Sensor (Low Coolant Level)	1
17	**c** 14385	Fitting	1
17	246108	Sealant	AR
18	1548497	Screen	1
19	1633307	Reservoir	1
20	345455	Outlet Assembly	1
20	336550	Bushing	1
20	345453	Outlet (Reservoir)	1
20	345454	Cap	1
20	339735	Hose	1
21	1567674	Hose	1
22	369815	Clamp	2

FOOTNOTES:

a Gasoline Engines Only
b LPG Engines Only
c Without Low Coolant Level Sensor
d → S/N L177B15326E EXC. 05512, 06207
e S/N L177B15327E →

©2013 HYSTER COMPANY

COOLING SYSTEM (FIGURE 3-3)

MAZDA 2.0L AND 2.2L, GASOLINE AND LPG, SQUARE WAVE RADIATOR — ELECTRONIC CONTROL TRANSMISSION, WITH INTERNAL OIL COOLER (→ S/N L177B14568E)

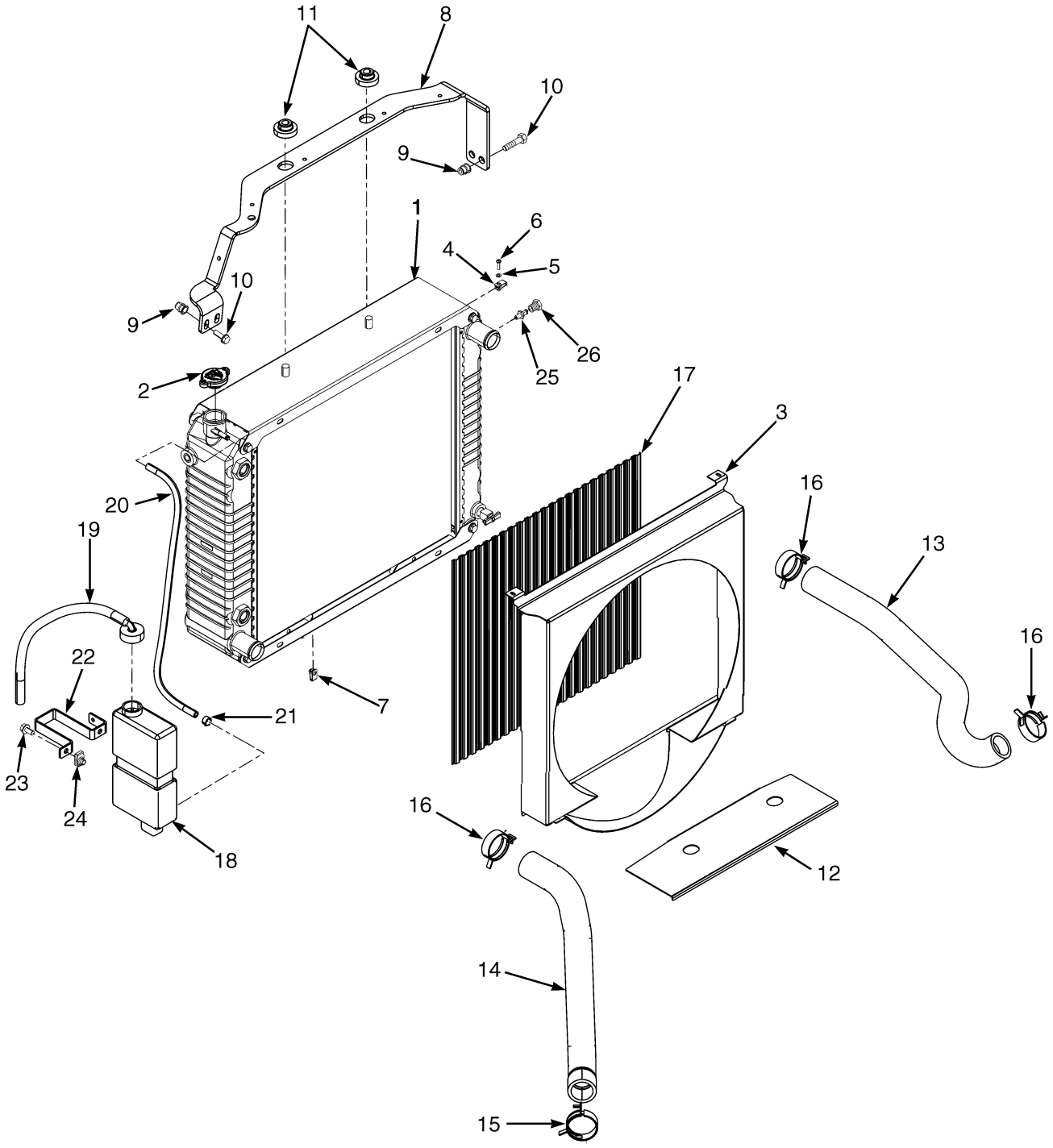

HP060046

©2013 HYSTER COMPANY

COOLING SYSTEM

MAZDA 2.0L AND 2.2L, GASOLINE AND LPG, SQUARE WAVE RADIATOR – ELECTRONIC CONTROL TRANSMISSION, WITH INTERNAL OIL COOLER (→ S/N L177B14568E)

ITEM	PART NO.	DESCRIPTION	QTY
1	2071615	Radiator	1
1	1569079	Drain Valve (w/Thread Wrap)	1
1	. . . . .	Capscrew	8
2	1352140	Radiator Cap	1
3	1594057	Shroud	1
4	1535257	Nut	2
5	320154	Washer	2
6	302023	Screw	2
7	1551663	Clip	2
8	1585317	Bracket (Radiator)	1
9	1530243	Insert	4
10	1583611	Capscrew	4
11	1529787	Isolator	4
12	1565692	Exhaust Shield	1
13	~~2069701~~		
	2085042	Radiator Hose (Upper) (LPG)	1
13	~~2069703~~		
	2085254	Radiator Hose (Upper) (Gasoline)	1
14	2069698	Radiator Hose (Lower)	1
15	1501999	Hose Clamp	1
16	1527982	Hose Clamp	3
17	1582078	Screen	1
18	1347026	Reservoir	1
19	345455	Outlet Assembly	1
19	336550	Bushing	1
19	345453	Outlet (Reservoir)	1
19	345454	Cap	1
19	339735	Hose	1
20	1567674	Hose	1
21	369815	Clamp	2
22	1531167	Bracket	1
23	1527879	Capscrew	2
24	1480237	Nut	2
25	1531404	Sensor (Low Coolant Level)	1
26	**a** 14385	Fitting	1

FOOTNOTES:

a Without Low Coolant Level Sensor

©2013 HYSTER COMPANY

COOLING SYSTEM (FIGURE 3-4)

MAZDA 2.0L AND 2.2L, GASOLINE AND LPG, SQUARE WAVE RADIATOR — BASIC POWERSHIFT TRANSMISSION (→ S/N L177B14568E)

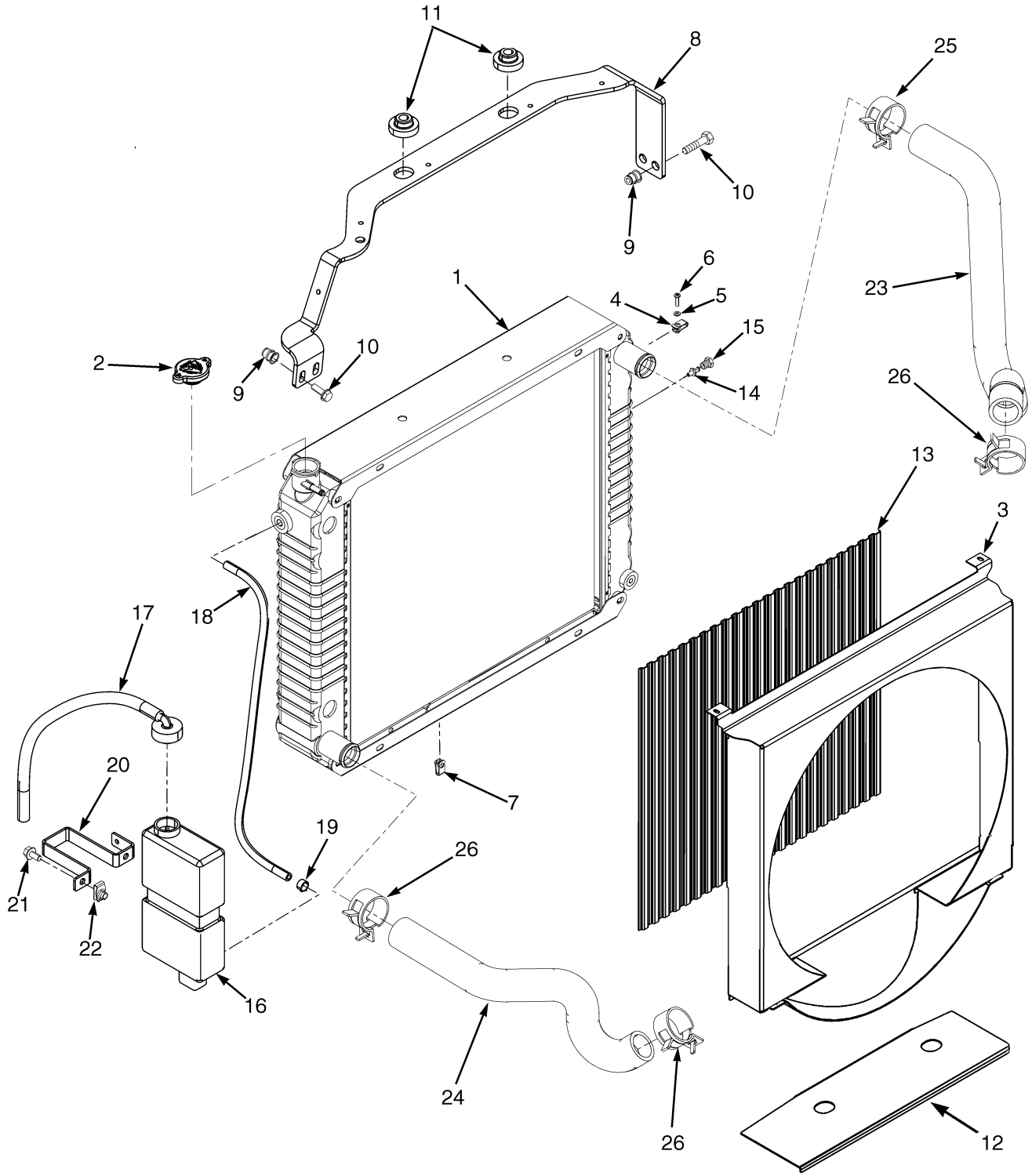

HP060037

©2013 HYSTER COMPANY

COOLING SYSTEM

MAZDA 2.0L AND 2.2L, GASOLINE AND LPG, SQUARE WAVE RADIATOR – BASIC POWERSHIFT TRANSMISSION (→ S/N L177B14568E)

ITEM	PART NO.	DESCRIPTION	QTY
1	2056870	Radiator	1
1	1569079	Drain Valve (w/Thread Wrap)	1
2	1352140	Radiator Cap	1
3	1565391	Shroud	1
4	1535257	Nut	2
5	320154	Washer	2
6	302023	Screw	2
7	1329271	Clip	2
8	1588507	Bracket (Radiator)	1
9	1530243	Insert	4
10	1583611	Capscrew	4
11	1529787	Isolator	4
12	1565691	Exhaust Shield	1
13	1548497	Screen	1
14	1531404	Sensor (Low Coolant Level)	1
15	**b** 14385	Fitting	1
16	1347026	Reservoir	1
17	345455	Outlet Assembly	1
17	345453	Outlet (Reservoir)	1
17	345454	Cap	1
17	336550	Bushing	1
17	339735	Hose	1
18	1567674	Hose	1
19	369815	Clamp	2
20	1531167	Bracket	1
21	1527879	Capscrew	2
22	1480237	Nut	2
	a 2085255	Hose (Upper) (Gasoline)	1
23	2085041	Radiator Hose (Upper) (LPG)	1
24	2069698	Radiator Hose (Lower)	1
25	1501999	Hose Clamp	1
26	1527982	Hose Clamp	3

FOOTNOTES:

a Not Illustrated

b Without Low Coolant Level Sensor

©2013 HYSTER COMPANY

COOLING SYSTEM (FIGURE 3-5)

MAZDA 2.0L AND 2.2L, GASOLINE AND LPG, SQUARE WAVE RADIATOR — BASIC POWERSHIFT TRANSMISSION (S/N L177B14569E →) (S/N L177V01501F →)

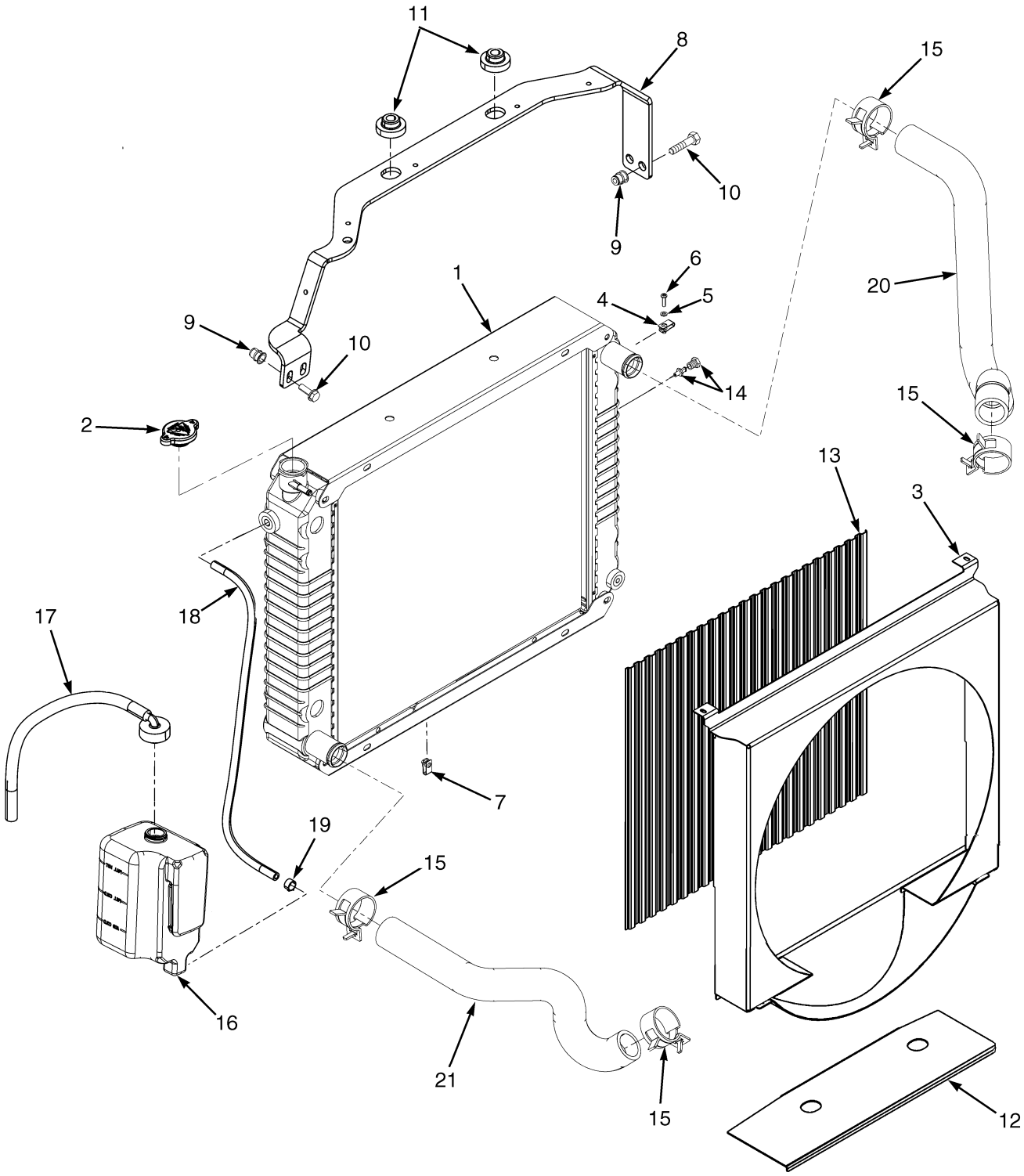

BP060031

©2013 HYSTER COMPANY

COOLING SYSTEM

MAZDA 2.0L AND 2.2L, GASOLINE AND LPG, SQUARE WAVE RADIATOR – BASIC POWERSHIFT TRANSMISSION (S/N L177B14569E →) (S/N L177V01501F →)

ITEM	PART NO.	DESCRIPTION	QTY
1	2056870	Radiator	1
1	1569079	Drain Valve (w/Thread Wrap)	1
2	1352140	Radiator Cap	1
3	1565391	Shroud	1
4	1535257	Nut	2
5	320154	Washer	2
6	302023	Screw	2
7	1329271	Clip	2
8	1588507	Bracket (Radiator)	1
9	1530243	Insert	4
10	1583611	Capscrew	4
11	1529787	Isolator	4
12	1565691	Exhaust Shield	1
13	1548497	Screen	1
14	1531404	Sensor (Low Coolant Level)	1
14	**a** 14385	Fitting	1
14	246108	Sealant	AR
15	369804	Clamp	4
16	1633307	Reservoir	1
17	345455	Outlet Assembly	1
17	345453	Outlet (Reservoir)	1
17	345454	Cap	1
17	336550	Bushing	1
17	339735	Hose	1
18	1567674	Hose	1
19	369815	Clamp	2
20	2085255	Hose (Upper) (Gasoline)	1
20	2085041	Radiator Hose (Upper) (LPG)	1
21	**b** 2069698	Radiator Hose (Lower)	1
21	**c** 2088675	Radiator Hose (Lower)	1

FOOTNOTES:

a Without Low Coolant Level Sensor
b → S/N L177B15326E EXC. 05512, 06207
c S/N L177B15327E → INC. 05512, 06207

©2013 HYSTER COMPANY

COOLING SYSTEM (FIGURE 3-6)

MAZDA 2.0L AND 2.2L, GASOLINE AND LPG, SQUARE WAVE RADIATOR — ELECTRONIC TRANSMISSION, WITH EXTERNAL OIL COOLER (→ S/N L177B14568E)

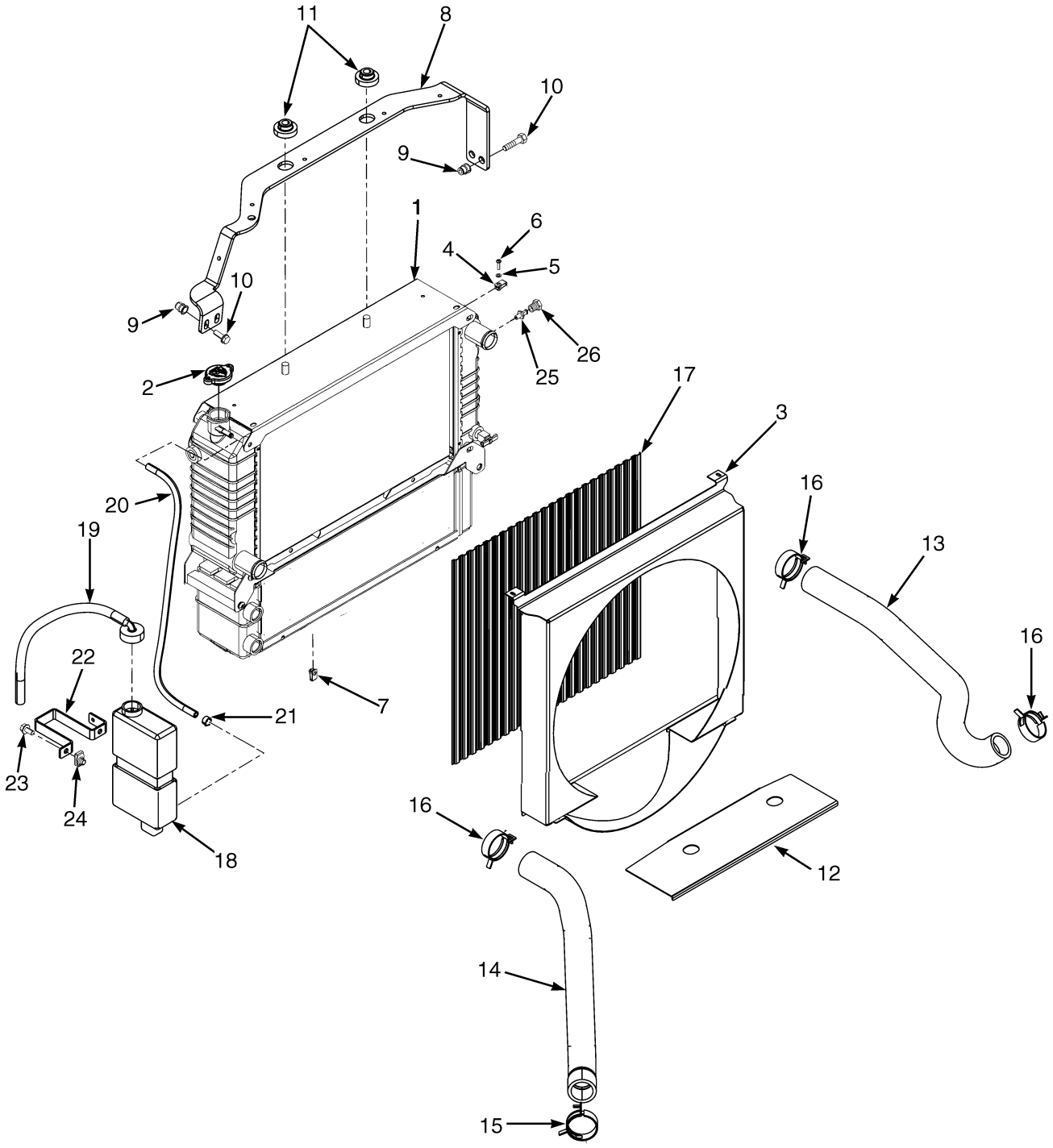

HP060047

©2013 HYSTER COMPANY

COOLING SYSTEM

MAZDA 2.0L AND 2.2L, GASOLINE AND LPG, SQUARE WAVE RADIATOR – ELECTRONIC TRANSMISSION, WITH EXTERNAL OIL COOLER (→ S/N L177B14568E)

ITEM	PART NO.	DESCRIPTION	QTY
1	2074789	Radiator	1
1	1590917	Radiator	1
1	1590918	Oil Cooler	1
1	1597765	Washer	4
1	1597766	Screw	4
2	1352140	Radiator Cap	1
3	1582074	Shroud	1
4	1535257	Nut	2
5	320154	Washer	2
6	302023	Screw	2
7	1551663	Clip	2
8	1585317	Bracket (Radiator)	1
9	1530243	Insert	4
10	1583611	Capscrew	4
11	1529787	Isolator	4
12	1565692	Exhaust Shield	1
	a ~~2069703~~		
	2085254	Radiator Hose (Upper) (Gasoline)	1
13	~~2069701~~		
	2085042	Radiator Hose (Upper) (LPG)	1
14	2069702	Radiator Hose (Lower)	1
15	1501999	Hose Clamp	1
16	1527982	Hose Clamp	3
17	1582078	Screen	1
18	1347026	Reservoir	1
19	345455	Outlet Assembly	1
19	336550	Bushing	1
19	345453	Outlet (Reservoir)	1
19	345454	Cap	1
19	339735	Hose	1
20	1567674	Hose	1
21	369815	Clamp	2
22	1531167	Bracket	1
23	1527879	Capscrew	2
24	1480237	Nut	2
25	1531404	Sensor (Low Coolant Level)	1
26	**b** 14385	Fitting	1

FOOTNOTES:

a Not Illustrated

b Without Low Coolant Sensor

©2013 HYSTER COMPANY

COOLING SYSTEM (FIGURE 3-7)

MAZDA 2.0L AND 2.2L, GASOLINE AND LPG, SQUARE WAVE RADIATOR — ELECTRONIC TRANSMISSION, EXTERNAL OIL COOLER, OR WET BRAKE (S/N L177B14569E →) (S/N L177V01501F →)

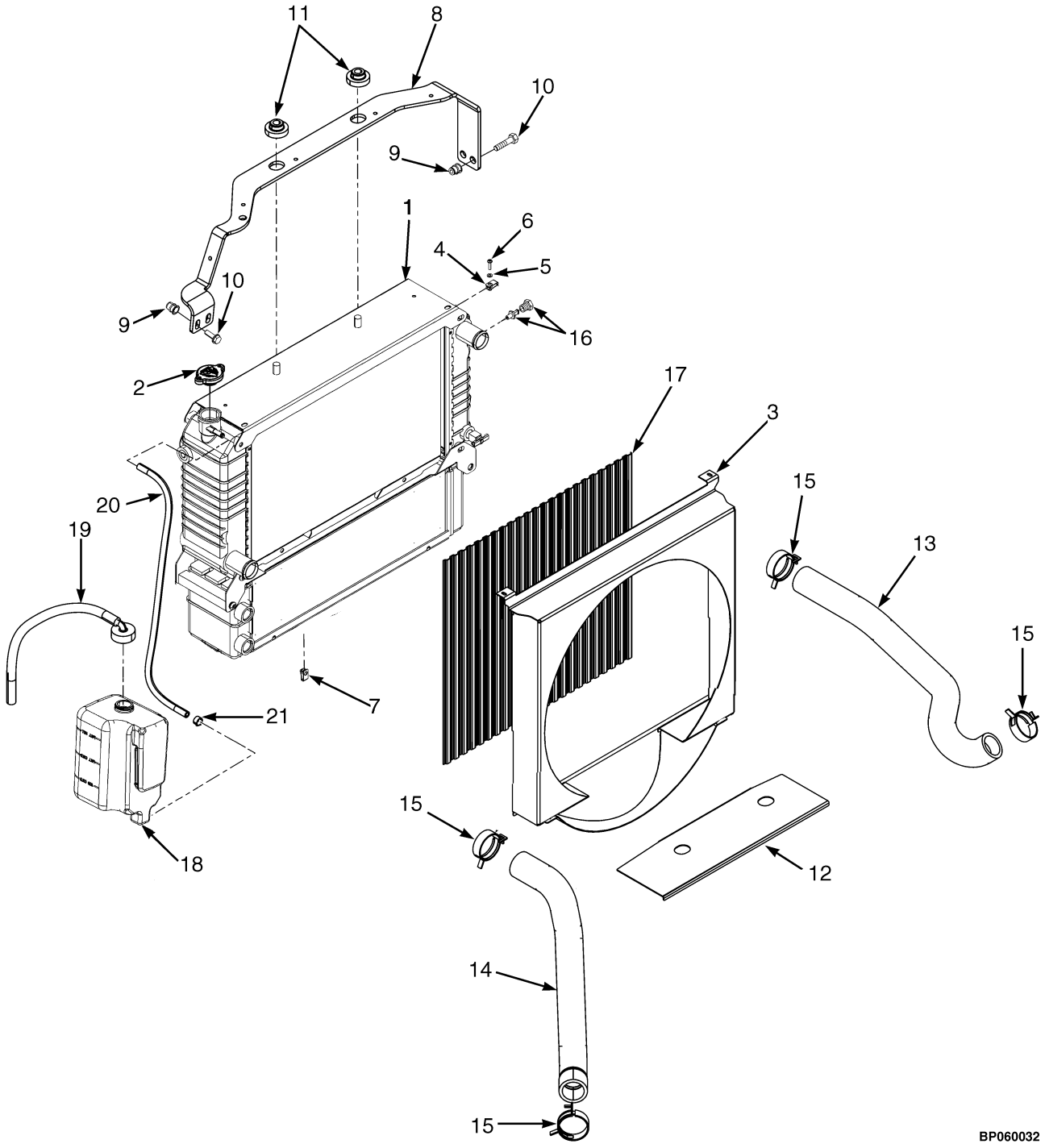

©2013 HYSTER COMPANY

COOLING SYSTEM

MAZDA 2.0L AND 2.2L, GASOLINE AND LPG, SQUARE WAVE RADIATOR – ELECTRONIC TRANSMISSION, EXTERNAL OIL COOLER, OR WET BRAKE (S/N L177B14569E →) (S/N L177V01501F →)

ITEM	PART NO.	DESCRIPTION	QTY
1	**c** 2074789	Radiator	1
1	**c** 1590917	Radiator	1
1	**c** 1590918	Oil Cooler	1
1	**c** 1597765	Washer	4
1	**c** 1597766	Screw	4
1	**e** 4603553	Radiator (Assembly)	1
1	4038259	Radiator	1
1	**e** 4038263	Oil Cooler	1
1	**e** 4038264	Drain Valve	1
1	**e** 4038265	Nut	2
1	**e** 4038266	Bolt	8
1	**e** 4038267	Bolt	4
2	1352140	Radiator Cap	1
3	1582074	Shroud	1
4	1535257	Nut	2
5	320154	Washer	2
6	**c** 302023	Screw (M4 x 0.7 x 12)	2
6	**e** 302020	Screw (M 4 x 0.7 x 10)	2
7	1551663	Clip	2
8	1588507	Bracket (Radiator)	1
9	1530243	Insert	4
10	1583611	Capscrew	4
11	1529787	Isolator	4
12	1565691	Exhaust Shield	1
13	~~2069703~~		
	2085254	Radiator Hose (Upper) (Gasoline)	1
13	~~2069701~~		
	2085042	Radiator Hose (Upper) (LPG)	1
14	**b** 2069702	Radiator Hose (Lower)	1
14	**d** 2088676	Radiator Hose (Lower)	1
15	369804	Clamp	4
16	1531404	Sensor (Low Coolant Level)	1
16	**a** 14385	Fitting	1
16	246108	Sealant	AR
17	1582078	Screen	1
18	1633307	Reservoir	1
19	345455	Outlet Assembly	1
19	336550	Bushing	1
19	345453	Outlet (Reservoir)	1
19	345454	Cap	1
19	339735	Hose	1
20	1567674	Hose	1
21	369815	Clamp	2

FOOTNOTES:

a Without Low Coolant Sensor
b → S/N L177B15326E EXC. 05512, 06207
c → S/N L177V08992J
d S/N L177B15327E → INC. 05512, 06207
e S/N L177V08993J →

©2013 HYSTER COMPANY

EXHAUST SYSTEM WITH CATALYTIC CONVERTER (FIGURE 3-8)

MAZDA 2.0L AND 2.2L, GASOLINE AND LPG — 2006 EMISSION COMPLIANT ENGINES (→ S/N L177B15326E)

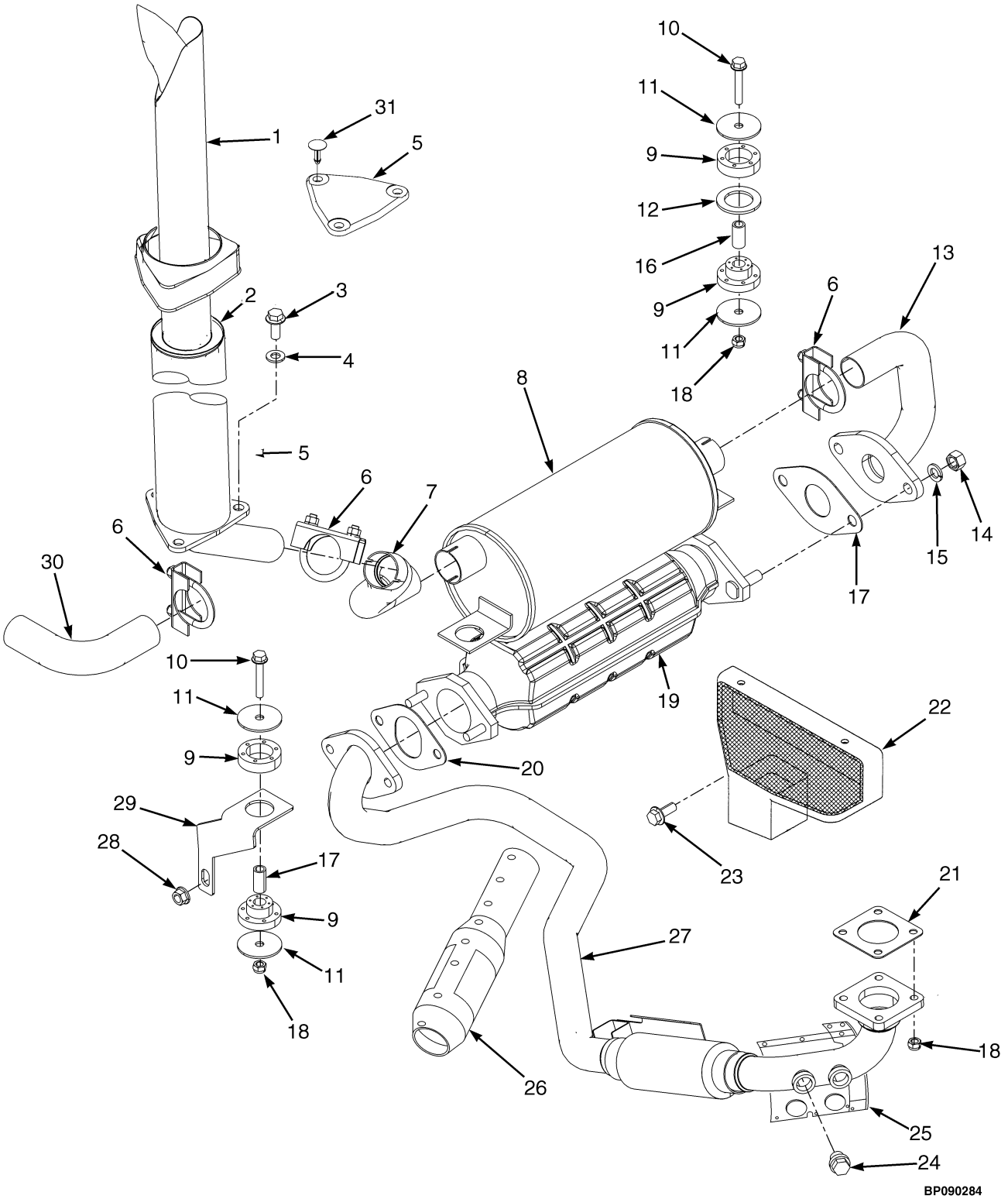

©2013 HYSTER COMPANY

EXHAUST SYSTEM WITH CATALYTIC CONVERTER

MAZDA 2.0L AND 2.2L, GASOLINE AND LPG – 2006 EMISSION COMPLIANT ENGINES

(→ S/N L177B15326E)

KEY:
A: With Catalytic Converter
B: For Vehicles With Safety Option

ITEM	PART NO.	DESCRIPTION	QTY A	QTY B
1	**b** 2021394	Cover	1	1
2	**c** 1646827	Tail Pipe	1	1
3	**c** 1510117	Capscrew	3	3
4	320159	Washer	3	3
5	1533639	Cover	1	1
6	68968	Clamp	3	3
7	1533863	Exhaust Pipe	1	1
8	2060957	Muffler (Crimped)	1	..
8	2056524	Muffler (Welded)	..	1
9	1528930	Mount	2	2
10	1510115	Capscrew	2	2
11	1528938	Washer	4	4
12	1532585	Washer	1	1
13	1534174	Exhaust Pipe	1	1
14	1469405	Nut	2	2
15	292683	Lockwasher	2	2
16	1649471	Spacer	2	2
17	1469379	Gasket	1	1
17	1677491	Gasket (Alternate Part)	1	1
18	1582222	Locknut	6	6
19	1469342	Converter	1	1
20	1547712	Gasket	1	1
20	1677490	Gasket (Alternate Part)	1	1
21	1528937	Gasket	1	1
21	1338308	Gasket (Alternate Part)	1	1
21	1528937	Gasket (Alternate Part)	1	1
22	**a** 2084006	Cover (Manifold)	1	1
23	**a** 1528778	Capscrew	1	1
24	1396518	Plug	1	1
24	1509103	Ring (Copper)	1	1
24	1509104	Plug	1	1
25	**a** 2084003	Exhaust Wrap	1	1
26	**a** 2084005	Exhaust Wrap	1	1
27	1542670	Exhaust Pipe	1	1
28	1460477	Nut	2	2
29	1532523	Bracket	1	1
30	**b** 1589312	Exhaust Pipe	1	1
31	**b** 1347045	Fastener	1	1

FOOTNOTES:

a Paper Industry Applications
b With Counterweight Exhaust
c With Overhead Exhaust

©2013 HYSTER COMPANY

EXHAUST SYSTEM WITH CATALYTIC CONVERTER (FIGURE 3-9)

MAZDA 2.0L AND 2.2L, GASOLINE AND LPG — 2007-2010 EMISSION COMPLIANT ENGINES (S/N L177B15327E →) (S/N L177V01501F →)

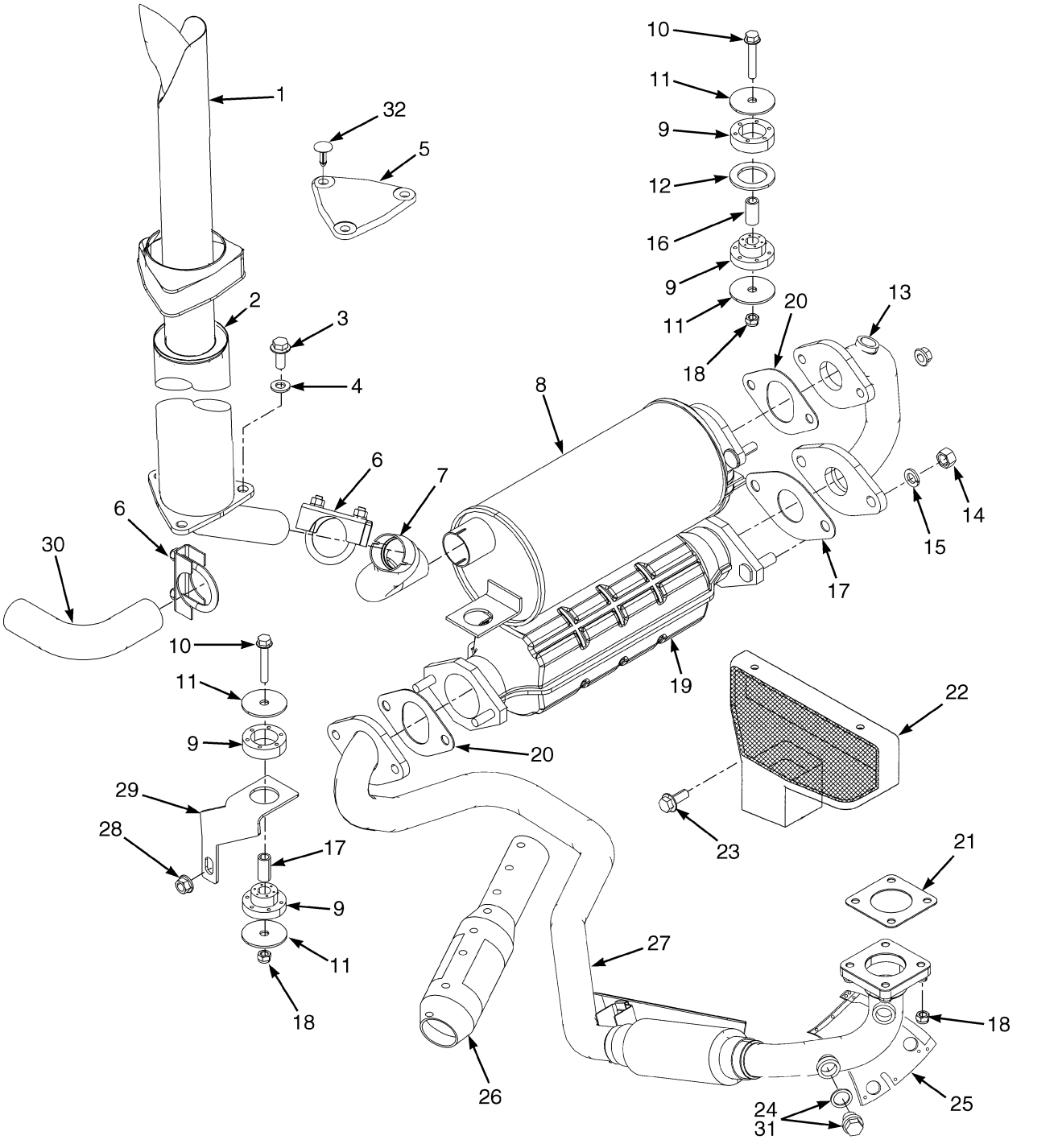

©2013 HYSTER COMPANY

EXHAUST SYSTEM WITH CATALYTIC CONVERTER

MAZDA 2.0L AND 2.2L, GASOLINE AND LPG – 2007-2010 EMISSION COMPLIANT ENGINES (S/N L177B15327E →) (S/N L177V01501F →)

KEY:
A: With Catalytic Converter
B: For Vehicles With Safety Option

ITEM	PART NO.	DESCRIPTION	QTY A	QTY B
1	2021394	Cover	1	1
2	**c** 1646827	Tail Pipe	1	1
3	**c** 1510117	Capscrew	3	3
4	320159	Washer	3	3
5	**b** 1533639	Cover	1	1
6	68968	Clamp	1	1
6	63117	Clamp (Alternate Part)	1	1
7	1533863	Exhaust Pipe	1	1
8	2089895	Muffler (Crimped)	1	..
8	2089894	Muffler (Welded)	..	1
9	**e** 1528930	Mount	2	2
9	**g** 1709996	Isolator	4	4
10	1510115	Capscrew	2	2
11	**e** 1528938	Washer	4	4
12	**e** 1532585	Washer	1	1
13	1636409	Exhaust Pipe	1	1
14	1469405	Nut	2	2
15	292683	Lockwasher	2	2
16	1649471	Spacer	2	2
16	**g** 1708371	Spacer	2	2
17	**e** 1469379	Gasket	1	1
17	1677491	Gasket (Alternate Part)	1	1
18	1582222	Locknut	6	6
19	1469342	Converter	1	1
19	4005681	Catalytic Converter (2010 Series)	1	1
20	1547712	Gasket	2	2
20	1677490	Gasket (Alternate Part)	2	2
21	1528937	Gasket	1	1
21	1338308	Gasket (Alternate Part)	1	1
22	**a** 2084006	Cover (Manifold)	1	1
23	**a** 1528778	Capscrew	1	1
24	1396518	Plug	1	1
24	1509103	Ring (Copper)	1	1
24	1509104	Plug	1	1
25	**a** 2084003	Exhaust Wrap	1	1
26	**a** 2084005	Exhaust Wrap	1	1
27	**d** 1651606	Exhaust Pipe	1	1
27	**f** ~~1687706~~ 4025054	Exhaust Pipe	1	1
28	1460477	Nut	4	4
29	1532523	Bracket	1	1
30	**b** 1589312	Exhaust Pipe	1	1
31	251979	Lubricant	AR	AR
32	**b** 1347045	Fastener	1	1

©2013 HYSTER COMPANY

FOOTNOTES:

a Paper Industry Applications
b With Counterweight Exhaust
c With Overhead Exhaust
d → S/N L177B28223G
e → S/N L177V04023G
f S/N L177B28224G →
g S/N L177V04024G →

©2013 HYSTER COMPANY

FAN ASSEMBLY (FIGURE 3-10)
MAZDA 2.0L

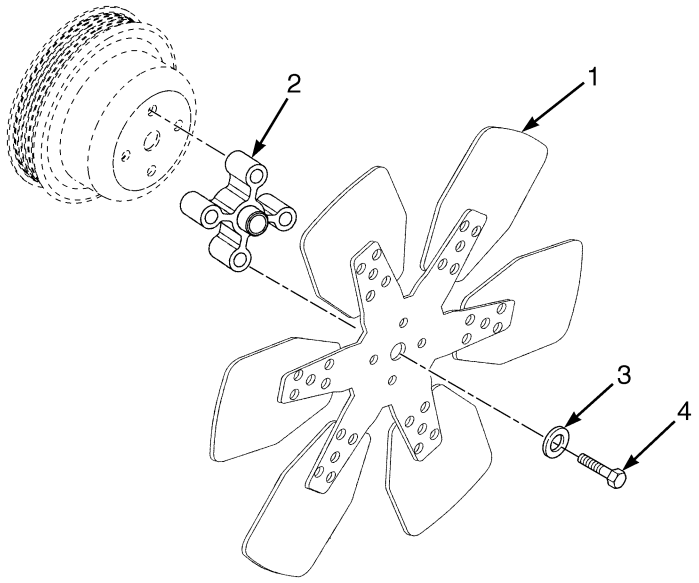

BP090418

ITEM	PART NO.	DESCRIPTION	QTY
1	**a** 1375642	Fan	1
2	**b** 1528140	Spacer	1
3	**b** 293619	Capscrew	4
4	296418	Washer	4

FOOTNOTES:

a → S/N L177B06744D

b S/N L177B12347D →

©2013 HYSTER COMPANY

ENGINE MOUNTING (FIGURE 3-11)

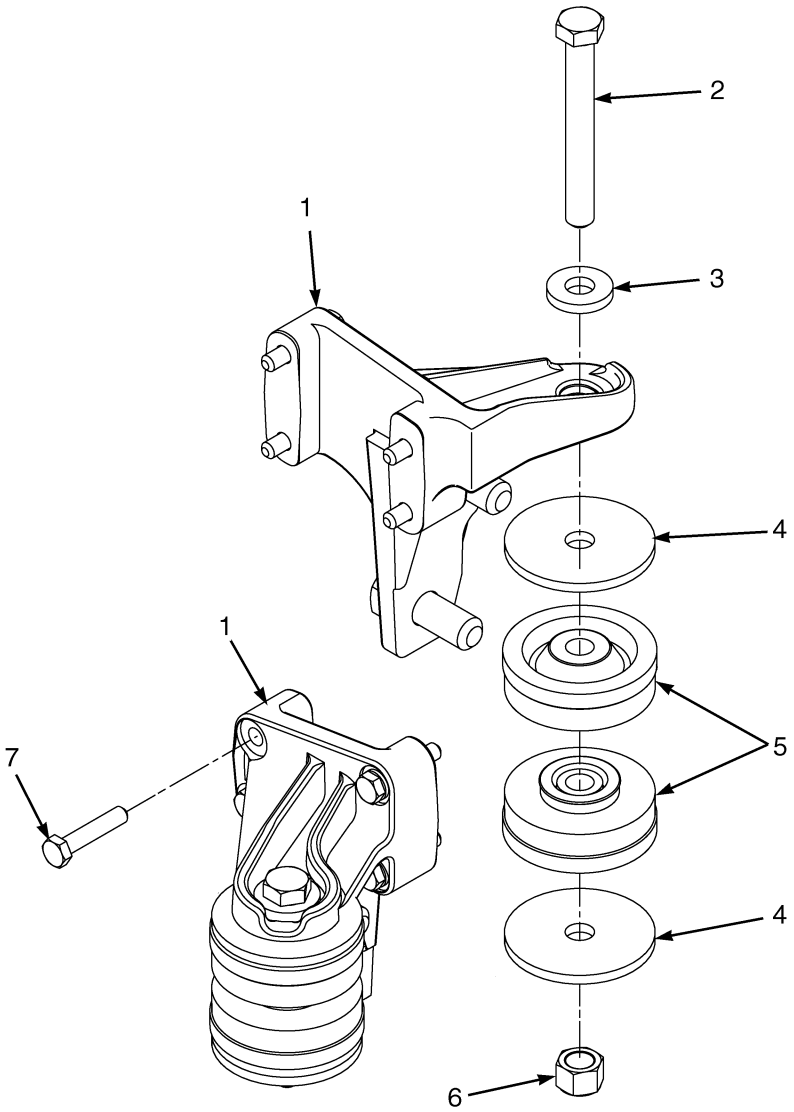

BP090163

©2013 HYSTER COMPANY

ENGINE MOUNTING

ITEM	PART NO.	DESCRIPTION	QTY
1	1557478	Mount (RH)	1
1	1557479	Mount (LH)	1
2	293698	Capscrew	2
3	1504075	Washer	2
4	1557737	Washer	4
5	2069951	Isolator	4
6	1565453	Nut (Flange)	2
7	1565150	Bolt (Flange)	8

©2013 HYSTER COMPANY

FLYWHEEL AND HOUSING (FIGURE 3-12)

MAZDA 2.0L AND 2.2L — GASOLINE AND LPG (→ S/N L177B11107D)

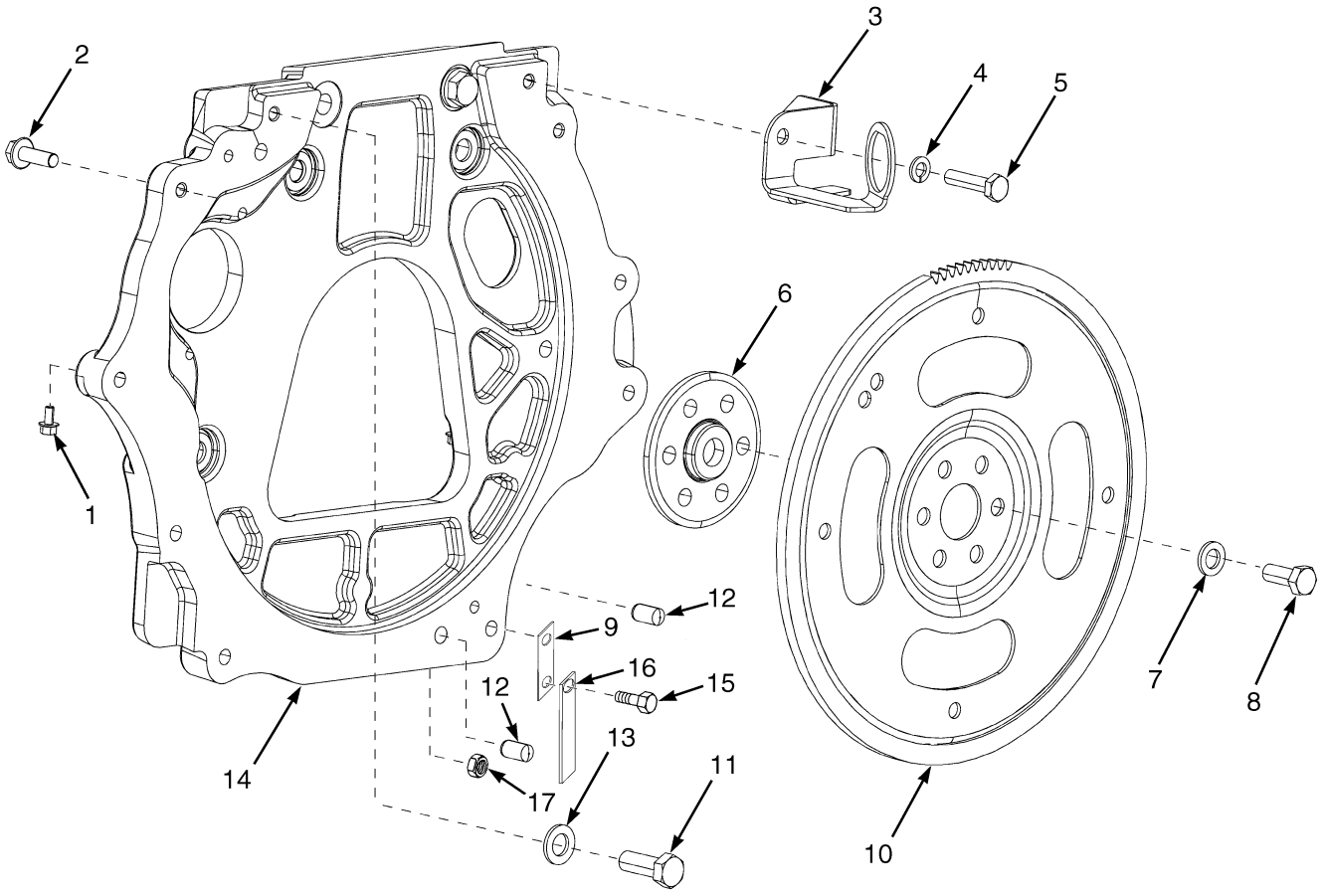

HP091268

©2013 HYSTER COMPANY

FLYWHEEL AND HOUSING

MAZDA 2.0L AND 2.2L – GASOLINE AND LPG (→ S/N L177B11107D)

ITEM	PART NO.	DESCRIPTION	QTY
1	1534417	Capscrew	3
2	1527884	Capscrew	2
3	1551608	Bracket	1
4	~~388049~~		
	292682	Lockwasher	10
5	292517	Capscrew	10
6	1506572	Hub Adapter	1
7	296422	Washer	6
8	1528415	Capscrew	6
9	1565832	Bracket	1
10	1605467	Flywheel (With Ring Gear)	1
10	1506607	Flywheel (With Ring Gear) (Alternate Part)	1
11	2072918	Capscrew	6
12	303150	Dowel	2
13	296424	Washer	6
14	1553266	Flywheel Housing	1
15	1586013	Capscrew	1
16	216895	Static Strap	1
17	1460477	Nut	1
	a 1625999	Dust Cover (Not Illustrated)	1

FOOTNOTES:

a S/N L177B07132D →

©2013 HYSTER COMPANY

FLYWHEEL AND HOUSING (FIGURE 3-13)

MAZDA 2.0 L AND 2.2 L — GASOLINE AND LPG (S/N L177B11118D →) (S/N L177V01501F →)

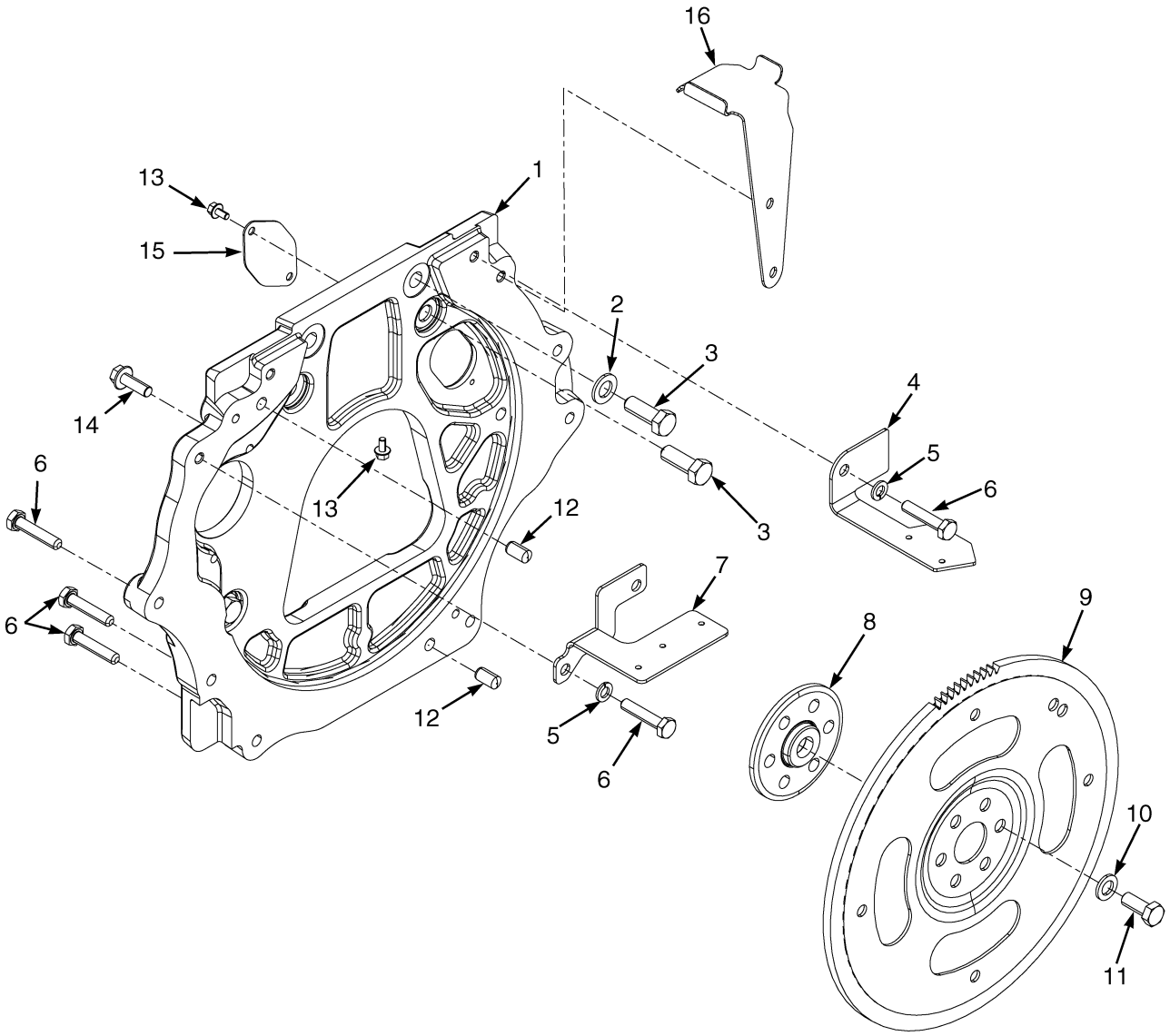

BP090370

©2013 HYSTER COMPANY

FLYWHEEL AND HOUSING

MAZDA 2.0 L AND 2.2 L – GASOLINE AND LPG (S/N L177B11118D →) (S/N L177V01501F →)

ITEM	PART NO.	DESCRIPTION	QTY
1	1553266	Flywheel Housing	1
2	296424	Washer	6
3	2072918	Capscrew	6
4	1624727	Bracket	1
5	~~388049~~		
	292682	Lockwasher	10
6	292517	Capscrew	10
7	1623093	Bracket	1
8	1506572	Hub Adapter	1
9	1605467	Flywheel (With Ring Gear)	1
9	1506607	Flywheel (With Ring Gear) (Alternate Part)	1
10	296422	Washer	6
11	1528415	Capscrew	6
12	303150	Dowel	2
13	1534417	Capscrew	5
14	1527884	Capscrew	2
15	1625999	Dust Cover	1
16	1658141	Drip Shield (Gasoline)	1

©2013 HYSTER COMPANY

CYLINDER HEAD (FIGURE 3-14)

MAZDA 2.0L AND 2.2L, GASOLINE AND LPG, 2006 EMISSION COMPLIANT ENGINES
(→ S/N L177B15326E 2.2L GAS) (→ S/N L177B16206E 2.2L LPG)
(S/N L177B15512E → 2.0L GAS AND LPG)

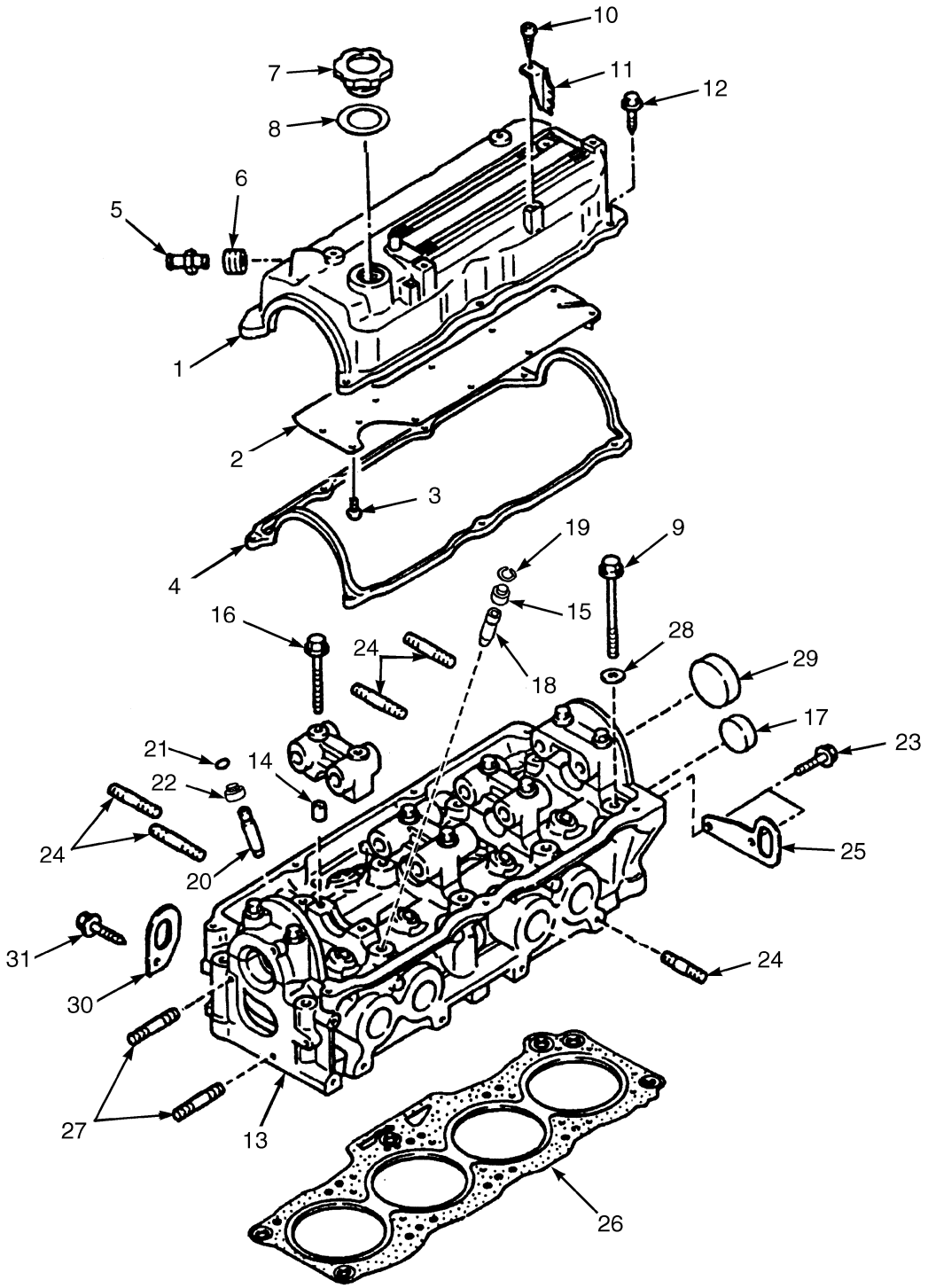

HP000902

©2013 HYSTER COMPANY

CYLINDER HEAD

MAZDA 2.0L AND 2.2L, GASOLINE AND LPG, 2006 EMISSION COMPLIANT ENGINES (→ S/N L177B15326E 2.2L GAS) (→ S/N L177B16206E 2.2L LPG) (S/N L177B15512E → 2.0L GAS AND LPG)

ITEM	PART NO.	DESCRIPTION	QTY
	1587841	Long Block (2.0L, Gasoline)	1
	1587843	Long Block (2.0L, LPG)	1
	1587844	Long Block (2.2L, Gasoline)	1
	1587845	Long Block (2.2L, LPG)	1
1	1360883	Engine Cover (LPG)	1
1	1553693	Engine Cover (Gasoline)	1
2	1360884	Plate	1
3	2022655	Screw	10
4	1360886	Gasket	1
5	1553692	PCV Valve (PCV, Gasoline)	1
5	1360893	PCV Valve (PCV, LPG)	1
5	1360893	PCV Valve (LPG) (Alternate Part)	1
6	1360892	Seal	1
7	1360887	Cap (Oil)	1
8	1360888	Gasket	1
9	1360880	Bolt	10
10	1362000	Screw	2
11	1360885	Bracket	2
12	1362001	Bolt	7
13	1360878	Cylinder Head	1
14	1362002	Pin	10
15	1361719	Seal (Exhaust Valve)	4
16	1361894	Bolt	10
17	1362003	Plug	1
18	1360895	Guide	4
19	1360879	Clip	1
20	1360895	Guide	4
21	1360879	Clip	4
22	1361718	Seal (Inlet Valve)	4
23	1361898	Bolt	2
24	1361897	Stud	20
25	2314973	Hanger	1
26	2045321	Gasket (Cylinder Head)	1
27	1361899	Stud	2
28	1360881	Washer	10
29	1360882	Cap	1

©2013 HYSTER COMPANY

CYLINDER BLOCK (FIGURE 3-15)

MAZDA 2.0L AND 2.2L, GASOLINE AND LPG, 2006 EMISSION COMPLIANT ENGINES (→ S/N L177B15326E 2.2L GAS) (→ S/N L177B16206E (2.2L LPG)) (S/N L177B15512E → 2.0L GAS AND LPG)

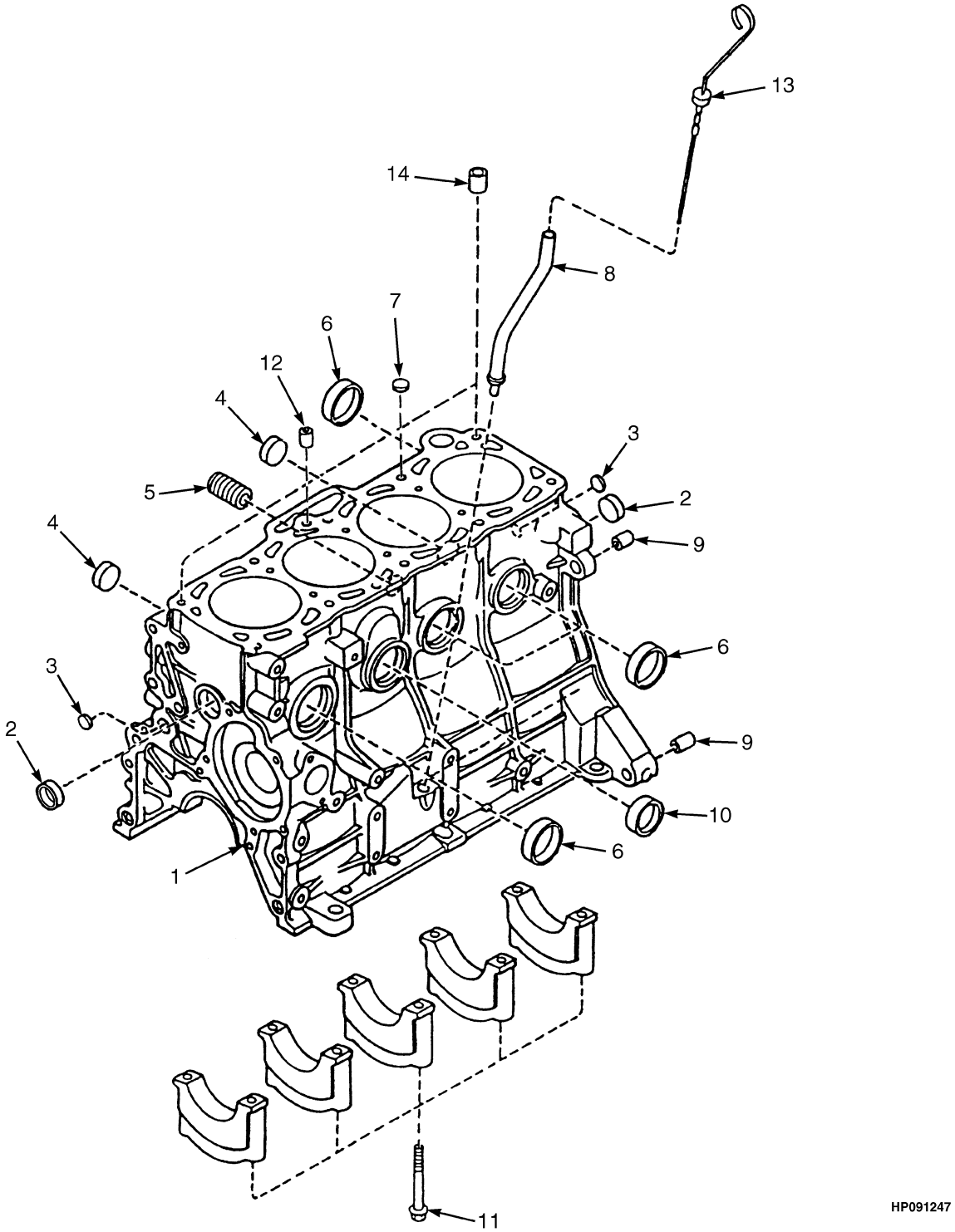

©2013 HYSTER COMPANY

CYLINDER BLOCK

MAZDA 2.0L AND 2.2L, GASOLINE AND LPG, 2006 EMISSION COMPLIANT ENGINES (→ S/N L177B15326E 2.2L GAS) (→ S/N L177B16206E (2.2L LPG)) (S/N L177B15512E → 2.0L GAS AND LPG)

ITEM	PART NO.	DESCRIPTION	QTY
	1587841	Long Block (2.0L, Gasoline)	1
	1587843	Long Block (2.0L, LPG)	1
	1587844	Long Block (2.2L, Gasoline)	1
	1587845	Long Block (2.2L, LPG)	1
	1553650	Short Block (2.0L, Gasoline)	1
	1572387	Short Block (2.0L, LPG)	1
	1553652	Short Block (2.2L, Gasoline)	1
	1572388	Short Block (2.2L, LPG)	1
1	1553710	Cylinder Block (2.0L)	1
1	1370744	Cylinder Block (2.2L)	1
2	1362009	Plug	2
3	1361675	Plug	2
4	1362005	Plug	2
5	1360898	Joint Fitting	1
6	1362003	Plug	4
7	2028927	Plug	1
8	1360899	Tube Assy	1
9	1362008	Pin	2
10	1362007	Plug	2
11	1361676	Bolt	10
12	2029081	Plug	1
13	1361677	Dipstick	1
14	1360896	Pin	2

©2013 HYSTER COMPANY

CAMSHAFT AND VALVES (FIGURE 3-16)

MAZDA 2.0L AND 2.2L, GASOLINE AND LPG, 2006 EMISSION COMPLIANT ENGINES

(→ S/N L177B15326E (2.2L GAS)) (→ S/N L177B16206E (2.2L LPG))

(S/N L177B15512E → 2.0L GAS AND LPG)

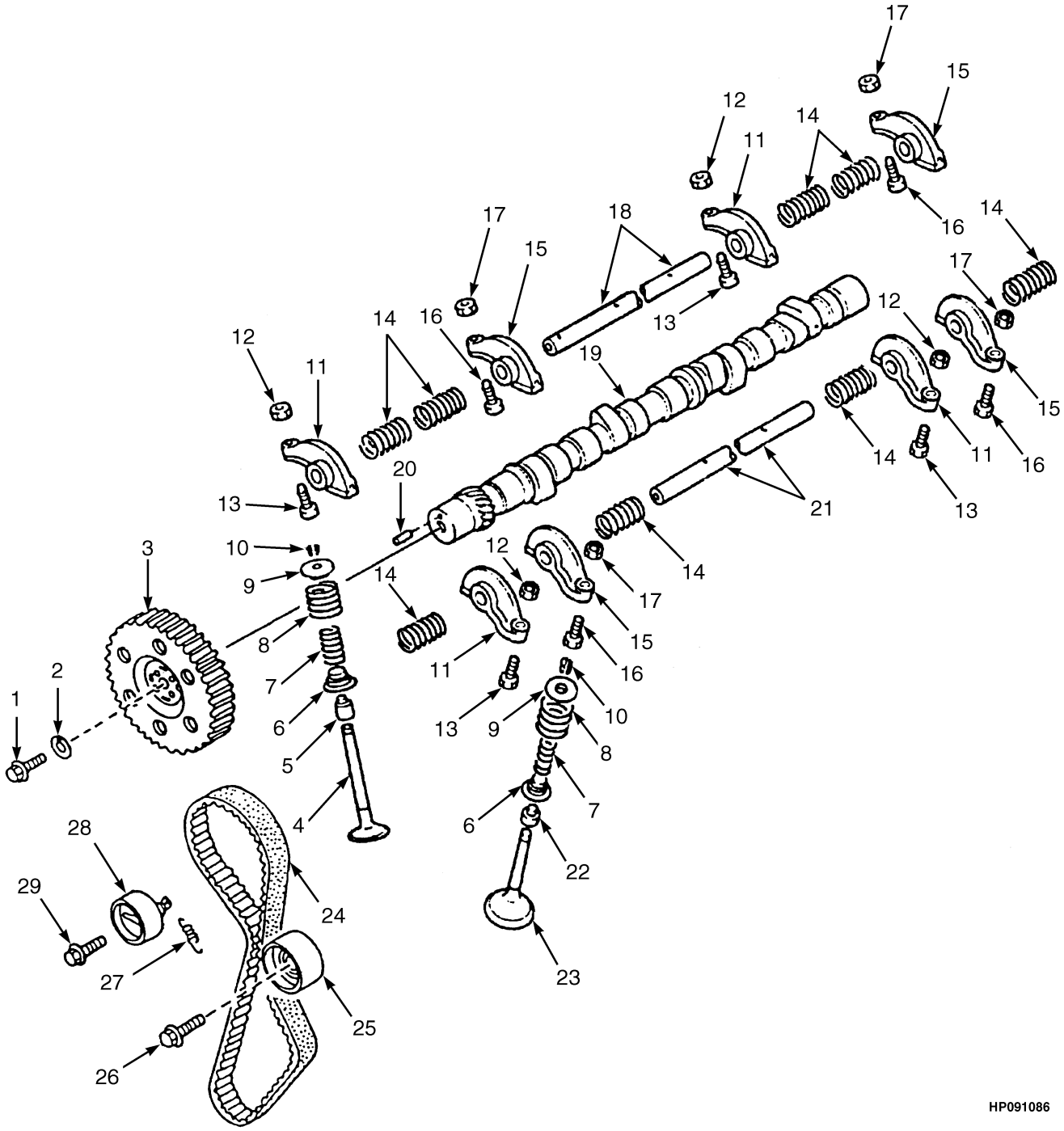

©2013 HYSTER COMPANY

CAMSHAFT AND VALVES

MAZDA 2.0L AND 2.2L, GASOLINE AND LPG, 2006 EMISSION COMPLIANT ENGINES (→ S/N L177B15326E (2.2L GAS)) (→ S/N L177B16206E (2.2L LPG)) (S/N L177B15512E → 2.0L GAS AND LPG)

ITEM	PART NO.	DESCRIPTION	QTY
	1587841	Long Block (2.0L, Gasoline)	1
	1587843	Long Block (2.0L, LPG)	1
	1587844	Long Block (2.2L, Gasoline)	1
	1587845	Long Block (2.2L, LPG)	1
1	1361736	Bolt	1
2	1361737	Washer	1
3	2029095	Pulley (Camshaft)	1
4	1361720	Inlet Valve (Intake)	4
5	1361718	Seal	4
6	1361724	Valve Seat	8
7	1361723	Spring (Intake Valve)	8
8	1361722	Spring (Exhaust Valve)	8
9	1361721	Valve Seat	8
10	326612	Keeper	16
11	1361726	Rocker Arm	4
12	1361728	Nut	4
13	1361727	Screw	4
14	1361731	Spring	8
15	1361729	Rocker Arm	4
16	1361727	Screw	4
17	1361728	Nut	4
18	1361730	Shaft	1
19	1361734	Camshaft	1
20	1361717	Pin	1
21	1361732	Shaft	1
22	1361719	Seal	4
23	1361725	Exhaust Valve	4
24	1553762	Timing Belt (2.0L)	1
24	2028852	Timing Belt (2.2L)	1
25	2029098	Idler Pulley	1
26	1361884	Bolt	1
27	1553763	Spring (2.0L)	1
27	2029096	Spring (2.2L)	1
28	2029097	Belt Tensioner	1
29	1362016	Bolt	1

©2013 HYSTER COMPANY

CRANKSHAFT AND PISTONS (FIGURE 3-17)

MAZDA 2.0L AND 2.2L, GASOLINE AND LPG, 2006 EMISSION COMPLIANT ENGINES (→ S/N L177B15326E (2.2L GAS)) (→ S/N L177B16206E (2.2L LPG)) (S/N L177B15512E → 2.0L GAS AND LPG)

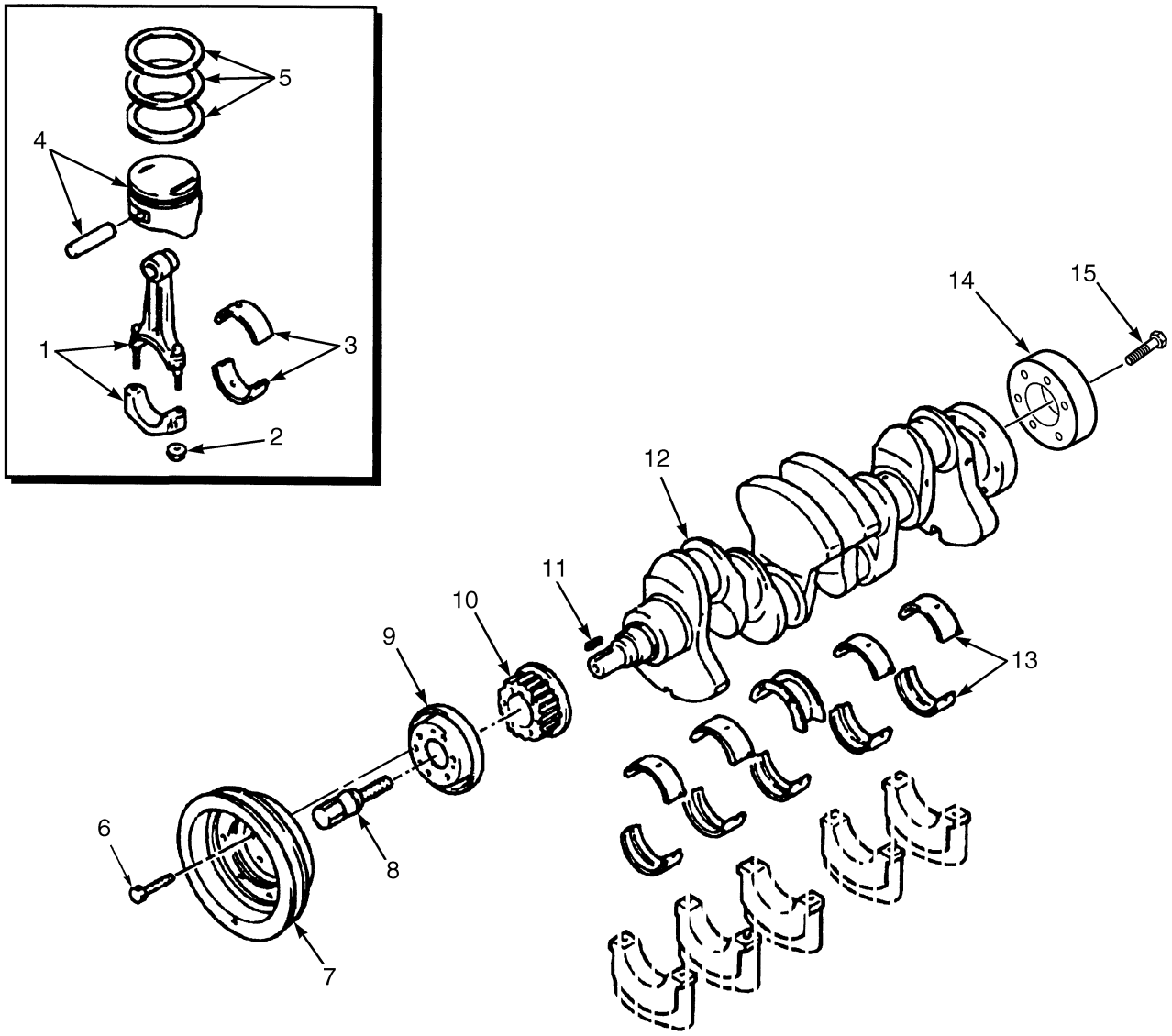

HP090487

©2013 HYSTER COMPANY

CRANKSHAFT AND PISTONS

MAZDA 2.0L AND 2.2L, GASOLINE AND LPG, 2006 EMISSION COMPLIANT ENGINES

(→ S/N L177B15326E (2.2L GAS)) (→ S/N L177B16206E (2.2L LPG))
(S/N L177B15512E → 2.0L GAS AND LPG)

KEY:
A: Mazda 2.0L Gasoline Engine
B: Mazda 2.2L Gasoline Engine
C: Mazda 2.0L LPG Engine
D: Mazda 2.2L LPG Engine

ITEM	PART NO.	DESCRIPTION	QTY A	B	C	D
	1587841	Long Block (2.0L, Gasoline)	1	..	..	..
	1587843	Long Block (2.0L, LPG)	..	..	1	..
	1587844	Long Block (2.2L, Gasoline)	..	1	..	..
	1587845	Long Block (2.2L, LPG)	..	..	..	1
1	~~1361694~~					
	2105970	Piston Rod	4	..	4	..
1	~~1370746~~					
	2105972	Piston Rod	..	4	..	4
2	1361695	Nut	2	2	2	2
3	1361703	Piston Rod Bearing (Standard)	1	1	1	1
3	1361704	Piston Rod Bearing (0.25 mm)	1	1	1	1
3	1361705	Piston Rod Bearing (0.50 mm)	1	1	1	1
3	1361706	Piston Rod Bearing (0.75 mm)	1	1	1	1
4	1572593	Piston and Pin (Standard)	..	..	4	..
4	1361714	Piston and Pin (Standard)	4	..	..	..
4	1572597	Piston and Pin (0.25 mm)	..	..	4	..
4	1361715	Piston and Pin (0.25 mm)	4	..	..	..
4	1572595	Piston and Pin (0.50 mm)	..	..	4	..
4	1361716	Piston and Pin (0.50 mm)	4	..	..	..
4	1572594	Piston and Pin (Standard)	..	..	..	4
4	1370745	Piston and Pin (Standard)	..	4	..	..
4	1572596	Piston and Pin (0.50 mm)	..	..	..	4
4	2029094	Piston and Pin (0.50 mm)	..	4	..	..
4	1572598	Piston and Pin (0.25 mm)	..	..	..	4
4	2029093	Piston and Pin (0.25 mm)	..	4	..	..
5	1495473	Kit-Piston Ring (Standard)	4	4	4	4
5	1495475	Kit-Piston Ring (0.25 mm)	4	4	4	4
5	1495474	Kit-Piston Ring (0.50 mm)	4	4	4	4
6	1361700	Bolt	6	6	6	6
7	1553722	Crankshaft Pulley	1	1	..	..
7	1495472	Pulley	..	..	1	1
8	2045034	Bolt	1	1	..	..
8	1361701	Bolt	..	..	1	1
9	2045033	Plate	1	1	1	1
10	2045030	Pulley	1	1	1	1
11	1361697	Key	1	1	1	1
12	1361696	Crankshaft	1	..	1	..
12	2045029	Crankshaft	..	1	..	1
13	1361710	Kit-Crankshaft Bearing (Standard)	1	1	1	1
13	1361713	Crankshaft Bearing (0.25 mm)	1	1	1	1
13	1361711	Crankshaft Bearing (0.50 mm)	1	1	1	1

©2013 HYSTER COMPANY

CRANKSHAFT AND PISTONS

MAZDA 2.0L AND 2.2L, GASOLINE AND LPG, 2006 EMISSION COMPLIANT ENGINES
(→ S/N L177B15326E (2.2L GAS)) (→ S/N L177B16206E (2.2L LPG))
(S/N L177B15512E → 2.0L GAS AND LPG)

KEY:
A: Mazda 2.0L Gasoline Engine
B: Mazda 2.2L Gasoline Engine
C: Mazda 2.0L LPG Engine
D: Mazda 2.2L LPG Engine

ITEM	PART NO.	DESCRIPTION	QTY A	B	C	D
13	1361712	Crankshaft Bearing (0.75 mm)	1	1	1	1
14	2021442	Plate	1	1	1	1
15	2021438	Bolt	1	1	1	1

©2013 HYSTER COMPANY

NOTES

©2013 HYSTER COMPANY

ENGINE COOLING (FIGURE 3-18)

MAZDA 2.0L AND 2.2L, GASOLINE AND LPG — 2006 EMISSION COMPLIANT ENGINES (→ S/N L177B15326E (2.2L GAS)) (→ S/N L177B16206E (2.2L LPG)) (S/N L177B15512E → 2.0L GAS AND LPG)

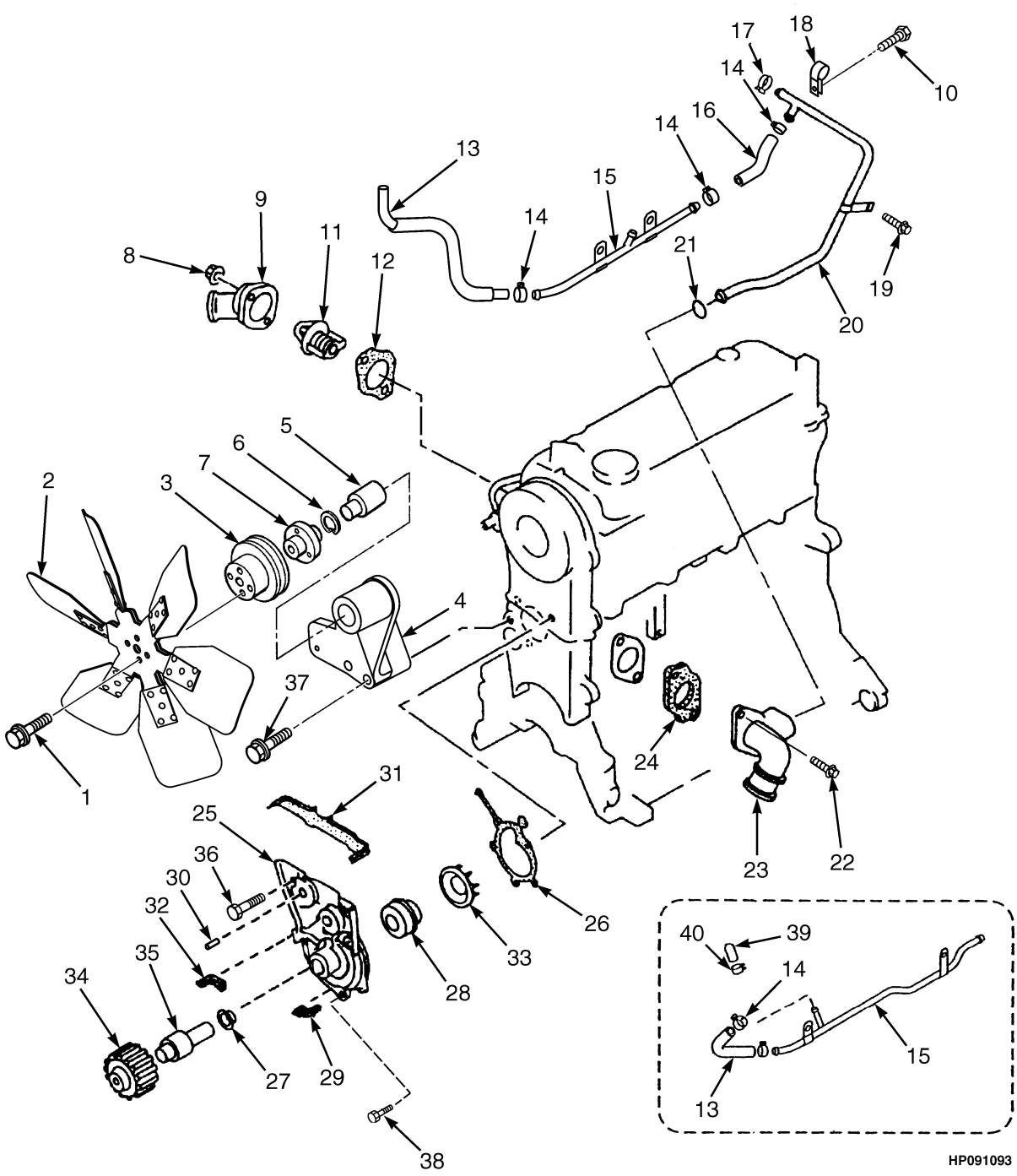

©2013 HYSTER COMPANY

ENGINE COOLING

MAZDA 2.0L AND 2.2L, GASOLINE AND LPG – 2006 EMISSION COMPLIANT ENGINES (→ S/N L177B15326E (2.2L GAS)) (→ S/N L177B16206E (2.2L LPG)) (S/N L177B15512E → 2.0L GAS AND LPG)

ITEM	PART NO.	DESCRIPTION	QTY
	1587841	Long Block (2.0L Gasoline)	1
	1587843	Long Block (2.0L LPG)	1
	1587845	Long Block (2.2L LPG)	1
	1587844	Long Block (2.2L Gasoline)	1
1	324706	Bolt	4
2	1582389	Fan	1
3	1573179	Fan Pulley	1
4	~~1573176~~		
	4053018	Bracket	1
5	2029116	Shaft Bearing (Fan)	1
6	2045025	Clip	1
7	. . . . .	Hub	1
8	326504	Nut	2
9	1361821	Cover	1
10	1361898	Bolt	1
11	1495428	Thermostat	1
11	2082929	Thermostat	1
12	1367191	Gasket	1
13	1553946	Hose Assy (Gasoline)	1
13	1361825	Radiator Hose (LPG)	1
13	1553948	Protector	1
14	1361873	Clamp	4
15	1553945	Pipe (Water Bypass) (Gasoline)	1
15	1361823	Pipe (Water Bypass) (LPG)	1
16	2029108	Radiator Hose	1
17	1361886	Clamp	1
18	1361826	Clip	1
19	2022309	Bolt	1
20	1553943	Pipe (2.0L)	1
20	2045024	Pipe (2.2L)	1
21	1361827	O-Ring	1
22	1361875	Screw	2
23	2029112	Adapter (Intake)	1
24	2029120	Gasket (Inlet)	1
25	2028644	Water Pump	1
26	2028645	Gasket	1
27	2045319	Baffle	1
28	1361814	Seal	1
29	2029106	Seal	1
30	1361880	Stud	1
31	2029107	Seal	1
32	2029105	Seal	1
33	. . . . .	Impeller	1
34	. . . . .	Pulley	1
35	. . . . .	Shaft	1
36	326608	Bolt	2
37	2045026	Screw	3
38	1369914	Bolt	5

©2013 HYSTER COMPANY

ENGINE COOLING

MAZDA 2.0L AND 2.2L, GASOLINE AND LPG – 2006 EMISSION COMPLIANT ENGINES (→ S/N L177B15326E (2.2L GAS)) (→ S/N L177B16206E (2.2L LPG)) (S/N L177B15512E → 2.0L GAS AND LPG)

ITEM	PART NO.	DESCRIPTION	QTY
39	1361790	Cap (LPG)	1
40	1495429	Hose Clamp (LPG)	1
	2045036	Kit-Gasket	1

©2013 HYSTER COMPANY

EXHAUST MANIFOLD (FIGURE 3-19)

MAZDA 2.0L AND 2.2L, GASOLINE AND LPG, 2006 EMISSION COMPLIANT ENGINES
(→ S/N L177B15326E (2.2L GAS)) (→ S/N L177B15511E (2.0 GAS AND LPG))
(→ S/N L177B16206E (2.2L LPG))

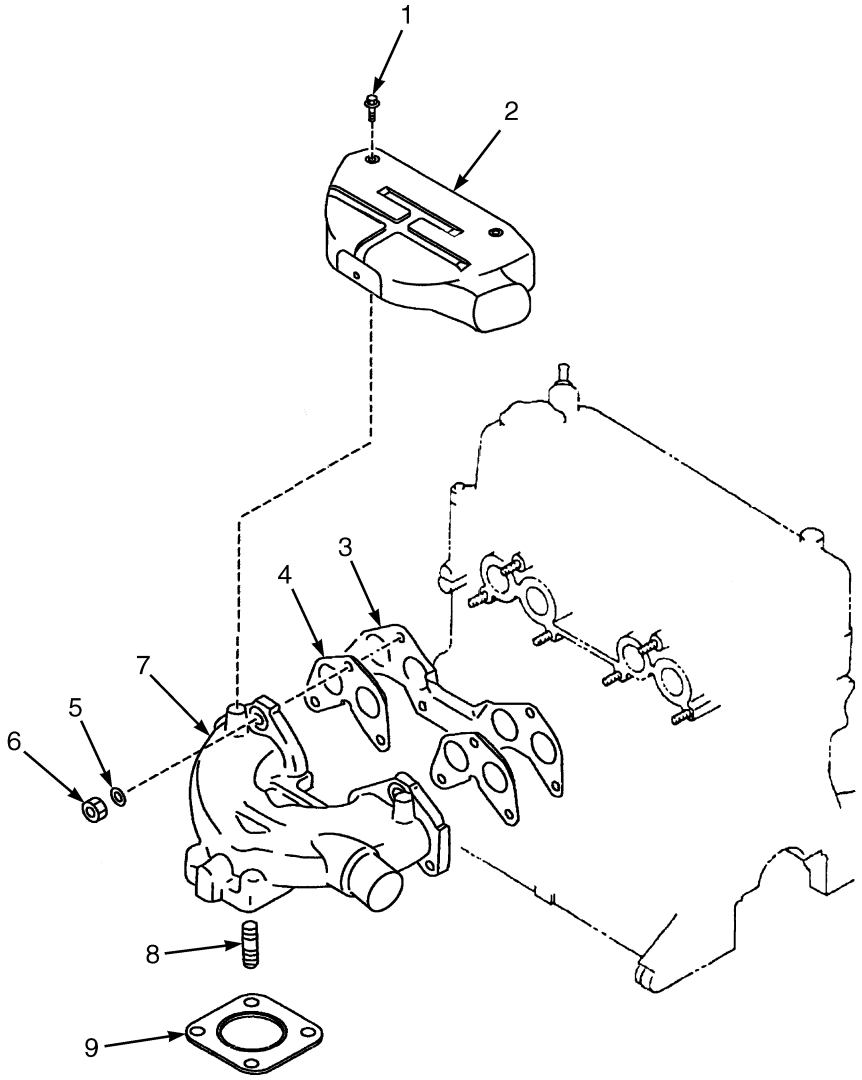

HP091248

ITEM	PART NO.	DESCRIPTION	QTY
1	1361898	Bolt	3
2	1370691	Cover	1
3	1361747	Gasket	1
4	1370689	Gasket	2
5	1370690	Washer	6
6	1361746	Nut	6
7	1370688	Exhaust Manifold	1
8	1361745	Stud	4
9	1338308	Gasket	1
9	1528937	Gasket (Alternate Part)	1

©2013 HYSTER COMPANY

ENGINE FUEL SYSTEM AND INTAKE MANIFOLD (FIGURE 3-20)

MAZDA 2.0L AND 2.2L, GASOLINE, 2006 EMISSION COMPLIANT ENGINES (→ S/N L177B15326E 2.2L GAS) (→ S/N L177B15511E 2.0L GAS)

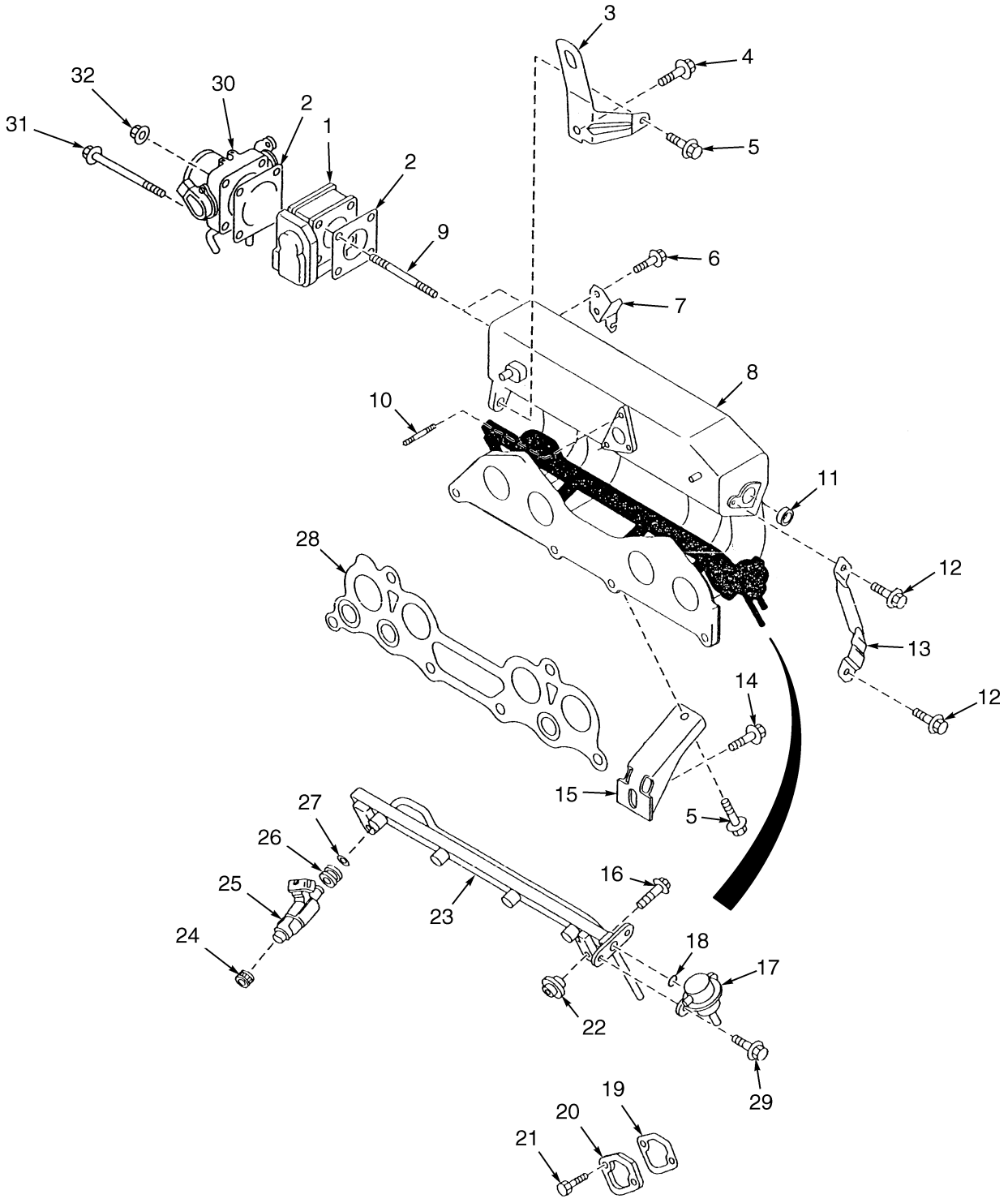

BP090139

©2013 HYSTER COMPANY

ENGINE FUEL SYSTEM AND INTAKE MANIFOLD

MAZDA 2.0L AND 2.2L, GASOLINE, 2006 EMISSION COMPLIANT ENGINES (→ S/N L177B15326E 2.2L GAS) (→ S/N L177B15511E 2.0L GAS)

ITEM	PART NO.	DESCRIPTION	QTY
1	1553838	Governor	1
2	1553832	Gasket	1
3	1553779	Bracket	1
4	1361881	Bolt	1
5	324706	Bolt	2
6	1368805	Bolt	2
7	1553787	Bracket (Throttle)	1
8	1573014	Intake Manifold	1
9	1553773	Stud	2
10	1553774	Stud	2
11	1362005	Plug	1
12	1366874	Bolt	2
13	1553778	Bracket	1
14	1370675	Bolt	1
15	1553777	Bracket	1
16	1553839	Bolt	2
17	1553840	Pressure Regulator	1
18	1553841	O-Ring	1
19	1361756	Gasket (Fuel Pump)	1
20	1361749	Cover	1
21	1361898	Bolt	2
22	1553830	Insulator	2
23	1553831	Manifold	1
24	1553837	Insulator	4
25	1553833	Injector	4
26	1553834	Grommet	1
27	1553835	O-Ring	1
28	1553776	Gasket	1
29	1361893	Screw	2
30	1553864	Throttle Body	1
31	2066630	Bolt	2
32	326504	Nut	2

©2013 HYSTER COMPANY

INTAKE MANIFOLD (FIGURE 3-21)

MAZDA 2.0L AND 2.2L LPG — 2006 EMISSION COMPLIANT ENGINES (→ S/N L177B15511E 2.0L LPG) (→ S/N L177B16205E (2.2L LPG))

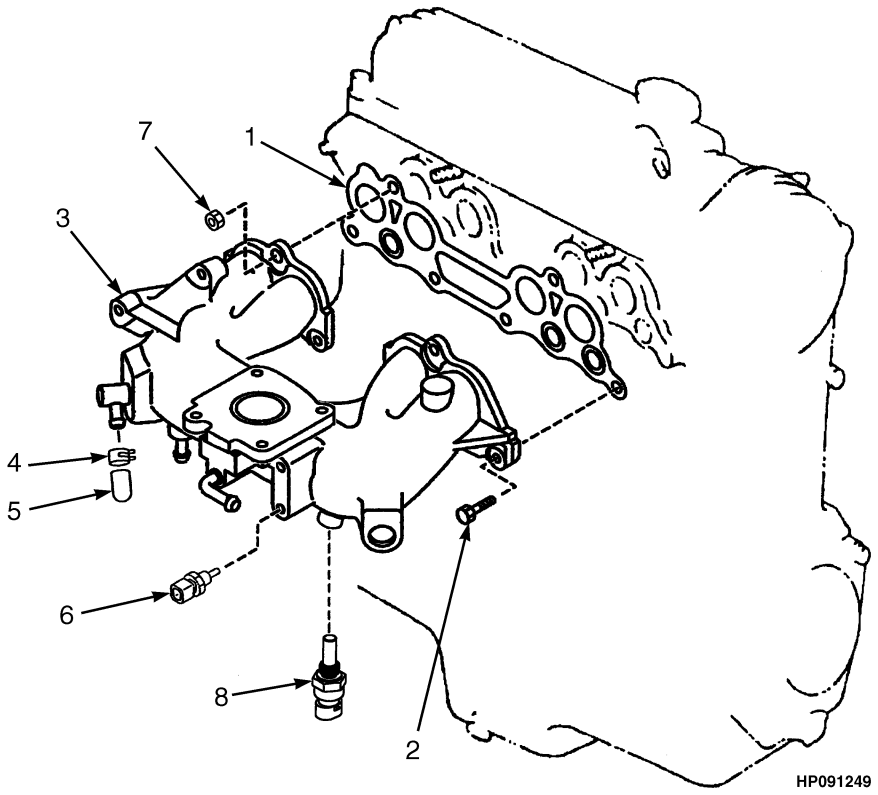

©2013 HYSTER COMPANY

INTAKE MANIFOLD

MAZDA 2.0L AND 2.2L LPG – 2006 EMISSION COMPLIANT ENGINES (→ S/N L177B15511E 2.0L LPG) (→ S/N L177B16205E (2.2L LPG))

ITEM	PART NO.	DESCRIPTION	QTY
1	1553776	Gasket	1
2	1361885	Bolt	2
3	1573015	Intake Manifold	1
4	1361873	Clamp	1
5	1361741	Cap	1
6	1539962	Sensor (Air Temperature)	1
7	326504	Nut	4
8	1515654	Temperature Sensor	1

©2013 HYSTER COMPANY

EMISSION CONTROL SYSTEM (FIGURE 3-22)

MAZDA 2.0L AND 2.2L LPG — 2006 EMISSION COMPLIANT ENGINES (→ S/N L177B15511E 2.0L LPG) (→ S/N L177B16206E (2.2L LPG))

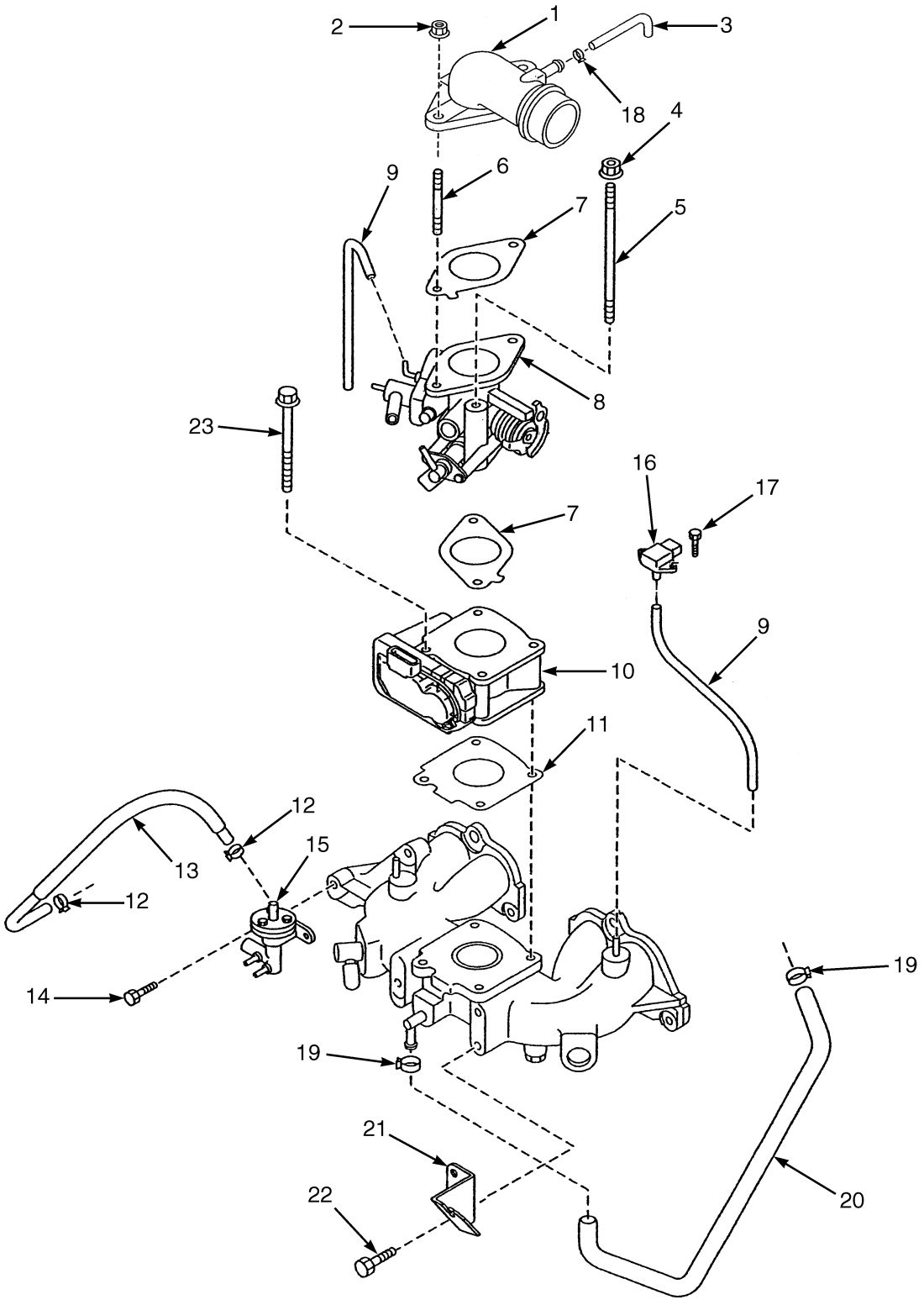

HP000900

©2013 HYSTER COMPANY

EMISSION CONTROL SYSTEM

MAZDA 2.0L AND 2.2L LPG – 2006 EMISSION COMPLIANT ENGINES (→ S/N L177B15511E 2.0L LPG) (→ S/N L177B16206E (2.2L LPG))

ITEM	PART NO.	DESCRIPTION	QTY
1	1573118	Air Duct	1
2	2066629	Nut	2
3	1573562	Hose (Ventilation)	1
4	326504	Nut	2
5	1582323	Stud	2
6	1553774	Stud	2
7	1573117	Gasket	2
8	1573119	Carburetor	1
8	1616236	Setscrew	1
8	1620009	Injector (Trim)	1
9	1495413	Hose	1
10	1553838	Governor	1
11	1553832	Gasket	1
12	1553799	Clamp	2
13	1573120	Hose (Fuel)	1
14	1361878	Screw	2
15	1581048	Fuel Filter (LPG Vapor)	1
15	1583593	Kit-Cover	1
15	1581051	Setscrew	1
15	1581050	Screw	3
15	1581052	Fuel Filter (With O-Ring)	1
15	1581049	Spring	1
16	1548352	Sensor (Boost, M.A.P.)	1
17	1582324	Screw	2
18	1361871	Clamp	1
19	1366933	Clamp	2
20	1573564	Hose (PCV)	1
21	1573021	Bracket (Throttle)	1
22	1361898	Bolt	2
23	1582321	Bolt	2
	1374788	Valve (Delay) (Not illustrated)	1

©2013 HYSTER COMPANY

TIMING GEAR COVER AND OIL PAN (FIGURE 3-23)

MAZDA 2.0L AND 2.2L, GASOLINE AND LPG, 2006 EMISSION COMPLIANT ENGINES (→ S/N L177B15326E (2.2L GAS)) (→ S/N L177B16206E (2.2L LPG)) (S/N L177B15512E → 2.0L GAS AND LPG)

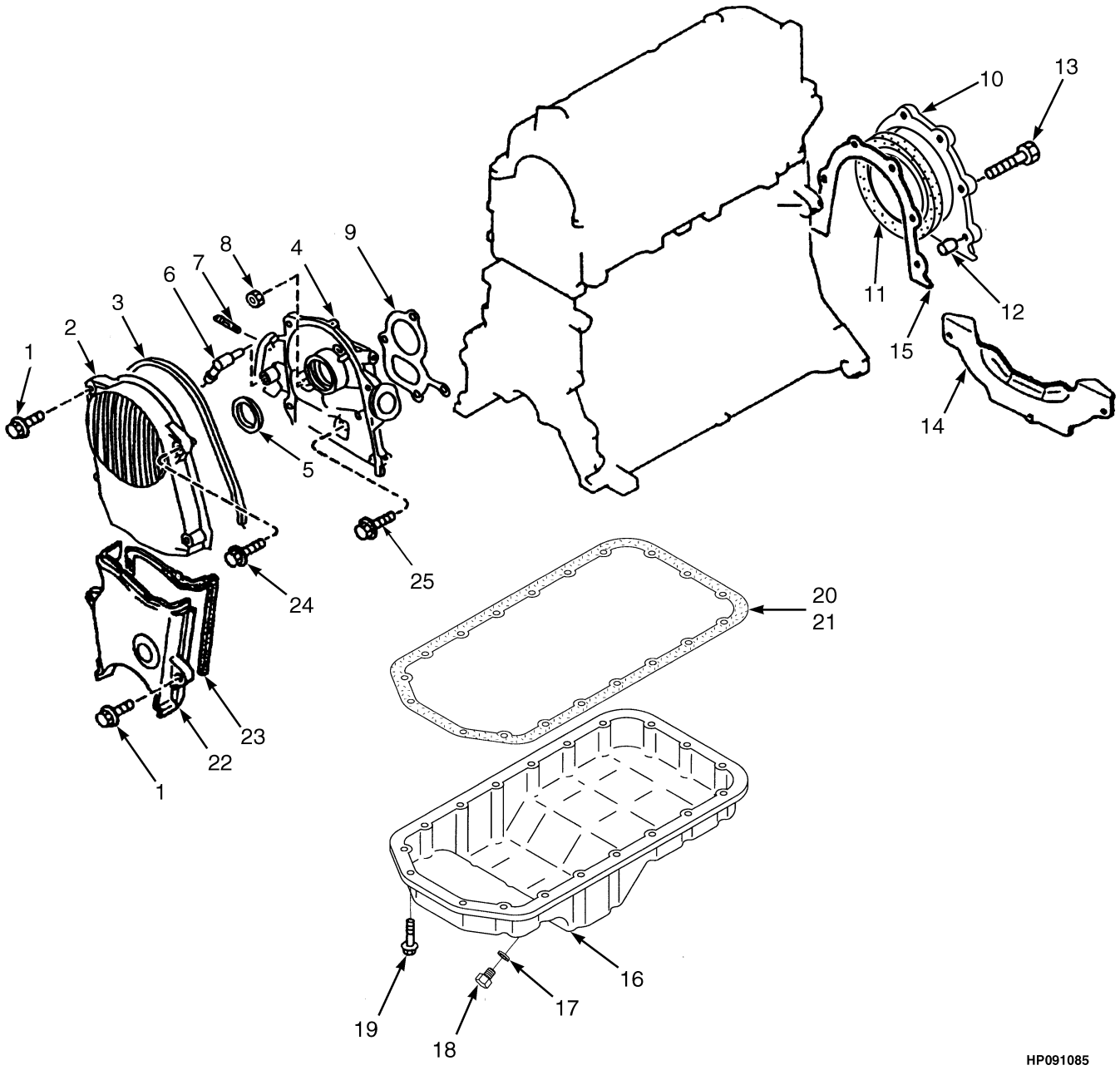

©2013 HYSTER COMPANY

TIMING GEAR COVER AND OIL PAN

MAZDA 2.0L AND 2.2L, GASOLINE AND LPG, 2006 EMISSION COMPLIANT ENGINES (→ S/N L177B15326E (2.2L GAS)) (→ S/N L177B16206E (2.2L LPG)) (S/N L177B15512E → 2.0L GAS AND LPG)

ITEM	PART NO.	DESCRIPTION	QTY
	1587841	Long Block (2.0L, Gasoline)	1
	1587843	Long Block (2.0L, LPG)	1
	1587844	Long Block (2.2L, Gasoline)	1
	1587845	Long Block (2.2L, LPG)	1
1	1362001	Bolt	5
2	1553716	Cover (Upper Timing Belt) (2.0L)	1
2	2029084	Cover (Upper Timing Belt) (2.2L)	1
3	1553717	Gasket (2.0L)	1
3	2028854	Gasket (2.2L)	1
4	2051129	Housing (2.2L)	1
4	1553715	Housing (2.0L)	1
5	1361688	Oil Seal	1
6	1361692	Connector	1
7	1362012	Stud	2
8	326504	Nut	1
9	1361679	Gasket	1
10	1361689	Cover	1
11	1361691	Oil Seal (Rear)	1
12	1362010	Pin	2
13	1362011	Bolt	6
14	1371652	Cover	1
15	1361690	Gasket	1
16	1361680	Oil Pan (2.0L)	1
16	2029082	Oil Pan (2.2L)	1
17	1362015	Gasket	1
18	1361681	Drain Plug	1
19	1370736	Capscrew	19
20	1361682	Gasket (Oil Pan)	1
21	~~1370737~~		
	4618898	Sealant	1
22	2051128	Cover	1
23	2028853	Gasket	1
24	2029086	Bolt	1
25	1369993	Bolt	2
	2045036	Kit-Gasket	1

©2013 HYSTER COMPANY

OIL PUMP AND FILTER (FIGURE 3-24)

MAZDA 2.0L AND 2.2L, GASOLINE AND LPG, 2006 EMISSION COMPLIANT ENGINES (→ S/N L177B15326E (2.2L GAS)) (→ S/N L177B16206E (2.2L LPG)) (S/N L177B15512E → 2.0 GAS AND LPG)

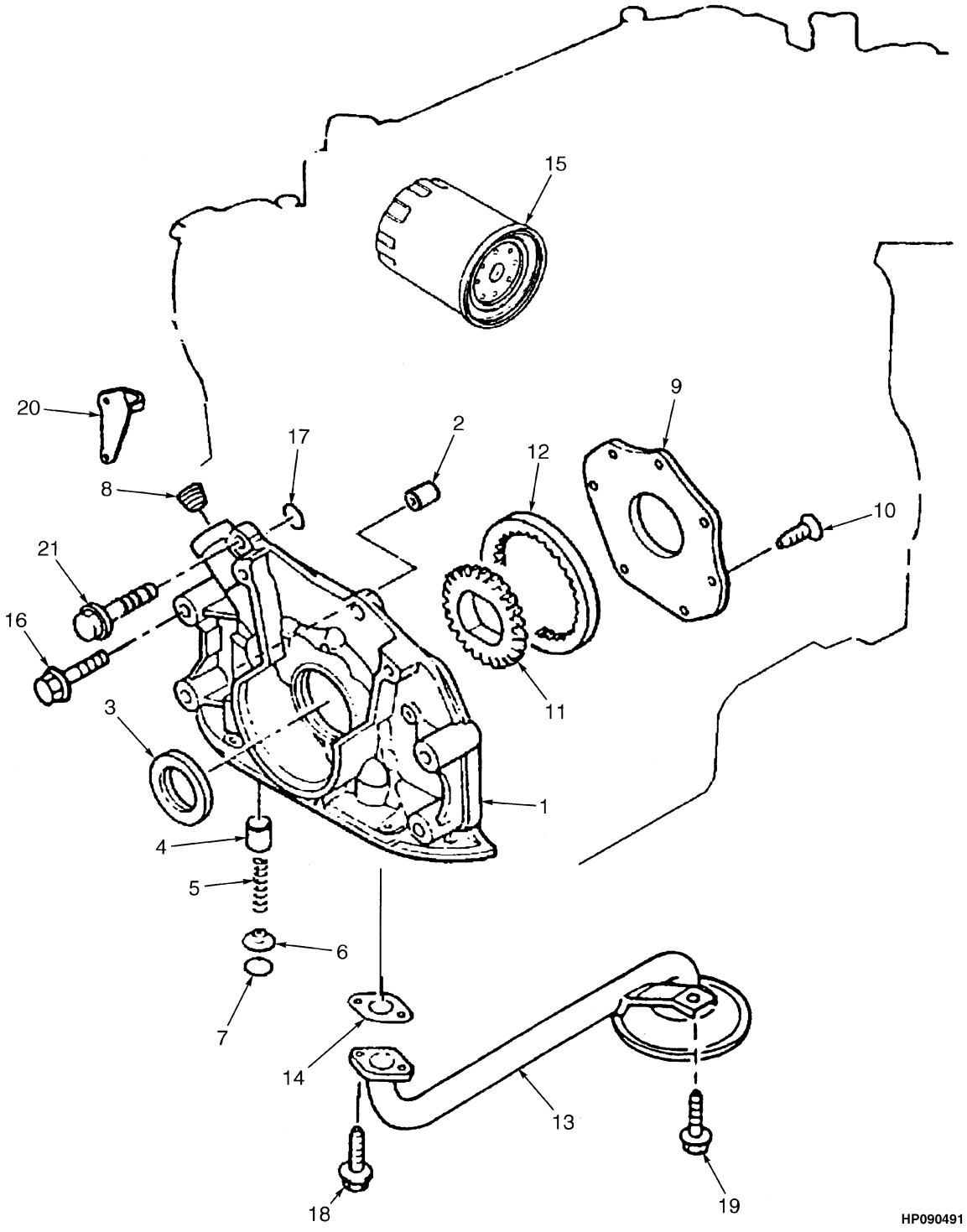

©2013 HYSTER COMPANY

OIL PUMP AND FILTER

MAZDA 2.0L AND 2.2L, GASOLINE AND LPG, 2006 EMISSION COMPLIANT ENGINES (→ S/N L177B15326E (2.2L GAS)) (→ S/N L177B16206E (2.2L LPG)) (S/N L177B15512E → 2.0 GAS AND LPG)

ITEM	PART NO.	DESCRIPTION	QTY
	1587841	Long Block (2.0L, Gasoline)	1
	1587843	Long Block (2.0L, LPG)	1
	1587844	Long Block (2.2L, Gasoline)	1
	1587845	Long Block (2.2L, LPG)	1
1	1455676	Engine Oil Pump	1
2	1361798	Pin (Timing Indicator)	2
3	1361688	Oil Seal	1
4	1455674	Plunger	1
5	326748	Spring	1
6	326749	Spring Seat	1
7	1361879	Snap Ring	1
8	1495426	Plug	1
9	2029100	Cover	1
10	1455677	Screw	7
11	2029101	Gear	1
12	2029102	Gear	1
13	1361806	Strainer	1
14	1361807	Gasket	1
15	324692	Oil Filter	1
16	1553878	Bolt	2
17	1361801	O-Ring	1
18	1361878	Screw	2
19	1361868	Screw	1
20	1495427	Pin (Top Indicator)	1
21	2029103	Bolt	6

©2013 HYSTER COMPANY

EMISSIONS LINES (FIGURE 3-25)

MAZDA 2.0L AND 2.2L, GASOLINE — 2006 EMISSION COMPLIANT ENGINES (→ S/N L177B15326E (2.2L GAS)) (→ S/N L177B15511E 2.0 GAS)

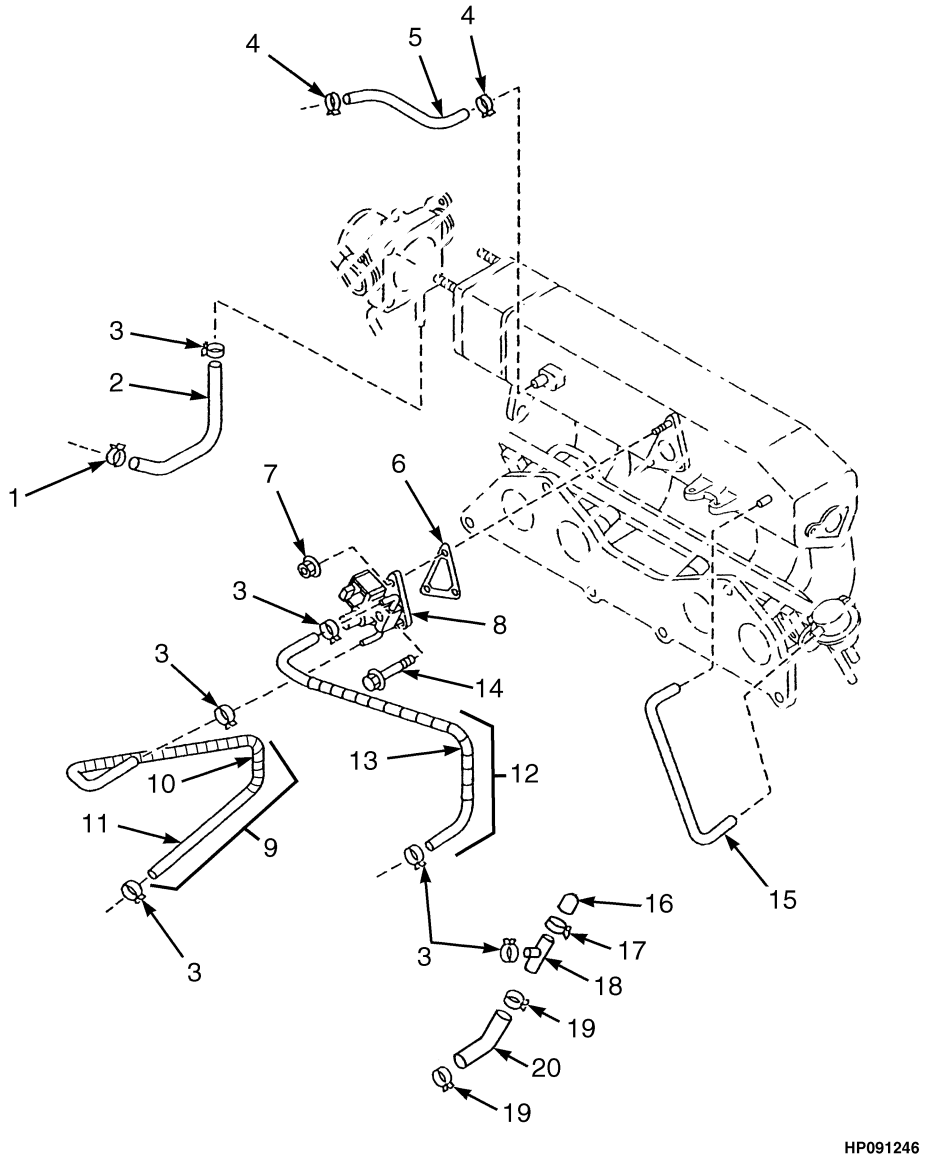

©2013 HYSTER COMPANY

EMISSIONS LINES

MAZDA 2.0L AND 2.2L, GASOLINE – 2006 EMISSION COMPLIANT ENGINES

(→ S/N L177B15326E (2.2L GAS)) (→ S/N L177B15511E 2.0 GAS)

ITEM	PART NO.	DESCRIPTION	QTY
1	1361873	Clamp	1
2	1553867	Radiator Hose	1
3	1495429	Hose Clamp	6
4	1366933	Clamp	2
5	1553868	Hose (PCV)	1
6	1553871	Gasket	1
7	2066629	Nut	2
8	1553870	Valve (Idle Air Control)	1
9	1574101	Hose Assy	1
10	1553829	Support	1
11	1553866	Radiator Hose	1
12	1573561	Cap (Water)	1
13	1553948	Protector	1
14	1362011	Bolt	1
15	1553869	Tube (Vacuum)	1
16	1574098	Cap	2
17	1573568	Clamp	1
18	1574097	Pipe (Air Intake)	1
19	1573567	Clamp	2
20	1574099	Hose (Water) (Water)	1

©2013 HYSTER COMPANY

CARBURETOR (FIGURE 3-26)

MAZDA 2.0L AND 2.2L LPG — 2006 EMISSION COMPLIANT ENGINES (→ S/N L177B15511E 2.0 LPG) (→ S/N L177B16206E (2.2L LPG))

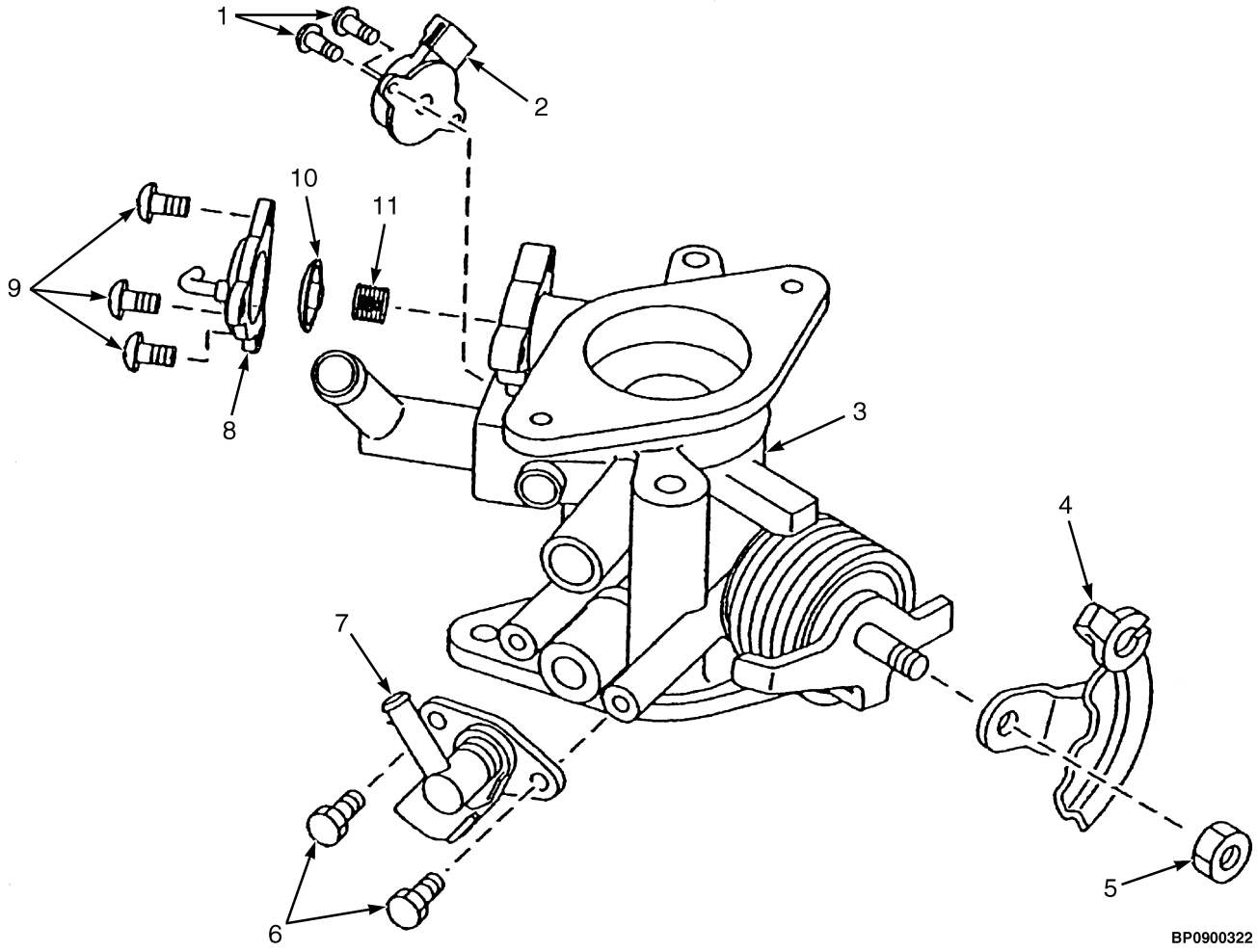

©2013 HYSTER COMPANY

CARBURETOR

MAZDA 2.0L AND 2.2L LPG – 2006 EMISSION COMPLIANT ENGINES (→ S/N L177B15511E 2.0 LPG) (→ S/N L177B16206E (2.2L LPG))

ITEM	PART NO.	DESCRIPTION	QTY
	1573119	Carburetor (LPG)	1
1	1652216	Screw (Sensor)	2
2	1639791	Sensor (Throttle Position)	1
3	. . . . .	Body	1
4	2051839	Lever (Throttle)	1
5	1652217	Nut	1
6	1616236	Setscrew	1
7	1620009	Injector (Trim)	1
8	2051836	Cover (Power Valve)	1
9	1652215	Screw (Diaphragm)	3
10	2051834	Diaphragm (Power)	1
11	2051835	Spring (Power)	1

©2013 HYSTER COMPANY

DELAY VALVE (FIGURE 3-27)

MAZDA 2.0L AND 2.2L LPG (→ S/N L177B11511E (2.0L LPG))
(S/N L177B11108D ↔ S/N L177B16206E 2.2L LPG)

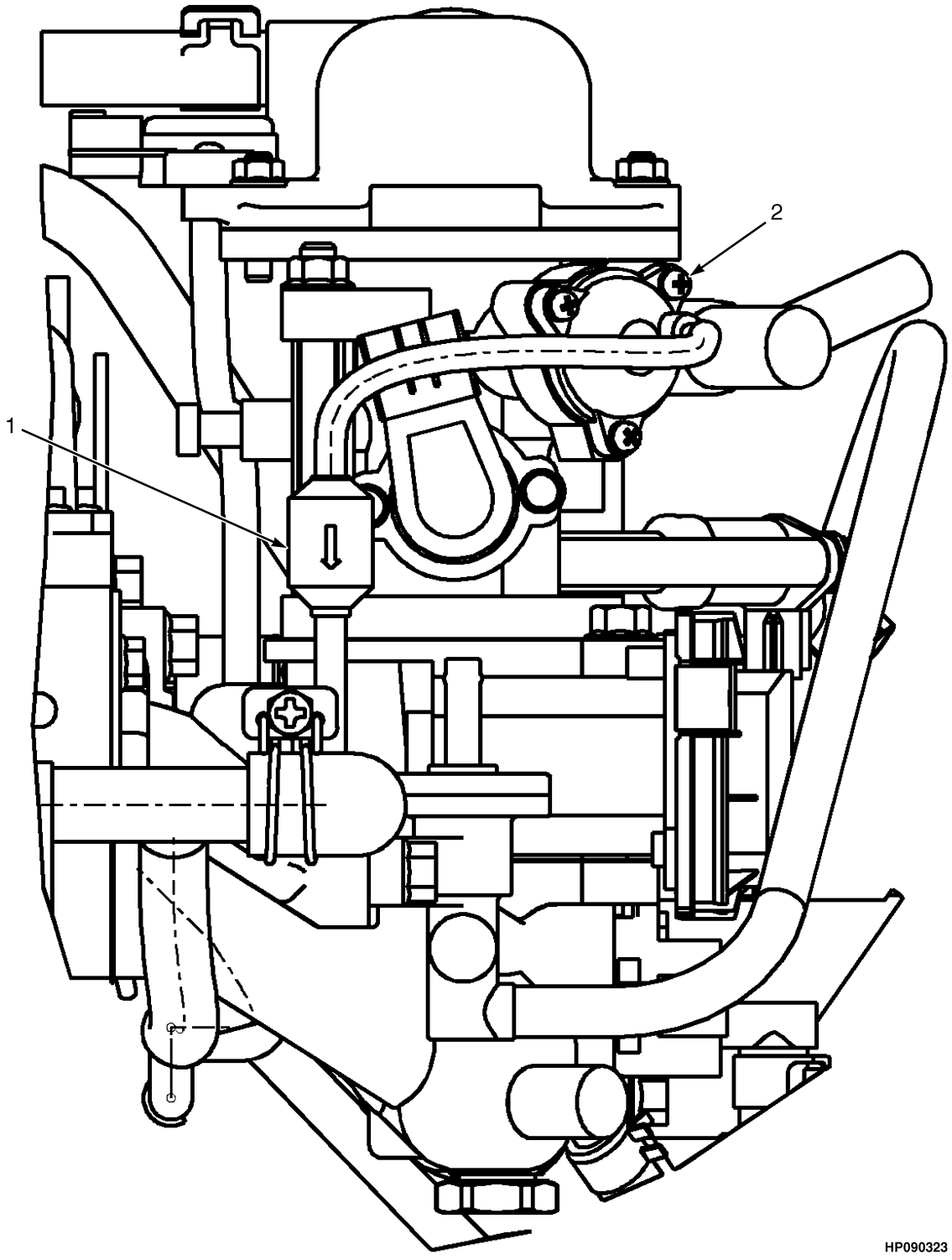

©2013 HYSTER COMPANY

DELAY VALVE

MAZDA 2.0L AND 2.2L LPG (→ S/N L177B11511E (2.0L LPG)) (S/N L177B11108D ↔ S/N L177B16206E 2.2L LPG)

ITEM	PART NO.	DESCRIPTION	QTY
1	1374788	Valve (Delay)	1
2	1573119	Carburetor	1

©2013 HYSTER COMPANY

ASSEMBLED ENGINE (FIGURE 3-28)

MAZDA 2.0L AND 2.2L, GASOLINE AND LPG, 2007-2010 EMISSION COMPLIANT ENGINES (S/N L177B15327E → (2.2L GAS)) (S/N L177B15512E → 2.0L GAS AND LPG) (S/N L177B16207E → (2.2L LPG)) (S/N L177V01501F →)

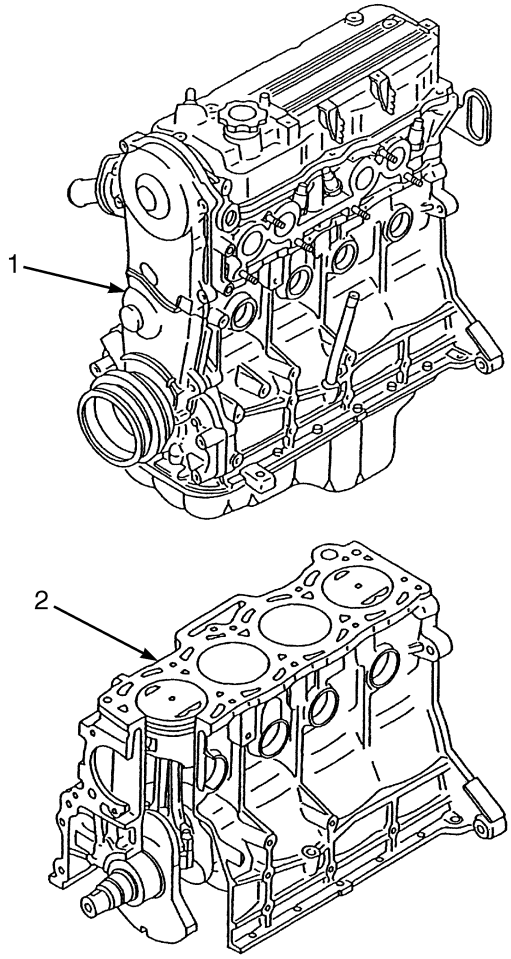

ITEM	PART NO.	DESCRIPTION	QTY
1	1652304	Long Block (Mazda 2.0L, Gasoline)	1
1	1652302	Long Block (Mazda 2.0L, LPG	1
1	1652306	Long Block (Mazda 2.2L, Gasoline)	1
1	1652305	Long Block (Mazda 2.2L, LPG	1
2	1553650	Short Block (Mazda 2.0L, Gasoline)	1
2	1572387	Short Block (Mazda 2.0L, LPG	1
2	1553652	Short Block (Mazda 2.2L, Gasoline)	1
2	1572388	Short Block (Mazda 2.2L, LPG	1

©2013 HYSTER COMPANY

NOTES

©2013 HYSTER COMPANY

CYLINDER HEAD (FIGURE 3-29)

MAZDA 2.0L AND 2.2L, GASOLINE AND LPG, 2007-2010 EMISSION COMPLIANT ENGINES
(→ S/N L177B15327E 2.2L GAS) (S/N L177B15512E → 2.0L GAS AND LPG)
(S/N L177B16207E → 2.2L LPG) (S/N L177V01501F →)

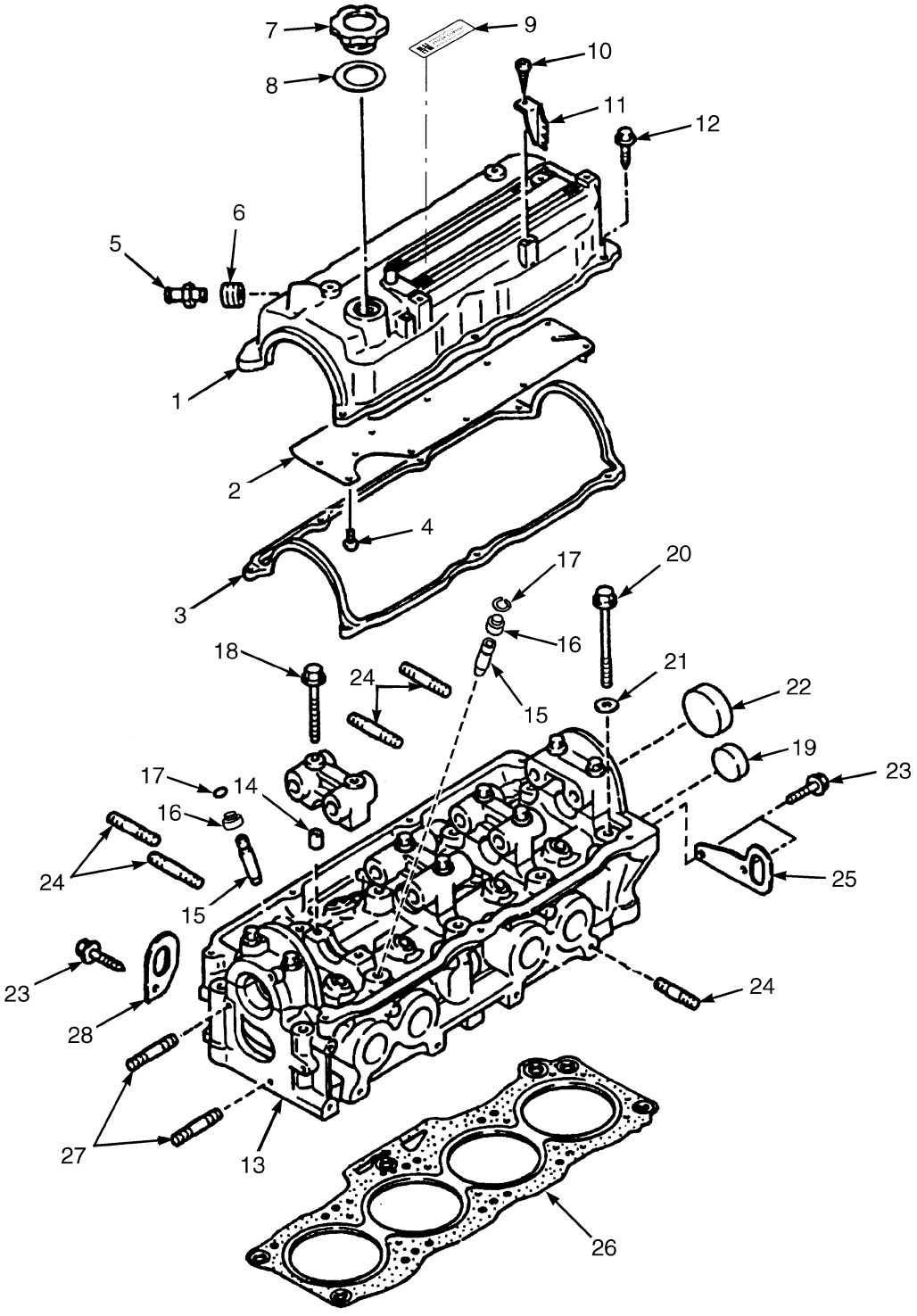

HP091088

©2013 HYSTER COMPANY

CYLINDER HEAD

MAZDA 2.0L AND 2.2L, GASOLINE AND LPG, 2007-2010 EMISSION COMPLIANT ENGINES (→ S/N L177B15327E 2.2L GAS) (S/N L177B15512E → 2.0L GAS AND LPG) (S/N L177B16207E → 2.2L LPG) (S/N L177V01501F →)

ITEM	PART NO.	DESCRIPTION	QTY
	1652304	Long Block (2.0L, Gasoline)	1
	1652302	Long Block (2.0L, LPG)	1
	1652306	Long Block (2.2L, Gasoline)	1
	1652305	Long Block (2.2L, LPG)	1
1	1360883	Engine Cover (LPG)	1
1	1553693	Engine Cover (Gasoline)	1
2	1360884	Plate	1
3	1360886	Gasket	1
4	2022655	Screw	10
5	1553692	PCV Valve	1
6	1360892	Seal	1
7	1360887	Cap	1
8	1360888	Gasket	1
9	. . . . .	Label	1
10	1362000	Screw	2
11	1360885	Bracket	2
12	1362001	Bolt	7
13	1360878	Cylinder Head	1
14	1362002	Pin	10
15	1360895	Guide	8
16	**b** 1361718	Seal (Inlet)	4
16	**a** 1361719	Seal (Exhaust)	4
17	1360879	Clip	1
18	1361894	Bolt	10
19	1362003	Plug	1
20	1360880	Bolt	10
21	1360881	Washer	10
22	1360882	Cap	8
23	1361898	Bolt	3
24	1361897	Stud	20
25	2314973	Hanger	1
26	2045321	Gasket (Cylinder Head)	1
27	1361899	Stud	2
28	1360890	Bracket	1

FOOTNOTES:

a Black

b Red/Brown

©2013 HYSTER COMPANY

CYLINDER BLOCK (FIGURE 3-30)

MAZDA 2.0L AND 2.2L, GASOLINE AND LPG, 2007-2010 EMISSION COMPLIANT ENGINES
(S/N L177B15327E → (2.2L GAS)) (S/N L177B15512E → (2.0L GAS AND LPG))
(S/N L177B16207E → (2.2L LPG)) (S/N L177V01501F →)

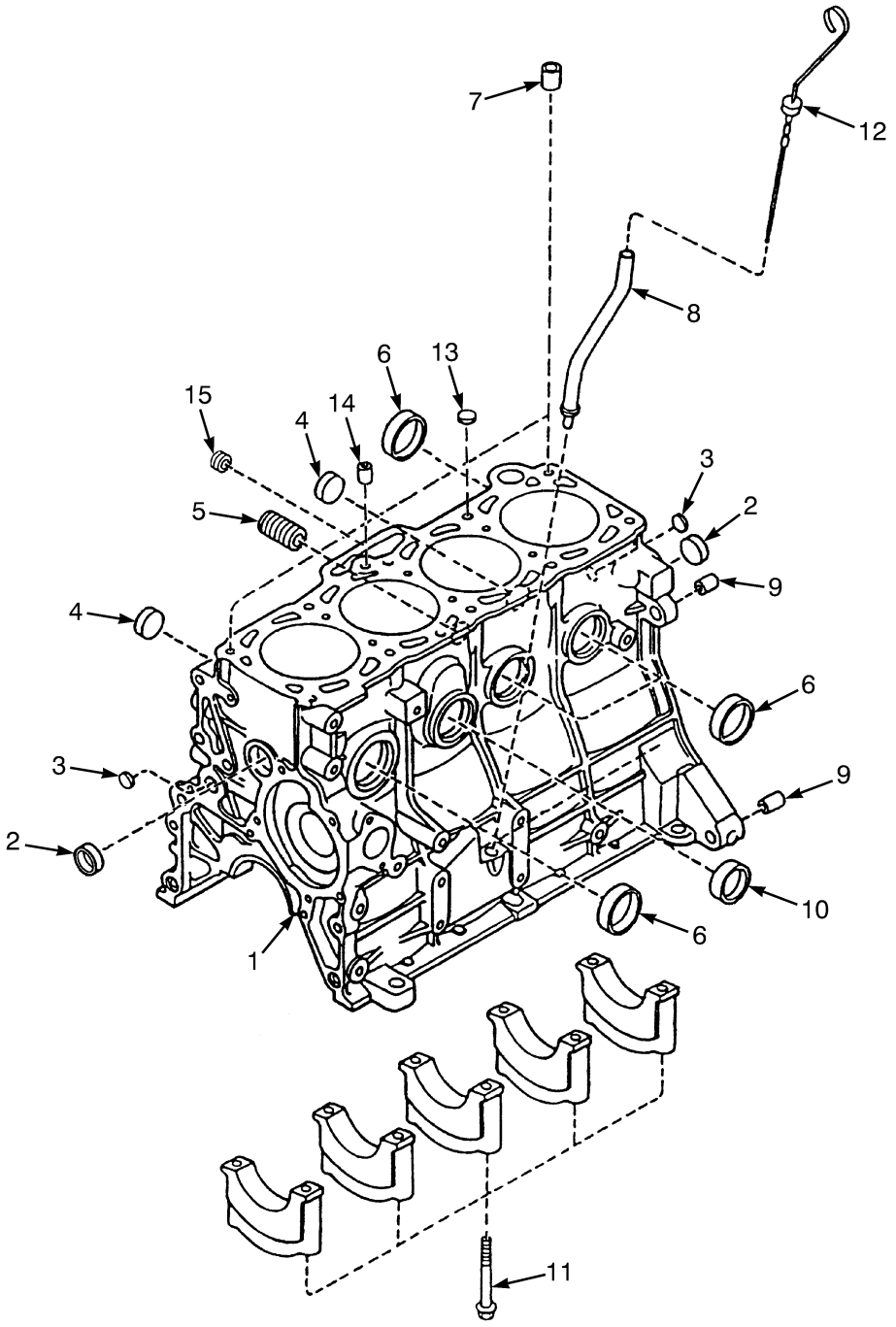

BP090328

©2013 HYSTER COMPANY

CYLINDER BLOCK

MAZDA 2.0L AND 2.2L, GASOLINE AND LPG, 2007-2010 EMISSION COMPLIANT ENGINES (S/N L177B15327E → (2.2L GAS)) (S/N L177B15512E → (2.0L GAS AND LPG)) (S/N L177B16207E → (2.2L LPG)) (S/N L177V01501F →)

ITEM	PART NO.	DESCRIPTION	QTY
	1652304	Long Block (2.0L, Gasoline)	1
	1652302	Long Block (2.0L, LPG)	1
	1652306	Long Block (2.2L, Gasoline)	1
	1652305	Long Block (2.2L, LPG)	1
	1553650	Short Block (2.0L, Gasoline)	1
	1572387	Short Block (2.0L, LPG)	1
	1553652	Short Block (2.2L, Gasoline)	1
	1572388	Short Block (2.2L, LPG)	1
1	1553710	Cylinder Block (2.0L)	1
1	1370744	Cylinder Block (2.2L)	1
2	1362009	Plug	1
3	1361675	Plug	2
4	1362005	Plug	2
5	1360898	Joint Fitting	1
6	1362003	Plug	4
7	1360896	Pin	2
8	1360899	Tube Assy	1
9	1362008	Pin	2
10	1362007	Plug	2
11	1361676	Bolt	10
12	1361677	Dipstick	1
13	2028927	Plug	1
14	2029081	Plug	2
15	1553708	Plug	2

©2013 HYSTER COMPANY

CAMSHAFT AND VALVES (FIGURE 3-31)

MAZDA 2.0L AND 2.2L, GASOLINE AND LPG, 2007-2010 EMISSION COMPLIANT ENGINES (S/N L177B15327E → 2.2L GAS) (S/N L177B15512E → (2.0L GAS AND LPG)) (S/N L177B16207E → (2.2L LPG)) (S/N L177V01501F →)

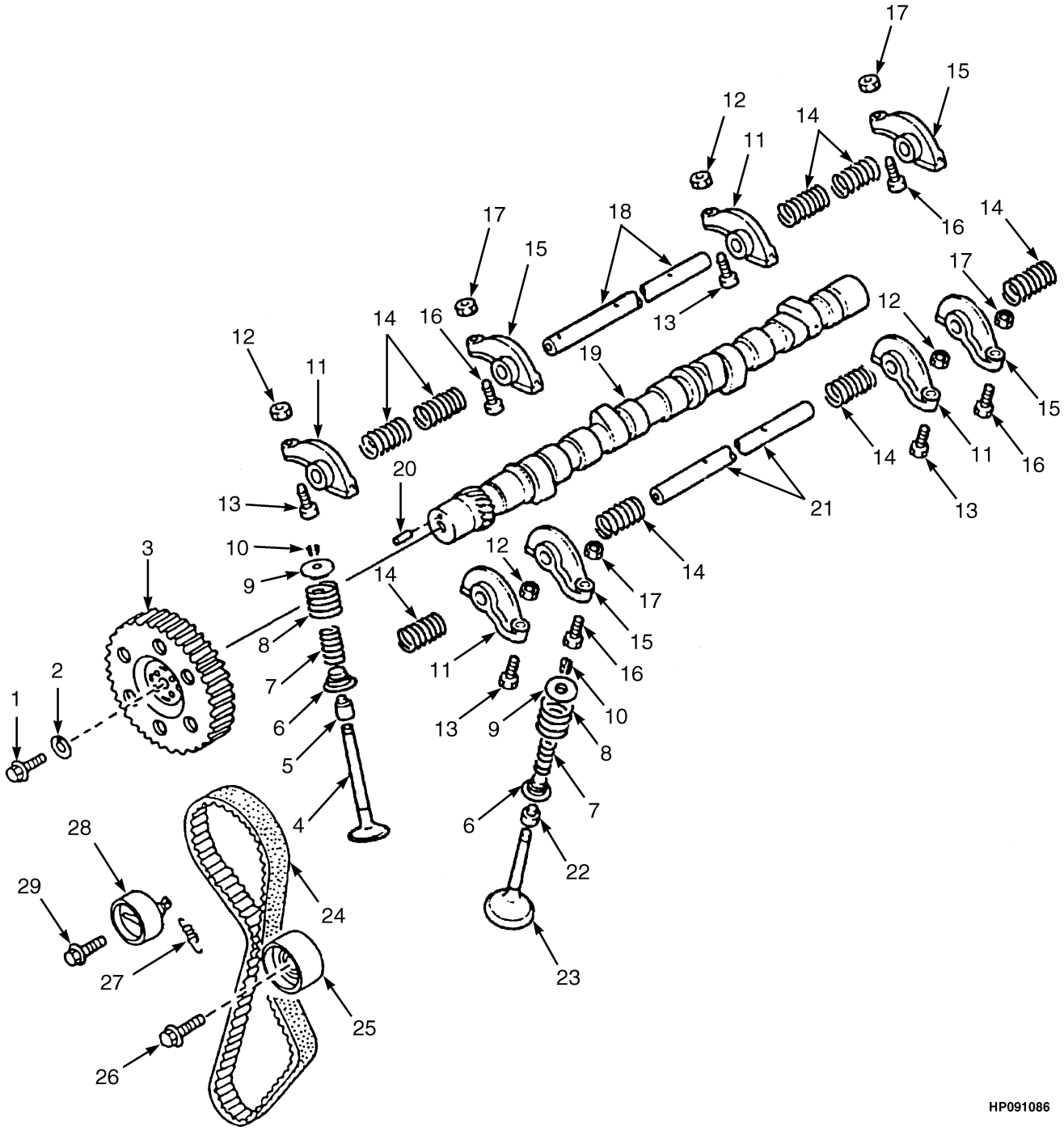

©2013 HYSTER COMPANY

CAMSHAFT AND VALVES

MAZDA 2.0L AND 2.2L, GASOLINE AND LPG, 2007-2010 EMISSION COMPLIANT ENGINES (S/N L177B15327E → 2.2L GAS) (S/N L177B15512E → (2.0L GAS AND LPG)) (S/N L177B16207E → (2.2L LPG)) (S/N L177V01501F →)

ITEM	PART NO.	DESCRIPTION	QTY
	1652304	Long Block (2.0L, Gasoline)	1
	1652302	Long Block (2.0L, LPG)	1
	1652306	Long Block (2.2L, Gasoline)	1
	1652305	Long Block (2.2L, LPG)	1
1	1361736	Bolt	1
2	1361737	Washer	1
3	2029095	Pulley (Camshaft)	1
4	1361720	Inlet Valve (Intake)	4
5	1361718	Seal	4
6	1361724	Valve Seat	8
7	1361723	Spring (Intake Valve)	8
8	1361722	Spring (Exhaust Valve)	8
9	1361721	Valve Seat	8
10	326612	Keeper	16
11	1361726	Rocker Arm	4
12	1361728	Nut	1
13	1361727	Screw	1
14	1361731	Spring	8
15	1361729	Rocker Arm	4
16	1361727	Screw	1
17	1361728	Nut	1
18	1361730	Shaft	1
19	1361734	Camshaft	1
20	1361717	Pin	1
21	1361732	Shaft	1
22	1361719	Seal	4
23	1361725	Exhaust Valve	4
24	1553762	Timing Belt (2.0L)	1
24	2028852	Timing Belt (2.2L)	1
25	2029098	Idler Pulley	1
26	1361884	Bolt	1
27	1553763	Spring (2.0L)	1
27	2029096	Spring (2.2L)	1
28	2029097	Belt Tensioner	1
29	1362016	Bolt	1

©2013 HYSTER COMPANY

EMISSION CONTROL SYSTEM (FIGURE 3-32)

MAZDA 2.0L AND 2.2L, GASOLINE — 2007-2010 EMISSION COMPLIANT ENGINES (S/N L177B15512E → (2.0L GAS)) (S/N L177B15327E → (2.2L GAS)) (S/N L177V01501F →)

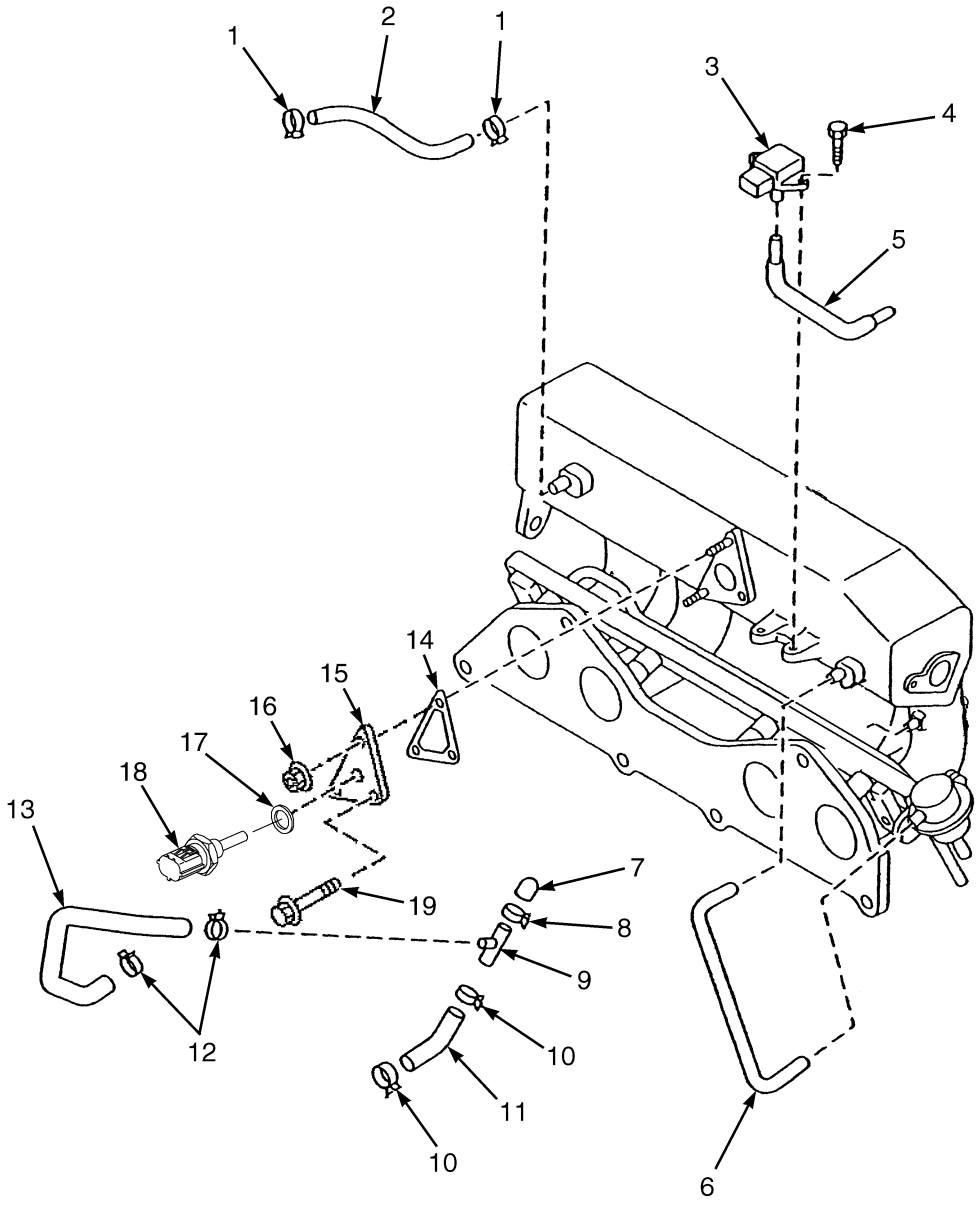

BP090424

©2013 HYSTER COMPANY

EMISSION CONTROL SYSTEM

MAZDA 2.0L AND 2.2L, GASOLINE – 2007-2010 EMISSION COMPLIANT ENGINES (S/N L177B15512E → (2.0L GAS)) (S/N L177B15327E → (2.2L GAS)) (S/N L177V01501F →)

ITEM	PART NO.	DESCRIPTION	QTY
1	1366933	Clamp	2
2	1553868	Hose	1
3	1548352	Sensor (Boost, M.A.P.)	1
4	1582324	Screw	2
5	1495413	Hose	1
5	1574096	Tube	1
6	1553869	Tube	1
7	1574098	Cap	1
8	1573568	Clamp	1
9	1574097	Pipe	1
10	1573567	Clamp	2
11	1574099	Hose (Water)	1
12	1495429	Hose Clamp	2
13	1652399	Hose (Water)	1
14	1553871	Gasket	1
15	4605191	Spacer (2010 Series)	1
16	2066629	Nut (2010 Series)	2
17	1368886	Washer (2010 Series)	1
18	1539962	Sensor (Air Temperature) (2010 Series)	1
19	1362011	Bolt (2010 Series)	1

©2013 HYSTER COMPANY

MAP SENSOR (FIGURE 3-33)

MAZDA 2.0L AND 2.2L, LPG — 2007-2010 EMISSION COMPLIANT ENGINES (S/N L177B15512E → 2.0L LPG) (S/N L177B16207E → (2.2L LPG)) (S/N L177V01501F →)

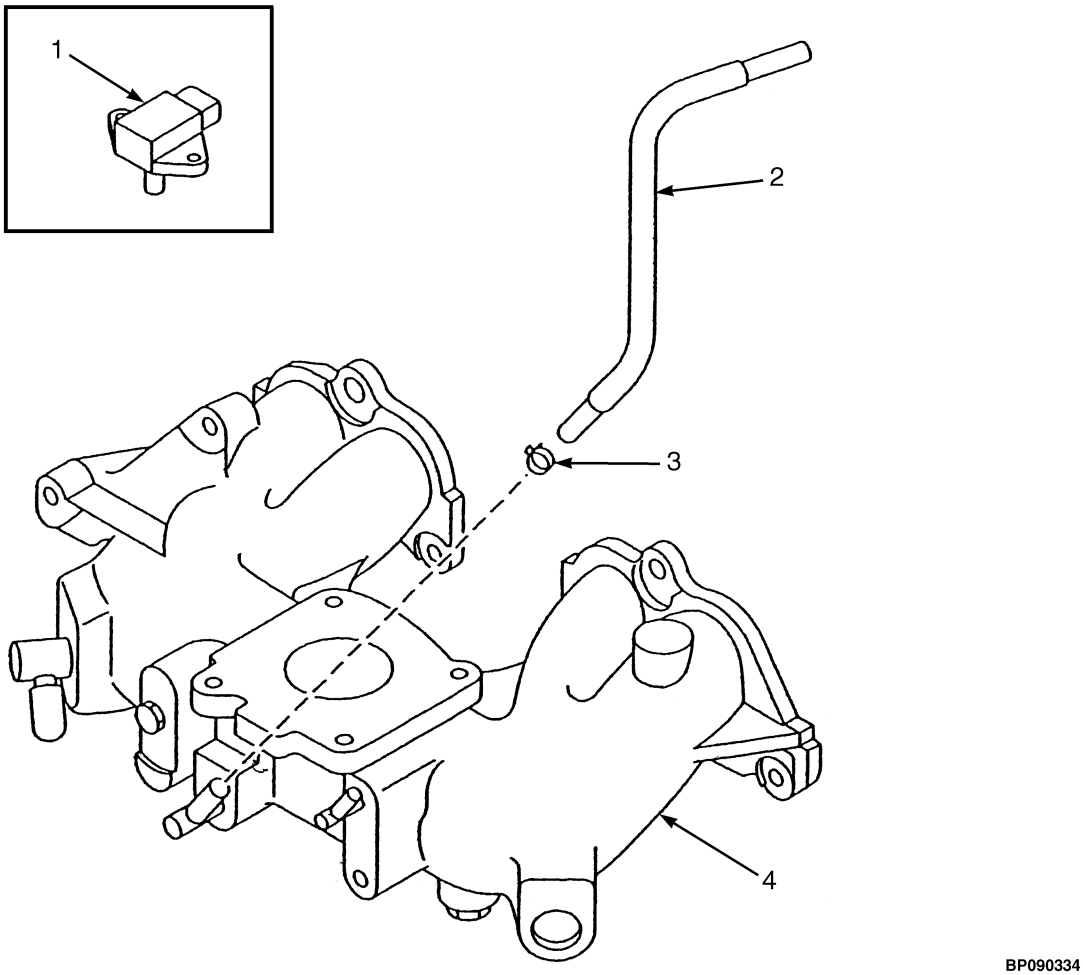

BP090334

ITEM	PART NO.	DESCRIPTION	QTY
1	1548352	Sensor (Boost, M.A.P.)	1
2	1652417	Hose (PCV)	1
3	1361872	Clamp	1
4	**a** 1652333	Intake Manifold	1
4	**b** 1687035	Intake Manifold	1

FOOTNOTES:

a → S/N L177V01503F INC. 01695, 01756, 01759, 01819-01820, 01825-01827

b S/N L177V01504F → EXC. 01695, 01756, 01759, 01819-01820, 01825-01827

©2013 HYSTER COMPANY

NOTES

©2013 HYSTER COMPANY

ENGINE FUEL SYSTEM (FIGURE 3-34)

MAZDA 2.0L AND 2.2L, GASOLINE AND LPG, 2007-2010 EMISSION COMPLIANT ENGINES (S/N L177B15327E → (2.2L GAS)) (S/N L177B15512E → (2.0L GAS AND LPG)) (S/N L177B16207E → (2.2L LPG)) (S/N L177V01501F →)

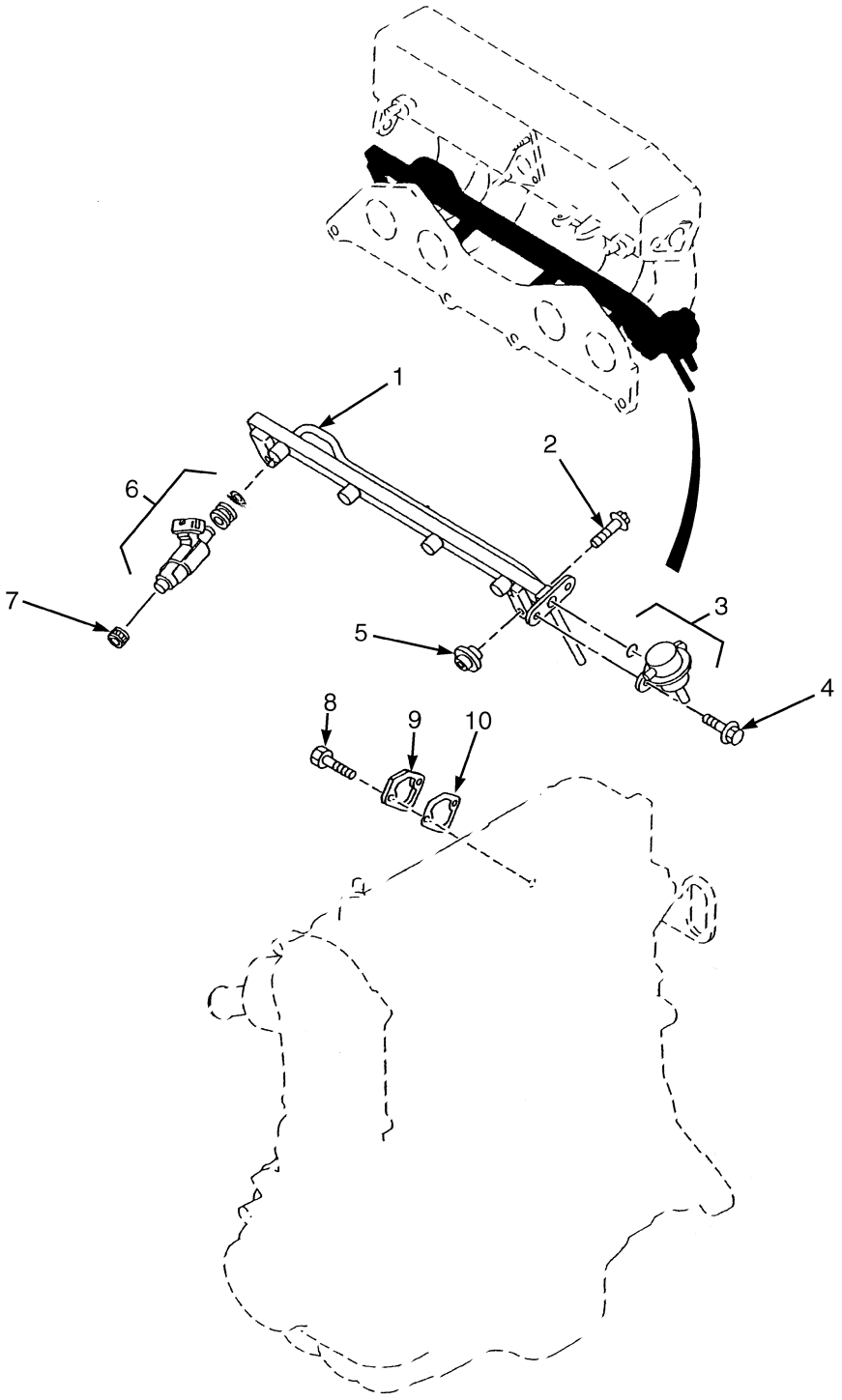

©2013 HYSTER COMPANY

ENGINE FUEL SYSTEM

MAZDA 2.0L AND 2.2L, GASOLINE AND LPG, 2007-2010 EMISSION COMPLIANT ENGINES (S/N L177B15327E → (2.2L GAS)) (S/N L177B15512E → (2.0L GAS AND LPG)) (S/N L177B16207E → (2.2L LPG)) (S/N L177V01501F →)

KEY:
A: Gasoline
B: LPG

ITEM	PART NO.	DESCRIPTION	QTY A	QTY B
1	1553831	Manifold	1	..
2	1553839	Bolt	2	..
3	1553840	Pressure Regulator	1	..
3	1553841	O-Ring	1	..
4	1361893	Screw	2	..
5	1553830	Insulator	2	..
6	1553833	Injector	4	..
6	1553834	Grommet	1	..
6	1553835	O-Ring	1	..
7	1553837	Insulator	4	..
8	1361898	Bolt	2	2
9	1361749	Cover	2	2
10	1361756	Gasket	1	1

©2013 HYSTER COMPANY

CRANKSHAFT AND PISTONS (FIGURE 3-35)

MAZDA 2.0L AND 2.2L, GASOLINE AND LPG, 2007-2010 EMISSION COMPLIANT ENGINES
(S/N L177B15327E → (2.2L GAS)) (S/N L177B15512E → (2.0L GAS AND LPG))
(S/N L177B16207E → (2.2L LPG)) (S/N L177V01501F →)

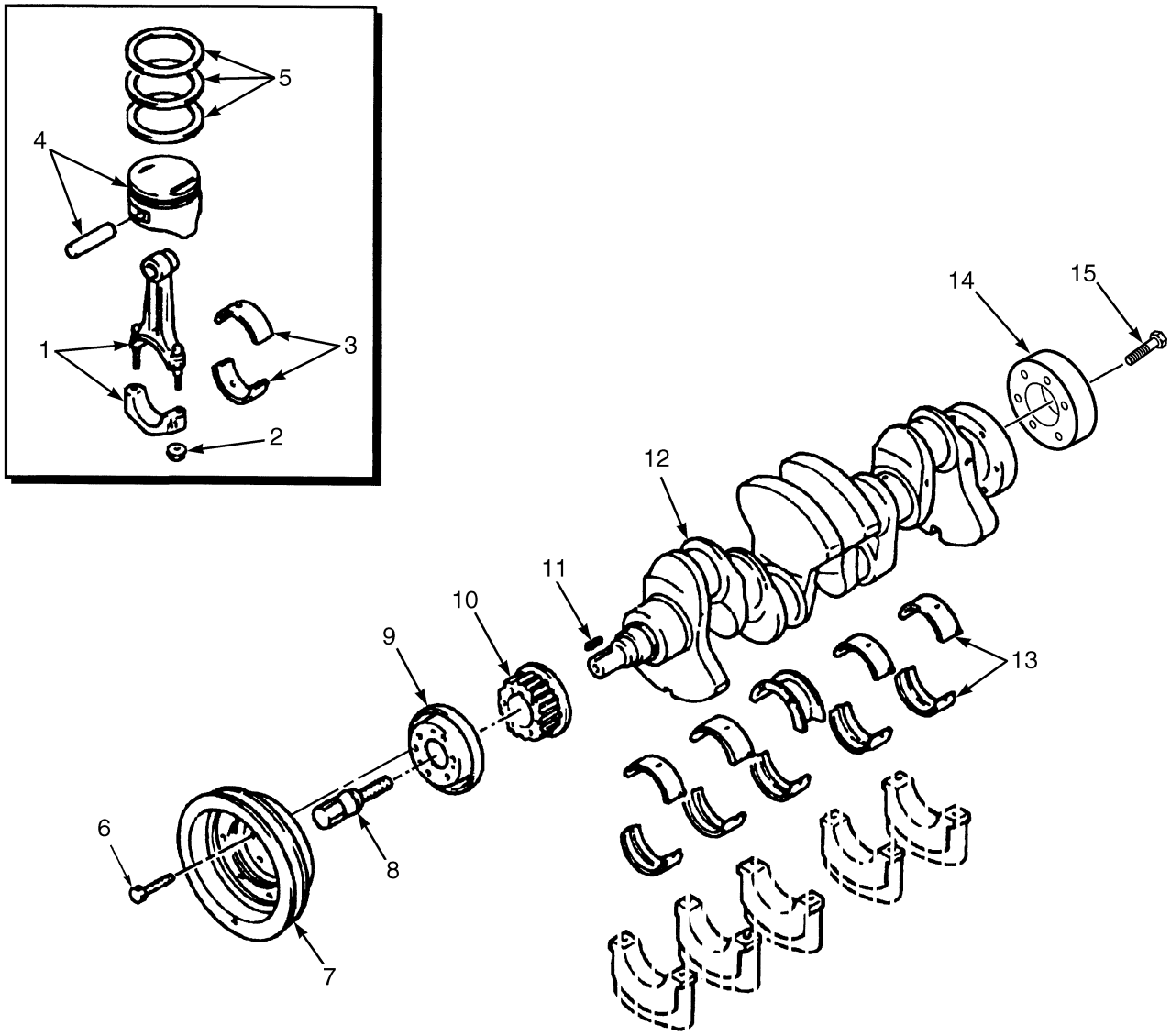

HP090487

©2013 HYSTER COMPANY

CRANKSHAFT AND PISTONS

MAZDA 2.0L AND 2.2L, GASOLINE AND LPG, 2007-2010 EMISSION COMPLIANT ENGINES (S/N L177B15327E → (2.2L GAS)) (S/N L177B15512E → (2.0L GAS AND LPG)) (S/N L177B16207E → (2.2L LPG)) (S/N L177V01501F →)

KEY:
A: Gasoline
B: LPG

ITEM	PART NO.	DESCRIPTION	QTY A	QTY B
	1652304	Long Block (2.0L, Gasoline)	1	..
	1652302	Long Block (2.0L, LPG)	..	1
	1652306	Long Block (2.2L, Gasoline)	1	..
	1652305	Long Block (2.2L, LPG)	..	1
1	~~1361694~~			
	2105970	Piston Rod (2.0L)	4	4
1	~~1370746~~			
	2105972	Piston Rod (2.2L)	4	4
2	1361695	Nut	2	2
3	1361703	Piston Rod Bearing (Standard)	1	1
3	1361704	Piston Rod Bearing (0.25 mm)	1	1
3	1361705	Piston Rod Bearing (0.50 mm)	1	1
3	1361706	Piston Rod Bearing (0.75 mm)	1	1
4	1572593	Piston and Pin (Standard) (2.0L)	..	4
4	1361714	Piston and Pin (Standard) (2.0L)	4	..
4	1572597	Piston and Pin (0.25 mm) (2.0L)	..	4
4	1361715	Piston and Pin (0.25 mm) (2.0L)	4	..
4	1572595	Piston and Pin (0.50 mm) (2.0L)	..	4
4	1361716	Piston and Pin (0.50 mm) (2.0L)	4	..
4	1572594	Piston and Pin (Standard) (2.2L)	..	4
4	1370745	Piston and Pin (Standard) (2.2L)	4	..
4	1572596	Piston and Pin (0.50 mm) (2.2L)	..	4
4	1572598	Piston and Pin (0.25 mm) (2.2L)	..	4
4	2029093	Piston and Pin (0.25 mm) (2.2L)	4	..
4	2029094	Piston and Pin (0.50 mm) (2.2L)	4	..
5	1495473	Kit-Piston Ring (Standard)	1	1
5	1495475	Kit-Piston Ring (0.25 mm)	1	1
5	1495474	Kit-Piston Ring (0.50 mm)	1	1
6	1361700	Bolt	6	6
7	1553722	Crankshaft Pulley	1	..
8	2045034	Bolt	1	..
9	2045033	Plate	1	1
10	2045030	Pulley	1	1
11	1361697	Key	1	1
12	1361696	Crankshaft (2.0L)	1	1
12	2045029	Crankshaft (2.2L)	1	1
13	1361710	Kit-Crankshaft Bearing (Standard)	1	1
13	1361713	Crankshaft Bearing (0.25 mm)	1	1
13	1361711	Crankshaft Bearing (0.50 mm)	1	1
13	1361712	Crankshaft Bearing (0.75 mm)	1	1
14	2021442	Plate	1	1
15	2021438	Bolt	1	1

©2013 HYSTER COMPANY

EXHAUST MANIFOLD (FIGURE 3-36)

MAZDA 2.0L AND 2.2L, GASOLINE AND LPG, 2007-2010EMISSION COMPLIANT ENGINES (S/N L177B15327E → (2.2L GAS)) (S/N L177B15512E → (2.0 GAS AND LPG)) (S/N L177B16207E → 2.2L LPG) (S/N L177V01501F →)

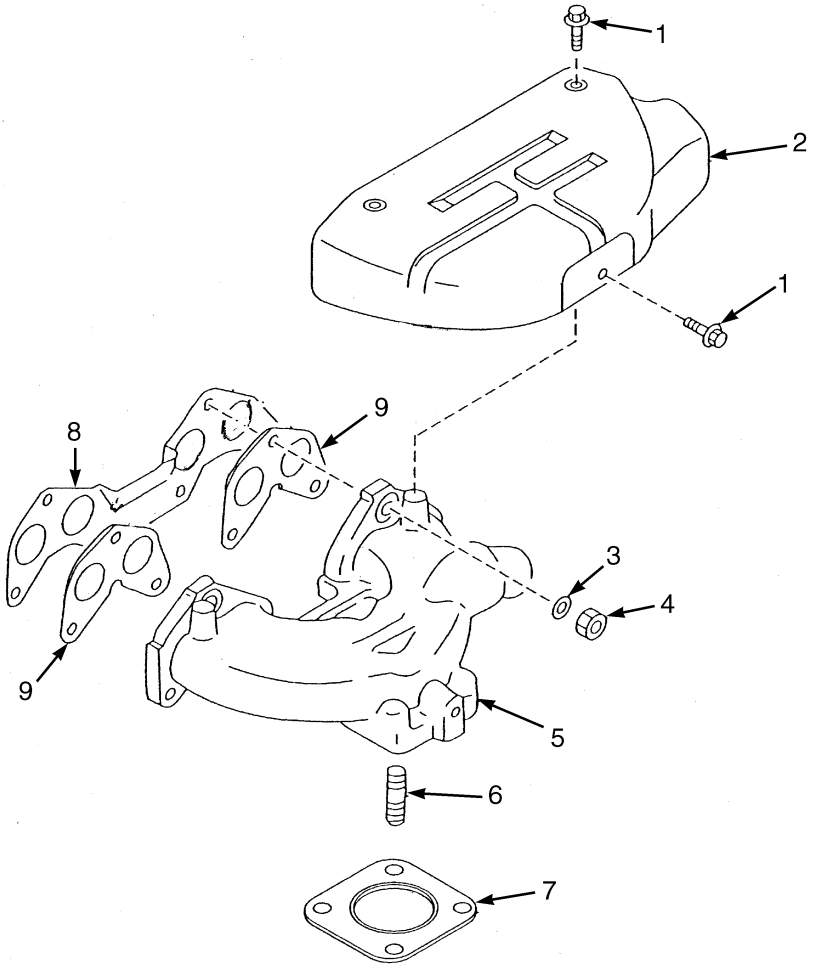

BP090330

ITEM	PART NO.	DESCRIPTION	QTY
1	1361898	Bolt	3
2	1370691	Cover	1
3	1370690	Washer	6
4	1361746	Nut	6
5	1370688	Exhaust Manifold	1
6	1361745	Stud	4
7	1338308	Gasket	1
7	1528937	Gasket (Alternate Part)	1
8	1361747	Gasket	1
9	1370689	Gasket	2

©2013 HYSTER COMPANY

NOTES

©2013 HYSTER COMPANY

INTAKE MANIFOLD (FIGURE 3-37)

MAZDA 2.0L AND 2.2L, GASOLINE — 2007-2010 EMISSION COMPLIANT ENGINES (S/N L177B15327E → 2.2L GAS) (S/N L177B15512E → 2.0L GAS) (S/N L177V01501F →)

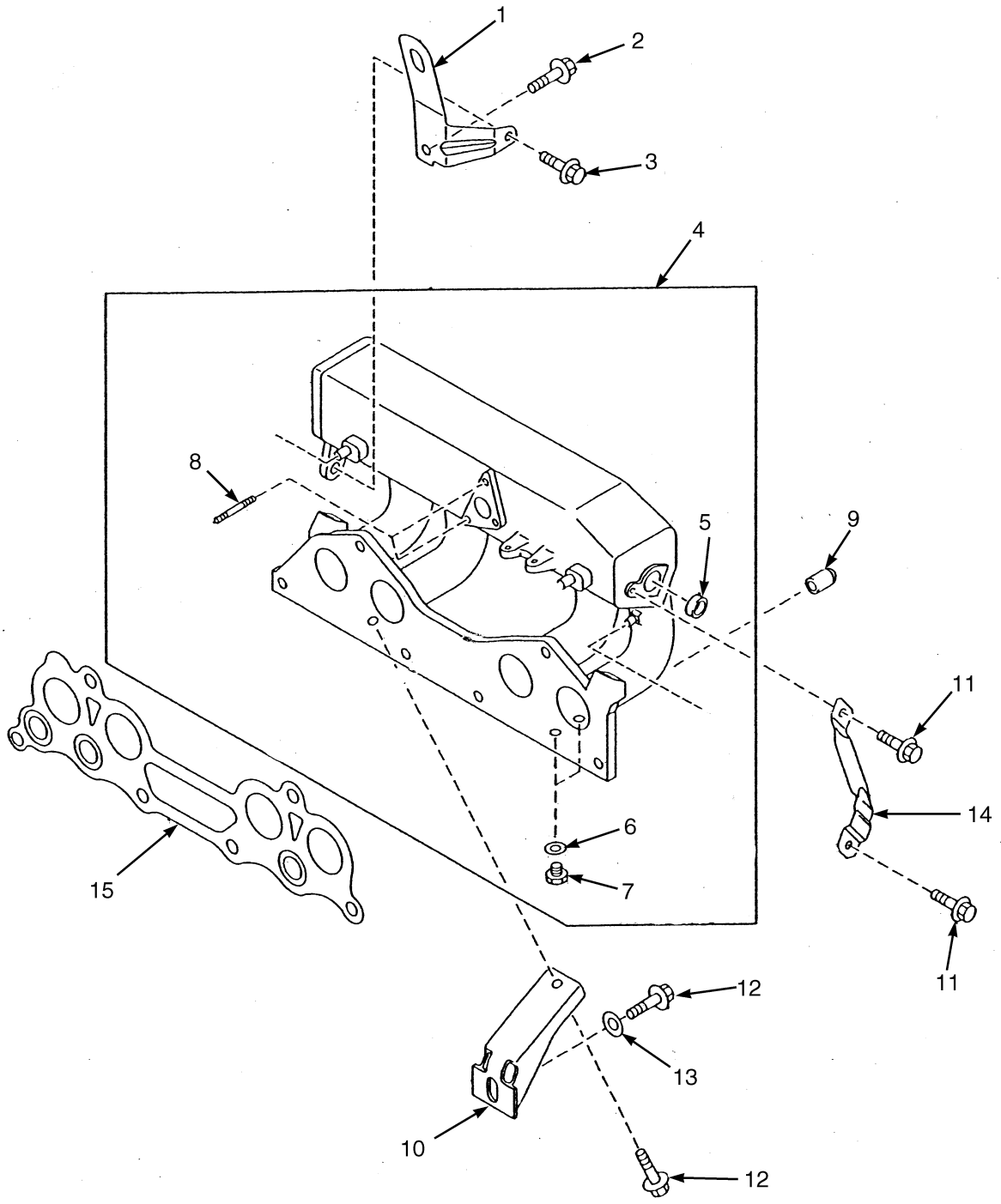

BP090331

©2013 HYSTER COMPANY

INTAKE MANIFOLD

MAZDA 2.0L AND 2.2L, GASOLINE – 2007-2010 EMISSION COMPLIANT ENGINES (S/N L177B15327E → 2.2L GAS) (S/N L177B15512E → 2.0L GAS) (S/N L177V01501F →)

ITEM	PART NO.	DESCRIPTION	QTY
1	1553779	Bracket	1
2	1361881	Bolt	1
3	324706	Bolt	2
4	1652327	Intake Manifold	1
5	1362005	Plug	1
6	1368743	Seal	2
7	1366902	Bolt	2
8	1553774	Stud	2
9	2023551	Cap	1
10	1553778	Bracket	1
11	1366874	Bolt	2
12	1370675	Bolt	1
13	1652328	Washer	1
14	1553777	Bracket	1
15	1553776	Gasket	1

©2013 HYSTER COMPANY

INTAKE MANIFOLD (FIGURE 3-38)

MAZDA 2.0L AND 2.2L LPG — 2007-2010 EMISSION COMPLIANT ENGINES

(S/N L177B15512E → 2.0L LPG) (S/N L177B16207E → (2.2L LPG)) (S/N L177V01501F →)

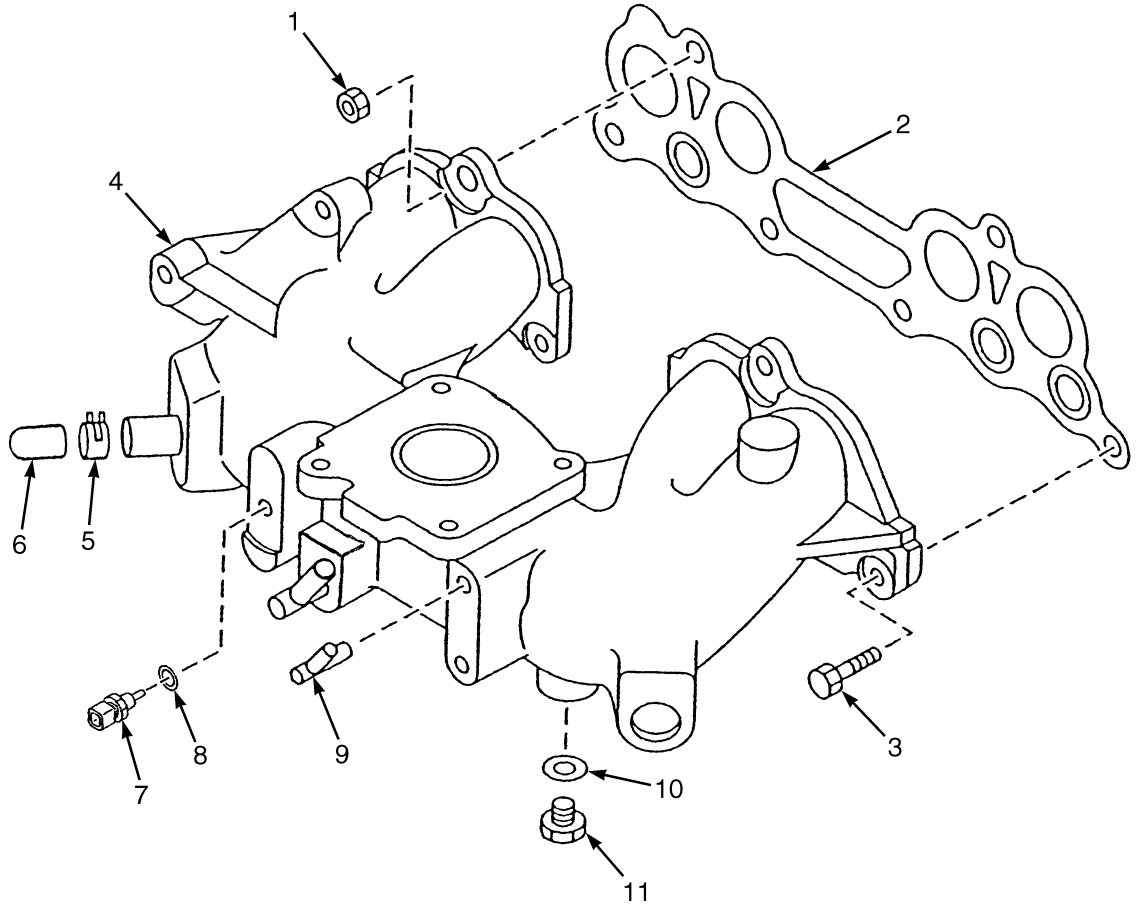

BP090332

©2013 HYSTER COMPANY

INTAKE MANIFOLD

MAZDA 2.0L AND 2.2L LPG – 2007-2010 EMISSION COMPLIANT ENGINES (S/N L177B15512E → 2.0L LPG) (S/N L177B16207E → (2.2L LPG)) (S/N L177V01501F →)

ITEM	PART NO.	DESCRIPTION	QTY
1	326504	Nut	4
2	1553776	Gasket	1
3	1361885	Bolt	2
4	**a** 1652333	Intake Manifold (LPG)	1
4	**b** 1687035	Intake Manifold (LPG)	1
5	1361873	Clamp	1
6	1361741	Cap	1
7	1369861	Plug	1
8	1368886	Washer	1
9	1652334	Connector	1
10	1368743	Seal	1
11	1366902	Bolt	1

FOOTNOTES:

a → S/N L177V01503F INC. 01695, 01756, 01759, 01819-01820, 01825-01827

b S/N L177V01504F → EXC. 01695, 01756, 01759, 01819-01820, 01825-01827

©2013 HYSTER COMPANY

TIMING GEAR COVER AND OIL PAN (FIGURE 3-39)

MAZDA 2.0L AND 2.2L, GASOLINE AND LPG — 2007-2010 EMISSION COMPLIANT ENGINES (S/N L177B15327E → (2.2L GAS)) (S/N L177B15512E → (2.0 GAS AND LPG)) (S/N L177B16207E → (2.2L LPG)) (S/N L177V01501F →)

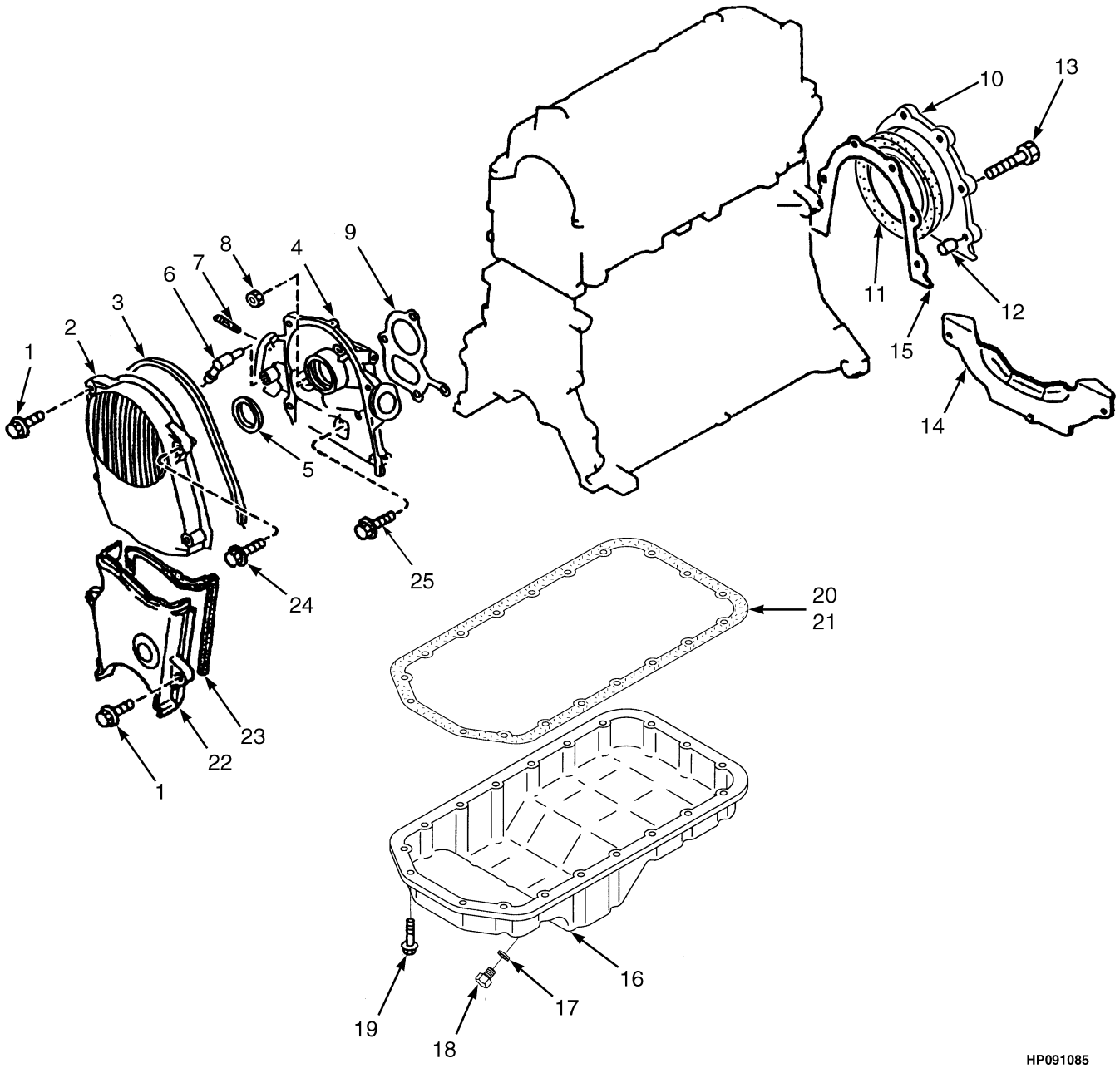

©2013 HYSTER COMPANY

TIMING GEAR COVER AND OIL PAN

MAZDA 2.0L AND 2.2L, GASOLINE AND LPG – 2007-2010 EMISSION COMPLIANT ENGINES (S/N L177B15327E → (2.2L GAS)) (S/N L177B15512E → (2.0 GAS AND LPG)) (S/N L177B16207E → (2.2L LPG)) (S/N L177V01501F →)

ITEM	PART NO.	DESCRIPTION	QTY
	1652304	Long Block (2.0L Gasoline)	1
	1652302	Long Block (2.0L LPG)	1
	1652306	Long Block (2.2L Gasoline)	1
	1652305	Long Block (2.2L, LPG)	1
1	1362001	Bolt	5
2	1553716	Cover (Upper Timing Belt) (2.0L)	1
2	2029084	Cover (Upper Timing Belt) (2.2L)	1
3	1553717	Gasket (2.0L)	1
3	2028854	Gasket (2.2L)	1
4	2051129	Housing (2.2L)	1
4	1553715	Housing (2.0L)	1
5	1361688	Oil Seal	1
6	1361692	Connector	1
7	1362012	Stud	2
8	326504	Nut	2
9	1361679	Gasket	1
10	1361689	Cover	1
11	1361691	Oil Seal (Rear)	1
12	1362010	Pin	2
13	1362011	Bolt	6
14	1371652	Cover	1
15	1361690	Gasket	1
16	1361680	Oil Pan (2.0L)	1
16	2029082	Oil Pan (2.2L)	1
17	1362015	Gasket	1
18	1361681	Drain Plug	1
19	1370736	Capscrew	19
20	1361682	Gasket (Oil Pan)	1
21	~~1370737~~		
	4618898	Sealant	AR
22	2051128	Cover	1
23	2028853	Gasket	1
24	2029086	Bolt	1
25	1369993	Bolt	2
	2045036	Kit-Gasket	1

©2013 HYSTER COMPANY

OIL PUMP AND FILTER (FIGURE 3-40)

MAZDA 2.0L AND 2.2L, GASOLINE AND LPG, 2007-2010 EMISSION COMPLIANT ENGINES
(S/N L177B15327E → (2.2L GAS)) (S/N L177B15512E → 2.0 GAS AND LPG)
(S/N L177B16207E → (2.2L LPG)) (S/N L177V01501F →)

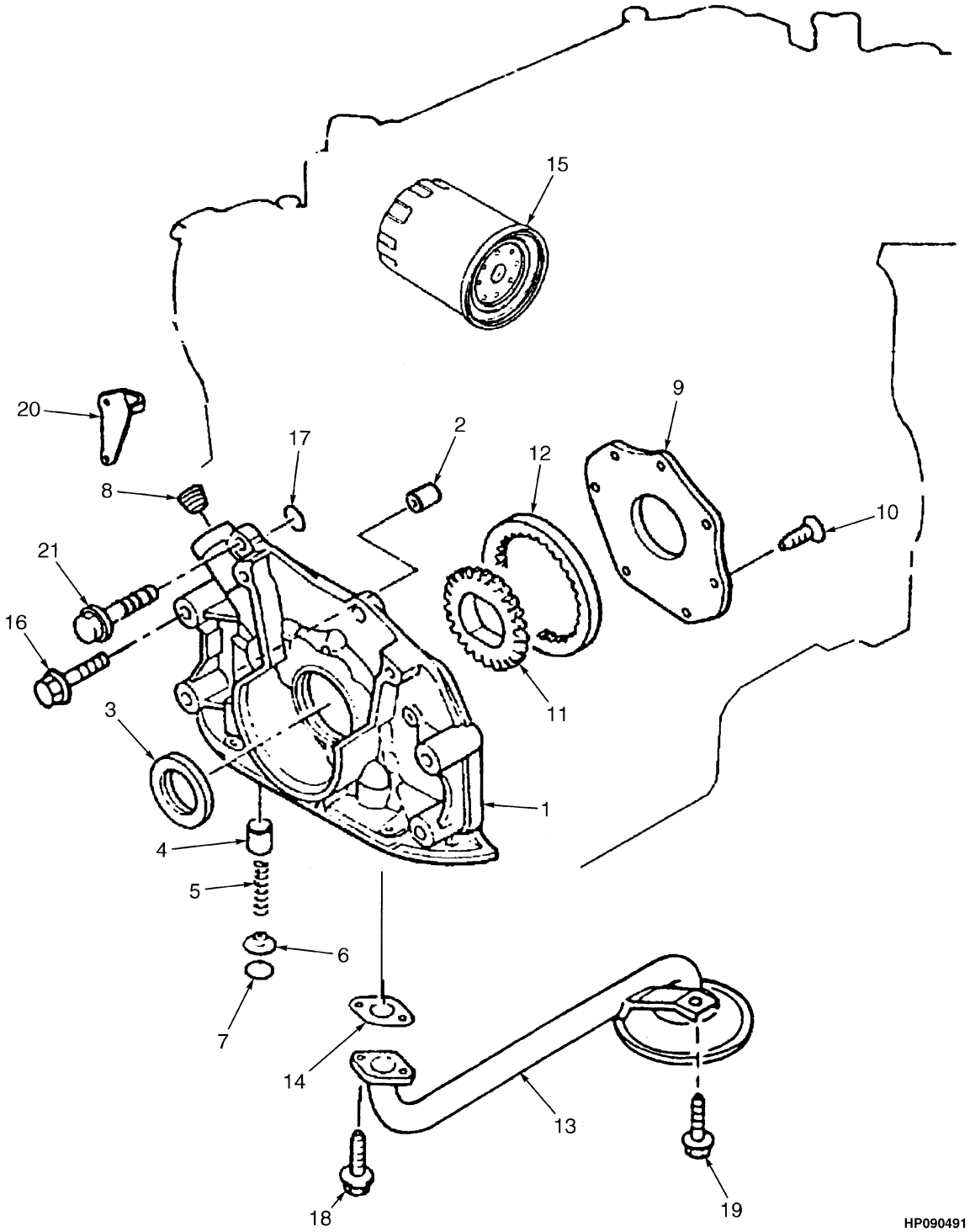

©2013 HYSTER COMPANY

OIL PUMP AND FILTER

MAZDA 2.0L AND 2.2L, GASOLINE AND LPG, 2007-2010 EMISSION COMPLIANT ENGINES (S/N L177B15327E → (2.2L GAS)) (S/N L177B15512E → 2.0 GAS AND LPG) (S/N L177B16207E → (2.2L LPG)) (S/N L177V01501F →)

ITEM	PART NO.	DESCRIPTION	QTY
	1652304	Long Block (2.0L, Gasoline)	1
	1652302	Long Block (2.0L, LPG)	1
	1652306	Long Block (2.2L, Gasoline)	1
	1652305	Long Block (2.2L, LPG)	1
1	1455676	Engine Oil Pump	1
2	1361798	Pin (Timing Indicator)	2
3	1361688	Oil Seal	1
4	1455674	Plunger	1
5	326748	Spring	1
6	326749	Spring Seat	1
7	1361879	Snap Ring	1
8	1495426	Plug	1
9	2029100	Cover	1
10	1455677	Screw	7
11	2029101	Gear (Inner)	1
12	2029102	Gear (Outer)	1
13	1361806	Strainer	1
14	1361807	Gasket	1
15	324692	Oil Filter	1
16	1553878	Bolt	2
17	1361801	O-Ring	1
18	1361878	Screw	2
19	1361868	Screw	1
20	1495427	Pin (Top Indicator)	1
21	2029103	Bolt	4

©2013 HYSTER COMPANY

ENGINE COOLING SYSTEM (FIGURE 3-41)

MAZDA 2.0L AND 2.2L, GASOLINE AND LPG, (2007-2010 SERIES) (S/N L177B15327E → (2.2L GAS)) (S/N L177B15512E → (2.0L GAS AND LPG)) (S/N L177B16207E → 2.2L LPG) (S/N L177V01501F →)

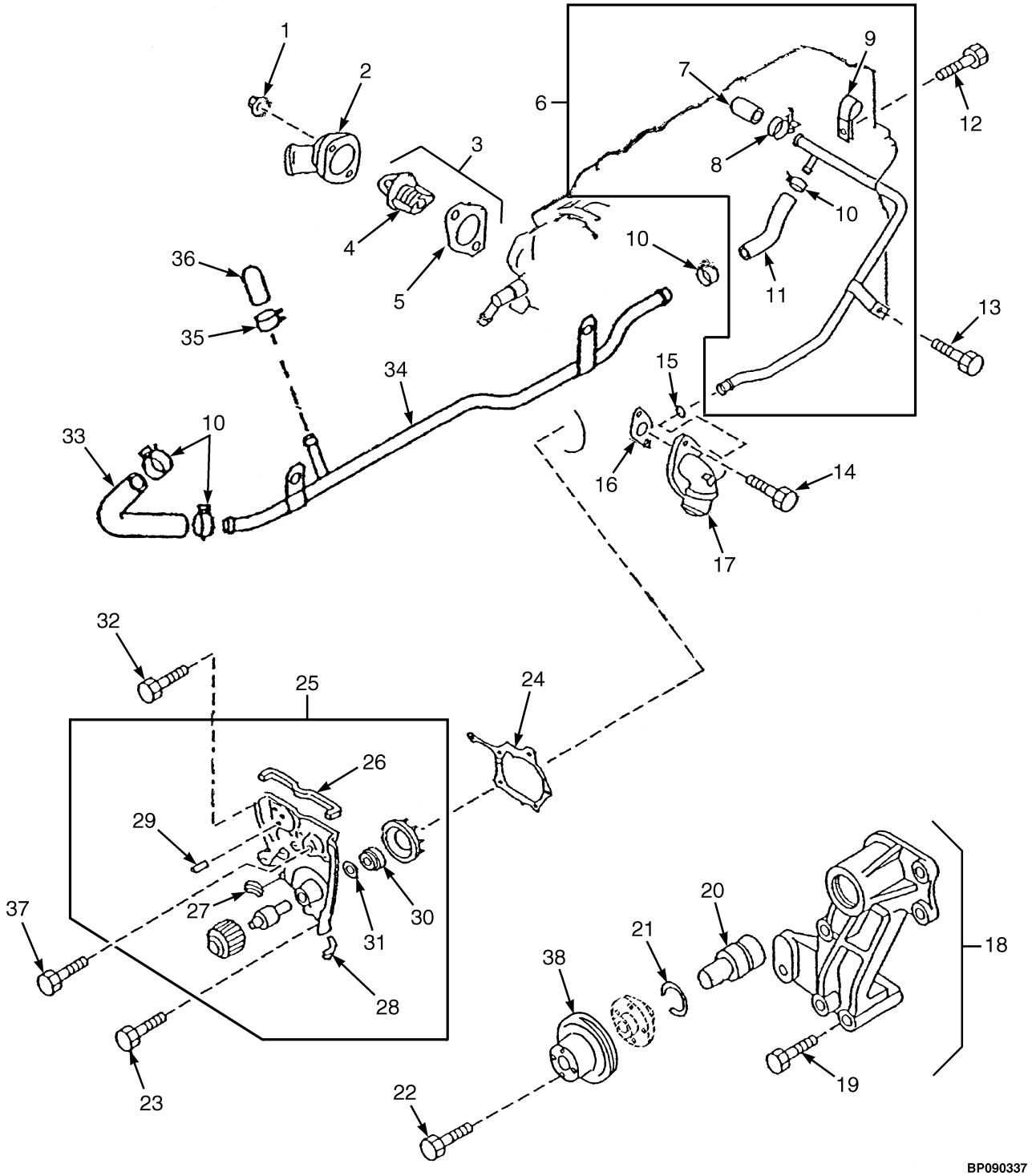

©2013 HYSTER COMPANY

ENGINE COOLING SYSTEM

MAZDA 2.0L AND 2.2L, GASOLINE AND LPG, (2007-2010 SERIES) (S/N L177B15327E → (2.2L GAS)) (S/N L177B15512E → (2.0L GAS AND LPG)) (S/N L177B16207E → 2.2L LPG) (S/N L177V01501F →)

KEY:
A: Mazda 2.0L Gasoline
B: Mazda 2.0L LPG
C: Mazda 2.2L Gasoline
D: Mazda 2.2L LPG

ITEM	PART NO.	DESCRIPTION	QTY A	B	C	D
	1652302	Long Block	1	..	..	..
	1652304	Long Block	..	1	..	..
	1652305	Long Block	..	..	1	..
	1652306	Long Block	..	..	..	1
1	326504	Nut	2	2	2	2
2	1361821	Cover	1	1	1	1
3	1495428	Thermostat	1	1	1	1
4	2082929	Thermostat	1	1	1	1
5	1367191	Gasket	1	1	1	1
6	1553943	Pipe (Water)	1	1	..	..
6	2045024	Pipe (Water)	..	..	1	1
7	1361836	Cap	1	1	1	1
8	1361886	Clamp	1	1	1	1
9	1361826	Clip	1	1	1	1
10	1361873	Clamp	4	4	4	4
11	2029108	Radiator Hose (Water)	1	1	1	1
12	1361898	Bolt	1	1	1	1
13	2022309	Bolt	1	1	1	1
14	1361875	Screw	2	2	2	2
15	1361827	O-Ring	1	1	1	1
16	2029120	Gasket (Inlet)	1	1	1	1
17	2029112	Adapter	1	1	1	1
18	~~1573176~~					
	4053018	Bracket (Fan)	1	1	1	1
19	2045026	Screw	3	3	3	3
20	2029116	Shaft Bearing (Fan)	1	1	3	1
21	2045025	Clip	1	1	1	1
22	324706	Bolt	4	4	4	4
23	1369914	Bolt	5	5	5	5
24	2028645	Gasket	1	1	1	1
25	2078488	Water Pump	1	1	1	1
26	2029107	Seal	1	1	1	1
27	2029102	Gear (Outer)	1	..	1	..
28	2029106	Seal	3	3	3	3
29	1361880	Stud	1	..	1	..
30	1361814	Seal	..	1	..	1
31	1361790	Cap	..	1	..	1
32	2087757	Bolt	1	1	1	1
33	1361825	Radiator Hose	1	1	1	1
34	1361823	Pipe (Water Bypass)	1	1	1	1
35	1495429	Hose Clamp	1	1	1	1
36	1361790	Cap	1	1	1	1

©2013 HYSTER COMPANY

ENGINE COOLING SYSTEM

MAZDA 2.0L AND 2.2L, GASOLINE AND LPG, (2007-2010 SERIES) (S/N L177B15327E → (2.2L GAS)) (S/N L177B15512E → (2.0L GAS AND LPG)) (S/N L177B16207E → 2.2L LPG) (S/N L177V01501F →)

KEY:
A: Mazda 2.0L Gasoline
B: Mazda 2.0L LPG
C: Mazda 2.2L Gasoline
D: Mazda 2.2L LPG

ITEM	PART NO.	DESCRIPTION	QTY A	QTY B	QTY C	QTY D
37	1361884	Bolt	1	1	1	1
38	1573179	Fan Pulley	1	1	1	1

©2013 HYSTER COMPANY

4 ENGINE ASSEMBLY - YANMAR

SECTION 4
ENGINE ASSEMBLY - YANMAR

DESCRIPTION	PAGE
CAMSHAFT AND DRIVE GEAR	
YANMAR 2.6L AND 3.3L - DIESEL	4-26
COOLING SYSTEM	
YANMAR 2.6L AND 3.3L, DIESEL, SQUARE WAVE RADIATOR - WITH INTERNAL OIL COOLER (→ S/N L177B14568E)	4-2
YANMAR 2.6L AND 3.3L, DIESEL, SQUARE WAVE RADIATOR - WITH INTERNAL OIL COOLER (S/N L177B14569E →) (S/N L177V01501F →)	4-4
YANMAR 2.6L AND 3.3L, DIESEL, SQUARE WAVE RADIATOR - WITH EXTERNAL OIL COOLER (→ S/N L177B14568E)	4-6
YANMAR 2.6L AND 3.3L, DIESEL, SQUARE WAVE RADIATOR - WITH EXTERNAL OIL COOLER (S/N L177B14569E →) (S/N L177V01501F →)	4-8
CRANKSHAFT AND PISTONS	
YANMAR 2.6L AND 3.3L - DIESEL	4-28
CYLINDER BLOCK	
YANMAR 2.6 AND 3.3L - DIESEL	4-30
CYLINDER HEAD	
YANMAR 2.6L AND 3.3L - DIESEL	4-22
ENGINE COOLING	
YANMAR 2.6L AND 3.3L - DIESEL	4-32
ENGINE MOUNTING	
YANMAR 2.6 AND 3.3L	4-12
EXHAUST SYSTEM	
YANMAR 2.6L AND 3.3L - DIESEL	4-10
FAN ASSEMBLY	
YANMAR 2.6 AND 3.3L	4-13
FLYWHEEL AND HOUSING	
YANMAR 2.6L AND 3.3L - DIESEL	4-16
GEAR HOUSING	
YANMAR 2.6L AND 3.3L - DIESEL	4-18
INTAKE AND EXHAUST MANIFOLD	
YANMAR 2.6L AND 3.3L - DIESEL	4-14
LUBRICATION SYSTEM	
YANMAR 2.6L AND 3.3L - DIESEL	4-34
OIL PAN	
YANMAR 2.6L AND 3.3L - DIESEL	4-20

©2013 HYSTER COMPANY

COOLING SYSTEM (FIGURE 4-1)

YANMAR 2.6L AND 3.3L, DIESEL, SQUARE WAVE RADIATOR — WITH INTERNAL OIL COOLER (→ S/N L177B14568E)

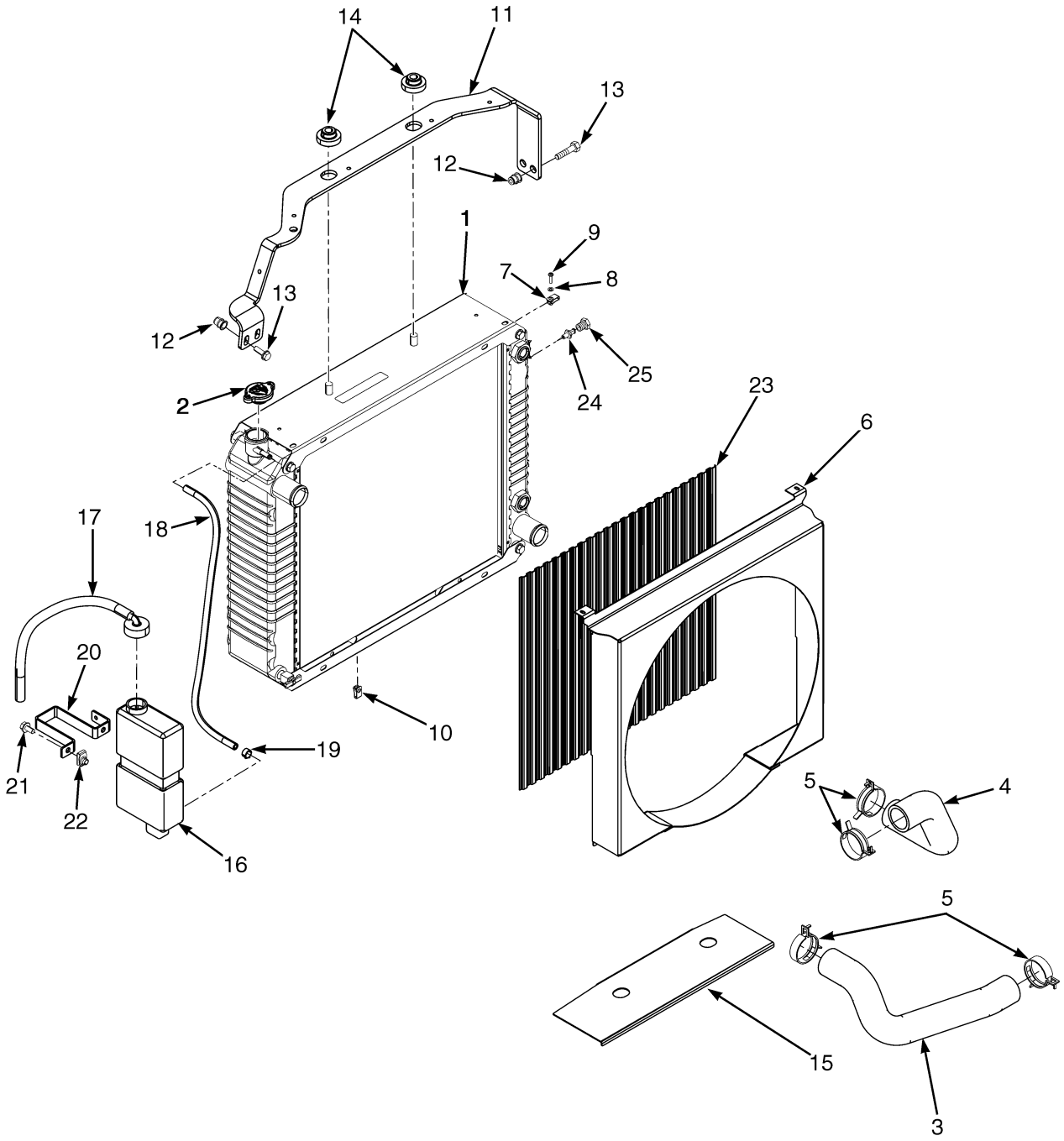

HP060040

©2013 HYSTER COMPANY

COOLING SYSTEM

YANMAR 2.6L AND 3.3L, DIESEL, SQUARE WAVE RADIATOR – WITH INTERNAL OIL COOLER (→ S/N L177B14568E)

ITEM	PART NO.	DESCRIPTION	QTY
1	2069552	Radiator (3.3L With Basic or Electronic Transmission)	1
1	2089141	Radiator (2.6L With Basic Transmission)	1
1	1569079	Drain Valve (w/Thread Wrap)	1
2	1352140	Radiator Cap	1
3	2085104	Radiator Hose (Upper) (3 Row)	1
3	2087215	Radiator Hose (Upper) (2 Row)	1
4	2070072	Radiator Hose (Lower) (3 Row)	1
4	2087216	Radiator Hose (Lower) (2 Row)	1
5	369804	Clamp	4
6	1625760	Shroud (2 Row)	1
6	1622236	Shroud (3 Row)	1
7	1535257	Nut	2
8	320154	Washer	2
9	302023	Screw	2
10	1329271	Clip	2
11	1588507	Bracket (Radiator) (2 Row)	1
11	1611852	Bracket (3 Row)	1
12	1530243	Insert	4
13	1583611	Capscrew	4
14	1529787	Isolator	4
15	1565691	Exhaust Shield (2 Row)	1
15	1565692	Exhaust Shield (3 Row)	1
16	1347026	Reservoir	1
17	345455	Outlet Assembly	1
17	336550	Bushing	1
17	345453	Outlet (Reservoir)	1
17	345454	Cap	1
17	339735	Hose	1
18	1567674	Hose	1
19	369815	Clamp	2
20	1531167	Bracket	1
21	1527879	Capscrew	2
22	1480237	Nut	2
23	**c** 1582078	Screen	1
23	**b** 1548497	Screen	1
23	**a** 1623471	Screen	1
23	4077917	Screen (Alternate Part)	1
24	1531404	Sensor (Low Coolant Level)	1
25	**d** 14385	Fitting	1

FOOTNOTES:

a 2.6L and 3.3L
b 2.6L with Basic Transmission
c 3.3L with Basic Transmission
d Without Low Coolant Level Sensor

©2013 HYSTER COMPANY

COOLING SYSTEM (FIGURE 4-2)

YANMAR 2.6L AND 3.3L, DIESEL, SQUARE WAVE RADIATOR — WITH INTERNAL OIL COOLER (S/N L177B14569E →) (S/N L177V01501F →)

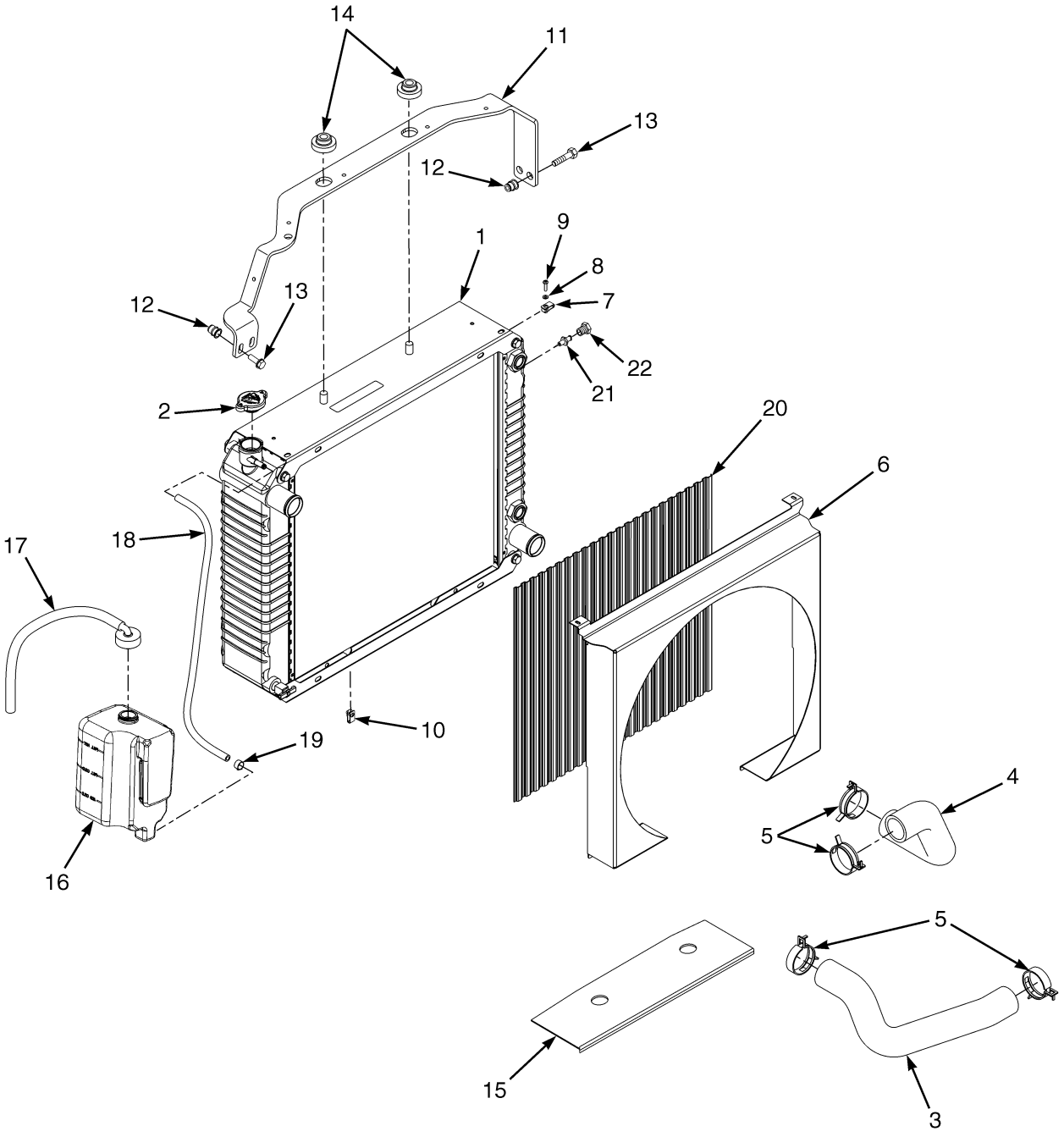

BP060046

©2013 HYSTER COMPANY

COOLING SYSTEM

YANMAR 2.6L AND 3.3L, DIESEL, SQUARE WAVE RADIATOR – WITH INTERNAL OIL COOLER (S/N L177B14569E →) (S/N L177V01501F →)

ITEM	PART NO.	DESCRIPTION	QTY
1	**ce** 2069552	Radiator	1
1	**be** 2089141	Radiator	1
1	**e** 1569079	Drain Valve (w/Thread Wrap)	1
1	**f** 4603552	Radiator (Assembly)	1
1	**f** 4038260	Radiator	1
1	**f** 4038264	Drain Valve	1
1	**f** 4038265	Nut	2
1	**f** 4038266	Bolt	8
2	1352140	Radiator Cap	1
3	**c** 2085104	Radiator Hose (Upper)	1
3	**b** 2087215	Radiator Hose (Upper)	1
4	**c** 2070072	Radiator Hose (Lower)	1
4	**b** 2087216	Radiator Hose (Lower)	1
5	**b** 369804	Clamp	4
5	**c** 1502001	Hose Clamp	4
6	**b** 1625760	Shroud	1
6	**c** 1622236	Shroud	1
7	1535257	Nut	2
8	320154	Washer	2
9	302023	Screw	2
10	1329271	Clip	2
11	**b** 1588507	Bracket (Radiator)	1
11	**c** 1611852	Bracket	1
12	1530243	Insert	4
13	1583611	Capscrew	4
14	1529787	Isolator	4
15	**c** 1565692	Exhaust Shield	1
15	**b** 1565691	Exhaust Shield	1
16	1633307	Reservoir	1
17	345455	Outlet Assembly	1
17	336550	Bushing	1
17	345453	Outlet (Reservoir)	1
17	345454	Cap	1
17	1663877	Hose	1
18	1567674	Hose	1
19	369815	Clamp	2
20	**c** 1582078	Screen	1
20	**b** 1548497	Screen	1
20	**a** 1623471	Screen	1
20	4077917	Screen (Alternate Part)	1
21	1531404	Sensor (Low Coolant Level)	1
22	**d** 14385	Fitting	1

FOOTNOTES:

a 2.6L and 3.3L
b 2.6L with Basic Transmission
c 3.3L with Basic Transmission
d Without Low Coolant Level Sensor
e → S/N L177V09356K
f S/N L177V09357K →

©2013 HYSTER COMPANY

COOLING SYSTEM (FIGURE 4-3)

YANMAR 2.6L AND 3.3L, DIESEL, SQUARE WAVE RADIATOR — WITH EXTERNAL OIL COOLER (→ S/N L177B14568E)

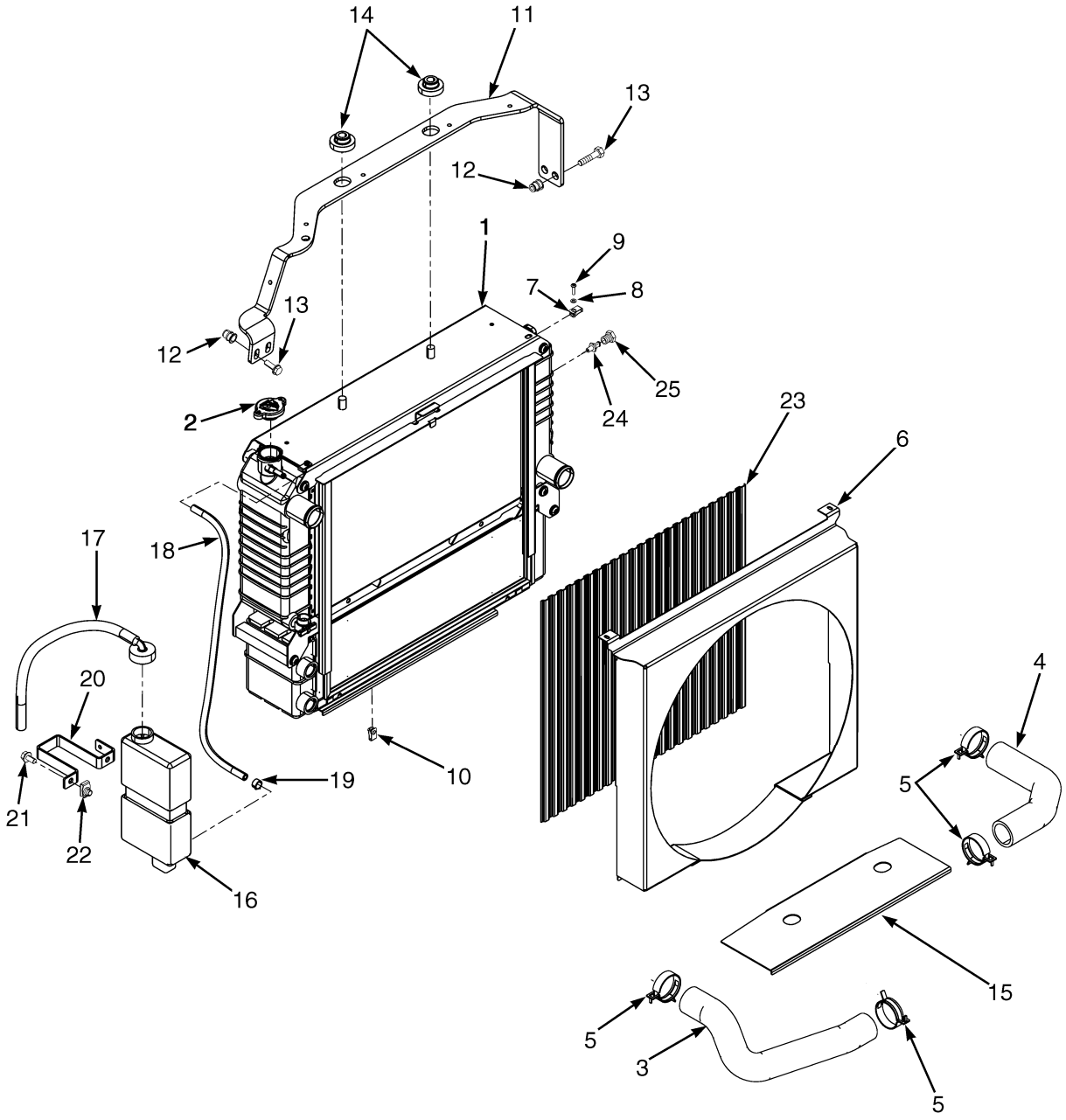

HP060041

©2013 HYSTER COMPANY

COOLING SYSTEM

YANMAR 2.6L AND 3.3L, DIESEL, SQUARE WAVE RADIATOR – WITH EXTERNAL OIL COOLER (→ S/N L177B14568E)

ITEM	PART NO.	DESCRIPTION	QTY
1	2074790	Radiator Assembly (Includes Oil Cooler)	1
1	1590972	Radiator	1
1	1569079	Drain Valve (w/Thread Wrap)	1
1	1590918	Oil Cooler	1
1	1597765	Washer	4
1	1597766	Screw	4
1	1597763	Drain Valve	1
2	1352140	Radiator Cap	1
3	2085104	Radiator Hose (Upper)	1
4	2069688	Radiator Hose (Lower)	1
5	369804	Clamp	4
6	**e** 1610900	Shroud	1
6	**f** 1622272	Shroud	1
7	1535257	Nut	2
8	320154	Washer	2
9	302023	Screw	2
10	1551663	Clip	2
11	1611852	Bracket	1
12	1530243	Insert	4
13	1583611	Capscrew	4
14	1529787	Isolator	4
15	1565692	Exhaust Shield	1
16	1347026	Reservoir	1
17	345455	Outlet Assembly	1
17	336550	Bushing	1
17	345453	Outlet (Reservoir)	1
17	345454	Cap	1
17	339735	Hose	1
18	1567674	Hose	1
19	369815	Clamp	2
20	1531167	Bracket	1
21	1527879	Capscrew	2
22	1480237	Nut	2
23	**c** 1582078	Screen	1
23	**b** 1548497	Screen	1
23	**af** 1623471	Screen	1
23	4077917	Screen (Alternate Part)	1
24	1531404	Sensor (Low Coolant Level)	1
25	**d** 14385	Fitting	1

FOOTNOTES:

a 2.6L and 3.3L
b 2.6L with Basic Transmission
c 3.3L with Basic Transmission
d Without Low Coolant Level Sensor
e → S/N L177B06744D
f S/N L177B06745D →

©2013 HYSTER COMPANY

COOLING SYSTEM (FIGURE 4-4)

YANMAR 2.6L AND 3.3L, DIESEL, SQUARE WAVE RADIATOR — WITH EXTERNAL OIL COOLER (S/N L177B14569E →) (S/N L177V01501F →)

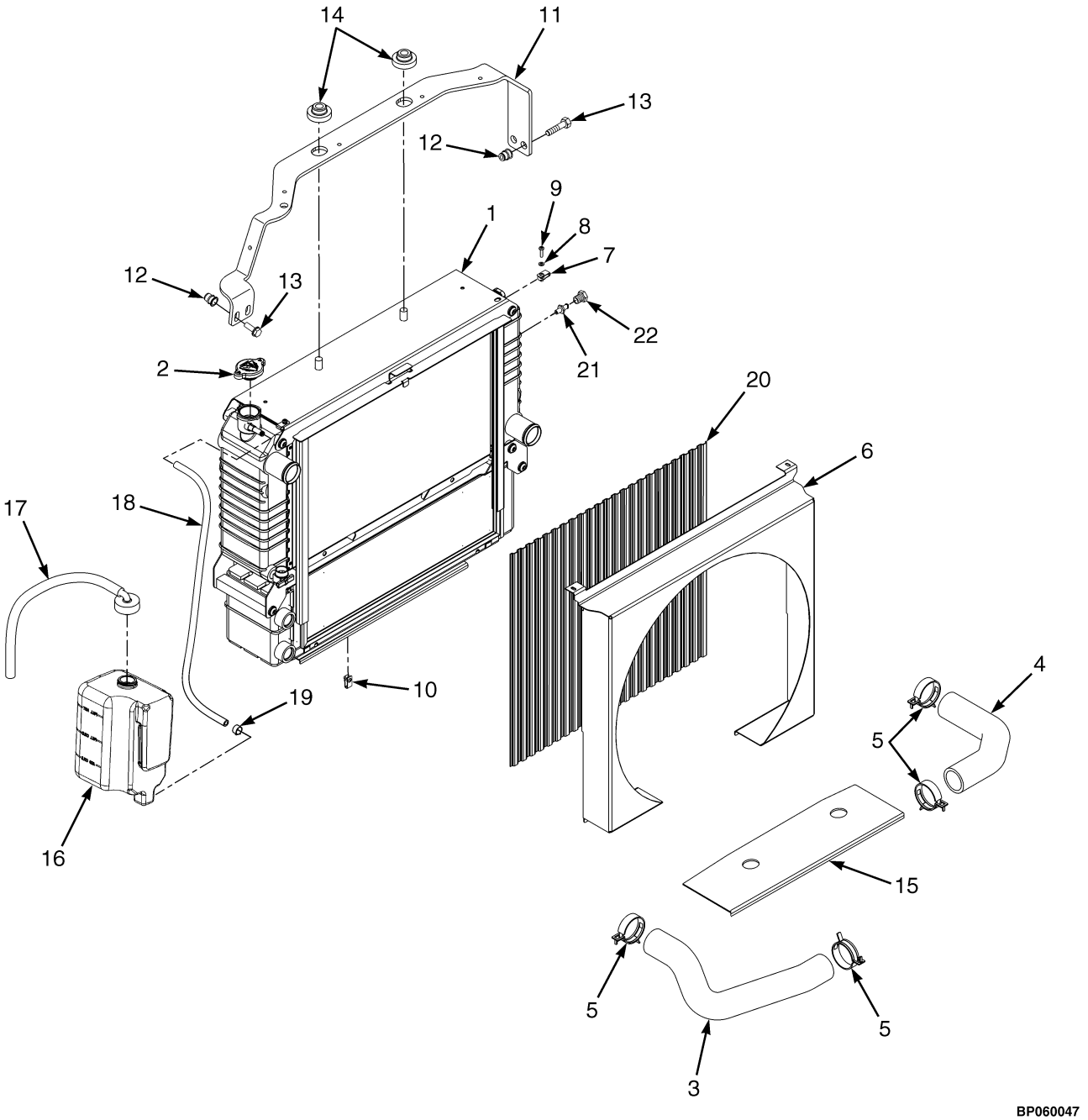

©2013 HYSTER COMPANY

COOLING SYSTEM

YANMAR 2.6L AND 3.3L, DIESEL, SQUARE WAVE RADIATOR – WITH EXTERNAL OIL COOLER (S/N L177B14569E →) (S/N L177V01501F →)

ITEM	PART NO.	DESCRIPTION	QTY
1	**e** 2074790	Radiator Assembly (Includes Oil Cooler)	1
1	**e** 1569079	Drain Valve (w/Thread Wrap)	1
1	**e** 1590918	Oil Cooler	1
1	**f** 4603554	Radiator (Assembly)	1
1	**f** 4038258	Radiator	1
1	**f** 4038263	Oil Cooler	1
1	**f** 4038264	Drain Valve	1
1	**f** 4038265	Nut	2
1	**f** 4038266	Bolt	8
1	**f** 4038267	Bolt	4
2	1352140	Radiator Cap	1
3	2085104	Radiator Hose (Upper)	1
4	2069688	Radiator Hose (Lower)	1
5	369804	Clamp	4
6	1622272	Shroud	1
7	1535257	Nut	2
8	320154	Washer	2
9	302023	Screw	2
10	1551663	Clip	2
11	1611852	Bracket	1
12	1530243	Insert	4
13	1583611	Capscrew	4
14	1529787	Isolator	4
15	1565692	Exhaust Shield	1
16	1633307	Reservoir	1
17	345455	Outlet Assembly	1
17	336550	Bushing	1
17	345453	Outlet (Reservoir)	1
17	345454	Cap	1
17	1663877	Hose	1
18	1567674	Hose	1
19	369815	Clamp	2
20	**c** 1582078	Screen	1
20	**b** 1548497	Screen	1
20	**a** 1623471	Screen	1
20	4077917	Screen (Alternate Part)	1
21	1531404	Sensor (Low Coolant Level)	1
22	**d** 14385	Fitting	1

FOOTNOTES:

a 2.6L and 3.3L
b 2.6L with Basic Transmission
c 3.3L with Basic Transmission
d Without Low Coolant Level Sensor
e → S/N L177V09071J
f S/N L177V09072J →

©2013 HYSTER COMPANY

EXHAUST SYSTEM (FIGURE 4-5)

YANMAR 2.6L AND 3.3L — DIESEL

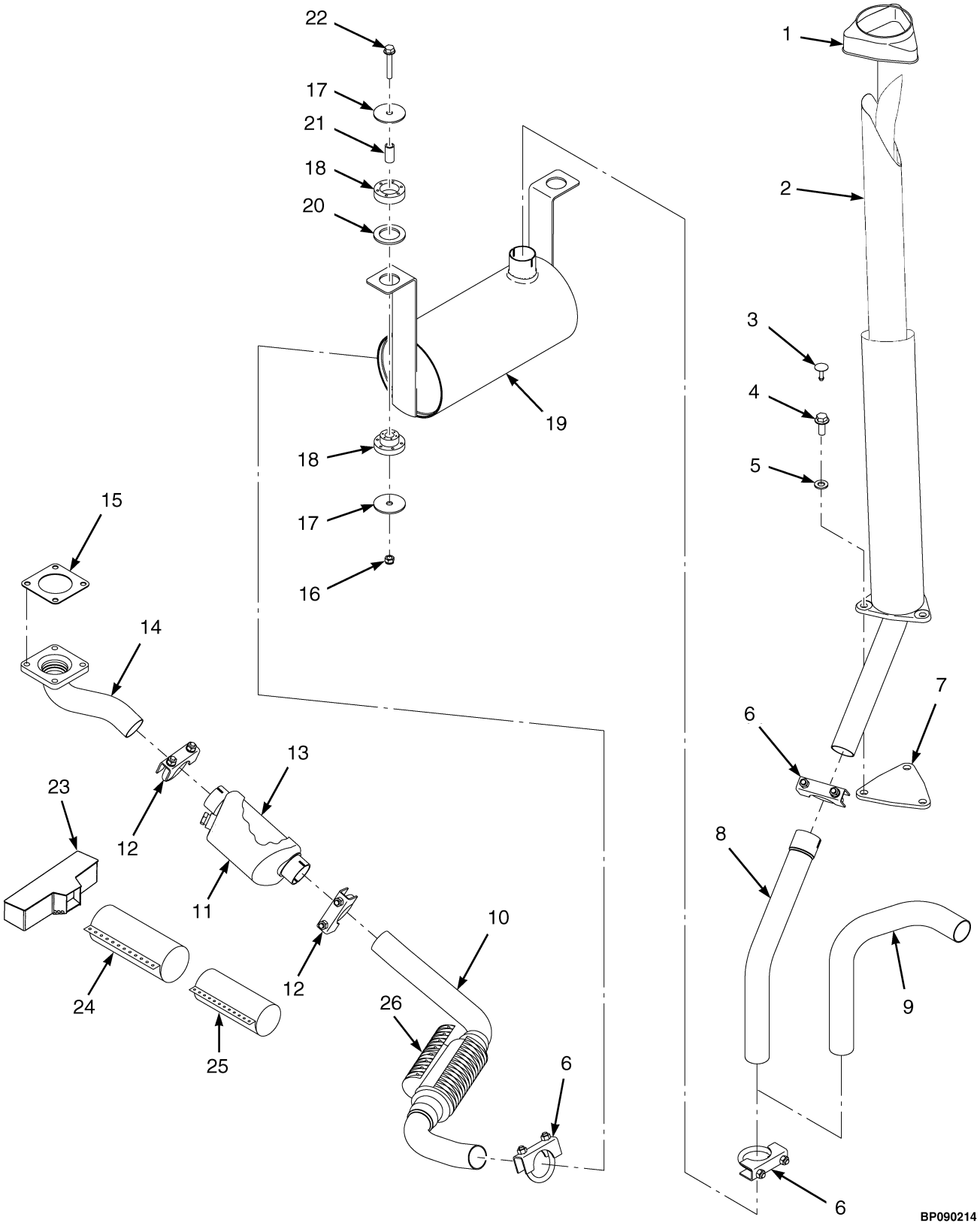

©2013 HYSTER COMPANY

EXHAUST SYSTEM
YANMAR 2.6L AND 3.3L – DIESEL

KEY:
A: With Catalytic Converter
B: Without Catalytic Converter

ITEM	PART NO.	DESCRIPTION	QTY A	QTY B
1	2021394	Cover	1	1
2	**c** 1609626	Tail Pipe	1	1
2	**f** 1646827	Tail Pipe	1	1
3	1347045	Fastener	3	3
4	1510117	Capscrew	3	3
5	320159	Washer	3	3
6	**d** 68968	Clamp	3	3
6	**g** 63117	Clamp	3	3
7	1533639	Cover	1	1
8	1567020	Exhaust Pipe (Overhead)	1	1
9	1586967	Exhaust Pipe (Counterweight)	1	1
9	**b** 1625173	Exhaust Pipe (Diffuser) (Not Illustrated)	1	1
10	1589629	Exhaust Pipe	1	..
10	1589630	Exhaust Pipe (Not Illustrated)	..	1
11	878258	Diesel Exhaust Purifier (Exhaust)	1	..
12	1391757	Clamp	2	..
13	1391758	Sock (Fiberglass)	1	..
14	1589635	Exhaust Pipe	1	..
15	1532363	Gasket	1	1
16	1582222	Locknut	4	4
17	**e** 1528938	Washer	4	4
18	**e** 1528930	Mount	2	2
18	**h** 1709996	Isolator	4	4
19	2075554	Muffler (Exhaust)	1	1
20	**e** 1532585	Washer	2	2
21	**e** 1528934	Spacer	2	2
21	**h** 1708371	Spacer	2	2
22	1510115	Capscrew	2	2
23	**a** 2084000	Exhaust Wrap (Manifold)	1	1
24	**a** 2084002	Wrap (With Snaps)	1	1
25	**a** 2084001	Wrap (With Snaps)	1	1
26	**a** 2073024	Wrap (Flex Joint)	1	1

FOOTNOTES:

a For Paper Industry Applications
b Used with Safety Option
c → S/N L177B12956E
d → S/N L177B30004H
e → S/N L177V04023G
f S/N L177B12957E →
g S/N L177B30005H →
h S/N L177V04024G →

©2013 HYSTER COMPANY

ENGINE MOUNTING (FIGURE 4-6)

YANMAR 2.6 AND 3.3L

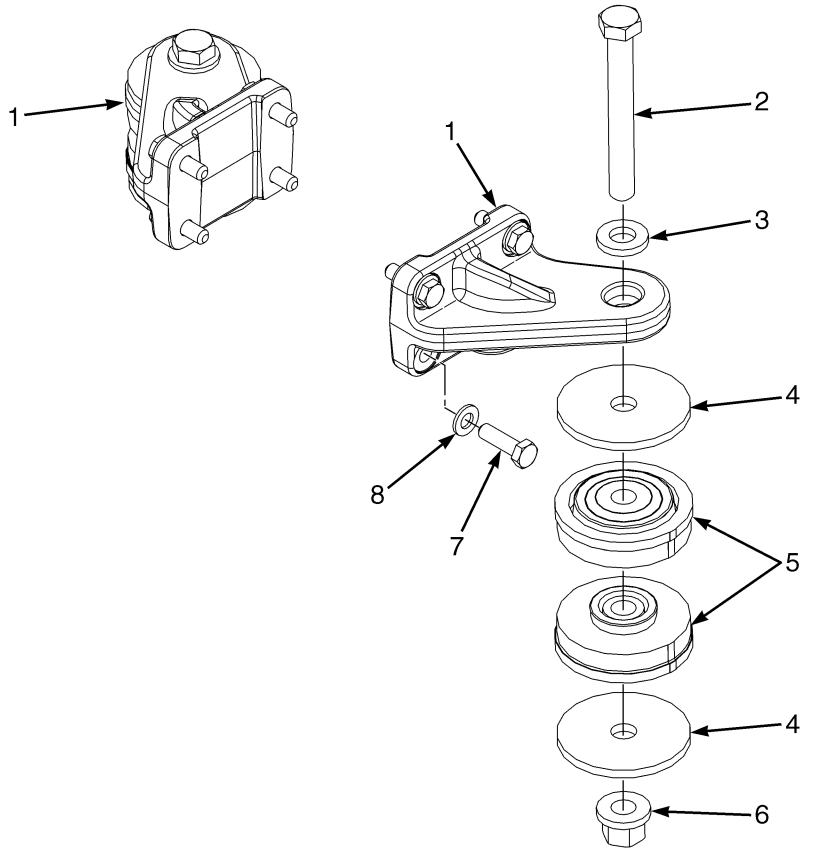

BP090419

ITEM	PART NO.	DESCRIPTION	QTY
1	1557767	Mount	2
2	293698	Capscrew	2
3	1504075	Washer	2
4	1557737	Washer	4
5	2069951	Isolator	4
6	1565453	Nut (Flange)	2
7	293630	Capscrew	8
8	296420	Washer	8

©2013 HYSTER COMPANY

FAN ASSEMBLY (FIGURE 4-7)
YANMAR 2.6 AND 3.3L

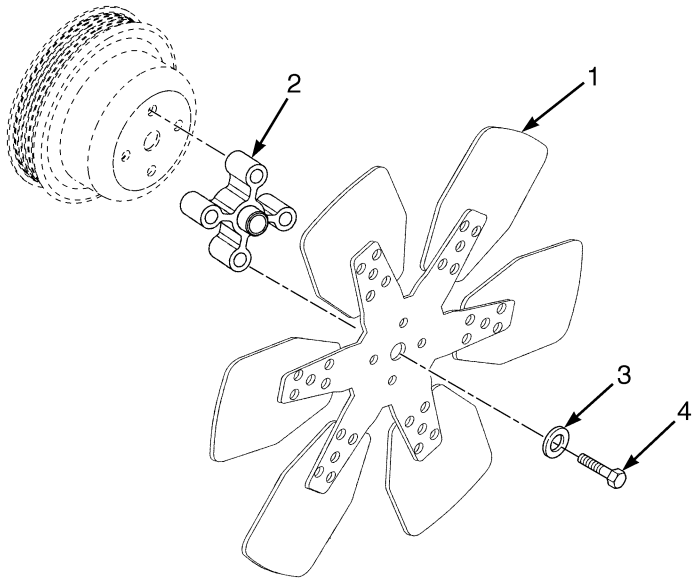

BP090418

ITEM	PART NO.	DESCRIPTION	QTY
1	**a** 2081311	Fan (Pusher)	1
1	**b** 2085570	Fan (Pusher)	1
2	1539154	Spacer	1
3	293623	Capscrew	4
4	296418	Washer	4

FOOTNOTES:

a → S/N L177B12346D

b S/N L177B12347D →

INTAKE AND EXHAUST MANIFOLD (FIGURE 4-8)

YANMAR 2.6L AND 3.3L — DIESEL

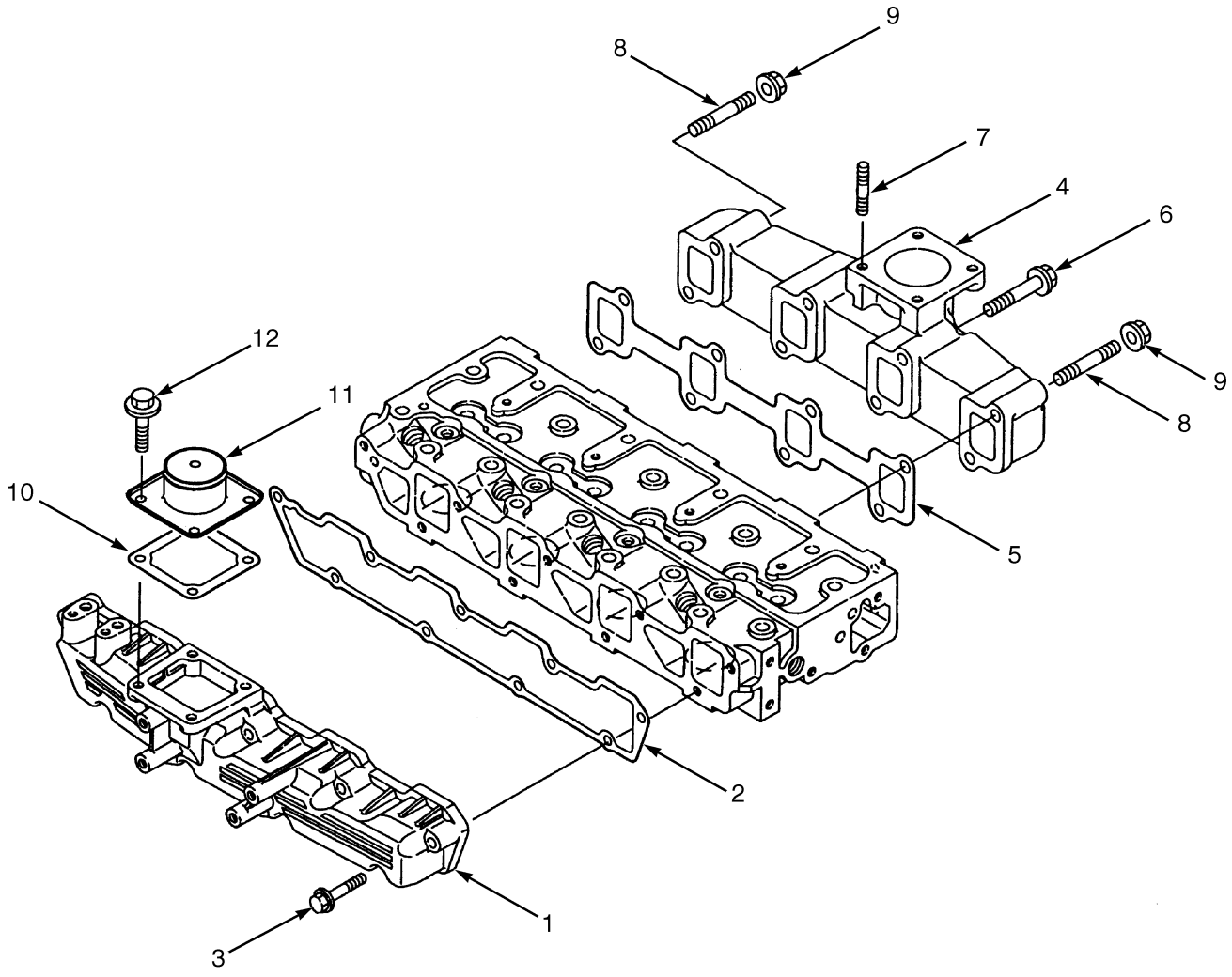

BP090185

©2013 HYSTER COMPANY

INTAKE AND EXHAUST MANIFOLD

YANMAR 2.6L AND 3.3L – DIESEL

ITEM	PART NO.	DESCRIPTION	QTY
	a 1501687	Engine Assy-Diesel (Yanmar 2.6L)	1
	a 1501690	Engine Assy-Diesel (Yanmar 3.3L)	1
	b 1688273	Engine Assy-Diesel (Yanmar 2.6L)	1
	b 1676883	Engine Assy-Diesel (Yanmar 3.3L)	1
1	1599556	Intake Manifold	1
2	1599543	Gasket	1
3	1599475	Bolt	9
4	1599559	Exhaust Manifold	1
5	1599560	Gasket	1
6	1599561	Bolt	9
7	1599562	Stud	4
8	1599563	Stud	2
9	2068378	Nut	2
10	1599565	Gasket	1
11	1599567	Adapter	1
12	1599568	Bolt	4
	1599898	Kit-Gasket (2.6L Engine Complete)	1
	a 1600085	Kit-Gasket (Complete Engine) (3.3L)	1
	b 1689744	Kit-Gasket (Complete Engine) (3.3L)	1

FOOTNOTES:

a → S/N L177V01571F

b S/N L177V01572F →

©2013 HYSTER COMPANY

FLYWHEEL AND HOUSING (FIGURE 4-9)

YANMAR 2.6L AND 3.3L — DIESEL

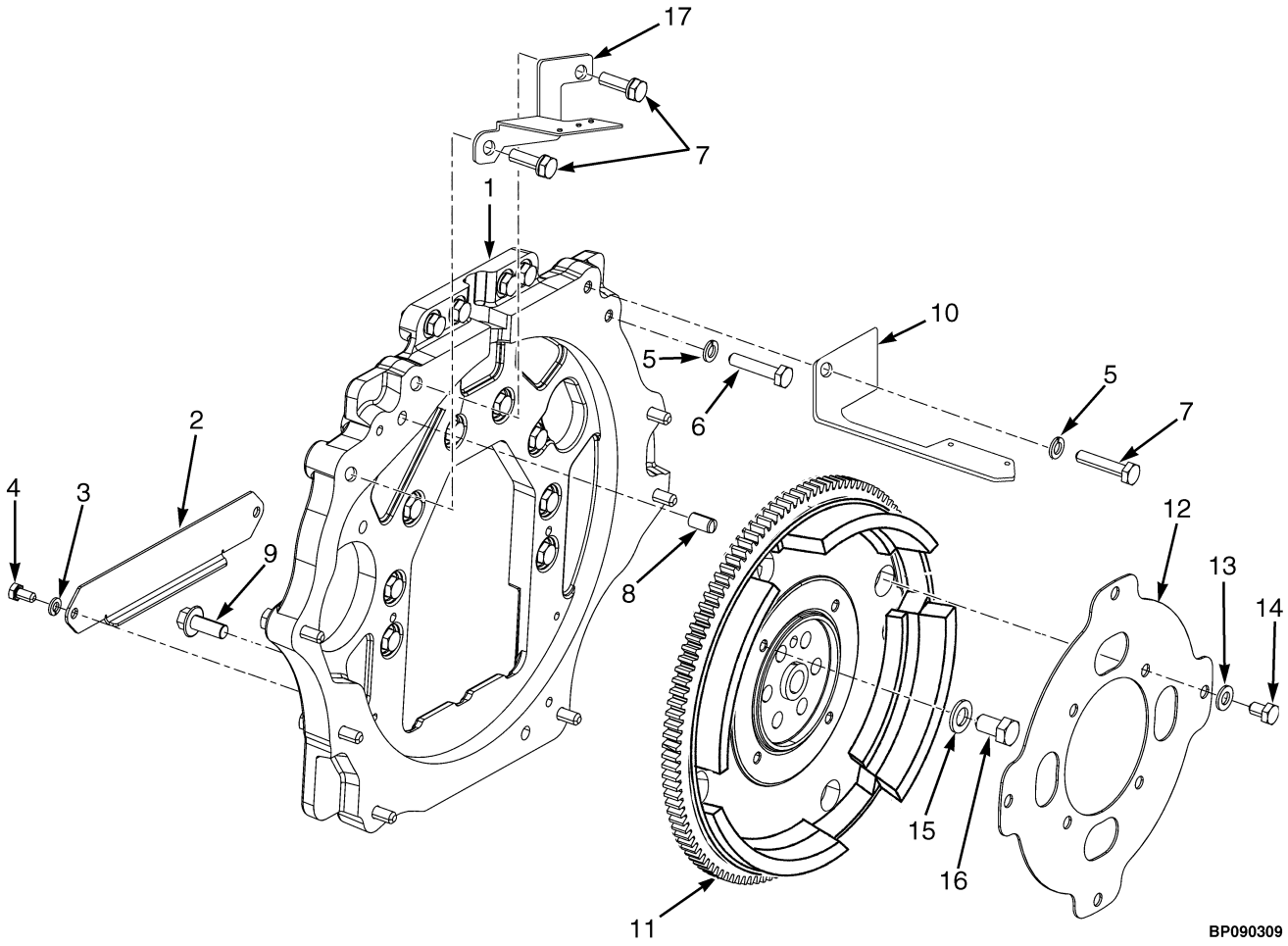

©2013 HYSTER COMPANY

FLYWHEEL AND HOUSING

YANMAR 2.6L AND 3.3L – DIESEL

ITEM	PART NO.	DESCRIPTION	QTY
1	1553265	Housing	1
2	1522363	Cover	1
3	292681	Lockwasher	2
4	287851	Capscrew	2
5	~~388049~~		
	292682	Lockwasher	22
6	136985	Capscrew	12
7	292517	Capscrew	10
8	303150	Dowel	2
9	1528889	Capscrew	2
10	**bc** 1622886	Bracket	1
10	**fg** 1653569	Bracket	1
11	**a** 1615800	Flywheel	1
11	**d** 1707341	Flywheel Assembly	1
12	1531806	Flex Plate	1
13	296420	Washer	4
14	293626	Capscrew	4
15	296424	Washer	6
16	1550747	Capscrew	6
17	1623093	Bracket	1
	e 1625999	Dust Cover (Not Illustrated)	1

FOOTNOTES:

a → 9/2009
b → S/N L177B15745E (Wet Brake)
c → S/N L177B15791E (Dry Brake)
d 10/2009 →
e S/N L177B07256D →
f S/N L177B15746E → (Wet Brake)
g S/N L177B15792E → (Dry Brake)

©2013 HYSTER COMPANY

GEAR HOUSING (FIGURE 4-10)
YANMAR 2.6L AND 3.3L — DIESEL

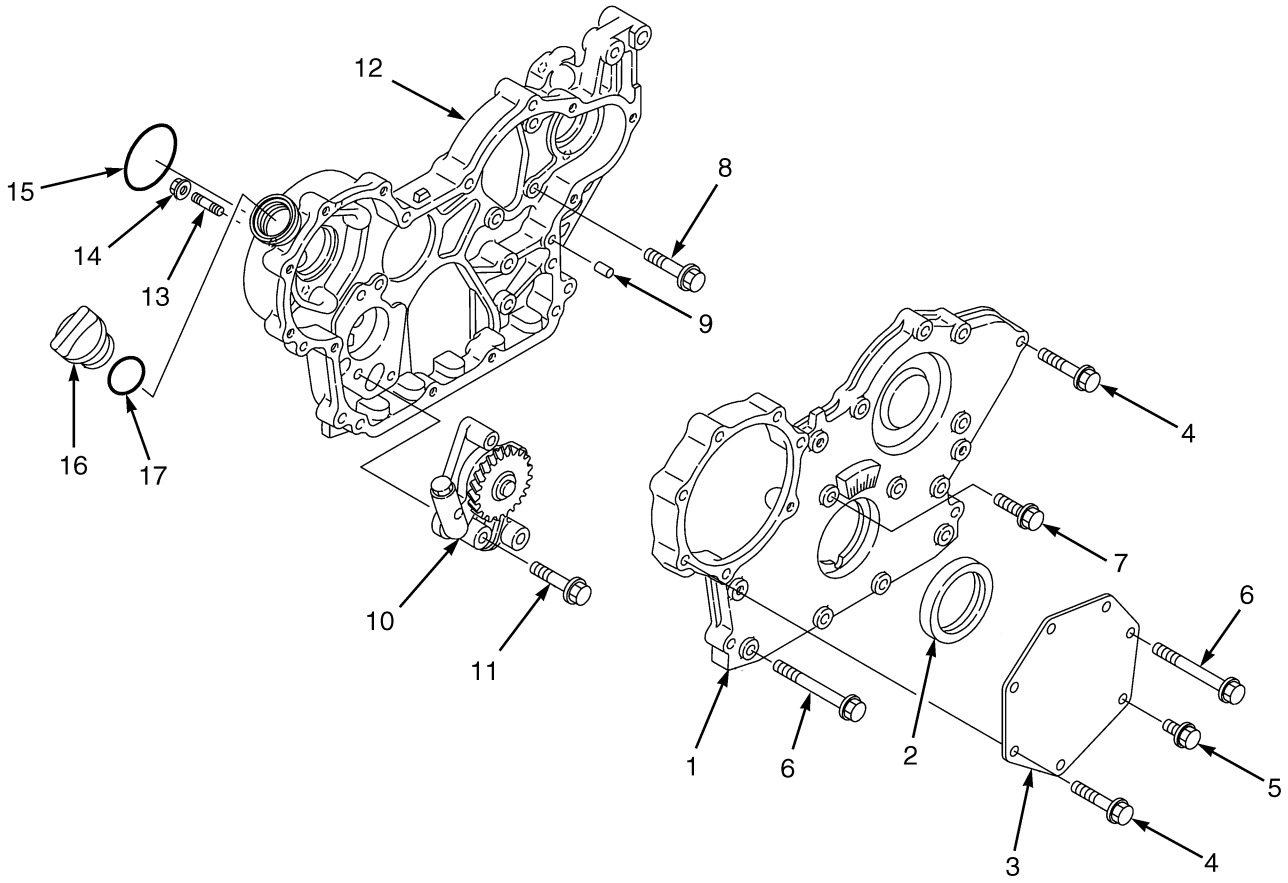

BP090182

©2013 HYSTER COMPANY

GEAR HOUSING

YANMAR 2.6L AND 3.3L – DIESEL

ITEM	PART NO.	DESCRIPTION	QTY
	a 1501687	Engine Assy-Diesel (Yanmar 2.6L)	1
	a 1501690	Engine Assy-Diesel (Yanmar 3.3L)	1
	b 1688273	Engine Assy-Diesel (Yanmar 2.6L)	1
	b 1676883	Engine Assy-Diesel (Yanmar 3.3L)	1
1	**a** 1599459	Cover	1
1	**b** 2101708	Gear Cover Assembly	1
2	**a** 1599460	Oil Seal	1
2	**b** 2100927	Oil Seal	1
3	1599461	Cover	1
4	1599473	Bolt	10
5	1599470	Bolt	1
6	1599476	Bolt	7
7	1599472	Bolt	1
8	1599471	Bolt	3
9	1599458	Pin	4
10	1599466	Engine Oil Pump	1
11	1599475	Bolt	1
12	1599465	Cover	1
13	1599467	Stud	3
14	2068378	Nut	3
15	1599462	O-Ring	1
16	1599463	Cap (Oil Fill)	1
17	1599464	O-Ring	1
	a 1599478	Gasket (Liquid)	AR
	b 2084312	Gasket (Liquid)	1
	a 1600085	Kit-Gasket (Complete Engine)	1
	1599898	Kit-Gasket (2.6L Engine Complete)	1
	b 1689744	Kit-Gasket (Complete Engine) (3.3L)	1

FOOTNOTES:

a → S/N L177V01571F

b S/N L177V01572F →

©2013 HYSTER COMPANY

OIL PAN (FIGURE 4-11)
YANMAR 2.6L AND 3.3L — DIESEL

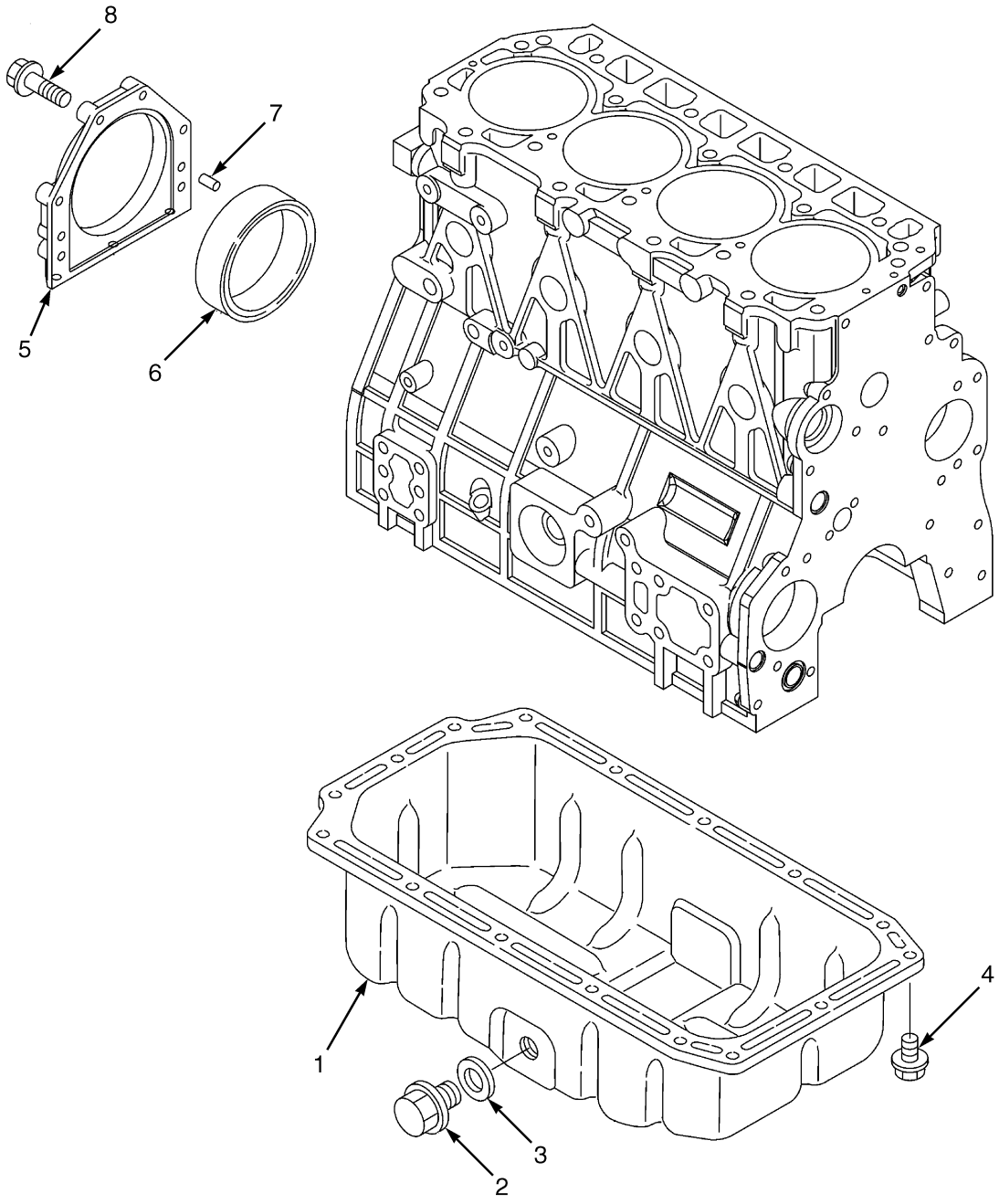

BP090183

©2013 HYSTER COMPANY

OIL PAN

YANMAR 2.6L AND 3.3L – DIESEL

ITEM	PART NO.	DESCRIPTION	QTY
	a 1501687	Engine Assy-Diesel (Yanmar 2.6L)	1
	a 1501690	Engine Assy-Diesel (Yanmar 3.3L)	1
	b 1688273	Engine Assy-Diesel (Yanmar 2.6L)	1
	b 1676883	Engine Assy-Diesel (Yanmar 3.3L)	1
1	1599479	Oil Pan	1
2	1599480	Drain Plug	1
3	1599481	Oil Seal	1
4	1599448	Bolt	16
5	1599483	Case	1
6	~~1599484~~		
	1707826	Seal	1
7	1599458	Pin	2
8	1599485	Bolt	6
	1599478	Gasket (Liquid) (Not Illustrated)	AR
	a 1600085	Kit-Gasket (Complete Engine)	1
	1599898	Kit-Gasket (2.6L Engine Complete)	1
	b 1689744	Kit-Gasket (Complete Engine) (3.3L)	1

FOOTNOTES:

a → S/N L177B01571F

b S/N L177B01572F →

©2013 HYSTER COMPANY

CYLINDER HEAD (FIGURE 4-12)

YANMAR 2.6L AND 3.3L — DIESEL

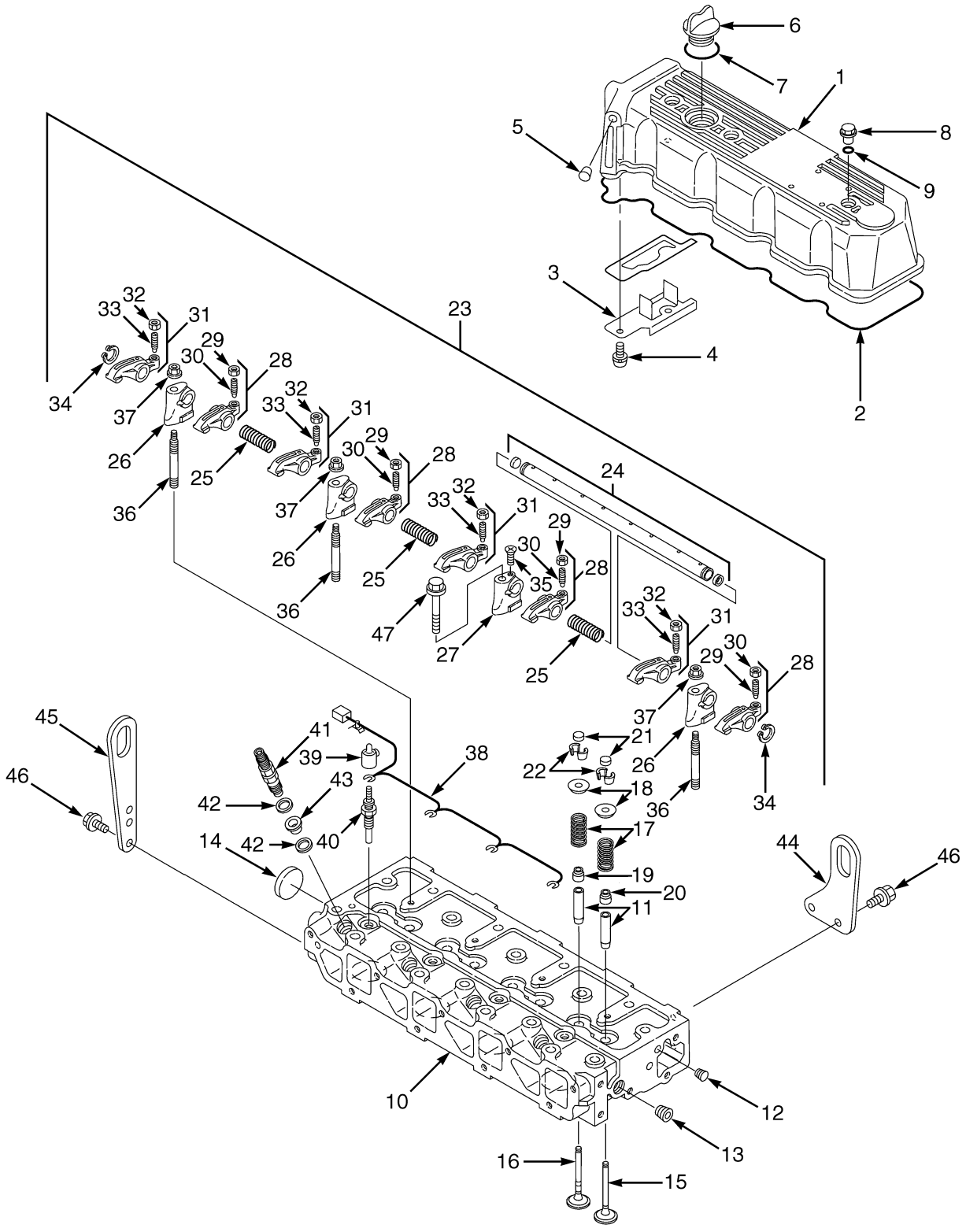

BP090184

©2013 HYSTER COMPANY

CYLINDER HEAD
YANMAR 2.6L AND 3.3L – DIESEL

ITEM	PART NO.	DESCRIPTION	QTY
	a 1501687	Engine Assy-Diesel (Yanmar 2.6L)	1
	a 1501690	Engine Assy-Diesel (Yanmar 3.3L)	1
	b 1688273	Engine Assy-Diesel (Yanmar 2.6L)	1
	b 1676883	Engine Assy-Diesel (Yanmar 3.3L)	1
1	1599545	Engine Cover	1
2	1599546	Gasket	1
3	1599547	Plate	1
4	1599548	Screw	2
5	1599549	Plug	1
6	1599463	Cap (Oil Fill)	1
7	1599464	O-Ring	1
8	1599544	Plug	3
9	1599550	O-Ring	3
10	1599488	Cylinder Head Assembly (2.6L)	1
10	1600273	Cylinder Head (3.3L)	1
10	1599524	Cylinder Head (2.6L)	1
10	1600274	Cylinder Head (3.3L)	1
11	1599525	Guide	8
12	1599526	Plug	1
13	1599441	Plug	1
14	1599528	Plug	1
15	1599489	Inlet Valve	4
16	1599516	Exhaust Valve	4
17	1599517	Spring	8
18	1599518	Retainer	8
19	1599519	Seal (Exhaust Valve)	4
20	1599520	Seal (Intake Valve)	4
21	1599521	Cap	8
22	1599529	Retainer	8
23	1599530	Support Assembly (Rocker Arm)	1
24	1599531	Shaft	1
25	1599532	Spring	3
26	1599533	Support	3
27	1599534	Support	1
28	1599535	Kit-Rocker Arm	4
29	1599536	Screw	1
30	1599537	Nut	1
31	1599538	Kit-Rocker Arm	4
32	1599536	Screw	1
33	1599537	Nut	1
34	1599539	Retaining Ring	2
35	1599540	Screw	1
36	1599541	Stud	3
37	1599542	Nut	3
38	1599553	Connector (Glow Plug) (3.3L)	1
38	2084316	Connector (Glow Plug) (2.6L)	1
39	1599557	Cover	4
40	1599552	Glow Plug	4
41	1599819	Nozzle	1
42	1599523	Gasket	8

©2013 HYSTER COMPANY

CYLINDER HEAD
YANMAR 2.6L AND 3.3L – DIESEL

ITEM	PART NO.	DESCRIPTION	QTY
43	1599522	Protector	4
44	1599487	Lifting Eye	1
45	1599486	Lifting Eye	1
46	1599470	Bolt	4
47	1599555	Bolt	1
	a 1600085	Kit-Gasket (Complete Engine) (3.3L)	1
	1599898	Kit-Gasket (2.6L Engine Complete)	1
	b 1689744	Kit-Gasket (Complete Engine) (3.3L)	1

FOOTNOTES:

a → S/N L177V01571F

b S/N L177V01572F →

©2013 HYSTER COMPANY

NOTES

©2013 HYSTER COMPANY

CAMSHAFT AND DRIVE GEAR (FIGURE 4-13)

YANMAR 2.6L AND 3.3L — DIESEL

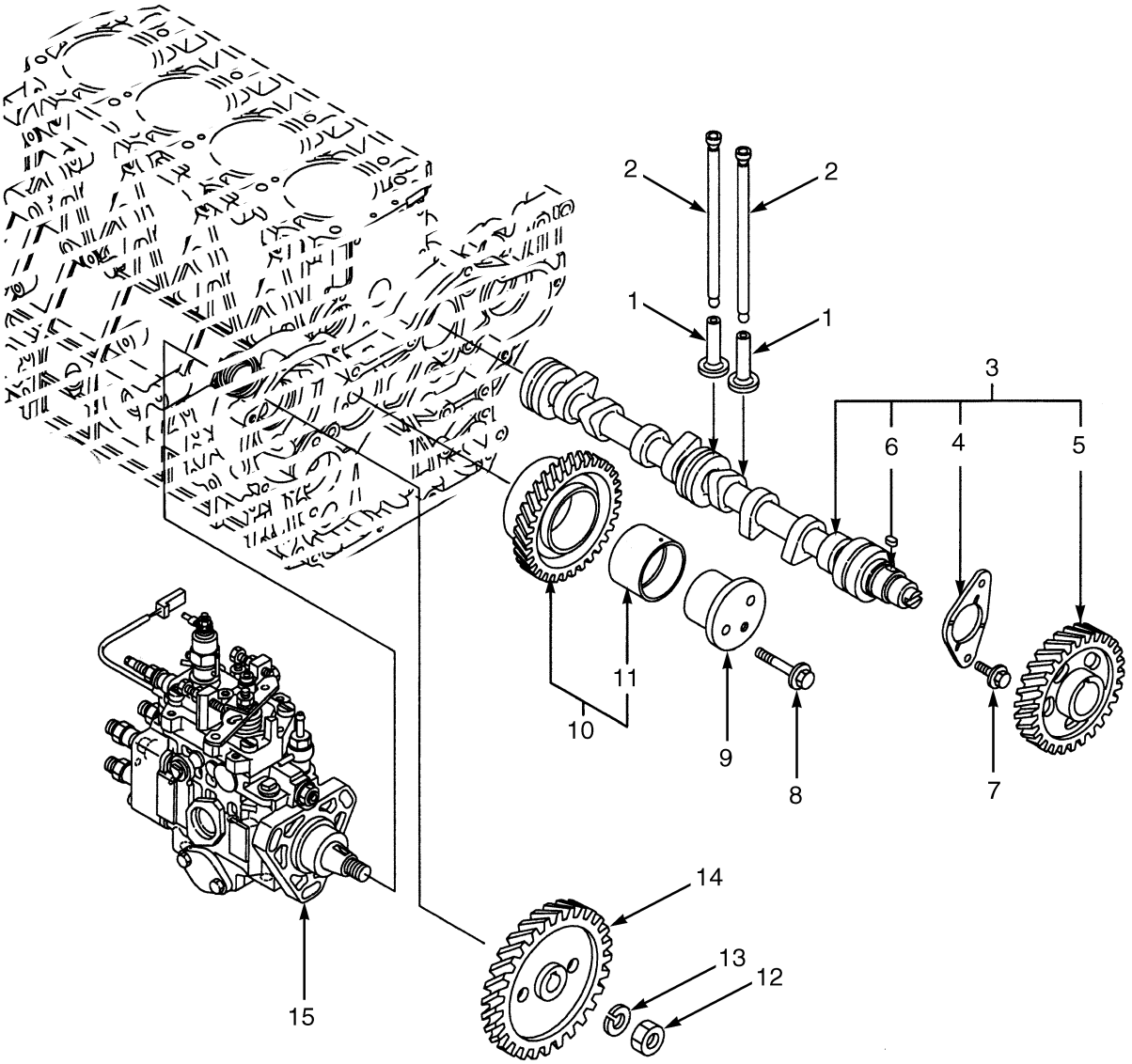

BP090186

©2013 HYSTER COMPANY

CAMSHAFT AND DRIVE GEAR

YANMAR 2.6L AND 3.3L – DIESEL

ITEM	PART NO.	DESCRIPTION	QTY
	a 1501687	Engine Assy-Diesel (Yanmar 2.6L)	1
	b 1501690	Engine Assy-Diesel (Yanmar 3.3L) (3.3L)	1
	b 1688273	Engine Assy-Diesel (Yanmar 2.6L)	1
	b 1676883	Engine Assy-Diesel (Yanmar 3.3L)	1
1	1599569	Tappet	8
2	1599570	Push Rod	8
3	1599571	Camshaft	1
4	1599572	Retainer	1
5	1599573	Gear	1
6	1599574	Key	1
7	1599470	Bolt	2
8	1599579	Bolt	2
9	1599576	Shaft	1
10	~~1599577~~		
	4021292	Idler Gear	1
11	1599578	Bushing	1
12	1599582	Locknut	1
13	1599581	Spring Washer	1
14	1599580	Gear	1
15	1599901	Injection Pump (2.6L)	1
15	1708457	Fuel Pump Assembly (Injection 2.6L) (Alternate Part)	1
15	**a** 1600084	Injection Pump (3.3L)	1
	b 1689747	Fuel Pump (Injection 3.3L)	1

FOOTNOTES:

a → S/N L177V01571F

b S/N L177V01572F →

©2013 HYSTER COMPANY

CRANKSHAFT AND PISTONS (FIGURE 4-14)

YANMAR 2.6L AND 3.3L — DIESEL

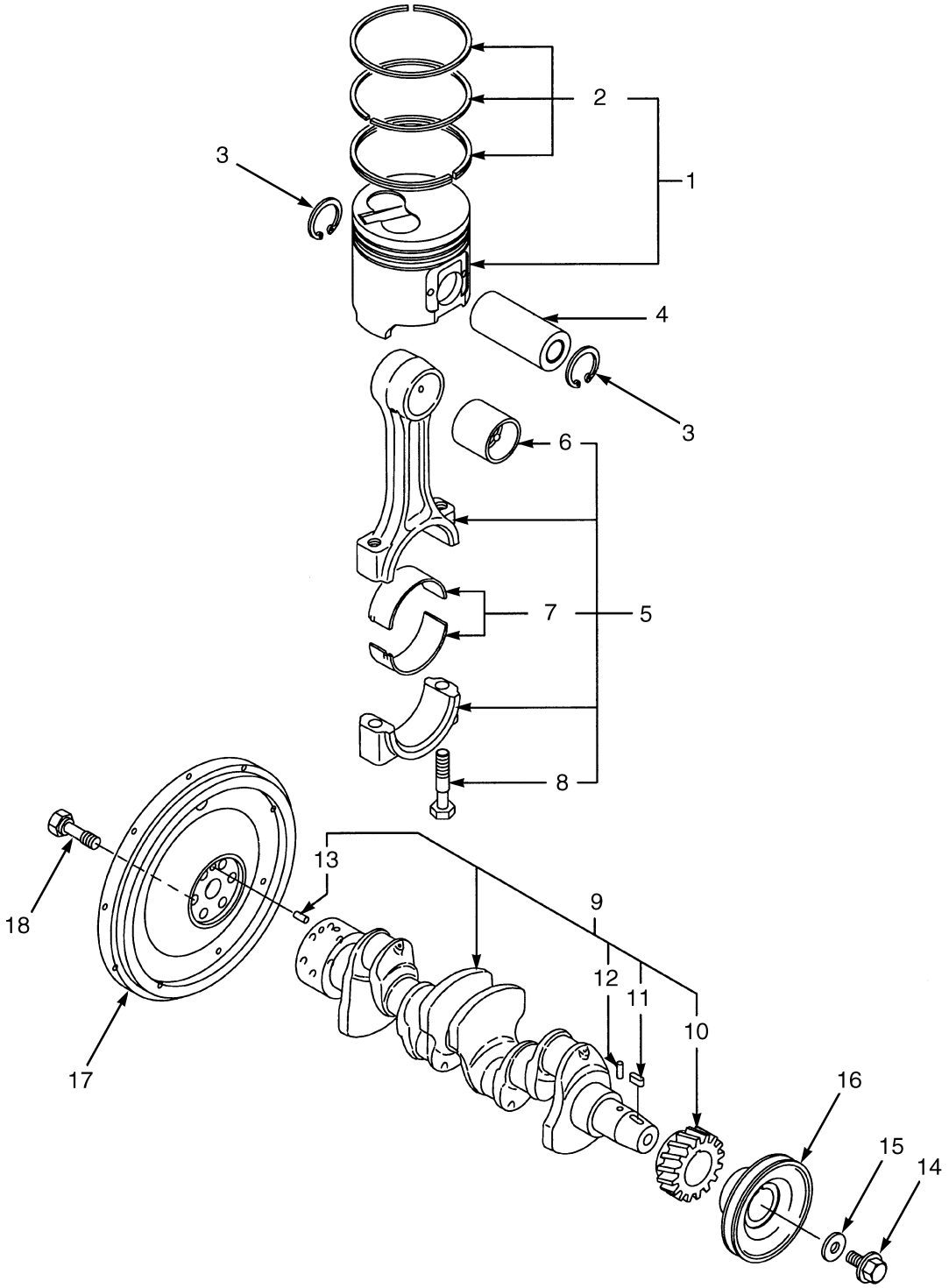

BP090187

©2013 HYSTER COMPANY

CRANKSHAFT AND PISTONS

YANMAR 2.6L AND 3.3L – DIESEL

ITEM	PART NO.	DESCRIPTION	QTY
	b 1501687	Engine Assy-Diesel (Yanmar 2.6L)	1
	b 1501690	Engine Assy-Diesel (Yanmar 3.3L) (3.3L)	1
	d 1688273	Engine Assy-Diesel (Yanmar 2.6L)	1
	d 1676883	Engine Assy-Diesel (Yanmar 3.3L)	1
1	1599592	Piston (With Standard Rings) (2.6L)	4
1	1600276	Piston (With Standard Rings) (3.3L)	4
1	1599600	Kit-Piston (O/S 0.25 with Rings) (2.6L)	4
1	1600278	Piston (O/S 0.25 with Rings) (3.3L)	4
2	1599593	Kit-Piston Ring (Standard) (2.6L)	1
2	1600277	Kit-Piston Ring (Standard) (3.3L)	1
2	1599601	Kit-Piston Ring (O/S 0.25) (2.6L)	1
2	1600279	Kit-Piston Ring (O/S 0.25) (3.3L)	1
3	1599595	Snap Ring	8
4	1599594	Pin	4
5	1599596	Piston Rod	4
6	1599597	Bushing	1
7	2092550	Piston Rod Bearing (Standard)	1
7	2092551	Bearing (U/S 0.25)	4
8	1599598	Bolt	2
9	1599583	Crankshaft (2.6L)	1
9	1600275	Crankshaft (3.3L)	1
10	1599584	Gear	1
11	1599574	Key	1
12	1599585	Pin	1
13	1599586	Pin	1
14	1599590	Bolt	1
15	1599589	Washer	1
16	1599588	Pulley	1
17	**a** 1615800	Flywheel	1
17	**c** 1707341	Flywheel	1
18	1599591	Bolt	6

FOOTNOTES:

a → 9/2009
b → S/N L177V01571F
c 10/2009 →
d S/N L177V01572F →

©2013 HYSTER COMPANY

CYLINDER BLOCK (FIGURE 4-15)

YANMAR 2.6 AND 3.3L — DIESEL

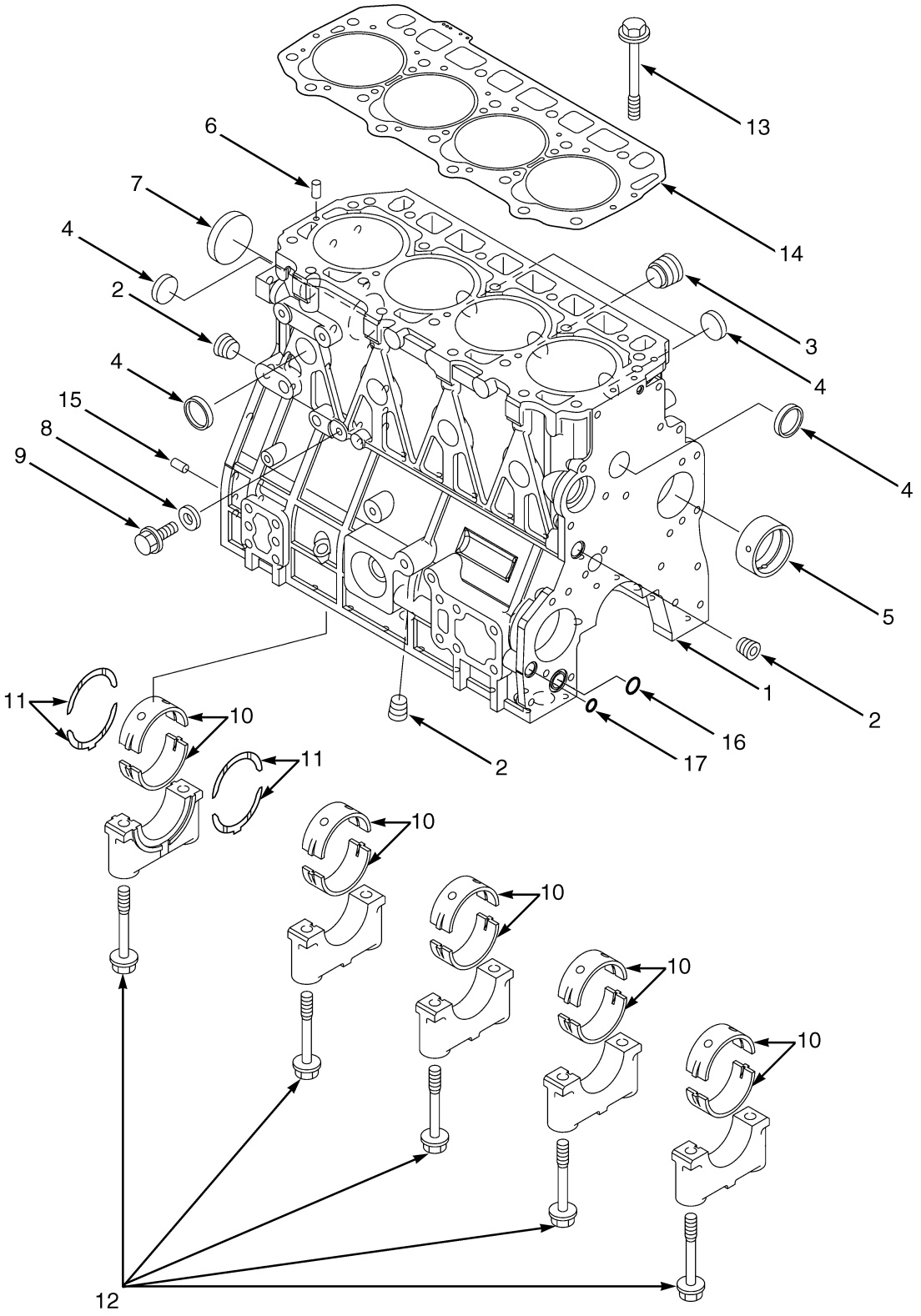

BP090181

©2013 HYSTER COMPANY

CYLINDER BLOCK
YANMAR 2.6 AND 3.3L – DIESEL

ITEM	PART NO.	DESCRIPTION	QTY
	a 1501687	Engine Assy-Diesel (Yanmar 2.6L)	1
	a 1501690	Engine Assy-Diesel (Yanmar 3.3L) (3.3L)	1
	b 1688273	Engine Assy-Diesel (Yanmar 2.6L)	1
	b 1676883	Engine Assy-Diesel (Yanmar 3.3L)	1
1	1599440	Cylinder Block (2.6L)	1
1	**a** 1599904	Cylinder Block (3.3L)	1
1	**b** 1689742	Cylinder Block (3.3L)	1
2	1599441	Plug	3
3	1599442	Plug	1
4	1599451	Plug	8
5	1599444	Bushing	1
6	1599446	Cotter Pin	2
7	1599449	Plug	1
8	1599445	Washer	1
9	1599448	Bolt	1
10	2092548	Kit-Crankshaft Bearing (Standard)	5
10	2092549	Kit-Bearing (U/S 0.25)	5
11	2092552	Kit-Thrust Bearing (Standard)	2
11	2092553	Kit-Thrust Bearing (U/S 0.25)	2
12	1599443	Bolt	10
13	1599454	Bolt	18
14	1599455	Cylinder Head Gasket (2.6L)	1
14	4000453	Cylinder Head Gasket (1.0MM Over Size) (2.6L)	1
14	4000454	Cylinder Head Gasket (0.8MM Option) (2.6L)	1
14	1720519	Gasket (3.3L)	1
15	1599458	Pin	2
16	1599468	O-Ring	1
17	1599469	O-Ring	1
	a 1600085	Kit-Gasket (Complete Engine)	1
	1599898	Kit-Gasket (2.6L Engine Complete)	1
	b 1689744	Kit-Gasket (Complete Engine) (3.3L)	1

FOOTNOTES:

a → S/N L177V01571F

b S/N L177V01572F →

©2013 HYSTER COMPANY

ENGINE COOLING (FIGURE 4-16)
YANMAR 2.6L AND 3.3L — DIESEL

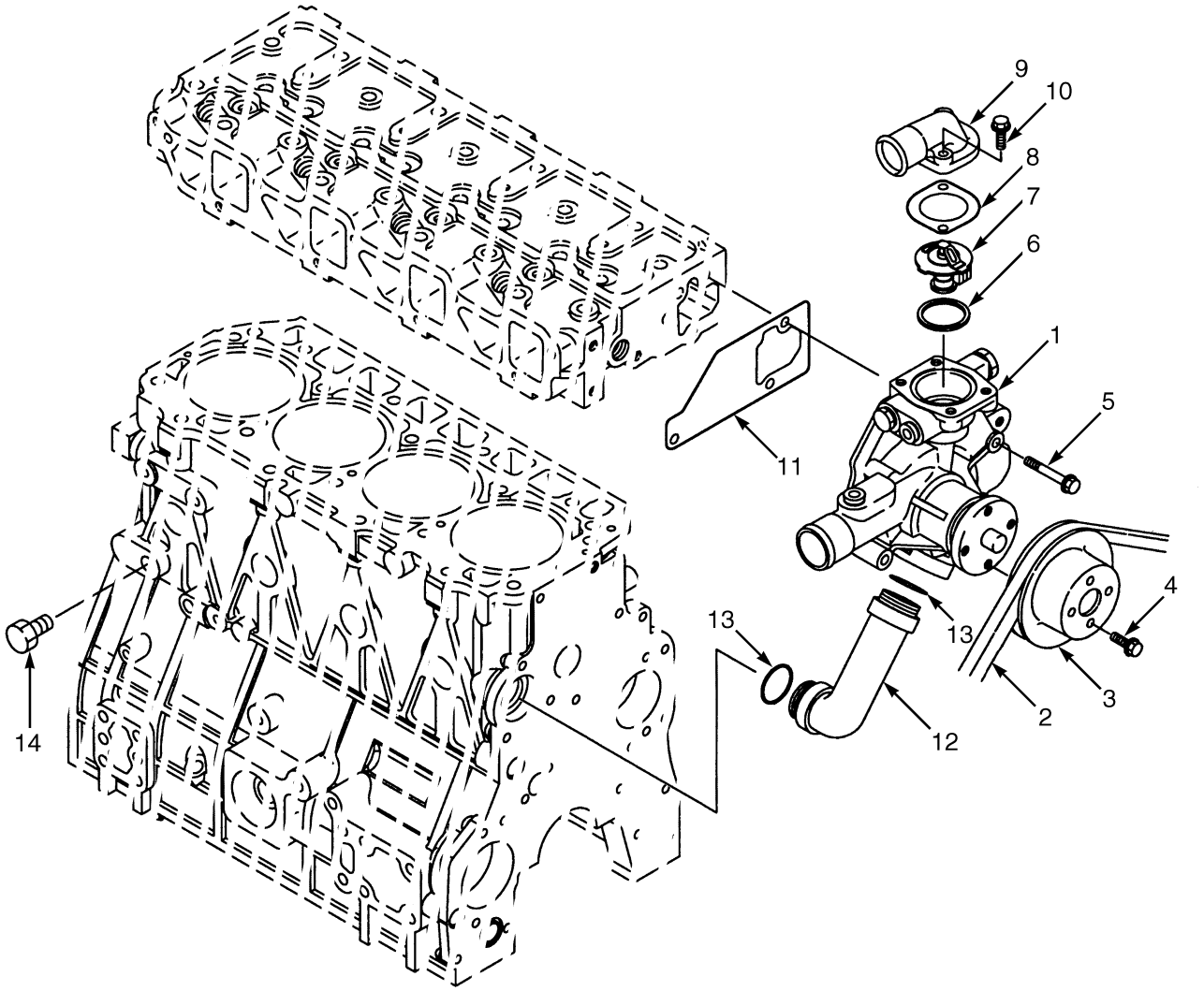

BP090193

©2013 HYSTER COMPANY

ENGINE COOLING

YANMAR 2.6L AND 3.3L – DIESEL

ITEM	PART NO.	DESCRIPTION	QTY
	a 1501687	Engine Assy-Diesel (Yanmar 2.6L)	1
	a 1501690	Engine Assy-Diesel (Yanmar 3.3L) (3.3L)	1
	b 1688273	Engine Assy-Diesel (Yanmar 2.6L)	1
	b 1676883	Engine Assy-Diesel (Yanmar 3.3L)	1
1	1599804	Water Pump	1
1	1599799	Cover	1
1	1599840	Gasket	1
1	**a** 1599815	Gasket	1
1	**b** 1600086	Seal	1
2	1581441	V-Belt	1
3	1616427	Water Pump Pulley	1
4	1599448	Bolt	4
5	1599579	Bolt	3
6	1597709	Gasket	1
7	1599800	Thermostat	1
8	1597710	Gasket	1
9	1599798	Cover	1
10	1599801	Bolt	1
11	1599803	Gasket	1
12	1599797	Pipe	1
13	1599807	O-Ring	2
14	1599802	Drain Plug	2
	1599898	Kit-Gasket (2.6L Engine Complete)	1
	a 1600085	Kit-Gasket (Complete Engine)	1
	b 1689744	Kit-Gasket (Complete Engine) (3.3L)	1

FOOTNOTES:

a → S/N L177V01571F

b S/N L177V01572F →

©2013 HYSTER COMPANY

LUBRICATION SYSTEM (FIGURE 4-17)

YANMAR 2.6L AND 3.3L — DIESEL

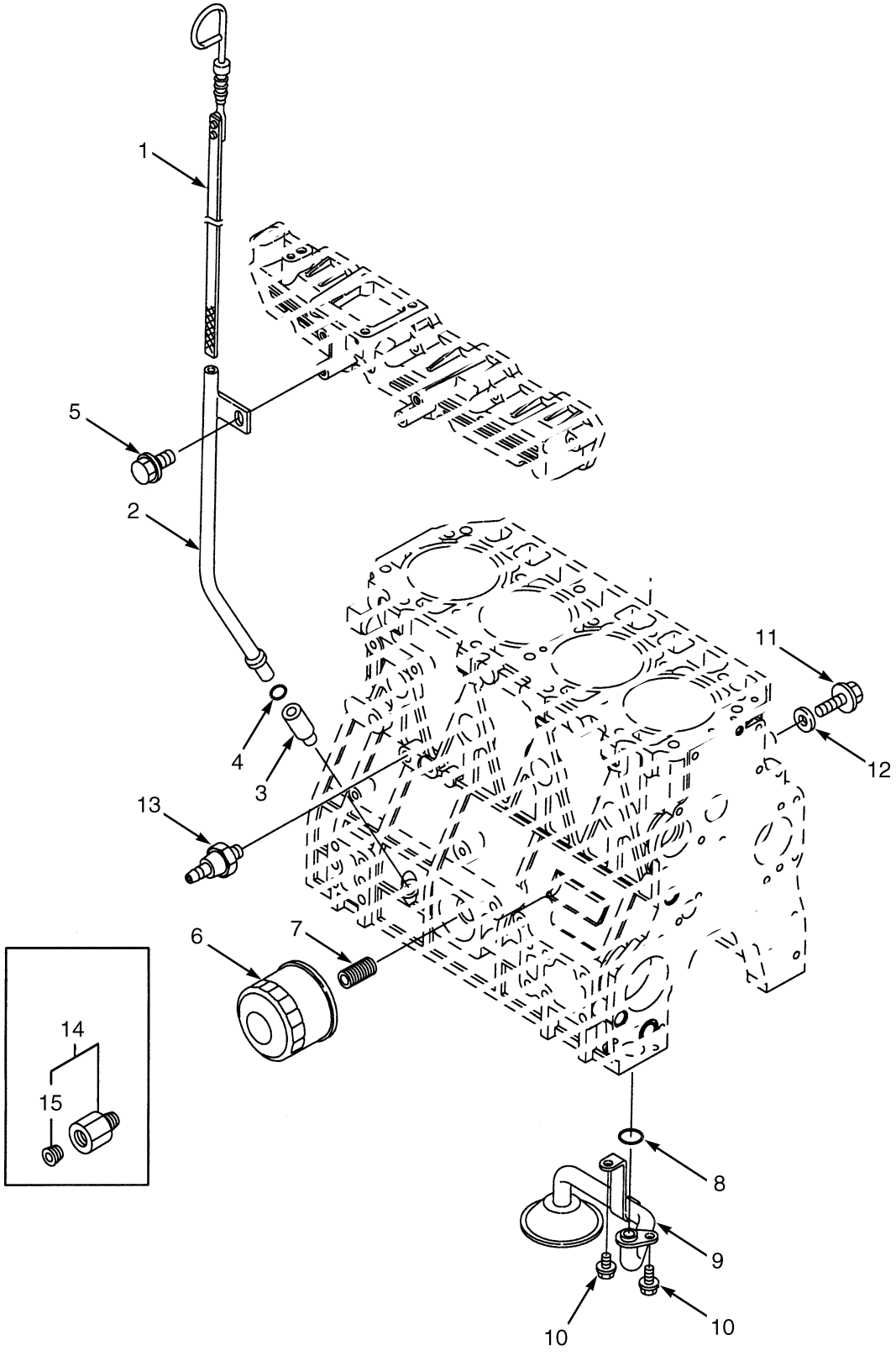

©2013 HYSTER COMPANY

LUBRICATION SYSTEM
YANMAR 2.6L AND 3.3L – DIESEL

ITEM	PART NO.	DESCRIPTION	QTY
	a 1501687	Engine Assy-Diesel (Yanmar 2.6L)	1
	a 1501690	Engine Assy-Diesel (Yanmar 3.3L) (3.3L)	1
	b 1688273	Engine Assy-Diesel (Yanmar 2.6L)	1
	b 1676883	Engine Assy-Diesel (Yanmar 3.3L)	1
1	1599604	Dipstick	1
2	1599606	Dipstick Tube	1
3	1599605	Guide	1
4	1599607	O-Ring	1
5	1599470	Bolt	1
6	2077983	Oil Filter	1
7	1599610	Stud	1
8	1599468	O-Ring	1
9	1599611	Pipe	1
10	1599612	Bolt	2
11	1599448	Bolt	1
12	1599445	Washer	1
13	1566654	Pressure Transducer Sensor (Oil Pressure)	1
14	1599616	Plug (Oil Pressure Sensor)	1
15	1599793	Plug	1
	1599898	Kit-Gasket (2.6L Engine Complete)	1
	a 1600085	Kit-Gasket (Complete Engine)	1
	b 1689744	Kit-Gasket (Complete Engine) (3.3L)	1

FOOTNOTES:

a → S/N L177V01571F

b S/N L177V01572F →

©2013 HYSTER COMPANY

NOTES

©2013 HYSTER COMPANY

5 FUEL SYSTEM - DIESEL

SECTION 5
FUEL SYSTEM - DIESEL

DESCRIPTION	PAGE
AIR FILTER ASSEMBLY	
YANMAR 2.6L AND 3.3L DIESEL	5-6
AIR INTAKE SYSTEM	
DIESEL - YANMAR 2.6L AND 3.3L (→ S/N L177B14427E)	5-2
DIESEL - YANMAR 2.6L AND 3.3L (S/N L177B14428E →)	5-4
FUEL FILTER AND WATER SEPARATOR	
YANMAR 2.6L AND 3.3L - DIESEL	5-12
FUEL INJECTION SYSTEM	
YANMAR 2.6L AND 3.3L - DIESEL	5-10
FUEL SYSTEM	
YANMAR 2.6L AND 3.3L - DIESEL	5-8
MONOTROL PEDAL ASSEMBLY	
YANMAR 2.6L AND 3.3L DIESEL (→ S/N L177V11233K)	5-20
THROTTLE CABLE ASSEMBLY	
YANMAR 2.6L AND 3.3L - DIESEL	5-14
THROTTLE PEDAL ASSEMBLY AND ATTACHING PARTS	
MONOTROL (S/N L177V11234K →)	5-24
STANDARD PEDAL	5-22
THROTTLE POSITION SENSOR AND ATTACHING PARTS	
YANMAR 2.6L AND 3.3L DIESEL (→ S/N L177V05112H)	5-16
YANMAR 2.6L AND 3.3L DIESEL (S/N L177V05113H →)	5-18

©2013 HYSTER COMPANY

AIR INTAKE SYSTEM (FIGURE 5-1)

DIESEL — YANMAR 2.6L AND 3.3L (→ S/N L177B14427E)

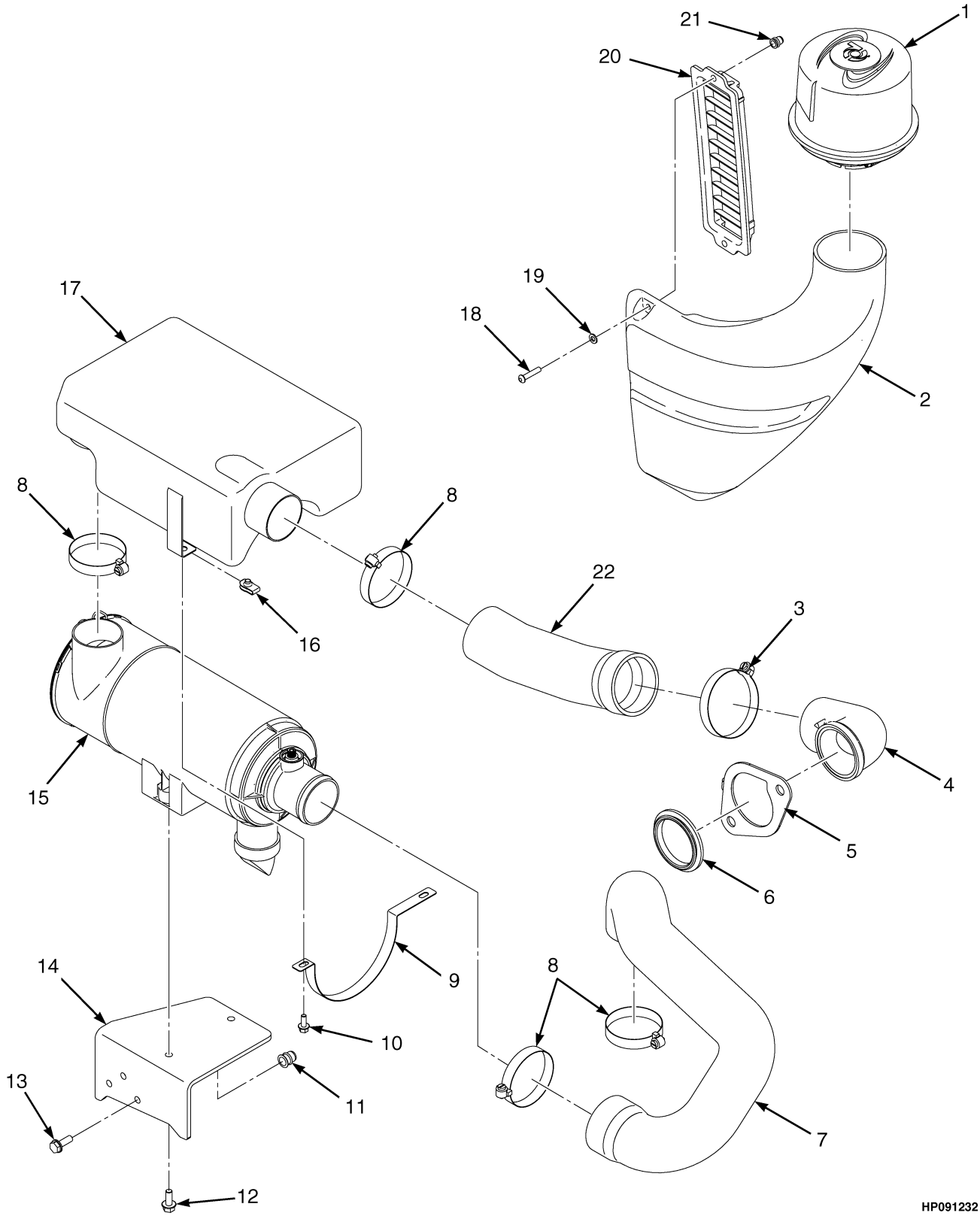

©2013 HYSTER COMPANY

AIR INTAKE SYSTEM

DIESEL – YANMAR 2.6L AND 3.3L (→ S/N L177B14427E)

ITEM	PART NO.	DESCRIPTION	QTY
1	1501888	Pre-Cleaner	1
2	1565201	Air Duct	1
3	1394008	Hose Clamp	2
4	1581438	Elbow	1
5	1581439	Retainer (Elbow)	1
6	1502079	Grommet	1
7	2075783	Hose	1
8	112989	Hose Clamp	3
9	1589542	Strap	1
10	1527876	Capscrew	2
11	1530243	Insert	3
12	1527880	Capscrew	2
13	1583611	Capscrew	3
14	1501849	Bracket	1
14	4034386	Bracket (Alternate Part)	1
15	1501855	Air Filter (☞Figure 5-3)	1
16	1566420	Nut (Foldover)	2
17	**b** 2078092	Silencer	1
17	**c** 2086133	Silencer	1
18	2071261	Capscrew	2
19	1506738	Washer	2
20	2067476	Grill	1
21	1531558	Insert	2
22	1565212	Hose	1
23	**a** 1677833	Screw (Pre-Cleaner Mounting)	3

FOOTNOTES:

a Not Illustrated
b → S/N L177B06881D
c S/N L177B06882D →

©2013 HYSTER COMPANY

AIR INTAKE SYSTEM (FIGURE 5-2)

DIESEL — YANMAR 2.6L AND 3.3L (S/N L177B14428E →)

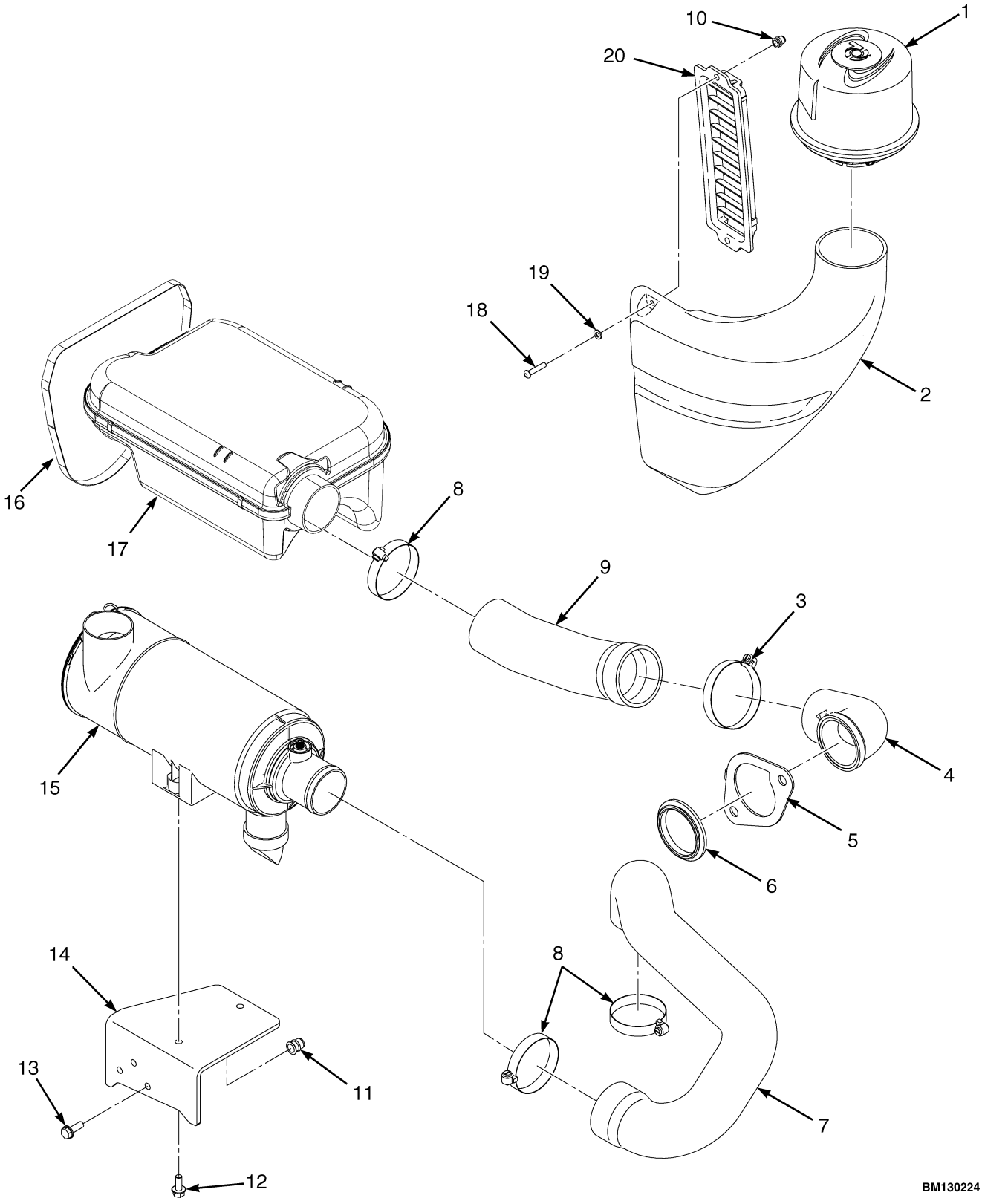

©2013 HYSTER COMPANY

AIR INTAKE SYSTEM

DIESEL – YANMAR 2.6L AND 3.3L (S/N L177B14428E →)

ITEM	PART NO.	DESCRIPTION	QTY
1	1501888	Pre-Cleaner	1
2	**d** 1565201	Air Duct	1
2	**g** 1677793	Air Duct	1
3	1394008	Hose Clamp	2
4	1581438	Elbow	1
5	1581439	Retainer (Elbow)	1
6	1502079	Grommet	1
7	2075783	Hose (Clean Air)	1
8	112989	Hose Clamp	3
9	1565212	Hose (Dirty Air)	1
10	1531558	Insert	2
11	1530243	Insert	3
12	1527879	Capscrew	2
13	1583611	Capscrew	3
14	1501849	Bracket	1
14	4034386	Bracket (Alternate Part)	1
15	**b** 1501855	Air Filter (☞Figure 5-3)	1
15	**e** 2105338	Air Filter (☞Figure 5-3)	1
15	**h** 4612945	Air Filter (☞Figure 5-3)	1
16	1636797	Strap	1
17	**c** 2090086	Silencer	1
17	**f** 2102226	Silencer	1
17	2092848	Clip	6
17	15871	O-Ring	1
18	2071261	Capscrew	2
19	1506738	Washer	2
20	2067476	Grill	1
	af 1677833	Screw (Pre-Cleaner Mounting)	3

FOOTNOTES:

a Not Illustrated
b → S/N L177B22489F
c → S/N L177V01609F
d → S/N L177V02649F
e S/N L177B22490F ↔ 10/2010
f S/N L177V01610F →
g S/N L177V02650F →
h 10/2010 →

©2013 HYSTER COMPANY

AIR FILTER ASSEMBLY (FIGURE 5-3)

YANMAR 2.6L AND 3.3L DIESEL

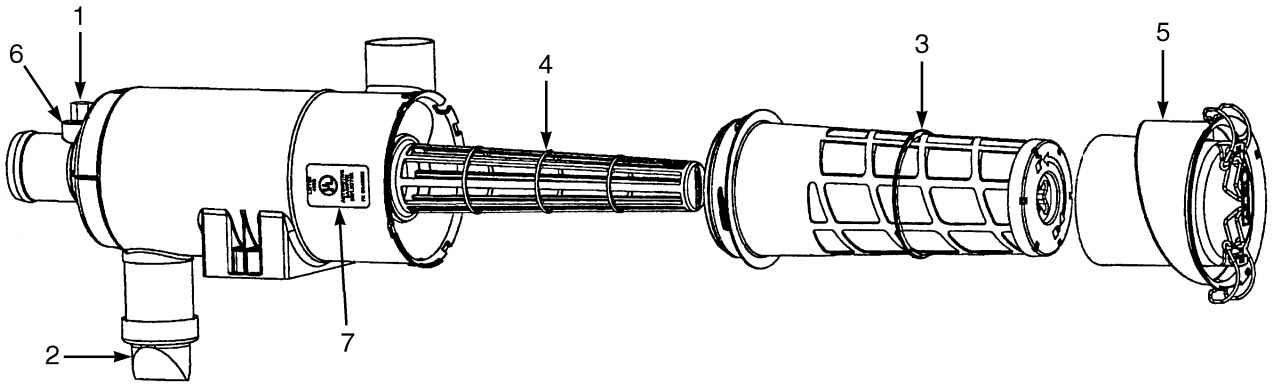

HP091227

ITEM	PART NO.	DESCRIPTION	QTY
	a 1501855	Air Filter	1
	bc 2105338	Air Filter	1
	d 4612945	Air Filter	1
1	141331	Cap	1
2	374923	Valve	1
3	1574111	Filter Element	1
4	1574260	Liner (With O-Ring)	1
5	**a** 1574131	Cover	1
5	**c** 1687933	Cover (Alternate Part)	1
6	**d** 4030497	Connector (Pipe Nipple)	1
	2095889	Label (Air Filter Installation)	1

FOOTNOTES:

a → S/N L177B22489F
b S/N L177B22490F ↔ 10/2010
c S/N L177B22490F →
d 10/2010 →

©2013 HYSTER COMPANY

NOTES

©2013 HYSTER COMPANY

FUEL SYSTEM (FIGURE 5-4)
YANMAR 2.6L AND 3.3L — DIESEL

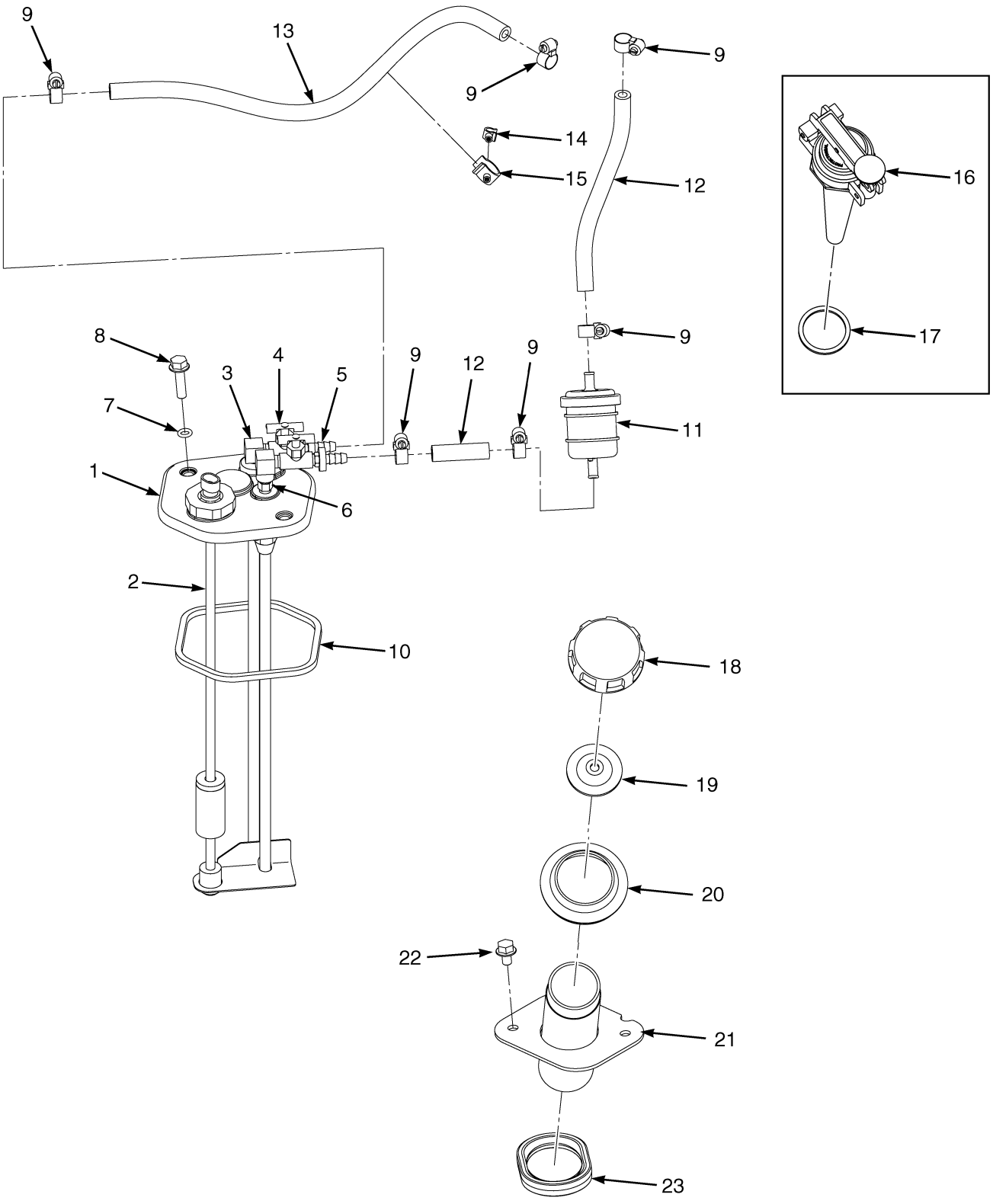

©2013 HYSTER COMPANY

FUEL SYSTEM

YANMAR 2.6L AND 3.3L – DIESEL

ITEM	PART NO.	DESCRIPTION	QTY
1	1532532	Fuel Sender Assembly	1
2	1501811	Fuel Sender	1
3	17650	Fitting	1
4	87446	Drain Valve (Shut-Off)	2
5	309651	Fitting	2
6	16151	Fitting	1
7	353000	O-Ring	2
8	1527881	Capscrew	2
9	168718	Clamp	6
10	1528893	Quad Ring	1
11	1304950	Fuel Filter	1
11	4617767	Fuel Filter (Alternate Part)	1
12	1610852	Hose	1
12	2081870	Hose (Alternate Part)	1
13	260878	Hose	1
13	2062589	Hose (Alternate Part)	1
14	1542440	Clamp (Swivel)	1
15	1543691	Clamp (Swivel)	1
16	**a** 1579677	Fuel Cap	1
17	**a** 2021685	Gasket	1
18	**b** 2081840	Fuel Cap	1
19	**b** 2021683	Gasket	1
20	1528608	Grommet	1
21	1564392	Pipe (Fill)	1
22	1529366	Capscrew	2
23	~~1528314~~		
	1593391	Seal	1
24	1551452	Hose	1

FOOTNOTES:

a DS Models Only

b Standard Models Only

FUEL INJECTION SYSTEM (FIGURE 5-5)

YANMAR 2.6L AND 3.3L — DIESEL

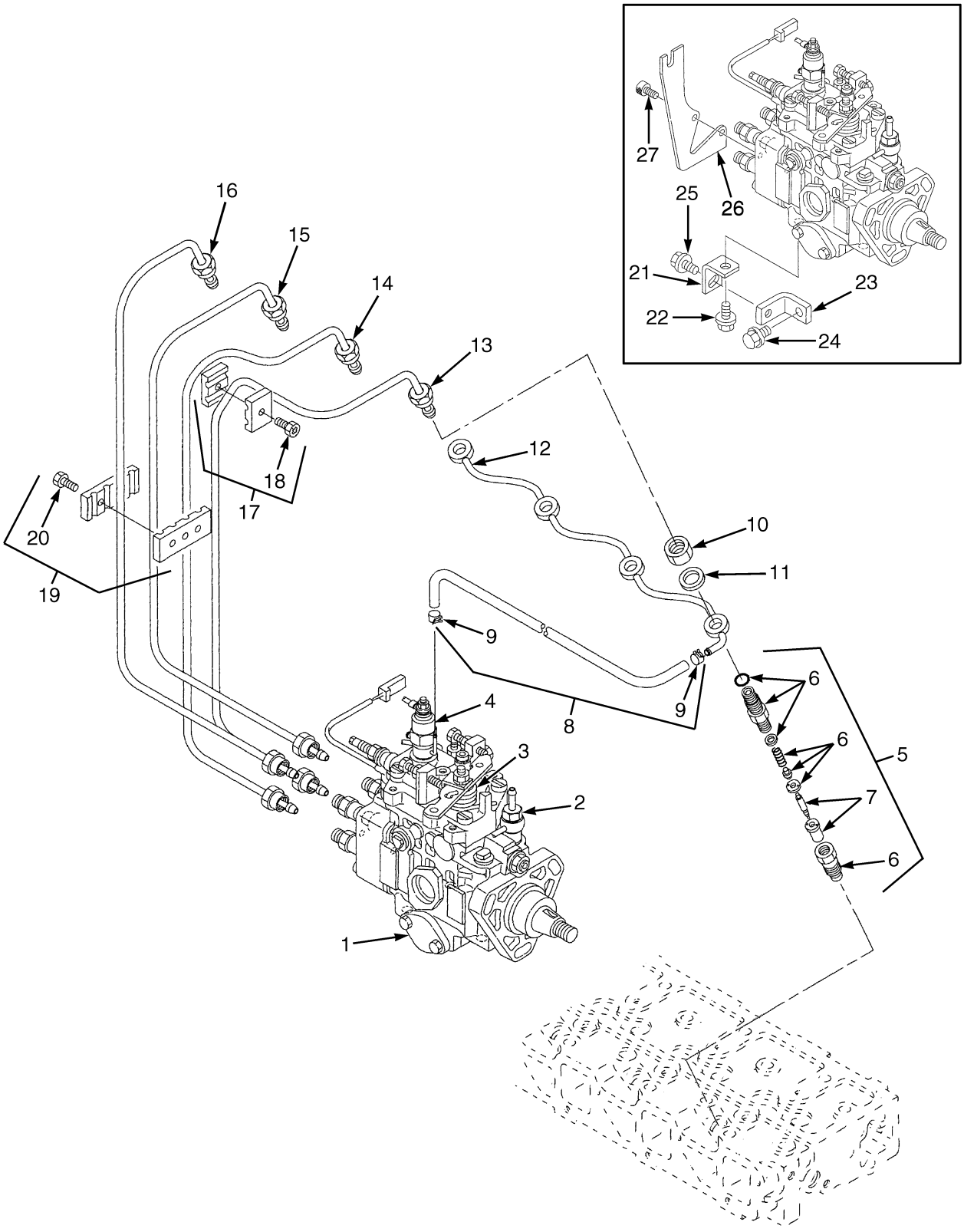

©2013 HYSTER COMPANY

FUEL INJECTION SYSTEM
YANMAR 2.6L AND 3.3L – DIESEL

ITEM	PART NO.	DESCRIPTION	QTY
	a 1501687	Engine Assy-Diesel (Yanmar 2.6L)	1
	a 1501690	Engine Assy-Diesel (Yanmar 3.3L)	1
	b 1688273	Engine Assy-Diesel (Yanmar 2.6L)	1
	b 1676883	Engine Assy-Diesel (Yanmar 3.3L)	1
1	1599901	Injection Pump (2.6L)	1
1	1708457	Fuel Pump Assembly (Injection 2.6L) (Alternate Part)	1
1	**a** 1600084	Injection Pump (3.3L)	1
1	**b** 1689747	Fuel Pump (Injector 3.3L)	1
2	1608616	Solenoid (Fuel Shut-Off)	1
2	1608617	O-Ring	1
3	4021384	Spring (Yanmar 2.6L) (Alternate Part)	1
4	1597644	Solenoid Valve (Cold Start)	1
4	1600093	O-Ring	1
5	1599818	Injector	4
5	1689746	Shim	1
6	1599820	Retainer	1
7	1599819	Nozzle	1
8	1599828	Tube Assy	1
9	1599829	Clamp	2
10	1599832	Nut	4
11	1599831	Gasket	4
12	1599830	Tube Assy (Fuel Return)	1
13	1599827	Tube Assy (#4)	1
14	1599825	Tube Assy (#2)	1
15	1599826	Tube Assy (#3)	1
16	1599824	Tube Assy (#1)	1
17	1599821	Retainer	2
18	1599822	Bolt	1
19	1599823	Retainer	1
20	1599822	Bolt	2
21	1599909	Retainer	1
22	1599911	Bolt	1
23	1599910	Bracket	1
24	1599913	Bolt	1
25	1599912	Bolt	1
26	1599907	Bracket	1
27	1599908	Bolt	2
	1599898	Kit-Gasket (2.6L Engine Complete)	1
	a 1600085	Kit-Gasket (Complete Engine)	1
	b 1689744	Kit-Gasket (Complete Engine) (3.3L)	1

FOOTNOTES:

a → S/N L177V01571F

b S/N L177V01572F →

©2013 HYSTER COMPANY

See Service Manual for service procedures.

FUEL FILTER AND WATER SEPARATOR (FIGURE 5-6)

YANMAR 2.6L AND 3.3L — DIESEL

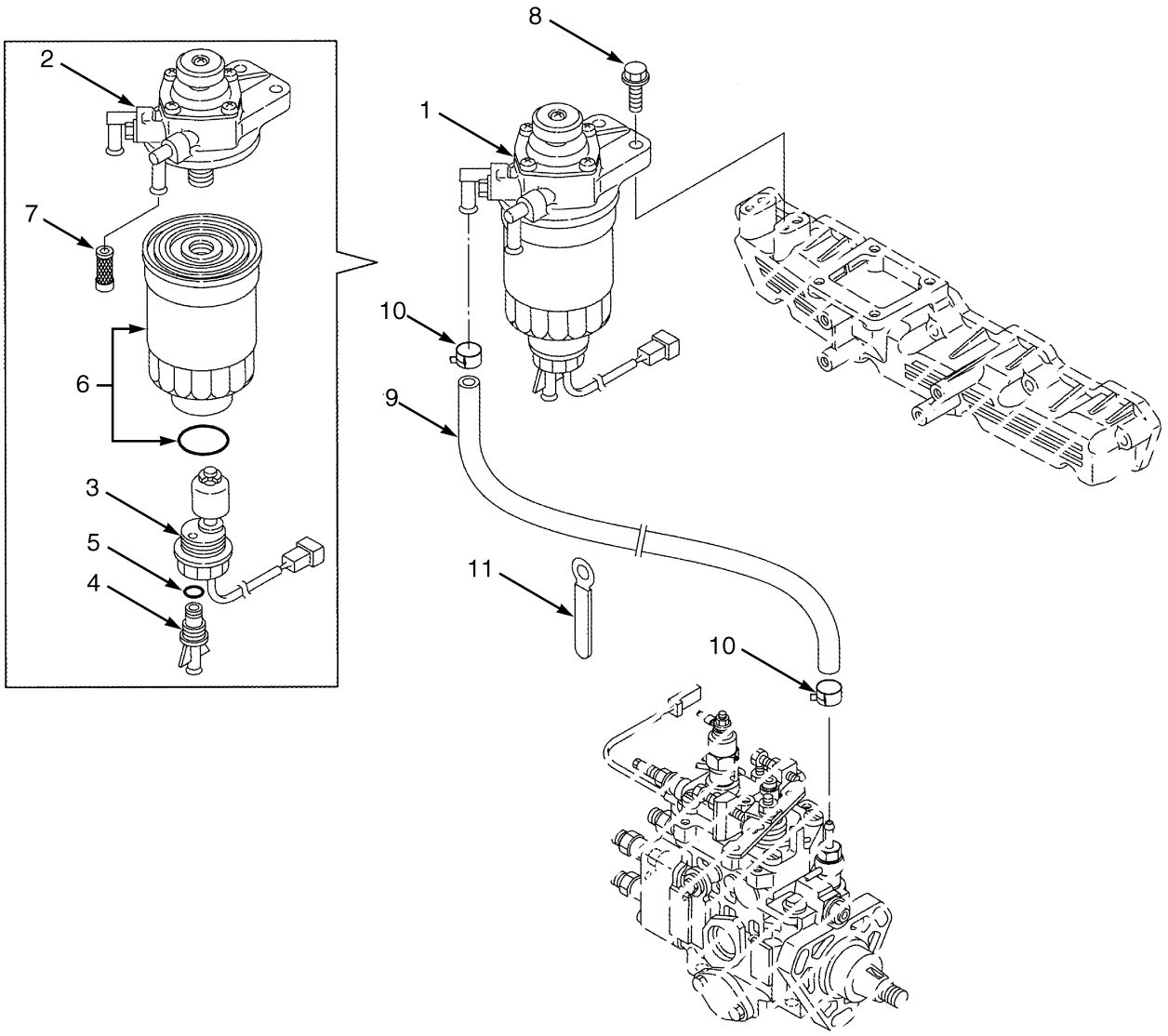

BP090212

©2013 HYSTER COMPANY

FUEL FILTER AND WATER SEPARATOR

YANMAR 2.6L AND 3.3L – DIESEL

ITEM	PART NO.	DESCRIPTION	QTY
	a 1501687	Engine Assy-Diesel (Yanmar 2.6L)	1
	a 1501690	Engine Assy-Diesel (Yanmar 3.3L) (3.3L)	1
	b 1688273	Engine Assy-Diesel (Yanmar 2.6L)	1
	b 1676883	Engine Assy-Diesel (Yanmar 3.3L)	1
1	1599833	Fuel Filter (2.6L)	1
1	2084448	Fuel Filter (3.3L)	1
2	1599834	Body (Primer Pump) (2.6L)	1
2	2084449	Filter Head (3.3L)	1
3	1599835	Sensor (2.6L)	1
3	2084450	Sensor (3.3L)	1
4	1599836	Drain Plug (2.6L)	1
4	2084451	Plug (3.3L)	1
5	1599837	O-Ring (2.6L)	1
5	2084452	O-Ring (3.3L)	1
6	1330033	Fuel Filter (Cartridge 10 micron) (2.6L)	1
6	2084453	Element Assy	1
7	1599839	Filter (2.6L)	1
8	1599801	Bolt	2
9	1599841	Tube Assy	1
10	1599842	Clamp	2
11	1599843	Clamp	2

FOOTNOTES:

a → S/N L177V01571F

b S/N L177V01572F →

©2013 HYSTER COMPANY

THROTTLE CABLE ASSEMBLY (FIGURE 5-7)

YANMAR 2.6L AND 3.3L — DIESEL

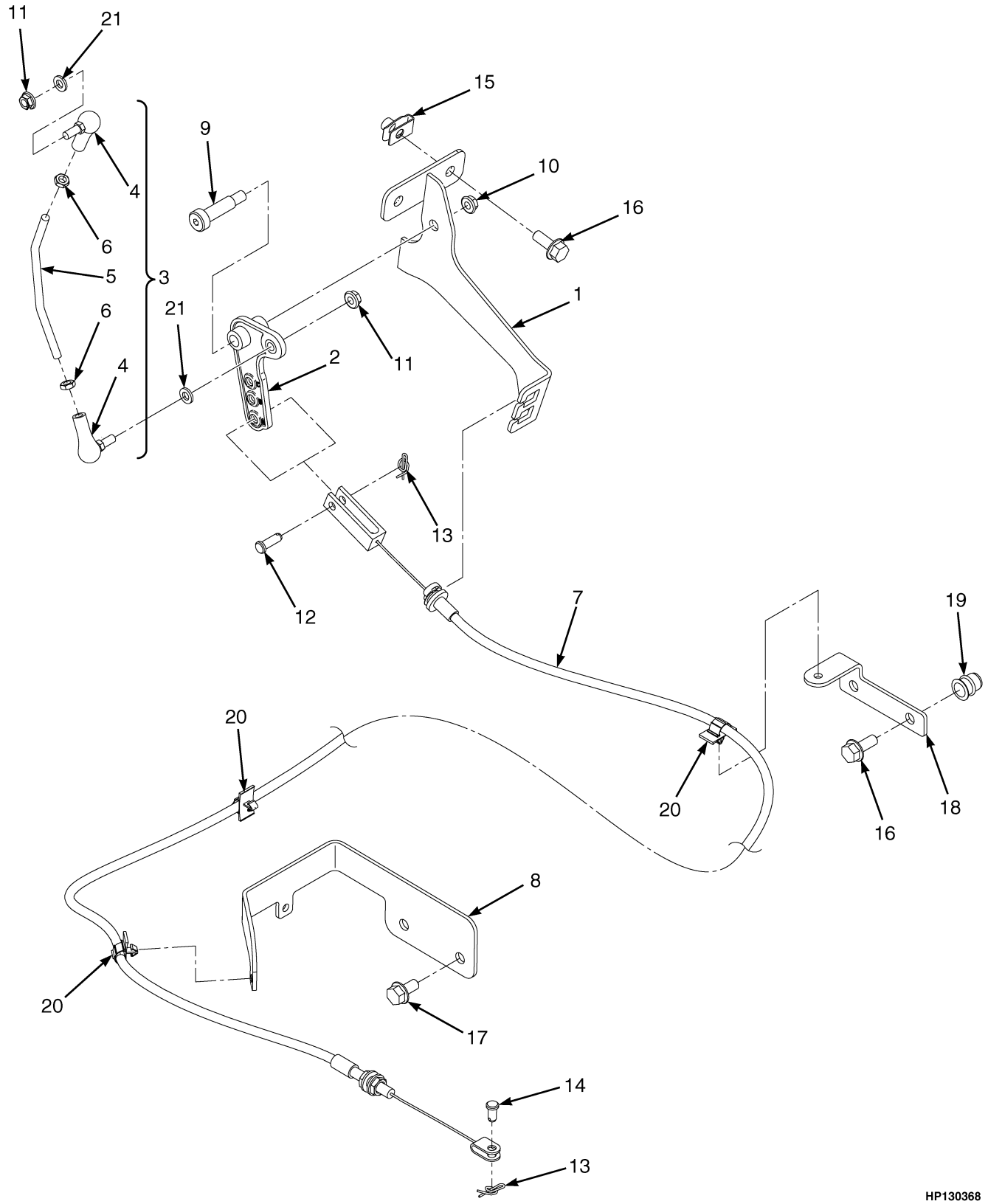

©2013 HYSTER COMPANY

THROTTLE CABLE ASSEMBLY

YANMAR 2.6L AND 3.3L – DIESEL

ITEM	PART NO.	DESCRIPTION	QTY
1	1609374	Bracket (Throttle Cable)	1
2	1538162	Bellcrank	1
3	1538782	Push Rod Assembly	1
4	2027949	Ball Joint	2
5	1538490	Push Rod	1
6	2308541	Nut	2
7	2067396	Throttle Cable	1
8	1542500	Bracket	1
9	1399802	Bolt	1
10	302400	Nut	1
11	~~1307884~~		
	1514429	Nut	2
12	126	Pin	1
13	1517361	Locking Ring Cotter Pin	2
14	128263	Pin	1
15	1480237	Nut	2
16	1527880	Capscrew	2
17	1527879	Capscrew	4
18	1542082	Bracket	1
19	1530243	Insert	2
20	1562088	Clip	3
21	320156	Washer	2

©2013 HYSTER COMPANY

THROTTLE POSITION SENSOR AND ATTACHING PARTS (FIGURE 5-8)

YANMAR 2.6L AND 3.3L DIESEL (→ S/N L177V05112H)

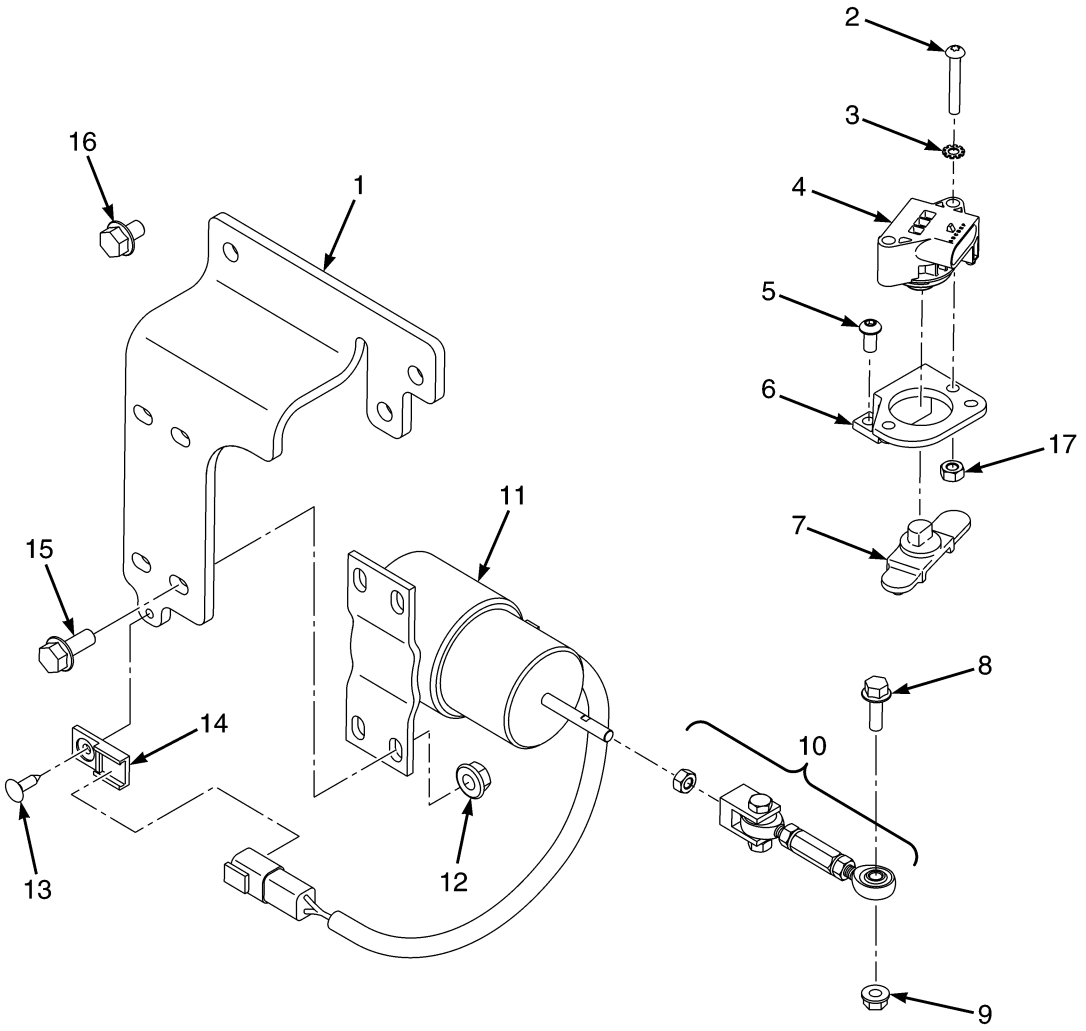

BP130182

©2013 HYSTER COMPANY

THROTTLE POSITION SENSOR AND ATTACHING PARTS

YANMAR 2.6L AND 3.3L DIESEL (→ S/N L177V05112H)

ITEM	PART NO.	DESCRIPTION	QTY
1	1547550	Bracket (Actuator)	1
2	1553897	Capscrew	2
3	296378	Washer	2
4	2080376	Sensor (Hall Throttle Postion)	1
5	293774	Capscrew	2
6	1616491	Bracket	1
7	2078335	Rotor	1
8	1527877	Capscrew	1
9	313805	Nut	1
10	**a** 1542773	Linkage	1
10	**b** 1690182	Linkage	1
11	1542772	Actuator (Pull)	1
12	~~1382472~~		
	1502543	Nut (Flange)	4
13	1344124	Fastener	1
14	1500912	Clip	1
15	1527880	Capscrew	7
16	1529366	Capscrew	2
17	292668	Nut	2

FOOTNOTES:

a → S/N L177V03018G

b S/N L177V03019G →

©2013 HYSTER COMPANY

THROTTLE POSITION SENSOR AND ATTACHING PARTS (FIGURE 5-9)

YANMAR 2.6L AND 3.3L DIESEL (S/N L177V05113H →)

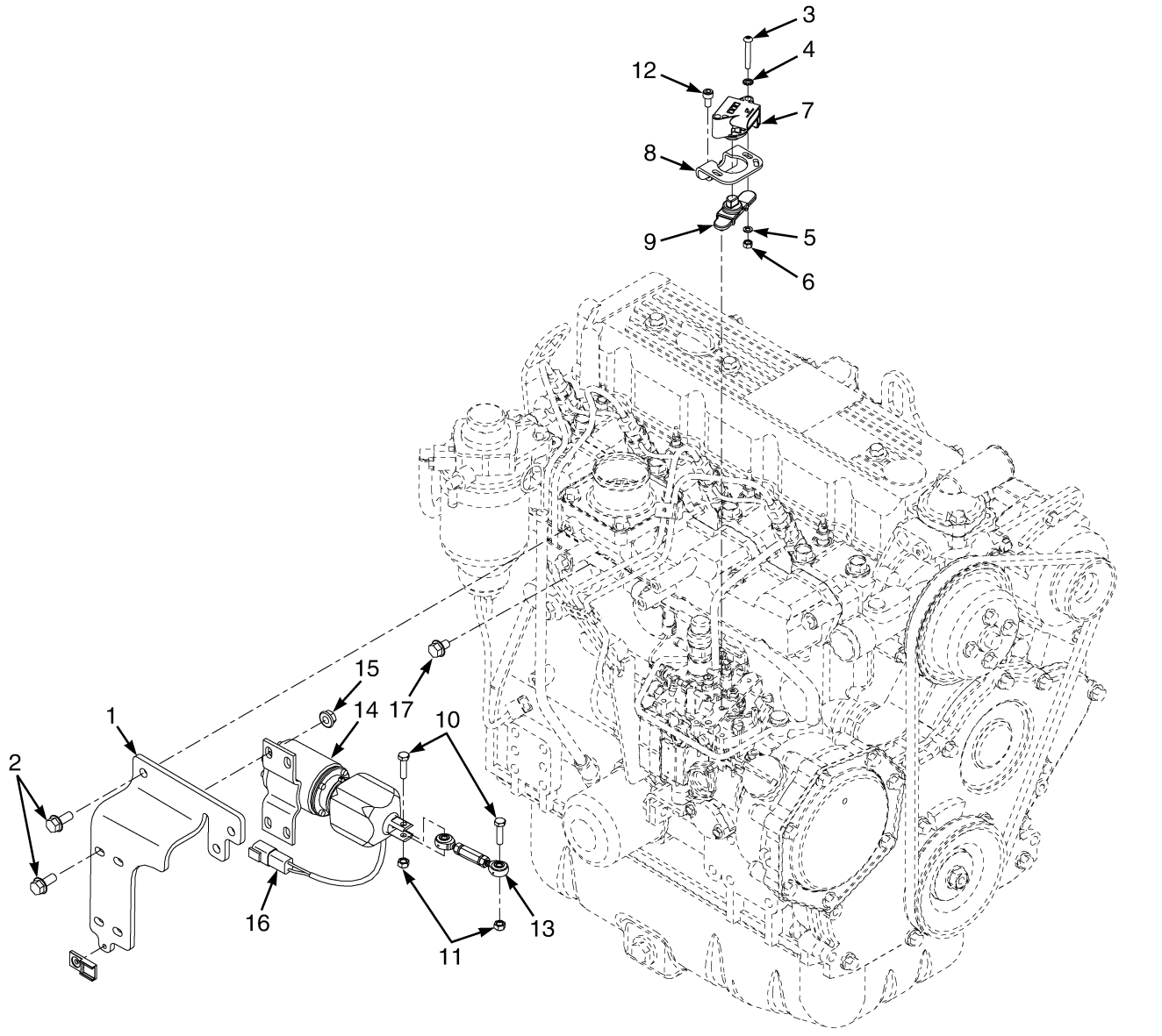

©2013 HYSTER COMPANY

THROTTLE POSITION SENSOR AND ATTACHING PARTS

YANMAR 2.6L AND 3.3L DIESEL (S/N L177V05113H →)

ITEM	PART NO.	DESCRIPTION	QTY
1	1709997	Bracket	1
2	1527880	Capscrew	7
3	1553897	Capscrew	2
4	296378	Washer	2
5	292679	Washer	2
6	292668	Nut	2
7	2080376	Sensor (Hall Throttle Postion)	1
8	1616491	Bracket	1
9	2078335	Rotor	1
10	287816	Capscrew	2
11	~~1512440~~		
	302399	Nut	2
12	293762	Capscrew	2
13	1695108	Linkage	1
14	2107187	Actuator	1
15	~~1382472~~		
	1502543	Nut (Flange)	4
16	1500912	Clip	1
16	1344124	Fastener	1
17	1529366	Capscrew	2

©2013 HYSTER COMPANY

MONOTROL PEDAL ASSEMBLY (FIGURE 5-10)

YANMAR 2.6L AND 3.3L DIESEL (→ S/N L177V11233K)

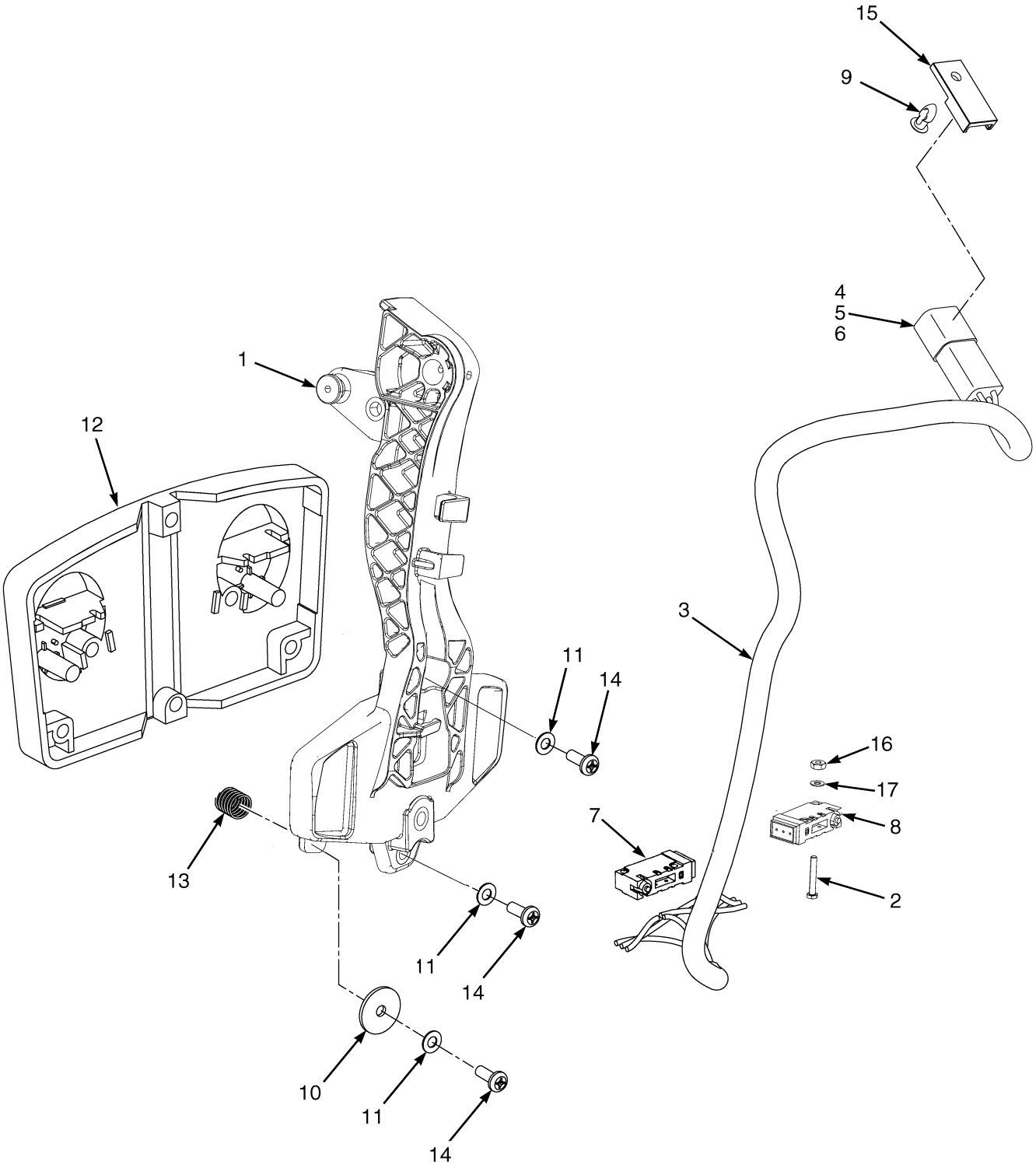

©2013 HYSTER COMPANY

MONOTROL PEDAL ASSEMBLY

YANMAR 2.6L AND 3.3L DIESEL (→ S/N L177V11233K)

ITEM	PART NO.	DESCRIPTION	QTY
	1608412	Monotrol Pedal Assembly	1
1	2074702	Pedal	1
2	220428	Screw	4
3	2072782	Wire Harness	1
4	1330416	Connector (Secondary Lock)	1
5	1489655	Connector (4 Way)	1
6	1531312	Terminal	4
7	. . . . .	Switch	1
8	. . . . .	Switch	1
9	1582464	Fastener	1
10	362036	Washer	2
11	15931	Lockwasher	4
12	1340470	Pad	1
13	325699	Spring	2
14	16708	Screw	4
15	1500912	Clip	1
16	16865	Nut	4
17	53162	Lockwasher	4

©2013 HYSTER COMPANY

THROTTLE PEDAL ASSEMBLY AND ATTACHING PARTS (FIGURE 5-11)

STANDARD PEDAL

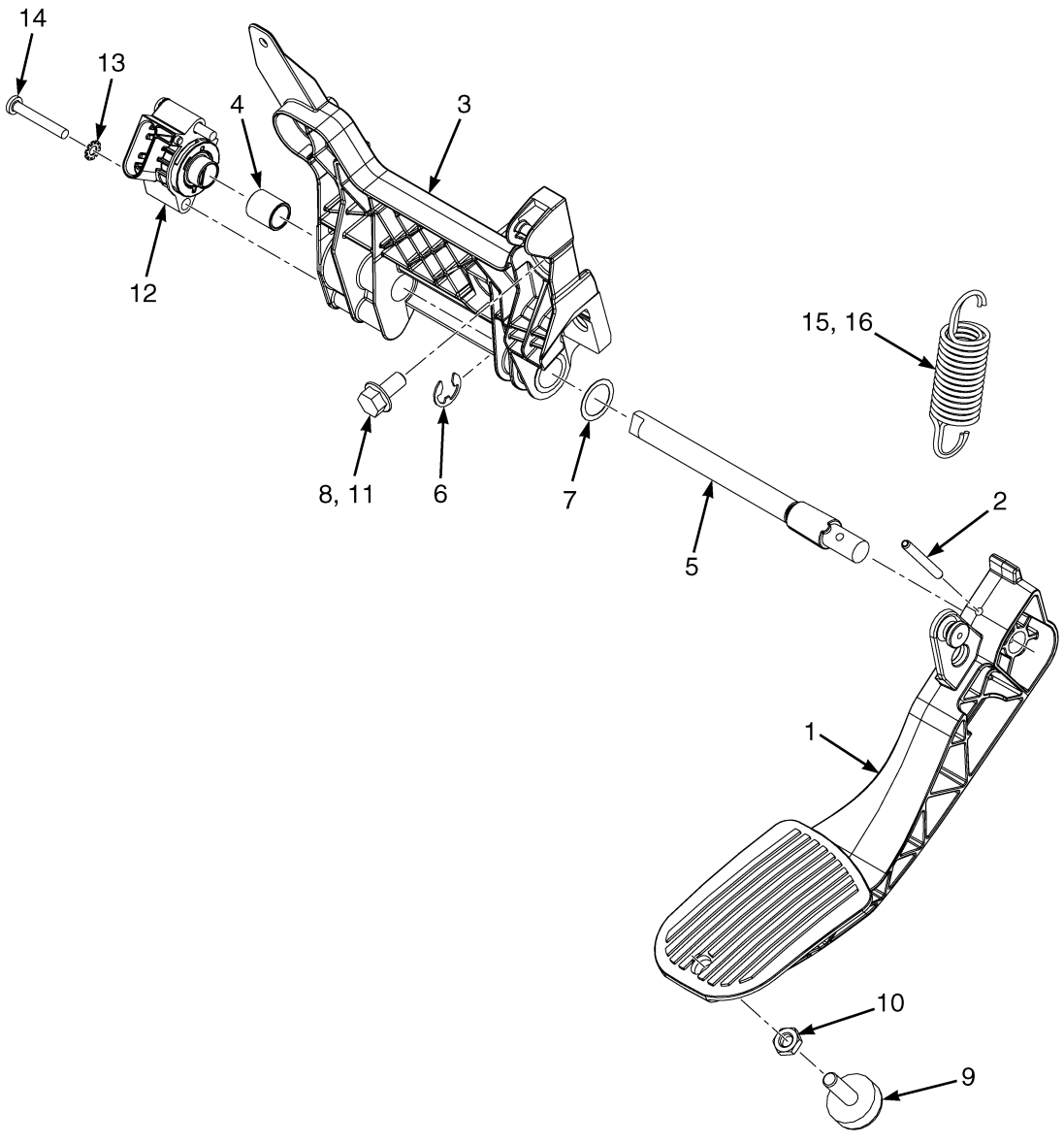

BP130362

©2013 HYSTER COMPANY

THROTTLE PEDAL ASSEMBLY AND ATTACHING PARTS

STANDARD PEDAL

ITEM	PART NO.	DESCRIPTION	QTY
1	2071181	Pedal (Standard)	1
2	302443	Roll Pin	1
3	**a** 1538488	Throttle Plate	1
3	**b** 1654411	Throttle Plate	1
3	**d** 4051924	Base Assembly (Throttle)	1
3	4615964	Molding	1
4	1524267	Bushing	1
5	**a** 1521005	Shaft	1
5	**c** 1654754	Shaft	1
6	1530971	E-Ring	1
7	1654156	Shim	AR
8	1527879	Capscrew	3
9	1530311	Screw (Stop)	1
10	329069	Nut	1
11	251099	Loctite	AR
12	2063842	Sensor (Hall Throttle Position)	1
13	296378	Washer	2
14	1564752	Capscrew	2
15	1582301	Spring (Inner)	1
16	1582300	Spring (Outer)	1

FOOTNOTES:

a → S/N L177B13612E
b S/N L177B13613E ↔ S/N L177V11233K
c S/N L177B13613E →
d S/N L177V11234K →

©2013 HYSTER COMPANY

THROTTLE PEDAL ASSEMBLY AND ATTACHING PARTS (FIGURE 5-12)

MONOTROL (S/N L177V11234K →)

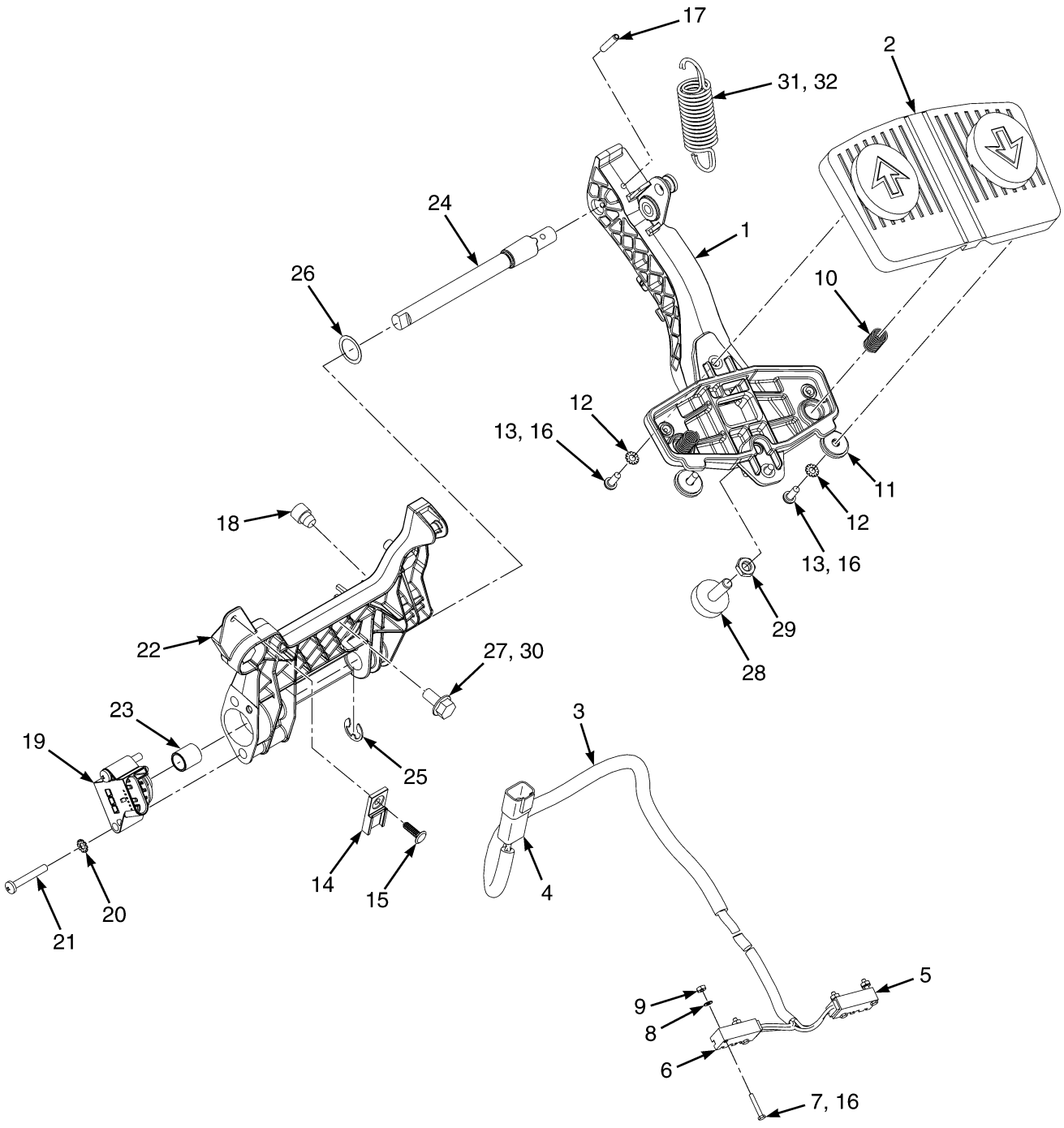

©2013 HYSTER COMPANY

THROTTLE PEDAL ASSEMBLY AND ATTACHING PARTS

MONOTROL (S/N L177V11234K →)

ITEM	PART NO.	DESCRIPTION	QTY
	4051938	Pedal Assy (Monotrol)	1
1	2074702	Pedal	1
2	1340470	Pad	1
3	2072782	Wire Harness	1
4	. . . . .	Connector Assembly (To Cowl Harness)	1
4	1489655	Connector (4 Way)	1
4	1330416	Connector (Secondary Lock) (Secondary Lock)	1
4	1531312	Terminal	4
5	. . . . .	Switch (Reverse)	1
6	. . . . .	Switch (Forward)	1
7	220428	Screw	4
8	53162	Lockwasher	4
9	16865	Nut	4
10	325699	Spring	2
11	4040523	Washer (Bonded)	2
12	15931	Lockwasher	2
13	16708	Screw	2
14	1500912	Clip	1
15	1582464	Fastener	1
16	360387	Loctite	AR
17	302437	Roll Pin	1
18	4031769	Isolator (Throttle Pedal)	1
19	2063842	Sensor (Hall Throttle Position) (To Cowl Harness)	1
20	296378	Washer	2
21	1564752	Capscrew	2
22	4051924	Base Assembly (Throttle)	1
22	4615964	Molding	1
23	1524267	Bushing	1
24	1654754	Shaft	1
25	1530971	E-Ring	1
26	1654156	Shim	AR
27	1527879	Capscrew	3
28	1530311	Screw (Stop)	1
29	329069	Nut	1
30	251099	Loctite	AR
31	1582301	Spring (Inner)	1
32	1582300	Spring (Outer)	1

©2013 HYSTER COMPANY

NOTES

©2013 HYSTER COMPANY

6 FUEL SYSTEM - GAS/LPG

SECTION 6
FUEL SYSTEM - GAS/LPG

DESCRIPTION **PAGE**

AIR FILTER ASSEMBLY
GASOLINE AND LPG 6-18
AIR INTAKE SYSTEM
GASOLINE AND LPG - GM 2.4L (→ S/N L177B15327E) 6-4
GASOLINE AND LPG - GM 2.4L (S/N L177B19203E →) 6-6
MAZDA 2.0L AND 2.2L LPG - 2006 EMISSION COMPLIANT ENGINES (→ S/N L177B15512E) 6-12
MAZDA 2.0L AND 2.2L LPG - 2007-2010 EMISSION COMPLIANT ENGINES (S/N L177B15326E →) 6-16
MAZDA 2.0L AND 2.2L, GASOLINE - 2006 EMISSION COMPLIANT ENGINES (→ S/N L177B15326E) 6-8
MAZDA 2.0L AND 2.2L, GASOLINE - 2007-2010 EMISSION COMPLIANT ENGINES (S/N L177B16207E →) 6-14
PRE-CLEANER AND DUCT - MAZDA 2.0L AND 2.2L 6-10
CARBURETOR
MAZDA 2.0L AND 2.2L LPG - 2006 EMISSION COMPLIANT ENGINES (→ S/N L177B15511E 2.0 LPG) (→ S/N L177B16206E (2.2L LPG)) 6-42
DELAY VALVE
MAZDA 2.0L AND 2.2L LPG (→ S/N L177B11511E (2.0L LPG)) (S/N L177B11108D ↔ S/N L177B16206E 2.2L LPG) 6-44
ELECTRONIC PRESSURE REGULATOR ASSEMBLY
MAZDA 2.0L AND 2.2L LPG - 2007 EMISSION COMPLIANT ENGINES (S/N L177B15327E ↔ 2/2008 (ENGINE ESSY MAZDA 2.2L EGI W/ECES)) 6-72
MAZDA 2.0L AND 2.2L LPG - 2007-2010 EMISSION COMPLIANT ENGINES (2/2008 →) 6-74
ELECTRONIC PRESSURE REGULATOR KIT
MAZDA 2.0L AND 2.2L LPG - 2007-2010 EMISSION COMPLIANT ENGINES (S/N L177B16207E → (ENGINE ESSY MAZDA 2.2L LPG W/ECES)) 6-76
EMISSION CONTROL SYSTEM
MAZDA 2.0L AND 2.2L LPG - 2006 EMISSION COMPLIANT ENGINES (→ S/N L177B15511E 2.0L LPG) (→ S/N L177B16206E (2.2L LPG)) 6-38
EMISSIONS LINES
MAZDA 2.0L AND 2.2L, GASOLINE - 2006 EMISSION COMPLIANT ENGINES (→ S/N L177B15326E (2.2L GAS)) (→ S/N L177B15511E 2.0 GAS) 6-40
ENGINE FUEL SYSTEM AND INTAKE MANIFOLD
MAZDA 2.0L AND 2.2L, GASOLINE, 2006 EMISSION COMPLIANT ENGINES (→ S/N L177B15326E 2.2L GAS) (→ S/N L177B15511E 2.0L GAS) 6-36
FUEL PUMP AND ATTACHING PARTS
MAZDA 2.0L AND 2.2L/GM 2.4L - GASOLINE 6-62
FUEL PUMP AND SENDER
MAZDA 2.0L AND 2.2L, GASOLINE - 2007-2010 EMISSION COMPLIANT ENGINES (S/N L177B16207E →) 6-64
FUEL REGULATOR
LPG - GM 2.4L 6-34
FUEL SUPPLY SYSTEM
MAZDA 2.0L AND 2.2L LPG - 2007 EMISSION COMPLIANT ENGINES (S/N L177B15512E ↔ S/N L177V04793H (2.0L ENGINE)) (S/N L177B16207E ↔ S/N L177V04794H (2.2L ENGINE)) 6-56
MAZDA 2.0L AND 2.2L LPG - 2007-2010 EMISSION COMPLIANT ENGINES (S/N L177V04794H → EXC. 04821, 04804) 6-58

©2013 HYSTER COMPANY

SECTION 6
FUEL SYSTEM - GAS/LPG

DESCRIPTION **PAGE**

MAZDA 2.0L AND 2.2L, GASOLINE - 2007 EMISSION COMPLIANT ENGINES (S/N L177B15326E ↔ S/N L177B15511E (2.0L ENGINE)) (S/N L177B15326E ↔ S/N L177B16206E (2.2L ENGINE)) 6-54
FUEL SYSTEM
GM 2.4L - GASOLINE 6-20
GM 2.4L - LPG (→ S/N L177V02219F) 6-22
GM 2.4L - LPG (S/N L177V02202F ↔ S/N L177V04793H EXC. 04777, 04792) 6-24
GM 2.4L - LPG (S/N L177V04794H → EXC. 04804, 04821) 6-26
MAZDA 2.0L AND 2.2L LPG - 2006 EMISSION COMPLIANT ENGINES (→ S/N L177B16207E) 6-48
MAZDA 2.0L AND 2.2L LPG - 2007-2010 EMISSION COMPLIANT ENGINES (S/N L177B15512E →) 6-52
MAZDA 2.0L AND 2.2L, GASOLINE - 2006 EMISSION COMPLIANT ENGINES (→ S/N L177B16206E) 6-46
MAZDA 2.0L AND 2.2L, GASOLINE - 2007-2010 EMISSION COMPLIANT ENGINES (S/N L177B15511E →) 6-51
FUEL SYSTEM HOSES AND ATTACHING PARTS
MAZDA 2.0L AND 2.2L LPG - 2007-2010 EMISSION COMPLIANT ENGINES 6-60
LPG BRACKET ASSEMBLY
EZXCHANGE (→ 4/2007) 6-86
EZXCHANGE (4/2007 →) 6-90
SWING OUT BRACKET (→ 11/2007) 6-78
SWING OUT BRACKET (11/2007 →) (→ 1/2013) 6-80
LPG TANK BRACKET
SWING OUT (1/2013 →) 6-84
MIXER AND THROTTLE BODY ASSEMBLY
MAZDA 2.0L AND 2.2L LPG - 2007 EMISSION COMPLIANT ENGINES (S/N L177B15327E ↔ 2/2008) 6-68
MAZDA 2.0L AND 2.2L LPG - 2007-2010 EMISSION COMPLIANT ENGINES (2/2008 →) 6-70
MONOTROL PEDAL ASSEMBLY
→ S/N L177V11233K 6-98
THROTTLE BODY AND ATTACHING PARTS
GM 2.4L - GASOLINE 6-28
GM 2.4L - LPG 6-30
GM 2.4L GASOLINE AND LPG - 2010 SERIES 6-32
MAZDA 2.0L AND 2.2L, GASOLINE - 2007-2010 EMISSION COMPLIANT ENGINES 6-66
THROTTLE CABLE ASSEMBLY
MAZDA 2.0L AND 2.2L - GASOLINE 6-94
MAZDA 2.0L AND 2.2L - LPG 6-96
THROTTLE PEDAL ASSEMBLY AND ATTACHING PARTS
MONOTROL 6-102
STANDARD PEDAL 6-100

©2013 HYSTER COMPANY

NOTES

©2013 HYSTER COMPANY

AIR INTAKE SYSTEM (FIGURE 6-1)

GASOLINE AND LPG — GM 2.4L (→ S/N L177B15327E)

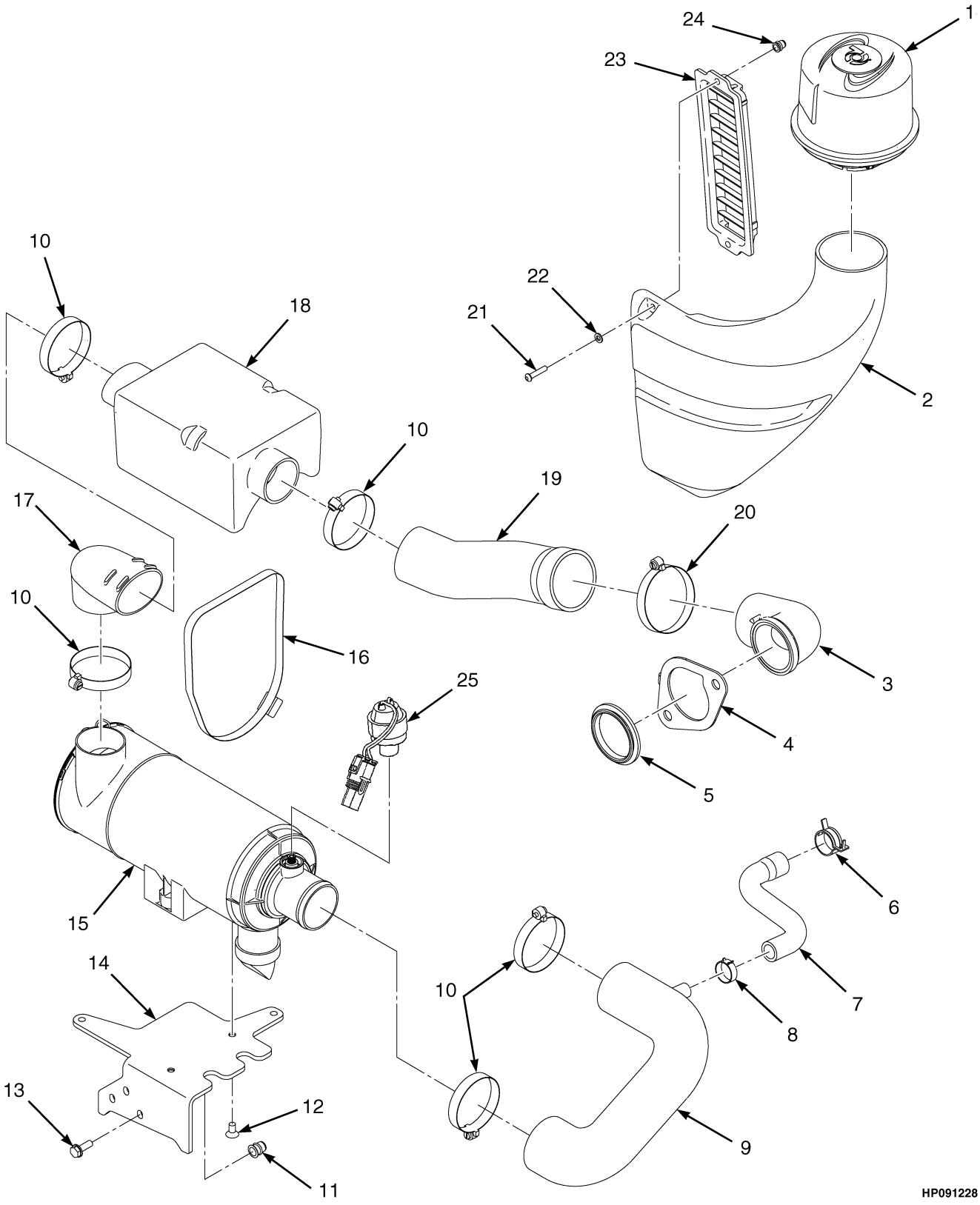

©2013 HYSTER COMPANY

AIR INTAKE SYSTEM

GASOLINE AND LPG – GM 2.4L (→ S/N L177B15327E)

ITEM	PART NO.	DESCRIPTION	QTY
1	1501888	Pre-Cleaner	1
2	1565201	Air Duct	1
3	1581438	Elbow	1
4	1581439	Retainer	1
5	1502079	Grommet	1
6	1501997	Hose Clamp	1
7	1501887	Hose	1
8	353199	Clamp	1
9	1501837	Hose	1
10	112989	Hose Clamp	5
11	1530243	Insert	3
12	296481	Screw	2
13	1583611	Capscrew	3
14	1582159	Bracket	1
15	1501855	Air Filter (☞Figure 6-8)	1
16	1580068	Strap	1
17	1565199	Elbow	1
18	1565200	Silencer	1
19	1565212	Hose	1
20	1394008	Hose Clamp	1
21	2071261	Capscrew	2
22	1506738	Washer	2
23	2067476	Grill	1
24	1531558	Insert	2
25	1529257	Sensor (Air Flow Restriction)	1
ab	1677833	Screw (Pre-Cleaner Mounting)	3

FOOTNOTES:

a Not Illustrated

b S/N L177V02650F →

©2013 HYSTER COMPANY

AIR INTAKE SYSTEM (FIGURE 6-2)

GASOLINE AND LPG — GM 2.4L (S/N L177B19203E →)

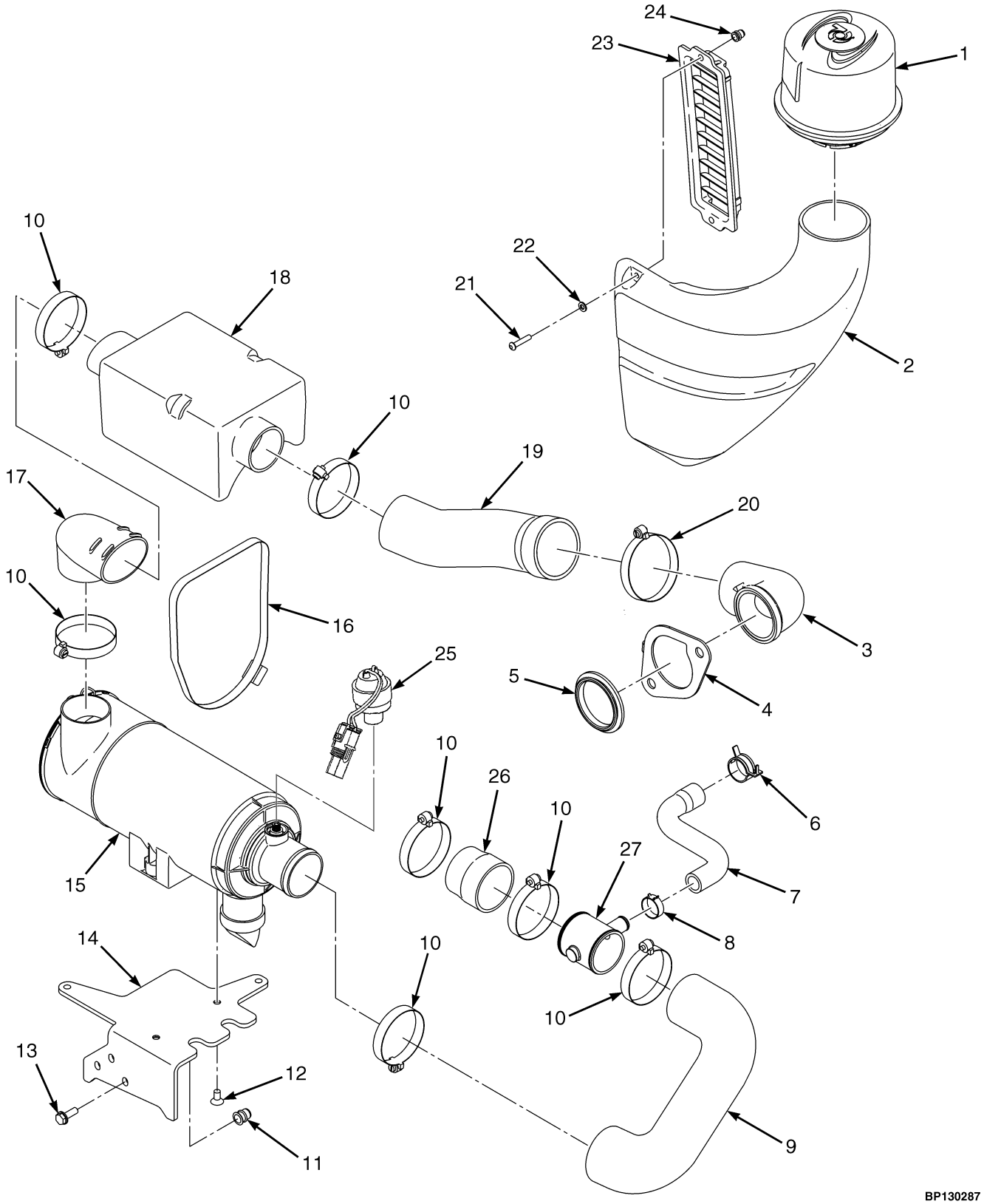

©2013 HYSTER COMPANY

AIR INTAKE SYSTEM

GASOLINE AND LPG – GM 2.4L (S/N L177B19203E →)

ITEM	PART NO.	DESCRIPTION	QTY
1	1501888	Pre-Cleaner	1
2	**c** 1565201	Air Duct	1
2	**e** 1677793	Air Duct (Precleaner)	1
3	1581438	Elbow	1
4	1581439	Retainer	1
5	1502079	Grommet	1
6	1501997	Hose Clamp	1
7	1501887	Hose	1
8	353199	Clamp	1
9	2098965	Hose (Clean Air)	1
9	2102914	Hose	1
10	112989	Hose Clamp	7
11	1530243	Insert	3
12	296481	Screw	2
13	1583611	Capscrew	3
14	1582159	Bracket	1
15	**b** 1501855	Air Filter (GM 2.4L) (☞Figure 6-8)	1
15	**d** 2105338	Air Filter (☞Figure 6-8)	1
15	**f** 4612945	Air Filter (☞Figure 6-8)	1
16	1580068	Strap	1
17	1565199	Elbow (Silencer)	1
18	1565200	Silencer	1
19	1565212	Hose (Dirty Air)	1
20	1394008	Hose Clamp	8
21	2071261	Capscrew	2
22	1506738	Washer	2
23	2067476	Grill	1
24	1531558	Insert	2
25	1529257	Sensor (Air Flow Restriction)	1
26	2098964	Hose (Air Intake)	1
26	2102913	Hose (Air Intake) (Alternate Part)	1
27	1661665	Coupler (PCV)	1
28	**ae** 1677833	Screw (Pre-Cleaner Mounting)	3

FOOTNOTES:

a Not Illustrated
b → S/N L177B22489F
c → S/N L177V02649F
d S/N L177B22490F ↔ 10/2010
e S/N L177V02650F →
f 10/2010 →

©2013 HYSTER COMPANY

AIR INTAKE SYSTEM (FIGURE 6-3)

MAZDA 2.0L AND 2.2L, GASOLINE — 2006 EMISSION COMPLIANT ENGINES (→ S/N L177B15326E)

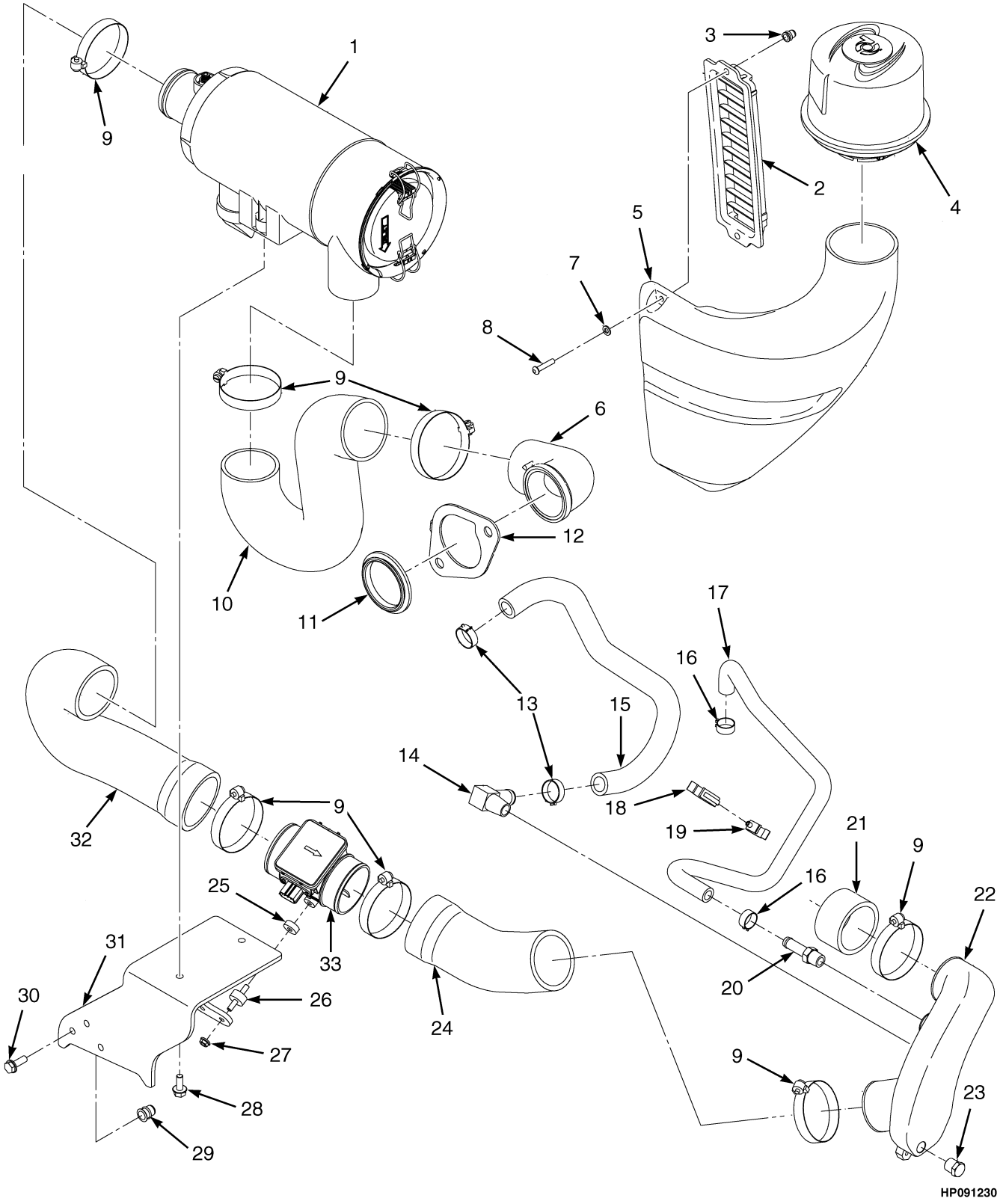

©2013 HYSTER COMPANY

AIR INTAKE SYSTEM

MAZDA 2.0L AND 2.2L, GASOLINE – 2006 EMISSION COMPLIANT ENGINES (→ S/N L177B15326E)

ITEM	PART NO.	DESCRIPTION	QTY
1	2063128	Air Filter (☞Figure 6-8)	1
2	2067476	Grill	1
3	1531558	Insert	2
4	1501888	Pre-Cleaner	1
5	**b** 1565201	Air Duct	1
5	**c** 1677793	Air Duct (Pre-Cleaner)	1
6	1581438	Elbow	1
7	1506738	Washer	2
8	2071261	Capscrew	2
9	1394008	Hose Clamp	8
10	1501841	Hose	1
11	1502079	Grommet	1
12	1581439	Retainer	1
13	353199	Clamp	2
14	201800	Fitting	1
15	2069357	Hose	1
16	1452463	Hose Clamp	2
17	2069356	Hose (PCV)	1
18	1561759	Clamp (Swivel)	1
19	1502053	Clamp (Swivel)	1
20	102919	Fitting	1
21	2057796	Hose	1
22	1580255	Intake Manifold	1
23	14386	Fitting	1
24	1558449	Hose (For 2.2L Engine)	1
24	2075703	Hose (For 2.0L Engine)	1
25	1527563	Spacer	2
26	1527562	Rubber Mount	2
27	~~1307884~~		
	1514429	Nut	2
28	1527880	Capscrew	2
29	1530243	Insert	3
30	1583611	Capscrew	3
31	1501665	Bracket Wldmt	1
32	1501838	Hose	1
33	1501629	Sensor (Airflow)	1
34	**ac** 1677833	Screw (Pre-Cleaner Mounting)	3

FOOTNOTES:

a Not Illustrated
b → S/N L177V02649F
c S/N L177F02650F →

©2013 HYSTER COMPANY

AIR INTAKE SYSTEM (FIGURE 6-4)

PRE-CLEANER AND DUCT — MAZDA 2.0L AND 2.2L

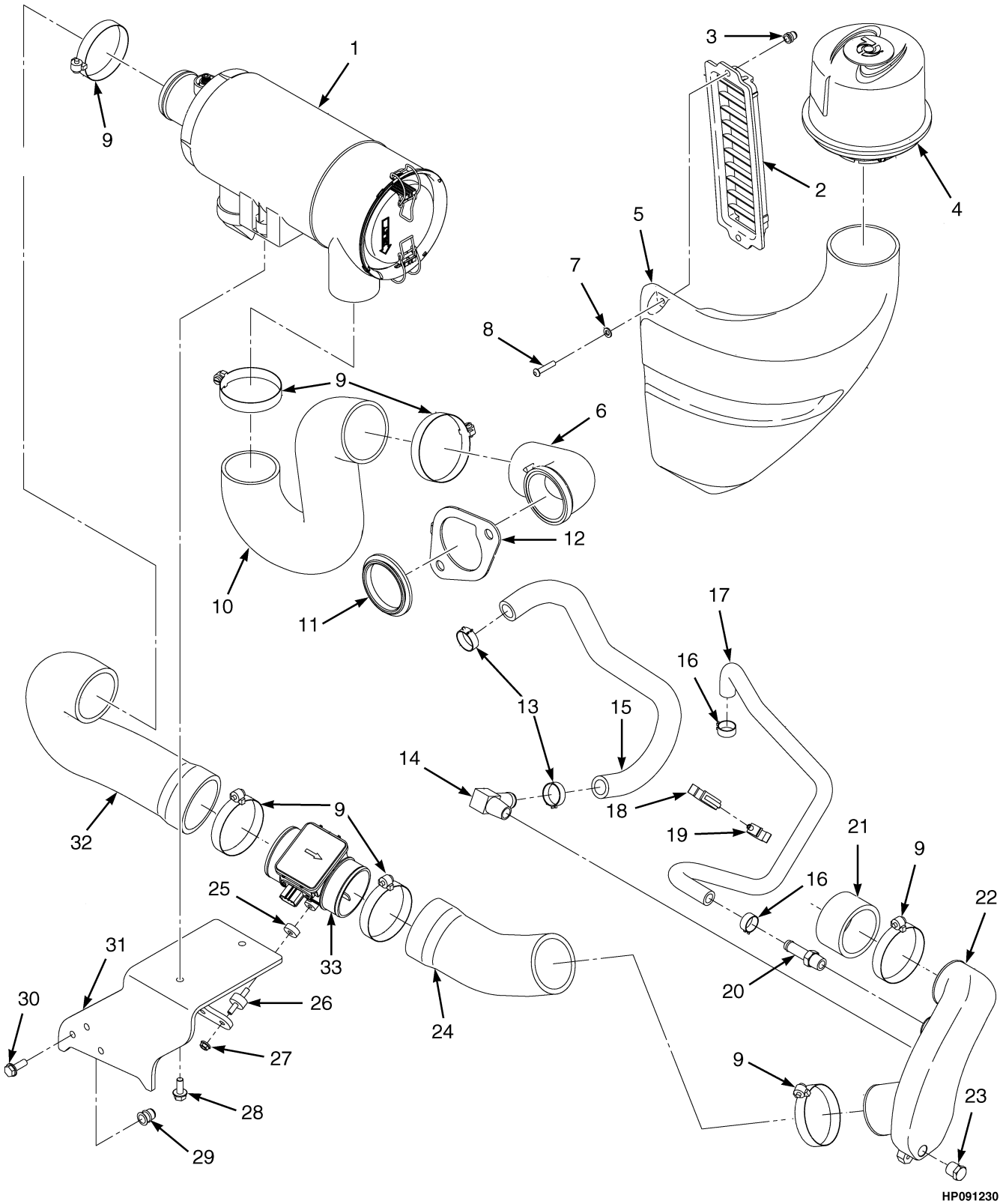

©2013 HYSTER COMPANY

AIR INTAKE SYSTEM

PRE-CLEANER AND DUCT – MAZDA 2.0L AND 2.2L

ITEM	PART NO.	DESCRIPTION	QTY
1	2063128	Air Filter (☞Figure 6-8)	1
2	2067476	Grill	1
3	1531558	Insert	2
4	1501888	Pre-Cleaner	1
5	**b** 1565201	Air Duct	1
5	**c** 1677793	Air Duct (Alternate Part)	1
6	1581438	Elbow	1
7	1506738	Washer	2
8	2071261	Capscrew	2
9	1394008	Hose Clamp	8
10	1501841	Hose	1
11	1502079	Grommet	1
12	1581439	Retainer	1
13	353199	Clamp	2
14	201800	Fitting	1
15	2069357	Hose	1
16	1452463	Hose Clamp	2
17	2069356	Hose (PCV)	1
18	1561759	Clamp (Swivel)	1
19	1502053	Clamp (Swivel)	1
20	102919	Fitting	1
21	2057796	Hose	1
22	1580255	Intake Manifold	1
23	14386	Fitting	1
24	1558449	Hose (For 2.2L Engine)	1
24	2075703	Hose (For 2.0L Engine)	1
25	1527563	Spacer	2
26	1527562	Rubber Mount	2
27	~~1307884~~		
	1514429	Nut	2
28	1527880	Capscrew	2
29	1530243	Insert	3
30	1583611	Capscrew	3
31	1501665	Bracket Wldmt	1
32	1501838	Hose	1
33	1501629	Sensor (Airflow)	1
34	**ac** 1677833	Screw (Pre-Cleaner Mounting)	1

FOOTNOTES:

a Not Illustrated
b → S/N L177V02649F
c S/N L177V02650F →

©2013 HYSTER COMPANY

AIR INTAKE SYSTEM (FIGURE 6-5)

MAZDA 2.0L AND 2.2L LPG — 2006 EMISSION COMPLIANT ENGINES (→ S/N L177B15512E)

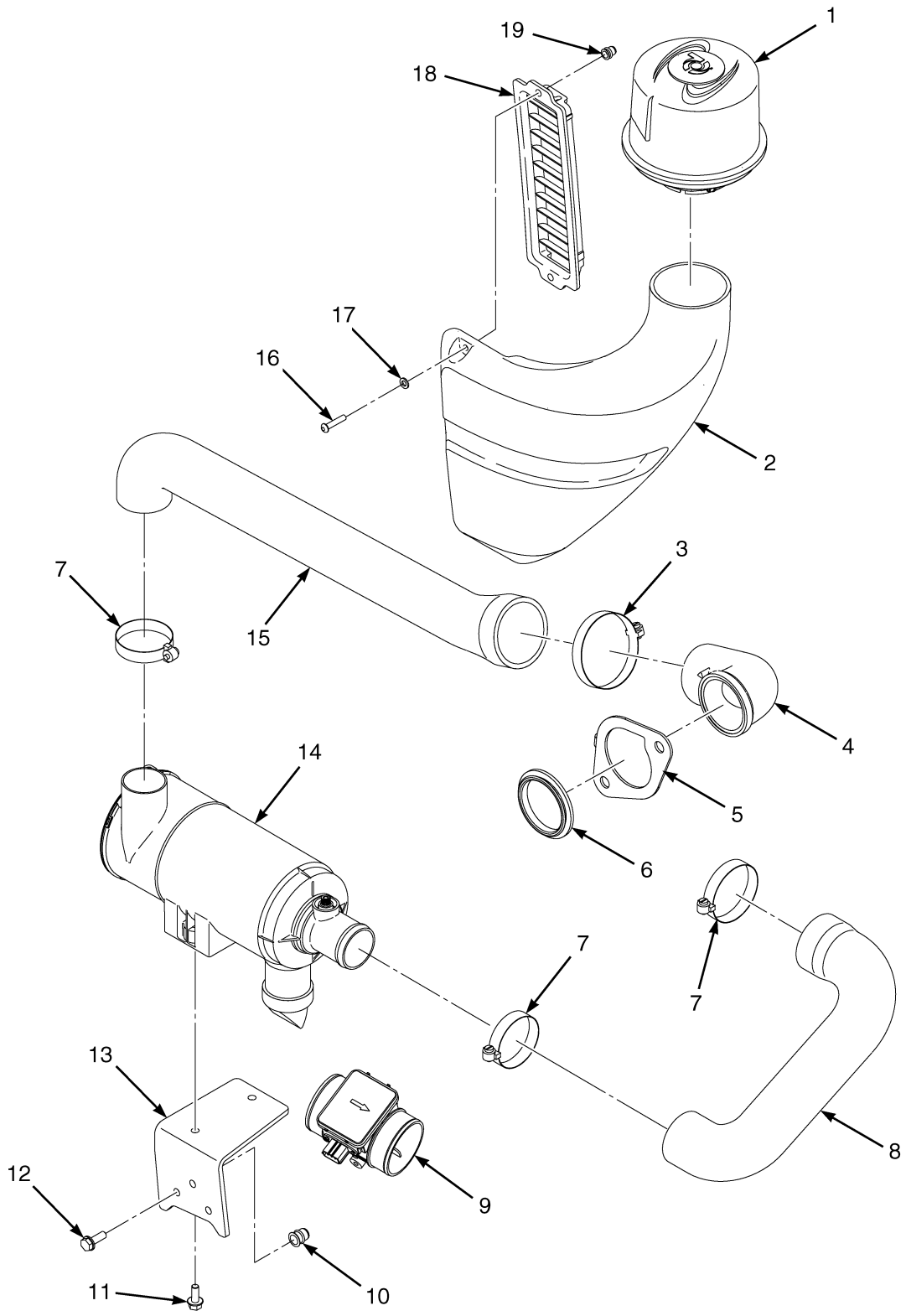

©2013 HYSTER COMPANY

AIR INTAKE SYSTEM

MAZDA 2.0L AND 2.2L LPG – 2006 EMISSION COMPLIANT ENGINES (→ S/N L177B15512E)

ITEM	PART NO.	DESCRIPTION	QTY
1	1501888	Pre-Cleaner	1
2	**b** 1565201	Air Duct	1
2	**c** 1677793	Air Duct	1
3	1394008	Hose Clamp	1
4	1581438	Elbow	1
5	1581439	Retainer (Elbow)	1
6	1502079	Grommet	1
7	112989	Hose Clamp	3
8	1501835	Hose	1
9	1501629	Sensor (Airflow)	1
10	1530243	Insert	3
11	1527880	Capscrew	2
12	1583611	Capscrew	3
13	1501848	Bracket	1
14	~~2055193~~		
	4611248	Air Filter (☞Figure 6-8)	1
15	1502034	Hose	1
16	2071261	Capscrew	2
17	1506738	Washer	2
18	2067476	Grill	1
19	1531558	Insert	2
	ac 1677833	Screw (Pre-Cleaner Mounting)	3

FOOTNOTES:

a Not Illustrated
b → S/N L177V02649F
c S/N L177V02650F →

AIR INTAKE SYSTEM (FIGURE 6-6)

MAZDA 2.0L AND 2.2L, GASOLINE — 2007-2010 EMISSION COMPLIANT ENGINES (S/N L177B16207E →)

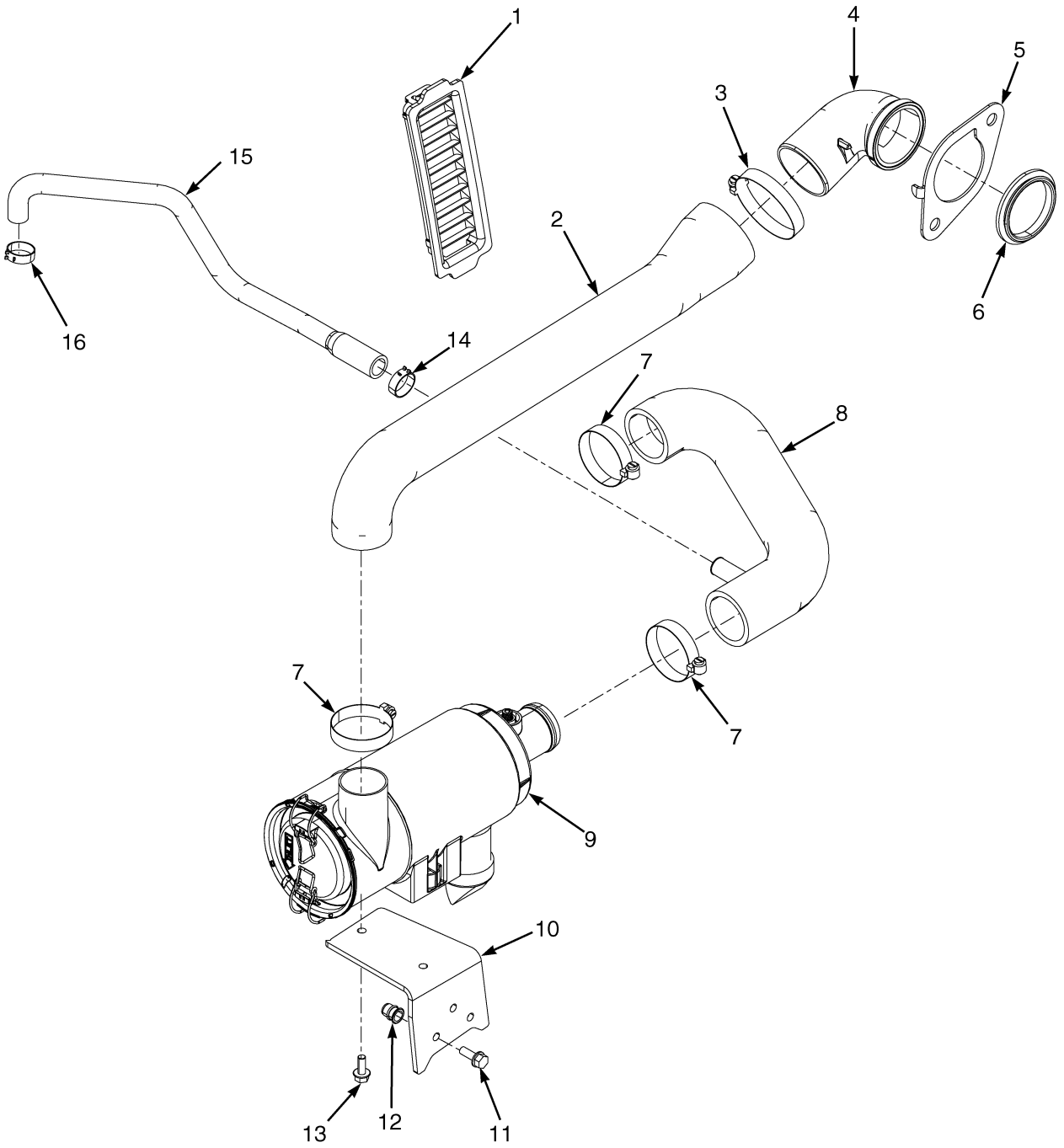

BP130255

©2013 HYSTER COMPANY

AIR INTAKE SYSTEM

MAZDA 2.0L AND 2.2L, GASOLINE – 2007-2010 EMISSION COMPLIANT ENGINES (S/N L177B16207E →)

ITEM	PART NO.	DESCRIPTION	QTY
1	2067476	Grill	1
2	1502034	Hose (Dirty Air)	1
3	1394008	Hose Clamp	1
4	1581438	Elbow (Dirty Air)	1
5	1581439	Retainer	1
6	1502079	Grommet	1
7	112989	Hose Clamp	3
8	2084251	Hose (Clean Air)	1
9	~~2055193~~		
	4611248	Air Filter (☞Figure 6-8)	1
10	1501848	Bracket	1
11	1583611	Capscrew	3
12	1530243	Insert	3
13	1527879	Capscrew	2
14	1452463	Hose Clamp	1
15	1632564	Hose (PCV)	1
16	353199	Clamp	1

©2013 HYSTER COMPANY

AIR INTAKE SYSTEM (FIGURE 6-7)

MAZDA 2.0L AND 2.2L LPG — 2007-2010 EMISSION COMPLIANT ENGINES (S/N L177B15326E →)

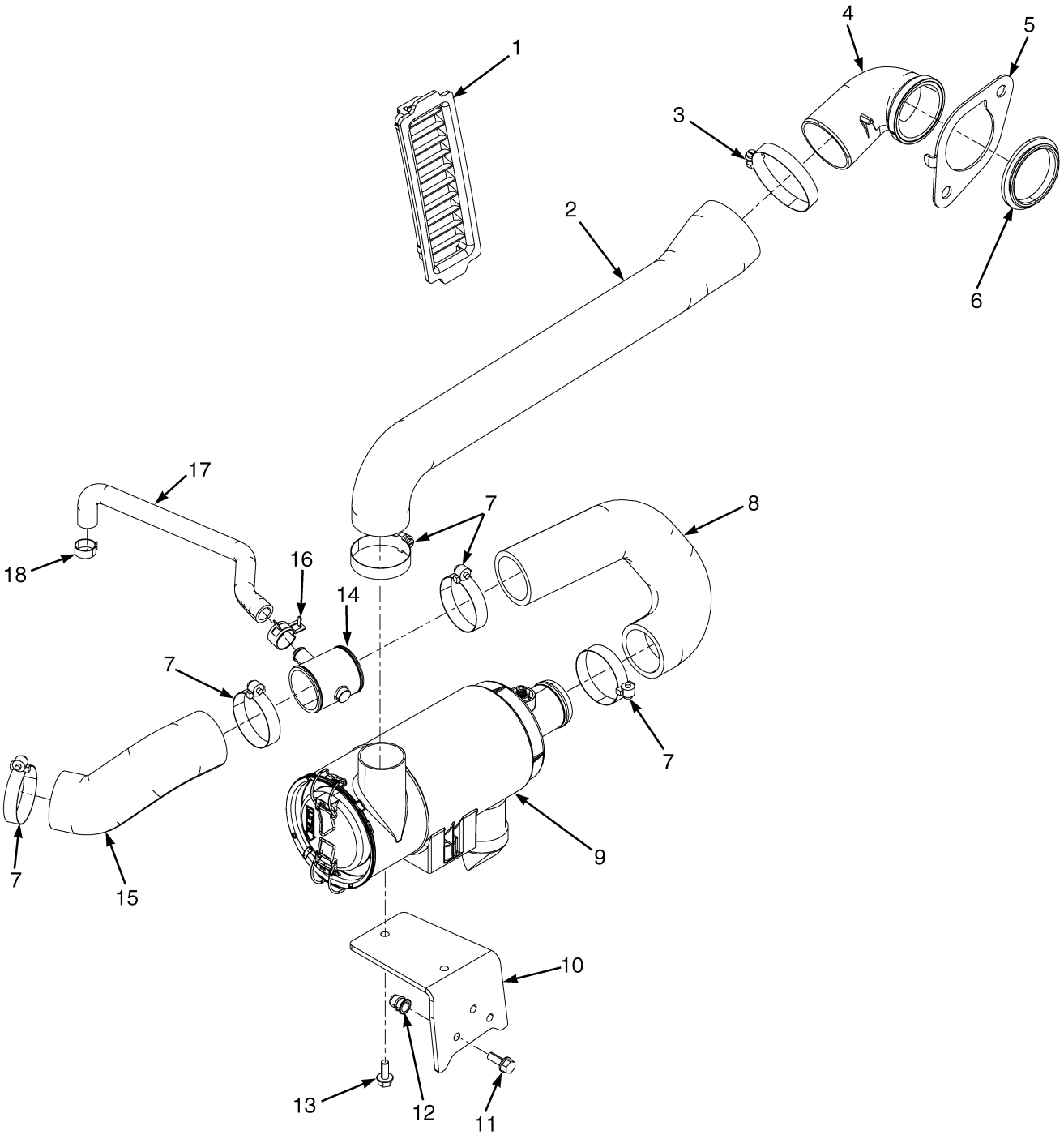

©2013 HYSTER COMPANY

AIR INTAKE SYSTEM

MAZDA 2.0L AND 2.2L LPG – 2007-2010 EMISSION COMPLIANT ENGINES (S/N L177B15326E →)

ITEM	PART NO.	DESCRIPTION	QTY
1	2067476	Grill (Air Inlet)	1
2	1502034	Hose (Dirty Air)	1
3	1394008	Hose Clamp	1
4	1581438	Elbow (Dirty Air)	1
5	1581439	Retainer	1
6	1502079	Grommet	1
7	112989	Hose Clamp	5
8	2090644	Hose (Clean Air)	1
9	**a** ~~2055193~~		
	4611248	Air Filter (☞Figure 6-8)	1
9	**b** ~~2055193~~		
	4611248	Air Filter (☞Figure 6-8)	1
10	1501848	Bracket	1
11	1583611	Capscrew	3
12	1530243	Insert	3
13	1527879	Capscrew	2
14	1640814	Coupler (Clean Air)	1
15	2091231	Hose (Clean Air)	1
16	130845	Clamp	1
17	2091232	Hose (PCV)	1
18	1452463	Hose Clamp	1

FOOTNOTES:

a → 10/2010

b 10/2010 →

©2013 HYSTER COMPANY

AIR FILTER ASSEMBLY (FIGURE 6-8)
GASOLINE AND LPG

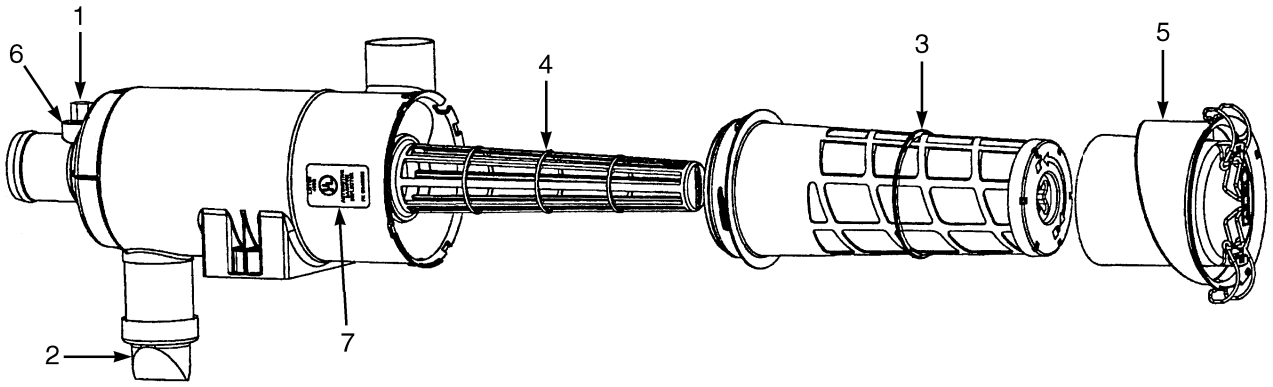

HP091227

KEY:
A: Mazda Engines - Gasoline
B: Mazda Engines - LPG
C: GM Engines - Gasoline and LPG

ITEM	PART NO.	DESCRIPTION	QTY A	QTY B	QTY C
	a ~~2055193~~				
	4611248	Air Filter	..	1	..
	e ~~2055193~~				
	4611248	Air Filter	..	1	..
	2063128	Air Filter	1	..	..
	b 1501855	Air Filter	..	..	1
	cd 2105338	Air Filter	..	..	1
	e 4612945	Air Filter	..	..	1
1	141331	Cap	1	1	1
2	374923	Valve	1	1	1
3	1559418	Filter Element	..	1	..
3	1574111	Filter Element	1	..	1
4	1559419	Guide (With O-Ring)	..	1	..
4	1574260	Liner (With O-Ring)	1	..	1
5	1559420	Cover	..	1	..
5	**b** 1574131	Cover	1	..	1
5	**d** 1687933	Cover (Alternate Part)	1	..	1
6	**e** 4030497	Connector (Pipe Nipple)	..	1	1
7	2095889	Label (Air Filter Installation)	1	1	1

FOOTNOTES:

a → 10/2010
b → S/N L177B22489F
c S/N L177B22490F ↔ 10/2010
d S/N L177B22490F →
e 10/2010 →

©2013 HYSTER COMPANY

NOTES

©2013 HYSTER COMPANY

FUEL SYSTEM (FIGURE 6-9)

GM 2.4L — GASOLINE

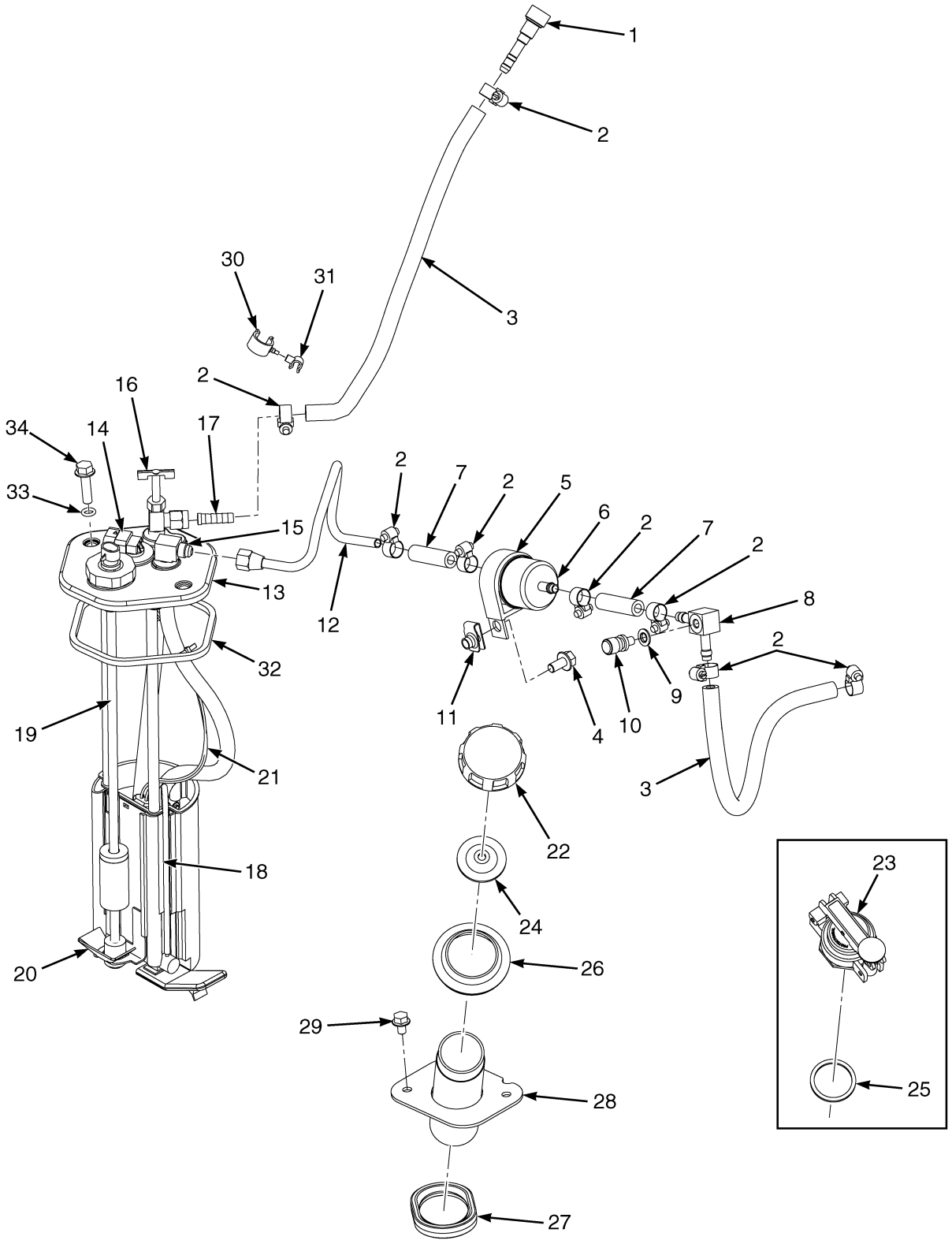

©2013 HYSTER COMPANY

FUEL SYSTEM
GM 2.4L – GASOLINE

ITEM	PART NO.	DESCRIPTION	QTY
1	1544024	Fitting (5/16 Quick Disconnect)	1
2	168718	Clamp	8
3	2062586	Hose	2
4	1527879	Capscrew	1
5	1316496	Clamp	1
6	1304950	Fuel Filter	1
7	2062587	Hose	2
8	1547848	Fitting	1
9	1339438	Seal	1
10	1345991	Pressure Valve	1
11	1480237	Nut	1
12	1550600	Tube	1
13	1617572	Fuel Sender and Pump	1
13	1527311	Cover	1
14	1371149	Connector	1
14	1330326	Nut	1
14	1330325	O-Ring	1
15	21195	Fitting	1
16	43883	Drain Valve (Shut-Off)	1
17	1568998	Fitting	1
18	1527318	Tube	1
19	1501811	Fuel Sender	1
20	1527314	Bracket	1
21	1527315	Harness (Fuel Pump)	1
22	**b** 2021679	Fuel Cap	1
23	**a** 1579677	Fuel Cap	1
24	**b** 2021683	Gasket	1
25	**a** 2021685	Gasket	1
25	**a** 325549	Shim (0.020 in.)	1
26	1528608	Grommet	1
27	~~1528314~~		
	1593391	Seal	1
28	1564392	Pipe (Fill)	1
29	1529366	Capscrew	2
30	1543698	Clamp (Swivel)	1
31	1542440	Clamp (Swivel)	1
32	1528893	Quad Ring	1
33	353000	O-Ring	2
34	1527881	Capscrew	2

FOOTNOTES:

a GS Models Only

b Standard Models Only

©2013 HYSTER COMPANY

FUEL SYSTEM (FIGURE 6-10)

GM 2.4L — LPG (→ S/N L177V02219F)

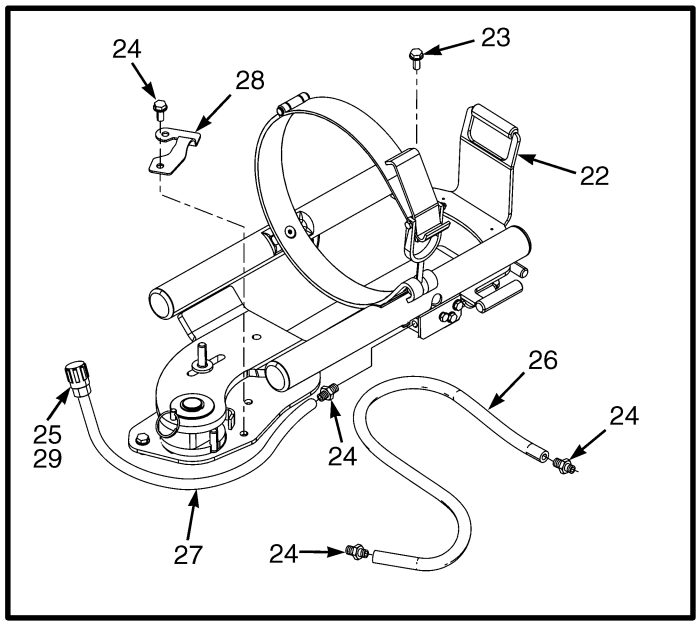

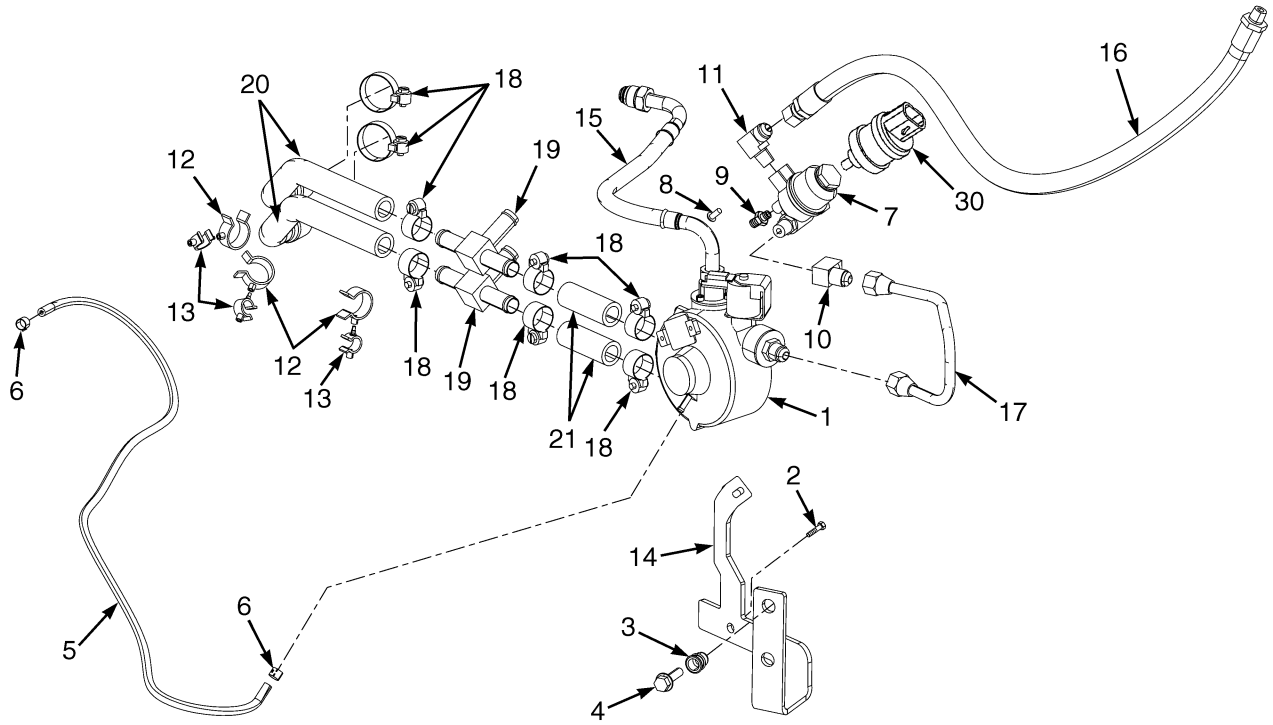

BP080378

©2013 HYSTER COMPANY

FUEL SYSTEM

GM 2.4L – LPG (→ S/N L177V02219F)

ITEM	PART NO.	DESCRIPTION	QTY
1	~~2056762~~		
	4602051	LPG Converter (☞Figure 6-16)	1
2	1529366	Capscrew	1
3	1530243	Insert	2
4	1527881	Capscrew	2
5	1347166	Hose	1
6	366473	Clamp	2
7	2070100	Fuel Filter (LPG)	1
7	1581302	Kit-Filter Element	1
8	296152	Capscrew	2
9	16151	Fitting	1
10	14372	Fitting	1
11	14358	Fitting	1
12	1542436	Clamp	3
13	1542439	Clamp (Swivel)	3
14	1578965	Bracket	1
15	2064431	Hose	1
15	1698684	Kit-O-Ring	1
16	2072300	Hose Assy	1
17	2072299	Tube	1
18	**a** 130845	Clamp	8
18	**b** 130845	Clamp	4
19	**a** 366000	Fitting	2
20	**a** 2072894	Radiator Hose	2
20	**b** 2072895	Radiator Hose	2
21	**a** 2070782	Radiator Hose	2
22	**e** 1519360	Lpg Tank Bracket (EZXchange)	1
22	**f** 1615864	Lpg Tank Bracket (EZXchange)	1
22	**g** 1649220	Lpg Tank Bracket (Swing Out/Drop Down)	1
22	**d** 1582409	Lpg Tank Bracket (Swing Out)	1
22	**g** 1649216	Lpg Tank Bracket (Swing Out)	1
23	1586013	Capscrew	4
24	16134	Fitting	2
25	97999	Fitting	1
26	2072298	Hose Assy	1
27	2058426	Hose Assy	1
28	**c** 1564061	Bracket	1
29	2071517	Sleeve	1
30	1501970	Pressure Switch (Low Fuel)	1

FOOTNOTES:

a For Vehicles With Cab
b For Vehicles With Overhead Guard
c For Vehicles With Swing Out Bracket
d → 11/2007
e → S/N L177B104056D
f S/N L177B10405D ↔ 11/2007
g 11/2007 →

©2013 HYSTER COMPANY

FUEL SYSTEM (FIGURE 6-11)

GM 2.4L — LPG (S/N L177V02202F ↔ S/N L177V04793H EXC. 04777, 04792)

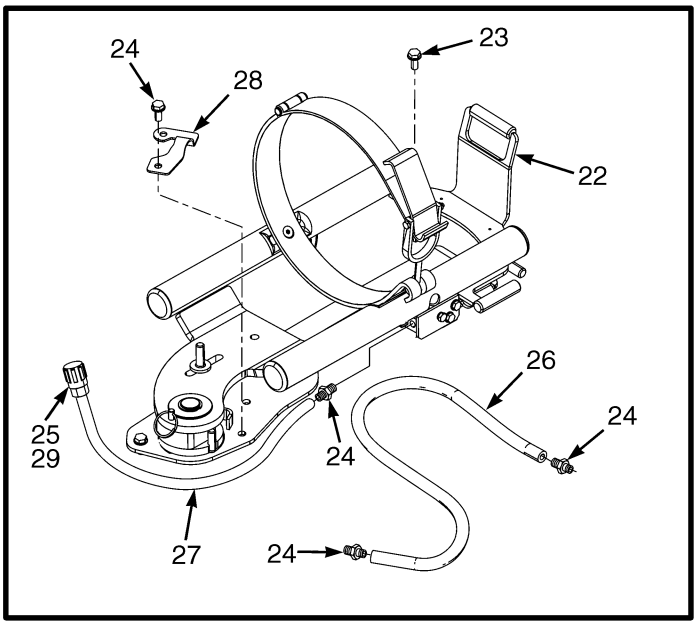

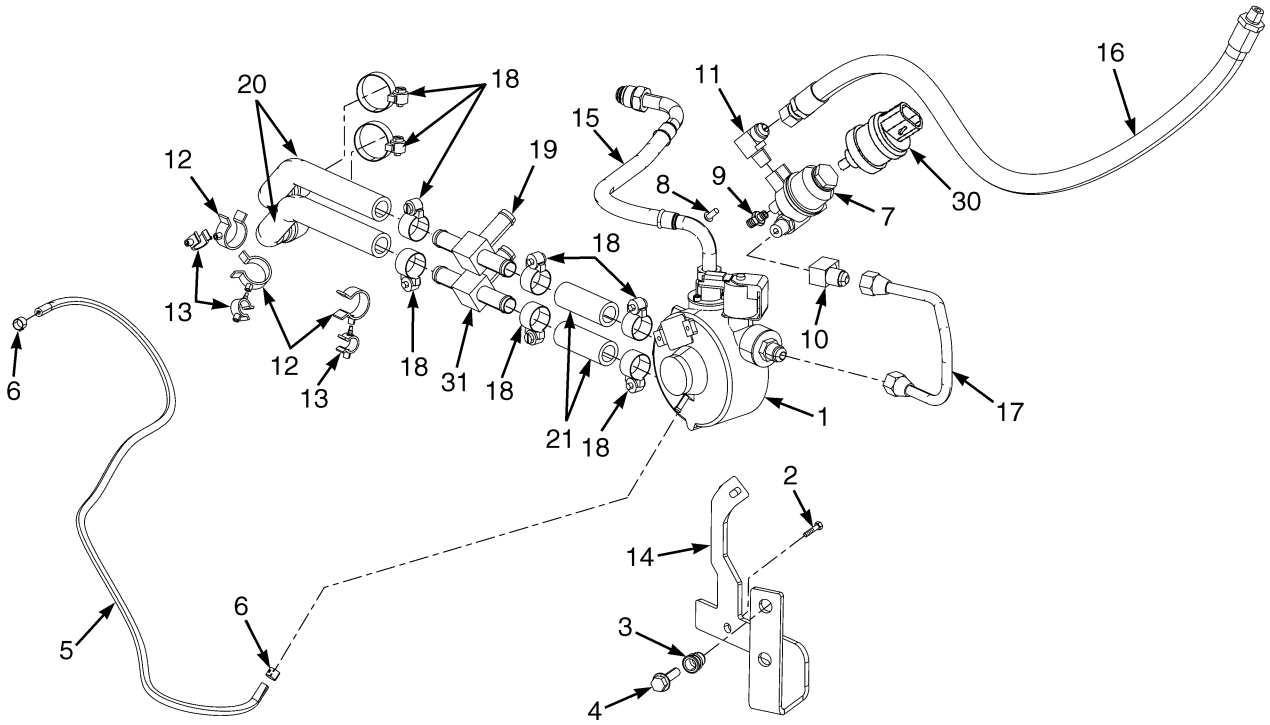

BP130292

©2013 HYSTER COMPANY

FUEL SYSTEM

GM 2.4L – LPG (S/N L177V02202F ↔ S/N L177V04793H EXC. 04777, 04792)

ITEM	PART NO.	DESCRIPTION	QTY
1	**e** ~~2056762~~		
	4602051	LPG Converter (☞Figure 6-16)	1
2	1529366	Capscrew	1
3	1530243	Insert	2
4	1527881	Capscrew	2
5	1347166	Hose	1
6	366473	Clamp	2
7	2105803	Fuel Filter (LPG)	1
7	1689544	Kit-Filter Element	1
8	296152	Capscrew	2
9	16151	Fitting	1
10	14372	Fitting	1
11	14358	Fitting	1
12	1542436	Clamp	3
13	1542439	Clamp (Swivel)	3
14	1578965	Bracket	1
15	2064431	Hose	1
15	1698684	Kit-O-Ring	1
16	2072300	Hose Assy	1
17	2072299	Tube	1
18	**a** 130845	Clamp	8
18	**b** 130845	Clamp	4
19	**a** 366000	Fitting	1
20	**a** 2072894	Radiator Hose	2
20	**b** 2072895	Radiator Hose	2
21	**a** 2070782	Radiator Hose	2
22	1615864	Lpg Tank Bracket (EZXchange)	1
22	1649220	Lpg Tank Bracket (Swing Out/Drop Down)	1
22	1649216	Lpg Tank Bracket (Swing Out)	1
23	1586013	Capscrew	4
24	16134	Fitting	2
25	97999	Fitting	1
26	2072298	Hose Assy	1
27	2058426	Hose Assy	1
28	**c** 1564061	Bracket	1
29	2071517	Sleeve	1
30	1501970	Pressure Switch (Low Fuel)	1
31	1683422	Fitting	1
	d 246108	Sealant	1
	d 1687376	Sealant (Alternate Part)	1
	d 1687377	Activator (Alternate Part)	1

FOOTNOTES:

a For Vehicles With Cab
b For Vehicles With Overhead Guard
c For Vehicles With Swing Out Bracket
d Not Illustrated
e → S/N L177V03843G

©2013 HYSTER COMPANY

FUEL SYSTEM (FIGURE 6-12)

GM 2.4L — LPG (S/N L177V04794H → EXC. 04804, 04821)

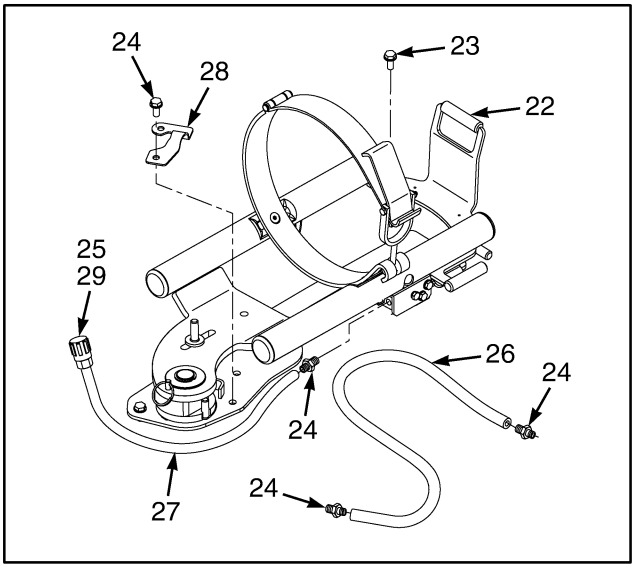

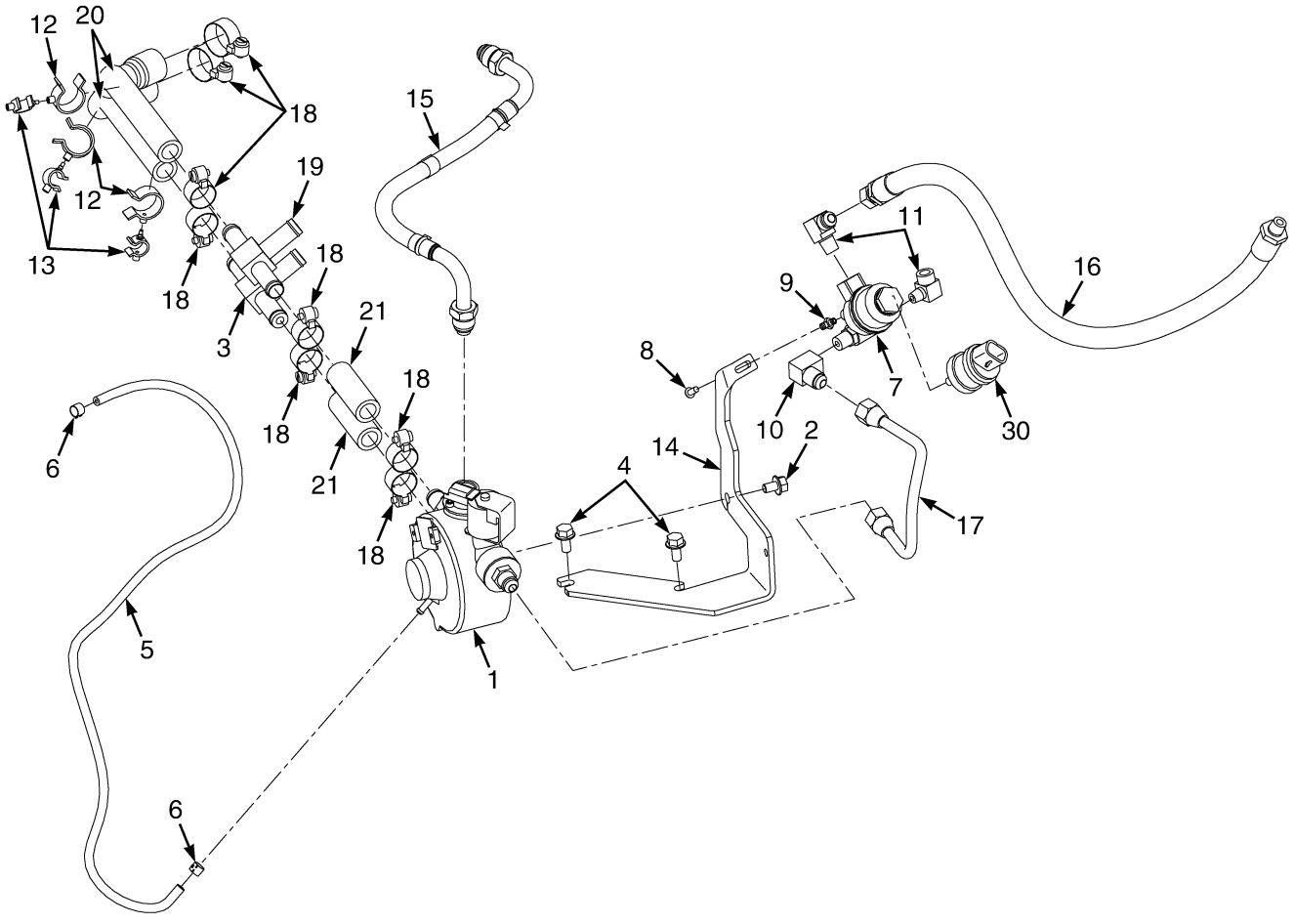

©2013 HYSTER COMPANY

FUEL SYSTEM

GM 2.4L – LPG (S/N L177V04794H → EXC. 04804, 04821)

ITEM	PART NO.	DESCRIPTION	QTY
1	~~2056762~~		
	4602051	LPG Converter (☞Figure 6-16)	1
2	1529366	Capscrew	1
3	1683422	Fitting	1
4	1529366	Capscrew	2
5	1347166	Hose	1
6	366473	Clamp	2
7	2105803	Fuel Filter (LPG)	1
7	1689544	Kit-Filter Element	1
8	296152	Capscrew	2
9	**b** 16151	Fitting	1
9	**a** 14349	Fitting (Pipe Plug) (Not Shown)	1
10	**b** 14372	Fitting	1
10	**a** 16134	Fitting (Not Shown)	1
11	14358	Fitting	1
12	1542436	Clamp	3
13	1542439	Clamp (Swivel)	3
14	4000330	Bracket	1
15	2064431	Hose	1
15	1698684	Kit-O-Ring	1
16	2072300	Hose Assy	1
17	**b** 2072299	Tube	1
17	**a** 2107842	Tube Assy	1
18	**c** 130845	Clamp	8
18	**d** 130845	Clamp	4
19	**c** 366000	Fitting	1
20	**c** 2072894	Radiator Hose	2
20	**d** 2072895	Radiator Hose	2
21	**c** 2070782	Radiator Hose	2
22	**g** 1649220	Lpg Tank Bracket (Swing Out/Drop Down)	1
22	**g** 1649216	Lpg Tank Bracket (Swing Out)	1
23	1586013	Capscrew	4
24	16134	Fitting	2
25	97999	Fitting	1
26	2072298	Hose Assy	1
27	2058426	Hose Assy	1
28	**e** 1564061	Bracket	1
29	2071517	Sleeve	1
30	1501970	Pressure Switch (Low Fuel)	1
30	**a** 4602843	Wire Harness (Adapter, Low Fuel Pressure Switch) (Not Shown) (☞Figure 7-96)	1
	af 1662253	Sensor (Vapor)	1
	af 12855	Fitting	2

FOOTNOTES:

a For use only with premium low fuel sensor.
b For use only without premium low fuel sensor.
c For Vehicles With Cab
d For Vehicles With Overhead Guard
e For Vehicles With Swing Out Bracket
f Not Illustrated
g 11/2007 →

©2013 HYSTER COMPANY

THROTTLE BODY AND ATTACHING PARTS (FIGURE 6-13)

GM 2.4L — GASOLINE

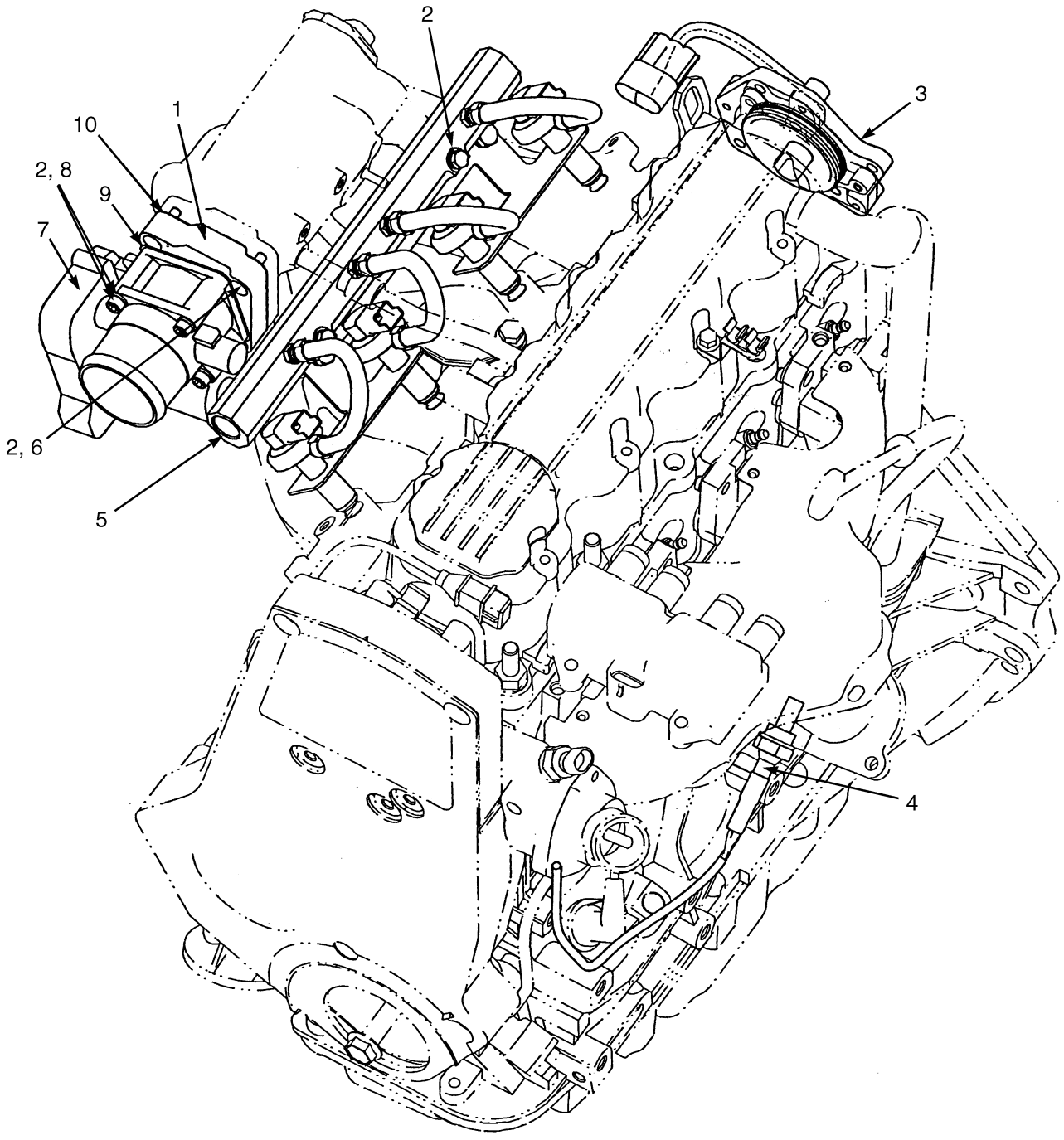

HP130377

©2013 HYSTER COMPANY

THROTTLE BODY AND ATTACHING PARTS
GM 2.4L – GASOLINE

ITEM	PART NO.	DESCRIPTION	QTY
1	1557553	Plate (Throttle Adapter)	1
2	**b** 1557550	Lockwasher	10
3	1581796	Kit-Sensor	1
3	1564589	Screw	1
3	1564588	O-Ring	1
3	1564587	Sensor (Camshaft Position)	1
3	**b** 1557550	Lockwasher	1
3	1534417	Capscrew	1
3	1600125	Clamp	1
4	**a** 1557546	Oxygen Sensor (With Wire Harness)	1
5	1548395	Fuel Rail (Gasoline)	1
5	1597699	Rail	1
5	1597700	Retainer	4
5	1597701	Injector	4
5	1597702	Regulator	1
5	1597703	Bolt	1
5	1597704	Seal	1
6	1557549	Capscrew	4
7	1557547	Throttle Body	1
8	1557548	Capscrew	4
9	1557551	Gasket (Throttle Body)	1
10	1557552	Gasket (Throttle Plate)	1

FOOTNOTES:

a Located in exhaust System

b → S/N L177B14822E

©2013 HYSTER COMPANY

THROTTLE BODY AND ATTACHING PARTS (FIGURE 6-14)

GM 2.4L — LPG

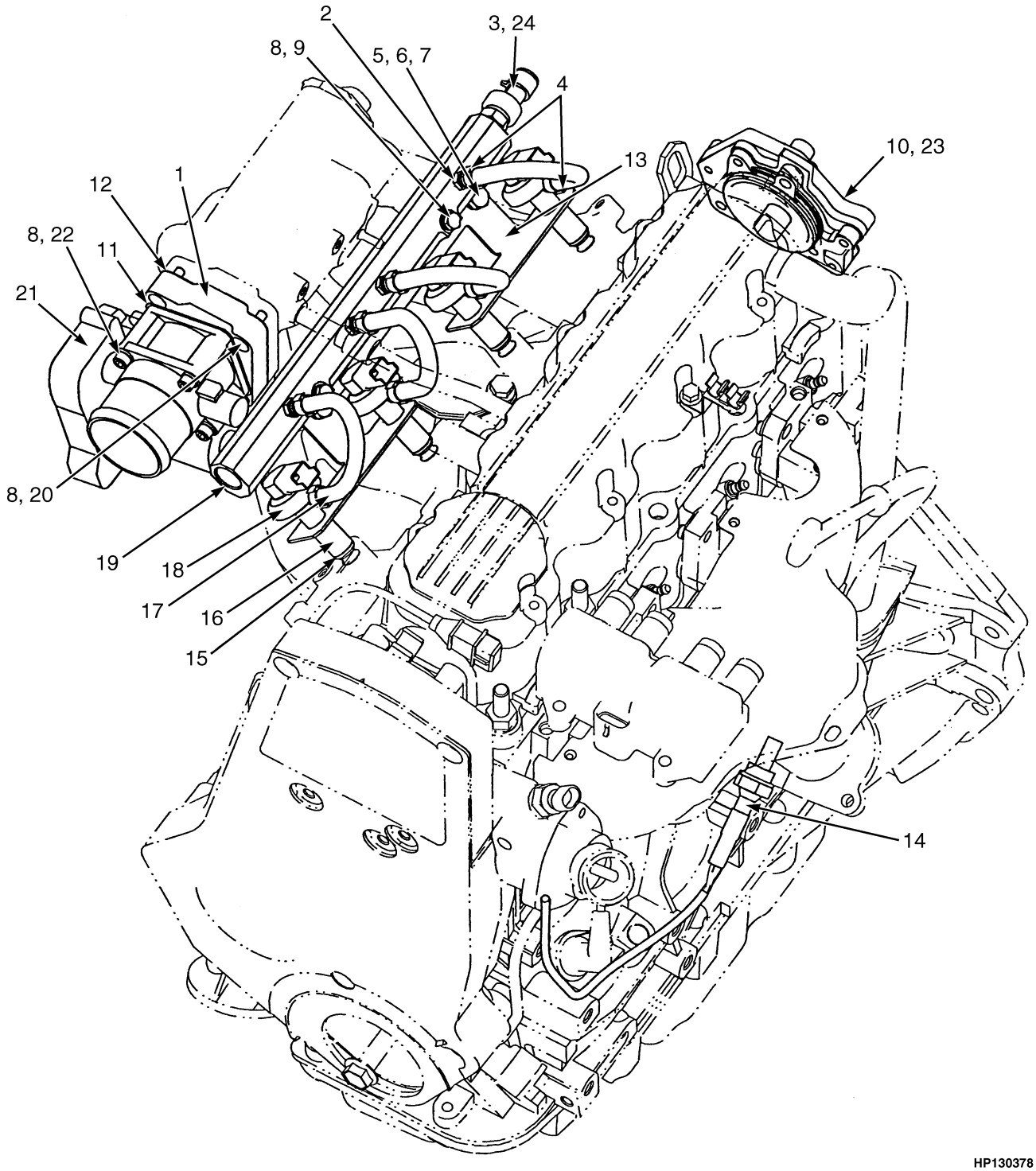

©2013 HYSTER COMPANY

THROTTLE BODY AND ATTACHING PARTS
GM 2.4L – LPG

ITEM	PART NO.	DESCRIPTION	QTY
1	1557553	Plate (Throttle Adapter)	1
2	. . . . .	Fitting	4
3	. . . . .	Plug	1
4	1557566	Hose Clamp	8
5	**b** 1557558	Lockwasher	2
6	1557559	Capscrew	2
7	1557561	Spacer	2
8	**b** 1557550	Lockwasher	10
9	1557554	Capscrew	2
10	1581796	Kit-Sensor	1
10	1564589	Screw	1
10	1564588	O-Ring	1
10	1564587	Sensor (Camshaft Position)	1
10	1557550	Lockwasher	1
10	1534417	Capscrew	1
10	1600125	Clamp	1
11	1557551	Gasket (Throttle Body)	1
12	1557552	Gasket (Throttle Plate)	1
13	1557564	Bracket	1
14	**a** 1557546	Oxygen Sensor (With Wire Harness)	1
15	1557565	O-Ring	4
16	1557563	Adapter (Injector)	4
17	1557562	Hose (LPG Vapor)	4
18	1557560	Injector (LPG)	4
19	1581795	Fuel Rail (LPG)	1
20	1557549	Capscrew	4
21	1557547	Throttle Body	1
22	1557548	Capscrew	4
23	1564586	Plate (Coil Support)	1
24	1632300	Sensor (Fuel Air Pressure)	1

FOOTNOTES:

a Located in Exhaust System

b → S/N L177B14822E

©2013 HYSTER COMPANY

THROTTLE BODY AND ATTACHING PARTS (FIGURE 6-15)

GM 2.4L GASOLINE AND LPG — 2010 SERIES

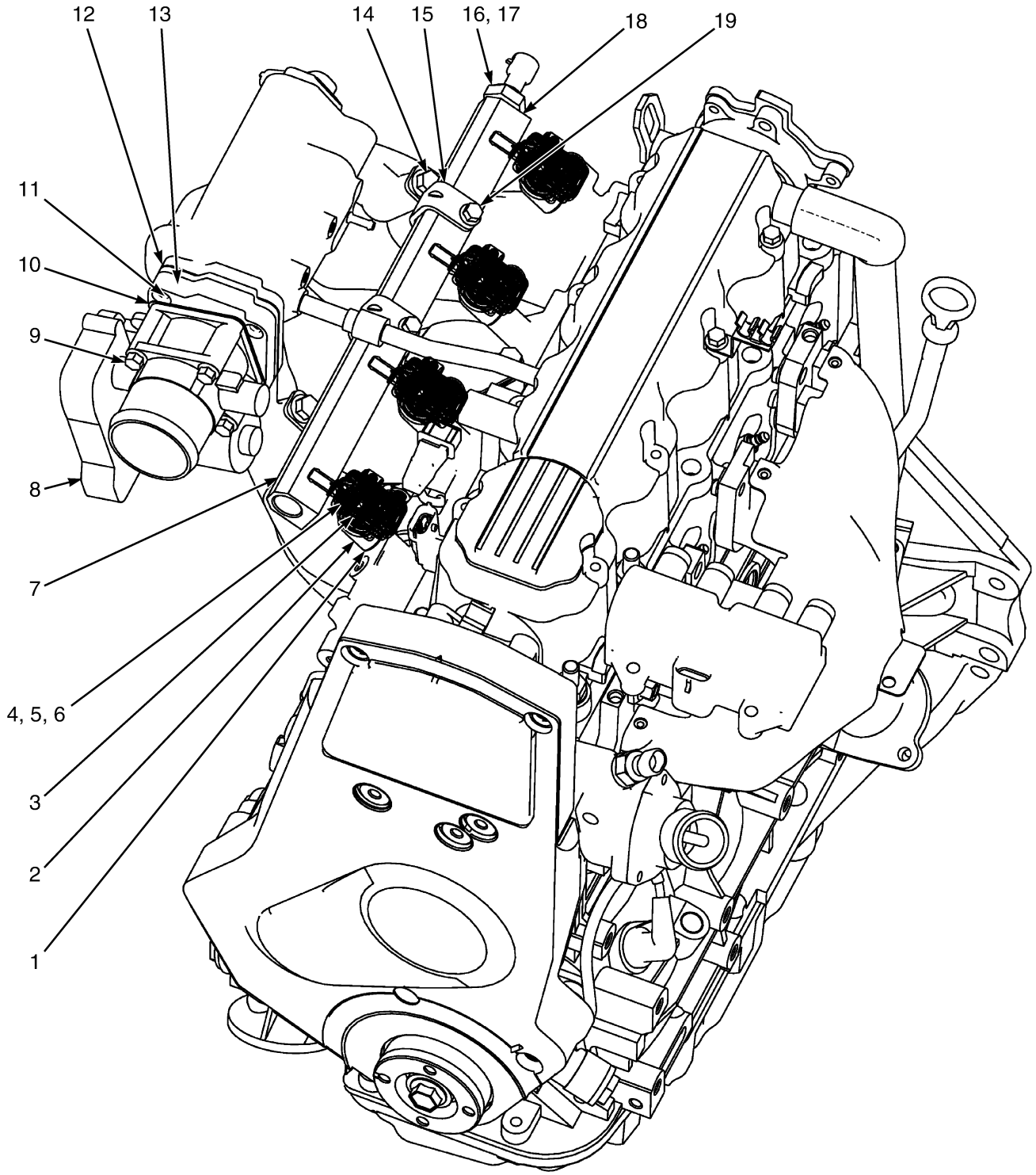

©2013 HYSTER COMPANY

THROTTLE BODY AND ATTACHING PARTS
GM 2.4L GASOLINE AND LPG – 2010 SERIES

KEY:
A: Gasoline
B: LPG

ITEM	PART NO.	DESCRIPTION	QTY A	QTY B
1	1557565	O-Ring (Injector Adaptor)	..	4
2	4013304	Adapter (Injector)	..	4
3	4013299	O-Ring (Adaptor)	..	4
4	4013301	Injector	..	4
5	4013302	O-Ring (Spacer)	..	4
6	4013303	O-Ring (Inlet)	..	4
7	4013300	Fuel Rail	..	1
8	1557547	Throttle Body	1	1
9	1540643	Capscrew	4	4
10	1557551	Gasket (Throttle Body)	1	1
11	1534417	Capscrew	4	4
12	1557552	Gasket (Throttle Plate)	1	1
13	1557553	Plate (Throttle Adapter)	1	1
14	1527879	Capscrew	..	2
15	4013305	Bracket (Fuel Rail Mounting)	..	1
16	. . . . .	Fitting	..	1
17	1632300	Sensor (Fuel Air Pressure)	..	1
18	246108	Sealant	..	AR
19	1527876	Capscrew	..	2

©2013 HYSTER COMPANY

FUEL REGULATOR (FIGURE 6-16)

LPG — GM 2.4L

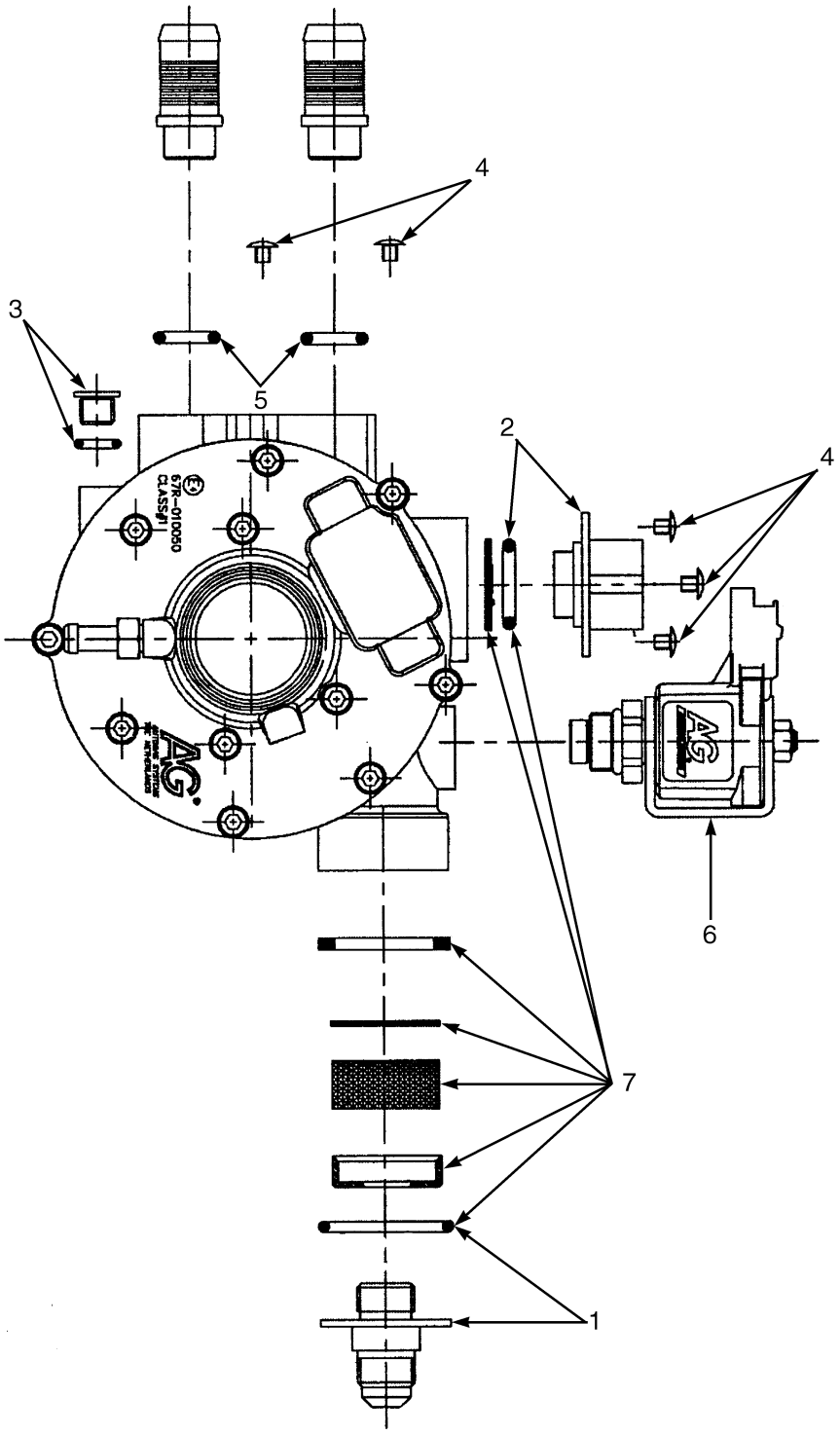

HP130352

©2013 HYSTER COMPANY

FUEL REGULATOR
LPG – GM 2.4L

ITEM	PART NO.	DESCRIPTION	QTY
	~~2056762~~		
	4602051	LPG Converter	1
1	1581762	Fitting (Inlet Fitting With O-Ring)	1
2	1581763	Fitting (Outlet Fitting With O-Ring)	1
3	1581764	Drain Plug (With O-Ring)	1
4	1585751	Kit-Screw (Includes 5 Connector Screws)	1
5	1585748	Kit-O-Ring (Includes 2 Coolant Fitting O-Rings)	1
6	1585747	LPG Lock-Off	1
7	1581761	Kit-Filter	1
7	. . . . .	O-Ring	1
7	. . . . .	Plastic Cap	1
7	. . . . .	Foam Filter	1
7	. . . . .	Paper Filter	1
7	. . . . .	Rubber Washer	1
7	. . . . .	Screen	1
	1692176	Kit-Repair LPG Converter	1
	. . . . .	Diaphragm	1
	. . . . .	Barrier, Lower	1
	. . . . .	Barrier, Upper	1
	. . . . .	Rubber Seal, High Pressure	1
	. . . . .	Support (For Rubber Seal)	1
	. . . . .	Pivot Pin	1
	. . . . .	Screw (For Pivot Pin)	1
	. . . . .	Washer	1
	. . . . .	Washer, Anti-Friction	1
	4600754	Fitting	1

©2013 HYSTER COMPANY

ENGINE FUEL SYSTEM AND INTAKE MANIFOLD (FIGURE 6-17)

MAZDA 2.0L AND 2.2L, GASOLINE, 2006 EMISSION COMPLIANT ENGINES (→ S/N L177B15326E 2.2L GAS) (→ S/N L177B15511E 2.0L GAS)

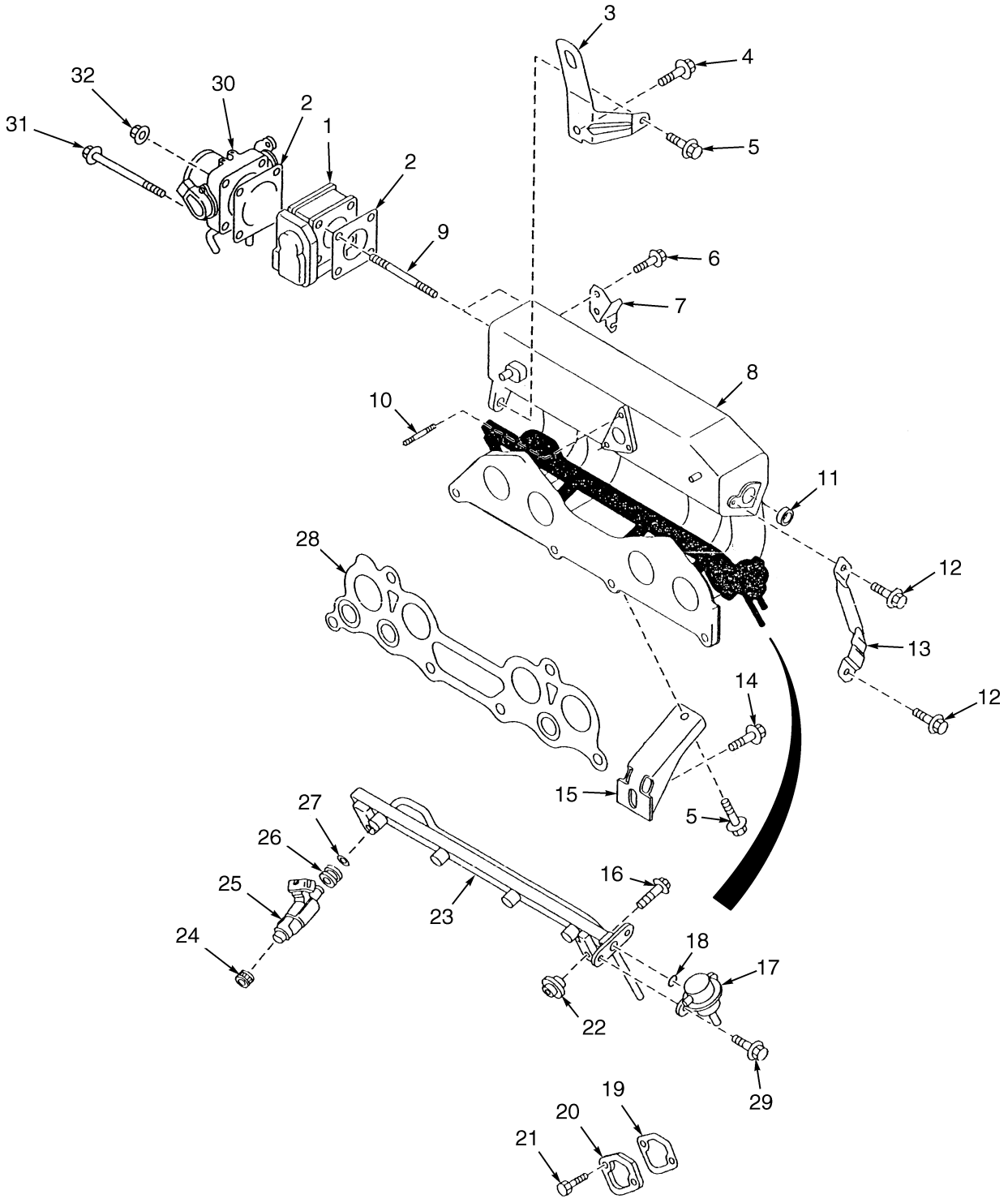

BP090139

©2013 HYSTER COMPANY

ENGINE FUEL SYSTEM AND INTAKE MANIFOLD

MAZDA 2.0L AND 2.2L, GASOLINE, 2006 EMISSION COMPLIANT ENGINES (→ S/N L177B15326E 2.2L GAS) (→ S/N L177B15511E 2.0L GAS)

ITEM	PART NO.	DESCRIPTION	QTY
1	1553838	Governor	1
2	1553832	Gasket	1
3	1553779	Bracket	1
4	1361881	Bolt	1
5	324706	Bolt	2
6	1368805	Bolt	2
7	1553787	Bracket (Throttle)	1
8	1573014	Intake Manifold	1
9	1553773	Stud	2
10	1553774	Stud	2
11	1362005	Plug	1
12	1366874	Bolt	2
13	1553778	Bracket	1
14	1370675	Bolt	1
15	1553777	Bracket	1
16	1553839	Bolt	2
17	1553840	Pressure Regulator	1
18	1553841	O-Ring	1
19	1361756	Gasket (Fuel Pump)	1
20	1361749	Cover	1
21	1361898	Bolt	2
22	1553830	Insulator	2
23	1553831	Manifold	1
24	1553837	Insulator	4
25	1553833	Injector	4
26	1553834	Grommet	1
27	1553835	O-Ring	1
28	1553776	Gasket	1
29	1361893	Screw	2
30	1553864	Throttle Body	1
31	2066630	Bolt	2
32	326504	Nut	2
	4049234	Kit Governor	1
	4050315	Kit Governor with Filters	1

©2013 HYSTER COMPANY

EMISSION CONTROL SYSTEM (FIGURE 6-18)

MAZDA 2.0L AND 2.2L LPG — 2006 EMISSION COMPLIANT ENGINES (→ S/N L177B15511E 2.0L LPG) (→ S/N L177B16206E (2.2L LPG))

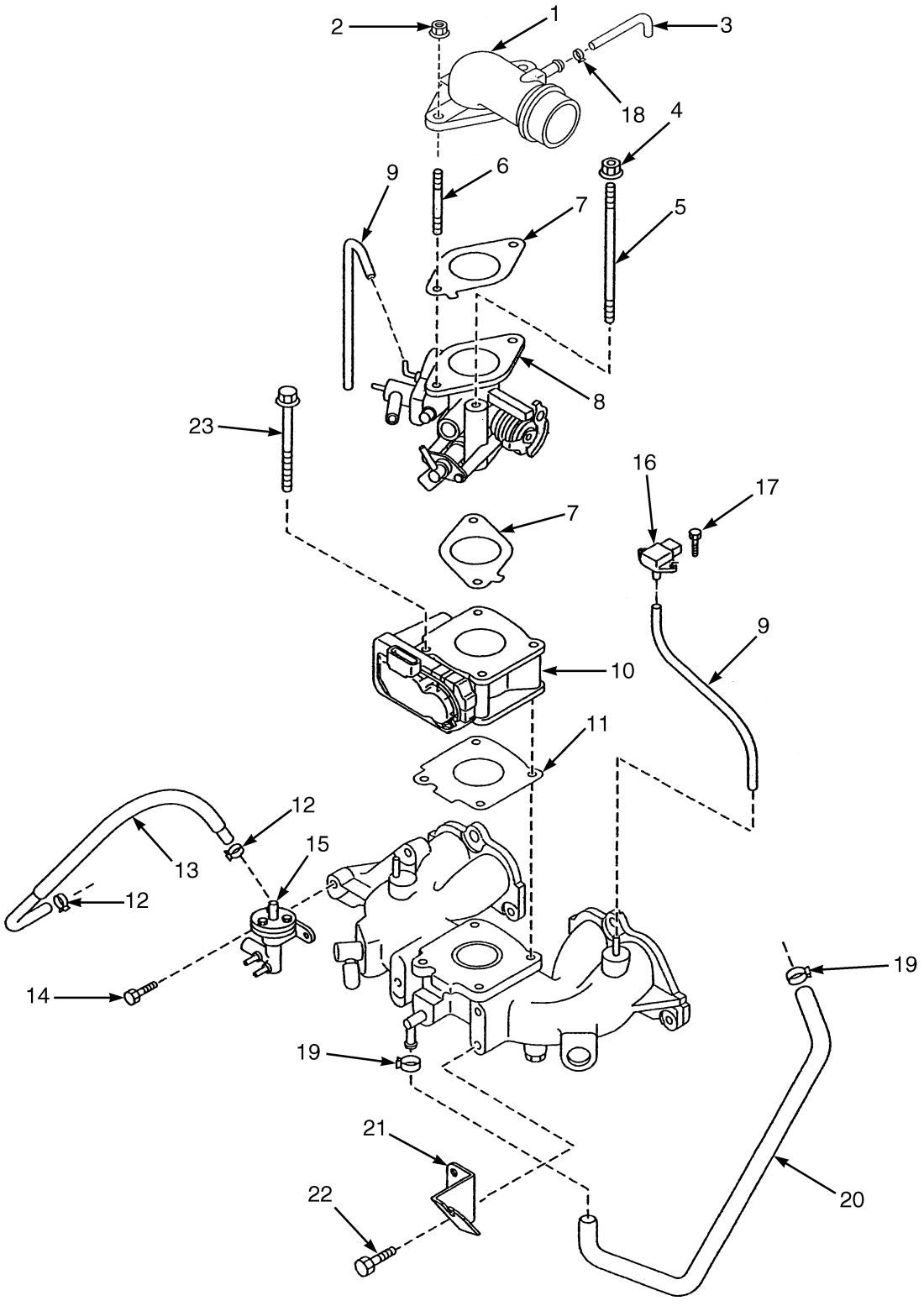

HP000900

©2013 HYSTER COMPANY

EMISSION CONTROL SYSTEM

MAZDA 2.0L AND 2.2L LPG – 2006 EMISSION COMPLIANT ENGINES (→ S/N L177B15511E 2.0L LPG) (→ S/N L177B16206E (2.2L LPG))

ITEM	PART NO.	DESCRIPTION	QTY
1	1573118	Air Duct	1
2	2066629	Nut	2
3	1573562	Hose (Ventilation)	1
4	326504	Nut	2
5	1582323	Stud	2
6	1553774	Stud	2
7	1573117	Gasket	2
8	1573119	Carburetor	1
8	1616236	Setscrew	1
8	1620009	Injector (Trim)	1
9	1495413	Hose	1
10	1553838	Governor	1
11	1553832	Gasket	1
12	1553799	Clamp	2
13	1573120	Hose (Fuel)	1
14	1361878	Screw	2
15	1581048	Fuel Filter (LPG Vapor)	1
15	1583593	Kit-Cover	1
15	1581051	Setscrew	1
15	1581050	Screw	3
15	1581052	Fuel Filter (With O-Ring)	1
15	1581049	Spring	1
16	1548352	Sensor (Boost, M.A.P.)	1
17	1582324	Screw	2
18	1361871	Clamp	1
19	1366933	Clamp	2
20	1573564	Hose (PCV)	1
21	1573021	Bracket (Throttle)	1
22	1361898	Bolt	2
23	1582321	Bolt	2
	1374788	Valve (Delay) (Not illustrated)	1
	4049234	Kit Governor	1
	4050315	Kit Governor with Filters	1

©2013 HYSTER COMPANY

EMISSIONS LINES (FIGURE 6-19)

MAZDA 2.0L AND 2.2L, GASOLINE — 2006 EMISSION COMPLIANT ENGINES (→ S/N L177B15326E (2.2L GAS)) (→ S/N L177B15511E 2.0 GAS)

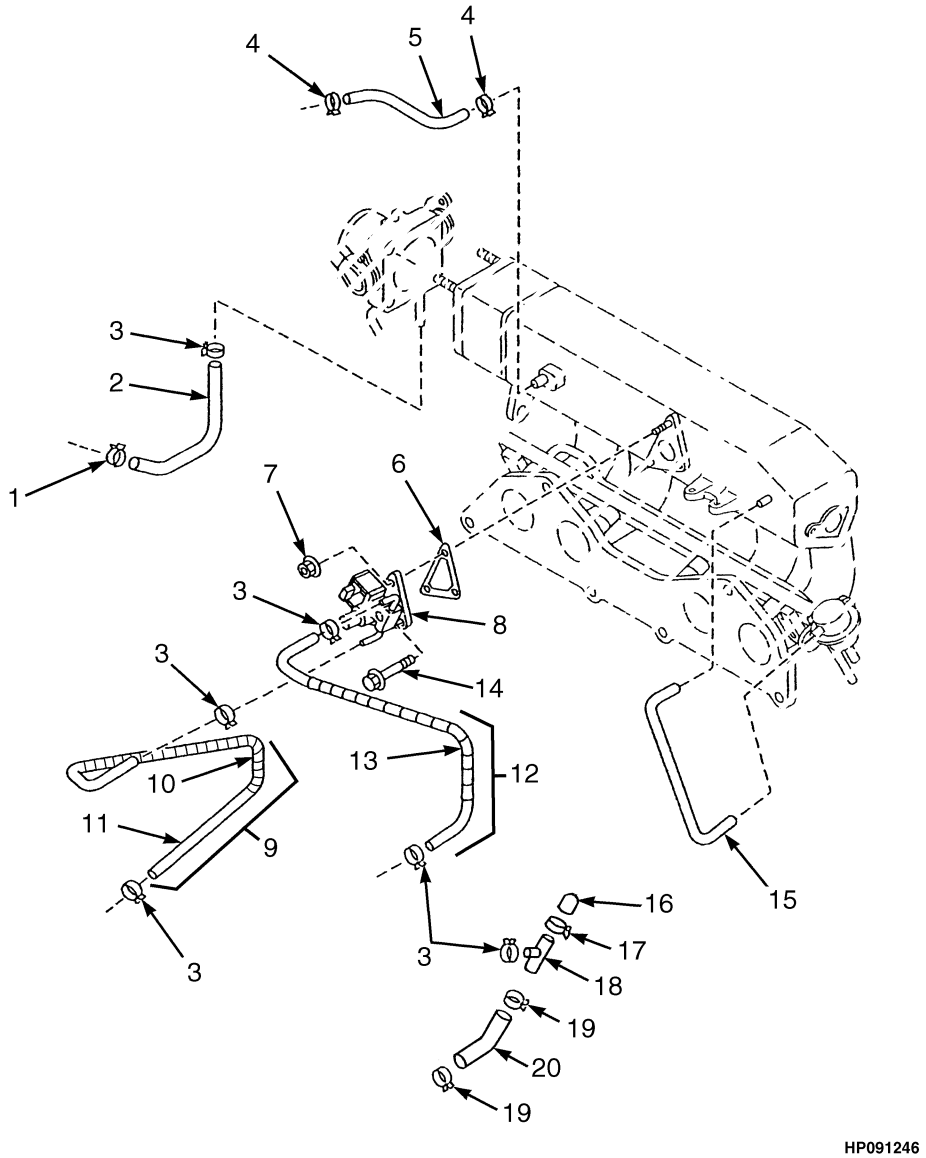

©2013 HYSTER COMPANY

EMISSIONS LINES

MAZDA 2.0L AND 2.2L, GASOLINE – 2006 EMISSION COMPLIANT ENGINES

(→ S/N L177B15326E (2.2L GAS)) (→ S/N L177B15511E 2.0 GAS)

ITEM	PART NO.	DESCRIPTION	QTY
1	1361873	Clamp	1
2	1553867	Radiator Hose	1
3	1495429	Hose Clamp	6
4	1366933	Clamp	2
5	1553868	Hose (PCV)	1
6	1553871	Gasket	1
7	2066629	Nut	2
8	1553870	Valve (Idle Air Control)	1
9	1574101	Hose Assy	1
10	1553829	Support	1
11	1553866	Radiator Hose	1
12	1573561	Cap (Water)	1
13	1553948	Protector	1
14	1362011	Bolt	1
15	1553869	Tube (Vacuum)	1
16	1574098	Cap	2
17	1573568	Clamp	1
18	1574097	Pipe (Air Intake)	1
19	1573567	Clamp	2
20	1574099	Hose (Water) (Water)	1

©2013 HYSTER COMPANY

CARBURETOR (FIGURE 6-20)

MAZDA 2.0L AND 2.2L LPG — 2006 EMISSION COMPLIANT ENGINES (→ S/N L177B15511E 2.0 LPG) (→ S/N L177B16206E (2.2L LPG))

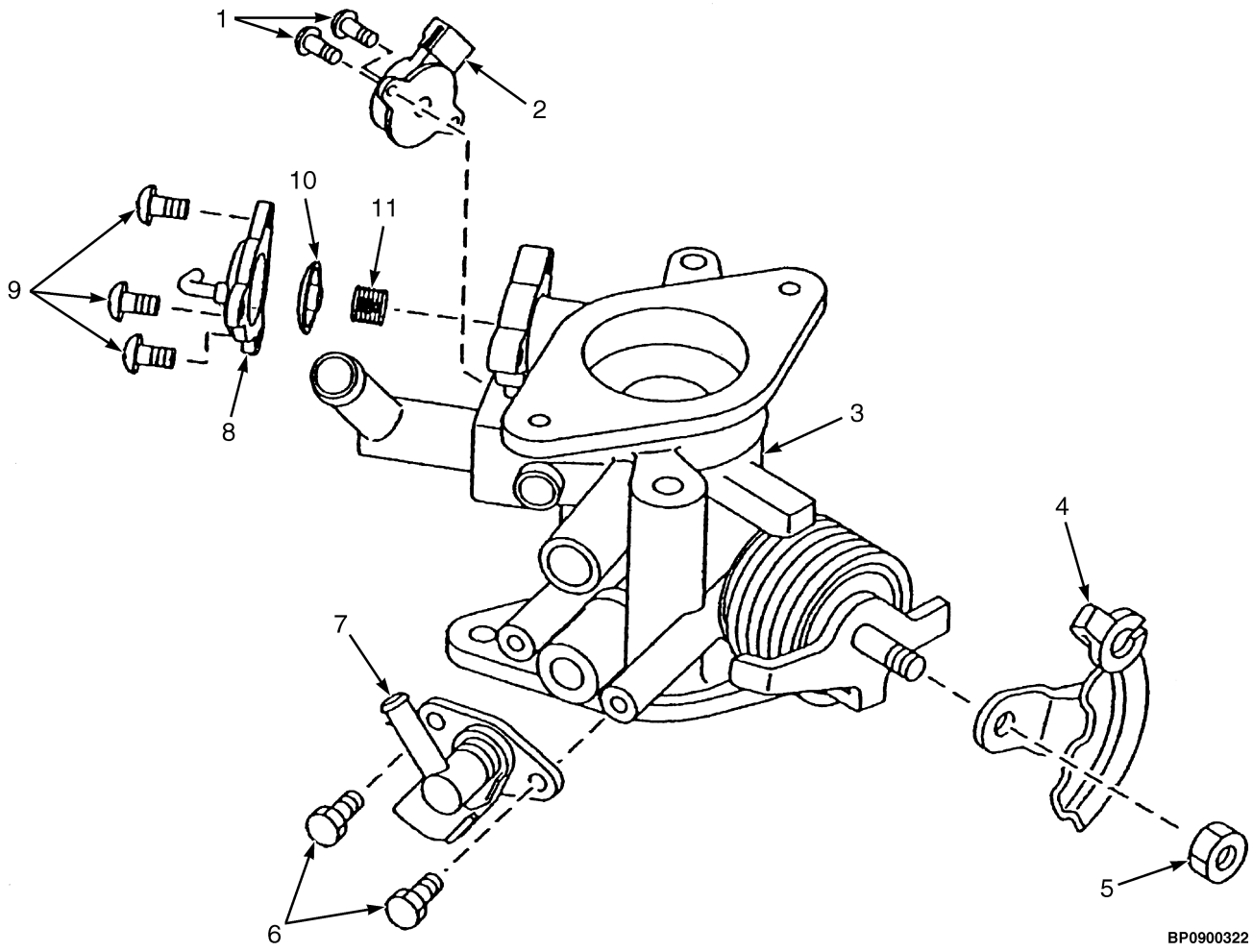

©2013 HYSTER COMPANY

CARBURETOR

MAZDA 2.0L AND 2.2L LPG – 2006 EMISSION COMPLIANT ENGINES (→ S/N L177B15511E 2.0 LPG) (→ S/N L177B16206E (2.2L LPG))

ITEM	PART NO.	DESCRIPTION	QTY
	1573119	Carburetor (LPG)	1
1	1652216	Screw (Sensor)	2
2	1639791	Sensor (Throttle Position)	1
3	. . . . .	Body	1
4	2051839	Lever (Throttle)	1
5	1652217	Nut	1
6	1616236	Setscrew	1
7	1620009	Injector (Trim)	1
8	2051836	Cover (Power Valve)	1
9	1652215	Screw (Diaphragm)	3
10	2051834	Diaphragm (Power)	1
11	2051835	Spring (Power)	1

©2013 HYSTER COMPANY

DELAY VALVE (FIGURE 6-21)

MAZDA 2.0L AND 2.2L LPG (→ S/N L177B11511E (2.0L LPG))
(S/N L177B11108D ↔ S/N L177B16206E 2.2L LPG)

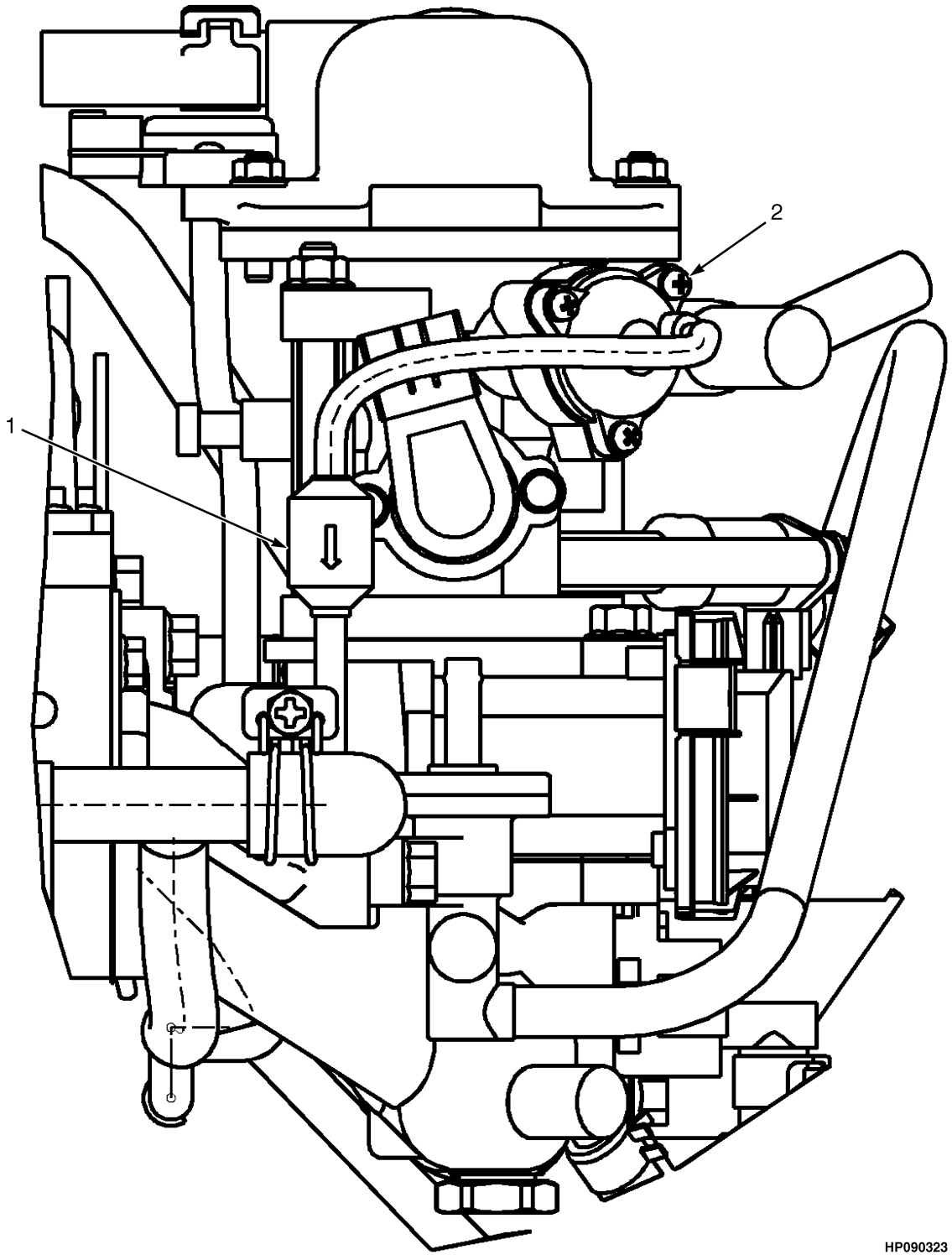

©2013 HYSTER COMPANY

DELAY VALVE

MAZDA 2.0L AND 2.2L LPG (→ S/N L177B11511E (2.0L LPG)) (S/N L177B11108D ↔ S/N L177B16206E 2.2L LPG)

ITEM	PART NO.	DESCRIPTION	QTY
1	1374788	Valve (Delay)	1
2	1573119	Carburetor	1

©2013 HYSTER COMPANY

FUEL SYSTEM (FIGURE 6-22)

MAZDA 2.0L AND 2.2L, GASOLINE — 2006 EMISSION COMPLIANT ENGINES (→ S/N L177B16206E)

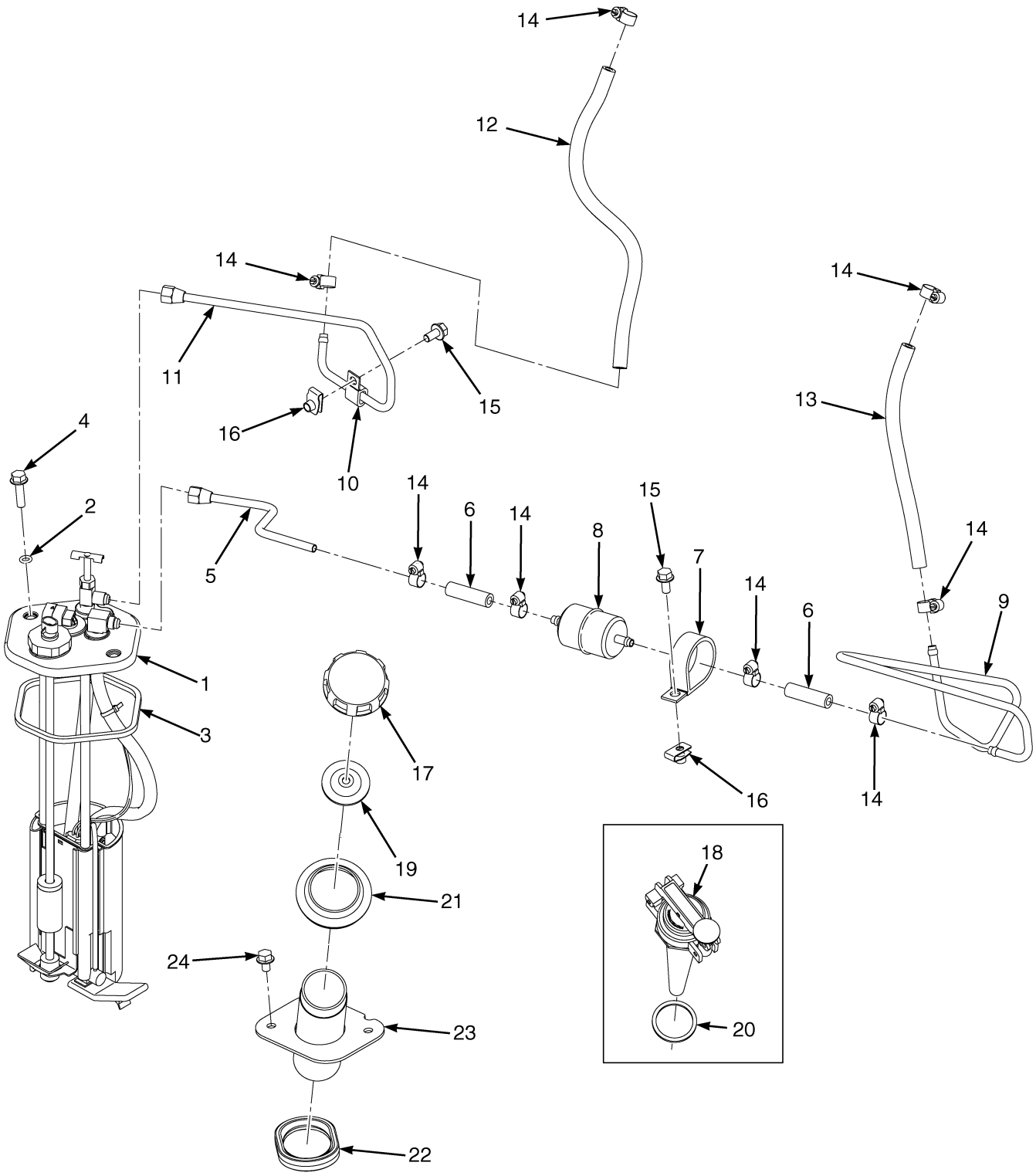

HP130355

©2013 HYSTER COMPANY

FUEL SYSTEM

MAZDA 2.0L AND 2.2L, GASOLINE – 2006 EMISSION COMPLIANT ENGINES (→ S/N L177B16206E)

KEY:
A: For Use On Standard Models
B: For Use On GS Models

ITEM	PART NO.	DESCRIPTION	QTY A	QTY B
1	1579400	Fuel Sender	1	1
2	353000	O-Ring	2	2
3	1528893	Quad Ring	1	1
4	1527881	Capscrew	2	2
5	1549376	Tube	1	1
6	2062587	Hose	2	2
7	1316496	Clamp	1	1
8	1304950	Fuel Filter	1	1
9	1550602	Tube	1	1
10	187630	Clamp	1	1
11	1547489	Tube	1	1
12	2062586	Hose	1	1
13	2064463	Hose	1	1
14	168718	Clamp	8	8
15	1527879	Capscrew	2	2
16	1480237	Nut	2	2
17	2021679	Fuel Cap	1	1
18	1579677	Fuel Cap	..	1
19	2021683	Gasket	1	..
20	2021685	Gasket	..	1
20	325549	Shim (0.020 in.)	..	1
21	1528608	Grommet	1	1
22	~~1528314~~			
	1593391	Seal	1	1
23	1564392	Pipe (Fill)	1	1
24	1529366	Capscrew	2	2

©2013 HYSTER COMPANY

FUEL SYSTEM (FIGURE 6-23)

MAZDA 2.0L AND 2.2L LPG — 2006 EMISSION COMPLIANT ENGINES (→ S/N L177B16207E)

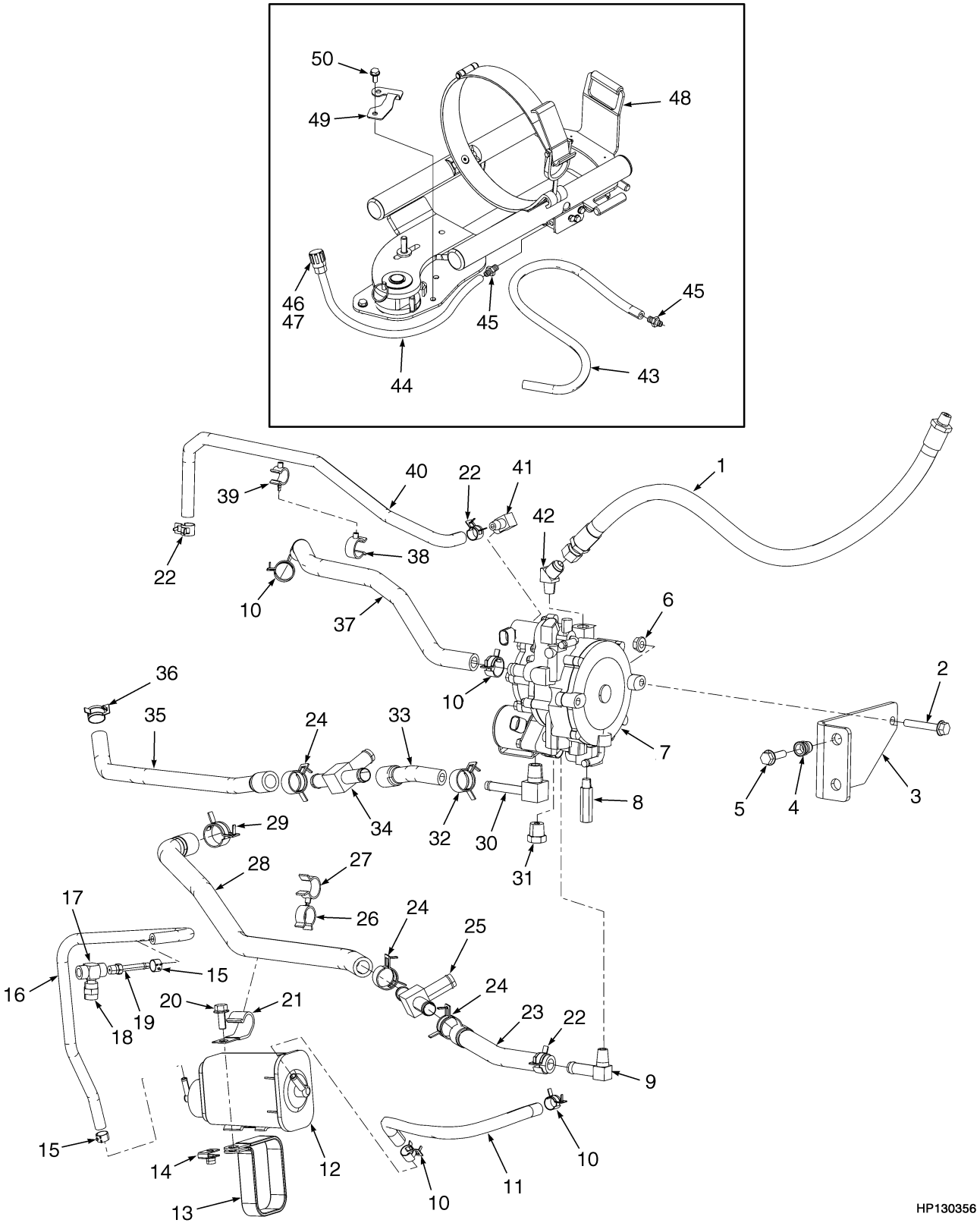

©2013 HYSTER COMPANY

FUEL SYSTEM

MAZDA 2.0L AND 2.2L LPG – 2006 EMISSION COMPLIANT ENGINES (→ S/N L177B16207E)

KEY:
A: With Cab and Steel Door
B: With Overhead Guard or Cab with PVC Door

ITEM	PART NO.	DESCRIPTION	QTY A	QTY B
1	2072300	Hose Assy	1	1
2	1510115	Capscrew	2	2
3	1502069	Bracket (Regulator)	1	1
4	1530243	Insert	2	2
5	1527881	Capscrew	2	2
6	~~1382472~~			
	1502543	Nut (Flange)	2	2
7	1594144	LPG Regulator	1	1
7	1578553	Setscrew	1	1
7	1616232	Filter	1	1
7	~~1479530~~			
	4042625	Valve Sub Assembly	1	1
7	1479531	Kit-Diaphragm	1	1
8	1502058	Fitting	1	1
9	17353	Fitting	1	1
10	1502003	Hose Clamp	4	4
11	260878	Hose	1	1
12	1471694	Resonator	1	1
13	1475409	Clamp	1	1
14	1480237	Nut	1	1
15	369815	Clamp	2	2
16	1502085	Hose	1	1
17	16199	Fitting	1	1
18	16168	Fitting	1	1
19	1502027	Fitting	1	1
20	1527880	Capscrew	1	1
21	1339452	Clamp	1	1
22	1502005	Hose Clamp	3	3
23	2071303	Radiator Hose	1	..
24	130845	Clamp	2	..
25	1608989	Fitting	1	..
26	1502066	Clamp	1	1
27	1502054	Clamp	1	1
28	1625311	Radiator Hose	..	1
28	2070784	Radiator Hose	1	..
29	1502007	Hose Clamp	1	1
30	16788	Fitting	1	1
31	63108	Fitting	2	2
32	1502005	Hose Clamp	4	2
33	2086921	Hose	1	..
34	366000	Fitting	1	..
35	1502083	Radiator Hose	..	1
35	2071302	Radiator Hose	1	..
36	1501995	Hose Clamp	1	1
37	1502081	Hose	1	1

©2013 HYSTER COMPANY

FUEL SYSTEM

MAZDA 2.0L AND 2.2L LPG – 2006 EMISSION COMPLIANT ENGINES (→ S/N L177B16207E)

KEY:
A: With Cab and Steel Door
B: With Overhead Guard or Cab with PVC Door

ITEM	PART NO.	DESCRIPTION	QTY A	QTY B
38	1502053	Clamp (Swivel)	1	1
39	1543691	Clamp (Swivel)	1	1
40	1502084	Hose	1	1
41	15971	Fitting	1	1
42	16863	Fitting	1	1
43	2072298	Hose Assy	1	1
44	2058426	Hose Assy	1	1
45	16134	Fitting	2	2
46	2071517	Sleeve	1	1
47	97999	Fitting	1	1
48	**b** 1519360	Lpg Tank Bracket (EZXchange)	1	1
48	**c** 1615864	Lpg Tank Bracket (EZXchange)	1	1
48	1582409	Lpg Tank Bracket (Swing Out)	1	1
49	**a** 1564061	Bracket	1	1
50	1586013	Capscrew	4	4

FOOTNOTES:

a For Use With Swing Out Bracket Only
b → S/N L177B10456D
c S/N L177B10457D →

©2013 HYSTER COMPANY

FUEL SYSTEM (FIGURE 6-24)

MAZDA 2.0L AND 2.2L, GASOLINE — 2007-2010 EMISSION COMPLIANT ENGINES (S/N L177B15511E →)

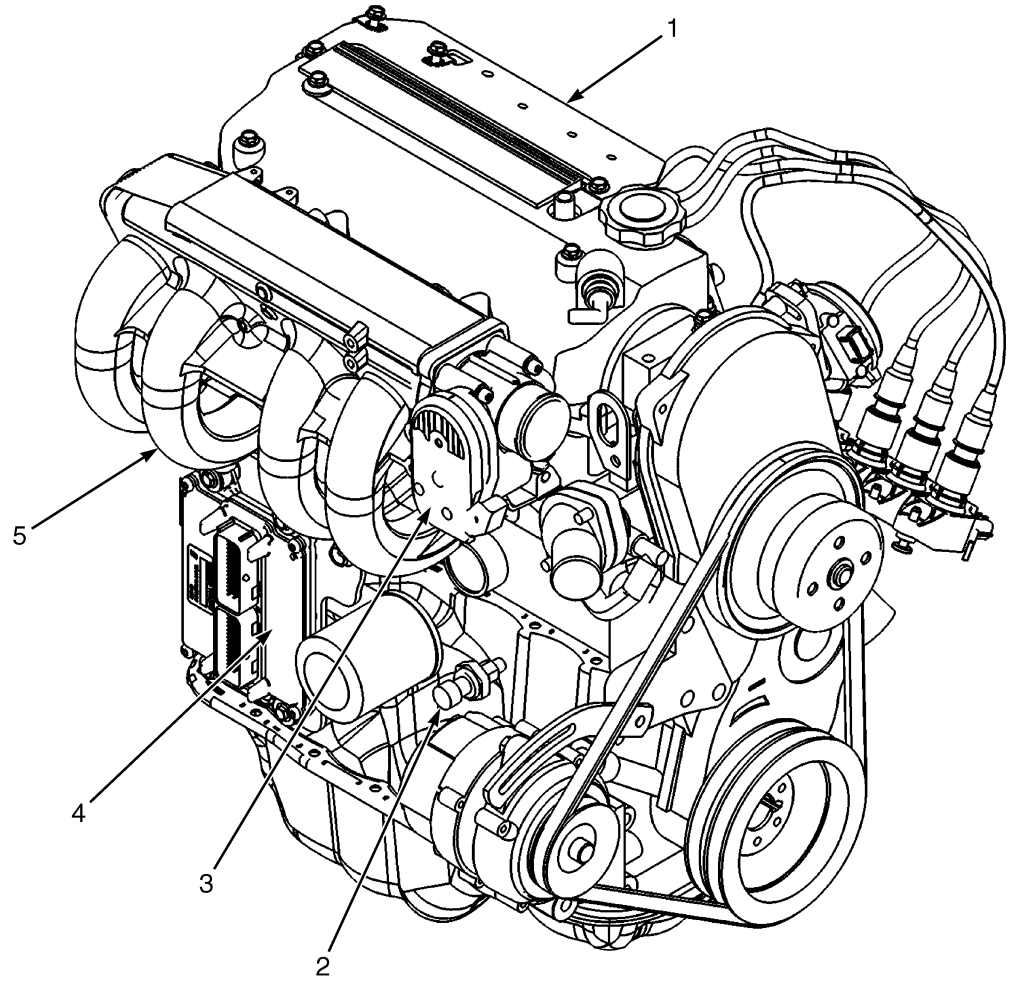

BP130249

ITEM	PART NO.	DESCRIPTION	QTY
1	1650507	Bracket (Relay)	1
2	1566654	Pressure Transducer Sensor (Oil Pressure) (☞Figure 7-15)	1
2	4016652	Pressure Transducer (Oil) (2010 Series)	1
2	1650506	Adapter	1
3	1650404	Throttle Body	1
4	2093596	Electronic Control Module (2.0L, Gasoline) (☞Figure 7-13)	1
4	2111038	Engine Control Module (2.0L, Gasoline) (Alternate Part)	1
4	2093597	Electronic Control Module (2.2L, Gasoline) (☞Figure 7-13)	1
4	2111039	Engine Control Module (2.2L, Gasoline) (Alternate Part)	1
4	4603434	Engine Control Module (2.2L, Gasoline) (2010 Series)	1
5	1515654	Temperature Sensor (☞Figure 7-15)	1
5	4001804	Sensor (Temperature) (2010 Series)	1

©2013 HYSTER COMPANY

FUEL SYSTEM (FIGURE 6-25)

MAZDA 2.0L AND 2.2L LPG — 2007-2010 EMISSION COMPLIANT ENGINES (S/N L177B15512E →)

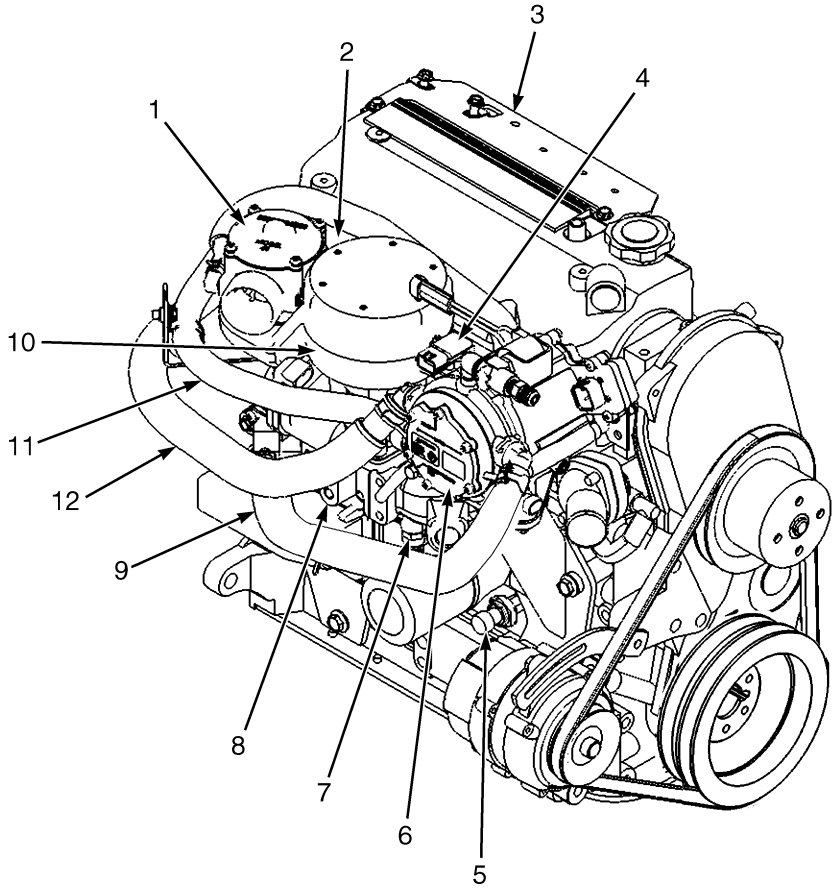

BP130244

ITEM	PART NO.	DESCRIPTION	QTY
1	1650758	Mixer	1
2	1539962	Sensor (Air Temperature) (☞Figure 7-16)	1
3	1650507	Bracket (Relay)	1
4	1548352	Sensor (Boost, M.A.P.) (Boost) (☞Figure 7-16)	1
5	1566654	Pressure Transducer Sensor (Oil Pressure) (☞Figure 7-16)	1
5	4016652	Pressure Transducer (Oil) (2010 Series)	1
5	1650506	Adapter	1
6	1650764	Pressure Regulator (EPR)	1
6	1701813	Pressure Regulator (EPR) (Alternate Part)	1
7	1515654	Temperature Sensor (☞Figure 7-16)	1
7	4001804	Sensor (Temperature) (2010 Series)	1
8	2093578	Electronic Control Module (2.0L, LPG) (☞Figure 7-14)	1
8	2109866	Engine Control Module (2.0L, LPG) (Alternate Part)	1
8	2093579	Electronic Control Module (2.2L, LPG) (☞Figure 7-14)	1
8	2109867	Engine Control Module (2.2L, LPG) (Alternate Part)	1
8	4603432	Engine Control Module (2010 Series)	1
9	1650784	Hose (RH) (Cooling)	1
10	1650404	Throttle Body	1
11	1650781	Hose	1
12	1687184	Hose	1

©2013 HYSTER COMPANY

NOTES

©2013 HYSTER COMPANY

FUEL SUPPLY SYSTEM (FIGURE 6-26)

MAZDA 2.0L AND 2.2L, GASOLINE — 2007 EMISSION COMPLIANT ENGINES

(S/N L177B15326E ↔ S/N L177B15511E (2.0L ENGINE))

(S/N L177B15326E ↔ S/N L177B16206E (2.2L ENGINE))

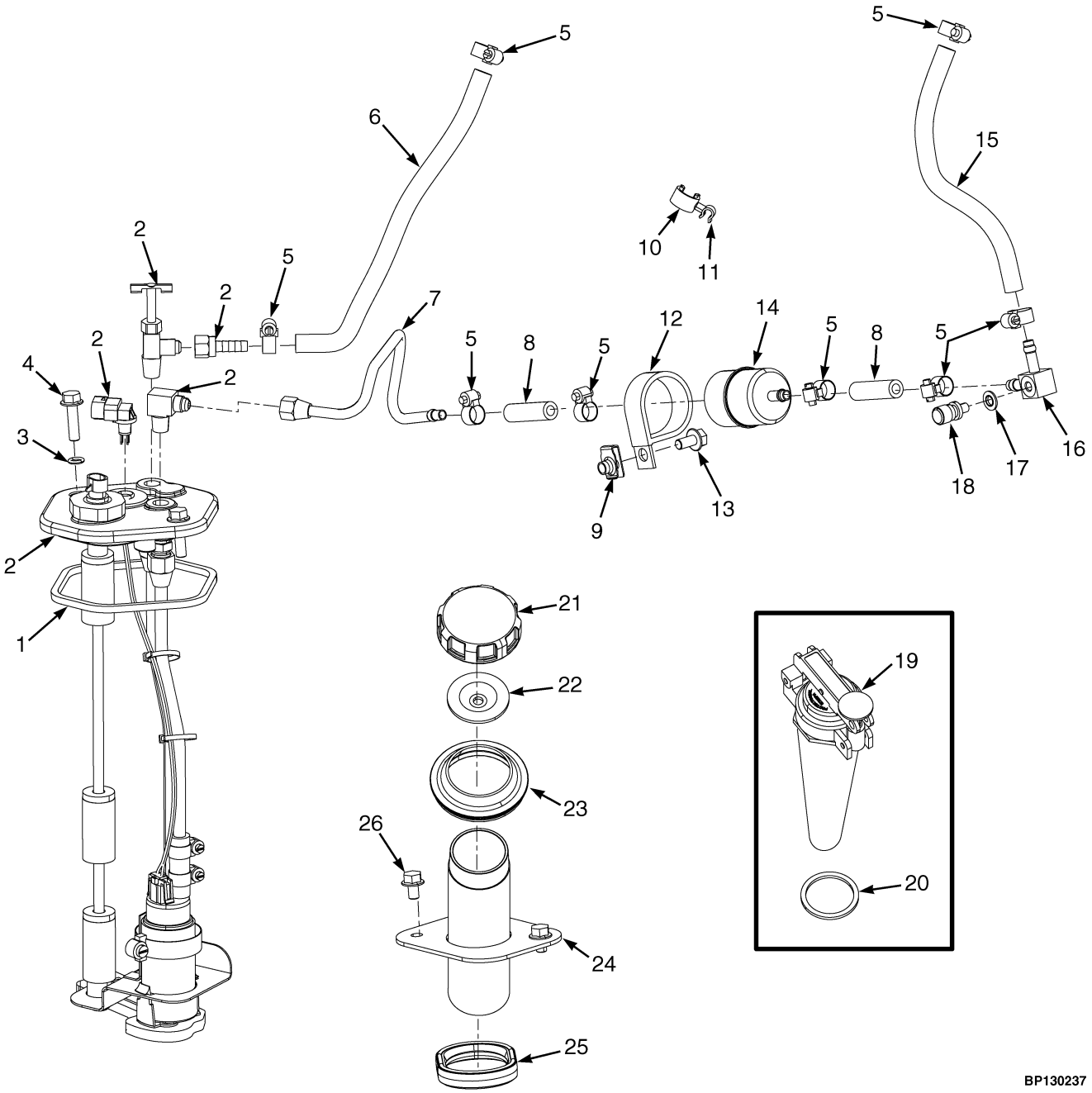

©2013 HYSTER COMPANY

FUEL SUPPLY SYSTEM

MAZDA 2.0L AND 2.2L, GASOLINE – 2007 EMISSION COMPLIANT ENGINES

(S/N L177B15326E ↔ S/N L177B15511E (2.0L ENGINE))
(S/N L177B15326E ↔ S/N L177B16206E (2.2L ENGINE))

ITEM	PART NO.	DESCRIPTION	QTY
1	1528893	Quad Ring	1
2	1634894	Fuel Sender	1
3	353000	O-Ring	2
4	1527881	Capscrew	2
5	168718	Clamp	8
6	2076792	Hose	1
7	1550600	Tube	1
8	2062587	Hose	2
9	1480237	Nut	1
10	1543698	Clamp (Swivel)	1
11	1542440	Clamp (Swivel)	1
12	1316496	Clamp	1
13	1527879	Capscrew	1
14	1304950	Fuel Filter	1
15	2072764	Hose	1
16	1547848	Fitting	1
17	1339438	Seal	1
18	1345991	Pressure Valve	1
19	1579677	Fuel Cap	1
20	2021685	Gasket	1
21	1579677	Fuel Cap	1
22	2021685	Gasket	1
23	1528608	Grommet	1
24	1564392	Pipe (Fill)	1
25	~~1528314~~		
	1593391	Seal	1
26	1529366	Capscrew	2

©2013 HYSTER COMPANY

FUEL SUPPLY SYSTEM (FIGURE 6-27)

MAZDA 2.0L AND 2.2L LPG — 2007 EMISSION COMPLIANT ENGINES

(S/N L177B15512E ↔ S/N L177V04793H (2.0L ENGINE))

(S/N L177B16207E ↔ S/N L177V04794H (2.2L ENGINE))

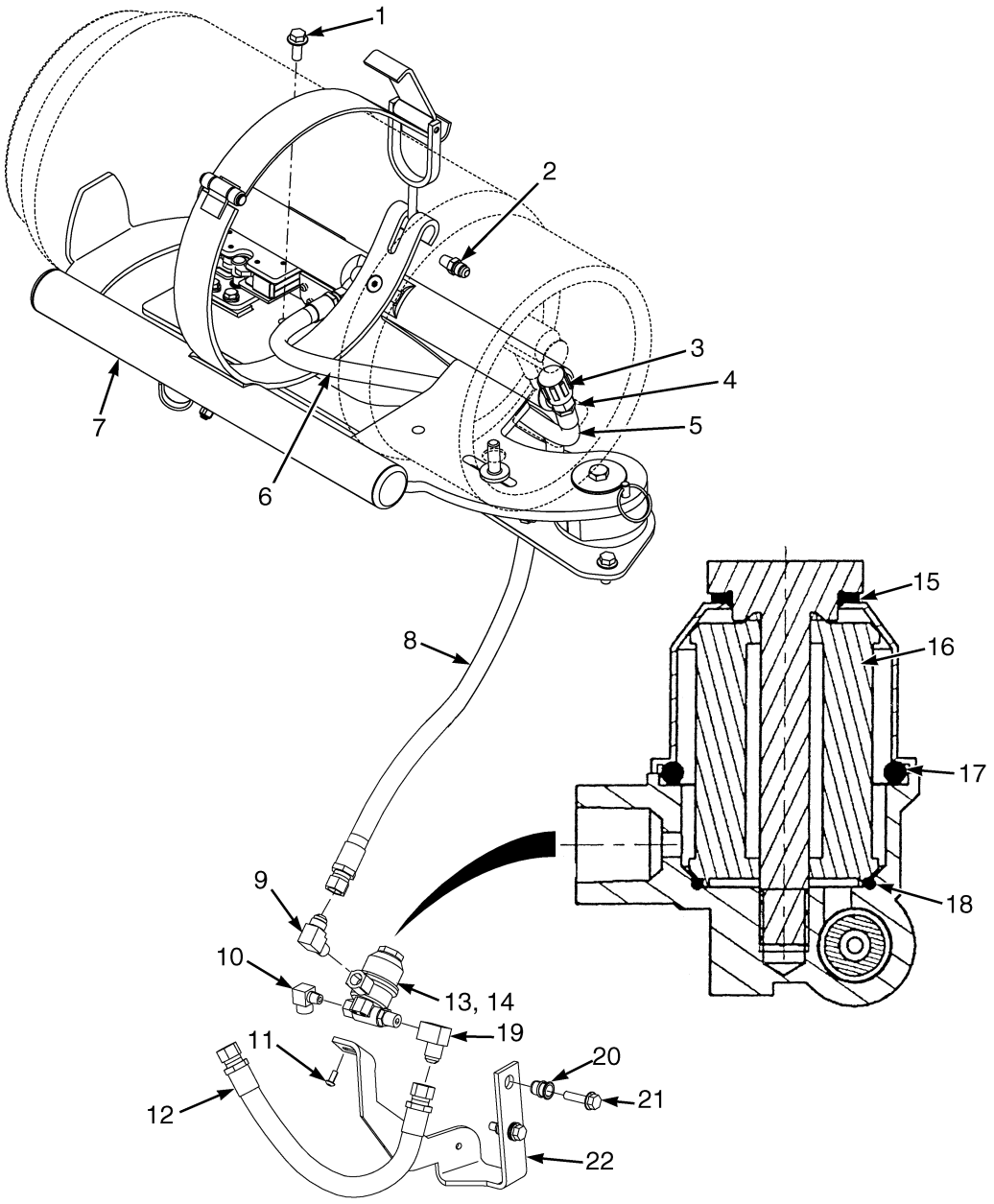

©2013 HYSTER COMPANY

FUEL SUPPLY SYSTEM

MAZDA 2.0L AND 2.2L LPG – 2007 EMISSION COMPLIANT ENGINES

(S/N L177B15512E ↔ S/N L177V04793H (2.0L ENGINE))

(S/N L177B16207E ↔ S/N L177V04794H (2.2L ENGINE))

ITEM	PART NO.	DESCRIPTION	QTY
1	1586013	Capscrew	4
2	16134	Fitting	1
3	97999	Fitting	1
4	16863	Fitting	1
5	2058426	Hose Assy	1
6	2072298	Hose Assy	1
7	**b** 1519360	Lpg Tank Bracket (EZXchange)	1
7	**de** 1649220	Lpg Tank Bracket (Swing Out/Drop Down)	1
7	**b** 1582409	Lpg Tank Bracket (Swing Out/Drop Down)	1
7	**de** 1649216	Lpg Tank Bracket (Swing Out)	1
8	2072300	Hose Assy	1
8	2090418	Hose Assy	1
9	14358	Fitting	1
10	16151	Fitting	1
11	296152	Capscrew	2
12	2090361	Hose Assy	1
13	**c** 2070100	Fuel Filter (LPG)	1
13	**f** 2105803	Fuel Filter (LPG)	1
14	**c** 1581302	Kit-Filter Element	1
14	**f** 1689544	Kit-Filter Element	1
16	**a**	Filter Element	1
17	**a**	O-Ring	1
17	**a**	Seal	1
18	**a**	O-Ring	1
19	14372	Fitting	1
20	1530243	Insert	2
21	1527881	Capscrew	2
22	1632257	Bracket	1
	a 246108	Sealant	1
	a 1687376	Sealant	1
	a 1687377	Activator	1

FOOTNOTES:

a Not Illustrated
b → 6/2007
c → S/N L177V02219F
d S/N L177B15512E → (2.0L Engine)
e S/N L177B16207E → (2.2L Engine)
f S/N L177V02220F →

©2013 HYSTER COMPANY

FUEL SUPPLY SYSTEM (FIGURE 6-28)

MAZDA 2.0L AND 2.2L LPG — 2007-2010 EMISSION COMPLIANT ENGINES (S/N L177V04794H → EXC. 04821, 04804)

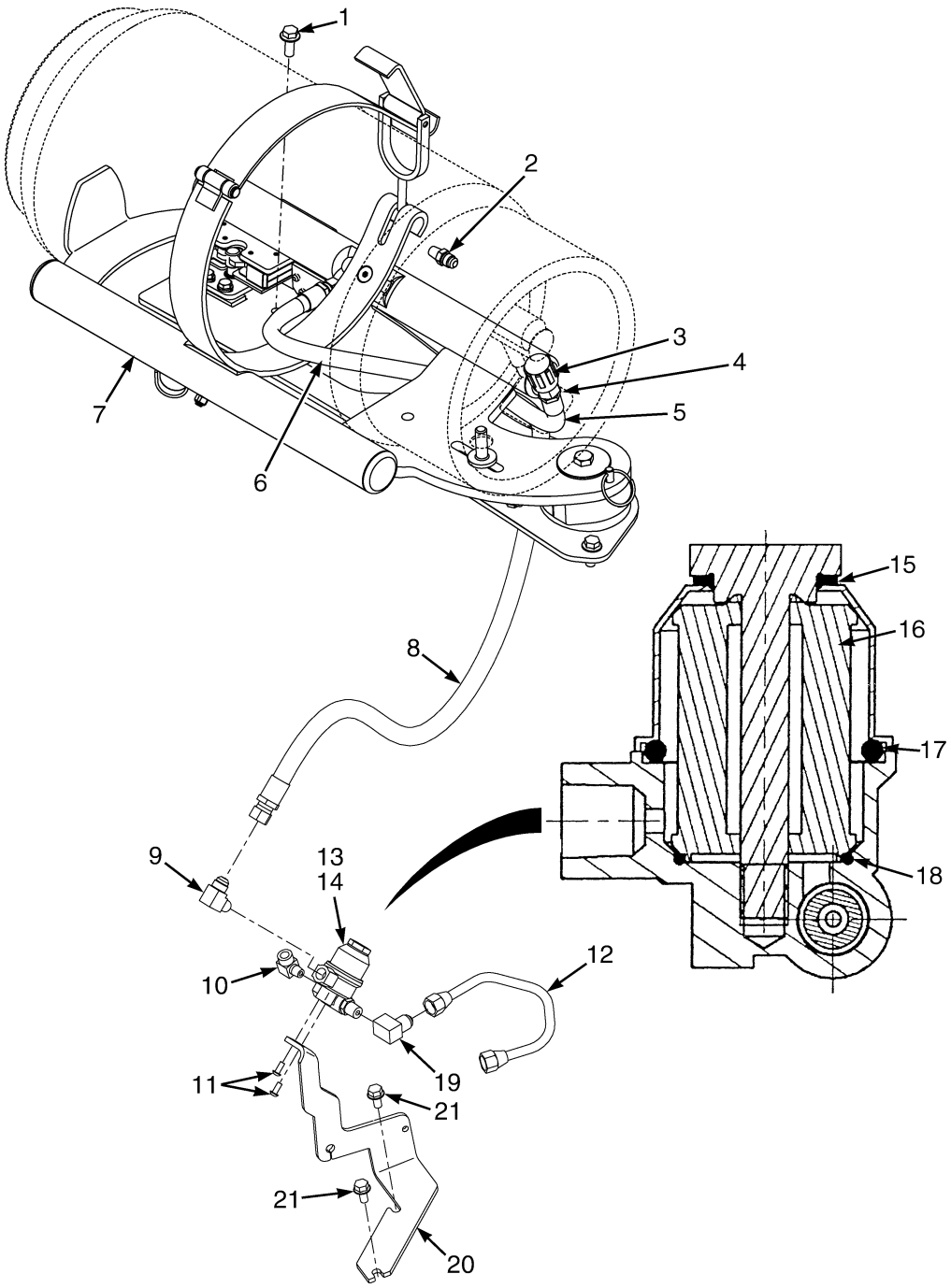

HP130431

©2013 HYSTER COMPANY

FUEL SUPPLY SYSTEM

MAZDA 2.0L AND 2.2L LPG – 2007-2010 EMISSION COMPLIANT ENGINES (S/N L177V04794H → EXC. 04821, 04804)

ITEM	PART NO.	DESCRIPTION	QTY
1	1586013	Capscrew	4
2	16134	Fitting	1
3	97999	Fitting	1
4	16863	Fitting	1
5	2058426	Hose Assy	1
6	2072298	Hose Assy	1
7	1649220	Lpg Tank Bracket (Swing Out/Drop Down)	1
7	1649216	Lpg Tank Bracket (Swing Out)	1
8	2072300	Hose Assy	1
8	2090418	Hose Assy	1
9	14358	Fitting	1
10	**b** 16151	Fitting	1
10	**a** 14349	Fitting (Pipe Plug) (Not Shown)	1
11	296152	Capscrew	2
12	2090361	Hose Assy	1
13	2105803	Fuel Filter (LPG)	1
14	1689544	Kit-Filter Element	1
16	**c**	Filter Element	1
17	**c**	O-Ring	1
17	**c**	Seal	1
18	**c**	O-Ring	1
19	**b** 14372	Fitting	1
20	4000330	Bracket	1
21	1529366	Capscrew	2
	ac 1662253	Sensor (Vapor)	1
	c 1501970	Pressure Switch (Low Fuel)	1

FOOTNOTES:

a For use only with premium low fuel sensor.
b For use only without premium low fuel sensor.
c Not Illustrated

©2013 HYSTER COMPANY

FUEL SYSTEM HOSES AND ATTACHING PARTS (FIGURE 6-29)

MAZDA 2.0L AND 2.2L LPG — 2007-2010 EMISSION COMPLIANT ENGINES

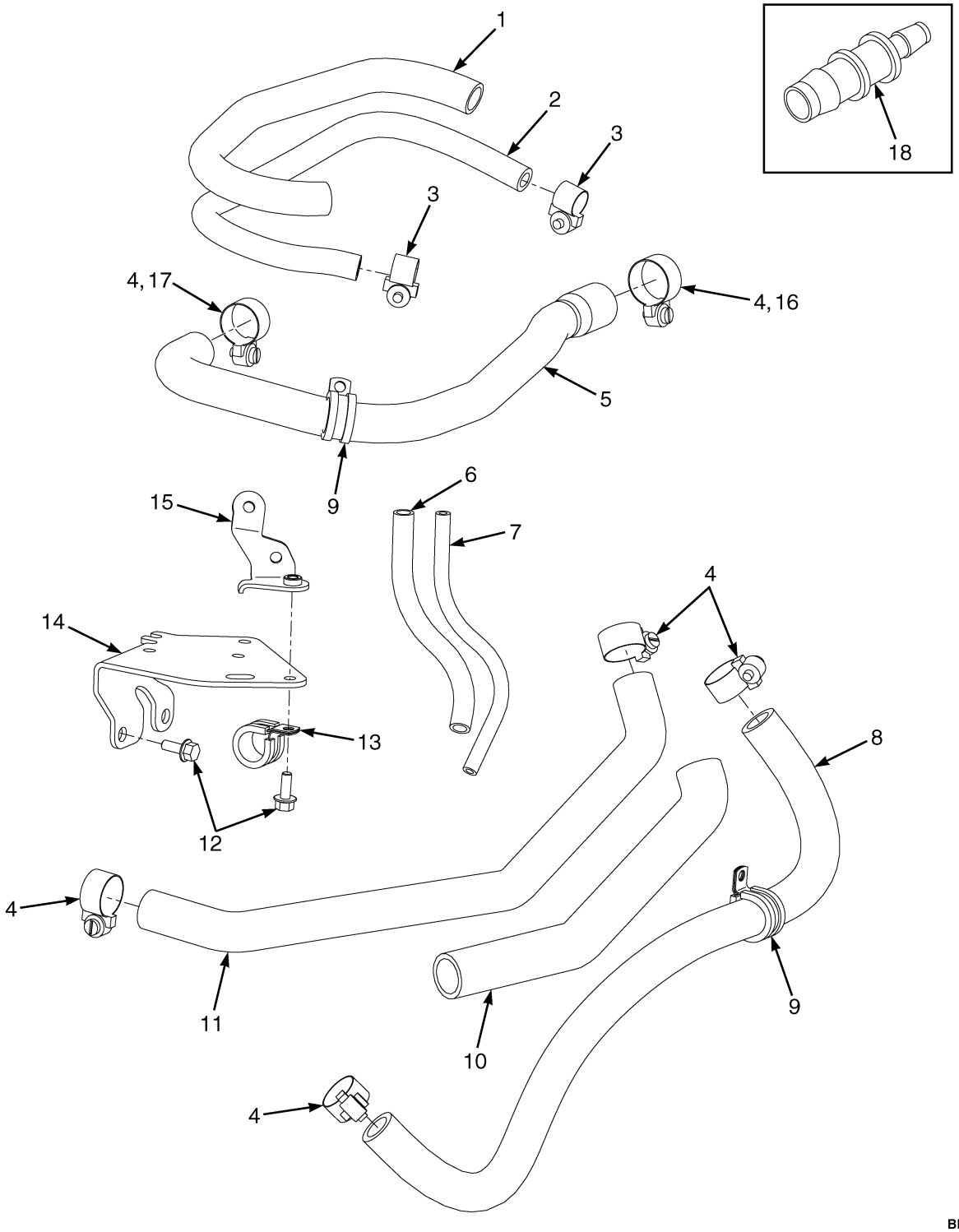

©2013 HYSTER COMPANY

FUEL SYSTEM HOSES AND ATTACHING PARTS

MAZDA 2.0L AND 2.2L LPG – 2007-2010 EMISSION COMPLIANT ENGINES

ITEM	PART NO.	DESCRIPTION	QTY
1	1650780	Hose Conduit	1
2	1650779	Hose (Vacuum Balance)	1
3	1614770	Hose Clamp	2
4	1614771	Hose Clamp	6
4	1582385	Hose Clamp (Worm Type) (Alternate Part)	6
4	4015021	Hose Clamp (2010 Series)	4
5	1650781	Hose (Fuel)	1
6	1650791	Hose Conduit	1
7	1650785	Hose (Vacuum)	1
8	1650784	Hose (RH) (Cooling) (5/8")	1
8	**ac** 1650786	Hose (RH) (Cooling) (3/8")	1
9	1653901	Clamp	2
10	1653904	Hose Conduit	1
11	**c** 1650784	Hose (RH) (Cooling) (5/8")	1
11	**d** 1687184	Hose (5.8")	1
12	1527876	Capscrew	3
12	1558432	Bolt (Alternate Part)	2
13	~~1655235~~		
	1653900	Clamp	1
14	1650762	Bracket	1
15	1650789	Bracket	1
16	4015023	Hose Clamp (2010 Series)	1
17	4015022	Hose Clamp (2010 Series)	1
18	**bc** 1682884	Adapter (3/8 " to 5/8")	1

FOOTNOTES:

a Not Shown
b Used between hoses 1650786 and 1650784
c → S/N L177V01503F
d S/N L177V01504F →

©2013 HYSTER COMPANY

FUEL PUMP AND ATTACHING PARTS (FIGURE 6-30)
MAZDA 2.0L AND 2.2L/GM 2.4L — GASOLINE

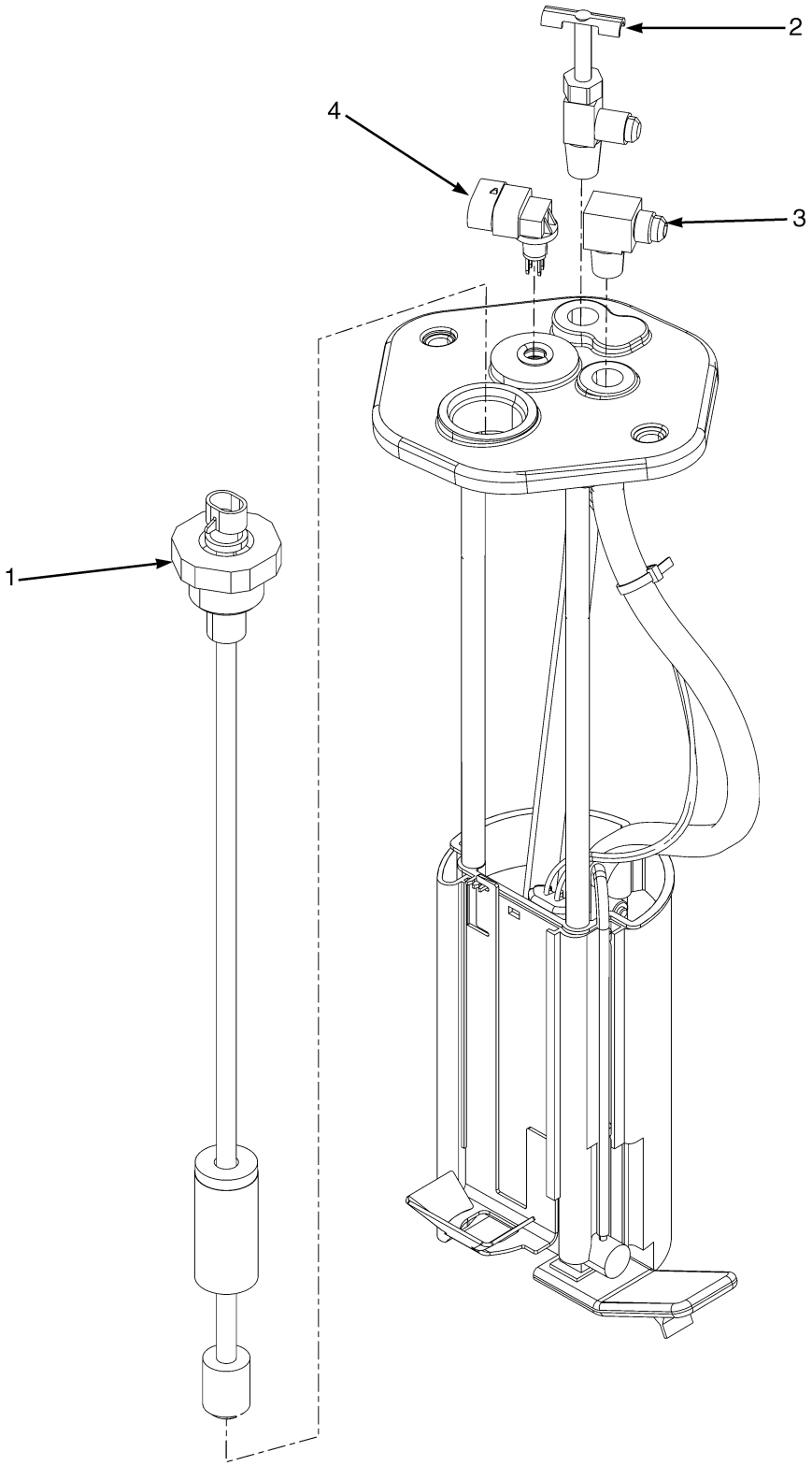

©2013 HYSTER COMPANY

FUEL PUMP AND ATTACHING PARTS
MAZDA 2.0L AND 2.2L/GM 2.4L – GASOLINE

ITEM	PART NO.	DESCRIPTION	QTY
	1579400	Fuel Sender	1
1	1501811	Fuel Sender	1
2	43883	Drain Valve (Shut-Off)	1
3	21195	Fitting	1
4	1371149	Connector	1

©2013 HYSTER COMPANY

FUEL PUMP AND SENDER (FIGURE 6-31)

MAZDA 2.0L AND 2.2L, GASOLINE — 2007-2010 EMISSION COMPLIANT ENGINES (S/N L177B16207E →)

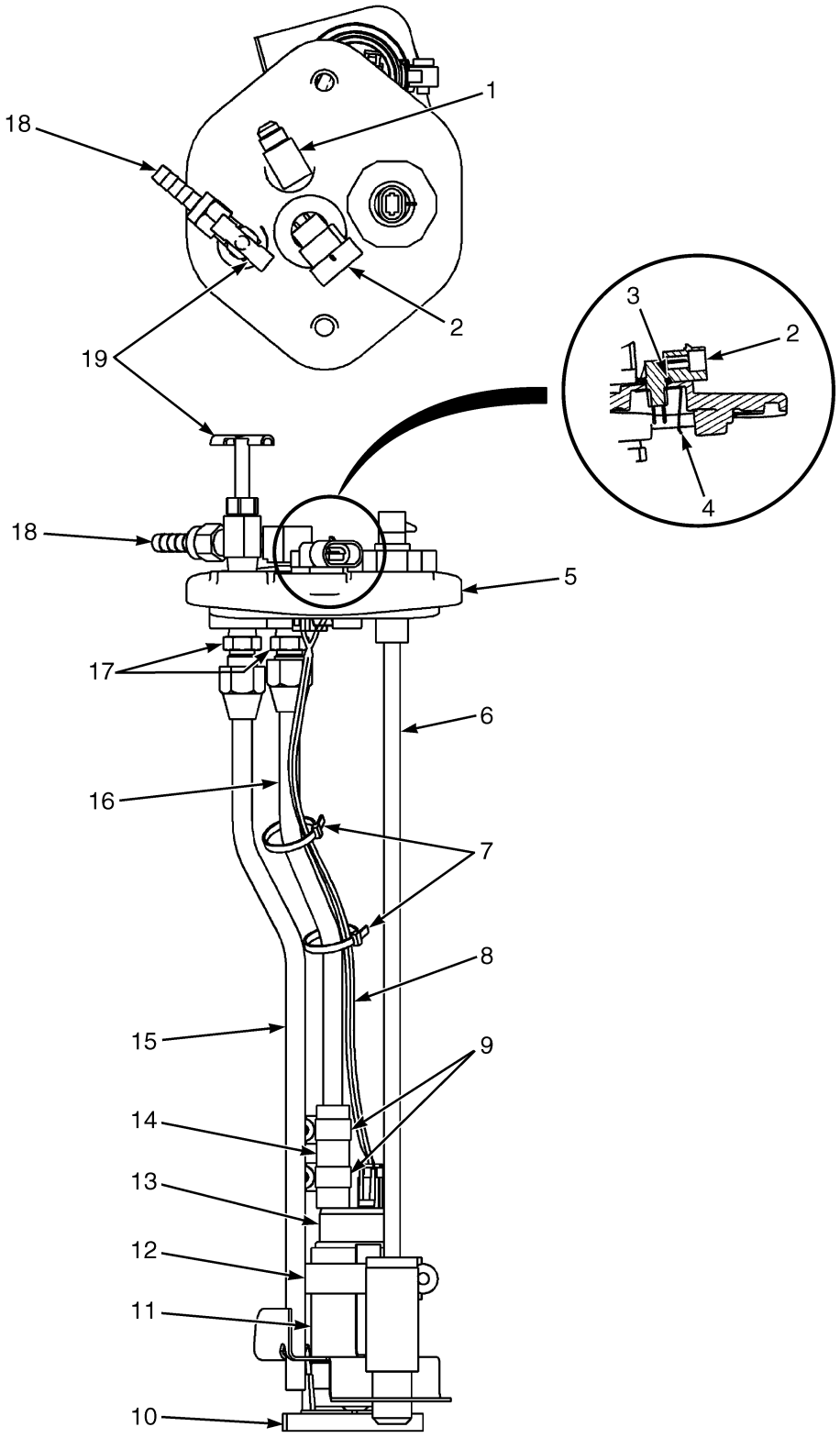

BP130243

©2013 HYSTER COMPANY

FUEL PUMP AND SENDER

MAZDA 2.0L AND 2.2L, GASOLINE – 2007-2010 EMISSION COMPLIANT ENGINES (S/N L177B16207E →)

ITEM	PART NO.	DESCRIPTION	QTY
	1634894	Fuel Sender	1
1	21195	Fitting	1
2	1371149	Connector	1
3	1330325	O-Ring	1
4	1330326	Nut	1
5	1527311	Cover	1
6	1501811	Fuel Sender	1
7	114312	Strap Clamp	1
8	1632224	Wire Harness (Fuel Pump)	1
9	168718	Clamp	2
10	1634456	Strainer	1
11	1644624	Isolator	1
12	369804	Clamp	1
13	1634455	Fuel Pump	1
14	2089368	Hose	1
15	1632179	Tube	1
16	2089239	Tube	1
17	16134	Fitting	2
18	1568998	Fitting	1
19	43883	Drain Valve (Shut-Off)	1

©2013 HYSTER COMPANY

THROTTLE BODY AND ATTACHING PARTS (FIGURE 6-32)

MAZDA 2.0L AND 2.2L, GASOLINE — 2007-2010 EMISSION COMPLIANT ENGINES

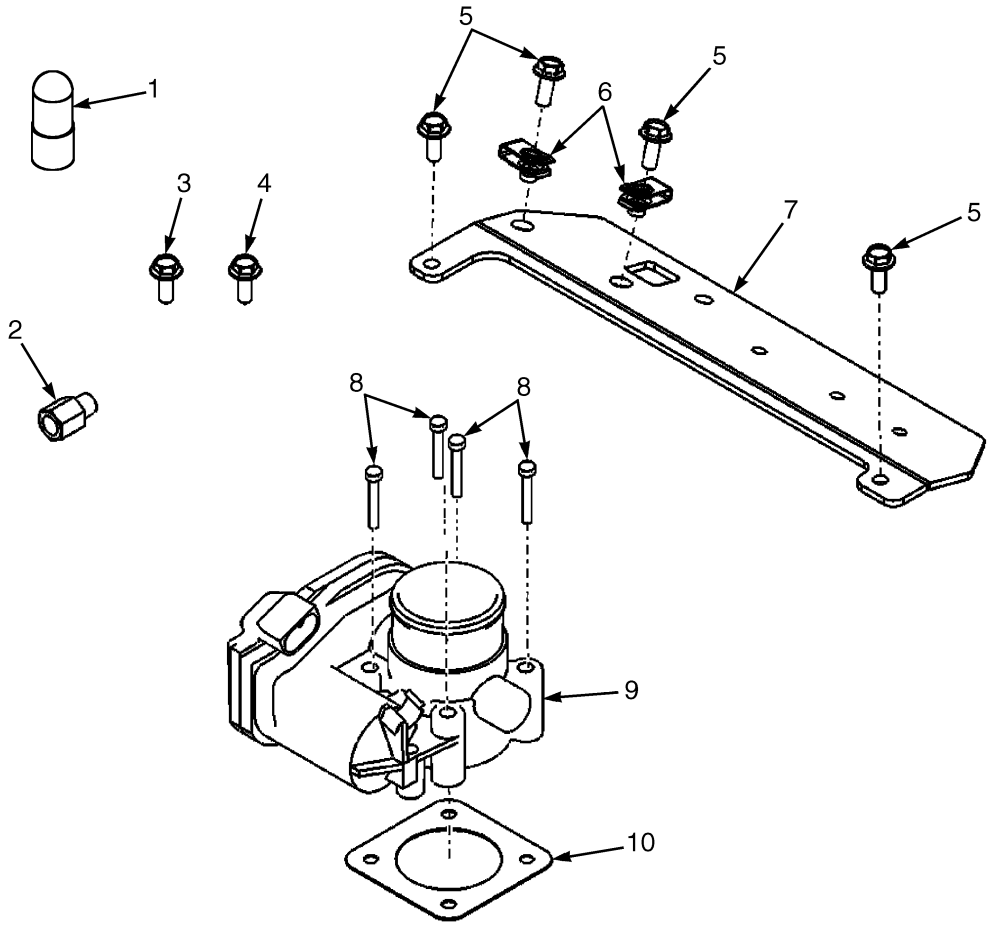

BP130250

ITEM	PART NO.	DESCRIPTION	QTY
1	1655241	Cap (For Unused Manifold Fitting)	1
2	1650506	Adapter	1
3	1650508	Screw	4
4	1650868	Screw	1
5	1558432	Bolt	4
6	1650402	Nut	1
7	1650507	Bracket (Relay)	1
8	1650505	Bolt	4
9	1650404	Throttle Body	1
10	1650504	Gasket (Throttle Body)	1

©2013 HYSTER COMPANY

NOTES

©2013 HYSTER COMPANY

MIXER AND THROTTLE BODY ASSEMBLY (FIGURE 6-33)

MAZDA 2.0L AND 2.2L LPG — 2007 EMISSION COMPLIANT ENGINES (S/N L177B15327E ↔ 2/2008)

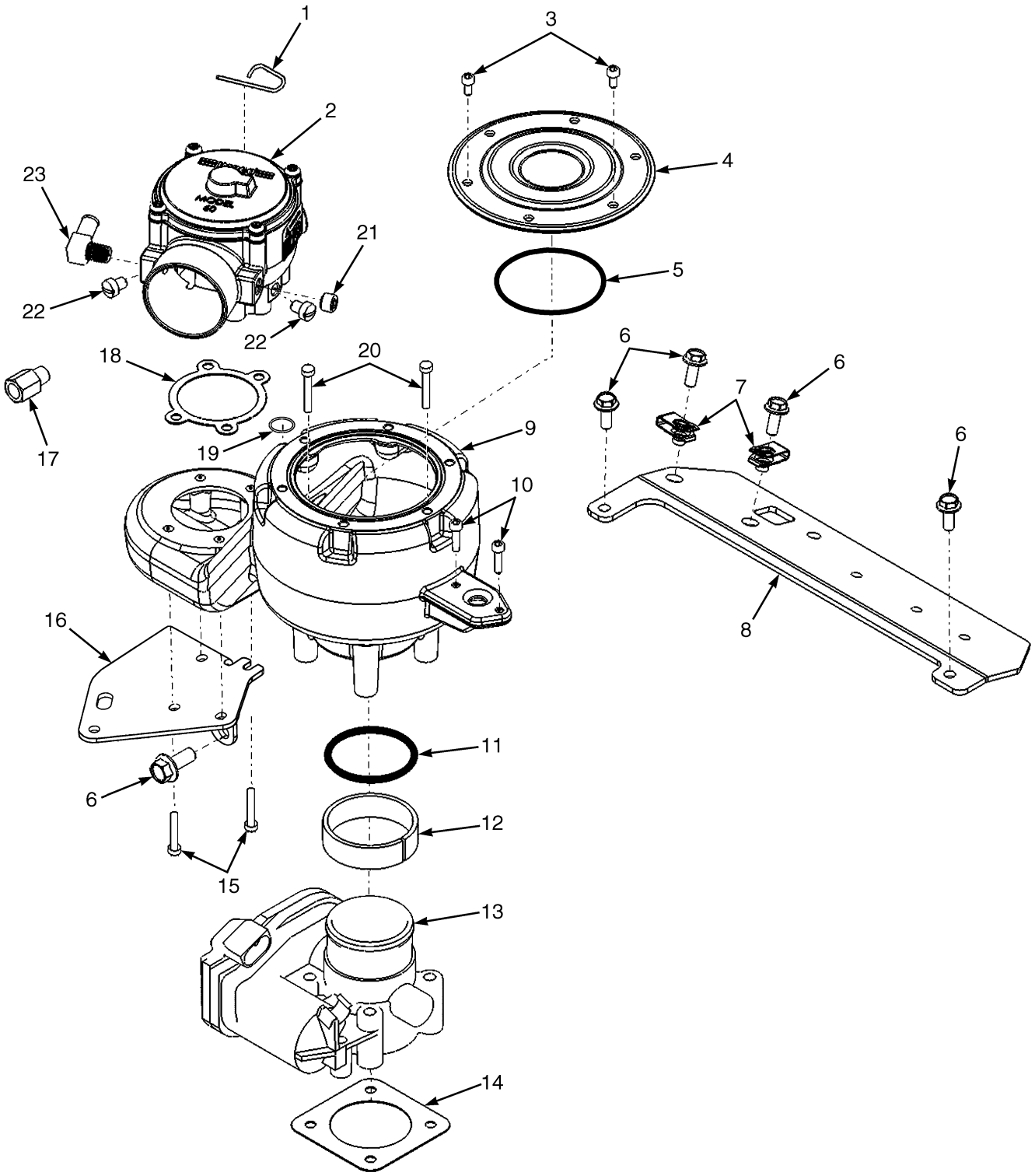

©2013 HYSTER COMPANY

MIXER AND THROTTLE BODY ASSEMBLY

MAZDA 2.0L AND 2.2L LPG – 2007 EMISSION COMPLIANT ENGINES (S/N L177B15327E ↔ 2/2008)

ITEM	PART NO.	DESCRIPTION	QTY
1	1558161	Pin	1
2	1650758	Mixer	1
3	296508	Screw	6
4	1650760	Cover	1
5	1650400	O-Ring	1
6	1558432	Bolt	6
7	1650402	Nut	2
8	1650507	Bracket (Relay)	1
9	1650761	Adapter	1
10	1558170	Screw	2
11	1650405	O-Ring	1
12	1650407	Sleeve	1
13	1650404	Throttle Body	1
14	1650504	Gasket (Throttle Body)	1
15	1650757	Screw	4
16	1650507	Bracket (Relay)	6
17	1650506	Adapter	1
18	204787	Gasket	1
19	1650403	Seal	1
20	1650401	Screw	4
21	1357749	Plug	1
22	326926	Screw	2
23	1361164	Fitting	1

©2013 HYSTER COMPANY

MIXER AND THROTTLE BODY ASSEMBLY (FIGURE 6-34)

MAZDA 2.0L AND 2.2L LPG — 2007-2010 EMISSION COMPLIANT ENGINES (2/2008 →)

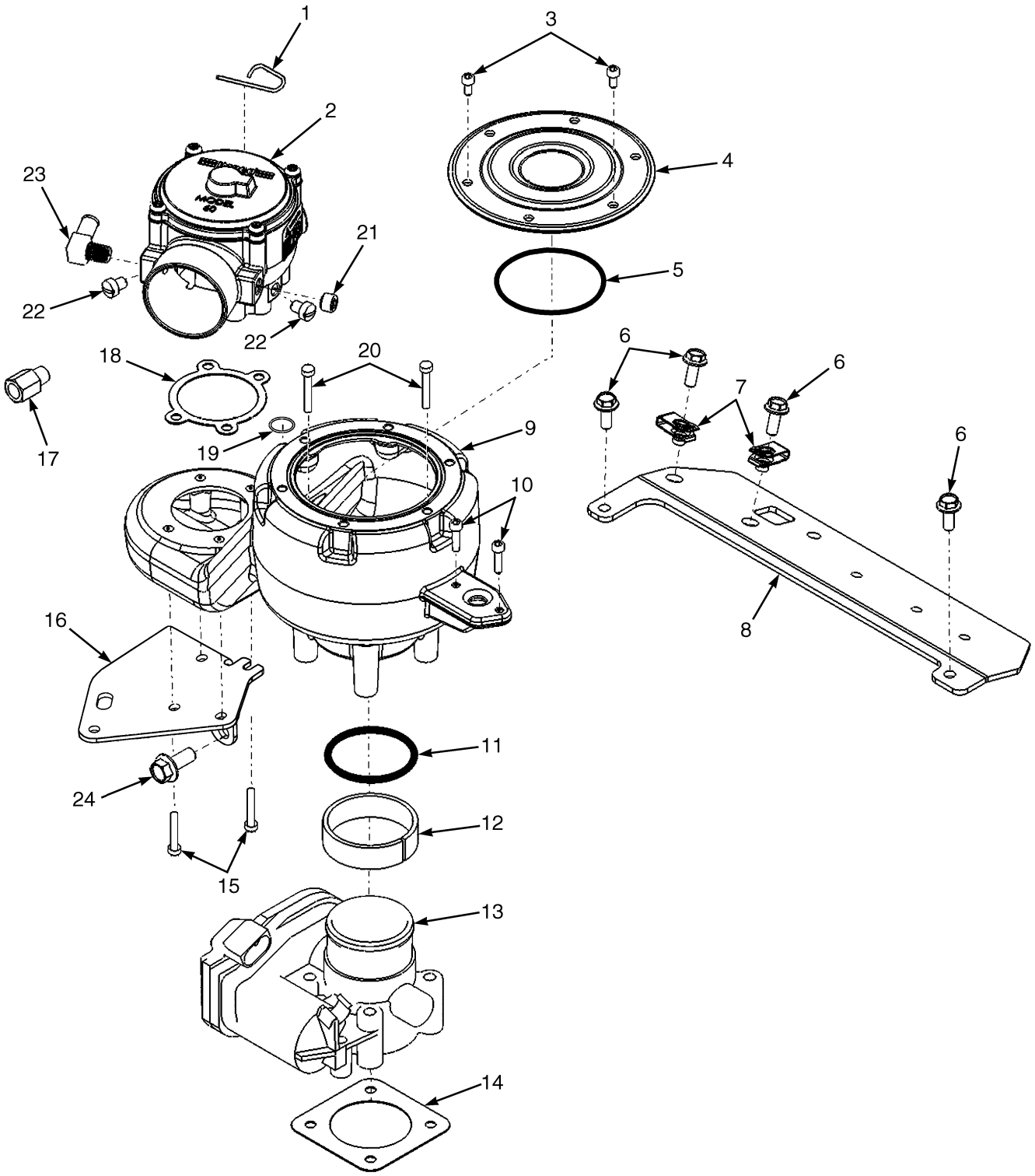

©2013 HYSTER COMPANY

MIXER AND THROTTLE BODY ASSEMBLY

MAZDA 2.0L AND 2.2L LPG – 2007-2010 EMISSION COMPLIANT ENGINES (2/2008 →)

ITEM	PART NO.	DESCRIPTION	QTY
1	1558161	Pin	1
2	1650758	Mixer	1
2	1650223	Kit-Repair LPG Mixer	1
3	296508	Screw	6
4	1650760	Cover	1
5	1650400	O-Ring	1
6	1558432	Bolt	6
7	1650402	Nut	2
8	1650507	Bracket (Relay)	1
9	1650761	Adapter	1
10	1558170	Screw	2
11	1650405	O-Ring	1
12	1650407	Sleeve	1
13	1650404	Throttle Body	1
14	1650504	Gasket (Throttle Body)	1
15	1650757	Screw	4
16	1650762	Bracket	1
17	1650506	Adapter	1
18	204787	Gasket	1
19	1650403	Seal	1
20	1682881	Screw	4
21	1682882	Plug	1
22	326926	Screw	2
23	1361164	Fitting	1
24	1682883	Screw	1

©2013 HYSTER COMPANY

ELECTRONIC PRESSURE REGULATOR ASSEMBLY (FIGURE 6-35)

MAZDA 2.0L AND 2.2L LPG — 2007 EMISSION COMPLIANT ENGINES (S/N L177B15327E ↔ 2/2008 (ENGINE ESSY MAZDA 2.2L EGI W/ECES))

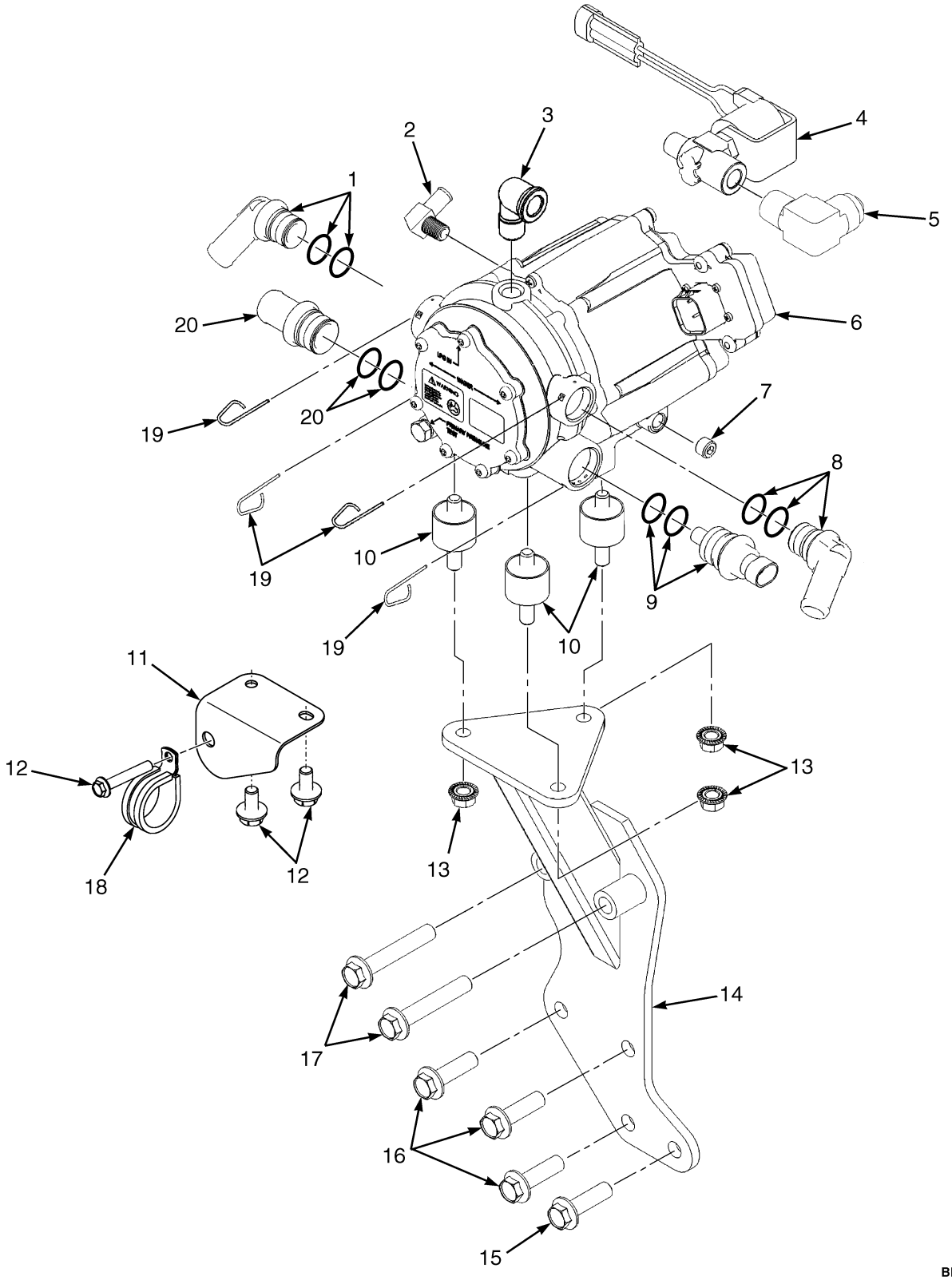

©2013 HYSTER COMPANY

ELECTRONIC PRESSURE REGULATOR ASSEMBLY

MAZDA 2.0L AND 2.2L LPG – 2007 EMISSION COMPLIANT ENGINES

(S/N L177B15327E ↔ 2/2008 (ENGINE ESSY MAZDA 2.2L EGI W/ECES))

ITEM	PART NO.	DESCRIPTION	QTY
1	1558176	Fitting	1
1	1650777	O-Ring	2
2	1361164	Fitting	1
3	1650769	Fitting	1
4	1558187	Lpg Lock-Off	1
5	1650770	Fitting	1
6	1650764	Pressure Regulator	1
6	1650778	Kit-Repair (Electronic Pressure Regulator)	1
7	1357749	Plug	1
8	1650771	Fitting	1
8	1650777	O-Ring	2
9	1672800	Sensor	1
9	1603857	O-Ring	2
10	1650766	Mount (Vibration)	3
11	1654423	Bracket	1
12	1654422	Screw	3
13	1650768	Nut	3
14	1650772	Bracket	1
15	1650767	Screw	1
16	1650870	Screw	3
17	1650773	Screw	2
18	~~1655235~~		
	1653900	Clamp	1
19	1558161	Pin	4
20	1650763	Fitting	1
20	1603857	O-Ring	2

©2013 HYSTER COMPANY

ELECTRONIC PRESSURE REGULATOR ASSEMBLY (FIGURE 6-36)

MAZDA 2.0L AND 2.2L LPG — 2007-2010 EMISSION COMPLIANT ENGINES (2/2008 →)

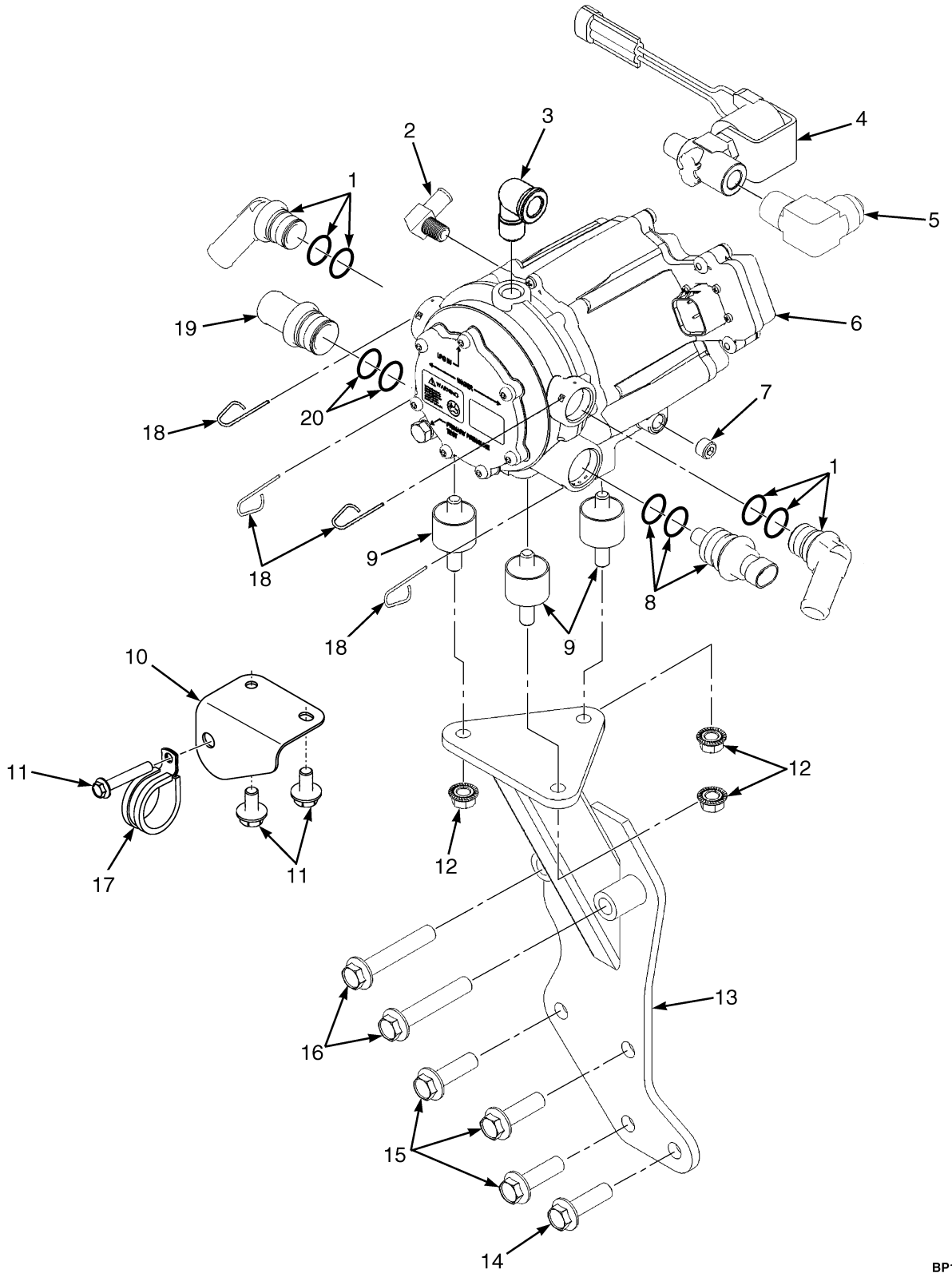

©2013 HYSTER COMPANY

ELECTRONIC PRESSURE REGULATOR ASSEMBLY

MAZDA 2.0L AND 2.2L LPG – 2007-2010 EMISSION COMPLIANT ENGINES (2/2008 →)

ITEM	PART NO.	DESCRIPTION	QTY
1	1558176	Fitting	2
1	1650777	O-Ring	2
2	1361164	Fitting	1
3	1650769	Fitting	1
4	1558187	Lpg Lock-Off	1
4	**a** 1697294	Shutoff Valve	1
4	**b** 4040480	LPG Lock-Off	1
5	1650770	Fitting	1
6	1650764	Pressure Regulator	1
6	1701813	Pressure Regulator	1
6	1650778	Kit-Repair (Electronic Pressure Regulator)	1
7	1682882	Plug	1
8	1672800	Sensor	1
8	1603857	O-Ring	2
9	1650766	Mount (Vibration)	3
10	1653902	Bracket	1
11	1654422	Screw	3
12	1650768	Nut	3
13	1650772	Bracket	1
14	1650767	Screw	1
15	1650870	Screw	3
16	1650773	Screw	2
17	~~1655235~~		
	1653900	Clamp	1
18	1558161	Pin	4
19	1650763	Fitting	1
20	1603857	O-Ring	2
	4043883	Kit-Valve (LPG Shutoff)	1

FOOTNOTES:

a → 2/2012

b 2/2012 →

©2013 HYSTER COMPANY

ELECTRONIC PRESSURE REGULATOR KIT (FIGURE 6-37)

MAZDA 2.0L AND 2.2L LPG — 2007-2010 EMISSION COMPLIANT ENGINES (S/N L177B16207E → (ENGINE ESSY MAZDA 2.2L LPG W/ECES))

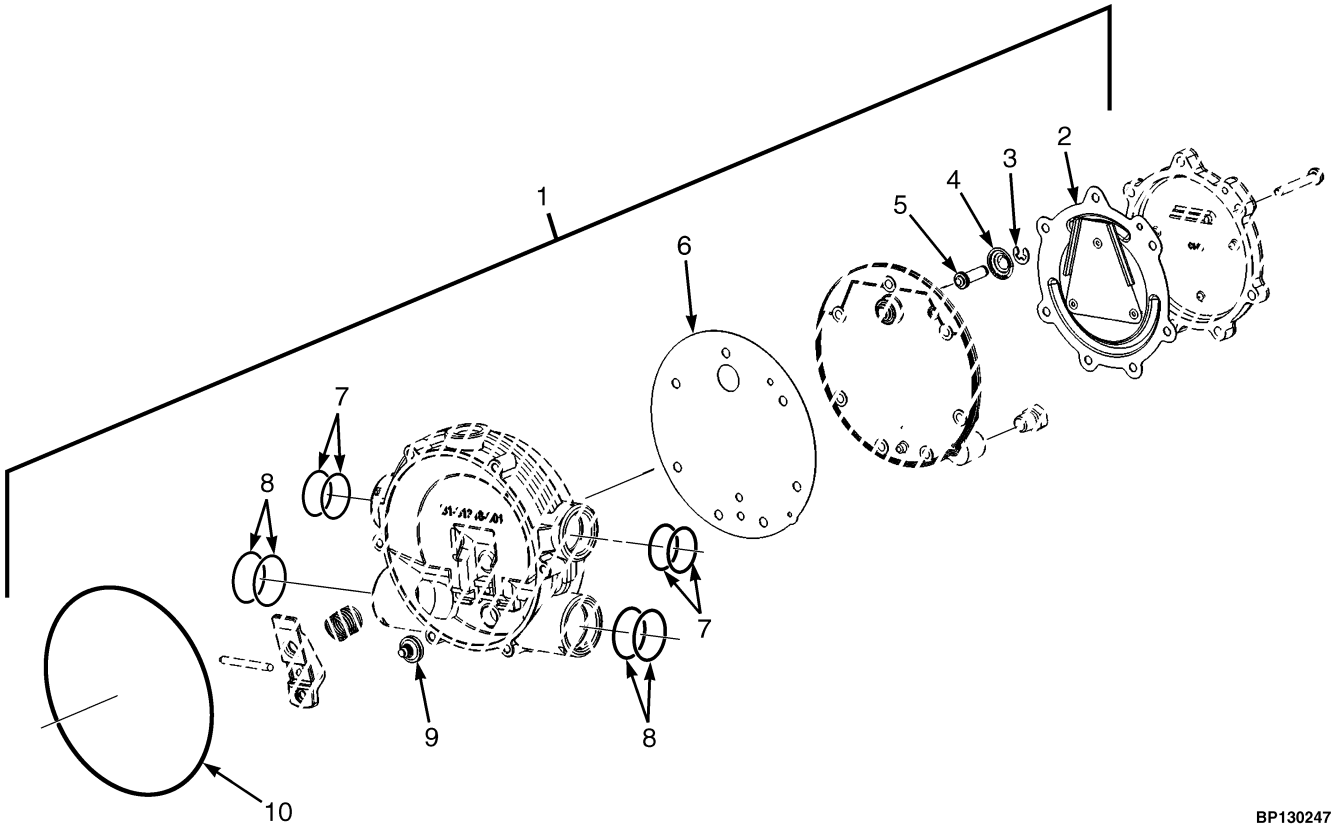

BP130247

ITEM	PART NO.	DESCRIPTION	QTY
1	1650778	Kit-Repair (Electronic Pressure Regulator) (2007-2009 Series)	1
1	4014699	Kit-Repair (Regulator Assembled) (2010 Series)	1
2	. . . . .	Diaphram (Not Serviced Seperately)	1
3	1455304	E-Ring (Primary)	1
4	. . . . .	Spring (Not Serviced Seperately)	1
5	1458764	Pin (Primary)	1
6	1375033	Gasket (Body Secondary)	1
7	. . . . .	O-Ring (Not Serviced Seperately)	4
8	1603857	O-Ring	4
9	. . . . .	Seat (Not Serviced Seperately)	1
10	. . . . .	Clamp Plate Seal (Not Serviced Seperately)	1

©2013 HYSTER COMPANY

NOTES

©2013 HYSTER COMPANY

LPG BRACKET ASSEMBLY (FIGURE 6-38)

SWING OUT BRACKET (→ 11/2007)

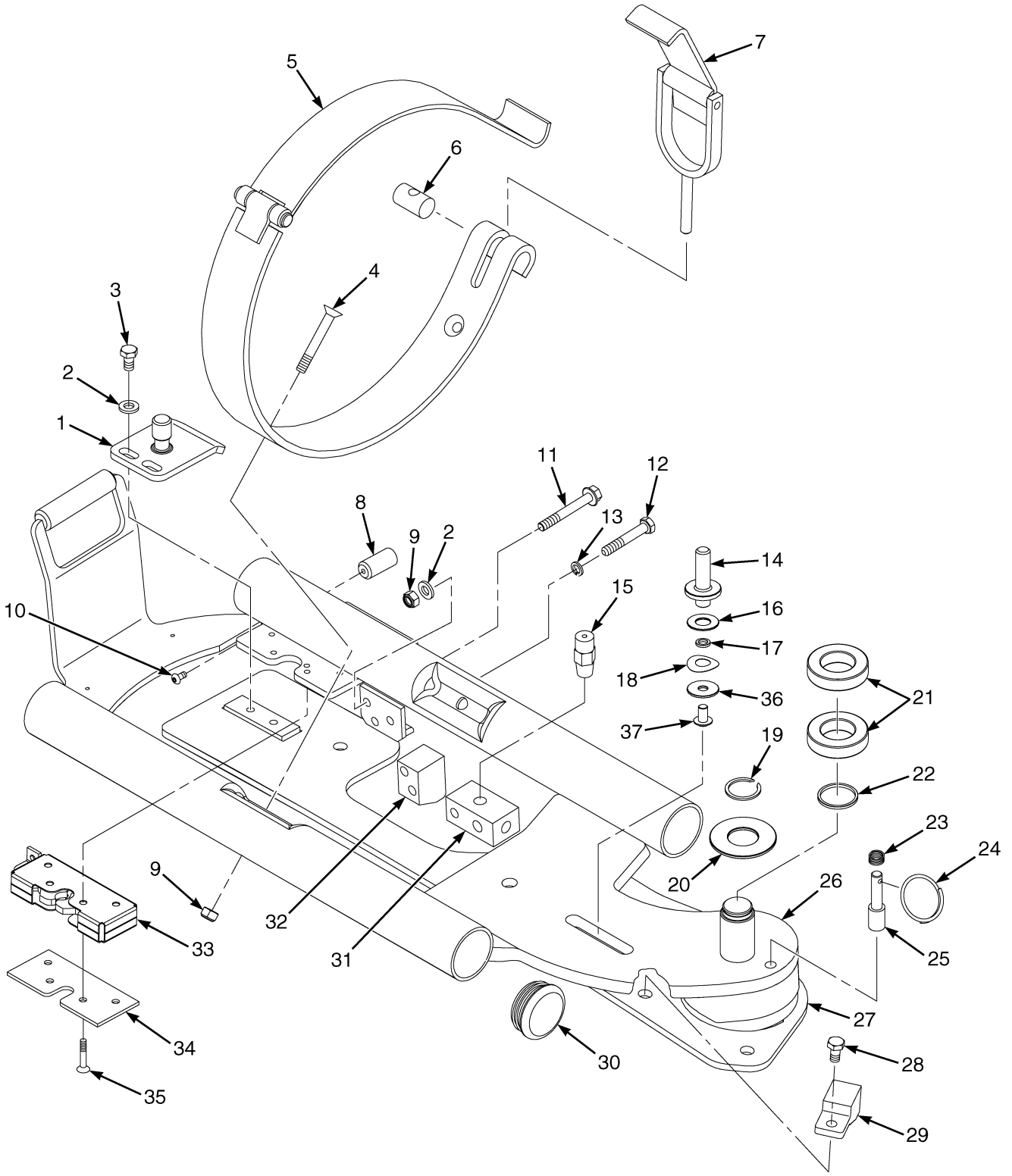

©2013 HYSTER COMPANY

LPG BRACKET ASSEMBLY

SWING OUT BRACKET (→ 11/2007)

ITEM	PART NO.	DESCRIPTION	QTY
	1582409	Lpg Tank Bracket	1
1	1534649	Pin	1
2	1581556	Washer	2
3	1581885	Capscrew	2
4	1581733	Capscrew	2
5	1613749	Strap	1
6	1613763	Nut (Adjusting)	1
7	1613755	Latch	1
8	1534677	Pin	1
9	1581739	Nut	4
10	1581740	Capscrew	1
11	1585835	Capscrew	2
12	1581583	Capscrew	1
13	1581898	Washer	1
14	~~1684323~~		
	4029506	Pin	1
15	101809	Relief Valve	1
16	4029538	Washer	1
17	4032292	Spacer	AR
18	4029920	Washer	1
19	34507	Snap Ring	1
20	1568839	Washer (Pivot)	1
21	184451	Ball Bearing	2
22	1568853	Thrust Washer	1
23	1528903	Spring	1
24	1534672	Ring	1
25	1534671	Pin	1
26	1582410	Support (Tank)	1
27	1568844	Base Weldment	1
28	1581579	Capscrew	1
29	1525451	Fitting (Bulkhead)	1
30	1398099	Plug	4
31	1534675	Fitting (Bulkhead) (Bulkhead)	1
32	1534679	Block (Anti-Rattle)	1
33	1517405	Latch	1
34	1534674	Plate	1
35	1581899	Capscrew	4
36	4032291	Washer	1
37	4031146	Capscrew	1

©2013 HYSTER COMPANY

LPG BRACKET ASSEMBLY (FIGURE 6-39)

SWING OUT BRACKET (11/2007 →) (→ 1/2013)

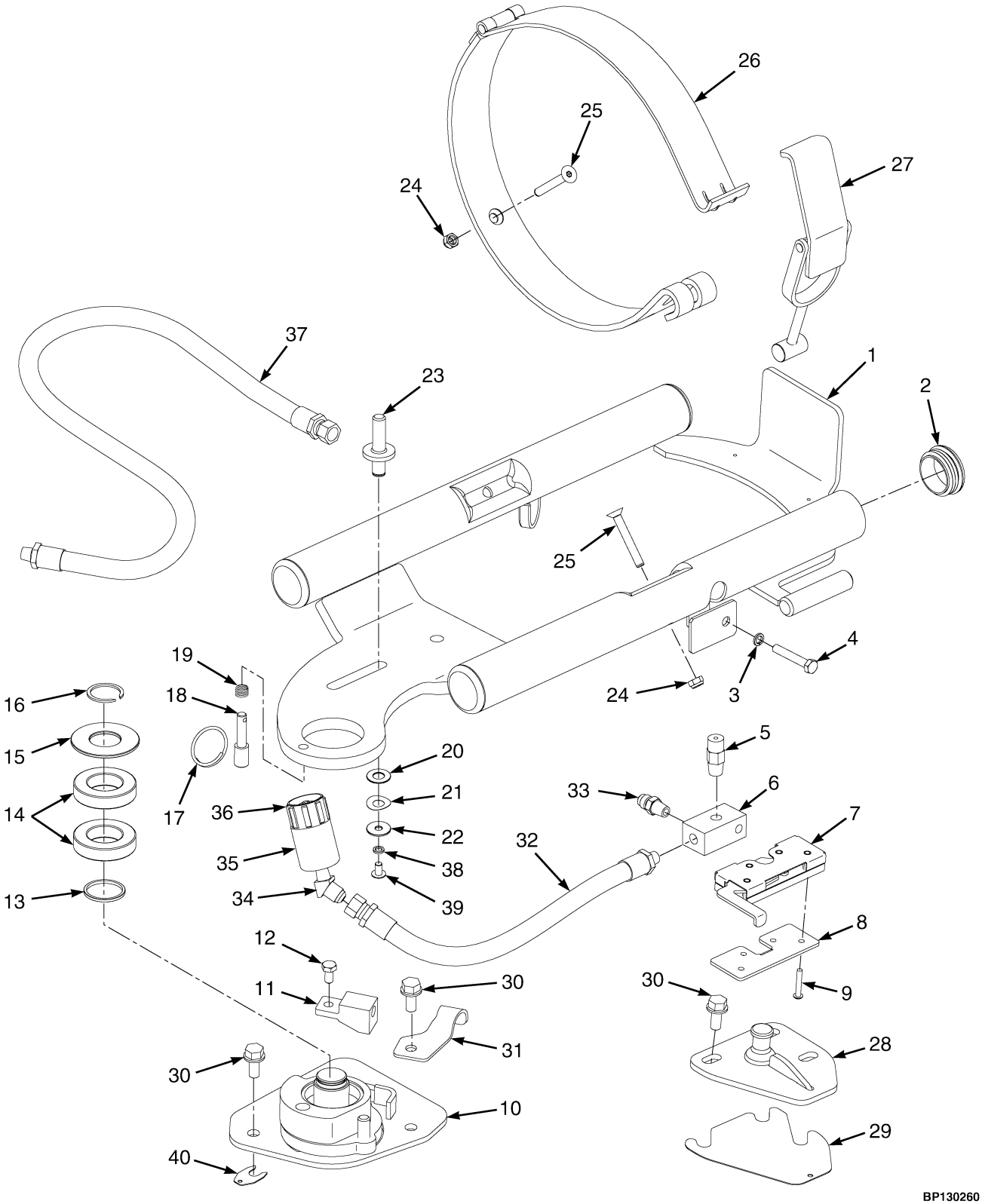

©2013 HYSTER COMPANY

LPG BRACKET ASSEMBLY

SWING OUT BRACKET (11/2007 →) (→ 1/2013)

ITEM	PART NO.	DESCRIPTION	QTY
	b 1649216	Lpg Tank Bracket (Swing Out)	1
	d 4067492	LPG Tank Bracket	1
1	1649217	Lpg Tank Bracket	1
2	1398099	Plug	4
3	1581898	Washer	1
4	4054932	Capscrew	1
5	101809	Relief Valve	1
6	4048941	Fitting (LPG Bulkhead Rear)	1
7	1656325	Latch	1
8	1649565	Plate	1
9	296156	Capscrew	4
10	1656901	Base Plate	1
11	1525451	Fitting	1
12	1581579	Capscrew	1
13	1568853	Thrust Washer	1
14	184451	Ball Bearing	2
15	1568839	Washer (Pivot)	1
16	34507	Snap Ring	1
17	1534672	Ring	1
18	1615956	Pin	1
19	1528903	Spring	1
20	4029538	Washer	1
21	4029920	Washer	1
22	4032291	Washer	1
23	1525459	Pin (Alignment)	1
23	~~1684323~~		
	4029506	Pin (Alignment)	1
24	1581739	Nut	2
25	1581733	Capscrew	2
26	1613749	Strap	1
27	1613755	Latch	1
28	1655300	Striker	1
28	1682758	Striker (Alternate Part)	1
29	**c** 1655328	Shim (Used with 1655300)	1
30	1586013	Capscrew	6
31	1656903	Bracket	1
32	**c** 2076168	Hose Assy	1
32	**be** ~~2111871~~ ~~4607258~~ 4609648	Hose Assy	1
32	**d** 4619095	Hose Assy	1
33	16134	Fitting	1
34	**c** 16863	Fitting	1
34	**e** 14358	Fitting	1
35	2071517	Sleeve	1
36	97999	Fitting	1
37	**b** 2072298	Hose Assy	1
37	**d** 4619094	Hose Assy	1
38	4032292	Spacer	1
39	4031146	Capscrew	1

©2013 HYSTER COMPANY

LPG BRACKET ASSEMBLY

SWING OUT BRACKET (11/2007 →) (→ 1/2013)

ITEM	PART NO.	DESCRIPTION	QTY
40	1688803	Shim	AR
	a 246108	Sealant	1
	a 1687376	Sealant (Alternate Part)	1
	a 1687377	Activator (Alternate Part)	1
	ad 4051434	Fitting (Elbow)	1

FOOTNOTES:

a Not Illustrated
b → 12/2012
c → S/N L177V03251G
d 12/2012 →
e S/N L177V03252G →

©2013 HYSTER COMPANY

NOTES

©2013 HYSTER COMPANY

LPG TANK BRACKET (FIGURE 6-40)

SWING OUT (1/2013 →)

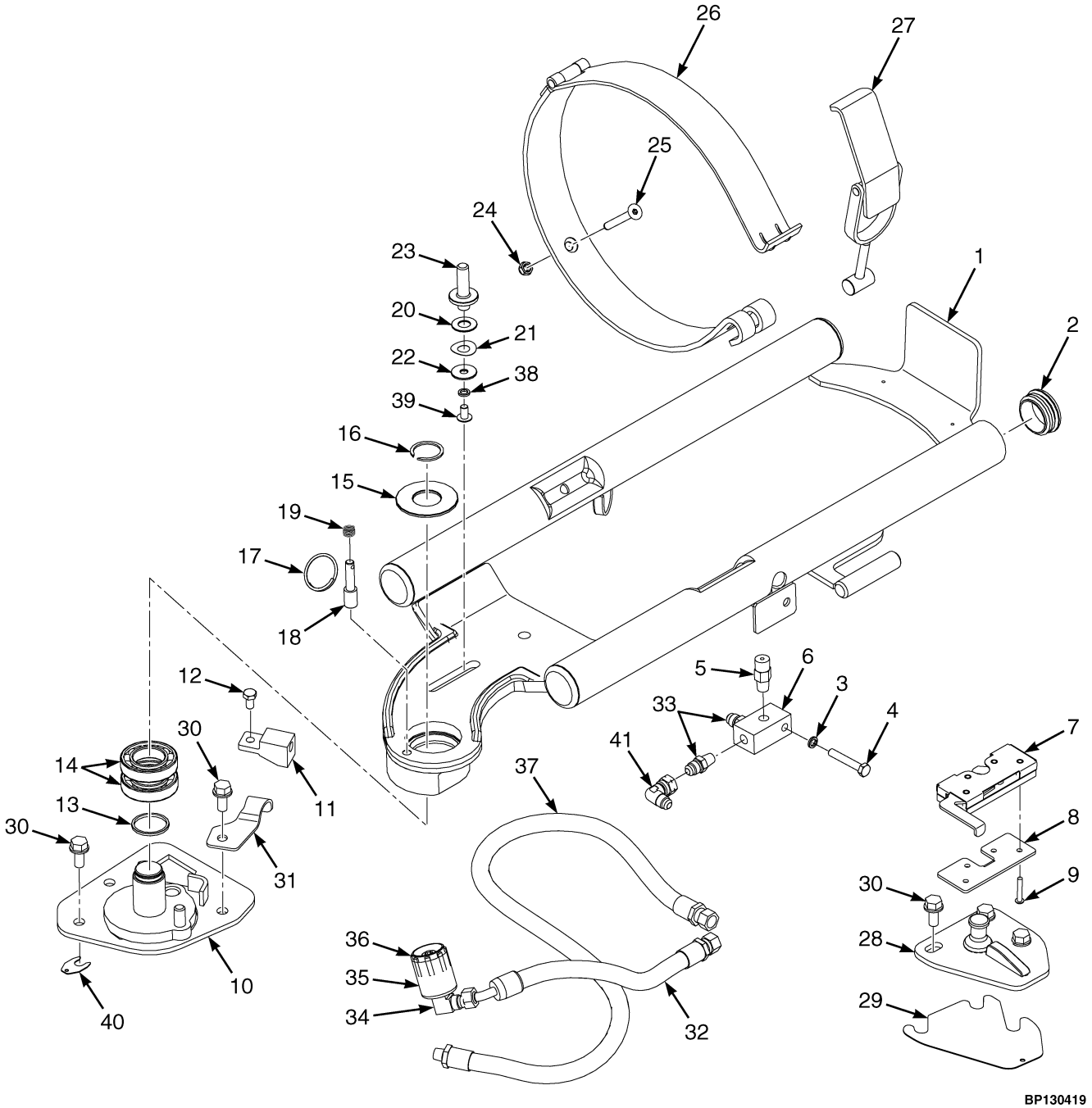

©2013 HYSTER COMPANY

LPG TANK BRACKET

SWING OUT (1/2013 →)

ITEM	PART NO.	DESCRIPTION	QTY
1	4067496	LPG Tank Bracket	1
2	1398099	Plug	4
3	1581898	Washer	1
4	1581583	Capscrew	1
5	101809	Relief Valve	1
6	4048941	Fitting (LPG Bulkhead Rear)	1
7	1656325	Latch	1
8	1649565	Plate	1
9	4054932	Capscrew	4
10	1656901	Base Plate	1
11	1525451	Fitting	1
12	1581579	Capscrew	1
13	1568853	Thrust Washer	1
14	184451	Ball Bearing	2
15	1568839	Washer (Pivot)	1
16	34507	Snap Ring	1
17	1534672	Ring	1
18	1615956	Pin	1
19	1528903	Spring	1
20	4029538	Washer	1
21	4029920	Washer	1
22	4032291	Washer	1
23	~~1684323~~		
	4029506	Pin (Alignment)	1
24	1581739	Nut	2
25	1581733	Capscrew	2
26	1613749	Strap	1
27	1613755	Latch	1
28	1682758	Striker	1
29	1655328	Shim	1
30	1586013	Capscrew	6
31	1656903	Bracket	1
32	4619095	Hose Assy	1
33	16134	Fitting	2
34	16863	Fitting	1
35	2071517	Sleeve	1
36	97999	Fitting	1
37	4619094	Hose Assy	1
38	4032292	Spacer	1
39	4031146	Capscrew	1
40	1688803	Shim	3
41	4051434	Fitting (Elbow)	1
	a 246108	Sealant	AR
	a 1687376	Sealant (Alternate Part)	AR

FOOTNOTES:

a Not Illustrated

©2013 HYSTER COMPANY

See Service Manual for service procedures.

LPG BRACKET ASSEMBLY (FIGURE 6-41)

EZXCHANGE (→ 4/2007)

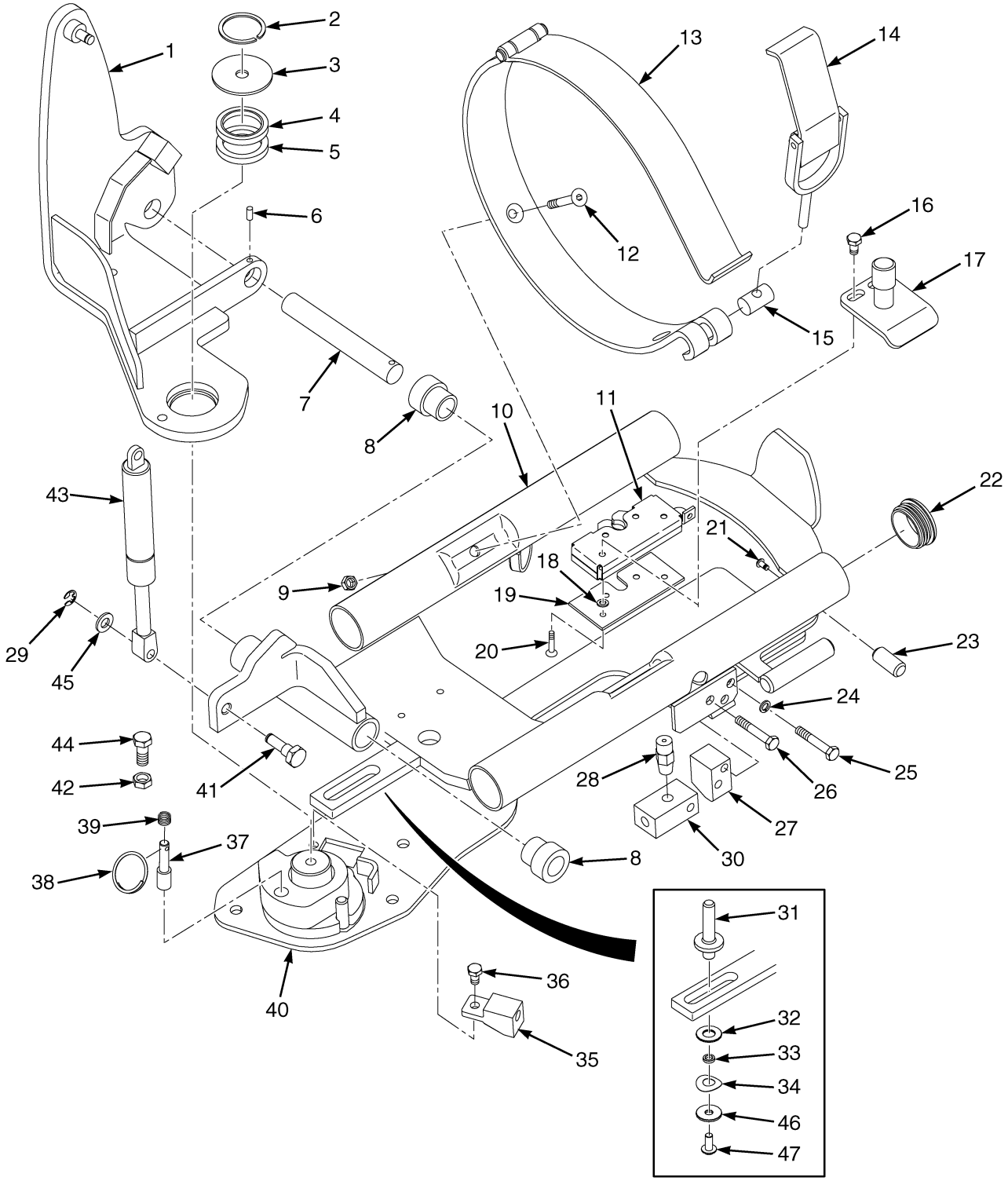

HP130373

©2013 HYSTER COMPANY

LPG BRACKET ASSEMBLY

EZXCHANGE (→ 4/2007)

ITEM	PART NO.	DESCRIPTION	QTY
	a 1519360	Lpg Tank Bracket	1
	b 1615864	Lpg Tank Bracket	1
1	**a** 1517437	Pivot (Intermediate)	1
1	**b** 1615671	Pivot (Intermediate)	1
2	34507	Snap Ring	1
3	1568839	Washer (Pivot)	1
4	184451	Ball Bearing	2
5	1568853	Thrust Washer (Thrust)	1
6	302468	Roll Pin	1
7	1581887	Shaft	1
8	1581888	Bushing	2
9	1581739	Nut	4
10	**a** 1517438	Support	1
10	**b** 1615904	Support	1
11	1517405	Latch	1
12	1581733	Capscrew	2
13	1613749	Strap	1
14	1613755	Latch	1
15	1613763	Nut (Adjustment)	1
16	1581885	Capscrew	2
17	1534649	Pin	1
18	1581556	Washer	4
19	1534674	Plate	1
20	1581899	Capscrew	4
21	1581740	Capscrew	1
22	1398099	Plug	4
23	1534677	Pin	1
24	1581898	Washer	1
25	1585835	Capscrew	2
26	1581583	Capscrew	1
27	1534679	Block (Anti-Rattle)	1
28	101809	Relief Valve	1
29	1525442	E-Ring	2
30	1534675	Fitting (Bulkhead) (Bulkhead)	1
31	~~1684323~~		
	4029506	Pin	1
32	4029538	Washer	1
33	4032292	Spacer	AR
34	4029920	Washer	1
35	1525451	Fitting (Bulkhead)	1
36	1581579	Capscrew	1
37	**a** 1534671	Pin	1
37	**b** 1615956	Pin	1
38	1534672	Ring	1
39	1528903	Spring	1
40	1568844	Base Weldment	1
41	1525478	Pin	1
42	1581848	Nut	1
43	1402414	Gas Spring	1
44	1586022	Capscrew	1

©2013 HYSTER COMPANY

LPG BRACKET ASSEMBLY

EZXCHANGE (→ 4/2007)

ITEM	PART NO.	DESCRIPTION	QTY
45	1581557	Washer	2
46	4032291	Washer	1
47	4031146	Capscrew	1

FOOTNOTES:

a → S/N L177B10456D

b S/N L177B10457D →

©2013 HYSTER COMPANY

NOTES

©2013 HYSTER COMPANY

LPG BRACKET ASSEMBLY (FIGURE 6-42)

EZXCHANGE (4/2007 →)

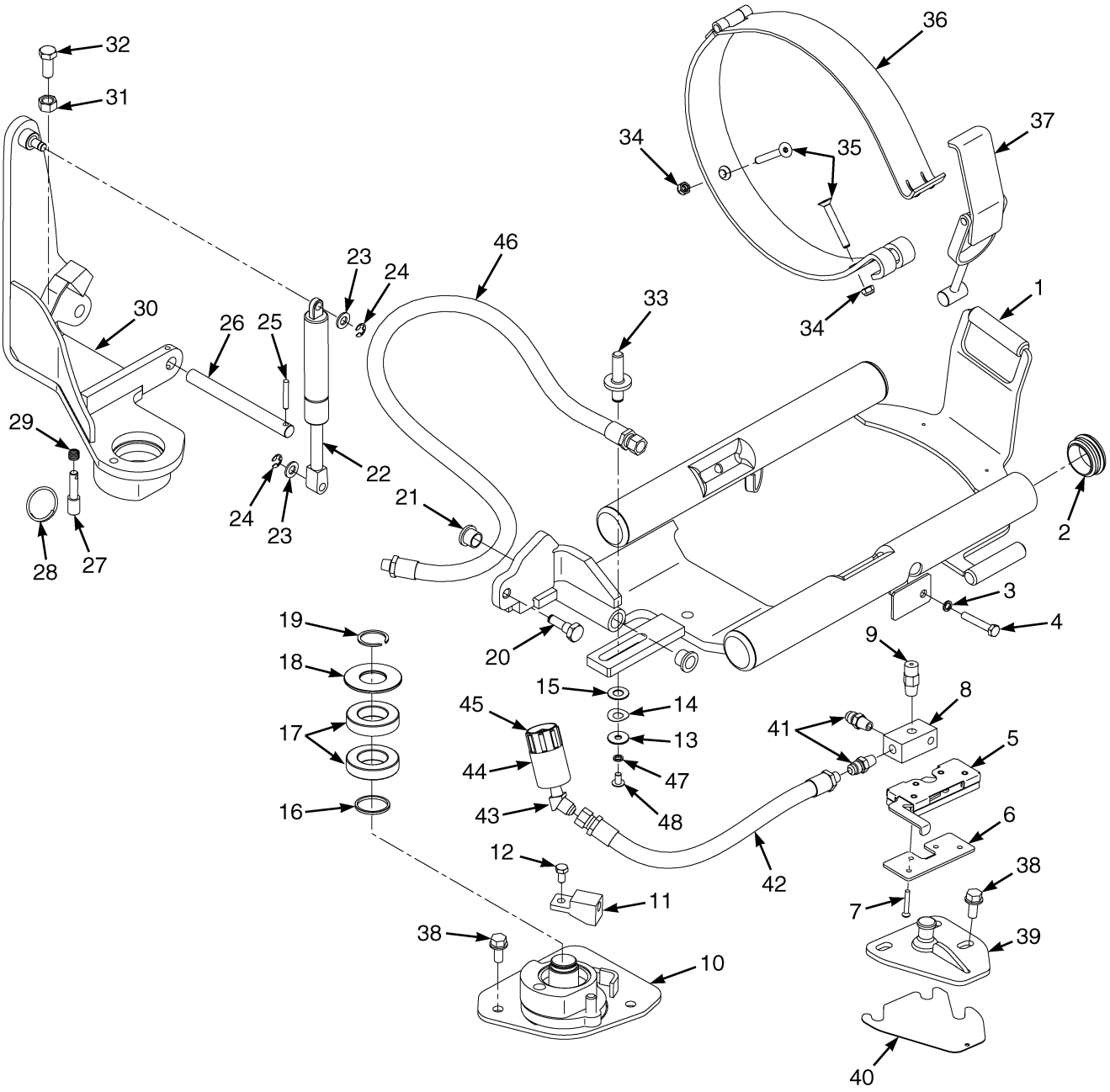

BP130261

©2013 HYSTER COMPANY

LPG BRACKET ASSEMBLY

EZXCHANGE (4/2007 →)

ITEM	PART NO.	DESCRIPTION	QTY
	b 1649220	Lpg Tank Bracket (Swing Out/Drop Down)	1
	d 4067494	LPG Tank Bracket	1
1	1649219	Lpg Tank Bracket	1
2	1398099	Plug	4
3	1581898	Washer	1
4	1581583	Capscrew	1
5	1656325	Latch	1
6	1649565	Plate	1
7	**c** 4054932	Capscrew	4
7	**e** 296156	Capscrew	4
8	**c** 4048941	Fitting (LPG Bulkhead Rear)	1
8	**e** 1534675	Fitting (Bulkhead)	1
9	101809	Relief Valve	1
10	1656901	Base Plate	1
11	1525451	Fitting	1
12	1581579	Capscrew	1
13	4032291	Washer	1
14	4029920	Washer	1
15	4029538	Washer	1
16	1568853	Thrust Washer	1
17	184451	Ball Bearing	2
18	1568839	Washer (Pivot)	1
19	34507	Snap Ring	1
20	1525478	Pin	1
21	1581888	Bushing	1
22	1402414	Gas Spring	1
23	1581557	Washer	1
24	1525442	E-Ring	1
25	302363	Dowel	1
25	302468	Roll Pin (Alternate Part)	1
26	1581887	Shaft	1
27	1615956	Pin	1
28	1534672	Ring	1
29	1528903	Spring	1
30	1615671	Pivot	1
31	1581848	Nut	1
32	1586022	Capscrew	1
33	1525459	Pin (Alignment)	1
33	~~1684323~~		
	4029506	Pin (Alignment)	1
34	1581739	Nut	2
35	1581733	Capscrew	2
36	1613749	Strap	1
37	1613755	Latch	1
38	1586022	Capscrew	1
39	1655300	Striker	1
39	1682758	Striker (Alternate Part)	1
40	1655328	Shim (Use with 1655300)	1
41	16134	Fitting	1
42	**b** 4619095	Hose Assy	1

©2013 HYSTER COMPANY

LPG BRACKET ASSEMBLY

EZXCHANGE (4/2007 →)

ITEM	PART NO.	DESCRIPTION	QTY
42	**d** 4619574	Hose Assy	1
43	16863	Fitting	1
44	2071517	Sleeve	1
45	97999	Fitting	1
46	4619094	Hose Assy	1
47	4032292	Spacer	1
48	4031146	Capscrew	1
	a 246108	Sealant	AR
	a 1687376	Sealant (Alternate Part)	AR
	a 1687377	Activator (Alternate Part)	1
	ad 4051434	Fitting (Elbow)	1

FOOTNOTES:

a Not Illustrated
b → 1/2013
c → 12/2012
d 1/2013 →
e 12/2012 →

©2013 HYSTER COMPANY

NOTES

©2013 HYSTER COMPANY

THROTTLE CABLE ASSEMBLY (FIGURE 6-43)

MAZDA 2.0L AND 2.2L — GASOLINE

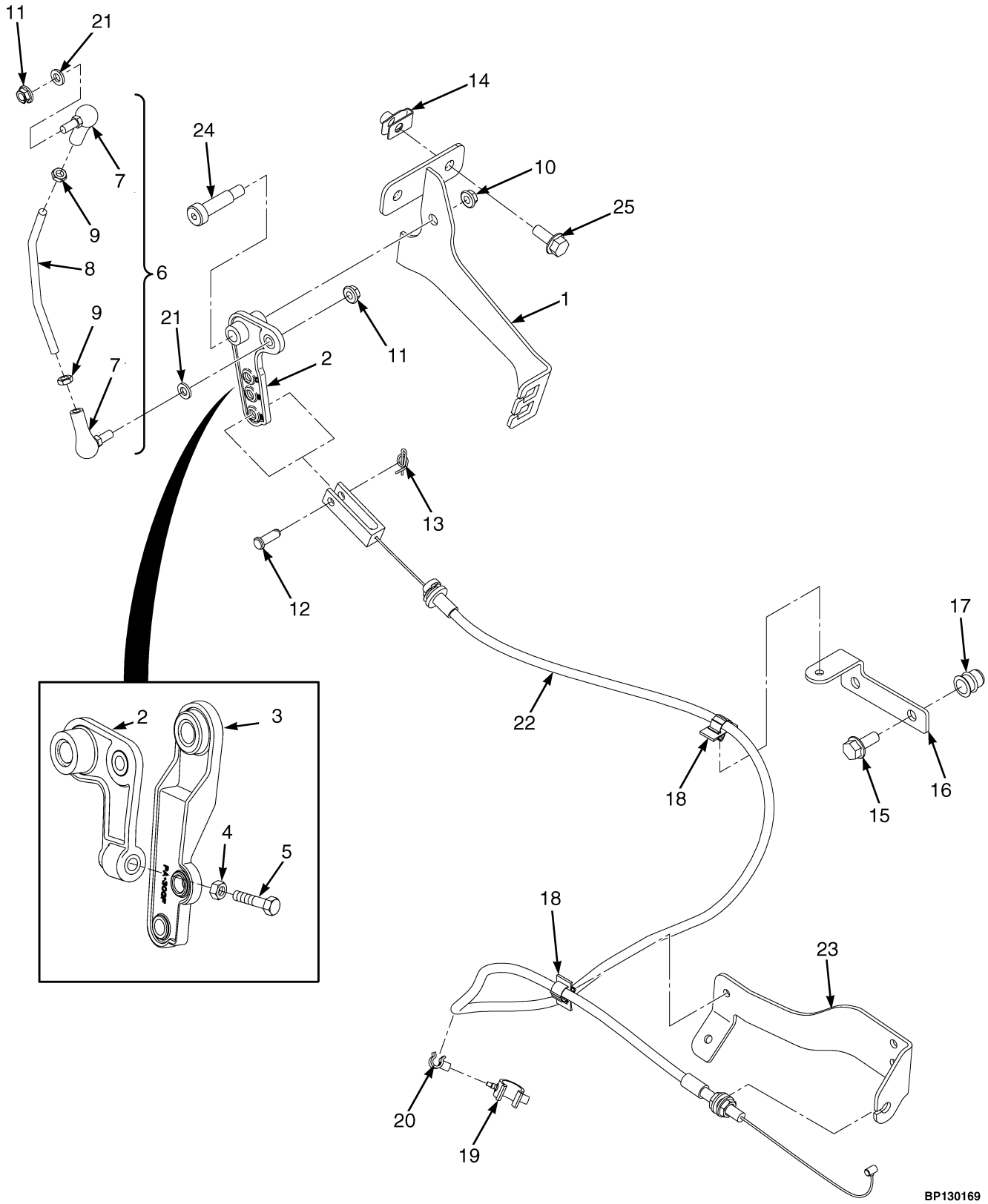

©2013 HYSTER COMPANY

THROTTLE CABLE ASSEMBLY
MAZDA 2.0L AND 2.2L – GASOLINE

ITEM	PART NO.	DESCRIPTION	QTY
1	1539298	Bracket (Throttle Cable)	1
2	**a** 1538162	Bellcrank	1
2	**b** 1565551	Bellcrank	1
3	1565552	Bellcrank	1
4	**b** 1593334	Nut	1
5	**b** 302051	Screw	1
6	1538782	Push Rod Assembly	1
7	2027949	Ball Joint	2
8	1538490	Push Rod	1
9	2308541	Nut	2
10	302400	Nut	1
11	~~1307884~~		
	1514429	Nut	2
12	126	Pin	1
13	1517361	Locking Ring Cotter Pin	1
14	1480237	Nut	2
15	1527880	Capscrew	4
16	1542082	Bracket	1
17	1530243	Insert	2
18	1562088	Clip	2
19	1543691	Clamp (Swivel)	1
20	1542440	Clamp (Swivel)	1
21	320156	Washer	2
22	2067394	Cable	1
23	1569544	Bracket	1
24	1399802	Bolt	1
25	**ab** 1527879	Capscrew	2

FOOTNOTES:

a With Basic Power Shift Transmission

b With Electronic Control Transmission

©2013 HYSTER COMPANY

THROTTLE CABLE ASSEMBLY (FIGURE 6-44)

MAZDA 2.0L AND 2.2L — LPG

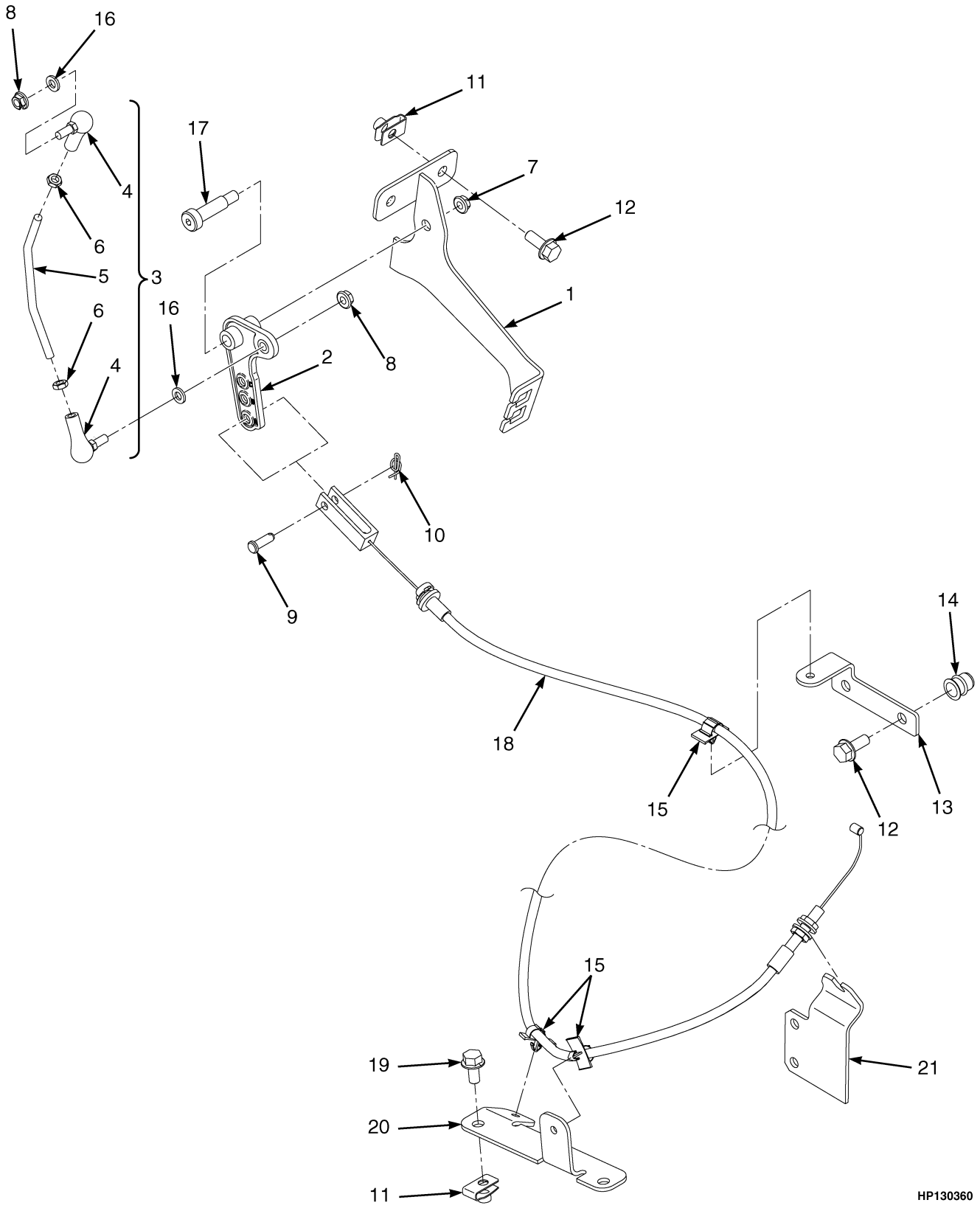

©2013 HYSTER COMPANY

THROTTLE CABLE ASSEMBLY

MAZDA 2.0L AND 2.2L – LPG

ITEM	PART NO.	DESCRIPTION	QTY
1	1609374	Bracket (Throttle Cable)	1
2	1538162	Bellcrank	1
3	1538782	Push Rod Assembly	1
4	2027949	Ball Joint	2
5	1538490	Push Rod	1
6	2308541	Nut	2
7	302400	Nut	1
8	~~1307884~~		
	1514429	Nut	2
9	126	Pin	1
10	1517361	Locking Ring Cotter Pin	1
11	1480237	Nut	4
12	1527880	Capscrew	2
13	1542082	Bracket	1
14	1530243	Insert	2
15	1562088	Clip	3
16	320156	Washer	2
17	1399802	Bolt	1
18	2067395	Throttle Cable	1
19	1527879	Capscrew	4
20	1542555	Bracket	1
21	1535136	Bracket (Throttle Cable)	1

©2013 HYSTER COMPANY

MONOTROL PEDAL ASSEMBLY (FIGURE 6-45)

(→ S/N L177V11233K)

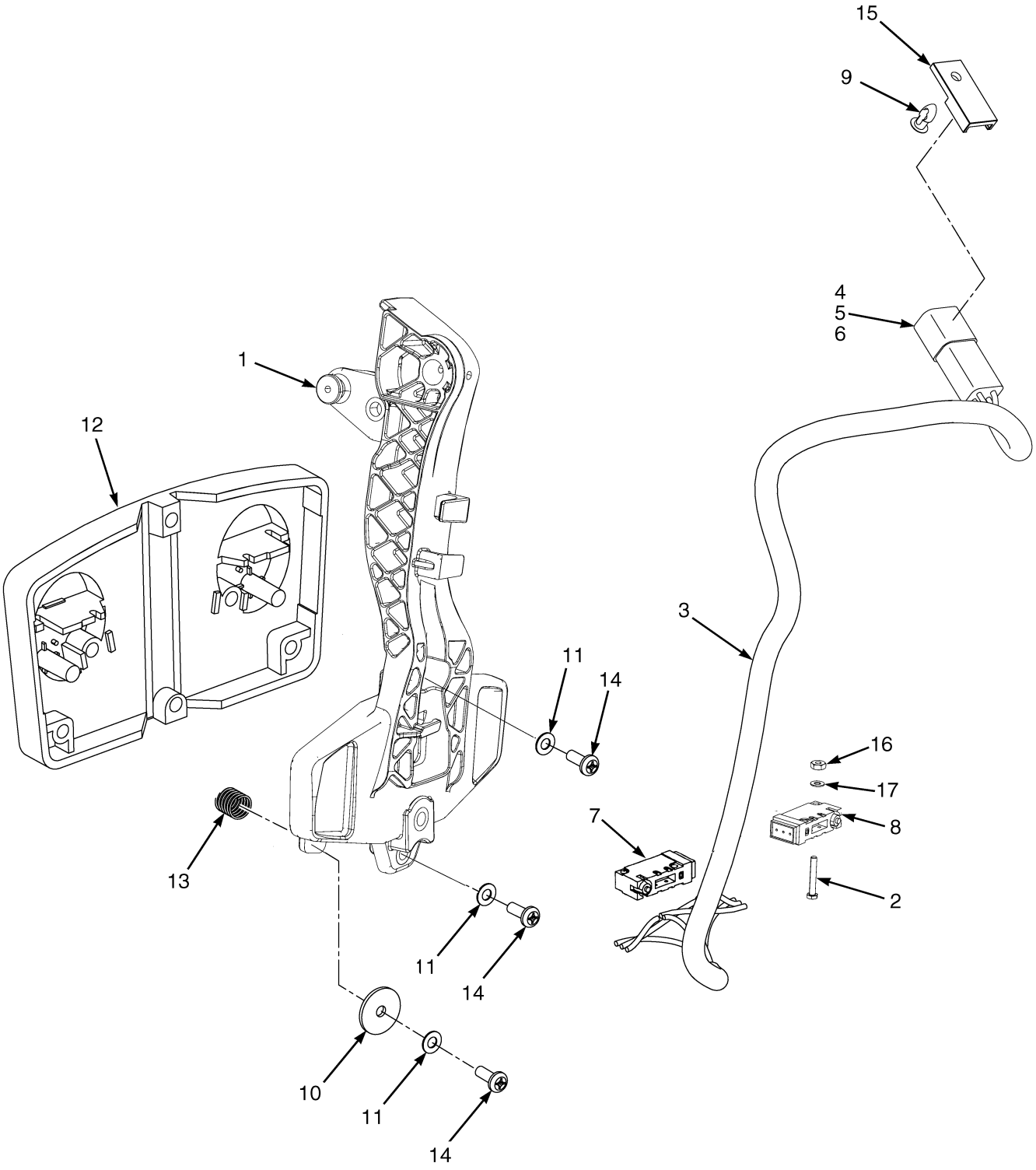

©2013 HYSTER COMPANY

MONOTROL PEDAL ASSEMBLY

(→ S/N L177V11233K)

ITEM	PART NO.	DESCRIPTION	QTY
	1608412	Monotrol Pedal Assembly	1
1	2074702	Pedal	1
2	220428	Screw	4
3	2072782	Wire Harness	1
4	1330416	Connector (Secondary Lock)	1
5	1489655	Connector (4 Way)	1
6	1531312	Terminal	4
7	. . . . .	Switch	1
8	. . . . .	Switch	1
9	1582464	Fastener	1
10	362036	Washer	2
11	15931	Lockwasher	4
12	1340470	Pad	1
13	325699	Spring	2
14	16708	Screw	4
15	1500912	Clip	1
16	16865	Nut	4
17	53162	Lockwasher	4

©2013 HYSTER COMPANY

THROTTLE PEDAL ASSEMBLY AND ATTACHING PARTS (FIGURE 6-46)

STANDARD PEDAL

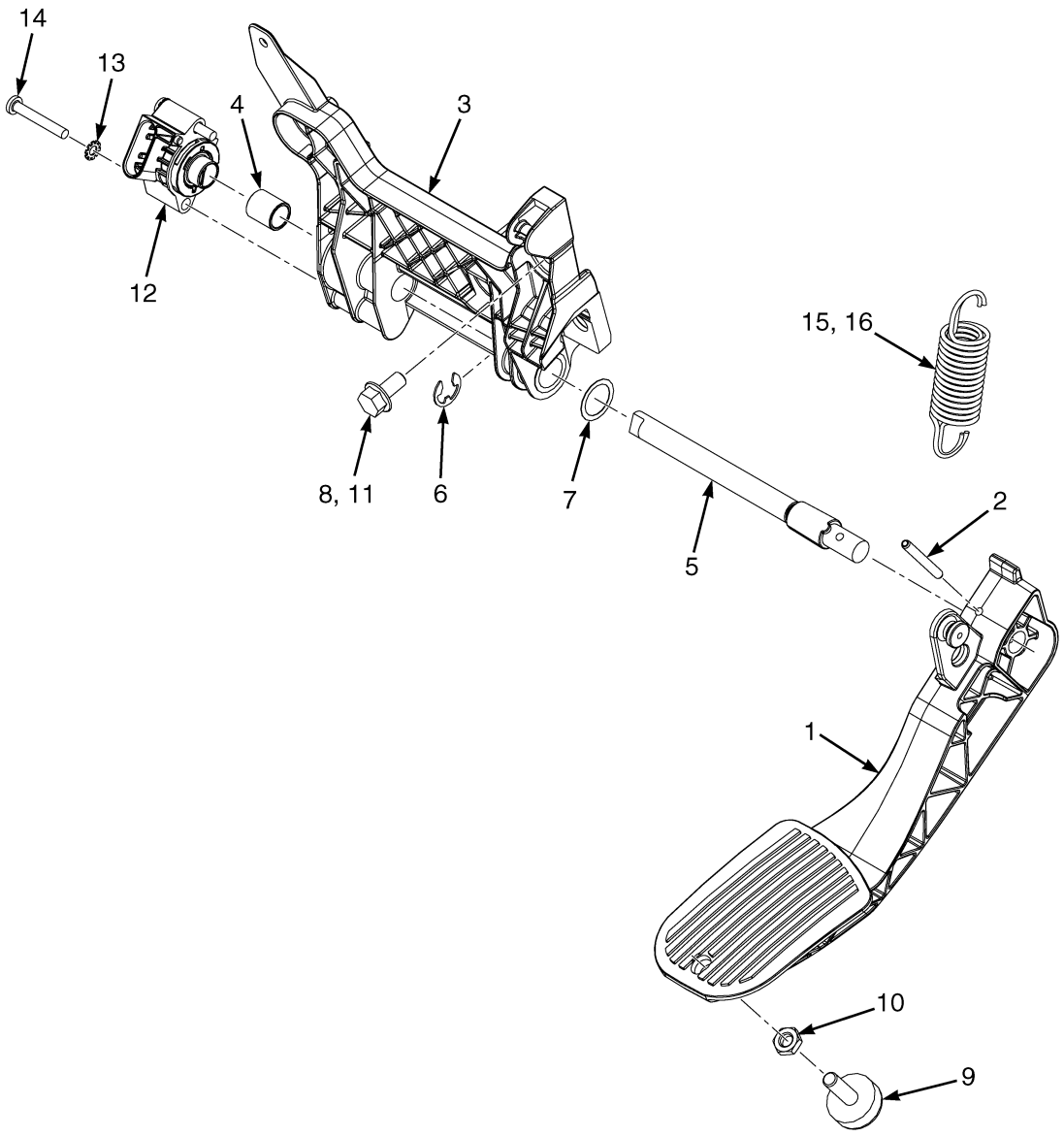

BP130362

©2013 HYSTER COMPANY

THROTTLE PEDAL ASSEMBLY AND ATTACHING PARTS

STANDARD PEDAL

ITEM	PART NO.	DESCRIPTION	QTY
1	2071181	Pedal (Standard)	1
2	302443	Roll Pin	1
3	**a** 1538488	Throttle Plate	1
3	**b** 1654411	Throttle Plate	1
3	**d** 4051924	Base Assembly (Throttle)	1
3	4615964	Molding	1
4	1524267	Bushing	1
5	**a** 1521005	Shaft	1
5	**c** 1654754	Shaft	1
6	1530971	E-Ring	1
7	1654156	Shim	AR
8	1527879	Capscrew	3
9	1530311	Screw (Stop)	1
10	329069	Nut	1
11	251099	Loctite	AR
12	2063842	Sensor (Hall Throttle Position)	1
13	296378	Washer	2
14	1564752	Capscrew	2
15	1582301	Spring (Inner)	1
16	1582300	Spring (Outer)	1

FOOTNOTES:

a → S/N L177B13612E
b S/N L177B13613E ↔ S/N L177V11233K
c S/N L177B13613E →
d S/N L177V11234K →

©2013 HYSTER COMPANY

THROTTLE PEDAL ASSEMBLY AND ATTACHING PARTS (FIGURE 6-47)

MONOTROL

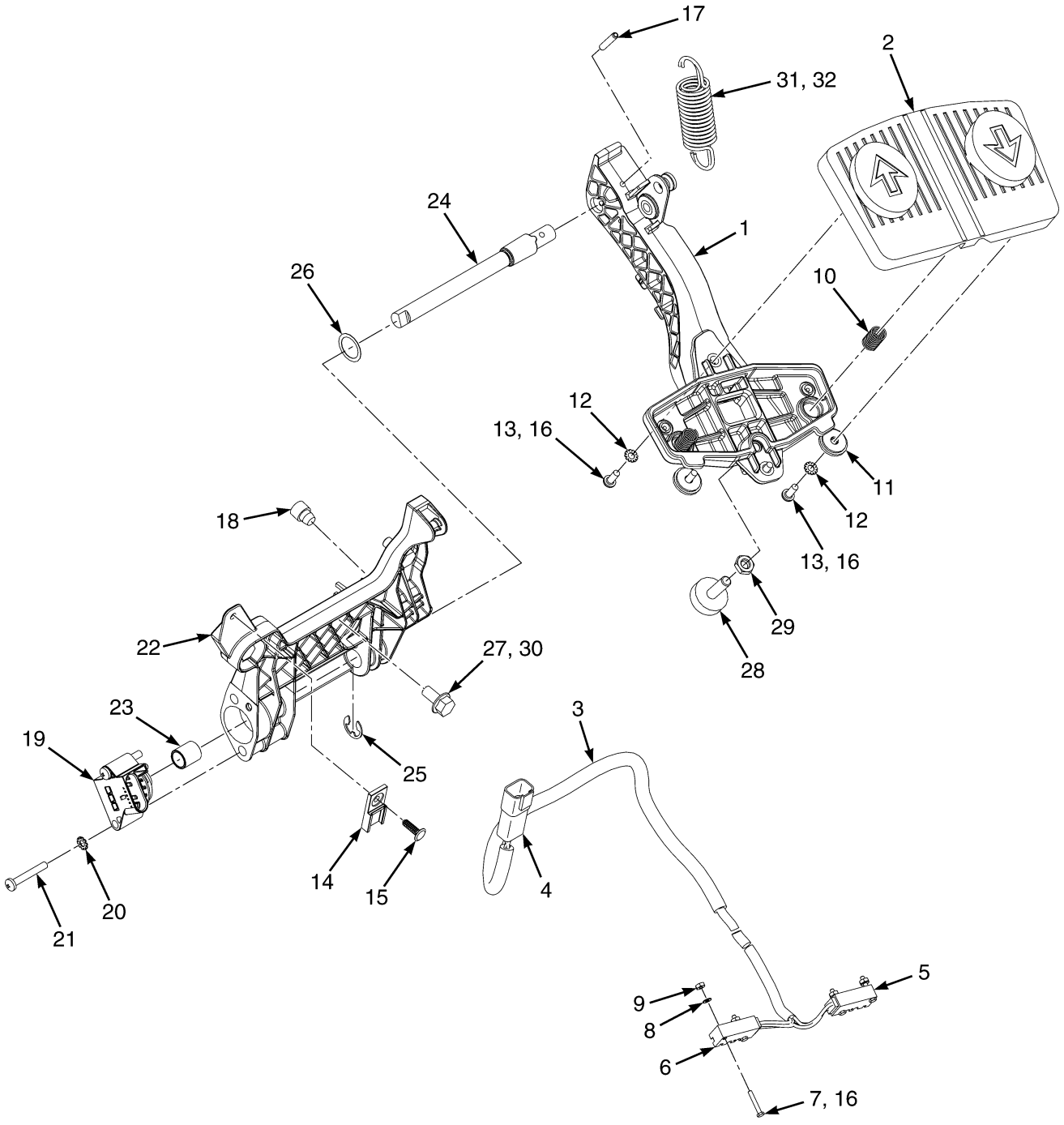

©2013 HYSTER COMPANY

THROTTLE PEDAL ASSEMBLY AND ATTACHING PARTS
MONOTROL

ITEM	PART NO.	DESCRIPTION	QTY
	4051938	Pedal Assy (Monotrol)	1
1	2074702	Pedal	1
2	1340470	Pad	1
3	2072782	Wire Harness	1
4	. . . . .	Connector Assembly (To Cowl Harness)	1
4	1489655	Connector (4 Way)	1
4	1330416	Connector (Secondary Lock) (Secondary Lock)	1
4	1531312	Terminal	4
5	. . . . .	Switch (Reverse)	1
6	. . . . .	Switch (Forward)	1
7	220428	Screw	4
8	53162	Lockwasher	4
9	16865	Nut	4
10	325699	Spring	2
11	4040523	Washer (Bonded)	2
12	15931	Lockwasher	2
13	16708	Screw	2
14	1500912	Clip	1
15	1582464	Fastener	1
16	360387	Loctite	AR
17	302437	Roll Pin	1
18	4031769	Isolator (Throttle Pedal)	1
19	2063842	Sensor (Hall Throttle Position) (To Cowl Harness)	1
20	296378	Washer	2
21	1564752	Capscrew	2
22	4051924	Base Assembly (Throttle)	1
22	4615964	Molding	1
23	1524267	Bushing	1
24	1521005	Shaft	1
24	1654754	Shaft	1
25	1530971	E-Ring	1
26	1654156	Shim	AR
27	1527879	Capscrew	3
28	1530311	Screw (Stop)	1
29	329069	Nut	1
30	251099	Loctite	AR
31	1582301	Spring (Inner)	1
32	1582300	Spring (Outer)	1

©2013 HYSTER COMPANY

NOTES

©2013 HYSTER COMPANY

7 ELECTRICAL SYSTEM

SECTION 7
ELECTRICAL SYSTEM

DESCRIPTION **PAGE**

ALTERNATOR AND MOUNTING
YANMAR 2.6L AND 3.3L - DIESEL 7-39
BATTERY CABLES
GM 2.4L - GASOLINE AND LPG 7-42
COWL ELECTRICAL
ELECTRO-HYDRAULIC 7-8
MANUAL HYDRAULIC - WITH OPERATOR PRESENCE SYSTEM 7-10
DISTRIBUTOR
MAZDA 2.0L AND 2.2L, GASOLINE AND LPG - 2006 EMISSION COMPLIANT
ENGINES (S/N L177B15327E →) (S/N L177B16207E →) (S/N L177B15512E →) 7-21
ELECTRICAL SYSTEM
CHASSIS 7-4
ELECTRONIC CONTROL LEVERS
MINI-LEVER MODULE (FOUR FUNCTION) - DATE CODE 0725 THRU 0743 7-62
MINI-LEVER MODULE (FOUR FUNCTION) - DATE CODE 0744 7-68
MINI-LEVER MODULES - DATE CODE 0724 7-58
MINI-LEVER MODULES (THREE FUNCTION) - DATE CODE 0725 THRU 0743 7-60
MINI-LEVER MODULES (THREE FUNCTION) - DATE CODE 0744 7-64
ENGINE CONTROL MODULE
MAZDA 2.0L AND 2.2L LPG - 2007-2010 EMISSION COMPLIANT ENGINES (S/N L177B15327E →)
(S/N L177B16207E →) (S/N L177B15512E →) 7-36
MAZDA 2.0L AND 2.2L, GASOLINE - 2007-2010 EMISSION COMPLIANT
ENGINES (S/N L177B15327E →) (S/N L177B16207E →) (S/N L17715512E →) 7-35
ENGINE ELECTRICAL COMPONENTS
MAZDA 2.0L AND 2.2L, GASOLINE AND LPG - 2006 EMISSION COMPLIANT
ENGINES (S/N L177B15327E →) (S/N L177B16207E →) (S/N L177B15512E →) 7-18
MAZDA 2.0L AND 2.2L, GASOLINE AND LPG - 2007-2010 EMISSION COMPLIANT
ENGINES (S/N L177B15327E →) (S/N L177B16207E →) (S/N L177B15512E →) 7-22
ENGINE ELECTRICAL SYSTEM
MAZDA 2.0L AND 2.2L LPG - SHEET 1 OF 2 7-28
MAZDA 2.0L AND 2.2L, GASOLINE - SHEET 1 OF 2 7-24
MAZDA 2.0L AND 2.2L, GASOLINE AND LPG, SHEET 2 OF 2 - 2007 EMISSION COMPLIANT
ENGINES (S/N L177B15327E →) (S/N L177B16207E →) (S/N L177B15512E →) 7-32
YANMAR DIESEL 7-44
ENGINE SAFETY ELECTRICAL SYSTEM
GM 2.4L - GASOLINE AND LPG 7-52
WITH SEALED ALTERNATOR WIRE HARNESS - MAZDA - GASOLINE AND LPG 7-48
FUEL SYSTEM SENSORS
MAZDA 2.0L AND 2.2L LPG - 2007-2010 EMISSION COMPLIANT ENGINES (S/N L177B15327E →)
(S/N L177B16207E →) (S/N L177B15512E →) 7-38
MAZDA 2.0L AND 2.2L, GASOLINE - 2007-2010 EMISSION COMPLIANT
ENGINES (S/N L177B15327E →) (S/N L177B16207E →) (S/N L177B15512E →) 7-37
IMPACT SENSOR 7-12
INSTRUMENT CLUSTER 7-55
LIGHTS
STOP, TAIL, TURN, BACKUP, AND STROBE - WITH CAB 7-74
STOP, TAIL, TURN, BACKUP, AND STROBE - WITH OVERHEAD GUARD 7-76
LOAD WEIGH ELECTRICAL 7-82
MAST ELECTRICAL 7-80

©2013 HYSTER COMPANY

SECTION 7
ELECTRICAL SYSTEM

DESCRIPTION **PAGE**

MINI-LEVER CONTROLS
WITH ARMREST - THREE FUNCTION (S/N L177V04458H → INC. 04450) 7-70
WITH ARMREST - FOUR FUNCTION (S/N L177V04458H → INC. 04450) 7-72
POWER DISTRIBUTION MODULE
→ S/N L177B08959D 7-14
S/N L177B08960D → 7-16
SEALED ALTERNATOR AND MOUNTING
YANMAR 2.6 AND 3.3L 7-40
TRANSMISSION ELECTRICAL SYSTEM 7-78
WIRE HARNESS
ALTERNATOR 7-324
COWL WITH FORWARD/REVERSE - WITH HYDRAULIC PUMP SOLENOID (S/N L117B28589G →)
(→ S/N L177V04756H) 7-308
COWL WITH FORWARD/REVERSE LEVER - WITHOUT RETURN TO SET TILT (→ S/N L177V04756H)
..... 7-300
COWL WITH FORWARD/REVERSE LEVER - WITHOUT RETURN TO SET TILT (S/N L177V04757H →)
..... 7-304
COWL WITH FORWARD/REVERSE LEVER - WITH HYDRAULIC PUMP
SOLENOID (S/N L177V04757H →) 7-316
COWL WITH MONOTROL PEDAL - WITH RETURN TO SET TILT (→ S/N L177V04756H) 7-292
COWL WITH MONOTROL PEDAL - WITH RETURN TO SET TILT (S/N L177V04757H →) 7-296
COWL WITH MONOTROL PEDAL - WITH HYDRAULIC PUMP SOLENOID (S/N L117B28589G →)
(→ S/N L177V04756H) 7-312
COWL WITH MONOTROL PEDAL - WITH HYDRAULIC PUMP SOLENOID (S/N L177V04757H →) 7-320
ELECTRONIC CONTROL VALVE - THREE FUNCTION 7-266
ELECTRONIC CONTROL VALVE - FOUR FUNCTION 7-270
ENGINE - GM 2.4L, GASOLINE (→ S/N L177B14822E) 7-226
ENGINE - GM 2.4L, GASOLINE (S/N L177B14823E ↔ S/N L177V04179H) 7-230
ENGINE - GM 2.4L, LPG (→ S/N L177B14822E) 7-238
ENGINE - GM 2.4L, LPG (S/N L177B14823E ↔ S/N L177B23560F) 7-242
ENGINE - YANMAR 2.6L AND 3.3L, DIESEL (S/N L177B11118D →) 7-254
ENGINE - YANMAR 2.6L AND 3.3L, DIESEL (→ S/N L177B11117D) 7-258
FUSED STARTER - GM 2.4L 2010 SERIES 7-264
GASOLINE ENGINE - MAZDA 2.0L AND 2.2L (→ S/N L177B11117D) 7-194
GASOLINE ENGINE - MAZDA 2.0L AND 2.2L (S/N L177B11118D ↔ S/N L177B15326E) 7-196
GM 2.4L ENGINE, LPG - WITH LOW FUEL SENSOR (S/N L177B23561F ↔ S/N L177V04385H) 7-246
HYDRAULIC COOLER 7-290
LIGHTS - WITH OVERHEAD GUARD (→ S/N L177B11224D) 7-272
LIGHTS - WITH OVERHEAD GUARD (S/N L177B11225D →) 7-274
LIGHTS (6/2007 →) 7-276
LPG ENGINE - MAZDA 2.0L AND 2.2L (→ S/N L177B11117D) 7-200
LPG ENGINE - MAZDA 2.0L AND 2.2L (S/N L177B11118D ↔ S/N L177B16207E 2.2L)
(S/N L177B11118D ↔ S/N L177B15512E 2.0L) 7-202
RH CHASSIS - MAZDA 2.0L AND 2.2L, GASOLINE AND LPG (→ 1/2006) 7-84
RH CHASSIS - MAZDA 2.0L AND 2.2L (→ S/N L177B11117D) 7-88
RH CHASSIS - MAZDA 2.0L AND
2.2L (S/N L177B11118D ↔ S/N L177B15327E 2.2L GASOLINE ENGINE)
(→ S/N L177B15512E 2.0L LPG ENGINE) (→ S/N L177B16207E 2.2L LPG ENGINE) 7-94

©2013 HYSTER COMPANY

SECTION 7
ELECTRICAL SYSTEM

DESCRIPTION **PAGE**

RH CHASSIS - MAZDA 2.0L AND 2.2L (S/N L177B15327E ↔ 10/2008 (2.2L GASOLINE ENGINE)) (S/N L177B16207E ↔ 10/2008 (2.2L LPG ENGINE)) (S/N L177B15512E ↔ 10/2008 (2.0L LPG ENGINE)) 7-100
RH CHASSIS - MAZDA 2.0L AND 2.2L (10/2008 ↔ S/N L177V05175H) 7-106
RH CHASSIS - MAZDA 2.0L AND 2.2L (S/N L177V05176H →) 7-112
RH CHASSIS - MAZDA 2.0L AND 2.2L (1/2013 →) 7-118
RH CHASSIS - GM 2.4L, GASOLINE AND LPG (→ 12/2005) 7-124
RH CHASSIS - GM 2.4L (→ S/N L177B11117D) 7-128
RH CHASSIS - GM 2.4L (S/N L177B11118D ↔ 1/2007) 7-134
RH CHASSIS - GM 2,4L (1/2007 ↔ 10/2008) 7-140
RH CHASSIS - GM 2.4L (10/2008 ↔ S/N L177V05175H) 7-146
RH CHASSIS - GM 2.4L (S/N L177V05176H →) 7-152
RH CHASSIS - GM 2.4L (1/2013 →) 7-158
RH CHASSIS - YANMAR 2.6L AND 3.3L, DIESEL (→ 2/2006) 7-164
RH CHASSIS - YANMAR 2.6L AND 3.3L, DIESEL (→ 8/2006) 7-168
RH CHASSIS - YANMAR 2.6L AND 3.3L, DIESEL (8/2006 ↔ S/N L177B31165H) 7-174
RH CHASSIS - YANMAR 2.6L AND 3.3L, DIESEL (S/N L177B31166H →) 7-180
RH CHASSIS - YANMAR 2.6L AND 3.3L, DIESEL (1/2013 →) 7-186
SEALED ALTERNATOR - GM 2.4L, GASOLINE AND LPG 7-261
SEALED ALTERNATOR - YANMAR 2.6L AND 3.3L, DIESEL 7-268
SEAT JUMPER (→ S/N L177V04457H EXC. 04450) 7-192
TRANSMISSION - SINGLE SPEED (S/N L177B11118D →) 7-278
TRANSMISSION - SINGLE SPEED (→ S/N L177B11117D) 7-280
TRANSMISSION - DUAL SPEED (→ S/N L177B11117D) 7-282
TRANSMISSION - SINGLE SPEED 7-286
TRANSMISSION - DUAL SPEED (S/N L177B11118D →) 7-288
WIRE HARNESS (ENGINE)
GM 2.4L GASOLINE (S/N L177V04180H →) 7-234
GM 2.4L, LPG (S/N L177V04386H →) 7-250
MAZDA 2.0L AND 2.2L LPG - 2007-2009 EMISSION COMPLIANT ENGINES (S/N L177B16207E → 2.2L LPG) (S/N L177B15512E → 2.0L LPG) 7-214
MAZDA 2.0L AND 2.2L LPG - 2010 SERIES 7-220
MAZDA 2.0L AND 2.2L, GASOLINE - 2007-2009 EMISSION COMPLIANT ENGINES (S/N L177B15327E →) 7-204
MAZDA 2.0L AND 2.2L, GASOLINE - 2010 SERIES 7-210
WIRE HARNESS (SEALED ALTERNATOR)
MAZDA 2.0L AND 2.2L, GASOLINE AND LPG - 2007 EMISSION COMPLIANT ENGINES (S/N L177B15327E →) (S/N L177B16207E →) (S/N L177B15512E →) 7-263
WIRE HARNESS ADAPTER
LOW FUEL PRESSURE 7-323

©2013 HYSTER COMPANY

ELECTRICAL SYSTEM (FIGURE 7-1)
CHASSIS

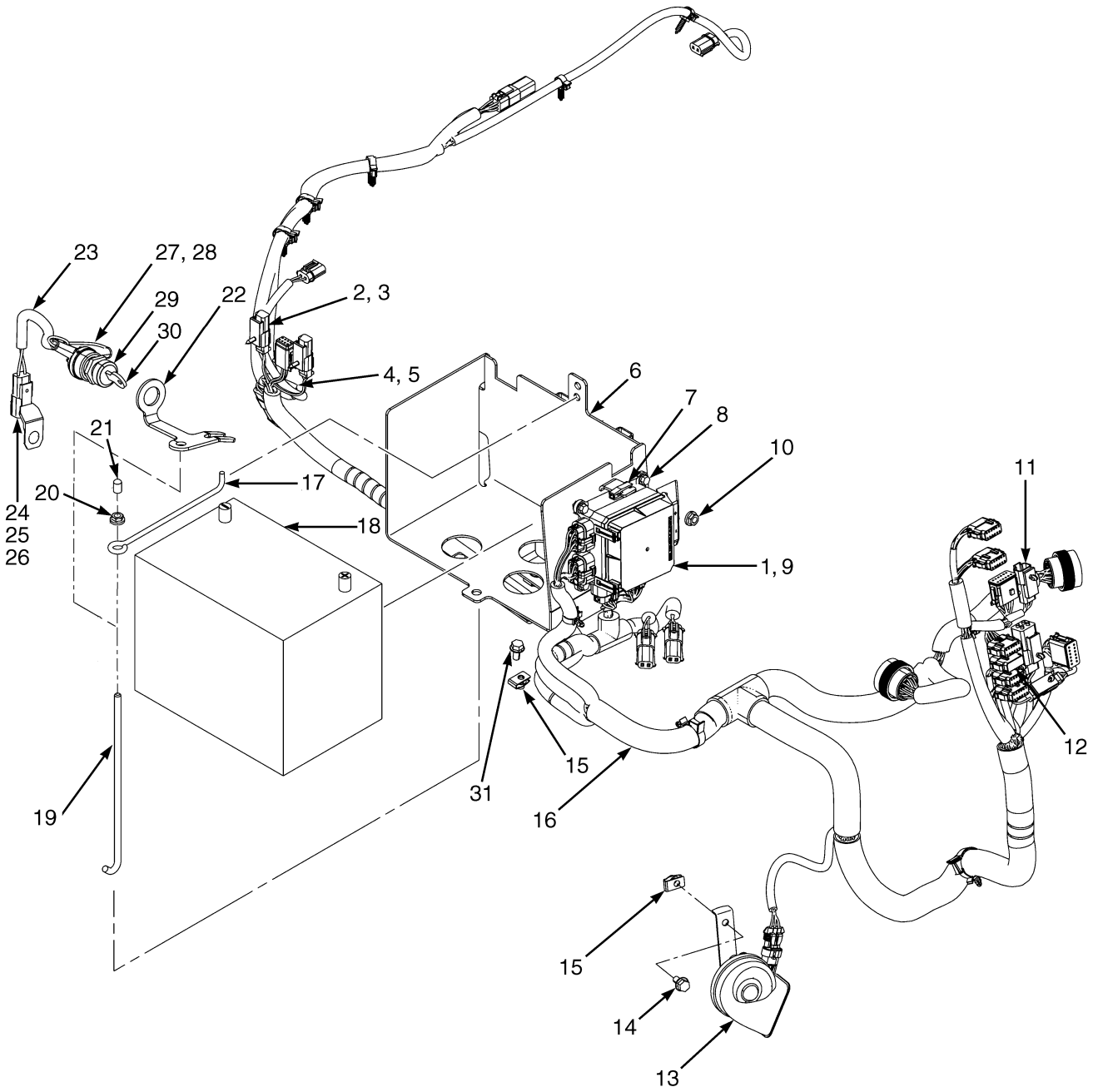

HP081625

©2013 HYSTER COMPANY

ELECTRICAL SYSTEM
CHASSIS

ITEM	PART NO.	DESCRIPTION	QTY
1	**e** 2063093	Fuse Box (☞Figure 7-5)	1
1	**u** 2090613	Fuse Box (☞Figure 7-6)	1
2	1582464	Fastener	6
3	1582442	Clip	1
4	1617080	Bracket (Hood Switch)	1
5	1529366	Capscrew	1
5	**d** 1529366	Capscrew	2
6	**i** 1616981	Battery Tray	1
6	**p** 1644560	Battery Tray	1
6	**r** 2090661	Battery Tray (Plastic)	1
7	1402883	Fuse Puller	1
8	1534417	Capscrew	4
9	1559928	Seal	1
10	~~1382472~~		
	1502543	Nut (Flange)	1
11	1500912	Clip	6
12	**a** 1593331	Connector	1
13	**f** 1527264	Horn	1
13	**v** ~~1618978~~		
	4043562	Horn (Electronic)	1
14	1527879	Capscrew	4
15	1480237	Nut	4
16	**g** 2078879	Wire Harness (Chassis) (Mazda 2.0L and 2.2L) (☞Figure 7-37)	1
16	**n** 2085945	Wire Harness (Chassis) (Mazda 2.0L and 2.2L) (☞Figure 7-38)	1
16	**k** 2090054	Wire Harness (Chassis) (Mazda 2.0L and 2.2L) (☞Figure 7-39)	1
16	**cm** 2108124	Wire Harness (Chassis) (Mazda 2.0L and 2.2L) (☞Figure 7-40)	1
16	**s** 4606936	Wire Harness (Chassis) (Mazda 2.0L and 2.2L) (☞Figure 7-41)	1
16	**w** 4620357	Wire Harness (Chassis) (Mazda 2,0L, 2.2L) (☞Figure 7-42)	1
16	**g** 2078878	Wire Harness (Chassis) (GM 2.4L) (☞Figure 7-44)	1
16	**n** 2085944	Wire Harness (Chassis) (GM 2.4L) (☞Figure 7-45)	1
16	**j** 2089179	Wire Harness (Chassis) (GM 2.4L) (☞Figure 7-46)	1
16	**cl** 2108126	Wire Harness (Chassis) (GM 4.3L) (☞Figure 7-47)	1
16	**s** 4604203	Wire Harness (Chassis) (GM 2.4L) (☞Figure 7-48)	1
16	**w** 4620359	Wire Harness (Chassis) (GM 2.4L) (☞Figure 7-49)	1
16	**g** 2078880	Wire Harness (Chassis) (Yanmar 2.6L and 3.3L Diesel) (☞Figure 7-51)	1
16	**o** 2085947	Wire Harness (Chassis) (Yanmar 2.6L and 3.3L Diesel) (☞Figure 7-52)	1
16	**s** 4604204	Wire Harness (Chassis) (Yanmar 2.6L and 3.3L Diesel) (☞Figure 7-53)	1
16	**w** 4620360	Wire Harness (Chassis) (Yanmar 2.6L, 3.3L) (☞Figure 7-54)	1
17	**i** 1585529	Link (Battery Hold Down)	1
17	**q** 1638706	Link (Battery Hold Down)	1
17	1641368	Link (Battery Hold Down) (Alternate Part)	1
18	1383331	Start Battery Wet	1
19	2065745	Link (Battery Hold Down)	1
20	~~1382472~~		
	1502543	Nut (Flange)	1
20	296380	Washer (Use above item 17)	1
21	1540805	Cap	1
22	1582337	Bracket	1
23	**h** 2074320	Wire Harness (Remote Keyswitch)	1
23	**t** 2058110	Wire Harness (Remote Keyswitch)	1

©2013 HYSTER COMPANY

ELECTRICAL SYSTEM
CHASSIS

ITEM	PART NO.	DESCRIPTION	QTY
24	1493465	Connector (2 Pin)	1
25	1330414	Connector (Secondary Lock)	2
26	1330437	Terminal (Pin)	2
27	1497433	Ring Terminal	2
28	190383	Boot	2
29	**h** 254007	Ignition Switch (Key)	1
29	**t** 2058111	Ignition Switch	1
30	262798	Key Set	1
31	**i** 1527879	Capscrew	3
31	**q** 1527880	Capscrew	3
	b 4601500	Wire Harness (Seat Adapter) (☞Figure 7-55)	1
	b 4616988	Wire Harness (Jumper) (Jumper, Electronic Horn)	1

FOOTNOTES:

a For Use With GM And Mazda Engines Only
b Not Illustrated
c With Anti-Stall Connector
d Yanmar 2.6L and 3.3L Diesel
e → S/N L177B08959D
f → S/N L177B10274D
g → S/N L177B11117D
h → S/N L177B12264D
i → S/N L177B14568E
j 1/2007 ↔ 10/2008
k 1/2007 ↔ 6/2009
l 10/2008 ↔ S/N L177V05175H
m 6/2009 ↔ S/N L177V05175H
n S/N L177B11118D ↔ 1/2007
o S/N L177B11118D ↔ S/N L177V05175H
p S/N L177B14569E ↔ S/N L177B17947E
q S/N L177B14569E →
r S/N L177B17948E →
s S/N L177V05176H →
t S/N L177B12265D →
u S/N L177B08960D →
v S/N L177B10275D →
w 1/2013 →

©2013 HYSTER COMPANY

NOTES

©2013 HYSTER COMPANY

COWL ELECTRICAL (FIGURE 7-2)
ELECTRO-HYDRAULIC

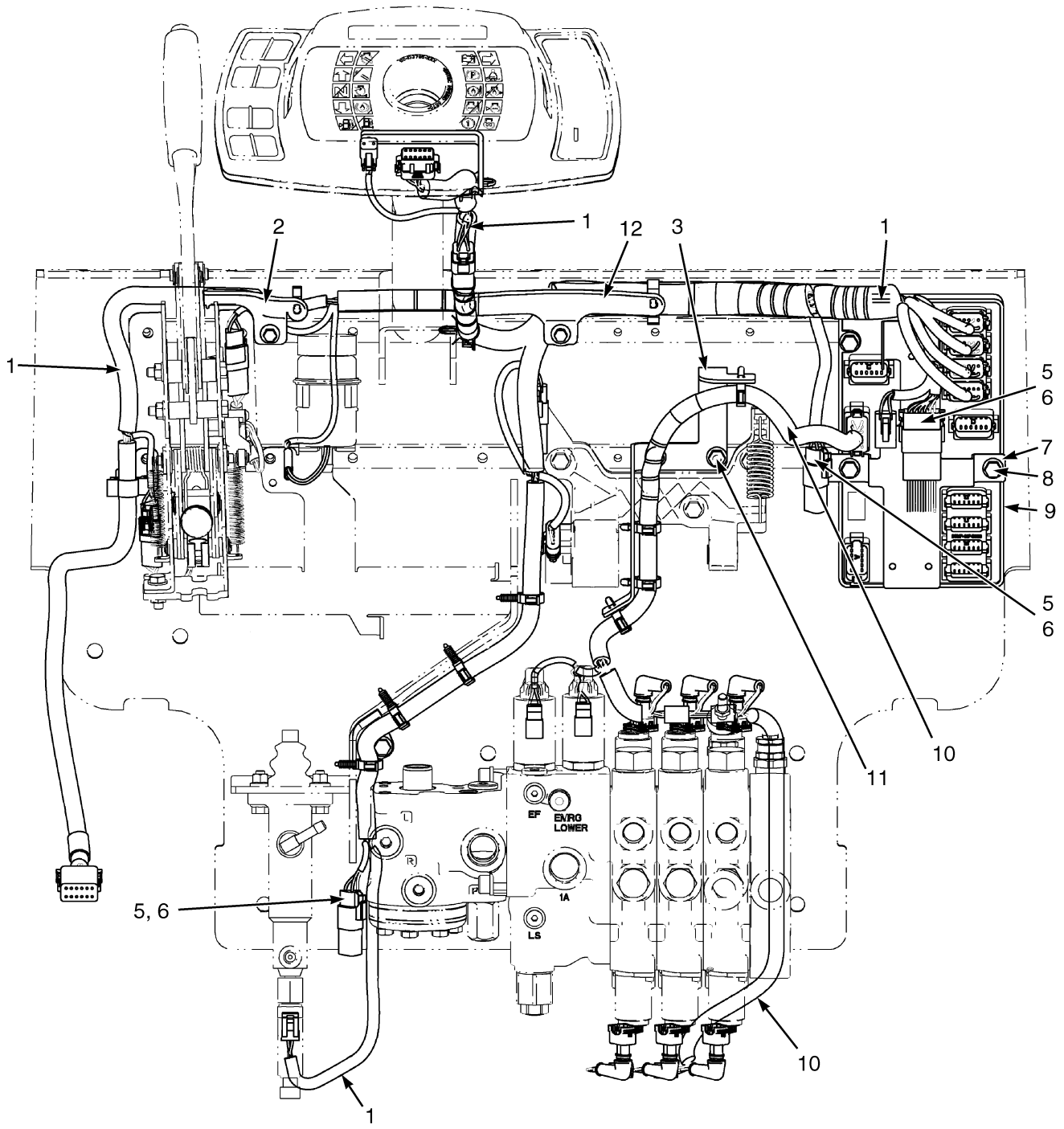

BP080206

©2013 HYSTER COMPANY

COWL ELECTRICAL
ELECTRO-HYDRAULIC

ITEM	PART NO.	DESCRIPTION	QTY
1	**f** 2070269	Wire Harness (Cowl with Monotrol Pedal) (☞Figure 7-88)	1
1	**h** 2098011	Wire Harness (Cowl With Monotrol Pedal) (☞Figure 7-88)	1
1	4603283	Wire Harness (Cowl With Monotrol Pedal) (☞Figure 7-89)	1
1	**f** 2084829	Wire Harness (Cowl w/ Forward/Reverse Lever) (☞Figure 7-90)	1
1	**h** 2098012	Wire Harness (Cowl w/ Forward/Reverse Lever) (☞Figure 7-90)	1
1	4603280	Wire Harness (Cowl w/ Forward/Reverse Lever) (☞Figure 7-91)	1
2	1600190	Bracket	1
2	2111004	Bracket (Left Hand) (Alternate Part)	1
2	2111005	Bracket (Right Hand) (Alternate Part)	1
3	1531975	Bracket	1
4	1529366	Capscrew	2
4	1529366	Capscrew (Alternate Part)	2
5	1500912	Clip	3
6	1582464	Fastener	3
7	1582465	Bracket	1
8	1510115	Capscrew	3
9	**eg** 2068340	Vehicle System Manager (VSM)	1
9	**ei** 2068343	Vehicle System Manager (VSM) (w/ Electro-Hydraulics)	1
9	**di** 2068344	Vehicle System Manager (VSM) (w/ Manual or Electro-Hydraulics)	1
10	**a** 2058909	Wire Harness (Control Valve) (☞Figure 7-78)	1
10	**c** 2060198	Wire Harness (Control Valve) (☞Figure 7-76)	1
11	1529366	Capscrew	4
	b 1554902	Screw	2

FOOTNOTES:

a Four Function
b Not Illustrated
c Three Function
d With Cab
e With Overhead Guard
f → 6/2009
g → S/N L177B07128D
h 1/2009 ↔ S/N L177V04756H
i S/N L177B07129D →

©2013 HYSTER COMPANY

COWL ELECTRICAL (FIGURE 7-3)
MANUAL HYDRAULIC — WITH OPERATOR PRESENCE SYSTEM

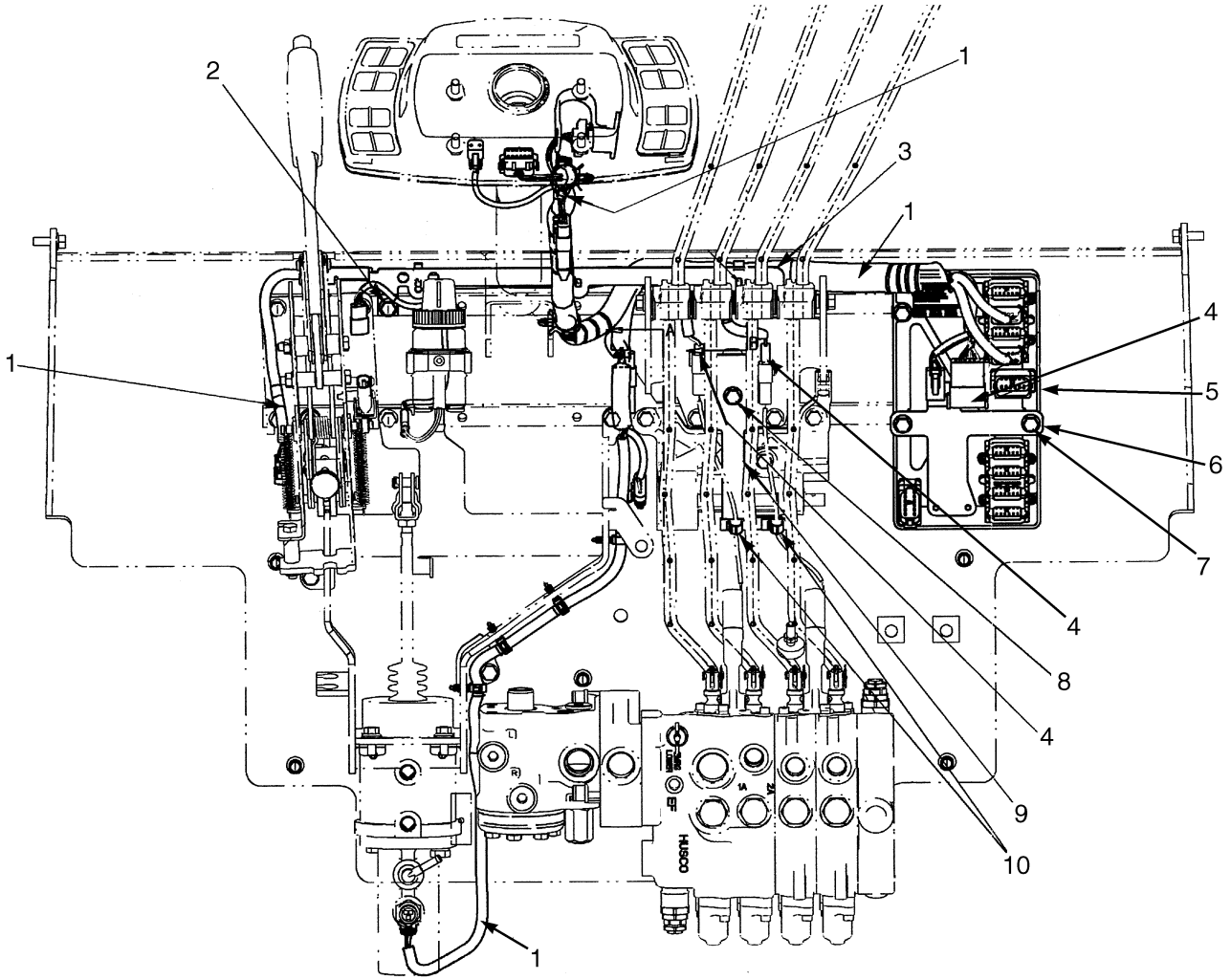

BP080709

©2013 HYSTER COMPANY

COWL ELECTRICAL

MANUAL HYDRAULIC – WITH OPERATOR PRESENCE SYSTEM

ITEM	PART NO.	DESCRIPTION	QTY
1	**e** 2070269	Wire Harness (Cowl With Monotrol Pedal) (☞Figure 7-88)	1
1	**bf** 2104701	Wire Harness (Cowl with Monotrol) (☞Figure 7-93)	1
1	4603281	Wire Harness (Cowl with Monotrol Pedal) (☞Figure 7-95)	1
1	**e** 2084829	Wire Harness (Cowl w/ Forward/Reverse Lever) (☞Figure 7-90)	1
1	**f** 2104702	Wire Harness (Cowl with Forward/Reverse Lever) (☞Figure 7-92)	1
1	4603282	Wire Harness (Cowl with Forward/Reverse Lever) (☞Figure 7-94)	1
2	1529366	Capscrew	2
2	1529366	Capscrew (Alternate Part)	2
3	1600190	Bracket	1
3	2111004	Bracket (Left Hand) (Alternate Part)	1
3	2111005	Bracket (Right Hand) (Alternate Part)	1
4	1500912	Clip (With Monotrol)	4
4	1500912	Clip (Without Forward/Reverse Lever)	3
4	1582464	Fastener (With Monotrol)	4
4	1582464	Fastener (Without Forward/Reverse Lever)	3
5	**cd** 2068339	Vehicle System Manager (VSM)	1
5	**cg** 2068342	Vehicle System Manager (VSM) (w/ Manual Hydraulics)	1
5	**ag** 2068344	Vehicle System Manager (VSM) (w/ Manual or Electro-Hydraulics)	1
6	1582465	Bracket	1
7	1510115	Capscrew	3
8	1528482	Capscrew	1
8	1398062	Nut (Fold Over)	1
9	1686719	Bracket	1
10	1562088	Clip	2

FOOTNOTES:

a With Cab
b With Operator Presence System
c With Overhead Guard
d → S/N L177B07128D
e → S/N L177B28588G
f S/N L117B28589G →
g S/N L177B07129D →

©2013 HYSTER COMPANY

IMPACT SENSOR (FIGURE 7-4)

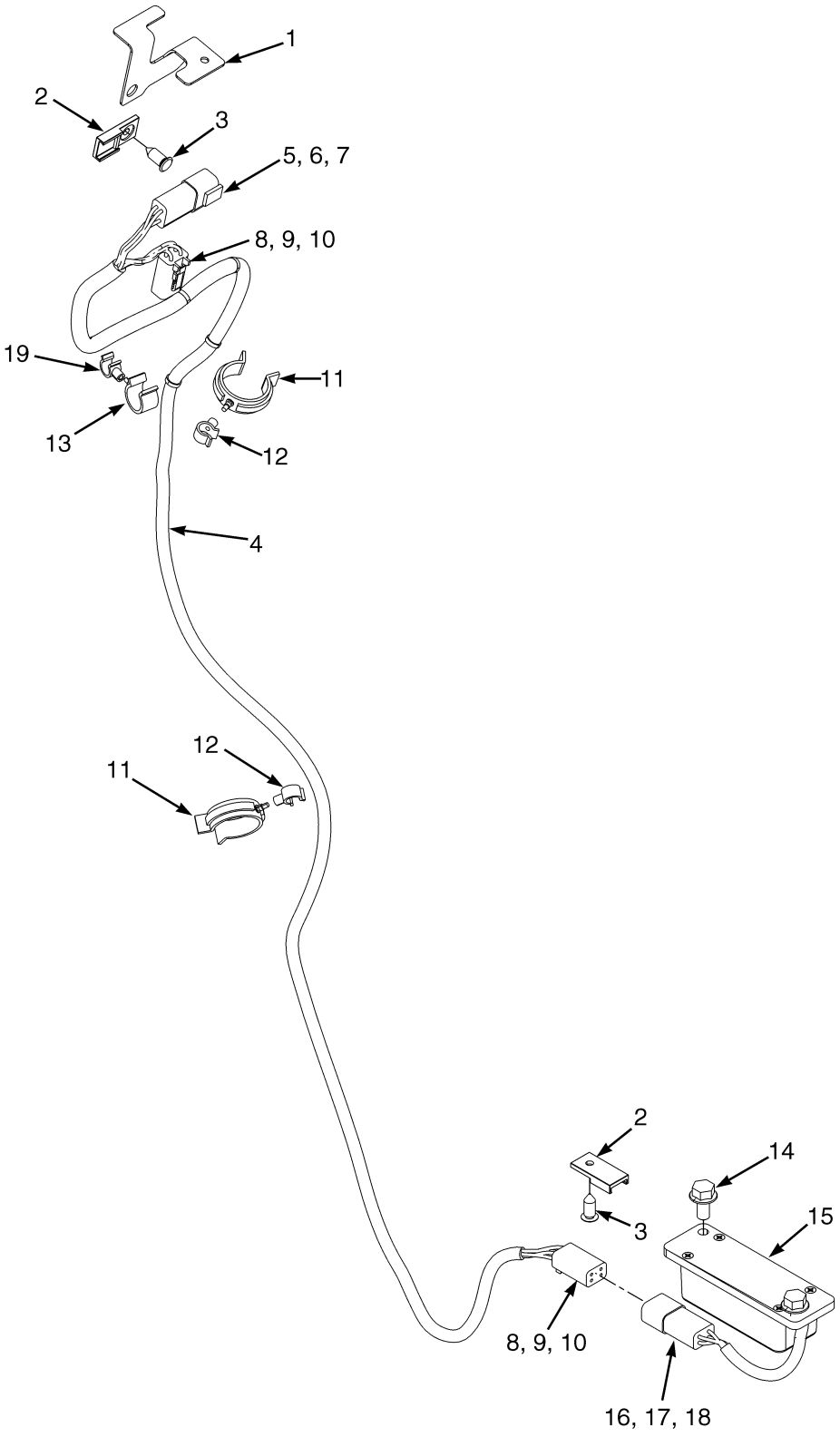

©2013 HYSTER COMPANY

IMPACT SENSOR

ITEM	PART NO.	DESCRIPTION	QTY
1	1535166	Bracket	1
2	1500912	Clip	2
3	1582464	Fastener	2
3	2100710	Fastener (Alternate Part)	1
4	2079281	Wire Harness (Impact Sensor)	1
5	1489655	Connector (4 Way)	1
6	1330416	Connector (Secondary Lock)	1
7	1330437	Terminal (Pin)	4
8	1489656	Connector (4-Way)	2
9	1489657	Connector	2
10	1330438	Terminal (Socket)	8
11	1561759	Clamp (Swivel)	2
12	1542439	Clamp (Swivel)	2
13	1502055	Clamp (Swivel)	1
14	1527879	Capscrew	2
14	287851	Capscrew (Alternate Part)	2
14	320157	Washer (Alternate Part)	2
15	2079843	Sensor (Impact)	1
16	1489655	Connector (4 Way)	1
17	1330416	Connector (Secondary Lock)	1
18	1330433	Terminal	4
19	1502053	Clamp (Swivel)	1

©2013 HYSTER COMPANY

POWER DISTRIBUTION MODULE (FIGURE 7-5)

(→ S/N L177B08959D)

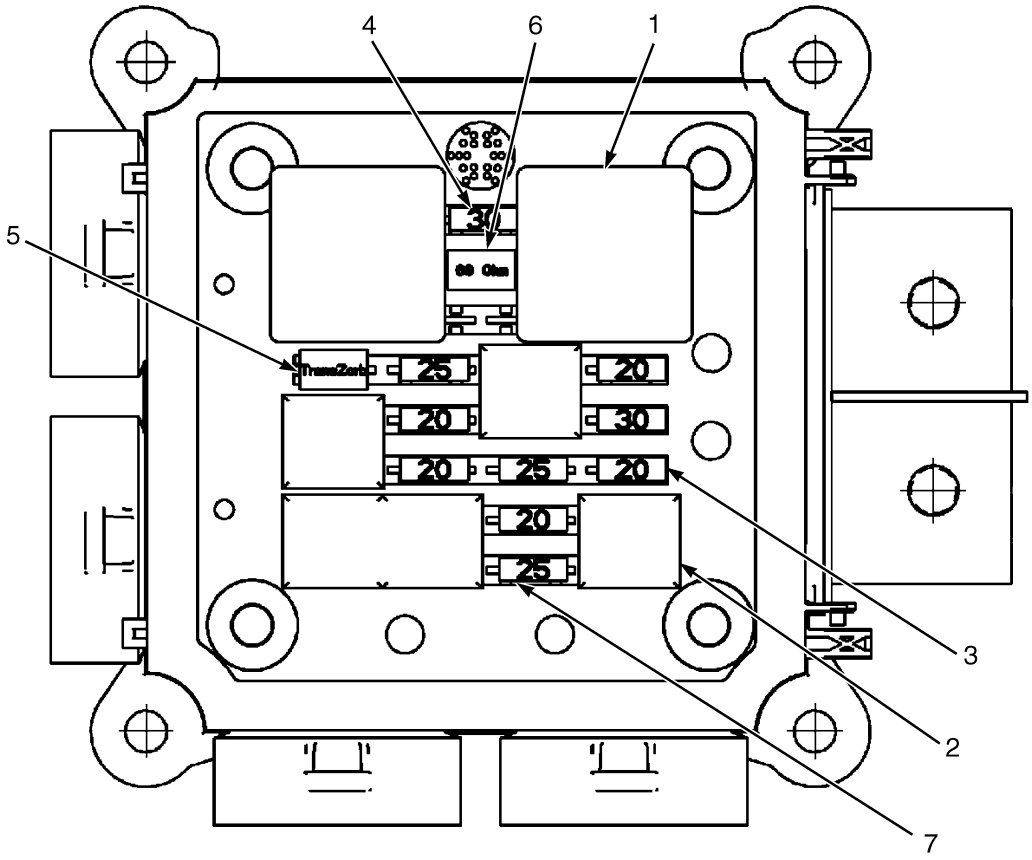

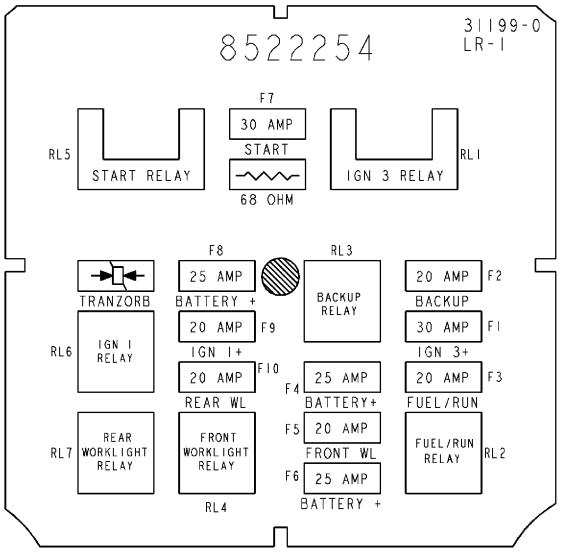

BP080278

©2013 HYSTER COMPANY

POWER DISTRIBUTION MODULE

(→ S/N L177B08959D)

ITEM	PART NO.	DESCRIPTION	QTY
	2063093	Fuse Box	1
1	2044712	Relay (30 Amp)	2
2	1528315	Relay (20 Amp)	5
3	1528132	Fuse (20 Amp)	5
4	1528133	Fuse (30 Amp)	2
5	1528630	Semiconductor	1
6	1528631	Resistor (68 Ohm, 5 Watt)	1
7	1544255	Fuse (25 Amp)	3

©2013 HYSTER COMPANY

POWER DISTRIBUTION MODULE (FIGURE 7-6)

(S/N L177B08960D →)

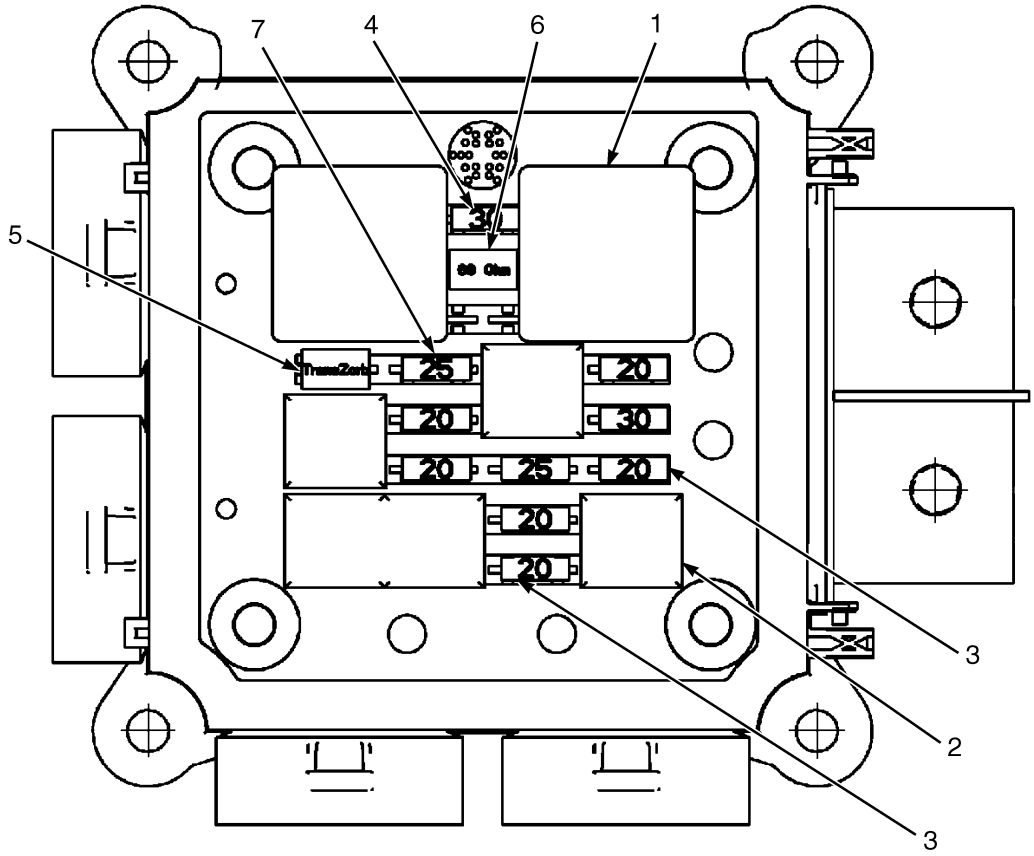

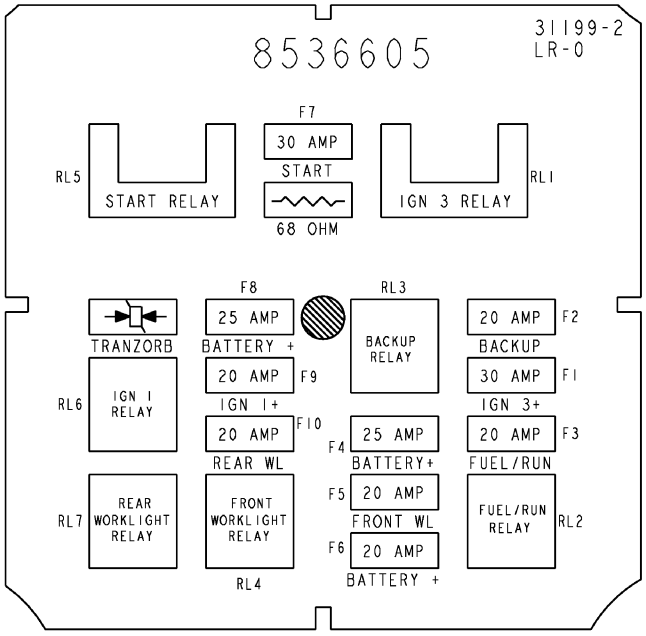

BP080485

©2013 HYSTER COMPANY

POWER DISTRIBUTION MODULE

(S/N L177B08960D →)

ITEM	PART NO.	DESCRIPTION	QTY
	2090613	Fuse Box	1
1	2044712	Relay (30 Amp)	2
2	1528315	Relay (20 Amp)	5
3	1528132	Fuse (20 Amp)	6
4	1528133	Fuse (30 Amp)	2
5	1528630	Semiconductor	1
6	1528631	Resistor (68 Ohm, 5 Watt)	1
7	1544255	Fuse (25 Amp)	2
	a 4046933	Fuse Box Cover	1

FOOTNOTES:

a Not Illustrated

©2013 HYSTER COMPANY

ENGINE ELECTRICAL COMPONENTS (FIGURE 7-7)

MAZDA 2.0L AND 2.2L, GASOLINE AND LPG — 2006 EMISSION COMPLIANT ENGINES

(S/N L177B15327E →) (S/N L177B16207E →) (S/N L177B15512E →)

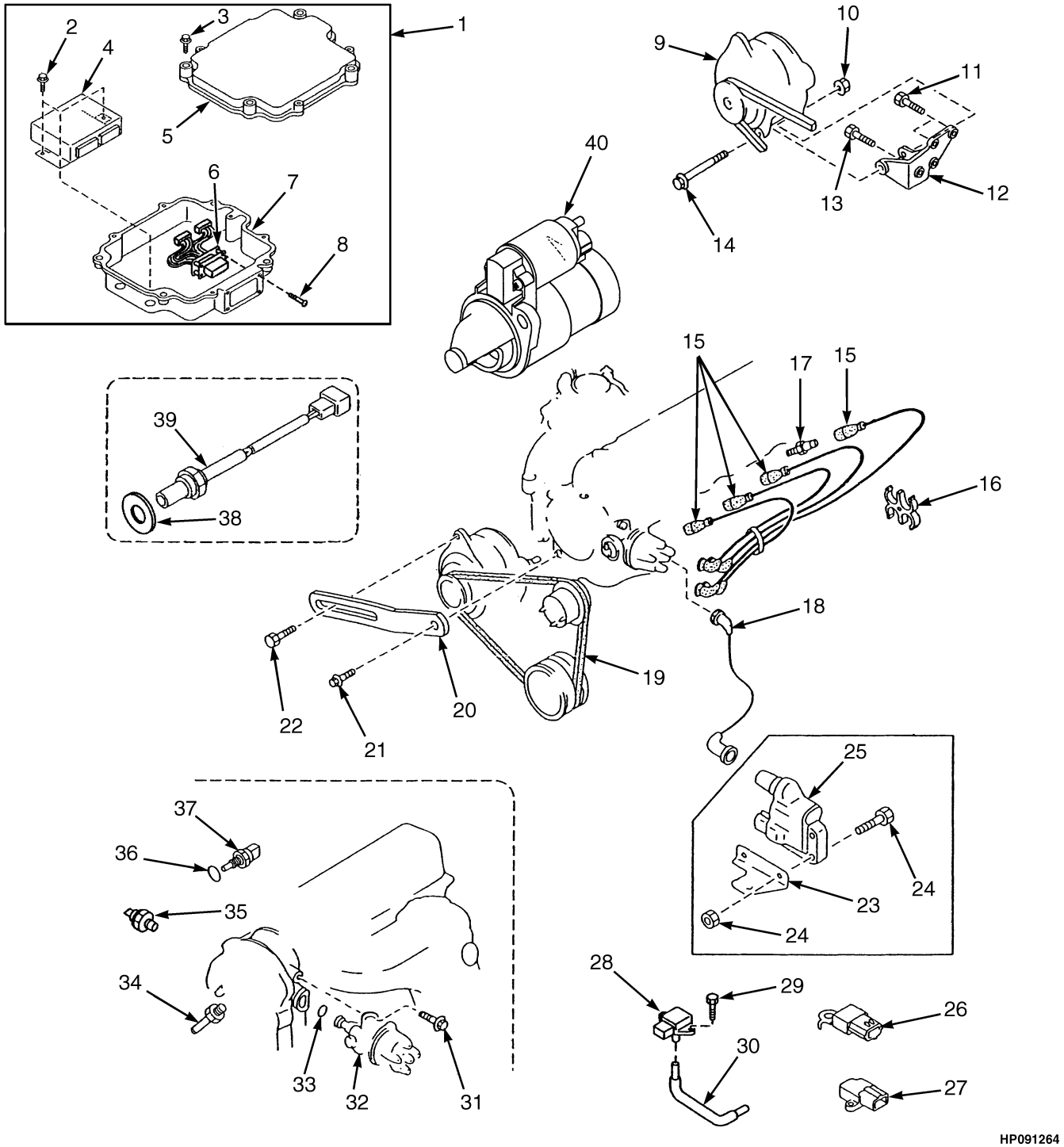

HP091264

©2013 HYSTER COMPANY

ENGINE ELECTRICAL COMPONENTS

MAZDA 2.0L AND 2.2L, GASOLINE AND LPG – 2006 EMISSION COMPLIANT ENGINES (S/N L177B15327E →) (S/N L177B16207E →) (S/N L177B15512E →)

ITEM	PART NO.	DESCRIPTION	QTY
1	**a**	Engine Control Unit	1
2	2045023	Screw	3
3	1362011	Bolt	5
4	**a** 1554006	Electronic Control Module (2.0L)	1
4	**b** ~~2065857~~ 2101552	Engine Control Module (2.0L)	1
4	**b** 4617253	Engine Control Module (2.0L) (Alternate)	1
4	**a** 1554008	Electronic Control Module (2.2L)	1
4	**b** 2101551	Engine Control Module (2.2L) Alternate)	1
4	4617251	Engine Control Module (2.2L, LPG) (Alternate Part)	1
5	1613449	Cover	1
6	1573937	Wire Harness (Electronic Control Unit)	1
7	1573938	Box (Electronic Control Unit)	1
8	1585840	Screw	2
9	1450928	Alternator	1
9	1361861	Pulley	1
10	1361890	Nut	1
11	1361891	Bolt	3
12	1361846	Bracket	1
13	1361888	Bolt	1
14	1368844	Bolt	1
15	1362113	Kit-Ignition Cable	1
15	1361840	Cable (Spark Plug)	1
15	1361841	Cable (Spark Plug)	1
15	1361842	Cable (Spark Plug)	1
15	1361843	Cable (Spark Plug)	1
16	1361838	Support	1
17	1361837	Spark Plug	4
18	1553984	Ignition Cable	1
19	1495412	V-Belt	1
20	1361845	Strap	1
21	1361881	Bolt	1
22	326898	Bolt	1
23	1553996	Bracket	1
24	1553997	Setscrew	1
25	1527571	Ignition Coil	1
26	1545443	Condenser	1
27	1545444	Igniter	1
28	1548352	Sensor (Boost, M.A.P.)	1
29	1582324	Screw	2
30	1495413	Hose	1
31	1361895	Bolt	1
32	1554030	Distributor (☞Figure 7-8)	1
33	1553985	O-Ring	1
34	1361867	Temperature Sender	1
35	2026608	Pressure Switch (Oil)	1
36	**b** 1368743	Seal	1
37	1539962	Sensor (Air Temperature)	1
38	1368886	Washer	1

©2013 HYSTER COMPANY

ENGINE ELECTRICAL COMPONENTS

MAZDA 2.0L AND 2.2L, GASOLINE AND LPG – 2006 EMISSION COMPLIANT ENGINES (S/N L177B15327E →) (S/N L177B16207E →) (S/N L177B15512E →)

ITEM	PART NO.	DESCRIPTION	QTY
39	1556342	Sensor (Oxygen)	1
40	1534424	Starter	1
	c 1527884	Capscrew (Starter Mounting)	2

FOOTNOTES:

a Gasoline
b LPG
c Not Illustrated

©2013 HYSTER COMPANY

DISTRIBUTOR (FIGURE 7-8)

MAZDA 2.0L AND 2.2L, GASOLINE AND LPG — 2006 EMISSION COMPLIANT ENGINES (S/N L177B15327E →) (S/N L177B16207E →) (S/N L177B15512E →)

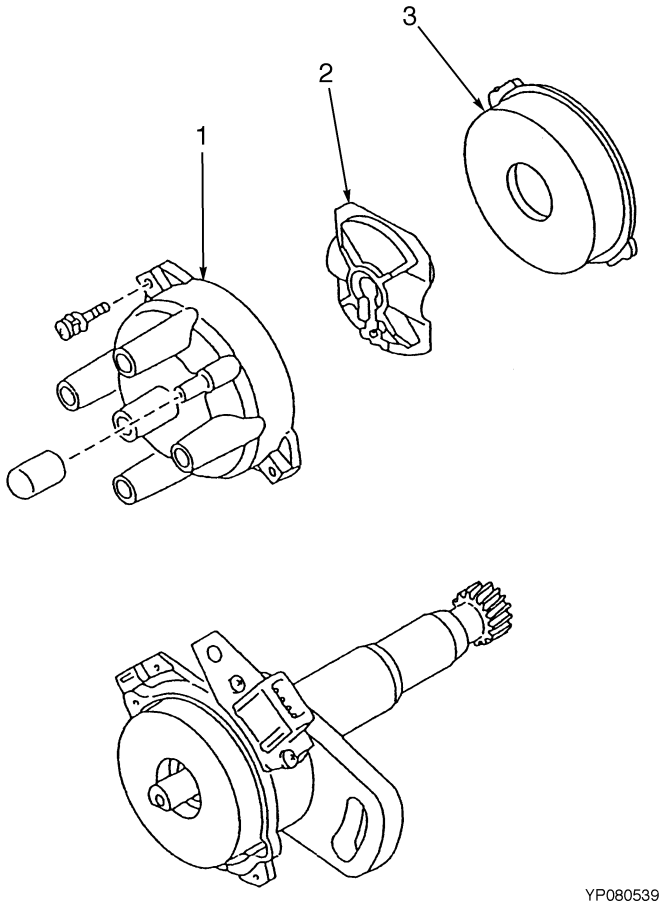

YP080539

ITEM	PART NO.	DESCRIPTION	QTY
	1554030	Distributor	1
1	1554033	Distributor Cap	1
2	1554034	Rotor	1
3	1554032	Cover	1

ENGINE ELECTRICAL COMPONENTS (FIGURE 7-9)

MAZDA 2.0L AND 2.2L, GASOLINE AND LPG — 2007-2010 EMISSION COMPLIANT ENGINES (S/N L177B15327E →) (S/N L177B16207E →) (S/N L177B15512E →)

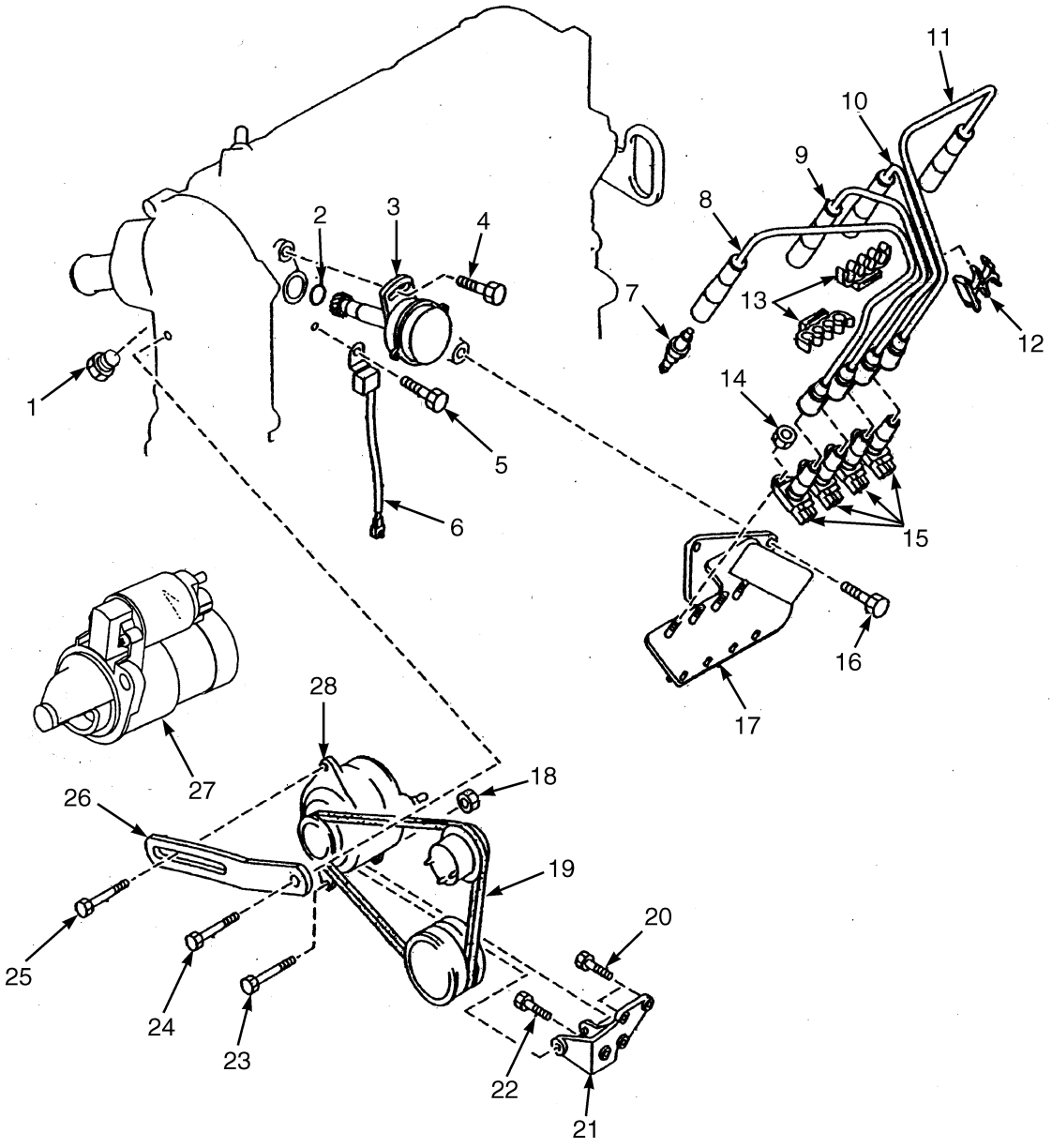

BP080563

©2013 HYSTER COMPANY

ENGINE ELECTRICAL COMPONENTS

MAZDA 2.0L AND 2.2L, GASOLINE AND LPG – 2007-2010 EMISSION COMPLIANT ENGINES (S/N L177B15327E →) (S/N L177B16207E →) (S/N L177B15512E →)

ITEM	PART NO.	DESCRIPTION	QTY
1	1654049	Plug	1
2	326850	O-Ring	1
3	1652471	Camshaft Position Sensor	1
4	1361895	Bolt	1
5	1361898	Bolt	1
6	1652473	Condenser	1
7	1361837	Spark Plug	4
8	1652467	Ignition Cable	1
9	1652468	Ignition Cable	1
10	1652469	Ignition Cable	1
11	1652470	Ignition Cable	1
12	1652462	Support (Spark Plug Wires)	1
13	1652461	Support (Spark Plug Wires)	2
14	2066629	Nut	1
15	1652458	Ignition Coil	4
16	1652457	Bolt	2
17	1652459	Bracket (Ignition Coil)	1
18	1361890	Nut	1
19	1495412	V-Belt (2.0L 2700 RPM, G And LP)	1
19	1495412	V-Belt (2.2L 2700 RPM, G And LP)	1
19	2097620	V-Belt (Notched) (2.0L 2700 RPM, LPS)	1
19	2088515	V-Belt (Notched) (2.0L 2700 RPM, GS)	1
20	1361891	Bolt	3
21	1361846	Bracket	1
22	1361888	Bolt	1
23	1368844	Bolt	1
24	1361881	Bolt	1
25	326898	Bolt	1
26	1361845	Strap	1
27	1534424	Starter	1
28	1450928	Alternator (G And LP)	1
28	1394001	Alternator (Sealed) (GS And LPS)	1
	a 1527884	Capscrew (Starter Mounting)	2
	1652460	Kit-Ignition Cable	1

FOOTNOTES:

a Not Illustrated

©2013 HYSTER COMPANY

ENGINE ELECTRICAL SYSTEM (FIGURE 7-10)

MAZDA 2.0L AND 2.2L, GASOLINE — SHEET 1 OF 2

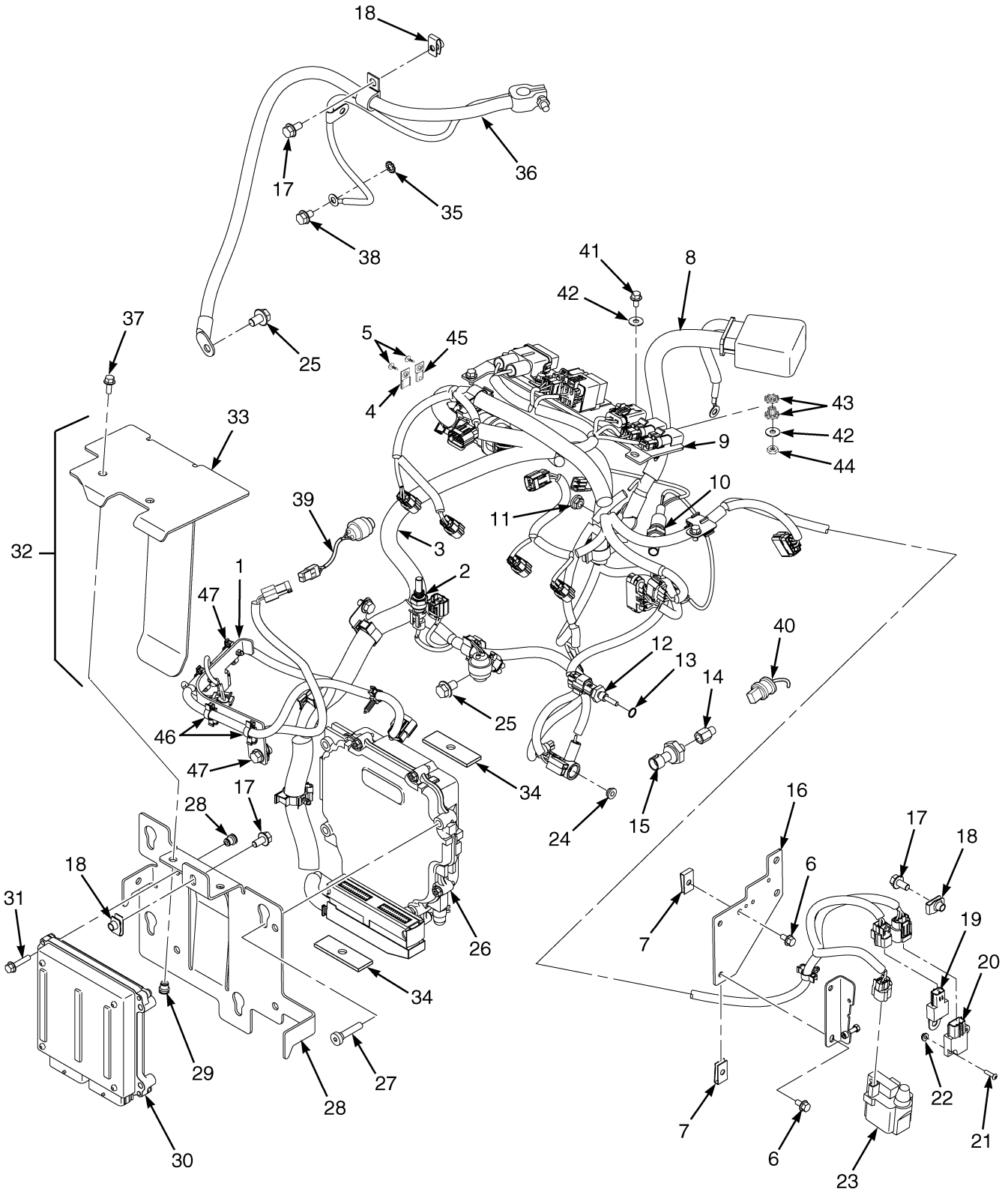

©2013 HYSTER COMPANY

ENGINE ELECTRICAL SYSTEM

MAZDA 2.0L AND 2.2L, GASOLINE – SHEET 1 OF 2

ITEM	PART NO.	DESCRIPTION	QTY
1	1542403	Bracket	1
2	1515654	Temperature Sensor	1
2	4001804	Sensor (Temperature) (2010 Series)	1
3	**a** 2065856	Wire Harness (☞Figure 7-56)	1
3	**bc** 2087190	Wire Harness (☞Figure 7-57)	1
3	**ef** 2091281	Wire Harness (Engine) (☞Figure 7-60)	1
3	~~4605117~~		
	4605855	Wire Harness (2010 Series)	1
4	**a** 1539086	Lockwasher	1
5	**d** 1500912	Clip	2
5	**a** 1539085	Locknut	1
6	**d** 1582464	Fastener	3
6	1534417	Capscrew	5
7	325182	Nut	6
8	2061383	Battery Cable (Positive)	1
8	2107181	Battery Cable (Positive) (Alternate Part)	1
8	1536304	Boot	1
8	1560091	Boot	1
8	16079	Terminal	1
8	806426	E-Ring	1
8	148792	Terminal	1
8	1590368	Terminal	1
9	1561225	Bracket	1
10	1556342	Sensor (Oxygen)	1
10	1646456	Sensor (Oxygen) (Alternate Part)	1
11	~~1382472~~		
	1502543	Nut (Flange)	5
12	1539962	Sensor (Air Temperature)	1
13	1368886	Washer	1
14	1650506	Adapter	1
15	1566654	Pressure Transducer Sensor (Oil Pressure)	1
15	4016652	Pressure Transducer (Oil) (2010 Series)	1
16	1556838	Plate (Coil Mounting)	1
17	1527879	Capscrew	6
18	1480237	Nut	6
19	1545443	Condenser	1
20	1545444	Igniter	1
21	296150	Capscrew	2
22	1549398	Nut	2
23	1527571	Ignition Coil	1
24	~~1307884~~		
	1514429	Nut	1
25	1556623	Bolt	2
26	2093596	Electronic Control Module (2.0L, Gasoline)	1
26	2111038	Engine Control Module (2.0L, Gasoline) (Alternate Part)	1
26	2093597	Electronic Control Module (2.2L, Gasoline)	1
26	2111039	Engine Control Module (2.2L, Gasoline) (Alternate Part)	1
26	4603434	Engine Control Module (2.2L, Gasoline) (2010 Series)	1
27	1581962	Capscrew	4
28	1582138	Bracket	1

©2013 HYSTER COMPANY

ENGINE ELECTRICAL SYSTEM

MAZDA 2.0L AND 2.2L, GASOLINE – SHEET 1 OF 2

ITEM	PART NO.	DESCRIPTION	QTY
29	1531558	Insert	6
30	2065858	Governor Controller	1
31	1586495	Capscrew	4
32	1582238	Shield	1
33	1582101	Drip Shield	1
34	1399323	Pad	1
35	296380	Washer	1
36	2069225	Battery Cable (Negative)	1
36	128408	Clamp	1
36	1564044	E-Ring	1
36	806426	E-Ring	1
36	148789	Terminal	1
36	1616122	Terminal	1
37	1527876	Capscrew	7
38	1529366	Capscrew	2
39	1529257	Sensor (Air Flow Restriction)	1
40	1501970	Pressure Switch (Low Fuel)	1
40	4602843	Wire Harness (Adapter, Low Fuel Pressure Switch) (Not Shown) (☞Figure 7-96)	1
41	302249	Capscrew	1
42	2081289	Washer	2
43	2080790	Isolator	1
44	316825	Nut	1
45	1531480	Clip	1
46	1480237	Nut	2
47	1527879	Capscrew	2

FOOTNOTES:

a → 8/2006
b 8/2006 ↔ S/N L177B15326E (2.2L)
c 8/2006 ↔ S/N L177B15512E (2.0L)
d 8/2006 →
e S/N L177B15327E → (2.2L)
f S/N L177B15512E → (2.0L)

©2013 HYSTER COMPANY

NOTES

©2013 HYSTER COMPANY

ENGINE ELECTRICAL SYSTEM (FIGURE 7-11)

MAZDA 2.0L AND 2.2L LPG — SHEET 1 OF 2

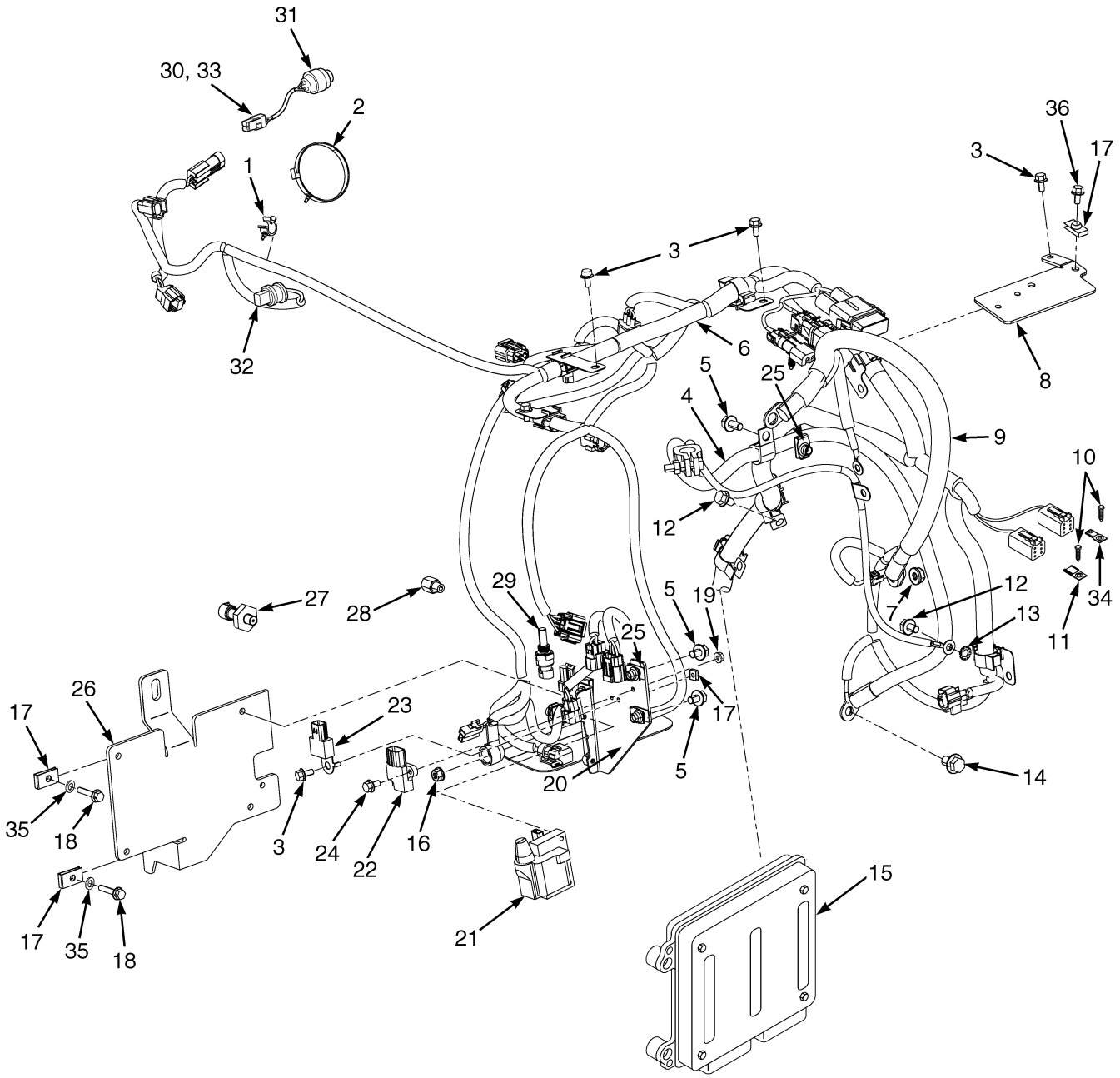

HP081637

©2013 HYSTER COMPANY

ENGINE ELECTRICAL SYSTEM

MAZDA 2.0L AND 2.2L LPG – SHEET 1 OF 2

ITEM	PART NO.	DESCRIPTION	QTY
1	1542439	Clamp (Swivel)	1
2	1502061	Clamp	1
3	1534417	Capscrew	5
4	2069225	Battery Cable (Negative)	1
4	148789	Terminal	1
4	1616122	Terminal	1
4	1564044	E-Ring	1
4	128408	Clamp	1
4	806426	E-Ring	1
5	1527879	Capscrew	4
6	**a** 2065855	Wire Harness (LPG Mazda Engine) (☞Figure 7-58)	1
6	**bc** 2087189	Wire Harness (LPG Mazda Engine) (☞Figure 7-59)	1
6	**ef** 2090744	Wire Harness (LPG Mazda Engine) (☞Figure 7-62)	1
6	~~4601366~~		
	4605854	Wire Harness (2010 Series)	1
7	~~1382472~~		
	1502543	Nut (Flange)	1
8	1560121	Bracket	1
9	2061383	Battery Cable (Positive)	1
9	2107181	Battery Cable (Positive) (Alternate Part)	1
9	148792	Terminal	1
9	16079	Terminal	1
9	1590368	Terminal	1
9	806426	E-Ring	1
9	1536304	Boot	1
9	1560091	Boot	1
10	**a** 1539085	Locknut (Not Illustrated)	1
10	**d** 1582464	Fastener	2
11	**a** 1539086	Lockwasher (Not Illustrated)	1
11	**d** 1500912	Clip	1
12	1529366	Capscrew	2
13	296380	Washer	1
14	1556623	Bolt	1
15	2093578	Electronic Control Module (2.0L, LPG)	1
15	2109866	Engine Control Module (2.0L, LPG) (Alternate Part)	1
15	~~2065857~~		
	2101552	Engine Control Module (2.0L) (Alternate)	1
15	4617253	Engine Control Module (2.0L) (Alternate)	1
15	2093579	Electronic Control Module (2.2L, LPG)	1
15	2109867	Engine Control Module (2.2L, LPG) (Alternate Part)	1
15	2101551	Engine Control Module (2.2L) (Alternate)	1
15	4603432	Engine Control Module (2010 Series)	1
16	~~1307884~~		
	1514429	Nut	1
17	325182	Nut	9
18	1581577	Capscrew	4
19	1549398	Nut	2
20	1556838	Plate	1
21	1527571	Ignition Coil	1
22	1545444	Igniter	1

©2013 HYSTER COMPANY

ENGINE ELECTRICAL SYSTEM

MAZDA 2.0L AND 2.2L LPG – SHEET 1 OF 2

ITEM	PART NO.	DESCRIPTION	QTY
23	1545443	Condenser	1
24	296150	Capscrew	2
25	1480237	Nut	4
26	1581526	Bracket	1
27	1566654	Pressure Transducer Sensor (Oil Pressure)	1
27	4016652	Pressure Transducer (Oil) (2010 Series)	1
28	1650506	Adapter	1
29	1515654	Temperature Sensor	1
29	4001804	Sensor (Temperature) (2010 Series)	1
30	141259	Fitting	1
31	1529257	Sensor (Air Flow Restriction)	1
32	1501970	Pressure Switch (Low Fuel)	1
32	4602843	Wire Harness (Adapter, Low Fuel Pressure Switch) (Not Shown) (☞Figure 7-96)	1
33	14349	Fitting (Pipe Plug)	1
34	**d** 1531480	Clip	1
35	320156	Washer	4
36	1527876	Capscrew	4

FOOTNOTES:

a → 8/2006
b 8/2006 ↔ S/N L177B15511E (2.0L)
c 8/2006 ↔ S/N L177B16206E (2.2L)
d 8/2006 →
e S/N L177B15512E → (2.0L)
f S/N L177B16207E → (2.2L)

©2013 HYSTER COMPANY

NOTES

©2013 HYSTER COMPANY

ENGINE ELECTRICAL SYSTEM (FIGURE 7-12)

MAZDA 2.0L AND 2.2L, GASOLINE AND LPG, SHEET 2 OF 2 — 2007 EMISSION COMPLIANT ENGINES (S/N L177B15327E →) (S/N L177B16207E →) (S/N L177B15512E →)

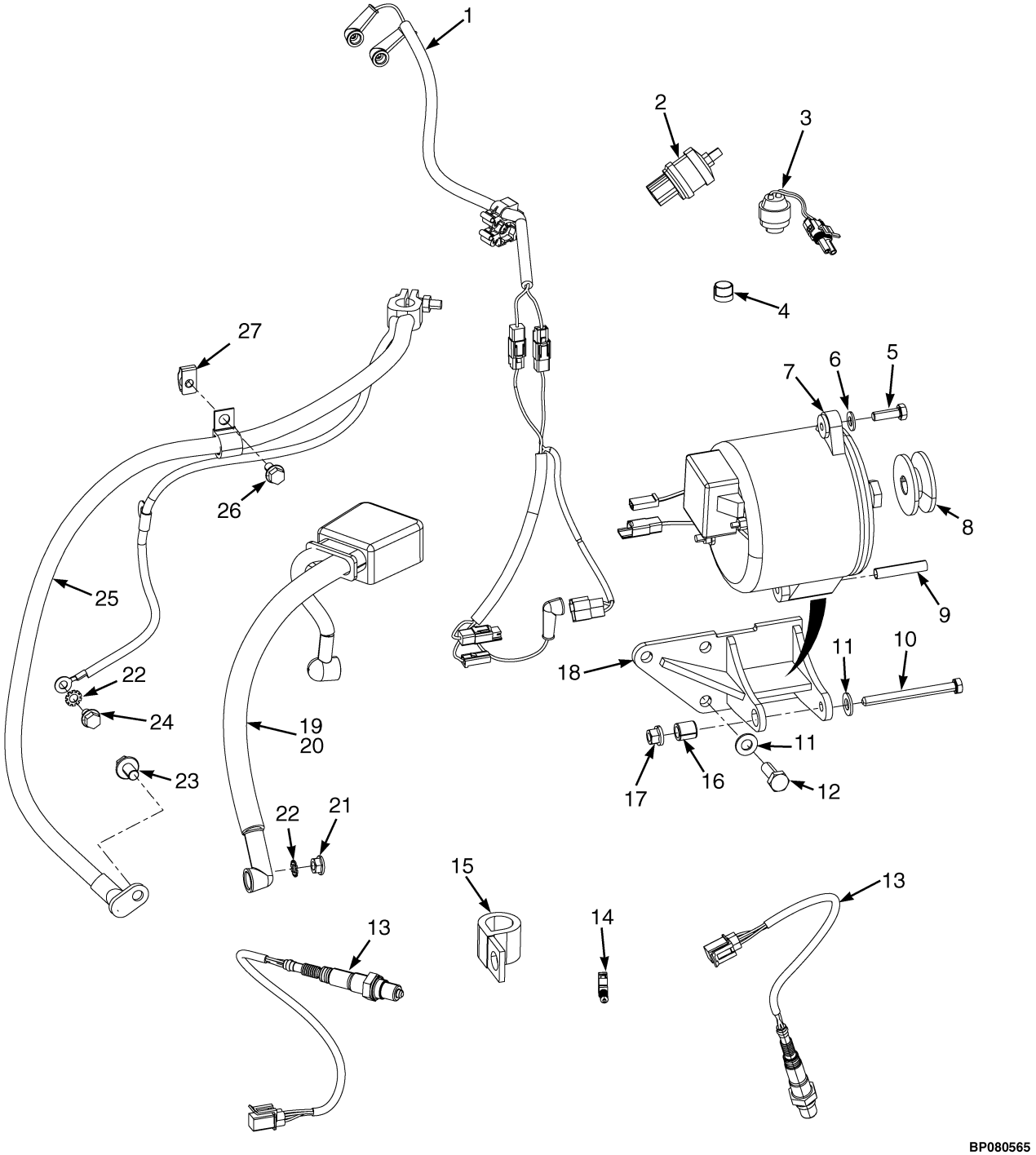

©2013 HYSTER COMPANY

ENGINE ELECTRICAL SYSTEM

MAZDA 2.0L AND 2.2L, GASOLINE AND LPG, SHEET 2 OF 2 – 2007 EMISSION COMPLIANT ENGINES (S/N L177B15327E →) (S/N L177B16207E →) (S/N L177B15512E →)

ITEM	PART NO.	DESCRIPTION	QTY
1	2084812	Wire Harness (Sealed Alternator)	1
2	1501970	Pressure Switch (Low Fuel)	1
2	4602843	Wire Harness (Adapter, Low Fuel Pressure Switch) (Not Shown) (☞Figure 7-96)	1
3	1529257	Sensor (Air Flow Restriction)	1
4	17829	Fitting	1
5	18497	Capscrew	1
6	18515	Washer	3
7	1450928	Alternator (G And LPG)	1
7	1394001	Alternator (Sealed) (GS And LPS)	1
7	4013365	Alternator (2010 Series)	1
7	4013487	Cover (Rear Alternator) (2010 Series)	1
7	4013489	Rectifier (2010 Series)	1
7	4013488	Stator (2010 Series)	1
7	1361861	Pulley (2010 Series)	1
7	4013490	Rotor (2010 Series)	1
8	1608928	Pulley	1
9	1537422	Spacer	1
10	346656	Capscrew	1
11	320159	Washer	1
12	1582462	Bolt (Gasoline)	3
12	367323	Capscrew (LPG)	3
13	1646456	Sensor (Oxygen)	2
14	1509888	Clip	3
15	279033	Clamp	1
16	1345014	Sleeve	1
17	1544153	Locknut	1
18	1636794	Bracket Wldmt	1
19	2061383	Battery Cable (Positive) (G And LPG)	1
19	2107181	Battery Cable (Positive) (Alternate Part)	1
19	148792	Terminal	1
19	16079	Terminal	1
19	1590368	Terminal	1
19	806426	E-Ring	1
19	1536304	Boot	1
19	204223	Boot	1
19	1566146	Boot	1
20	2074984	Battery Cable (Positive) (GS And LPS)	1
20	148795	Terminal	1
20	16079	Terminal	1
20	806426	E-Ring	1
20	204223	Boot	2
20	1566146	Boot	1
21	~~1382472~~ 1502543	Nut (Flange)	1
22	296380	Washer	2
23	1556623	Bolt	1
24	1529366	Capscrew	1
25	2069225	Battery Cable (Negative)	1

©2013 HYSTER COMPANY

ENGINE ELECTRICAL SYSTEM

MAZDA 2.0L AND 2.2L, GASOLINE AND LPG, SHEET 2 OF 2 – 2007 EMISSION COMPLIANT ENGINES (S/N L177B15327E →) (S/N L177B16207E →) (S/N L177B15512E →)

ITEM	PART NO.	DESCRIPTION	QTY
25	148789	Terminal	1
25	. . . . .	Terminal	1
25	1616122	Terminal	1
25	1564044	E-Ring	1
25	806426	E-Ring	1
26	1527879	Capscrew	1
27	1480237	Nut (G And LP)	1

©2013 HYSTER COMPANY

ENGINE CONTROL MODULE (FIGURE 7-13)

MAZDA 2.0L AND 2.2L, GASOLINE — 2007-2010 EMISSION COMPLIANT ENGINES (S/N L177B15327E →) (S/N L177B16207E →) (S/N L17715512E →)

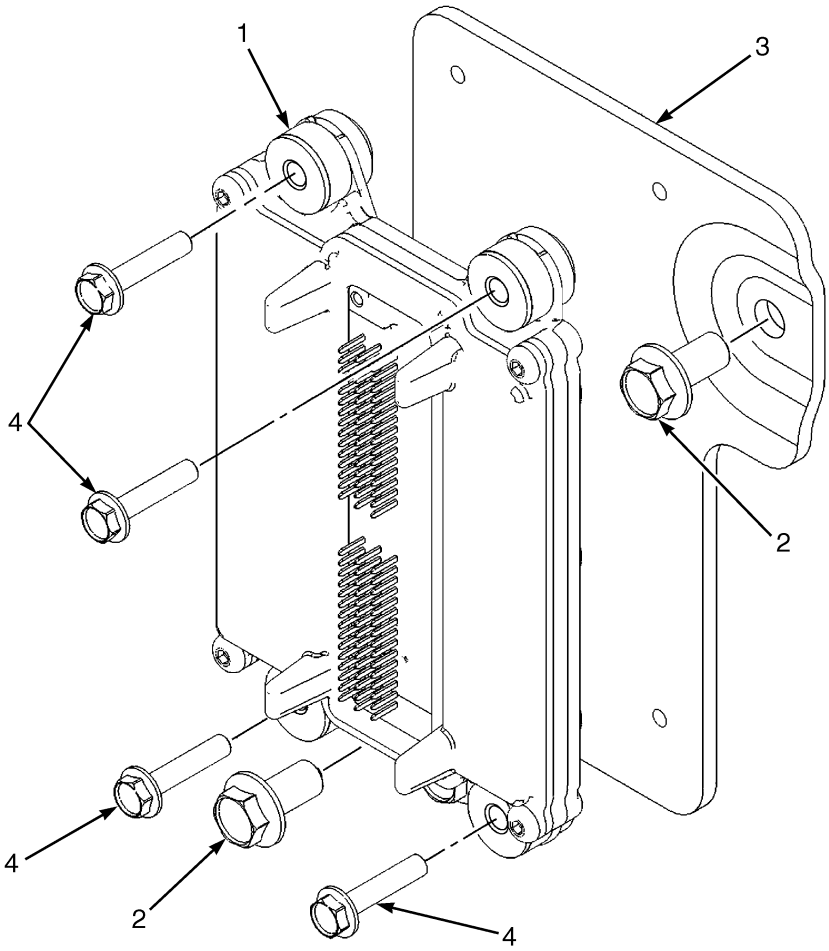

BP080543

ITEM	PART NO.	DESCRIPTION	QTY
1	2093596	Electronic Control Module (2.0L, Gasoline)	1
1	2111038	Engine Control Module (2.0L, Gasoline) (Alternate Part)	1
1	2093597	Electronic Control Module (2.2L, Gasoline)	1
1	2111039	Engine Control Module (2.2L, Gasoline) (Alternate Part)	1
1	4603434	Engine Control Module (2.2L, Gasoline) (2010 Series)	1
2	1657006	Screw	2
3	1650513	Bracket	1
4	1650514	Screw	4

©2013 HYSTER COMPANY

ENGINE CONTROL MODULE (FIGURE 7-14)

MAZDA 2.0L AND 2.2L LPG — 2007-2010 EMISSION COMPLIANT ENGINES (S/N L177B15327E →) (S/N L177B16207E →) (S/N L177B15512E →)

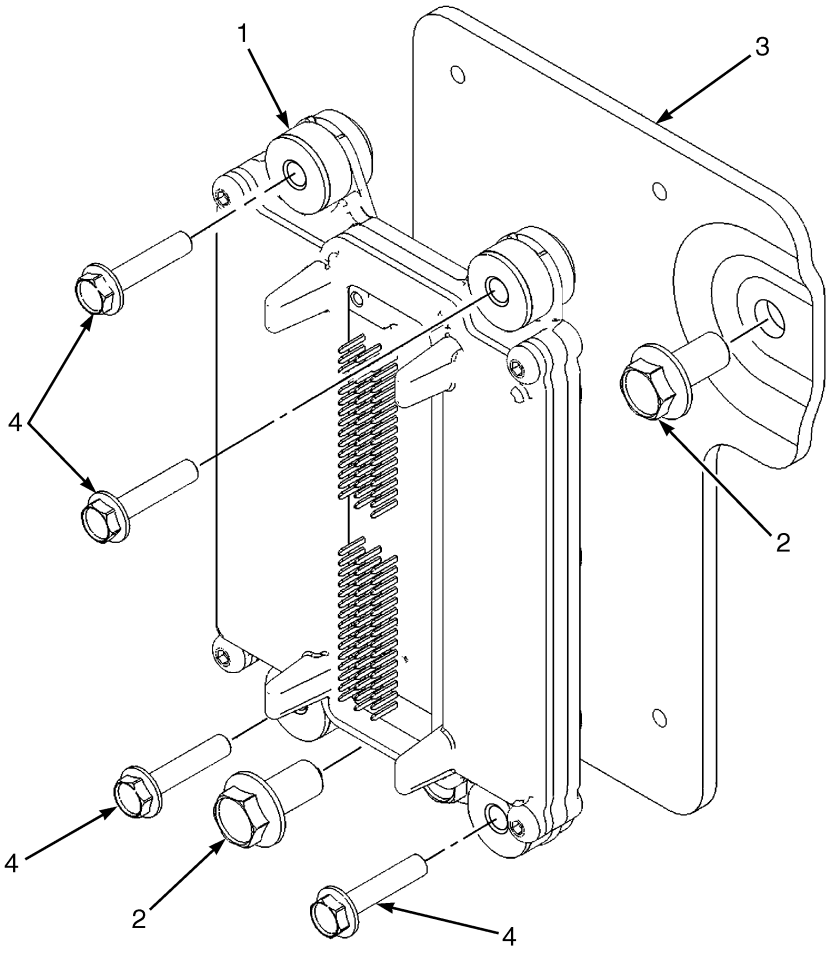

BP080543

ITEM	PART NO.	DESCRIPTION	QTY
1	2093578	Electronic Control Module (2.0L, LPG)	1
1	2109866	Engine Control Module (2.0L, LPG) (Alternate Part)	1
1	~~2065857~~ 2101552	Engine Control Module (2.0L) (Alternate)	1
1	4617253	Engine Control Module (2.0L) (Alternate)	1
1	2093579	Electronic Control Module (2.2L, LPG)	1
1	2109867	Engine Control Module (2.2L, LPG) (Alternate Part)	1
1	2101551	Engine Control Module (2.2L) (Alternate)	1
1	4603432	Engine Control Module (2010 Series)	1
2	1655237	Screw	2
3	1650513	Bracket	1
4	1650514	Screw	4

©2013 HYSTER COMPANY

FUEL SYSTEM SENSORS (FIGURE 7-15)

MAZDA 2.0L AND 2.2L, GASOLINE — 2007-2010 EMISSION COMPLIANT ENGINES (S/N L177B15327E →) (S/N L177B16207E →) (S/N L177B15512E →)

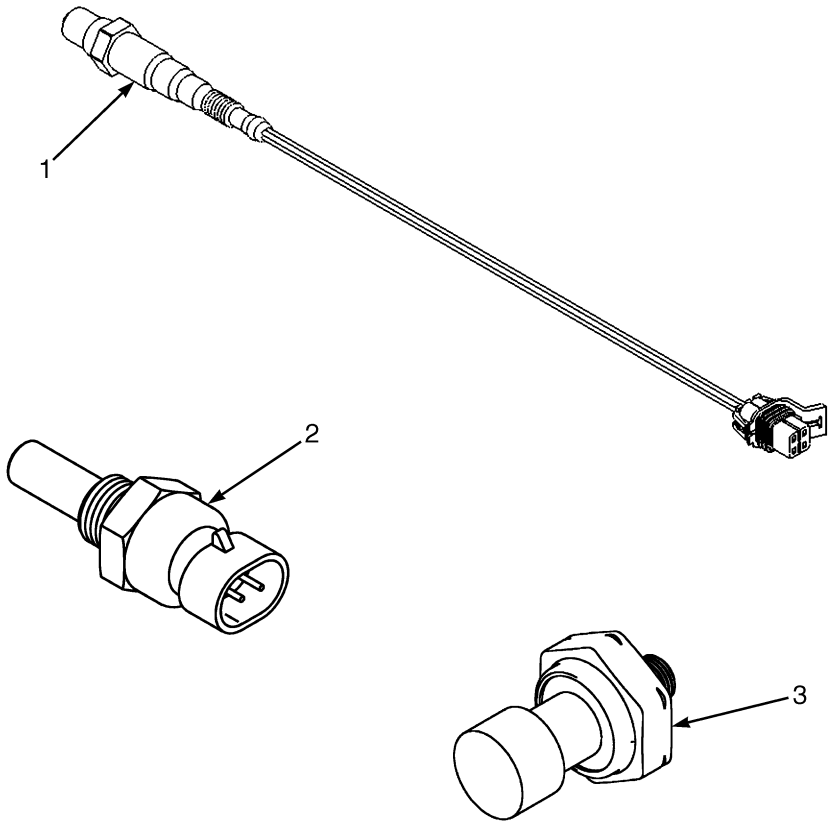

BP130251

ITEM	PART NO.	DESCRIPTION	QTY
1	1646456	Sensor (Oxygen)	2
2	1515654	Temperature Sensor	1
2	4001804	Sensor (Temperature) (2010 Series)	1
3	1566654	Pressure Transducer Sensor (Oil Pressure)	1
3	4016652	Pressure Transducer (2010 Series)	1

FUEL SYSTEM SENSORS (FIGURE 7-16)

MAZDA 2.0L AND 2.2L LPG — 2007-2010 EMISSION COMPLIANT ENGINES (S/N L177B15327E →) (S/N L177B16207E →) (S/N L177B15512E →)

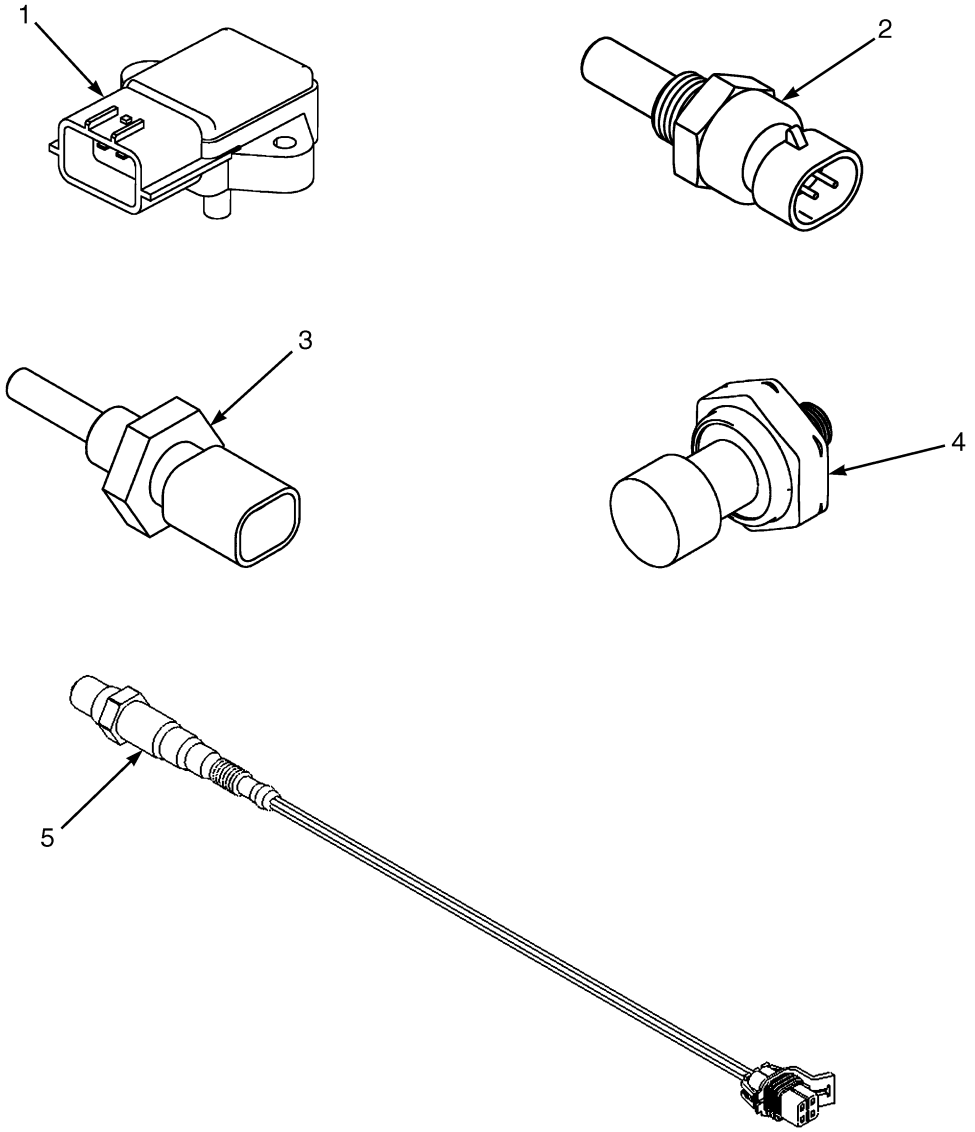

BP080544

ITEM	PART NO.	DESCRIPTION	QTY
1	1548352	Sensor (Boost, M.A.P.) (Boost)	1
2	1539962	Sensor (Air Temperature)	1
3	1515654	Temperature Sensor	1
3	4001804	Sensor (Temperature) (2010 Series)	1
4	1566654	Pressure Transducer Sensor (Oil Pressure)	1
4	4016652	Pressure Transducer (2010 Series)	1
5	1646456	Sensor (Oxygen)	2

©2013 HYSTER COMPANY

ALTERNATOR AND MOUNTING (FIGURE 7-17)

YANMAR 2.6L AND 3.3L — DIESEL

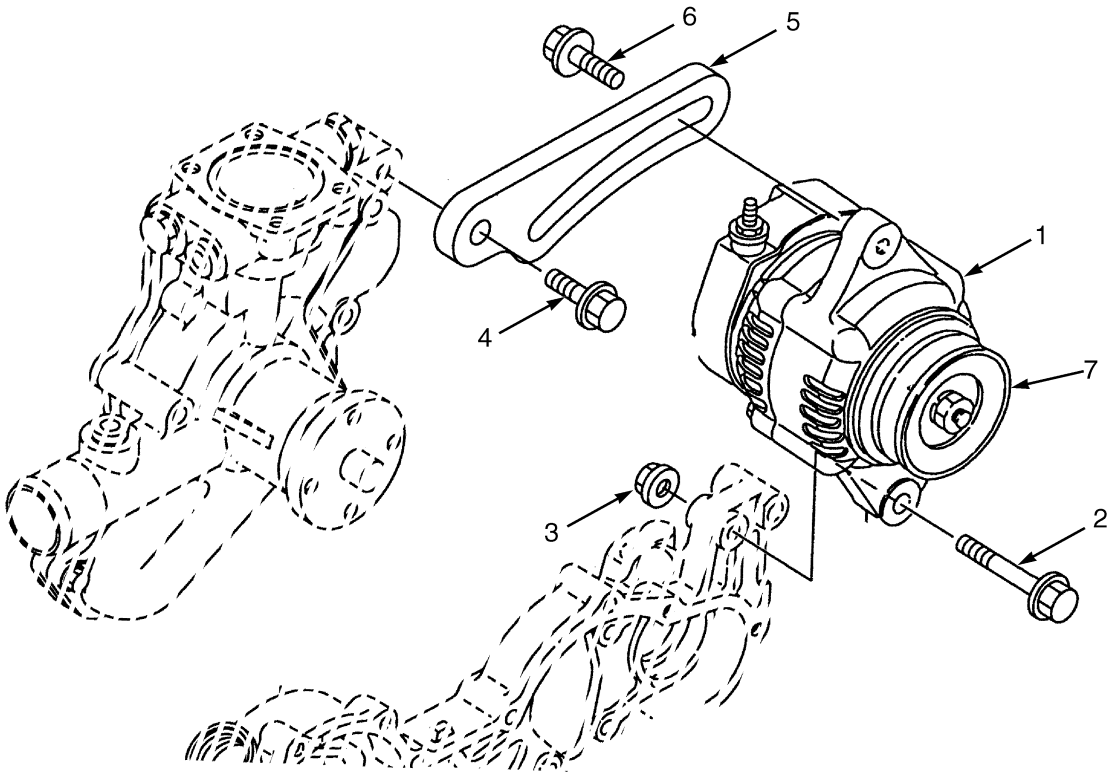

BP080337

ITEM	PART NO.	DESCRIPTION	QTY
1	1599869	Alternator	1
1	1599873	Ball Bearing	1
1	1599874	Plate	1
1	1599875	Screw	4
1	1599876	Stud	2
1	1599878	Ball Bearing	1
1	1599879	Cover	1
2	1599893	Bolt	1
3	1599894	Nut	1
4	1599897	Bolt	1
5	1599895	Bracket	1
6	1599896	Bolt	1
7	1599870	Pulley	1

©2013 HYSTER COMPANY

SEALED ALTERNATOR AND MOUNTING (FIGURE 7-18)

YANMAR 2.6 AND 3.3L

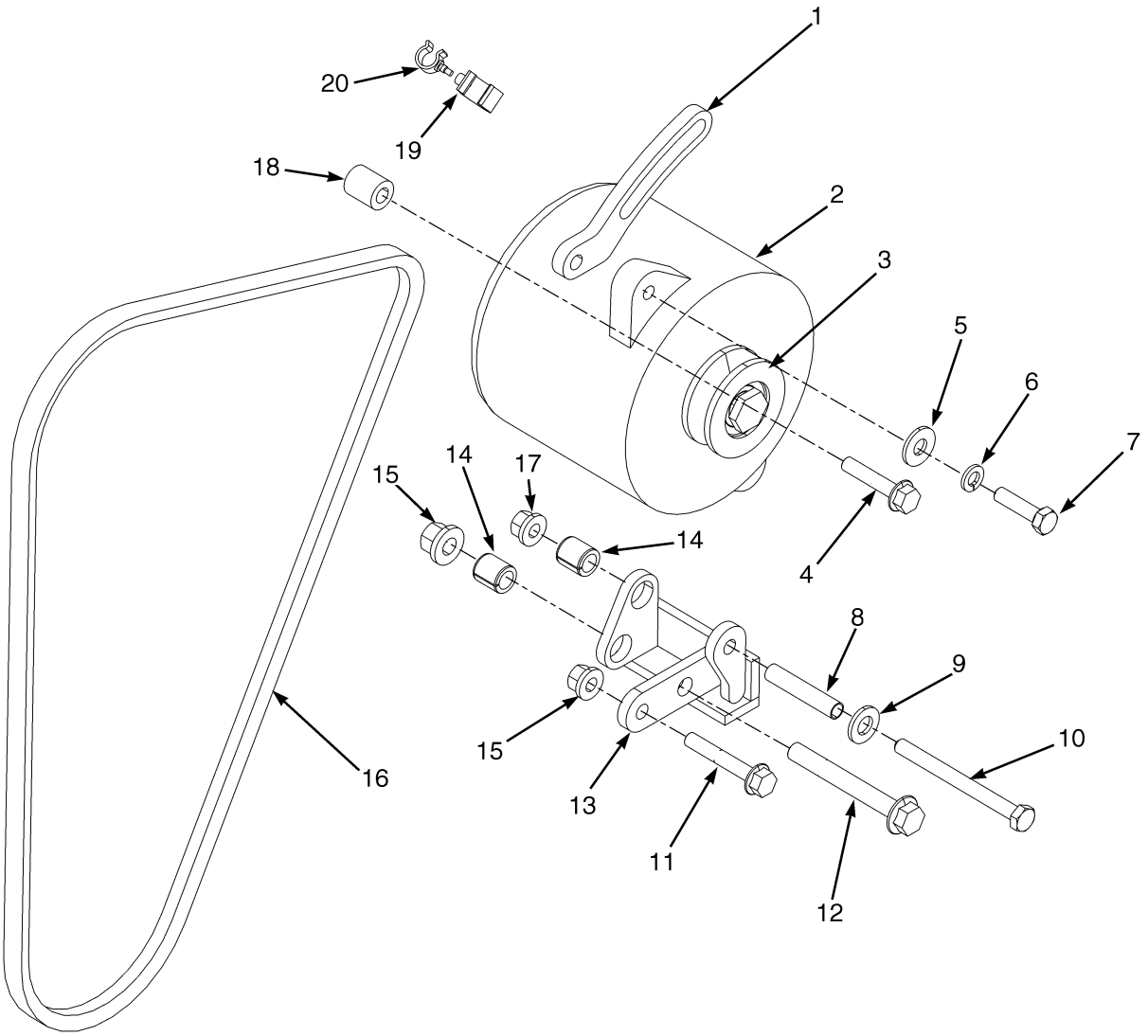

BP080422

©2013 HYSTER COMPANY

SEALED ALTERNATOR AND MOUNTING

YANMAR 2.6 AND 3.3L

ITEM	PART NO.	DESCRIPTION	QTY
1	1608865	Strap (Alternator)	1
2	1598645	Alternator (Sealed)	1
3	1608928	Pulley	1
4	1510114	Capscrew	1
5	15175	Lockwasher	1
6	15155	Lockwasher	1
7	18498	Capscrew	1
8	1537422	Spacer	1
9	320159	Washer	1
10	346656	Capscrew	1
11	1510116	Capscrew	1
12	1617600	Capscrew	1
13	1617614	Bracket Wldmt	1
14	1345014	Sleeve	2
15	1544153	Locknut	2
16	2080581	V-Belt	1
17	1544154	Flange Locknut	1
18	1615860	Spacer	1
19	1606544	Clamp	1
20	1573549	Clamp	1

©2013 HYSTER COMPANY

BATTERY CABLES (FIGURE 7-19)

GM 2.4L — GASOLINE AND LPG

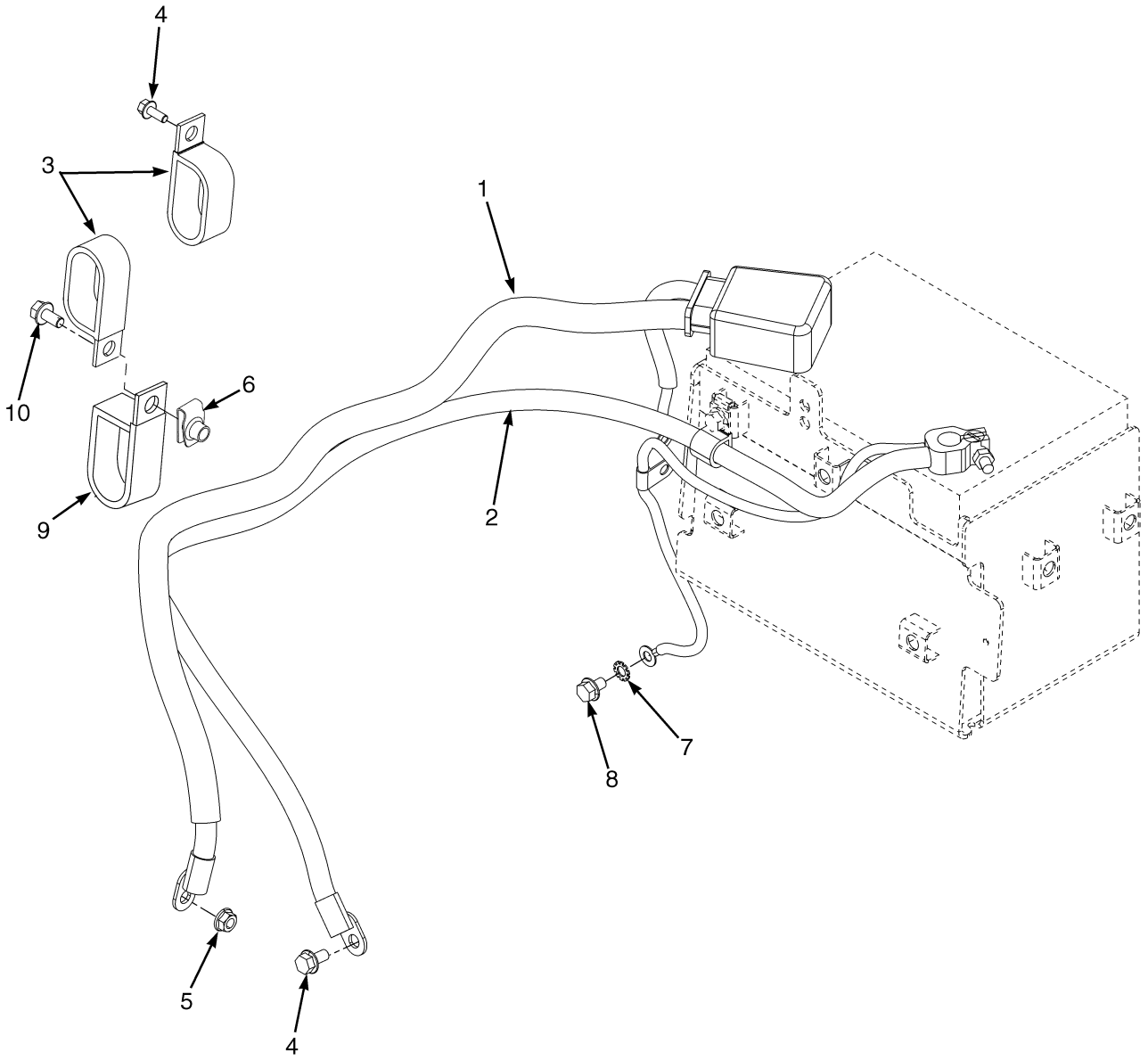

BP080383

©2013 HYSTER COMPANY

BATTERY CABLES
GM 2.4L – GASOLINE AND LPG

ITEM	PART NO.	DESCRIPTION	QTY
1	**a** 2061381	Battery Cable (Positive)	1
1	**b** 2105556	Battery Cable (Positive)	1
1	1536304	Boot	1
1	1560091	Boot	1
1	16079	Terminal	1
1	148792	Terminal	1
1	806426	E-Ring	1
2	2069224	Battery Cable (Negative)	1
2	148789	Terminal	1
2	1564044	E-Ring	1
2	16079	Terminal	1
2	128408	Clamp	1
2	806426	E-Ring	1
2	1616122	Terminal	1
3	**a** 212786	Clamp	2
3	**b** 251994	Clamp	2
4	**a** 1527879	Capscrew	3
4	**b** 1527876	Capscrew	3
5	~~1382472~~		
	1502543	Nut (Flange)	1
6	1480237	Nut	1
7	296380	Washer	1
8	1529366	Capscrew	1
9	**b** 136516	Clamp	1
10	**b** 1583611	Capscrew	1

FOOTNOTES:

a → S/N L177V01820F

b S/N L177V01821F →

©2013 HYSTER COMPANY

ENGINE ELECTRICAL SYSTEM (FIGURE 7-20)
YANMAR DIESEL

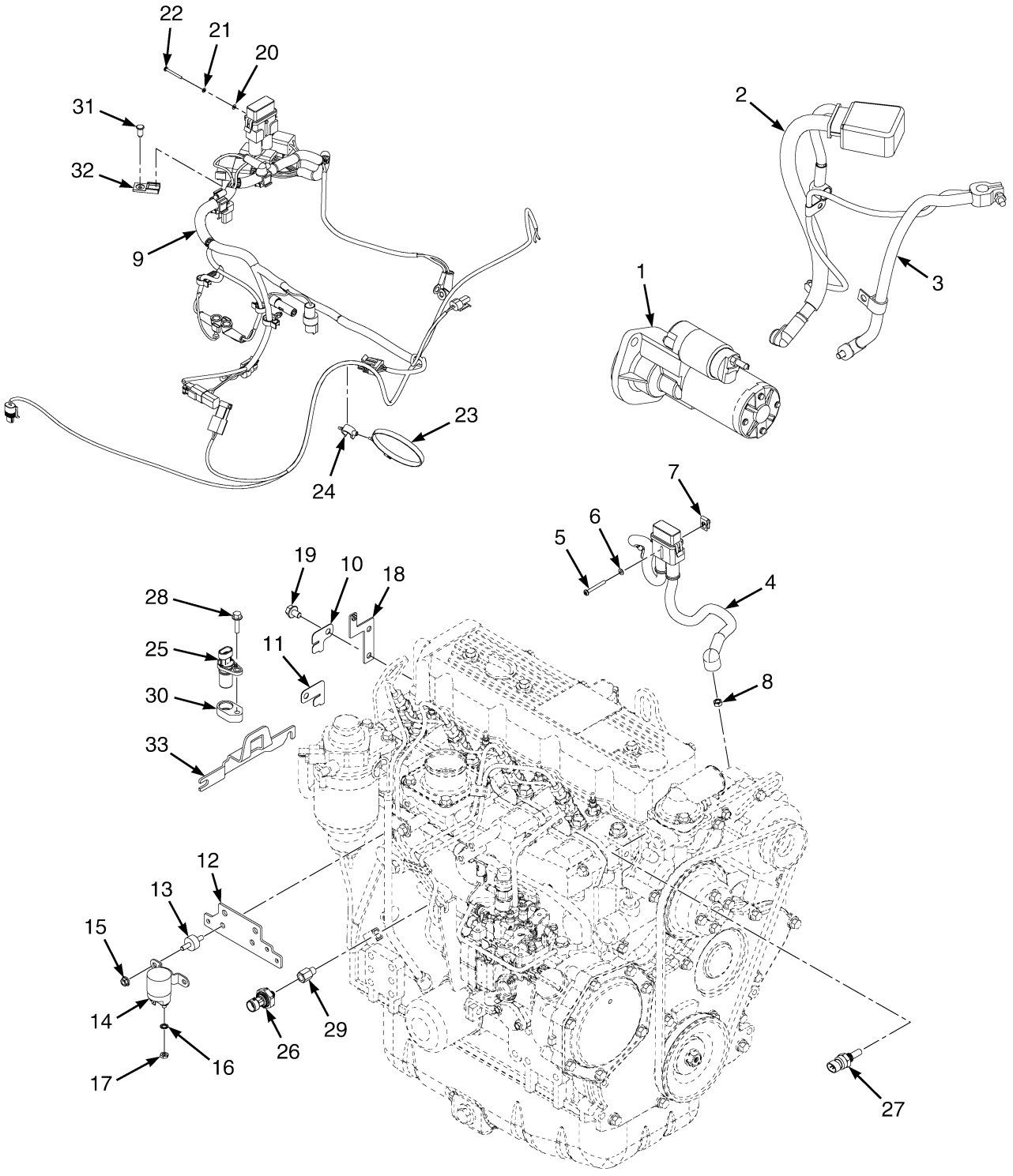

HP081653

©2013 HYSTER COMPANY

ENGINE ELECTRICAL SYSTEM
YANMAR DIESEL

ITEM	PART NO.	DESCRIPTION	QTY
1	1599845	Starter Assembly	1
1	. . . . .	Armature Assembly	1
1	1599847	Ball Bearing	1
1	1599848	Ball Bearing	1
1	. . . . .	Coil Assembly	1
1	1599850	Screw	1
1	1599851	Brush	2
1	. . . . .	Holder Assembly	1
1	1599851	Brush	2
1	1599853	Brush Spring	4
1	1599855	Magnetic Switch	1
1	. . . . .	Gear Case Assembly	1
1	1599860	Pinion (Assembly)	1
1	1599861	Shaft	1
1	1599862	Stopper Kit	1
1	1599863	Clutch	1
1	1599864	Ball Bearing	1
1	1599865	Ball Bearing	1
1	1599866	Retainer	1
1	1599867	Housing	1
2	2107181	Battery Cable (Positive)	1
3	2069226	Battery Cable (Negative)	1
4	2065098	Wire Harness (Adapter) (☞Figure 7-97)	1
5	302027	Screw	1
6	320154	Washer	1
7	1537551	Nut (Clip)	1
8	136687	Nut	1
9	2087191	Wire Harness (Powertrain Yanmar) (☞Figure 7-72, ☞Figure 7-71)	1
10	1532761	Clip	1
11	1532759	Clip	1
12	1582151	Bracket (Glow Plug Relay)	1
13	1527562	Rubber Mount	2
14	1454967	Relay (Fuel Lift Pump, Starter Solenoid and Glow Plug)	1
15	~~1307884~~		
	1514429	Nut	2
16	296379	Washer	2
17	1560678	Nut	2
18	1582150	Bracket (Glow Plug Fuse)	1
19	1529366	Capscrew	4
20	320152	Washer	1
21	292676	Lockwasher	1
22	302015	Screw	1
23	1502061	Clamp (Swivel)	1
24	1542439	Clamp (Swivel)	1
25	1541231	Sensor (Input Speed, TISS)	1
26	1566654	Pressure Transducer Sensor (Oil Pressure)	1
27	1515654	Temperature Sensor	1
28	1527878	Capscrew	1
29	367224	Adapter	1
30	1591454	Bracket (Speed Sensor)	1

©2013 HYSTER COMPANY

ENGINE ELECTRICAL SYSTEM
YANMAR DIESEL

ITEM	PART NO.	DESCRIPTION	QTY
31	1582464	Fastener	3
32	1500912	Clip	3
33	1594055	Bracket	1

©2013 HYSTER COMPANY

NOTES

©2013 HYSTER COMPANY

ENGINE SAFETY ELECTRICAL SYSTEM (FIGURE 7-21)

WITH SEALED ALTERNATOR WIRE HARNESS — MAZDA - GASOLINE AND LPG

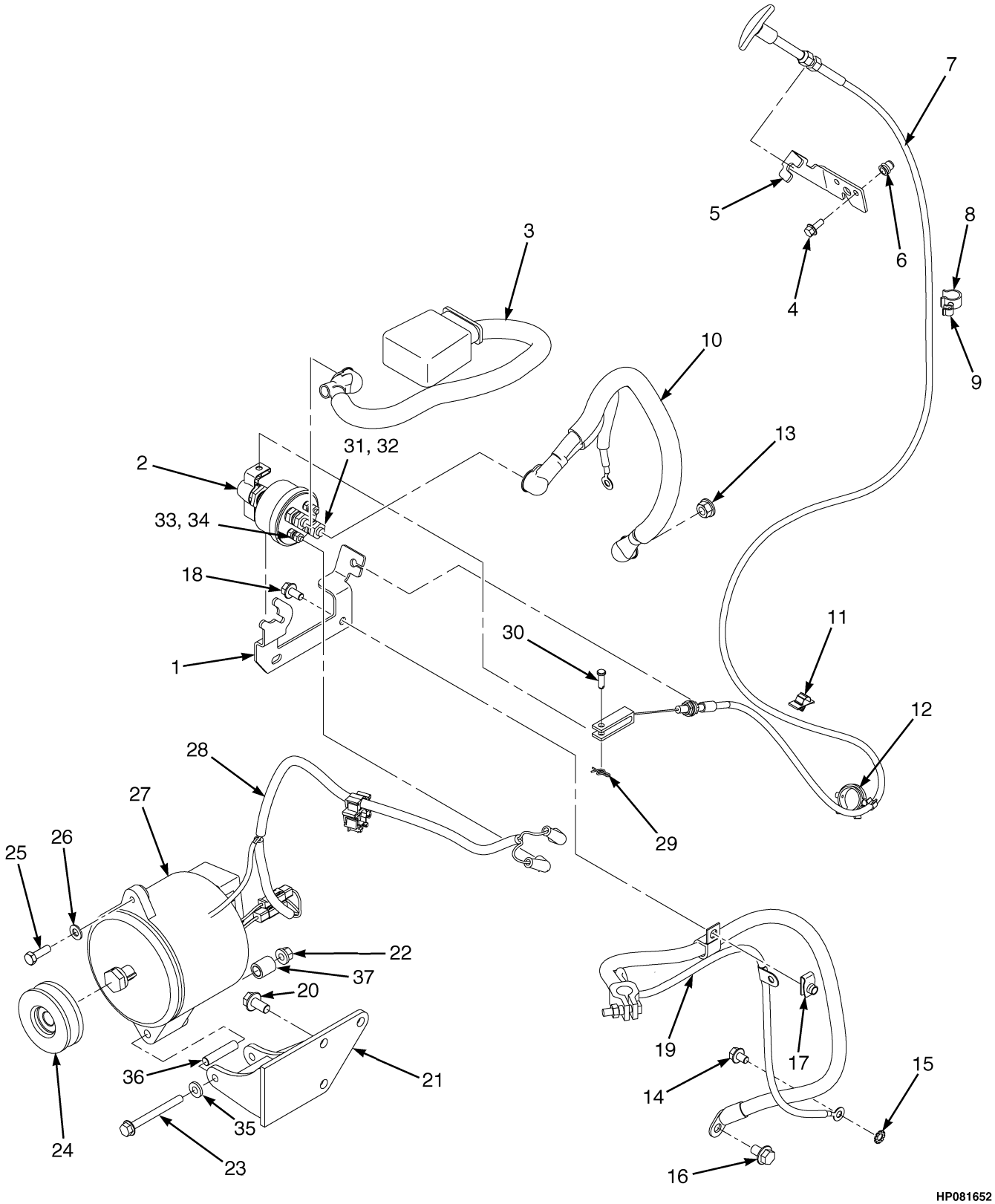

©2013 HYSTER COMPANY

ENGINE SAFETY ELECTRICAL SYSTEM

WITH SEALED ALTERNATOR WIRE HARNESS – MAZDA - GASOLINE AND LPG

ITEM	PART NO.	DESCRIPTION	QTY
1	**b** 1646410	Bracket	1
1	**d** 1648116	Bracket	1
2	1578660	Switch	1
3	2071501	Battery Cable Assembly (Positive)	1
3	1536304	Boot	1
3	1560091	Boot	1
3	148792	Terminal	1
3	1590368	Terminal	1
4	1527876	Capscrew	2
4	1527876	Capscrew (Alternate Part)	..
5	1565382	Bracket	1
5	1703868	Bracket (Alternate Part)	1
6	1531558	Insert	2
6	1531558	Insert (Alternate Part)	..
7	2071497	Cable Assy	1
8	1543698	Clamp (Swivel)	2
9	1542440	Clamp (Swivel)	3
10	2071498	Battery Cable (Positive)	1
10	1560091	Boot	2
10	16079	Terminal	1
10	148796	Terminal	1
10	806426	E-Ring	1
11	1562088	Clip	1
12	1569465	Clamp (Swivel)	1
13	~~1382472~~		
	1502543	Nut (Flange)	1
14	1529366	Capscrew	1
15	296380	Washer	1
16	1556623	Bolt	1
17	1480237	Nut	2
17	1566420	Nut (Foldover) (Alternate Part)	2
18	1527879	Capscrew	3
18	1527877	Capscrew (Alternate Part)	2
19	2069225	Battery Cable (Negative)	1
19	148789	Terminal	1
19	1616122	Terminal	1
19	1564044	E-Ring	1
19	128408	Clamp	1
19	806426	E-Ring	1
20	1582462	Bolt	3
21	**a** 1578858	Bracket Wldmt	1
21	**c** 1636794	Bracket Wldmt	1
22	1544153	Locknut	1
23	**a** 1550767	Capscrew	1
23	**c** 346656	Capscrew	1
24	**a** 1394009	Pulley	1
24	**c** 1608928	Pulley	1
25	18497	Capscrew	1
26	18515	Washer	AR
27	1394001	Alternator (Sealed)	1

©2013 HYSTER COMPANY

ENGINE SAFETY ELECTRICAL SYSTEM

WITH SEALED ALTERNATOR WIRE HARNESS – MAZDA - GASOLINE AND LPG

ITEM	PART NO.	DESCRIPTION	QTY
28	2084812	Wire Harness (Sealed Alternator) (☞Figure 7-74)	1
29	1517361	Locking Ring Cotter Pin	1
30	126	Pin	1
31	17407	Nut	2
32	15156	Lockwasher	2
33	15002	Nut	2
34	15916	Lockwasher	2
35	**c** 320159	Washer	1
36	**c** 1537422	Spacer	1
37	**c** 1345014	Sleeve	1
	c 2088515	V-Belt (Notched) (Not Illustrated)	1

FOOTNOTES:

a → S/N L177B09304D
b → S/N L177B14568E
c S/N B177B09305D →
d S/N L177B14569E →

©2013 HYSTER COMPANY

NOTES

©2013 HYSTER COMPANY

ENGINE SAFETY ELECTRICAL SYSTEM (FIGURE 7-22)

GM 2.4L — GASOLINE AND LPG

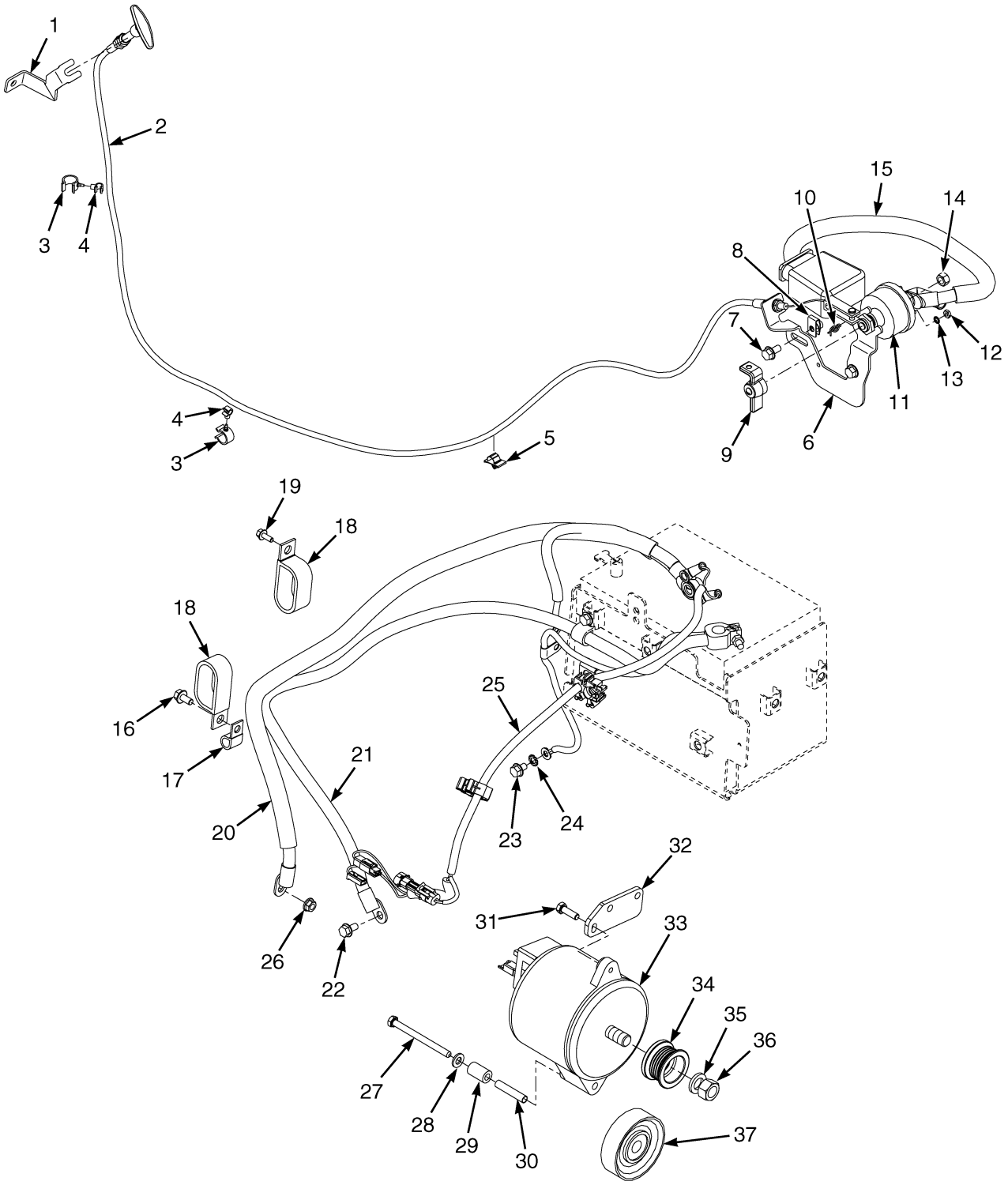

©2013 HYSTER COMPANY

ENGINE SAFETY ELECTRICAL SYSTEM
GM 2.4L – GASOLINE AND LPG

ITEM	PART NO.	DESCRIPTION	QTY
1	1703868	Bracket	1
2	2071497	Cable Assy	1
3	1543698	Clamp (Swivel)	2
4	1542440	Clamp (Swivel)	2
5	1562088	Clip	1
6	1648116	Bracket	1
7	1527877	Capscrew	2
8	1566420	Nut (Foldover)	2
9	126	Pin	1
10	1517361	Locking Ring Cotter Pin	1
11	1578660	Switch	1
12	15002	Nut	2
13	15916	Lockwasher	2
14	17407	Nut	2
15	2071501	Battery Cable Assembly	1
16	1583611	Capscrew	1
17	136516	Clamp	1
18	**b** 212786	Clamp	2
18	**c** 251994	Clamp	2
19	1527876	Capscrew	1
20	**b** 2071499	Battery Cable (Positive)	1
20	1560091	Boot	2
20	16079	Terminal	1
20	148796	Terminal	1
20	806426	E-Ring	1
20	**c** 2105557	Battery Cable (Positive)	1
21	2069224	Battery Cable (Negative)	1
21	148789	Terminal	1
21	1564044	E-Ring	1
21	16079	Terminal	1
21	806426	E-Ring	1
21	128408	Clamp	1
21	1616122	Terminal	1
22	1527879	Capscrew	2
23	1529366	Capscrew	1
24	296380	Washer	1
25	2094581	Wire Harness (Sealed Alternator) (☞Figure 7-73)	1
27	136750	Capscrew	1
28	261379	Washer	1
29	1554815	Spacer	1
30	1537422	Spacer	1
31	221457	Capscrew	1
32	1532131	Plate	1
33	1394001	Alternator (Sealed)	1
34	1532255	Pulley	1
35	15160	Washer	1
36	15010	Nut	1
37	1618226	Pulley (Tensioner)	1
	a 15156	Lockwasher	2

©2013 HYSTER COMPANY

ENGINE SAFETY ELECTRICAL SYSTEM
GM 2.4L – GASOLINE AND LPG

ITEM	PART NO.	DESCRIPTION	QTY
	a 360387	Loctite	AR

FOOTNOTES:

a Not Illustrated
b → S/N L177V02672F
c S/N L177V02673F →

©2013 HYSTER COMPANY

INSTRUMENT CLUSTER (FIGURE 7-23)

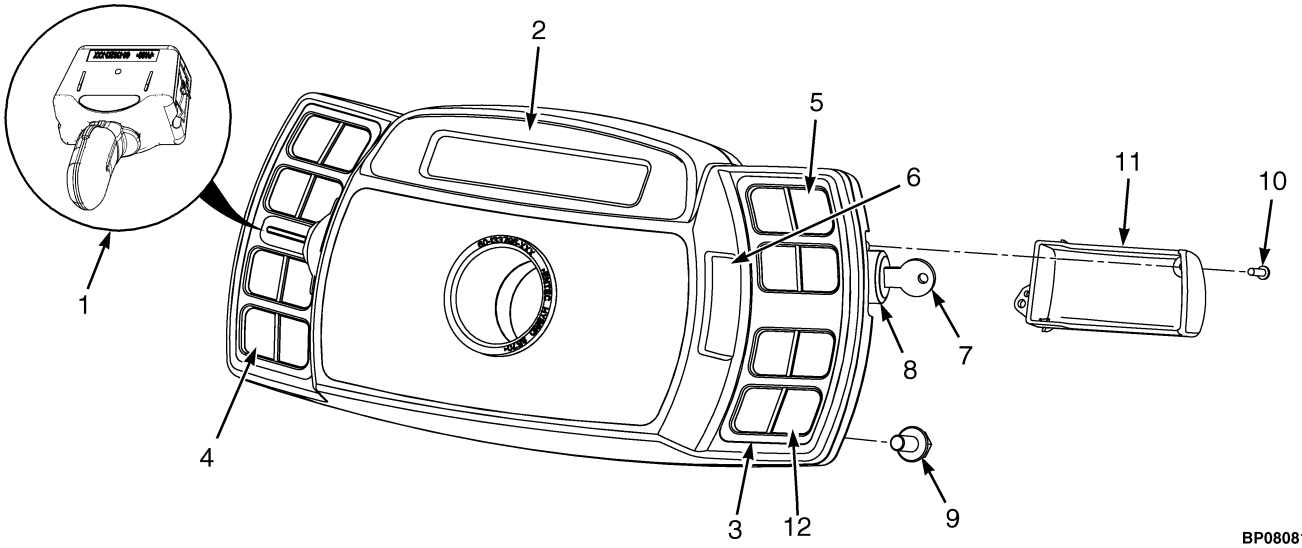

KEY:
A: Standard Ignition Switch - With Cab
B: Standard Ignition Switch - With Overhead Guard

ITEM	PART NO.	DESCRIPTION	QTY A	QTY B
1	**e** 2060837	Lever (Detent Forward and Reverse)	1	1
1	**fg** 2090110	Lever (Detent Forward and Reverse)	1	1
1	**hi** 2102904	Lever (Detent Forward and Reverse)	1	1
1	**j** 4604594	Lever (Detent Forward and Reverse)	1	1
2	2076695	Display	..	1
2	2076696	Display	1	..
3	2066485	Bezel	1	1
4	2069431	Label (Blank) (LH Instrument Cluster)	..	1
4	2066483	Label (LH Instrument Cluster)	1	..
5	**b** 2066482	Label (RH Display)	1	1
6	2060032	Cover (Without Turn Signals)	1	1
6	**ae** 2060838	Lever (Turn Signal Lever)	1	1
6	**afg** 2090111	Lever (Turn Signal Lever)	1	1
6	**ahi** 2102906	Lever (Turn Signal Lever)	1	1
6	**aj** 4604595	Lever (Turn Signal Lever)	1	1
7	**c** 1337197	Key Set	1	1
7	**c** 186304	Key	2	2
8	**c** 2057948	Ignition Switch (Without Keys)	1	1
8	**d** 254007	Ignition Switch (Key) (☞Figure 7-1)	1	1
8	**d** 262798	Key Set	1	1
9	1527879	Capscrew	4	4
10	**d** 1554902	Screw	5	5
11	**d** 2060033	Cover	1	1
12	2066484	Label (RH Display, All Options)	1	1

FOOTNOTES:

a Not Illustrated
b Remove Panels From Overlay As Required For Truck Configuaration.
c Start With Key Switch
d Start with Push Button and Remote Key Switch
e → S/N L177B11272D
f S/N L177B11273D ↔ S/N L177B24875F
g S/N L177B11273D ↔ S/N L177V01503F
h S/N L177B24876F ↔ S/N L177V04154H
i S/N L177V01504F ↔ S/N L177V04154H
j S/N L177V04155H →

©2013 HYSTER COMPANY

NOTES

©2013 HYSTER COMPANY

ELECTRONIC CONTROL LEVERS (FIGURE 7-24)

MINI-LEVER MODULES — DATE CODE 0724

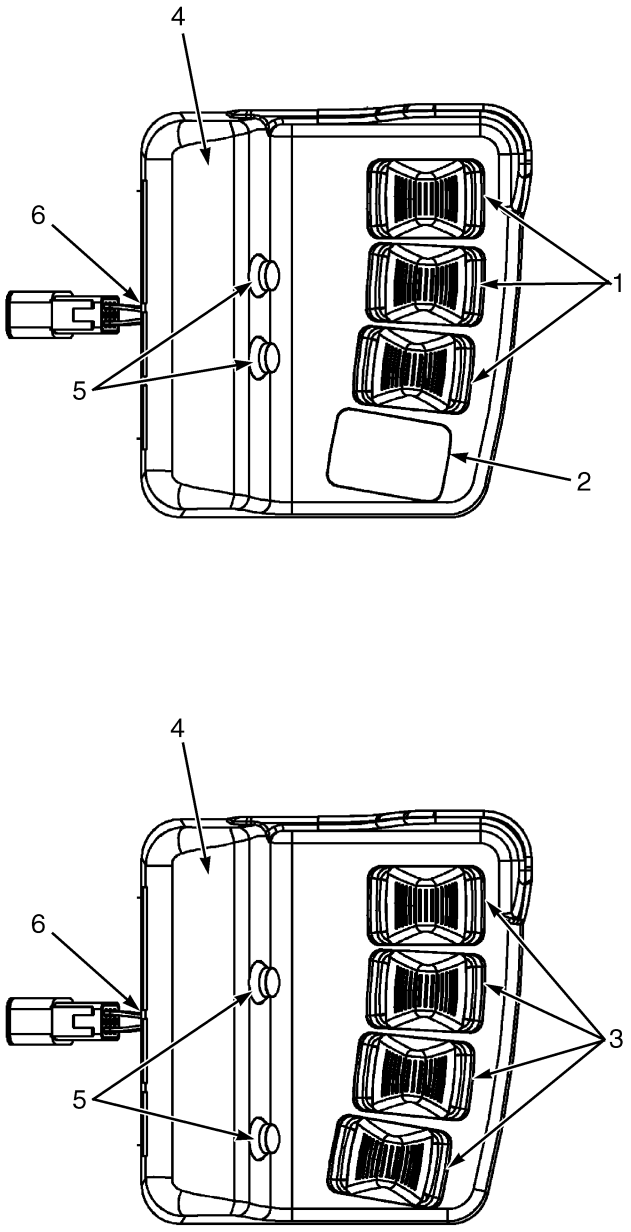

©2013 HYSTER COMPANY

ELECTRONIC CONTROL LEVERS
MINI-LEVER MODULES – DATE CODE 0724

KEY:
A: Three Function
B: Four Function

ITEM	PART NO.	DESCRIPTION	QTY A	QTY B
1	2064790	Mini-Lever (Plain, 8522697) (Without Clamping)	1	..
1	2075911	Mini-Lever (Clamping, 8528542)	1	..
1	2075913	Mini-Lever (Return To Set Tilt, 8528544)	1	..
1	2075916	Mini-Lever (Clamping and Return To Set Tilt, 8528546)	1	..
1	1683379	Kit-Mini-Lever (Non-Clamping)	AR	..
1	1683398	Kit-Mini-Lever (Clamping)	AR	..
1	1658063	Handle (Mini-Lever)	1	1
2	1598222	Kit-Plug (Mini-Lever Plug)	1	..
3	2064807	Mini-Lever (Plain, 8522700) (Without Clamping)	..	1
3	2075912	Mini-Lever (Clamping, 8528543)	..	1
3	2075914	Mini-Lever (Return To Set Tilt, 8528545)	..	1
3	2075917	Mini-Lever (Clamping And Return To Set Tilt, 8528547)	..	1
3	1683379	Kit-Mini-Lever (Non-Clamping)	..	AR
3	1683398	Kit-Mini-Lever (Clamping)	..	AR
3	1658063	Handle (Mini-Lever)	1	1
4	. . . . .	Label	1	1
5	1598221	Kit-Switch (Interlock Switch)	AR	AR
5	1591181	Switch-Momentary	1	1
5	1598223	Kit-Plug (Interlock Switch Plug)	AR	AR
6	~~1307884~~			
	1514429	Nut	4	4

©2013 HYSTER COMPANY

ELECTRONIC CONTROL LEVERS (FIGURE 7-25)

MINI-LEVER MODULES (THREE FUNCTION) — DATE CODE 0725 THRU 0743

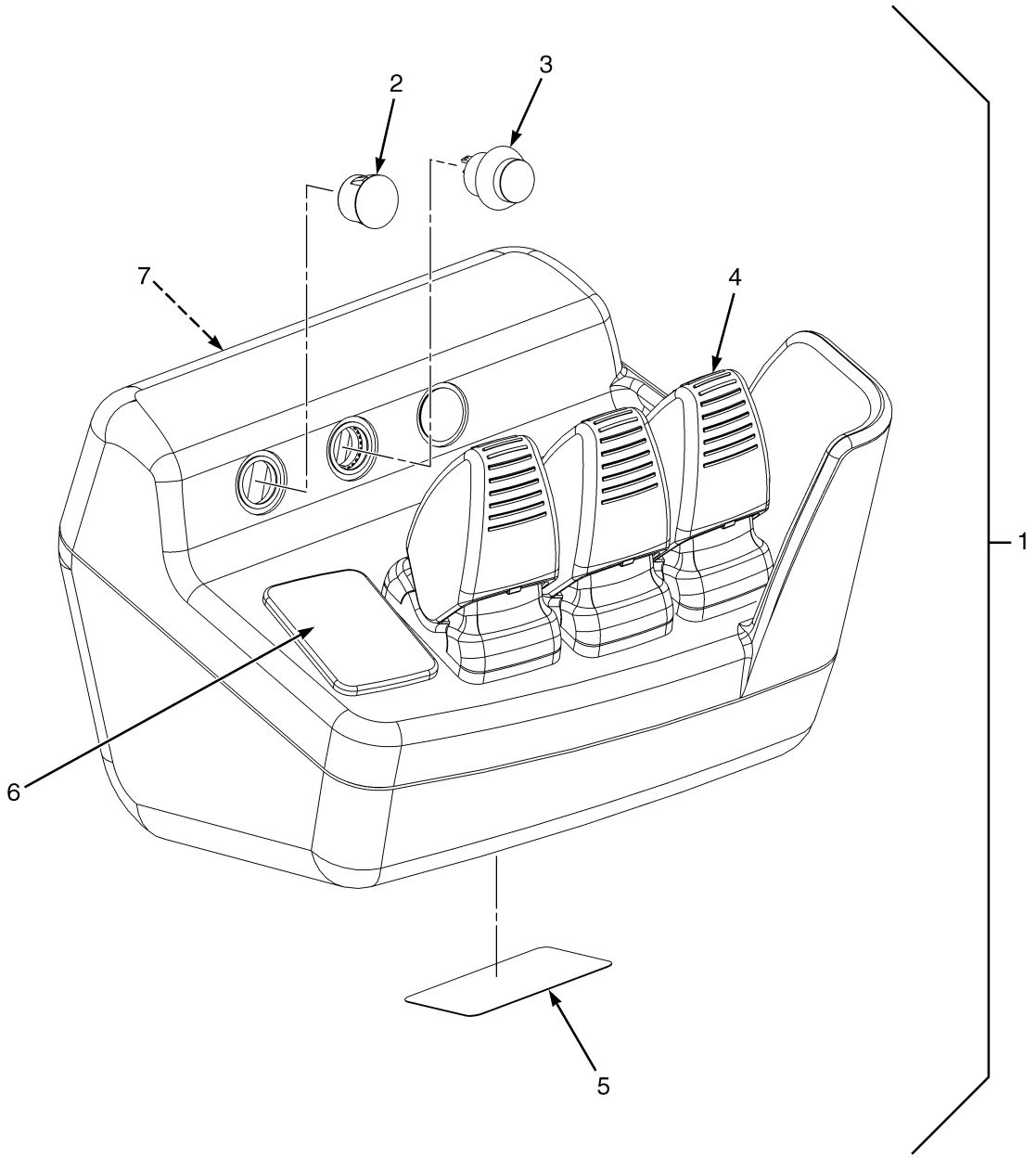

©2013 HYSTER COMPANY

ELECTRONIC CONTROL LEVERS

MINI-LEVER MODULES (THREE FUNCTION) – DATE CODE 0725 THRU 0743

ITEM	PART NO.	DESCRIPTION	QTY
1	2099224	Mini-Lever (Plain, 8542298)	1
	b 1598222	Kit-Plug (Mini-Lever Plug)	1
	c 1598223	Kit-Plug (Interlock Switch Plug)	3
1	2099228	Mini-Lever (Clamping, 8542302)	1
	a 1683398	Kit-Mini-Lever (Clamping)	1
	d 1598221	Kit-Switch (Interlock Switch)	1
	b 1598222	Kit-Plug (Mini-Lever Plug)	1
	c 1598223	Kit-Plug (Interlock Switch Plug)	2
1	2099230	Mini-Lever (Return To Set Tilt, 8542304)	1
	a 1683398	Kit-Mini-Lever (Clamping)	1
	d 1598221	Kit-Switch (Interlock Switch)	1
	b 1598222	Kit-Plug (Mini-Lever Plug)	1
	c 1598223	Kit-Plug (Interlock Switch Plug)	2
1	2099233	Mini-Lever (Clamping and Return To Set Tilt, 8542307)	1
	a 1591185	Kit-Lever (Interlock Mini-Lever)	1
	d 1598221	Kit-Switch (Interlock Switch)	1
	b 1598224	Plug	1
	c 1598223	Kit-Plug (Interlock Switch Plug)	2
2	. . . . .	Plug (Momentary Switch)	AR
3	1591181	Switch-Momentary	AR
4	. . . . .	Mini-Lever	AR
4	1658063	Handle (Mini-Lever)	1
5	. . . . .	Label (Shows Production Part Number)	1
6	1598224	Plug (Mini-Lever)	1
7	. . . . .	Control Labels	1

FOOTNOTES:

a Kit Includes: 1 Interlock Rocker (must be used in combination with a Momentary Interlock Switch), 1 Gasket, 4 Screws (parts are NSS)

b Kit Includes: 1 Mini-Lever Plug, 1 Gasket (parts are NSS)

c Kit Includes: 1 Momentary Interlock Switch Plug, 1 Gasket (parts are NSS)

d Kit Includes: 1 Momentary Switch, 1 Lockwasher, 1 Gasket, 1 Nut (parts are NSS)

©2013 HYSTER COMPANY

ELECTRONIC CONTROL LEVERS (FIGURE 7-26)

MINI-LEVER MODULE (FOUR FUNCTION) — DATE CODE 0725 THRU 0743

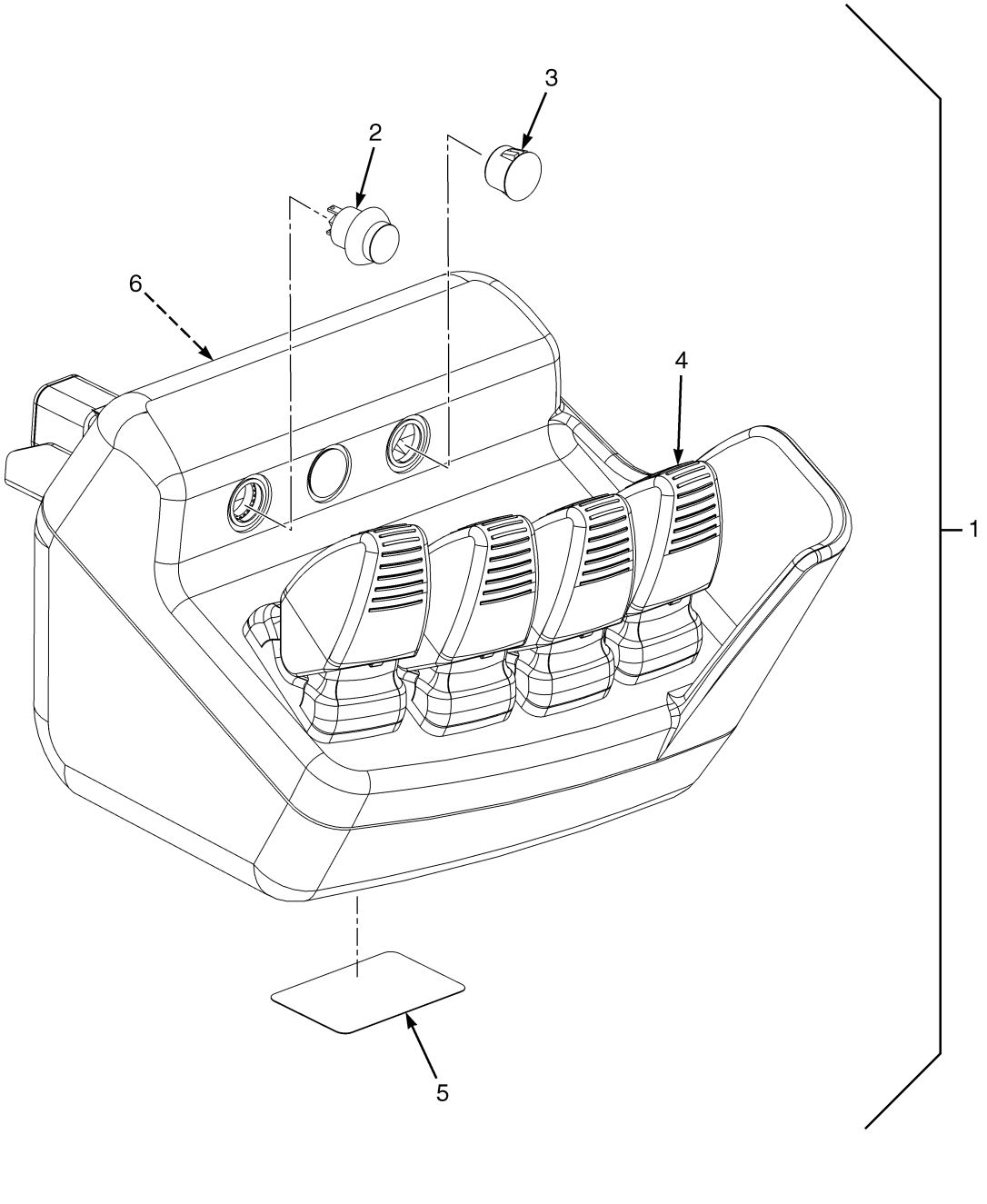

©2013 HYSTER COMPANY

ELECTRONIC CONTROL LEVERS

MINI-LEVER MODULE (FOUR FUNCTION) – DATE CODE 0725 THRU 0743

ITEM	PART NO.	DESCRIPTION	QTY
1	2099225	Mini-Lever (Plain, 8542299)	1
	b 1598223	Kit-Plug (Interlock Switch Plug)	3
	d 1683379	Kit-Mini-Lever (Non-Clamping)	3
1	2099229	Mini-Lever (Clamping, 8542303)	1
1	1683379	Kit-Mini-Lever (Non-Clamping)	2
	c 1683398	Kit-Mini-Lever (Clamping)	1
	b 1598221	Kit-Switch (Interlock Switch)	1
1	1598223	Kit-Plug (Interlock Switch Plug)	2
1	2099231	Mini-Lever (Return To Set Tilt, 8542305)	1
	d 1683379	Kit-Mini-Lever (Non-Clamping)	2
1	1683398	Kit-Mini-Lever (Clamping)	1
	c 1598221	Kit-Switch (Interlock Switch)	1
	b 1598223	Kit-Plug (Interlock Switch Plug)	2
1	2099234	Mini-Lever (Clamping And Return To Set Tilt, 8542308)	1
	a 1683379	Kit-Mini-Lever (Non-Clamping)	2
	c 1598221	Kit-Switch (Interlock Switch)	1
	b 1598223	Kit-Plug (Interlock Switch Plug)	2
2	1591181	Switch-Momentary	AR
3	. . . . .	Plug (Momentary Switch)	AR
4	. . . . .	Mini-Lever	AR
4	1658063	Handle (Mini-Lever)	1
5	. . . . .	Label	1
6	. . . . .	Control Labels	1

FOOTNOTES:

a Kit Includes: 1 Interlock Mini-Lever (must be used in combination with a Momentary Interlock Switch), 1 Gasket, 4 Screws (parts are NSS)

b Kit Includes: 1 Momentary Switch Hole Plug, 1 Gasket (parts are NSS)

c Kit Includes: 1 Momentary Switch, 1 Lockwasher, 1 Gasket, 1 Nut (parts are NSS)

d Kit Includes: 1 Plain Mini-Lever, 1 Gasket, 4 Screws (parts are NSS)

©2013 HYSTER COMPANY

ELECTRONIC CONTROL LEVERS (FIGURE 7-27)
MINI-LEVER MODULES (THREE FUNCTION) — DATE CODE 0744

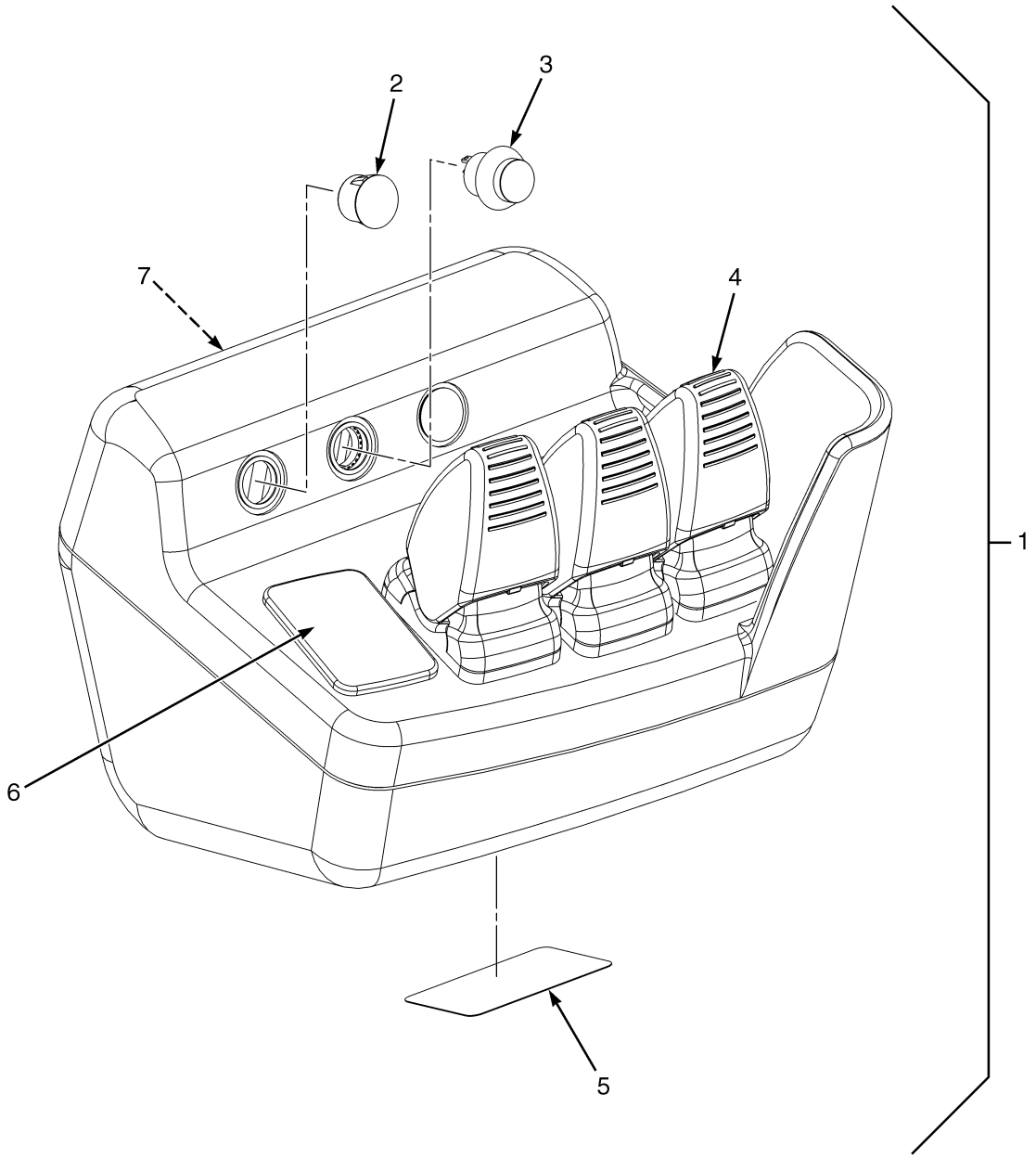

©2013 HYSTER COMPANY

ELECTRONIC CONTROL LEVERS

MINI-LEVER MODULES (THREE FUNCTION) – DATE CODE 0744

ITEM	PART NO.	DESCRIPTION	QTY
1	2105372	Mini-Lever (8544613)	1
	1689455	Kit-Mini-Lever (Non-Clamping)	3
	b 1598224	Plug	1
	c 1598223	Kit-Plug (Interlock Switch Plug)	3
1	2105376	Mini-Lever (8544617) (With Clamping)	1
	a 1598223	Kit-Plug (Interlock Switch Plug)	1
	d 1598221	Kit-Switch (Interlock Switch)	1
	b 1598224	Plug	1
	c 1689455	Kit-Mini-Lever (Non-Clamping)	2
	1689460	Kit-Mini-Lever (Clamping)	1
1	2105378	Mini-Lever (8544619) (With Return To Set Tilt)	1
	a 1598223	Kit-Plug (Interlock Switch Plug)	2
	d 1598221	Kit-Switch (Interlock Switch)	1
	b 1598224	Plug	1
	c 1689455	Kit-Mini-Lever (Non-Clamping)	2
	1689460	Kit-Mini-Lever (Clamping)	1
1	2105380	Mini-Lever (8544621) (With Clamping and Return to set Tilt)	1
	d 1598221	Kit-Switch (Interlock Switch)	2
	b 1598224	Plug	2
	c 1598223	Kit-Plug (Interlock Switch Plug)	1
	1689455	Kit-Mini-Lever (Non-Clamping)	1
	1689460	Kit-Mini-Lever (Clamping)	2
1	2103849	Mini-Lever (8543799)	1
	1683379	Kit-Mini-Lever (Non-Clamping)	3
	c 1598223	Kit-Plug (Interlock Switch Plug)	3
1	1598224	Plug	1
1	2103853	Mini Lever (8543802) (With Clamping)	1
	1683379	Kit-Mini-Lever (Non-Clamping)	2
	1683398	Kit-Mini-Lever (Clamping)	1
1	**d** 1598221	Kit-Switch (Interlock Switch)	1
1	**c** 1598223	Kit-Plug (Interlock Switch Plug)	2
	1598224	Plug	1
1	2103857	Mini Lever (8543807) (Clamping With Return To Set Tilt)	1
	1683379	Kit-Mini-Lever (Non-Clamping)	1
	1683398	Kit-Mini-Lever (Clamping)	2
1	**d** 1598221	Kit-Switch (Interlock Switch)	2
1	**c** 1598223	Kit-Plug (Interlock Switch Plug)	1
1	1598224	Plug	2
1	2103855	Mini Lever (8543805) (With Return to Set Tilt)	1
	1683379	Kit-Mini-Lever (Non-Clamping)	2
	1683398	Kit-Mini-Lever (Clamping)	1
1	**d** 1598221	Kit-Switch (Interlock Switch)	1
1	**c** 1598223	Kit-Plug (Interlock Switch Plug)	2
1	1598224	Plug	1
2	. . . . .	Plug (Momentary Switch)	AR
3	1591181	Switch-Momentary	AR
4	. . . . .	Mini-Lever	AR
4	1658063	Handle (Mini-Lever)	1
5	. . . . .	Label (Shows Production Part Number)	1
6	1598224	Plug (Mini-Lever)	1

©2013 HYSTER COMPANY

ELECTRONIC CONTROL LEVERS

MINI-LEVER MODULES (THREE FUNCTION) – DATE CODE 0744

ITEM	PART NO.	DESCRIPTION	QTY
7	. . . . .	Control Labels	1

FOOTNOTES:

a Kit Includes: 1 Interlock Rocker (must be used in combination with a Momentary Interlock Switch), 1 Gasket, 4 Screws (parts are NSS)

b Kit Includes: 1 Mini-Lever Plug, 1 Gasket (parts are NSS)

c Kit Includes: 1 Momentary Interlock Switch Plug, 1 Gasket (parts are NSS)

d Kit Includes: 1 Momentary Switch, 1 Lockwasher, 1 Gasket, 1 Nut (parts are NSS)

©2013 HYSTER COMPANY

NOTES

©2013 HYSTER COMPANY

ELECTRONIC CONTROL LEVERS (FIGURE 7-28)
MINI-LEVER MODULE (FOUR FUNCTION) — DATE CODE 0744

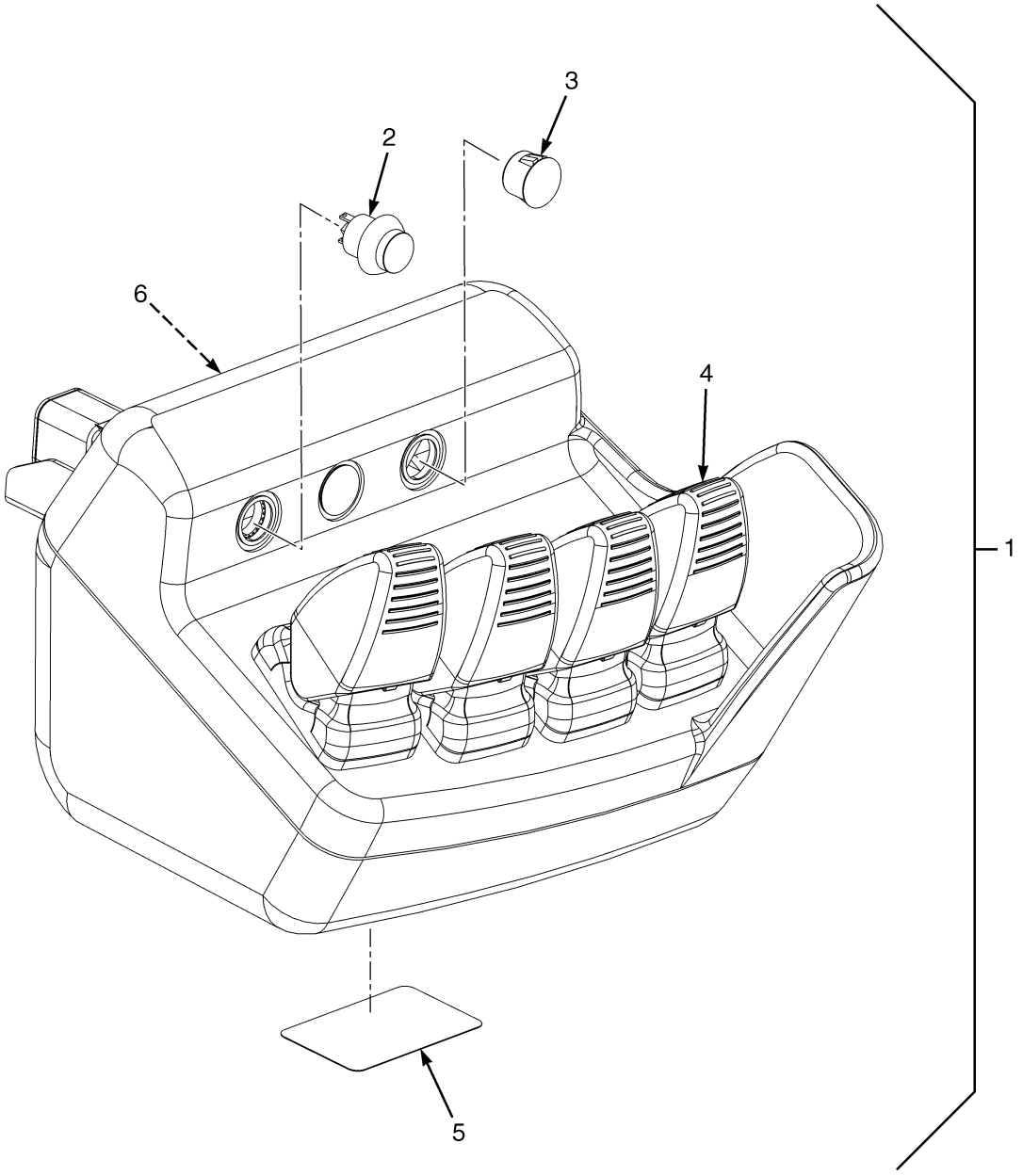

BP150258

©2013 HYSTER COMPANY

ELECTRONIC CONTROL LEVERS

MINI-LEVER MODULE (FOUR FUNCTION) – DATE CODE 0744

ITEM	PART NO.	DESCRIPTION	QTY
1	2105373	Mini-Lever Module (8544614)	1
	1689455	Kit-Mini-Lever (Non-Clamping)	4
	b 1598223	Kit-Plug (Interlock Switch Plug)	3
1	2105377	Mini-Lever Module (8544618) (With Clamping)	1
	1689455	Kit-Mini-Lever (Non-Clamping)	3
	1689460	Kit-Mini-Lever (Clamping)	1
	c 1598221	Kit-Switch (Interlock Switch)	1
	b 1598223	Kit-Plug (Interlock Switch Plug)	1
1	2105379	Mini-Lever Module (8544620) (With Return to Set Tilt)	1
	1689455	Kit-Mini-Lever (Non-Clamping)	3
	a 1689460	Kit-Mini-Lever (Clamping)	1
	c 1598221	Kit-Switch (Interlock Switch)	1
	b 1598223	Kit-Plug (Interlock Switch Plug)	2
1	2105381	Mini-Lever Module (8544622) (Clamping and Return to Set Tilt)	1
	1689455	Kit-Mini-Lever (Non-Clamping)	2
	c 1598221	Kit-Switch (Interlock Switch)	2
	b 1598223	Kit-Plug (Interlock Switch Plug)	1
1	1689460	Kit-Mini-Lever (Clamping)	2
1	2103850	Mini Lever Module (8543800)	1
1	1683379	Kit-Mini-Lever (Non-Clamping)	4
1	**b** 1598223	Kit-Plug (Interlock Switch Plug)	3
1	2103854	Mini Lever Module (8543804) (With Clamping)	1
	1683379	Kit-Mini-Lever (Non-Clamping)	3
	1683398	Kit-Mini-Lever (Clamping)	1
	c 1598221	Kit-Switch (Interlock Switch)	1
	b 1598223	Kit-Plug (Interlock Switch Plug)	2
1	2103856	Mini Lever Module (8543806) (With Return to Set Tilt)	1
	1683379	Kit-Mini-Lever (Non-Clamping)	3
	1683398	Kit-Mini-Lever (Clamping)	1
	c 1598221	Kit-Switch (Interlock Switch)	1
	b 1598223	Kit-Plug (Interlock Switch Plug)	2
1	2103858	Mini Lever Module (8543808) (Clamping with Return to Set Tilt)	1
	1683379	Kit-Mini-Lever (Non-Clamping)	2
	1683398	Kit-Mini-Lever (Clamping)	2
	c 1598221	Kit-Switch (Interlock Switch)	2
	b 1598223	Kit-Plug (Interlock Switch Plug)	1
2	1591181	Switch-Momentary	AR
3	. . . . .	Plug (Momentary Switch)	AR
4	. . . . .	Mini-Lever	AR
4	1658063	Handle (Mini-Lever)	1
5	. . . . .	Label	1
6	. . . . .	Control Labels	1

FOOTNOTES:

a Kit Includes: 1 Interlock Mini-Lever (must be used in combination with a Momentary Interlock Switch), 1 Gasket, 4 Screws (parts are NSS)

b Kit Includes: 1 Momentary Switch Hole Plug, 1 Gasket (parts are NSS)

c Kit Includes: 1 Momentary Switch, 1 Lockwasher, 1 Gasket, 1 Nut (parts are NSS)

©2013 HYSTER COMPANY

See Service Manual for service procedures.

MINI-LEVER CONTROLS (FIGURE 7-29)

WITH ARMREST — THREE FUNCTION (S/N L177V04458H → INC. 04450)

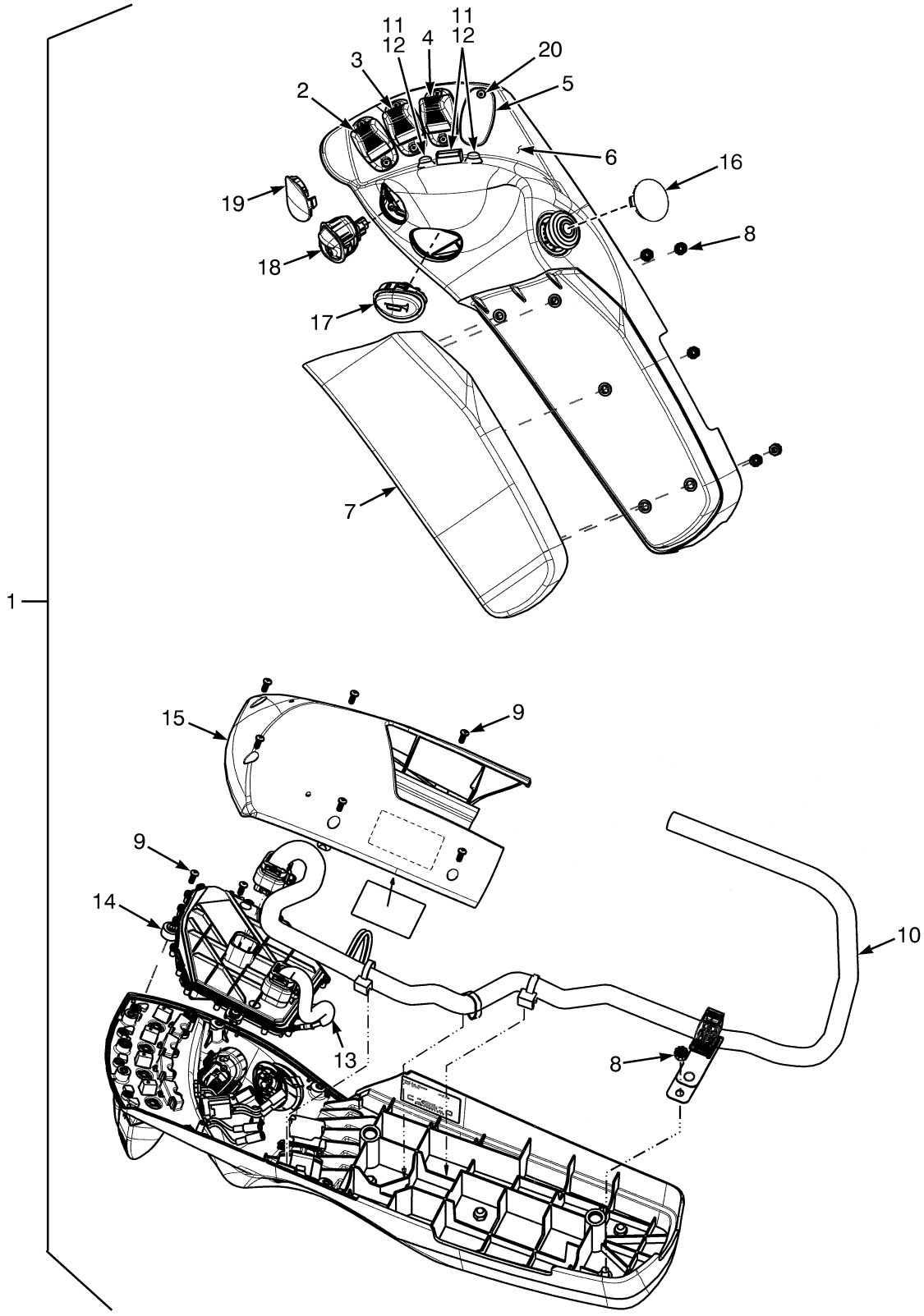

©2013 HYSTER COMPANY

MINI-LEVER CONTROLS

WITH ARMREST – THREE FUNCTION (S/N L177V04458H → INC. 04450)

KEY:
A: Without Directional Control Switch
B: With Directional Control Switch

ITEM	PART NO.	DESCRIPTION	QTY A	QTY B
1	4601093	Mini-Lever Assembly	1	..
1	**c** 4601265	Mini-Lever Assembly	1	..
1	**a** 4601097	Mini-Lever Assembly	1	..
1	**b** 4601099	Mini-Lever Assembly	1	..
1	4601101	Mini-Lever Assembly	..	1
1	**c** 4601103	Mini-Lever Assembly	..	1
1	**a** 4601105	Mini-Lever Assembly	..	1
1	**b** 4601107	Mini-Lever Assembly	..	1
2	. . . . .	Lever Position 1	1	1
2	2110791	Lever (Single Function)	1	1
3	. . . . .	Lever Position 2	1	1
3	2110791	Lever (Single Function)	1	1
3	**a** 2110793	Lever (With Override)	1	1
4	. . . . .	Lever Position 3	1	1
4	2110791	Lever (Single Function)	1	1
4	**c** 2110792	Lever (Clamping)	1	1
5	2108249	Plug	1	1
6	2111799	Armrest (Without Push Buttons)	1	1
6	**ac** 4603439	Armrest (With Push Buttons)	1	1
7	2111769	Cushion (Armrest)	1	1
8	1709587	Nut	5	5
9	1698449	Capscrew	6	6
10	4605336	Wire Harness	1	1
11	**c** 1704528	Push Button (Position 3)	1	1
11	**b** 1704528	Push Button (Position 2 and 3)	2	2
11	**a** 1704528	Push Button (Position 2)	1	1
12	**c** 1705359	Cover (Push Button)	1	1
12	**b** 1705359	Cover (Push Button)	1	1
13	1704529	Wire Harness (Forward/Reverse Switch in the MLM) (Push Buttons)	1	1
14	~~2111802~~ 4605337	Printed Circuit Board	1	1
15	2111800	Cover (Bottom Armrest)	1	1
16	4601120	Plug	1	1
17	2111770	Horn Button	1	1
18	2110943	Switch (Directional Control)	..	1
19	2110942	Plug (Directional Control Switch)	1	..
20	1698449	Capscrew	8	8

FOOTNOTES:

a Return to Set Tilt
b Three Function Clamp with Return to Set Tilt
c With Clamping

©2013 HYSTER COMPANY

MINI-LEVER CONTROLS (FIGURE 7-30)

WITH ARMREST — FOUR FUNCTION (S/N L177V04458H → INC. 04450)

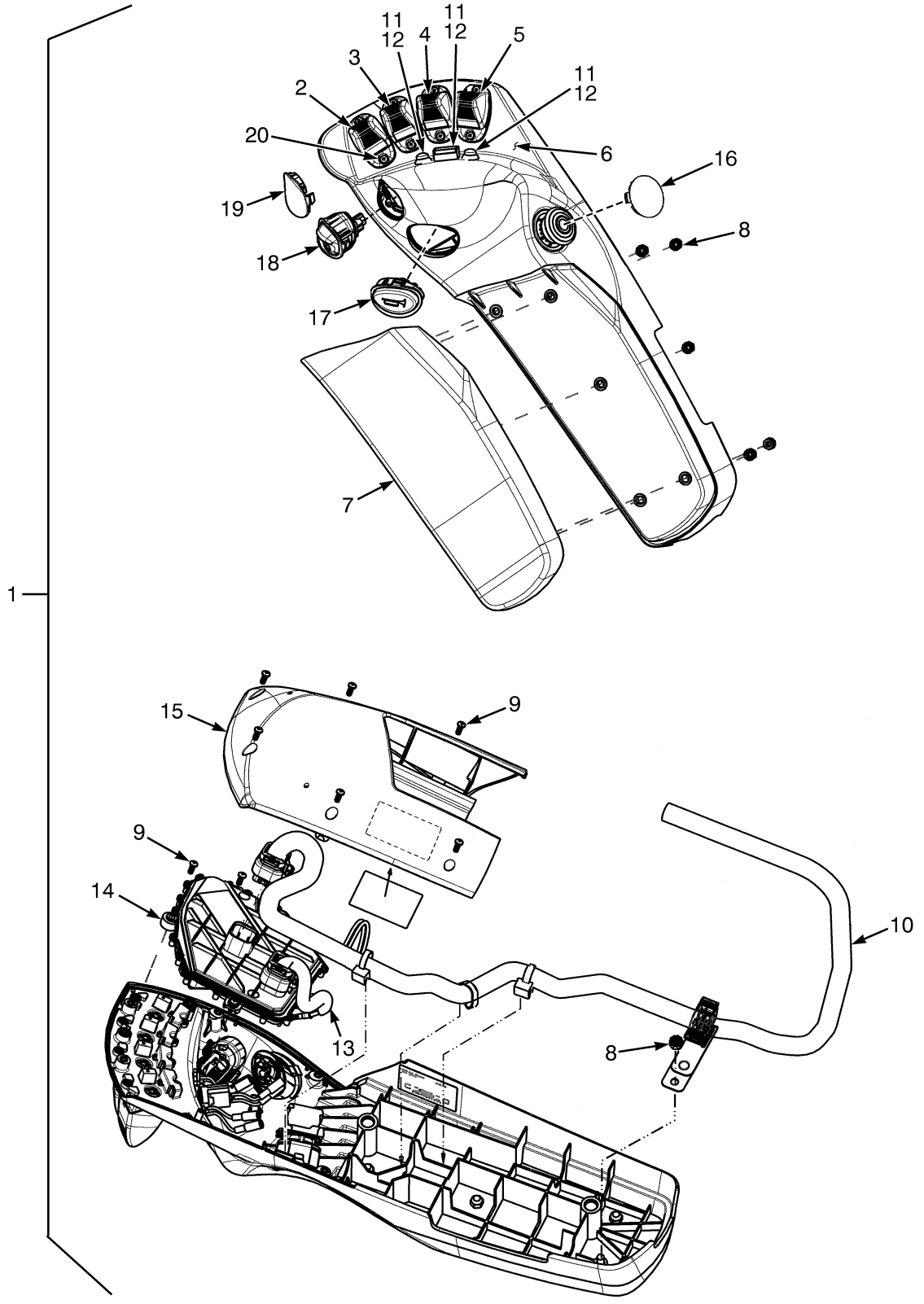

©2013 HYSTER COMPANY

MINI-LEVER CONTROLS

WITH ARMREST – FOUR FUNCTION (S/N L177V04458H → INC. 04450)

KEY:
A: Without Directional Control Switch
B: With Directional Control Switch

ITEM	PART NO.	DESCRIPTION	QTY A	QTY B
1	4601094	Mini-Lever Assembly	1	..
1	**a** 4601096	Mini-Lever Assembly	1	..
1	**c** 4601098	Mini-Lever Assembly	1	..
1	**b** 4601100	Mini-Lever Assembly	1	..
1	4601102	Mini-Lever Assembly	..	1
1	**a** 4601104	Mini-Lever Assembly	..	1
1	**c** 4601106	Mini-Lever Assembly	..	1
1	**b** 4601108	Mini-Lever Assembly	..	1
2	. . . . .	Lever Position 1	1	1
2	2110791	Lever (Single Function)	1	1
3	. . . . .	Lever Position 2	1	1
3	2110791	Lever (Single Function)	1	1
3	**b** 2110793	Lever (With Override)	1	1
4	. . . . .	Lever Position 3	1	1
4	2110791	Lever (Single Function)	1	1
5	. . . . .	Lever Position 4	1	1
5	2110791	Lever (Single Function)	1	1
5	**ab** 2110792	Lever (Clamping)	1	1
6	2111799	Armrest (Without Push Buttons)	1	1
6	**abc** 4603439	Armrest (With Push Buttons)	1	1
7	2111769	Cushion (Armrest)	1	1
8	1709587	Nut	5	5
9	1698449	Capscrew	6	6
10	4605336	Wire Harness	1	1
11	**a** 1704528	Push Button	1	1
11	**b** 1704528	Push Button	2	2
12	**a** 1705359	Cover (Push Button)	2	2
12	**b** 1705359	Cover (Push Button)	1	1
13	1704529	Wire Harness (Forward/Reverse Switch in the MLM) (Push Buttons)	1	1
14	~~2111802~~ 4605337	Printed Circuit Board	1	1
15	2111800	Cover (Bottom Armrest)	1	1
16	4601120	Plug	1	1
17	2111770	Horn Button	1	1
18	2110943	Switch (Directional Control)	..	1
19	2110942	Plug (Directional Control Switch)	1	..
20	1698449	Capscrew	8	8

FOOTNOTES:

a With Clamping
b With Clamping and Return to Set Tilt
c With Return to Set Tilt

©2013 HYSTER COMPANY

LIGHTS (FIGURE 7-31)
STOP, TAIL, TURN, BACKUP, AND STROBE — WITH CAB

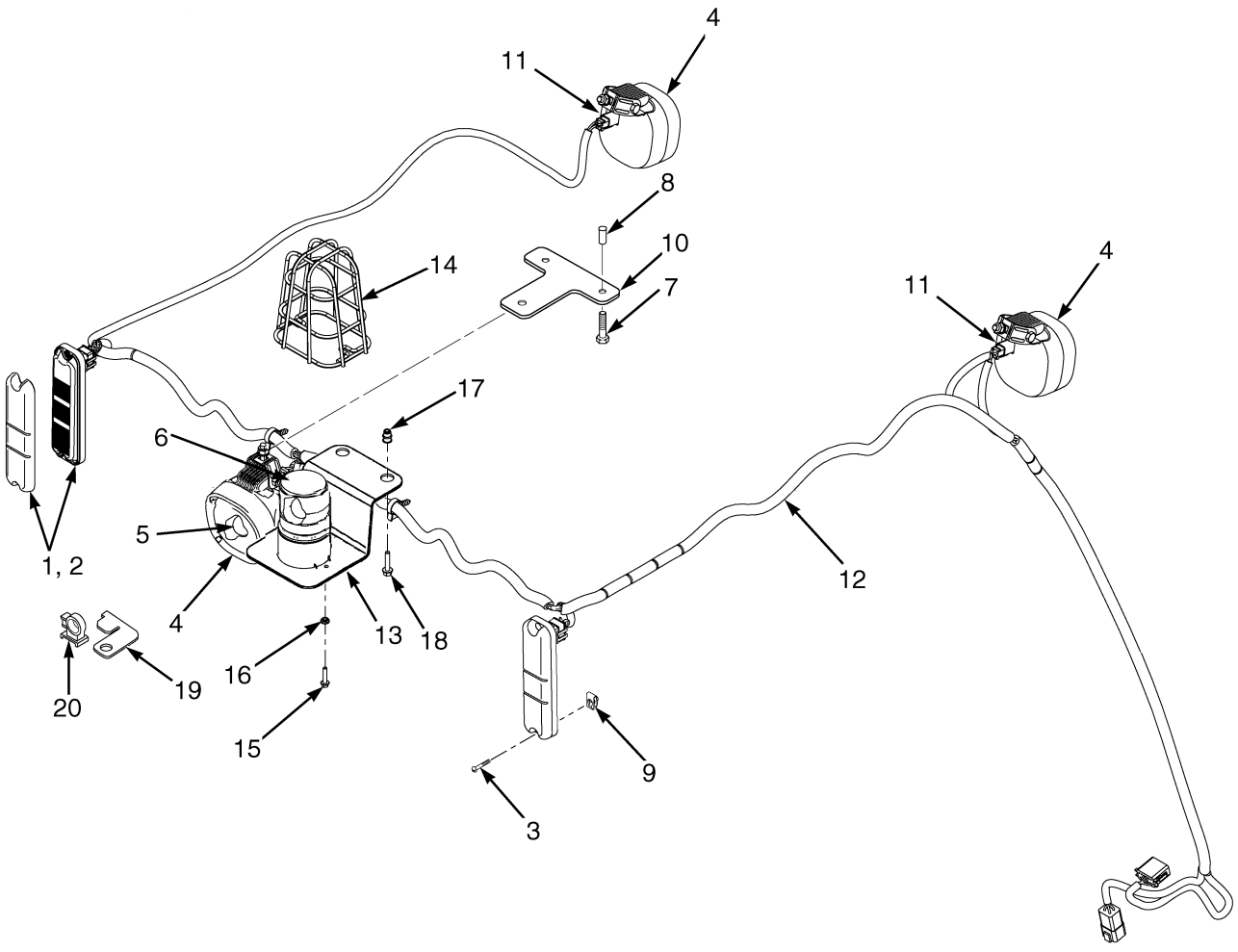

HP081649

©2013 HYSTER COMPANY

LIGHTS

STOP, TAIL, TURN, BACKUP, AND STROBE – WITH CAB

ITEM	PART NO.	DESCRIPTION	QTY
1	2056824	Brake/Backup Light (Stop,Turn,Tail, And Back-Up)	2
1	. . . . .	Bracket	2
2	2056826	Reflector (Tail)	2
3	1565125	Screw	4
4	**b** 2064836	Work Light (Rear) (Halogen)	1
4	**d** 2098083	Work Light (Rear) (Halogen)	1
4	2107382	Head/Work Light (Rear) (LED) (LED)	1
4	**b** 2064837	Work Light (RH Front) (Halogen)	1
4	**d** 2098084	Work Light (RH Front) (Halogen)	1
4	2107383	Head/Work Light (RH Front) (LED)	1
4	**b** 2064838	Work Light (LH Front) (Halogen)	1
4	**d** 2098085	Work Light (LH Front) (Halogen)	1
4	2107384	Head/Work Light (LH Front) (LED)	1
5	2098082	Bulb (Halogen)	1
6	**c** 1581670	Strobe Light	1
6	**e** 1654013	Strobe Light Assembly	1
7	1586495	Capscrew	2
8	1531558	Insert	2
9	1537551	Nut (Clip)	4
10	1558771	Bracket	1
10	1698541	Bracket (Alternate Part)	1
11	1351682	Connector (End Cap)	2
12	1598333	Wire Harness	1
12	**a** 2044712	Relay (30 Amp)	1
13	1565076	Bracket Wldmt	1
14	1302024	Guard (Strobe Light)	1
15	1586759	Capscrew	2
16	1586428	Nut	2
17	1531558	Insert	2
18	1586495	Capscrew	2
19	1532759	Clip	1
20	1532775	Clip	1

FOOTNOTES:

a Not Illustrated
b → S/N L177B17908E EXC. 07911, 07970
c → S/N L177B18988E
d S/N L177B17909E → INC. 07911, 07970
e S/N L177B18989E →

©2013 HYSTER COMPANY

LIGHTS (FIGURE 7-32)
STOP, TAIL, TURN, BACKUP, AND STROBE — WITH OVERHEAD GUARD

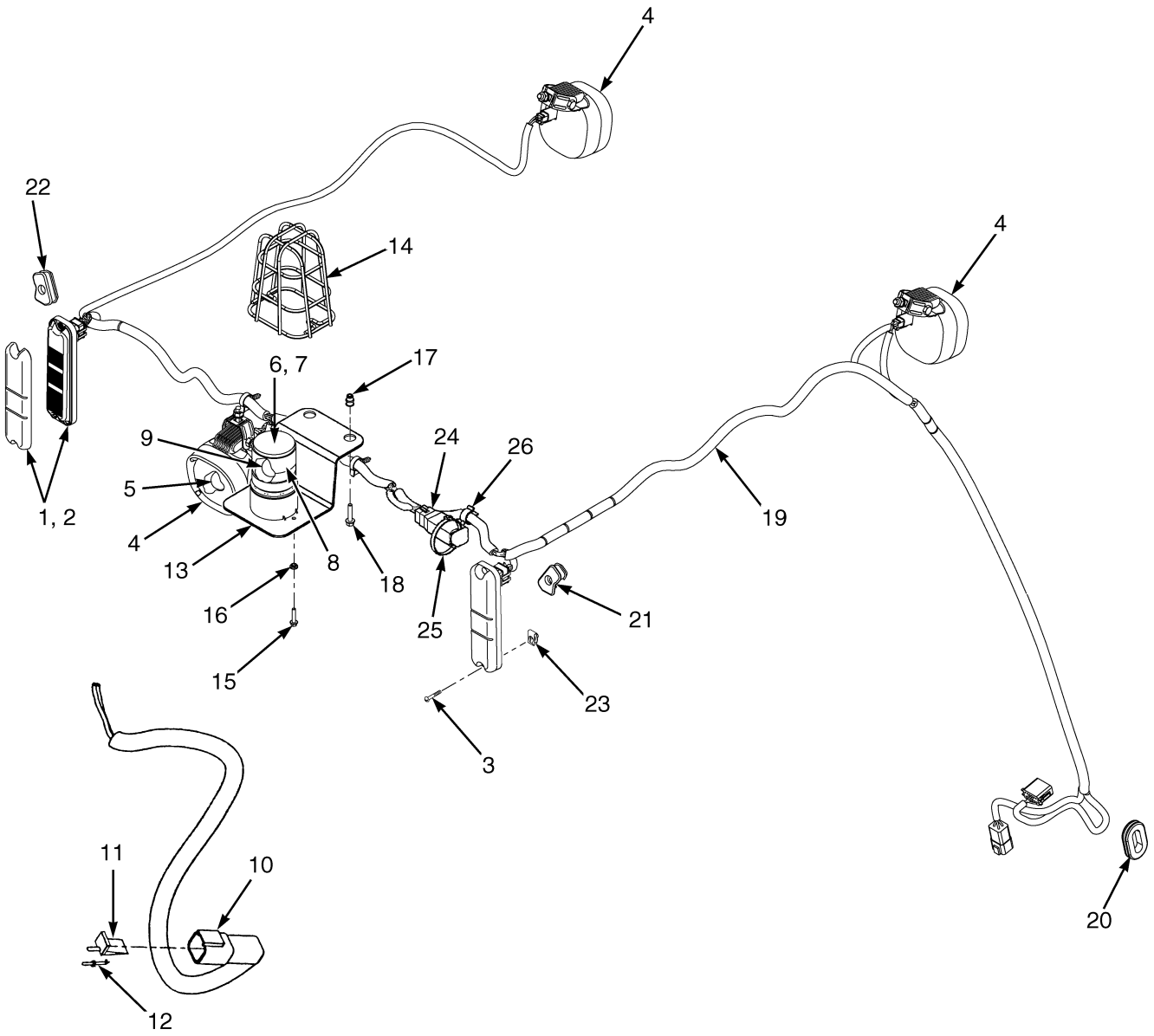

HP081633

©2013 HYSTER COMPANY

LIGHTS

STOP, TAIL, TURN, BACKUP, AND STROBE – WITH OVERHEAD GUARD

ITEM	PART NO.	DESCRIPTION	QTY
1	2056824	Brake/Backup Light (Stop,Turn,Tail, And Back-Up)	2
1	. . . . .	Tail Light Base (☞Figure 1-5)	2
2	2056826	Reflector (Tail)	2
3	1565125	Screw	4
4	**b** 2064836	Work Light (Rear) (Halogen)	1
4	**e** 2098083	Work Light (Rear) (Halogen)	1
4	2107382	Head/Work Light (Rear) (LED) (LED)	1
4	**b** 2064837	Work Light (RH Front) (Halogen)	1
4	**e** 2098084	Work Light (RH Front) (Halogen)	1
4	2107383	Head/Work Light (RH Front) (LED)	1
4	**b** 2064838	Work Light (LH Front) (Halogen)	1
4	**e** 2098085	Work Light (LH Front) (Halogen)	1
4	2107384	Head/Work Light (LH Front) (LED)	1
5	2098082	Bulb (Halogen)	1
6	1581670	Strobe Light	1
7	1382130	Strobe Light	1
8	1673755	Lens	1
9	1673704	Lamp	1
10	1561559	Connector (2 Pin)	1
11	1561755	Connector (Secondary Lock)	1
12	1463138	Terminal Pin	2
13	1565076	Bracket Wldmt	1
14	1302024	Guard (Strobe Light)	1
15	1586759	Capscrew	2
16	1586428	Nut	2
17	1531001	Insert	2
18	1586495	Capscrew	2
19	**a** 2073760	Wire Harness (Lights) (☞Figure 7-79)	1
19	**d** 2090084	Wire Harness (Lights) (☞Figure 7-80)	1
19	**f** 2098385	Wire Harness (Lights) (☞Figure 7-81)	1
20	1539584	Grommet	1
21	1560447	Grommet (RH Tail Light)	1
22	1560448	Grommet (LH Tail Light)	1
23	1537551	Nut (Clip)	4
24	**c** 2095895	Wire Harness	1
24	1514597	Connector	1
24	1514598	Connector	1
24	1484709	Terminal (Pin)	4
24	1634047	Resistor	3
25	**d** 1644398	Clamp	1
26	**d** 1606544	Clamp	1

FOOTNOTES:

a → S/N L177B11224D
b → S/N L177B17908E EXC. 07911, 07970
c S/N L177B11225D ↔ 6/2007
d S/N L177B11225D →
e S/N L177B17909E → INC. 07911, 07970
f 6/2007 →

©2013 HYSTER COMPANY

TRANSMISSION ELECTRICAL SYSTEM (FIGURE 7-33)

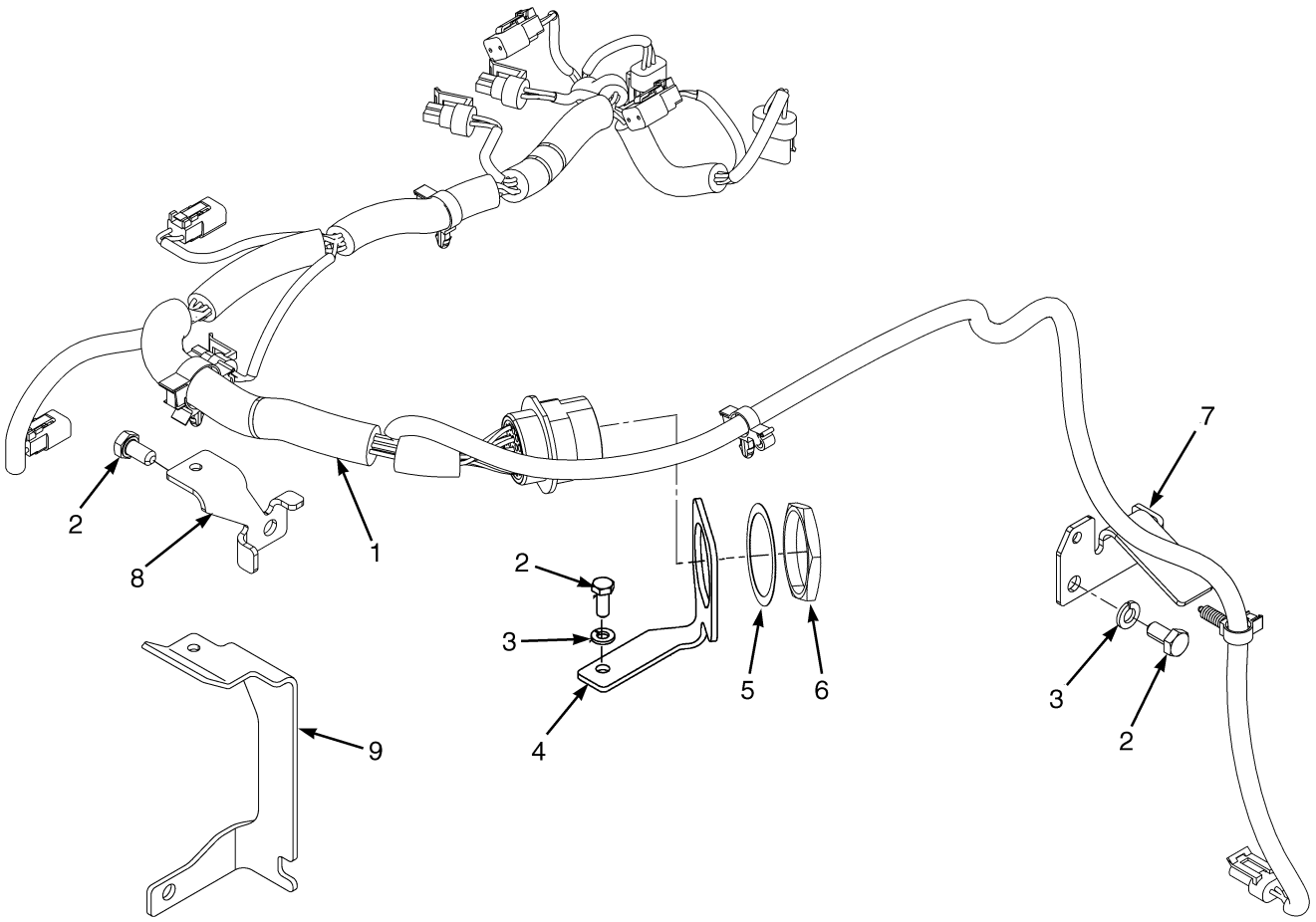

BP080410

©2013 HYSTER COMPANY

TRANSMISSION ELECTRICAL SYSTEM

KEY:
A: Single Speed
B: Dual Speed

ITEM	PART NO.	DESCRIPTION	QTY A	QTY B
1	**b** 2082323	Wire Harness (Transmission) (☞Figure 7-83)	1	..
1	**e** 2085943	Wire Harness (Transmission) (☞Figure 7-82)	1	..
1	**a** 2075644	Wire Harness (Transmission) (☞Figure 7-84)	..	1
1	**c** 2082324	Wire Harness (Transmission) (☞Figure 7-84)	..	1
1	**e** 2085942	Wire Harness (Transmission) (☞Figure 7-86)	..	1
2	287851	Capscrew	2	2
3	292681	Lockwasher	2	2
4	**a**	Bracket	1	1
5	**a** 1539086	Lockwasher	1	1
6	**a** 1539085	Locknut	1	1
7	**a** 1531519	Bracket	1	1
7	**d** 1612223	Bracket	1	..
8	1612399	Bracket	..	1
9	1616222	Bracket	1	..

FOOTNOTES:

a → 8/2006
b → S/N L177B11117D
c 8/2006 ↔ S/N L177B11117D
d 8/2006 →
e S/N L177B11118D →

©2013 HYSTER COMPANY

MAST ELECTRICAL (FIGURE 7-34)

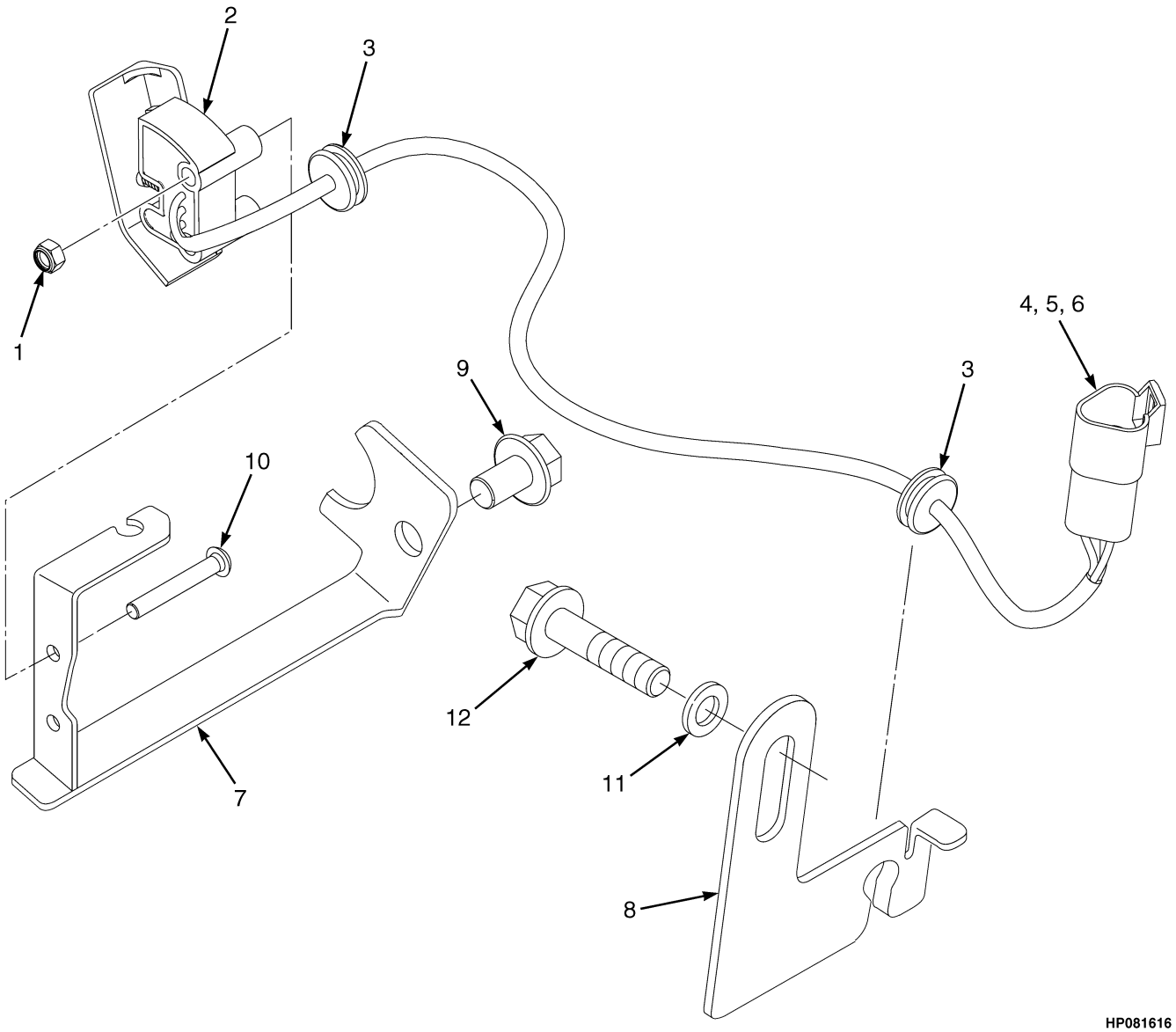

ITEM	PART NO.	DESCRIPTION	QTY
1	302398	Locknut	2
2	1589621	Sensor (Mast Position)	1
3	98644	Grommet	2
4	1493466	Connector	1
5	1330415	Connector	1
6	1330437	Terminal (Pin)	3
7	1592071	Bracket Wldmt	1
8	1595731	Bracket	1
9	1615163	Capscrew	1
10	1553897	Capscrew	2
11	1626478	Washer	1
12	1658075	Capscrew	1

©2013 HYSTER COMPANY

NOTES

©2013 HYSTER COMPANY

LOAD WEIGH ELECTRICAL (FIGURE 7-35)

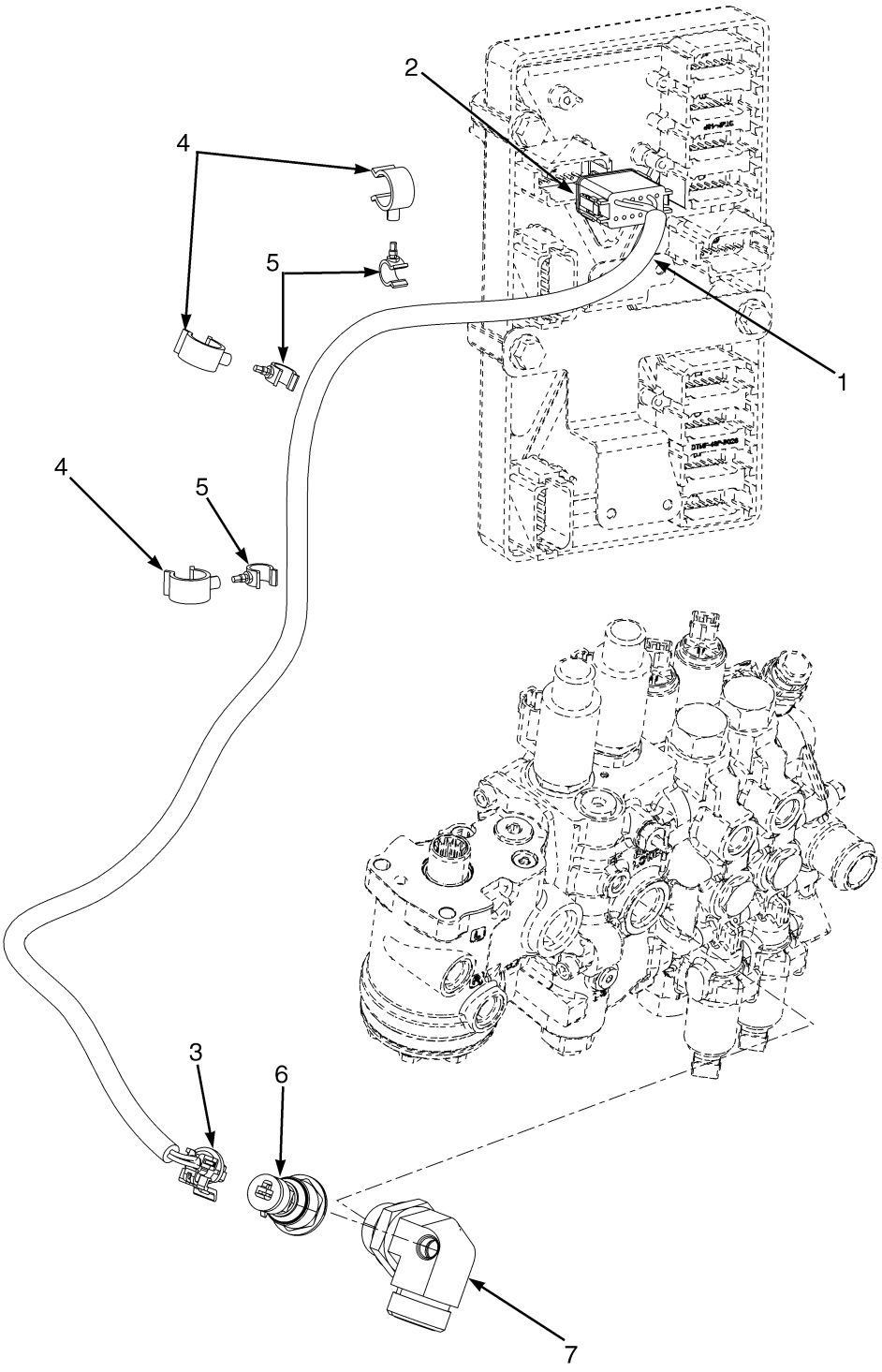

©2013 HYSTER COMPANY

LOAD WEIGH ELECTRICAL

ITEM	PART NO.	DESCRIPTION	QTY
1	2079326	Wire Harness (Load Weigh)	1
2	1525565	Connector	1
2	1500913	Connector	1
2	1330438	Terminal (Socket)	3
2	1484377	Plug	9
3	1603021	Connector	1
3	1603236	Connector (Secondary Lock)	1
3	1548517	Terminal (Socket)	3
3	1548519	Seal	3
4	1606544	Clamp	3
5	1573549	Clamp	3
6	1606735	Sensor (Load Sensing)	1
7	1605768	Fitting (Load Weigh Display)	1

©2013 HYSTER COMPANY

WIRE HARNESS (FIGURE 7-36)

RH CHASSIS — MAZDA 2.0L AND 2.2L, GASOLINE AND LPG (→ 1/2006)

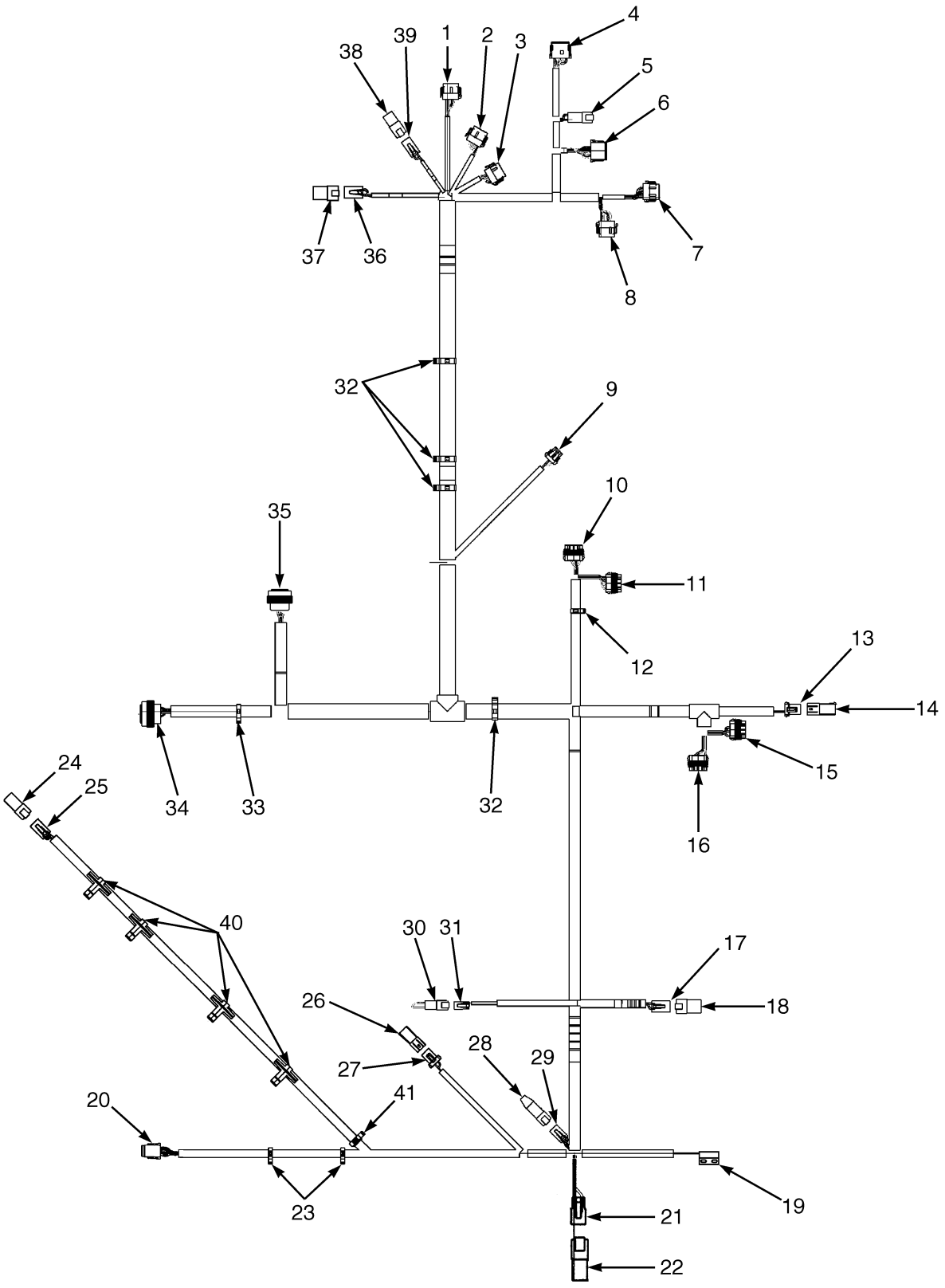

©2013 HYSTER COMPANY

WIRE HARNESS

RH CHASSIS – MAZDA 2.0L AND 2.2L, GASOLINE AND LPG (→ 1/2006)

ITEM	PART NO.	DESCRIPTION	QTY
	2075561	Wire Harness (RH Chassis)	1
1	1525570	Connector (Vehicle System Manager)	1
1	1530037	Connector	1
1	1463139	Terminal	9
1	1484377	Plug	4
2	1525568	Connector	1
2	1530037	Connector	1
2	1463139	Terminal	7
2	1484377	Plug	5
3	1525567	Connector (Vehicle System Manager)	1
3	1530037	Connector	1
3	1463139	Terminal	9
3	1484377	Plug	3
4	1525563	Connector (Vehicle System Manager)	1
4	1500913	Connector	1
4	1330438	Terminal (Socket)	8
4	1363886	Terminal (Socket)	4
5	1489655	Connector (4 Way) (To Cowl Harness)	1
5	1330416	Connector (Secondary Lock)	1
5	1330437	Terminal (Pin)	4
6	1493428	Connector (12-Way) (To Cowl Harness)	1
6	1500913	Connector	1
6	1330438	Terminal (Socket)	9
6	1484377	Plug	3
7	1525567	Connector (Vehicle System Manager)	1
7	1529046	Connector	1
7	1463139	Terminal	6
7	1484377	Plug	6
8	1525569	Connector (Vehicle System Manager)	1
8	1529046	Connector	1
8	1463139	Terminal	9
8	1484377	Plug	3
9	1476064	Connector (Horn)	1
9	1476109	Connector Lock	1
9	1330355	Terminal	3
9	1330356	Seal	2
9	1476108	Wire Seal	1
10	1521184	Connector (Power Distribution Module)	1
10	1521188	Lock	1
10	1330281	Terminal	5
10	1521989	Terminal	1
10	1327164	Seal	2
10	1402888	Seal	1
10	1323579	Seal	5
11	1521183	Connector (Power Distribution Module)	1
11	1521188	Lock	1
11	1330281	Terminal	4
11	1521989	Terminal	3
11	1323579	Seal	7
11	1327164	Seal	1

©2013 HYSTER COMPANY

WIRE HARNESS

RH CHASSIS – MAZDA 2.0L AND 2.2L, GASOLINE AND LPG (→ 1/2006)

ITEM	PART NO.	DESCRIPTION	QTY
12	1534828	Clip	1
13	1329152	Plug	1
13	1329151	Terminal	1
13	1330281	Terminal	2
13	1402888	Seal	2
14	1329150	Connector (End Cap)	1
14	1329151	Terminal	1
14	1327164	Seal	2
15	1521185	Connector (Power Distribution Module)	1
15	1521188	Lock	1
15	1330281	Terminal	5
15	1521989	Terminal	2
15	1323579	Seal	7
15	1327164	Seal	1
16	1521186	Connector (Power Distribution Module)	1
16	1521188	Lock	1
16	1521989	Terminal	7
16	1323579	Seal	7
16	1327164	Seal	1
17	1514602	Connector (Accessory 2)	1
17	1514603	Connector	1
17	1554359	Terminal	3
17	1330439	Plug	1
18	1514597	Connector (End Cap)	1
18	1330439	Plug	4
19	1572588	Switch (Hood Switch)	1
20	1541991	Connector (To Seat Harness)	1
20	1541992	Connector	1
20	1463139	Terminal	8
21	1490242	Connector (2 Way) (Socket)(Alternate Horn Button)	1
21	1490243	Connector (Secondary Lock) (Socket)	1
21	1330438	Terminal (Socket)	2
22	1351681	Connector (End Cap)	1
23	1402815	Clip	2
24	1351683	Connector (End Cap)	1
25	1493430	Connector (6 Way Housing) (To Back-Up Alarm)	1
25	1529052	Connector	1
25	1330438	Terminal (Socket)	6
26	1329150	Connector (End Cap)	1
26	1329151	Terminal	1
26	1327164	Seal	2
27	1329152	Plug (Coolant Level)	1
27	1329151	Terminal	1
27	1330281	Terminal	2
27	1402888	Seal	2
28	1525577	Connector (With Resistor) (End Cap)	1
29	1489656	Connector (4-Way) (Socket)(Bus Terminal)	1
29	1489657	Connector (Socket)	1
29	1330438	Terminal (Socket)	4
30	1493465	Connector (2 Pin) (Key Switch)	1

©2013 HYSTER COMPANY

WIRE HARNESS

RH CHASSIS – MAZDA 2.0L AND 2.2L, GASOLINE AND LPG (→ 1/2006)

ITEM	PART NO.	DESCRIPTION	QTY
30	1330414	Connector (Secondary Lock)	1
30	1330437	Terminal (Pin)	2
31	1490242	Connector (2 Way) (Socket)(Key Switch)	1
31	1490243	Connector (Secondary Lock) (Socket)	1
31	1330438	Terminal (Socket)	2
32	1534282	Clip	4
33	1500899	Clip	1
34	1502627	Connector (Socket) (To Transmission Harness)	1
34	1330438	Terminal (Socket)	17
34	1484377	Plug	6
35	1531501	Connector (To Engine Harness)	1
35	1330438	Terminal (Socket)	8
35	1554359	Terminal	3
35	1484377	Plug	17
35	1330439	Plug	1
36	1514602	Connector (To Light/Cab Harness)	1
36	1514603	Connector	1
36	1554359	Terminal	4
37	. . . . .	End Cap	..
37	1514597	Connector	1
37	1330439	Plug	4
38	. . . . .	End Cap	..
38	1480187	Connector	1
38	1330439	Plug	2
39	1545202	Connector (Accessory 1)	1
39	1546697	Connector	1
39	1554359	Terminal	2
40	1587778	Clip	4
41	1509890	Clip	1

©2013 HYSTER COMPANY

WIRE HARNESS (FIGURE 7-37)

RH CHASSIS — MAZDA 2.0L AND 2.2L (→ S/N L177B11117D)

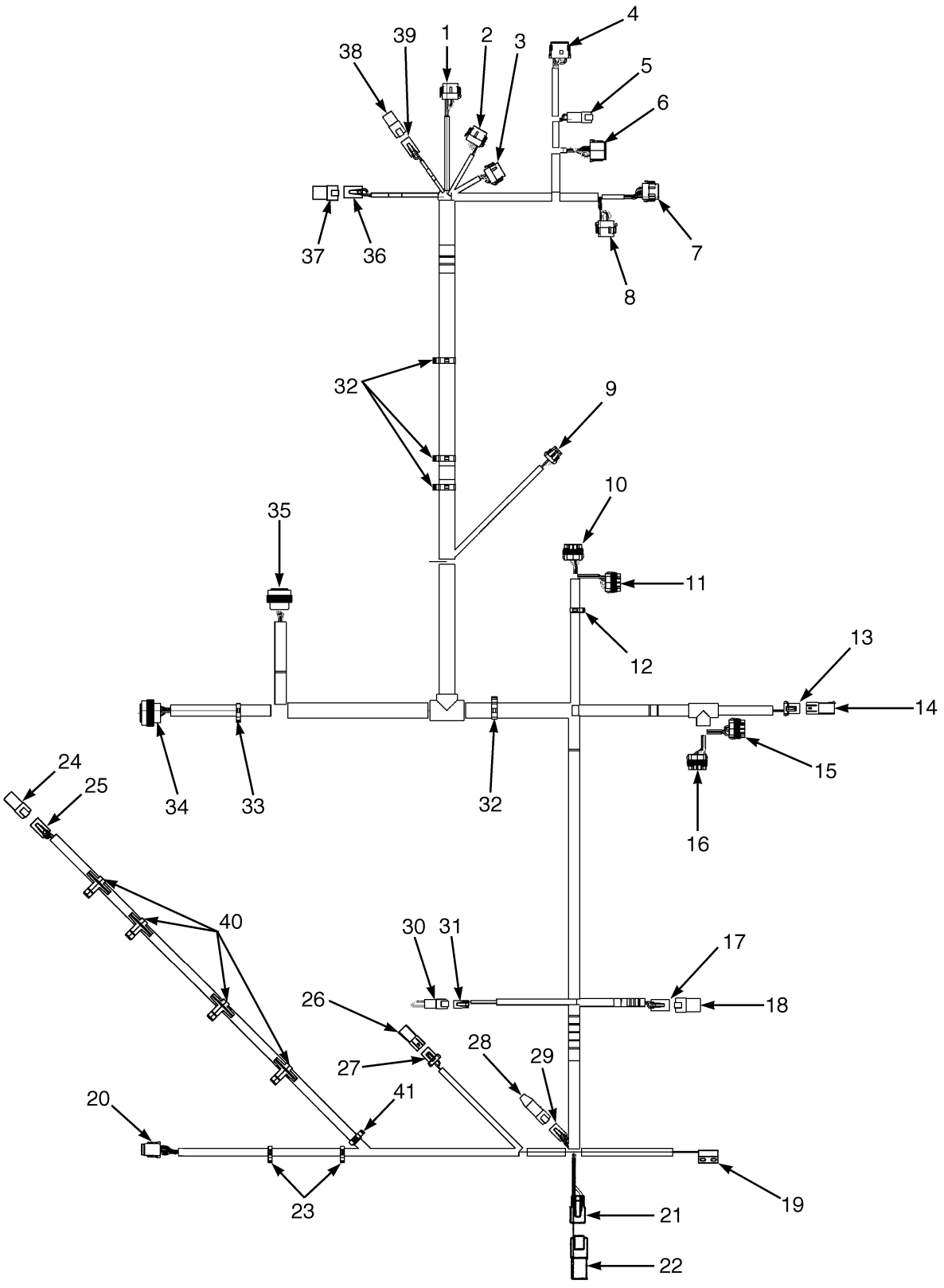

©2013 HYSTER COMPANY

WIRE HARNESS

RH CHASSIS – MAZDA 2.0L AND 2.2L (→ S/N L177B11117D)

ITEM	PART NO.	DESCRIPTION	QTY
	2078879	Wire Harness (Chassis)	1
1	. . . . .	Connector Assembly (Vehicle System Manager)	1
1	1525570	Connector	1
1	1530037	Connector	1
1	1463139	Terminal	9
1	1484377	Plug	4
2	. . . . .	Connector Assembly (Vehicle System Manager)	1
2	1525568	Connector	1
2	1530037	Connector	1
2	1463139	Terminal	7
2	1484377	Plug	5
3	. . . . .	Connector Assembly (Vehicle System Manager)	1
3	1525567	Connector	1
3	1530037	Connector	1
3	1463139	Terminal	9
3	1484377	Plug	3
4	. . . . .	Connector Assembly (Vehicle System Manager)	1
4	1525563	Connector	1
4	1500913	Connector	1
4	1330438	Terminal (Socket)	8
4	1363886	Terminal (Socket)	4
5	. . . . .	Connector Assembly (To Cowl Harness)	1
5	1489655	Connector (4 Way)	1
5	1330416	Connector (Secondary Lock)	1
5	1330437	Terminal (Pin)	4
6	. . . . .	Connector Assembly (To Cowl Harness)	1
6	1493428	Connector (12-Way)	1
6	1500913	Connector	1
6	1330438	Terminal (Socket)	9
6	1484377	Plug	3
7	. . . . .	Connector Assembly (Vehicle System Manager)	1
7	1525567	Connector	1
7	1529046	Connector	1
7	1463139	Terminal	3
7	1484377	Plug	9
8	. . . . .	Connector Assembly (Vehicle System Manager)	1
8	1525569	Connector	1
8	1529046	Connector	1
8	1463139	Terminal	9
8	1484377	Plug	3
9	. . . . .	Connector Assembly (Horn)	1
9	1476064	Connector	1
9	1476109	Connector Lock	1
9	1330355	Terminal	3
9	1330356	Seal	2
9	1476108	Wire Seal	1
10	. . . . .	Connector Assembly (Power Distribution Module)	1
10	1521184	Connector	1
10	1521188	Lock	1
10	1330281	Terminal	5

©2013 HYSTER COMPANY

WIRE HARNESS

RH CHASSIS – MAZDA 2.0L AND 2.2L (→ S/N L177B11117D)

ITEM	PART NO.	DESCRIPTION	QTY
10	1521989	Terminal	1
10	1327164	Seal	2
10	1402888	Seal	1
10	1323579	Seal	5
11	. . . . .	Connector Assembly (Power Distribution Module)	1
11	1521183	Connector	1
11	1521188	Lock	1
11	1330281	Terminal	4
11	1521989	Terminal	3
11	1323579	Seal	7
11	1327164	Seal	1
12	1534828	Clip	1
13	. . . . .	Connector Assembly (Hydraulic Filter)	1
13	1329152	Plug	1
13	1329151	Terminal	1
13	1330281	Terminal	2
13	1402888	Seal	2
14	. . . . .	Connector Assembly (End Cap)	1
14	1329150	Connector	1
14	1329151	Terminal	1
14	1327164	Seal	2
15	. . . . .	Connector Assembly (Power Distribution Module)	1
15	1521185	Connector	1
15	1521188	Lock	1
15	1330281	Terminal	5
15	1521989	Terminal	2
15	1323579	Seal	7
15	1327164	Seal	1
16	. . . . .	Connector Assembly (Power Distribution Module)	1
16	1521186	Connector	1
16	1521188	Lock	1
16	1521989	Terminal	7
16	1323579	Seal	7
16	1327164	Seal	1
17	. . . . .	Connector Assembly (Accessory 2)	1
17	1514602	Connector	1
17	1514603	Connector	1
17	1554359	Terminal	3
17	1330439	Plug	1
18	. . . . .	Connector Assembly (End Cap)	1
18	1514597	Connector	1
18	1330439	Plug	4
19	1572588	Switch	1
20	. . . . .	Connector Assembly (To Seat Harness)	1
20	1541991	Connector	1
20	1541992	Connector	1
20	1463139	Terminal	8
21	. . . . .	Connector Assembly (Alternate Horn Button)	1
21	1490242	Connector (2 Way)	1
21	1490243	Connector (Secondary Lock)	1

©2013 HYSTER COMPANY

WIRE HARNESS

RH CHASSIS – MAZDA 2.0L AND 2.2L (→ S/N L177B11117D)

ITEM	PART NO.	DESCRIPTION	QTY
21	1330438	Terminal (Socket)	2
22	1351681	Connector (End Cap)	1
23	1402815	Clip	2
24	1351681	Connector (End Cap)	1
25	. . . . .	Connector Assembly (To Back-Up Alarm)	1
25	1490242	Connector (2 Way)	1
25	1490243	Connector (Secondary Lock)	1
25	1330438	Terminal (Socket)	2
26	. . . . .	Connector Assembly (End Cap)	1
26	1329150	Connector	1
26	1329151	Terminal	1
26	1327164	Seal	2
27	. . . . .	Connector Assembly (Coolant Level)	1
27	1329152	Plug	1
27	1329151	Terminal	1
27	1330281	Terminal	2
27	1402888	Seal	2
28	1525577	Connector (With Resistor) (End Cap)	1
29	. . . . .	Connector Assembly (Bus Terminal)	1
29	1489656	Connector (4-Way)	1
29	1489657	Connector	1
29	1330438	Terminal (Socket)	4
30	. . . . .	Connector Assembly (Key Switch)	1
30	1493465	Connector (2 Pin)	1
30	1330414	Connector (Secondary Lock)	1
30	1330437	Terminal (Pin)	2
31	. . . . .	Connector Assembly (Key Switch)	1
31	1490242	Connector (2 Way)	1
31	1490243	Connector (Secondary Lock)	1
31	1330438	Terminal (Socket)	2
32	1534282	Clip	1
33	1500899	Clip	1
34	. . . . .	Connector Assembly (To Transmission Harness)	1
34	1502627	Connector (Socket)	1
34	1330438	Terminal (Socket)	17
34	1484377	Plug	6
35	. . . . .	Connector Assembly (To Engine Harness)	1
35	1531501	Connector	1
35	1330438	Terminal (Socket)	8
35	1554359	Terminal	3
35	1484377	Plug	17
35	1330439	Plug	1
36	. . . . .	Connector Assembly (To Lights/Cab Harness)	1
36	1514602	Connector	1
36	1514603	Connector	1
36	1554359	Terminal	4
37	. . . . .	End Cap Assembly	1
37	1514597	Connector	1
37	1330439	Plug	4
38	. . . . .	End Cap Assembly	1

©2013 HYSTER COMPANY

WIRE HARNESS

RH CHASSIS – MAZDA 2.0L AND 2.2L (→ S/N L177B11117D)

ITEM	PART NO.	DESCRIPTION	QTY
38	1480187	Connector	1
38	1330439	Plug	2
39	. . . . .	Connector Assembly (Accessory 1)	1
39	1545202	Connector	1
39	1546697	Connector	1
39	1554359	Terminal	2
40	1587778	Clip	4
41	1509888	Clip	1

©2013 HYSTER COMPANY

NOTES

©2013 HYSTER COMPANY

WIRE HARNESS (FIGURE 7-38)

RH CHASSIS — MAZDA 2.0L AND 2.2L (S/N L177B11118D ↔ S/N L177B15327E 2.2L GASOLINE ENGINE) (→ S/N L177B15512E 2.0L LPG ENGINE) (→ S/N L177B16207E 2.2L LPG ENGINE)

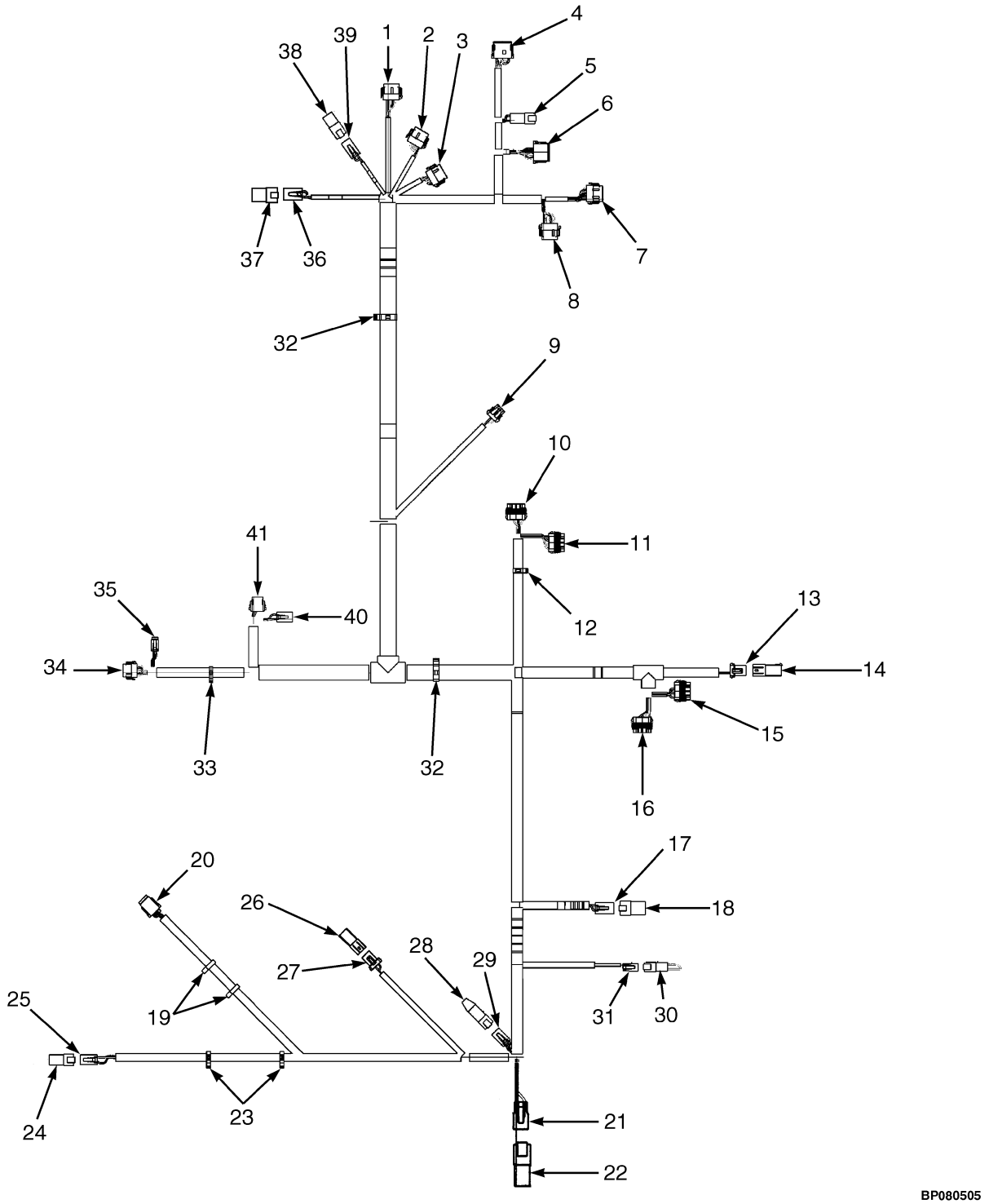

©2013 HYSTER COMPANY

WIRE HARNESS

RH CHASSIS – MAZDA 2.0L AND 2.2L (S/N L177B11118D ↔ S/N L177B15327E 2.2L GASOLINE ENGINE) (→ S/N L177B15512E 2.0L LPG ENGINE) (→ S/N L177B16207E 2.2L LPG ENGINE)

ITEM	PART NO.	DESCRIPTION	QTY
	2085945	Wire Harness (Chassis)	1
1	. . . . .	Connector Assembly (Vehicle System Manager)	1
1	1525570	Connector	1
1	1463139	Terminal	8
1	1484377	Plug	4
1	1530037	Connector	1
2	. . . . .	Connector Assembly (Vehicle System Manager)	1
2	1525568	Connector	1
2	1463139	Terminal	7
2	1484377	Plug	5
2	1530037	Connector	1
3	. . . . .	Connector Assembly (Vehicle System Manager)	1
3	1525567	Connector	1
3	1530037	Connector	1
3	1463139	Terminal	3
3	1484377	Plug	9
4	. . . . .	Connector Assembly (Vehicle System Manager)	1
4	1525563	Connector	1
4	1500913	Connector	1
4	1330438	Terminal (Socket)	8
4	1363886	Terminal (Socket)	4
5	. . . . .	Connector Assembly (Cowl Harness)	1
5	1489655	Connector (4 Way)	1
5	1330416	Connector (Secondary Lock)	1
5	1330437	Terminal (Pin)	4
6	. . . . .	Connector Assembly (Cowl Harness)	1
6	1493428	Connector (12-Way)	1
6	1330438	Terminal (Socket)	9
6	1484377	Plug	3
6	1500913	Connector	1
7	. . . . .	Connector Assembly (Vehicle System Manager)	1
7	1525567	Connector	1
7	1529046	Connector	1
7	1463139	Terminal	9
7	1484377	Plug	3
8	. . . . .	Connector Assembly (Vehicle System Manager)	1
8	1525569	Connector	1
8	1529046	Connector	1
8	1463139	Terminal	9
8	1484377	Plug	3
9	. . . . .	Connector Assembly (Horn)	1
9	1476064	Connector	1
9	1476109	Connector Lock	1
9	1330356	Seal	2
9	1330355	Terminal	3
9	1476108	Wire Seal	1
10	. . . . .	Connector Assembly (Power Distribution Module)	1
10	1521184	Connector	1
10	1521188	Lock	1

©2013 HYSTER COMPANY

WIRE HARNESS

RH CHASSIS – MAZDA 2.0L AND 2.2L (S/N L177B11118D ↔ S/N L177B15327E 2.2L GASOLINE ENGINE) (→ S/N L177B15512E 2.0L LPG ENGINE) (→ S/N L177B16207E 2.2L LPG ENGINE)

ITEM	PART NO.	DESCRIPTION	QTY
10	1323579	Seal	5
10	1327164	Seal	2
10	1330281	Terminal	5
10	1521989	Terminal	1
10	1402888	Seal	1
11	. . . . .	Connector Assembly (Power Distribution Module)	1
11	1521183	Connector	1
11	1521188	Lock	1
11	1323579	Seal	7
11	1327164	Seal	1
11	1330281	Terminal	4
11	1521989	Terminal	3
12	1534828	Clip	1
13	. . . . .	Connector Assembly (Hydraulic Filter)	1
13	1329152	Plug	1
13	1329151	Terminal	1
13	1330281	Terminal	2
13	1402888	Seal	2
14	. . . . .	Connector Assembly (End Cap)	1
14	1329150	Connector	1
14	1327164	Seal	2
14	1329151	Terminal	1
15	. . . . .	Connector Assembly (Power Distribution Module)	1
15	1521185	Connector	1
15	1521188	Lock	1
15	1323579	Seal	7
15	1327164	Seal	1
15	1330281	Terminal	5
15	1521989	Terminal	2
16	. . . . .	Connector Assembly (Power Distribution Module)	1
16	1521186	Connector	1
16	1521188	Lock	1
16	1323579	Seal	7
16	1327164	Seal	1
16	1521989	Terminal	7
17	. . . . .	Connector Assembly (Accessory 2)	1
17	1514602	Connector	1
17	1514603	Connector	1
17	1554359	Terminal	4
18	. . . . .	Connector Assembly (End Cap)	1
18	1514597	Connector	1
18	1330439	Plug	4
19	1402815	Clip	4
20	. . . . .	Connector Assembly (Back-Up Alarm)	1
20	1490242	Connector (2 Way)	1
20	1402813	Clip	1
20	1330438	Terminal (Socket)	2
21	. . . . .	Connector Assembly (Alternate Horn Button)	1
21	1490242	Connector (2 Way)	1

©2013 HYSTER COMPANY

WIRE HARNESS

RH CHASSIS – MAZDA 2.0L AND 2.2L (S/N L177B11118D ↔ S/N L177B15327E 2.2L GASOLINE ENGINE) (→ S/N L177B15512E 2.0L LPG ENGINE) (→ S/N L177B16207E 2.2L LPG ENGINE)

ITEM	PART NO.	DESCRIPTION	QTY
21	1402813	Clip	1
21	1330438	Terminal (Socket)	2
22	1351681	Connector (End Cap)	1
23	1509888	Clip	2
24	1351681	Connector (End Cap)	1
25	. . . . .	Connector Assembly (Seat Harness)	1
25	1541991	Connector	1
25	1541992	Connector	1
25	1463139	Terminal	8
26	. . . . .	Connector (End Cap)	1
26	1329150	Connector	1
26	1329151	Terminal	1
26	1327164	Seal	2
27	. . . . .	Connector (Coolant Level)	1
27	1329152	Plug	1
27	1329151	Terminal	1
27	1330281	Terminal	2
27	1402888	Seal	2
28	1525577	Connector (With Resistor) (End Cap)	1
29	. . . . .	Connector Assembly (Bus Terminal)	1
29	1489656	Connector (4-Way)	1
29	1489657	Connector	1
29	1330438	Terminal (Socket)	4
30	. . . . .	Connector Assembly (Keyswitch)	1
30	1490242	Connector (2 Way) (End Cap)	1
30	1402813	Clip	1
30	1330438	Terminal (Socket)	2
31	. . . . .	Connector Assembly (Keyswitch)	1
31	1493465	Connector (2 Pin)	1
31	1330414	Connector (Secondary Lock)	1
31	1330437	Terminal (Pin)	2
32	1534282	Clip	1
33	1500899	Clip	3
34	. . . . .	Connector Assembly (Transmission Harness)	1
34	1525567	Connector	1
34	1529046	Connector	1
34	1484377	Plug	1
34	1463139	Terminal	11
35	. . . . .	Connector Assembly (Transmission Harness)	1
35	1531973	Connector	1
35	1531974	Connector	1
35	1463139	Terminal	6
36	. . . . .	Connector Assembly (Lights/Cab Harness)	1
36	1514602	Connector	1
36	1514603	Connector	1
36	1554359	Terminal	4
37	. . . . .	Connector Assembly (End Cap)	1
37	1514597	Connector	1
37	1330439	Plug	4

©2013 HYSTER COMPANY

WIRE HARNESS

RH CHASSIS – MAZDA 2.0L AND 2.2L (S/N L177B11118D ↔ S/N L177B15327E 2.2L GASOLINE ENGINE) (→ S/N L177B15512E 2.0L LPG ENGINE) (→ S/N L177B16207E 2.2L LPG ENGINE)

ITEM	PART NO.	DESCRIPTION	QTY
38	. . . . .	Connector Assembly (End Cap)	1
38	1480187	Connector	1
38	1330439	Plug	2
39	. . . . .	Connector Assembly (Accessory 1)	1
39	1545202	Connector	1
39	1554359	Terminal	2
39	1546697	Connector	1
40	. . . . .	Connector Assembly (Engine Harness)	1
40	1514602	Connector	1
40	1514603	Connector	1
40	1330439	Plug	12
40	1554359	Terminal	12
41	. . . . .	Connector Assembly (Engine Harness)	1
41	1502625	Connector	1
41	1502626	Connector	1
41	1330438	Terminal (Socket)	8

©2013 HYSTER COMPANY

NOTES

©2013 HYSTER COMPANY

WIRE HARNESS (FIGURE 7-39)

RH CHASSIS — MAZDA 2.0L AND 2.2L (S/N L177B15327E ↔ 10/2008 (2.2L GASOLINE ENGINE)) (S/N L177B16207E ↔ 10/2008 (2.2L LPG ENGINE)) (S/N L177B15512E ↔ 10/2008 (2.0L LPG ENGINE))

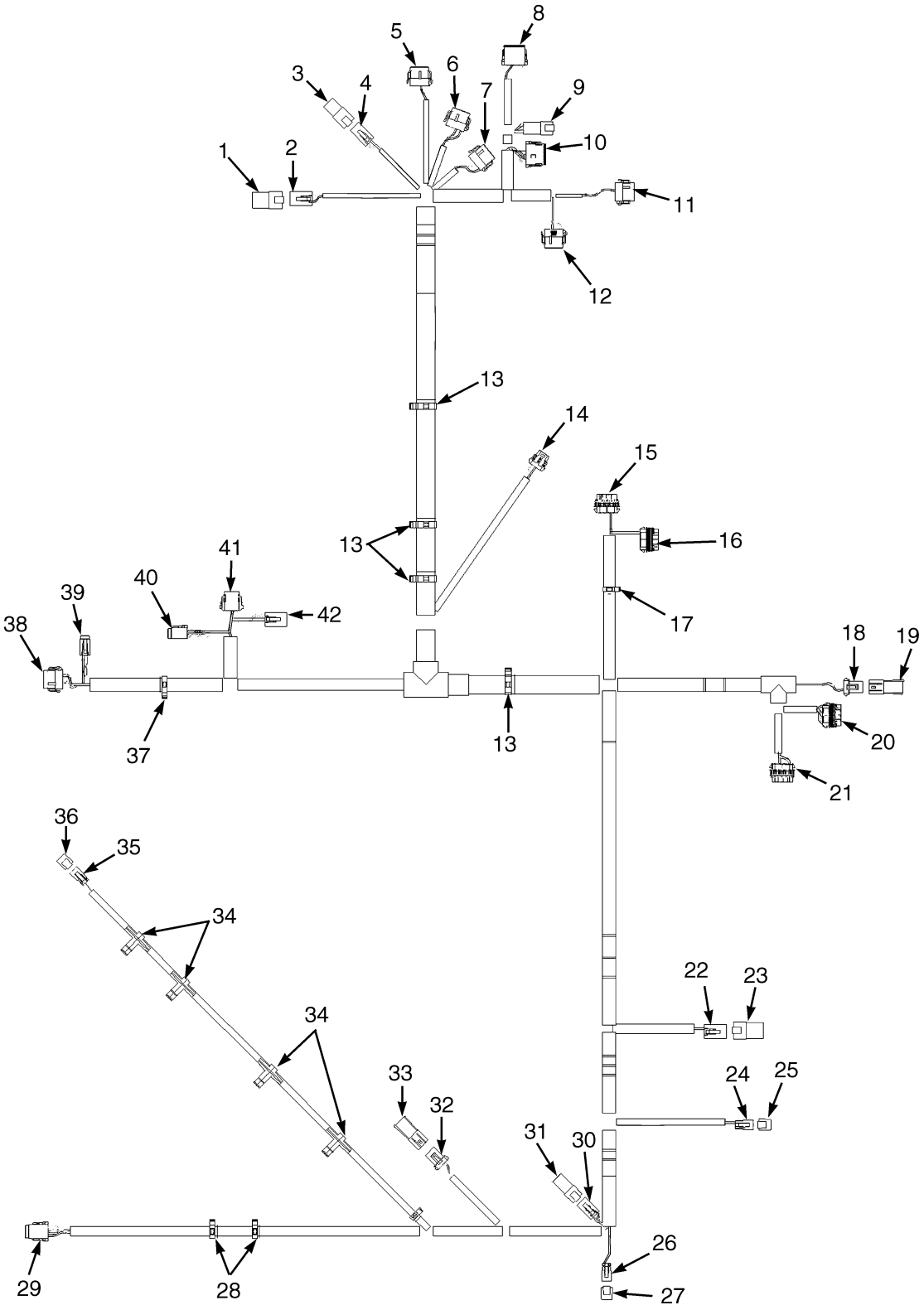

©2013 HYSTER COMPANY

WIRE HARNESS

RH CHASSIS – MAZDA 2.0L AND 2.2L (S/N L177B15327E ↔ 10/2008 (2.2L GASOLINE ENGINE)) (S/N L177B16207E ↔ 10/2008 (2.2L LPG ENGINE)) (S/N L177B15512E ↔ 10/2008 (2.0L LPG ENGINE))

ITEM	PART NO.	DESCRIPTION	QTY
	2090054	Wire Harness (Chassis)	1
1	. . . . .	End Cap Assembly	1
1	1514597	Connector	1
1	1554359	Terminal	4
2	. . . . .	Connector Assembly (Lights And Cab Harness)	1
2	1514602	Connector	1
2	1330439	Plug	4
2	1514603	Connector	1
3	. . . . .	End Cap Assembly	1
3	1480187	Connector	1
3	1330439	Plug	2
4	. . . . .	Connector Assembly (ACC 1)	1
4	1545202	Connector	1
4	1546697	Connector	1
4	1554359	Terminal	2
5	. . . . .	Connector Assembly (VSM)	1
5	1525570	Connector	1
5	1530037	Connector	1
5	1463139	Terminal	8
5	1484377	Plug	4
6	. . . . .	Connector Assembly (VSM)	1
6	1525568	Connector	1
6	1530037	Connector	1
6	1463139	Terminal	7
6	1484377	Plug	5
7	. . . . .	Connector Assembly (VSM)	1
7	1525567	Connector	1
7	1530037	Connector	1
7	1463139	Terminal	9
7	1484377	Plug	3
8	. . . . .	Connector Assembly (VSM)	1
8	1525563	Connector	1
8	1500913	Connector	1
8	1330438	Terminal (Socket)	8
8	1363886	Terminal (Socket)	4
9	. . . . .	Connector Assembly (Cowl Harness)	1
9	1489655	Connector (4 Way)	1
9	1330416	Connector (Secondary Lock)	1
9	1330437	Terminal (Pin)	4
10	. . . . .	Connector Assembly (Cowl Harness)	1
10	1493428	Connector (12-Way)	1
10	1500913	Connector	1
10	1330438	Terminal (Socket)	9
10	1484377	Plug	3
11	. . . . .	Connector Assembly (VSM)	1
11	1525567	Connector	1
11	1529046	Connector	1
11	1463139	Terminal	3
11	1484377	Plug	9

©2013 HYSTER COMPANY

WIRE HARNESS

RH CHASSIS – MAZDA 2.0L AND 2.2L (S/N L177B15327E ↔ 10/2008 (2.2L GASOLINE ENGINE)) (S/N L177B16207E ↔ 10/2008 (2.2L LPG ENGINE)) (S/N L177B15512E ↔ 10/2008 (2.0L LPG ENGINE))

ITEM	PART NO.	DESCRIPTION	QTY
12	. . . . .	Connector Assembly (Voltage Switch)	1
12	1525569	Connector	1
12	1529046	Connector	1
12	1463139	Terminal	3
12	1484377	Plug	9
13	1534282	Clip	1
14	. . . . .	Connector Assembly (Horn)	1
14	1476064	Connector	1
14	1476109	Connector Lock	1
14	1330356	Seal	2
14	1330355	Terminal	3
14	1476108	Wire Seal	1
15	. . . . .	Connector Assembly (PDM)	1
15	1521184	Connector	1
15	1521188	Lock	1
15	1323579	Seal	5
15	1327164	Seal	2
15	1330281	Terminal	5
15	1521989	Terminal	1
15	1402888	Seal	1
16	. . . . .	Connector Assembly (PDM)	1
16	1521183	Connector	1
16	1521188	Lock	1
16	1323579	Seal	7
16	1327164	Seal	1
16	1330281	Terminal	4
16	1521989	Terminal	3
17	1534828	Clip	1
18	. . . . .	Connector Assembly (Hydraulic Filter)	1
18	1329152	Plug	1
18	1329151	Terminal	1
18	1330281	Terminal	2
18	1402888	Seal	2
19	. . . . .	End Cap Assembly	1
19	1329150	Connector	1
19	1329151	Terminal	1
19	1327164	Seal	2
20	. . . . .	Connector Assembly (PDM)	1
20	1521185	Connector	1
20	1521188	Lock	1
20	1323579	Seal	7
20	1327164	Seal	1
20	1330281	Terminal	5
20	1521989	Terminal	2
21	. . . . .	Connector Assembly (PDM)	1
21	1521186	Connector	1
21	1521188	Lock	1
21	1323579	Seal	7
21	1327164	Seal	1

©2013 HYSTER COMPANY

WIRE HARNESS

RH CHASSIS – MAZDA 2.0L AND 2.2L (S/N L177B15327E ↔ 10/2008 (2.2L GASOLINE ENGINE)) (S/N L177B16207E ↔ 10/2008 (2.2L LPG ENGINE)) (S/N L177B15512E ↔ 10/2008 (2.0L LPG ENGINE))

ITEM	PART NO.	DESCRIPTION	QTY
21	1521989	Terminal	7
22	. . . . .	Connector Assembly (ACC 2)	1
22	1514602	Connector	1
22	1514603	Connector	1
22	1330438	Terminal (Socket)	1
22	1554359	Terminal	3
23	. . . . .	End Cap Assembly	1
23	1514597	Connector	1
23	1330438	Terminal (Socket)	4
24	. . . . .	End Cap Assembly	1
24	1626727	Connector	1
25	. . . . .	Connector Assembly (Hood And Key Switch)	1
25	1490242	Connector (2 Way)	1
25	1490243	Connector (Secondary Lock)	1
25	1330438	Terminal (Socket)	2
26	. . . . .	Connector Assembly (Alternate Horn Button)	1
26	1490242	Connector (2 Way)	1
26	1490243	Connector (Secondary Lock)	1
26	1330438	Terminal (Socket)	2
27	. . . . .	End Cap Assembly	1
27	1626727	Connector	1
28	1509888	Clip	2
29	. . . . .	Connector Assembly (Seat Harness)	1
29	1541991	Connector	1
29	1541992	Connector	1
29	1463139	Terminal	8
30	. . . . .	Connector Assembly (Bus Terminal 2)	1
30	1489656	Connector (4-Way)	1
30	1489657	Connector	1
30	1330438	Terminal (Socket)	4
31	. . . . .	End Cap Assembly	1
31	1525577	Connector (With Resistor)	1
32	. . . . .	Connector Assembly (Coolant Level)	1
32	1329152	Plug	1
32	1329151	Terminal	1
32	1330281	Terminal	2
32	1402888	Seal	2
33	. . . . .	End Cap Assembly	1
33	1329150	Connector	1
33	1329151	Terminal	1
33	1327164	Seal	2
34	1402815	Clip	4
35	. . . . .	Connector Assembly (Back-Up Alarm)	1
35	1490242	Connector (2 Way)	1
35	1490243	Connector (Secondary Lock)	1
35	1330438	Terminal (Socket)	2
36	. . . . .	End Cap Assembly	1
36	1626727	Connector	1
37	1500899	Clip	1

©2013 HYSTER COMPANY

WIRE HARNESS

RH CHASSIS – MAZDA 2.0L AND 2.2L (S/N L177B15327E ↔ 10/2008 (2.2L GASOLINE ENGINE)) (S/N L177B16207E ↔ 10/2008 (2.2L LPG ENGINE)) (S/N L177B15512E ↔ 10/2008 (2.0L LPG ENGINE))

ITEM	PART NO.	DESCRIPTION	QTY
38	. . . . .	Connector Assembly (Transmission Harness)	1
38	1525567	Connector	1
38	1476109	Connector Lock	1
38	1463139	Terminal	11
38	1484377	Plug	1
39	. . . . .	Connector Assembly (Transmission Harness)	1
39	1531973	Connector	1
39	1531974	Connector	1
39	1463139	Terminal	6
40	. . . . .	Connector Assembly (Engine Harness)	1
40	1531973	Connector	1
40	1531974	Connector	1
40	1463139	Terminal	6
41	. . . . .	Connector Assembly (Engine Harness)	1
41	1502625	Connector	1
41	1502626	Connector	1
41	1330438	Terminal (Socket)	8
42	. . . . .	Connector Assembly (Engine Harness)	1
42	1514602	Connector	1
42	1514603	Connector	1
42	1330439	Plug	1
42	1554359	Terminal	3

©2013 HYSTER COMPANY

NOTES

©2013 HYSTER COMPANY

WIRE HARNESS (FIGURE 7-40)

RH CHASSIS — MAZDA 2.0L AND 2.2L (10/2008 ↔ S/N L177V05175H)

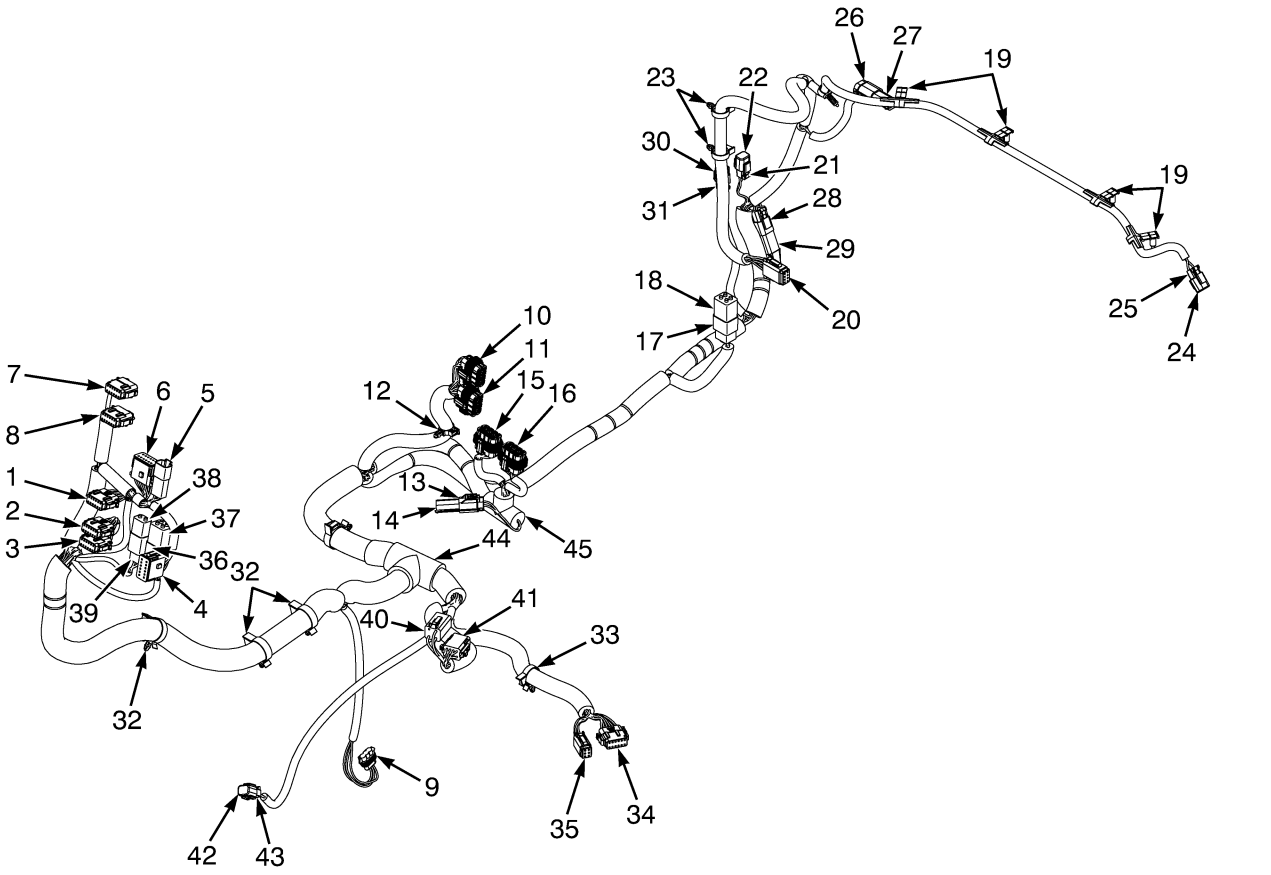

©2013 HYSTER COMPANY

WIRE HARNESS

RH CHASSIS – MAZDA 2.0L AND 2.2L (10/2008 ↔ S/N L177V05175H)

ITEM	PART NO.	DESCRIPTION	QTY
	2108124	Wire Harness (Chassis)	1
1	. . . . .	Connector Assembly (Vehicle System Manager)	1
1	1525570	Connector	1
1	1463139	Terminal	8
1	1484377	Plug	4
1	1530037	Connector (Secondary Lock)	1
2	. . . . .	Connector Assembly (Vehicle System Manager)	1
2	1525568	Connector	1
2	1463139	Terminal	1
2	1484377	Plug	5
2	1530037	Connector (Secondary Lock)	1
3	. . . . .	Connector Assembly (Vehicle System Manager)	1
3	1525567	Connector	1
3	1463139	Terminal	9
3	1484377	Plug	3
3	1530037	Connector (Secondary Lock)	1
4	. . . . .	Connector Assembly (Vehicle System Manager)	1
4	1525563	Connector	1
4	1363886	Terminal (Socket)	4
4	1330438	Terminal (Socket)	8
4	1500913	Connector (Secondary Lock)	1
5	. . . . .	Connector Assembly (Cowl Harness)	1
5	1489655	Connector (4 Way)	1
5	1330437	Terminal (Pin)	4
5	1330416	Connector (Secondary Lock) (Secondary Lock)	1
6	. . . . .	Connector Assembly (Cowl Harness)	1
6	1493428	Connector (12-Way)	1
6	1330438	Terminal (Socket)	10
6	1484377	Plug	1
6	1500913	Connector (Secondary Lock)	1
7	. . . . .	Connector Assembly (Vehicle System Manager)	1
7	1525567	Connector	1
7	1484377	Plug	9
7	1463139	Terminal	3
7	1529046	Connector (Secondary Lock)	1
8	. . . . .	Connector Assembly (Vehicle System Manager)	1
8	1525569	Connector	1
8	1463139	Terminal	3
8	1484377	Plug	9
8	1529046	Connector (Secondary Lock)	1
9	. . . . .	Connector Assembly (Horn)	1
9	1476064	Connector	1
9	1330355	Terminal	3
9	1330356	Seal	2
9	1476108	Wire Seal	1
9	1476109	Connector Lock (Secondary Lock)	1
10	. . . . .	Connector Assembly (Power Distribution Module)	1
10	1521184	Connector	1
10	1327164	Seal	1
10	1330281	Terminal	6

©2013 HYSTER COMPANY

WIRE HARNESS

RH CHASSIS – MAZDA 2.0L AND 2.2L (10/2008 ↔ S/N L177V05175H)

ITEM	PART NO.	DESCRIPTION	QTY
10	1521989	Terminal	1
10	1323579	Seal	5
10	1402888	Seal	2
10	1521188	Lock (Secondary Lock)	1
11	. . . . .	Connector Assembly (Power Distribution Module)	1
11	1521183	Connector	1
11	1521989	Terminal	1
11	1330281	Terminal	4
11	1327164	Seal	1
11	1323579	Seal	7
11	1521188	Lock (Secondary Lock)	1
12	1534828	Clip	1
13	. . . . .	Connector Assembly (Hydraulic Filter)	1
13	1329152	Plug	1
13	1330281	Terminal	2
13	1402888	Seal	2
13	1329151	Terminal (Secondary Lock)	1
14	. . . . .	Connector Assembly (End Cap)	1
14	1329150	Connector	1
14	1327164	Seal	2
14	1329151	Terminal (Secondary Lock)	1
15	. . . . .	Connector Assembly (Power Distribution Module)	1
15	1521185	Connector	1
15	1330281	Terminal	5
15	1521989	Terminal	2
15	1327164	Seal	1
15	1323579	Seal	7
15	1327164	Seal	1
15	1521188	Lock (Secondary Lock)	1
16	. . . . .	Connector Assembly (Power Distribution Module)	1
16	1521186	Connector	1
16	1521989	Terminal	7
16	1327164	Seal	1
16	1323579	Seal	7
16	1521188	Lock (Secondary Lock)	1
17	. . . . .	Connector Assembly (Accessory 2)	1
17	1514602	Connector	1
17	1554359	Terminal	3
17	1330439	Plug	1
17	1514603	Connector (Secondary Lock)	1
18	. . . . .	Connector Assembly (End Cap)	1
18	1514597	Connector	1
18	1330439	Plug	4
19	1587778	Clip	4
20	. . . . .	Connector Assembly (Seat Harness)	1
20	1541991	Connector	1
20	1463139	Terminal	8
20	1541992	Connector (Secondary Lock)	1
21	. . . . .	Connector Assembly (Alternate Horn Button)	1
21	1490242	Connector (2 Way)	1

©2013 HYSTER COMPANY

WIRE HARNESS

RH CHASSIS – MAZDA 2.0L AND 2.2L (10/2008 ↔ S/N L177V05175H)

ITEM	PART NO.	DESCRIPTION	QTY
21	1330438	Terminal (Socket)	2
21	1490243	Connector (Secondary Lock) (Secondary Lock)	1
22	1626727	Connector (End Cap)	1
23	1509888	Clip	2
24	1626727	Connector (End Cap)	1
25	. . . . .	Connector Assembly (Back-Up Alarm)	1
25	1490242	Connector (2 Way)	1
25	1330438	Terminal (Socket)	2
25	1490243	Connector (Secondary Lock) (Secondary Lock)	1
26	. . . . .	Connector Assembly (Coolant Level)	1
26	1329152	Plug	1
26	1330281	Terminal	2
26	1402888	Seal	2
26	1329151	Terminal (Secondary Lock)	1
27	. . . . .	Connector Assembly (End Cap)	1
27	1493428	Connector (12-Way)	1
27	1327164	Seal	2
27	1329151	Terminal (Secondary Lock)	1
28	. . . . .	Connector Assembly (Bus Terminal)	1
28	1489656	Connector (4-Way)	1
28	1330438	Terminal (Socket)	4
28	1489657	Connector (Secondary Lock)	1
29	1531973	Connector (End Cap)	1
30	1626727	Connector (End Cap)	1
31	. . . . .	Connector Assembly (Hood Switch/Key Switch)	1
31	1490242	Connector (2 Way)	1
31	1330438	Terminal (Socket)	1
31	1490243	Connector (Secondary Lock) (Secondary Lock)	1
32	1534282	Clip	4
33	1500899	Clip	1
34	. . . . .	Connector Assembly (Transmission Harness)	1
34	1525567	Connector	1
34	1463139	Terminal	11
34	1484377	Plug	1
34	1529046	Connector (Secondary Lock)	1
35	. . . . .	Connector Assembly (Transmission Harness)	1
35	1531973	Connector	1
35	1463139	Terminal	6
35	1531974	Connector (Secondary Lock)	1
36	. . . . .	Connector Assembly (Lights/Cab Harness)	1
36	1514602	Connector	1
36	1554359	Terminal	4
36	1514603	Connector (Secondary Lock)	1
37	. . . . .	Connector Assembly (End Cap)	1
37	1514597	Connector	1
37	1330439	Plug	4
38	. . . . .	Connector Assembly (End Cap)	1
38	1480187	Connector	1
38	1330439	Plug	2
39	. . . . .	Connector Assembly (Accessory 1)	1

©2013 HYSTER COMPANY

WIRE HARNESS

RH CHASSIS – MAZDA 2.0L AND 2.2L (10/2008 ↔ S/N L177V05175H)

ITEM	PART NO.	DESCRIPTION	QTY
39	1545202	Connector	1
39	1554359	Terminal	2
39	1546697	Connector	1
40	. . . . .	Connector Assembly (Engine Harness)	1
40	1514602	Connector	1
40	1554359	Terminal	3
40	1330439	Plug	1
40	1514603	Connector (Secondary Lock)	1
41	. . . . .	Connector Assembly (To Engine Harness)	1
41	1502625	Connector	1
41	1330438	Terminal (Socket)	8
41	1502626	Connector (Secondary Lock)	1
42	1626727	Connector (End Cap)	1
43	. . . . .	Connector Assembly (Hydraulic Solenoid)	1
43	1490242	Connector (2 Way)	1
43	1330438	Terminal (Socket)	1
43	1490243	Connector (Secondary Lock)	1
44	1531492	T-Fitting	1
45	1531490	Conduit	1
46	. . . . .	Connector Assembly (To Engine Harness)	1
46	1541991	Connector	1
46	1463139	Terminal	8
46	1541992	Connector (Secondary Lock)	1
47	1509888	Clip	2

©2013 HYSTER COMPANY

NOTES

©2013 HYSTER COMPANY

WIRE HARNESS (FIGURE 7-41)

RH CHASSIS — MAZDA 2.0L AND 2.2L (S/N L177V05176H →)

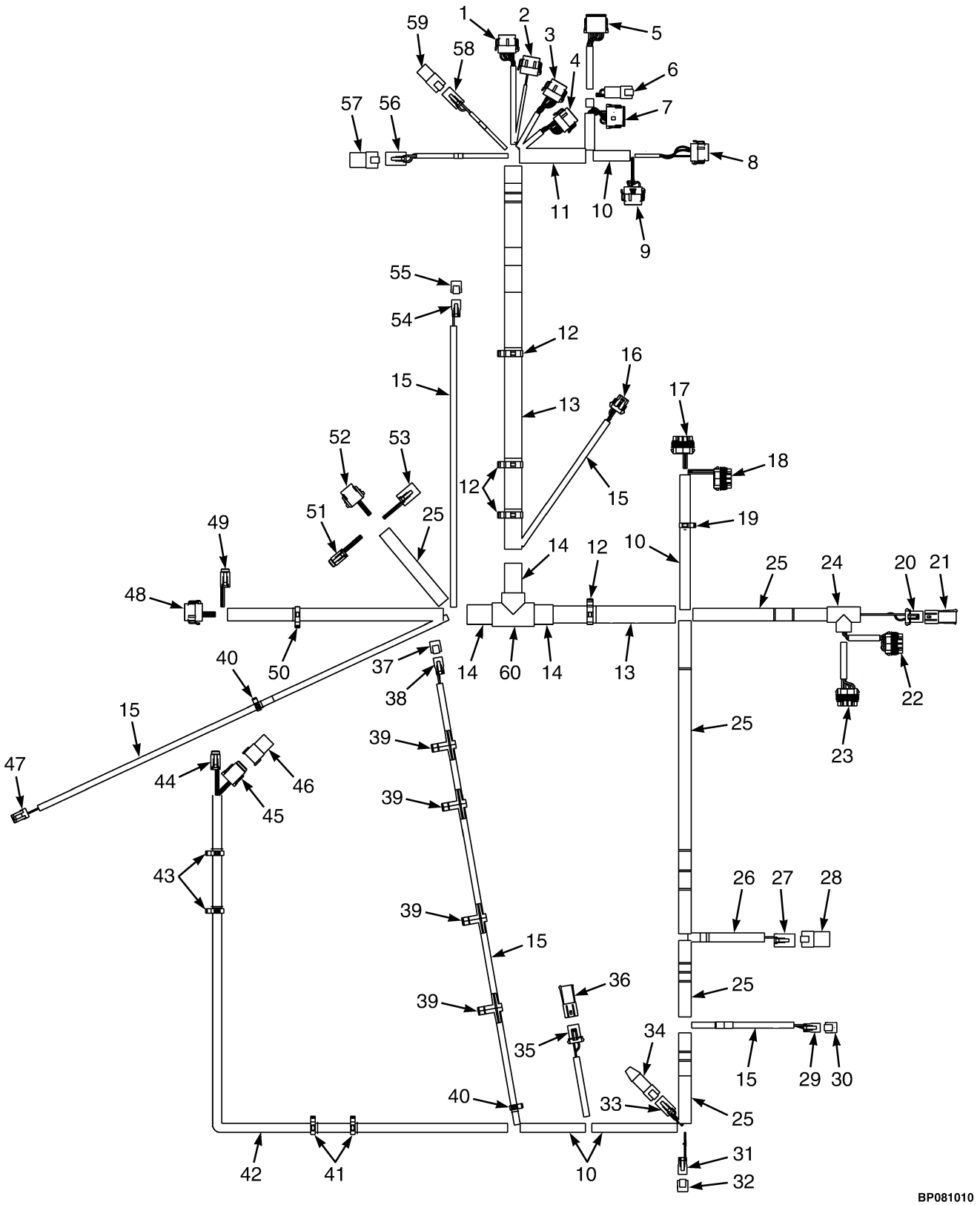

©2013 HYSTER COMPANY

WIRE HARNESS

RH CHASSIS – MAZDA 2.0L AND 2.2L (S/N L177V05176H →)

ITEM	PART NO.	DESCRIPTION	QTY
	4606936	Wire Harness (Chassis)	1
1	. . . . .	Connector Assembly (Vehicle System Manager)	1
1	1525570	Connector	1
1	1463139	Terminal	8
1	1484377	Plug	4
1	1530037	Connector (Secondary Lock)	1
2	. . . . .	Connector Assembly (Vehicle System Manager)	1
2	1525569	Connector	1
2	1484377	Plug	10
2	1463139	Terminal	2
2	1530037	Connector (Secondary Lock)	1
3	. . . . .	Connector Assembly (Vehicle System Manager)	1
3	1525568	Connector	1
3	1463139	Terminal	7
3	1484377	Plug	5
3	1530037	Connector (Secondary Lock)	1
4	. . . . .	Connector Assembly (Vehicle System Manager)	1
4	1525567	Connector	1
4	1463139	Terminal	9
4	1484377	Plug	3
4	1530037	Connector (Secondary Lock)	1
5	. . . . .	Connector Assembly (Vehicle System Manager)	1
5	1525563	Connector	1
5	1363886	Terminal (Socket)	4
5	1330438	Terminal (Socket)	8
5	1500913	Connector (Secondary Lock)	1
6	. . . . .	Connector Assembly (Cowl Harness)	1
6	1489655	Connector (4 Way)	1
6	1330437	Terminal (Pin)	4
6	1330416	Connector (Secondary Lock) (Secondary Lock)	1
7	. . . . .	Connector Assembly (Cowl Harness)	1
7	1493428	Connector (12-Way)	1
7	1330438	Terminal (Socket)	10
7	1484377	Plug	2
7	1500913	Connector (Secondary Lock)	1
8	1529046	Connector (Secondary Lock)	1
8	. . . . .	Connector Assembly (Vehicle System Manager)	1
8	1525567	Connector	1
8	1484377	Plug	9
8	1463139	Terminal	3
8	1529046	Connector (Secondary Lock)	1
9	. . . . .	Connector Assembly (Vehicle System Manager)	1
9	1525569	Connector	1
9	1463139	Terminal	9
9	1484377	Plug	3
9	1529046	Connector (Secondary Lock)	1
10	275496	Conduit	AR
11	275498	Conduit	AR
12	1534282	Clip	4
13	1540388	Conduit	AR

©2013 HYSTER COMPANY

WIRE HARNESS

RH CHASSIS – MAZDA 2.0L AND 2.2L (S/N L177V05176H →)

ITEM	PART NO.	DESCRIPTION	QTY
14	275499	Conduit	AR
15	275493	Conduit	AR
16	. . . . .	Connector Assembly (Horn)	1
16	1476064	Connector	1
16	1330355	Terminal	3
16	1330356	Seal	2
16	1476108	Wire Seal	1
16	1476109	Connector Lock (Secondary Lock)	1
17	. . . . .	Connector Assembly (Power Distribution Module)	1
17	1521184	Connector	1
17	1327164	Seal	1
17	1330281	Terminal	6
17	1521989	Terminal	1
17	1323579	Seal	5
17	1402888	Seal	2
17	1521188	Lock (Secondary Lock)	1
18	. . . . .	Connector Assembly (Power Distribution Module)	1
18	1521183	Connector	1
18	1330281	Terminal	4
18	1327164	Seal	1
18	1323579	Seal	7
18	1521989	Terminal	1
18	1521188	Lock (Secondary Lock)	1
19	1534828	Clip	1
20	. . . . .	Connector Assembly (Hydraulic Filter)	1
20	1329152	Plug	1
20	1330281	Terminal	2
20	1402888	Seal	2
20	1329151	Terminal (Secondary Lock)	1
21	. . . . .	Connector Assembly (End Cap)	1
21	1329150	Connector	1
21	1327164	Seal	2
21	1329151	Terminal (Secondary Lock)	1
22	. . . . .	Connector Assembly (Power Distribution Module)	1
22	1521185	Connector	1
22	1330281	Terminal	5
22	1521989	Terminal	2
22	1327164	Seal	1
22	1323579	Seal	7
22	1521188	Lock (Secondary Lock)	1
23	. . . . .	Connector Assembly (Power Distribution Module)	1
23	1521186	Connector	1
23	1521989	Terminal	7
23	1323579	Seal	7
23	1327164	Seal	1
23	1521188	Lock (Secondary Lock)	1
24	1531490	Conduit	1
25	275497	Conduit	AR
26	275495	Conduit	AR
27	. . . . .	Connector Assembly (Accessory 2)	1

©2013 HYSTER COMPANY

WIRE HARNESS

RH CHASSIS – MAZDA 2.0L AND 2.2L (S/N L177V05176H →)

ITEM	PART NO.	DESCRIPTION	QTY
27	1514602	Connector	1
27	1554359	Terminal	3
27	1330439	Plug	1
27	1514603	Connector (Secondary Lock)	1
28	. . . . .	Connector Assembly (End Cap)	1
28	1514597	Connector	1
28	1330439	Plug	4
29	. . . . .	Connector Assembly (Hood Switch/Key Switch)	1
29	1490242	Connector (2 Way)	1
29	1330438	Terminal (Socket)	1
29	1490243	Connector (Secondary Lock) (Secondary Lock)	1
30	1626727	Connector (End Cap)	1
31	. . . . .	Connector Assembly (Alternate Horn Button)	1
31	1490242	Connector (2 Way)	1
31	1330438	Terminal (Socket)	2
31	1490243	Connector (Secondary Lock) (Secondary Lock)	1
32	1626727	Connector (End Cap)	1
33	. . . . .	Connector Assembly (Bus Terminal)	1
33	1489656	Connector (4-Way)	1
33	1330438	Terminal (Socket)	4
33	1489657	Connector (Secondary Lock)	1
34	1531973	Connector (End Cap)	1
35	. . . . .	Connector Assembly (Coolant Level)	1
35	4052151	Connector	1
35	1330281	Terminal	2
35	1402888	Seal	2
35	1329151	Terminal (Secondary Lock)	1
36	. . . . .	Connector Assembly (End Cap)	1
36	1493428	Connector (12-Way)	1
36	1327164	Seal	2
36	1329151	Terminal (Secondary Lock)	1
37	1626727	Connector (End Cap)	1
38	. . . . .	Connector Assembly (Back-Up Alarm)	1
38	1490242	Connector (2 Way)	1
38	1330438	Terminal (Socket)	2
38	1490243	Connector (Secondary Lock) (Secondary Lock)	1
39	1587778	Clip	4
40	1509888	Clip	2
41	1402815	Clip	2
42	1699754	Conduit	AR
43	1509890	Clip	2
44	. . . . .	Connector Assembly (Seat Harness)	1
44	1531973	Connector	1
44	1463139	Terminal	4
44	1484377	Plug	2
44	1531974	Connector (Secondary Lock)	1
45	. . . . .	Connector Assembly (MLM Harness)	1
45	1541991	Connector	1
45	1463139	Terminal	5
45	1484377	Plug	3

©2013 HYSTER COMPANY

WIRE HARNESS

RH CHASSIS – MAZDA 2.0L AND 2.2L (S/N L177V05176H →)

ITEM	PART NO.	DESCRIPTION	QTY
45	1541992	Connector (Secondary Lock)	1
46	. . . . .	Connector Assembly (Endcap)	1
46	1541988	Connector (8 Pin)	1
46	1484377	Plug	8
47	. . . . .	Connector Assembly (Hydraulic Temp)	1
47	1402868	Connector	1
47	1323576	Terminal	2
48	. . . . .	Connector Assembly (Transmission Harness)	1
48	1525567	Connector	1
48	1463139	Terminal	11
48	1484377	Plug	1
48	1529046	Connector (Secondary Lock)	1
49	. . . . .	Connector Assembly (Transmission Harness)	1
49	1531973	Connector	1
49	1463139	Terminal	6
49	1531974	Connector (Secondary Lock)	1
50	1500899	Clip	1
51	. . . . .	Connector Assembly (Engine Harness)	1
51	1531973	Connector	1
51	1463139	Terminal	6
51	1531974	Connector (Secondary Lock)	1
52	. . . . .	Connector Assembly (Engine Harness)	1
52	1502625	Connector	1
52	1330438	Terminal (Socket)	8
52	1502626	Connector (Secondary Lock)	1
53	. . . . .	Connector Assembly (Engine Harness)	1
53	1514602	Connector	1
53	1554359	Terminal	3
53	1330439	Plug	1
53	1514603	Connector (Secondary Lock)	1
54	. . . . .	Connector Assembly (Hydraulic Solenoid)	1
54	1490242	Connector (2 Way)	1
54	1330438	Terminal (Socket)	2
54	1490243	Connector (Secondary Lock)	1
55	1626727	Connector (End Cap)	1
56	. . . . .	Connector Assembly (Lights/Cab Harness)	1
56	1514602	Connector	1
56	1554359	Terminal	4
56	1514603	Connector (Secondary Lock)	1
57	. . . . .	Connector Assembly (End Cap)	1
57	1514597	Connector	1
57	1330439	Plug	4
58	. . . . .	Connector Assembly (Accessory 1)	1
58	1545202	Connector	1
58	1554359	Terminal	2
58	1546697	Connector	1
59	. . . . .	Connector Assembly (End Cap)	1
59	1480187	Connector	1
60	1531492	T-Fitting	1

©2013 HYSTER COMPANY

NOTES

©2013 HYSTER COMPANY

WIRE HARNESS (FIGURE 7-42)

RH CHASSIS — MAZDA 2.0L AND 2.2L (1/2013 →)

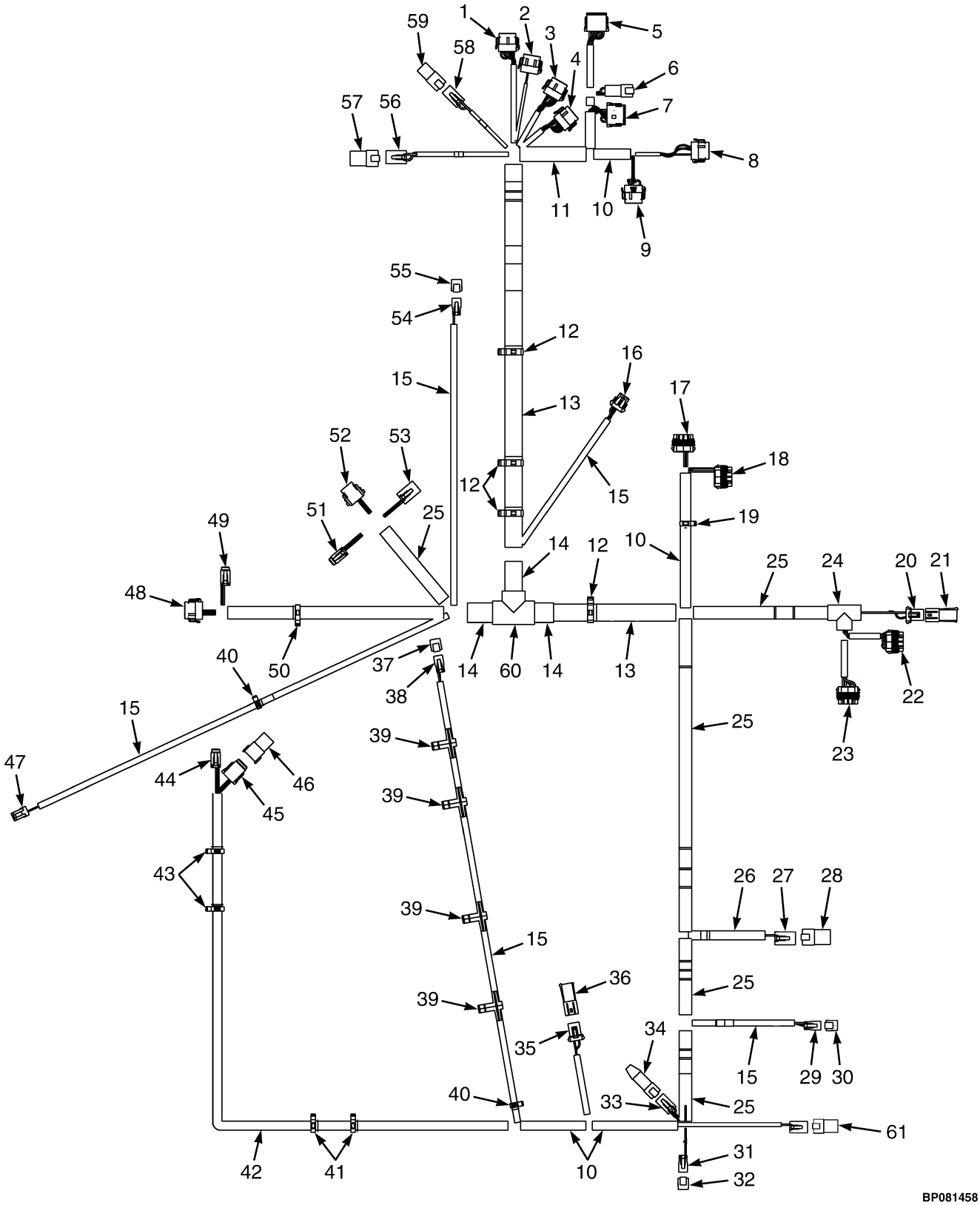

©2013 HYSTER COMPANY

WIRE HARNESS

RH CHASSIS – MAZDA 2.0L AND 2.2L (1/2013 →)

ITEM	PART NO.	DESCRIPTION	QTY
	4620357	Wire Harness (Chassis)	1
1	. . . . .	Connector Assembly (Vehicle System Manager)	1
1	1525570	Connector	1
1	1463139	Terminal	8
1	1484377	Plug	4
1	1530037	Connector (Secondary Lock)	1
2	. . . . .	Connector Assembly (Vehicle System Manager)	1
2	1525569	Connector	1
2	1484377	Plug	10
2	1463139	Terminal	2
2	1530037	Connector (Secondary Lock)	1
3	. . . . .	Connector Assembly (Vehicle System Manager)	1
3	1525568	Connector	1
3	1463139	Terminal	7
3	1484377	Plug	5
3	1530037	Connector (Secondary Lock)	1
4	. . . . .	Connector Assembly (Vehicle System Manager)	1
4	1525567	Connector	1
4	1463139	Terminal	9
4	1484377	Plug	3
4	1530037	Connector (Secondary Lock)	1
5	. . . . .	Connector Assembly (Vehicle System Manager)	1
5	1525563	Connector	1
5	1363886	Terminal (Socket)	4
5	1330438	Terminal (Socket)	8
5	1500913	Connector (Secondary Lock)	1
6	. . . . .	Connector Assembly (Cowl Harness)	1
6	1489655	Connector (4 Way)	1
6	1330437	Terminal (Pin)	4
6	1330416	Connector (Secondary Lock) (Secondary Lock)	1
7	. . . . .	Connector Assembly (Cowl Harness)	1
7	1493428	Connector (12-Way)	1
7	1330438	Terminal (Socket)	10
7	1484377	Plug	2
7	1500913	Connector (Secondary Lock)	1
8	1529046	Connector (Secondary Lock)	1
8	. . . . .	Connector Assembly (Vehicle System Manager)	1
8	1525567	Connector	1
8	1484377	Plug	9
8	1463139	Terminal	3
8	1529046	Connector (Secondary Lock)	1
9	. . . . .	Connector Assembly (Vehicle System Manager)	1
9	1525569	Connector	1
9	1463139	Terminal	9
9	1484377	Plug	3
9	1529046	Connector (Secondary Lock)	1
10	275496	Conduit	AR
11	275498	Conduit	AR
12	1534282	Clip	4
13	1540388	Conduit	AR

©2013 HYSTER COMPANY

WIRE HARNESS

RH CHASSIS – MAZDA 2.0L AND 2.2L (1/2013 →)

ITEM	PART NO.	DESCRIPTION	QTY
14	275499	Conduit	AR
15	275493	Conduit	AR
16	. . . . .	Connector Assembly (Horn)	1
16	1476064	Connector	1
16	1330355	Terminal	3
16	1330356	Seal	2
16	1476108	Wire Seal	1
16	1476109	Connector Lock (Secondary Lock)	1
17	. . . . .	Connector Assembly (Power Distribution Module)	1
17	1521184	Connector	1
17	1327164	Seal	1
17	1330281	Terminal	6
17	1521989	Terminal	1
17	1323579	Seal	5
17	1402888	Seal	2
17	1521188	Lock (Secondary Lock)	1
18	. . . . .	Connector Assembly (Power Distribution Module)	1
18	1521183	Connector	1
18	1330281	Terminal	4
18	1327164	Seal	1
18	1323579	Seal	7
18	1521989	Terminal	1
18	1521188	Lock (Secondary Lock)	1
19	1534828	Clip	1
20	. . . . .	Connector Assembly (Hydraulic Filter)	1
20	1329152	Plug	1
20	1330281	Terminal	2
20	1402888	Seal	2
20	1329151	Terminal (Secondary Lock)	1
21	. . . . .	Connector Assembly (End Cap)	1
21	1329150	Connector	1
21	1327164	Seal	2
21	1329151	Terminal (Secondary Lock)	1
22	. . . . .	Connector Assembly (Power Distribution Module)	1
22	1521185	Connector	1
22	1330281	Terminal	5
22	1521989	Terminal	2
22	1327164	Seal	1
22	1323579	Seal	7
22	1521188	Lock (Secondary Lock)	1
23	. . . . .	Connector Assembly (Power Distribution Module)	1
23	1521186	Connector	1
23	1521989	Terminal	7
23	1323579	Seal	7
23	1327164	Seal	1
23	1521188	Lock (Secondary Lock)	1
24	1531490	Conduit	1
25	275497	Conduit	AR
26	275495	Conduit	AR
27	. . . . .	Connector Assembly (Accessory 2)	1

©2013 HYSTER COMPANY

WIRE HARNESS

RH CHASSIS – MAZDA 2.0L AND 2.2L (1/2013 →)

ITEM	PART NO.	DESCRIPTION	QTY
27	1514602	Connector	1
27	1554359	Terminal	3
27	1330439	Plug	1
27	1514603	Connector (Secondary Lock)	1
28	. . . . .	Connector Assembly (End Cap)	1
28	1514597	Connector	1
28	1330439	Plug	4
29	. . . . .	Connector Assembly (Hood Switch/Key Switch)	1
29	1490242	Connector (2 Way)	1
29	1330438	Terminal (Socket)	1
29	1490243	Connector (Secondary Lock) (Secondary Lock)	1
30	1626727	Connector (End Cap)	1
31	. . . . .	Connector Assembly (Alternate Horn Button)	1
31	1490242	Connector (2 Way)	1
31	1330438	Terminal (Socket)	2
31	1490243	Connector (Secondary Lock) (Secondary Lock)	1
32	1626727	Connector (End Cap)	1
33	. . . . .	Connector Assembly (Bus Terminal)	1
33	1489656	Connector (4-Way)	1
33	1330438	Terminal (Socket)	4
33	1489657	Connector (Secondary Lock)	1
34	1531973	Connector (End Cap)	1
35	. . . . .	Connector Assembly (Coolant Level)	1
35	1329152	Plug	1
35	1330281	Terminal	2
35	1402888	Seal	2
35	1329151	Terminal (Secondary Lock)	1
36	. . . . .	Connector Assembly (End Cap)	1
36	1493428	Connector (12-Way)	1
36	1327164	Seal	2
36	1329151	Terminal (Secondary Lock)	1
37	1626727	Connector (End Cap)	1
38	. . . . .	Connector Assembly (Back-Up Alarm)	1
38	1490242	Connector (2 Way)	1
38	1330438	Terminal (Socket)	2
38	1490243	Connector (Secondary Lock) (Secondary Lock)	1
39	1587778	Clip	4
40	1509888	Clip	2
41	1509890	Clip	2
42	1699754	Conduit	AR
43	1509890	Clip	2
44	. . . . .	Connector Assembly (Seat Harness)	1
44	1531973	Connector	1
44	1463139	Terminal	4
44	1484377	Plug	2
44	1531974	Connector (Secondary Lock)	1
45	. . . . .	Connector Assembly (MLM Harness)	1
45	1541991	Connector	1
45	1463139	Terminal	5
45	1484377	Plug	3

©2013 HYSTER COMPANY

WIRE HARNESS

RH CHASSIS – MAZDA 2.0L AND 2.2L (1/2013 →)

ITEM	PART NO.	DESCRIPTION	QTY
45	1541992	Connector (Secondary Lock)	1
46	. . . . .	Connector Assembly (Endcap)	1
46	1541988	Connector (8 Pin)	1
46	1484377	Plug	8
47	. . . . .	Connector Assembly (Hydraulic Temp)	1
47	1402868	Connector	1
47	1323576	Terminal	2
48	. . . . .	Connector Assembly (Transmission Harness)	1
48	1525567	Connector	1
48	1463139	Terminal	11
48	1484377	Plug	1
48	1529046	Connector (Secondary Lock)	1
49	. . . . .	Connector Assembly (Transmission Harness)	1
49	1531973	Connector	1
49	1463139	Terminal	6
49	1531974	Connector (Secondary Lock)	1
50	1500899	Clip	1
51	. . . . .	Connector Assembly (Engine Harness)	1
51	1531973	Connector	1
51	1463139	Terminal	6
51	1531974	Connector (Secondary Lock)	1
52	. . . . .	Connector Assembly (Engine Harness)	1
52	1502625	Connector	1
52	1330438	Terminal (Socket)	8
52	1502626	Connector (Secondary Lock)	1
53	. . . . .	Connector Assembly (Engine Harness)	1
53	1514602	Connector	1
53	1554359	Terminal	3
53	1330439	Plug	1
53	1514603	Connector (Secondary Lock)	1
54	. . . . .	Connector Assembly (Hydraulic Solenoid)	1
54	1490242	Connector (2 Way)	1
54	1330438	Terminal (Socket)	2
54	1490243	Connector (Secondary Lock)	1
55	1626727	Connector (End Cap)	1
56	. . . . .	Connector Assembly (Lights/Cab Harness)	1
56	1514602	Connector	1
56	1554359	Terminal	4
56	1514603	Connector (Secondary Lock)	1
57	. . . . .	Connector Assembly (End Cap)	1
57	1514597	Connector	1
57	1330439	Plug	4
58	. . . . .	Connector Assembly (Accessory 1)	1
58	1545202	Connector	1
58	1554359	Terminal	2
58	1546697	Connector	1
59	. . . . .	Connector Assembly (End Cap)	1
59	1480187	Connector	1
60	1531492	T-Fitting	1
61	. . . . .	Connector Assembly (Seat Switch Harness)	1

©2013 HYSTER COMPANY

WIRE HARNESS

RH CHASSIS – MAZDA 2.0L AND 2.2L (1/2013 →)

ITEM	PART NO.	DESCRIPTION	QTY
61	1632865	Connector	1
61	1514603	Connector	1
61	1554359	Terminal	4

©2013 HYSTER COMPANY

WIRE HARNESS (FIGURE 7-43)

RH CHASSIS — GM 2.4L, GASOLINE AND LPG (→ 12/2005)

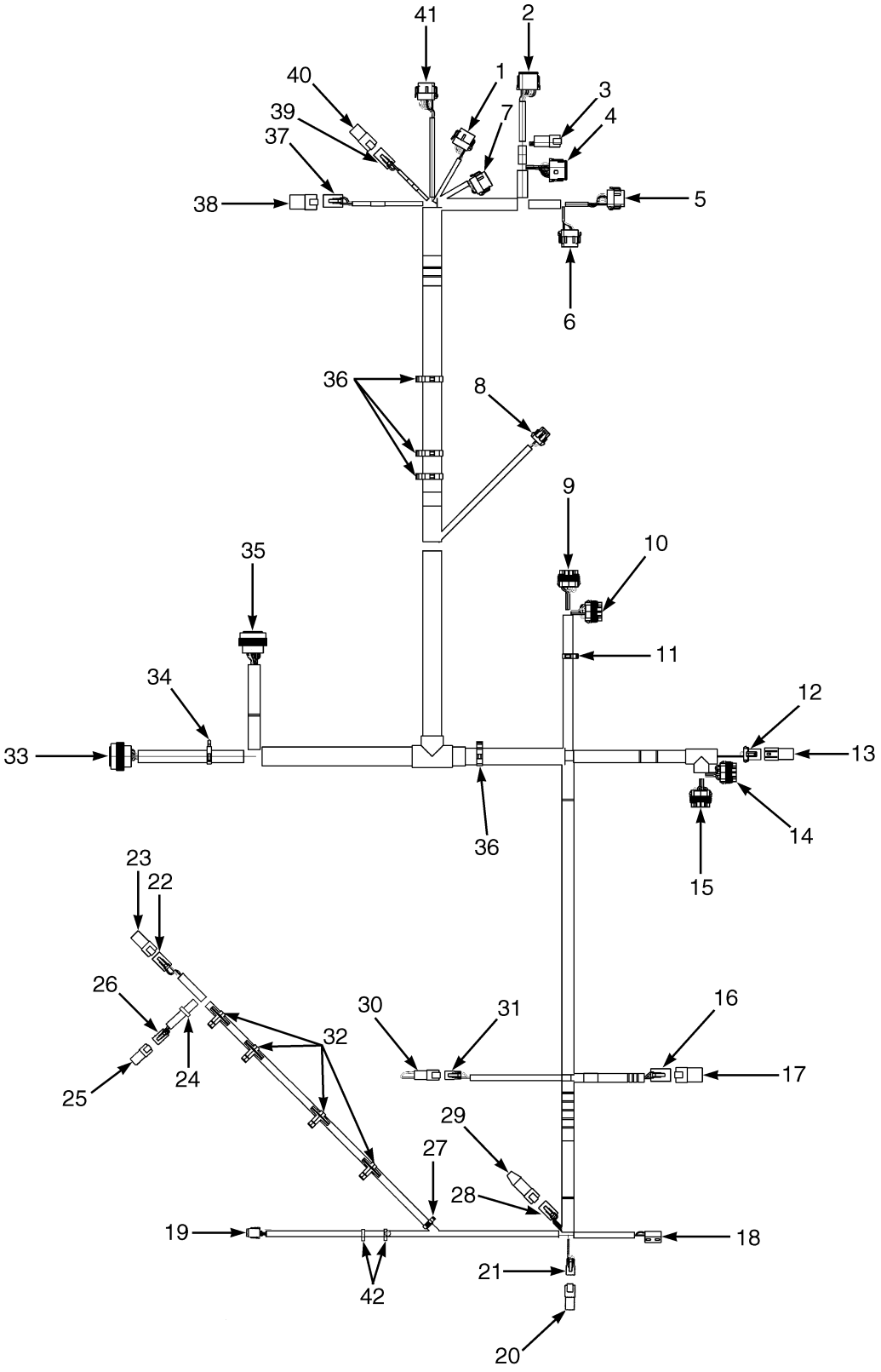

HP081622

©2013 HYSTER COMPANY

WIRE HARNESS

RH CHASSIS – GM 2.4L, GASOLINE AND LPG (→ 12/2005)

ITEM	PART NO.	DESCRIPTION	QTY
	2075560	Wire Harness (RH Chassis)	1
1	1525568	Connector (Vehicle System Manager)	1
1	1530037	Connector	1
1	1463139	Terminal	7
1	1484377	Plug	5
2	1525563	Connector (Vehicle System Manager)	1
2	1500913	Connector	1
2	1330438	Terminal (Socket)	8
2	1363886	Terminal (Socket)	4
3	1489655	Connector (4 Way) (To Cowl Harness)	1
3	1330416	Connector (Secondary Lock)	1
3	1330437	Terminal (Pin)	4
4	1493428	Connector (12-Way) (To Cowl Harness)	1
4	1500913	Connector	1
4	1330438	Terminal (Socket)	9
4	1484377	Plug	3
5	1525567	Connector (Vehicle System Manager)	1
5	1529046	Connector	1
5	1463139	Terminal	6
5	1484377	Plug	6
6	1525569	Connector (Vehicle System Manager)	1
6	1529046	Connector	1
6	1463139	Terminal	3
6	1484377	Plug	9
7	1525567	Connector (Vehicle System Manager)	1
7	1530037	Connector	1
7	1463139	Terminal	9
7	1484377	Plug	3
8	1476064	Connector (Horn)	1
8	1476109	Connector Lock	1
8	1330355	Terminal	3
8	1330356	Seal	2
8	1476108	Wire Seal	1
9	1521184	Connector (Power Distribution Module)	1
9	1521188	Lock	1
9	1330281	Terminal	6
9	1521989	Terminal	1
9	1323579	Seal	5
9	1402888	Seal	2
9	1327164	Seal	1
10	1521183	Connector (Power Distribution Module)	1
10	1521188	Lock	1
10	1330281	Terminal	4
10	1521989	Terminal	3
10	1323579	Seal	7
10	1327164	Seal	1
11	1534828	Clip	1
12	1329152	Plug (Hydraulic Filter)	1
12	1329151	Terminal	1
12	1330281	Terminal	2

©2013 HYSTER COMPANY

WIRE HARNESS

RH CHASSIS – GM 2.4L, GASOLINE AND LPG (→ 12/2005)

ITEM	PART NO.	DESCRIPTION	QTY
12	1402888	Seal	2
13	1329150	Connector (End Cap)	1
13	1329151	Terminal	1
13	1327164	Seal	2
14	1521185	Connector (Power Distribution Module)	1
14	1521188	Lock	1
14	1330281	Terminal	5
14	1521989	Terminal	3
14	1323579	Seal	8
15	1521186	Connector (Power Distribution Module)	1
15	1521188	Lock	1
15	1521989	Terminal	7
15	1323579	Seal	7
15	1327164	Seal	1
16	1514602	Connector (Accessory 2)	1
16	1514603	Connector	1
16	1554359	Terminal	3
16	1330439	Plug	1
17	1514597	Connector (End Cap)	1
17	1330439	Plug	4
18	1572588	Switch (Hood Switch)	1
19	1541991	Connector (To Seat Harness)	1
19	1541992	Connector	1
19	1463139	Terminal	8
20	1351681	Connector (End Cap)	1
21	1490242	Connector (2 Way) (Socket)(Alternate Horn Button)	1
21	1490243	Connector (Secondary Lock) (Socket)	1
21	1330438	Terminal (Socket)	2
22	1493430	Connector (6 Way Housing) (To Back-Up Alarm Harness)	1
22	1529052	Connector	1
22	1330438	Terminal (Socket)	6
23	1351683	Connector (End Cap)	1
24	1509888	Clip	1
25	1329150	Connector (End Cap)	1
25	1329151	Terminal	1
25	1327164	Seal	2
26	1329152	Plug (Coolant Level)	1
26	1329151	Terminal	1
26	1330281	Terminal	2
26	1402888	Seal	2
27	1509890	Clip	1
28	1489656	Connector (4-Way) (Socket)(Bus Terminal 2)	1
28	1489657	Connector (Socket)	1
28	1330438	Terminal (Socket)	4
29	1525577	Connector (With Resistor) (End Cap)	1
30	1493465	Connector (2 Pin) (Switch Key)	1
30	1330414	Connector (Secondary Lock)	1
30	1330437	Terminal (Pin)	2
31	1490242	Connector (2 Way) (Socket)(Key Switch)	1
31	1490243	Connector (Secondary Lock) (Socket)	1

©2013 HYSTER COMPANY

WIRE HARNESS

RH CHASSIS – GM 2.4L, GASOLINE AND LPG (→ 12/2005)

ITEM	PART NO.	DESCRIPTION	QTY
31	1330438	Terminal (Socket)	2
32	1587778	Clip	4
33	1502627	Connector (Socket) (To Transmission Harness)	1
33	1330438	Terminal (Socket)	17
33	1484377	Plug	6
34	1500899	Clip	1
35	1531501	Connector (To Engine Harness)	1
35	1330438	Terminal (Socket)	9
35	1463139	Terminal	6
35	1554359	Terminal	4
35	1484377	Plug	10
36	1534282	Clip	4
37	1514602	Connector (To Lights/Cab Harness)	1
37	1514603	Connector	1
37	1554359	Terminal	4
38	1514597	Connector (End Cap)	1
38	1330439	Plug	4
39	1545202	Connector (Accessory 1)	1
39	1546697	Connector	1
39	1554359	Terminal	2
40	1480187	Connector (End Cap)	1
40	1330439	Plug	2
41	1525570	Connector (Vehicle System Manager)	1
41	1530037	Connector	1
41	1463139	Terminal	8
41	1484377	Plug	4
42	1402815	Clip	2

©2013 HYSTER COMPANY

WIRE HARNESS (FIGURE 7-44)

RH CHASSIS — GM 2.4L (→ S/N L177B11117D)

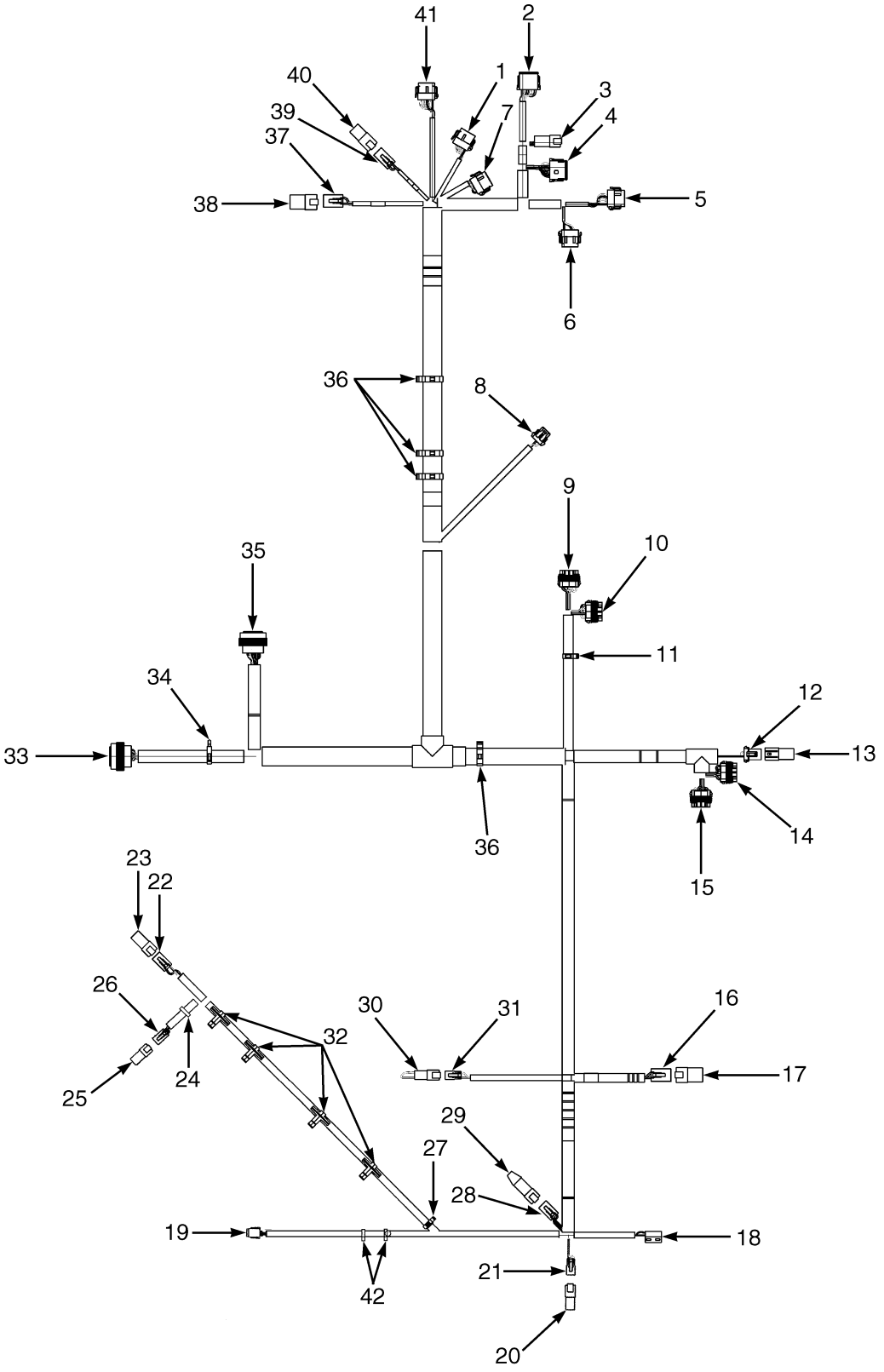

HP081622

©2013 HYSTER COMPANY

WIRE HARNESS

RH CHASSIS – GM 2.4L (→ S/N L177B11117D)

ITEM	PART NO.	DESCRIPTION	QTY
	2078878	Wire Harness (Chassis)	1
1	. . . . .	Connector Assembly (Vehicle System Manager)	1
1	1525568	Connector	1
1	1530037	Connector	1
1	1463139	Terminal	7
1	1484377	Plug	5
2	. . . . .	Connector Assembly (Vehicle System Manager)	1
2	1525563	Connector	1
2	1500913	Connector	1
2	1330438	Terminal (Socket)	8
2	1363886	Terminal (Socket)	4
3	. . . . .	Connector Assembly (To Cowl Harness)	1
3	1489655	Connector (4 Way)	1
3	1330416	Connector (Secondary Lock)	1
3	1330437	Terminal (Pin)	4
4	. . . . .	Connector Assembly (To Cowl Harness)	1
4	1493428	Connector (12-Way)	1
4	1500913	Connector	1
4	1330438	Terminal (Socket)	9
4	1484377	Plug	3
5	. . . . .	Connector Assembly (Vehicle System Manager)	1
5	1525567	Connector	1
5	1529046	Connector	1
5	1463139	Terminal	3
5	1484377	Plug	9
6	. . . . .	Connector Assembly (Vehicle System Manager)	1
6	1525569	Connector	1
6	1529046	Connector	1
6	1463139	Terminal	3
6	1484377	Plug	9
7	. . . . .	Connector Assembly (Vehicle System Manager)	1
7	1525567	Connector	1
7	1530037	Connector	1
7	1463139	Terminal	9
7	1484377	Plug	3
8	. . . . .	Connector Assembly (Horn)	1
8	1476064	Connector	1
8	1476109	Connector Lock	1
8	1330355	Terminal	3
8	1330356	Seal	2
8	1476108	Wire Seal	1
9	. . . . .	Connector Assembly (Power Distribution Module)	1
9	1521184	Connector	1
9	1521188	Lock	1
9	1330281	Terminal	6
9	1521989	Terminal	1
9	1323579	Seal	5
9	1402888	Seal	2
9	1327164	Seal	1
10	. . . . .	Connector Assembly (Power Distribution Module)	1

©2013 HYSTER COMPANY

WIRE HARNESS

RH CHASSIS – GM 2.4L (→ S/N L177B11117D)

ITEM	PART NO.	DESCRIPTION	QTY
10	1521183	Connector	1
10	1521188	Lock	1
10	1330281	Terminal	4
10	1521989	Terminal	3
10	1323579	Seal	7
10	1327164	Seal	1
11	1534828	Clip	1
12	. . . . .	Connector Assembly (Hydraulic Filter)	1
12	1329152	Plug	1
12	1329151	Terminal	1
12	1330281	Terminal	2
12	1402888	Seal	2
13	. . . . .	Connector Assembly (End Cap)	1
13	1329150	Connector	1
13	1329151	Terminal	1
13	1327164	Seal	2
14	. . . . .	Connector Assembly (Power Distribution Module)	1
14	1521185	Connector	1
14	1521188	Lock	1
14	1330281	Terminal	5
14	1521989	Terminal	3
14	1323579	Seal	8
15	. . . . .	Connector Assembly (Power Distribution Module)	1
15	1521186	Connector	1
15	1521188	Lock	1
15	1521989	Terminal	7
15	1323579	Seal	7
15	1327164	Seal	1
16	. . . . .	Connector Assembly (Accessory 2)	1
16	1514602	Connector	1
16	1514603	Connector	1
16	1554359	Terminal	3
16	1330439	Plug	1
17	. . . . .	Connector Assembly (End Cap)	1
17	1514597	Connector	1
17	1330439	Plug	4
18	1572588	Switch	1
19	. . . . .	Connector Assembly (To Seat Harness)	1
19	1541991	Connector	1
19	1541992	Connector	1
19	1463139	Terminal	8
20	1351681	Connector (End Cap)	1
21	. . . . .	Connector Assembly (Alternate Horn Button)	1
21	1490242	Connector (2 Way)	1
21	1490243	Connector (Secondary Lock)	1
21	1330438	Terminal (Socket)	2
22	. . . . .	Connector Assembly (To Back-Up Alarm Harness)	1
22	1490242	Connector (2 Way)	1
22	1490243	Connector (Secondary Lock)	1
22	1330438	Terminal (Socket)	2

©2013 HYSTER COMPANY

WIRE HARNESS

RH CHASSIS – GM 2.4L (→ S/N L177B11117D)

ITEM	PART NO.	DESCRIPTION	QTY
23	1351681	Connector (End Cap)	1
24	1509888	Clip	1
25	. . . . .	Connector Assembly (End Cap)	1
25	1329150	Connector	1
25	1329151	Terminal	1
25	1327164	Seal	2
26	. . . . .	Connector Assembly (Coolant Level)	1
26	1329152	Plug	1
26	1329151	Terminal	1
26	1330281	Terminal	2
26	1402888	Seal	2
27	1509888	Clip	1
28	. . . . .	Connector Assembly (Bus Terminal 2)	1
28	1489656	Connector (4-Way)	1
28	1489657	Connector	1
28	1330438	Terminal (Socket)	4
29	1525577	Connector (With Resistor) (End Cap)	1
30	. . . . .	Connector Assembly (Key Switch)	1
30	1493465	Connector (2 Pin)	1
30	1330414	Connector (Secondary Lock)	1
30	1330437	Terminal (Pin)	2
31	. . . . .	Connector Assembly (Key Switch)	1
31	1490242	Connector (2 Way)	1
31	1490243	Connector (Secondary Lock)	1
31	1330438	Terminal (Socket)	2
32	1587778	Clip	4
33	. . . . .	Connector Assembly (To Transmission Harness)	1
33	1502627	Connector (Socket)	1
33	1330438	Terminal (Socket)	17
33	1484377	Plug	6
34	1500899	Clip	1
35	. . . . .	Connector Assembly (To Engine Harness)	1
35	1531501	Connector	1
35	1330438	Terminal (Socket)	9
35	1463139	Terminal	6
35	1554359	Terminal	4
35	1484377	Plug	10
36	1534282	Clip	4
37	. . . . .	Connector Assembly (To Lights/Cab Harness)	1
37	1514602	Connector	1
37	1514603	Connector	1
37	1554359	Terminal	4
38	. . . . .	Connector Assembly (End Cap)	1
38	1514597	Connector	1
38	1330439	Plug	4
39	. . . . .	Connector Assembly (Accessory 1)	1
39	1545202	Connector	1
39	1546697	Connector	1
39	1554359	Terminal	2
40	. . . . .	Connector Assembly (End Cap)	1

©2013 HYSTER COMPANY

WIRE HARNESS

RH CHASSIS – GM 2.4L (→ S/N L177B11117D)

ITEM	PART NO.	DESCRIPTION	QTY
40	1480187	Connector	1
40	1330439	Plug	2
41	. . . . .	Connector Assembly (Vehicle System Manager)	1
41	1525570	Connector	1
41	1530037	Connector	1
41	1463139	Terminal	8
41	1484377	Plug	4
42	1402815	Clip	2

©2013 HYSTER COMPANY

NOTES

©2013 HYSTER COMPANY

WIRE HARNESS (FIGURE 7-45)

RH CHASSIS — GM 2.4L (S/N L177B11118D ↔ 1/2007)

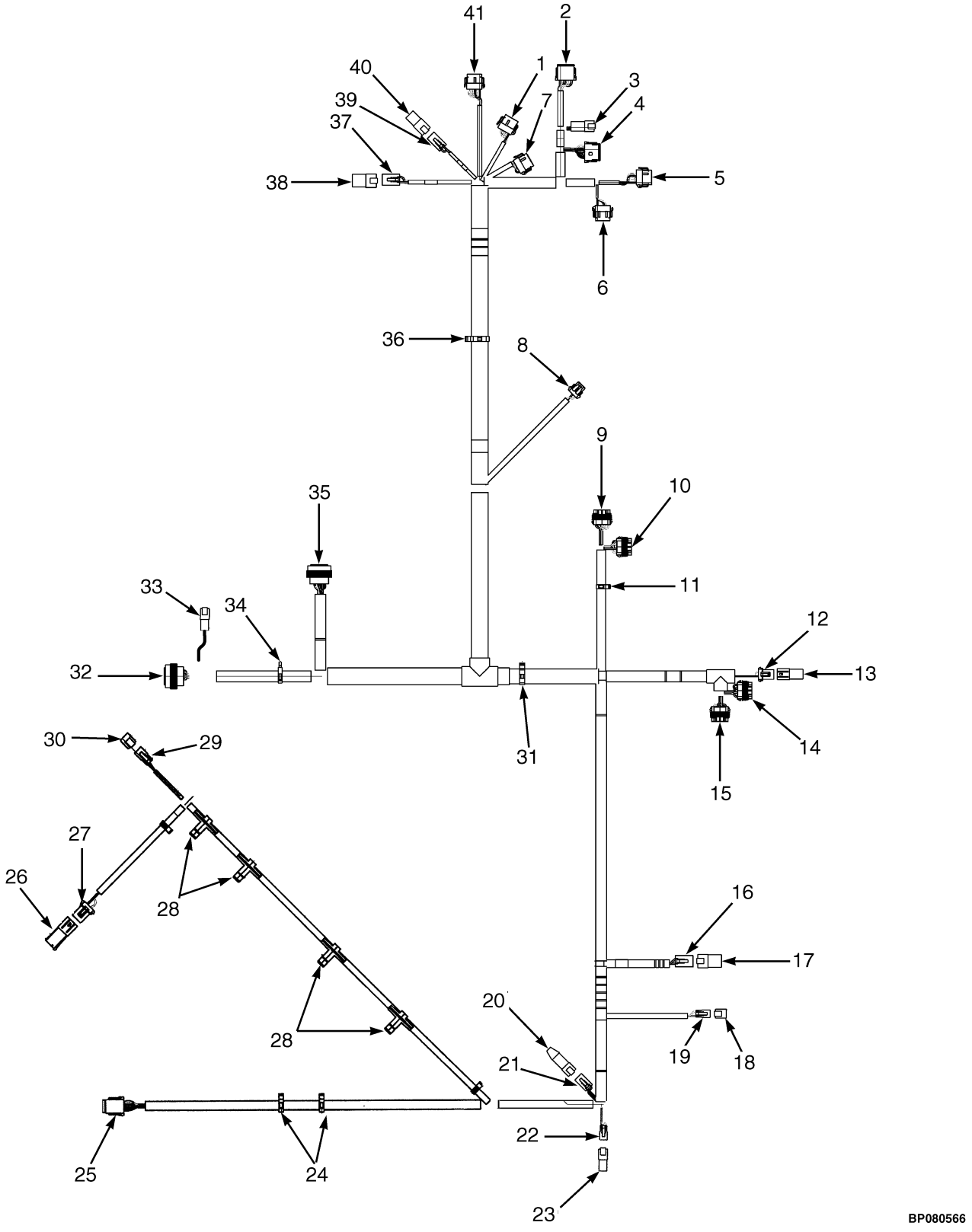

©2013 HYSTER COMPANY

WIRE HARNESS

RH CHASSIS – GM 2.4L (S/N L177B11118D ↔ 1/2007)

ITEM	PART NO.	DESCRIPTION	QTY
	2085944	Wire Harness (Chassis)	1
1	. . . . .	Connector Assembly (Vehicle System Manager)	1
1	1525568	Connector	1
1	1530037	Connector	1
1	1330438	Terminal (Socket)	9
1	1484377	Plug	3
2	. . . . .	Connector Assembly (Vehicle System Manager)	1
2	1525563	Connector	1
2	1500913	Connector	1
2	1330438	Terminal (Socket)	8
2	1363886	Terminal (Socket)	4
3	. . . . .	Connector Assembly (To Cowl Harness)	1
3	1489655	Connector (4 Way)	1
3	1330416	Connector (Secondary Lock)	1
3	1330437	Terminal (Pin)	4
4	. . . . .	Connector Assembly (To Cowl Harness)	1
4	1493428	Connector (12-Way)	1
4	1500913	Connector	1
4	1330439	Plug	3
4	1484377	Plug	3
4	1330438	Terminal (Socket)	9
5	. . . . .	Connector Assembly (Vehicle System Manager)	1
5	1525567	Connector	1
5	1529046	Connector	1
5	1463139	Terminal	3
5	1484377	Plug	9
6	. . . . .	Connector Assembly (Vehicle System Manager)	1
6	1525569	Connector	1
6	1529046	Connector	1
6	1463139	Terminal	3
6	1484377	Plug	9
7	. . . . .	Connector Assembly (Vehicle System Manager)	1
7	1525567	Connector	1
7	1530037	Connector	1
7	1463139	Terminal	9
7	1484377	Plug	3
8	. . . . .	Connector Assembly (Horn)	1
8	1476064	Connector	1
8	1476109	Connector Lock	1
8	1330356	Seal	2
8	1330355	Terminal	3
8	1476108	Wire Seal	1
9	. . . . .	Connector Assembly (Power Distribution Module)	1
9	1521183	Connector	1
9	1521188	Lock	1
9	1323579	Seal	7
9	1327164	Seal	1
9	1330281	Terminal	4
9	1521989	Terminal	3
10	. . . . .	Connector Assembly (Power Distribution Module)	1

©2013 HYSTER COMPANY

WIRE HARNESS

RH CHASSIS – GM 2.4L (S/N L177B11118D ↔ 1/2007)

ITEM	PART NO.	DESCRIPTION	QTY
10	1521183	Connector	1
10	1521184	Connector	1
10	1521188	Lock	1
10	1323579	Seal	7
10	1327164	Seal	1
10	1330281	Terminal	4
10	1521989	Terminal	3
10	1402888	Seal	2
11	1534828	Clip	1
12	. . . . .	Connector Assembly (Hydraulic Filter)	1
12	1329152	Plug	1
12	1329151	Terminal	1
12	1330281	Terminal	2
12	1402888	Seal	2
13	. . . . .	Connector Assembly (End Cap)	1
13	1329150	Connector	1
13	1329151	Terminal	1
13	1327164	Seal	2
14	. . . . .	Connector Assembly (Power Distribution Module)	1
14	1521185	Connector	1
14	1521188	Lock	1
14	1323579	Seal	8
14	1330281	Terminal	5
14	1521989	Terminal	3
15	. . . . .	Connector Assembly (Power Distribution Module)	1
15	1521186	Connector	1
15	1521188	Lock	1
15	1323579	Seal	7
15	1327164	Seal	1
15	1521989	Terminal	7
16	. . . . .	Connector Assembly (Accessory 2)	1
16	1514602	Connector	1
16	1514603	Connector	1
16	1330439	Plug	1
16	1554359	Terminal	3
17	. . . . .	Connector Assembly (End Cap)	1
17	1514597	Connector	1
17	1330439	Plug	4
18	1626727	Connector (End Cap)	1
19	. . . . .	Connector Assembly (Hood Switch)	1
19	1490242	Connector (2 Way)	1
19	1402813	Clip	1
19	1330438	Terminal (Socket)	2
20	1525577	Connector (With Resistor) (End Cap)	1
21	. . . . .	Connector Assembly (Bus Terminal 2)	1
21	1489656	Connector (4-Way)	1
21	1489657	Connector	1
21	1330438	Terminal (Socket)	4
22	. . . . .	Connector Assembly (Alternate Horn Button)	1
22	1490242	Connector (2 Way)	1

©2013 HYSTER COMPANY

WIRE HARNESS

RH CHASSIS – GM 2.4L (S/N L177B11118D ↔ 1/2007)

ITEM	PART NO.	DESCRIPTION	QTY
22	1402813	Clip	1
22	1330438	Terminal (Socket)	2
23	1626727	Connector (End Cap)	1
24	1402815	Clip	2
25	. . . . .	Connector Assembly (To Seat Harness)	1
25	1541991	Connector	1
25	1541992	Connector	1
25	1463139	Terminal	8
26	. . . . .	Connector Assembly (End Cap)	1
26	1329150	Connector	1
26	1329151	Terminal	1
26	1327164	Seal	2
27	. . . . .	Connector Assembly (Coolant Level)	1
27	1329152	Plug	1
27	1329151	Terminal	1
27	1330281	Terminal	2
27	1402888	Seal	2
28	1509888	Clip	4
29	. . . . .	Connector Assembly (To Back-Up Alarm)	1
29	1490242	Connector (2 Way)	1
29	1402813	Clip	1
29	1330438	Terminal (Socket)	2
30	1626727	Connector (End Cap)	1
31	1534282	Clip	1
32	. . . . .	Connector Assembly (To Transmission Harness)	1
32	1525567	Connector	1
32	1529046	Connector	11
32	1463139	Terminal	1
33	. . . . .	Connector Assembly (To Transmission Harness)	1
33	1531973	Connector	1
33	1531974	Connector	1
33	1463139	Terminal	6
34	1540944	Clip	1
35	. . . . .	Connector Assembly (To Engine Harness)	1
35	1531501	Connector	1
35	1330438	Terminal (Socket)	1
35	1330439	Plug	1
35	1484377	Plug	11
35	1463139	Terminal	1
36	1540944	Clip	3
37	. . . . .	Connector Assembly (To Lights/Cab Harness)	1
37	1514602	Connector	1
37	1330439	Plug	4
37	1514603	Connector	1
37	1554359	Terminal	4
38	1514597	Connector (End Cap)	1
39	. . . . .	Connector Assembly (Accessory 1)	1
39	1545202	Connector	1
39	1546697	Connector	1
39	1554359	Terminal	2

©2013 HYSTER COMPANY

WIRE HARNESS

RH CHASSIS – GM 2.4L (S/N L177B11118D ↔ 1/2007)

ITEM	PART NO.	DESCRIPTION	QTY
40	1480187	Connector (End Cap)	1
40	1330439	Plug	2
41	. . . . .	Connector Assembly (Vehicle System Manager)	1
41	1525570	Connector	1
41	1530037	Connector	1
41	1463139	Terminal	8
41	1484377	Plug	4

©2013 HYSTER COMPANY

NOTES

©2013 HYSTER COMPANY

WIRE HARNESS (FIGURE 7-46)

RH CHASSIS — GM 2,4L (1/2007 ↔ 10/2008)

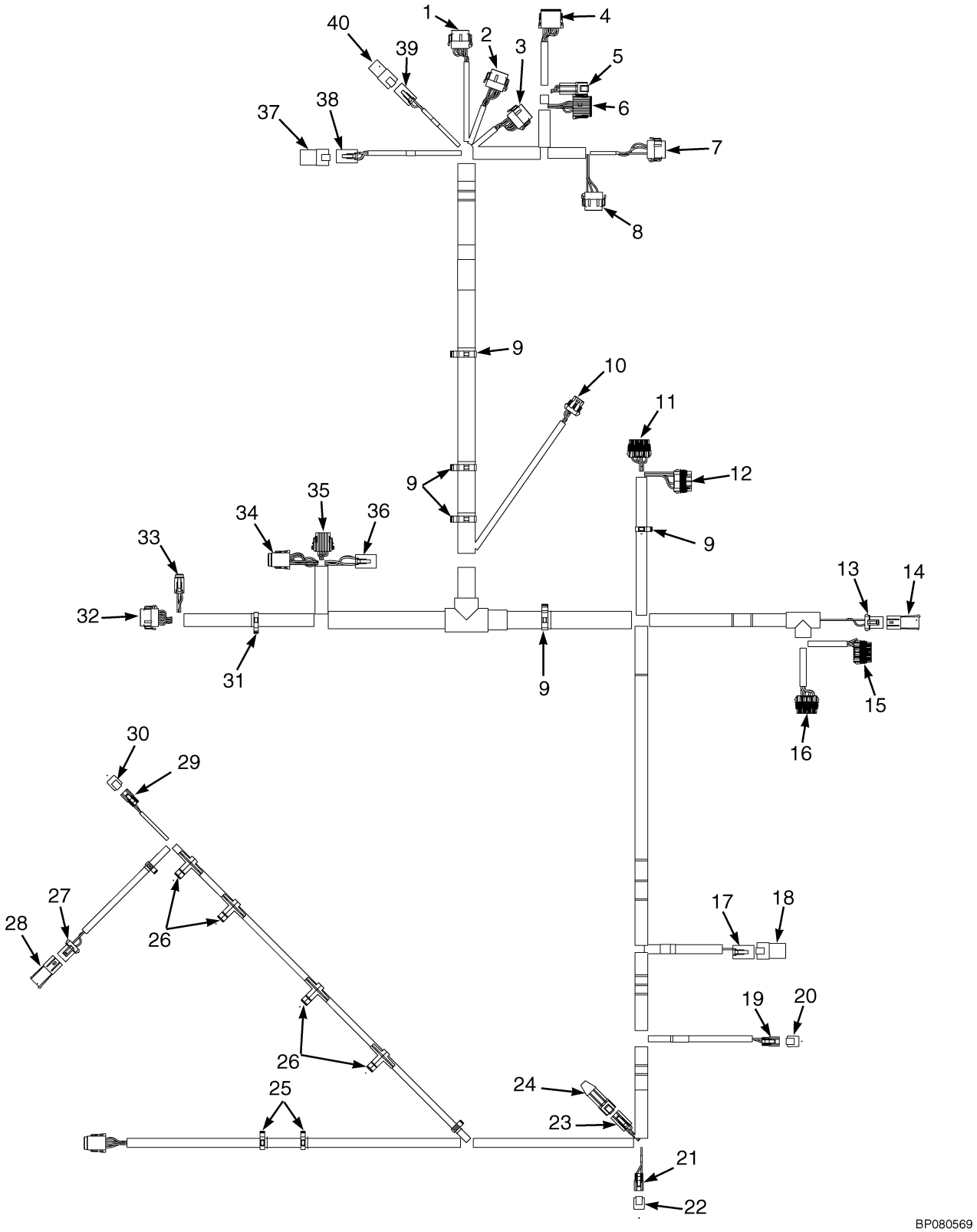

©2013 HYSTER COMPANY

WIRE HARNESS

RH CHASSIS – GM 2,4L (1/2007 ↔ 10/2008)

ITEM	PART NO.	DESCRIPTION	QTY
	2089179	Wire Harness (Chassis)	1
1	. . . . .	Connector Assembly (Vehicle System Manager, VSM)	1
1	1525570	Connector	1
1	1530037	Connector	1
1	1463139	Terminal	8
1	1484377	Plug	4
2	. . . . .	Connector Assembly (Vehicle System Manager, VSM)	1
2	1525568	Connector	1
2	1530037	Connector	1
2	1463139	Terminal	7
2	1484377	Plug	5
3	. . . . .	Connector Assembly (Vehicle System Manager, VSM)	1
3	1525567	Connector	1
3	1530037	Connector	1
3	1463139	Terminal	9
3	1484377	Plug	3
4	. . . . .	Connector Assembly (Vehicle System Manager, VSM)	1
4	1525563	Connector	1
4	1500913	Connector	1
4	1330438	Terminal (Socket)	8
4	1363886	Terminal (Socket)	4
5	. . . . .	Connector Assembly (Cowl Harness)	1
5	1489655	Connector (4 Way)	1
5	1330416	Connector (Secondary Lock)	1
5	1330437	Terminal (Pin)	4
6	. . . . .	Connector Assembly (Cowl Harness)	1
6	1493428	Connector (12-Way)	1
6	1500913	Connector	1
6	1330438	Terminal (Socket)	9
6	1330439	Plug	3
7	. . . . .	Connector Assembly (Vehicle System Manager, VSM)	1
7	1525567	Connector	1
7	1529046	Connector	1
7	1463139	Terminal	3
7	1484377	Plug	9
8	. . . . .	Connector Assembly (Vehicle System Manager, VSM)	1
8	1525569	Connector	1
8	1529046	Connector	1
8	1463139	Terminal	3
8	1484377	Plug	9
9	1534282	Clip	1
10	. . . . .	Connector Assembly (Horn)	1
10	1476064	Connector	1
10	1476109	Connector Lock	1
10	1330356	Seal	2
10	1330355	Terminal	3
10	1476108	Wire Seal	1
11	. . . . .	Connector Assembly (Power Distribution Module, PDM)	1
11	1521184	Connector	1
11	1521188	Lock	1

©2013 HYSTER COMPANY

WIRE HARNESS

RH CHASSIS – GM 2,4L (1/2007 ↔ 10/2008)

ITEM	PART NO.	DESCRIPTION	QTY
11	1323579	Seal	5
11	1327164	Seal	1
11	1330281	Terminal	6
11	1521989	Terminal	1
11	1402888	Seal	2
12	. . . . .	Connector Assembly (Power Distribution Module, PDM)	1
12	1521183	Connector	1
12	1521188	Lock	1
12	1323579	Seal	7
12	1327164	Seal	1
12	1330281	Terminal	4
12	1521989	Terminal	3
13	. . . . .	Connector Assembly (Hydraulic Filter)	1
13	1329152	Plug	1
13	1329151	Terminal	1
13	1330281	Terminal	2
13	1402888	Seal	2
14	. . . . .	End Cap	1
14	1329150	Connector	1
14	1329151	Terminal	1
14	1327164	Seal	2
15	. . . . .	Connector Assembly (Power Distribution Module, PDM)	1
15	1521185	Connector	1
15	1521188	Lock	1
15	1323579	Seal	8
15	1330281	Terminal	5
15	1521989	Terminal	3
16	. . . . .	Connector Assembly (Power Distribution Module, PDM)	1
16	1521188	Lock	1
16	1323579	Seal	7
16	1327164	Seal	1
16	1521989	Terminal	7
17	. . . . .	Connector Assembly (Accessory 2)	1
17	1514602	Connector	1
17	1514603	Connector	1
17	1330439	Plug	1
17	1554359	Terminal	3
18	. . . . .	End Cap	1
18	1514597	Connector	1
18	1330439	Plug	4
19	. . . . .	Connector Assembly (Hood And Key Switch)	1
19	1490242	Connector (2 Way)	1
19	1490243	Connector (Secondary Lock)	1
19	1330438	Terminal (Socket)	2
20	1626727	Connector (End Cap)	1
21	. . . . .	Connector Assembly (Alternate Horn Button)	1
21	1490242	Connector (2 Way)	1
21	1490243	Connector (Secondary Lock)	1
21	1330438	Terminal (Socket)	1
22	1626727	Connector (End Cap)	1

©2013 HYSTER COMPANY

WIRE HARNESS

RH CHASSIS – GM 2,4L (1/2007 ↔ 10/2008)

ITEM	PART NO.	DESCRIPTION	QTY
23	. . . . .	Connector Assembly (Bus Terminal 2)	1
23	1489655	Connector (4 Way)	1
23	1489657	Connector	1
23	1330438	Terminal (Socket)	1
24	1525577	Connector (With Resistor) (End Cap)	1
25	1402815	Clip	1
26	1587778	Clip	1
27	. . . . .	Connector Assembly (Coolant Level)	1
27	1329152	Plug	1
27	1329151	Terminal	1
27	1330281	Terminal	2
27	1402888	Seal	2
28	. . . . .	End Cap	1
28	1329150	Connector	1
28	1329151	Terminal	1
28	1327164	Seal	2
29	. . . . .	Connector Assembly (Back-Up Alarm Harness)	1
29	1490242	Connector (2 Way)	1
29	1490243	Connector (Secondary Lock)	1
29	1330437	Terminal (Pin)	2
30	1626727	Connector (End Cap)	1
31	1500899	Clip	1
32	. . . . .	Connector Assembly (Transmission Harness)	1
32	1525567	Connector	1
32	1529046	Connector	1
32	1463139	Terminal	11
32	1484377	Plug	1
33	. . . . .	Connector Assembly (Transmission Harness)	1
33	1493428	Connector (12-Way)	1
33	1531974	Connector	1
33	1463137	Terminal	6
34	. . . . .	Connector Assembly (Engine Harness)	1
34	1541991	Connector	1
34	1541992	Connector	1
34	1463139	Terminal	8
35	. . . . .	Connector Assembly (Engine Harness)	1
35	1502625	Connector	1
35	1502626	Connector	1
35	1330438	Terminal (Socket)	7
35	1484377	Plug	1
36	. . . . .	Connector Assembly (Engine Harness)	1
36	1514602	Connector	1
36	1514603	Connector	1
36	1554359	Terminal	4
37	. . . . .	End Cap	1
37	1514597	Connector	1
37	1330439	Plug	4
38	. . . . .	Connector Assembly (Lights And Cab Harness)	1
38	1514602	Connector	1
38	1514603	Connector	1

©2013 HYSTER COMPANY

WIRE HARNESS

RH CHASSIS – GM 2,4L (1/2007 ↔ 10/2008)

ITEM	PART NO.	DESCRIPTION	QTY
38	1554359	Terminal	4
39	. . . . .	Connector Assembly (Accessories 1)	1
39	1545202	Connector	1
39	1546697	Connector	1
39	1554359	Terminal	2
40	. . . . .	End Cap	1
40	1480187	Connector	1
40	1330439	Plug	2

©2013 HYSTER COMPANY

NOTES

©2013 HYSTER COMPANY

WIRE HARNESS (FIGURE 7-47)

RH CHASSIS — GM 2.4L (10/2008 ↔ S/N L177V05175H)

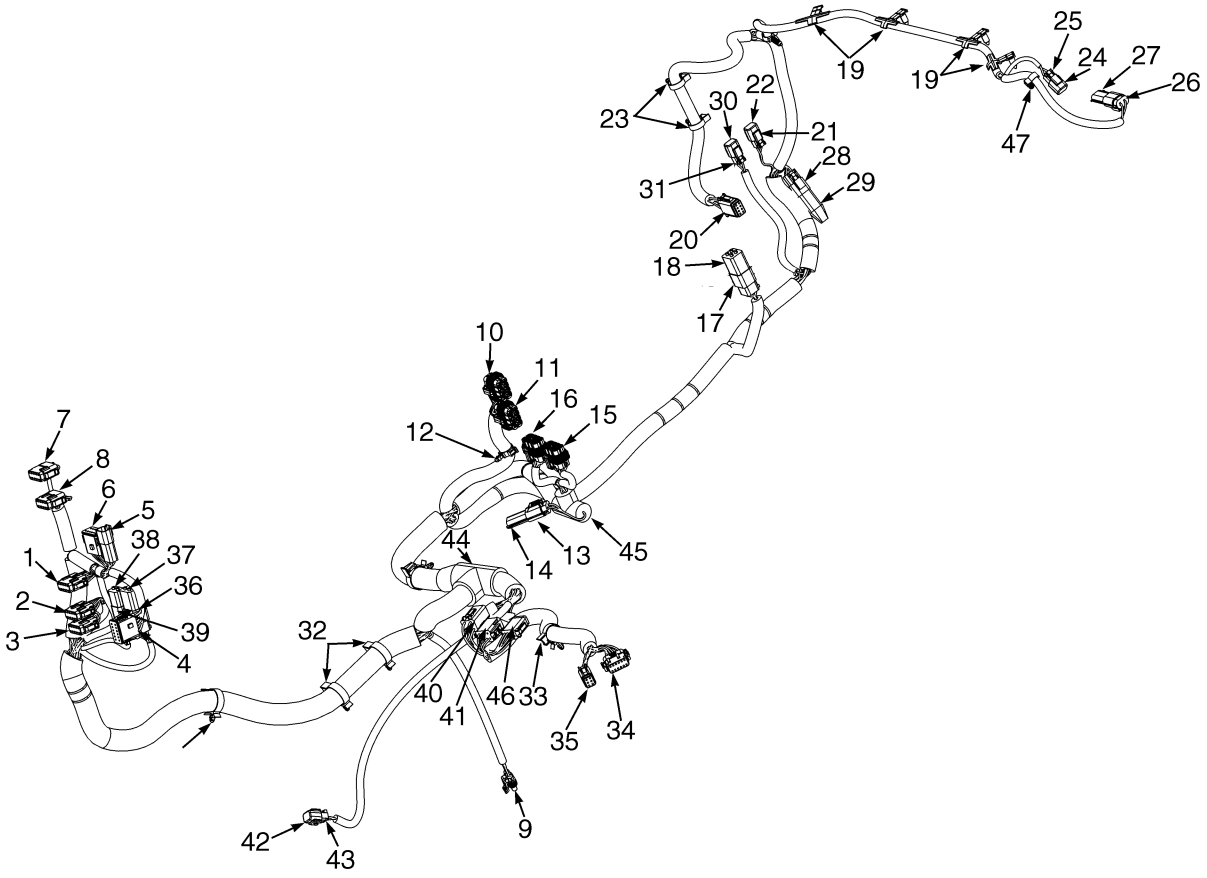

BP080821

©2013 HYSTER COMPANY

WIRE HARNESS

RH CHASSIS – GM 2.4L (10/2008 ↔ S/N L177V05175H)

ITEM	PART NO.	DESCRIPTION	QTY
	2108126	Wire Harness (Chassis) (RH)	1
1	. . . . .	Connector Assembly (Vehicle System Manager)	1
1	1525570	Connector	1
1	1463139	Terminal	8
1	1484377	Plug	4
1	1530037	Connector (Secondary Lock)	1
2	. . . . .	Connector Assembly (Vehicle System Manager)	1
2	1525568	Connector	1
2	1463139	Terminal	1
2	1484377	Plug	5
2	1530037	Connector (Secondary Lock)	1
3	. . . . .	Connector Assembly (Vehicle System Manager)	1
3	1525567	Connector	1
3	1463139	Terminal	9
3	1484377	Plug	3
3	1530037	Connector (Secondary Lock)	1
4	. . . . .	Connector Assembly (Vehicle System Manager)	1
4	1525563	Connector	1
4	1363886	Terminal (Socket)	4
4	1330438	Terminal (Socket)	8
4	1500913	Connector (Secondary Lock)	1
5	. . . . .	Connector Assembly (Cowl Harness)	1
5	1489655	Connector (4 Way)	1
5	1330437	Terminal (Pin)	4
5	1330416	Connector (Secondary Lock) (Secondary Lock)	1
6	. . . . .	Connector Assembly (Cowl Harness)	1
6	1493428	Connector (12-Way)	1
6	1330438	Terminal (Socket)	10
6	1484377	Plug	1
6	1500913	Connector (Secondary Lock)	1
7	. . . . .	Connector Assembly (Vehicle System Manager)	1
7	1525567	Connector	1
7	1484377	Plug	9
7	1463139	Terminal	3
7	1529046	Connector (Secondary Lock)	1
8	. . . . .	Connector Assembly (Vehicle System Manager)	1
8	1525569	Connector	1
8	1463139	Terminal	3
8	1484377	Plug	9
8	1529046	Connector (Secondary Lock)	1
9	. . . . .	Connector Assembly (Horn)	1
9	1476064	Connector	1
9	1330355	Terminal	3
9	1330356	Seal	2
9	1476108	Wire Seal	1
9	1476109	Connector Lock (Secondary Lock)	1
10	. . . . .	Connector Assembly (Power Distribution Module)	1
10	1521184	Connector	1
10	1327164	Seal	1
10	1330281	Terminal	6

©2013 HYSTER COMPANY

WIRE HARNESS

RH CHASSIS – GM 2.4L (10/2008 ↔ S/N L177V05175H)

ITEM	PART NO.	DESCRIPTION	QTY
10	1521989	Terminal	1
10	1323579	Seal	5
10	1402888	Seal	2
10	1521188	Lock (Secondary Lock)	1
11	. . . . .	Connector Assembly (Power Distribution Module)	1
11	1521183	Connector	1
11	1521989	Terminal	1
11	1330281	Terminal	4
11	1327164	Seal	1
11	1323579	Seal	7
11	1521188	Lock (Secondary Lock)	1
12	1534828	Clip	1
13	. . . . .	Connector Assembly (Hydraulic Filter)	1
13	1329152	Plug	1
13	1330281	Terminal	2
13	1402888	Seal	2
13	1329151	Terminal (Secondary Lock)	1
14	. . . . .	Connector Assembly (End Cap)	1
14	1329150	Connector	1
14	1327164	Seal	2
14	1329151	Terminal (Secondary Lock)	1
15	. . . . .	Connector Assembly (Power Distribution Module)	1
15	1521185	Connector	1
15	1330281	Terminal	5
15	1521989	Terminal	3
15	1327164	Seal	1
15	1323579	Seal	8
15	1327164	Seal	1
15	1521188	Lock (Secondary Lock)	1
16	. . . . .	Connector Assembly (Power Distribution Module)	1
16	1521186	Connector	1
16	1521989	Terminal	7
16	1327164	Seal	1
16	1323579	Seal	7
16	1521188	Lock (Secondary Lock)	1
17	. . . . .	Connector Assembly (Accessory 2)	1
17	1514602	Connector	1
17	1554359	Terminal	3
17	1330439	Plug	1
17	1514603	Connector (Secondary Lock)	1
18	. . . . .	Connector Assembly (End Cap)	1
18	1514597	Connector	1
18	1330439	Plug	4
19	1587778	Clip	4
20	. . . . .	Connector Assembly (Seat Harness)	1
20	1541991	Connector	1
20	1463139	Terminal	8
20	1541992	Connector (Secondary Lock)	1
21	. . . . .	Connector Assembly (Alternate Horn Button)	1
21	1490242	Connector (2 Way)	1

©2013 HYSTER COMPANY

WIRE HARNESS

RH CHASSIS – GM 2.4L (10/2008 ↔ S/N L177V05175H)

ITEM	PART NO.	DESCRIPTION	QTY
21	1330438	Terminal (Socket)	2
21	1490243	Connector (Secondary Lock) (Secondary Lock)	1
22	1626727	Connector (End Cap)	1
23	1509888	Clip	2
24	1626727	Connector (End Cap)	1
25	. . . . .	Connector Assembly (Back-Up Alarm)	1
25	1490242	Connector (2 Way)	1
25	1330438	Terminal (Socket)	2
25	1490243	Connector (Secondary Lock) (Secondary Lock)	1
26	. . . . .	Connector Assembly (Coolant Level)	1
26	1329152	Plug	1
26	1330281	Terminal	2
26	1402888	Seal	2
26	1329151	Terminal (Secondary Lock)	1
27	. . . . .	Connector Assembly (End Cap)	1
27	1493428	Connector (12-Way)	1
27	1327164	Seal	2
27	1329151	Terminal (Secondary Lock)	1
28	. . . . .	Connector Assembly (Bus Terminal)	1
28	1489656	Connector (4-Way)	1
28	1330438	Terminal (Socket)	4
28	1489657	Connector (Secondary Lock)	1
29	1531973	Connector (End Cap)	1
30	1626727	Connector (End Cap)	1
31	. . . . .	Connector Assembly (Hood Switch/Key Switch)	1
31	1490242	Connector (2 Way)	1
31	1330438	Terminal (Socket)	1
31	1490243	Connector (Secondary Lock) (Secondary Lock)	1
32	1534282	Clip	4
33	1500899	Clip	1
34	. . . . .	Connector Assembly (Transmission Harness)	1
34	1525567	Connector	1
34	1463139	Terminal	11
34	1484377	Plug	1
34	1529046	Connector (Secondary Lock)	1
35	. . . . .	Connector Assembly (Transmission Harness)	1
35	1531973	Connector	1
35	1463139	Terminal	6
35	1531974	Connector (Secondary Lock)	1
36	. . . . .	Connector Assembly (Lights/Cab Harness)	1
36	1514602	Connector	1
36	1554359	Terminal	4
36	1514603	Connector (Secondary Lock)	1
37	. . . . .	Connector Assembly (End Cap)	1
37	1514597	Connector	1
37	1330439	Plug	4
38	. . . . .	Connector Assembly (End Cap)	1
38	1480187	Connector	1
38	1330439	Plug	2
39	. . . . .	Connector Assembly (Accessory 1)	1

©2013 HYSTER COMPANY

WIRE HARNESS

RH CHASSIS – GM 2.4L (10/2008 ↔ S/N L177V05175H)

ITEM	PART NO.	DESCRIPTION	QTY
39	1545202	Connector	1
39	1554359	Terminal	2
39	1546697	Connector	1
40	. . . . .	Connector Assembly (Engine Harness)	1
40	1514602	Connector	1
40	1554359	Terminal	4
40	1514603	Connector	1
41	. . . . .	Connector Assembly (To Engine Harness)	1
41	1502625	Connector	1
41	1330438	Terminal (Socket)	7
41	1484377	Plug	1
41	1502626	Connector (Secondary Lock)	1
42	1626727	Connector (End Cap)	1
43	. . . . .	Connector Assembly (Hydraulic Solenoid)	1
43	1490242	Connector (2 Way)	1
43	1330438	Terminal (Socket)	1
43	1490243	Connector (Secondary Lock)	1
44	1531492	T-Fitting	1
45	1531490	Conduit	1
46	. . . . .	Connector Assembly (To Engine Harness)	1
46	1541991	Connector	1
46	1463139	Terminal	8
46	1541992	Connector (Secondary Lock)	1
47	1509888	Clip	2

©2013 HYSTER COMPANY

NOTES

©2013 HYSTER COMPANY

WIRE HARNESS (FIGURE 7-48)

RH CHASSIS — GM 2.4L (S/N L177V05176H →)

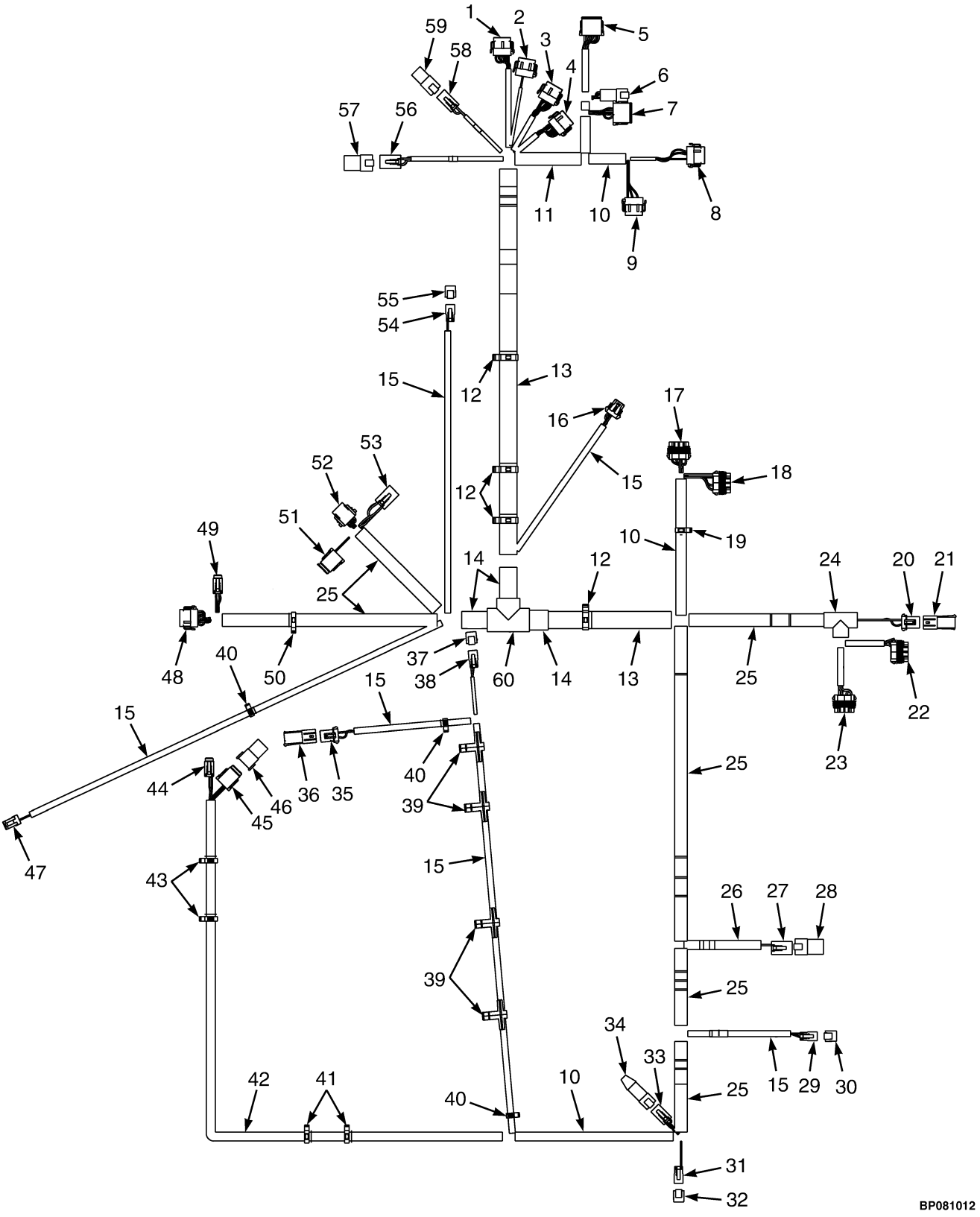

©2013 HYSTER COMPANY

WIRE HARNESS

RH CHASSIS – GM 2.4L (S/N L177V05176H →)

ITEM	PART NO.	DESCRIPTION	QTY
	4604203	Wire Harness (Chassis)	1
1	. . . . .	Connector Assembly (Vehicle System Manager)	1
1	1525570	Connector	1
1	1463139	Terminal	8
1	1484377	Plug	4
1	1530037	Connector (Secondary Lock)	1
2	. . . . .	Connector Assembly (Vehicle System Manager)	1
2	1525569	Connector	1
2	1484377	Plug	10
2	1463139	Terminal	2
2	1530037	Connector (Secondary Lock)	1
3	. . . . .	Connector Assembly (Vehicle System Manager)	1
3	1525568	Connector	1
3	1463139	Terminal	7
3	1484377	Plug	5
3	1530037	Connector (Secondary Lock)	1
4	. . . . .	Connector Assembly (Vehicle System Manager)	1
4	1525567	Connector	1
4	1463139	Terminal	9
4	1484377	Plug	3
4	1530037	Connector (Secondary Lock)	1
5	. . . . .	Connector Assembly (Vehicle System Manager)	1
5	1525563	Connector	1
5	1363886	Terminal (Socket)	4
5	1330438	Terminal (Socket)	8
5	1500913	Connector (Secondary Lock)	1
6	. . . . .	Connector Assembly (Cowl Harness)	1
6	1489655	Connector (4 Way)	1
6	1330437	Terminal (Pin)	4
6	1330416	Connector (Secondary Lock) (Secondary Lock)	1
7	. . . . .	Connector Assembly (Cowl Harness)	1
7	1493428	Connector (12-Way)	1
7	1330438	Terminal (Socket)	10
7	1484377	Plug	2
7	1500913	Connector (Secondary Lock)	1
8	. . . . .	Connector Assembly (Vehicle System Manager)	1
8	1525567	Connector	1
8	1484377	Plug	9
8	1463139	Terminal	3
8	1529046	Connector (Secondary Lock)	1
9	. . . . .	Connector Assembly (Vehicle System Manager)	1
9	1525569	Connector	1
9	1463139	Terminal	3
9	1484377	Plug	9
9	1529046	Connector (Secondary Lock)	1
10	275496	Conduit	AR
11	275497	Conduit	AR
12	1534282	Clip	4
13	1540388	Conduit	AR
14	275499	Conduit	AR

©2013 HYSTER COMPANY

WIRE HARNESS

RH CHASSIS – GM 2.4L (S/N L177V05176H →)

ITEM	PART NO.	DESCRIPTION	QTY
15	275493	Conduit	AR
16	. . . . .	Connector Assembly (Horn)	1
16	1476064	Connector	1
16	1330355	Terminal	3
16	1330356	Seal	2
16	1476108	Wire Seal	1
16	1476109	Connector Lock (Secondary Lock)	1
17	. . . . .	Connector Assembly (Power Distribution Module)	1
17	1521184	Connector	1
17	1327164	Seal	1
17	1330281	Terminal	6
17	1521989	Terminal	1
17	1323579	Seal	5
17	1402888	Seal	2
17	1521188	Lock (Secondary Lock)	1
18	. . . . .	Connector Assembly (Power Distribution Module)	1
18	1521183	Connector	1
18	1330281	Terminal	4
18	1327164	Seal	1
18	1323579	Seal	7
18	1521989	Terminal	3
18	1521188	Lock (Secondary Lock)	1
19	1534828	Clip	1
20	. . . . .	Connector Assembly (Hydraulic Filter)	1
20	1329152	Plug	1
20	1330281	Terminal	2
20	1402888	Seal	2
20	1329151	Terminal (Secondary Lock)	1
21	. . . . .	Connector Assembly (End Cap)	1
21	1329150	Connector	1
21	1327164	Seal	2
21	1329151	Terminal (Secondary Lock)	1
22	. . . . .	Connector Assembly (Power Distribution Module)	1
22	1521185	Connector	1
22	1330281	Terminal	5
22	1521989	Terminal	3
22	1323579	Seal	8
22	1521188	Lock (Secondary Lock)	1
23	. . . . .	Connector Assembly (Power Distribution Module)	1
23	1521186	Connector	1
23	1521989	Terminal	7
23	1323579	Seal	7
23	1327164	Seal	1
23	1521188	Lock (Secondary Lock)	1
24	1531490	Conduit	1
25	275497	Conduit	AR
26	275495	Conduit	AR
27	. . . . .	Connector Assembly (Accessory 2)	1
27	1514602	Connector	1
27	1554359	Terminal	3

©2013 HYSTER COMPANY

WIRE HARNESS

RH CHASSIS – GM 2.4L (S/N L177V05176H →)

ITEM	PART NO.	DESCRIPTION	QTY
27	1330439	Plug	1
27	1514603	Connector (Secondary Lock)	1
28	. . . . .	Connector Assembly (End Cap)	1
28	1514597	Connector	1
28	1330439	Plug	4
29	. . . . .	Connector Assembly (Hood Switch/Key Switch)	1
29	1490242	Connector (2 Way)	1
29	1330438	Terminal (Socket)	1
29	1490243	Connector (Secondary Lock) (Secondary Lock)	1
30	1626727	Connector (End Cap)	1
31	. . . . .	Connector Assembly (Alternate Horn Button)	1
31	1490242	Connector (2 Way)	1
31	1330438	Terminal (Socket)	2
31	1490243	Connector (Secondary Lock) (Secondary Lock)	1
32	1626727	Connector (End Cap)	1
33	. . . . .	Connector Assembly (Bus Terminal)	1
33	1489656	Connector (4-Way)	1
33	1330438	Terminal (Socket)	4
33	1489657	Connector (Secondary Lock)	1
34	1531973	Connector (End Cap)	1
35	. . . . .	Connector Assembly (Coolant Level)	1
35	4052151	Connector	1
35	1330281	Terminal	2
35	1402888	Seal	2
35	1329151	Terminal (Secondary Lock)	1
36	. . . . .	Connector Assembly (End Cap)	1
36	1493428	Connector (12-Way)	1
36	1327164	Seal	2
36	1329151	Terminal (Secondary Lock)	1
37	1626727	Connector (End Cap)	1
38	. . . . .	Connector Assembly (Back-Up Alarm)	1
38	1490242	Connector (2 Way)	1
38	1330438	Terminal (Socket)	2
38	1490243	Connector (Secondary Lock) (Secondary Lock)	1
39	1587778	Clip	4
40	1509888	Clip	2
41	1402815	Clip	2
42	1699754	Conduit	AR
43	1509890	Clip	2
44	. . . . .	Connector Assembly (Seat Harness)	1
44	1531973	Connector	1
44	1463139	Terminal	4
44	1484377	Plug	2
44	1531974	Connector (Secondary Lock)	1
45	. . . . .	Connector Assembly (MLM Harness)	1
45	1541991	Connector	1
45	1463139	Terminal	5
45	1484377	Plug	3
45	1541992	Connector (Secondary Lock)	1
46	. . . . .	Connector Assembly (Endcap)	1

©2013 HYSTER COMPANY

WIRE HARNESS

RH CHASSIS – GM 2.4L (S/N L177V05176H →)

ITEM	PART NO.	DESCRIPTION	QTY
46	1541988	Connector (8 Pin)	1
46	1484377	Plug	8
47	. . . . .	Connector Assembly (Hydraulic Temp)	1
47	1402868	Connector	1
47	1323576	Terminal	2
48	. . . . .	Connector Assembly (Transmission Harness)	1
48	1525567	Connector	1
48	1463139	Terminal	11
48	1484377	Plug	1
48	1529046	Connector (Secondary Lock)	1
49	. . . . .	Connector Assembly (Transmission Harness)	1
49	1531973	Connector	1
49	1463139	Terminal	6
49	1531974	Connector (Secondary Lock)	1
50	1500899	Clip	1
51	. . . . .	Connector Assembly (Engine Harness)	1
51	1541991	Connector	1
51	1463139	Terminal	8
51	1541992	Connector (Secondary Lock)	1
52	. . . . .	Connector Assembly (Engine Harness)	1
52	1502625	Connector	1
52	1330438	Terminal (Socket)	8
52	1484377	Plug	1
52	1502626	Connector (Secondary Lock)	1
53	. . . . .	Connector Assembly (Engine Harness)	1
53	1514602	Connector	1
53	1554359	Terminal	4
53	1514603	Connector (Secondary Lock)	1
54	. . . . .	Connector Assembly (Hydraulic Solenoid)	1
54	1490242	Connector (2 Way)	1
54	1330438	Terminal (Socket)	2
54	1490243	Connector (Secondary Lock)	1
55	1626727	Connector (End Cap)	1
56	. . . . .	Connector Assembly (Lights/Cab Harness)	1
56	1514602	Connector	1
56	1554359	Terminal	4
56	1514603	Connector (Secondary Lock)	1
57	. . . . .	Connector Assembly (End Cap)	1
57	1514597	Connector	1
57	1330439	Plug	4
58	. . . . .	Connector Assembly (Accessory 1)	1
58	1545202	Connector	1
58	1554359	Terminal	2
58	1546697	Connector	1
59	. . . . .	Connector Assembly (End Cap)	1
59	1480187	Connector	1
60	1531492	T-Fitting	1

©2013 HYSTER COMPANY

NOTES

©2013 HYSTER COMPANY

WIRE HARNESS (FIGURE 7-49)

RH CHASSIS — GM 2.4L (1/2013 →)

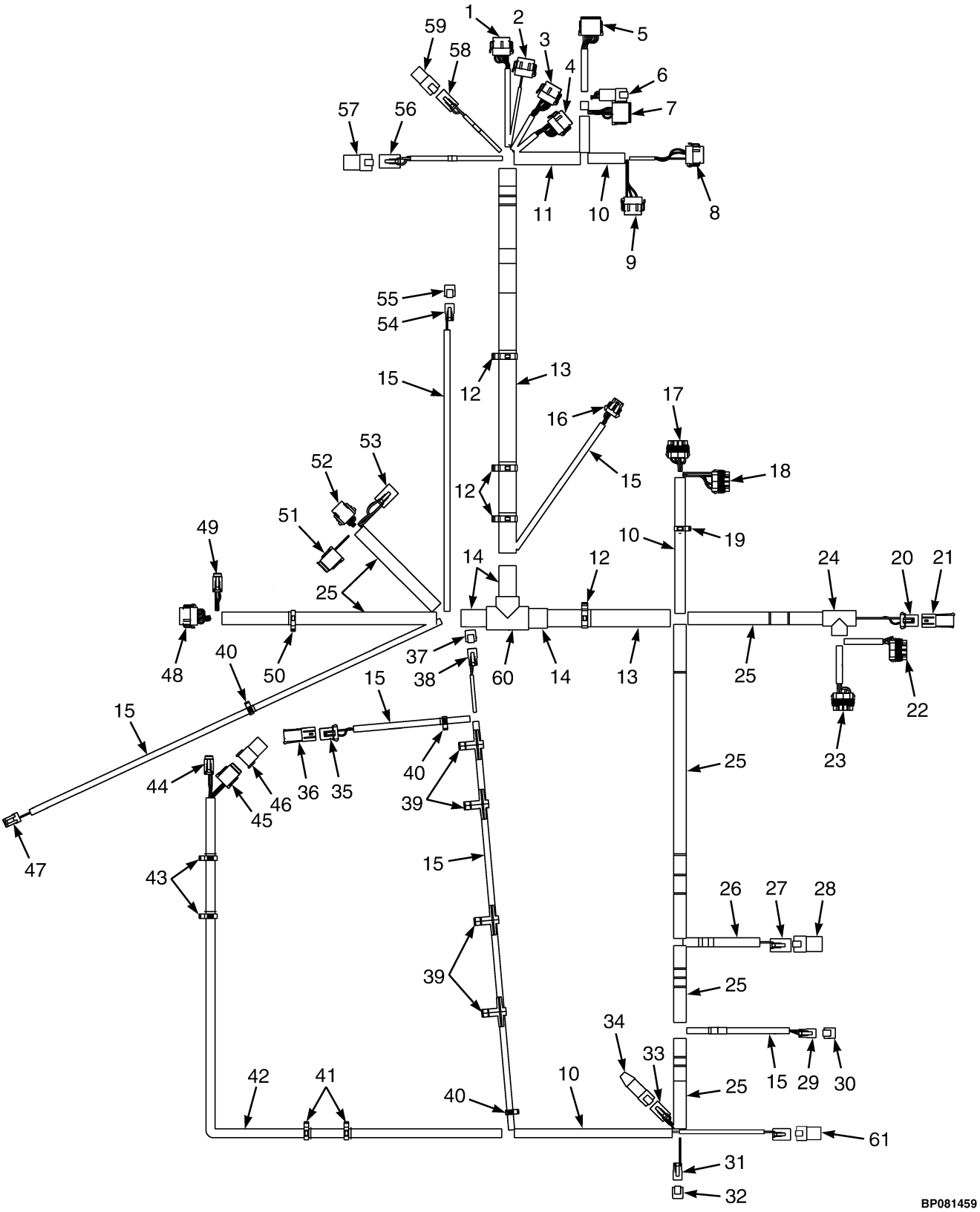

©2013 HYSTER COMPANY

WIRE HARNESS

RH CHASSIS – GM 2.4L (1/2013 →)

ITEM	PART NO.	DESCRIPTION	QTY
	4620359	Wire Harness (Chassis)	1
1	. . . . .	Connector Assembly (Vehicle System Manager)	1
1	1525570	Connector	1
1	1463139	Terminal	8
1	1484377	Plug	4
1	1530037	Connector (Secondary Lock)	1
2	. . . . .	Connector Assembly (Vehicle System Manager)	1
2	1525569	Connector	1
2	1484377	Plug	10
2	1463139	Terminal	2
2	1530037	Connector (Secondary Lock)	1
3	. . . . .	Connector Assembly (Vehicle System Manager)	1
3	1525568	Connector	1
3	1463139	Terminal	7
3	1484377	Plug	5
3	1530037	Connector (Secondary Lock)	1
4	. . . . .	Connector Assembly (Vehicle System Manager)	1
4	1525567	Connector	1
4	1463139	Terminal	9
4	1484377	Plug	3
4	1530037	Connector (Secondary Lock)	1
5	. . . . .	Connector Assembly (Vehicle System Manager)	1
5	1525563	Connector	1
5	1363886	Terminal (Socket)	4
5	1330438	Terminal (Socket)	8
5	1500913	Connector (Secondary Lock)	1
6	. . . . .	Connector Assembly (Cowl Harness)	1
6	1489655	Connector (4 Way)	1
6	1330437	Terminal (Pin)	4
6	1330416	Connector (Secondary Lock) (Secondary Lock)	1
7	. . . . .	Connector Assembly (Cowl Harness)	1
7	1493428	Connector (12-Way)	1
7	1330438	Terminal (Socket)	10
7	1484377	Plug	2
7	1500913	Connector (Secondary Lock)	1
8	. . . . .	Connector Assembly (Vehicle System Manager)	1
8	1525567	Connector	1
8	1484377	Plug	9
8	1463139	Terminal	3
8	1529046	Connector (Secondary Lock)	1
9	. . . . .	Connector Assembly (Vehicle System Manager)	1
9	1525569	Connector	1
9	1463139	Terminal	3
9	1484377	Plug	9
9	1529046	Connector (Secondary Lock)	1
10	275496	Conduit	AR
11	275497	Conduit	AR
12	1534282	Clip	4
13	1540388	Conduit	AR
14	275499	Conduit	AR

©2013 HYSTER COMPANY

WIRE HARNESS

RH CHASSIS – GM 2.4L (1/2013 →)

ITEM	PART NO.	DESCRIPTION	QTY
15	275493	Conduit	AR
16	. . . . .	Connector Assembly (Horn)	1
16	1476064	Connector	1
16	1330355	Terminal	3
16	1330356	Seal	2
16	1476108	Wire Seal	1
16	1476109	Connector Lock (Secondary Lock)	1
17	. . . . .	Connector Assembly (Power Distribution Module)	1
17	1521184	Connector	1
17	1327164	Seal	1
17	1330281	Terminal	6
17	1521989	Terminal	1
17	1323579	Seal	5
17	1402888	Seal	2
17	1521188	Lock (Secondary Lock)	1
18	. . . . .	Connector Assembly (Power Distribution Module)	1
18	1521183	Connector	1
18	1330281	Terminal	4
18	1327164	Seal	1
18	1323579	Seal	7
18	1521989	Terminal	3
18	1521188	Lock (Secondary Lock)	1
19	1534828	Clip	1
20	. . . . .	Connector Assembly (Hydraulic Filter)	1
20	1329152	Plug	1
20	1330281	Terminal	2
20	1402888	Seal	2
20	1329151	Terminal (Secondary Lock)	1
21	. . . . .	Connector Assembly (End Cap)	1
21	1329150	Connector	1
21	1327164	Seal	2
21	1329151	Terminal (Secondary Lock)	1
22	. . . . .	Connector Assembly (Power Distribution Module)	1
22	1521185	Connector	1
22	1330281	Terminal	5
22	1521989	Terminal	3
22	1323579	Seal	8
22	1521188	Lock (Secondary Lock)	1
23	. . . . .	Connector Assembly (Power Distribution Module)	1
23	1521186	Connector	1
23	1521989	Terminal	7
23	1323579	Seal	7
23	1327164	Seal	1
23	1521188	Lock (Secondary Lock)	1
24	1531490	Conduit	1
25	275497	Conduit	AR
26	275495	Conduit	AR
27	. . . . .	Connector Assembly (Accessory 2)	1
27	1514602	Connector	1
27	1554359	Terminal	3

©2013 HYSTER COMPANY

WIRE HARNESS

RH CHASSIS – GM 2.4L (1/2013 →)

ITEM	PART NO.	DESCRIPTION	QTY
27	1330439	Plug	1
27	1514603	Connector (Secondary Lock)	1
28	. . . . .	Connector Assembly (End Cap)	1
28	1514597	Connector	1
28	1330439	Plug	4
29	. . . . .	Connector Assembly (Hood Switch/Key Switch)	1
29	1490242	Connector (2 Way)	1
29	1330438	Terminal (Socket)	1
29	1490243	Connector (Secondary Lock) (Secondary Lock)	1
30	1626727	Connector (End Cap)	1
31	. . . . .	Connector Assembly (Alternate Horn Button)	1
31	1490242	Connector (2 Way)	1
31	1330438	Terminal (Socket)	2
31	1490243	Connector (Secondary Lock) (Secondary Lock)	1
32	1626727	Connector (End Cap)	1
33	. . . . .	Connector Assembly (Bus Terminal)	1
33	1489656	Connector (4-Way)	1
33	1330438	Terminal (Socket)	4
33	1489657	Connector (Secondary Lock)	1
34	1531973	Connector (End Cap)	1
35	. . . . .	Connector Assembly (Coolant Level)	1
35	1329152	Plug	1
35	1330281	Terminal	2
35	1402888	Seal	2
35	1329151	Terminal (Secondary Lock)	1
36	. . . . .	Connector Assembly (End Cap)	1
36	1493428	Connector (12-Way)	1
36	1327164	Seal	2
36	1329151	Terminal (Secondary Lock)	1
37	1626727	Connector (End Cap)	1
38	. . . . .	Connector Assembly (Back-Up Alarm)	1
38	1490242	Connector (2 Way)	1
38	1330438	Terminal (Socket)	2
38	1490243	Connector (Secondary Lock) (Secondary Lock)	1
39	1587778	Clip	4
40	1509888	Clip	2
41	1509890	Clip	2
42	1699754	Conduit	AR
43	1509890	Clip	2
44	. . . . .	Connector Assembly (Seat Harness)	1
44	1531973	Connector	1
44	1463139	Terminal	4
44	1484377	Plug	2
44	1531974	Connector (Secondary Lock)	1
45	. . . . .	Connector Assembly (MLM Harness)	1
45	1541991	Connector	1
45	1463139	Terminal	5
45	1484377	Plug	3
45	1541992	Connector (Secondary Lock)	1
46	. . . . .	Connector Assembly (Endcap)	1

©2013 HYSTER COMPANY

WIRE HARNESS

RH CHASSIS – GM 2.4L (1/2013 →)

ITEM	PART NO.	DESCRIPTION	QTY
46	1541988	Connector (8 Pin)	1
46	1484377	Plug	8
47	. . . . .	Connector Assembly (Hydraulic Temp)	1
47	1402868	Connector	1
47	1323576	Terminal	2
48	. . . . .	Connector Assembly (Transmission Harness)	1
48	1525567	Connector	1
48	1463139	Terminal	11
48	1484377	Plug	1
48	1529046	Connector (Secondary Lock)	1
49	. . . . .	Connector Assembly (Transmission Harness)	1
49	1531973	Connector	1
49	1463139	Terminal	6
49	1531974	Connector (Secondary Lock)	1
50	1500899	Clip	1
51	. . . . .	Connector Assembly (Engine Harness)	1
51	1541991	Connector	1
51	1463139	Terminal	8
51	1541992	Connector (Secondary Lock)	1
52	. . . . .	Connector Assembly (Engine Harness)	1
52	1502625	Connector	1
52	1330438	Terminal (Socket)	8
52	1484377	Plug	1
52	1502626	Connector (Secondary Lock)	1
53	. . . . .	Connector Assembly (Engine Harness)	1
53	1514602	Connector	1
53	1554359	Terminal	4
53	1514603	Connector (Secondary Lock)	1
54	. . . . .	Connector Assembly (Hydraulic Solenoid)	1
54	1490242	Connector (2 Way)	1
54	1330438	Terminal (Socket)	2
54	1490243	Connector (Secondary Lock)	1
55	1626727	Connector (End Cap)	1
56	. . . . .	Connector Assembly (Lights/Cab Harness)	1
56	1514602	Connector	1
56	1554359	Terminal	4
56	1514603	Connector (Secondary Lock)	1
57	. . . . .	Connector Assembly (End Cap)	1
57	1514597	Connector	1
57	1330439	Plug	4
58	. . . . .	Connector Assembly (Accessory 1)	1
58	1545202	Connector	1
58	1554359	Terminal	2
58	1546697	Connector	1
59	. . . . .	Connector Assembly (End Cap)	1
59	1480187	Connector	1
60	1531492	T-Fitting	1
61	. . . . .	Connector Assembly (Seat Switch Harness)	1
61	1632865	Connector	1
61	1514603	Connector	1

©2013 HYSTER COMPANY

WIRE HARNESS

RH CHASSIS – GM 2.4L (1/2013 →)

ITEM	PART NO.	DESCRIPTION	QTY
61	1554359	Terminal	4

©2013 HYSTER COMPANY

WIRE HARNESS (FIGURE 7-50)

RH CHASSIS — YANMAR 2.6L AND 3.3L, DIESEL (→ 2/2006)

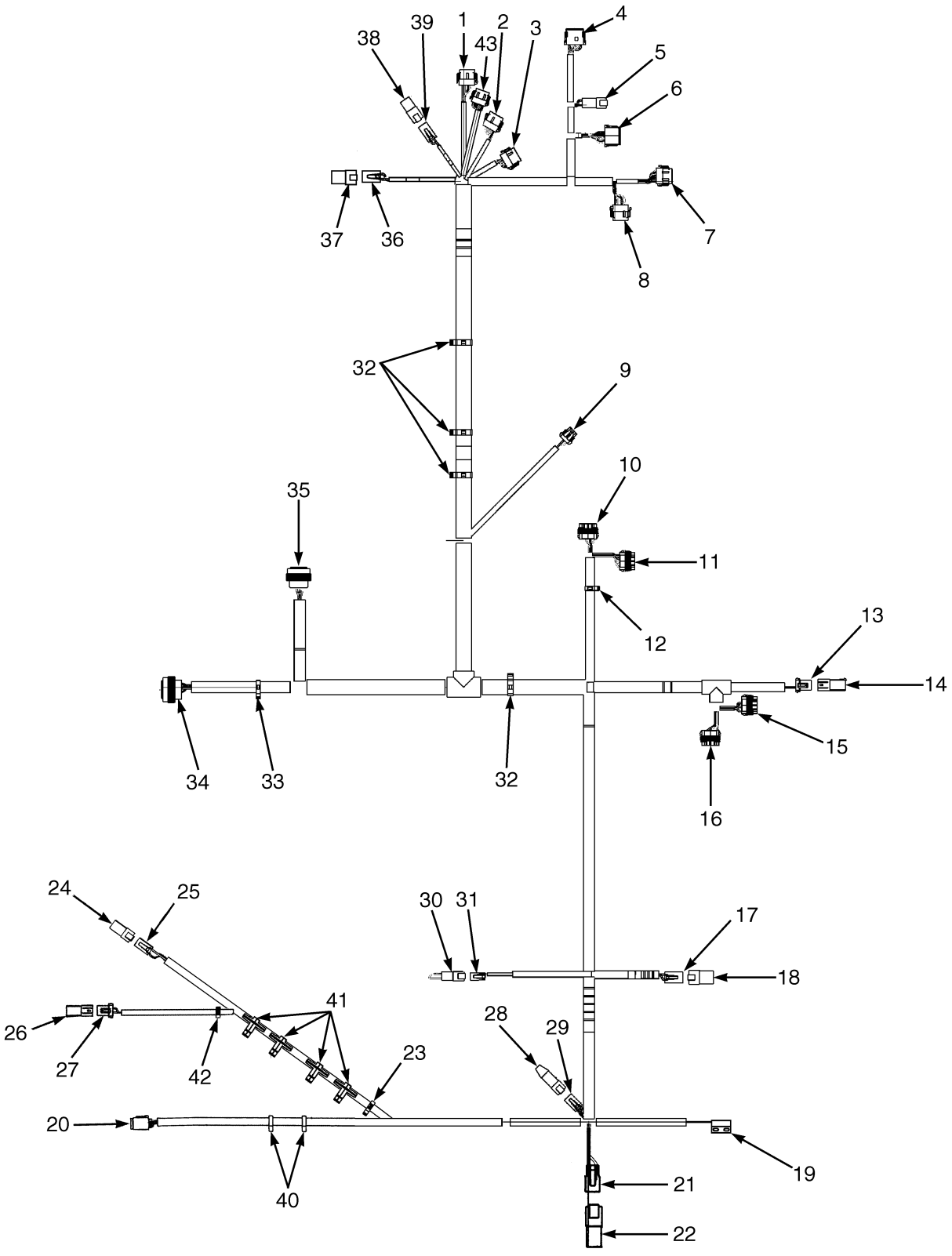

HP081619

©2013 HYSTER COMPANY

WIRE HARNESS

RH CHASSIS – YANMAR 2.6L AND 3.3L, DIESEL (→ 2/2006)

ITEM	PART NO.	DESCRIPTION	QTY
	2075562	Wire Harness (RH Chassis)	1
1	1525570	Connector (Vehicle System Manager)	1
1	1463139	Terminal	7
1	1484377	Plug	5
1	1530037	Connector	1
2	1525568	Connector (Vehicle System Manager)	1
2	1463139	Terminal	9
2	1484377	Plug	3
2	1530037	Connector	1
3	1525567	Connector (Vehicle System Manager)	1
3	1530037	Connector	1
3	1463139	Terminal	9
3	1484377	Plug	3
4	1525563	Connector (Vehicle System Manager)	1
4	1500913	Connector	1
4	1330438	Terminal (Socket)	8
4	1363886	Terminal (Socket)	4
5	1489655	Connector (4 Way) (To Cowl Harness)	1
5	1330416	Connector (Secondary Lock)	1
5	1330437	Terminal (Pin)	4
6	1493428	Connector (12-Way) (To Cowl Harness)	1
6	1330438	Terminal (Socket)	9
6	1484377	Plug	3
6	1500913	Connector	1
7	1525567	Connector (Vehicle System Manager)	1
7	1529046	Connector	1
7	1463139	Terminal	6
7	1484377	Plug	6
8	1525569	Connector (Vehicle System Manager)	1
8	1529046	Connector	1
8	1463139	Terminal	9
8	1484377	Plug	3
9	1476064	Connector (Horn)	1
9	1476109	Connector Lock	1
9	1330356	Seal	2
9	1330355	Terminal	3
9	1476108	Wire Seal	1
10	1521184	Connector (Power Distribution Module)	1
10	1521188	Lock	1
10	1323579	Seal	5
10	1327164	Seal	2
10	1330281	Terminal	5
10	1521989	Terminal	1
10	1402888	Seal	1
11	1521183	Connector (Power Distribution Module)	1
11	1521188	Lock	1
11	1323579	Seal	7
11	1327164	Seal	1
11	1330281	Terminal	4
11	1521989	Terminal	3

©2013 HYSTER COMPANY

WIRE HARNESS

RH CHASSIS – YANMAR 2.6L AND 3.3L, DIESEL (→ 2/2006)

ITEM	PART NO.	DESCRIPTION	QTY
12	1534828	Clip	1
13	1329152	Plug (Hydraulic Filter)	1
13	1329151	Terminal	1
13	1330281	Terminal	2
13	1402888	Seal	2
14	1329150	Connector (End Cap)	1
14	1327164	Seal	2
14	1329151	Terminal	1
15	1521185	Connector (Power Distribution Module)	1
15	1521188	Lock	1
15	1323579	Seal	8
15	1521989	Terminal	2
15	1330281	Terminal	6
15	1521989	Terminal	2
16	1521186	Connector (Power Distribution Module)	1
16	1521188	Lock	1
16	1323579	Seal	7
16	1327164	Seal	1
16	1521989	Terminal	7
17	1514602	Connector (Accessory 2)	1
17	1514603	Connector	1
17	1330439	Plug	1
17	1554359	Terminal	3
18	1514597	Connector (End Cap)	1
18	1330439	Plug	4
19	1572588	Switch (Hood Switch)	1
20	1541991	Connector (To Seat Harness)	1
20	1541992	Connector	1
20	1463139	Terminal	8
21	1490242	Connector (2 Way) (Socket)(Alternate Horn Button)	1
21	1561519	Connector	1
21	1330438	Terminal (Socket)	2
22	1351681	Connector (End Cap)	1
23	1509890	Clip	1
24	1351683	Connector (End Cap)	1
25	1493430	Connector (6 Way Housing) (To Back-Up Alarm)	1
25	1529052	Connector	1
25	1330438	Terminal (Socket)	6
26	1329150	Connector (End Cap)	1
26	1329151	Terminal	1
26	1327164	Seal	2
27	1329152	Plug	1
27	1329151	Terminal	1
27	1330281	Terminal	2
27	1402888	Seal	2
28	1525577	Connector (With Resistor) (End Cap)	1
29	1489656	Connector (4-Way) (Socket)(Bus Terminal)	1
29	1489657	Connector (Socket)	1
29	1330438	Terminal (Socket)	4
30	1493465	Connector (2 Pin) (Key Switch)	1

©2013 HYSTER COMPANY

WIRE HARNESS

RH CHASSIS – YANMAR 2.6L AND 3.3L, DIESEL (→ 2/2006)

ITEM	PART NO.	DESCRIPTION	QTY
30	1330414	Connector (Secondary Lock)	1
30	1330437	Terminal (Pin)	2
31	1490242	Connector (2 Way) (Socket)(Key Switch)	1
31	1490243	Connector (Secondary Lock) (Socket)	1
31	1330438	Terminal (Socket)	2
32	1534282	Clip	4
33	1500899	Clip	1
34	1502627	Connector (Socket) (To Transmission Harness)	1
34	1330438	Terminal (Socket)	16
34	1484377	Plug	7
35	1531501	Connector (To Engine Harness)	1
35	1330438	Terminal (Socket)	13
35	1330439	Plug	1
35	1484377	Plug	6
35	1554359	Terminal	3
35	1463139	Terminal	6
36	1514602	Connector (To Lights/Cab Harness)	1
36	1514603	Connector	1
36	1554359	Terminal	4
37	. . . . .	(End Cap)	..
37	1514597	Connector	1
37	1330439	Plug	4
38	. . . . .	(End Cap)	..
38	1480187	Connector	1
38	1330439	Plug	2
39	1545202	Connector (Accessory 1)	1
39	1554359	Terminal	2
39	1546697	Connector	1
40	1402815	Clip	2
41	1587778	Clip	4
42	1509888	Clip	2
43	1525569	Connector (Vehicle System Manager)	1
43	1530037	Connector	1
43	1463139	Terminal	11
43	1484377	Plug	1

©2013 HYSTER COMPANY

WIRE HARNESS (FIGURE 7-51)

RH CHASSIS — YANMAR 2.6L AND 3.3L, DIESEL (→ 8/2006)

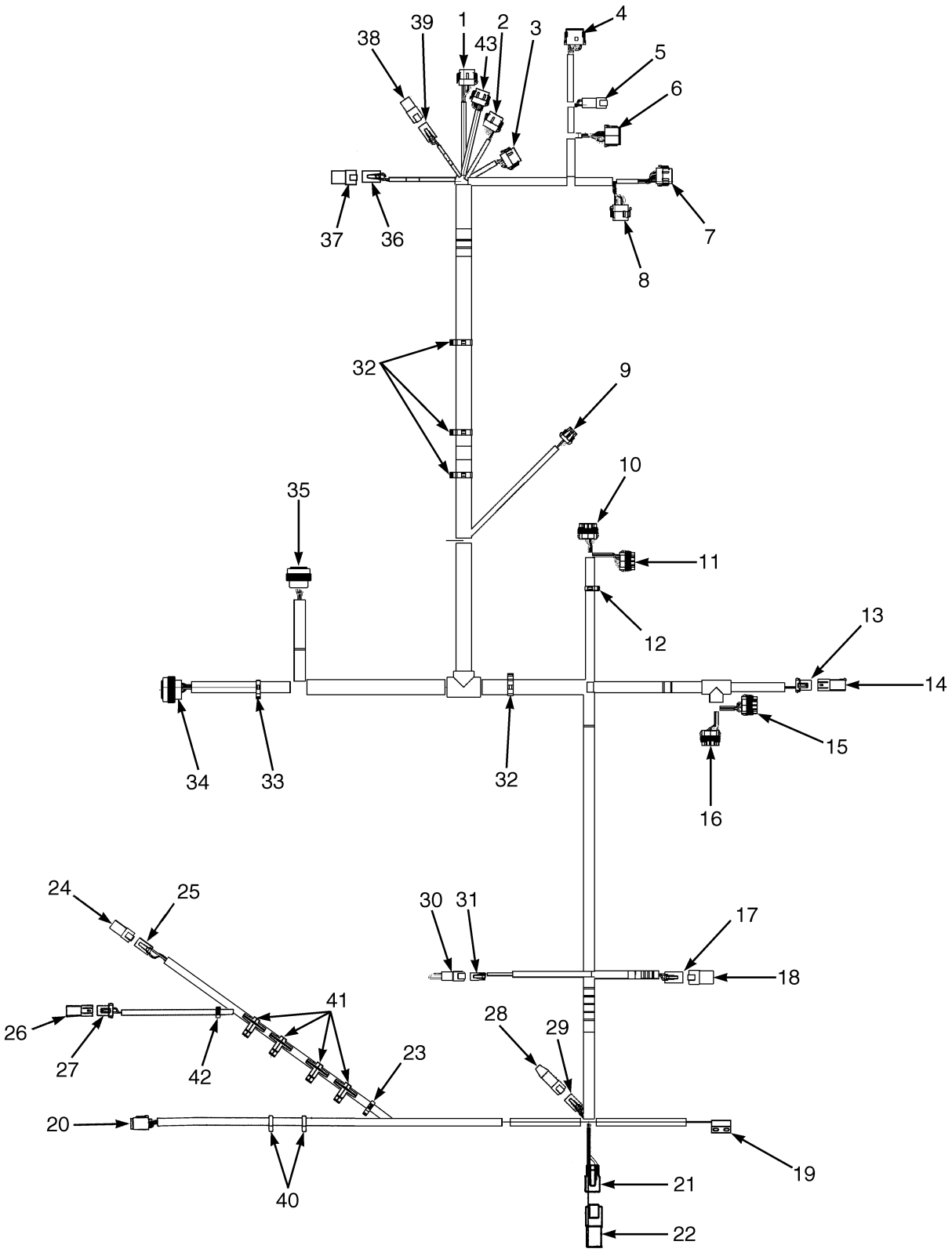

HP081619

©2013 HYSTER COMPANY

WIRE HARNESS

RH CHASSIS – YANMAR 2.6L AND 3.3L, DIESEL (→ 8/2006)

ITEM	PART NO.	DESCRIPTION	QTY
	2078880	Wire Harness (Chassis)	1
1	. . . . .	Connector Assembly (Vehicle System Manager)	1
1	1525570	Connector	1
1	1463139	Terminal	8
1	1484377	Plug	4
1	1530037	Connector	1
2	. . . . .	Connector Assembly (Vehicle System Manager)	1
2	1525568	Connector	1
2	1463139	Terminal	9
2	1484377	Plug	3
2	1530037	Connector	1
3	. . . . .	Connector Assembly (Vehicle System Manager)	1
3	1525567	Connector	1
3	1530037	Connector	1
3	1463139	Terminal	9
3	1484377	Plug	3
4	. . . . .	Connector Assembly (Vehicle System Manager)	1
4	1525563	Connector	1
4	1500913	Connector	1
4	1330438	Terminal (Socket)	8
4	1363886	Terminal (Socket)	4
5	. . . . .	Connector Assembly (To Cowl Harness)	1
5	1489655	Connector (4 Way)	1
5	1330416	Connector (Secondary Lock)	1
5	1330437	Terminal (Pin)	4
6	. . . . .	Connector Assembly (To Cowl Harness)	1
6	1493428	Connector (12-Way)	1
6	1330438	Terminal (Socket)	9
6	1484377	Plug	3
6	1500913	Connector	1
7	. . . . .	Connector Assembly (Vehicle System Manager)	1
7	1525567	Connector	1
7	1529046	Connector	1
7	1463139	Terminal	3
7	1484377	Plug	9
8	. . . . .	Connector Assembly (Vehicle System Manager)	1
8	1525569	Connector	1
8	1529046	Connector	1
8	1463139	Terminal	9
8	1484377	Plug	3
9	. . . . .	Connector Assembly (Horn)	1
9	1476064	Connector	1
9	1476109	Connector Lock	1
9	1330356	Seal	2
9	1330355	Terminal	3
9	1476108	Wire Seal	1
10	. . . . .	Connector Assembly (Power Distribution Module)	1
10	1521184	Connector	1
10	1521188	Lock	1
10	1323579	Seal	5

©2013 HYSTER COMPANY

WIRE HARNESS

RH CHASSIS – YANMAR 2.6L AND 3.3L, DIESEL (→ 8/2006)

ITEM	PART NO.	DESCRIPTION	QTY
10	1327164	Seal	2
10	1330281	Terminal	5
10	1521989	Terminal	1
10	1402888	Seal	1
11	. . . . .	Connector Assembly (Power Distribution Module)	1
11	1521183	Connector	1
11	1521188	Lock	1
11	1323579	Seal	7
11	1327164	Seal	1
11	1330281	Terminal	4
11	1521989	Terminal	3
12	1534828	Clip	1
13	. . . . .	Connector Assembly (Hydraulic Filter)	1
13	1329152	Plug	1
13	1329151	Terminal	1
13	1330281	Terminal	2
13	1402888	Seal	2
14	. . . . .	Connector Assembly (End Cap)	1
14	1329150	Connector	1
14	1327164	Seal	2
14	1329151	Terminal	1
15	. . . . .	Connector Assembly (Power Distribution Module)	1
15	1521185	Connector	1
15	1521188	Lock	1
15	1323579	Seal	8
15	1521989	Terminal	2
15	1330281	Terminal	6
16	. . . . .	Connector Assembly (Power Distribution Module)	1
16	1521186	Connector	1
16	1521188	Lock	1
16	1323579	Seal	7
16	1327164	Seal	1
16	1521989	Terminal	7
17	. . . . .	Connector Assembly (Accessory 2)	1
17	1514602	Connector	1
17	1514603	Connector	1
17	1330439	Plug	1
17	1554359	Terminal	3
18	. . . . .	Connector Assembly (End Cap)	1
18	1514597	Connector	1
18	1330439	Plug	4
19	1572588	Switch	1
20	. . . . .	Connector Assembly (To Seat Harness)	1
20	1541991	Connector	1
20	1541992	Connector	1
20	1463139	Terminal	8
21	. . . . .	Connector Assembly (Alternate Horn Button)	1
21	1490242	Connector (2 Way)	1
21	1490243	Connector (Secondary Lock)	1
21	1330438	Terminal (Socket)	2

©2013 HYSTER COMPANY

WIRE HARNESS

RH CHASSIS – YANMAR 2.6L AND 3.3L, DIESEL (→ 8/2006)

ITEM	PART NO.	DESCRIPTION	QTY
22	1351681	Connector (End Cap)	1
23	1509888	Clip	1
24	1351681	Connector (End Cap)	1
25	. . . . .	Connector Assembly (To Back-Up Alarm)	1
25	1490242	Connector (2 Way)	1
25	1490243	Connector (Secondary Lock)	1
25	1330438	Terminal (Socket)	2
26	. . . . .	Connector Assembly (End Cap)	1
26	1329150	Connector	1
26	1329151	Terminal	1
26	1327164	Seal	2
27	. . . . .	Connector Assembly (Coolant Level)	1
27	1329152	Plug	1
27	1329151	Terminal	1
27	1330281	Terminal	2
27	1402888	Seal	2
28	1525577	Connector (With Resistor) (End Cap)	1
29	. . . . .	Connector Assembly (Bus Terminal)	1
29	1489656	Connector (4-Way)	1
29	1489657	Connector	1
29	1330438	Terminal (Socket)	4
30	. . . . .	Connector Assembly (Key Switch)	1
30	1493465	Connector (2 Pin)	1
30	1330414	Connector (Secondary Lock)	1
30	1330437	Terminal (Pin)	2
31	. . . . .	Connector Assembly (Key Switch)	1
31	1490242	Connector (2 Way)	1
31	1490243	Connector (Secondary Lock)	1
31	1330438	Terminal (Socket)	2
32	1534282	Clip	4
33	1500899	Clip	1
34	. . . . .	Connector Assembly (To Transmission Harness)	1
34	1502627	Connector (Socket)	1
34	1330438	Terminal (Socket)	17
34	1484377	Plug	6
35	. . . . .	Connector Assembly (To Engine Harness)	1
35	1531501	Connector	1
35	1330438	Terminal (Socket)	13
35	1330439	Plug	1
35	1484377	Plug	6
35	1554359	Terminal	3
35	1463139	Terminal	6
36	. . . . .	Connector Assembly (To Lights/Cab Harness)	1
36	1514602	Connector	1
36	1514603	Connector	1
36	1554359	Terminal	4
37	. . . . .	End Cap Assembly	1
37	1514597	Connector	1
37	1330439	Plug	4
38	. . . . .	End Cap Assembly	1

©2013 HYSTER COMPANY

WIRE HARNESS

RH CHASSIS – YANMAR 2.6L AND 3.3L, DIESEL (→ 8/2006)

ITEM	PART NO.	DESCRIPTION	QTY
38	1480187	Connector	1
38	1330439	Plug	2
39	. . . . .	Connector Assembly (Accessory 1)	1
39	1545202	Connector	1
39	1554359	Terminal	2
39	1546697	Connector	1
40	1402815	Clip	2
41	1587778	Clip	4
42	1509888	Clip	2
43	. . . . .	Connector Assembly (Vehicle System Manager)	1
43	1525569	Connector	1
43	1530037	Connector	1
43	1463139	Terminal	11
43	1484377	Plug	1

©2013 HYSTER COMPANY

NOTES

©2013 HYSTER COMPANY

WIRE HARNESS (FIGURE 7-52)

RH CHASSIS — YANMAR 2.6L AND 3.3L, DIESEL (8/2006 ↔ S/N L177B31165H)

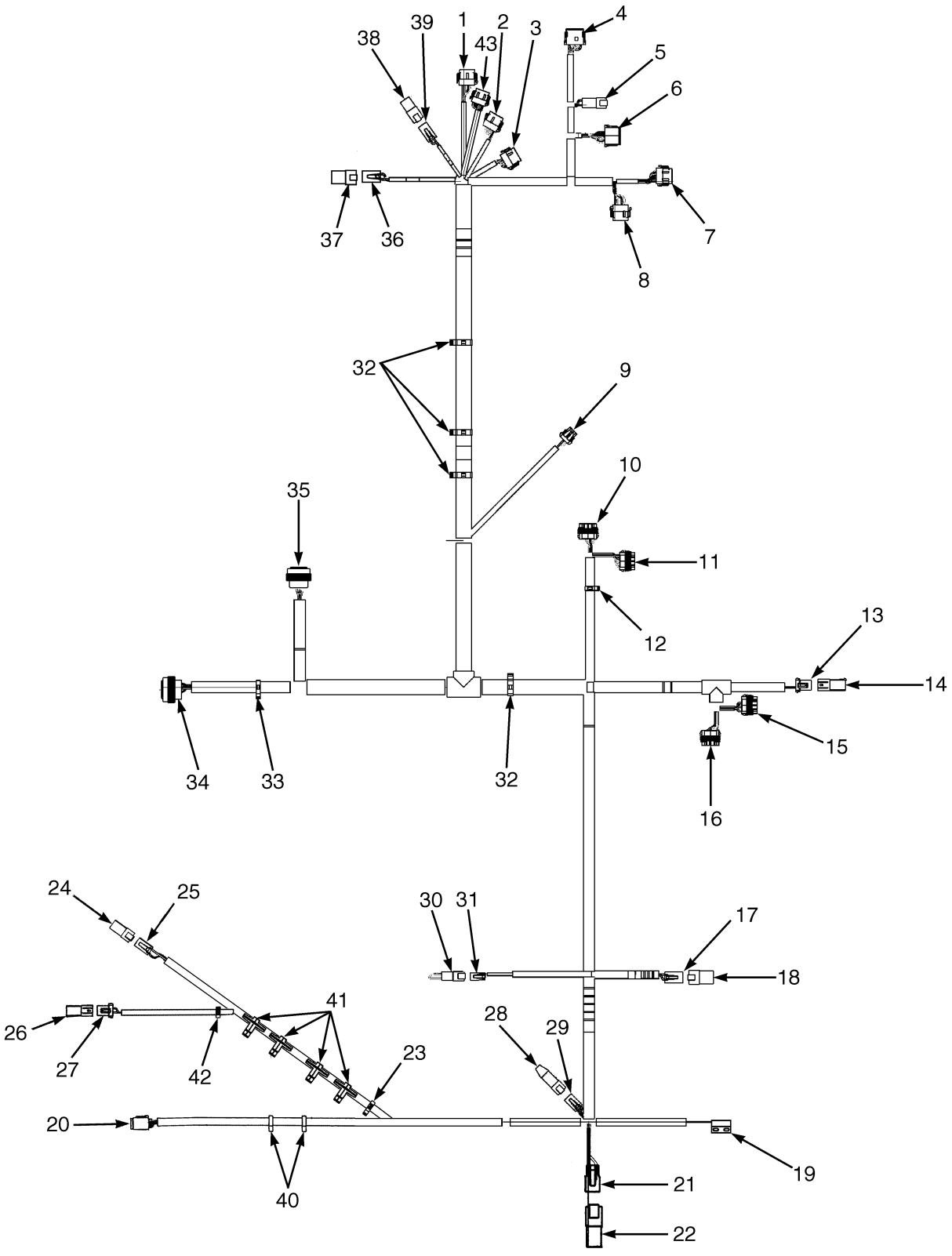

HP081619

©2013 HYSTER COMPANY

WIRE HARNESS

RH CHASSIS – YANMAR 2.6L AND 3.3L, DIESEL (8/2006 ↔ S/N L177B31165H)

ITEM	PART NO.	DESCRIPTION	QTY
	2085947	Wire Harness (Chassis)	1
1	. . . . .	Connector Assembly (Vehicle System Manager)	1
1	1525570	Connector	1
1	1463139	Terminal	8
1	1484377	Plug	4
1	1530037	Connector	1
2	. . . . .	Connector Assembly (Vehicle System Manager)	1
2	1525568	Connector	1
2	1463139	Terminal	9
2	1484377	Plug	3
2	1530037	Connector	1
3	. . . . .	Connector Assembly (Vehicle System Manager)	1
3	1525567	Connector	1
3	1529046	Connector	1
3	1463139	Terminal	9
3	1484377	Plug	3
4	. . . . .	Connector Assembly (Vehicle System Manager)	1
4	1525563	Connector	1
4	1500913	Connector	1
4	1330438	Terminal (Socket)	8
4	1363886	Terminal (Socket)	4
5	. . . . .	Connector Assembly (To Cowl Harness)	1
5	1489655	Connector (4 Way)	1
5	1330416	Connector (Secondary Lock)	1
5	1330437	Terminal (Pin)	4
6	. . . . .	Connector Assembly (To Cowl Harness)	1
6	1493428	Connector (12-Way)	1
6	1330438	Terminal (Socket)	9
6	1484377	Plug	3
6	1500913	Connector	1
7	. . . . .	Connector Assembly (Vehicle System Manager)	1
7	1525567	Connector	1
7	1529046	Connector	1
7	1463139	Terminal	3
7	1484377	Plug	9
8	. . . . .	Connector Assembly (Vehicle System Manager)	1
8	1525569	Connector	1
8	1529046	Connector	1
8	1463139	Terminal	9
8	1484377	Plug	3
9	. . . . .	Connector Assembly (Horn)	1
9	1476064	Connector	1
9	1476109	Connector Lock	1
9	1330356	Seal	2
9	1330355	Terminal	3
9	1476108	Wire Seal	1
10	. . . . .	Connector Assembly (Power Distribution Module)	1
10	1521184	Connector	1
10	1521188	Lock	1
10	1323579	Seal	5

©2013 HYSTER COMPANY

WIRE HARNESS

RH CHASSIS – YANMAR 2.6L AND 3.3L, DIESEL (8/2006 ↔ S/N L177B31165H)

ITEM	PART NO.	DESCRIPTION	QTY
10	1327164	Seal	2
10	1330281	Terminal	5
10	1521989	Terminal	1
10	1402888	Seal	1
11	. . . . .	Connector Assembly (Power Distribution Module)	1
11	1521183	Connector	1
11	1521188	Lock	1
11	1323579	Seal	7
11	1327164	Seal	1
11	1330281	Terminal	4
11	1521989	Terminal	3
12	1534828	Clip	1
13	. . . . .	Connector Assembly (Hydraulic Filter)	1
13	1329152	Plug	1
13	1329151	Terminal	1
13	1330281	Terminal	2
13	1402888	Seal	2
14	. . . . .	Connector Assembly (End Cap)	1
14	1329150	Connector	1
14	1327164	Seal	2
14	1329151	Terminal	1
15	. . . . .	Connector Assembly (Power Distribution Module)	1
15	1521185	Connector	1
15	1521188	Lock	1
15	1323579	Seal	8
15	1521989	Terminal	2
15	1330281	Terminal	6
16	. . . . .	Connector Assembly (Power Distribution Module)	1
16	1521186	Connector	1
16	1521188	Lock	1
16	1323579	Seal	7
16	1327164	Seal	1
16	1521989	Terminal	7
17	. . . . .	Connector Assembly (Accessory 2)	1
17	1514602	Connector	1
17	1514603	Connector	1
17	1330439	Plug	1
17	1554359	Terminal	3
18	. . . . .	Connector Assembly (End Cap)	1
18	1514597	Connector	1
18	1330439	Plug	4
19	1402815	Clip	2
20	. . . . .	Connector Assembly (To Seat Harness)	1
20	1541991	Connector	1
20	1541992	Connector	1
20	1463139	Terminal	8
21	. . . . .	Connector Assembly (Alternate Horn Button)	1
21	1490242	Connector (2 Way)	1
21	1490243	Connector (Secondary Lock)	1
21	1330438	Terminal (Socket)	2

©2013 HYSTER COMPANY

WIRE HARNESS

RH CHASSIS – YANMAR 2.6L AND 3.3L, DIESEL (8/2006 ↔ S/N L177B31165H)

ITEM	PART NO.	DESCRIPTION	QTY
22	1626727	Connector (End Cap)	1
23	1509888	Clip	1
24	1626727	Connector (End Cap)	1
25	. . . . .	Connector Assembly (To Back-Up Alarm)	1
25	1490242	Connector (2 Way)	1
25	1490243	Connector (Secondary Lock)	1
25	1330438	Terminal (Socket)	2
26	. . . . .	Connector Assembly (End Cap)	1
26	1329150	Connector	1
26	1329151	Terminal	1
26	1327164	Seal	2
27	. . . . .	Connector Assembly (Coolant Level)	1
27	1329152	Plug	1
27	1329151	Terminal	1
27	1330281	Terminal	2
27	1402888	Seal	2
28	1525577	Connector (With Resistor) (End Cap)	1
29	. . . . .	Connector Assembly (Bus Terminal)	1
29	1489656	Connector (4-Way)	1
29	1489657	Connector	1
29	1330438	Terminal (Socket)	4
30	1626727	Connector (End Cap)	1
31	. . . . .	Connector Assembly (Key Switch)	1
31	1490242	Connector (2 Way)	1
31	1490243	Connector (Secondary Lock)	1
31	1330438	Terminal (Socket)	2
32	1534282	Clip	4
33	1500899	Clip	1
34	. . . . .	Connector Assembly (To Transmission Harness)	1
34	1525567	Connector	1
34	1529046	Connector	1
34	1463139	Terminal	11
34	1484377	Plug	1
35	. . . . .	Connector Assembly (To Transmission Harness)	1
35	1531973	Connector	1
35	1531974	Connector	1
35	1463139	Terminal	6
36	. . . . .	Connector Assembly (To Engine Harness)	1
36	1493428	Connector (12-Way)	1
36	1500913	Connector	1
36	1330438	Terminal (Socket)	11
36	1484377	Plug	1
37	. . . . .	Connector Assembly (To Engine Harness)	1
37	1541991	Connector	1
37	1541992	Connector	1
37	1463139	Terminal	8
38	. . . . .	Connector Assembly (To Engine Harness)	1
38	1514602	Connector	1
38	1514603	Connector	1
38	1330439	Plug	1

©2013 HYSTER COMPANY

WIRE HARNESS

RH CHASSIS – YANMAR 2.6L AND 3.3L, DIESEL (8/2006 ↔ S/N L177B31165H)

ITEM	PART NO.	DESCRIPTION	QTY
38	1554359	Terminal	3
39	. . . . .	Connector Assembly (To Lights/Cab Harness)	1
39	1514602	Connector	1
39	1514603	Connector	1
39	1554359	Terminal	4
40	1514597	Connector	1
40	1330439	Plug	4
41	1480187	Connector	1
41	1330439	Plug	2
42	. . . . .	Connector Assembly (Accessory 1)	1
42	1545202	Connector	1
42	1554359	Terminal	2
42	1546697	Connector	1
43	. . . . .	Connector Assembly (Vehicle System Manager)	1
43	1525569	Connector	1
43	1530037	Connector	1
43	1463139	Terminal	11
43	1484377	Plug	1
44	1587778	Clip	4
45	1509888	Clip	2

©2013 HYSTER COMPANY

NOTES

©2013 HYSTER COMPANY

WIRE HARNESS (FIGURE 7-53)

RH CHASSIS — YANMAR 2.6L AND 3.3L, DIESEL (S/N L177B31166H →)

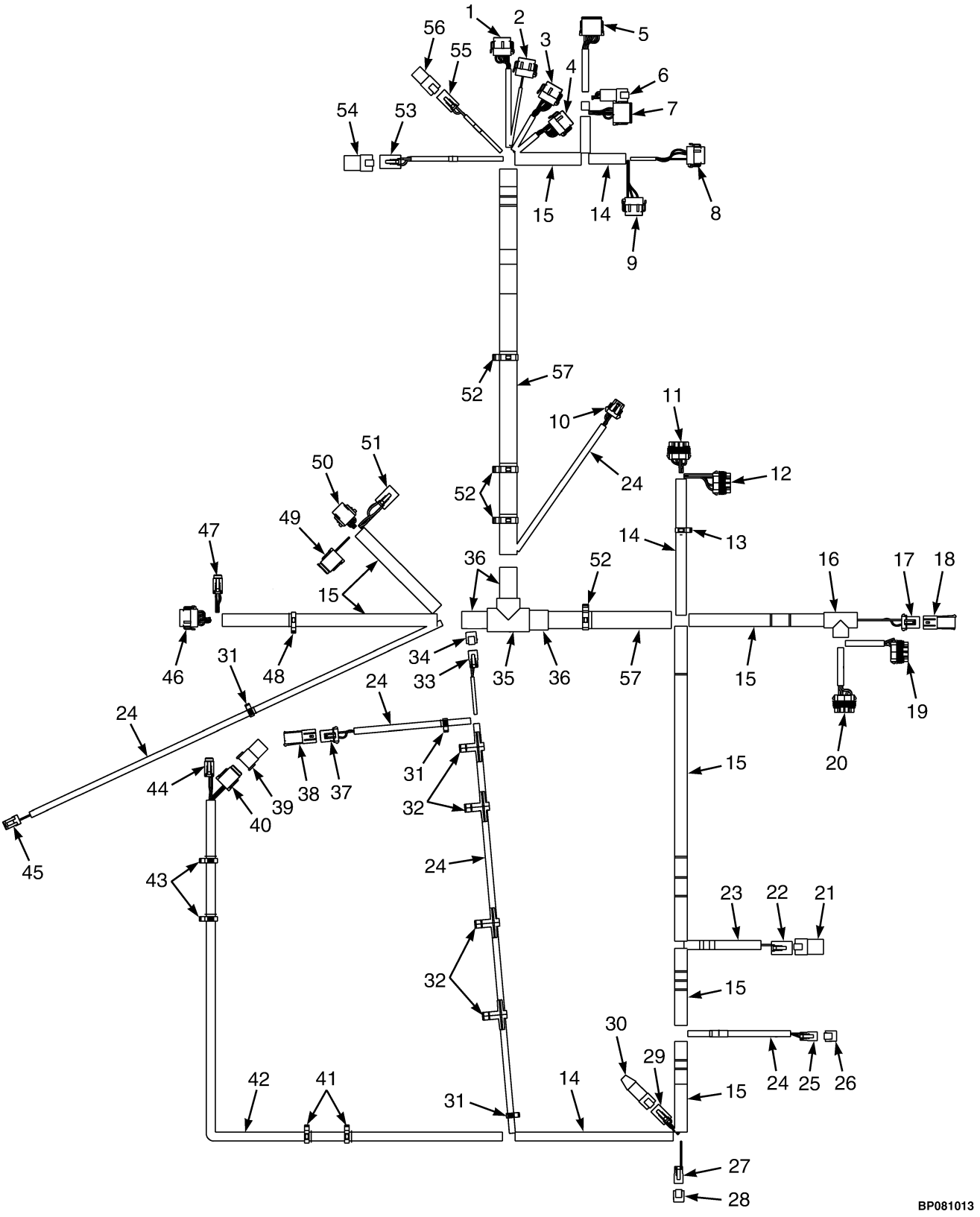

©2013 HYSTER COMPANY

WIRE HARNESS

RH CHASSIS – YANMAR 2.6L AND 3.3L, DIESEL (S/N L177B31166H →)

ITEM	PART NO.	DESCRIPTION	QTY
	4604204	Wire Harness (Chassis)	1
1	. . . . .	Connector Assembly (Vehicle System Manager)	1
1	1525570	Connector	1
1	1463139	Terminal	8
1	1484377	Plug	4
1	1530037	Connector (Secondary Lock)	1
2	. . . . .	Connector Assembly (Vehicle System Manager)	1
2	1525569	Connector	1
2	1463139	Terminal	12
2	1530037	Connector (Secondary Lock)	1
3	. . . . .	Connector Assembly (Vehicle System Manager)	1
3	1525568	Connector	1
3	1463139	Terminal	9
3	1484377	Plug	3
3	1530037	Connector (Secondary Lock)	1
4	. . . . .	Connector Assembly (Vehicle System Manager)	1
4	1525567	Connector	1
4	1463139	Terminal	9
4	1484377	Plug	3
4	1530037	Connector (Secondary Lock)	1
5	. . . . .	Connector Assembly (Vehicle System Manager)	1
5	1525563	Connector	1
5	1330438	Terminal (Socket)	8
5	1363886	Terminal (Socket)	4
5	1500913	Connector (Secondary Lock)	1
6	. . . . .	Connector Assembly (To Cowl Harness)	1
6	1489655	Connector (4 Way)	1
6	1330437	Terminal (Pin)	4
6	1330416	Connector (Secondary Lock) (Secondary Lock)	1
7	. . . . .	Connector Assembly (To Cowl Harness)	1
7	1493428	Connector (12-Way)	1
7	1330438	Terminal (Socket)	9
7	1484377	Plug	3
7	1500913	Connector (Secondary Lock)	1
8	. . . . .	Connector Assembly (Vehicle System Manager)	1
8	1525567	Connector	1
8	1463139	Terminal	3
8	1484377	Plug	9
8	1529046	Connector (Secondary Lock)	1
9	. . . . .	Connector Assembly (Vehicle System Manager)	1
9	1525569	Connector	1
9	1463139	Terminal	9
9	1484377	Plug	3
9	1529046	Connector (Secondary Lock)	1
10	. . . . .	Connector Assembly (Horn)	1
10	1476064	Connector	1
10	1476109	Connector Lock	1
10	1330356	Seal	2
10	1330355	Terminal	3
10	1476108	Wire Seal	1

©2013 HYSTER COMPANY

WIRE HARNESS

RH CHASSIS – YANMAR 2.6L AND 3.3L, DIESEL (S/N L177B31166H →)

ITEM	PART NO.	DESCRIPTION	QTY
11	. . . . .	Connector Assembly (Power Distribution Module)	1
11	1521184	Connector	1
11	1323579	Seal	5
11	1327164	Seal	2
11	1330281	Terminal	5
11	1521989	Terminal	1
11	1402888	Seal	1
11	1521188	Lock	1
12	. . . . .	Connector Assembly (Power Distribution Module)	1
12	1521183	Connector	1
12	1323579	Seal	7
12	1327164	Seal	1
12	1330281	Terminal	4
12	1521989	Terminal	3
12	1521188	Lock	1
13	1534828	Clip	1
14	275496	Conduit	AR
15	275497	Conduit	AR
16	1531490	Conduit	1
17	. . . . .	Connector Assembly (Hydraulic Filter)	1
17	1329152	Plug	1
17	1329151	Terminal	1
17	1330281	Terminal	2
17	1402888	Seal	2
18	. . . . .	Connector Assembly (End Cap)	1
18	1329150	Connector	1
18	1327164	Seal	2
18	1329151	Terminal	1
19	. . . . .	Connector Assembly (Power Distribution Module)	1
19	1521185	Connector	1
19	1521188	Lock	1
19	1323579	Seal	8
19	1521989	Terminal	2
19	1330281	Terminal	6
20	. . . . .	Connector Assembly (Power Distribution Module)	1
20	1521186	Connector	1
20	1521188	Lock	1
20	1323579	Seal	7
20	1327164	Seal	1
20	1521989	Terminal	7
21	. . . . .	Connector Assembly (End Cap)	1
21	1514597	Connector	1
21	1330439	Plug	4
22	. . . . .	Connector Assembly (Accessory 2)	1
22	1514602	Connector	1
22	1514603	Connector	1
22	1330439	Plug	1
22	1554359	Terminal	3
23	275495	Conduit	AR
24	275493	Conduit	AR

©2013 HYSTER COMPANY

WIRE HARNESS

RH CHASSIS – YANMAR 2.6L AND 3.3L, DIESEL (S/N L177B31166H →)

ITEM	PART NO.	DESCRIPTION	QTY
25	. . . . .	Connector Assembly (Key Switch)	1
25	1490242	Connector (2 Way)	1
25	1490243	Connector (Secondary Lock)	1
25	1330438	Terminal (Socket)	2
26	1626727	Connector (End Cap)	1
27	. . . . .	Connector Assembly (To Alternate Horn Button)	1
27	1490242	Connector (2 Way)	1
27	1490243	Connector (Secondary Lock)	1
27	1330438	Terminal (Socket)	1
28	1626727	Connector (Endcap)	1
29	. . . . .	Connector Assembly (To Bus Terminal 2)	1
29	1489656	Connector (4-Way)	1
29	1489657	Connector	1
29	1330438	Terminal (Socket)	4
30	1525577	Connector (With Resistor)	1
31	1509888	Clip	3
32	1587778	Clip	4
33	. . . . .	Connector Assembly (To Back-Up Alarm Harness)	1
33	1490242	Connector (2 Way)	1
33	1490243	Connector (Secondary Lock)	1
33	1330438	Terminal (Socket)	2
34	1626727	Connector (Endcap)	1
35	1531492	T-Fitting	1
36	275499	Conduit	AR
37	. . . . .	Connector Assembly (Coolant Level)	1
37	4052151	Connector	1
37	1329151	Terminal	1
37	1330281	Terminal	2
37	1402888	Seal	2
38	. . . . .	Connector Assembly (Endcap)	1
38	1329150	Connector	1
38	1329151	Terminal	1
38	1327164	Seal	2
39	. . . . .	Connector Assembly (Endcap)	1
39	1541988	Connector (8 Pin)	1
39	1484377	Plug	8
40	1514597	Connector	1
40	1330439	Plug	4
40	. . . . .	Connector Assembly (To MLM Harness)	1
40	1541991	Connector	1
40	1541992	Connector	1
40	1463139	Terminal	5
40	1484377	Plug	3
41	1402815	Clip	2
42	1699754	Conduit	AR
43	1509890	Clip	1
44	1587778	Clip	4
44	. . . . .	Connector Assembly (To Seat Harness)	1
44	1531973	Connector	1
44	1531974	Connector	1

©2013 HYSTER COMPANY

WIRE HARNESS

RH CHASSIS – YANMAR 2.6L AND 3.3L, DIESEL (S/N L177B31166H →)

ITEM	PART NO.	DESCRIPTION	QTY
44	1463139	Terminal	4
44	1484377	Plug	2
45	. . . . .	Connector Assembly (Hydraulic Temp)	1
45	1402868	Connector	1
45	1323576	Terminal	2
46	. . . . .	Connector Assembly (To Transmission Harness)	1
46	1525567	Connector	1
46	1529046	Connector	1
46	1463139	Terminal	11
46	1484377	Plug	1
47	. . . . .	Connector Assembly (To Transmission Harness)	1
47	1531973	Connector	1
47	1531974	Connector	1
47	1463139	Terminal	6
48	1500899	Clip	1
49	. . . . .	Connector Assembly (To Engine Harness)	1
49	1493428	Connector (12-Way)	1
49	1330438	Terminal (Socket)	11
49	1484377	Plug	1
49	1500913	Connector (Secondary Lock)	1
50	. . . . .	Connector Assembly (To Engine Harness)	1
50	1541991	Connector	1
50	1463139	Terminal	8
50	1541992	Connector (Secondary Lock)	1
51	. . . . .	Connector Assembly (To Engine Harness)	1
51	1514602	Connector	1
51	1554359	Terminal	3
51	1330439	Plug	1
51	1514603	Connector (Secondary Lock)	1
52	1534282	Clip	4
53	. . . . .	Connector Assembly (To Lights/Cab Harness)	1
53	1514602	Connector	1
53	1514603	Connector	1
53	1554359	Terminal	4
54	. . . . .	Connector Assembly (Endcap)	1
54	1514597	Connector	1
54	1330439	Plug	4
55	. . . . .	Connector Assembly (Acc 1)	1
55	1545202	Connector	1
55	1554359	Terminal	2
55	1546697	Connector (Secondary Lock)	1
56	. . . . .	Connector Assembly	1
56	1480187	Connector	1
56	1330439	Plug	2
57	1540388	Conduit	AR

©2013 HYSTER COMPANY

NOTES

©2013 HYSTER COMPANY

WIRE HARNESS (FIGURE 7-54)

RH CHASSIS — YANMAR 2.6L AND 3.3L, DIESEL (1/2013 →)

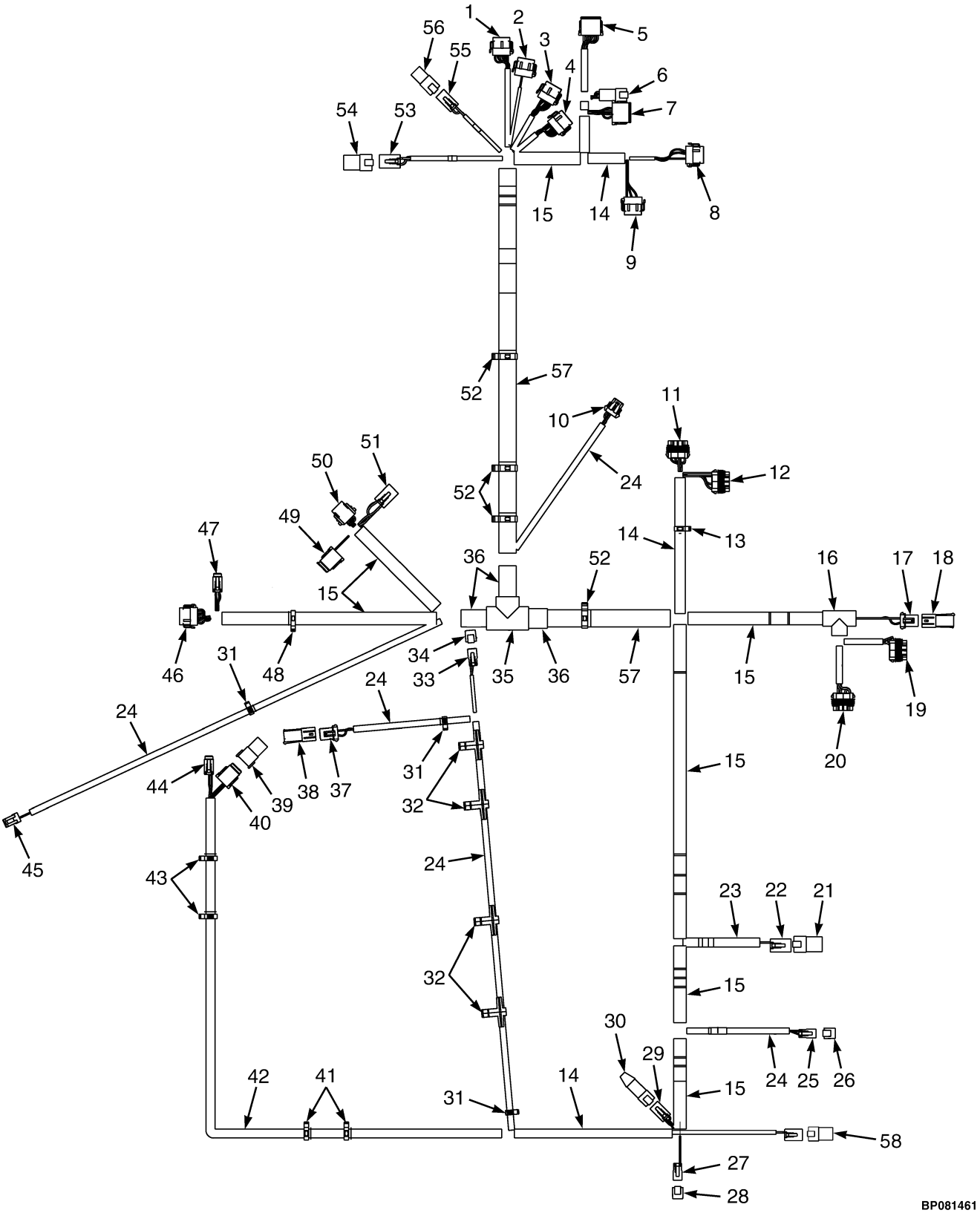

©2013 HYSTER COMPANY

WIRE HARNESS

RH CHASSIS – YANMAR 2.6L AND 3.3L, DIESEL (1/2013 →)

ITEM	PART NO.	DESCRIPTION	QTY
	4620360	Wire Harness (Chassis)	1
1	. . . . .	Connector Assembly (Vehicle System Manager)	1
1	1525570	Connector	1
1	1463139	Terminal	8
1	1484377	Plug	4
1	1530037	Connector (Secondary Lock)	1
2	. . . . .	Connector Assembly (Vehicle System Manager)	1
2	1525569	Connector	1
2	1463139	Terminal	12
2	1530037	Connector (Secondary Lock)	1
3	. . . . .	Connector Assembly (Vehicle System Manager)	1
3	1525568	Connector	1
3	1463139	Terminal	9
3	1484377	Plug	3
3	1530037	Connector (Secondary Lock)	1
4	. . . . .	Connector Assembly (Vehicle System Manager)	1
4	1525567	Connector	1
4	1463139	Terminal	9
4	1484377	Plug	3
4	1530037	Connector (Secondary Lock)	1
5	. . . . .	Connector Assembly (Vehicle System Manager)	1
5	1525563	Connector	1
5	1330438	Terminal (Socket)	8
5	1363886	Terminal (Socket)	4
5	1500913	Connector (Secondary Lock)	1
6	. . . . .	Connector Assembly (To Cowl Harness)	1
6	1489655	Connector (4 Way)	1
6	1330437	Terminal (Pin)	4
6	1330416	Connector (Secondary Lock) (Secondary Lock)	1
7	. . . . .	Connector Assembly (To Cowl Harness)	1
7	1493428	Connector (12-Way)	1
7	1330438	Terminal (Socket)	9
7	1484377	Plug	3
7	1500913	Connector (Secondary Lock)	1
8	. . . . .	Connector Assembly (Vehicle System Manager)	1
8	1525567	Connector	1
8	1463139	Terminal	3
8	1484377	Plug	9
8	1529046	Connector (Secondary Lock)	1
9	. . . . .	Connector Assembly (Vehicle System Manager)	1
9	1525569	Connector	1
9	1463139	Terminal	9
9	1484377	Plug	3
9	1529046	Connector (Secondary Lock)	1
10	. . . . .	Connector Assembly (Horn)	1
10	1476064	Connector	1
10	1476109	Connector Lock	1
10	1330356	Seal	2
10	1330355	Terminal	3
10	1476108	Wire Seal	1

©2013 HYSTER COMPANY

WIRE HARNESS

RH CHASSIS – YANMAR 2.6L AND 3.3L, DIESEL (1/2013 →)

ITEM	PART NO.	DESCRIPTION	QTY
11	. . . . .	Connector Assembly (Power Distribution Module)	1
11	1521184	Connector	1
11	1323579	Seal	5
11	1327164	Seal	2
11	1330281	Terminal	5
11	1521989	Terminal	1
11	1402888	Seal	1
11	1521188	Lock	1
12	. . . . .	Connector Assembly (Power Distribution Module)	1
12	1521183	Connector	1
12	1323579	Seal	7
12	1327164	Seal	1
12	1330281	Terminal	4
12	1521989	Terminal	3
12	1521188	Lock	1
13	1534828	Clip	1
14	275496	Conduit	AR
15	275497	Conduit	AR
16	1531490	Conduit	1
17	. . . . .	Connector Assembly (Hydraulic Filter)	1
17	1329152	Plug	1
17	1329151	Terminal	1
17	1330281	Terminal	2
17	1402888	Seal	2
18	. . . . .	Connector Assembly (End Cap)	1
18	1329150	Connector	1
18	1327164	Seal	2
18	1329151	Terminal	1
19	. . . . .	Connector Assembly (Power Distribution Module)	1
19	1521185	Connector	1
19	1521188	Lock	1
19	1323579	Seal	8
19	1521989	Terminal	2
19	1330281	Terminal	6
20	. . . . .	Connector Assembly (Power Distribution Module)	1
20	1521186	Connector	1
20	1521188	Lock	1
20	1323579	Seal	7
20	1327164	Seal	1
20	1521989	Terminal	7
21	. . . . .	Connector Assembly (End Cap)	1
21	1514597	Connector	1
21	1330439	Plug	4
22	. . . . .	Connector Assembly (Accessory 2)	1
22	1514602	Connector	1
22	1514603	Connector	1
22	1330439	Plug	1
22	1554359	Terminal	3
23	275495	Conduit	AR
24	275493	Conduit	AR

©2013 HYSTER COMPANY

WIRE HARNESS

RH CHASSIS – YANMAR 2.6L AND 3.3L, DIESEL (1/2013 →)

ITEM	PART NO.	DESCRIPTION	QTY
25	. . . . .	Connector Assembly (Key Switch)	1
25	1490242	Connector (2 Way)	1
25	1490243	Connector (Secondary Lock)	1
25	1330438	Terminal (Socket)	2
26	1626727	Connector (End Cap)	1
27	. . . . .	Connector Assembly (To Alternate Horn Button)	1
27	1490242	Connector (2 Way)	1
27	1490243	Connector (Secondary Lock)	1
27	1330438	Terminal (Socket)	1
28	1626727	Connector (Endcap)	1
29	. . . . .	Connector Assembly (To Bus Terminal 2)	1
29	1489656	Connector (4-Way)	1
29	1489657	Connector	1
29	1330438	Terminal (Socket)	4
30	1525577	Connector (With Resistor)	1
31	1509888	Clip	3
32	1587778	Clip	4
33	. . . . .	Connector Assembly (To Back-Up Alarm Harness)	1
33	1490242	Connector (2 Way)	1
33	1490243	Connector (Secondary Lock)	1
33	1330438	Terminal (Socket)	2
34	1626727	Connector (Endcap)	1
35	1531492	T-Fitting	1
36	275499	Conduit	AR
37	. . . . .	Connector Assembly (Coolant Level)	1
37	1329152	Plug	1
37	1329151	Terminal	1
37	1330281	Terminal	2
37	1402888	Seal	2
38	. . . . .	Connector Assembly (Endcap)	1
38	1329150	Connector	1
38	1329151	Terminal	1
38	1327164	Seal	2
39	. . . . .	Connector Assembly (Endcap)	1
39	1541988	Connector (8 Pin)	1
39	1484377	Plug	8
40	1514597	Connector	1
40	1330439	Plug	4
40	. . . . .	Connector Assembly (To MLM Harness)	1
40	1541991	Connector	1
40	1541992	Connector	1
40	1463139	Terminal	5
40	1484377	Plug	3
41	1509890	Clip	2
42	1699754	Conduit	AR
43	1509890	Clip	2
44	1587778	Clip	4
44	. . . . .	Connector Assembly (To Seat Harness)	1
44	1531973	Connector	1
44	1531974	Connector	1

©2013 HYSTER COMPANY

WIRE HARNESS

RH CHASSIS – YANMAR 2.6L AND 3.3L, DIESEL (1/2013 →)

ITEM	PART NO.	DESCRIPTION	QTY
44	1463139	Terminal	4
44	1484377	Plug	2
45	. . . . .	Connector Assembly (Hydraulic Temp)	1
45	1402868	Connector	1
45	1323576	Terminal	2
46	. . . . .	Connector Assembly (To Transmission Harness)	1
46	1525567	Connector	1
46	1529046	Connector	1
46	1463139	Terminal	11
46	1484377	Plug	1
47	. . . . .	Connector Assembly (To Transmission Harness)	1
47	1531973	Connector	1
47	1531974	Connector	1
47	1463139	Terminal	6
48	1500899	Clip	1
49	. . . . .	Connector Assembly (To Engine Harness)	1
49	1493428	Connector (12-Way)	1
49	1330438	Terminal (Socket)	11
49	1484377	Plug	1
49	1500913	Connector (Secondary Lock)	1
50	. . . . .	Connector Assembly (To Engine Harness)	1
50	1541991	Connector	1
50	1463139	Terminal	8
50	1541992	Connector (Secondary Lock)	1
51	. . . . .	Connector Assembly (To Engine Harness)	1
51	1514602	Connector	1
51	1554359	Terminal	3
51	1330439	Plug	1
51	1514603	Connector (Secondary Lock)	1
52	1534282	Clip	4
53	. . . . .	Connector Assembly (To Lights/Cab Harness)	1
53	1514602	Connector	1
53	1514603	Connector	1
53	1554359	Terminal	4
54	. . . . .	Connector Assembly (Endcap)	1
54	1514597	Connector	1
54	1330439	Plug	4
55	. . . . .	Connector Assembly (Acc 1)	1
55	1545202	Connector	1
55	1554359	Terminal	2
55	1546697	Connector (Secondary Lock)	1
56	. . . . .	Connector Assembly	1
56	1480187	Connector	1
56	1330439	Plug	2
57	1540388	Conduit	AR
58	. . . . .	Connector Assembly (Seat Switch Harness)	1
58	1632865	Connector	1
58	1514603	Connector	1
58	1554359	Terminal	4

©2013 HYSTER COMPANY

NOTES

©2013 HYSTER COMPANY

WIRE HARNESS (FIGURE 7-55)
SEAT JUMPER (→ S/N L177V04457H EXC. 04450)

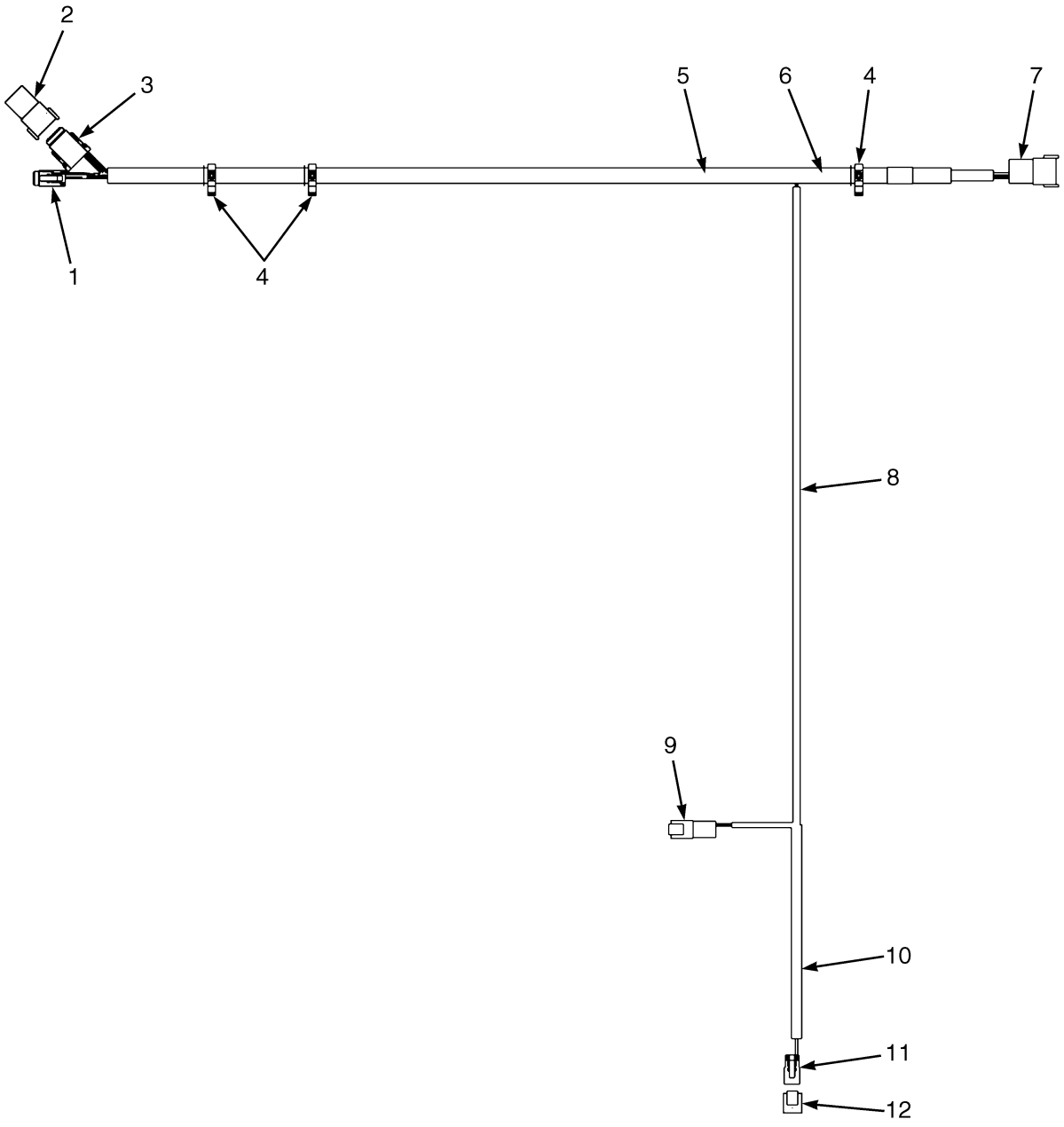

©2013 HYSTER COMPANY

WIRE HARNESS

SEAT JUMPER (→ S/N L177V04457H EXC. 04450)

ITEM	PART NO.	DESCRIPTION	QTY
	4601500	Wire Harness	1
1	. . . . .	Connector Assembly (Seat Harness)	1
1	1531973	Connector	1
1	1531974	Connector (Lock)	1
1	1463139	Terminal (Pin)	4
1	1484377	Plug	2
2	. . . . .	Connector Assembly (MLM Harness)	1
2	1541991	Connector	1
2	1541992	Connector (Lock)	1
2	1463139	Terminal (Pin)	5
2	1484377	Plug	3
3	. . . . .	End Cap	1
3	1541988	Connector (8 Pin)	1
3	1484377	Plug	8
4	1509890	Clip	3
5	1699754	Conduit	AR
6	275495	Conduit	AR
7	. . . . .	Connector Assembly (RH Chassis Harness)	1
7	1541988	Connector (8 Pin)	1
7	1541989	Connector (Secondary Lock) (Lock)	1
7	1463138	Terminal Pin (Pin)	8
8	1697181	Conduit	AR
9	. . . . .	Connector Assembly (RH Chassis Harness)	1
9	1493465	Connector (2 Pin)	1
9	1330414	Connector (Secondary Lock)	1
9	1330437	Terminal (Pin)	2
10	275493	Conduit	AR
11	. . . . .	Connector Assembly (Alternate Horn Button)	1
11	1490242	Connector (2 Way)	1
11	1490243	Connector (Secondary Lock) (Lock)	1
11	1330438	Terminal (Socket)	2
12	1626727	Connector (End Cap)	1

©2013 HYSTER COMPANY

WIRE HARNESS (FIGURE 7-56)

GASOLINE ENGINE — MAZDA 2.0L AND 2.2L (→ S/N L177B11117D)

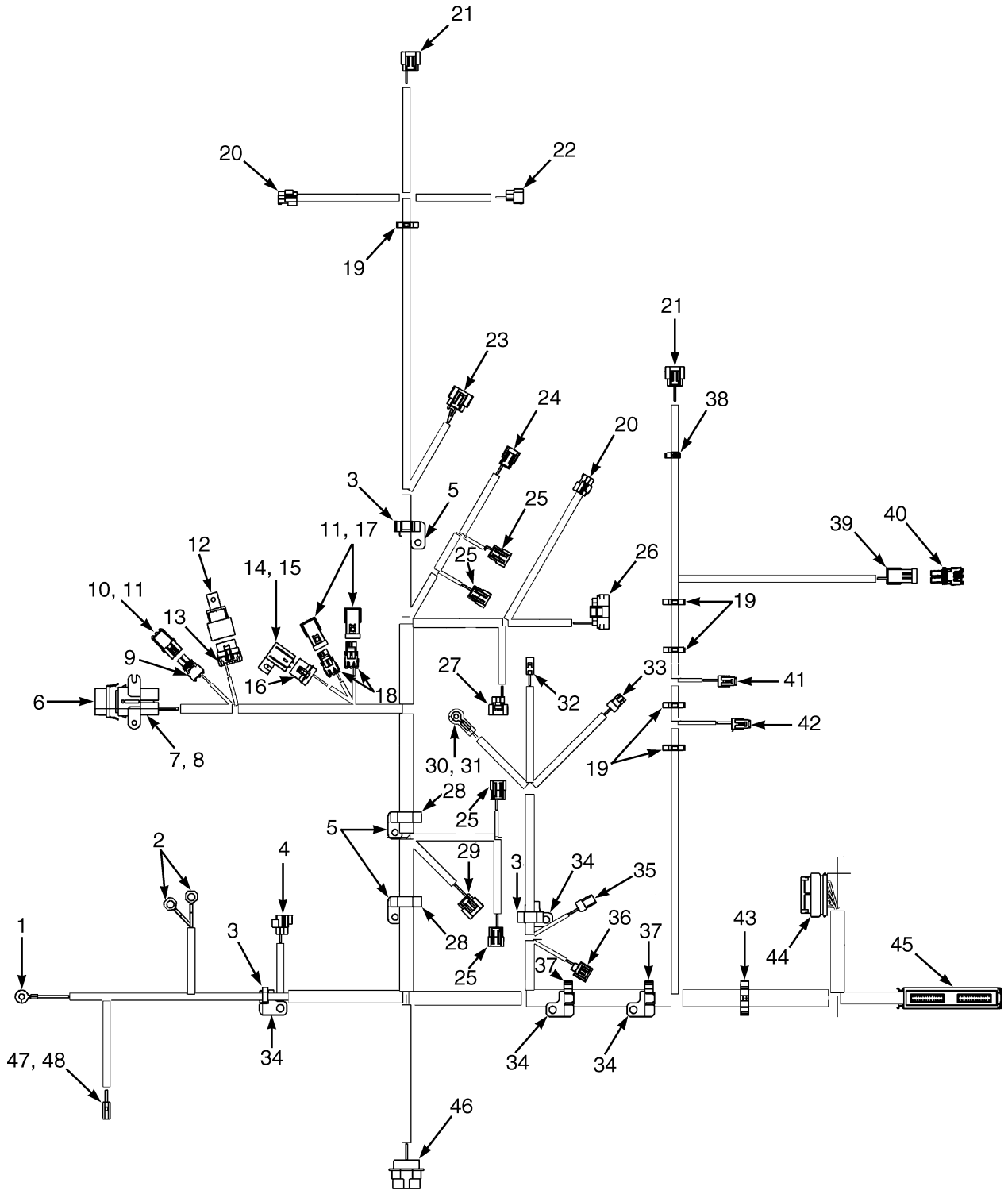

HP081567

©2013 HYSTER COMPANY

WIRE HARNESS

GASOLINE ENGINE – MAZDA 2.0L AND 2.2L (→ S/N L177B11117D)

ITEM	PART NO.	DESCRIPTION	QTY
	2065856	Wire Harness	1
1	1493458	E-Ring (Starter)	1
2	1402890	Ring Terminal (Block Ground)	2
3	1532775	Clip	3
4	1531991	Connector (Oxygen Sensor)	1
5	1532761	Clip	3
6	1454862	Cover (With Seal) (Fuse Holder)	1
7	1543553	Fuse Holder	1
8	1378418	Fuse (50 Amp)	1
9	1547482	Connector (Governor Control Unit Interface)	1
10	1547482	Connector	1
11	1567333	Clip	3
12	1654577	Relay (Shrouded 4 Pin) (Fuel Pump)	1
12	1654579	Clip (Relay)	1
13	1375795	Connector Body	1
14	1330293	Cover (Fuse)	1
15	370647	Fuse (10 Amp)	1
16	1330292	Connector	1
17	1465469	Connector (Electronic Control Unit Test Port)	2
18	1465468	Connector	2
19	1402816	Clip	5
20	1482651	Connector Body (Condensor)	2
21	1531237	Connector Body (Igniter)	2
22	1531239	Connector Body (Coil)	1
23	1531240	Connector Body (Distributor)	1
24	1531235	Connector Body (Pressure Regulator)	1
25	1531238	Connector Body (Fuel Injector)	4
26	1531231	Connector Body (Governor)	1
27	1561518	Connector (Throttle Position Sensor)	1
28	1532777	Clip	2
29	1560441	Connector Body (MAP Sensor)	1
30	1520864	Boot	1
31	129888	E-Ring (Alternator)	1
32	1308259	Connector Body (Alternator)	1
33	1327957	Connector (Oil Sensor)	1
34	1558228	Clip	4
35	1323586	Connector (Coolant Temperature)	1
36	1531233	Connector Body (Coolant Temperature)	1
37	1532778	Clip	2
38	1509888	Clip	1
39	1465469	Connector (Air Filter Restriction Sensor)	1
40	1465468	Connector	1
41	1519611	Connector (Fuel Pump)	1
42	1476077	Connector (Fuel Level Sender)	1
43	1402817	Clip	1
44	1553094	Connector (Electronic Control Unit)	1
45	1547479	Housing (Governor Control Unit)	1
46	1531502	Connector (Chassis Harness)	1
47	1581313	Connector (Starter)	1
48	1581315	Terminal (Starter)	1

©2013 HYSTER COMPANY

WIRE HARNESS (FIGURE 7-57)

GASOLINE ENGINE — MAZDA 2.0L AND 2.2L (S/N L177B11118D ↔ S/N L177B15326E)

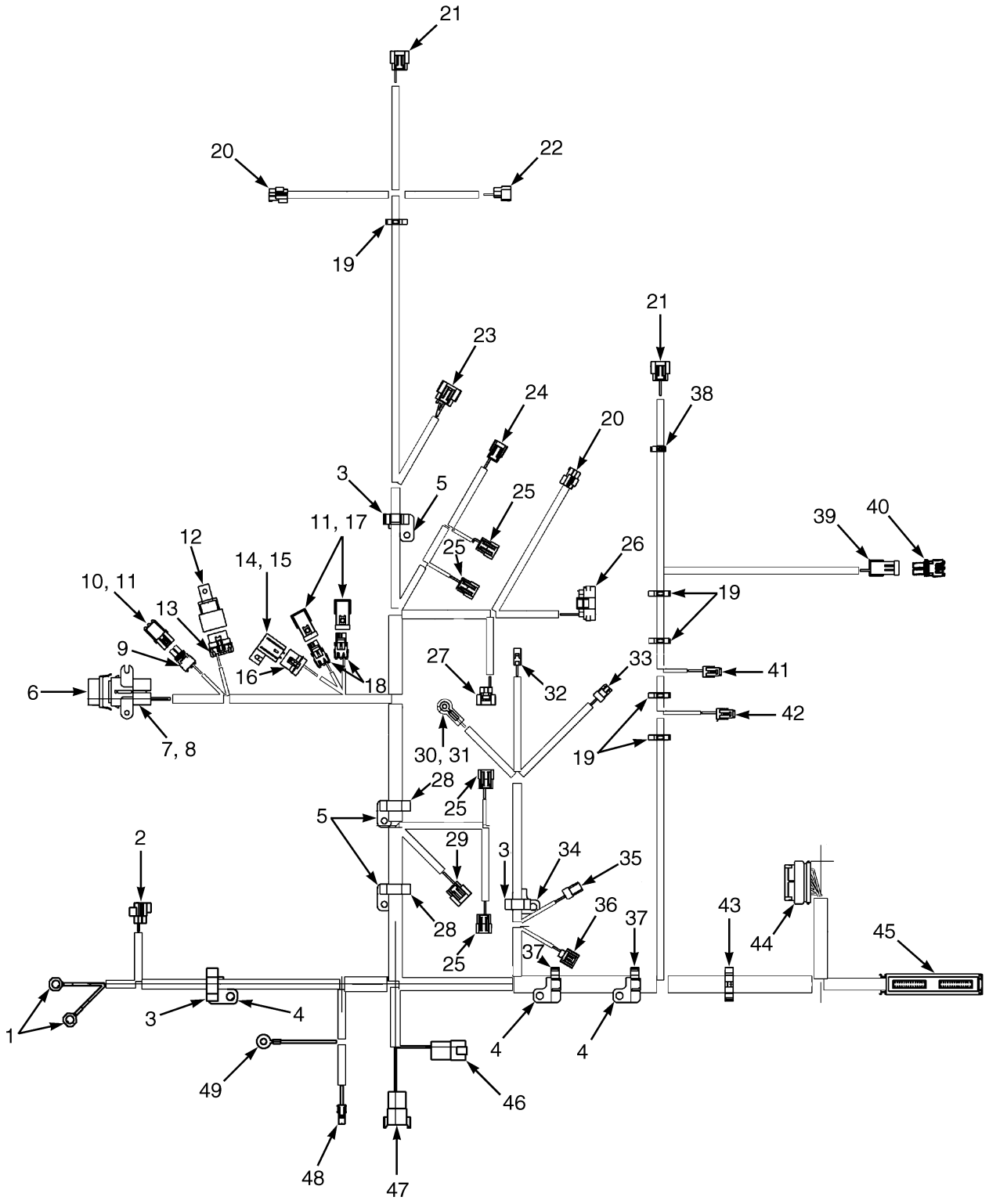

©2013 HYSTER COMPANY

WIRE HARNESS

GASOLINE ENGINE – MAZDA 2.0L AND 2.2L (S/N L177B11118D ↔ S/N L177B15326E)

ITEM	PART NO.	DESCRIPTION	QTY
	2087190	Wire Harness	1
1	1402890	Ring Terminal (Block Ground)	2
2	1531991	Connector (Oxygen Sensor)	1
3	1532775	Clip	3
4	1558228	Clip	3
5	1532761	Clip	3
6	1454862	Cover (With Seal) (Fuse Holder)	1
7	1543553	Fuse Holder	1
8	1378418	Fuse (50 Amp)	1
9	1547482	Connector (GCU Interface)	1
10	1547482	Connector	1
11	1567333	Clip	3
12	1654577	Relay (Shrouded 4 Pin) (Fuel Pump)	1
12	1654579	Clip (Relay)	1
13	1375795	Connector Body	1
14	1330293	Cover (Fuse)	1
15	370647	Fuse (10 Amp)	1
16	1330292	Connector	1
17	1465469	Connector (Engine Control Unit Test Port)	2
18	1465468	Connector	2
19	1402816	Clip	5
20	1482651	Connector Body (Condensor)	2
21	1531237	Connector Body (Igniter)	2
22	1531239	Connector Body (Coil)	1
23	1531240	Connector Body (Distributor)	1
24	1531235	Connector Body (ISCV)	1
25	1531238	Connector Body (Fuel Injector)	4
26	1531231	Connector Body (Governor)	1
27	1561518	Connector (TPS)	1
28	1532777	Clip	2
29	1560441	Connector Body (MAP)	1
30	1520864	Boot	1
31	129888	E-Ring (Alternator)	1
32	1308259	Connector Body (Alternator)	1
33	1327957	Connector (Oil Sensor)	1
34	1558228	Clip	1
35	1323586	Connector (Coolant Temperature)	1
36	1531233	Connector Body (Coolant Temperature)	1
37	1532778	Clip	2
38	1509888	Clip	1
39	1465469	Connector (Air Filter Restriction Sensor)	1
40	1465468	Connector	1
41	1519611	Connector (Fuel Pump)	1
42	1476077	Connector (Fuel Level Sender)	1
43	1402817	Clip	1
44	1553094	Connector (Engine Control Unit)	1
45	1547479	Housing (GCU)	1
46	1514597	Connector (Chassis Harness)	1
46	1514598	Connector	1
47	1330413	Connector (8 Pin) (Chassis Harness)	1

©2013 HYSTER COMPANY

WIRE HARNESS

GASOLINE ENGINE – MAZDA 2.0L AND 2.2L (S/N L177B11118D ↔ S/N L177B15326E)

ITEM	PART NO.	DESCRIPTION	QTY
47	1330418	Connector (Secondary Lock)	1
48	1581313	Connector (Starter)	1
49	1493458	E-Ring	1

©2013 HYSTER COMPANY

NOTES

©2013 HYSTER COMPANY

WIRE HARNESS (FIGURE 7-58)

LPG ENGINE — MAZDA 2.0L AND 2.2L (→ S/N L177B11117D)

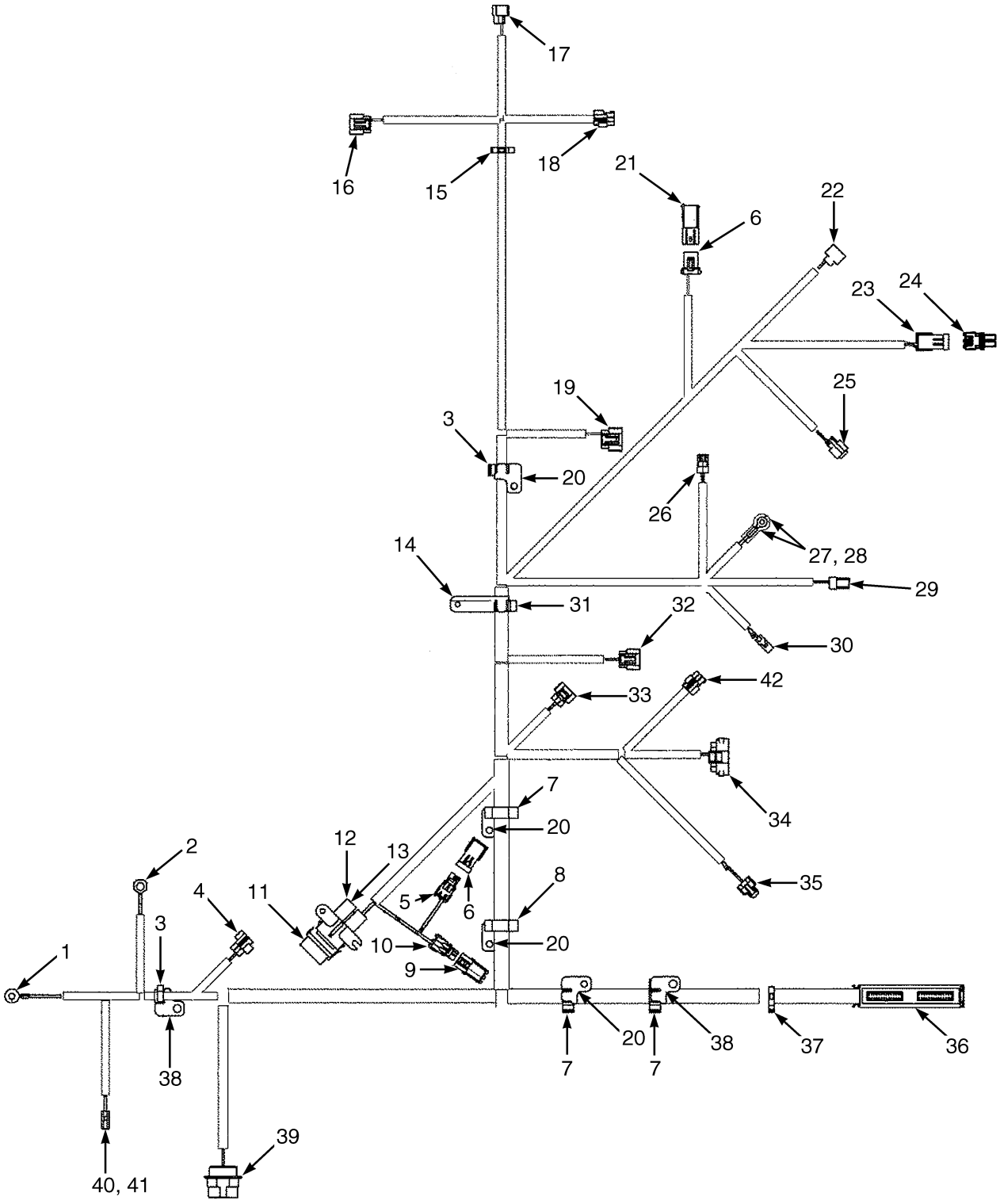

©2013 HYSTER COMPANY

WIRE HARNESS

LPG ENGINE – MAZDA 2.0L AND 2.2L (→ S/N L177B11117D)

ITEM	PART NO.	DESCRIPTION	QTY
	2065855	Wire Harness (LPG Mazda Engine)	1
1	1493458	E-Ring	1
2	1402890	Ring Terminal	1
3	1532775	Clip	2
4	1561518	Connector (Oxygen Sensor)	1
5	1465468	Connector (Test Port)	2
6	1547482	Connector	2
7	1567333	Clip	2
8	1532777	Clip	4
9	1547482	Connector (Electronic Control Module Interface)	1
10	1378652	Connector	1
11	1454862	Cover (With Seal) (Alternator)	1
12	1378418	Fuse (50 Amp)	1
13	1543553	Fuse Holder	1
14	1558226	Clip	1
15	1402816	Clip	1
16	1531237	Connector Body (Igniter)	1
17	1531239	Connector Body (Coil)	1
18	1482651	Connector Body (Condenser)	1
19	1531240	Connector Body (Distributor)	1
20	1532761	Clip	4
21	1329150	Connector (LPG Low Pressure Switch)	1
22	1474764	Connector Body (Idle LPG Solenoid)	1
23	1465469	Connector (Air Filter Restriction)	1
24	1465468	Connector (Air Filter Restriction Sensor)	1
25	1474763	Connector Body (Main LPG Solenoid)	1
26	1327957	Connector (Oil Pressure Sensor)	1
27	1520864	Boot (Alternator)	1
28	129888	E-Ring	1
29	1323586	Connector (Coolant Temperature)	1
30	1308259	Connector Body (Alternator)	1
31	1532776	Clip	1
32	1560441	Connector Body (MAP Sensor)	1
33	1531991	Connector (Throttle Position Sensor)	1
34	1531231	Connector Body (Governor)	1
35	1482654	Connector Body (Injector)	1
36	1547479	Housing	1
37	1500899	Clip	1
38	1558228	Clip	2
39	1531502	Connector (Chassis Harness)	1
40	1581313	Connector (Starter)	1
41	1581315	Terminal	1
42	1482651	Connector Body (Intake Air Tempertor Sensor)	1

©2013 HYSTER COMPANY

WIRE HARNESS (FIGURE 7-59)

LPG ENGINE — MAZDA 2.0L AND 2.2L (S/N L177B11118D ↔ S/N L177B16207E 2.2L) (S/N L177B11118D ↔ S/N L177B15512E 2.0L)

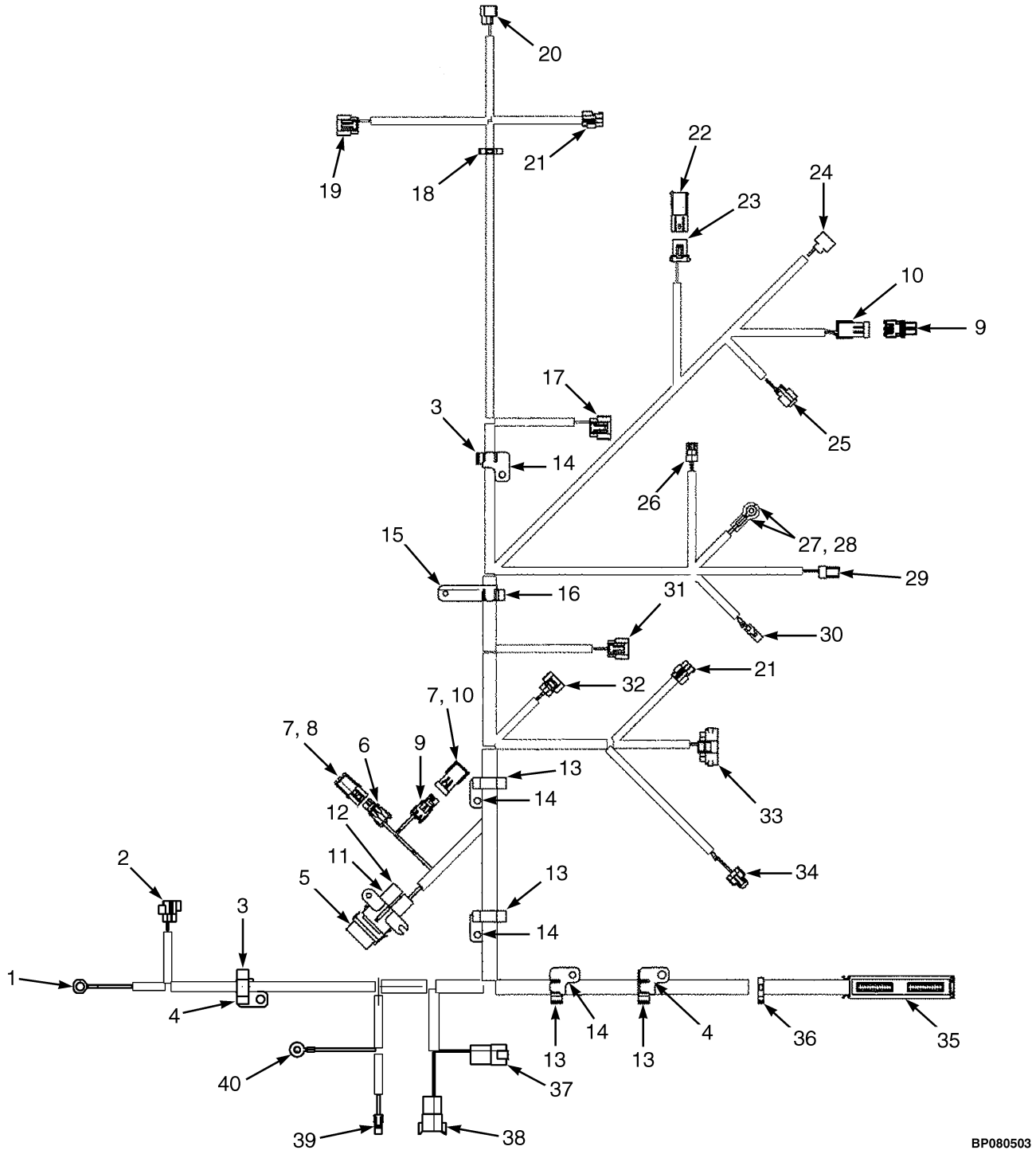

©2013 HYSTER COMPANY

WIRE HARNESS

LPG ENGINE – MAZDA 2.0L AND 2.2L (S/N L177B11118D ↔ S/N L177B16207E 2.2L) (S/N L177B11118D ↔ S/N L177B15512E 2.0L)

ITEM	PART NO.	DESCRIPTION	QTY
	2087189	Wire Harness (LPG Mazda Engine)	1
1	1402890	Ring Terminal	1
2	1561518	Connector (Oxygen Sensor)	1
3	1532775	Clip	2
4	1558228	Clip	2
5	1454862	Cover (With Seal) (Alternator)	1
6	1378652	Connector	1
7	1567333	Clip	2
8	1547482	Connector	1
9	1465468	Connector (Air Filter Restriction Sensor)	2
10	1465469	Connector (Air Filter Restriction)	2
11	1378418	Fuse (50 Amp)	1
12	1543553	Fuse Holder	1
13	1532777	Clip	4
14	1532761	Clip	4
15	1558226	Clip	1
16	1532776	Clip	1
17	1531240	Connector Body (Distributor)	1
18	1402816	Clip	1
19	1531237	Connector Body (Igniter)	1
20	1531239	Connector Body (Coil)	1
21	1482651	Connector Body (Condenser)	2
22	1329150	Connector (LPG Low Pressure Switch)	1
23	1329152	Plug	1
24	1474764	Connector Body (Idle LPG Solenoid)	1
25	1474763	Connector Body (Main LPG Solenoid)	1
26	1327957	Connector (Oil Pressure Sensor)	1
27	1520864	Boot (Alternator)	1
28	129888	E-Ring	1
29	1323586	Connector (Coolant Temperature)	1
30	1308259	Connector Body (Alternator)	1
31	1560441	Connector Body (MAP Sensor)	1
32	1531991	Connector (Throttle Position Sensor)	1
33	1531231	Connector Body (Governor)	1
34	1482654	Connector Body (Injector)	1
35	1547479	Housing	1
36	1500899	Clip	1
37	1514597	Connector (Chassis Harness)	1
37	1514598	Connector	1
38	1330413	Connector (8 Pin) (Chassis Harness)	1
38	1330418	Connector (Secondary Lock)	1
39	1581313	Connector (Starter)	1
40	1493458	E-Ring	1

©2013 HYSTER COMPANY

WIRE HARNESS (ENGINE) (FIGURE 7-60)

MAZDA 2.0L AND 2.2L, GASOLINE — 2007-2009 EMISSION COMPLIANT ENGINES (S/N L177B15327E →)

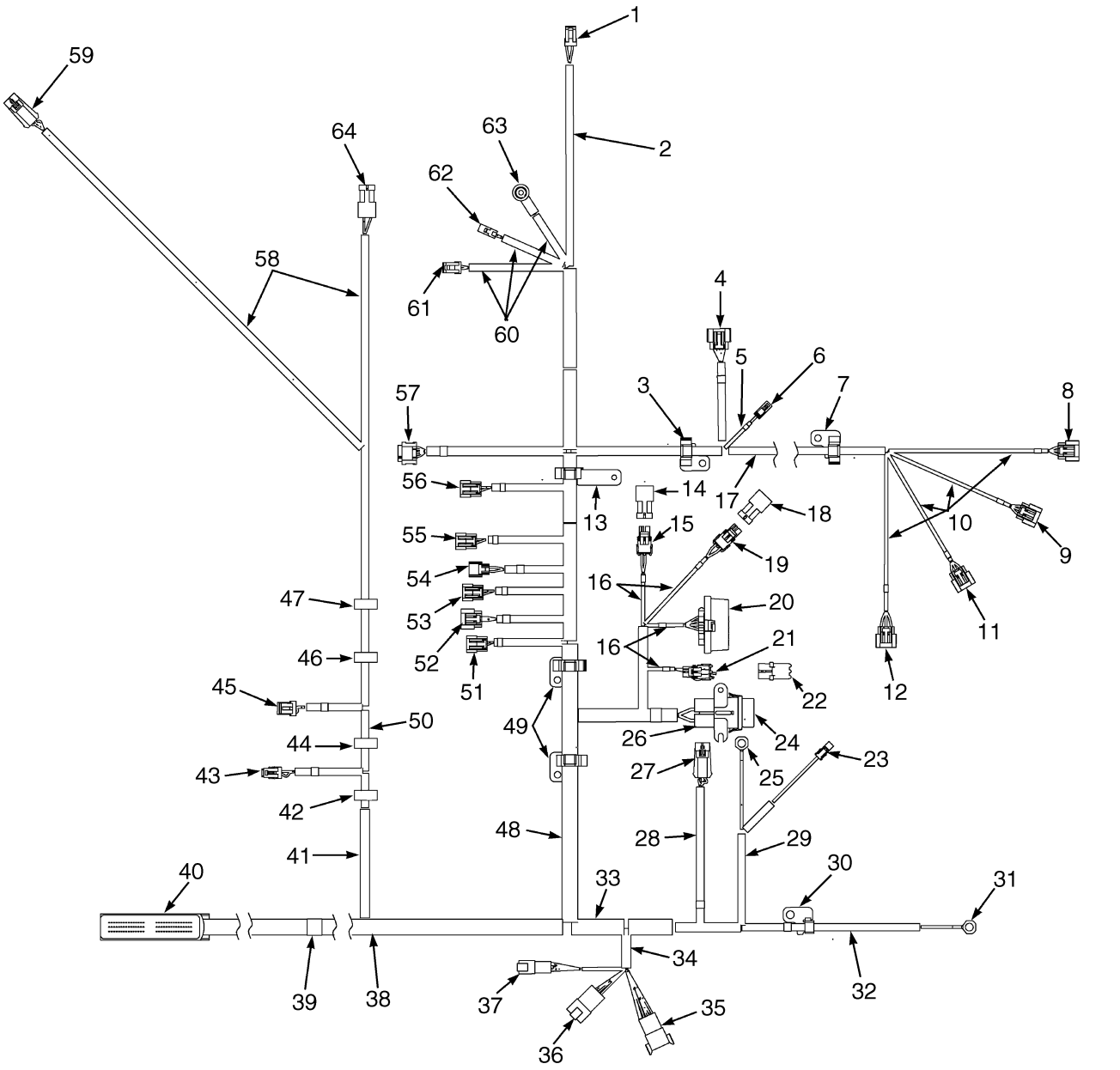

©2013 HYSTER COMPANY

WIRE HARNESS (ENGINE)

MAZDA 2.0L AND 2.2L, GASOLINE – 2007-2009 EMISSION COMPLIANT ENGINES (S/N L177B15327E →)

ITEM	PART NO.	DESCRIPTION	QTY
	2091281	Wire Harness (Engine)	1
1	. . . . .	Connector Assembly (Engine Coolant Temperature)	1
1	1323586	Connector	1
1	1532571	Terminal	2
2	275494	Conduit	AR
3	. . . . .	Bracket Assembly (Cam Angle Sensor)	1
3	1532761	Clip	1
3	1532775	Clip	1
4	. . . . .	Connector Assembly (Ignition Suppresser)	1
4	. . . . .	Sensor	1
5	275494	Conduit	AR
6	. . . . .	Connector Assembly	1
6	. . . . .	Connector	1
7	. . . . .	Bracket Assembly	1
7	1532761	Clip	1
7	1532775	Clip	1
8	. . . . .	Connector Assembly (Coil)	1
8	. . . . .	Connector	1
9	. . . . .	Connector Assembly (Coil)	1
9	. . . . .	Connector	1
10	. . . . .	Conduit	AR
11	. . . . .	Connector Assembly (Coil)	1
11	. . . . .	Connector	1
12	. . . . .	Connector Assembly (Coil)	1
12	. . . . .	Connector	1
13	. . . . .	Bracket Assembly	1
13	1532761	Clip	1
13	1532775	Clip	1
14	. . . . .	Connector Assembly (ECM Test Port)	1
14	1327164	Seal	2
14	1465469	Connector	1
15	. . . . .	Connector Assembly (ECM Test Port)	1
15	1491818	Seal	2
15	1465468	Connector	1
15	1498420	Terminal	2
15	1504197	Terminal	2
16	. . . . .	Conduit	AR
17	275496	Conduit	AR
18	. . . . .	Connector Assembly	1
18	1327164	Seal	2
18	1465469	Connector	1
19	. . . . .	Connector Assembly	1
19	1491818	Seal	2
19	1465468	Connector	1
19	1504197	Terminal	2
19	1498420	Terminal	2
20	. . . . .	Connector Assembly (Mini-Fuses)	1
20	1327164	Seal	2
20	1327959	Connector	1
20	1330297	Lock	1

©2013 HYSTER COMPANY

WIRE HARNESS (ENGINE)

MAZDA 2.0L AND 2.2L, GASOLINE – 2007-2009 EMISSION COMPLIANT ENGINES (S/N L177B15327E →)

ITEM	PART NO.	DESCRIPTION	QTY
20	. . . . .	Clip	1
20	1491818	Seal	4
20	1330281	Terminal	4
20	. . . . .	Cap	1
20	1498420	Terminal	4
21	. . . . .	Connector Assembly (ECM Interface)	1
21	. . . . .	Terminal	1
21	. . . . .	Terminal	1
21	. . . . .	Connector	4
22	. . . . .	Connector Assembly (ECM Interface)	1
22	. . . . .	Spacer	1
22	. . . . .	Cap	1
23	. . . . .	Connector Assembly (Starter)	1
23	1581313	Connector	1
23	1581315	Terminal	1
24	1327164	Seal (Alternator)	1
25	1402890	Ring Terminal (Starter B+)	1
26	. . . . .	Connector Assembly (Alternator)	1
26	1382694	Fuse Connector	2
26	1543553	Fuse Holder	1
26	. . . . .	Terminal	2
27	. . . . .	Connector Assembly (Pre-Catalytic 02 Sensor)	1
27	1476108	Wire Seal	4
27	1498424	Housing	1
27	. . . . .	Lock	1
27	. . . . .	Terminal	4
27	1520513	Clip	1
28	. . . . .	Conduit	AR
29	. . . . .	Conduit	AR
30	. . . . .	Bracket Assembly	1
30	1558228	Clip	1
30	1532774	Clip	1
31	1402890	Ring Terminal (Block Ground)	1
32	. . . . .	Conduit	AR
33	275498	Conduit	AR
34	275497	Conduit	AR
35	. . . . .	Connector Assembly (Chassis Harness)	1
35	1531480	Clip	1
35	1330437	Terminal (Pin)	1
35	1330413	Connector (8 Pin)	1
35	1330418	Connector (Secondary Lock)	1
36	. . . . .	Connector Assembly (Chassis Harness)	1
36	1500912	Clip	1
36	1514597	Connector	1
36	1330439	Plug	1
36	. . . . .	Terminal	1
36	1514598	Connector	3
37	. . . . .	Connector Assembly (Chassis Harness)	1
37	1530960	Connector	1
37	1530961	Connector (Secondary Lock)	1

©2013 HYSTER COMPANY

WIRE HARNESS (ENGINE)

MAZDA 2.0L AND 2.2L, GASOLINE – 2007-2009 EMISSION COMPLIANT ENGINES (S/N L177B15327E →)

ITEM	PART NO.	DESCRIPTION	QTY
37	1500912	Clip	1
37	1463138	Terminal Pin	1
38	275498	Conduit	AR
39	. . . . .	Label	1
40	. . . . .	Connector Assembly (ECM)	1
40	. . . . .	Connector	1
40	. . . . .	Cover	1
40	. . . . .	Cam	1
40	. . . . .	Terminal	43
41	275494	Conduit	AR
42	1402816	Clip	1
43	. . . . .	Connector Assembly (Fuel Level)	1
43	1476077	Connector	1
43	1323576	Terminal	2
44	1402816	Clip	1
45	1519611	Connector (Fuel Pump)	1
46	1402816	Clip	1
47	1402816	Clip	1
48	275498	Conduit	AR
49	. . . . .	Connector Assembly (Bracket Assembly)	1
49	1532761	Clip	1
49	1532778	Clip	1
50	. . . . .	Conduit	AR
51	. . . . .	Connector Assembly (Fuel Injector)	1
51	. . . . .	Clip	1
51	1560441	Connector Body	1
52	. . . . .	Connector Assembly (MAP Sensor)	1
52	1560441	Connector Body	1
52	1560441	Connector Body	1
52	1561144	Spacer	AR
53	. . . . .	Connector Assembly (Fuel Injector)	1
53	. . . . .	Clip	1
53	1560441	Connector Body	1
54	. . . . .	Connector Assembly (Intake Air Temperature Sensor)	1
54	. . . . .	Spacer	1
54	1482651	Connector Body	1
55	. . . . .	Connector Assembly (Fuel Injector)	1
55	. . . . .	Clip	1
55	1560441	Connector Body	1
56	. . . . .	Connector Assembly (Fuel Injector)	1
56	. . . . .	Clip	1
56	1560441	Connector Body	1
57	. . . . .	Connector Assembly (Throttle)	1
57	1533810	Seal	6
57	1569973	Connector Body	1
57	. . . . .	Terminal	6
58	. . . . .	Conduit	AR
59	. . . . .	Connector Assembly (Post-Catalytic 02 Sensor)	1
59	1476108	Wire Seal	4
59	1498424	Housing	1

©2013 HYSTER COMPANY

WIRE HARNESS (ENGINE)

MAZDA 2.0L AND 2.2L, GASOLINE – 2007-2009 EMISSION COMPLIANT ENGINES (S/N L177B15327E →)

ITEM	PART NO.	DESCRIPTION	QTY
59	. . . . .	Lock	1
59	. . . . .	Terminal	4
59	1520513	Clip	1
60	. . . . .	Conduit	AR
61	. . . . .	Connector Assembly (Oil Pressure Sensor)	1
61	1327957	Connector	1
61	1532571	Terminal	3
62	. . . . .	Connector Assembly (Alternator)	1
62	1308259	Connector Body	1
63	. . . . .	Connector Assembly (Alternator B+)	1
63	1567694	Ring Terminal	1
63	. . . . .	Boot	1
64	. . . . .	Connector Assembly (Air Filter Restriction Sensor)	1
64	1465469	Connector	1
64	1323578	Terminal	2
64	. . . . .	Terminal	2

©2013 HYSTER COMPANY

NOTES

©2013 HYSTER COMPANY

WIRE HARNESS (ENGINE) (FIGURE 7-61)
MAZDA 2.0L AND 2.2L, GASOLINE — 2010 SERIES

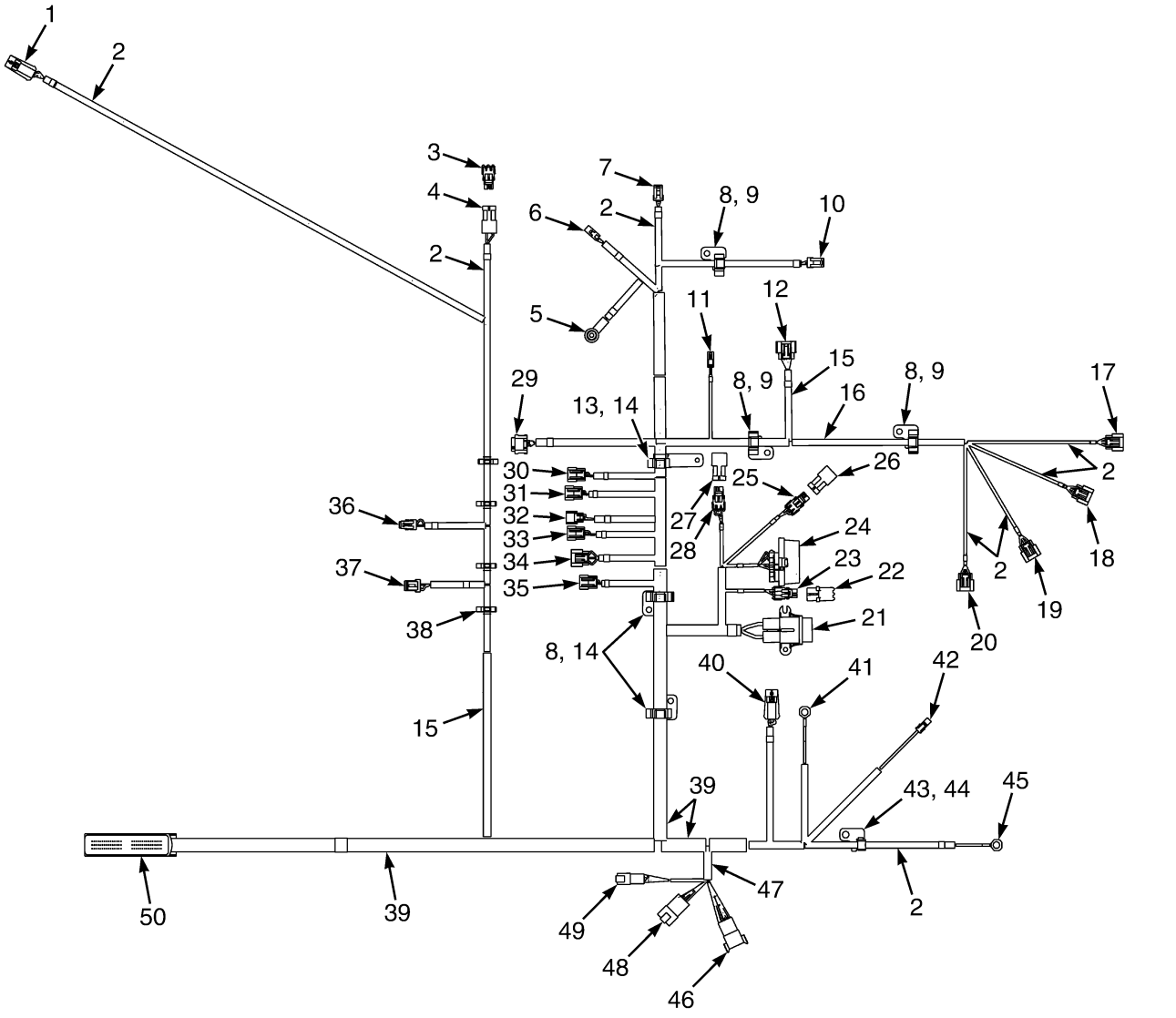

©2013 HYSTER COMPANY

WIRE HARNESS (ENGINE)
MAZDA 2.0L AND 2.2L, GASOLINE – 2010 SERIES

ITEM	PART NO.	DESCRIPTION	QTY
	~~4605117~~		
	4605855	Wire Harness	1
1	. . . . .	Connector Assembly (Post Catalytic Converter Oxygen Sensor)	1
1	1476108	Wire Seal	4
1	1498424	Housing	1
1	1650797	Lock	1
1	1653508	Terminal (Gold)	4
1	1520513	Clip	1
2	275493	Conduit	AR
3	. . . . .	Connector Assembly (Air Filter Restriction Sensor Cap)	1
3	1465468	Connector	1
3	1327164	Seal	2
4	. . . . .	Connector Assembly (Air Filter Restriction Sensor)	1
4	1465469	Connector	1
4	1323578	Terminal	2
4	1491821	Terminal	2
5	. . . . .	Connector Assembly (Alternator B+)	1
5	1567694	Ring Terminal	1
5	1656059	Boot	1
6	. . . . .	Connector Assembly (Alternator)	1
6	1308259	Connector Body	1
7	. . . . .	Connector Assembly (Oil Pressure Sensor)	1
7	1327957	Connector	1
7	1532571	Terminal	3
8	1532761	Clip	5
9	1532775	Clip	3
10	. . . . .	Connector Assembly (Engine Coolant Temperature Sensor)	1
10	1323586	Connector	1
10	1532571	Terminal	2
11	. . . . .	Connector Assembly (Ignition Suppressor)	1
11	1641935	Connector	1
12	. . . . .	Connector Assembly (Cam Sensor)	1
12	1656060	Sensor	1
13	1558226	Clip	1
14	1532778	Clip	3
15	275496	Conduit	AR
16	275496	Conduit	AR
17	. . . . .	Connector Assembly (Coil #1)	1
17	1641932	Connector	1
18	. . . . .	Connector Assembly (Coil #2)	1
18	1641932	Connector	1
19	. . . . .	Connector Assembly (Coil #3)	1
19	1641932	Connector	1
20	. . . . .	Connector Assembly (Coil #4)	1
20	1641932	Connector	1
21	. . . . .	Connector Assembly (Alternator)	1
21	1543553	Fuse Holder	1
21	1497235	Fuse Holder	1
21	1454829	Fuse (60 Amp)	1
21	1454827	Seal	2

©2013 HYSTER COMPANY

WIRE HARNESS (ENGINE)
MAZDA 2.0L AND 2.2L, GASOLINE – 2010 SERIES

ITEM	PART NO.	DESCRIPTION	QTY
21	1520543	Terminal	2
22	. . . . .	Connector Assembly (To ECU Interface)	1
22	1641945	Spacer	1
22	1641947	Cap	1
23	. . . . .	Connector Assembly (To ECU Interface)	1
23	1650522	Terminal	4
23	1650523	Terminal	4
23	1641944	Connector	1
24	. . . . .	Connector Assembly (Mini Fuses)	1
24	1327164	Seal	2
24	1327959	Connector	1
24	1330297	Lock	4
24	1641938	Clip	1
24	1491818	Seal	4
24	1330281	Terminal	4
24	1650526	Cap	1
24	1498420	Terminal	4
25	. . . . .	Connector Assembly	1
25	1491818	Seal	2
25	1465468	Connector	1
25	1504197	Terminal	2
25	1498420	Terminal	2
26	. . . . .	Connector Assembly	1
26	1327164	Seal	2
26	1465469	Connector	1
27	. . . . .	Connector Assembly (Fuel Test Port)	1
27	1327164	Seal	2
27	1465469	Connector	1
28	. . . . .	Connector Assembly (Fuel Test Port)	1
28	1491818	Seal	2
28	1465468	Connector	1
28	1498420	Terminal	2
28	1504197	Terminal	2
29	. . . . .	Connector Assembly (Bosch Throttle)	1
29	1533810	Seal	6
29	1569973	Connector Body	1
29	1610975	Terminal	6
30	. . . . .	Connector Assembly (Injector #2)	1
30	1647724	Connector	1
30	1650529	Seal	2
31	. . . . .	Connector Assembly (Injector #1)	1
31	1647724	Connector	1
31	1650529	Seal	2
32	. . . . .	Connector Assembly (Intake Air Temperature Sensor)	1
32	1641948	Spacer	1
32	1482651	Connector Body	1
33	. . . . .	Connector Assembly (Injector #4)	1
33	1647724	Connector	1
33	1650529	Seal	2
34	. . . . .	Connector Assembly (Map Sensor)	1

©2013 HYSTER COMPANY

WIRE HARNESS (ENGINE)
MAZDA 2.0L AND 2.2L, GASOLINE – 2010 SERIES

ITEM	PART NO.	DESCRIPTION	QTY
34	1641938	Clip	1
34	1560441	Connector Body	1
34	1561144	Spacer	1
35	. . . . .	Connector Assembly (Injector #3)	1
35	1647724	Connector	1
35	1650529	Seal	2
36	. . . . .	Connector Assembly (Fuel Level Sensor)	1
36	1476077	Connector	1
36	1323576	Terminal	2
37	. . . . .	Connector Assembly (Fuel Pump)	1
37	1519611	Connector	1
38	1402816	Clip	4
39	275498	Conduit	AR
40	. . . . .	Connector Assembly (Pre Catalytic Converter Oxygen Sensor)	1
40	1476108	Wire Seal	4
40	1498424	Housing	1
40	1650797	Lock	1
40	1653508	Terminal (Gold)	4
40	1520513	Clip	1
41	. . . . .	Connector Assembly (Starter B+)	1
41	1402890	Ring Terminal	1
42	. . . . .	Connector Assembly (Starter)	1
42	1581313	Connector	1
42	1581315	Terminal	1
43	1558228	Clip	1
44	1532774	Clip	1
45	. . . . .	Connector Assembly (Block Ground)	1
45	1402890	Ring Terminal	1
46	. . . . .	Connector Assembly (To Chassis Harness)	1
46	1531480	Clip	1
46	1330437	Terminal (Pin)	8
46	1330413	Connector (8 Pin)	1
46	1330418	Connector (Secondary Lock)	1
47	275497	Conduit	AR
48	. . . . .	Connector Assembly (To Chassis Harness)	1
48	1500912	Clip	1
48	1514597	Connector	1
48	1330439	Plug	1
48	1484709	Terminal (Pin)	3
48	1514598	Connector	1
49	. . . . .	Connector Assembly (To Chassis Harness)	1
49	1530960	Connector	1
49	1530961	Connector (Secondary Lock)	1
49	1500912	Clip	1
49	1463138	Terminal Pin	6
50	. . . . .	Connector Assembly (ECU Connector)	1
50	1641949	Connector	1
50	1641950	Cover	1
50	1641952	Cam	1
50	1653510	Terminal (Gold)	41

©2013 HYSTER COMPANY

WIRE HARNESS (ENGINE) (FIGURE 7-62)

MAZDA 2.0L AND 2.2L LPG — 2007-2009 EMISSION COMPLIANT ENGINES

(S/N L177B16207E → 2.2L LPG) (S/N L177B15512E → 2.0L LPG)

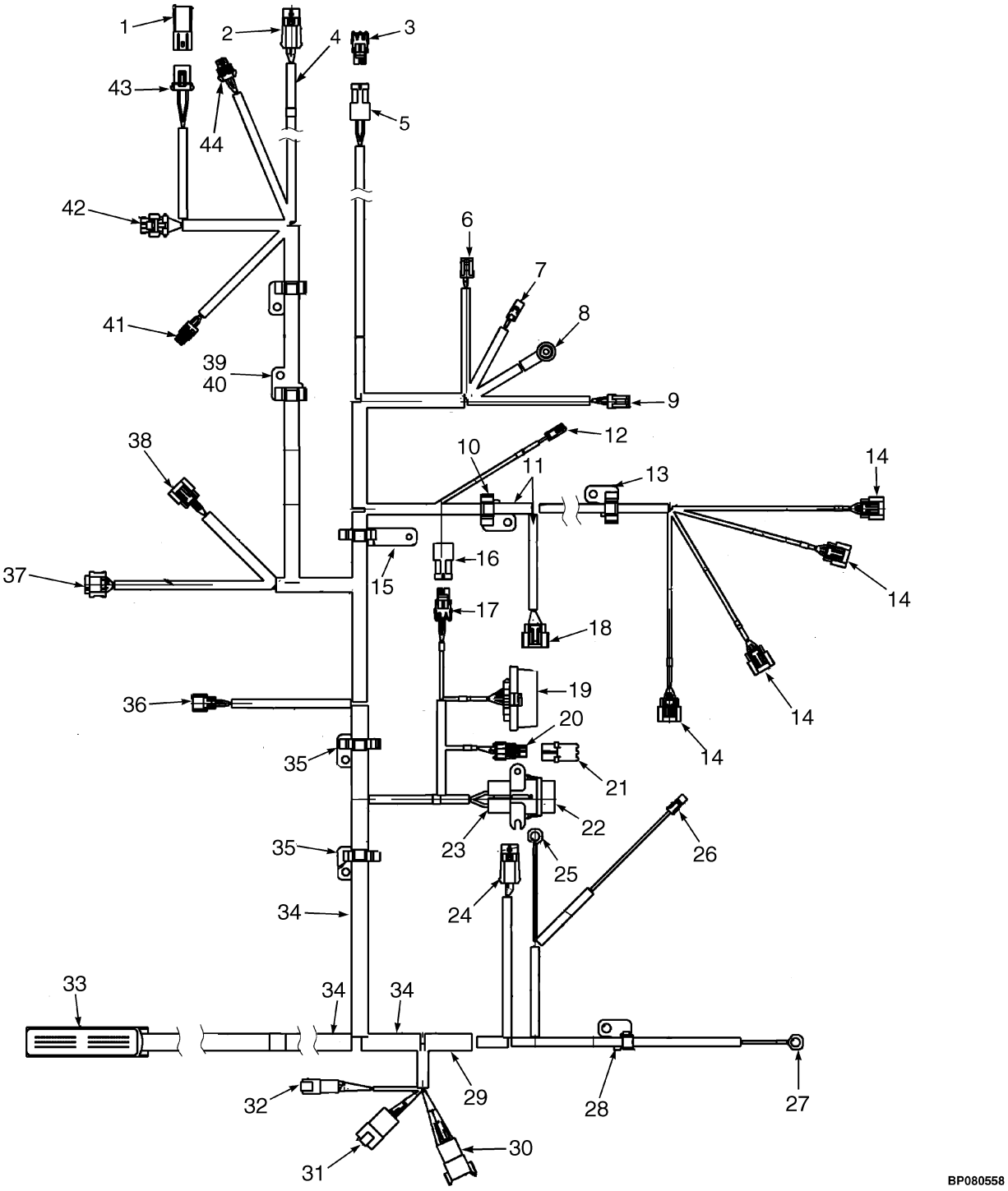

©2013 HYSTER COMPANY

WIRE HARNESS (ENGINE)

MAZDA 2.0L AND 2.2L LPG – 2007-2009 EMISSION COMPLIANT ENGINES (S/N L177B16207E → 2.2L LPG) (S/N L177B15512E → 2.0L LPG)

ITEM	PART NO.	DESCRIPTION	QTY
	2090744	Wire Harness (LPG Mazda Engine)	1
1	. . . . .	Connector Assembly (Low Pressure Sensor)	1
1	1329150	Connector	1
1	1392205	Terminal	1
2	. . . . .	Connector Assembly (Post-Catalytic 02 Sensor)	1
2	1476108	Wire Seal	4
2	1498424	Housing	1
2	. . . . .	Lock	1
2	. . . . .	Terminal	4
3	. . . . .	Connector Assembly (Cap)	1
3	1465468	Connector	1
3	1327164	Seal	2
4	. . . . .	Connector Assembly (LPG Shut-Off)	1
4	1539872	Connector	1
4	1330355	Terminal	2
4	1330356	Seal	2
5	. . . . .	Connector Assembly (Air Filter Restriction Sensor)	1
5	1465469	Connector	1
5	1323578	Terminal	2
5	. . . . .	Lock	2
5	1327164	Seal	2
5	1465468	Connector	1
6	. . . . .	Connector Assembly (Oil Pressure Sensor)	1
6	1327957	Connector	1
6	1532571	Terminal	3
7	. . . . .	Connector Assembly (Alternator)	1
7	1308259	Connector Body	1
8	. . . . .	Connector Assembly (Alternator B+)	1
8	1567694	Ring Terminal	1
8	. . . . .	Boot	1
9	. . . . .	Connector Assembly (Engine Coolant Temperature)	1
9	1323586	Connector	1
10	. . . . .	Bracket Assembly	1
10	1532761	Clip	1
10	1532776	Clip	1
10	275496	Conduit	1
11	275496	Conduit	AR
12	. . . . .	Connector Assembly (Ignition Suppressor)	1
12	. . . . .	Connector	1
13	. . . . .	Connector Assembly (Bracket Assembly)	1
13	1532761	Clip	1
13	1532775	Clip	1
14	**d**	Connector Assembly (Coil #1)	1
14	**c**	Connector Assembly (Coil #2)	1
14	**b**	Connector Assembly (Coil #3)	1
14	**a**	Connector Assembly (Coil #4)	1
14	. . . . .	Connector	1
14	. . . . .	Terminal	2
14	. . . . .	Terminal	1

©2013 HYSTER COMPANY

WIRE HARNESS (ENGINE)

MAZDA 2.0L AND 2.2L LPG – 2007-2009 EMISSION COMPLIANT ENGINES (S/N L177B16207E → 2.2L LPG) (S/N L177B15512E → 2.0L LPG)

ITEM	PART NO.	DESCRIPTION	QTY
15	. . . . .	Bracket Assembly	1
15	1558226	Clip	1
15	1532778	Clip	1
16	. . . . .	Connector Assembly (ECM Test Port)	1
16	1465469	Connector	1
16	1327164	Seal	2
17	. . . . .	Connector Assembly (ECM Test Port)	1
17	1465468	Connector	1
17	1498420	Terminal	1
17	1504197	Terminal	2
18	. . . . .	Connector Assembly (Distributer)	1
18	. . . . .	Clip	1
18	. . . . .	Sensor	1
19	. . . . .	Connector Assembly (Mini-Fuses)	1
19	1327164	Seal	2
19	1327959	Connector	1
19	1330297	Lock	1
19	1491818	Seal	4
19	. . . . .	Clip	1
19	1641937	Cap	1
19	1330281	Terminal	4
20	. . . . .	Connector Assembly (ECM Interface)	1
20	. . . . .	Connector	1
20	. . . . .	Spacer	1
20	. . . . .	Terminal	4
21	. . . . .	Connector Assembly (Cap)	1
21	. . . . .	Cap	1
21	. . . . .	Terminal	1
22	. . . . .	Connector Assembly (Alternator)	1
22	1497235	Fuse Holder	1
23	. . . . .	Connector Assembly (Alternator)	1
23	1382694	Fuse Connector	1
23	1641943	Fuse Holder	1
23	. . . . .	Terminal	2
24	. . . . .	Connector Assembly (Pre-Catalytic 02 Sensor)	1
24	1476108	Wire Seal	4
24	1498424	Housing	1
24	. . . . .	Lock	1
24	. . . . .	Terminal	4
24	275498	Conduit	AR
25	1402890	Ring Terminal (Starter B+)	1
26	. . . . .	Connector Assembly (Starter)	1
26	1581313	Connector	1
26	1581315	Terminal	1
27	1402890	Ring Terminal (Block Ground)	1
28	. . . . .	Bracket Assembly	1
28	1558228	Clip	1
28	1532774	Clip	1
29	275497	Conduit	AR

©2013 HYSTER COMPANY

WIRE HARNESS (ENGINE)

MAZDA 2.0L AND 2.2L LPG – 2007-2009 EMISSION COMPLIANT ENGINES (S/N L177B16207E → 2.2L LPG) (S/N L177B15512E → 2.0L LPG)

ITEM	PART NO.	DESCRIPTION	QTY
30	. . . . .	Connector Assembly (Chassis Harness)	1
30	1330413	Connector (8 Pin)	1
30	1330418	Connector (Secondary Lock)	1
30	1531480	Clip	1
30	1500912	Clip	1
30	1330437	Terminal (Pin)	8
31	. . . . .	Connector Assembly (Chassis Harness)	1
31	1330439	Plug	1
31	1500912	Clip	1
31	1514597	Connector	1
31	1514598	Connector	1
31	1484709	Terminal (Pin)	3
32	. . . . .	Connector Assembly (Chassis Harness)	1
32	1530960	Connector	1
32	1530961	Connector (Secondary Lock)	1
32	1500912	Clip	1
32	1514598	Connector	1
32	1463138	Terminal Pin	6
33	. . . . .	Connector Assembly (ECM)	1
33	. . . . .	Connector	1
33	. . . . .	Cover	1
33	. . . . .	Cam	1
33	. . . . .	Terminal	43
35	. . . . .	Connector Assembly (Bracket Assembly)	2
35	1532761	Clip	1
35	1532778	Clip	1
36	. . . . .	Connector Assembly (Intake Air Temperature Sensor)	1
36	1482651	Connector Body	1
36	1641948	Spacer	1
37	. . . . .	Connector Assembly (Throttle)	1
37	1533810	Seal	6
37	1569973	Connector Body	1
37	1610975	Terminal	6
38	. . . . .	Connector Assembly (MAP Sensor)	1
38	1560441	Connector Body	1
38	1561144	Spacer	1
39	1532761	Clip	1
40	1532776	Clip	1
41	. . . . .	Connector Assembly (Fuel Temperature Sensor)	1
41	. . . . .	Connector	1
41	1323576	Terminal	2
42	. . . . .	Connector Assembly (Electronic Pressure Regulator)	1
42	1641934	Connector	1
42	. . . . .	Contact	5
43	. . . . .	Connector Assembly (LPG Low Pressure)	1
43	1329150	Connector	1
43	1392205	Terminal	2
44	. . . . .	Connector Assembly (LPG Shut-Off	1
44	1539872	Connector	1

©2013 HYSTER COMPANY

WIRE HARNESS (ENGINE)

MAZDA 2.0L AND 2.2L LPG – 2007-2009 EMISSION COMPLIANT ENGINES (S/N L177B16207E → 2.2L LPG) (S/N L177B15512E → 2.0L LPG)

ITEM	PART NO.	DESCRIPTION	QTY
44	1330355	Terminal	1
44	1330356	Seal	2

FOOTNOTES:

a Service with 1705191
b Service with 1705192
c Service with 1705193
d Service with 1705194

©2013 HYSTER COMPANY

NOTES

©2013 HYSTER COMPANY

WIRE HARNESS (ENGINE) (FIGURE 7-63)
MAZDA 2.0L AND 2.2L LPG — 2010 SERIES

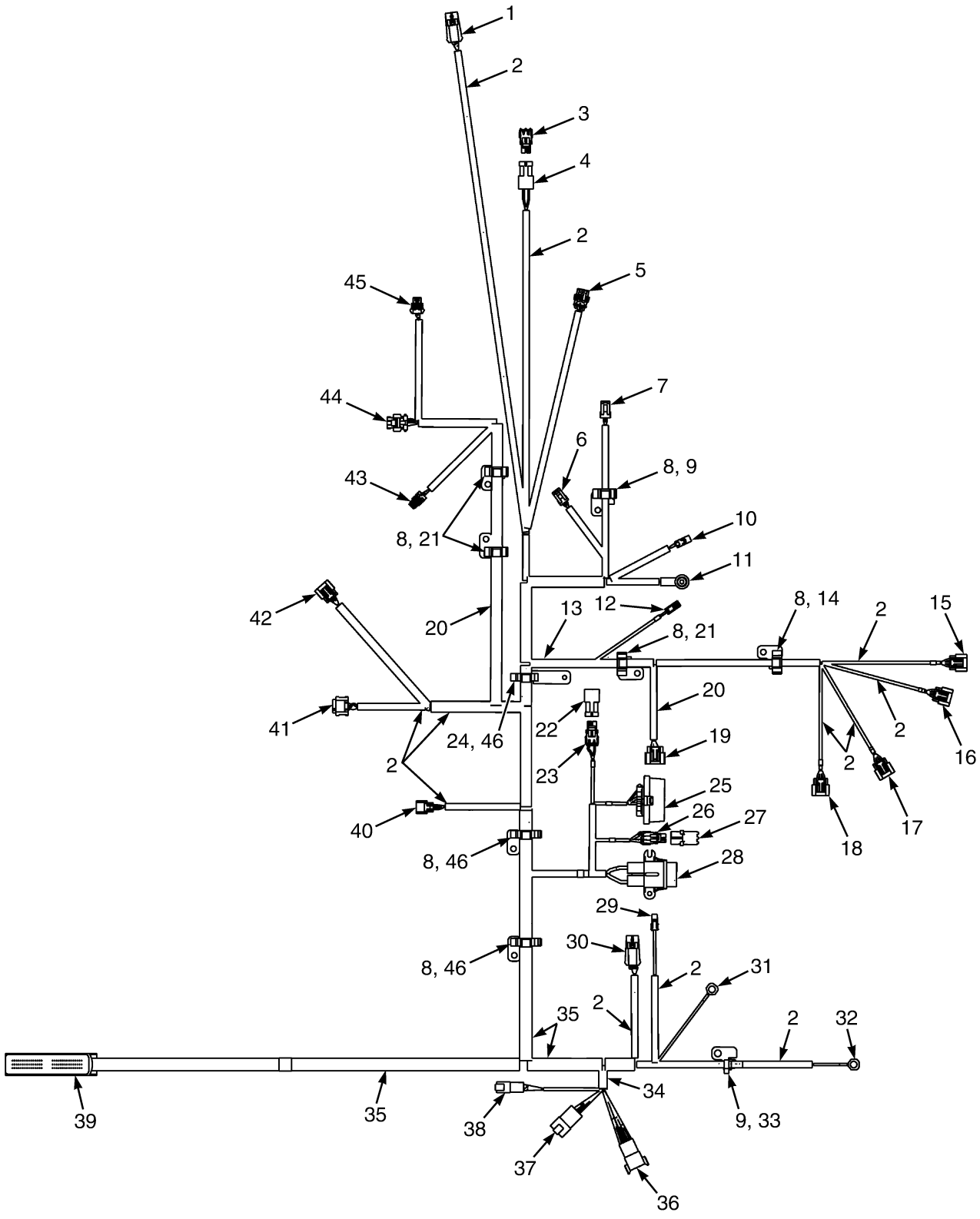

BP080942

©2013 HYSTER COMPANY

WIRE HARNESS (ENGINE)
MAZDA 2.0L AND 2.2L LPG – 2010 SERIES

ITEM	PART NO.	DESCRIPTION	QTY
	~~4601366~~		
	4605854	Wire Harness (Engine)	1
1	. . . . .	Connector Assembly (Post Catalytic Converter Oxygen Sensor)	1
1	1476108	Wire Seal	4
1	1498424	Housing	1
1	1650797	Lock	1
1	1653508	Terminal (Gold)	4
2	275493	Conduit	AR
3	. . . . .	Connector Assembly (Cap)	1
3	1327164	Seal	2
3	1465468	Connector	1
4	. . . . .	Connector Assembly (Air Filter Restriction Sensor)	1
4	1465469	Connector	1
4	1323578	Terminal	2
4	1491821	Terminal	2
5	. . . . .	Connector Assembly LPG OPTEC (Sensor)	1
5	1547629	Connector (3 Way)	1
5	1323579	Seal	3
5	1508232	Terminal (Pin)	3
6	. . . . .	Connector Assembly (Oil Pressure Sensor)	1
6	1327957	Connector	1
6	1532571	Terminal	3
7	. . . . .	Connector Assembly (Engine Coolant Temperature Sensor)	1
7	1323586	Connector	1
8	1532761	Clip	7
9	1532774	Clip	2
10	. . . . .	Connector Assembly (Alternator)	1
10	1308259	Connector Body	1
11	. . . . .	Connector Assembly (Alternator B+)	1
11	1567694	Ring Terminal	1
11	1656059	Boot	1
12	. . . . .	Connector Assembly (Ignition Suppressor)	1
12	1641935	Connector	1
13	275496	Conduit	AR
14	1532775	Clip	1
15	. . . . .	Connector Assembly (Coil #1)	1
15	1641932	Connector	1
15	1689241	Terminal	2
15	1689242	Terminal	1
15	4016131	Bracket	1
15	4016937	Strap Clamp	1
16	. . . . .	Connector Assembly (Coil #2)	1
16	1641932	Connector	1
16	1689241	Terminal	2
16	1689242	Terminal	1
16	4016131	Bracket	1
16	4016937	Strap Clamp	1
17	. . . . .	Connector Assembly (Coil #3)	1
17	1641932	Connector	1
17	1689241	Terminal	2

©2013 HYSTER COMPANY

WIRE HARNESS (ENGINE)
MAZDA 2.0L AND 2.2L LPG – 2010 SERIES

ITEM	PART NO.	DESCRIPTION	QTY
17	1689242	Terminal	1
17	4016131	Bracket	1
17	4016937	Strap Clamp	1
18	. . . . .	Connector Assembly (Coil #4)	1
18	1641932	Connector	1
18	1689241	Terminal	2
18	1689242	Terminal	1
18	4016131	Bracket	1
18	4016937	Strap Clamp	1
19	. . . . .	Connector Assembly (Cam Sensor)	1
19	1656060	Sensor	1
20	275494	Conduit	AR
21	1532776	Clip	3
22	. . . . .	Connector Assembly (ECU Test Port Cap)	1
22	1465469	Connector	1
22	1327164	Seal	2
22	1520513	Clip	1
23	. . . . .	Connector Assembly (ECU Test Port Connector)	1
23	1465468	Connector	1
23	1498420	Terminal	2
23	1520513	Clip	1
24	1558226	Clip	1
25	. . . . .	Connector Assembly (Mini Fuses)	1
25	1327164	Seal	2
25	1327959	Connector	1
25	1330297	Lock	1
25	1491818	Seal	4
25	1641937	Cap	1
25	1330281	Terminal	4
25	1641938	Clip	1
26	. . . . .	Connector Assembly	1
26	1641945	Spacer	1
26	1650522	Terminal	4
26	1650523	Terminal	1
26	1641944	Connector	1
27	. . . . .	Connector Assembly (ECU Interface)	1
27	1641947	Cap	1
28	. . . . .	Connector Assembly (Alternator)	1
28	1454827	Seal	1
28	1497235	Fuse Holder	1
28	1543553	Fuse Holder	1
28	1520543	Terminal	2
29	. . . . .	Connector Assembly (Starter)	1
29	1581313	Connector	1
29	1581315	Terminal	1
30	. . . . .	Connector Assembly (Pre Catalytic Converter Oxygen Sensor)	1
30	1476108	Wire Seal	4
30	1498424	Housing	1
30	1650797	Lock	1
30	1653508	Terminal (Gold)	4

©2013 HYSTER COMPANY

WIRE HARNESS (ENGINE)
MAZDA 2.0L AND 2.2L LPG – 2010 SERIES

ITEM	PART NO.	DESCRIPTION	QTY
31	1402890	Ring Terminal (Starter B+)	1
32	1402890	Ring Terminal (Block Ground)	1
33	1558228	Clip	1
34	275497	Conduit	AR
35	275498	Conduit	AR
36	. . . . .	Connector Assembly (To Chassis Harness)	1
36	1330413	Connector (8 Pin)	1
36	1330418	Connector (Secondary Lock)	1
36	1531480	Clip	1
36	1500912	Clip	1
36	1330437	Terminal (Pin)	8
37	. . . . .	Connector Assembly (To Chassis Harness)	1
37	1330439	Plug	1
37	1500912	Clip	1
37	1514597	Connector	1
37	1514598	Connector	1
37	1484709	Terminal (Pin)	3
38	. . . . .	Connector Assembly (To Chassis Harness)	1
38	1530960	Connector	1
38	1530961	Connector (Secondary Lock)	1
38	1500912	Clip	1
38	1514598	Connector	1
38	1463138	Terminal Pin	6
39	. . . . .	Connector Assembly (ECU Connector)	1
39	1641949	Connector	1
39	1641950	Cover	1
39	1641952	Cam	1
39	1653510	Terminal (Gold)	43
40	. . . . .	Connector Assembly (Intake Air Temperature Sensor)	1
40	1482651	Connector Body	1
40	1641948	Spacer	1
41	. . . . .	Connector Assembly (Bosch Throttle)	1
41	1533810	Seal	6
41	1569973	Connector Body	1
41	1610975	Terminal	6
42	. . . . .	Connector Assembly (Map Sensor)	1
42	1560441	Connector Body	1
42	1561144	Spacer	1
43	. . . . .	Connector Assembly (Fuel Temperature Sensor)	1
43	1402607	Electrical Connector	1
43	1323576	Terminal	2
44	. . . . .	Connector Assembly (EPR)	1
44	1641934	Connector	1
44	~~1561019~~		
	2035276	Connector (Socket Female)	5
45	**a**	Connector Assembly (LPG Fuel Shutoff)	1
45	1539872	Connector	1
45	1330355	Terminal	2
45	1330356	Seal	2
45	**b**	Connector Assembly (LPG Fuel Shutoff)	1

©2013 HYSTER COMPANY

WIRE HARNESS (ENGINE)

MAZDA 2.0L AND 2.2L LPG – 2010 SERIES

ITEM	PART NO.	DESCRIPTION	QTY
45	1508206	Connector (2 Way)	1
45	2060555	Wire Seal	5
45	1508232	Terminal (Pin)	2
46	1532778	Clip	3

FOOTNOTES:

a Used with Harness 4601366

b Used with Harness 4605854

©2013 HYSTER COMPANY

NOTES

©2013 HYSTER COMPANY

WIRE HARNESS (FIGURE 7-64)
ENGINE — GM 2.4L, GASOLINE (→ S/N L177B14822E)

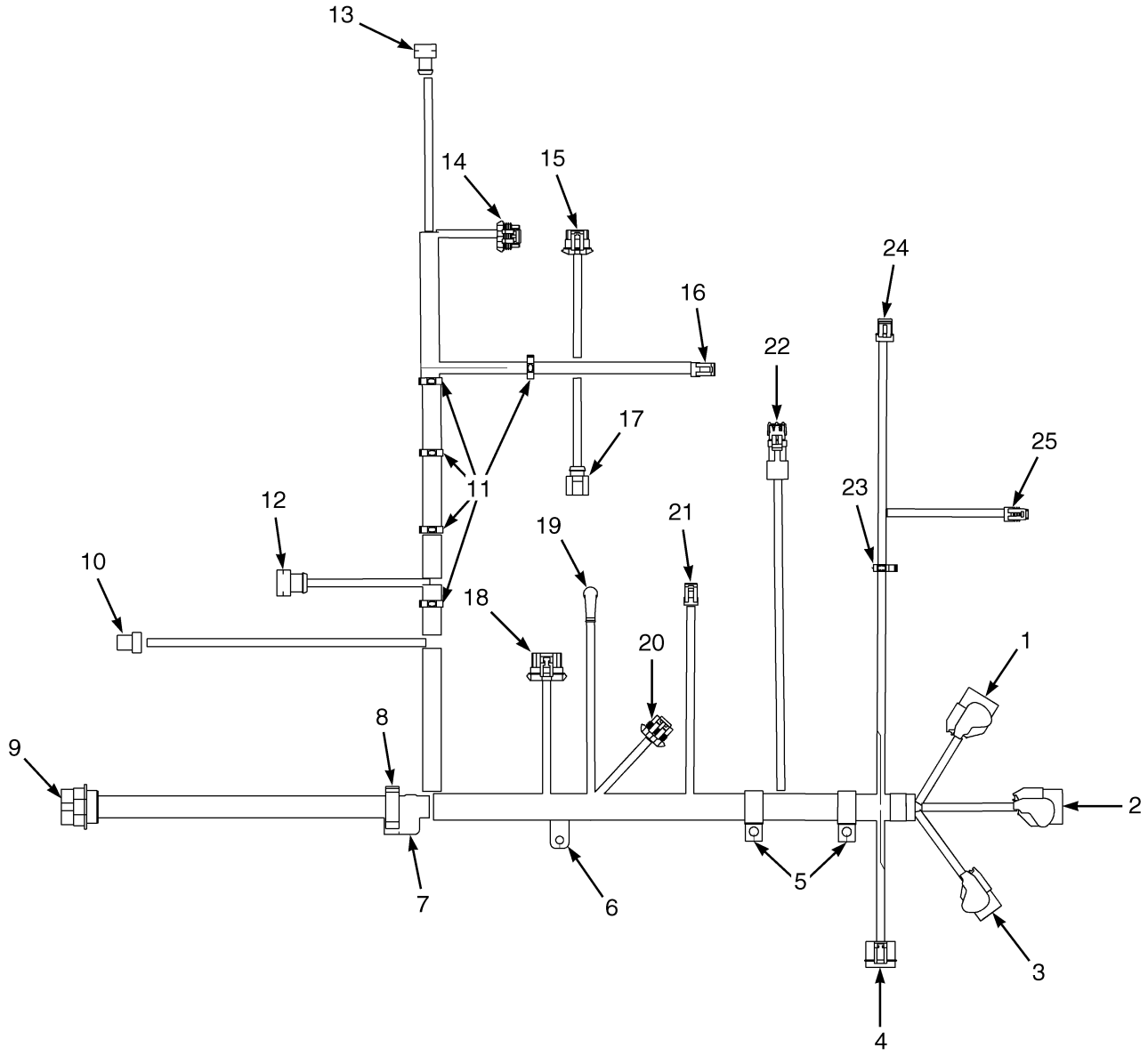

BP080409

©2013 HYSTER COMPANY

WIRE HARNESS

ENGINE – GM 2.4L, GASOLINE (→ S/N L177B14822E)

ITEM	PART NO.	DESCRIPTION	QTY
	2053096	Wire Harness (Engine, GM 2.4L, Gasoline)	1
1	. . . . .	Engine Control Unit A	1
2	. . . . .	Engine Control Unit B	1
3	. . . . .	Engine Control Unit C	1
4	. . . . .	Connector Assembly (Latch Relay)	1
4	1330302	Connector	1
4	1330281	Terminal	2
4	1330303	Lock	1
4	1330304	Terminal	2
4	1337391	Seal	1
5	166112	Clamp	2
6	1532758	Clip	1
7	1532759	Clip	1
8	1532779	Clip	1
9	. . . . .	Connector Assembly (Chassis Harness)	1
9	1531502	Connector	1
9	866401	Terminal	4
9	1330433	Terminal	9
9	1463136	Terminal	6
9	1330439	Plug	10
9	1484685	Locknut	1
9	1484686	Washer (Spring)	1
10	. . . . .	Connector Assembly (MAP Sensor)	1
10	1607839	Connector	1
10	1402814	Terminal	4
10	1562649	Seal	4
11	1500899	Clip	5
12	. . . . .	Connector Assembly (Crank Position Sensor)	1
12	1607958	Connector	1
12	1402814	Terminal	3
12	1562649	Seal	3
13	. . . . .	Connector Assembly (Coolant Temperature Sensor)	1
13	1607837	Connector	1
13	1402814	Terminal	2
13	1562649	Seal	2
14	. . . . .	(Connector Assembly) (Oxygen Sensor)	1
14	1330355	Terminal	4
14	1402887	Wire Seal	4
14	1482663	Connector	1
14	1482667	Connector Body	1
15	. . . . .	Connector Assembly (E Throttle)	1
15	1607744	Terminal	1
15	1607744	Terminal	6
15	1607745	Seal	2
15	1607746	Seal	4
16	. . . . .	Connector Assembly (Alternator)	1
16	1323576	Terminal	2
16	1323586	Connector	1
17	. . . . .	Connector Assembly (Ignition Coil)	1
17	1330356	Seal	2

©2013 HYSTER COMPANY

WIRE HARNESS

ENGINE – GM 2.4L, GASOLINE (→ S/N L177B14822E)

ITEM	PART NO.	DESCRIPTION	QTY
17	1402887	Wire Seal	3
17	1330355	Terminal	5
17	1531486	Connector	1
18	. . . . .	Connector Assembly (Camshaft Sensor)	1
18	1476109	Connector Lock	1
18	1402887	Wire Seal	3
18	1330355	Terminal	3
18	1476067	Connector	1
19	. . . . .	Terminal (Starter Solenoid)	1
19	129888	E-Ring	1
19	190383	Boot	1
20	1547484	Connector (Fuel Injection Harness)	1
21	. . . . .	Connector Assembly (Oil Pressure Sensor)	1
21	1354237	Terminal	3
21	1402613	Connector	1
22	. . . . .	Connector Assembly (Air Restriction Switch)	1
22	1323578	Terminal	2
22	1402888	Seal	2
22	1465469	Connector	1
22	1465468	Connector	1
23	1500900	Clip	1
24	. . . . .	(Connector Assembly) (Fuel Pump)	1
24	1323576	Terminal	2
24	1519611	Connector	1
25	. . . . .	(Connector Assembly) (Fuel Level Sender)	1
25	1323576	Terminal	2
25	1476077	Connector	1

©2013 HYSTER COMPANY

NOTES

©2013 HYSTER COMPANY

WIRE HARNESS (FIGURE 7-65)

ENGINE — GM 2.4L, GASOLINE (S/N L177B14823E ↔ S/N L177V04179H)

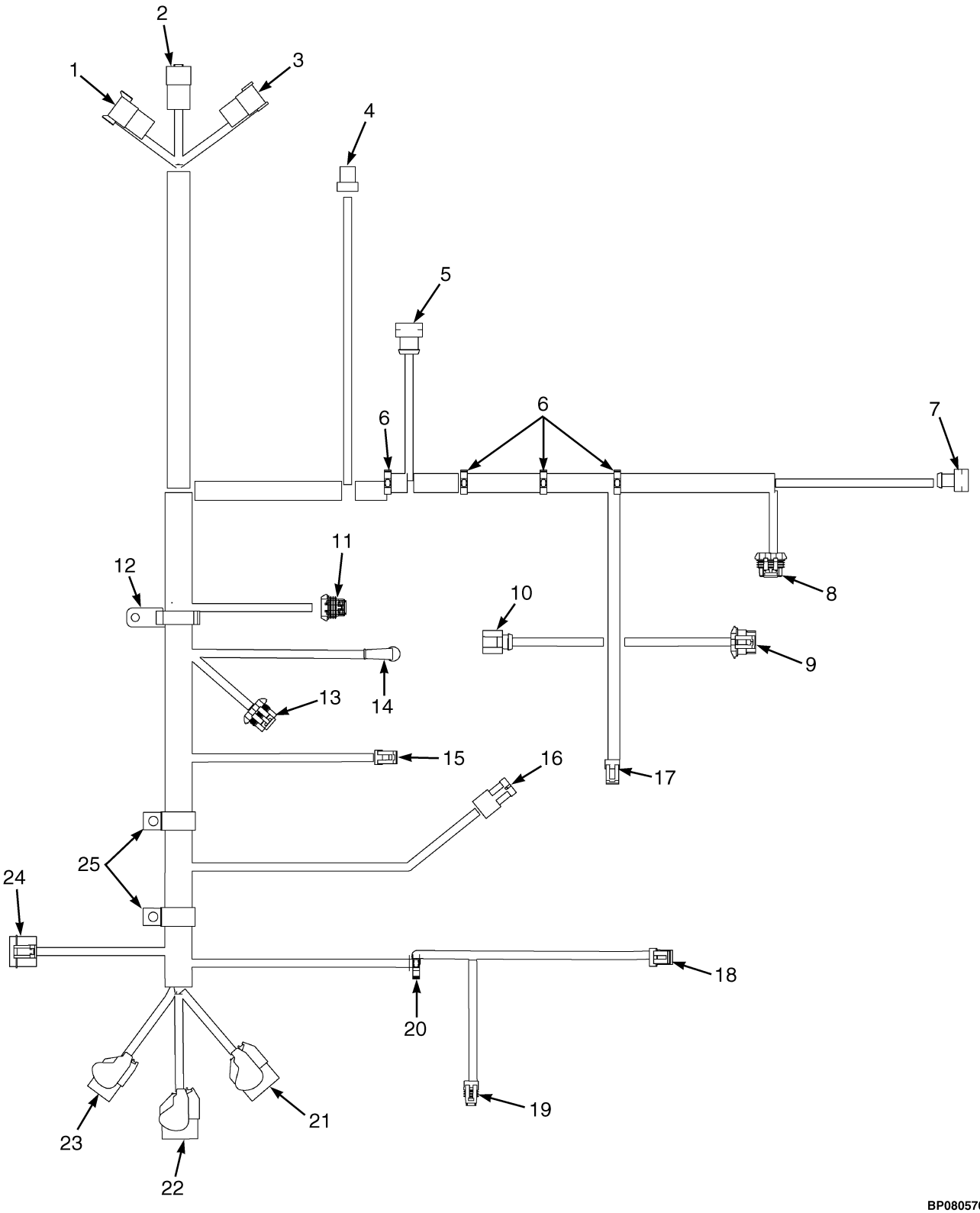

©2013 HYSTER COMPANY

WIRE HARNESS

ENGINE – GM 2.4L, GASOLINE (S/N L177B14823E ↔ S/N L177V04179H)

ITEM	PART NO.	DESCRIPTION	QTY
	2089065	Wire Harness (Engine, GM 2.4L, Gasoline)	1
1	. . . . .	Connector Assembly (Chassis Harness)	1
1	1330437	Terminal (Pin)	1
1	1484377	Plug	1
1	1330413	Connector (8 Pin)	1
2	. . . . .	Connector Assembly (Chassis Harness)	1
2	1514597	Connector	1
2	866401	Terminal	4
3	. . . . .	Connector Assembly (Chassis Harness)	1
3	1541988	Connector (8 Pin)	1
3	1463138	Terminal Pin	8
4	. . . . .	Connector Assembly (NAP/MAT Sensor)	1
4	1607839	Connector	1
4	1402814	Terminal	4
4	1562649	Seal	4
5	. . . . .	Connector Assembly (Crankshaft Position Sensor)	1
5	1402814	Terminal	3
5	1562649	Seal	3
5	1607958	Connector	1
6	1500899	Clip	4
7	. . . . .	Connector Assembly (Coolant Temperature)	1
7	1402814	Terminal	2
7	1562649	Seal	2
7	1607958	Connector	1
8	. . . . .	Connector Assembly (Oxygen Sensor)	1
8	1482667	Connector Body	1
8	1330355	Terminal	4
8	1402887	Wire Seal	4
8	1482663	Connector	1
9	. . . . .	Connector Assembly (E-Throttle)	1
9	1607743	Connector	1
9	1607744	Terminal	6
9	1607746	Seal	4
9	1607745	Seal	2
10	. . . . .	Connector Assembly (Ignition Coil)	1
10	1482668	Plug (Cavity Plug)	1
10	1330356	Seal	2
10	1402887	Wire Seal	3
10	1330355	Terminal	5
10	1531486	Connector	1
11	. . . . .	Connector Assembly (Camshaft Sensor)	1
11	1476067	Connector	1
11	1330355	Terminal	3
11	1402887	Wire Seal	3
11	1476109	Connector Lock	1
12	1532758	Clip	1
13	. . . . .	Connector Assembly (Injector Harness)	1
13	1463138	Terminal Pin	1
13	1330355	Terminal	5
13	1402887	Wire Seal	5

©2013 HYSTER COMPANY

WIRE HARNESS

ENGINE – GM 2.4L, GASOLINE (S/N L177B14823E ↔ S/N L177V04179H)

ITEM	PART NO.	DESCRIPTION	QTY
13	1482668	Plug (Cavity Plug)	3
14	. . . . .	Connector Assembly (Starter Solenoid)	1
14	129888	E-Ring	1
14	190383	Boot	1
15	. . . . .	Connector Assembly (Oil Pressure Sensor)	1
15	1402613	Connector	1
15	1354237	Terminal	3
16	. . . . .	Connector Assembly (Air Restriction Sensor)	1
16	1465469	Connector	1
16	1465468	Connector	1
16	1323578	Terminal	2
16	1402888	Seal	2
17	. . . . .	Connector Assembly (Alternator)	1
17	1323586	Connector	1
17	1323576	Terminal	2
18	. . . . .	Connector Assembly (Fuel Pump)	1
18	1519611	Connector	1
18	1323576	Terminal	2
19	. . . . .	Connector Assembly (Fuel Level)	1
19	1476077	Connector	1
19	1323576	Terminal	2
20	1500901	Clip	1
21	. . . . .	Connector Assembly (ECU "A")	1
22	. . . . .	Connector Assembly (ECU "B")	1
23	. . . . .	Connector Assembly (ECU "C")	1
24	. . . . .	Connector Assembly (Latch Relay)	1
24	1461744	Connector Body	1
24	1402904	Terminal	2
24	1375797	Terminal	2
24	1323579	Seal	1
25	166112	Clamp	2

©2013 HYSTER COMPANY

NOTES

©2013 HYSTER COMPANY

WIRE HARNESS (ENGINE) (FIGURE 7-66)

GM 2.4L GASOLINE (S/N L177V04180H →)

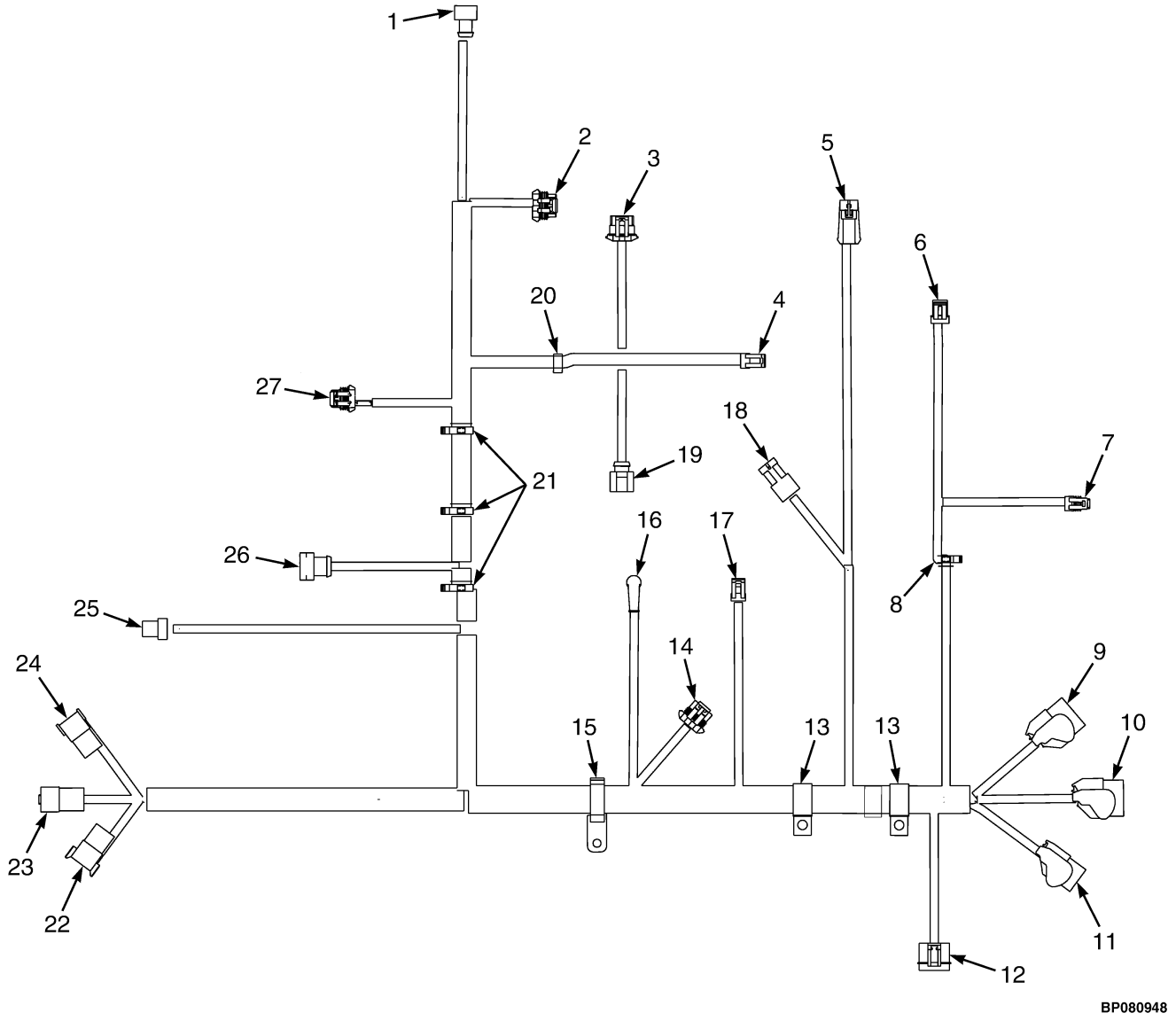

©2013 HYSTER COMPANY

WIRE HARNESS (ENGINE)

GM 2.4L GASOLINE (S/N L177V04180H →)

ITEM	PART NO.	DESCRIPTION	QTY
	4601156	Wire Harness (Engine, GM 2.4L, Gasoline)	1
1	. . . . .	Connector Assembly (Coolant Temperature Sensor)	1
1	1607837	Connector	1
1	1402814	Terminal	2
1	1562649	Seal	2
2	. . . . .	Connector Assembly (Oxygen Sensor)	1
2	1482667	Connector Body	1
2	1482663	Connector	1
2	1330355	Terminal	4
2	1402887	Wire Seal	4
3	. . . . .	Connector Assembly (E-Throttle)	1
3	1607743	Connector	1
3	1607744	Terminal	6
3	1607746	Seal	4
3	1607745	Seal	2
4	. . . . .	Connector Assembly (Alternator)	1
4	1323586	Connector	1
4	1323576	Terminal	2
5	. . . . .	Connector Assembly (Rear Oxygen Sensor)	1
5	1498424	Housing	1
5	1482666	Terminal (Male)	4
5	1476108	Wire Seal	4
5	1650797	Lock	1
5	1520513	Clip	1
6	. . . . .	Connector Assembly (Fuel Pump)	1
6	1323576	Terminal	2
6	1519611	Connector	1
7	. . . . .	Connector Assembly) (Fuel Level Sensor)	1
7	1323576	Terminal	1
7	1476077	Connector	1
8	1500901	Clip	1
9	. . . . .	Connector Assembly (ECU - Connector "A")	1
10	. . . . .	Connector Assembly (ECU - Connector "B")	1
11	. . . . .	Connector Assembly (ECU - Connector "C")	1
12	. . . . .	Connector Assembly (Latch Relay)	1
12	1461744	Connector Body	1
12	1402904	Terminal	2
12	1375797	Terminal	2
12	1323579	Seal	1
13	166112	Clamp	2
14	. . . . .	Connector Assembly (Fuel Injector Harness)	1
14	1547484	Connector	1
14	1330355	Terminal	5
14	1402887	Wire Seal	5
14	1482668	Plug (Cavity Plug)	3
15	1532779	Clip	1
15	1532758	Clip	1
16	. . . . .	Connector Assembly (Starter Solenoid)	1
16	129888	E-Ring	1
16	190383	Boot	1

©2013 HYSTER COMPANY

WIRE HARNESS (ENGINE)

GM 2.4L GASOLINE (S/N L177V04180H →)

ITEM	PART NO.	DESCRIPTION	QTY
17	. . . . .	Connector Assembly (Oil Pressure Sensor)	1
17	1402613	Connector	1
17	1354237	Terminal	3
18	. . . . .	Connector Assembly (Air Restriction Switch)	1
18	1465469	Connector	1
18	1465468	Connector	1
18	1323578	Terminal	2
18	1402888	Seal	2
19	. . . . .	Connector Assembly (Ignition Coil)	1
19	1482668	Plug (Cavity Plug)	1
19	1330356	Seal	2
19	1402887	Wire Seal	3
19	1330355	Terminal	5
19	1531486	Connector	1
20	1500900	Clip	1
21	1500899	Clip	3
22	. . . . .	Connector Assembly (To Chassis Harness)	1
22	1330437	Terminal (Pin)	7
22	1484377	Plug	1
22	1330413	Connector (8 Pin)	1
23	. . . . .	Connector Assembly (To Chassis Harness)	1
23	1514597	Connector	1
23	866401	Terminal	4
24	. . . . .	Connector Assembly (To Chassis Harness)	1
24	1541988	Connector (8 Pin)	1
24	1463138	Terminal Pin	8
25	. . . . .	Connector Assembly (MAP/MAT Sensor)	1
25	1607839	Connector	1
25	1402814	Terminal	4
25	1562649	Seal	4
26	. . . . .	Connector Assembly (Crankshaft Position Sensor)	1
26	1562649	Seal	3
26	1402814	Terminal	3
26	1607958	Connector	1
27	. . . . .	Connector Assembly (Camshaft Sensor)	1
27	1476109	Connector Lock	1
27	1402887	Wire Seal	3
27	1330355	Terminal	3
27	1476067	Connector	1

©2013 HYSTER COMPANY

NOTES

©2013 HYSTER COMPANY

WIRE HARNESS (FIGURE 7-67)

ENGINE — GM 2.4L, LPG (→ S/N L177B14822E)

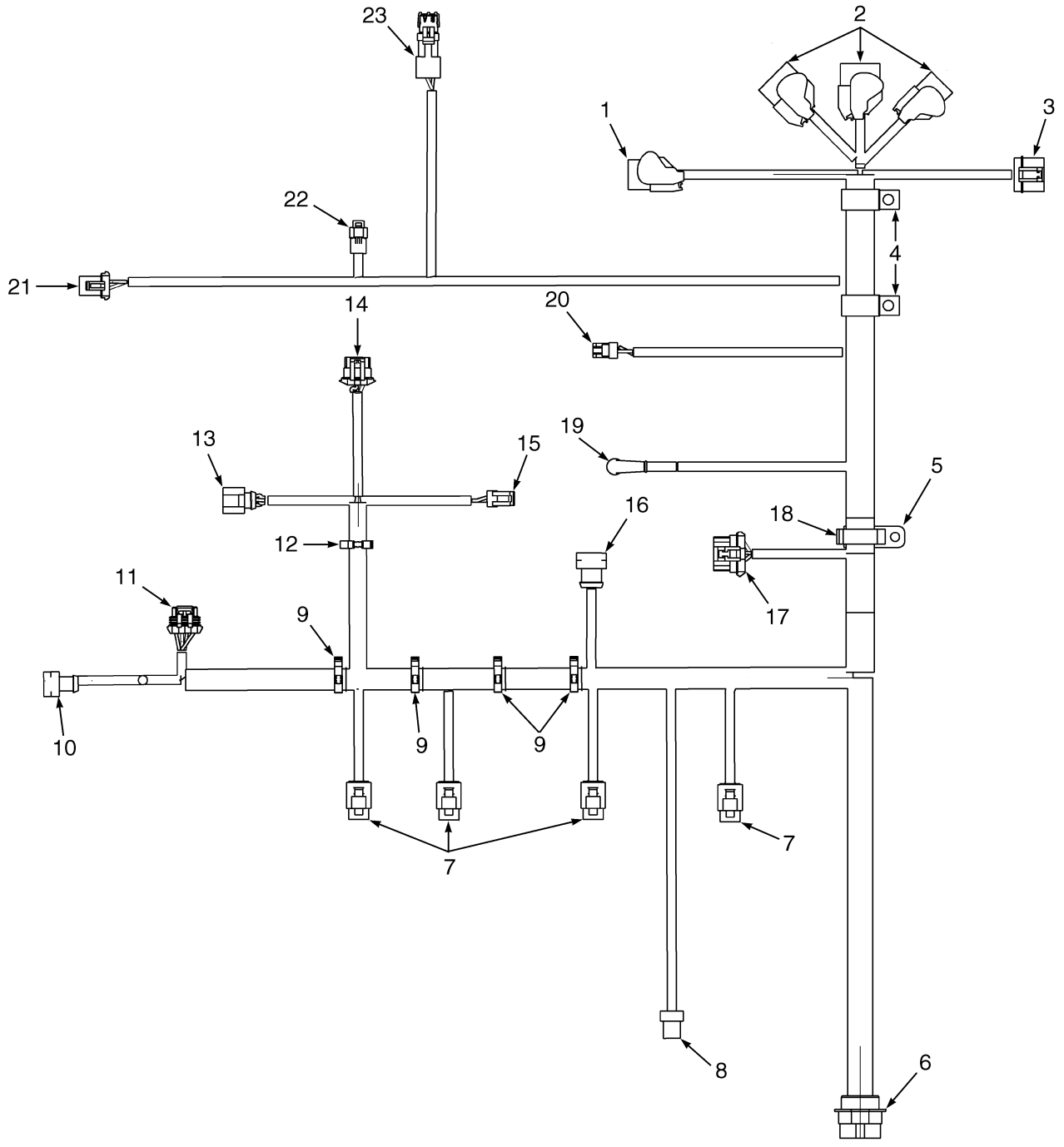

BP080408

©2013 HYSTER COMPANY

WIRE HARNESS

ENGINE – GM 2.4L, LPG (→ S/N L177B14822E)

ITEM	PART NO.	DESCRIPTION	QTY
	2053099	Wire Harness (Engine, GM 2.4L, LPG)	1
1	. . . . .	Peak and Hold Module	1
2	. . . . .	Engine Control Unit	3
3	. . . . .	Connector Assembly (Latch Relay)	1
3	1330302	Connector	1
3	1330281	Terminal	2
3	1330303	Lock	1
3	1330304	Terminal	2
3	1337391	Seal	1
4	166112	Clamp	2
5	1532758	Clip	1
6	. . . . .	Connector Assembly (To Chassis Harness)	1
6	1531502	Connector	1
6	866401	Terminal	4
6	1330433	Terminal	9
6	1463136	Terminal	6
6	1330439	Plug	10
6	1484686	Washer (Spring)	1
6	1484685	Locknut	1
7	. . . . .	Connector Assembly (Injector)	1
7	1607548	Connector	1
7	1607549	Terminal	2
7	1561147	Plug	2
8	. . . . .	Connector Assembly (MAP Sensor)	1
8	1607839	Connector	1
8	1402814	Terminal	4
8	1562649	Seal	4
9	1500899	Clip	4
10	. . . . .	Connector Assembly (Coolant Temperature Sensor)	1
10	1607837	Connector	1
10	1402814	Terminal	2
10	1562649	Seal	2
11	. . . . .	(Connector Assembly) (Oxygen Sensor)	1
11	1330355	Terminal	4
11	1402887	Wire Seal	4
11	1482663	Connector	1
11	1482667	Connector Body	1
12	1500900	Clip	1
13	. . . . .	Connector Assembly (Electronic Throttle)	1
13	1607743	Connector	1
13	1607744	Terminal	6
13	1607746	Seal	4
13	1607745	Seal	2
14	. . . . .	Connector Assembly (Ignition Coil)	1
14	1531486	Connector	1
14	1330356	Seal	2
14	1402887	Wire Seal	3
14	1330355	Terminal	5
15	. . . . .	Connector Assembly (Alternator)	1
15	1323586	Connector	1

©2013 HYSTER COMPANY

WIRE HARNESS

ENGINE – GM 2.4L, LPG (→ S/N L177B14822E)

ITEM	PART NO.	DESCRIPTION	QTY
15	1323576	Terminal	2
16	. . . . .	Connector Assembly (Crankshaft Position Sensor)	1
16	1607958	Connector	1
16	1562649	Seal	3
16	1402814	Terminal	3
17	. . . . .	Connector Assembly (Camshaft Sensor)	1
17	1476067	Connector	1
17	1476109	Connector Lock	1
17	1402887	Wire Seal	3
17	1330355	Terminal	3
18	1532779	Clip	1
19	. . . . .	Terminal (Starter Solenoid)	1
19	129888	E-Ring	1
19	190383	Boot	1
20	. . . . .	Connector Assembly (Oil Pressure Sensor)	1
20	1402613	Connector	1
20	1354237	Terminal	3
21	. . . . .	Connector Assembly (LPG Pressure Switch)	1
21	1329152	Plug	1
21	1329151	Terminal	1
21	1330281	Terminal	2
21	1402888	Seal	2
22	. . . . .	(Connector Assembly) (LPG Lockoff)	1
22	1599337	Connector	1
22	1561146	Terminal	2
23	. . . . .	(Connector Assembly) (Air Restriction Switch)	1
23	1465469	Connector	1
23	1465468	Connector	1
23	1323578	Terminal	2
23	1402888	Seal	2

©2013 HYSTER COMPANY

NOTES

©2013 HYSTER COMPANY

WIRE HARNESS (FIGURE 7-68)

ENGINE — GM 2.4L, LPG (S/N L177B14823E ↔ S/N L177B23560F)

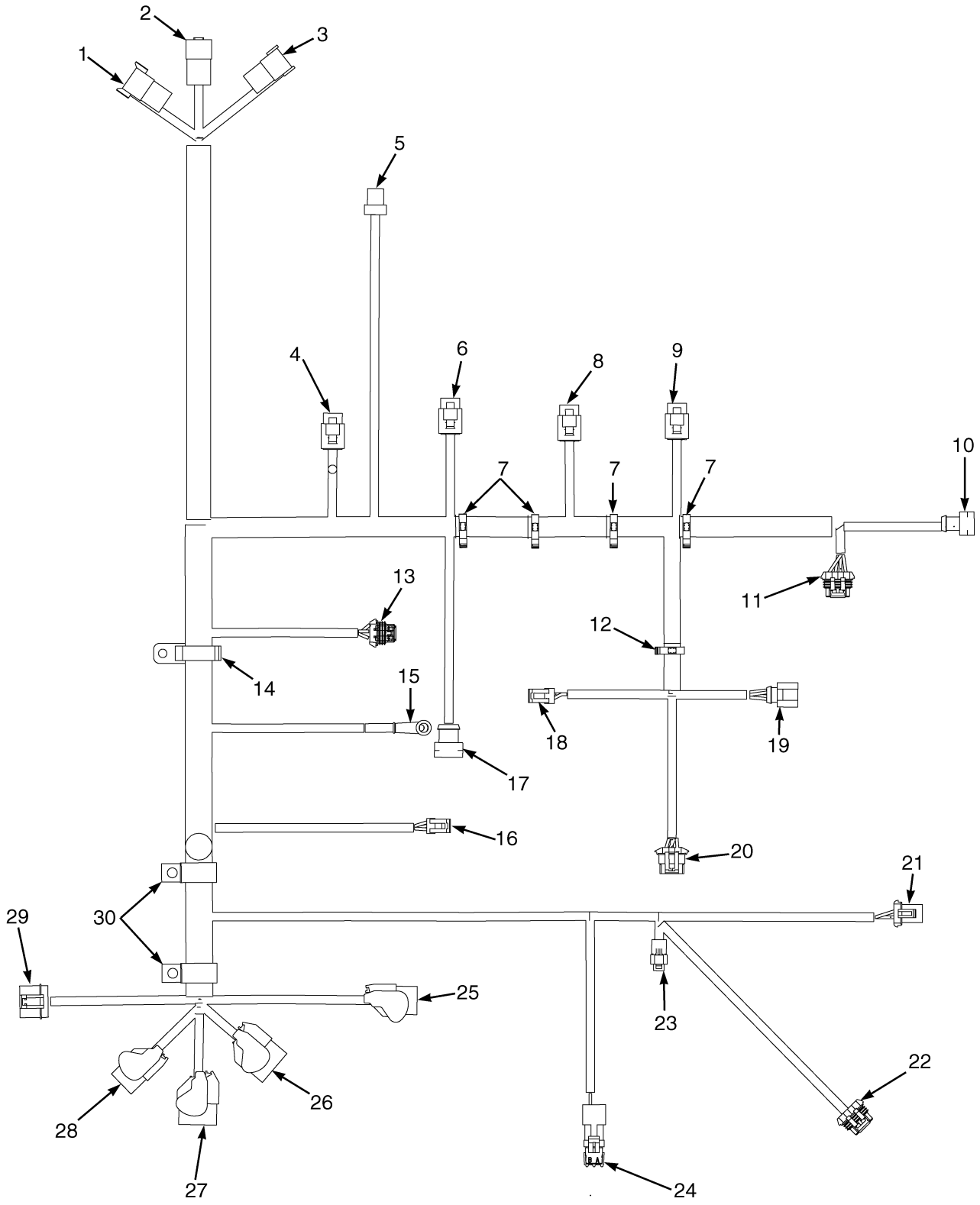

©2013 HYSTER COMPANY

WIRE HARNESS

ENGINE – GM 2.4L, LPG (S/N L177B14823E ↔ S/N L177B23560F)

ITEM	PART NO.	DESCRIPTION	QTY
	2089064	Wire Harness (Engine, GM 2.4L, LPG)	1
1	. . . . .	Connector Assembly (Chassis Harness)	1
1	1330413	Connector (8 Pin)	1
1	1330437	Terminal (Pin)	1
1	1484377	Plug	1
2	. . . . .	Connector Assembly (Chassis Harness)	1
2	866401	Terminal	4
2	1514597	Connector	1
3	. . . . .	Connector Assembly (Chassis Harness)	1
3	1541988	Connector (8 Pin)	1
3	1463138	Terminal Pin	8
4	. . . . .	Connector Assembly (Injector 4)	1
4	1607548	Connector	1
4	1561147	Plug	2
4	1607549	Terminal	2
5	. . . . .	Connector Assembly (NAT/MAP Sensor)	1
5	1607839	Connector	1
5	1402814	Terminal	4
5	1562649	Seal	4
6	. . . . .	Connector Assembly (Injector 3)	1
6	1607548	Connector	2
6	1561147	Plug	2
6	1607549	Terminal	4
7	. . . . .	Clip	1
8	. . . . .	Connector Assembly (Injector 2)	1
8	1607548	Connector	1
8	1561147	Plug	2
8	1607549	Terminal	2
9	. . . . .	Connector Assembly (Injector 1)	1
9	1607548	Connector	1
9	1561147	Plug	2
9	1607549	Terminal	2
10	. . . . .	Connector Assembly (Coolant Temperature Sensor)	1
10	1402814	Terminal	2
10	1562649	Seal	2
10	1607837	Connector	1
11	. . . . .	Connector Assembly (Oxygen Sensor, Pre-Catalytic)	1
11	1482667	Connector Body	1
11	1330355	Terminal	4
11	1402887	Wire Seal	4
11	1482663	Connector	1
12	1500900	Clip	1
13	. . . . .	Connector Assembly (Camshaft Sensor)	1
13	1476067	Connector	1
13	1330355	Terminal	3
13	1402887	Wire Seal	3
13	1476109	Connector Lock	1
14	1532758	Clip	1
15	. . . . .	Connector Assembly (Starter Solenoid)	1
15	129888	E-Ring	1

©2013 HYSTER COMPANY

WIRE HARNESS

ENGINE – GM 2.4L, LPG (S/N L177B14823E ↔ S/N L177B23560F)

ITEM	PART NO.	DESCRIPTION	QTY
15	190383	Boot	1
16	. . . . .	Connector Assembly (Oil Pressure Sensor)	1
16	1402613	Connector	1
16	1354237	Terminal	3
17	. . . . .	Connector Assembly (Crankshaft Position Sensor)	1
17	1402814	Terminal	3
17	1562649	Seal	3
17	1607958	Connector	1
18	. . . . .	Connector Assembly (Alternator)	1
18	1323576	Terminal	2
18	1323586	Connector	1
19	. . . . .	Connector Assembly (E-Throttle)	1
19	1607743	Connector	1
19	1607744	Terminal	6
19	1607746	Seal	4
19	1607745	Seal	2
20	. . . . .	Connector Assembly (Ignition Coil)	1
20	1402613	Connector	12
20	1531486	Connector	1
20	1330355	Terminal	5
20	1402887	Wire Seal	3
20	1330356	Seal	2
21	. . . . .	Connector Assembly (LPG Pressure Switch)	1
21	1329152	Plug	1
21	1402888	Seal	2
21	1330281	Terminal	2
21	1329151	Terminal	1
22	. . . . .	Connector Assembly (Oxygen Sensor, Post Catalytic)	1
22	1482667	Connector Body	1
22	1330355	Terminal	4
22	1402887	Wire Seal	4
22	1482663	Connector	1
23	. . . . .	Connector Assembly (LPG Lockoff)	1
23	1599337	Connector	1
23	1561146	Terminal	2
24	. . . . .	Connector Assembly (Air Restriction Sensor)	1
24	1465469	Connector	1
24	1465468	Connector	1
24	1323578	Terminal	2
24	1402888	Seal	2
25	. . . . .	Connector Assembly (CPS "Peak And Hold")	1
26	. . . . .	Connector Assembly (ECU "A")	1
27	. . . . .	Connector Assembly (ECU "B")	1
28	. . . . .	Connector Assembly (ECU "C")	1
29	. . . . .	Connector Assembly (Latch Relay)	1
29	1461744	Connector Body	1
29	1402904	Terminal	2
29	1375797	Terminal	2
30	166112	Clamp	1
30	1323579	Seal	1

©2013 HYSTER COMPANY

NOTES

©2013 HYSTER COMPANY

WIRE HARNESS (FIGURE 7-69)

GM 2.4L ENGINE, LPG — WITH LOW FUEL SENSOR (S/N L177B23561F ↔ S/N L177V04385H)

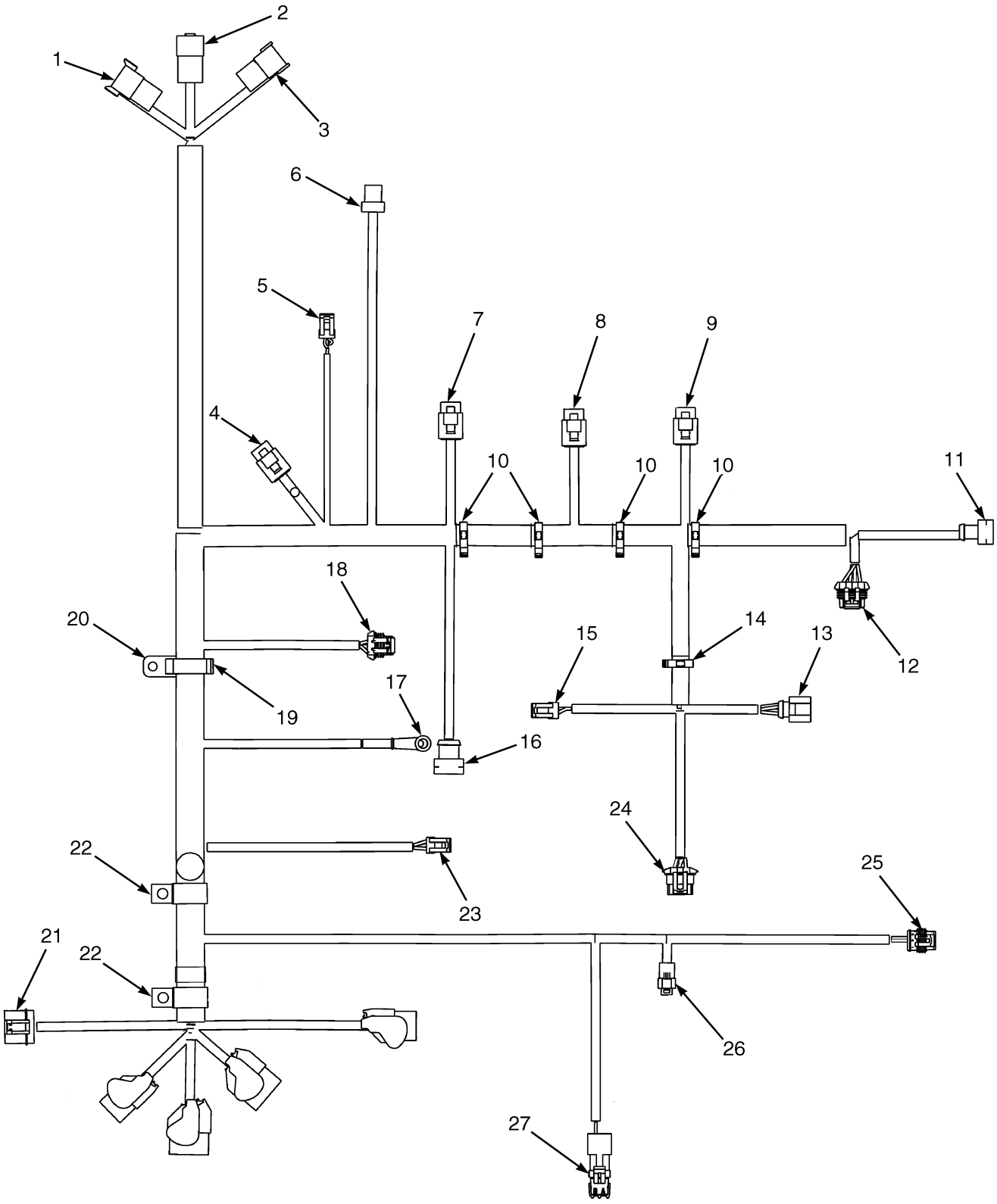

HP082026

©2013 HYSTER COMPANY

WIRE HARNESS

GM 2.4L ENGINE, LPG – WITH LOW FUEL SENSOR (S/N L177B23561F ↔ S/N L177V04385H)

ITEM	PART NO.	DESCRIPTION	QTY
	4601529	Wire Harness (Engine, GM 2.4L, LPG)	1
1	. . . . .	Connector Assembly (CRP 55)	1
1	1330413	Connector (8 Pin)	1
1	1330437	Terminal (Pin)	7
1	1484377	Plug	1
2	. . . . .	Connector Assembly (CRP 160)	1
2	866401	Terminal	4
2	1514597	Connector	1
3	. . . . .	Connector Assembly (CRP 83)	1
3	1541988	Connector (8 Pin)	1
3	1463138	Terminal Pin	8
4	. . . . .	Connector Assembly (Injector 4)	1
4	1607549	Terminal	2
4	1561147	Plug	2
4	1607548	Connector	1
5	. . . . .	Connector Assembly (FAP Sensor)	1
5	1402613	Connector	1
5	1354237	Terminal	3
6	. . . . .	Connector Assembly (MAP/MAT Sensor)	1
6	1607839	Connector	1
6	1402814	Terminal	4
6	1562649	Seal	4
7	. . . . .	Connector Assembly (Injector 3)	1
7	1607549	Terminal	2
7	1561147	Plug	2
7	1607548	Connector	1
8	. . . . .	Connector Assembly (Injector 2)	1
8	1607549	Terminal	2
8	1561147	Plug	2
8	1607548	Connector	1
9	. . . . .	Connector Assembly (Injector 1)	1
9	1607549	Terminal	2
9	1561147	Plug	2
9	1607548	Connector	1
10	1500899	Clip	4
11	. . . . .	Connector Assembly (Coolant Temperature Sensor)	1
11	1607837	Connector	1
11	1402814	Terminal	2
11	1562649	Seal	2
12	. . . . .	Connector Assembly (Oxygen Sensor)	1
12	1482667	Connector Body	1
12	1330355	Terminal	4
12	1402887	Wire Seal	4
12	1482663	Connector	1
13	. . . . .	Connector Assembly (E-Throttle)	1
13	1607745	Seal	2
13	1607746	Seal	4
13	1607744	Terminal	6
13	1607743	Connector	1
14	1500900	Clip	1

©2013 HYSTER COMPANY

WIRE HARNESS

GM 2.4L ENGINE, LPG – WITH LOW FUEL SENSOR (S/N L177B23561F ↔ S/N L177V04385H)

ITEM	PART NO.	DESCRIPTION	QTY
15	. . . . .	Connector Assembly (Alternator)	1
15	1323576	Terminal	2
15	1323586	Connector	1
16	. . . . .	Connector Assembly (Crankshaft Position Sensor)	1
16	1562649	Seal	3
16	1402814	Terminal	3
16	1607958	Connector	1
17	. . . . .	Connector Assembly (Starter Solenoid)	1
17	129888	E-Ring	1
17	190383	Boot	1
18	. . . . .	Connector Assembly (Camshaft Sensor)	1
18	1476067	Connector	1
18	1330355	Terminal	3
18	1402887	Wire Seal	3
18	1476109	Connector Lock	1
19	1532779	Clip	1
20	1532758	Clip	1
21	. . . . .	Connector Assembly (Latch Relay)	1
21	1323579	Seal	1
21	1375797	Terminal	2
21	1402904	Terminal	2
21	1461744	Connector Body	1
22	166112	Clamp	1
23	. . . . .	Connector Assembly (Oil Pressure Sensor)	1
23	1402613	Connector	1
23	1354237	Terminal	3
24	. . . . .	Connector Assembly (Ignition Coil)	1
24	1482668	Plug (Cavity Plug)	1
24	1330356	Seal	2
24	1402887	Wire Seal	3
24	1330355	Terminal	5
24	1531486	Connector	1
25	. . . . .	Connector Assembly (LPG Pressure Switch)	1
25	1508232	Terminal (Pin)	3
25	2060555	Wire Seal	3
25	1547629	Connector (3 Way)	1
26	. . . . .	Connector Assembly (LPG Lockoff)	1
26	1599337	Connector	1
26	1561146	Terminal	2
27	. . . . .	Connector Assembly (Air Restriction Switch)	1
27	1465469	Connector	1
27	1465468	Connector	1
27	1323578	Terminal	2
27	1402888	Seal	2

©2013 HYSTER COMPANY

NOTES

©2013 HYSTER COMPANY

WIRE HARNESS (ENGINE) (FIGURE 7-70)

GM 2.4L, LPG (S/N L177V04386H →)

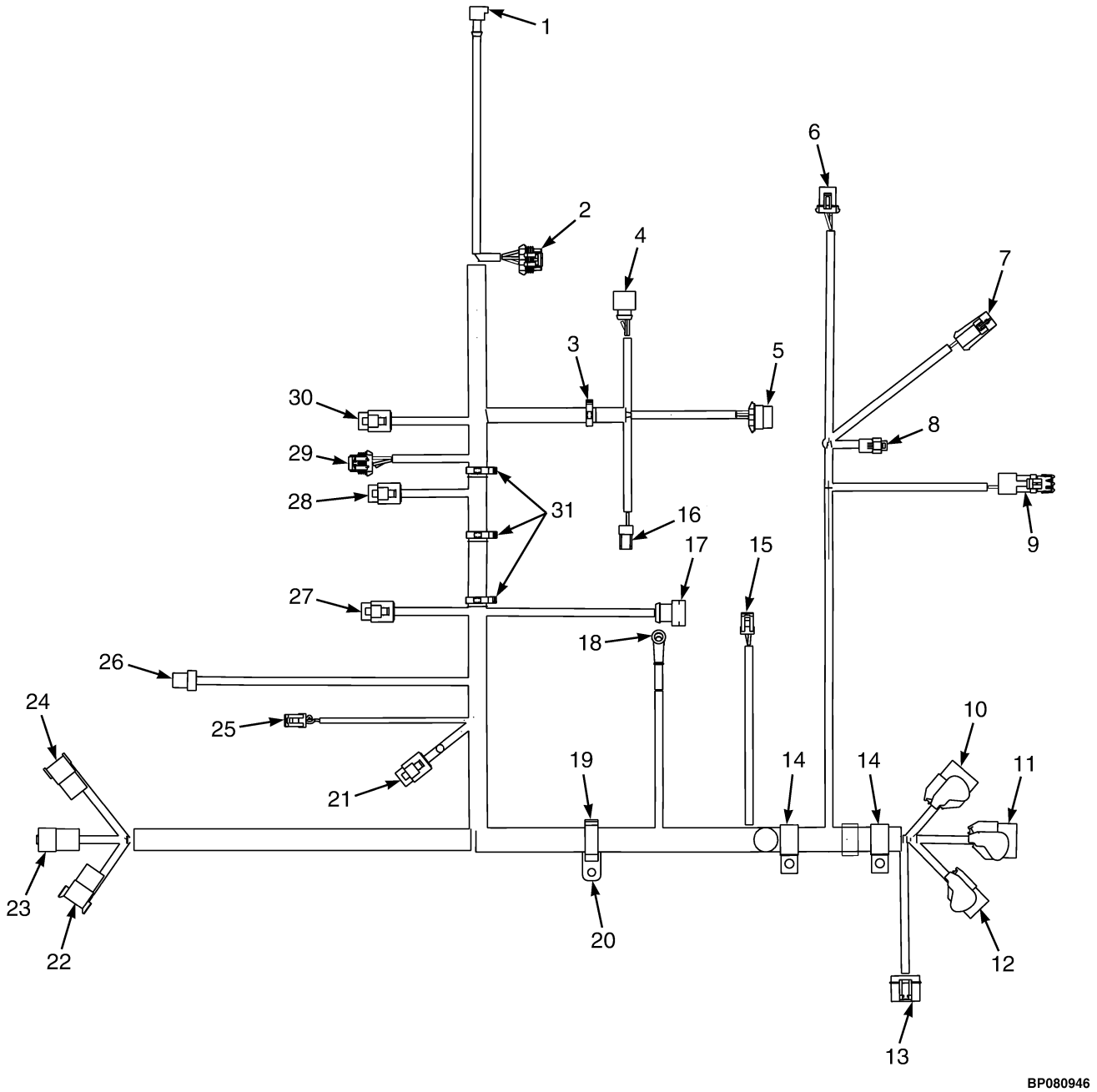

©2013 HYSTER COMPANY

WIRE HARNESS (ENGINE)

GM 2.4L, LPG (S/N L177V04386H →)

ITEM	PART NO.	DESCRIPTION	QTY
	4601157	Wire Harness (Engine, GM 2.4L, LPG)	1
1	. . . . .	Connector Assembly (Coolant Temperature Sensor)	1
1	1607837	Connector	1
1	1402814	Terminal	2
1	1562649	Seal	2
2	. . . . .	Connector Assembly (Oxygen Sensor)	1
2	1482667	Connector Body	1
2	1330355	Terminal	4
2	1402887	Wire Seal	4
2	1482663	Connector	1
2	**a** 1502061	Clamp	1
2	**a** 1561871	Clamp (Swivel)	1
3	1500900	Clip	1
4	. . . . .	Connector Assembly (E-Throttle)	1
4	1607743	Connector	1
4	1607744	Terminal	6
4	1607746	Seal	4
4	1607745	Seal	2
5	. . . . .	Connector Assembly (Ignition Coil)	1
5	1482668	Plug (Cavity Plug)	1
5	1330356	Seal	2
5	1402887	Wire Seal	3
5	1330355	Terminal	5
5	1531486	Connector	1
6	. . . . .	Connector Assembly (LPG Pressure Switch)	1
6	1329151	Terminal	1
6	1508232	Terminal (Pin) (Alternate Part)	3
6	1330281	Terminal	2
6	2060555	Wire Seal (Alternate Part)	3
6	1329152	Plug	1
6	1547629	Connector (3 Way) (Alternate Part)	1
7	. . . . .	Connector Assembly (Rear Oxygen Sensor)	1
7	1498424	Housing	1
7	1482666	Terminal (Male)	4
7	1476108	Wire Seal	4
7	1650797	Lock	1
7	1520513	Clip	1
8	. . . . .	Connector Assembly (LPG Lockoff)	1
8	1599337	Connector	1
8	1561146	Terminal	2
9	. . . . .	Connector Assembly (Air Restriction Switch)	1
9	1465469	Connector	1
9	1465468	Connector	1
9	1323578	Terminal	2
9	1402888	Seal	2
10	. . . . .	Connector Assembly (ECU Connector A)	1
11	. . . . .	Connector Assembly (ECU Connector B)	1
12	. . . . .	Connector Assembly (ECU Connector C)	1
13	. . . . .	Connector Assembly (Latch Relay)	1
13	1323579	Seal	1

©2013 HYSTER COMPANY

WIRE HARNESS (ENGINE)

GM 2.4L, LPG (S/N L177V04386H →)

ITEM	PART NO.	DESCRIPTION	QTY
13	1375797	Terminal	2
13	1402904	Terminal	2
13	1461744	Connector Body	1
14	166112	Clamp	2
15	. . . . .	Connector Assembly (Oil Pressure Sensor)	1
15	1402613	Connector	1
15	1354237	Terminal	2
16	. . . . .	Connector Assembly (Alternator)	1
16	1323576	Terminal	2
16	1323586	Connector	1
17	. . . . .	Connector Assembly (Crankshaft Position Sensor)	1
17	1562649	Seal	3
17	1402814	Terminal	3
17	1607958	Connector	1
18	. . . . .	Connector Assembly (Starter Solenoid)	1
18	129888	E-Ring	1
18	190383	Boot	1
19	1532779	Clip	1
20	1532758	Clip	1
21	. . . . .	Connector Assembly (Injector #4)	1
21	1607549	Terminal	2
21	1561147	Plug	2
21	1607548	Connector	1
22	. . . . .	Connector Assembly (Chassis Harness)	1
22	1330413	Connector (8 Pin)	1
22	1330437	Terminal (Pin)	7
22	1484377	Plug	1
23	. . . . .	Connector Assembly (Chassis Harness)	1
23	866401	Terminal	4
23	1514597	Connector	1
24	. . . . .	Connector Assembly (Chassis Harness)	1
24	1541988	Connector (8 Pin)	1
24	1463138	Terminal Pin	8
25	1402613	Connector	1
25	. . . . .	Connector Assembly (FAP Sensor)	1
25	1354237	Terminal	3
26	. . . . .	Connector Assembly (MAP/MAT Sensor)	1
26	1607839	Connector	1
26	1402814	Terminal	4
26	1562649	Seal	4
27	. . . . .	Connector Assembly (Injector #3)	1
27	1607549	Terminal	2
27	1561147	Plug	2
27	1607548	Connector	1
28	. . . . .	Connector Assembly (Injector #2)	1
28	1607549	Terminal	2
28	1561147	Plug	2
28	1607548	Connector	1
29	. . . . .	Connector Assembly (Camshaft Sensor)	1
29	1476109	Connector Lock	1

©2013 HYSTER COMPANY

WIRE HARNESS (ENGINE)

GM 2.4L, LPG (S/N L177V04386H →)

ITEM	PART NO.	DESCRIPTION	QTY
29	1402887	Wire Seal	3
29	1330355	Terminal	3
29	1476067	Connector	1
30	. . . . .	Connector Assembly (Injector #1)	1
30	1607549	Terminal	2
30	1561147	Plug	2
30	1607548	Connector	1
31	1500899	Clip	3

FOOTNOTES:

a Not Illustrated

©2013 HYSTER COMPANY

WIRE HARNESS (FIGURE 7-71)

ENGINE — YANMAR 2.6L AND 3.3L, DIESEL (S/N L177B11118D →)

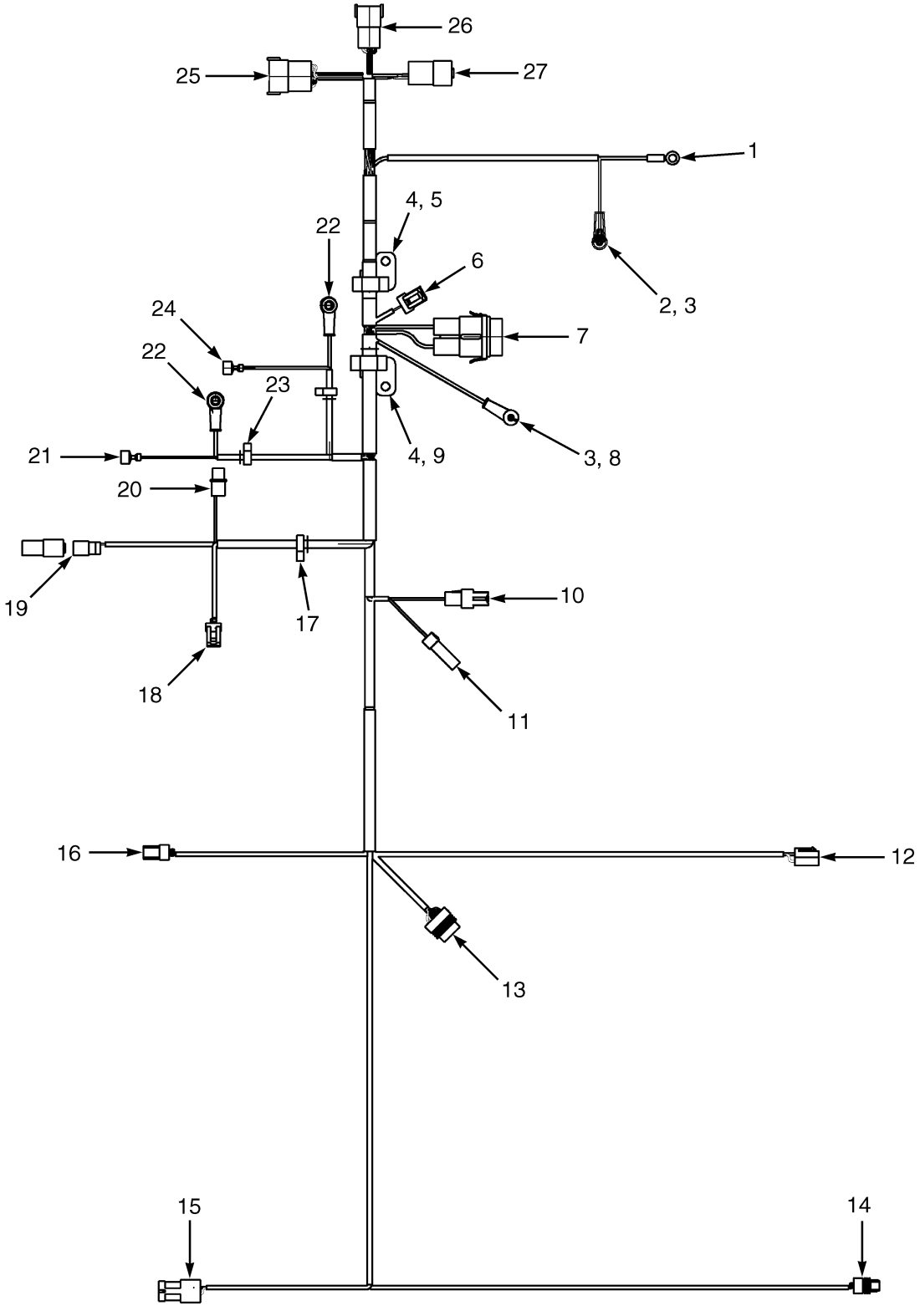

BP080672

©2013 HYSTER COMPANY

WIRE HARNESS

ENGINE – YANMAR 2.6L AND 3.3L, DIESEL (S/N L177B11118D →)

ITEM	PART NO.	DESCRIPTION	QTY
	2087191	Wire Harness	1
1	148611	E-Ring (Starter Stud)	1
2	1382695	Fuse Connector	2
2	1559049	Ring Terminal (Glow Plug)	1
3	190382	Boot	2
4	1559049	Ring Terminal (Starter Solenoid)	1
4	190382	Boot	1
4	1532776	Clip	2
5	1532761	Clip	1
6	1546673	Connector (Engine RPM Sensor)	1
6	1323576	Terminal	3
7	. . . . .	Connector (Fuse 60 Amp)	1
7	1454860	Connector Body	1
7	1382695	Fuse Connector	2
7	1382694	Fuse Connector	2
7	1454829	Fuse (60 Amp)	1
7	1454862	Cover (With Seal)	1
8	148609	E-Ring (Glow Plug)	1
9	1532759	Clip	1
10	1582484	Connector (Fuel Shut-off Solenoid)	1
11	1582486	Connector (Cold Start Aid)	1
12	1547368	Connector Body (Alternator)	1
12	1565098	Terminal	1
13	. . . . .	Throttle Position Sensor	1
13	1525584	Connector (Throttle Position Sensor)	1
13	1532571	Terminal	6
14	1476077	Connector (Fuel Level Sensor)	1
14	1323576	Terminal	2
15	. . . . .	Connector (Air Filter Sensor)	1
15	1465469	Connector	1
15	1323578	Terminal	2
15	1402888	Seal	2
16	1323586	Connector (Water Temperature Sensor)	1
16	1323576	Terminal	2
17	1500901	Clip	1
18	1327957	Connector (Low Engine Oil Pressure Switch)	1
18	1532571	Terminal	3
19	1330419	Connector (Pull Actuator)	1
19	1330436	Terminal	2
19	1330424	Connector (Secondary Lock)	1
19	1351681	Connector	1
20	1547369	Connector Body (Fuel Filter Water Separator)	1
21	1402849	Connector Body (Relay Signal 86)	1
22	1560015	E-Ring	1
22	190383	Boot	1
23	1509888	Clip	2
24	325789	Terminal	2
25	. . . . .	Engine to Chassis	1
25	1500925	Connector	1
25	1330437	Terminal (Pin)	11

©2013 HYSTER COMPANY

WIRE HARNESS

ENGINE – YANMAR 2.6L AND 3.3L, DIESEL (S/N L177B11118D →)

ITEM	PART NO.	DESCRIPTION	QTY
25	1484377	Plug	1
25	1352603	Secondary Lock	1
26	. . . . .	Engine to Chassis	1
26	1541988	Connector (8 Pin)	1
26	1463138	Terminal Pin	8
26	1541989	Connector (Secondary Lock)	1
27	. . . . .	Engine to Chassis	1
27	1514598	Connector	1
27	1330439	Plug	1
27	1484709	Terminal (Pin)	3
27	1514597	Connector	1

©2013 HYSTER COMPANY

NOTES

©2013 HYSTER COMPANY

WIRE HARNESS (FIGURE 7-72)

ENGINE — YANMAR 2.6L AND 3.3L, DIESEL (→ S/N L177B11117D)

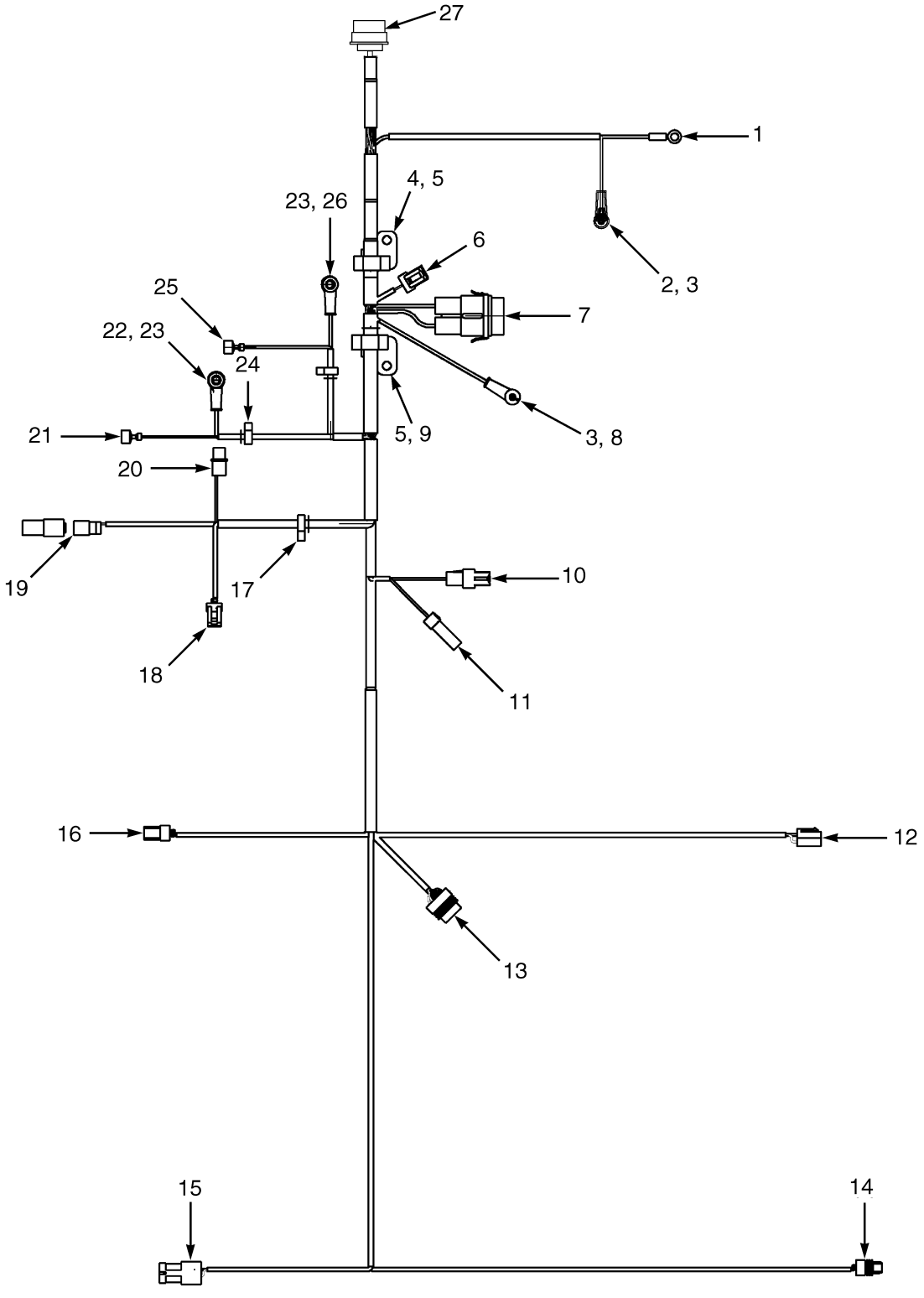

HP081650

©2013 HYSTER COMPANY

WIRE HARNESS

ENGINE – YANMAR 2.6L AND 3.3L, DIESEL (→ S/N L177B11117D)

ITEM	PART NO.	DESCRIPTION	QTY
	2060844	Wire Harness (Engine)	1
1	1559049	Ring Terminal (Glow Plug)	1
1	190382	Boot	1
2	. . . . .	Connector Assembly (Fuse)	1
2	1454860	Connector Body	1
2	1382695	Fuse Connector	2
2	1382694	Fuse Connector	2
2	1454829	Fuse (60 Amp)	1
2	1454862	Cover (With Seal)	1
3	. . . . .	Connector Assembly (Engine RPM Sensor)	1
3	1546673	Connector	1
3	1323576	Terminal	3
4	1559049	Ring Terminal (Starter Solenoid)	1
4	190382	Boot	1
5	148611	E-Ring (Starter Stud)	1
6	. . . . .	Connector Assembly (Alternator)	1
6	1547368	Connector Body	1
6	1565098	Terminal	2
7	1582484	Connector (Fuel Shut-Off Solenoid)	1
8	1582486	Connector (Cold Start Aid)	1
9	1521328	Terminal (Relay Power To Glow Plugs)	1
9	190383	Boot	1
10	325789	Terminal (Relay Ground)	1
11	1521328	Terminal (Fused Power Positive)	1
11	190383	Boot	1
12	325789	Terminal (Relay Signal)	1
13	1547369	Connector Body (Fuel Filter/Water Separator)	1
14	. . . . .	Connector Assembly (Fuel Level Sensor)	1
14	1476077	Connector	1
14	1323576	Terminal	2
15	. . . . .	Connector Assembly (Throttle Position Sensor)	1
15	1525584	Connector	1
15	1532571	Terminal	6
16	. . . . .	Connector Assembly (Water Temperature Sensor)	1
16	1323586	Connector	1
16	1323576	Terminal	2
17	1465469	Connector (Air Filter Sensor)	1
17	1323578	Terminal	2
17	1402888	Seal	2
17	1498416	Connector	2
18	. . . . .	Connector Assembly (Low Engine Oil Pressure Switch)	1
18	1327957	Connector	1
18	1532571	Terminal	3
19	. . . . .	Connector Assembly (Pull Actuator)	1
19	1330419	Connector	1
19	1330436	Terminal	2
19	1330424	Connector (Secondary Lock)	1
19	1351681	Connector	1
20	. . . . .	Connector Assembly (Engine To Chassis)	1
20	1531502	Connector	1

©2013 HYSTER COMPANY

WIRE HARNESS

ENGINE – YANMAR 2.6L AND 3.3L, DIESEL (→ S/N L177B11117D)

ITEM	PART NO.	DESCRIPTION	QTY
20	1484709	Terminal (Pin)	3
20	1330437	Terminal (Pin)	19
20	1330439	Plug	7
21	1500901	Clip	1
22	1509888	Clip	2
23	1532776	Clip	2
24	1532761	Clip	2

©2013 HYSTER COMPANY

WIRE HARNESS (FIGURE 7-73)
SEALED ALTERNATOR — GM 2.4L, GASOLINE AND LPG

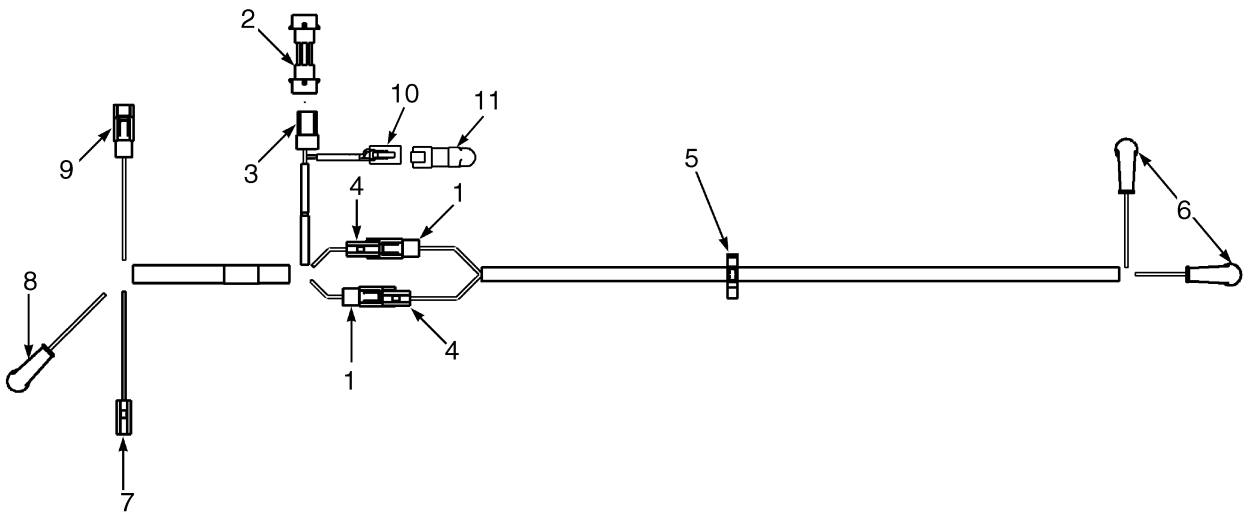

BP080577

ITEM	PART NO.	DESCRIPTION	QTY
	2094581	Wire Harness	1
1	. . . . .	Connector Assembly (To Disconnect Switch Link)	2
1	181045	Connector Body	1
1	134810	Terminal	1
2	1469606	Adapter (To Engine Harness)	1
3	. . . . .	Connector Assembly (To Engine Harness)	1
3	1323586	Connector	1
3	1323576	Terminal	2
4	. . . . .	Connector Assembly (To Disconnect Switch Link)	2
4	181046	Connector Body	1
4	1561117	Terminal	1
5	1402816	Clip	1
6	. . . . .	Connector Assembly (To Disconnect Switch)	2
6	1582218	E-Ring	1
6	190383	Boot	1
6	175944	Heat Shrink	1
7	. . . . .	Connector Assembly (Alternator Excite)	1
7	181046	Connector Body	1
7	1561117	Terminal	1
8	. . . . .	Connector Assembly (Alternator D+)	1
8	1582218	E-Ring	1
8	190383	Boot	1
8	175944	Heat Shrink	1
9	. . . . .	Connector Assembly (Alternator Field)	1
9	181045	Connector Body	1
9	134810	Terminal	1
10	. . . . .	Connector Assembly (Diode Pack)	1

©2013 HYSTER COMPANY

ITEM	PART NO.	DESCRIPTION	QTY
10	1489656	Connector (4-Way)	1
10	1489657	Connector	1
10	1363886	Terminal (Socket)	4
11	2094490	Kit-Diode	1

©2013 HYSTER COMPANY

WIRE HARNESS (SEALED ALTERNATOR) (FIGURE 7-74)

MAZDA 2.0L AND 2.2L, GASOLINE AND LPG — 2007 EMISSION COMPLIANT ENGINES

(S/N L177B15327E →) (S/N L177B16207E →) (S/N L177B15512E →)

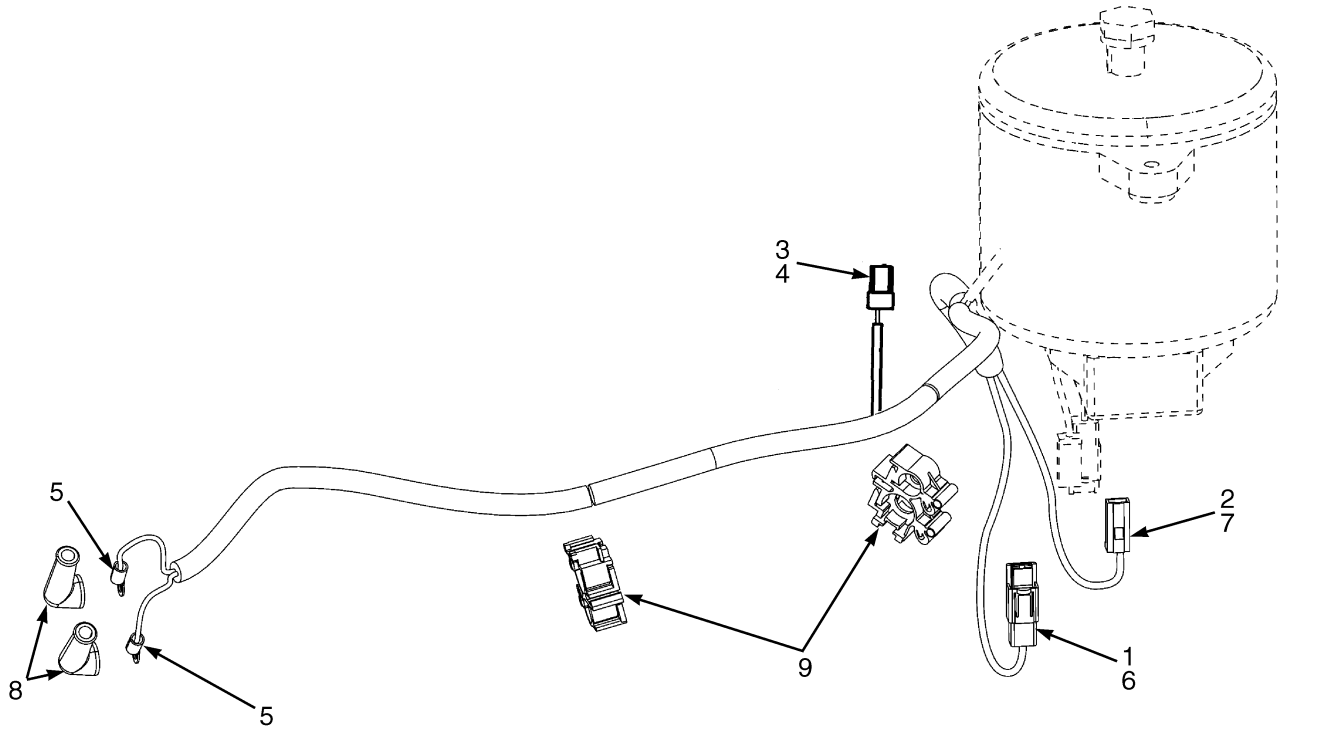

HP081641

ITEM	PART NO.	DESCRIPTION	QTY
	2084812	Wire Harness (Sealed Alternator) (Sealed Alternator)	1
1	181045	Connector Body (Alternator Field)	1
2	181046	Connector Body (Alternator Excite)	1
3	1308260	Connector Body (To Engine Harness)	1
4	314773	Terminal (To Engine Harness)	1
5	1582218	E-Ring (Battery Disconnect)	2
6	134810	Terminal (Alternator Field)	1
7	1561117	Terminal (Alternator Excite)	1
8	190383	Boot (Battery Disconnect)	2
9	1579403	Clip	1

©2013 HYSTER COMPANY

WIRE HARNESS (FIGURE 7-75)
FUSED STARTER — GM 2.4L 2010 SERIES

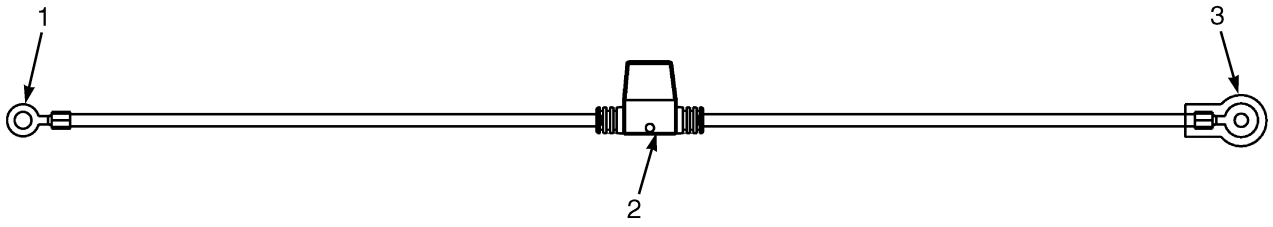

BP080941

ITEM	PART NO.	DESCRIPTION	QTY
	4603542	Wire Harness (Fused Starter)	1
1	. . . . .	Connector Assembly (To Starter)	1
1	148615	E-Ring	1
2	. . . . .	Connector Assembly (Inline Fuse)	1
2	4007984	Connector (Fuse Holder)	1
2	4008604	Fuse (60 AMP)	1
3	. . . . .	Connector Assembly (To Alternator)	1
3	148614	E-Ring	1
3	1566146	Boot	1

©2013 HYSTER COMPANY

NOTES

©2013 HYSTER COMPANY

WIRE HARNESS (FIGURE 7-76)
ELECTRONIC CONTROL VALVE — THREE FUNCTION

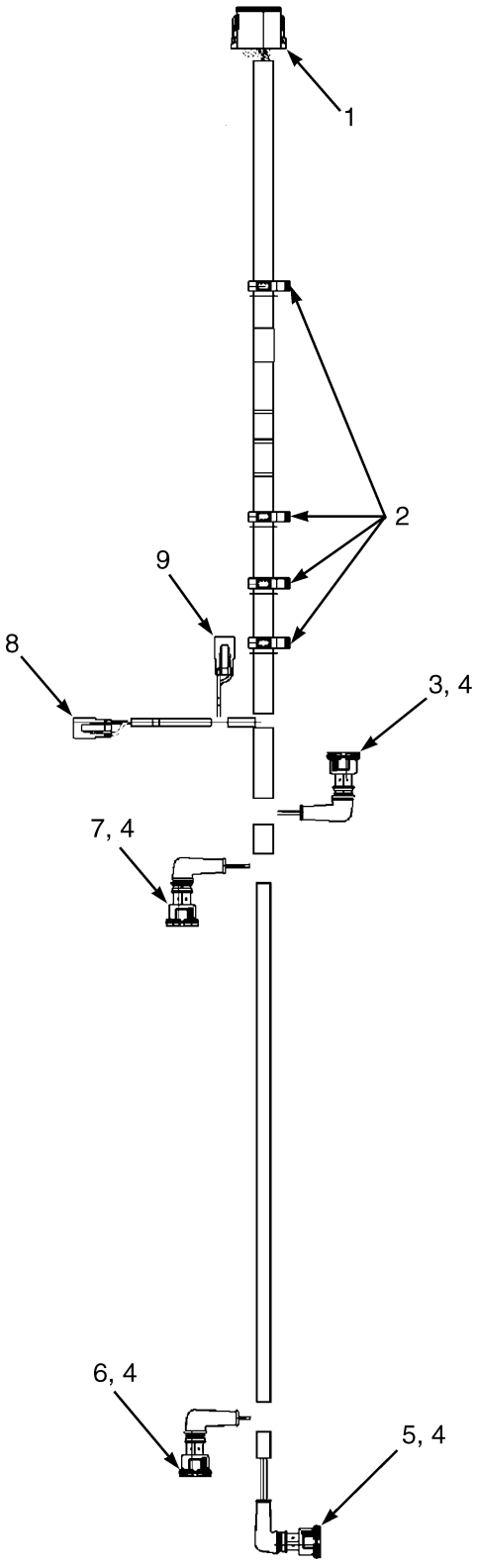

HP081569

©2013 HYSTER COMPANY

WIRE HARNESS
ELECTRONIC CONTROL VALVE – THREE FUNCTION

ITEM	PART NO.	DESCRIPTION	QTY
	2060198	Wire Harness (Control Valve)	1
1	. . . . .	Connector Assembly (Vehicle System Manager)	1
1	1525564	Connector	1
1	1330438	Terminal (Socket)	9
1	1330439	Plug	3
1	1525564	Connector	1
1	1500913	Connector	1
2	1402815	Clip	4
3	. . . . .	Connector Assembly (2A Tilt)	1
3	1531162	Connector	1
3	1562649	Seal	2
3	1402814	Terminal	2
4	190383	Boot	4
5	. . . . .	Connector Assembly (2B Tilt)	1
5	1531162	Connector	1
5	1562649	Seal	2
5	1402814	Terminal	2
6	. . . . .	Connector Assembly (3B Auxiliary 1)	1
6	1493435	Connector (2-Way)	1
6	1562649	Seal	2
6	1402814	Terminal	2
7	. . . . .	Connector Assembly (3A Auxiliary 1)	1
7	1493435	Connector (2-Way)	1
7	1562649	Seal	2
7	1402814	Terminal	2
8	. . . . .	Connector Assembly (Lift)	1
8	1490242	Connector (2 Way)	1
8	1330438	Terminal (Socket)	2
8	1490243	Connector (Secondary Lock)	1
9	. . . . .	Connector Assembly (Lower)	1
9	1490242	Connector (2 Way)	1
9	1330438	Terminal (Socket)	2
9	1490243	Connector (Secondary Lock)	1

©2013 HYSTER COMPANY

WIRE HARNESS (FIGURE 7-77)
SEALED ALTERNATOR — YANMAR 2.6L AND 3.3L, DIESEL

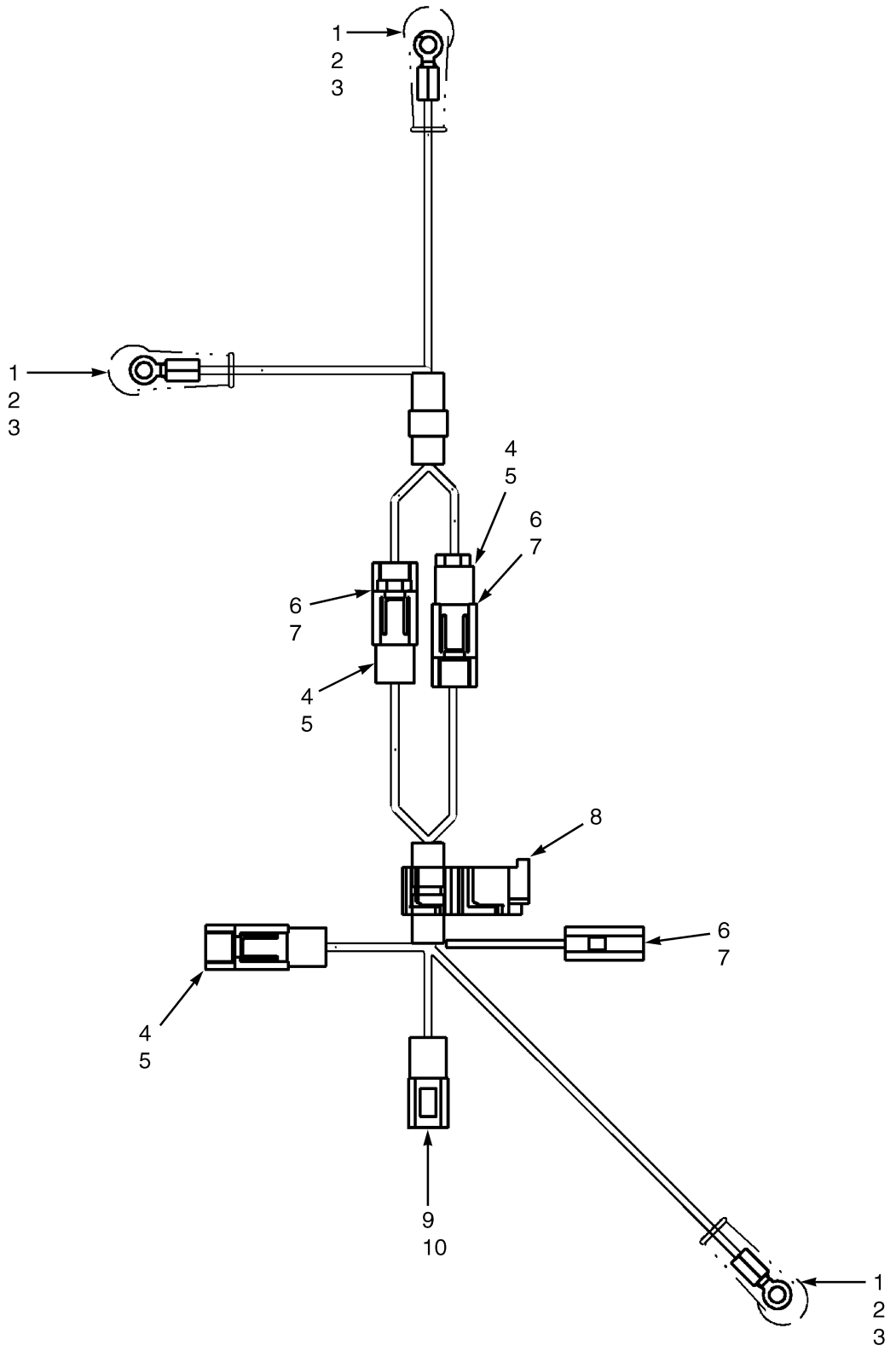

©2013 HYSTER COMPANY

WIRE HARNESS

SEALED ALTERNATOR – YANMAR 2.6L AND 3.3L, DIESEL

ITEM	PART NO.	DESCRIPTION	QTY
	2084810	Wire Harness (Alternator)	1
1	1582218	E-Ring	3
2	190383	Boot	3
3	175944	Heat Shrink	AR
4	181045	Connector Body	3
5	134810	Terminal	3
6	181046	Connector Body	3
7	1561117	Terminal	3
8	1579403	Clip	1
9	1308260	Connector Body	1
10	314773	Terminal	2

©2013 HYSTER COMPANY

WIRE HARNESS (FIGURE 7-78)
ELECTRONIC CONTROL VALVE — FOUR FUNCTION

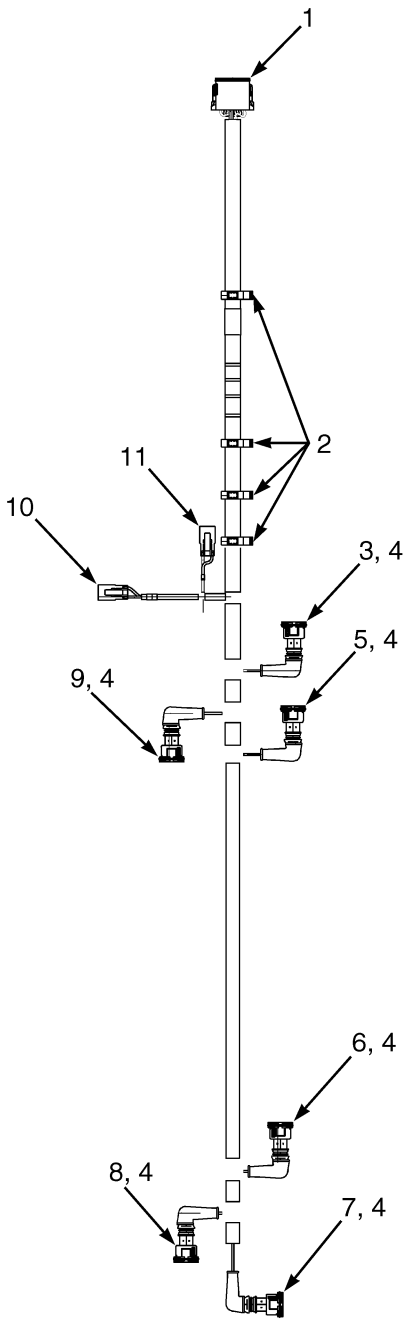

HP081568

©2013 HYSTER COMPANY

WIRE HARNESS
ELECTRONIC CONTROL VALVE – FOUR FUNCTION

ITEM	PART NO.	DESCRIPTION	QTY
	2058909	Wire Harness (Control Valve)	1
1	. . . . .	Connector Assembly (Vehicle System Manager)	1
1	1525564	Connector	1
1	1330438	Terminal (Socket)	12
1	1500913	Connector	1
2	1402815	Clip	4
3	. . . . .	Connector Assembly (2A Tilt)	1
3	1531162	Connector	1
3	1562649	Seal	2
3	1402814	Terminal	2
4	190383	Boot	6
5	1493447	Connector (4A Auxiliary 2)	1
5	1562649	Seal	2
5	1402814	Terminal	2
6	1493447	Connector (4B Auxiliary 2)	1
6	1562649	Seal	2
6	1402814	Terminal	2
7	. . . . .	Connector Assembly (2B Tilt)	1
7	1531162	Connector	1
7	1562649	Seal	2
7	1402814	Terminal	2
8	. . . . .	Connector Assembly (3B Auxiliary 1)	1
8	1493435	Connector (2-Way)	1
8	1562649	Seal	2
8	1402814	Terminal	2
9	. . . . .	Connector Assembly (3A Auxiliary 1)	1
9	1493435	Connector (2-Way)	1
9	1562649	Seal	2
9	1402814	Terminal	2
10	. . . . .	Connector Assembly (Lift)	1
10	1490242	Connector (2 Way)	1
10	1330438	Terminal (Socket)	2
10	1490243	Connector (Secondary Lock)	1
11	. . . . .	Connector Assembly (Lower)	1
11	1490242	Connector (2 Way)	1
11	1330438	Terminal (Socket)	2
11	1490243	Connector (Secondary Lock)	1

©2013 HYSTER COMPANY

WIRE HARNESS (FIGURE 7-79)

LIGHTS — WITH OVERHEAD GUARD (→ S/N L177B11224D)

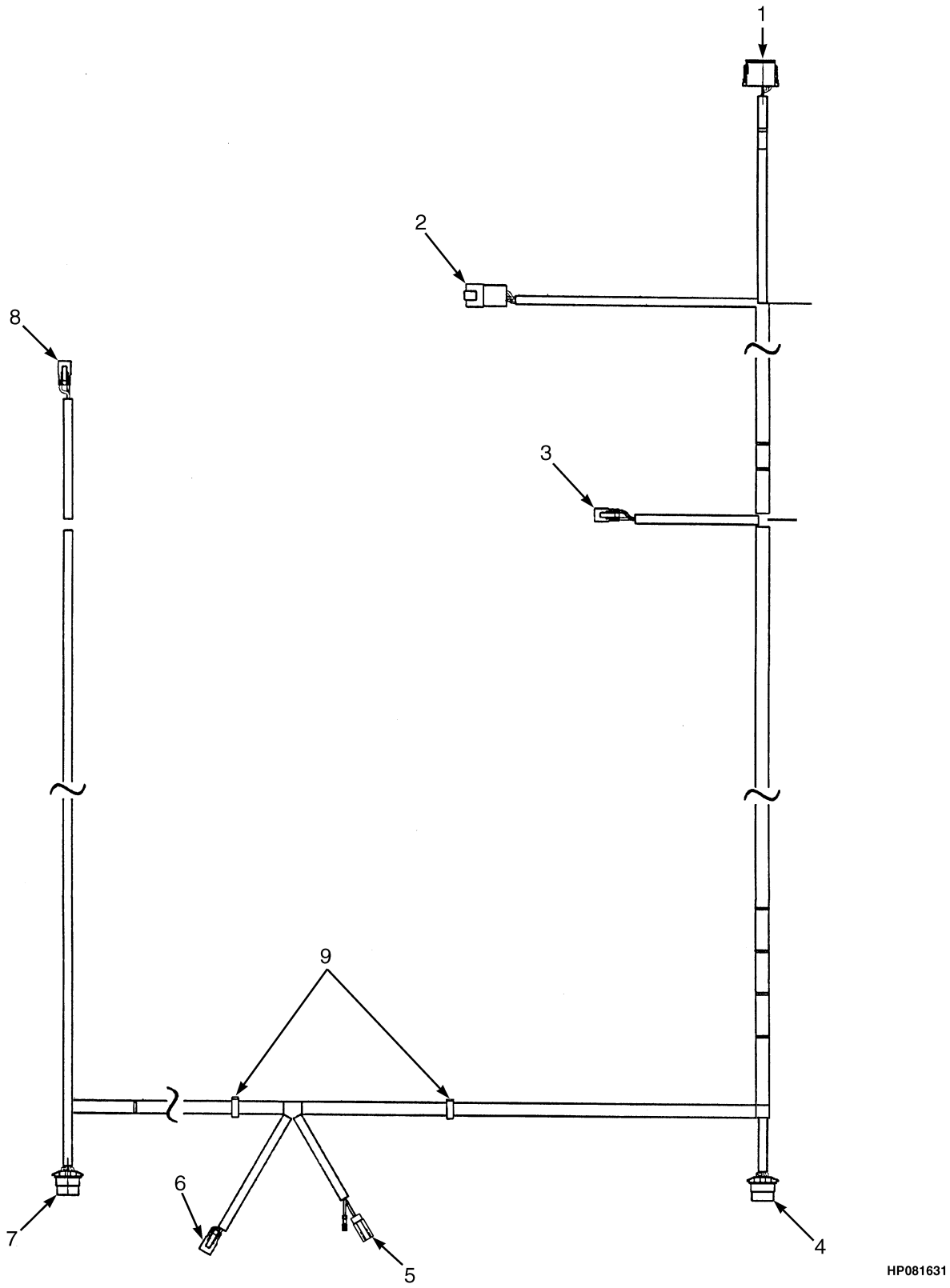

©2013 HYSTER COMPANY

WIRE HARNESS

LIGHTS – WITH OVERHEAD GUARD (→ S/N L177B11224D)

ITEM	PART NO.	DESCRIPTION	QTY
	2073760	Wire Harness (Lights)	1
1	. . . . .	Connector Assembly (Vehicle System Manager)	1
1	1525566	Connector	1
1	1484377	Plug	9
1	1330438	Terminal (Socket)	3
1	1500913	Connector	1
2	. . . . .	Connector Assembly (Chassis Harness)	1
2	1514597	Connector	1
2	1484709	Terminal (Pin)	4
2	1514598	Connector	1
3	. . . . .	Connector Assembly (RH Front Work Lights)	1
3	1490242	Connector (2 Way)	1
3	1363886	Terminal (Socket)	2
3	1490243	Connector (Secondary Lock)	1
4	. . . . .	Connector Assembly (RH Rear Signal Lights)	1
4	1531486	Connector	1
4	1330355	Terminal	4
4	1330356	Seal	1
4	1482668	Plug (Cavity Plug)	2
4	930591	Connector (Secondary Lock)	1
4	1476108	Wire Seal	3
5	1484557	Connector (2 Socket) (Strobe Lights)	1
5	1484558	Connector (Seconday Lock)	1
5	1463139	Terminal	2
6	. . . . .	Connector Assembly (Rear Work Lights)	1
6	1490242	Connector (2 Way)	1
6	1363886	Terminal (Socket)	2
6	1490243	Connector (Secondary Lock)	1
7	. . . . .	Connector Assembly (LH Rear Signal Lights)	1
7	1531486	Connector	1
7	1330355	Terminal	4
7	1330356	Seal	1
7	1482668	Plug (Cavity Plug)	2
7	930591	Connector (Secondary Lock)	1
7	1476108	Wire Seal	3
8	. . . . .	Connector Assembly (LH Front Work Lights)	1
8	1490242	Connector (2 Way)	1
8	1363886	Terminal (Socket)	2
8	1490243	Connector (Secondary Lock)	1
9	1509890	Clip	2

©2013 HYSTER COMPANY

WIRE HARNESS (FIGURE 7-80)

LIGHTS — WITH OVERHEAD GUARD (S/N L177B11225D →)

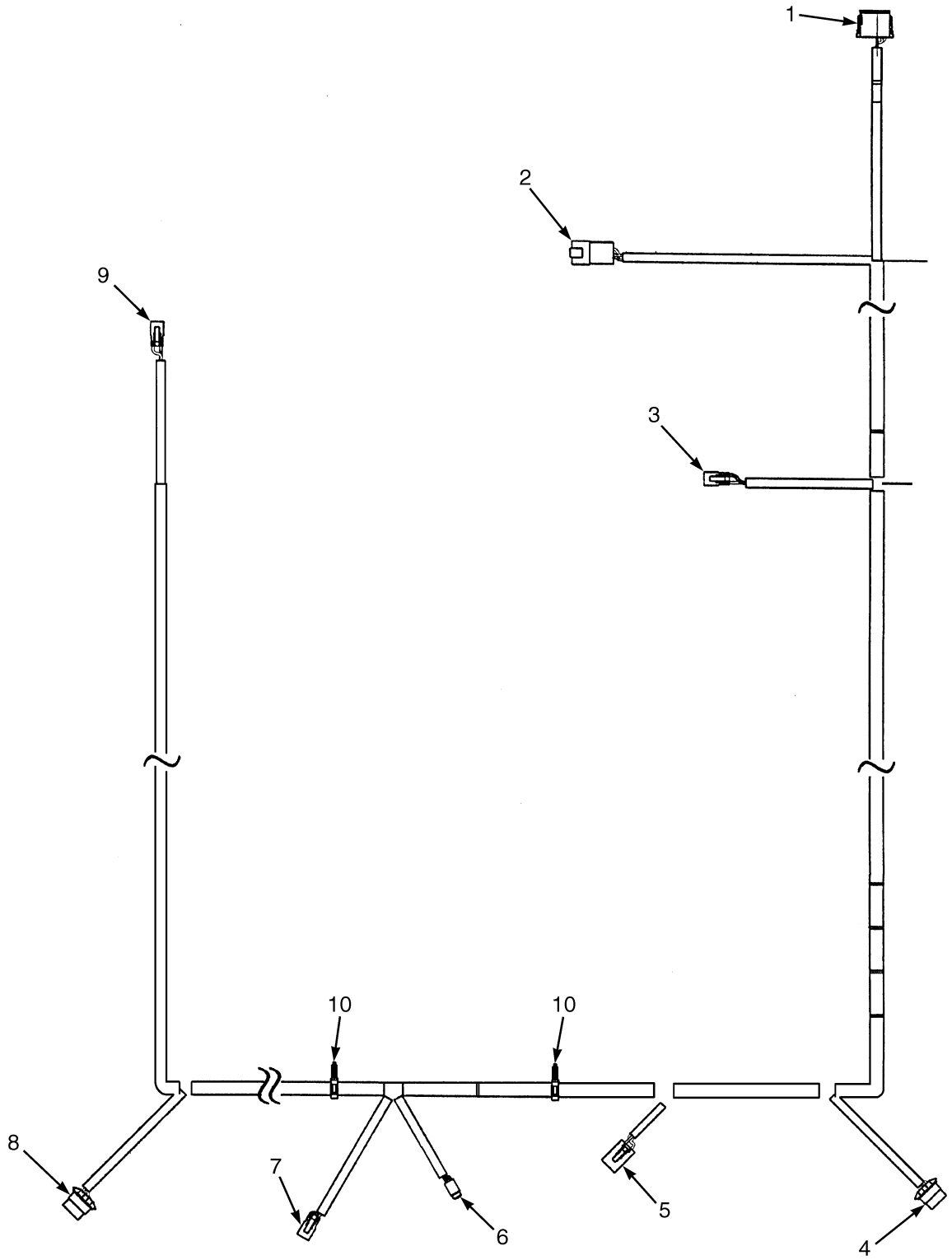

©2013 HYSTER COMPANY

WIRE HARNESS

LIGHTS – WITH OVERHEAD GUARD (S/N L177B11225D →)

ITEM	PART NO.	DESCRIPTION	QTY
	2090084	Wire Harness (Lights)	1
1	. . . . .	Connector Assembly (VSM)	1
1	1525566	Connector	1
1	1484377	Plug	9
1	1330438	Terminal (Socket)	3
1	1500913	Connector	1
2	. . . . .	Connector Assembly (Chassis Harness)	1
2	1514597	Connector	1
2	1484709	Terminal (Pin)	4
2	1514598	Connector	1
3	. . . . .	Connector Assembly (RH Front Work)	1
3	1490242	Connector (2 Way)	1
3	1363886	Terminal (Socket)	2
3	1490243	Connector (Secondary Lock)	1
4	. . . . .	Connector Assembly (RH Rear Signal)	1
4	1531486	Connector	1
4	1330355	Terminal	4
4	1330356	Seal	1
4	1482668	Plug (Cavity Plug)	1
4	930591	Connector (Secondary Lock)	1
4	1476108	Wire Seal	3
5	. . . . .	Connector Assembly (Work Light Resistor)	1
5	1514602	Connector	1
5	1514603	Connector	1
5	1484709	Terminal (Pin)	4
6	. . . . .	Socket Assembly (Strobe)	1
6	1484557	Connector (2 Socket)	1
6	1484558	Connector (Seconday Lock)	1
6	1463139	Terminal	2
7	. . . . .	Connector Assembly (Rear Work)	1
7	1490242	Connector (2 Way)	1
7	1363886	Terminal (Socket)	2
7	1490243	Connector (Secondary Lock)	1
8	. . . . .	Connector Assembly (LH Rear Signal)	1
8	1531486	Connector	1
8	1330355	Terminal	4
8	1330356	Seal	1
8	1482668	Plug (Cavity Plug)	2
8	930591	Connector (Secondary Lock)	1
8	1476108	Wire Seal	3
9	. . . . .	Connector Assembly (LH Front Work)	1
9	1490242	Connector (2 Way)	1
9	1363886	Terminal (Socket)	2
9	1490243	Connector (Secondary Lock)	1
10	1509890	Clip	2

©2013 HYSTER COMPANY

WIRE HARNESS (FIGURE 7-81)

LIGHTS (6/2007 →)

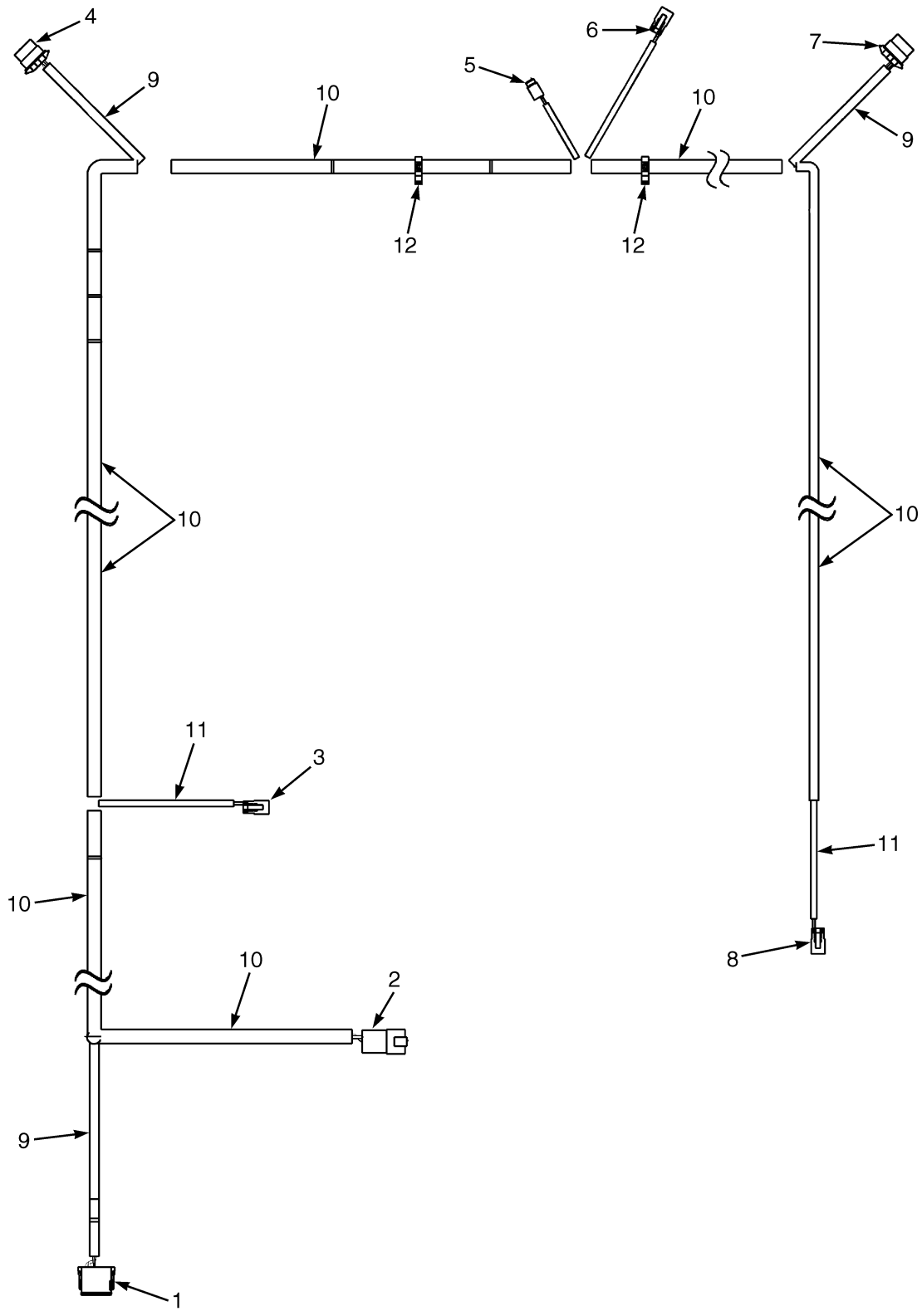

©2013 HYSTER COMPANY

WIRE HARNESS
LIGHTS (6/2007 →)

ITEM	PART NO.	DESCRIPTION	QTY
	2098385	Wire Harness (Lights)	1
1	. . . . .	Connector Assembly (Vehicle System Management)	1
1	1525566	Connector	1
1	1500913	Connector	1
1	1330438	Terminal (Socket)	3
1	1484377	Plug	9
2	. . . . .	Connector Assembly (RH Chassis)	1
2	1514597	Connector	1
2	1514598	Connector	1
2	1484709	Terminal (Pin)	4
3	. . . . .	Connector Assembly (RH Front Work Light)	1
3	1490242	Connector (2 Way)	1
3	1490243	Connector (Secondary Lock)	1
3	1363886	Terminal (Socket)	2
4	. . . . .	Connector Assembly (RH Rear Signal)	1
4	1531486	Connector	1
4	930591	Connector (Secondary Lock)	1
4	1330355	Terminal	4
4	1330356	Seal	1
4	1482668	Plug (Cavity Plug)	2
4	1476108	Wire Seal	3
5	. . . . .	Connector Assembly (Strobe)	1
5	1484557	Connector (2 Socket)	1
5	1484558	Connector (Seconday Lock)	1
5	1463139	Terminal	2
6	. . . . .	Connector Assembly (Rear Work Light)	1
6	1490242	Connector (2 Way)	1
6	1490243	Connector (Secondary Lock)	1
6	1363886	Terminal (Socket)	2
7	. . . . .	Connector Assembly (LH Rear Signal)	1
7	1531486	Connector	1
7	930591	Connector (Secondary Lock)	1
7	1330355	Terminal	4
7	1330356	Seal	1
7	1482668	Plug (Cavity Plug)	2
7	1476108	Wire Seal	3
8	. . . . .	Connector Assembly (LH Front Work Light)	1
8	1490242	Connector (2 Way)	1
8	1490243	Connector (Secondary Lock)	1
8	1363886	Terminal (Socket)	2
9	275493	Conduit	AR
10	275495	Conduit	AR
11	175944	Heat Shrink	AR
12	1509890	Clip	2

©2013 HYSTER COMPANY

WIRE HARNESS (FIGURE 7-82)

TRANSMISSION — SINGLE SPEED (S/N L177B11118D →)

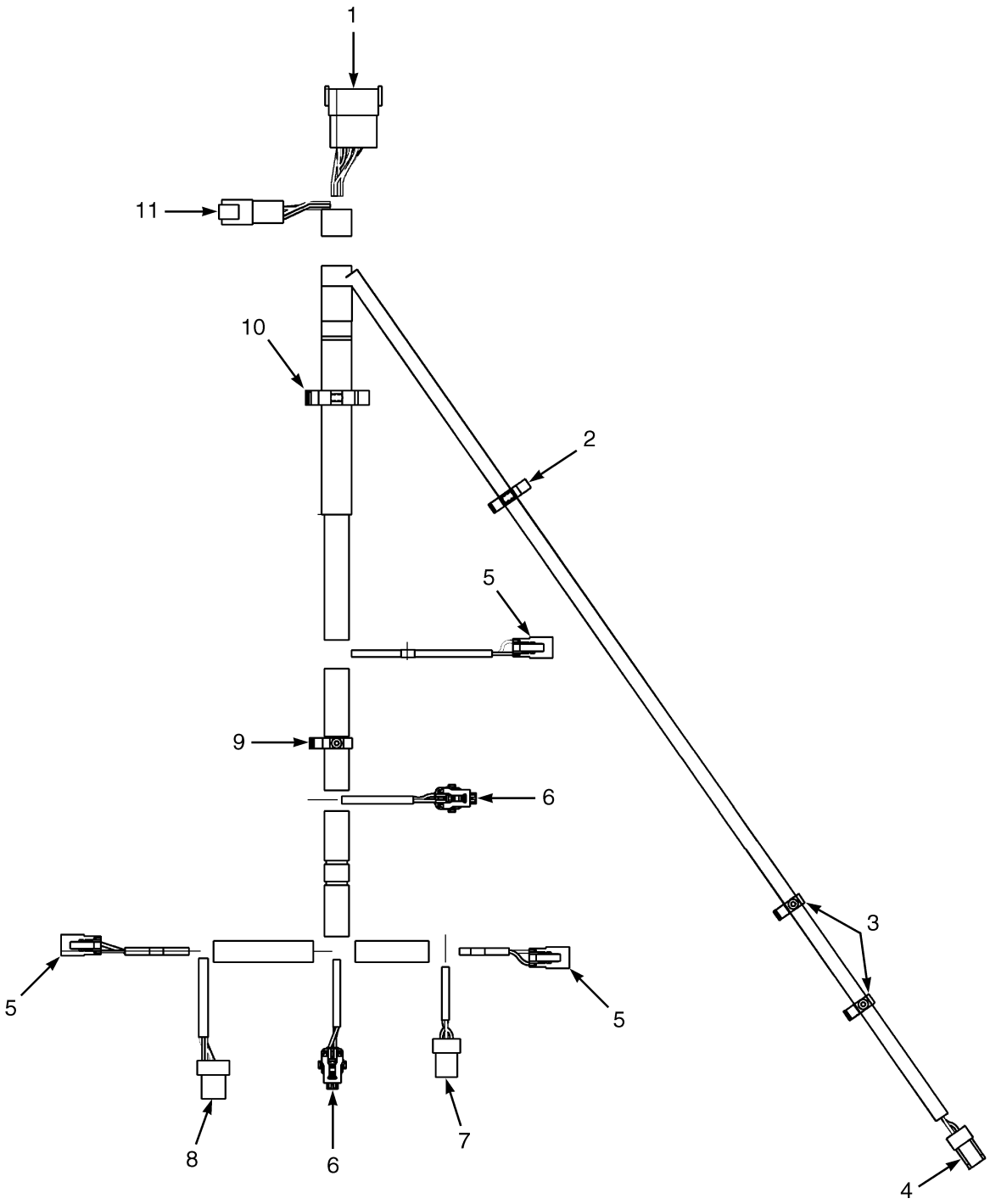

BP080478

©2013 HYSTER COMPANY

WIRE HARNESS

TRANSMISSION – SINGLE SPEED (S/N L177B11118D →)

ITEM	PART NO.	DESCRIPTION	QTY
	2085943	Wire Harness (Transmission)	1
1	. . . . .	Connector Assembly (To RH Chassis Harness)	1
1	1623280	Connector	1
1	1623281	Connector	1
1	1463138	Terminal Pin	10
1	1484377	Plug	2
2	1402816	Clip	1
3	1509888	Clip	2
4	. . . . .	Connector Assembly (Temperature)	1
4	1402868	Connector	1
4	4009253	Connector (Alternate Part)	1
4	1323576	Terminal	2
5	. . . . .	Connector Assembly (Clutch Forward/Reverse 1)	1
5	1490242	Connector (2 Way)	1
5	1490243	Connector (Secondary Lock)	1
5	1330438	Terminal (Socket)	2
6	. . . . .	Connector Assembly (Forward/Reverse 1 Pressure)	1
6	1603021	Connector	1
6	1603236	Connector (Secondary Lock)	1
6	1548517	Terminal (Socket)	3
6	1548519	Seal	3
7	. . . . .	Connector Assembly (Turbine Shaft RPM)	1
7	1546673	Connector	1
7	1323576	Terminal	3
8	. . . . .	Connector Assembly (Tail Shaft RPM)	1
8	1558156	Connector	1
8	1323576	Terminal	4
9	1509890	Clip	1
10	1402813	Clip	1
11	. . . . .	Connector Assembly (To RH Chassis Harness)	1
11	1530960	Connector	1
11	1530961	Connector (Secondary Lock)	1
11	1463138	Terminal Pin	4
11	1484377	Plug	2

©2013 HYSTER COMPANY

WIRE HARNESS (FIGURE 7-83)
TRANSMISSION — SINGLE SPEED (→ S/N L177B11117D)

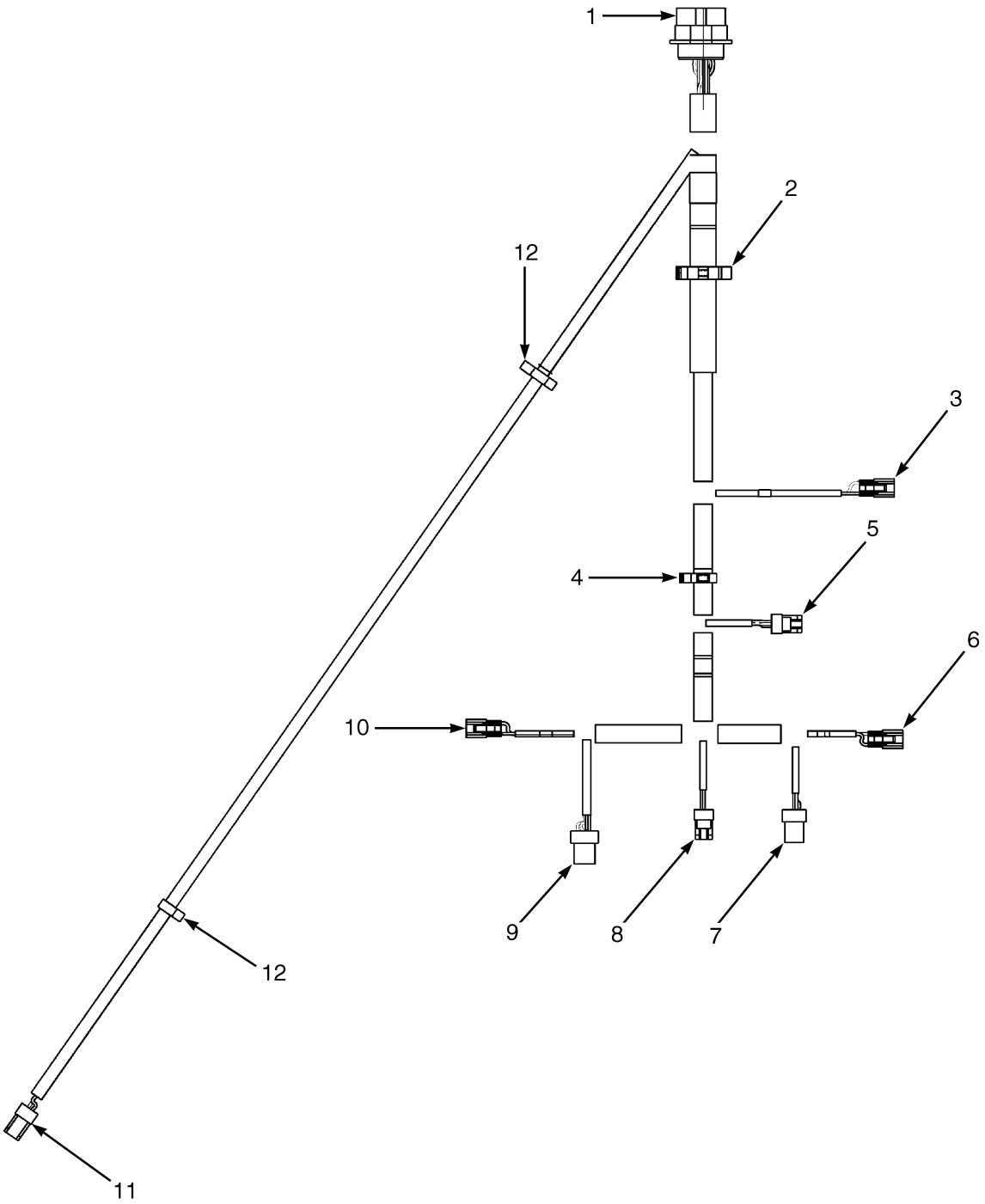

HP081570

©2013 HYSTER COMPANY

WIRE HARNESS

TRANSMISSION – SINGLE SPEED (→ S/N L177B11117D)

ITEM	PART NO.	DESCRIPTION	QTY
	a 2070731	Wire Harness (Transmission)	1
	b 2082323	Wire Harness (Transmission)	1
1	1500919	Connector (To Chassis)	1
1	1330437	Terminal (Pin)	14
1	**a** 1330439	Plug	9
1	**b** 1484377	Plug	9
2	**a** 1402813	Clip	1
2	**b** 1509890	Clip	1
3	**a** 1490242	Connector (2 Way) (Forward Clutch 1)	1
3	**a** 1330438	Terminal (Socket)	2
3	**a** 1490243	Connector (Secondary Lock)	1
3	**b** 1603021	Connector (Forward Clutch 1)	1
3	**b** 1603236	Connector (Secondary Lock)	1
3	**b** 1548517	Terminal (Socket)	3
3	**b** 1548519	Seal	3
4	1402815	Clip	1
5	1327957	Connector (Forward Pressure 1)	1
5	1532571	Terminal	3
6	1490242	Connector (2 Way) (Reverse Clutch 1)	1
6	1330438	Terminal (Socket)	2
6	1490243	Connector (Secondary Lock)	1
7	1546673	Connector (Shaft RPM)	1
7	1323576	Terminal	3
8	**a** 1327957	Connector (Reverse Pressure 1)	1
8	**a** 1532571	Terminal	3
9	**b** 1548517	Terminal (Socket)	3
9	**b** 1548519	Seal	3
9	**b** 1603021	Connector (Reverse Pressure 1)	1
9	**b** 1603236	Connector (Secondary Lock)	1
9	1558156	Connector (Tail Shaft RPM)	1
9	1323576	Terminal	4
10	1490242	Connector (2 Way) (Transmission Check Valve)	1
10	1490243	Connector (Secondary Lock)	1
10	1330438	Terminal (Socket)	2
11	1402868	Connector (Transmission Temperature)	1
11	1323576	Terminal	2
12	1509888	Clip	2

FOOTNOTES:

a → 9/2005

b 9/2005 →

©2013 HYSTER COMPANY

WIRE HARNESS (FIGURE 7-84)
TRANSMISSION — DUAL SPEED (→ S/N L177B11117D)

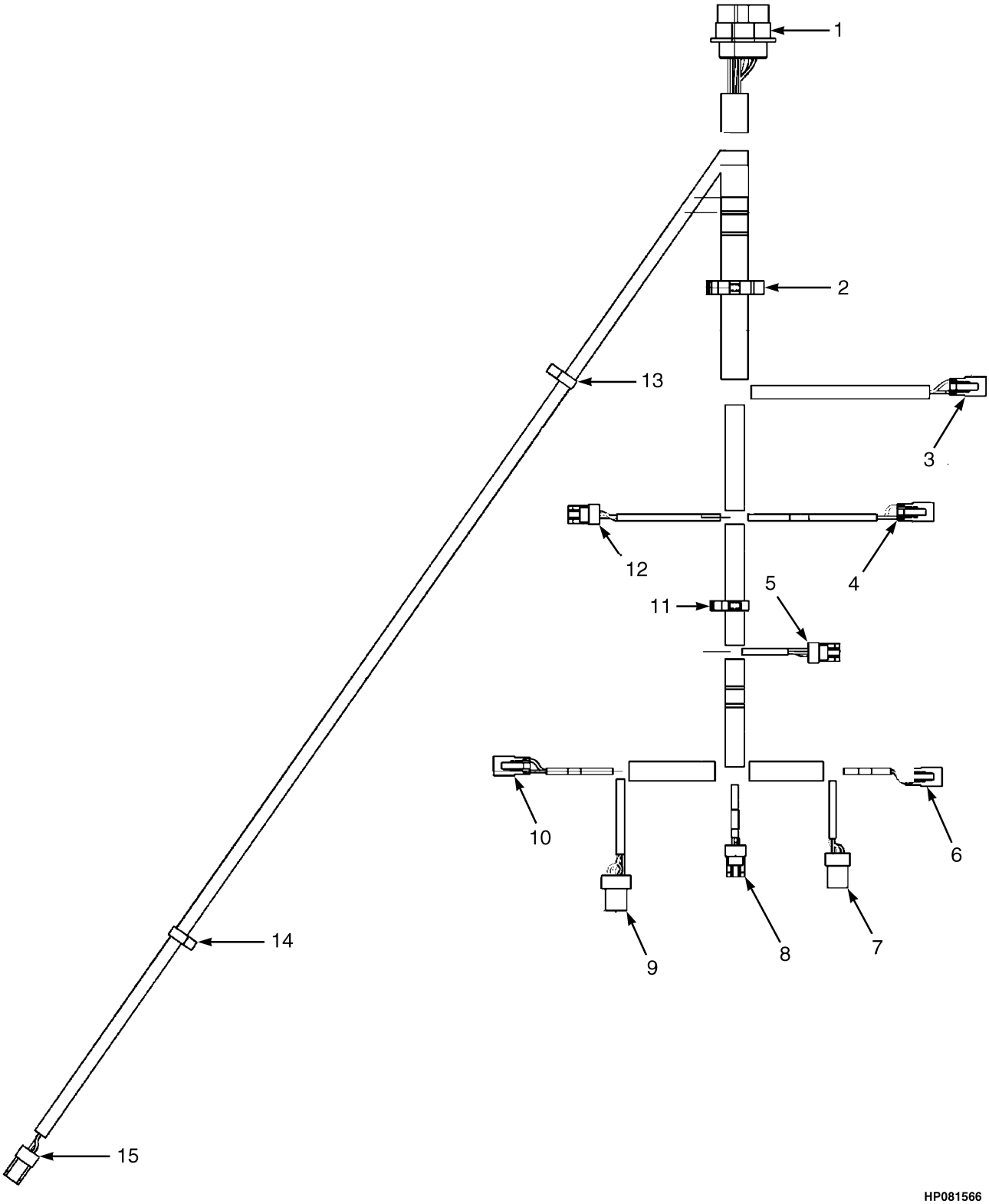

©2013 HYSTER COMPANY

WIRE HARNESS

TRANSMISSION – DUAL SPEED (→ S/N L177B11117D)

ITEM	PART NO.	DESCRIPTION	QTY
	a 2075644	Wire Harness (Transmission)	1
	b 2082324	Wire Harness (Transmission)	1
1	. . . . .	Connector Assembly (To Chassis Harness)	1
1	1500919	Connector	1
1	1330437	Terminal (Pin)	16
1	1330437	Terminal (Pin)	17
1	1330439	Plug	7
1	1484377	Plug	6
2	1402813	Clip	1
3	. . . . .	Connector Assembly (Clutch Forward 2)	1
3	1490243	Connector (Secondary Lock)	1
3	1490242	Connector (2 Way)	1
3	1330438	Terminal (Socket)	2
4	. . . . .	Connector Assembly (Clutch Forward 1)	1
4	1490243	Connector (Secondary Lock)	1
4	1490242	Connector (2 Way)	1
4	1330438	Terminal (Socket)	2
5	. . . . .	Connector Assembly (Forward 1 Pressure)	1
5	1603021	Connector	1
5	1603236	Connector (Secondary Lock)	1
5	1548517	Terminal (Socket)	3
5	1548519	Seal	3
6	. . . . .	Connector Assembly (Clutch Reverse 1)	1
6	1490242	Connector (2 Way)	1
6	1490243	Connector (Secondary Lock)	1
6	1330438	Terminal (Socket)	2
7	. . . . .	Connector Assembly (Turbine Shaft RPM)	1
7	1546673	Connector	1
7	1323576	Terminal	3
8	. . . . .	Connector Assembly (Reverse 1 Pressure)	1
8	1603021	Connector	1
8	1603236	Connector (Secondary Lock)	1
8	1548517	Terminal (Socket)	3
8	1548519	Seal	3
9	. . . . .	Connector Assembly (Tail Shaft RPM)	1
9	1558156	Connector	1
9	1323576	Terminal	4
10	. . . . .	Connector Assembly (Transmission Check Valve)	1
10	1490243	Connector (Secondary Lock)	1
10	1490242	Connector (2 Way)	1
10	1330438	Terminal (Socket)	2
11	1402815	Clip	1
11	1534828	Clip	1
11	1509890	Clip	1
12	. . . . .	Connector Assembly (Forward 2 Pressure)	1
12	1603021	Connector	1
12	1603236	Connector (Secondary Lock)	1
12	1548517	Terminal (Socket)	3
12	1548519	Seal	3
13	1402816	Clip	1

©2013 HYSTER COMPANY

WIRE HARNESS

TRANSMISSION – DUAL SPEED (→ S/N L177B11117D)

ITEM	PART NO.	DESCRIPTION	QTY
14	1509888	Clip	2
15	. . . . .	Connector Assembly (Transmission Temperature)	1
15	1402868	Connector	1
15	1323576	Terminal	2

FOOTNOTES:

a → 9/2005

b 9/2005 →

©2013 HYSTER COMPANY

NOTES

©2013 HYSTER COMPANY

WIRE HARNESS (FIGURE 7-85)
TRANSMISSION — SINGLE SPEED

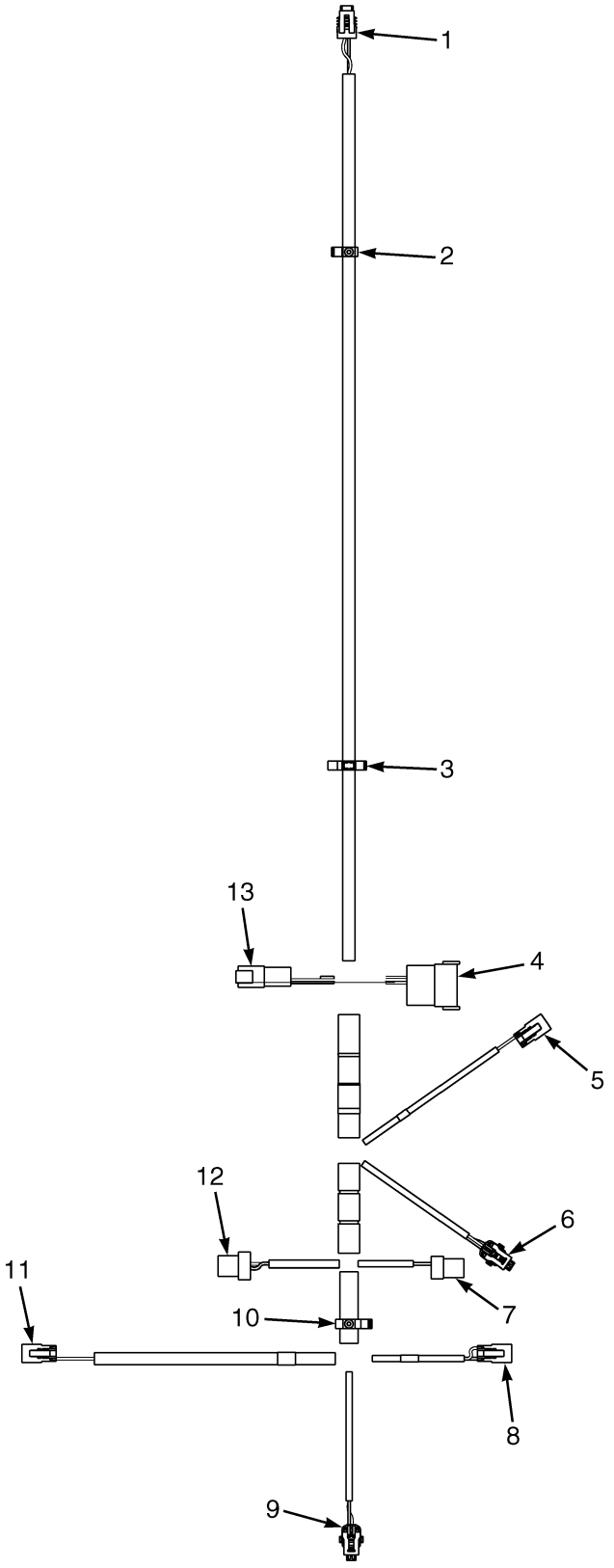

©2013 HYSTER COMPANY

WIRE HARNESS
TRANSMISSION – SINGLE SPEED

ITEM	PART NO.	DESCRIPTION	QTY
	2105959	Wire Harness (Transmission)	1
1	. . . . .	Connector Assembly (Transmission Temperature)	1
1	4009253	Connector	1
1	1323576	Terminal	2
2	1509888	Clip	1
3	1402816	Clip	1
4	. . . . .	Connector Assembly (To RH Chassis Harness)	1
4	1623280	Connector	1
4	1623281	Connector	1
4	1463138	Terminal Pin	10
4	1484377	Plug	2
5	. . . . .	Connector Assembly (Clutch Forward 1)	1
5	1490242	Connector (2 Way)	1
5	1490243	Connector (Secondary Lock)	1
5	1330438	Terminal (Socket)	2
6	. . . . .	Connector Assembly (Forward 1 Pressure)	1
6	1603021	Connector	1
6	1603236	Connector (Secondary Lock)	1
6	1548517	Terminal (Socket)	3
6	1548519	Seal	3
7	. . . . .	Connector Assembly (Turbine Shaft RPM)	1
7	1546673	Connector	1
7	1323576	Terminal	3
8	. . . . .	Connector Assembly (Transmission Check Valve)	1
8	1490242	Connector (2 Way)	1
8	1490243	Connector (Secondary Lock)	1
8	1330438	Terminal (Socket)	2
9	. . . . .	Connector Assembly (Reverse 1 Pressure)	1
9	1603021	Connector	1
9	1603236	Connector (Secondary Lock)	1
9	1548517	Terminal (Socket)	3
9	1548519	Seal	3
10	1509890	Clip	1
11	. . . . .	Connector Assembly (Clutch Reverse 1)	1
11	1490242	Connector (2 Way)	1
11	1490243	Connector (Secondary Lock)	1
11	1330438	Terminal (Socket)	2
12	. . . . .	Connector Assembly (Tail Shaft RPM - Toss)	1
12	1558156	Connector	1
12	1323576	Terminal	4
13	. . . . .	Connector Assembly (To RH Chassis Harness)	1
13	1530960	Connector	1
13	1530961	Connector (Secondary Lock)	1
13	1463138	Terminal Pin	4
13	1484377	Plug	2

©2013 HYSTER COMPANY

WIRE HARNESS (FIGURE 7-86)
TRANSMISSION — DUAL SPEED (S/N L177B11118D →)

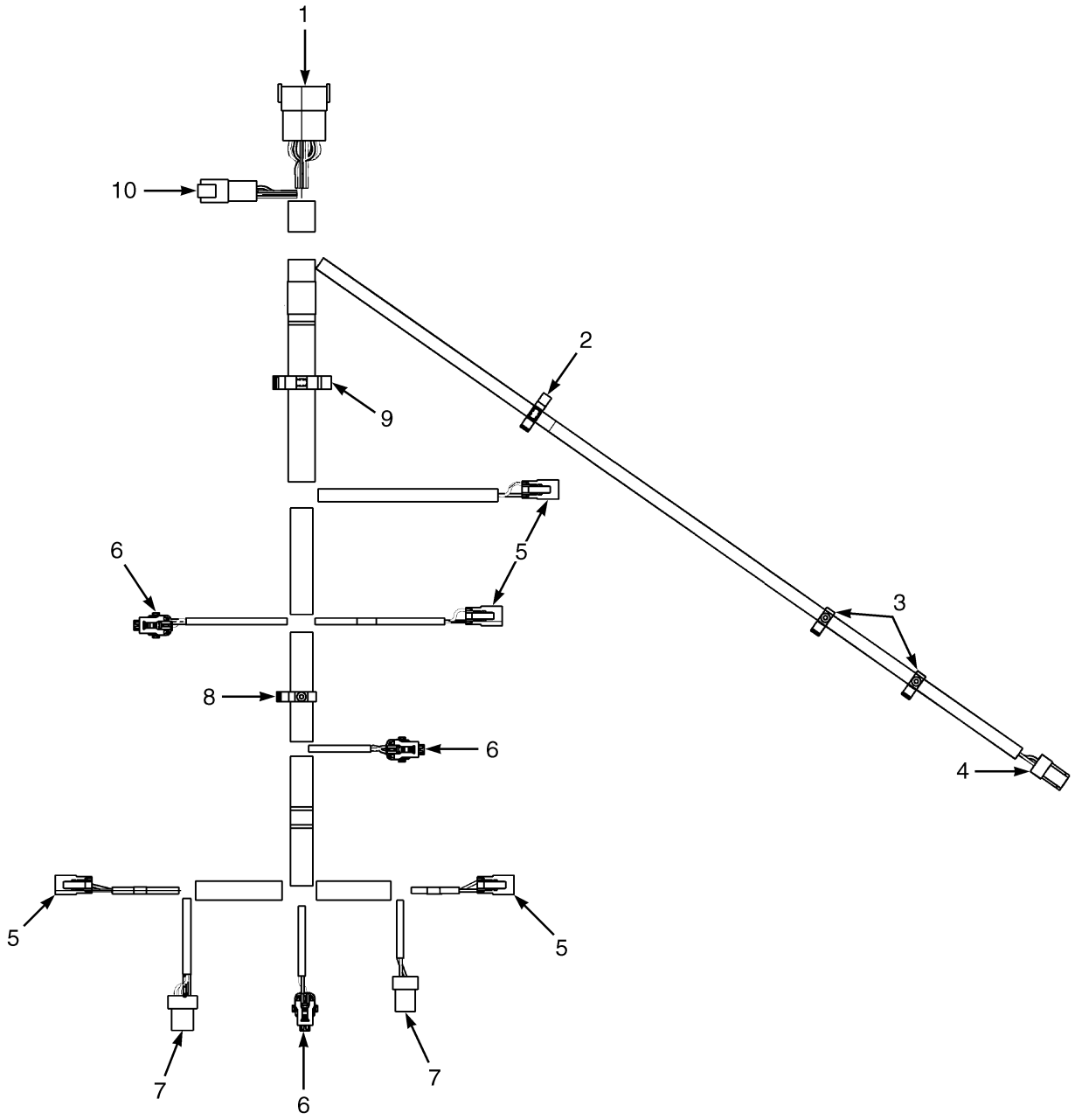

BP080479

©2013 HYSTER COMPANY

WIRE HARNESS

TRANSMISSION – DUAL SPEED (S/N L177B11118D →)

ITEM	PART NO.	DESCRIPTION	QTY
	2085942	Wire Harness (Transmission)	1
1	. . . . .	Connector Assembly (To RH Chassis Harness)	1
1	1623280	Connector	1
1	1623281	Connector	1
1	1463138	Terminal Pin	11
1	1484377	Plug	2
2	1402816	Clip	1
3	1509888	Clip	2
4	. . . . .	Connector Assembly (Temperature)	1
4	1402868	Connector	1
4	1323576	Terminal	2
5	. . . . .	Connector Assembly (Clutch Forward 1, and 2 Reverse 1)	1
5	1490242	Connector (2 Way)	1
5	1490243	Connector (Secondary Lock)	1
5	1330438	Terminal (Socket)	2
6	. . . . .	Connector Assembly (Forward/Reverse 1 Pressure)	1
6	1603021	Connector	1
6	1603236	Connector (Secondary Lock)	1
6	1548517	Terminal (Socket)	3
6	1548519	Seal	3
7	. . . . .	Connector Assembly (Turbine/Tail Shaft RPM)	1
7	1546673	Connector	1
7	1323576	Terminal	3
8	1509890	Clip	1
9	1402813	Clip	1
10	. . . . .	Connector Assembly (To RH Chassis Harness)	1
10	1530960	Connector	1
10	1530961	Connector (Secondary Lock)	1
10	1463138	Terminal Pin	6

©2013 HYSTER COMPANY

WIRE HARNESS (FIGURE 7-87)
HYDRAULIC COOLER

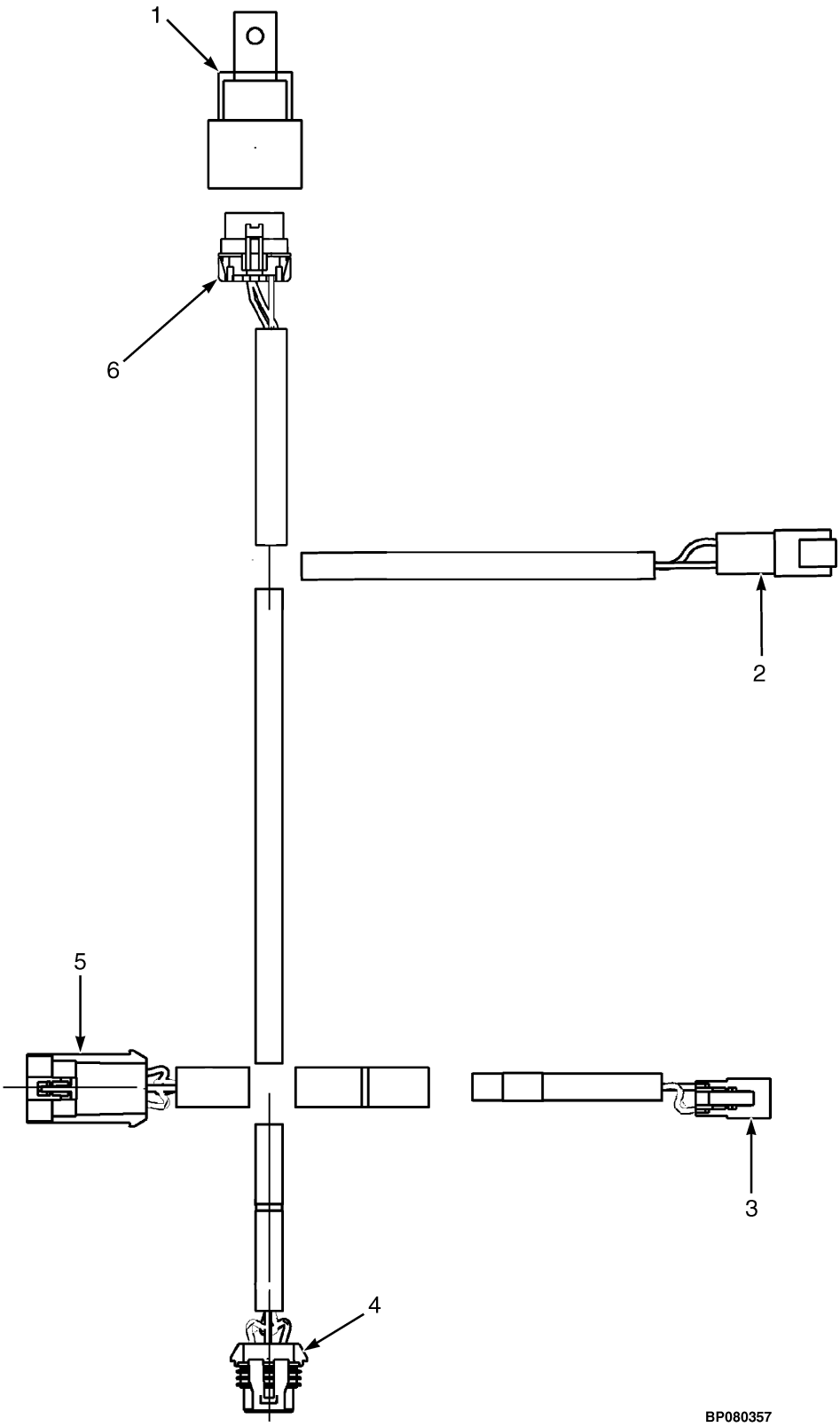

©2013 HYSTER COMPANY

WIRE HARNESS
HYDRAULIC COOLER

ITEM	PART NO.	DESCRIPTION	QTY
	2090666	Wire Harness	1
1	. . . . .	Hydraulic Oil Cooler Relay Assembly	1
1	1654578	Relay (Latch)	1
1	1654579	Clip (Relay)	1
2	. . . . .	Connector Assembly (Hydraulic Cooler Fan)	1
2	1493465	Connector (2 Pin)	1
2	1330414	Connector (Secondary Lock)	1
2	1330437	Terminal (Pin)	2
3	. . . . .	Connector Assembly (Hydrualic Oil Cooler Temperature)	1
3	1490242	Connector (2 Way)	1
3	1490243	Connector (Secondary Lock)	1
3	1330438	Terminal (Socket)	2
4	. . . . .	Connector Assembly (Horn)	1
4	1476064	Connector	1
4	1476109	Connector Lock	1
4	1330355	Terminal	3
4	1330356	Seal	2
4	1476108	Wire Seal	1
5	. . . . .	Connector Assembly (Chassis Harness)	1
5	1595554	Connector	1
5	1476109	Connector Lock	1
5	1482666	Terminal (Male)	3
5	1330356	Seal	2
5	1476108	Wire Seal	1
6	. . . . .	Connector Assembly (Hydraulic Oil Cooler Relay)	1
6	1461744	Connector Body	1
6	1503088	Lock	1
6	1402888	Seal	4
6	1323579	Seal	4
6	1327164	Seal	1

©2013 HYSTER COMPANY

WIRE HARNESS (FIGURE 7-88)

COWL WITH MONOTROL PEDAL — WITH RETURN TO SET TILT (→ S/N L177V04756H)

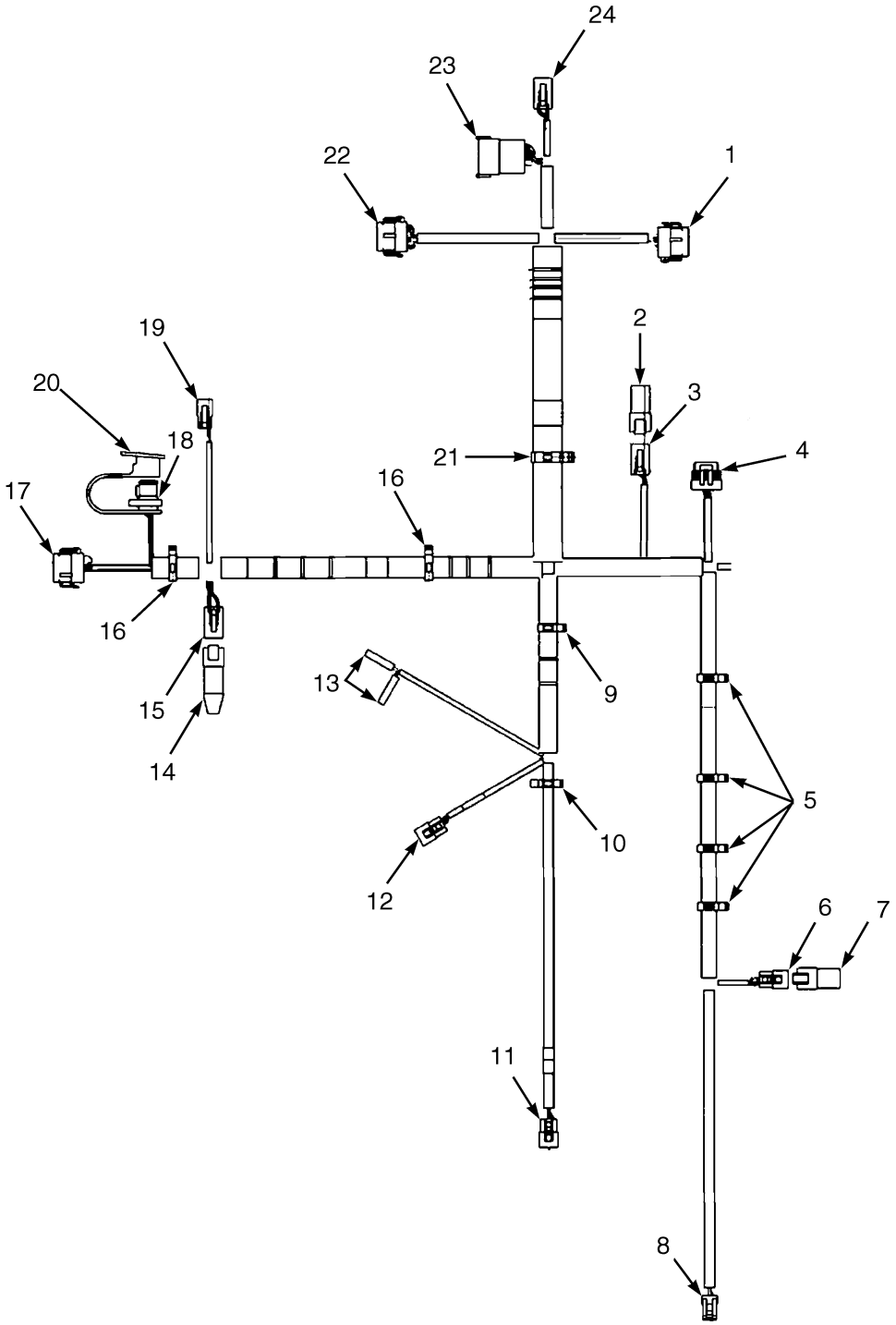

HP081702

©2013 HYSTER COMPANY

WIRE HARNESS

COWL WITH MONOTROL PEDAL – WITH RETURN TO SET TILT (→ S/N L177V04756H)

ITEM	PART NO.	DESCRIPTION	QTY
	a 2070269	Wire Harness	1
	b 2098011	Wire Harness	1
1	. . . . .	Connector Assembly (Vehicle System Manager)	1
1	1525568	Connector	1
1	1529046	Connector	1
1	1463139	Terminal	10
1	1463139	Terminal	11
1	1484377	Plug	2
1	1484377	Plug	1
2	1525573	Connector	1
3	. . . . .	Connector Assembly (To Monotrol Harness)	1
3	1489656	Connector (4-Way)	1
3	1489657	Connector	1
3	1330438	Terminal (Socket)	4
4	. . . . .	Connector Assembly (Accelerator Pedal)	1
4	1525584	Connector	1
4	1532571	Terminal	6
5	1509890	Clip	4
6	. . . . .	Connector Assembly (To Mast)	1
6	1484397	Connector (3-Way)	1
6	1463194	Connector (Secondary Lock)	1
6	1330438	Terminal (Socket)	3
7	1351682	Connector (End Cap)	1
8	. . . . .	Connector Assembly (Brake Pressure)	1
8	1603021	Connector	1
8	1603236	Connector (Secondary Lock)	1
8	1548517	Terminal (Socket)	3
8	1548519	Seal	3
9	1534828	Clip	1
10	1402816	Clip	1
11	. . . . .	Connector Assembly (Brake Pedal)	1
11	1463194	Connector (Secondary Lock)	1
11	1484397	Connector (3-Way)	1
11	1330438	Terminal (Socket)	3
12	. . . . .	Connector Assembly (Park Brake)	1
12	1463194	Connector (Secondary Lock)	1
12	1484397	Connector (3-Way)	1
12	1330438	Terminal (Socket)	3
13	. . . . .	Connector Assembly (Brake Fluid Sensor)	2
13	1324309	Sleeve	1
13	1324310	Terminal	1
14	1525577	Connector (With Resistor) (End Cap)	1
15	. . . . .	Connector Assembly (Bus Terminal 1)	1
15	1489656	Connector (4-Way)	1
15	1489657	Connector	1
15	1330438	Terminal (Socket)	4
16	1500899	Clip	2
17	. . . . .	Connector Assembly (Display)	1
17	1525567	Connector	1
17	1529046	Connector	1

©2013 HYSTER COMPANY

WIRE HARNESS

COWL WITH MONOTROL PEDAL – WITH RETURN TO SET TILT (→ S/N L177V04756H)

ITEM	PART NO.	DESCRIPTION	QTY
17	1463139	Terminal	5
17	1484377	Plug	7
18	. . . . .	Connector Assembly (J1939 Diagnostic)	1
18	1566116	Connector	1
18	1532664	Connector (Secondary Lock)	1
18	1330438	Terminal (Socket)	3
19	. . . . .	Connector Assembly (To Horn)	1
19	1490242	Connector (2 Way)	1
19	1402813	Clip	1
19	1330438	Terminal (Socket)	2
20	1566117	Dust Cap (Diagnostic Connector)	1
21	1534282	Clip	1
22	. . . . .	Connector Assembly (Vehicle System Manager)	1
22	1525570	Connector	1
22	1529046	Connector	1
22	1463139	Terminal	7
22	1484377	Plug	5
23	. . . . .	Connector Assembly (RH Chassis)	1
23	1500925	Connector	1
23	1352603	Secondary Lock	1
23	1330437	Terminal (Pin)	9
23	1330437	Terminal (Pin)	10
23	1484377	Plug	3
23	1484377	Plug	2
24	. . . . .	Connector Assembly (RH Chassis)	1
24	1489656	Connector (4-Way)	1
24	1330438	Terminal (Socket)	4
24	1489657	Connector	1

FOOTNOTES:

a → S/N L177B29727G

b S/N L177B29728G →

©2013 HYSTER COMPANY

NOTES

©2013 HYSTER COMPANY

WIRE HARNESS (FIGURE 7-89)

COWL WITH MONOTROL PEDAL — WITH RETURN TO SET TILT (S/N L177V04757H →)

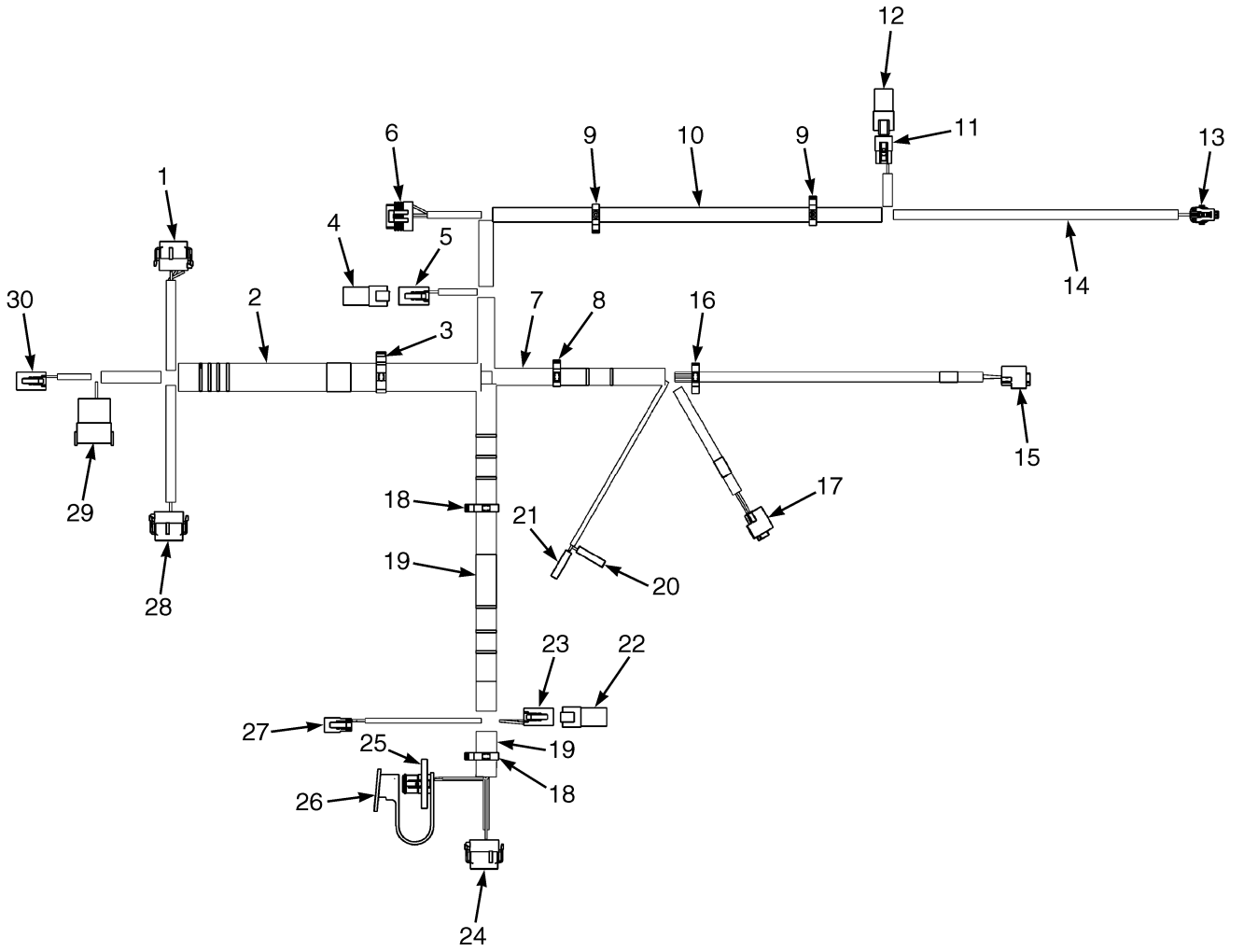

BP080916

©2013 HYSTER COMPANY

WIRE HARNESS

COWL WITH MONOTROL PEDAL – WITH RETURN TO SET TILT (S/N L177V04757H →)

ITEM	PART NO.	DESCRIPTION	QTY
	4603283	Wire Harness	1
1	. . . . .	Connector Assembly (Vehicle System Manager)	1
1	1525568	Connector	1
1	1529046	Connector	1
1	1463139	Terminal	11
1	1484377	Plug	1
2	1540388	Conduit	AR
3	1534282	Clip	1
4	. . . . .	Connector Assembly (Endcap)	1
4	1525573	Connector	1
5	. . . . .	Connector Assembly (To Monotrol Pedal Harness)	1
5	1489656	Connector (4-Way)	1
5	1489657	Connector	1
5	1330438	Terminal (Socket)	4
6	. . . . .	Connector Assembly (Accelerator Pedal Sensor)	1
6	1525584	Connector	1
6	1532571	Terminal	6
7	275496	Conduit	AR
8	1534828	Clip	1
9	1509890	Clip	2
10	275495	Conduit	AR
11	. . . . .	Connector Assembly (To Mast Harness)	1
11	1330438	Terminal (Socket)	3
11	1463194	Connector (Secondary Lock)	1
11	1484397	Connector (3-Way)	1
12	. . . . .	Connector Assembly) (Endcap)	1
12	1351682	Connector (End Cap)	1
13	. . . . .	Connector Assembly (Brake Pressure)	1
13	1603021	Connector	1
13	1603236	Connector (Secondary Lock)	1
13	1548517	Terminal (Socket)	3
13	1548519	Seal	3
14	275493	Conduit	AR
15	. . . . .	Connector Assembly (Brake Pedal)	1
15	1700460	Connector	1
15	1700461	Terminal	3
16	1402816	Clip	2
17	. . . . .	Connector Assembly (Park Brake)	1
17	1700460	Connector	1
17	1700461	Terminal	3
18	1500899	Clip	2
19	275497	Conduit	AR
20	. . . . .	Connector Assembly (Brake Fluid)	1
20	1566227	Terminal	1
20	1566076	Seal	1
21	. . . . .	Connector Assembly (Brake Fluid)	1
21	1566227	Terminal	1
21	1566076	Seal	1
22	. . . . .	Connector Assembly (Endcap w/ Resistor)	1
22	1525577	Connector (With Resistor)	1

©2013 HYSTER COMPANY

WIRE HARNESS

COWL WITH MONOTROL PEDAL – WITH RETURN TO SET TILT (S/N L177V04757H →)

ITEM	PART NO.	DESCRIPTION	QTY
23	. . . . .	Connector Assembly (Bus Terminal 1)	1
23	1489656	Connector (4-Way)	1
23	1489657	Connector	1
23	1330438	Terminal (Socket)	4
24	. . . . .	Connector Assembly (Display)	1
24	1525567	Connector	1
24	1529046	Connector	1
24	1463139	Terminal	5
24	1484377	Plug	7
25	. . . . .	Connector Assembly (J1939 Diagnostic)	1
25	1566116	Connector	1
25	1532664	Connector (Secondary Lock)	1
25	1330438	Terminal (Socket)	3
26	. . . . .	Connector Assembly (Dust Cap)	1
26	1566117	Dust Cap	1
27	. . . . .	Connector Assembly (Horn Button)	1
27	1490242	Connector (2 Way)	1
27	1490243	Connector (Secondary Lock)	1
27	1330438	Terminal (Socket)	2
28	. . . . .	Connector Assembly (Vehicle System Manager)	1
28	1525570	Connector	1
28	1529046	Connector	1
28	1463139	Terminal	7
28	1484377	Plug	5
29	. . . . .	Connector Assembly (To Right Hand Chassis Harness)	1
29	1500925	Connector	1
29	1352603	Secondary Lock	1
29	1330437	Terminal (Pin)	10
29	1484377	Plug	2
30	. . . . .	Connector Assembly	1
30	1489656	Connector (4-Way)	1
30	1489657	Connector	1
30	1330438	Terminal (Socket)	4

©2013 HYSTER COMPANY

NOTES

©2013 HYSTER COMPANY

WIRE HARNESS (FIGURE 7-90)

COWL WITH FORWARD/REVERSE LEVER — WITHOUT RETURN TO SET TILT (→ S/N L177V04756H)

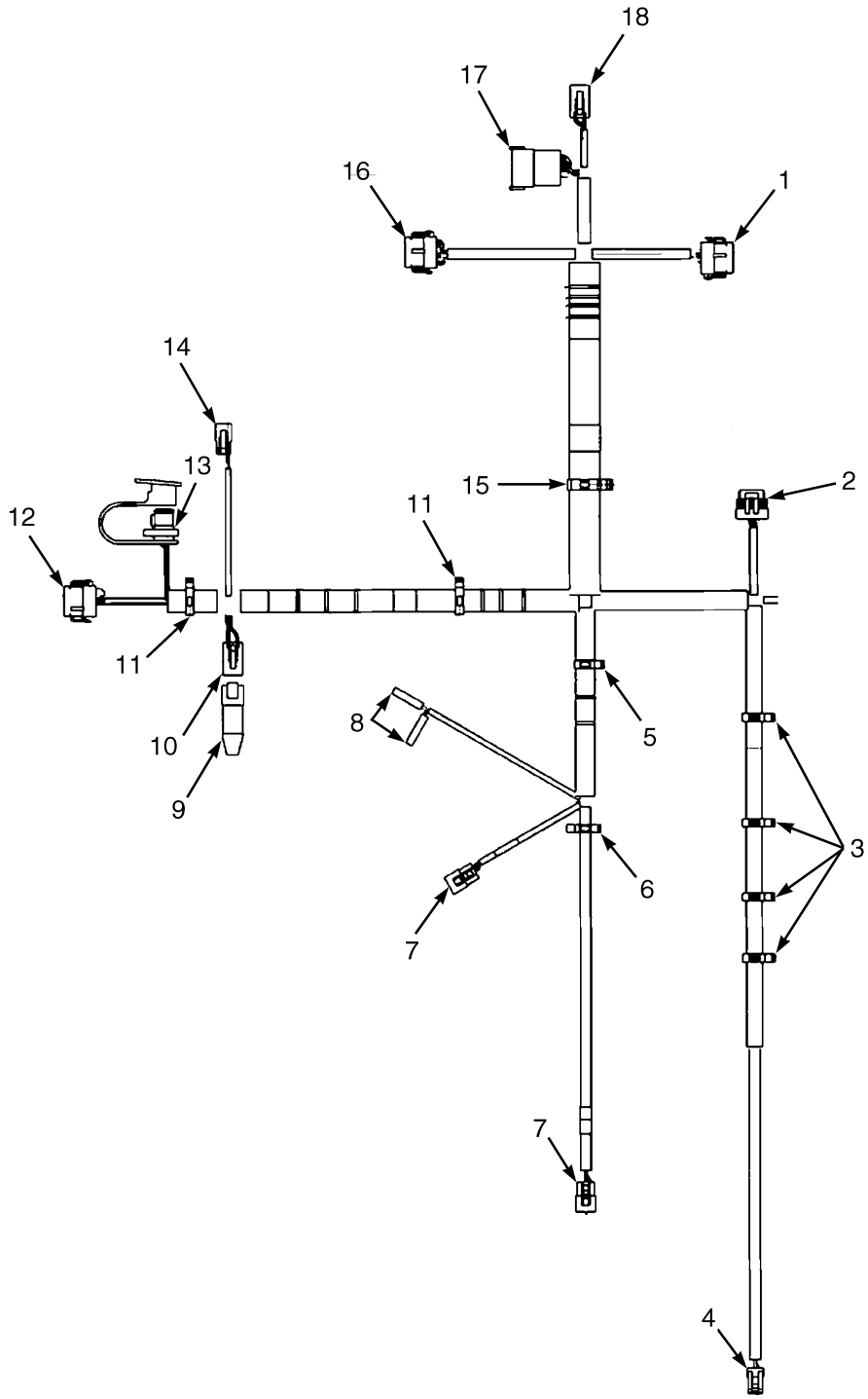

BP080443

©2013 HYSTER COMPANY

WIRE HARNESS

COWL WITH FORWARD/REVERSE LEVER – WITHOUT RETURN TO SET TILT (→ S/N L177V04756H)

ITEM	PART NO.	DESCRIPTION	QTY
	a 2084829	Wire Harness (Cowl w/ Forward/Reverse Lever) (Cowl)	1
	b 2098012	Wire Harness (Cowl w/ Forward/Reverse Lever)	1
1	. . . . .	Connector Assembly (Vehicle System Manager)	1
1	1525568	Connector	1
1	1463139	Terminal	6
1	1463139	Terminal	7
1	1484377	Plug	6
1	1484377	Plug	5
1	1529046	Connector	1
2	. . . . .	Connector Assembly (Accelerator Pedal Sensor)	1
2	1525584	Connector	1
2	1532571	Terminal	6
3	1509888	Clip	4
4	. . . . .	Connector Assembly (Brake Pressure)	1
4	1603021	Connector	1
4	1603236	Connector (Secondary Lock)	1
4	1548517	Terminal (Socket)	3
4	1548519	Seal	3
5	1534828	Clip	1
6	1402816	Clip	1
7	. . . . .	Connector Assembly (Park Brake)	2
7	1484397	Connector (3-Way)	1
7	1463194	Connector (Secondary Lock)	1
7	1330438	Terminal (Socket)	3
8	. . . . .	Connector Assembly (Brake Fluid)	2
8	1324309	Sleeve	1
8	1324310	Terminal	1
9	1525577	Connector (With Resistor) (End Cap)	1
10	. . . . .	Connector Assembly	1
10	1489656	Connector (4-Way)	1
10	1489657	Connector	1
10	1330438	Terminal (Socket)	4
11	1500899	Clip	2
12	. . . . .	Connector Assembly (Display)	1
12	1525567	Connector	1
12	1529046	Connector	1
12	1463139	Terminal	5
12	1484377	Plug	7
13	. . . . .	Connector Assembly (J1939 Diagnostic)	1
13	1566116	Connector	1
13	1532664	Connector (Secondary Lock)	1
13	1330438	Terminal (Socket)	3
13	1566117	Dust Cap	1
14	. . . . .	Connector Assembly (Horn Button)	1
14	1490242	Connector (2 Way)	1
14	1402813	Clip	1
14	1330438	Terminal (Socket)	2
15	1534282	Clip	1
16	. . . . .	Connector Assembly (Vehicle System Manager)	1
16	1525570	Connector	1

©2013 HYSTER COMPANY

WIRE HARNESS

COWL WITH FORWARD/REVERSE LEVER – WITHOUT RETURN TO SET TILT (→ S/N L177V04756H)

ITEM	PART NO.	DESCRIPTION	QTY
16	1529046	Connector	1
16	1463139	Terminal	7
16	1484377	Plug	5
17	. . . . .	Connector Assembly (To RH Chassis)	1
17	1500925	Connector	1
17	1352603	Secondary Lock	1
17	1330437	Terminal (Pin)	6
17	1330437	Terminal (Pin)	7
17	1484377	Plug	6
17	1484377	Plug	5
18	. . . . .	Connector Assembly (To RH Chassis)	1
18	1489656	Connector (4-Way)	1
18	1489657	Connector	1
18	1330438	Terminal (Socket)	4

FOOTNOTES:

a → 6/2009

b 7/2009 →

©2013 HYSTER COMPANY

NOTES

©2013 HYSTER COMPANY

WIRE HARNESS (FIGURE 7-91)

COWL WITH FORWARD/REVERSE LEVER — WITHOUT RETURN TO SET TILT (S/N L177V04757H →)

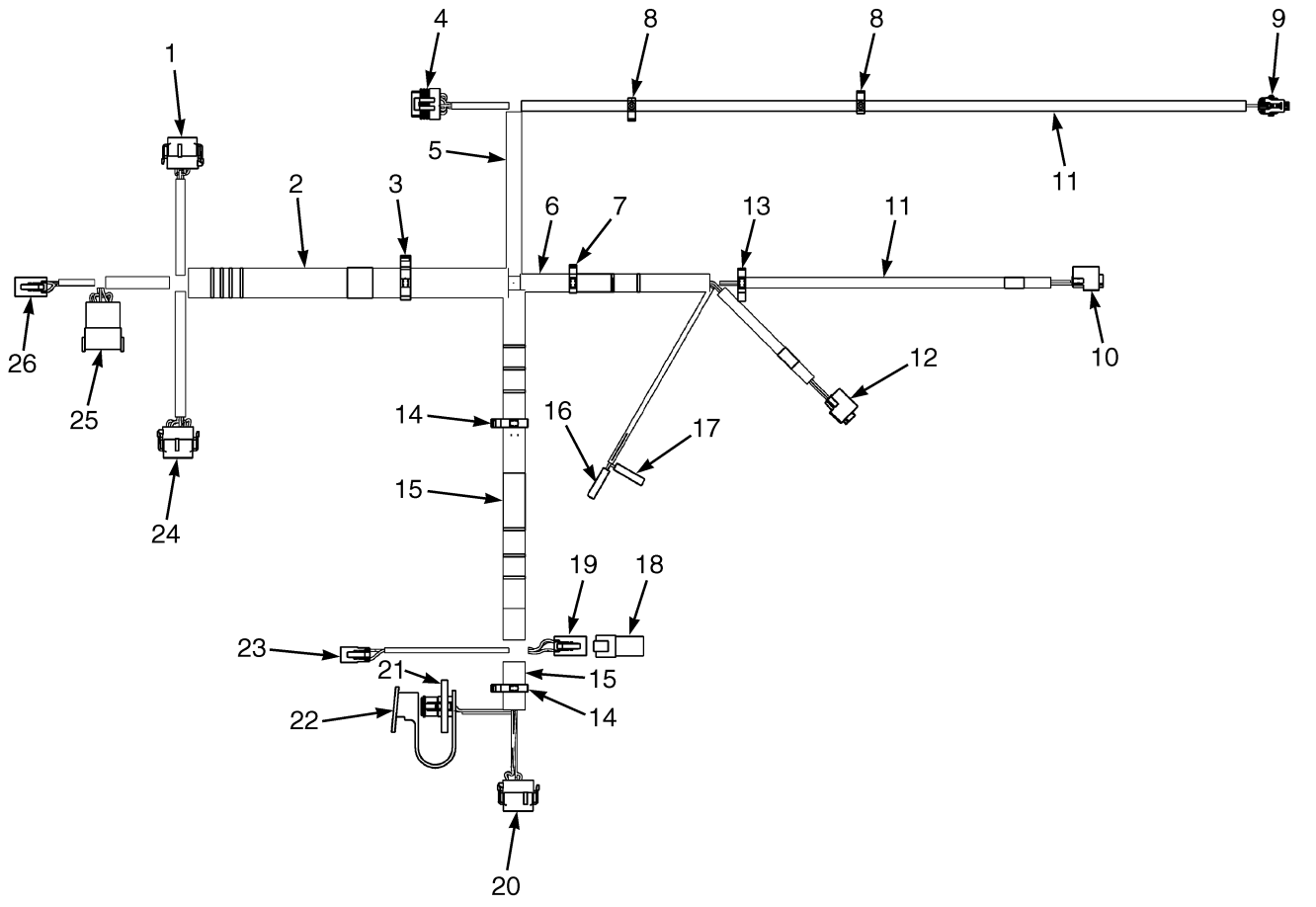

BP080917

©2013 HYSTER COMPANY

WIRE HARNESS

COWL WITH FORWARD/REVERSE LEVER – WITHOUT RETURN TO SET TILT (S/N L177V04757H →)

ITEM	PART NO.	DESCRIPTION	QTY
	4603280	Wire Harness (Cowl w/ Forward/Reverse Lever)	1
1	. . . . .	Connector Assembly (Vehicle System Manager)	1
1	1525568	Connector	1
1	1529046	Connector	1
1	1463139	Terminal	7
1	1484377	Plug	5
2	1540388	Conduit	AR
3	1534282	Clip	1
4	. . . . .	Connector Assembly (Accelerator Pedal Sensor)	1
4	1525584	Connector	1
4	1532571	Terminal	6
5	275495	Conduit	AR
6	275496	Conduit	AR
7	1534828	Clip	1
8	1509888	Clip	2
9	. . . . .	Connector Assembly (Brake Pressure)	1
9	1603021	Connector	1
9	1603236	Connector (Secondary Lock)	1
9	1548517	Terminal (Socket)	3
9	1548519	Seal	3
10	. . . . .	Connector Assembly (Brake Pedal)	1
10	1700460	Connector	1
10	1700461	Terminal	3
11	275493	Conduit	AR
12	. . . . .	Connector Assembly (Park Brake)	1
12	1700460	Connector	1
12	1700461	Terminal	3
13	1402816	Clip	1
14	1500899	Clip	2
15	275497	Conduit	AR
16	. . . . .	Connector Assembly (Brake Fluid)	1
16	1324310	Terminal	1
16	1324309	Sleeve	1
17	. . . . .	Connector Assembly (Brake Fluid)	1
17	1324310	Terminal	1
17	1324309	Sleeve	1
18	. . . . .	Connector Assembly (Endcap w/ Resistor)	1
18	1525577	Connector (With Resistor)	1
19	. . . . .	Connector Assembly (Bus Terminal 1)	1
19	1489656	Connector (4-Way)	1
19	1489657	Connector	1
19	1330438	Terminal (Socket)	4
20	. . . . .	Connector Assembly (Display)	1
20	1525567	Connector	1
20	1529046	Connector	1
20	1463139	Terminal	5
20	1484377	Plug	7
21	. . . . .	Connector Assembly (J1939 Diagnostic)	1
21	1566116	Connector	1
21	1532664	Connector (Secondary Lock)	1

©2013 HYSTER COMPANY

WIRE HARNESS

COWL WITH FORWARD/REVERSE LEVER – WITHOUT RETURN TO SET TILT (S/N L177V04757H →)

ITEM	PART NO.	DESCRIPTION	QTY
21	1330438	Terminal (Socket)	3
22	. . . . .	Connector Assembly (Dust Cap)	1
22	1566117	Dust Cap	1
23	. . . . .	Connector Assembly (Horn Button)	1
23	1490242	Connector (2 Way)	1
23	1490243	Connector (Secondary Lock)	1
23	1330438	Terminal (Socket)	2
24	. . . . .	Connector Assembly (Vehicle System Manager)	1
24	1525570	Connector	1
24	1529046	Connector	1
24	1463139	Terminal	7
24	1484377	Plug	5
25	. . . . .	Connector Assembly (To Right Hand Chassis Harness)	1
25	1500925	Connector	1
25	1352603	Secondary Lock	1
25	1330437	Terminal (Pin)	7
25	1484377	Plug	5
26	. . . . .	Connector Assembly (To Right Hand Chassis Harness)	1
26	1489657	Connector	1
26	1489656	Connector (4-Way)	1
26	1330438	Terminal (Socket)	4

©2013 HYSTER COMPANY

NOTES

©2013 HYSTER COMPANY

WIRE HARNESS (FIGURE 7-92)

COWL WITH FORWARD/REVERSE — WITH HYDRAULIC PUMP SOLENOID (S/N L117B28589G →) (→ S/N L177V04756H)

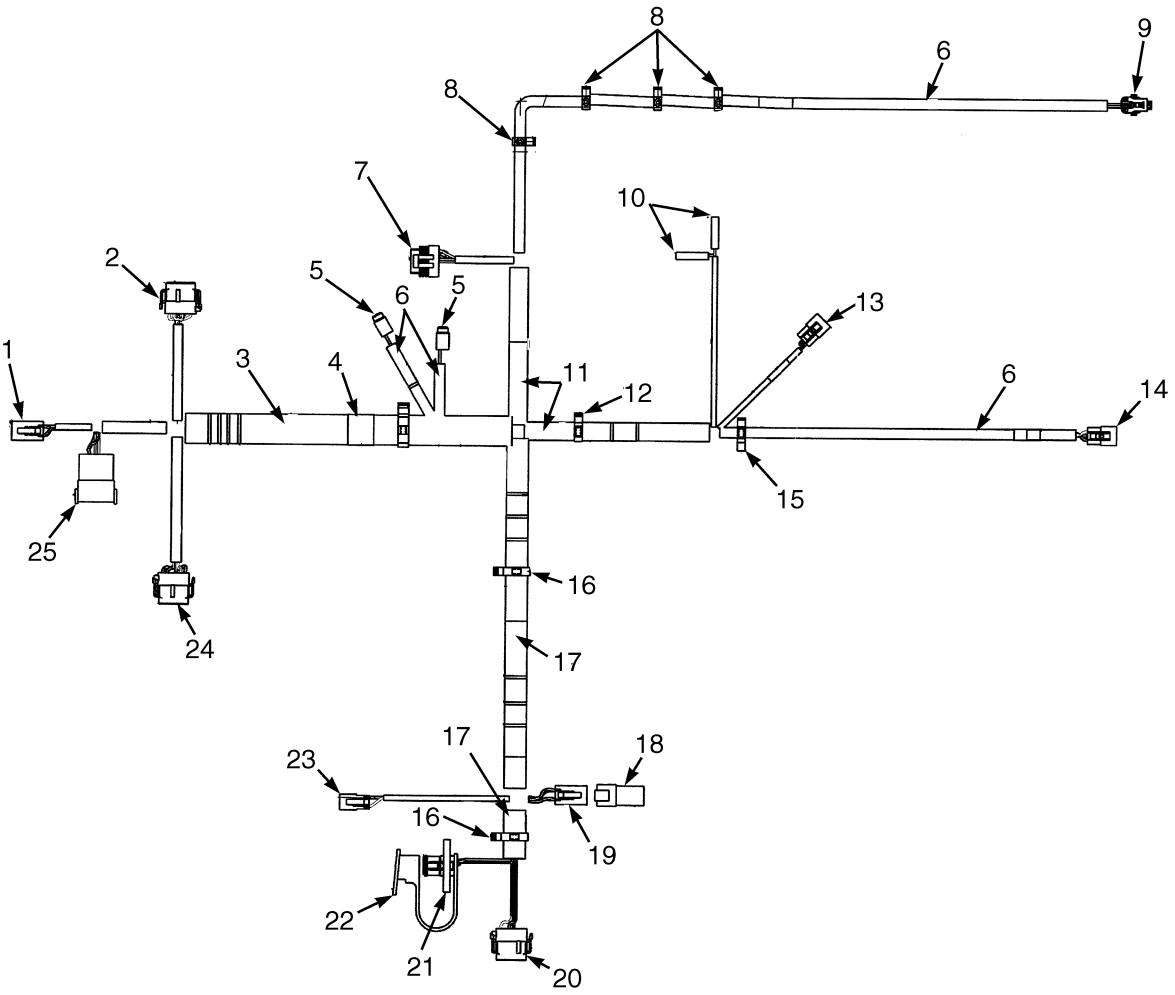

BP080711

©2013 HYSTER COMPANY

WIRE HARNESS

COWL WITH FORWARD/REVERSE – WITH HYDRAULIC PUMP SOLENOID (S/N L117B28589G →) (→ S/N L177V04756H)

ITEM	PART NO.	DESCRIPTION	QTY
	2104702	Wire Harness	1
1	. . . . .	To Right Hand Chassis Harness	1
1	1489656	Connector (4-Way)	1
1	1489657	Connector	1
1	1330438	Terminal (Socket)	4
2	. . . . .	VSM	1
2	1525568	Connector	1
2	1529046	Connector	1
2	1463139	Terminal	8
2	1484377	Plug	4
3	1540388	Conduit	1
4	1534282	Clip	1
5	. . . . .	Hydraulic Lockout Solenoid	2
5	1484557	Connector (2 Socket)	1
5	1484558	Connector (Seconday Lock)	1
5	1463139	Terminal	2
6	275493	Conduit	AR
7	. . . . .	Accelerator Pedal Sensor	1
7	1525584	Connector	1
7	1532571	Terminal	6
8	1509888	Clip	4
9	. . . . .	Brake Pressure	1
9	1603021	Connector	1
9	1603236	Connector (Secondary Lock)	1
9	1548517	Terminal (Socket)	3
9	1548519	Seal	3
10	. . . . .	Brake Fluid	2
10	1324310	Terminal	1
10	1324309	Sleeve	1
11	275496	Conduit	AR
12	1534828	Clip	1
13	. . . . .	Park Brake	1
13	1484397	Connector (3-Way)	1
13	1463194	Connector (Secondary Lock)	1
13	1330438	Terminal (Socket)	3
14	. . . . .	Brake Pedal	1
14	1484397	Connector (3-Way)	1
14	1463194	Connector (Secondary Lock)	1
14	1330438	Terminal (Socket)	3
15	1402816	Clip	1
16	1500899	Clip	1
17	275497	Conduit	AR
18	1525577	Connector (With Resistor)	1
19	. . . . .	Bus Terminal	1
19	1489656	Connector (4-Way)	1
19	1489657	Connector	1
19	1330438	Terminal (Socket)	1
20	. . . . .	Display	1
20	1525567	Connector	1

©2013 HYSTER COMPANY

WIRE HARNESS

COWL WITH FORWARD/REVERSE – WITH HYDRAULIC PUMP SOLENOID (S/N L117B28589G →) (→ S/N L177V04756H)

ITEM	PART NO.	DESCRIPTION	QTY
20	1529046	Connector	1
20	1463139	Terminal	5
20	1484377	Plug	7
21	. . . . .	Diagnostic	1
21	1566116	Connector	1
21	1532664	Connector (Secondary Lock)	1
21	1330438	Terminal (Socket)	3
22	1566117	Dust Cap	1
23	. . . . .	Horn Button	1
23	1490242	Connector (2 Way)	1
23	1490243	Connector (Secondary Lock)	1
23	1330438	Terminal (Socket)	2
24	. . . . .	VSM	1
24	1525570	Connector	1
24	1529046	Connector	1
24	1463139	Terminal	7
24	1484377	Plug	5
25	. . . . .	To Right Hand Chassis	1
25	1500925	Connector	1
25	1352603	Secondary Lock	1
25	1330437	Terminal (Pin)	7
25	1484377	Plug	5

©2013 HYSTER COMPANY

NOTES

©2013 HYSTER COMPANY

WIRE HARNESS (FIGURE 7-93)

COWL WITH MONOTROL PEDAL — WITH HYDRAULIC PUMP SOLENOID (S/N L117B28589G →) (→ S/N L177V04756H)

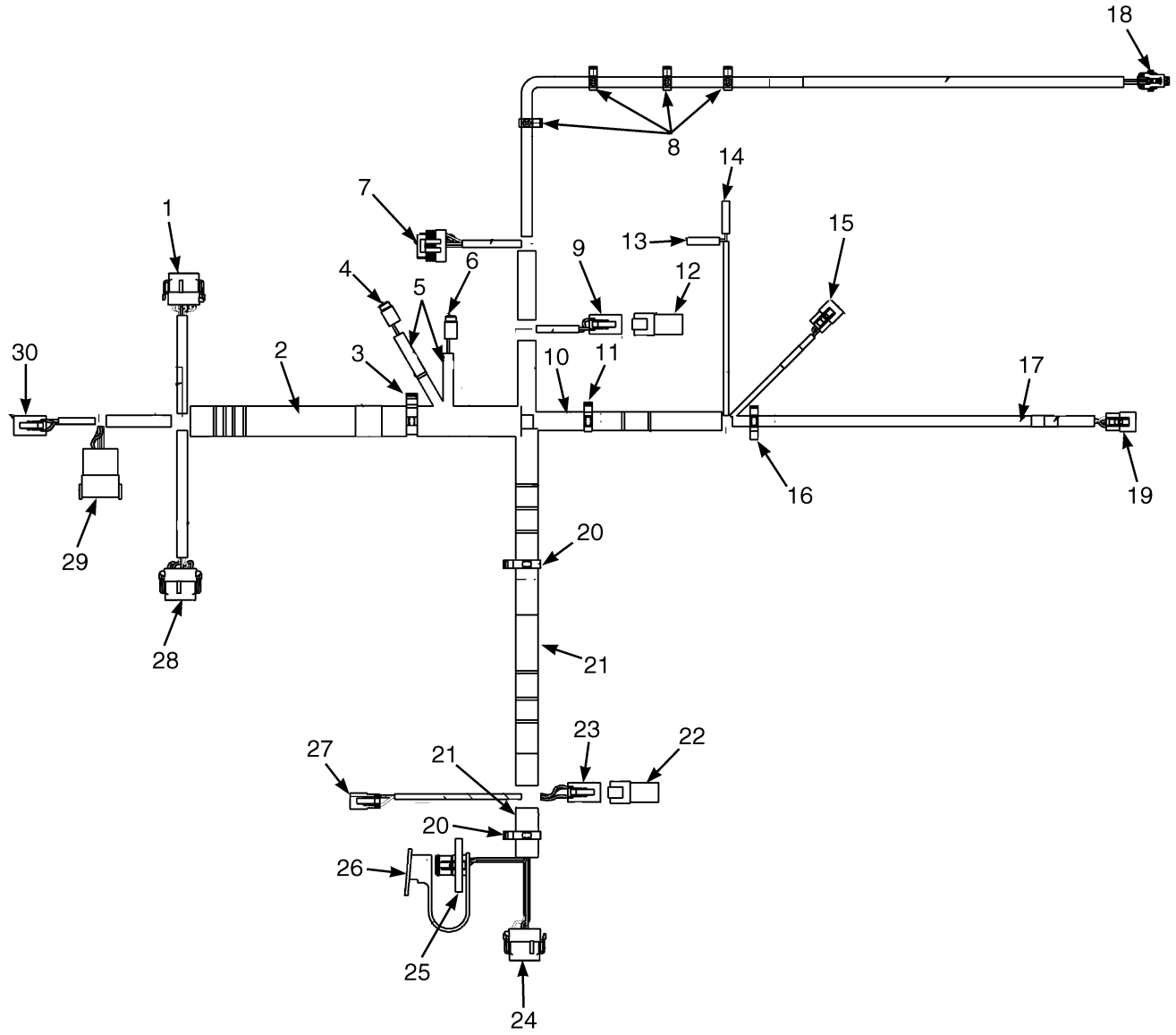

BP080757

©2013 HYSTER COMPANY

WIRE HARNESS

COWL WITH MONOTROL PEDAL – WITH HYDRAULIC PUMP SOLENOID (S/N L117B28589G →) (→ S/N L177V04756H)

ITEM	PART NO.	DESCRIPTION	QTY
	2104701	Wire Harness	1
1	. . . . .	Connector Assembly (Vehicle System Manager)	1
1	1525568	Connector	1
1	1529046	Connector	1
1	1463139	Terminal	12
2	1540388	Conduit	AR
3	1534282	Clip	1
4	. . . . .	Connector Assembly (Hydraulic Lockout Solenoid 2)	1
4	1484557	Connector (2 Socket)	1
4	1484558	Connector (Seconday Lock)	1
4	1463139	Terminal	2
5	275493	Conduit	AR
6	. . . . .	Connector Assembly	1
6	1484557	Connector (2 Socket)	1
6	1484558	Connector (Seconday Lock)	1
6	1463139	Terminal	2
7	. . . . .	Connector Assembly	1
7	1525584	Connector	1
7	1532571	Terminal	6
8	1509888	Clip	4
9	. . . . .	Connector Assembly (To Monotrol Harness)	1
9	1489656	Connector (4-Way)	1
9	1489657	Connector	1
9	1330438	Terminal (Socket)	4
10	275496	Conduit	AR
11	1534828	Clip	1
12	. . . . .	Connector Assembly (Endcap)	1
12	1525573	Connector	1
13	. . . . .	Connector Assembly (Brake Fluid)	1
13	1324310	Terminal	1
13	1324309	Sleeve	1
14	. . . . .	Connector Assembly (Brake Fluid)	1
14	1324310	Terminal	1
14	1324309	Sleeve	1
15	. . . . .	Connector Assembly (Park Brake)	1
15	1484397	Connector (3-Way)	1
15	1463194	Connector (Secondary Lock)	1
15	1330438	Terminal (Socket)	3
16	1402816	Clip	1
17	275493	Conduit	AR
18	. . . . .	Connector Assembly (Brake Pressure)	1
18	1603021	Connector	1
18	1603236	Connector (Secondary Lock)	1
18	1548517	Terminal (Socket)	3
18	1548519	Seal	3
19	. . . . .	Connector Assembly (Brake Pressure)	1
19	1484397	Connector (3-Way)	1
19	1463194	Connector (Secondary Lock)	1
19	1330438	Terminal (Socket)	3

©2013 HYSTER COMPANY

WIRE HARNESS

COWL WITH MONOTROL PEDAL – WITH HYDRAULIC PUMP SOLENOID (S/N L117B28589G →) (→ S/N L177V04756H)

ITEM	PART NO.	DESCRIPTION	QTY
20	1500899	Clip	2
21	275497	Conduit	AR
22	. . . . .	Connector Assembly (Endcap with Resister)	1
22	1525577	Connector (With Resistor)	1
23	. . . . .	Connector Assembly (Bus Terminal 1)	1
23	1489656	Connector (4-Way)	1
23	1489657	Connector	1
23	1330438	Terminal (Socket)	4
24	. . . . .	Connector Assembly (Display)	1
24	1525567	Connector	1
24	1529046	Connector	1
24	1463139	Terminal	5
24	1484377	Plug	7
25	. . . . .	Connector Assembly (J1939 Diagnostic)	1
25	1566116	Connector	1
25	1532664	Connector (Secondary Lock)	1
25	1330438	Terminal (Socket)	3
26	1566117	Dust Cap	1
27	. . . . .	Connector Assembly (Horn Button)	1
27	1490242	Connector (2 Way)	1
27	1490243	Connector (Secondary Lock)	1
27	1330438	Terminal (Socket)	2
28	. . . . .	Connector Assembly (Vehicle System Manager)	1
28	1525570	Connector	1
28	1529046	Connector	1
28	1463139	Terminal	7
28	1484377	Plug	5
29	. . . . .	Connector Assembly (To RH Chassis Harness)	1
29	1500925	Connector	1
29	1352603	Secondary Lock	1
29	1330437	Terminal (Pin)	7
29	1484377	Plug	5
30	. . . . .	Connector Assembly (To RH Chassis Harness)	1
30	1489656	Connector (4-Way)	1
30	1489657	Connector	1
30	1330438	Terminal (Socket)	4

©2013 HYSTER COMPANY

NOTES

©2013 HYSTER COMPANY

WIRE HARNESS (FIGURE 7-94)

COWL WITH FORWARD/REVERSE LEVER — WITH HYDRAULIC PUMP SOLENOID (S/N L177V04757H →)

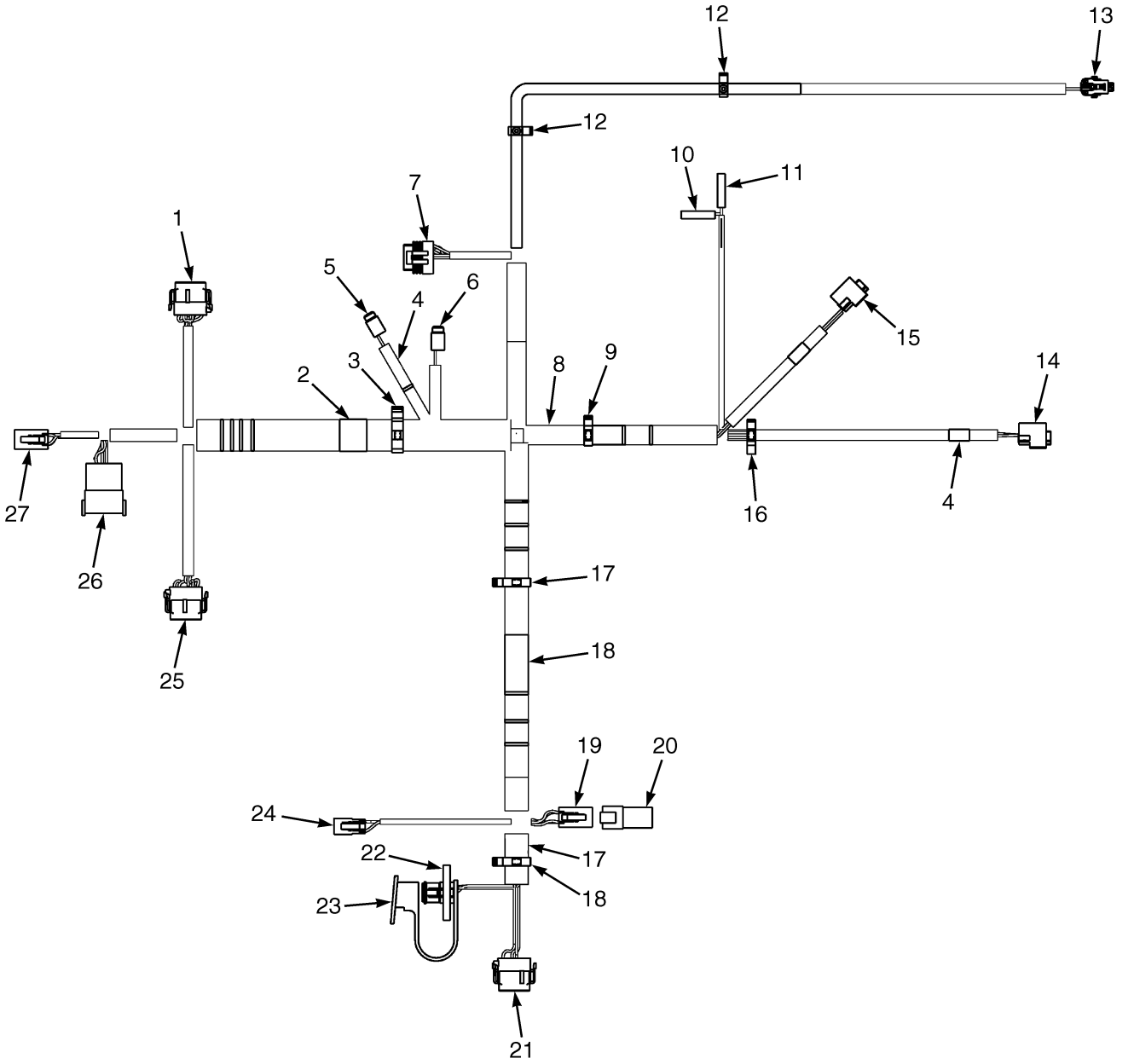

BP080919

©2013 HYSTER COMPANY

WIRE HARNESS

COWL WITH FORWARD/REVERSE LEVER – WITH HYDRAULIC PUMP SOLENOID (S/N L177V04757H →)

ITEM	PART NO.	DESCRIPTION	QTY
	4603282	Wire Harness	1
1	. . . . .	Connector Assembly (Vehicle System Manager)	1
1	1525568	Connector	1
1	1529046	Connector	1
1	1463139	Terminal	8
1	1484377	Plug	4
2	1540388	Conduit	AR
3	1534282	Clip	1
4	275493	Conduit	AR
5	. . . . .	Connector Assembly (Hydraulic Lockout Solenoid #2)	1
5	1484557	Connector (2 Socket)	1
5	1484558	Connector (Seconday Lock)	1
5	1463139	Terminal	2
6	. . . . .	Connector Assembly (Hydraulic Lockout Solenoid #1)	1
6	1484557	Connector (2 Socket)	1
6	1484558	Connector (Seconday Lock)	1
6	1463139	Terminal	2
7	. . . . .	Connector Assembly (Accelerator Pedal Sensor)	1
7	1525584	Connector	1
7	1532571	Terminal	6
8	275496	Conduit	AR
9	1534828	Clip	1
10	. . . . .	Connector Assembly (Brake Fluid)	1
10	1324310	Terminal	1
10	1324309	Sleeve	1
11	. . . . .	Connector Assembly (Brake Fluid)	1
11	1324310	Terminal	1
11	1324309	Sleeve	1
12	1509888	Clip	2
13	. . . . .	Connector Assembly (Brake Pressure)	1
13	1603021	Connector	1
13	1603236	Connector (Secondary Lock)	1
13	1548517	Terminal (Socket)	3
13	1548519	Seal	3
14	. . . . .	Connector Assembly (Brake Pedal)	1
14	1700460	Connector	1
14	1700461	Terminal	3
15	. . . . .	Connector Assembly (Park Brake)	1
15	1700460	Connector	1
15	1700461	Terminal	3
16	1402816	Clip	1
17	1500899	Clip	2
18	275497	Conduit	AR
19	. . . . .	Connector Assembly (Bus Terminal 1)	1
19	1489656	Connector (4-Way)	1
19	1489657	Connector	1
19	1330438	Terminal (Socket)	4
20	. . . . .	Connector Assembly (Endcap w/ Resistor)	1
20	1525577	Connector (With Resistor)	1
21	. . . . .	Connector Assembly (Display)	1

©2013 HYSTER COMPANY

WIRE HARNESS

COWL WITH FORWARD/REVERSE LEVER – WITH HYDRAULIC PUMP SOLENOID (S/N L177V04757H →)

ITEM	PART NO.	DESCRIPTION	QTY
21	1525567	Connector	1
21	1529046	Connector	1
21	1463139	Terminal	5
21	1484377	Plug	7
22	. . . . .	Connector Assembly (J1939 Diagnostic)	1
22	1566116	Connector	1
22	1532664	Connector (Secondary Lock)	1
22	1330438	Terminal (Socket)	3
23	. . . . .	Connector Assembly (Dust Cap)	1
23	1566117	Dust Cap	1
24	. . . . .	Connector Assembly (Horn Button)	1
24	1490242	Connector (2 Way)	1
24	1490243	Connector (Secondary Lock)	1
24	1330438	Terminal (Socket)	1
25	. . . . .	Connector Assembly (Vehicle System Manager)	1
25	1525570	Connector	1
25	1529046	Connector	1
25	1463139	Terminal	7
25	1484377	Plug	5
26	. . . . .	Connector Assembly (To Right Hand Chassis Harness)	1
26	1500925	Connector	1
26	1352603	Secondary Lock	1
26	1330437	Terminal (Pin)	7
26	1484377	Plug	5
27	. . . . .	Connector Assembly (To Right Hand Chassis Harness)	1
27	1489656	Connector (4-Way)	1
27	1489657	Connector	1
27	1330438	Terminal (Socket)	4

©2013 HYSTER COMPANY

NOTES

©2013 HYSTER COMPANY

WIRE HARNESS (FIGURE 7-95)

COWL WITH MONOTROL PEDAL — WITH HYDRAULIC PUMP SOLENOID (S/N L177V04757H →)

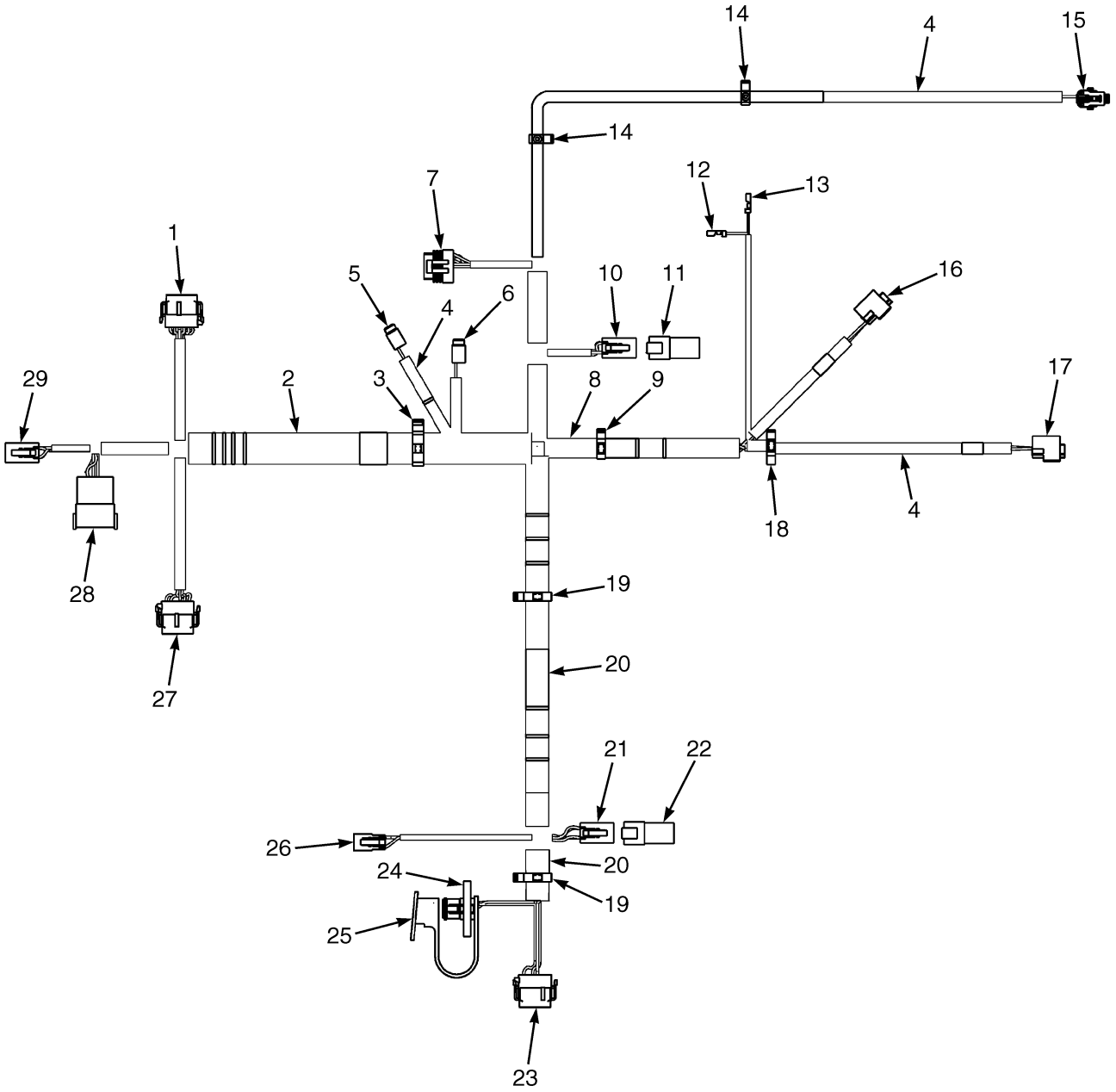

BP080918

©2013 HYSTER COMPANY

WIRE HARNESS

COWL WITH MONOTROL PEDAL – WITH HYDRAULIC PUMP SOLENOID (S/N L177V04757H →)

ITEM	PART NO.	DESCRIPTION	QTY
	4603281	Wire Harness	1
1	. . . . .	Connector Assembly (Vehicle System Manager)	1
1	1525568	Connector	1
1	1529046	Connector	1
1	1463139	Terminal	12
2	1540388	Conduit	AR
3	1534282	Clip	1
4	275493	Conduit	AR
5	. . . . .	Connector Assembly (Hydraulic Lockout Solenoid #2)	1
5	1484557	Connector (2 Socket)	1
5	1484558	Connector (Seconday Lock)	1
5	1463139	Terminal	1
6	. . . . .	Connector Assembly (Hydraulic Lockout Solenoid 1)	1
6	1484557	Connector (2 Socket)	1
6	1484558	Connector (Seconday Lock)	1
6	1463139	Terminal	2
7	. . . . .	Connector Assembly (Accelerator Pedal Sensor)	1
7	1525584	Connector	1
7	1532571	Terminal	6
8	275496	Conduit	AR
9	1534828	Clip	1
10	. . . . .	Connector Assembly (To Monotrol Harness)	1
10	1489656	Connector (4-Way)	1
10	1489657	Connector	1
10	1330438	Terminal (Socket)	4
11	. . . . .	Connector Assembly (Endcap)	1
11	1525573	Connector	1
12	. . . . .	Connector Assembly (Brake Fluid)	1
12	1566227	Terminal	1
12	1324309	Sleeve	1
13	. . . . .	Connector Assembly (Brake Fluid)	1
13	1566227	Terminal	1
13	1324309	Sleeve	1
14	1509888	Clip	2
15	. . . . .	Connector Assembly (Brake Pressure)	1
15	1603021	Connector	1
15	1603236	Connector (Secondary Lock)	1
15	1548517	Terminal (Socket)	3
15	1548519	Seal	3
16	. . . . .	Connector Assembly (Park Brake)	1
16	1700460	Connector	1
16	1700461	Terminal	3
17	. . . . .	Connector Assembly (Brake Pedal)	1
17	1700460	Connector	1
17	1700461	Terminal	3
18	1402816	Clip	1
19	1500899	Clip	2
20	275497	Conduit	AR
21	. . . . .	Connector Assembly (Bus Terminal 1)	1
21	1489656	Connector (4-Way)	1

©2013 HYSTER COMPANY

WIRE HARNESS

COWL WITH MONOTROL PEDAL – WITH HYDRAULIC PUMP SOLENOID (S/N L177V04757H →)

ITEM	PART NO.	DESCRIPTION	QTY
21	1489657	Connector	1
21	1330438	Terminal (Socket)	4
22	. . . . .	Connector Assembly (Endcap w/ Resistor)	1
22	1525577	Connector (With Resistor)	1
23	. . . . .	Connector Assembly (Display)	1
23	1525567	Connector	1
23	1529046	Connector	1
23	1463139	Terminal	5
23	1484377	Plug	7
24	. . . . .	Connector Assembly (J1939 Diagnostic)	1
24	1566116	Connector	1
24	1532664	Connector (Secondary Lock)	1
24	1330438	Terminal (Socket)	3
25	. . . . .	Connector Assembly (Dustcap)	1
25	1566117	Dust Cap	1
26	. . . . .	Connector Assembly (Horn Button)	1
26	1490242	Connector (2 Way)	1
26	1490243	Connector (Secondary Lock)	1
26	1330438	Terminal (Socket)	2
27	. . . . .	Connector Assembly (Vehicle System Manager)	1
27	1525570	Connector	1
27	1529046	Connector	1
27	1463139	Terminal	7
27	1484377	Plug	5
28	. . . . .	Connector Assembly (To Right Hand Chassis Harness)	1
28	1500925	Connector	1
28	1352603	Secondary Lock	1
28	1330437	Terminal (Pin)	7
28	1484377	Plug	5
29	. . . . .	Connector Assembly (To Right Hand Chassis Harness)	1
29	1489656	Connector (4-Way)	1
29	1489657	Connector	1
29	1330438	Terminal (Socket)	4

©2013 HYSTER COMPANY

WIRE HARNESS ADAPTER (FIGURE 7-96)
LOW FUEL PRESSURE

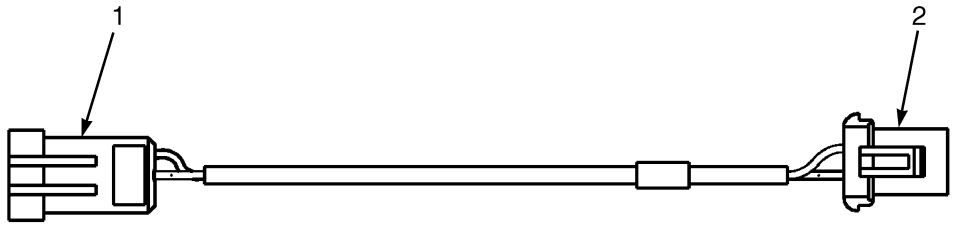

HP082028

ITEM	PART NO.	DESCRIPTION	QTY
	4602843	Wire Harness	1
1	. . . . .	Connector Assembly (To LH Chassis Harness)	1
1	2795583	Connector (3 Way)	1
1	2787350	Pin Terminal	2
1	2069381	Plug	1
1	2060555	Wire Seal	2
2	. . . . .	Connector Assembly (Low LPG Switch)	1
2	1329152	Plug	1
2	1329151	Terminal	1
2	1330281	Terminal	2
2	1402888	Seal	2

©2013 HYSTER COMPANY

WIRE HARNESS (FIGURE 7-97)
ALTERNATOR

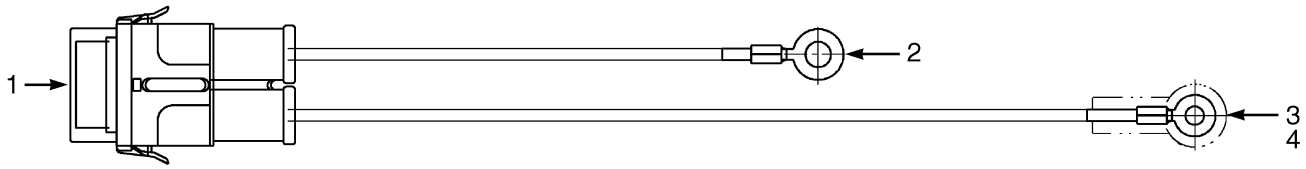

BP080476

ITEM	PART NO.	DESCRIPTION	QTY
	2065098	Wire Harness (Adapter)	1
1	. . . . .	Connector Assembly	1
1	1454827	Seal	2
1	1454828	Terminal	2
1	1454829	Fuse (60 Amp)	1
1	1454860	Connector Body	1
1	1454862	Cover (With Seal)	1
2	1566145	E-Ring (To PDM)	1
3	1560015	E-Ring (To Alternator)	1
4	1566146	Boot	1

©2013 HYSTER COMPANY

8 TRANSMISSION

SECTION 8
TRANSMISSION

DESCRIPTION **PAGE**

CONTROL VALVE
TRANSMISSION (→ S/N L177B19874E (HIGH PRESSURE IDLE))
(→ S/N L177B19274E (LOW PRESSURE IDLE)) 8-74
CONTROL VALVE ASSEMBLY
S/N L177B19875E → (HIGH PRESSURE IDLE) S/N L177B19275E → (LOW PRESSURE IDLE) 8-76
COUNTER/REVERSE CLUTCH
SINGLE SPEED TRANSMISSION (→ S/N L177B13245E) 8-68
SINGLE SPEED TRANSMISSION (S/N L177B13246E →) 8-70
SINGLE SPEED TRANSMISSION (S/N T141M001501 →) (S/N T148M001501 →) 8-72
INPUT/FORWARD CLUTCH
SINGLE SPEED TRANSMISSION (→ S/N L177B134120E) 8-62
SINGLE SPEED TRANSMISSION (S/N L177B13421E →) 8-64
SINGLE SPEED TRANSMISSION (S/N T141M001501 →) (S/N T148M001501 →) 8-66
STATOR SUPPORT HOUSING 8-60
TORQUE CONVERTER 8-12
TORQUE CONVERTER HOUSING AND ATTACHING PARTS
SINGLE SPEED (S/N T141M001501 →) 8-52
SINGLE SPEED - ALUMINUM CHAIN DRIVE (2/2011 →) 8-58
TRANSMISSION
SINGLE SPEED, THREE PIECE HOUSING, DRY BRAKE - SHEET 1 OF
2 (S/N L177B10030D ↔ S/N L177B15791E) 8-38
SINGLE SPEED, THREE PIECE HOUSING, DRY BRAKE - SHEET 2 OF
2 (S/N L177B10030D ↔ S/N L177B15791E) 8-42
SINGLE SPEED, THREE PIECE HOUSING, WET AND DRY BRAKE - SHEET 1 0F
2 (→ S/N L177B10029D (DRY BRAKE)) (→ S/N L177B15745E (WET BRAKE)) 8-32
SINGLE SPEED, THREE PIECE HOUSING, WET AND DRY BRAKE - SHEET 2 OF
2 (→ S/N L177B10029D (DRY BRAKE)) (→ L177B15745E WET BRAKE) 8-36
SINGLE SPEED, WET AND DRY BRAKE - SHEET 1 OF
2 (S/N L177B15792E → (T133M0001501, DRY BRAKE))
(S/N L177B15746E → (T134M0001501, WET BRAKE)) 8-44
SINGLE SPEED, WET AND DRY BRAKE - SHEET 2 OF 2 (S/N L177B15792E → (DRY BRAKE))
(S/N L177B15746E → (WET BRAKE)) 8-46
TRANSMISSION COOLING
MAZDA 2.0L AND 2.2L, GASOLINE AND LPG - SERPENTINE AND SQUARE WAVE WITH INTERNAL
OIL COOLER (→ S/N L177V02742F) 8-16
MAZDA 2.0L AND 2.2L, LPG - SERPENTINE AND SQUARE WAVE (S/N L177V02743F →) 8-18
MAZDA 2.0L AND 2.2L, LPG - WITH AIR COOLER (S/N L177V02743F →) 8-20
MAZDA 2.0L AND 2.2L/GM 2.4L, GASOLINE AND LPG - SQUARE WAVE WITH EXTERNAL OIL
COOLER (→ S/N L177V02742F) 8-14
YANMAR 2.6L AND 3.3L DIESEL AND GM 2.4L LPG - SQUARE WAVE WITH INTERNAL OIL
COOLER (S/N L177B29084G →) 8-24
YANMAR 2.6L AND 3.3L DIESEL AND GM 2.4L LPG - SQUARE WAVE WITHOUT AIR
COOLER (S/N L177V02743F ↔ S/N L177B31603H) 8-26
YANMAR 2.6L AND 3.3L DIESEL AND GM 2.4L LPG - SQUARE WAVE WITHOUT AIR
COOLER (S/N L177B31604H →) 8-30
YANMAR 2.6L AND 3.3L DIESEL AND GM 2.4L GASOLINE AND LPG - SQUARE WAVE WITH
INTERNAL OIL COOLER (→ S/N L177V02742F) 8-22
TRANSMISSION HOUSING AND ASSEMBLY
SINGLE SPEED (S/N T141M001501 →) 8-50

©2013 HYSTER COMPANY

SECTION 8
TRANSMISSION

DESCRIPTION **PAGE**

SINGLE SPEED - ALUMINUM CHAIN DRIVE (2/2011 →) 8-54
TRANSMISSION MOUNT
SINGLE SPEED - THREE PIECE HOUSING 8-4
SINGLE SPEED - TWO PIECE HOUSING (S/N T133M001501 →) (S/N T134M001501 →) 8-6
SINGLE SPEED (S/N T141M001501 →) 8-8
SINGLE SPEED - ALUMINUM CHAIN DRIVE (2/2011 →) 8-10

©2013 HYSTER COMPANY

NOTES

©2013 HYSTER COMPANY

TRANSMISSION MOUNT (FIGURE 8-1)
SINGLE SPEED — THREE PIECE HOUSING

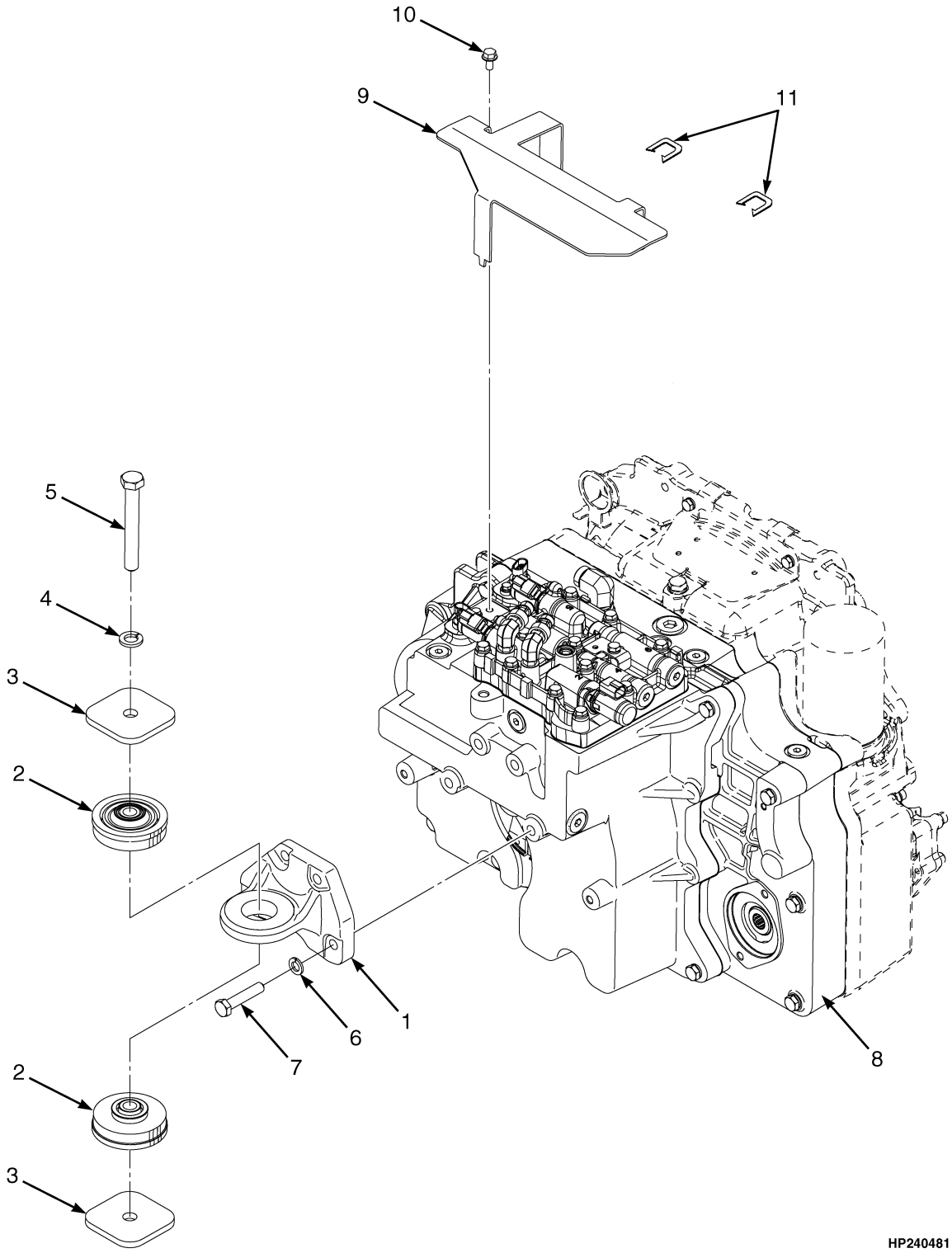

©2013 HYSTER COMPANY

TRANSMISSION MOUNT
SINGLE SPEED – THREE PIECE HOUSING

ITEM	PART NO.	DESCRIPTION	QTY
1	1501274	Bracket	1
2	2070147	Isolator	2
3	1566329	Washer	2
4	292685	Lockwasher	1
4	320165	Washer (Alternate Part)	1
5	293697	Capscrew	1
6	292683	Lockwasher	4
7	292531	Capscrew	4
8	**a** 1550565	Transmission Assy (Single Speed, Dry Brake) (☞Figure 8-14)	1
8	**c** 1632260	Transmission Assy (Single Speed Dry Brake) (☞Figure 8-16)	1
8	**b** 1616478	Transmission Assy (Single Speed Wet Brake) (☞Figure 8-14)	1
9	1569768	Shield	1
10	1527879	Capscrew	1
11	1380849	Edge Protector	2
11	4013363	Trim (Alternate Part)	2
	264134	Loctite	AR

FOOTNOTES:

a → S/N L177B10029
b → S/N L177B15745
c S/N L177B10030 ↔ S/N L177B15791

©2013 HYSTER COMPANY

TRANSMISSION MOUNT (FIGURE 8-2)

SINGLE SPEED — TWO PIECE HOUSING (S/N T133M001501 →) (S/N T134M001501 →)

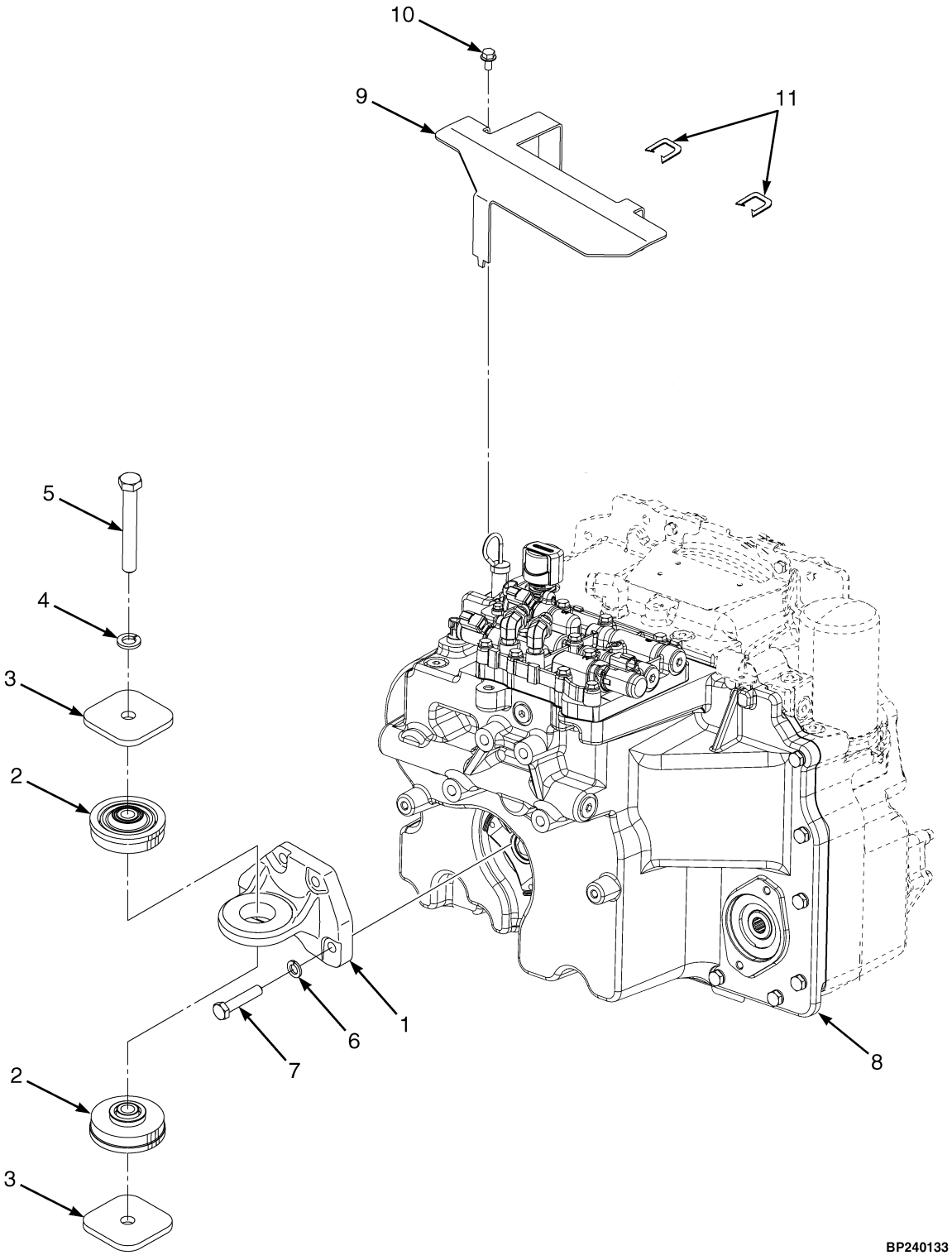

©2013 HYSTER COMPANY

TRANSMISSION MOUNT

SINGLE SPEED – TWO PIECE HOUSING (S/N T133M001501 →) (S/N T134M001501 →)

ITEM	PART NO.	DESCRIPTION	QTY
1	1501274	Bracket	1
2	2070147	Isolator	2
3	1566329	Washer	2
4	292685	Lockwasher	1
5	293697	Capscrew	1
6	292683	Lockwasher	4
7	292531	Capscrew	4
8	1646871	Transmission Assy (Single Speed Dry Brake) (☞Figure 8-18, ☞Figure 8-19)	1
8	1646872	Transmission Assy (Single Speed Wet Brake) (☞Figure 8-18, ☞Figure 8-19)	1
8	1703481	Transmission Assy (Single Speed Dry Brake) (☞Figure 8-18, ☞Figure 8-19)	1
9	1569768	Shield	1
10	1527879	Capscrew	1
11	1380849	Edge Protector	2
11	4013363	Trim (Alternate Part)	2

©2013 HYSTER COMPANY

TRANSMISSION MOUNT (FIGURE 8-3)

SINGLE SPEED (S/N T141M001501 →)

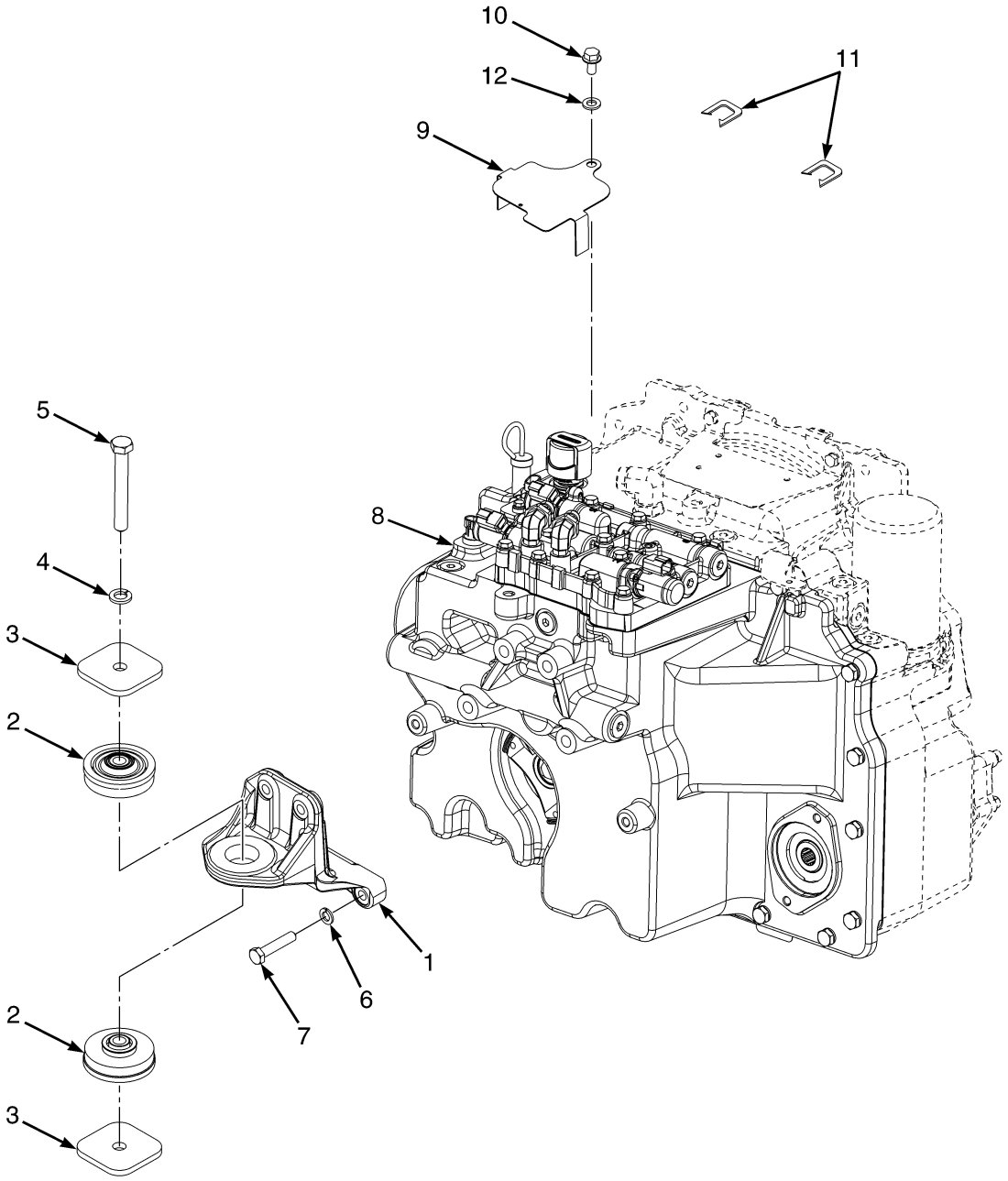

BP240172

©2013 HYSTER COMPANY

TRANSMISSION MOUNT

SINGLE SPEED (S/N T141M001501 →)

ITEM	PART NO.	DESCRIPTION	QTY
	1697665	Bracket	1
2	2070147	Isolator	2
3	1566329	Washer	2
4	292685	Lockwasher	1
4	320165	Washer (Alternate Part)	1
5	293697	Capscrew	1
6	292683	Lockwasher	4
7	292531	Capscrew	4
8	1675651	Transmission Assy (☞Figure 8-21, ☞Figure 8-20)	1
9	1703183	Shield	1
10	226458	Capscrew	1
11	1380849	Edge Protector	2
11	4013363	Trim (Alternate Part)	2
12	320165	Washer	1
20	264134	Loctite	AR

©2013 HYSTER COMPANY

TRANSMISSION MOUNT (FIGURE 8-4)

SINGLE SPEED — ALUMINUM CHAIN DRIVE (2/2011 →)

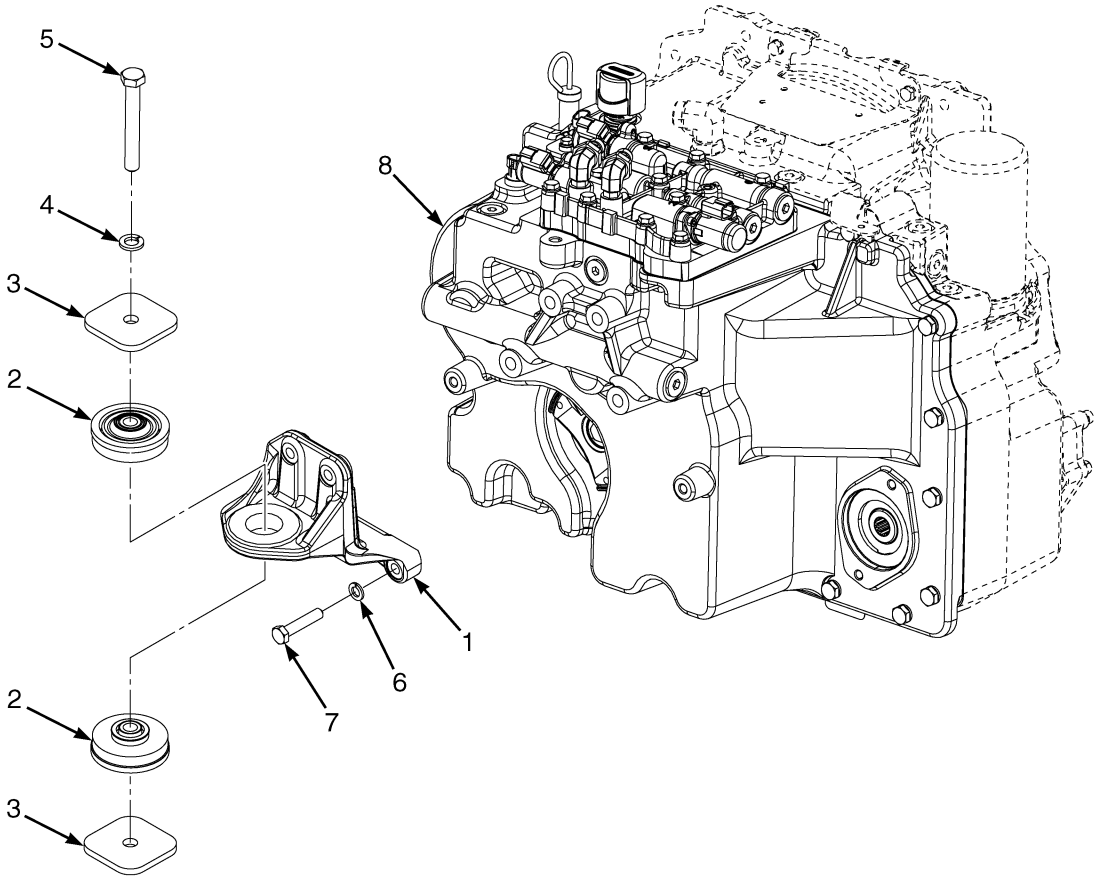

BP240180

©2013 HYSTER COMPANY

TRANSMISSION MOUNT

SINGLE SPEED – ALUMINUM CHAIN DRIVE (2/2011 →)

ITEM	PART NO.	DESCRIPTION	QTY
1	1697672	Bracket	1
2	2070147	Isolator	2
3	1566329	Washer	2
4	320165	Washer	1
5	293697	Capscrew	1
6	292683	Lockwasher	4
7	292531	Capscrew	4
8	4020056	Transmission Assy (☞Figure 8-22, ☞Figure 8-23)	1
	264134	Loctite	AR

©2013 HYSTER COMPANY

TORQUE CONVERTER (FIGURE 8-5)

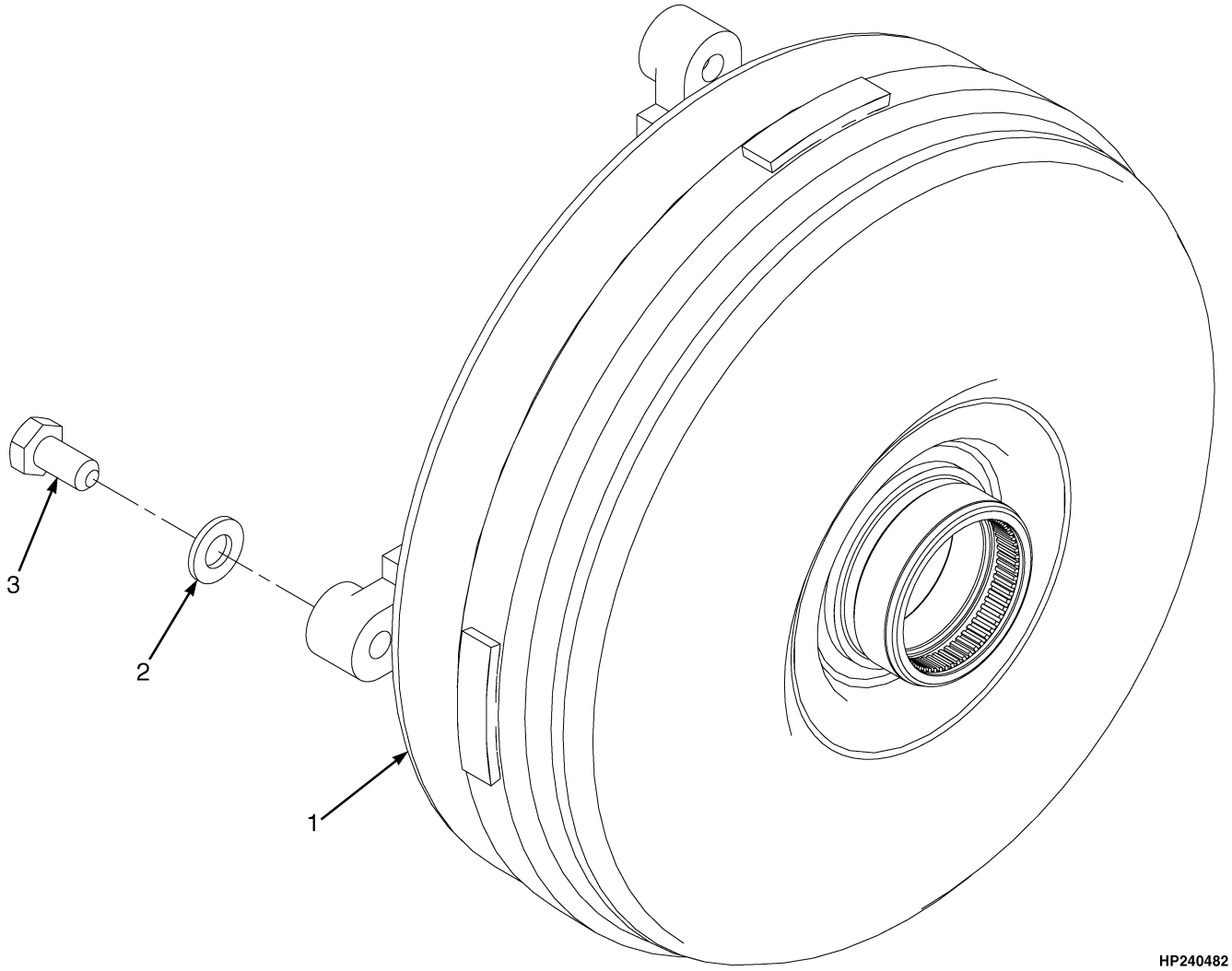

KEY:
A: For Use With Mazda 2.0/2.2L Gasoline and LPG Engines
B: For Use With GM 2.4L Gasoline and LPG Engines
C: For Use With Yanmar 2.6/3.3L Diesel Engines

ITEM	PART NO.	DESCRIPTION	QTY A	QTY B	QTY C
1	1553122	Torque Converter	1	..	..
1	1553125	Torque Converter	..	1	..
1	1553123	Torque Converter	..	..	1
2	296420	Washer	4	4	4
3	1541921	Capscrew	4	..	4
3	309740	Capscrew	..	4	..

©2013 HYSTER COMPANY

NOTES

©2013 HYSTER COMPANY

TRANSMISSION COOLING (FIGURE 8-6)

MAZDA 2.0L AND 2.2L/GM 2.4L, GASOLINE AND LPG — SQUARE WAVE WITH EXTERNAL OIL COOLER (→ S/N L177V02742F)

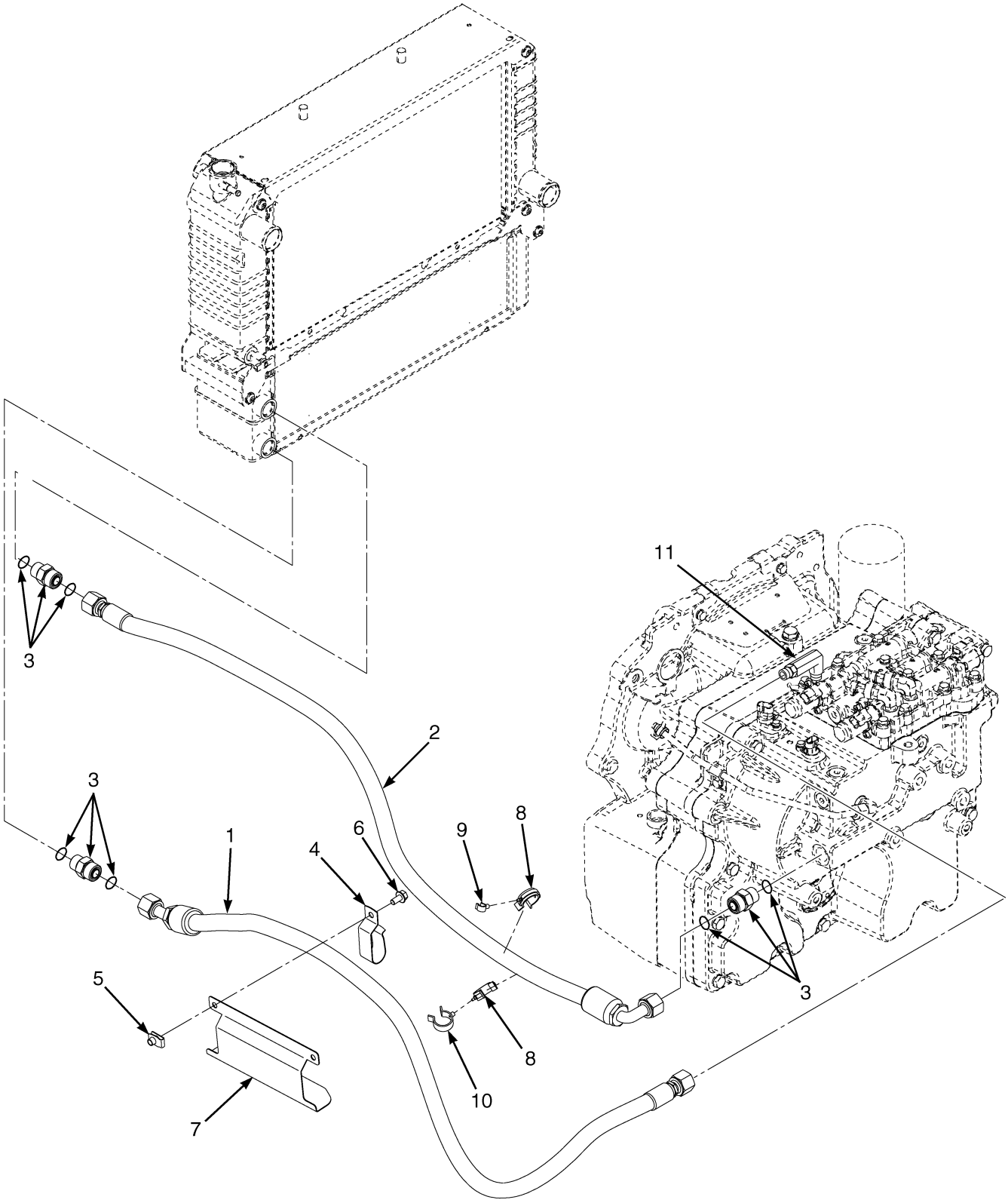

©2013 HYSTER COMPANY

TRANSMISSION COOLING

MAZDA 2.0L AND 2.2L/GM 2.4L, GASOLINE AND LPG – SQUARE WAVE WITH EXTERNAL OIL COOLER (→ S/N L177V02742F)

ITEM	PART NO.	DESCRIPTION	QTY
1	2095658	Hose Assy	1
2	2095659	Hose Assy	1
3	1486749	Fitting	3
3	16485	O-Ring	3
3	252729	O-Ring	3
4	1562648	Clip	1
5	1480237	Nut	1
6	1527879	Capscrew	1
7	1616979	Heat Shield	1
8	1569465	Clamp (Swivel)	2
9	1561871	Clamp (Swivel)	1
10	1542436	Clamp	1
11	1487067	Fitting	1
11	16485	O-Ring	1
11	252729	O-Ring	1

©2013 HYSTER COMPANY

TRANSMISSION COOLING (FIGURE 8-7)

MAZDA 2.0L AND 2.2L, GASOLINE AND LPG — SERPENTINE AND SQUARE WAVE WITH INTERNAL OIL COOLER (→ S/N L177V02742F)

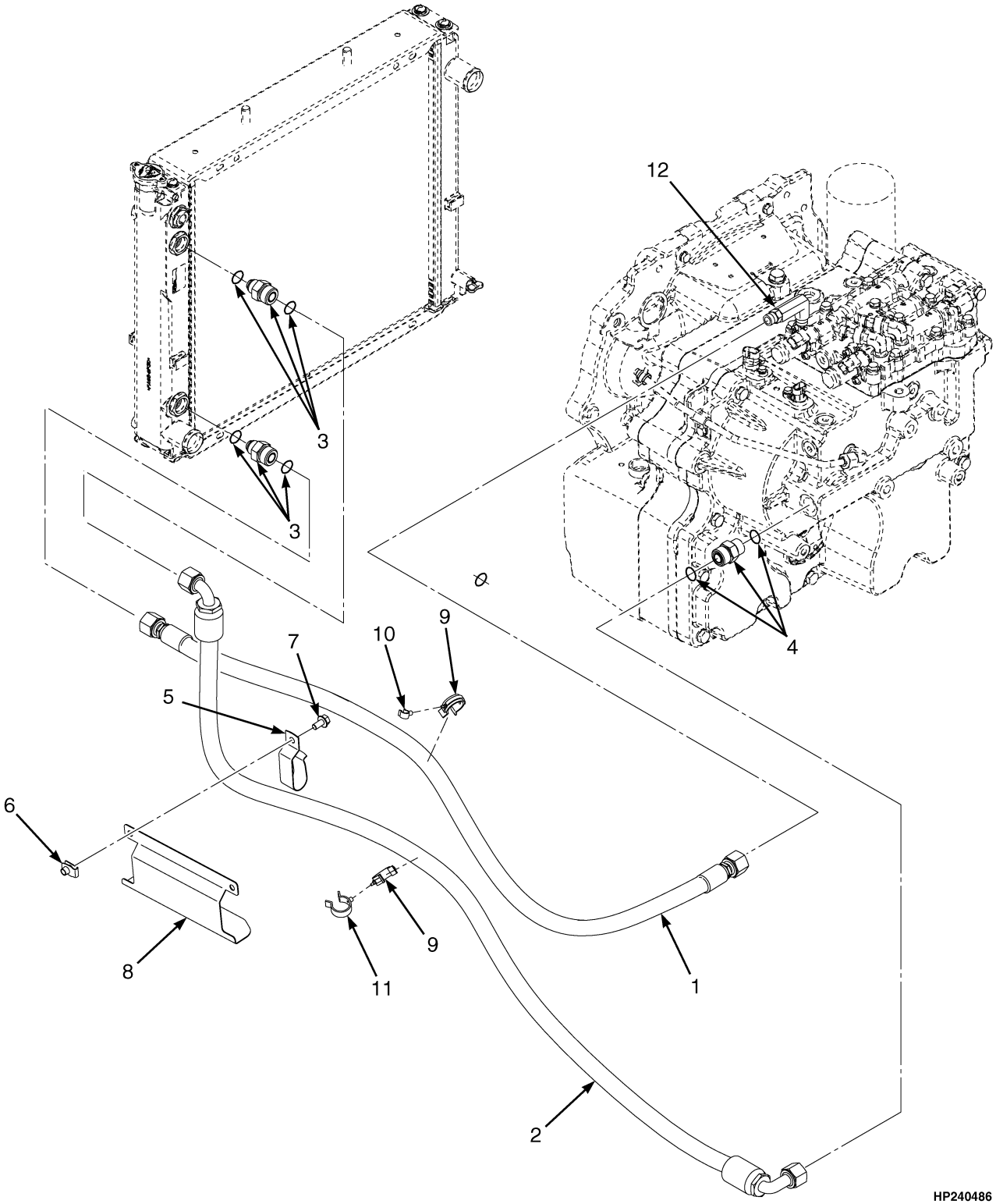

©2013 HYSTER COMPANY

TRANSMISSION COOLING

MAZDA 2.0L AND 2.2L, GASOLINE AND LPG – SERPENTINE AND SQUARE WAVE WITH INTERNAL OIL COOLER (→ S/N L177V02742F)

KEY:
A: With Serpentine Radiator
B: With Square Wave Radiator, Without Air Oil Cooler

ITEM	PART NO.	DESCRIPTION	QTY A	QTY B
1	2095647	Hose Assy	1	1
2	2095652	Hose Assy	1	1
3	**a** 1565127	Fitting	..	2
3	16484	O-Ring	..	2
3	252729	O-Ring	..	2
4	1486749	Fitting	1	1
4	16485	O-Ring	1	1
4	252729	O-Ring	1	1
5	1562648	Clip	2	2
6	1480237	Nut	2	2
7	1527879	Capscrew	2	2
8	1616979	Heat Shield	1	1
9	1569465	Clamp (Swivel)	2	2
10	1561871	Clamp (Swivel)	1	1
11	1542436	Clamp	1	1
12	1487067	Fitting	1	1
12	16485	O-Ring	1	1
12	252729	O-Ring	1	1

FOOTNOTES:

a Fittings And O-Rings Supplied With Serpentine Radiator.

©2013 HYSTER COMPANY

TRANSMISSION COOLING (FIGURE 8-8)

MAZDA 2.0L AND 2.2L, LPG — SERPENTINE AND SQUARE WAVE (S/N L177V02743F →)

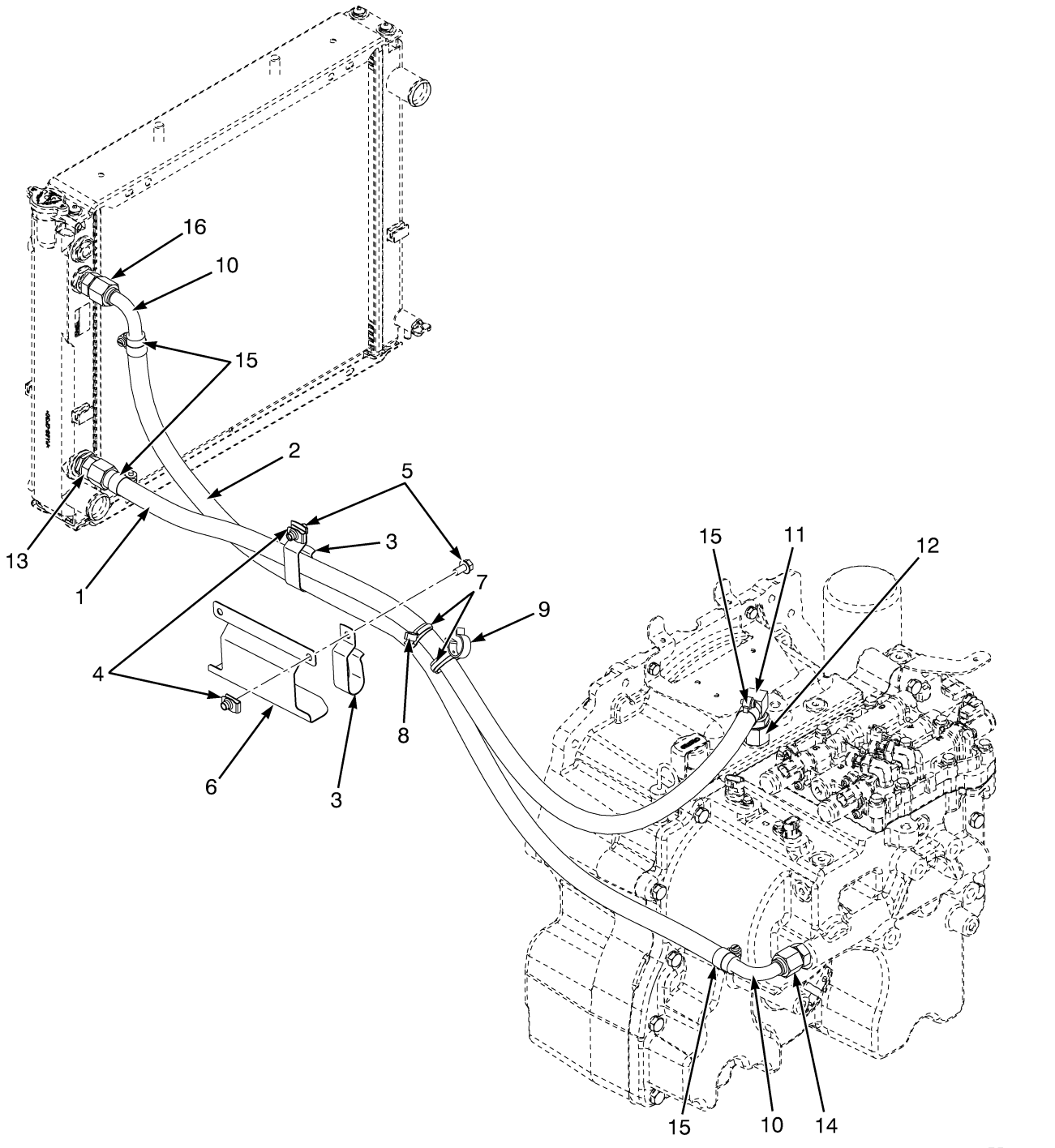

©2013 HYSTER COMPANY

TRANSMISSION COOLING

MAZDA 2.0L AND 2.2L, LPG – SERPENTINE AND SQUARE WAVE (S/N L177V02743F →)

KEY:
A: With square wave radiator
B: With serpentine radiator

ITEM	PART NO.	DESCRIPTION	QTY A	QTY B
1	**a** 2109871	Hose	1	1
1	**b** 2110024	Hose	1	1
2	**a** 2109870	Hose	1	1
2	**b** 2109869	Hose	1	..
2	**b** 2109870	Hose	..	1
3	1562648	Clip	2	2
4	1480237	Nut	2	2
5	1527879	Capscrew	2	2
6	1616979	Heat Shield	1	1
7	1569465	Clamp (Swivel)	2	2
8	1561871	Clamp (Swivel)	1	1
9	1542436	Clamp	1	1
10	2109875	Tube Assy	2	2
10	1487165	Fitting	1	1
11	222512	Fitting	1	1
11	16485	O-Ring	1	1
12	1691525	Adapter	1	1
13	1673198	Fitting	1	..
13	222493	Fitting	1	..
13	16484	O-Ring	1	..
13	1691916	Fitting	..	1
14	1486749	Fitting	1	1
15	130845	Clamp	4	4
16	1565127	Fitting	1	..

FOOTNOTES:

a → 9/2009

b 9/2009 →

©2013 HYSTER COMPANY

TRANSMISSION COOLING (FIGURE 8-9)

MAZDA 2.0L AND 2.2L, LPG — WITH AIR COOLER (S/N L177V02743F →)

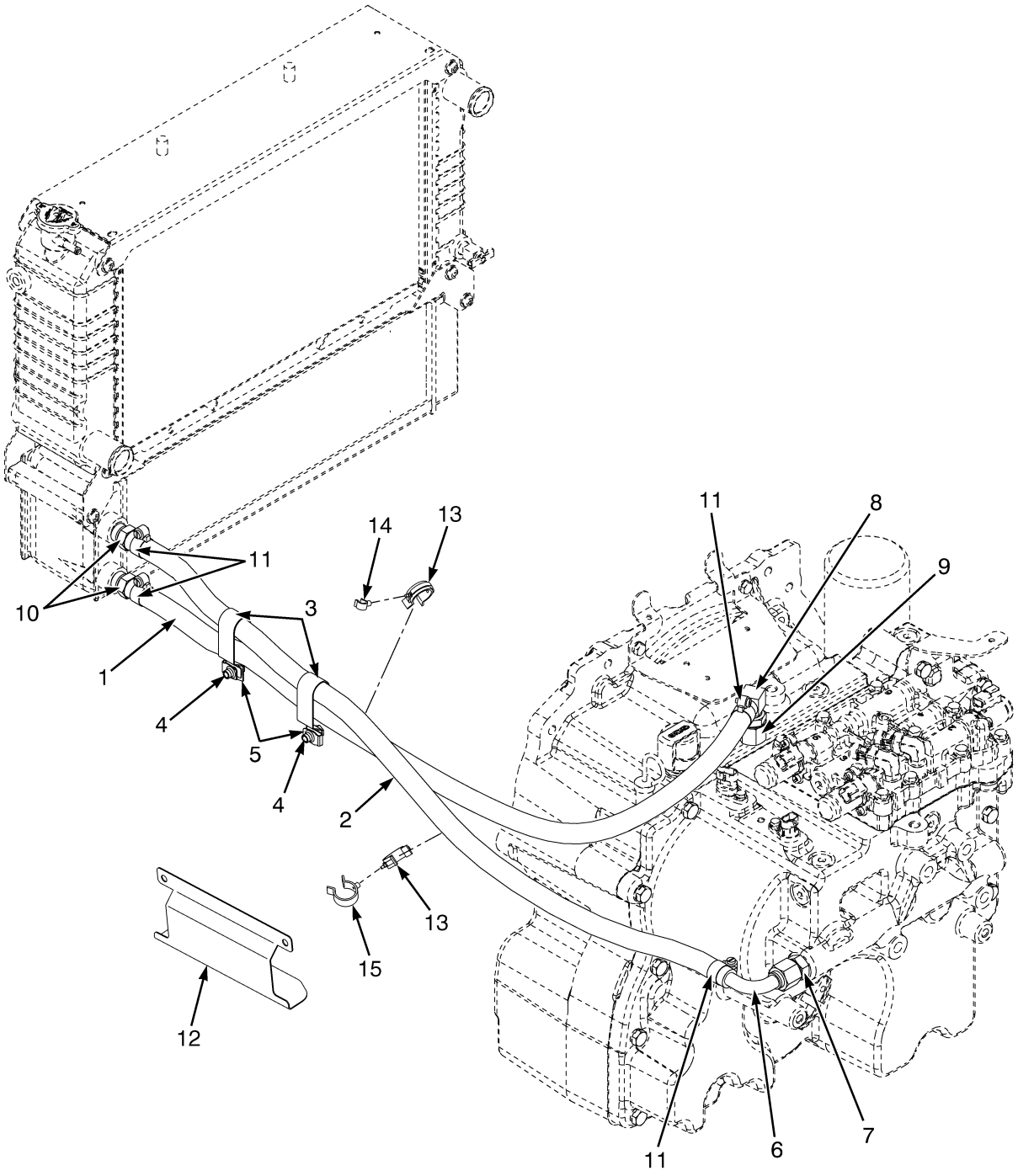

BP240176

©2013 HYSTER COMPANY

TRANSMISSION COOLING

MAZDA 2.0L AND 2.2L, LPG – WITH AIR COOLER (S/N L177V02743F →)

ITEM	PART NO.	DESCRIPTION	QTY
1	2107524	Hose	1
2	2110024	Hose	1
3	1562648	Clip	2
4	1527879	Capscrew	2
5	1480237	Nut	2
6	2109875	Tube Assy	1
7	1486749	Fitting	1
8	222512	Fitting	1
9	**a** 1691525	Adapter	1
10	17223	Fitting	2
10	16485	O-Ring	1
11	130845	Clamp	4
12	1616979	Heat Shield	1
13	1569465	Clamp (Swivel)	2
14	1561871	Clamp (Swivel)	1
15	1542436	Clamp	1

FOOTNOTES:

a → 9/2009

©2013 HYSTER COMPANY

TRANSMISSION COOLING (FIGURE 8-10)

YANMAR 2.6L AND 3.3L DIESEL AND GM 2.4L GASOLINE AND LPG — SQUARE WAVE WITH INTERNAL OIL COOLER (→ S/N L177V02742F)

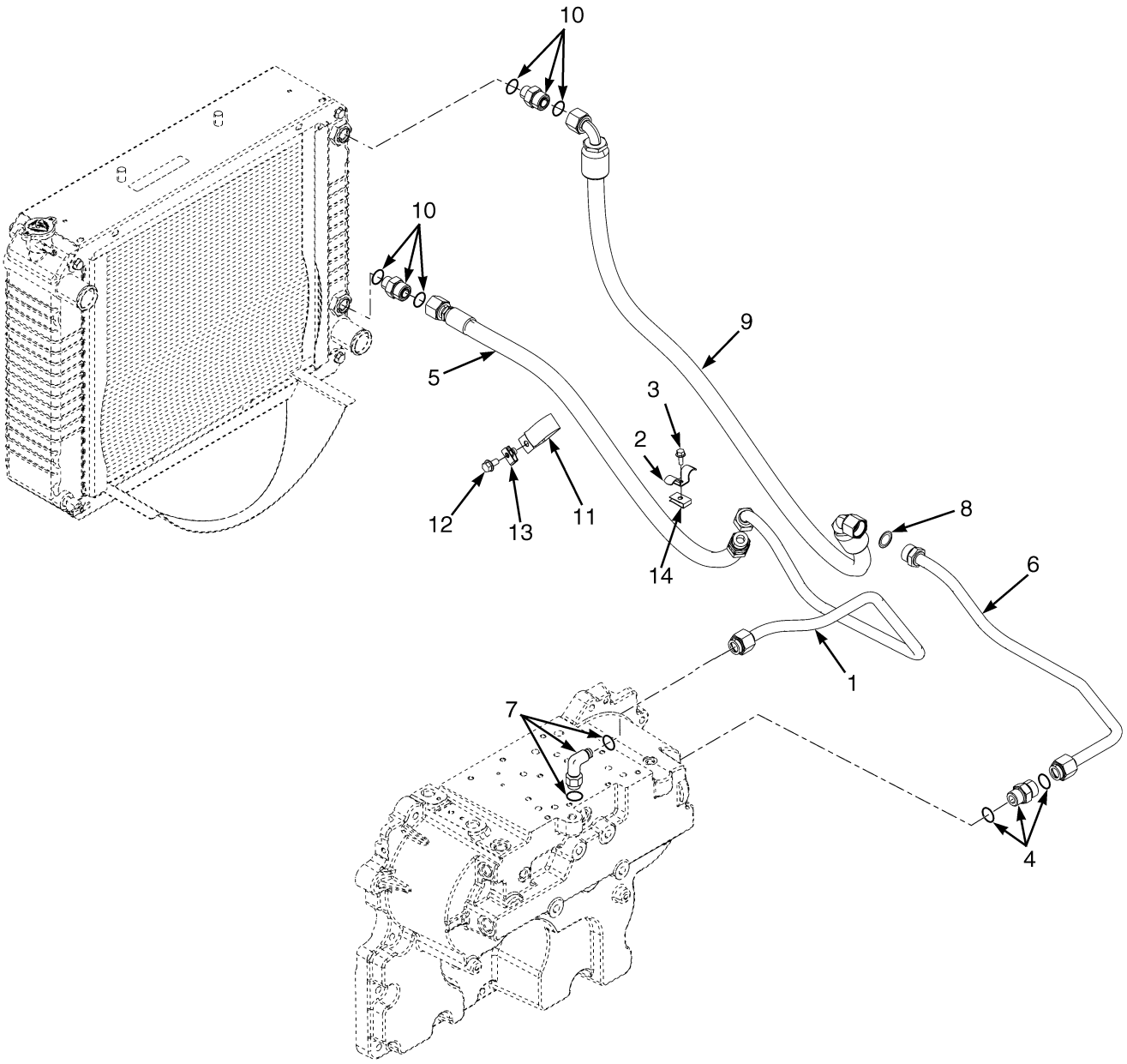

HP240498

©2013 HYSTER COMPANY

TRANSMISSION COOLING

YANMAR 2.6L AND 3.3L DIESEL AND GM 2.4L GASOLINE AND LPG – SQUARE WAVE WITH INTERNAL OIL COOLER (→ S/N L177V02742F)

ITEM	PART NO.	DESCRIPTION	QTY
1	**ab** 2067598	Tube Assy	1
1	**cd** 2095262	Tube	1
2	1561780	Clip	1
3	1527876	Capscrew	1
4	1486749	Fitting	1
4	16485	O-Ring	1
4	252729	O-Ring	1
5	2070228	Hose Assy	1
5	2095654	Hose Assy	1
5	2095649	Hose Assy (Alternate Part)	1
6	2067597	Tube	1
7	1487067	Fitting	1
7	252729	O-Ring	1
7	16485	O-Ring	1
8	1582449	Sealing Ring	1
9	2075551	Hose Assy	1
9	2095657	Hose Assy	1
9	2095653	Hose Assembly (Alternate Part)	1
10	1565127	Fitting	2
10	16484	O-Ring	2
10	252729	O-Ring	2
11	1562648	Clip	1
12	1527879	Capscrew	1
13	1480237	Nut	1
14	1350215	Nut	1

FOOTNOTES:

a → S/N L177B15745 (Dry Brake)
b → S/N L177B15791 (Wet Brake)
c S/N L177B15746 → (Dry Brake)
d S/N L177B15792 → (Wet Brake)

©2013 HYSTER COMPANY

TRANSMISSION COOLING (FIGURE 8-11)

YANMAR 2.6L AND 3.3L DIESEL AND GM 2.4L LPG — SQUARE WAVE WITH INTERNAL OIL COOLER (S/N L177B29084G →)

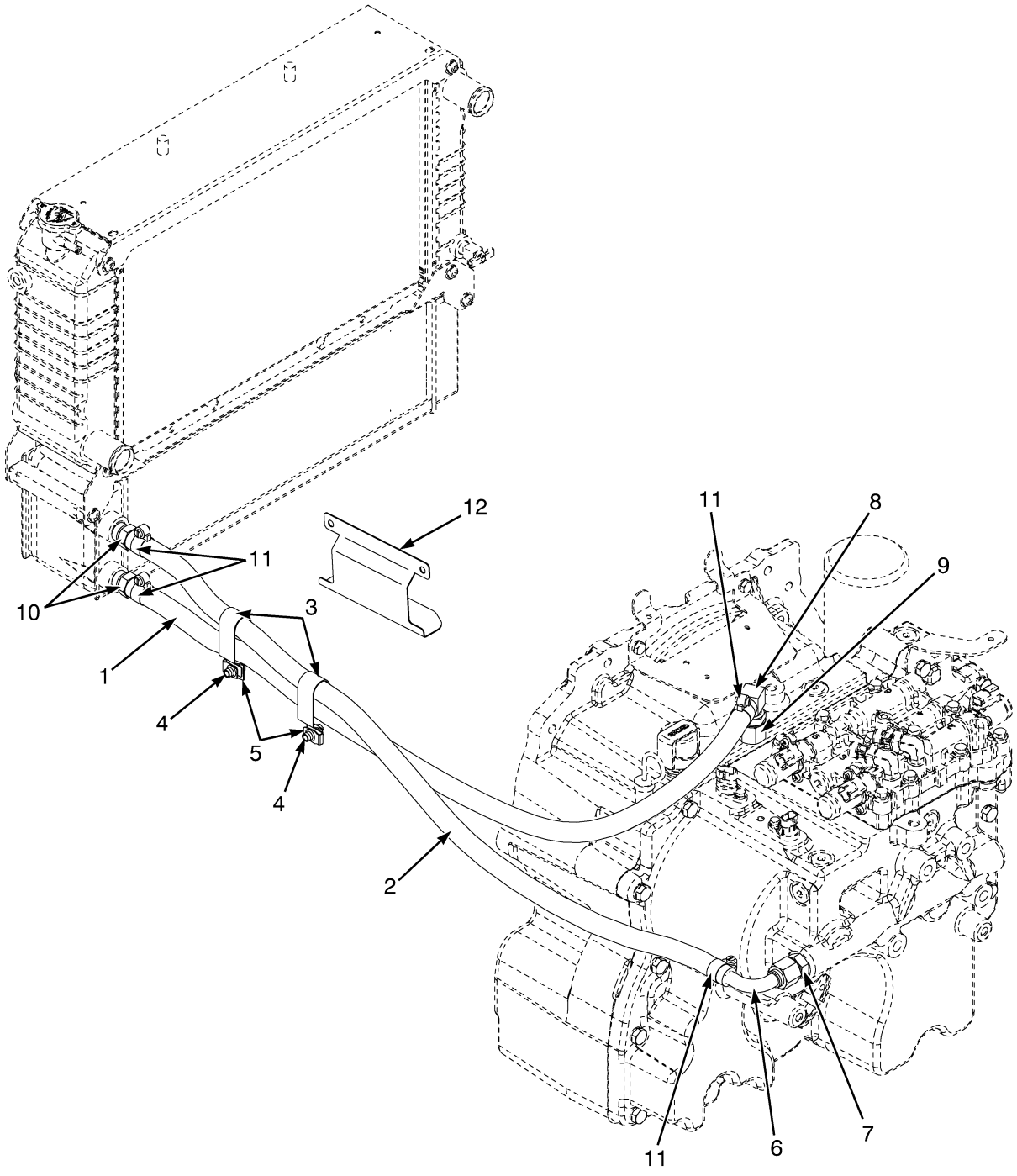

©2013 HYSTER COMPANY

TRANSMISSION COOLING

YANMAR 2.6L AND 3.3L DIESEL AND GM 2.4L LPG – SQUARE WAVE WITH INTERNAL OIL COOLER (S/N L177B29084G →)

ITEM	PART NO.	DESCRIPTION	QTY
1	2109871	Hose	1
1	2109665	Hose Assy (Alternate Part)	1
2	2110024	Hose	1
3	1562648	Clip	2
4	1527879	Capscrew	2
5	1480237	Nut (Foldover)	2
6	2109875	Tube Assy	1
6	1487165	Fitting	1
7	1486749	Fitting	1
8	222512	Fitting	1
8	16485	O-Ring	1
9	**a** 1691525	Adapter	1
10	17223	Fitting	2
10	16485	O-Ring	1
11	130845	Clamp	4
12	1616979	Heat Shield	1

FOOTNOTES:

a → 9/2009

©2013 HYSTER COMPANY

TRANSMISSION COOLING (FIGURE 8-12)

YANMAR 2.6L AND 3.3L DIESEL AND GM 2.4L LPG — SQUARE WAVE WITHOUT AIR COOLER (S/N L177V02743F ↔ S/N L177B31603H)

©2013 HYSTER COMPANY

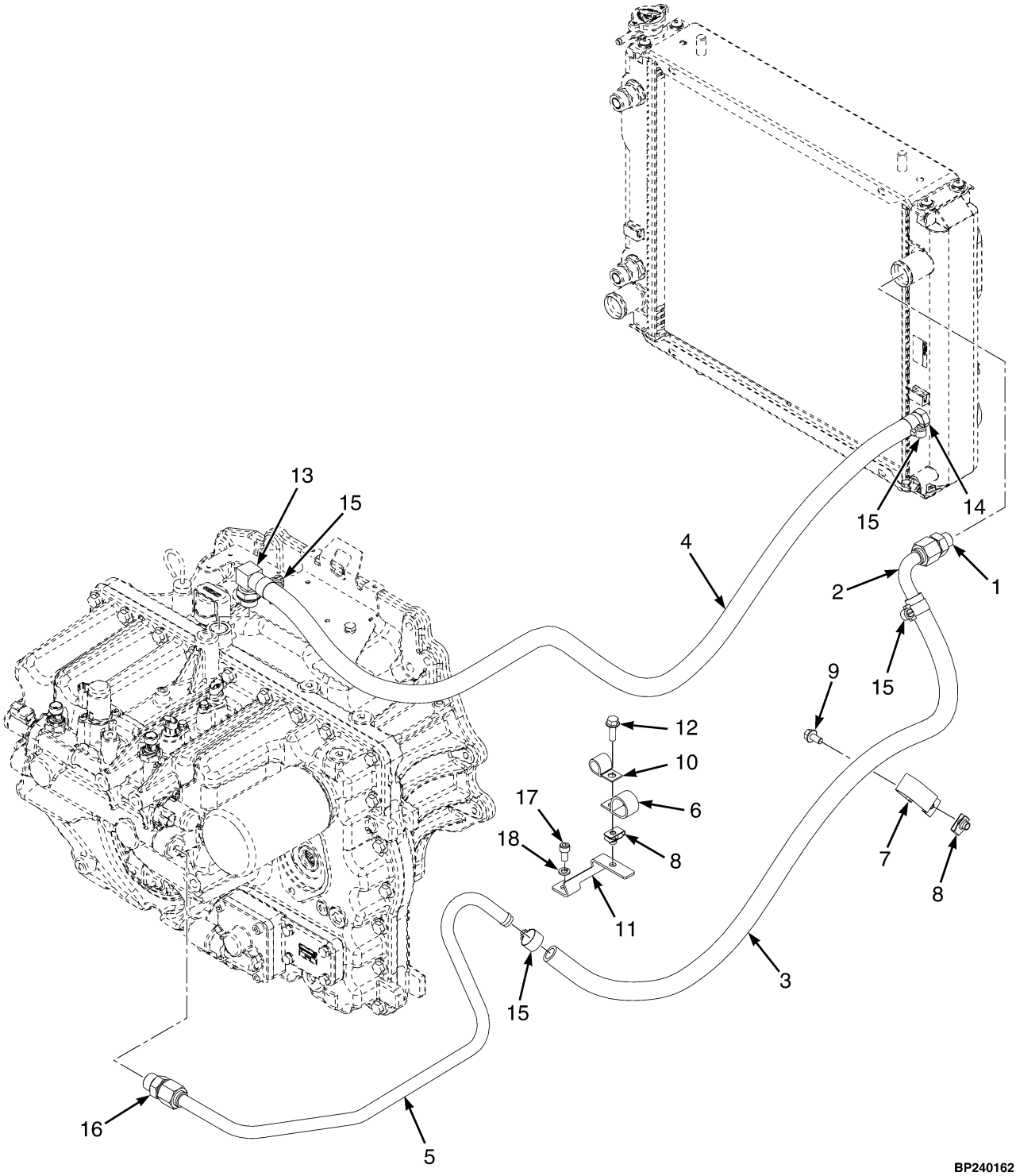
13
15
4
15
14
2
1
15
9
12
10
6
17
18
8
11
7
8
3
15
16
5
BP240162

TRANSMISSION COOLING

YANMAR 2.6L AND 3.3L DIESEL AND GM 2.4L LPG – SQUARE WAVE WITHOUT AIR COOLER (S/N L177V02743F ↔ S/N L177B31603H)

ITEM	PART NO.	DESCRIPTION	QTY
1	1565127	Fitting	1
2	2109875	Tube Assy	1
2	1487165	Fitting	1
3	2107727	Hose	1
4	**a** 2110027	Hose	1
5	**a** 2109494	Tube Assy	1
5	1487165	Fitting	1
6	2109495	Tube Assy	1
6	**b** 1487165	Fitting	1
7	1562648	Clip	1
8	1480237	Nut	1
9	1527879	Capscrew	1
10	1561780	Clip	1
11	1350215	Nut	1
12	1527877	Capscrew	1
13	1487067	Fitting	1
14	1673198	Fitting	1
14	222493	Fitting	1
14	16484	O-Ring	1
15	**b** 130845	Clamp	4
16	1486749	Fitting	1

FOOTNOTES:

a → 9/2009

b 9/2009 →

©2013 HYSTER COMPANY

NOTES

©2013 HYSTER COMPANY

TRANSMISSION COOLING (FIGURE 8-13)

YANMAR 2.6L AND 3.3L DIESEL AND GM 2.4L LPG — SQUARE WAVE WITHOUT AIR COOLER (S/N L177B31604H →)

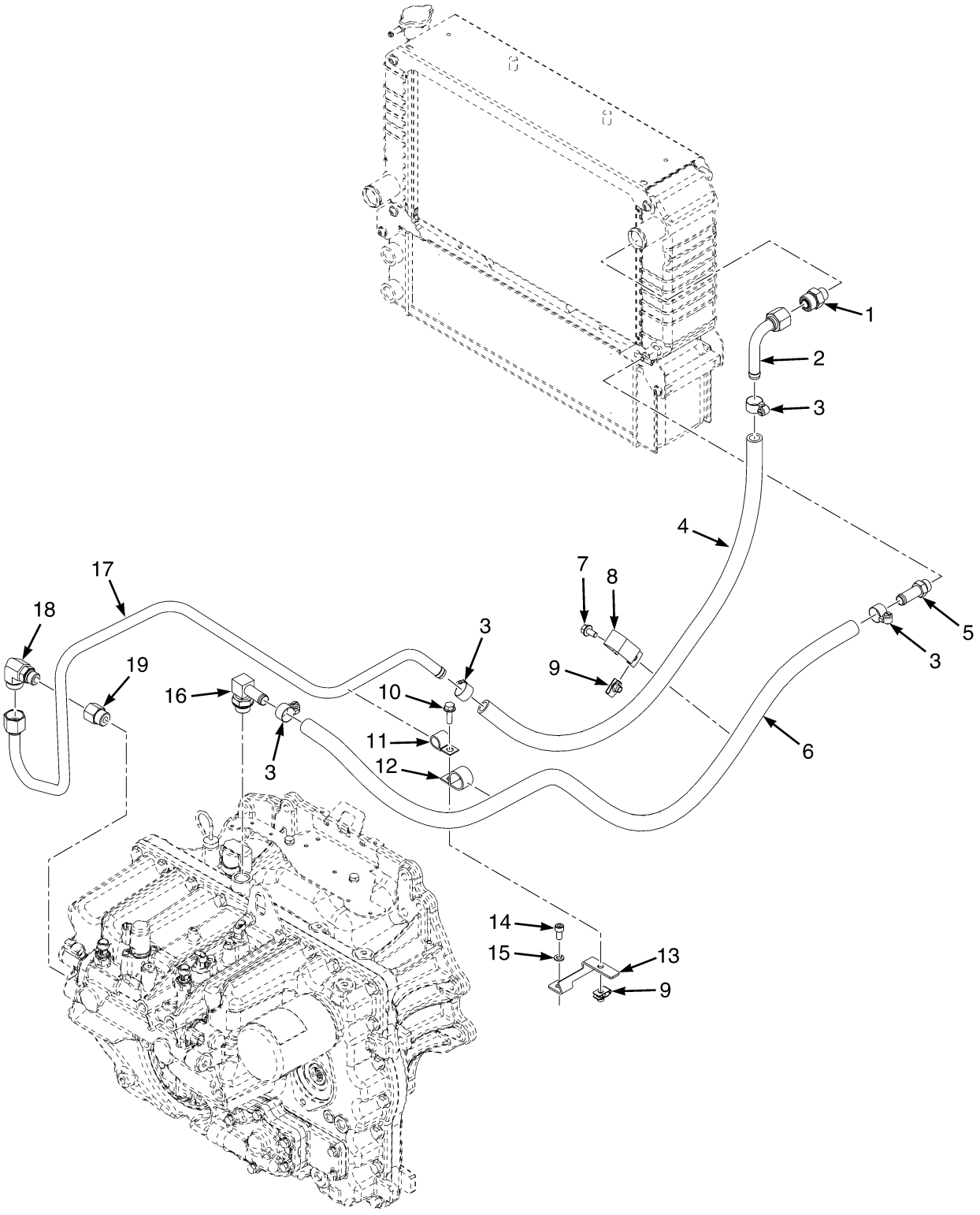

BP240170

©2013 HYSTER COMPANY

TRANSMISSION COOLING

YANMAR 2.6L AND 3.3L DIESEL AND GM 2.4L LPG – SQUARE WAVE WITHOUT AIR COOLER (S/N L177B31604H →)

ITEM	PART NO.	DESCRIPTION	QTY
1	1565127	Fitting	1
2	2109875	Tube Assy	1
3	130845	Clamp	4
4	2107727	Hose	1
5	1673198	Fitting	1
6	2109869	Hose	1
7	1527879	Capscrew	1
8	1562648	Clip	1
9	1480237	Nut	2
10	1510113	Capscrew	1
11	128408	Clamp	1
12	178119	Clamp	1
13	1694547	Bracket	1
14	296009	Capscrew	1
15	292681	Lockwasher	1
16	222512	Fitting	1
17	4612847	Tube Assy	1
18	1487068	Fitting	1
19	239222	Connector	1

©2013 HYSTER COMPANY

TRANSMISSION (FIGURE 8-14)

SINGLE SPEED, THREE PIECE HOUSING, WET AND DRY BRAKE — SHEET 1 0F 2

(→ S/N L177B10029D (DRY BRAKE)) (→ S/N L177B15745E (WET BRAKE))

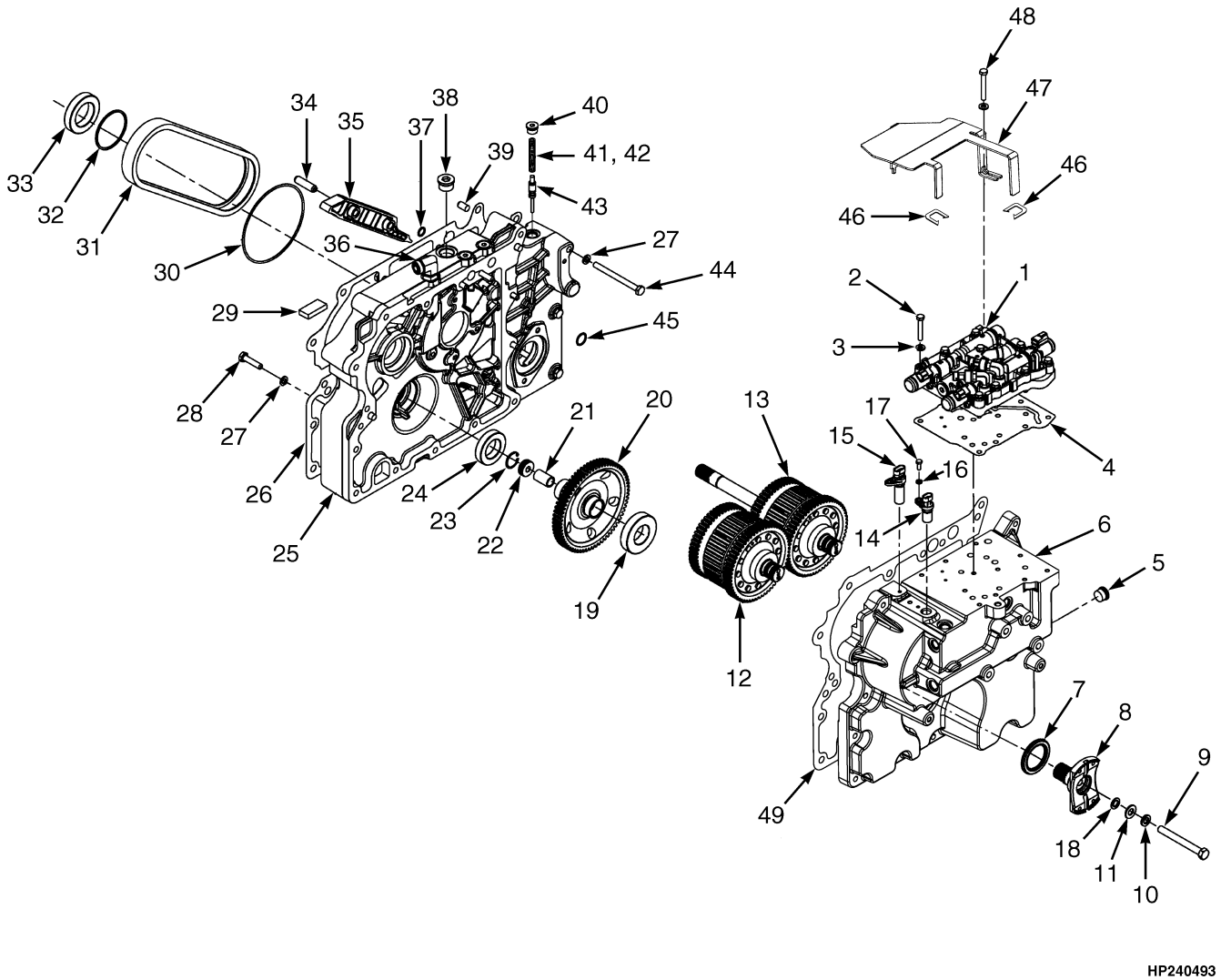

HP240493

©2013 HYSTER COMPANY

TRANSMISSION

SINGLE SPEED, THREE PIECE HOUSING, WET AND DRY BRAKE – SHEET 1 0F 2

(→ S/N L177B10029D (DRY BRAKE)) (→ S/N L177B15745E (WET BRAKE))

ITEM	PART NO.	DESCRIPTION	QTY
	a 1550565	Transmission Assy (Single Speed, Dry Brake)	1
	b 1616478	Transmission Assy (Single Speed Wet Brake)	1
1	**a** 1613695	Hydraulic Control Valve (☞Figure 8-31)	1
1	**c** 1611835	Hydraulic Control Valve (☞Figure 8-31)	1
2	292509	Capscrew	11
3	320157	Washer	11
4	1570360	Gasket	1
5	233693	Fitting	1
5	16485	O-Ring	1
6	**a** 1624509	Transmission Housing	1
6	**c** 1624508	Transmission Housing	1
7	1547447	Oil Seal	1
8	1550578	Yoke (24 Tooth)	1
9	18595	Capscrew	1
10	15158	Washer	1
11	15135	Washer	1
12	1595421	Clutch Pack (Counter/Reverse) (☞Figure 8-28)	1
13	1595420	Clutch Pack (Input/Forward) (☞Figure 8-25)	1
14	1541231	Sensor (Input Speed, TISS)	1
15	1541232	Sensor (Output Speed, TOSS)	1
16	292680	Washer	2
17	292500	Capscrew	2
18	86229	Seal	1
19	43208	Ball Bearing	1
20	1585745	Gear (Output)	1
21	1516851	Spacer	1
22	1516849	Nut	1
23	58916	Snap Ring	1
24	44308	Ball Bearing	1
25	1550575	Housing	1
26	1550573	Gasket (Torque Converter Housing to Cover)	1
27	~~388049~~		
	292682	Lockwasher	24
28	292516	Capscrew	4
29	334560	Magnet	1
30	16682	O-Ring	1
31	1494750	Chain (Drive Pump)	1
32	1544218	Sealing Ring	1
33	44310	Ball Bearing	1
34	303100	Roll Pin	4
35	1553270	Snubber	2
36	1487067	Fitting	1
36	252729	O-Ring	1
36	16485	O-Ring	1
37	1553475	O-Ring	1
38	233683	Fitting	1
38	16487	O-Ring	1
39	303150	Dowel	4
40	235691	Fitting	7

©2013 HYSTER COMPANY

TRANSMISSION

SINGLE SPEED, THREE PIECE HOUSING, WET AND DRY BRAKE – SHEET 1 0F 2

(→ S/N L177B10029D (DRY BRAKE)) (→ S/N L177B15745E (WET BRAKE))

ITEM	PART NO.	DESCRIPTION	QTY
41	**a** 1612918	Spring (Regulator)	1
42	**c** 1612917	Spring (Regulator)	1
43	1612916	Spool (Regulator)	1
44	1359458	Capscrew	16
45	1553403	O-Ring	4
46	1380849	Edge Protector	2
46	4013363	Trim (Alternate Part)	2
47	1569768	Shield	1
48	1527879	Capscrew	1
49	1550576	Gasket (Cover to Transmission Housing)	1
	b 1624414	Baffle	1

FOOTNOTES:

a Dry Brakes
b Not Illustrated
c Wet Brakes

©2013 HYSTER COMPANY

NOTES

©2013 HYSTER COMPANY

TRANSMISSION (FIGURE 8-15)

SINGLE SPEED, THREE PIECE HOUSING, WET AND DRY BRAKE — SHEET 2 OF 2

(→ S/N L177B10029D (DRY BRAKE)) (→ L177B15745E WET BRAKE)

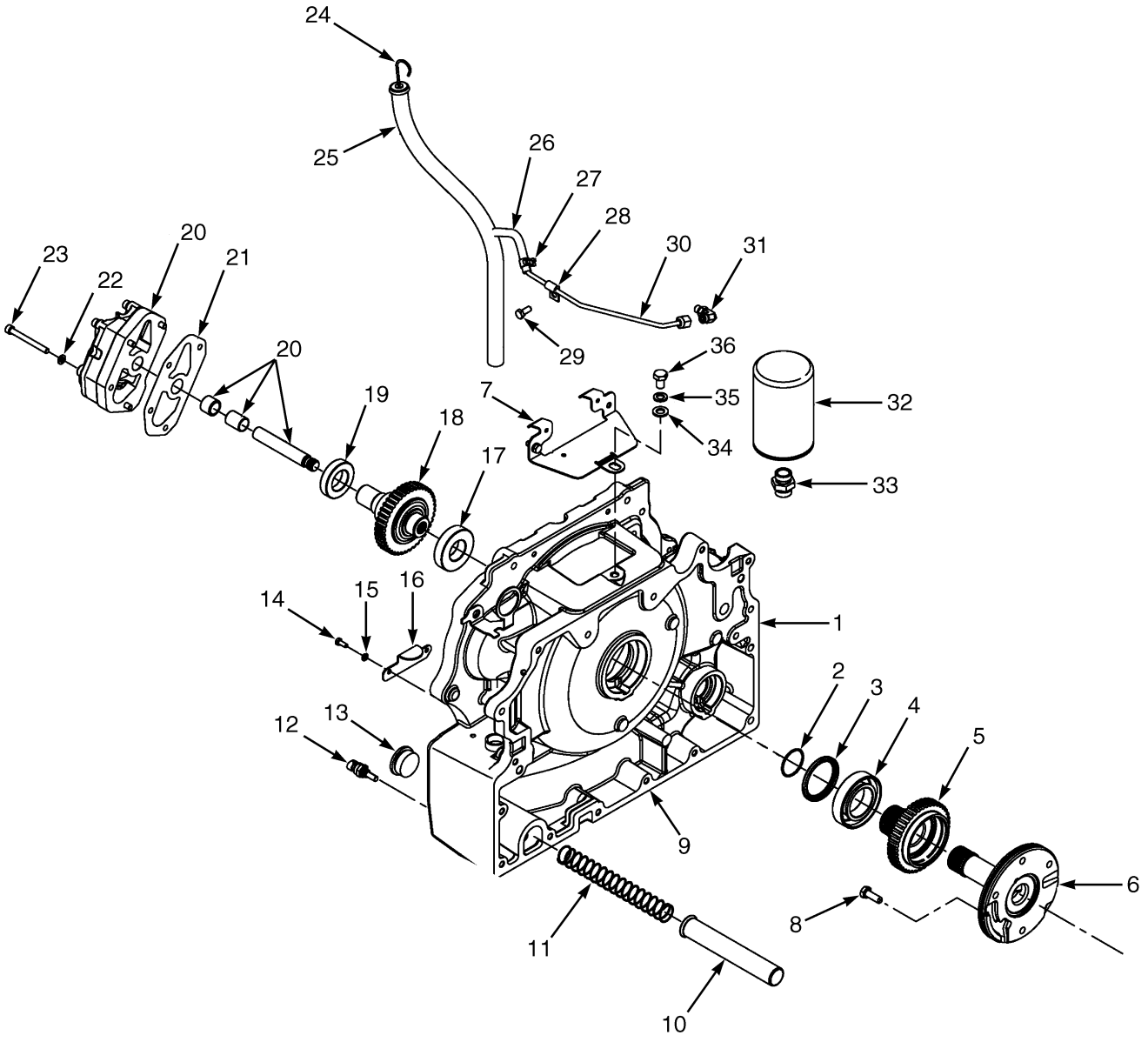

HP240494

©2013 HYSTER COMPANY

TRANSMISSION

SINGLE SPEED, THREE PIECE HOUSING, WET AND DRY BRAKE – SHEET 2 OF 2

(→ S/N L177B10029D (DRY BRAKE)) (→ L177B15745E WET BRAKE)

ITEM	PART NO.	DESCRIPTION	QTY
	1550565	Transmission Assy (Single Speed, Dry Brake)	1
	1616478	Transmission Assy (Single Speed Wet Brake)	1
1	1550566	Converter Housing (Torque Convertor)	1
2	145481	O-Ring	1
3	1544217	Oil Seal (Torque Converter)	1
4	1544216	Bearing	1
5	1541556	Sprocket (Driving)	1
6	1550585	Stator	1
6	1516826	Bushing	1
7	1566169	Cover	1
8	136985	Capscrew	4
9	1550573	Gasket (Torque Converter Housing to Cover)	1
10	1550571	Screen (Suction)	1
11	1550572	Spring (Suction Screen)	1
12	1515654	Temperature Sensor	1
13	188210	Fitting	1
13	16983	O-Ring	1
14	292500	Capscrew	2
15	292680	Washer	2
16	1550567	Cover Plate (Torque Convertor Housing)	1
17	43207	Ball Bearing	1
18	1550574	Sprocket (Driven)	1
19	44307	Ball Bearing	1
20	**a** 1529894	Pump (20.5 CC/REV)	1
20	**b** 1552853	Pump (27.0 CC/REV)	1
20	1623836	O-Ring	1
21	1653815	Gasket (Charge Pump)	1
22	292681	Lockwasher	6
23	296022	Capscrew	4
24	1516818	Dipstick	1
25	1566166	Dipstick Tube	1
26	169690	Hose	1
27	1569616	Hose Clamp	2
28	16448	Fitting	1
29	136681	Capscrew	3
30	1566168	Tube	1
31	1487063	Fitting	1
31	16483	O-Ring	1
32	2075558	Transmission Filter	1
33	1558515	Fitting	1
34	320161	Washer	1
35	292683	Lockwasher	1
36	292526	Capscrew	1

FOOTNOTES:

a Dry Brakes

b Wet Brakes

©2013 HYSTER COMPANY

TRANSMISSION (FIGURE 8-16)

SINGLE SPEED, THREE PIECE HOUSING, DRY BRAKE — SHEET 1 OF 2

(S/N L177B10030D ↔ S/N L177B15791E)

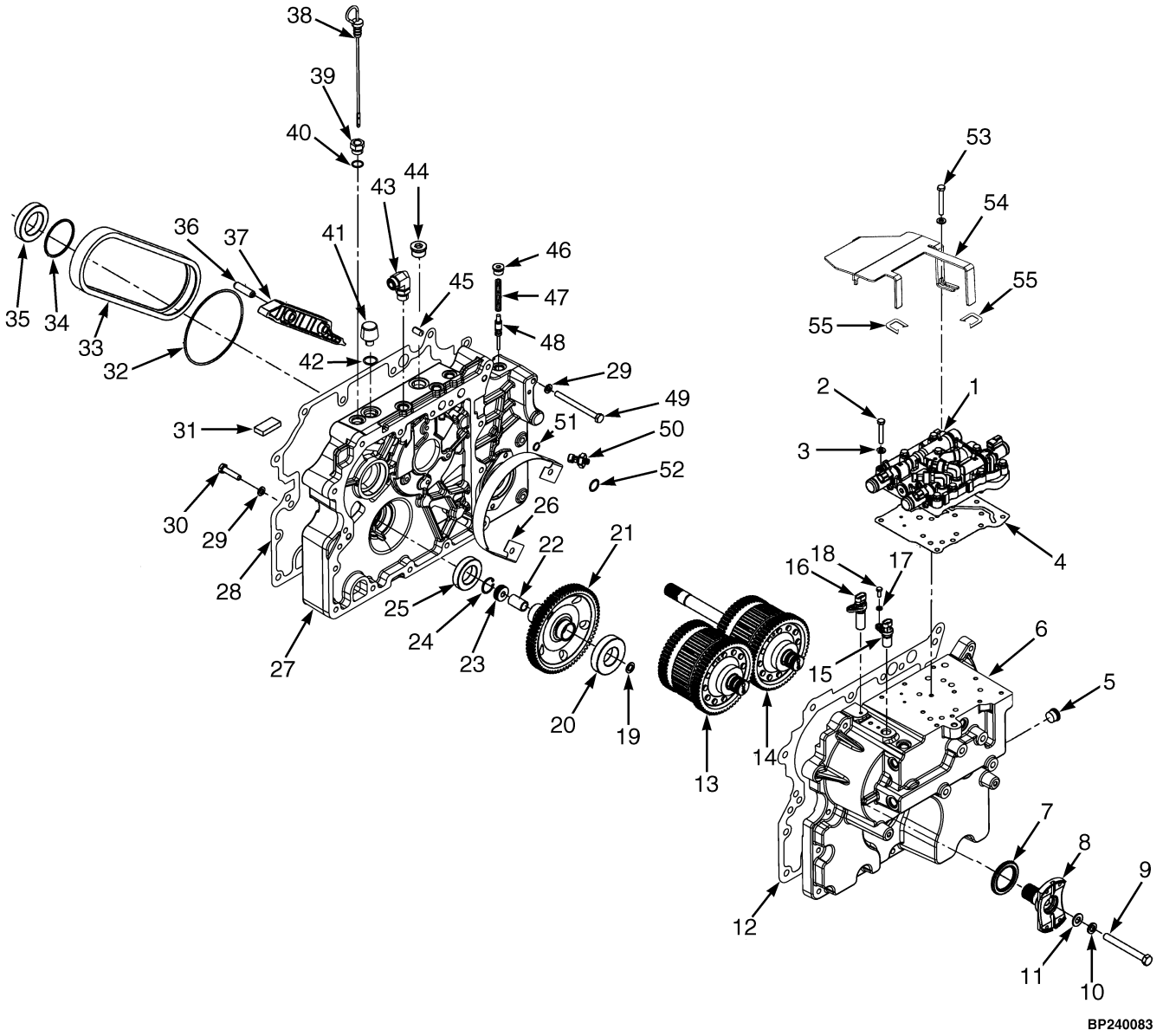

©2013 HYSTER COMPANY

TRANSMISSION

SINGLE SPEED, THREE PIECE HOUSING, DRY BRAKE – SHEET 1 OF 2
(S/N L177B10030D ↔ S/N L177B15791E)

ITEM	PART NO.	DESCRIPTION	QTY
	1632260	Transmission Assy (Single Speed Dry Brake)	1
1	1613695	Hydraulic Control Valve (☞Figure 8-31)	1
2	292509	Capscrew	11
3	320157	Washer	11
4	1570360	Gasket	1
5	233693	Fitting	1
5	16485	O-Ring	1
6	1624509	Transmission Housing	1
7	1547447	Oil Seal	1
8	1550578	Yoke (24 Teeth)	1
9	18595	Capscrew	1
10	15158	Washer	1
11	15135	Washer	1
12	1550576	Gasket (Cover to Transmission Housing)	1
13	1595421	Clutch Pack (Counter/Reverse) (☞Figure 8-28)	1
14	1595420	Clutch Pack (Input/Forward) (☞Figure 8-26)	1
15	1541231	Sensor (Input Speed, TISS)	1
16	1541232	Sensor (Output Speed, TOSS)	1
17	292680	Washer	2
18	292500	Capscrew	2
19	86229	Seal	1
20	43208	Ball Bearing	1
21	1585745	Gear (Output)	1
22	1516851	Spacer	1
23	1516849	Nut	1
24	58916	Snap Ring	1
25	44308	Ball Bearing	1
26	1624415	Cover (Pump Drive)	1
27	1624503	Housing (Front Cover)	1
28	1550573	Gasket (Torque Converter Housing to Cover)	1
29	~~388049~~		
	292682	Lockwasher	20
30	292516	Capscrew	4
31	334560	Magnet	1
32	16682	O-Ring	1
33	1494750	Chain (Drive Pump)	1
34	1544218	Sealing Ring	1
35	44310	Ball Bearing	1
36	303100	Roll Pin	4
37	1553270	Snubber	2
38	1624401	Dipstick	1
39	1624405	Fitting	1
40	16485	O-Ring	1
41	1632741	Breather	1
42	16486	O-Ring	1
43	1634651	Fitting	1
44	222444	Fitting	1
44	16486	O-Ring	1
45	303150	Dowel	4

©2013 HYSTER COMPANY

TRANSMISSION

SINGLE SPEED, THREE PIECE HOUSING, DRY BRAKE – SHEET 1 OF 2
(S/N L177B10030D ↔ S/N L177B15791E)

ITEM	PART NO.	DESCRIPTION	QTY
46	235691	Fitting	1
46	16484	O-Ring	1
47	1612918	Spring (Regulator)	1
48	1612916	Spool (Regulator)	1
49	1359458	Capscrew	16
50	2070263	Pressure Transducer	1
51	1553475	O-Ring	1
52	1553403	O-Ring	4
53	1527879	Capscrew	1
54	1569768	Shield	1
55	1380849	Edge Protector	2
55	4013363	Trim (Alternate Part)	2

©2013 HYSTER COMPANY

NOTES

©2013 HYSTER COMPANY

TRANSMISSION (FIGURE 8-17)

SINGLE SPEED, THREE PIECE HOUSING, DRY BRAKE — SHEET 2 OF 2

(S/N L177B10030D ↔ S/N L177B15791E)

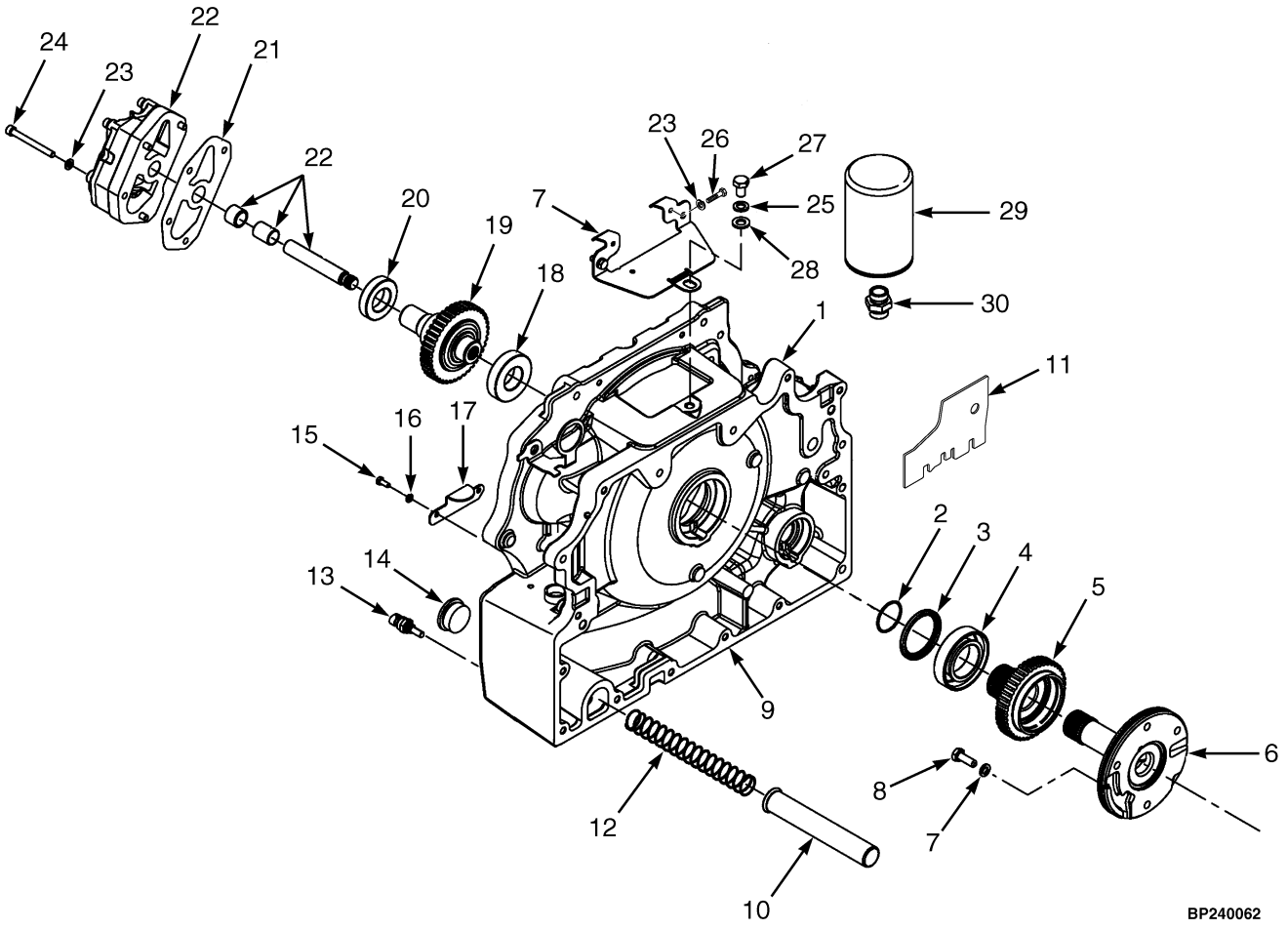

©2013 HYSTER COMPANY

TRANSMISSION

SINGLE SPEED, THREE PIECE HOUSING, DRY BRAKE – SHEET 2 OF 2

(S/N L177B10030D ↔ S/N L177B15791E)

ITEM	PART NO.	DESCRIPTION	QTY
	1632260	Transmission Assy (Single Speed Dry Brake)	1
1	1624504	Converter Housing (Torque Convertor)	1
2	145481	O-Ring	1
3	1544217	Oil Seal (Torque Converter)	1
4	1544216	Bearing	1
5	1541556	Sprocket (Driving)	1
6	1550585	Stator	1
6	1516826	Bushing	1
6	. . . . .	Stator	1
7	1566169	Cover	1
8	136985	Capscrew	4
9	1636640	Gasket (Torque Convertor Housing To Cover)	1
10	1550571	Screen (Suction)	1
11	1624414	Baffle	1
12	1550572	Spring (Suction Screen)	1
13	1515654	Temperature Sensor	1
14	188210	Fitting	1
15	292500	Capscrew	2
16	292680	Washer	2
17	1550567	Cover Plate (Torque Convertor Housing)	1
18	43207	Ball Bearing	1
19	1550574	Sprocket (Driven)	1
20	44307	Ball Bearing	1
21	1653815	Gasket (Charge Pump)	1
22	1529894	Pump	1
22	1623836	O-Ring	1
23	292681	Lockwasher	7
24	296022	Capscrew	4
25	292683	Lockwasher	1
26	136681	Capscrew	3
27	292526	Capscrew	1
28	320161	Washer	1
29	2075558	Transmission Filter (Transmission)	1
30	1558515	Fitting (Transmission Filter)	1

©2013 HYSTER COMPANY

TRANSMISSION (FIGURE 8-18)

SINGLE SPEED, WET AND DRY BRAKE — SHEET 1 OF 2

(S/N L177B15792E → (T133M0001501, DRY BRAKE)) (S/N L177B15746E → (T134M0001501, WET BRAKE))

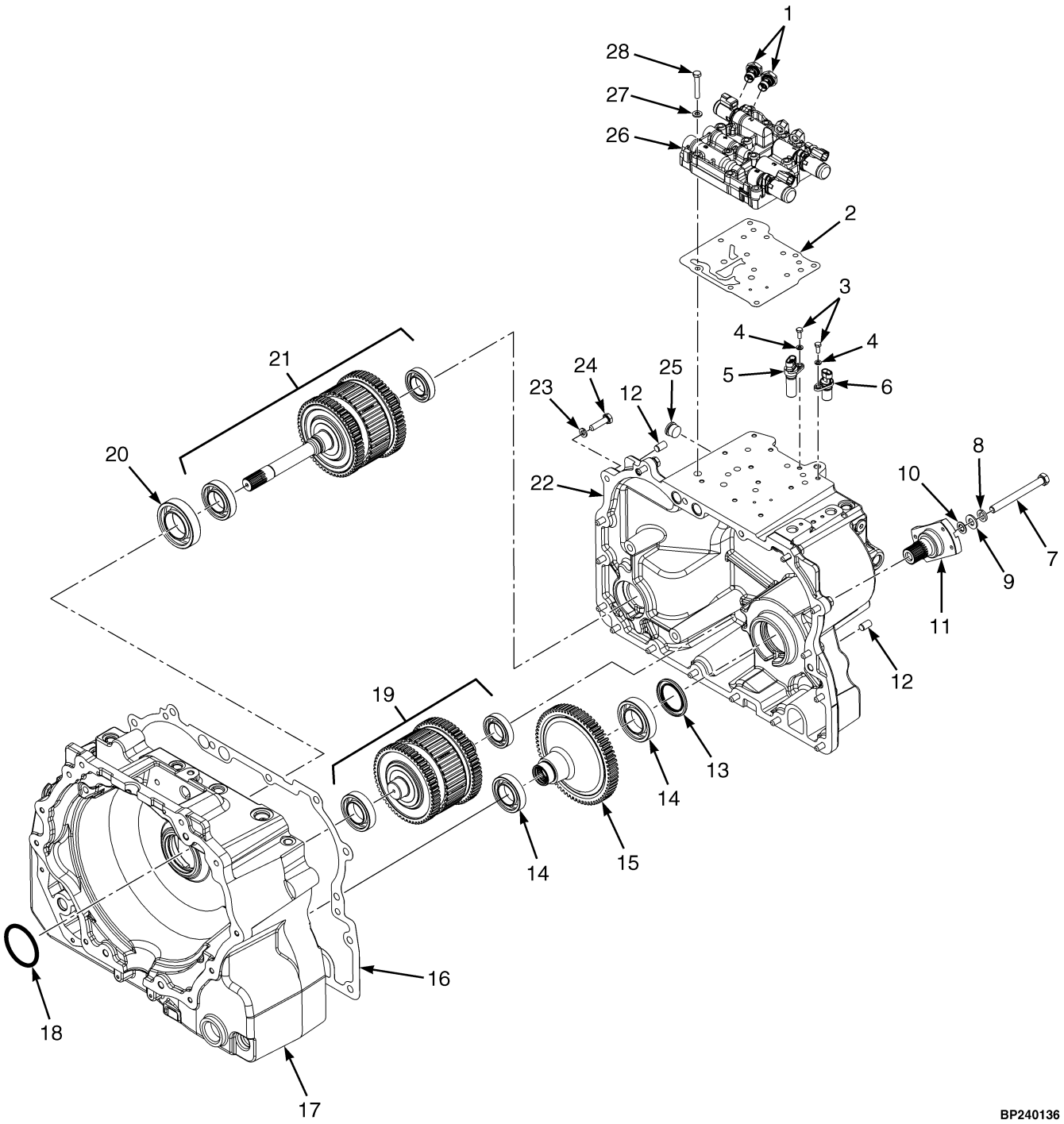

©2013 HYSTER COMPANY

TRANSMISSION

SINGLE SPEED, WET AND DRY BRAKE – SHEET 1 OF 2 (S/N L177B15792E → (T133M0001501, DRY BRAKE)) (S/N L177B15746E → (T134M0001501, WET BRAKE))

ITEM	PART NO.	DESCRIPTION	QTY
	a 1646871	Transmission Assy (Single Speed Dry Brake) (T133)	1
	a 1646872	Transmission Assy (Single Speed Wet Brake) (T134)	1
	b 1703481	Transmission Assy (Single Speed Dry Brake) (Dry Brake)	1
	b 1703482	Transmission Assy (Single Speed) (Wet Brake)	1
1	2070263	Pressure Transducer	2
2	1570360	Gasket	1
3	292500	Capscrew	4
4	292680	Washer	8
5	1541232	Sensor (Output Speed, TOSS)	1
6	1541231	Sensor (Input Speed, TISS)	1
7	1654651	Flange Head Capscrew	1
8	15158	Washer	1
9	15135	Washer	1
10	86229	Seal	1
11	1655880	Yoke	1
12	303150	Dowel	4
13	1547447	Oil Seal	1
14	43208	Ball Bearing	2
15	1638791	Gear (Output)	1
16	1636640	Gasket	1
17	1615602	Converter Housing	1
18	1544217	Oil Seal (Torque Converter)	1
19	2093523	Clutch Pack (Counter/Reverse) (☞Figure 8-29)	1
19	~~1581116~~		
	4025477	Ball Bearing	1
19	43207	Ball Bearing	1
20	1544216	Bearing	1
21	1646880	Clutch Pack (Input/Forward) (☞Figure 8-26)	1
21	~~1581116~~		
	4025477	Ball Bearing	1
21	124603	Ball Bearing	1
22	1615601	Transmission Housing (Dry Brake)	1
22	1629361	Transmission Housing (Wet Brake)	1
23	~~388049~~		
	292682	Lockwasher	25
24	292515	Capscrew	15
25	233693	Fitting	1
25	16485	O-Ring	1
26	1665205	Valve (Low Pressure) (Dry Brake)	1
26	1665204	Valve (High Pressure) (Wet Brake)	1
27	320157	Washer	11
28	292509	Capscrew	11

FOOTNOTES:

a → S/N L177V02742F

b S/N L177V02743F →

©2013 HYSTER COMPANY

TRANSMISSION (FIGURE 8-19)

SINGLE SPEED, WET AND DRY BRAKE — SHEET 2 OF 2 (S/N L177B15792E → (DRY BRAKE)) (S/N L177B15746E → (WET BRAKE))

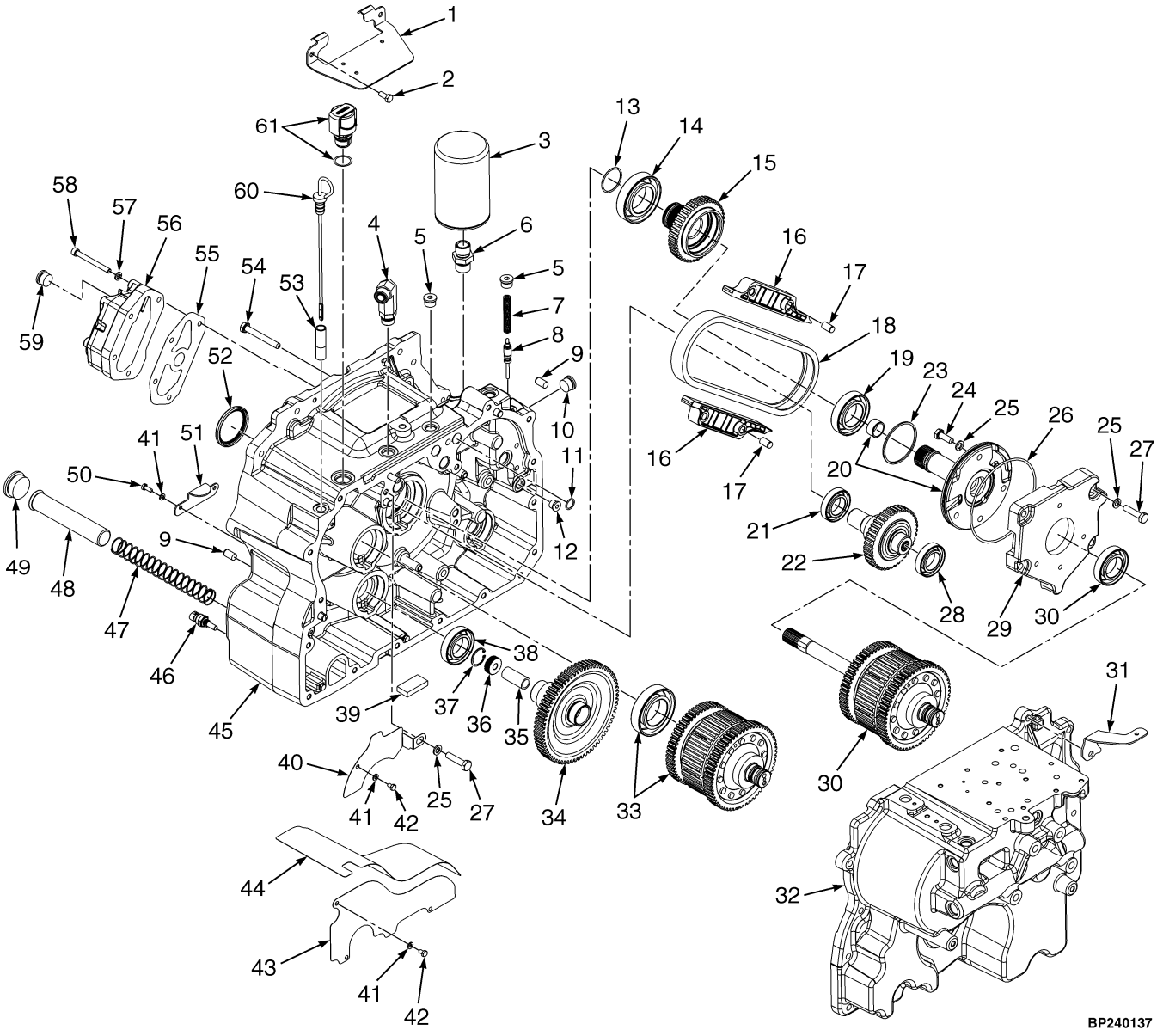

©2013 HYSTER COMPANY

TRANSMISSION

SINGLE SPEED, WET AND DRY BRAKE – SHEET 2 OF 2 (S/N L177B15792E → (DRY BRAKE)) (S/N L177B15746E → (WET BRAKE))

ITEM	PART NO.	DESCRIPTION	QTY
	b 1646871	Transmission Assy (Single Speed Dry Brake) (T133)	1
	b 1646872	Transmission Assy (Single Speed Wet Brake) (T134)	1
	c 1703481	Transmission Assy (Single Speed Dry Brake) (Dry Brake)	1
	c 1703482	Transmission Assy (Single Speed) (Wet Brake)	1
1	1622888	Cover (Converter Housing)	1
1	1699141	Cover Plate (Converter Housing) (Alternate Part)	1
2	136681	Capscrew	2
3	2075558	Transmission Filter	1
3	4020588	Transmission Filter (Alternate Part)	1
4	1487067	Fitting	1
4	252729	O-Ring	1
4	16485	O-Ring	1
5	235691	Fitting	8
5	16484	O-Ring	1
6	1558515	Fitting	1
7	**a** 1612917	Spring (System Regulator)	1
8	1612916	Spool (System Regulator)	1
9	303150	Dowel	4
10	233693	Fitting	2
10	16485	O-Ring	1
11	1553403	O-Ring	4
12	222443	Fitting	1
12	16483	O-Ring	1
13	145481	O-Ring	1
14	1544216	Bearing	1
15	1541556	Sprocket (Driving) (Driving)	1
16	1615804	Snubber	2
17	303100	Roll Pin	4
18	1494750	Chain (Drive Pump)	1
19	44310	Ball Bearing	1
20	1550585	Stator (Support Assy)	1
20	1516826	Bushing	1
21	44307	Ball Bearing	1
22	1550574	Sprocket (Driven)	1
23	1544218	Sealing Ring	1
24	136985	Capscrew	4
25	~~388049~~		
	292682	Lockwasher	4
26	16682	O-Ring	1
27	292616	Capscrew (7 in.)	1
28	43207	Ball Bearing	1
29	1615603	Carrier	1
30	1646880	Clutch Pack (Input/Forward) (☞Figure 8-26)	1
30	124603	Ball Bearing	1
31	1652575	Bracket	1
32	1615601	Transmission Housing (Dry Brake)	1
32	1629361	Transmission Housing (Wet Brake)	1
33	2093523	Clutch Pack (Counter/Reverse) (☞Figure 8-29)	1
33	43207	Ball Bearing	1

©2013 HYSTER COMPANY

TRANSMISSION

SINGLE SPEED, WET AND DRY BRAKE – SHEET 2 OF 2 (S/N L177B15792E → (DRY BRAKE)) (S/N L177B15746E → (WET BRAKE))

ITEM	PART NO.	DESCRIPTION	QTY
34	1638791	Gear (Output)	1
35	1636645	Spacer	1
36	1516849	Nut	1
37	58916	Snap Ring	1
38	44308	Ball Bearing	1
39	334560	Magnet	1
40	1624408	Shield (Upper) (Oil)	1
41	292680	Washer	8
42	148962	Capscrew	4
43	1627453	Shield (Lower) (Oil)	1
44	1622887	Baffle	1
45	1615602	Converter Housing	1
46	1515654	Temperature Sensor	1
47	1550572	Spring (Suction Screen)	1
48	1627465	Screen (Suction)	1
49	188210	Fitting	1
49	16983	O-Ring	1
50	292500	Capscrew	4
51	1550567	Cover Plate	1
52	1544217	Oil Seal (Torque Converter)	1
53	1624406	Dipstick Tube	1
54	292522	Capscrew	2
55	1653815	Gasket (Charge Pump)	1
56	1529894	Pump (Charge, Dry Brake)	1
56	1623836	O-Ring	1
56	1552853	Pump (Charge, Wet Brake)	1
56	1623836	O-Ring	1
57	292681	Lockwasher	6
58	296022	Capscrew	4
59	235691	Fitting	1
59	16484	O-Ring	1
60	1624401	Dipstick	1
61	1632741	Breather	1
61	16486	O-Ring	1

FOOTNOTES:

a Used on wet brake application only.
b → S/N L177V03742F
c S/N L177V02743F →

©2013 HYSTER COMPANY

NOTES

©2013 HYSTER COMPANY

TRANSMISSION HOUSING AND ASSEMBLY (FIGURE 8-20)

SINGLE SPEED (S/N T141M001501 →)

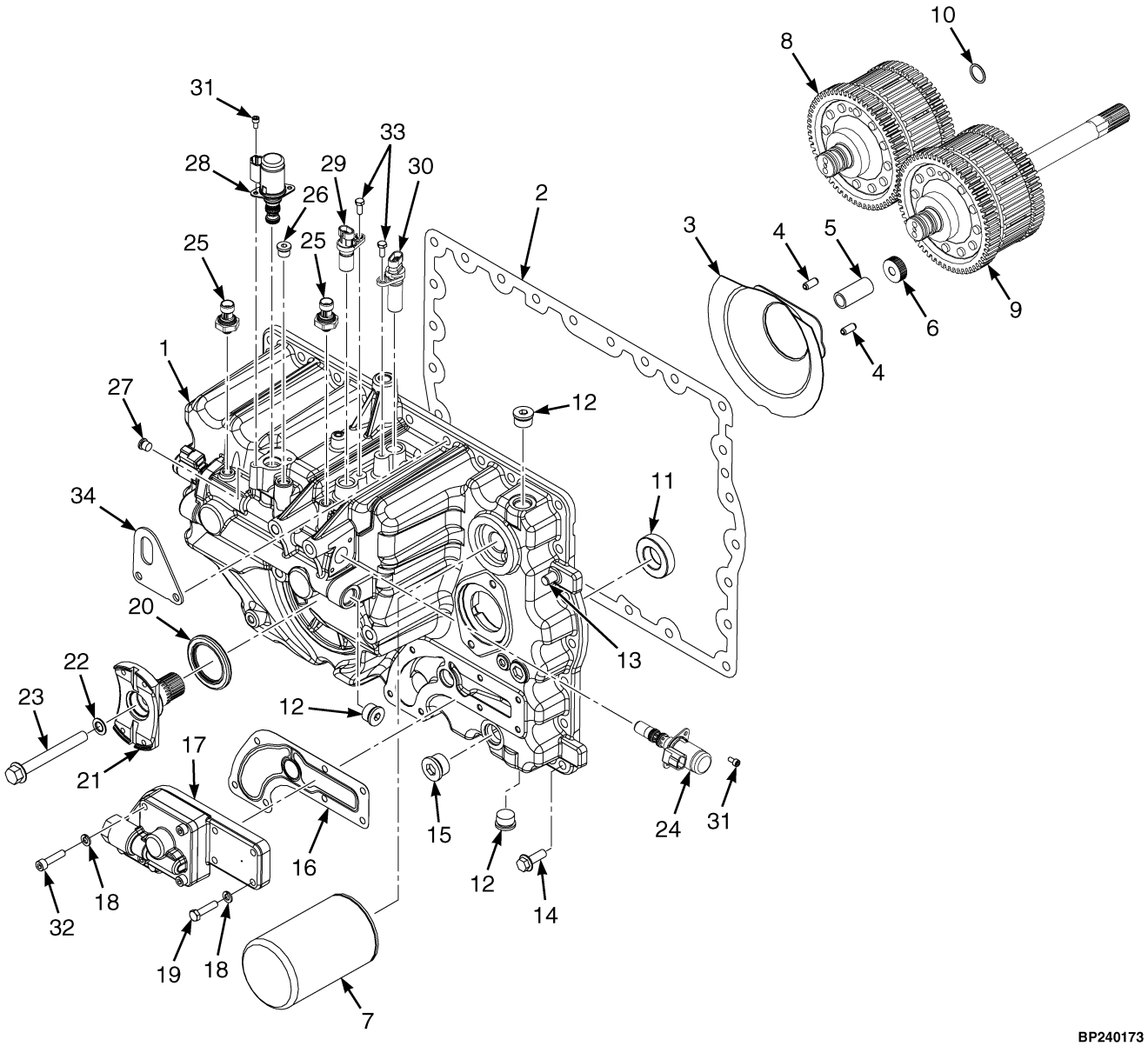

©2013 HYSTER COMPANY

TRANSMISSION HOUSING AND ASSEMBLY

SINGLE SPEED (S/N T141M001501 →)

ITEM	PART NO.	DESCRIPTION	QTY
	b 1675651	Transmission Assy	1
	c 4043337	Transmission Assy	1
1	1675648	Transmission Housing	1
2	1702335	Gasket	1
3	1688435	Cover	1
4	302472	Roll Pin	2
5	1636645	Spacer	1
6	1516849	Nut	1
7	2089366	Filter	1
7	4020588	Transmission Filter (Alternate Part)	1
8	1676324	Clutch Pack (Reverse) (☞Figure 8-30)	1
9	1676323	Clutch Pack (Forward) (☞Figure 8-27)	1
10	1553403	O-Ring	1
11	44306	Ball Bearing	2
12	233693	Fitting	3
13	303150	Dowel	2
14	1527884	Capscrew	26
15	222444	Fitting	1
16	1702336	Gasket	1
17	**b** ~~2102764~~		
	4606846	Charge Pump	1
17	**c** 4614678	Charge Pump	1
18	292681	Lockwasher	9
19	293615	Capscrew	7
20	1547447	Oil Seal	1
21	1655880	Yoke	1
22	86229	Seal	1
23	1654651	Flange Head Capscrew	1
24	1660500	Solenoid Valve	2
25	2070263	Pressure Transducer	2
26	222443	Fitting	1
27	222442	Fitting	1
28	1520660	Solenoid (Transmisison Enable)	1
29	1541231	Sensor (Input Speed, TISS)	1
30	1541232	Sensor (Output Speed, TOSS)	1
	a ~~384279~~		
	293741	Capscrew	6
32	293622	Capscrew	3
33	292500	Capscrew	3
34	4025106	Bracket (Lifting Eye)	1
	a 145481	O-Ring	1

FOOTNOTES:

a Not Illustrated
b → PENDING PER ECN 15417601
c PENDING PER ECN 15417601 →

©2013 HYSTER COMPANY

TORQUE CONVERTER HOUSING AND ATTACHING PARTS (FIGURE 8-21)

SINGLE SPEED (S/N T141M001501 →)

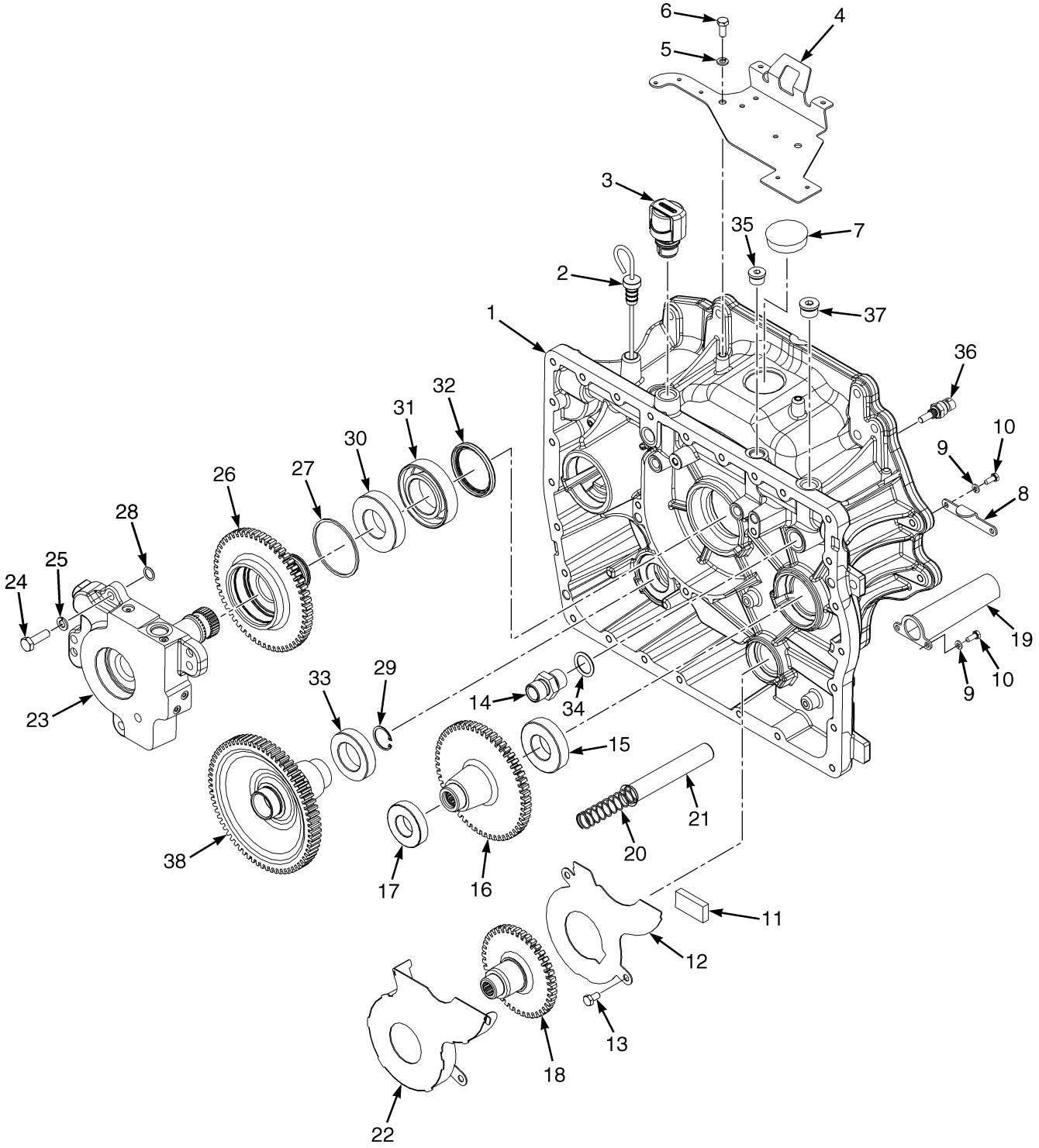

BP240174

©2013 HYSTER COMPANY

TORQUE CONVERTER HOUSING AND ATTACHING PARTS

SINGLE SPEED (S/N T141M001501 →)

ITEM	PART NO.	DESCRIPTION	QTY
	a 1675651	Transmission Assy	1
	b 4043337	Transmission Assy	1
1	1675649	Converter Housing	1
2	1624401	Dipstick	1
3	1632741	Breather	1
4	~~1684027~~		
	4026774	Cover (Converter Housing)	1
5	292681	Lockwasher	2
6	136681	Capscrew	2
7	1703644	Plug	1
8	1687847	Cover Plate	1
9	292680	Washer	3
10	292500	Capscrew	3
11	334560	Magnet	1
12	1676519	Cover	1
13	287851	Capscrew	2
14	1558515	Fitting	1
15	43207	Ball Bearing	1
16	4006034	Drive Gear	1
17	44307	Ball Bearing	1
18	4006035	Drive Gear	1
19	1702520	Cover	1
20	334450	Screen	1
21	1688598	Spring	1
22	1686782	Cover	1
23	1675647	Housing	1
24	287860	Capscrew	4
25	~~388049~~		
	292682	Lockwasher	4
26	4006033	Drive Gear	1
27	1544218	Sealing Ring	1
28	1553475	O-Ring	2
29	58916	Snap Ring	1
30	43208	Ball Bearing	2
31	1544216	Bearing	1
32	1544217	Oil Seal (Torque Converter)	1
33	44308	Ball Bearing	1
34	280157	O-Ring AS568A-120	1
35	235691	Fitting	1
36	1515654	Temperature Sensor	1
37	233693	Fitting	3
38	1684389	Transmission Gear	1

FOOTNOTES:

a → PENDING PER ECN 15417601

b PENDING PER ECN 15417601 →

©2013 HYSTER COMPANY

TRANSMISSION HOUSING AND ASSEMBLY (FIGURE 8-22)

SINGLE SPEED — ALUMINUM CHAIN DRIVE (2/2011 →)

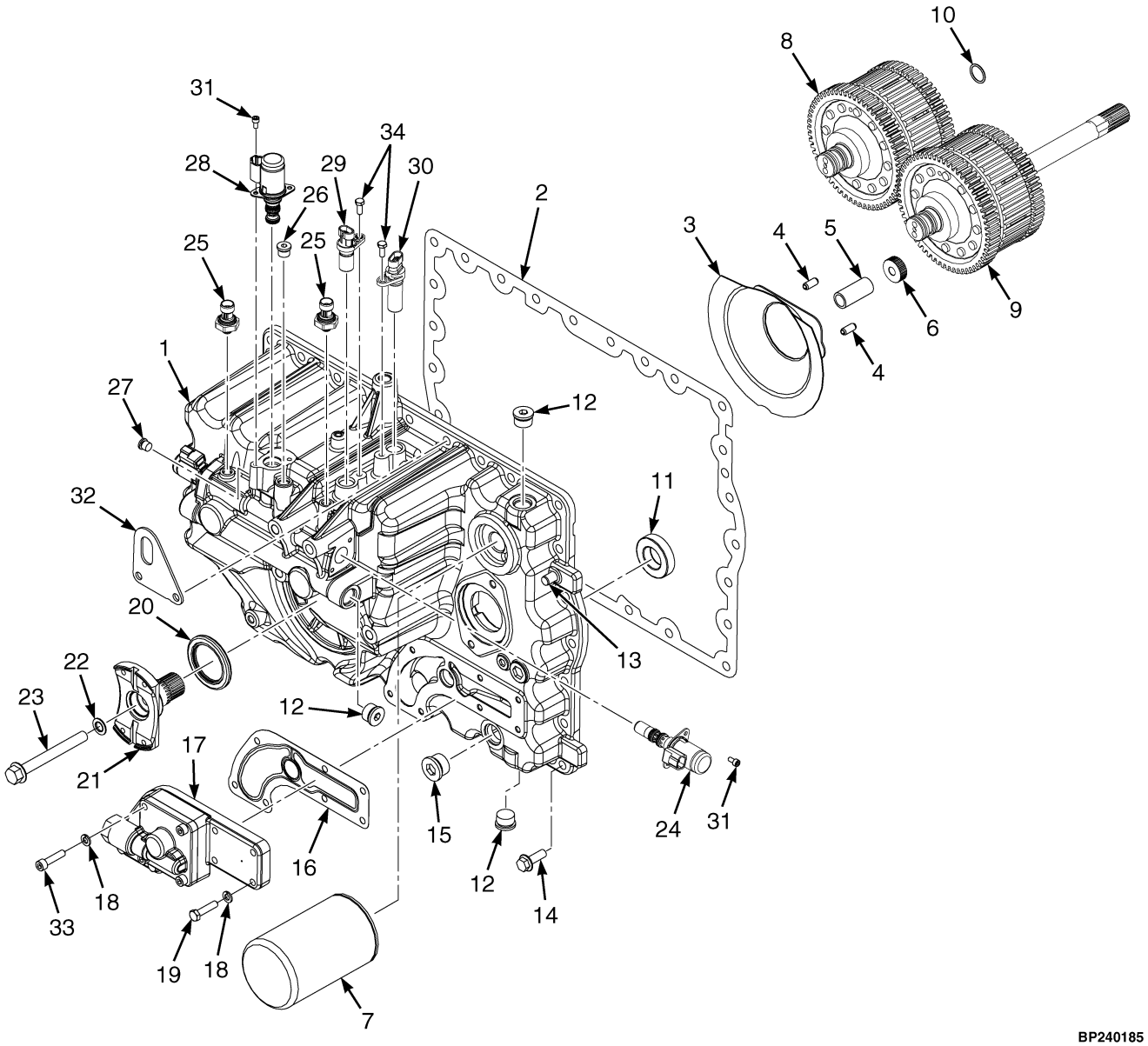

©2013 HYSTER COMPANY

TRANSMISSION HOUSING AND ASSEMBLY

SINGLE SPEED – ALUMINUM CHAIN DRIVE (2/2011 →)

ITEM	PART NO.	DESCRIPTION	QTY
	b 4020056	Transmission Assy	1
	c 4043334	Transmission Assy	1
1	4025209	Transmission Housing	1
2	1702335	Gasket	1
3	1688435	Cover	1
4	173056	Roll Pin	2
5	1636645	Spacer	1
6	1516849	Nut	1
7	4020588	Transmission Filter	1
8	1676324	Clutch Pack (Reverse) (☞Figure 8-30)	1
9	1676323	Clutch Pack (Forward) (☞Figure 8-27)	1
10	118361	O-Ring	1
11	44306	Ball Bearing	2
12	233693	Fitting	3
13	303150	Dowel	2
14	1527884	Capscrew	26
15	222444	Fitting	1
15	16486	O-Ring	1
16	1702336	Gasket	1
17	**b** ~~2102764~~		
	4606846	Charge Pump	1
17	**c** 4614678	Charge Pump	1
18	292681	Lockwasher	9
19	293615	Capscrew	4
20	1547447	Oil Seal	1
21	1655880	Yoke	1
22	86229	Seal	1
23	1654651	Flange Head Capscrew	1
24	1660500	Solenoid Valve (Proportional Value)	2
24	~~384279~~		
	293741	Capscrew	4
25	2070263	Pressure Transducer	2
26	222443	Fitting	1
26	16483	O-Ring	1
27	222442	Fitting	1
27	204128	Plug	1
27	16481	O-Ring	1
28	1520660	Solenoid (Transmisison Enable) (Valve)	1
28	~~384279~~		
	293741	Capscrew	2
29	1541231	Sensor (Input Speed, TISS)	1
30	1541232	Sensor (Output Speed, TOSS)	1
31	~~384279~~		
	293741	Capscrew	6
32	4025106	Bracket (Lifting Eye)	1
33	293622	Capscrew	3
34	292500	Capscrew	3
34	**a** 292680	Washer	1
	a 145481	O-Ring	1

©2013 HYSTER COMPANY

FOOTNOTES:

a Not Illustrated
b → PENDING PER ECN 15417601
c PENDING PER ECN 15417601 →

©2013 HYSTER COMPANY

NOTES

©2013 HYSTER COMPANY

TORQUE CONVERTER HOUSING AND ATTACHING PARTS (FIGURE 8-23)

SINGLE SPEED — ALUMINUM CHAIN DRIVE (2/2011 →)

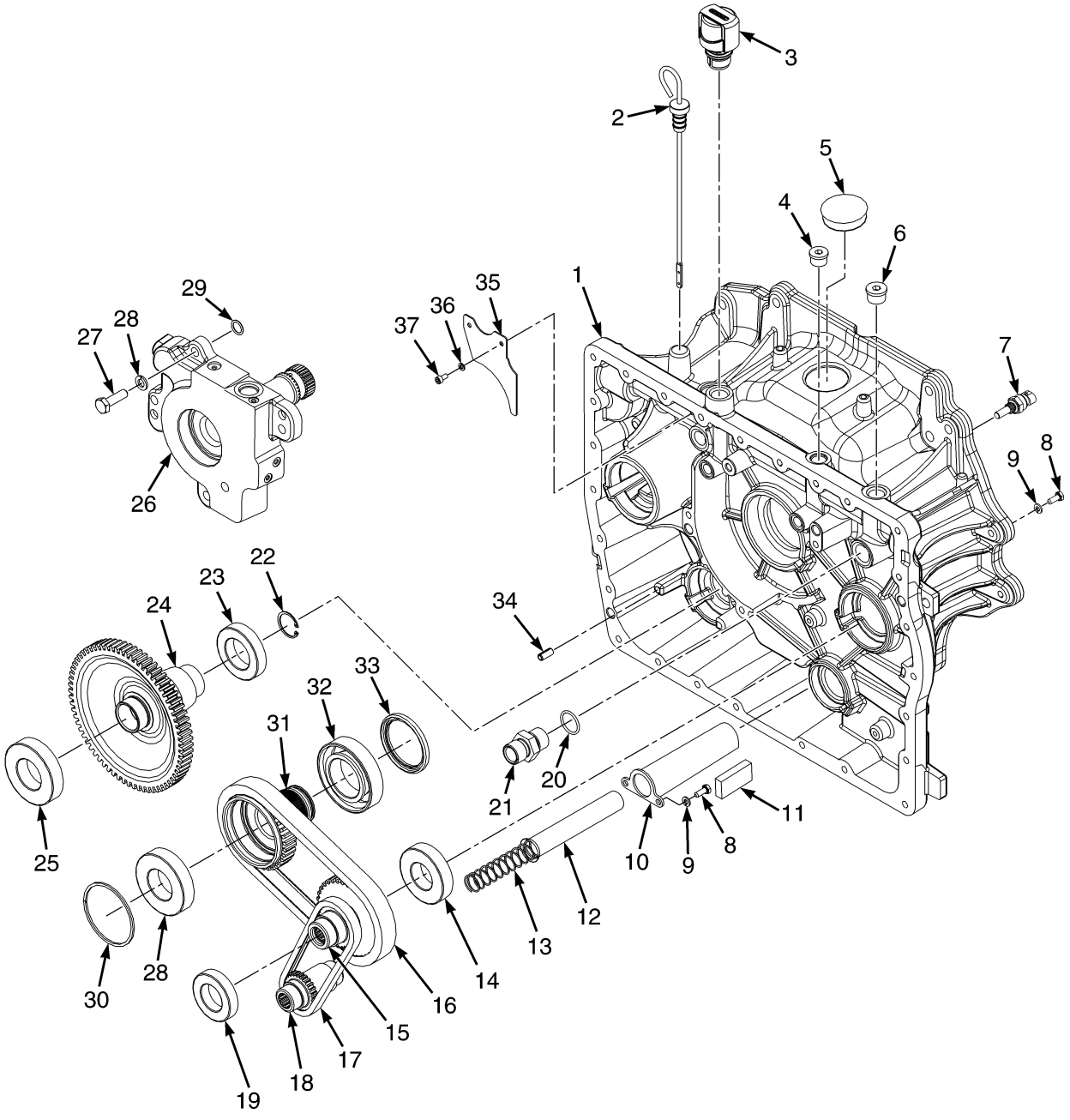

©2013 HYSTER COMPANY

TORQUE CONVERTER HOUSING AND ATTACHING PARTS

SINGLE SPEED – ALUMINUM CHAIN DRIVE (2/2011 →)

ITEM	PART NO.	DESCRIPTION	QTY
	a 4020056	Transmission Assy	1
	b 4043334	Transmission Assy	1
1	4016150	Converter Housing	1
2	1624401	Dipstick	1
3	1632741	Breather	1
3	16486	O-Ring	1
4	235691	Fitting	1
5	1703644	Plug	1
6	233693	Fitting	3
6	16485	O-Ring	1
7	1515654	Temperature Sensor	1
8	292500	Capscrew	2
9	292680	Washer	4
10	1702520	Cover (Suction Screen)	1
11	334560	Magnet	1
12	334450	Screen	1
13	1688598	Spring	1
14	43207	Ball Bearing	1
15	4016152	Sprocket (Driven)	1
16	4020467	Drive Chain	1
17	4020466	Drive Chain	1
18	4010318	Sprocket (Driven)	1
19	44307	Ball Bearing	1
20	39375	O-Ring	1
21	1558515	Fitting	1
22	58916	Snap Ring	1
23	44308	Ball Bearing	1
24	1684389	Transmission Gear (Output)	1
25	43208	Ball Bearing	2
26	1675647	Housing (Stator Support Assembly) (☞Figure 8-24)	1
27	287860	Capscrew	4
28	~~388049~~		
	292682	Lockwasher	4
29	104681	O-Ring	2
30	1544218	Sealing Ring	1
31	4016151	Sprocket (Driving)	1
32	1544216	Bearing	1
33	1544217	Oil Seal (Torque Converter)	1
34	303150	Dowel	2
35	4020311	Plate	1
36	292679	Washer	2
37	~~384279~~		
	293741	Capscrew	2

FOOTNOTES:

a → PENDING PER ECN 15417601

b PENDING PER ECN 15417601 →

©2013 HYSTER COMPANY

STATOR SUPPORT HOUSING (FIGURE 8-24)

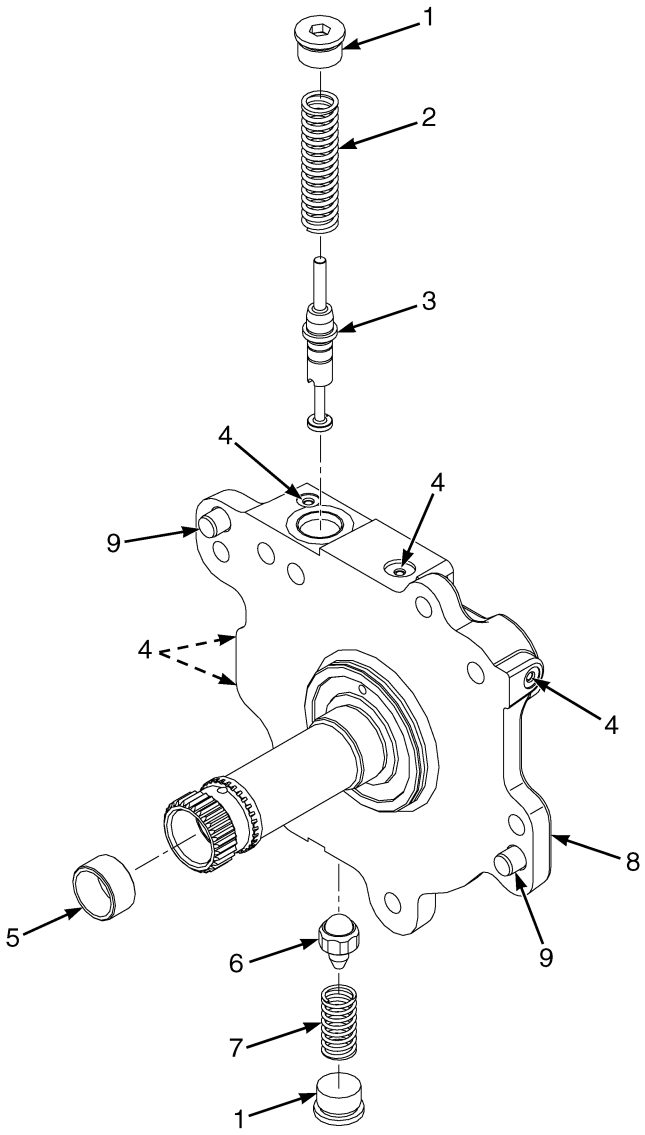

BP240196

©2013 HYSTER COMPANY

STATOR SUPPORT HOUSING

ITEM	PART NO.	DESCRIPTION	QTY
	1675647	Housing Stator Support	1
1	233693	Fitting	2
1	16485	O-Ring	1
2	1676327	Spring	1
3	1676326	Spool	1
4	. . . . .	Plug	5
5	1516826	Bushing	1
6	63081	Ball	1
7	1676328	Spring	1
8	. . . . .	Body	1

©2013 HYSTER COMPANY

INPUT/FORWARD CLUTCH (FIGURE 8-25)
SINGLE SPEED TRANSMISSION (→ S/N L177B134120E)

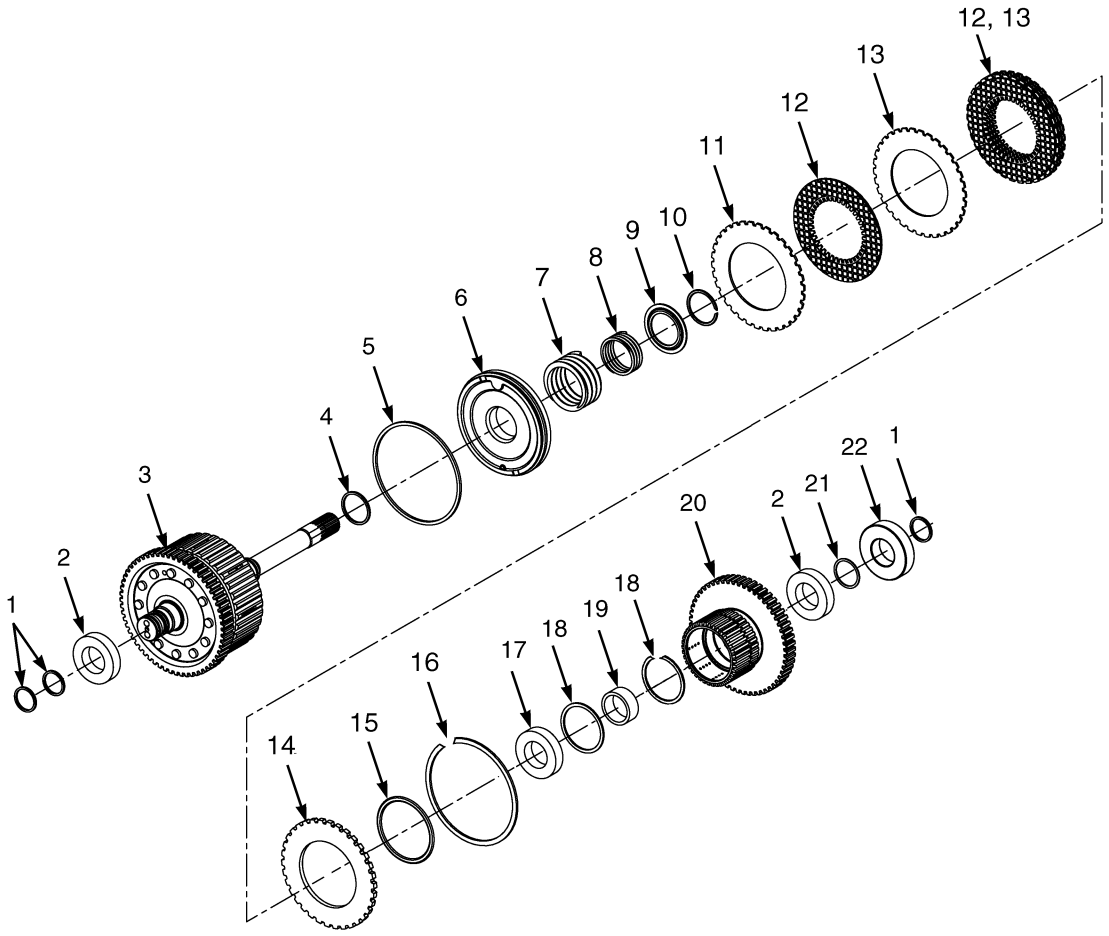

BP240049

©2013 HYSTER COMPANY

INPUT/FORWARD CLUTCH

SINGLE SPEED TRANSMISSION (→ S/N L177B134120E)

ITEM	PART NO.	DESCRIPTION	QTY
	1595420	Clutch Pack (Input/Forward)	1
1	. . . . .	Ring Seal	3
2	~~1581116~~		
	4025477	Ball Bearing	2
3	1581104	Shaft	1
4	. . . . .	Ring Seal	1
5	. . . . .	Ring Seal	1
6	1552525	Piston	1
7	1581108	Spring	1
8	1581098	Spring	1
9	1581099	Spring Guide	1
10	1581100	Snap Ring	1
11	. . . . .	Conical Plate	1
12	. . . . .	Friction Plate	5
13	. . . . .	Separator Plate	4
14	1543094	Pressure Plate (5.8 mm)	1
14	1537449	Pressure Plate (6.0 mm)	1
14	1543096	Pressure Plate (5.6 mm)	1
14	1543097	Pressure Plate (5.4 mm)	1
14	1543098	Pressure Plate (5.2 mm)	1
15	. . . . .	O-Ring	1
16	1537450	Snap Ring	1
17	124603	Ball Bearing	1
18	1581107	Snap Ring	2
19	1581117	Spacer	1
20	1595427	Gear	1
21	1581106	Snap Ring	1
22	43207	Ball Bearing	1
	1595426	Kit-Clutch Pack Plates/Seals	1
	1543102	Kit-Clutch Pack Plates	1
	1595425	Kit-Clutch Pack Seals	1

©2013 HYSTER COMPANY

INPUT/FORWARD CLUTCH (FIGURE 8-26)
SINGLE SPEED TRANSMISSION (S/N L177B13421E →)

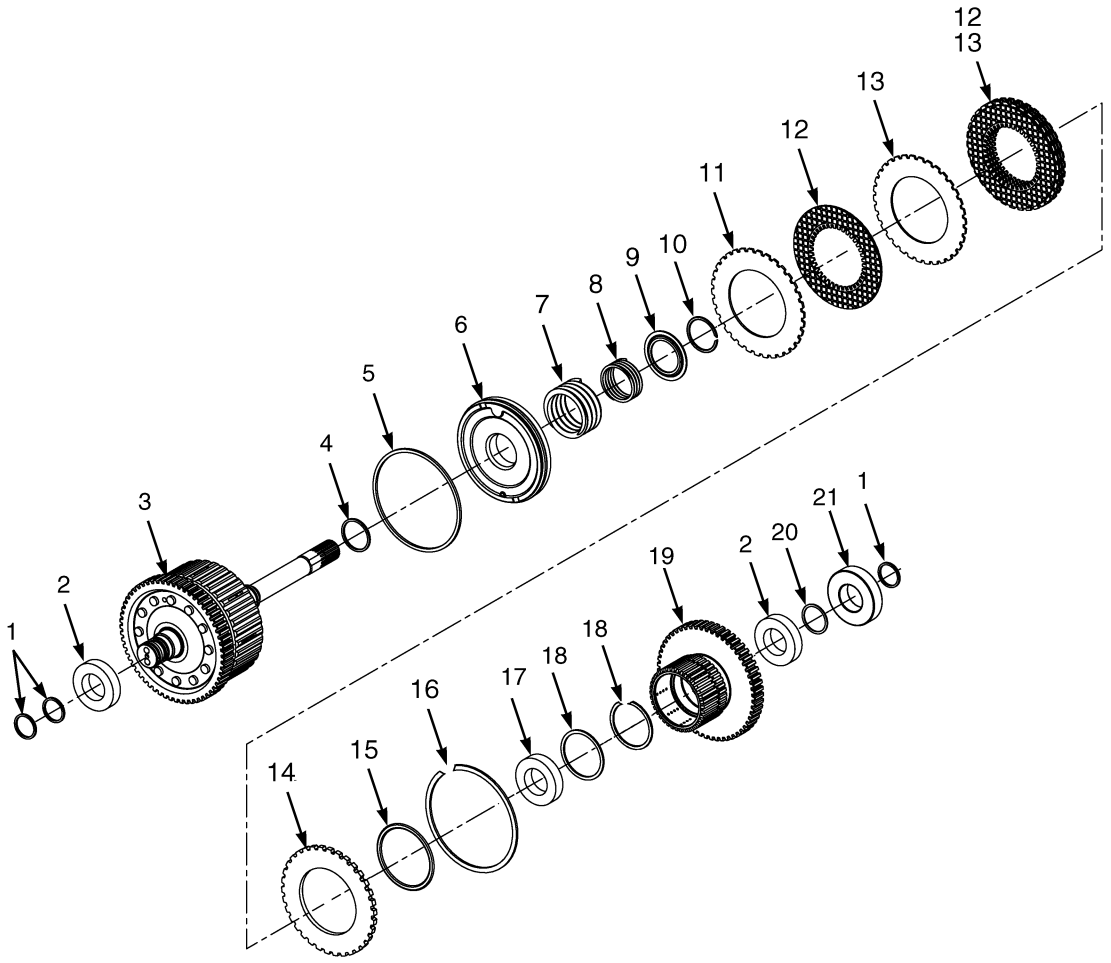

BP240098

©2013 HYSTER COMPANY

INPUT/FORWARD CLUTCH

SINGLE SPEED TRANSMISSION (S/N L177B13421E →)

ITEM	PART NO.	DESCRIPTION	QTY
	1646880	Clutch Pack (Input/Forward)	1
1	. . . . .	Ring Seal	3
2	~~1581116~~		
	4025477	Ball Bearing	2
3	1581104	Shaft	1
4	. . . . .	Ring Seal	1
5	. . . . .	Ring Seal	1
6	2085129	Piston	1
7	1581108	Spring	1
8	1581098	Spring	1
9	1581099	Spring Guide	1
10	1581100	Snap Ring	1
11	. . . . .	Conical Plate	1
12	. . . . .	Friction Plate	5
13	. . . . .	Separator Plate	4
14	1537449	Pressure Plate (6.0 mm)	1
15	. . . . .	O-Ring	1
16	1537450	Snap Ring	1
17	124603	Ball Bearing	1
18	1581107	Snap Ring	2
19	1595427	Gear	1
19	2095533	Clutch Gear (Alternate Part)	1
20	1581106	Snap Ring	1
20	1537459	Snap Ring (Alternate Part)	1
21	43207	Ball Bearing	1
	1543102	Kit-Clutch Pack Plates	1
	1595425	Kit-Clutch Pack Seals	1

©2013 HYSTER COMPANY

INPUT/FORWARD CLUTCH (FIGURE 8-27)

SINGLE SPEED TRANSMISSION (S/N T141M001501 →) (S/N T148M001501 →)

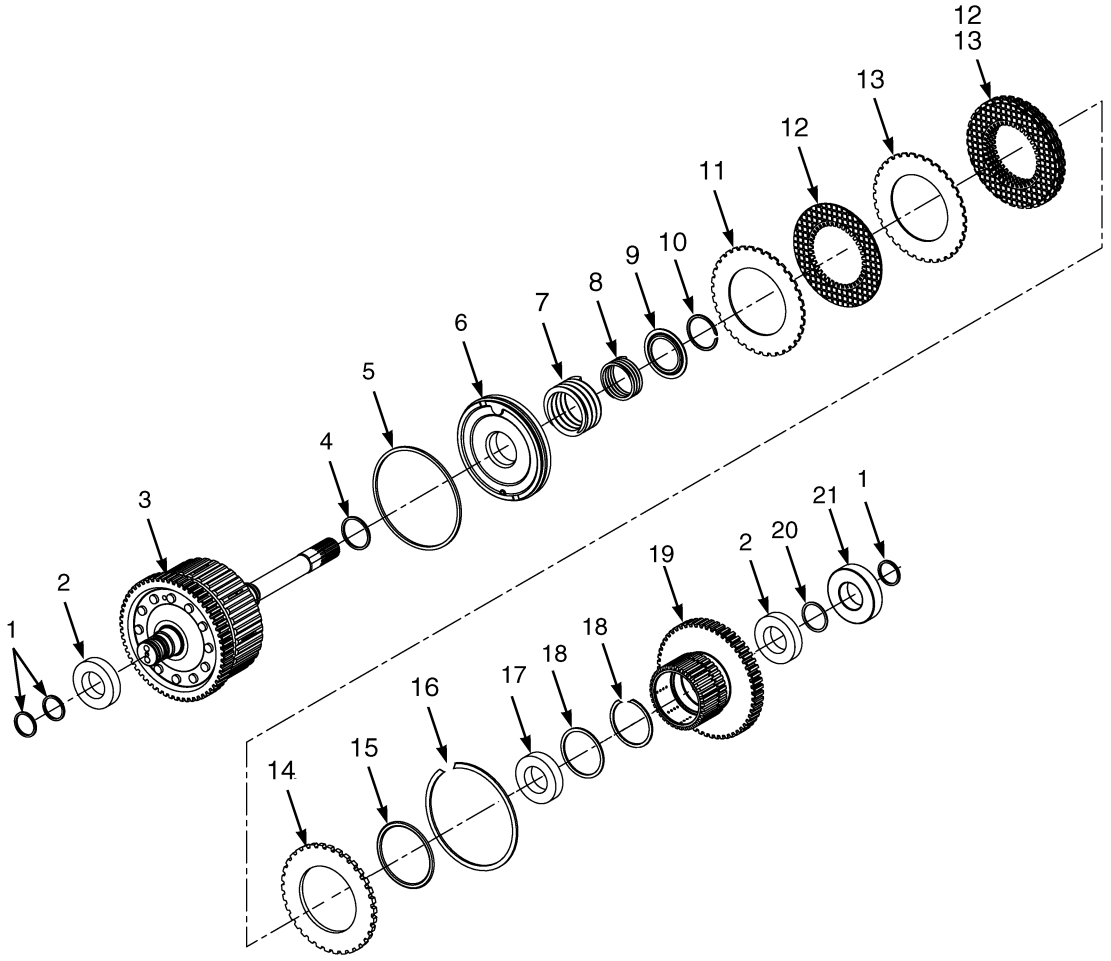

BP240098

©2013 HYSTER COMPANY

INPUT/FORWARD CLUTCH

SINGLE SPEED TRANSMISSION (S/N T141M001501 →) (S/N T148M001501 →)

ITEM	PART NO.	DESCRIPTION	QTY
	1676323	Clutch Pack	1
1	. . . . .	Ring Seal	3
2	~~1581116~~		
	4025477	Ball Bearing	2
3	4053208	Shaft	1
4	. . . . .	Ring Seal	1
5	. . . . .	Ring Seal	1
6	2085129	Piston	1
7	1581108	Spring	1
8	1581098	Spring	1
9	1581099	Spring Guide	1
10	1581100	Snap Ring	1
11	. . . . .	Conical Plate	1
12	. . . . .	Friction Plate	5
13	. . . . .	Separator Plate	4
14	1537449	Pressure Plate (6.0 mm)	1
15	. . . . .	O-Ring	1
16	1537450	Snap Ring	1
17	124603	Ball Bearing	1
18	1581107	Snap Ring	2
19	4007889	Clutch Gear	1
20	1537459	Snap Ring	1
21	43207	Ball Bearing	1
	1543102	Kit-Clutch Pack Plates	1
	1595425	Kit-Clutch Pack Seals	1

©2013 HYSTER COMPANY

COUNTER/REVERSE CLUTCH (FIGURE 8-28)

SINGLE SPEED TRANSMISSION (→ S/N L177B13245E)

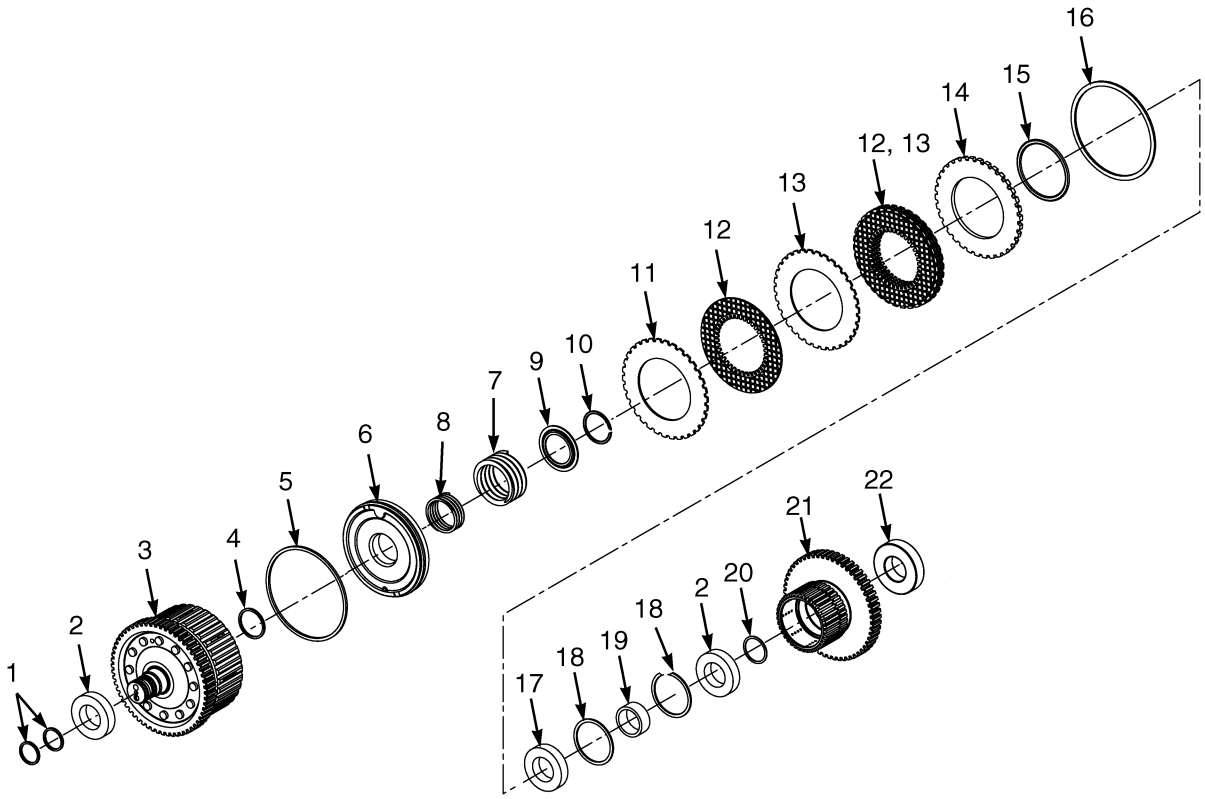

BP240051

©2013 HYSTER COMPANY

COUNTER/REVERSE CLUTCH

SINGLE SPEED TRANSMISSION (→ S/N L177B13245E)

ITEM	PART NO.	DESCRIPTION	QTY
	1595421	Clutch Pack (Counter/Reverse)	1
1	. . . . .	Seal	2
2	~~1581116~~		
	4025477	Ball Bearing	2
3	1581114	Shaft	1
4	. . . . .	Seal	1
5	. . . . .	Seal	1
6	1552525	Piston	1
7	1581108	Spring	1
8	1581098	Spring	1
9	1581099	Spring Guide	1
10	1581100	Snap Ring	1
11	. . . . .	Conical Plate	1
12	. . . . .	Friction Plate	5
13	. . . . .	Separator Plate	4
14	1543094	Pressure Plate (5.8 mm)	1
14	1537449	Pressure Plate (6.0 mm)	1
14	1543096	Pressure Plate (5.6 mm)	1
14	1543097	Pressure Plate (5.4 mm)	1
14	1543098	Pressure Plate (5.2 mm)	1
15	. . . . .	O-Ring	1
16	1537450	Snap Ring	1
17	124603	Ball Bearing	1
18	1581107	Snap Ring	1
19	1581117	Spacer	1
20	1581106	Snap Ring	1
21	1595427	Gear	1
22	43207	Ball Bearing	1
	1595426	Kit-Clutch Pack Plates/Seals	1
	1543102	Kit-Clutch Pack Plates	1
	1595425	Kit-Clutch Pack Seals	1

©2013 HYSTER COMPANY

COUNTER/REVERSE CLUTCH (FIGURE 8-29)

SINGLE SPEED TRANSMISSION (S/N L177B13246E →)

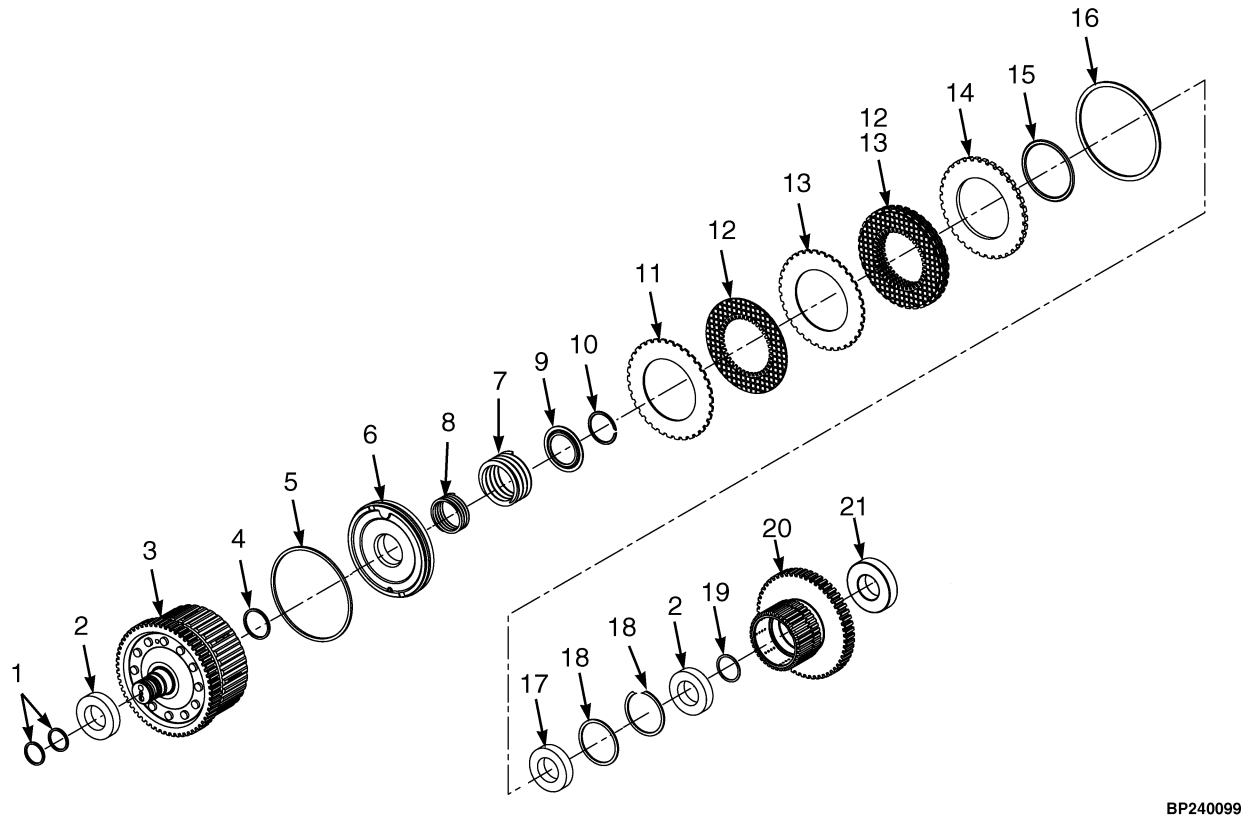

©2013 HYSTER COMPANY

COUNTER/REVERSE CLUTCH

SINGLE SPEED TRANSMISSION (S/N L177B13246E →)

ITEM	PART NO.	DESCRIPTION	QTY
	2093523	Clutch Pack (Counter/Reverse)	1
1	. . . . .	Seal	2
2	~~1581116~~		
	4025477	Ball Bearing	2
3	1581114	Shaft	1
4	. . . . .	Seal	1
5	. . . . .	Seal	1
6	2085129	Piston	1
7	1581108	Spring	1
8	1581098	Spring	1
9	1581099	Spring Guide	1
10	1581100	Snap Ring	1
11	. . . . .	Conical Plate	1
12	. . . . .	Friction Plate	5
13	. . . . .	Separator Plate	4
14	1543094	Pressure Plate (5.8 mm)	1
15	. . . . .	O-Ring	1
16	1537450	Snap Ring	1
17	124603	Ball Bearing	1
18	1581107	Snap Ring	1
19	1581106	Snap Ring	1
19	1537459	Snap Ring (Alternate Part)	1
20	2095533	Clutch Gear	1
21	43207	Ball Bearing	1
	1543102	Kit-Clutch Pack Plates	1
	1595425	Kit-Clutch Pack Seals	1

©2013 HYSTER COMPANY

COUNTER/REVERSE CLUTCH (FIGURE 8-30)

SINGLE SPEED TRANSMISSION (S/N T141M001501 →) (S/N T148M001501 →)

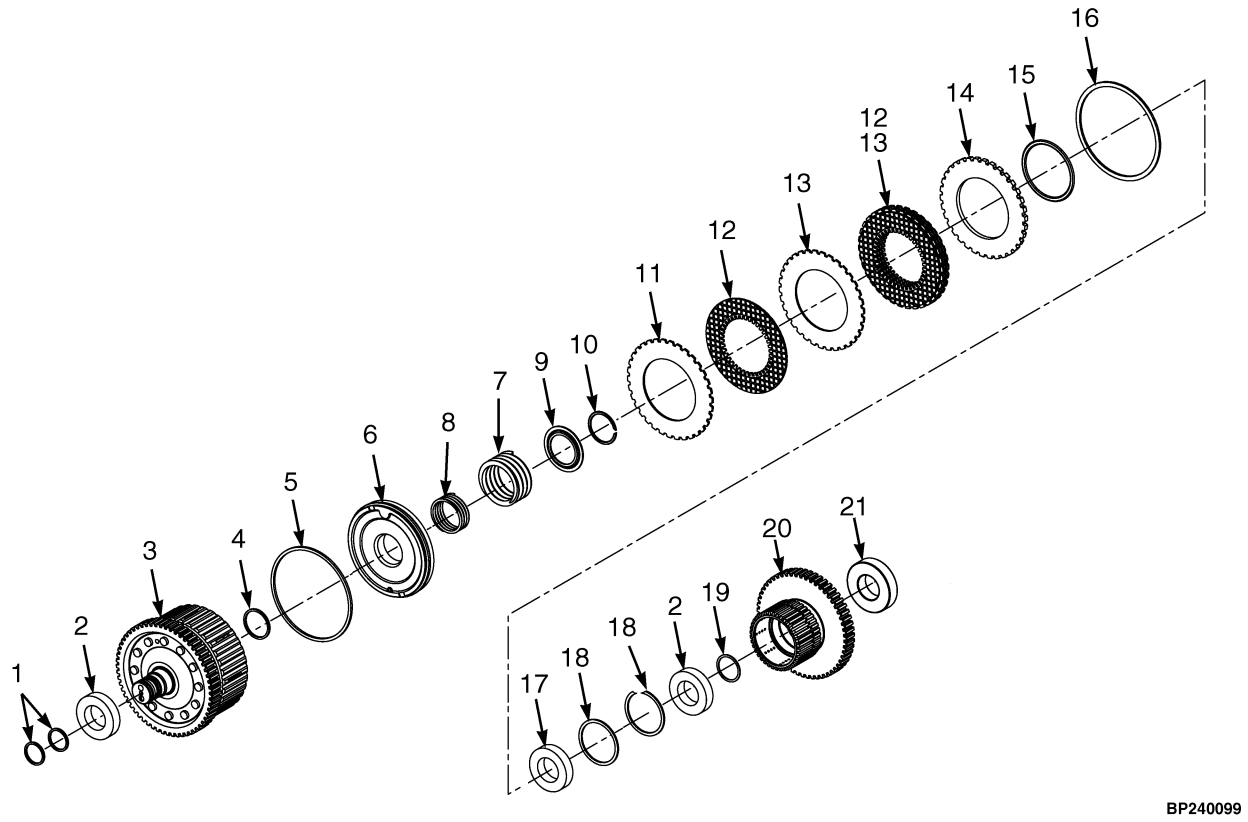

©2013 HYSTER COMPANY

COUNTER/REVERSE CLUTCH

SINGLE SPEED TRANSMISSION (S/N T141M001501 →) (S/N T148M001501 →)

ITEM	PART NO.	DESCRIPTION	QTY
	1676324	Clutch Pack	1
1	. . . . .	Seal	2
2	~~1581116~~		
	4025477	Ball Bearing	2
3	4007888	Shaft	1
4	. . . . .	Seal	1
5	. . . . .	Seal	1
6	2085129	Piston	1
7	1581108	Spring	1
8	1581098	Spring	1
9	1581099	Spring Guide	1
10	1581100	Snap Ring	1
11	. . . . .	Conical Plate	1
12	. . . . .	Friction Plate	5
13	. . . . .	Separator Plate	4
14	1543094	Pressure Plate (5.8 mm)	1
15	. . . . .	O-Ring	1
16	1537450	Snap Ring	1
17	124603	Ball Bearing	1
18	1581107	Snap Ring	1
19	1537459	Snap Ring	1
20	4007889	Clutch Gear	1
21	43207	Ball Bearing	1
	1543102	Kit-Clutch Pack Plates	1
	1595425	Kit-Clutch Pack Seals	1

©2013 HYSTER COMPANY

CONTROL VALVE (FIGURE 8-31)

TRANSMISSION (→ S/N L177B19874E (HIGH PRESSURE IDLE))
(→ S/N L177B19274E (LOW PRESSURE IDLE))

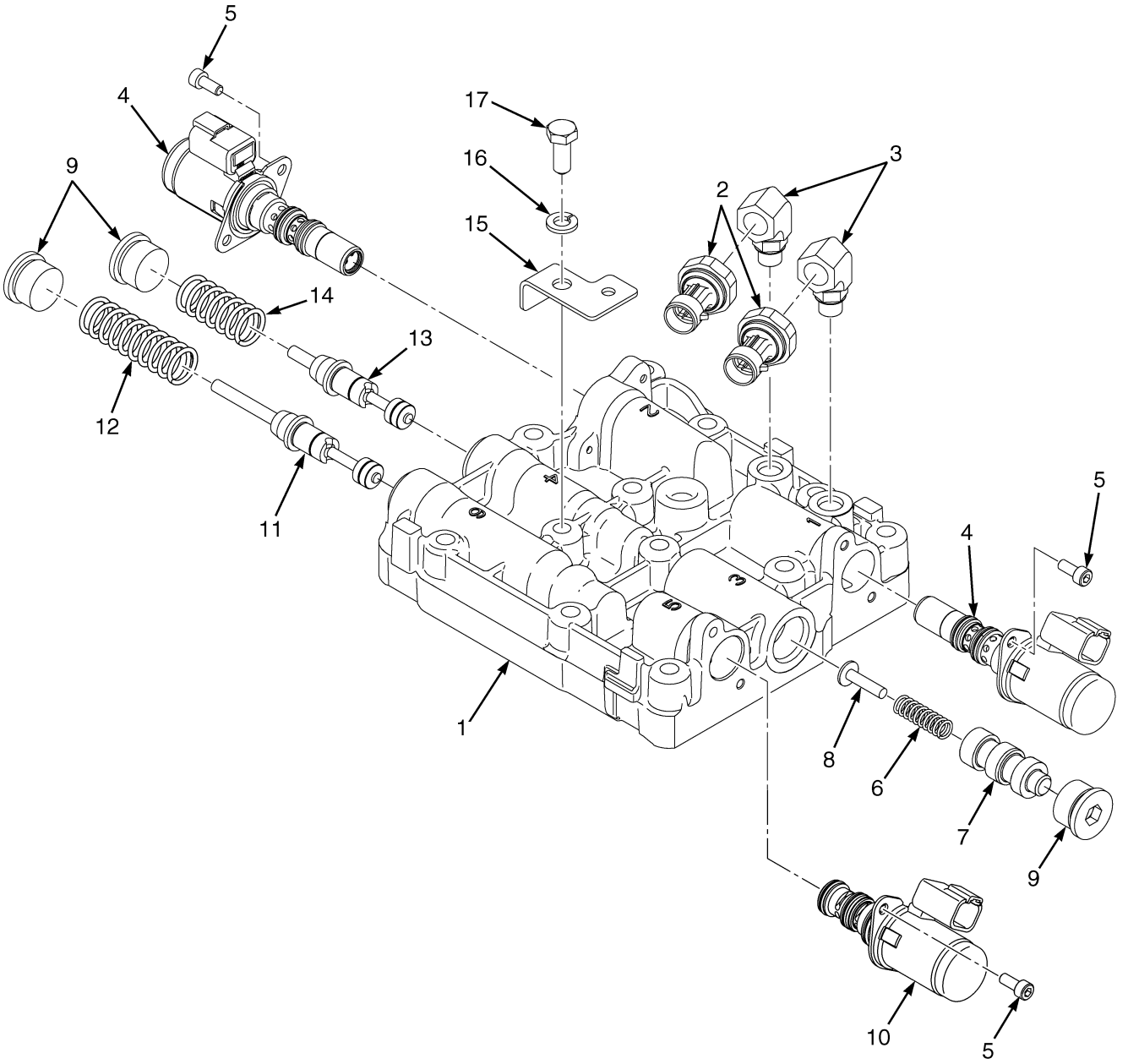

BP240046

©2013 HYSTER COMPANY

CONTROL VALVE

TRANSMISSION (→ S/N L177B19874E (HIGH PRESSURE IDLE)) (→ S/N L177B19274E (LOW PRESSURE IDLE))

ITEM	PART NO.	DESCRIPTION	QTY
	a 1613695	Hydraulic Control Valve (Low Pressure)	1
	b 1611835	Hydraulic Control Valve (High Pressure)	1
1	. . . . .	Body	1
2	2070263	Pressure Transducer	2
3	1545546	Fitting	2
3	16481	O-Ring	2
4	1530722	Solenoid Valve	2
4	1650819	Kit-Seal	1
5	293742	Screw	6
6	1590866	Return Spring	1
7	1590865	Spool (Cut-Off)	1
8	1590839	Spool (Stop)	1
9	233693	Fitting	3
9	16485	O-Ring	3
10	1520660	Solenoid (Transmisison Enable)	1
11	1613470	Spool (High Pressure) (Proportional Regulator)	1
11	1610746	Spool (Low Pressure) (Proportional Regulator)	1
12	1550561	Spring (Proportional Regulator)	1
13	1544759	Spool (Torque Convertor Regulator)	1
14	1514138	Spring (Torque Convertor Regulator)	1
15	1562310	Clip	1
16	292681	Lockwasher	1
17	136681	Capscrew	1

FOOTNOTES:

a (Dry Brake)

b (Wet brake)

©2013 HYSTER COMPANY

CONTROL VALVE ASSEMBLY (FIGURE 8-32)

(S/N L177B19875E → (HIGH PRESSURE IDLE)) (S/N L177B19275E → (LOW PRESSURE IDLE))

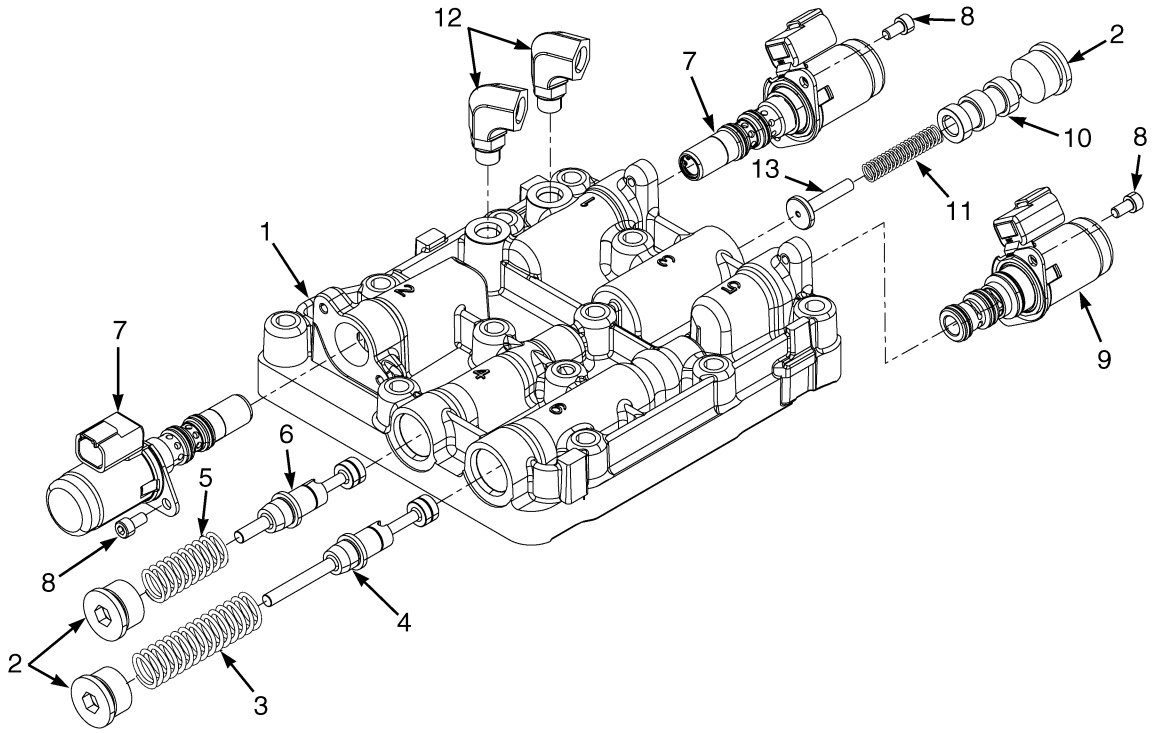

BP240127

ITEM	PART NO.	DESCRIPTION	QTY
	a 1665205	Valve (Low Pressure) (Dry Brake)	1
	b 1665204	Valve (High Pressure) (Wet Brake)	1
1	. . . . .	Body	1
2	233693	Fitting	3
2	. . . . .	Plug	1
2	16485	O-Ring	1
3	1550561	Spring	1
4	**a** 1610746	Spool	1
4	**b** 1613470	Spool	1
5	1514138	Spring	1
6	1544759	Spool	1
7	1660500	Solenoid Valve	2
7	1650819	Kit-Seal	1
8	~~384279~~		
	293741	Capscrew	6
9	1520660	Solenoid (Transmisison Enable)	1
10	1590865	Spool (Cut-Off)	1
11	1590866	Return Spring	1
12	1545546	Fitting	2
13	1590839	Spool (Stop)	1

FOOTNOTES:

a (Dry Brake)

b (Wet brake)

©2013 HYSTER COMPANY

9 DRIVE AXLE

SECTION 9
DRIVE AXLE

DESCRIPTION	PAGE
AXLE HOUSING	
WET BRAKE	9-4
BEVEL GEAR	
WET BRAKE	9-6
DIFFERENTIAL	
DRY BRAKE	9-26
DRY BRAKES	9-24
WET BRAKE	9-8
DRIVE AXLE	
SHEET 1 OF 3	9-18
SHEET 2 OF 3	9-20
SHEET 3 OF 3	9-22
DRIVE AXLE AND ATTACHING PARTS	
WET BRAKE	9-2
DRIVE TIRE AND WHEEL	
PNEUMATIC RADIAL	9-30
SINGLE	9-28
WIDE TREAD	9-29
DUAL DRIVE WHEELS AND TIRES	9-32
PARKING BRAKE	
WET BRAKE	9-10
WET BRAKES	9-12
WHEEL HUB	
WET BRAKE	9-14

©2013 HYSTER COMPANY

DRIVE AXLE AND ATTACHING PARTS (FIGURE 9-1)
WET BRAKE

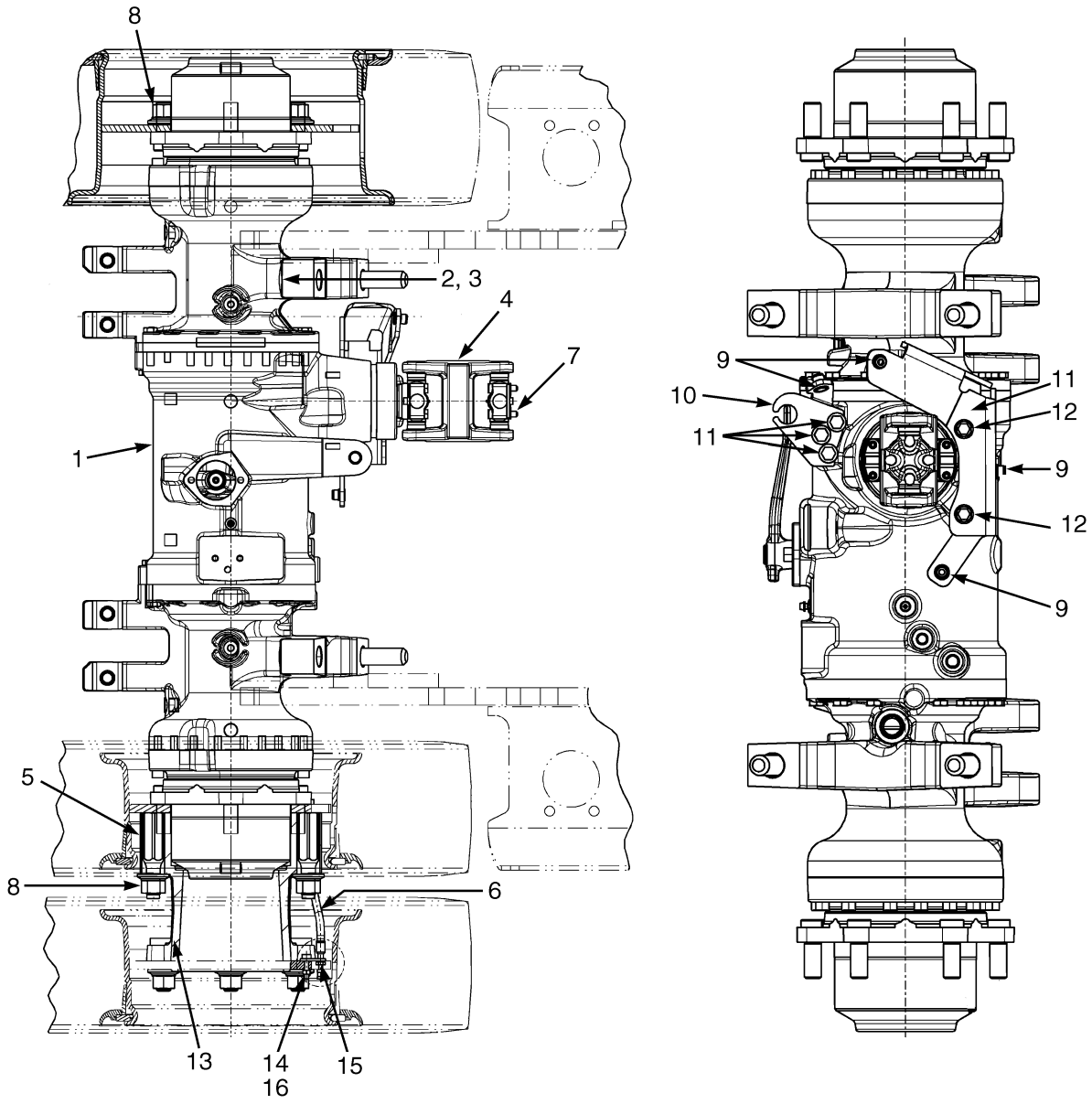

BP070074

©2013 HYSTER COMPANY

DRIVE AXLE AND ATTACHING PARTS
WET BRAKE

KEY:
A: Single Wheel
B: Dual Wheel

ITEM	PART NO.	DESCRIPTION	QTY A	QTY B
1	**b** 1539245	Drive Axle (14.52 Overall Ratio)	1	1
1	**a** 1539246	Drive Axle (17.82 Overall Ratio)	1	1
1	**c** 2070734	Drive Axle (12.79 Overall Ratio)	1	1
2	296434	Washer	4	4
3	226430	Capscrew	4	4
4	1600539	Drive Shaft	1	1
4	1566462	Universal Joint	2	2
4	1611535	Coupling	1	1
5	1545401	Stud	..	12
6	1583169	Extension	..	2
7	293616	Capscrew	8	8
8	1537133	Wheel Nut	6	12
9	**d** 1527884	Capscrew	3	3
9	1530243	Insert	4	4
10	**d** 1580213	Plate	1	1
10	**e** 1657226	Plate (Cable Mount)	1	1
11	**e** 1510117	Capscrew	3	3
12	1612234	Bracket	1	1
13	**e** 1527879	Capscrew	2	2
13	**e** 1637398	Clip	2	2
14	1613386	Wheel Hub	..	2
14	1613383	Hub	..	1
14	1532337	Wheel Stud	..	6
15	1584690	Bracket	..	2
16	136687	Nut	..	2
17	292680	Washer	..	2

FOOTNOTES:

a GM 2.4L 2 Speed
b Mazda Engine 2.0/2.2L, GM 2.4L, Yanmar 2.6L 1 Speed, Yanmar 3.3L 2 Speed
c Yanmar 3.3L 1 Speed
d → S/N L177B24983F EXC. 07927
e S/N L177B24984F → INC. 07927

©2013 HYSTER COMPANY

AXLE HOUSING (FIGURE 9-2)
WET BRAKE

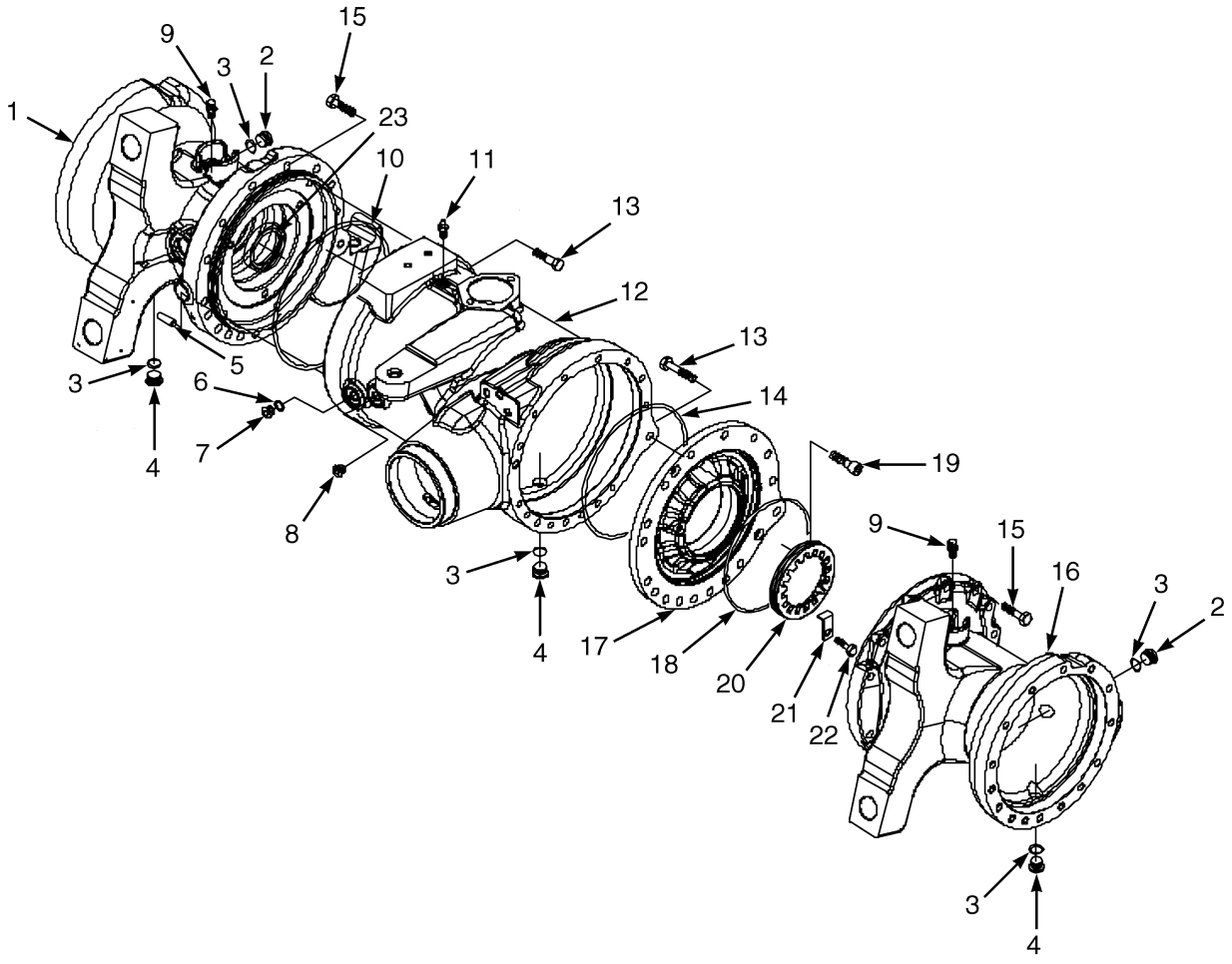

BP070063

©2013 HYSTER COMPANY

AXLE HOUSING
WET BRAKE

ITEM	PART NO.	DESCRIPTION	QTY
	1539245	Drive Axle (14.52 Overall Ratio)	1
	1539246	Drive Axle (17.82 Overall Ratio)	1
	2070734	Drive Axle (12.79 Overall Ratio)	1
1	1589789	Drive Axle Housing (LH)	1
2	1589792	Plug (Fluid Check And Fill)	2
3	1589791	O-Ring	5
4	1589792	Plug (Fluid Drain)	3
5	1589793	Pin	2
6	1589794	Washer	1
7	1589795	Plug	1
8	1589797	Plug	1
9	1557392	Breather	2
10	1589798	O-Ring	1
11	1557383	Breather	1
12	1589799	Valve Section	1
13	1589807	Bolt	2
14	1589801	O-Ring	1
15	1589806	Bolt	30
16	1589803	Drive Axle Housing (RH)	1
17	1589804	Support Plate	1
18	1589805	O-Ring	1
19	1589808	Capscrew	2
20	1589811	Nut	1
21	1589812	Plate (Locking)	1
22	1589813	Bolt	1
23	1589814	Sealing Ring	1

©2013 HYSTER COMPANY

BEVEL GEAR (FIGURE 9-3)
WET BRAKE

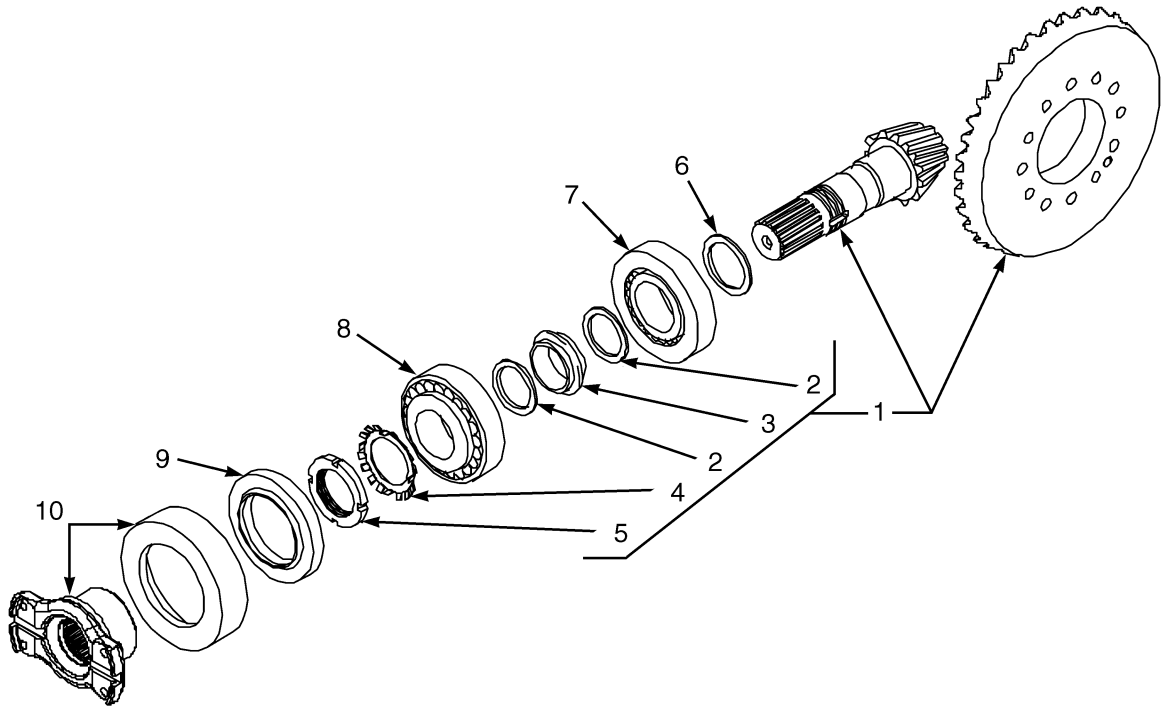

BP070020

©2013 HYSTER COMPANY

BEVEL GEAR
WET BRAKE

ITEM	PART NO.	DESCRIPTION	QTY
	1539245	Drive Axle (14.52 Overall Ratio)	1
	1539246	Drive Axle (17.82 Overall Ratio)	1
	2070734	Drive Axle (12.79 Overall Ratio)	1
1	1590206	Kit-Gear and Pinion (14.52 Overall Ratio)	1
1	1589815	Kit-Gear and Pinion (17.82 Overall Ratio)	1
1	1590204	Kit-Gear and Pinion (12.79 Overall Ratio)	1
2	1589816	Washer	2
3	1589817	Spacer	1
4	1589818	Washer	1
5	1589819	Nut	1
6	1589820	Shim (2.0 mm)	AR
6	1589821	Shim (2.1 mm)	AR
6	1589822	Shim (2.2 mm)	AR
6	1589823	Shim (2.3 mm)	AR
6	1589824	Shim (2.4 mm)	AR
6	1589825	Shim (2.5 mm)	AR
6	1589826	Shim (2.6 mm)	AR
6	1589827	Shim (2.7 mm)	AR
6	1589828	Shim (2.8 mm)	AR
7	1589829	Bearing	1
8	1589830	Bearing	1
9	1589831	Sealing Ring	1
10	1589832	Flange (Input)	1

©2013 HYSTER COMPANY

DIFFERENTIAL (FIGURE 9-4)
WET BRAKE

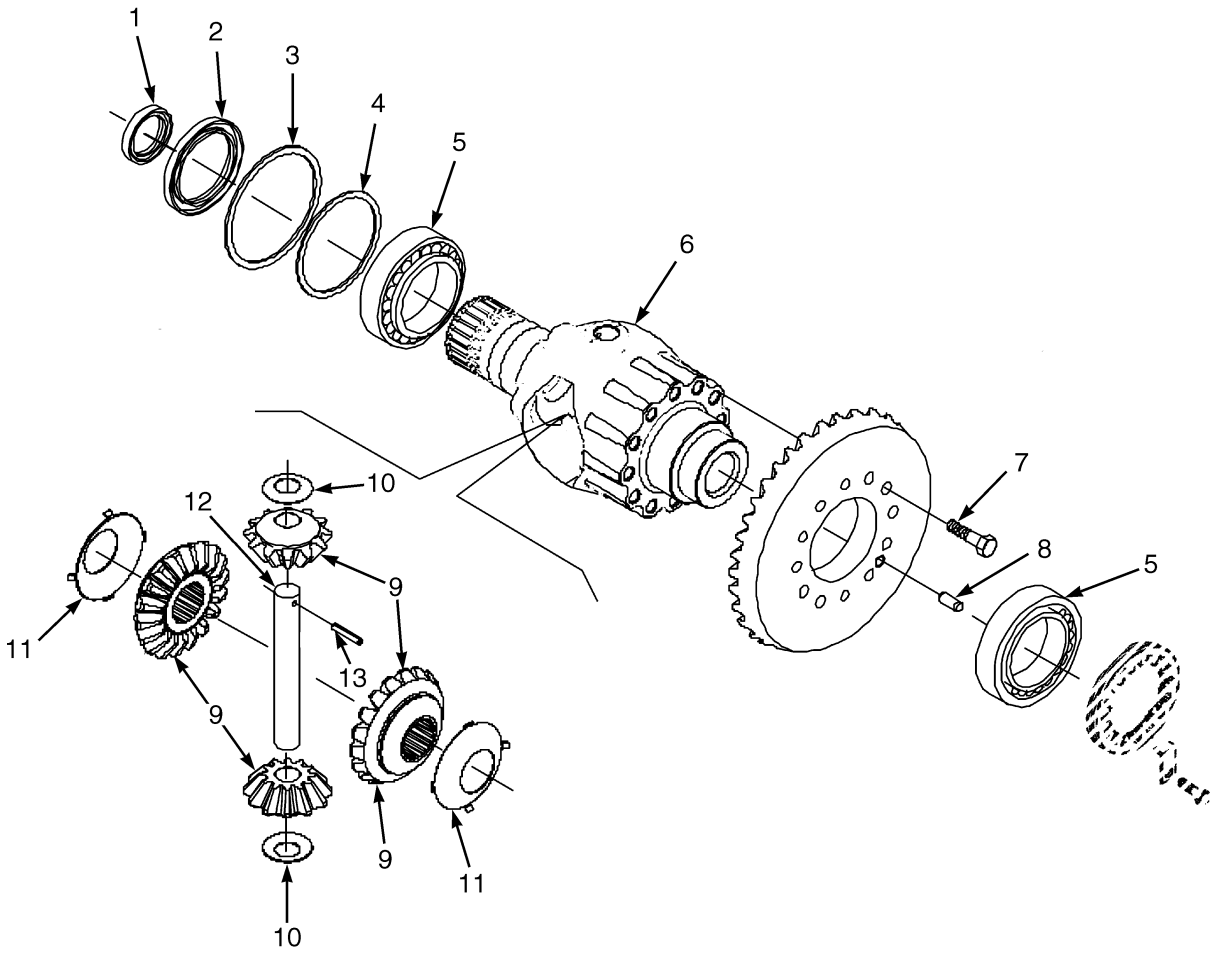

BP070022

©2013 HYSTER COMPANY

DIFFERENTIAL
WET BRAKE

ITEM	PART NO.	DESCRIPTION	QTY
	1539245	Drive Axle (14.52 Overall Ratio)	1
	1539246	Drive Axle (17.82 Overall Ratio)	1
	2070734	Drive Axle (12.79 Overall Ratio)	1
1	1589833	Sealing Ring	1
2	1589834	Sealing Ring	1
3	1610522	Spacer	1
4	1589835	Shim (0.5 mm)	AR
4	1589836	Shim (0.3 mm)	AR
4	1589837	Shim (0.1 mm)	AR
4	1589838	Shim (0.05 mm)	AR
5	1557445	Bearing	2
6	1589839	Differential Housing	1
7	1589840	Bolt	12
8	1589841	Pin	1
9	1589842	Gear Set	1
10	1589843	Thrust Washer	2
11	1589844	Thrust Washer	2
12	1589845	Drive Shaft	1
13	1589846	Dowel	1

©2013 HYSTER COMPANY

PARKING BRAKE (FIGURE 9-5)
WET BRAKE

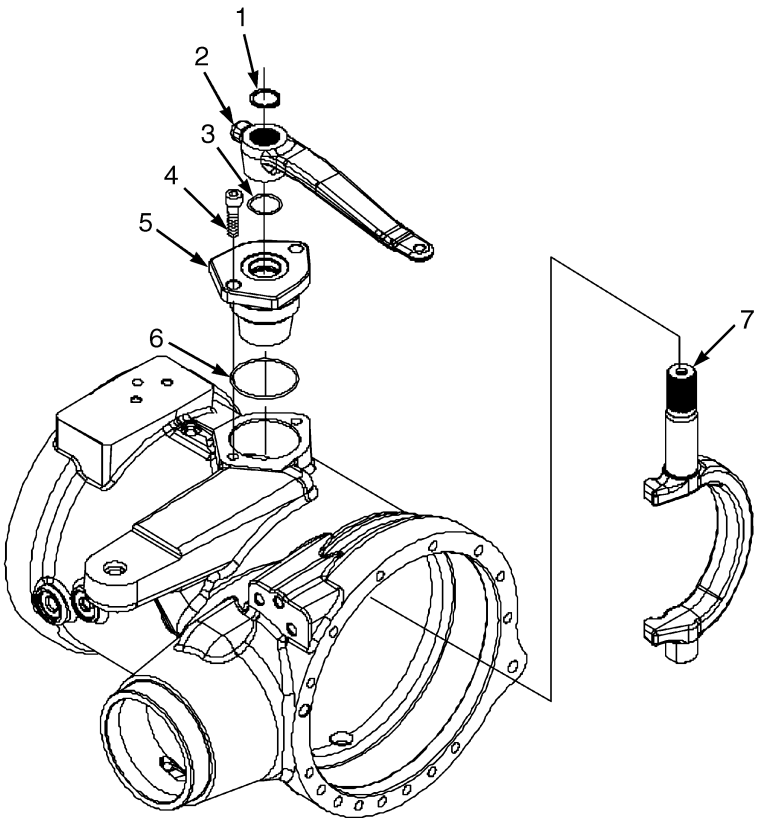

BP070023

ITEM	PART NO.	DESCRIPTION	QTY
	1539245	Drive Axle (14.52 Overall Ratio)	1
	1539246	Drive Axle (17.82 Overall Ratio)	1
	2070734	Drive Axle (12.79 Overall Ratio)	1
1	1589847	Snap Ring	1
2	1589848	Parking Brake Lever	1
3	1589849	O-Ring	1
4	1589850	Bolt	2
5	1589851	Flange	1
6	1589852	O-Ring	1
7	1589853	Shaft	1

©2013 HYSTER COMPANY

NOTES

©2013 HYSTER COMPANY

WET BRAKES (FIGURE 9-6)

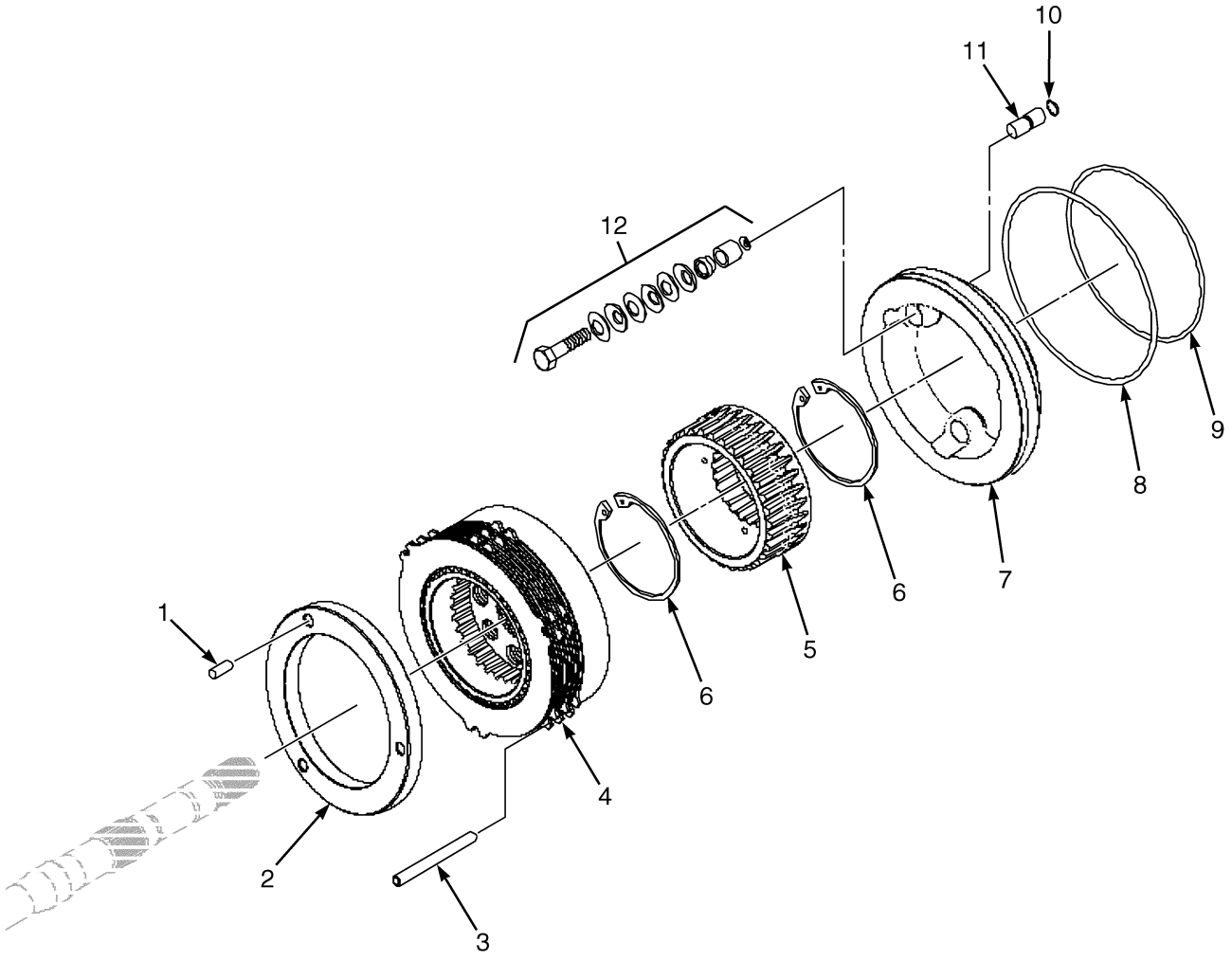

BP070024

©2013 HYSTER COMPANY

WET BRAKES

ITEM	PART NO.	DESCRIPTION	QTY
	1539245	Drive Axle (14.52 Overall Ratio)	1
	1539246	Drive Axle (17.82 Overall Ratio)	1
	2070734	Drive Axle (12.79 Overall Ratio)	1
1	1610516	Pin	3
2	1610521	Drive Plate	1
3	1589854	Pin	6
4	1610506	Brake Assembly	1
4	4038135	Kit-Brake Disk	1
5	1610512	Hub (Spline)	1
6	1610514	Snap Ring	2
7	1589856	Piston	1
8	1589857	O-Ring	1
9	1610508	O-Ring	1
10	1589860	O-Ring	2
11	1589861	Pin	2
12	1610510	Kit-Self Adjusting	1

©2013 HYSTER COMPANY

WHEEL HUB (FIGURE 9-7)
WET BRAKE

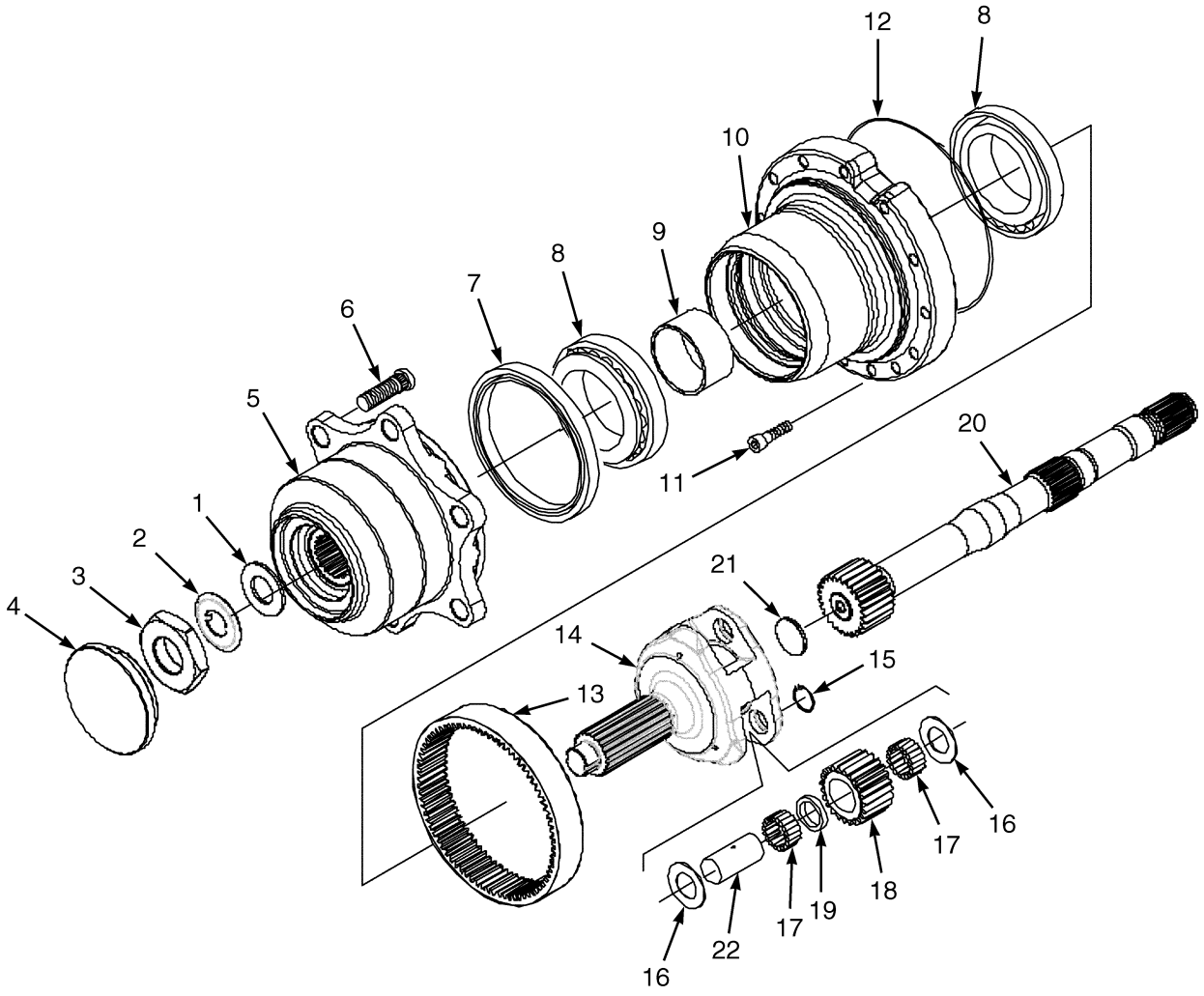

BP0700025

©2013 HYSTER COMPANY

WHEEL HUB
WET BRAKE

ITEM	PART NO.	DESCRIPTION	QTY
	1539245	Drive Axle (14.52 Overall Ratio)	1
	1539246	Drive Axle (17.82 Overall Ratio)	1
	2070734	Drive Axle (12.79 Overall Ratio)	1
1	1613375	Washer	2
2	1613376	Thrust Washer	2
3	1613377	Nut	2
4	1613378	Plug	2
5	1589867	Wheel Hub	2
6	1589868	Stud	6
7	1613379	Sealing Ring	2
8	1589870	Bearing	4
9	1613380	Spacer	2
10	1589872	Support	2
11	1589873	Bolt	30
12	1589874	O-Ring	2
13	1589875	Ring Gear	2
14	1589876	Carrier	2
15	1613381	Snap Ring	6
16	1589878	Thrust Washer	12
17	1589879	Needle Bearing	28
18	1589880	Gear	6
19	1589881	Spacer	6
20	1589886	Axle Shaft (RH)	1
20	1589887	Axle Shaft (LH)	1
21	1613382	Washer	2
22	1589924	Shaft	6

©2013 HYSTER COMPANY

DRIVE AXLE AND ATTACHING PARTS (FIGURE 9-8)

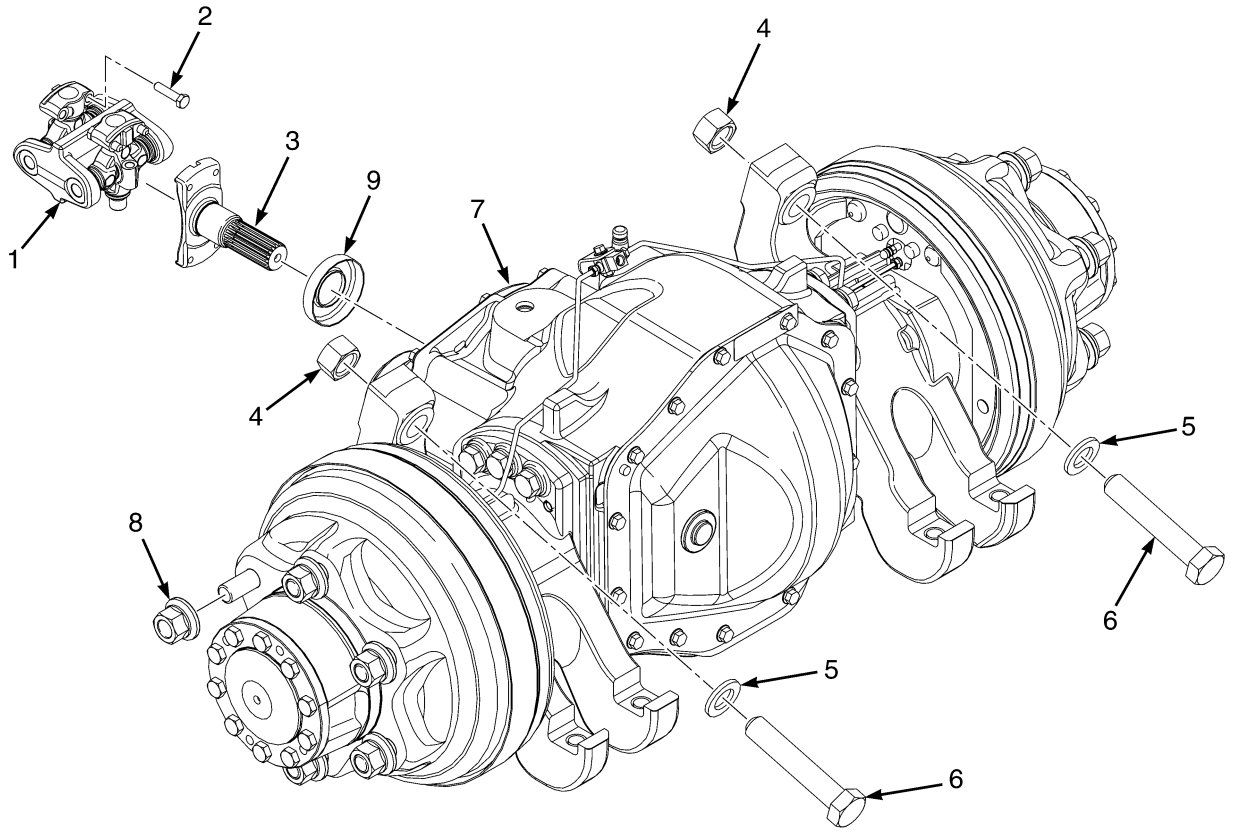

BP070133

©2013 HYSTER COMPANY

DRIVE AXLE AND ATTACHING PARTS

ITEM	PART NO.	DESCRIPTION	QTY
1	1547757	Drive Shaft	1
2	293616	Capscrew	8
3	1517673	Shaft	1
4	292660	Nut	4
5	296434	Washer	4
6	293733	Capscrew	4
7	~~1532729~~		
	2105822	Drive Axle (2.17 Gear Ratio) (☞Figure 9-9, ☞Figure 9-10, ☞Figure 9-11)	1
7	~~1532730~~		
	2105823	Drive Axle (2.48 Gear Ratio) (☞Figure 9-9, ☞Figure 9-10, ☞Figure 9-11)	1
8	1537133	Wheel Nut	12
9	1516534	Dust Cover	1
9	4000205	Dust Cover (Alternate Part)	1

©2013 HYSTER COMPANY

DRIVE AXLE (FIGURE 9-9)
SHEET 1 OF 3

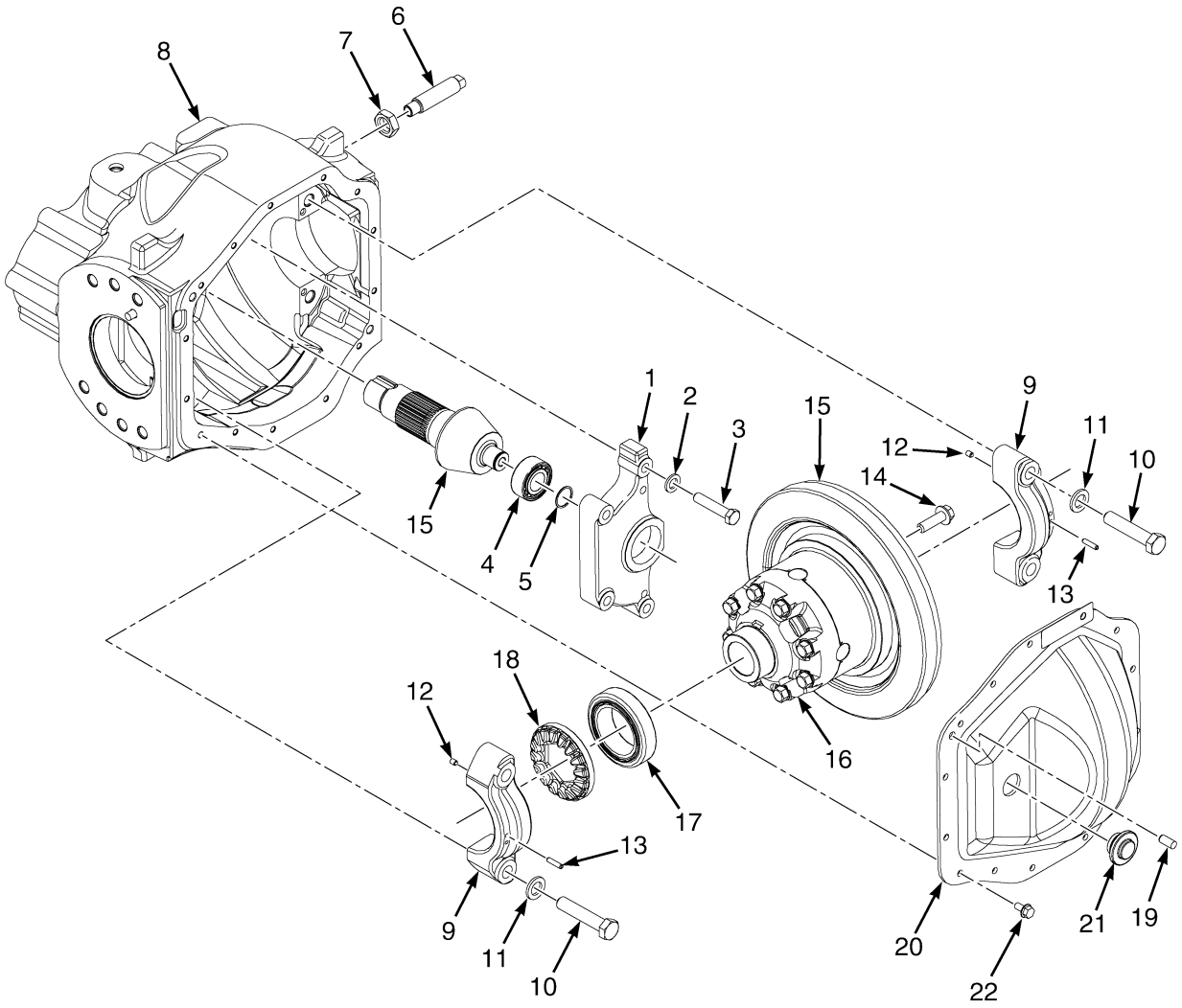

BP070134

©2013 HYSTER COMPANY

DRIVE AXLE
SHEET 1 OF 3

ITEM	PART NO.	DESCRIPTION	QTY
	~~1532729~~		
	2105822	Drive Axle (2.17 Gear Ratio)	1
	~~1532730~~		
	2105823	Drive Axle (2.48 Gear Ratio)	1
1	1512561	Support	1
2	296422	Washer	4
3	293651	Capscrew	4
4	135158	Bearing	1
5	320264	Snap Ring	1
6	1583732	Thrust Screw	1
7	296137	Nut	1
8	1656333	Drive Axle Housing (Center)	1
9	. . . . .	Bearing Cap	2
10	293692	Capscrew	4
11	296426	Washer	4
12	234038	Dowel	4
13	15242	Cotter Pin	2
14	2029436	Bolt	14
15	2067965	Gear and Pinion (Hypoid)	1
16	2067962	Differential (☞Figure 9-12)	1
17	1375488	Bearing Set	2
17	2027661	Roller Bearing (Optional)	2
18	1652926	Retainer	2
19	302385	Dowel	7
20	1532735	Cover (Center)	1
21	1516075	Plug	1
22	1527879	Capscrew	15
	a 264159	Adhesive	AR
	a 383789	Thread Sealant	AR

FOOTNOTES:

a Not Illustrated

©2013 HYSTER COMPANY

DRIVE AXLE (FIGURE 9-10)
SHEET 2 OF 3

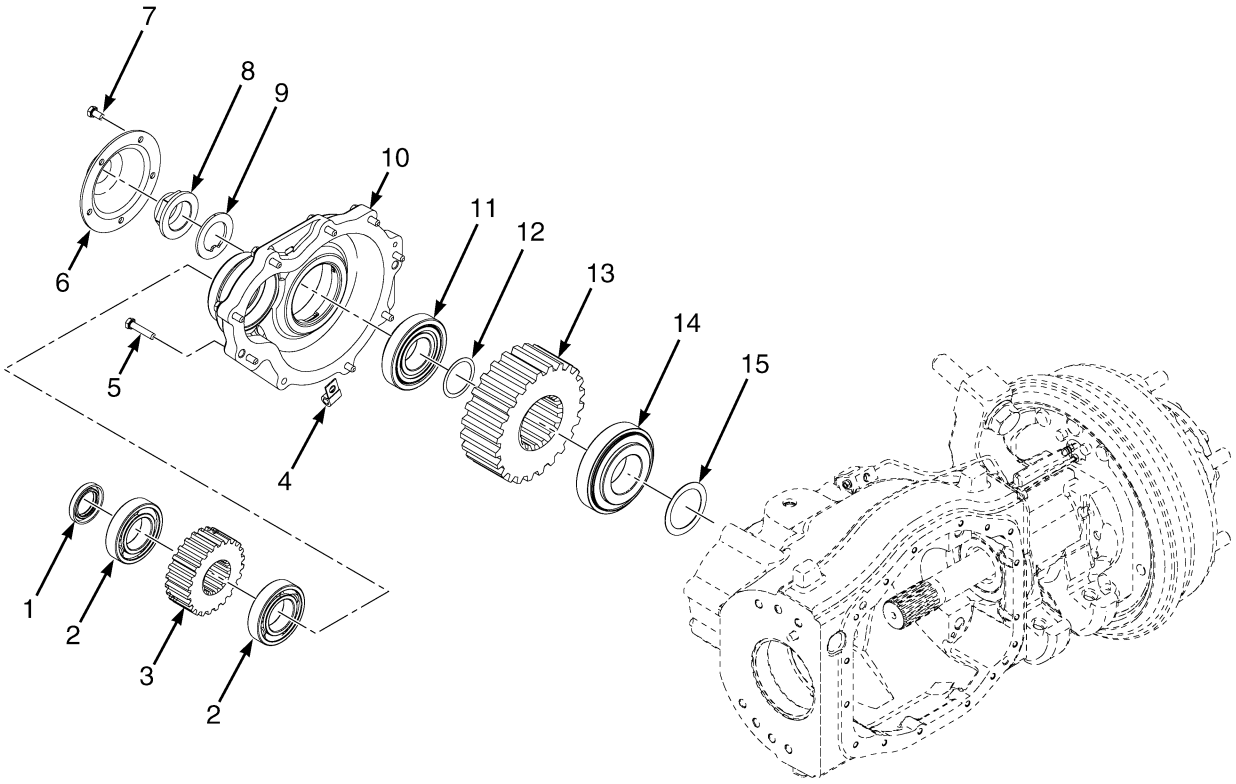

BP070135

©2013 HYSTER COMPANY

DRIVE AXLE
SHEET 2 OF 3

ITEM	PART NO.	DESCRIPTION	QTY
	~~1532729~~		
	2105822	Drive Axle (2.17 Gear Ratio)	1
	~~1532730~~		
	2105823	Drive Axle (2.48 Gear Ratio)	1
1	1522377	Oil Seal	1
2	1523479	Ball Bearing	2
3	1517578	Gear (2.17 Gear Ratio) (Drive)	1
3	1516530	Gear (2.49 Gear Ratio) (Drive)	1
4	2075120	Clamp	2
4	164488	Clamp	2
5	1510114	Capscrew	9
6	1516536	Cover (Pinion)	1
7	1527879	Capscrew	5
8	2026861	Nut	1
9	1530588	Washer	1
10	1516535	Housing	1
11	2022352	Tapered Roller Bearing	1
11	1578978	Tapered Roller Bearing	1
12	1516335	Shim (0.019 in.)	AR
12	1516331	Shim (0.004 in.)	AR
12	1516332	Shim (0.005 in.)	AR
12	1516333	Shim (0.007 in.)	AR
12	1516334	Shim (0.009 in.)	AR
13	1517576	Gear (2.17 Gear Ratio) (Driven)	1
13	1516526	Gear (2.48 Gear Ratio) (Driven)	1
14	2028862	Tapered Roller Bearing	1
14	1578981	Tapered Roller Bearing	1
15	1520755	Shim (0.04 in.)	AR
15	1569912	Shim (0.008 in.)	AR
15	1569913	Shim (0.009 in.)	AR
15	1520752	Shim (0.012 in.)	AR
15	1569914	Shim (0.014 in.)	AR
15	1520753	Shim (0.016 in.)	AR
15	1569915	Shim (0.018 in.)	AR
15	1520754	Shim (0.19 in.)	AR

©2013 HYSTER COMPANY

DRIVE AXLE (FIGURE 9-11)
SHEET 3 OF 3

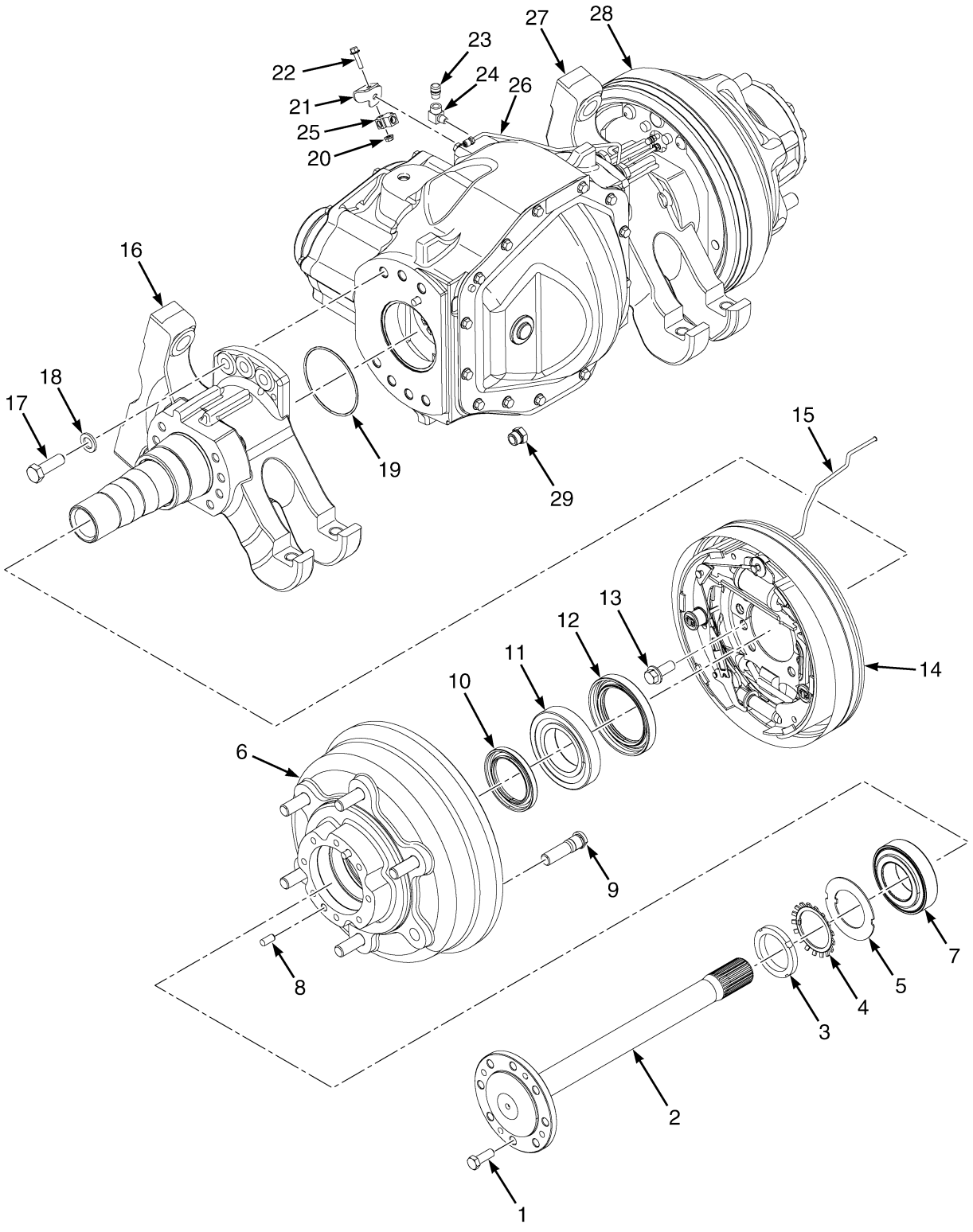

©2013 HYSTER COMPANY

DRIVE AXLE
SHEET 3 OF 3

ITEM	PART NO.	DESCRIPTION	QTY
	~~1532729~~		
	2105822	Drive Axle (2.17 Gear Ratio)	1
	~~1532730~~		
	2105823	Drive Axle (2.48 Gear Ratio)	1
1	293646	Capscrew	20
2	1532708	Axle Shaft	2
3	2028145	Nut	2
4	2027756	Lockwasher	2
5	1515219	Washer	2
6	1634451	Hub Assembly	2
6	1614672	Hub	1
7	2027663	Bearing Set (Tapered)	1
8	302385	Dowel	2
9	1532337	Wheel Stud	6
10	2028621	Oil Seal	1
11	~~1375492~~		
	2027662	Bearing Set (Tapered)	1
12	2027817	Oil Seal	1
13	1327246	Bolt	16
14	1579455	Brake Assembly (RH)	1
15	~~2063264~~		
	4613341	Tube Assy (RH Brake Line)	1
16	1641525	Hanger (RH)	1
17	293686	Capscrew	14
18	296426	Washer	14
19	2027828	O-Ring	2
20	~~1307884~~		
	1514429	Nut	1
21	1618311	Bracket	1
22	1527878	Capscrew	1
23	21420	Breather	1
24	16151	Fitting	1
25	1641351	Fitting	1
26	2063265	Tube Assy (LH, Brake line)	1
27	1644700	Hanger (LH)	1
28	1579454	Brake Assembly (LH)	1
29	1521809	Drain Plug	1

©2013 HYSTER COMPANY

DIFFERENTIAL (FIGURE 9-12)
DRY BRAKES

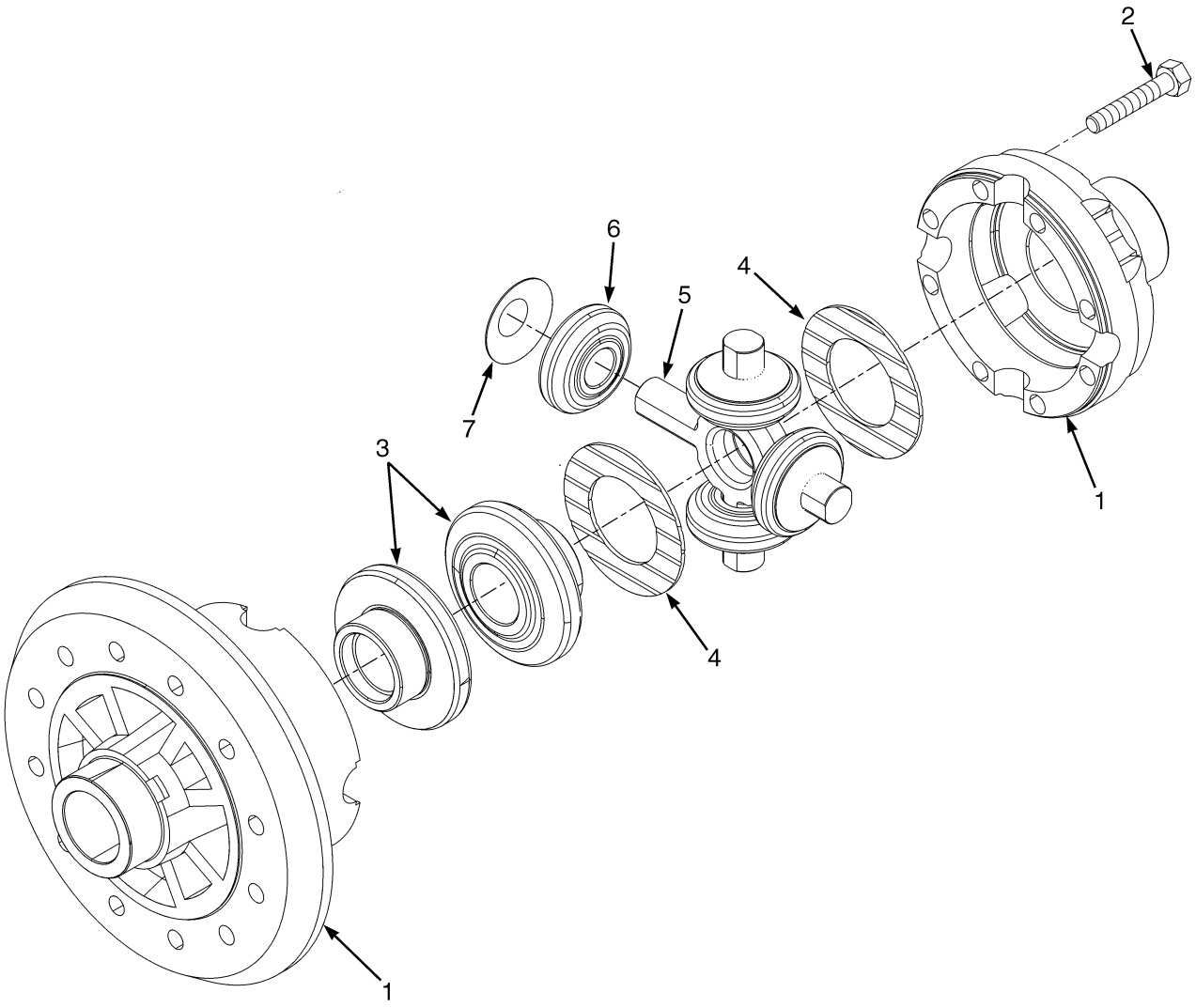

BP070055

©2013 HYSTER COMPANY

DIFFERENTIAL
DRY BRAKES

ITEM	PART NO.	DESCRIPTION	QTY
	2067962	Differential	1
1	. . . . .	Case Set	1
2	1565327	Bolt	8
3	. . . . .	Gear (Side)	2
4	. . . . .	Washer (Side)	2
5	2029383	Spider	1
6	. . . . .	Gear (Pinion)	4
7	. . . . .	Washer (Pinion)	4
	1606532	Kit-Gear	1
	1565324	Kit-Washer	1

©2013 HYSTER COMPANY

DIFFERENTIAL (FIGURE 9-13)
DRY BRAKE

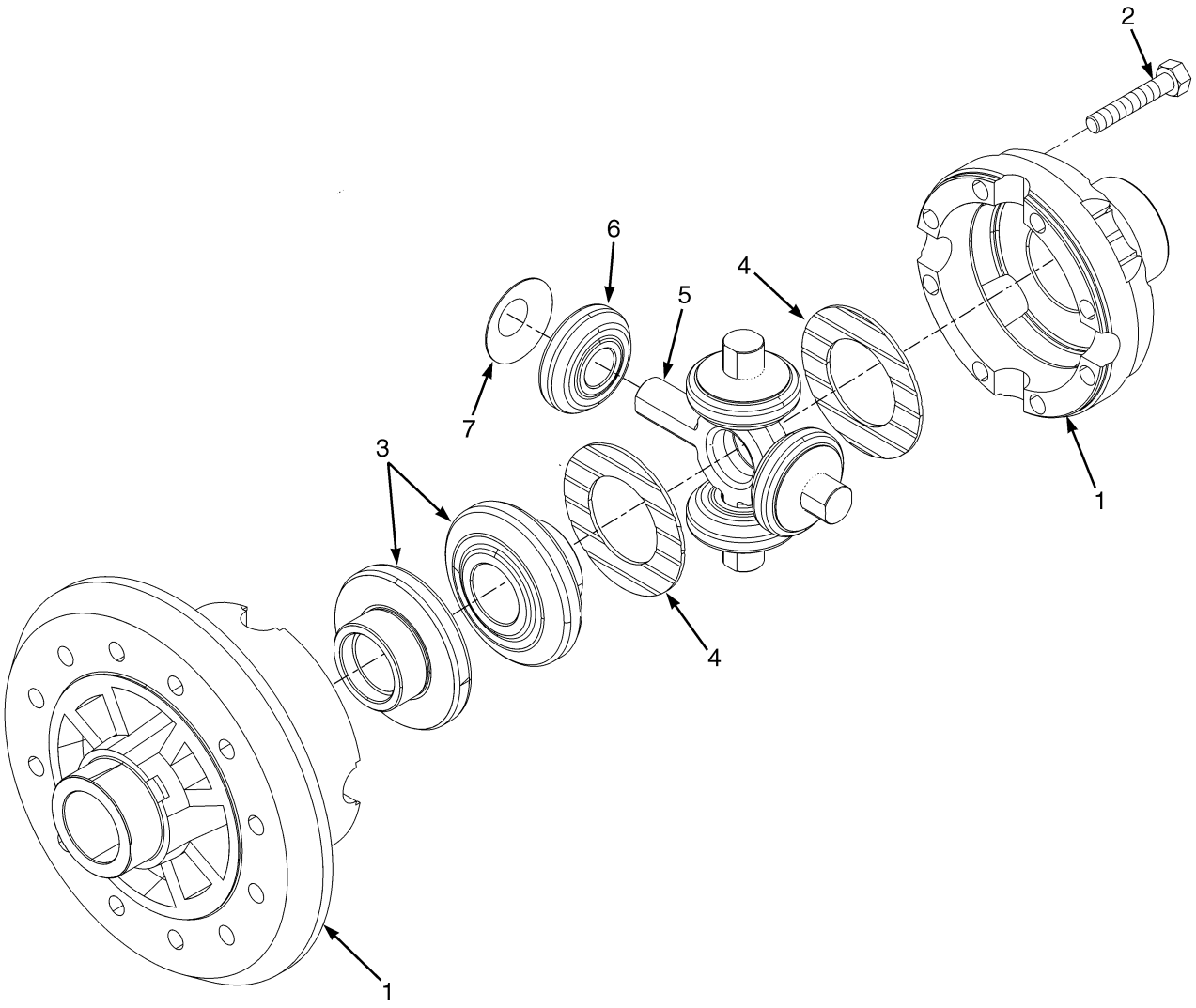

BP070055

©2013 HYSTER COMPANY

DIFFERENTIAL
DRY BRAKE

ITEM	PART NO.	DESCRIPTION	QTY
	2067962	Differential	1
1	. . . . .	Case Set	1
2	1565327	Bolt	8
3	. . . . .	Gear (Side)	2
4	. . . . .	Washer (Side)	2
5	2029383	Spider	1
6	. . . . .	Gear (Pinion)	4
7	. . . . .	Washer (Pinion)	4
	1606532	Kit-Gear	1
	1565324	Kit-Washer	1

©2013 HYSTER COMPANY

DRIVE TIRE AND WHEEL (FIGURE 9-14)

SINGLE

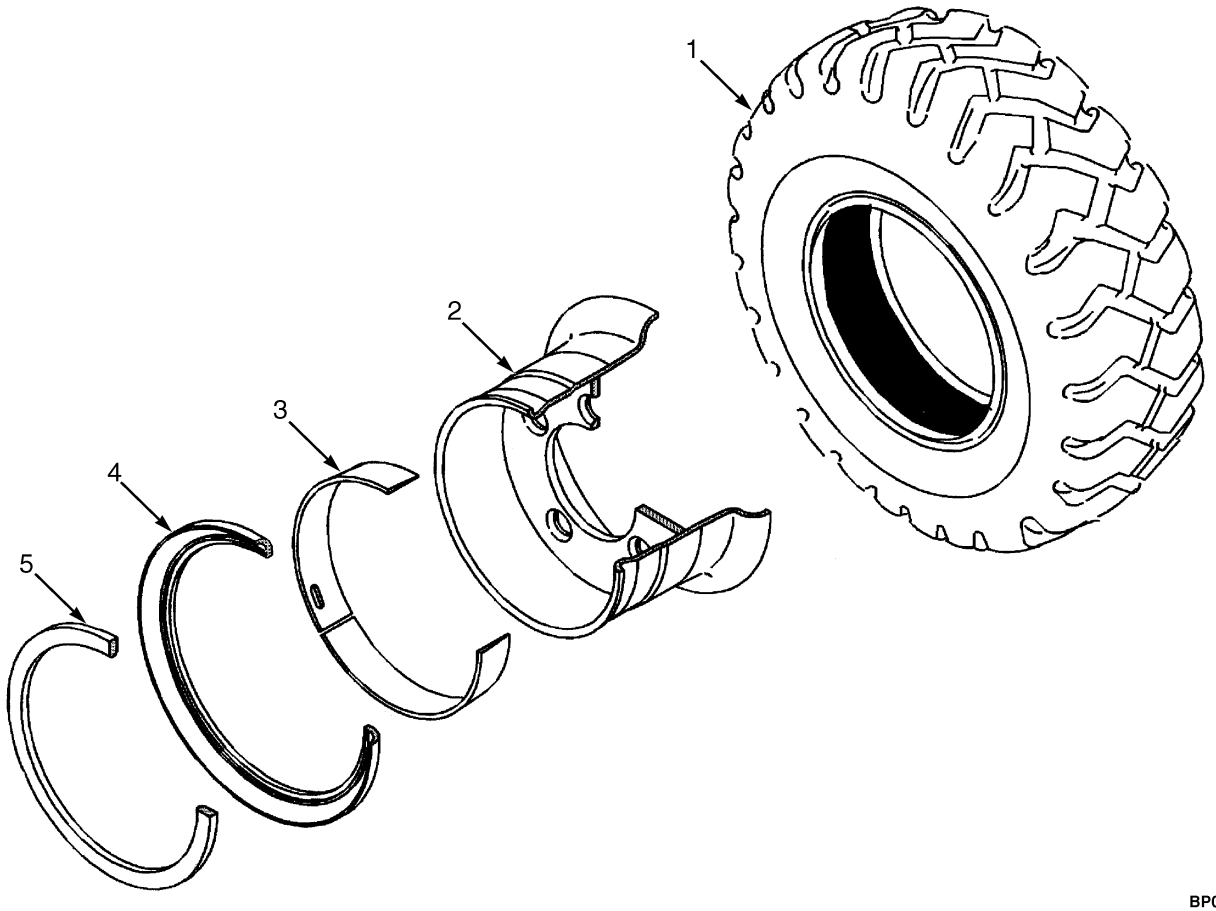

BP070012

KEY:
A: 7.00 X 12 14 Pneumatic (H40-50)
B: 28 X 9 15 Pneumatic (H40-70)

ITEM	PART NO.	DESCRIPTION	QTY A	QTY B
1	1543060	Tire	2	..
1	1543070	Tire (Monarch) (Solid)	2	..
1	1654009	Tire (Solid) (Alternate Part)	2	..
1	1543061	Tire (Trell)	..	2
1	1543071	Tire (Solid)	..	2
1	1603485	Tire (Non-Marking)	2	..
1	1603486	Tire (Non-Marking)	..	2
2	2070073	Rim (5.00 x 12)	2	..
2	2070074	Wheel Assy (7.00 x 15)	..	2
3	1584694	Wedge Band	1	..
3	1584695	Wedge Band	..	1
4	161890	Wheel Side Ring	1	..
4	160653	Wheel Side Ring	..	1
5	161889	Wheel Lock Ring	1	..
5	980542	Wheel Lock Ring	..	1

©2013 HYSTER COMPANY

DRIVE TIRE AND WHEEL (FIGURE 9-15)
WIDE TREAD

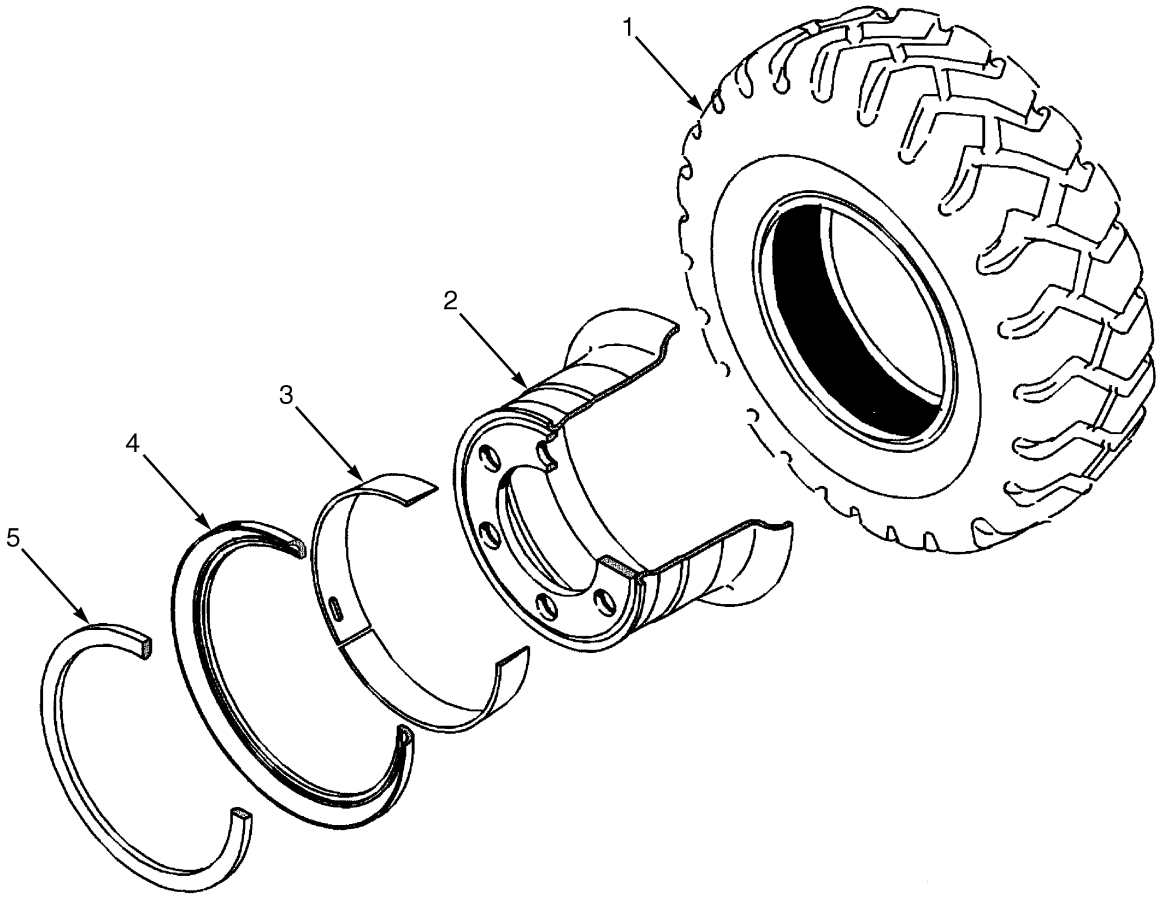

BP070013

KEY:
A: 7.00 x 12 14 (H40-50)
B: 28 x 9-15 14 (H40-70)

ITEM	PART NO.	DESCRIPTION	QTY A	QTY B
1	1543060	Tire (Pneumatic)	2	..
1	1543070	Tire (Monarch) (Solid Pneumatic)	2	..
1	1654009	Tire (Solid Pneumatic) (Alternate Part)	2	..
1	1543061	Tire (Trell) (Pneumatic)	..	2
1	1543071	Tire (Solid Pneumatic)	..	2
1	1603485	Tire (Non-Marking)	2	..
1	1603486	Tire (Non-Marking)	..	2
2	2070075	Rim (5.00 x 12)	2	..
2	2070076	Wheel Assy (7.00 x 15)	..	2
3	1584694	Wedge Band	1	..
3	1584695	Wedge Band	..	1
4	161890	Wheel Side Ring	1	..
4	160653	Wheel Side Ring	..	1
5	161889	Wheel Lock Ring	1	..
5	980542	Wheel Lock Ring	..	1

©2013 HYSTER COMPANY

DRIVE TIRE AND WHEEL (FIGURE 9-16)
PNEUMATIC RADIAL

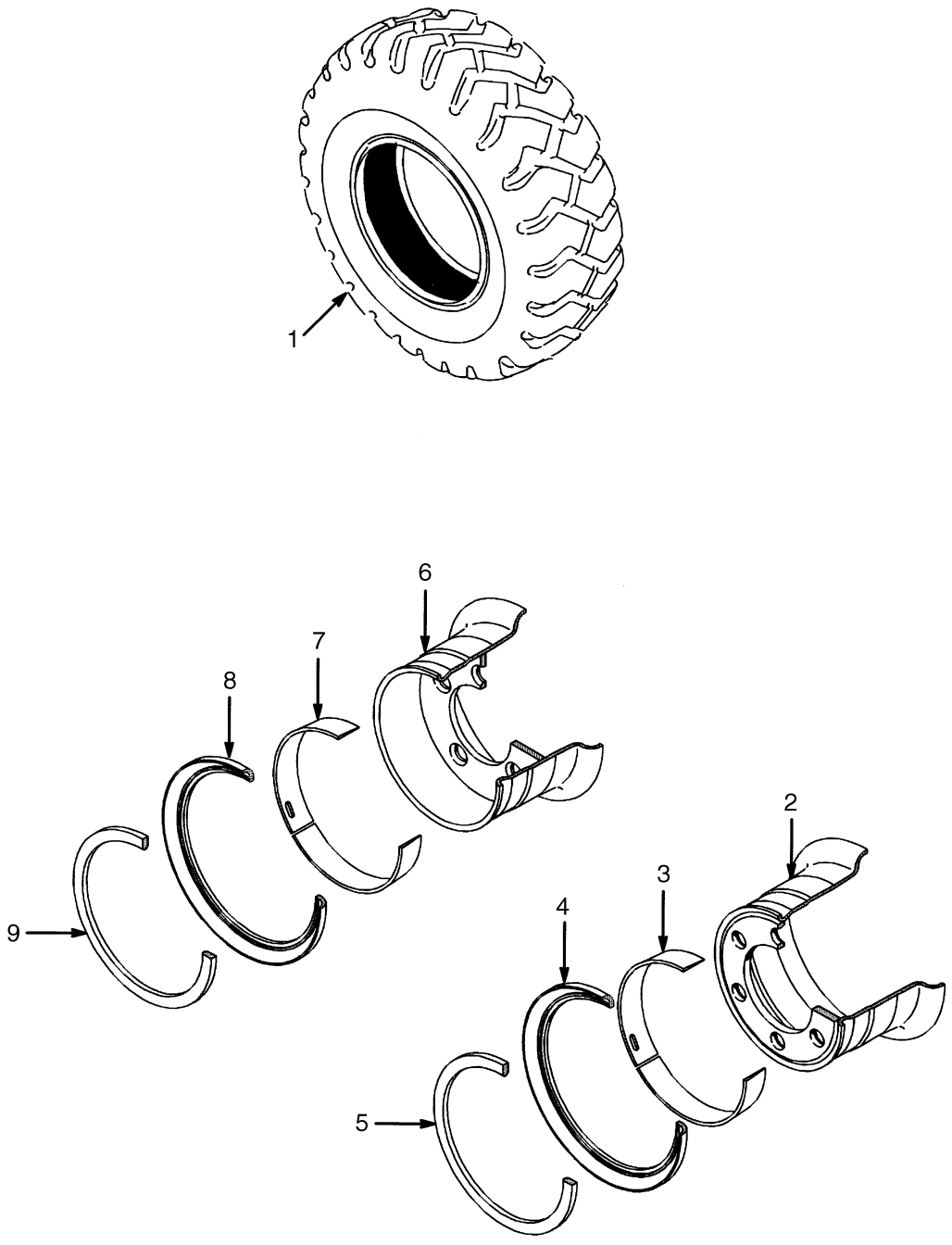

©2013 HYSTER COMPANY

DRIVE TIRE AND WHEEL
PNEUMATIC RADIAL

KEY:
A: 7.00 R12 Pneumatic Radial (H40-50)
B: 225/75 R15 Pneumatic Radial (H40-70)

ITEM	PART NO.	DESCRIPTION	QTY A	QTY B
1	1471829	Pneumatic Tire	2	..
1	1471591	Tubeless Bead Seal	1	..
1	1358179	Pneumatic Tire	1	..
1	1471922	Tubeless Bead Seal Valve	1	..
1	1471835	Pneumatic Tire	..	2
1	1462617	Tubeless Bead Seal	..	1
1	1358183	Pneumatic Tire (Michelin XZM)	..	1
1	1471922	Tubeless Bead Seal Valve	..	1
1	4029270	Tire Assembly (Conti RT20)	2	..
1	4029457	Tire	1	..
1	4029482	Seal (Tubeless Sealing Ring)	1	..
1	4029271	Tire Assembly (Conti RT20)	..	2
1	4029458	Tire	..	1
1	4029483	Seal (Tubeless Sealing Ring)	..	1
2	2070073	Rim (5.00 x 12)	2	..
2	2070075	Rim (5.00 x 12) (Wide Tread)	2	..
3	1584694	Wedge Band	1	..
4	161890	Wheel Side Ring	1	..
5	161889	Wheel Lock Ring	1	..
6	2070074	Wheel Assy (7.00 x 15)	..	2
6	2070076	Wheel Assy (7.00 x 15) (Wide Tread)	..	2
7	1584695	Wedge Band	..	1
8	160653	Wheel Side Ring	..	1
9	980542	Wheel Lock Ring	..	1

©2013 HYSTER COMPANY

DUAL DRIVE WHEELS AND TIRES (FIGURE 9-17)

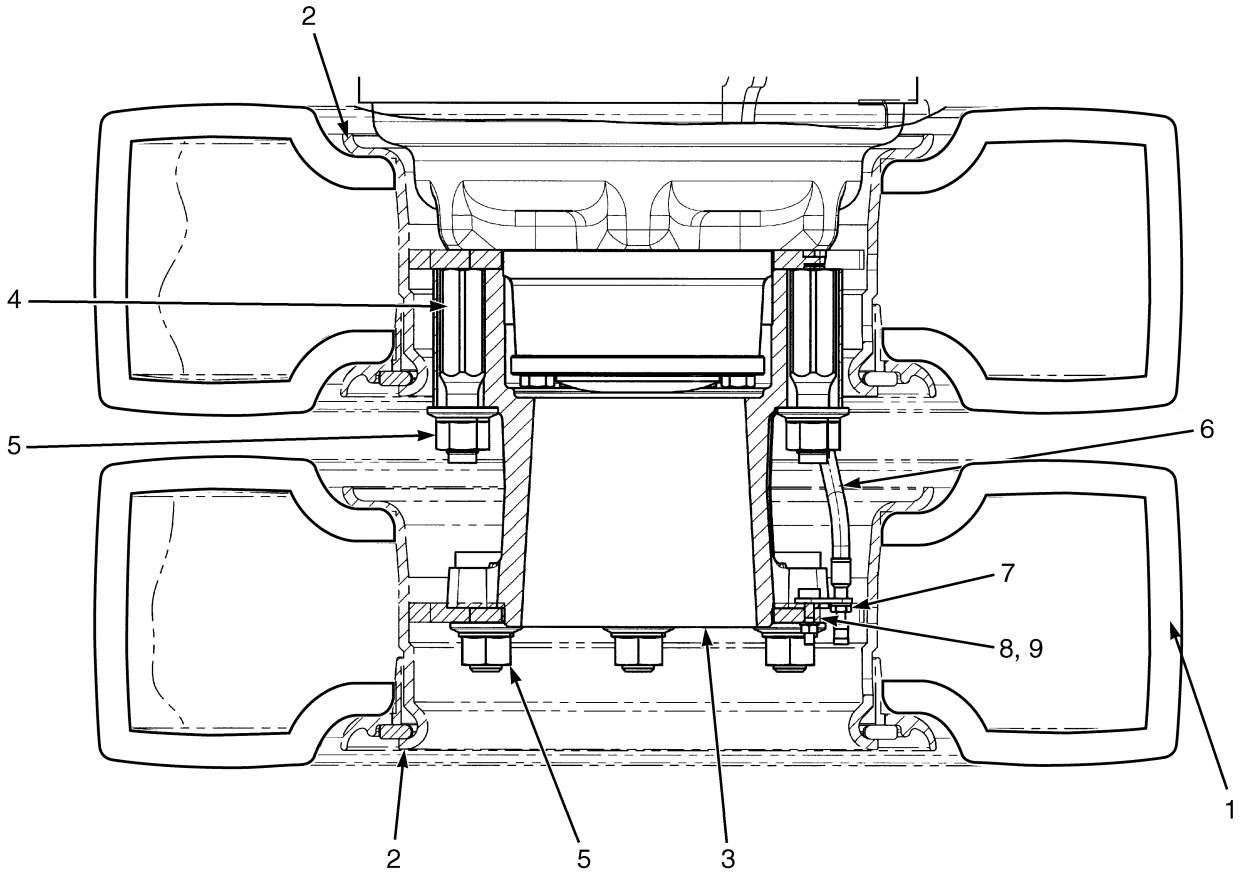

HP070054

©2013 HYSTER COMPANY

DUAL DRIVE WHEELS AND TIRES

ITEM	PART NO.	DESCRIPTION	QTY
1	1543070	Tire (Monarch) (Solid Pneumatic)	4
1	1654009	Tire (Solid Pneumatic) (Alternate Part)	4
1	1543060	Tire (Pneumatic)	4
1	1603485	Tire (Non-Marking)	4
2	2075454	Rim Assembly (5.00 x 12)	4
2	2075455	Rim (Dual Wheel)	1
2	161889	Wheel Lock Ring	1
2	1584694	Wedge Band	1
2	161890	Wheel Side Ring	1
3	1613386	Wheel Hub	2
3	1532337	Wheel Stud	6
3	1613383	Hub	1
4	1545401	Stud	12
5	1537133	Wheel Nut	12
6	1583169	Extension	2
7	1584690	Bracket	2
8	136687	Nut	2
9	292680	Washer	2

©2013 HYSTER COMPANY

NOTES

©2013 HYSTER COMPANY

10 STEERING SYSTEM

SECTION 10
STEERING SYSTEM

DESCRIPTION	PAGE
STEER AXLE	10-12
STEER CYLINDER	10-14
STEER TIRES AND WHEELS	
H40-50FT	10-16
H40-70FT	10-18
STEERING COLUMN AND ATTACHING PARTS	
DIESEL	10-3
GASOLINE AND LPG	10-2
STEERING COLUMN ASSEMBLY	
GASOLINE AND LPG	10-4
ISOLATED, DIESEL	10-6
STEERING CONTROL UNIT	10-8
STEERING LINES	10-10

©2013 HYSTER COMPANY

STEERING COLUMN AND ATTACHING PARTS (FIGURE 10-1)

GASOLINE AND LPG

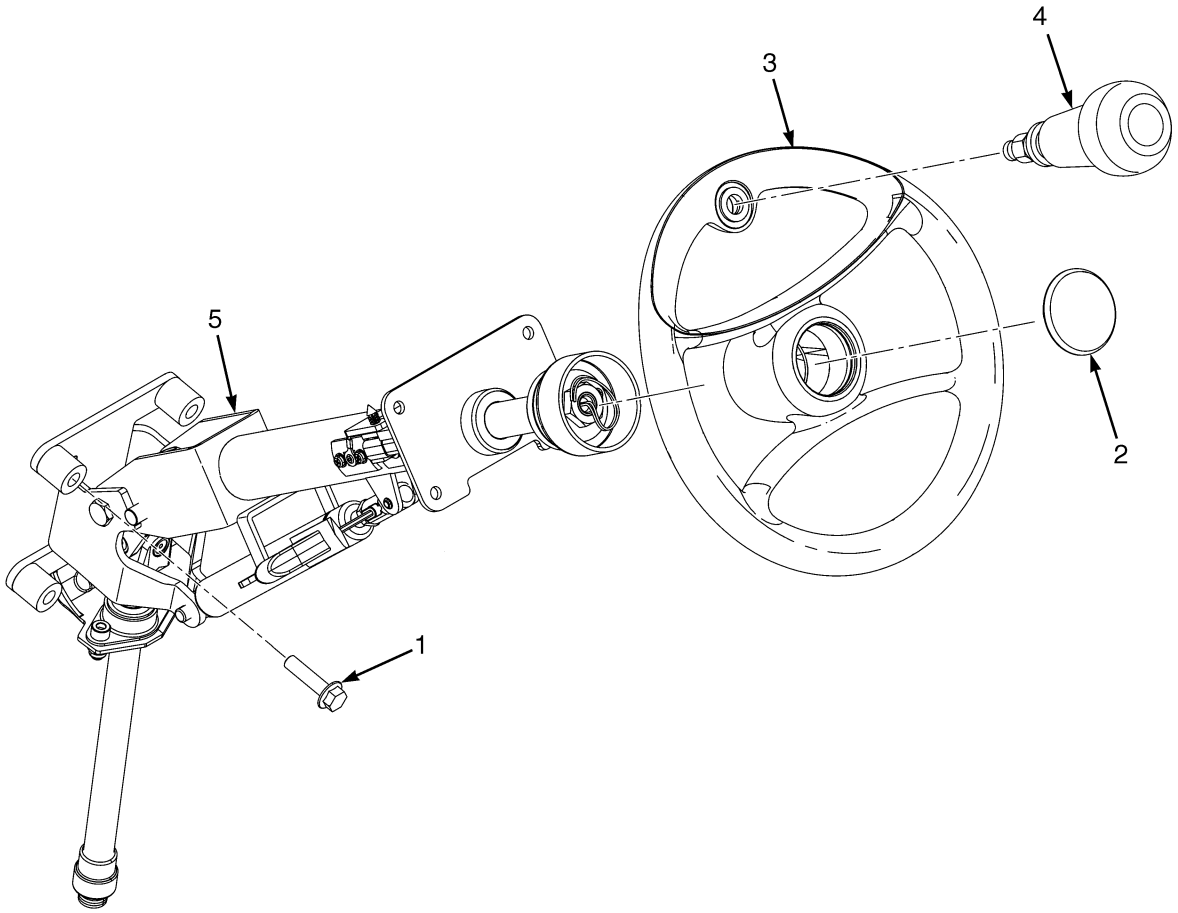

HP220500

ITEM	PART NO.	DESCRIPTION	QTY
1	1512403	Capscrew	4
2	**a** 1450503	Horn Button	1
3	1551839	Steering Wheel (Without Spinner Knob)	1
3	1531563	Steering Wheel (With Spinner)	1
4	1586109	Knob Assembly	1
5	**b** ~~1544566~~		
	1640589	Steering Column Assembly (☞Figure 10-3)	1
5	**c** 1657962	Steering Column (☞Figure 10-3)	1
5	**d** 4023450	Steering Column (☞Figure 10-3)	1

FOOTNOTES:

a Service with Horn Replacement Kit 1642089
b → 2/2007
c 2/2007 ↔ S/N L177V06136J
d S/N L177V06137J → EXC. 06238-06268

©2013 HYSTER COMPANY

STEERING COLUMN AND ATTACHING PARTS (FIGURE 10-2)

DIESEL

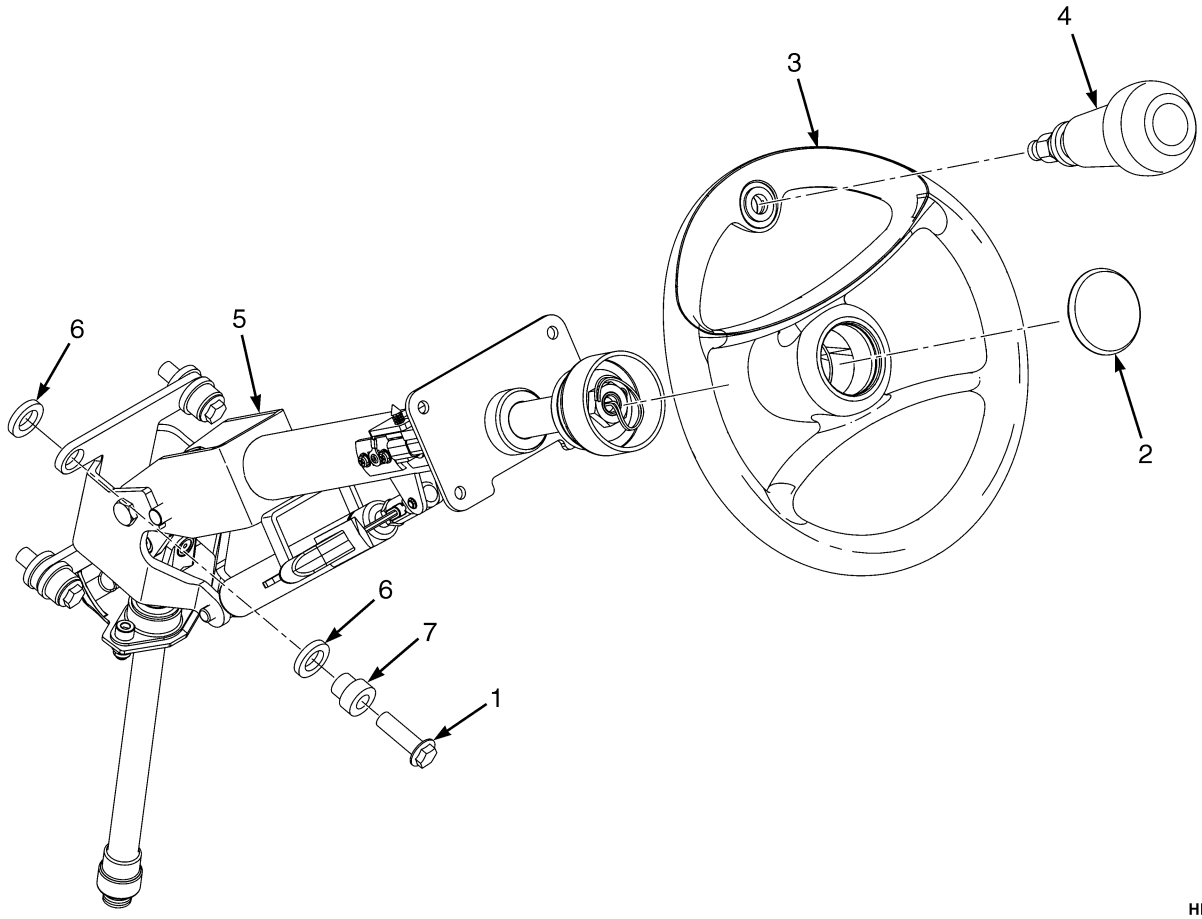

HP220499

ITEM	PART NO.	DESCRIPTION	QTY
1	1512403	Capscrew	4
2	**a** 1450503	Horn Button	1
3	1551839	Steering Wheel (Without Spinner Knob)	1
3	1531563	Steering Wheel (With Spinner)	1
4	1586109	Knob Assembly	1
5	**b** ~~1606891~~		
	1657959	Steering Column (☞Figure 10-4)	1
5	**c** 4023451	Steering Column (☞Figure 10-4)	1
5	**d** 4611791	Steering Column (☞Figure 10-4)	1
6	2079369	Isolator	8
7	1606750	Spacer	4

FOOTNOTES:

a Service with Horn Replacement Kit 1642089
b → S/N L177V06169J
c S/N L177V06170J ↔ S/N L177V10085K
d S/N L177V10086K →

©2013 HYSTER COMPANY

STEERING COLUMN ASSEMBLY (FIGURE 10-3)
GASOLINE AND LPG

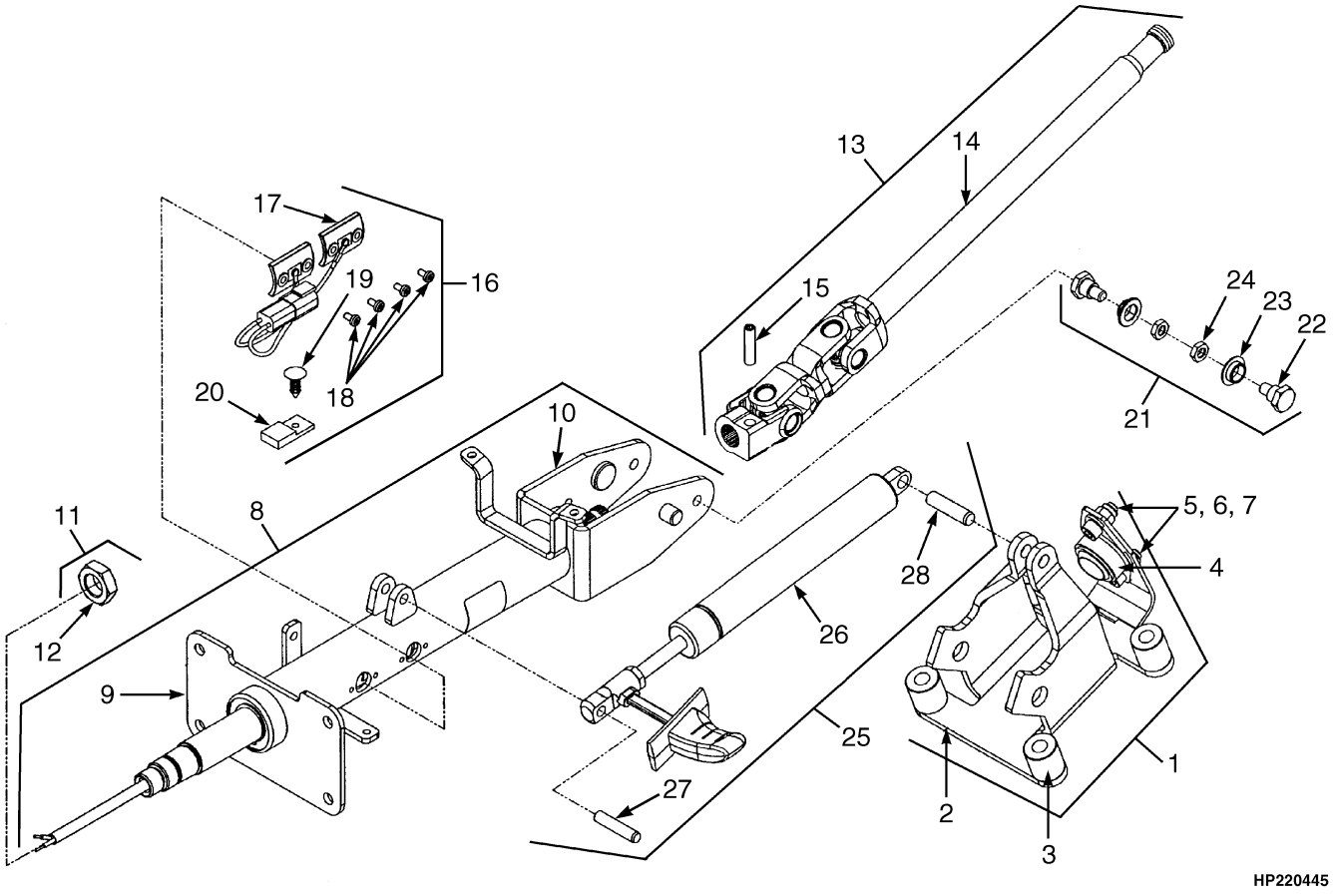

©2013 HYSTER COMPANY

STEERING COLUMN ASSEMBLY
GASOLINE AND LPG

ITEM	PART NO.	DESCRIPTION	QTY
	a ~~1544566~~		
	1640589	Steering Column Assembly (Gasoline and LPG)	1
	b 1657962	Steering Column (Gasoline and LPG)	1
	c 4023450	Steering Column (Gasoline and LPG)	1
1	1562509	Kit-Support (Gasoline and LPG)	1
2	. . . . .	Support	1
3	. . . . .	Spacer (Gasoline and LPG Only)	4
4	. . . . .	Joint	1
5	. . . . .	Nut	2
6	. . . . .	Washer	2
7	. . . . .	Screw	2
8	**a** 1562489	Kit-Shaft (Upper)	1
8	**b** 1647528	Kit-Shaft (Upper)	1
8	**c** 4028642	Kit (Shaft Upper)	1
9	. . . . .	Shaft Assembly (Upper)	1
10	. . . . .	Housing Assembly	1
11	1562492	Kit-Nut	1
12	. . . . .	Nut	2
13	1562493	Kit-Shaft (Lower)	1
14	. . . . .	Shaft Assembly (Lower)	1
15	. . . . .	Pin	1
16	1562496	Kit-Contact	1
17	. . . . .	Contact Assembly (Horn)	1
18	. . . . .	Screw	4
19	. . . . .	Fastener	1
20	. . . . .	Connector	1
21	1562501	Kit-Pivot (Lower)	1
22	. . . . .	Bolt (Pivot)	2
23	. . . . .	Bushing	2
24	. . . . .	Nut	2
25	1562505	Kit-Gas Spring	1
26	. . . . .	Gas Spring	1
27	. . . . .	Pin	1
28	. . . . .	Pin	1

FOOTNOTES:

a → 2/2007
b 2/2007 ↔ S/N L177V06136J
c S/N L177V06137J → EXC. 06238-06268

©2013 HYSTER COMPANY

STEERING COLUMN ASSEMBLY (FIGURE 10-4)
ISOLATED, DIESEL

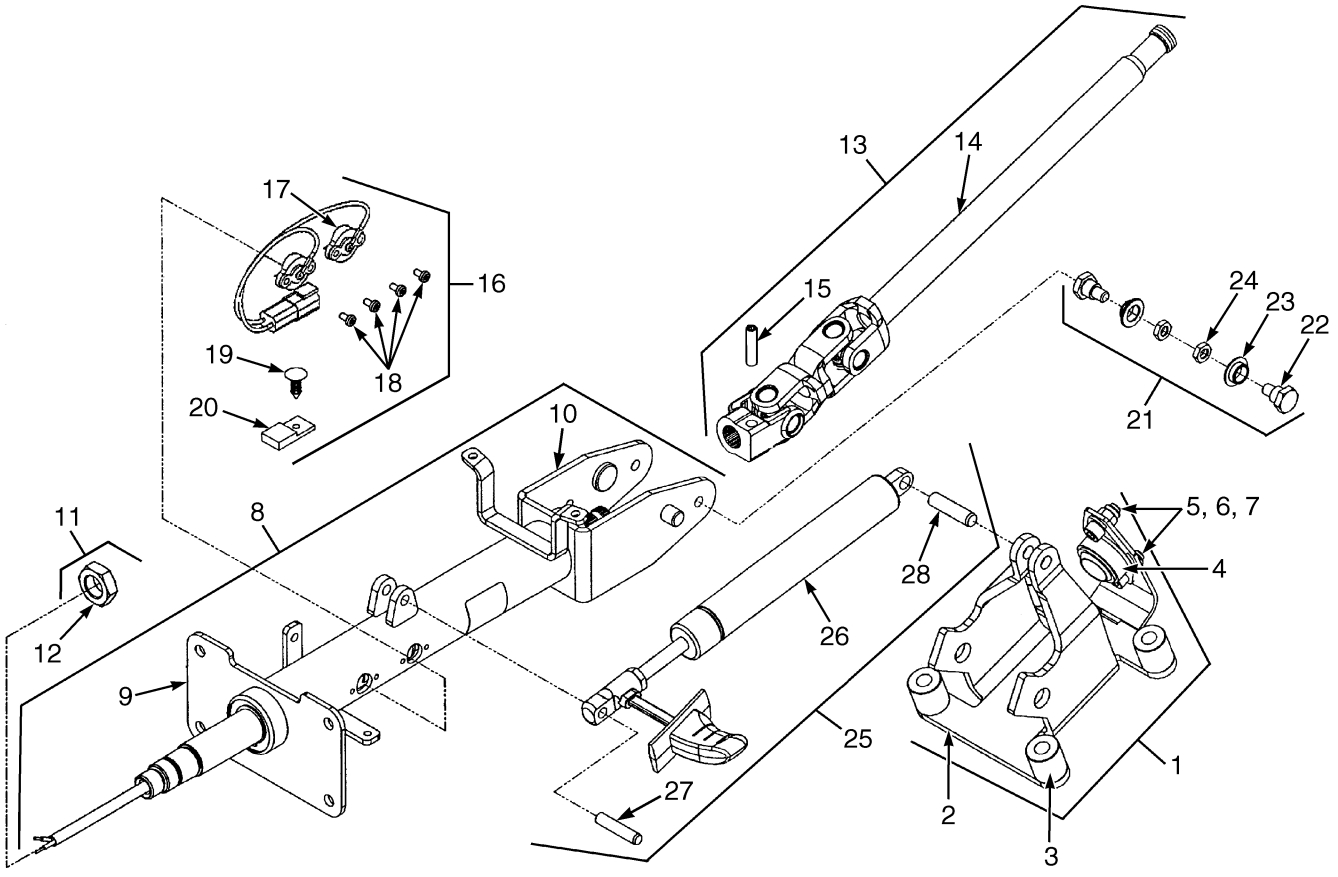

BP220224

©2013 HYSTER COMPANY

STEERING COLUMN ASSEMBLY
ISOLATED, DIESEL

ITEM	PART NO.	DESCRIPTION	QTY
	a ~~1606891~~		
	1657959	Steering Column	1
	c 4023451	Steering Column	1
	d 4611791	Steering Column	1
1	**b** 1647530	Kit-Support	1
1	**d** 4038672	Kit-Support	1
2	. . . . .	Support	1
3	. . . . .	Spacer	4
4	. . . . .	Joint	1
5	. . . . .	Nut	2
6	. . . . .	Washer	2
7	. . . . .	Screw	2
8	**a** 1647528	Kit-Shaft (Upper)	1
8	**c** 4028642	Kit (Shaft Upper)	1
8	**d** 4038673	Kit-Shaft (Upper)	1
9	. . . . .	Shaft Assembly (Upper)	1
10	. . . . .	Housing Assembly	1
11	**b** 1562492	Kit-Nut	1
11	**d** 4038674	Kit-Nut	1
12	. . . . .	Nut	2
13	**b** 1562493	Kit-Shaft (Lower)	1
13	**d** 4038675	Kit-Shaft (Lower)	1
14	. . . . .	Shaft Assembly (Lower)	1
15	. . . . .	Pin	1
16	**b** 1562496	Kit-Contact	1
16	**d** 4038676	Kit-Contact	1
17	. . . . .	Contact Assembly (Horn)	1
18	. . . . .	Screw	4
19	. . . . .	Fastener	1
20	. . . . .	Connector	1
21	**b** 1562501	Kit-Pivot (Lower)	1
21	**d** 4038677	Kit Pivot (Lower)	1
22	. . . . .	Bolt (Pivot)	2
23	. . . . .	Bushing	2
24	. . . . .	Nut	2
25	**b** 1562505	Kit-Gas Spring	1
25	**d** 4038678	Kit-Gas Spring	1
26	. . . . .	Gas Spring	1
27	. . . . .	Pin	1
28	. . . . .	Pin	1

FOOTNOTES:

a → S/N L177V06169J
b → S/N L177V10085K
c S/N L177V06170J ↔ S/N L177V10085K
d S/N L177V10086K →

©2013 HYSTER COMPANY

STEERING CONTROL UNIT (FIGURE 10-5)

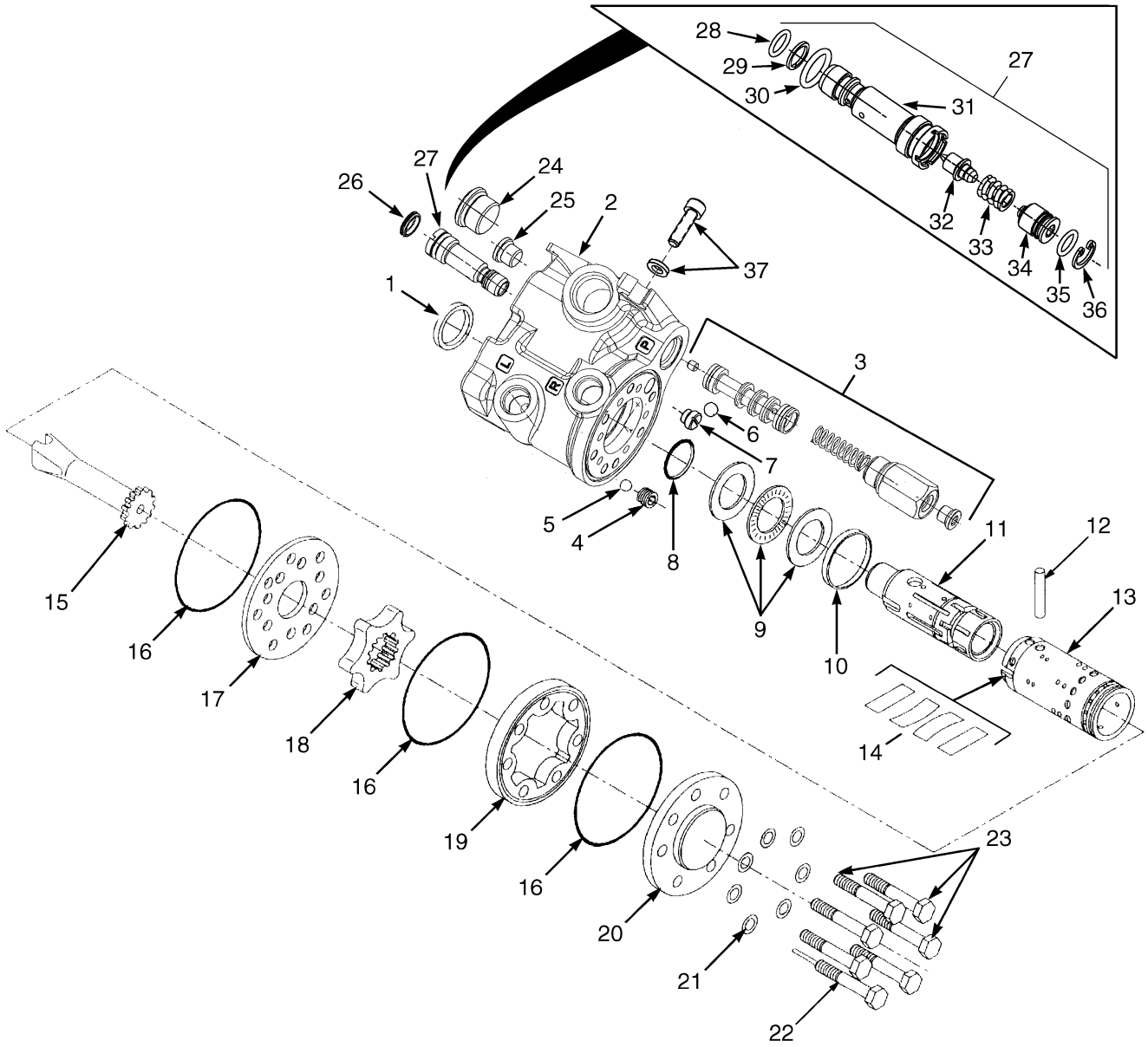

BP220056

©2013 HYSTER COMPANY

STEERING CONTROL UNIT

ITEM	PART NO.	DESCRIPTION	QTY
	2063117	Steering Control Unit (H40-60FT)	1
	2063118	Steering Control Unit (H70FT)	1
1	. . . . .	Dust Seal	1
2	. . . . .	Housing	1
3	. . . . .	Relief Valve	1
4	. . . . .	Bushing	1
5	. . . . .	Check Ball	1
6	. . . . .	Check Ball	1
7	. . . . .	Seat	1
8	. . . . .	O-Ring	1
9	. . . . .	Bearing Set	1
10	. . . . .	Ring	1
11	. . . . .	Spool	1
12	. . . . .	Pin	1
13	. . . . .	Sleeve	1
14	. . . . .	Spring Set	1
15	. . . . .	Shaft	1
16	. . . . .	O-Ring	3
17	. . . . .	Plate	1
18	. . . . .	Gear Set	1
19	. . . . .	Gear Ring	1
20	. . . . .	Cover	1
21	. . . . .	Washer	7
22	. . . . .	Special Screw	2
23	. . . . .	Capscrew	5
24	. . . . .	Priority Valve Plug	1
25	. . . . .	Diagnostic Plug (Supply Pressure)	1
26	. . . . .	Cap	1
27	. . . . .	System Relief Valve	1
28	. . . . .	O-Ring	1
29	. . . . .	Back-Up Ring	1
30	. . . . .	O-Ring	1
31	. . . . .	Cartridge	1
32	. . . . .	Seat	1
33	. . . . .	Spring	1
34	. . . . .	Plug	1
35	. . . . .	Anti-Tamper Ring	1
36	. . . . .	Snap Ring	1
37	1581858	Kit-Capscrew	1
38	1579908	Kit-Seal (Steering Control Unit)	1

©2013 HYSTER COMPANY

STEERING LINES (FIGURE 10-6)

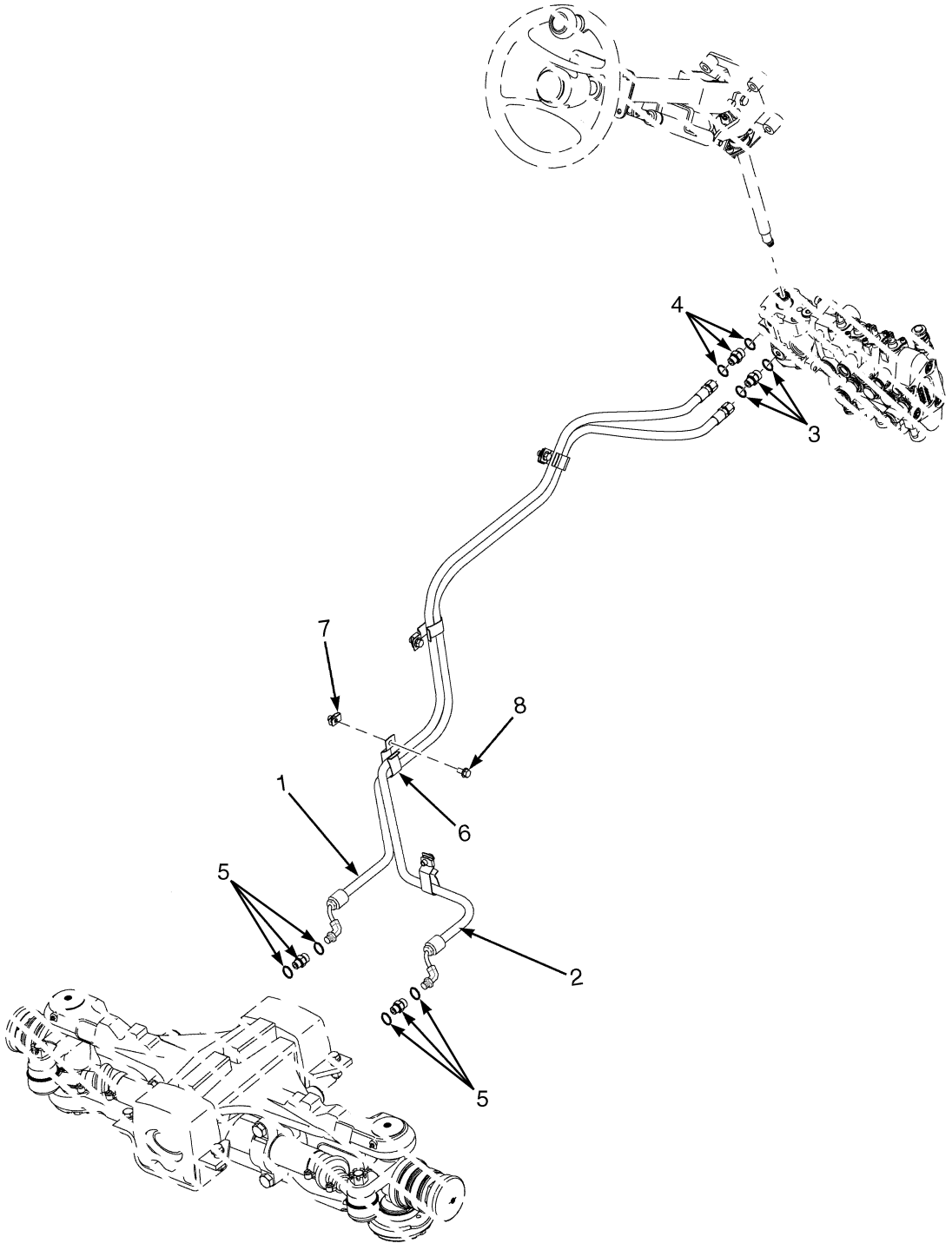

HP220443

©2013 HYSTER COMPANY

STEERING LINES

ITEM	PART NO.	DESCRIPTION	QTY
1	**b** 2072902	Hose Assy (H40-60FT)	1
1	**d** 2104068	Hose Assy (H40-60FT) (Alternate Part)	1
1	**b** 2073017	Hose Assy (H70FT)	1
1	**d** 2104070	Hose Assy (H70FT) (Alternate Part)	1
2	**b** 2073016	Hose Assy (H40-60FT)	1
2	**d** 2103497	Hose Assy (H40-60FT)	1
2	**b** 2072903	Hose Assy (H70FT)	1
2	**d** 2104069	Hose Assy (H70FT) (Alternate Part)	1
3	**b** 1516201	Fitting	1
3	**d** 4022958	Fitting	2
3	265787	O-Ring	1
3	16484	O-Ring	1
4	**b** 1486742	Fitting	1
4	**d** 1486742	Fitting (Alternate Part)	..
4	265787	O-Ring	1
4	16484	O-Ring	1
5	1487063	Fitting	2
5	265787	O-Ring	2
5	1527813	O-Ring	2
6	**b** 1544157	Clip	6
6	**d** 1544157	Clip (Alternate Part)	5
7	1480237	Nut	6
8	1527879	Capscrew	6
	ac 1692507	Mounting Plate (Alternate Part)	1
	ae 110322	Clamp	1
	ae 203230	Clamp	1
	ac 1360386	Clamp (Double Hose) (Alternate Part)	1
	ac 287816	Capscrew (Alternate Part)	2
	ac 313805	Nut (Alternate Part)	2

FOOTNOTES:

a Not Illustrated
b → S/N L177V02397F
c S/N L177V02398F ↔ 10/2008
d S/N L177V02398F →
e 10/2008 →

©2013 HYSTER COMPANY

STEER AXLE (FIGURE 10-7)

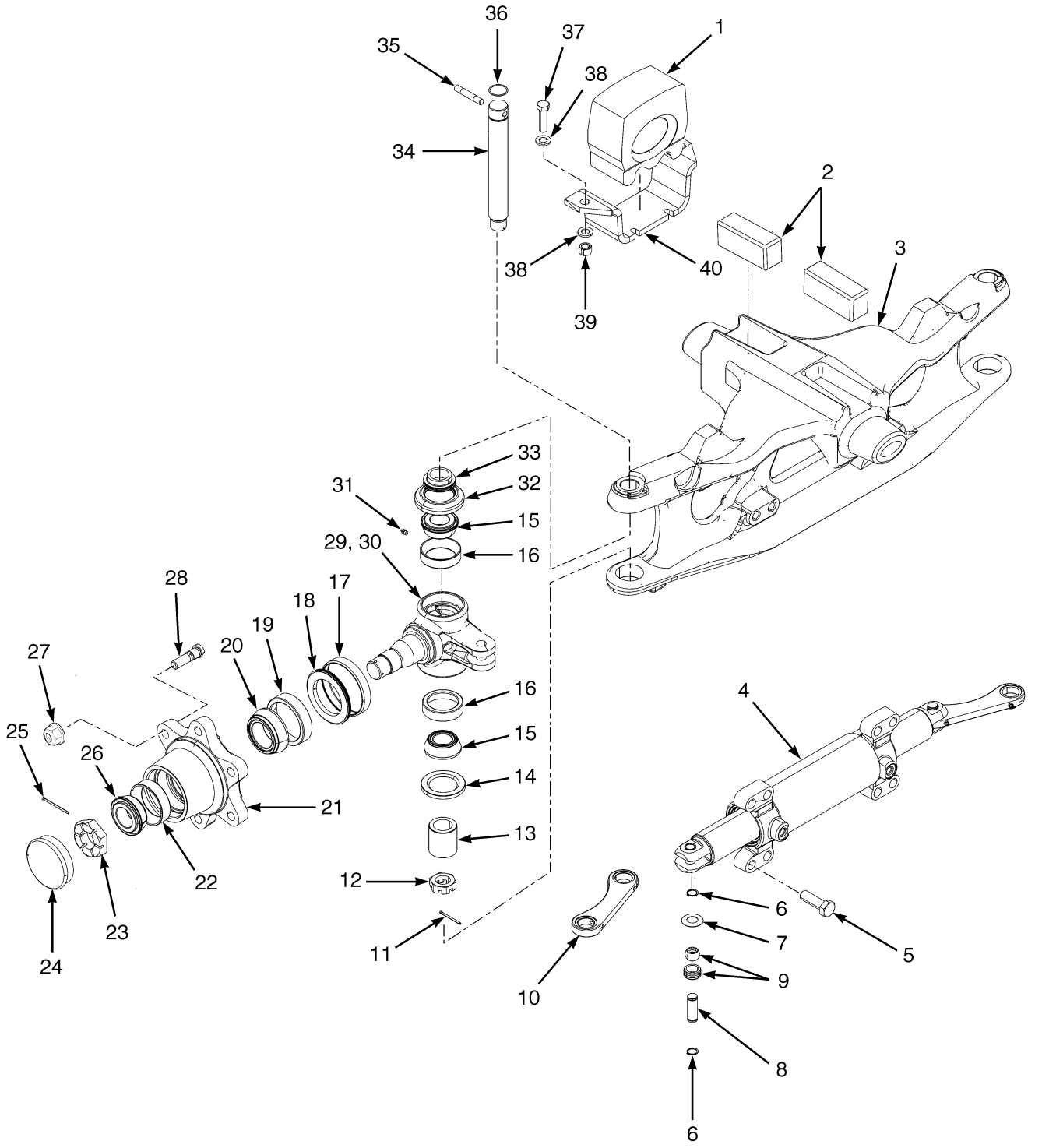

©2013 HYSTER COMPANY

STEER AXLE

ITEM	PART NO.	DESCRIPTION	QTY
1	1525354	Rubber Mount	2
2	1388838	Rubber Mount	2
3	1537400	Steering Axle	1
4	2071096	Steering Cylinder (☞Figure 10-8)	1
5	293686	Capscrew	8
6	58903	Snap Ring	8
7	300752	Spherical Washer	8
8	1568271	Pin	4
9	300751	Bushing	4
10	381298	Tie Rod	2
11	15225	Cotter Pin	2
12	249289	Nut	2
13	300766	Sleeve	2
14	98525	Oil Seal	2
15	156195	Bearing Cone	4
16	156194	Bearing Cup	4
17	164639	Wear Sleeve	2
18	44542	Seal	2
19	163970	Bearing Cup	2
20	30273	Bearing Cone	2
21	1537667	Hub	2
22	317075	Bearing Cup	2
23	1383777	Nut	2
24	69029	Cap	2
25	15227	Cotter Pin	2
26	317076	Bearing Cone	2
27	1517836	Wheel Nut	12
28	1502276	Wheel Stud	12
29	1310599	Spindle (LH)	1
30	1315425	Spindle (RH)	1
31	13957	Grease Fitting	6
32	264973	Seal	2
33	300767	Spacer	2
34	300765	King Pin	2
35	226986	Pin	2
36	39352	O-Ring	2
37	293648	Capscrew	4
38	320161	Washer	8
39	300937	Nut	4
40	1543254	Plate	2

©2013 HYSTER COMPANY

STEER CYLINDER (FIGURE 10-8)

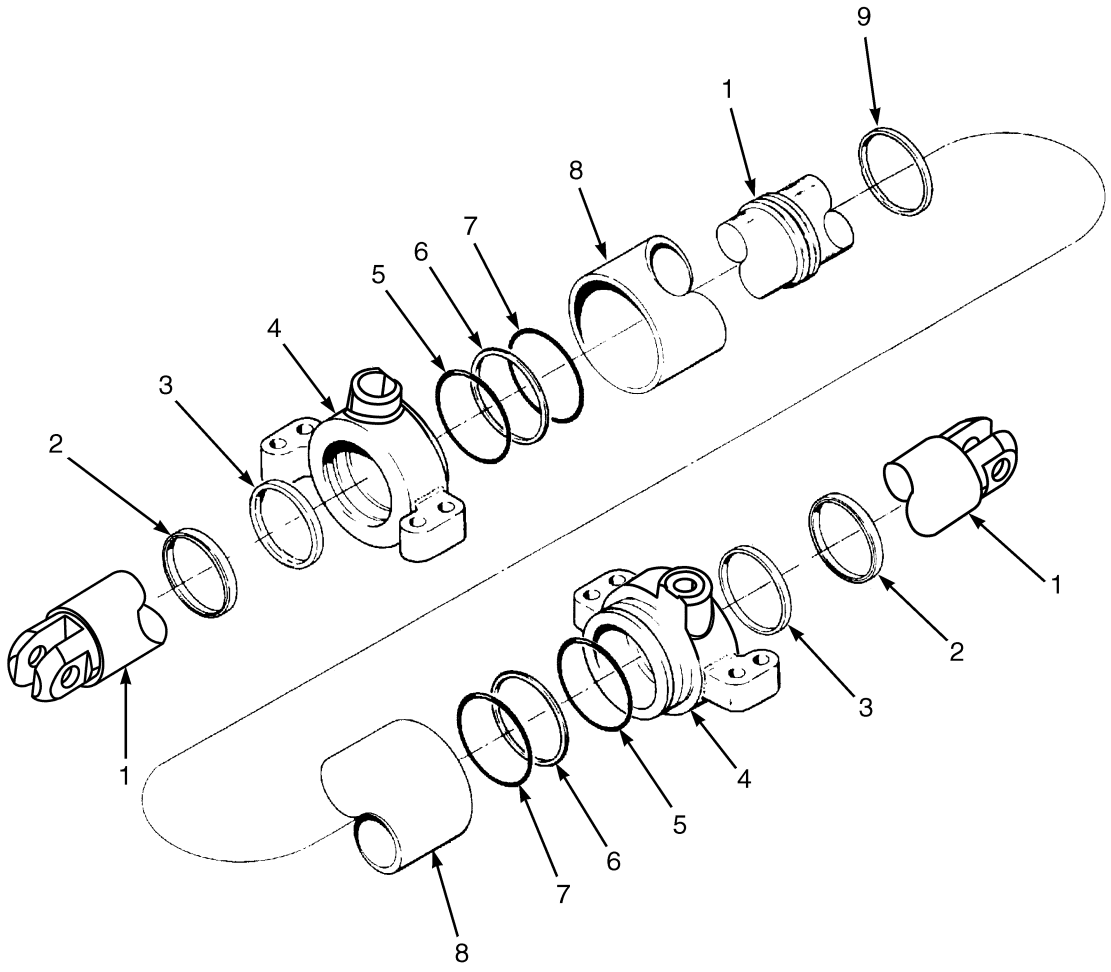

BP220070

©2013 HYSTER COMPANY

STEER CYLINDER

ITEM	PART NO.	DESCRIPTION	QTY
	2071096	Steering Cylinder	1
1	375634	Cylinder Rod	1
2	2071094	Rod Wiper	2
3	1380092	Rod Seal	2
4	1561008	End Cap	1
5	268619	O-Ring	2
6	147973	Back-Up Ring	2
7	118358	O-Ring	2
8	375635	Tube Wldmt-Cylinder	1
9	2044371	Piston Seal	1
	1566700	Kit-Seal	1

©2013 HYSTER COMPANY

STEER TIRES AND WHEELS (FIGURE 10-9)

H40-50FT

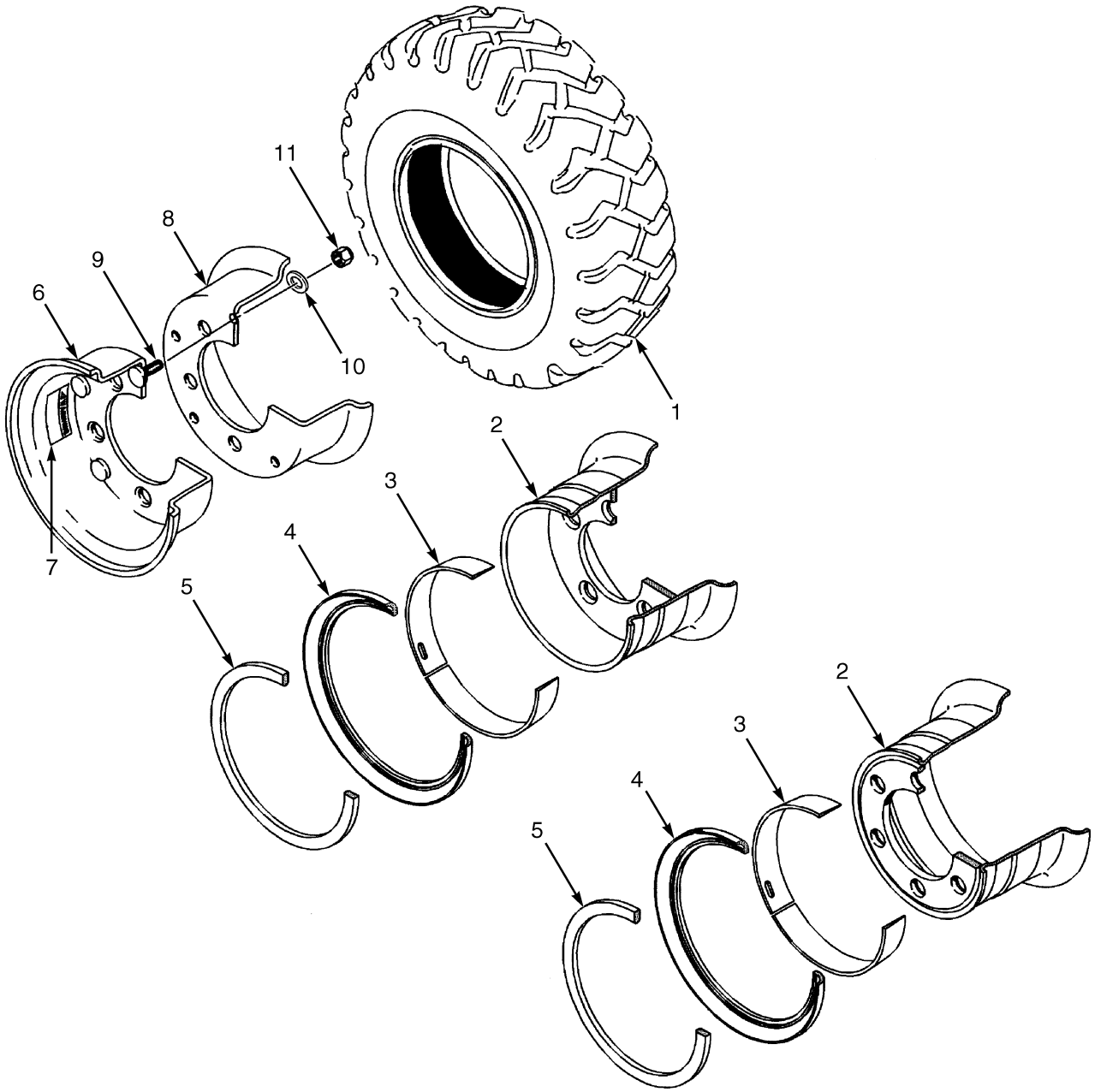

BP220065

©2013 HYSTER COMPANY

STEER TIRES AND WHEELS
H40-50FT

KEY:
A: 6.00 x 9.00 Pneumatic
B: 6.00 x 9 Radial
C: 6.00 x 9-12 PR

ITEM	PART NO.	DESCRIPTION	QTY A	QTY B	QTY C
1	1543059	Tire	..	..	2
1	1543069	Tire	2	..	..
1	1688697	Solid Pneumatic Tire (Alternate Part)	2	..	..
1	1603489	Tire (Non-Marking)	2	..	..
1	1471837	Pneumatic Tire	..	2	..
1	1358177	Pneumatic Tire (Michelin XZM)	..	2	..
1	1462615	Tubeless Bead Seal	..	1	..
1	1471921	Tubeless Bead Seal Valve	..	1	..
1	4029268	Tire Assembly (Conti RT20)	..	2	..
1	4029455	Tire	..	1	..
1	4029480	Seal (Tubeless Sealing Ring)	..	1	..
2	2070081	Rim (4.00 x 9)	2	2	..
2	2070083	Rim	2	2	..
3	1584693	Ring-Tapered Bead Seat	1	1	..
4	161885	Wheel Side Ring	1	1	..
5	161884	Wheel Lock Ring	1	1	..
6	2092535	Wheel Assy (4.00 x 9)	..	..	2
6	. . . . .	Outer Wheel	..	..	1
7	288638	Label (Warning)	..	..	2
8	. . . . .	Inner Wheel	..	..	1
9	2021575	Wheel Stud	..	..	12
10	292683	Lockwasher	..	..	12
11	303119	Nut	..	..	12

©2013 HYSTER COMPANY

STEER TIRES AND WHEELS (FIGURE 10-10)

H40-70FT

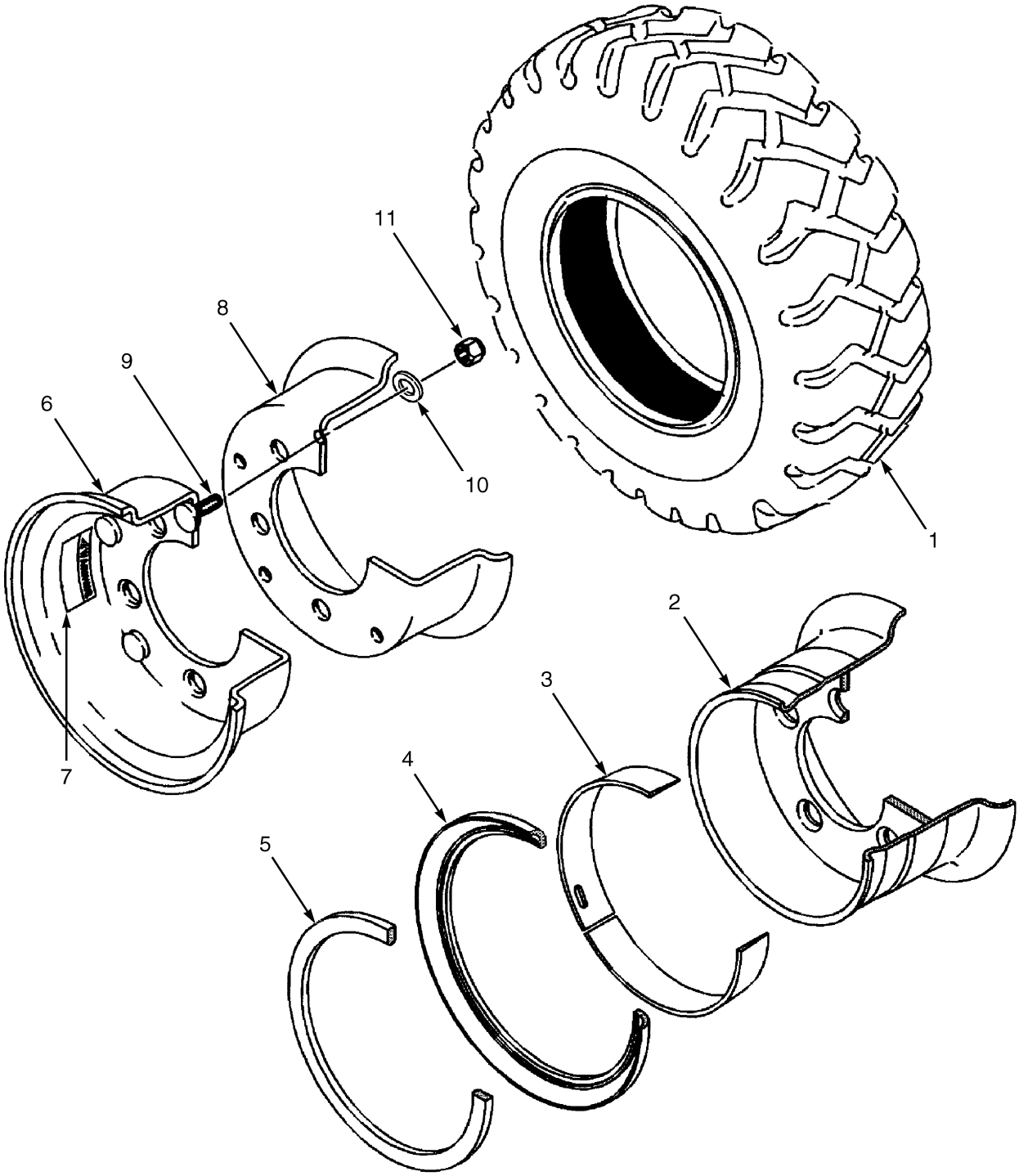

BP220066

©2013 HYSTER COMPANY

STEER TIRES AND WHEELS
H40-70FT

KEY:
A: 6.50 x 10 Pneumatic
B: 6.50 R10 Radial
C: 6.50 x 10-12 Two Piece Wheel

ITEM	PART NO.	DESCRIPTION	QTY A	QTY B	QTY C
1	1539636	Solid Pneumatic Tire	2	..	..
1	1544234	Solid Pneumatic Tire (6.50x10/5.0) (Alternate Part)	2	..	..
1	1544232	Pneumatic Tire (6.50 x 10-12PR)	..	..	2
1	1603490	Tire (Non-Marking 6.50x10/5.0)	2	..	..
1	1471832	Pneumatic Tire (6.5 R10 Pneu Radial)	..	2	..
1	1462616	Tubeless Bead Seal	..	1	..
1	1358178	Pneumatic Tire (Michelin XZM 6.50 R10)	..	1	..
1	1471922	Tubeless Bead Seal Valve	..	1	..
1	4029269	Tire Assembly (Conti RT20)	..	2	..
1	4029456	Tire	..	1	..
1	4029481	Seal (Tubeless Sealing Ring)	..	1	..
2	2067044	Rim (5.00 x 10)	2	2	..
3	1580427	Wedge Band	1	1	..
4	1580426	Wheel Side Ring	1	1	..
5	161894	Wheel Lock Ring	1	1	..
6	2092536	Wheel Assy (5.00 x 10)	..	..	2
6	. . . . .	Outer Wheel	..	..	2
7	288638	Label (Warning)	..	..	2
8	. . . . .	Inner Wheel	..	..	2
8	288638	Label (Warning)	..	..	2
9	2027618	Wheel Stud	..	..	12
10	292685	Lockwasher	..	..	12
11	292600	Nut	..	..	12

©2013 HYSTER COMPANY

NOTES

©2013 HYSTER COMPANY

11 BRAKE SYSTEM

SECTION 11
BRAKE SYSTEM

DESCRIPTION	PAGE
BRAKE ASSEMBLY	
DRY BRAKE	11-10
BRAKE COOLING SYSTEM	
SINGLE AND DUAL PEDAL - WET BRAKE (→ S/N L177B15745E)	11-14
SINGLE AND DUAL PEDAL - WET BRAKE (S/N L177B15746E ↔ S/N L177V03122G)	11-16
SINGLE AND DUAL PEDAL WET BRAKE - WITH ALUMINUM TRANSMISSION (S/N L177V03123G →)	11-18
BRAKE LINKAGE	
DUAL PEDAL - DRY BRAKE (→ S/N L177V04756H)	11-6
DUAL PEDAL - DRY BRAKE (S/N L177V04757H →)	11-8
DUAL PEDAL - WET BRAKE (→ S/N L177V03122G)	11-26
DUAL PEDAL - WET BRAKE (S/N L177V03123G →)	11-30
SINGLE PEDAL - DRY BRAKE (→ S/N L177V04756H)	11-2
SINGLE PEDAL - DRY BRAKE (S/N L177V04757H →)	11-4
SINGLE PEDAL - WET BRAKE (→ S/N L177V03122G)	11-20
SINGLE PEDAL - WET BRAKE (S/N L177V03123G →)	11-24
BRAKE MASTER CYLINDER ASSEMBLY	
DRY BRAKE	11-13
WET BRAKE (→ S/N L177V03122G)	11-32
WET BRAKE (S/N L177V04757H →)	11-34
PARK BRAKE ASSEMBLY	
→ S/N L177V04756H	11-36
S/N L177V04757H →	11-38

©2013 HYSTER COMPANY

BRAKE LINKAGE (FIGURE 11-1)

SINGLE PEDAL — DRY BRAKE (→ S/N L177V04756H)

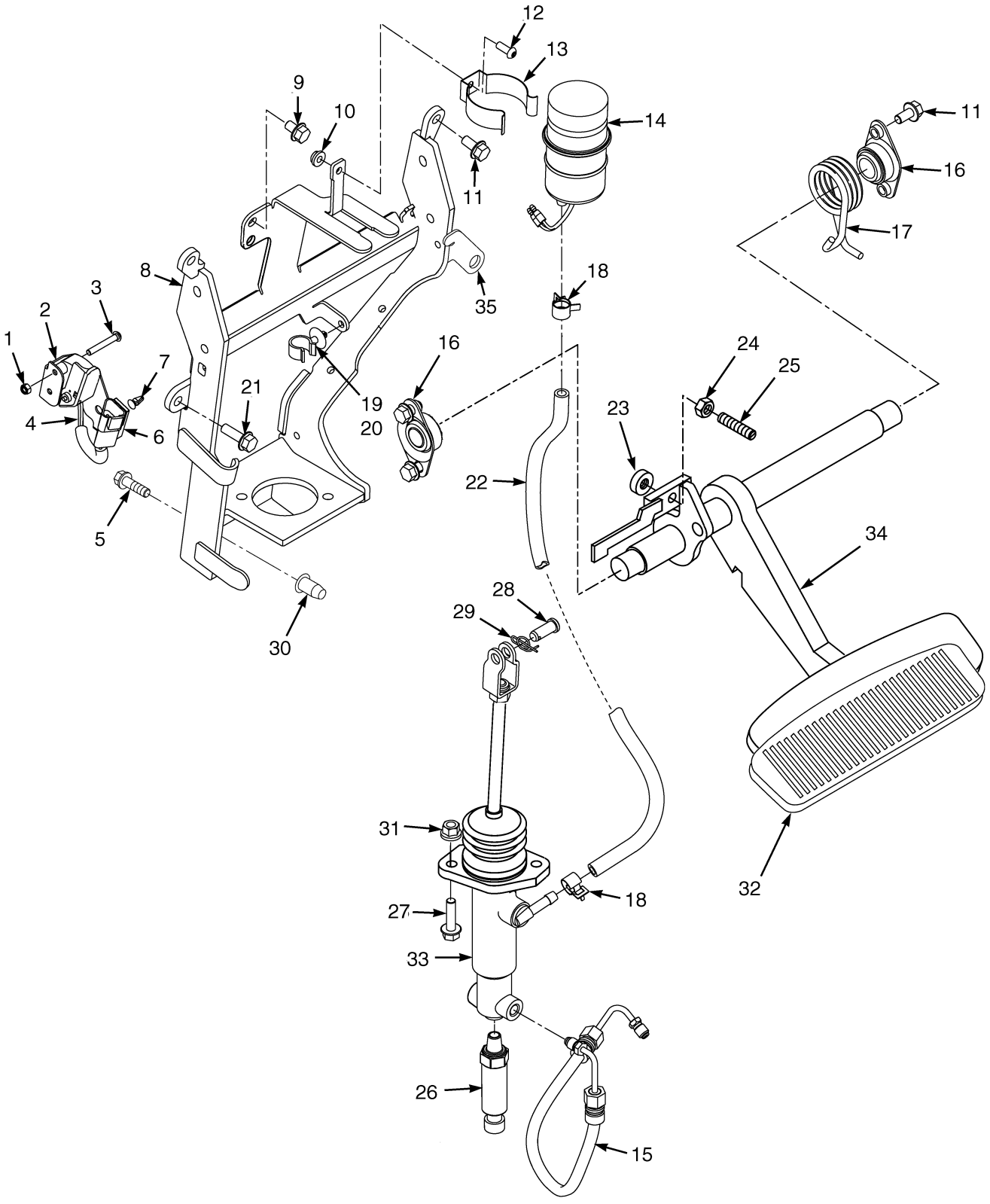

HP040421

©2013 HYSTER COMPANY

BRAKE LINKAGE

SINGLE PEDAL – DRY BRAKE (→ S/N L177V04756H)

ITEM	PART NO.	DESCRIPTION	QTY
1	302398	Locknut	2
2	1531567	Bracket (Inching Sensor)	1
3	1553897	Capscrew	2
4	1547849	Sensor (Brake Position)	1
5	1586627	Capscrew	2
6	1500912	Clip	1
7	1564526	Clip (Key Hole)	1
8	1570290	Bracket Wldmt	1
9	1529366	Capscrew	1
10	~~1307884~~		
	1514429	Nut	1
11	1527879	Capscrew	6
12	1510126	Screw (Button Head)	1
13	2021353	Holder	1
14	2314223	Reservoir	1
14	2021341	Cap	1
14	2077604	Tank	1
14	2021343	Packing	1
15	2059937	Hose Assy (Brake)	1
16	1585575	Bushing	2
17	1568075	Spring (RH)	1
18	1502003	Hose Clamp	2
19	1543842	Clamp	1
20	1543698	Clamp (Swivel)	1
21	1583611	Capscrew	2
22	1531569	Hose (Brake Feed)	1
23	1556475	Bumper	1
24	239503	Nut	1
25	1534871	Bolt	1
26	1590033	Transducer (Brake Pressure)	1
27	1527881	Capscrew	2
28	1375391	Pin (Rod End)	1
29	1351689	Locking Cotter Pin	1
30	1530243	Insert	2
31	1544153	Locknut	2
32	1570298	Rubber Pad	1
33	1536724	Master Cylinder (☞Figure 11-6)	1
34	1568243	Pedal	1
35	~~1594950~~		
	4053949	Plate	1
	2093224	Label (Brake Fluid Warning) (Not Illustrated)	1

©2013 HYSTER COMPANY

BRAKE LINKAGE (FIGURE 11-2)

SINGLE PEDAL — DRY BRAKE (S/N L177V04757H →)

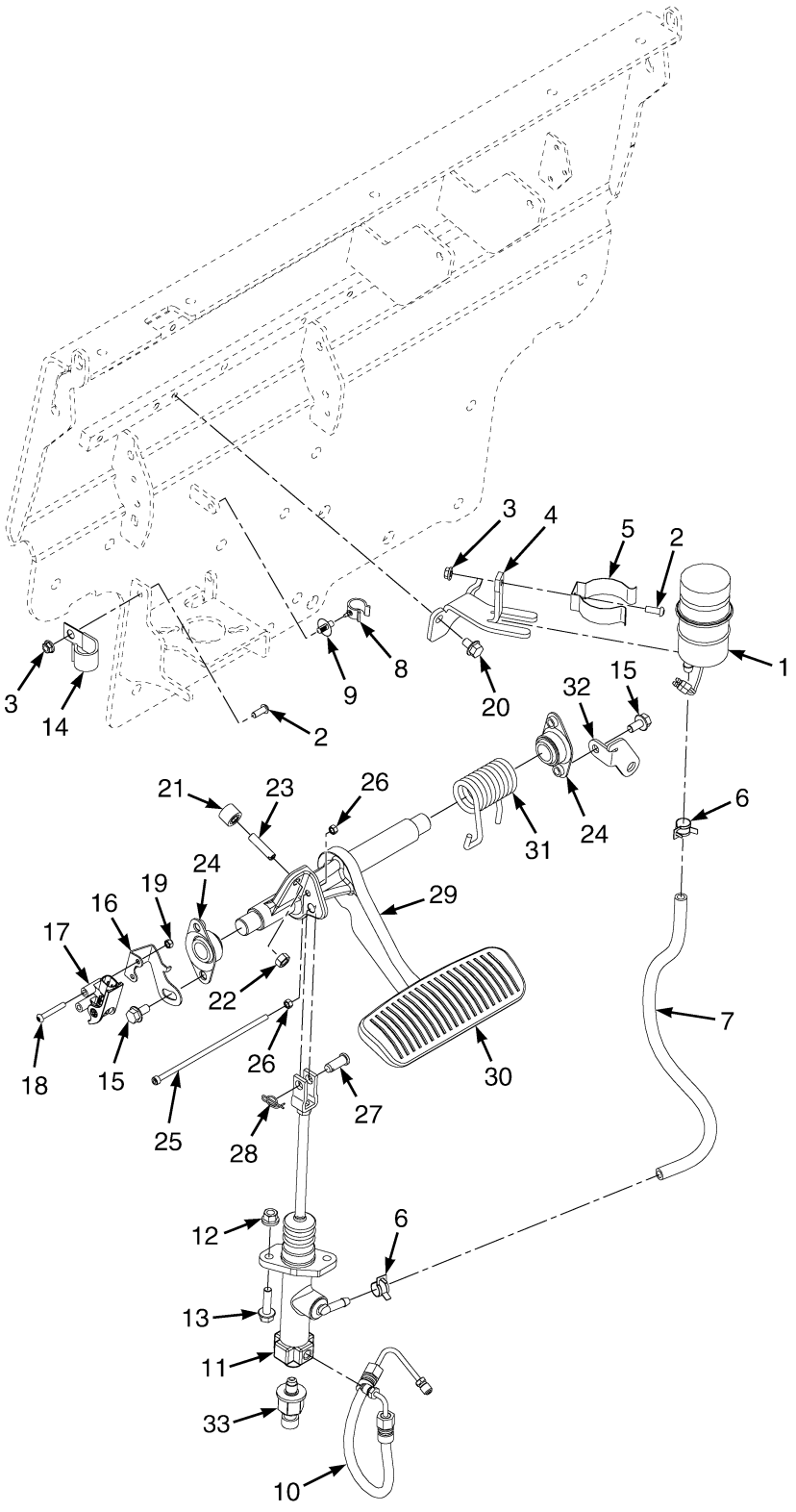

BP040150

©2013 HYSTER COMPANY

BRAKE LINKAGE

SINGLE PEDAL – DRY BRAKE (S/N L177V04757H →)

ITEM	PART NO.	DESCRIPTION	QTY
1	2314223	Reservoir	1
1	2021341	Cap	1
1	2077604	Tank	1
1	2021343	Packing	1
2	1510126	Screw (Button Head)	2
3	~~1307884~~		
	1514429	Nut	2
4	1699992	Mount	1
5	2021353	Holder	1
6	1502003	Hose Clamp	2
7	1531569	Hose	1
8	1543698	Clamp (Swivel)	1
9	1543842	Clamp	1
10	2059937	Hose Assy	1
10	**a** 4014682	Adapter (Master Cylinder)	1
11	1536724	Master Cylinder (☞Figure 11-6)	1
12	1544153	Locknut	2
13	1527881	Capscrew	2
14	325897	Clamp	1
15	1527879	Capscrew	2
16	1688503	Mount	1
17	1683486	Sensor (Brake Position)	1
18	1701768	Screw	2
19	302398	Locknut	2
20	1529366	Capscrew	1
21	1556475	Bumper	1
22	239503	Nut	1
23	1534871	Bolt	1
24	1585575	Bushing	2
25	1704902	Capscrew	1
26	292668	Nut	2
27	1375391	Pin (Rod End)	1
28	1351689	Locking Cotter Pin	1
29	1707008	Brake Pedal	1
30	1570298	Rubber Pad	1
31	1568075	Spring (RH)	1
32	~~1594950~~		
	4053949	Plate	1
33	1590033	Transducer (Brake Pressure)	1
	2064554	Loctite	1

FOOTNOTES:

a Not Illustrated

©2013 HYSTER COMPANY

BRAKE LINKAGE (FIGURE 11-3)

DUAL PEDAL — DRY BRAKE (→ S/N L177V04756H)

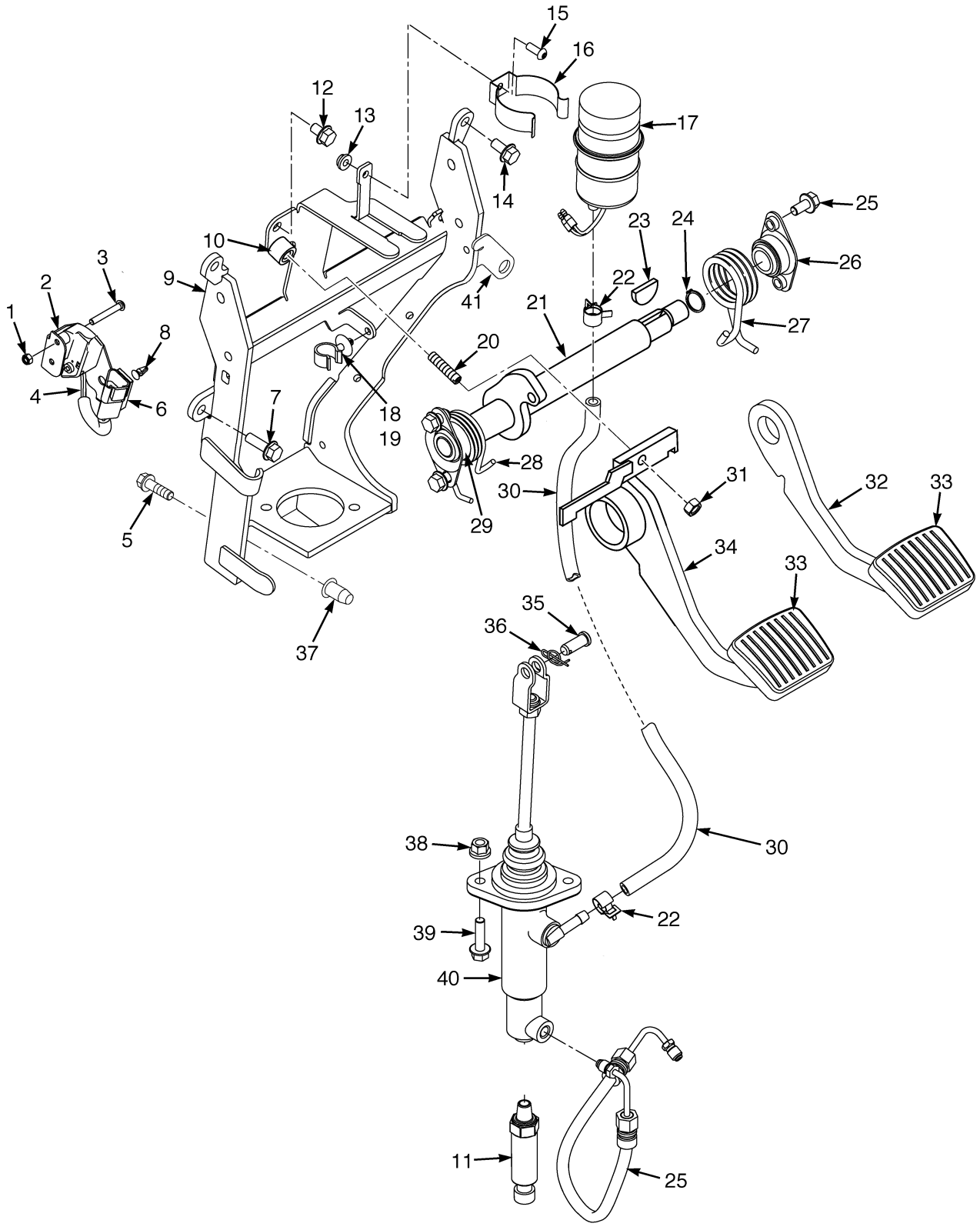

©2013 HYSTER COMPANY

BRAKE LINKAGE

DUAL PEDAL – DRY BRAKE (→ S/N L177V04756H)

ITEM	PART NO.	DESCRIPTION	QTY
1	302398	Locknut	2
2	1531567	Bracket (Inching Sensor)	1
3	1553897	Capscrew	2
4	1547849	Sensor (Brake Position)	1
5	1586627	Capscrew	2
6	1500912	Clip (Connector)	1
7	1583611	Capscrew	2
8	1564526	Clip (Key Hole)	1
9	1570290	Bracket Wldmt	1
10	1556475	Bumper	1
11	1590033	Transducer (Brake Pressure)	1
12	1529366	Capscrew	1
13	~~1307884~~		
	1514429	Nut	1
14	1527879	Capscrew	6
15	1510126	Screw (Button Head)	1
16	2021353	Holder	1
17	2314223	Reservoir	1
17	2021341	Cap	1
17	2077604	Tank	1
17	2021343	Packing	1
18	1543698	Clamp (Swivel)	1
19	1543842	Clamp	1
20	1534871	Bolt	1
21	1568253	Crank	1
22	1502003	Hose Clamp	2
23	206	Woodruff Key	1
24	12929	Snap Ring	1
25	2059937	Hose Assy (Brake)	1
26	1585575	Bushing	2
27	1568076	Spring (RH)	1
28	1568077	Spring (LH)	1
29	244540	Bushing	2
30	1531569	Hose (Brake Feed)	1
31	239503	Nut	1
32	1568256	Brake Pedal (RH)	1
33	1570300	Pad	2
34	1568245	Brake Pedal (LH)	1
35	1375391	Pin (Rod End)	1
36	1351689	Locking Cotter Pin	1
37	1530243	Insert	2
38	1544153	Locknut	2
39	1527881	Capscrew	2
40	1536724	Master Cylinder (☞Figure 11-6)	1
41	~~1594950~~		
	4053949	Plate	1
	2093224	Label (Brake Fluid Warning) (Not Illustrated)	1

©2013 HYSTER COMPANY

BRAKE LINKAGE (FIGURE 11-4)

DUAL PEDAL — DRY BRAKE (S/N L177V04757H →)

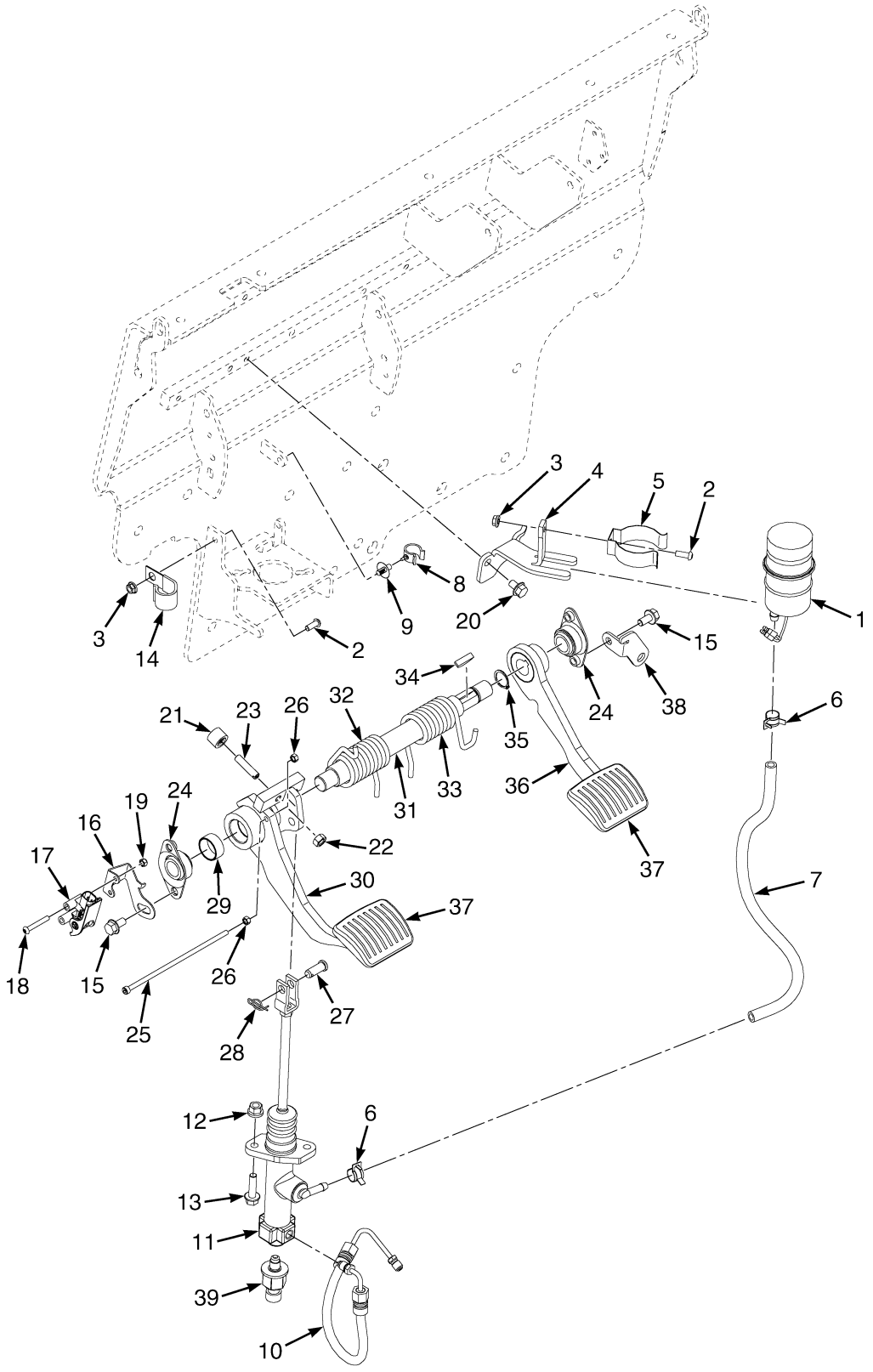

©2013 HYSTER COMPANY

BRAKE LINKAGE

DUAL PEDAL – DRY BRAKE (S/N L177V04757H →)

ITEM	PART NO.	DESCRIPTION	QTY
1	2314223	Reservoir	1
1	2021341	Cap	1
1	2077604	Tank	1
1	2021343	Packing	1
2	1510126	Screw (Button Head)	2
3	~~1307884~~		
	1514429	Nut	2
4	1699992	Mount	1
5	2021353	Holder	1
6	1502003	Hose Clamp	2
7	1531569	Hose	1
8	1543698	Clamp (Swivel)	1
9	1543842	Clamp	1
10	2059937	Hose Assy	1
11	1536724	Master Cylinder (☞Figure 11-6)	1
12	1544153	Locknut	2
13	1527881	Capscrew	2
14	325897	Clamp	1
15	1527879	Capscrew	2
16	1688503	Mount	1
17	1683486	Sensor (Brake Position)	1
18	1701768	Screw	2
19	302398	Locknut	2
20	1529366	Capscrew	1
21	1556475	Bumper	1
22	239503	Nut	1
23	1534871	Bolt	1
24	1585575	Bushing	2
25	1704901	Capscrew	1
26	292668	Nut	2
27	1375391	Pin (Rod End)	1
28	1351689	Locking Cotter Pin	1
29	244540	Bushing	2
30	1701771	Inching Pedal (Left Hand)	1
31	1568253	Crank	1
32	1568077	Spring (LH)	1
33	1568076	Spring (RH)	1
34	206	Woodruff Key	1
35	12929	Snap Ring	1
36	1568256	Brake Pedal (RH)	1
37	1570300	Pad	1
38	~~1594950~~		
	4053949	Plate	1
39	1590033	Transducer (Brake Pressure)	1
	a 2111171	Wire Harness (Jumper) (Position Sensor/Cowl Harness)	1
	2064554	Loctite	1

FOOTNOTES:

a Not Illustrated

©2013 HYSTER COMPANY

BRAKE ASSEMBLY (FIGURE 11-5)
DRY BRAKE

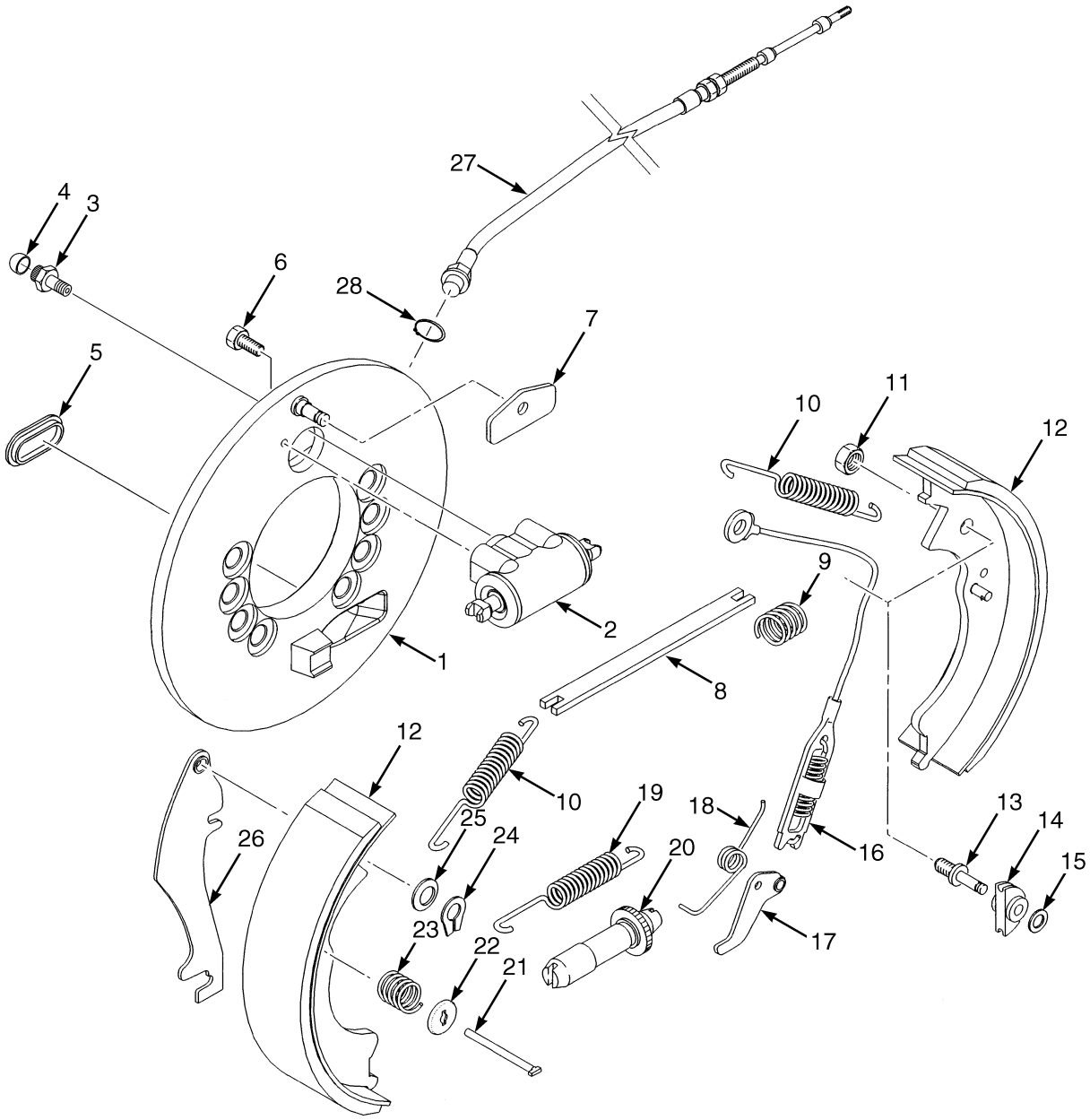

BP040047

©2013 HYSTER COMPANY

BRAKE ASSEMBLY
DRY BRAKE

KEY:
A: RH
B: LH

ITEM	PART NO.	DESCRIPTION	QTY A	QTY B
	1579455	Brake Assembly (With Cable and Dust Shield)	1	..
	1579454	Brake Assembly (With Cable and Dust Shield)	..	1
	1606086	Brake Assembly (Without Cable)	1	..
	1606085	Brake Assembly (Without Cable)	..	1
1	1606088	Backplate	1	..
1	1606087	Backplate	..	1
2	1565290	Wheel Cylinder	1	1
2	1334647	Kit-Repair Wheel Cylinder	1	1
3	1361503	Bleeder Screw	1	1
4	1361504	Cap	1	1
5	1334642	Cover	1	1
6	1565303	Bolt	2	2
7	2037343	Wear Plate	1	1
8	1360796	Bracket	1	..
8	1361507	Strut	..	1
9	1360797	Spring	1	1
10	. . . . .	Spring	1	1
11	. . . . .	Nut	1	1
12	1565314	Kit-Brake Shoe	1	..
12	1565313	Kit-Brake Shoe	..	1
13	. . . . .	Pin	1	1
14	1334644	Sheave	1	1
15	1361500	Washer	1	1
16	. . . . .	Cable and Spring Assembly	1	1
17	2037518	Lever	1	..
17	2037517	Lever	..	1
18	. . . . .	Spring	1	1
19	2037340	Spring	1	1
20	1600492	Adjuster	1	..
20	1600491	Adjuster	..	1
21	2037323	Pin	1	1
22	2037341	Cup	1	1
23	. . . . .	Spring	1	1
24	1338916	Retainer	1	1
25	1338917	Washer	1	1
26	. . . . .	Park Brake Lever	1	1
27	1565305	Parking Brake Cable	1	..
27	1600493	Parking Brake Cable	..	1
28	1361502	Snap Ring	1	1
	1565316	Kit-Spring	1	1
	1565310	Kit-Adjuster (RH)	1	..
	1565309	Kit-Adjuster (LH)	..	1
	1565311	Kit-Repair Parking Brake (LH)	..	1
	1565312	Kit-Park Brake (RH)	1	..

©2013 HYSTER COMPANY

BRAKE ASSEMBLY
DRY BRAKE

KEY:
A: RH
B: LH

ITEM	PART NO.	DESCRIPTION	QTY A	QTY B
	1565315	Kit-Hold Down	1	1

©2013 HYSTER COMPANY

BRAKE MASTER CYLINDER ASSEMBLY (FIGURE 11-6)

DRY BRAKE

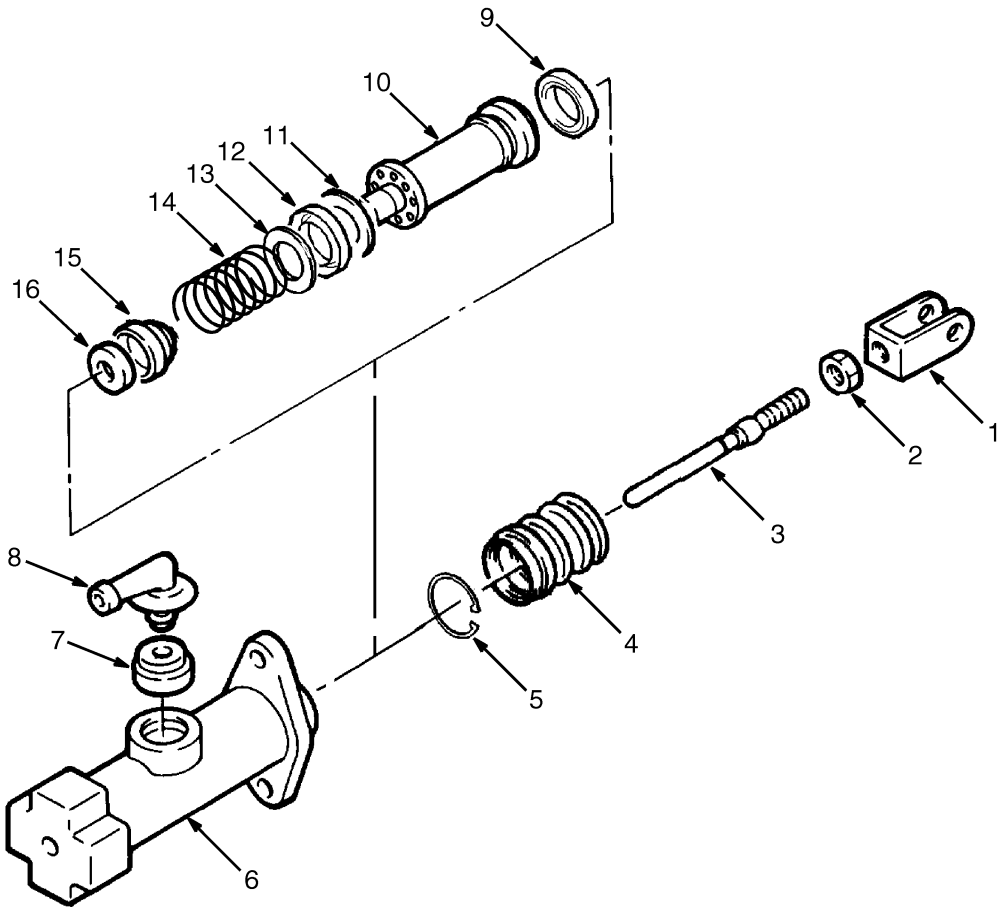

BP040123

ITEM	PART NO.	DESCRIPTION	QTY
	1536724	Master Cylinder	1
1	2041520	Yoke	1
2	1566142	Nut	1
3	1566141	Push Rod	1
4	. . . . .	Boot	1
5	. . . . .	Snap Ring	1
6	. . . . .	Housing	1
7	1566144	Gasket	1
8	1566143	Fitting	1
9	. . . . .	Seal	1
10	. . . . .	Piston	1
11	. . . . .	Spacer	1
12	. . . . .	Piston Cup	1
13	. . . . .	Retainer	1
14	. . . . .	Spring	1
15	. . . . .	Check Valve	1
16	. . . . .	Valve Seat	1
	1566131	Kit-Repair Master Cylinder	1

©2013 HYSTER COMPANY

See Service Manual for service procedures.

BRAKE COOLING SYSTEM (FIGURE 11-7)

SINGLE AND DUAL PEDAL — WET BRAKE (→ S/N L177B15745E)

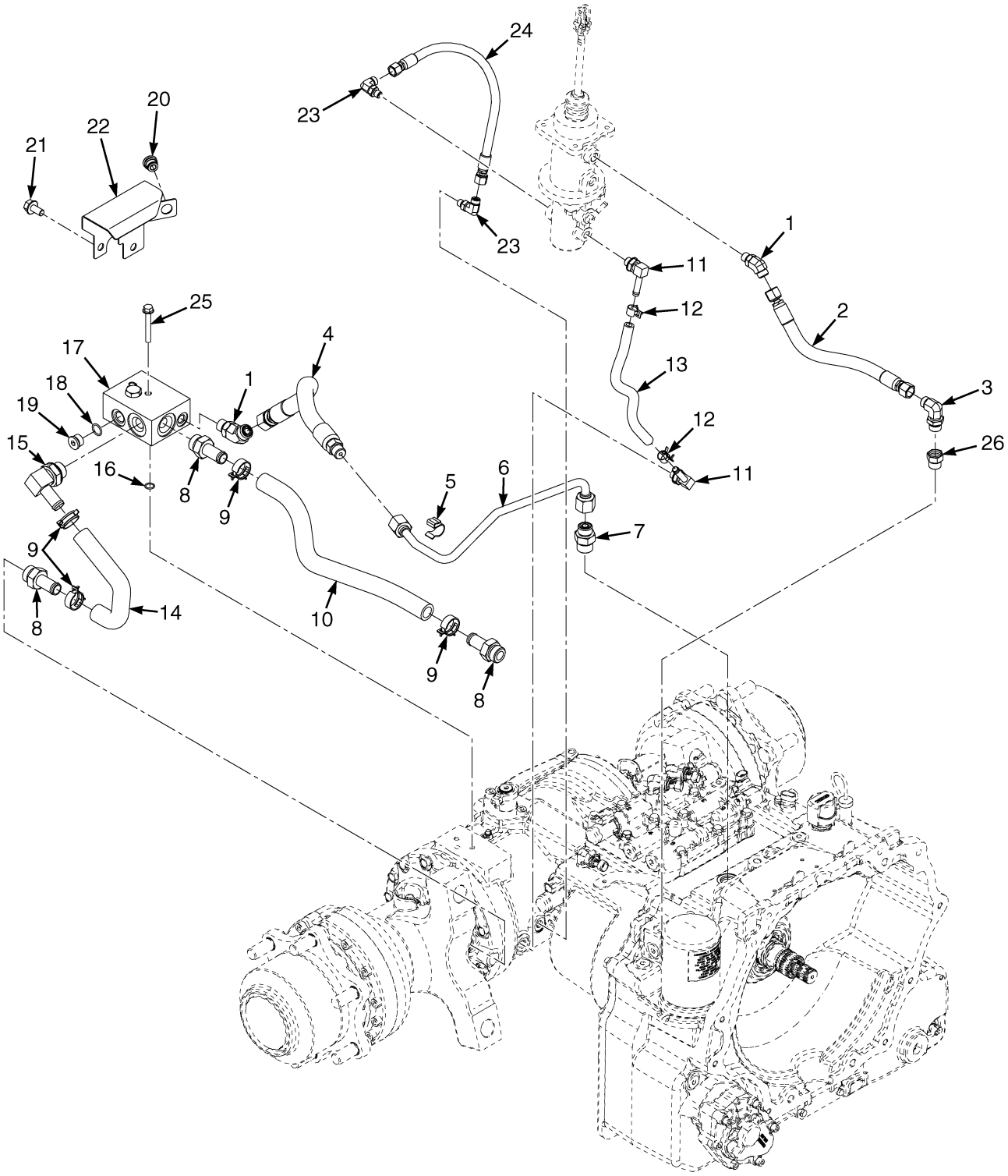

BP040179

©2013 HYSTER COMPANY

BRAKE COOLING SYSTEM

SINGLE AND DUAL PEDAL – WET BRAKE (→ S/N L177B15745E)

ITEM	PART NO.	DESCRIPTION	QTY
1	1516199	Fitting	2
1	16483	O-Ring	2
1	265787	O-Ring	2
2	2082235	Hose Assy (Master Cylinder to Torque Converter)	1
3	1487061	Fitting	1
3	265787	O-Ring	1
3	16484	O-Ring	1
4	2083929	Hose Assy (Torque Converter)	1
5	1612097	Clip	1
6	2083930	Tube	1
7	1486742	Fitting	1
7	265787	O-Ring	1
7	16483	O-Ring	1
8	17758	Fitting	3
8	16486	O-Ring	2
9	1502009	Hose Clamp	4
10	~~2083931~~		
	4606207	Hose (Transmission Return)	1
11	17221	Fitting	2
11	16483	O-Ring	1
11	265731	O-Ring	1
12	1569616	Hose Clamp	2
13	2083928	Hose	1
14	2072897	Hose (Coolant)	1
15	17775	Fitting	2
15	16486	O-Ring	2
16	265731	O-Ring	1
17	2083971	Manifold	1
17	1616054	Check Valve	1
17	1517906	Kit-Seal	1
18	16483	O-Ring	1
19	222443	Fitting	1
20	1531557	Insert	1
21	1527879	Capscrew	2
22	1588577	Bracket	1
23	1487058	Fitting	2
23	16481	O-Ring	2
23	1527813	O-Ring	2
24	2083955	Hose Assy (Brake Actuation)	1
25	1510116	Capscrew	2
26	77186	Fitting	1
26	16487	O-Ring	1

©2013 HYSTER COMPANY

BRAKE COOLING SYSTEM (FIGURE 11-8)

SINGLE AND DUAL PEDAL — WET BRAKE (S/N L177B15746E ↔ S/N L177V03122G)

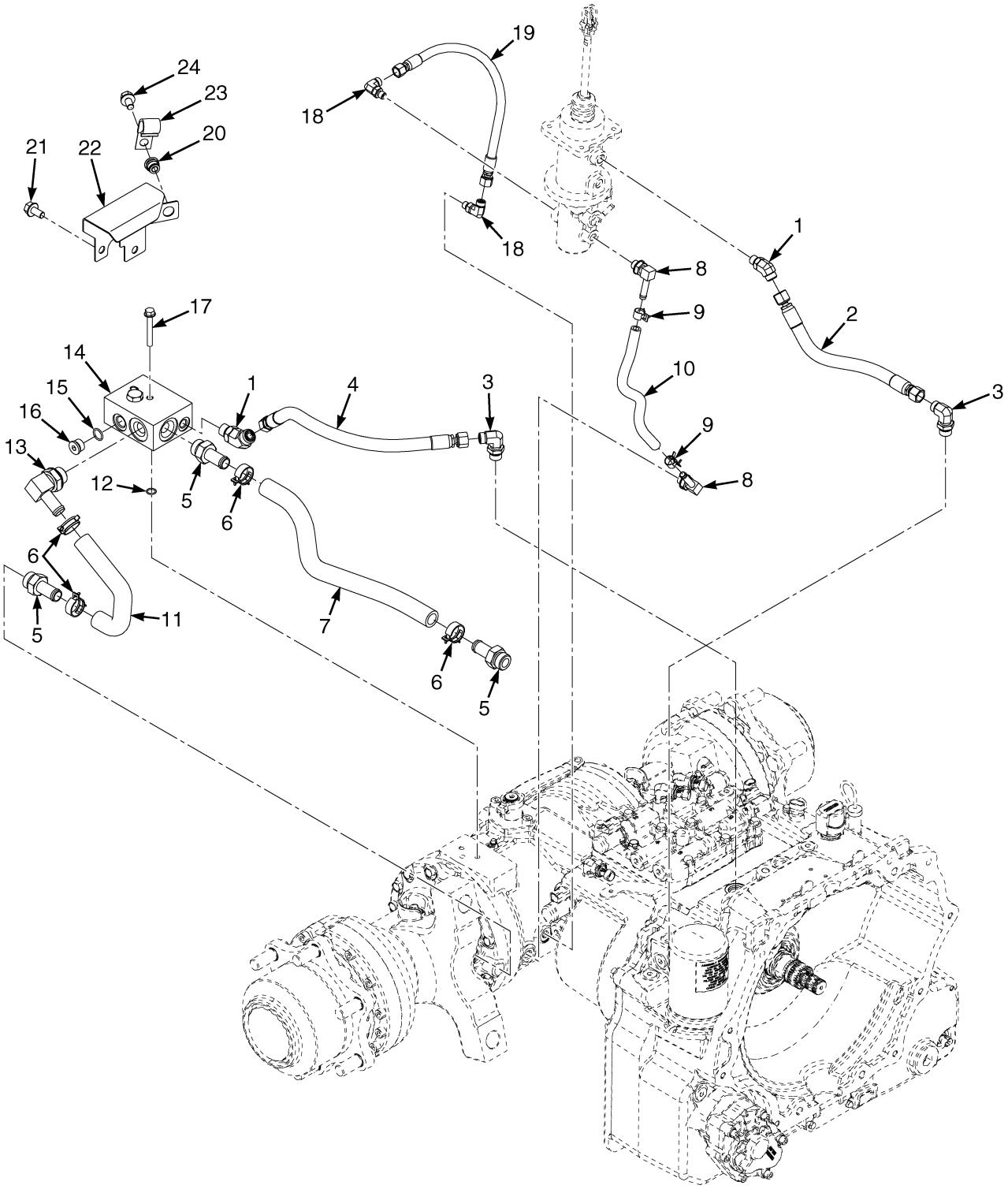

BP040180

©2013 HYSTER COMPANY

BRAKE COOLING SYSTEM

SINGLE AND DUAL PEDAL – WET BRAKE (S/N L177B15746E ↔ S/N L177V03122G)

ITEM	PART NO.	DESCRIPTION	QTY
1	1516199	Fitting	2
1	16483	O-Ring	2
1	265787	O-Ring	2
2	2095227	Hose Assy (Torque Converter to Master Cylinder)	1
3	1487061	Fitting	2
3	265787	O-Ring	1
3	16484	O-Ring	1
4	2095228	Hose Assy (Torque Converter)	1
5	17758	Fitting	3
5	16486	O-Ring	2
6	1502009	Hose Clamp	4
7	~~2083931~~		
	4606207	Hose (Transmission Return)	1
8	17221	Fitting	2
8	16483	O-Ring	1
8	265731	O-Ring	1
9	1569616	Hose Clamp	2
10	2083928	Hose	1
11	2072897	Hose (Coolant)	1
12	265731	O-Ring	1
13	17775	Fitting	2
13	16486	O-Ring	2
14	2083971	Manifold	1
14	1616054	Check Valve	1
15	16483	O-Ring	1
16	222443	Fitting	1
17	1510116	Capscrew	2
18	1487058	Fitting	2
18	16481	O-Ring	2
18	1527813	O-Ring	2
19	2083955	Hose Assy (Brake Actuation)	1
20	1531557	Insert	1
21	1527879	Capscrew	2
22	1588577	Bracket	1
23	325804	Clamp	1
24	1613324	Capscrew	1

©2013 HYSTER COMPANY

BRAKE COOLING SYSTEM (FIGURE 11-9)

SINGLE AND DUAL PEDAL WET BRAKE — WITH ALUMINUM TRANSMISSION (S/N L177V03123G →)

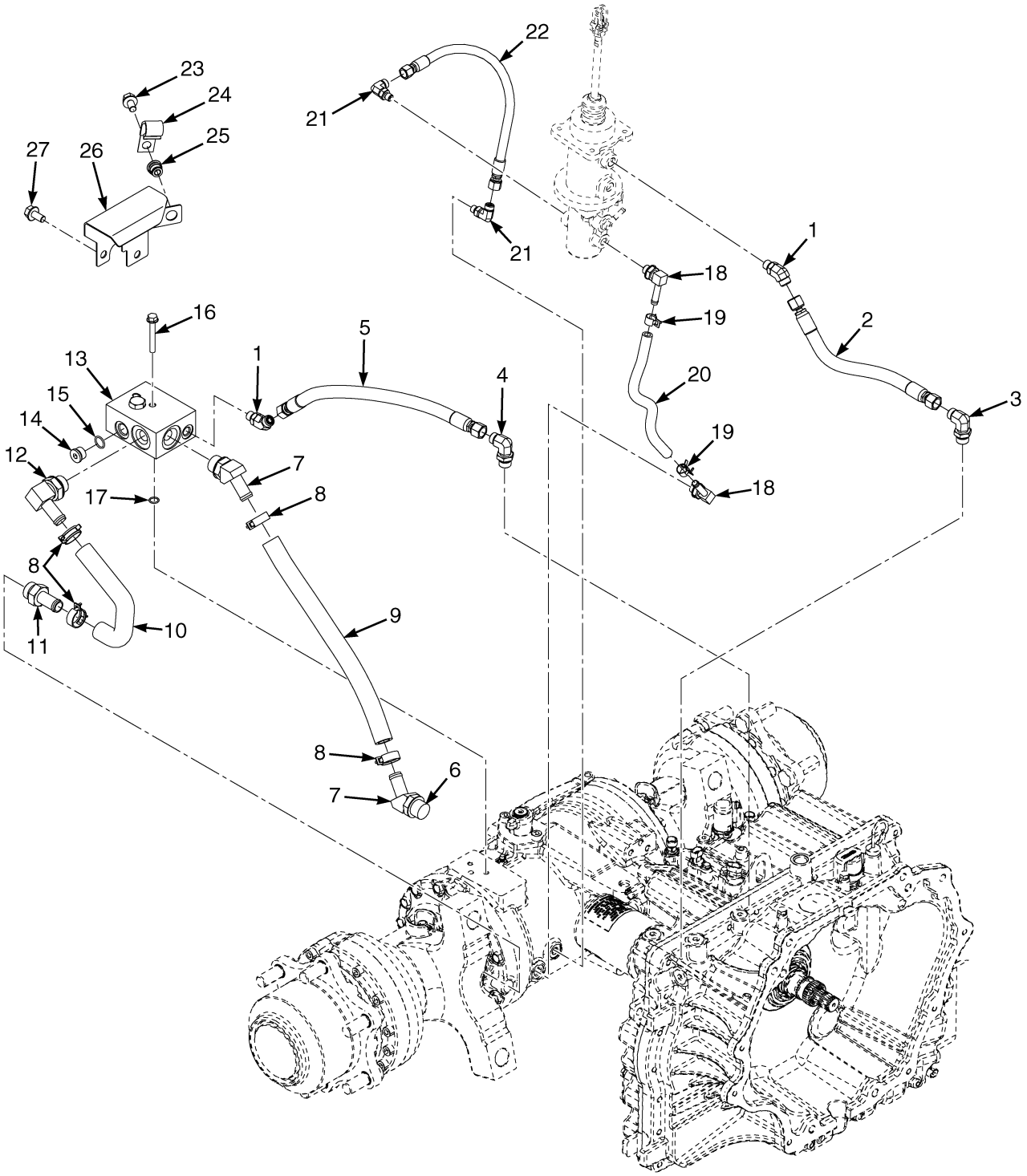

BP040181

©2013 HYSTER COMPANY

BRAKE COOLING SYSTEM

SINGLE AND DUAL PEDAL WET BRAKE – WITH ALUMINUM TRANSMISSION (S/N L177V03123G →)

ITEM	PART NO.	DESCRIPTION	QTY
1	1516199	Fitting	2
2	2095227	Hose Assy	1
3	1487062	Fitting	1
4	1487061	Fitting	1
5	2110267	Hose Assy (To Torque Converter)	1
6	4002394	Fitting	1
7	222505	Fitting	2
8	1502009	Hose Clamp	4
9	4612188	Hose Assy	1
10	2072897	Hose (Coolant Wet Disc Brake)	1
11	17758	Fitting	1
11	16486	O-Ring	2
12	17775	Fitting	1
12	16486	O-Ring	2
13	4607793	Manifold	1
14	. . . . .	Fitting	1
15	. . . . .	O-ring	1
16	1510116	Capscrew	2
17	265731	O-Ring	1
18	17221	Fitting	2
19	1569616	Hose Clamp	2
20	2083928	Hose	1
21	1487058	Fitting	2
22	2083955	Hose Assy	1
23	1613324	Capscrew	1
24	325804	Clamp	1
25	1531557	Insert	1
26	1588577	Bracket	1
27	1527879	Capscrew	2

©2013 HYSTER COMPANY

BRAKE LINKAGE (FIGURE 11-10)

SINGLE PEDAL — WET BRAKE (→ S/N L177V03122G)

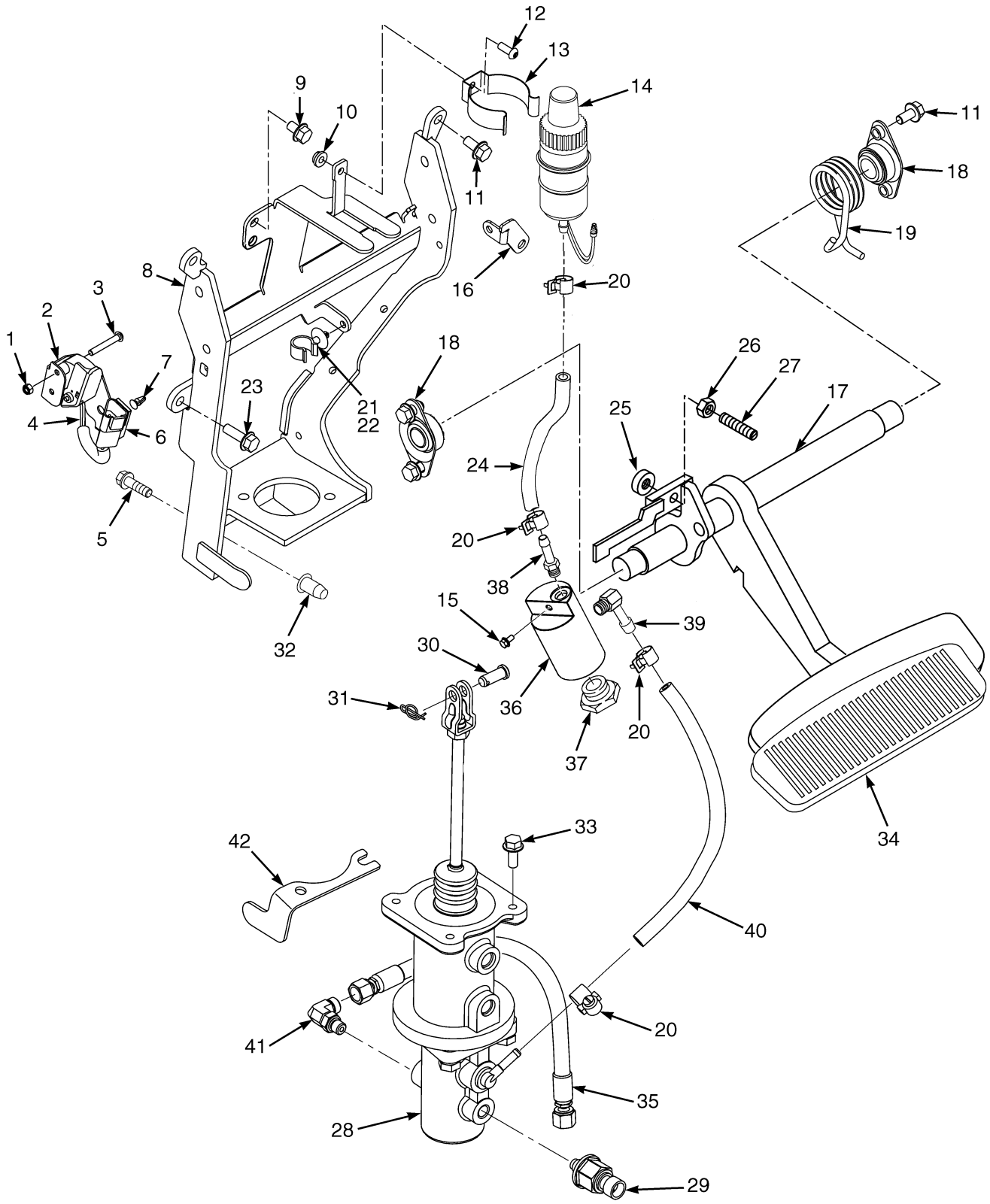

©2013 HYSTER COMPANY

BRAKE LINKAGE

SINGLE PEDAL – WET BRAKE (→ S/N L177V03122G)

ITEM	PART NO.	DESCRIPTION	QTY
1	302398	Locknut	2
2	1531567	Bracket	1
3	1553897	Capscrew	2
4	1547849	Sensor (Brake Position)	1
5	1586627	Capscrew	2
6	1500912	Clip	1
7	1564526	Clip (Key Hole)	1
8	1639075	Bracket Wldmt	1
9	1529366	Capscrew	1
10	~~1307884~~		
	1514429	Nut	1
11	1527879	Capscrew	6
12	1510126	Screw (Button Head)	1
13	2021353	Holder	1
14	1646439	Reservoir	1
14	2077604	Tank	1
14	**c** 1646557	Diaphragm	1
14	**g** 1645381	Diaphragm	1
14	1646397	Cap	1
15	1527876	Capscrew	1
16	~~1594950~~		
	4053949	Plate	1
17	1641558	Pedal	1
18	1585575	Bushing	2
19	1568075	Spring (RH)	1
20	166857	Clamp	4
20	**b** 168718	Clamp	4
21	1543842	Clamp	1
22	1543698	Clamp (Swivel)	1
23	1583611	Capscrew	2
24	2092888	Hose (Upper Brake Feed)	1
25	1556475	Bumper	1
26	239503	Nut	1
27	1534871	Bolt	1
28	**d** 1573675	Brake Booster (☞Figure 11-14)	1
28	**e** 2096079	Master Cylinder (Boosted) (☞Figure 11-14)	1
28	**f** 1569527	Master Cylinder (Boosted) (☞Figure 11-14)	1
29	1590033	Transducer (Brake Pressure)	1
30	1375391	Pin (Rod End)	1
31	1351689	Locking Cotter Pin	1
32	1530243	Insert	2
33	1527880	Capscrew	4
34	1570298	Rubber Pad	1
35	2083955	Hose Assy (Lower Brake Feed)	1
36	2092613	Cylinder Block	1
37	233683	Fitting	1
37	16487	O-Ring	1
38	222491	Fitting	1
38	16481	O-Ring	1
39	222509	Fitting	1

©2013 HYSTER COMPANY

BRAKE LINKAGE

SINGLE PEDAL – WET BRAKE (→ S/N L177V03122G)

ITEM	PART NO.	DESCRIPTION	QTY
39	16481	O-Ring	1
40	117989	Hose	1
41	1487058	Fitting	1
41	16481	O-Ring	1
41	1527813	O-Ring	1
42	**a** 1670905	Bracket	1

FOOTNOTES:

a Not Required
b Optional
c → S/N L177B11900D
d → S/N L177B13168E
e S/N L177B13169E ↔ S/N L177B16711E
f S/N L177B16712E →
g S/N L177B11901D →

©2013 HYSTER COMPANY

NOTES

©2013 HYSTER COMPANY

BRAKE LINKAGE (FIGURE 11-11)

SINGLE PEDAL — WET BRAKE (S/N L177V03123G →)

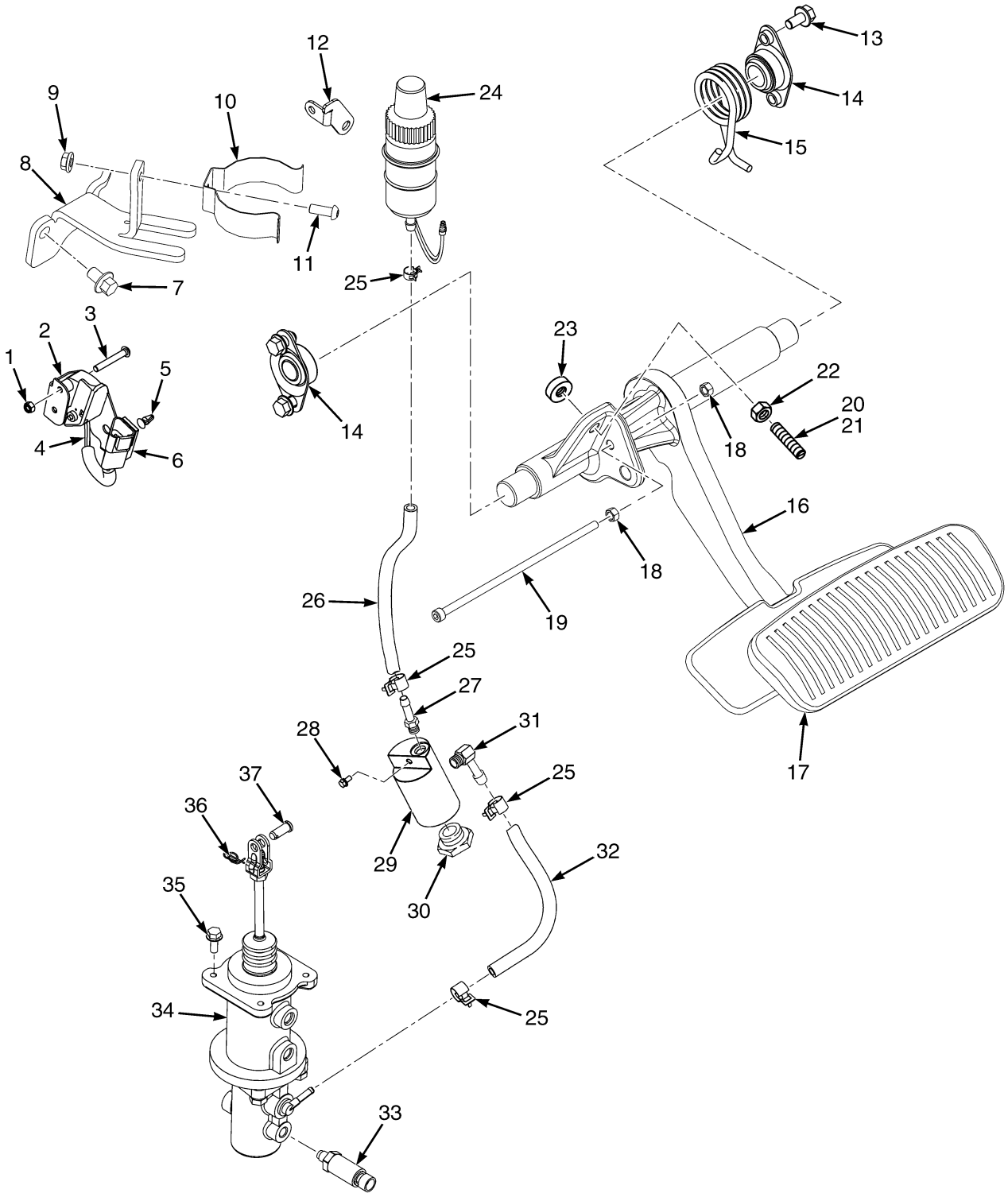

©2013 HYSTER COMPANY

BRAKE LINKAGE

SINGLE PEDAL – WET BRAKE (S/N L177V03123G →)

ITEM	PART NO.	DESCRIPTION	QTY
1	302398	Locknut	2
2	1531567	Bracket	1
3	1553897	Capscrew	2
4	1547849	Sensor (Brake Position)	1
5	1564526	Clip (Key Hole)	1
6	1500912	Clip	1
7	4011940	Capscrew	1
8	1699992	Mount	1
9	~~1307884~~		
	1514429	Nut	1
10	2021353	Holder	1
11	1510126	Screw (Button Head)	1
12	~~1594950~~		
	4053949	Plate	1
13	1527879	Capscrew	4
14	1585575	Bushing	2
15	1568075	Spring (RH)	1
16	1641558	Pedal	1
17	1570298	Rubber Pad	1
18	292668	Nut	2
19	1704902	Capscrew	1
20	1534871	Bolt	1
21	2064554	Loctite	AR
22	239503	Nut	1
23	1556475	Bumper	1
24	1646439	Reservoir	1
24	2077604	Tank	1
24	1645381	Diaphragm	1
24	1646397	Cap	1
25	166857	Clamp	4
25	168718	Clamp (Optional)	4
26	2092888	Hose	1
27	222491	Fitting	1
27	16481	O-Ring	1
28	1527876	Capscrew	1
29	2092613	Cylinder Block	1
30	233683	Fitting	1
30	16487	O-Ring	1
31	222509	Fitting	1
31	16481	O-Ring	1
32	117989	Hose	1
33	1590033	Transducer (Brake Pressure)	1
34	1703607	Master Cylinder (☞Figure 11-15)	1
35	1527880	Capscrew	4
36	1351689	Locking Cotter Pin	1
37	1375391	Pin (Rod End)	1

©2013 HYSTER COMPANY

BRAKE LINKAGE (FIGURE 11-12)

DUAL PEDAL — WET BRAKE (→ S/N L177V03122G)

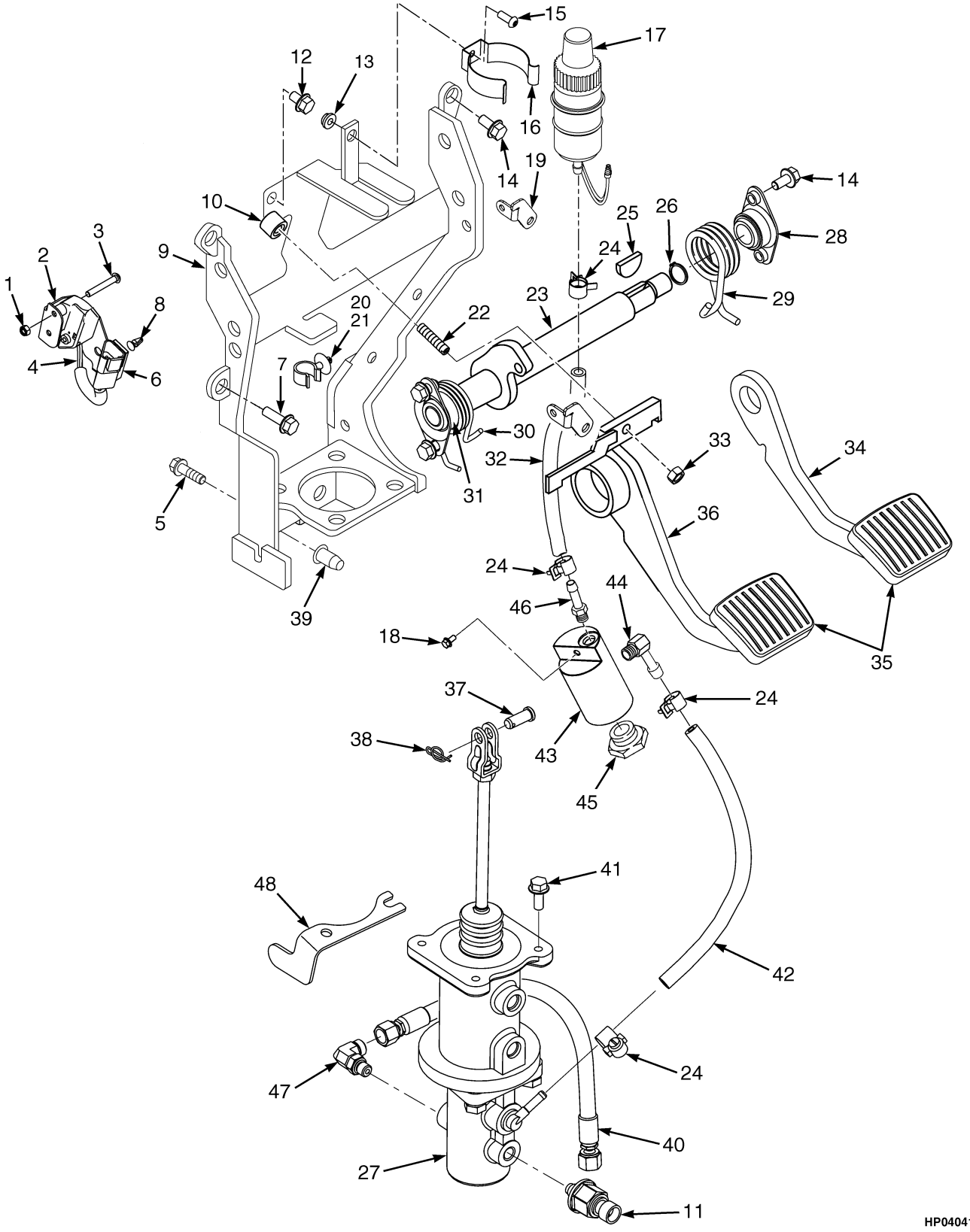

©2013 HYSTER COMPANY

BRAKE LINKAGE

DUAL PEDAL – WET BRAKE (→ S/N L177V03122G)

ITEM	PART NO.	DESCRIPTION	QTY
1	302398	Locknut	2
2	1531567	Bracket	1
3	1553897	Capscrew	2
4	1547849	Sensor (Brake Position)	1
5	1586627	Capscrew	2
6	1500912	Clip (Connector)	1
7	1583611	Capscrew	2
8	1564526	Clip (Key Hole)	1
9	1639075	Bracket Wldmt	1
10	1556475	Bumper	1
11	1590033	Transducer (Brake Pressure)	1
12	1529366	Capscrew	1
13	~~1307884~~		
	1514429	Nut	1
14	1527879	Capscrew	6
15	1510126	Screw (Button Head)	1
16	2021353	Holder	1
17	1646439	Reservoir	1
17	2077604	Tank	1
17	**c** 1646557	Diaphragm	1
17	**g** 1645381	Diaphragm	1
17	1646397	Cap	1
18	1527876	Capscrew	1
19	~~1594950~~		
	4053949	Plate	1
20	1543698	Clamp (Swivel)	1
21	1543842	Clamp	1
22	1534871	Bolt	1
23	1579028	Crank	1
24	166857	Clamp	4
24	**b** 168718	Clamp	4
25	206	Woodruff Key	1
26	12929	Snap Ring	1
27	**d** 1573675	Brake Booster	1
27	**e** 2096079	Master Cylinder (Boosted) (☞Figure 11-14)	1
27	**f** 1569527	Master Cylinder (Boosted) (☞Figure 11-14)	1
28	1585575	Bushing	2
29	1568076	Spring (RH)	1
30	1568077	Spring (LH)	1
31	244540	Bushing	2
32	2092888	Hose (Upper Brake Feed)	1
33	239503	Nut	1
34	1568256	Brake Pedal (RH)	1
35	1570300	Pad	2
36	1639801	Brake Pedal (LH)	1
37	1375391	Pin (Rod End)	1
38	1351689	Locking Cotter Pin	1
39	1530243	Insert	2
40	2076656	Hose Assy (Brake)	1
41	1527880	Capscrew	4

©2013 HYSTER COMPANY

BRAKE LINKAGE

DUAL PEDAL – WET BRAKE (→ S/N L177V03122G)

ITEM	PART NO.	DESCRIPTION	QTY
42	2083955	Hose Assy (Lower Brake Feed)	1
43	2092613	Cylinder Block	1
44	222509	Fitting	1
44	16481	O-Ring	1
45	1569616	Hose Clamp	2
45	233683	Fitting	1
45	16487	O-Ring	1
46	222491	Fitting	1
46	16481	O-Ring	1
47	1487058	Fitting	1
47	16481	O-Ring	1
47	1527813	O-Ring	1
48	**a** 1670905	Bracket	1

FOOTNOTES:

a Not Required
b Optional
c → S/N L177B11900D
d → S/N L177B13168E
e S/N L177B13169E ↔ S/N L177B16711E
f S/N L177B16712E →
g S/N L177B11901D →

©2013 HYSTER COMPANY

NOTES

©2013 HYSTER COMPANY

BRAKE LINKAGE (FIGURE 11-13)

DUAL PEDAL — WET BRAKE (S/N L177V03123G →)

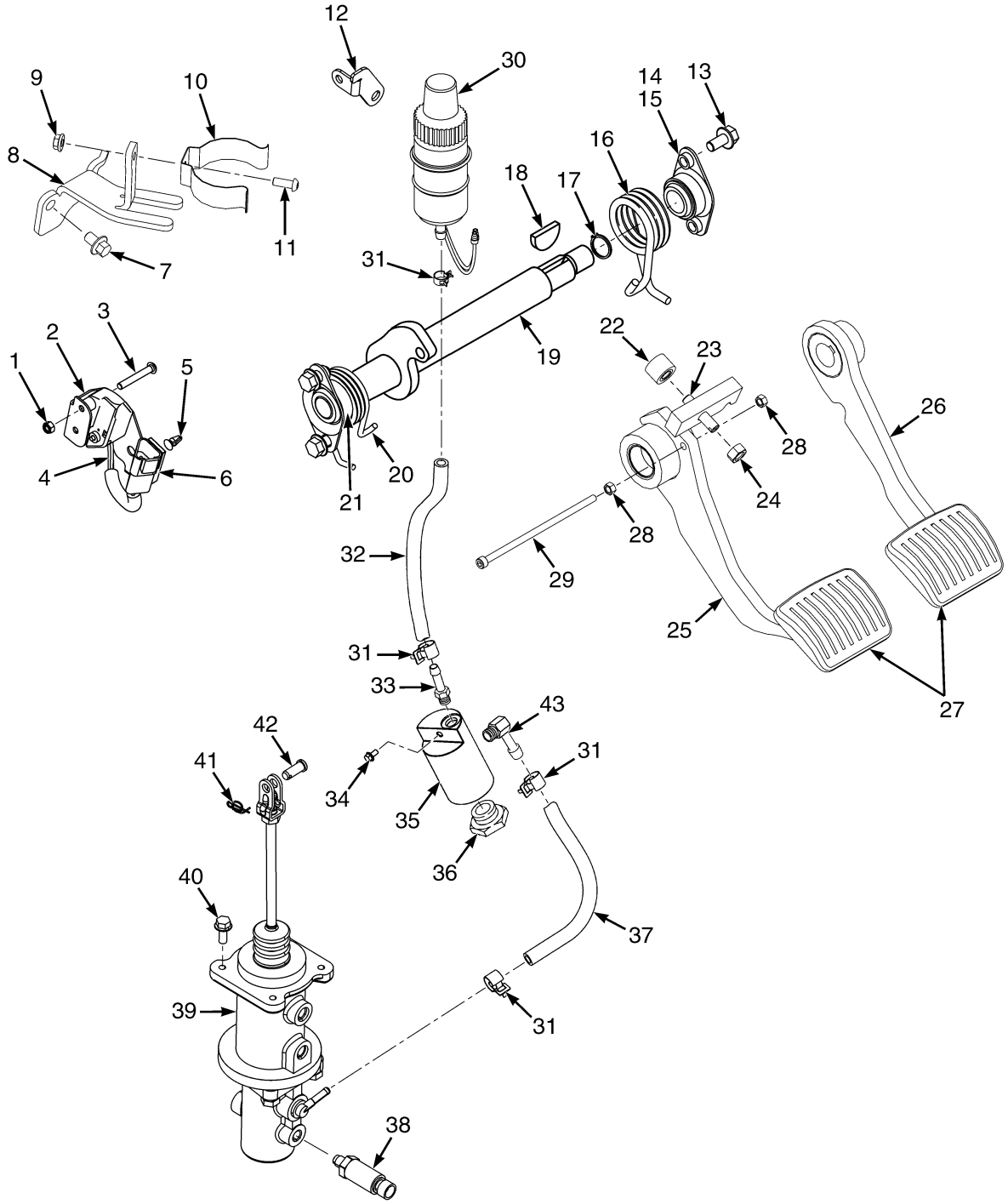

©2013 HYSTER COMPANY

BRAKE LINKAGE

DUAL PEDAL – WET BRAKE (S/N L177V03123G →)

ITEM	PART NO.	DESCRIPTION	QTY
1	302398	Locknut	2
2	1531567	Bracket	1
3	1553897	Capscrew	2
4	1547849	Sensor (Brake Position)	1
5	1564526	Clip (Key Hole)	1
6	1500912	Clip	1
7	4011940	Capscrew	1
8	1699992	Mount	1
9	~~1307884~~		
	1514429	Nut	1
10	2021353	Holder	1
11	1510126	Screw (Button Head)	1
12	~~1594950~~		
	4053949	Plate	1
13	1527879	Capscrew	4
14	1585575	Bushing	2
15	2064554	Loctite	AR
16	1568076	Spring (RH)	1
17	12929	Snap Ring	1
18	206	Woodruff Key	2
19	1579028	Crank	1
20	1568077	Spring (LH)	1
21	244540	Bushing	2
22	1556475	Bumper	1
23	1534871	Bolt	1
24	239503	Nut	1
25	1639801	Brake Pedal (LH) (Inching)	1
26	1568256	Brake Pedal (RH)	1
27	1570300	Pad	1
28	292668	Nut	2
29	1704901	Capscrew	1
30	1646439	Reservoir	1
31	166857	Clamp	4
31	168718	Clamp (Optional)	4
32	2092888	Hose	1
33	222491	Fitting	1
33	16481	O-Ring	1
34	1527876	Capscrew	1
35	2092613	Cylinder Block	1
36	233683	Fitting	1
36	16487	O-Ring	1
37	117989	Hose	1
38	1590033	Transducer (Brake Pressure)	1
39	1703607	Master Cylinder (☞Figure 11-15)	1
40	1527880	Capscrew	4
41	1351689	Locking Cotter Pin	1
42	1375391	Pin (Rod End)	1
43	222509	Fitting	1
43	16481	O-Ring	1

©2013 HYSTER COMPANY

BRAKE MASTER CYLINDER ASSEMBLY (FIGURE 11-14)

WET BRAKE (→ S/N L177V03122G)

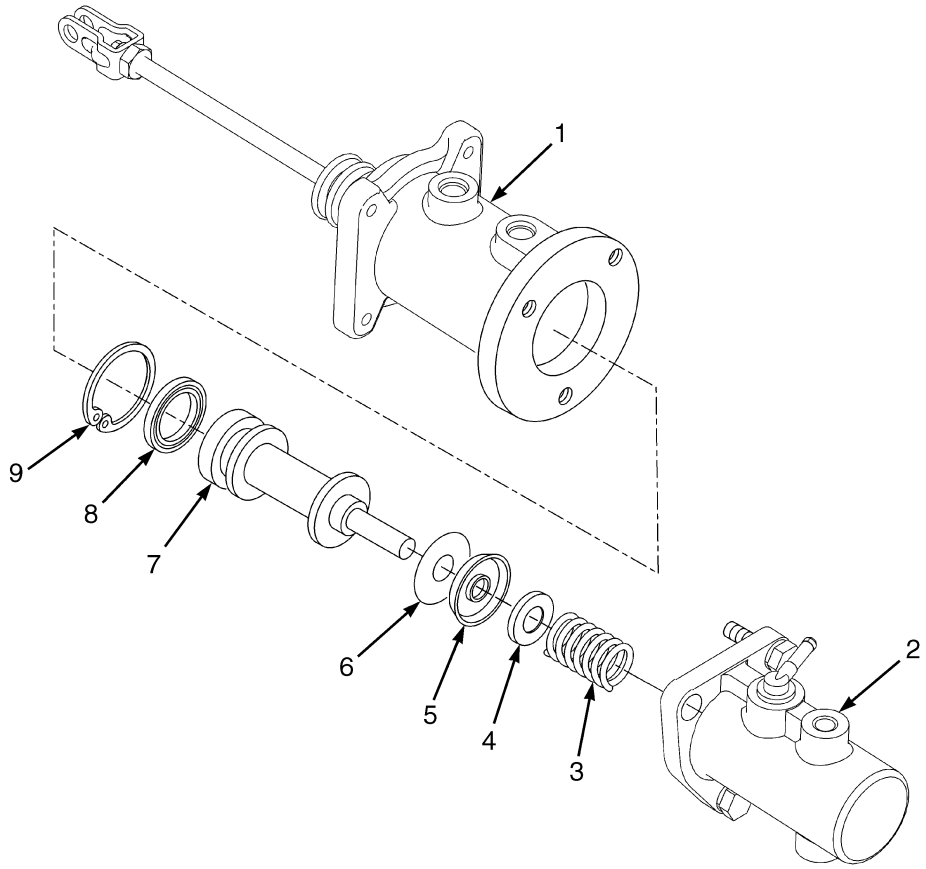

BP040065

KEY:
A: 1573675
B: 2096079
C: 1569527

ITEM	PART NO.	DESCRIPTION	QTY A	QTY B	QTY C
	b 1573675	Brake Booster (31.75 Bore)	1	..	..
	c 2096079	Master Cylinder (31.75 Bore)	..	1	..
	d 1569527	Master Cylinder (38.1 Bore)	..	..	1
1	1670332	Brake Booster	..	1	1
1	1692229	Kit-Repair Brake Booster	..	1	1
2	1670333	Master Cylinder	1	1	..
2	1670334	Master Cylinder	..	..	1
2	. . . . .	Housing	1	1	1
3	. . . . .	Spring	1	1	1
4	. . . . .	Retainer	1	1	1
5	. . . . .	Seal (Pressure)	1	1	1
6	. . . . .	Washer	1	1	1
7	. . . . .	Piston	1	1	1
8	. . . . .	Seal (Retaining)	1	1	1
9	. . . . .	Snap Ring	1	1	1
	a 1596179	Kit-Repair Master Cylinder (31.75 Bore)	1	1	..
	1596180	Kit-Repair Minor-Master Cyl (31.75 Bore)	1	1	..

©2013 HYSTER COMPANY

KEY:
A: 1573675
B: 2096079
C: 1569527

ITEM	PART NO.	DESCRIPTION	QTY A	QTY B	QTY C
	a 1620023	Kit-Repair Major-Master Cyl (38.1 Bore)	..	..	1
	1620024	Kit-Repair Minor-Master Cyl (38.1 Bore)	..	..	1

FOOTNOTES:

a Includes Minor Repair Kit.
b → S/N L177B131268E
c S/N L177B13169E ↔ S/N L177B16711E
d S/N L177B16712E →

©2013 HYSTER COMPANY

BRAKE MASTER CYLINDER ASSEMBLY (FIGURE 11-15)

WET BRAKE (S/N L177V04757H →)

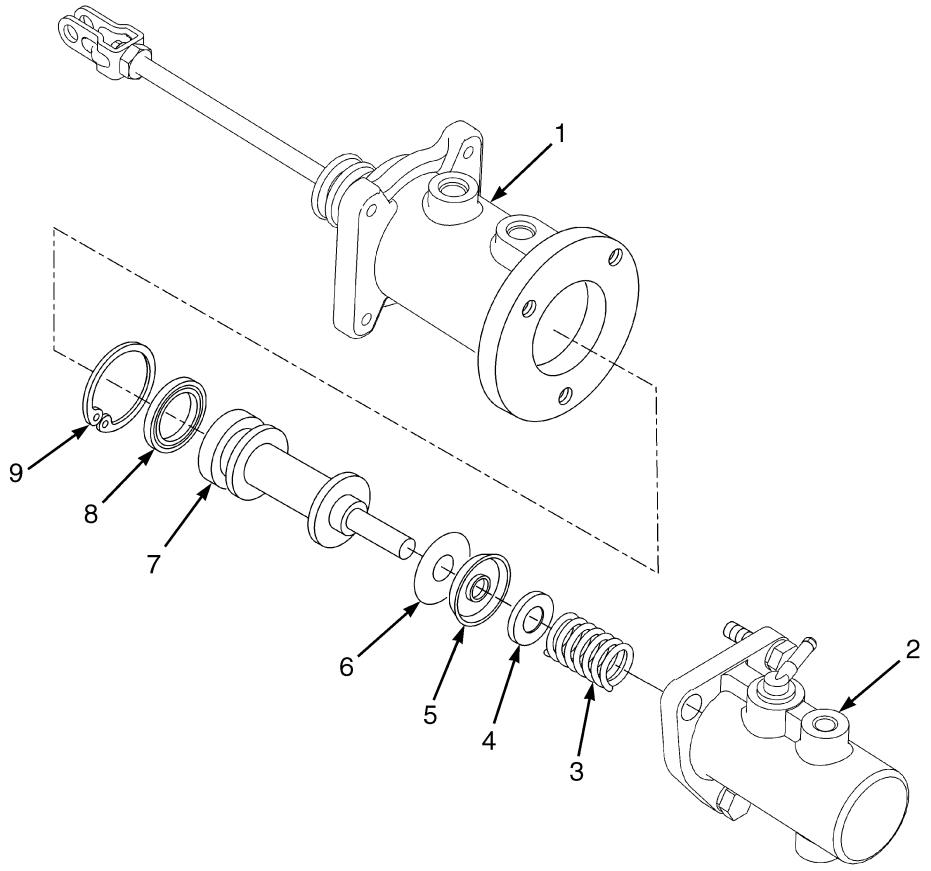

BP040065

ITEM	PART NO.	DESCRIPTION	QTY
	1703607	Master Cylinder (38.1 Bore)	1
1	1670332	Brake Booster	1
1	1692229	Kit-Repair Brake Booster	1
2	1670334	Master Cylinder	1
2	. . . . .	Housing	1
3	. . . . .	Spring	1
4	. . . . .	Retainer	1
5	. . . . .	Seal (Pressure)	1
6	. . . . .	Washer	1
7	. . . . .	Piston	1
8	. . . . .	Seal (Retaining)	1
9	. . . . .	Snap Ring	1
	a 1620023	Kit-Repair Major-Master Cyl (38.1 Bore)	1
	1620024	Kit-Repair Minor-Master Cyl (38.1 Bore)	1

FOOTNOTES:

a Includes Minor Repair Kit

©2013 HYSTER COMPANY

NOTES

©2013 HYSTER COMPANY

PARK BRAKE ASSEMBLY (FIGURE 11-16)

(→ S/N L177V04756H)

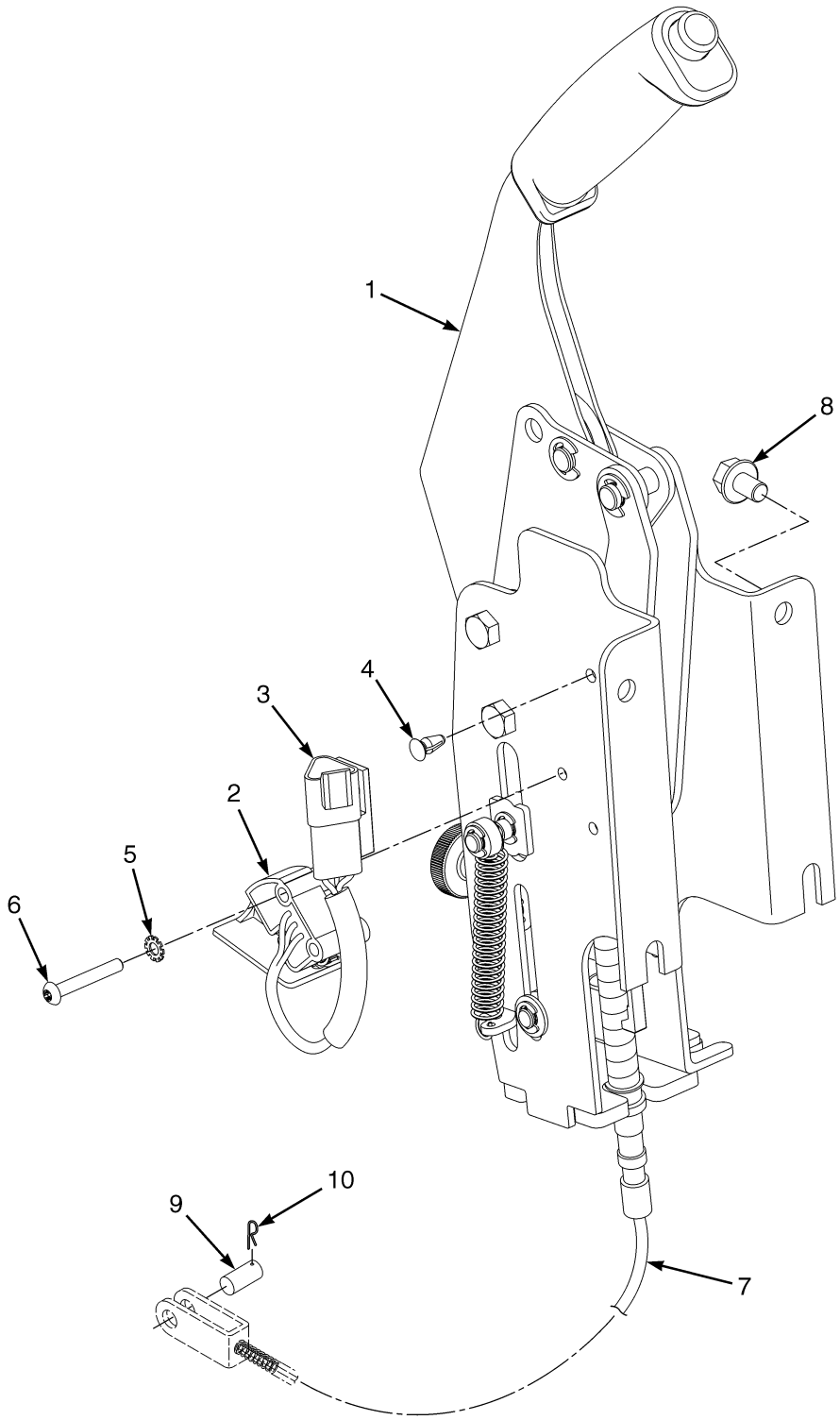

©2013 HYSTER COMPANY

PARK BRAKE ASSEMBLY

(→ S/N L177V04756H)

KEY:
A: Without Cab - Dry Brakes
B: With Cab - Dry Brakes
C: Without Cab - Wet Brakes
D: With Cab - Wet Brakes

ITEM	PART NO.	DESCRIPTION	QTY A	QTY B	QTY C	QTY D
	1544466	Parking Brake Assembly	1	..	..	..
	1548181	Parking Brake Assembly	..	1	..	..
	a 1612215	Parking Brake-Single Cable	..	..	1	..
	c 1654317	Parking Brake Assembly	..	..	1	..
	b 1612216	Parking Brake-Single Cable	..	..	..	1
	c 1654315	Parking Brake Assembly	..	..	..	1
1	1528799	Parking Brake Lever	1	..	..	..
1	1583915	Grip	1	..	..	..
1	1548032	Parking Brake Lever	..	1	..	..
1	1654318	Parking Brake Lever	..	..	1	..
1	1654316	Parking Brake Lever	..	..	..	1
2	1547849	Sensor (Brake Position)	1	1	1	1
3	1500912	Clip	1	1	1	1
4	1564526	Clip (Key Hole)	1	1	1	1
5	296378	Washer	2	2	2	2
6	1553897	Capscrew	2	2	2	2
7	**a** 2082685	Parking Brake Cable	..	..	1	1
7	**c** ~~2097830~~ 4611578	Parking Brake Cable	..	..	1	1
7	1600493	Parking Brake Cable (LH)	1	1	..	..
7	1565305	Parking Brake Cable (RH)	1	1	..	..
8	1529366	Capscrew	4	4	4	4
9	**a** 133683	Pin	..	..	1	1
9	**c** 240724	Pin	..	..	1	1
10	1530010	Lockring	..	..	1	1

FOOTNOTES:

a → S/N L177B24983F
b → S/N L177B24983F EXC. 07927
c S/N L177B24984F →

PARK BRAKE ASSEMBLY (FIGURE 11-17)

(S/N L177V04757H →)

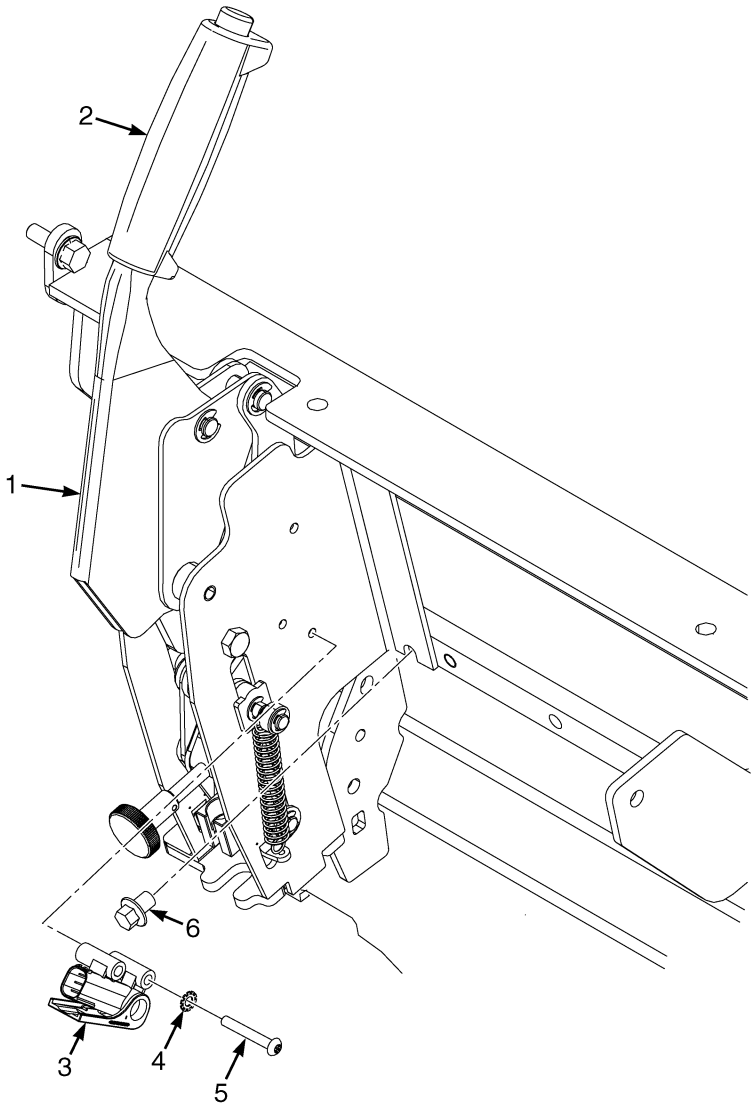

BP040148

©2013 HYSTER COMPANY

PARK BRAKE ASSEMBLY

(S/N L177V04757H →)

KEY:

A: Without Cab - Dry Brakes, Two Cable High Force
B: With Cab - Dry Brakes, Two Cable High Force
C: Without Cab - Wet Brakes, One Cable Low Force
D: With Cab - Wet Brakes, One Cable Low Force

ITEM	PART NO.	DESCRIPTION	QTY A	B	C	D
1	**c** 1702933	Parking Brake Assembly	1	..	..	..
1	**d** 4039373	Parking Brake Assembly	1	..	..	..
1	**c** 1702937	Parking Brake Assembly	..	1	..	..
1	**d** 4039374	Parking Brake Assembly	..	1	..	..
1	**c** 1701778	Parking Brake Assembly	..	..	1	..
1	**d** 4039375	Parking Brake Assembly	..	..	1	..
1	**c** 1701779	Parking Brake Assembly	..	..	..	1
1	**d** 4039376	Parking Brake Assembly	..	..	..	1
2	**c** 1528799	Parking Brake Lever	1	..	..	..
2	1583915	Grip	1	..	..	..
2	**c** 1548032	Parking Brake Lever	..	1	..	..
2	**c** 1654318	Parking Brake Lever	..	..	1	..
2	**c** 1654316	Parking Brake Lever	..	..	..	1
2	**d** 4039366	Parking Brake Lever	1	..	..	..
2	**d** 4039367	Parking Brake Lever	..	1	..	..
2	**d** 4039368	Parking Brake Lever	..	..	1	..
2	**d** 4039369	Parking Brake Lever	..	..	..	1
3	1683486	Sensor (Brake Position)	1	1	1	1
4	296378	Washer	2	2	2	2
5	1701768	Screw	2	2	2	2
6	4011940	Capscrew	4	4	4	4
	ab ~~2097830~~ 4611578	Parking Brake Cable	..	..	1	1
	b 240724	Pin (Rod End)	..	..	1	1
	b 1530010	Lockring (Cotter Pin)	..	..	1	1

FOOTNOTES:

a For Dry Brake Cables See Dry Brake Assembly
b Not Illustrated
c → S/N L177V09127J EXC. 09110
d S/N L177V09128K → INC. 09110

©2013 HYSTER COMPANY

NOTES

©2013 HYSTER COMPANY

12 HYDRAULIC SYSTEM

SECTION 12
HYDRAULIC SYSTEM

DESCRIPTION **PAGE**

AUXILIARY ONE AND TWO
MANUAL CONTROL VALVE - THREE AND FOUR FUNCTION (→ S/N L177B17861E (3 FUNCTION LOW RELIEF)) (→ S/N L177B18169E (4 FUNCTION LOW RELIEF)) (→ S/N L177B18729E (3 FUNCTION HIGH RELIEF)) (→ S/N L177B18808E (4 FUNCTION HIGH RELIEF)) 12-44
MANUAL CONTROL VALVE - THREE AND FOUR FUNCTION (S/N L177B17862E → (3 FUNCTION LOW RELIEF)) (S/N L177B18170E → (4 FUNCTION LOW RELIEF)) (S/N L177B18730E → (3 FUNCTION HIGH RELIEF)) (S/N L177B18809E → (4 FUNCTION HIGH RELIEF)) 12-46
CONTROL VALVE ASSEMBLY
MANUAL CONTROL - THREE AND FOUR FUNCTION 12-32
CONTROL VALVE LOCKOUT GROUP
MANUAL CONTROL VALVE (S/N L177V03025G →) 12-36
GEAR PUMP ASSEMBLY
HIGH PRESSURE 12-14
LOW PRESSURE - GEAR DRIVE OPTION 12-10
LOW PRESSURE - CHAIN DRIVE OPTION 12-12
HAND LEVERS
FOUR FUNCTION - WITH DETENTED LEVERS 12-26
FOUR FUNCTION - WITHOUT DETENTED LEVERS 12-30
THREE FUNCTION - WITH DETENTED LEVERS 12-22
THREE FUNCTION - WITHOUT DETENTED LEVERS 12-24
HYDRAULIC CONTROL VALVE
ELECTRO HYDRAULIC POPPET VALVES - LIFT AND LOWER 12-58
ELECTRONIC CONTROL - THREE AND FOUR FUNCTION (→ S/N L177B18806E) 12-50
ELECTRONIC VALVE ASSEMBLY - THREE AND FOUR FUNCTION (S/N L177B18807E →) 12-52
ELECTRONIC VALVE AUXILIARY ONE SECTION - THREE AND FOUR FUNCTION 12-62
ELECTRONIC VALVE AUXILIARY TWO SECTION - FOUR FUNCTION 12-64
ELECTRONIC VALVE INLET SECTION - THREE AND FOUR FUNCTION (S/N L177B18807E → INC. 08807, 09603, 08238, 08262) 12-56
ELECTRONIC VALVE OUTLET SECTION - THREE AND FOUR FUNCTION 12-66
ELECTRONIC VALVE TILT SECTION - THREE AND FOUR FUNCTION 12-60
HYDRAULIC FILTER 12-16
HYDRAULIC HOSES
LIFT, TILT, AND AUXILIARY 12-18
HYDRAULIC SUPPLY AND RETURN
WITH ALUMINUM TRANSMISSION - WITH GEAR DRIVE 12-6
WITH ALUMINUM TRANSMISSION - WITH CHAIN DRIVE 12-8
WITH IRON TRANSMISSION 12-4
OUTLET SECTION
ELECTRONIC CONTROL VALVE - THREE AND FOUR FUNCTION 12-68
MANUAL CONTROL VALVE - THREE AND FOUR FUNCTION 12-48
TILT CYLINDER AND MAST INSTALLATION 12-70
TILT CYLINDERS
H40-50FT 12-72
H60-70FT 12-74

©2013 HYSTER COMPANY

SECTION 12
HYDRAULIC SYSTEM

DESCRIPTION **PAGE**

VALVE ASSEMBLY, LIFT AND LOWER
ELECTRONIC CONTROL VALVE - THREE AND FOUR
FUNCTION (→ S/N L177B18806E EXC. 08807, 09603, 08238, 08262) 12-54
VALVE ASSEMBLY, LIFT AND TILT
MANUAL CONTROL VALVE - THREE AND FOUR
FUNCTION (→ S/N L177B18729E (3 FUNCTION HIGH RELIEF))
(→ S/N L177B17862E (3 FUNCTION LOW RELIEF))
(→ S/N L177B18169E (4 FUNCTION LOW RELIEF))
(→ S/N L177B18808E (4 FUNCTION HIGH RELIEF)) 12-38
MANUAL CONTROL VALVE - THREE AND FOUR
FUNCTION (S/N L177B17862E ↔ S/N L177V03752G (3 FUNCTION LOW RELIEF))
(S/N L177B18730E ↔ S/N L177V03752G (3 FUNCTION HIGH RELIEF)))
(S/N L177B18170E ↔ S/N L177V03752G (4 FUNCTION LOW RELIEF))
(S/N L177B18809E ↔ S/N L177V03752G (4 FUNCTION HIGH RELIEF)) 12-40
MANUAL CONTROL VALVE - THREE AND FOUR FUNCTION (S/N L177V03752G →) 12-42

©2013 HYSTER COMPANY

NOTES

©2013 HYSTER COMPANY

HYDRAULIC SUPPLY AND RETURN (FIGURE 12-1)
WITH IRON TRANSMISSION

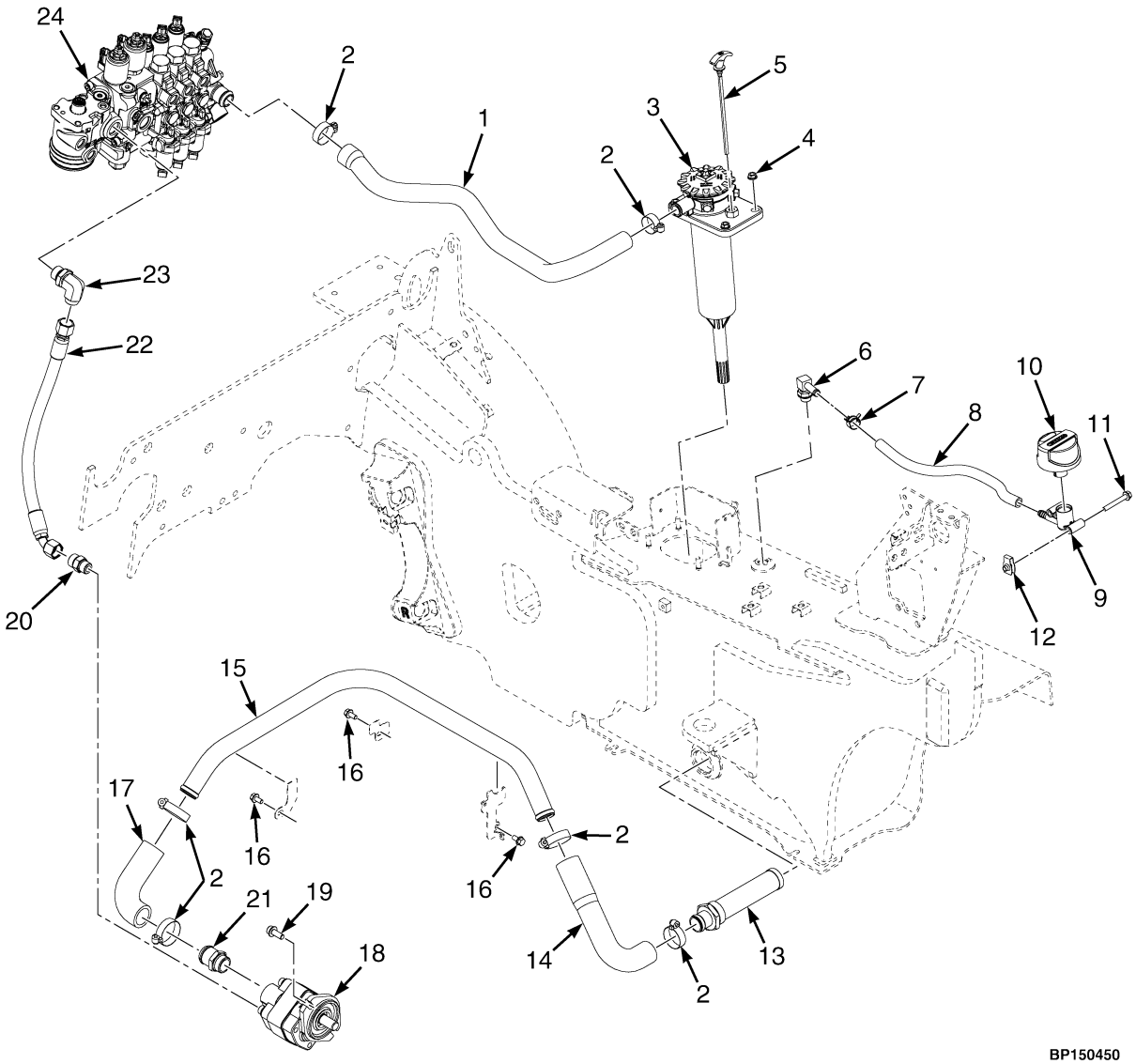

©2013 HYSTER COMPANY

HYDRAULIC SUPPLY AND RETURN
WITH IRON TRANSMISSION

ITEM	PART NO.	DESCRIPTION	QTY
1	**d** 2076408	Hose Assy (Third Function)	1
1	**i** 2104944	Hose Assy (Third Function)	1
1	**d** 2085958	Hose Assy (Fourth Function)	1
1	**i** 2104945	Hose Assy (Fourth Function)	1
2	369804	Clamp	6
2	369804	Clamp (Alternate Part)	4
3	**e** 1544975	Hydraulic Filter (☞Figure 12-7)	1
3	**e** 132861	Capscrew	4
3	**e** 1639704	Seal	4
3	**e** 1637158	Retainer	4
3	**e** 1624189	Retainer	4
4	~~1382472~~		
	1502543	Nut (Flange)	4
5	2060751	Dipstick	1
5	1580682	O-Ring	1
6	222510	Fitting	1
6	16484	O-Ring	1
7	1502007	Hose Clamp	1
8	1502123	Hose	1
9	1582160	Adapter (Breather)	1
10	1582161	Breather	1
10	16486	O-Ring	1
11	1510116	Capscrew	4
12	1393879	Nut	2
13	1624904	Strainer	1
14	2061778	Hose	1
15	**bc** 2068947	Tube Assy (Suction)	1
15	**gh** 2095146	Tube Assy (Suction)	1
16	1527879	Capscrew	3
17	2069005	Hose (Pump Suction)	1
18	. . . . .	Gear Pump (☞Figure 12-5, ☞Figure 12-6)	1
19	1564515	Capscrew	4
20	1486749	Fitting	1
21	1568199	Adapter (Suction)	1
21	16487	O-Ring	1
22	2070114	Hose Assy	1
22	**f** 4627333	Hose Assy	1
23	1487069	Fitting	1
24	. . . . .	Hydraulic Control Valve (☞Figure 12-21, ☞Figure 12-13)	1
	264159	Adhesive	AR
	a 1528481	Plug (With O-Ring for Tank Drain) (Hydraulic Tank Plug)	1

FOOTNOTES:

a Not Illustrated
b → S/N L177B15745E (Wet Brake)
c → S/N L177B15791E (Dry Brake)
d → S/N L177V01589F
e → S/N L177V03974G
f PENDING PER ECN 154878 →
g S/N L177B15746E → (Wet Brake)
h S/N L177B15792E → (Dry Brake)
i S/N L177V01590F →

©2013 HYSTER COMPANY

HYDRAULIC SUPPLY AND RETURN (FIGURE 12-2)
WITH ALUMINUM TRANSMISSION — WITH GEAR DRIVE

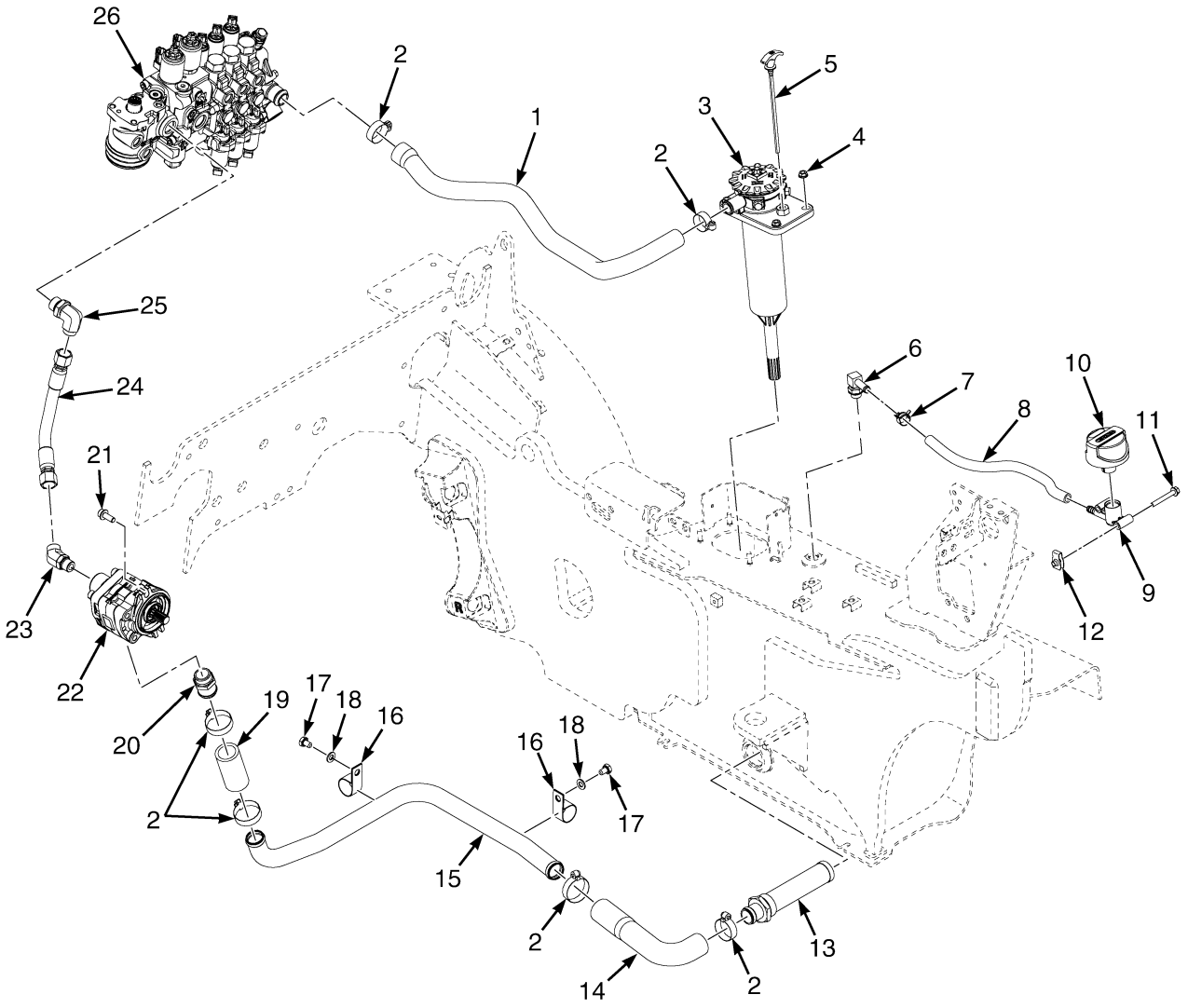

©2013 HYSTER COMPANY

HYDRAULIC SUPPLY AND RETURN
WITH ALUMINUM TRANSMISSION – WITH GEAR DRIVE

ITEM	PART NO.	DESCRIPTION	QTY
1	2111369	Hose (3rd Function)	1
1	2111370	Hose (4th Function)	1
2	369804	Clamp	6
2	369804	Clamp (Alternate Part)	4
3	. . . . .	Hydraulic Filter (☞Figure 12-7)	1
4	~~1382472~~		
	1502543	Nut (Flange)	4
5	2060751	Dipstick	1
5	1580682	O-Ring	1
6	222510	Fitting	1
6	16484	O-Ring	1
7	1502007	Hose Clamp	1
8	1502123	Hose	1
9	1582160	Adapter (Breather)	1
10	1582161	Breather	1
10	16486	O-Ring	1
11	1510116	Capscrew	2
12	1393879	Nut	2
13	1624904	Strainer	1
14	2061778	Hose	1
15	2109937	Tube	1
16	4015887	Clamp	2
17	292513	Capscrew	2
18	296420	Washer	2
19	2109982	Hose	1
20	1568199	Adapter (Suction)	1
21	1564515	Capscrew	2
22	. . . . .	Gear Pump (☞Figure 12-4)	1
23	1516205	Fitting	1
24	2110268	Hose Assy	1
25	1487069	Fitting	1
26	. . . . .	Hydraulic Control Valve (☞Figure 12-21, ☞Figure 12-13)	1
	264159	Adhesive (To Mount Gear Pump)	AR
	a 1528481	Plug (With O-Ring for Tank Drain) (Hydraulic Trank Drain)	1

FOOTNOTES:

a Not Illustrated

©2013 HYSTER COMPANY

HYDRAULIC SUPPLY AND RETURN (FIGURE 12-3)
WITH ALUMINUM TRANSMISSION — WITH CHAIN DRIVE

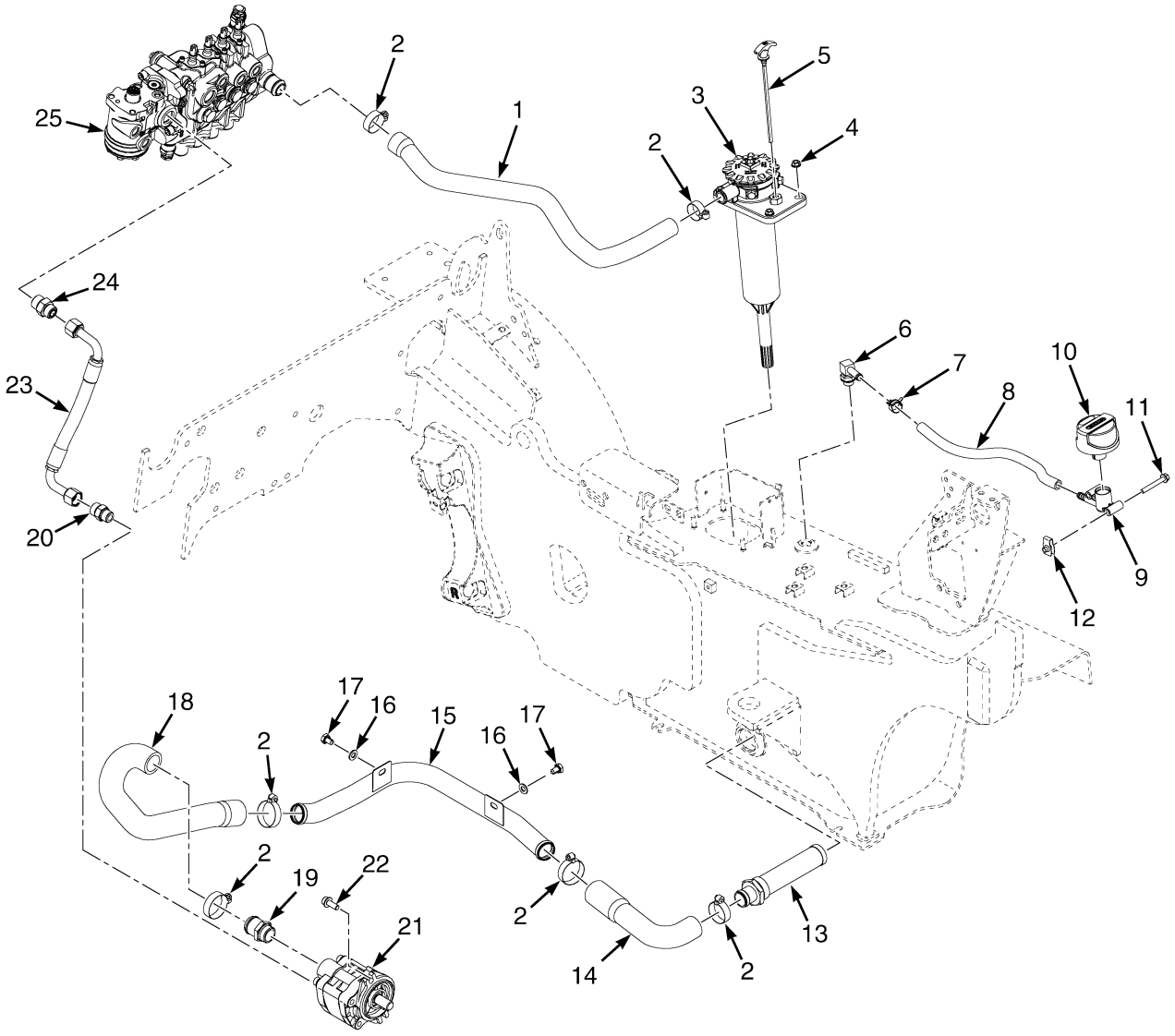

©2013 HYSTER COMPANY

HYDRAULIC SUPPLY AND RETURN
WITH ALUMINUM TRANSMISSION – WITH CHAIN DRIVE

ITEM	PART NO.	DESCRIPTION	QTY
1	2111369	Hose (3rd Function)	1
1	2111370	Hose (4th Function)	1
2	369804	Clamp	6
2	369804	Clamp (Alternate Part)	4
3	. . . . .	Hydraulic Filter (☞Figure 12-7)	1
4	~~1382472~~		
	1502543	Nut (Flange)	2
5	2060751	Dipstick	1
6	222510	Fitting	1
7	1502007	Hose Clamp	1
8	1502123	Hose	1
8	127918	Hose (Optional)	1
9	1582160	Adapter (Breather)	1
10	1582161	Breather	1
11	1510116	Capscrew	2
12	1393879	Nut	2
13	1624904	Strainer	1
14	4605974	Hose	1
15	4026661	Tube Assy	1
16	296420	Washer	2
17	292513	Capscrew	2
18	4605946	Hose	1
19	1568199	Adapter (Suction)	1
20	**c** 1486749	Fitting	1
20	**b** 4028685	Adapter	1
21	. . . . .	Gear Pump (☞Figure 12-5, ☞Figure 12-6)	1
22	1564515	Capscrew	2
23	**c** 4612085	Hose Assy	1
23	**b** 4611861	Hose Assy	1
24	1486751	Fitting	1
24	**b** 4028686	Adapter	1
25	. . . . .	Hydraulic Control Valve (☞Figure 12-21, ☞Figure 12-13)	1
	264159	Adhesive	AR
	a 1528481	Plug (With O-Ring for Tank Drain) (Hydraulic Tank Drain)	1

FOOTNOTES:

a Not Illustrated
b With Quick-lock Option
c Without Quick Lock Option

©2013 HYSTER COMPANY

GEAR PUMP ASSEMBLY (FIGURE 12-4)
LOW PRESSURE — GEAR DRIVE OPTION

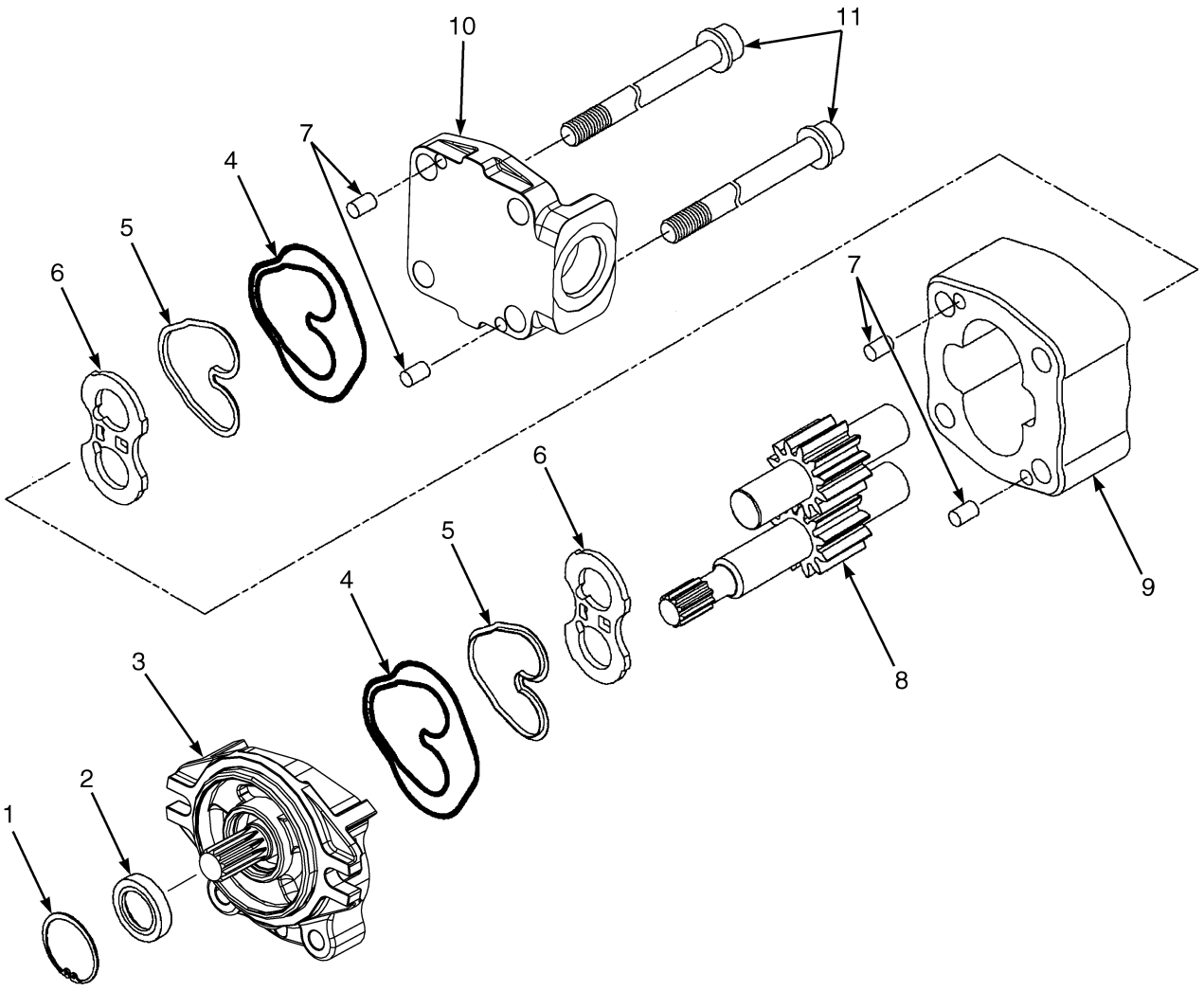

BP150453

©2013 HYSTER COMPANY

GEAR PUMP ASSEMBLY
LOW PRESSURE – GEAR DRIVE OPTION

KEY:
A: Mazda
B: GM
C: Yanmar

ITEM	PART NO.	DESCRIPTION	QTY A	QTY B	QTY C
	2104430	Gear Pump	1	..	..
	2104431	Gear Pump	..	1	..
	2104432	Gear Pump	..	..	1
1	. . . . .	Snap Ring	1	1	1
2	. . . . .	Oil Seal	1	1	1
3	2081832	Flange	1	1	1
4	. . . . .	Back-Up Seal	2	2	2
5	. . . . .	Plate Seal	2	2	2
6	1700084	Side Plate	2	2	2
7	1578672	Dowel	4	4	4
8	1581537	Gear Set	1	..	..
8	1584987	Gear Set	..	1	..
8	1581534	Gear Set	..	..	1
8	. . . . .	Drive Gear	1	1	1
8	. . . . .	Driven Gear	1	1	1
9	. . . . .	Gear Plate	1	1	1
10	4600549	Cover	1	1	1
11	1578671	Screw	4	..	..
11	1578693	Screw	..	4	4
	1465140	Kit-Seal	1	1	1

©2013 HYSTER COMPANY

GEAR PUMP ASSEMBLY (FIGURE 12-5)
LOW PRESSURE — CHAIN DRIVE OPTION

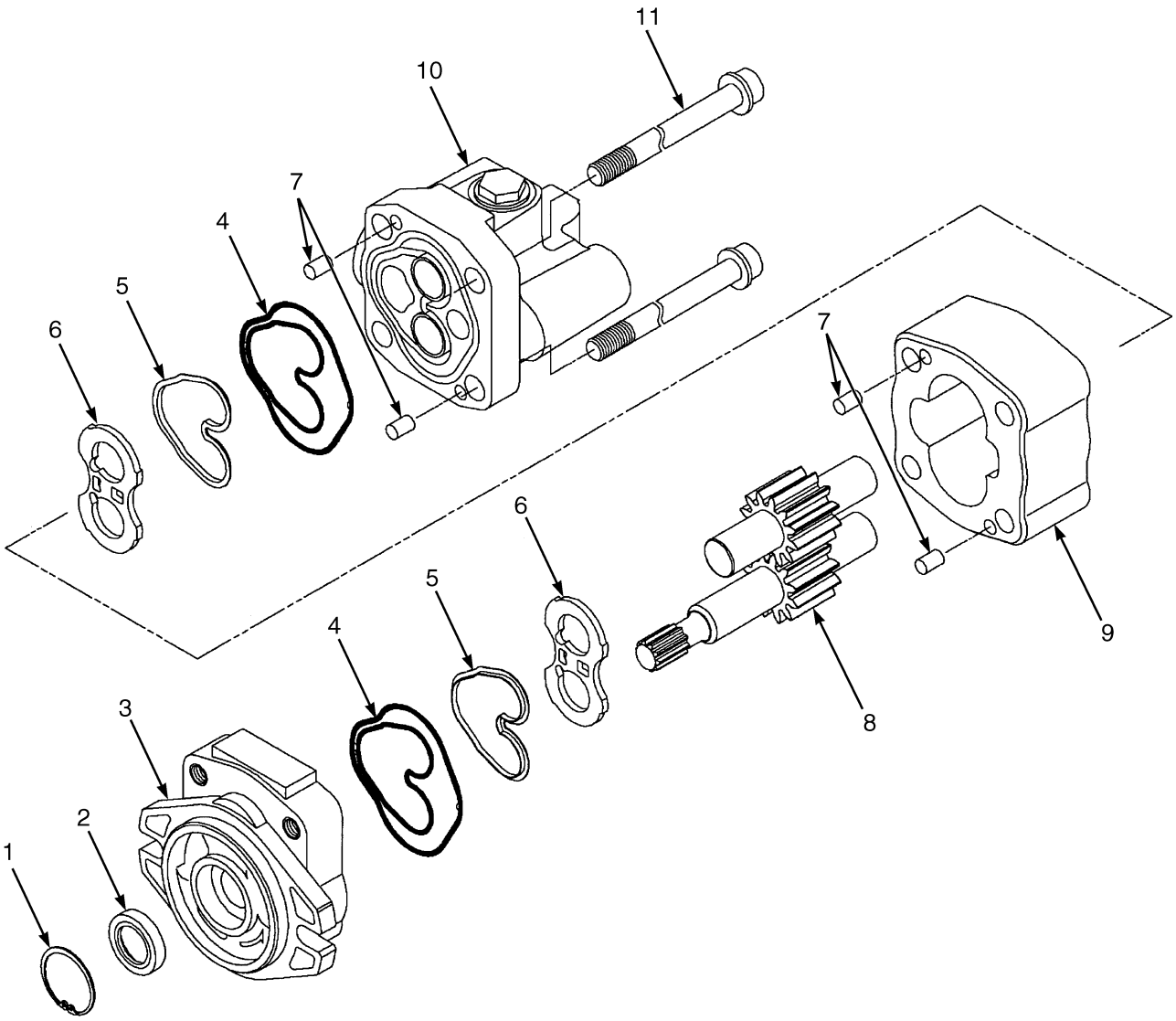

BP150098

©2013 HYSTER COMPANY

GEAR PUMP ASSEMBLY
LOW PRESSURE – CHAIN DRIVE OPTION

KEY:
A: Mazda
B: GM
C: Yanmar

ITEM	PART NO.	DESCRIPTION	QTY A	QTY B	QTY C
	2067800	Gear Pump (H40-60FT)	1	..	..
	2074230	Gear Pump (H40-60FT)	..	1	..
	2067802	Gear Pump (H40-60FT)	..	..	1
1	. . . . .	Snap Ring	1	1	1
2	. . . . .	Oil Seal	1	1	1
3	1581536	Flange	1	1	1
4	. . . . .	Back-Up Seal	2	2	2
5	. . . . .	Plate Seal	2	2	2
6	1578673	Side Plate	2	2	2
7	1578672	Dowel	4	4	4
8	1581537	Gear Set	1	..	..
8	1584987	Gear Set	..	1	..
8	1581534	Gear Set	..	..	1
8	. . . . .	Drive Gear	1	1	1
8	. . . . .	Driven Gear	1	1	1
9	. . . . .	Gear Plate	1	1	1
10	1581535	Cover	1	1	1
11	1578671	Screw	4	4	..
11	1578693	Screw	..	..	4
	1465140	Kit-Seal	1	1	1

©2013 HYSTER COMPANY

GEAR PUMP ASSEMBLY (FIGURE 12-6)
HIGH PRESSURE

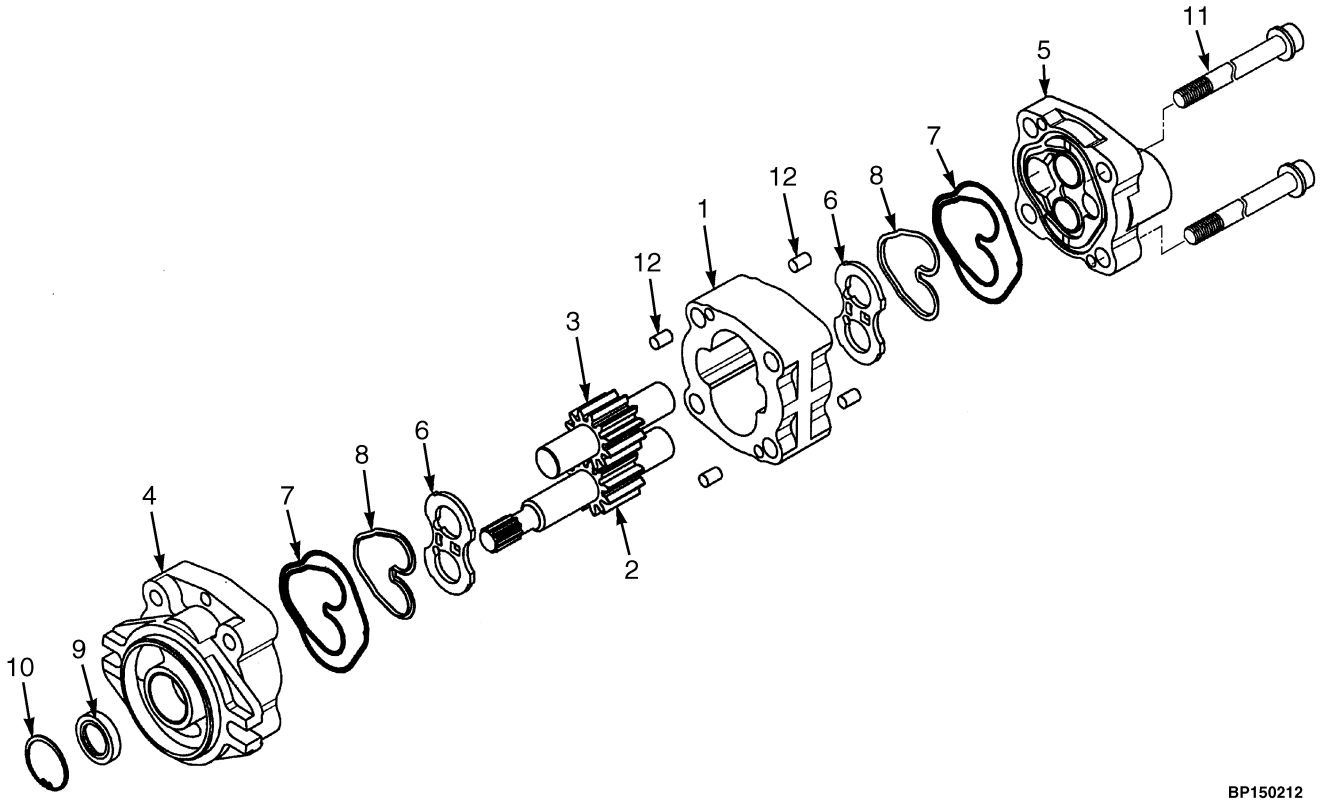

©2013 HYSTER COMPANY

GEAR PUMP ASSEMBLY
HIGH PRESSURE

KEY:
A: 24.0 Liter per Minute
B: 25.7 Liter per Minute
C: 29.4 Liter per Minute

ITEM	PART NO.	DESCRIPTION	QTY A	QTY B	QTY C
	c 2067801	Gear Pump	1	..	..
	f 2098695	Gear Pump	1	..	..
	a 2074211	Gear Pump	..	1	..
	d 2098694	Gear Pump	..	1	..
	b 2067803	Gear Pump	..	..	1
	e 2098693	Gear Pump	..	..	1
1	. . . . .	Gear Plate	1	..	..
1	. . . . .	Gear Plate	..	1	..
1	. . . . .	Gear Plate	..	..	1
2	. . . . .	Drive Gear	1	..	..
2	. . . . .	Drive Gear	..	1	..
2	. . . . .	Drive Gear	..	..	1
3	. . . . .	Driven Gear	1	..	..
3	. . . . .	Driven Gear	..	1	..
3	. . . . .	Driven Gear	..	..	1
4	1581536	Flange	1	1	1
5	1578665	Cover	1	1	1
6	1578673	Side Plate	2	2	2
7	. . . . .	Plate Seal	2	2	2
8	. . . . .	Back-Up Ring	2	2	2
9	. . . . .	Oil Seal	1	1	1
10	. . . . .	Snap Ring	1	1	1
11	1578671	Screw	4	4	..
11	1578693	Screw	..	..	4
12	1578672	Dowel	4	4	4
	1581537	Gear Set	1	..	..
	1584987	Gear Set	..	1	..
	1581534	Gear Set	..	..	1
	1465140	Kit-Seal	1	1	1

FOOTNOTES:

a → S/N L177B19934E
b → S/N L177B20271E
c → S/N L177B22938F
d S/N L177B19935E →
e S/N L177B20272E →
f S/N L177B22939F →

©2013 HYSTER COMPANY

HYDRAULIC FILTER (FIGURE 12-7)

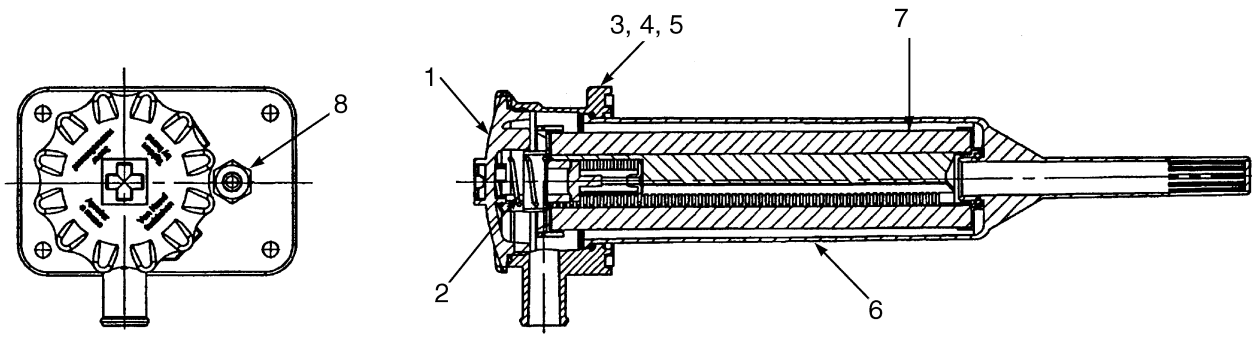

BP150095

ITEM	PART NO.	DESCRIPTION	QTY
	1544975	Hydraulic Filter	1
1	1705820	Cap (Hydraulic Filter)	1
1	1570338	Lid Assembly	1
1	1705548	O-Ring	1
1	1570339	Lid	1
2	1570340	Spring	1
3	1570342	Filter Head Assembly	1
3	1570343	Filter Head	1
4	16481	O-Ring	2
4	1705548	O-Ring	1
4	209457	Quad Ring	1
5	14191	O-Ring	1
5	16481	O-Ring	1
6	1570347	Filter Can	1
6	1570348	Ring	1
6	1570346	Filter Can Assembly	1
7	2070611	Hydraulic Filter Assembly	1
7	1705548	O-Ring	1
8	1568182	Fitting (Dipstick Assembly)	1
8	1570352	Plug	1
	1705720	Kit-Filter Element	1
	1570337	Kit-Seal	1
	1705723	Kit-Seal	1
	a 2068337	Pressure Switch	1

FOOTNOTES:

a With Electronic Monitoring Package

©2013 HYSTER COMPANY

NOTES

©2013 HYSTER COMPANY

HYDRAULIC HOSES (FIGURE 12-8)
LIFT, TILT, AND AUXILIARY

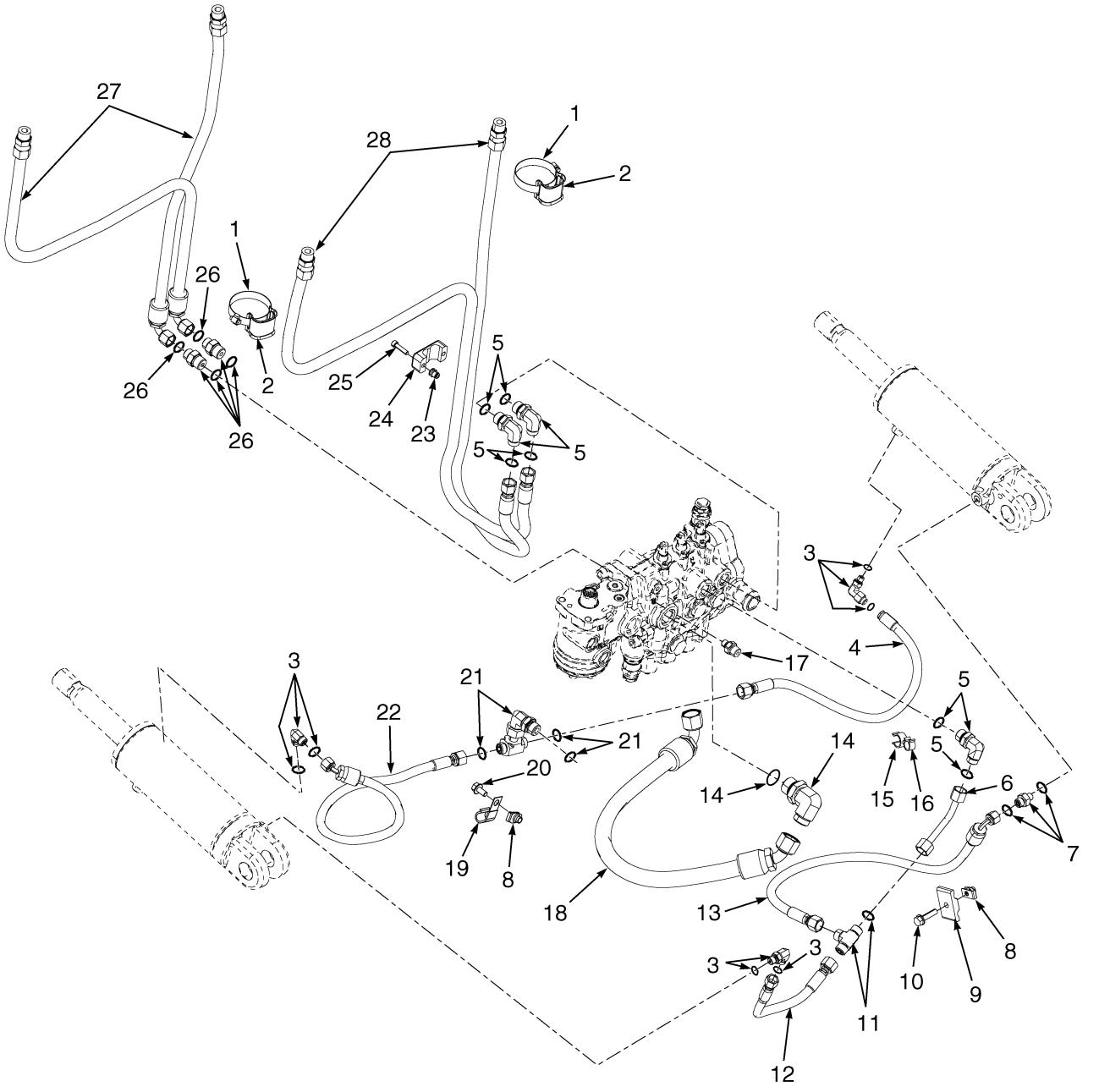

HP150984

©2013 HYSTER COMPANY

HYDRAULIC HOSES
LIFT, TILT, AND AUXILIARY

KEY:
A: Three Function
B: Four Function

ITEM	PART NO.	DESCRIPTION	QTY A	QTY B
1	1481229	Clamp	1	1
1	1617657	Clamp (Alternate Part)	1	1
2	1477996	Hose Clamp	1	1
3	1487058	Fitting	3	3
3	1527813	O-Ring	3	3
3	16481	O-Ring	3	3
4	2075630	Hose Assy	1	1
5	1487061	Fitting (Electronic Valve)	3	3
5	265787	O-Ring	1	1
5	16484	O-Ring	1	1
5 **abcd**	1487061	Fitting (Manual Valve)	1	1
5	265787	O-Ring	1	1
5	16484	O-Ring	1	1
5 **efgh**	1516201	Fitting (Manual Valve)	1	1
5	265731	O-Ring	1	1
5	16484	O-Ring	1	1
6	4606301	Tube Assy (Electronic Valve)	1	1
6 **abcd**	2074327	Tube Assy (Manual Valve)	1	1
6 **efgh**	4604147	Tube Assy (Manual Valve)	1	1
7	1486737	Fitting	1	1
7	16481	O-Ring	1	1
7	16483	O-Ring	1	1
8	1480237	Nut	2	2
9	1359620	Clamp	1	1
10	1586627	Capscrew	1	1
11	1522425	Fitting	1	1
11	265787	O-Ring	1	1
12	4606302	Hose Assy	1	1
13	4606303	Hose Assy	1	1
14	1487069	Fitting	1	1
14	252729	O-Ring	1	1
15	1502055	Clamp (Swivel)	1	1
16	1502059	Clamp (Swivel)	1	1
17	2061646	Fitting (Diagnostic)	1	1
18	2070148	Hose Assy (Main Mast To Lowering Control Valve)	1	1
19	325804	Clamp	1	1
20	1527879	Capscrew	1	1
21	1488464	Fitting	1	1
21	265787	O-Ring	2	2
22	2074325	Hose Assy	1	1
23	1531558	Insert	2	..
24	1360386	Clamp (Double Hose)	1	..
25	293796	Capscrew	2	..
26	1486742	Fitting	2	2
26	265787	O-Ring	2	2

©2013 HYSTER COMPANY

HYDRAULIC HOSES
LIFT, TILT, AND AUXILIARY

KEY:
A: Three Function
B: Four Function

ITEM	PART NO.	DESCRIPTION	QTY A	QTY B
26	16484	O-Ring	2	2
27	2065051	Hose Assy	1	..
27	2065052	Hose Assy	..	1
28	2073495	Hose Assy	1	..
28	2073496	Hose Assy	..	1

FOOTNOTES:

a → S/N L177B17861E (Three Function Low Relief)
b → S/N L177B18169E (Four Function Low Relief)
c → S/N L177B18729E (Three Function High Relief)
d → S/N L177B18808E (Four Function High Relief)
e S/N L177B17862E → (Three Function Low Relief)
f S/N L177B18170E → (Four Function Low Relief)
g S/N L177B18730E → (Three Function High Relief)
h S/N L177B18809E → (Four Function High Relief)

©2013 HYSTER COMPANY

NOTES

©2013 HYSTER COMPANY

HAND LEVERS (FIGURE 12-9)
THREE FUNCTION — WITH DETENTED LEVERS

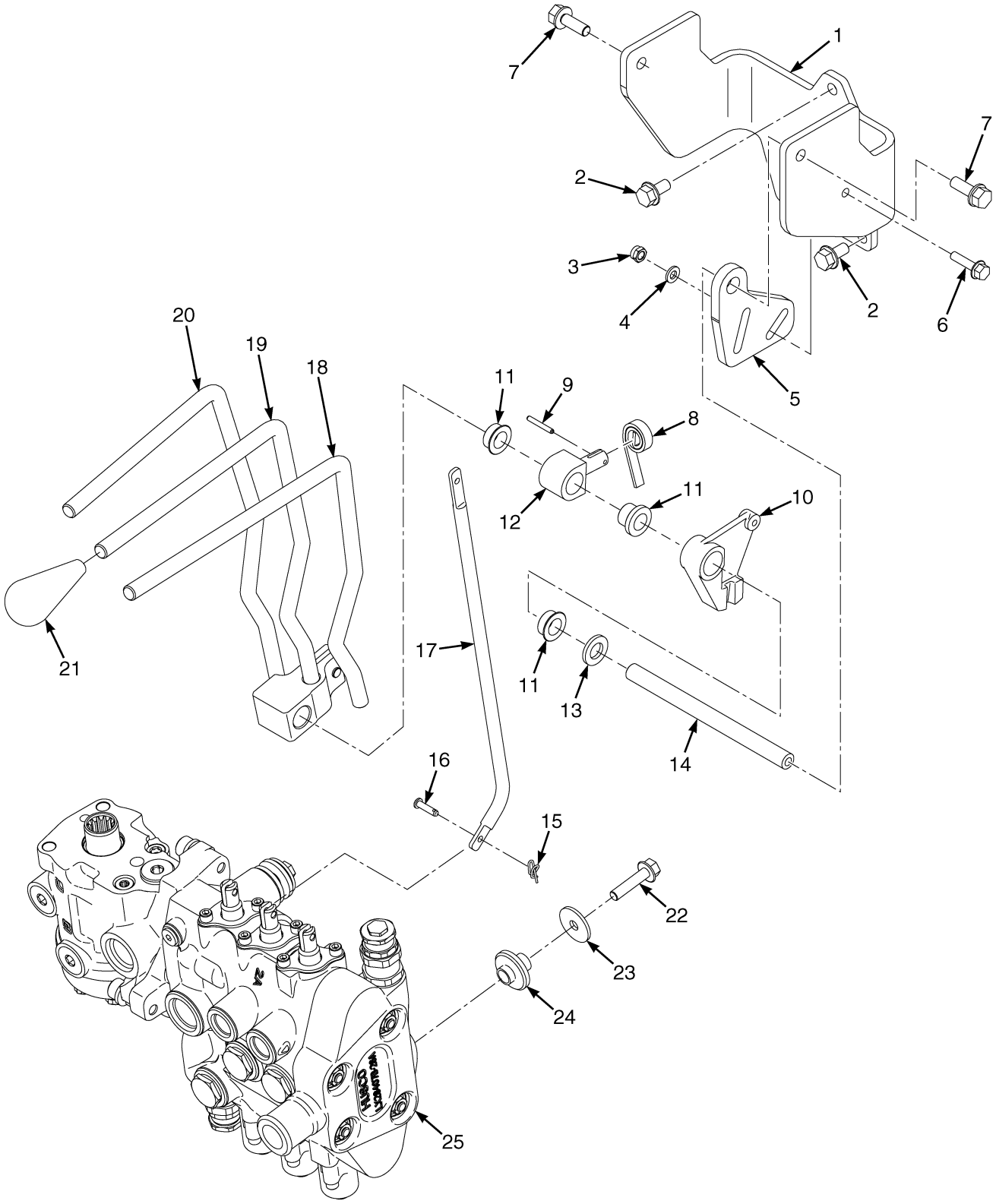

BP150484

©2013 HYSTER COMPANY

HAND LEVERS

THREE FUNCTION – WITH DETENTED LEVERS

ITEM	PART NO.	DESCRIPTION	QTY
1	**c** 1578454	Bracket	1
1	**f** 1670194	Bracket	1
2	1527879	Capscrew	3
3	**c** 230882	Locknut	1
3	**f** 316834	Nut	1
4	**c** 197067	Washer	2
4	**f** 320165	Washer	1
5	**c** 1528339	Spacer	1
5	**f** 1670677	Plate	1
6	**c** 18094	Capscrew	1
6	**f** 1527878	Capscrew	1
7	1583611	Capscrew	2
8	175861	Spring	1
9	302428	Roll Pin	1
10	1542546	Lever	2
11	1564747	Bushing	10
12	306113	Pin (Selector)	1
13	320161	Washer	3
14	**c** 1528328	Shaft	1
14	**f** 1670195	Shaft (Pivot)	1
15	1517361	Locking Ring Cotter Pin	6
16	309109	Pin	6
17	**c** 1517394	Link	3
17	**f** 1662420	Link	3
18	**c** 2083706	Lever (Auxiliary One And Two)	1
18	**f** 2099398	Lever (Auxiliary One and Two)	1
19	**c** 2083702	Lever (Tilt)	1
19	**f** 2099394	Lever (Tilt)	1
20	**c** 2083701	Lever (Lift)	1
20	**f** 2099393	Lever (Lift)	1
21	~~1517395~~		
	4038182	Knob	3
22	1586627	Capscrew	3
23	1346752	Washer	3
24	2063991	Isolator	3
25	**a** 2064895	Hydraulic Control Valve (Manual) (H40-60FT) (☞Figure 12-13)	1
25	**d** 2095079	Hydraulic Control Valve (Manual) (H40-60FT) (☞Figure 12-13)	1
25	**g** 2105870	Hydraulic Control Valve (Manual) (H40-60FT)	1
25	**b** 2064899	Hydraulic Control Valve (Manual) (H70FT) (☞Figure 12-13)	1
25	**e** 2095083	Hydraulic Control Valve (Manual) (H70FT) (☞Figure 12-13)	1
25	**h** 2105874	Hydraulic Control Valve (Manual) (H70FT)	1

FOOTNOTES:

a → S/N L177B17861E
b → S/N L177B18729E
c → S/N L177B26281F
d S/N L177B17862E ↔ S/N L177V03752G
e S/N L177B18730E ↔ S/N L177V03887G
f S/N L177B26282F →
g S/N L177V03753G →
h S/N L177V03880G →

©2013 HYSTER COMPANY

HAND LEVERS (FIGURE 12-10)
THREE FUNCTION — WITHOUT DETENTED LEVERS

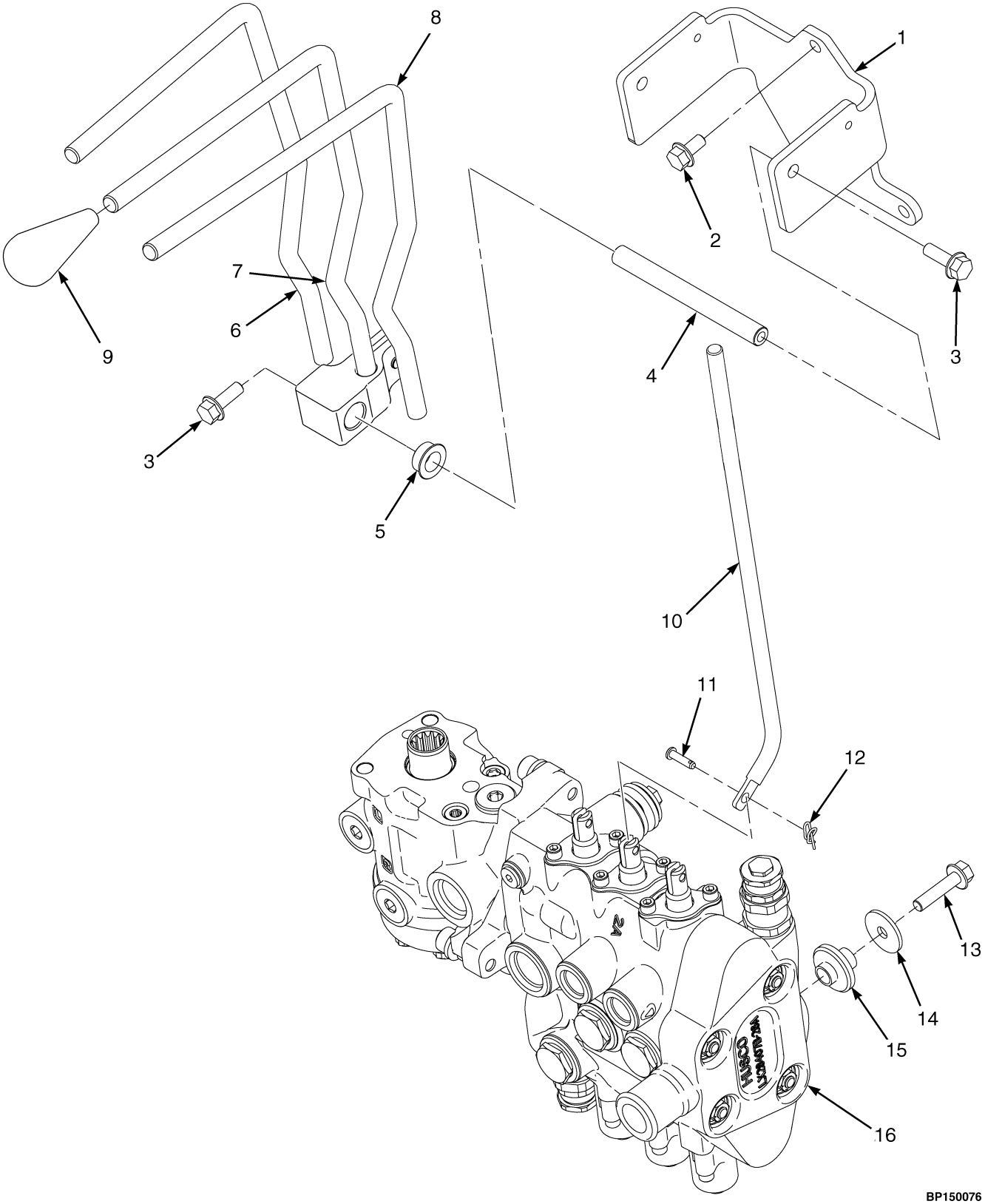

©2013 HYSTER COMPANY

HAND LEVERS

THREE FUNCTION – WITHOUT DETENTED LEVERS

ITEM	PART NO.	DESCRIPTION	QTY
1	**c** 1578453	Bracket	1
1	**e** 1656383	Bracket	1
1	**k** 1665746	Bracket	1
2	1527879	Capscrew	3
3	1583611	Capscrew	2
4	**c** 1528327	Shaft	1
4	**h** 1670292	Shaft	1
5	1564747	Bushing	6
6	**c** 2083701	Lever (Lift)	1
6	**g** 2099393	Lever (Lift)	1
7	**c** 2083702	Lever (Tilt)	1
7	**h** 2099394	Lever (Tilt)	1
8	**c** 2083703	Lever (Auxiliary One)	1
8	**h** 2099395	Lever (Auxiliary One)	1
9	~~1517395~~		
	4038182	Knob	3
10	**c** 1517394	Link	3
10	**e** 1643709	Link	3
10	**k** 1662420	Link	3
11	309109	Pin	6
12	1517361	Locking Ring Cotter Pin	6
13	1586627	Capscrew	3
14	1346752	Washer	3
15	2063991	Isolator	3
16	**a** 2064895	Hydraulic Control Valve (Manual) (H40-60FT) (☞Figure 12-13)	1
16	**f** 2095079	Hydraulic Control Valve (Manual) (H40-60FT) (☞Figure 12-13)	1
16	**i** 2105870	Hydraulic Control Valve (Manual) (H40-60FT)	1
16	**b** 2064899	Hydraulic Control Valve (Manual) (H70FT) (☞Figure 12-13)	1
16	**d** 2095083	Hydraulic Control Valve (Manual) (H70FT) (☞Figure 12-13)	1
16	**j** 2105874	Hydraulic Control Valve (Manual) (H70FT)	1

FOOTNOTES:

a → S/N L177B17862E
b → S/N L177B18730E
c → S/N L177B26281F
d S/N L177B18731E ↔ S/N L177V03880G
e S/N L177B26281F ↔ 9/2007
f S/N L177B17862E ↔ S/N L177V03752G
g S/N L177B17863E →
h S/N L177B26282F →
i S/N L177V03753G →
j S/N L177V03756G →
k 9/2007 →

©2013 HYSTER COMPANY

HAND LEVERS (FIGURE 12-11)
FOUR FUNCTION — WITH DETENTED LEVERS

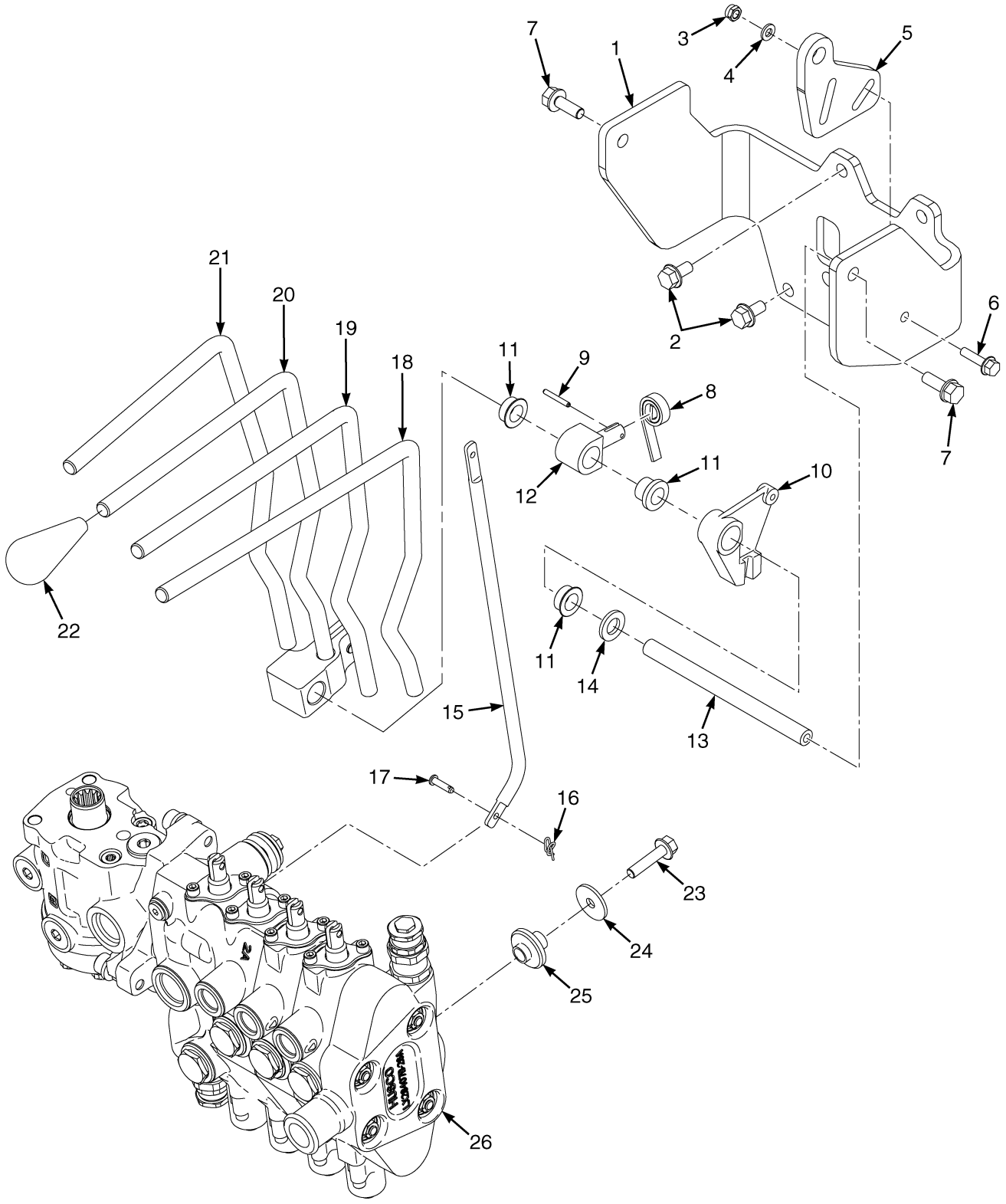

BP150483

©2013 HYSTER COMPANY

HAND LEVERS

FOUR FUNCTION – WITH DETENTED LEVERS

ITEM	PART NO.	DESCRIPTION	QTY
1	**a** 1619997	Bracket	1
1	**e** 1656385	Bracket	1
1	**i** 1665748	Bracket	1
2	1527879	Capscrew	4
3	**d** 230882	Locknut	1
3	**i** 316834	Nut	1
4	**d** 197067	Washer	2
4	**i** 320156	Washer	1
5	**d** 1528339	Spacer	1
5	**i** 1670677	Plate	1
6	**d** 18094	Capscrew	1
6	**i** 1527878	Capscrew	1
7	1583611	Capscrew	2
8	175861	Spring	1
9	302428	Roll Pin	1
10	1542546	Lever	2
11	1564747	Bushing	12
12	306113	Pin (Selector)	1
13	**d** 1528329	Shaft	1
13	**i** 1670196	Shaft	1
14	320161	Washer	3
15	**d** 1517394	Link	4
15	**h** 1643709	Link	4
15	**l** 1662420	Link	4
16	1517361	Locking Ring Cotter Pin	8
17	309109	Pin	8
18	**d** 2083705	Lever (Auxiliary Two And Three)	1
18	**i** 2099397	Lever (Auxiliary Two and Three)	1
19	**d** 2083703	Lever (Auxiliary One)	1
19	**i** 2099395	Lever (Auxiliary One)	1
20	**d** 2083702	Lever (Tilt)	1
20	**i** 2099394	Lever (Tilt)	1
21	**d** 2083701	Lever (Lift)	1
21	**i** 2099393	Lever (Lift)	1
22	~~1517395~~		
	4038182	Knob	4
22	2070655	Lens (Blank)	1
23	1586627	Capscrew	3
24	1346752	Washer	3
25	2063991	Isolator	3
26	**b** 2064897	Hydraulic Control Valve (Manual) (H40-60FT) (☞Figure 12-13)	1
26	**f** 2095081	Hydraulic Control Valve (Manual) (H40-60FT) (☞Figure 12-13)	1
26	**j** 2105872	Hydraulic Control Valve (Manual) (H40-60FT)	1
26	**c** 2064901	Hydraulic Control Valve (Manual) (H70FT) (☞Figure 12-13)	1
26	**g** 2095085	Hydraulic Control Valve (Manual) (H70FT) (☞Figure 12-13)	1
26	**k** 2105876	Hydraulic Control Valve (Manual) (H70FT)	1

©2013 HYSTER COMPANY

FOOTNOTES:

a → 9/2007
b → S/N L177B18169E
c → S/N L177B18808E
d → S/N L177B26281F
e 9/2007 ↔ S/N L177B26281F
f S/N L177B18170E ↔ S/N L177V03767G
g S/N L177B18809E ↔ S/N L177V03841G
h S/N L177B26282F ↔ 9/2007
i S/N L177B26282F →
j S/N L177V03768G →
k S/N L177V03840G →
l 9/2007 →

©2013 HYSTER COMPANY

NOTES

©2013 HYSTER COMPANY

HAND LEVERS (FIGURE 12-12)
FOUR FUNCTION — WITHOUT DETENTED LEVERS

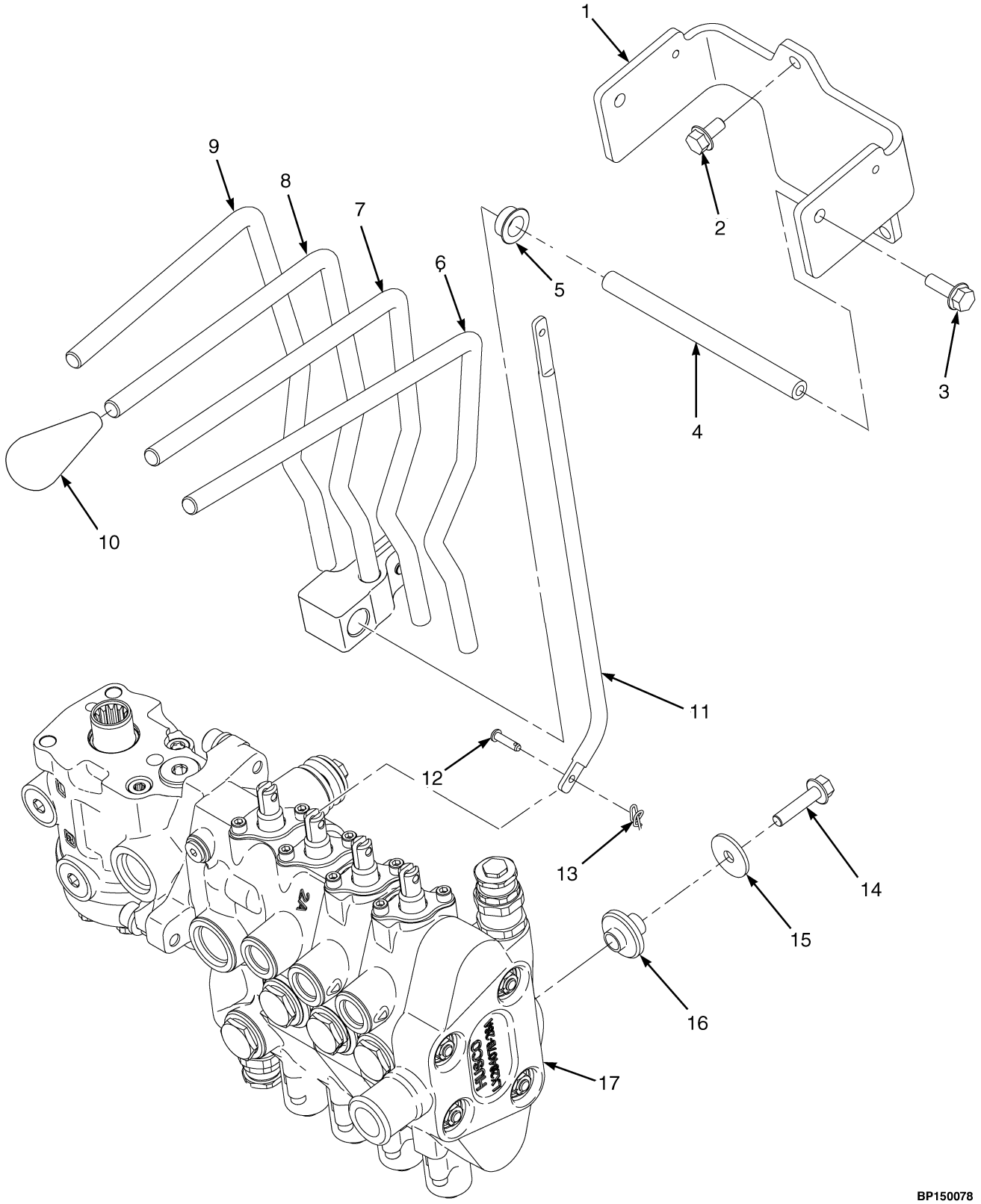

©2013 HYSTER COMPANY

HAND LEVERS

FOUR FUNCTION – WITHOUT DETENTED LEVERS

ITEM	PART NO.	DESCRIPTION	QTY
1	**a** 1578454	Bracket	1
1	**e** 1656384	Bracket	1
1	**h** 1665747	Bracket	1
2	1527879	Capscrew	3
3	1583611	Capscrew	2
4	**d** 1528328	Shaft	1
4	**h** 1670293	Shaft	1
5	1564747	Bushing	8
6	**d** 2083704	Lever (Auxiliary Two)	1
6	**h** 2099396	Lever (Auxiliary Two)	1
7	**d** 2083703	Lever (Auxiliary One)	1
7	**h** 2099395	Lever (Auxiliary One)	1
8	**d** 2083702	Lever (Tilt)	1
8	**h** 2099394	Lever (Tilt)	1
9	**d** 2083701	Lever (Lift)	1
9	**h** 2099393	Lever (Lift)	1
10	~~1517395~~		
	4038182	Knob	4
10	2070655	Lens (Blank)	1
11	**d** 1517394	Link	4
11	**h** 1662420	Link	4
12	309109	Pin	8
13	1517361	Locking Ring Cotter Pin	8
14	1586627	Capscrew	3
15	1346752	Washer	3
16	2063991	Isolator	3
17	**b** 2064897	Hydraulic Control Valve (Manual) (H40-60FT) (☞Figure 12-13)	1
17	**f** 2095081	Hydraulic Control Valve (Manual) (H40-60FT) (☞Figure 12-13)	1
17	**i** 2105872	Hydraulic Control Valve (Manual) (H40-60FT)	1
17	**c** 2064901	Hydraulic Control Valve (Manual) (H70FT) (☞Figure 12-13)	1
17	**g** 2095085	Hydraulic Control Valve (Manual) (H70FT) (☞Figure 12-13)	1
17	**j** 2105876	Hydraulic Control Valve (Manual) (H70FT)	1

FOOTNOTES:

a → 9/2007
b → S/N L177B18169E
c → S/N L177B18808E
d → S/N L177B26281F
e 9/2007 ↔ S/N L177B26281F
f S/N L177B18170E ↔ S/N L177V03767G
g S/N L177B18809E ↔ S/N L177B03841G
h S/N L177B26282F →
i S/N L177V03768G →
j S/N L177V03842G →

©2013 HYSTER COMPANY

CONTROL VALVE ASSEMBLY (FIGURE 12-13)
MANUAL CONTROL — THREE AND FOUR FUNCTION

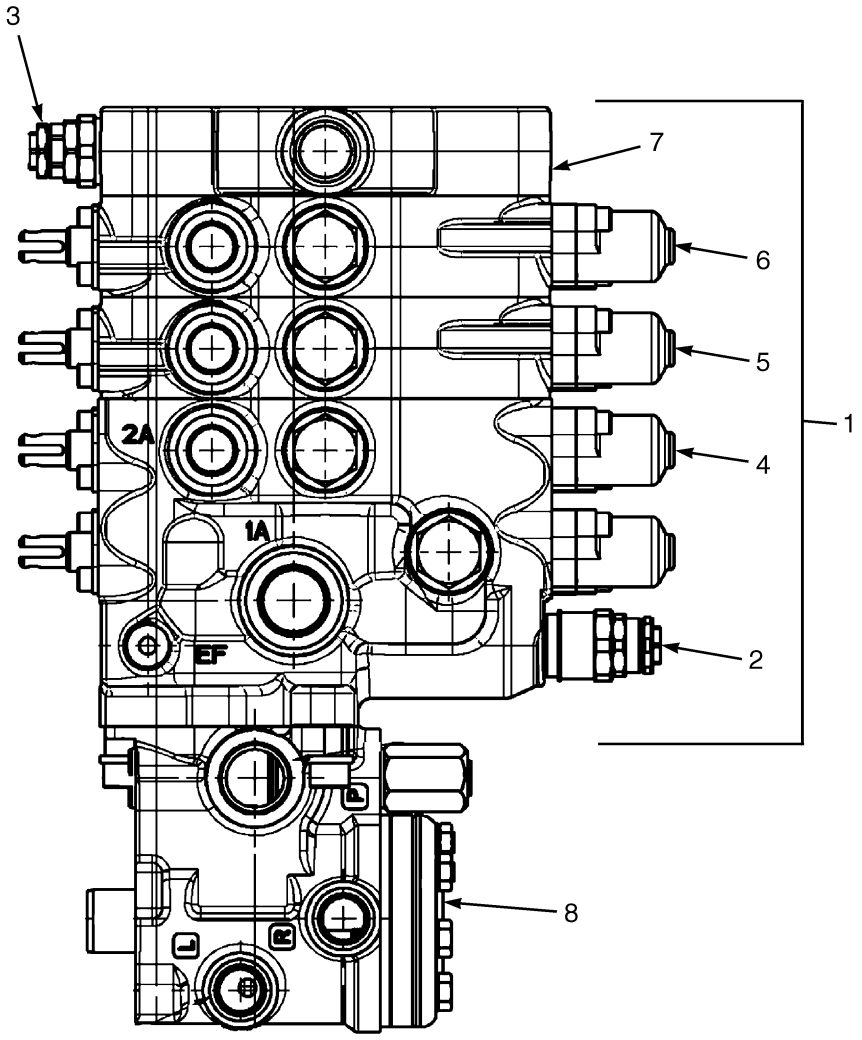

©2013 HYSTER COMPANY

CONTROL VALVE ASSEMBLY
MANUAL CONTROL – THREE AND FOUR FUNCTION

KEY:
A: H40-60FT
B: H70FT

ITEM	PART NO.	DESCRIPTION	QTY A	QTY B
	a 2064895	Hydraulic Control Valve (Manual) (3 Function)	1	..
	e 2095079	Hydraulic Control Valve (Manual) (3 Function)	1	..
	k 2105870	Hydraulic Control Valve (Manual) (3 Function)	1	..
	b 2064897	Hydraulic Control Valve (Manual) (4 Function)	1	..
	f 2095081	Hydraulic Control Valve (Manual) (4 Function)	1	..
	q 2105872	Hydraulic Control Valve (Manual (4 Function))	1	..
	c 2064899	Hydraulic Control Valve (Manual) (3 Function)	..	1
	h 2095083	Hydraulic Control Valve (Manual) (3 Function)	..	1
	n 2105874	Hydraulic Control Valve (Manual) (3 Function)	..	1
	d 2064901	Hydraulic Control Valve (Manual) (4 Function)	..	1
	i 2095085	Hydraulic Control Valve (Manual) (4 Function)	..	1
	m 2105876	Hydraulic Control Valve (Manual) (4 Function)	..	1
1	**a** 2064885	Hydraulic Control Valve (3 Function)	1	..
1	1580146	Kit-Seal (Three Function)	1	..
1	**e** 2095088	Hydraulic Control Valve 3 Function)	1	..
1	**k** 2105879	Hydraulic Control Valve (3 Function)	1	..
1	1670434	Kit-Seal (Three Function)	1	..
1	**b** 2064886	Hydraulic Control Valve 4 Function)	1	..
1	1580148	Kit-Seal (Four Function)	1	..
1	**f** 2095089	Hydraulic Control Valve (4 Function)	1	..
1	**l** 2105880	Hydraulic Control Valve (4 Function)	1	..
1	1670054	Kit-Seal (Four Function)	1	..
1	**c** 2064887	Hydraulic Control Valve (3 Function)	..	1
1	1580146	Kit-Seal (Three Function)	..	1
1	**fg** 2095090	Hydraulic Control Valve (3 Function)	..	1
1	**l** 2105881	Hydraulic Control Valve (3 Function)	..	1
1	1670434	Kit-Seal (Three Function)	..	1
1	**d** 2064888	Hydraulic Control Valve (4 Function)	..	1
1	1580148	Kit-Seal (Four Function)	..	1
1	**i** 2095091	Hydraulic Control Valve (4 Function)	..	1
1	**m** 2105882	Hydraulic Control Valve (4 Function)	..	1
1	1670054	Kit-Seal (Four Function)	..	1
2	1578747	Relief Valve (3100 PSI) (Main Relief)	1	..
2	1578748	Relief Valve (3400 PSI) (Main Relief)	..	1
2	1580097	Kit-Seal	1	1
3	1578707	Relief Valve (Secondary) (2250 PSI)	1	1
3	1580131	Kit-Seal	1	1
4	**abcd** 1578743	Valve Section (Lift and Tilt) (☞Figure 12-15)	1	1
4	**efhi** 1670464	Valve Section (Lift and Tilt) (☞Figure 12-16)	1	1
4	**klmn** 1702420	Valve Section (Lift And Tilt)	1	1
5	**ac** 1578744	Valve Section (3 Function) (☞Figure 12-18)	1	1
5	**ro** 1670463	Valve Section (3 Function) (☞Figure 12-19)	1	1
6	**bd** 1578745	Valve Section (4 Function) (☞Figure 12-18)	1	1
6	**pj** 1670462	Valve Section (4 Function) (☞Figure 12-19)	1	1
7	1578746	Valve Section (Outlet Section) (☞Figure 12-20)	1	1

©2013 HYSTER COMPANY

CONTROL VALVE ASSEMBLY
MANUAL CONTROL – THREE AND FOUR FUNCTION

KEY:
A: H40-60FT
B: H70FT

ITEM	PART NO.	DESCRIPTION	QTY A	QTY B
8	2063117	Steering Control Unit	1	..
8	2063118	Steering Control Unit	..	1

FOOTNOTES:

a → S/N L177B17862E
b → S/N L177B18170E
c → S/N L177B18729E
d → S/N L177B18808E
e S/N L177B17863E ↔ S/N L177B03753G
f S/N L177B18171E ↔ S/N L177V03767G
g S/N L177B18731E ↔ S/N L177V03755G
h S/N L177B18731E ↔ S/N L177V03879G
i S/N L177B18809E ↔ S/N L177V03841G
j S/N L177B18809E →
k S/N L177V03753G →
l S/N L177V03768G →
m S/N L177V03842G →
n S/N L177V03880G →
o S/N L177B18730E →
p S/N L177B18170E →
q S/N L177B03768G →
r S/N L177B17862E →

©2013 HYSTER COMPANY

NOTES

©2013 HYSTER COMPANY

CONTROL VALVE LOCKOUT GROUP (FIGURE 12-14)

MANUAL CONTROL VALVE (S/N L177V03025G →)

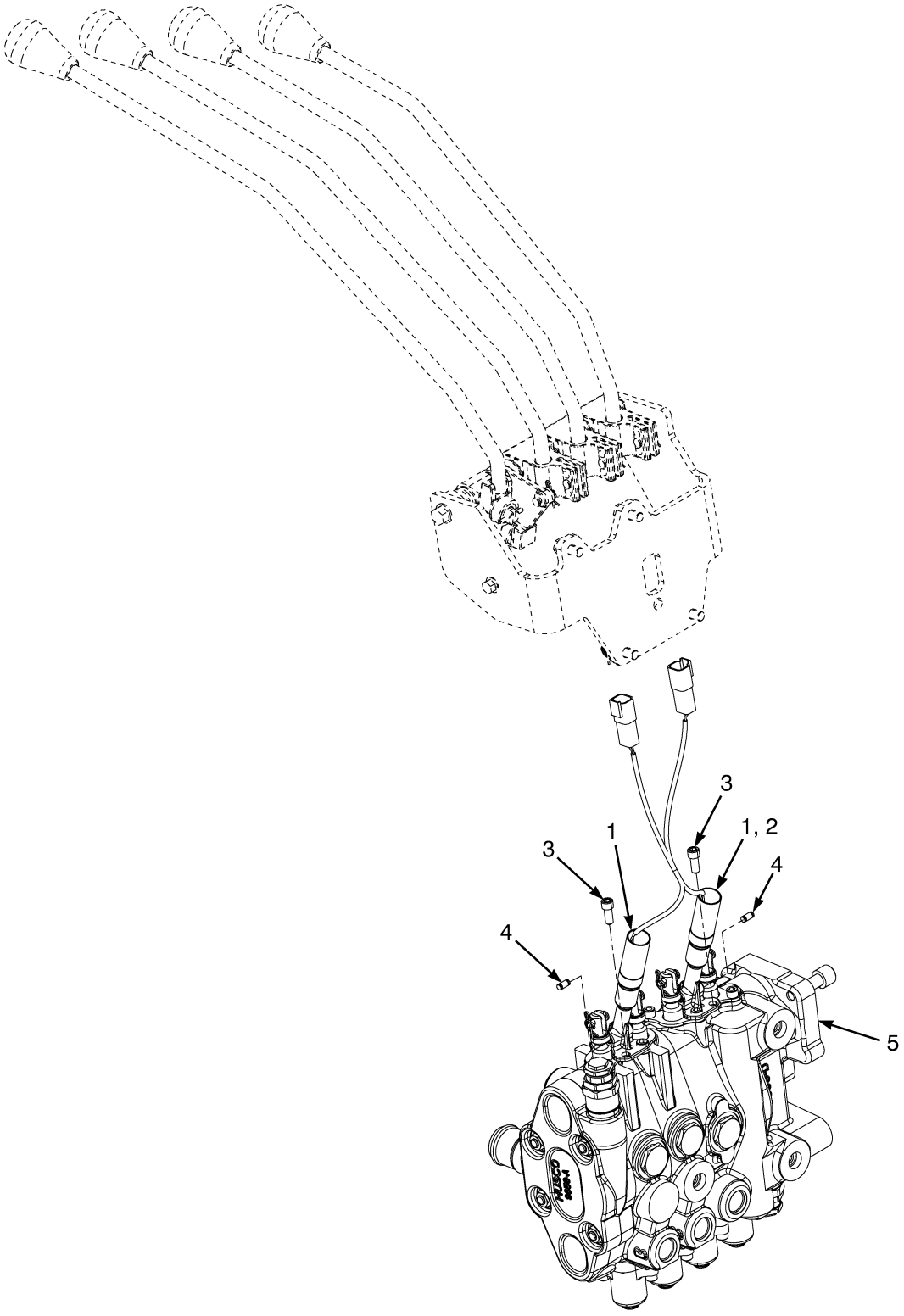

BP140133

©2013 HYSTER COMPANY

CONTROL VALVE LOCKOUT GROUP

MANUAL CONTROL VALVE (S/N L177V03025G →)

KEY:
A: 3 Function
B: 4 Function

ITEM	PART NO.	DESCRIPTION	QTY A	QTY B
1	1683529	Solenoid Assembly (Double Function)	1	2
2	1683621	Solenoid Assembly (Single Function)	1	..
3	18748	Capscrew	4	4
4	1670413	Needle Roller	3	4
5	. . . . .	Manual Control Valve (☞Figure 12-13)	1	1

©2013 HYSTER COMPANY

VALVE ASSEMBLY, LIFT AND TILT (FIGURE 12-15)

MANUAL CONTROL VALVE — THREE AND FOUR FUNCTION

(→ S/N L177B18729E (3 FUNCTION HIGH RELIEF)) (→ S/N L177B17862E (3 FUNCTION LOW RELIEF))
(→ S/N L177B18169E (4 FUNCTION LOW RELIEF)) (→ S/N L177B18808E (4 FUNCTION HIGH RELIEF))

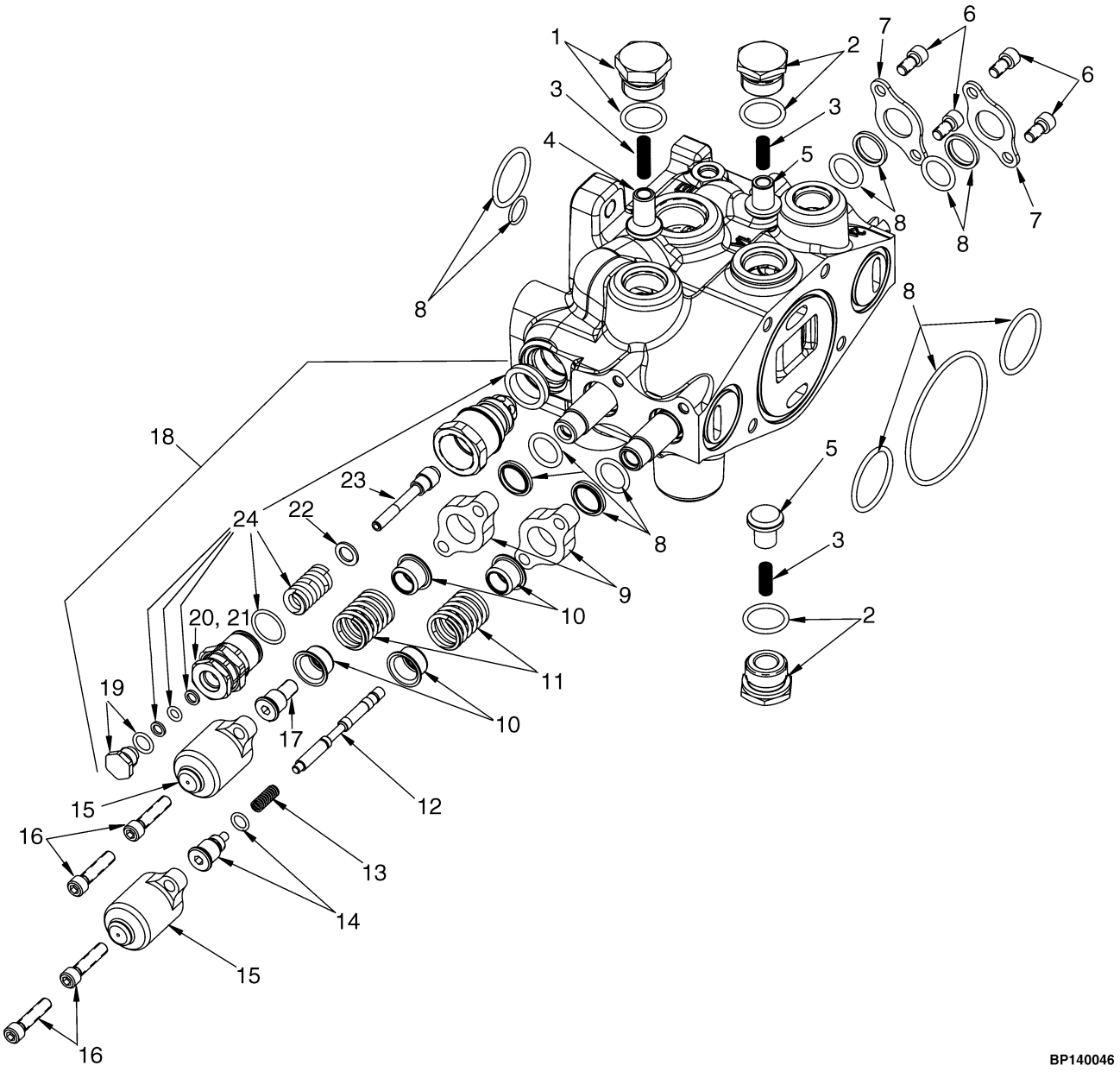

©2013 HYSTER COMPANY

VALVE ASSEMBLY, LIFT AND TILT

MANUAL CONTROL VALVE – THREE AND FOUR FUNCTION

(→ S/N L177B18729E (3 FUNCTION HIGH RELIEF)) (→ S/N L177B17862E (3 FUNCTION LOW RELIEF))
(→ S/N L177B18169E (4 FUNCTION LOW RELIEF)) (→ S/N L177B18808E (4 FUNCTION HIGH RELIEF))

ITEM	PART NO.	DESCRIPTION	QTY
	1578743	Valve Section (Lift and Tilt)	1
1	1578713	Plug Assembly	2
2	1578940	Plug	1
3	77442	Spring	3
4	1578943	Poppet	1
5	77443	Poppet	2
6	16706	Screw	4
7	188515	Plate	2
8	1670445	Kit-Seal (Lift and Tilt)	1
9	. . . . .	Seal Plate	2
10	320289	Spring Seat	2
11	1581860	Spring	2
12	1581861	Piston	1
13	341462	Spring	1
14	386015	Spool End	1
15	1560681	Cap	2
16	~~1628746~~		
	1578705	Capscrew	4
17	1581859	Spool End	1
18	1578747	Relief Valve (3100 PSI) (Main Relief) (H40-60FT)	1
18	1578748	Relief Valve (3400 PSI) (Main Relief) (H70FT)	1
19	. . . . .	Plug	1
20	. . . . .	Screw	1
21	. . . . .	Nut	1
22	. . . . .	Washer	1
23	. . . . .	Poppet	1
24	1580097	Kit-Seal (H40-60FT)	1
24	1580131	Kit-Seal (H70FT)	1

©2013 HYSTER COMPANY

VALVE ASSEMBLY, LIFT AND TILT (FIGURE 12-16)

MANUAL CONTROL VALVE — THREE AND FOUR FUNCTION

(S/N L177B17862E ↔ S/N L177V03752G (3 FUNCTION LOW RELIEF))
(S/N L177B18730E ↔ S/N L177V03752G (3 FUNCTION HIGH RELIEF)))
(S/N L177B18170E ↔ S/N L177V03752G (4 FUNCTION LOW RELIEF))
(S/N L177B18809E ↔ S/N L177V03752G (4 FUNCTION HIGH RELIEF))

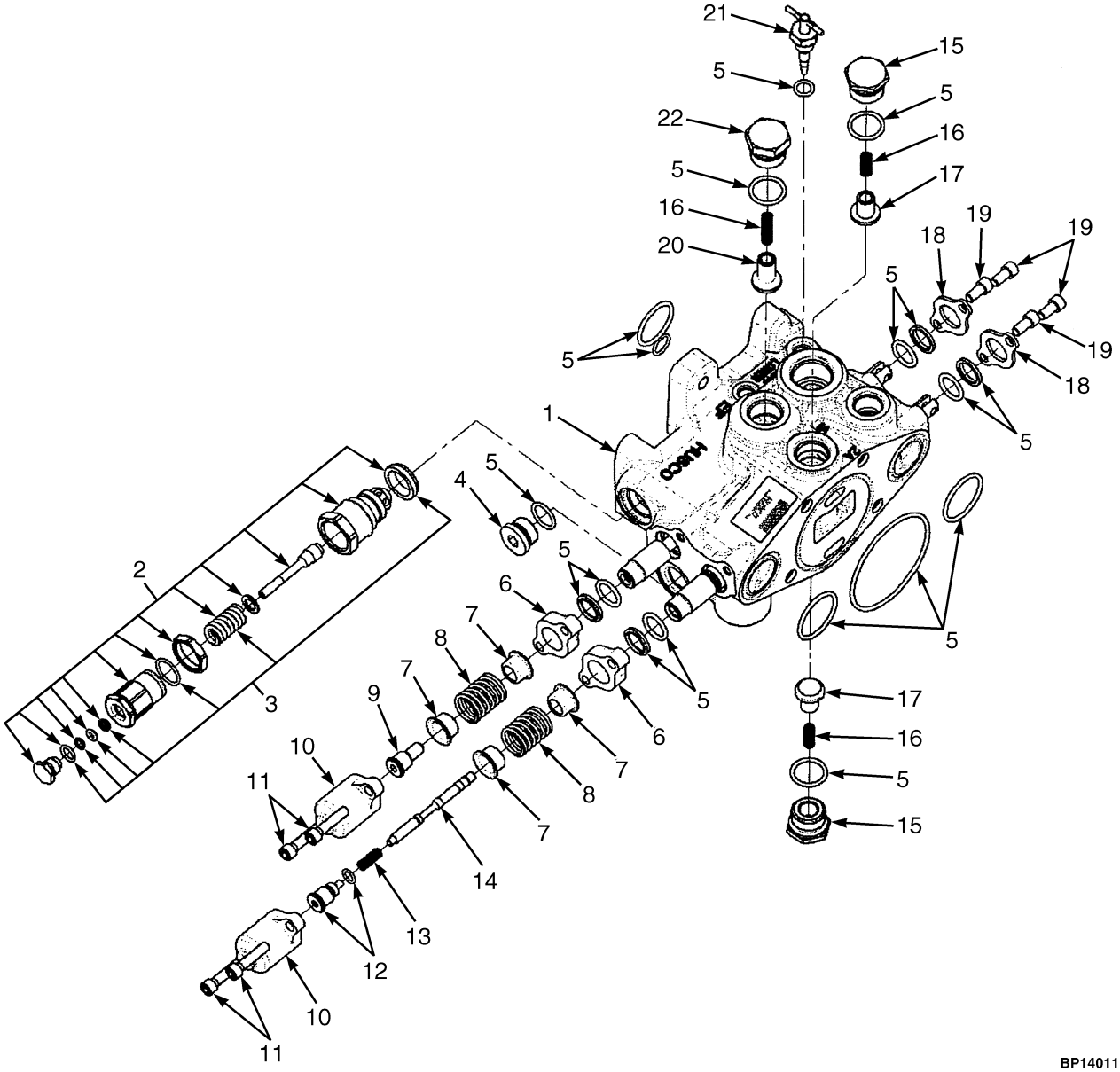

©2013 HYSTER COMPANY

VALVE ASSEMBLY, LIFT AND TILT

MANUAL CONTROL VALVE – THREE AND FOUR FUNCTION

(S/N L177B17862E ↔ S/N L177V03752G (3 FUNCTION LOW RELIEF))
(S/N L177B18730E ↔ S/N L177V03752G (3 FUNCTION HIGH RELIEF)))
(S/N L177B18170E ↔ S/N L177V03752G (4 FUNCTION LOW RELIEF))
(S/N L177B18809E ↔ S/N L177V03752G (4 FUNCTION HIGH RELIEF))

KEY:
A: Three Function
B: Four Function

ITEM	PART NO.	DESCRIPTION	QTY A	QTY B
1	1670464	Valve Section (Lift and Tilt)	1	1
2	1578747	Relief Valve (3100 PSI) (Main Relief)	1	1
2	1578748	Relief Valve (3400 PSI) (Main Relief)	1	1
2	1580694	Plug	1	1
2	1580697	Screw	1	1
2	1580698	Nut	1	1
2	1580695	Washer	1	1
2	1580696	Poppet	1	1
3	1580097	Kit-Seal	1	1
4	1569602	Plug	1	1
5	1670445	Kit-Seal (Lift and Tilt)	1	1
6	. . . . .	Seal Plate	2	2
7	320289	Spring Seat	4	4
8	1581860	Spring	2	2
9	1581859	Spool End	1	1
10	1560681	Cap	2	2
11	~~1628746~~			
	1578705	Capscrew	4	4
12	386015	Spool End	1	1
13	341462	Spring	1	1
14	1581861	Piston	1	1
15	1578713	Plug Assembly	1	1
16	77442	Spring	3	3
17	77443	Poppet	2	2
18	188515	Plate	2	2
19	16706	Screw	4	4
20	1578943	Poppet	1	1
21	1670522	Kit-Valve (Manual Lower Assembly)	1	1
22	1578940	Plug	1	1
	1670054	Kit-Seal (Four Function)	..	1
	1670434	Kit-Seal (Three Function)	1	..

©2013 HYSTER COMPANY

VALVE ASSEMBLY, LIFT AND TILT (FIGURE 12-17)

MANUAL CONTROL VALVE — THREE AND FOUR FUNCTION (S/N L177V03752G →)

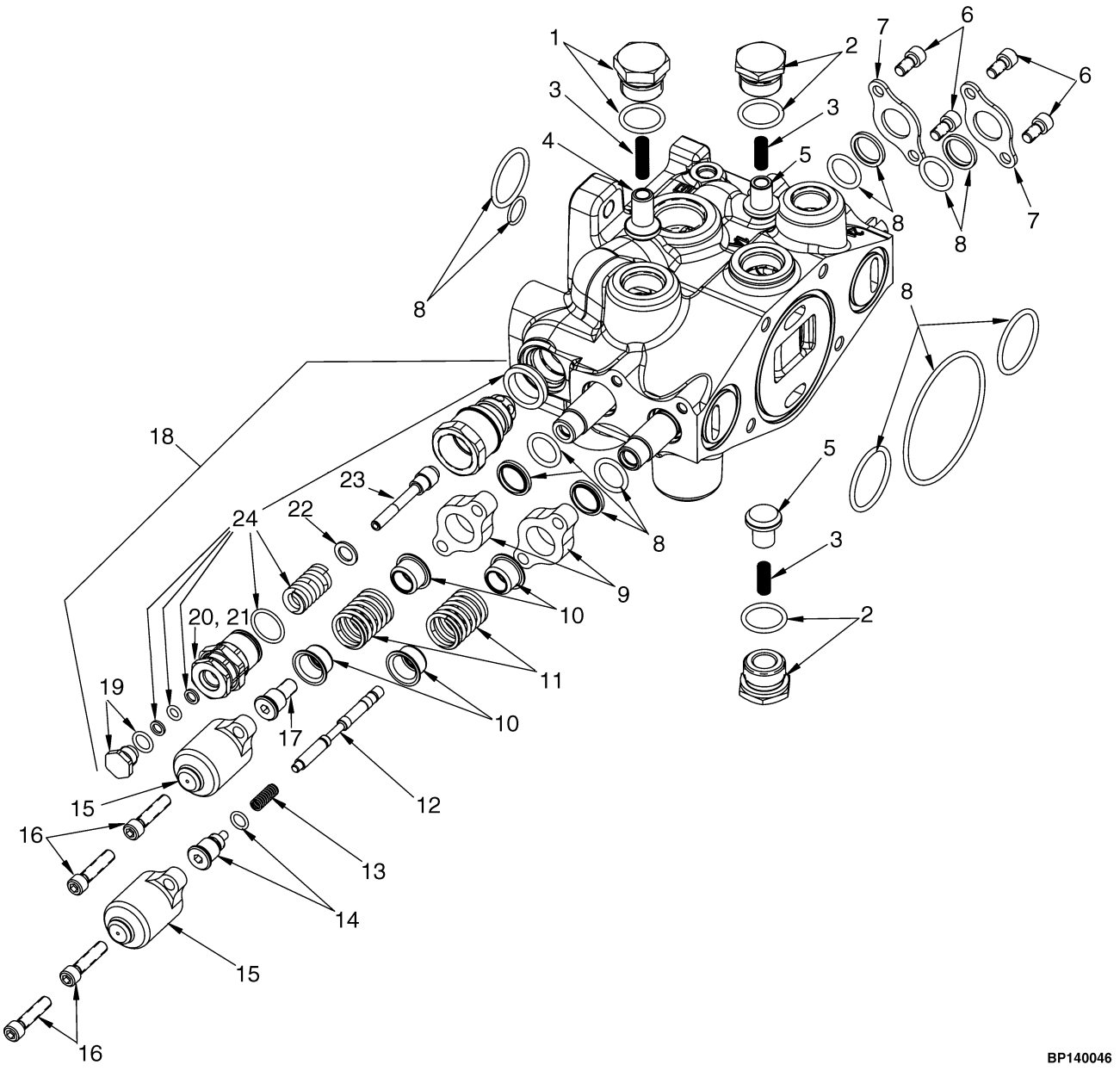

©2013 HYSTER COMPANY

VALVE ASSEMBLY, LIFT AND TILT

MANUAL CONTROL VALVE – THREE AND FOUR FUNCTION (S/N L177V03752G →)

ITEM	PART NO.	DESCRIPTION	QTY
	1702420	Valve Section (Lift And Tilt)	1
1	1578713	Plug Assembly	2
2	1578940	Plug	1
3	77442	Spring	3
4	1578943	Poppet	1
5	77443	Poppet	2
6	16706	Screw	4
7	188515	Plate	2
8	1670522	Kit-Valve (Manual Lower Assembly)	1
9	1560682	Plate	2
10	320289	Spring Seat	4
11	1581860	Spring	2
12	1581861	Piston	1
13	341462	Spring	1
14	386015	Spool End	1
15	1560681	Cap	2
16	~~1628746~~		
	1578705	Capscrew	4
17	1581859	Spool End	1
18	1578747	Relief Valve (3100 PSI) (Main Relief) (Low Relief)	1
18	1578748	Relief Valve (3400 PSI) (Main Relief) (High Relief)	1
19	1580694	Plug	1
20	1580697	Screw	1
21	1580698	Nut	1
22	1580695	Washer	1
23	1580696	Poppet	1
24	1580097	Kit-Seal	1

©2013 HYSTER COMPANY

AUXILIARY ONE AND TWO (FIGURE 12-18)

MANUAL CONTROL VALVE — THREE AND FOUR FUNCTION

(→ S/N L177B17861E (3 FUNCTION LOW RELIEF)) (→ S/N L177B18169E (4 FUNCTION LOW RELIEF))
(→ S/N L177B18729E (3 FUNCTION HIGH RELIEF)) (→ S/N L177B18808E (4 FUNCTION HIGH RELIEF))

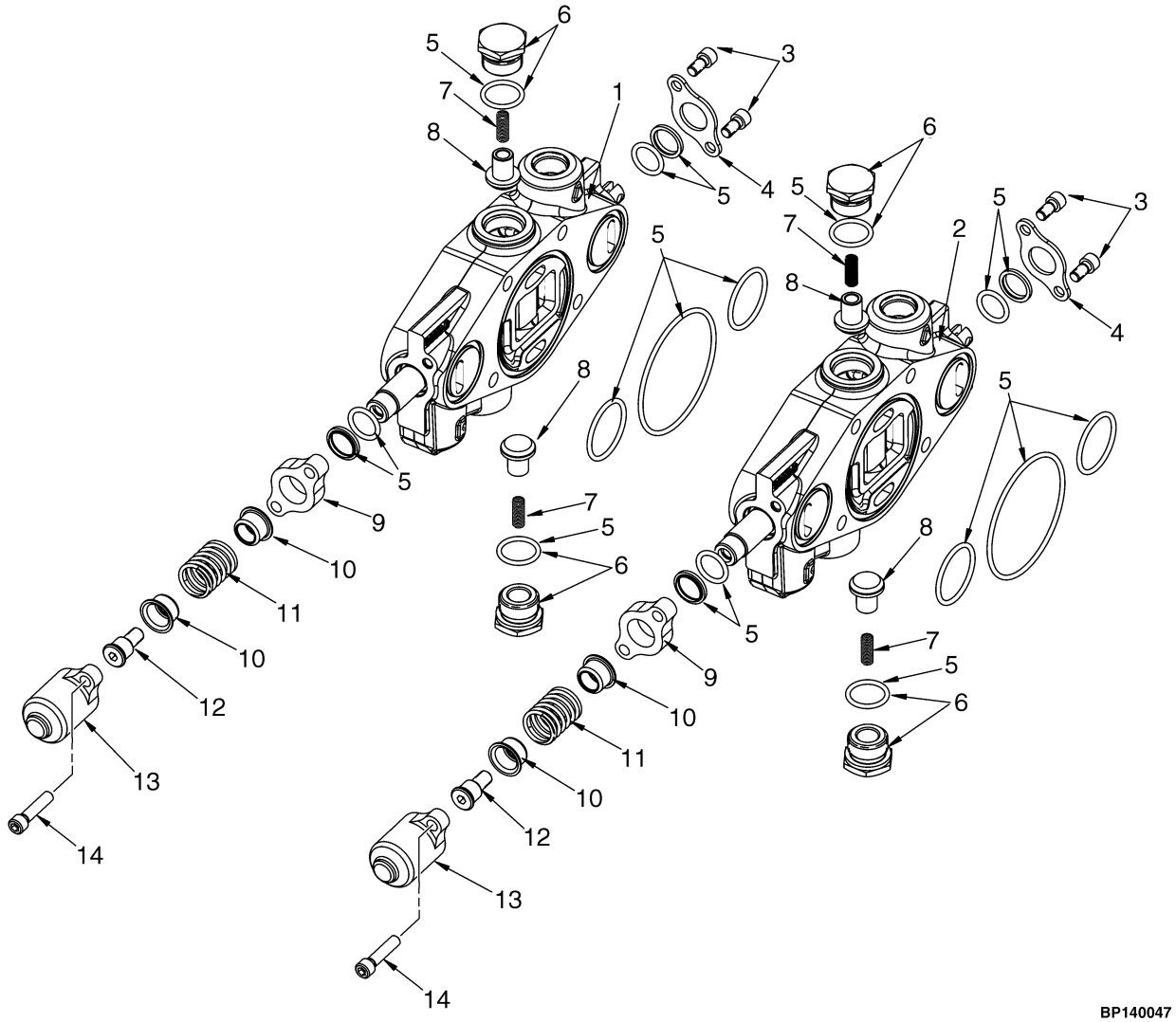

©2013 HYSTER COMPANY

AUXILIARY ONE AND TWO

MANUAL CONTROL VALVE – THREE AND FOUR FUNCTION

(→ S/N L177B17861E (3 FUNCTION LOW RELIEF)) (→ S/N L177B18169E (4 FUNCTION LOW RELIEF))
(→ S/N L177B18729E (3 FUNCTION HIGH RELIEF)) (→ S/N L177B18808E (4 FUNCTION HIGH RELIEF))

KEY:
A: Three Function
B: Four Function

ITEM	PART NO.	DESCRIPTION	QTY A	QTY B
1	1578744	Valve Section	1	1
2	1578745	Valve Section	..	1
3	16706	Screw	2	2
4	188515	Plate	1	1
5	1580147	Kit-Seal (Auxiliary Functions)	1	1
6	1578713	Plug Assembly	2	2
6	77441	Plug	2	2
7	77442	Spring	2	2
8	77443	Poppet	2	2
9	. . . . .	Seal Plate	1	1
10	320289	Spring Seat	1	1
11	1581860	Spring	1	1
12	1581859	Spool End	1	1
13	1560681	Cap	1	1
14	~~1628746~~			
	1578705	Capscrew	2	2

©2013 HYSTER COMPANY

AUXILIARY ONE AND TWO (FIGURE 12-19)

MANUAL CONTROL VALVE — THREE AND FOUR FUNCTION

(S/N L177B17862E → (3 FUNCTION LOW RELIEF)) (S/N L177B18170E → (4 FUNCTION LOW RELIEF))
(S/N L177B18730E → (3 FUNCTION HIGH RELIEF)) (S/N L177B18809E → (4 FUNCTION HIGH RELIEF))

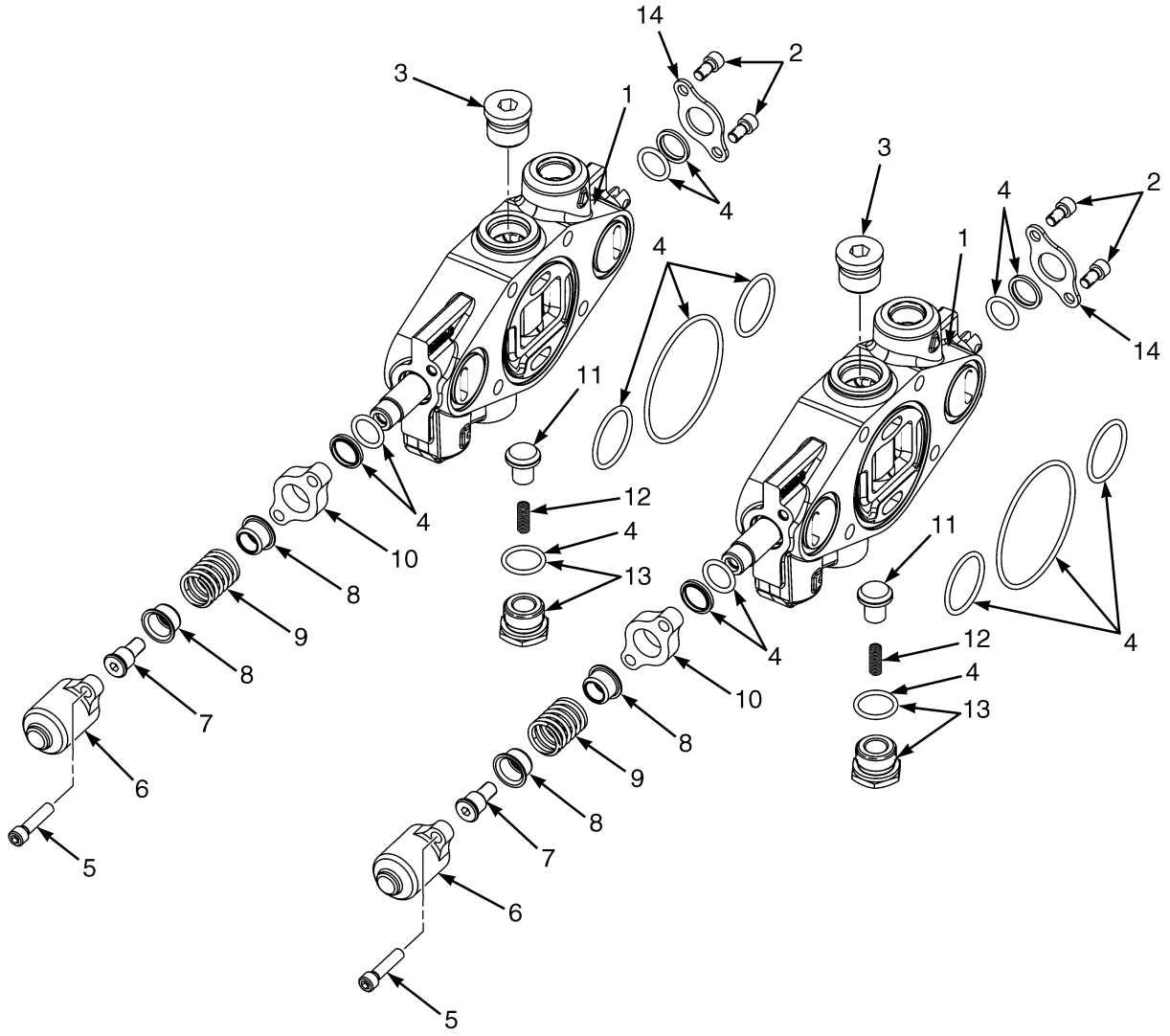

BP140119

©2013 HYSTER COMPANY

AUXILIARY ONE AND TWO

MANUAL CONTROL VALVE – THREE AND FOUR FUNCTION

(S/N L177B17862E → (3 FUNCTION LOW RELIEF)) (S/N L177B18170E → (4 FUNCTION LOW RELIEF))
(S/N L177B18730E → (3 FUNCTION HIGH RELIEF)) (S/N L177B18809E → (4 FUNCTION HIGH RELIEF))

KEY:
A: Three Function
B: Four Function

ITEM	PART NO.	DESCRIPTION	QTY A	QTY B
1	1670463	Valve Section	1	1
1	1670462	Valve Section	1	1
2	16706	Screw	2	4
3	1578714	Plug Assembly	1	1
4	1580147	Kit-Seal (Auxiliary Functions)	1	1
5	~~1628746~~			
	1578705	Capscrew	2	4
6	1560681	Cap	1	2
7	1581859	Spool End	1	2
8	320289	Spring Seat	2	4
9	1581860	Spring	1	2
10	1560682	Plate	1	2
11	77443	Poppet	1	2
12	77442	Spring	1	2
13	1578713	Plug Assembly	1	2
14	188515	Plate	1	2
	1670434	Kit-Seal (Three Function)	1	..
	1670054	Kit-Seal (Four Function)	..	1

©2013 HYSTER COMPANY

OUTLET SECTION (FIGURE 12-20)
MANUAL CONTROL VALVE — THREE AND FOUR FUNCTION

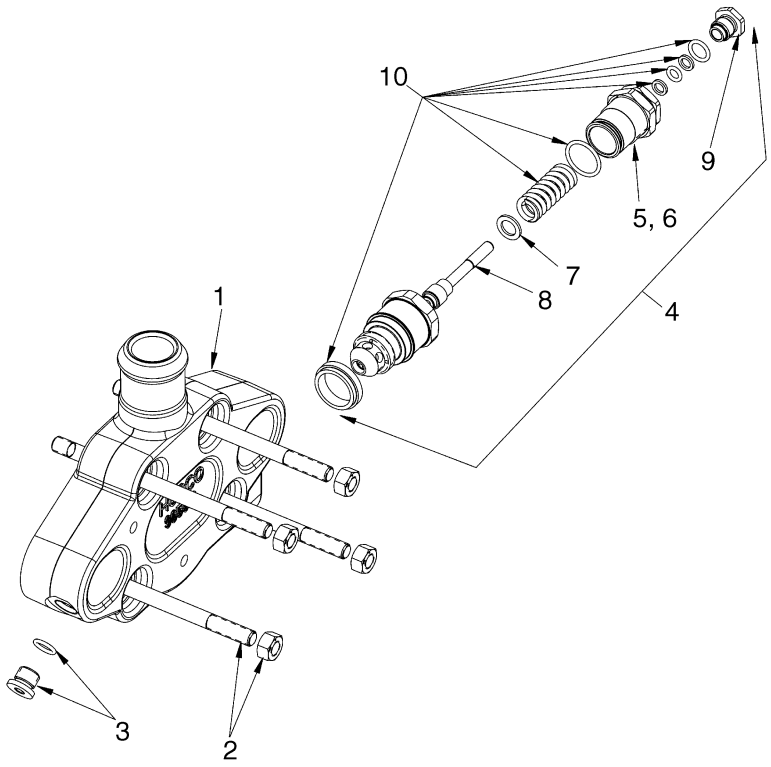

BP140048

ITEM	PART NO.	DESCRIPTION	QTY
1	1578746	Valve Section (Outlet Section)	1
2	1580155	Kit-Tie Rod (Three Function)	1
2	1580156	Kit-Tie Rod (Four Function)	1
2	15055	Nut	4
3	1578712	Plug Assembly	1
3	204128	Plug	1
4	1578707	Relief Valve (Secondary) (2250 PSI)	1
5	. . . . .	Nut	1
6	. . . . .	Screw	1
7	. . . . .	Washer	1
8	. . . . .	Poppet	1
9	. . . . .	Plug	1
10	1580131	Kit-Seal	1

©2013 HYSTER COMPANY

NOTES

©2013 HYSTER COMPANY

HYDRAULIC CONTROL VALVE (FIGURE 12-21)

ELECTRONIC CONTROL — THREE AND FOUR FUNCTION (→ S/N L177B18806E)

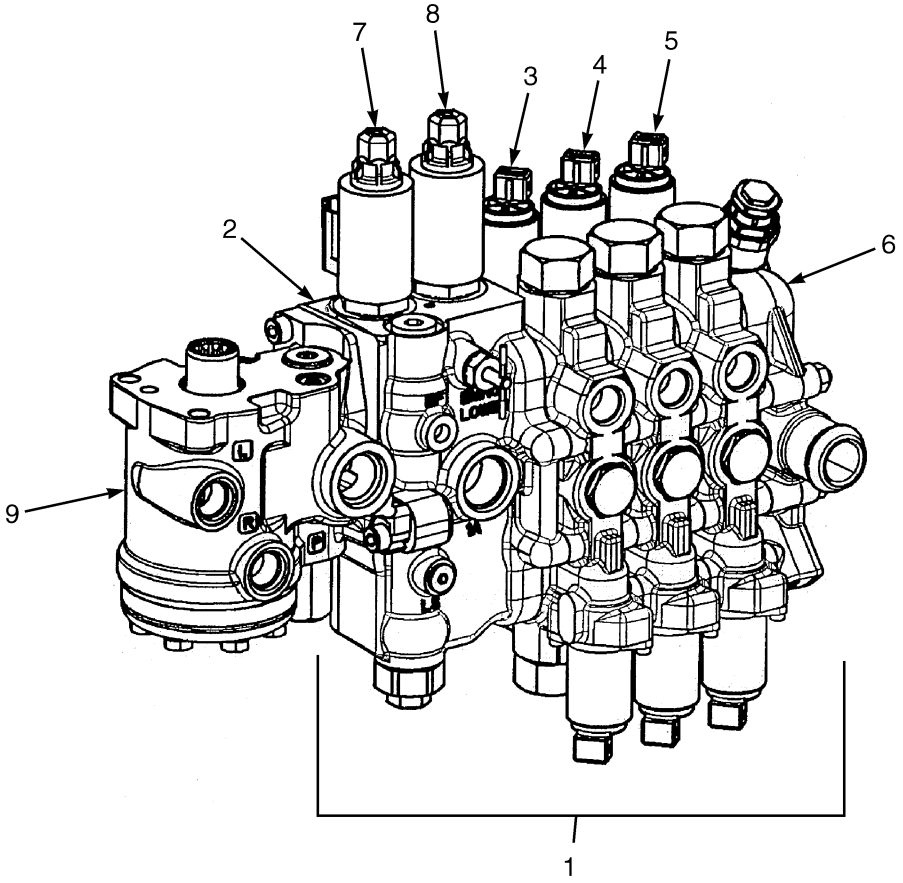

BP140053

©2013 HYSTER COMPANY

HYDRAULIC CONTROL VALVE

ELECTRONIC CONTROL – THREE AND FOUR FUNCTION (→ S/N L177B18806E)

KEY:
A: H40-60FT
B: H70FT

ITEM	PART NO.	DESCRIPTION	QTY A	QTY B
	c 2064848	Hydraulic Control Valve	1	..
	c 2064851	Hydraulic Control Valve	..	1
	a 2064859	Hydraulic Control Valve	1	..
	a 2064862	Hydraulic Control Valve	..	1
1	**c** 2064845	Hydraulic Control Valve (Electronic)	1	..
1	**c** 2064849	Hydraulic Control Valve (Electronic)	..	1
1	**a** 2064857	Hydraulic Control Valve (Electronic)	1	..
1	**a** 2064860	Hydraulic Control Valve (Electronic)	..	1
2	1578701	Valve Section (Lift and Lower) (☞Figure 12-23)	1	..
2	1578700	Valve Section (Lift and Lower) (☞Figure 12-23)	..	1
3	1578702	Valve Section (Tilt) (☞Figure 12-26)	1	1
4	**c** 1578703	Valve Section (Aux. 1) (☞Figure 12-27)	1	1
5	**a** 1578741	Valve Section (Aux. 2) (☞Figure 12-28)	1	1
6	1578704	Valve Section (Outlet) (☞Figure 12-29)	1	1
7	1590113	Poppet Valve (Lift) (☞Figure 12-25)	1	1
8	1590114	Poppet Valve (Lower) (☞Figure 12-25)	1	1
9	2063117	Steering Control Unit (☞Figure 10-5)	1	..
9	2063118	Steering Control Unit (☞Figure 10-5)	..	1
	b 1579908	Kit-Seal (Steering Control Unit)	1	1
	b 2063991	Isolator	3	3
	b 1586627	Capscrew	3	3
	b 1346752	Washer	3	3
	1578909	Kit-Seal (Master 3 Function)	1	..
	1578908	Kit-Seal (Master 4 Function)	..	1

FOOTNOTES:

a Four Function
b Not Illustrated
c Three Function

©2013 HYSTER COMPANY

HYDRAULIC CONTROL VALVE (FIGURE 12-22)

ELECTRONIC VALVE ASSEMBLY — THREE AND FOUR FUNCTION (S/N L177B18807E →)

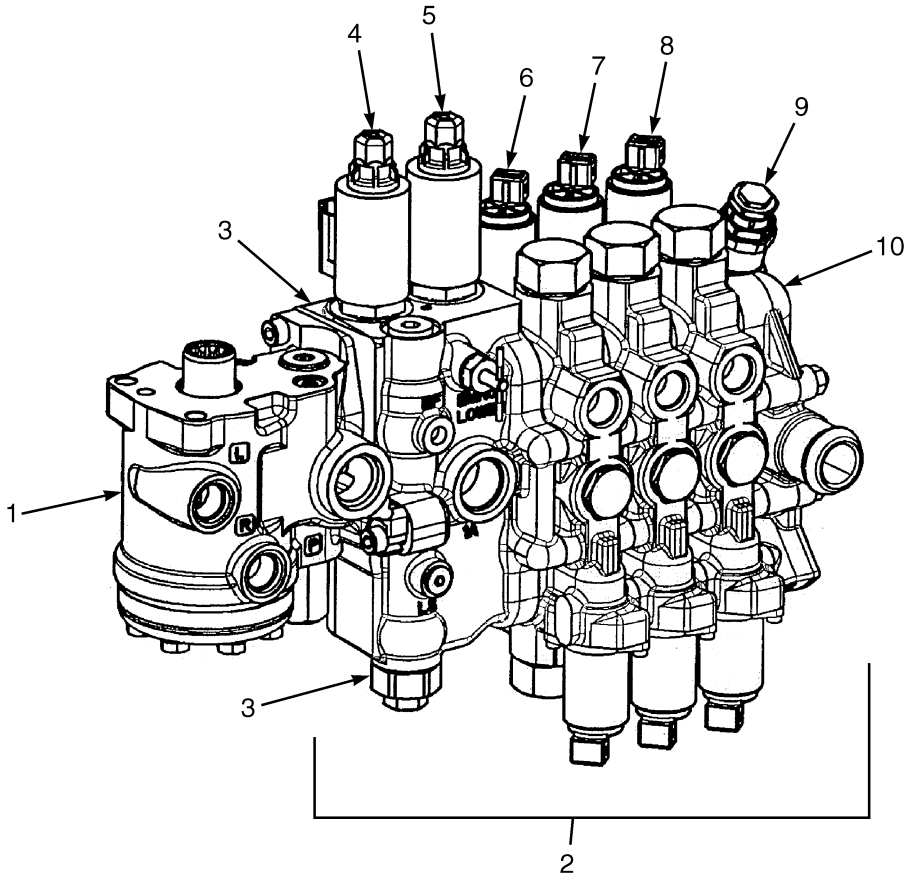

BP140112

©2013 HYSTER COMPANY

HYDRAULIC CONTROL VALVE

ELECTRONIC VALVE ASSEMBLY – THREE AND FOUR FUNCTION (S/N L177B18807E →)

KEY:
A: Three Function Valve, Low Relief
B: Four Function Valve, Low Relief
C: Three Function Valve, High Relief
D: Four Function Valve, High Relief

ITEM	PART NO.	DESCRIPTION	QTY A	QTY B	QTY C	QTY D
	2095423	Hydraulic Control Valve	1	..	..	..
	2095425	Hydraulic Control Valve	..	1	..	..
	2095427	Hydraulic Control Valve	..	..	1	..
	2095429	Hydraulic Control Valve	..	..	..	1
1	2063117	Steering Control Unit	1	1	..	..
1	2063118	Steering Control Unit	..	..	1	1
2	2095432	Hydraulic Control Valve (Electronic)	1	..	..	..
2	2095433	Hydraulic Control Valve (Electronic)	..	1	..	..
2	2095434	Hydraulic Control Valve (Electronic)	..	..	1	..
2	2095435	Hydraulic Control Valve (Electronic)	..	..	..	1
3	1664485	Valve Section (Inlet) (☞Figure 12-24)	1	1	..	..
3	1578706	Relief Valve (Main)	1	1	..	..
3	1664486	Valve Section (Inlet) (☞Figure 12-24)	..	..	1	1
3	1578753	Relief Valve (Main)	..	..	1	1
4	1590113	Poppet Valve (☞Figure 12-25)	1	1	1	1
5	1590114	Poppet Valve (☞Figure 12-25)	1	1	1	1
6	1578702	Valve Section (Tilt) (☞Figure 12-26)	1	1	1	1
7	1578703	Valve Section (Aux. 1) (☞Figure 12-27)	1	1	1	1
8	1578741	Valve Section (Aux. 2) (☞Figure 12-28)	..	1	..	1
9	1578707	Relief Valve (Secondary) (2250 PSI) (☞Figure 12-29)	1	1	1	1
10	1578704	Valve Section (Outlet) (☞Figure 12-29)	1	1	1	1
	1578909	Kit-Seal (Master 3 Function)	1	..	1	..
	1578908	Kit-Seal (Master 4 Function)	..	1	..	1
	1578715	Kit-Tie Rod	1	..	1	..
	1580151	Kit-Tie Rod	..	1	..	1

©2013 HYSTER COMPANY

VALVE ASSEMBLY, LIFT AND LOWER (FIGURE 12-23)

ELECTRONIC CONTROL VALVE — THREE AND FOUR FUNCTION

(→ S/N L177B18806E EXC. 08807, 09603, 08238, 08262)

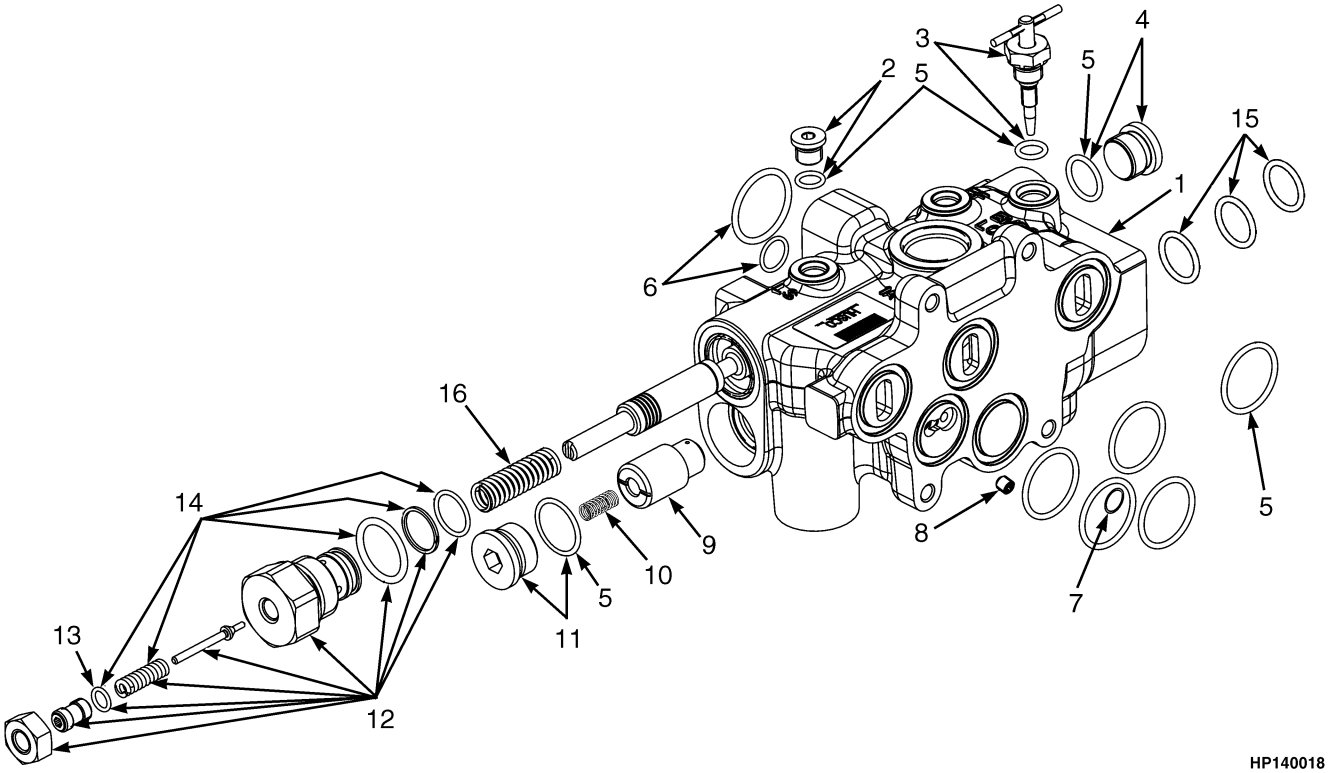

©2013 HYSTER COMPANY

VALVE ASSEMBLY, LIFT AND LOWER

ELECTRONIC CONTROL VALVE – THREE AND FOUR FUNCTION

(→ S/N L177B18806E EXC. 08807, 09603, 08238, 08262)

ITEM	PART NO.	DESCRIPTION	QTY
1	1578701	Valve Section (Lift and Lower) (H40-60FT)	1
1	1578700	Valve Section (Lift and Lower) (H70FT)	1
2	1578712	Plug Assembly	1
2	204128	Plug	1
3	1581862	Kit-Valve (Manual Lowering)	1
4	1569602	Plug	1
5	1578904	Kit-Seal (Inlet)	1
6	1578911	Kit-Seal (Steering Control Unit Interface)	1
7	1578875	Shuttle Valve	1
8	1578888	Setscrew	1
9	1586280	Poppet	1
10	1578876	Spring	1
11	1578714	Plug Assembly	1
12	1578706	Relief Valve (Main) (H40-60FT)	1
12	1578753	Relief Valve (Main) (H70FT)	1
12	1580749	Screw	1
13	16480	O-Ring	1
14	1580132	Kit-Relief Valve	1
15	1586279	Kit-Seal (Electro Hydraulic Poppet Valve)	AR
16	1578881	Spring	1

©2013 HYSTER COMPANY

HYDRAULIC CONTROL VALVE (FIGURE 12-24)

ELECTRONIC VALVE INLET SECTION — THREE AND FOUR FUNCTION (S/N L177B18807E → INC. 08807, 09603, 08238, 08262)

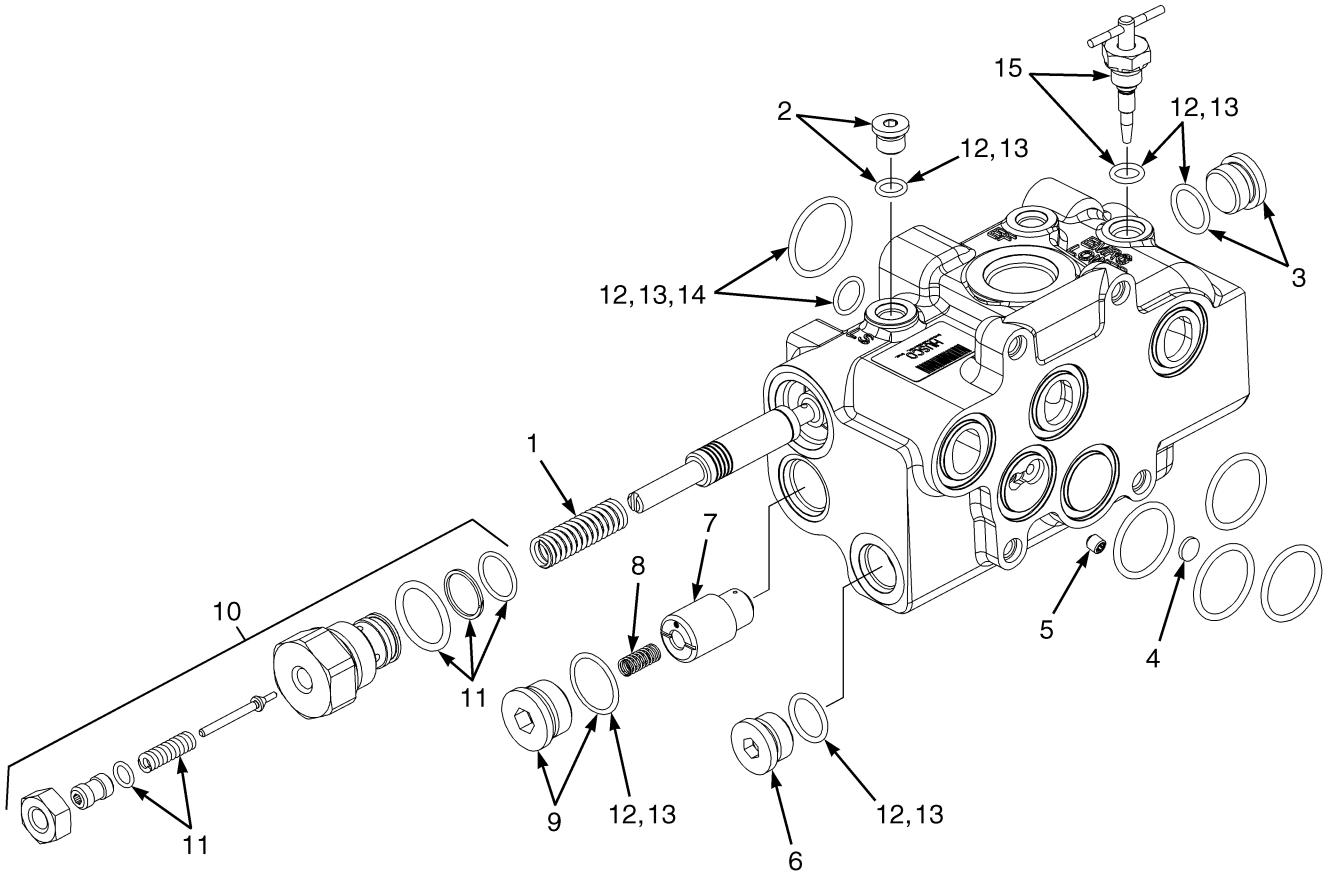

©2013 HYSTER COMPANY

HYDRAULIC CONTROL VALVE

ELECTRONIC VALVE INLET SECTION – THREE AND FOUR FUNCTION

(S/N L177B18807E → INC. 08807, 09603, 08238, 08262)

KEY:
A: 3 Function Valve
B: 4 Function Valve

ITEM	PART NO.	DESCRIPTION	QTY A	QTY B
	1664485	Valve Section (Inlet)	1	..
	1664486	Valve Section (Inlet)	..	1
1	1578881	Spring	1	1
2	1578712	Plug Assembly	1	1
3	1629210	Plug	1	1
4	1578875	Shuttle Valve	1	1
5	1578888	Setscrew	1	1
6	1569602	Plug	1	1
7	1586280	Poppet	1	1
8	1578876	Spring	1	1
9	1578714	Plug Assembly	1	1
10	1578706	Relief Valve (Main)	1	..
10	1578753	Relief Valve (Main)	..	1
11	1580132	Kit-Relief Valve	1	1
12	1578909	Kit-Seal (Master 3 Function)	1	1
13	1578904	Kit-Seal (Inlet)	1	1
14	1578911	Kit-Seal (Steering Control Unit Interface)	1	1
15	1581862	Kit-Valve (Manual Lowering)	1	1

©2013 HYSTER COMPANY

HYDRAULIC CONTROL VALVE (FIGURE 12-25)
ELECTRO HYDRAULIC POPPET VALVES — LIFT AND LOWER

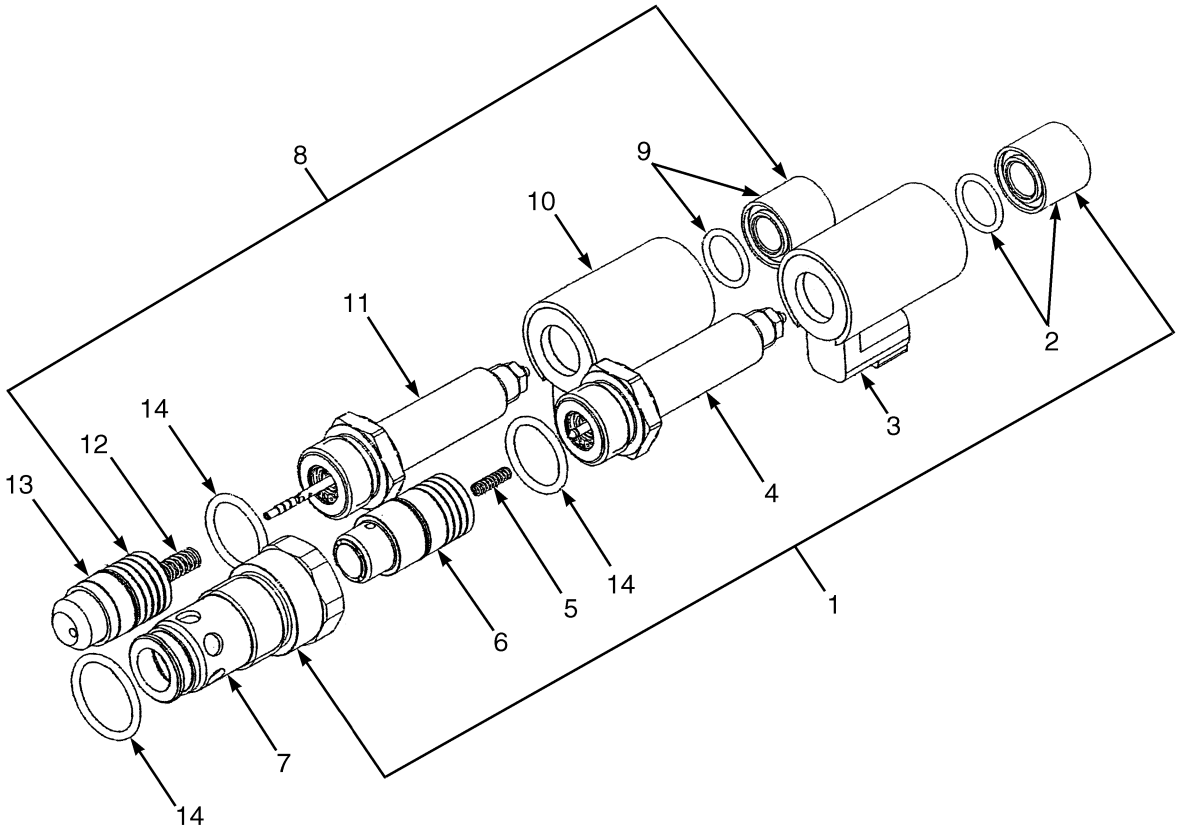

BP140055

©2013 HYSTER COMPANY

HYDRAULIC CONTROL VALVE

ELECTRO HYDRAULIC POPPET VALVES – LIFT AND LOWER

ITEM	PART NO.	DESCRIPTION	QTY
1	**a** 1590114	Poppet Valve (Lower)	1
1	**b** 1699589	Poppet Valve (Lower)	1
2	1629163	Nut	1
3	1578710	Coil	1
4	1578918	Tube Assy (Solenoid)	1
5	1578934	Spring	1
6	**a** 1586021	Poppet	1
6	**b** 1699591	Poppet Valve	1
7	1586020	Sleeve	1
8	1590113	Poppet Valve (Lift)	1
9	1629163	Nut	1
10	1578710	Coil	1
11	1586019	Tube Assy (Solenoid)	1
12	1586017	Spring	1
13	1586016	Poppet	1
14	1586279	Kit-Seal (Electro Hydraulic Poppet Valve)	1

FOOTNOTES:

a → 6/2009

b 7/2009 →

©2013 HYSTER COMPANY

HYDRAULIC CONTROL VALVE (FIGURE 12-26)
ELECTRONIC VALVE TILT SECTION — THREE AND FOUR FUNCTION

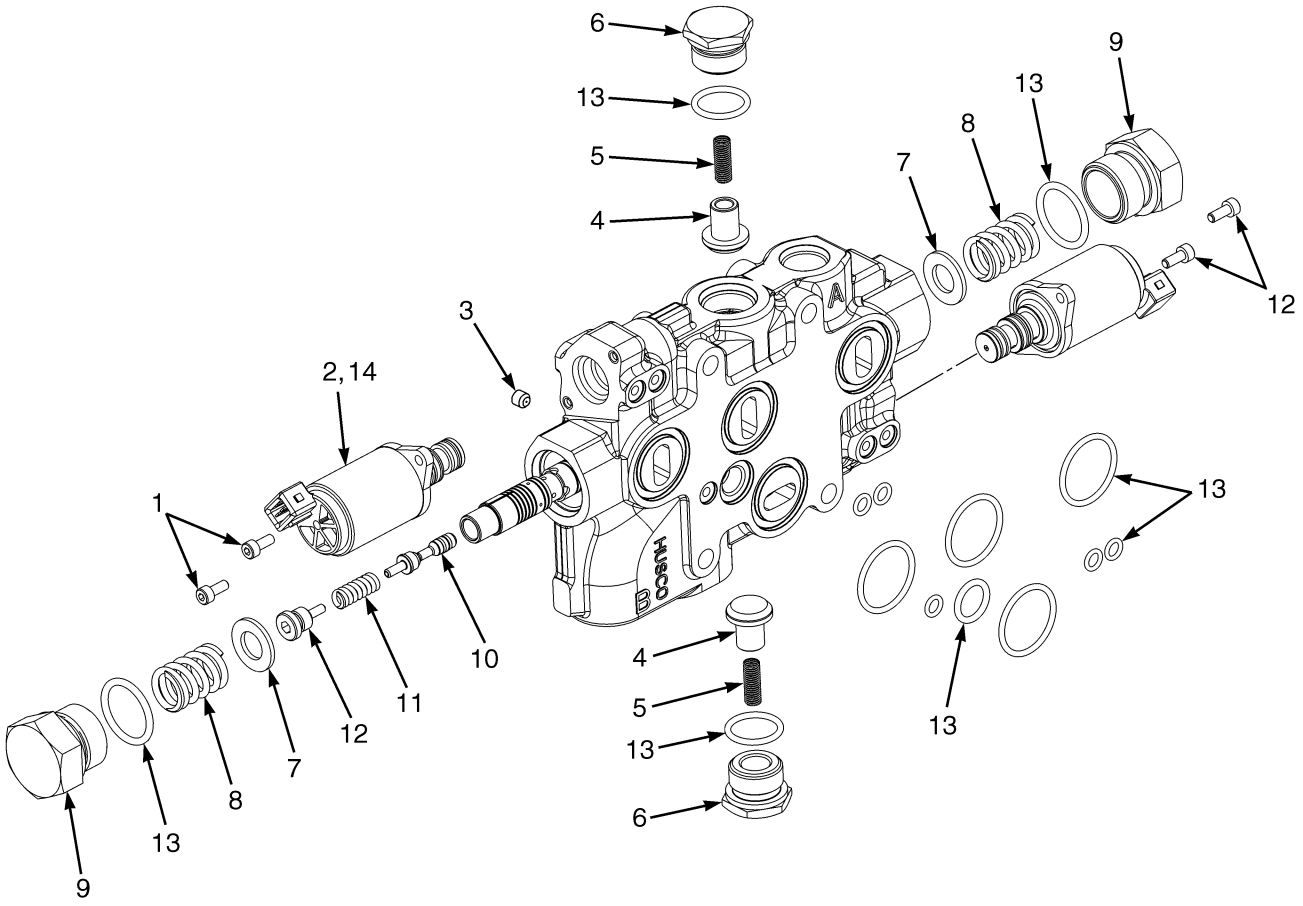

BP140114

©2013 HYSTER COMPANY

HYDRAULIC CONTROL VALVE

ELECTRONIC VALVE TILT SECTION – THREE AND FOUR FUNCTION

ITEM	PART NO.	DESCRIPTION	QTY
	1578702	Valve Section (Tilt)	1
1	1664395	Capscrew	4
2	1578711	Valve (Pressure Reducing)	2
3	1578887	Setscrew	1
4	77443	Poppet	2
5	77442	Spring	2
6	1578713	Plug Assembly	2
7	1578883	Washer	2
8	1578882	Spring	2
9	1578889	Plug	2
10	1580099	Piston and Rod	1
11	1580759	Spring	1
12	1580760	Spool End	1
13	1578905	Kit-Seal (Tilt)	1
14	~~1578912~~		
	1687534	Kit-Seal (Solenoid Pressure Reducing)	1

©2013 HYSTER COMPANY

HYDRAULIC CONTROL VALVE (FIGURE 12-27)
ELECTRONIC VALVE AUXILIARY ONE SECTION — THREE AND FOUR FUNCTION

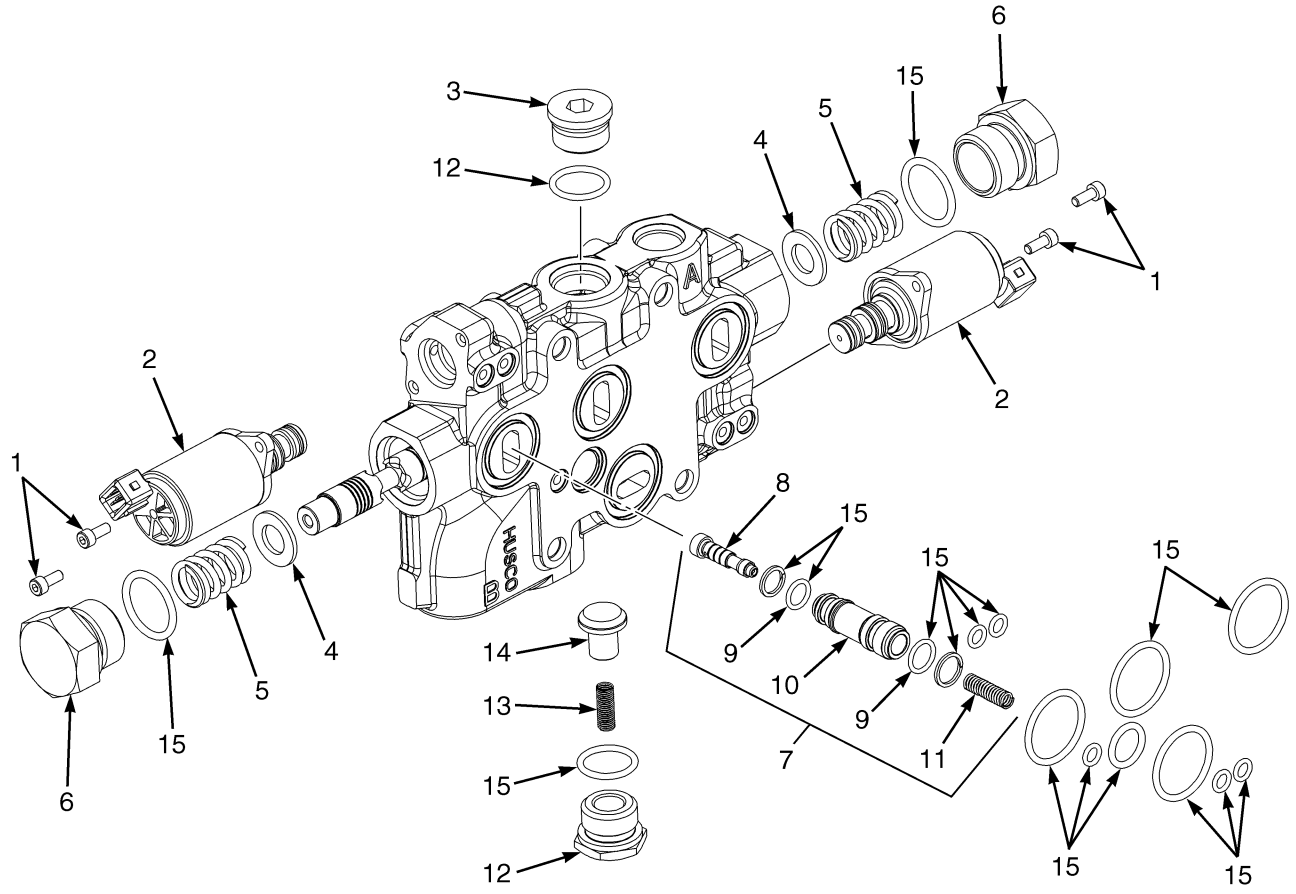

BP140115

©2013 HYSTER COMPANY

HYDRAULIC CONTROL VALVE

ELECTRONIC VALVE AUXILIARY ONE SECTION – THREE AND FOUR FUNCTION

ITEM	PART NO.	DESCRIPTION	QTY
	1578703	Valve Section (Aux. 1)	1
1	1664395	Capscrew	4
2	1578711	Valve (Pressure Reducing)	2
2	~~1578912~~		
	1687534	Kit-Seal (Solenoid Pressure Reducing)	1
3	1578714	Plug Assembly	1
4	1578883	Washer	2
5	1578882	Spring	2
6	1578889	Plug	2
7	1578718	Cartridge Valve	1
8	. . . . .	Spool	1
9	266519	O-Ring	1
10	1629166	Sleeve	1
11	1578886	Spring	1
12	1578713	Plug Assembly	1
13	77442	Spring	2
14	77443	Poppet	2
15	1578906	Kit-Seal (Auxiliary Section)	1

©2013 HYSTER COMPANY

HYDRAULIC CONTROL VALVE (FIGURE 12-28)
ELECTRONIC VALVE AUXILIARY TWO SECTION — FOUR FUNCTION

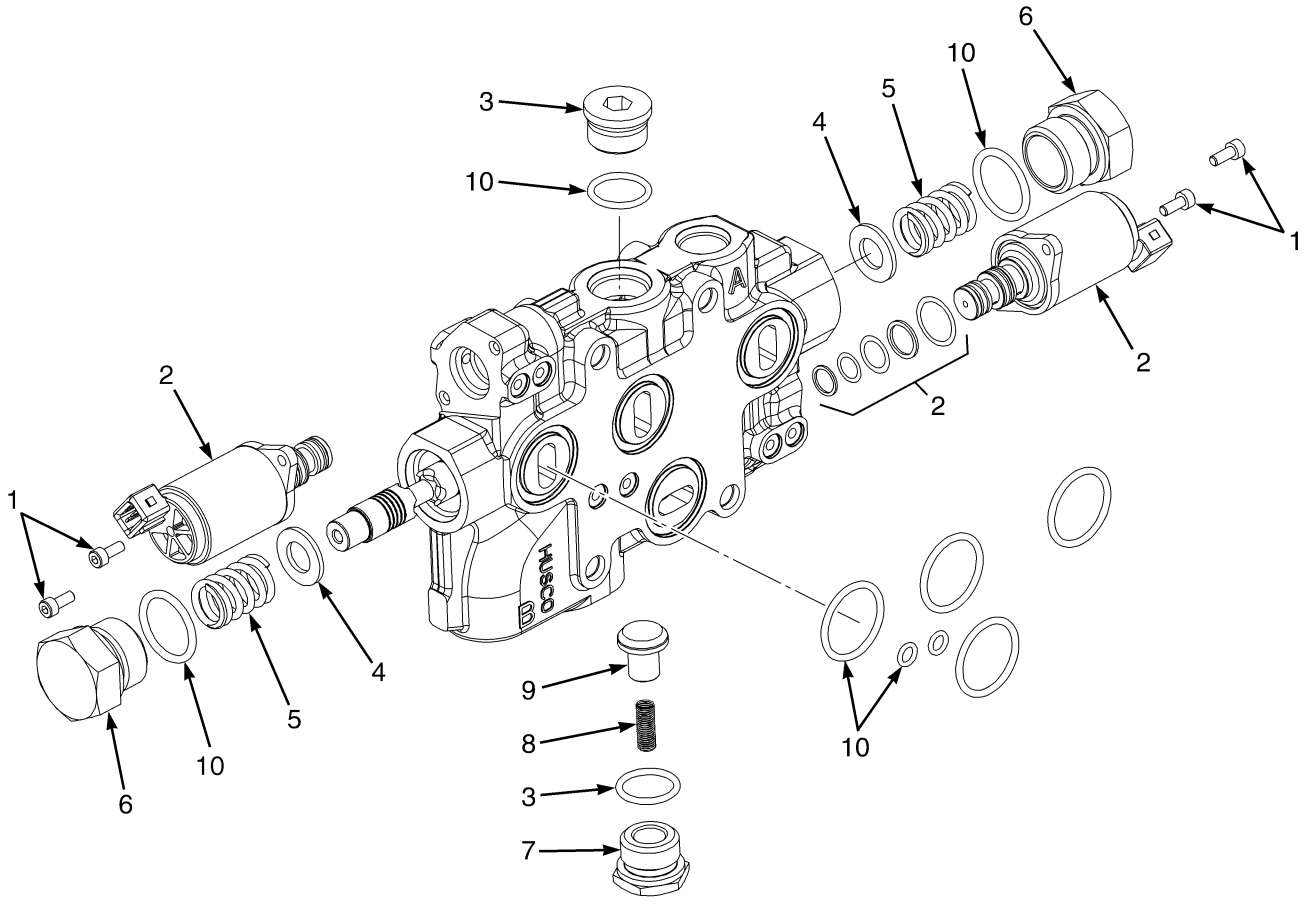

BP140116

©2013 HYSTER COMPANY

HYDRAULIC CONTROL VALVE

ELECTRONIC VALVE AUXILIARY TWO SECTION – FOUR FUNCTION

ITEM	PART NO.	DESCRIPTION	QTY
	1578741	Valve Section (Aux. 2)	1
1	1578878	Capscrew	4
2	1578711	Valve (Pressure Reducing)	2
2	~~1578912~~		
	1687534	Kit-Seal (Solenoid Pressure Reducing)	1
3	1578714	Plug Assembly	1
4	1578883	Washer	2
5	1578882	Spring	2
6	1578889	Plug	2
7	1578713	Plug Assembly	1
8	77442	Spring	2
9	77443	Poppet	2
10	1578907	Kit-Seal (Auxiliary Section) (Auxiliary Two Section)	1

©2013 HYSTER COMPANY

HYDRAULIC CONTROL VALVE (FIGURE 12-29)
ELECTRONIC VALVE OUTLET SECTION — THREE AND FOUR FUNCTION

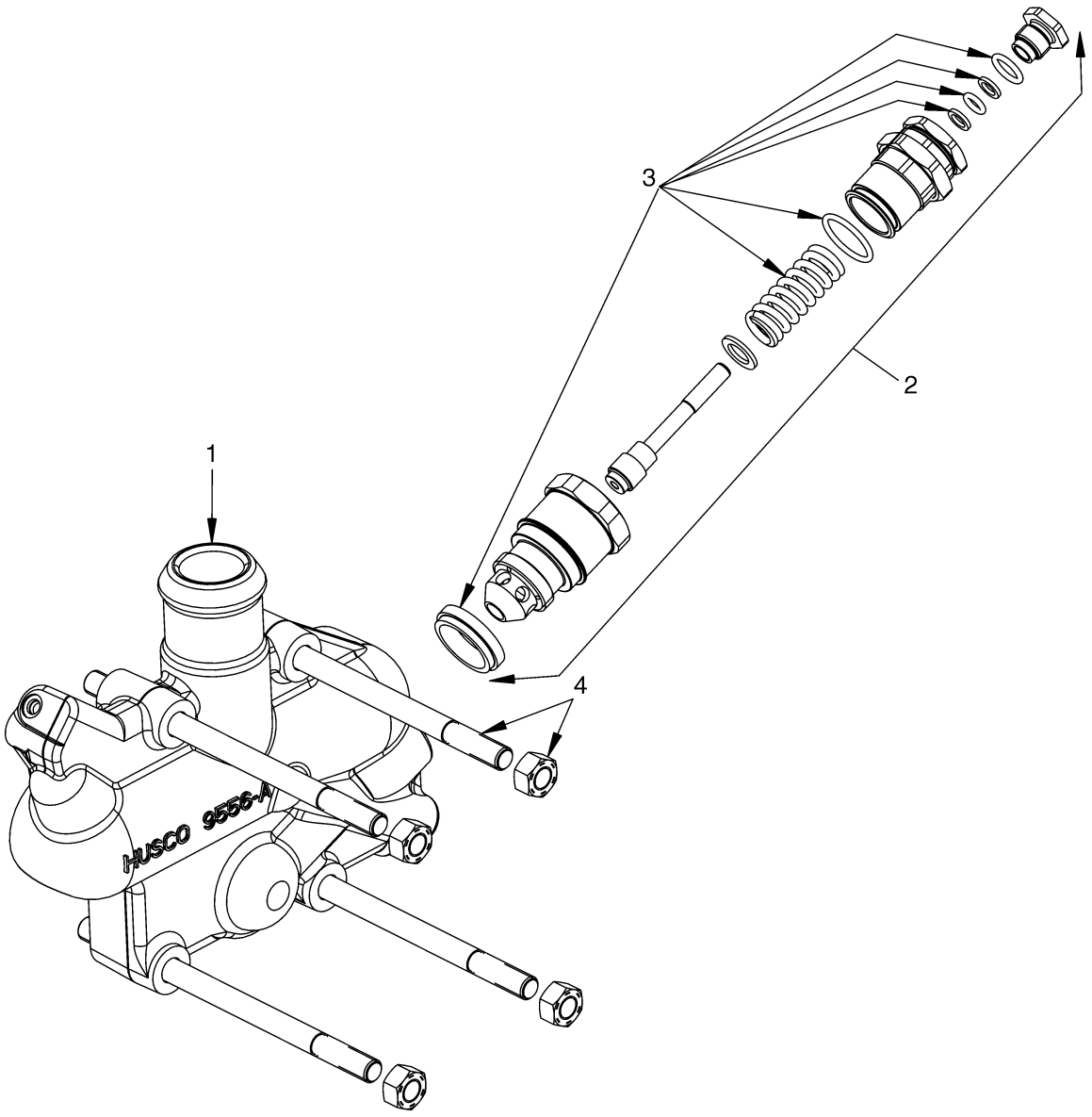

BP140075

©2013 HYSTER COMPANY

HYDRAULIC CONTROL VALVE

ELECTRONIC VALVE OUTLET SECTION – THREE AND FOUR FUNCTION

ITEM	PART NO.	DESCRIPTION	QTY
1	1578704	Valve Section (Outlet)	1
2	1578707	Relief Valve (Secondary) (2250 PSI)	1
3	1580131	Kit-Seal	1
4	1578715	Kit-Tie Rod (Three Function)	1
4	1580151	Kit-Tie Rod (Four Function)	1
4	15055	Nut	4

©2013 HYSTER COMPANY

OUTLET SECTION (FIGURE 12-30)
ELECTRONIC CONTROL VALVE — THREE AND FOUR FUNCTION

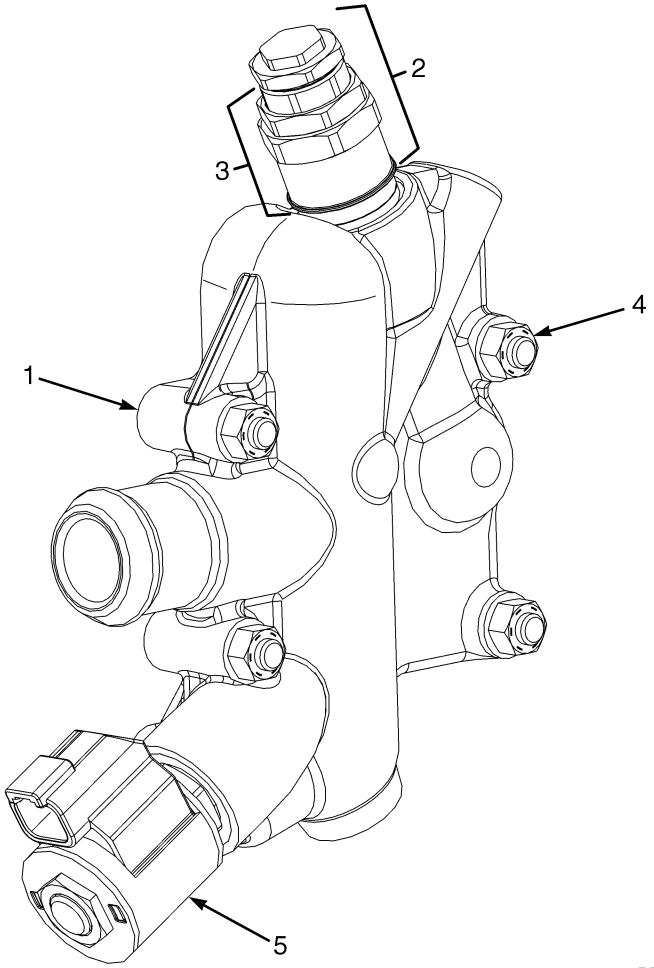

©2013 HYSTER COMPANY

OUTLET SECTION

ELECTRONIC CONTROL VALVE – THREE AND FOUR FUNCTION

ITEM	PART NO.	DESCRIPTION	QTY
1	1708262	Valve Section (Outlet)	1
2	1708054	Relief Valve	1
3	1580131	Kit-Seal	1
4	1578715	Kit-Tie Rod (Three Function)	1
4	1580151	Kit-Tie Rod (Four Function)	1
5	1678165	Solenoid Valve	1

©2013 HYSTER COMPANY

TILT CYLINDER AND MAST INSTALLATION (FIGURE 12-31)

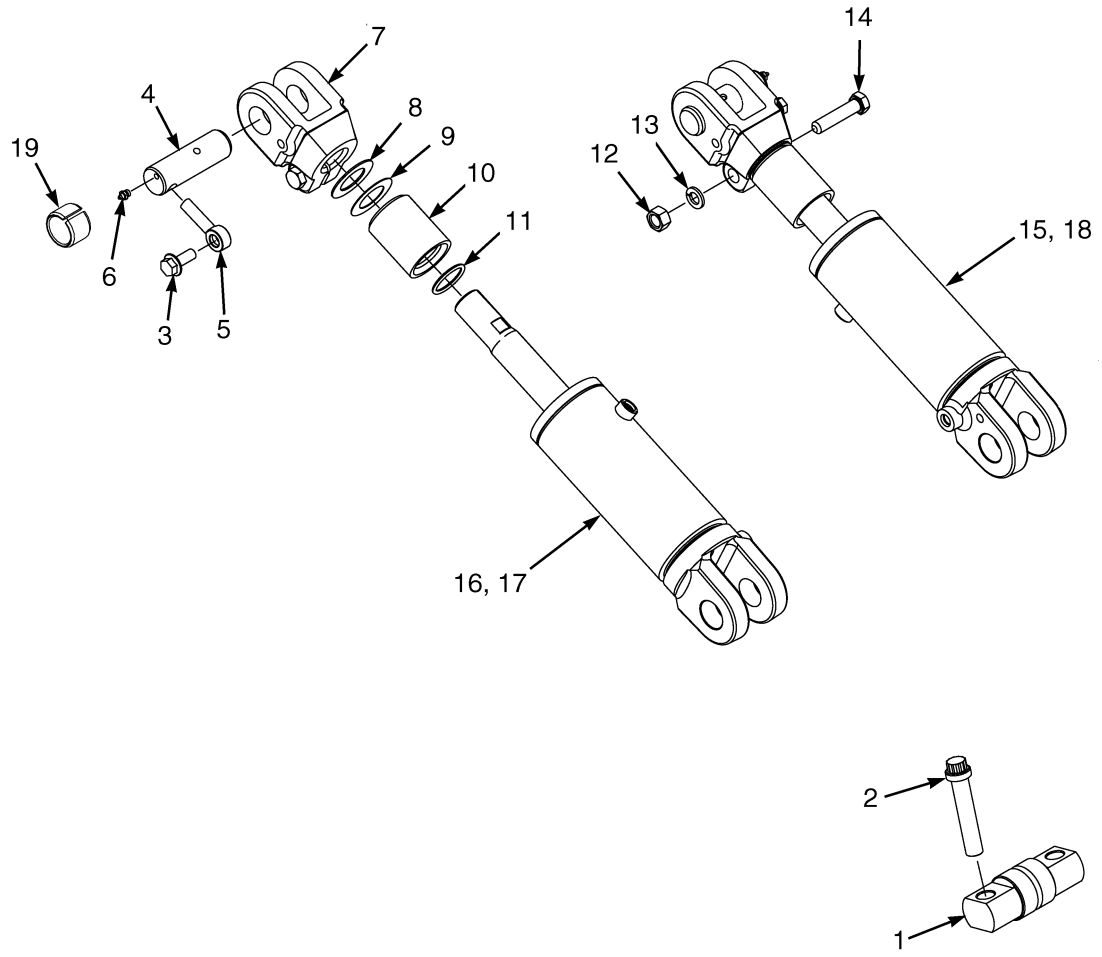

©2013 HYSTER COMPANY

TILT CYLINDER AND MAST INSTALLATION

KEY:
A: H40-50FT
B: H60-70FT

ITEM	PART NO.	DESCRIPTION	QTY A	QTY B
1	1514269	Pin (Mast Mounting)	2	2
2	1520290	Capscrew	4	4
3	1586013	Capscrew	2	2
4	1533493	Pin	4	4
5	1533494	Pin Anchor	2	2
6	16041	Grease Fitting	2	2
7	**bcd** 1544118	Rod End	2	..
7	**a** 1544120	Rod End	2	..
7	**bcd** 1544119	Rod End	..	2
7	**a** 1544121	Rod End	..	2
8	**cd** 134675	Shim	4	..
8	**cd** 142247	Shim	..	4
9	**cd** 1325119	Shim	4	..
9	**cd** 1325120	Shim	..	4
10	**d** 1544122	Spacer	2	..
10	**c** 192877	Spacer	2	..
10	**d** 1544123	Spacer	..	2
10	**c** 1544124	Spacer	..	2
11	**cd** 55434	O-Ring	4	..
11	**cd** 60563	O-Ring	..	4
12	1581848	Nut	2	2
13	1581852	Washer	2	2
14	1597381	Capscrew	2	2
15	2069187	Tilt Cylinder (RH) (☞Figure 12-32)	1	..
16	2069188	Tilt Cylinder (LH) (☞Figure 12-32)	1	..
17	2069186	Tilt Cylinder (LH) (☞Figure 12-33)	..	1
18	2069189	Tilt Cylinder (RH) (☞Figure 12-33)	..	1
19	300982	Bushing	2	2

FOOTNOTES:

a 10° Forward/6° Back
b 6° Forward/10° Back
c 6° Forward/5° Back
d 6° Forward/6° Back

©2013 HYSTER COMPANY

TILT CYLINDERS (FIGURE 12-32)
H40-50FT

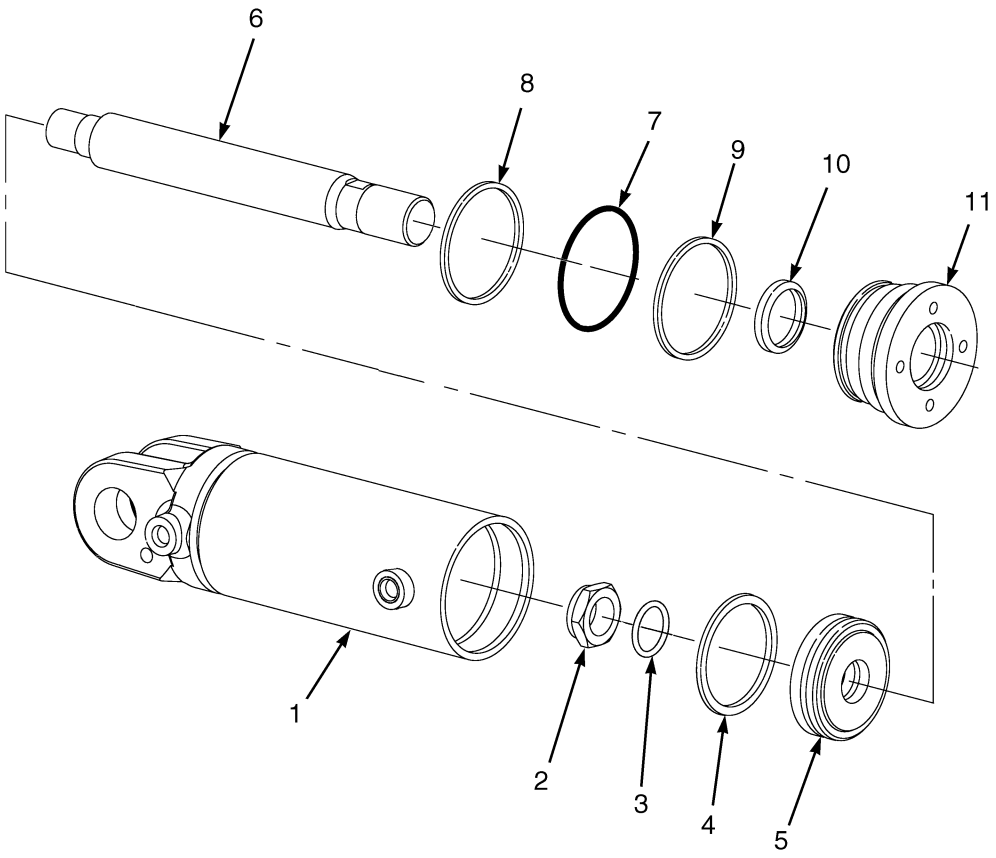

HP150974

©2013 HYSTER COMPANY

TILT CYLINDERS

H40-50FT

ITEM	PART NO.	DESCRIPTION	QTY
	2069187	Tilt Cylinder (RH)	1
	2069188	Tilt Cylinder (LH)	1
1	2076537	Tube Wldmt-Cylinder (RH)	1
1	2076541	Tube Wldmt-Cylinder (LH)	1
2	2302899	Locknut	1
3	39374	O-Ring	1
4	2044370	Piston Seal	1
5	1338741	Piston	1
6	2076539	Cylinder Rod	1
7	46388	O-Ring	1
8	154375	Back-Up Ring	1
9	1381082	Rod Seal	1
10	1383062	Rod Wiper	1
11	1338744	Gland	1
	1492644	Kit-Seal	1

©2013 HYSTER COMPANY

TILT CYLINDERS (FIGURE 12-33)
H60-70FT

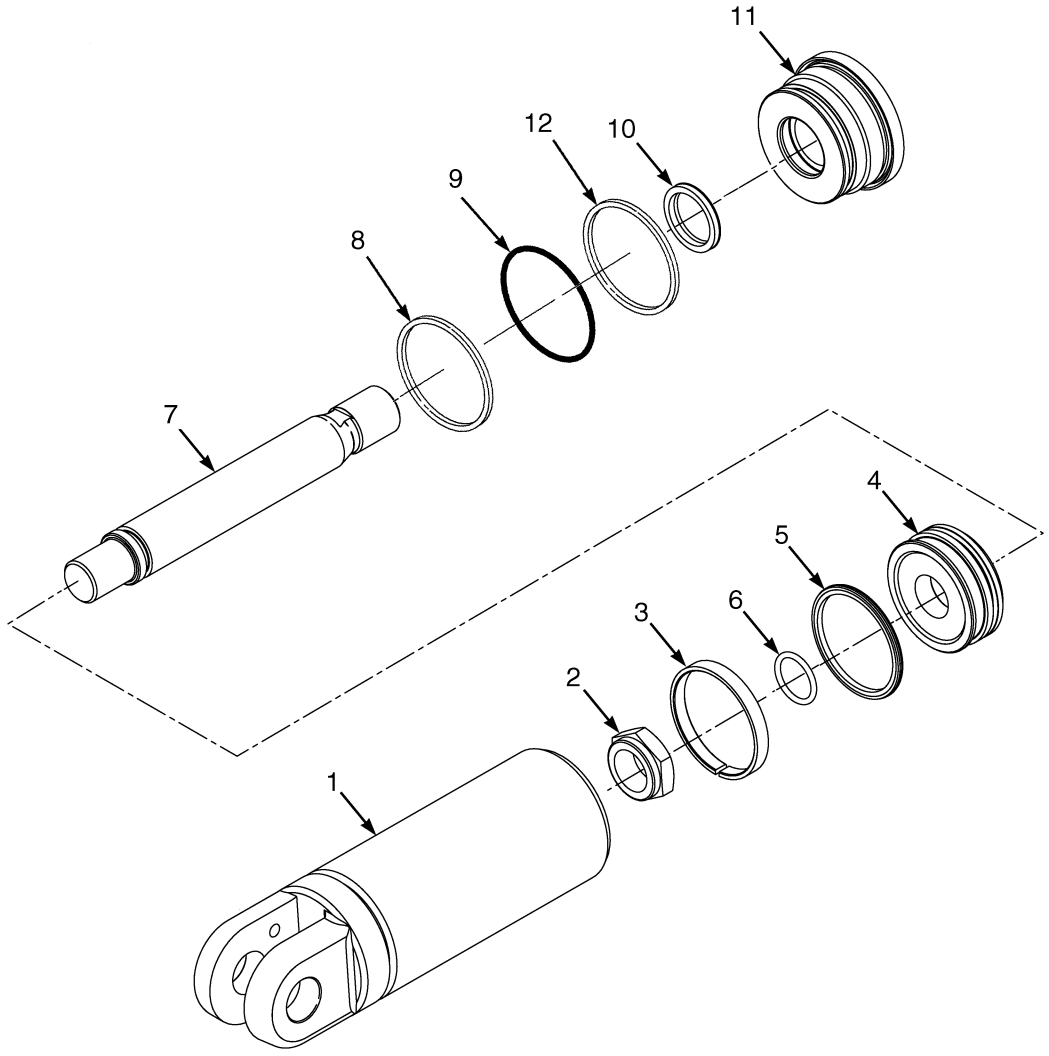

HP150975

©2013 HYSTER COMPANY

TILT CYLINDERS

H60-70FT

ITEM	PART NO.	DESCRIPTION	QTY
	2069186	Tilt Cylinder (LH)	1
	2069189	Tilt Cylinder (RH)	1
1	2076536	Tube Wldmt-Cylinder (RH)	1
1	2076540	Tube Wldmt-Cylinder (LH)	1
2	2070018	Locknut	1
3	199852	Wear Ring	1
4	1381078	Piston	1
5	2044371	Piston Seal	1
6	237812	O-Ring	1
7	2076538	Cylinder Rod	1
8	268619	O-Ring	1
9	147973	Back-Up Ring	1
10	1383063	Rod Wiper	1
11	1527520	Gland	1
12	1381083	Rod Seal	1
	1527719	Kit-Seal	1

©2013 HYSTER COMPANY

NOTES

©2013 HYSTER COMPANY

13 MAST-TWO STAGE LIMITED FREE-LIFT

SECTION 13
MAST-TWO STAGE LIMITED FREE-LIFT

DESCRIPTION	PAGE
CARRIAGE	
TWO STAGE LIMITED FREE-LIFT	13-18
HEADER HOSES	
TWO STAGE LIMITED FREE-LIFT	13-14
INNER MAST	
TWO STAGE LIMITED FREE-LIFT	13-4
MAIN LIFT	
TWO STAGE LIMITED FREE-LIFT	13-6
MAIN LIFT CYLINDERS	
TWO STAGE LIMITED FREE-LIFT	13-10
OUTER MAST	
TWO STAGE LIMITED FREE-LIFT	13-2

©2013 HYSTER COMPANY

OUTER MAST (FIGURE 13-1)
TWO STAGE LIMITED FREE-LIFT

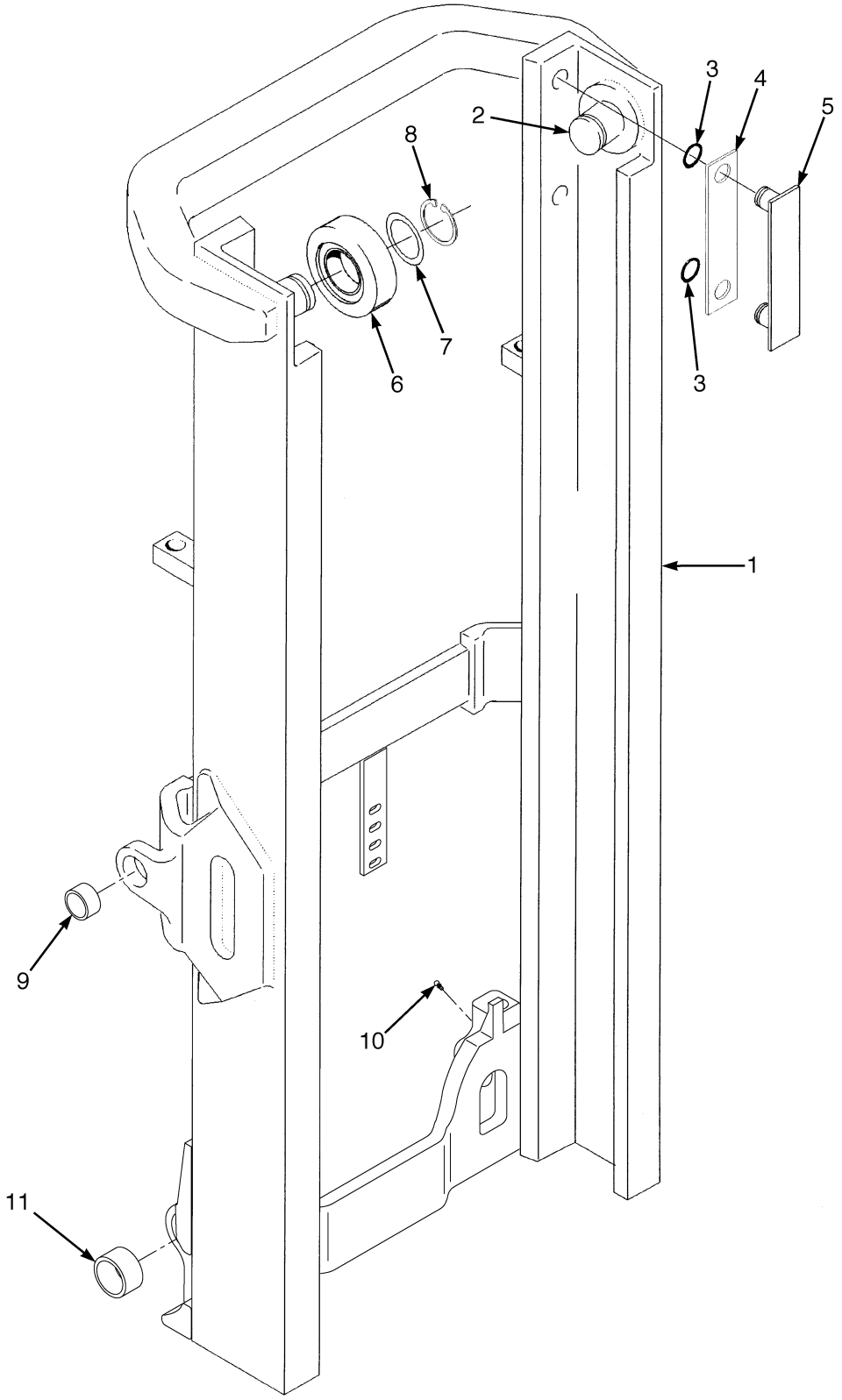

HP171372

See Service Manual for service procedures.
©2013 HYSTER COMPANY

OUTER MAST
TWO STAGE LIMITED FREE-LIFT

D507

ITEM	DESCRIPTION 1 2 3 4	LIFT HEIGHT TO BOTTOM OF FORKS
		3252 mm (128.0 in.)
	Mast Group Number	D507 3252
	Mast Assy	2054714
1	Outer Mast	1524755

D562

ITEM	DESCRIPTION 1 2 3 4	LIFT HEIGHT TO BOTTOM OF FORKS
		3159 mm (124.4 in.)
	Mast Group Number	D562 3159
	Mast Assy	2054754
1	Outer Mast	1524756

ITEM	PART NO.	DESCRIPTION	QTY
	a	Mast Assy	1
1	**a**	Outer Mast	1
2	1345216	Stubshaft	2
3	104506	O-Ring	4
4	131716	Shim (0.020 in.)	AR
5	215211	Wear Strip	2
6	1395168	Load Roller ("A") (111.10/110.84)	2
6	1333396	Load Roller ("B") (111.48/111.22)	2
6	1333397	Load Roller ("C") (112.62/112.36)	2
7	129387	Shim (0.020 in.)	AR
8	58901	Snap Ring	2
9	300982	Bushing	2
10	16001	Grease Fitting	2
11	1502811	Bushing	2

FOOTNOTES:

a Refer to Table

©2013 HYSTER COMPANY

INNER MAST (FIGURE 13-2)
TWO STAGE LIMITED FREE-LIFT

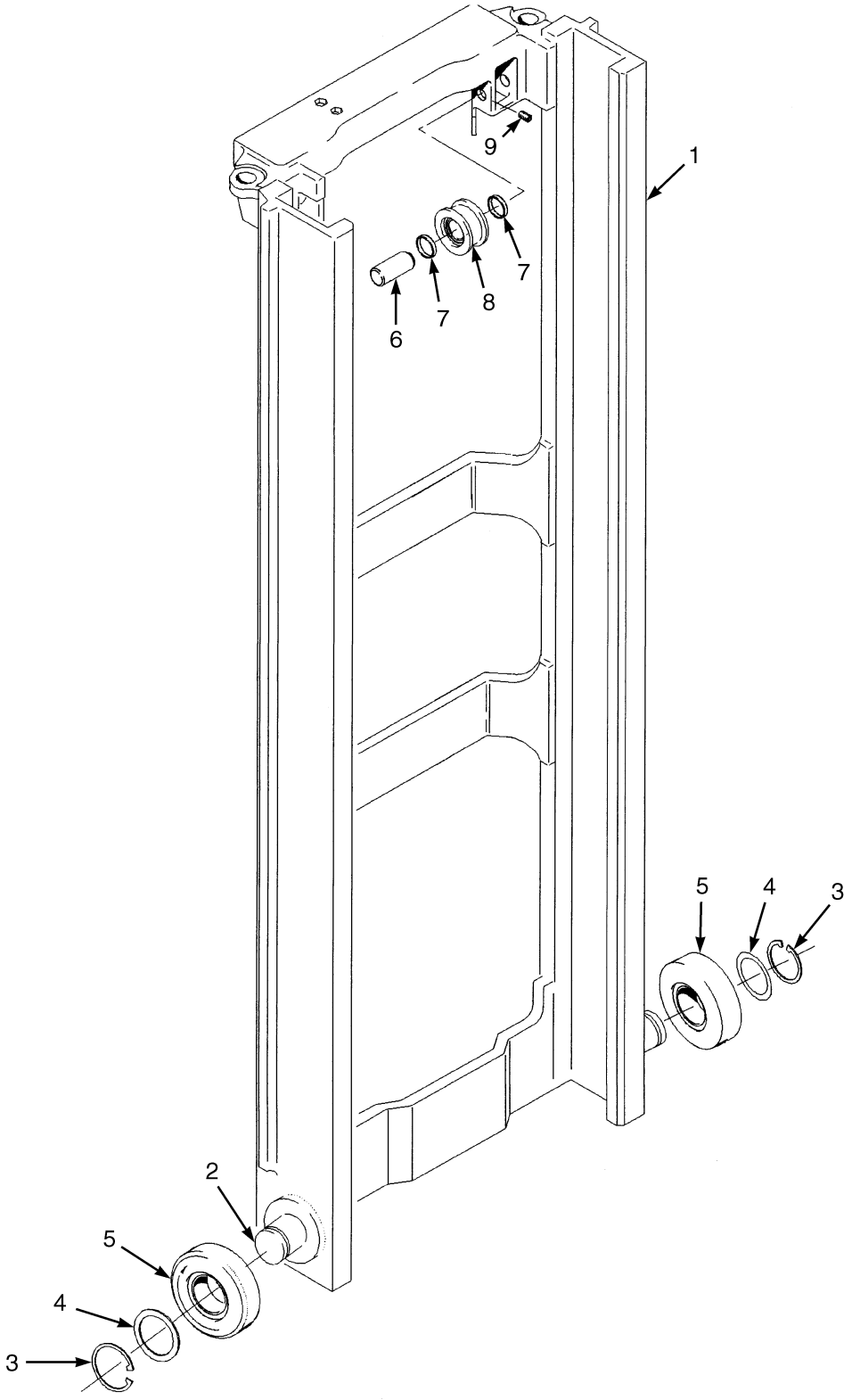

HP290008

©2013 HYSTER COMPANY

INNER MAST
TWO STAGE LIMITED FREE-LIFT

D507

ITEM	DESCRIPTION 1 2 3 4	LIFT HEIGHT TO BOTTOM OF FORKS
		3252 mm (128.0 in.)
	Mast Group Number	D507 3252
	Mast Assy	2054714
1	Inner Mast	1524798

D562

ITEM	DESCRIPTION 1 2 3 4	LIFT HEIGHT TO BOTTOM OF FORKS
		3159 mm (124.4 in.)
	Mast Group Number	D562 3159
	Mast Assy	2054754
1	Inner Mast	1524799

KEY:
A: H40-50FT
B: H60-70FT

ITEM	PART NO.	DESCRIPTION	QTY A	QTY B
	a	Mast Assy	1	1
1	**a**	Inner Mast	1	1
2	1345216	Stubshaft	2	2
3	58901	Snap Ring	2	2
4	129387	Shim (0.020 in.)	AR	AR
5	1395168	Load Roller ("A") (111.10/110.84)	2	2
5	1333396	Load Roller ("B") (111.48/111.22)	2	2
5	1333397	Load Roller ("C") (112.62/112.36)	2	2
6	1368656	Pin	2	2
7	1378691	Spacer	4	4
8	1379685	Chain Sheave	2	..
8	1379684	Chain Sheave Assembly	..	2
8	1378698	Chain Sheave	1	..
8	1378694	Chain Sheave	..	1
8	37752	Snap Ring	1	1
8	1378699	Ball Bearing	1	1
9	302462	Roll Pin	2	2

FOOTNOTES:

a Refer to Table

©2013 HYSTER COMPANY

MAIN LIFT (FIGURE 13-3)
TWO STAGE LIMITED FREE-LIFT

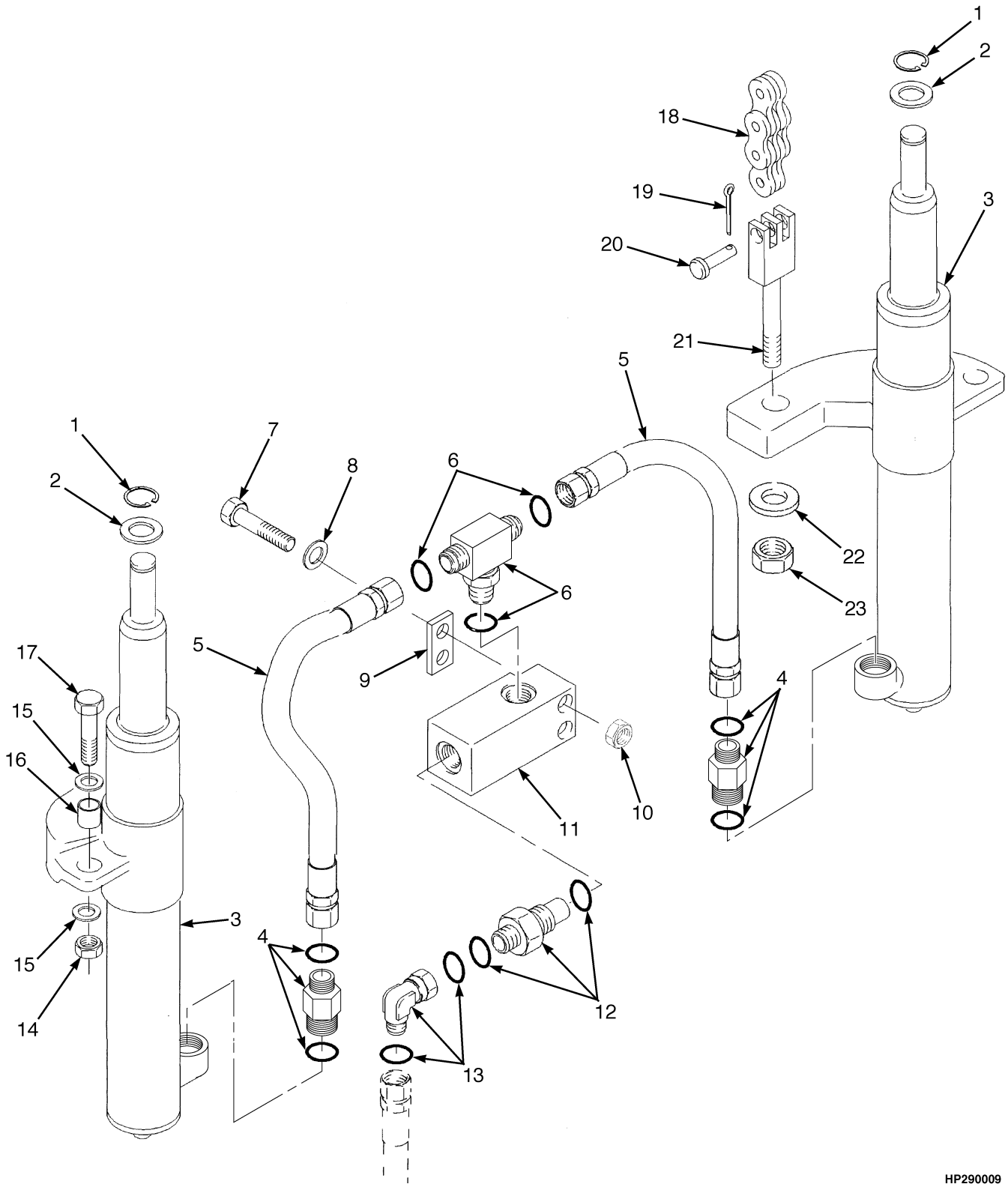

©2013 HYSTER COMPANY

MAIN LIFT
TWO STAGE LIMITED FREE-LIFT

D507

ITEM	DESCRIPTION 1 2 3 4	LIFT HEIGHT TO BOTTOM OF FORKS
		3252 mm (128.0 in.)
	Mast Group Number	D507 3252
18	Chain	223389

D562

ITEM	DESCRIPTION 1 2 3 4	LIFT HEIGHT TO BOTTOM OF FORKS
		3159 mm (124.4 in.)
	Mast Group Number	D562 3159
18	Chain	1342384

KEY:
A: H40-50FT, D507-3252mm
B: H60-70FT, D562-3159mm

ITEM	PART NO.	DESCRIPTION	QTY A	QTY B
1	131358	Snap Ring	2	2
2	1333382	Washer (0.060 in.)	2	2
2	1354915	Washer (0.010 in.)	AR	AR
2	1354916	Washer (0.030 in.)	AR	AR
2	1354917	Washer (0.060 in.)	AR	AR
3	. . . . .	Main Lift Cylinders (☞Figure 13-4)	2	2
4	2062686	Hyd Velocity Fuse	2	..
4	2062687	Hyd Velocity Fuse	..	2
4	16485	O-Ring	1	1
4	252729	O-Ring	1	1
5	1481097	Hose Assy	2	2
6	1532650	Fitting	1	1
6	16485	O-Ring	1	1
6	252729	O-Ring	2	2
7	1581836	Capscrew	2	2
8	1581556	Washer	2	2
9	1354913	Side Plate	1	1
10	1581566	Nut	2	2
11	1379687	Housing (Lowering Control)	1	1
12	2062651	Lowering Control Valve	1	..
12	2062652	Lowering Control Valve	..	1
12	16982	O-Ring	1	1
12	252729	O-Ring	1	1
13	1486773	Fitting	1	1
13	252729	O-Ring	2	2
14	1581849	Nut	2	2

©2013 HYSTER COMPANY

MAIN LIFT
TWO STAGE LIMITED FREE-LIFT

KEY:
A: H40-50FT, D507-3252mm
B: H60-70FT, D562-3159mm

ITEM	PART NO.	DESCRIPTION	QTY A	QTY B
15	1581852	Washer	4	4
16	323090	Spacer	2	2
17	1581829	Capscrew	2	2
18	**a**	Chain	2	2
19	15211	Cotter Pin	2	2
20	1514866	Pin	2	2
21	1369357	Chain Anchor	2	..
21	1369356	Chain Anchor	..	2
22	297649	Ring	2	2
23	161003	Nut	2	2

FOOTNOTES:

a Refer to Table

©2013 HYSTER COMPANY

NOTES

©2013 HYSTER COMPANY

MAIN LIFT CYLINDERS (FIGURE 13-4)
TWO STAGE LIMITED FREE-LIFT

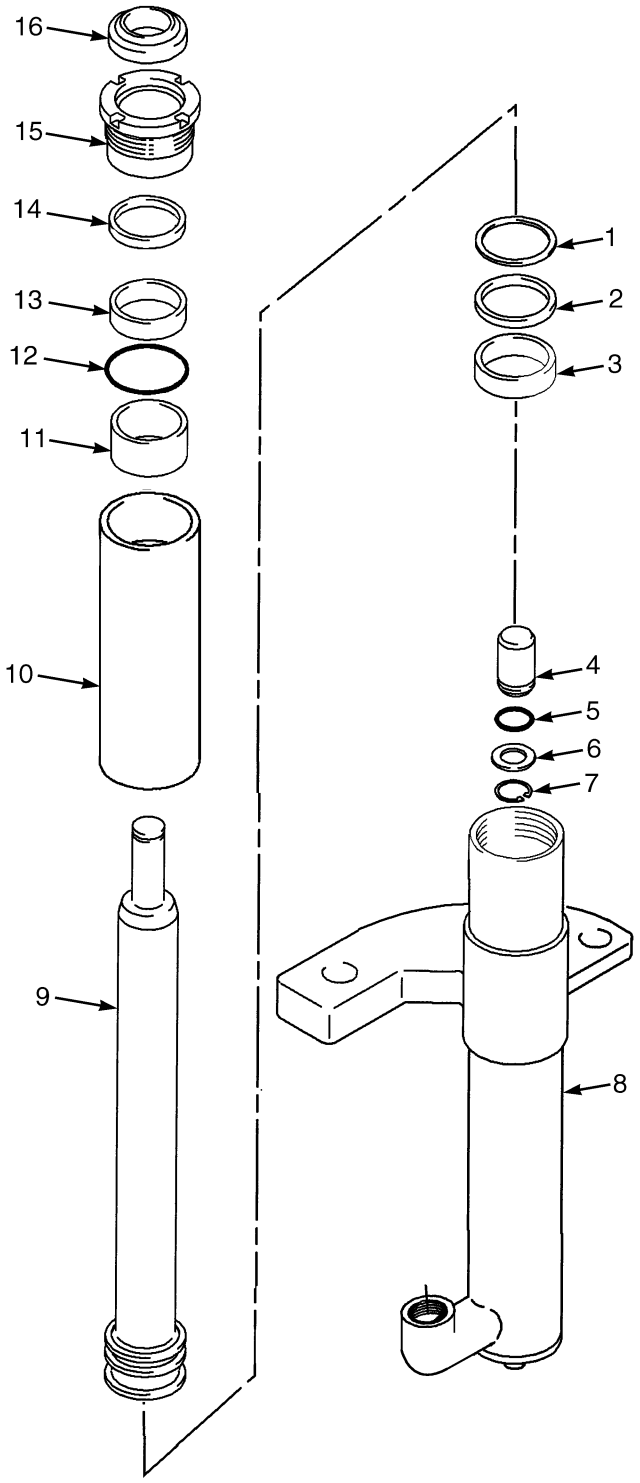

BP170293

©2013 HYSTER COMPANY

MAIN LIFT CYLINDERS
TWO STAGE LIMITED FREE-LIFT

LEFT HAND

ITEM	DESCRIPTION 1 2 3 4	LIFT HEIGHT TO BOTTOM OF FORKS
		3252 mm (128.0 in.)
	Mast Group Number	D507 3252
	Cylinder Group Number	8517709
	Cylinder Assy	2064142
8	Tube Wldmt-Cylinder	2064202
9	Cylinder Rod	1355158

RIGHT HAND

ITEM	DESCRIPTION 1 2 3 4	LIFT HEIGHT TO BOTTOM OF FORKS
		3252 mm (128.0 in.)
	Mast Group Number	D507 3252
	Cylinder Group Number	8517759
	Cylinder Assy	2064166
8	Tube Wldmt-Cylinder	2064239
9	Cylinder Rod	1355158

LEFT HAND

ITEM	DESCRIPTION 1 2 3 4	LIFT HEIGHT TO BOTTOM OF FORKS
		3252 mm (128.0 in.)
	Mast Group Number	D562 3159
	Cylinder Group Number	8518010
	Cylinder Assy	2064353
8	Tube Wldmt-Cylinder	2064279
9	Cylinder Rod	1355371

©2013 HYSTER COMPANY

MAIN LIFT CYLINDERS
TWO STAGE LIMITED FREE-LIFT

RIGHT HAND

ITEM	DESCRIPTION 1 2 3 4	LIFT HEIGHT TO BOTTOM OF FORKS 3252 mm (128.0 in.)
	Mast Group Number	D562 3159
	Cylinder Group Number	8518060
	Cylinder Assy	2064370
8	Tube Wldmt- Cylinder	2064315
9	Cylinder Rod	1355371

KEY:
A: H40-50FT, D507-3252mm
B: H60-70FT, D562-3159mm

ITEM	PART NO.	DESCRIPTION	QTY A	QTY B
	a	Cylinder Assy	1	1
1	638246	Back-Up Ring	1	..
1	335012	Back-Up Ring	..	1
2	2013075	Rod Seal	1	..
2	334156	Rod Seal	..	1
3	1356750	Wear Ring	1	..
3	1356751	Wear Ring	..	1
4	257913	Check Valve	1	1
5	190580	O-Ring	1	1
6	297531	Washer	1	1
7	187388	Snap Ring	1	1
8	**a**	Tube Wldmt-Cylinder	1	1
9	**a**	Cylinder Rod	1	1
10	1355711	Spacer	..	1
11	**c** 322902	Wear Ring	1	1
12	59229	O-Ring	..	1
12	~~4028986~~ 92861	O-Ring	1	..
13	1356749	Rod Seal	1	1
13	1381095	Rod Seal	1	1
14	322824	Back-Up Ring	1	1
15	**b** 1355496	Gland	1	..
15	**c** 2091257	Gland	1	..
15	**b** 1355713	Gland	..	1
15	**c** 2091259	Gland	..	1
16	1319668	Rod Wiper	1	1
	1355276	Kit-Seal	1	..
	1499111	Kit-Seal	..	1

©2013 HYSTER COMPANY

FOOTNOTES:

a Refer to Table
b → 3/2007
c 3/2007 →

HEADER HOSES (FIGURE 13-5)
TWO STAGE LIMITED FREE-LIFT

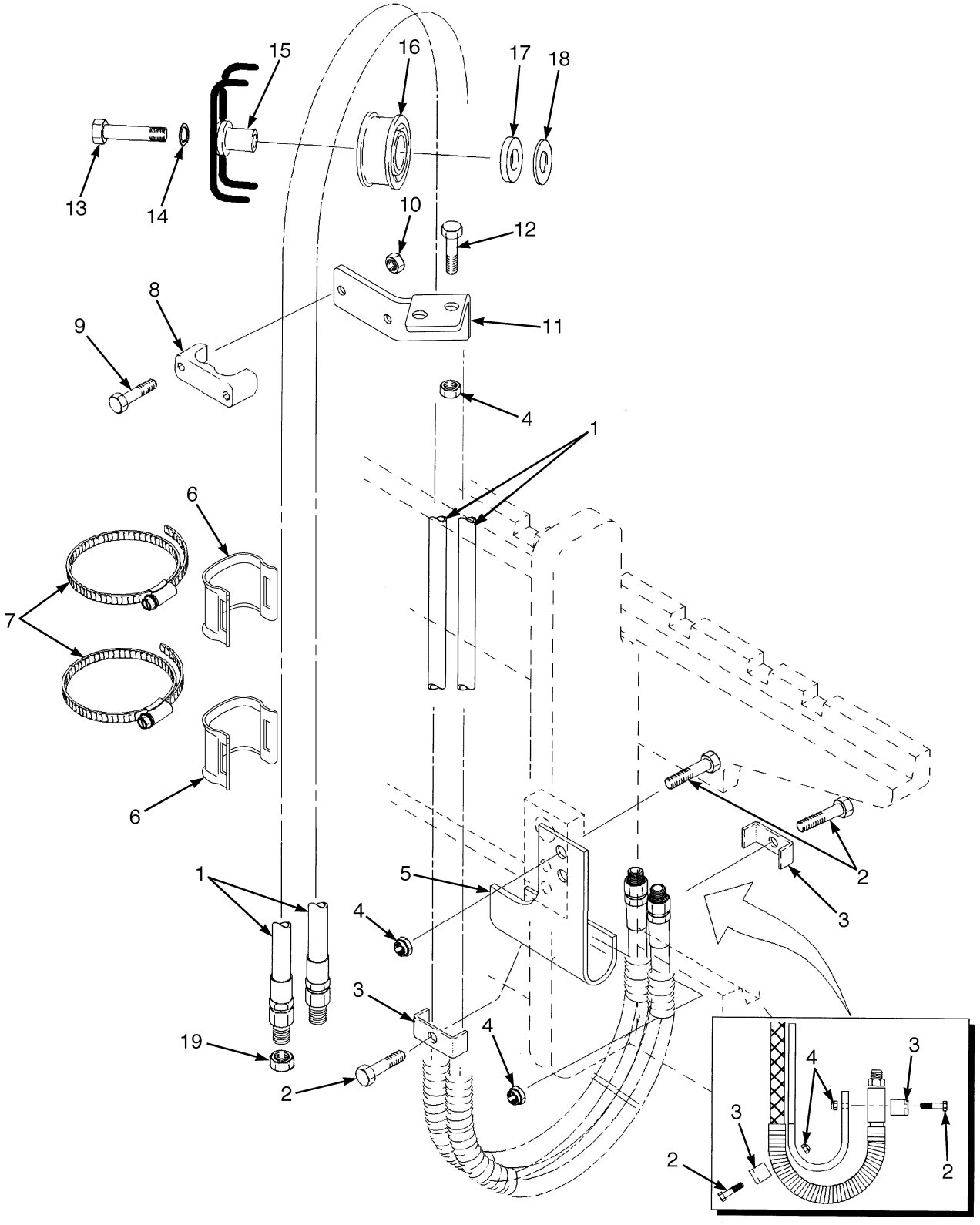

HP171373

©2013 HYSTER COMPANY

HEADER HOSES
TWO STAGE LIMITED FREE-LIFT

D507

ITEM	DESCRIPTION 1 2 3 4	LIFT HEIGHT TO BOTTOM OF FORKS
		3252 mm (128.0 in.)
	Mast Group Number	D507 3252
1	Hose Assy (H40-50FT)	2065138

D562

ITEM	DESCRIPTION 1 2 3 4	LIFT HEIGHT TO BOTTOM OF FORKS
		3159 mm (124.4 in.)
	Mast Group Number	D562 3159
1	Hose Assy (H60-70FT)	2065139

KEY:
A: Three Function
B: Four Function

ITEM	PART NO.	DESCRIPTION	QTY A	QTY B
1	**a**	Hose Assy (H40-50FT)	2	4
2	1581582	Capscrew	4	8
3	1345348	Clamp	2	4
4	1581566	Nut	6	12
5	1345412	Bracket (RH)	1	..
5	1345413	Bracket (LH)	1	1
6	1477996	Hose Clamp	3	6
7	1481229	Clamp	1	2
8	1360386	Clamp (Double Hose)	1	2
9	1581834	Capscrew	2	4
10	1581565	Nut	2	4
11	1354919	Bracket (RH)	1	..
11	1354921	Bracket (LH)	1	1
12	1581836	Capscrew	2	4
13	1581830	Capscrew	1	2
14	**b** 1581564	Lockwasher	1	2
15	**b** 1360548	Stubshaft	1	2
15	**c** 4051751	Stubshaft	1	2
16	**b** 1494017	Hose Sheave	1	2
16	**c** 4041194	Hose Sheave	1	2
17	**b** 1360549	Spacer	1	2
17	**c** 1581560	Washer	1	2
18	1345190	Washer	3	6
19	1529015	Cap	2	4

©2013 HYSTER COMPANY

FOOTNOTES:

a Refer to Table
b → 5/2012
c 5/2012 →

©2013 HYSTER COMPANY

NOTES

©2013 HYSTER COMPANY

CARRIAGE (FIGURE 13-6)
TWO STAGE LIMITED FREE-LIFT

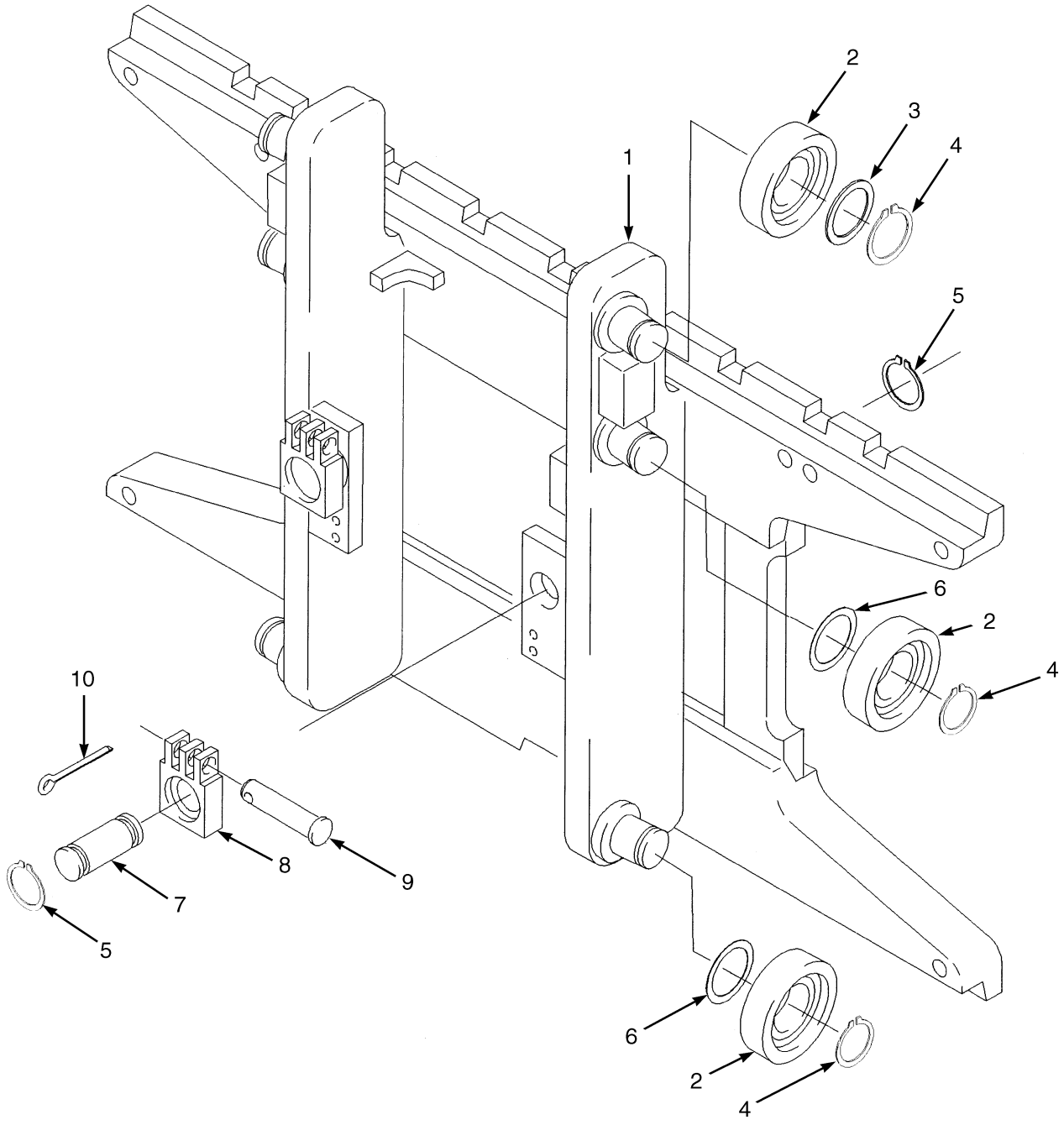

HP290013

©2013 HYSTER COMPANY

CARRIAGE
TWO STAGE LIMITED FREE-LIFT

KEY:
A: H40-50FT D507-3252 mm
B: H60-70FT D562-3159 mm

ITEM	PART NO.	DESCRIPTION	QTY A	QTY B
	1343846	Carriage	1	..
	1477647	Carriage	..	1
1	1338616	Carriage Wldmt	1	..
1	1477930	Carriage Wldmt	..	1
1	1345264	Stubshaft	6	6
2	1345219	Load Roller ("B") (111.48/111.22)	6	6
3	366116	Spacer	2	2
4	12891	Snap Ring	6	6
5	131358	Snap Ring	4	4
6	1345263	Shim (0.020 in.)	AR	AR
7	1353408	Pin	2	2
8	1369345	Chain Anchor (Dual Hole)	2	..
8	1504010	Chain Anchor (Single Hole) (Optional)	2	..
8	1369344	Chain Anchor (Dual Hole)	..	2
8	1504012	Chain Anchor (Single Hole) (Optional)	..	2
9	1514866	Pin	2	2
10	15211	Cotter Pin	2	2
	a 386422	Snap Ring	6	6

FOOTNOTES:

a Not Illustrated

©2013 HYSTER COMPANY

NOTES

©2013 HYSTER COMPANY

14 MAST-TWO STAGE FULL FREE-LIFT

SECTION 14
MAST-TWO STAGE FULL FREE-LIFT

DESCRIPTION	PAGE
CARRIAGE	
TWO STAGE FULL FREE-LIFT	14-22
FREE-LIFT	
TWO STAGE FULL FREE-LIFT	14-12
FREE-LIFT CYLINDER	
TWO STAGE FULL FREE-LIFT	14-15
HEADER HOSES	
TWO STAGE FULL FREE-LIFT	14-18
INNER MAST	
TWO STAGE FULL FREE-LIFT	14-4
MAIN LIFT	
TWO STAGE FULL FREE-LIFT	14-6
MAIN LIFT CYLINDER	
LEFT HAND - TWO STAGE FULL FREE-LIFT	14-10
RIGHT HAND - TWO STAGE FULL FREE-LIFT	14-8
OUTER MAST	
TWO STAGE FULL FREE-LIFT	14-2

©2013 HYSTER COMPANY

OUTER MAST (FIGURE 14-1)
TWO STAGE FULL FREE-LIFT

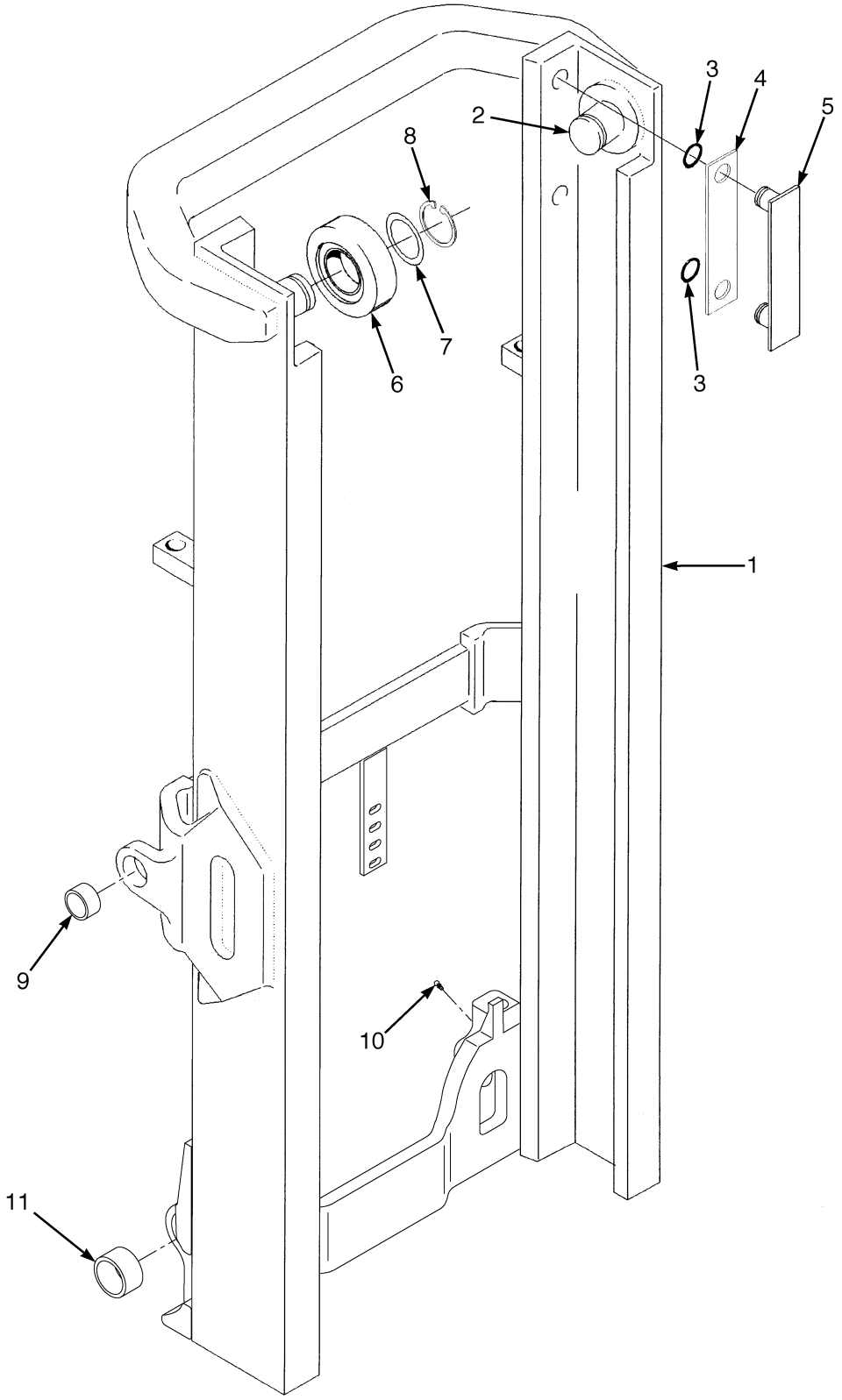

HP290004

©2013 HYSTER COMPANY

OUTER MAST
TWO STAGE FULL FREE-LIFT

D509

ITEM	DESCRIPTION 1 2 3 4	LIFT HEIGHT TO BOTTOM OF FORKS
		3262 mm (128.4 in.)
	Mast Group Number	D509 3262
	Mast Assy	2065580
1	Outer Mast	1524755

D564

ITEM	DESCRIPTION 1 2 3 4	LIFT HEIGHT TO BOTTOM OF FORKS	
		3060 mm (120.5 in.)	3260 mm (128.3 in.)
	Mast Group Number	D564 3060	D564 3260
	Mast Assy	2065522	2065526
1	Outer Mast	1524755	1524757

KEY:
A: H40-50FT
B: H60-70FT

ITEM	PART NO.	DESCRIPTION	QTY A	QTY B
	a	Mast Assy	1	1
1	**a**	Outer Mast	1	1
2	1345216	Stubshaft	2	2
3	104506	O-Ring	4	4
4	131716	Shim (0.020 in.)	4	4
5	215211	Wear Strip	2	2
6	1395168	Load Roller ("A") (111.10/110.84)	2	2
6	1333396	Load Roller ("B") (111.48/111.22)	2	2
6	1333397	Load Roller ("C") (112.62/112.36)	2	2
7	129387	Shim (0.020 in.)	AR	AR
8	58901	Snap Ring	2	2
9	300982	Bushing	2	2
10	16001	Grease Fitting	2	2
11	1502811	Bushing	2	2

FOOTNOTES:

a Refer to Table

©2013 HYSTER COMPANY

INNER MAST (FIGURE 14-2)
TWO STAGE FULL FREE-LIFT

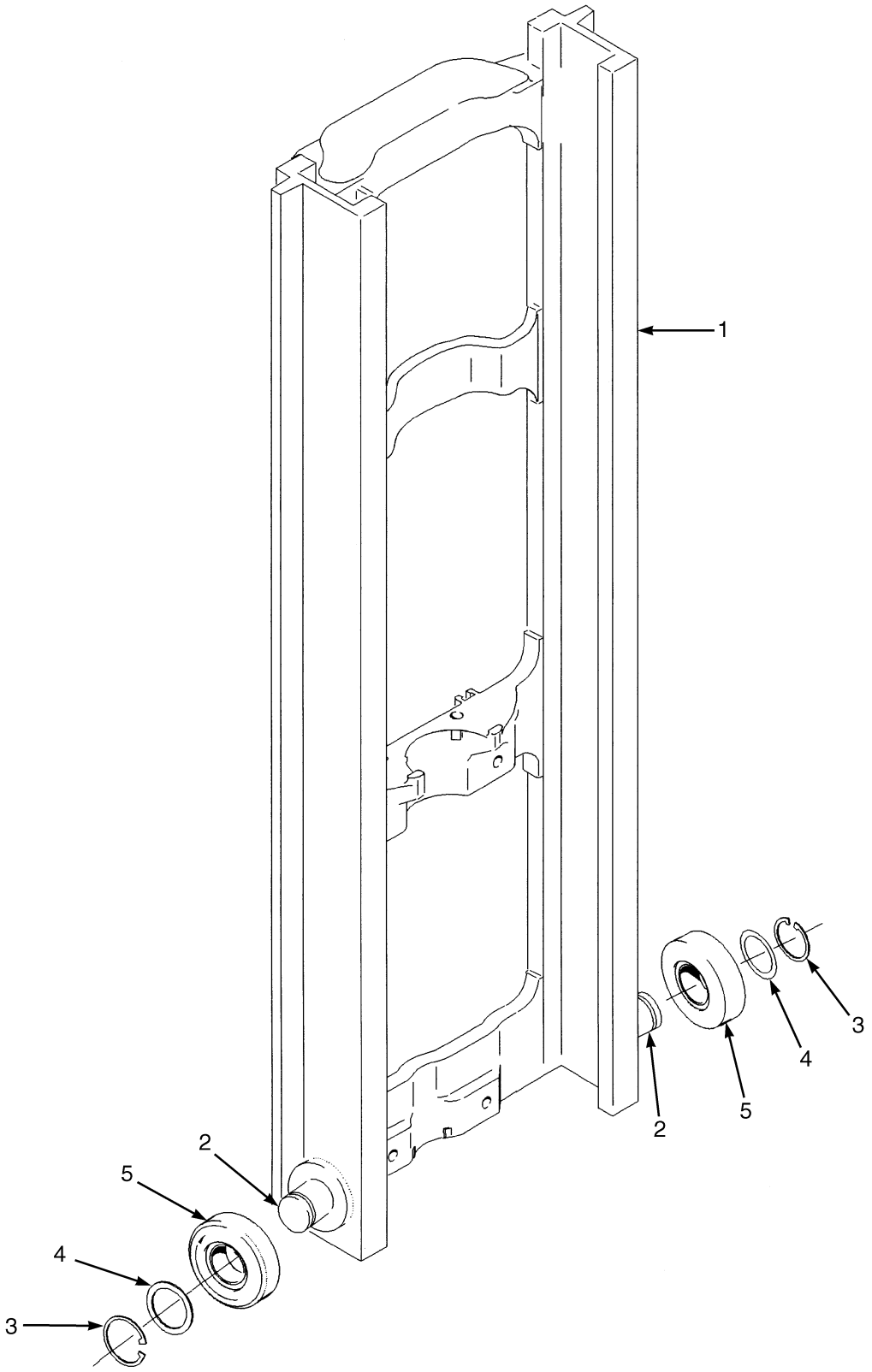

HP290005

©2013 HYSTER COMPANY

INNER MASS
TWO STAGE FULL FREE-LIFT

D509

ITEM	DESCRIPTION 1 2 3 4	LIFT HEIGHT TO BOTTOM OF FORKS
		3262 mm (128.4 in.)
	Mast Group Number	D509 3262
	Mast Assy	2065580
1	Inner Mast	1342477

D564

ITEM	DESCRIPTION 1 2 3 4	LIFT HEIGHT TO BOTTOM OF FORKS	
		3060 mm (120.5 in.)	3260 mm (128.3 in.)
	Mast Group Number	D564 3060	D564 3260
	Mast Assy	2065522	2065526
1	Inner Mast	1342477	1342479

KEY:
A: H40-50FT
B: H60-70FT

ITEM	PART NO.	DESCRIPTION	QTY A	QTY B
	a	Mast Assy	1	1
1	**a**	Inner Mast	1	1
2	1345216	Stubshaft	2	2
3	58901	Snap Ring	2	2
4	129387	Shim (0.020 in.)	AR	AR
5	1395168	Load Roller ("A") (111.10/110.84)	2	2
5	1333396	Load Roller ("B") (111.48/111.22)	2	2
5	1333397	Load Roller ("C") (112.62/112.36)	2	2

FOOTNOTES:

a Refer to Table

©2013 HYSTER COMPANY

MAIN LIFT (FIGURE 14-3)
TWO STAGE FULL FREE-LIFT

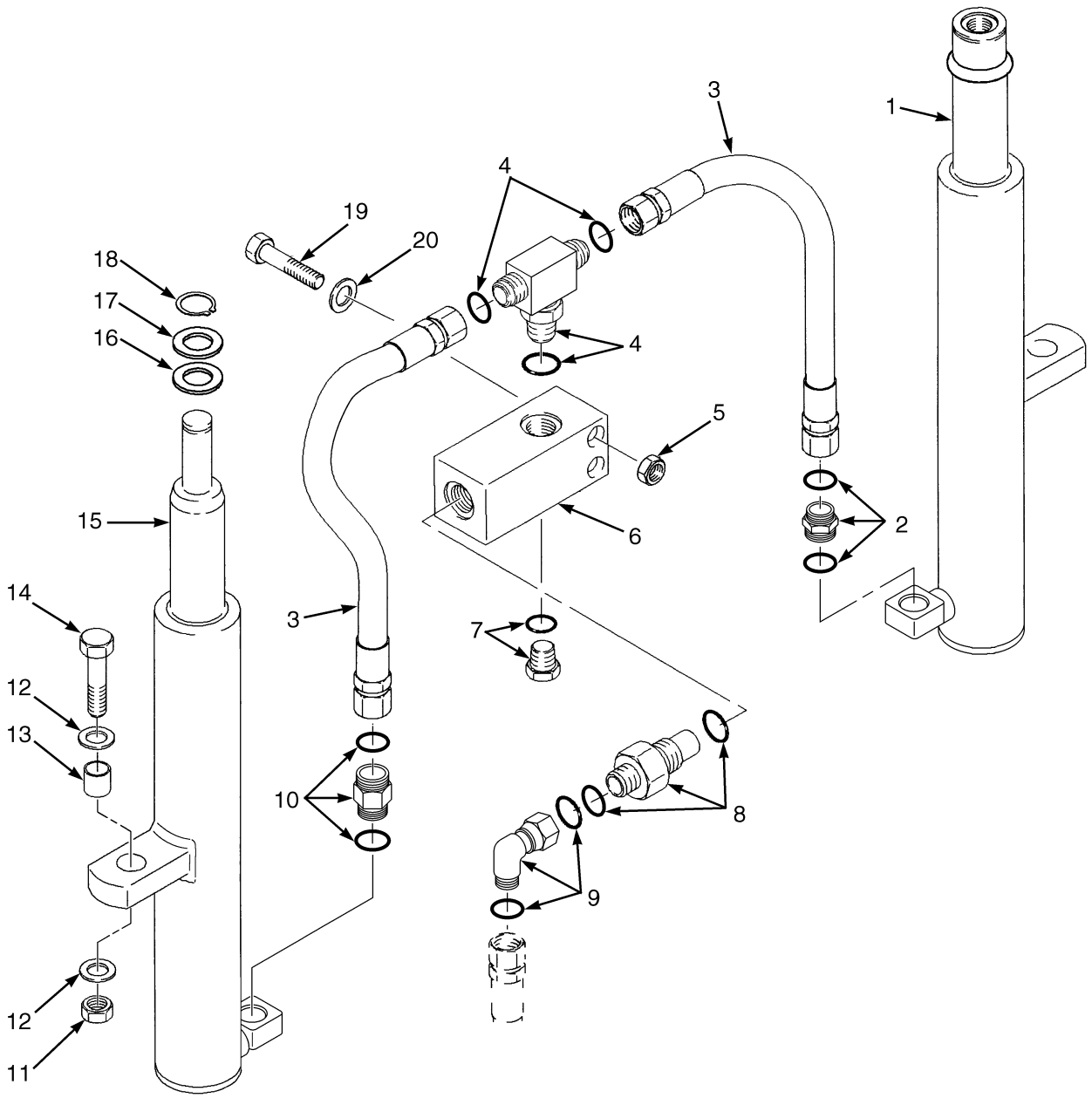

HP290006

©2013 HYSTER COMPANY

MAIN LIFT
TWO STAGE FULL FREE-LIFT

ITEM	PART NO.	DESCRIPTION	QTY
1	. . . . .	Main Lift Cylinder (LH) (☞Figure 14-5)	1
2	1486749	Fitting	1
2	16485	O-Ring	1
2	252729	O-Ring	1
3	1481097	Hose Assy	2
4	1532650	Fitting	1
4	16485	O-Ring	1
4	252729	O-Ring	2
5	1581566	Nut	2
6	1379687	Housing (Lowering Control)	1
7	14603	Plug	1
7	16486	O-Ring	1
8	2062652	Lowering Control Valve (H60-70FT D564-3060 and 3260 mm)	1
8	2062651	Lowering Control Valve (H40-50FT D509-3262 mm)	1
8	280154	O-Ring	1
8	252729	O-Ring	1
9	1486773	Fitting	1
9	252729	O-Ring	2
10	2062687	Hyd Velocity Fuse (H60-70FT D564-3060 and 3260 mm)	1
10	2062686	Hyd Velocity Fuse (H40-50FT D509-3262 mm)	1
10	16485	O-Ring	1
10	252729	O-Ring	1
11	1581849	Nut	2
12	1581852	Washer	4
13	323090	Spacer	2
14	1581829	Capscrew	2
15	. . . . .	Main Lift Cylinder (RH) (☞Figure 14-4)	1
16	1354915	Washer (0.010 in.)	AR
16	1354916	Washer (0.030 in.)	AR
16	1354917	Washer (0.060 in.)	AR
17	1333382	Washer (0.060 in.)	1
18	131358	Snap Ring	1
19	1581835	Capscrew	2
20	1581556	Washer	2

©2013 HYSTER COMPANY

MAIN LIFT CYLINDER (FIGURE 14-4)
RIGHT HAND — TWO STAGE FULL FREE-LIFT

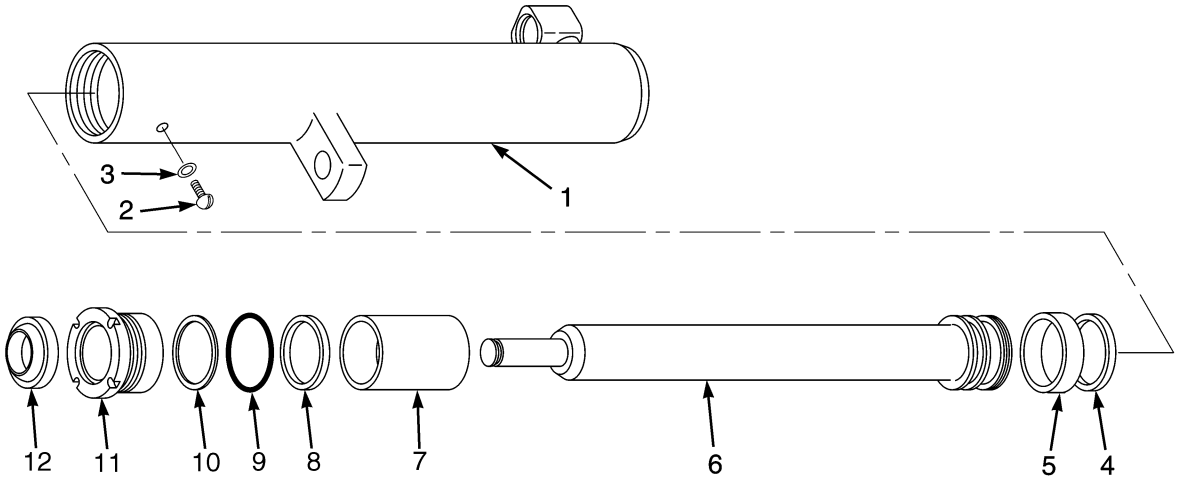

HP171367

MAIN LIFT CYLINDER
RIGHT HAND – TWO STAGE FULL FREE-LIFT

D509

ITEM	DESCRIPTION 1 2 3 4	LIFT HEIGHT TO BOTTOM OF FORKS
		3262 mm (128.4 in.)
	Mast Group Number	D509 3262
	Cylinder Group Number	8518609
	Cylinder Assy	2058651
1	Tube Wldmt- Cylinder	2058536
6	Cylinder Rod	1358940

©2013 HYSTER COMPANY

MAIN LIFT CYLINDER
RIGHT HAND – TWO STAGE FULL FREE-LIFT

D564

ITEM	DESCRIPTION 1 2 3 4	LIFT HEIGHT TO BOTTOM OF FORKS	
		3060 mm (120.5 in.)	3260 mm (128.3 in.)
	Mast Group Number	D564 3060	D564 3260
	Cylinder Group Number	8518659	8518661
	Cylinder Assy	2060422	2060424
1	Tube Wldmt-Cylinder	2058536	2058538
6	Cylinder Rod	1358940	1358942

ITEM	PART NO.	DESCRIPTION	QTY
	a	Cylinder Assy	1
1	**a**	Tube Wldmt-Cylinder	1
2	295649	Screw	1
3	190887	Sealing Ring	1
4	1356748	Piston Ring	1
5	1356747	Wear Ring	1
6	**a**	Cylinder Rod	1
7	2073159	Spacer (H60-70FT Models Only)	1
8	1356749	Rod Seal	1
9	59229	O-Ring	1
10	147972	Back-Up Ring	1
11	1355713	Gland	1
12	1319668	Rod Wiper	1
	1496922	Kit-Seal	1

FOOTNOTES:

a Refer to Table

©2013 HYSTER COMPANY

MAIN LIFT CYLINDER (FIGURE 14-5)
LEFT HAND — TWO STAGE FULL FREE-LIFT

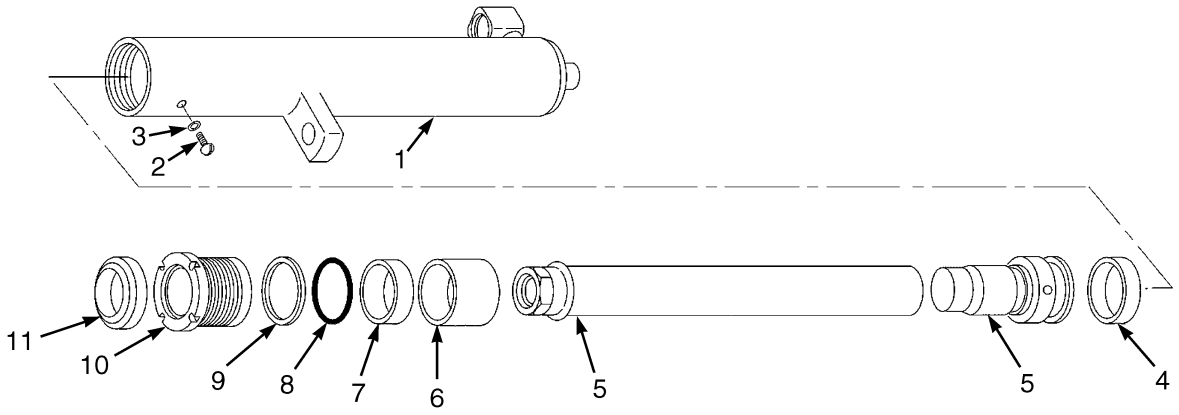

HP171366

MAIN LIFT CYLINDER
LEFT HAND – TWO STAGE FULL FREE-LIFT

D509

ITEM	DESCRIPTION 1 2 3 4	LIFT HEIGHT TO BOTTOM OF FORKS 3262 mm (128.4 in.)
	Mast Group Number	**D509 3262**
	Cylinder Group Number	**8518509**
	Cylinder Assy	2058619
1	Tube Wldmt-Cylinder	2058500
5	Cylinder Rod	1355929

©2013 HYSTER COMPANY

MAIN LIFT CYLINDER
LEFT HAND – TWO STAGE FULL FREE-LIFT

D564

ITEM	DESCRIPTION 1 2 3 4	LIFT HEIGHT TO BOTTOM OF FORKS	
		3060 mm (120.5 in.)	3260 mm (128.3 in.)
	Mast Group Number	D564 3060	D564 3260
	Cylinder Group Number	8518559	8518561
	Cylinder Assy	2058823	2058825
1	Tube Wldmt-Cylinder	2058500	2058502
5	Cylinder Rod	1355929	1355941

ITEM	PART NO.	DESCRIPTION	QTY
	a	Cylinder Assy	1
1	**a**	Tube Wldmt-Cylinder	1
2	295649	Screw	1
3	190887	Sealing Ring	1
4	1356747	Wear Ring	1
5	**a**	Cylinder Rod	1
5	1355930	Cylinder Rod (D564-3060 mm, D509-3262 mm)	1
5	1355936	Cylinder Rod (D564-3260 mm)	1
5	2064464	Piston	1
6	2073159	Spacer (H60-70FT Models Only)	1
7	1356749	Rod Seal	1
8	59229	O-Ring	1
9	147972	Back-Up Ring	1
10	1355713	Gland	1
11	1319668	Rod Wiper	1
	1496922	Kit-Seal	1

FOOTNOTES:

a Refer to Table

©2013 HYSTER COMPANY

FREE-LIFT (FIGURE 14-6)
TWO STAGE FULL FREE-LIFT

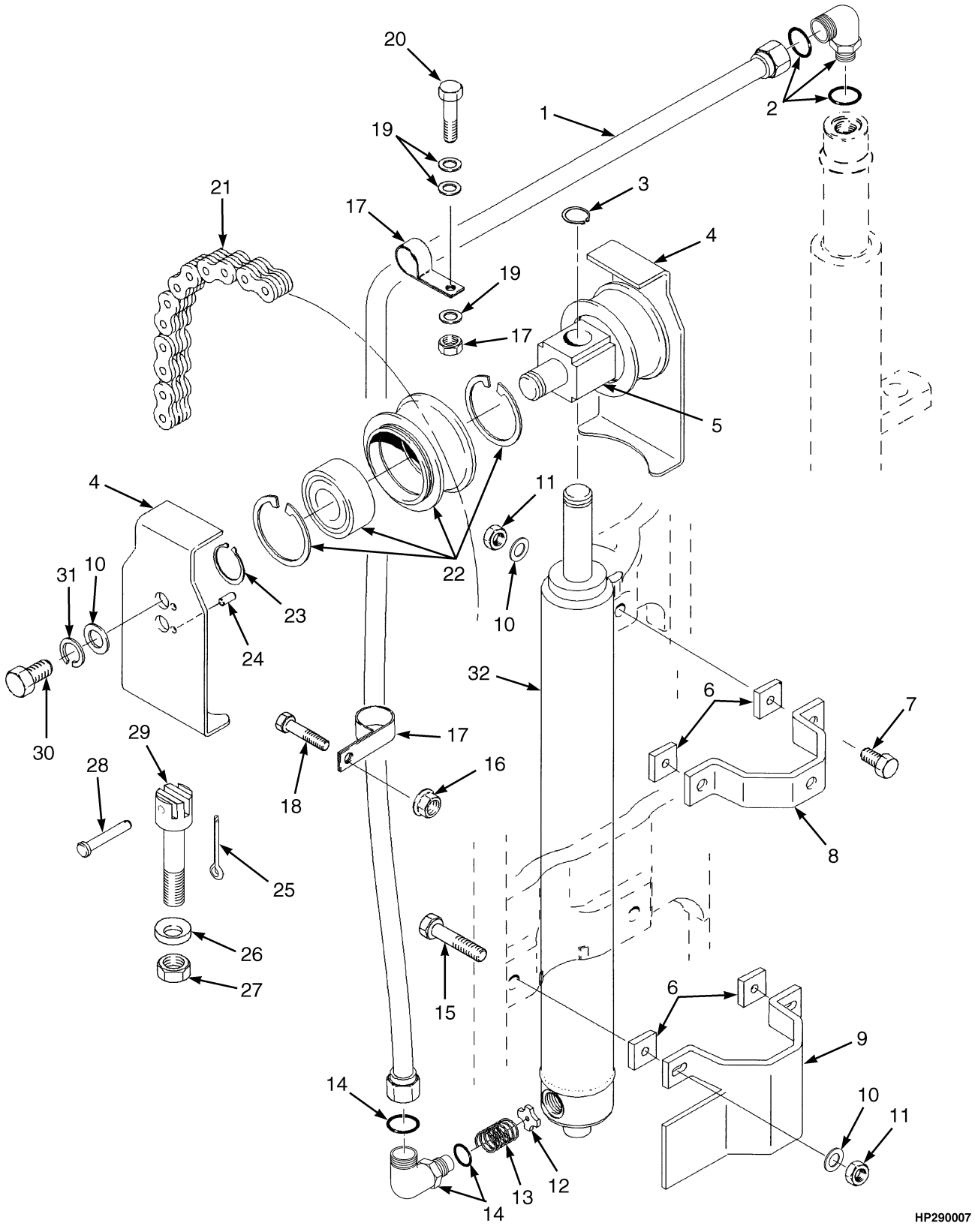

©2013 HYSTER COMPANY

FREE-LIFT
TWO STAGE FULL FREE-LIFT

D509

ITEM	DESCRIPTION 1 2 3 4	LIFT HEIGHT TO BOTTOM OF FORKS
		3262 mm (128.4 in.)
	Mast Group Number	D509 3262
1	Tube Assy	1481742
21	Chain	180177

D564

ITEM	DESCRIPTION 1 2 3 4	LIFT HEIGHT TO BOTTOM OF FORKS	
		3060 mm (120.5 in.)	3260 mm (128.3 in.)
	Mast Group Number	D564 3060	D564 3260
1	Tube Assy	1481742	1481744
21	Chain	1342377	1342117

KEY:
A: H40-50FT
B: H60-70FT

ITEM	PART NO.	DESCRIPTION	QTY A	QTY B
1	**a**	Tube Assy	1	1
2	1481090	Fitting	1	1
2	16485	O-Ring	1	1
2	244167	O-Ring	1	1
3	131358	Snap Ring	1	1
4	1395285	Chain Guard	2	2
5	1378690	Crosshead	1	1
6	1354902	Spacer	..	4
7	1581828	Capscrew	..	2
7	1581827	Capscrew	2	..
8	1465504	Tie Down	1	1
9	1354967	Bracket Wldmt	1	1
10	1581559	Washer	6	6
11	1581849	Nut	4	4
12	356505	Washer (Special)	1	1
13	154355	Spring	1	1
14	1481096	Fitting	1	1
14	244167	O-Ring	1	1
14	16485	O-Ring	1	1
15	1581832	Capscrew	2	2
16	1581567	Nut	2	..
17	178119	Clamp	2	2
18	1581587	Capscrew	1	1

©2013 HYSTER COMPANY

FREE-LIFT
TWO STAGE FULL FREE-LIFT

KEY:
A: H40-50FT
B: H60-70FT

ITEM	PART NO.	DESCRIPTION	QTY A	QTY B
19	1581557	Washer	3	3
20	1581841	Capscrew	1	1
21	**a**	Chain	2	2
22	1379683	Chain Sheave Assembly (Assembly)	..	2
22	1379682	Chain Sheave Assembly (Assembly)	2	..
22	1378693	Chain Sheave	..	1
22	1378692	Chain Sheave	1	..
22	37752	Snap Ring	1	1
22	1378699	Ball Bearing	1	1
23	304526	Snap Ring	3	3
24	302461	Roll Pin	2	2
25	15211	Cotter Pin	2	2
26	297649	Ring	2	2
27	161003	Nut	2	2
28	1514866	Pin	2	2
29	1369356	Chain Anchor	..	2
29	1369357	Chain Anchor	2	..
30	1581590	Capscrew	2	2
31	1581564	Lockwasher	2	2
32	. . . . .	Free-Lift Cylinder (☞Figure 14-7)	1	1

FOOTNOTES:

a Refer to Table

©2013 HYSTER COMPANY

FREE-LIFT CYLINDER (FIGURE 14-7)
TWO STAGE FULL FREE-LIFT

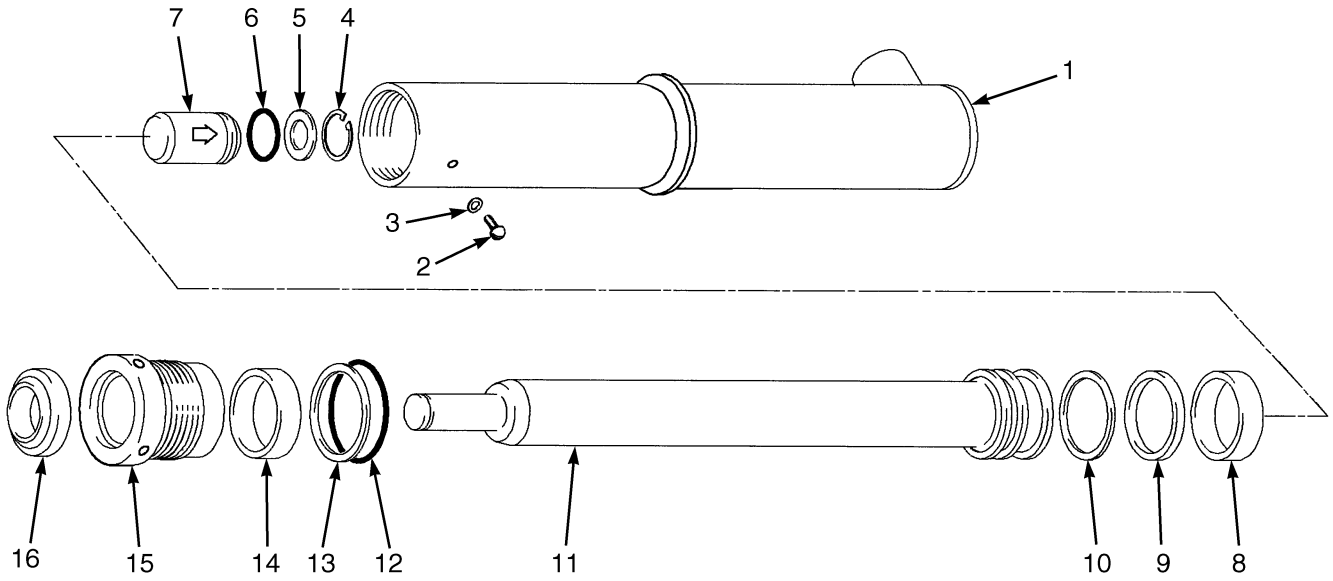

HP171368

FREE-LIFT CYLINDER
TWO STAGE FULL FREE-LIFT

D509

ITEM	DESCRIPTION 1 2 3 4	LIFT HEIGHT TO BOTTOM OF FORKS 3262 mm (128.4 in.)
	Mast Group Number	**D509 3262**
	Cylinder Group Number	**8514559**
	Cylinder Assy	2053796
1	Tube Wldmt-Cylinder	2058213
11	Cylinder Rod	1356569

FREE-LIFT CYLINDER
TWO STAGE FULL FREE-LIFT

D564

ITEM	DESCRIPTION 1 2 3 4	LIFT HEIGHT TO BOTTOM OF FORKS	
		3060 mm (120.5 in.)	3260 mm (128.3 in.)
	Mast Group Number	D564 3060	D564 3260
	Cylinder Group Number	8518709	8518711
	Cylinder Assy	2058326	2058328
1	Tube Wldmt-Cylinder	2058252	2063691
11	Cylinder Rod	1356688	1356694

KEY:
A: H40-50FT D509-3262 mm
B: H60-70FT D564-3260 mm, D564-3060 mm

ITEM	PART NO.	DESCRIPTION	QTY A	QTY B
	b	Cylinder Assy	1	1
1	**b**	Tube Wldmt-Cylinder	1	1
2	1361302	Screw	1	1
3	190887	Sealing Ring	1	1
4	187388	Snap Ring	1	1
5	297531	Washer	1	1
6	190580	O-Ring	1	1
7	297538	Check Valve	1	1
8	636941	Wear Ring	..	1
8	1358972	Wear Ring	1	..
9	309062	Rod Seal	..	1
9	2013088	Rod Seal	1	..
10	637565	Back-Up Ring	..	1
10	2013089	Back-Up Ring	1	..
11	**b**	Cylinder Rod	1	1
12	15880	O-Ring	..	1
12	90263	O-Ring	1	..
13	164840	Back-Up Ring	..	1
13	147973	Back-Up Ring	1	..
14	1622946	Rod Seal	1	1
15	1356661	Gland (D564-3060 mm)	..	1
15	1355713	Gland (D564-3260 mm, D509-3262 mm)	1	1
16	1463105	Rod Wiper	1	1
	a 322824	Back-Up Ring	1	1
	a 322902	Wear Ring	1	1
	1356662	Kit-Seal	..	1
	1358969	Kit-Seal	1	..

©2013 HYSTER COMPANY

FOOTNOTES:

a Not Illustrated

b Refer to Table

HEADER HOSES (FIGURE 14-8)
TWO STAGE FULL FREE-LIFT

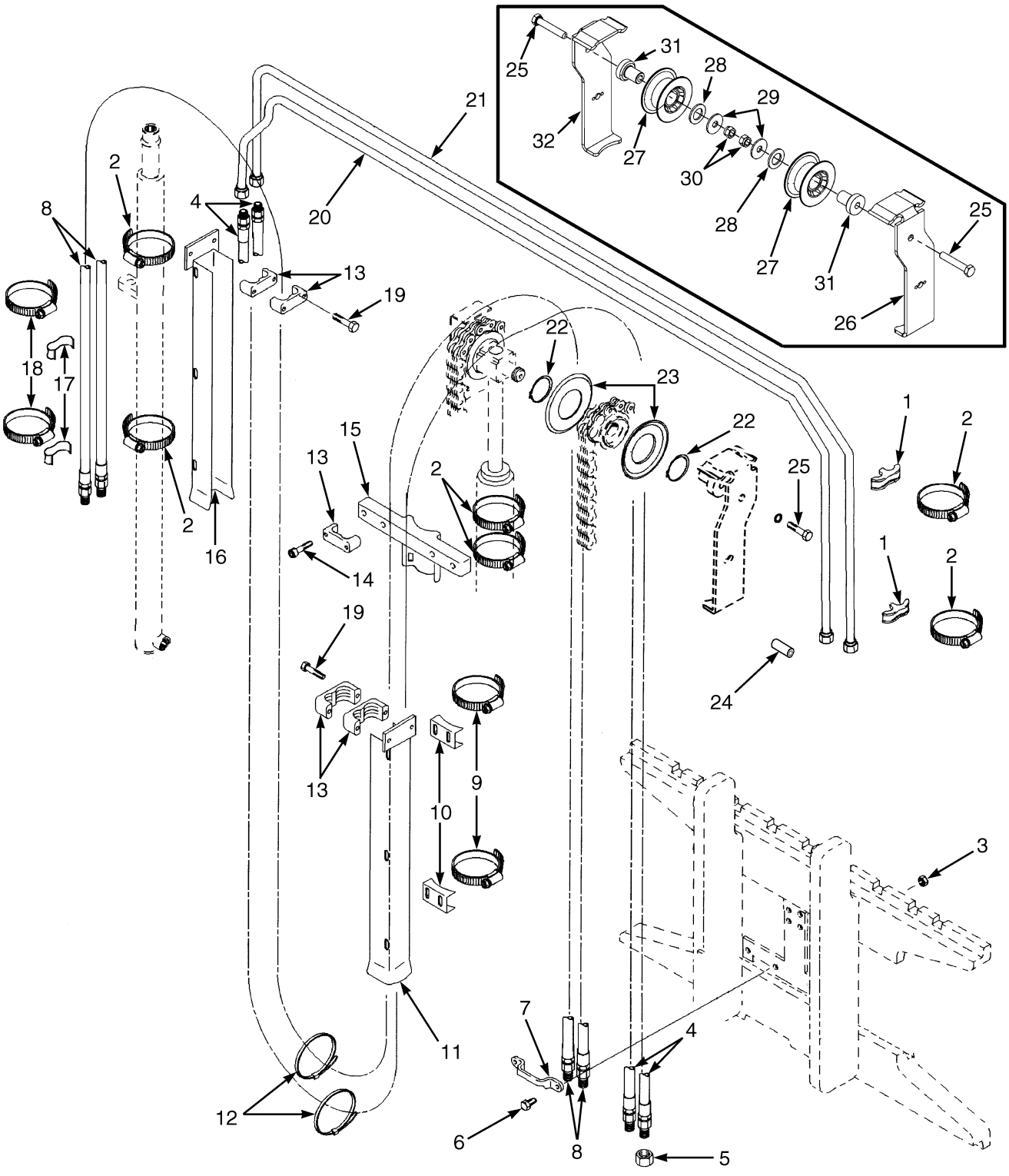

HP020340

©2013 HYSTER COMPANY

HEADER HOSES
TWO STAGE FULL FREE-LIFT

D509

ITEM	DESCRIPTION 1 2 3 4	LIFT HEIGHT TO BOTTOM OF FORKS
		3262 mm (128.4 in.)
	Mast Group Number	D509 3262
4	Hose Assy (To Side-Shift)	2065211
8	Hose Assy (To Mast)	2065241
16	Hose Guard (LH)	1365517
20	Tube Assy	2065030
21	Tube Assy	2065001

D564

ITEM	DESCRIPTION 1 2 3 4	LIFT HEIGHT TO BOTTOM OF FORKS	
		3060 mm (120.5 in.)	3260 mm (128.3 in.)
	Mast Group Number	D564 3060	D564 3260
4	Hose Assy (To Side-Shift)	2065211	2065213
8	Hose Assy (To Mast)	2065241	2065243
16	Hose Guard (LH)	1365517	1365520
20	Tube Assy	2065030	2065032
21	Tube Assy	2065001	2065003

KEY:
A: Three Function
B: Four Function

ITEM	PART NO.	DESCRIPTION	QTY A	QTY B
1	1606855	Spacer	2	2
2	1360507	Clamp	6	6
3	**b** 1581566	Nut	2	4
4	**a**	Hose Assy (To Side-Shift)	2	2
5	1529015	Cap	2	4
6	**b** 1581581	Capscrew	2	4
6	**d** 1597448	Capscrew	2	4
7	**b** 1643405	Hose Clamp	1	2
7	**d** 4008020	Clamp	1	2
8	**a**	Hose Assy (To Mast)	..	2
9	1360508	Clamp	2	2
10	1345423	Clamp	2	2
11	1481232	Hose Guard (RH)	1	1

©2013 HYSTER COMPANY

HEADER HOSES
TWO STAGE FULL FREE-LIFT

KEY:
A: Three Function
B: Four Function

ITEM	PART NO.	DESCRIPTION	QTY A	QTY B
12	137852	Strap Clamp	1	2
13	1360386	Clamp (Double Hose)	3	6
14	1581741	Capscrew	2	4
15	1354918	Bracket	1	1
16	**a**	Hose Guard (LH)	1	1
17	1477996	Hose Clamp	..	2
18	1617657	Clamp	..	2
19	1581842	Capscrew	4	8
20	**a**	Tube Assy	1	1
21	**a**	Tube Assy	1	1
22	1345204	Snap Ring (Spiral Retaining Ring)	2	4
23	1345199	Hose Guide	2	4
24	302461	Roll Pin	2	4
25	1581830	Capscrew	1	2
26	1395292	Bracket (LH)	..	1
27	**c** 1494017	Hose Sheave	1	2
27	**e** 4041194	Hose Sheave	1	2
28	1581560	Washer	1	2
29	1345190	Washer	1	2
30	1581849	Nut	1	2
31	1396406	Stubshaft	1	2
32	1395291	Bracket (RH)	1	1

FOOTNOTES:

a Refer to Table
b → 4/2011
c → 5/2012
d 4/2011 →
e 5/2012 →

©2013 HYSTER COMPANY

NOTES

©2013 HYSTER COMPANY

CARRIAGE (FIGURE 14-9)
TWO STAGE FULL FREE-LIFT

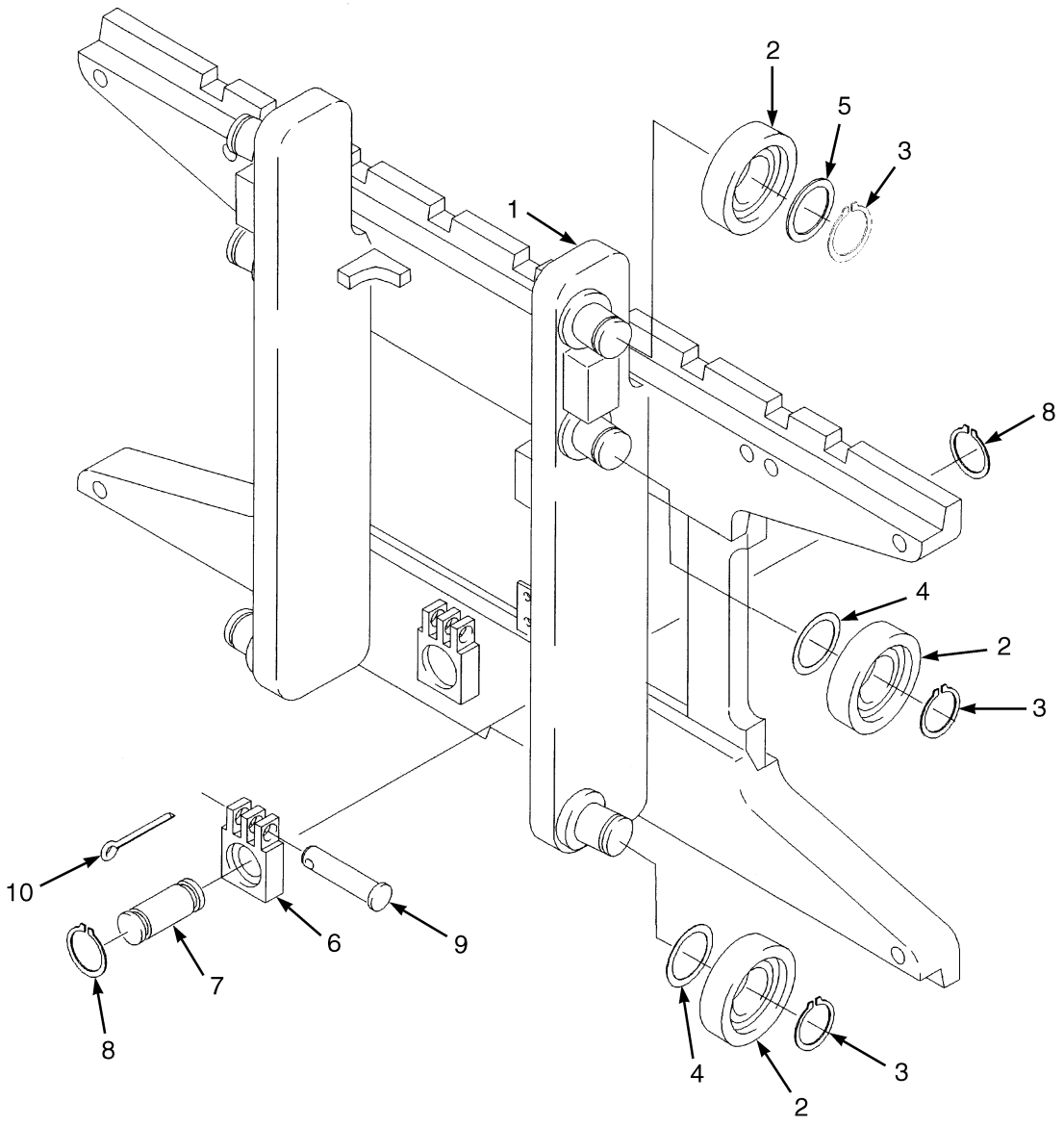

HP290012

©2013 HYSTER COMPANY

CARRIAGE
TWO STAGE FULL FREE-LIFT

KEY:
A: H40-50FT D509
B: H60-70FT D564

ITEM	PART NO.	DESCRIPTION	QTY A	QTY B
	1343844	Carriage	1	..
	1477683	Carriage	..	1
1	1345239	Carriage Wldmt	1	..
1	1477932	Carriage Wldmt	..	1
1	1345264	Stubshaft	6	6
2	1345219	Load Roller ("B") (111.48/111.22)	6	6
3	12891	Snap Ring	6	6
4	1345263	Shim (0.020 in.)	AR	AR
5	366116	Spacer	2	2
6	1369345	Chain Anchor (Dual Hole)	2	..
6	1504010	Chain Anchor (Single Hole) (Optional)	2	..
6	1369344	Chain Anchor (Dual Hole)	..	2
6	1504012	Chain Anchor (Single Hole) (Optional)	..	2
7	317735	Pin	2	2
8	131358	Snap Ring	4	4
9	1514866	Pin	2	2
10	15211	Cotter Pin	2	2
	a 386422	Snap Ring	6	6

FOOTNOTES:

a Not Illustrated

©2013 HYSTER COMPANY

NOTES

©2013 HYSTER COMPANY

SECTION 15
MAST-THREE STAGE FULL FREE-LIFT

DESCRIPTION	PAGE
CARRIAGE	
THREE STAGE FULL FREE-LIFT	15-32
FREE-LIFT	
THREE STAGE FULL FREE-LIFT	15-18
FREE-LIFT CYLINDER	
THREE STAGE FULL FREE-LIFT	15-22
HEADER HOSES	
THREE STAGE FULL FREE-LIFT (→ S/N D508V27872H) (→ S/N D563V11658H)	15-24
THREE STAGE FULL FREE-LIFT (S/N D508V27873H →) (S/N D563V11659H →)	15-28
INNER MAST	
THREE STAGE FULL FREE-LIFT	15-8
INTERMEDIATE MAST	
THREE STAGE FULL FREE-LIFT	15-4
MAIN LIFT	
THREE STAGE FULL FREE-LIFT	15-10
MAIN LIFT CYLINDERS	
THREE STAGE FULL FREE-LIFT	15-14
OUTER MAST	
THREE STAGE FULL FREE-LIFT	15-2

©2013 HYSTER COMPANY

OUTER MAST (FIGURE 15-1)
THREE STAGE FULL FREE-LIFT

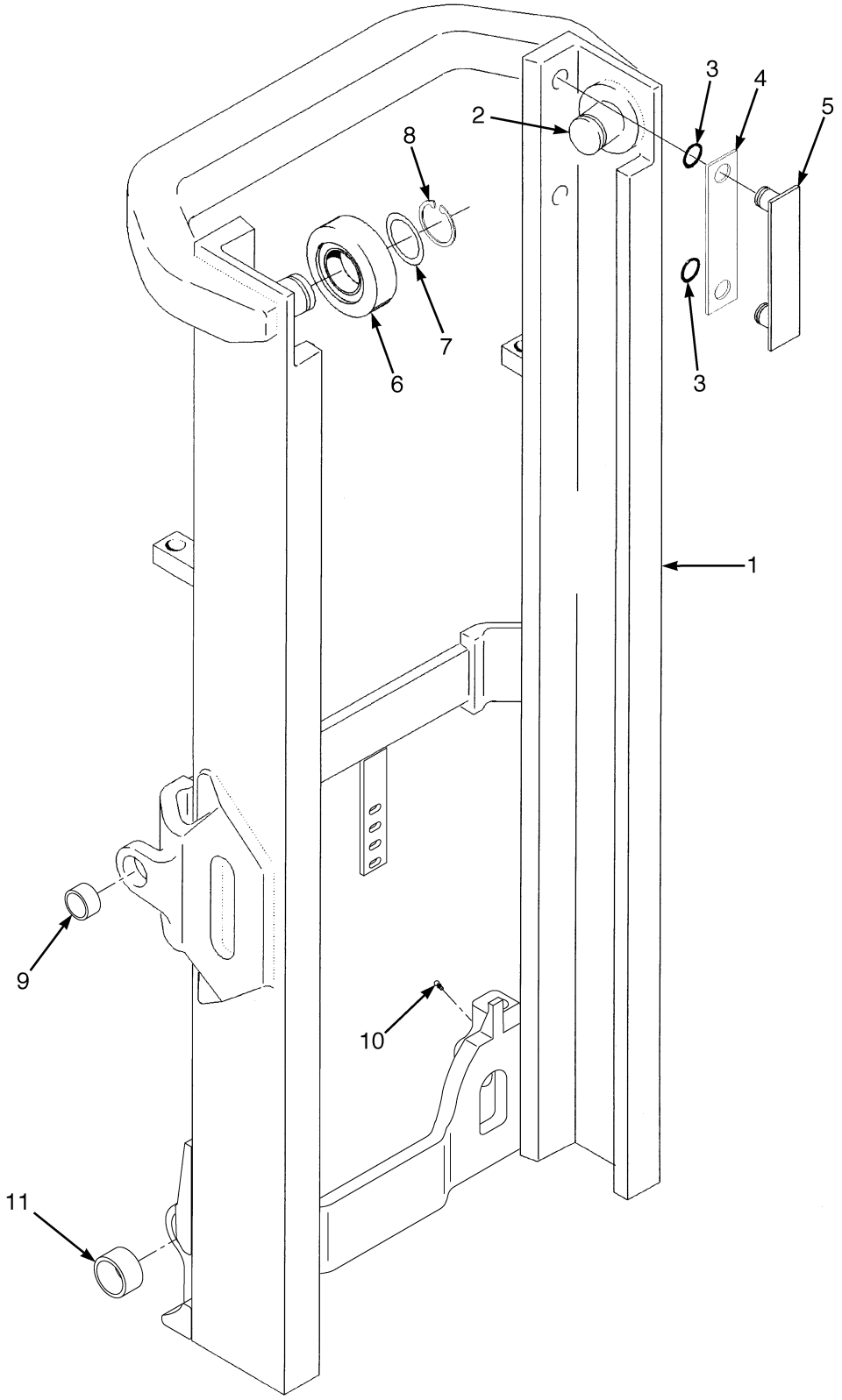

HP290019

©2013 HYSTER COMPANY

OUTER MASS

THREE STAGE FULL FREE-LIFT

H40-50FT

ITEM	DESCRIPTION 1 2 3 4	LIFT HEIGHT TO BOTTOM OF FORKS				
		4310 mm (169.7 in.)	4760 mm (187.4 in.)	4910 mm (193.3 in.)	5060 mm (199.2 in.)	5510 mm (216.9 in.)
	Mast Group Number	D508 4310	D508 4760	D508 4910	D508 5060	D508 5510
	Mast Assy	2065448	2065454	2065456	2065458	2065464
1	Outer Mast	1524751	1524754	1524755	1524757	1524760

H60-70FT

ITEM	DESCRIPTION 1 2 3 4	LIFT HEIGHT TO BOTTOM OF FORKS			
		4568 mm (179.8 in.)	4718 mm (185.7 in.)	5318 mm (209.4 in.)	5768 mm (227.1 in.)
	Mast Group Number	D563 4568	D563 4718	D563 5318	D563 5768
	Mast Assy	2065396	2065398	2065405	2065411
1	Outer Mast	1524755	1524757	1524761	1524764

ITEM	PART NO.	DESCRIPTION	QTY
	a	Mast Assy	1
1	**a**	Outer Mast	1
2	1345216	Stubshaft	2
3	104506	O-Ring	4
4	131715	Shim (0.007 in.)	AR
4	131716	Shim (0.020 in.)	AR
5	215211	Wear Strip	2
6	1395168	Load Roller ("A") (111.10/110.84)	2
6	1333396	Load Roller ("B") (111.48/111.22)	2
6	1333397	Load Roller ("C") (112.62/112.36)	2
7	129387	Shim (0.020 in.)	AR
8	58901	Snap Ring	2
9	300982	Bushing	2
10	16001	Grease Fitting	2
11	1502811	Bushing	2

FOOTNOTES:

a Refer to Table

©2013 HYSTER COMPANY

INTERMEDIATE MAST (FIGURE 15-2)
THREE STAGE FULL FREE-LIFT

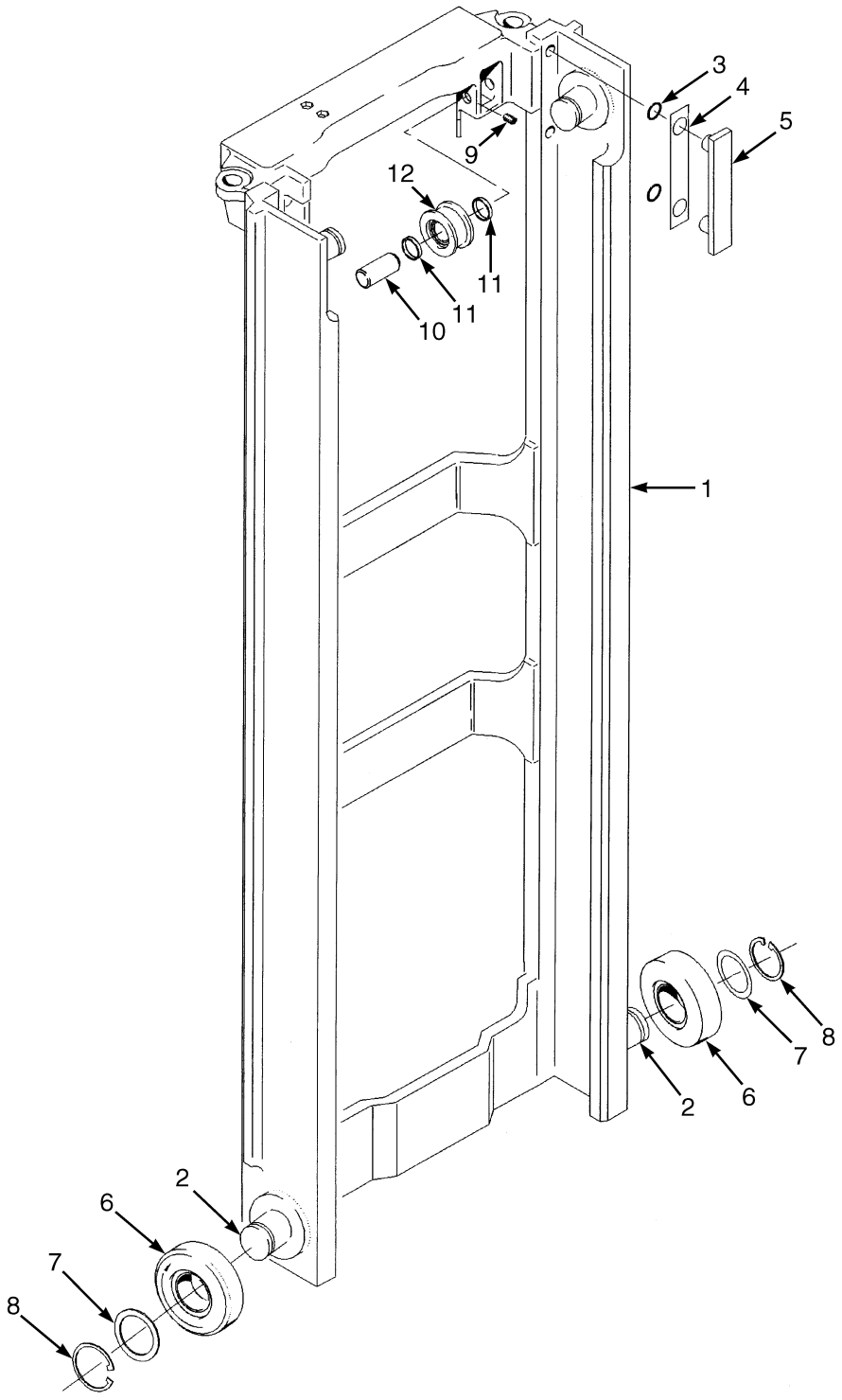

HP290018

©2013 HYSTER COMPANY

INTERMEDIATE MAST
THREE STAGE FULL FREE-LIFT

H40-50FT

ITEM	DESCRIPTION 1 2 3 4	LIFT HEIGHT TO BOTTOM OF FORKS				
		4310 mm (169.7 in.)	4760 mm (187.4 in.)	4910 mm (193.3 in.)	5060 mm (199.2 in.)	5510 mm (216.9 in.)
	Mast Group Number	D508 4310	D508 4760	D508 4910	D508 5060	D508 5510
	Mast Assy	2065448	2065454	2065456	2065458	2065464
1	Intermediate Mast	1524831	1524834	1524835	1524836	1524839

H60-70FT

ITEM	DESCRIPTION 1 2 3 4	LIFT HEIGHT TO BOTTOM OF FORKS			
		4568 mm (179.8 in.)	4718 mm (185.7 in.)	5318 mm (209.4 in.)	5768 mm (227.1 in.)
	Mast Group Number	D563 4568	D563 4718	D563 5318	D563 5768
	Mast Assy	2065396	2065398	2065405	2065411
1	Intermediate Mast	1524835	1524836	1524840	1524843

KEY:
A: H40-50FT
B: H60-70FT

ITEM	PART NO.	DESCRIPTION	QTY A	QTY B
	a	Mast Assy	1	1
1	**a**	Intermediate Mast	1	1
2	1345216	Stubshaft	2	2
3	104506	O-Ring	4	4
4	131716	Shim (0.020 in.)	AR	AR
5	215211	Wear Strip	2	2
6	1395168	Load Roller ("A") (111.10/110.84)	4	4
6	1333396	Load Roller ("B") (111.48/111.22)	4	4
6	1333397	Load Roller ("C") (112.62/112.36)	4	4
7	129387	Shim (0.020 in.)	AR	AR
8	58901	Snap Ring	4	4
9	302462	Roll Pin	2	2
10	1368656	Pin	2	2
11	1378691	Spacer	4	4
12	1379685	Chain Sheave	2	..
12	1379684	Chain Sheave Assembly	..	2
12	1378698	Chain Sheave	1	..
12	1378694	Chain Sheave	..	1
12	1378699	Ball Bearing	1	1
12	37752	Snap Ring	1	1

©2013 HYSTER COMPANY

FOOTNOTES:

a Refer to Table

©2013 HYSTER COMPANY

NOTES

©2013 HYSTER COMPANY

INNER MAST (FIGURE 15-3)
THREE STAGE FULL FREE-LIFT

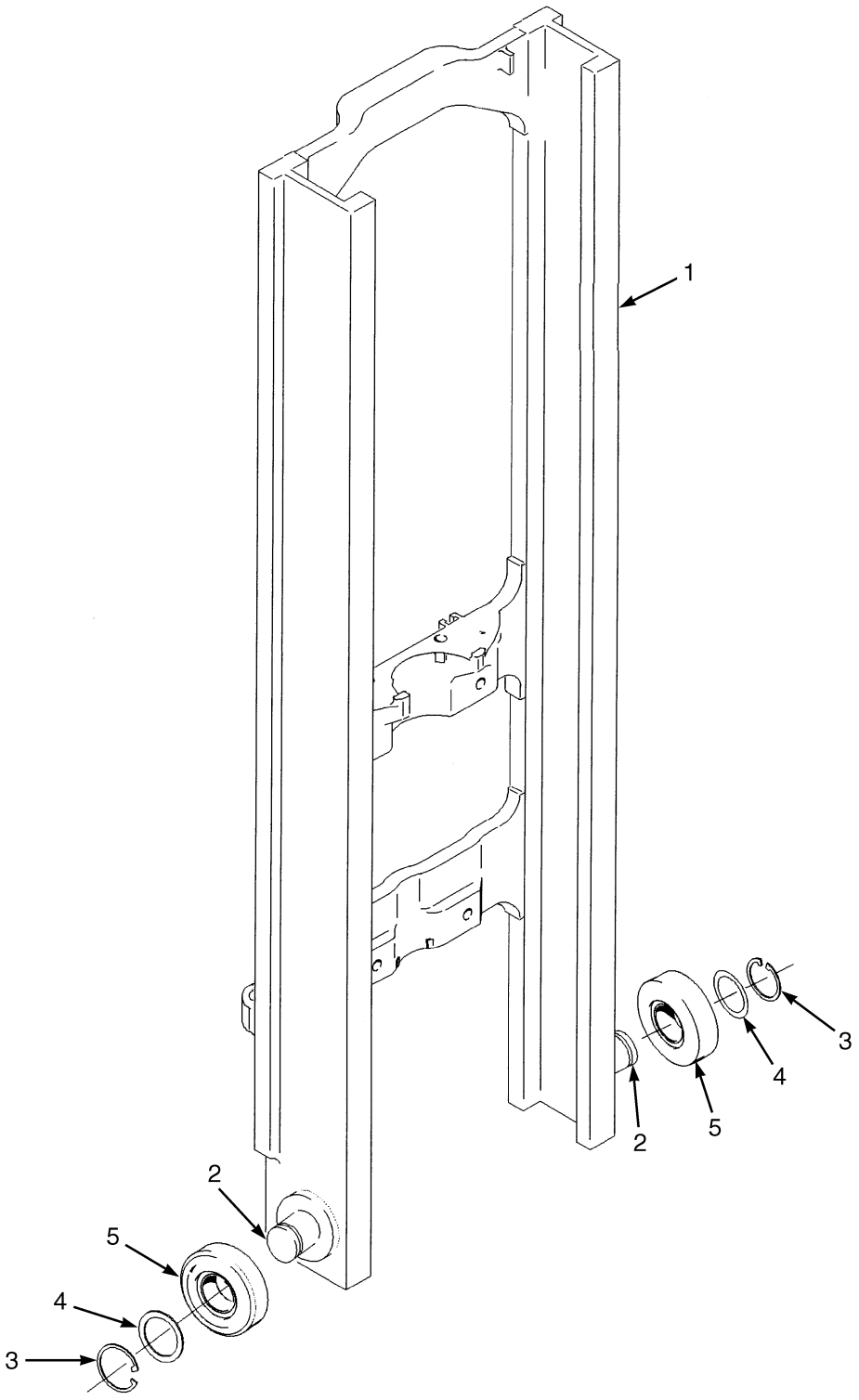

HP290017

©2013 HYSTER COMPANY

INNER MAST
THREE STAGE FULL FREE-LIFT

H40-50FT

ITEM	DESCRIPTION 1 2 3 4	LIFT HEIGHT TO BOTTOM OF FORKS				
		4310 mm (169.7 in.)	4760 mm (187.4 in.)	4910 mm (193.3 in.)	5060 mm (199.2 in.)	5510 mm (216.9 in.)
	Mast Group Number	D508 4310	D508 4760	D508 4910	D508 5060	D508 5510
	Mast Assy	2065448	2065454	2065456	2065458	2065464
1	Inner Mast	1381354	1381357	1381358	1381359	1381362

H60-70FT

ITEM	DESCRIPTION 1 2 3 4	LIFT HEIGHT TO BOTTOM OF FORKS			
		4568 mm (179.8 in.)	4718 mm (185.7 in.)	5318 mm (209.4 in.)	5768 mm (227.1 in.)
	Mast Group Number	D563 4568	D563 4718	D563 5318	D563 5768
	Mast Assy	2065396	2065398	2065405	2065411
1	Inner Mast	1381358	1381359	1381363	1381366

ITEM	PART NO.	DESCRIPTION	QTY
	a	Mast Assy	1
1	**a**	Inner Mast	1
2	1345216	Stubshaft	2
3	58901	Snap Ring	2
4	129387	Shim (0.020 in.)	AR
5	1395168	Load Roller ("A") (111.10/110.84)	2
5	1333396	Load Roller ("B") (111.48/111.22)	2
5	1333397	Load Roller ("C") (112.62/112.36)	2

FOOTNOTES:

a Refer to Table

©2013 HYSTER COMPANY

MAIN LIFT (FIGURE 15-4)
THREE STAGE FULL FREE-LIFT

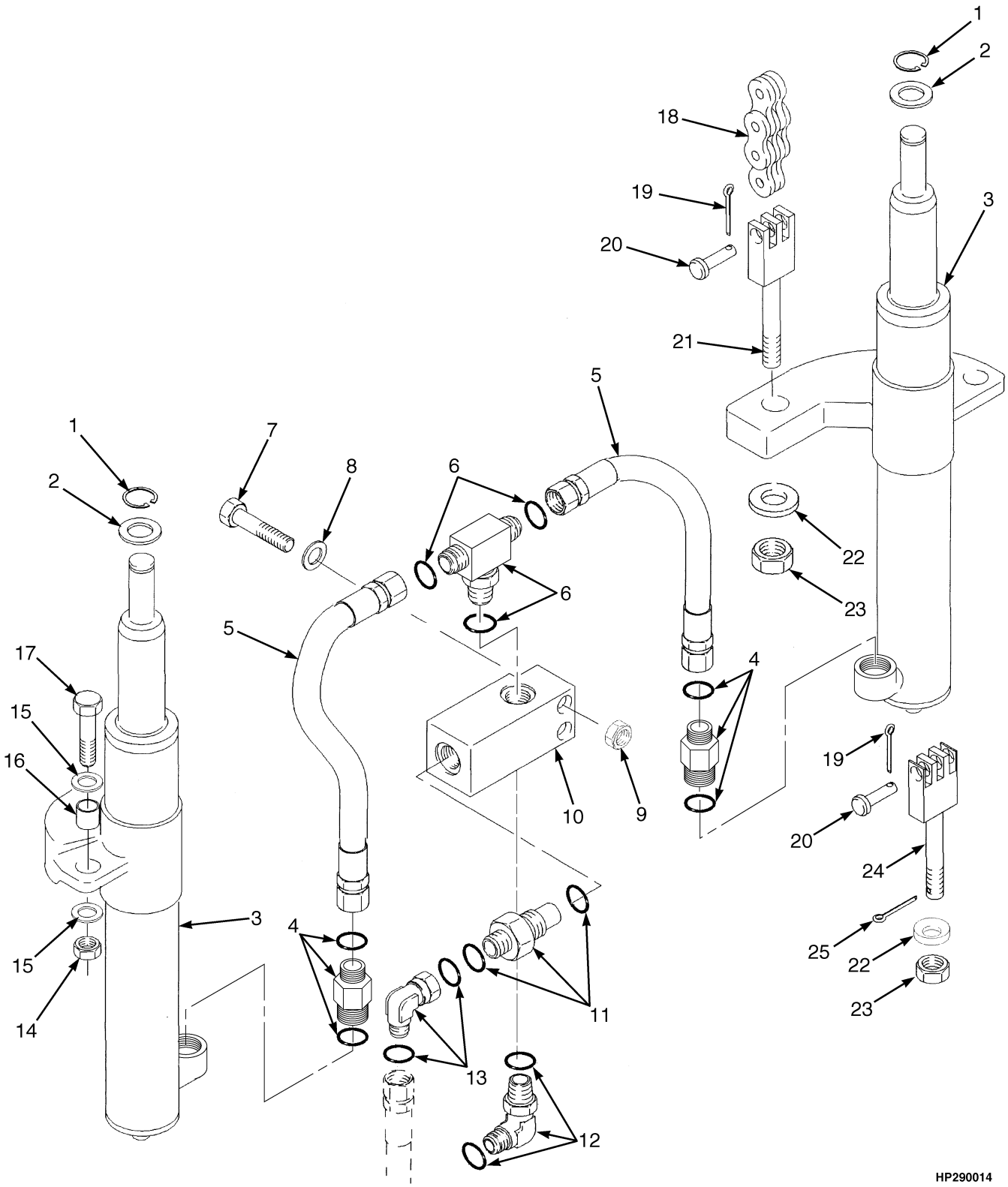

©2013 HYSTER COMPANY

MAIN LIFT
THREE STAGE FULL FREE-LIFT

H40-50FT

ITEM	DESCRIPTION 1 2 3 4	LIFT HEIGHT TO BOTTOM OF FORKS				
		4310 mm (169.7 in.)	4760 mm (187.4 in.)	4910 mm (193.3 in.)	5060 mm (199.2 in.)	5510 mm (216.9 in.)
	Mast Group Number	D508 4310	D508 4760	D508 4910	D508 5060	D508 5510
18	Chain	182343	135634	337174	129361	135588

H60-70FT

ITEM	DESCRIPTION 1 2 3 4	LIFT HEIGHT TO BOTTOM OF FORKS			
		4568 mm (179.8 in.)	4718 mm (185.7 in.)	5318 mm (209.4 in.)	5768 mm (227.1 in.)
	Mast Group Number	D563 4568	D563 4718	D563 5318	D563 5768
18	Chain	1342124	1342384	1342387	1342132

KEY:
A: H40-50FT
B: H60-70FT

ITEM	PART NO.	DESCRIPTION	QTY A	QTY B
1	131358	Snap Ring	2	2
2	1333382	Washer (0.060 in.)	2	2
2	1354915	Washer (0.010 in.)	AR	AR
2	1354916	Washer (0.030 in.)	AR	AR
2	1354917	Washer (0.060 in.)	AR	AR
3	. . . . .	Main Lift Cylinders (☞Figure 15-5)	2	2
4	2062686	Hyd Velocity Fuse	2	..
4	2062687	Hyd Velocity Fuse	..	2
4	16485	O-Ring	1	1
4	252729	O-Ring	1	1
5	1481097	Hose Assy	2	2
6	1532650	Fitting	1	1
6	16485	O-Ring	1	1
6	252729	O-Ring	2	2
7	1581835	Capscrew	2	2
8	1581556	Washer	2	2
9	1581566	Nut	2	2
10	1333392	Housing (Lowering Control)	1	1
11	2062651	Lowering Control Valve	1	..
11	2062652	Lowering Control Valve	..	1
11	280154	O-Ring	1	1
11	252729	O-Ring	1	1
12	1480747	Fitting	1	1
12	16486	O-Ring	1	1
12	244167	O-Ring	1	1
13	1486773	Fitting	1	1

©2013 HYSTER COMPANY

MAIN LIFT
THREE STAGE FULL FREE-LIFT

KEY:
A: H40-50FT
B: H60-70FT

ITEM	PART NO.	DESCRIPTION	QTY A	QTY B
13	252729	O-Ring	2	2
14	1581849	Nut	2	2
15	1581852	Washer	4	4
16	323090	Spacer	2	2
17	1581829	Capscrew	2	2
18	**a**	Chain	1	1
19	15211	Cotter Pin	2	2
20	1514866	Pin	2	2
21	1369357	Chain Anchor	2	..
21	1369356	Chain Anchor	..	2
22	297649	Ring	2	2
23	161003	Nut	2	2
24	1365140	Chain Anchor	2	..
24	1333329	Chain Anchor	..	2
25	15223	Cotter Pin	2	2

FOOTNOTES:

a Refer to Table

©2013 HYSTER COMPANY

NOTES

©2013 HYSTER COMPANY

MAIN LIFT CYLINDERS (FIGURE 15-5)
THREE STAGE FULL FREE-LIFT

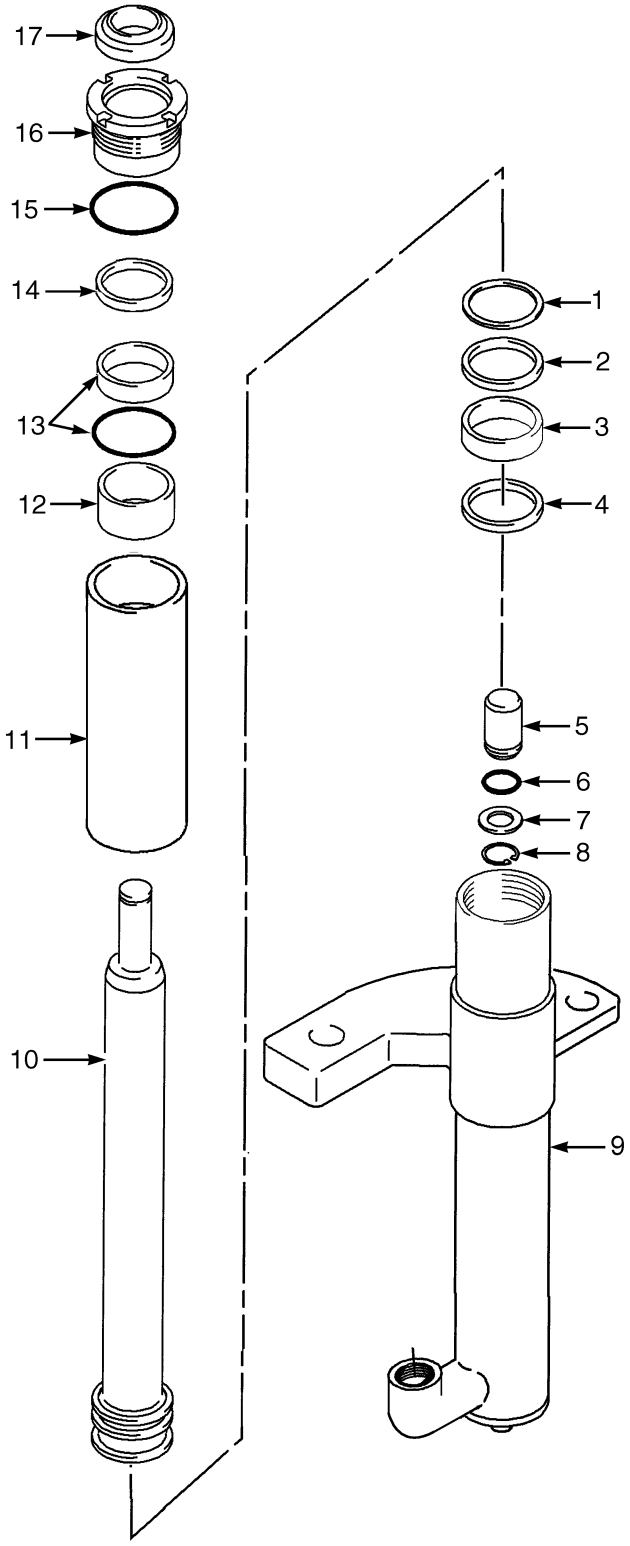

©2013 HYSTER COMPANY

MAIN LIFT CYLINDERS
THREE STAGE FULL FREE-LIFT

LEFT HAND (H40-50FT)

ITEM	DESCRIPTION 1 2 3 4	LIFT HEIGHT TO BOTTOM OF FORKS				
		4310 mm (169.7 in.)	4760 mm (187.4 in.)	4910 mm (193.3 in.)	5060 mm (199.2 in.)	5510 mm (216.9 in.)
	Mast Group Number	**D508 4310**	**D508 4760**	**D508 4910**	**D508 5060**	**D508 5510**
	Cylinder Group Number	**8518205**	**8518208**	**8518209**	**8518210**	**8518213**
	Cylinder Assy	2064640	2064643	2064644	2064645	2064648
9	Tube Wldmt-Cylinder	2064607	2064610	2064611	2064612	2064615
10	Cylinder Rod	1355587	1355599	1355603	1355607	1355620
11	Spacer	----	----	----	1355610	1355610

RIGHT HAND (H40-50FT)

ITEM	DESCRIPTION 1 2 3 4	LIFT HEIGHT TO BOTTOM OF FORKS				
		4310 mm (169.7 in.)	4760 mm (187.4 in.)	4910 mm (193.3 in.)	5060 mm (199.2 in.)	5510 mm (216.9 in.)
	Mast Group Number	**D508 4310**	**D508 4760**	**D508 4910**	**D508 5060**	**D508 5510**
	Cylinder Group Number	**8518255**	**8518258**	**8518259**	**8518260**	**8518263**
	Cylinder Assy	2064673	2064676	2064677	2064678	2064681
9	Tube Wldmt-Cylinder	2073082	2073083	2073084	2073085	2073086
10	Cylinder Rod	1355587	1355599	1355603	1355607	1355620
11	Spacer	----	----	----	----	1355610

LEFT HAND (H60-70FT)

ITEM	DESCRIPTION 1 2 3 4	LIFT HEIGHT TO BOTTOM OF FORKS			
		4568 mm (179.8 in.)	4718 mm (185.7 in.)	5318 mm (209.4 in.)	5768 mm (227.1 in.)
	Mast Group Number	**D563 4568**	**D563 4718**	**D563 5318**	**D563 5768**
	Cylinder Group Number	**8518309**	**8518310**	**8518314**	**8518317**
	Cylinder Assy	2064710	2064711	2064715	2064718
9	Tube Wldmt-Cylinder	2064563	2064564	2064568	2064571
10	Cylinder Rod	1355745	1355749	1355762	1355775
11	Spacer	----	2073087	2077818	2077818

©2013 HYSTER COMPANY

MAIN LIFT CYLINDERS
THREE STAGE FULL FREE-LIFT
RIGHT HAND (H60-70FT)

ITEM	DESCRIPTION 1 2 3 4	LIFT HEIGHT TO BOTTOM OF FORKS			
		4568 mm (179.8 in.)	4718 mm (185.7 in.)	5318 mm (209.4 in.)	5768 mm (227.1 in.)
	Mast Group Number	D563 4568	D563 4718	D563 5318	D563 5768
	Cylinder Group Number	8518359	8518360	8518364	8518367
	Cylinder Assy	2064735	2064736	2064740	2064743
9	Tube Wldmt-Cylinder	2064587	2064588	2064592	2064595
10	Cylinder Rod	1355745	1355749	1355762	1355775
11	Spacer	----	2073087	2077818	2077818

KEY:
A: H40-50FT
B: H60-70FT

ITEM	PART NO.	DESCRIPTION	QTY A	QTY B
	b	Cylinder Assy	1	1
1	638246	Back-Up Ring	1	..
1	335012	Back-Up Ring	..	1
2	2013075	Rod Seal	1	..
2	334156	Rod Seal	..	1
3	1356750	Wear Ring	1	..
3	1356751	Wear Ring	..	1
4	1360127	Piston Ring	1	..
4	1356748	Piston Ring	..	1
5	257913	Check Valve	1	1
6	190580	O-Ring	1	1
7	297531	Washer	1	1
8	187388	Snap Ring	1	1
9	**b**	Tube Wldmt-Cylinder	1	1
10	**b**	Cylinder Rod	1	1
11	**b**	Spacer	1	1
12	**d** 322902	Wear Ring	1	1
13	1356749	Rod Seal	1	..
13	1381095	Rod Seal	..	1
14	**d** 322824	Back-Up Ring	1	1
15	~~4028986~~ 92861	O-Ring	1	..
15	59229	O-Ring	..	1
16	**c** 1355496	Gland	1	..
16	**d** 2091257	Gland	1	..
16	**c** 1355713	Gland	..	1
16	**d** 2091259	Gland	..	1
17	1319668	Rod Wiper	1	1

See Service Manual for service procedures.
©2013 HYSTER COMPANY

MAIN LIFT CYLINDERS
THREE STAGE FULL FREE-LIFT

KEY:
A: H40-50FT
B: H60-70FT

ITEM	PART NO.	DESCRIPTION	QTY A	QTY B
	a 322824	Back-Up Ring	1	1
	a 322902	Wear Ring	1	1
	1355497	Kit-Seal	1	..
	1355714	Kit-Seal	..	1

FOOTNOTES:

a Not Illustrated
b Refer to Table
c → 3/2007
d 3/2007 →

©2013 HYSTER COMPANY

FREE-LIFT (FIGURE 15-6)
THREE STAGE FULL FREE-LIFT

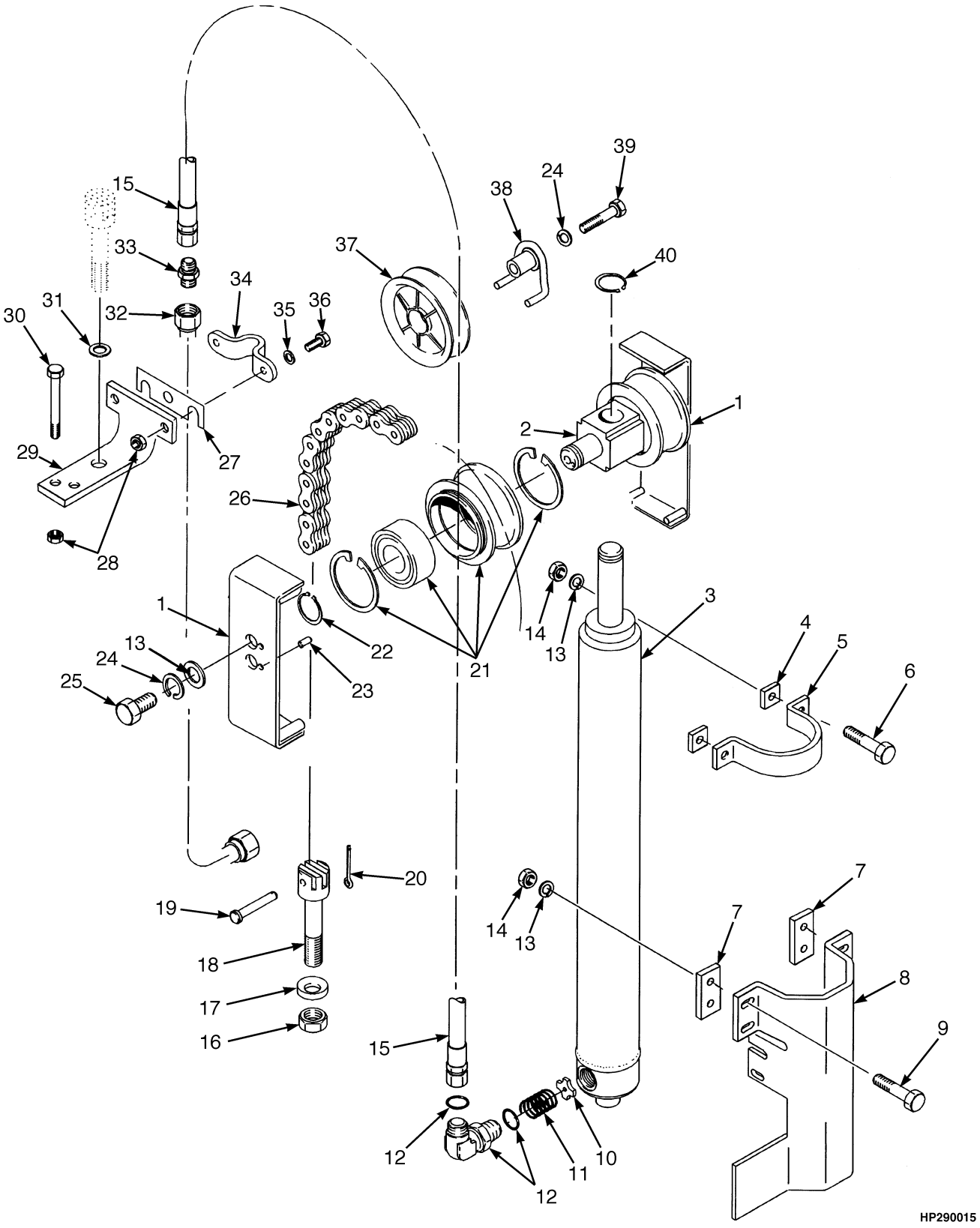

©2013 HYSTER COMPANY

FREE-LIFT
THREE STAGE FULL FREE-LIFT

H40-50FT

ITEM	DESCRIPTION 1 2 3 4	LIFT HEIGHT TO BOTTOM OF FORKS				
		4310 mm (169.7 in.)	4760 mm (187.4 in.)	4910 mm (193.3 in.)	5060 mm (199.2 in.)	5510 mm (216.9 in.)
	Mast Group Number	D508 4310	D508 4760	D508 4910	D508 5060	D508 5510
15	Hose Assy	2084650	2084653	2084654	2084655	2084658
26	Chain	197345	180177	161029	180029	180057
32	Tube Assy	2075925	2075928	2075929	2075930	2075933

H60-70FT

ITEM	DESCRIPTION 1 2 3 4	LIFT HEIGHT TO BOTTOM OF FORKS			
		4568 mm (179.8 in.)	4718 mm (185.7 in.)	5318 mm (209.4 in.)	5768 mm (227.1 in.)
	Mast Group Number	D563 4568	D563 4718	D563 5318	D563 5768
15	Hose Assy	2084570	2084571	2084575	2084578
26	Chain	1342116	1342118	1342123	1342384
32	Tube Assy	2075929	2075930	2075934	2075937

KEY:
A: H40-50FT
B: H60-70FT

ITEM	PART NO.	DESCRIPTION	QTY A	QTY B
1	1395285	Chain Guard	2	2
2	1378690	Crosshead	1	1
3	. . . . .	Free-Lift Cylinder (☞Figure 15-7)	1	1
4	1354902	Spacer	..	2
5	1465504	Tie Down	1	1
6	1581827	Capscrew	2	..
6	1581828	Capscrew	..	2
7	1354903	Spacer	..	2
8	**d** 1354962	Bracket Wldmt	1	1
8	**bcg** 1702706	Bracket	1	1
8	**ef** 4015720	Bracket Wldmt	1	1
9	1581832	Capscrew	4	4
10	356505	Washer (Special)	1	1
11	154355	Spring	1	1
12	1481095	Fitting	1	1
12	16485	O-Ring	1	1
12	280154	O-Ring	1	1
13	1581559	Washer	8	8
14	1581849	Nut	6	6
15	**a**	Hose Assy	1	1

©2013 HYSTER COMPANY

FREE-LIFT
THREE STAGE FULL FREE-LIFT

KEY:
A: H40-50FT
B: H60-70FT

ITEM	PART NO.	DESCRIPTION	QTY A	QTY B
16	161003	Nut	4	4
17	297649	Ring	4	4
18	1369357	Chain Anchor	2	..
18	1369356	Chain Anchor	..	2
19	1514866	Pin	4	4
20	15211	Cotter Pin	4	4
21	1379682	Chain Sheave Assembly	2	..
21	1379683	Chain Sheave Assembly	..	2
21	1378692	Chain Sheave	1	..
21	1378693	Chain Sheave	..	1
21	37752	Snap Ring	1	1
21	1378699	Ball Bearing	1	1
22	304526	Snap Ring	2	2
23	302461	Roll Pin	2	2
24	1581564	Lockwasher	3	3
25	1581590	Capscrew	2	2
26	**a**	Chain	2	2
27	325616	Spacer	AR	AR
27	4022999	Spacer (Alternate Part)	AR	AR
28	1581566	Nut	4	4
28	1581565	Nut (Alternate Part)	6	6
29	1550298	Bracket	1	1
29	4022998	Bracket (Alternate Part)	1	1
30	1581836	Capscrew	2	2
31	1581850	Washer	1	1
32	**a**	Tube Assy	1	1
33	1522442	Fitting	1	1
33	280154	O-Ring	1	1
33	244167	O-Ring	1	1
34	4022906	Clamp	1	1
34	1345401	Clamp (Optional)	1	1
35	1581556	Washer	2	2
35	1673754	Washer (Alternate Part)	4	4
36	1581581	Capscrew	2	2
36	4022940	Capscrew (Alternate Part)	2	2
37	1343989	Hose Sheave	1	1
37	1354901	Bushing	1	1
38	1360534	Stubshaft	1	1
39	1581829	Capscrew	1	1
40	131358	Snap Ring	1	1

©2013 HYSTER COMPANY

FOOTNOTES:

a Refer to Table
b → S/N D508V27872H
c → S/N D563V11658H
d → S/N L177B28940G
e S/N D508V27873H →
f S/N D563V11659H →
g S/N L177B28941G →

©2013 HYSTER COMPANY

FREE-LIFT CYLINDER (FIGURE 15-7)
THREE STAGE FULL FREE-LIFT

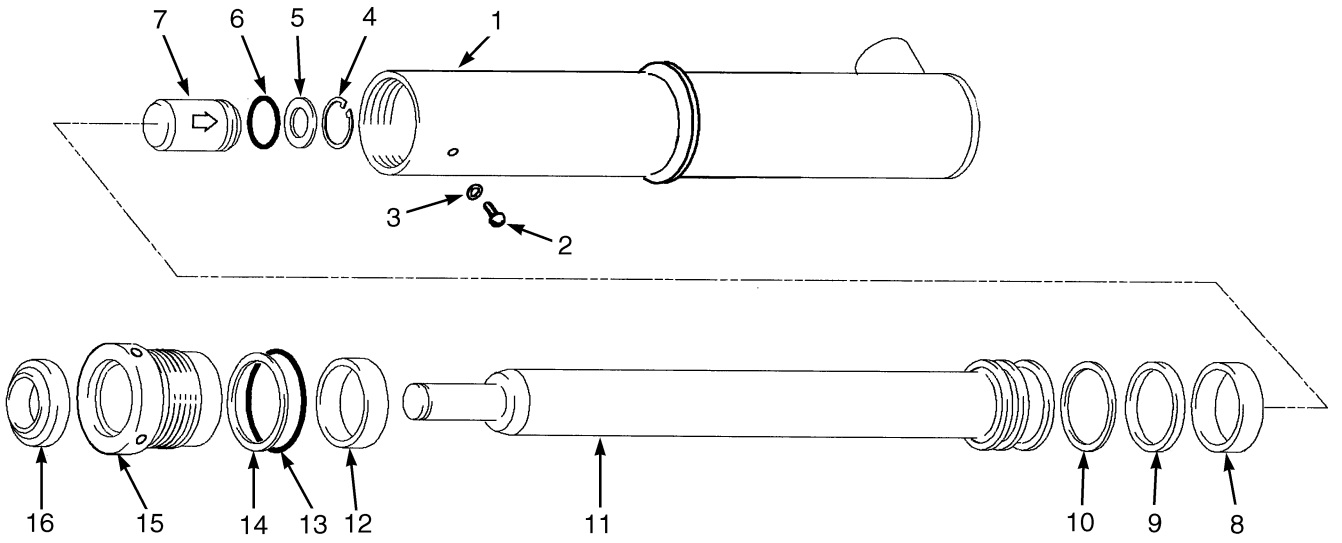

HP171369

FREE-LIFT CYLINDER
THREE STAGE FULL FREE-LIFT

H40-50FT

ITEM	DESCRIPTION 1 2 3 4	LIFT HEIGHT TO BOTTOM OF FORKS				
		4310 mm (169.7 in.)	4760 mm (187.4 in.)	4910 mm (193.3 in.)	5060 mm (199.2 in.)	5510 mm (216.9 in.)
	Mast Group Number	D508 4310	D508 4760	D508 4910	D508 5060	D508 5510
	Cylinder Group Number	8514556	8514559	8514560	8514562	8514565
	Cylinder Assy	2053795	2053796	2053797	2053798	2053799
1	Tube Wldmt-Cylinder	2058210	2058213	2058214	2058216	2058219
11	Cylinder Rod	1356560	1356569	1356572	1356578	1371631

©2013 HYSTER COMPANY

FREE-LIFT CYLINDER
THREE STAGE FULL FREE-LIFT

H60-70FT

ITEM	DESCRIPTION 1 2 3 4	LIFT HEIGHT TO BOTTOM OF FORKS			
		4568 mm (179.8 in.)	4718 mm (185.7 in.)	5318 mm (209.4 in.)	5768 mm (227.1 in.)
	Mast Group Number	**D563 4568**	**D563 4718**	**D563 5318**	**D563 5768**
	Cylinder Group Number	**8518711**	**8518713**	**8518718**	**8518721**
	Cylinder Assy	2058328	2058330	2058335	2058338
1	Tube Wldmt-Cylinder	2063691	2058254	2058256	2064753
11	Cylinder Rod	1356694	1356065	1356080	1356089

KEY:
A: H40-50FT
B: H60-70FT

ITEM	PART NO.	DESCRIPTION	QTY A	QTY B
	a	Cylinder Assy	1	1
1	**a**	Tube Wldmt-Cylinder	1	1
2	1361302	Screw	1	1
3	190887	Sealing Ring	1	1
4	187388	Snap Ring	1	1
5	297531	Washer	1	1
6	190580	O-Ring	1	1
7	297538	Check Valve	1	1
8	1358972	Wear Ring	1	..
8	636941	Wear Ring	..	1
9	2013088	Rod Seal	1	..
9	309062	Rod Seal	..	1
10	2013089	Back-Up Ring	1	..
10	637565	Back-Up Ring	..	1
11	**a**	Cylinder Rod	1	1
12	1622946	Rod Seal	1	1
13	90263	O-Ring	1	..
13	15880	O-Ring	..	1
14	147973	Back-Up Ring	1	..
14	164840	Back-Up Ring	..	1
15	1356292	Gland	1	..
15	1356661	Gland	..	1
16	1463105	Rod Wiper	1	1
	1358969	Kit-Seal	1	..
	1356662	Kit-Seal	..	1

FOOTNOTES:

a Refer to Table

©2013 HYSTER COMPANY

HEADER HOSES (FIGURE 15-8)

THREE STAGE FULL FREE-LIFT (→ S/N D508V27872H) (→ S/N D563V11658H)

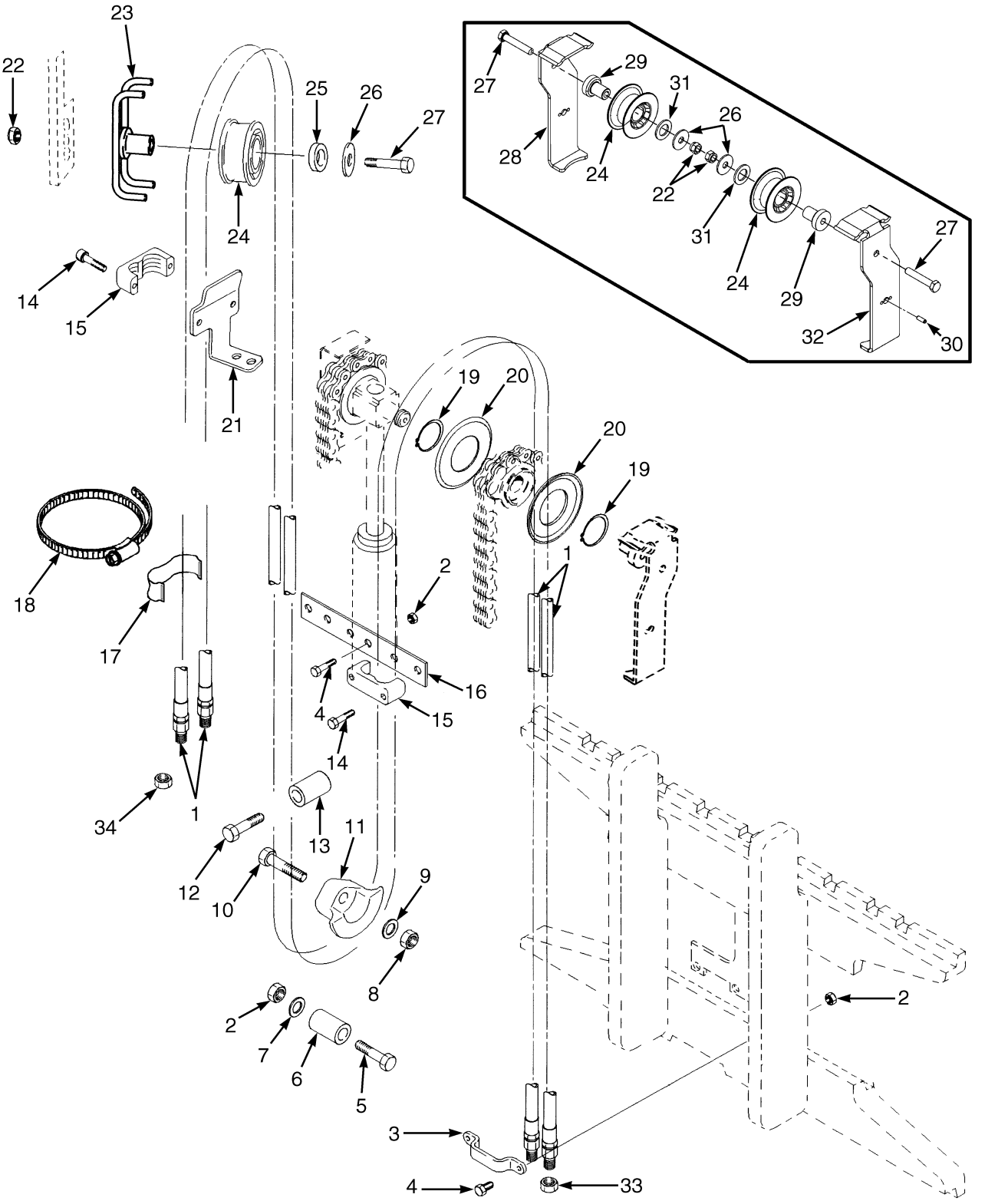

©2013 HYSTER COMPANY

HEADER HOSES

THREE STAGE FULL FREE-LIFT (→ S/N D508V27872H) (→ S/N D563V11658H)

H40-50FT

ITEM	DESCRIPTION 1 2 3 4	LIFT HEIGHT TO BOTTOM OF FORKS				
		4310 mm (169.7 in.)	4760 mm (187.4 in.)	4910 mm (193.3 in.)	5060 mm (199.2 in.)	5510 mm (216.9 in.)
	Mast Group Number	D508 4310	D508 4760	D508 4910	D508 5060	D508 5510
1	Hose Assy	2065121	2065124	2065125	2065161	2065164

H60-70FT

ITEM	DESCRIPTION 1 2 3 4	LIFT HEIGHT TO BOTTOM OF FORKS			
		4568 mm (179.8 in.)	4718 mm (185.7 in.)	5318 mm (209.4 in.)	5768 mm (227.1 in.)
	Mast Group Number	D563 4568	D563 4718	D563 5318	D563 5768
1	Hose Assy	2065125	2065161	2065165	2065168

KEY:
A: Three Function
B: Four Function

ITEM	PART NO.	DESCRIPTION	QTY A	QTY B
1	**a**	Hose Assy	2	4
2	1581566	Nut	5	10
3	1643405	Hose Clamp	1	2
4	1581581	Capscrew	4	10
5	1581835	Capscrew	1	2
6	1354961	Spacer	1	2
7	1581851	Washer	1	2
8	1581567	Nut	1	2
9	1581558	Washer	1	2
10	1581588	Capscrew	1	2
11	1348246	Hose Guide (RH)	1	1
11	1348247	Hose Guide (LH)	..	1
12	1581831	Capscrew	1	2
13	1360538	Tube Assy	1	2
14	1581842	Capscrew	4	8
15	1360386	Clamp (Double Hose)	2	4
16	1353464	Plate	1	1
17	1477996	Hose Clamp	1	2
18	1617657	Clamp	1	2
19	1345204	Snap Ring (Spiral Retaining Ring)	2	4
20	1345199	Hose Guide	2	4
21	1354906	Bracket (RH)	1	1
21	1354907	Bracket (LH)	..	1
22	1390182	Nut	2	4
23	1362387	Stubshaft	1	2
24	1494017	Hose Sheave	2	4

©2013 HYSTER COMPANY

HEADER HOSES

THREE STAGE FULL FREE-LIFT (→ S/N D508V27872H) (→ S/N D563V11658H)

KEY:
A: Three Function
B: Four Function

ITEM	PART NO.	DESCRIPTION	QTY A	QTY B
25	1360549	Spacer	1	2
26	1345190	Washer	2	4
27	1581830	Capscrew	2	4
28	1395291	Bracket (RH Hose Guard)	1	1
29	1396406	Stubshaft	1	2
30	302461	Roll Pin	1	2
31	1581560	Washer	1	2
32	1395292	Bracket (LH Hose Guard)	..	1
33	1529015	Cap	2	4
34	1566564	Cap	1	2

FOOTNOTES:

a Refer to Table

©2013 HYSTER COMPANY

NOTES

©2013 HYSTER COMPANY

HEADER HOSES (FIGURE 15-9)

THREE STAGE FULL FREE-LIFT (S/N D508V27873H →) (S/N D563V11659H →)

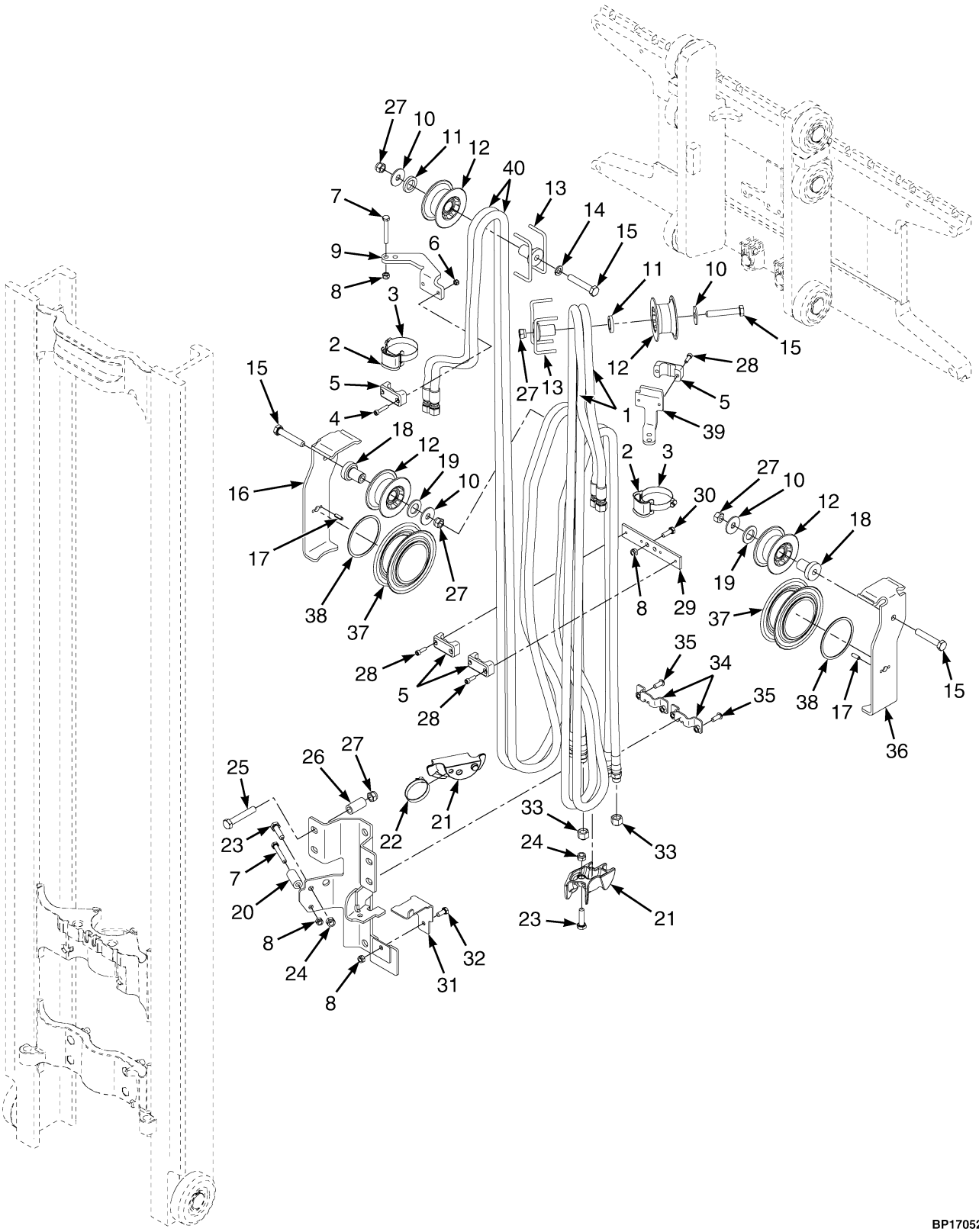

BP170529

©2013 HYSTER COMPANY

HEADER HOSES

THREE STAGE FULL FREE-LIFT (S/N D508V27873H →) (S/N D563V11659H →)

D508

ITEM	DESCRIPTION 1 2 3 4	LIFT HEIGHT TO BOTTOM OF FORKS				
		4310 mm (169.7 in.)	4760 mm (187.4 in.)	4910 mm (193.3 in.)	5060 mm (199.2 in.)	5510 mm (216.9 in.)
	Mast Group Number	D508 4310	D508 4760	D508 4910	D508 5060	D508 5510
1	Hose Assy	4608521	4608524	4608525	4608526	4608529
40	Hose Assy	4608556	4608559	4608560	4608561	4608564

D563

ITEM	DESCRIPTION 1 2 3 4	LIFT HEIGHT TO BOTTOM OF FORKS			
		4568 mm (179.8 in.)	4718 mm (185.7 in.)	5318 mm (209.4 in.)	5768 mm (227.1 in.)
	Mast Group Number	D563 4568	D563 4718	D563 5318	D563 5768
1	Hose Assy	4608525	4608526	4608530	4608533
40	Hose Assy	4608560	4608561	4608565	4608568

KEY:
A: Three Function
B: Four Function

ITEM	PART NO.	DESCRIPTION	QTY A	QTY B
1	**b**	Hose Assy	2	2
2	1477996	Hose Clamp (D508 169.7-216.9 in.)(D563 179.8-185.7 in.)	1	2
2	1477996	Hose Clamp (D563 209.4-227.1 in.)	3	6
3	1617657	Clamp (D508 169.7-216.9 in.)(D563 179.8-185.7 in.)	1	2
3	1617657	Clamp (D563 209.4-227.1 in.)	3	6
4	1581742	Capscrew	..	2
5	1360386	Clamp (Double Hose)	2	4
6	1581565	Nut	..	2
7	1581836	Capscrew	..	3
8	1581566	Nut	5	10
8	1581566	Nut	3	6
9	1354921	Bracket	..	1
10	1345190	Washer	2	4
11	**d** 1360549	Spacer	1	2
11	**f** 1581560	Washer	1	2
12	**d** 1494017	Hose Sheave	2	4
12	**f** 4041194	Hose Sheave	2	3
12	**f** 1494017	Hose Sheave (Upper LH)	..	1
13	**d** 1362387	Stubshaft	1	1
13	1360548	Stubshaft (Upper LH)	..	1
13	**f** 4051749	Stubshaft (Upper RH)	1	1
14	**d** 1581564	Lockwasher	..	1
15	1581830	Capscrew	2	4

©2013 HYSTER COMPANY

HEADER HOSES

THREE STAGE FULL FREE-LIFT (S/N D508V27873H →) (S/N D563V11659H →)

KEY:
A: Three Function
B: Four Function

ITEM	PART NO.	DESCRIPTION	QTY A	QTY B
16	1395292	Bracket (LH Hose Guard)	..	1
17	302461	Roll Pin	1	2
18	1396406	Stubshaft	1	2
19	**c** 1581560	Washer	1	2
19	**e** 4064560	Spacer	1	2
20	4021618	Spacer	1	2
21	~~4609464~~			
	4613901	Casting (Header Hose Turnaround Guide) (RH)	1	1
21	4609465	Casting (Header Hose Turnaround Guide) (LH)	..	1
22	397676	Strap Clamp	..	1
23	1658075	Capscrew	1	2
24	1581567	Nut	1	2
25	1581831	Capscrew	1	2
26	1360538	Tube Assy	1	2
27	1390182	Nut	2	3
28	1581842	Capscrew	4	6
29	1353464	Plate	1	1
30	1581581	Capscrew	2	2
31	~~4019607~~			
	4034686	Bracket	1	1
32	1581580	Capscrew	1	1
33	1529015	Cap	2	4
34	1643405	Hose Clamp	1	2
34	4008020	Clamp	1	2
35	1581581	Capscrew	4	6
35	1597448	Capscrew	2	4
36	1395291	Bracket (RH Hose Guard)	1	1
37	1345199	Hose Guide	2	4
38	1345204	Snap Ring (Spiral Retaining Ring)	2	4
39	1354906	Bracket (RH)	1	1
40	**b**	Hose Assy	..	2
	a 1566564	Cap	1	2

FOOTNOTES:

a Not Illustrated
b Refer to Table
c → 2/2013
d → 5/2012
e 2/2013 →
f 5/2012 →

©2013 HYSTER COMPANY

NOTES

©2013 HYSTER COMPANY

CARRIAGE (FIGURE 15-10)
THREE STAGE FULL FREE-LIFT

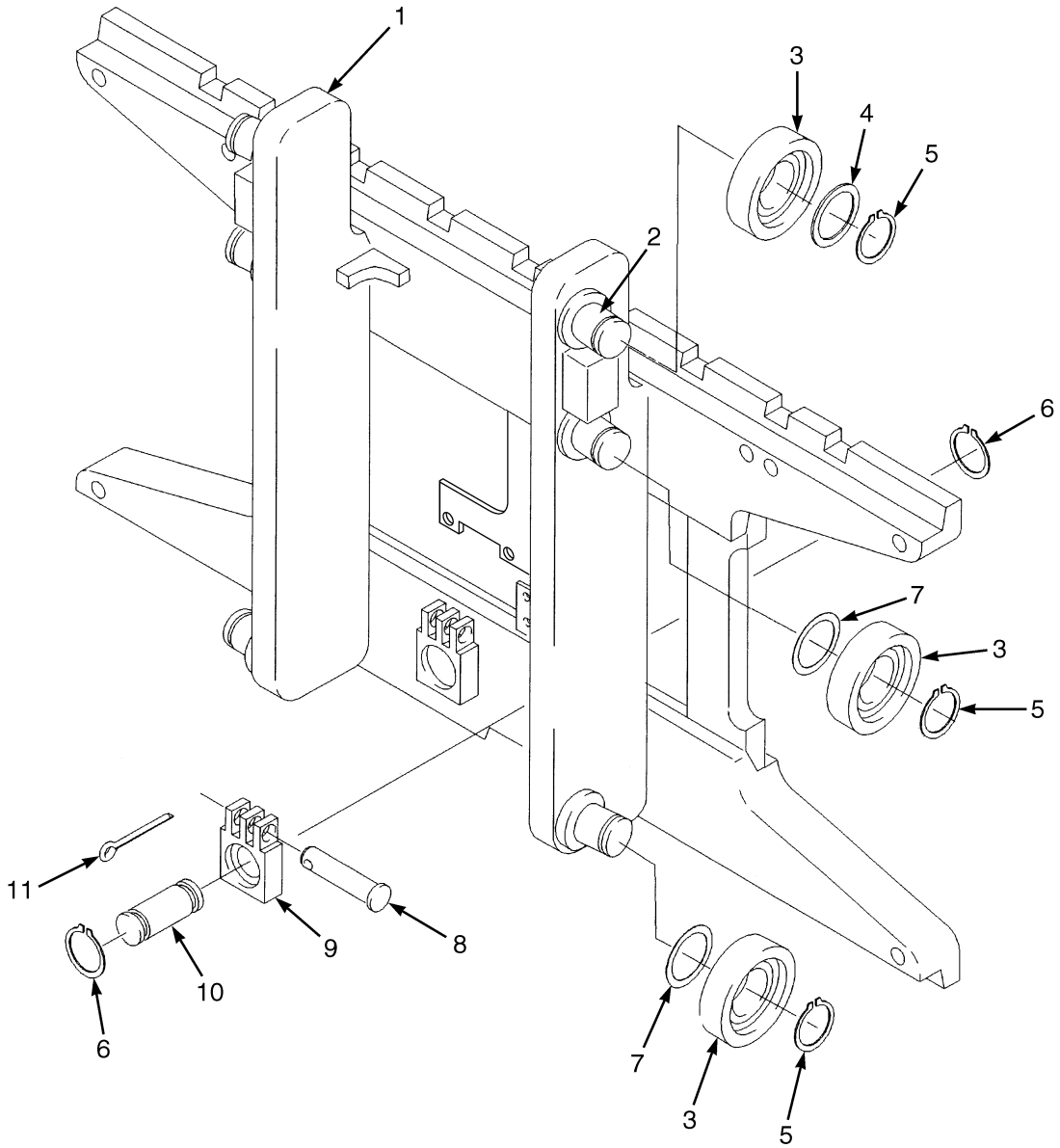

HP290016

©2013 HYSTER COMPANY

CARRIAGE
THREE STAGE FULL FREE-LIFT

KEY:
A: H40-50FT
B: H60-70FT

ITEM	PART NO.	DESCRIPTION	QTY A	QTY B
	1379459	Carriage (42 in)	1	..
	1477680	Carriage (42 in.)	..	1
1	1381560	Carriage Wldmt (42 in)	1	..
1	1477931	Carriage Wldmt (42 in.)	..	1
2	1345216	Stubshaft	6	6
3	1333399	Load Roller ("B") (3.63 in./3.62 in.)	6	6
3	1393142	Load Roller ("B") (3.24 in.) (Optional)	6	6
3	1395174	Load Roller ("A") (3.22 in.) (Optional)	6	6
3	1395176	Load Roller ("A") (3.23 in.) (Optional)	6	6
4	366115	Spacer	2	2
5	58901	Snap Ring	6	6
5	**a** 1374797	Snap Ring (Optional)	6	6
6	131358	Snap Ring	4	4
7	129387	Shim (0.020 in.)	AR	AR
8	1514866	Pin (Chain Anchor)	2	2
9	1369345	Chain Anchor (Dual Hole)	2	..
9	1504010	Chain Anchor (Single Hole) (Optional)	2	..
9	1369344	Chain Anchor (Dual Hole)	..	2
9	1504012	Chain Anchor (Single Hole) (Optional)	..	2
10	317735	Pin	2	2
11	15211	Cotter Pin	2	2

FOOTNOTES:

a Not Illustrated

©2013 HYSTER COMPANY

NOTES

©2013 HYSTER COMPANY

SECTION 16
OPTIONS

DESCRIPTION	PAGE
ACCUMULATOR AND ATTACHING PARTS	16-12
AUXILIARY TUBE EXTENSIONS	
TWO AND THREE STAGE FULL FREE-LIFT (→ S/N D508V27242H) (→ S/N D509V02103H) (→ S/N D563V11350H) (→ S/N D564V02121H)	16-50
TWO AND THREE STAGE FULL FREE-LIFT (S/N D508V27243H →) (S/N D509V02104H →) (S/N D563V11351H →) (S/N D564V02122H →)	16-54
TWO AND THREE STAGE FULL FREE-LIFT - E-HYDRAULICS WITH QUICK DISCONNECT FITTINGS (S/N D508V27243H →) (S/N D509V02104H →) (S/N D563V11351H →) (S/N D564V02122H →)	16-56
TWO STAGE LIMITED FREE-LIFT (→ S/N D507V02972H) (→ S/N D562V02053H)	16-36
TWO STAGE LIMITED FREE-LIFT - WITHOUT QUICK DISCONNECT FITTINGS (S/N D507V02973H →) (S/N D562V02054H →)	16-38
TWO STAGE LIMITED FREE-LIFT - MANUAL HYDRAULICS WITH QUICK DISCONNECT FITTINGS (S/N D507V02973H →) (S/N D562V02054H →)	16-40
TWO STAGE LIMITED FREE-LIFT - E-HYDRAULICS WITH QUICK DISCONNECT FITTINGS (S/N D507V02973H →) (S/N D562V02054H →)	16-42
TWO STAGE LIMITED FREE-LIFT - WITH ISS CARRIAGE AND WITHOUT QUICK DISCONNECT FITTINGS (S/N D507V02973H →) (S/N D562V02054H →)	16-44
TWO STAGE LIMITED FREE-LIFT - WITH ISS CARRIAGE AND MANUAL HYDRAULICS WITH QUICK DISCONNECT FITTINGS (S/N D507V02973H →) (S/N D562V02054H →)	16-46
TWO STAGE LIMITED FREE-LIFT - WITH ISS CARRIAGE AND E-HYDRAULICS WITH QUICK DISCONNECT FITTINGS (S/N D507V02973H →) (S/N D562V02054H →)	16-48
BACK-UP ALARM	16-6
FIRE EXTINGUISHER	16-10
GM LPG REGULATOR DRAIN KIT	16-34
INTEGRAL SIDE-SHIFT	
FORK POSITIONER - TWO STAGE LIMITED FREE-LIFT	16-28
FORK POSITIONER - THREE STAGE FULL FREE-LIFT	16-30
INTEGRAL SIDE-SHIFT ASSEMBLY	
THREE STAGE FULL FREE-LIFT	16-18
TWO STAGE FULL FREE-LIFT	16-22
TWO STAGE LIMITED FREE-LIFT	16-14
INTEGRAL SIDE-SHIFT CYLINDER	16-32
INTEGRAL SIDE-SHIFT HYDRAULIC HOSES	
TWO AND THREE STAGE FULL FREE-LIFT	16-25
TWO STAGE LIMITED FREE-LIFT	16-26
MIRRORS	
WITH CAB	16-8
WITH OVERHEAD GUARD	16-9
STROBE LIGHT	
→ S/N L177B18988E	16-2
LED (S/N L177B18989E →)	16-4

©2013 HYSTER COMPANY

STROBE LIGHT (FIGURE 16-1)
(→ S/N L177B18988E)

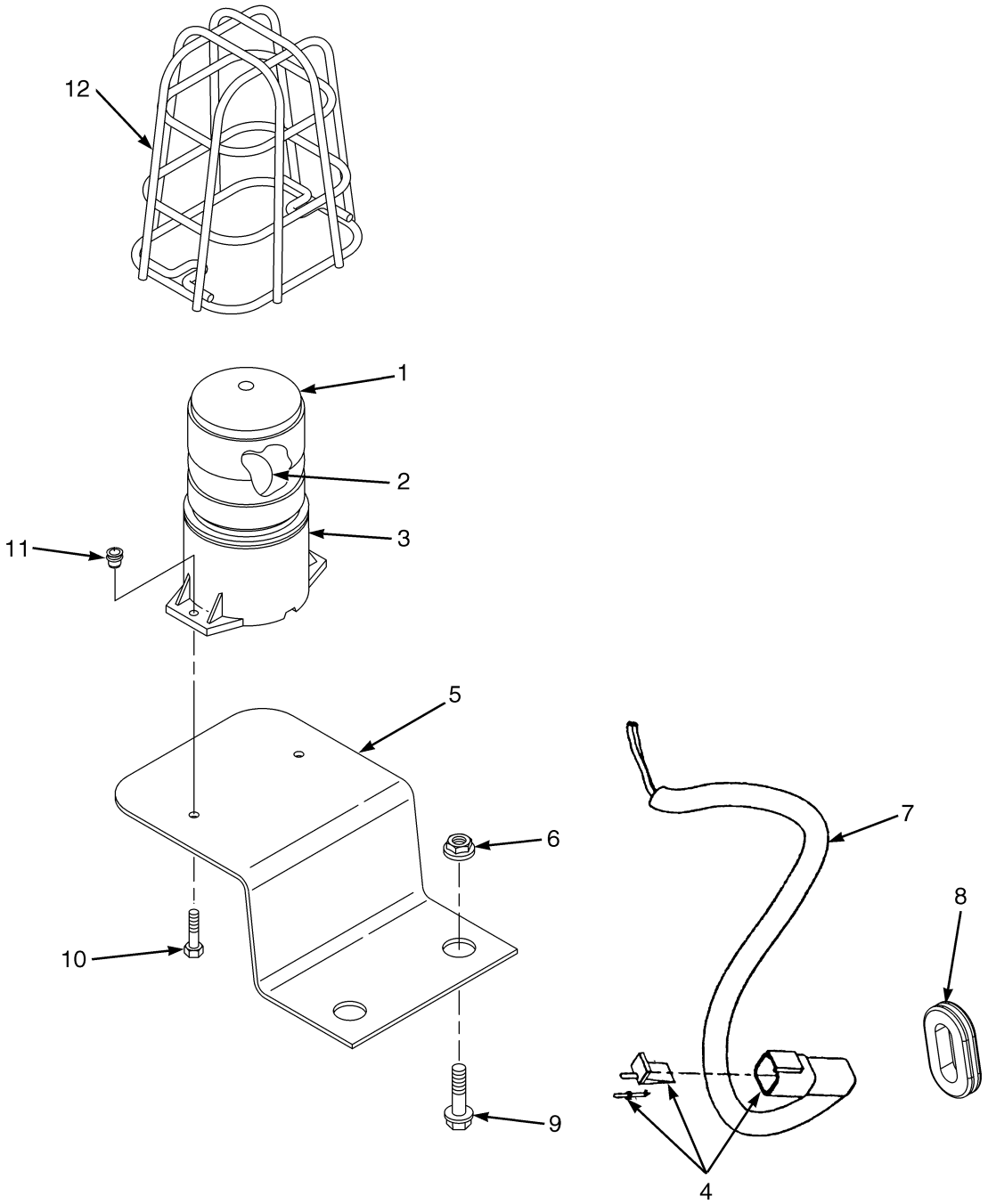

BP000283

©2013 HYSTER COMPANY

STROBE LIGHT
(→ S/N L177B18988E)

ITEM	PART NO.	DESCRIPTION	QTY
1	1581670	Strobe Light	1
1	1382130	Strobe Light	1
2	1673704	Lamp	1
3	1673755	Lens	1
4	1463138	Terminal Pin	2
4	1561755	Connector (Secondary Lock)	1
4	1561559	Connector (2 Pin)	2
5	1565076	Bracket Wldmt	1
6	1586428	Nut	2
7	2073760	Wire Harness (Lights)	1
8	1539584	Grommet	1
9	1586759	Capscrew	2
10	1586495	Capscrew	2
11	1531001	Insert	2
12	1302024	Guard (Strobe Light)	1

©2013 HYSTER COMPANY

STROBE LIGHT (FIGURE 16-2)
LED (S/N L177B18989E →)

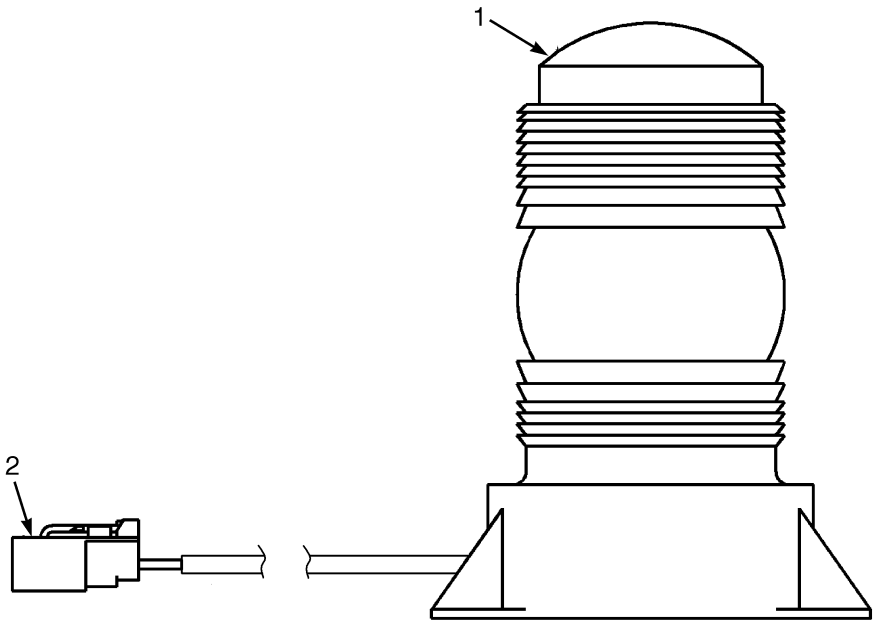

BP000363

ITEM	PART NO.	DESCRIPTION	QTY
	1654013	Strobe Light Assembly	1
1	1652290	Strobe Light (Amber LED)	1
2	1463138	Terminal Pin	2
2	1561559	Connector (2 Pin)	1
2	1561755	Connector (Secondary Lock)	1

©2013 HYSTER COMPANY

NOTES

©2013 HYSTER COMPANY

BACK-UP ALARM (FIGURE 16-3)

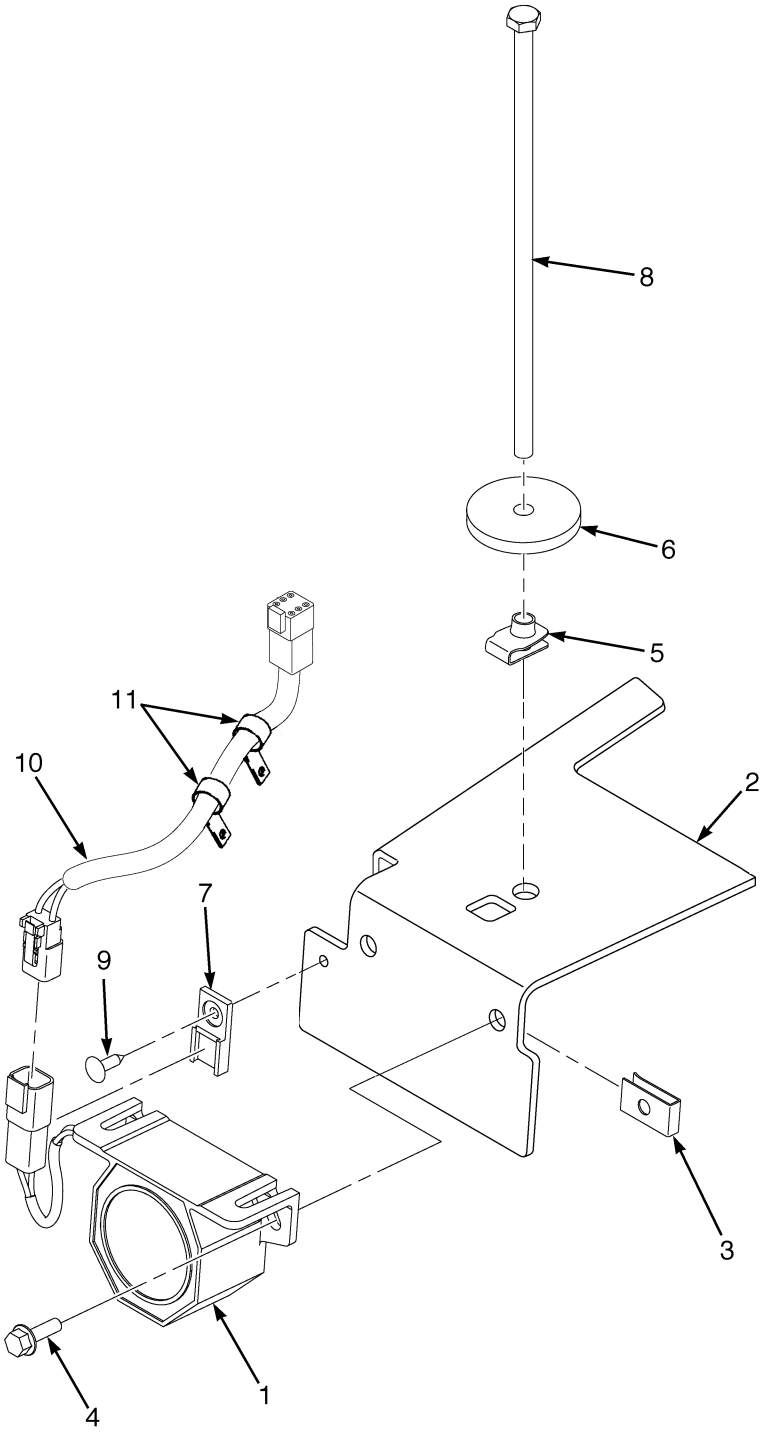

HP000897

©2013 HYSTER COMPANY

BACK-UP ALARM

ITEM	PART NO.	DESCRIPTION	QTY
1	2064929	Back-Up Alarm (82-102 dbA)	1
2	1589195	Bracket	1
3	1350215	Nut	2
4	1527877	Capscrew	2
5	1480237	Nut	1
6	1547756	Washer	1
7	1500912	Clip	1
8	1543982	Capscrew	1
9	1582464	Fastener	1
10	**b** 2078883	Wire Harness (Back-Up Alarm) (To RH Chassis) (2-Pin Connector)	1
10	1402923	Connector	1
10	1330417	Connector (Seconday Lock)	1
10	1490242	Connector (2 Way)	1
10	1490243	Connector (Secondary Lock)	1
10	1330437	Terminal (Pin)	2
10	1330438	Terminal (Socket)	2
10	1330439	Plug	4
10	**a** 2070771	Wire Harness (Back-Up Alarm) (To RH Chassis) (6-Pin Connector)	1
10	1493465	Connector (2 Pin)	1
10	1330414	Connector (Secondary Lock)	1
10	1490242	Connector (2 Way)	1
10	1490243	Connector (Secondary Lock)	1
10	1330437	Terminal (Pin)	1
10	1330438	Terminal (Socket)	2
11	1509888	Clip	2

FOOTNOTES:

a → 6/2006

b 6/2006 →

©2013 HYSTER COMPANY

MIRRORS (FIGURE 16-4)
WITH CAB

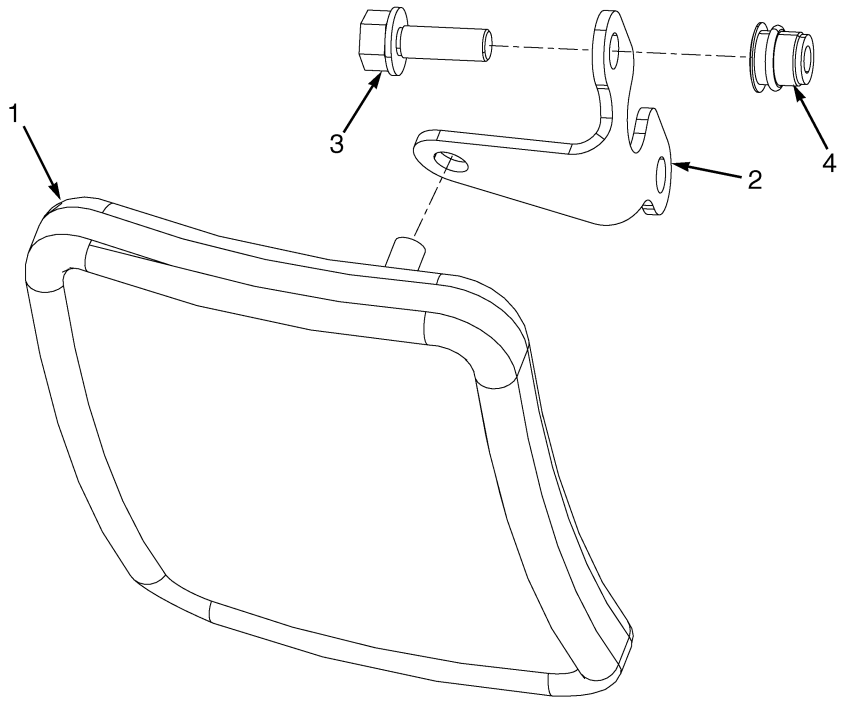

HP000896

ITEM	PART NO.	DESCRIPTION	QTY
1	4009488	Mirror	2
2	1579412	Bracket	2
3	1583611	Capscrew	4
4	1531557	Insert	4

©2013 HYSTER COMPANY

MIRRORS (FIGURE 16-5)
WITH OVERHEAD GUARD

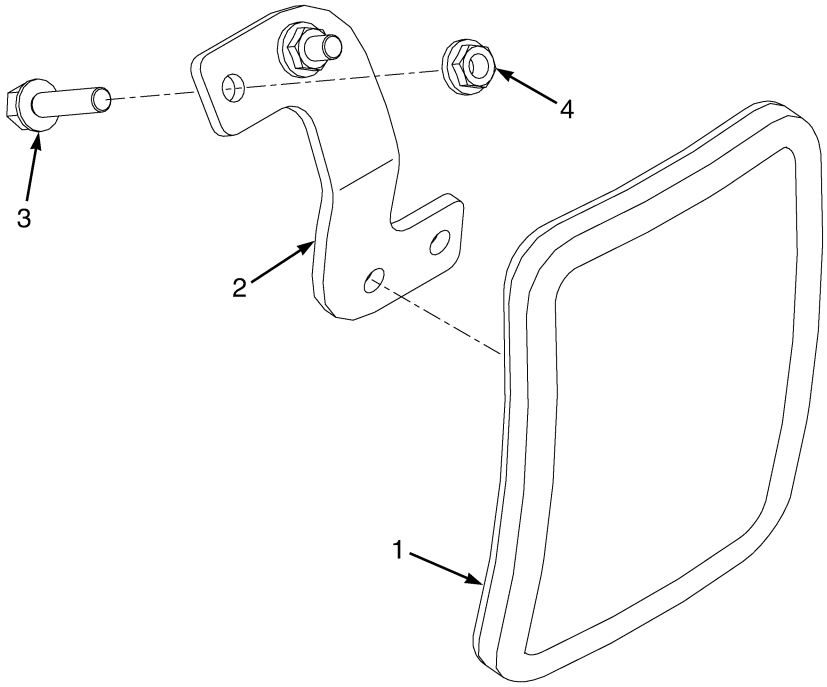

BP000540

ITEM	PART NO.	DESCRIPTION	QTY
1	4009488	Mirror	2
2	1656215	Bracket (RH)	1
2	1656216	Bracket (LH)	1
3	1583611	Capscrew	4
4	1586430	Nut	4

FIRE EXTINGUISHER (FIGURE 16-6)

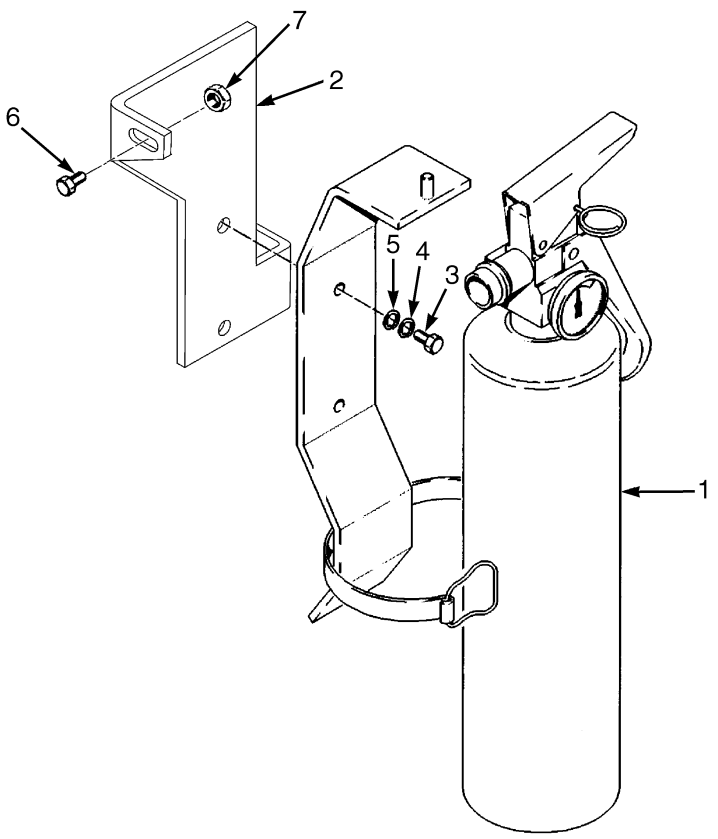

BP000252

ITEM	PART NO.	DESCRIPTION	QTY
1	146540	Fire Extinguisher Assembly	1
1	. . . . .	Fire Extinguisher	1
1	1561749	Bracket	1
2	1582141	Bracket	1
3	296507	Screw	2
4	292679	Washer	2
5	320155	Washer	2
6	1583611	Capscrew	1
7	~~1382472~~		
	1502543	Nut (Flange)	1

©2013 HYSTER COMPANY

NOTES

©2013 HYSTER COMPANY

ACCUMULATOR AND ATTACHING PARTS (FIGURE 16-7)

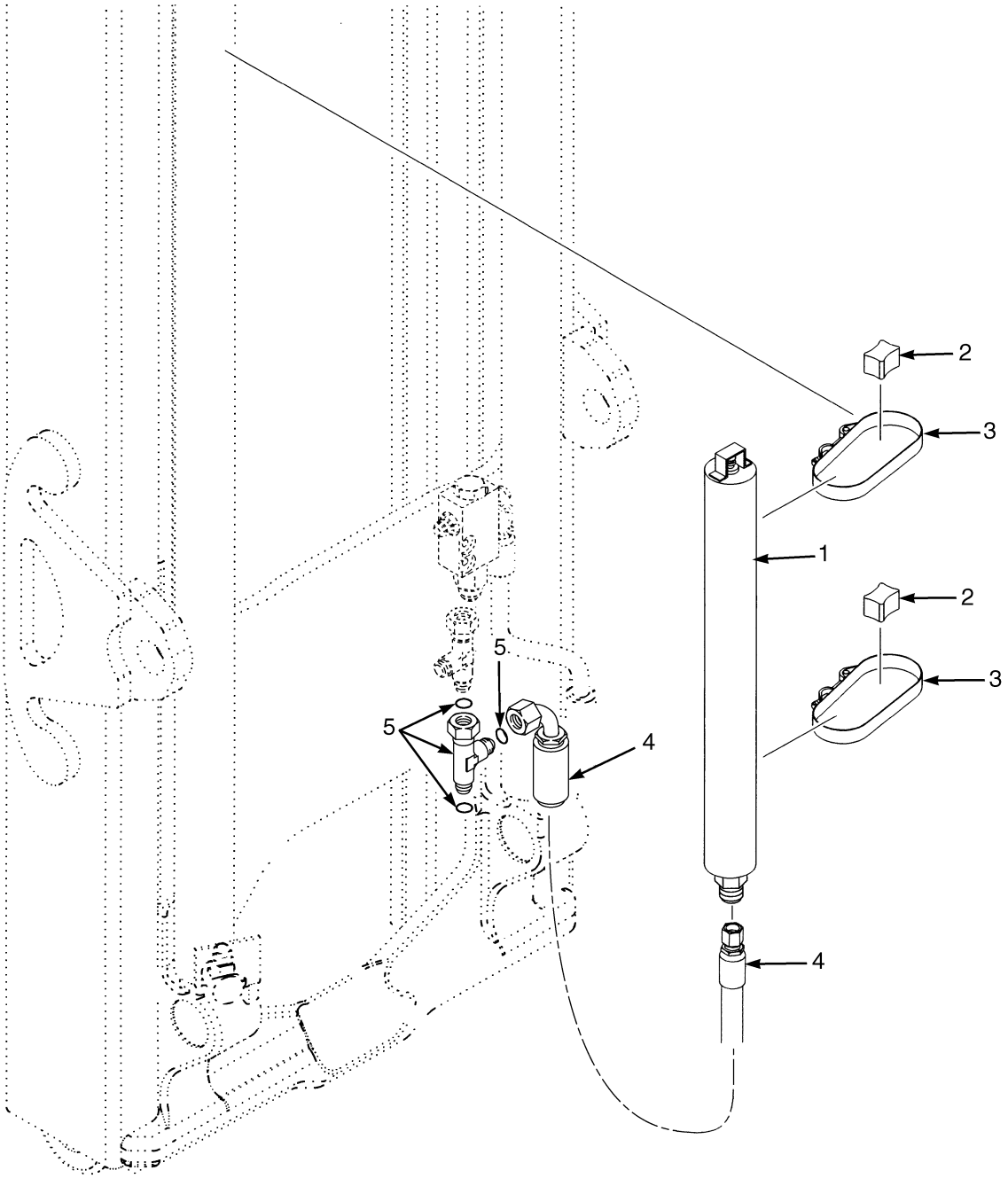

©2013 HYSTER COMPANY

ACCUMULATOR AND ATTACHING PARTS

ITEM	PART NO.	DESCRIPTION	QTY
1	1629185	Accumulator	1
2	1609864	Spacer	2
3	4031653	Strap Clamp	2
4	2073766	Hose Assy	1
5	1487096	Fitting	1
5	252729	O-Ring	3

©2013 HYSTER COMPANY

INTEGRAL SIDE-SHIFT ASSEMBLY (FIGURE 16-8)
TWO STAGE LIMITED FREE-LIFT

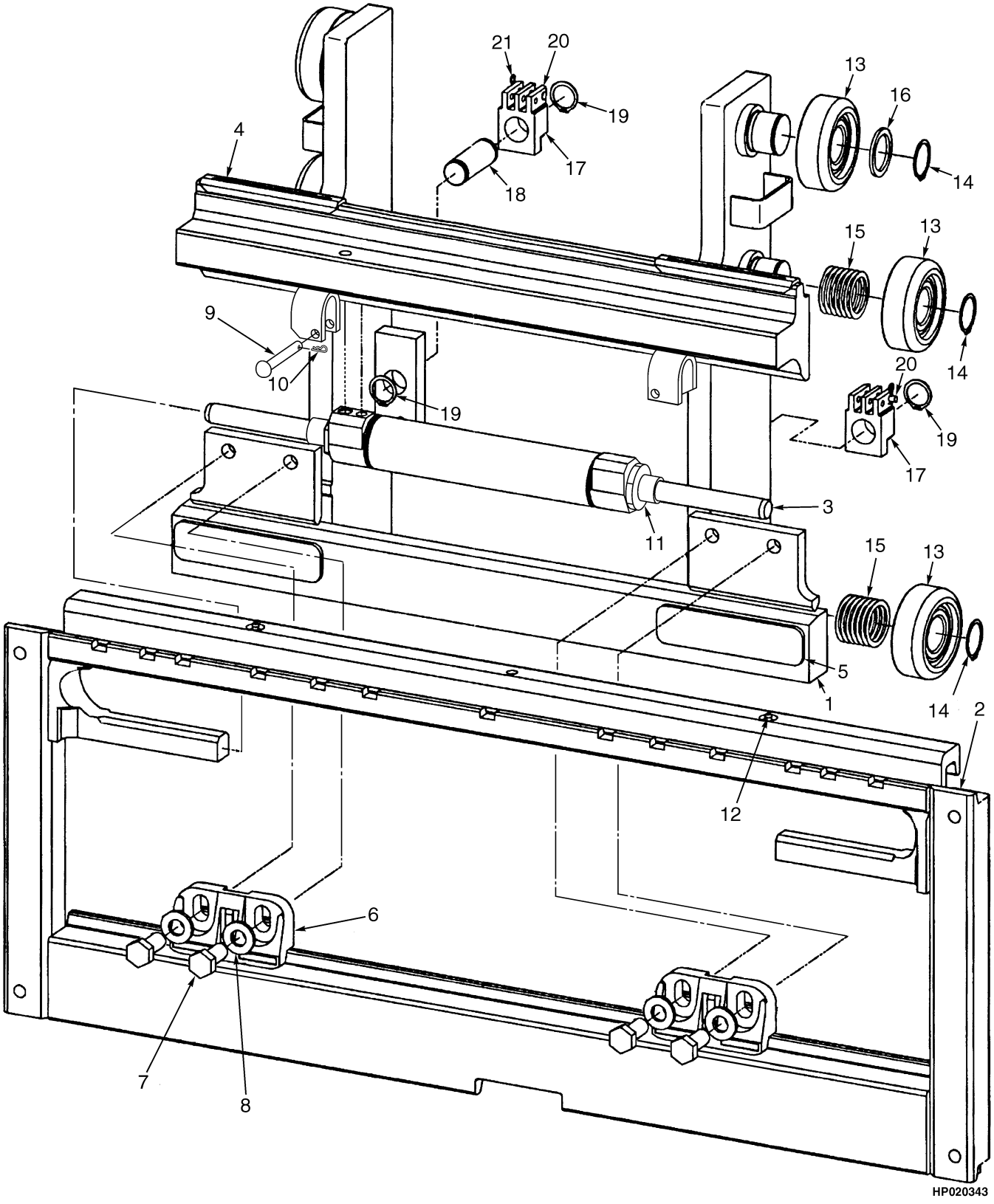

©2013 HYSTER COMPANY

INTEGRAL SIDE-SHIFT ASSEMBLY
TWO STAGE LIMITED FREE-LIFT

KEY:
A: H40-50FT D507
B: H60-70FT D562

ITEM	PART NO.	DESCRIPTION	QTY A	QTY B
	1486182	Side-Shift Carriage (42 in.)	1	..
	1486185	Side-Shift Carriage (48 in.)	1	..
	1477981	Side-Shift Carriage (42 in.)	..	1
	1477982	Side-Shift Carriage (48 in.)	..	1
1	1489002	Carriage Wldmt (Inner) (42 in., 48 in.)	1	..
1	1477849	Frame (Inner)	..	1
2	~~1489011~~			
	4033955	Frame (Outer) (42 in.)	1	..
2	~~1489012~~			
	4033958	Frame Wldmt (for 1219 mm) (48 in.)	1	..
2	~~1488975~~			
	4033960	Frame (42 in.)	..	1
2	~~1488976~~			
	4033957	Frame Wldmt (1219 mm) (48 in.)	..	1
3	2043528	Sideshift Cylinder Assembly (☞Figure 16-15)	1	..
3	2043529	Sideshift Cylinder Assembly (☞Figure 16-15)	..	1
4	2043531	Bearing Strip (Upper)	2	..
4	2043532	Bearing (Upper)	..	2
5	2043533	Bearing Strip (Lower)	2	..
5	2043534	Bearing (Lower)	..	2
6	4611363	Hook	2	2
7	226458	Capscrew	4	4
8	296426	Washer	4	4
9	1401746	Pin	2	2
10	18832	Cotter Pin	2	2
11	1498326	Shim	3	3
12	16041	Grease Fitting	2	2
13	1345219	Load Roller ("B") (111.48/111.22)	6	6
14	12891	Snap Ring	6	6
14	**a** 386422	Snap Ring (Optional)	6	6
15	1345263	Shim (0.020 in.)	28	28
16	366116	Spacer	2	2
17	1369344	Chain Anchor (Dual Hole)	..	2
17	1504012	Chain Anchor (Single Hole) (Optional)	..	2
17	1369345	Chain Anchor (Dual Hole)	2	..
17	1504010	Chain Anchor (Single Hole) (Optional)	2	..
18	1353408	Pin	2	2
18	317735	Pin (48 in.)	2	..
19	131358	Snap Ring	4	4
20	1514866	Pin	2	2
21	15211	Cotter Pin	2	2
	a 4611880	Carriage (42 in.) (Fork Positioner) (☞Figure 16-13)	1	..
	a 4611882	Carriage (42 in.) (Fork Positioner) (☞Figure 16-13)	..	1

©2013 HYSTER COMPANY

FOOTNOTES:

a Not Illustrated

©2013 HYSTER COMPANY

NOTES

©2013 HYSTER COMPANY

INTEGRAL SIDE-SHIFT ASSEMBLY (FIGURE 16-9)
THREE STAGE FULL FREE-LIFT

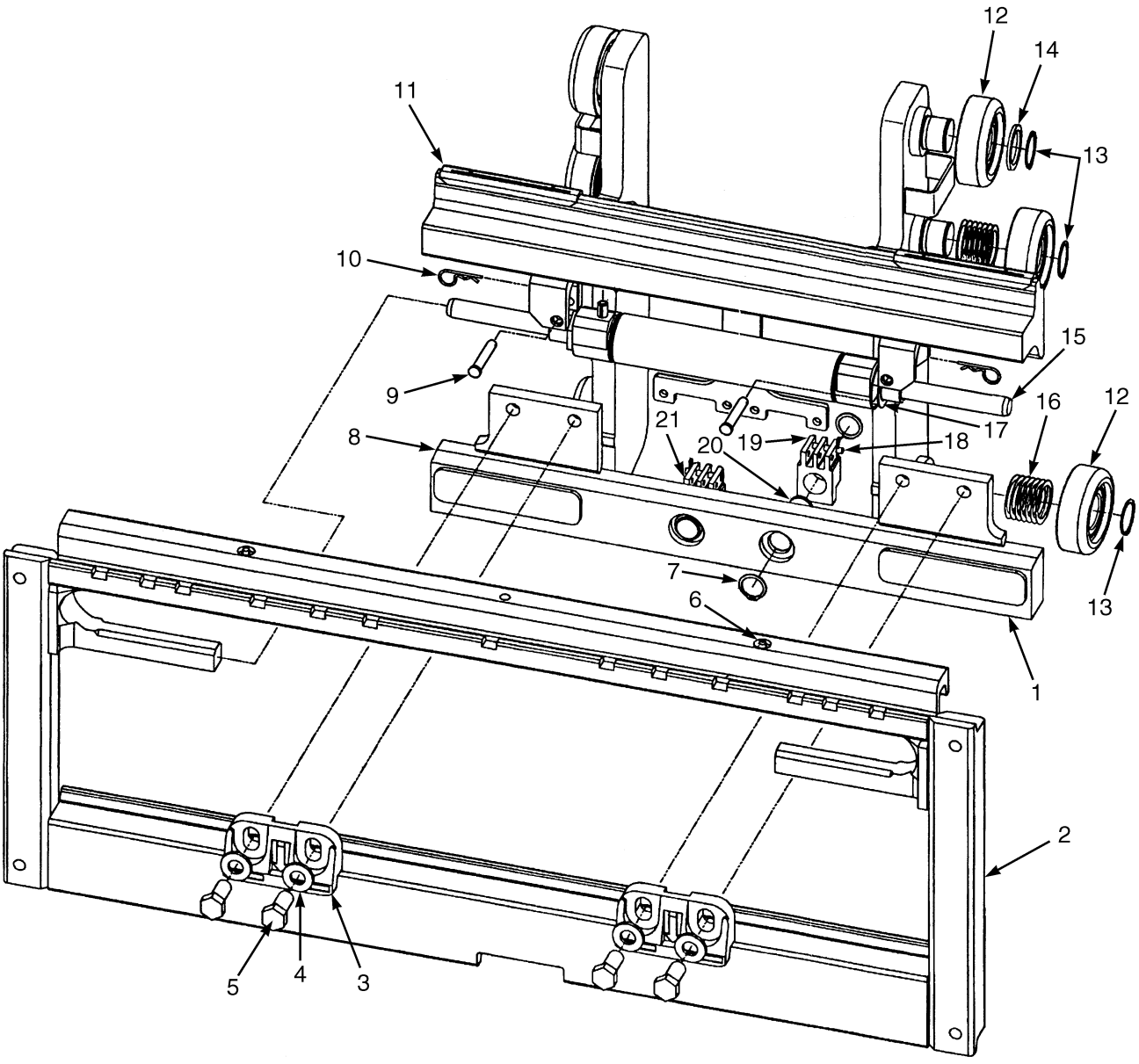

HP020344

©2013 HYSTER COMPANY

INTEGRAL SIDE-SHIFT ASSEMBLY
THREE STAGE FULL FREE-LIFT

KEY:
A: H40-50FT D508
B: H60-70FT D563

ITEM	PART NO.	DESCRIPTION	QTY A	QTY B
	1486184	Side-Shift Carriage (42 in.)	1	..
	1486187	Side-Shift Carriage (48 in.)	1	..
	1477945	Side-Shift Carriage (42 in.)	..	1
	1477947	Side-Shift Carriage (48 in.)	..	1
	1477949	Side-Shift Carriage (54 in.)	..	1
1	1489004	Carriage Wldmt (Inner) (42 in., 48 in.)	1	..
1	1477939	Carriage Wldmt (Inner) (42 in., 48 in.)	..	1
1	1477941	Carriage Wldmt (Inner) (54 in.)	..	1
2	~~1489011~~			
	4033955	Frame (Outer) (42 in.)	1	..
2	~~1489012~~			
	4033958	Frame Wldmt (for 1219 mm) (48 in.)	1	..
2	~~1488975~~			
	4033960	Frame (42 in.)	..	1
2	~~1488976~~			
	4033957	Frame Wldmt (1219 mm) (48 in.)	..	1
2	~~1517606~~			
	4033956	Frame Wldmt (Outer)	..	1
3	4611363	Hook	2	2
4	1581854	Washer	4	4
5	1581833	Capscrew	4	4
6	16041	Grease Fitting	2	2
7	131358	Snap Ring	4	4
8	2043533	Bearing Strip (Lower)	2	..
8	2043534	Bearing (Lower)	..	2
9	1401746	Pin	2	2
10	18832	Cotter Pin	2	2
11	2043531	Bearing Strip (Upper)	2	..
11	2043532	Bearing (Upper)	..	2
12	1333399	Load Roller ("B") (3.63 in./3.62 in.)	6	6
13	58901	Snap Ring	6	6
14	366115	Spacer	2	2
15	2043528	Sideshift Cylinder Assembly (☞Figure 16-15)	1	..
15	2043529	Sideshift Cylinder Assembly (☞Figure 16-15)	..	1
16	129387	Shim (0.020 in.)	28	28
17	1498326	Shim	3	3
18	1514866	Pin	2	2
19	1369345	Chain Anchor (Dual Hole)	2	..
19	1504010	Chain Anchor (Single Hole) (Optional)	2	..
19	1369344	Chain Anchor (Dual Hole)	..	2
19	1504012	Chain Anchor (Single Hole) (Optional)	..	2
20	317735	Pin	2	2
21	15211	Cotter Pin	2	2
	a 1374797	Snap Ring	6	6
	a 1345216	Stubshaft	6	6

©2013 HYSTER COMPANY

INTEGRAL SIDE-SHIFT ASSEMBLY
THREE STAGE FULL FREE-LIFT

KEY:
A: H40-50FT D508
B: H60-70FT D563

ITEM	PART NO.	DESCRIPTION	QTY A	QTY B
	a 4611880	Carriage (42 in.) (Fork Positioner) (☞Figure 16-14).....	1	..
	a 4611882	Carriage (42 in.) (Fork Positioner) (☞Figure 16-14).....	..	1

FOOTNOTES:

a Not Illustrated

©2013 HYSTER COMPANY

NOTES

©2013 HYSTER COMPANY

INTEGRAL SIDE-SHIFT ASSEMBLY (FIGURE 16-10)
TWO STAGE FULL FREE-LIFT

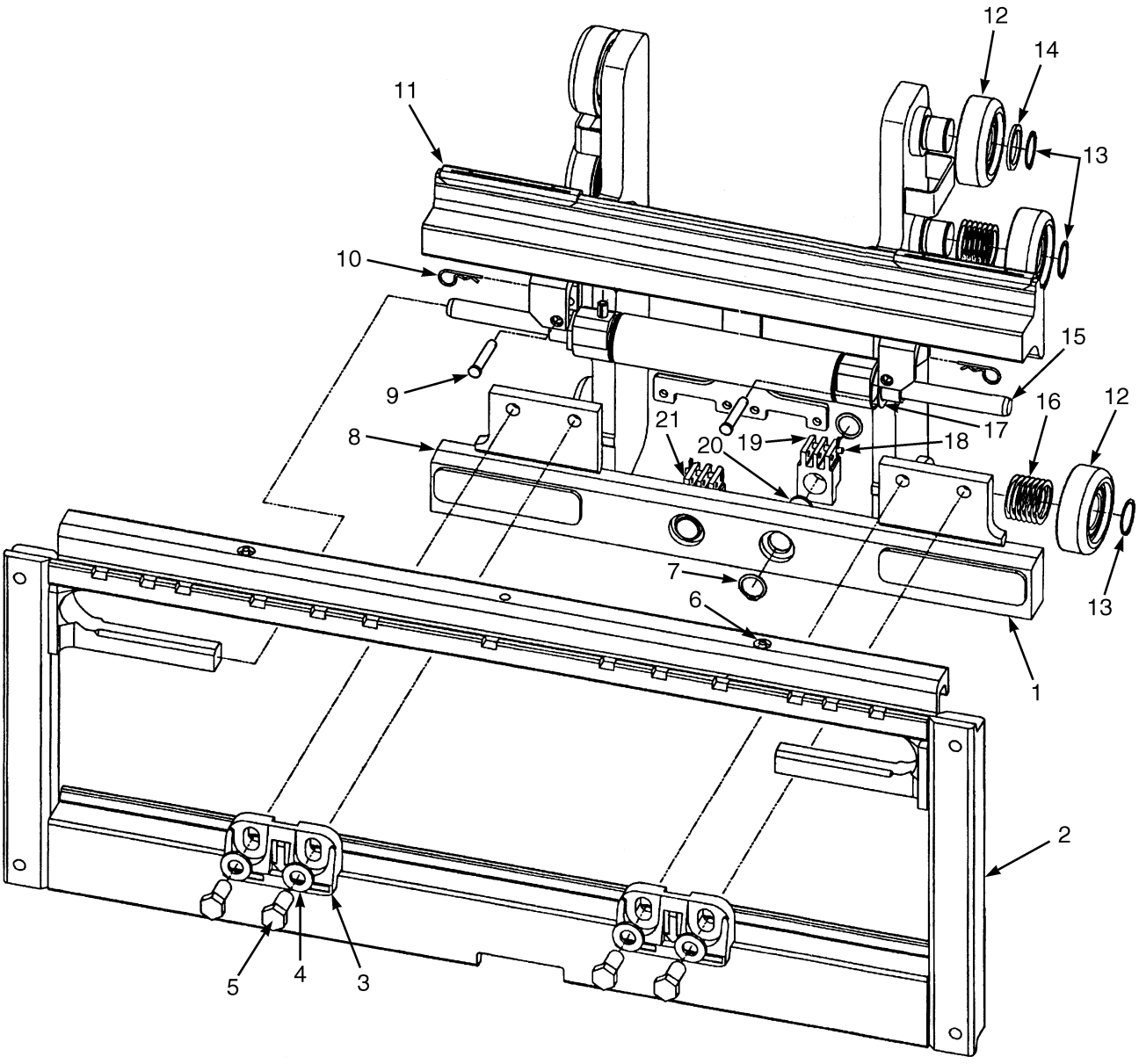

HP020344

©2013 HYSTER COMPANY

INTEGRAL SIDE-SHIFT ASSEMBLY
TWO STAGE FULL FREE-LIFT

KEY:
A: H40-50FT D509
B: H60-70FT D564

ITEM	PART NO.	DESCRIPTION	QTY A	QTY B
	1486183	Side-Shift Carriage (42 in.)	1	..
	1486186	Side-Shift Carriage (48 in.)	1	..
	1477944	Side-Shift Carriage (42 in.)	..	1
	1477946	Side-Shift Carriage (48 in.)	..	1
1	1489003	Carriage Wldmt (Inner) (42 in., 48 in.)	1	..
1	1477938	Frame (Inner) (42 in., 48 in.)	..	1
2	~~1489011~~			
	4033955	Frame (Outer) (42 in.)	1	..
2	~~1489012~~			
	4033958	Frame Wldmt (for 1219 mm) (48 in.)	1	..
2	~~1488975~~			
	4033960	Frame (42 in.)	..	1
2	~~1488976~~			
	4033957	Frame Wldmt (1219 mm) (48 in.)	..	1
3	4611363	Hook	2	2
4	296426	Washer	4	4
5	226458	Capscrew	4	2
6	16041	Grease Fitting	2	2
7	131358	Snap Ring	4	4
8	2043533	Bearing Strip (Lower)	2	..
8	2043534	Bearing (Lower)	..	2
9	1401746	Pin	2	2
10	18832	Cotter Pin	2	2
11	2043531	Bearing Strip (Upper)	2	..
11	2043532	Bearing (Upper)	..	2
12	1345219	Load Roller ("B") (111.48/111.22)	6	6
13	12891	Snap Ring	6	6
13	**a** 386422	Snap Ring (Optional)	6	6
14	366116	Spacer	2	2
15	2043528	Sideshift Cylinder Assembly (☞Figure 16-15)	1	..
15	2043529	Sideshift Cylinder Assembly (☞Figure 16-15)	..	1
16	1345263	Shim (0.020 in.)	28	28
17	1498326	Shim	3	3
18	1514866	Pin	2	2
19	1369345	Chain Anchor (Dual Hole)	2	..
19	1504010	Chain Anchor (Single Hole) (Optional)	2	..
19	1369344	Chain Anchor (Dual Hole)	..	2
19	1504012	Chain Anchor (Single Hole) (Optional)	..	2
20	317735	Pin	2	2
21	15211	Cotter Pin	2	2
	a 4611880	Carriage (42 in.) (Fork Positioner)	1	..
	a 4611882	Carriage (42 in.) (Fork Positioner)	..	1

©2013 HYSTER COMPANY

FOOTNOTES:

a Not Illustrated

©2013 HYSTER COMPANY

INTEGRAL SIDE-SHIFT HYDRAULIC HOSES (FIGURE 16-11)

TWO AND THREE STAGE FULL FREE-LIFT

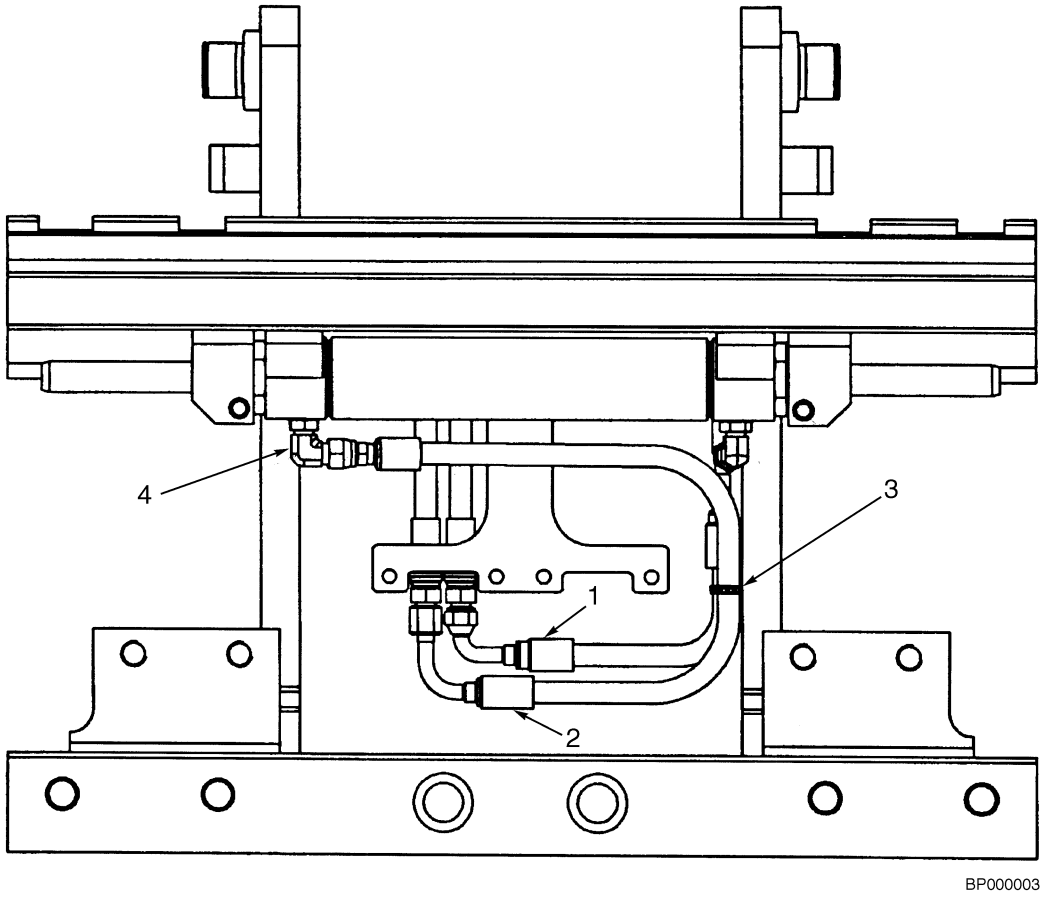

KEY:
A: H40-50FT
B: H60-70FT

ITEM	PART NO.	DESCRIPTION	QTY A	QTY B
1	2065674	Hose Assy	1	..
1	4612128	Hose Assy (Alternate Part)	1	..
1	2065671	Hose Assy	..	1
1	4612129	Hose Assy (Alternate Part)	..	1
2	2065670	Hose Assy	1	..
2	4612127	Hose Assy (Alternate Part)	1	..
2	2065675	Hose Assy	..	1
2	4612130	Hose Assy (Alternate Part)	..	1
3	114312	Strap Clamp	1	1
4	1487063	Fitting (ORFS 6)	2	2
4	1487059	Fitting (Alternate Part ORFS 4x6)	2	2

©2013 HYSTER COMPANY

INTEGRAL SIDE-SHIFT HYDRAULIC HOSES (FIGURE 16-12)

TWO STAGE LIMITED FREE-LIFT

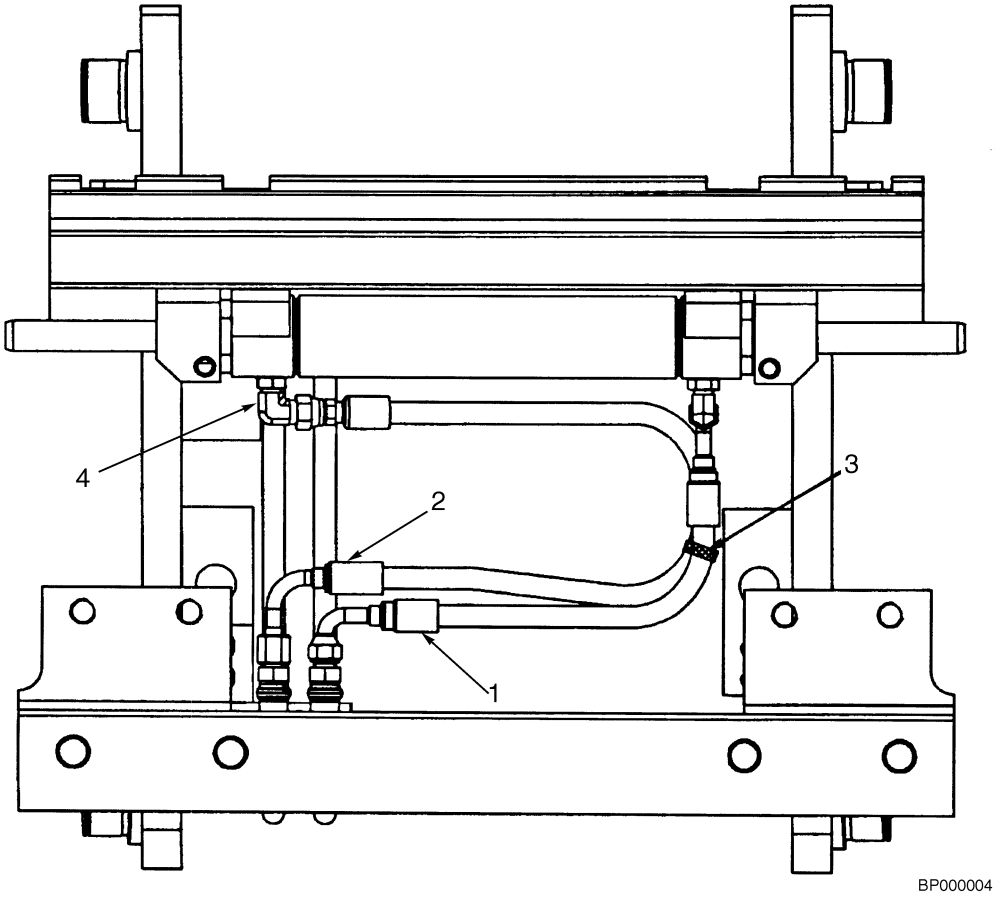

KEY:
A: H40-50FT
B: H60-70FT

ITEM	PART NO.	DESCRIPTION	QTY A	QTY B
1	~~4612515~~			
	4617344	Hose Assy	1	..
1	~~4610728~~			
	4616426	Hose Assy	..	1
2	4612516	Hose Assy	1	..
2	4610727	Hose Assy	..	1
3	114312	Strap Clamp	1	1
4	1487059	Fitting	2	2

©2013 HYSTER COMPANY

NOTES

©2013 HYSTER COMPANY

INTEGRAL SIDE-SHIFT (FIGURE 16-13)
FORK POSITIONER — TWO STAGE LIMITED FREE-LIFT

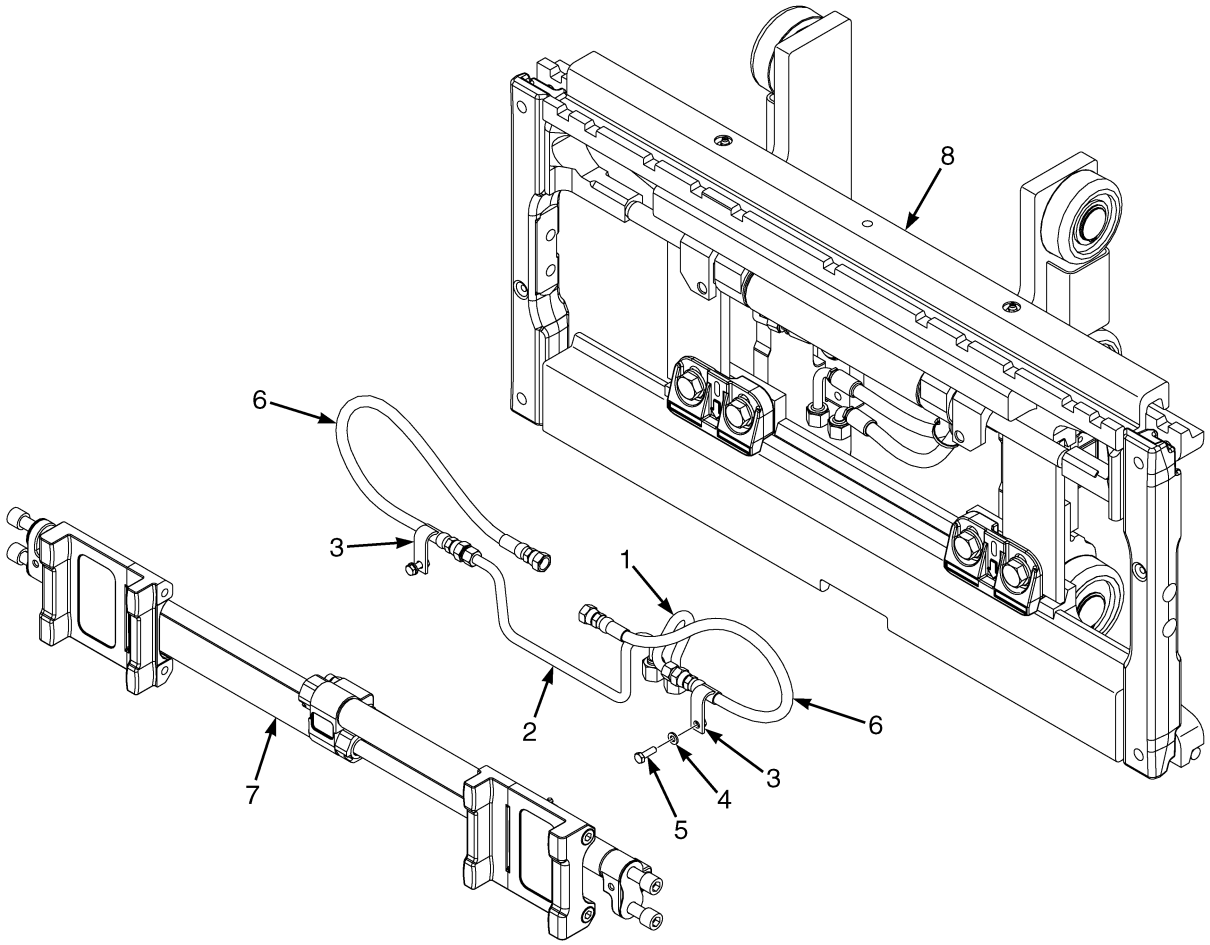

BP020033

©2013 HYSTER COMPANY

INTEGRAL SIDE-SHIFT
FORK POSITIONER – TWO STAGE LIMITED FREE-LIFT

ITEM	PART NO.	DESCRIPTION	QTY
1	**a** 4612432	Tube Assy	1
1	**b** 4612434	Tube Assy	1
2	**a** 4612431	Tube Assy	1
2	**b** 4612433	Tube Assy	1
3	4027695	Bracket Wldmt	2
3	4047980	Bracket Wldmt (Optional)	2
4	1673754	Washer	2
5	1670032	Capscrew	2
6	~~4618718~~		
	4611913	Hose Assy	2
7	**a** 4611880	Carriage (42 in.) (Fork Positioner)	1
7	**b** 4611882	Carriage (42 in.) (Fork Positioner)	1
7	4034634	Kit-Service Cylinder	1
7	4034635	Kit-Bearing	1
8	. . . . .	Carriage Assembly (☞Figure 16-8)	1

FOOTNOTES:

a Class II

b Class III

INTEGRAL SIDE-SHIFT (FIGURE 16-14)
FORK POSITIONER — THREE STAGE FULL FREE-LIFT

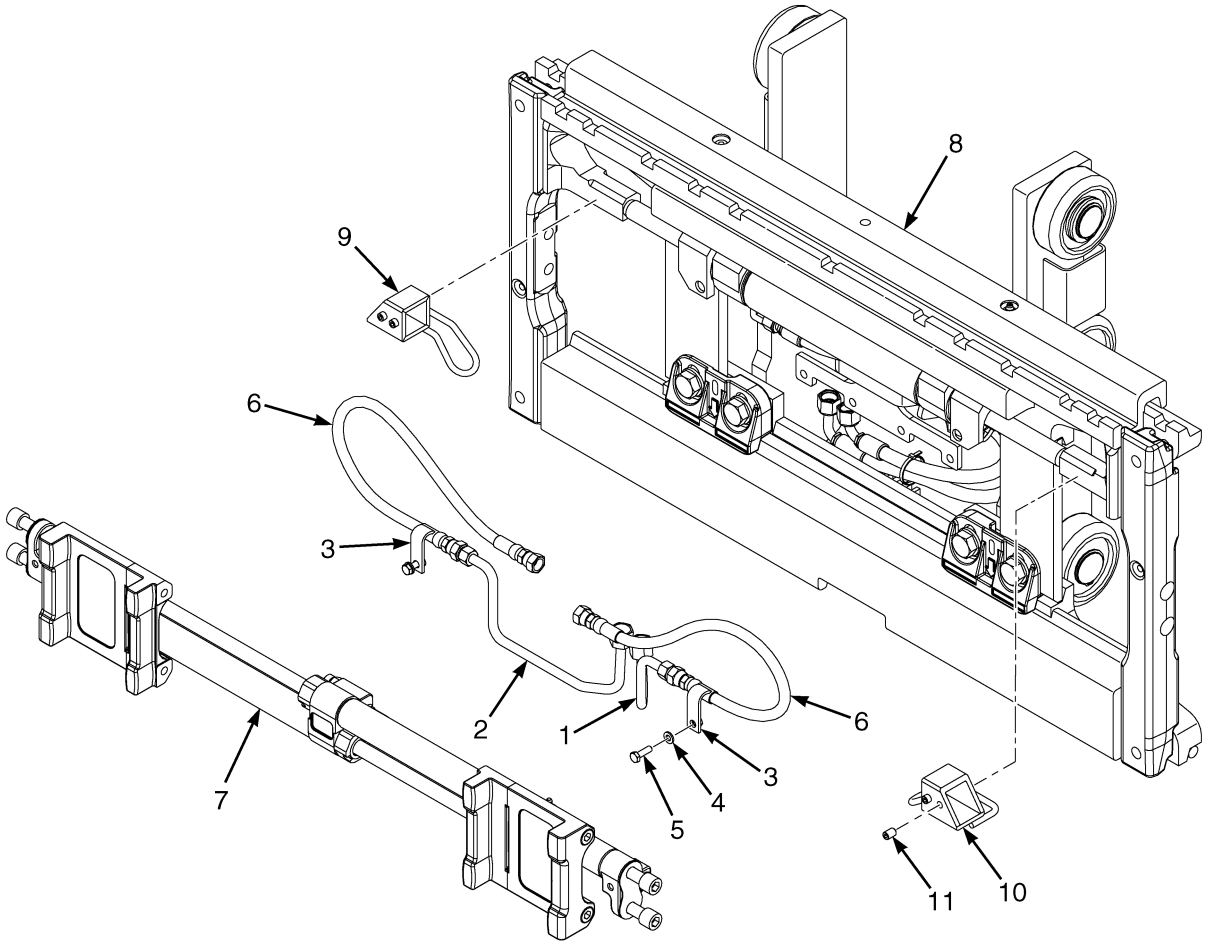

BP020032

©2013 HYSTER COMPANY

INTEGRAL SIDE-SHIFT
FORK POSITIONER – THREE STAGE FULL FREE-LIFT

ITEM	PART NO.	DESCRIPTION	QTY
1	~~4616647~~		
	4619595	Tube Assy	1
2	~~4616648~~		
	4619594	Tube Assy	1
3	4050817	Bracket Wldmt	2
4	1673754	Washer	2
5	1670032	Capscrew	2
6	**a** ~~4618718~~		
	4611913	Hose Assy	2
6	**b** 4622266	Hose Assy	2
7	**a** 4611880	Carriage (42 in.) (Fork Positioner)	1
7	**b** 4611882	Carriage (42 in.) (Fork Positioner)	1
7	4034634	Kit-Service Cylinder	1
7	4034635	Kit-Bearing	1
8	. . . . .	Carriage Assembly (☞Figure 16-9)	1
9	4061319	Guide , Hose (RH)	1
10	4061318	Guide , Hose (LH)	1
11	4055634	Setscrew	4

FOOTNOTES:

a Class II

b Class III

©2013 HYSTER COMPANY

INTEGRAL SIDE-SHIFT CYLINDER (FIGURE 16-15)

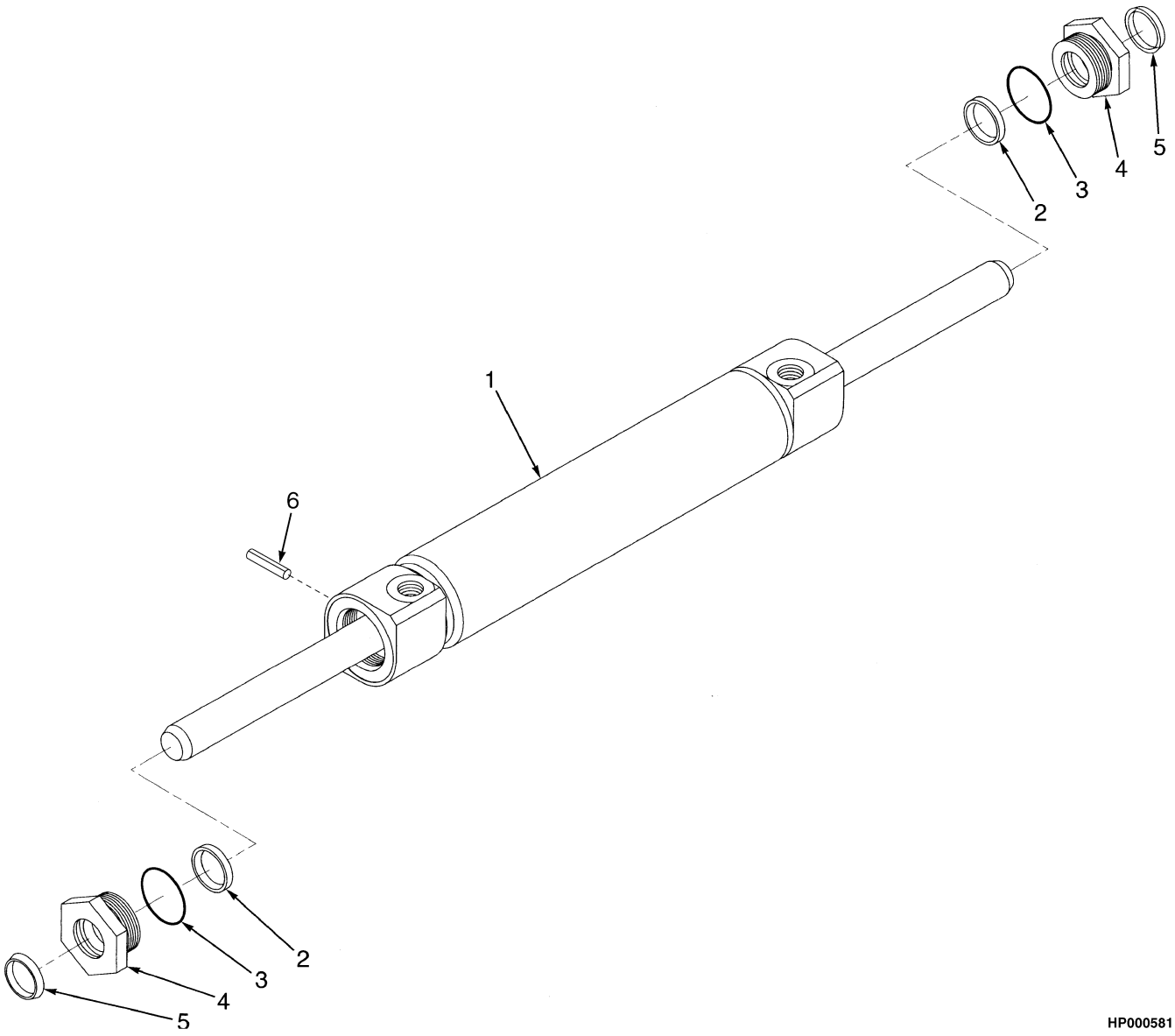

©2013 HYSTER COMPANY

INTEGRAL SIDE-SHIFT CYLINDER

ITEM	PART NO.	DESCRIPTION	QTY
	2043528	Sideshift Cylinder Assembly (H40-50FT)	1
	2043529	Sideshift Cylinder Assembly (H60-70FT)	1
1	1489016	Sideshift Cylinder	1
2	1489037	Rod Seal	2
3	1489035	O-Ring	2
4	1498325	Retainer	2
5	1489039	Rod Wiper	2
6	302487	Roll Pin	1
	1503096	Kit-Seal	1

©2013 HYSTER COMPANY

GM LPG REGULATOR DRAIN KIT (FIGURE 16-16)

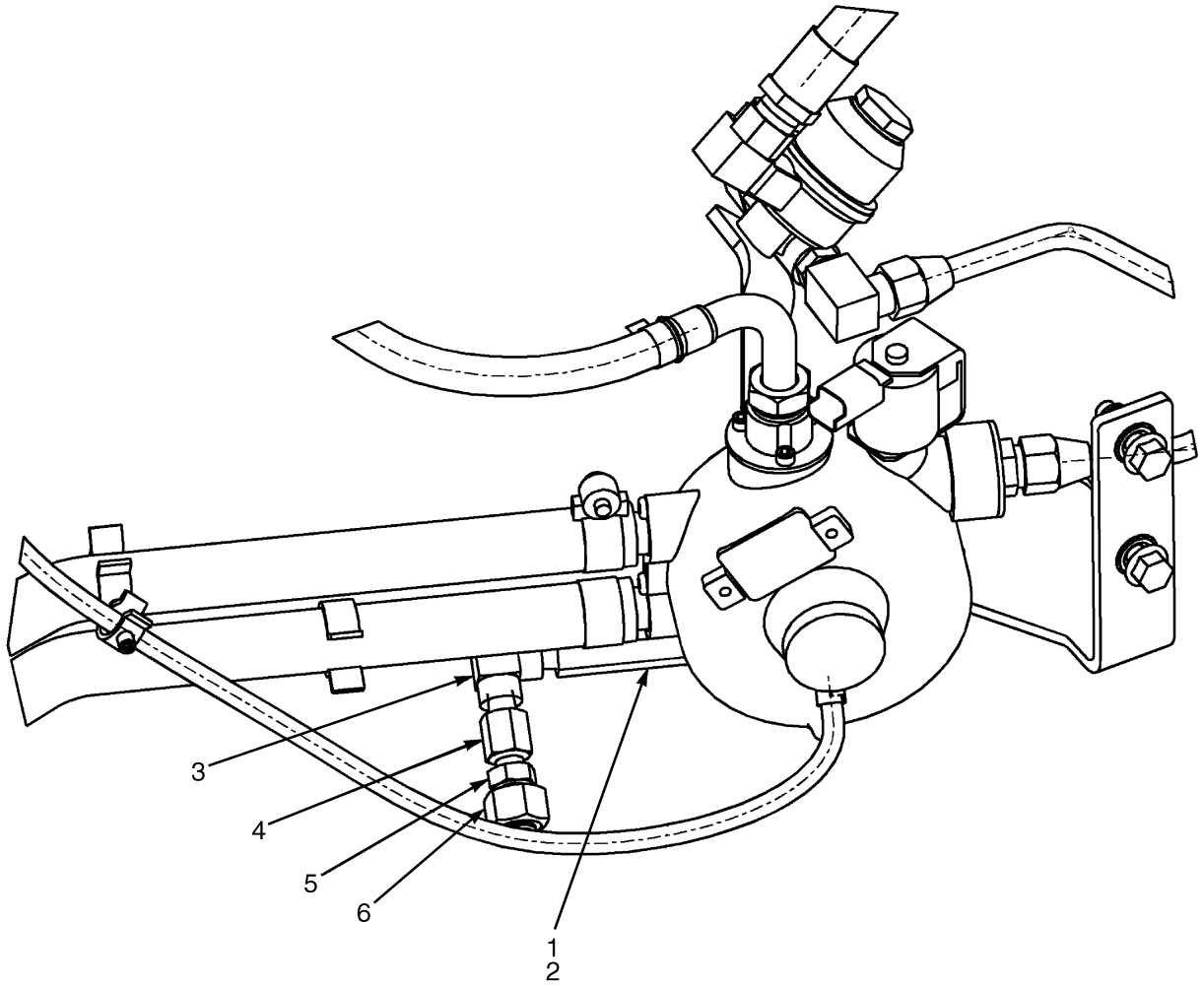

BP000396

©2013 HYSTER COMPANY

GM LPG REGULATOR DRAIN KIT

ITEM	PART NO.	DESCRIPTION	QTY
	1664940	Kit-Service (GM LPG regulator Drain GM2.4L and 4.32)	1
1	1652140	Fitting	1
2	16481	O-Ring	1
3	69392	Fitting	1
4	28584	Fitting	1
5	1488404	Fitting	1
6	1529014	Fitting	1
7	**a** 273338	Thread Sealant	1

FOOTNOTES:

a Not Shown

©2013 HYSTER COMPANY

AUXILIARY TUBE EXTENSIONS (FIGURE 16-17)

TWO STAGE LIMITED FREE-LIFT (→ S/N D507V02972H) (→ S/N D562V02053H)

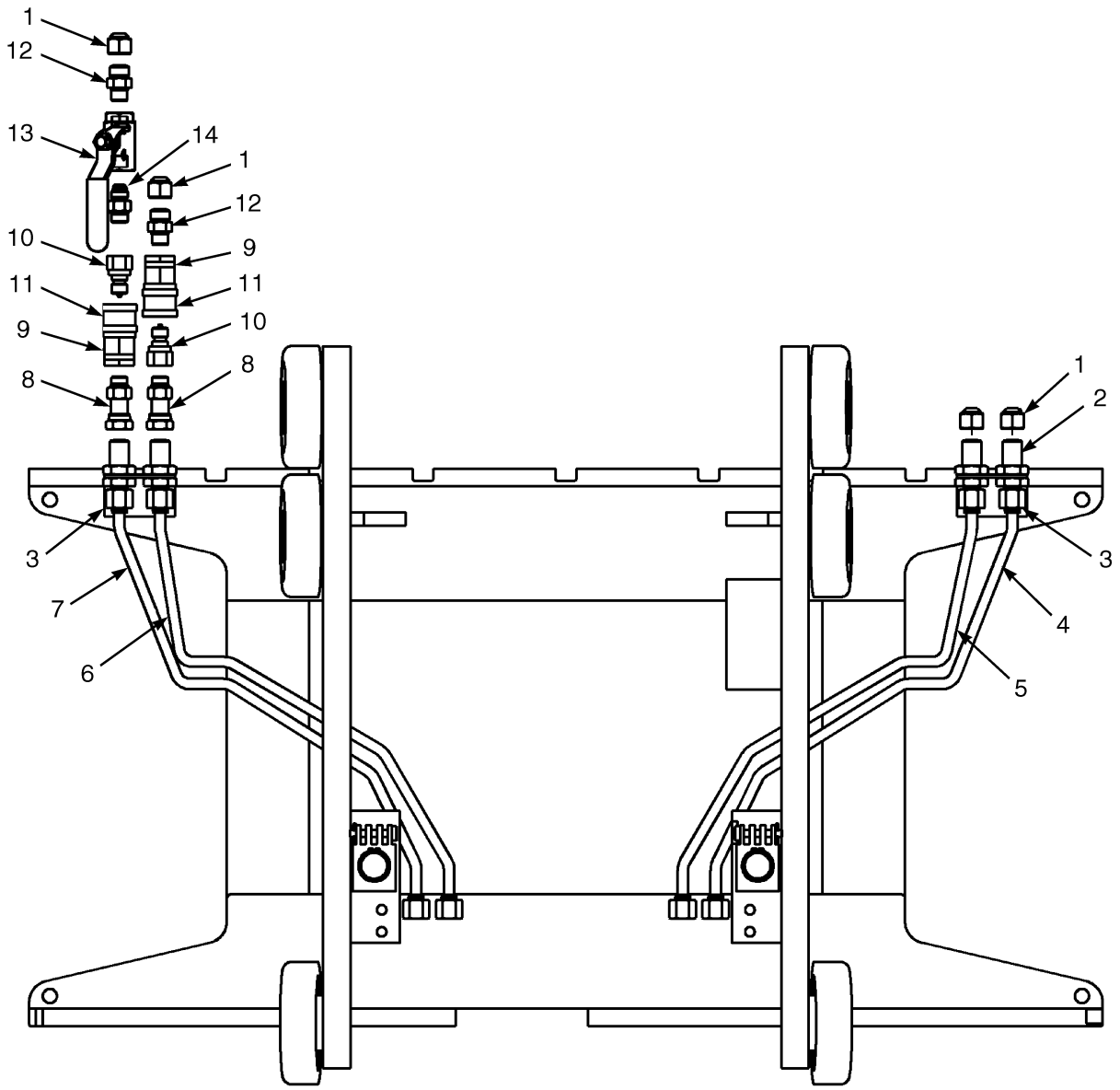

BP000291

©2013 HYSTER COMPANY

AUXILIARY TUBE EXTENSIONS

TWO STAGE LIMITED FREE-LIFT (→ S/N D507V02972H) (→ S/N D562V02053H)

KEY:
A: D507, Three Function
B: D507, Four Function
C: D562, Three Function
D: D562, Four Function

ITEM	PART NO.	DESCRIPTION	QTY A	B	C	D
1	1529015	Cap	2	2	2	2
2	1528573	Fitting	2	2	2	2
2	265787	O-Ring	4	4	4	4
3	**a** 1549717	Bracket	1	..	..	..
3	**a** 1549718	Bracket	..	1	..	..
3	**a** 1549723	Bracket	..	..	1	..
3	**a** 1549724	Bracket	..	..	..	1
3	**cde** 1550070	Bracket	1	1	1	1
3	**cfg** 1696635	Bracket (Bolted on)	1	1	1	1
3	**cfg** 1527879	Capscrew (Bolted On)	2	2	2	2
4	2079327	Tube Assy	1	..	..	..
4	2079331	Tube Assy	..	..	1	..
5	2079328	Tube Assy	1	..	..	..
5	2079332	Tube Assy	..	..	1	..
6	2079329	Tube Assy	..	1	..	..
6	2079333	Tube Assy	..	..	..	1
7	2079330	Tube Assy	..	1	..	..
7	2079334	Tube Assy	..	..	..	1
8	**b** 1549715	Fitting	2	2	2	2
8	**b** 265787	O-Ring	2	2	2	2
8	**b** 1527813	O-Ring	2	2	2	2
9	**b** 1483663	Quick Disconnect Fitting	2	2	2	2
10	**b** 1483664	Fitting	2	2	2	2
11	**b** 1483661	Dust Cap	2	2	2	2
12	**b** 1486740	Fitting	2	2	2	2
12	**b** 1527813	O-Ring	2	2	2	2
12	**b** 265787	O-Ring	2	2	2	2
13	2081418	Drain Valve	1	1	1	1
14	16540	Connector	1	1	1	1
14	16483	O-Ring	1	1	1	1

FOOTNOTES:

a Used With Integral Side-Shift
b Used With Quick Disconnect Only
c Used With Standard Carriage
d → S/N D507V02542G
e → S/N D562V01841G
f S/N D507V02343G →
g S/N D562V01842G →

©2013 HYSTER COMPANY

AUXILIARY TUBE EXTENSIONS (FIGURE 16-18)

TWO STAGE LIMITED FREE-LIFT — WITHOUT QUICK DISCONNECT FITTINGS (S/N D507V02973H →) (S/N D562V02054H →)

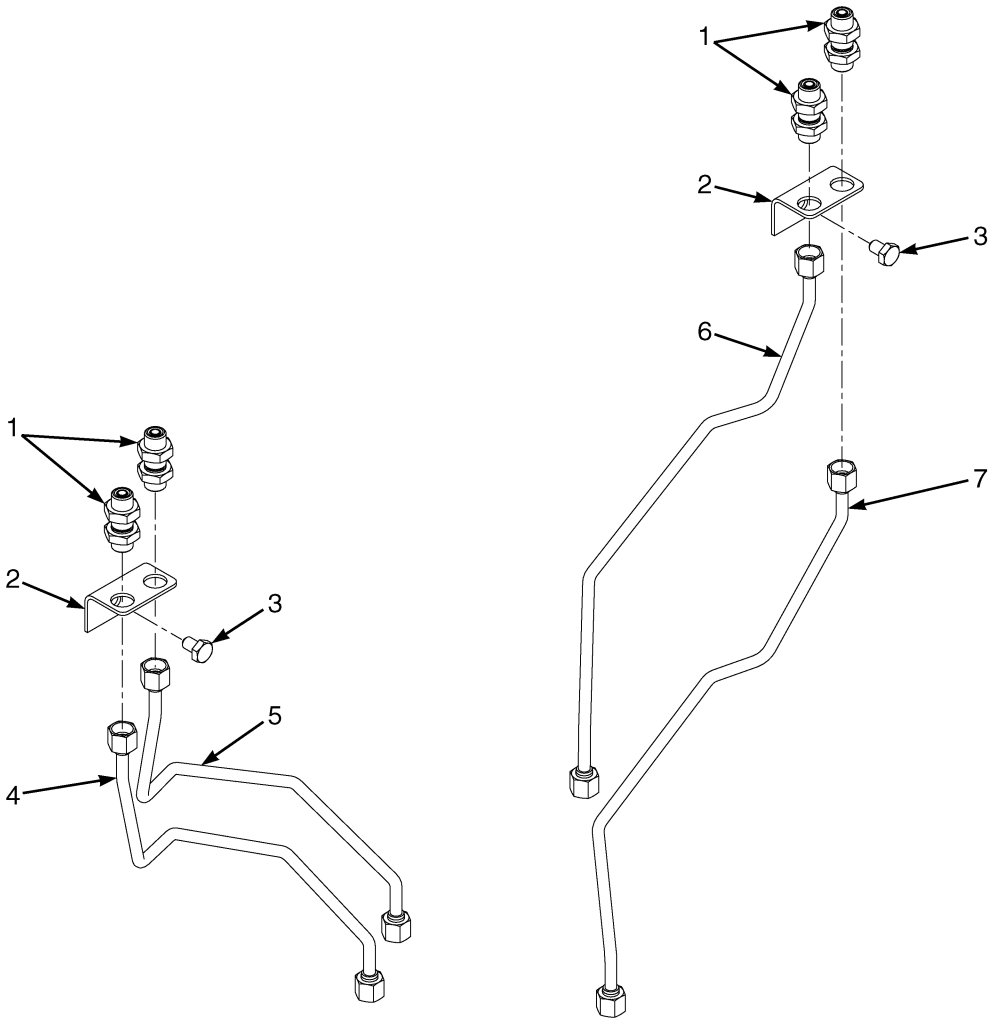

©2013 HYSTER COMPANY

AUXILIARY TUBE EXTENSIONS

TWO STAGE LIMITED FREE-LIFT – WITHOUT QUICK DISCONNECT FITTINGS (S/N D507V02973H →) (S/N D562V02054H →)

KEY:
A: D507 3 Function
B: D507 4 Function
C: D562 3 Function
D: D562 4 Function

ITEM	PART NO.	DESCRIPTION	QTY A	QTY B	QTY C	QTY D
1	1528573	Fitting	1	2	1	2
2	1550070	Bracket	1	2	1	2
3	1658934	Capscrew	1	2	1	2
4	2079330	Tube Assy	..	1	..	..
4	2074403	Tube Assy (Cushion)	..	1	..	..
4	2074407	Tube Assy	..	..	..	1
5	2079329	Tube Assy	..	1	..	..
5	2074402	Tube Assy (Cushion)	..	1	..	..
5	2074406	Tube Assy	..	..	..	1
6	2079328	Tube Assy	1	1	..	..
6	2074401	Tube Assy (Cushion)	1	1	..	..
6	2074405	Tube Assy	..	..	1	1
7	2079327	Tube Assy	1	1	..	..
7	2074400	Tube Assy (Cushion)	1	1	..	..
7	2074404	Tube Assy	..	..	1	1

©2013 HYSTER COMPANY

AUXILIARY TUBE EXTENSIONS (FIGURE 16-19)

TWO STAGE LIMITED FREE-LIFT — MANUAL HYDRAULICS WITH QUICK DISCONNECT FITTINGS (S/N D507V02973H →) (S/N D562V02054H →)

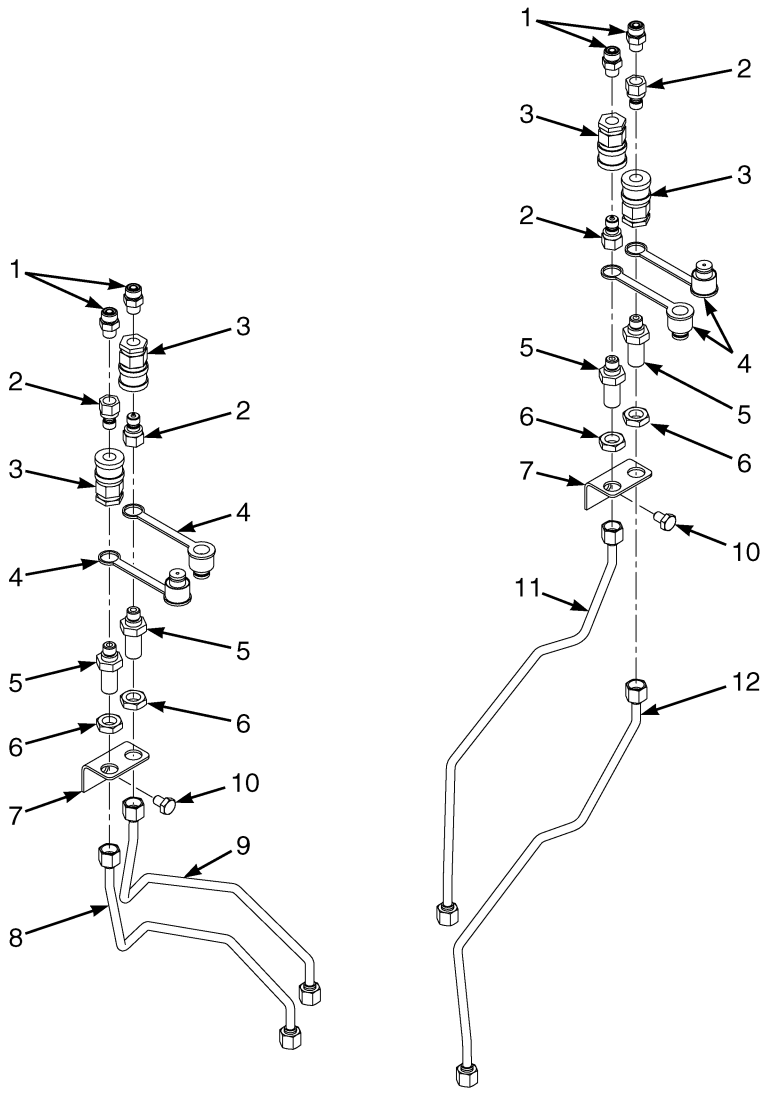

©2013 HYSTER COMPANY

AUXILIARY TUBE EXTENSIONS

TWO STAGE LIMITED FREE-LIFT – MANUAL HYDRAULICS WITH QUICK DISCONNECT FITTINGS (S/N D507V02973H →) (S/N D562V02054H →)

KEY:
A: D507 3 Function
B: D507 4 Function
C: D562 3 Function
D: D562 4 Function

ITEM	PART NO.	DESCRIPTION	QTY A	QTY B	QTY C	QTY D
1	1486740	Fitting	2	4	2	4
2	1483664	Fitting (Quick Disconnect)	2	4	2	4
3	1483663	Quick Disconnect Fitting	2	4	2	4
4	1483661	Dust Cap	2	4	2	4
5	1708364	Bulkhead (Fitting)	2	4	2	4
6	1528602	Locknut	2	4	2	4
7	1550070	Bracket	1	2	1	2
8	2074407	Tube Assy	..	..	..	1
8	2079330	Tube Assy	..	1	..	..
8	2074403	Tube Assy (Cushion)	..	1	..	..
9	2074406	Tube Assy	..	..	..	1
9	2079329	Tube Assy	..	1	..	..
9	2074402	Tube Assy (Cushion)	..	1	..	..
10	1658934	Capscrew	1	2	1	2
11	2074405	Tube Assy	..	..	1	1
11	2079328	Tube Assy	1	1	..	..
11	2074401	Tube Assy (Cushion)	1	1	..	..
12	2074404	Tube Assy	..	..	1	1
12	2079327	Tube Assy	1	1	..	..
12	2074400	Tube Assy (Cushion)	1	1	..	..

©2013 HYSTER COMPANY

AUXILIARY TUBE EXTENSIONS (FIGURE 16-20)

TWO STAGE LIMITED FREE-LIFT — E-HYDRAULICS WITH QUICK DISCONNECT FITTINGS (S/N D507V02973H →) (S/N D562V02054H →)

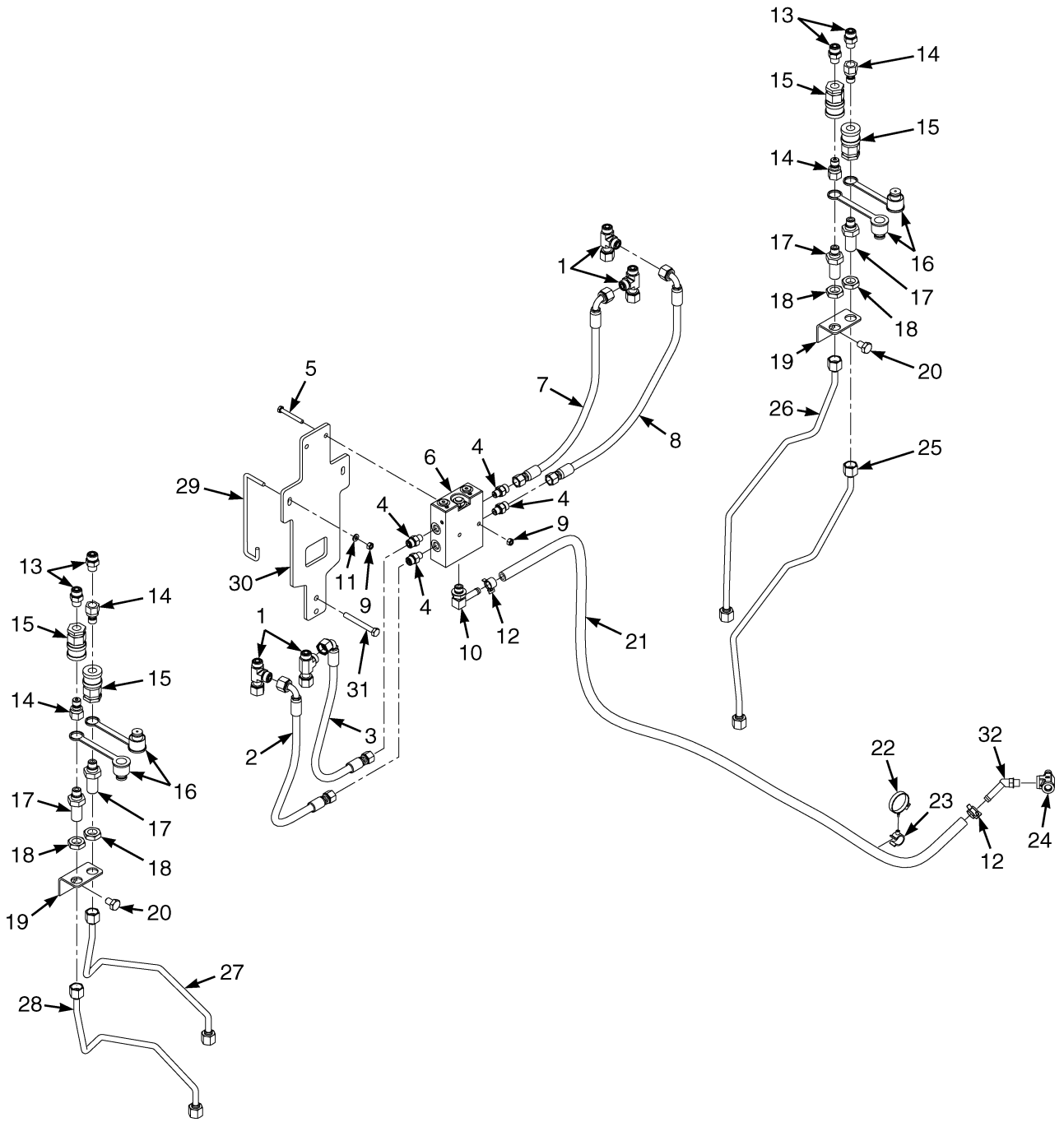

©2013 HYSTER COMPANY

AUXILIARY TUBE EXTENSIONS

TWO STAGE LIMITED FREE-LIFT – E-HYDRAULICS WITH QUICK DISCONNECT FITTINGS (S/N D507V02973H →) (S/N D562V02054H →)

KEY:
A: D507 3 Function
B: D507 4 Function
C: D562 3 Function
D: D562 4 Function

ITEM	PART NO.	DESCRIPTION	QTY A	B	C	D
1	1487095	Fitting	2	4	2	4
2	4604683	Hose Assy	..	1	..	1
3	4604565	Hose Assy	..	1	..	1
4	1486737	Fitting	2	4	2	4
5	292505	Capscrew	2	2	2	2
6	2111754	Valve (Single Auxiliary)	1	..	1	..
6	2111755	Valve (Dual Auxiliary)	..	1	..	1
7	4604566	Hose Assy	1	1	1	1
8	4604564	Hose Assy	1	1	1	1
9	~~1512440~~					
	302399	Nut	4	4	4	4
10	17221	Fitting	1	1	1	1
11	1673754	Washer	2	2	2	2
12	1569616	Hose Clamp	2	2	2	2
13	1486740	Fitting	2	4	2	4
14	1483664	Fitting (Quick Disconnect)	2	4	2	4
15	1483663	Quick Disconnect Fitting	2	4	2	4
16	1483661	Dust Cap	2	4	2	4
17	1708364	Bulkhead (Fitting)	2	4	2	4
18	1528602	Locknut	2	4	2	4
19	1550070	Bracket	1	2	1	2
20	1658934	Capscrew	1	2	1	2
21	110153	Hose	1	1	1	1
22	1644398	Clamp	1	1	1	1
23	1606544	Clamp	1	1	1	1
24	222500	Fitting	1	1	1	1
25	2079327	Tube Assy	1	1	..	..
25	2074400	Tube Assy (Cushion)	1	1	..	..
25	2074404	Tube Assy	..	..	1	1
26	2079328	Tube Assy	1	1	..	..
26	2074401	Tube Assy (Cushion)	1	1	..	..
26	2074405	Tube Assy	..	..	1	1
27	2079329	Tube Assy	..	1	..	..
27	2074402	Tube Assy (Cushion)	..	1	..	..
27	2074406	Tube Assy	..	..	..	1
28	2079330	Tube Assy	..	1	..	..
28	2074403	Tube Assy (Cushion)	..	1	..	..
28	2074407	Tube Assy	..	..	..	1
29	4016313	Hook	2	2	2	2
30	4013928	Bracket	1	1	1	1
31	1581836	Capscrew	2	2	2	2

©2013 HYSTER COMPANY

AUXILIARY TUBE EXTENSIONS (FIGURE 16-21)

TWO STAGE LIMITED FREE-LIFT — WITH ISS CARRIAGE AND WITHOUT QUICK DISCONNECT FITTINGS (S/N D507V02973H →) (S/N D562V02054H →)

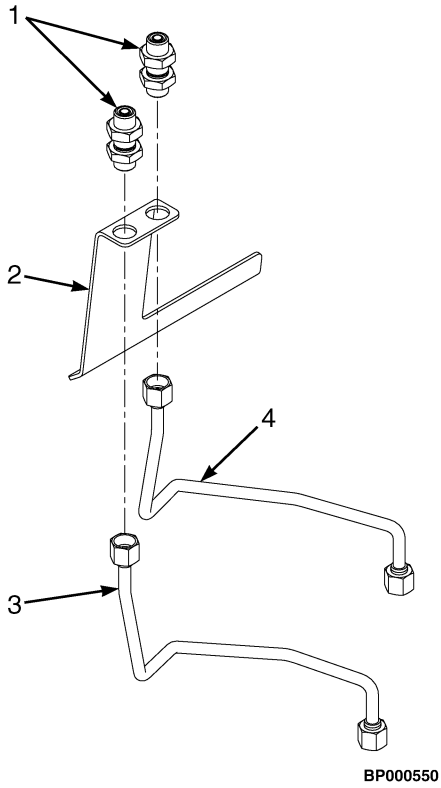

©2013 HYSTER COMPANY

AUXILIARY TUBE EXTENSIONS

TWO STAGE LIMITED FREE-LIFT – WITH ISS CARRIAGE AND WITHOUT QUICK DISCONNECT FITTINGS (S/N D507V02973H →) (S/N D562V02054H →)

KEY:
A: D507 4 Function, Pneumatic
B: D562 4 Function, Pneumatic

ITEM	PART NO.	DESCRIPTION	QTY A	QTY B
1	1528573	Fitting	2	2
2	1549724	Bracket	1	1
3	2079330	Tube Assy	1	..
3	2079334	Tube Assy	..	1
4	2079329	Tube Assy	1	..
4	2079333	Tube Assy	..	1

©2013 HYSTER COMPANY

AUXILIARY TUBE EXTENSIONS (FIGURE 16-22)

TWO STAGE LIMITED FREE-LIFT — WITH ISS CARRIAGE AND MANUAL HYDRAULICS WITH QUICK DISCONNECT FITTINGS (S/N D507V02973H →) (S/N D562V02054H →)

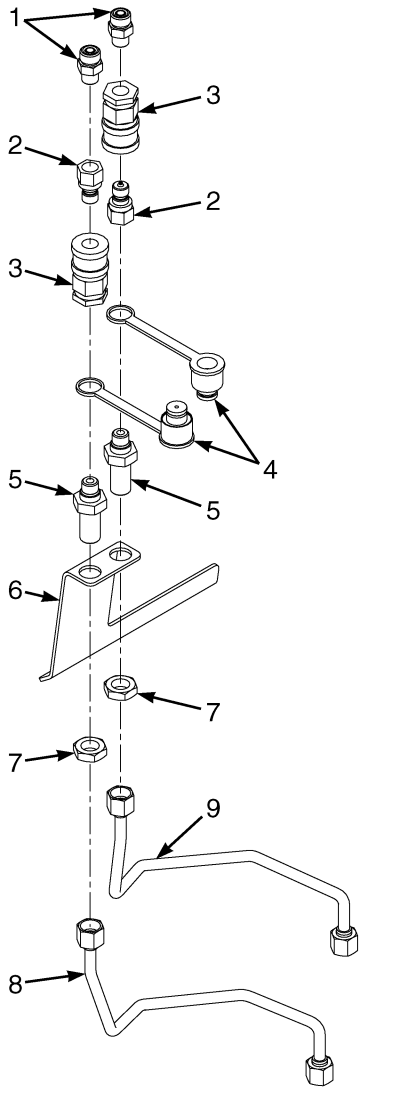

©2013 HYSTER COMPANY

AUXILIARY TUBE EXTENSIONS

TWO STAGE LIMITED FREE-LIFT – WITH ISS CARRIAGE AND MANUAL HYDRAULICS WITH QUICK DISCONNECT FITTINGS (S/N D507V02973H →) (S/N D562V02054H →)

KEY:
A: D507 4 Function, Pneumatic
B: D562 4 Function, Pneumatic

ITEM	PART NO.	DESCRIPTION	QTY A	QTY B
1	1486740	Fitting	2	2
2	1483664	Fitting (Quick Disconnect)	2	2
3	1483663	Quick Disconnect Fitting	2	2
4	1483661	Dust Cap	2	2
5	1708364	Bulkhead (Fitting)	2	2
6	1549718	Bracket	1	1
7	1528602	Locknut	2	2
8	2079330	Tube Assy	1	..
8	2079334	Tube Assy	..	1
9	2079329	Tube Assy	1	..
9	2079333	Tube Assy	..	1

©2013 HYSTER COMPANY

AUXILIARY TUBE EXTENSIONS (FIGURE 16-23)

TWO STAGE LIMITED FREE-LIFT — WITH ISS CARRIAGE AND E-HYDRAULICS WITH QUICK DISCONNECT FITTINGS (S/N D507V02973H →) (S/N D562V02054H →)

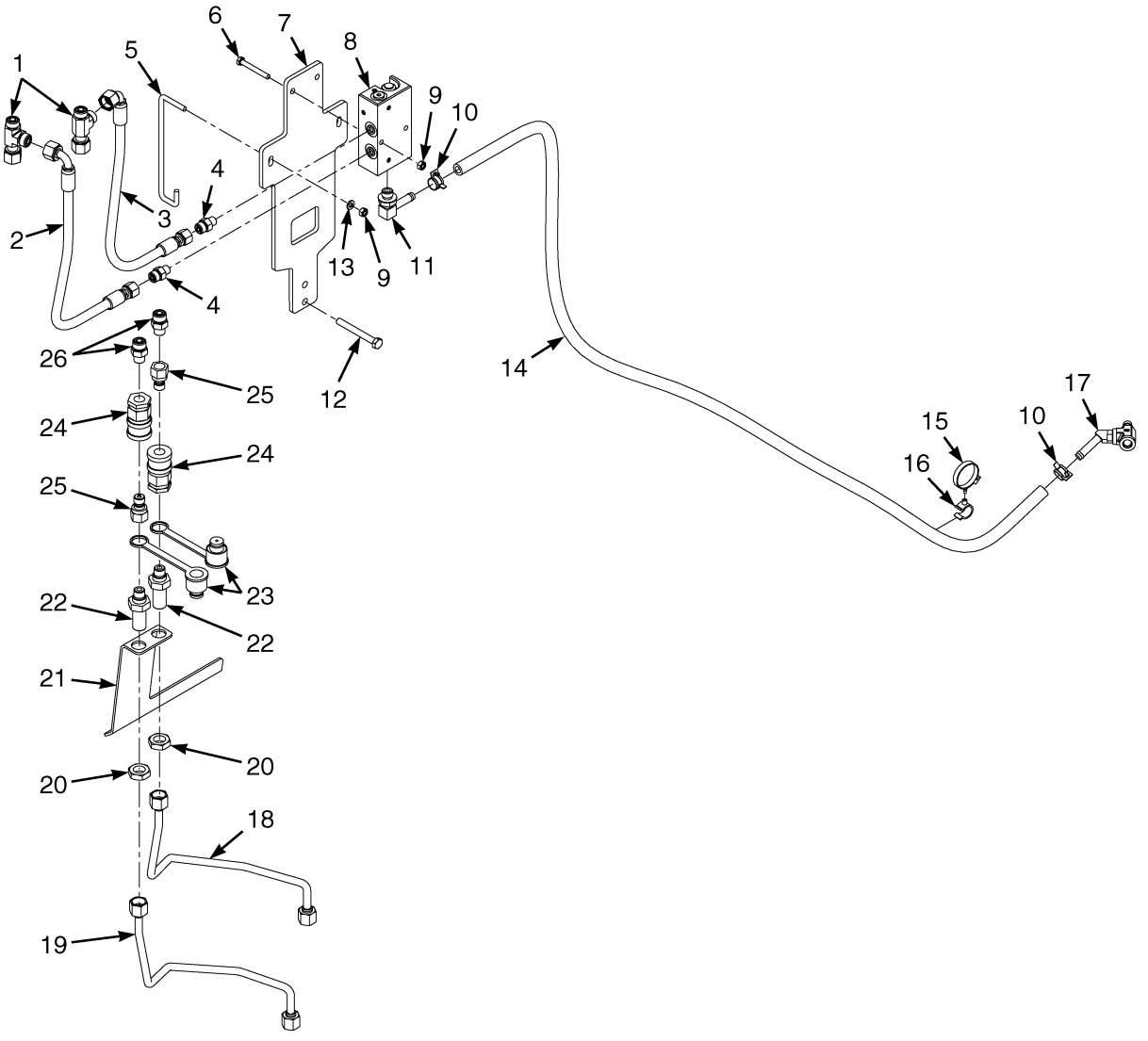

©2013 HYSTER COMPANY

AUXILIARY TUBE EXTENSIONS

TWO STAGE LIMITED FREE-LIFT – WITH ISS CARRIAGE AND E-HYDRAULICS WITH QUICK DISCONNECT FITTINGS (S/N D507V02973H →) (S/N D562V02054H →)

KEY:
A: D507 4 Function Pneumatic
B: D562 4 Function Pneumatic

ITEM	PART NO.	DESCRIPTION	QTY A	QTY B
1	1487095	Fitting	2	2
2	4604683	Hose Assy	1	1
3	4604565	Hose Assy	1	1
4	1486737	Fitting	2	2
5	4016313	Hook	2	2
6	292505	Capscrew	2	2
7	4013928	Bracket	1	1
8	2111754	Valve (Single Auxiliary)	1	1
9	~~1512440~~			
	302399	Nut	4	4
10	1569616	Hose Clamp	2	2
11	17221	Fitting	1	1
12	1581836	Capscrew	2	2
13	1673754	Washer	2	2
14	110153	Hose	1	1
15	1644398	Clamp	1	1
16	1606544	Clamp	1	1
17	4606305	T-Fitting	1	1
17	222500	Fitting	1	1
18	2079329	Tube Assy	1	..
18	2079333	Tube Assy	..	1
19	2079330	Tube Assy	1	..
19	2079334	Tube Assy	..	1
20	1528602	Locknut	2	2
21	1549724	Bracket	1	1
22	1708364	Bulkhead (Fitting)	2	2
23	1483661	Dust Cap	2	2
24	1483663	Quick Disconnect Fitting	2	2
25	1483664	Fitting (Quick Disconnect)	2	2
26	1486740	Fitting	2	2

©2013 HYSTER COMPANY

AUXILIARY TUBE EXTENSIONS (FIGURE 16-24)

TWO AND THREE STAGE FULL FREE-LIFT (→ S/N D508V27242H) (→ S/N D509V02103H) (→ S/N D563V11350H) (→ S/N D564V02121H)

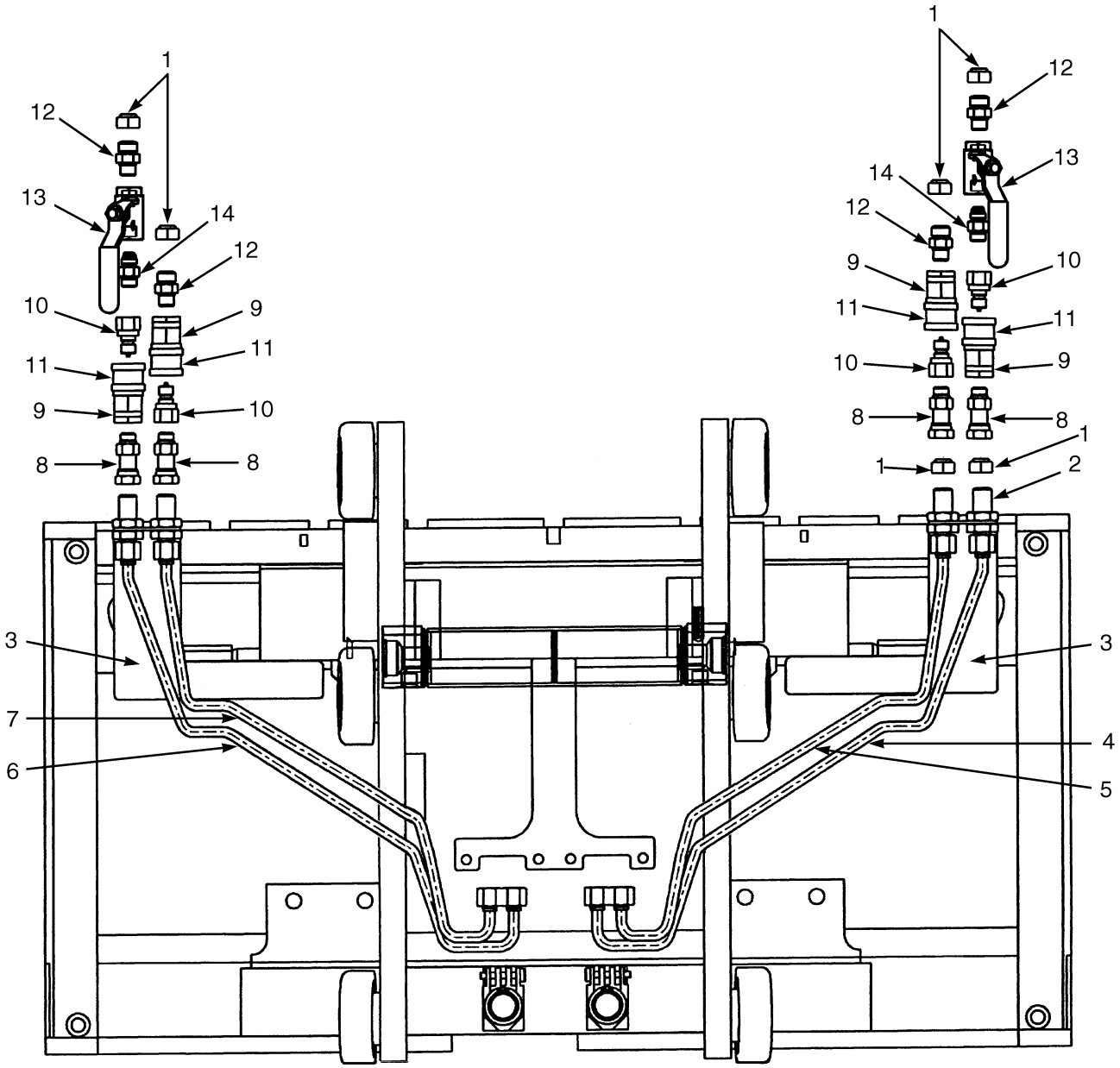

BP000295

©2013 HYSTER COMPANY

AUXILIARY TUBE EXTENSIONS

TWO AND THREE STAGE FULL FREE-LIFT (→ S/N D508V27242H) (→ S/N D509V02103H) (→ S/N D563V11350H) (→ S/N D564V02121H)

KEY:
A: D508, D509 Three Function, Class 2
B: D508, D509 Four Function, Class 2
C: D563, D564 Three Function, Class 3
D: D563, D564 Four Function, Class 3

ITEM	PART NO.	DESCRIPTION	QTY A	QTY B	QTY C	QTY D
1	1529015	Cap	2	4	2	4
2	**d** 1528573	Fitting	2	4	2	4
3	**cefgh** 1550070	Bracket (LH)	1	1	1	1
3	**cijkl** 1696635	Bracket (Bolted on) (LH)	1	1	1	1
3	**a** 1549717	Bracket (RH)	1	1	..	..
3	**a** 1549718	Bracket (LH)	..	1	..	..
3	**a** 1549723	Bracket (RH)	..	..	1	1
3	**a** 1549724	Bracket (LH)	..	..	..	1
3	**cijkl** 1527879	Capscrew (Bolted On)	2	2	2	2
4	~~2079985~~					
	4613398	Tube Assy (RH)	1	1	..	..
4	~~2079989~~					
	4613402	Tube Assy (RH)	..	..	1	1
5	~~2079986~~					
	4613399	Tube Assy (RH)	1	1	..	..
5	~~2079990~~					
	4613403	Tube Assy (RH)	..	..	1	1
6	~~2079991~~					
	4613404	Tube Assy (LH)	..	..	..	1
6	~~2079988~~					
	4613401	Tube Assy (LH)	..	1	..	..
7	~~2079989~~					
	4613402	Tube Assy (LH)	..	..	..	1
7	~~2079987~~					
	4613400	Tube Assy (LH)	..	1	..	..
8	**b** 1549715	Fitting	2	4	2	4
8	**b** 1527813	O-Ring	2	4	2	4
8	**b** 265787	O-Ring	2	4	2	4
9	**b** 1483663	Quick Disconnect Fitting	2	4	2	4
10	**b** 1483664	Fitting	2	4	2	4
11	**b** 1483661	Dust Cap	2	4	2	4
12	**b** 1486740	Fitting	2	4	2	4
12	**b** 1527813	O-Ring	1	1	1	1
12	**b** 265787	O-Ring	1	1	1	1
13	**b** 2081418	Drain Valve	1	2	1	2
14	16540	Connector	1	2	1	2
14	16483	O-Ring	1	1	1	1

©2013 HYSTER COMPANY

FOOTNOTES:

a Used With Integral Sideshift Carriage
b Used With Quick Disconnect Only
c Used With Standard Carriage
d Without Quick Disconnect
e → S/N D508V20677G
f → S/N D509V01881G
g → S/N D563V07831G
h → S/N D564V01884G
i S/N D508V20678G →
j S/N D509V01882G →
k S/N D563V07832G →
l S/N D564V01885G →

©2013 HYSTER COMPANY

NOTES

©2013 HYSTER COMPANY

AUXILIARY TUBE EXTENSIONS (FIGURE 16-25)

TWO AND THREE STAGE FULL FREE-LIFT (S/N D508V27243H →) (S/N D509V02104H →) (S/N D563V11351H →) (S/N D564V02122H →)

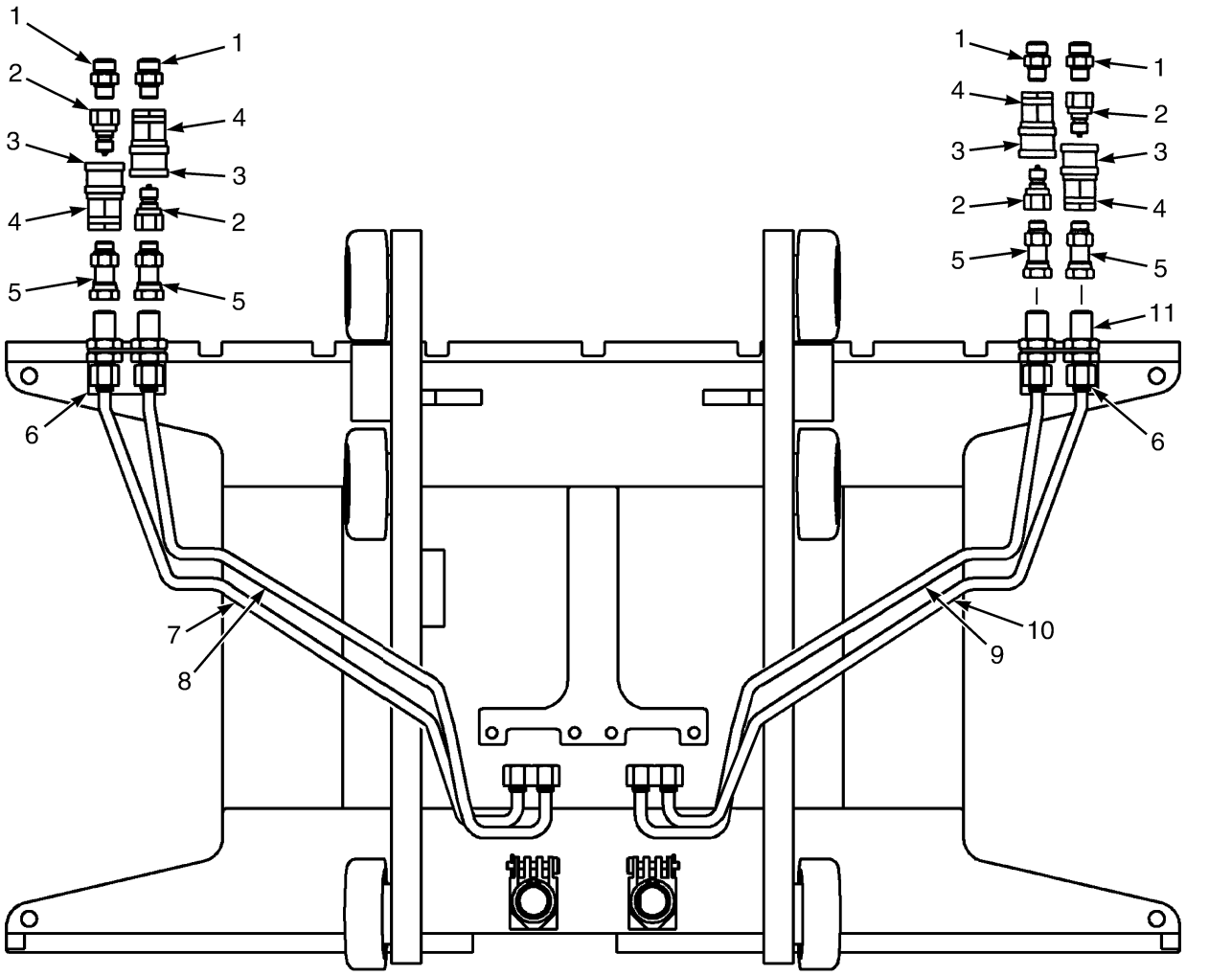

©2013 HYSTER COMPANY

AUXILIARY TUBE EXTENSIONS

TWO AND THREE STAGE FULL FREE-LIFT (S/N D508V27243H →) (S/N D509V02104H →) (S/N D563V11351H →) (S/N D564V02122H →)

KEY:
A: D508, D509 Three Function, Class 2
B: D508, D509 Four Function, Class 2
C: D563, D564 Three Function, Class 3
D: D563, D564 Four Function, Class 3

ITEM	PART NO.	DESCRIPTION	QTY A	QTY B	QTY C	QTY D
1	**b** 1486740	Fitting	2	4	2	4
2	**b** 1483664	Fitting	2	4	2	4
3	**b** 1483661	Dust Cap	2	4	2	4
4	**b** 1483663	Quick Disconnect Fitting	2	4	2	4
5	**b** 1708364	Bulkhead (Fitting)	2	4	2	4
6	**c** 1550070	Bracket	1	2	1	2
6	**a** 1549718	Bracket	..	1	..	..
6	**a** 1549724	Bracket	..	..	..	1
7	~~2079987~~					
	4613400	Tube Assy	..	1	..	..
7	4616325	Tube Assy (Alternate Part)	..	1	..	..
7	~~2079991~~					
	4613404	Tube Assy	..	..	..	1
8	~~2079988~~					
	4613401	Tube Assy	..	1	..	..
8	4616326	Tube Assy (Alternate Part)	..	1	..	..
8	~~2079989~~					
	4613402	Tube Assy	..	..	..	1
9	~~2079986~~					
	4613399	Tube Assy	1	1	..	..
9	4616324	Tube Assy (Alternate Part)	1	1	..	..
9	~~2079990~~					
	4613403	Tube Assy	..	..	1	1
10	~~2079985~~					
	4613398	Tube Assy	1	1	..	..
10	4616420	Tube Assy (Alternate Part)	1	1	..	..
10	~~2079989~~					
	4613402	Tube Assy	..	..	1	1
11	**d** 1528573	Fitting	2	4	2	4

FOOTNOTES:

a Used With Integral Sideshift Carriage
b Used With Quick Disconnect Only
c Used With Standard Carriage
d Without Quick Disconnect

©2013 HYSTER COMPANY

AUXILIARY TUBE EXTENSIONS (FIGURE 16-26)

TWO AND THREE STAGE FULL FREE-LIFT — E-HYDRAULICS WITH QUICK DISCONNECT FITTINGS (S/N D508V27243H →) (S/N D509V02104H →) (S/N D563V11351H →) (S/N D564V02122H →)

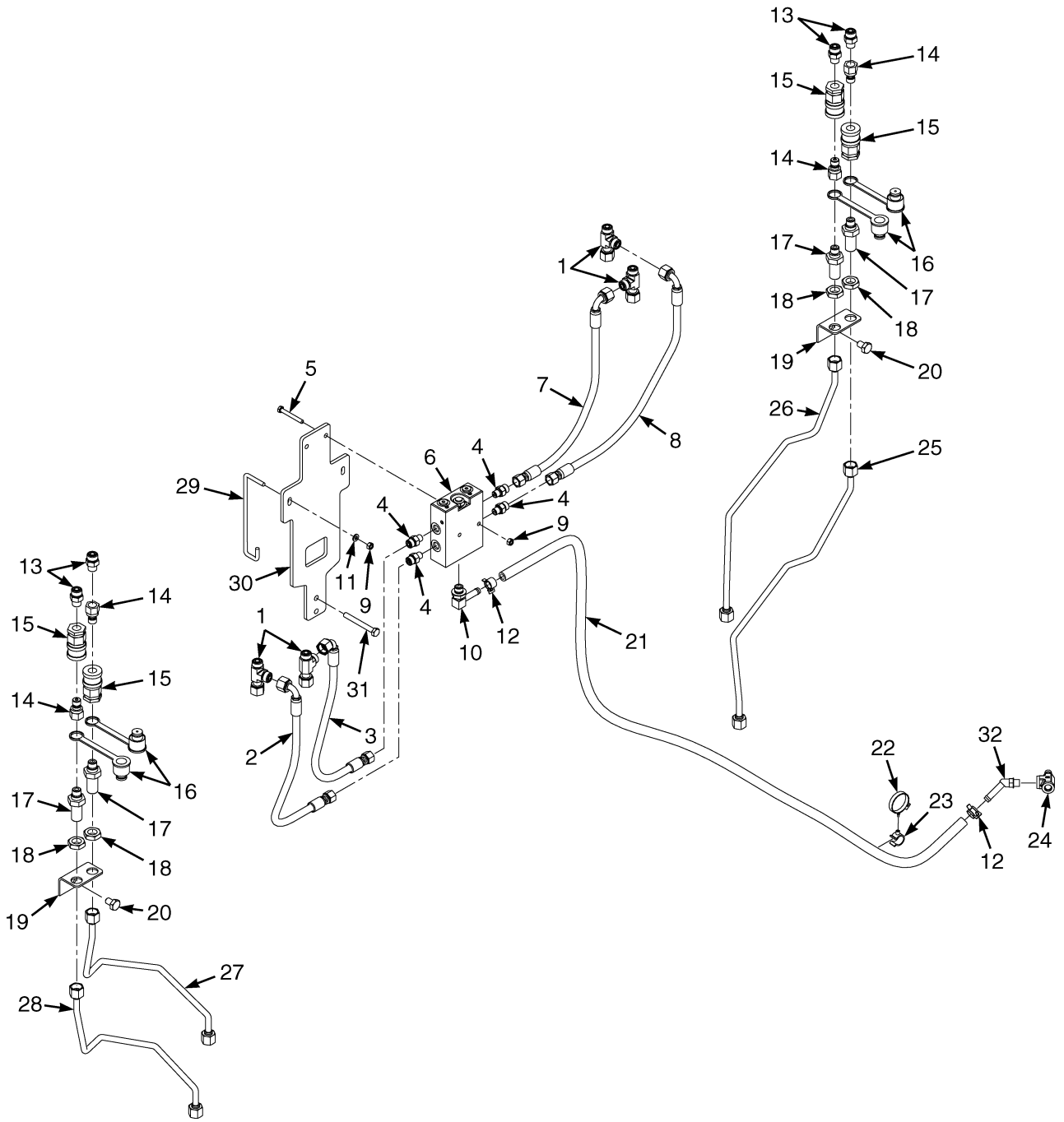

©2013 HYSTER COMPANY

AUXILIARY TUBE EXTENSIONS

TWO AND THREE STAGE FULL FREE-LIFT – E-HYDRAULICS WITH QUICK DISCONNECT FITTINGS (S/N D508V27243H →) (S/N D509V02104H →) (S/N D563V11351H →) (S/N D564V02122H →)

KEY:
A: D508, D509 3 Function, Class 2
B: D508, D509 4 Function, Class 2
C: D563, D564 3 Function, Class 3
D: D563, D564 4 Function, Class 3

ITEM	PART NO.	DESCRIPTION	QTY A	QTY B	QTY C	QTY D
1	1487095	Fitting	2	4	2	4
2	4604683	Hose Assy	..	1	..	1
3	4604565	Hose Assy	..	1	..	1
4	1486737	Fitting	2	4	2	4
5	292505	Capscrew	2	2	2	2
6	2111754	Valve (Single Auxiliary)	1	..	1	..
6	2111755	Valve (Dual Auxiliary)	..	1	..	1
7	4604566	Hose Assy	1	1	1	1
8	4604564	Hose Assy	1	1	1	1
9	~~1512440~~					
	302399	Nut	4	4	4	4
10	17221	Fitting	1	1	1	1
11	1673754	Washer	2	2	2	2
12	1569616	Hose Clamp	2	2	2	2
13	1486740	Fitting	2	4	2	4
14	1483664	Fitting (Quick Disconnect)	2	4	2	4
15	1483663	Quick Disconnect Fitting	2	4	2	4
16	1483661	Dust Cap	2	4	2	4
17	1708364	Bulkhead (Fitting)	2	4	2	4
18	1528602	Locknut	2	4	2	4
19	1550070	Bracket	1	2	1	2
19	**a** 1549718	Bracket	..	1	..	..
19	**a** 1549724	Bracket	..	1	..	1
20	1658934	Capscrew	1	2	1	2
21	110153	Hose	1	1	1	1
22	1644398	Clamp	1	1	1	1
23	1606544	Clamp	1	1	1	1
24	**a** 4606305	T-Fitting	1	1	1	1
25	~~2079985~~					
	4613398	Tube Assy	1	1	..	..
25	4616420	Tube Assy (Alternate Part)	1	1	..	..
25	~~2079989~~					
	4613402	Tube Assy	..	..	1	1
26	~~2079986~~					
	4613399	Tube Assy	1	1	..	..
26	4616324	Tube Assy (Alternate Part)	1	1	..	..
26	~~2079990~~					
	4613403	Tube Assy	..	..	1	1
27	~~2079988~~					
	4613401	Tube Assy	..	1	..	..
27	4616326	Tube Assy (Alternate Part)	..	1	..	..
27	~~2079989~~	Tube Assy	..	..	..	1

©2013 HYSTER COMPANY

AUXILIARY TUBE EXTENSIONS

TWO AND THREE STAGE FULL FREE-LIFT – E-HYDRAULICS WITH QUICK DISCONNECT FITTINGS (S/N D508V27243H →) (S/N D509V02104H →) (S/N D563V11351H →) (S/N D564V02122H →)

KEY:
A: D508, D509 3 Function, Class 2
B: D508, D509 4 Function, Class 2
C: D563, D564 3 Function, Class 3
D: D563, D564 4 Function, Class 3

ITEM	PART NO.	DESCRIPTION	QTY A	QTY B	QTY C	QTY D
	4613402					
28	~~2079987~~					
	4613400	Tube Assy	..	1	..	..
28	4616325	Tube Assy (Alternate Part)	..	1	..	..
28	~~2079991~~					
	4613404	Tube Assy	..	..	..	1
29	4016313	Hook	2	2	2	2
30	4013928	Bracket	1	1	1	1
31	1581836	Capscrew	2	2	2	2
32	222500	Fitting	1	1	1	1

FOOTNOTES:

a Use with Integral Sideshift Carriage

©2013 HYSTER COMPANY

SECTION 17
FIELD CONVERSION KITS

DESCRIPTION	PAGE
ADD ON OPTION KITS	17-12
ADD ON OPTIONS	
FORK POSITIONER	17-12
AUXILIARY TUBE EXTENSION KITS	17-10
BRAKE PEDAL CONVERSION KITS	17-2
COOLING REPAIR KITS	17-2
DIRECTIONAL CONTROL CONVERSION	17-3
E-HYDRAULIC CONTROL CONVERSION KITS	
→ S/N L177V04457H EXC. 04450	17-3
S/N L177V04458H → INC. 04450	17-3
FORK ASSEMBLY KITS	17-13
HEADER HOSE CONVERSION KITS	
THREE STAGE FULL FREE-LIFT - H60-70FT (S/N D563V11659H →)	17-10
THREE STAGE FULL FREE LIFT - H40-50FT (S/N D508V27873H →)	17-8
THREE STAGE FULL FREE-LIFT - H40-50FT (→ S/N D508V27872H)	17-7
THREE STAGE FULL FREE-LIFT - H60-70FT (→ S/N D563V11658H)	17-9
TWO STAGE FULL FREE-LIFT	17-6
TWO STAGE LIMITED FREE-LIFT	17-5
HYDRAULIC CONTROL CONVERSIONS	17-4
HYDRAULIC OIL COOLER KITS	17-13
LIGHT KITS	17-11
MISCELLANEOUS CONVERSION KITS	17-13
RETURN TO SET TILT KITS	17-3
SEAT CONVERSION KITS	17-2
TREAD CONVERSION KITS	17-11
WEATHER PROTECTION KITS	17-2

©2013 HYSTER COMPANY

SEAT CONVERSION KITS

DESCRIPTION	PART NUMBER
Kit-Swivel Seat Full Susp (Vinyl w/o E-Hyd Controls)	1587556
Kit-Swivel Seat Full Susp (Cloth w/o E-Hyd Controls)	1587557
Kit-Swivel Seat Full Susp (Vinyl with E-Hyd Controls)	1587558
Kit-Swivel Seat Full Susp (Cloth with E-Hyd Controls)	1587559
Kit-Seat-Full Susp Non-Swivel (Vinyl w/o E-Hyd Controls) (FLM)	4016015
Kit-Seat-Full Susp Non-Swivel (Cloth w/o E-Hyd Controls) (FLM)	4016016
Kit-Seat-Full Susp Non-Swivel (Vinyl with E-Hyd Controls) (FLM)	4016019
Kit-Seat-Full Susp Non-Swivel (Cloth with E-Hyd Controls) (FLM)	4016020
Kit-Seat-Full Susp Swivel (Vinyl w/o E-Hyd Controls) (FLM)	4016017
Kit-Seat-Full Susp Swivel (Cloth w/o E-Hyd Controls) (FLM)	4016018
Kit-Seat-Full Susp Swivel (Vinyl with E-Hyd Controls) (FLM)	4016021
Kit-Seat-Full Susp Swivel (Cloth with E-Hyd Controls) (FLM)	4016022

WEATHER PROTECTION KITS

DESCRIPTION	PART NUMBER
Kit-Front Screen W Wiper	1616498
Kit-Top Screen	1616501
Kit-Rear Screen	1650489
Kit-Door	1650490
Kit-Heater	1659013
Kit-Radiator Screen (Cold Climate)	1662532

COOLING REPAIR KITS

DESCRIPTION	PART NUMBER
Kit-Repair Yanmar 3.3 DL with Radiator Screen Cooling Kit	1651176
Kit-Repair Yanmar 3.3 DL without Radiator Screen Cooling Kit	1652379

BRAKE PEDAL CONVERSION KITS

DESCRIPTION	PART NUMBER
Kit-Dual Brake Pedal With Dry Brakes	1601231
Kit-Dual Brake Pedal With Wet Brakes	1601232
Kit-Brake (Single to Dual Pedal Inch Brake)	1705412
Kit-Brake (Single to Dual Pedal Inch Brake, Dry)	**a**4007019
Kit-Brake (Dual Pedal, Wet)	**a**4016148

FOOTNOTES:

©2013 HYSTER COMPANY

a S/N L177V04757H →

DIRECTIONAL CONTROL CONVERSION

DESCRIPTION	PART NUMBER
Kit-Fwd/Rev Lever to Monotrol	**a**1625467
Kit-Monotrol to Fwd/Rev Lever	**a**1583198

FOOTNOTES:
a Kit requires Software that must be Dealer installed.

RETURN TO SET TILT KITS

DESCRIPTION	PART NUMBER
Kit-Return to Set Tilt 3 Way	**a**1627949
Kit-Return to Set Tilt 4 Way	**a**1627954
Kit-Return to Set Tilt 3 Way	**a**1627956
Kit-Return to Set Tilt 4 Way	**a**1627957

FOOTNOTES:
a Kit Requires Software that Must be Dealer Installed

E-HYDRAULIC CONTROL CONVERSION KITS
(→ S/N L177V04457H EXC. 04450)

DESCRIPTION	PART NUMBER
Kit-Mini Lever Conv 3 Way (without Clamp to 3 Way with Clamp)	**a**1585281
Kit-Mini Lever Conv 3 Way (With Clamp to 3 Way Without Clamp)	**a**1607685
Kit-Mini Lever Conv 3 Way (without Clamp to 4 Way without Clamp)	**a**1605316
Kit-Mini Lever Conv 3 Way (without Clamp to 4 Way with Clamp)	**a**1605317
Kit-Mini Lever Conv 4 Way (With Clamp to 4 Way Without Clamp)	**a**1635699
Kit-Hyd Control Valve (Outlet with Anti-Stall)	**a**4006655
Kit-Mini Lever Conv 4 Way (without Clamp to 4 Way with Clamp) (without Clamp to 4 Way with Clamp)	**a**1703633

FOOTNOTES:
a Kits require software that must be dealer installed, See Kit Drawing for instructions.

E-HYDRAULIC CONTROL CONVERSION KITS
(S/N L177V04458H → INC. 04450)

DESCRIPTION	PART NUMBER
Kit-Mini Lever Conv 3 Way (Without Lockout to with Lockout) (without Lockout to with Lockout)	**a**1701683
Kit-Mini Lever Conv 3 Way (With Lockout to without Lockout) (with Lockout to without Lockout)	**a**1701682
Kit-Mini Lever Conv 3 Way (without Clamp to 4 way without Clamp)	**a**4014170

©2013 HYSTER COMPANY

E-HYDRAULIC CONTROL CONVERSION KITS
(S/N L177V04458H → INC. 04450)
(CONTINUED)

DESCRIPTION	PART NUMBER
Kit-Mini Lever Conv 3 Way (without Clamp to 4 Way with Clamp)	**a**4014171
Kit-Mini Lever Conv 4 Way (With Lockout to without Lockout) (with Lockout to without Lockout)	**a**1701684
Kit-Mini Lever Conv 4 Way (Without Lockout to with Lockout) (without Lockout to with Lockout)	**a**1701685

FOOTNOTES:
a Kits require software that must be dealer installed.

HYDRAULIC CONTROL CONVERSIONS

DESCRIPTION	PART NUMBER
Kit-Manual Lever Conv 3 Way (without Clamp to 3 Way with Clamp)	**e**1584061
Kit-Manual Lever Conv 3 Way (without Clamp to 3 Way with Clamp)	**jk**1677913
Kit-Manual Lever Conv 3 Way (without Clamping to 4 Way without Clamping)	**abcd**1605318
Kit -Manual Lever Conv 3 Way (without Clamping to 4 Way without Clamping)	**fghi**1670819
Kit-Manual Lever Conv 3 Way (Without Clamping to Four Way Without Clamping)	**jk**1677919
Kit-Manual Lever Conv 3 Way (without Clamping to 4 Way with Clamping)	**abcd**1605319
Kit -Manual Lever Conv 3 Way (without Clamping to 4 Way with Clamping)	**fghi**1670822
Kit-Manual Lever Conv 3 Way (Without Clamping to Four Way With Clamping)	**jk**1677916

FOOTNOTES:
a → S/N L177B17861E
b → S/N L177B18169E
c → S/N L177B18729E
d → S/N L177B18808E
e → S/N L177B26281F
f S/N L177B17862E ↔ S/N L177B28281F
g S/N L177B18170E ↔ S/N L177B28281F
h S/N L177B18730E ↔ S/N L177B28281F
i S/N L177B18890E ↔ S/N L177B28281F
j S/N L177B26282F →
k S/N L177V01501F →

©2013 HYSTER COMPANY

HEADER HOSE CONVERSION KITS

TWO STAGE LIMITED FREE-LIFT

THREE TO FOUR FUNCTION

DESCRIPTION	LIFT HEIGHT TO BOTTOM OF FORKS	
	3159 mm (124.4 in.)	**3252 mm (128.0 in.)**
Mast Group Number	**D562 3159**	**D507 3252**
Kit-Hose Group 3 to 4 Way	1584978	1584975

TWO TO FOUR FUNCTION

DESCRIPTION	LIFT HEIGHT TO BOTTOM OF FORKS	
	3159 mm (124.4 in.)	**3252 mm (128.0 in.)**
Mast Group Number	**D562 3159**	**D507 3252**
Kit-Hose Group 2 to 4 Way	1584979	1584976

TWO TO THREE FUNCTION

DESCRIPTION	LIFT HEIGHT TO BOTTOM OF FORKS	
	3159 mm (124.4 in.)	**3252 mm (128.0 in.)**
Mast Group Number	**D562 3159**	**D507 3252**
Kit-Hose Group 2 to 3 Way	1584977	1584974

©2013 HYSTER COMPANY

HEADER HOSE CONVERSION KITS

TWO STAGE FULL FREE-LIFT

THREE TO FOUR FUNCTION

DESCRIPTION	LIFT HEIGHT TO BOTTOM OF FORKS		
	3060 mm (120.5 in.)	**3260 mm (128.3 in.)**	**3262 mm (128.4 in.)**
Mast Group Number	**D564 3060**	**D564 3260**	**D509 3262**
Kit-Hose Group 3 to 4 Way	1585074	1585077	1585074

TWO TO FOUR FUNCTION

DESCRIPTION	LIFT HEIGHT TO BOTTOM OF FORKS		
	3060 mm (120.5 in.)	**3260 mm (128.3 in.)**	**3262 mm (128.4 in.)**
Mast Group Number	**D564 3060**	**D564 3260**	**D509 3262**
Kit-Hose Group 2 to 4 Way	1585075	1585078	1585075

TWO TO THREE FUNCTION

DESCRIPTION	LIFT HEIGHT TO BOTTOM OF FORKS		
	3060 mm (120.5 in.)	**3260 mm (128.3 in.)**	**3262 mm (128.4 in.)**
Mast Group Number	**D564 3060**	**D564 3260**	**D509 3262**
Kit-Hose Group 2 to 3 Way	1585073	1585076	1585073

©2013 HYSTER COMPANY

HEADER HOSE CONVERSION KITS

THREE STAGE FULL FREE-LIFT — H40-50FT (→ S/N D508V27872H)

THREE TO FOUR FUNCTION

DESCRIPTION	LIFT HEIGHT TO BOTTOM OF FORKS				
	4310 mm (169.7 in.)	4760 mm (187.4 in.)	4910 mm (193.3 in.)	5060 mm (199.2 in.)	5510 mm (216.9 in.)
Mast Group Number	**D508 4310**	**D508 4760**	**D508 4910**	**D508 5060**	**D508 5510**
Kit-Hose Group 3 to 4 Way	1585187	1585190	1585193	1585196	1585199

TWO TO FOUR FUNCTION

DESCRIPTION	LIFT HEIGHT TO BOTTOM OF FORKS				
	4310 mm (169.7 in.)	4760 mm (187.4 in.)	4910 mm (193.3 in.)	5060 mm (199.2 in.)	5510 mm (216.9 in.)
Mast Group Number	**D508 4310**	**D508 4760**	**D508 4910**	**D508 5060**	**D508 5510**
Kit-Hose Group 2 to 4 Way	1585188	1585191	1585194	1585197	1585200

TWO TO THREE FUNCTION

DESCRIPTION	LIFT HEIGHT TO BOTTOM OF FORKS				
	4310 mm (169.7 in.)	4760 mm (187.4 in.)	4910 mm (193.3 in.)	5060 mm (199.2 in.)	5510 mm (216.9 in.)
Mast Group Number	**D508 4310**	**D508 4760**	**D508 4910**	**D508 5060**	**D508 5510**
Kit-Hose Group 2 to 3 Way	1585186	1585189	1585192	1585195	1585198

©2013 HYSTER COMPANY

HEADER HOSE CONVERSION KITS

THREE STAGE FULL FREE LIFT — H40-50FT (S/N D508V27873H →)

THREE TO FOUR FUNCTION

DESCRIPTION	LIFT HEIGHT TO BOTTOM OF FORKS				
	4310 mm (169.7 in.)	**4760 mm (187.4 in.)**	**4910 mm (193.3 in.)**	**5060 mm (199.2 in.)**	**5510 mm (216.9 in.)**
Mast Group Number	**D508 4310**	**D508 4760**	**D508 4910**	**D508 5060**	**D508 5510**
Kit-Hose Group 3 TO 4 Way	4046862	4046871	4046874	4046889	4046898

TWO TO FOUR FUNCTION

DESCRIPTION	LIFT HEIGHT TO BOTTOM OF FORKS				
	4310 mm (169.7 in.)	**4760 mm (187.4 in.)**	**4910 mm (193.3 in.)**	**5060 mm (199.2 in.)**	**5510 mm (216.9 in.)**
Mast Group Number	**D508 4310**	**D508 4760**	**D508 4910**	**D508 5060**	**D508 5510**
Kit-Hose Group 2 TO 4 Way	4046863	4046872	4046887	4046890	4046899

TWO TO THREE FUNCTION

DESCRIPTION	LIFT HEIGHT TO BOTTOM OF FORKS				
	4310 mm (169.7 in.)	**4760 mm (187.4 in.)**	**4910 mm (193.3 in.)**	**5060 mm (199.2 in.)**	**5510 mm (216.9 in.)**
Mast Group Number	**D508 4310**	**D508 4760**	**D508 4910**	**D508 5060**	**D508 5510**
Kit-Hose Group 2 TO 3 Way	4046861	4046870	4046873	4046888	4046897

©2013 HYSTER COMPANY

HEADER HOSE CONVERSION KITS

THREE STAGE FULL FREE-LIFT — H60-70FT (→ S/N D563V11658H)

THREE TO FOUR FUNCTION

DESCRIPTION	LIFT HEIGHT TO BOTTOM OF FORKS			
	4568 mm (179.8 in.)	4718 mm (185.7 in.)	5318 mm (209.4 in.)	5768 mm (227.1 in.)
Mast Group Number	**D563 4568**	**D563 4718**	**D563 5318**	**D563 5768**
Kit-Hose Group 3 to 4 Way	1585193	1585196	1585202	1585205

TWO TO FOUR FUNCTION

DESCRIPTION	LIFT HEIGHT TO BOTTOM OF FORKS			
	4568 mm (179.8 in.)	4718 mm (185.7 in.)	5318 mm (209.4 in.)	5768 mm (227.1 in.)
Mast Group Number	**D563 4568**	**D563 4718**	**D563 5318**	**D563 5768**
Kit-Hose Group 2 to 4 Way	1585194	1585197	1585203	1585206

TWO TO THREE FUNCTION

DESCRIPTION	LIFT HEIGHT TO BOTTOM OF FORKS			
	4568 mm (179.8 in.)	4718 mm (185.7 in.)	5318 mm (209.4 in.)	5768 mm (227.1 in.)
Mast Group Number	**D563 4568**	**D563 4718**	**D563 5318**	**D563 5768**
Kit-Hose Group 2 to 3 Way	1585192	1585195	1585201	1585204

©2013 HYSTER COMPANY

HEADER HOSE CONVERSION KITS

THREE STAGE FULL FREE-LIFT — H60-70FT (S/N D563V11659H →)

THREE TO FOUR FUNCTION

DESCRIPTION	LIFT HEIGHT TO BOTTOM OF FORKS			
	4568 mm (179.8 in.)	4718 mm (185.7 in.)	5318 mm (209.4 in.)	5768 mm (227.1 in.)
Mast Group Number	**D563 4568**	**D563 4718**	**D563 5318**	**D563 5768**
Kit-Hose Group 3 TO 4 Way	4046874	4046889	4046901	4046910

TWO TO FOUR FUNCTION

DESCRIPTION	LIFT HEIGHT TO BOTTOM OF FORKS			
	4568 mm (179.8 in.)	4718 mm (185.7 in.)	5318 mm (209.4 in.)	5768 mm (227.1 in.)
Mast Group Number	**D563 4568**	**D563 4718**	**D563 5318**	**D563 5768**
Kit-Hose Group 2 TO 4 Way	4046887	4046890	4046902	4046911

TWO TO THREE FUNCTION

DESCRIPTION	LIFT HEIGHT TO BOTTOM OF FORKS			
	4568 mm (179.8 in.)	4718 mm (185.7 in.)	5318 mm (209.4 in.)	5768 mm (227.1 in.)
Mast Group Number	**D563 4568**	**D563 4718**	**D563 5318**	**D563 5768**
Kit-Hose Group 3 TO 4 Way	4046874	4046889	4046901	4046910

AUXILIARY TUBE EXTENSION KITS

DESCRIPTION	PART NUMBER
Kit-Quick Disconnect Fitting Manual Hydraulics for Two Stage LFL Mast (C661 Mast Series)	1550257
Kit-Aux Tube Extension (Three Function, Class II Std Carriage, 2 LFL, 40-55)	1606597
Kit-Aux Tube Extension (Four Function, Class II, Std Carriage, 2 LFL, 40-55)	1606598
Kit-Aux Tube Extension (Three Function, Class III, Std Carriage, 2 LFL, 60-70)	1606599
Kit-Aux Tube Extension (Four Function, Class III, Std Carriage, 2 LFL, 60-70)	1606600
Kit-Aux Tube Extension (Three Function, Class II, Side-Shift Carriage, 2 LFL, 40-55)	1606601
Kit-Aux Tube Extension (Four Function, Class II, Side-Shift Carriage, 2 LFL, 40-55)	1606602
Kit-Aux Tube Extension (Three Function, Class III, Side-Shift Carriage, 2 LFL, 60-70)	1606603
Kit-Aux Tube Extension (Four Function, Class III, Side-Shift Carriage, 2 LFL, 60-70)	1606604

©2013 HYSTER COMPANY

AUXILIARY TUBE EXTENSION KITS (CONTINUED)

DESCRIPTION	PART NUMBER
Kit-Aux Tube Extension (Three Function, Class II, Std Carriage, 2 and 3 FFL, 40-55)	1550261
Kit-Aux Tube Extension (Four Function, Class II, Std Carriage, 2 and 3 FFL, 40-55)	1550262
Kit-Aux Tube Extension (Three Function, Class III, Std Carriage, 2 and 3 FFL, 60-70)	1550263
Kit-Aux Tube Extension (Four Function, Class III, Std Carriage, 2 and 3 FFL, 60-70)	1550264
Kit-Aux Tube Extension (Three Function, Class II, Side-Shift Carriage, 2 and 3 FFL, 40-55)	1550265
Kit-Aux Tube Extension (Four Function, Class II, Side-Shift Carriage, 2 and 3 FFL, 40-55)	1550266
Kit-Aux Tube Extension (Three Function, Class III, Side-Shift Carriage, 2 and 3 FFL, 60-70)	1550267
Kit-Aux Tube Extension (Four Function, Class III, Side-Shift Carriage, 2 and 3 FFL, 60-70)	1550268
Kit (Quick Disconnect Fittings Single Auxiliary E-Hydraulics)	4018147
Kit (Quick Disconnect Fittings Dual Auxiliary with E-Hydraulics)	4018148
Kit (Quick Disconnect Fittings Single Auxiliary E-Hydraulics) (ISS Carriage)	4018745

LIGHT KITS

DESCRIPTION	PART NUMBER
Kit-Light (Halogen Front Drive/Rear Work Light, with Harness and Overhead Guard)	1583707
Kit-Light (Front Drive/Rear Work lights, w/o Harness, with Overhead Guard)	1583708
Kit-Light (Strobe -Flash Tube with Other Lights and Overhead Guard, with Harness)	1583709
Kit-Light (Strobe, Flash Tube with Other Lights and Overhead Guard, w/o Harness)	1583710
Kit-Light (Brake/Tail/Back-up Lights with Harness, with Overhead Guard)	1583711
Kit-Light (Brake/Tail/Back-up Lights w/o Harness with Overhead Guard)	1583712
Kit-Strobe Light (Amber Strobe with Cab)	1625728
Kit-Light (LED Strobe with other lights for Overhead Guard, w/o Harness)	1655205
Kit-Light (LED Strobe w/o Other Lights for Overhead Guard with Harness)	1655204
Kit-Strobe Light (Amber Strobe LED Light with Cab)	1655298
Kit-Worklight (Mast w/Overhead Guard)	4023814
Kit-Worklight (Mast w/Overhead Guard 1-2T Cushion)	4023815
Kit-Worklight (Mast w/Cab)	4023816
Kit-Worklight (Mast)	4023817

TREAD CONVERSION KITS

DESCRIPTION	PART NUMBER
Kit-Wide Tread (7.00x12 P Monarch Tires)	1617916
Kit-Wide Tread (28x9P Monarch or 225/75 Radial Tire)	1617917

©2013 HYSTER COMPANY

TREAD CONVERSION KITS (CONTINUED)

DESCRIPTION	PART NUMBER
Kit-Single to Dual Drive Wheel (7.00 x 12 Pnue Tires)	1618087
Kit-Single to Dual Drive Wheel (7.00 x 12 Solid Tires)	1618088

ADD ON OPTION KITS

DESCRIPTION	PART NUMBER
Kit-Air Intake W Pre-Cleaner	1583815
Kit-Powertrain Protection (English - US Language)	**a**1585854
Kit-Accumulator	1585425
Kit-Fire Extinguisher (Without Cab)	1580126
Kit-Fire Extinguisher (With Cab)	1635618
Kit-Back-Up Alarm	1612229
Kit-Back-Up Alarm	1612230
Kit-Back-Up Alarm	1612231
Kit-Back-Up Alarm	1612232
Kit-Back-Up Alarm	1612233
Kit-Keyswitch to Pushbutton (Pushbutton Start with Remote Key Switch)	**a**1624521
Kit-Push-Button to Keyswitch	**a**1624518
Kit-Impact Monitoring (With Immediate Shutdown)	**a**1629135
Kit-Electronic Monitoring	**a**1629208
Kit-Impact Monitoring (With 30 Second Shutdown)	**a**1637768
Kit-Load Weight on Display (Use with E-Hydraulics Only)	**a**1618217
Kit-Radiator Screen	1662532
Kit-Service (Drain Kit LPG Regulator)	1652150
Kit-Red Seat Belt (Red Seat Belt Kit)	1636120
Kit Liner w/secondary filter, 4", Diesel	1670584
Kit Liner w/secondary filter, 5", Diesel	1670585
Kit-Sensor (Low LPG Fuel) (Pre-2010 GM Engines)	**a**4008501
Kit-Sensor (Low LPG Fuel) (2010 GM Engines)	**a**4007941
Kit-Sensor (Low LPG Fuel) (2007-2009 Mazda Engines)	**a**4008502
Kit-Sensor (Low LPG Fuel) (2010 Mazda Engines)	**a**4007942
Kit-Lifting Eye (LPG)	1602394
Kit-Lifting Eye (Diesel or Gasoline Fuel)	1602395

FOOTNOTES:

a Kits require software that must be dealer installed

ADD ON OPTIONS

FORK POSITIONER

©2013 HYSTER COMPANY

ADD ON OPTIONS
FORK POSITIONER
(CONTINUED)

DESCRIPTION	PART NUMBER
Kit-Fork Positioner (3 FFL 2.0-2.5T Class II)	4064915
Kit-Fork Positioner (3FFL 3.0-3.5T Class III)	4064919

HYDRAULIC OIL COOLER KITS

DESCRIPTION	PART NUMBER
Kit-Oil Cooler (3rd Function)	1689549
Kit-Oil Cooler (4th Function)	1689550

FORK ASSEMBLY KITS

DESCRIPTION	PART NUMBER
Kit-Latch (Class II)	1686665
Kit (Latch) (Class III)	1701249

MISCELLANEOUS CONVERSION KITS

DESCRIPTION	PART NUMBER
Kit-Mini Lever Conv 4 Way (without Clamp to 4 Way with Clamp)	**a**1703633
Kit-Bracket (Exhaust Support)	1699379
Kit-Gas Spring (And Ball Stud)	4016355
Kit-Gas Spring (And Ball Stud)	4016356
Kit-Gas Spring (And Ball Stud)	4016869

FOOTNOTES:

a Kit requires software that must be Dealer installed

©2013 HYSTER COMPANY

NOTES

©2013 HYSTER COMPANY

18 NUMERICAL INDEX

SECTION 18
NUMERICAL INDEX

PART NO.	PAGE	ITEM
126	5-15	12
	6-95	12
	6-97	9
	7-50	30
	7-53	9
206	11-7	23
	11-9	34
	11-27	25
	11-31	18
12855	6-27	
12891	13-19	4
	14-23	3
	16-15	14
	16-23	13
12929	11-7	24
	11-9	35
	11-27	26
	11-31	17
13957	10-13	31
14191	12-16	5
14349	6-27	9
	6-59	10
	7-30	33
14358	6-23	11
	6-25	11
	6-27	11
	6-57	9
	6-59	9
	6-81	34
14372	6-23	10
	6-25	10
	6-27	10
	6-57	19
	6-59	19
14385	2-3	25
	2-5	22
	2-7	26
	2-9	22
	3-5	27
	3-7	17
	3-9	26
	3-11	15
	3-13	14
	3-15	26
	3-17	16
	4-3	25
	4-5	22
	4-7	25
	4-9	22
14386	6-9	23
	6-11	23
14603	14-7	7
15002	7-50	33
	7-53	12
15010	7-53	36
15055	12-48	2
	12-67	4
15127	1-71	21
	1-75	27
15135	8-33	11
	8-39	11
	8-45	9
15155	7-41	6
15156	7-50	32
	7-53	
15158	8-33	10
	8-39	10
	8-45	8
15160	7-53	35
15175	7-41	5
15211	13-8	19
	13-19	10
	14-14	25
	14-23	10
	15-12	19
	15-20	20
	15-33	11
	16-15	21
	16-19	21
	16-23	21
15223	15-12	25
15225	10-13	11
15227	10-13	25
15242	9-19	13
15329	2-30	6
15871	5-5	17
15880	14-16	12
	15-23	13
15916	7-50	34
	7-53	13
15931	5-21	11
	5-25	12
	6-99	11
	6-103	12
15971	6-50	41
16001	13-3	10
	14-3	10
	15-3	10
16041	12-71	6
	16-15	12
	16-19	6
	16-23	6
16079	7-25	8
	7-29	9
	7-33	19
	7-33	20
	7-43	1
	7-43	2
	7-49	10
	7-53	20
	7-53	21
16134	6-23	24
	6-25	24
	6-27	10
	6-27	24
	6-50	45
	6-57	2
	6-59	2
	6-65	17
	6-81	33
	6-85	33
	6-91	41
16151	5-9	6
	6-23	9
	6-25	9
	6-27	9
	6-57	10
	6-59	10
	9-23	24
16168	6-49	18
16199	6-49	17
16448	8-37	28
16480	12-55	13
16481	8-55	27
	8-75	3
	11-15	23
	11-17	18
	11-21	38
	11-22	39
	11-22	41
	11-25	27
	11-25	31
	11-28	44
	11-28	46
	11-28	47
	11-31	33
	11-31	43
	12-16	4
	12-16	5
	12-19	3
	12-19	7
	16-35	2
16483	8-37	31
	8-47	12
	8-55	26
	11-15	1
	11-15	7
	11-15	11
	11-15	18
	11-17	1
	11-17	8
	11-17	15
	12-19	7
	16-37	14
	16-51	14
16484	8-17	3
	8-19	13
	8-23	10
	8-28	14
	8-40	46
	8-47	5
	8-48	59
	10-11	3
	10-11	4
	11-15	3
	11-17	3
	12-5	6
	12-7	6
	12-19	5
	12-19	5
	12-19	5
	12-20	26
16485	8-15	3
	8-15	11
	8-17	4
	8-17	12
	8-19	11
	8-21	10
	8-23	4
	8-23	7
	8-25	8
	8-25	10
	8-33	5
	8-33	36
	8-39	5
	8-39	40

©2013 HYSTER COMPANY

NUMERICAL INDEX (continued)

PART NO.	PAGE	ITEM
	8-45	25
	8-47	4
	8-47	10
	8-59	6
	8-61	1
	8-75	9
	8-76	2
	13-7	4
	13-7	6
	14-7	2
	14-7	4
	14-7	10
	14-13	2
	14-13	14
	15-11	4
	15-11	6
	15-19	12
16486	8-39	42
	8-39	44
	8-48	61
	8-55	15
	8-59	3
	11-15	8
	11-15	15
	11-17	5
	11-17	13
	11-19	11
	11-19	12
	12-5	10
	12-7	10
	14-7	7
	15-11	12
16487	8-33	38
	11-15	26
	11-21	37
	11-25	30
	11-28	45
	11-31	36
	12-5	21
16540	16-37	14
	16-51	14
16682	8-33	30
	8-39	32
	8-47	26
16706	12-39	6
	12-41	19
	12-43	6
	12-45	3
	12-47	2
16708	5-21	14
	5-25	13
	6-99	14
	6-103	13
16788	6-49	30
16863	6-50	42
	6-57	4
	6-59	4
	6-81	34
	6-85	34
	6-92	43
16865	5-21	16
	5-25	9
	6-99	16
	6-103	9
16982	13-7	12
16983	8-37	13
	8-48	49
17221	11-15	11
	11-17	8
	11-19	18
	16-43	10
	16-49	11
	16-57	10
17223	8-21	10
	8-25	10
17353	6-49	9
17407	7-50	31
	7-53	14
17650	5-9	3
17758	11-15	8
	11-17	5
	11-19	11
17775	11-15	15
	11-17	13
	11-19	12
17829	7-33	4
18094	12-23	6
	12-27	6
18462	1-107	23
	1-111	22
18471	1-107	15
	1-111	23
18497	7-33	5
	7-49	25
18498	7-41	7
18515	7-33	6
	7-49	26
18595	8-33	9
	8-39	9
18735	1-107	4
18738	1-107	4
	1-111	19
18748	12-37	3
18832	16-15	10
	16-19	10
	16-23	10
19901	1-75	16
	1-89	11
	1-107	8
21195	6-21	15
	6-63	3
	6-65	1
21420	9-23	23
28584	16-35	4
30273	10-13	20
34507	6-79	19
	6-81	16
	6-85	16
	6-87	2
	6-91	19
37752	13-5	8
	14-14	22
	15-5	12
	15-20	21
39352	10-13	36
39374	12-73	3
39375	8-59	20
43207	8-37	17
	8-43	18
	8-45	19
	8-47	28
	8-47	33
	8-53	15
	8-59	14
	8-63	22
	8-65	21
	8-67	21
	8-69	22
	8-71	21
	8-73	21
43208	8-33	19
	8-39	20
	8-45	14
	8-53	30
	8-59	25
43883	6-21	16
	6-63	2
	6-65	19
44306	8-51	11
	8-55	11
44307	8-37	19
	8-43	20
	8-47	21
	8-53	17
	8-59	19
44308	8-33	24
44310	8-33	33
	8-39	35
	8-47	19
44542	10-13	18
46388	12-73	7
53162	5-21	17
	5-25	8
	6-99	17
	6-103	8
55434	12-71	11
58901	13-3	8
	13-5	3
	14-3	8
	14-5	3
	15-3	8
	15-5	8
	15-9	3
	15-33	5
	16-19	13
58903	10-13	6
58916	8-33	23
	8-39	24
	8-48	37
	8-53	29
	8-59	22
59229	13-12	12
	14-9	9
	14-11	8
	15-16	15
60563	12-71	11
63081	8-61	6
63108	6-49	31
63117	2-11	6
	2-15	6
	3-21	6
	4-11	6
68968	2-11	6
	2-15	6
	3-19	6
	3-21	6
	4-11	6
69029	10-13	24
69392	16-35	3
77186	11-15	26
77441	12-45	6
77442	12-39	3
	12-41	16
	12-43	3

©2013 HYSTER COMPANY

NUMERICAL INDEX (continued)

PART NO.	PAGE	ITEM
	12-45	7
	12-47	12
	12-61	5
	12-63	13
	12-65	8
77443	12-39	5
	12-41	17
	12-43	5
	12-45	8
	12-47	11
	12-61	4
	12-63	14
	12-65	9
86229	8-33	18
	8-39	19
	8-45	10
	8-51	22
	8-55	22
87446	5-9	4
90263	14-16	12
	15-23	13
92861	13-12	12
	15-16	15
97999	6-23	25
	6-25	25
	6-27	25
	6-50	47
	6-57	3
	6-59	3
	6-81	36
	6-85	36
	6-92	45
98525	10-13	14
98644	7-80	3
101809	6-79	15
	6-81	5
	6-85	5
	6-87	28
	6-91	9
102919	6-9	20
	6-11	20
104506	13-3	3
	14-3	3
	15-3	3
	15-5	3
104681	8-59	29
110153	16-43	21
	16-49	14
	16-57	21
110322	10-11	
112989	5-3	8
	5-5	8
	6-5	10
	6-7	10
	6-13	7
	6-15	7
	6-17	7
114312	1-107	
	6-65	7
	16-25	3
	16-26	3
117989	11-22	40
	11-25	32
	11-31	37
118358	10-15	7
118361	8-55	10
124603	8-45	21
	8-47	30
	8-63	17
	8-65	17
	8-67	17
	8-69	17
	8-71	17
	8-73	17
125305	1-132	10
127918	12-9	8
128263	5-15	14
128408	7-26	36
	7-29	4
	7-43	2
	7-49	19
	7-53	21
	8-31	11
129361	15-12	18
129387	13-3	7
	13-5	4
	14-3	7
	14-5	4
	15-3	7
	15-5	7
	15-9	4
	15-33	7
	16-19	16
129888	7-195	31
	7-197	31
	7-201	28
	7-203	28
	7-228	19
	7-232	14
	7-235	16
	7-240	19
	7-243	15
	7-248	17
	7-252	18
130845	1-128	2
	1-129	2
	1-130	2
	1-131	2
	1-132	2
	2-19	16
	2-30	4
	6-17	16
	6-23	18
	6-23	18
	6-25	18
	6-25	18
	6-27	18
	6-27	18
	6-49	24
	8-19	15
	8-21	11
	8-25	11
	8-28	15
	8-31	3
131358	13-7	1
	13-19	5
	14-7	18
	14-13	3
	14-23	8
	15-11	1
	15-20	40
	15-33	6
	16-15	19
	16-19	7
	16-23	7
131715	15-3	4
131716	13-3	4
	14-3	4
	15-3	4
	15-5	4
132861	12-5	3
133683	11-37	9
134675	12-71	8
134810	7-261	1
	7-261	9
	7-263	6
	7-269	5
135158	9-19	4
135588	15-12	18
135634	15-12	18
136516	7-43	9
	7-53	17
136681	1-73	5
	1-77	6
	1-81	9
	8-37	29
	8-43	26
	8-47	2
	8-53	6
	8-75	17
136687	1-35	8
	1-73	11
	1-77	13
	1-81	15
	7-45	8
	9-3	16
	9-33	8
136749	1-75	7
136750	7-53	27
136985	4-17	6
	8-37	8
	8-43	8
	8-47	24
137852	14-20	12
138710	1-132	9
140612	1-129	11
141259	7-30	30
141331	5-6	1
	6-18	1
142247	12-71	8
145481	8-37	2
	8-43	2
	8-47	13
	8-51	
	8-55	
145639	1-97	11
146540	16-10	1
147972	14-9	10
	14-11	9
147973	10-15	6
	12-75	9
	14-16	13
	15-23	14
148609	7-255	8
148611	7-255	1
	7-259	5
148614	2-23	13
	7-264	3
148615	2-23	13
	7-264	1
148789	7-26	36
	7-29	4
	7-34	25
	7-43	2
	7-49	19
	7-53	21
148792	7-25	8
	7-29	9

©2013 HYSTER COMPANY

NUMERICAL INDEX (continued)

PART NO.	PAGE	ITEM
	7-33	19
	7-43	1
	7-49	3
148795	7-33	20
148796	7-49	10
	7-53	20
148962	8-48	42
154065	1-115	18
154066	1-115	18
154067	1-115	18
154355	14-13	13
	15-19	11
154375	12-73	8
156194	10-13	16
156195	10-13	15
160653	9-28	4
	9-29	4
	9-31	8
161003	13-8	23
	14-14	27
	15-12	23
	15-20	16
161029	15-20	26
161884	10-17	5
161885	10-17	4
161889	9-28	5
	9-29	5
	9-31	5
	9-33	2
161890	9-28	4
	9-29	4
	9-31	4
	9-33	2
161894	10-19	5
163970	10-13	19
164488	9-21	4
164639	10-13	17
164840	14-16	13
	15-23	14
166112	7-227	5
	7-232	25
	7-235	13
	7-239	4
	7-244	30
	7-248	22
	7-252	14
166857	11-21	20
	11-25	25
	11-27	24
	11-31	31
168718	2-19	3
	5-9	9
	6-21	2
	6-47	14
	6-55	5
	6-65	9
	11-21	20
	11-25	25
	11-27	24
	11-31	31
169690	8-37	26
169874	1-107	19
	1-111	26
170658	1-115	7
	1-115	25
	1-117	1
173056	8-55	4
175861	12-23	8
	12-27	8
175944	7-261	6
	7-261	8
	7-269	3
	7-277	11
178119	8-31	12
	14-13	17
180029	15-20	26
180057	15-20	26
180177	14-14	21
	15-20	26
181045	7-261	1
	7-261	9
	7-263	1
	7-269	4
181046	7-261	4
	7-261	7
	7-263	2
	7-269	6
182343	15-12	18
184451	6-79	21
	6-81	14
	6-85	14
	6-87	4
	6-91	17
186304	7-55	7
187388	13-12	7
	14-16	4
	15-16	8
	15-23	4
187630	6-47	10
188210	8-37	13
	8-43	14
	8-48	49
188515	12-39	7
	12-41	18
	12-43	7
	12-45	4
	12-47	14
190382	7-255	3
	7-255	4
	7-259	1
	7-259	4
190383	7-6	28
	7-228	19
	7-232	14
	7-235	16
	7-240	19
	7-244	15
	7-248	17
	7-252	18
	7-255	22
	7-259	9
	7-259	11
	7-261	6
	7-261	8
	7-261	8
	7-263	8
	7-267	4
	7-269	2
	7-271	4
190580	13-12	5
	14-16	6
	15-16	6
	15-23	6
190887	14-9	3
	14-11	3
	14-16	3
	15-23	3
191941	1-63	8
	1-69	4
	1-79	11
	1-83	11
	1-85	8
	1-91	8
	1-93	8
	1-95	8
	1-99	6
192877	12-71	10
197067	12-23	4
	12-27	4
197345	15-20	26
199852	12-75	3
201800	6-9	14
	6-11	14
203230	10-11	
204128	8-55	27
	12-48	3
	12-55	2
204223	7-33	19
	7-33	20
204787	6-69	18
	6-71	18
209457	12-16	4
212786	7-43	3
	7-53	18
215211	13-3	5
	14-3	5
	15-3	5
	15-5	5
216895	3-27	16
220428	5-21	2
	5-25	7
	6-99	2
	6-103	7
221353	1-71	15
	1-75	15
	1-89	
	1-107	5
221457	7-53	31
221530	1-75	21
	1-89	
	1-107	10
221533	1-89	14
221536	1-71	13
	1-75	14
	1-107	7
221542	1-107	11
222442	8-51	27
	8-55	27
222443	8-47	12
	8-51	26
	8-55	26
	11-15	19
	11-17	16
222444	8-39	44
	8-51	15
	8-55	15
222491	11-21	38
	11-25	27
	11-28	46
	11-31	33
222493	8-19	13
	8-28	14
222500	16-43	24
	16-49	17
	16-58	32
222505	11-19	7
222509	11-21	39
	11-25	31
	11-28	44

See Service Manual for service procedures.
©2013 HYSTER COMPANY

NUMERICAL INDEX (continued)

PART NO.	PAGE	ITEM
	11-31	43
222510	12-5	6
	12-7	6
	12-9	6
222512	8-19	11
	8-21	8
	8-25	8
	8-31	16
223389	13-8	18
226430	9-3	3
226458	8-9	10
	16-15	7
	16-23	5
226986	10-13	35
227157	1-109	4
	1-109	13
	1-111	4
	1-111	13
230882	12-23	3
	12-27	3
233683	8-33	38
	11-21	37
	11-25	30
	11-28	45
	11-31	36
233693	8-33	5
	8-39	5
	8-45	25
	8-47	10
	8-51	12
	8-53	37
	8-55	12
	8-59	6
	8-61	1
	8-75	9
	8-76	2
234038	9-19	12
235691	8-33	40
	8-40	46
	8-47	5
	8-48	59
	8-53	35
	8-59	4
237812	12-75	6
239222	8-31	19
239503	1-35	9
	1-47	5
	1-59	29
	11-3	24
	11-5	22
	11-7	31
	11-9	22
	11-21	26
	11-25	22
	11-27	33
	11-31	24
240072	2-35	20
240724	11-37	9
	11-39	
244167	14-13	2
	14-13	14
	15-11	12
	15-20	33
244540	11-7	29
	11-9	29
	11-27	31
	11-31	21
246001	2-32	12
	2-35	10
246108	2-23	7
	2-23	17
	3-7	17
	3-13	14
	3-17	16
	6-25	
	6-33	18
	6-57	
	6-82	
	6-85	
	6-92	
249289	10-13	12
251099	5-23	11
	5-25	30
	6-101	11
	6-103	30
251979	3-21	31
251994	7-43	3
	7-53	18
252729	8-15	3
	8-15	11
	8-17	3
	8-17	4
	8-17	12
	8-23	4
	8-23	7
	8-23	10
	8-33	36
	8-47	4
	12-19	14
	13-7	4
	13-7	6
	13-7	12
	13-7	13
	14-7	2
	14-7	4
	14-7	8
	14-7	9
	14-7	10
	15-11	4
	15-11	6
	15-11	11
	15-12	13
	16-13	5
254007	7-6	29
	7-55	8
257913	13-12	4
	15-16	5
260878	5-9	13
	6-49	11
261379	7-53	28
261395	1-136	8
262798	7-6	30
	7-55	8
264134	8-5	
	8-9	20
	8-11	
264159	9-19	
	12-5	
	12-7	
	12-9	
264973	10-13	32
265731	11-15	11
	11-15	16
	11-17	8
	11-17	12
	11-19	17
	12-19	5
265787	10-11	3
	10-11	4
	10-11	5
	11-15	1
	11-15	3
	11-15	7
	11-17	1
	11-17	3
	12-19	5
	12-19	5
	12-19	11
	12-19	21
	12-19	26
	16-37	2
	16-37	8
	16-37	12
	16-51	8
	16-51	12
266519	12-63	9
268619	10-15	5
	12-75	8
272133	1-71	22
	1-75	20
273338	16-35	7
275493	7-114	15
	7-120	15
	7-154	15
	7-160	15
	7-182	24
	7-188	24
	7-193	10
	7-211	2
	7-221	2
	7-277	9
	7-297	14
	7-305	11
	7-309	6
	7-313	5
	7-313	17
	7-317	4
	7-321	4
275494	7-205	2
	7-205	5
	7-207	41
	7-222	20
275495	7-114	26
	7-120	26
	7-154	26
	7-160	26
	7-182	23
	7-188	23
	7-193	6
	7-277	10
	7-297	10
	7-305	5
275496	7-113	10
	7-119	10
	7-153	10
	7-159	10
	7-182	14
	7-188	14
	7-205	17
	7-211	15
	7-211	16
	7-215	10
	7-215	11
	7-221	13
	7-297	7
	7-305	6
	7-309	11
	7-313	10

©2013 HYSTER COMPANY

NUMERICAL INDEX (continued)

PART NO.	PAGE	ITEM
	7-317	8
	7-321	8
275497	7-114	25
	7-120	25
	7-153	11
	7-154	25
	7-159	11
	7-160	25
	7-182	15
	7-188	15
	7-206	34
	7-213	47
	7-216	29
	7-223	34
	7-297	19
	7-305	15
	7-309	17
	7-314	21
	7-317	18
	7-321	20
275498	7-113	11
	7-119	11
	7-206	33
	7-207	38
	7-207	48
	7-213	39
	7-216	24
	7-223	35
275499	7-114	14
	7-120	14
	7-153	14
	7-159	14
	7-183	36
	7-189	36
279033	7-33	15
280154	14-7	8
	15-11	11
	15-19	12
	15-20	33
280157	8-53	34
287816	5-19	10
	10-11	
287851	1-35	1
	4-17	4
	7-13	14
	7-79	2
	8-53	13
287860	8-53	24
	8-59	27
288638	10-17	7
	10-19	7
	10-19	8
292500	1-71	20
	1-75	26
	1-109	22
	8-33	17
	8-37	14
	8-39	18
	8-43	15
	8-45	3
	8-48	50
	8-51	33
	8-53	10
	8-55	34
	8-59	8
292501	1-35	6
292505	16-43	5
	16-49	6
	16-57	5
292509	8-33	2
	8-39	2
	8-45	28
292513	12-7	17
	12-9	17
292515	8-45	24
292516	2-35	11
	8-33	28
	8-39	30
292517	2-32	11
	2-35	21
	3-27	5
	3-29	6
	4-17	7
292521	2-19	30
292522	8-48	54
292526	8-37	36
	8-43	27
292531	8-5	7
	8-7	7
	8-9	7
	8-11	7
292539	2-32	8
	2-35	3
292600	10-19	11
292608	1-25	2
	1-27	2
292613	1-25	2
	1-27	2
292616	8-47	27
292660	9-17	4
292667	1-60	35
292668	5-17	17
	5-19	6
	11-5	26
	11-9	26
	11-25	18
	11-31	28
292676	7-45	21
292678	1-31	17
	1-33	17
292679	5-19	5
	8-59	36
	16-10	4
292680	8-33	16
	8-37	15
	8-39	17
	8-43	16
	8-45	4
	8-48	41
	8-53	9
	8-55	34
	8-59	9
	9-3	17
	9-33	9
292681	4-17	3
	7-79	3
	8-31	15
	8-37	22
	8-43	23
	8-48	57
	8-51	18
	8-53	5
	8-55	18
	8-75	16
292682	2-32	13
	2-35	12
	3-27	4
	3-29	5
	4-17	5
	8-33	27
	8-39	29
	8-45	23
	8-47	25
	8-53	25
	8-59	28
292683	1-127	4
	2-11	26
	2-15	26
	2-32	6
	2-35	4
	3-19	15
	3-21	15
	8-5	6
	8-7	6
	8-9	6
	8-11	6
292685	8-5	4
	8-7	4
	8-9	4
	10-19	10
292689	1-25	4
	1-27	4
293615	8-51	19
	8-55	19
293616	9-3	7
	9-17	2
293619	3-23	3
293622	8-51	32
	8-55	33
293623	2-29	3
	4-13	3
293625	2-19	7
293626	4-17	14
293630	4-12	7
293646	9-23	1
293648	10-13	37
293651	9-19	3
293686	9-23	17
	10-13	5
293692	9-19	10
293697	8-5	5
	8-7	5
	8-9	5
	8-11	5
293698	2-17	2
	3-25	2
	4-12	2
293733	9-17	6
293741	8-51	
	8-55	24
	8-55	28
	8-55	31
	8-59	37
	8-76	8
293742	8-75	5
293762	5-19	12
293774	5-17	5
293796	12-19	25
295649	14-9	2
	14-11	2
296009	8-31	14
296022	8-37	23
	8-43	24
	8-48	58
296032	1-5	29

©2013 HYSTER COMPANY

NUMERICAL INDEX (continued)

PART NO.	PAGE	ITEM
	1-7	25
	1-7	27
	1-10	28
296137	9-19	7
296149	1-85	12
	1-97	9
	1-99	9
296150	7-25	21
	7-30	24
296152	6-23	8
	6-25	8
	6-27	8
	6-57	11
	6-59	11
296156	6-81	9
	6-91	7
296157	1-31	11
	1-33	11
296165	1-109	9
	1-111	9
296229	1-37	6
	1-39	6
	1-47	13
296357	1-71	18
	1-75	24
	1-89	17
	1-107	21
296359	1-31	10
	1-33	10
296360	1-109	6
	1-109	21
	1-111	6
	1-111	20
296378	5-17	3
	5-19	4
	5-23	13
	5-25	20
	6-101	13
	6-103	20
	11-37	5
	11-39	4
296379	1-107	16
	7-45	16
296380	7-5	20
	7-26	35
	7-29	13
	7-33	22
	7-43	7
	7-49	15
	7-53	24
296415	1-60	34
	1-67	15
296418	2-19	7
	2-29	4
	3-23	4
	4-13	4
296419	1-67	16
296420	2-35	8
	4-12	8
	4-17	13
	8-12	2
	12-7	18
	12-9	16
296422	3-27	7
	3-29	10
	9-19	2
296423	1-127	3
296424	3-27	13
	3-29	2
	4-17	15
296426	9-19	11
	9-23	18
	16-15	8
	16-23	4
296434	9-3	2
	9-17	5
296463	1-75	2
296481	6-5	12
	6-7	12
296507	16-10	3
296508	6-69	3
	6-71	3
297531	13-12	6
	14-16	5
	15-16	7
	15-23	5
297538	14-16	7
	15-23	7
297649	13-8	22
	14-14	26
	15-12	22
	15-20	17
300751	10-13	9
300752	10-13	7
300765	10-13	34
300766	10-13	13
300767	10-13	33
300937	1-127	5
	10-13	39
300982	12-71	19
	13-3	9
	14-3	9
	15-3	9
302015	7-45	22
302019	1-55	22
	1-59	22
302020	3-17	6
302023	2-3	9
	2-5	9
	2-7	10
	2-9	10
	3-5	7
	3-7	7
	3-9	6
	3-11	6
	3-13	6
	3-15	6
	3-17	6
	4-3	9
	4-5	9
	4-7	9
	4-9	9
302027	7-45	5
302047	1-37	8
	1-39	8
	1-47	11
	2-38	82
	2-42	56
302051	6-95	5
302249	7-26	41
302363	6-91	25
302380	1-5	8
	1-7	8
302385	9-19	19
	9-23	8
302398	7-80	1
	11-3	1
	11-5	19
	11-7	1
	11-9	19
	11-21	1
	11-25	1
	11-27	1
	11-31	1
302399	5-19	11
	16-43	9
	16-49	9
	16-57	9
302400	1-39	12
	1-47	18
	1-69	4
	1-85	8
	5-15	10
	6-95	10
	6-97	7
302428	12-23	9
	12-27	9
302437	5-25	17
	6-103	17
302443	5-23	2
	6-101	2
302450	1-124	2
302461	14-14	24
	14-20	24
	15-20	23
	15-26	30
	15-30	17
302462	13-5	9
	15-5	9
302468	6-87	6
	6-91	25
302472	8-51	4
302487	16-33	6
302492	1-25	6
303100	8-33	34
	8-39	36
	8-47	17
303119	10-17	11
303150	2-32	4
	3-27	12
	3-29	12
	4-17	8
	8-33	39
	8-39	45
	8-45	12
	8-47	9
	8-51	13
	8-55	13
	8-59	34
304526	14-14	23
	15-20	22
306113	12-23	12
	12-27	12
309062	14-16	9
	15-23	9
309109	12-23	16
	12-25	11
	12-27	17
	12-31	12
309651	5-9	5
309740	2-32	10
	2-35	7
	8-12	3
313805	5-17	9
	10-11	
313828	1-71	11
	1-75	18
	1-89	20

©2013 HYSTER COMPANY

NUMERICAL INDEX (continued)

PART NO.	PAGE	ITEM
	1-107	14
	1-109	7
	1-109	20
	1-111	7
	1-111	21
314773	7-263	4
	7-269	10
316825	7-26	44
316826	1-109	17
	1-111	15
316834	12-23	3
	12-27	3
316835	1-37	12
	1-39	12
	1-47	18
	1-59	32
317075	10-13	22
317076	10-13	26
317735	14-23	7
	15-33	10
	16-15	18
	16-19	20
	16-23	20
320152	7-45	20
320154	2-3	7
	2-5	8
	2-7	8
	2-9	8
	3-5	6
	3-7	6
	3-9	5
	3-11	5
	3-13	5
	3-15	5
	3-17	5
	4-3	8
	4-5	8
	4-7	8
	4-9	8
	7-45	6
320155	16-10	5
320156	1-35	5
	1-37	9
	1-39	9
	1-47	12
	1-73	8
	1-77	12
	1-81	14
	5-15	21
	6-95	21
	6-97	16
	7-30	35
	12-27	4
320157	1-13	27
	1-17	27
	2-31	5
	7-13	14
	8-33	3
	8-39	3
	8-45	27
320158	1-35	2
	1-47	6
	1-59	30
	1-65	16
	1-73	4
	1-77	5
	1-97	10
320159	2-11	5
	2-15	5
	3-19	4
	3-21	4
	4-11	5
	7-33	11
	7-41	9
	7-50	35
320160	1-23	4
	1-109	18
	1-111	16
320161	8-37	34
	8-43	28
	10-13	38
	12-23	13
	12-27	14
320165	8-5	4
	8-9	4
	8-9	12
	8-11	4
	12-23	4
320264	9-19	5
320289	12-39	10
	12-41	7
	12-43	10
	12-45	10
	12-47	8
322824	13-12	14
	14-16	
	15-16	14
	15-17	
322902	13-12	11
	14-16	
	15-16	12
	15-17	
323090	13-8	16
	14-7	13
	15-12	16
324692	3-53	15
	3-85	15
324706	3-41	1
	3-45	5
	3-79	3
	3-87	22
	6-37	5
325182	7-25	7
	7-29	17
325549	6-21	25
	6-47	20
325616	15-20	27
325699	5-21	13
	5-25	10
	6-99	13
	6-103	10
325789	7-255	24
	7-259	10
	7-259	12
325804	11-17	23
	11-19	24
	12-19	19
325897	11-5	14
	11-9	14
326504	3-41	8
	3-45	32
	3-47	7
	3-49	4
	3-51	8
	3-81	1
	3-83	8
	3-87	1
	6-37	32
	6-39	4
326608	3-41	36
326612	3-35	10
	3-67	10
326748	3-53	5
	3-85	5
326749	3-53	6
	3-85	6
326850	7-23	2
326898	7-19	22
	7-23	25
326926	6-69	22
	6-71	22
329069	1-5	6
	1-5	22
	1-7	6
	1-7	20
	1-9	11
	1-9	25
	5-23	10
	5-25	29
	6-101	10
	6-103	29
334156	13-12	2
	15-16	2
334450	8-53	20
	8-59	12
334560	8-33	29
	8-39	31
	8-48	39
	8-53	11
	8-59	11
335012	13-12	1
	15-16	1
335988	1-69	
335991	1-69	
336550	2-3	17
	2-5	17
	2-7	18
	2-9	18
	3-5	20
	3-7	20
	3-9	19
	3-11	17
	3-13	17
	3-15	19
	3-17	19
	4-3	17
	4-5	17
	4-7	17
	4-9	17
337174	15-12	18
339735	2-3	17
	2-5	17
	2-7	18
	2-9	18
	3-5	20
	3-7	20
	3-9	19
	3-11	17
	3-13	17
	3-15	19
	3-17	19
	4-3	17
	4-7	17
341462	12-39	13
	12-41	13
	12-43	13
345453	2-3	17
	2-5	17

©2013 HYSTER COMPANY

NUMERICAL INDEX (continued)

PART NO.	PAGE	ITEM
	2-7	18
	2-9	18
	3-5	20
	3-7	20
	3-9	19
	3-11	17
	3-13	17
	3-15	19
	3-17	19
	4-3	17
	4-5	17
	4-7	17
	4-9	17
345454	2-3	17
	2-5	17
	2-7	18
	2-9	18
	3-5	20
	3-7	20
	3-9	19
	3-11	17
	3-13	17
	3-15	19
	3-17	19
	4-3	17
	4-5	17
	4-7	17
	4-9	17
345455	2-3	17
	2-5	17
	2-7	18
	2-9	18
	3-5	20
	3-7	20
	3-9	19
	3-11	17
	3-13	17
	3-15	19
	3-17	19
	4-3	17
	4-5	17
	4-7	17
	4-9	17
346656	7-33	10
	7-41	10
	7-49	23
352406	2-35	9
353000	5-9	7
	6-21	33
	6-47	2
	6-55	3
353199	6-5	8
	6-7	8
	6-9	13
	6-11	13
	6-15	16
353206	1-13	28
	1-17	28
356505	14-13	12
	15-19	10
360387	5-25	16
	6-103	16
	7-54	
362036	5-21	10
	6-99	10
364868	1-9	16
366000	1-129	10
	6-23	19
	6-25	19
	6-27	19
	6-49	34
366115	15-33	4
	16-19	14
366116	13-19	3
	14-23	5
	16-15	16
	16-23	14
366473	6-23	6
	6-25	6
	6-27	6
367224	7-45	29
367323	7-33	12
367419	1-122	1
367420	1-122	1
367421	1-122	1
367422	1-122	1
367423	1-122	1
367424	1-122	1
369804	2-5	5
	2-9	6
	2-30	5
	3-7	16
	3-13	15
	3-17	15
	4-3	5
	4-5	5
	4-7	5
	4-9	5
	6-65	12
	12-5	2
	12-5	2
	12-7	2
	12-7	2
	12-9	2
	12-9	2
369815	2-3	19
	2-5	19
	2-7	20
	2-9	16
	3-5	22
	3-7	22
	3-9	21
	3-11	19
	3-13	19
	3-15	21
	3-17	21
	4-3	19
	4-5	19
	4-7	19
	4-9	19
	6-49	15
370647	7-195	15
	7-197	15
374923	5-6	2
	6-18	2
375634	10-15	1
375635	10-15	8
381298	10-13	10
383789	9-19	
384211	1-122	1
384213	1-122	1
384214	1-122	1
384215	1-122	1
384216	1-122	1
386015	12-39	14
	12-41	12
	12-43	14
386422	13-19	
	14-23	
	16-15	14
	16-23	13
389688	1-117	3
392238	1-63	6
397676	15-30	22
636941	14-16	8
	15-23	8
637565	14-16	10
	15-23	10
638246	13-12	1
	15-16	1
806426	7-25	8
	7-26	36
	7-29	4
	7-29	9
	7-33	19
	7-33	20
	7-34	25
	7-43	1
	7-43	2
	7-49	10
	7-49	19
	7-53	20
	7-53	21
866401	7-227	9
	7-231	2
	7-236	23
	7-239	6
	7-243	2
	7-247	2
	7-252	23
878258	4-11	11
930591	7-273	4
	7-273	7
	7-275	4
	7-275	8
	7-277	4
	7-277	7
980542	9-28	5
	9-29	5
	9-31	9
1302024	7-75	14
	7-77	14
	16-3	12
1304950	5-9	11
	6-21	6
	6-47	8
	6-55	14
1304971	1-5	11
	1-7	11
	1-9	7
1307994	2-31	6
1308093	1-122	1
1308259	7-195	32
	7-197	32
	7-201	30
	7-203	30
	7-208	62
	7-211	6
	7-215	7
	7-221	10
1308260	7-263	3
	7-269	9
1310599	10-13	29
1311213	1-31	18
	1-33	18
1315425	10-13	30
1316496	6-21	5
	6-47	7

©2013 HYSTER COMPANY

NUMERICAL INDEX (continued)

PART NO.	PAGE	ITEM
	6-55	12
1319668	13-12	16
	14-9	12
	14-11	11
	15-16	17
1323576	7-116	47
	7-122	47
	7-156	47
	7-162	47
	7-184	45
	7-190	45
	7-207	43
	7-213	36
	7-217	41
	7-223	43
	7-227	16
	7-228	24
	7-228	25
	7-232	17
	7-232	18
	7-232	19
	7-235	4
	7-235	6
	7-235	7
	7-240	15
	7-244	18
	7-248	15
	7-252	16
	7-255	6
	7-255	14
	7-255	16
	7-259	3
	7-259	14
	7-259	16
	7-261	3
	7-279	4
	7-279	7
	7-279	8
	7-281	7
	7-281	9
	7-281	11
	7-283	7
	7-283	9
	7-284	15
	7-287	1
	7-287	7
	7-287	12
	7-289	4
	7-289	7
1323578	7-208	64
	7-211	4
	7-215	5
	7-221	4
	7-228	22
	7-232	16
	7-236	18
	7-240	23
	7-244	24
	7-248	27
	7-251	9
	7-255	15
	7-259	17
1323579	7-85	10
	7-85	11
	7-86	15
	7-86	16
	7-90	10
	7-90	11
	7-90	15
	7-90	16
	7-96	10
	7-96	11
	7-96	15
	7-96	16
	7-102	15
	7-102	16
	7-102	20
	7-102	21
	7-108	10
	7-108	11
	7-108	15
	7-108	16
	7-114	17
	7-114	18
	7-114	22
	7-114	23
	7-120	17
	7-120	18
	7-120	22
	7-120	23
	7-125	9
	7-125	10
	7-126	14
	7-126	15
	7-129	9
	7-130	10
	7-130	14
	7-130	15
	7-135	9
	7-136	10
	7-136	14
	7-136	15
	7-142	11
	7-142	12
	7-142	15
	7-142	16
	7-148	10
	7-148	11
	7-148	15
	7-148	16
	7-154	17
	7-154	18
	7-154	22
	7-154	23
	7-160	17
	7-160	18
	7-160	22
	7-160	23
	7-165	10
	7-165	11
	7-166	15
	7-166	16
	7-169	10
	7-170	11
	7-170	15
	7-170	16
	7-175	10
	7-176	11
	7-176	15
	7-176	16
	7-182	11
	7-182	12
	7-182	19
	7-182	20
	7-188	11
	7-188	12
	7-188	19
	7-188	20
	7-221	5
	7-232	24
	7-235	12
	7-244	30
	7-248	21
	7-251	13
	7-291	6
1323586	7-195	35
	7-197	35
	7-201	29
	7-203	29
	7-205	1
	7-211	10
	7-215	9
	7-221	7
	7-227	16
	7-232	17
	7-235	4
	7-239	15
	7-244	18
	7-248	15
	7-252	16
	7-255	16
	7-259	16
	7-261	3
1324309	7-293	13
	7-301	8
	7-305	16
	7-305	17
	7-309	10
	7-313	13
	7-313	14
	7-317	10
	7-317	11
	7-321	12
	7-321	13
1324310	7-293	13
	7-301	8
	7-305	16
	7-305	17
	7-309	10
	7-313	13
	7-313	14
	7-317	10
	7-317	11
1324360	1-9	22
1324480	1-117	11
1325119	12-71	9
1325120	12-71	9
1327164	7-85	10
	7-85	11
	7-86	14
	7-86	15
	7-86	16
	7-86	26
	7-90	10
	7-90	11
	7-90	14
	7-90	15
	7-90	16
	7-91	26
	7-96	10
	7-96	11
	7-96	14
	7-96	15
	7-96	16
	7-97	26
	7-102	15
	7-102	16
	7-102	19

©2013 HYSTER COMPANY

NUMERICAL INDEX (continued)

PART NO.	PAGE	ITEM
	7-102	20
	7-102	21
	7-103	33
	7-107	10
	7-108	11
	7-108	14
	7-108	15
	7-108	15
	7-108	16
	7-109	27
	7-114	17
	7-114	18
	7-114	21
	7-114	22
	7-114	23
	7-115	36
	7-120	17
	7-120	18
	7-120	21
	7-120	22
	7-120	23
	7-121	36
	7-125	9
	7-125	10
	7-126	13
	7-126	15
	7-126	25
	7-129	9
	7-130	10
	7-130	13
	7-130	15
	7-131	25
	7-135	9
	7-136	10
	7-136	13
	7-136	15
	7-137	26
	7-142	11
	7-142	12
	7-142	14
	7-142	16
	7-143	28
	7-147	10
	7-148	11
	7-148	14
	7-148	15
	7-148	15
	7-148	16
	7-149	27
	7-154	17
	7-154	18
	7-154	21
	7-154	23
	7-155	36
	7-160	17
	7-160	18
	7-160	21
	7-160	23
	7-161	36
	7-165	10
	7-165	11
	7-166	14
	7-166	16
	7-166	26
	7-170	10
	7-170	11
	7-170	14
	7-170	16
	7-171	26
	7-176	10
	7-176	11
	7-176	14
	7-176	16
	7-177	26
	7-182	11
	7-182	12
	7-182	18
	7-182	20
	7-183	38
	7-188	11
	7-188	12
	7-188	18
	7-188	20
	7-189	38
	7-205	14
	7-205	18
	7-205	20
	7-206	24
	7-211	3
	7-212	24
	7-212	26
	7-212	27
	7-215	3
	7-215	5
	7-216	16
	7-216	19
	7-221	3
	7-222	22
	7-222	25
	7-291	6
1327246	9-23	13
1327957	7-195	33
	7-197	33
	7-201	26
	7-203	26
	7-208	61
	7-211	7
	7-215	6
	7-221	6
	7-255	18
	7-259	18
	7-281	5
	7-281	8
1327959	7-205	20
	7-212	24
	7-216	19
	7-222	25
1329150	7-86	14
	7-86	26
	7-90	14
	7-91	26
	7-96	14
	7-97	26
	7-102	19
	7-103	33
	7-108	14
	7-114	21
	7-120	21
	7-126	13
	7-126	25
	7-130	13
	7-131	25
	7-136	13
	7-137	26
	7-142	14
	7-143	28
	7-148	14
	7-154	21
	7-160	21
	7-166	14
	7-166	26
	7-170	14
	7-171	26
	7-176	14
	7-177	26
	7-182	18
	7-183	38
	7-188	18
	7-189	38
	7-201	21
	7-203	22
	7-215	1
	7-217	43
1329151	7-86	13
	7-86	14
	7-86	26
	7-86	27
	7-90	13
	7-90	14
	7-91	26
	7-91	27
	7-96	13
	7-96	14
	7-97	26
	7-97	27
	7-102	18
	7-102	19
	7-103	32
	7-103	33
	7-108	13
	7-108	14
	7-109	26
	7-109	27
	7-114	20
	7-114	21
	7-115	35
	7-115	36
	7-120	20
	7-120	21
	7-121	35
	7-121	36
	7-125	12
	7-126	13
	7-126	25
	7-126	26
	7-130	12
	7-130	13
	7-131	25
	7-131	26
	7-136	12
	7-136	13
	7-137	26
	7-137	27
	7-142	13
	7-142	14
	7-143	27
	7-143	28
	7-148	13
	7-148	14
	7-149	26
	7-149	27
	7-154	20
	7-154	21
	7-155	35
	7-155	36
	7-160	20
	7-160	21
	7-161	35

©2013 HYSTER COMPANY

NUMERICAL INDEX (continued)

PART NO.	PAGE	ITEM
	7-161	36
	7-166	13
	7-166	14
	7-166	26
	7-166	27
	7-170	13
	7-170	14
	7-171	26
	7-171	27
	7-176	13
	7-176	14
	7-177	26
	7-177	27
	7-182	17
	7-182	18
	7-183	37
	7-183	38
	7-188	17
	7-188	18
	7-189	37
	7-189	38
	7-240	21
	7-244	21
	7-251	6
	7-323	2
1329152	7-86	13
	7-86	27
	7-90	13
	7-91	27
	7-96	13
	7-97	27
	7-102	18
	7-103	32
	7-108	13
	7-109	26
	7-114	20
	7-120	20
	7-121	35
	7-125	12
	7-126	26
	7-130	12
	7-131	26
	7-136	12
	7-137	27
	7-142	13
	7-143	27
	7-148	13
	7-149	26
	7-154	20
	7-160	20
	7-161	35
	7-166	13
	7-166	27
	7-170	13
	7-171	27
	7-176	13
	7-177	27
	7-182	17
	7-188	17
	7-189	37
	7-203	23
	7-240	21
	7-244	21
	7-251	6
	7-323	2
1329271	2-3	10
	2-5	10
	3-5	8
	3-7	8
	3-11	7
	3-13	7
	4-3	10
	4-5	10
1330033	5-13	6
1330281	7-85	10
	7-85	11
	7-86	13
	7-86	15
	7-86	27
	7-89	10
	7-90	11
	7-90	13
	7-90	15
	7-91	27
	7-96	10
	7-96	11
	7-96	13
	7-96	15
	7-97	27
	7-102	15
	7-102	16
	7-102	18
	7-102	20
	7-103	32
	7-107	10
	7-108	11
	7-108	13
	7-108	15
	7-109	26
	7-114	17
	7-114	18
	7-114	20
	7-114	22
	7-115	35
	7-120	17
	7-120	18
	7-120	20
	7-120	22
	7-121	35
	7-125	9
	7-125	10
	7-125	12
	7-126	14
	7-126	26
	7-129	9
	7-130	10
	7-130	12
	7-130	14
	7-131	26
	7-135	9
	7-136	10
	7-136	12
	7-136	14
	7-137	27
	7-142	11
	7-142	12
	7-142	13
	7-142	15
	7-143	27
	7-147	10
	7-148	11
	7-148	13
	7-148	15
	7-149	26
	7-154	17
	7-154	18
	7-154	20
	7-154	22
	7-155	35
	7-160	17
	7-160	18
	7-160	20
	7-160	22
	7-161	35
	7-165	10
	7-165	11
	7-166	13
	7-166	15
	7-166	27
	7-170	10
	7-170	11
	7-170	13
	7-170	15
	7-171	27
	7-176	10
	7-176	11
	7-176	13
	7-176	15
	7-177	27
	7-182	11
	7-182	12
	7-182	17
	7-182	19
	7-183	37
	7-188	11
	7-188	12
	7-188	17
	7-188	19
	7-189	37
	7-206	20
	7-212	24
	7-216	19
	7-222	25
	7-227	4
	7-239	3
	7-240	21
	7-244	21
	7-251	6
	7-323	2
1330292	7-195	16
	7-197	16
1330293	7-195	14
	7-197	14
1330297	7-205	20
	7-212	24
	7-216	19
	7-222	25
1330301	2-27	3
1330302	7-227	4
	7-239	3
1330303	7-227	4
	7-239	3
1330304	7-227	4
	7-239	3
1330325	6-21	14
	6-65	3
1330326	6-21	14
	6-65	4
1330355	7-85	9
	7-89	9
	7-95	9
	7-102	14
	7-107	9
	7-114	16
	7-120	16
	7-125	8
	7-129	8
	7-135	8

©2013 HYSTER COMPANY

NUMERICAL INDEX (continued)

PART NO.	PAGE	ITEM
	7-141	10
	7-147	9
	7-154	16
	7-160	16
	7-165	9
	7-169	9
	7-175	9
	7-181	10
	7-187	10
	7-215	4
	7-218	44
	7-223	45
	7-227	14
	7-228	17
	7-228	18
	7-231	8
	7-231	10
	7-231	11
	7-231	13
	7-235	2
	7-235	14
	7-236	19
	7-236	27
	7-239	11
	7-239	14
	7-240	17
	7-243	11
	7-243	13
	7-244	20
	7-244	22
	7-247	12
	7-248	18
	7-248	24
	7-251	2
	7-251	5
	7-253	29
	7-273	4
	7-273	7
	7-275	4
	7-275	8
	7-277	4
	7-277	7
	7-291	4
1330356	7-85	9
	7-89	9
	7-95	9
	7-102	14
	7-107	9
	7-114	16
	7-120	16
	7-125	8
	7-129	8
	7-135	8
	7-141	10
	7-147	9
	7-154	16
	7-160	16
	7-165	9
	7-169	9
	7-175	9
	7-181	10
	7-187	10
	7-215	4
	7-218	44
	7-223	45
	7-227	17
	7-231	10
	7-236	19
	7-239	14
	7-244	20
	7-248	24
	7-251	5
	7-273	4
	7-273	7
	7-275	4
	7-275	8
	7-277	4
	7-277	7
	7-291	4
	7-291	5
1330409	1-31	18
	1-33	18
1330413	7-197	47
	7-203	38
	7-206	35
	7-213	46
	7-217	30
	7-223	36
	7-231	1
	7-236	22
	7-243	1
	7-247	1
	7-252	22
1330414	1-29	16
	1-31	18
	1-33	18
	7-6	25
	7-87	30
	7-91	30
	7-97	31
	7-126	30
	7-131	30
	7-167	30
	7-171	30
	7-193	9
	7-291	2
	16-7	10
1330415	7-80	5
1330416	5-21	4
	5-25	4
	6-99	4
	6-103	4
	7-13	6
	7-13	17
	7-85	5
	7-89	5
	7-95	5
	7-101	9
	7-107	5
	7-113	6
	7-119	6
	7-125	3
	7-129	3
	7-135	3
	7-141	5
	7-147	5
	7-153	6
	7-159	6
	7-165	5
	7-169	5
	7-175	5
	7-181	6
	7-187	6
1330417	16-7	10
1330418	7-198	47
	7-203	38
	7-206	35
	7-213	46
	7-217	30
	7-223	36
1330419	7-255	19
	7-259	19
1330424	7-255	19
	7-259	19
1330433	7-13	18
	7-227	9
	7-239	6
1330436	7-255	19
	7-259	19
1330437	1-29	17
	1-31	18
	1-33	18
	7-6	26
	7-13	7
	7-80	6
	7-85	5
	7-87	30
	7-89	5
	7-91	30
	7-95	5
	7-97	31
	7-101	9
	7-107	5
	7-113	6
	7-119	6
	7-125	3
	7-126	30
	7-129	3
	7-131	30
	7-135	3
	7-141	5
	7-143	29
	7-147	5
	7-153	6
	7-159	6
	7-165	5
	7-167	30
	7-169	5
	7-171	30
	7-175	5
	7-181	6
	7-187	6
	7-193	9
	7-206	35
	7-213	46
	7-217	30
	7-223	36
	7-231	1
	7-236	22
	7-243	1
	7-247	1
	7-252	22
	7-255	25
	7-260	20
	7-281	1
	7-283	1
	7-283	1
	7-291	2
	7-294	23
	7-294	23
	7-298	29
	7-302	17
	7-302	17
	7-306	25
	7-310	25
	7-314	29
	7-318	26
	7-322	28

©2013 HYSTER COMPANY

NUMERICAL INDEX (continued)

PART NO.	PAGE	ITEM
	16-7	10
	16-7	10
1330438	7-13	10
	7-83	2
	7-85	4
	7-85	6
	7-86	21
	7-86	25
	7-86	29
	7-87	31
	7-87	34
	7-87	35
	7-89	4
	7-89	6
	7-91	21
	7-91	25
	7-91	29
	7-91	31
	7-91	34
	7-91	35
	7-95	4
	7-95	6
	7-96	20
	7-97	21
	7-97	29
	7-97	30
	7-98	41
	7-101	8
	7-101	10
	7-103	22
	7-103	23
	7-103	25
	7-103	26
	7-103	30
	7-103	35
	7-104	41
	7-107	4
	7-107	6
	7-109	21
	7-109	25
	7-109	28
	7-109	31
	7-110	41
	7-110	43
	7-113	5
	7-113	7
	7-115	29
	7-115	31
	7-115	33
	7-115	38
	7-116	52
	7-116	54
	7-119	5
	7-119	7
	7-121	29
	7-121	31
	7-121	33
	7-121	38
	7-122	52
	7-122	54
	7-125	2
	7-125	4
	7-126	21
	7-126	22
	7-126	28
	7-127	31
	7-127	33
	7-127	35
	7-129	2
	7-129	4
	7-130	21
	7-130	22
	7-131	28
	7-131	31
	7-131	33
	7-131	35
	7-135	1
	7-135	2
	7-135	4
	7-136	19
	7-136	21
	7-137	22
	7-137	29
	7-137	35
	7-141	4
	7-141	6
	7-142	19
	7-142	21
	7-143	23
	7-143	35
	7-147	4
	7-147	6
	7-149	21
	7-149	25
	7-149	28
	7-149	31
	7-150	41
	7-150	43
	7-153	5
	7-153	7
	7-155	29
	7-155	31
	7-155	33
	7-155	38
	7-156	52
	7-156	54
	7-159	5
	7-159	7
	7-161	29
	7-161	31
	7-161	33
	7-161	38
	7-162	52
	7-162	54
	7-165	4
	7-165	6
	7-166	21
	7-166	25
	7-166	29
	7-167	31
	7-167	34
	7-167	35
	7-169	4
	7-169	6
	7-170	21
	7-171	25
	7-171	29
	7-171	31
	7-171	34
	7-171	35
	7-175	4
	7-175	6
	7-176	21
	7-177	25
	7-177	29
	7-177	31
	7-177	36
	7-181	5
	7-181	7
	7-183	25
	7-183	27
	7-183	29
	7-183	33
	7-184	49
	7-187	5
	7-187	7
	7-189	25
	7-189	27
	7-189	29
	7-189	33
	7-190	49
	7-193	11
	7-267	1
	7-267	8
	7-267	9
	7-271	1
	7-271	10
	7-271	11
	7-273	1
	7-275	1
	7-277	1
	7-279	5
	7-281	3
	7-281	6
	7-281	10
	7-283	3
	7-283	4
	7-283	6
	7-283	10
	7-287	5
	7-287	8
	7-287	11
	7-289	5
	7-291	3
	7-293	3
	7-293	6
	7-293	11
	7-293	12
	7-293	15
	7-294	18
	7-294	19
	7-294	24
	7-297	5
	7-297	11
	7-298	23
	7-298	25
	7-298	27
	7-298	30
	7-301	7
	7-301	10
	7-301	13
	7-301	14
	7-302	18
	7-305	19
	7-306	21
	7-306	23
	7-306	26
	7-309	1
	7-309	13
	7-309	14
	7-309	19
	7-310	21
	7-310	23
	7-313	9
	7-313	15
	7-313	19
	7-314	23
	7-314	25

©2013 HYSTER COMPANY

NUMERICAL INDEX (continued)

PART NO.	PAGE	ITEM
	7-314	27
	7-314	30
	7-317	19
	7-318	22
	7-318	24
	7-318	27
	7-321	10
	7-322	21
	7-322	24
	7-322	26
	7-322	29
	16-7	10
	16-7	10
1330439	7-86	17
	7-86	18
	7-87	35
	7-87	37
	7-87	38
	7-90	17
	7-90	18
	7-91	35
	7-91	37
	7-92	38
	7-96	18
	7-97	37
	7-98	38
	7-98	40
	7-101	2
	7-101	3
	7-104	42
	7-108	17
	7-108	18
	7-109	37
	7-109	38
	7-110	40
	7-115	27
	7-115	28
	7-116	53
	7-116	57
	7-121	27
	7-121	28
	7-122	53
	7-122	57
	7-126	16
	7-126	17
	7-127	38
	7-127	40
	7-130	16
	7-130	17
	7-131	38
	7-132	40
	7-135	4
	7-136	16
	7-136	17
	7-137	35
	7-137	37
	7-138	40
	7-141	6
	7-142	17
	7-142	18
	7-143	37
	7-144	40
	7-148	17
	7-148	18
	7-149	37
	7-149	38
	7-155	27
	7-155	28
	7-156	57
	7-161	27
	7-161	28
	7-162	57
	7-166	17
	7-166	18
	7-167	35
	7-167	37
	7-167	38
	7-170	17
	7-170	18
	7-171	35
	7-171	37
	7-172	38
	7-176	17
	7-176	18
	7-177	38
	7-178	40
	7-178	41
	7-182	21
	7-182	22
	7-183	40
	7-184	51
	7-184	54
	7-184	56
	7-188	21
	7-188	22
	7-189	40
	7-190	51
	7-190	54
	7-190	56
	7-206	36
	7-213	48
	7-217	31
	7-223	37
	7-227	9
	7-239	6
	7-256	27
	7-260	20
	7-267	1
	7-281	1
	7-283	1
	16-7	10
1330917	1-115	2
1330919	1-115	1
1330920	1-115	19
1332745	1-122	1
1333329	15-12	24
1333382	13-7	2
	14-7	17
	15-11	2
1333392	15-11	10
1333396	13-3	6
	13-5	5
	14-3	6
	14-5	5
	15-3	6
	15-5	6
	15-9	5
1333397	13-3	6
	13-5	5
	14-3	6
	14-5	5
	15-3	6
	15-5	6
	15-9	5
1333399	15-33	3
	16-19	12
1334642	11-11	5
1334644	11-11	14
1334647	11-11	2
1335129	1-115	20
1335137	1-117	7
1337197	7-55	7
1337391	7-227	4
	7-239	3
1338087	1-122	1
1338088	1-122	1
1338089	1-122	1
1338097	1-122	1
1338098	1-122	1
1338308	3-19	21
	3-21	21
	3-43	9
	3-76	7
1338616	13-19	1
1338741	12-73	5
1338744	12-73	11
1338916	11-11	24
1338917	11-11	25
1339438	6-21	9
	6-55	17
1339452	6-49	21
1340470	5-21	12
	5-25	2
	6-99	12
	6-103	2
1342116	15-20	26
1342117	14-14	21
1342118	15-20	26
1342123	15-20	26
1342124	15-12	18
1342132	15-12	18
1342377	14-14	21
1342384	13-8	18
	15-12	18
	15-20	26
1342387	15-12	18
1342477	14-5	1
	14-5	1
1342479	14-5	1
1343844	14-23	
1343846	13-19	
1343989	15-20	37
1343990	1-127	2
1344124	5-17	13
	5-19	16
1345014	7-33	16
	7-41	14
	7-50	37
1345190	13-15	18
	14-20	29
	15-26	26
	15-29	10
1345199	14-20	23
	15-25	20
	15-30	37
1345204	14-20	22
	15-25	19
	15-30	38
1345216	13-3	2
	13-5	2
	14-3	2
	14-5	2
	15-3	2
	15-5	2
	15-9	2
	15-33	2
	16-19	
1345219	13-19	2

©2013 HYSTER COMPANY

NUMERICAL INDEX (continued)

PART NO.	PAGE	ITEM
	14-23	2
	16-15	13
	16-23	12
1345239	14-23	1
1345263	13-19	6
	14-23	4
	16-15	15
	16-23	16
1345264	13-19	1
	14-23	1
1345348	13-15	3
1345401	15-20	34
1345412	13-15	5
1345413	13-15	5
1345423	14-19	10
1345939	1-115	13
1345991	6-21	10
	6-55	18
1346752	12-23	23
	12-25	14
	12-27	24
	12-31	15
	12-51	
1347026	2-3	16
	2-7	17
	3-5	19
	3-9	18
	3-11	16
	3-15	18
	4-3	16
	4-7	16
1347045	1-5	32
	1-7	30
	1-10	35
	1-25	11
	2-11	3
	2-15	3
	3-19	31
	3-21	32
	4-11	3
1347166	6-23	5
	6-25	5
	6-27	5
1348246	15-25	11
1348247	15-25	11
1350215	1-14	50
	1-18	50
	8-23	14
	8-28	11
	16-7	3
1351681	1-31	23
	1-33	23
	7-86	22
	7-91	22
	7-91	24
	7-97	22
	7-97	24
	7-126	20
	7-130	20
	7-131	23
	7-166	22
	7-171	22
	7-171	24
	7-255	19
	7-259	19
1351682	7-75	11
	7-293	7
	7-297	12
1351683	7-86	24
	7-126	23
	7-166	24
1351689	11-3	29
	11-5	28
	11-7	36
	11-9	28
	11-21	31
	11-25	36
	11-27	38
	11-31	41
1352140	2-3	2
	2-5	2
	2-7	2
	2-9	2
	3-5	3
	3-7	3
	3-9	2
	3-11	2
	3-13	2
	3-15	2
	3-17	2
	4-3	2
	4-5	2
	4-7	2
	4-9	2
1352603	7-256	25
	7-294	23
	7-298	29
	7-302	17
	7-306	25
	7-310	25
	7-314	29
	7-318	26
	7-322	28
1353408	13-19	7
	16-15	18
1353464	15-25	16
	15-30	29
1354165	1-115	14
1354171	1-115	8
1354237	7-228	21
	7-232	15
	7-236	17
	7-240	20
	7-244	16
	7-247	5
	7-248	23
	7-252	15
	7-252	25
1354901	15-20	37
1354902	14-13	6
	15-19	4
1354903	15-19	7
1354906	15-25	21
	15-30	39
1354907	15-25	21
1354913	13-7	9
1354915	13-7	2
	14-7	16
	15-11	2
1354916	13-7	2
	14-7	16
	15-11	2
1354917	13-7	2
	14-7	16
	15-11	2
1354918	14-20	15
1354919	13-15	11
1354921	13-15	11
	15-29	9
1354923	1-127	2
1354961	15-25	6
1354962	15-19	8
1354967	14-13	9
1355158	13-12	9
	13-12	9
1355276	13-12	
1355371	13-12	9
	13-12	9
1355496	13-12	15
	15-16	16
1355497	15-17	
1355587	15-16	10
	15-16	10
1355599	15-16	10
	15-16	10
1355603	15-16	10
	15-16	10
1355607	15-16	10
	15-16	10
1355610	15-16	11
	15-16	11
	15-16	11
1355620	15-16	10
	15-16	10
1355711	13-12	10
1355713	13-12	15
	14-9	11
	14-11	10
	14-16	15
	15-16	16
1355714	15-17	
1355745	15-16	10
	15-16	10
1355749	15-16	10
	15-16	10
1355762	15-16	10
	15-16	10
1355775	15-16	10
	15-16	10
1355929	14-11	5
	14-11	5
1355930	14-11	5
1355936	14-11	5
1355941	14-11	5
1356065	15-23	11
1356080	15-23	11
1356089	15-23	11
1356292	15-23	15
1356560	15-23	11
1356569	14-16	11
	15-23	11
1356572	15-23	11
1356578	15-23	11
1356661	14-16	15
	15-23	15
1356662	14-16	
	15-23	
1356688	14-16	11
1356694	14-16	11
	15-23	11
1356747	14-9	5
	14-11	4
1356748	14-9	4
	15-16	4
1356749	13-12	13
	14-9	8
	14-11	7
	15-16	13

See Service Manual for service procedures.
©2013 HYSTER COMPANY

NUMERICAL INDEX (continued)

PART NO.	PAGE	ITEM
1356750	13-12	3
	15-16	3
1356751	13-12	3
	15-16	3
1357749	6-69	21
	6-73	7
1358026	2-45	34
1358177	10-17	1
1358178	10-19	1
1358179	9-31	1
1358183	9-31	1
1358940	14-9	6
	14-9	6
1358942	14-9	6
1358969	14-16	
	15-23	
1358972	14-16	8
	15-23	8
1359458	8-34	44
	8-40	49
1359562	1-31	18
	1-33	18
1359620	12-19	9
1360127	15-16	4
1360386	10-11	
	12-19	24
	13-15	8
	14-20	13
	15-25	15
	15-29	5
1360507	14-19	2
1360508	14-19	9
1360534	15-20	38
1360538	15-25	13
	15-30	26
1360548	13-15	15
	15-29	13
1360549	13-15	17
	15-26	25
	15-29	11
1360796	11-11	8
1360797	11-11	9
1360878	3-31	13
	3-63	13
1360879	3-31	19
	3-31	21
	3-63	17
1360880	3-31	9
	3-63	20
1360881	3-31	28
	3-63	21
1360882	3-31	29
	3-63	22
1360883	3-31	1
	3-63	1
1360884	3-31	2
	3-63	2
1360885	3-31	11
	3-63	11
1360886	3-31	4
	3-63	3
1360887	3-31	7
	3-63	7
1360888	3-31	8
	3-63	8
1360890	3-63	28
1360892	3-31	6
	3-63	6
1360893	3-31	5
	3-31	5
1360895	3-31	18
	3-31	20
	3-63	15
1360896	3-33	14
	3-65	7
1360898	3-33	5
	3-65	5
1360899	3-33	8
	3-65	8
1361164	6-69	23
	6-71	23
	6-73	2
	6-75	2
1361302	14-16	2
	15-23	2
1361500	11-11	15
1361502	11-11	28
1361503	11-11	3
1361504	11-11	4
1361507	11-11	8
1361675	3-33	3
	3-65	3
1361676	3-33	11
	3-65	11
1361677	3-33	13
	3-65	12
1361679	3-51	9
	3-83	9
1361680	3-51	16
	3-83	16
1361681	3-51	18
	3-83	18
1361682	3-51	20
	3-83	20
1361688	3-51	5
	3-53	3
	3-83	5
	3-85	3
1361689	3-51	10
	3-83	10
1361690	3-51	15
	3-83	15
1361691	3-51	11
	3-83	11
1361692	3-51	6
	3-83	6
1361695	3-37	2
	3-75	2
1361696	3-37	12
	3-75	12
1361697	3-37	11
	3-75	11
1361700	3-37	6
	3-75	6
1361701	3-37	8
1361703	3-37	3
	3-75	3
1361704	3-37	3
	3-75	3
1361705	3-37	3
	3-75	3
1361706	3-37	3
	3-75	3
1361710	3-37	13
	3-75	13
1361711	3-37	13
	3-75	13
1361712	3-38	13
	3-75	13
1361713	3-37	13
	3-75	13
1361714	3-37	4
	3-75	4
1361715	3-37	4
	3-75	4
1361716	3-37	4
	3-75	4
1361717	3-35	20
	3-67	20
1361718	3-31	22
	3-35	5
	3-63	16
	3-67	5
1361719	3-31	15
	3-35	22
	3-63	16
	3-67	22
1361720	3-35	4
	3-67	4
1361721	3-35	9
	3-67	9
1361722	3-35	8
	3-67	8
1361723	3-35	7
	3-67	7
1361724	3-35	6
	3-67	6
1361725	3-35	23
	3-67	23
1361726	3-35	11
	3-67	11
1361727	3-35	13
	3-35	16
	3-67	13
	3-67	16
1361728	3-35	12
	3-35	17
	3-67	12
	3-67	17
1361729	3-35	15
	3-67	15
1361730	3-35	18
	3-67	18
1361731	3-35	14
	3-67	14
1361732	3-35	21
	3-67	21
1361734	3-35	19
	3-67	19
1361736	3-35	1
	3-67	1
1361737	3-35	2
	3-67	2
1361741	3-47	5
	3-81	6
1361745	3-43	8
	3-76	6
1361746	3-43	6
	3-76	4
1361747	3-43	3
	3-76	8
1361749	3-45	20
	3-73	9
	6-37	20
1361756	3-45	19
	3-73	10
	6-37	19
1361790	3-42	39

©2013 HYSTER COMPANY

NUMERICAL INDEX (continued)

PART NO.	PAGE	ITEM
	3-87	31
	3-87	36
1361798	3-53	2
	3-85	2
1361801	3-53	17
	3-85	17
1361806	3-53	13
	3-85	13
1361807	3-53	14
	3-85	14
1361814	3-41	28
	3-87	30
1361821	3-41	9
	3-87	2
1361823	3-41	15
	3-87	34
1361825	3-41	13
	3-87	33
1361826	3-41	18
	3-87	9
1361827	3-41	21
	3-87	15
1361836	3-87	7
1361837	7-19	17
	7-23	7
1361838	7-19	16
1361840	7-19	15
1361841	7-19	15
1361842	7-19	15
1361843	7-19	15
1361845	7-19	20
	7-23	26
1361846	7-19	12
	7-23	21
1361861	7-19	9
	7-33	7
1361867	7-19	34
1361868	3-53	19
	3-85	19
1361871	3-49	18
	6-39	18
1361872	3-70	3
1361873	3-41	14
	3-47	4
	3-55	1
	3-81	5
	3-87	10
	6-41	1
1361875	3-41	22
	3-87	14
1361878	3-49	14
	3-53	18
	3-85	18
	6-39	14
1361879	3-53	7
	3-85	7
1361880	3-41	30
	3-87	29
1361881	3-45	4
	3-79	2
	6-37	4
	7-19	21
	7-23	24
1361884	3-35	26
	3-67	26
	3-88	37
1361885	3-47	2
	3-81	3
1361886	3-41	17
	3-87	8
1361888	7-19	13
	7-23	22
1361890	7-19	10
	7-23	18
1361891	7-19	11
	7-23	20
1361893	3-45	29
	3-73	4
	6-37	29
1361894	3-31	16
	3-63	18
1361895	7-19	31
	7-23	4
1361897	3-31	24
	3-63	24
1361898	3-31	23
	3-41	10
	3-43	1
	3-45	21
	3-49	22
	3-63	23
	3-73	8
	3-76	1
	3-87	12
	6-37	21
	6-39	22
	7-23	5
1361899	3-31	27
	3-63	27
1362000	3-31	10
	3-63	10
1362001	3-31	12
	3-51	1
	3-63	12
	3-83	1
1362002	3-31	14
	3-63	14
1362003	3-31	17
	3-33	6
	3-63	19
	3-65	6
1362005	3-33	4
	3-45	11
	3-65	4
	3-79	5
	6-37	11
1362007	3-33	10
	3-65	10
1362008	3-33	9
	3-65	9
1362009	3-33	2
	3-65	2
1362010	3-51	12
	3-83	12
1362011	3-51	13
	3-55	14
	3-69	19
	3-83	13
	6-41	14
	7-19	3
1362012	3-51	7
	3-83	7
1362015	3-51	17
	3-83	17
1362016	3-35	29
	3-67	29
1362049	1-79	
	1-83	
	1-85	
	1-89	
1362058	1-79	2
	1-83	2
	1-85	9
	1-89	10
1362113	7-19	15
1362387	15-25	23
	15-29	13
1363886	7-85	4
	7-89	4
	7-95	4
	7-101	8
	7-107	4
	7-113	5
	7-119	5
	7-125	2
	7-129	2
	7-135	2
	7-141	4
	7-147	4
	7-153	5
	7-159	5
	7-165	4
	7-169	4
	7-175	4
	7-181	5
	7-187	5
	7-262	10
	7-273	3
	7-273	6
	7-273	8
	7-275	3
	7-275	7
	7-275	9
	7-277	3
	7-277	6
	7-277	8
1363916	1-51	4
1365140	15-12	24
1365517	14-20	16
	14-20	16
1365520	14-20	16
1366874	3-45	12
	3-79	11
	6-37	12
1366902	3-79	7
	3-81	11
1366933	3-49	19
	3-55	4
	3-69	1
	6-39	19
	6-41	4
1367150	1-105	7
	1-105	10
1367191	3-41	12
	3-87	5
1368656	13-5	6
	15-5	10
1368743	3-79	6
	3-81	10
	7-19	36
1368805	3-45	6
	6-37	6
1368844	7-19	14
	7-23	23
1368886	3-69	17
	3-81	8
	7-19	38
	7-25	13

See Service Manual for service procedures.
©2013 HYSTER COMPANY

NUMERICAL INDEX (continued)

PART NO.	PAGE	ITEM
1369344	13-19	8
	14-23	6
	15-33	9
	16-15	17
	16-19	19
	16-23	19
1369345	13-19	8
	14-23	6
	15-33	9
	16-15	17
	16-19	19
	16-23	19
1369356	13-8	21
	14-14	29
	15-12	21
	15-20	18
1369357	13-8	21
	14-14	29
	15-12	21
	15-20	18
1369861	3-81	7
1369914	3-41	38
	3-87	23
1369993	3-51	25
	3-83	25
1370675	3-45	14
	3-79	12
	6-37	14
1370688	3-43	7
	3-76	5
1370689	3-43	4
	3-76	9
1370690	3-43	5
	3-76	3
1370691	3-43	2
	3-76	2
1370736	3-51	19
	3-83	19
1370744	3-33	1
	3-65	1
1370745	3-37	4
	3-75	4
1371149	6-21	14
	6-63	4
	6-65	2
1371631	15-23	11
1371652	3-51	14
	3-83	14
1374190	1-79	
	1-83	2
	1-85	9
	1-89	10
1374788	3-49	
	3-59	1
	6-39	
	6-45	1
1374797	15-33	5
	16-19	
1375033	6-76	6
1375214	1-25	3
	1-27	3
1375391	11-3	28
	11-5	27
	11-7	35
	11-9	27
	11-21	30
	11-25	37
	11-27	37
	11-31	42
1375488	9-19	17
1375642	2-29	1
	3-23	1
1375676	1-115	12
1375795	7-195	13
	7-197	13
1375797	7-232	24
	7-235	12
	7-244	29
	7-248	21
	7-252	13
1376727	2-19	5
1378418	7-195	8
	7-197	8
	7-201	12
	7-203	11
1378652	7-201	10
	7-203	6
1378690	14-13	5
	15-19	2
1378691	13-5	7
	15-5	11
1378692	14-14	22
	15-20	21
1378693	14-14	22
	15-20	21
1378694	13-5	8
	15-5	12
1378698	13-5	8
	15-5	12
1378699	13-5	8
	14-14	22
	15-5	12
	15-20	21
1378732	1-124	1
1378733	1-124	1
1378734	1-124	1
1378735	1-124	1
1378736	1-124	1
1378737	1-124	1
1378760	1-124	5
1378761	1-124	5
1378762	1-124	4
1378763	1-124	3
1378765	1-124	
1378766	1-125	
1378786	1-124	1
1378788	1-124	1
1378789	1-124	1
1378790	1-124	1
1378807	1-124	1
1378808	1-124	1
1378809	1-124	1
1379459	15-33	
1379682	14-14	22
	15-20	21
1379683	14-14	22
	15-20	21
1379684	13-5	8
	15-5	12
1379685	13-5	8
	15-5	12
1379687	13-7	11
	14-7	6
1380092	10-15	3
1380849	8-5	11
	8-7	11
	8-9	11
	8-34	46
	8-40	55
1381078	12-75	4
1381082	12-73	9
1381083	12-75	12
1381095	13-12	13
	15-16	13
1381354	15-9	1
1381357	15-9	1
1381358	15-9	1
	15-9	1
1381359	15-9	1
	15-9	1
1381362	15-9	1
1381363	15-9	1
1381366	15-9	1
1381560	15-33	1
1381816	1-124	1
1381817	1-124	1
1382111	1-79	3
	1-83	3
	1-85	1
	1-89	1
1382112	1-79	6
	1-83	6
	1-85	4
	1-89	3
1382113	1-79	3
	1-83	3
	1-85	1
	1-89	1
1382114	1-79	6
	1-83	6
	1-85	4
	1-89	3
1382130	7-77	7
	16-3	1
1382694	7-206	26
	7-216	23
	7-255	7
	7-259	2
1382695	7-255	2
	7-255	7
	7-259	2
1383062	12-73	10
1383063	12-75	10
1383331	7-5	18
1383777	10-13	23
1385102	1-117	4
1387170	1-9	12
1388838	10-13	2
1390182	15-25	22
	15-30	27
1391757	4-11	12
1391758	4-11	13
1392205	7-215	1
	7-217	43
1393142	15-33	3
1393458	1-65	11
	1-67	11
1393463	1-39	11
	1-47	20
1393472	1-39	12
	1-48	42
	1-59	31
1393479	1-37	10
	1-39	10
1393488	1-55	9
1393499	1-47	22
	1-77	8
	1-81	10

©2013 HYSTER COMPANY

NUMERICAL INDEX (continued)

PART NO.	PAGE	ITEM
1393527	1-65	6
	1-67	6
1393528	1-65	7
	1-67	7
1393539	1-37	7
	1-39	7
	1-47	7
	1-48	38
	1-73	13
	1-77	16
1393541	1-55	8
	1-59	8
1393879	1-17	22
	12-5	12
	12-7	12
	12-9	12
1394001	2-31	1
	7-23	28
	7-33	7
	7-49	27
	7-53	33
1394008	5-3	3
	5-5	3
	6-5	20
	6-7	20
	6-9	9
	6-11	9
	6-13	3
	6-15	3
	6-17	3
1394009	7-49	24
1395168	13-3	6
	13-5	5
	14-3	6
	14-5	5
	15-3	6
	15-5	6
	15-9	5
1395174	15-33	3
1395176	15-33	3
1395285	14-13	4
	15-19	1
1395291	14-20	32
	15-26	28
	15-30	36
1395292	14-20	26
	15-26	32
	15-30	16
1396406	14-20	31
	15-26	29
	15-30	18
1396518	2-19	23
	3-19	24
	3-21	24
1398062	7-11	8
1398099	6-79	30
	6-81	2
	6-85	2
	6-87	22
	6-91	2
1399323	7-26	34
1399802	5-15	9
	6-95	24
	6-97	17
1401746	16-15	9
	16-19	9
	16-23	9
1402414	6-87	43
	6-91	22
1402607	7-223	43
1402613	7-228	21
	7-232	15
	7-236	17
	7-240	20
	7-244	16
	7-244	20
	7-247	5
	7-248	23
	7-252	15
	7-252	25
1402813	7-96	20
	7-97	21
	7-97	30
	7-136	19
	7-137	22
	7-137	29
	7-279	10
	7-281	2
	7-283	2
	7-289	9
	7-294	19
	7-301	14
1402814	7-227	10
	7-227	12
	7-227	13
	7-231	4
	7-231	5
	7-231	7
	7-235	1
	7-236	25
	7-236	26
	7-239	8
	7-239	10
	7-240	16
	7-243	5
	7-243	10
	7-244	17
	7-247	6
	7-247	11
	7-248	16
	7-251	1
	7-252	17
	7-252	26
	7-267	3
	7-267	5
	7-267	6
	7-267	7
	7-271	3
	7-271	5
	7-271	6
	7-271	7
	7-271	8
	7-271	9
1402815	7-86	23
	7-91	23
	7-96	19
	7-103	34
	7-115	41
	7-127	42
	7-132	42
	7-137	24
	7-143	25
	7-155	41
	7-167	40
	7-172	40
	7-176	19
	7-183	41
	7-267	2
	7-271	2
	7-281	4
	7-283	11
1402816	7-195	19
	7-197	19
	7-201	15
	7-203	18
	7-207	42
	7-207	44
	7-207	46
	7-207	47
	7-213	38
	7-261	5
	7-279	2
	7-283	13
	7-287	3
	7-289	2
	7-293	10
1402817	7-195	43
	7-197	43
1402849	7-255	21
1402868	7-116	47
	7-122	47
	7-156	47
	7-162	47
	7-184	45
	7-190	45
	7-279	4
	7-281	11
	7-284	15
	7-289	4
1402883	7-5	7
1402887	7-227	14
	7-228	17
	7-228	18
	7-231	8
	7-231	10
	7-231	11
	7-231	13
	7-235	2
	7-235	14
	7-236	19
	7-236	27
	7-239	11
	7-239	14
	7-240	17
	7-243	11
	7-243	13
	7-244	20
	7-244	22
	7-247	12
	7-248	18
	7-248	24
	7-251	2
	7-251	5
	7-253	29
1402888	7-85	10
	7-86	13
	7-86	27
	7-90	10
	7-90	13
	7-91	27
	7-96	10
	7-297	16
	7-301	6
	7-305	13
	7-309	15
	7-313	16
	7-317	16
	7-321	18

©2013 HYSTER COMPANY

NUMERICAL INDEX (continued)

PART NO.	PAGE	ITEM
	7-96	13
	7-97	27
	7-102	15
	7-102	18
	7-103	32
	7-108	10
	7-108	13
	7-109	26
	7-114	17
	7-114	20
	7-115	35
	7-120	17
	7-120	20
	7-121	35
	7-125	9
	7-126	12
	7-126	26
	7-129	9
	7-130	12
	7-131	26
	7-136	10
	7-136	12
	7-137	27
	7-142	11
	7-142	13
	7-143	27
	7-148	10
	7-148	13
	7-149	26
	7-154	17
	7-154	20
	7-155	35
	7-160	17
	7-160	20
	7-161	35
	7-165	10
	7-166	13
	7-166	27
	7-170	10
	7-170	13
	7-171	27
	7-176	10
	7-176	13
	7-177	27
	7-182	11
	7-182	17
	7-183	37
	7-188	11
	7-188	17
	7-189	37
	7-228	22
	7-232	16
	7-236	18
	7-240	21
	7-240	23
	7-244	21
	7-244	24
	7-248	27
	7-251	9
	7-255	15
	7-259	17
	7-291	6
	7-323	2
1402890	7-195	2
	7-197	1
	7-201	2
	7-203	1
	7-206	25
	7-206	31
	7-213	41
	7-213	45
	7-216	25
	7-216	27
	7-223	31
	7-223	32
1402904	7-232	24
	7-235	12
	7-244	29
	7-248	21
	7-252	13
1402923	16-7	10
1450503	10-2	2
	10-3	2
1450928	7-19	9
	7-23	28
	7-33	7
1452463	6-9	16
	6-11	16
	6-15	14
	6-17	18
1454827	2-23	13
	7-211	21
	7-222	28
	7-324	1
1454828	7-324	1
1454829	2-23	13
	7-211	21
	7-255	7
	7-259	2
	7-324	1
1454860	7-255	7
	7-259	2
	7-324	1
1454862	2-23	13
	7-195	6
	7-197	6
	7-201	11
	7-203	5
	7-255	7
	7-259	2
	7-324	1
1454967	7-45	14
1455304	6-76	3
1455674	3-53	4
	3-85	4
1455676	3-53	1
	3-85	1
1455677	3-53	10
	3-85	10
1458764	6-76	5
1459173	1-63	3
	1-69	5
	1-79	9
	1-83	9
	1-85	7
1460477	1-5	27
	1-7	25
	1-10	29
	2-11	10
	2-15	10
	2-15	35
	2-19	21
	2-27	10
	2-35	19
	3-19	28
	3-21	28
	3-27	17
1461743	2-27	3
1461744	7-232	24
	7-235	12
	7-244	29
	7-248	21
	7-252	13
	7-291	6
1462615	10-17	1
1462616	10-19	1
1462617	9-31	1
1463105	14-16	16
	15-23	16
1463136	7-227	9
	7-239	6
1463137	7-143	33
1463138	7-77	12
	7-193	7
	7-207	37
	7-213	49
	7-217	32
	7-223	38
	7-231	3
	7-231	13
	7-236	24
	7-243	3
	7-247	3
	7-252	24
	7-256	26
	7-279	1
	7-279	11
	7-287	4
	7-287	13
	7-289	1
	7-289	10
	16-3	4
	16-4	2
1463139	7-85	1
	7-85	2
	7-85	3
	7-85	7
	7-85	8
	7-86	20
	7-89	1
	7-89	2
	7-89	3
	7-89	7
	7-89	8
	7-90	20
	7-95	1
	7-95	2
	7-95	3
	7-95	7
	7-95	8
	7-97	25
	7-97	34
	7-97	35
	7-101	5
	7-101	6
	7-101	7
	7-101	11
	7-102	12
	7-103	29
	7-104	38
	7-104	39
	7-104	40
	7-107	1
	7-107	2
	7-107	3
	7-107	7
	7-107	8
	7-108	20

©2013 HYSTER COMPANY

NUMERICAL INDEX (continued)

PART NO.	PAGE	ITEM
	7-109	34
	7-109	35
	7-110	46
	7-113	1
	7-113	2
	7-113	3
	7-113	4
	7-113	8
	7-113	9
	7-115	44
	7-115	45
	7-116	48
	7-116	49
	7-116	51
	7-119	1
	7-119	2
	7-119	3
	7-119	4
	7-119	8
	7-119	9
	7-121	44
	7-121	45
	7-122	48
	7-122	49
	7-122	51
	7-125	1
	7-125	5
	7-125	6
	7-125	7
	7-126	19
	7-127	35
	7-127	41
	7-129	1
	7-129	5
	7-129	6
	7-129	7
	7-130	19
	7-131	35
	7-132	41
	7-135	5
	7-135	6
	7-135	7
	7-137	25
	7-137	32
	7-137	33
	7-137	35
	7-138	41
	7-141	1
	7-141	2
	7-141	3
	7-141	7
	7-141	8
	7-143	32
	7-143	34
	7-147	1
	7-147	2
	7-147	3
	7-147	7
	7-147	8
	7-148	20
	7-149	34
	7-149	35
	7-150	46
	7-153	1
	7-153	2
	7-153	3
	7-153	4
	7-153	8
	7-153	9
	7-155	44
	7-155	45
	7-156	48
	7-156	49
	7-156	51
	7-159	1
	7-159	2
	7-159	3
	7-159	4
	7-159	8
	7-159	9
	7-161	44
	7-161	45
	7-162	48
	7-162	49
	7-162	51
	7-165	1
	7-165	2
	7-165	3
	7-165	7
	7-165	8
	7-166	20
	7-167	35
	7-167	43
	7-169	1
	7-169	2
	7-169	3
	7-169	7
	7-169	8
	7-170	20
	7-171	35
	7-172	43
	7-175	1
	7-175	2
	7-175	3
	7-175	7
	7-175	8
	7-176	20
	7-177	34
	7-177	35
	7-177	37
	7-178	43
	7-181	1
	7-181	2
	7-181	3
	7-181	4
	7-181	8
	7-181	9
	7-183	40
	7-184	44
	7-184	46
	7-184	47
	7-184	50
	7-187	1
	7-187	2
	7-187	3
	7-187	4
	7-187	8
	7-187	9
	7-189	40
	7-190	44
	7-190	46
	7-190	47
	7-190	50
	7-193	1
	7-193	2
	7-273	5
	7-275	6
	7-277	5
	7-293	1
	7-293	1
	7-294	17
	7-294	22
	7-297	1
	7-298	24
	7-298	28
	7-301	1
	7-301	1
	7-301	12
	7-302	16
	7-305	1
	7-305	20
	7-306	24
	7-309	2
	7-309	5
	7-310	20
	7-310	24
	7-313	1
	7-313	4
	7-313	6
	7-314	24
	7-314	28
	7-317	1
	7-317	5
	7-317	6
	7-318	21
	7-318	25
	7-321	1
	7-321	5
	7-321	6
	7-322	23
	7-322	27
1463194	7-293	6
	7-293	11
	7-293	12
	7-297	11
	7-301	7
	7-309	13
	7-309	14
	7-313	15
	7-313	19
1463912	1-31	19
	1-33	19
1465140	12-11	
	12-13	
	12-15	
1465468	7-195	18
	7-195	40
	7-197	18
	7-197	40
	7-201	5
	7-201	24
	7-203	9
	7-205	15
	7-205	19
	7-211	3
	7-212	25
	7-212	28
	7-215	3
	7-215	5
	7-216	17
	7-221	3
	7-222	23
	7-228	22
	7-232	16
	7-236	18
	7-240	23
	7-244	24
	7-248	27

©2013 HYSTER COMPANY

NUMERICAL INDEX (continued)

PART NO.	PAGE	ITEM
	7-251	9
1465469	7-195	17
	7-195	39
	7-197	17
	7-197	39
	7-201	23
	7-203	10
	7-205	14
	7-205	18
	7-208	64
	7-211	4
	7-212	26
	7-212	27
	7-215	5
	7-216	16
	7-221	4
	7-222	22
	7-228	22
	7-232	16
	7-236	18
	7-240	23
	7-244	24
	7-248	27
	7-251	9
	7-255	15
	7-259	17
1465504	14-13	8
	15-19	5
1467523	1-91	
	1-93	
	1-95	
	1-97	
	1-99	
1467524	1-91	
	1-93	
	1-95	
	1-97	
	1-99	
1467525	1-91	
	1-93	
	1-97	
	1-99	
1467526	1-91	
	1-93	
	1-95	
	1-97	
	1-99	
1467527	1-91	
	1-93	
	1-95	
	1-97	
	1-99	
1467529	1-91	
	1-93	
	1-95	
	1-97	
	1-99	
1468308	1-73	14
	1-77	20
1468312	1-37	18
	1-39	18
	1-48	32
1468314	1-55	16
	1-59	16
1468315	1-55	15
	1-59	15
1468316	1-55	14
	1-59	14
1468317	1-55	13
	1-59	13
1468318	1-48	23
1468319	1-65	5
	1-65	12
	1-67	5
	1-67	12
1468320	1-65	2
	1-67	2
1469342	3-19	19
	3-21	19
1469379	2-11	27
	2-15	27
	3-19	17
	3-21	17
1469405	2-11	25
	2-15	25
	3-19	14
	3-21	14
1469606	7-261	2
1470152	1-91	4
	1-93	1
	1-95	1
	1-97	1
	1-99	1
1470153	1-91	4
	1-93	1
	1-95	1
	1-97	1
	1-99	1
1470155	1-93	
	1-95	
	1-97	
	1-99	
	1-101	
1470156	1-91	3
	1-93	2
	1-95	4
	1-97	
	1-99	3
1470157	1-91	3
	1-93	2
	1-95	4
	1-97	4
	1-99	3
1470158	1-63	5
	1-79	5
	1-91	2
1470161	1-91	6
	1-93	6
	1-95	5
	1-97	5
	1-99	7
1470163	1-91	7
	1-93	5
	1-95	6
	1-95	
	1-97	6
	1-99	5
1471591	9-31	1
1471694	6-49	12
1471829	9-31	1
1471832	10-19	1
1471835	9-31	1
1471837	10-17	1
1471921	10-17	1
1471922	9-31	1
	9-31	1
	10-19	1
1474763	7-201	25
	7-203	25
1474764	7-201	22
	7-203	24
1475409	6-49	13
1476064	7-85	9
	7-89	9
	7-95	9
	7-102	14
	7-107	9
	7-114	16
	7-120	16
	7-125	8
	7-129	8
	7-135	8
	7-141	10
	7-147	9
	7-154	16
	7-160	16
	7-165	9
	7-169	9
	7-175	9
	7-181	10
	7-187	10
	7-291	4
1476067	7-228	18
	7-231	11
	7-236	27
	7-240	17
	7-243	13
	7-248	18
	7-253	29
1476077	7-195	42
	7-197	42
	7-207	43
	7-213	36
	7-228	25
	7-232	19
	7-235	7
	7-255	14
	7-259	14
1476108	7-85	9
	7-89	9
	7-95	9
	7-102	14
	7-107	9
	7-114	16
	7-120	16
	7-125	8
	7-129	8
	7-135	8
	7-141	10
	7-147	9
	7-154	16
	7-160	16
	7-165	9
	7-169	9
	7-175	9
	7-181	10
	7-187	10
	7-206	27
	7-207	59
	7-211	1
	7-213	40
	7-215	2
	7-216	24
	7-221	1
	7-222	30
	7-235	5
	7-251	7
	7-273	4

©2013 HYSTER COMPANY

NUMERICAL INDEX (continued)

PART NO.	PAGE	ITEM
	7-273	7
	7-275	4
	7-275	8
	7-277	4
	7-277	7
	7-291	4
	7-291	5
1476109	7-85	9
	7-89	9
	7-95	9
	7-102	14
	7-104	38
	7-107	9
	7-114	16
	7-120	16
	7-125	8
	7-129	8
	7-135	8
	7-141	10
	7-147	9
	7-154	16
	7-160	16
	7-165	9
	7-169	9
	7-175	9
	7-181	10
	7-187	10
	7-228	18
	7-231	11
	7-236	27
	7-240	17
	7-243	13
	7-248	18
	7-252	29
	7-291	4
	7-291	5
1477166	1-123	5
1477167	1-123	6
1477237	1-123	6
1477647	13-19	
1477680	15-33	
1477683	14-23	
1477849	16-15	1
1477930	13-19	1
1477931	15-33	1
1477932	14-23	1
1477938	16-23	1
1477939	16-19	1
1477941	16-19	1
1477944	16-23	
1477945	16-19	
1477946	16-23	
1477947	16-19	
1477949	16-19	
1477981	16-15	
1477982	16-15	
1477996	12-19	2
	13-15	6
	14-20	17
	15-25	17
	15-29	2
	15-29	2
1479453	1-75	10
1479531	6-49	7
1480187	7-87	38
	7-92	38
	7-98	38
	7-101	3
	7-109	38
	7-116	59
	7-122	59
	7-127	40
	7-132	40
	7-138	40
	7-144	40
	7-149	38
	7-156	59
	7-162	59
	7-167	38
	7-172	38
	7-178	41
	7-184	56
	7-190	56
1480237	1-13	39
	1-13	39
	1-18	39
	1-18	39
	2-3	22
	2-7	23
	2-11	19
	2-15	19
	2-27	7
	2-29	13
	3-5	25
	3-9	24
	3-11	22
	3-15	24
	4-3	22
	4-7	22
	5-15	15
	6-21	11
	6-47	16
	6-49	14
	6-55	9
	6-95	14
	6-97	11
	7-5	15
	7-25	18
	7-26	46
	7-30	25
	7-34	27
	7-43	6
	7-49	17
	8-15	5
	8-17	6
	8-19	4
	8-21	5
	8-23	13
	8-25	5
	8-28	8
	8-31	9
	10-11	7
	12-19	8
	16-7	5
1480747	15-11	12
1481090	14-13	2
1481095	15-19	12
1481096	14-13	14
1481097	13-7	5
	14-7	3
	15-11	5
1481229	12-19	1
	13-15	7
1481232	14-19	11
1481742	14-13	1
	14-13	1
1481744	14-13	1
1482651	7-195	20
	7-197	20
	7-201	18
	7-201	42
	7-203	21
	7-207	54
	7-212	32
	7-217	36
	7-223	40
1482654	7-201	35
	7-203	34
1482663	7-227	14
	7-231	8
	7-235	2
	7-239	11
	7-243	11
	7-244	22
	7-247	12
	7-251	2
1482666	7-235	5
	7-251	7
	7-291	5
1482667	7-227	14
	7-231	8
	7-235	2
	7-239	11
	7-243	11
	7-244	22
	7-247	12
	7-251	2
1482668	7-231	10
	7-232	13
	7-235	14
	7-236	19
	7-248	24
	7-251	5
	7-273	4
	7-273	7
	7-275	4
	7-275	8
	7-277	4
	7-277	7
1482905	1-105	4
1482906	1-105	6
1482950	1-71	9
1483023	1-79	7
	1-83	7
	1-85	5
1483226	1-39	2
	1-47	17
1483661	16-37	11
	16-41	4
	16-43	16
	16-47	4
	16-49	23
	16-51	11
	16-55	3
	16-57	16
1483663	16-37	9
	16-41	3
	16-43	15
	16-47	3
	16-49	24
	16-51	9
	16-55	4
	16-57	15
1483664	16-37	10
	16-41	2
	16-43	14
	16-47	2
	16-49	25

See Service Manual for service procedures.
©2013 HYSTER COMPANY

NUMERICAL INDEX (continued)

PART NO.	PAGE	ITEM
	16-51	10
	16-55	2
	16-57	14
1483828	1-91	
	1-93	
	1-97	
	1-99	
	1-99	
1484377	7-83	2
	7-85	1
	7-85	2
	7-85	3
	7-85	6
	7-85	7
	7-85	8
	7-87	34
	7-87	35
	7-89	1
	7-89	2
	7-89	3
	7-89	6
	7-89	7
	7-89	8
	7-91	34
	7-91	35
	7-95	1
	7-95	2
	7-95	3
	7-95	6
	7-95	7
	7-95	8
	7-97	34
	7-101	5
	7-101	6
	7-101	7
	7-101	10
	7-101	11
	7-102	12
	7-104	38
	7-107	1
	7-107	2
	7-107	3
	7-107	6
	7-107	7
	7-107	8
	7-109	34
	7-113	1
	7-113	2
	7-113	3
	7-113	4
	7-113	7
	7-113	8
	7-113	9
	7-115	44
	7-115	45
	7-116	46
	7-116	48
	7-119	1
	7-119	2
	7-119	3
	7-119	4
	7-119	7
	7-119	8
	7-119	9
	7-121	44
	7-121	45
	7-122	46
	7-122	48
	7-125	1
	7-125	4
	7-125	5
	7-125	6
	7-125	7
	7-127	33
	7-127	35
	7-127	41
	7-129	1
	7-129	4
	7-129	5
	7-129	6
	7-129	7
	7-131	33
	7-131	35
	7-132	41
	7-135	1
	7-135	4
	7-135	5
	7-135	6
	7-135	7
	7-137	35
	7-138	41
	7-141	1
	7-141	2
	7-141	3
	7-141	7
	7-141	8
	7-143	32
	7-143	35
	7-147	1
	7-147	2
	7-147	3
	7-147	6
	7-147	7
	7-147	8
	7-149	34
	7-150	41
	7-153	1
	7-153	2
	7-153	3
	7-153	4
	7-153	7
	7-153	8
	7-153	9
	7-155	44
	7-155	45
	7-156	46
	7-156	48
	7-156	52
	7-159	1
	7-159	2
	7-159	3
	7-159	4
	7-159	7
	7-159	8
	7-159	9
	7-161	44
	7-161	45
	7-162	46
	7-162	48
	7-162	52
	7-165	1
	7-165	2
	7-165	3
	7-165	6
	7-165	7
	7-165	8
	7-167	34
	7-167	35
	7-167	43
	7-169	1
	7-169	2
	7-169	3
	7-169	6
	7-169	7
	7-169	8
	7-171	34
	7-171	35
	7-172	43
	7-175	1
	7-175	2
	7-175	3
	7-175	6
	7-175	7
	7-175	8
	7-177	34
	7-177	36
	7-178	43
	7-181	1
	7-181	3
	7-181	4
	7-181	7
	7-181	8
	7-181	9
	7-183	39
	7-183	40
	7-184	44
	7-184	46
	7-184	49
	7-187	1
	7-187	3
	7-187	4
	7-187	7
	7-187	8
	7-187	9
	7-189	39
	7-189	40
	7-190	44
	7-190	46
	7-190	49
	7-193	1
	7-193	2
	7-193	3
	7-231	1
	7-236	22
	7-243	1
	7-247	1
	7-252	22
	7-256	25
	7-273	1
	7-275	1
	7-277	1
	7-279	1
	7-279	11
	7-281	1
	7-283	1
	7-287	4
	7-287	13
	7-289	1
	7-293	1
	7-293	1
	7-294	17
	7-294	22
	7-294	23
	7-294	23
	7-297	1
	7-298	24
	7-298	28
	7-298	29

©2013 HYSTER COMPANY

NUMERICAL INDEX (continued)

PART NO.	PAGE	ITEM
	7-301	1
	7-301	1
	7-301	12
	7-302	16
	7-302	17
	7-302	17
	7-305	1
	7-305	20
	7-306	24
	7-306	25
	7-309	2
	7-310	20
	7-310	24
	7-310	25
	7-314	24
	7-314	28
	7-314	29
	7-317	1
	7-318	21
	7-318	25
	7-318	26
	7-322	23
	7-322	27
	7-322	28
1484397	7-293	6
	7-293	11
	7-293	12
	7-297	11
	7-301	7
	7-309	13
	7-309	14
	7-313	15
	7-313	19
1484557	7-273	5
	7-275	6
	7-277	5
	7-309	5
	7-313	4
	7-313	6
	7-317	5
	7-317	6
	7-321	5
	7-321	6
1484558	7-273	5
	7-275	6
	7-277	5
	7-309	5
	7-313	4
	7-313	6
	7-317	5
	7-317	6
	7-321	5
	7-321	6
1484685	7-227	9
	7-239	6
1484686	7-227	9
	7-239	6
1484709	7-77	24
	7-213	48
	7-217	31
	7-223	37
	7-256	27
	7-260	20
	7-273	2
	7-275	2
	7-275	5
	7-277	2
1486182	16-15	
1486183	16-23	
1486184	16-19	
1486185	16-15	
1486186	16-23	
1486187	16-19	
1486737	12-19	7
	16-43	4
	16-49	4
	16-57	4
1486740	16-37	12
	16-41	1
	16-43	13
	16-47	1
	16-49	26
	16-51	12
	16-55	1
	16-57	13
1486742	10-11	4
	10-11	4
	11-15	7
	12-19	26
1486749	8-15	3
	8-17	4
	8-19	14
	8-21	7
	8-23	4
	8-25	7
	8-28	16
	12-5	20
	12-9	20
	14-7	2
1486751	12-9	24
1486773	13-7	13
	14-7	9
	15-11	13
1487058	11-15	23
	11-17	18
	11-19	21
	11-22	41
	11-28	47
	12-19	3
1487059	16-25	4
	16-26	4
1487061	11-15	3
	11-17	3
	11-19	4
	12-19	5
	12-19	5
1487062	11-19	3
1487063	8-37	31
	10-11	5
	16-25	4
1487067	8-15	11
	8-17	12
	8-23	7
	8-28	13
	8-33	36
	8-47	4
1487068	8-31	18
1487069	12-5	23
	12-7	25
	12-19	14
1487095	16-43	1
	16-49	1
	16-57	1
1487096	16-13	5
1487165	8-19	10
	8-25	6
	8-28	2
	8-28	5
	8-28	6
1487945	1-45	9
1487956	1-43	18
1487957	1-43	17
1488404	16-35	5
1488464	12-19	21
1489002	16-15	1
1489003	16-23	1
1489004	16-19	1
1489016	16-33	1
1489035	16-33	3
1489037	16-33	2
1489039	16-33	5
1489655	5-21	5
	5-25	4
	6-99	5
	6-103	4
	7-13	5
	7-13	16
	7-85	5
	7-89	5
	7-95	5
	7-101	9
	7-107	5
	7-113	6
	7-119	6
	7-125	3
	7-129	3
	7-135	3
	7-141	5
	7-143	23
	7-147	5
	7-153	6
	7-159	6
	7-165	5
	7-169	5
	7-175	5
	7-181	6
	7-187	6
1489656	7-13	8
	7-86	29
	7-91	29
	7-97	29
	7-103	30
	7-109	28
	7-115	33
	7-121	33
	7-126	28
	7-131	28
	7-136	21
	7-149	28
	7-155	33
	7-161	33
	7-166	29
	7-171	29
	7-177	29
	7-183	29
	7-189	29
	7-262	10
	7-293	3
	7-293	15
	7-294	24
	7-297	5
	7-298	23
	7-298	30
	7-301	10
	7-302	18
	7-305	19
	7-306	26
	7-309	1

See Service Manual for service procedures.
©2013 HYSTER COMPANY

NUMERICAL INDEX (continued)

PART NO.	PAGE	ITEM
	7-309	19
	7-313	9
	7-314	23
	7-314	30
	7-317	19
	7-318	27
	7-321	10
	7-321	21
	7-322	29
1489657	7-13	9
	7-86	29
	7-91	29
	7-97	29
	7-103	30
	7-109	28
	7-115	33
	7-121	33
	7-126	28
	7-131	28
	7-136	21
	7-143	23
	7-149	28
	7-155	33
	7-161	33
	7-166	29
	7-171	29
	7-177	29
	7-183	29
	7-189	29
	7-262	10
	7-293	3
	7-293	15
	7-294	24
	7-297	5
	7-298	23
	7-298	30
	7-301	10
	7-302	18
	7-305	19
	7-306	26
	7-309	1
	7-309	19
	7-313	9
	7-314	23
	7-314	30
	7-317	19
	7-318	27
	7-321	10
	7-322	21
	7-322	29
1490242	7-86	21
	7-87	31
	7-90	21
	7-91	25
	7-91	31
	7-96	20
	7-96	21
	7-97	30
	7-103	25
	7-103	26
	7-103	35
	7-108	21
	7-109	25
	7-109	31
	7-110	43
	7-115	29
	7-115	31
	7-115	38
	7-116	54
	7-121	29
	7-121	31
	7-121	38
	7-122	54
	7-126	21
	7-126	31
	7-130	21
	7-130	22
	7-131	31
	7-136	19
	7-136	22
	7-137	29
	7-142	19
	7-142	21
	7-143	29
	7-148	21
	7-149	25
	7-149	31
	7-150	43
	7-155	29
	7-155	31
	7-155	38
	7-156	54
	7-161	29
	7-161	31
	7-161	38
	7-162	54
	7-166	21
	7-167	31
	7-170	21
	7-171	25
	7-171	31
	7-176	21
	7-177	25
	7-177	31
	7-183	25
	7-183	27
	7-183	33
	7-189	25
	7-189	27
	7-189	33
	7-193	11
	7-267	8
	7-267	9
	7-271	10
	7-271	11
	7-273	3
	7-273	6
	7-273	8
	7-275	3
	7-275	7
	7-275	9
	7-277	3
	7-277	6
	7-277	8
	7-279	5
	7-281	3
	7-281	6
	7-281	10
	7-283	3
	7-283	4
	7-283	6
	7-283	10
	7-287	5
	7-287	8
	7-287	11
	7-289	5
	7-291	3
	7-294	19
	7-298	27
	7-301	14
	7-306	23
	7-310	23
	7-314	27
	7-318	24
	7-322	26
	16-7	10
	16-7	10
1490243	7-86	21
	7-87	31
	7-90	21
	7-91	25
	7-91	31
	7-103	25
	7-103	26
	7-103	35
	7-109	21
	7-109	25
	7-109	31
	7-110	43
	7-115	29
	7-115	31
	7-115	38
	7-116	54
	7-121	29
	7-121	31
	7-121	38
	7-122	54
	7-126	21
	7-126	31
	7-130	21
	7-130	22
	7-131	31
	7-142	19
	7-142	21
	7-143	29
	7-149	21
	7-149	25
	7-149	31
	7-150	43
	7-155	29
	7-155	31
	7-155	38
	7-156	54
	7-161	29
	7-161	31
	7-161	38
	7-162	54
	7-167	31
	7-170	21
	7-171	25
	7-171	31
	7-176	21
	7-177	25
	7-183	25
	7-183	27
	7-183	33
	7-189	25
	7-189	27
	7-189	33
	7-193	11
	7-267	8
	7-267	9
	7-271	10
	7-271	11
	7-273	3
	7-273	6
	7-273	8

©2013 HYSTER COMPANY

NUMERICAL INDEX (continued)

PART NO.	PAGE	ITEM
	7-275	3
	7-275	7
	7-275	9
	7-277	3
	7-277	6
	7-277	8
	7-279	5
	7-281	3
	7-281	6
	7-281	10
	7-283	3
	7-283	4
	7-283	6
	7-283	10
	7-287	5
	7-287	8
	7-287	11
	7-289	5
	7-291	3
	7-298	27
	7-306	23
	7-310	23
	7-314	27
	7-318	24
	7-322	26
	16-7	10
	16-7	10
1491818	7-205	15
	7-205	19
	7-206	20
	7-212	24
	7-212	25
	7-212	28
	7-216	19
	7-222	25
1491821	7-211	4
	7-221	4
1492644	12-73	
1493308	1-37	20
	1-39	17
	1-48	34
	1-55	10
	1-65	8
	1-77	10
1493336	1-55	4
	1-59	4
1493428	7-85	6
	7-89	6
	7-95	6
	7-101	10
	7-107	6
	7-109	27
	7-113	7
	7-115	36
	7-119	7
	7-121	36
	7-125	4
	7-129	4
	7-135	4
	7-141	6
	7-143	33
	7-147	6
	7-149	27
	7-153	7
	7-155	36
	7-159	7
	7-161	36
	7-165	6
	7-169	6
	7-175	6
	7-177	36
	7-181	7
	7-184	49
	7-187	7
	7-190	49
1493430	7-86	25
	7-126	22
	7-166	25
1493435	7-267	6
	7-267	7
	7-271	8
	7-271	9
1493447	7-271	5
	7-271	6
1493458	7-195	1
	7-198	49
	7-201	1
	7-203	40
1493465	1-29	15
	7-6	24
	7-86	30
	7-91	30
	7-97	31
	7-126	30
	7-131	30
	7-166	30
	7-171	30
	7-193	9
	7-291	2
	16-7	10
1493466	7-80	4
1494017	13-15	16
	14-20	27
	15-25	24
	15-29	12
	15-29	12
1494750	8-33	31
	8-39	33
	8-47	18
1494888	1-29	6
	1-31	13
	1-33	13
1495412	7-19	19
	7-23	19
	7-23	19
1495413	3-49	9
	3-69	5
	6-39	9
	7-19	30
1495426	3-53	8
	3-85	8
1495427	3-53	20
	3-85	20
1495428	3-41	11
	3-87	3
1495429	3-42	40
	3-55	3
	3-69	12
	3-87	35
	6-41	3
1495441	1-59	21
1495472	3-37	7
1495473	3-37	5
	3-75	5
1495474	3-37	5
	3-75	5
1495475	3-37	5
	3-75	5
1495501	2-11	29
	2-15	29
1495502	2-11	30
	2-15	30
1496922	14-9	
	14-11	
1497235	7-211	21
	7-216	22
	7-222	28
1497433	7-6	27
1498325	16-33	4
1498326	16-15	11
	16-19	17
	16-23	17
1498336	1-35	11
1498416	7-259	17
1498420	7-205	15
	7-205	19
	7-206	20
	7-212	24
	7-212	25
	7-212	28
	7-216	17
	7-222	23
1498424	7-206	27
	7-207	59
	7-211	1
	7-213	40
	7-215	2
	7-216	24
	7-221	1
	7-222	30
	7-235	5
	7-251	7
1499111	13-12	
1500782	1-122	4
1500784	1-123	4
1500899	7-87	33
	7-91	33
	7-97	33
	7-103	37
	7-109	33
	7-116	50
	7-122	50
	7-127	34
	7-131	34
	7-143	31
	7-149	33
	7-156	50
	7-162	50
	7-167	33
	7-171	33
	7-177	33
	7-184	48
	7-190	48
	7-201	37
	7-203	36
	7-227	11
	7-231	6
	7-236	21
	7-239	9
	7-247	10
	7-253	31
	7-293	16
	7-297	18
	7-301	11
	7-305	14
	7-309	16
	7-314	20
	7-317	17

©2013 HYSTER COMPANY

NUMERICAL INDEX (continued)

PART NO.	PAGE	ITEM
	7-321	19
1500900	7-228	23
	7-236	20
	7-239	12
	7-243	12
	7-247	14
	7-251	3
1500901	1-85	11
	7-232	20
	7-235	8
	7-255	17
	7-260	21
1500912	1-85	13
	1-99	10
	2-35	14
	5-17	14
	5-19	16
	5-21	15
	5-25	14
	6-99	15
	6-103	14
	7-5	11
	7-9	5
	7-11	4
	7-11	4
	7-13	2
	7-25	5
	7-29	11
	7-46	32
	7-206	36
	7-207	37
	7-213	48
	7-213	49
	7-217	30
	7-217	31
	7-217	32
	7-223	36
	7-223	37
	7-223	38
	11-3	6
	11-7	6
	11-21	6
	11-25	6
	11-27	6
	11-31	6
	11-37	3
	16-7	7
1500913	7-83	2
	7-85	4
	7-85	6
	7-89	4
	7-89	6
	7-95	4
	7-95	6
	7-101	8
	7-101	10
	7-107	4
	7-107	6
	7-113	5
	7-113	7
	7-119	5
	7-119	7
	7-125	2
	7-125	4
	7-129	2
	7-129	4
	7-135	2
	7-135	4
	7-141	4
	7-141	6
	7-147	4
	7-147	6
	7-153	5
	7-153	7
	7-159	5
	7-159	7
	7-165	4
	7-165	6
	7-169	4
	7-169	6
	7-175	4
	7-175	6
	7-177	36
	7-181	5
	7-181	7
	7-184	49
	7-187	5
	7-187	7
	7-190	49
	7-267	1
	7-271	1
	7-273	1
	7-275	1
	7-277	1
1500919	7-281	1
	7-283	1
1500925	7-255	25
	7-294	23
	7-298	29
	7-302	17
	7-306	25
	7-310	25
	7-314	29
	7-318	26
	7-322	28
1501258	1-115	6
1501274	8-5	1
	8-7	1
1501629	6-9	33
	6-11	33
	6-13	9
1501665	6-9	31
	6-11	31
1501687	4-15	
	4-19	
	4-21	
	4-23	
	4-27	
	4-29	
	4-31	
	4-33	
	4-35	
	5-11	
	5-13	
1501690	4-15	
	4-19	
	4-21	
	4-23	
	4-27	
	4-29	
	4-31	
	4-33	
	4-35	
	5-11	
	5-13	
1501695	2-19	1
	2-23	1
	2-25	1
	2-27	
	2-30	
	2-37	1
	2-41	
	2-45	1
1501811	5-9	2
	6-21	19
	6-63	1
	6-65	6
1501835	6-13	8
1501837	6-5	9
1501838	6-9	32
	6-11	32
1501841	6-9	10
	6-11	10
1501848	6-13	13
	6-15	10
	6-17	10
1501849	5-3	14
	5-5	14
1501855	5-3	15
	5-5	15
	5-6	
	6-5	15
	6-7	15
	6-18	
1501887	6-5	7
	6-7	7
1501888	5-3	1
	5-5	1
	6-5	1
	6-7	1
	6-9	4
	6-11	4
	6-13	1
1501970	6-23	30
	6-25	30
	6-27	30
	6-59	
	7-26	40
	7-30	32
	7-33	2
1501995	6-49	36
1501997	1-130	10
	2-30	5
	6-5	6
	6-7	6
1501999	3-5	16
	3-9	15
	3-11	25
	3-15	15
1502001	2-3	5
	2-7	6
	2-30	9
	4-5	5
1502003	6-49	10
	11-3	18
	11-5	6
	11-7	22
	11-9	6
1502005	6-49	22
	6-49	32
1502007	6-49	29
	12-5	7
	12-7	7
	12-9	7
1502009	2-30	4
	11-15	9
	11-17	6
	11-19	8

©2013 HYSTER COMPANY

NUMERICAL INDEX (continued)

PART NO.	PAGE	ITEM
1502027	6-49	19
1502034	6-13	15
	6-15	2
	6-17	2
1502053	6-9	19
	6-11	19
	6-50	38
	7-13	19
1502054	6-49	27
1502055	7-13	13
	12-19	15
1502058	6-49	8
1502059	12-19	16
1502061	1-132	
	7-29	2
	7-45	23
	7-251	2
1502066	6-49	26
1502069	6-49	3
1502079	5-3	6
	5-5	6
	6-5	5
	6-7	5
	6-9	11
	6-11	11
	6-13	6
	6-15	6
	6-17	6
1502081	6-49	37
1502083	6-49	35
1502084	6-50	40
1502085	6-49	16
1502123	12-5	8
	12-7	8
	12-9	8
1502276	10-13	28
1502543	5-17	12
	5-19	15
	6-49	6
	7-5	10
	7-5	20
	7-25	11
	7-29	7
	7-33	21
	7-43	5
	7-49	13
	12-5	4
	12-7	4
	12-9	4
	16-10	7
1502625	7-98	41
	7-104	41
	7-110	41
	7-116	52
	7-122	52
	7-143	35
	7-150	41
	7-156	52
	7-162	52
1502626	7-98	41
	7-104	41
	7-110	41
	7-116	52
	7-122	52
	7-143	35
	7-150	41
	7-156	52
	7-162	52
1502627	7-87	34
	7-91	34
	7-127	33
	7-131	33
	7-167	34
	7-171	34
1502811	13-3	11
	14-3	11
	15-3	11
1503088	7-291	6
1503096	16-33	
1503958	1-37	19
	1-39	19
1503959	1-48	33
1504010	13-19	8
	14-23	6
	15-33	9
	16-15	17
	16-19	19
	16-23	19
1504012	13-19	8
	14-23	6
	15-33	9
	16-15	17
	16-19	19
	16-23	19
1504075	2-17	3
	3-25	3
	4-12	3
1504197	7-205	15
	7-205	19
	7-212	25
	7-212	28
	7-216	17
1504953	1-59	9
1506572	3-27	6
	3-29	8
1506607	3-27	10
	3-29	9
1506738	5-3	19
	5-5	19
	6-5	22
	6-7	22
	6-9	7
	6-11	7
	6-13	17
1506825	1-40	
	1-48	
1508206	7-224	45
1508232	7-221	5
	7-224	45
	7-248	25
	7-251	6
1509103	2-19	23
	3-19	24
	3-21	24
1509104	2-19	23
	3-19	24
	3-21	24
1509888	7-33	14
	7-92	41
	7-97	23
	7-103	28
	7-109	23
	7-110	47
	7-115	40
	7-121	40
	7-126	24
	7-131	24
	7-131	27
	7-137	28
	7-149	23
	7-150	47
	7-155	40
	7-161	40
	7-167	42
	7-171	23
	7-172	42
	7-177	23
	7-178	45
	7-183	31
	7-189	31
	7-195	38
	7-197	38
	7-255	23
	7-260	22
	7-279	3
	7-281	12
	7-284	14
	7-287	2
	7-289	3
	7-301	3
	7-305	8
	7-309	8
	7-313	8
	7-317	12
	7-321	14
	16-7	11
1509890	7-87	41
	7-115	43
	7-121	41
	7-121	43
	7-126	27
	7-155	43
	7-161	41
	7-161	43
	7-166	23
	7-183	43
	7-189	41
	7-189	43
	7-193	4
	7-273	9
	7-275	10
	7-277	12
	7-279	9
	7-281	2
	7-283	11
	7-287	10
	7-289	8
	7-293	5
	7-297	9
1510113	1-5	4
	1-23	1
	8-31	10
1510114	7-41	4
	9-21	5
1510115	2-11	37
	2-15	37
	2-29	15
	3-19	10
	3-21	10
	4-11	22
	6-49	2
	7-9	8
	7-11	7
1510116	2-29	12
	7-41	11
	11-15	25
	11-17	17
	11-19	16

See Service Manual for service procedures.
©2013 HYSTER COMPANY

NUMERICAL INDEX (continued)

PART NO.	PAGE	ITEM
	12-5	11
	12-7	11
	12-9	11
1510117	2-11	4
	2-15	4
	2-19	13
	2-27	16
	3-19	3
	3-21	3
	4-11	4
	9-3	11
1510126	11-3	12
	11-5	2
	11-7	15
	11-9	2
	11-21	12
	11-25	11
	11-27	15
	11-31	11
1512403	2-32	
	10-2	1
	10-3	1
1512536	1-107	3
1512561	9-19	1
1514138	8-75	14
	8-76	5
1514269	12-71	1
1514429	1-128	6
	1-129	6
	1-130	6
	1-131	6
	1-132	6
	2-23	14
	2-25	13
	2-27	2
	2-27	5
	5-15	11
	6-9	27
	6-11	27
	6-95	11
	6-97	8
	7-25	24
	7-29	16
	7-45	15
	7-59	6
	9-23	20
	11-3	10
	11-5	3
	11-7	13
	11-9	3
	11-21	10
	11-25	9
	11-27	13
	11-31	9
1514597	7-77	24
	7-86	18
	7-87	37
	7-90	18
	7-91	37
	7-96	18
	7-97	37
	7-101	1
	7-103	23
	7-108	18
	7-109	37
	7-115	28
	7-116	57
	7-121	28
	7-122	57
	7-126	17
	7-127	38
	7-130	17
	7-131	38
	7-136	17
	7-137	38
	7-142	18
	7-143	37
	7-148	18
	7-149	37
	7-155	28
	7-156	57
	7-161	28
	7-162	57
	7-166	18
	7-167	37
	7-170	18
	7-171	37
	7-176	18
	7-178	40
	7-182	21
	7-183	40
	7-184	54
	7-188	21
	7-189	40
	7-190	54
	7-197	46
	7-203	37
	7-206	36
	7-213	48
	7-217	31
	7-223	37
	7-231	2
	7-236	23
	7-243	2
	7-247	2
	7-252	23
	7-256	27
	7-273	2
	7-275	2
	7-277	2
1514598	7-77	24
	7-197	46
	7-203	37
	7-206	36
	7-213	48
	7-217	31
	7-217	32
	7-223	37
	7-223	38
	7-256	27
	7-273	2
	7-275	2
	7-277	2
1514602	7-86	17
	7-87	36
	7-90	17
	7-91	36
	7-96	17
	7-97	36
	7-98	40
	7-101	2
	7-103	22
	7-104	42
	7-108	17
	7-109	36
	7-110	40
	7-115	27
	7-116	53
	7-116	56
	7-121	27
	7-122	53
	7-122	56
	7-122	56
	7-126	16
	7-127	37
	7-130	16
	7-131	37
	7-136	16
	7-137	37
	7-142	17
	7-143	36
	7-143	38
	7-148	17
	7-149	36
	7-150	40
	7-154	27
	7-156	53
	7-156	56
	7-160	27
	7-162	53
	7-162	56
	7-166	17
	7-167	36
	7-170	17
	7-171	36
	7-176	17
	7-177	38
	7-178	39
	7-182	22
	7-184	51
	7-184	53
	7-188	22
	7-190	51
	7-190	53
	7-275	5
1514603	7-86	17
	7-87	36
	7-90	17
	7-91	36
	7-96	17
	7-97	36
	7-98	40
	7-101	2
	7-103	22
	7-104	42
	7-108	17
	7-109	36
	7-110	40
	7-115	27
	7-116	53
	7-116	56
	7-121	27
	7-122	53
	7-122	56
	7-123	61
	7-126	16
	7-127	37
	7-130	16
	7-131	37
	7-136	16
	7-137	37
	7-142	17
	7-143	36
	7-143	38
	7-148	17
	7-149	36
	7-150	40
	7-155	27
	7-156	53

©2013 HYSTER COMPANY

NUMERICAL INDEX (continued)

PART NO.	PAGE	ITEM
	7-156	56
	7-161	27
	7-162	53
	7-162	56
	7-162	61
	7-166	17
	7-167	36
	7-170	17
	7-171	36
	7-176	17
	7-177	38
	7-178	39
	7-182	22
	7-184	51
	7-184	53
	7-188	22
	7-190	51
	7-190	53
	7-190	58
	7-275	5
1514866	13-8	20
	13-19	9
	14-14	28
	14-23	9
	15-12	20
	15-20	19
	15-33	8
	16-15	20
	16-19	18
	16-23	18
1515219	9-23	5
1515337	1-37	11
	1-39	11
	1-47	20
	1-48	39
	1-73	6
	1-77	9
	1-77	17
	1-81	11
1515654	3-47	8
	6-51	5
	6-52	7
	7-25	2
	7-30	29
	7-37	2
	7-38	3
	7-45	27
	8-37	12
	8-43	13
	8-48	46
	8-53	36
	8-59	7
1516075	9-19	21
1516199	11-15	1
	11-17	1
	11-19	1
1516201	10-11	3
	12-19	5
1516205	12-7	23
1516331	9-21	12
1516332	9-21	12
1516333	9-21	12
1516334	9-21	12
1516335	9-21	12
1516526	9-21	13
1516530	9-21	3
1516534	9-17	9
1516535	9-21	10
1516536	9-21	6
1516818	8-37	24
1516826	8-37	6
	8-43	6
	8-47	20
	8-61	5
1516849	8-33	22
	8-39	23
	8-48	36
	8-51	6
	8-55	6
1516851	8-33	21
	8-39	22
1517361	5-15	13
	6-95	13
	6-97	10
	7-50	29
	7-53	10
	12-23	15
	12-25	12
	12-27	16
	12-31	13
1517394	12-23	17
	12-25	10
	12-27	15
	12-31	11
1517405	6-79	33
	6-87	11
1517420	1-13	1
	1-17	1
1517421	1-13	1
	1-17	1
1517437	6-87	1
1517438	6-87	10
1517576	9-21	13
1517578	9-21	3
1517656	1-13	23
	1-17	23
1517673	9-17	3
1517836	10-13	27
1517906	11-15	17
1519232	1-37	
	1-55	
	1-65	
	1-73	
1519360	6-23	22
	6-50	48
	6-57	7
	6-87	
1519611	7-195	41
	7-197	41
	7-207	45
	7-213	37
	7-228	24
	7-232	18
	7-235	6
1520290	12-71	2
1520513	7-206	27
	7-208	59
	7-211	1
	7-213	40
	7-222	22
	7-222	23
	7-235	5
	7-251	7
1520543	2-23	13
	7-212	21
	7-222	28
1520660	8-51	28
	8-55	28
	8-75	10
	8-76	9
1520752	9-21	15
1520753	9-21	15
1520754	9-21	15
1520755	9-21	15
1520864	7-195	30
	7-197	30
	7-201	27
	7-203	27
1521005	5-23	5
	6-101	5
	6-103	24
1521183	7-85	11
	7-90	11
	7-96	11
	7-102	16
	7-108	11
	7-114	18
	7-120	18
	7-125	10
	7-130	10
	7-135	9
	7-136	10
	7-142	12
	7-148	11
	7-154	18
	7-160	18
	7-165	11
	7-170	11
	7-176	11
	7-182	12
	7-188	12
1521184	7-85	10
	7-89	10
	7-95	10
	7-102	15
	7-107	10
	7-114	17
	7-120	17
	7-125	9
	7-129	9
	7-136	10
	7-141	11
	7-147	10
	7-154	17
	7-160	17
	7-165	10
	7-169	10
	7-175	10
	7-182	11
	7-188	11
1521185	7-86	15
	7-90	15
	7-96	15
	7-102	20
	7-108	15
	7-114	22
	7-120	22
	7-126	14
	7-130	14
	7-136	14
	7-142	15
	7-148	15
	7-154	22
	7-160	22
	7-166	15
	7-170	15
	7-176	15
	7-182	19

See Service Manual for service procedures.
©2013 HYSTER COMPANY

NUMERICAL INDEX (continued)

PART NO.	PAGE	ITEM
	7-188	19
1521186	7-86	16
	7-90	16
	7-96	16
	7-102	21
	7-108	16
	7-114	23
	7-120	23
	7-126	15
	7-130	15
	7-136	15
	7-148	16
	7-154	23
	7-160	23
	7-166	16
	7-170	16
	7-176	16
	7-182	20
	7-188	20
1521188	7-85	10
	7-85	11
	7-86	15
	7-86	16
	7-89	10
	7-90	11
	7-90	15
	7-90	16
	7-95	10
	7-96	11
	7-96	15
	7-96	16
	7-102	15
	7-102	16
	7-102	20
	7-102	21
	7-108	10
	7-108	11
	7-108	15
	7-108	16
	7-114	17
	7-114	18
	7-114	22
	7-114	23
	7-120	17
	7-120	18
	7-120	22
	7-120	23
	7-125	9
	7-125	10
	7-126	14
	7-126	15
	7-129	9

PART NO.	PAGE	ITEM
	7-130	10
	7-130	14
	7-130	15
	7-135	9
	7-136	10
	7-136	14
	7-136	15
	7-141	11
	7-142	12
	7-142	15
	7-142	16
	7-148	10
	7-148	11
	7-148	15
	7-148	16
	7-154	17
	7-154	18
	7-154	22
	7-154	23
	7-160	17
	7-160	18
	7-160	22
	7-160	23
	7-165	10
	7-165	11
	7-166	15
	7-166	16
	7-169	10
	7-170	11
	7-170	15
	7-170	16
	7-175	10
	7-176	11
	7-176	15
	7-176	16
	7-182	11
	7-182	12
	7-182	19
	7-182	20
	7-188	11
	7-188	12
	7-188	19
	7-188	20
1521328	7-259	9
	7-259	11
1521809	9-23	29
1521989	7-85	10
	7-85	11
	7-86	15
	7-86	16
	7-90	10
	7-90	11

PART NO.	PAGE	ITEM
	7-90	15
	7-90	16
	7-96	10
	7-96	11
	7-96	15
	7-96	16
	7-102	15
	7-102	16
	7-102	20
	7-103	21
	7-108	10
	7-108	11
	7-108	15
	7-108	16
	7-114	17
	7-114	18
	7-114	22
	7-114	23
	7-120	17
	7-120	18
	7-120	22
	7-120	23
	7-125	9
	7-125	10
	7-126	14
	7-126	15
	7-129	9
	7-130	10
	7-130	14
	7-130	15
	7-135	9
	7-136	10
	7-136	14
	7-136	15
	7-142	11
	7-142	12
	7-142	15
	7-142	16
	7-148	10
	7-148	11
	7-148	15
	7-148	16
	7-154	17
	7-154	18
	7-154	22
	7-154	23
	7-160	17
	7-160	18
	7-160	22
	7-160	23
	7-165	10
	7-165	11

PART NO.	PAGE	ITEM
	7-166	15
	7-166	15
	7-166	16
	7-170	10
	7-170	11
	7-170	15
	7-170	16
	7-176	10
	7-176	11
	7-176	15
	7-176	16
	7-182	11
	7-182	12
	7-182	19
	7-182	20
	7-188	11
	7-188	12
	7-188	19
	7-188	20
1522363	4-17	2
1522377	9-21	1
1522425	12-19	11
1522442	15-20	33
1523479	9-21	2
1523732	1-122	2
1523733	1-122	3
1523734	1-123	7
1523735	1-123	
1523737	1-122	3
1523739	1-123	
1524267	5-23	4
	5-25	23
	6-101	4
	6-103	23
1524751	15-3	1
1524754	15-3	1
1524755	13-3	1
	14-3	1
	14-3	1
	15-3	1
	15-3	1
1524756	13-3	1
1524757	14-3	1
	15-3	1
	15-3	1
1524760	15-3	1
1524761	15-3	1
1524764	15-3	1
1524798	13-5	1
1524799	13-5	1
1524831	15-5	1
1524834	15-5	1

©2013 HYSTER COMPANY

NUMERICAL INDEX (continued)

PART NO.	PAGE	ITEM
1524835	15-5	1
	15-5	1
1524836	15-5	1
	15-5	1
1524839	15-5	1
1524840	15-5	1
1524843	15-5	1
1525354	10-13	1
1525442	6-87	29
	6-91	24
1525451	6-79	29
	6-81	11
	6-85	11
	6-87	35
	6-91	11
1525459	6-81	23
	6-91	33
1525478	6-87	41
	6-91	20
1525563	7-85	4
	7-89	4
	7-95	4
	7-101	8
	7-107	4
	7-113	5
	7-119	5
	7-125	2
	7-129	2
	7-135	2
	7-141	4
	7-147	4
	7-153	5
	7-159	5
	7-165	4
	7-169	4
	7-175	4
	7-181	5
	7-187	5
1525564	7-267	1
	7-267	1
	7-271	1
1525565	7-83	2
1525566	7-273	1
	7-275	1
	7-277	1
1525567	7-85	3
	7-85	7
	7-89	3
	7-89	7
	7-95	3
	7-95	7
	7-97	34
	7-101	7
	7-101	11
	7-104	38
	7-107	3
	7-107	7
	7-109	34
	7-113	4
	7-113	8
	7-116	48
	7-119	4
	7-119	8
	7-122	48
	7-125	5
	7-125	7
	7-129	5
	7-129	7
	7-135	5
	7-135	7
	7-137	32
	7-141	3
	7-141	7
	7-143	32
	7-147	3
	7-147	7
	7-149	34
	7-153	4
	7-153	8
	7-156	48
	7-159	4
	7-159	8
	7-162	48
	7-165	3
	7-165	7
	7-169	3
	7-169	7
	7-175	3
	7-175	7
	7-177	34
	7-181	4
	7-181	8
	7-184	46
	7-187	4
	7-187	8
	7-190	46
	7-293	17
	7-298	24
	7-301	12
	7-305	20
	7-309	20
	7-314	24
	7-318	21
	7-322	23
1525568	7-85	2
	7-89	2
	7-95	2
	7-101	6
	7-107	2
	7-113	3
	7-119	3
	7-125	1
	7-129	1
	7-135	1
	7-141	2
	7-147	2
	7-153	3
	7-159	3
	7-165	2
	7-169	2
	7-175	2
	7-181	3
	7-187	3
	7-293	1
	7-297	1
	7-301	1
	7-305	1
	7-309	2
	7-313	1
	7-317	1
	7-321	1
1525569	7-85	8
	7-89	8
	7-95	8
	7-102	12
	7-107	8
	7-113	2
	7-113	9
	7-119	2
	7-119	9
	7-125	6
	7-129	6
	7-135	6
	7-141	8
	7-147	8
	7-153	2
	7-153	9
	7-159	2
	7-159	9
	7-165	8
	7-167	43
	7-169	8
	7-172	43
	7-175	8
	7-178	43
	7-181	2
	7-181	9
	7-187	2
	7-187	9
1525570	7-85	1
	7-89	1
	7-95	1
	7-101	5
	7-107	1
	7-113	1
	7-119	1
	7-127	41
	7-132	41
	7-138	41
	7-141	1
	7-147	1
	7-153	1
	7-159	1
	7-165	1
	7-169	1
	7-175	1
	7-181	1
	7-187	1
	7-294	22
	7-298	28
	7-301	16
	7-306	24
	7-310	24
	7-314	28
	7-318	25
	7-322	27
1525573	7-293	2
	7-297	4
	7-313	12
	7-321	11
1525577	7-86	28
	7-91	28
	7-97	28
	7-103	31
	7-126	29
	7-131	29
	7-136	20
	7-143	24
	7-166	28
	7-171	28
	7-177	28
	7-183	30
	7-189	30
	7-293	14
	7-297	22
	7-301	9
	7-305	18
	7-309	18

See Service Manual for service procedures.
©2013 HYSTER COMPANY

NUMERICAL INDEX (continued)

PART NO.	PAGE	ITEM
	7-314	22
	7-317	20
	7-322	22
1525584	7-255	13
	7-259	15
	7-293	4
	7-297	6
	7-301	2
	7-305	4
	7-309	7
	7-313	7
	7-317	7
	7-321	7
1527264	7-5	13
1527311	6-21	13
	6-65	5
1527314	6-21	20
1527315	6-21	21
1527318	6-21	18
1527395	1-29	5
1527520	12-75	11
1527562	6-9	26
	6-11	26
	7-45	13
1527563	6-9	25
	6-11	25
1527571	7-19	25
	7-25	23
	7-29	21
1527719	12-75	
1527813	10-11	5
	11-15	23
	11-17	18
	11-22	41
	11-28	47
	12-19	3
	16-37	8
	16-37	12
	16-51	8
	16-51	12
1527876	1-5	9
	1-7	9
	1-9	21
	2-23	10
	5-3	10
	6-33	19
	6-61	12
	7-26	37
	7-30	36
	7-43	4
	7-49	4
	7-49	4
	7-53	19
	8-23	3
	11-21	15
	11-25	28
	11-27	18
	11-31	34
1527877	2-27	1
	2-27	4
	5-17	8
	7-49	18
	7-53	7
	8-28	12
	16-7	4
1527878	1-5	15
	1-7	15
	7-45	28
	9-23	22
	12-23	6
	12-27	6
1527879	2-3	21
	2-7	22
	2-11	14
	2-15	14
	2-25	11
	2-30	10
	3-5	24
	3-9	23
	3-11	21
	3-15	23
	4-3	21
	4-7	21
	5-5	12
	5-15	17
	5-23	8
	5-25	27
	6-15	13
	6-17	13
	6-21	4
	6-33	14
	6-47	15
	6-55	13
	6-95	25
	6-97	19
	6-101	8
	6-103	27
	7-5	14
	7-6	31
	7-13	14
	7-25	17
	7-26	47
	7-29	5
	7-34	26
	7-43	4
	7-49	18
	7-53	22
	7-55	9
	8-5	10
	8-7	10
	8-15	6
	8-17	7
	8-19	5
	8-21	4
	8-23	12
	8-25	4
	8-28	9
	8-31	7
	8-34	48
	8-40	53
	9-3	13
	9-19	22
	9-21	7
	10-11	8
	11-3	11
	11-5	15
	11-7	14
	11-9	15
	11-15	21
	11-17	21
	11-19	27
	11-21	11
	11-25	13
	11-27	14
	11-31	13
	12-5	16
	12-19	20
	12-23	2
	12-25	2
	12-27	2
	12-31	2
	16-37	3
	16-51	3
1527880	1-7	4
	1-9	6
	2-29	6
	5-3	12
	5-15	16
	5-17	15
	5-19	2
	6-9	28
	6-11	28
	6-13	11
	6-49	20
	6-95	15
	6-97	12
	7-6	31
	11-21	33
	11-25	35
	11-27	41
	11-31	40
1527881	1-5	25
	1-7	23
	1-10	31
	2-19	26
	2-23	4
	5-9	8
	6-21	34
	6-23	4
	6-25	4
	6-47	4
	6-49	5
	6-55	4
	6-57	21
	11-3	27
	11-5	13
	11-7	39
	11-9	13
1527884	3-27	2
	3-29	14
	7-20	
	7-23	
	8-51	14
	8-55	14
	9-3	9
1527885	2-19	25
	2-27	17
1527886	2-19	19
1527888	1-29	7
	1-31	6
	1-33	6
1527892	2-31	4
1527939	1-14	44
	1-18	44
1527940	1-14	44
	1-18	44
1527946	1-13	30
	1-17	30
1527982	2-3	26
	2-7	5
	2-30	7
	3-5	17
	3-9	16
	3-11	26
	3-15	16
1528132	7-15	3
	7-17	3
1528133	7-15	4

©2013 HYSTER COMPANY

NUMERICAL INDEX (continued)

PART NO.	PAGE	ITEM
	7-17	4
1528140	3-23	2
1528315	7-15	2
	7-17	2
1528327	12-25	4
1528328	12-23	14
	12-31	4
1528329	12-27	13
1528339	12-23	5
	12-27	5
1528415	3-27	8
	3-29	11
1528481	12-5	
	12-7	
	12-9	
1528482	7-11	8
1528495	3-5	2
	3-7	2
1528573	16-37	2
	16-39	1
	16-45	1
	16-51	2
	16-55	11
1528602	16-41	6
	16-43	18
	16-47	7
	16-49	20
	16-57	18
1528608	5-9	20
	6-21	26
	6-47	21
	6-55	23
1528617	2-23	6
1528630	7-15	5
	7-17	5
1528631	7-15	6
	7-17	6
1528778	2-11	16
	2-15	16
	3-19	23
	3-21	23
1528799	11-37	1
	11-39	2
1528888	1-29	8
	1-31	7
	1-33	7
1528889	4-17	9
1528893	5-9	10
	6-21	32
	6-47	3
	6-55	1
1528903	6-79	23
	6-81	19
	6-85	19
	6-87	39
	6-91	29
1528930	2-11	34
	3-19	9
	3-21	9
	4-11	18
1528934	2-11	36
	4-11	21
1528937	3-19	21
	3-19	21
	3-21	21
	3-43	9
	3-76	7
1528938	2-11	33
	3-19	11
	3-21	11
	4-11	17
1529014	16-35	6
1529015	13-15	19
	14-19	5
	15-26	33
	15-30	33
	16-37	1
	16-51	1
1529046	7-85	7
	7-85	8
	7-89	7
	7-89	8
	7-95	7
	7-95	8
	7-97	34
	7-101	11
	7-102	12
	7-107	7
	7-107	8
	7-109	34
	7-113	8
	7-113	8
	7-113	9
	7-116	48
	7-119	8
	7-119	8
	7-119	9
	7-122	48
	7-125	5
	7-125	6
	7-129	5
	7-129	6
	7-135	5
	7-135	6
	7-137	32
	7-141	7
	7-141	8
	7-143	32
	7-147	7
	7-147	8
	7-149	34
	7-153	8
	7-153	9
	7-156	48
	7-159	8
	7-159	9
	7-162	48
	7-165	7
	7-165	8
	7-169	7
	7-169	8
	7-175	3
	7-175	7
	7-175	8
	7-177	34
	7-181	8
	7-181	9
	7-184	46
	7-187	8
	7-187	9
	7-190	46
	7-293	1
	7-293	17
	7-294	22
	7-297	1
	7-298	24
	7-298	28
	7-301	1
	7-301	12
	7-302	16
	7-305	1
	7-305	20
	7-306	24
	7-309	2
	7-310	20
	7-310	24
	7-313	1
	7-314	24
	7-314	28
	7-317	1
	7-318	21
	7-318	25
	7-321	1
	7-322	23
	7-322	27
1529052	7-86	25
	7-126	22
	7-166	25
1529257	6-5	25
	6-7	25
	7-26	39
	7-30	31
	7-33	3
1529366	2-19	17
	5-9	22
	5-17	16
	5-19	17
	6-21	29
	6-23	2
	6-25	2
	6-27	2
	6-27	4
	6-47	24
	6-55	26
	6-59	21
	7-5	5
	7-5	5
	7-9	4
	7-9	4
	7-9	11
	7-11	2
	7-11	2
	7-26	38
	7-29	12
	7-33	24
	7-43	8
	7-45	19
	7-49	14
	7-53	23
	11-3	9
	11-5	20
	11-7	12
	11-9	20
	11-21	9
	11-27	12
	11-37	8
1529427	1-14	62
	1-18	62
1529787	2-3	14
	2-5	14
	2-7	15
	2-9	15
	3-5	12
	3-7	12
	3-9	11
	3-11	11
	3-13	11
	3-15	11

See Service Manual for service procedures.
©2013 HYSTER COMPANY

NUMERICAL INDEX (continued)

PART NO.	PAGE	ITEM
	3-17	11
	4-3	14
	4-5	14
	4-7	14
	4-9	14
1529894	8-37	20
	8-43	22
	8-48	56
1530010	11-37	10
	11-39	
1530019	1-13	40
	1-18	40
1530037	7-85	1
	7-85	2
	7-85	3
	7-89	1
	7-89	2
	7-89	3
	7-95	1
	7-95	2
	7-95	3
	7-101	5
	7-101	6
	7-101	7
	7-107	1
	7-107	2
	7-107	3
	7-113	1
	7-113	2
	7-113	3
	7-113	4
	7-119	1
	7-119	2
	7-119	3
	7-119	4
	7-125	1
	7-125	7
	7-127	41
	7-129	1
	7-129	7
	7-132	41
	7-135	1
	7-135	7
	7-138	41
	7-141	1
	7-141	2
	7-141	3
	7-147	1
	7-147	2
	7-147	3
	7-153	1
	7-153	2
	7-153	3
	7-153	4
	7-159	1
	7-159	2
	7-159	3
	7-159	4
	7-165	1
	7-165	2
	7-165	3
	7-167	43
	7-169	1
	7-169	2
	7-169	3
	7-172	43
	7-175	1
	7-175	2
	7-178	43
	7-181	1
	7-181	2
	7-181	3
	7-181	4
	7-187	1
	7-187	2
	7-187	3
	7-187	4
1530135	1-14	61
	1-18	61
1530243	1-7	26
	1-10	32
	1-23	3
	2-3	12
	2-5	12
	2-7	13
	2-9	13
	3-5	10
	3-7	10
	3-9	9
	3-11	9
	3-13	9
	3-15	9
	3-17	9
	4-3	12
	4-5	12
	4-7	12
	4-9	12
	5-3	11
	5-5	11
	5-15	19
	6-5	11
	6-7	11
	6-9	29
	6-11	29
	6-13	10
	6-15	12
	6-17	12
	6-23	3
	6-25	3
	6-49	4
	6-57	20
	6-95	17
	6-97	14
	9-3	9
	11-3	30
	11-7	37
	11-21	32
	11-27	39
1530244	1-5	28
1530311	5-23	9
	5-25	28
	6-101	9
	6-103	28
1530588	9-21	9
1530722	8-75	4
1530960	7-206	37
	7-213	49
	7-217	32
	7-223	38
	7-279	11
	7-287	13
	7-289	10
1530961	7-206	37
	7-213	49
	7-217	32
	7-223	38
	7-279	11
	7-287	13
	7-289	10
1530971	5-23	6
	5-25	25
	6-101	6
	6-103	25
1531001	1-13	13
	1-17	13
	1-17	13
	7-77	17
	16-3	11
1531162	7-267	3
	7-267	5
	7-271	3
	7-271	7
1531167	2-3	20
	2-7	21
	3-5	23
	3-9	22
	3-11	20
	3-15	22
	4-3	20
	4-7	20
1531231	7-195	26
	7-197	26
	7-201	34
	7-203	33
1531233	7-195	36
	7-197	36
1531235	7-195	24
	7-197	24
1531237	7-195	21
	7-197	21
	7-201	16
	7-203	19
1531238	7-195	25
	7-197	25
1531239	7-195	22
	7-197	22
	7-201	17
	7-203	20
1531240	7-195	23
	7-197	23
	7-201	19
	7-203	17
1531254	2-19	27
1531312	5-21	6
	5-25	4
	6-99	6
	6-103	4
1531404	2-3	24
	2-5	21
	2-7	25
	2-9	21
	3-5	26
	3-7	17
	3-9	25
	3-11	14
	3-13	14
	3-15	25
	3-17	16
	4-3	24
	4-5	21
	4-7	24
	4-9	21
1531480	2-35	15
	7-26	45
	7-30	34
	7-206	35
	7-213	46
	7-217	30

©2013 HYSTER COMPANY

NUMERICAL INDEX (continued)

PART NO.	PAGE	ITEM
	7-223	36
1531486	7-228	17
	7-231	10
	7-236	19
	7-239	14
	7-244	20
	7-248	24
	7-251	5
	7-273	4
	7-273	7
	7-275	4
	7-275	8
	7-277	4
	7-277	7
1531490	7-110	45
	7-114	24
	7-120	24
	7-150	45
	7-154	24
	7-160	24
	7-182	16
	7-188	16
1531492	7-110	44
	7-116	60
	7-122	60
	7-150	44
	7-156	60
	7-162	60
	7-183	35
	7-189	35
1531501	7-87	35
	7-91	35
	7-127	35
	7-131	35
	7-137	35
	7-167	35
	7-171	35
1531502	7-195	46
	7-201	39
	7-227	9
	7-239	6
	7-259	20
1531519	7-79	7
1531557	1-5	33
	1-7	31
	1-29	9
	1-31	21
	1-33	21
	11-15	20
	11-17	20
	11-19	25
	16-8	4
1531558	1-13	38
	1-18	38
	1-29	3
	1-109	8
	1-111	8
	5-3	21
	5-5	10
	6-5	24
	6-7	24
	6-9	3
	6-11	3
	6-13	19
	7-26	29
	7-49	6
	7-49	6
	7-75	8
	7-75	17
	12-19	23
1531563	10-2	3
	10-3	3
1531567	11-3	2
	11-7	2
	11-21	2
	11-25	2
	11-27	2
	11-31	2
1531569	11-3	22
	11-5	7
	11-7	30
	11-9	7
1531806	4-17	12
1531973	7-97	35
	7-104	39
	7-104	40
	7-109	29
	7-109	35
	7-115	34
	7-115	44
	7-116	49
	7-116	51
	7-121	34
	7-121	44
	7-122	49
	7-122	51
	7-137	33
	7-149	29
	7-149	35
	7-155	34
	7-155	44
	7-156	49
	7-161	34
	7-161	44
	7-162	49
	7-177	35
	7-183	44
	7-184	47
	7-189	44
	7-190	47
	7-193	1
1531974	7-97	35
	7-104	39
	7-104	40
	7-109	35
	7-115	44
	7-116	49
	7-116	51
	7-121	44
	7-122	49
	7-122	51
	7-137	33
	7-143	33
	7-149	35
	7-155	44
	7-156	49
	7-161	44
	7-162	49
	7-177	35
	7-183	44
	7-184	47
	7-189	44
	7-190	47
	7-193	1
1531975	7-9	3
1531991	7-195	4
	7-197	2
	7-201	33
	7-203	32
1532131	7-53	32
1532255	7-53	34
1532337	9-3	14
	9-23	9
	9-33	3
1532363	4-11	15
1532513	2-19	14
1532523	2-11	11
	2-15	11
	3-19	29
	3-21	29
1532532	5-9	1
1532571	7-205	1
	7-208	61
	7-211	7
	7-211	10
	7-215	6
	7-221	6
	7-255	13
	7-255	18
	7-259	15
	7-259	18
	7-281	5
	7-281	8
	7-293	4
	7-297	6
	7-301	2
	7-305	4
	7-309	7
	7-313	7
	7-317	7
	7-321	7
1532585	2-11	35
	3-19	12
	3-21	12
	4-11	20
1532650	13-7	6
	14-7	4
	15-11	6
1532664	7-294	18
	7-298	25
	7-301	13
	7-305	21
	7-310	21
	7-314	25
	7-318	22
	7-322	24
1532708	9-23	2
1532735	9-19	20
1532758	7-227	6
	7-231	12
	7-235	15
	7-239	5
	7-243	14
	7-248	20
	7-252	20
1532759	7-45	11
	7-75	19
	7-227	7
	7-255	9
1532761	7-45	10
	7-195	5
	7-197	5
	7-201	20
	7-203	14
	7-205	3
	7-205	7
	7-205	13
	7-207	49

©2013 HYSTER COMPANY

NUMERICAL INDEX (continued)

PART NO.	PAGE	ITEM
	7-211	8
	7-215	10
	7-215	13
	7-217	35
	7-217	39
	7-221	8
	7-255	5
	7-260	24
1532774	7-206	30
	7-213	44
	7-216	28
	7-221	9
1532775	7-75	20
	7-195	3
	7-197	3
	7-201	3
	7-203	3
	7-205	3
	7-205	7
	7-205	13
	7-211	9
	7-215	13
	7-221	14
1532776	7-201	31
	7-203	16
	7-215	10
	7-217	40
	7-222	21
	7-255	4
	7-260	23
1532777	7-195	28
	7-197	28
	7-201	8
	7-203	13
1532778	7-195	37
	7-197	37
	7-207	49
	7-211	14
	7-216	15
	7-217	35
	7-224	46
1532779	7-227	8
	7-235	15
	7-240	18
	7-248	19
	7-252	19
1533493	12-71	4
1533494	12-71	5
1533596	1-25	5
1533597	1-25	1
1533598	1-25	1
1533599	1-25	1
1533601	1-25	1
1533639	2-11	7
	2-15	7
	3-19	5
	3-21	5
	4-11	7
1533810	7-207	57
	7-212	29
	7-217	37
	7-223	41
1533863	2-11	8
	2-15	8
	3-19	7
	3-21	7
1534017	2-31	1
1534174	2-11	32
	3-19	13
1534282	7-87	32
	7-91	32
	7-97	32
	7-102	13
	7-109	32
	7-113	12
	7-119	12
	7-127	36
	7-131	36
	7-137	31
	7-141	9
	7-149	32
	7-153	12
	7-159	12
	7-167	32
	7-171	32
	7-177	32
	7-184	52
	7-190	52
	7-294	21
	7-297	3
	7-301	15
	7-305	3
	7-309	4
	7-313	3
	7-317	3
	7-321	3
1534417	1-5	16
	1-7	16
	1-9	8
	2-23	11
	2-25	7
	2-30	11
	3-27	1
	3-29	13
	6-29	3
	6-31	10
	6-33	11
	7-5	8
	7-25	6
	7-29	3
1534424	7-20	40
	7-23	27
1534649	6-79	1
	6-87	17
1534660	1-117	8
1534671	6-79	25
	6-87	37
1534672	6-79	24
	6-81	17
	6-85	17
	6-87	38
	6-91	28
1534674	6-79	34
	6-87	19
1534675	6-79	31
	6-87	30
	6-91	8
1534677	6-79	8
	6-87	23
1534679	6-79	32
	6-87	27
1534828	7-86	12
	7-90	12
	7-96	12
	7-102	17
	7-108	12
	7-114	19
	7-120	19
	7-125	11
	7-130	11
	7-136	11
	7-148	12
	7-154	19
	7-160	19
	7-166	12
	7-170	12
	7-176	12
	7-182	13
	7-188	13
	7-283	11
	7-293	9
	7-297	8
	7-301	5
	7-305	7
	7-309	12
	7-313	11
	7-317	9
	7-321	9
1534871	11-3	25
	11-5	23
	11-7	20
	11-9	23
	11-21	27
	11-25	20
	11-27	22
	11-31	23
1535136	6-97	21
1535166	7-13	1
1535257	2-3	8
	2-5	7
	2-7	9
	2-9	9
	3-5	5
	3-7	5
	3-9	4
	3-11	4
	3-13	4
	3-15	4
	3-17	4
	4-3	7
	4-5	7
	4-7	7
	4-9	7
1536304	7-25	8
	7-29	9
	7-33	19
	7-43	1
	7-49	3
1536719	2-27	13
1536724	11-3	33
	11-5	11
	11-7	40
	11-9	11
	11-13	
1536813	1-29	10
	1-31	4
	1-33	4
1537133	9-3	8
	9-17	8
	9-33	5
1537400	10-13	3
1537422	7-33	9
	7-41	8
	7-50	36
	7-53	30
1537449	8-63	14
	8-65	14
	8-67	14

©2013 HYSTER COMPANY

NUMERICAL INDEX (continued)

PART NO.	PAGE	ITEM
	8-69	14
1537450	8-63	16
	8-65	16
	8-67	16
	8-69	16
	8-71	16
	8-73	16
1537459	8-65	20
	8-67	20
	8-71	19
	8-73	19
1537551	1-85	14
	1-97	8
	1-99	11
	7-45	7
	7-75	9
	7-77	23
1537667	10-13	21
1538162	5-15	2
	6-95	2
	6-97	2
1538488	5-23	3
	6-101	3
1538490	5-15	5
	6-95	8
	6-97	5
1538782	5-15	3
	6-95	6
	6-97	3
1539085	2-32	3
	7-25	5
	7-29	10
	7-79	6
1539086	2-32	2
	7-25	4
	7-29	11
	7-79	5
1539154	2-29	2
	4-13	2
1539245	9-3	1
	9-5	
	9-7	
	9-9	
	9-10	
	9-13	
	9-15	
1539246	9-3	1
	9-5	
	9-7	
	9-9	
	9-10	
	9-13	
	9-15	
1539298	6-95	1
1539584	7-77	20
	16-3	8
1539636	10-19	1
1539872	7-215	4
	7-217	44
	7-223	45
1539962	3-47	6
	3-69	18
	6-52	2
	7-19	37
	7-25	12
	7-38	2
1540388	7-113	13
	7-119	13
	7-153	13
	7-159	13
	7-184	57
	7-190	57
	7-297	2
	7-305	2
	7-309	3
	7-313	2
	7-317	2
	7-321	2
1540643	1-13	15
	1-17	15
	6-33	9
1540805	7-5	21
1540860	1-14	46
	1-18	46
1540870	1-14	58
	1-18	58
1540944	7-137	34
	7-137	36
1541231	7-45	25
	8-33	14
	8-39	15
	8-45	6
	8-51	29
	8-55	29
1541232	8-33	15
	8-39	16
	8-45	5
	8-51	30
	8-55	30
1541556	8-37	5
	8-43	5
	8-47	15
1541921	8-12	3
1541988	7-116	46
	7-122	46
	7-156	46
	7-162	46
	7-183	39
	7-189	39
	7-193	3
	7-193	7
	7-231	3
	7-236	24
	7-243	3
	7-247	3
	7-252	24
	7-256	26
1541989	7-193	7
	7-256	26
1541991	7-86	20
	7-90	20
	7-97	25
	7-103	29
	7-108	20
	7-110	46
	7-115	45
	7-121	45
	7-126	19
	7-130	19
	7-137	25
	7-143	34
	7-148	20
	7-150	46
	7-155	45
	7-156	51
	7-161	45
	7-162	51
	7-166	20
	7-170	20
	7-176	20
	7-177	37
	7-183	40
	7-184	50
	7-189	40
	7-190	50
	7-193	2
1541992	7-86	20
	7-90	20
	7-97	25
	7-103	29
	7-108	20
	7-110	46
	7-116	45
	7-122	45
	7-126	19
	7-130	19
	7-137	25
	7-143	34
	7-148	20
	7-150	46
	7-155	45
	7-156	51
	7-161	45
	7-162	51
	7-166	20
	7-170	20
	7-176	20
	7-177	37
	7-183	40
	7-184	50
	7-189	40
	7-190	50
	7-193	2
1542082	5-15	18
	6-95	16
	6-97	13
1542403	7-25	1
1542436	6-23	12
	6-25	12
	6-27	12
	8-15	10
	8-17	11
	8-19	9
	8-21	15
1542439	6-23	13
	6-25	13
	6-27	13
	7-13	12
	7-29	1
	7-45	24
1542440	5-9	14
	6-21	31
	6-55	11
	6-95	20
	7-49	9
	7-53	4
1542500	5-15	8
1542546	12-23	10
	12-27	10
1542555	6-97	20
1542670	3-19	27
1542772	5-17	11
1542773	5-17	10
1543059	10-17	1
1543060	9-28	1
	9-29	1
	9-33	1
1543061	9-28	1

©2013 HYSTER COMPANY

NUMERICAL INDEX (continued)

PART NO.	PAGE	ITEM
	9-29	1
1543069	10-17	1
1543070	9-28	1
	9-29	1
	9-33	1
1543071	9-28	1
	9-29	1
1543094	8-63	14
	8-69	14
	8-71	14
	8-73	14
1543096	8-63	14
	8-69	14
1543097	8-63	14
	8-69	14
1543098	8-63	14
	8-69	14
1543102	8-63	
	8-65	
	8-67	
	8-69	
	8-71	
	8-73	
1543254	10-13	40
1543553	2-23	13
	7-195	7
	7-197	7
	7-201	13
	7-203	12
	7-206	26
	7-211	21
	7-222	28
1543691	5-9	15
	6-50	39
	6-95	19
1543698	6-21	30
	6-55	10
	7-49	8
	7-53	3
	11-3	20
	11-5	8
	11-7	18
	11-9	8
	11-21	22
	11-27	20
1543842	1-128	3
	1-129	3
	1-130	3
	1-131	3
	1-132	3
	11-3	19
	11-5	9
	11-7	19
	11-9	9
	11-21	21
	11-27	21
1543900	2-19	4
1543933	2-19	2
1543982	16-7	8
1544024	6-21	1
1544118	12-71	7
1544119	12-71	7
1544120	12-71	7
1544121	12-71	7
1544122	12-71	10
1544123	12-71	10
1544124	12-71	10
1544153	1-14	51
	1-14	51
	1-18	51
	1-18	51
	7-33	17
	7-41	15
	7-49	22
	11-3	31
	11-5	12
	11-7	38
	11-9	12
1544154	7-41	17
1544157	10-11	6
	10-11	6
1544216	8-37	4
	8-43	4
	8-45	20
	8-47	14
	8-53	31
	8-59	32
1544217	8-37	3
	8-43	3
	8-45	18
	8-48	52
	8-53	32
	8-59	33
1544218	8-33	32
	8-39	34
	8-47	23
	8-53	27
	8-59	30
1544232	10-19	1
1544234	10-19	1
1544255	7-15	7
	7-17	7
1544413	1-13	41
	1-18	41
1544415	1-13	22
	1-17	22
1544466	11-37	
1544759	8-75	13
	8-76	6
1544846	1-5	3
	1-7	3
1544975	12-5	3
	12-16	
1545202	7-87	39
	7-92	39
	7-98	39
	7-101	4
	7-110	39
	7-116	58
	7-122	58
	7-127	39
	7-131	39
	7-137	39
	7-144	39
	7-150	39
	7-156	58
	7-162	58
	7-167	39
	7-172	39
	7-178	42
	7-184	55
	7-190	55
1545401	9-3	5
	9-33	4
1545443	7-19	26
	7-25	19
	7-30	23
1545444	7-19	27
	7-25	20
	7-29	22
1545546	8-75	3
	8-76	12
1546673	7-255	6
	7-259	3
	7-279	7
	7-281	7
	7-283	7
	7-287	7
	7-289	7
1546689	1-97	
	1-99	
1546697	7-87	39
	7-92	39
	7-98	39
	7-101	4
	7-110	39
1546731	2-11	12
	2-15	12
1547368	7-255	12
	7-259	6
1547369	7-255	20
	7-259	13
1547447	8-33	7
	8-39	7
	8-45	13
	8-51	20
	8-55	20
1547466	1-13	26
	1-17	26
1547467	1-13	26
	1-17	26
1547468	1-13	26
	1-17	26
1547479	7-195	45
	7-197	45
	7-201	36
	7-203	35
1547482	7-195	9
	7-195	10
	7-197	9
	7-197	10
	7-201	6
	7-201	9
	7-203	8
1547484	7-228	20
	7-235	14
1547489	6-47	11
1547550	5-17	1
1547629	7-221	5
	7-248	25
	7-251	6
1547712	2-11	31
	2-15	31
	2-15	33

©2013 HYSTER COMPANY

NUMERICAL INDEX (continued)

PART NO.	PAGE	ITEM
	3-19	20
	3-21	20
1547756	16-7	6
1547757	9-17	1
1547848	6-21	8
	6-55	16
1547849	11-3	4
	11-7	4
	11-21	4
	11-25	4
	11-27	4
	11-31	4
	11-37	2
1547984	2-19	9
1548032	11-37	1
	11-39	2
1548181	11-37	
1548352	3-49	16
	3-69	3
	3-70	1
	6-39	16
	6-52	4
	7-19	28
	7-38	1
1548394	2-23	2
	2-37	31
1548395	2-23	5
	2-37	16
	6-29	5
1548497	3-5	18
	3-7	18
	3-11	13
	3-13	13
	4-3	23
	4-5	20
	4-7	23
	4-9	20
1548517	7-83	3
	7-279	6
	7-281	3
	7-281	9
	7-283	5
	7-283	8
	7-283	12
	7-287	6
	7-287	9
	7-289	6
	7-293	8
	7-297	13
	7-301	4
	7-305	9
	7-309	9
	7-313	18
	7-317	13
	7-321	15
1548519	7-83	3
	7-279	6
	7-281	3
	7-281	9
	7-283	5
	7-283	8
	7-283	12
	7-287	6
	7-287	9
	7-289	6
	7-293	8
	7-297	13
	7-301	4
	7-305	9
	7-309	9
	7-313	18
	7-317	13
	7-321	15
1548618	1-5	7
	1-7	7
	1-9	5
1548620	2-19	12
1549376	6-47	5
1549398	7-25	22
	7-29	19
1549715	16-37	8
	16-51	8
1549717	16-37	3
	16-51	3
1549718	16-37	3
	16-47	6
	16-51	3
	16-55	6
	16-57	19
1549723	16-37	3
	16-51	3
1549724	16-37	3
	16-45	2
	16-49	21
	16-51	3
	16-55	6
	16-57	19
1550070	16-37	3
	16-39	2
	16-41	7
	16-43	19
	16-51	3
	16-55	6
	16-57	19
1550298	15-20	29
1550561	8-75	12
	8-76	3
1550565	8-5	8
	8-33	
	8-37	
1550566	8-37	1
1550567	8-37	16
	8-43	17
	8-48	51
1550571	8-37	10
	8-43	10
1550572	8-37	11
	8-43	12
	8-48	47
1550573	8-33	26
	8-37	9
	8-39	28
1550574	8-37	18
	8-43	19
	8-47	22
1550575	8-33	25
1550576	8-34	49
	8-39	12
1550578	8-33	8
	8-39	8
1550585	8-37	6
	8-43	6
	8-47	20
1550600	6-21	12
	6-55	7
1550602	6-47	9
1550747	4-17	16
1550764	1-124	1
1550767	7-49	23
1551452	5-9	24
1551608	3-27	3
1551663	2-7	11
	2-9	11
	3-9	7
	3-15	7
	3-17	7
	4-7	10
	4-9	10
1551839	10-2	3
	10-3	3
1551845	2-19	12
1551846	2-19	12
1552010	1-5	17
1552011	1-5	18
1552012	1-5	19
1552525	8-63	6
	8-69	6
1552853	8-37	20
	8-48	56
1553094	7-195	44
	7-197	44
1553122	8-12	1
1553123	8-12	1
1553125	8-12	1
1553265	4-17	1
1553266	3-27	14
	3-29	1
1553267	2-32	5
1553270	8-33	35
	8-39	37
1553403	8-34	45
	8-40	52
	8-47	11
	8-51	10
1553475	8-33	37
	8-40	51
	8-53	28
1553650	3-33	
	3-60	2
	3-65	
1553652	3-33	
	3-60	2
	3-65	
1553692	3-31	5
	3-63	5
1553693	3-31	1
	3-63	1
1553708	3-65	15
1553710	3-33	1
	3-65	1
1553715	3-51	4
	3-83	4
1553716	3-51	2
	3-83	2
1553717	3-51	3
	3-83	3
1553722	3-37	7
	3-75	7
1553762	3-35	24
	3-67	24
1553763	3-35	27
	3-67	27
1553773	3-45	9
	6-37	9
1553774	3-45	10
	3-49	6
	3-79	8
	6-37	10

©2013 HYSTER COMPANY

NUMERICAL INDEX (continued)

PART NO.	PAGE	ITEM
	6-39	6
1553776	3-45	28
	3-47	1
	3-79	15
	3-81	2
	6-37	28
1553777	3-45	15
	3-79	14
	6-37	15
1553778	3-45	13
	3-79	10
	6-37	13
1553779	3-45	3
	3-79	1
	6-37	3
1553787	3-45	7
	6-37	7
1553799	3-49	12
	6-39	12
1553829	3-55	10
	6-41	10
1553830	3-45	22
	3-73	5
	6-37	22
1553831	3-45	23
	3-73	1
	6-37	23
1553832	3-45	2
	3-49	11
	6-37	2
	6-39	11
1553833	3-45	25
	3-73	6
	6-37	25
1553834	3-45	26
	3-73	6
	6-37	26
1553835	3-45	27
	3-73	6
	6-37	27
1553837	3-45	24
	3-73	7
	6-37	24
1553838	3-45	1
	3-49	10
	6-37	1
	6-39	10
1553839	3-45	16
	3-73	2
	6-37	16
1553840	3-45	17
	3-73	3
	6-37	17
1553841	3-45	18
	3-73	3
	6-37	18
1553864	3-45	30
	6-37	30
1553866	3-55	11
	6-41	11
1553867	3-55	2
	6-41	2
1553868	3-55	5
	3-69	2
	6-41	5
1553869	3-55	15
	3-69	6
	6-41	15
1553870	3-55	8
	6-41	8
1553871	3-55	6
	3-69	14
	6-41	6
1553878	3-53	16
	3-85	16
1553897	5-17	2
	5-19	3
	7-80	10
	11-3	3
	11-7	3
	11-21	3
	11-25	3
	11-27	3
	11-31	3
	11-37	6
1553943	3-41	20
	3-87	6
1553945	3-41	15
1553946	3-41	13
1553948	3-41	13
	3-55	13
	6-41	13
1553984	7-19	18
1553985	7-19	33
1553996	7-19	23
1553997	7-19	24
1554006	7-19	4
1554008	7-19	4
1554030	7-19	32
	7-21	
1554032	7-21	3
1554033	7-21	1
1554034	7-21	2
1554359	7-86	17
	7-87	35
	7-87	36
	7-87	39
	7-90	17
	7-91	35
	7-91	36
	7-92	39
	7-96	17
	7-97	36
	7-98	39
	7-98	40
	7-101	1
	7-101	4
	7-103	22
	7-104	42
	7-108	17
	7-109	36
	7-110	39
	7-110	40
	7-115	27
	7-116	53
	7-116	56
	7-116	58
	7-121	27
	7-122	53
	7-122	56
	7-122	58
	7-123	61
	7-126	16
	7-127	35
	7-127	37
	7-127	39
	7-130	16
	7-131	35
	7-131	37
	7-131	39
	7-136	16
	7-137	37
	7-137	39
	7-142	17
	7-143	36
	7-144	38
	7-144	39
	7-148	17
	7-149	36
	7-150	39
	7-150	40
	7-154	27
	7-156	53
	7-156	56
	7-156	58
	7-160	27
	7-162	53
	7-162	56
	7-162	58
	7-163	61
	7-166	17
	7-167	35
	7-167	36
	7-167	39
	7-170	17
	7-171	35
	7-171	36
	7-172	39
	7-176	17
	7-178	38
	7-178	39
	7-178	42
	7-182	22
	7-184	51
	7-184	53
	7-184	55
	7-188	22
	7-190	51
	7-190	53
	7-190	55
	7-190	58
1554814	2-31	3
1554815	7-53	29
1554816	2-31	2
1554837	2-23	3
1554838	2-25	4
1554902	7-9	
	7-55	10
1554921	2-30	2
1556342	7-20	39
	7-25	10
1556475	11-3	23
	11-5	21
	11-7	10
	11-9	21
	11-21	25
	11-25	23
	11-27	10
	11-31	22
1556623	7-25	25
	7-29	14
	7-33	23
	7-49	16
1556838	7-25	16
	7-29	20
1557383	9-5	11
1557392	9-5	9
1557445	9-9	5

©2013 HYSTER COMPANY

NUMERICAL INDEX (continued)

PART NO.	PAGE	ITEM
1557478	3-25	1
1557479	3-25	1
1557546	2-15	
	6-29	4
	6-31	14
1557547	6-29	7
	6-31	21
	6-33	8
1557548	6-29	8
	6-31	22
1557549	6-29	6
	6-31	20
1557550	6-29	2
	6-29	3
	6-31	8
	6-31	10
1557551	6-29	9
	6-31	11
	6-33	10
1557552	6-29	10
	6-31	12
	6-33	12
1557553	6-29	1
	6-31	1
	6-33	13
1557554	6-31	9
1557558	6-31	5
1557559	6-31	6
1557560	6-31	18
1557561	6-31	7
1557562	6-31	17
1557563	6-31	16
1557564	6-31	13
1557565	6-31	15
	6-33	1
1557566	6-31	4
1557737	2-17	4
	3-25	4
	4-12	4
1557767	4-12	1
1558034	1-39	13
1558036	1-77	7
	1-81	4
1558052	1-55	24
	1-59	24
1558156	7-279	8
	7-281	9
	7-283	9
	7-287	12
1558161	6-69	1
	6-71	1
	6-73	19
	6-75	18
1558170	6-69	10
	6-71	10
1558176	6-73	1
	6-75	1
1558184	2-17	1
1558186	2-17	1
1558187	6-73	4
	6-75	4
1558219	1-29	2
1558226	7-201	14
	7-203	15
	7-211	13
	7-216	15
	7-222	24
1558228	7-195	34
	7-197	4
	7-197	34
	7-201	38
	7-203	4
	7-206	30
	7-213	43
	7-216	28
	7-223	33
1558294	1-39	21
	1-48	43
1558432	6-61	12
	6-66	5
	6-69	6
	6-71	6
1558449	6-9	24
	6-11	24
1558515	8-37	33
	8-43	30
	8-47	6
	8-53	14
	8-59	21
1558771	7-75	10
1559049	7-255	2
	7-255	4
	7-259	1
	7-259	4
1559418	6-18	3
1559419	6-18	4
1559420	6-18	5
1559928	7-5	9
1560015	7-255	22
	7-324	3
1560091	7-25	8
	7-29	9
	7-43	1
	7-49	3
	7-49	10
	7-53	20
1560121	7-29	8
1560441	7-195	29
	7-197	29
	7-201	32
	7-203	31
	7-207	51
	7-207	52
	7-207	52
	7-207	53
	7-207	55
	7-207	56
	7-213	34
	7-217	38
	7-223	42
1560447	7-77	21
1560448	7-77	22
1560643	1-41	4
1560671	1-29	4
	1-31	15
	1-33	15
1560678	7-45	17
1560681	12-39	15
	12-41	10
	12-43	15
	12-45	13
	12-47	6
1560682	12-43	9
	12-47	10
1561008	10-15	4
1561015	1-5	24
	1-7	22
	1-10	36
1561117	7-261	4
	7-261	7
	7-263	7
	7-269	7
1561144	7-207	52
	7-213	34
	7-217	38
	7-223	42
1561146	7-240	22
	7-244	23
	7-248	26
	7-251	8
1561147	7-239	7
	7-243	4
	7-243	6
	7-243	8
	7-243	9
	7-247	4
	7-247	7
	7-247	8
	7-247	9
	7-252	21
	7-252	27
	7-252	28
	7-253	30
1561225	7-25	9
1561518	7-195	27
	7-197	27
	7-201	4
	7-203	2
1561519	7-166	21
1561559	7-77	10
	16-3	4
	16-4	2
1561749	16-10	1
1561755	7-77	11
	16-3	4
	16-4	2
1561759	6-9	18
	6-11	18
	7-13	11
1561780	8-23	2
	8-28	10
1561871	7-251	2
	8-15	9
	8-17	10
	8-19	8
	8-21	14
1562088	5-15	20
	6-95	18
	6-97	15
	7-11	10
	7-49	11
	7-53	5
1562310	8-75	15
1562353	1-115	27
1562359	1-21	1
1562360	1-21	1
1562361	1-21	1
1562362	1-21	1
1562489	10-5	8
1562492	10-5	11
	10-7	11
1562493	10-5	13
	10-7	13
1562496	10-5	16
	10-7	16
1562501	10-5	21
	10-7	21
1562505	10-5	25

See Service Manual for service procedures.
©2013 HYSTER COMPANY

NUMERICAL INDEX (continued)

PART NO.	PAGE	ITEM
	10-7	25
1562509	10-5	1
1562648	1-128	9
	1-129	9
	1-130	9
	1-131	8
	1-132	8
	8-15	4
	8-17	5
	8-19	3
	8-21	3
	8-23	11
	8-25	3
	8-28	7
	8-31	8
1562649	7-227	10
	7-227	12
	7-227	13
	7-231	4
	7-231	5
	7-231	7
	7-235	1
	7-236	25
	7-236	26
	7-239	8
	7-239	10
	7-240	16
	7-243	5
	7-243	10
	7-244	17
	7-247	6
	7-247	11
	7-248	16
	7-251	1
	7-252	17
	7-252	26
	7-267	3
	7-267	5
	7-267	6
	7-267	7
	7-271	3
	7-271	5
	7-271	6
	7-271	7
	7-271	8
	7-271	9
1563207	1-91	1
	1-93	4
	1-95	2
	1-97	2
	1-99	2
1563208	1-91	5
	1-93	
	1-95	2
	1-97	3
	1-99	2
	1-101	
1563210	1-79	
	1-83	
	1-91	
	1-93	
	1-97	
1563211	1-79	
	1-83	
	1-85	
	1-91	
	1-93	
	1-97	
	1-99	
1563215	1-63	1
	1-69	1
	1-79	
	1-83	
	1-85	4
1563216	1-63	2
	1-69	2
	1-71	2
1563217	1-63	2
	1-69	2
	1-71	7
1563222	1-63	1
	1-69	1
1563224	1-79	4
	1-83	4
	1-85	2
	1-89	2
1563225	1-79	4
	1-83	4
	1-85	2
	1-89	9
1563227	1-79	8
	1-83	8
	1-85	6
	1-89	4
1563351	1-63	1
	1-69	1
	1-71	1
1563369	1-5	20
	1-5	20
	1-7	18
	1-7	18
	1-9	24
	1-9	27
1563497	1-5	23
	1-7	21
	1-9	23
	1-9	26
1563881	1-14	49
	1-18	49
1563883	1-14	60
	1-18	60
1564044	7-26	36
	7-29	4
	7-34	25
	7-43	2
	7-49	19
	7-53	21
1564061	6-23	28
	6-25	28
	6-27	28
	6-50	49
1564392	5-9	21
	6-21	28
	6-47	23
	6-55	24
1564515	12-5	19
	12-7	21
	12-9	22
1564526	11-3	7
	11-7	8
	11-21	7
	11-25	5
	11-27	8
	11-31	5
	11-37	4
1564529	1-13	31
	1-17	31
1564586	6-31	23
1564587	6-29	3
	6-31	10
1564588	6-29	3
	6-31	10
1564589	6-29	3
	6-31	10
1564747	12-23	11
	12-25	5
	12-27	11
	12-31	5
1564752	5-23	14
	5-25	21
	6-101	14
	6-103	21
1565076	7-75	13
	7-77	13
	16-3	5
1565098	7-255	12
	7-259	6
1565125	1-31	16
	1-33	16
	7-75	3
	7-77	3
1565127	8-17	3
	8-19	16
	8-23	10
	8-28	1
	8-31	1
1565150	3-25	7
1565195	2-17	7
1565199	6-5	17
	6-7	17
1565200	6-5	18
	6-7	18
1565201	5-3	2
	5-5	2
	6-5	2
	6-7	2
	6-9	5
	6-11	5
	6-13	2
1565212	5-3	22
	5-5	9
	6-5	19
	6-7	19
1565290	11-11	2
1565303	11-11	6
1565305	11-11	27
	11-37	7
1565309	11-11	
1565310	11-11	
1565311	11-11	
1565312	11-11	
1565313	11-11	12
1565314	11-11	12
1565315	11-12	
1565316	11-11	
1565324	9-25	
	9-27	
1565327	9-25	2
	9-27	2
1565382	7-49	5
1565391	3-11	3
	3-13	3
1565453	2-17	6
	3-25	6
	4-12	6
1565551	6-95	2
1565552	6-95	3
1565691	3-5	13

©2013 HYSTER COMPANY

NUMERICAL INDEX (continued)

PART NO.	PAGE	ITEM
	3-7	13
	3-11	12
	3-13	12
	3-17	12
	4-3	15
	4-5	15
1565692	2-3	15
	2-5	15
	2-7	16
	2-9	5
	3-9	12
	3-15	12
	4-3	15
	4-5	15
	4-7	15
	4-9	15
1565832	2-35	17
	3-27	9
1566076	7-297	20
	7-297	21
1566116	7-294	18
	7-298	25
	7-301	13
	7-305	21
	7-310	21
	7-314	25
	7-318	22
	7-322	24
1566117	7-294	20
	7-298	26
	7-301	13
	7-306	22
	7-310	22
	7-314	26
	7-318	23
	7-322	25
1566131	11-13	
1566141	11-13	3
1566142	11-13	2
1566143	11-13	8
1566144	11-13	7
1566145	7-324	2
1566146	2-23	13
	7-33	19
	7-33	20
	7-264	3
	7-324	4
1566166	8-37	25
1566168	8-37	30
1566169	8-37	7
	8-43	7
1566227	7-297	20
	7-297	21
	7-321	12
	7-321	13
1566329	8-5	3
	8-7	3
	8-9	3
	8-11	3
1566420	5-3	16
	7-49	17
	7-53	8
1566453	1-91	1
	1-93	4
	1-95	2
	1-97	2
	1-99	2
1566462	9-3	4
1566505	2-29	3
1566522	2-11	12
	2-15	12
1566528	2-11	21
	2-15	21
1566564	15-26	34
	15-30	
1566654	2-23	16
	2-25	10
	4-35	13
	6-51	2
	6-52	5
	7-25	15
	7-30	27
	7-37	3
	7-38	4
	7-45	26
1566700	10-15	
1566726	1-29	14
1566853	1-29	7
1566951	1-115	11
1567020	4-11	8
1567333	7-195	11
	7-197	11
	7-201	7
	7-203	7
1567674	2-3	18
	2-5	18
	2-7	19
	2-9	19
	3-5	21
	3-7	21
	3-9	20
	3-11	18
	3-13	18
	3-15	20
	3-17	20
	4-3	18
	4-5	18
	4-7	18
	4-9	18
1567694	7-208	63
	7-211	5
	7-215	8
	7-221	11
1567831	2-11	22
	2-15	22
	2-19	24
1568075	11-3	17
	11-5	31
	11-21	19
	11-25	15
1568076	11-7	27
	11-9	33
	11-27	29
	11-31	16
1568077	11-7	28
	11-9	32
	11-27	30
	11-31	20
1568182	12-16	8
1568199	12-5	21
	12-7	20
	12-9	19
1568243	11-3	34
1568245	11-7	34
1568253	11-7	21
	11-9	31
1568256	11-7	32
	11-9	36
	11-27	34
	11-31	26
1568271	10-13	8
1568839	6-79	20
	6-81	15
	6-85	15
	6-87	3
	6-91	18
1568844	6-79	27
	6-87	40
1568853	6-79	22
	6-81	13
	6-85	13
	6-87	5
	6-91	16
1568998	6-21	17
	6-65	18
1569079	2-3	1
	2-5	1
	2-7	1
	2-9	1
	3-9	1
	3-11	1
	3-13	1
	4-3	1
	4-5	1
	4-7	1
	4-9	1
1569465	1-128	4
	1-129	4
	1-130	4
	1-131	4
	1-132	4
	7-49	12
	8-15	8
	8-17	9
	8-19	7
	8-21	13
1569527	11-21	28
	11-27	27
	11-32	
1569544	6-95	23
1569602	12-41	4
	12-55	4
	12-57	6
1569616	8-37	27
	11-15	12
	11-17	9
	11-19	19
	11-28	45
	16-43	12
	16-49	10
	16-57	12
1569768	8-5	9
	8-7	9
	8-34	47
	8-40	54
1569776	2-23	12
	2-25	8
1569912	9-21	15
1569913	9-21	15
1569914	9-21	15
1569915	9-21	15
1569973	7-207	57
	7-212	29
	7-217	37
	7-223	41
1569982	2-11	17
	2-15	17
1570290	11-3	8

See Service Manual for service procedures.
©2013 HYSTER COMPANY

NUMERICAL INDEX (continued)

PART NO.	PAGE	ITEM
	11-7	9
1570298	11-3	32
	11-5	30
	11-21	34
	11-25	17
1570300	11-7	33
	11-9	37
	11-27	35
	11-31	27
1570337	12-16	
1570338	12-16	1
1570339	12-16	1
1570340	12-16	2
1570342	12-16	3
1570343	12-16	3
1570346	12-16	6
1570347	12-16	6
1570348	12-16	6
1570352	12-16	8
1570360	8-33	4
	8-39	4
	8-45	2
1571029	1-59	28
1571628	1-65	1
	1-67	1
1571775	1-73	7
1572387	3-33	
	3-60	2
	3-65	
1572388	3-33	
	3-60	2
	3-65	
1572588	7-86	19
	7-90	19
	7-126	18
	7-130	18
	7-166	19
	7-170	19
1572593	3-37	4
	3-75	4
1572594	3-37	4
	3-75	4
1572595	3-37	4
	3-75	4
1572596	3-37	4
	3-75	4
1572597	3-37	4
	3-75	4
1572598	3-37	4
	3-75	4
1573014	3-45	8
	6-37	8
1573015	3-47	3
1573021	3-49	21
	6-39	21
1573117	3-49	7
	6-39	7
1573118	3-49	1
	6-39	1
1573119	3-49	8
	3-57	
	3-59	2
	6-39	8
	6-43	
	6-45	2
1573120	3-49	13
	6-39	13
1573179	3-41	3
	3-88	38
1573549	7-41	20
	7-83	5
1573561	3-55	12
	6-41	12
1573562	3-49	3
	6-39	3
1573564	3-49	20
	6-39	20
1573567	3-55	19
	3-69	10
	6-41	19
1573568	3-55	17
	3-69	8
	6-41	17
1573675	11-21	28
	11-27	27
	11-32	
1573774	1-13	18
	1-17	18
1573937	7-19	6
1573938	7-19	7
1574096	3-69	5
1574097	3-55	18
	3-69	9
	6-41	18
1574098	3-55	16
	3-69	7
	6-41	16
1574099	3-55	20
	3-69	11
	6-41	20
1574101	3-55	9
	6-41	9
1574111	5-6	3
	6-18	3
1574131	5-6	5
	6-18	5
1574147	1-117	2
1574260	5-6	4
	6-18	4
1574275	1-14	42
	1-18	42
1574277	1-13	21
	1-17	21
1574301	1-31	2
	1-33	2
1578453	12-25	1
1578454	12-23	1
	12-31	1
1578553	6-49	7
1578660	7-49	2
	7-53	11
1578665	12-15	5
1578671	12-11	11
	12-13	11
	12-15	11
1578672	12-11	7
	12-13	7
	12-15	12
1578673	12-13	6
	12-15	6
1578693	12-11	11
	12-13	11
	12-15	11
1578700	12-51	2
	12-55	1
1578701	12-51	2
	12-55	1
1578702	12-51	3
	12-53	6
	12-61	
1578703	12-51	4
	12-53	7
	12-63	
1578704	12-51	6
	12-53	10
	12-67	1
1578705	12-39	16
	12-41	11
	12-43	16
	12-45	14
	12-47	5
1578706	12-53	3
	12-55	12
	12-57	10
1578707	12-33	3
	12-48	4
	12-53	9
	12-67	2
1578710	12-59	3
	12-59	10
1578711	12-61	2
	12-63	2
	12-65	2
1578712	12-48	3
	12-55	2
	12-57	2
1578713	12-39	1
	12-41	15
	12-43	1
	12-45	6
	12-47	13
	12-61	6
	12-63	12
	12-65	7
1578714	12-47	3
	12-55	11
	12-57	9
	12-63	3
	12-65	3
1578715	12-53	
	12-67	4
	12-69	4
1578718	12-63	7
1578741	12-51	5
	12-53	8
	12-65	
1578743	12-33	4
	12-39	
1578744	12-33	5
	12-45	1
1578745	12-33	6
	12-45	2
1578746	12-33	7
	12-48	1
1578747	12-33	2
	12-39	18
	12-41	2
	12-43	18
1578748	12-33	2
	12-39	18
	12-41	2
	12-43	18
1578753	12-53	3
	12-55	12
	12-57	10
1578858	7-49	21
1578875	12-55	7
	12-57	4

©2013 HYSTER COMPANY

NUMERICAL INDEX (continued)

PART NO.	PAGE	ITEM
1578876	12-55	10
	12-57	8
1578878	12-65	1
1578881	12-55	16
	12-57	1
1578882	12-61	8
	12-63	5
	12-65	5
1578883	12-61	7
	12-63	4
	12-65	4
1578886	12-63	11
1578887	12-61	3
1578888	12-55	8
	12-57	5
1578889	12-61	9
	12-63	6
	12-65	6
1578904	12-55	5
	12-57	13
1578905	12-61	13
1578906	12-63	15
1578907	12-65	10
1578908	12-51	
	12-53	
1578909	12-51	
	12-53	
	12-57	12
1578911	12-55	6
	12-57	14
1578918	12-59	4
1578934	12-59	5
1578940	12-39	2
	12-41	22
	12-43	2
1578943	12-39	4
	12-41	20
	12-43	4
1578965	6-23	14
	6-25	14
1578978	9-21	11
1578981	9-21	14
1579028	11-27	23
	11-31	19
1579116	1-48	28
	1-73	1
	1-77	2
1579400	6-47	1
	6-63	
1579403	7-263	9
	7-269	8
1579412	16-8	2
1579454	9-23	28
	11-11	
1579455	9-23	14
	11-11	
1579677	5-9	16
	6-21	23
	6-47	18
	6-55	19
	6-55	21
1579837	1-14	55
1579908	10-9	38
	12-51	
1580068	6-5	16
	6-7	16
1580093	1-14	55
	1-18	55
1580097	12-33	2
	12-39	24
	12-41	3
	12-43	24
1580099	12-61	10
1580131	12-33	3
	12-39	24
	12-48	10
	12-67	3
	12-69	3
1580132	12-55	14
	12-57	11
1580146	12-33	1
	12-33	1
1580147	12-45	5
	12-47	4
1580148	12-33	1
	12-33	1
1580151	12-53	
	12-67	4
	12-69	4
1580155	12-48	2
1580156	12-48	2
1580213	9-3	10
1580255	6-9	22
	6-11	22
1580426	10-19	4
1580427	10-19	3
1580652	1-5	12
	1-7	12
	1-9	3
1580682	12-5	5
	12-7	5
1580694	12-41	2
	12-43	19
1580695	12-41	2
	12-43	22
1580696	12-41	2
	12-43	23
1580697	12-41	2
	12-43	20
1580698	12-41	2
	12-43	21
1580749	12-55	12
1580759	12-61	11
1580760	12-61	12
1580793	2-19	28
	2-29	7
	2-37	36
1581048	3-49	15
	6-39	15
1581049	3-49	15
	6-39	15
1581050	3-49	15
	6-39	15
1581051	3-49	15
	6-39	15
1581052	3-49	15
	6-39	15
1581055	1-119	1
	1-121	25
1581079	1-14	47
	1-18	47
1581098	8-63	8
	8-65	8
	8-67	8
	8-69	8
	8-71	8
	8-73	8
1581099	8-63	9
	8-65	9
	8-67	9
	8-69	9
	8-71	9
	8-73	9
1581100	8-63	10
	8-65	10
	8-67	10
	8-69	10
	8-71	10
	8-73	10
1581104	8-63	3
	8-65	3
1581106	8-63	21
	8-65	20
	8-69	20
	8-71	19
1581107	8-63	18
	8-65	18
	8-67	18
	8-69	18
	8-71	18
	8-73	18
1581108	8-63	7
	8-65	7
	8-67	7
	8-69	7
	8-71	7
	8-73	7
1581114	8-69	3
	8-71	3
1581117	8-63	19
	8-69	19
1581302	6-23	7
	6-57	14
1581313	7-195	47
	7-198	48
	7-201	40
	7-203	39
	7-206	23
	7-213	42
	7-216	26
	7-222	29
1581315	7-195	48
	7-201	41
	7-206	23
	7-213	42
	7-216	26
	7-222	29
1581438	5-3	4
	5-5	4
	6-5	3
	6-7	3
	6-9	6
	6-11	6
	6-13	4
	6-15	4
	6-17	4
1581439	5-3	5
	5-5	5
	6-5	4
	6-7	4
	6-9	12
	6-11	12
	6-13	5
	6-15	5
	6-17	5
1581441	4-33	2
1581526	7-30	26
1581534	12-11	8

See Service Manual for service procedures.
©2013 HYSTER COMPANY

NUMERICAL INDEX (continued)

PART NO.	PAGE	ITEM
	12-13	8
	12-15	
1581535	12-13	10
1581536	12-13	3
	12-15	4
1581537	12-11	8
	12-13	8
	12-15	
1581556	6-79	2
	6-87	18
	13-7	8
	14-7	20
	15-11	8
	15-20	35
1581557	6-88	45
	6-91	23
	14-14	19
1581558	15-25	9
1581559	14-13	10
	15-19	13
1581560	13-15	17
	14-20	28
	15-26	31
	15-29	11
	15-30	19
1581564	13-15	14
	14-14	31
	15-20	24
	15-29	14
1581565	13-15	10
	15-20	28
	15-29	6
1581566	13-7	10
	13-15	4
	14-7	5
	14-19	3
	15-11	9
	15-20	28
	15-25	2
	15-29	8
	15-29	8
1581567	1-23	4
	14-13	16
	15-25	8
	15-30	24
1581577	7-29	18
1581579	6-79	28
	6-81	12
	6-85	12
	6-87	36
	6-91	12
1581580	15-30	32
1581581	14-19	6
	15-20	36
	15-25	4
	15-30	30
	15-30	35
1581582	13-15	2
1581583	6-79	12
	6-85	4
	6-87	26
	6-91	4
1581587	14-13	18
1581588	15-25	10
1581590	14-14	30
	15-20	25
1581657	1-55	21
1581670	7-75	6
	7-77	6
	16-3	1
1581733	6-79	4
	6-81	25
	6-85	25
	6-87	12
	6-91	35
1581739	6-79	9
	6-81	24
	6-85	24
	6-87	9
	6-91	34
1581740	6-79	10
	6-87	21
1581741	14-20	14
1581742	15-29	4
1581761	6-35	7
1581762	6-35	1
1581763	6-35	2
1581764	6-35	3
1581795	2-37	16
	6-31	19
1581796	2-25	2
	6-29	3
	6-31	10
1581827	14-13	7
	15-19	6
1581828	14-13	7
	15-19	6
1581829	13-8	17
	14-7	14
	15-12	17
	15-20	39
1581830	13-15	13
	14-20	25
	15-26	27
	15-29	15
1581831	15-25	12
	15-30	25
1581832	14-13	15
	15-19	9
1581833	16-19	5
1581834	13-15	9
1581835	14-7	19
	15-11	7
	15-25	5
1581836	13-7	7
	13-15	12
	15-20	30
	15-29	7
	16-43	31
	16-49	12
	16-58	31
1581841	14-14	20
1581842	14-20	19
	15-25	14
	15-30	28
1581848	6-87	42
	6-91	31
	12-71	12
1581849	13-7	14
	14-7	11
	14-13	11
	14-20	30
	15-12	14
	15-19	14
1581850	15-20	31
1581851	15-25	7
1581852	1-71	14
	1-75	13
	1-89	13
	1-107	6
	12-71	13
	13-8	15
	14-7	12
	15-12	15
1581854	16-19	4
1581858	10-9	37
1581859	12-39	17
	12-41	9
	12-43	17
	12-45	12
	12-47	7
1581860	12-39	11
	12-41	8
	12-43	11
	12-45	11
	12-47	9
1581861	12-39	12
	12-41	14
	12-43	12
1581862	12-55	3
	12-57	15
1581885	6-79	3
	6-87	16
1581887	6-87	7
	6-91	26
1581888	6-87	8
	6-91	21
1581898	6-79	13
	6-81	3
	6-85	3
	6-87	24
	6-91	3
1581899	6-79	35
	6-87	20
1581962	7-25	27
1582072	1-13	32
	1-17	32
1582074	3-15	3
	3-17	3
1582076	2-5	6
	2-7	7
	2-9	7
1582078	2-3	23
	2-5	20
	2-7	24
	2-9	20
	3-9	17
	3-15	17
	3-17	17
	4-3	23
	4-5	20
	4-7	23
	4-9	20
1582101	7-26	33
1582138	7-25	28
1582139	2-11	23
	2-15	23
1582141	16-10	2
1582150	7-45	18
1582151	7-45	12
1582159	6-5	14
	6-7	14
1582160	12-5	9
	12-7	9
	12-9	9
1582161	12-5	10
	12-7	10
	12-9	10

©2013 HYSTER COMPANY

NUMERICAL INDEX (continued)

PART NO.	PAGE	ITEM
1582162	2-27	6
1582163	2-27	15
1582218	7-261	6
	7-261	8
	7-263	5
	7-269	1
1582222	2-11	20
	2-15	20
	3-19	18
	3-21	18
	4-11	16
1582238	7-26	32
1582286	1-5	14
	1-7	14
1582287	1-5	13
	1-7	13
1582300	5-23	16
	5-25	32
	6-101	16
	6-103	32
1582301	5-23	15
	5-25	31
	6-101	15
	6-103	31
1582321	3-49	23
	6-39	23
1582323	3-49	5
	6-39	5
1582324	3-49	17
	3-69	4
	6-39	17
	7-19	29
1582337	7-5	22
1582370	1-9	19
1582385	6-61	4
1582389	3-41	2
1582409	6-23	22
	6-50	48
	6-57	7
	6-79	
1582410	6-79	26
1582442	7-5	3
1582449	8-23	8
1582462	7-33	12
	7-49	20
1582464	2-35	16
	5-21	9
	5-25	15
	6-99	9
	6-103	15
	7-5	2
	7-9	6
	7-11	4
	7-11	4
	7-13	3
	7-25	6
	7-29	10
	7-46	31
	16-7	9
1582465	7-9	7
	7-11	6
1582484	7-255	10
	7-259	7
1582486	7-255	11
	7-259	8
1583169	9-3	6
	9-33	6
1583593	3-49	15
	6-39	15
1583609	1-115	10
1583611	1-5	31
	1-7	29
	1-10	34
	1-14	54
	1-14	54
	1-18	54
	1-18	54
	1-23	1
	1-29	11
	1-31	3
	1-33	3
	1-31	20
	1-33	20
	1-77	15
	2-3	13
	2-5	13
	2-7	14
	2-9	14
	3-5	11
	3-7	11
	3-9	10
	3-11	10
	3-13	10
	3-15	10
	3-17	10
	4-3	13
	4-5	13
	4-7	13
	4-9	13
	5-3	13
	5-5	13
	6-5	13
	6-7	13
	6-9	30
	6-11	30
	6-13	12
	6-15	11
	6-17	11
	7-43	10
	7-53	16
	11-3	21
	11-7	7
	11-21	23
	11-27	7
	12-23	7
	12-25	3
	12-27	7
	12-31	3
	16-8	3
	16-9	3
	16-10	6
1583713	2-11	24
	2-15	24
1583732	9-19	6
1583915	11-37	1
	11-39	2
1584060	1-63	7
	1-71	8
1584120	2-46	48
1584121	2-38	80
	2-42	59
1584122	2-38	79
	2-42	60
1584123	2-38	50
	2-41	30
1584138	2-46	
1584140	2-38	73
	2-42	61
1584141	2-38	66
	2-41	37
1584175	2-42	39
1584178	2-45	28
1584182	2-38	67
	2-41	38
	2-45	7
1584183	2-45	8
1584184	2-46	53
1584185	2-45	31
1584187	2-46	50
1584188	2-38	61
	2-41	29
1584193	2-38	59
1584195	2-38	65
	2-41	36
1584196	2-38	64
	2-41	35
1584197	2-38	58
	2-41	27
1584198	2-41	27
1584199	2-38	57
	2-41	26
1584200	2-38	56
	2-41	25
1584201	2-38	55
	2-41	24
1584202	2-38	54
	2-41	23
1584203	2-38	49
	2-42	66
1584204	2-38	71
	2-41	31
1584206	2-37	43
	2-41	16
1584207	2-38	45
	2-41	13
1584208	2-37	44
	2-41	14
1584209	2-45	24
1584222	2-45	26
1584227	2-45	19
	2-45	40
1584232	2-45	4
1584239	2-45	4
	2-45	6
1584240	2-45	38
1584241	2-45	32
1584242	2-45	35
1584243	2-45	29
	2-46	58
1584244	2-38	84
	2-42	42
	2-45	39
1584245	2-46	47
1584246	2-46	52
1584247	2-45	41
1584248	2-45	5
1584251	2-46	
1584252	2-46	49
1584253	2-46	
1584254	2-46	44
1584255	2-46	46
1584256	2-41	28
	2-46	54
1584257	2-46	43
1584260	2-46	55
1584261	2-46	45
1584262	2-46	42
1584263	2-46	60

See Service Manual for service procedures.
©2013 HYSTER COMPANY

NUMERICAL INDEX (continued)

PART NO.	PAGE	ITEM
1584264	2-46	61
1584265	2-45	13
1584266	2-37	9
	2-41	6
1584267	2-37	14
	2-41	11
1584442	2-37	12
	2-41	9
1584444	2-37	13
	2-41	10
1584445	2-37	10
	2-41	7
1584446	2-45	11
1584447	2-45	10
1584449	2-45	16
1584450	2-45	15
1584451	2-37	11
	2-41	8
	2-45	14
1584453	2-38	81
	2-42	40
1584455	2-46	51
1584456	2-46	56
1584457	2-46	57
1584458	2-37	33
	2-42	47
1584459	2-38	76
	2-42	65
1584460	2-38	78
	2-42	57
1584462	2-38	72
	2-42	58
	2-42	64
1584463	2-38	75
	2-42	63
1584464	2-37	38
	2-42	74
1584465	2-37	15
	2-42	71
1584472	2-25	3
	2-37	26
	2-42	69
1584474	2-38	68
	2-41	34
	2-42	68
1584475	2-38	70
	2-41	32
1584476	2-38	
	2-42	
1584477	2-42	
	2-46	
1584478	2-38	69
	2-41	33
1584479	2-38	46
	2-41	19
1584480	2-38	47
	2-41	15
1584481	2-38	48
	2-42	67
1584488	2-37	42
	2-41	18
1584490	2-37	8
	2-41	17
1584491	2-38	85
	2-42	55
1584492	2-37	2
	2-41	5
1584493	2-37	3
	2-41	1
1584495	2-37	4
	2-41	2
1584497	2-37	5
	2-41	12
1584498	2-37	22
	2-38	87
	2-42	53
1584502	2-37	23
	2-42	44
1584503	2-38	90
	2-42	49
1584504	2-37	24
	2-45	25
1584505	2-37	25
	2-42	43
1584506	2-37	37
	2-42	45
1584507	2-38	77
	2-42	48
1584508	2-38	52
	2-41	21
1584509	2-38	89
	2-42	51
1584510	2-42	50
1584511	2-38	53
	2-41	22
1584514	2-45	17
1584519	2-38	51
	2-41	20
1584520	2-37	35
1584521	2-38	83
	2-42	41
1584522	2-38	88
	2-42	52
1584523	2-27	11
	2-37	41
1584532	2-37	7
	2-41	4
1584533	2-45	21
1584617	1-5	26
	1-7	24
1584618	2-46	
1584619	2-46	
1584631	1-91	7
	1-93	5
	1-95	6
	1-97	6
	1-99	5
1584632	1-105	9
1584638	1-105	11
1584662	2-45	5
1584690	9-3	15
	9-33	7
1584693	10-17	3
1584694	9-28	3
	9-29	3
	9-31	3
	9-33	2
1584695	9-28	3
	9-29	3
	9-31	7
1584696	2-38	46
	2-41	19
1584974		
1584975		
1584976		
1584977		
1584978		
1584979		
1584987	12-11	8
	12-13	8
	12-15	
1585073		
1585074		
1585075		
1585076		
1585077		
1585078		
1585083	2-23	15
1585084	2-23	15
1585085	2-23	15
1585186		
1585187		
1585188		
1585189		
1585190		
1585191		
1585192		
1585193		
1585194		
1585195		
1585196		
1585197		
1585198		
1585199		
1585200		
1585201		
1585202		
1585203		
1585204		
1585205		
1585206		
1585317	3-9	8
	3-15	8
1585529	7-5	17
1585575	11-3	16
	11-5	24
	11-7	26
	11-9	24
	11-21	18
	11-25	14
	11-27	28
	11-31	14
1585581	1-5	5
	1-7	5
	1-9	10
1585590	1-9	18
1585592	1-5	
	1-7	
	1-10	37
1585745	8-33	20
	8-39	21
1585747	6-35	6
1585748	6-35	5
1585751	6-35	4
1585835	6-79	11
	6-87	25
1585840	7-19	8
1585979	1-91	
1585980	1-91	
1585981	1-79	1
1585982	1-79	1
1585983	1-91	
1585984	1-91	
1585987	1-63	
1585988	1-63	
1585989	1-79	1
1585990	1-79	1
1586013	2-35	18

©2013 HYSTER COMPANY

NUMERICAL INDEX (continued)

PART NO.	PAGE	ITEM
	3-27	15
	6-23	23
	6-25	23
	6-27	23
	6-50	50
	6-57	1
	6-59	1
	6-81	30
	6-85	30
	12-71	3
1586016	12-59	13
1586017	12-59	12
1586019	12-59	11
1586020	12-59	7
1586021	12-59	6
1586022	6-87	44
	6-91	32
	6-91	38
1586109	10-2	4
	10-3	4
1586279	12-55	15
	12-59	14
1586280	12-55	9
	12-57	7
1586428	7-75	16
	7-77	16
	16-3	6
1586430	1-136	5
	16-9	4
1586432	1-21	4
1586439	1-115	16
1586440	1-115	17
1586444	1-115	15
1586447	1-115	15
1586448	1-115	15
1586449	1-115	15
1586495	1-13	16
	1-17	16
	1-29	18
	7-26	31
	7-75	7
	7-75	18
	7-77	18
	16-3	10
1586627	11-3	5
	11-7	5
	11-21	5
	11-27	5
	12-19	10
	12-23	22
	12-25	13
	12-27	23
	12-31	14
	12-51	
1586630	1-21	2
1586759	7-75	15
	7-77	15
	16-3	9
1586815	1-23	2
1586967	4-11	9
1587068	2-11	18
	2-15	18
1587069	2-11	15
	2-15	15
1587778	7-87	40
	7-92	40
	7-108	19
	7-115	39
	7-121	39
	7-127	32
	7-131	32
	7-143	26
	7-148	19
	7-155	39
	7-161	39
	7-167	41
	7-172	41
	7-178	44
	7-183	32
	7-183	44
	7-189	32
	7-189	44
1587841	3-31	
	3-33	
	3-35	
	3-37	
	3-41	
	3-51	
	3-53	
1587843	3-31	
	3-33	
	3-35	
	3-37	
	3-41	
	3-51	
	3-53	
1587844	3-31	
	3-33	
	3-35	
	3-37	
	3-41	
	3-51	
	3-53	
1587845	3-31	
	3-33	
	3-35	
	3-37	
	3-41	
	3-51	
	3-53	
1588247	1-13	29
	1-17	29
1588507	3-11	8
	3-13	8
	3-17	8
	4-3	11
	4-5	11
1588508	3-5	9
	3-7	9
1588577	11-15	22
	11-17	22
	11-19	26
1588833	1-128	5
	1-129	5
	1-130	5
	1-131	5
	1-132	5
1588963	2-32	7
	2-35	5
1589195	16-7	2
1589312	2-11	9
	2-15	9
	3-19	30
	3-21	30
1589366	2-19	15
1589377	1-117	5
1589397	1-117	6
1589520	2-19	11
1589542	5-3	9
1589621	7-80	2
1589629	4-11	10
1589630	4-11	10
1589635	4-11	14
1589787	1-31	5
	1-33	5
1589789	9-5	1
1589791	9-5	3
1589792	9-5	2
	9-5	4
1589793	9-5	5
1589794	9-5	6
1589795	9-5	7
1589797	9-5	8
1589798	9-5	10
1589799	9-5	12
1589801	9-5	14
1589803	9-5	16
1589804	9-5	17
1589805	9-5	18
1589806	9-5	15
1589807	9-5	13
1589808	9-5	19
1589811	9-5	20
1589812	9-5	21
1589813	9-5	22
1589814	9-5	23
1589815	9-7	1
1589816	9-7	2
1589817	9-7	3
1589818	9-7	4
1589819	9-7	5
1589820	9-7	6
1589821	9-7	6
1589822	9-7	6
1589823	9-7	6
1589824	9-7	6
1589825	9-7	6
1589826	9-7	6
1589827	9-7	6
1589828	9-7	6
1589829	9-7	7
1589830	9-7	8
1589831	9-7	9
1589832	9-7	10
1589833	9-9	1
1589834	9-9	2
1589835	9-9	4
1589836	9-9	4
1589837	9-9	4
1589838	9-9	4
1589839	9-9	6
1589840	9-9	7
1589841	9-9	8
1589842	9-9	9
1589843	9-9	10
1589844	9-9	11
1589845	9-9	12
1589846	9-9	13
1589847	9-10	1
1589848	9-10	2
1589849	9-10	3
1589850	9-10	4
1589851	9-10	5
1589852	9-10	6
1589853	9-10	7
1589854	9-13	3
1589856	9-13	7
1589857	9-13	8

See Service Manual for service procedures.
©2013 HYSTER COMPANY

NUMERICAL INDEX (continued)

PART NO.	PAGE	ITEM
1589860	9-13	10
1589861	9-13	11
1589867	9-15	5
1589868	9-15	6
1589870	9-15	8
1589872	9-15	10
1589873	9-15	11
1589874	9-15	12
1589875	9-15	13
1589876	9-15	14
1589878	9-15	16
1589879	9-15	17
1589880	9-15	18
1589881	9-15	19
1589886	9-15	20
1589887	9-15	20
1589924	9-15	22
1590033	11-3	26
	11-5	33
	11-7	11
	11-9	39
	11-21	29
	11-25	33
	11-27	11
	11-31	38
1590113	12-51	7
	12-53	4
	12-59	8
1590114	12-51	8
	12-53	5
	12-59	1
1590145	1-14	48
	1-18	48
1590147	1-14	59
	1-18	59
1590152	1-25	9
	1-27	9
1590153	1-25	10
	1-27	10
1590204	9-7	1
1590206	9-7	1
1590279	1-25	7
	1-27	7
1590280	1-25	8
	1-27	8
1590368	7-25	8
	7-29	9
	7-33	19
	7-49	3
1590839	8-75	8
	8-76	13
1590865	8-75	7
	8-76	10
1590866	8-75	6
	8-76	11
1590917	3-15	1
	3-17	1
1590918	2-7	1
	2-9	1
	3-15	1
	3-17	1
	4-7	1
	4-9	1
1590972	2-7	1
	2-9	1
	4-7	1
1591181	7-59	5
	7-61	3
	7-63	2
	7-65	3
	7-69	2
1591185	7-61	
1591454	7-45	30
1591652	1-69	6
	1-83	10
	1-85	10
	1-95	3
	1-97	3
	1-99	8
1592071	7-80	7
1593331	7-5	12
1593334	1-71	23
	1-75	19
	1-109	24
	6-95	4
1593335	2-25	14
1593356	3-5	4
	3-7	4
1593391	5-9	23
	6-21	27
	6-47	22
	6-55	25
1593425	1-93	
	1-95	
1593426	1-93	
	1-95	
1593427	1-83	1
1593428	1-83	1
1593429	1-93	
1593430	1-93	
1593433	1-69	
1593434	1-69	
1593435	1-83	1
	1-85	
1593436	1-83	1
	1-85	
1593437	1-97	
	1-99	
1593438	1-97	
	1-99	
1593439	1-97	
1593440	1-97	
1593629	1-40	
	1-48	
1593653	2-45	30
1593654	2-38	60
1593657	2-45	2
1593658	2-45	3
1593660	2-46	59
1593661	2-45	33
1593662	2-38	86
	2-42	54
1593665	2-37	6
	2-41	3
1594055	7-46	33
1594057	3-9	3
1594144	6-49	7
1595232	1-5	21
	1-7	19
	1-10	38
1595420	8-33	13
	8-39	14
	8-63	
1595421	8-33	12
	8-39	13
	8-69	
1595425	8-63	
	8-65	
	8-67	
	8-69	
	8-71	
	8-73	
1595426	8-63	
	8-69	
1595427	8-63	20
	8-65	19
	8-69	21
1595554	7-291	5
1595731	7-80	8
1596179	11-32	
1596180	11-32	
1596624	1-13	20
	1-17	20
1596625	1-14	43
	1-18	43
1597051	1-14	56
	1-18	56
1597052	1-14	45
1597058	1-13	33
1597070	1-14	57
	1-18	57
1597381	12-71	14
1597448	14-19	6
	15-30	35
1597644	5-11	4
1597697	2-45	36
1597698	2-45	37
1597699	2-37	16
	6-29	5
1597700	2-37	21
	6-29	5
1597701	2-37	18
	6-29	5
1597702	2-37	19
	6-29	5
1597703	2-37	15
	6-29	5
1597704	2-37	20
	6-29	5
1597709	4-33	6
1597710	4-33	8
1597763	2-7	1
	2-9	1
	4-7	1
1597765	2-7	1
	2-9	1
	3-15	1
	3-17	1
	4-7	1
1597766	2-7	1
	2-9	1
	3-15	1
	3-17	1
	4-7	1
1598209	1-55	20
	1-59	20
1598210	1-55	11
	1-59	11
1598211	1-55	12
	1-59	12
1598221	7-59	5
	7-61	
	7-61	
	7-61	
	7-63	
	7-63	
	7-63	
	7-65	

©2013 HYSTER COMPANY

NUMERICAL INDEX (continued)

PART NO.	PAGE	ITEM
	7-65	
	7-65	
	7-65	1
	7-65	1
	7-65	1
	7-69	
	7-69	
	7-69	
	7-69	
	7-69	
1598222	7-59	2
	7-61	
	7-61	
	7-61	
1598223	7-59	5
	7-61	
	7-61	
	7-61	
	7-61	
	7-63	
	7-63	1
	7-63	
	7-63	
	7-65	
	7-65	
	7-65	
	7-65	
	7-65	1
	7-65	1
	7-65	1
	7-69	
	7-69	
	7-69	
	7-69	1
	7-69	
	7-69	
	7-69	
1598224	7-61	
	7-61	6
	7-65	
	7-65	
	7-65	
	7-65	
	7-65	1
	7-65	
	7-65	1
	7-65	1
	7-65	6
1598290	1-53	

PART NO.	PAGE	ITEM
	1-55	5
	1-59	5
1598291	1-55	23
	1-59	23
1598293	1-55	1
	1-59	1
1598294	1-55	17
	1-59	17
1598295	1-55	6
	1-59	6
1598296	1-55	3
	1-59	3
1598297	1-55	2
	1-59	2
1598298	1-55	18
	1-59	18
1598299	1-55	19
	1-59	19
1598300	1-55	7
1598301	1-55	26
	1-59	26
1598302	1-55	25
	1-59	25
1598321	1-73	3
1598323	1-73	12
1598325	1-73	16
1598327	1-48	37
	1-73	15
	1-77	18
	1-128	1
	1-129	1
	1-130	1
	1-131	1
	1-132	1
1598329	1-73	10
	1-77	11
	1-81	13
1598332	1-73	2
	1-77	3
	1-81	3
1598333	1-77	1
	1-81	1
	7-75	12
1598389	1-37	15
	1-39	15
	1-47	2
1598390	1-37	13
	1-39	13
	1-40	
	1-48	25
1598391	1-37	16
	1-39	16

PART NO.	PAGE	ITEM
1598392	1-37	5
	1-39	5
1598393	1-37	3
	1-39	3
	1-47	16
1598394	1-37	4
	1-39	4
	1-47	15
1598395	1-37	17
	1-39	14
1598396	1-37	2
	1-39	2
1598397	1-37	14
	1-39	20
1598398	1-47	3
1598399	1-47	8
1598400	1-47	10
1598401	1-47	9
1598404	1-41	
	1-47	21
1598407	1-47	4
1598408	1-48	27
1598409	1-48	30
1598410	1-48	31
1598411	1-47	14
1598412	1-48	26
1598413	1-47	17
1598414	1-48	41
1598415	1-81	
1598416	1-47	1
1598417	1-37	1
	1-39	1
1598420	1-65	3
	1-67	3
1598421	1-65	4
	1-67	4
1598422	1-65	9
	1-67	9
1598423	1-65	10
1598424	1-65	13
	1-67	13
1598425	1-65	14
	1-67	14
1598426	1-65	15
1598427	1-65	17
	1-67	18
1598428	1-65	18
1598504	1-69	3
	1-71	10
	1-75	12
	1-83	5
	1-85	3

PART NO.	PAGE	ITEM
	1-89	12
	1-93	3
	1-95	7
	1-97	7
	1-99	4
	1-107	9
1598645	7-41	2
1598668	1-77	14
1598669	1-48	24
1598670	1-48	
1598671	1-41	3
1598672	1-41	2
1598673	1-41	
1598674	1-41	1
1598675	1-41	4
1599204	1-29	1
1599210	1-29	1
1599337	7-240	22
	7-244	23
	7-248	26
	7-251	8
1599415	1-29	
	1-31	14
	1-33	14
	1-51	5
1599440	4-31	1
1599441	4-23	13
	4-31	2
1599442	4-31	3
1599443	4-31	12
1599444	4-31	5
1599445	4-31	8
	4-35	12
1599446	4-31	6
1599448	4-21	4
	4-31	9
	4-33	4
	4-35	11
1599449	4-31	7
1599451	4-31	4
1599454	4-31	13
1599455	4-31	14
1599458	4-19	9
	4-21	7
	4-31	15
1599459	4-19	1
1599460	4-19	2
1599461	4-19	3
1599462	4-19	15
1599463	4-19	16
	4-23	6
1599464	4-19	17

See Service Manual for service procedures.
©2013 HYSTER COMPANY

NUMERICAL INDEX (continued)

PART NO.	PAGE	ITEM
	4-23	7
1599465	4-19	12
1599466	4-19	10
1599467	4-19	13
1599468	4-31	16
	4-35	8
1599469	4-31	17
1599470	4-19	5
	4-24	46
	4-27	7
	4-35	5
1599471	4-19	8
1599472	4-19	7
1599473	4-19	4
1599475	4-15	3
	4-19	11
1599476	4-19	6
1599478	4-19	
	4-21	
1599479	4-21	1
1599480	4-21	2
1599481	4-21	3
1599483	4-21	5
1599485	4-21	8
1599486	4-24	45
1599487	4-24	44
1599488	4-23	10
1599489	4-23	15
1599516	4-23	16
1599517	4-23	17
1599518	4-23	18
1599519	4-23	19
1599520	4-23	20
1599521	4-23	21
1599522	4-24	43
1599523	4-23	42
1599524	4-23	10
1599525	4-23	11
1599526	4-23	12
1599528	4-23	14
1599529	4-23	22
1599530	4-23	23
1599531	4-23	24
1599532	4-23	25
1599533	4-23	26
1599534	4-23	27
1599535	4-23	28
1599536	4-23	29
	4-23	32
1599537	4-23	30
	4-23	33
1599538	4-23	31
1599539	4-23	34
1599540	4-23	35
1599541	4-23	36
1599542	4-23	37
1599543	4-15	2
1599544	4-23	8
1599545	4-23	1
1599546	4-23	2
1599547	4-23	3
1599548	4-23	4
1599549	4-23	5
1599550	4-23	9
1599552	4-23	40
1599553	4-23	38
1599555	4-24	47
1599556	4-15	1
1599557	4-23	39
1599559	4-15	4
1599560	4-15	5
1599561	4-15	6
1599562	4-15	7
1599563	4-15	8
1599565	4-15	10
1599567	4-15	11
1599568	4-15	12
1599569	4-27	1
1599570	4-27	2
1599571	4-27	3
1599572	4-27	4
1599573	4-27	5
1599574	4-27	6
	4-29	11
1599576	4-27	9
1599578	4-27	11
1599579	4-27	8
	4-33	5
1599580	4-27	14
1599581	4-27	13
1599582	4-27	12
1599583	4-29	9
1599584	4-29	10
1599585	4-29	12
1599586	4-29	13
1599588	4-29	16
1599589	4-29	15
1599590	4-29	14
1599591	4-29	18
1599592	4-29	1
1599593	4-29	2
1599594	4-29	4
1599595	4-29	3
1599596	4-29	5
1599597	4-29	6
1599598	4-29	8
1599600	4-29	1
1599601	4-29	2
1599604	4-35	1
1599605	4-35	3
1599606	4-35	2
1599607	4-35	4
1599610	4-35	7
1599611	4-35	9
1599612	4-35	10
1599616	4-35	14
1599793	4-35	15
1599797	4-33	12
1599798	4-33	9
1599799	4-33	1
1599800	4-33	7
1599801	4-33	10
	5-13	8
1599802	4-33	14
1599803	4-33	11
1599804	4-33	1
1599807	4-33	13
1599815	4-33	1
1599818	5-11	5
1599819	4-23	41
	5-11	7
1599820	5-11	6
1599821	5-11	17
1599822	5-11	18
	5-11	20
1599823	5-11	19
1599824	5-11	16
1599825	5-11	14
1599826	5-11	15
1599827	5-11	13
1599828	5-11	8
1599829	5-11	9
1599830	5-11	12
1599831	5-11	11
1599832	5-11	10
1599833	5-13	1
1599834	5-13	2
1599835	5-13	3
1599836	5-13	4
1599837	5-13	5
1599839	5-13	7
1599840	4-33	1
1599841	5-13	9
1599842	5-13	10
1599843	5-13	11
1599845	7-45	1
1599847	7-45	1
1599848	7-45	1
1599850	7-45	1
1599851	7-45	1
	7-45	1
1599853	7-45	1
1599855	7-45	1
1599860	7-45	1
1599861	7-45	1
1599862	7-45	1
1599863	7-45	1
1599864	7-45	1
1599865	7-45	1
1599866	7-45	1
1599867	7-45	1
1599869	7-39	1
1599870	7-39	7
1599873	7-39	1
1599874	7-39	1
1599875	7-39	1
1599876	7-39	1
1599878	7-39	1
1599879	7-39	1
1599893	7-39	2
1599894	7-39	3
1599895	7-39	5
1599896	7-39	6
1599897	7-39	4
1599898	4-15	
	4-19	
	4-21	
	4-24	
	4-31	
	4-33	
	4-35	
	5-11	
1599901	4-27	15
	5-11	1
1599904	4-31	1
1599907	5-11	26
1599908	5-11	27
1599909	5-11	21
1599910	5-11	23
1599911	5-11	22
1599912	5-11	25
1599913	5-11	24
1600084	4-27	15
	5-11	1
1600085	4-15	
	4-19	
	4-21	
	4-24	

©2013 HYSTER COMPANY

NUMERICAL INDEX (continued)

PART NO.	PAGE	ITEM
	4-31	
	4-33	
	4-35	
	5-11	
1600086	4-33	1
1600093	5-11	4
1600125	6-29	3
	6-31	10
1600126	1-91	7
	1-93	5
	1-95	6
	1-97	6
	1-99	5
1600190	7-9	2
	7-11	3
1600273	4-23	10
1600274	4-23	10
1600275	4-29	9
1600276	4-29	1
1600277	4-29	2
1600278	4-29	1
1600279	4-29	2
1600491	11-11	20
1600492	11-11	20
1600493	11-11	27
	11-37	7
1600539	9-3	4
1603004	2-19	1
	2-23	1
	2-25	1
	2-27	
	2-30	
	2-41	
	2-45	1
1603021	7-83	3
	7-279	6
	7-281	3
	7-281	9
	7-283	5
	7-283	8
	7-283	12
	7-287	6
	7-287	9
	7-289	6
	7-293	8
	7-297	13
	7-301	4
	7-305	9
	7-309	9
	7-313	18
	7-317	13
	7-321	15
1603236	7-83	3
	7-279	6
	7-281	3
	7-281	9
	7-283	5
	7-283	8
	7-283	12
	7-287	6
	7-287	9
	7-289	6
	7-293	8
	7-297	13
	7-301	4
	7-305	9
	7-309	9
	7-313	18
	7-317	13
	7-321	15
1603485	9-28	1
	9-29	1
	9-33	1
1603486	9-28	1
	9-29	1
1603489	10-17	1
1603490	10-19	1
1603857	6-73	9
	6-73	20
	6-75	8
	6-75	20
	6-76	8
1605467	3-27	10
	3-29	9
1605768	7-83	7
1605988	2-32	9
	2-35	6
1605990	1-23	5
1606085	11-11	
1606086	11-11	
1606087	11-11	1
1606088	11-11	1
1606532	9-25	
	9-27	
1606544	7-41	19
	7-77	26
	7-83	4
	16-43	23
	16-49	16
	16-57	23
1606659	1-5	20
	1-7	18
1606735	7-83	6
1606750	10-3	7
1606855	14-19	1
1607548	7-239	7
	7-243	4
	7-243	6
	7-243	8
	7-243	9
	7-247	4
	7-247	7
	7-247	8
	7-247	9
	7-252	21
	7-252	27
	7-252	28
	7-253	30
1607549	7-239	7
	7-243	4
	7-243	6
	7-243	8
	7-243	9
	7-247	4
	7-247	7
	7-247	8
	7-247	9
	7-252	21
	7-252	27
	7-252	28
	7-253	30
1607743	7-231	9
	7-235	3
	7-239	13
	7-244	19
	7-247	13
	7-251	4
1607744	7-227	15
	7-227	15
	7-231	9
	7-235	3
	7-239	13
	7-244	19
	7-247	13
	7-251	4
1607745	7-227	15
	7-231	9
	7-235	3
	7-239	13
	7-244	19
	7-247	13
	7-251	4
1607746	7-227	15
	7-231	9
	7-235	3
	7-239	13
	7-244	19
	7-247	13
	7-247	11
	7-251	1
1607839	7-227	10
	7-231	4
	7-236	25
	7-239	8
	7-243	5
	7-247	6
	7-252	26
1607958	7-227	12
	7-231	5
	7-231	7
	7-236	26
	7-240	16
	7-244	17
	7-248	16
	7-252	17
1608412	5-21	
	6-99	
1608616	5-11	2
1608617	5-11	2
1608865	7-41	1
1608876	1-9	14
1608877	1-9	15
1608879	1-9	17
1608928	7-33	8
	7-41	3
	7-49	24
1608989	6-49	25
1609374	5-15	1
	6-97	1
1609626	4-11	2
1609706	1-13	37
	1-18	37
1609707	1-13	34
	1-17	34
1609708	1-13	36
	1-17	36
1609709	1-13	35
	1-17	35
1609864	16-13	2
1610506	9-13	4
1610508	9-13	9
1610510	9-13	12
1610512	9-13	5

See Service Manual for service procedures.
©2013 HYSTER COMPANY

NUMERICAL INDEX (continued)

PART NO.	PAGE	ITEM
1610514	9-13	6
1610516	9-13	1
1610521	9-13	2
1610522	9-9	3
1610746	8-75	11
	8-76	4
1610852	5-9	12
1610853	1-5	23
	1-7	21
1610854	1-5	23
	1-7	21
1610900	4-7	6
1610975	7-212	29
	7-217	37
	7-223	41
1611535	9-3	4
1611835	8-33	1
	8-75	
1611852	2-3	11
	2-5	11
	2-7	12
	2-9	12
	4-3	11
	4-5	11
	4-7	11
	4-9	11
1612097	11-15	5
1612215	11-37	
1612216	11-37	
1612223	7-79	7
1612234	9-3	12
1612399	7-79	8
1612617	1-132	
1612916	8-34	43
	8-40	48
	8-47	8
1612917	8-34	42
	8-47	7
1612918	8-34	41
	8-40	47
1613324	11-17	24
	11-19	23
1613375	9-15	1
1613376	9-15	2
1613377	9-15	3
1613378	9-15	4
1613379	9-15	7
1613380	9-15	9
1613381	9-15	15
1613382	9-15	21
1613383	9-3	14
	9-33	3
1613386	9-3	14
	9-33	3
1613449	7-19	5
1613470	8-75	11
	8-76	4
1613695	8-33	1
	8-39	1
	8-75	
1613734	1-31	22
	1-33	22
1613749	6-79	5
	6-81	26
	6-85	26
	6-87	13
	6-91	36
1613755	6-79	7
	6-81	27
	6-85	27
	6-87	14
	6-91	37
1613763	6-79	6
	6-87	15
1614672	9-23	6
1614686	1-31	12
	1-33	12
1614687	1-31	12
	1-33	12
1614770	6-61	3
1614771	6-61	4
1614926	1-77	19
1615163	7-80	9
1615601	8-45	22
	8-47	32
1615602	8-45	17
	8-48	45
1615603	8-47	29
1615671	6-87	1
	6-91	30
1615800	4-17	11
	4-29	17
1615804	8-47	16
1615813	1-53	16
	1-59	5
1615860	7-41	18
1615864	6-23	22
	6-25	22
	6-50	48
	6-87	
1615904	6-87	10
1615956	6-81	18
	6-85	18
	6-87	37
	6-91	27
1615998	1-53	17
	1-59	5
1615999	1-53	18
	1-59	5
1616049	2-29	2
1616054	11-15	17
	11-17	14
1616122	7-26	36
	7-29	4
	7-34	25
	7-43	2
	7-49	19
	7-53	21
1616222	7-79	9
1616232	6-49	7
1616236	3-49	8
	3-57	6
	6-39	8
	6-43	6
1616288	2-19	18
	2-29	5
1616379	1-9	4
1616427	4-33	3
1616478	8-5	8
	8-33	
	8-37	
1616480	1-13	8
	1-17	8
1616481	1-13	10
	1-17	10
1616482	1-13	9
1616483	1-13	6
1616484	1-13	5
	1-17	5
1616485	1-13	7
	1-17	7
1616491	5-17	6
	5-19	8
1616764	1-5	2
	1-7	2
	1-9	1
1616768	1-5	2
	1-7	2
	1-9	1
1616770	1-5	2
	1-7	2
1616772	1-5	1
	1-7	1
1616774	1-5	1
	1-7	1
1616776	1-5	1
	1-7	1
1616979	8-15	7
	8-17	8
	8-19	6
	8-21	12
	8-25	12
1616981	7-5	6
1617080	7-5	4
1617572	6-21	13
1617600	7-41	12
1617614	7-41	13
1617657	12-19	1
	14-20	18
	15-25	18
	15-29	3
	15-29	3
1618226	7-53	37
1618311	9-23	21
1618408	2-19	18
	2-29	5
1618992	1-14	62
	1-18	62
1619997	12-27	1
1620009	3-49	8
	3-57	7
	6-39	8
	6-43	7
1620023	11-33	
	11-34	
1620024	11-33	
	11-34	
1622236	4-3	6
	4-5	6
1622272	4-7	6
	4-9	6
1622886	2-32	14
	4-17	10
1622887	8-48	44
1622888	8-47	1
1622946	14-16	14
	15-23	12
1623093	2-35	13
	3-29	7
	4-17	17
1623280	7-279	1
	7-287	4
	7-289	1
1623281	7-279	1
	7-287	4
	7-289	1
1623364	1-59	10
	1-67	8

©2013 HYSTER COMPANY

NUMERICAL INDEX (continued)

PART NO.	PAGE	ITEM
1623366	1-59	27
1623370	1-67	10
1623377	1-59	33
1623391	1-39	7
	1-47	7
1623393	1-39	8
	1-47	11
1623396	1-67	19
1623400	1-47	19
1623402	1-41	
1623471	4-3	23
	4-5	20
	4-7	23
	4-9	20
1623836	8-37	20
	8-43	22
	8-48	56
	8-48	56
1623905	1-5	30
	1-7	28
1624018	1-5	10
	1-7	10
	1-9	9
1624189	12-5	3
1624204	2-32	1
1624401	8-39	38
	8-48	60
	8-53	2
	8-59	2
1624405	8-39	39
1624406	8-48	53
1624408	8-48	40
1624414	8-34	
	8-43	11
1624415	8-39	26
1624503	8-39	27
1624504	8-43	1
1624508	8-33	6
1624509	8-33	6
	8-39	6
1624727	3-29	4
1624904	12-5	13
	12-7	13
	12-9	13
1625173	4-11	9
1625311	6-49	28
1625323	2-19	20
1625760	4-3	6
	4-5	6
1625999	3-27	
	3-29	15
	4-17	
1626129	2-3	6
1626478	7-80	11
1626727	7-103	24
	7-103	27
	7-103	36
	7-109	22
	7-109	24
	7-109	30
	7-110	42
	7-115	30
	7-115	32
	7-115	37
	7-116	55
	7-121	30
	7-121	32
	7-121	37
	7-122	55
	7-136	18
	7-137	23
	7-137	30
	7-142	20
	7-142	22
	7-143	30
	7-149	22
	7-149	24
	7-149	30
	7-150	42
	7-155	30
	7-155	32
	7-155	37
	7-156	55
	7-161	30
	7-161	32
	7-161	37
	7-162	55
	7-177	22
	7-177	24
	7-177	30
	7-183	26
	7-183	28
	7-183	34
	7-189	26
	7-189	28
	7-189	34
	7-193	12
1627172	1-51	
1627173	1-51	3
1627174	1-51	1
1627175	1-51	2
1627176	1-51	
1627177	1-51	3
1627178	1-51	1
1627179	1-51	2
1627180	1-51	
1627453	8-48	43
1627465	8-48	48
1627639	1-91	
	1-93	
	1-97	
	1-99	
1629163	12-59	2
	12-59	9
1629166	12-63	10
1629185	16-13	1
1629210	12-57	3
1629361	8-45	22
	8-47	32
1632179	6-65	15
1632224	6-65	8
1632225	2-45	11
1632226	2-45	13
1632257	6-57	22
1632260	8-5	8
	8-39	
	8-43	
1632261	2-29	
1632300	6-31	24
	6-33	17
1632564	6-15	15
1632741	8-39	41
	8-48	61
	8-53	3
	8-59	3
1632865	7-123	61
	7-162	61
	7-190	58
1633307	2-5	16
	2-9	17
	3-7	19
	3-13	16
	3-17	18
	4-5	16
	4-9	16
1634047	7-77	24
1634451	9-23	6
1634455	6-65	13
1634456	6-65	10
1634651	8-39	43
1634894	6-55	2
	6-65	
1635025	1-81	13
1636120	1-69	3
	1-71	10
	1-75	12
	1-83	5
	1-85	3
	1-89	12
	1-93	3
	1-95	7
	1-97	7
	1-99	4
	1-107	9
1636409	2-15	32
	3-21	13
1636640	8-43	9
	8-45	16
1636645	8-48	35
	8-51	5
	8-55	5
1636647	1-31	
	1-33	
1636794	7-33	18
	7-49	21
1636797	5-5	16
1636853	1-31	9
	1-33	9
1637158	12-5	3
1637398	9-3	13
1638705	2-30	2
1638706	7-5	17
1638791	8-45	15
	8-48	34
1639003	1-59	7
1639004	1-77	4
	1-81	7
1639075	11-21	8
	11-27	9
1639704	12-5	3
1639791	3-57	2
	6-43	2
1639801	11-27	36
	11-31	25
1640589	10-2	5
	10-5	
1640776	1-23	4
1640814	6-17	14
1641054	1-67	17
1641351	9-23	25
1641368	7-5	17
1641493	1-31	1
	1-39	
	1-47	
	1-59	
	1-67	
	1-77	
1641494	1-48	35

See Service Manual for service procedures.
©2013 HYSTER COMPANY

NUMERICAL INDEX (continued)

PART NO.	PAGE	ITEM
1641525	9-23	16
1641558	11-21	17
	11-25	16
1641637	1-53	4
1641640	1-53	5
1641932	7-211	17
	7-211	18
	7-211	19
	7-211	20
	7-221	15
	7-221	16
	7-221	17
	7-222	18
1641934	7-217	42
	7-223	44
1641935	7-211	11
	7-221	12
1641937	7-216	19
	7-222	25
1641938	7-212	24
	7-213	34
	7-222	25
1641943	7-216	23
1641944	7-212	23
	7-222	26
1641945	7-212	22
	7-222	26
1641947	7-212	22
	7-222	27
1641948	7-212	32
	7-217	36
	7-223	40
1641949	7-213	50
	7-223	39
1641950	7-213	50
	7-223	39
1641952	7-213	50
	7-223	39
1643405	14-19	7
	15-25	3
	15-30	34
1643584	1-48	36
	1-77	16
1643709	12-25	10
	12-27	15
1643947	1-27	5
1644398	7-77	25
	16-43	22
	16-49	15
	16-57	22
1644560	7-5	6
1644624	6-65	11
1644700	9-23	27
1645315	1-59	17
1645316	1-59	6
1645317	1-59	6
1645381	11-21	14
	11-25	24
	11-27	17
1646397	11-21	14
	11-25	24
	11-27	17
1646410	7-49	1
1646439	11-21	14
	11-25	24
	11-27	17
	11-31	30
1646456	7-25	10
	7-33	13
	7-37	1
	7-38	5
1646557	11-21	14
	11-27	17
1646726	1-81	5
1646728	1-81	17
1646729	1-48	28
	1-81	2
1646827	2-11	2
	2-15	2
	3-19	2
	3-21	2
	4-11	2
1646871	8-7	8
	8-45	
	8-47	
1646872	8-7	8
	8-45	
	8-47	
1646880	8-45	21
	8-47	30
	8-65	
1647528	10-5	8
	10-7	8
1647530	10-7	1
1647532	1-85	
	1-99	
1647611	1-93	
1647724	7-212	30
	7-212	31
	7-212	33
	7-213	35
1648116	7-49	1
	7-53	6
1649216	6-23	22
	6-25	22
	6-27	22
	6-57	7
	6-59	7
	6-81	
1649217	6-81	1
1649219	6-91	1
1649220	6-23	22
	6-25	22
	6-27	22
	6-57	7
	6-59	7
	6-91	
1649471	3-19	16
	3-21	16
1649486	2-19	1
	2-23	1
	2-25	1
	2-27	
	2-30	
	2-41	
	2-45	1
1649565	6-81	8
	6-85	8
	6-91	6
1649733	1-27	1
1649734	1-27	1
1649735	1-27	1
1649736	1-27	1
1650223	6-71	2
1650400	6-69	5
	6-71	5
1650401	6-69	20
1650402	6-66	6
	6-69	7
	6-71	7
1650403	6-69	19
	6-71	19
1650404	6-51	3
	6-52	10
	6-66	9
	6-69	13
	6-71	13
1650405	6-69	11
	6-71	11
1650407	6-69	12
	6-71	12
1650504	6-66	10
	6-69	14
	6-71	14
1650505	6-66	8
1650506	6-51	2
	6-52	5
	6-66	2
	6-69	17
	6-71	17
	7-25	14
	7-30	28
1650507	6-51	1
	6-52	3
	6-66	7
	6-69	8
	6-69	16
	6-71	8
1650508	6-66	3
1650513	7-35	3
	7-36	3
1650514	7-35	4
	7-36	4
1650522	7-212	23
	7-222	26
1650523	7-212	23
	7-222	26
1650526	7-212	24
1650529	7-212	30
	7-212	31
	7-212	33
	7-213	35
1650640	1-109	19
	1-111	17
1650757	6-69	15
	6-71	15
1650758	6-52	1
	6-69	2
	6-71	2
1650760	6-69	4
	6-71	4
1650761	6-69	9
	6-71	9
1650762	6-61	14
	6-71	16
1650763	6-73	20
	6-75	19
1650764	6-52	6
	6-73	6
	6-75	6
1650766	6-73	10
	6-75	9
1650767	6-73	15
	6-75	14
1650768	6-73	13
	6-75	12
1650769	6-73	3
	6-75	3

©2013 HYSTER COMPANY

NUMERICAL INDEX (continued)

PART NO.	PAGE	ITEM
1650770	6-73	5
	6-75	5
1650771	6-73	8
1650772	6-73	14
	6-75	13
1650773	6-73	17
	6-75	16
1650777	6-73	1
	6-73	8
	6-75	1
1650778	6-73	6
	6-75	6
	6-76	1
1650779	6-61	2
1650780	6-61	1
1650781	6-52	11
	6-61	5
1650784	6-52	9
	6-61	8
	6-61	11
1650785	6-61	7
1650786	6-61	8
1650789	6-61	15
1650791	6-61	6
1650797	7-211	1
	7-213	40
	7-221	1
	7-222	30
	7-235	5
	7-251	7
1650819	8-75	4
	8-76	7
1650868	6-66	4
1650870	6-73	16
	6-75	15
1651606	3-21	27
1651739	1-39	9
	1-39	15
	1-67	19
1651814	1-39	1
1652140	16-35	1
1652215	3-57	9
	6-43	9
1652216	3-57	1
	6-43	1
1652217	3-57	5
	6-43	5
1652290	16-4	1
1652302	3-60	1
	3-63	
	3-65	
	3-67	
	3-75	
	3-83	
	3-85	
	3-87	
1652304	3-60	1
	3-63	
	3-65	
	3-67	
	3-75	
	3-83	
	3-85	
	3-87	
1652305	3-60	1
	3-63	
	3-65	
	3-67	
	3-75	
	3-83	
	3-85	
	3-87	
1652306	3-60	1
	3-63	
	3-65	
	3-67	
	3-75	
	3-83	
	3-85	
	3-87	
1652327	3-79	4
1652328	3-79	13
1652333	3-70	4
	3-81	4
1652334	3-81	9
1652399	3-69	13
1652417	3-70	2
1652426	1-47	1
1652457	7-23	16
1652458	7-23	15
1652459	7-23	17
1652460	7-23	
1652461	7-23	13
1652462	7-23	12
1652467	7-23	8
1652468	7-23	9
1652469	7-23	10
1652470	7-23	11
1652471	7-23	3
1652473	7-23	6
1652575	8-47	31
1652926	9-19	18
1653508	7-211	1
	7-213	40
	7-221	1
	7-222	30
1653510	7-213	50
	7-223	39
1653569	2-32	14
	2-35	1
	4-17	10
1653630	1-59	7
1653815	8-37	21
	8-43	21
	8-48	55
1653900	6-61	13
	6-73	18
	6-75	17
1653901	6-61	9
1653902	6-75	10
1653904	6-61	10
1653967	1-39	2
1653970	1-47	17
1653972	1-47	4
1653973	1-39	16
1654009	9-28	1
	9-29	1
	9-33	1
1654013	7-75	6
	16-4	
1654049	7-23	1
1654156	5-23	7
	5-25	26
	6-101	7
	6-103	26
1654298	1-48	
1654315	11-37	
1654316	11-37	1
	11-39	2
1654317	11-37	
1654318	11-37	1
	11-39	2
1654411	5-23	3
	6-101	3
1654415	2-32	1
1654422	6-73	12
	6-75	11
1654423	6-73	11
1654577	7-195	12
	7-197	12
1654578	7-291	1
1654579	7-195	12
	7-197	12
	7-291	1
1654651	8-45	7
	8-51	23
	8-55	23
1654754	5-23	5
	5-25	24
	6-101	5
	6-103	24
1654890	1-95	
1654891	1-85	10
	1-95	3
	1-99	8
1655237	7-36	2
1655241	6-66	1
1655300	6-81	28
	6-91	39
1655328	6-81	29
	6-85	29
	6-91	40
1655865	1-109	3
	1-109	12
	1-111	3
	1-111	12
1655880	8-45	11
	8-51	21
	8-55	21
1656059	7-211	5
	7-221	11
1656060	7-211	12
	7-222	19
1656215	16-9	2
1656216	16-9	2
1656325	6-81	7
	6-85	7
	6-91	5
1656333	9-19	8
1656383	12-25	1
1656384	12-31	1
1656385	12-27	1
1656901	6-81	10
	6-85	10
	6-91	10
1656903	6-81	31
	6-85	31
1657006	7-35	2
1657226	9-3	10
1657959	10-3	5
	10-7	
1657962	10-2	5
	10-5	
1658063	7-59	1
	7-59	3
	7-61	4
	7-63	4
	7-65	4

©2013 HYSTER COMPANY

NUMERICAL INDEX (continued)

PART NO.	PAGE	ITEM
	7-69	4
1658075	7-80	12
	15-30	23
1658141	3-29	16
1658934	16-39	3
	16-41	10
	16-43	20
	16-57	20
1659839	2-42	
1660500	8-51	24
	8-55	24
	8-76	7
1661438	2-42	
	2-46	
1661511	1-109	2
	1-109	11
	1-111	2
	1-111	11
1661665	6-7	27
1661971	1-45	5
1662253	6-27	
	6-59	
1662420	12-23	17
	12-25	10
	12-27	15
	12-31	11
1663424	1-127	1
1663443	1-127	1
	1-127	1
1663450	1-127	1
	1-127	1
1663460	1-127	1
1663467	1-127	1
1663877	4-5	17
	4-9	17
1664395	12-61	1
	12-63	1
1664485	12-53	3
	12-57	
1664486	12-53	3
	12-57	
1664940	16-35	
1665204	8-45	26
	8-76	
1665205	8-45	26
	8-76	
1665746	12-25	1
1665747	12-31	1
1665748	12-27	1
1666732	1-9	2
1667630	1-59	20
1667632	1-60	
1669224	1-59	17
1670032	16-29	5
	16-31	5
1670049	1-7	1
1670050	1-7	1
1670054	12-33	1
	12-33	1
	12-41	
	12-47	
1670194	12-23	1
1670195	12-23	14
1670196	12-27	13
1670292	12-25	4
1670293	12-31	4
1670332	11-32	1
	11-34	1
1670333	11-32	2
1670334	11-32	2
	11-34	2
1670413	12-37	4
1670421	1-53	10
1670422	1-53	19
1670423	1-53	13
1670424	1-53	3
1670425	1-53	11
1670426	1-53	14
1670427	1-53	6
1670428	1-53	7
1670429	1-53	8
1670430	1-53	20
1670434	12-33	1
	12-33	1
	12-41	
	12-47	
1670440	1-53	15
1670441	1-53	1
1670442	1-53	9
1670443	1-53	2
1670444	1-53	12
1670445	12-39	8
	12-41	5
1670462	12-33	6
	12-47	1
1670463	12-33	5
	12-47	1
1670464	12-33	4
	12-41	1
1670522	12-41	21
	12-43	8
1670677	12-23	5
	12-27	5
1670905	11-22	42
	11-28	48
1672560	1-9	20
1672722	1-17	6
1672723	1-17	9
1672724	1-19	72
1672800	6-73	9
	6-75	8
1673198	8-19	13
	8-28	14
	8-31	5
1673704	7-77	9
	16-3	2
1673754	1-136	9
	15-20	35
	16-29	4
	16-31	4
	16-43	11
	16-49	13
	16-57	11
1673755	7-77	8
	16-3	3
1674030	1-10	33
1674073	1-47	22
1674088	1-60	33
1674101	1-59	8
1674102	1-81	16
1674103	1-39	17
	1-81	12
1674106	1-81	20
1674109	1-48	
	1-60	
1674131	1-10	30
1675647	8-53	23
	8-59	26
	8-61	
1675648	8-51	1
1675649	8-53	1
1675651	8-9	8
	8-51	
	8-53	
1676323	8-51	9
	8-55	9
	8-67	
1676324	8-51	8
	8-55	8
	8-73	
1676326	8-61	3
1676327	8-61	2
1676328	8-61	7
1676395	1-9	
1676396	1-9	
1676397	1-9	
1676398	1-9	
1676399	1-9	
1676406	1-9	13
1676519	8-53	12
1676836	1-7	17
	1-9	9
1676883	4-15	
	4-19	
	4-21	
	4-23	
	4-27	
	4-29	
	4-31	
	4-33	
	4-35	
	5-11	
	5-13	
1677286	1-69	
	1-71	12
	1-75	17
	1-85	
	1-89	19
	1-107	13
1677428	1-115	10
1677490	3-19	20
	3-21	20
1677491	3-19	17
	3-21	17
1677793	5-5	2
	6-7	2
	6-9	5
	6-11	5
	6-13	2
1677833	5-3	23
	5-5	
	6-5	
	6-7	28
	6-9	34
	6-11	34
	6-13	
1678165	12-69	5
1682758	6-81	28
	6-85	28
	6-91	39
1682881	6-71	20
1682882	6-71	21
	6-75	7
1682883	6-71	24
1682884	6-61	18
1683379	7-59	1
	7-59	3
	7-63	

©2013 HYSTER COMPANY

NUMERICAL INDEX (continued)

PART NO.	PAGE	ITEM
	7-63	1
	7-63	
	7-63	
	7-65	
	7-65	
	7-65	
	7-65	
	7-69	1
	7-69	
	7-69	
	7-69	
1683398	7-59	1
	7-59	3
	7-61	
	7-61	
	7-63	
	7-63	1
	7-65	
	7-65	
	7-65	
	7-69	
	7-69	
1683422	6-25	31
	6-27	3
1683486	11-5	17
	11-9	17
	11-39	3
1683529	12-37	1
1683621	12-37	2
1684389	8-53	38
	8-59	24
1684395	1-99	
1686711	1-23	2
1686719	7-11	9
1686782	8-53	22
1687035	3-70	4
	3-81	4
1687184	6-52	12
	6-61	11
1687376	6-25	
	6-57	
	6-82	
	6-85	
	6-92	
1687377	6-25	
	6-57	
	6-82	
	6-92	
1687534	12-61	14
	12-63	2
	12-65	2
1687847	8-53	8
1687933	5-6	5
	6-18	5
1688200	1-35	10
1688273	4-15	
	4-19	
	4-21	
	4-23	
	4-27	
	4-29	
	4-31	
	4-33	
	4-35	
	5-11	
	5-13	
1688435	8-51	3
	8-55	3
1688503	11-5	16
	11-9	16
1688598	8-53	21
	8-59	13
1688697	10-17	1
1688803	6-82	40
	6-85	40
1689241	7-221	15
	7-221	16
	7-221	17
	7-222	18
1689242	7-221	15
	7-221	16
	7-222	17
	7-222	18
1689455	7-65	
	7-65	
	7-65	
	7-65	
	7-69	
	7-69	
	7-69	
	7-69	
1689460	7-65	
	7-65	
	7-65	
	7-69	
	7-69	
	7-69	1
1689544	6-25	7
	6-27	7
	6-57	14
	6-59	14
1689742	4-31	1
1689744	4-15	
	4-19	
	4-21	
	4-24	
	4-31	
	4-33	
	4-35	
	5-11	
1689746	5-11	5
1689747	4-27	
	5-11	1
1690075	1-33	24
1690182	5-17	10
1690931	1-39	1
1690932	1-47	1
1690933	1-59	18
1690934	1-59	19
1690936	1-81	6
1690995	1-85	7
	1-89	5
1690996	1-69	5
	1-71	3
1691216	1-18	55
1691525	8-19	12
	8-21	9
	8-25	9
1691916	8-19	13
1692176	6-35	
1692229	11-32	1
	11-34	1
1692507	10-11	
1692589	1-81	19
1694547	8-31	13
1694700	1-107	12
1694830	1-71	19
	1-75	25
	1-89	18
	1-107	22
1695108	5-19	13
1696276	2-35	2
1696635	16-37	3
	16-51	3
1697181	7-193	8
1697294	6-75	4
1697665	8-9	
1697672	8-11	1
1698449	7-71	9
	7-71	20
	7-73	9
	7-73	20
1698541	7-75	10
1698684	6-23	15
	6-25	15
	6-27	15
1699141	8-47	1
1699589	12-59	1
1699591	12-59	6
1699754	7-115	42
	7-121	42
	7-155	42
	7-161	42
	7-183	42
	7-189	42
	7-193	5
1699988	1-23	2
1699992	11-5	4
	11-9	4
	11-25	8
	11-31	8
1700084	12-11	6
1700460	7-297	15
	7-297	17
	7-305	10
	7-305	12
	7-317	14
	7-317	15
	7-321	16
	7-321	17
1700461	7-297	15
	7-297	17
	7-305	10
	7-305	12
	7-317	14
	7-317	15
	7-321	16
	7-321	17
1701768	11-5	18
	11-9	18
	11-39	5
1701771	11-9	30
1701778	11-39	1
1701779	11-39	1
1701813	6-52	6
	6-75	6
1701958	1-35	12
1701959	1-35	7
1701960	1-35	4
1701961	1-47	1
1701962	1-47	8
1701964	1-47	4
1701965	1-48	24
1701967	1-43	
	1-47	21
1702335	8-51	2
	8-55	2

See Service Manual for service procedures.
©2013 HYSTER COMPANY

NUMERICAL INDEX (continued)

PART NO.	PAGE	ITEM
1702336	8-51	16
	8-55	16
1702420	12-33	4
	12-43	
1702520	8-53	19
	8-59	10
1702642	2-41	35
1702643	2-42	
1702706	15-19	8
1702933	11-39	1
1702937	11-39	1
1703183	8-9	9
1703481	8-7	8
	8-45	
	8-47	
1703482	8-45	
	8-47	
1703607	11-25	34
	11-31	39
	11-34	
1703644	8-53	7
	8-59	5
1703868	7-49	5
	7-53	1
1703890	1-105	8
1703891	1-105	1
1703892	1-101	4
1703893	1-101	5
1703894	1-101	5
1703895	1-107	
1703896	1-107	
1703897	1-107	
1703898	1-101	2
1703899	1-101	3
1703900	1-101	1
1703901	1-101	2
1703902	1-101	3
1703903	1-101	1
1703904	1-101	6
1704528	7-71	11
	7-71	11
	7-71	11
	7-73	11
	7-73	11
1704529	7-71	13
	7-73	13
1704901	11-9	25
	11-31	29
1704902	11-5	25
	11-25	19
1705359	7-71	12
	7-71	12
	7-73	12
	7-73	12
1705548	12-16	1
	12-16	4
	12-16	7
1705720	12-16	
1705723	12-16	
1705820	12-16	1
1705878	1-18	45
1705891	1-19	75
1705892	1-19	75
1707008	11-5	29
1707341	4-17	11
	4-29	17
1707678	1-17	33
1707793	1-7	19
	1-10	38
1707826	4-21	6
1708054	12-69	2
1708262	12-69	1
1708364	16-41	5
	16-43	17
	16-47	5
	16-49	22
	16-55	5
	16-57	17
1708371	2-11	36
	2-15	36
	3-21	16
	4-11	21
1708457	4-27	15
	5-11	1
1708834	1-19	73
1708835	1-19	74
1709587	7-71	8
	7-73	8
1709876	1-69	1
	1-71	4
	1-85	4
	1-89	6
1709980	1-33	25
	1-136	7
1709996	2-11	34
	2-15	34
	3-21	9
	4-11	18
1709997	5-19	1
1710006	1-33	26
1710007	1-136	6
1720519	4-31	14
2013075	13-12	2
	15-16	2
2013088	14-16	9
	15-23	9
2013089	14-16	10
	15-23	10
2021341	11-3	14
	11-5	1
	11-7	17
	11-9	1
2021343	11-3	14
	11-5	1
	11-7	17
	11-9	1
2021353	11-3	13
	11-5	5
	11-7	16
	11-9	5
	11-21	13
	11-25	10
	11-27	16
	11-31	10
2021394	2-11	1
	2-15	1
	3-19	1
	3-21	1
	4-11	1
2021395	1-13	25
	1-17	25
	1-25	12
	1-27	6
2021438	3-38	15
	3-75	15
2021442	3-38	14
	3-75	14
2021575	10-17	9
2021679	6-21	22
	6-47	17
2021683	5-9	19
	6-21	24
	6-47	19
2021685	5-9	17
	6-21	25
	6-47	20
	6-55	20
	6-55	22
2022309	3-41	19
	3-87	13
2022352	9-21	11
2022655	3-31	3
	3-63	4
2023551	3-79	9
2026608	7-19	35
2026861	9-21	8
2027618	10-19	9
2027655	1-14	71
	1-19	71
2027661	9-19	17
2027662	9-23	11
2027663	9-23	7
2027756	9-23	4
2027817	9-23	12
2027828	9-23	19
2027949	5-15	4
	6-95	7
	6-97	4
2028145	9-23	3
2028621	9-23	10
2028644	3-41	25
2028645	3-41	26
	3-87	24
2028852	3-35	24
	3-67	24
2028853	3-51	23
	3-83	23
2028854	3-51	3
	3-83	3
2028862	9-21	14
2028927	3-33	7
	3-65	13
2029081	3-33	12
	3-65	14
2029082	3-51	16
	3-83	16
2029084	3-51	2
	3-83	2
2029086	3-51	24
	3-83	24
2029093	3-37	4
	3-75	4
2029094	3-37	4
	3-75	4
2029095	3-35	3
	3-67	3
2029096	3-35	27
	3-67	27
2029097	3-35	28
	3-67	28
2029098	3-35	25
	3-67	25
2029100	3-53	9
	3-85	9
2029101	3-53	11
	3-85	11
2029102	3-53	12
	3-85	12

©2013 HYSTER COMPANY

NUMERICAL INDEX (continued)

PART NO.	PAGE	ITEM
	3-87	27
2029103	3-53	21
	3-85	21
2029105	3-41	32
2029106	3-41	29
	3-87	28
2029107	3-41	31
	3-87	26
2029108	3-41	16
	3-87	11
2029112	3-41	23
	3-87	17
2029116	2-29	5
	3-41	5
	3-87	20
2029120	3-41	24
	3-87	16
2029383	9-25	5
	9-27	5
2029436	9-19	14
2034347	1-127	2
2034459	1-115	5
2035276	7-223	44
2037323	11-11	21
2037340	11-11	19
2037341	11-11	22
2037343	11-11	7
2037517	11-11	17
2037518	11-11	17
2041520	11-13	1
2043528	16-15	3
	16-19	15
	16-23	15
	16-33	
2043529	16-15	3
	16-19	15
	16-23	15
	16-33	
2043531	16-15	4
	16-19	11
	16-23	11
2043532	16-15	4
	16-19	11
	16-23	11
2043533	16-15	5
	16-19	8
	16-23	8
2043534	16-15	5
	16-19	8
	16-23	8
2044370	12-73	4
2044371	10-15	9
	12-75	5
2044712	1-77	1
	7-15	1
	7-17	1
	7-75	12
2045023	7-19	2
2045024	3-41	20
	3-87	6
2045025	3-41	6
	3-87	21
2045026	3-41	37
	3-87	19
2045029	3-37	12
	3-75	12
2045030	3-37	10
	3-75	10
2045033	3-37	9
	3-75	9
2045034	3-37	8
	3-75	8
2045036	3-42	
	3-51	
	3-83	
2045319	3-41	27
2045321	3-31	26
	3-63	26
2051128	3-51	22
	3-83	22
2051129	3-51	4
	3-83	4
2051834	3-57	10
	6-43	10
2051835	3-57	11
	6-43	11
2051836	3-57	8
	6-43	8
2051839	3-57	4
	6-43	4
2053096	2-25	6
	7-227	
2053099	2-25	6
	7-239	
2053795	15-23	
2053796	14-16	
	15-23	
2053797	15-23	
2053798	15-23	
2053799	15-23	
2054714	13-3	
	13-5	
2054754	13-3	
	13-5	
2054879	3-5	1
	3-7	1
2055232	2-25	5
	2-30	1
2055298	2-30	8
2056355	2-23	9
2056524	2-11	38
	3-19	8
2056702	2-23	8
2056732	2-30	3
2056762	6-23	1
2056822	1-13	11
	1-17	11
2056823	1-13	14
	1-17	14
2056824	7-75	1
	7-77	1
2056826	7-75	2
	7-77	2
2056870	3-11	1
	3-13	1
2057796	6-9	21
	6-11	21
2057865	2-23	13
	2-25	12
2057948	7-55	8
2058110	7-5	23
2058111	7-6	29
2058210	15-23	1
2058213	14-16	1
	15-23	1
2058214	15-23	1
2058216	15-23	1
2058219	15-23	1
2058252	14-16	1
2058254	15-23	1
2058256	15-23	1
2058326	14-16	
2058328	14-16	
	15-23	
2058330	15-23	
2058335	15-23	
2058338	15-23	
2058426	6-23	27
	6-25	27
	6-27	27
	6-50	44
	6-57	5
	6-59	5
2058500	14-11	1
	14-11	1
2058502	14-11	1
2058536	14-9	1
	14-9	1
2058538	14-9	1
2058619	14-11	
2058651	14-9	
2058823	14-11	
2058825	14-11	
2058909	7-9	10
	7-271	
2059248	2-27	14
2059689	2-11	28
2059937	11-3	15
	11-5	10
	11-7	25
	11-9	10
2060032	7-55	6
2060033	7-55	11
2060198	7-9	10
	7-267	
2060422	14-9	
2060424	14-9	
2060555	7-224	45
	7-248	25
	7-251	6
	7-323	1
2060751	12-5	5
	12-7	5
	12-9	5
2060837	7-55	1
2060838	7-55	6
2060844	7-259	
2060957	2-11	38
	3-19	8
2061381	7-43	1
2061383	7-25	8
	7-29	9
	7-33	19
2061646	12-19	17
2061778	12-5	14
	12-7	14
2062586	6-21	3
	6-47	12
2062587	6-21	7
	6-47	6
	6-55	8
2062589	5-9	13
2062651	13-7	12
	14-7	8
	15-11	11
2062652	13-7	12
	14-7	8
	15-11	11

See Service Manual for service procedures.
©2013 HYSTER COMPANY

NUMERICAL INDEX (continued)

PART NO.	PAGE	ITEM
2062686	13-7	4
	14-7	10
	15-11	4
2062687	13-7	4
	14-7	10
	15-11	4
2062875	1-109	16
	1-111	28
2063093	7-5	1
	7-15	
2063117	10-9	
	12-34	8
	12-51	9
	12-53	1
2063118	10-9	
	12-34	8
	12-51	9
	12-53	1
2063128	6-9	1
	6-11	1
	6-18	
2063265	9-23	26
2063691	14-16	1
	15-23	1
2063842	5-23	12
	5-25	19
	6-101	12
	6-103	19
2063991	12-23	24
	12-25	15
	12-27	25
	12-31	16
	12-51	
2064142	13-12	
2064166	13-12	
2064202	13-12	8
2064239	13-12	8
2064279	13-12	8
2064315	13-12	8
2064353	13-12	
2064370	13-12	
2064431	6-23	15
	6-25	15
	6-27	15
2064463	6-47	13
2064464	14-11	5
2064554	11-5	
	11-9	
	11-25	21
	11-31	15
2064563	15-16	9
2064564	15-16	9
2064568	15-16	9
2064571	15-16	9
2064587	15-16	9
2064588	15-16	9
2064592	15-16	9
2064595	15-16	9
2064607	15-16	9
2064610	15-16	9
2064611	15-16	9
2064612	15-16	9
2064615	15-16	9
2064640	15-16	
2064643	15-16	
2064644	15-16	
2064645	15-16	
2064648	15-16	
2064673	15-16	
2064676	15-16	
2064677	15-16	
2064678	15-16	
2064681	15-16	
2064710	15-16	
2064711	15-16	
2064715	15-16	
2064718	15-16	
2064735	15-16	
2064736	15-16	
2064740	15-16	
2064743	15-16	
2064753	15-23	1
2064790	7-59	1
2064807	7-59	3
2064836	7-75	4
	7-77	4
2064837	7-75	4
	7-77	4
2064838	7-75	4
	7-77	4
2064845	12-51	1
2064848	12-51	
2064849	12-51	1
2064851	12-51	
2064857	12-51	1
2064859	12-51	
2064860	12-51	1
2064862	12-51	
2064885	12-33	1
2064886	12-33	1
2064887	12-33	1
2064888	12-33	1
2064895	12-23	25
	12-25	16
	12-33	
2064897	12-27	26
	12-31	17
	12-33	
2064899	12-23	25
	12-25	16
	12-33	
2064901	12-27	26
	12-31	17
	12-33	
2064929	16-7	1
2065001	14-20	21
	14-20	21
2065003	14-20	21
2065030	14-20	20
	14-20	20
2065032	14-20	20
2065051	12-20	27
2065052	12-20	27
2065098	7-45	4
	7-324	
2065121	15-25	1
2065124	15-25	1
2065125	15-25	1
	15-25	1
2065138	13-15	1
2065139	13-15	1
2065161	15-25	1
	15-25	1
2065164	15-25	1
2065165	15-25	1
2065168	15-25	1
2065211	14-19	4
	14-19	4
2065213	14-19	4
2065241	14-19	8
	14-19	8
2065243	14-19	8
2065396	15-3	
	15-5	
	15-9	
2065398	15-3	
	15-5	
	15-9	
2065405	15-3	
	15-5	
	15-9	
2065411	15-3	
	15-5	
	15-9	
2065448	15-3	
	15-5	
	15-9	
2065454	15-3	
	15-5	
	15-9	
2065456	15-3	
	15-5	
	15-9	
2065458	15-3	
	15-5	
	15-9	
2065464	15-3	
	15-5	
	15-9	
2065522	14-3	
	14-5	
2065526	14-3	
	14-5	
2065580	14-3	
	14-5	
2065666	1-14	70
	1-19	70
2065667	1-13	4
	1-17	4
2065668	1-14	69
2065670	16-25	2
2065671	16-25	1
2065674	16-25	1
2065675	16-25	2
2065745	7-5	19
2065796	1-14	67
	1-18	67
2065797	1-14	66
	1-18	66
2065798	1-14	65
	1-18	65
2065799	1-14	64
	1-18	64
2065826	1-14	64
	1-18	64
2065827	1-14	65
	1-18	65
2065855	7-29	6
	7-201	
2065856	7-25	3
	7-195	
2065858	7-26	30
2066482	7-55	5
2066483	7-55	4
2066484	7-55	12
2066485	7-55	3
2066629	3-49	2
	3-55	7

©2013 HYSTER COMPANY

NUMERICAL INDEX (continued)

PART NO.	PAGE	ITEM
	3-69	16
	6-39	2
	6-41	7
	7-23	14
2066630	3-45	31
	6-37	31
2067044	10-19	2
2067394	6-95	22
2067395	6-97	18
2067396	5-15	7
2067476	5-3	20
	5-5	20
	6-5	23
	6-7	23
	6-9	2
	6-11	2
	6-13	18
	6-15	1
	6-17	1
2067504	2-19	8
2067597	8-23	6
2067598	8-23	1
2067623	2-19	22
	2-27	12
2067800	12-13	
2067801	12-15	
2067802	12-13	
2067803	12-15	
2067962	9-19	16
	9-25	
	9-27	
2067965	9-19	15
2068337	12-16	
2068339	7-11	5
2068340	7-9	9
2068342	7-11	5
2068343	7-9	9
2068344	7-9	9
	7-11	5
2068357	2-25	9
2068378	4-15	9
	4-19	14
2068947	12-5	15
2069005	12-5	17
2069008	1-14	52
	1-18	52
2069186	12-71	17
	12-75	
2069187	12-71	15
	12-73	
2069188	12-71	16
	12-73	
2069189	12-71	18
	12-75	
2069203	1-13	12
	1-17	12
2069224	7-43	2
	7-53	21
2069225	7-26	36
	7-29	4
	7-33	25
	7-49	19
2069226	7-45	3
2069356	6-9	17
	6-11	17
2069357	6-9	15
	6-11	15
2069381	7-323	1
2069431	7-55	4
2069454	1-29	13
2069464	1-14	63
	1-18	63
2069544	1-14	53
	1-18	53
2069545	1-14	53
	1-18	53
2069550	1-14	53
	1-18	53
2069552	2-3	1
	2-5	1
	4-3	1
	4-5	1
2069688	4-7	4
	4-9	4
2069698	3-5	14
	3-7	15
	3-9	14
	3-11	24
	3-13	21
2069702	3-15	14
	3-17	14
2069951	2-17	5
	3-25	5
	4-12	5
2069954	1-14	53
	1-18	53
2070018	12-75	2
2070039	2-19	10
	2-29	8
2070072	4-3	4
	4-5	4
2070073	9-28	2
	9-31	2
2070074	9-28	2
	9-31	6
2070075	9-29	2
	9-31	2
2070076	9-29	2
	9-31	6
2070081	10-17	2
2070083	10-17	2
2070100	6-23	7
	6-57	13
2070114	12-5	22
2070147	8-5	2
	8-7	2
	8-9	2
	8-11	2
2070148	12-19	18
2070223	1-29	12
2070228	8-23	5
2070263	8-40	50
	8-45	1
	8-51	25
	8-55	25
	8-75	2
2070269	7-9	1
	7-11	1
	7-293	
2070611	12-16	7
2070655	12-27	22
	12-31	10
2070731	7-281	
2070734	9-3	1
	9-5	
	9-7	
	9-9	
	9-10	
	9-13	
	9-15	
2070769	1-132	7
2070770	1-130	8
2070771	16-7	10
2070782	6-23	21
	6-25	21
	6-27	21
2070783	1-131	7
2070784	6-49	28
2070975	1-13	2
	1-17	2
2070996	1-31	
2071001	1-128	7
2071002	1-128	8
2071094	10-15	2
2071096	10-13	4
	10-15	
2071181	5-23	1
	6-101	1
2071197	1-13	24
	1-17	24
2071198	1-13	19
	1-17	19
2071261	1-13	3
	1-17	3
	5-3	18
	5-5	18
	6-5	21
	6-7	21
	6-9	8
	6-11	8
	6-13	16
2071262	1-13	17
	1-17	17
2071302	6-49	35
2071303	6-49	23
2071497	7-49	7
	7-53	2
2071498	7-49	10
2071499	7-53	20
2071501	7-49	3
	7-53	15
2071517	6-23	29
	6-25	29
	6-27	29
	6-50	46
	6-81	35
	6-85	35
	6-92	44
2071595	1-14	68
	1-19	68
2071596	1-14	68
	1-19	68
2071615	3-9	1
2072298	6-23	26
	6-25	26
	6-27	26
	6-50	43
	6-57	6
	6-59	6
	6-81	37
2072299	6-23	17
	6-25	17
	6-27	17
2072300	6-23	16
	6-25	16
	6-27	16
	6-49	1
	6-57	8

See Service Manual for service procedures.
©2013 HYSTER COMPANY

NUMERICAL INDEX (continued)

PART NO.	PAGE	ITEM
	6-59	8
2072764	6-55	15
2072782	5-21	3
	5-25	3
	6-99	3
	6-103	3
2072894	6-23	20
	6-25	20
	6-27	20
2072895	6-23	20
	6-25	20
	6-27	20
2072897	11-15	14
	11-17	11
	11-19	10
2072902	10-11	1
2072903	10-11	2
2072918	3-27	11
	3-29	3
2073016	10-11	2
2073017	10-11	1
2073024	4-11	26
2073082	15-16	9
2073083	15-16	9
2073084	15-16	9
2073085	15-16	9
2073086	15-16	9
2073087	15-16	11
	15-16	11
2073114	1-119	3
2073115	1-119	2
2073116	1-119	6
2073117	1-119	7
2073118	1-119	4
2073119	1-119	8
2073121	1-119	9
2073122	1-119	10
2073123	1-119	11
2073159	14-9	7
	14-11	6
2073197	1-115	4
2073495	12-20	28
2073496	12-20	28
2073760	7-77	19
	7-273	
	16-3	7
2073766	16-13	4
2074210	1-117	10
2074211	12-15	
2074230	12-13	
2074255	1-115	9
2074256	1-115	9
2074320	7-5	23
2074325	12-19	22
2074327	12-19	6
2074400	16-39	7
	16-41	12
	16-43	25
2074401	16-39	6
	16-41	11
	16-43	26
2074402	16-39	5
	16-41	9
	16-43	27
2074403	16-39	4
	16-41	8
	16-43	28
2074404	16-39	7
	16-41	12
	16-43	25
2074405	16-39	6
	16-41	11
	16-43	26
2074406	16-39	5
	16-41	9
	16-43	27
2074407	16-39	4
	16-41	8
	16-43	28
2074702	5-21	1
	5-25	1
	6-99	1
	6-103	1
2074741	1-115	23
2074789	3-15	1
	3-17	1
2074790	2-7	1
	2-9	1
	4-7	1
	4-9	1
2074984	7-33	20
2075120	9-21	4
2075418	1-115	22
2075428	1-79	10
	1-83	10
	1-91	5
	1-93	7
	1-97	3
2075454	9-33	2
2075455	9-33	2
2075551	8-23	9
2075554	4-11	19
2075558	8-37	32
	8-43	29
	8-47	3
2075560	7-125	
2075561	7-85	
2075562	7-165	
2075615	1-115	21
2075630	12-19	4
2075644	7-79	1
	7-283	
2075656	1-115	26
2075659	1-130	7
2075703	6-9	24
	6-11	24
2075783	5-3	7
	5-5	7
2075911	7-59	1
2075912	7-59	3
2075913	7-59	1
2075914	7-59	3
2075916	7-59	1
2075917	7-59	3
2075925	15-20	32
2075928	15-20	32
2075929	15-20	32
	15-20	32
2075930	15-20	32
	15-20	32
2075933	15-20	32
2075934	15-20	32
2075937	15-20	32
2076168	6-81	32
2076169	1-115	23
2076289	1-21	3
2076408	12-5	1
2076536	12-75	1
2076537	12-73	1
2076538	12-75	7
2076539	12-73	6
2076540	12-75	1
2076541	12-73	1
2076656	11-27	40
2076695	7-55	2
2076696	7-55	2
2076792	6-55	6
2077554	2-27	8
2077555	2-27	8
2077604	11-3	14
	11-5	1
	11-7	17
	11-9	1
	11-21	14
	11-25	24
	11-27	17
2077818	15-16	11
	15-16	11
	15-16	11
	15-16	11
2077983	4-35	6
2078092	5-3	17
2078335	5-17	7
	5-19	9
2078488	3-87	25
2078878	7-5	16
	7-129	
2078879	7-5	16
	7-89	
2078880	7-5	16
	7-169	
2078883	16-7	10
2079281	7-13	4
2079326	7-83	1
2079327	16-37	4
	16-39	7
	16-41	12
	16-43	25
2079328	16-37	5
	16-39	6
	16-41	11
	16-43	26
2079329	16-37	6
	16-39	5
	16-41	9
	16-43	27
	16-45	4
	16-47	9
	16-49	18
2079330	16-37	7
	16-39	4
	16-41	8
	16-43	28
	16-45	3
	16-47	8
	16-49	19
2079331	16-37	4
2079332	16-37	5
2079333	16-37	6
	16-45	4
	16-47	9
	16-49	18
2079334	16-37	7
	16-45	3
	16-47	8
	16-49	19
2079369	10-3	6
2079843	7-13	15

©2013 HYSTER COMPANY

NUMERICAL INDEX (continued)

PART NO.	PAGE	ITEM
2080376	5-17	4
	5-19	7
2080581	7-41	16
2080790	7-26	43
2081229	1-121	1
2081230	1-121	2
2081231	1-121	3
2081232	1-121	4
2081233	1-121	5
2081234	1-121	6
2081235	1-121	7
2081236	1-121	8
2081237	1-121	9
2081238	1-121	10
2081239	1-121	11
2081240	1-121	12
2081241	1-121	13
2081242	1-121	14
2081243	1-121	15
2081244	1-121	16
2081245	1-121	17
2081246	1-121	18
2081247	1-121	19
2081248	1-121	20
2081249	1-121	21
2081250	1-121	22
2081251	1-121	23
2081252	1-121	24
2081289	7-26	42
2081311	4-13	1
2081418	16-37	13
	16-51	13
2081832	12-11	3
2081840	5-9	18
2081868	1-48	40
2081870	5-9	12
2082235	11-15	2
2082323	7-79	1
	7-281	
2082324	7-79	1
	7-283	
2082657	2-27	14
2082679	1-115	21
2082685	11-37	7
2082929	3-41	11
	3-87	4
2083701	12-23	20
	12-25	6
	12-27	21
	12-31	9
2083702	12-23	19
	12-25	7
	12-27	20
	12-31	8
2083703	12-25	8
	12-27	19
	12-31	7
2083704	12-31	6
2083705	12-27	18
2083706	12-23	18
2083821	2-19	6
2083928	11-15	13
	11-17	10
	11-19	20
2083929	11-15	4
2083930	11-15	6
2083955	11-15	24
	11-17	19
	11-19	22
	11-21	35
	11-28	42
2083971	11-15	17
	11-17	14
2084000	4-11	23
2084001	4-11	25
2084002	4-11	24
2084003	3-19	25
	3-21	25
2084004	2-11	13
	2-15	13
2084005	3-19	26
	3-21	26
2084006	3-19	22
	3-21	22
2084251	6-15	8
2084312	4-19	
2084316	4-23	38
2084448	5-13	1
2084449	5-13	2
2084450	5-13	3
2084451	5-13	4
2084452	5-13	5
2084453	5-13	6
2084570	15-19	15
2084571	15-19	15
2084575	15-19	15
2084578	15-19	15
2084599	2-29	11
2084600	2-29	10
2084601	2-29	9
2084616	2-29	14
2084650	15-19	15
2084653	15-19	15
2084654	15-19	15
2084655	15-19	15
2084658	15-19	15
2084810	7-269	
2084812	7-33	1
	7-50	28
	7-263	
2084829	7-9	1
	7-11	1
	7-301	
2084981	1-95	
2084982	1-95	
2085041	3-5	15
	3-7	14
	3-11	23
	3-13	20
2085042	3-9	13
	3-15	13
	3-17	13
2085103	2-3	4
	2-5	4
	2-7	4
	2-9	3
2085104	4-3	3
	4-5	3
	4-7	3
	4-9	3
2085129	8-65	6
	8-67	6
	8-71	6
	8-73	6
2085188	1-99	
2085190	1-99	
2085193	1-85	
2085194	1-85	
2085254	3-9	13
	3-15	
	3-17	13
2085255	3-5	15
	3-7	14
	3-11	
	3-13	20
2085256	2-19	6
2085268	2-7	3
	2-9	4
2085570	4-13	1
2085875	1-119	12
2085877	1-119	5
2085942	7-79	1
	7-289	
2085943	7-79	1
	7-279	
2085944	7-5	16
	7-135	
2085945	7-5	16
	7-95	
2085947	7-5	16
	7-175	
2085958	12-5	1
2086133	5-3	17
2086921	6-49	33
2087189	7-29	6
	7-203	
2087190	7-25	3
	7-197	
2087191	7-45	9
	7-255	
2087196	2-27	8
2087197	2-27	8
2087215	4-3	3
	4-5	3
2087216	4-3	4
	4-5	4
2087370	2-3	3
	2-5	3
2087757	3-87	32
2088515	7-23	19
	7-50	
2088675	3-7	15
	3-13	21
2088676	3-17	14
2089064	2-25	6
	7-243	
2089065	2-25	6
	7-231	
2089066	2-27	8
2089067	2-27	8
2089141	4-3	1
	4-5	1
2089179	7-5	16
	7-141	
2089239	6-65	16
2089366	8-51	7
2089368	6-65	14
2089673	1-63	4
	1-79	10
	1-91	5
	1-93	7
2089846	2-19	22
	2-27	12
2089894	2-15	38
	3-21	8
2089895	2-15	38
	3-21	8
2090054	7-5	16

See Service Manual for service procedures.
©2013 HYSTER COMPANY

NUMERICAL INDEX (continued)

PART NO.	PAGE	ITEM
	7-101	
2090084	7-77	19
	7-275	
2090086	5-5	17
2090110	7-55	1
2090111	7-55	6
2090303	2-19	29
2090361	6-57	12
	6-59	12
2090418	6-57	8
	6-59	8
2090613	7-5	1
	7-17	
2090644	6-17	8
2090661	7-5	6
2090666	7-291	
2090744	7-29	6
	7-215	
2091231	6-17	15
2091232	6-17	17
2091257	13-12	15
	15-16	16
2091259	13-12	15
	15-16	16
2091281	7-25	3
	7-205	
2092535	10-17	6
2092536	10-19	6
2092548	4-31	10
2092549	4-31	10
2092550	4-29	7
2092551	4-29	7
2092552	4-31	11
2092553	4-31	11
2092613	11-21	36
	11-25	29
	11-28	43
	11-31	35
2092848	5-5	17
2092888	11-21	24
	11-25	26
	11-27	32
	11-31	32
2093224	11-3	
	11-7	
2093523	8-45	19
	8-47	33
	8-71	
2093578	6-52	8
	7-29	15
	7-36	1
2093579	6-52	8
	7-29	15
	7-36	1
2093596	6-51	4
	7-25	26
	7-35	1
2093597	6-51	4
	7-25	26
	7-35	1
2094490	7-262	11
2094581	7-53	25
	7-261	
2095079	12-23	25
	12-25	16
	12-33	
2095081	12-27	26
	12-31	17
	12-33	
2095083	12-23	25
	12-25	16
	12-33	
2095085	12-27	26
	12-31	17
	12-33	
2095088	12-33	1
2095089	12-33	1
2095090	12-33	1
2095091	12-33	1
2095146	12-5	15
2095227	11-17	2
	11-19	2
2095228	11-17	4
2095262	8-23	1
2095423	12-53	
2095425	12-53	
2095427	12-53	
2095429	12-53	
2095432	12-53	2
2095433	12-53	2
2095434	12-53	2
2095435	12-53	2
2095533	8-65	19
	8-71	20
2095647	8-17	1
2095649	8-23	5
2095652	8-17	2
2095653	8-23	9
2095654	8-23	5
2095657	8-23	9
2095658	8-15	1
2095659	8-15	2
2095889	5-6	
	6-18	7
2095895	7-77	24
2096079	11-21	28
	11-27	27
	11-32	
2097620	7-23	19
2098011	7-9	1
	7-293	
2098012	7-9	1
	7-301	
2098082	7-75	5
	7-77	5
2098083	7-75	4
	7-77	4
2098084	7-75	4
	7-77	4
2098085	7-75	4
	7-77	4
2098119	1-129	7
2098120	1-129	8
2098153	1-27	11
2098330	1-19	69
2098385	7-77	19
	7-277	
2098693	12-15	
2098694	12-15	
2098695	12-15	
2098964	6-7	26
2098965	6-7	9
2099224	7-61	1
2099225	7-63	1
2099228	7-61	1
2099229	7-63	1
2099230	7-61	1
2099231	7-63	1
2099233	7-61	1
2099234	7-63	1
2099393	12-23	20
	12-25	6
	12-27	21
	12-31	9
2099394	12-23	19
	12-25	7
	12-27	20
	12-31	8
2099395	12-25	8
	12-27	19
	12-31	7
2099396	12-31	6
2099397	12-27	18
2099398	12-23	18
2099951	1-107	2
2100710	7-13	3
2100927	4-19	2
2101551	7-19	4
	7-29	15
	7-36	1
2101552	7-19	4
	7-29	15
	7-36	1
2101708	4-19	1
2102122	1-69	
2102126	1-85	
2102127	1-85	
2102128	1-85	
2102129	1-85	
2102226	5-5	17
2102558	1-18	42
2102559	1-17	21
2102640	1-113	1
2102904	7-55	1
2102906	7-55	6
2102913	6-7	26
2102914	6-7	9
2103360	1-69	
2103364	1-85	
2103365	1-85	
2103366	1-85	
2103367	1-85	
2103497	10-11	2
2103849	7-65	1
2103850	7-69	1
2103853	7-65	1
2103854	7-69	1
2103855	7-65	1
2103856	7-69	1
2103857	7-65	1
2103858	7-69	1
2104068	10-11	1
2104069	10-11	2
2104070	10-11	1
2104430	12-11	
2104431	12-11	
2104432	12-11	
2104701	7-11	1
	7-313	
2104702	7-11	1
	7-309	
2104944	12-5	1
2104945	12-5	1
2105338	5-5	15
	5-6	
	6-7	15
	6-18	
2105372	7-65	1

©2013 HYSTER COMPANY

NUMERICAL INDEX (continued)

PART NO.	PAGE	ITEM
2105373	7-69	1
2105376	7-65	1
2105377	7-69	1
2105378	7-65	1
2105379	7-69	1
2105380	7-65	1
2105381	7-69	1
2105556	7-43	1
2105557	7-53	20
2105803	6-25	7
	6-27	7
	6-57	13
	6-59	13
2105822	9-17	7
	9-19	
	9-21	
	9-23	
2105823	9-17	7
	9-19	
	9-21	
	9-23	
2105870	12-23	25
	12-25	16
	12-33	
2105872	12-27	26
	12-31	17
	12-33	
2105874	12-23	25
	12-25	16
	12-33	
2105876	12-27	26
	12-31	17
	12-33	
2105879	12-33	1
2105880	12-33	1
2105881	12-33	1
2105882	12-33	1
2105959	7-287	
2105970	3-37	1
	3-75	1
2105972	3-37	1
	3-75	1
2107181	7-25	8
	7-29	9
	7-33	19
	7-45	2
2107187	5-19	14
2107382	7-75	4
	7-77	4
2107383	7-75	4
	7-77	4
2107384	7-75	4
	7-77	4
2107524	8-21	1
2107727	8-28	3
	8-31	4
2107842	6-27	17
2107957	1-17	14
2107958	1-17	11
2107969	1-71	16
	1-75	22
	1-89	15
	1-107	18
2108124	7-5	16
	7-107	
2108126	7-5	16
	7-147	
2108249	7-71	5
2109494	8-28	5
2109495	8-28	6
2109665	8-25	1
2109698	1-115	
2109866	6-52	8
	7-29	15
	7-36	1
2109867	6-52	8
	7-29	15
	7-36	1
2109869	8-19	2
	8-31	6
2109870	8-19	2
	8-19	2
2109871	8-19	1
	8-25	1
2109875	8-19	10
	8-21	6
	8-25	6
	8-28	2
	8-31	2
2109937	12-7	15
2109982	12-7	19
2110024	8-19	1
	8-21	2
	8-25	2
2110027	8-28	4
2110267	11-19	5
2110268	12-7	24
2110791	7-71	2
	7-71	3
	7-71	4
	7-73	2
	7-73	3
	7-73	4
	7-73	5
2110792	7-71	4
	7-73	5
2110793	7-71	3
	7-73	3
2110942	7-71	19
	7-73	19
2110943	7-71	18
	7-73	18
2111004	7-9	2
	7-11	3
2111005	7-9	2
	7-11	3
2111038	6-51	4
	7-25	26
	7-35	1
2111039	6-51	4
	7-25	26
	7-35	1
2111171	11-9	
2111369	12-7	1
	12-9	1
2111370	12-7	1
	12-9	1
2111754	16-43	6
	16-49	8
	16-57	6
2111755	16-43	6
	16-57	6
2111769	7-71	7
	7-73	7
2111770	7-71	17
	7-73	17
2111799	7-71	6
	7-73	6
2111800	7-71	15
	7-73	15
2302899	12-73	2
2307400	1-117	1
2308541	5-15	6
	6-95	9
	6-97	6
2314223	11-3	14
	11-5	1
	11-7	17
	11-9	1
2314973	3-31	25
	3-63	25
2787350	7-323	1
2795583	7-323	1
4000205	9-17	9
4000330	6-27	14
	6-59	20
4000453	4-31	14
4000454	4-31	14
4001804	6-51	5
	6-52	7
	7-25	2
	7-30	29
	7-37	2
	7-38	3
4002394	11-19	6
4002504	1-57	
4002509	1-57	
4002682	1-69	
	1-69	
	1-71	5
	1-85	
	1-89	7
4003079	1-57	6
4003082	1-45	6
4004045	1-45	2
4004059	1-45	4
4004060	1-45	3
4004062	1-45	10
4004063	1-45	11
4004065	1-45	1
4004066	1-45	8
4004149	1-43	1
	1-45	
4004150	1-43	2
4004151	1-43	6
4004152	1-43	5
4004153	1-43	4
4004154	1-43	3
4004155	1-43	7
4004156	1-43	11
4004157	1-43	8
4004158	1-43	9
4004159	1-43	10
4004160	1-43	12
4004161	1-43	13
4004162	1-43	14
4004163	1-43	15
4004165	1-43	22
4004166	1-43	19
4004167	1-43	20
4004168	1-43	21
4004775	1-109	14
	1-111	14
4004776	1-107	20
	1-111	25
4005010	1-89	9
	1-107	2
	1-109	

See Service Manual for service procedures.
©2013 HYSTER COMPANY

NUMERICAL INDEX (continued)

PART NO.	PAGE	ITEM
	1-111	
4005681	3-21	19
4005805	1-109	23
4005807	1-89	
4005808	1-89	
4006033	8-53	26
4006034	8-53	16
4006035	8-53	18
4006369	2-19	1
	2-23	1
	2-25	1
	2-27	
	2-30	
	2-41	
	2-45	1
4006383	2-19	1
	2-23	1
	2-25	1
	2-27	
	2-30	
	2-41	
	2-45	
4006802	2-15	39
4007052	1-109	5
	1-111	5
4007132	1-57	2
4007133	1-57	1
4007134	1-57	3
4007135	1-35	3
	1-57	4
4007138	1-57	10
4007139	1-57	8
4007140	1-57	9
4007141	1-57	7
4007142	1-57	
4007143	1-57	11
4007144	1-57	12
4007145	1-57	5
4007147	1-57	
4007209	1-57	
4007210	1-57	
4007211	1-57	
4007212	1-57	
4007213	1-57	
4007318	1-107	17
	1-111	24
4007319	1-107	3
	1-111	18
4007549	1-9	1
4007562	1-9	1
4007711	1-9	
4007715	1-9	
4007716	1-9	
4007717	1-9	
4007718	1-9	
4007888	8-73	3
4007889	8-67	19
	8-73	20
4007891	1-71	17
	1-75	23
4007984	7-264	2
4008020	14-19	7
	15-30	34
4008420	1-89	16
4008604	7-264	2
4009253	7-279	4
	7-287	1
4009488	16-8	1
	16-9	1
4009578	1-67	18
4009731	1-10	38
4009733	1-10	38
4009782	1-39	2
	1-47	17
4009902	1-39	12
	1-48	42
4010318	8-59	18
4011397	1-10	27
4011403	2-31	2
4011406	2-29	11
4011435	1-9	26
4011940	11-25	7
	11-31	7
	11-39	6
4013095	1-71	6
	1-89	8
	1-101	7
4013299	6-33	3
4013300	6-33	7
4013301	6-33	4
4013302	6-33	5
4013303	6-33	6
4013304	6-33	2
4013305	6-33	15
4013363	8-5	11
	8-7	11
	8-9	11
	8-34	46
	8-40	55
4013365	7-33	7
4013487	7-33	7
4013488	7-33	7
4013489	7-33	7
4013490	7-33	7
4013558	1-39	2
	1-47	17
4013559	1-39	2
	1-47	17
4013928	16-43	30
	16-49	7
	16-58	30
4014340	1-23	2
4014682	11-5	10
4014699	6-76	1
4014809	2-45	21
4014810	2-41	19
4014811	2-41	3
4014812	2-19	
4014813	2-37	34
	2-42	46
	2-42	46
	2-47	2
4014814	2-42	53
4014816	2-46	50
4014817	2-41	15
4015021	6-61	4
4015022	6-61	17
4015023	6-61	16
4015720	15-19	8
4015887	12-7	16
4015888	1-9	1
4016100	1-9	1
4016131	7-221	15
	7-221	16
	7-222	17
	7-222	18
4016150	8-59	1
4016151	8-59	31
4016152	8-59	15
4016184	1-9	
4016188	1-9	
4016189	1-9	
4016190	1-9	
4016191	1-9	
4016313	16-43	29
	16-49	5
	16-58	29
4016652	6-51	2
	6-52	5
	7-25	15
	7-30	27
	7-37	3
	7-38	4
4016937	7-221	15
	7-221	16
	7-222	17
	7-222	18
4018959	2-11	21
	2-15	21
4020056	8-11	8
	8-55	
	8-59	
4020311	8-59	35
4020466	8-59	17
4020467	8-59	16
4020588	8-47	3
	8-51	7
	8-55	7
4021292	4-27	10
4021384	5-11	3
4021618	15-30	20
4022906	15-20	34
4022940	15-20	36
4022958	10-11	3
4022998	15-20	29
4022999	15-20	27
4023450	10-2	5
	10-5	
4023451	10-3	5
	10-7	
4024323	1-39	2
	1-47	17
4025054	3-21	27
4025106	8-51	34
	8-55	32
4025209	8-55	1
4025274	1-9	13
4025477	8-45	19
	8-45	21
	8-63	2
	8-65	2
	8-67	2
	8-69	2
	8-71	2
	8-73	2
4026661	12-9	15
4026774	8-53	4
4027341	1-101	
4027451	1-17	30
4027456	1-18	44
4027457	1-18	44
4027695	16-29	3
4028642	10-5	8
	10-7	8
4028685	12-9	20
4028686	12-9	24
4029268	10-17	1
4029269	10-19	1

©2013 HYSTER COMPANY

NUMERICAL INDEX (continued)

PART NO.	PAGE	ITEM
4029270	9-31	1
4029271	9-31	1
4029455	10-17	1
4029456	10-19	1
4029457	9-31	1
4029458	9-31	1
4029480	10-17	1
4029481	10-19	1
4029482	9-31	1
4029483	9-31	1
4029506	6-79	14
	6-81	23
	6-85	23
	6-87	31
	6-91	33
4029538	6-79	16
	6-81	20
	6-85	20
	6-87	32
	6-91	15
4029920	6-79	18
	6-81	21
	6-85	21
	6-87	34
	6-91	14
4030278	1-75	3
4030279	1-75	4
4030497	5-6	6
	6-18	6
4031146	6-79	37
	6-81	39
	6-85	39
	6-88	47
	6-92	48
4031346	2-25	2
	2-47	1
4031653	16-13	3
4031769	5-25	18
	6-103	18
4031944	1-10	36
4032291	6-79	36
	6-81	22
	6-85	22
	6-88	46
	6-91	13
4032292	6-79	17
	6-81	38
	6-85	38
	6-87	33
	6-92	47
4033955	16-15	2
	16-19	2
	16-23	2
4033956	16-19	2
4033957	16-15	2
	16-19	2
	16-23	2
4033958	16-15	2
	16-19	2
	16-23	2
4033960	16-15	2
	16-19	2
	16-23	2
4034386	5-3	14
	5-5	14
4034634	16-29	7
	16-31	7
4034635	16-29	7
	16-31	7
4034686	15-30	31
4034931	1-135	1
4034932	1-135	2
4034933	1-135	3
4034934	1-135	4
4034935	1-135	5
4034936	1-135	6
4034937	1-135	7
4034938	1-135	8
4034939	1-135	9
4034940	1-135	10
4034941	1-135	11
4034942	1-135	12
4034943	1-135	13
4035130	1-29	19
4035750	1-115	30
4036586	1-101	
4036587	1-101	
4038135	9-13	4
4038182	12-23	21
	12-25	9
	12-27	22
	12-31	10
4038258	2-9	1
	4-9	1
4038259	3-17	1
4038260	2-5	1
	4-5	1
4038263	2-9	1
	3-17	1
	4-9	1
4038264	2-5	1
	2-9	1
	3-17	1
	4-5	1
	4-9	1
4038265	2-5	1
	2-9	1
	3-17	1
	4-5	1
	4-9	1
4038266	2-5	1
	2-9	1
	3-17	1
	4-5	1
	4-9	1
4038267	2-9	1
	3-17	1
	4-9	1
4038672	10-7	1
4038673	10-7	8
4038674	10-7	11
4038675	10-7	13
4038676	10-7	16
4038677	10-7	21
4038678	10-7	25
4039366	11-39	2
4039367	11-39	2
4039368	11-39	2
4039369	11-39	2
4039373	11-39	1
4039374	11-39	1
4039375	11-39	1
4039376	11-39	1
4040480	6-75	4
4040523	5-25	11
	6-103	11
4040607	1-31	8
	1-33	8
4041194	13-15	16
	14-20	27
	15-29	12
4042625	6-49	7
4043082	1-101	6
4043334	8-55	
	8-59	
4043337	8-51	
	8-53	
4043562	7-5	13
4043638	1-136	4
4043883	6-75	
4044163	1-43	16
4046492	1-101	
4046861		
4046862		
4046863		
4046870		
4046871		
4046872		
4046873		
4046874		
4046887		
4046888		
4046889		
4046890		
4046897		
4046898		
4046899		
4046901		
4046902		
4046910		
4046911		
4046933	7-17	
4047980	16-29	3
4048941	6-81	6
	6-85	6
	6-91	8
4049136	1-31	1
	1-39	
	1-47	
	1-59	
	1-67	
	1-77	
4049137	1-33	1
	1-35	
	1-39	
	1-47	
	1-59	
	1-67	
4049138	1-31	1
	1-51	
	1-59	
	1-67	
	1-77	
4049234	6-37	
	6-39	
4050311	1-136	3
4050312	1-136	2
4050313	1-136	12
4050315	6-37	
	6-39	
4050343	1-136	11
4050426	1-136	10
4050817	16-31	3
4051334	1-136	1
4051346	1-29	1
4051347	1-29	1
4051434	6-82	
	6-85	41

See Service Manual for service procedures.
©2013 HYSTER COMPANY

NUMERICAL INDEX (continued)

PART NO.	PAGE	ITEM
	6-92	
4051749	15-29	13
4051751	13-15	15
4051924	5-23	3
	5-25	22
	6-101	3
	6-103	22
4051938	5-25	
	6-103	
4052151	7-115	35
	7-155	35
	7-183	37
4053018	3-41	4
	3-87	18
4053208	8-67	3
4053949	11-3	35
	11-5	32
	11-7	41
	11-9	38
	11-21	16
	11-25	12
	11-27	19
	11-31	12
4054932	6-81	4
	6-85	9
	6-91	7
4055634	16-31	11
4060157	1-45	7
4061318	16-31	10
4061319	16-31	9
4064560	15-30	19
4066964	1-41	6
4066965	1-41	
4066966	1-41	5
4066967	1-41	7
4066968	1-41	4
4066969	1-41	4
4066970	1-41	4
4066971	1-41	4
4067492	6-81	
4067494	6-91	
4067496	6-85	1
4070545	1-48	29
4077917	4-3	23
	4-5	20
	4-7	23
	4-9	20
4600549	12-11	10
4600754	6-35	
4601093	7-71	1
4601094	7-73	1
4601096	7-73	1
4601097	7-71	1
4601098	7-73	1
4601099	7-71	1
4601100	7-73	1
4601101	7-71	1
4601102	7-73	1
4601103	7-71	1
4601104	7-73	1
4601105	7-71	1
4601106	7-73	1
4601107	7-71	1
4601108	7-73	1
4601120	7-71	16
	7-73	16
4601151	2-15	28
4601156	2-25	6
	7-235	
4601157	2-25	6
	7-251	
4601265	7-71	1
4601500	7-6	
	7-193	
4601529	2-25	6
	7-247	
4601836	1-89	
4601837	1-89	
4602051	6-25	1
	6-27	1
	6-35	
4602843	6-27	30
	7-26	40
	7-30	32
	7-33	2
	7-323	
4603280	7-9	1
	7-305	
4603281	7-11	1
	7-321	
4603282	7-11	1
	7-317	
4603283	7-9	1
	7-297	
4603376	1-71	
4603382	1-101	
4603383	1-101	
4603384	1-101	
4603385	1-101	
4603432	6-52	8
	7-29	15
	7-36	1
4603434	6-51	4
	7-25	26
	7-35	1
4603439	7-71	6
	7-73	6
4603492	1-109	25
	1-111	27
4603493	1-109	15
	1-111	29
4603542	7-264	
4603552	2-5	1
	4-5	1
4603553	3-17	1
4603554	2-9	1
	4-9	1
4603960	2-27	8
4603961	2-27	8
4603962	2-27	8
4604044	2-23	9
4604147	12-19	6
4604203	7-5	16
	7-153	
4604204	7-5	16
	7-181	
4604564	16-43	8
	16-57	8
4604565	16-43	3
	16-49	3
	16-57	3
4604566	16-43	7
	16-57	7
4604594	7-55	1
4604595	7-55	6
4604683	16-43	2
	16-49	2
	16-57	2
4605191	3-69	15
4605336	7-71	10
	7-73	10
4605337	7-71	14
	7-73	14
4605854	7-29	6
	7-221	
4605855	7-25	3
	7-211	
4605946	12-9	18
4605974	12-9	14
4606207	11-15	10
	11-17	7
4606301	12-19	6
4606302	12-19	12
4606303	12-19	13
4606305	16-49	17
	16-57	24
4606846	8-51	17
	8-55	17
4606936	7-5	16
	7-113	
4607793	11-19	13
4608521	15-29	1
4608524	15-29	1
4608525	15-29	1
	15-29	1
4608526	15-29	1
	15-29	1
4608529	15-29	1
4608530	15-29	1
4608533	15-29	1
4608556	15-30	40
4608559	15-30	40
4608560	15-30	40
	15-30	40
4608561	15-30	40
	15-30	40
4608564	15-30	40
4608565	15-30	40
4608568	15-30	40
4609465	15-30	21
4609648	6-81	32
4610727	16-26	2
4611248	6-13	14
	6-15	9
	6-17	9
	6-17	9
	6-18	
	6-18	
4611363	16-15	6
	16-19	3
	16-23	3
4611578	11-37	7
	11-39	
4611791	10-3	5
	10-7	
4611861	12-9	23
4611880	16-15	
	16-20	
	16-23	
	16-29	7
	16-31	7
4611882	16-15	
	16-20	
	16-23	
	16-29	7
	16-31	7
4611913	16-29	6
	16-31	6

©2013 HYSTER COMPANY

NUMERICAL INDEX (continued)

PART NO.	PAGE	ITEM
4612085	12-9	23
4612127	16-25	2
4612128	16-25	1
4612129	16-25	1
4612130	16-25	2
4612188	11-19	9
4612320	1-117	8
4612431	16-29	2
4612432	16-29	1
4612433	16-29	2
4612434	16-29	1
4612516	16-26	2
4612847	8-31	17
4612911	1-107	1
4612945	5-5	15
	5-6	
	6-7	15
	6-18	
4613341	9-23	15
4613398	16-51	4
	16-55	10
	16-57	25
4613399	16-51	5
	16-55	9
	16-57	26
4613400	16-51	7
	16-55	7
	16-58	28
4613401	16-51	6
	16-55	8
	16-57	27
4613402	16-51	4
	16-51	7
	16-55	8
	16-55	10
	16-57	25
	16-57	27
4613403	16-51	5
	16-55	9
	16-57	26
4613404	16-51	6
	16-55	7
	16-58	28
4613901	15-30	21
4614678	8-51	17
	8-55	17
4615811	1-75	8
4615812	1-75	
4615813	1-75	1
4615964	5-23	3
	5-25	22
	6-101	3
	6-103	22
4615969	1-75	9
4616324	16-55	9
	16-57	26
4616325	16-55	7
	16-58	28
4616326	16-55	8
	16-57	27
4616420	16-55	10
	16-57	25
4616426	16-26	1
4616988	7-6	
4617251	7-19	4
4617253	7-19	4
	7-29	15
	7-36	1
4617344	16-26	1
4617767	5-9	11
4618438	1-75	6
4618898	3-51	21
	3-83	21
4619094	6-81	37
	6-85	37
	6-92	46
4619095	6-81	32
	6-85	32
	6-91	42
4619574	6-92	42
4619594	16-31	2
4619595	16-31	1
4620357	7-5	16
	7-119	
4620359	7-5	16
	7-159	
4620360	7-5	16
	7-187	
4622266	16-31	6
4627333	12-5	22

©2013 HYSTER COMPANY


HYSTER