RUTHZIL TRATOR COMERCIAL DE PEÇAS LTDA 11 97083-6812 ROLANDO

PARTS MANUAL

HYSTER

H4.0FT5, H4.0FT6, H4.5FTS5, H4.5FT6, H5.0FT. H5.5FT (U005)

CUSTOMER EDITION

HYSTER

4128545
10/2015

©2015 HYSTER COMPANY

SECTIONS

1	FRAME
2	ENGINE ASSEMBLY - DIESEL
3	ENGINE ASSEMBLY - LPG
4	FUEL SYSTEM
5	ELECTRICAL SYSTEM
6	TRANSMISSION
7	DRIVE AXLE
8	STEERING SYSTEM
9	BRAKE SYSTEM
10	HYDRAULIC SYSTEM
11	MAST-TWO STAGE LIMITED FREE-LIFT
12	MAST-TWO STAGE FULL FREE-LIFT
13	MAST-THREE STAGE FULL FREE-LIFT
14	OPTIONS
15	FIELD CONVERSION KITS
16	NUMERICAL INDEX

This Parts Manual is divided into 16 major sections which are listed above. Quick reference to these sections can be made by placing the right thumb on the tab of the desired section, bending the book back and thumbing the pages to the corresponding tab.

TABLE OF CONTENTS

DESCRIPTION **PAGE**

A

ACCUMULATOR 14-50
ADD-ON OPTION KITS 15-7
AIR FILTER ASSEMBLY
KUBOTA DIESEL - 3.6L, 3.8L 4-9
KUBOTA LPG - 3.8L 4-8
AIR INTAKE AND FILTER
KUBOTA 3.8L LPG 4-6
KUBOTA DIESEL - 3.6L 4-2
KUBOTA DIESEL - 3.8L 4-4
ALTERNATOR AND PULLEY
KUBOTA DIESEL 2-105
ANTI-STALL
WITH MANUAL HYDRAULIC VALVE - 3.8L LPG AND 3.6L DIESEL 10-28
ARMREST ASSEMBLY
MINI-LEVER MODULES - SEMI-SUSPENSION SEAT 1-74
MINI-LEVER MODULES - FULL SUSPENSION SEAT 1-76
AUXILIARY HOSES 10-64

B

BACK-UP ALARM 14-46
BATTERY CABLE
FUSED-STANDARD ALTERNATOR - KUBOTA 3.6L DIESEL, 3.8L DIESEL/LPG 5-28
BATTERY CABLES
KUBOTA 3.8L DIESEL/LPG 5-26
BOLT ON CAB WITH STANDARD (HIGH) OVERHEAD GUARD
FRONT SCREEN WITH WIPER/WASHER - PAGE 1 OF 2 1-104
FRONT SCREEN WITH WIPER/WASHER - PAGE 2 OF 2 1-106
PVC DOORS 1-114
REAR SCREEN WITH WIPER/WASHER - PAGE 1 OF 2 1-110
REAR SCREEN WITH WIPER/WASHER - PAGE 2 OF 2 1-112
TOP SCREEN 1-108
BRAKE COOLING SYSTEM
SINGLE AND DUAL PEDAL - DANA WET BRAKE 9-10
BRAKE LINKAGE
DUAL PEDAL - WET BRAKE 9-6
SINGLE PEDAL - WET BRAKE 9-2
BRAKE MASTER CYLINDER ASSEMBLY 9-14
BREATHER AND SEPARATOR PIPES
KUBOTA DIESEL - 3.8L 2-84

C

CAMSHAFT AND IDLE GEAR SHAFT
KUBOTA DIESEL - 3.6L 2-72
KUBOTA DIESEL - 3.8L 2-73
CARRIAGE
STANDARD - TWO STAGE LIMITED FREE LIFT 11-22
THREE STAGE FULL FREE LIFT 13-34
TWO STAGE FULL FREE LIFT 12-28

©2015 HYSTER COMPANY

TABLE OF CONTENTS (continued)

DESCRIPTION	PAGE
CARRIAGE LOCKOUT ROD	
CHARGE PUMP ASSEMBLY	6-34
COMPRESSOR ASSEMBLY AND ATTACHING PARTS	
WITH CAB AND AIR CONDITIONING	2-40
CONTROL MODULE	
DIESEL INTERFACE - KUBOTA V3800	5-24
CONTROL VALVE ASSEMBLY	
ELECTRONIC CONTROL - THREE FUNCTION	10-38
ELECTRONIC CONTROL - FOUR FUNCTION	10-40
ELECTRONIC CONTROL - THREE AND FOUR FUNCTION-WITH VARIABLE DISPLACEMENT PUMP	10-42
CONTROL VALVE LOCKOUT GROUP	
MANUAL CONTROL VALVE	10-26
COOLING	
KUBOTA DIESEL - WITH EXTERNAL OIL COOLER	2-12
KUBOTA DIESEL - WITHOUT EXTERNAL OIL COOLER WITH SHORT WHEELBASE	2-14
KUBOTA LPG - WITH EXTERNAL OIL COOLER	3-2
KUBOTA LPG - WITHOUT EXTERNAL OIL COOLER WITH SHORT WHEELBASE	3-4
COUNTERWEIGHT	1-4
COVER BEARING CASE	
KUBOTA DIESEL - 3.6L, 3.8L	2-63
COWL ELECTRICAL	
ELECTRO-HYDRAULIC	5-8
MANUAL HYDRAULIC	5-6
COWL MOUNT	1-80
CYLINDER BLOCK	
KUBOTA DIESEL - 3.6L	2-64
KUBOTA DIESEL - 3.8L	2-66
CYLINDER HEAD	
KUBOTA DIESEL - 3.6L	2-48
KUBOTA DIESEL - 3.8L	2-49
CYLINDER HEAD COVER	
KUBOTA DIESEL - 3.6L	2-44
KUBOTA DIESEL - 3.8L	2-46
D	
DIESEL PARTICULATE FILTER	
ATTACHING PARTS - KUBOTA 3.8L DIESEL	2-36
MUFFLER ASSEMBLY - KUBOTA 3.8L DIESEL	2-38
DIFFERENTIAL ASSEMBLY	
WET BRAKE (NMHG)	7-20
DIPSTICK	
KUBOTA DIESEL - 3.6L, 3.8L	2-74
DIRECTIONAL CONTROL	15-6
DPF DISPLAY	
3.8L KUBOTA DIESEL	5-20
DRIVE AXLE AND ATTACHING PARTS	
WET BRAKE - DANA	7-2
WET BRAKE (NMHG)	7-12

©2015 HYSTER COMPANY

TABLE OF CONTENTS (continued)

DESCRIPTION	PAGE
DRIVE AXLE ASSEMBLY	
WET BRAKE (DANA) - HOUSING AND HUB	7-4
WET BRAKE (DANA) - DIFFERENTIAL	7-6
WET BRAKE (DANA) - BRAKE ASSEMBLY	7-10
WET BRAKE (NMHG) - RIGHT AND LEFT HAND HUBS	7-14
WET BRAKE (NMHG) - BRAKES AND DIFFERENTIAL	7-16
WET BRAKE (NMHG) - INPUT PINION CARRIER	7-18
DRIVE TIRE AND WHEEL	
HEAVY DUTY	7-30
PNEUMATIC RADIAL	7-26
SINGLE MOUNT WITH STANDARD TREAD	7-24
SINGLE MOUNT WITH WIDE TREAD	7-25
SNAP-ON SOLID TIRE	7-28
DUAL MIRRORS	
WITH CAB	14-49
E	
EGR COOLER	
KUBOTA DIESEL - 3.8L	2-94
EGR VALVE	
KUBOTA DIESEL - 3.8L	2-93
ELECTRICAL SYSTEM	
RIGHT HAND CHASSIS	5-4
ELECTRONIC CONTROL VALVE	
LIFT SECTION - WITH VARIABLE DISPLACEMENT PUMP	10-50
OUTLET SECTION - WITH VARIABLE DISPLACEMENT PUMP	10-62
TILT SECTION - WITH VARIABLE DISPLACEMENT PUMP	10-54
TRANSITION SECTION - WITH VARIABLE DISPLACEMENT PUMP	10-48
ENGINE AND ATTACHING PARTS	
KUBOTA 3.8L SI LPG	3-14
ENGINE ASSEMBLY	
ALTERNATOR AND PULLEY - KUBOTA 3.8L SI LPG	3-46
CAMSHAFT AND IDLE GEAR SHAFT - KUBOTA 3.8L SI LPG	3-39
CYLINDER HEAD - KUBOTA 3.8L SI LPG	3-25
CYLINDER HEAD COVER - KUBOTA 3.8L SI LPG	3-24
DIPSTICK AND GUIDE - KUBOTA 3.8L SI LPG	3-36
ELECTRONIC CONTROL MODULE - KUBOTA 3.8L SI LPG	3-49
EXHAUST MANIFOLD - KUBOTA 3.8L SI LPG	3-35
FAN DRIVE AND MOUNTING - KUBOTA 3.8L SI LPG	3-30
GEAR CASE - KUBOTA 3.8L SI LPG	3-22
IGNITION COIL - KUBOTA 3.8L SI LPG	3-43
INJECTION PUMP COVER - KUBOTA 3.8L SI LPG	3-42
INTAKE MANIFOLD AND THROTTLE BODY - KUBOTA 3.8L SI LPG	3-28
MAIN BEARING CASE - KUBOTA 3.8L SI LPG	3-38
OIL COOLER - KUBOTA 3.8L SI LPG	3-37
OIL PAN - KUBOTA 3.8L SI LPG	3-21
PISTON AND CRANKSHAFT - KUBOTA 3.8L SI LPG	3-40
SHORT BLOCK - KUBOTA 3.8L SI LPG	3-20
STARTER - KUBOTA 3.8L SI LPG	3-48

©2015 HYSTER COMPANY

TABLE OF CONTENTS (continued)

DESCRIPTION	PAGE
SUPPLY PUMP COVER - KUBOTA 3.8L SI LPG	3-44
THERMOSTAT AND HOUSING - KUBOTA 3.8L SI LPG	3-32
VALVE AND ROCKER ARM - KUBOTA 3.8L SI LPG	3-26
WATER PUMP - KUBOTA 3.8L SI LPG	3-34
ENGINE ELECTRICAL SYSTEM	
KUBOTA 3.6L DIESEL	5-10
KUBOTA 3.8L DIESEL - WITH STANDARD ALTERNATOR HARNESS	5-16
KUBOTA 3.8L LPG - WITH STANDARD ALTERNATOR HARNESS	5-18
ENGINE ELECTRICAL SYSTEM AND ATTACHING PARTS	
KUBOTA 3.6L DIESEL	5-12
KUBOTA 3.6L DIESEL - WITH ELECTRONIC THROTTLE	5-14
ENGINE MOUNT	3-16
ENGINE WITH ENGINE MOUNT AND TORQUE CONVERTER	
3.6L KUBOTA DIESEL	2-4
3.8L KUBOTA DIESEL	2-6
E-THROTTLE LINKAGE	
KUBOTA 3.6L DIESEL	4-18
EXHAUST MANIFOLD	
KUBOTA DIESEL - 3.6L	2-58
KUBOTA DIESEL - 3.8L	2-59
EXHAUST SYSTEM	
COUNTERWEIGHT EXHAUST LWB - 3.6L DIESEL	2-20
COUNTERWEIGHT EXHAUST LWB - 3.8L DIESEL WITH DPF	2-30
COUNTERWEIGHT EXHAUST SWB - 3.6L	2-24
COUNTERWEIGHT EXHAUST SWB - 3.8L WITH DPF	2-28
OVERHEAD EXHAUST LWB - 3.6L	2-22
OVERHEAD EXHAUST LWB - 3.8L DIESEL WITH DPF	2-34
OVERHEAD EXHAUST SWB - 3.6L	2-26
OVERHEAD EXHAUST SWB - 3.8L DIESEL WITH DPF	2-32
EXHAUST SYSTEM WITH CATALYTIC CONVERTER	
KUBOTA 3.8L LPG - OVERHEAD SHORT WHEELBASE	3-10
KUBOTA 3.8L LPG - OVERHEAD LONG WHEELBASE	3-12
EXHAUST SYSTEM WITHOUT CATALYTIC CONVERTER	
KUBOTA 3.8L LPG OVERHEAD LONG WHEELBASE	3-8
KUBOTA 3.8L LPG OVERHEAD SHORT WHEELBASE	3-6

F

FAN PULLEY	
KUBOTA DIESEL - 3.6L, 3.8L	2-43
FAN SHROUD WITH RADIATOR SCREEN	
LONG WHEEL BASE	2-18
SHORT WHEEL BASE	2-17
FAN SHROUD WITHOUT RADIATOR SCREEN	
SHORT WHEEL BASE	2-16
FENDER EXTENSIONS	1-86
FLOOR PLATES AND COVERS	
SHEET 1 OF 2	1-82
SHEET 2 OF 2	1-84

©2015 HYSTER COMPANY

TABLE OF CONTENTS (continued)

DESCRIPTION	PAGE
FLYWHEEL AND HOUSING	
KUBOTA 3.8L LPG	3-18
KUBOTA DIESEL - 3.6L, 3.8L	2-42
FORKS	
CLASS III AND CLASS IV STANDARD TAPER	1-92
CLASS III AND CLASS IV STANDARD TAPER - OPTIONAL	1-94
FORWARD CLUTCH	
SINGLE SPEED TRANSMISSION	6-14
FORWARD CLUTCH, HIGH	
DUAL SPEED TRANSMISSION	6-28
FORWARD CLUTCH, LOW	
DUAL SPEED TRANSMISSION	6-26
FREE LIFT CYLINDER	
THREE STAGE FULL FREE LIFT	13-24
TWO STAGE FULL FREE LIFT	12-18
FUEL CAP	
DIESEL	4-20
FUEL FILTER	
KUBOTA DIESEL - 3.6L	2-100
FUEL INJECTION PUMP	
KUBOTA DIESEL - 3.8L	2-89
FUEL PUMP	
KUBOTA DIESEL - 3.6L	2-99
FUEL RAIL	
KUBOTA DIESEL - 3.8L	2-90
FUEL SYSTEM	
3.8L LPG - WITH LOW FUEL SENSOR	4-28
3.8L LPG - W/O LOW FUEL SENSOR	4-30
KUBOTA 3.6L DIESEL	4-22
KUBOTA DIESEL - 3.8L	4-24
FULL SUSPENSION SEAT	
ELECTRO-HYDRAULIC WITH SWIVEL AND NON-SWIVEL - SHEET 1 OF 3	1-60
HIGH BACK WITH LUMBAR ADJUSTMENT - SHEET 1 0F 2	1-68
HIGH BACK WITH LUMBAR ADJUSTMENT - SHEET 2 OF 2	1-72
MANUAL WITH SWIVEL AND NON-SWIVEL - SHEET 1 OF 3	1-56
RECLINER AND DAMPER KITS - SHEET 2 OF 3	1-64
SERVICE KITS FOR NON SWIVEL AND SWIVEL - SHEET 3 OF 3	1-66
G	
GEAR CASE	
KUBOTA DIESEL - 3.6L	2-60
KUBOTA DIESEL - 3.8L	2-62
GEAR PUMP	10-14
GOVERNOR	
KUBOTA DIESEL - 3.6L	2-102
GOVERNOR ACTUATOR AND PLUG	
KUBOTA DIESEL - 3.6L	2-104

©2015 HYSTER COMPANY

TABLE OF CONTENTS (continued)

DESCRIPTION **PAGE**

H

HAND LEVERS
- FOUR FUNCTION - WITH DETENTED LEVERS 10-22
- FOUR FUNCTION - WITHOUT DETENTED LEVERS 10-24
- THREE FUNCTION - WITH DETENTED LEVERS 10-18
- THREE FUNCTION - WITHOUT DETENTED LEVERS 10-20

HEADER HOSE
- THREE STAGE FULL FREE LIFT 13-28
- TWO STAGE FULL FREE LIFT 12-22
- TWO STAGE LIMITED FREE LIFT 11-16

HEADER HOSE AUX. TUBE EXTENSIONS WITH QUICK DISCONNECTS
- THREE STAGE FULL FREE-LIFT - STANDARD CARRIAGE 14-20
- THREE STAGE FULL FREE-LIFT - INTEGRAL SIDE-SHIFT CARRIAGE 14-28
- TWO STAGE FULL FREE- LIFT - STANDARD CARRIAGE 14-16
- TWO STAGE FULL FREE-LIFT - INTEGRAL SIDE-SHIFT CARRIAGE 14-26
- TWO STAGE LIMITED FREE-LIFT - STANDARD CARRIAGE 14-12
- TWO STAGE LIMITED FREE-LIFT - INTEGRAL SIDE-SHIFT CARRIAGE 14-24

HEADER HOSE AUXILIARY TUBE EXTENSIONS
- THREE STAGE FULL FREE LIFT - STANDARD CARRIAGE 13-32
- THREE STAGE FULL FREE- LIFT - INTEGRAL SIDE-SHIFT CARRIAGE WITHOUT QUICK DISCONNECTS 14-5
- THREE STAGE FULL FREE- LIFT - ATTACHMENT CARRIAGE WITHOUT QUICK DISCONNECTS 14-10
- TWO STAGE FULL FREE LIFT - STANDARD CARRIAGE 12-26
- TWO STAGE FULL FREE- LIFT - INTEGRAL SIDE-SHIFT CARRIAGE WITHOUT QUICK DISCONNECTS 14-4
- TWO STAGE FULL FREE- LIFT - ATTACHMENT CARRIAGE WITHOUT QUICK DISCONNECTS 14-8
- TWO STAGE LIMITED FREE LIFT - STANDARD CARRIAGE 11-20
- TWO STAGE LIMITED FREE-LIFT - INTEGRAL SIDE-SHIFT CARRIAGE WITHOUT QUICK DISCONNECTS 14-3
- TWO STAGE LIMITED FREE-LIFT - ATTACHMENT CARRIAGE WITHOUT QUICK DISCONNECTS 14-6

HEATER HOSES
- KUBOTA DIESEL 1-50
- KUBOTA LPG 1-51

HOOD ASSEMBLY 1-78

HOSE GROUPS

HYDRAULIC CONTROL VALVE (MANUAL)
- AUXILIARY ONE AND TWO SECTION - THREE AND FOUR FUNCTION 10-34
- LIFT AND TILT - THREE AND FOUR FUNCTION 10-32
- OUTLET SECTION - THREE AND FOUR FUNCTION 10-36
- THREE AND FOUR FUNCTION 10-30

HYDRAULIC FAN DRIVE
- DIESEL LWB 2-8
- KUBOTA 3.8L DIESEL/LPG - SWB 2-10
- WITH VARIABLE DISPLACEMENT PUMP 10-8

HYDRAULIC FAN DRIVE MANIFOLD 10-10

HYDRAULIC FILTER 10-12

HYDRAULIC SUPPLY AND RETURN 10-2
- WITH VARIABLE DISPLACEMENT PUMP 10-4

©2015 HYSTER COMPANY

TABLE OF CONTENTS (continued)

DESCRIPTION	PAGE
I	
IMPACT SENSOR	5-34
INJECTION PIPE	
KUBOTA DIESEL - 3.8L	2-92
INJECTION PUMP	
KUBOTA DIESEL - 3.6L	2-96
INJECTION PUMP HOUSING	
KUBOTA DIESEL - 3.6L	2-95
INJECTOR BODY	
KUBOTA 3.6L DIESEL	2-98
INJECTOR HARNESS	
KUBOTA DIESEL - 3.8L	2-91
INLET AND EXHAUST VALVES	
KUBOTA DIESEL - 3.8L	2-53
INLET MANIFOLD	
KUBOTA DIESEL - 3.6L	2-54
KUBOTA DIESEL - 3.8L	2-56
INNER MAST	
THREE STAGE FULL FREE-LIFT	13-10
INNER MAST AND FREE-LIFT	
THREE STAGE FULL FREE-LIFT	13-12
INSTRUMENT CLUSTER	5-29
INTEGRAL SIDE-SHIFT CARRIAGE ASSEMBLY	
CHAIN ANCHOR GROUPS	14-42
THREE STAGE FULL FREE LIFT	14-38
TWO STAGE FULL FREE LIFT	14-34
TWO STAGE LIMITED FREE-LIFT	14-30
INTERMEDIATE MAST	
THREE STAGE FULL FREE LIFT	13-6
L	
LABELS	
EXTERIOR	1-96
HYDRAULIC CONTROL LABELS - MANUAL HYDRAULIC	1-100
INTERIOR	1-98
LIFTING EYES	14-52
LIGHTS	
BRAKE, TAIL, BACKUP, SIDE, TURN SIGNALS, WORK, STROBE - WITH OVERHEAD GUARD	5-42
BRAKE, TAIL, BACKUP, SIDE, TURN SIGNALS, WORK, STROBE - WITH CAB	5-44
LOAD BACKREST EXTENSION	1-90
LOAD WEIGH ELECTRICAL	5-32
LPG BRACKET ASSEMBLY	
SWING OUT DROP DOWN WITH TWIN STEEL STRAPS	4-32
SWING OUT WITH FABRIC STRAP	4-36
SWING OUT, DROP DOWN WITH FABRIC STRAP	4-38
M	
MAIN LIFT	
THREE STAGE FULL FREE-LIFT	13-16

©2015 HYSTER COMPANY

TABLE OF CONTENTS (continued)

DESCRIPTION	PAGE
MAIN LIFT CYLINDER	
THREE STAGE FULL FREE LIFT	13-20
TWO STAGE FULL FREE LIFT - H4.0FT5-H4.0FT6	12-10
TWO STAGE FULL FREE LIFT - H4.5FTS5, H4.5FT6, H5.0-5.5FT	12-14
TWO STAGE LIMITED FREE LIFT - H4.0FT5-H4.0FT6	11-10
TWO STAGE LIMITED FREE LIFT - H4.5FTS5, H4.5FT6, H5.0-5.5FT	11-12
MANUAL HYDRAULIC CONTROLS AND CONTROL VALVES	15-7
MAST	
TWO STAGE FULL FREE LIFT - OUTER MAST AND MAIN LIFT	12-2
TWO STAGE FULL FREE LIFT - INNER MAST AND FREE LIFT	12-6
TWO STAGE LIMITED FREE LIFT - OUTER MAST AND MAIN LIFT	11-2
TWO STAGE LIMITED FREE LIFT - INNER MAST	11-6
MAST TILT SENSOR	5-30
MINI LEVER MODULE LABELS	
HYDRAULIC CONTROL FUNCTIONS	1-102
MINI-LEVER CONTROLS	
WITH ARMREST - THREE FUNCTION	5-38
WITH ARMREST - FOUR FUNCTION	5-40
MINI-LEVER HYDRAULIC CONTROLS AND CONTROL VALVES	15-6
MIRROR	
WITHOUT CAB	14-48
MODULAR CAB	
PVC DOORS	1-20
MODULAR CAB AND ATTACHING PARTS	
WITH PVC DOORS	1-18
WITH STEEL DOORS - WITHOUT AIR CONDITIONING	1-8
WITH STEEL DOORS AND AIR CONDITIONING - SHEET 1 OF 2	1-10
WITH STEEL DOORS AND AIR CONDITIONING - SHEET 2 OF 2	1-12
MODULAR CAB WITH STEEL DOORS	
AC COMPRESSOR AND ATTACHING PARTS	1-48
AIR CONDITIONER HEATER	1-46
CONDENSER ASSEMBLY	1-44
HEATER - WITHOUT AIR CONDITIONING	1-34
LEFT HAND DOOR	1-28
RIGHT HAND DOOR AND AIR CONDITIONER	1-38
RIGHT HAND DOOR AND HEATER ASSEMBLY - WITHOUT AIR CONDITIONING	1-32
RIGHT HAND DOOR ASSEMBLY - WITH AIR CONDITIONING	1-36
SHEET 1 OF 3	1-22
SHEET 2 OF 3	1-24
SHEET 3 OF 3	1-26
SLIDING REAR WINDOW	1-42
WINDOW - LH DOOR	1-30
WINDOW - RH DOOR	1-40
WITH AIR CONDITIONING	1-16
WITHOUT AIR CONDITIONING	1-14
MUD GUARDS	1-88

©2015 HYSTER COMPANY

TABLE OF CONTENTS (continued)

DESCRIPTION	PAGE
N	
NOZZLE HOLDER AND GLOW PLUG	
KUBOTA DIESEL - 3.6L	2-97
O	
OIL COOLER	
KUBOTA DIESEL - 3.6L	2-80
KUBOTA DIESEL - 3.8L	2-81
OIL PAN	
KUBOTA DIESEL - 3.6L, 3.8L	2-75
OIL SEPARATOR	
KUBOTA DIESEL - 3.8L	2-85
OUTER MAST	
THREE STAGE FULL FREE-LIFT	13-2
OVERHEAD GUARD	1-6
P	
PARK BRAKE ASSEMBLY	
MANUAL WITH ONE CABLE - NMHG	9-16
MANUAL WITH TWO CABLES - DANA	9-18
PISTON AND CRANKSHAFT	
KUBOTA DIESEL - 3.6L	2-68
KUBOTA DIESEL - 3.8L	2-70
POWER DISTRIBUTION MODULE	5-22
PRE-CLEANER AND MOUNT	
DIESEL	4-10
DIESEL ENGINE - WITH AIR CONDITIONING	4-11
R	
REAR DRIVE HANDLE	14-2
RELAY	
KUBOTA DIESEL	5-25
REVERSE CLUTCH	
DUAL SPEED TRANSMISSION	6-30
SINGLE SPEED TRANSMISSION	6-16
ROCKER ARM ASSEMBLY	
WITH INLET AND EXHAUST VALVES - KUBOTA DIESEL (3.6L)	2-50
ROCKER ARM SHAFT	
KUBOTA DIESEL - 3.8L	2-52
S	
SEAT BELT SWITCH ADAPTER	5-36
SEMI-SUSPENSION SEAT	
WITH ELECTRONIC CONTROLS	1-54
WITHOUT ELECTRONIC CONTROLS	1-52
SENSORS	
KUBOTA DIESEL - 3.8L	2-106
START OPTIONS	15-2
STARTER	
KUBOTA DIESEL - 3.6L, 3.8L	2-107

©2015 HYSTER COMPANY

TABLE OF CONTENTS (continued)

DESCRIPTION	PAGE
STEER AXLE	8-12
STEER CYLINDER	8-16
STEER WHEELS AND TIRES	8-18
STEERING COLUMN AND ATTACHING PARTS	8-2
STEERING COLUMN ASSEMBLY	
DIESEL	8-6
LPG	8-4
STEERING CONTROL UNIT	8-8
STEERING HOSES	8-10
STROBE LIGHT	
LED	14-44
SWIVEL SEATS	15-2
T	
THROTTLE CABLE ASSEMBLY	
KUBOTA DIESEL - 3.6L	4-16
THROTTLE PEDAL ASSEMBLY AND ATTACHING PARTS	
MONOTROL PEDAL	4-14
STANDARD PEDAL	4-12
TILT HOSES	10-68
TILT CYLINDER AND MAST INSTALLATION	10-70
TILT CYLINDERS	10-72
TORQUE CONVERTER	
KUBOTA 3.8L LPG	6-7
TRANSMISSION	
DUAL SPEED - SHEET 1 OF 3	6-18
DUAL SPEED - SHEET 2 OF 3	6-20
DUAL SPEED - SHEET 3 OF 3	6-22
SINGLE SPEED - SHEET 1 OF 3	6-8
SINGLE SPEED - SHEET 2 OF 3	6-9
SINGLE SPEED - SHEET 3 OF 3	6-12
TRANSMISSION CONTROL VALVE ASSEMBLY	6-32
TRANSMISSION COOLING LINES	
WITH EXTERNAL OIL COOLER - GASOLINE, LPG AND DIESEL	6-4
WITHOUT EXTERNAL OIL COOLER - DIESEL	6-2
TRANSMISSION HARNESS GROUP	
WITH AND WITHOUT BRAKE TEMP	5-46
TRANSMISSION MOUNT	6-6
TURBO INLET PIPE	
KUBOTA DIESEL - 3.8L	2-86
TURBOCHARGER	
KUBOTA DIESEL - 3.6L	2-82
KUBOTA DIESEL - 3.8L	2-83
TURBOCHARGER OIL PLUMBING	
KUBOTA DIESEL - 3.6L	2-87
KUBOTA DIESEL - 3.8L	2-88

©2015 HYSTER COMPANY

TABLE OF CONTENTS (continued)

DESCRIPTION **PAGE**

V

VALVE ASSEMBLY
- AUXILIARY ONE SECTION - ELECTRONIC CONTROL VALVE-THREE AND FOUR FUNCTION 10-56
- AUXILIARY TWO SECTION - ELECTRONIC CONTROL VALVE-FOUR FUNCTION 10-58
- ELECTRO HYDRAULIC POPPET VALVE - THREE AND FOUR FUNCTION 10-44
- LIFT AND LOWER - ELECTRONIC CONTROL VALVE-THREE AND FOUR FUNCTION 10-46
- OUTLET SECTION - ELECTRONIC CONTROL VALVE-THREE AND FOUR FUNCTION 10-60
- TILT SECTION - ELECTRONIC CONTROL VALVE-THREE AND FOUR FUNCTION 10-52

VARIABLE DISPLACEMENT PUMP
- ASSEMBLY 10-17

VARIABLE DISPLACEMENT PUMP AND ADAPTOR 10-16

VENT LINE GROUP
- WITH STANDARD CONTROL VALVE 10-66
- WITH VARIABLE DISPLACEMENT CONTROL VALVE 10-67

W

WATER PUMP
- KUBOTA DIESEL - 3.6L 2-77
- KUBOTA DIESEL - 3.8L 2-79

WATER PUMP FLANGE AND THERMOSTAT
- KUBOTA DIESEL - 3.6L 2-76
- KUBOTA DIESEL - 3.8L 2-78

WET BRAKE ASSEMBLY
- NMHG 7-22

WET BRAKE BOOSTER SUPPLY AND RETURN
- NMHG 9-12

WIDE TREAD AND DUAL TREAD TIRES 15-2

WIRE HARNESS
- ADAPTER - LOW FUEL PRESSURE 5-47
- AIR CONDITIONER 5-48
- COWL - MANUAL HYDRAULICS WITH MONOTROL PEDAL 5-96
- COWL - MANUAL HYDRAULICS WITH FORWARD/REVERSE 5-100
- COWL - ELECTRO-HYDRAULICS WITH MONOTROL PEDAL 5-104
- COWL - ELECTRO-HYDRAULICS WITH FORWARD/REVERSE 5-108
- DPF DISPLAY 5-94
- ENGINE - KUBOTA 3.8L DIESEL 5-52
- ENGINE - KUBOTA DIESEL (3.6L) 5-58
- ENGINE - KUBOTA 3.8L SI LPG 5-62
- ENGINE WITH ELECTRONIC THROTTLE - KUBOTA DIESEL 3.6L 5-66
- LIGHTS - WITH OVERHEAD GUARD 5-112
- RH CHASSIS - KUBOTA 3.8L DIESEL AND LPG 5-70
- RH CHASSIS - KUBOTA DIESEL (3.6L) 5-82
- RH CHASSIS WITH SEAT BELT SEQUENCE MODULE - KUBOTA 3.8L DIESEL AND LPG 5-76
- RH CHASSIS WITH SEAT BELT SEQUENCE MODULE - KUBOTA DIESEL (3.6L) 5-88
- TRANSMISSION - SINGLE SPEED 5-120
- TRANSMISSION - DUAL SPEED 5-124
- TRANSMISSION WITH BRAKE TEMP - SINGLE SPEED 5-128
- TRANSMISSION WITH BRAKE TEMP - TWO SPEED 5-132

©2015 HYSTER COMPANY

TABLE OF CONTENTS (continued)

DESCRIPTION	PAGE
WIRE HARNESS FOUR FUNCTION	
ELECTRONIC CONTROL VALVE - WITH VARIABLE DISPLACEMENT PUMP	5-118
WIRE HARNESS THREE FUNCTION	
ELECTRONIC CONTROL VALVE - WITH VARIABLE DISPLACEMENT PUMP	5-116

©2015 HYSTER COMPANY

ABBREVIATIONS QUICK REFERENCE SHEET

Listed below are abbreviations used in parts manuals to denote the following expressions:

TERM	DEFINITION
Amp	Amperes
AR	As Required
BDI	Battery Discharge Indicators
BWI	Brush Wear Indicator
CE	Communicator End
CRE	Corrosive Environment
D/B	Date Break
dbA	Decibel "A" Scale
DE	Drive End
ECH	Empty Container Handler
ECH-3	Empty Container Handler - 3 High Stacking
ECH-4	Empty Container Handler - 4 High Stacking
ECH-5	Empty Container Handler - 5 High Stacking
ECH-6	Empty Container Handler - 6 High Stacking
ECH-7	Empty Container Handler - 7 High Stacking
ECM	Electronic Control Module
ECN	Engineering Change Notice
EEPROM	Electrically Erasable Programmable Read Only Memory
EPA	US Environmental Protection Agency
EPROM	Electrically Programmable Read Only Memory

TERM	DEFINITION
FRE	Freezer Environment
in.	inches
LPG	Liquefied Petroleum Gas
MAP	Manifold Absolute Pressure
mm	millimeters
MSTS	Microprocessor Spark Timing System
NPT	National Pipe Threads
O/S	Oversize
PTO	Power Take Off
RPM	Revolutions per Minute
S/N	Serial Number
TMM	Truck Management Module
UL Type D	Diesel-Powered Safety Rating
UL Type DS	Diesel-Powered Safety Rating
UL Type E	Battery-Powered Safety Rating
UL Type EE	Battery-Powered Safety Rating
UL Type ES	Battery-Powered Safety Rating
UL Type G	Gasoline-Powered Safety Rating
UL Type GS	Gasoline-Powered Safety Rating
UL Type LP	Gas-Powered Safety Rating
UL Type LPS	LP Gas-Powered Safety Rating
U/S	Undersize
UL	Underwriters Laboratory
V	Volts

©2015 HYSTER COMPANY

HOW TO USE THE ILLUSTRATED PARTS MANUAL

This parts manual describes and illustrates assemblies, subassemblies, and detail parts needed for service replacement.

The different constructions are indicated by keys and footnotes. The callouts correspond to descriptions found on the next page.

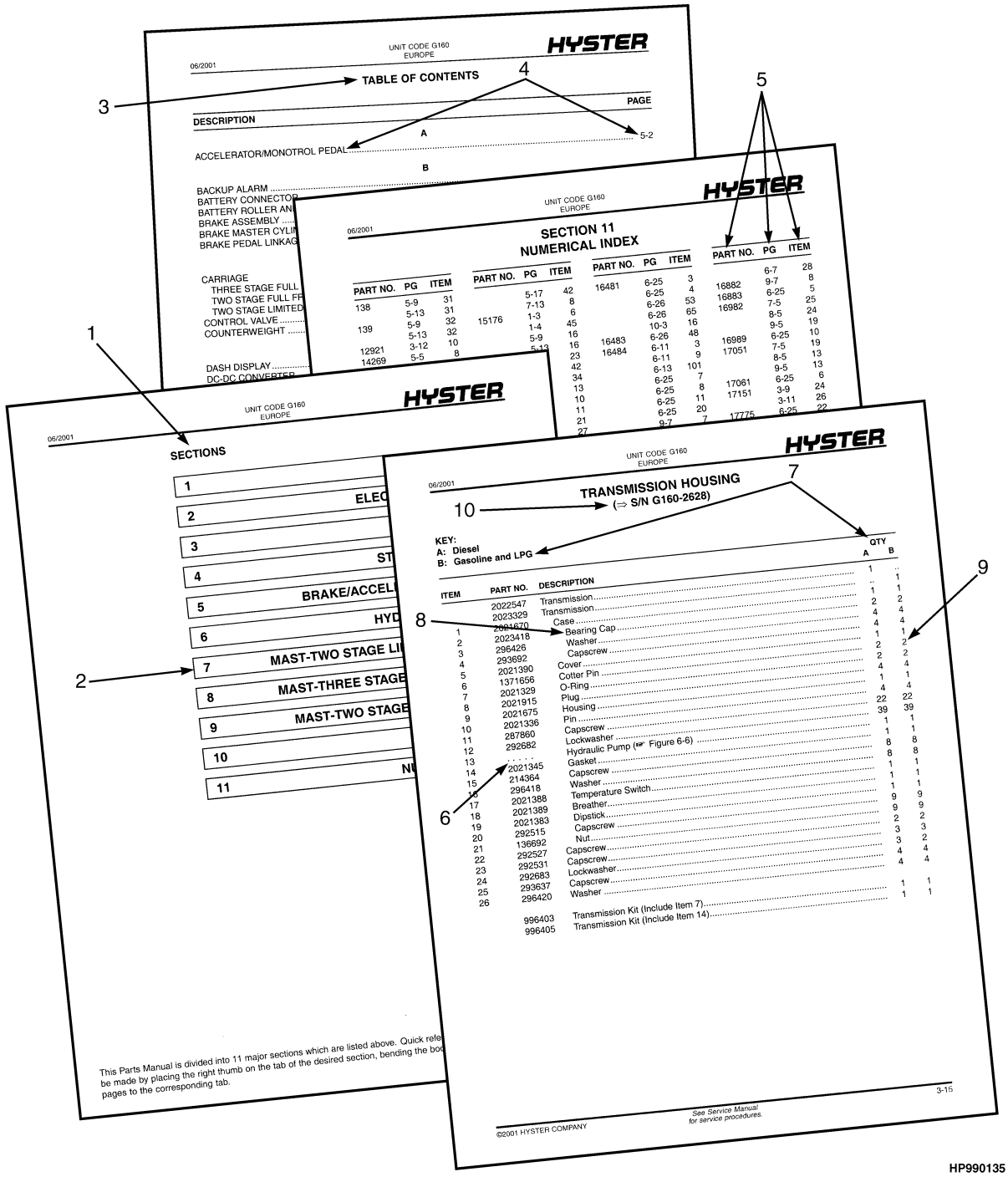

©2015 HYSTER COMPANY

HOW TO FIND THE DESIRED PART NUMBER

WHEN THE PART NUMBER AND THE NEXT HIGHER ASSEMBLY IS NOT KNOWN:

1. Determine the function and application of the part required. Turn to the Sections Page. Choose the general area of reference most likely to include the part.
2. Turn to the section you chose. Use the Section Table of Contents to determine the assembly which would normally contain the part required. Then locate the part on the assembly breakdown page.

WHEN THE PART NUMBER IS NOT KNOWN AND THE NEXT HIGHER ASSEMBLY IS KNOWN:

3. Determine the assembly the required part is used on. Turn to the Table of Contents (Page i).
4. Locate the assembly the required part is used on and turn to the page indicated for that assembly. Then locate the part on the assembly breakdown page.

WHEN THE PART NUMBER IS KNOWN:

5. Use the Numerical Index (Page 16-1) to find the part number. Turn to the page listed and locate the part as indicated by the item number.

GENERAL:

The assembly breakdowns include part numbers, descriptions, quantities required, keys and footnotes to help in selecting correct parts.

6. Parts Supersession Information. Part numbers that have this history will be displayed in the parts list in the order that they were superseded (from oldest to newest). The superseded part numbers will be shown with a line through them.

   Five periods in the PART NO. column (. . . . .) indicate that the part is either *Not Serviced Separately* or there is a reference to another figure. A figure reference is denoted by a pointing hand followed by a figure number in the DESCRIPTION column (☞Figure 10)
7. Keys are used to show two or more similar assemblies, RH and LH assembly parts, etc. Select the appropriate key, "A", "B", "C", "D", or "E" and the corresponding quantity column to find the required parts. Two periods in the QTY column (..) indicate that the part is not used for that assembly.
8. Indented descriptions under the DESCRIPTION column are used to indicate assemblies and subparts of assemblies. In the example on the previous page, *BEARING CAP* (Item 2) is a subpart of the major assembly *CASE*.
9. Quantities shown are for one assembly. The quantities of the subpart *BEARING CAP* are indicated as two and two. This means two per *CASE* assembly.
10. Serial number breaks identify the most current parts information and are shown as follows:
    → S/N D001H2628
    Indicates last serial number affected.
    S/N D001H2629 →
    Indicates the first serial number affected.
    S/N D001H1553 ↔ S/N D001H3291
    Indicates a range of serial numbers affected.

    ECN numbers for pending serial numbers are shown to allow for the inclusion of the most current parts information and are identified as follows:
    → S/N Pending Per ECN 63243
    Indicates a pending serial number for last unit affected.
    S/N Pending Per ECN 63243 →
    Indicates a pending serial number for first unit affected.

    Date breaks are used to indicate when a change occurred but a subsequent serial number break was not recorded. This is an arbitrary date usually based on the ECN release and are identified as follows:
    → D/B 3/00
    Indicates that a change occurred sometime within that month for the item affected.
    D/B 3/00 →
    Indicates that a change occurred sometime within that month for the item affected.
    D/B 3/00 ↔ D/B 4/00
    Indicates a range of production dates of the item affected.

    Contact your local dealer for Hyster lift trucks for serial number information for items with a ECN or a date break.

ORDERING PARTS:

When ordering replacement parts, give the unit serial number, part number, name of part and quantity required.

For any further information on parts, service, or ordering, consult your local dealer for Hyster lift trucks.

©2015 HYSTER COMPANY

IDENTIFICATION OF TRUCK SERIAL NUMBERS

X OOO X OOOO X

(1) (2) (3) (4) (5)

(1) and (2) The first letter and three numbers indicate the truck unit code.

(3) The second letter indicates the plant of manufacture.

(4) The four or five digit number indicates the production sequence number of the truck.

(5) The final letter indicates the year of manufacture starting with "A" in 1957, 1980, and 2003. The letters "I", "O", and "Q" will not be used.

For pending serial numbers contact your local dealer for Hyster lift trucks.

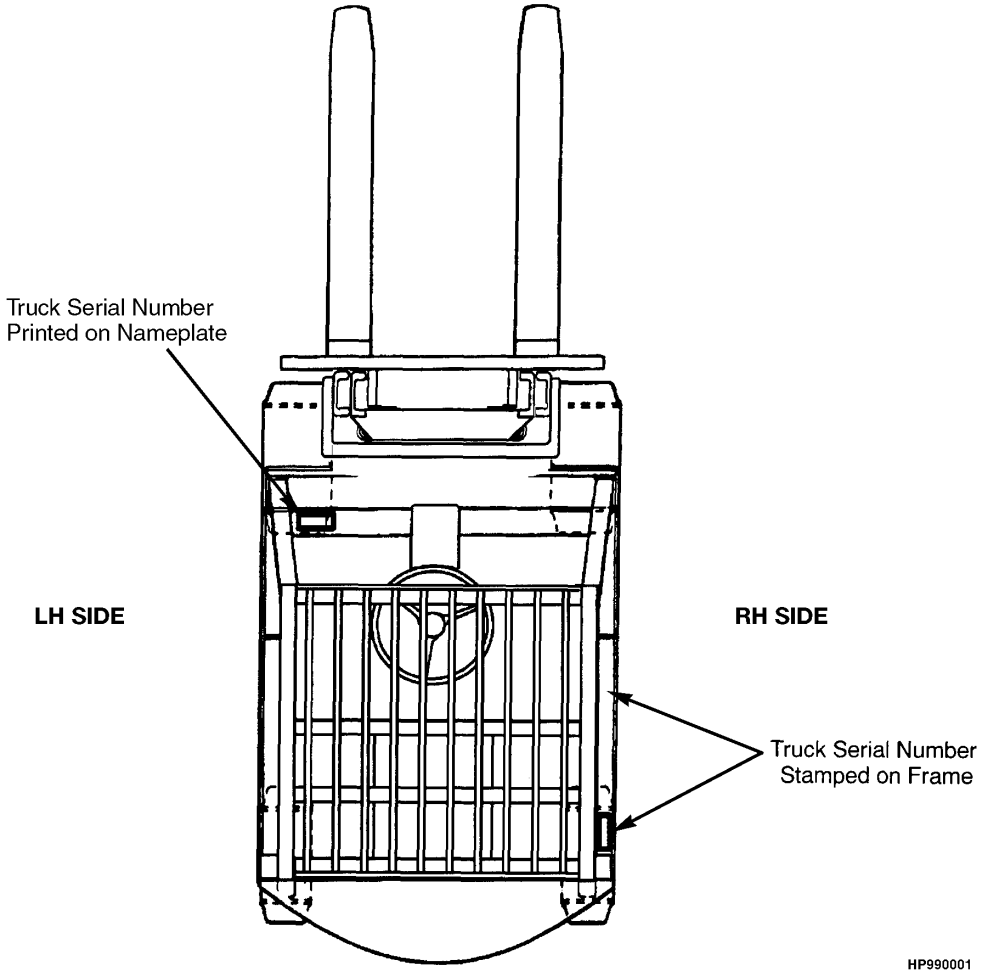

Parts referred to in this book as right or left hand parts are in accordance with the illustration above.

©2015 HYSTER COMPANY

IDENTIFICATION OF MAST SERIAL NUMBERS

X OOO X OOOO

(1) (2) (3) (4)

OOOO

(5)

(1) and (2) The first letter and number indicates the mast unit code.

(3) The second letter indicates the plant of manufacture.

(4) The four or five digit number indicates the production sequence number of the mast.

(5) Carriage travel in millimeters stamped just below the serial number.

Mast Group identification consists of mast unit code (1) and (2) plus carriage travel (5).

For pending production sequence numbers contact your local dealer for Hyster lift trucks.

LIFT EQUIPMENT IDENTIFICATION

1. Fork part number, capacity rating, plant code letter, and date of manufacture are stamped approximately six inches below the top of most forks.
2. The carriage group number is stamped on the right hand side of the top crossmember (pin type) or on the back of the right hand end of the bottom crossmember (hook type). A date code has two letters in line with or below the carriage group number.
3. The mast identification number has a unit code, a letter indicating the plant of manufacture, and a serial number. Underneath the production sequence number is a four digit number that indicates the carriage travel in millimeters.
4. Tilt and lift cylinder group numbers are stamped on the cylinder shell.

   Always refer to the group, serial, or part number when ordering service parts.

   Modification of masts and carriages by SPED (Special Products Engineering Department) are identified by a model prefix code beginning with the letter "S". contact your dealer for Hyster lift trucks for information on these assemblies.

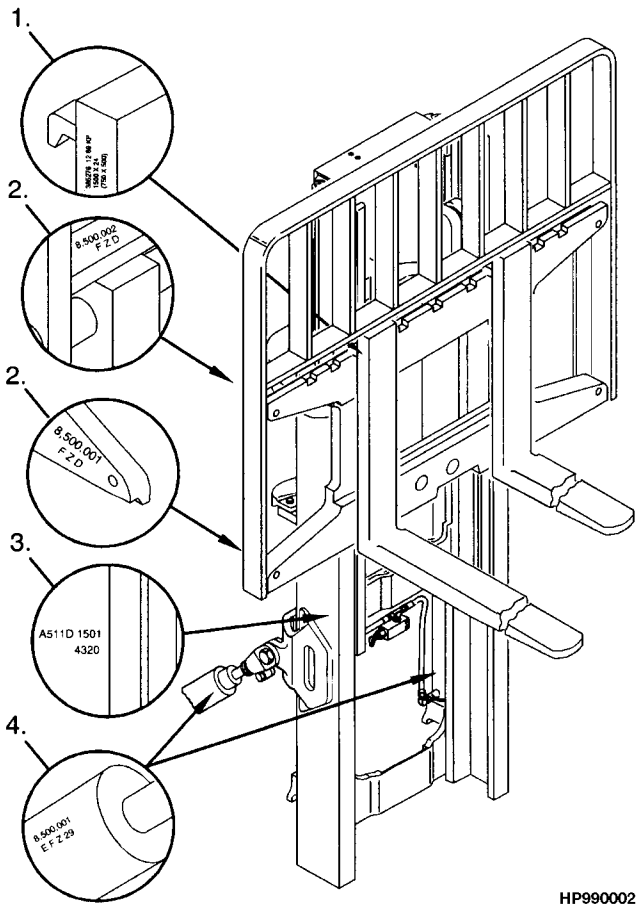

HP990002

IDENTIFICATION OF ATTACHMENT AND SIDE-SHIFT CARRIAGE SERIAL NUMBERS

X OOO X OOOO
(1) (2) (3) (4)

(1) and (2) The first letter and three numbers indicate the attachment unit code.

(3) The second letter indicates the plant of manufacture.

(4) The four or five digit number indicates the production sequence number.

For pending production sequence numbers contact your local dealer for Hyster lift trucks.

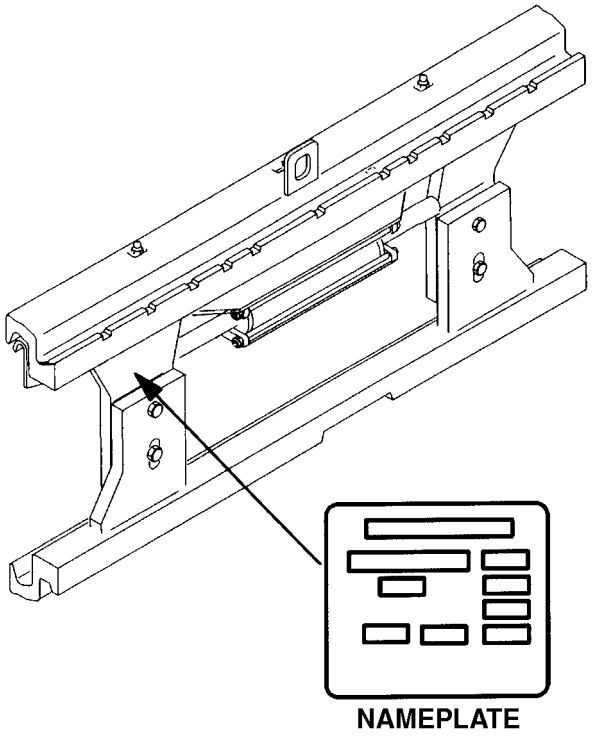

Side-shift carriages and attachments have nameplates. Use the serial number found on the nameplate to identify the attachment.

Always refer to the group, serial, or part number when ordering service parts.

Modifications of attachments and side-shift carriages by SPED (Special Products Engineering Department) are identified by a model prefix code beginning with the letter "S". Contact your dealer for Hyster lift trucks for information on these assemblies.

©2015 HYSTER COMPANY

PUBLICATIONS

Every new lift truck is provided with an OPERATING MANUAL. This manual has information that the operator must know for inspection and operation of the lift truck.

SERVICE MAINTENANCE MANUALS, which provide service and overhaul procedures, and PARTS MANUALS with complete replacement part identification, are available at a nominal fee from your Hyster dealer to assist users in effectively maintaining Hyster lift trucks in a safe, useful condition. See the list below for information on ordering specific publications for this model lift truck.

PUBLICATION	HYSTER PART NUMBER
Operating Manual	4128515
Service Manual (Complete)	4128553
Parts Manual	4128545

©2015 HYSTER COMPANY

NOTES

©2015 HYSTER COMPANY

1 FRAME

SECTION 1
FRAME

DESCRIPTION	PAGE
ARMREST ASSEMBLY	
MINI-LEVER MODULES - SEMI-SUSPENSION SEAT	1-74
MINI-LEVER MODULES - FULL SUSPENSION SEAT	1-76
BOLT ON CAB WITH STANDARD (HIGH) OVERHEAD GUARD	
FRONT SCREEN WITH WIPER/WASHER - PAGE 1 OF 2	1-104
FRONT SCREEN WITH WIPER/WASHER - PAGE 2 OF 2	1-106
PVC DOORS	1-114
REAR SCREEN WITH WIPER/WASHER - PAGE 1 OF 2	1-110
REAR SCREEN WITH WIPER/WASHER - PAGE 2 OF 2	1-112
TOP SCREEN	1-108
COUNTERWEIGHT	1-4
COWL MOUNT	1-80
FENDER EXTENSIONS	1-86
FLOOR PLATES AND COVERS	
SHEET 1 OF 2	1-82
SHEET 2 OF 2	1-84
FORKS	
CLASS III AND CLASS IV STANDARD TAPER	1-92
CLASS III AND CLASS IV STANDARD TAPER - OPTIONAL	1-94
FULL SUSPENSION SEAT	
ELECTRO-HYDRAULIC WITH SWIVEL AND NON-SWIVEL - SHEET 1 OF 3	1-60
HIGH BACK WITH LUMBAR ADJUSTMENT - SHEET 1 0F 2	1-68
HIGH BACK WITH LUMBAR ADJUSTMENT - SHEET 2 OF 2	1-72
MANUAL WITH SWIVEL AND NON-SWIVEL - SHEET 1 OF 3	1-56
RECLINER AND DAMPER KITS - SHEET 2 OF 3	1-64
SERVICE KITS FOR NON SWIVEL AND SWIVEL - SHEET 3 OF 3	1-66
HEATER HOSES	
KUBOTA DIESEL	1-50
KUBOTA LPG	1-51
HOOD ASSEMBLY	1-78
LABELS	
EXTERIOR	1-96
HYDRAULIC CONTROL LABELS - MANUAL HYDRAULIC	1-100
INTERIOR	1-98
LOAD BACKREST EXTENSION	1-90
MINI LEVER MODULE LABELS	
HYDRAULIC CONTROL FUNCTIONS	1-102
MODULAR CAB	
PVC DOORS	1-20
MODULAR CAB AND ATTACHING PARTS	
WITH PVC DOORS	1-18
WITH STEEL DOORS - WITHOUT AIR CONDITIONING	1-8
WITH STEEL DOORS AND AIR CONDITIONING - SHEET 1 OF 2	1-10
WITH STEEL DOORS AND AIR CONDITIONING - SHEET 2 OF 2	1-12
MODULAR CAB WITH STEEL DOORS	
AC COMPRESSOR AND ATTACHING PARTS	1-48
AIR CONDITIONER HEATER	1-46
CONDENSER ASSEMBLY	1-44
HEATER - WITHOUT AIR CONDITIONING	1-34

©2015 HYSTER COMPANY

SECTION 1
FRAME

DESCRIPTION	PAGE
LEFT HAND DOOR	1-28
RIGHT HAND DOOR AND AIR CONDITIONER	1-38
RIGHT HAND DOOR AND HEATER ASSEMBLY - WITHOUT AIR CONDITIONING	1-32
RIGHT HAND DOOR ASSEMBLY - WITH AIR CONDITIONING	1-36
SHEET 1 OF 3	1-22
SHEET 2 OF 3	1-24
SHEET 3 OF 3	1-26
SLIDING REAR WINDOW	1-42
WINDOW - LH DOOR	1-30
WINDOW - RH DOOR	1-40
WITH AIR CONDITIONING	1-16
WITHOUT AIR CONDITIONING	1-14
MUD GUARDS	1-88
OVERHEAD GUARD	1-6
SEMI-SUSPENSION SEAT	
WITH ELECTRONIC CONTROLS	1-54
WITHOUT ELECTRONIC CONTROLS	1-52

©2015 HYSTER COMPANY

NOTES

©2015 HYSTER COMPANY

COUNTERWEIGHT (FIGURE 1-1)

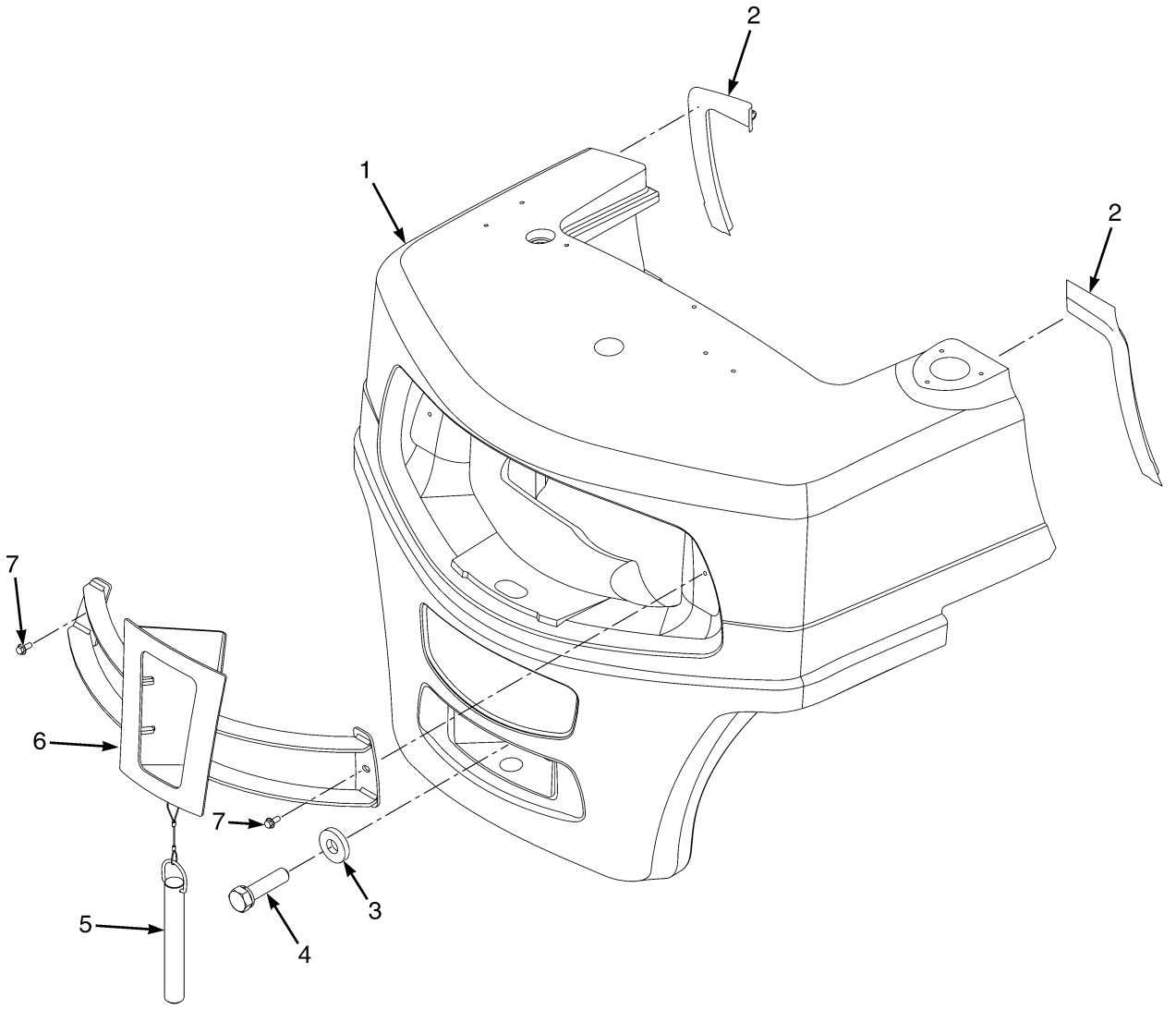

©2015 HYSTER COMPANY

COUNTERWEIGHT

ITEM	PART NO.	DESCRIPTION	QTY
1	4051593	Counterweight (H4.0FT5)	1
1	4051597	Counterweight (H4.0FT6)	1
1	4051594	Counterweight (H4.5FTS5)	1
1	4051595	Counterweight (H4.5FT6)	1
1	4051598	Counterweight (H5.0FT)	1
1	4051596	Counterweight (H5.5FT)	1
2	1603681	Seal	2
3	1571610	Washer	1
4	292626	Capscrew	1
5	1668335	Tow Pin	1
6	4087688	Cover	1
7	1586013	Capscrew	2

©2015 HYSTER COMPANY

OVERHEAD GUARD (FIGURE 1-2)

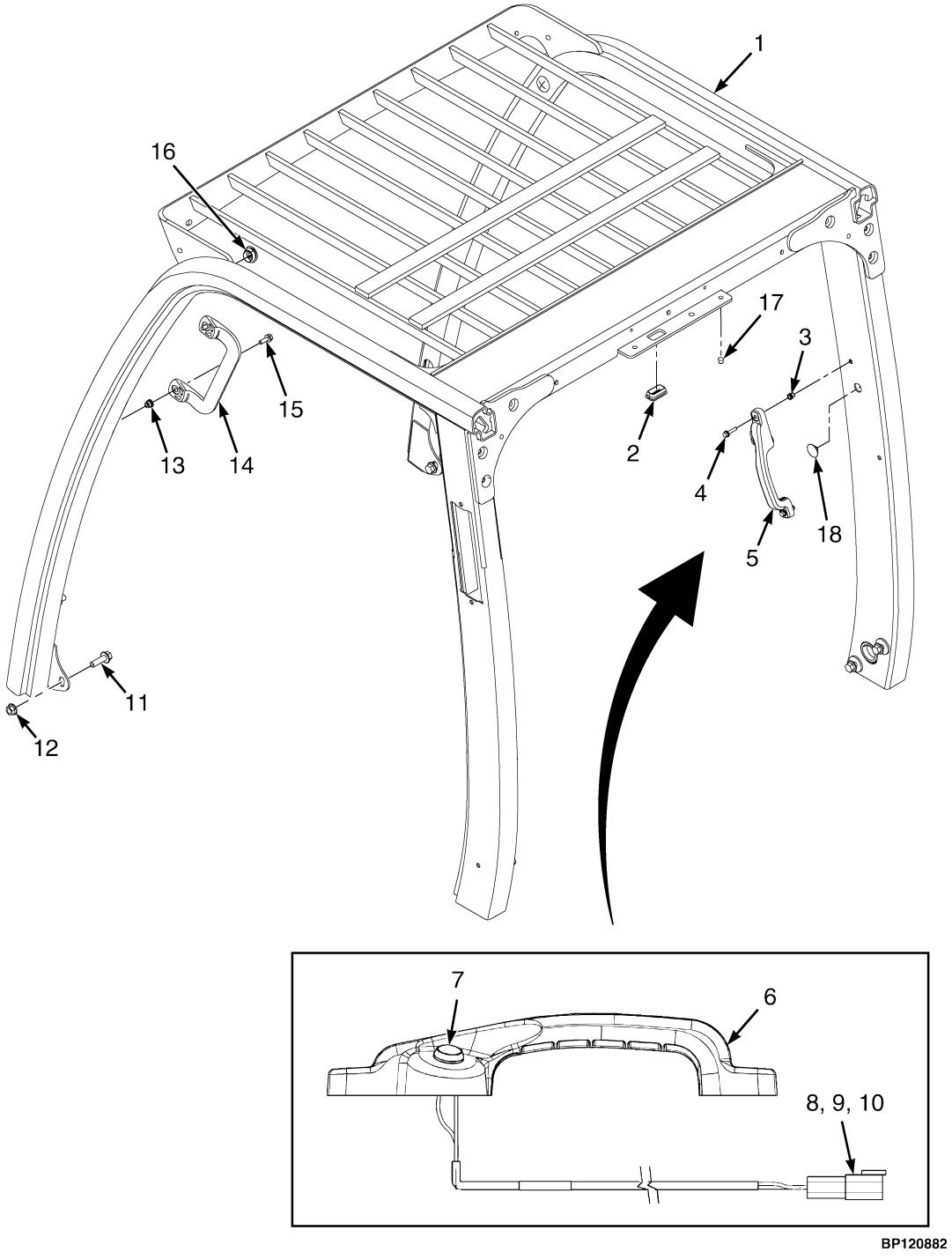

©2015 HYSTER COMPANY

OVERHEAD GUARD

KEY:
A: Without Optional Rear Handle
B: With Optional Rear Handle

ITEM	PART NO.	DESCRIPTION	QTY A	QTY B
1	4055755	Overhead Guard (High)	1	1
1	4055754	Overhead Guard (Low)	1	1
2	1560671	Grommet	1	1
3	1531558	Insert	..	2
4	1586495	Capscrew	..	2
5	2070223	Handle (Assembly) (☞Figure 14-1)	..	1
6	2069454	Handle	..	1
7	1566726	Push Button Switch	..	1
8	1493465	Connector (2 Pin)	..	1
9	1330414	Connector (Secondary Lock)	..	1
10	1330437	Terminal (Pin)	..	1
11	1566853	Capscrew	8	8
12	1528888	Nut (Shoulder)	2	2
13	1531557	Insert	4	4
14	1536813	Handle (Grab)	1	1
15	1583611	Capscrew	2	2
16	1558219	Grommet	2	2
17	1494888	Plug	6	6
18	1599415	Plug	1	1
	a 2067476	Grill (Air Intake)	1	1

FOOTNOTES:

a Not Illustrated

©2015 HYSTER COMPANY

MODULAR CAB AND ATTACHING PARTS (FIGURE 1-3)
WITH STEEL DOORS — WITHOUT AIR CONDITIONING

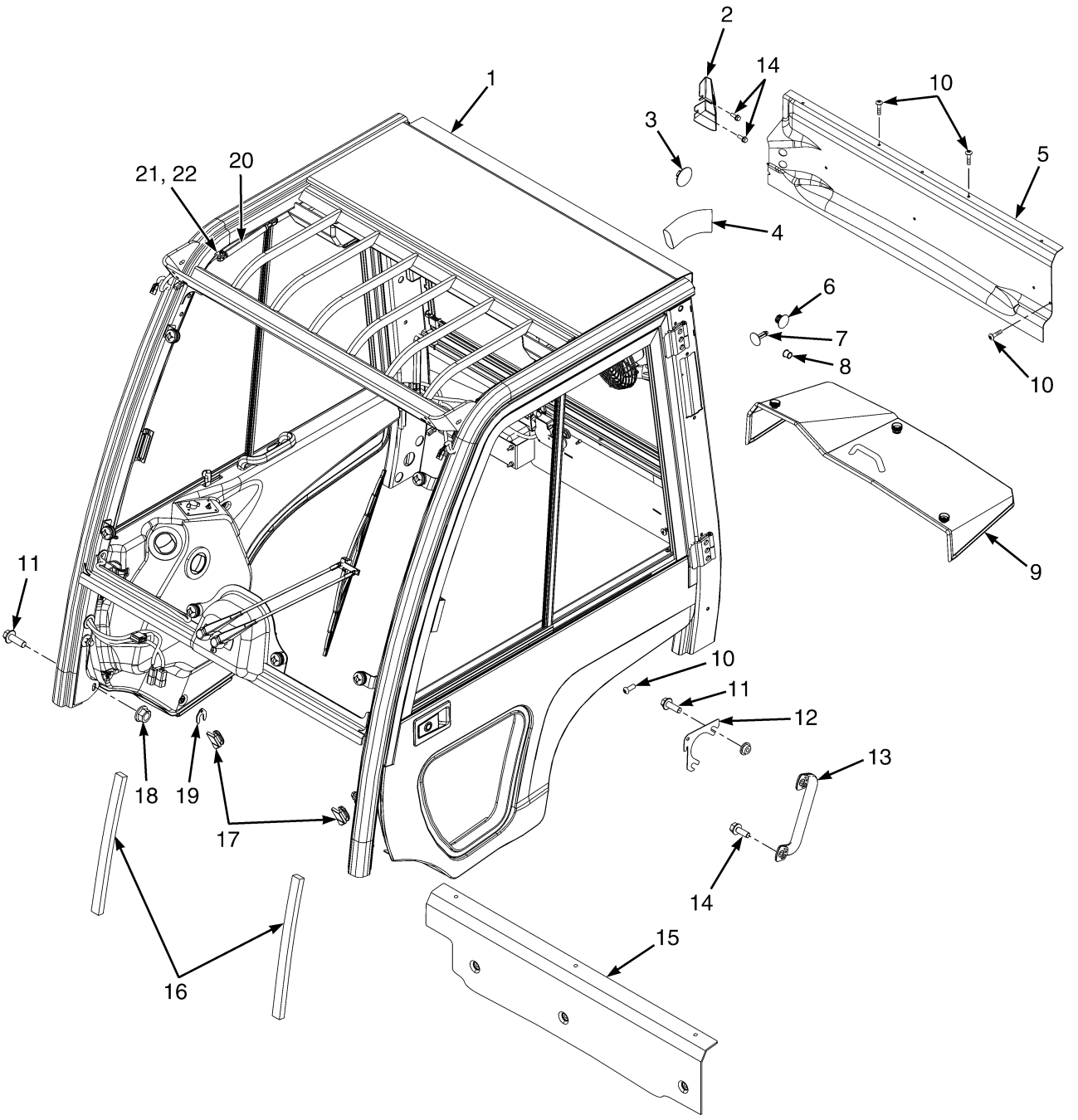

©2015 HYSTER COMPANY

MODULAR CAB AND ATTACHING PARTS
WITH STEEL DOORS – WITHOUT AIR CONDITIONING

ITEM	PART NO.	DESCRIPTION	QTY
1	1670240	Cab (With Steel Doors)	1
2	1661564	Bracket (Heater Hose)	1
2	1598327	Connector (Female)	1
3	1599415	Plug	1
4	1593845	Sleeve	1
5	1661567	Cover (Inner Rear)	1
5	1668667	Cover	1
5	1623377	Seal .280 M	1
5	1668666	Plate	1
5	1623396	Fastener	6
6	1574301	Plug	8
7	2090695	Fastener	6
8	1494888	Plug	4
9	1615902	Cover (Counterweight)	1
9	1492167	Trim-Bulk (2.480M)	1
9	1504941	Washer	1
9	4044428	Screw	1
9	4044429	Handle	1
9	1493480	Washer	2
9	302033	Screw	2
9	1623396	Fastener	1
9	4044430	Screw	2
10	1510126	Screw (Button Head)	3
11	1566853	Capscrew	8
12	1636853	Shim	AR
13	1536813	Handle (Grab)	1
14	1583611	Capscrew	4
15	1635652	Cover	1
16	4040607	Seal	2
17	1589787	Seal	2
18	1528888	Nut (Shoulder)	2
19	1636647	Shim	AR
20	1598414	Gas Spring (RH)	1
20	1598397	Gas Spring (LH)	1
21	4009902	Ball Stud	4
22	302400	Nut	4

©2015 HYSTER COMPANY

MODULAR CAB AND ATTACHING PARTS (FIGURE 1-4)
WITH STEEL DOORS AND AIR CONDITIONING — SHEET 1 OF 2

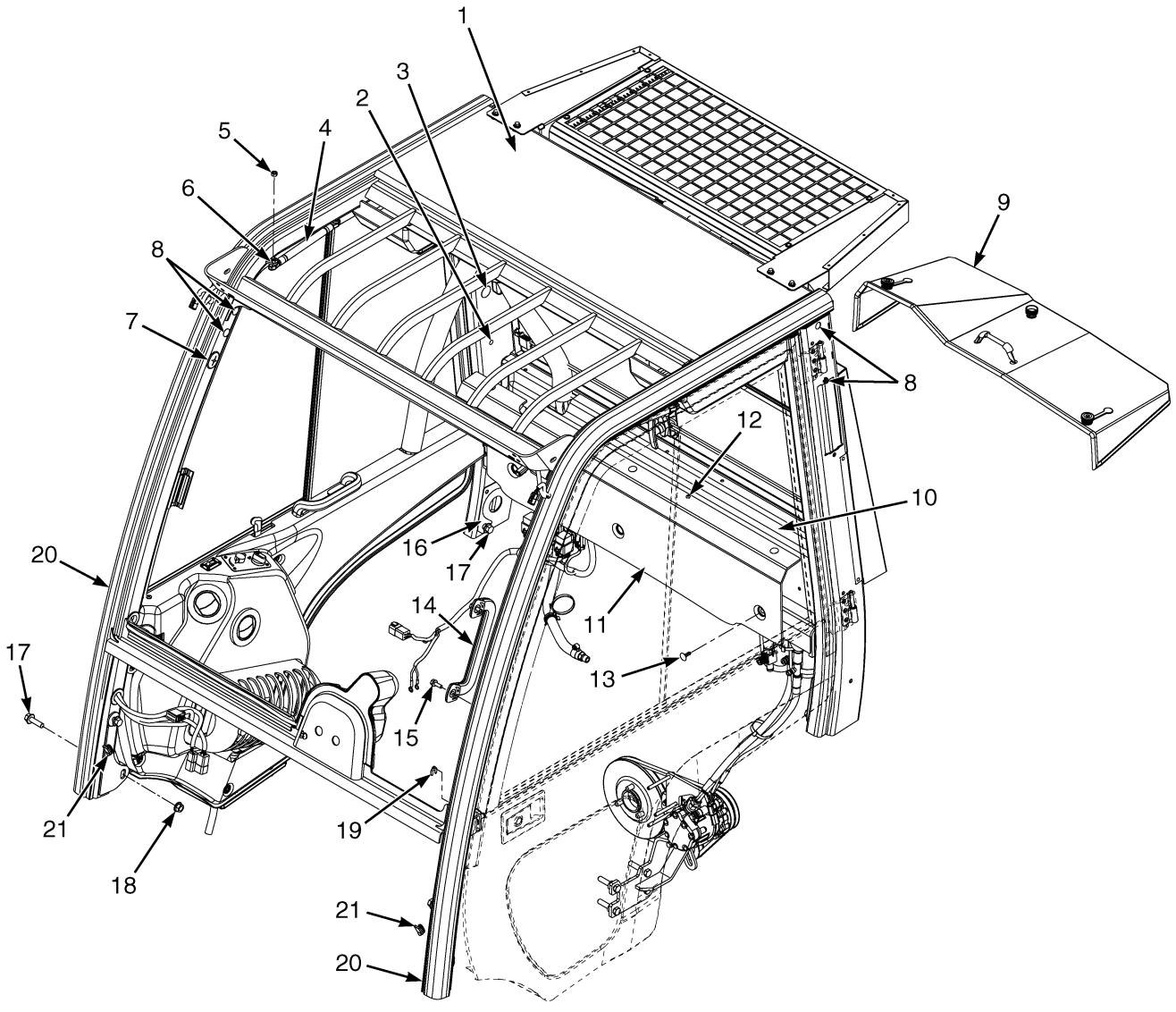

BP200262

©2015 HYSTER COMPANY

MODULAR CAB AND ATTACHING PARTS
WITH STEEL DOORS AND AIR CONDITIONING – SHEET 1 OF 2

ITEM	PART NO.	DESCRIPTION	QTY
1	1693291	Cab (With Air Conditioning) (☞Figure 1-7)	1
2	1494888	Plug	4
3	1599415	Plug	1
4	1598414	Gas Spring (RH)	1
4	1598397	Gas Spring (LH)	1
5	302400	Nut	4
6	4009902	Ball Stud	4
7	4601386	Grommet	1
8	1574301	Plug	8
9	1615902	Cover (Counterweight)	1
9	1492167	Trim-Bulk (2.480M)	1
9	1504941	Washer	1
9	4044428	Screw	1
9	4044429	Handle	1
9	1493480	Washer	2
9	302033	Screw	2
9	1623396	Fastener	1
9	4044430	Screw	2
10	4005633	Cover (Rear Inner)	1
10	1623377	Seal .280 M	1
10	1668666	Plate	1
10	1623396	Fastener	6
11	4005634	Cover (Fabric Rear)	1
12	1510126	Screw (Button Head)	3
13	2090695	Fastener	6
14	1536813	Handle (Grab)	1
15	1583611	Capscrew	2
16	1636853	Shim	AR
17	1566853	Capscrew	8
18	1528888	Nut (Shoulder)	2
19	1589787	Seal	2
20	4040607	Seal	2
21	1636647	Shim	AR

©2015 HYSTER COMPANY

MODULAR CAB AND ATTACHING PARTS (FIGURE 1-5)
WITH STEEL DOORS AND AIR CONDITIONING — SHEET 2 OF 2

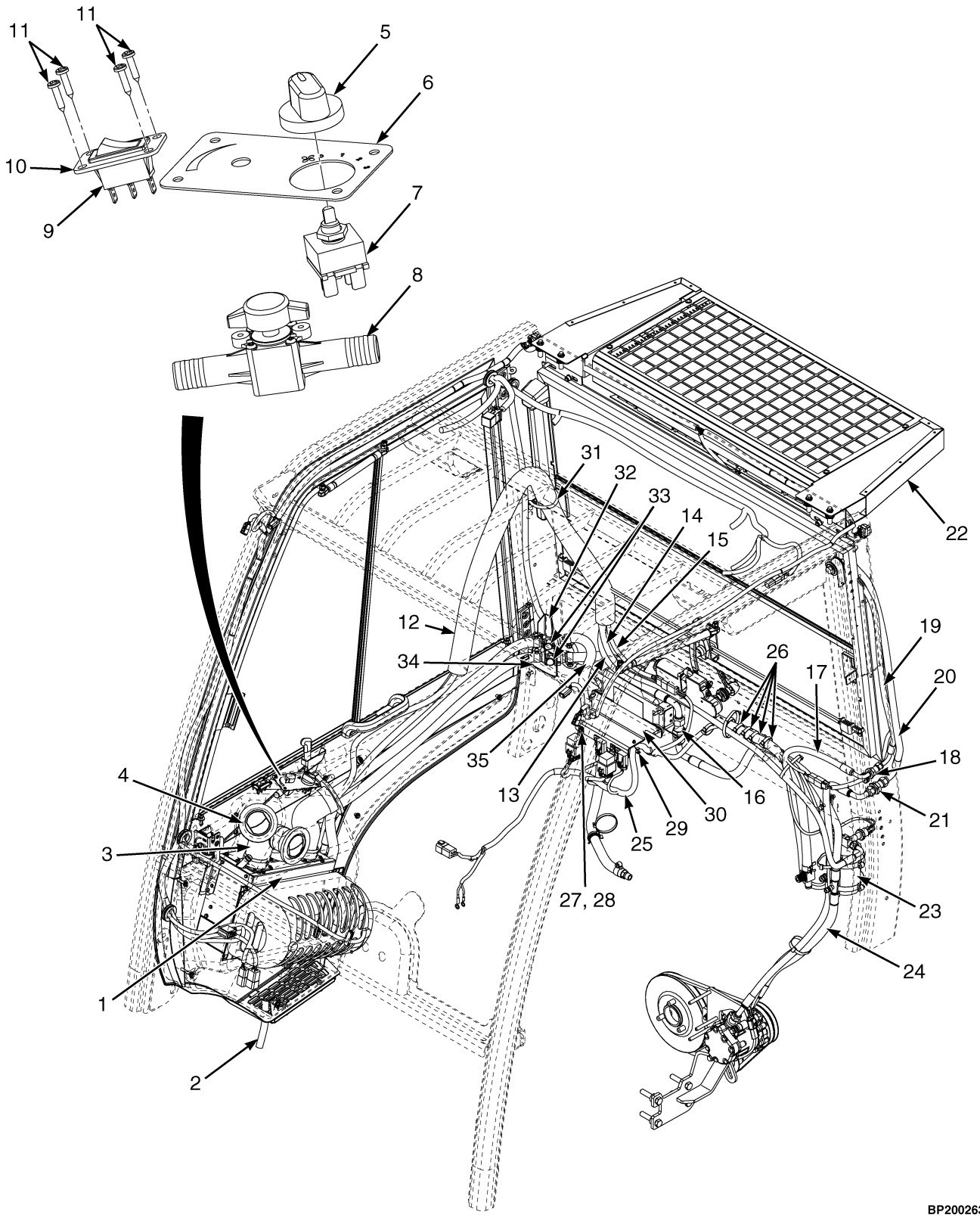

©2015 HYSTER COMPANY

MODULAR CAB AND ATTACHING PARTS
WITH STEEL DOORS AND AIR CONDITIONING – SHEET 2 OF 2

ITEM	PART NO.	DESCRIPTION	QTY
	1693291	Cab (With Air Conditioning) (☞Figure 1-7)	1
	4014295	Door (RH)	1
1	4044151	Air Conditioner	1
1	~~4044152~~		
	4132980	Heater (☞Figure 1-22)	1
2	4044154	Tube (PVC) (AC Drain Hose)	1
3	4044165	Hose	3
4	4004150	Louver	3
5	1487957	Knob	1
6	4004163	Panel	1
7	1487956	Switch , Blower (with Nut)	1
8	4044163	Valve	1
9	4004168	Switch	1
10	4004167	Panel	1
11	4044164	Screw	4
12	4044156	Hose (Harness Bundle)	1
13	. . . . .	(Refrigerant # 10)	1
14	. . . . .	(Refrigerant # 8)	1
15	. . . . .	Wire Harness	1
16	4044160	Fitting (#10)	1
17	4044158	Hose Assy (Refrigerant # 6)	1
18	. . . . .	Fitting	1
19	4132981	Hose Assy (Refrigerant # 6)	1
20	4044159	Hose Assy (Refrigerant # 8)	1
21	4044161	Fitting (#8)	1
22	4044155	Condenser Assembly (☞Figure 1-21)	1
23	4044162	Air Conditioner (Receiver/Dryer)	1
23	4047823	Pressure Switch	1
24	. . . . .	Air Conditioner Compressor Assembly (☞Figure 1-23)	1
25	4616123	Wire Harness (AC) (☞Figure 5-26)	1
26	129563	Strap Clamp	6
27	302244	Capscrew	4
28	4019192	Clip	4
29	1402815	Clip	1
30	4039098	Plate (Relay and Fuse)	1
31	4023867	Wire (Clamp)	1
32	1661564	Bracket (Heater Hose)	1
33	1598327	Connector (Female)	2
34	1583611	Capscrew	2
35	. . . . .	Heater Hoses (☞Figure 1-24, ☞Figure 1-25)	1
	a 4044153	Clamp (Tube) (AC Drain Hose)	2
	a 4618180	Label (AC Decal)	1

FOOTNOTES:

a Not Illustrated

©2015 HYSTER COMPANY

MODULAR CAB WITH STEEL DOORS (FIGURE 1-6)
WITHOUT AIR CONDITIONING

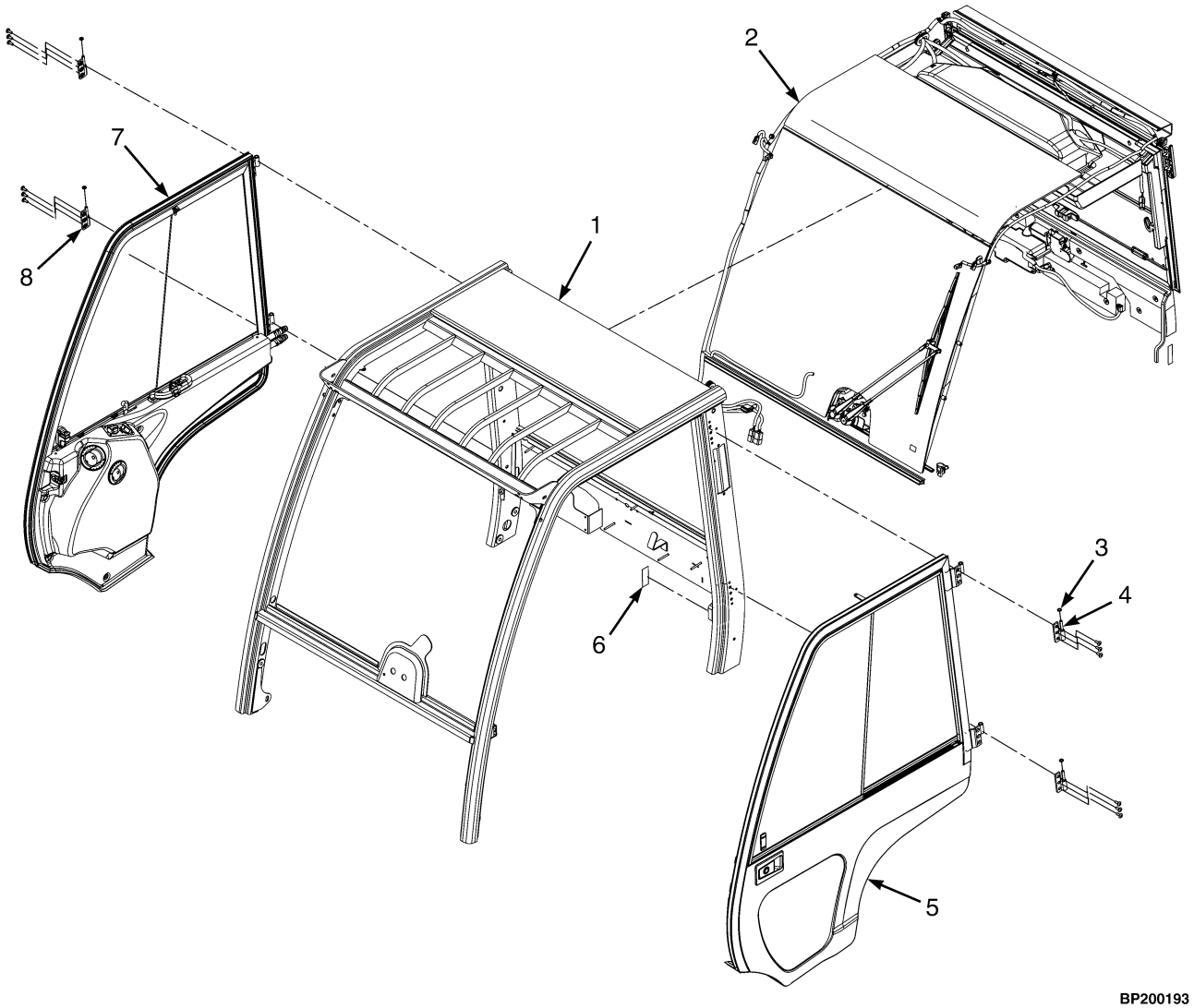

©2015 HYSTER COMPANY

MODULAR CAB WITH STEEL DOORS
WITHOUT AIR CONDITIONING

ITEM	PART NO.	DESCRIPTION	QTY
	1670240	Cab	1
1	1674069	Frame Wldmt	1
2	. . . . .	Cab Assembly (☞Figure 1-10, ☞Figure 1-11, ☞Figure 1-12)	1
3	1468312	Washer	4
4	1503958	Hinge (LH)	2
5	1623359	Door (LH) (☞Figure 1-13)	1
6	1674070	Label (With Steel Doors)	1
7	1623358	Door Assembly (RH) (☞Figure 1-15)	1
8	1503959	Hinge (RH)	2

©2015 HYSTER COMPANY

MODULAR CAB WITH STEEL DOORS (FIGURE 1-7)
WITH AIR CONDITIONING

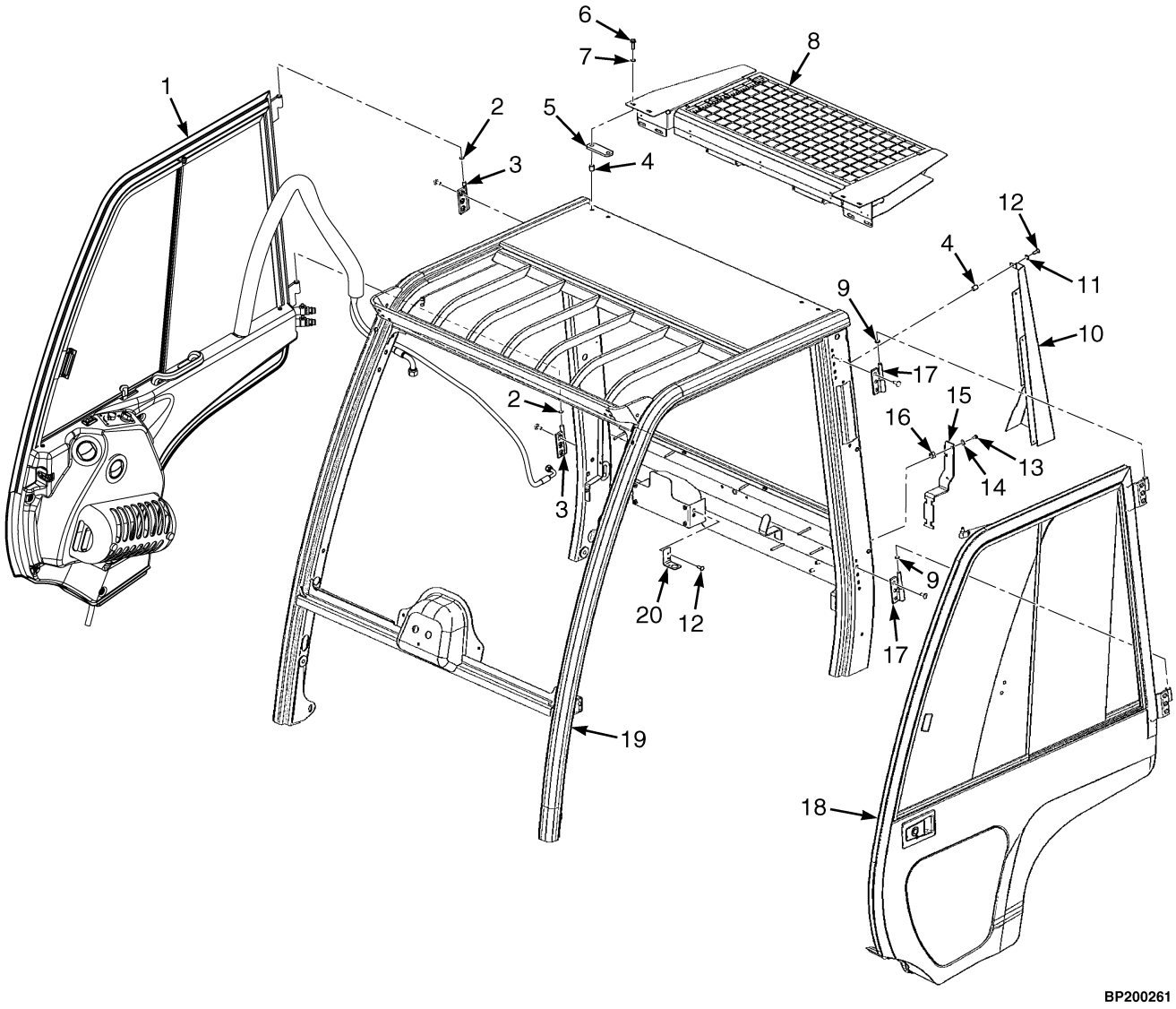

©2015 HYSTER COMPANY

MODULAR CAB WITH STEEL DOORS
WITH AIR CONDITIONING

ITEM	PART NO.	DESCRIPTION	QTY
	1693291	Cab (With Air Conditioning)	1
1	4014295	Door (RH) (☞Figure 1-18, ☞Figure 1-17)	1
2	1468312	Washer	2
3	1503959	Hinge (RH)	2
4	1468308	Nut	9
5	4033835	Bracket	2
6	320158	Washer	8
7	287851	Capscrew	8
8	4044155	Condenser Assembly	1
9	1468312	Washer	2
10	4033832	Cover (Hose)	1
11	320158	Washer	3
12	287851	Capscrew	3
13	1623395	Capscrew	2
14	320158	Washer	4
15	4033834	Plate (Fastening)	1
16	239503	Nut	2
17	1503958	Hinge (LH)	2
18	1623359	Door (LH) (☞Figure 1-13)	1
19	. . . . .	Cab Assembly (☞Figure 1-10, ☞Figure 1-11, ☞Figure 1-12)	1
20	4033833	Bracket	1
	a 4014560	Plug	1

FOOTNOTES:

a Not Illustrated

©2015 HYSTER COMPANY

MODULAR CAB AND ATTACHING PARTS (FIGURE 1-8)
WITH PVC DOORS

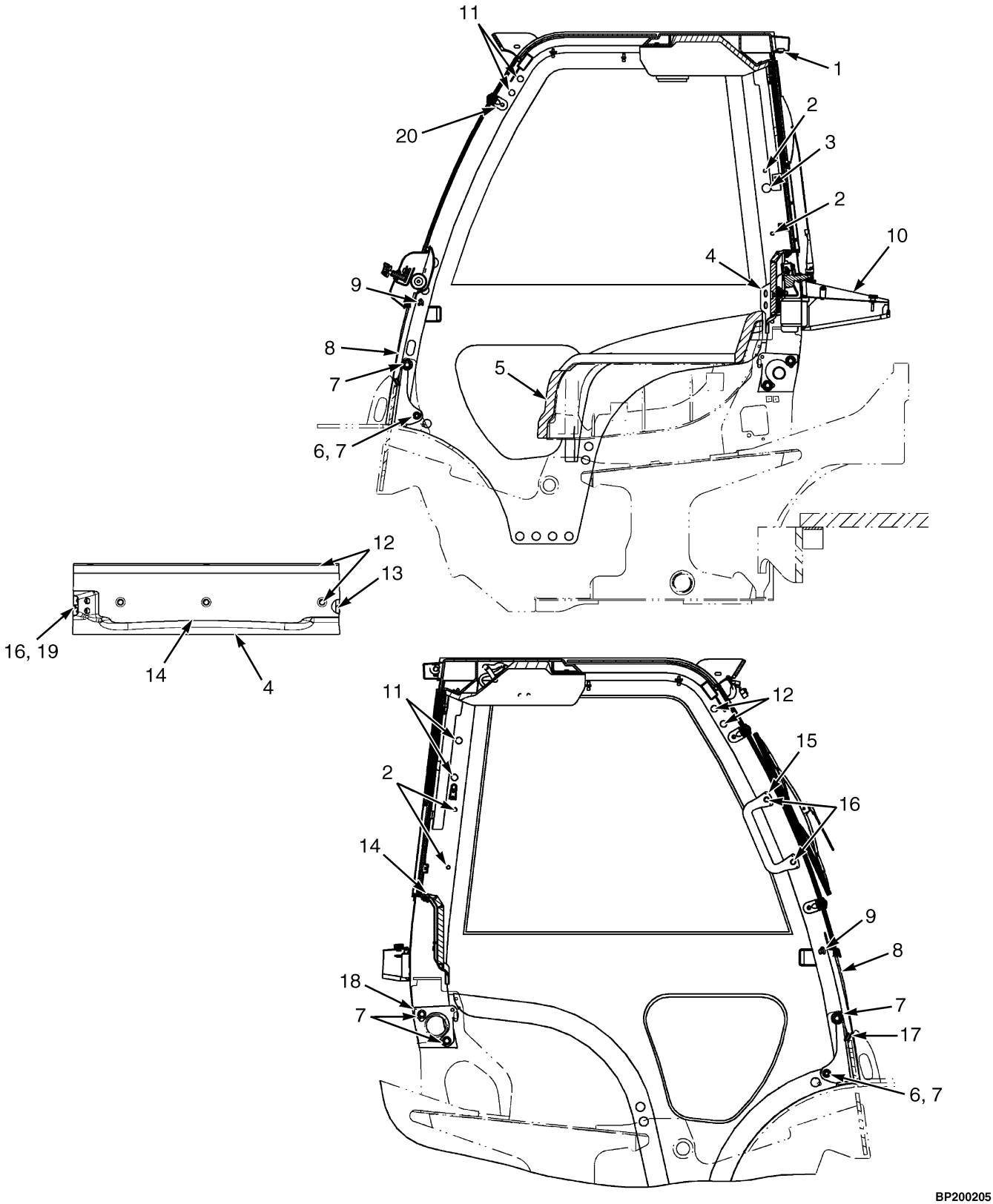

©2015 HYSTER COMPANY

MODULAR CAB AND ATTACHING PARTS
WITH PVC DOORS

ITEM	PART NO.	DESCRIPTION	QTY
1	1670242	Cab (With PVC Doors)	1
2	1494888	Plug	4
3	1599415	Plug	1
4	1661567	Cover (Inner Rear)	1
4	1668667	Cover	1
4	1623377	Seal .280 M	1
4	1668666	Plate	1
4	1623396	Fastener	6
5	1595161	Blanket	1
6	1528888	Nut (Shoulder)	2
7	1527888	Capscrew	8
8	1613743	Seal	2
9	1636647	Shim	AR
10	1615902	Cover	1
10	1492167	Trim-Bulk (2.480M)	1
10	1504941	Washer	1
10	4044428	Screw	1
10	4044429	Handle	1
10	1493480	Washer	2
10	302033	Screw	2
10	1623396	Fastener	1
10	4044430	Screw	2
11	1574301	Plug	8
12	2090695	Fastener	6
13	1510126	Screw (Button Head)	3
14	1635652	Cover	1
15	1536813	Handle (Grab)	1
16	1583611	Capscrew	4
17	1589787	Seal	2
18	1636853	Shim	AR
19	1661564	Bracket (Heater Hose)	1
19	1598327	Connector (Female)	1
20	4601386	Grommet	2
	1674072	Label	1

©2015 HYSTER COMPANY

MODULAR CAB (FIGURE 1-9)
PVC DOORS

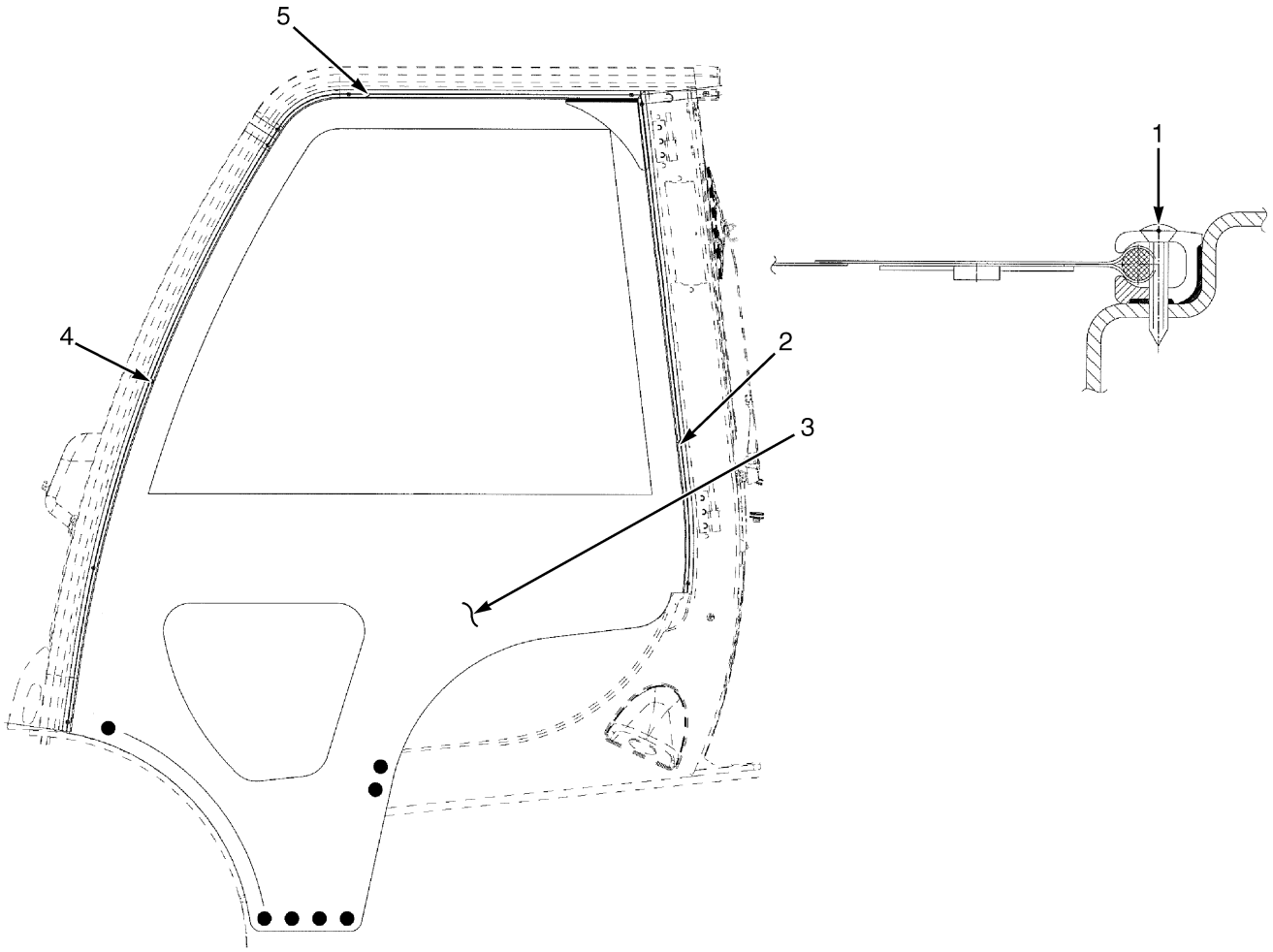

©2015 HYSTER COMPANY

MODULAR CAB
PVC DOORS

ITEM	PART NO.	DESCRIPTION	QTY
	1670242	Cab (With PVC Doors)	1
	1646709	Door (RH)	1
	1646710	Door Pvc (LH)	1
1	1627172	Screw	10
2	1646714	Door (Rear LH)	1
2	1646719	Door (Rear RH)	1
3	1646711	Door Pvc (Door LH)	1
3	1646720	Door Pvc (Door RH)	1
4	1646712	Door (Front LH)	1
4	1646717	Door (Front RH)	1
5	1646713	Door (Top LH)	1
5	1646718	Door (Top RH)	1
	1668665	Label (PVC Doors)	1
7	1689908	Door Key (Not Illustrated)	2

©2015 HYSTER COMPANY

MODULAR CAB WITH STEEL DOORS (FIGURE 1-10)

SHEET 1 OF 3

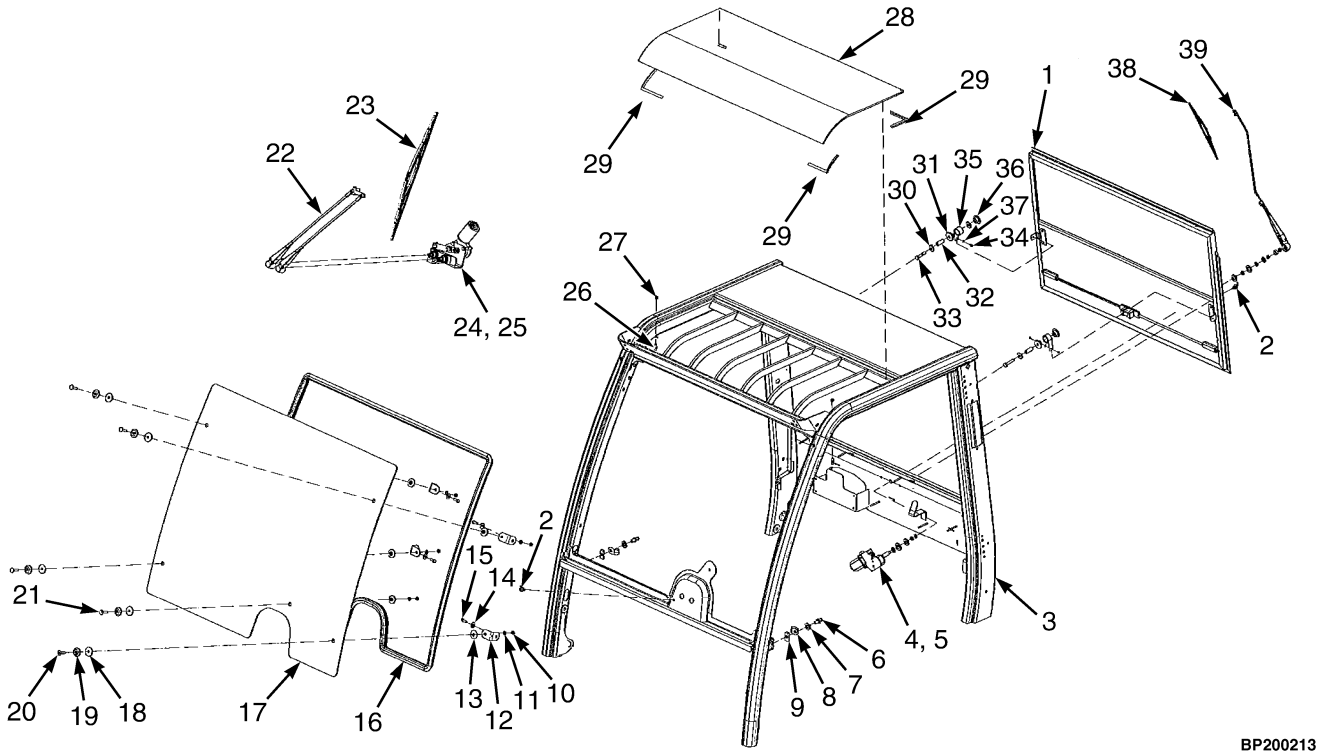

ITEM	PART NO.	DESCRIPTION	QTY
1	1623365	Sliding Window (☞Figure 1-20)	1
2	1493336	Connector (Spray Nozzle)	2
3	1635003	Plate	1
4	1598295	Wiper Motor	1
5	1507003	Nozzle	1
6	1653630	Striker Bolt	2
7	1571029	Washer	2
8	1674101	Spacer	2
9	1393488	Block	2
10	1468313	Nut	5
11	320158	Washer	5
12	1598210	Bracket	4
13	1468317	Washer	5
14	1504941	Washer	4
15	1623364	Capscrew	4
16	1495441	Seal	AR
17	1674090	Front Window	1
18	1468316	Washer	5
19	1468315	Washer	5
20	1468314	Screw	4
21	1674089	Screw	1
22	1623369	Wiper Arm	1
23	1520927	Wiper Blade	1
24	1674087	Wiper Motor	1
25	4018452	Window Washer Nozzle	1
26	1393472	Ball Stud	2

©2015 HYSTER COMPANY

ITEM	PART NO.	DESCRIPTION	QTY
27	316835	Nut	2
28	1623367	Kit-Top Screen	1
29	1674088	Seal	AR
30	1558052	Washer	4
31	292667	Nut	2
32	1623366	Sleeve	2
33	1598291	Capscrew	2
34	302019	Screw	2
35	1598302	Spring	2
36	1598301	Bushing	4
37	296415	Washer	2
38	1598297	Wiper Blade	1
39	1598296	Wiper Arm	1

©2015 HYSTER COMPANY

MODULAR CAB WITH STEEL DOORS (FIGURE 1-11)
SHEET 2 OF 3

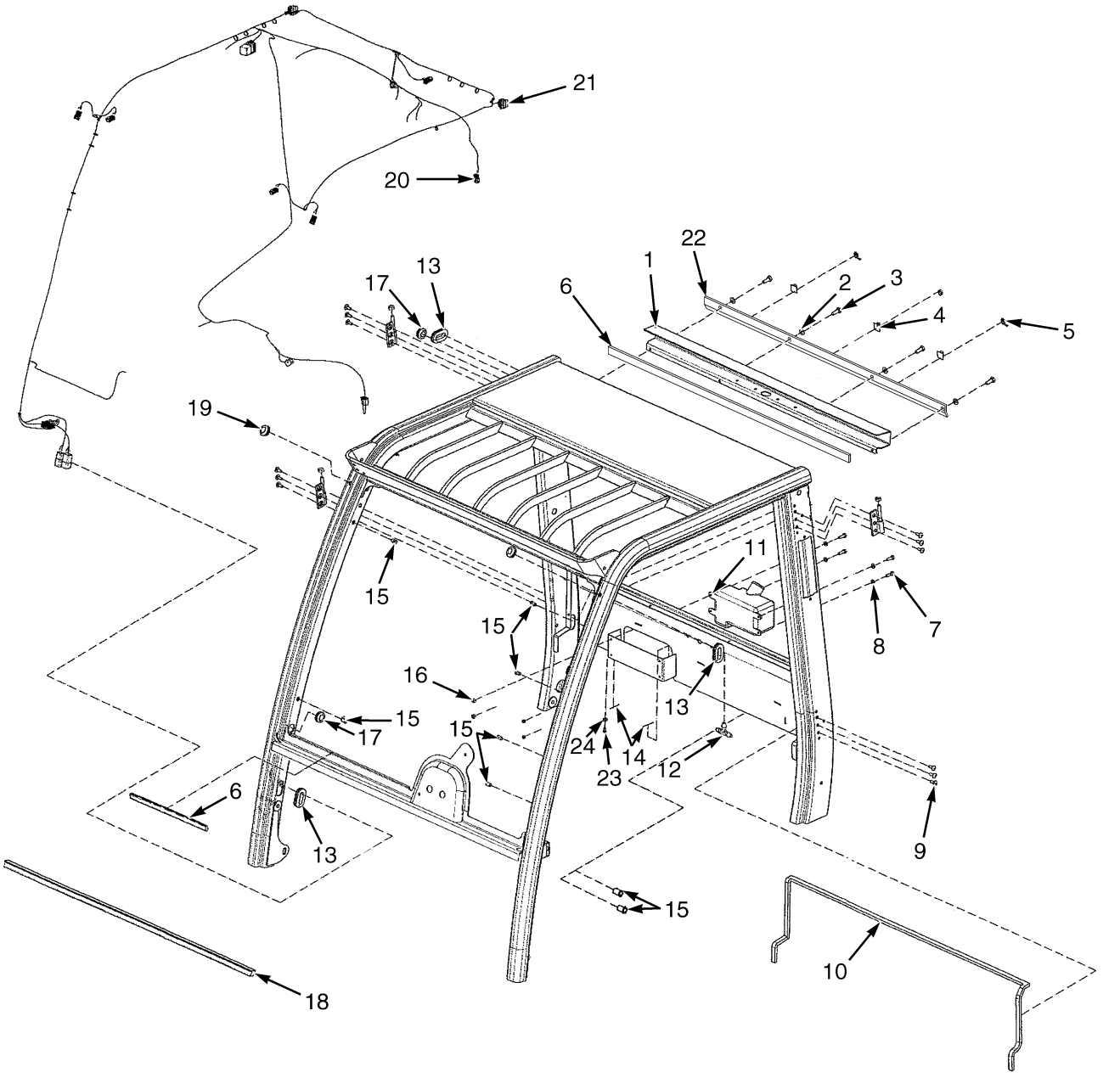

©2015 HYSTER COMPANY

MODULAR CAB WITH STEEL DOORS

SHEET 2 OF 3

ITEM	PART NO.	DESCRIPTION	QTY
1	1646725	Cover	1
2	320158	Washer	4
3	136681	Capscrew	6
4	1558036	Clip	1
5	1393499	Clamp	4
6	1646726	Seal	AR
7	1623380	Bolt	4
8	320156	Washer	4
9	1674103	Screw	12
10	1646722	Seal	AR
11	1646922	Reservoir	1
11	1705156	Pump (Windshield Washer, 12V)	1
11	1635026	Cap	1
12	1311260	Fitting	1
13	1598332	Grommet	3
14	1498336	Edge Protector	1
15	1674102	Rivet	9
16	136687	Nut	4
17	1646729	Grommet	2
18	1674106	Seal	AR
19	1646728	Sleeve	2
20	1646730	Connector	1
21	1623382	Wire Harness	1
22	1674112	Plate	1
23	1674104	Screw	2
24	1558035	Lockwasher	2

©2015 HYSTER COMPANY

MODULAR CAB WITH STEEL DOORS (FIGURE 1-12)
SHEET 3 OF 3

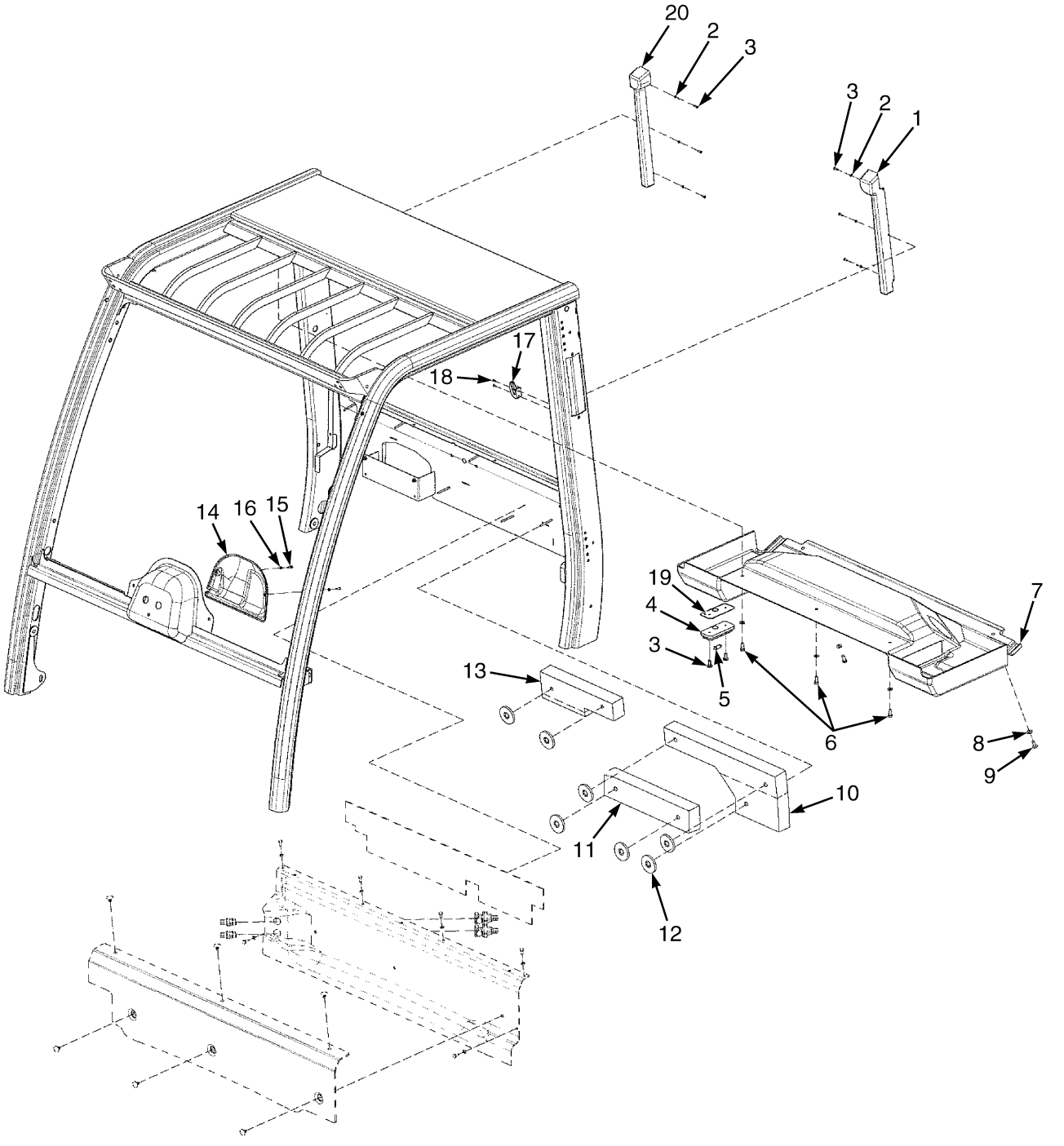

©2015 HYSTER COMPANY

MODULAR CAB WITH STEEL DOORS

SHEET 3 OF 3

ITEM	PART NO.	DESCRIPTION	QTY
1	1598425	Support (LH)	1
2	296415	Washer	6
3	1468319	Screw	8
4	1393528	Dome Light	1
5	1393527	Bulb	1
6	1468311	Screw	3
7	1623371	Headliner	1
8	296419	Washer	2
9	4023959	Screw	2
10	1646732	Block	1
11	1646731	Block	1
12	1623396	Fastener	7
13	1646733	Block	1
14	1674108	Cover	1
15	1623370	Screw	2
16	1674107	Nut	3
17	1393458	Hanger	1
18	1492140	Washer	3
19	1566767	Bracket	1
20	1598424	Support (RH)	1

©2015 HYSTER COMPANY

MODULAR CAB WITH STEEL DOORS (FIGURE 1-13)
LEFT HAND DOOR

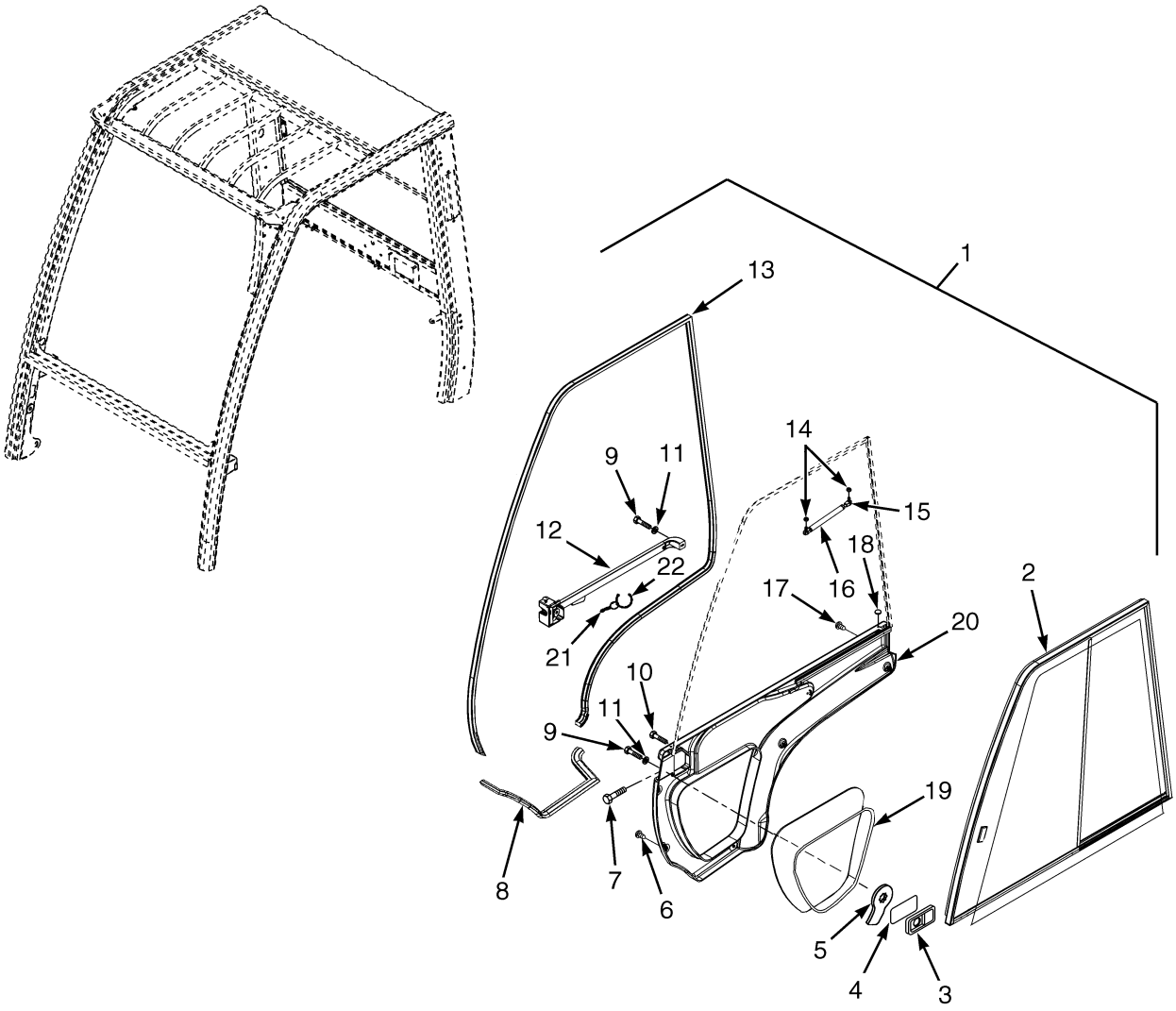

BP200201

©2015 HYSTER COMPANY

MODULAR CAB WITH STEEL DOORS
LEFT HAND DOOR

ITEM	PART NO.	DESCRIPTION	QTY
1	1623359	Door (LH)	1
2	1623404	Sliding Window (☞Figure 1-14)	1
3	1598393	Grip (Without Key)	1
4	1598394	Shim	1
5	1598392	Lever	1
6	1598389	Fastener	3
7	296229	Capscrew	2
8	1623391	Seal	AR
9	302047	Screw	3
10	1623393	Capscrew	2
11	320156	Washer	3
12	1393479	Door Handle	1
13	1393463	Seal	AR
14	316835	Nut	2
15	1393472	Ball Stud	1
16	1598397	Gas Spring	1
17	1623396	Fastener	2
18	1623406	Plug	2
19	1598395	Window	1
20	4035980	Cover	1
21	1593629	Key (For Cab Door Grip)	1
22	1506825	Strap Clamp	1
	a 1558294	Seal	AR
	a 1690792	Channel	AR

FOOTNOTES:

a Not Illustrated

©2015 HYSTER COMPANY

MODULAR CAB WITH STEEL DOORS (FIGURE 1-14)

WINDOW — LH DOOR

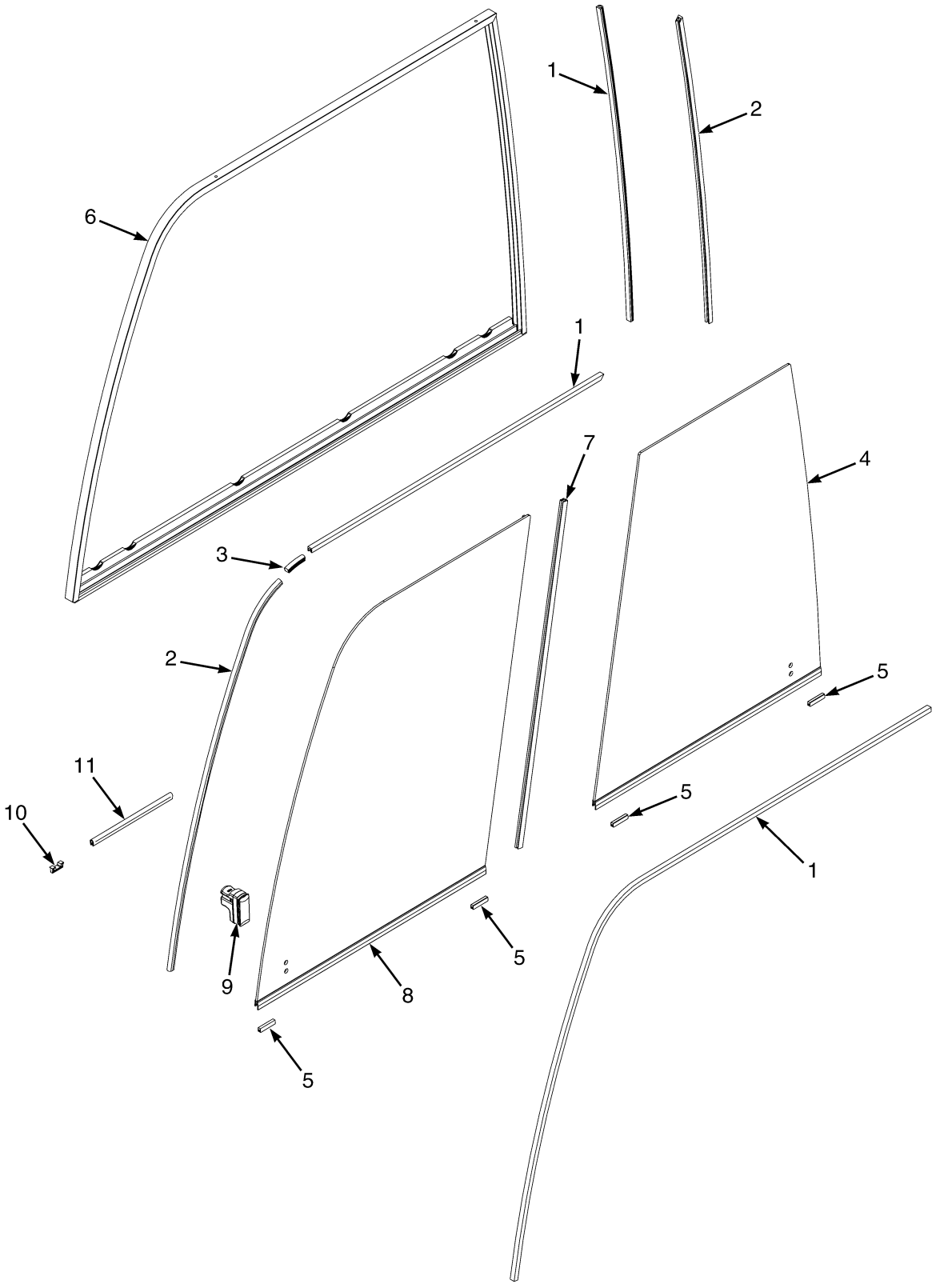

©2015 HYSTER COMPANY

MODULAR CAB WITH STEEL DOORS
WINDOW – LH DOOR

ITEM	PART NO.	DESCRIPTION	QTY
	1623404	Sliding Window (LH Door)	1
1	1644804	Seal	AR
2	4009783	Seal	AR
3	1641640	Strip Seal	AR
4	4013618	Sliding Window (Rear)	1
4	4028788	Rear Window	1
4	4028789	Edge Protector	1
5	4009782	Guide	4
6	4013616	Window Frame	1
7	1690792	Channel (Sealing Bar)	1
8	4013617	Sliding Window (Front)	1
9	4013559	Latch (With Screws) (Mounted from Inside)	1
10	4009779	Clip	3
11	1498336	Edge Protector	AR

©2015 HYSTER COMPANY

MODULAR CAB WITH STEEL DOORS (FIGURE 1-15)

RIGHT HAND DOOR AND HEATER ASSEMBLY — WITHOUT AIR CONDITIONING

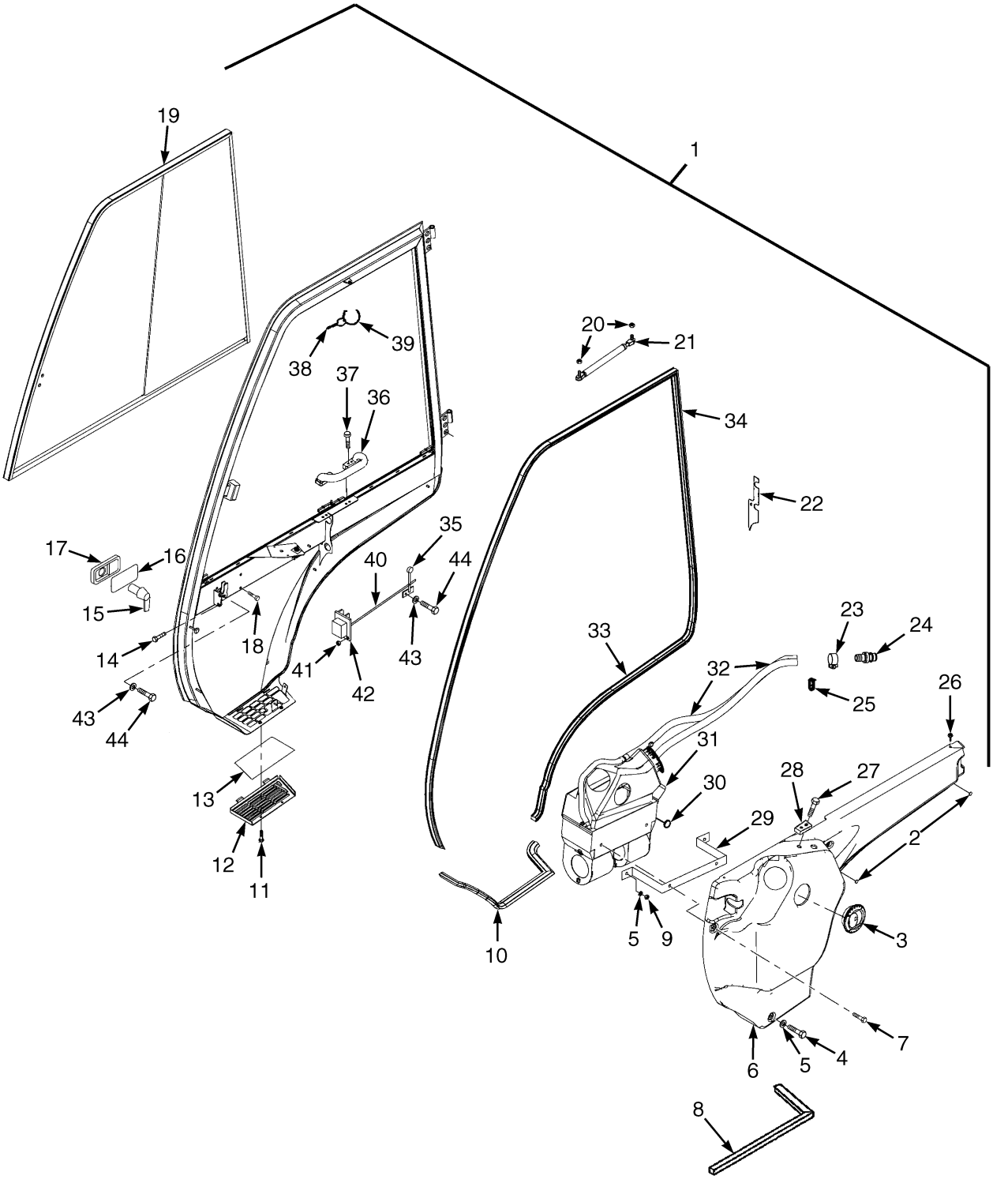

©2015 HYSTER COMPANY

MODULAR CAB WITH STEEL DOORS

RIGHT HAND DOOR AND HEATER ASSEMBLY – WITHOUT AIR CONDITIONING

ITEM	PART NO.	DESCRIPTION	QTY
1	1623358	Door Assembly (RH)	1
2	1651739	Rivet	2
3	1598398	Louver (Air)	3
4	1623395	Capscrew	2
5	320158	Washer	4
6	4020220	Cover	1
7	1598389	Fastener	3
8	1508229	Seal	AR
9	239503	Nut	2
10	1623391	Seal	AR
11	1598399	Screw	2
12	1623398	Bracket	1
13	1623399	Air Filter	1
14	296229	Capscrew	2
15	1598411	Lever	1
16	4070544	Seal	1
17	1598393	Grip (Without Key)	1
18	1623393	Capscrew	2
19	1623392	Sliding Window (RH) (☞Figure 1-19)	1
20	316835	Nut	1
21	1393472	Ball Stud	1
22	4010830	Foam	1
23	1674073	Clamp	1
24	1598670	Fitting (Male)	2
25	1393499	Clamp	1
26	1623406	Plug	2
27	1468318	Screw	4
28	1623403	Plate	4
29	1598669	Bracket	1
30	1598390	Plug	2
31	1598404	Heater Assembly (☞Figure 1-16)	1
32	1623400	Hose (Bulk)	AR
33	1515337	Seal	AR
34	1393463	Seal	AR
35	1598410	Lever	1
36	4070545	Handle	1
37	4070546	Screw	2
38	1593629	Key (For Cab Door Grip)	1
39	1506825	Strap Clamp	1
40	1598409	Bar	1
41	1598408	Nut	2
42	1598412	Latch (RH)	1
43	320156	Washer	4
44	302047	Screw	4
	a 1558294	Seal	AR
	a 292667	Nut	1

FOOTNOTES:

a Not Illustrated

©2015 HYSTER COMPANY

MODULAR CAB WITH STEEL DOORS (FIGURE 1-16)
HEATER — WITHOUT AIR CONDITIONING

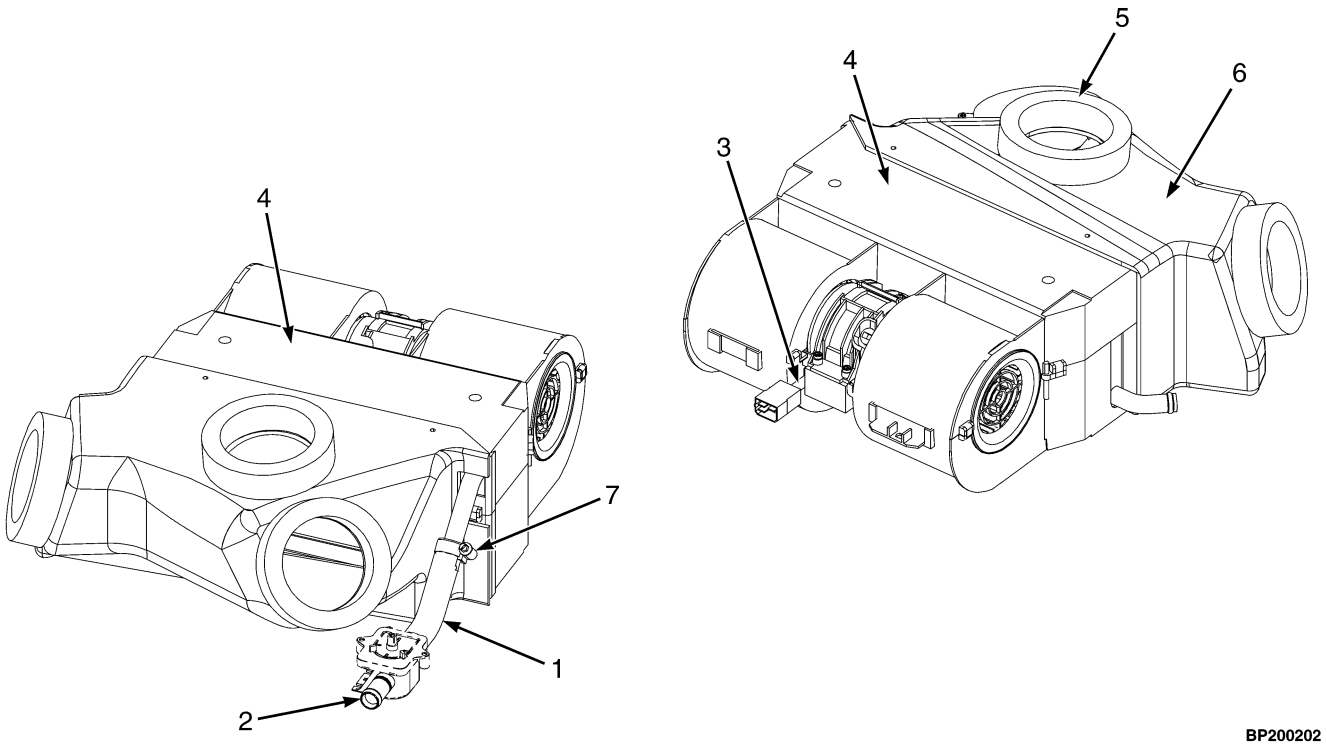

BP200202

ITEM	PART NO.	DESCRIPTION	QTY
	1598404	Heater Assembly (Sub Assembly)	1
1	1598674	Hose	AR
2	1598672	Valve (Water)	1
3	1598671	Wire Harness	1
4	1598675	Heater	1
4	4066968	Heater	1
4	4066969	Fan	1
4	1560643	Clamp	1
4	4066970	Resistor	1
4	4066971	Heat Exchanger	1
5	4066966	Valve	3
6	4066964	Vent	1
7	4066967	Clamp	2
	a 4066965	Valve	1
	a 1598673	Switch (Blower)	1
	a 1623402	Clip (Hose Clamp)	2
	a 1654298	Knob (Water Valve)	1
	a 1566210	Knob (Blower Switch)	1

FOOTNOTES:

a Not Illustrated

©2015 HYSTER COMPANY

NOTES

©2015 HYSTER COMPANY

MODULAR CAB WITH STEEL DOORS (FIGURE 1-17)
RIGHT HAND DOOR ASSEMBLY — WITH AIR CONDITIONING

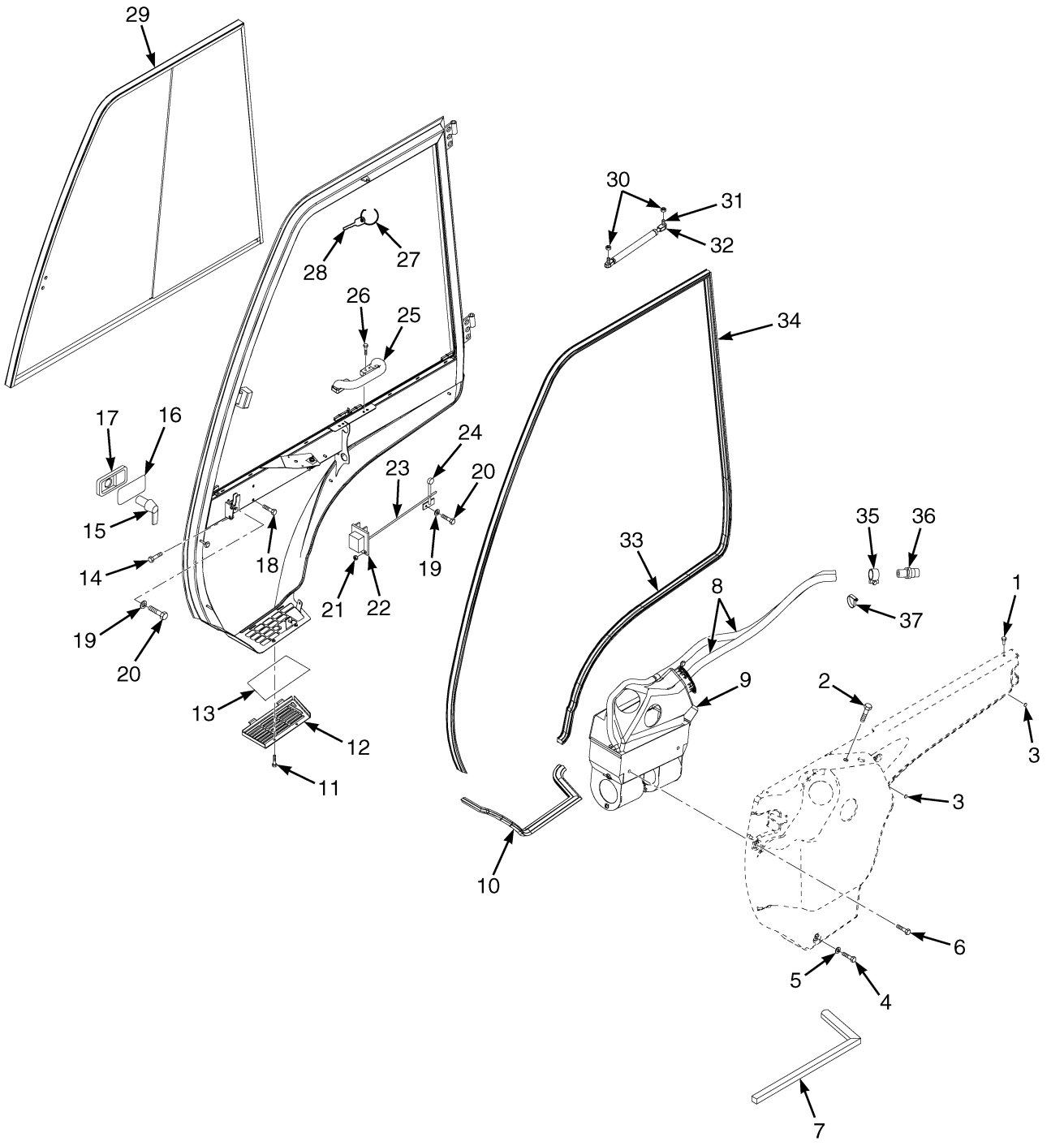

BP200216

©2015 HYSTER COMPANY

MODULAR CAB WITH STEEL DOORS
RIGHT HAND DOOR ASSEMBLY – WITH AIR CONDITIONING

ITEM	PART NO.	DESCRIPTION	QTY
	4014295	Door (RH)	1
1	1623406	Plug	2
2	1468318	Screw	4
3	1651739	Rivet	2
4	1623395	Capscrew	2
5	320158	Washer	2
6	1598389	Fastener	3
7	1508229	Seal	AR
8	1623400	Hose (Bulk)	AR
9	. . . . .	Heater Assembly (☞Figure 1-18)	1
10	1623391	Seal	AR
11	1598399	Screw	2
12	1623398	Bracket	1
13	1623399	Air Filter	1
14	296229	Capscrew	2
15	1598411	Lever	1
16	4070544	Seal	1
17	1598393	Grip (Without Key)	1
18	1623393	Capscrew	2
19	320156	Washer	4
20	302047	Screw	4
21	1598408	Nut	2
22	1598412	Latch (RH)	1
23	1598409	Bar	1
24	1598410	Lever	1
25	4070545	Handle	1
26	4070546	Screw	1
27	1506825	Strap Clamp	1
28	1593629	Key (For Cab Door Grip)	1
29	1623392	Sliding Window (RH) (☞Figure 1-19)	1
30	316835	Nut	2
31	1393472	Ball Stud	2
32	1598414	Gas Spring	1
33	1515337	Seal	AR
34	1393463	Seal	AR
35	1674073	Clamp	4
36	1598670	Fitting (Male)	2
37	1393499	Clamp	1
	a 1558294	Seal	AR
	a 292667	Nut	1

FOOTNOTES:

a Not Illustrated

©2015 HYSTER COMPANY

MODULAR CAB WITH STEEL DOORS (FIGURE 1-18)
RIGHT HAND DOOR AND AIR CONDITIONER

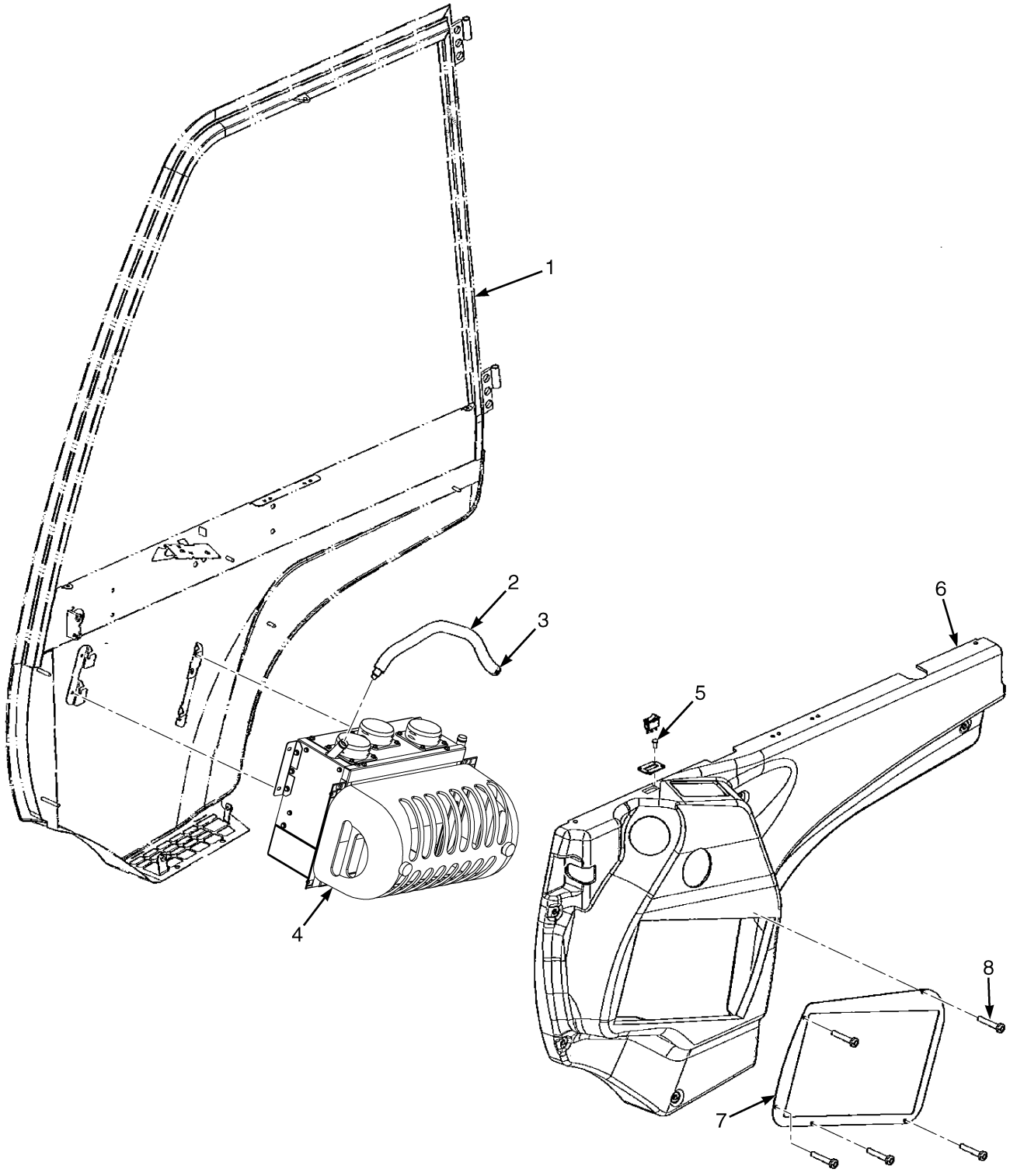

©2015 HYSTER COMPANY

MODULAR CAB WITH STEEL DOORS
RIGHT HAND DOOR AND AIR CONDITIONER

ITEM	PART NO.	DESCRIPTION	QTY
1	4014295	Door (RH)	1
2	1598674	Hose	1
3	1623402	Clip (Hose Clamp)	2
4	4044151	Air Conditioner (☞Figure 1-5)	1
5	1701963	Nut	4
6	4017718	Panel (Door Trim)	1
7	4045698	Cover	1
8	4045699	Screw	5

©2015 HYSTER COMPANY

MODULAR CAB WITH STEEL DOORS (FIGURE 1-19)

WINDOW — RH DOOR

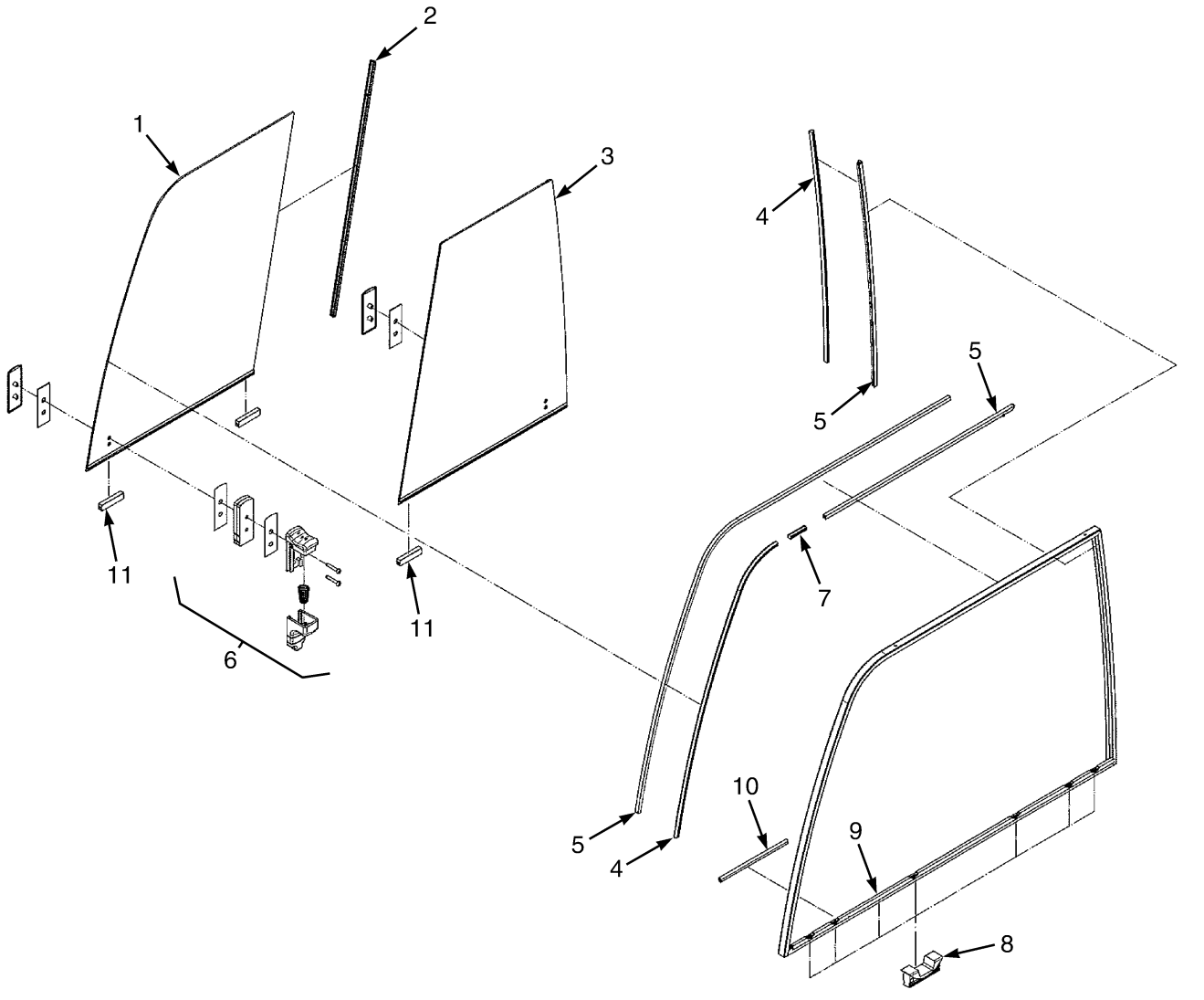

BP200204

©2015 HYSTER COMPANY

MODULAR CAB WITH STEEL DOORS
WINDOW – RH DOOR

ITEM	PART NO.	DESCRIPTION	QTY
	1623392	Sliding Window	1
1	4026695	Sliding Window (Front)	1
2	1690792	Channel	1
3	4028787	Sliding Window (Rear)	1
4	4009783	Seal	AR
5	1644804	Seal	AR
6	4013559	Latch (With Screws) (Mounted from Inside)	1
7	1641640	Strip Seal	AR
8	4009779	Clip	3
9	4013619	Window Frame (RH)	1
10	1498336	Edge Protector	AR
11	4009782	Guide	4

©2015 HYSTER COMPANY

MODULAR CAB WITH STEEL DOORS (FIGURE 1-20)
SLIDING REAR WINDOW

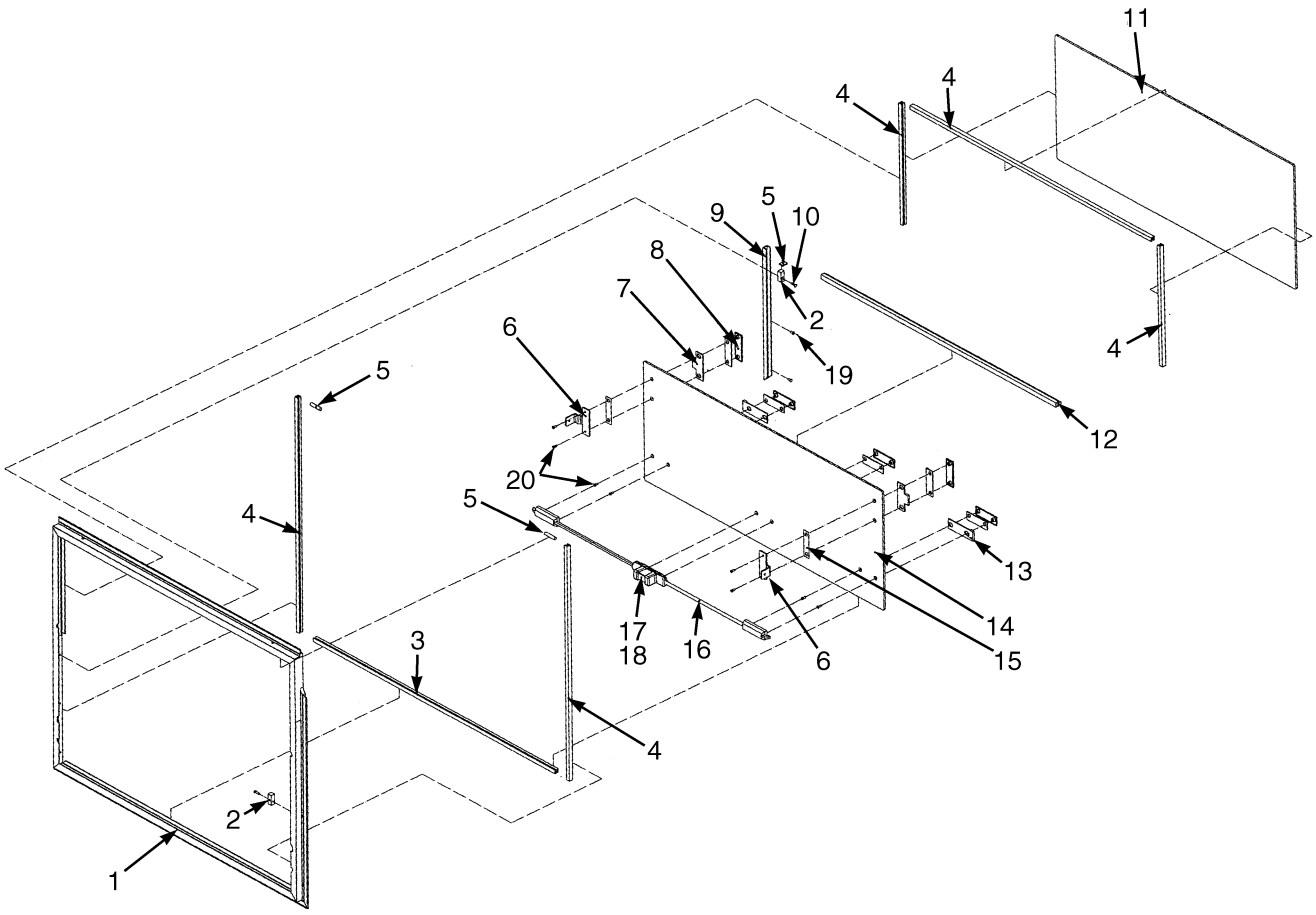

BP120365

©2015 HYSTER COMPANY

MODULAR CAB WITH STEEL DOORS
SLIDING REAR WINDOW

ITEM	PART NO.	DESCRIPTION	QTY
	1623365	Sliding Window	1
1	1670524	Frame	1
2	1670443	Bushing	2
3	1670519	Guide	1
4	1641637	Seal	AR
5	1641640	Strip Seal	AR
6	1670427	Stop	2
7	1670428	Pad	2
8	1670429	Plate	2
9	1670525	Rail	1
10	1670421	Screw	2
11	1670520	Glass (Rear)	1
12	1670526	Seal	1
13	1670423	Pad	2
14	1670521	Glass (Sliding)	1
15	1670440	Pad	2
16	1670518	Bar	2
17	1615998	Latch (Contains one center, two end latches and springs)	1
18	1615999	Spring	2
19	1670422	Screw	2
20	1670430	Screw	8

©2015 HYSTER COMPANY

MODULAR CAB WITH STEEL DOORS (FIGURE 1-21)

CONDENSER ASSEMBLY

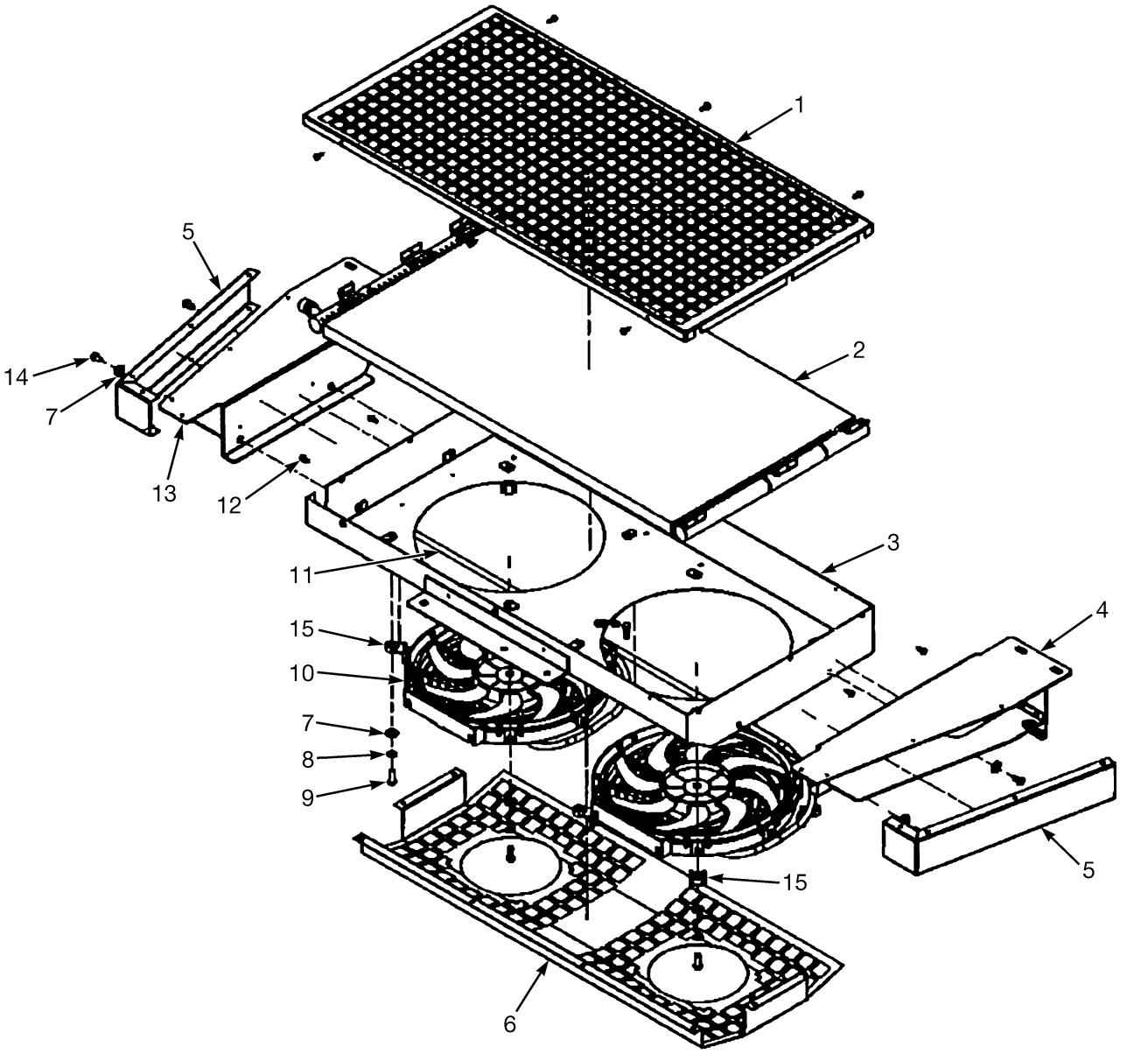

BP200184

©2015 HYSTER COMPANY

MODULAR CAB WITH STEEL DOORS
CONDENSER ASSEMBLY

ITEM	PART NO.	DESCRIPTION	QTY
	4044155	Condenser Assembly	1
1	4050750	Cover	1
2	4003079	Condenser (Coil)	1
3	. . . . .	Housing	1
4	. . . . .	Bracket (RH)	1
5	4002494	End Cover	2
6	4002495	Cover	1
7	. . . . .	Washer	13
8	. . . . .	Lockwasher	9
9	. . . . .	Bolt	9
10	4050754	Fan	2
11	. . . . .	Wire Harness	1
12	. . . . .	Screw	23
13	. . . . .	Bracket (LH)	1
14	. . . . .	Bolt	4
15	4050752	Fan Mount	8
	a 4007210	Wire Harness (Work Light)	1
	a 4007211	Wire Harness (Strobe)	1

FOOTNOTES:

a Not Illustrated

©2015 HYSTER COMPANY

MODULAR CAB WITH STEEL DOORS (FIGURE 1-22)
AIR CONDITIONER HEATER

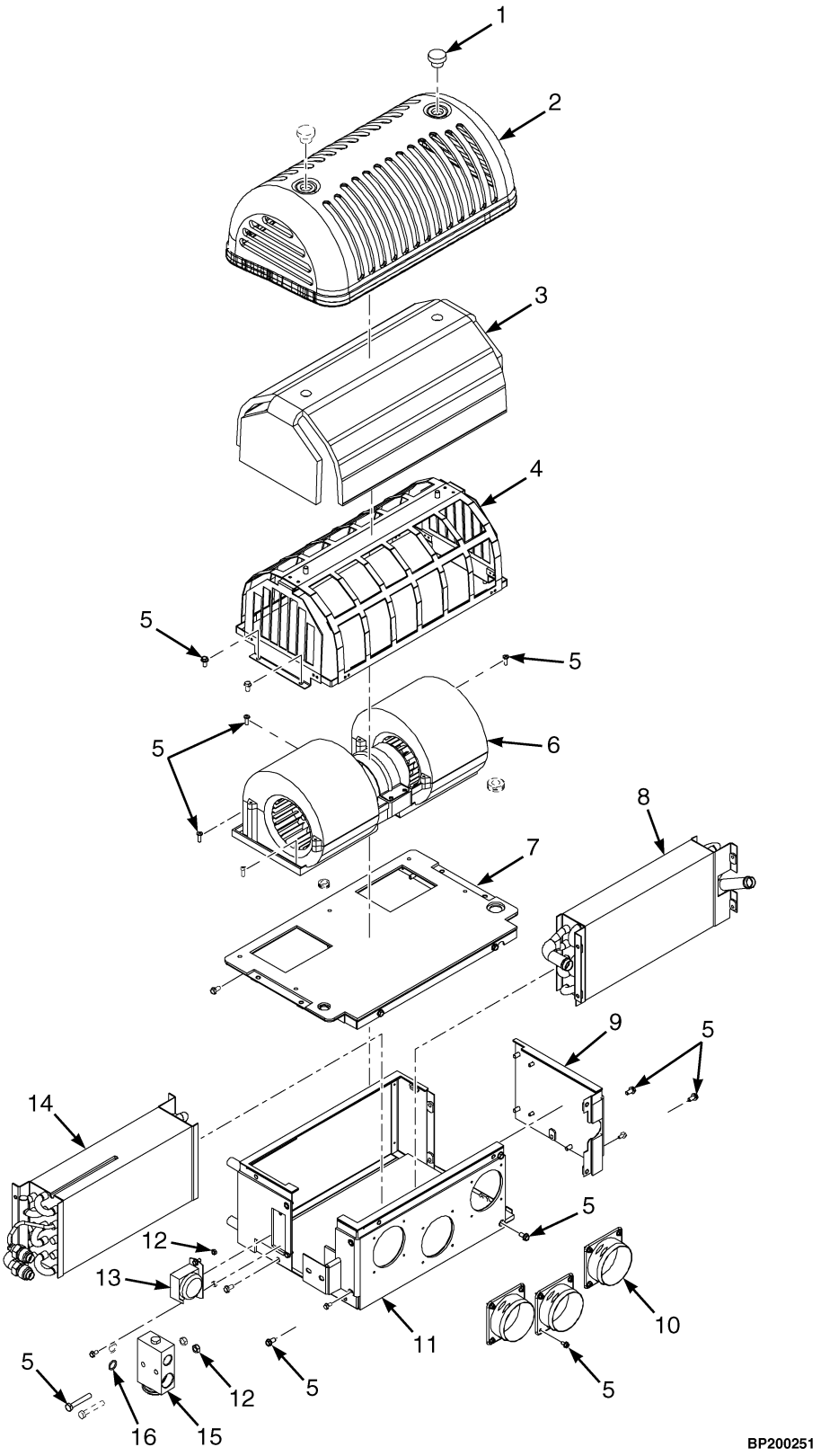

©2015 HYSTER COMPANY

MODULAR CAB WITH STEEL DOORS
AIR CONDITIONER HEATER

ITEM	PART NO.	DESCRIPTION	QTY
	~~4044152~~		
	4132980	Heater	1
1	4004065	Knob	2
2	4007074	Cover (Filter Assembly)	1
3	4007073	Air Filter	1
4	4006031	Cover (Air Filter Cage)	1
5	. . . . .	Bolts and Screws	42
6	4050760	Blower	1
7	4006911	Cover (Top)	1
8	4050762	Core Coil (Heater)	1
9	. . . . .	Side Cover	1
10	1487954	Hose (Adapter)	3
11	. . . . .	Case	1
12	. . . . .	Nut	4
13	4050770	Thermostat	1
14	4050761	Coil (Evaporator)	1
15	1487945	Valve (Block)	1
16	1487122	O-Ring	2

©2015 HYSTER COMPANY

MODULAR CAB WITH STEEL DOORS (FIGURE 1-23)
AC COMPRESSOR AND ATTACHING PARTS

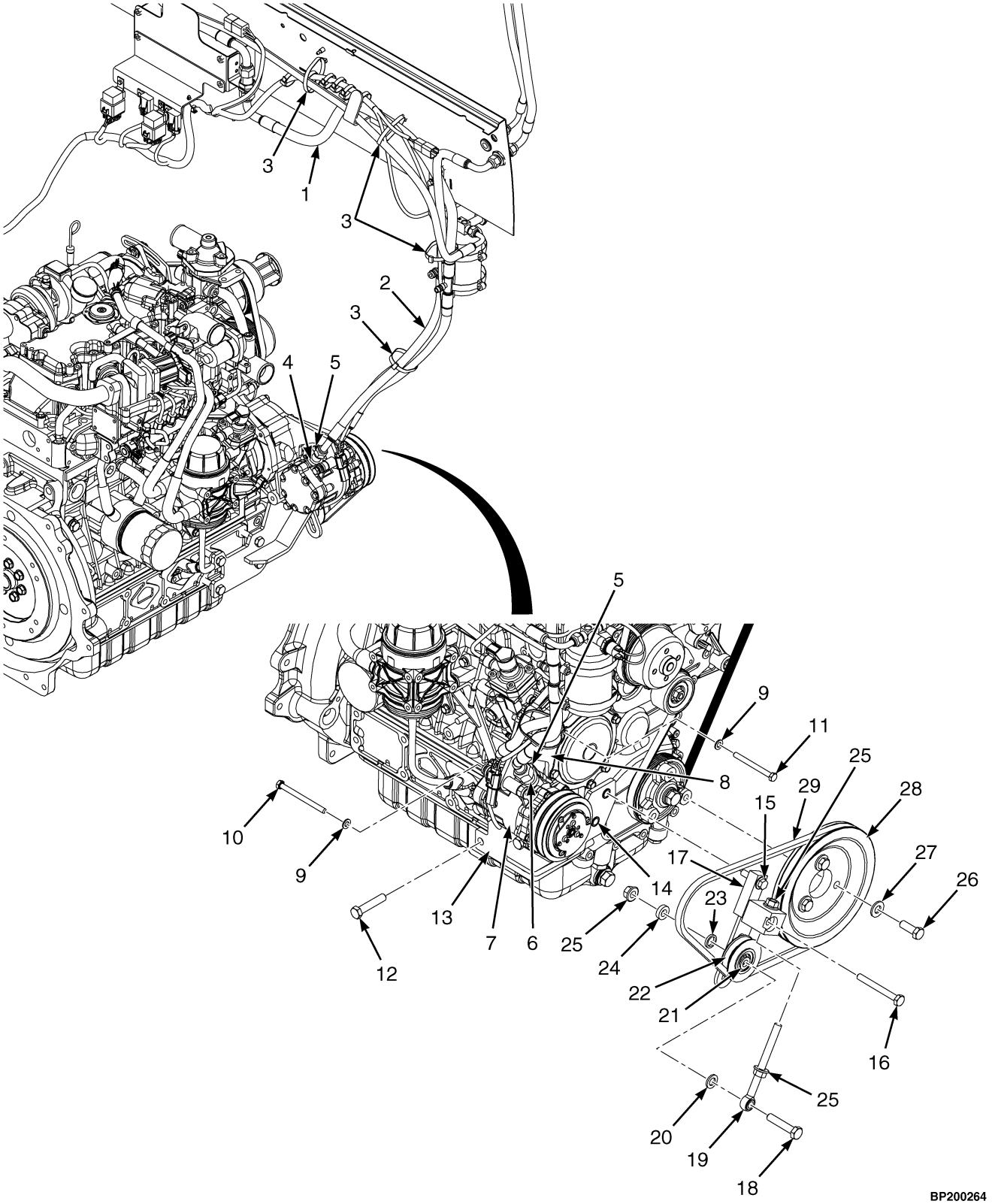

©2015 HYSTER COMPANY

MODULAR CAB WITH STEEL DOORS
AC COMPRESSOR AND ATTACHING PARTS

ITEM	PART NO.	DESCRIPTION	QTY
1	4614229	Hose Assy (#10) (AC Refrigerant # 10)	1
2	4614228	Hose Assy (#8) (AC Refrigerant # 8)	1
3	397676	Strap Clamp	4
4	4005339	Adapter (#8) (Compressor #8)	1
5	1597448	Capscrew	2
6	4005338	Adapter (#10) (Compressor #10)	1
7	4605389	Compressor Assembly, AC	1
8	4036744	Bracket (3.6L)	1
8	4034724	Bracket (3.8L)	1
9	296418	Washer	5
10	1566505	Capscrew	2
11	293625	Capscrew (3.6L)	3
11	4616174	Capscrew (3.8L)	3
12	326488	Capscrew	4
13	4036761	Bracket (Compressor Mounting)	1
14	1530244	Insert	2
15	1512403	Capscrew	1
16	292524	Capscrew	1
17	4005619	Plate Wldmt	1
18	292531	Capscrew	1
19	4005596	Link	1
20	296422	Washer	1
21	4005607	Bearing	1
22	1396781	Pulley (V-Belt)	1
23	1396780	Spacer	1
24	4005608	Spacer	1
25	1528888	Nut (Shoulder)	3
26	399898	Capscrew	3
27	296423	Washer	3
28	4034608	Pulley	1
29	2094420	V-Belt	1

©2015 HYSTER COMPANY

HEATER HOSES (FIGURE 1-24)
KUBOTA DIESEL

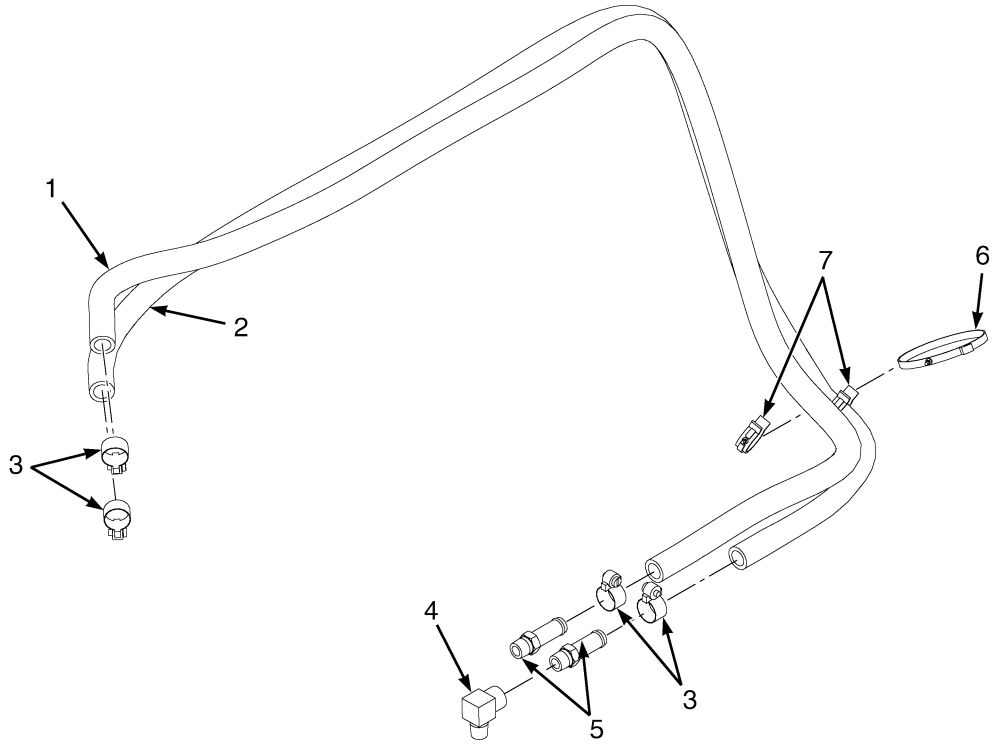

ITEM	PART NO.	DESCRIPTION	QTY
1	4613973	Hose	1
2	4613972	Hose	1
3	130845	Clamp	4
4	16143	Fitting	1
5	138710	Fitting	2
6	1502061	Clamp	1
7	1569465	Clamp (Swivel)	2
	246108	Sealant	AR

©2015 HYSTER COMPANY

HEATER HOSES (FIGURE 1-25)
KUBOTA LPG

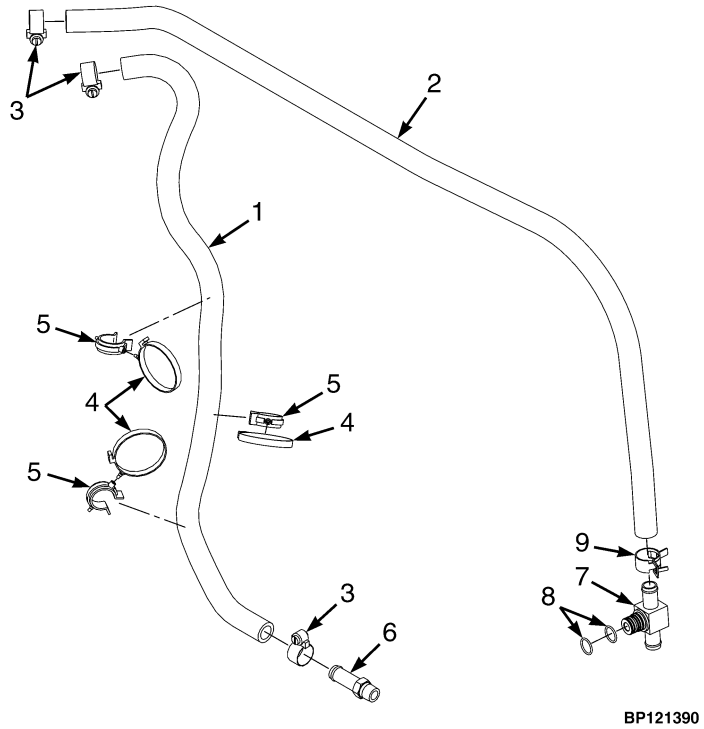

ITEM	PART NO.	DESCRIPTION	QTY
1	2098120	Hose	1
2	4626430	Hose	1
3	130845	Clamp	3
4	1502061	Clamp	3
5	1569465	Clamp (Swivel)	3
6	138710	Fitting	1
7	4066055	Fitting	1
8	118389	O-Ring	2
9	1501994	Hose Clamp	1

©2015 HYSTER COMPANY

SEMI-SUSPENSION SEAT (FIGURE 1-26)
WITHOUT ELECTRONIC CONTROLS

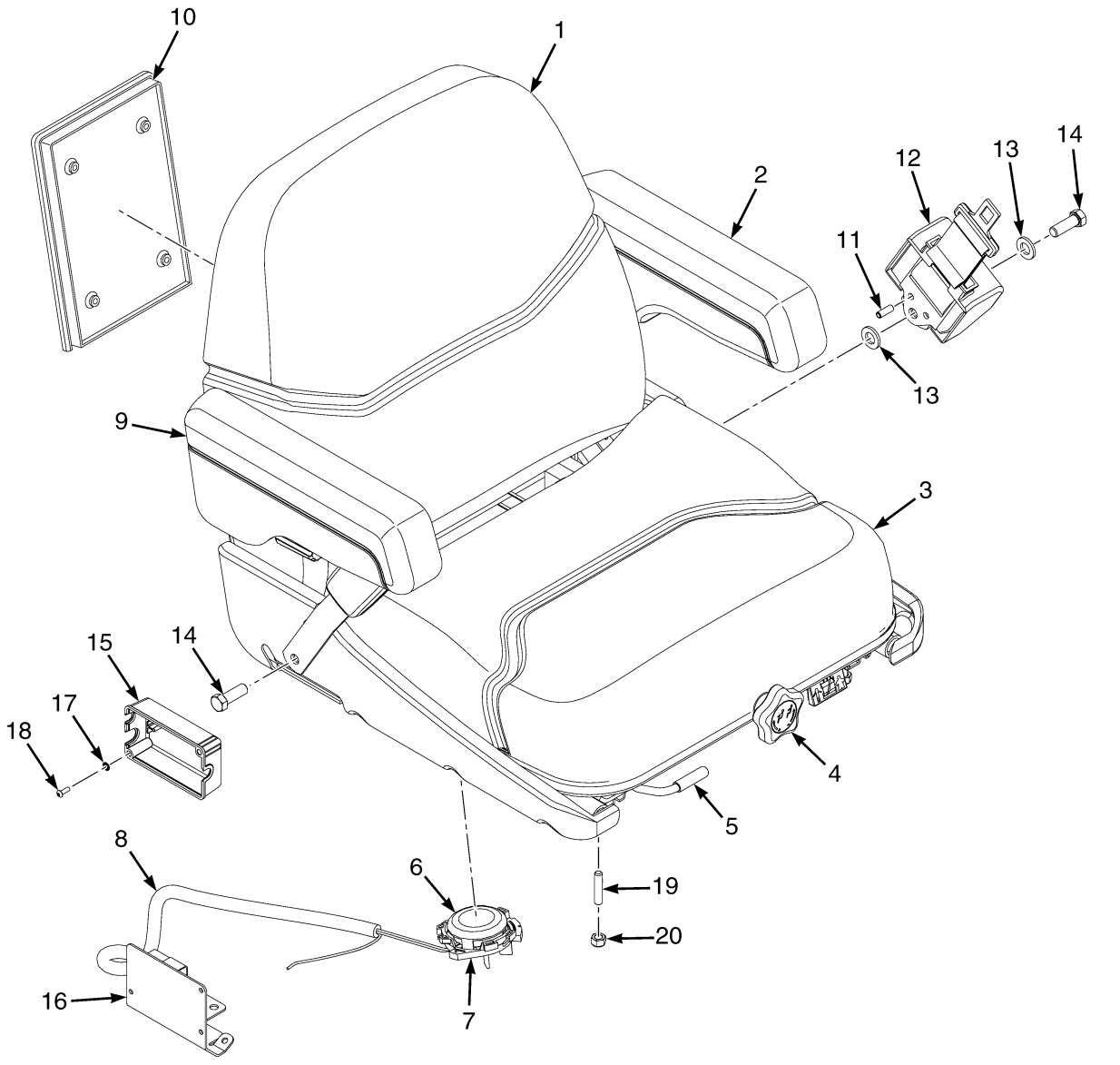

©2015 HYSTER COMPANY

SEMI-SUSPENSION SEAT
WITHOUT ELECTRONIC CONTROLS

ITEM	PART NO.	DESCRIPTION	QTY
	4009664	Seat-Semi Suspension (Vinyl)	1
1	1382111	Seat Cushion (Back Cushion) (Vinyl)	1
2	1453882	Armrest (LH)	1
3	1382112	Seat Cushion (Vinyl)	1
3	**a** 1362049	Kit-Shock Absorber	1
4	1563227	Knob	1
5	1690995	Kit-Seat Rail	1
6	1709876	Sensor (Operator Presence)	1
7	4002682	Bracket (Operator Presence Sensor)	1
8	4013095	Wire Harness	1
9	1453883	Armrest (RH)	1
10	1453887	Holder	1
11	19901	Roll Pin	1
12	1598504	Kit-Seat Belt (Black)	1
12	1636120	Kit-Red Seat Belt High Visibility without Interlock	1
12	4053079	Seat Belt (High Visibility with Interlock)	1
13	1581852	Washer	5
14	221533	Capscrew	1
15	2107969	Cover (Seat-Side Electrical)	1
16	4008420	Cover Plate	1
17	296357	Washer	2
18	1694830	Capscrew	2
19	1677286	Stud (Front)	2
19	4125619	Stud (Rear)	2
20	313828	Nut	4

FOOTNOTES:

a Not Illustrated

©2015 HYSTER COMPANY

SEMI-SUSPENSION SEAT (FIGURE 1-27)
WITH ELECTRONIC CONTROLS

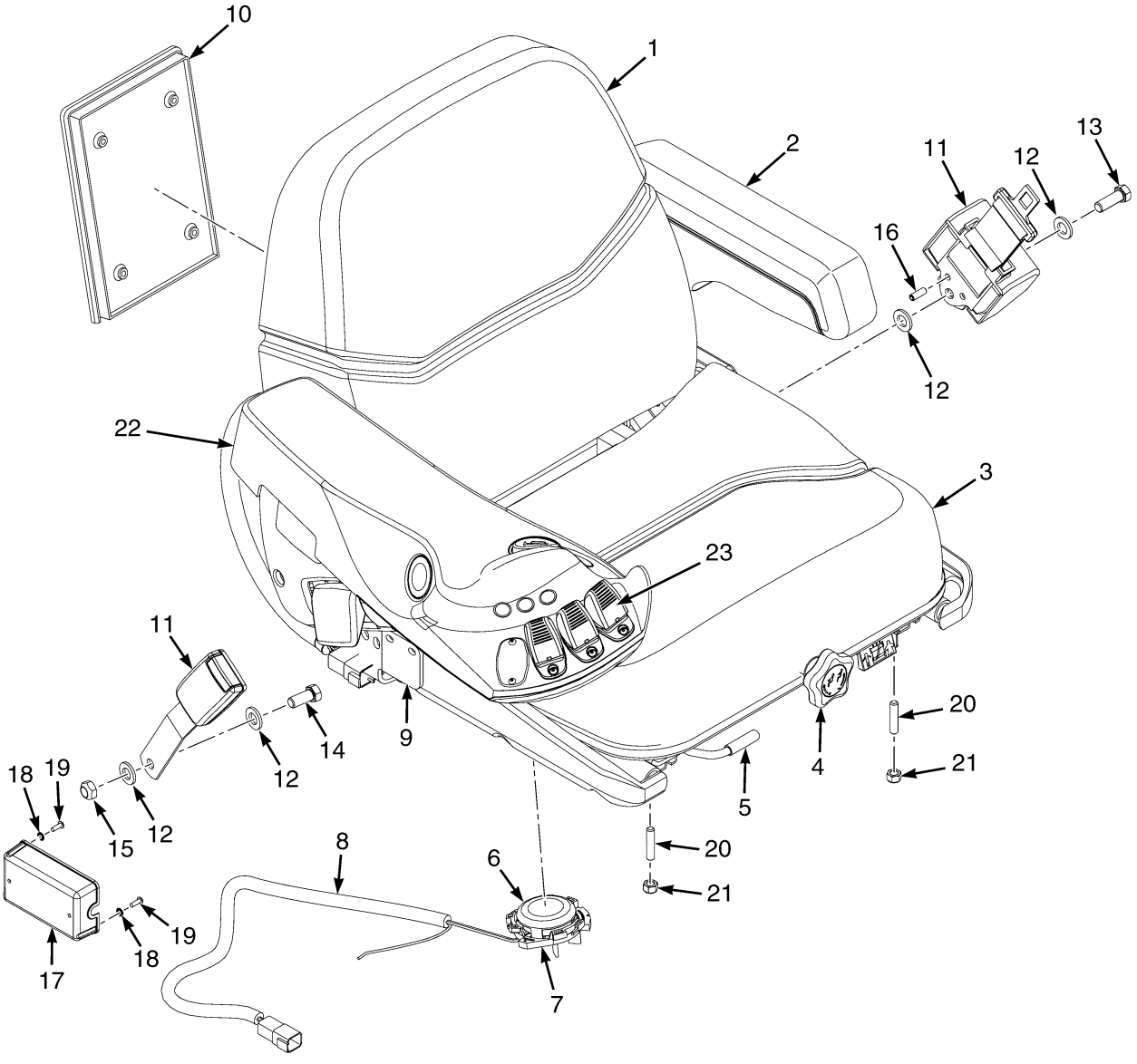

©2015 HYSTER COMPANY

SEMI-SUSPENSION SEAT
WITH ELECTRONIC CONTROLS

ITEM	PART NO.	DESCRIPTION	QTY
	4009667	Seat-Semi Suspension (Vinyl)	1
1	1382111	Seat Cushion (Back Cushion) (Vinyl)	1
2	1453882	Armrest (LH)	1
3	1382112	Seat Cushion (Vinyl)	1
3	**a** 1362049	Kit-Shock Absorber	1
4	1563227	Knob	1
5	1690995	Kit-Seat Rail	1
6	1709876	Sensor (Operator Presence)	1
7	4002682	Bracket (Operator Presence Sensor)	1
8	4013095	Wire Harness	1
9	4014598	Bracket (RH)	1
10	1453887	Holder	1
11	1598504	Kit-Seat Belt (Black)	1
11	1636120	Kit-Red Seat Belt High Visibility without Interlock	1
11	4053079	Seat Belt (High Visibility with Interlock)	1
12	1581852	Washer	5
13	221533	Capscrew	1
14	221530	Capscrew	1
15	221353	Locknut	1
16	19901	Roll Pin	1
17	2107969	Cover (Seat-Side Electrical)	1
18	296357	Washer	2
19	1694830	Capscrew	2
20	1677286	Stud (Front)	2
20	4125619	Stud (Rear)	2
21	313828	Nut	4
22	4005010	Armrest (Slider for Mini Lever) (☞Figure 1-34)	1
23	. . . . .	Mini-Lever Control (☞Figure 5-20, ☞Figure 5-21)	1

FOOTNOTES:

a Not Illustrated

©2015 HYSTER COMPANY

FULL SUSPENSION SEAT (FIGURE 1-28)
MANUAL WITH SWIVEL AND NON-SWIVEL — SHEET 1 OF 3

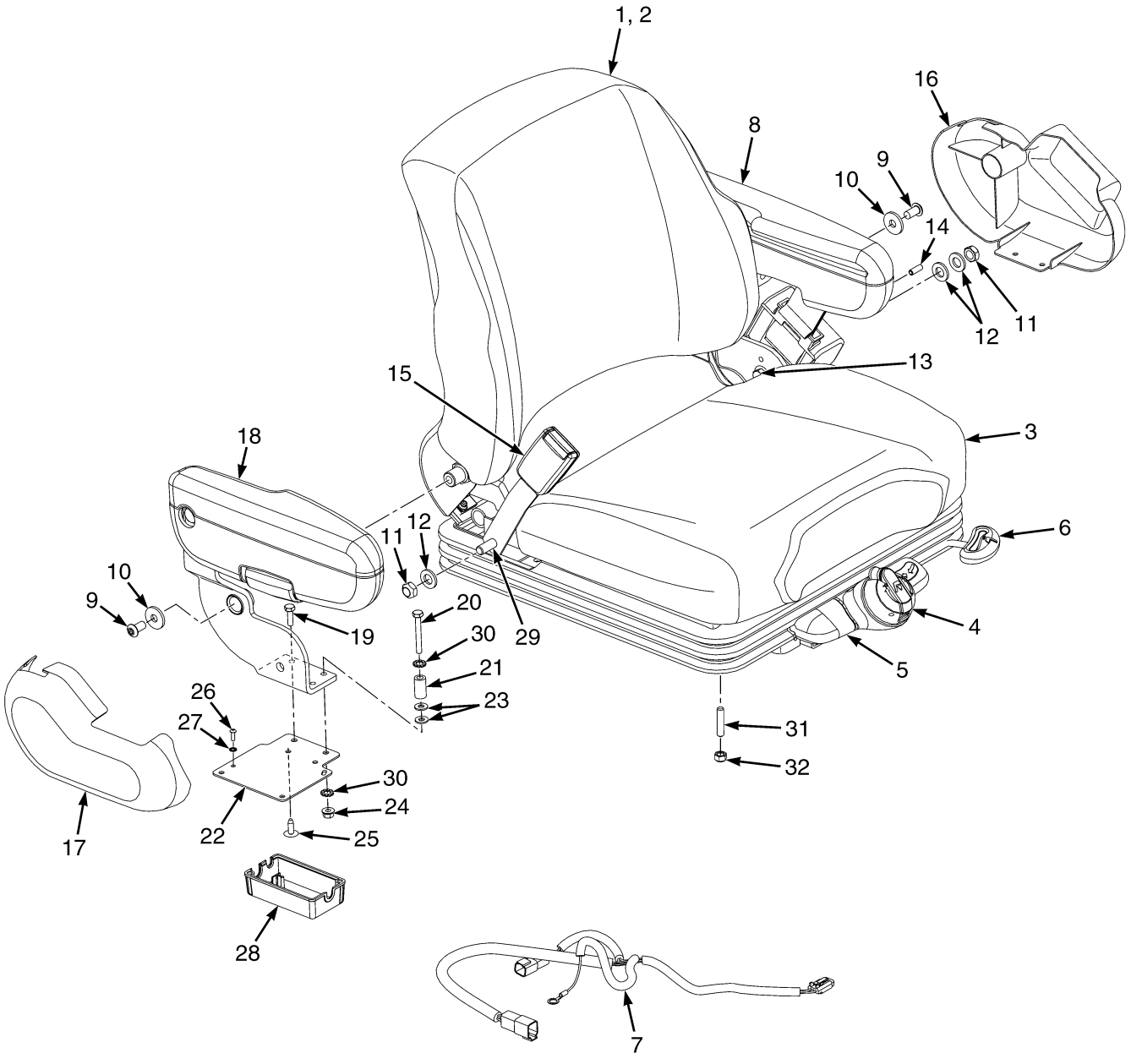

BP121107

©2015 HYSTER COMPANY

FULL SUSPENSION SEAT

MANUAL WITH SWIVEL AND NON-SWIVEL – SHEET 1 OF 3

ITEM	PART NO.	DESCRIPTION	QTY
	4603382	Seat-Full Suspension (Vinyl) (Non-Swivel)	1
	4603383	Seat-Full Suspension (Cloth) (Non-Swivel)	1
	4603384	Seat-Full Suspension (Vinyl) (Swivel)	1
	4603385	Seat-Full Suspension (Cloth) (Swivel)	1
1	1703900	Kit-Cushion (Seat and Back, Cloth)	1
1	1703903	Kit-Cushion (Seat and Back, Vinyl)	1
2	1703901	Kit-Cushion (Back Cushion, Vinyl)	1
2	1703898	Kit-Cushion (Back Cushion, Cloth)	1
2	. . . . .	Back Cushion	1
2	. . . . .	Screw	2
3	1703902	Kit-Seat Cushion (Vinyl)	1
3	1703899	Kit-Seat Cushion (Cloth)	1
3	. . . . .	Seat Cushion	1
3	. . . . .	Spring	2
3	. . . . .	Cotter Pin	2
4	1703892	Kit-Weight Adjuster (☞Figure 1-31)	1
5	1703893	Kit-Service (Front Panel) (Non Swivel) (☞Figure 1-31)	1
5	1703894	Kit-Service (Front Panel) (With Swivel)	1
6	4043082	Kit-Seat Rail (Non Swivel)	1
6	1703904	Kit-Seat Rail (With Swivel)	1
6	. . . . .	Locking Rail	1
6	. . . . .	Slave Rail	1
6	. . . . .	Bolt	4
6	. . . . .	Nut	4
7	4013095	Wire Harness	1
7	1563208	Sensor (Operator Presence)	1
8	2099947	Armrest (Left-Hand Side)	1
8	1563230	Cushion (LH Armrest)	1
9	18735	Screw	1
10	1512536	Washer	1
11	221353	Locknut	2
12	1581852	Washer	3
13	221536	Capscrew	1
14	19901	Roll Pin	1
15	1598504	Kit-Seat Belt (Black)	1
15	1636120	Kit-Red Seat Belt High Visibility without Interlock	1
15	4053079	Seat Belt (High Visibility with Interlock)	1
16	. . . . .	Cover	1
17	2099950	Seat Cover (Right-Hand Side)	1
18	2099949	Armrest (Right-Hand Side)	1
18	1563231	Cushion (RH Armrest)	1
19	18462	Capscrew	2
20	18471	Capscrew	2
21	4007318	Spacer	2
22	4004776	Cover Plate	1
23	15127	Washer	4
24	169874	Nut	4
25	1379945	Fastener	4
26	1694830	Capscrew	2
27	296357	Washer	2

©2015 HYSTER COMPANY

FULL SUSPENSION SEAT

MANUAL WITH SWIVEL AND NON-SWIVEL – SHEET 1 OF 3

ITEM	PART NO.	DESCRIPTION	QTY
28	2107969	Cover (Seat-Side Electrical)	1
29	221530	Capscrew	1
30	296379	Washer	2
31	1677286	Stud (Front)	2
31	4125619	Stud (Rear)	2
32	313828	Nut	4
	a 114312	Strap Clamp	1
	a 1470155	Information Case (Kit)	1
	a 4027341	Bracket (Angle Controller)	1
	1703895	Kit-Service Internal Tether-80 MM Travel	1
	1703896	Kit-Service Internal Tether-56 MM Travel	1
	1703897	Kit-Service Internal Tether-40 MM Travel	1

FOOTNOTES:

a Not Illustrated

©2015 HYSTER COMPANY

NOTES

©2015 HYSTER COMPANY

FULL SUSPENSION SEAT (FIGURE 1-29)

ELECTRO-HYDRAULIC WITH SWIVEL AND NON-SWIVEL — SHEET 1 OF 3

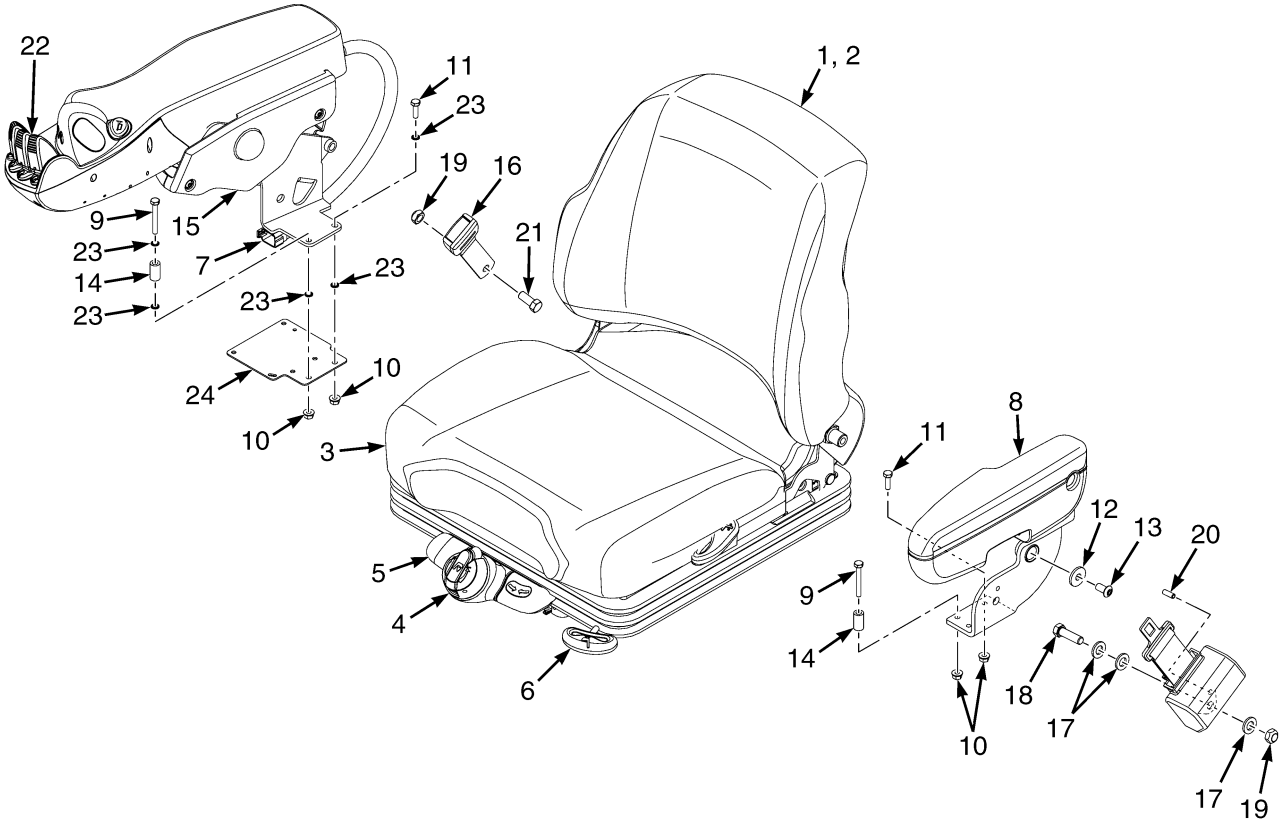

©2015 HYSTER COMPANY

FULL SUSPENSION SEAT

ELECTRO-HYDRAULIC WITH SWIVEL AND NON-SWIVEL – SHEET 1 OF 3

ITEM	PART NO.	DESCRIPTION	QTY
	4603382	Seat-Full Suspension (Vinyl) (Non-Swivel)	1
	4603383	Seat-Full Suspension (Cloth) (Non-Swivel)	1
	4603384	Seat-Full Suspension (Vinyl) (Swivel)	1
	4603385	Seat-Full Suspension (Cloth) (Swivel)	1
1	1703900	Kit-Cushion (Seat and Back, Cloth)	1
1	1703903	Kit-Cushion (Seat and Back, Vinyl)	1
2	1703901	Kit-Cushion (Back Cushion, Vinyl)	1
2	1703898	Kit-Cushion (Back Cushion, Cloth)	1
2	. . . . .	Back Cushion	1
2	. . . . .	Screw	2
3	1703902	Kit-Seat Cushion (Vinyl)	1
3	1703899	Kit-Seat Cushion (Cloth)	1
3	. . . . .	Seat Cushion	1
3	. . . . .	Spring	2
3	. . . . .	Cotter Pin	2
4	1703892	Kit-Weight Adjuster (☞Figure 1-31)	1
5	1703893	Kit-Service (Front Panel) (Non Swivel) (☞Figure 1-31)	1
5	1703894	Kit-Service (Front Panel) (With Swivel) (☞Figure 1-31)	1
6	4043082	Kit-Seat Rail (Non Swivel)	1
6	1703904	Kit-Seat Rail (With Swivel)	1
6	. . . . .	Locking Rail	1
6	. . . . .	Slave Rail	1
6	. . . . .	Bolt	4
6	. . . . .	Nut	4
7	4013095	Wire Harness	1
7	1563208	Sensor (Operator Presence)	1
8	2099947	Armrest (Left-Hand Side)	1
8	1563230	Cushion (LH Armrest)	1
9	18471	Capscrew	1
10	169874	Nut	1
11	18462	Capscrew	2
12	1512536	Washer	1
13	18735	Screw	1
14	4007318	Spacer (Frame)	1
15	4005010	Armrest (Slider for Mini Lever) (☞Figure 1-35)	1
16	1636120	Kit-Red Seat Belt High Visibility without Interlock	1
16	1598504	Kit-Seat Belt (Black)	1
16	4053079	Seat Belt (High Visibility with Interlock)	1
17	1581852	Washer	3
18	221536	Capscrew	1
19	221353	Locknut	2
20	19901	Roll Pin	1
21	221530	Capscrew	1
22	. . . . .	Mini-Lever Module (☞Figure 5-20, ☞Figure 5-21)	1
23	296379	Washer	4
24	4004776	Cover Plate	1
	a 114312	Strap Clamp	1
	a 1470155	Information Case (Kit)	1
	a 4027341	Bracket (Angle Controller)	1
	1703895	Kit-Service Internal Tether-80 MM Travel	1

©2015 HYSTER COMPANY

FULL SUSPENSION SEAT

ELECTRO-HYDRAULIC WITH SWIVEL AND NON-SWIVEL – SHEET 1 OF 3

ITEM	PART NO.	DESCRIPTION	QTY
	1703896	Kit-Service Internal Tether-56 MM Travel	1
	1703897	Kit-Service Internal Tether-40 MM Travel	1

FOOTNOTES:

a Not Illustrated

©2015 HYSTER COMPANY

NOTES

©2015 HYSTER COMPANY

FULL SUSPENSION SEAT (FIGURE 1-30)
RECLINER AND DAMPER KITS — SHEET 2 OF 3

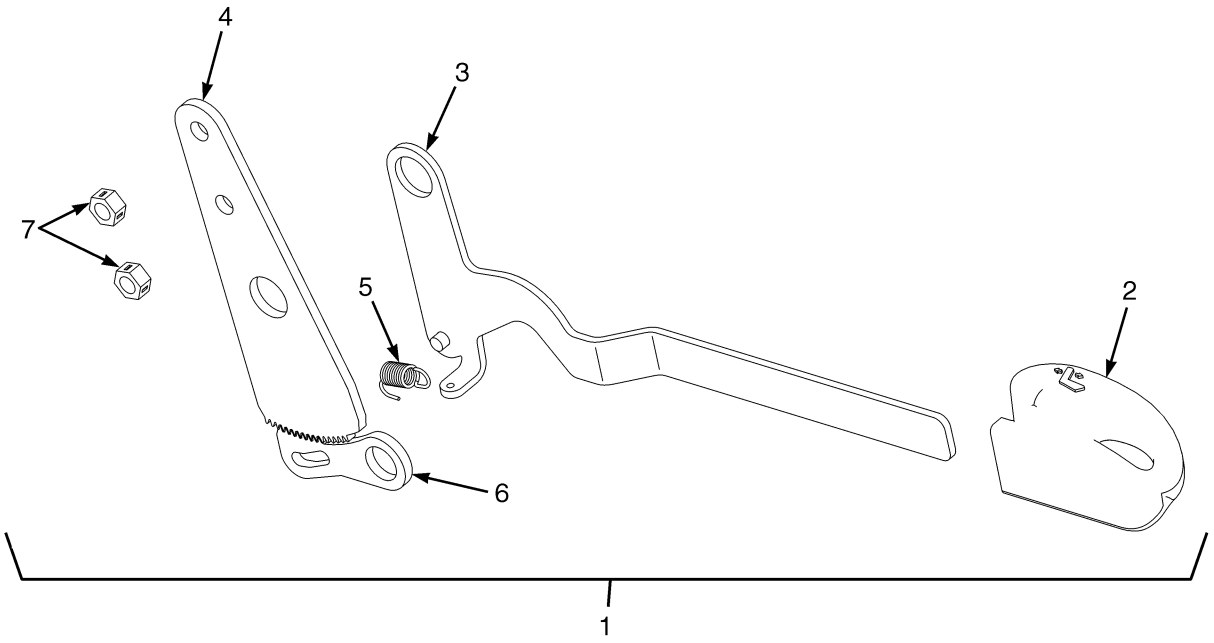

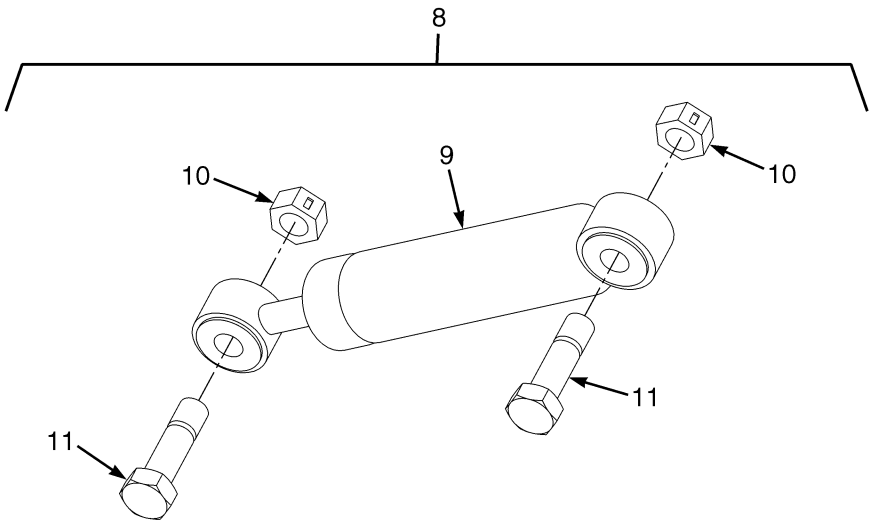

BP120646

©2015 HYSTER COMPANY

FULL SUSPENSION SEAT

RECLINER AND DAMPER KITS – SHEET 2 OF 3

ITEM	PART NO.	DESCRIPTION	QTY
1	1703891	Kit-Recliner (Back Seat Adjustment)	1
2	. . . . .	Knob	1
3	. . . . .	Lever	1
4	1482905	Plate	1
5	. . . . .	Spring	1
6	1482906	Latch	1
7	1367150	Nut	2
8	1703890	Kit-Damper Service	1
9	1584632	Damper	1
10	1367150	Nut	2
11	1584638	Bolt	2

©2015 HYSTER COMPANY

FULL SUSPENSION SEAT (FIGURE 1-31)

SERVICE KITS FOR NON SWIVEL AND SWIVEL — SHEET 3 OF 3

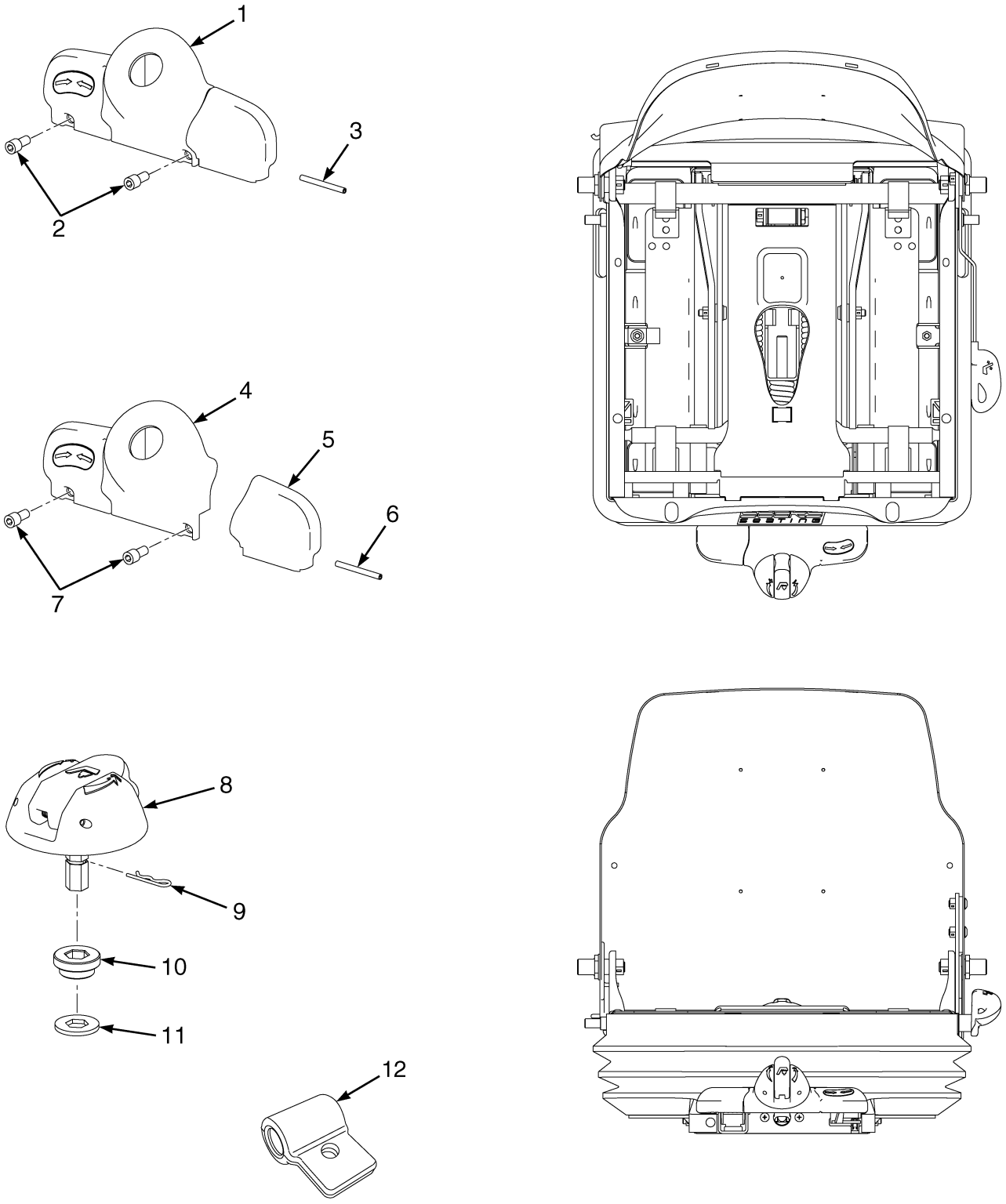

©2015 HYSTER COMPANY

FULL SUSPENSION SEAT

SERVICE KITS FOR NON SWIVEL AND SWIVEL – SHEET 3 OF 3

ITEM	PART NO.	DESCRIPTION	QTY
	4036586	Kit -Seat Suspension without Swivel	1
	4036587	Kit -Seat Suspension with Swivel	1
1	1703893	Kit-Service (Front Panel) (Non Swivel)	1
1	. . . . .	Front Panel	1
2	. . . . .	Capscrew	2
3	. . . . .	Roll Pin	1
4	1703894	Kit-Service (Front Panel) (With Swivel)	1
4	. . . . .	Front Panel	1
5	. . . . .	Swivel Knob	1
6	. . . . .	Roll Pin	1
7	. . . . .	Capscrew	2
8	1703892	Kit-Weight Adjuster	1
8	. . . . .	Knob	1
9	. . . . .	Cotter Pin	1
10	. . . . .	Bushing	1
11	. . . . .	Washer	1
12	4046492	Lever Spring Pull	2

©2015 HYSTER COMPANY

FULL SUSPENSION SEAT (FIGURE 1-32)
HIGH BACK WITH LUMBAR ADJUSTMENT — SHEET 1 0F 2

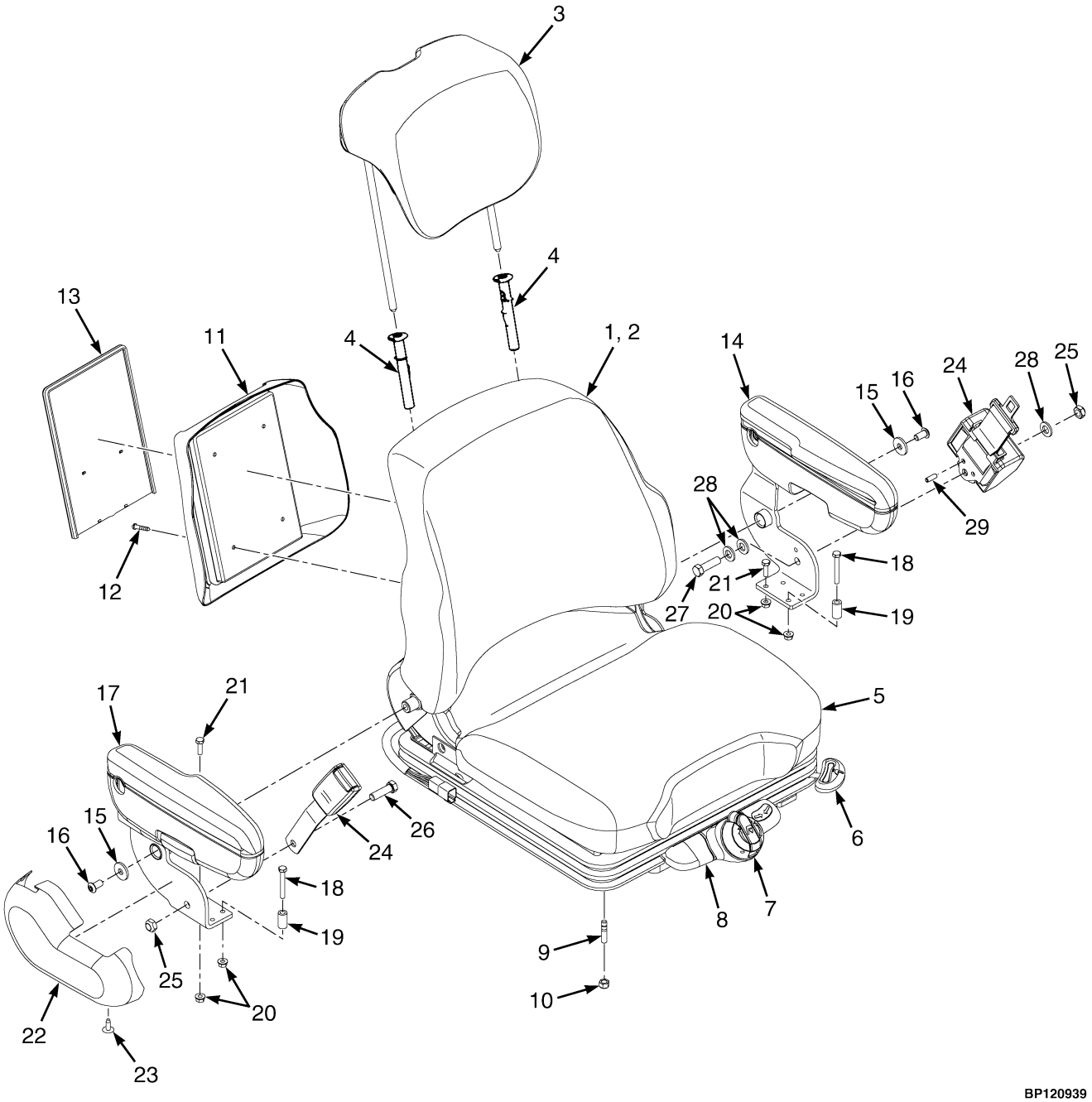

©2015 HYSTER COMPANY

FULL SUSPENSION SEAT

HIGH BACK WITH LUMBAR ADJUSTMENT – SHEET 1 0F 2

ITEM	PART NO.	DESCRIPTION	QTY
	4614480	Seat-Full Suspension (Vinyl)	1
	4614481	Seat-Full Suspension (Cloth)	1
1	4016924	Kit-Cushion (Seat Back, Vinyl)	1
1	4016928	Kit-Cushion (Seat Back, Cloth)	1
2	. . . . .	Back Cushion	1
2	1584643	Screw	2
3	4016926	Cushion (Head Rest Vinyl)	1
3	4016930	Cushion (Head Rest Cloth)	1
4	1615149	Guide Assembly (Tubes)	2
5	1703903	Kit-Cushion (Seat and Back, Vinyl)	1
5	1703900	Kit-Cushion (Seat and Back, Cloth)	1
5	1703902	Kit-Seat Cushion (Vinyl)	1
5	1703899	Kit-Seat Cushion (Cloth)	1
5	. . . . .	Seat Cushion	1
5	1637285	Spring	2
5	1513089	Cotter Pin (Hair)	2
6	4043082	Kit-Seat Rail	1
6	. . . . .	Locking Rail	1
6	. . . . .	Slave Rail	1
6	. . . . .	Bolt	4
6	1367150	Nut	4
7	1703892	Kit-Weight Adjuster	1
7	. . . . .	Knob	1
7	. . . . .	Bushing	1
7	. . . . .	Washer	1
7	. . . . .	Pin	1
7	. . . . .	U-Joint	1
8	1703893	Kit-Service (Front Panel) (Non Swivel)	1
8	. . . . .	Front Panel	1
8	. . . . .	Socket Head Capscrew	2
8	. . . . .	Roll Pin	1
9	1677286	Stud (Front)	4
9	4125619	Stud (Rear)	2
10	313828	Nut	4
11	1482925	Plate (Book Box)	1
12	1482949	Screw	4
13	1453887	Holder	1
14	2099947	Armrest (Left-Hand Side)	1
14	1563230	Cushion (LH Armrest)	1
15	1512536	Washer	2
16	18735	Screw	2
17	2099949	Armrest (Right-Hand Side)	1
17	1563231	Cushion (RH Armrest)	1
18	18471	Capscrew	2
19	4007318	Spacer	2
20	169874	Nut	4
21	18462	Capscrew	2
22	2099950	Seat Cover (Right-Hand Side)	1
23	1379945	Fastener	2
24	1598504	Kit-Seat Belt (Black)	1

©2015 HYSTER COMPANY

FULL SUSPENSION SEAT

HIGH BACK WITH LUMBAR ADJUSTMENT – SHEET 1 0F 2

ITEM	PART NO.	DESCRIPTION	QTY
24	1636120	Kit-Red Seat Belt High Visibility without Interlock	1
24	4053079	Seat Belt (High Visibility with Interlock)	1
25	221353	Locknut	2
26	221530	Capscrew	1
27	221536	Capscrew	1
28	1581852	Washer	3
29	19901	Roll Pin	1
	b 4046492	Lever	1
	b 1563208	Sensor (Operator Presence)	1
	b 4027341	Bracket	1
	b 1703895	Kit-Service Internal Tether-80 MM Travel	1
	b 114312	Strap Clamp	1
	b 296379	Washer	2
	b 4032461	Kit (Mechanical Lumbar)	1
	ab 4032460	Kit Seat Suspension (Non Swivel Seat) (Includes Items 7-8) (☞Figure 1-33)	1

FOOTNOTES:

a Kit includes Tether and Recliner from Sheet 2 of 2. **b** Not Illustrated

©2015 HYSTER COMPANY

NOTES

©2015 HYSTER COMPANY

FULL SUSPENSION SEAT (FIGURE 1-33)
HIGH BACK WITH LUMBAR ADJUSTMENT — SHEET 2 OF 2

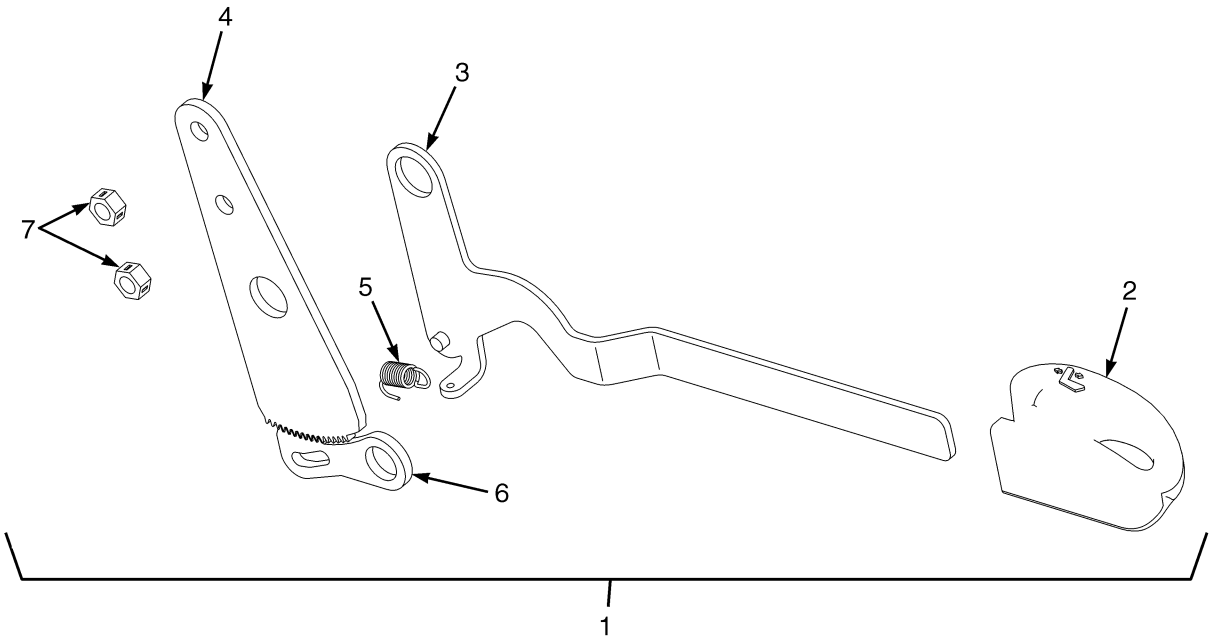

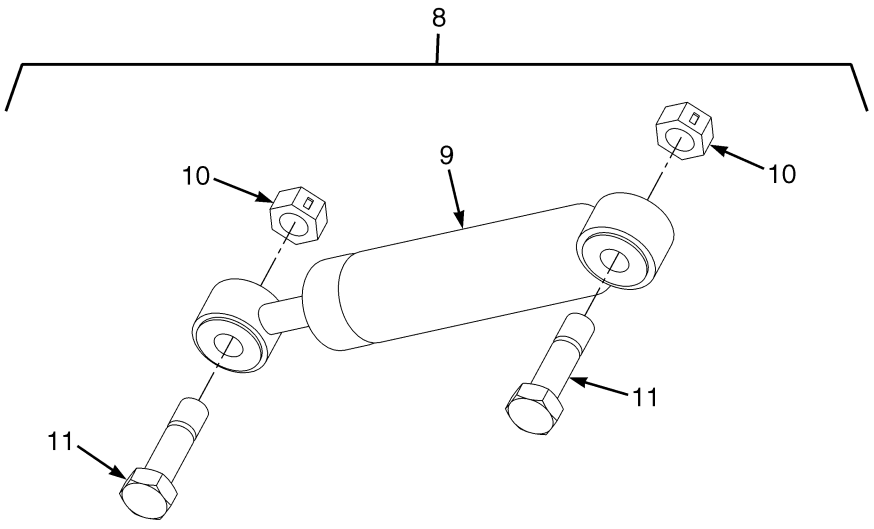

BP120646

©2015 HYSTER COMPANY

FULL SUSPENSION SEAT

HIGH BACK WITH LUMBAR ADJUSTMENT – SHEET 2 OF 2

ITEM	PART NO.	DESCRIPTION	QTY
1	1703891	Kit-Recliner (Back Seat Adjustment)	1
2	. . . . .	Knob	1
3	. . . . .	Lever	1
4	1482905	Plate	1
5	. . . . .	Spring	1
6	1482906	Latch	1
7	1367150	Nut	2
8	1703890	Kit-Damper Service	1
9	1584632	Damper	1
10	1367150	Nut	2
11	1584638	Bolt	2

©2015 HYSTER COMPANY

ARMREST ASSEMBLY (FIGURE 1-34)
MINI-LEVER MODULES — SEMI-SUSPENSION SEAT

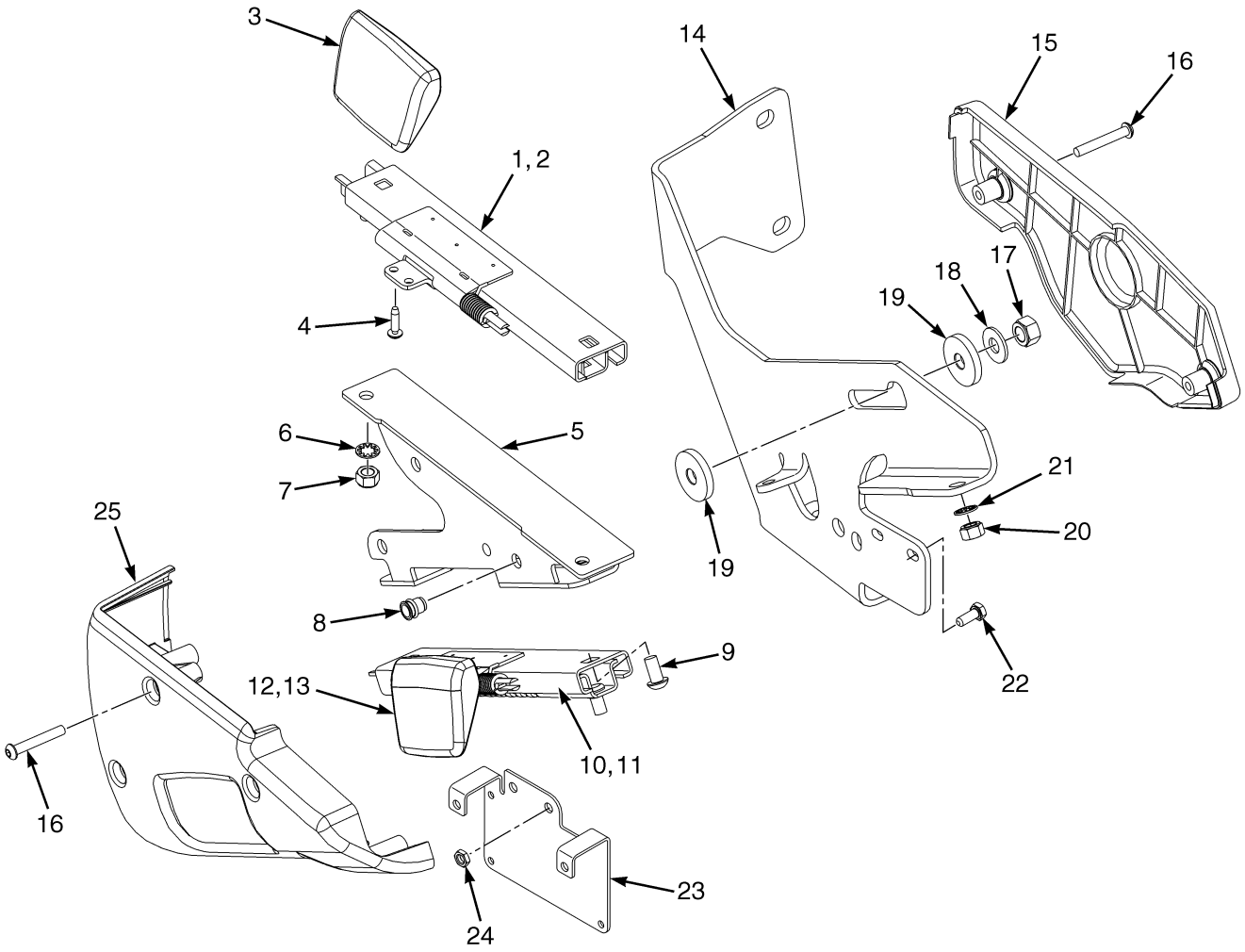

©2015 HYSTER COMPANY

ARMREST ASSEMBLY

MINI-LEVER MODULES – SEMI-SUSPENSION SEAT

ITEM	PART NO.	DESCRIPTION	QTY
	4005010	Armrest (Slider for Mini Lever)	1
1	. . . . .	Slider Assembly	1
2	1661511	Armrest (Slider)	1
3	1655865	Handle (Slider)	1
4	227157	Screw	2
5	4007052	Bracket Wldmt	1
6	296360	Washer	4
7	313828	Nut	4
8	1531558	Insert	3
9	296165	Capscrew	2
10	. . . . .	Slider Assembly	1
11	1661511	Armrest (Slider)	1
12	1655865	Handle (Slider)	1
13	227157	Screw	2
14	. . . . .	Bracket	1
15	4603493	Cover	1
16	2062875	Capscrew	5
17	316826	Nut	1
18	320160	Washer	1
19	1650640	Washer	2
20	313828	Nut	2
21	296360	Washer	2
22	292500	Capscrew	2
23	4005805	Cover Plate	1
24	1593334	Nut	2
25	4603492	Cover	1

©2015 HYSTER COMPANY

ARMREST ASSEMBLY (FIGURE 1-35)
MINI-LEVER MODULES — FULL SUSPENSION SEAT

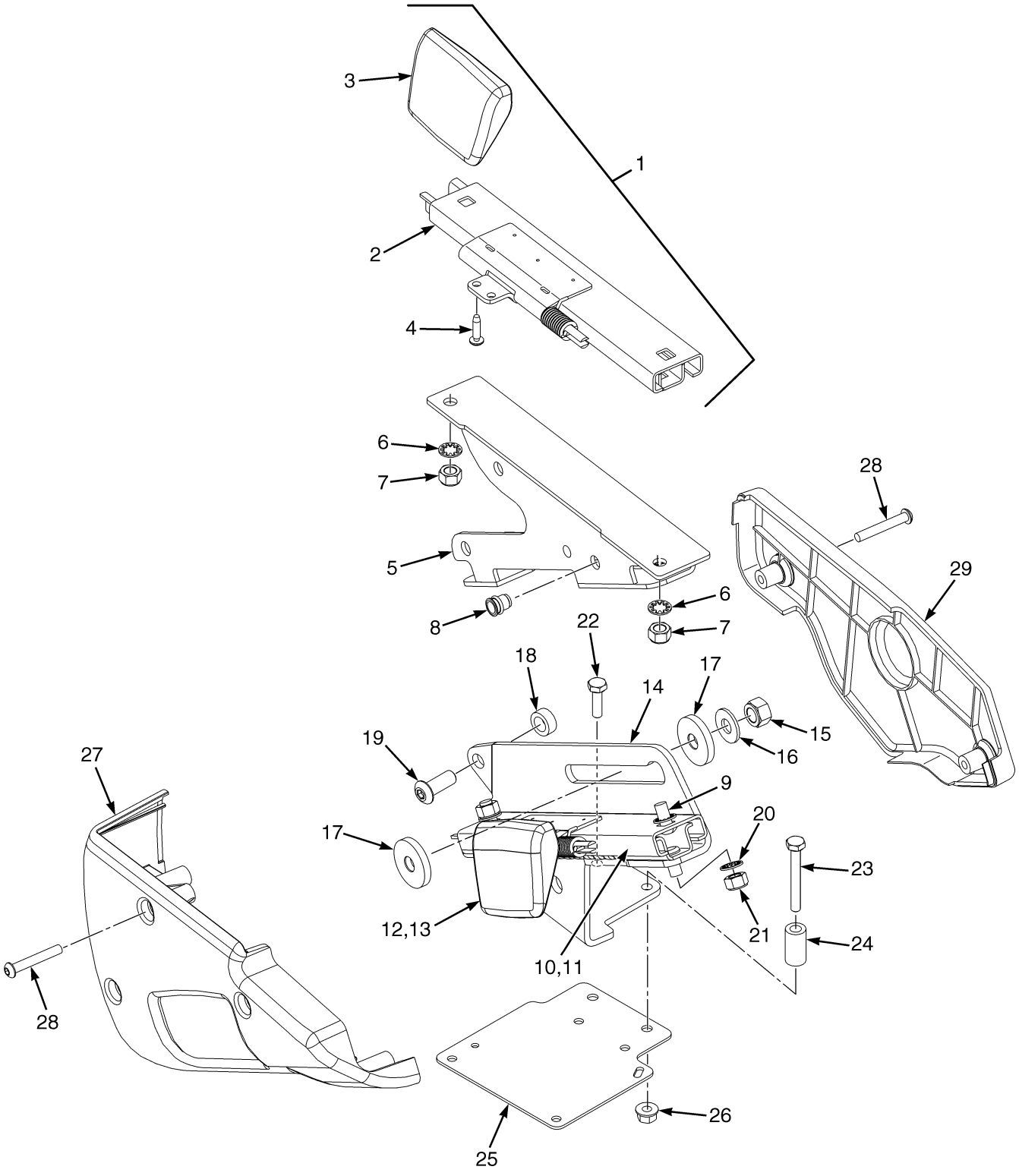

©2015 HYSTER COMPANY

ARMREST ASSEMBLY
MINI-LEVER MODULES – FULL SUSPENSION SEAT

ITEM	PART NO.	DESCRIPTION	QTY
	4005010	Armrest (Slider for Mini Lever)	1
1	. . . . .	Slider Assembly	1
2	1661511	Armrest (Slider)	1
3	1655865	Handle (Slider)	1
4	227157	Screw	2
5	4004775	Bracket	1
6	296360	Washer	2
7	313828	Nut	4
8	1531558	Insert	3
9	296165	Capscrew	2
10	. . . . .	Slider Assembly	1
11	1661511	Armrest (Slider)	1
12	1655865	Handle (Slider)	1
13	227157	Screw	2
14	4004775	Bracket	1
15	316826	Nut	1
16	320160	Washer	1
17	1650640	Washer	2
18	4007319	Spacer	1
19	18738	Capscrew	1
20	296360	Washer	2
21	313828	Nut	2
22	18462	Capscrew	1
23	18471	Capscrew	1
24	4007318	Spacer	1
25	4004776	Cover Plate	1
26	169874	Nut	2
27	4603492	Cover	1
28	2062875	Capscrew	5
29	4603493	Cover	1

©2015 HYSTER COMPANY

HOOD ASSEMBLY (FIGURE 1-36)

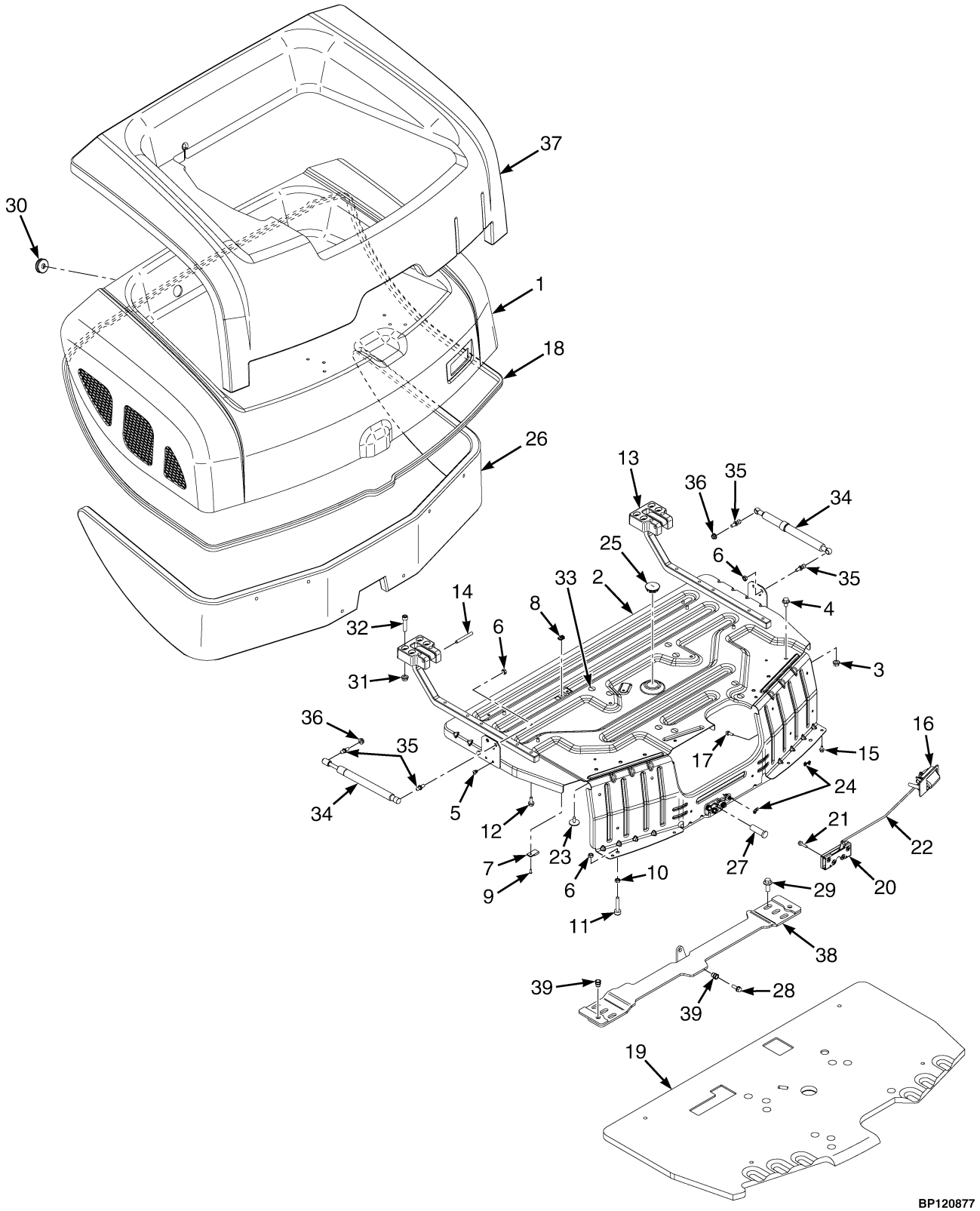

©2015 HYSTER COMPANY

HOOD ASSEMBLY

ITEM	PART NO.	DESCRIPTION	QTY
	4016238	Hood (With Sound Liner)	1
	4016241	Hood (Without Sound Liner)	1
1	4015889	Hood (Non-Vented)	1
2	4025271	Hood Reinforcement	1
3	1460477	Nut	6
4	1528778	Capscrew	6
5	1608879	Capscrew	4
6	364868	Nut	8
7	1500912	Clip	1
8	1537551	Nut (Clip) (Clip Connector)	1
9	296149	Capscrew	1
10	329069	Nut	2
11	1585581	Bumper (Hood)	2
12	1527880	Capscrew	8
13	1567821	Hinge	2
14	302381	Dowel	1
15	1534417	Capscrew	8
16	1564263	Handle	1
17	1527876	Capscrew	2
18	1590488	Seal	1
19	4126730	Hood Liner	1
20	1590370	Latch	1
21	1527878	Capscrew	4
22	1584142	Link	1
23	1304971	Fastener (Without Sound Liner)	5
23	1304971	Fastener (With Sound Liner)	11
24	1530221	Clip	2
25	1616379	Plug (Yellow)	1
26	1708350	Liner (With Sound Liner)	1
27	1584654	Striker Bolt	1
28	1583611	Capscrew	2
29	1528889	Capscrew	6
30	4031944	Grommet	1
31	1460477	Nut	4
32	296029	Capscrew	4
33	1347045	Fastener	8
34	4014557	Gas Spring (w/o Cab)	2
34	4014557	Gas Spring (w/ Cab and Semi/Full Suspension Seats) (RH)	1
34	4011395	Gas Spring (Lift and Latch) (LH, W/Cab)	1
35	1563369	Ball Stud (w/o Cab)	4
35	1563369	Ball Stud (w/ Cab)(RH)	2
35	4011397	Ball Stud (w/ Cab)(LH)	2
36	329069	Nut (W/Cab)	2
36	1586430	Nut (w/o Cab)	2
37	4009730	Blanket (Without Sound Liner)	1
37	4009734	Blanket (With Sound Liner)	1
38	1613246	Crossmember	1
39	1530243	Insert	4

©2015 HYSTER COMPANY

COWL MOUNT (FIGURE 1-37)

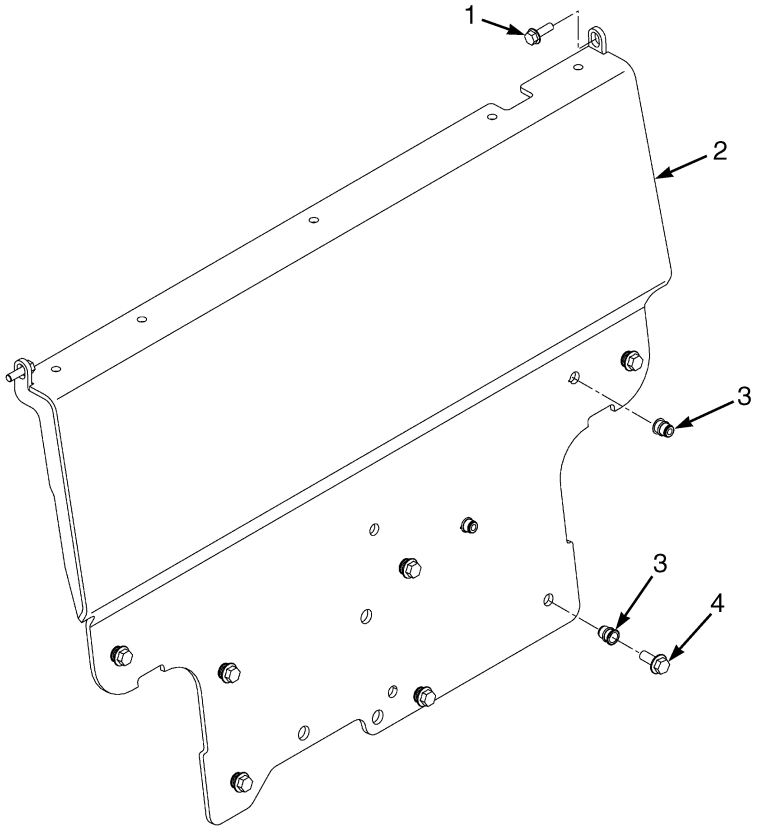

BP120849

ITEM	PART NO.	DESCRIPTION	QTY
1	1583611	Capscrew	2
1	1510113	Capscrew (Optional)	2
2	4074599	Cowl	1
3	1640776	Insert	7
3	**a** 1581567	Nut (Optional)	7
3	**a** 320160	Washer (Optional)	7
4	1586629	Capscrew	7

FOOTNOTES:

a Not Illustrated

©2015 HYSTER COMPANY

NOTES

©2015 HYSTER COMPANY

FLOOR PLATES AND COVERS (FIGURE 1-38)
SHEET 1 OF 2

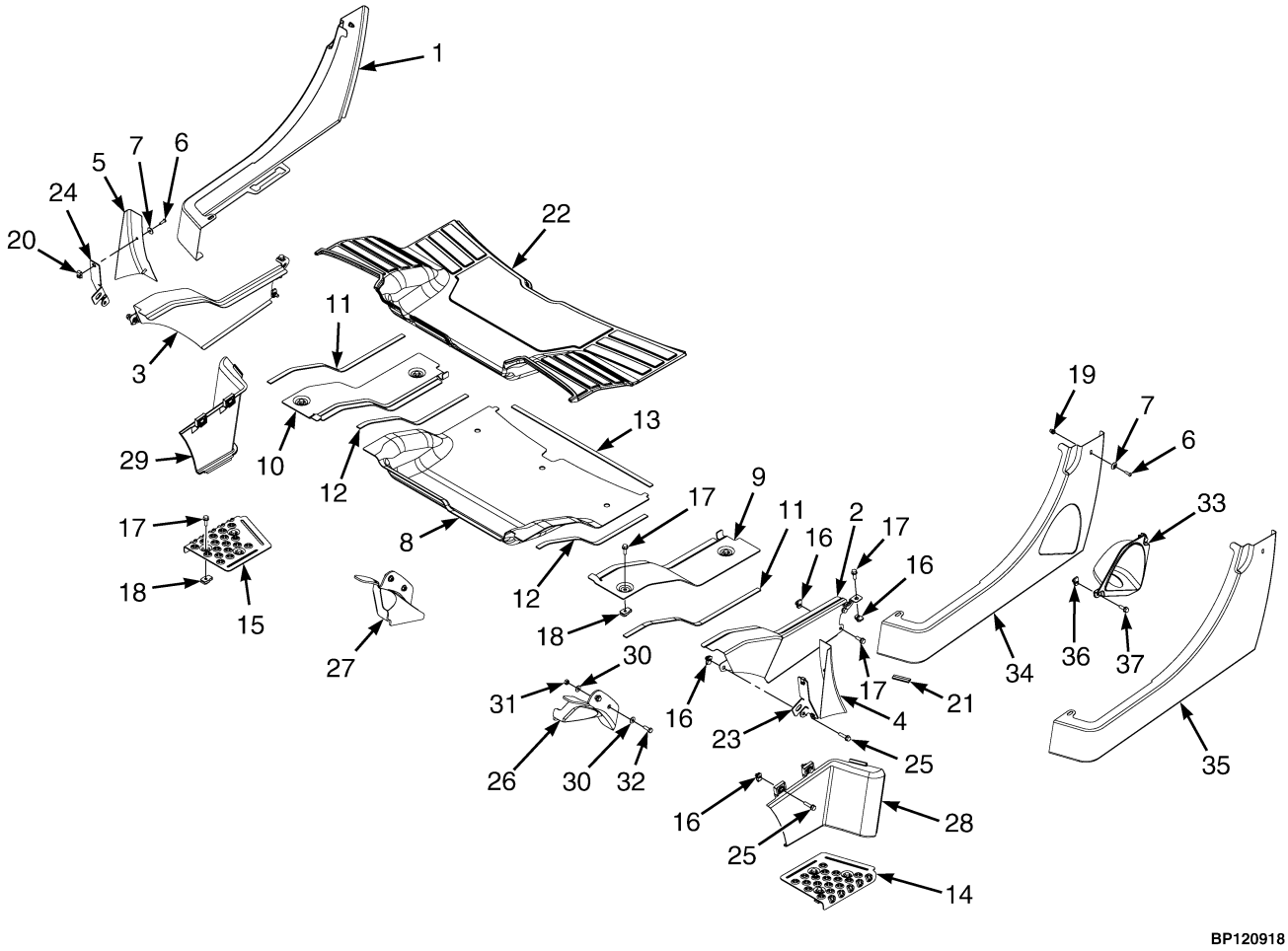

©2015 HYSTER COMPANY

FLOOR PLATES AND COVERS

SHEET 1 OF 2

ITEM	PART NO.	DESCRIPTION	QTY
1	1584135	Panel (Rear RH)	1
2	1597410	Panel (Front LH)	1
3	1597412	Panel (Front RH)	1
4	1565962	Cover (LH Fender)	1
5	1565964	Cover (RH Fender)	1
6	1710006	Capscrew	6
7	1709980	Washer	6
8	1583581	Floorplate	1
9	1583582	Floorplate (LH)	1
10	1583583	Floorplate (RH)	1
11	1567329	Seal (Rubber)	2
12	1586762	Seal (Rubber)	2
13	1588766	Seal (Rubber)	1
14	1544413	Plate (LH)	1
15	1544415	Plate (RH)	1
16	1480237	Nut	12
17	1583611	Capscrew	16
18	1393879	Nut	8
19	1531558	Insert	2
20	1350215	Nut	4
21	1582072	Trim Seal	2
22	2077209	Floormat	1
23	1597837	Bracket	1
24	1597838	Bracket	1
25	1586627	Capscrew	6
26	1626734	Flap (LH)	1
27	1626735	Flap (RH)	1
28	2102514	Step Panel (LH)	1
29	2102513	Step Panel (RH)	1
30	1581851	Washer	8
31	239503	Nut	4
32	1581581	Capscrew	4
33	1517656	Shield (Diesel)	1
34	1584129	Panel (Rear LH) (Diesel)	1
35	1584130	Panel (Rear LH) (LPG)	1
36	1480237	Nut (Diesel)	2
37	1583611	Capscrew (Diesel)	2
ab	1581079	Plug	4

FOOTNOTES:

a Not Illustrated

b Not Required With Fender Extensions

©2015 HYSTER COMPANY

FLOOR PLATES AND COVERS (FIGURE 1-39)
SHEET 2 OF 2

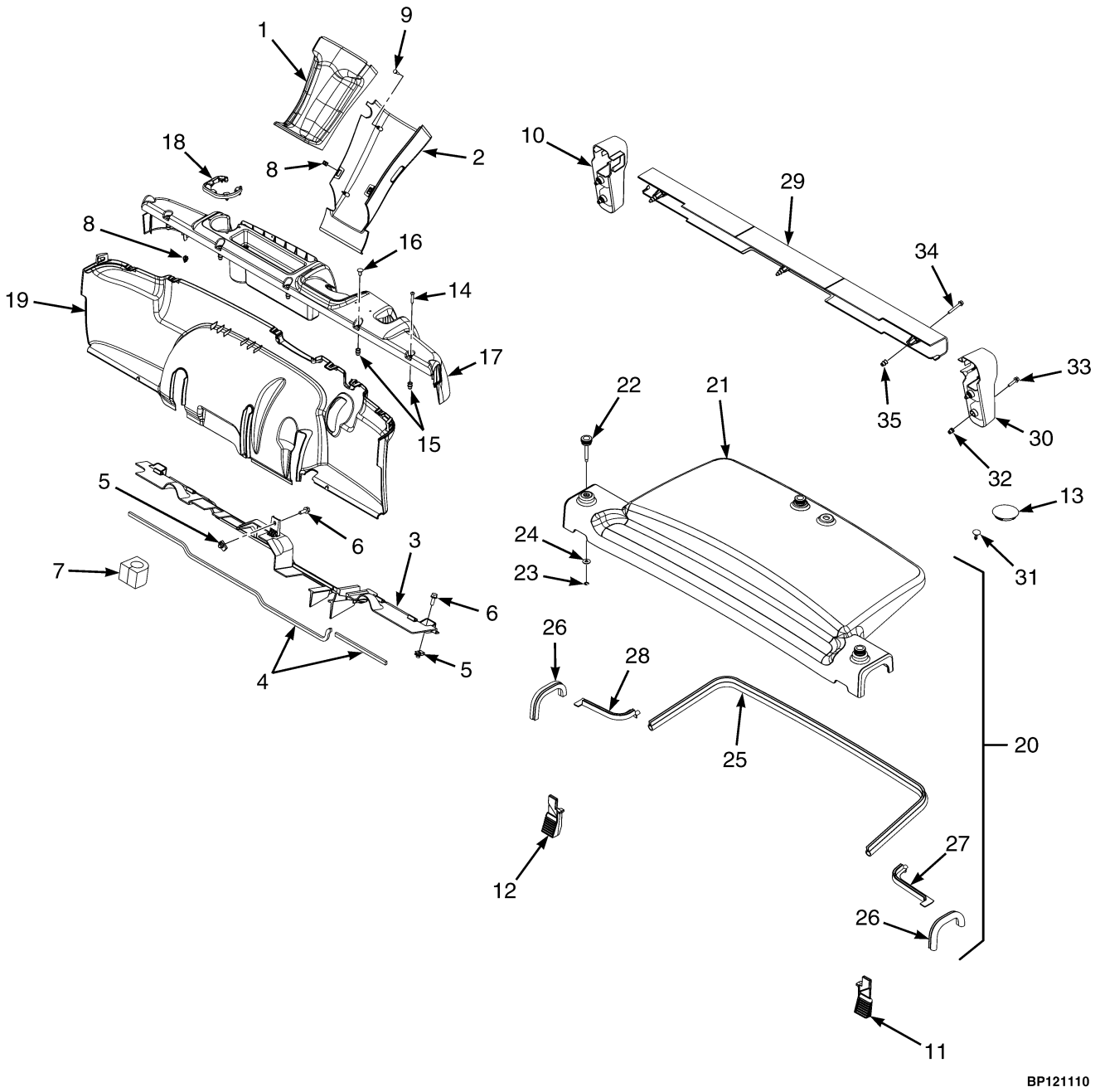

©2015 HYSTER COMPANY

FLOOR PLATES AND COVERS
SHEET 2 OF 2

KEY:
A: With Cab
B: Without Cab

ITEM	PART NO.	DESCRIPTION	QTY A	QTY B
1	2098330	Cover (Steering Column Upper)	1	1
2	2065666	Cover (Steering Column Lower)	1	1
3	1567328	Cover Plate	1	1
4	1529428	Seal	AR	AR
5	1480237	Nut	4	4
6	1583611	Capscrew	4	4
7	1530135	Grommet	1	1
8	2065667	Clip	8	8
9	2027655	Screw	2	2
10	2107957	Tail Light Base (RH)	1	1
11	2089201	Seal (LH)	1	1
12	2089202	Seal (RH)	1	1
13	**a** 2021395	Cap	2	2
14	1710007	Capscrew	4	5
15	1531001	Insert	5	5
16	1307737	Fastener	1	..
17	1573597	Dash Panel (Manual Hydraulics)	1	1
17	1573598	Dash Panel (Electronic Hydraulics)	1	1
18	2070975	Cup Holder	1	1
19	2070726	Panel (Single Brake)	1	1
19	2076204	Panel (Dual Brake)	1	1
20	1688244	Cover (Assembly)	..	1
21	1587872	Cover	..	1
22	1588247	Screw	..	3
23	353206	Retaining Ring	..	3
24	320158	Washer	..	3
25	1590332	Trim Seal	..	1
26	1603285	Trim Seal	..	2
27	1603893	Seal (LH)	..	1
28	1603959	Seal (RH)	..	1
29	2067475	Cover (Rear Crossmember)	1	1
30	2107958	Tail Light Base (LH)	1	1
31	**a** 1347045	Fastener	6	6
32	1531558	Insert	..	4
33	1586495	Capscrew	4	4
34	1540643	Capscrew	..	3
35	1531001	Insert	..	3

FOOTNOTES:

a Located Top of Counter Weight

©2015 HYSTER COMPANY

FENDER EXTENSIONS (FIGURE 1-40)

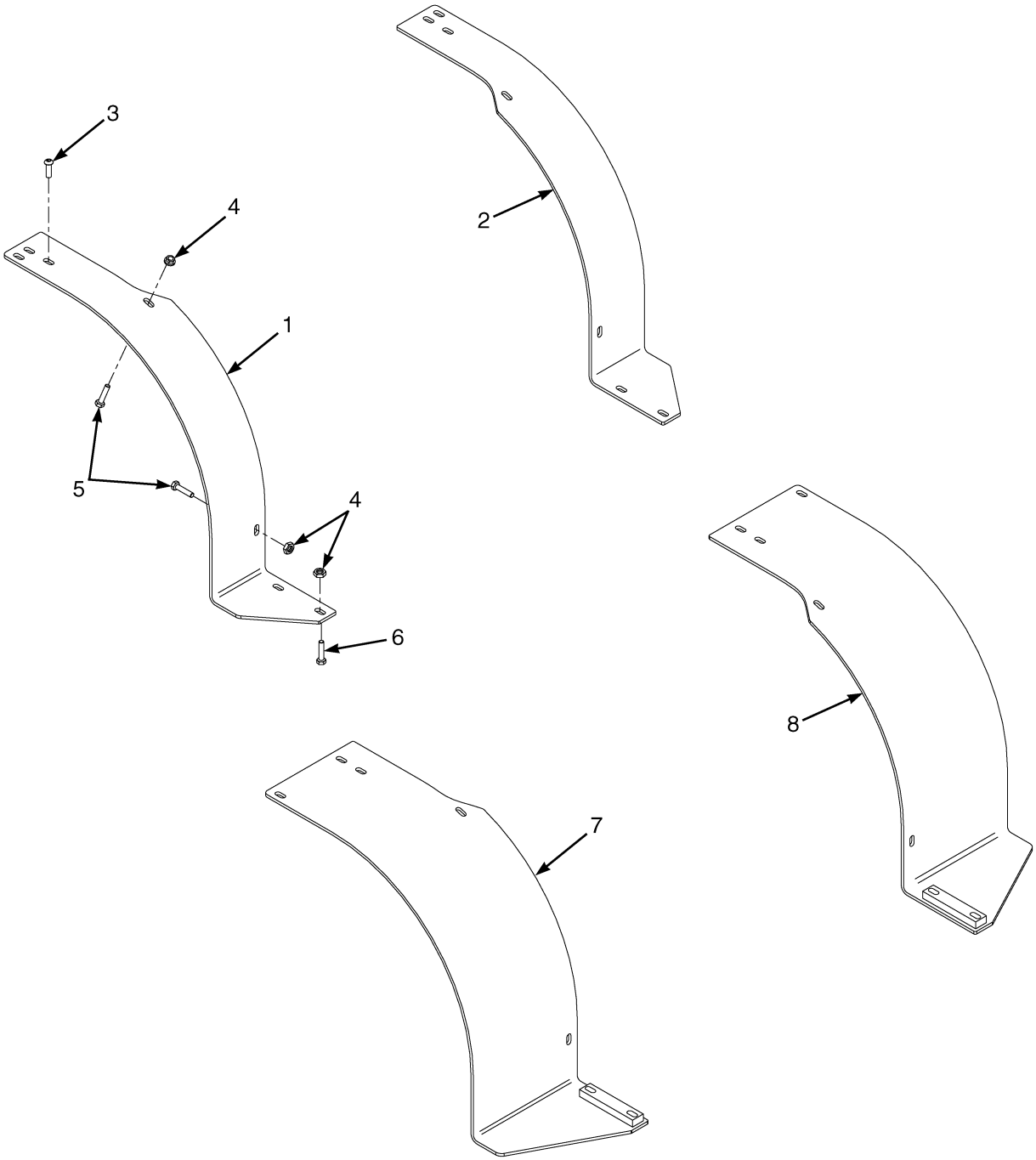

©2015 HYSTER COMPANY

FENDER EXTENSIONS

KEY:
A: H4.0FT5, H4.0FT6, H4.5FTS5
B: H4.5FT6, H5.0FT, H5.5FT
C: H4.0FT5, H4.0FT6, H4.5FTS5, H4.5FT6, H5.0FT, H5.5FT, (Heavy Duty Standard Tread)

			QTY		
ITEM	**PART NO.**	**DESCRIPTION**	**A**	**B**	**C**
1	1578570	Fender (Wide Tread) (LH)	1	..	..
1	1578571	Fender (Wide Tread) (LH)	..	1	1
2	1578574	Fender (Wide Tread) (RH)	1	..	..
2	1578575	Fender (Wide Tread) (RH)	..	1	1
3	2076289	Capscrew	2	2	2
4	1586432	Nut	10	10	10
5	1613433	Capscrew	4	4	4
6	1613434	Capscrew	4	4	4
7	1578573	Fender (Dual Tread) (LH)	..	1	..
7	1578572	Fender (Dual Tread) (LH)	1	..	..
8	1578576	Fender (Dual Tread) (RH)	1	..	..
8	1578577	Fender (Dual Tread) (RH)	..	1	..

©2015 HYSTER COMPANY

MUD GUARDS (FIGURE 1-41)

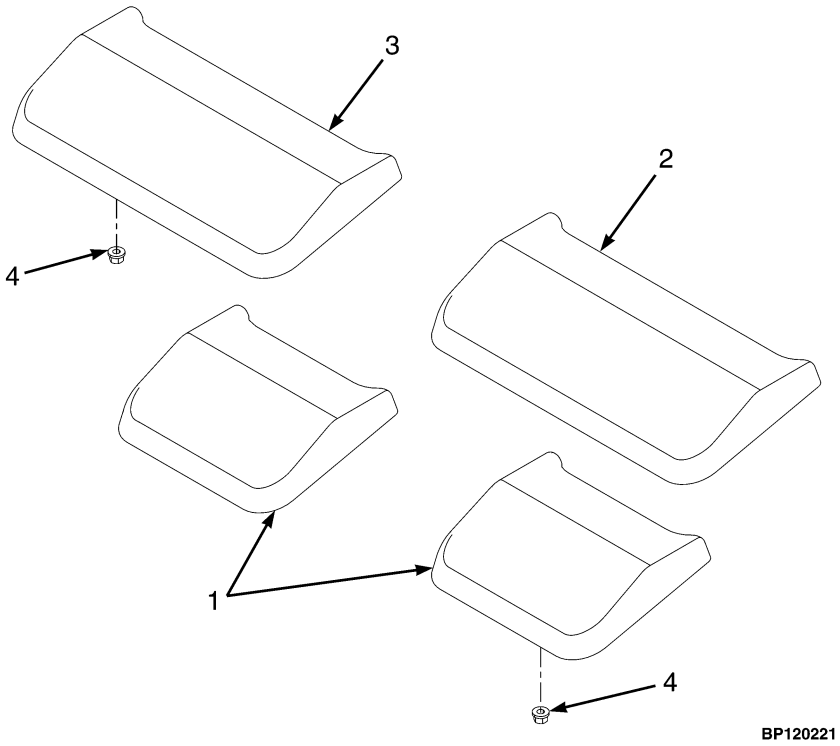

KEY:
A: Standard Tread
B: Wide Tread
C: Dual Tread

ITEM	PART NO.	DESCRIPTION	QTY A	QTY B	QTY C
1	**b** 2071647	Mud Flap	2	..	..
2	**a** 2074436	Mud Flap (LH)	..	1	..
2	**c** 2074437	Mud Flap (LH)	..	1	..
2	**a** 2074438	Mud Flap (LH)	..	..	1
2	**c** 2074439	Mud Flap (LH)	..	..	1
3	**a** 2074440	Mud Flap (RH)	..	1	..
3	**c** 2074441	Mud Flap (RH)	..	1	..
3	**a** 2074442	Mud Flap (RH)	..	..	1
3	**c** 2074443	Mud Flap (RH)	..	..	1
4	**a** 1544153	Locknut	4	4	..
4	**b** 1544153	Locknut	..	6	6

FOOTNOTES:

a H4.0FT5, H4.0FT6, H4.5FTS5
b H4.0FT5, H40FT6, H4.5FTS5, H4.5FT6, H5.0FT, H5.5FT
c H4.5FT6, H5.0FT, H5.5FT

©2015 HYSTER COMPANY

NOTES

©2015 HYSTER COMPANY

LOAD BACKREST EXTENSION (FIGURE 1-42)

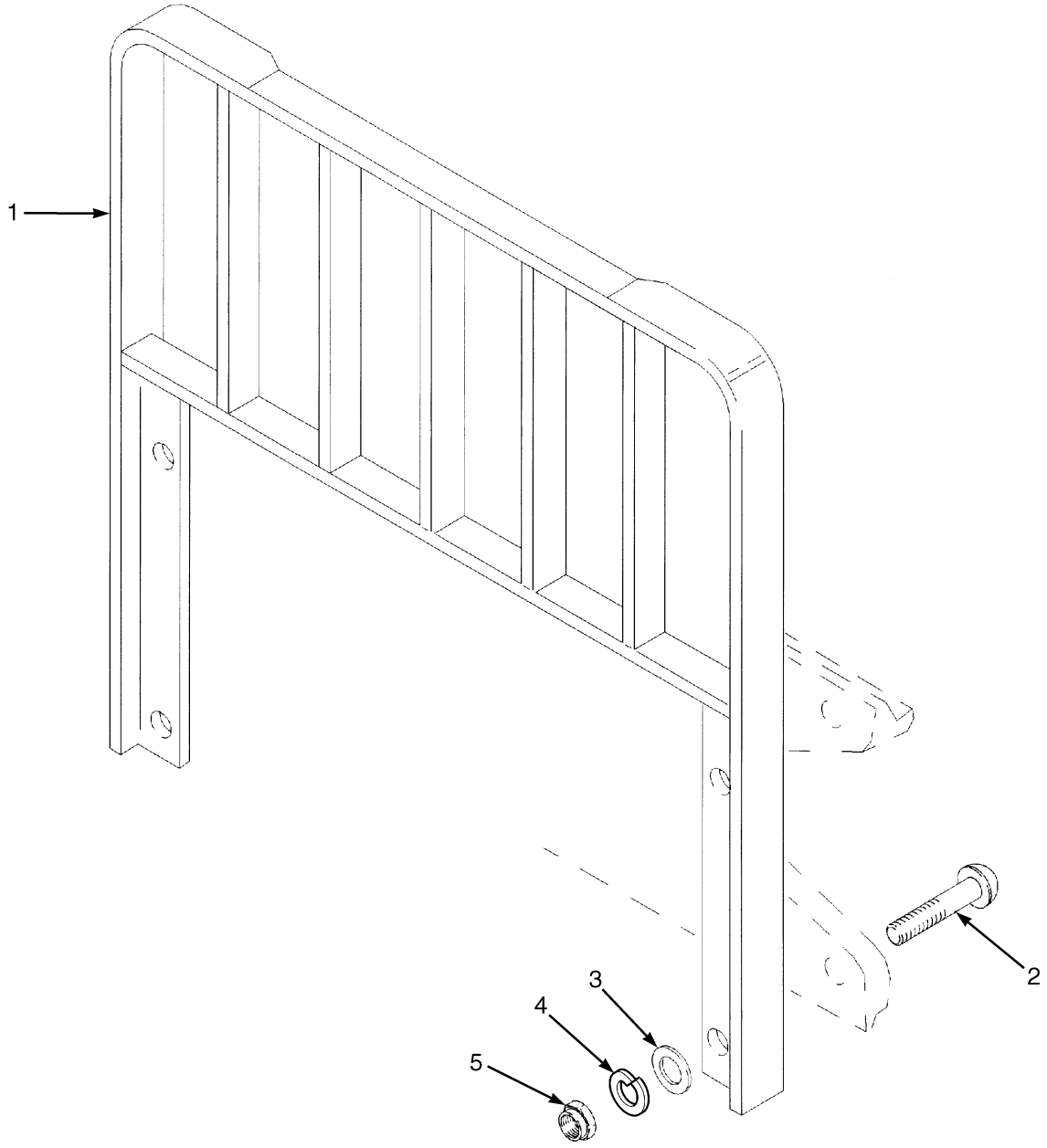

HP120836

©2015 HYSTER COMPANY

LOAD BACKREST EXTENSION

ITEM	PART NO.	DESCRIPTION	QTY
1	1387341	Load Backrest (1219 mm) (Class III)	1
1	1387345	Load Backrest (1524 mm) (Class III)	1
1	1387349	Load Backrest (1524 mm) (Class IV)	1
1	1387904	Load Backrest (1372 mm) (Class IV)	1
1	1387348	Load Backrest (1219 mm) (Class (IV))	1
2	1387330	Capscrew	4
3	221771	Washer	4
3	296423	Washer (Optional)	4
4	292683	Lockwasher	4
5	292656	Nut	4

©2015 HYSTER COMPANY

FORKS (FIGURE 1-43)
CLASS III AND CLASS IV STANDARD TAPER

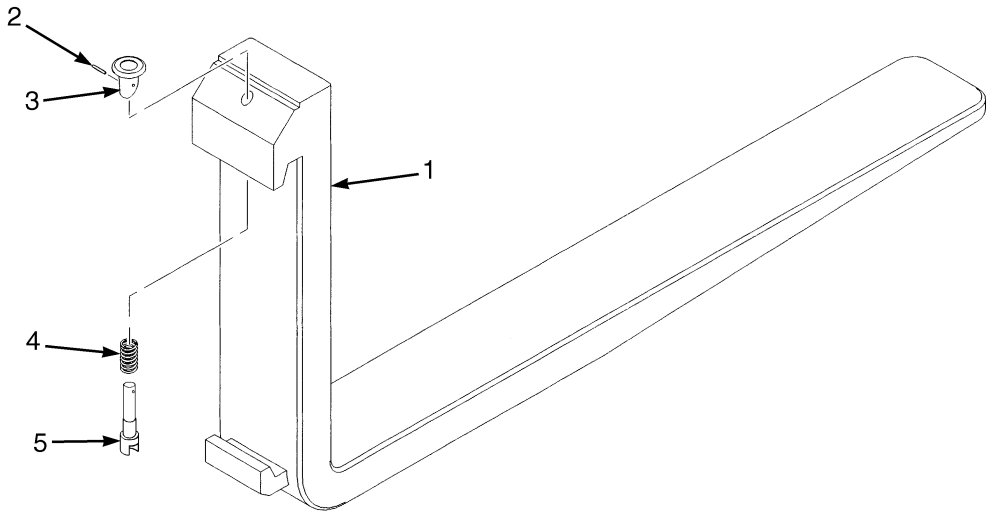

BP000187

KEY:
A: Class III 120 mm x 50 mm
B: Class III 150 mm x 50 mm
C: Class IV 150 mm x 50 mm
D: Class IV 150 mm x 60 mm

ITEM	PART NO.	DESCRIPTION	QTY A	QTY B	QTY C	QTY D
1	1385801	Fork (1000 mm)	2	..	..	..
1	1385802	Fork (1100 mm)	2	..	..	..
1	1385803	Fork (1200 mm)	2	..	..	..
1	1385804	Fork (1400 mm)	2	..	..	..
1	1519439	Fork (1200 mm)	..	2	..	..
1	1519440	Fork (1300 mm)	..	2	..	..
1	1519442	Fork (1500 mm)	..	2	..	..
1	1479090	Fork (1800 mm)	..	2	..	..
1	1519444	Fork (1200 mm)	..	..	2	..
1	1479132	Fork (1300 mm)	..	..	2	..
1	1479133	Fork (1500 mm)	..	..	2	..
1	1479134	Fork (1800 mm)	..	..	2	..
1	1362229	Fork (1200 mm)	..	..	..	2
1	1362231	Fork (1300 mm)	..	..	..	2
1	1362233	Fork (1500 mm)	..	..	..	2
1	1362235	Fork (1800 mm)	..	..	..	2
2	1523734	Pin	1	1	1	1
3	1523732	Knob	1	1	1	1
4	1500784	Spring	1	1	..	..
4	1500786	Spring	..	..	1	1
5	1523737	Pin	1	1	..	..

©2015 HYSTER COMPANY

KEY:
A: Class III 120 mm x 50 mm
B: Class III 150 mm x 50 mm
C: Class IV 150 mm x 50 mm
D: Class IV 150 mm x 60 mm

ITEM	PART NO.	DESCRIPTION	QTY A	QTY B	QTY C	QTY D
5	1523741	Pin	..	..	1	1
	4033435	Kit-Latch (Class III)	1	1	..	..
	1523742	Kit-Latch (Class IV)	..	..	1	1

©2015 HYSTER COMPANY

FORKS (FIGURE 1-44)

CLASS III AND CLASS IV STANDARD TAPER — OPTIONAL

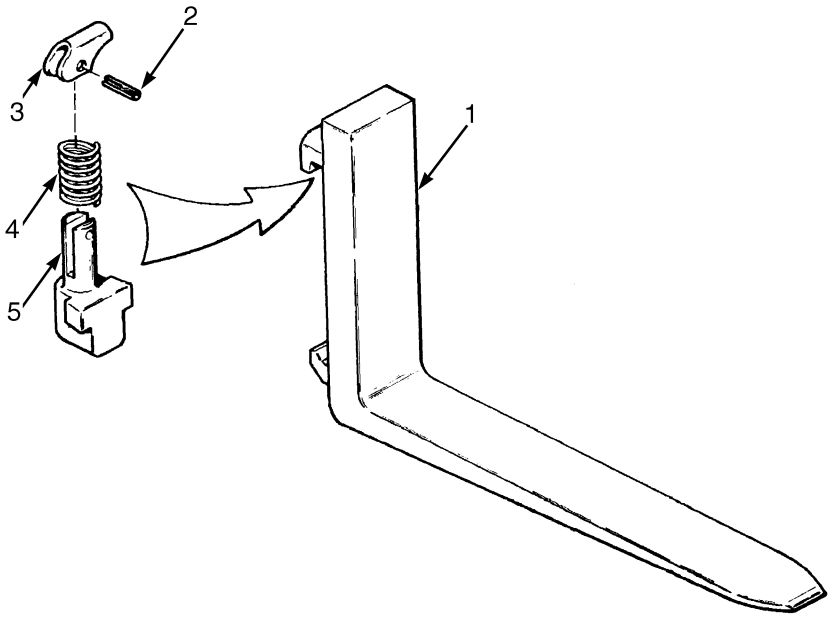

HP120793

KEY:
A: Class III 120 mm x 50 mm
B: Class III 150 mm x 50 mm
C: Class IV 150 mm x 50 mm
D: Class IV 150 mm x 60 mm

ITEM	PART NO.	DESCRIPTION	QTY A	B	C	D
1	4083681	Fork (1000mm)	2	..	..	..
1	4083682	Fork (1100mm)	2	..	..	..
1	4083683	Fork (1200mm)	2	..	..	..
1	4083684	Fork (1400mm)	2	..	..	..
1	4084034	Fork (1200mm)	..	2	..	..
1	4084035	Fork (1300mm)	..	2	..	..
1	4084037	Fork (1500mm)	..	2	..	..
1	4084038	Fork (1800mm)	..	2	..	..
1	4084046	Fork (1200mm)	..	..	2	..
1	4084047	Fork (1300mm)	..	..	2	..
1	4084048	Fork (1500mm)	..	..	2	..
1	4084049	Fork (1800mm)	..	..	2	..
1	4084061	Fork (1200mm)	..	..	..	2
1	4084063	Fork (1300mm)	..	..	..	2
1	4084066	Fork (1500mm)	..	..	..	2
1	4084069	Fork (1800mm)	..	..	..	2
2	. . . . .	Pin	1	1	1	1
3	. . . . .	Lever	1	1	1	1
4	. . . . .	Spring	1	1	1	1
5	. . . . .	Pin	1	1	1	1
	4083889	Kit Fork Latch Mechanism	2	2	2	2

©2015 HYSTER COMPANY

NOTES

©2015 HYSTER COMPANY

LABELS (FIGURE 1-45)
EXTERIOR

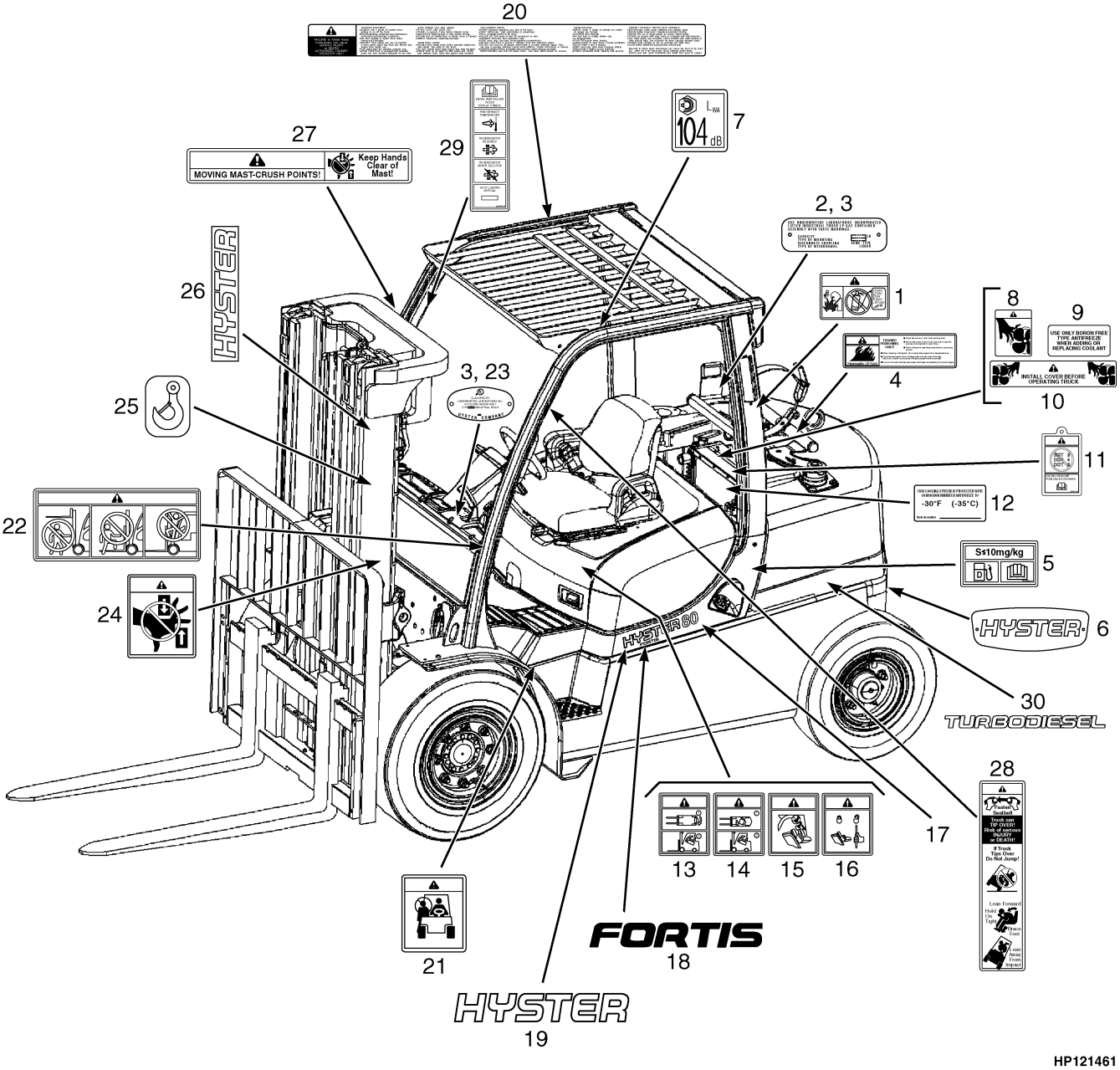

HP121461

©2015 HYSTER COMPANY

LABELS
EXTERIOR

ITEM	PART NO.	DESCRIPTION	QTY
1	**b** 2034460	Label (Ether Warning)	1
2	1501259	Nameplate (LP Tank)	1
3	170658	Rivet	4
3	2308673	Rivet (Optional)	4
3	1365922	Gripnail	4
4	1354172	Label (Flammable LPG)	1
5	**b** 2074256	Label (Fuel Fill)	1
5	**b** 4613963	Label (Low or Ultra Low Sulfer Fuel Only)	1
6	1677428	Label (Hyster Logo)	1
7	1503877	Label (Noise Level) (104 dba)	1
7	1503879	Label (Low Noise) (105 dba)	1
8	1300094	Label (Fan Warning)	2
9	1354165	Label (Antifreeze)	2
10	1345926	Label (Fan Warning)	1
11	2093225	Label (Brake System Fluid Tag)	1
12	1375676	Label (Boron-Free Antifreeze)	1
13	**d** 2075614	Label (Hood Opening Warning)	1
14	**c** 2076171	Label (Swivel Seat Caution)	1
15	2082680	Label (Electronic Arm Caution) (MinI Levers)	1
16	2075417	Label (Locking Gas Spring)	1
17	1594807	Label (Model 4.0)	2
17	1628690	Label (Model 4.5)	2
17	1594808	Label (Model 5.0)	2
17	1594809	Label (Model 5.5)	2
18	1601748	Label (Fortens)	2
19	1586440	Label (Hyster)	2
20	2073198	Label (Operator Warning)	1
21	1339828	Label (No Riders)	2
22	2075655	Label (Mast Warning)	2
23	**a**	Inspection Plate	1
24	1339832	Label (Pinch Point)	2
25	316448	Label (Lifting Eye)	3
26	1562353	Label (Hyster)	2
27	1343276	Label (Mast Warning)	1
28	1359588	Label (Operator Restraint)	2
29	**b** 4616658	Label (Diesel Particulate Filter)	1
30	**b** 1689504	Label (Turbo Diesel)	1
	4625662	Label	1
	4625663	Label	1
	4100051	Label	1

FOOTNOTES:

a Contact Your Local Hyster Dealer
b Diesel Only
c For Vehicles With Swivel Seat Only
d LPG Only

©2015 HYSTER COMPANY

LABELS (FIGURE 1-46)
INTERIOR

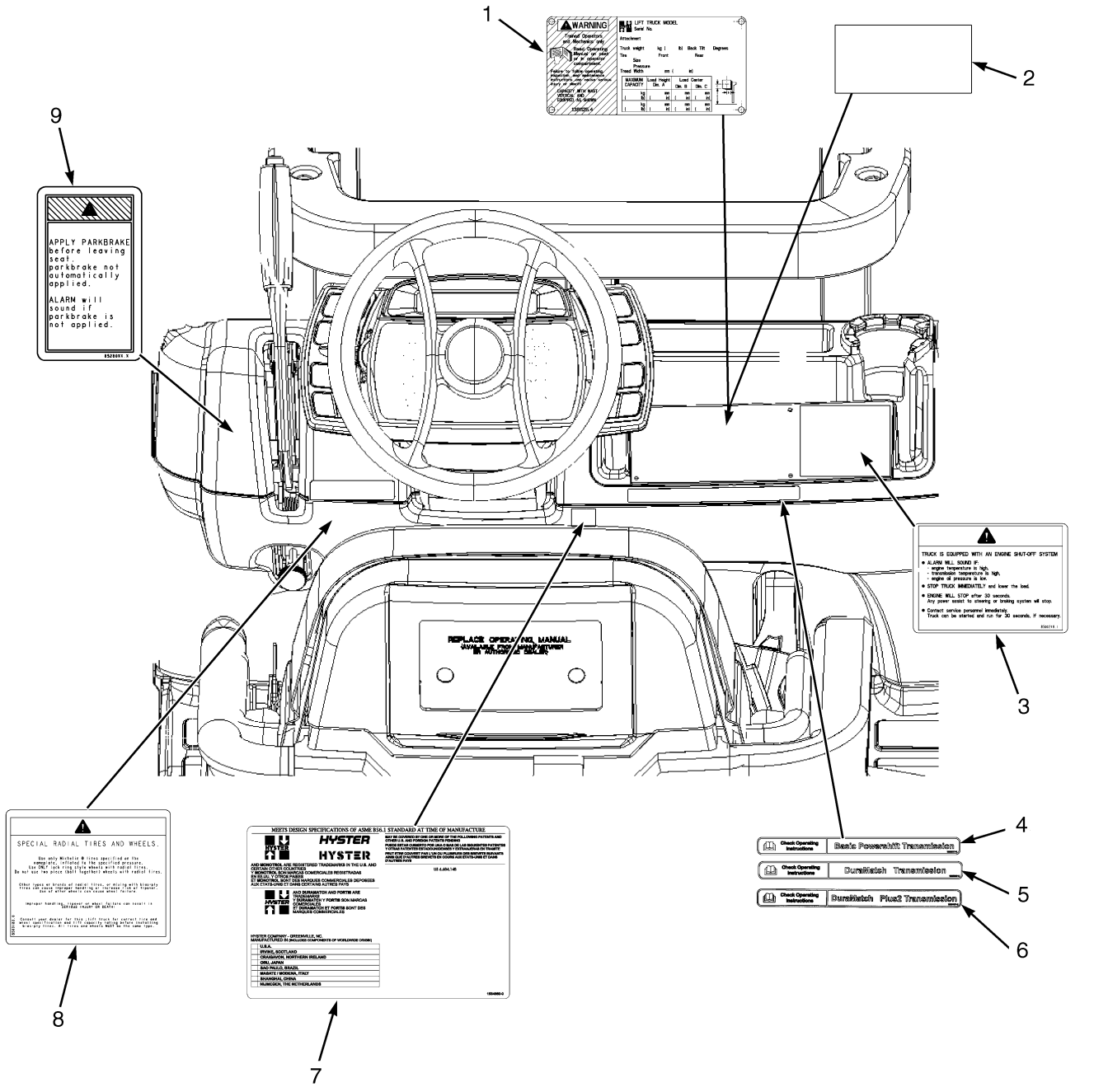

HP121462

©2015 HYSTER COMPANY

LABELS
INTERIOR

ITEM	PART NO.	DESCRIPTION	QTY
1	**b**	Nameplate	1
1	170658	Rivet	4
1	2307400	Rivet (Optional)	4
2	389688	Nameplate Cover	1
3	2038100	Label (Drive Train Protection)	1
4	**a** 1589377	Label (Basic Powershift Transmission)	1
4	4052059	Label (Basic Powershift 2 Transmission)	1
5	**c** 1589397	Label (DuraMatch Transmission)	1
6	1589437	Label (DuraMatch Plus2 Transmission)	1
6	**d** 1627200	Label (DuraMatch 2 Transmission)	1
7	1534660	Label (Patents and Trademarks)	1
8	4612321	Label (Radial Tire Warning)	1
9	2074210	Label (Park Brake Warning)	1
	d 4603387	Label (Hydraulic Quick Disconnect)	1

FOOTNOTES:

a Basic Transmission
b Contact Your Local Hyster Dealer
c Electric Transmission
d Not Illustrated

©2015 HYSTER COMPANY

LABELS (FIGURE 1-47)
HYDRAULIC CONTROL LABELS — MANUAL HYDRAULIC

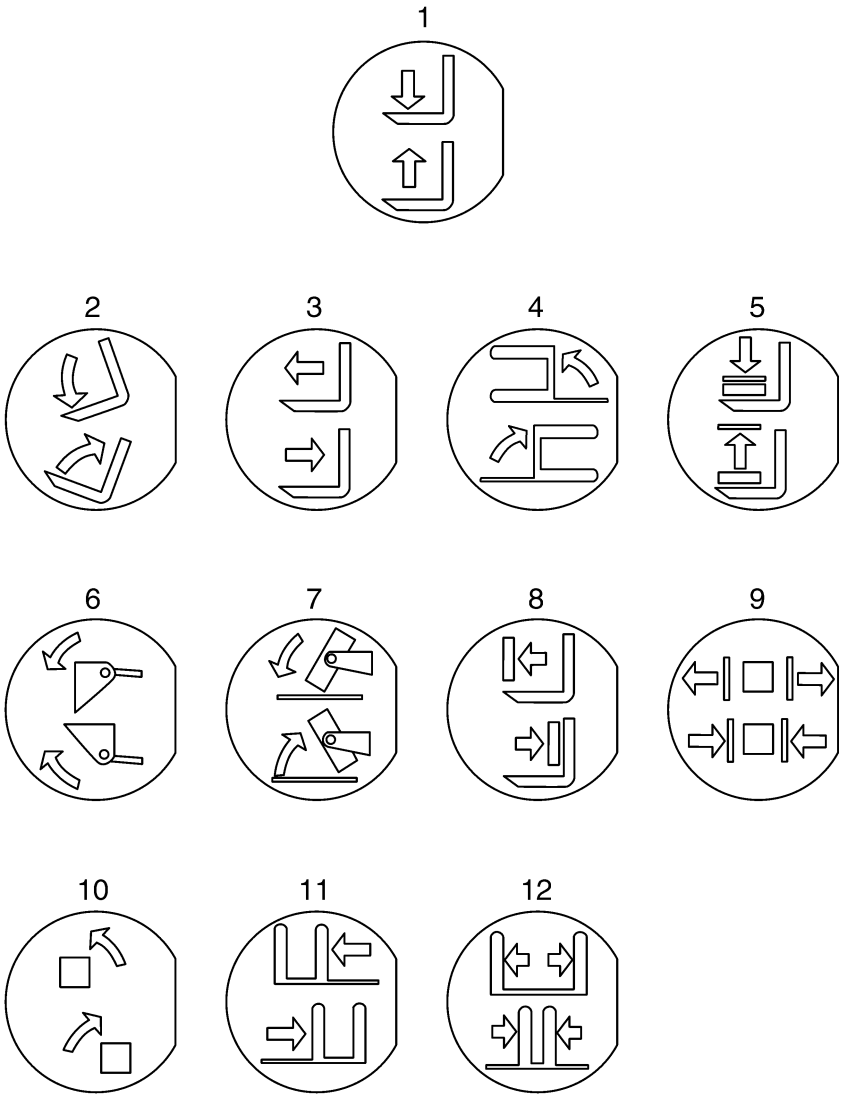

BP121111

©2015 HYSTER COMPANY

LABELS

HYDRAULIC CONTROL LABELS – MANUAL HYDRAULIC

ITEM	PART NO.	DESCRIPTION	QTY
1	4034931	Lens with label (Hoist)	1
2	4034932	Lens with label (Tilt)	1
3	4034933	Lens with label (Reach)	1
4	4034934	Lens with label (Swing)	1
5	4034935	Lens with label (Load Stabilizer)	1
6	4034936	Lens with label (Scoop)	1
7	4034937	Lens with label (Upender)	1
8	4034938	Lens with label	1
9	4034939	Lens with label (Clamp)	1
10	4034940	Lens with label (Rotate)	1
11	4034941	Lens with label (Side-Shift)	1
12	4034942	Lens with label (Fork Spread)	1
	a 2070655	Lens (Blank)	1

FOOTNOTES:

a Not Illustrated

©2015 HYSTER COMPANY

MINI LEVER MODULE LABELS (FIGURE 1-48)
HYDRAULIC CONTROL FUNCTIONS

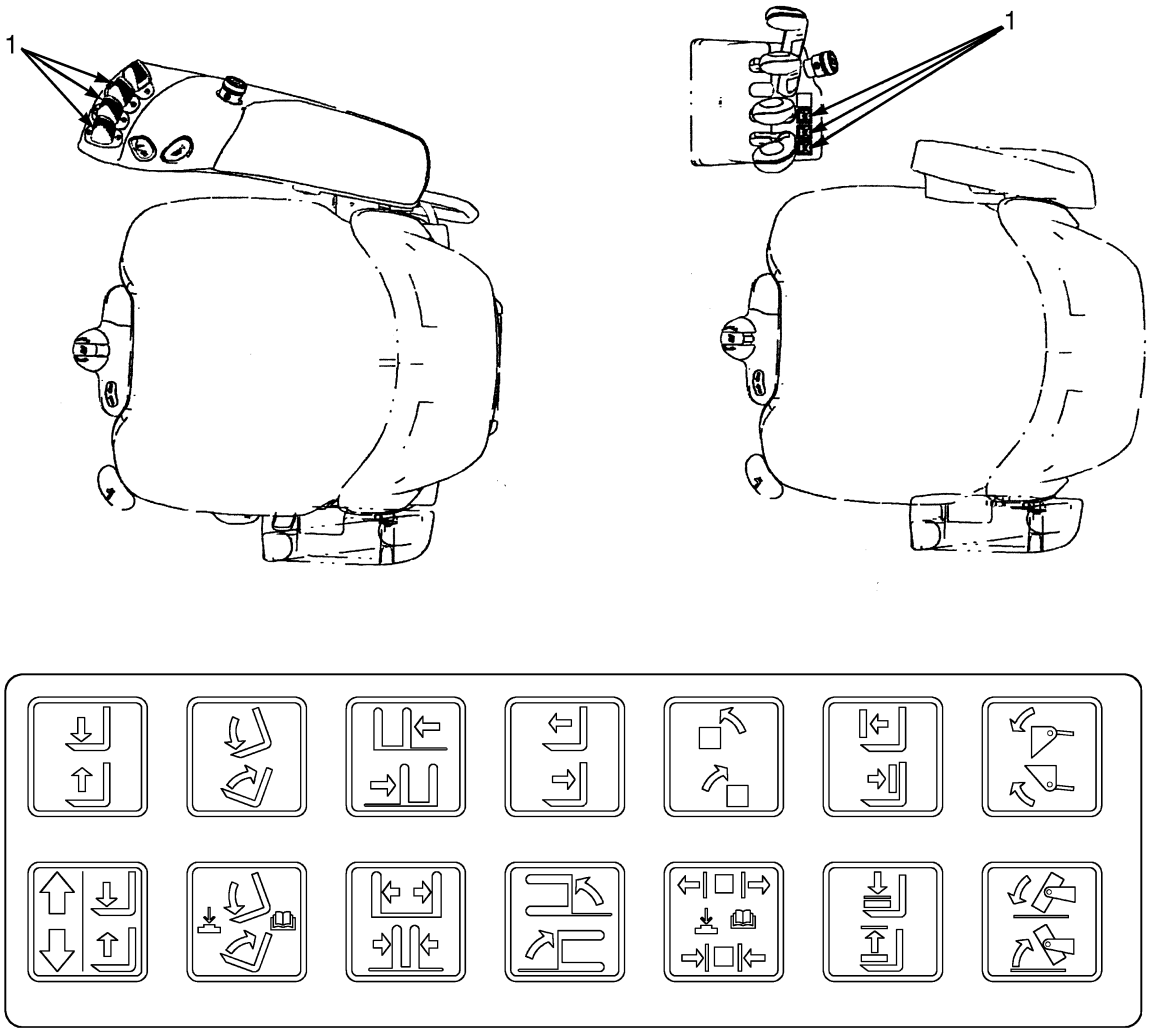

BP120427

©2015 HYSTER COMPANY

MINI LEVER MODULE LABELS
HYDRAULIC CONTROL FUNCTIONS

ITEM	PART NO.	DESCRIPTION	QTY
1	2102640	Label	1

©2015 HYSTER COMPANY

BOLT ON CAB WITH STANDARD (HIGH) OVERHEAD GUARD (FIGURE 1-49)

FRONT SCREEN WITH WIPER/WASHER — PAGE 1 OF 2

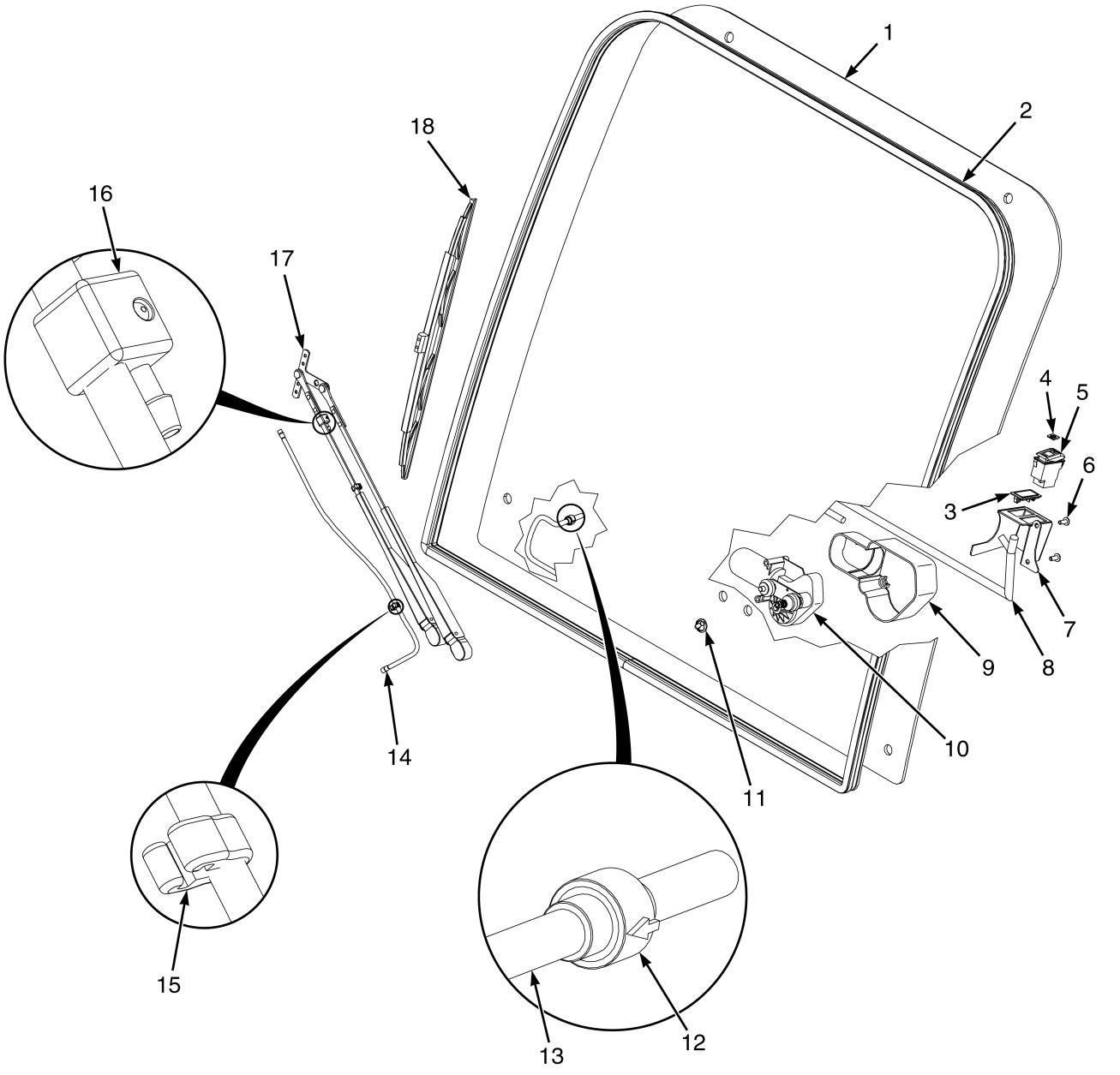

©2015 HYSTER COMPANY

BOLT ON CAB WITH STANDARD (HIGH) OVERHEAD GUARD

FRONT SCREEN WITH WIPER/WASHER – PAGE 1 OF 2

ITEM	PART NO.	DESCRIPTION	QTY
	4092603	Kit-Front Screen With Wipers	1
1	4108773	Window	1
2	4108774	Seal (4195mm)	1
3	4108725	Plug	1
4	4108724	Label Wiper/Washer	1
5	4108723	Switch	1
6	4108709	Capscrew	2
7	4108722	Housing	1
8	4108738	Wire Harness (Main)	1
9	4108721	Cover	1
10	4108718	Wiper Motor	1
11	4108726	Connector for Spray Hose (Elbow Fitting)	1
12	4108731	Valve (Non Return)	1
13	4108775	Hose (800mm)	1
14	4108727	Hose (500mm)	1
15	4108728	Clip	1
16	4108729	Window Washer (Spray Nozzle)	1
17	4108719	Wiper Arm	1
18	4108720	Wiper Blade	1

©2015 HYSTER COMPANY

BOLT ON CAB WITH STANDARD (HIGH) OVERHEAD GUARD (FIGURE 1-50)

FRONT SCREEN WITH WIPER/WASHER — PAGE 2 OF 2

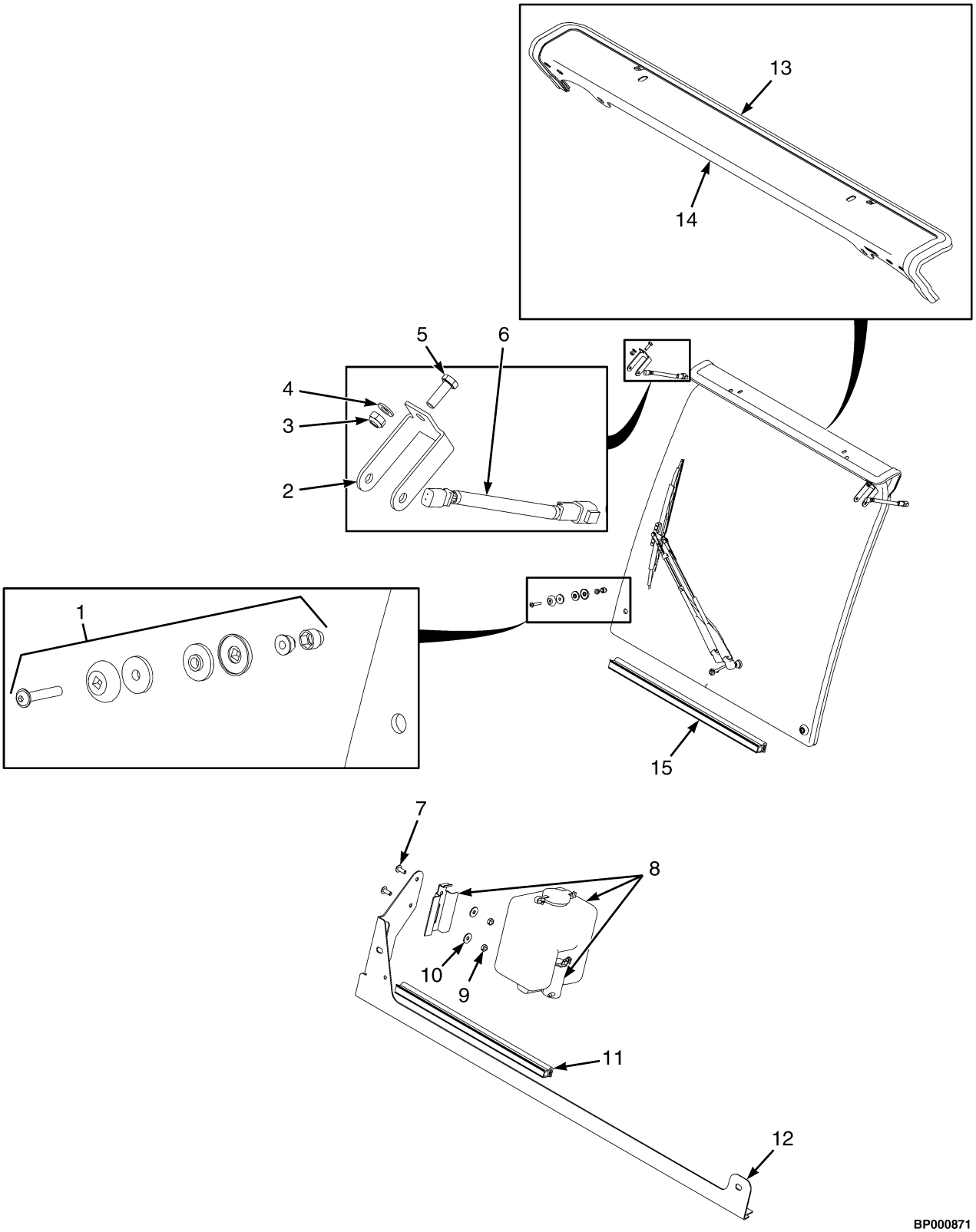

©2015 HYSTER COMPANY

BOLT ON CAB WITH STANDARD (HIGH) OVERHEAD GUARD

FRONT SCREEN WITH WIPER/WASHER – PAGE 2 OF 2

ITEM	PART NO.	DESCRIPTION	QTY
	4092603	Kit-Front Screen With Wipers	1
1	4108737	Kit Window Mounting Bolt	4
2	4108736	Bracket (Front Light)	2
3	~~4108735~~		
	4116826	Nut	2
4	4108734	Washer	2
5	4108733	Capscrew	2
6	4108739	Wire Harness (Light Jumper)	2
7	4108709	Capscrew	2
8	4108712	Window Washer Bottle Assembly with Pump	1
9	4108711	Nut	2
10	4108710	Washer	2
11	4109479	Seal (450mm)	1
12	4108770	Window Frame (Bottom Crossmember)	1
13	4108772	Seal (1518mm)	1
14	4108771	Window Frame (Top Crossmember)	1
15	4116835	Seal (1200mm)	1

©2015 HYSTER COMPANY

BOLT ON CAB WITH STANDARD (HIGH) OVERHEAD GUARD (FIGURE 1-51)

TOP SCREEN

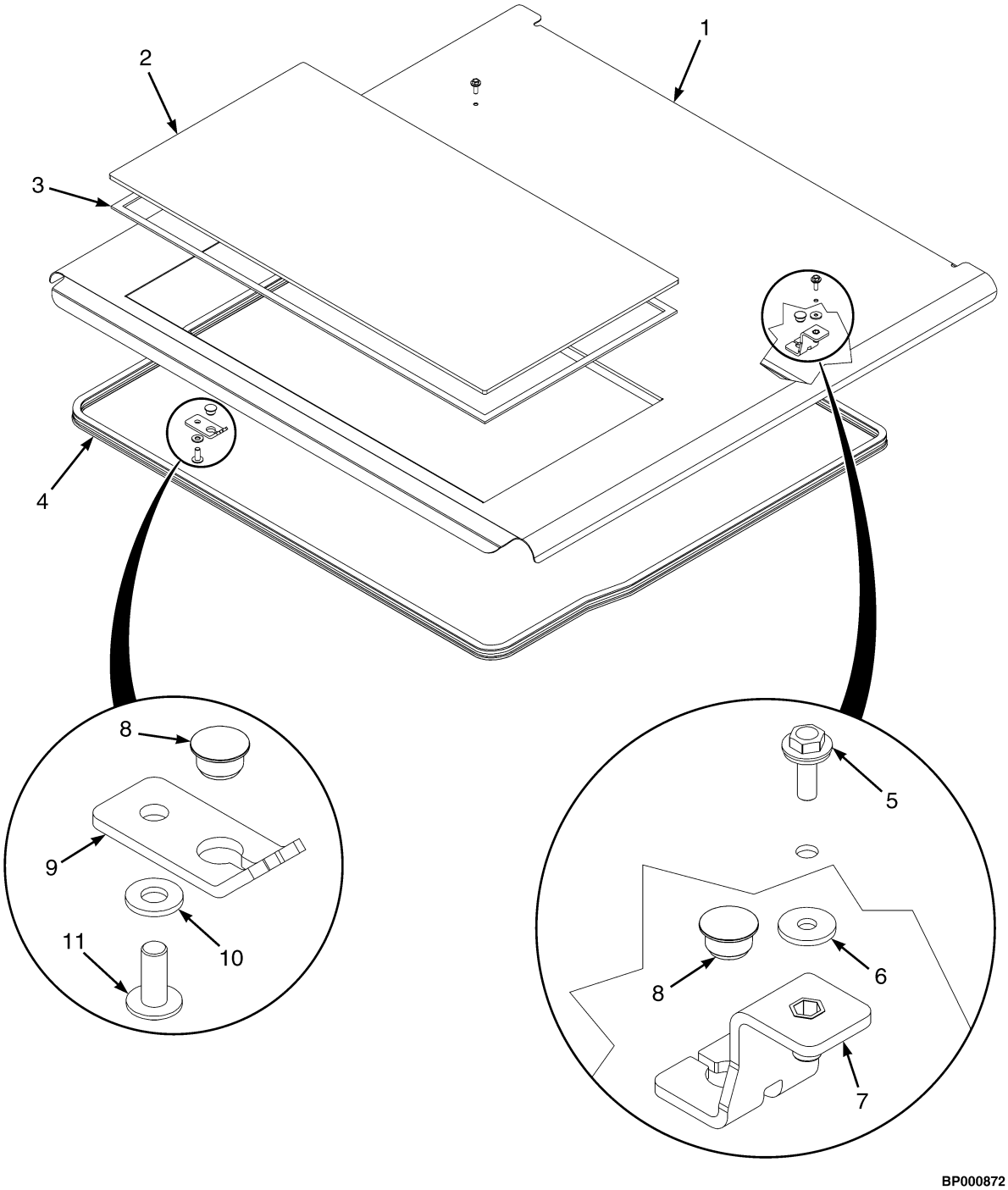

©2015 HYSTER COMPANY

BOLT ON CAB WITH STANDARD (HIGH) OVERHEAD GUARD

TOP SCREEN

ITEM	PART NO.	DESCRIPTION	QTY
	4092600	Kit-Top Screen	1
1	4108776	Frame (Window Top)	1
2	4108697	Window (Top)	1
3	4108698	Kit-Glue	1
4	4108777	Seal (3915mm)	1
5	4108705	Capscrew	2
6	4108704	Washer	2
7	4108703	Bracket Assembly (Roof Rear)	2
8	4108706	Cap	4
9	4108700	Bracket (Roof Front)	2
10	4108701	Washer	2
11	4108702	Capscrew	2

©2015 HYSTER COMPANY

BOLT ON CAB WITH STANDARD (HIGH) OVERHEAD GUARD (FIGURE 1-52)

REAR SCREEN WITH WIPER/WASHER — PAGE 1 OF 2

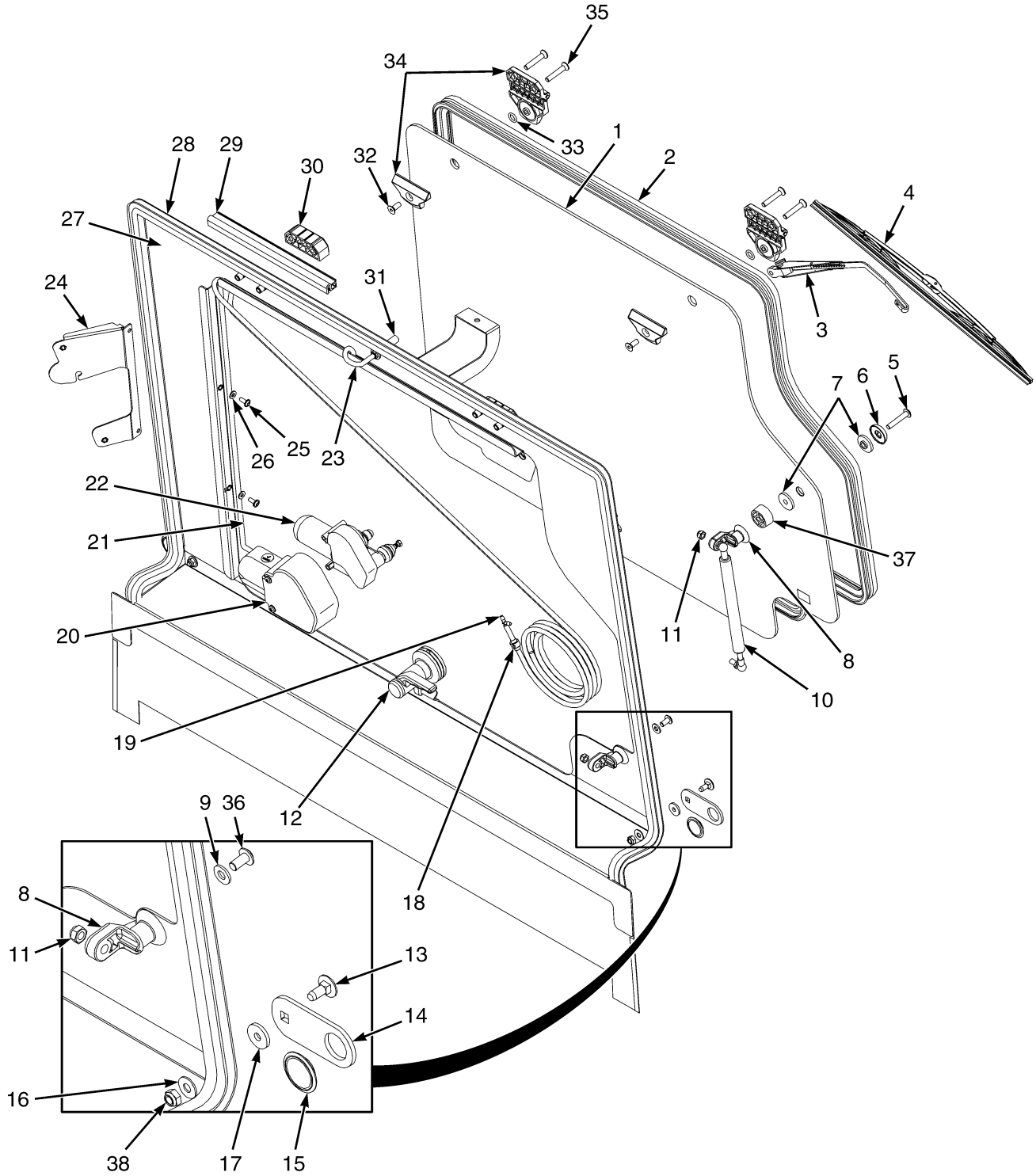

©2015 HYSTER COMPANY

BOLT ON CAB WITH STANDARD (HIGH) OVERHEAD GUARD

REAR SCREEN WITH WIPER/WASHER – PAGE 1 OF 2

ITEM	PART NO.	DESCRIPTION	QTY
	4092601	Kit-Rear Screen With Wipers	1
	4119706	Kit-Rear Screen Steel/Glass For High Overhead Guard with Jumper Harness	1
1	4109472	Rear Window	1
2	4109473	Seal (3228mm)	1
3	4108759	Wiper Arm	1
4	4108760	Wiper Blade	1
5	4108757	Capscrew	1
6	4108756	Washer	1
7	4108755	Washer	2
8	4108754	Bracket	2
9	4108701	Washer	1
10	4108753	Gas Spring	1
11	~~4108735~~		
	4116826	Nut	2
12	4108758	Handle	1
13	4108745	Bolt	2
14	4108743	Plate	2
15	4108746	Cap	2
16	4108732	Washer	4
17	4108744	Spacer	2
18	4108731	Valve (Non Return)	1
19	4108766	Fitting (T-Piece)	1
20	4108721	Cover	1
21	4108767	Wire Harness (Rear)	1
21	4141717	Wire Harness (Rear) (Alternate Part)	1
22	4108718	Wiper Motor	1
23	4108765	Hose (2550mm)	1
24	4108761	Bracket (Handle)	1
25	4108762	Washer	2
26	4108709	Capscrew	2
27	4109470	Window Frame (Rear)	1
28	4109471	Seal (2930mm)	1
29	4108763	Seal (280mm)	1
30	4108749	Spacer	1
31	4108742	Window Washer (Spray Nozzle)	1
32	4116825	Capscrew	2
33	4108752	O-Ring	2
34	4108750	Hinge	2
35	4108751	Capscrew	4
36	4109474	Capscrew	1
37	4109475	Spacer	1
38	~~4108735~~		
	4116826	Nut	2
	a 4141716	Grommet	1
	a 4126305	Wire Harness (Front/Rear Jumper)	1

FOOTNOTES:

a Not Illustrated

©2015 HYSTER COMPANY

BOLT ON CAB WITH STANDARD (HIGH) OVERHEAD GUARD (FIGURE 1-53)

REAR SCREEN WITH WIPER/WASHER — PAGE 2 OF 2

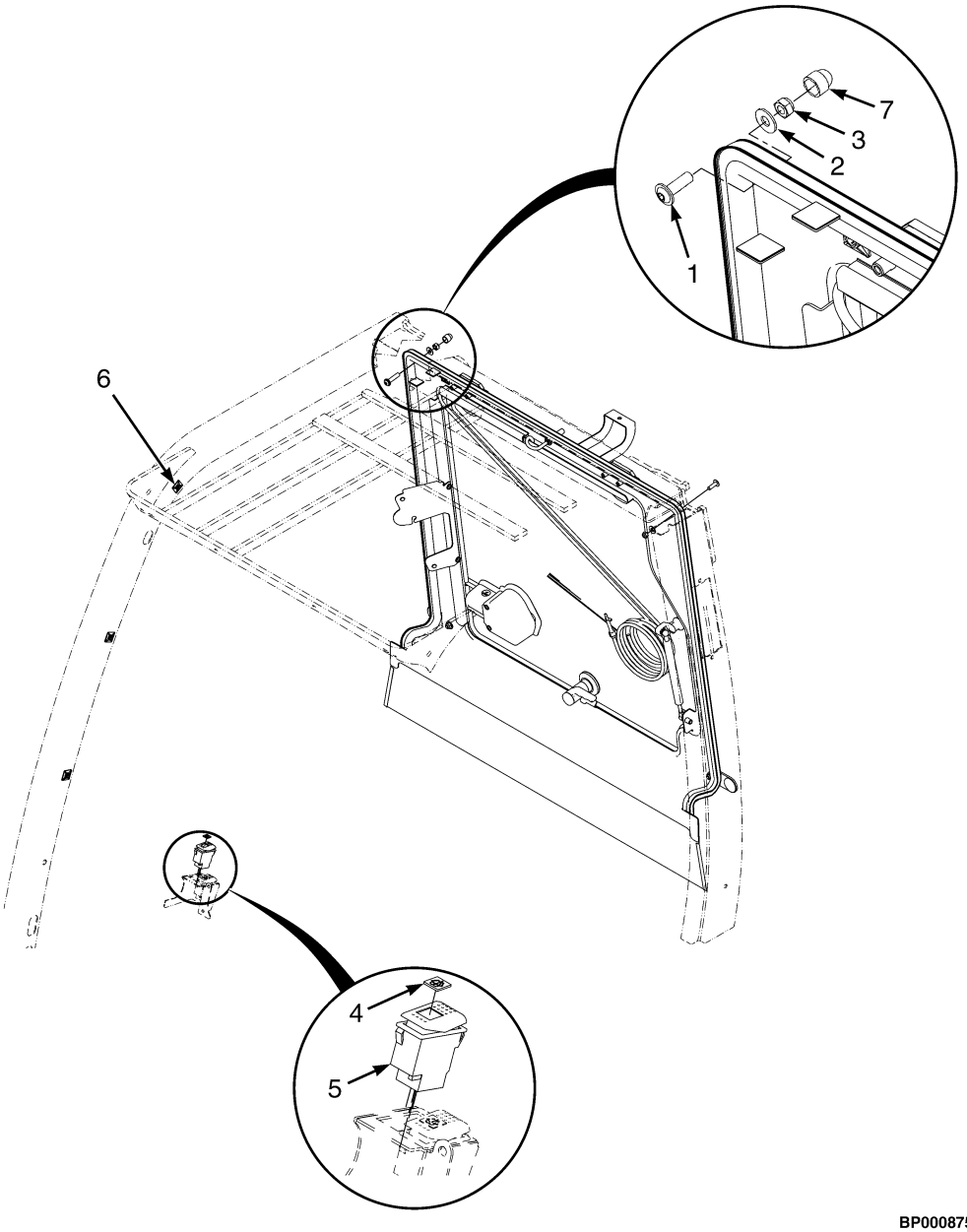

©2015 HYSTER COMPANY

BOLT ON CAB WITH STANDARD (HIGH) OVERHEAD GUARD

REAR SCREEN WITH WIPER/WASHER – PAGE 2 OF 2

ITEM	PART NO.	DESCRIPTION	QTY
	4092601	Kit-Rear Screen With Wipers	1
	4119706	Kit-Rear Screen Steel/Glass For High Overhead Guard with Jumper Harness	1
1	4108768	Capscrew	2
2	4108732	Washer	2
3	~~4108735~~		
	4116826	Nut	2
4	4108724	Label Wiper/Washer	1
5	4108723	Switch	1
6	4108769	Holder (Stick-On)	6
7	4112651	Cover	2

©2015 HYSTER COMPANY

BOLT ON CAB WITH STANDARD (HIGH) OVERHEAD GUARD (FIGURE 1-54)
PVC DOORS

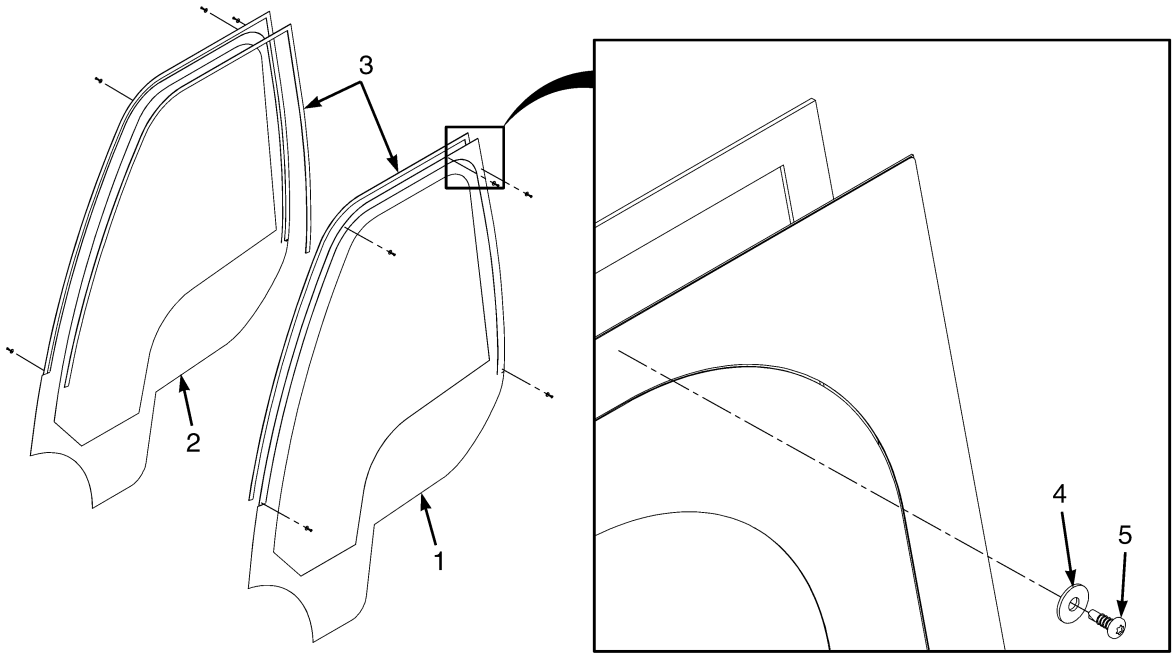

BP000873

ITEM	PART NO.	DESCRIPTION	QTY
	4092602	Kit-Door (PVC RH and LH For High Overhead Guard)	1
1	4109476	Door Pvc (LH)	1
2	4109477	Door Pvc (RH)	1
3	4109478	Seal (Velcro 2900mm)	2
4	4108694	Washer	10
5	4108695	Screw	10

©2015 HYSTER COMPANY

2 ENGINE ASSEMBLY - DIESEL

SECTION 2
ENGINE ASSEMBLY - DIESEL

DESCRIPTION	PAGE
ALTERNATOR AND PULLEY	
KUBOTA DIESEL	2-105
BREATHER AND SEPARATOR PIPES	
KUBOTA DIESEL - 3.8L	2-84
CAMSHAFT AND IDLE GEAR SHAFT	
KUBOTA DIESEL - 3.6L	2-72
KUBOTA DIESEL - 3.8L	2-73
COMPRESSOR ASSEMBLY AND ATTACHING PARTS	
WITH CAB AND AIR CONDITIONING	2-40
COOLING	
KUBOTA DIESEL - WITH EXTERNAL OIL COOLER	2-12
KUBOTA DIESEL - WITHOUT EXTERNAL OIL COOLER WITH SHORT WHEELBASE	2-14
COVER BEARING CASE	
KUBOTA DIESEL - 3.6L, 3.8L	2-63
CYLINDER BLOCK	
KUBOTA DIESEL - 3.6L	2-64
KUBOTA DIESEL - 3.8L	2-66
CYLINDER HEAD	
KUBOTA DIESEL - 3.6L	2-48
KUBOTA DIESEL - 3.8L	2-49
CYLINDER HEAD COVER	
KUBOTA DIESEL - 3.6L	2-44
KUBOTA DIESEL - 3.8L	2-46
DIESEL PARTICULATE FILTER	
ATTACHING PARTS - KUBOTA 3.8L DIESEL	2-36
MUFFLER ASSEMBLY - KUBOTA 3.8L DIESEL	2-38
DIPSTICK	
KUBOTA DIESEL - 3.6L, 3.8L	2-74
EGR COOLER	
KUBOTA DIESEL - 3.8L	2-94
EGR VALVE	
KUBOTA DIESEL - 3.8L	2-93
ENGINE WITH ENGINE MOUNT AND TORQUE CONVERTER	
3.6L KUBOTA DIESEL	2-4
3.8L KUBOTA DIESEL	2-6
EXHAUST MANIFOLD	
KUBOTA DIESEL - 3.6L	2-58
KUBOTA DIESEL - 3.8L	2-59
EXHAUST SYSTEM	
COUNTERWEIGHT EXHAUST LWB - 3.6L DIESEL	2-20
COUNTERWEIGHT EXHAUST LWB - 3.8L DIESEL WITH DPF	2-30
COUNTERWEIGHT EXHAUST SWB - 3.6L	2-24
COUNTERWEIGHT EXHAUST SWB - 3.8L WITH DPF	2-28
OVERHEAD EXHAUST LWB - 3.6L	2-22
OVERHEAD EXHAUST LWB - 3.8L DIESEL WITH DPF	2-34
OVERHEAD EXHAUST SWB - 3.6L	2-26
OVERHEAD EXHAUST SWB - 3.8L DIESEL WITH DPF	2-32
FAN PULLEY	
KUBOTA DIESEL - 3.6L, 3.8L	2-43

©2015 HYSTER COMPANY

SECTION 2
ENGINE ASSEMBLY - DIESEL

DESCRIPTION **PAGE**

FAN SHROUD WITH RADIATOR SCREEN
LONG WHEEL BASE 2-18
SHORT WHEEL BASE 2-17
FAN SHROUD WITHOUT RADIATOR SCREEN
SHORT WHEEL BASE 2-16
FLYWHEEL AND HOUSING
KUBOTA DIESEL - 3.6L, 3.8L 2-42
FUEL FILTER
KUBOTA DIESEL - 3.6L 2-100
FUEL INJECTION PUMP
KUBOTA DIESEL - 3.8L 2-89
FUEL PUMP
KUBOTA DIESEL - 3.6L 2-99
FUEL RAIL
KUBOTA DIESEL - 3.8L 2-90
GEAR CASE
KUBOTA DIESEL - 3.6L 2-60
KUBOTA DIESEL - 3.8L 2-62
GOVERNOR
KUBOTA DIESEL - 3.6L 2-102
GOVERNOR ACTUATOR AND PLUG
KUBOTA DIESEL - 3.6L 2-104
HYDRAULIC FAN DRIVE
DIESEL LWB 2-8
KUBOTA 3.8L DIESEL/LPG - SWB 2-10
INJECTION PIPE
KUBOTA DIESEL - 3.8L 2-92
INJECTION PUMP
KUBOTA DIESEL - 3.6L 2-96
INJECTION PUMP HOUSING
KUBOTA DIESEL - 3.6L 2-95
INJECTOR BODY
KUBOTA 3.6L DIESEL 2-98
INJECTOR HARNESS
KUBOTA DIESEL - 3.8L 2-91
INLET AND EXHAUST VALVES
KUBOTA DIESEL - 3.8L 2-53
INLET MANIFOLD
KUBOTA DIESEL - 3.6L 2-54
KUBOTA DIESEL - 3.8L 2-56
NOZZLE HOLDER AND GLOW PLUG
KUBOTA DIESEL - 3.6L 2-97
OIL COOLER
KUBOTA DIESEL - 3.6L 2-80
KUBOTA DIESEL - 3.8L 2-81
OIL PAN
KUBOTA DIESEL - 3.6L, 3.8L 2-75
OIL SEPARATOR
KUBOTA DIESEL - 3.8L 2-85

©2015 HYSTER COMPANY

SECTION 2
ENGINE ASSEMBLY - DIESEL

DESCRIPTION	PAGE
PISTON AND CRANKSHAFT	
KUBOTA DIESEL - 3.6L	2-68
KUBOTA DIESEL - 3.8L	2-70
ROCKER ARM ASSEMBLY	
WITH INLET AND EXHAUST VALVES - KUBOTA DIESEL (3.6L)	2-50
ROCKER ARM SHAFT	
KUBOTA DIESEL - 3.8L	2-52
SENSORS	
KUBOTA DIESEL - 3.8L	2-106
STARTER	
KUBOTA DIESEL - 3.6L, 3.8L	2-107
TURBO INLET PIPE	
KUBOTA DIESEL - 3.8L	2-86
TURBOCHARGER	
KUBOTA DIESEL - 3.6L	2-82
KUBOTA DIESEL - 3.8L	2-83
TURBOCHARGER OIL PLUMBING	
KUBOTA DIESEL - 3.6L	2-87
KUBOTA DIESEL - 3.8L	2-88
WATER PUMP	
KUBOTA DIESEL - 3.6L	2-77
KUBOTA DIESEL - 3.8L	2-79
WATER PUMP FLANGE AND THERMOSTAT	
KUBOTA DIESEL - 3.6L	2-76
KUBOTA DIESEL - 3.8L	2-78

©2015 HYSTER COMPANY

ENGINE WITH ENGINE MOUNT AND TORQUE CONVERTER (FIGURE 2-1)

3.6L KUBOTA DIESEL

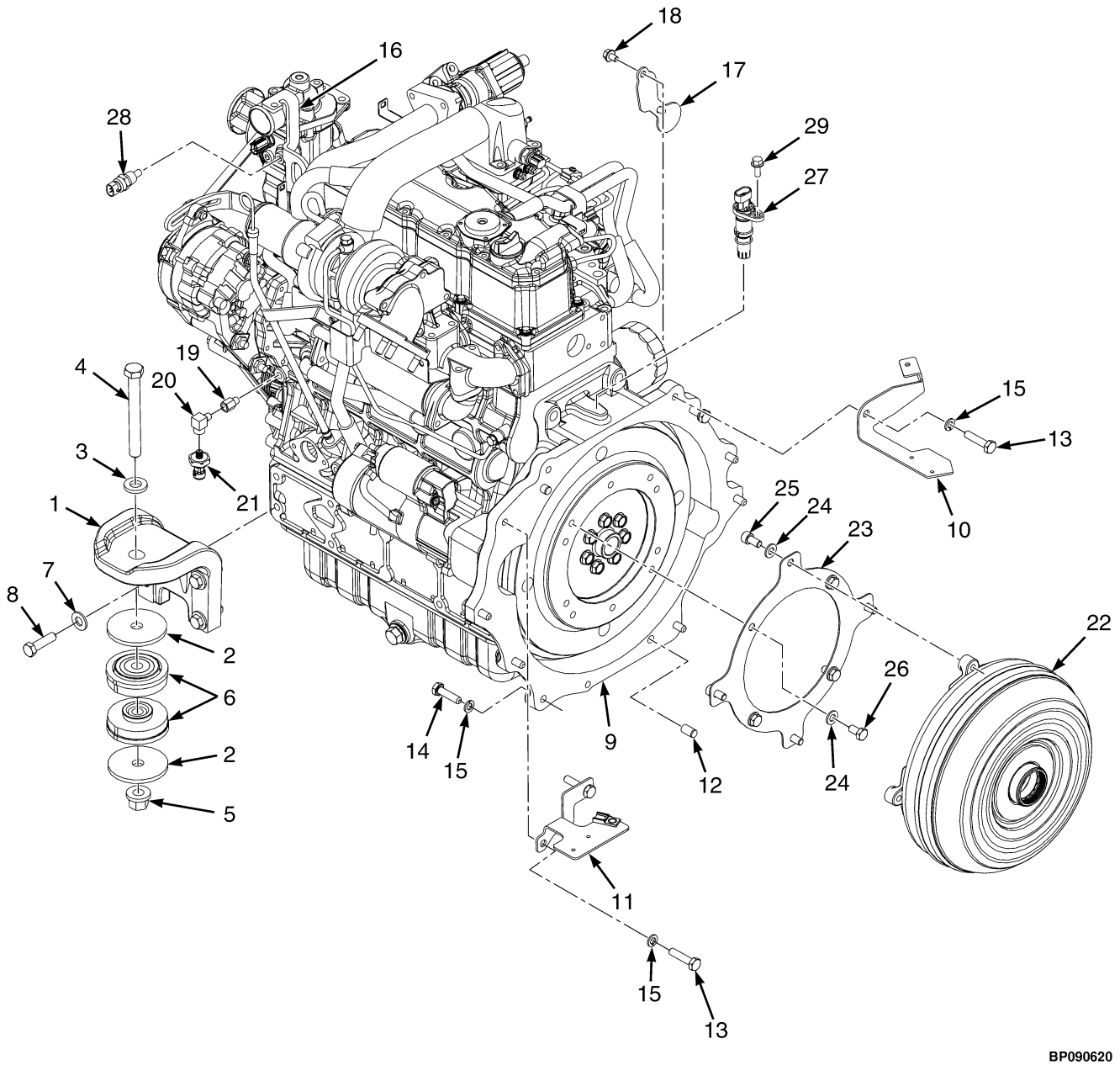

©2015 HYSTER COMPANY

ENGINE WITH ENGINE MOUNT AND TORQUE CONVERTER
3.6L KUBOTA DIESEL

ITEM	PART NO.	DESCRIPTION	QTY
1	4129891	Motor Mount (RH)	1
1	4129892	Motor Mount (LH)	1
2	4129461	Washer	4
3	1504075	Washer	2
4	293698	Capscrew	2
5	1565453	Nut (Flange)	2
6	4643563	Isolator	4
7	296423	Washer	8
8	2088763	Capscrew	8
9	4615470	Engine Assy-Diesel (3.6L)	1
10	1660913	Bracket (Tube Retention)	1
11	1623093	Bracket	1
12	303150	Dowel	2
13	292516	Capscrew	4
14	292515	Capscrew	6
15	292682	Lockwasher	10
16	4060809	Lifting Eye	1
17	4024574	Dust Cover	1
18	1529366	Capscrew	2
19	367224	Adapter	1
20	16151	Fitting	1
21	1566654	Pressure Transducer Sensor (Oil Pressure)	1
22	4020309	Torque Converter	1
23	4020310	Flex Plate	1
24	296420	Washer	8
25	4618189	Special Capscrew	4
26	293627	Capscrew	4
27	1541231	Sensor (Input Speed, TISS)	1
28	1560255	Sensor (Coolant Temperature)	1
29	1527876	Capscrew	1
	a 360387	Loctite	AR
	a 251979	Lubricant	AR

FOOTNOTES:

a Not Illustrated

©2015 HYSTER COMPANY

ENGINE WITH ENGINE MOUNT AND TORQUE CONVERTER (FIGURE 2-2)

3.8L KUBOTA DIESEL

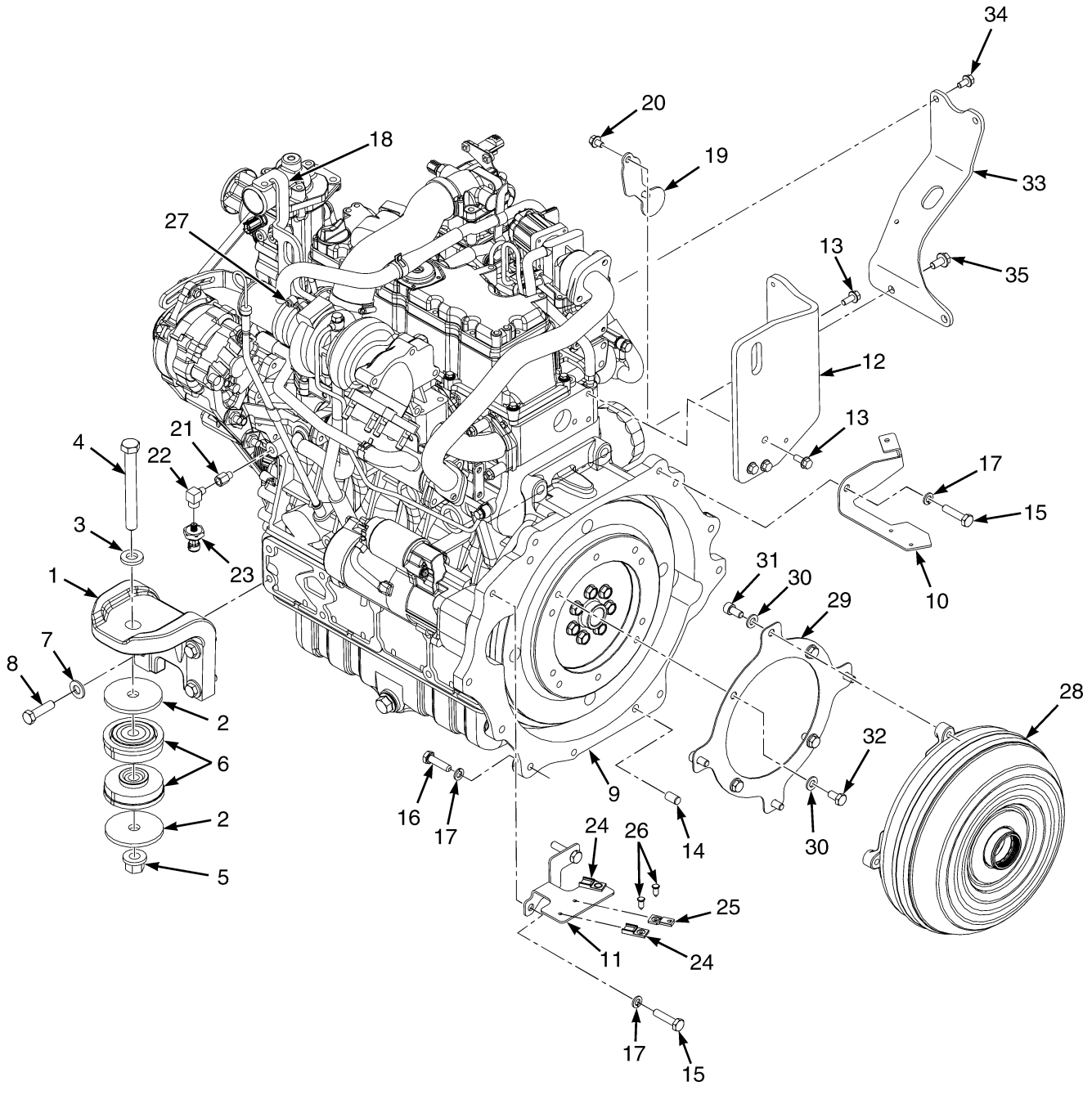

©2015 HYSTER COMPANY

ENGINE WITH ENGINE MOUNT AND TORQUE CONVERTER
3.8L KUBOTA DIESEL

ITEM	PART NO.	DESCRIPTION	QTY
1	4018204	Motor Mount (RH)	1
1	**a** 4093215	Motor Mount (LH)	1
2	1557737	Washer	4
3	1504075	Washer	2
4	293699	Capscrew	2
5	1565453	Nut (Flange)	2
6	2069951	Isolator	4
7	296423	Washer	8
8	2088763	Capscrew	8
9	4620483	Engine Assy-Diesel (3.8L)	1
10	1660913	Bracket (Tube Retention)	1
11	1623093	Bracket	1
12	4049150	Bracket (Lifting Eye)	1
13	1527880	Capscrew	4
14	303150	Dowel	2
15	292516	Capscrew	4
16	292515	Capscrew	6
17	292682	Lockwasher	10
18	4060809	Lifting Eye	1
19	4024574	Dust Cover	1
20	1529366	Capscrew	2
21	367224	Adapter	1
22	16151	Fitting	1
23	1566654	Pressure Transducer Sensor (Oil Pressure)	1
24	1500912	Clip	2
25	1531480	Clip	1
26	1582464	Fastener	3
27	1394008	Hose Clamp	1
28	4020309	Torque Converter	1
29	4020310	Flex Plate	1
30	296420	Washer	8
31	4618189	Special Capscrew	4
32	293627	Capscrew	4
33	4047641	Bracket (Breather Filter)	1
34	1527879	Capscrew	2
35	1582462	Bolt	2
	a 360387	Loctite	AR
	a 251979	Lubricant	AR

FOOTNOTES:

a Not Illustrated

©2015 HYSTER COMPANY

HYDRAULIC FAN DRIVE (FIGURE 2-3)
DIESEL LWB

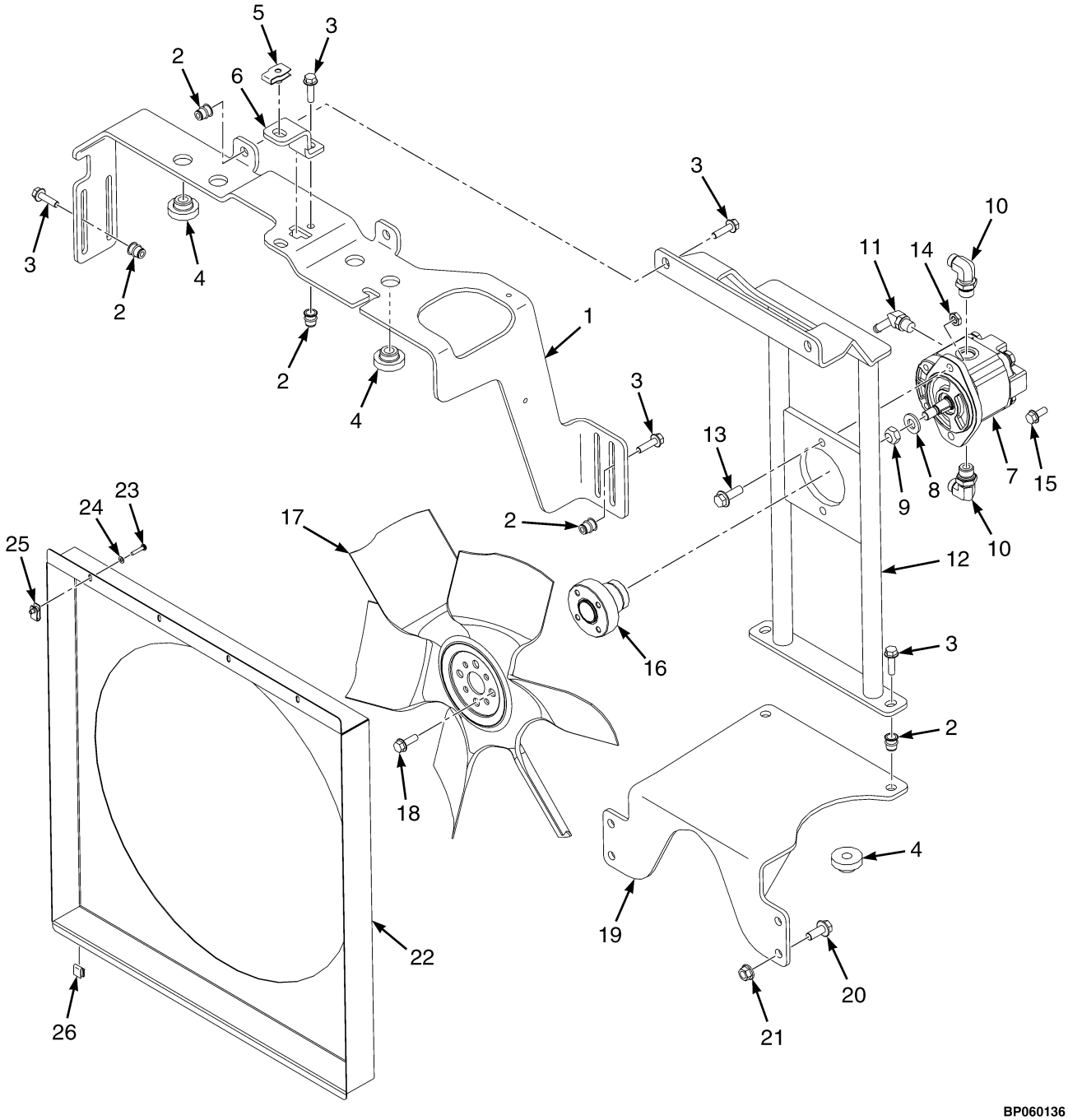

©2015 HYSTER COMPANY

HYDRAULIC FAN DRIVE
DIESEL LWB

ITEM	PART NO.	DESCRIPTION	QTY
1	4076791	Bracket	1
2	1530243	Insert	9
3	1527881	Capscrew	9
4	1529787	Isolator	4
5	1393879	Nut	1
6	4066321	Bracket	1
7	4628472	Hydraulic Motor	1
8	221771	Washer	1
9	221355	Locknut	1
10	1487061	Fitting	2
11	222501	Fitting	1
12	4076784	Mount	1
13	1527884	Capscrew	2
14	296128	Nut	2
15	1527880	Capscrew	4
16	4077036	Adapter	1
17	4634121	Fan (with Scalloped Blades)	1
18	1510113	Capscrew	4
19	4076790	Bracket Wldmt	1
20	1510117	Capscrew	4
21	1460477	Nut	4
22	4076676	Shroud	1
23	302024	Screw	4
24	320154	Washer	4
25	1535257	Nut	4
26	1551663	Clip	2

©2015 HYSTER COMPANY

HYDRAULIC FAN DRIVE (FIGURE 2-4)
KUBOTA 3.8L DIESEL/LPG — SWB

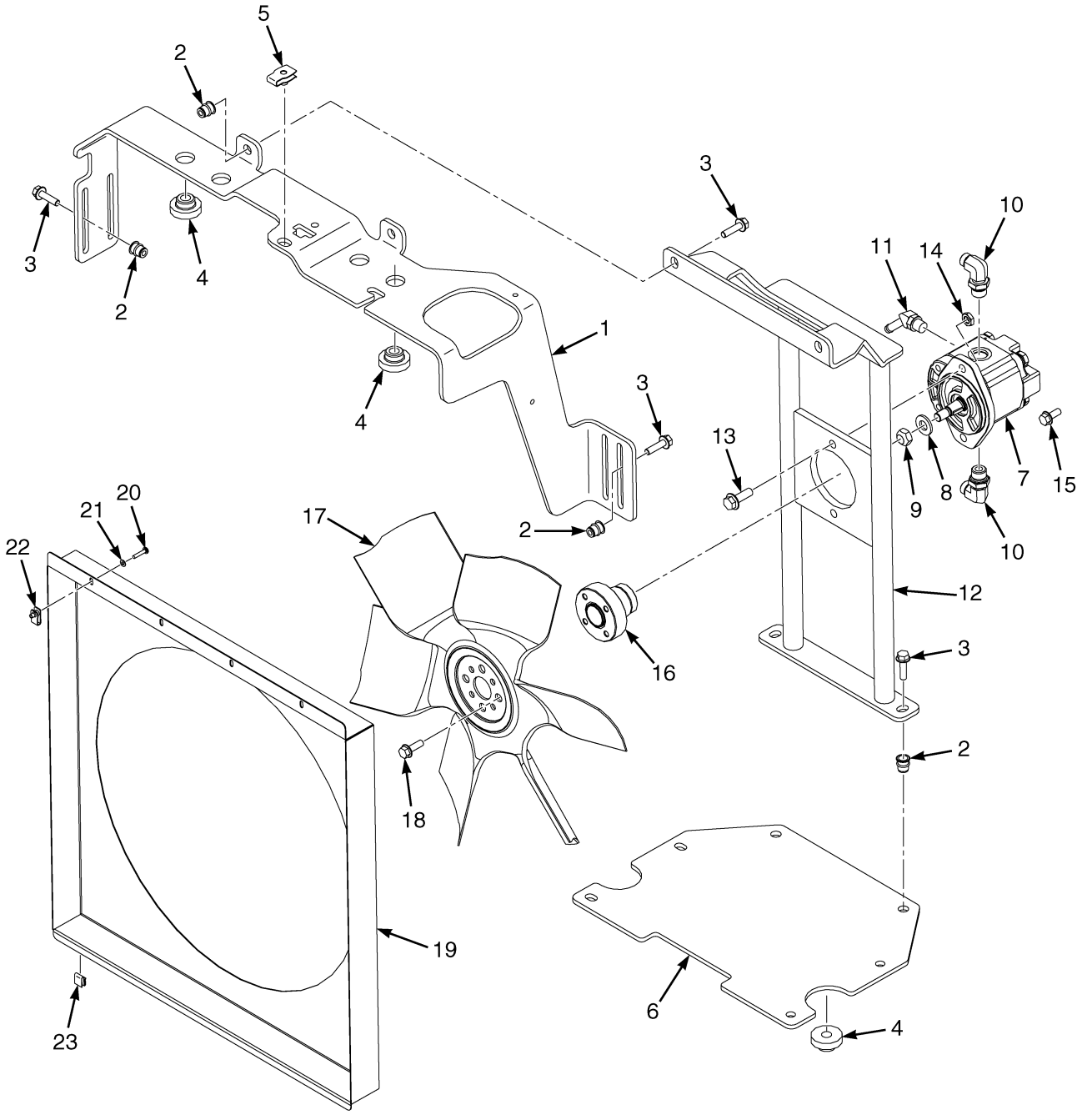

©2015 HYSTER COMPANY

HYDRAULIC FAN DRIVE
KUBOTA 3.8L DIESEL/LPG – SWB

ITEM	PART NO.	DESCRIPTION	QTY
1	4076791	Bracket	1
2	1530243	Insert	12
3	1527881	Capscrew	12
4	1529787	Isolator	4
5	1393879	Nut	1
6	4077826	Bracket (Lower Mount)	1
7	4628472	Hydraulic Motor	1
8	221771	Washer	1
9	221355	Locknut	1
10	1487061	Fitting	2
11	222501	Fitting	1
12	4076784	Mount	1
13	1527884	Capscrew	2
14	296128	Nut	2
15	1527880	Capscrew	4
16	4077036	Adapter	1
17	4634121	Fan (with Scalloped Blades)	1
18	1510113	Capscrew	4
19	4076676	Shroud	1
20	302024	Screw	4
21	320154	Washer	4
22	1535257	Nut	4
23	1551663	Clip	2

©2015 HYSTER COMPANY

COOLING (FIGURE 2-5)
KUBOTA DIESEL — WITH EXTERNAL OIL COOLER

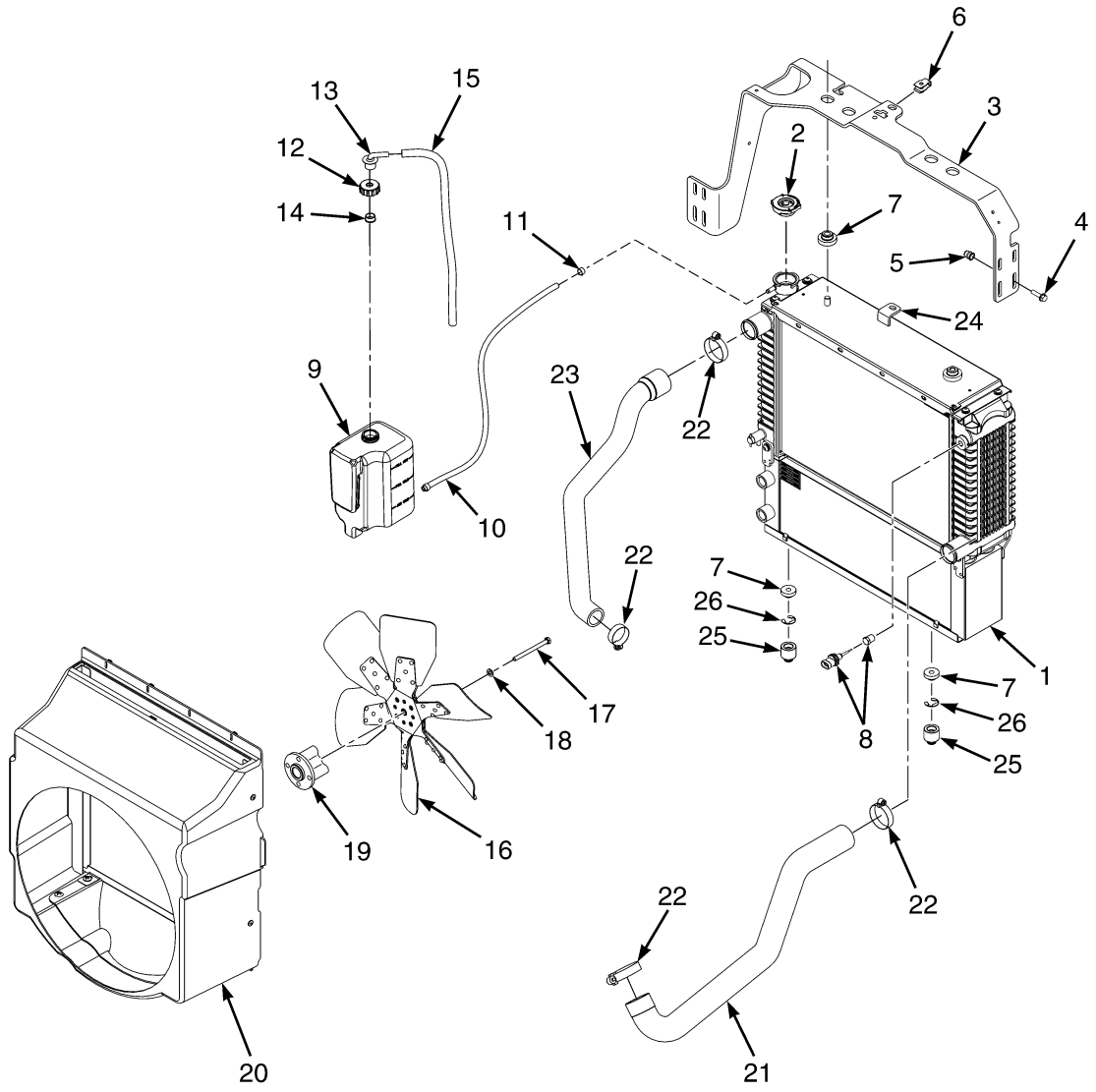

©2015 HYSTER COMPANY

COOLING

KUBOTA DIESEL – WITH EXTERNAL OIL COOLER

KEY:
A: Short Wheelbase
B: Long Wheelbase

ITEM	PART NO.	DESCRIPTION	QTY A	QTY B
1	4603551	Radiator (Assembly)	1	1
1	4038256	Radiator	1	1
1	4038262	Oil Cooler	1	1
1	4038264	Drain Valve	1	1
1	4038265	Nut , Foldover	2	2
1	4038266	Bolt (With Washer)	8	8
1	4038267	Bolt (With Washer)	4	4
2	178899	Radiator Cap	1	1
3	4000086	Bracket (Optional)	1	1
3	1699135	Bracket Wldmt	1	1
4	1527881	Capscrew	4	..
4	1527881	Capscrew	..	5
5	1530243	Insert	4	..
5	1530243	Insert	..	5
6	1393879	Nut	1	1
7	1529787	Isolator	4	4
8	1531404	Sensor (Low Coolant Level)	1	1
8	14385	Fitting (Without Low Coolant Level Sensor)	1	1
9	1643342	Reservoir	1	1
10	1581024	Hose	1	1
11	369815	Clamp	2	2
12	. . . . .	Outlet Assembly	1	1
12	345454	Cap	1	1
13	345453	Outlet (Reservoir)	1	1
13	4127425	Seal	1	1
14	336550	Bushing	1	1
15	1663877	Hose	1	1
16	4634121	Fan (with Scalloped Blades)	1	1
17	293622	Capscrew	4	4
18	296418	Washer	4	4
19	4042107	Collar	1	1
20	4612849	Shroud (Upper) (☞Figure 2-7, ☞Figure 2-8)	1	..
20	4612850	Shroud (Lower) (☞Figure 2-7)	1	..
20	4066325	Shroud (☞Figure 2-9)	..	1
21	4625947	Radiator Hose (Lower)	..	1
22	119236	Clamp	4	4
23	4625946	Radiator Hose (Upper)	1	1
24	4066321	Bracket (Offset)	..	1
25	4067335	Spacer	..	2
26	2076760	Retainer	..	2
	246108	Sealant	AR	AR

©2015 HYSTER COMPANY

COOLING (FIGURE 2-6)
KUBOTA DIESEL — WITHOUT EXTERNAL OIL COOLER WITH SHORT WHEELBASE

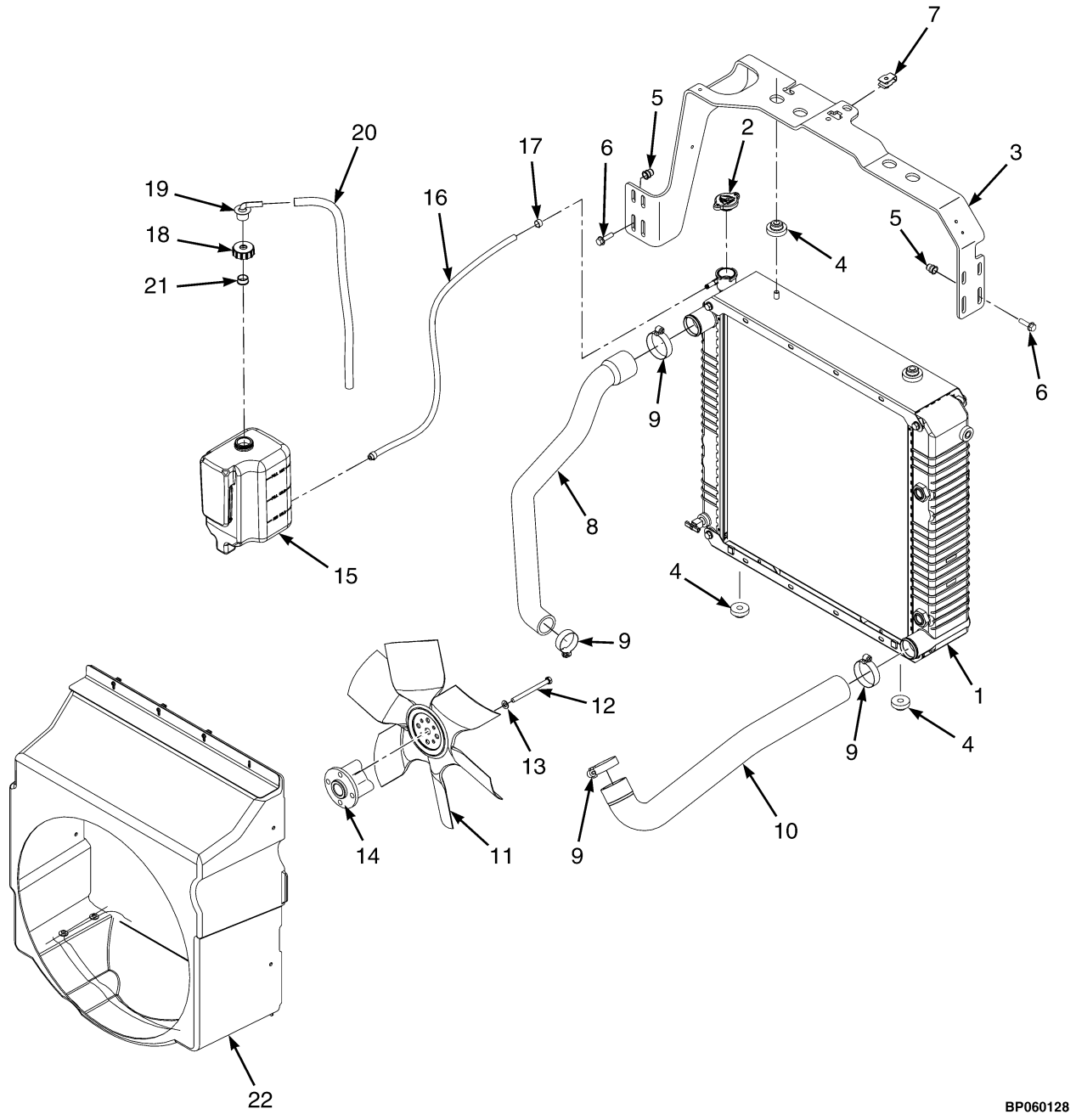

©2015 HYSTER COMPANY

COOLING

KUBOTA DIESEL – WITHOUT EXTERNAL OIL COOLER WITH SHORT WHEELBASE

ITEM	PART NO.	DESCRIPTION	QTY
1	2102313	Radiator	1
2	1352140	Radiator Cap	1
3	4000086	Bracket	1
3	1699135	Bracket Wldmt	1
4	1529787	Isolator	4
5	1530243	Insert	4
6	1527881	Capscrew	4
7	1393879	Nut	1
8	4625946	Radiator Hose (Upper)	1
9	119236	Clamp	4
10	4616119	Radiator Hose (Lower)	1
11	4634121	Fan (with Scalloped Blades)	1
12	293622	Capscrew	4
13	296418	Washer	4
14	4042107	Collar	1
15	1643342	Reservoir	1
16	1581024	Hose	1
17	369815	Clamp	2
18	. . . . .	Outlet Assembly	1
18	345454	Cap	1
19	345453	Outlet (Reservoir)	1
19	4127425	Seal	1
20	1663877	Hose	1
21	336550	Bushing	1
22	4612849	Shroud (Upper) (☞Figure 2-7, ☞Figure 2-8)	1
22	4612850	Shroud (Lower) (☞Figure 2-7)	1

©2015 HYSTER COMPANY

FAN SHROUD WITHOUT RADIATOR SCREEN (FIGURE 2-7)

SHORT WHEEL BASE

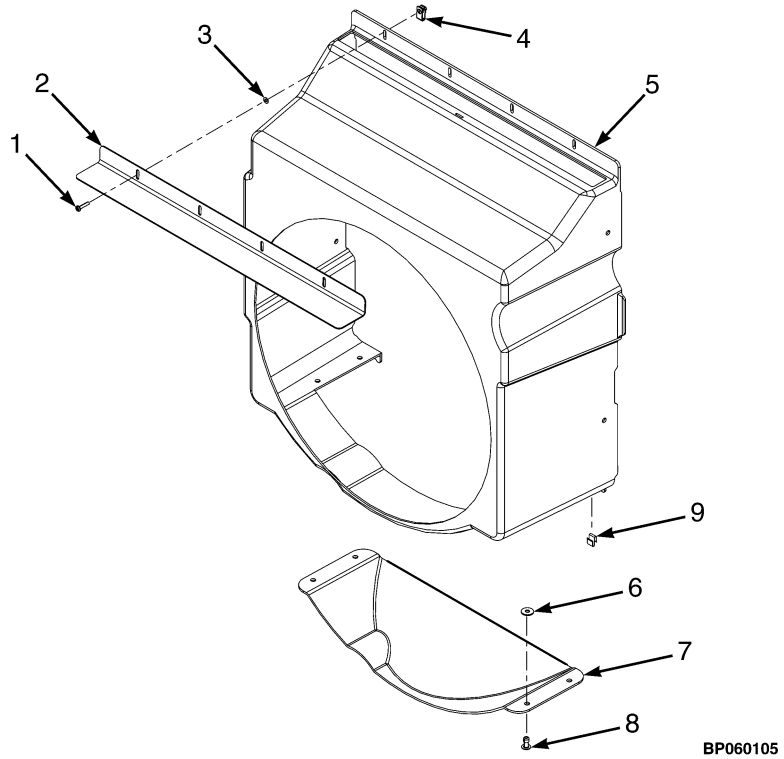

ITEM	PART NO.	DESCRIPTION	QTY
1	302024	Screw	4
2	1676093	Cover (Shroud)	1
3	320154	Washer	4
4	1535257	Nut	4
5	4612849	Shroud (Upper)	1
6	1476421	Washer	4
7	4612850	Shroud (Lower)	1
8	222036	Rivet	4
9	1693705	Clip	2

©2015 HYSTER COMPANY

FAN SHROUD WITH RADIATOR SCREEN (FIGURE 2-8)

SHORT WHEEL BASE

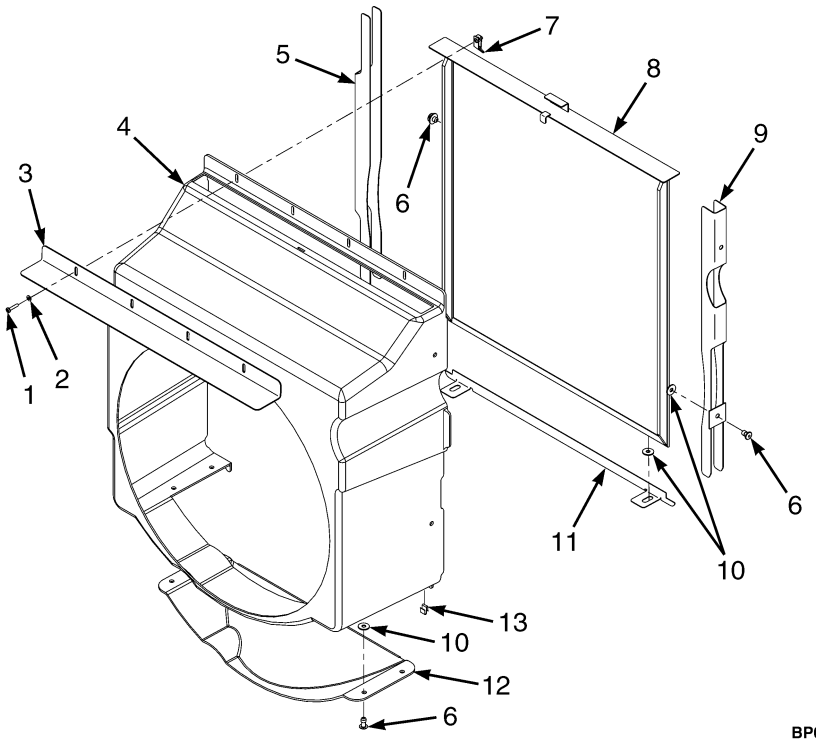

ITEM	PART NO.	DESCRIPTION	QTY
1	302024	Screw	4
2	320154	Washer	4
3	1676093	Cover (Shroud)	1
4	4612849	Shroud (Upper)	1
5	4006020	Channel (RH)	1
6	222036	Rivet	8
7	1535257	Nut	4
8	4003844	Screen	1
9	4006017	Channel (LH)	1
10	1476421	Washer	4
11	1684275	Bracket	1
12	4612850	Shroud (Lower)	1
13	1693705	Clip	1

©2015 HYSTER COMPANY

FAN SHROUD WITH RADIATOR SCREEN (FIGURE 2-9)
LONG WHEEL BASE

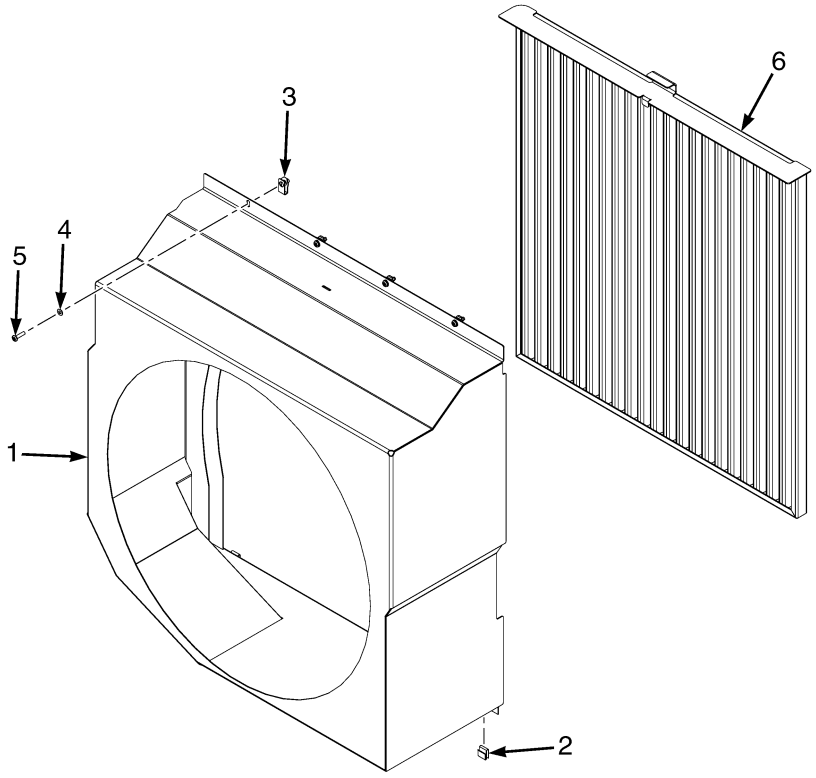

BP060106

ITEM	PART NO.	DESCRIPTION	QTY
1	4066325	Shroud	1
2	1551663	Clip	2
3	1535257	Nut (Clip)	4
4	320154	Washer	4
5	302023	Screw	4
6	1574286	Screen	1

©2015 HYSTER COMPANY

NOTES

©2015 HYSTER COMPANY

EXHAUST SYSTEM (FIGURE 2-10)
COUNTERWEIGHT EXHAUST LWB — 3.6L DIESEL

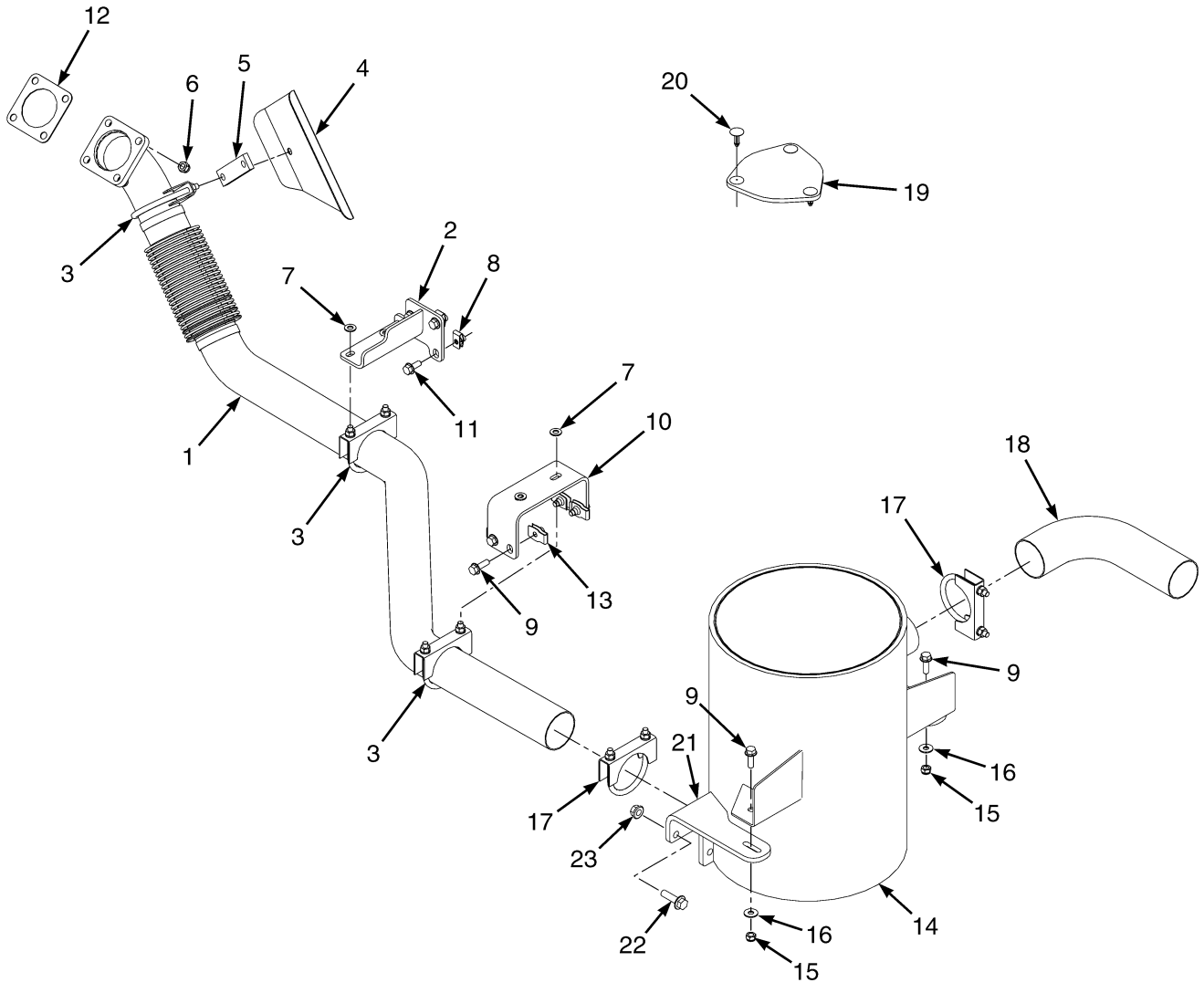

©2015 HYSTER COMPANY

EXHAUST SYSTEM

COUNTERWEIGHT EXHAUST LWB – 3.6L DIESEL

ITEM	PART NO.	DESCRIPTION	QTY
1	4030620	Exhaust Pipe	1
2	4062685	Bracket Wldmt	1
3	30372	Clamp	3
4	4024571	Heat Shield	1
5	4025092	Plate	1
6	4027330	Locknut	4
7	18515	Washer	4
8	1480237	Nut	3
9	1510113	Capscrew	6
10	1696451	Bracket	1
11	1527880	Capscrew	3
12	4032888	Gasket	1
13	1393879	Nut	4
14	4630519	Muffler	1
15	1582222	Locknut	2
16	320158	Washer	2
17	30372	Clamp	2
17	30374	Clamp (Optional)	2
18	4076774	Exhaust Pipe	1
19	1347043	Cover	1
20	1347045	Fastener	3
21	4052206	Bracket (LH)	1
21	**a** 4052207	Bracket (RH)	1
22	1527885	Capscrew	6
23	1460477	Nut	6

FOOTNOTES:

a Not Illustrated

©2015 HYSTER COMPANY

EXHAUST SYSTEM (FIGURE 2-11)
OVERHEAD EXHAUST LWB — 3.6L

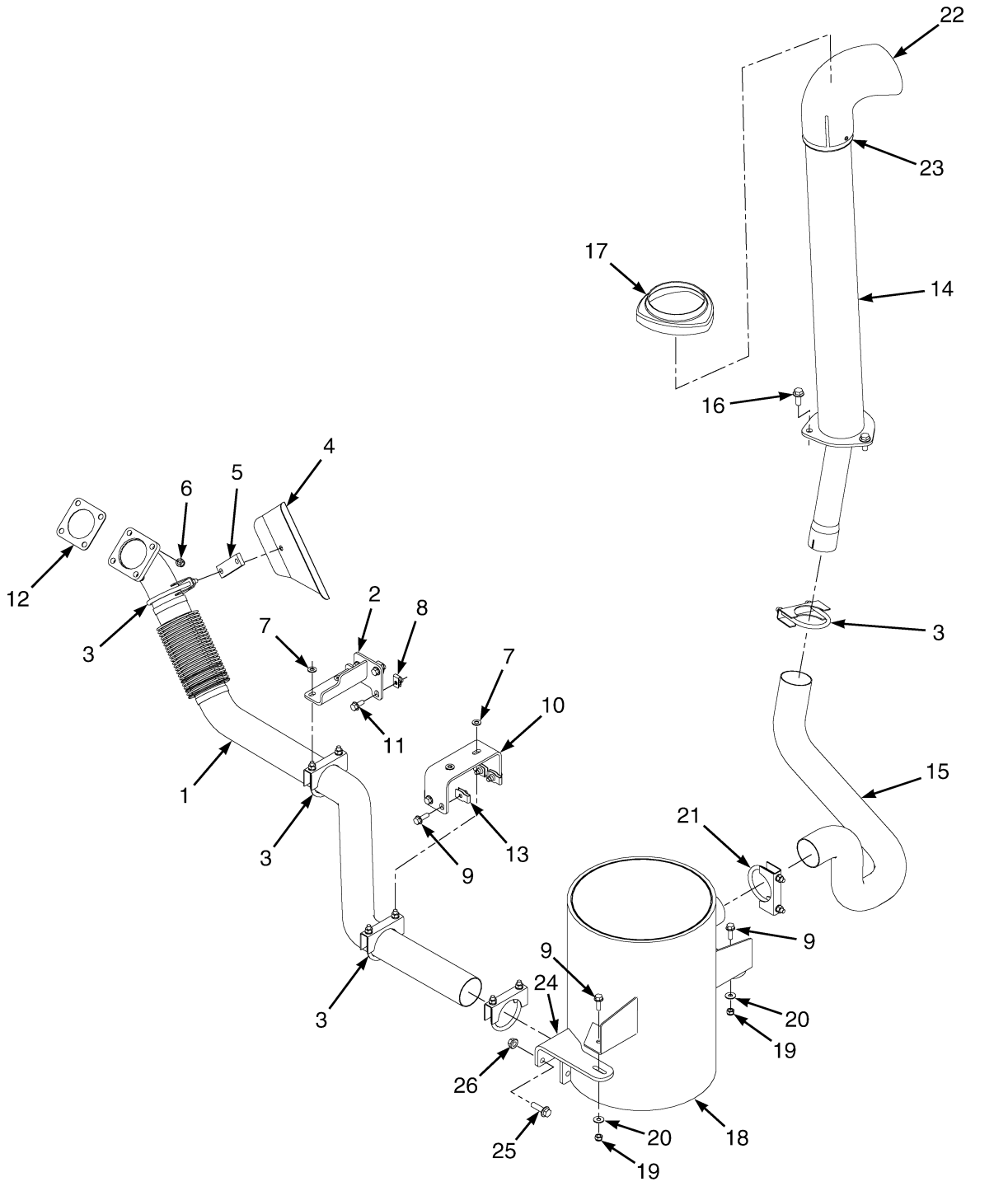

©2015 HYSTER COMPANY

EXHAUST SYSTEM
OVERHEAD EXHAUST LWB – 3.6L

ITEM	PART NO.	DESCRIPTION	QTY
1	4030620	Exhaust Pipe	1
2	4062685	Bracket Wldmt	1
3	30372	Clamp	4
4	4024571	Heat Shield	1
5	4025092	Plate	1
6	4027330	Locknut	4
7	18515	Washer	4
8	1480237	Nut	3
9	1510113	Capscrew	6
10	1696451	Bracket	1
11	1527880	Capscrew	3
12	4032888	Gasket	1
13	1393879	Nut	4
14	1664474	Overhead Exhaust	1
15	1664478	Exhaust Pipe	1
16	1510117	Capscrew	3
17	1668428	Cover	1
18	4630519	Muffler	1
19	1582222	Locknut	2
20	320158	Washer	2
21	30372	Clamp	2
21	30374	Clamp (Optional)	2
22	4050187	Exhaust Pipe (With A/C Cab)	1
23	1708540	Screw (With A/C Cab)	2
24	4052206	Bracket (LH)	1
24	**a** 4052207	Bracket (RH)	1
25	1527885	Capscrew	6
26	1460477	Nut	6

FOOTNOTES:

a Not Illustrated

©2015 HYSTER COMPANY

EXHAUST SYSTEM (FIGURE 2-12)
COUNTERWEIGHT EXHAUST SWB — 3.6L

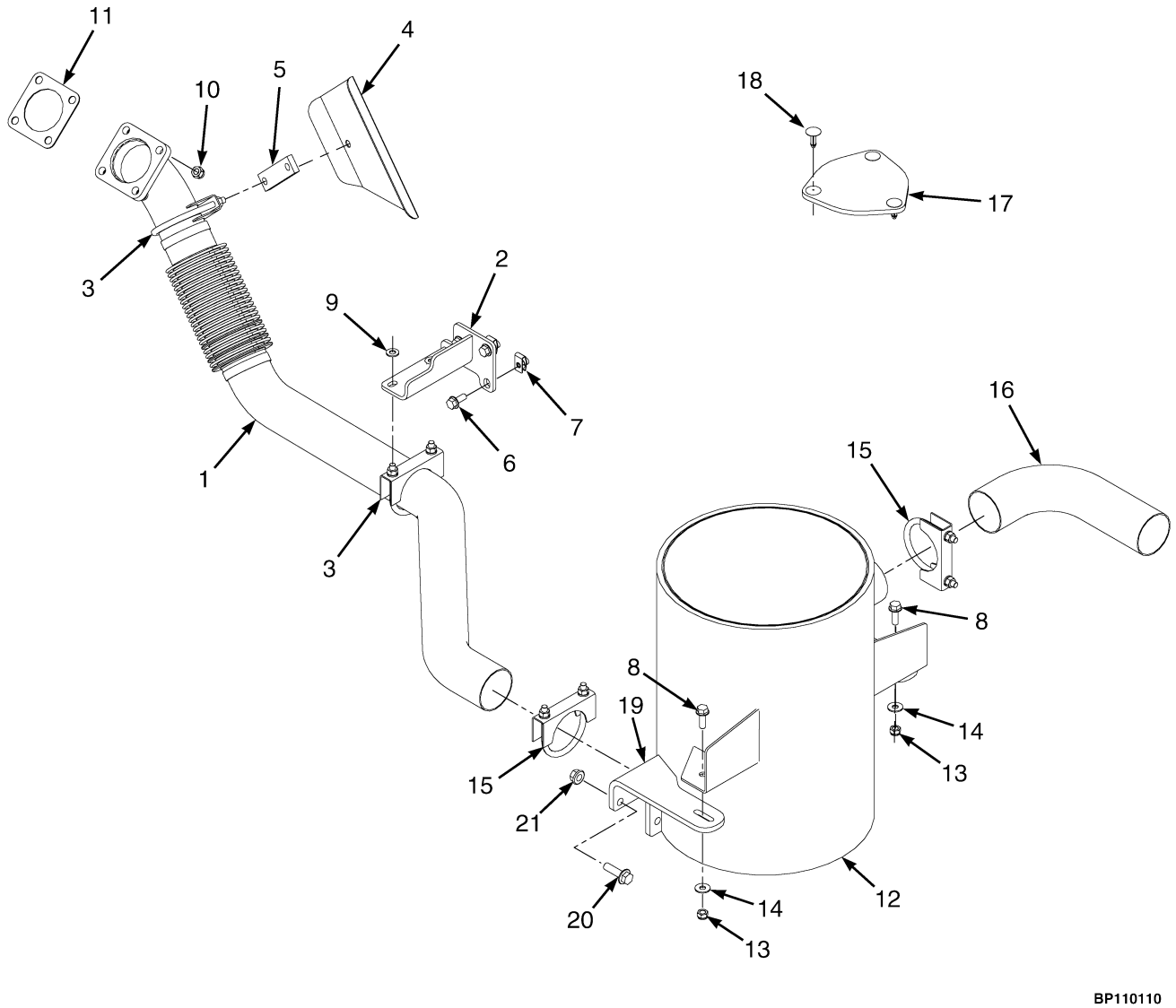

©2015 HYSTER COMPANY

EXHAUST SYSTEM
COUNTERWEIGHT EXHAUST SWB – 3.6L

ITEM	PART NO.	DESCRIPTION	QTY
1	4020926	Exhaust Pipe	1
2	4062685	Bracket Wldmt	1
3	30372	Clamp	2
4	4024571	Heat Shield	1
5	4025092	Plate	1
6	1527880	Capscrew	3
7	1480237	Nut	3
8	1510113	Capscrew	2
9	18515	Washer	2
10	4027330	Locknut	4
11	4032888	Gasket	1
12	4630519	Muffler	1
13	1582222	Locknut	2
14	320158	Washer	2
15	30372	Clamp	2
15	30374	Clamp (Optional)	2
16	4076774	Exhaust Pipe	1
17	1347043	Cover	1
18	1347045	Fastener	3
19	4052206	Bracket (LH)	1
19	**a** 4052207	Bracket (RH)	1
20	1527885	Capscrew	6
21	1460477	Nut	6

FOOTNOTES:

a Not Illustrated

©2015 HYSTER COMPANY

EXHAUST SYSTEM (FIGURE 2-13)
OVERHEAD EXHAUST SWB — 3.6L

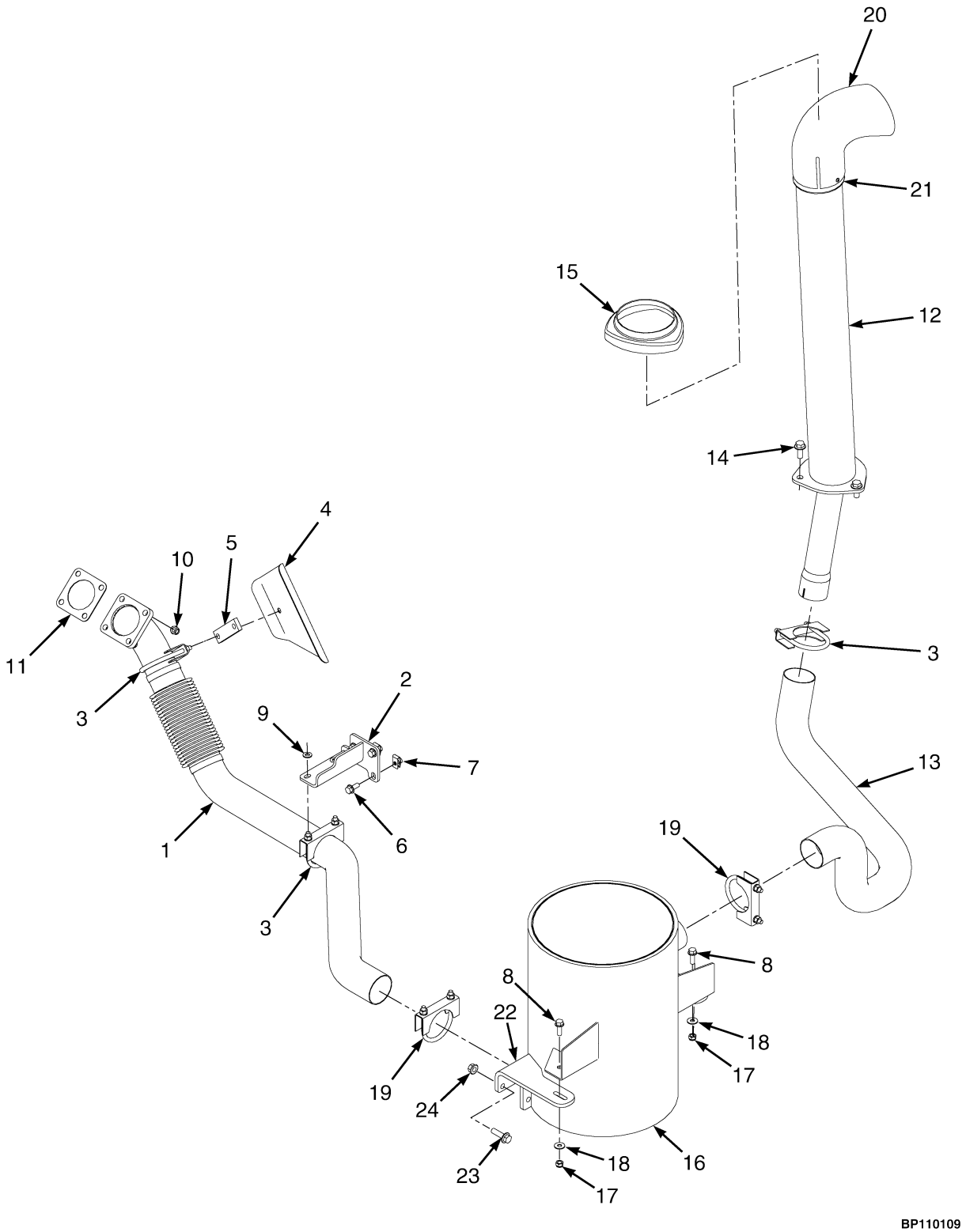

©2015 HYSTER COMPANY

EXHAUST SYSTEM
OVERHEAD EXHAUST SWB – 3.6L

ITEM	PART NO.	DESCRIPTION	QTY
1	4020926	Exhaust Pipe	1
2	4062685	Bracket Wldmt	1
3	30372	Clamp	3
4	4024571	Heat Shield	1
5	4025092	Plate	1
6	1527880	Capscrew	3
7	1480237	Nut	3
8	1510113	Capscrew	2
9	18515	Washer	2
10	4027330	Locknut	4
11	4032888	Gasket	1
12	1664474	Overhead Exhaust	1
13	1664475	Exhaust Pipe	1
14	1510117	Capscrew	3
15	1668428	Cover	1
16	4630519	Muffler	1
17	1582222	Locknut	2
18	320158	Washer	2
19	30372	Clamp	2
19	30374	Clamp (Optional)	2
20	4050187	Exhaust Pipe (With A/C Cab)	1
21	1708540	Screw (With A/C Cab)	2
22	4052206	Bracket (LH)	1
22	**a** 4052207	Bracket (RH)	1
23	1527885	Capscrew	6
24	1460477	Nut	6

FOOTNOTES:

a Not Illustrated

©2015 HYSTER COMPANY

EXHAUST SYSTEM (FIGURE 2-14)
COUNTERWEIGHT EXHAUST SWB — 3.8L WITH DPF

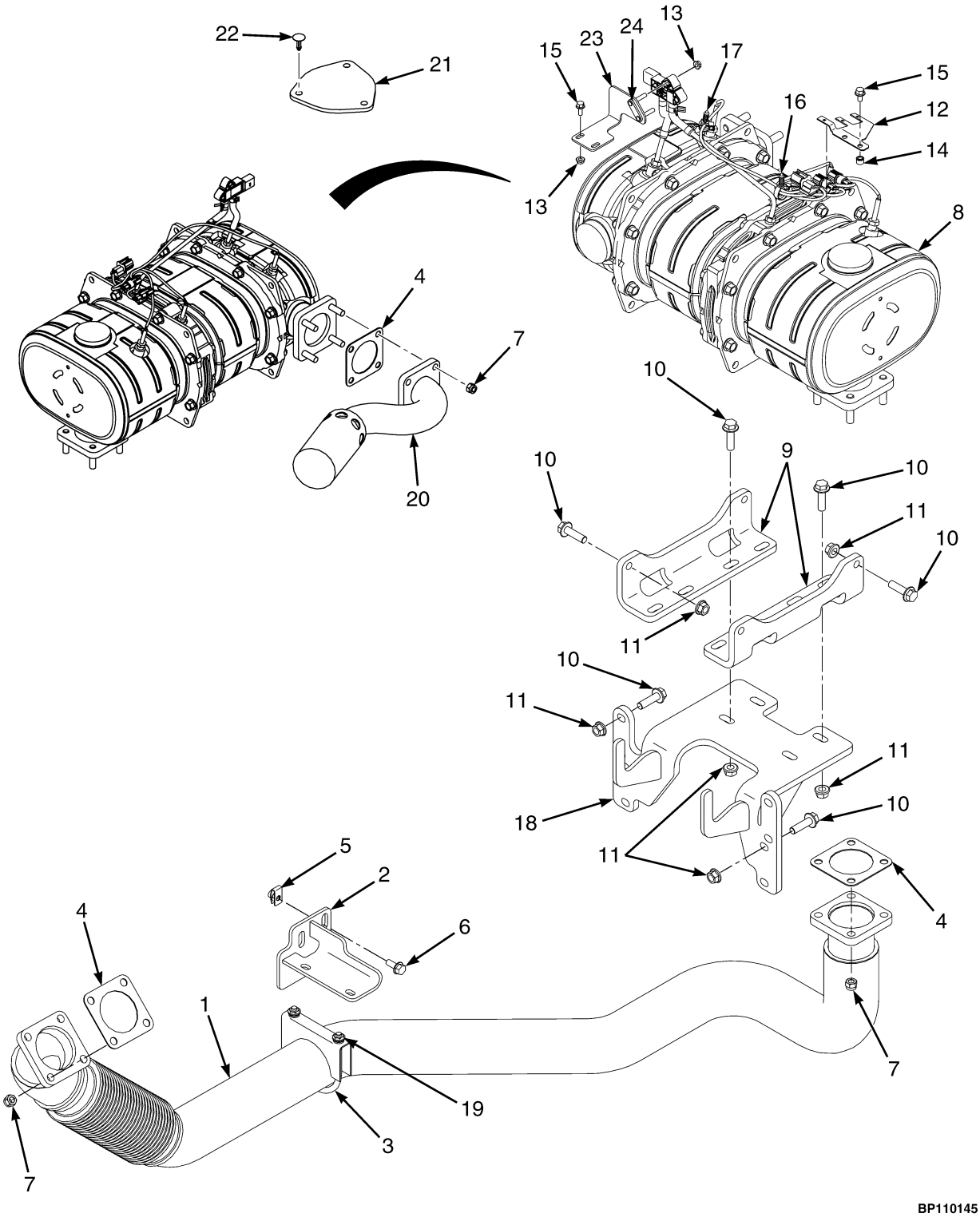

©2015 HYSTER COMPANY

EXHAUST SYSTEM

COUNTERWEIGHT EXHAUST SWB – 3.8L WITH DPF

ITEM	PART NO.	DESCRIPTION	QTY
1	4054347	Exhaust Pipe	1
2	4053068	Bracket Wldmt	1
3	30375	Clamp (Includes Hardware)	1
4	4032888	Gasket	3
5	1480237	Nut	3
6	1527880	Capscrew	3
7	4027330	Locknut	12
8	4620363	Diesel Particulate Filter (☞Figure 2-18, ☞Figure 2-19)	1
9	4051527	Bracket	2
10	1527885	Capscrew	14
11	1460477	Nut	14
12	4053250	Bracket	1
13	1514429	Nut	4
14	1531001	Insert	2
15	1527876	Capscrew	4
16	1509890	Clip	1
17	1509888	Clip	1
18	4082219	Mounting Weldment	1
19	18515	Washer	2
20	4066616	Tail Pipe	1
21	1347043	Cover	1
22	1347045	Fastener	3
23	4082011	Bracket (DPF Sensor)	1
24	4082013	Mounting Plate	1

©2015 HYSTER COMPANY

EXHAUST SYSTEM (FIGURE 2-15)
COUNTERWEIGHT EXHAUST LWB — 3.8L DIESEL WITH DPF

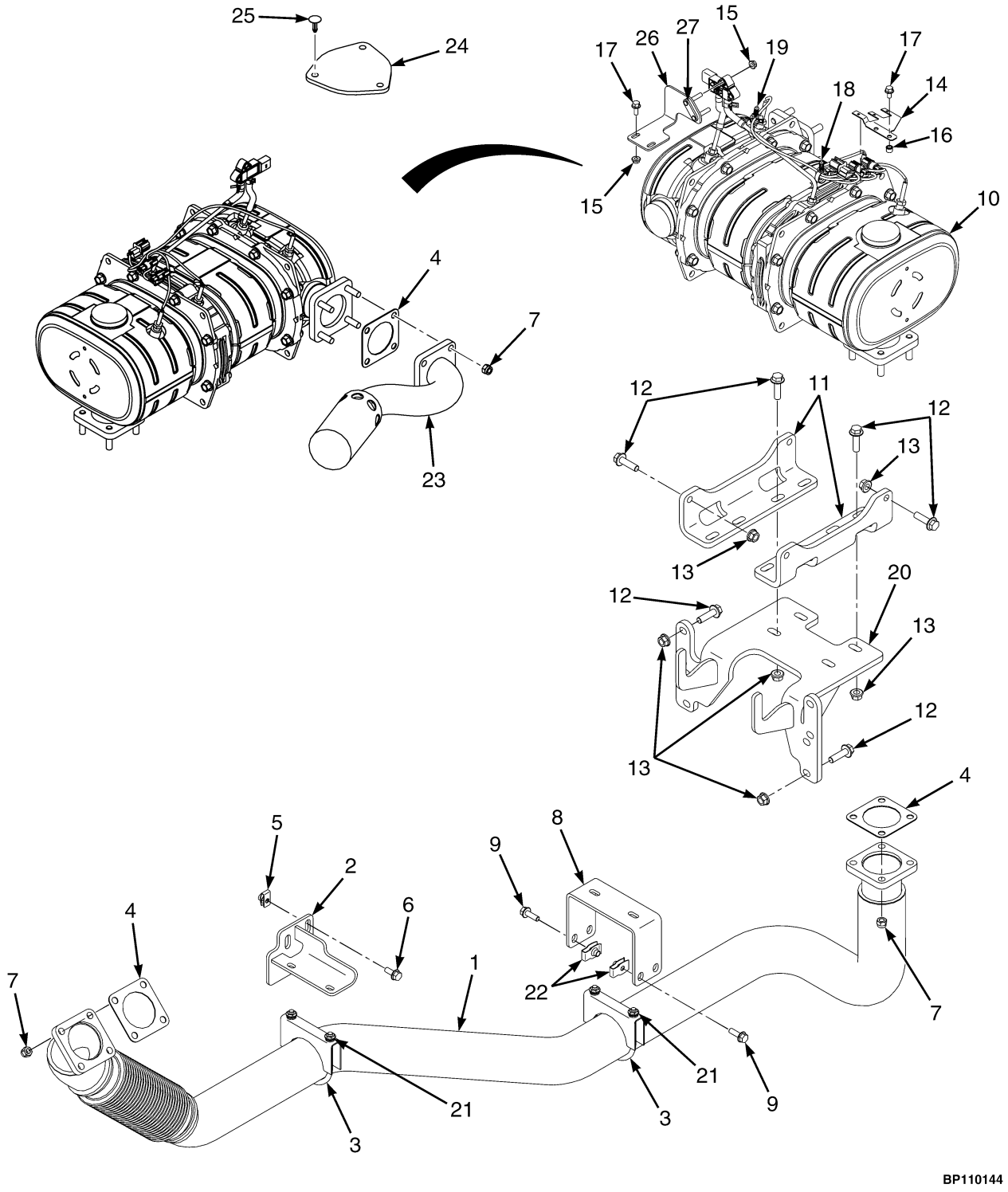

©2015 HYSTER COMPANY

EXHAUST SYSTEM

COUNTERWEIGHT EXHAUST LWB – 3.8L DIESEL WITH DPF

ITEM	PART NO.	DESCRIPTION	QTY
1	4052515	Exhaust Pipe	1
2	4053068	Bracket Wldmt	1
3	30375	Clamp (Includes Hardware)	2
4	4032888	Gasket	3
5	1480237	Nut	3
6	1527880	Capscrew	3
7	4027330	Locknut	12
8	4054231	Bracket	1
9	1510113	Capscrew	4
10	4620363	Diesel Particulate Filter (DPF) (☞Figure 2-18, ☞Figure 2-19)	1
11	4051527	Bracket	2
12	1527885	Capscrew	12
13	1460477	Nut	12
14	4053250	Bracket	1
15	1514429	Nut	4
16	1531001	Insert	2
17	1527876	Capscrew	4
18	1509890	Clip	1
19	1509888	Clip	1
20	4075462	Mounting Weldment	1
21	18515	Washer	4
22	1393879	Nut	4
23	4066616	Tail Pipe	1
24	1347043	Cover	1
25	1347045	Fastener	3
26	4082011	Bracket (DPF Sensor Bracket)	1
27	4082013	Mounting Plate	1

©2015 HYSTER COMPANY

EXHAUST SYSTEM (FIGURE 2-16)
OVERHEAD EXHAUST SWB — 3.8L DIESEL WITH DPF

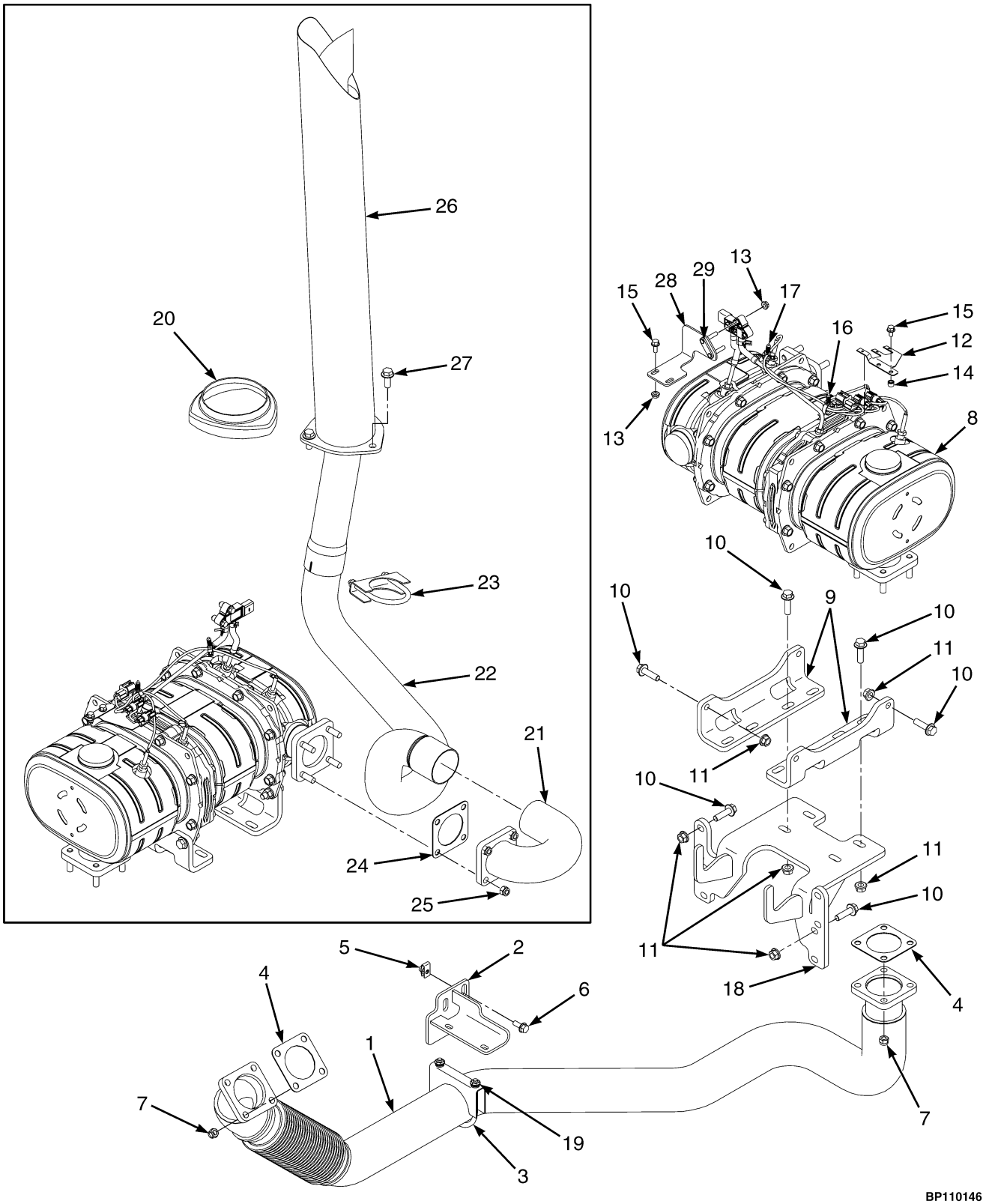

©2015 HYSTER COMPANY

EXHAUST SYSTEM

OVERHEAD EXHAUST SWB – 3.8L DIESEL WITH DPF

ITEM	PART NO.	DESCRIPTION	QTY
1	4054347	Exhaust Pipe	1
2	4053068	Bracket Wldmt	1
3	30375	Clamp (Includes Hardware)	1
4	4032888	Gasket	2
5	1480237	Nut	3
6	1527880	Capscrew	3
7	4027330	Locknut	8
8	4620363	Diesel Particulate Filter (☞Figure 2-18, ☞Figure 2-19)	1
9	4051527	Bracket	2
10	1527885	Capscrew	14
11	1460477	Nut	14
12	4053250	Bracket	1
13	1514429	Nut	4
14	1531001	Insert	2
15	1527876	Capscrew	4
16	1509890	Clip	1
17	1509888	Clip	1
18	4082219	Mounting Weldment	1
19	18515	Washer	2
20	1668428	Cover	1
21	4053065	Exhaust Pipe	1
22	4054352	Exhaust Pipe	1
23	30372	Clamp	1
24	4032888	Gasket	1
25	4027330	Locknut	4
26	1664474	Overhead Exhaust	1
27	1510117	Capscrew	3
28	4082011	Bracket (DPF Sensor Bracket)	1
29	4082013	Mounting Plate	1

©2015 HYSTER COMPANY

EXHAUST SYSTEM (FIGURE 2-17)
OVERHEAD EXHAUST LWB — 3.8L DIESEL WITH DPF

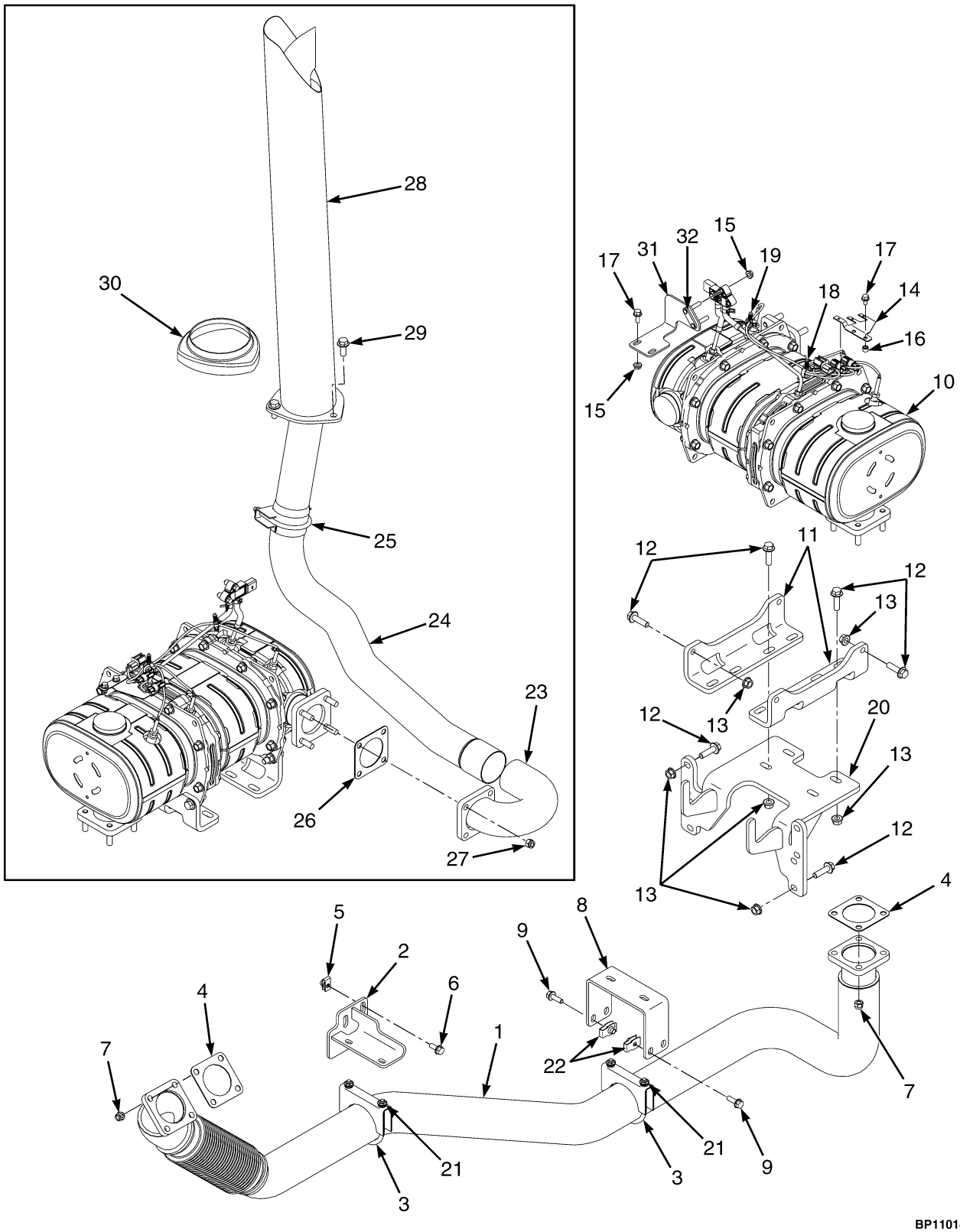

©2015 HYSTER COMPANY

EXHAUST SYSTEM

OVERHEAD EXHAUST LWB – 3.8L DIESEL WITH DPF

ITEM	PART NO.	DESCRIPTION	QTY
1	4052515	Exhaust Pipe	1
2	4053068	Bracket Wldmt	1
3	30375	Clamp (Includes Hardware)	2
4	4032888	Gasket	2
5	1480237	Nut	3
6	1527880	Capscrew	3
7	4027330	Locknut	8
8	4054231	Bracket	1
9	1510113	Capscrew	4
10	4620363	Diesel Particulate Filter (DPF) (☞Figure 2-18, ☞Figure 2-19)	1
11	4051527	Bracket	2
12	1527885	Capscrew	12
13	1460477	Nut	12
14	4053250	Bracket	1
15	1514429	Nut	4
16	1531001	Insert	2
17	1527876	Capscrew	4
18	1509890	Clip	1
19	1509888	Clip	1
20	4075462	Mounting Weldment	1
21	18515	Washer	4
22	1393879	Nut	4
23	4053065	Exhaust Pipe	1
24	4053055	Exhaust Pipe	1
25	30372	Clamp	1
26	4032888	Gasket	1
27	4027330	Locknut	4
28	1664474	Overhead Exhaust	1
29	1510117	Capscrew	3
30	1668428	Cover	1
31	4082011	Bracket (DPF Sensor Bracket)	1
32	4082013	Mounting Plate	1

©2015 HYSTER COMPANY

DIESEL PARTICULATE FILTER (FIGURE 2-18)
ATTACHING PARTS — KUBOTA 3.8L DIESEL

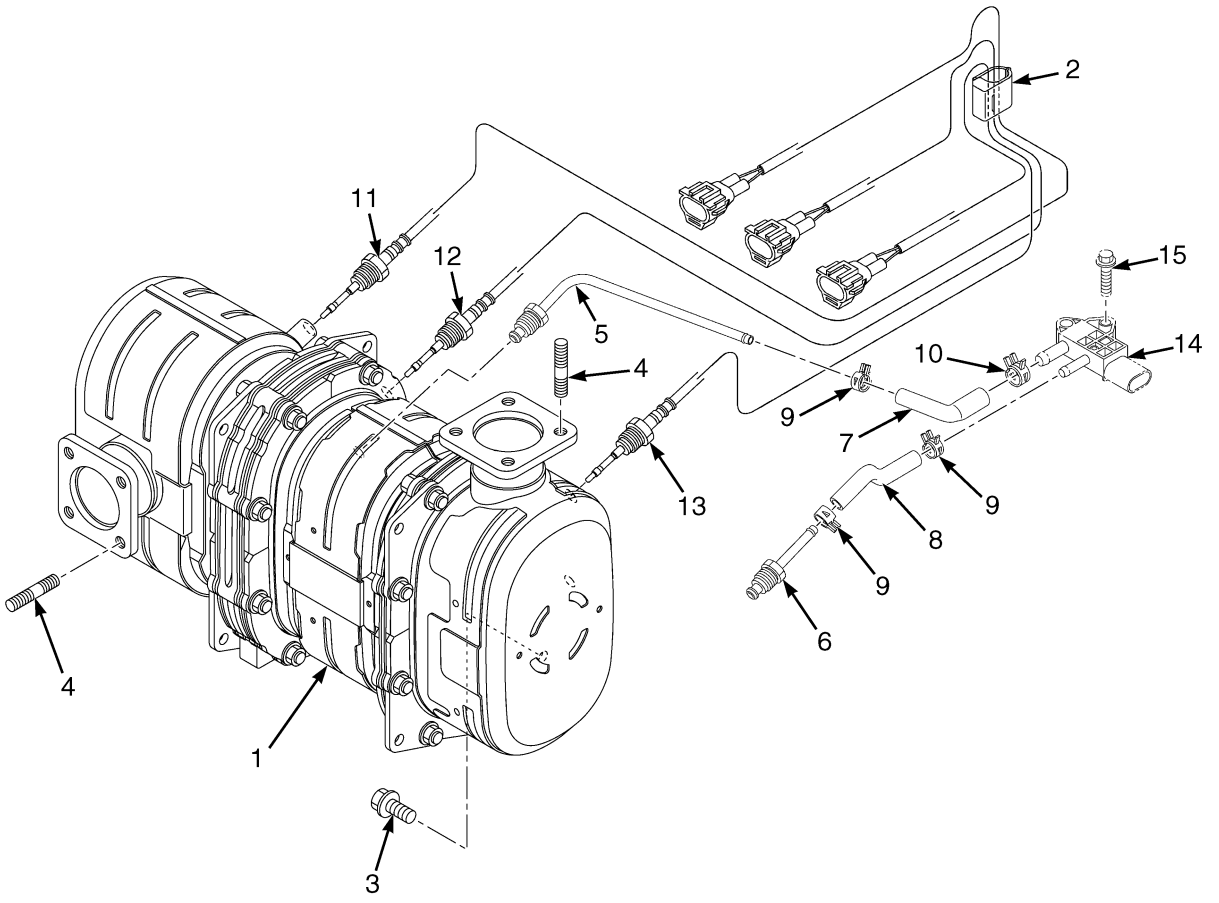

©2015 HYSTER COMPANY

DIESEL PARTICULATE FILTER
ATTACHING PARTS – KUBOTA 3.8L DIESEL

ITEM	PART NO.	DESCRIPTION	QTY
1	. . . . .	Diesel Particulate Filter Assembly (☞Figure 2-19)	1
2	4074937	Clamp	1
3	4074934	Bolt	1
4	4054763	Bolt	8
5	4074938	Pipe	1
6	4074939	Pipe	1
7	4074940	Tube	1
8	4074941	Tube	1
9	4054817	Hose Clamp	3
10	4042033	Hose Clamp	1
11	4054809	Sensor (Thermo, 0)	1
12	4054810	Sensor (Thermo, 1)	1
13	4060528	Sensor (Heat DPF)	1
14	4054812	Sensor (Pressure)	1
15	4054747	Bolt	2

©2015 HYSTER COMPANY

DIESEL PARTICULATE FILTER (FIGURE 2-19)
MUFFLER ASSEMBLY — KUBOTA 3.8L DIESEL

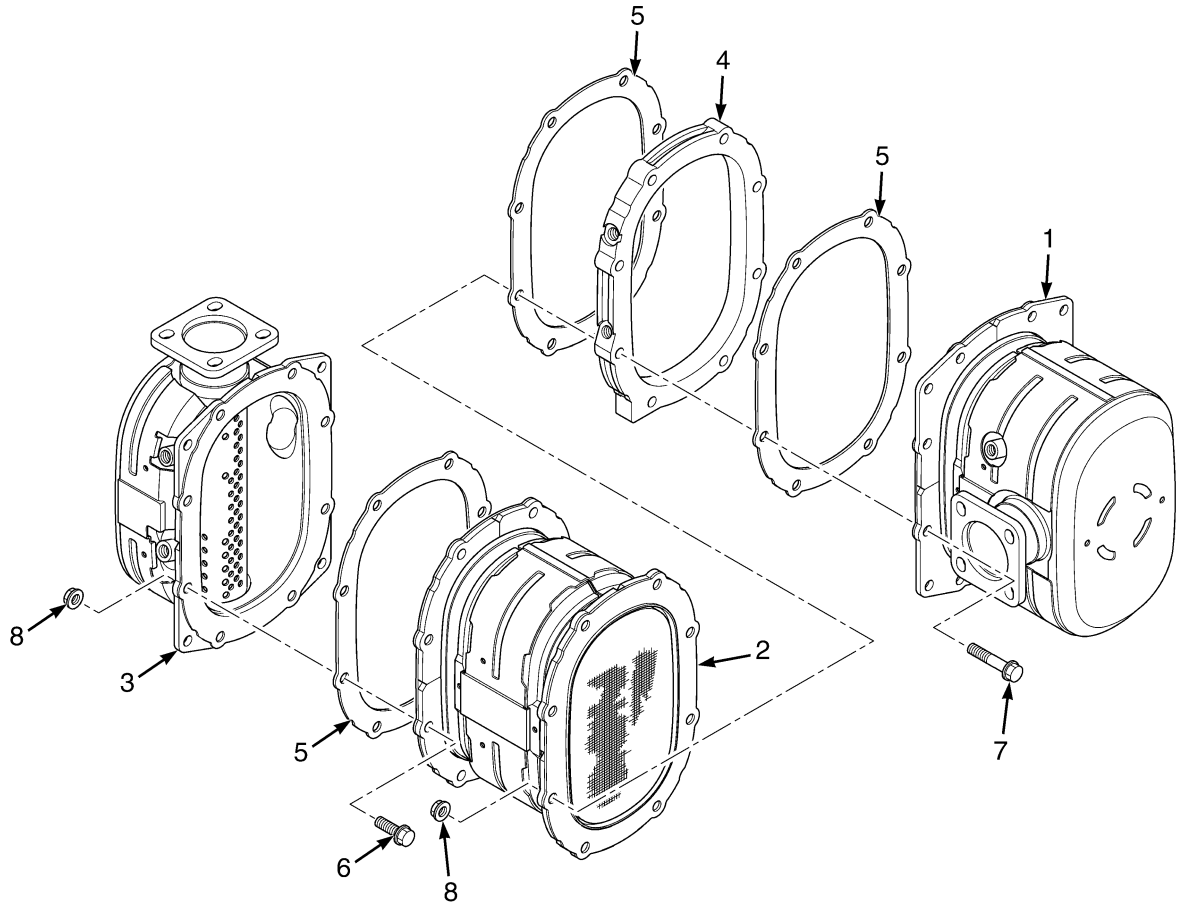

BP110097

©2015 HYSTER COMPANY

DIESEL PARTICULATE FILTER

MUFFLER ASSEMBLY – KUBOTA 3.8L DIESEL

ITEM	PART NO.	DESCRIPTION	QTY
1	4074935	Catalytic Converter Assy	1
2	. . . . .	Filter Element	1
3	4074936	Body	1
4	4054805	Collar	1
5	4054806	Gasket	3
6	4041932	Bolt	8
7	4054807	Bolt	8
8	4054808	Nut	16
	4074188	Kit-Filter Element	1

©2015 HYSTER COMPANY

COMPRESSOR ASSEMBLY AND ATTACHING PARTS (FIGURE 2-20)
WITH CAB AND AIR CONDITIONING

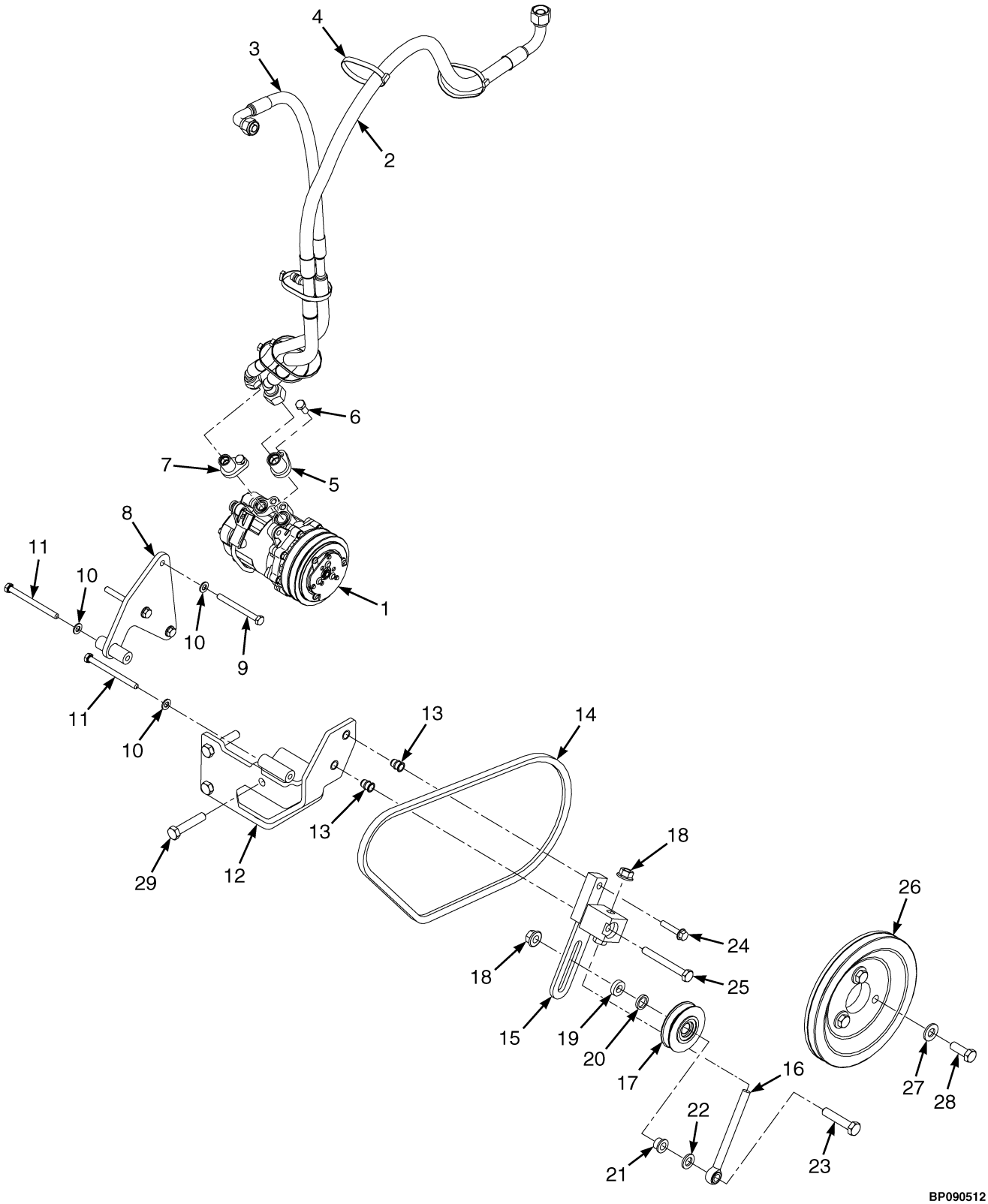

©2015 HYSTER COMPANY

COMPRESSOR ASSEMBLY AND ATTACHING PARTS
WITH CAB AND AIR CONDITIONING

ITEM	PART NO.	DESCRIPTION	QTY
1	4605389	Compressor Assembly, AC	1
1	. . . . .	Connector Assembly	1
1	1329150	Connector	1
1	1329149	Terminal	1
1	1329147	Seal	1
1	1329151	Terminal	1
2	4614229	Hose Assy (#10)	1
3	4614228	Hose Assy (#8)	1
4	397676	Strap Clamp	5
5	4005338	Adapter (#10)	1
6	1597448	Capscrew	2
7	4005339	Adapter (#8)	1
8	4034724	Bracket (3.8L)	1
8	4036744	Bracket (3.6L)	1
9	4616174	Capscrew (3.8L)	3
9	293625	Capscrew (3.6L)	3
10	296418	Washer	5
11	1566505	Capscrew	2
12	4036761	Bracket	1
13	1530244	Insert	2
14	2094420	V-Belt	1
15	4005619	Plate Wldmt	1
16	4005596	Link	1
17	1396781	Pulley	1
18	1528888	Nut (Shoulder)	3
19	4005608	Spacer	1
20	1396780	Spacer	1
21	4005607	Bearing	1
22	296422	Washer	1
23	292531	Capscrew	1
24	1512403	Capscrew	1
25	292524	Capscrew	1
26	4034608	Pulley	1
27	296423	Washer	3
28	399898	Capscrew	3
29	326488	Capscrew	4

©2015 HYSTER COMPANY

FLYWHEEL AND HOUSING (FIGURE 2-21)

KUBOTA DIESEL — 3.6L, 3.8L

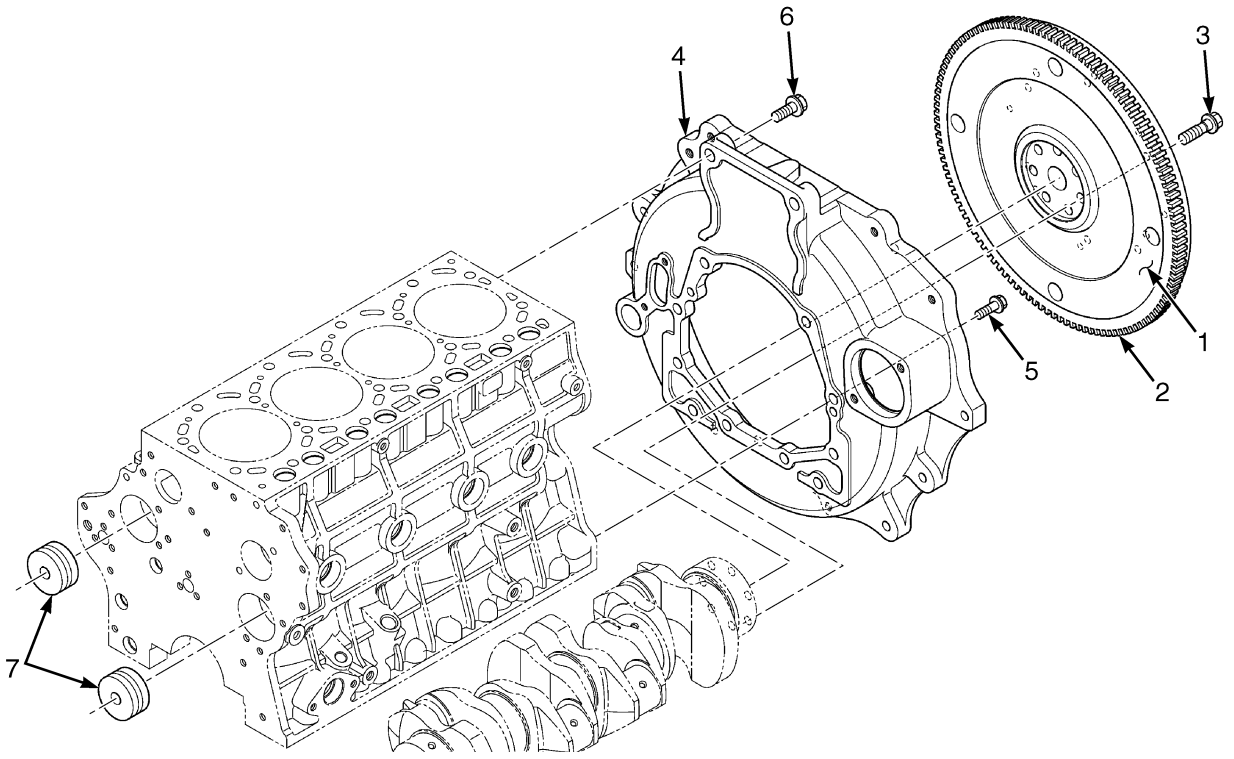

BP090484

ITEM	PART NO.	DESCRIPTION	QTY
	4620483	Engine Assy-Diesel (3.8L)	1
	4615470	Engine Assy-Diesel (3.6L)	1
1	4074580	Flywheel	1
2	4042207	Ring Gear	1
3	4042208	Bolt (3.8L)	7
3	4042208	Bolt (3.6L)	10
4	4042209	Housing (Flywheel) (3.8L)	1
4	4042317	Housing (Flywheel) (3.6L)	1
5	4042210	Bolt	10
6	4042211	Bolt	2
7	4042212	Cover (Balancer) (3.6L)	2

©2015 HYSTER COMPANY

FAN PULLEY (FIGURE 2-22)
KUBOTA DIESEL — 3.6L, 3.8L

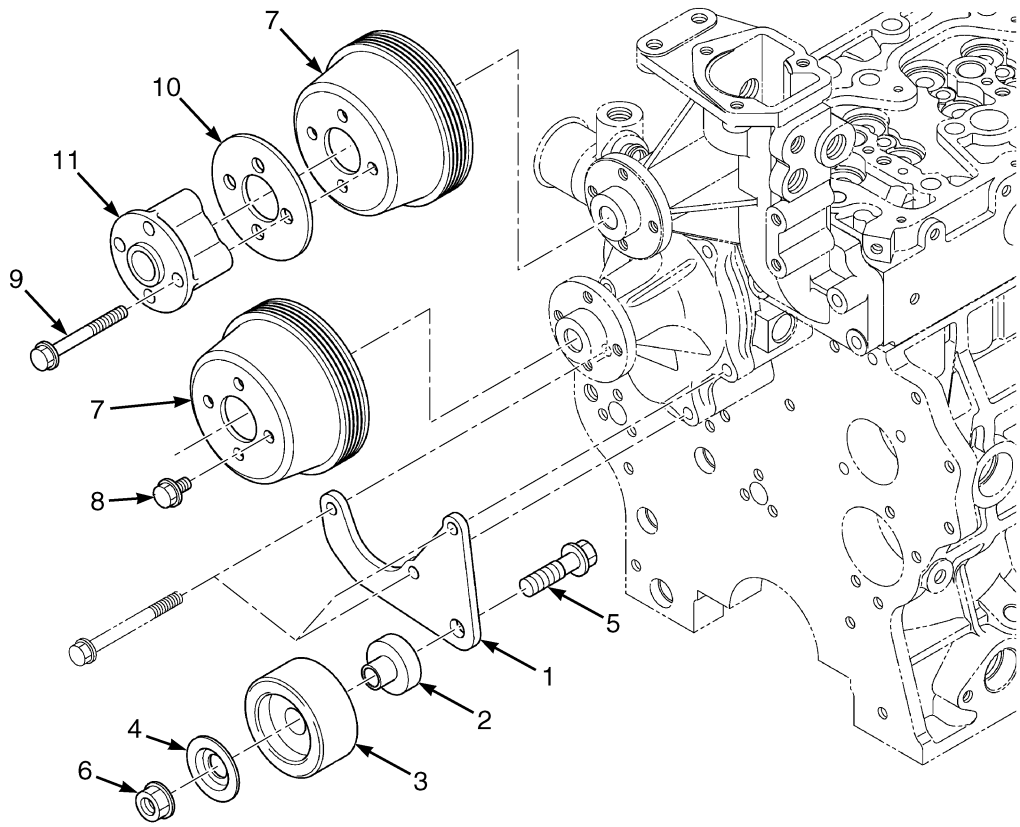

BP090490

ITEM	PART NO.	DESCRIPTION	QTY
	4620483	Engine Assy-Diesel (3.8L)	1
	4615470	Engine Assy-Diesel (3.6L)	1
	4042325	Pulley Assembly (Idle)	1
1	4042326	Plate	1
2	4042327	Shaft	1
3	4042328	Pulley	1
4	4041916	Cover (Tensioner)	1
5	4041922	Bolt	1
6	4041964	Nut	1
7	4042071	Fan Pulley	2
8	4041992	Bolt	4
9	4042043	Bolt	4
10	4042106	Washer	1
11	4042107	Collar	1

©2015 HYSTER COMPANY

CYLINDER HEAD COVER (FIGURE 2-23)

KUBOTA DIESEL — 3.6L

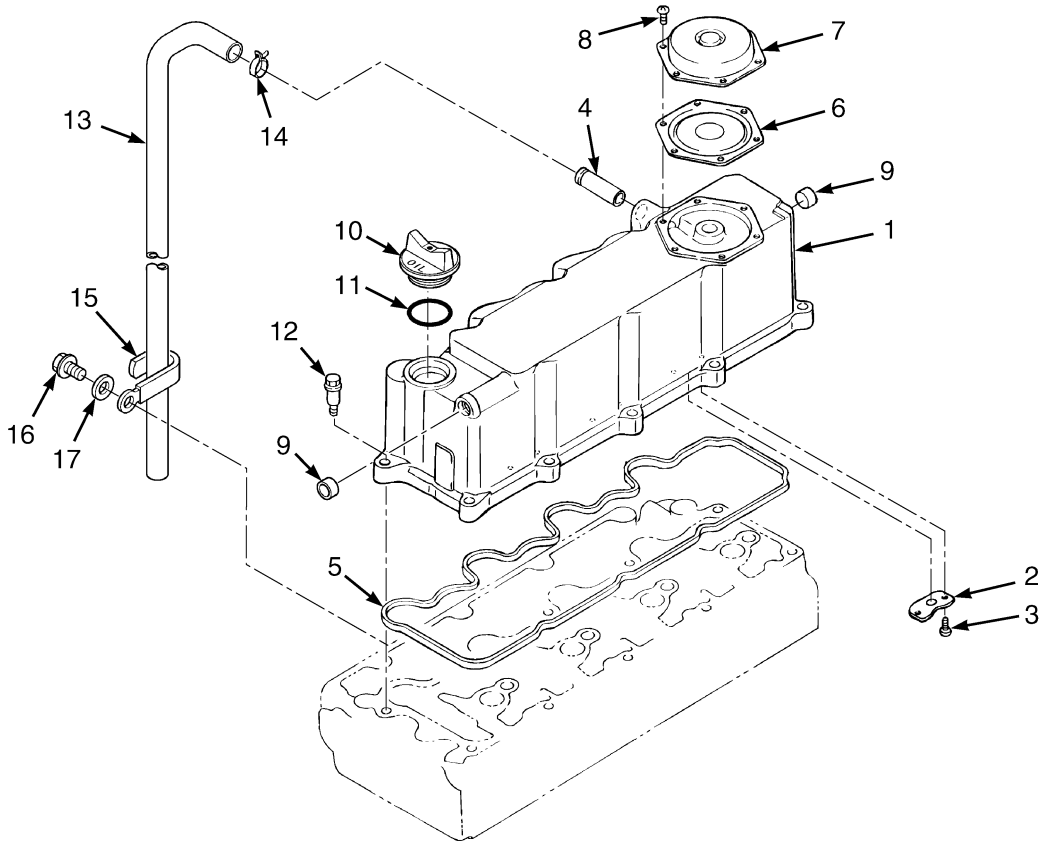

ITEM	PART NO.	DESCRIPTION	QTY
	4615470	Engine Assy-Diesel (3.6L)	1
1	4042170	Cover (Cylinder Head)	1
2	4042171	Shield	3
3	4042172	Screw	6
4	4042008	Joint (Breather Pipe)	1
5	4042176	Gasket (Cylinder Cover)	1
6	4042191	Valve (Breather)	1
7	4042192	Cover (Breather)	1
8	4042126	Screw	6
9	4042200	Cap	2
10	4042130	Plug	1
11	4042131	O-Ring	1
12	4042116	Bolt	10
13	4042201	Pipe (Breather)	1
14	4042203	Band (Clamp)	1
15	4042206	Clamp	1
16	4042034	Bolt	1
17	4042221	Washer	1
	4051069	Kit-Gasket Upper	1

©2015 HYSTER COMPANY

NOTES

©2015 HYSTER COMPANY

CYLINDER HEAD COVER (FIGURE 2-24)
KUBOTA DIESEL — 3.8L

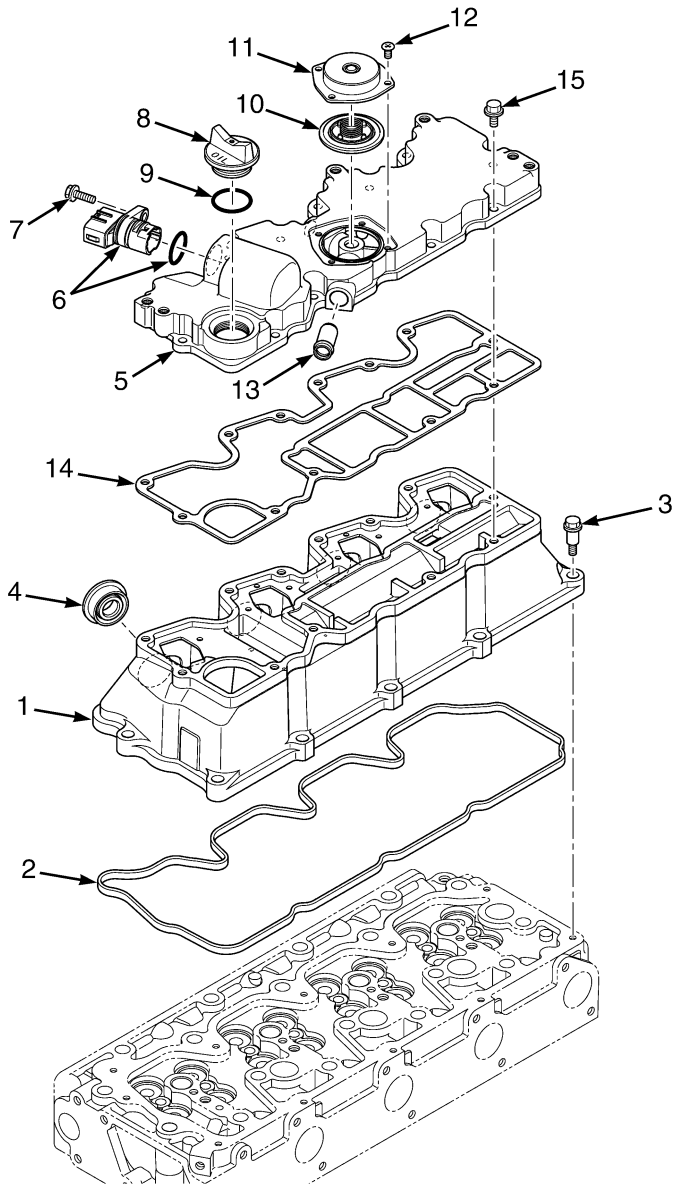

BP090562

©2015 HYSTER COMPANY

CYLINDER HEAD COVER
KUBOTA DIESEL – 3.8L

ITEM	PART NO.	DESCRIPTION	QTY
	4620483	Engine Assy-Diesel (3.8L)	1
1	4054588	Cover Assembly (Cylinder Head)	1
2	4042114	Gasket	1
3	4042116	Bolt	10
4	4042115	Seal (Injection Pipe)	4
5	4054589	Cover Assembly (Cylinder Head)	1
6	4042127	Connector	1
7	4042128	Bolt	1
8	4074572	Plug Assembly (Assembly)	1
8	4042130	Plug	1
9	4042131	O-Ring	1
10	4042124	Valve (Breather)	1
11	4042125	Cover (Breather)	1
12	4042126	Screw	4
13	4042008	Joint (Breather Pipe)	1
14	4054590	Gasket	1
15	4042128	Bolt	13

©2015 HYSTER COMPANY

CYLINDER HEAD (FIGURE 2-25)
KUBOTA DIESEL — 3.6L

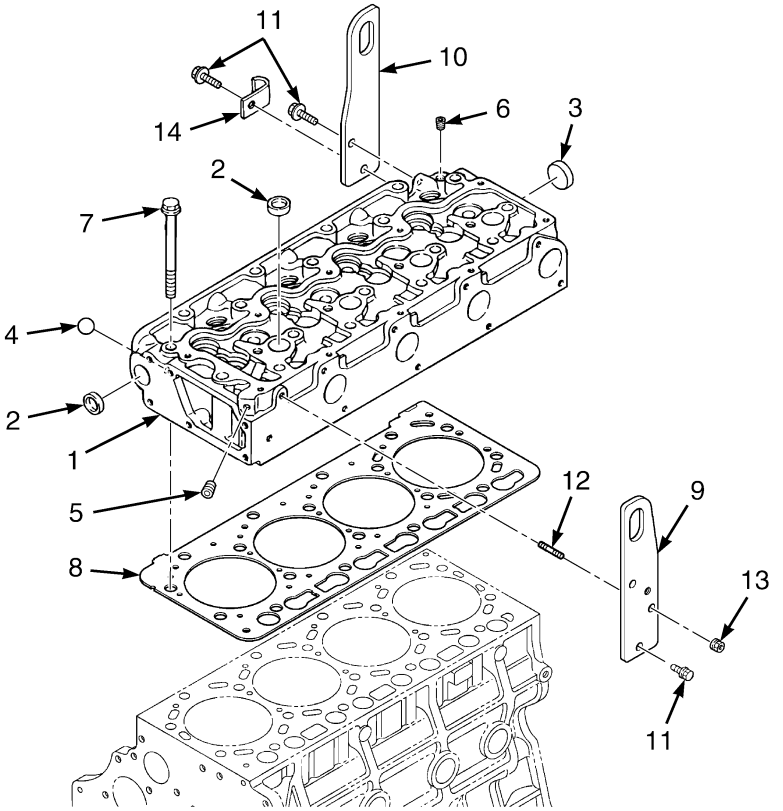

ITEM	PART NO.	DESCRIPTION	QTY
	4615470	Engine Assy-Diesel (3.6L)	1
1	4042022	Cylinder Head Assembly (☞Figure 2-27)	1
2	4041950	Cap	5
3	4041951	Cap	1
4	4042026	Ball	4
5	4041906	Plug	1
6	4041915	Plug	1
7	4041965	Bolt	18
8	4042045	Cylinder Head Gasket (Standard Two Notch)	1
8	4042079	Cylinder Head Gasket (One Notch Option)	1
8	4042093	Cylinder Head Gasket (Not Notched Option)	1
9	4041968	Lifting Eye	1
10	4042004	Lifting Eye	1
11	4041992	Bolt	3
12	4042010	Stud	1
13	4041946	Nut	1
14	4042012	Clamp	1

©2015 HYSTER COMPANY

CYLINDER HEAD (FIGURE 2-26)

KUBOTA DIESEL — 3.8L

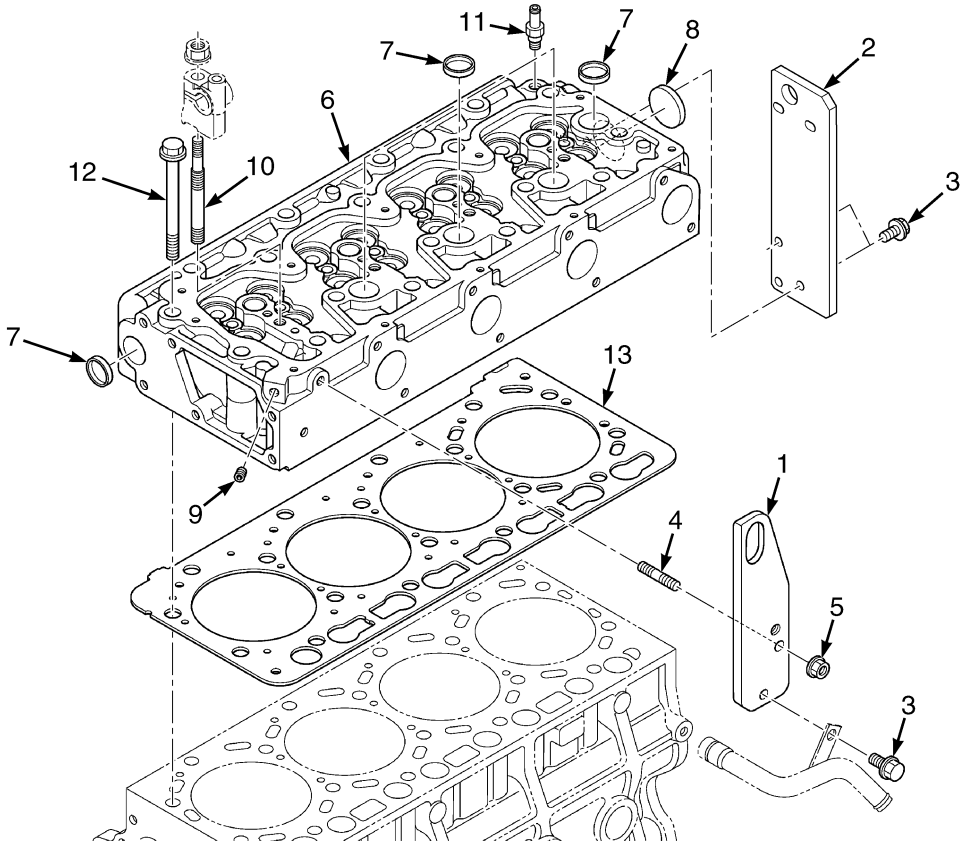

BP090560

ITEM	PART NO.	DESCRIPTION	QTY
	4620483	Engine Assy-Diesel (3.8L)	1
1	4041968	Lifting Eye	1
2	4054583	Lifting Eye	1
3	4054759	Bolt	4
4	4042010	Stud	1
5	4041946	Nut	1
6	4041947	Cylinder Head (☞Figure 2-29, ☞Figure 2-28)	1
7	4041950	Cap	5
8	4041951	Cap	1
9	4041906	Plug	1
10	4041963	Stud	4
11	4054584	Connector (Water Pipe)	1
12	4041965	Bolt	18
13	4041966	Cylinder Head Gasket (with Two Notches)	1
13	4048324	Cylinder Head Gasket (with One Notch)	1
13	4048325	Cylinder Head Gasket (with No Notches)	1

©2015 HYSTER COMPANY

ROCKER ARM ASSEMBLY (FIGURE 2-27)
WITH INLET AND EXHAUST VALVES — KUBOTA DIESEL (3.6L)

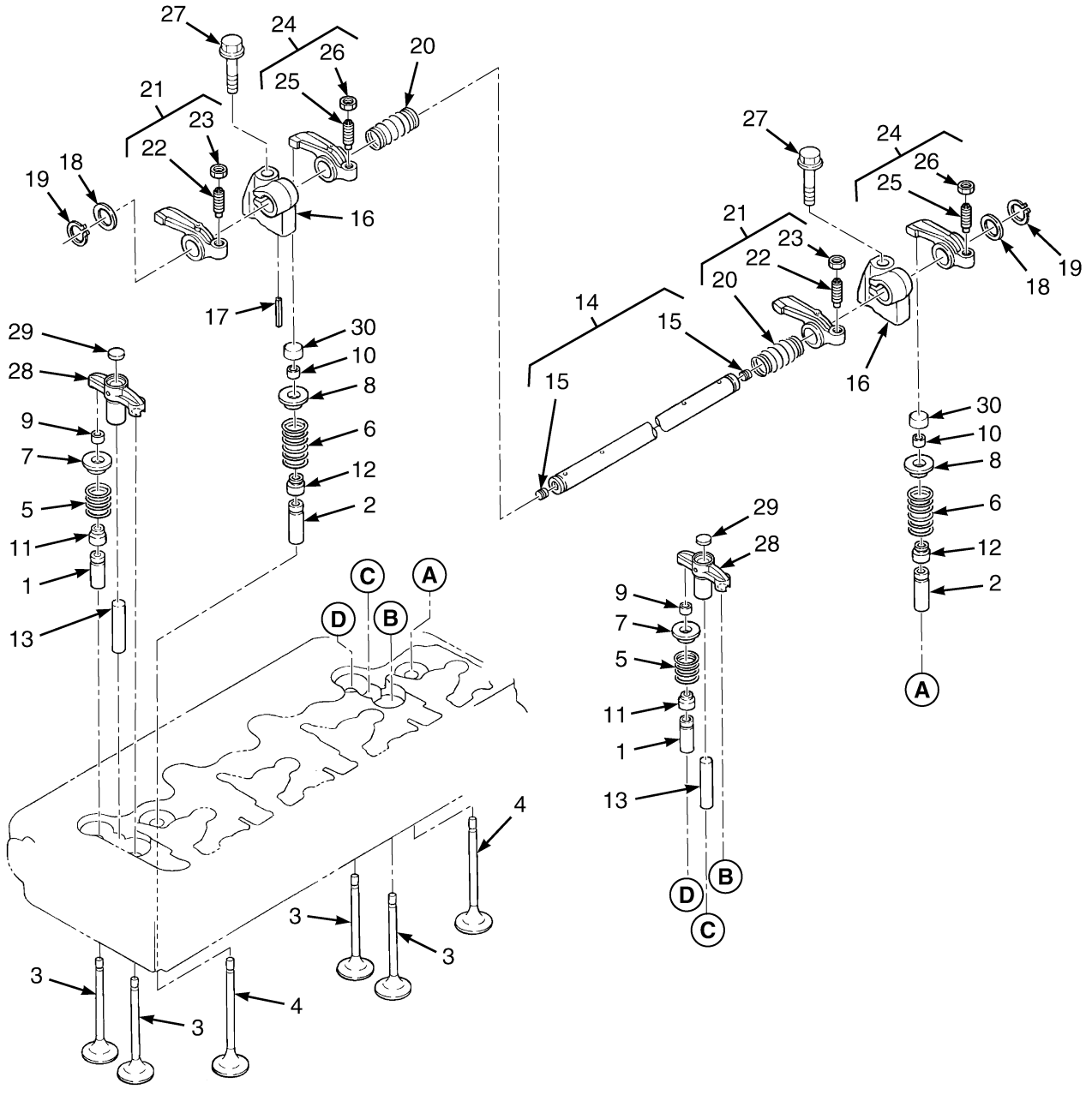

BP090530

©2015 HYSTER COMPANY

ROCKER ARM ASSEMBLY
WITH INLET AND EXHAUST VALVES – KUBOTA DIESEL (3.6L)

ITEM	PART NO.	DESCRIPTION	QTY
	4615470	Engine Assy-Diesel (3.6L)	1
	4042022	Cylinder Head Assembly	1
1	4041952	Guide (Exhaust Valve)	8
2	4042101	Guide (Exhaust Valve)	4
3	4042105	Valve (Intake)	8
4	4042111	Valve (Exhaust)	4
5	4041957	Spring (Intake)	8
6	4042119	Spring (Exhaust)	4
7	4041958	Retainer (Valve Spring Intake)	8
8	4042122	Retainer (Valve Spring Exhaust)	4
9	4041959	Collar (Valve Spring Intake)	8
10	4042129	Collar (Valve Spring Exhaust)	4
11	4041960	Seal (Valve Stem) (Intake)	8
12	4042147	Seal (Valve Stem Exhaust) (Exhaust)	4
13	4041962	Shaft (Valve)	4
14	4042151	Shaft Assembly (Rocker Arm)	1
15	4042094	Screw	2
16	4042153	Bracket (Rocker Arm)	4
17	4042096	Pin (Spring)	1
18	4042097	Washer	2
19	4042098	Retaining Ring	2
20	4042099	Spring	3
21	4042154	Rocker Arm (Intake)	4
22	4042155	Screw	4
23	4042103	Nut	4
24	4042157	Rocker Arm (Exhaust)	4
25	4042155	Screw	4
26	4042103	Nut	4
27	4042161	Bolt	4
28	4042109	Arm	4
29	4042110	Pad	4
30	4042168	Cap	4
	4051069	Kit-Gasket Upper	1

©2015 HYSTER COMPANY

ROCKER ARM SHAFT (FIGURE 2-28)

KUBOTA DIESEL — 3.8L

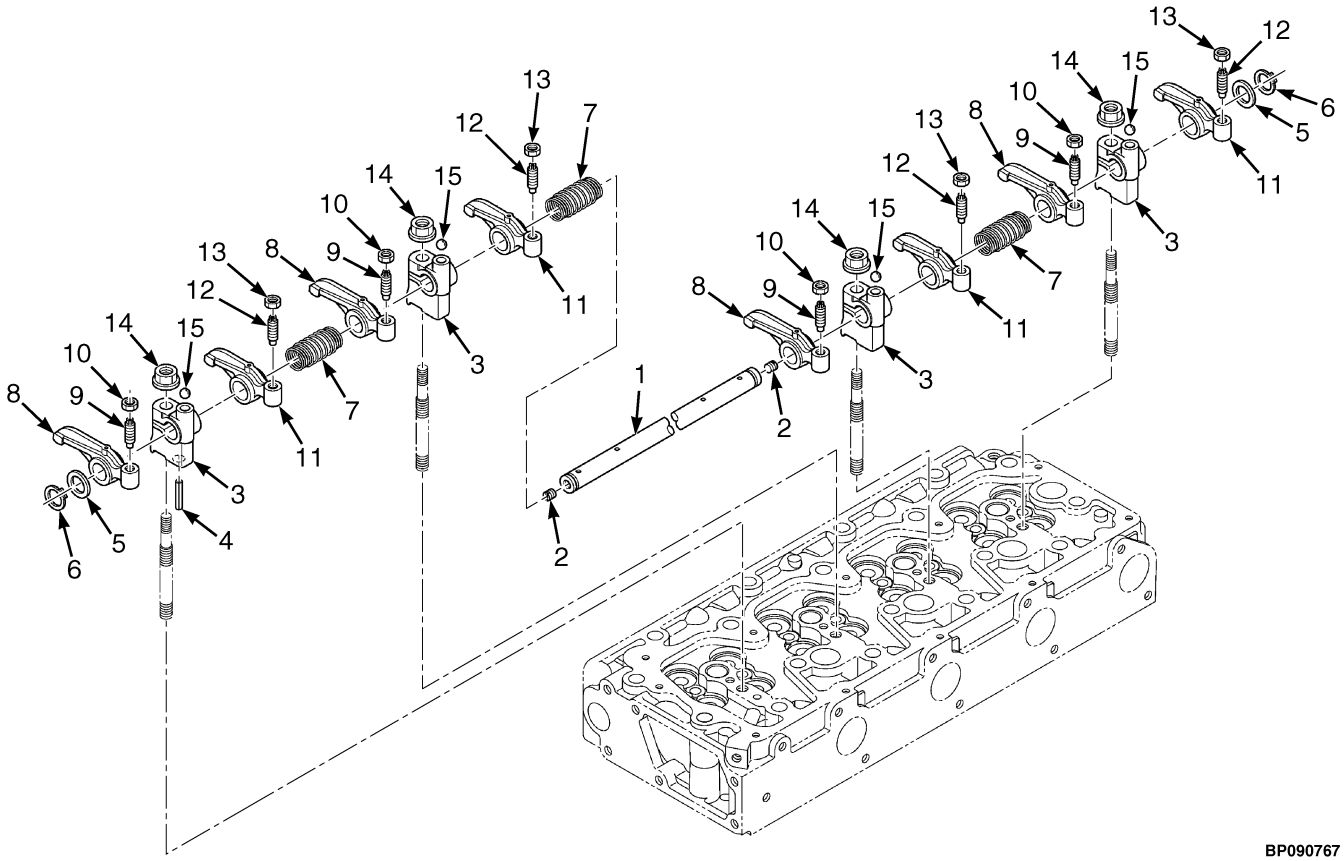

ITEM	PART NO.	DESCRIPTION	QTY
	4620483	Engine Assy-Diesel (3.8L)	1
1	4042092	Shaft Assy (Rocker Arm)	1
2	4042094	Screw	2
3	4042095	Bracket	4
4	4042096	Pin (Spring)	1
5	4042097	Washer	2
6	4042098	Retaining Ring	2
7	4042099	Spring	3
8	4042100	Rocker Arm Assy (Intake)	4
9	4042155	Screw	1
10	4042103	Nut	1
11	4042104	Rocker Arm Assy (Exhaust)	4
12	4042155	Screw	1
13	4042103	Nut	1
14	4042108	Nut	8
15	4042138	Ball	4

©2015 HYSTER COMPANY

INLET AND EXHAUST VALVES (FIGURE 2-29)

KUBOTA DIESEL — 3.8L

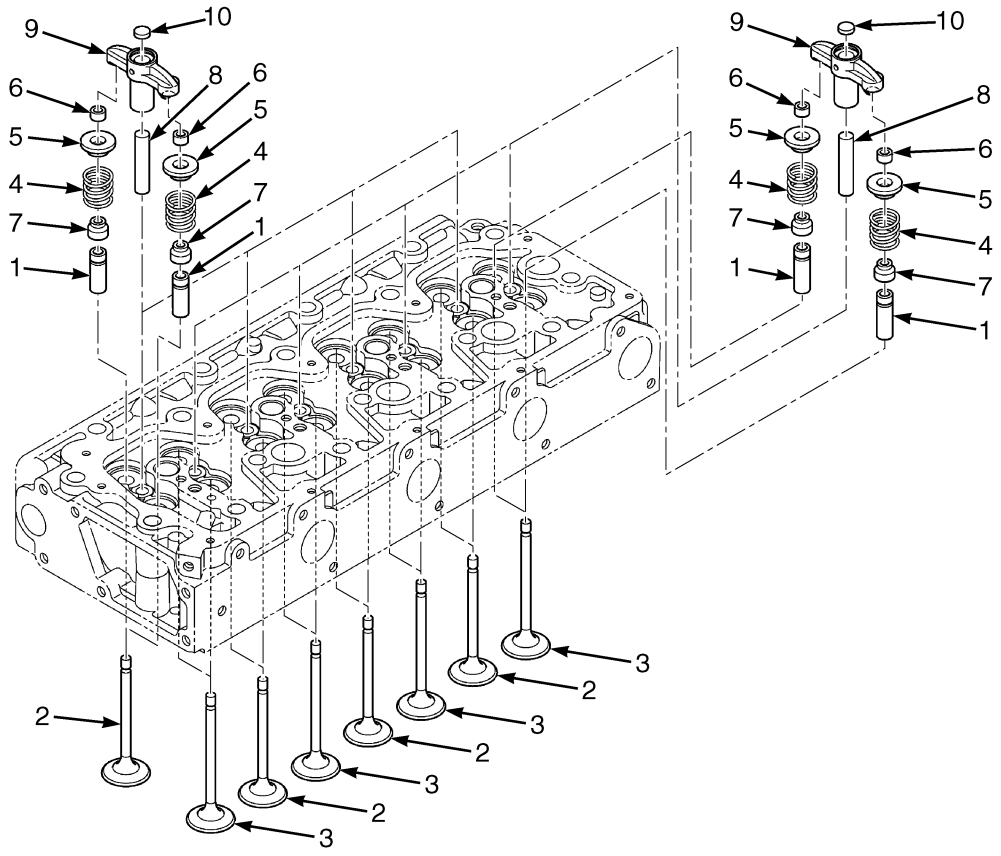

BP090507

ITEM	PART NO.	DESCRIPTION	QTY
	4620483	Engine Assy-Diesel (3.8L)	1
1	4041952	Guide (Exhaust Valve)	16
2	4041955	Inlet Valve	8
3	4041956	Exhaust Valve	8
4	4041957	Spring	16
5	4041958	Retainer	16
6	4041959	Collar	16
7	4041960	Seal (Valve Stem)	16
8	4041962	Shaft	8
9	4042109	Arm	8
10	4042110	Pad	8

©2015 HYSTER COMPANY

INLET MANIFOLD (FIGURE 2-30)
KUBOTA DIESEL — 3.6L

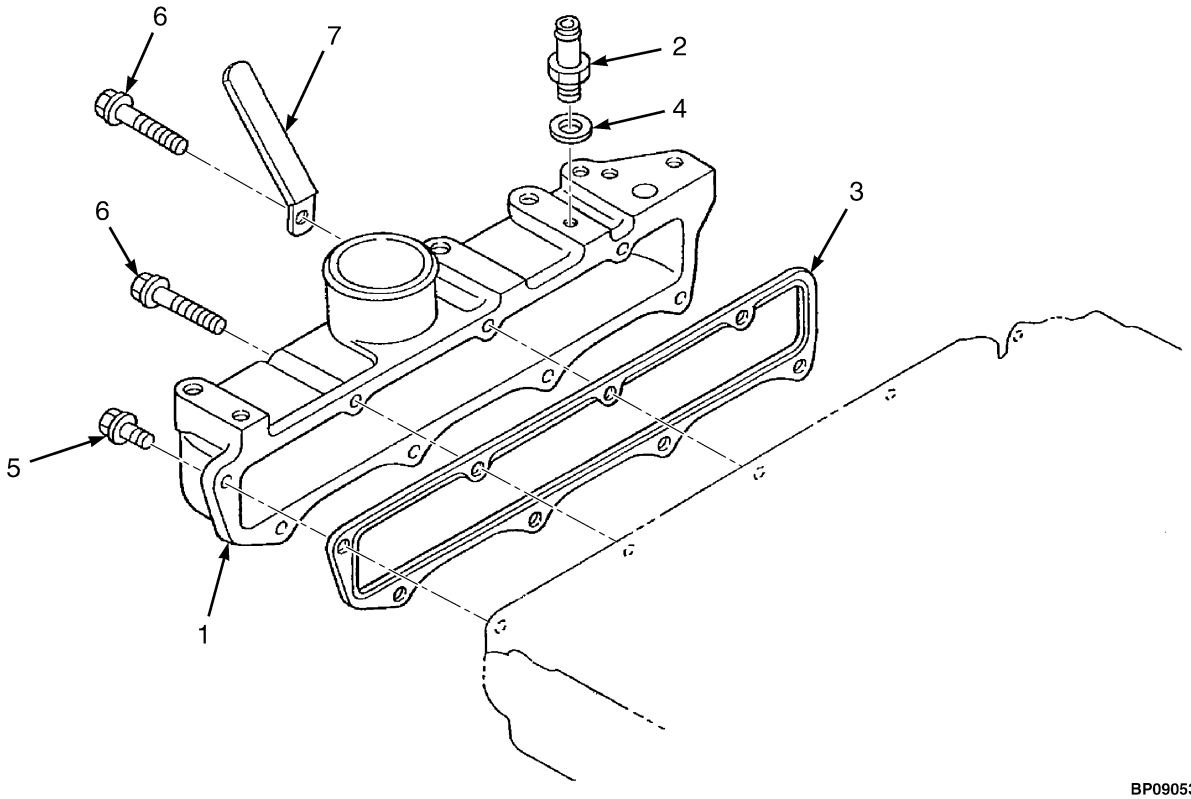

ITEM	PART NO.	DESCRIPTION	QTY
	4615470	Engine Assy-Diesel (3.6L)	1
1	4051046	Intake Manifold	1
2	4051047	Screw	1
3	4051048	Gasket	1
4	4050907	Gasket	1
5	4041944	Bolt	5
6	4042043	Bolt	3
7	4042012	Clamp	1
	4051069	Kit-Gasket Upper	1

©2015 HYSTER COMPANY

NOTES

©2015 HYSTER COMPANY

INLET MANIFOLD (FIGURE 2-31)
KUBOTA DIESEL — 3.8L

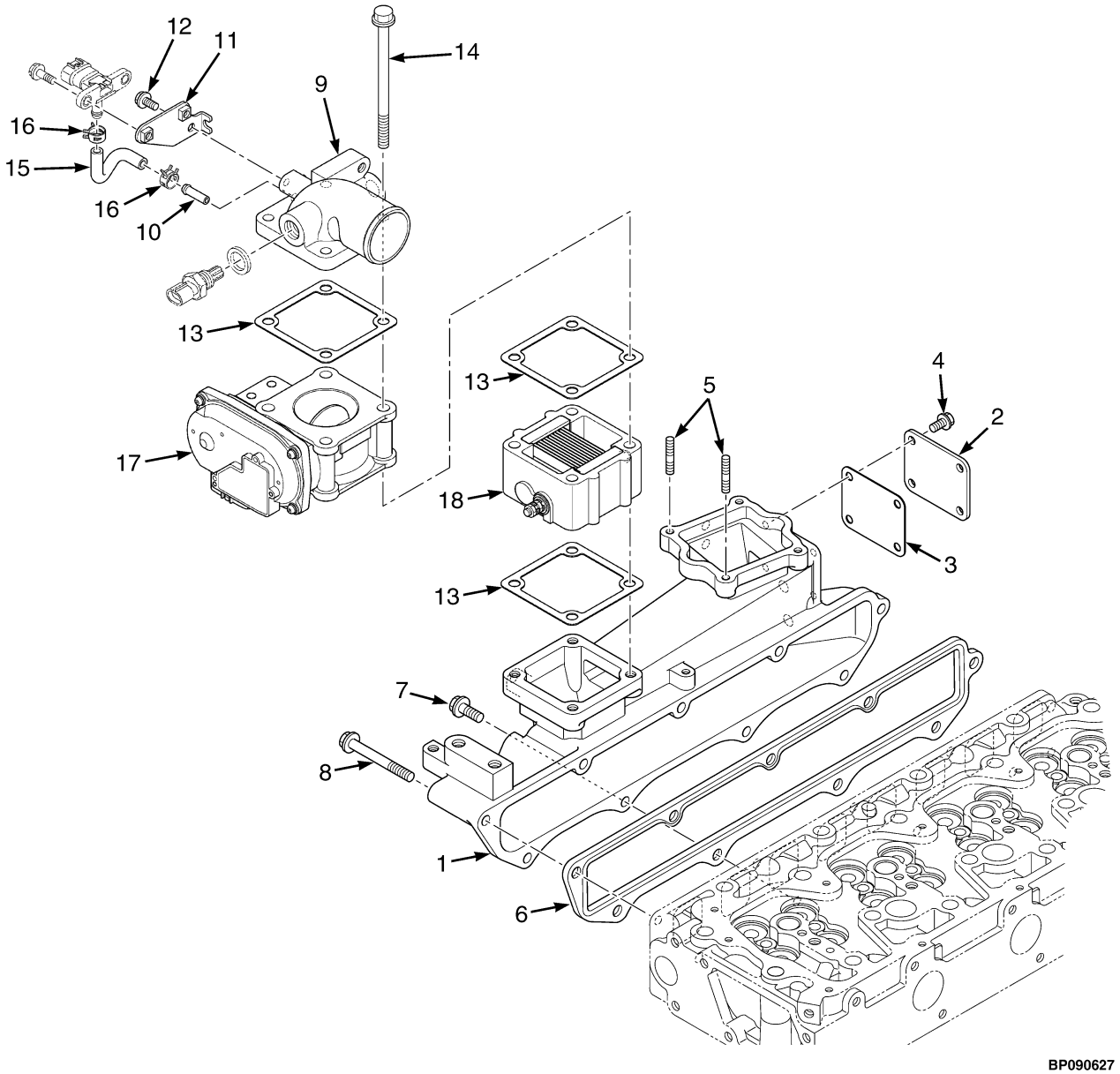

©2015 HYSTER COMPANY

INLET MANIFOLD
KUBOTA DIESEL – 3.8L

ITEM	PART NO.	DESCRIPTION	QTY
	4620483	Engine Assy-Diesel (3.8L)	1
1	4054696	Intake Manifold	1
2	4054697	Cover	1
3	4054698	Gasket	1
4	4042059	Bolt	4
5	4054699	Bolt	2
6	4042041	Gasket	1
7	4041944	Bolt	5
8	4042043	Bolt	4
9	4074793	Flange	1
10	4042046	Pipe (Boost)	1
11	4074794	Bracket	1
12	4042059	Bolt	1
13	4054723	Gasket	3
14	4074795	Bolt	4
15	4074796	Tube	1
16	4042053	Hose Clamp	2
17	4054727	Throttle Body	1
18	4054728	Heater	1

©2015 HYSTER COMPANY

EXHAUST MANIFOLD (FIGURE 2-32)
KUBOTA DIESEL — 3.6L

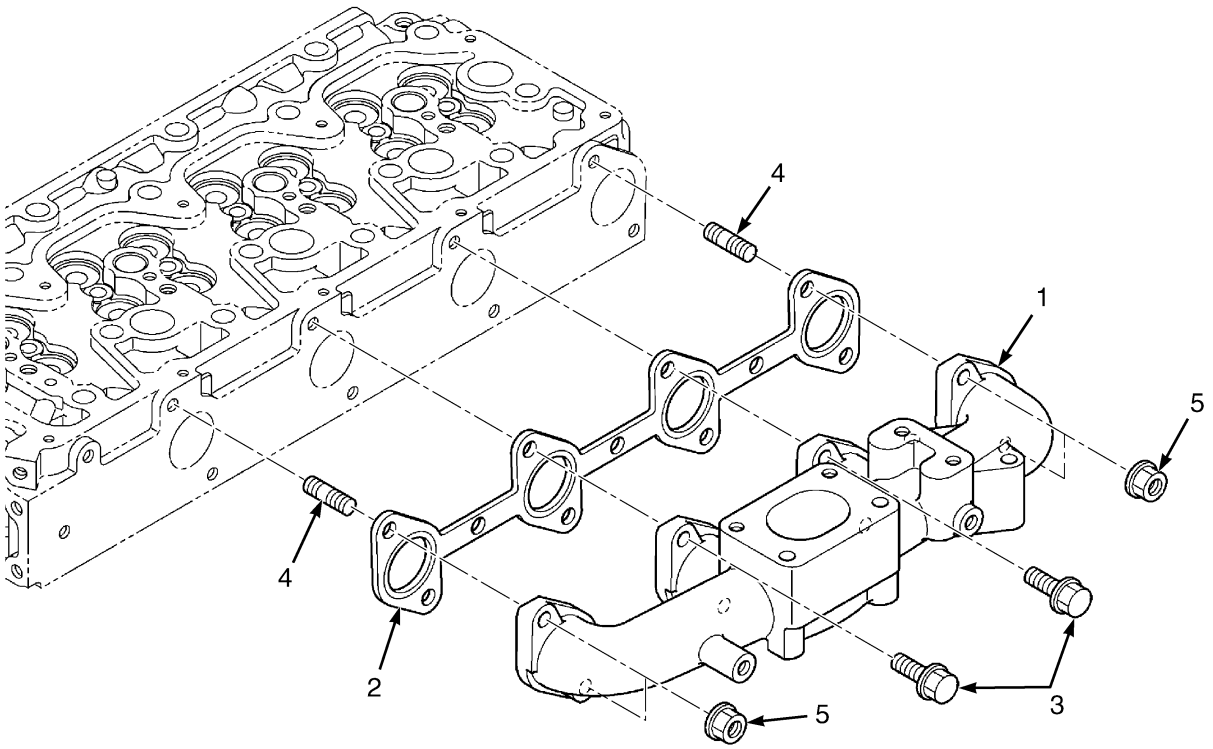

BP090532

ITEM	PART NO.	DESCRIPTION	QTY
	4615470	Engine Assy-Diesel (3.6L)	1
1	4051049	Exhaust Manifold	1
2	4042087	Gasket	1
3	4042088	Bolt	2
4	4042010	Stud	6
5	4051050	Nut	6
	4051069	Kit-Gasket Upper	1

©2015 HYSTER COMPANY

EXHAUST MANIFOLD (FIGURE 2-33)

KUBOTA DIESEL — 3.8L

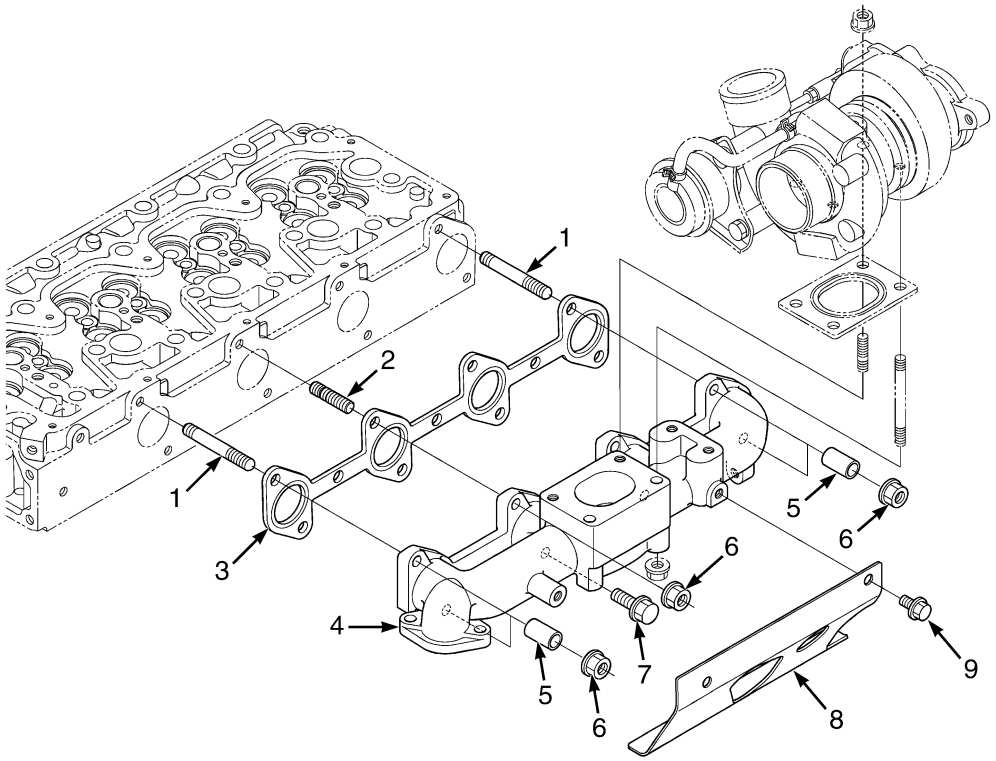

ITEM	PART NO.	DESCRIPTION	QTY
	4620483	Engine Assy-Diesel (3.8L)	1
1	4054741	Stud	4
2	4042010	Stud	2
3	4042087	Gasket	1
4	4054738	Exhaust Manifold	1
5	4054742	Collar	4
6	4051050	Nut	6
7	4042088	Bolt	2
8	4054739	Cover	1
9	4054740	Bolt	2

©2015 HYSTER COMPANY

GEAR CASE (FIGURE 2-34)
KUBOTA DIESEL — 3.6L

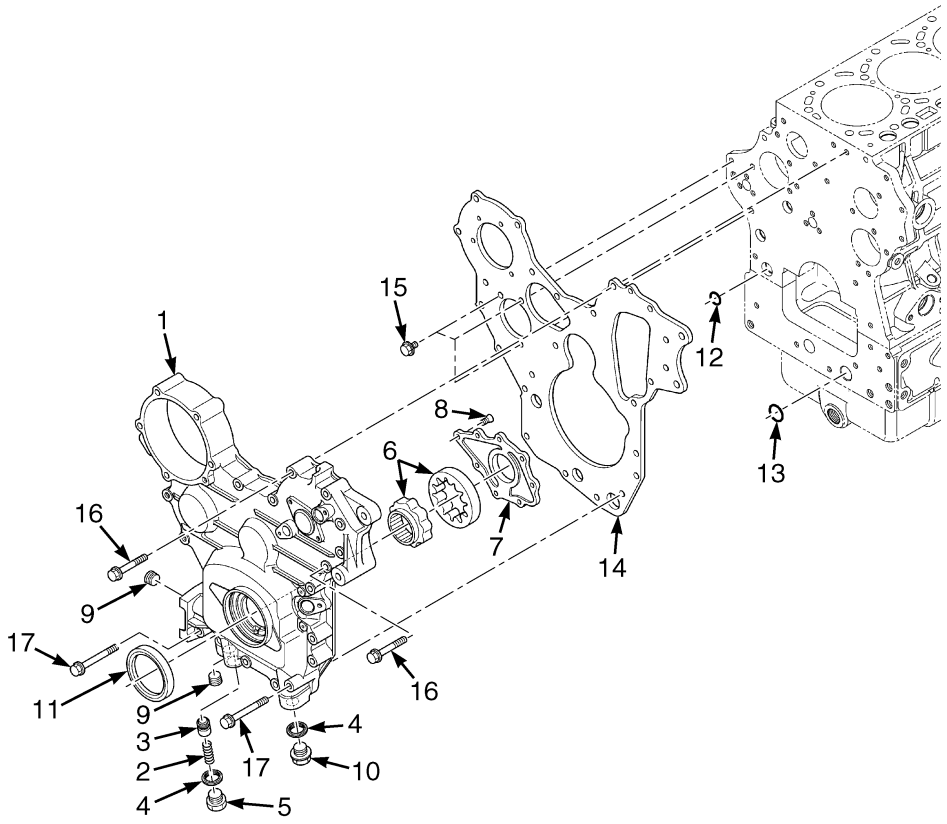

BP090481

ITEM	PART NO.	DESCRIPTION	QTY
	4615470	Engine Assy-Diesel (3.6L)	1
1	4042246	Case (Gear Assembly) (3.6L)	1
2	4041971	Spring	1
3	4041972	Relief Valve	1
4	4041939	Packing (O-Ring)	2
5	4041974	Plug	1
6	4041975	Rotor Assembly (Oil Pump)	1
7	4041978	Cover (Oil Pump)	1
8	4041979	Screw	8
9	4041980	Plug	2
10	4041981	Drain Plug	1
11	4041982	Oil Seal	1
12	4041983	O-Ring	1
13	4041984	O-Ring	1
14	4042247	Plate (Gear Case)	1
15	4041992	Bolt	3
16	4041994	Bolt	15
17	4041996	Bolt	2
	a 4041946	Nut	2
	4051070	Kit-Gasket Lower	1

©2015 HYSTER COMPANY

FOOTNOTES:

a Not Illustrated

©2015 HYSTER COMPANY

GEAR CASE (FIGURE 2-35)
KUBOTA DIESEL — 3.8L

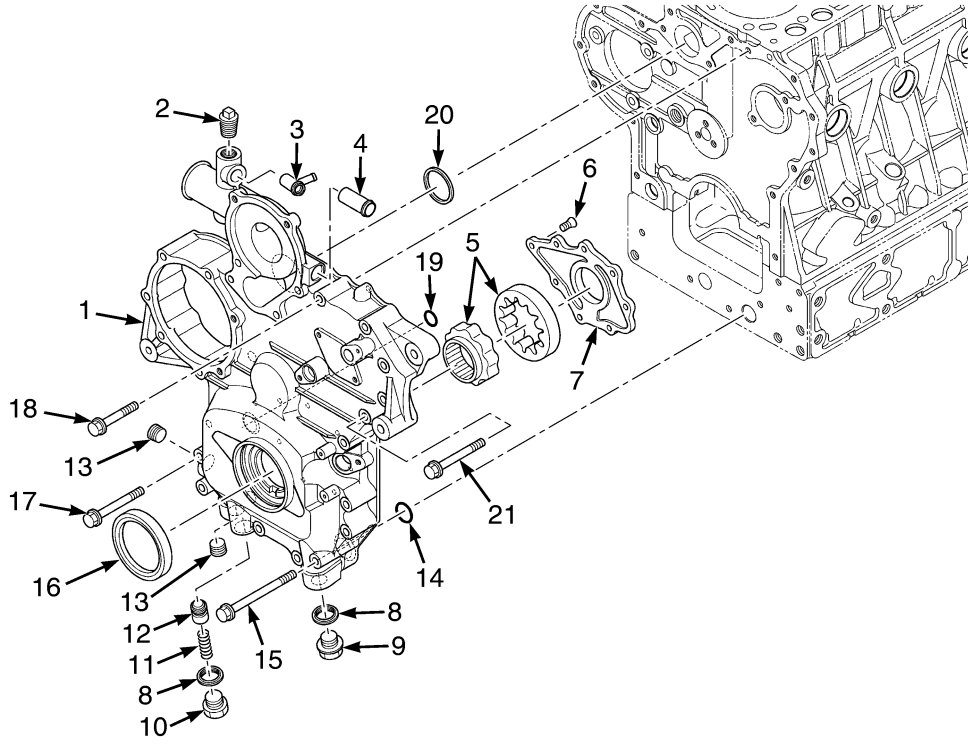

BP090624

ITEM	PART NO.	DESCRIPTION	QTY
	4620483	Engine Assy-Diesel (3.8L)	1
1	4054593	Case (Gear)	1
2	4054594	Plug	1
3	4054595	Pipe	1
4	4042008	Joint (Breather Pipe)	1
5	4041975	Rotor Assembly (Oil Pump)	1
6	4041979	Screw	8
7	4041978	Cover (Oil Pump)	1
8	4041939	Packing (O-Ring)	2
9	4041981	Drain Plug	1
10	4041974	Plug	1
11	4041971	Spring	1
12	4041972	Relief Valve	1
13	4041980	Plug	2
14	4041984	O-Ring	1
15	4041996	Bolt	1
16	4041982	Oil Seal	1
17	4054596	Bolt	2
18	4041992	Bolt	9
19	4041983	O-Ring	1
20	4042322	Gasket	1
21	4074574	Bolt	2

©2015 HYSTER COMPANY

COVER BEARING CASE (FIGURE 2-36)

KUBOTA DIESEL — 3.6L, 3.8L

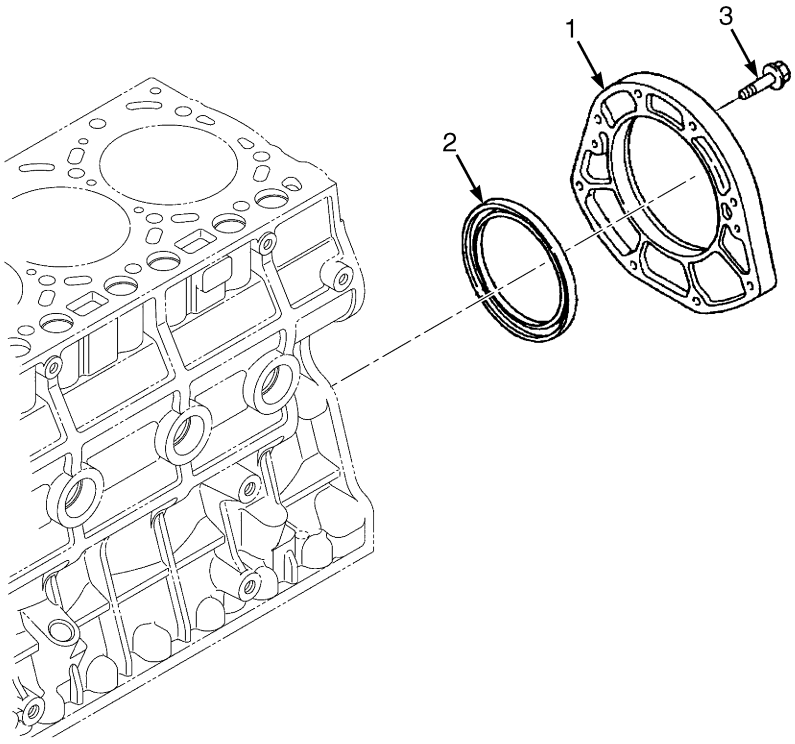

BP090483

ITEM	PART NO.	DESCRIPTION	QTY
	4615470	Engine Assy-Diesel (3.6L)	1
	4620483	Engine Assy-Diesel (3.8L)	1
1	4042009	Cover (Bearing Case)	1
2	4042011	Oil Seal	1
3	4041997	Bolt	8
	4051070	Kit-Gasket Lower (3.6L)	1

©2015 HYSTER COMPANY

CYLINDER BLOCK (FIGURE 2-37)

KUBOTA DIESEL — 3.6L

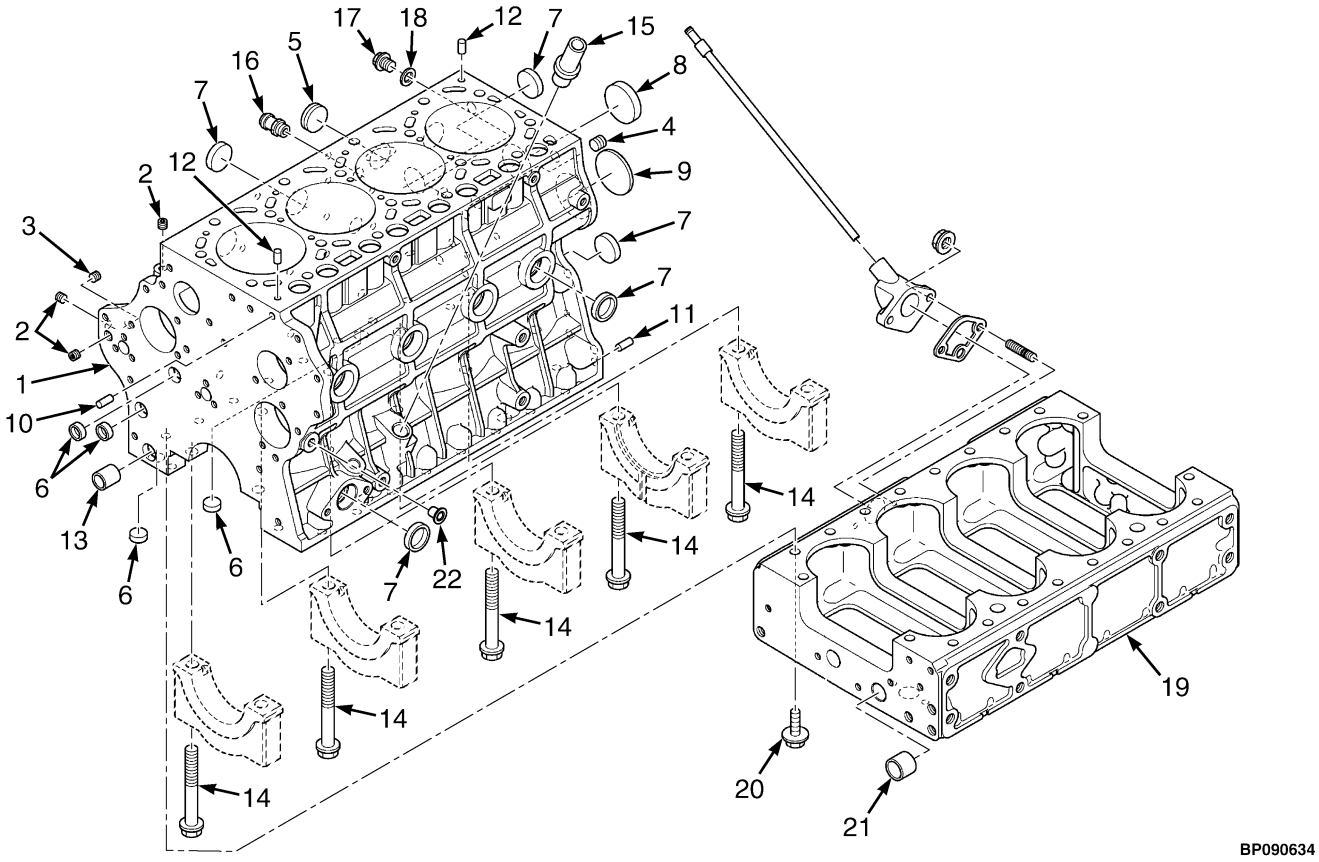

©2015 HYSTER COMPANY

CYLINDER BLOCK
KUBOTA DIESEL – 3.6L

ITEM	PART NO.	DESCRIPTION	QTY
	4615470	Engine Assy-Diesel (3.6L)	1
1	4041913	Short Block	1
2	4041906	Plug	3
3	4041915	Plug	2
4	4041907	Plug	1
5	4041908	Plug	1
6	4041909	Cap (Sealing)	4
7	4041910	Cap (Sealing)	10
8	4041911	Cap (Sealing)	1
9	4041917	Plug	1
10	4041918	Pin	1
11	4041919	Pin	4
12	4041920	Pin	2
13	4041921	Pin	1
14	4041914	Bolt (Bearing Case)	10
15	4041923	Pipe (Oil)	1
16	4041928	Joint (Water)	1
17	4041929	Plug	1
18	4041930	Gasket	1
19	4041953	Block (Lower)	1
20	4041932	Bolt	16
21	4041933	Pin	1
22	4042143	Plug	1

©2015 HYSTER COMPANY

CYLINDER BLOCK (FIGURE 2-38)
KUBOTA DIESEL — 3.8L

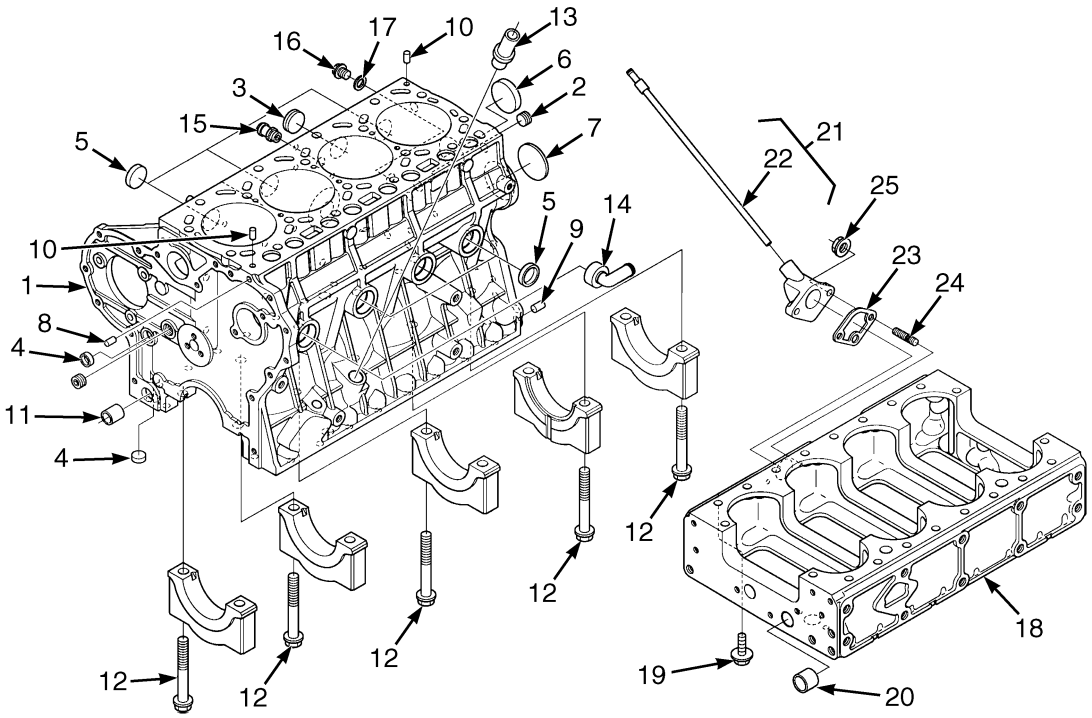

BP090635

ITEM	PART NO.	DESCRIPTION	QTY
	4620483	Engine Assy-Diesel (3.8L)	1
1	4054580	Short Block	1
2	4041907	Plug	2
3	4041908	Plug	1
4	4041909	Cap (Sealing)	2
5	4041910	Cap (Sealing)	6
6	4041911	Cap (Sealing)	1
7	4041917	Plug	1
8	4054581	PIN	1
9	4041919	Pin	4
10	4041920	Pin	2
11	4041921	Pin	1
12	4041914	Bolt (Bearing Case)	10
13	4041923	Pipe (Oil)	1
14	4041925	Pipe Joint	1
15	4041928	Joint (Water)	1
16	4041929	Plug	1
17	4041930	Gasket	1
18	4054582	Block (Lower)	1
19	4041932	Bolt	16
20	4041933	Pin	1
21	4042220	Flange Assembly	1
22	4042222	Pipe	1
23	4042223	Gasket	1
24	4042010	Stud	2

©2015 HYSTER COMPANY

ITEM	PART NO.	DESCRIPTION	QTY
25	4041946	Nut	2

©2015 HYSTER COMPANY

PISTON AND CRANKSHAFT (FIGURE 2-39)

KUBOTA DIESEL — 3.6L

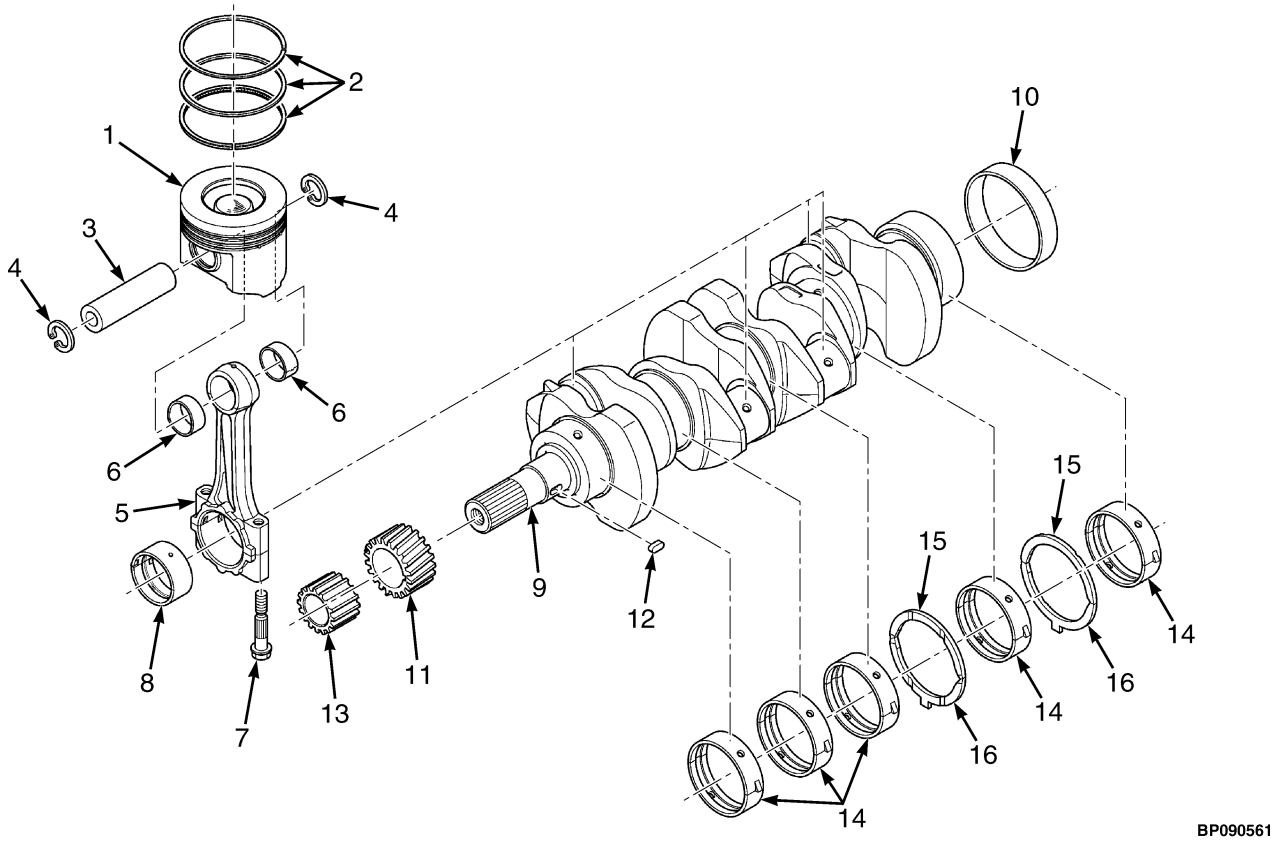

©2015 HYSTER COMPANY

PISTON AND CRANKSHAFT
KUBOTA DIESEL – 3.6L

ITEM	PART NO.	DESCRIPTION	QTY
	4615470	Engine Assy-Diesel (3.6L)	1
1	4042252	Piston (Standard)	4
1	4042263	Piston (+0.50mm)	4
2	4042269	Piston Ring (Standard)	4
2	4042282	Piston Ring (+0.50mm)	4
3	4042173	Pin	4
4	4042174	Retaining Ring	8
5	4042175	Rod Assy	4
6	4042229	Bushing	2
7	4042180	Bolt	2
8	4042181	Piston Rod Bearing (Standard/Blue)	2
8	4042182	Piston Rod Bearing (Standard)	2
8	4042163	Piston Rod Bearing (-0.20mm Green)	2
8	4042165	Piston Rod Bearing (-0.40mm Red)	2
9	4042283	Crankshaft	1
10	4042185	Sleeve	1
11	4042287	Gear (Crankshaft)	1
12	4042189	Key	1
13	4042193	Drive Gear	1
14	4042186	Crankshaft Bearing (Standard)	5
14	4042177	Crankshaft Bearing (-0.20mm)	5
14	4042178	Crankshaft Bearing (-0.40mm)	5
15	4042187	Thrust Washer (Standard)	2
15	4042204	Thrust Washer (+0.20 mm)	2
15	4042215	Thrust Washer (+0.40mm)	2
16	4042188	Thrust Washer (Standard)	2
16	4042219	Thrust Washer (+0.20 mm)	2
16	4042224	Thrust Washer (+0.40mm)	2
	4042304	Kit-Piston (Standard)	4
	4042305	Kit-Piston (+0.50mm)	4
	4042291	Kit-Crankshaft Bearing (Standard)	1
	4042297	Kit-Crankshaft Bearing (-0.20 mm)	1
	4042303	Kit-Crankshaft Bearing (-0.40mm)	1

©2015 HYSTER COMPANY

PISTON AND CRANKSHAFT (FIGURE 2-40)

KUBOTA DIESEL — 3.8L

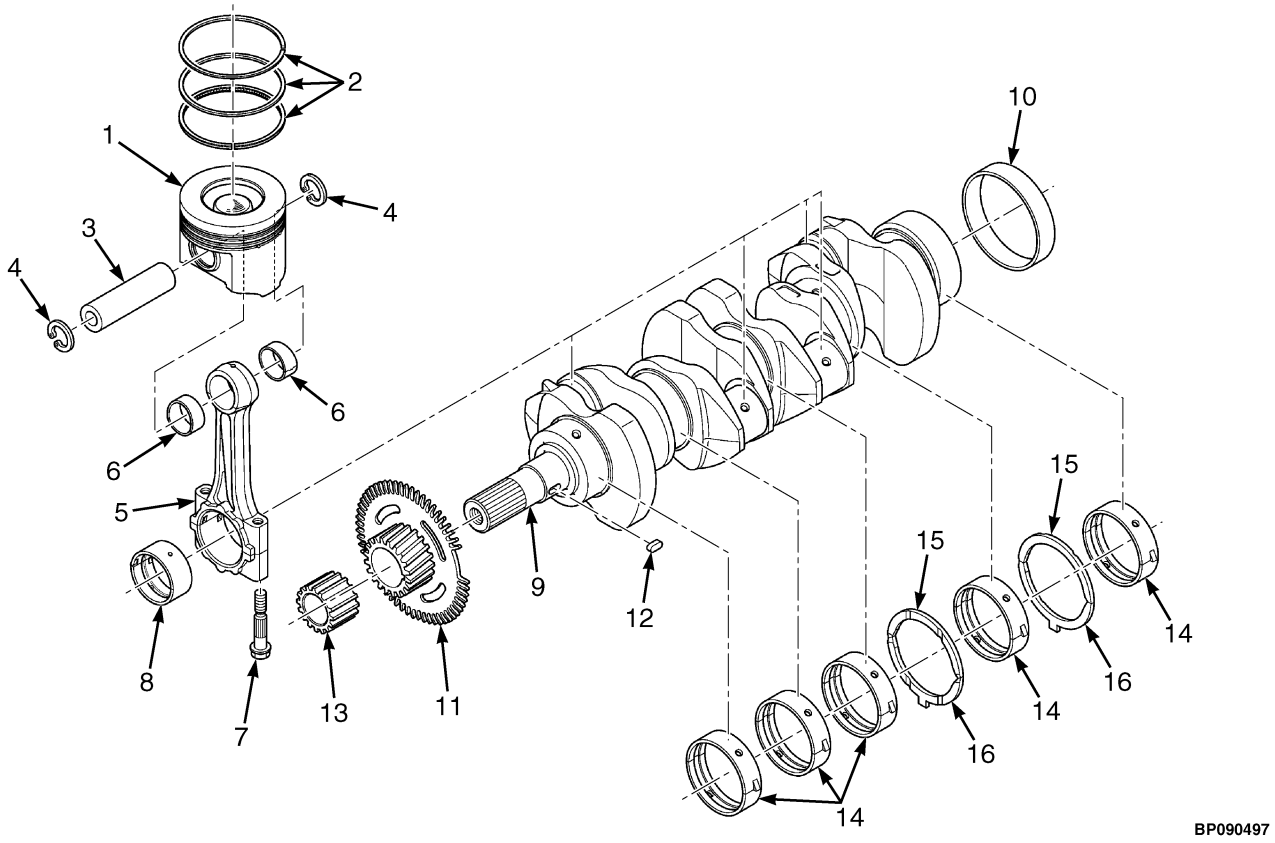

©2015 HYSTER COMPANY

PISTON AND CRANKSHAFT
KUBOTA DIESEL – 3.8L

ITEM	PART NO.	DESCRIPTION	QTY
	4620483	Engine Assy-Diesel (3.8L)	1
1	4042166	Piston (Standard)	4
1	4042144	Piston (+0.50mm)	4
2	4042167	Piston Ring (Standard)	4
2	4042146	Piston Ring (+0.50mm)	4
3	4042173	Pin	4
4	4042174	Retaining Ring	8
5	4042175	Rod Assy	4
6	4042229	Bushing	2
7	4042180	Bolt	2
8	4042181	Piston Rod Bearing (Standard/Blue)	1
8	4042182	Piston Rod Bearing (Standard)	1
8	4042163	Piston Rod Bearing (-0.20mm Green)	1
8	4042165	Piston Rod Bearing (-0.40mm Red)	1
9	4042183	Crankshaft	1
10	4042185	Sleeve	1
11	4042190	Gear (Crankshaft)	1
12	4042189	Key	1
13	4042193	Drive Gear	1
14	4042186	Crankshaft Bearing (Standard)	5
14	4042177	Crankshaft Bearing (-0.20mm)	5
14	4042178	Crankshaft Bearing (-0.40mm)	5
15	4042187	Thrust Washer (Standard)	2
15	4042204	Thrust Washer (+0.20 mm)	2
15	4042215	Thrust Washer (+0.40mm)	2
16	4042188	Thrust Washer (Standard)	2
16	4042219	Thrust Washer (+0.20 mm)	2
16	4042224	Thrust Washer (+0.40mm)	2
	4042239	Kit-Piston (Each Kit Services Only One Piston Assembly)	4
	4042245	Kit-Piston (+0.50mm)(Each Kit Services Only One Piston Assembly)	4
	4042291	Kit-Crankshaft Bearing (Standard)	1
	4042297	Kit-Crankshaft Bearing (-0.20 mm)	1
	4042303	Kit-Crankshaft Bearing (-0.40mm)	1

©2015 HYSTER COMPANY

CAMSHAFT AND IDLE GEAR SHAFT (FIGURE 2-41)

KUBOTA DIESEL — 3.6L

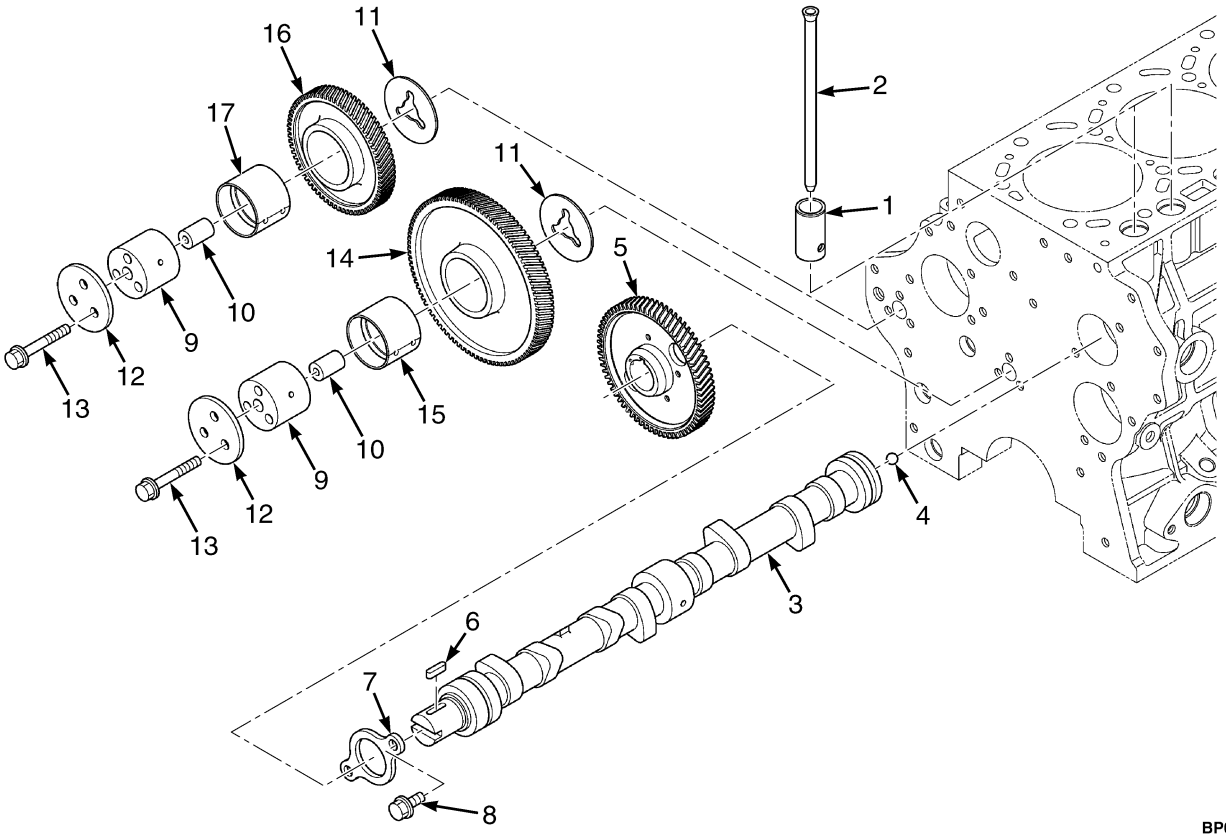

BP090565

ITEM	PART NO.	DESCRIPTION	QTY
	4615470	Engine Assy-Diesel (3.6L)	1
1	4042134	Tappet	8
2	4042135	Push Rod	8
3	4042307	Camshaft Assembly	1
4	4042138	Ball	1
5	4042310	Gear	1
6	4042140	Key	1
7	4042141	Stop	1
8	4041992	Bolt	2
9	4042194	Shaft (Idle Gear)	2
10	4042195	Pin	2
11	4042196	Collar (Idle Gear)	2
12	4042197	Collar	2
13	4042198	Bolt	6
14	4042314	Idler Gear	1
15	4042225	Bushing	1
16	4042315	Idler Gear	1
17	4042225	Bushing	1

©2015 HYSTER COMPANY

CAMSHAFT AND IDLE GEAR SHAFT (FIGURE 2-42)

KUBOTA DIESEL — 3.8L

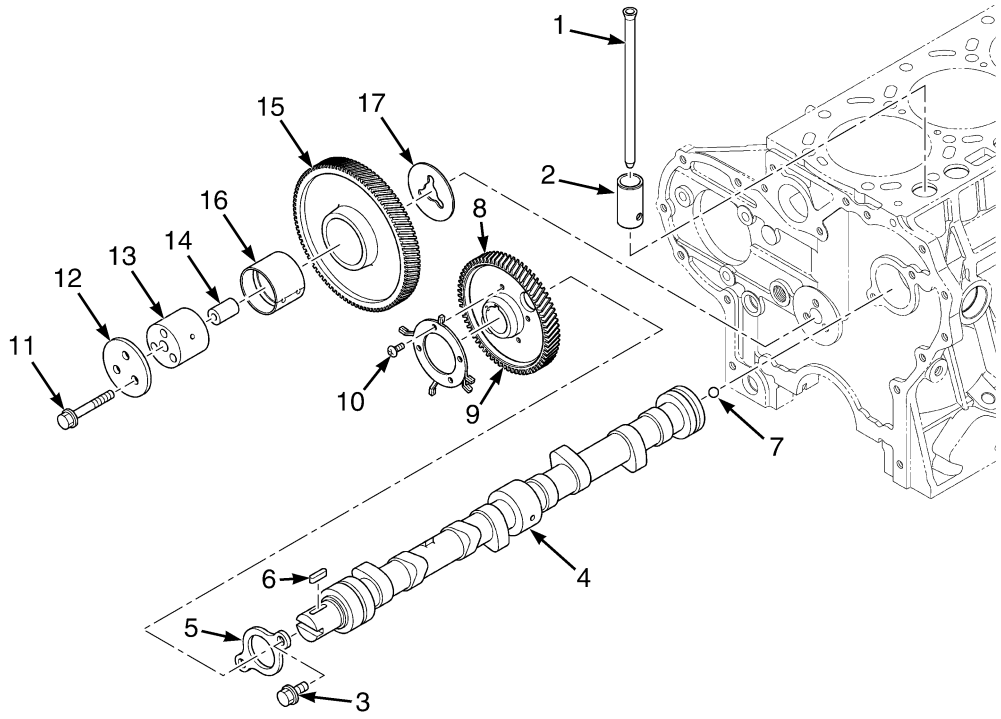

ITEM	PART NO.	DESCRIPTION	QTY
	4620483	Engine Assy-Diesel (3.8L)	1
1	4042135	Push Rod	8
2	4042134	Tappet	8
3	4041992	Bolt	2
4	4042136	Camshaft Assembly	1
5	4042141	Stop	1
6	4042140	Key	1
7	4042138	Ball	1
8	4042139	Gear	1
9	4042145	Gear Pulser	1
10	4042040	Screw	4
11	4042198	Bolt	3
12	4042197	Collar	1
13	4042194	Shaft (Idle Gear)	1
14	4042195	Pin	1
15	4042199	Idler Gear	1
16	4042225	Bushing	1
17	4042196	Collar (Idle Gear)	2

©2015 HYSTER COMPANY

DIPSTICK (FIGURE 2-43)
KUBOTA DIESEL — 3.6L, 3.8L

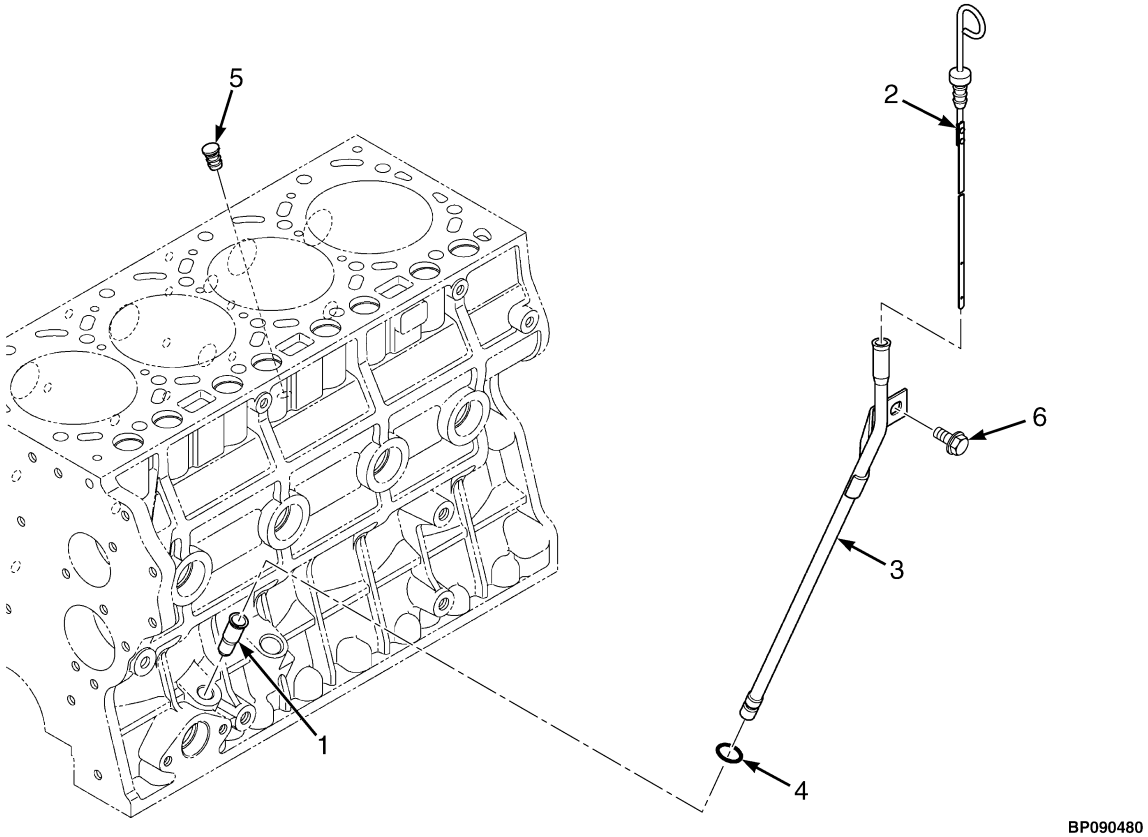

ITEM	PART NO.	DESCRIPTION	QTY
	4620483	Engine Assy-Diesel (3.8L)	1
	4615470	Engine Assy-Diesel (3.6L)	1
1	4042232	Guide	1
2	4042230	Dipstick	1
3	4074569	Guide (Dipstick Tube) (3.8L)	1
3	4042231	Dipstick Tube (3.6L)	1
4	4042233	O-Ring	1
5	4042234	Plug	1
6	4042035	Bolt	1

©2015 HYSTER COMPANY

OIL PAN (FIGURE 2-44)
KUBOTA DIESEL — 3.6L, 3.8L

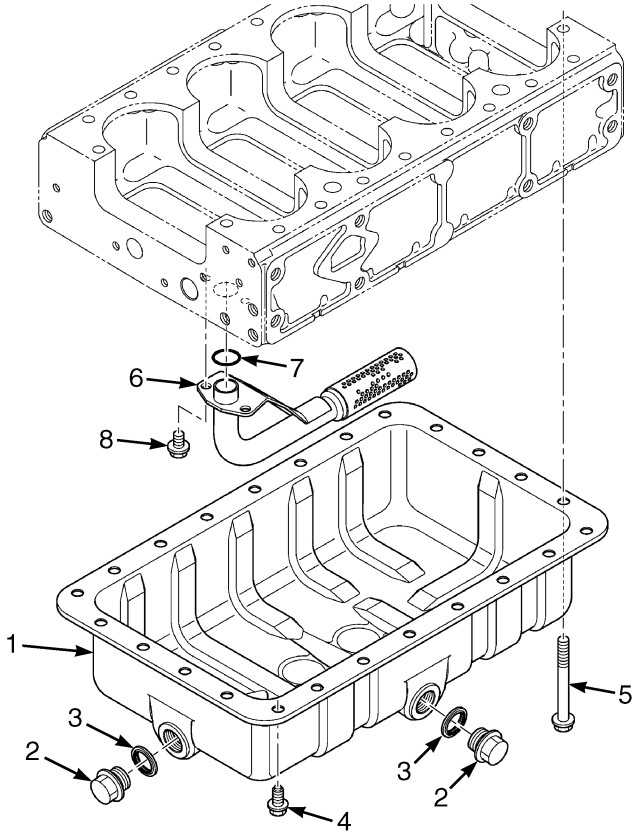

BP090479

ITEM	PART NO.	DESCRIPTION	QTY
	4620483	Engine Assy-Diesel (3.8L)	1
	4615470	Engine Assy-Diesel (3.6L)	1
1	4041936	Oil Pan	1
2	4041938	Drain Plug	2
3	4041939	Packing (O-Ring)	2
4	4041940	Bolt	20
5	4041941	Bolt	4
6	4042213	Strainer (For Oil Pan)	1
7	4042214	O-Ring	1
8	4042035	Bolt	2
	4051070	Kit-Gasket Lower (3.6L)	1

©2015 HYSTER COMPANY

WATER PUMP FLANGE AND THERMOSTAT (FIGURE 2-45)

KUBOTA DIESEL — 3.6L

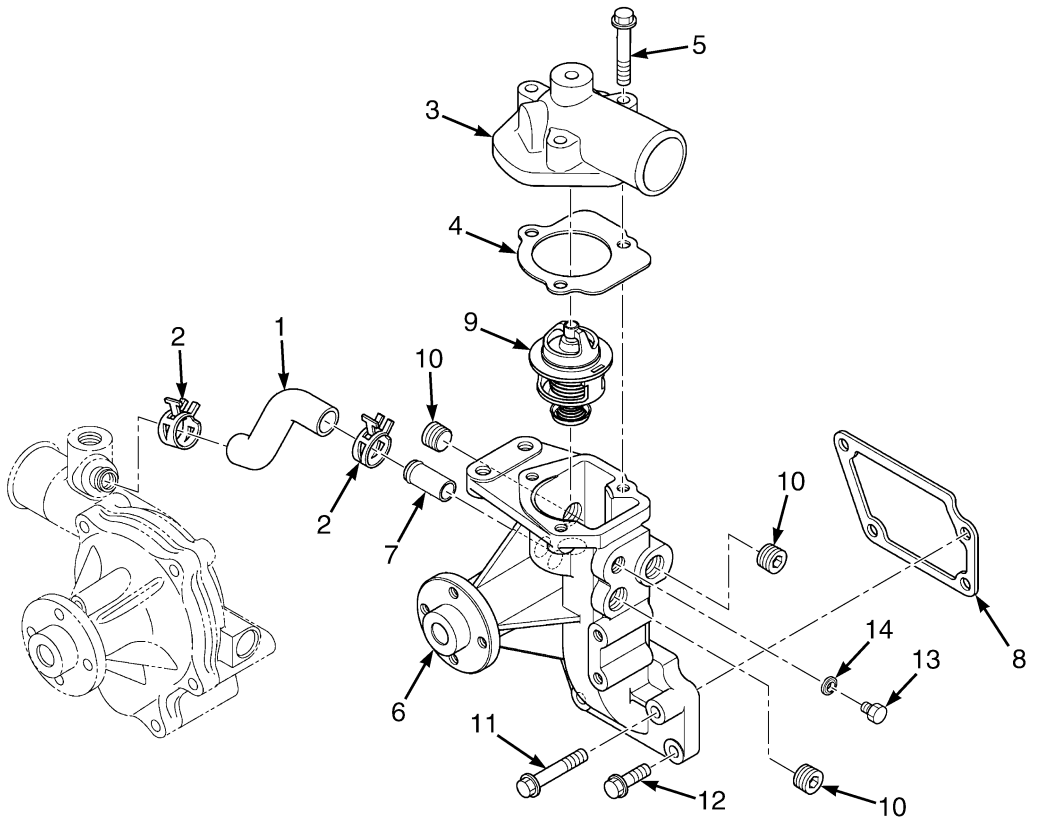

BP090533

ITEM	PART NO.	DESCRIPTION	QTY
	4615470	Engine Assy-Diesel (3.6L)	1
1	4042309	Hose (Water Return)	1
2	4042015	Hose Clamp	2
3	4041973	Cover (Thermostat)	1
4	4041993	Gasket	1
5	4042002	Bolt	3
6	4042003	Flange	1
7	4042008	Joint (Breather Pipe)	1
8	4042030	Gasket (Water Flange)	1
9	4042042	Thermostat	1
10	4042049	Plug	3
11	4042066	Bolt	1
12	4042067	Bolt	3
13	4051044	Drain Plug	1
14	4051045	Gasket	1
	4051069	Kit-Gasket Upper	1

©2015 HYSTER COMPANY

WATER PUMP (FIGURE 2-46)
KUBOTA DIESEL — 3.6L

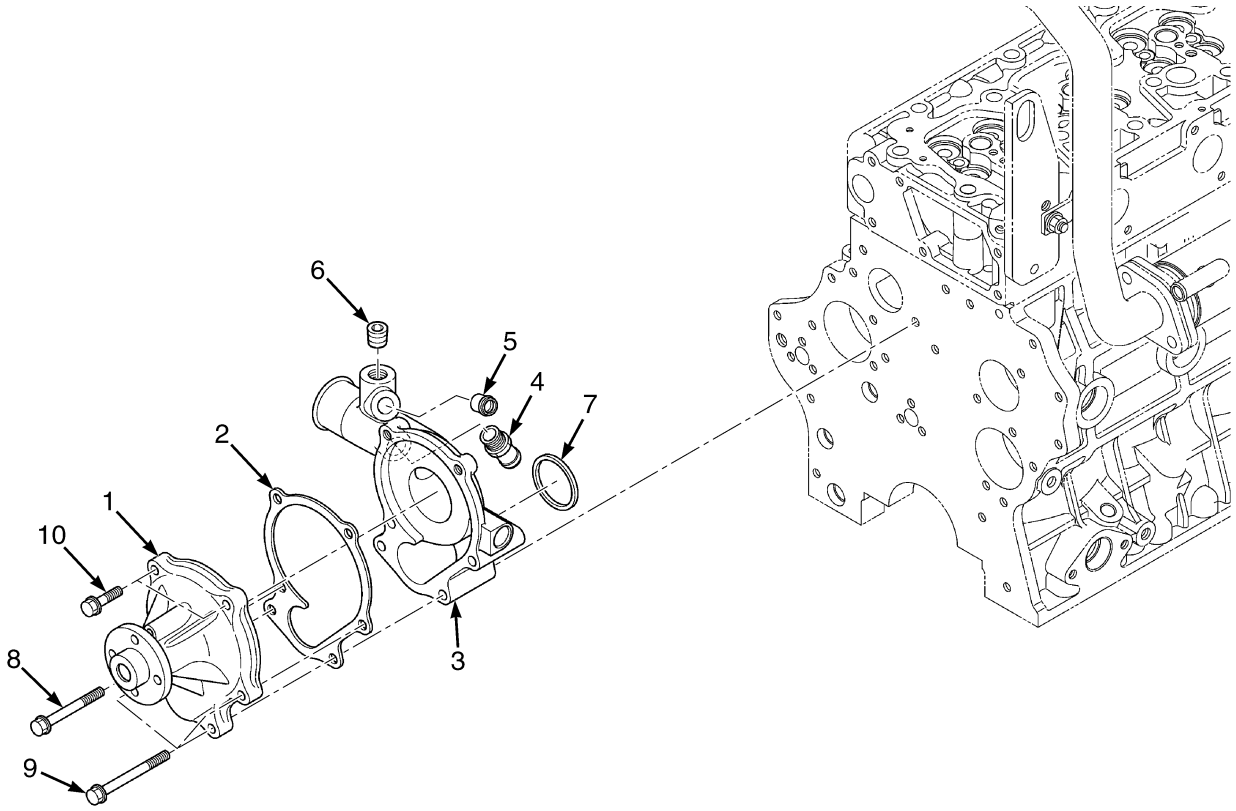

BP090572

ITEM	PART NO.	DESCRIPTION	QTY
	4615470	Engine Assy-Diesel (3.6L)	1
1	4042313	Water Pump	1
2	4042318	Gasket	1
3	4042319	Support	1
4	4041928	Joint (Water)	1
5	4042008	Joint (Breather Pipe)	1
6	4042321	Plug	1
7	4042322	Gasket	1
8	4042323	Bolt	1
9	4042324	Bolt	3
10	4041997	Bolt	2
	4051070	Kit-Gasket Lower (3.6L)	1

©2015 HYSTER COMPANY

WATER PUMP FLANGE AND THERMOSTAT (FIGURE 2-47)

KUBOTA DIESEL — 3.8L

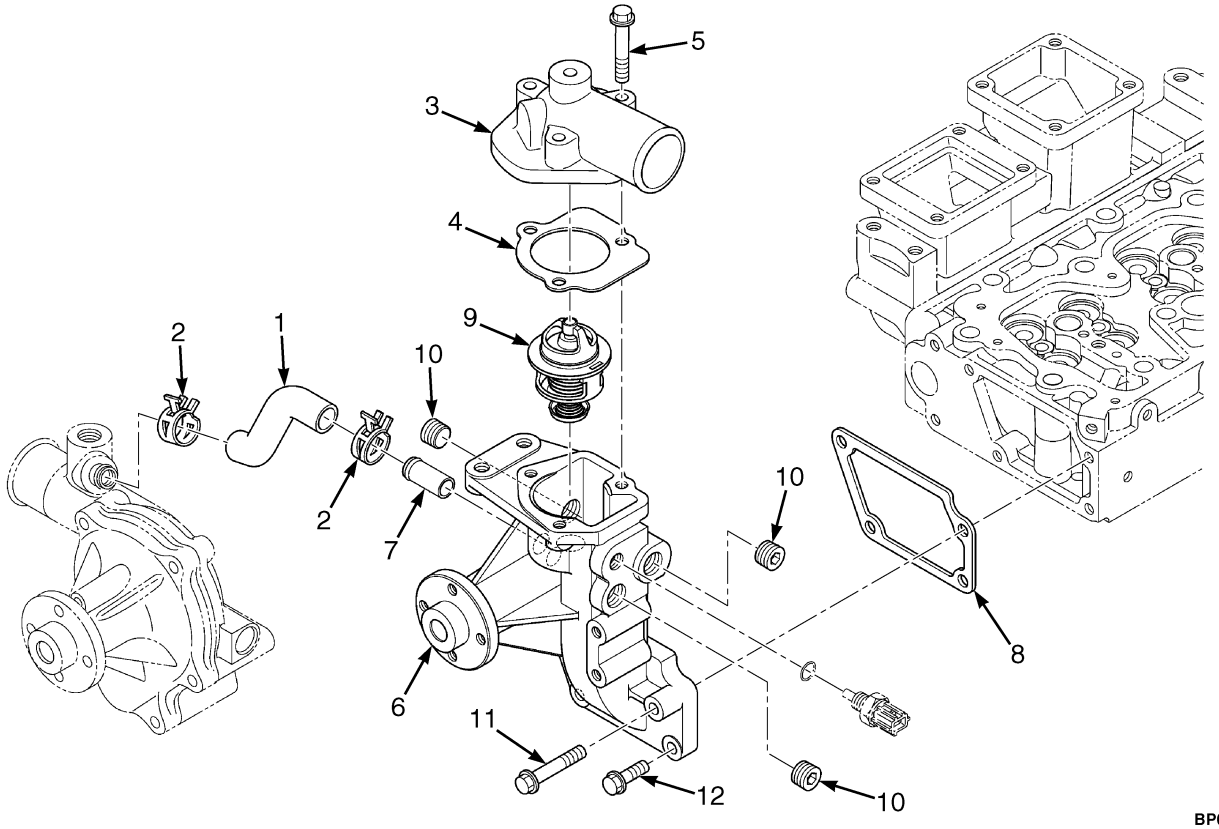

BP090488

ITEM	PART NO.	DESCRIPTION	QTY
	4620483	Engine Assy-Diesel (3.8L)	1
1	4054677	Hose (Water Return)	1
2	4042015	Hose Clamp	2
3	4041973	Cover (Thermostat)	1
4	4041993	Gasket	1
5	4042002	Bolt	3
6	4042003	Flange	1
7	4042008	Joint (Breather Pipe)	1
8	4042030	Gasket (Water Flange)	1
9	4042042	Thermostat	1
10	4042049	Plug	3
11	4042066	Bolt	1
12	4042067	Bolt	3

©2015 HYSTER COMPANY

WATER PUMP (FIGURE 2-48)
KUBOTA DIESEL — 3.8L

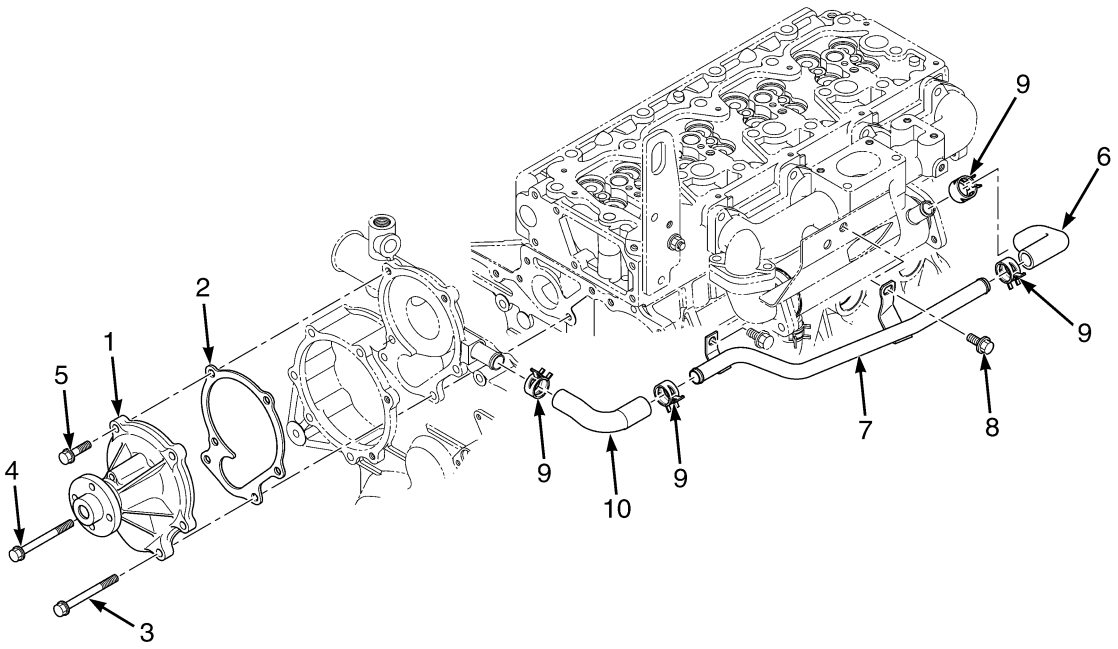

BP090628

ITEM	PART NO.	DESCRIPTION	QTY
	4620483	Engine Assy-Diesel (3.8L)	1
1	4042313	Water Pump	1
2	4042318	Gasket	1
3	4042324	Bolt	3
4	4042323	Bolt	1
5	4041997	Bolt	2
6	4054678	Tube	1
7	4054679	Pipe (Water)	1
8	4042035	Bolt	1
9	4042015	Hose Clamp	4
10	4054680	Hose (EGR)	1

©2015 HYSTER COMPANY

OIL COOLER (FIGURE 2-49)
KUBOTA DIESEL — 3.6L

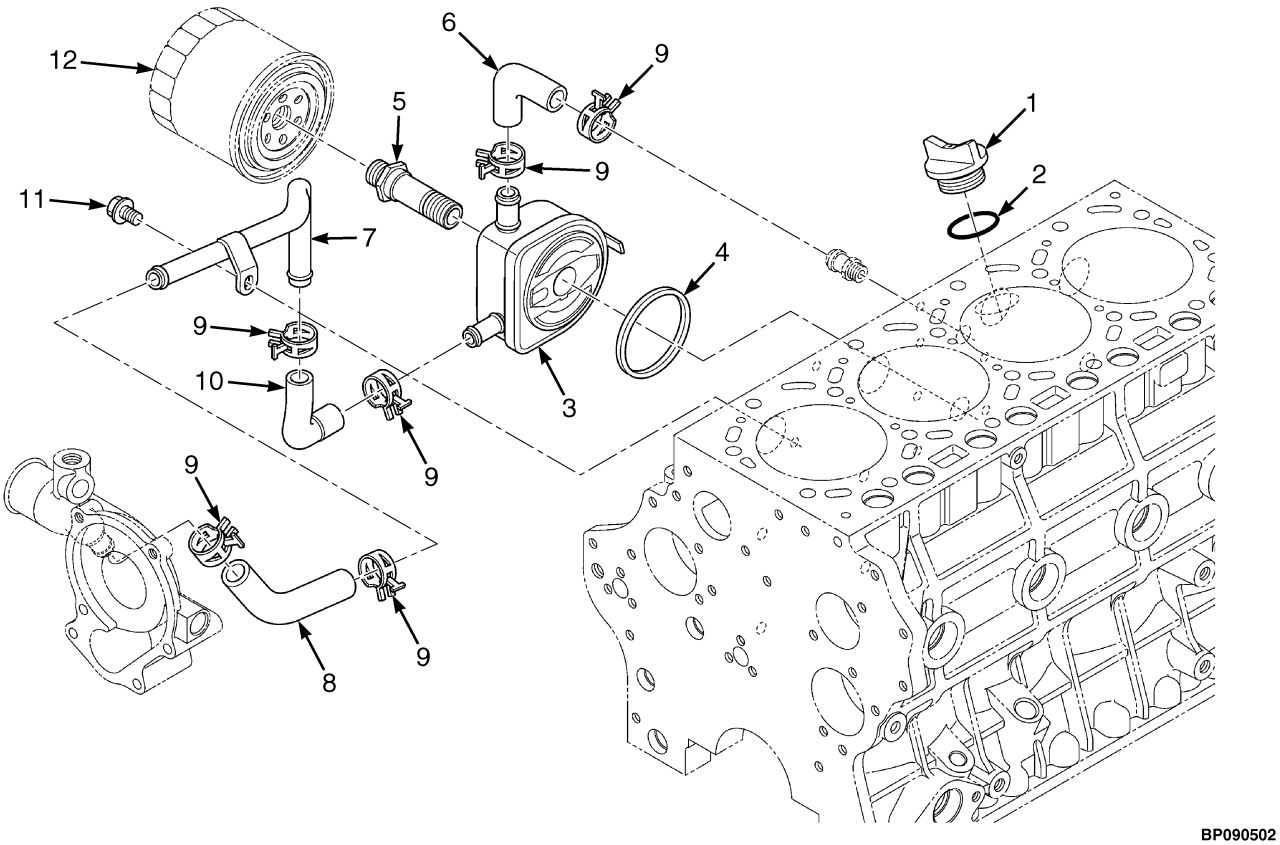

BP090502

ITEM	PART NO.	DESCRIPTION	QTY
	4615470	Engine Assy-Diesel (3.6L)	1
1	4042217	Plug	1
1	4042218	Plug	1
2	4042131	O-Ring	1
3	4042236	Oil Cooler	1
4	4041927	Gasket	1
5	4042240	Joint (Oil Cooler)	1
6	4042237	Hose	1
7	4042311	Pipe	1
8	4042312	Pipe	1
9	4042015	Hose Clamp	6
10	4042238	Hose	1
11	4042035	Bolt	1
12	4042216	Cartridge (Oil Filter)	1

©2015 HYSTER COMPANY

OIL COOLER (FIGURE 2-50)
KUBOTA DIESEL — 3.8L

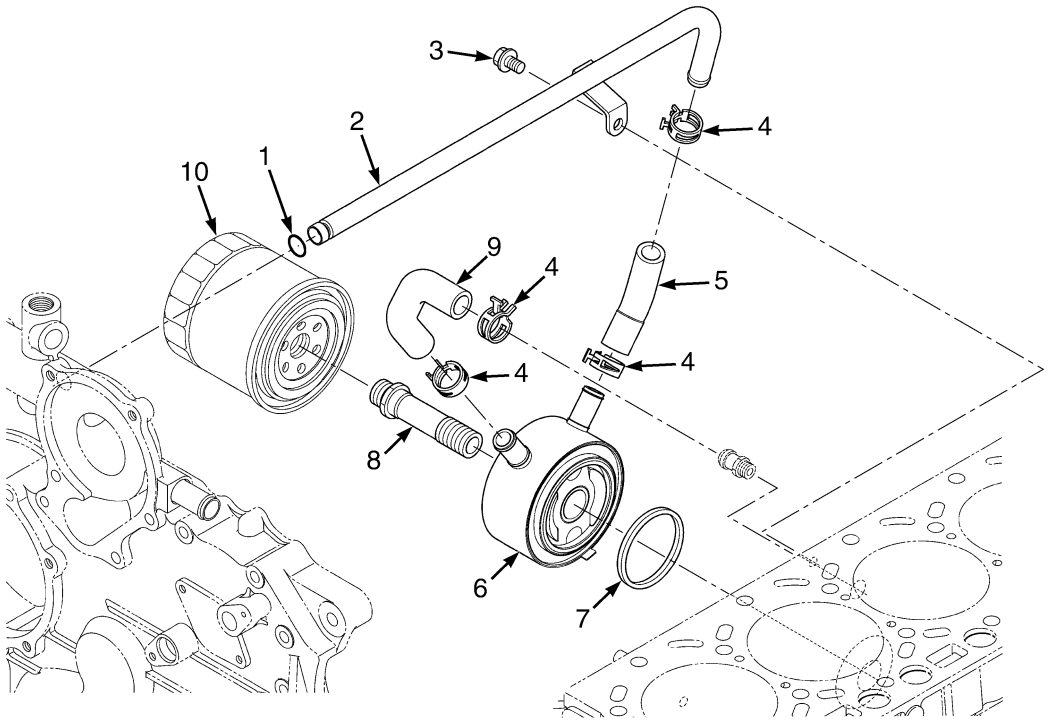

ITEM	PART NO.	DESCRIPTION	QTY
	4620483	Engine Assy-Diesel (3.8L)	1
1	4054786	O-Ring	1
2	4054785	Pipe (Oil Cooler)	1
3	4042035	Bolt	1
4	4042015	Hose Clamp	4
5	4054783	Hose	1
6	4054781	Oil Cooler	1
7	4041927	Gasket	1
8	4054784	Joint	1
9	4054782	Hose	1
10	4042216	Cartridge (Oil Filter)	1

©2015 HYSTER COMPANY

TURBOCHARGER (FIGURE 2-51)
KUBOTA DIESEL — 3.6L

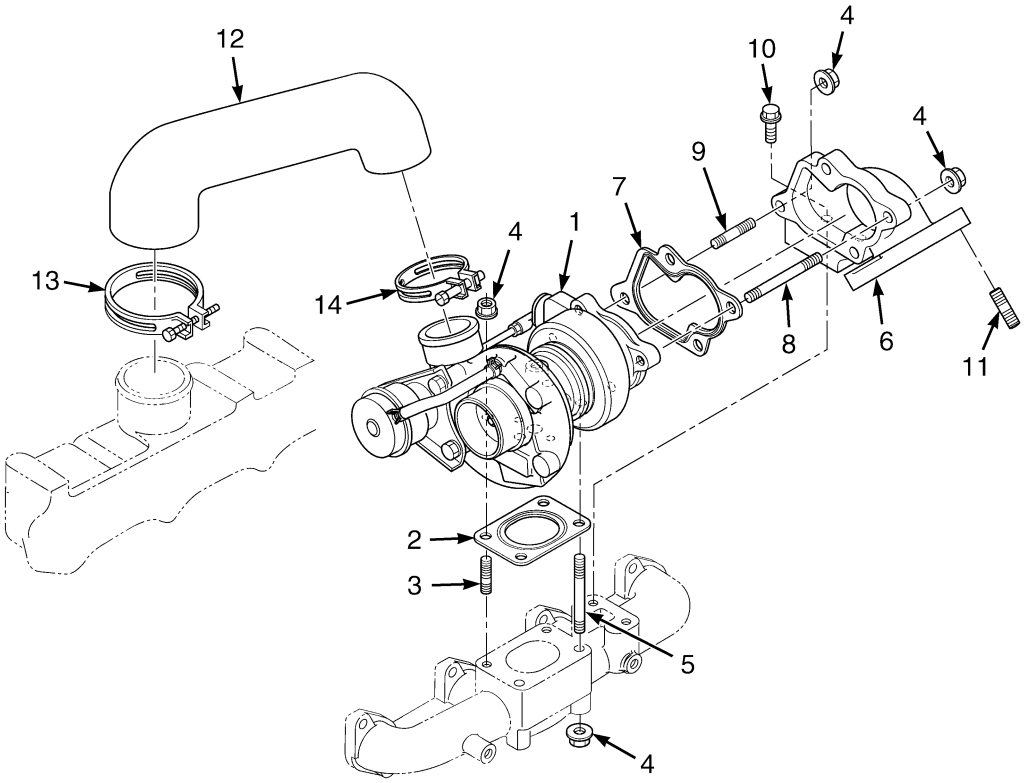

ITEM	PART NO.	DESCRIPTION	QTY
	4615470	Engine Assy-Diesel (3.6L)	1
1	4051051	Turbocharger Assembly	1
2	4042064	Gasket	1
3	4051052	Stud	2
4	4051053	Nut	8
5	4051054	Stud	2
6	4051055	Flange	1
7	4051061	Gasket	1
8	4051062	Stud	2
9	4051063	Stud	2
10	4051064	Bolt	2
11	4042072	Bolt (Stud)	4
12	4051065	Hose	1
13	4100326	Clamp	1
14	4051066	Band	1
	4051069	Kit-Gasket Upper	1

©2015 HYSTER COMPANY

TURBOCHARGER (FIGURE 2-52)
KUBOTA DIESEL — 3.8L

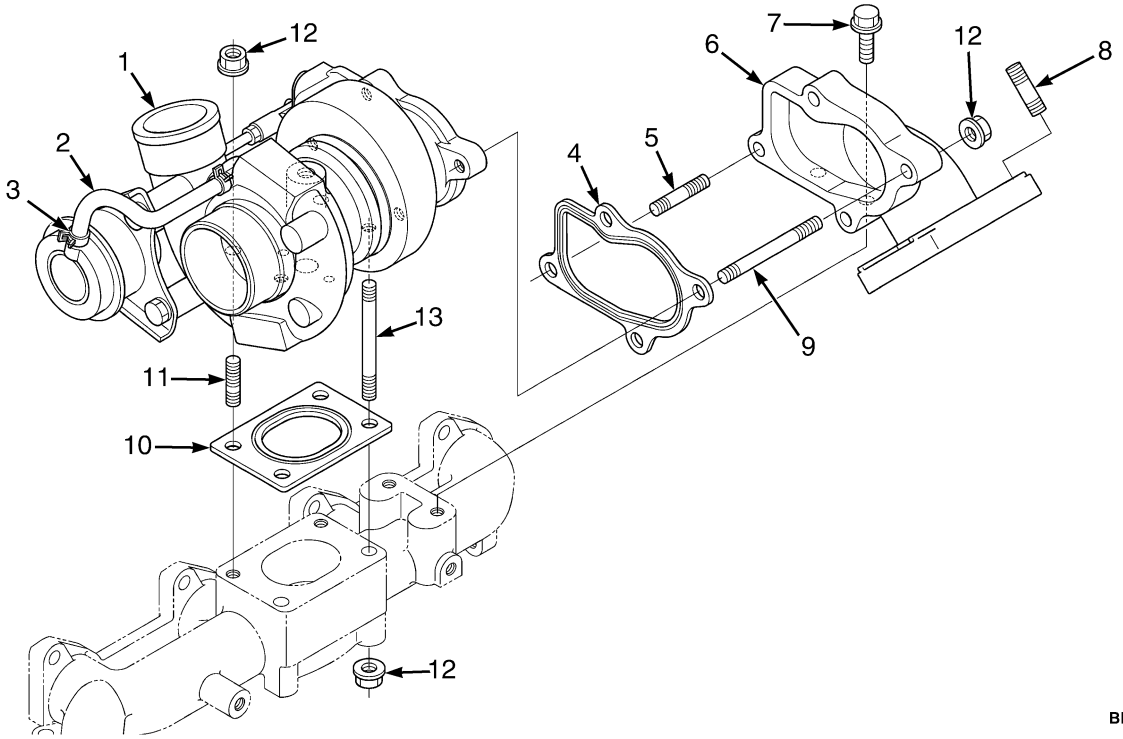

ITEM	PART NO.	DESCRIPTION	QTY
	4620483	Engine Assy-Diesel (3.8L)	1
1	4042063	Turbocharger	1
2	4074802	Hose Assy	1
3	4074803	Clamp	2
4	4042069	Gasket	1
5	4051063	Stud	3
6	4042068	Flange (Muffler)	1
7	4074804	Bolt	2
8	4054763	Bolt	4
9	4051062	Stud	1
10	4042064	Gasket	1
11	4051052	Stud	2
12	4051050	Nut	8
13	4051054	Stud	2

©2015 HYSTER COMPANY

BREATHER AND SEPARATOR PIPES (FIGURE 2-53)

KUBOTA DIESEL — 3.8L

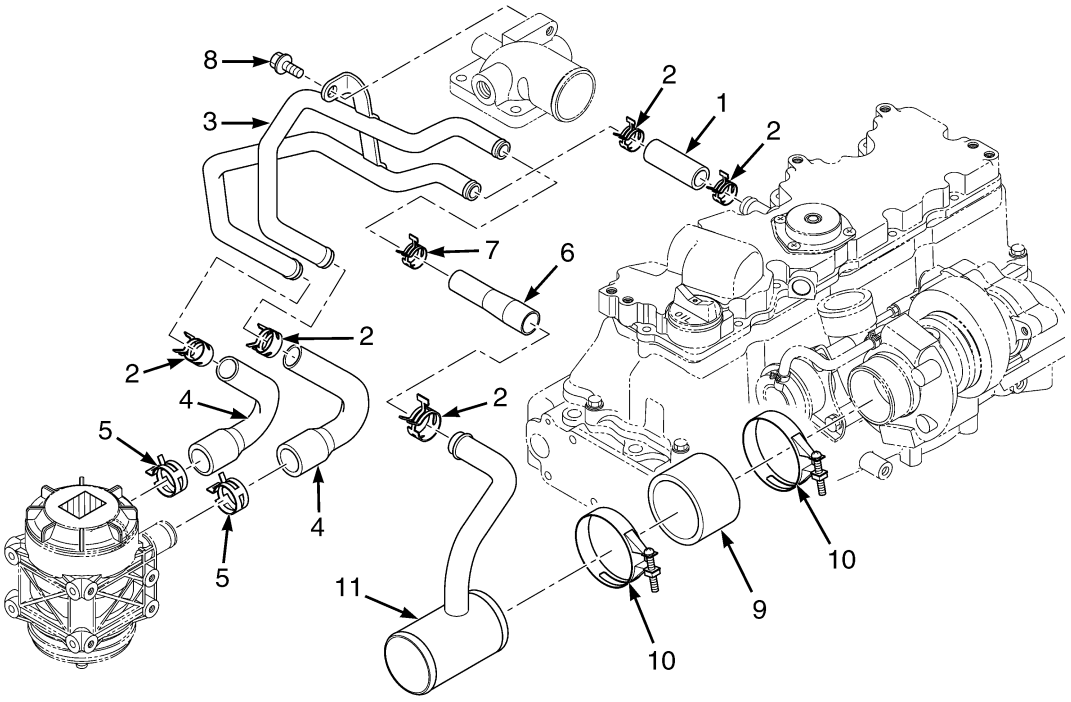

BP090626

ITEM	PART NO.	DESCRIPTION	QTY
	4620483	Engine Assy-Diesel (3.8L)	1
1	4042014	Tube (Separator)	1
2	4042015	Hose Clamp	5
3	4074805	Pipe	1
4	4042017	Tube (Separator)	2
5	4042018	Hose Clamp	2
6	4074806	Tube	1
7	4042020	Hose Clamp	1
8	4041992	Bolt	1
9	4042023	Tube (Intake Turbo)	1
10	4100326	Clamp	2
11	4074807	Pipe	1

©2015 HYSTER COMPANY

OIL SEPARATOR (FIGURE 2-54)

KUBOTA DIESEL — 3.8L

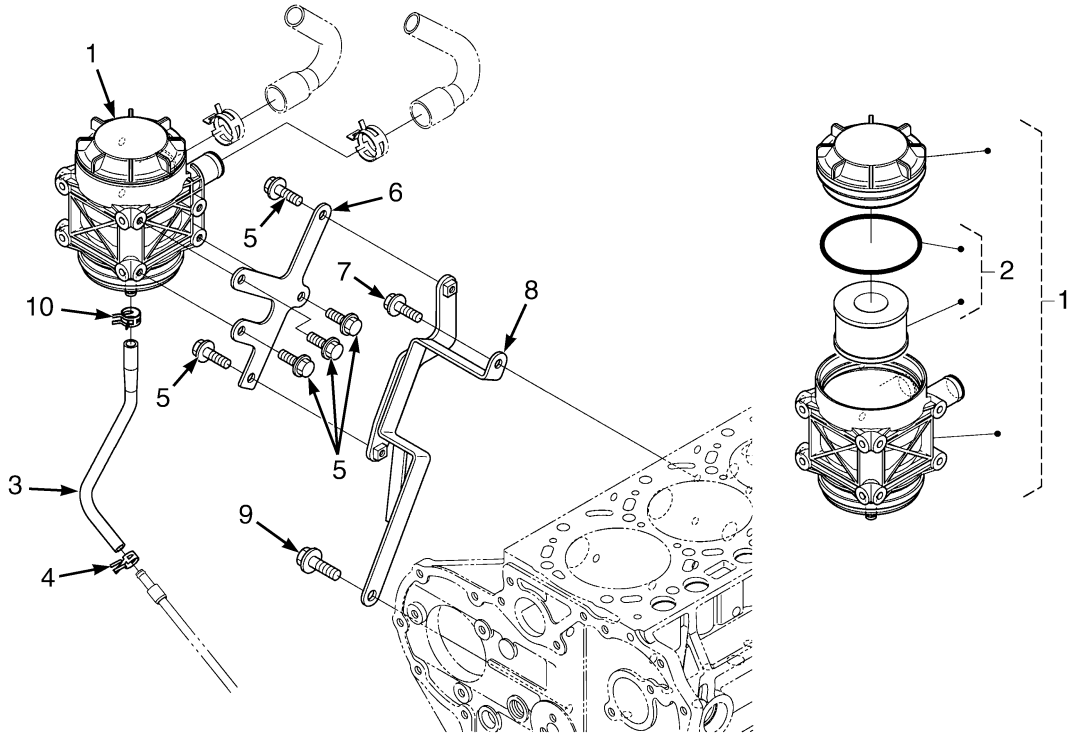

BP090636

ITEM	PART NO.	DESCRIPTION	QTY
	4620483	Engine Assy-Diesel (3.8L)	1
1	4042028	Separator (Crankcase Breather Filter)	1
2	4047237	Kit-Filter Element	1
3	4042031	Tube (Oil Return)	1
4	4042033	Hose Clamp	1
5	4041944	Bolt	5
6	4054771	Bracket	1
7	. . . . .	Bolt	1
8	4054772	Bracket	1
9	4042034	Bolt	1
10	4042032	Hose Clamp	1

©2015 HYSTER COMPANY

TURBO INLET PIPE (FIGURE 2-55)
KUBOTA DIESEL — 3.8L

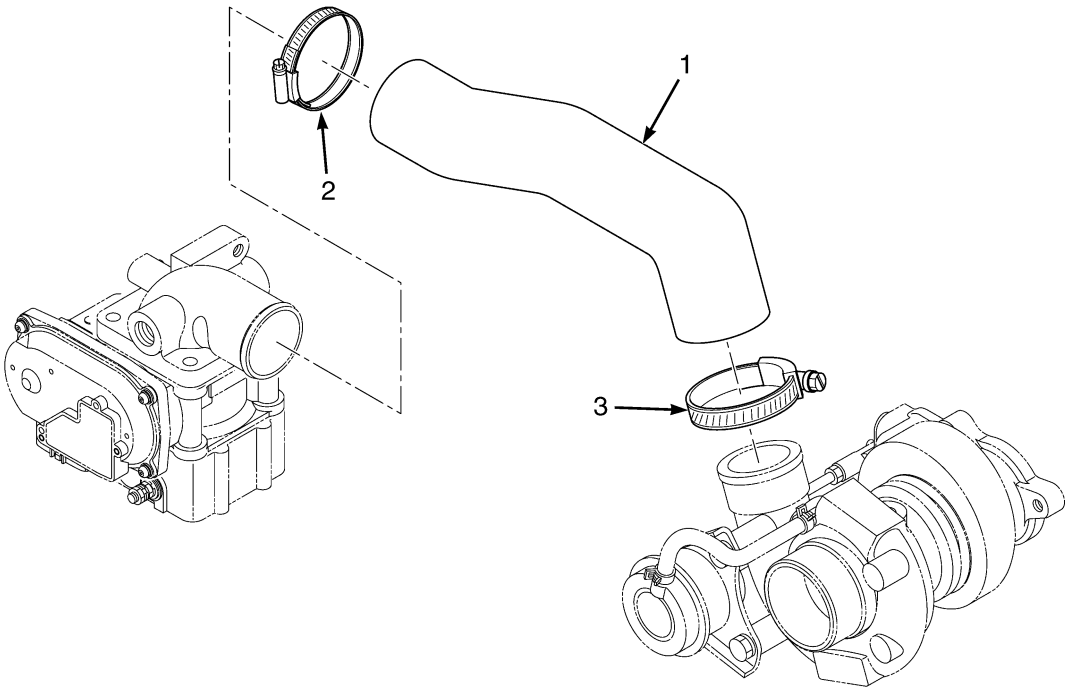

BP090625

ITEM	PART NO.	DESCRIPTION	QTY
	4620483	Engine Assy-Diesel (3.8L)	1
1	4074799	Hose	1
2	4042085	Band	1
3	4042086	Hose Clamp	1

©2015 HYSTER COMPANY

TURBOCHARGER OIL PLUMBING (FIGURE 2-56)

KUBOTA DIESEL — 3.6L

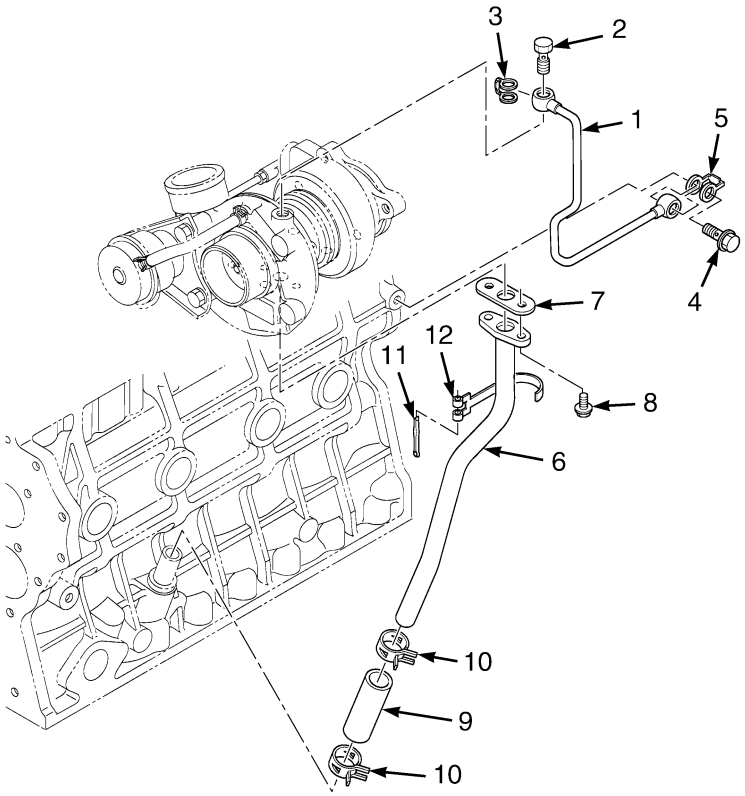

ITEM	PART NO.	DESCRIPTION	QTY
	4615470	Engine Assy-Diesel (3.6L)	1
1	4051067	Pipe	1
2	4042075	Bolt	1
3	4042076	Gasket	1
4	4042226	Bolt	1
5	4042227	Gasket	1
6	4051068	Pipe	1
7	4042078	Gasket	1
8	4042059	Bolt	2
9	4042228	Pipe (Oil)	1
10	4042020	Hose Clamp	2
11	4042080	Pin	1
12	4042081	Clamp	1
	4051069	Kit-Gasket Upper	1

©2015 HYSTER COMPANY

TURBOCHARGER OIL PLUMBING (FIGURE 2-57)

KUBOTA DIESEL — 3.8L

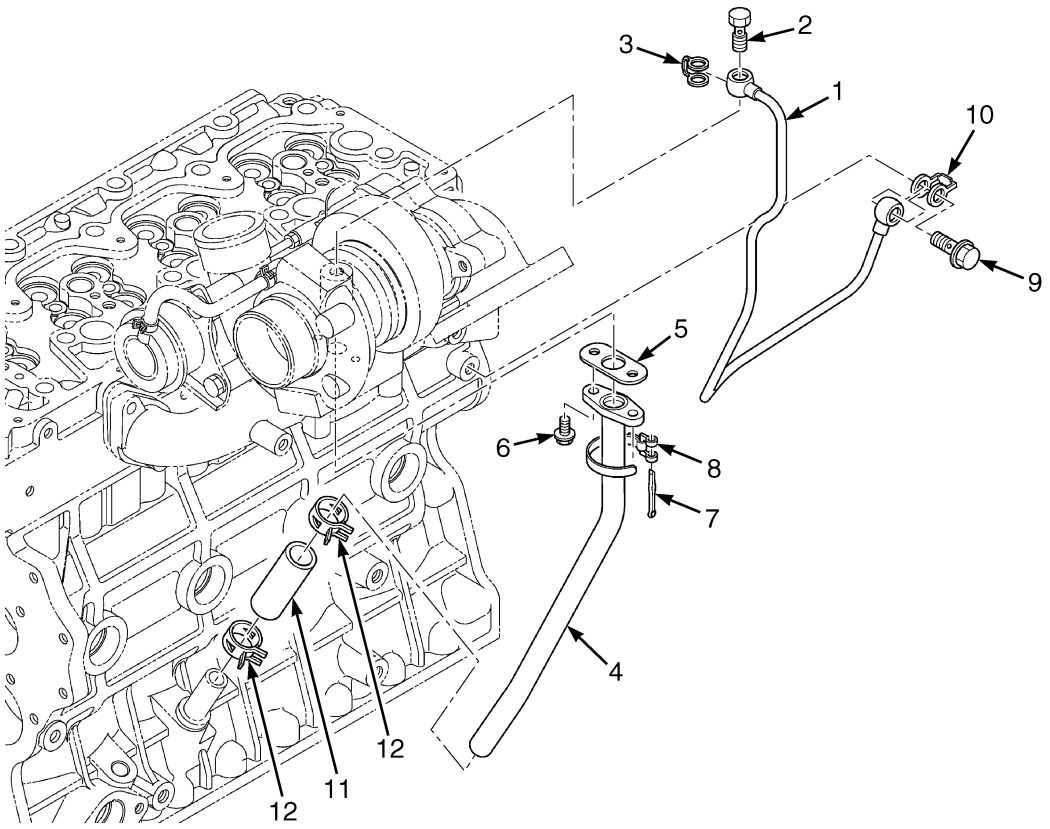

BP090499

ITEM	PART NO.	DESCRIPTION	QTY
	4620483	Engine Assy-Diesel (3.8L)	1
1	4042074	Pipe (Oil)	1
2	4042075	Bolt	1
3	4042076	Gasket	1
4	4042077	Pipe (Oil)	1
5	4042078	Gasket	1
6	4042059	Bolt	2
7	4042080	Pin	1
8	4042081	Clamp	1
9	4042226	Bolt	1
10	4042227	Gasket	1
11	4042228	Pipe (Oil)	1
12	4042020	Hose Clamp	2

©2015 HYSTER COMPANY

FUEL INJECTION PUMP (FIGURE 2-58)
KUBOTA DIESEL — 3.8L

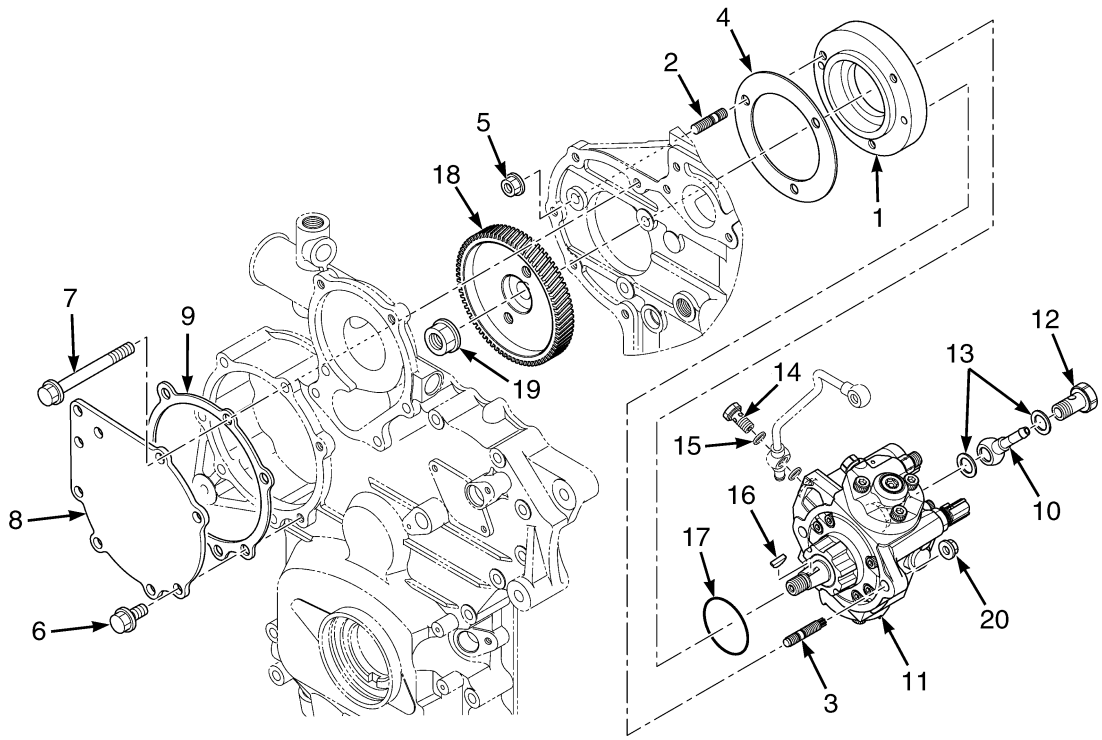

BP090630

ITEM	PART NO.	DESCRIPTION	QTY
	4620483	Engine Assy-Diesel (3.8L)	1
1	4054599	Base (Supply Pump)	1
2	4054600	Stud	3
3	4041988	Stud	2
4	4054601	Gasket	1
5	4041946	Nut	3
6	4041944	Bolt	2
7	4041995	Bolt	5
8	4054602	Cover	1
9	4054603	Gasket	1
10	. . . . .	Pipe	1
11	4054604	Pump	1
11	4094113	Kit-Valve Suction Control	1
11	4094114	Kit-Sensor Fuel Temperature	1
12	4042249	Screw	1
13	4054605	Gasket	2
14	4042251	Screw	1
15	4054606	Gasket	2
16	4074584	Woodruff Key	1
17	4042254	Gasket	1
18	4054607	Gear (Supply Pump)	1
19	4042256	Nut	1
20	4041946	Nut	2

©2015 HYSTER COMPANY

FUEL RAIL (FIGURE 2-59)
KUBOTA DIESEL — 3.8L

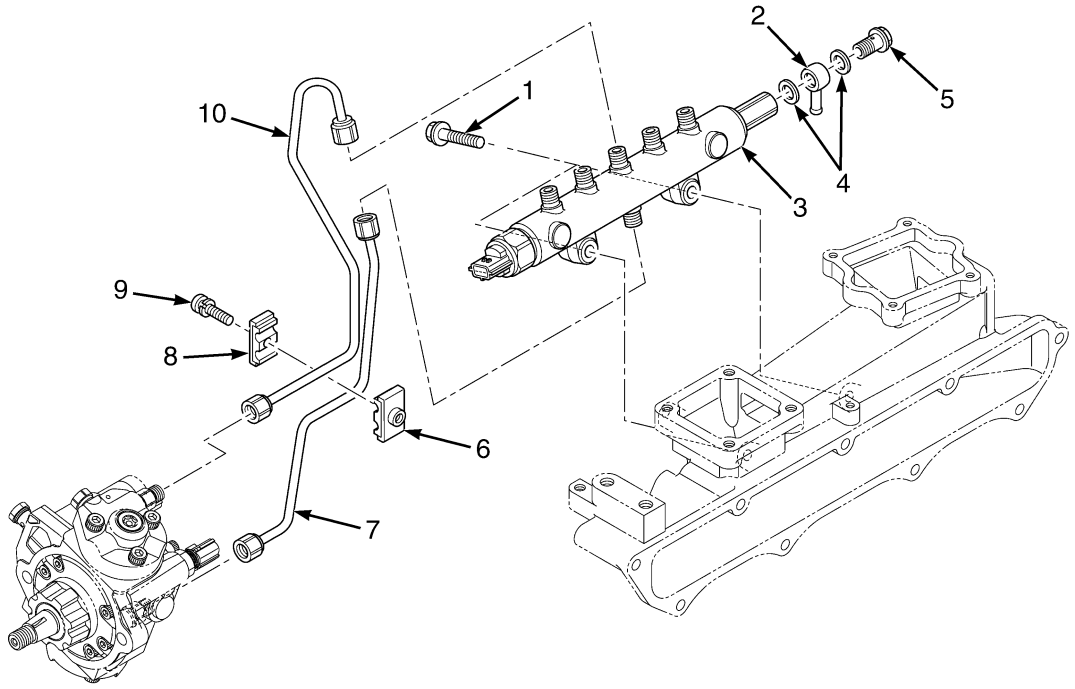

BP090571

ITEM	PART NO.	DESCRIPTION	QTY
	4620483	Engine Assy-Diesel (3.8L)	1
1	4054646	Bolt (Flange)	2
2	. . . . .	Joint (Banjo Connector)	1
3	4042258	Rail	1
4	. . . . .	Gasket	2
5	4074585	Bolt	1
6	4042274	Clamp	1
7	4054648	Pipe (Injection)	1
8	4042275	Clamp	1
9	4042276	Screw	1
10	4054647	Pipe (Injection)	1

©2015 HYSTER COMPANY

INJECTOR HARNESS (FIGURE 2-60)
KUBOTA DIESEL — 3.8L

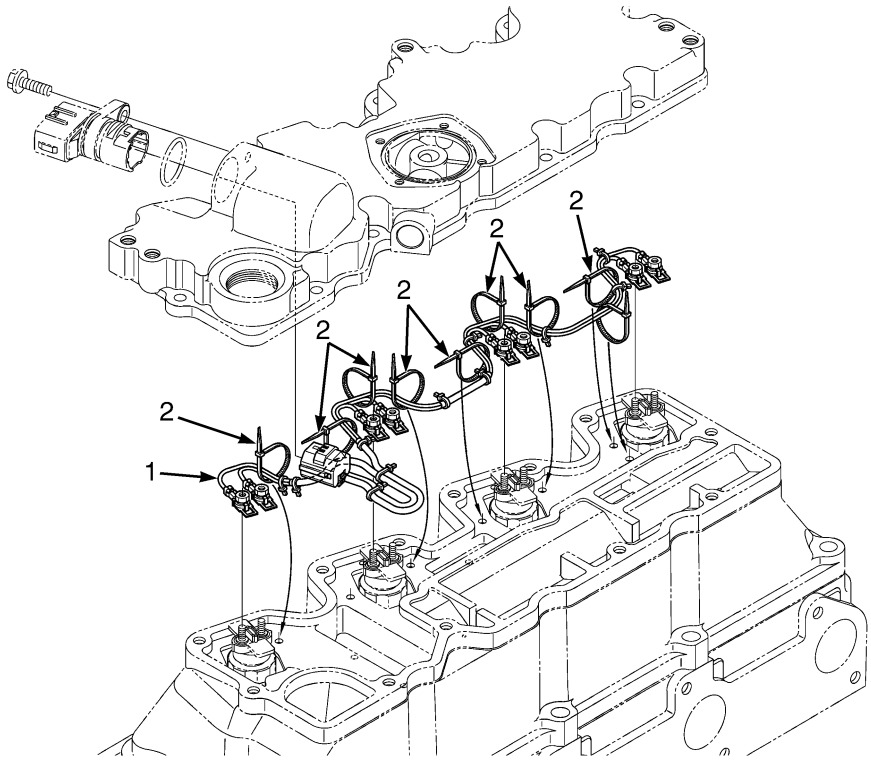

BP090602

ITEM	PART NO.	DESCRIPTION	QTY
	4620483	Engine Assy-Diesel (3.8L)	1
1	4054654	Wire Harness (Kubota 3.8L Diesel) (Injector)	1
2	4042120	Band	9

©2015 HYSTER COMPANY

INJECTION PIPE (FIGURE 2-61)

KUBOTA DIESEL — 3.8L

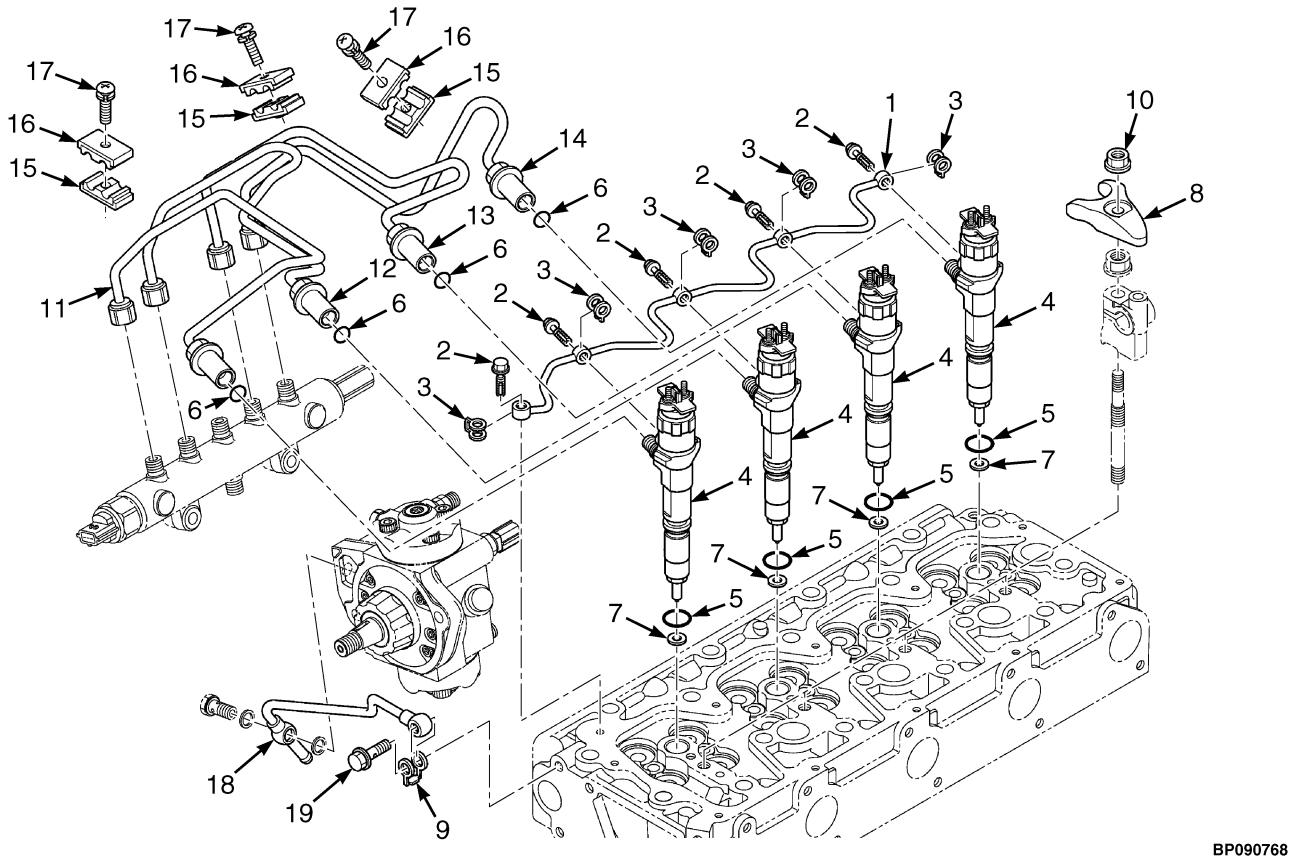

BP090768

ITEM	PART NO.	DESCRIPTION	QTY
	4620483	Engine Assy-Diesel (3.8L)	1
1	4042241	Pipe Assy (Over Flow)	1
2	4042242	Bolt	5
3	4054618	Gasket	5
4	4054619	Injector	4
5	4042265	O-Ring	4
6	4042266	O-Ring	4
7	4042267	Packing (Gasket)	4
8	4042268	Clamp	4
9	4042227	Gasket	1
10	4041946	Nut	4
11	4054620	Pipe (Injection)	1
12	4054621	Pipe (Injection)	1
13	4054622	Pipe (Injection)	1
14	4054623	Pipe (Injection)	1
15	4042274	Clamp	3
16	4042275	Clamp	3
17	4042276	Screw	3
18	4054624	Pipe	1
19	4042226	Bolt	1

©2015 HYSTER COMPANY

EGR VALVE (FIGURE 2-62)
KUBOTA DIESEL — 3.8L

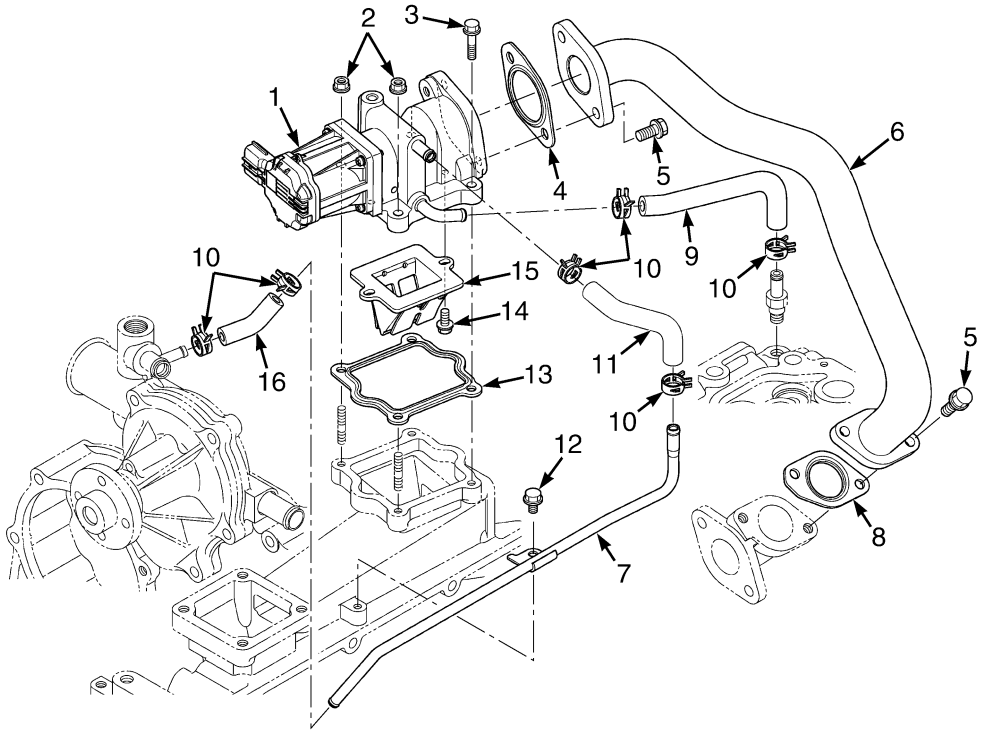

ITEM	PART NO.	DESCRIPTION	QTY
	4620483	Engine Assy-Diesel (3.8L)	1
1	4054744	Valve (EGR)	1
2	4050851	Nut (Flange)	2
3	4054747	Bolt	2
4	4042150	Gasket	1
5	4041944	Bolt	4
6	4054748	Pipe (EGR)	1
7	4054751	Pipe	1
8	4054749	Gasket (EGR Pipe)	1
9	4054745	Tube	1
10	4042032	Hose Clamp	6
11	4054750	Tube	1
12	4054753	Bolt (Flange)	1
13	4054746	Gasket (EGR Valve)	1
14	4042059	Bolt	2
15	4042058	Valve	1
16	4054752	Tube	1

©2015 HYSTER COMPANY

EGR COOLER (FIGURE 2-63)
KUBOTA DIESEL — 3.8L

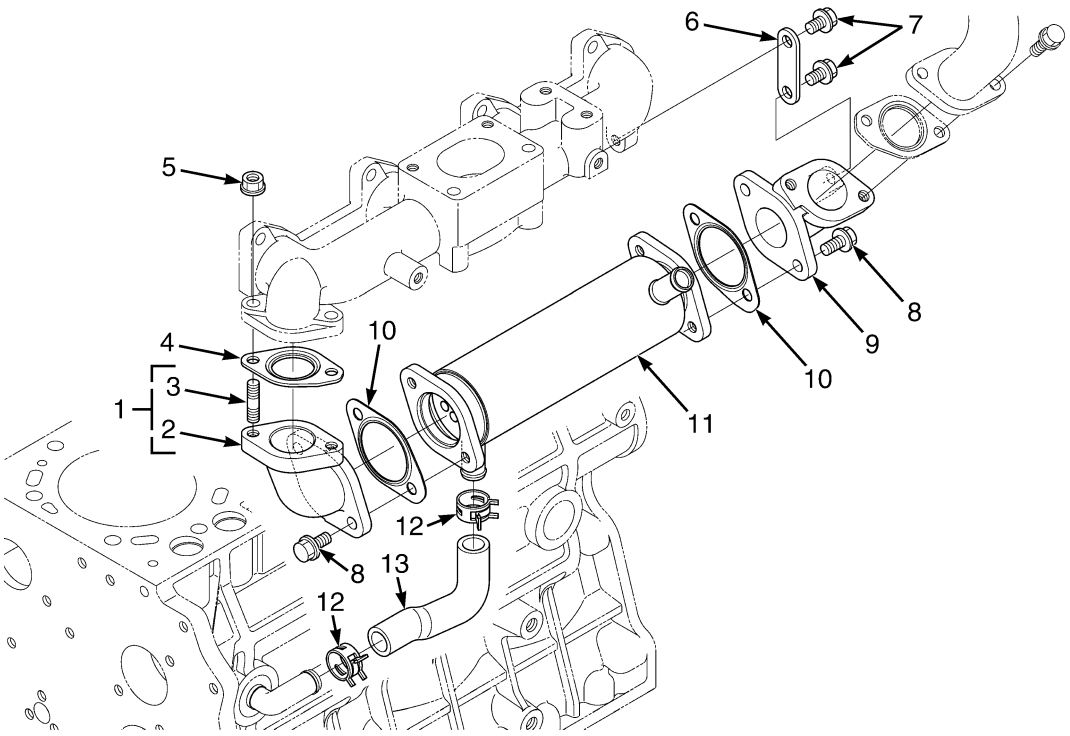

BP090605

ITEM	PART NO.	DESCRIPTION	QTY
	4620483	Engine Assy-Diesel (3.8L)	1
1	4054755	Flange (Assembly)	1
2	4054756	Flange	1
3	4054757	Stud	1
4	4054749	Gasket (EGR Pipe)	1
5	4051050	Nut	2
6	4054761	Bracket (EGR Cooler)	1
7	4054740	Bolt	2
8	4054759	Bolt	4
9	4054760	Flange	1
10	4042150	Gasket	2
11	4054758	Cooler (EGR)	1
12	4042015	Hose Clamp	2
13	4054762	Tube	1

©2015 HYSTER COMPANY

INJECTION PUMP HOUSING (FIGURE 2-64)
KUBOTA DIESEL — 3.6L

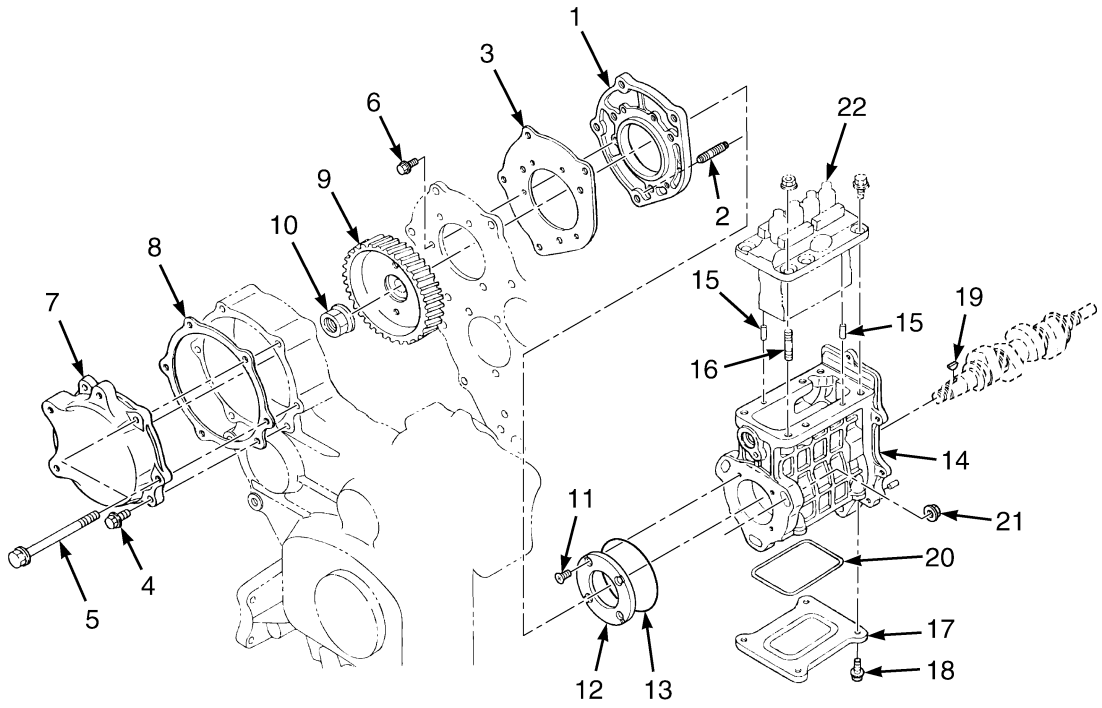

BP090639

ITEM	PART NO.	DESCRIPTION	QTY
	4615470	Engine Assy-Diesel (3.6L)	1
1	4042337	Base (Injection Pump)	1
2	4041988	Stud	3
3	4041989	Gasket	1
4	4041944	Bolt	1
5	4041995	Bolt	6
6	4041991	Bolt	3
7	4122916	Cover	1
8	4041999	Gasket (Pump Cover)	1
9	4050841	Gear (Injection Pump)	1
10	4042256	Nut	1
11	4041979	Screw	4
12	4042351	Stop	1
13	4050840	Gasket	1
14	4042340	Housing	1
15	4042343	Pin	2
16	4042342	Stud	3
17	4042352	Cover	1
18	4050839	Bolt	4
19	4042350	Woodruff Key	1
20	4050838	Gasket	1
21	4041946	Nut	3
	4122906	Injection Pump	1
22	4050844	Injection Pump (☞Figure 2-65)	1
	4051070	Kit-Gasket Lower	1

©2015 HYSTER COMPANY

INJECTION PUMP (FIGURE 2-65)
KUBOTA DIESEL — 3.6L

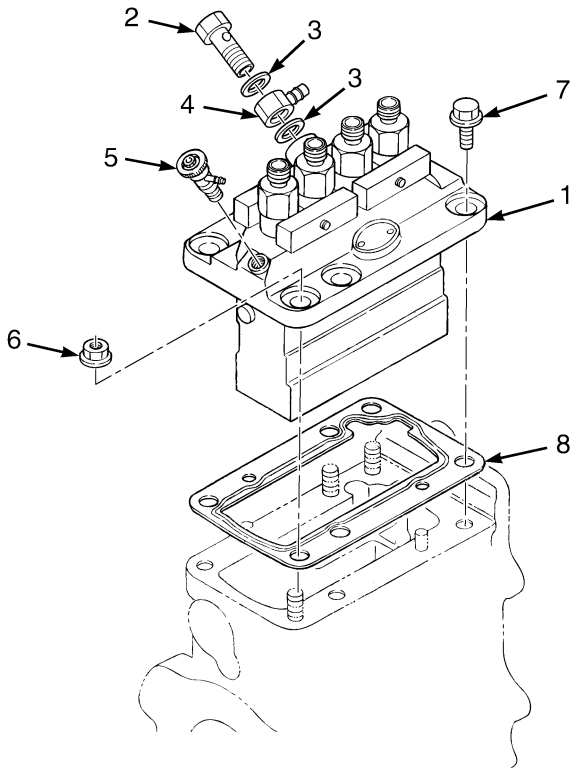

ITEM	PART NO.	DESCRIPTION	QTY
	4615470	Engine Assy-Diesel (3.6L)	1
1	4050844	Injection Pump	1
2	4042249	Screw	1
3	4050848	Gasket	2
4	4050846	Joint Eye	1
5	4050847	Nozzle	1
6	4041946	Nut	3
7	4042067	Bolt	3
8	4050845	Shim	1
	4122906	Injection Pump (Assembly)	1

©2015 HYSTER COMPANY

NOZZLE HOLDER AND GLOW PLUG (FIGURE 2-66)

KUBOTA DIESEL — 3.6L

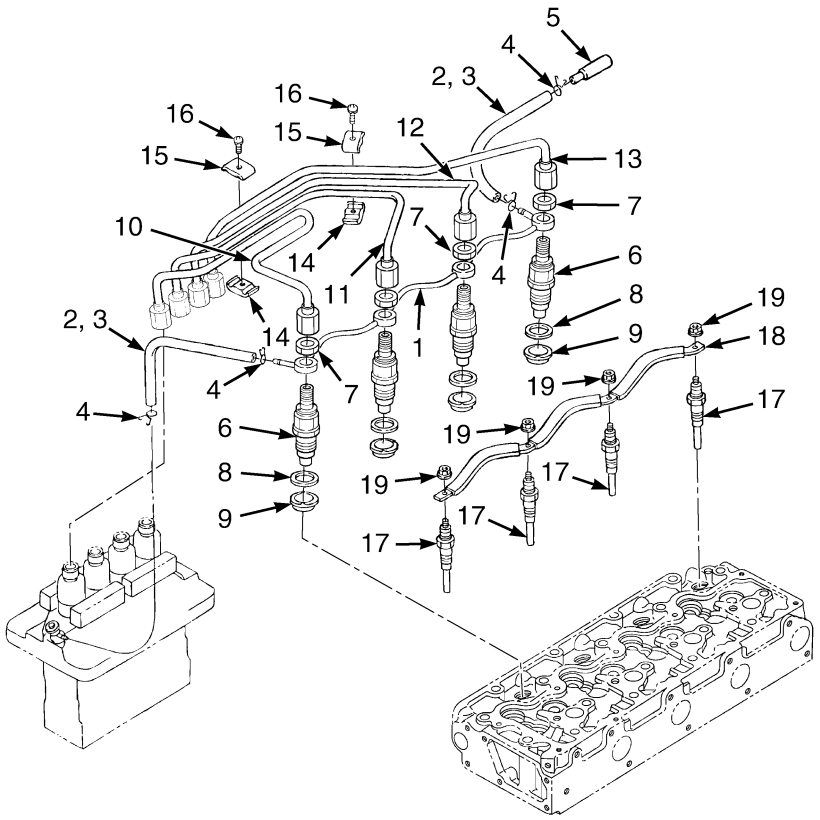

BP090637

ITEM	PART NO.	DESCRIPTION	QTY
	4615470	Engine Assy-Diesel (3.6L)	1
1	4050939	Pipe	1
2	4050940	Pipe	2
3	4050941	Tube	2
4	4050921	Clamp	4
5	4050942	Joint	1
6	4050988	Injector Body (☞Figure 2-67)	4
7	4050989	Nut	4
8	4051041	Gasket	4
9	4051042	Seal	4
10	4050944	Pipe (Injection)	1
11	4050945	Pipe (Injection)	1
12	4050946	Pipe (Injection)	1
13	4050947	Pipe (Injection)	1
14	4042274	Clamp	3
15	4042275	Clamp	3
16	4042276	Screw	3
17	4050985	Glow Plug	4
18	4050986	Strip (Glow Plug)	1
19	4050987	Nut	4
	4050943	Kit-Fuel Injector Nozzle	4
	4051069	Kit-Gasket Upper	1

©2015 HYSTER COMPANY

INJECTOR BODY (FIGURE 2-67)
KUBOTA 3.6L DIESEL

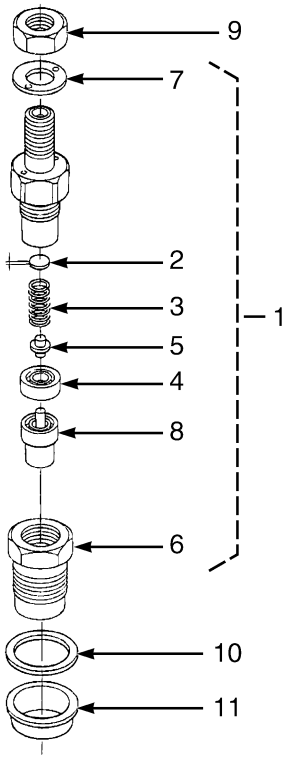

ITEM	PART NO.	DESCRIPTION	QTY
	4050943	Kit-Fuel Injector Nozzle	1
1	4050988	Injector Body	1
2	4050990	Shim (0.9 mm)	1
3	4050991	Spring	1
4	4050992	Spacer	1
5	4050993	Push Rod	1
6	4050994	Nut	1
7	4050995	Washer	1
8	4050996	Nozzle	1
9	4050989	Nut	1
10	4051041	Gasket	1
11	4051042	Seal	1
	a 4050997	Kit-Shim	1

FOOTNOTES:

a Optional shims for item 2

©2015 HYSTER COMPANY

FUEL PUMP (FIGURE 2-68)
KUBOTA DIESEL — 3.6L

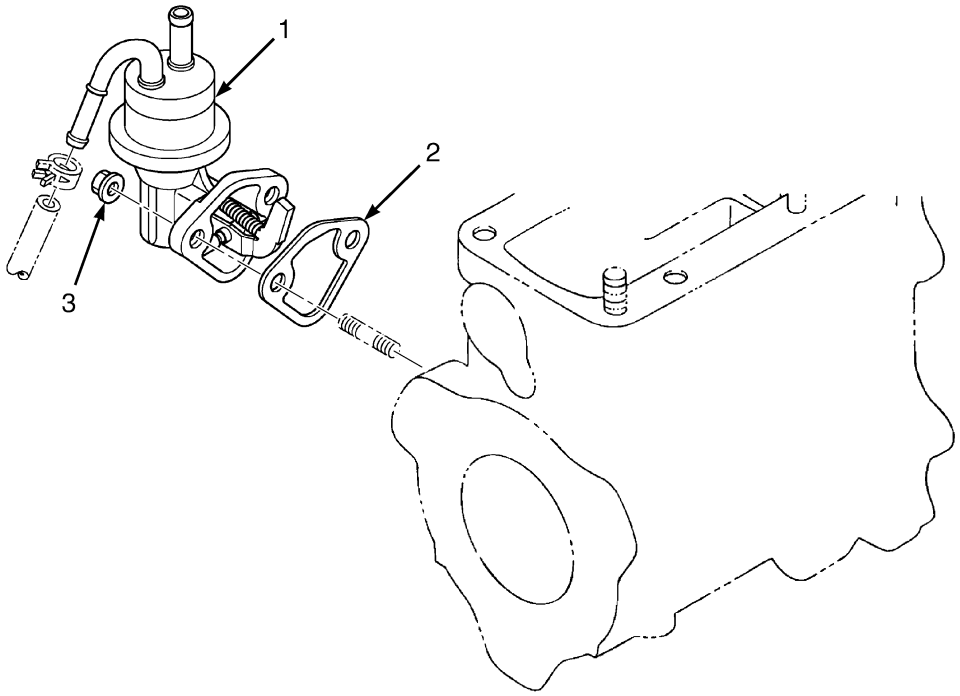

BP090536

ITEM	PART NO.	DESCRIPTION	QTY
	4615470	Engine Assy-Diesel (3.6L)	1
1	4050849	Fuel Pump	1
2	4050850	Gasket	1
3	4050851	Nut (Flange)	2
	4051070	Kit-Gasket Lower	1
	4042339	Injection Pump (Assembly)	1

©2015 HYSTER COMPANY

FUEL FILTER (FIGURE 2-69)

KUBOTA DIESEL — 3.6L

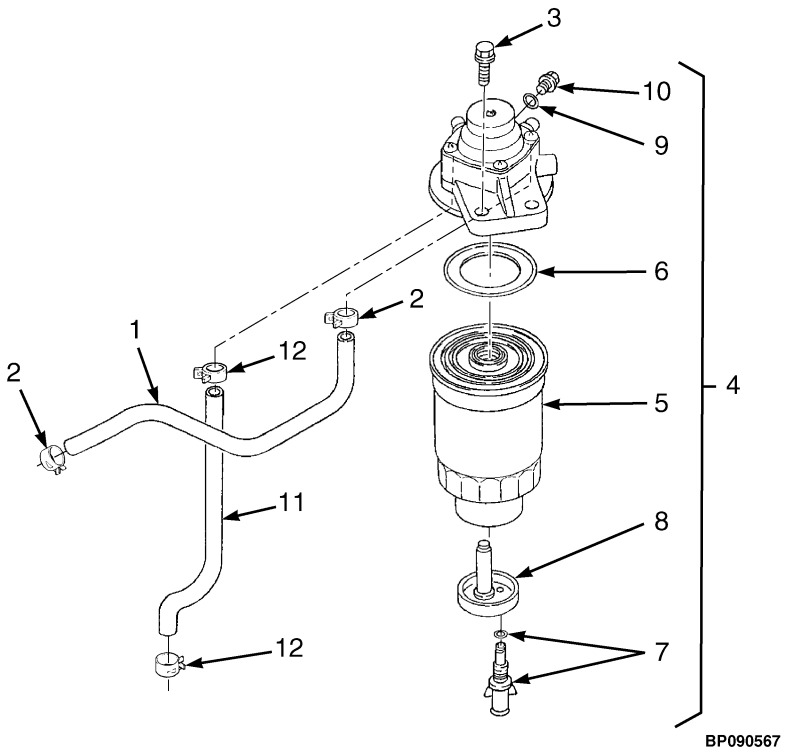

ITEM	PART NO.	DESCRIPTION	QTY
	4615470	Engine Assy-Diesel (3.6L)	1
1	4050927	Tube Assembly	1
1	4050928	Tube	1
2	4050929	Clamp	2
3	4041932	Bolt	2
4	4050930	Fuel Filter	1
5	4050931	Element	1
6	4050932	Gasket	1
7	4050936	Drain Valve	1
8	4050935	Plug	1
9	4050934	O-Ring	1
10	4050933	Plug	1
11	4050937	Tube Assembly	1
11	4050938	Tube	1
12	4050929	Clamp	2

©2015 HYSTER COMPANY

NOTES

©2015 HYSTER COMPANY

GOVERNOR (FIGURE 2-70)
KUBOTA DIESEL — 3.6L

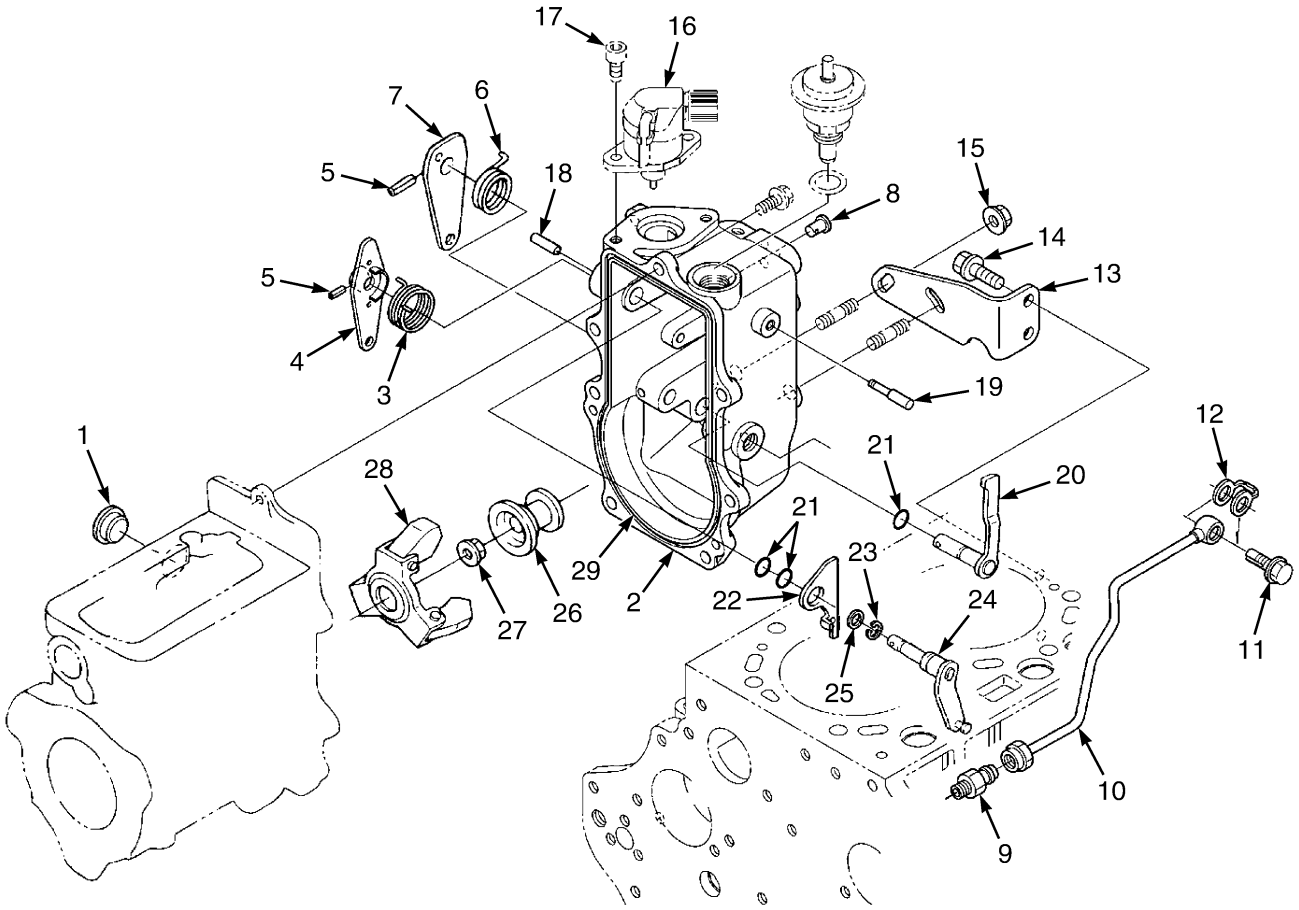

©2015 HYSTER COMPANY

GOVERNOR
KUBOTA DIESEL – 3.6L

ITEM	PART NO.	DESCRIPTION	QTY
	4615470	Engine Assy-Diesel (3.6L)	1
1	4050852	Cover (Governor Rod)	1
2	4050854	Housing (Governor)	1
3	4050860	Spring	1
4	4050861	Lever	1
5	4050862	Pin	2
6	4050864	Return Spring	1
7	4050865	Lever (Engine Stop)	1
8	4050866	Pin	1
9	4050869	Joint	1
10	4050870	Pipe	1
11	4050871	Bolt (Eye)	1
12	4042076	Gasket	1
13	4050872	Bracket	1
14	4050873	Bolt	2
15	4041946	Nut	5
16	4050922	Solenoid (Stop Solenoid)	1
17	4050923	Bolt	2
18	4050868	Pin	1
19	4050867	Shaft	1
20	4050863	Lever	1
21	4050856	O-Ring	3
22	4050857	Lever	1
23	4050858	Retaining Ring	1
24	4050855	Lever	1
25	4050859	Washer	1
26	. . . . .	Sleeve	1
27	4041964	Nut	1
28	. . . . .	FlyWheel	1
29	4050885	Gasket (Housing)	1
	4051069	Kit-Gasket Upper	1
	4042339	Injection Pump (Assembly)	1

©2015 HYSTER COMPANY

GOVERNOR ACTUATOR AND PLUG (FIGURE 2-71)

KUBOTA DIESEL — 3.6L

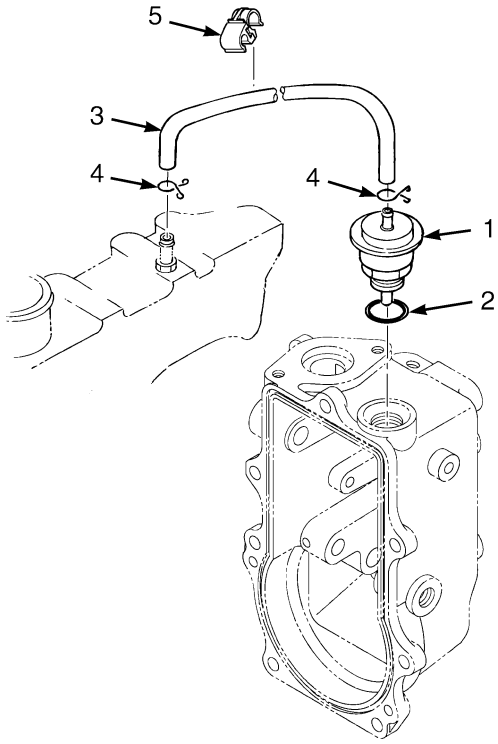

ITEM	PART NO.	DESCRIPTION	QTY
	4615470	Engine Assy-Diesel (3.6L)	1
1	4050914	Actuator (Boost)	1
2	4050915	O-Ring	1
3	4050919	Pipe	1
4	4050921	Clamp	2
5	4042054	Clamp	1
	4051069	Kit-Gasket Upper	1
	4042339	Injection Pump (Assembly)	1

©2015 HYSTER COMPANY

ALTERNATOR AND PULLEY (FIGURE 2-72)
KUBOTA DIESEL

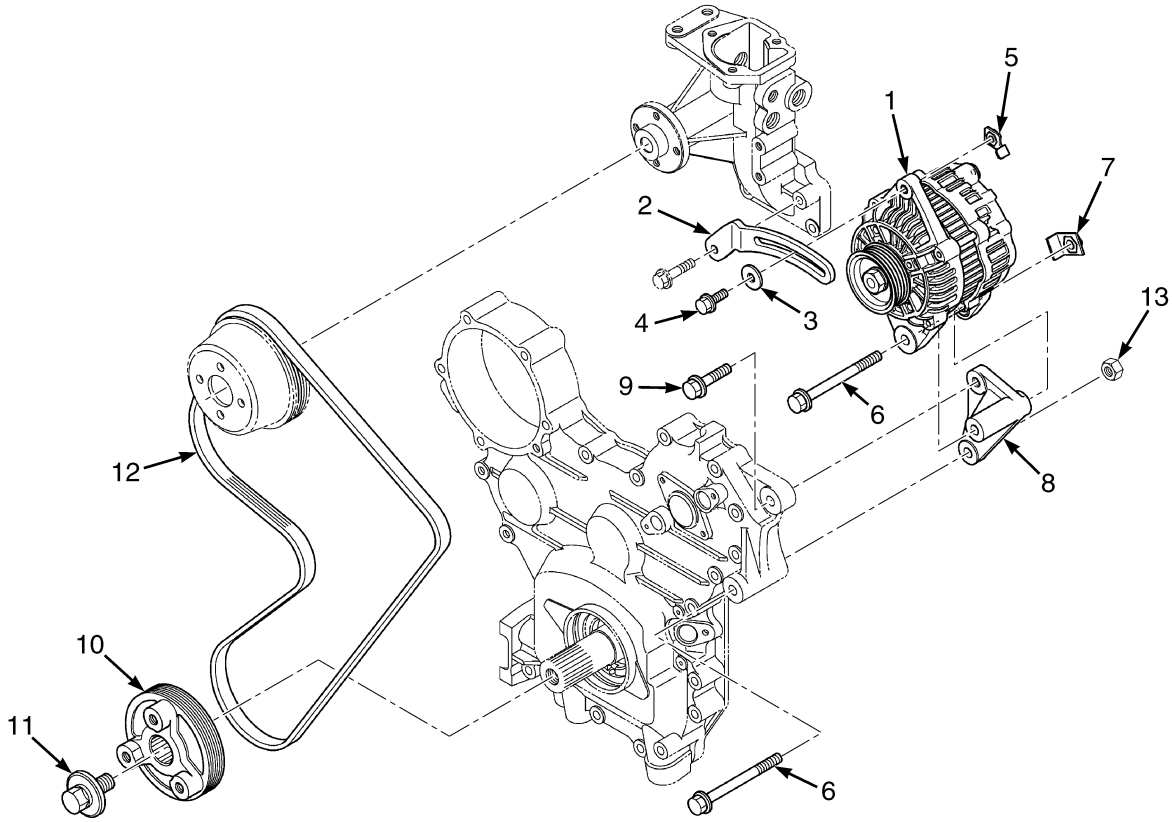

BP090629

ITEM	PART NO.	DESCRIPTION	QTY
	4620483	Engine Assy-Diesel (3.8L)	1
	4615470	Engine Assy-Diesel (3.6L)	1
1	4042286	Alternator	1
2	4042288	Bracket	1
3	4042289	Washer (3.6L)	1
3	4042289	Washer (3.8L)	1
4	4042070	Bolt (3.8L)	1
4	4041997	Bolt (3.6L)	1
5	4042290	Bracket	1
6	4042295	Bolt (3.8L)	2
6	4042295	Bolt (3.6L)	1
7	4042292	Nut (Clip) (3.6L)	2
7	4042292	Nut (Clip) (3.8L)	1
8	4042293	Bracket	1
9	4042294	Bolt	1
10	4042123	Pulley (Fan Drive)	1
11	4042133	Bolt	1
12	4042142	Belt (multi-ribbed flat)	1
13	4042108	Nut (3.8L)	1

©2015 HYSTER COMPANY

SENSORS (FIGURE 2-73)
KUBOTA DIESEL — 3.8L

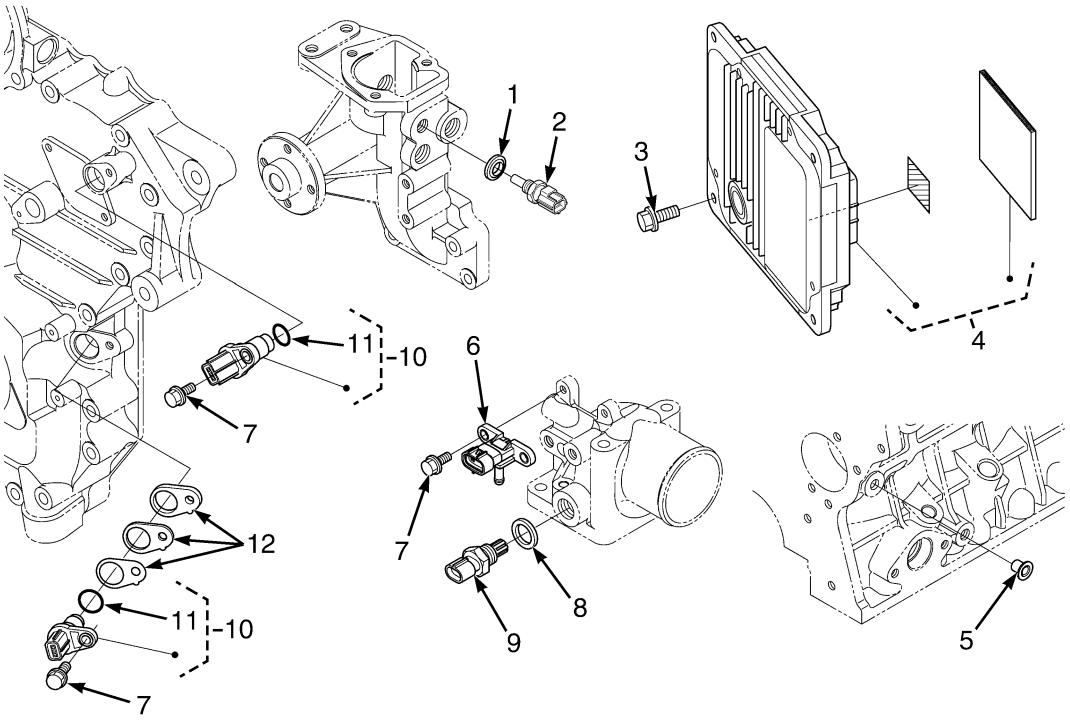

BP090599

ITEM	PART NO.	DESCRIPTION	QTY
	4620483	Engine Assy-Diesel (3.8L)	1
1	4042061	Washer	1
2	4042056	Sensor (Water Temperature)	1
3	4041944	Bolt	2
4	4056498	Electronic Control Module	1
5	4042143	Plug	1
6	4054653	Sensor (Manifold Absolute Pressure (MAP) Sensor/Boost Sensor) (Boost)	1
7	4041991	Bolt	4
8	4042050	Packing (O-Ring)	1
9	4042048	Sensor (Air Temperature)	1
10	4042000	Sensor	2
11	4042001	O-Ring	1
12	4042005	Shim (0.25)	1
12	4042006	Shim (.050)	1
12	4042007	Shim (.100)	1

©2015 HYSTER COMPANY

STARTER (FIGURE 2-74)
KUBOTA DIESEL — 3.6L, 3.8L

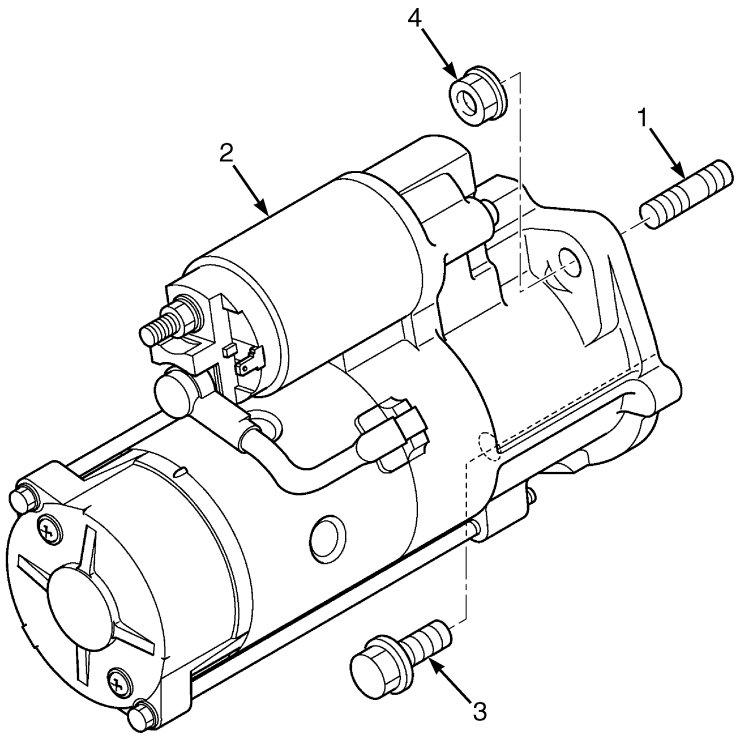

BP090501

ITEM	PART NO.	DESCRIPTION	QTY
	4620483	Engine Assy-Diesel (3.8L)	1
	4615470	Engine Assy-Diesel (3.6L)	1
1	4042285	Bolt (3.6L)	1
1	4054763	Bolt (3.8L)	1
2	4042280	Starter	1
3	4042284	Bolt	1
4	4042108	Nut	1

©2015 HYSTER COMPANY

NOTES

©2015 HYSTER COMPANY

3 ENGINE ASSEMBLY - LPG

SECTION 3
ENGINE ASSEMBLY - LPG

DESCRIPTION	PAGE
COOLING	
KUBOTA LPG - WITH EXTERNAL OIL COOLER	3-2
KUBOTA LPG - WITHOUT EXTERNAL OIL COOLER WITH SHORT WHEELBASE	3-4
ENGINE AND ATTACHING PARTS	
KUBOTA 3.8L SI LPG	3-14
ENGINE ASSEMBLY	
ALTERNATOR AND PULLEY - KUBOTA 3.8L SI LPG	3-46
CAMSHAFT AND IDLE GEAR SHAFT - KUBOTA 3.8L SI LPG	3-39
CYLINDER HEAD - KUBOTA 3.8L SI LPG	3-25
CYLINDER HEAD COVER - KUBOTA 3.8L SI LPG	3-24
DIPSTICK AND GUIDE - KUBOTA 3.8L SI LPG	3-36
ELECTRONIC CONTROL MODULE - KUBOTA 3.8L SI LPG	3-49
EXHAUST MANIFOLD - KUBOTA 3.8L SI LPG	3-35
FAN DRIVE AND MOUNTING - KUBOTA 3.8L SI LPG	3-30
GEAR CASE - KUBOTA 3.8L SI LPG	3-22
IGNITION COIL - KUBOTA 3.8L SI LPG	3-43
INJECTION PUMP COVER - KUBOTA 3.8L SI LPG	3-42
INTAKE MANIFOLD AND THROTTLE BODY - KUBOTA 3.8L SI LPG	3-28
MAIN BEARING CASE - KUBOTA 3.8L SI LPG	3-38
OIL COOLER - KUBOTA 3.8L SI LPG	3-37
OIL PAN - KUBOTA 3.8L SI LPG	3-21
PISTON AND CRANKSHAFT - KUBOTA 3.8L SI LPG	3-40
SHORT BLOCK - KUBOTA 3.8L SI LPG	3-20
STARTER - KUBOTA 3.8L SI LPG	3-48
SUPPLY PUMP COVER - KUBOTA 3.8L SI LPG	3-44
THERMOSTAT AND HOUSING - KUBOTA 3.8L SI LPG	3-32
VALVE AND ROCKER ARM - KUBOTA 3.8L SI LPG	3-26
WATER PUMP - KUBOTA 3.8L SI LPG	3-34
ENGINE MOUNT	3-16
EXHAUST SYSTEM WITH CATALYTIC CONVERTER	
KUBOTA 3.8L LPG - OVERHEAD SHORT WHEELBASE	3-10
KUBOTA 3.8L LPG - OVERHEAD LONG WHEELBASE	3-12
EXHAUST SYSTEM WITHOUT CATALYTIC CONVERTER	
KUBOTA 3.8L LPG OVERHEAD LONG WHEELBASE	3-8
KUBOTA 3.8L LPG OVERHEAD SHORT WHEELBASE	3-6
FLYWHEEL AND HOUSING	
KUBOTA 3.8L LPG	3-18

©2015 HYSTER COMPANY

COOLING (FIGURE 3-1)
KUBOTA LPG — WITH EXTERNAL OIL COOLER

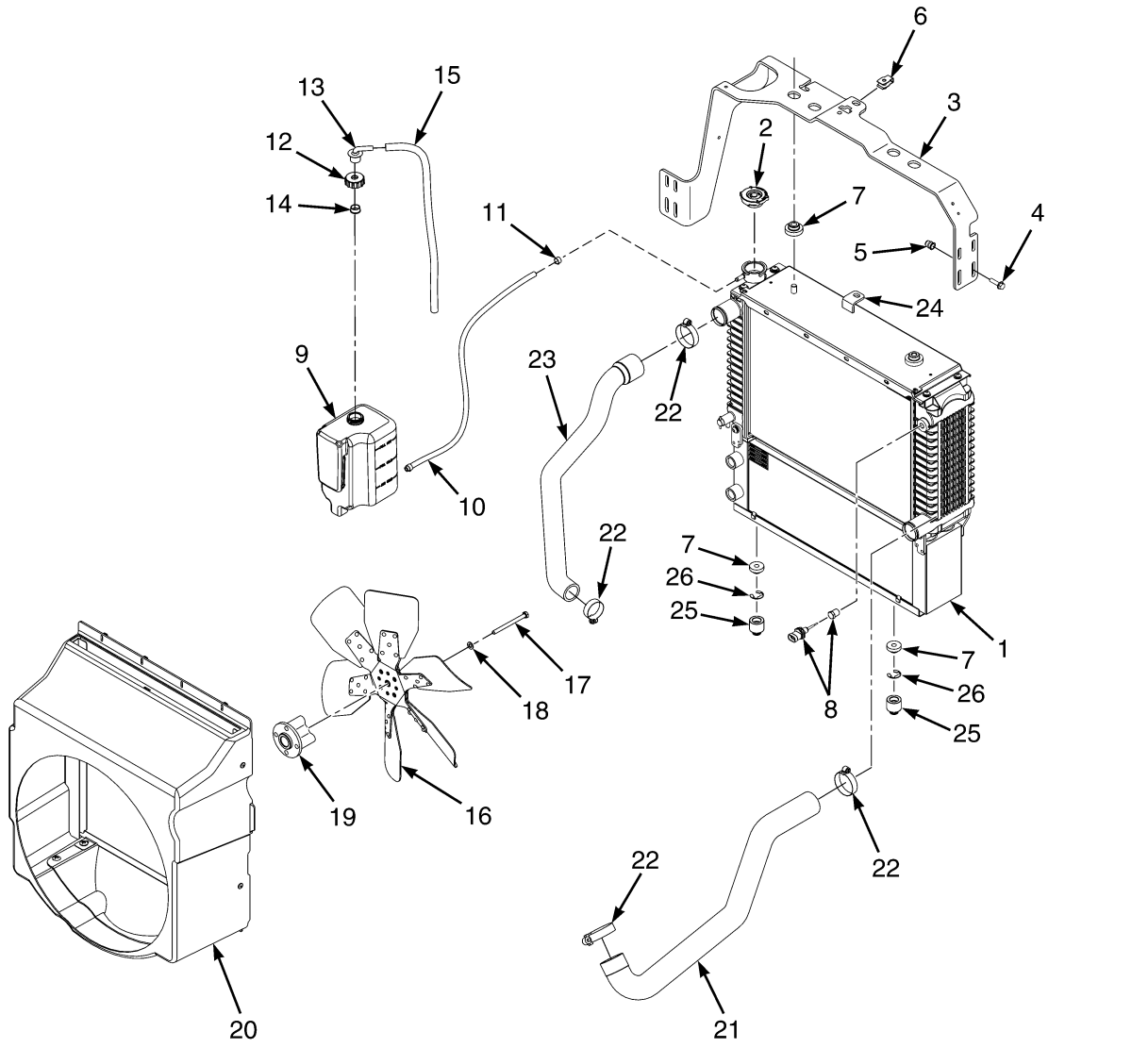

©2015 HYSTER COMPANY

COOLING

KUBOTA LPG – WITH EXTERNAL OIL COOLER

KEY:
A: Short Wheelbase
B: Long Wheelbase

ITEM	PART NO.	DESCRIPTION	QTY A	QTY B
1	4603551	Radiator (Assembly)	1	1
1	4038256	Radiator	1	1
1	4038262	Oil Cooler	1	1
1	4038264	Drain Valve	1	1
1	4038265	Nut , Foldover	2	2
1	4038266	Bolt (With Washer)	8	8
1	4038267	Bolt (With Washer)	4	4
2	178899	Radiator Cap	1	1
3	4000086	Bracket (Optional)	1	1
3	1699135	Bracket Wldmt	1	1
4	1527881	Capscrew	4	..
4	1527881	Capscrew	..	5
5	1530243	Insert	4	..
5	1530243	Insert	..	5
6	1393879	Nut	1	1
7	1529787	Isolator	4	4
8	1531404	Sensor (Low Coolant Level)	1	1
8	14385	Fitting (Without Low Coolant Level Sensor)	1	1
9	1643342	Reservoir	1	1
10	1581024	Hose	1	1
11	369815	Clamp	2	2
12	. . . . .	Outlet Assembly	1	1
12	345454	Cap	1	1
13	345453	Outlet (Reservoir)	1	1
13	4127425	Seal	1	1
14	336550	Bushing	1	1
15	1663877	Hose	1	1
16	4634121	Fan (with Scalloped Blades)	1	1
17	293622	Capscrew	4	4
18	296418	Washer	4	4
19	4042107	Collar	1	1
20	4612849	Shroud (Upper)	1	..
20	4612850	Shroud (Lower)	1	..
20	4066325	Shroud	..	1
21	4625947	Radiator Hose (Lower)	..	1
22	119236	Clamp	4	4
23	4625946	Radiator Hose (Upper)	1	1
24	4066321	Bracket (Offset)	..	1
25	4067335	Spacer	..	2
26	2076760	Retainer	..	2
	246108	Sealant	AR	AR

©2015 HYSTER COMPANY

COOLING (FIGURE 3-2)
KUBOTA LPG — WITHOUT EXTERNAL OIL COOLER WITH SHORT WHEELBASE

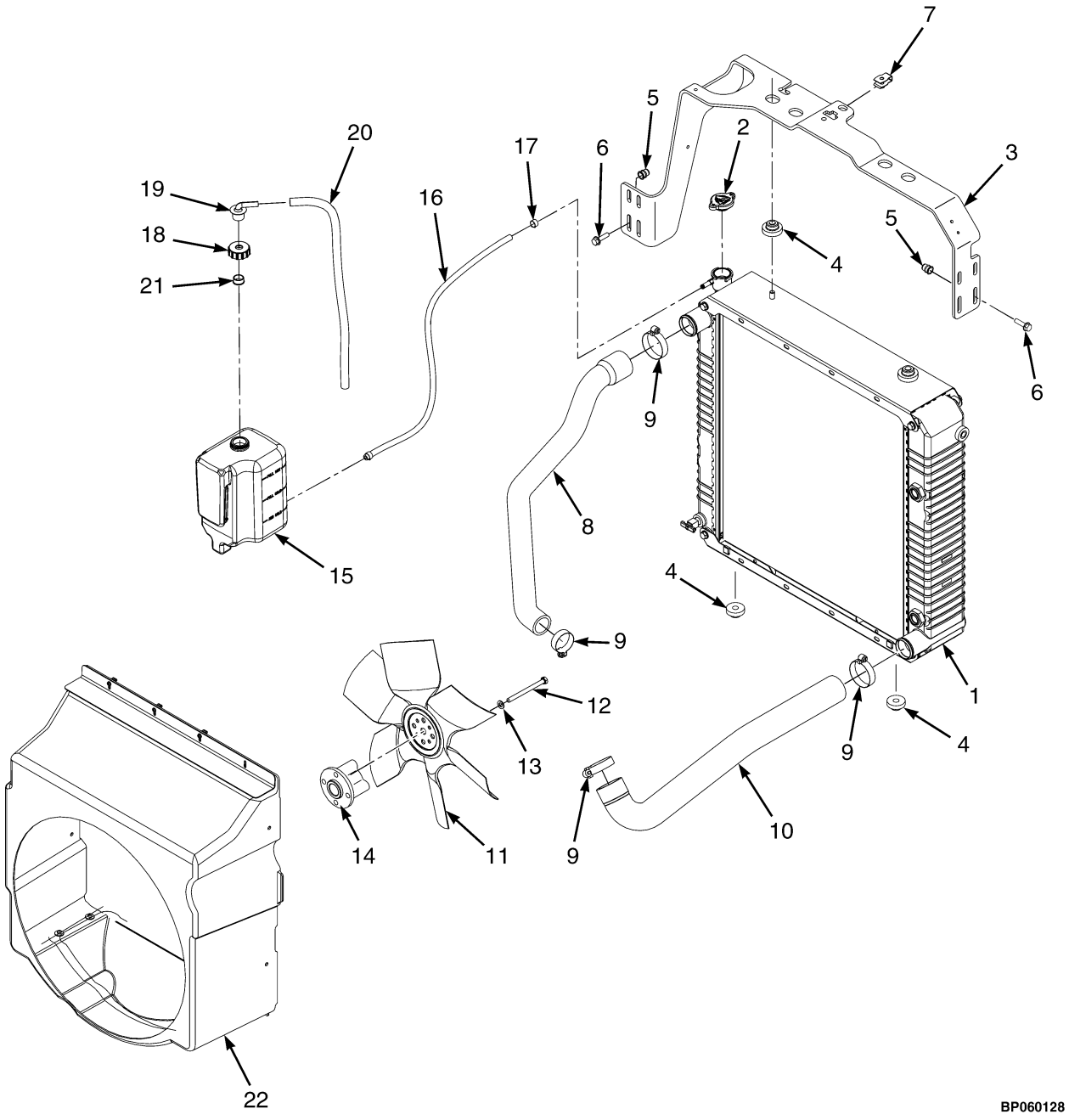

©2015 HYSTER COMPANY

COOLING

KUBOTA LPG – WITHOUT EXTERNAL OIL COOLER WITH SHORT WHEELBASE

ITEM	PART NO.	DESCRIPTION	QTY
1	2102313	Radiator	1
2	1352140	Radiator Cap	1
3	4000086	Bracket	1
3	1699135	Bracket Wldmt	1
4	1529787	Isolator	4
5	1530243	Insert	4
6	1527881	Capscrew	4
7	1393879	Nut	1
8	4625946	Radiator Hose (Upper)	1
9	119236	Clamp	4
10	4616119	Radiator Hose (Lower)	1
11	4634121	Fan (with Scalloped Blades)	1
12	293622	Capscrew	4
13	296418	Washer	4
14	4042107	Collar	1
15	1643342	Reservoir	1
16	1581024	Hose	1
17	369815	Clamp	2
18	. . . . .	Outlet Assembly	1
18	345454	Cap	1
19	345453	Outlet (Reservoir)	1
19	4127425	Seal	1
20	1663877	Hose	1
21	336550	Bushing	1
22	4612849	Shroud (Upper)	1
22	4612850	Shroud (Lower)	1

©2015 HYSTER COMPANY

EXHAUST SYSTEM WITHOUT CATALYTIC CONVERTER (FIGURE 3-3)
KUBOTA 3.8L LPG OVERHEAD SHORT WHEELBASE

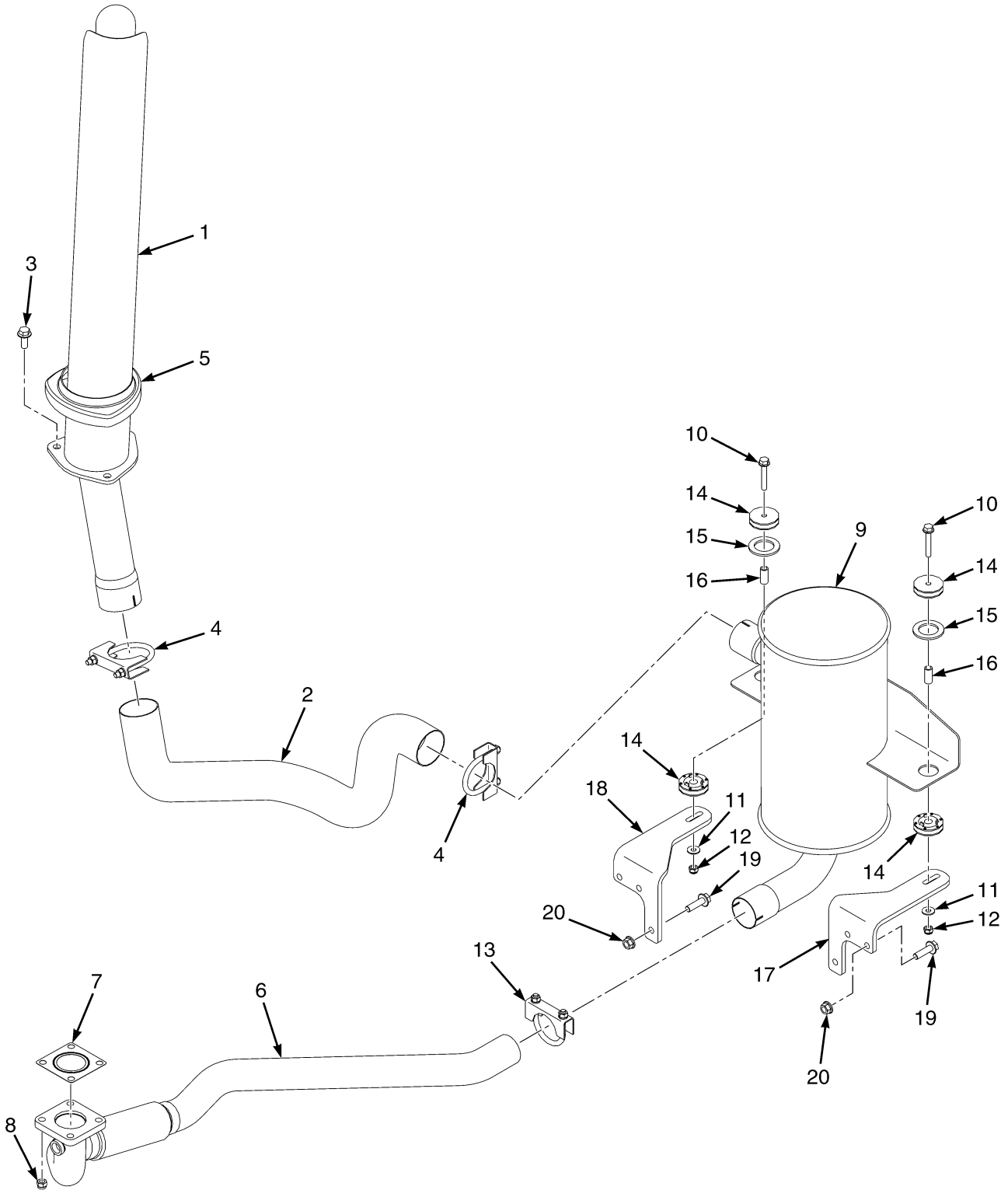

©2015 HYSTER COMPANY

EXHAUST SYSTEM WITHOUT CATALYTIC CONVERTER
KUBOTA 3.8L LPG OVERHEAD SHORT WHEELBASE

ITEM	PART NO.	DESCRIPTION	QTY
1	1664474	Overhead Exhaust	1
2	4135721	Exhaust Pipe	1
3	1510117	Capscrew	3
4	30372	Clamp	2
5	1668428	Cover	1
6	4131183	Exhaust Pipe	1
7	4131493	Gasket	1
8	4027330	Locknut	4
9	4643625	Muffler	1
10	1510115	Capscrew	2
11	320158	Washer	2
12	1582222	Locknut	2
13	63116	Clamp	1
14	1709996	Isolator	4
15	1532585	Washer	2
16	4124257	Spacer	2
17	4052206	Bracket (LH)	1
18	4052207	Bracket (RH)	1
19	1527885	Capscrew	6
20	1460477	Nut	6
	a 4104893	Sensor (O2)	1

FOOTNOTES:

a Not Illustrated

©2015 HYSTER COMPANY

EXHAUST SYSTEM WITHOUT CATALYTIC CONVERTER (FIGURE 3-4)

KUBOTA 3.8L LPG OVERHEAD LONG WHEELBASE

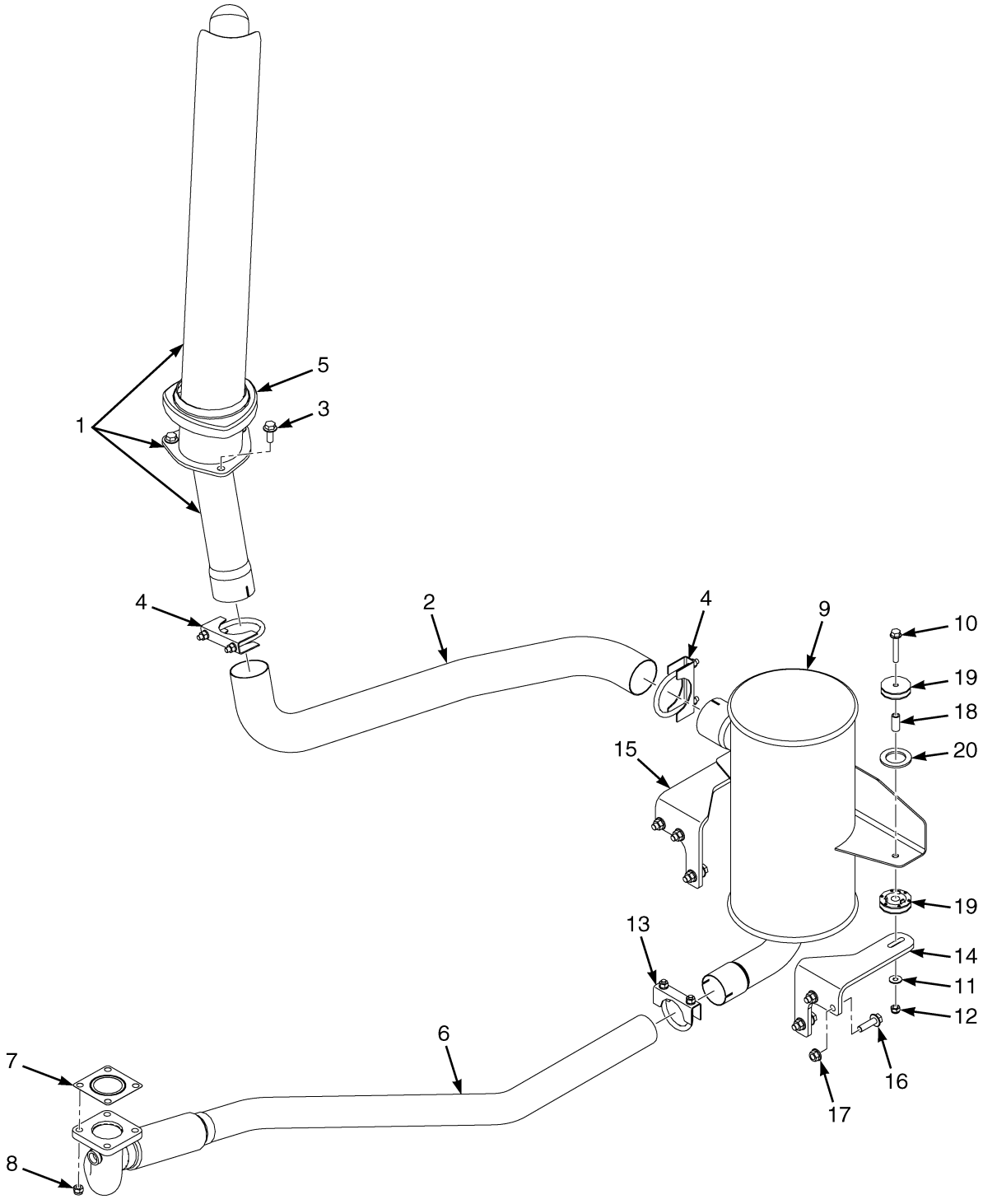

©2015 HYSTER COMPANY

EXHAUST SYSTEM WITHOUT CATALYTIC CONVERTER

KUBOTA 3.8L LPG OVERHEAD LONG WHEELBASE

ITEM	PART NO.	DESCRIPTION	QTY
1	1664474	Overhead Exhaust	1
2	4135722	Exhaust Pipe	1
3	1510117	Capscrew	3
4	30372	Clamp	2
5	1668428	Cover	1
6	4131194	Exhaust Pipe	1
7	4131493	Gasket	1
8	4027330	Locknut	4
9	4643625	Muffler	1
10	1510113	Capscrew	1
11	320158	Washer	2
12	1582222	Locknut	2
13	63116	Clamp	1
14	4052206	Bracket (LH)	1
15	4052207	Bracket (RH)	1
16	1527885	Capscrew	6
17	1460477	Nut	6
18	4124257	Spacer	2
19	1709996	Isolator	4
20	1532585	Washer	2
	a 4104893	Sensor (O2)	1

FOOTNOTES:

a Not Illustrated

©2015 HYSTER COMPANY

EXHAUST SYSTEM WITH CATALYTIC CONVERTER (FIGURE 3-5)

KUBOTA 3.8L LPG — OVERHEAD SHORT WHEELBASE

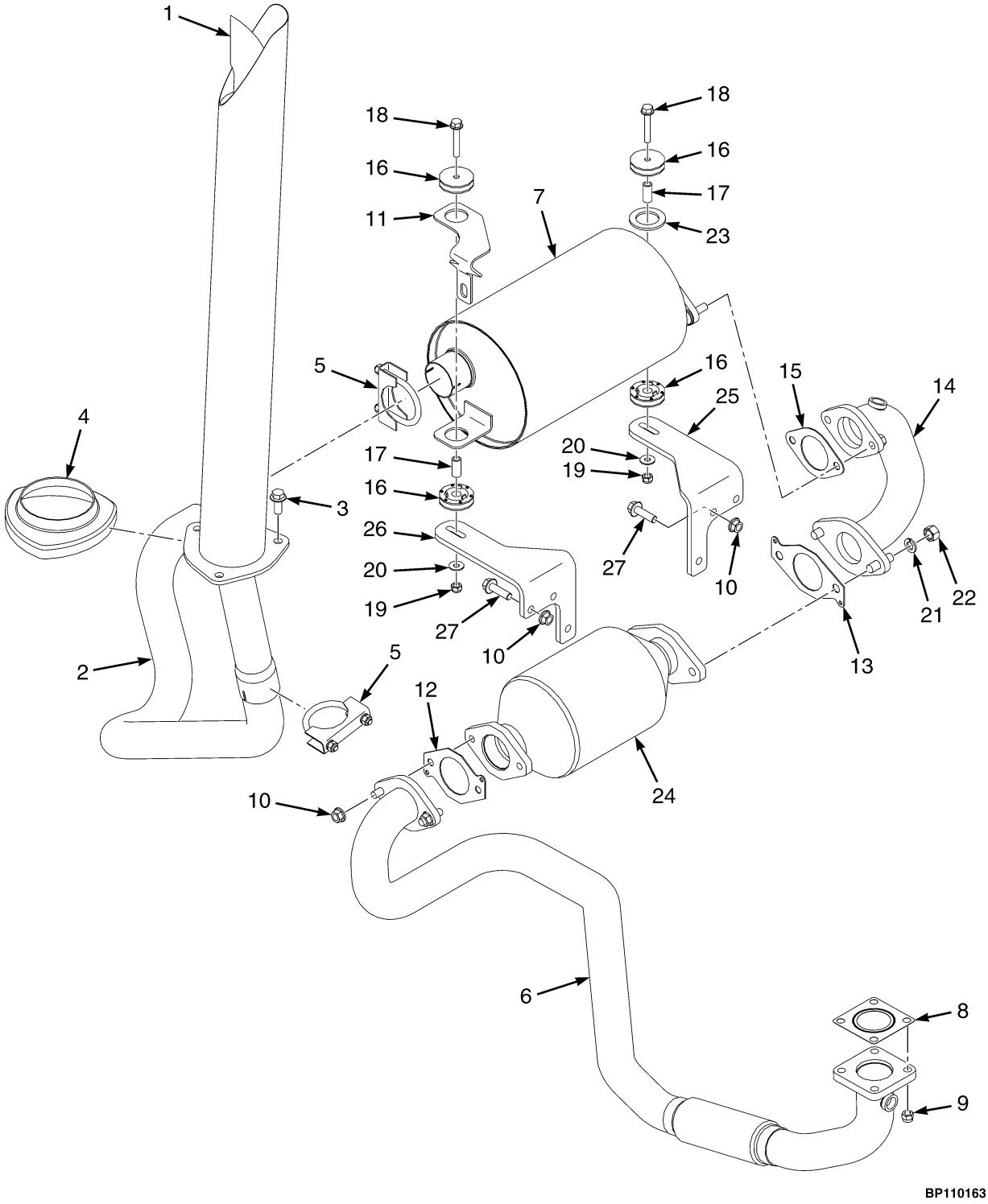

©2015 HYSTER COMPANY

EXHAUST SYSTEM WITH CATALYTIC CONVERTER

KUBOTA 3.8L LPG – OVERHEAD SHORT WHEELBASE

ITEM	PART NO.	DESCRIPTION	QTY
1	1650668	Tail Pipe	1
2	1581072	Exhaust Pipe	1
3	1510117	Capscrew	3
4	1351178	Cover	1
5	30370	Clamp	2
6	4105239	Exhaust Pipe	1
7	2078353	Muffler	1
8	4131493	Gasket	1
9	4027330	Locknut	4
10	1460477	Nut	10
11	1578873	Bracket	1
12	4098977	Gasket	1
13	4098976	Gasket	1
14	4070380	Exhaust Pipe	1
15	1402189	Gasket	1
16	1709996	Isolator	4
17	4124257	Spacer	2
18	1510115	Capscrew	2
19	1582222	Locknut	2
20	320158	Washer	2
21	292683	Lockwasher	2
22	1469405	Nut	2
23	1532585	Washer	1
24	4639014	Catalytic Converter	1
25	4052206	Bracket (LH)	1
26	4052207	Bracket (RH)	1
27	1527885	Capscrew	6
	a 4104893	Sensor (O2)	2
	a 4041292	Clip	1
	a 1582464	Fastener	1

FOOTNOTES:

a Not Illustrated

©2015 HYSTER COMPANY

EXHAUST SYSTEM WITH CATALYTIC CONVERTER (FIGURE 3-6)

KUBOTA 3.8L LPG — OVERHEAD LONG WHEELBASE

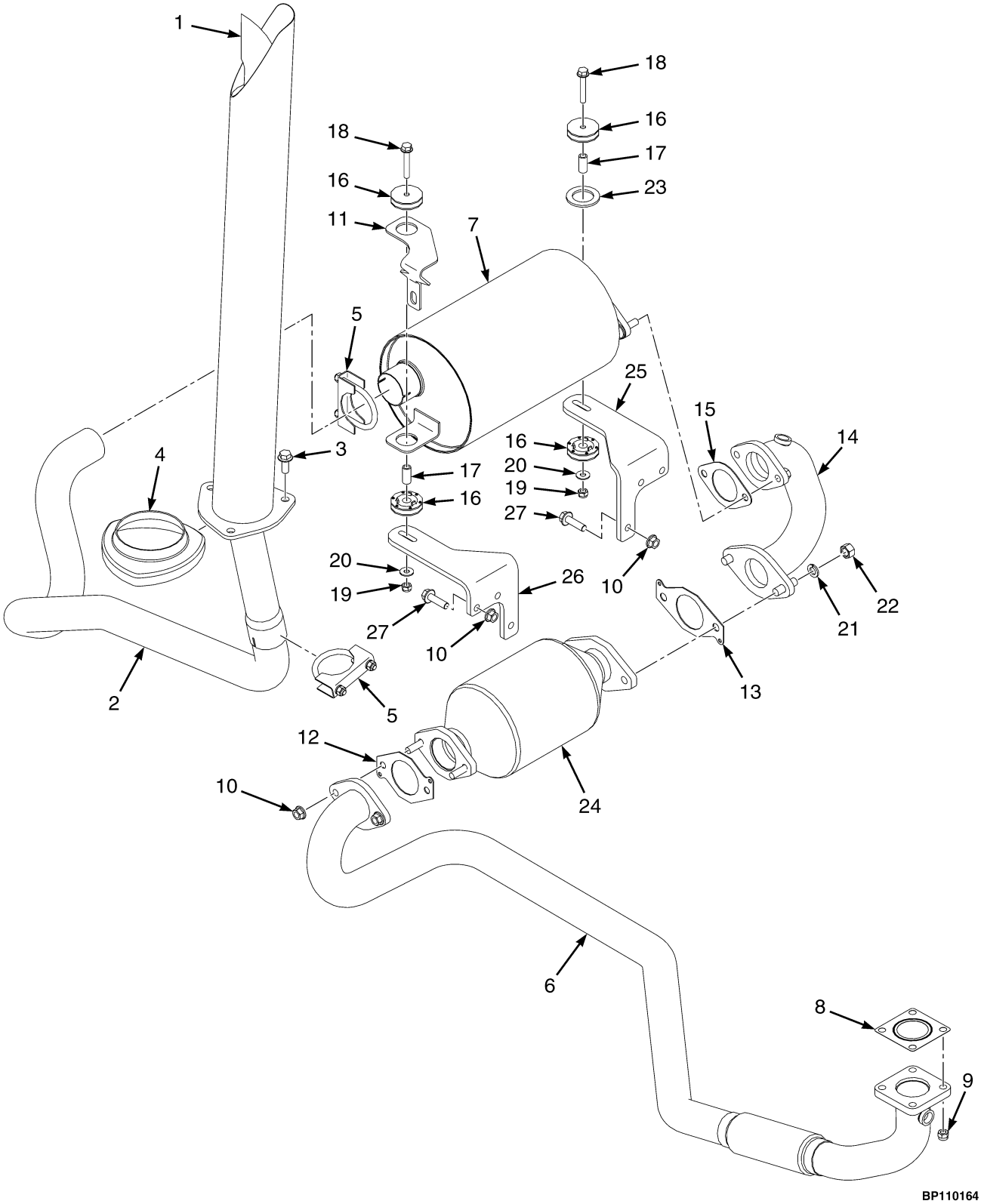

©2015 HYSTER COMPANY

EXHAUST SYSTEM WITH CATALYTIC CONVERTER
KUBOTA 3.8L LPG – OVERHEAD LONG WHEELBASE

ITEM	PART NO.	DESCRIPTION	QTY
1	1650668	Tail Pipe	1
2	1581068	Exhaust Pipe	1
3	1510117	Capscrew	3
4	1351178	Cover	1
5	30370	Clamp	2
6	4114090	Exhaust Pipe	1
7	2078353	Muffler	1
8	4131493	Gasket	1
9	4027330	Locknut	4
10	1460477	Nut	10
11	1578873	Bracket	1
12	4098977	Gasket	1
13	4098976	Gasket	1
14	4070380	Exhaust Pipe	1
15	1402189	Gasket	1
16	1709996	Isolator	4
17	4124257	Spacer	2
18	1510115	Capscrew	2
19	1582222	Locknut	2
20	320158	Washer	2
21	292683	Lockwasher	2
22	1469405	Nut	2
23	1532585	Washer	1
24	4639014	Catalytic Converter	1
25	4052206	Bracket (LH)	1
26	4052207	Bracket (RH)	1
27	1527885	Capscrew	6
	a 4104893	Sensor (O2)	2
	a 4041292	Clip	1
	a 1582464	Fastener	1

FOOTNOTES:

a Not Illustrated

©2015 HYSTER COMPANY

ENGINE AND ATTACHING PARTS (FIGURE 3-7)
KUBOTA 3.8L SI LPG

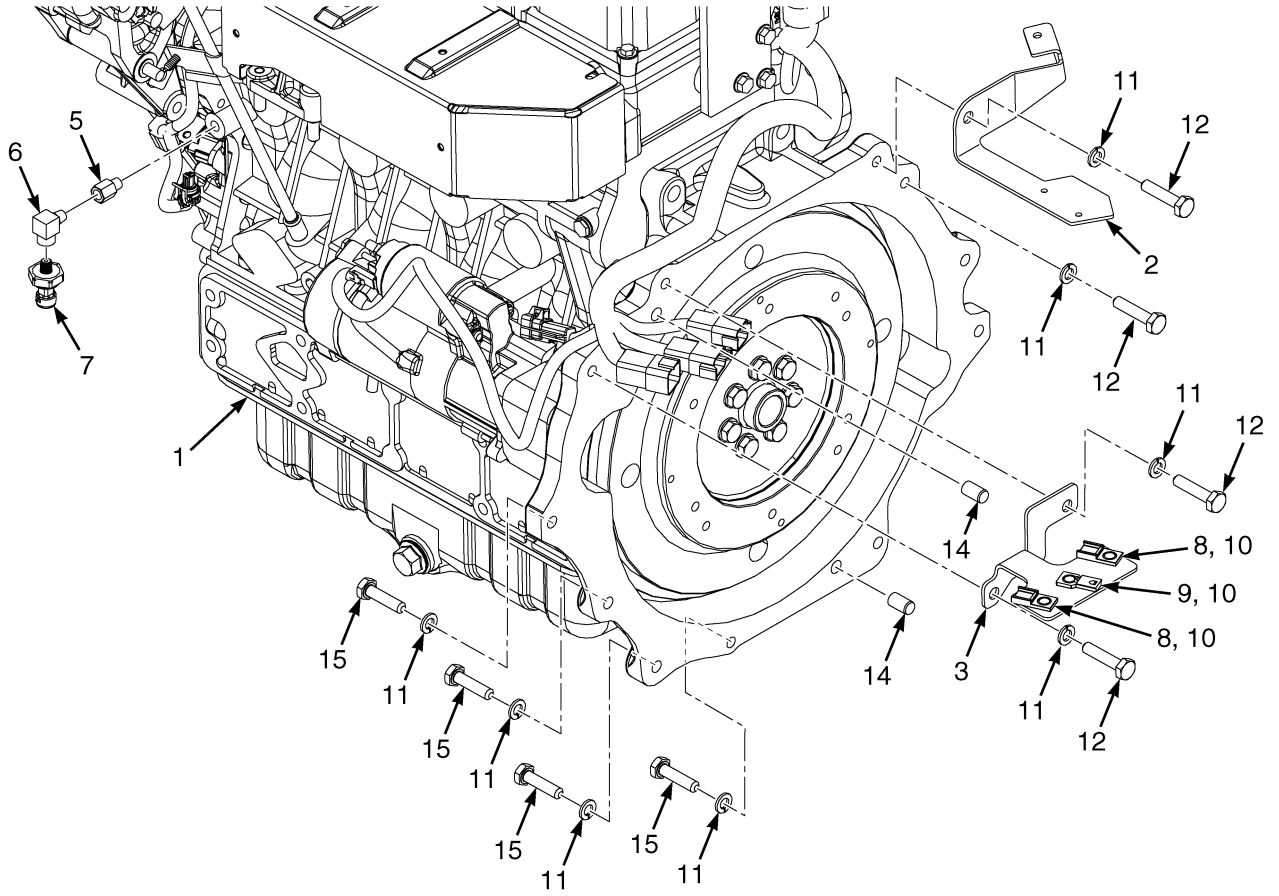

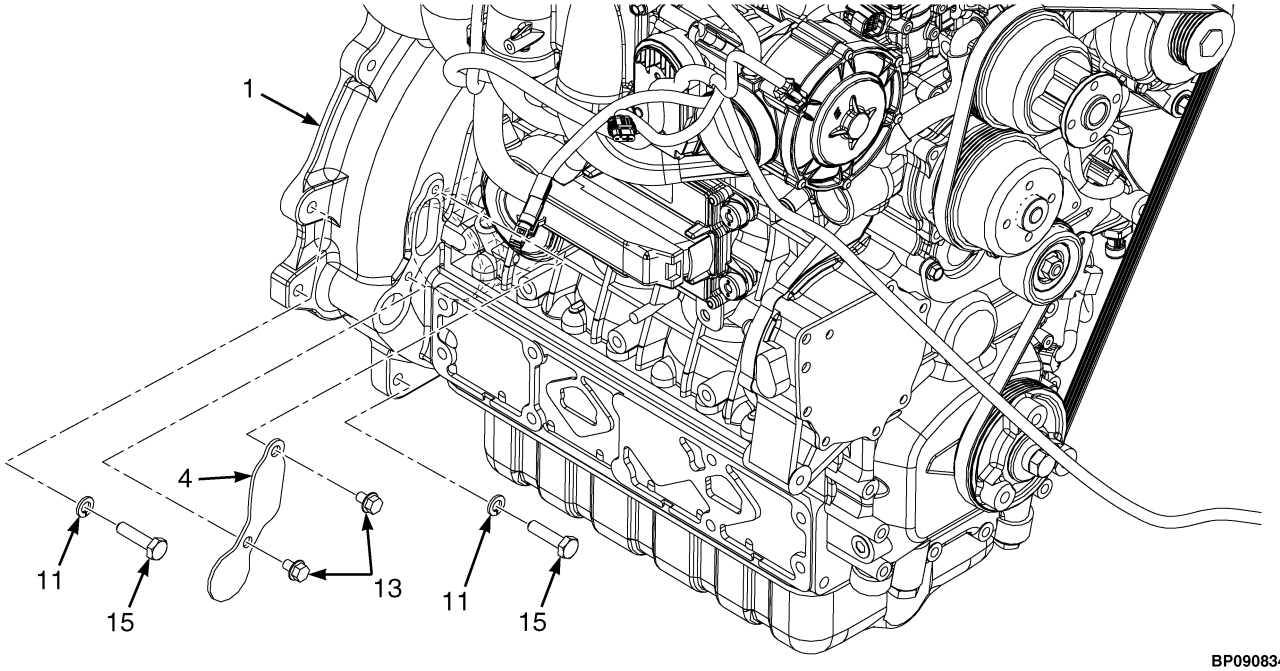

©2015 HYSTER COMPANY

ENGINE AND ATTACHING PARTS
KUBOTA 3.8L SI LPG

ITEM	PART NO.	DESCRIPTION	QTY
1	4636102	Engine Assy (Kubota 3.8L LPG)	1
2	1660913	Bracket (Tube Retention)	1
3	1623093	Bracket	1
4	4024574	Dust Cover	1
5	367224	Adapter	1
6	16151	Fitting	1
7	1566654	Pressure Transducer Sensor (Oil Pressure)	1
8	1500912	Clip	2
9	1531480	Clip	1
10	1582464	Fastener	3
11	292682	Lockwasher	11
12	292516	Capscrew	4
13	1529366	Capscrew	2
14	303150	Dowel	2
15	292515	Capscrew	7

©2015 HYSTER COMPANY

ENGINE MOUNT (FIGURE 3-8)

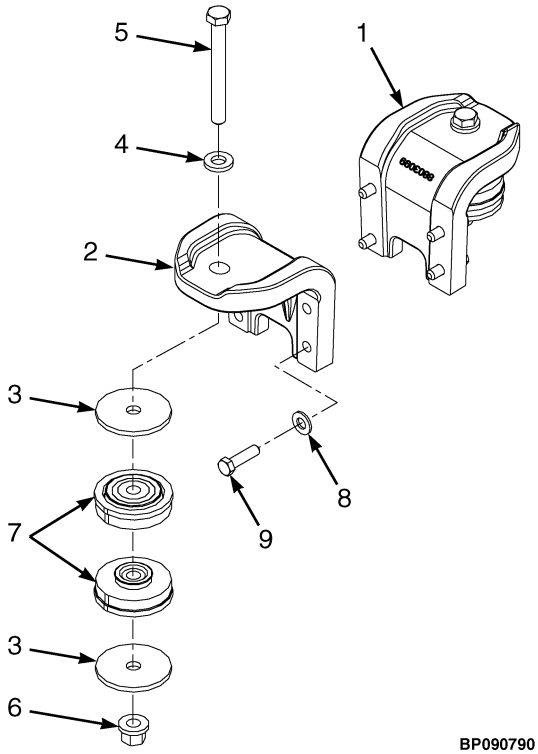

ITEM	PART NO.	DESCRIPTION	QTY
1	4129891	Motor Mount (RH)	1
2	4129892	Motor Mount (LH)	1
3	4129461	Washer	4
4	1504075	Washer	2
5	293698	Capscrew	2
6	1565453	Nut (Flange)	2
7	4643563	Isolator (Blue)	4
8	296423	Washer	8
9	2088763	Capscrew	8

©2015 HYSTER COMPANY

NOTES

©2015 HYSTER COMPANY

FLYWHEEL AND HOUSING (FIGURE 3-9)
KUBOTA 3.8L LPG

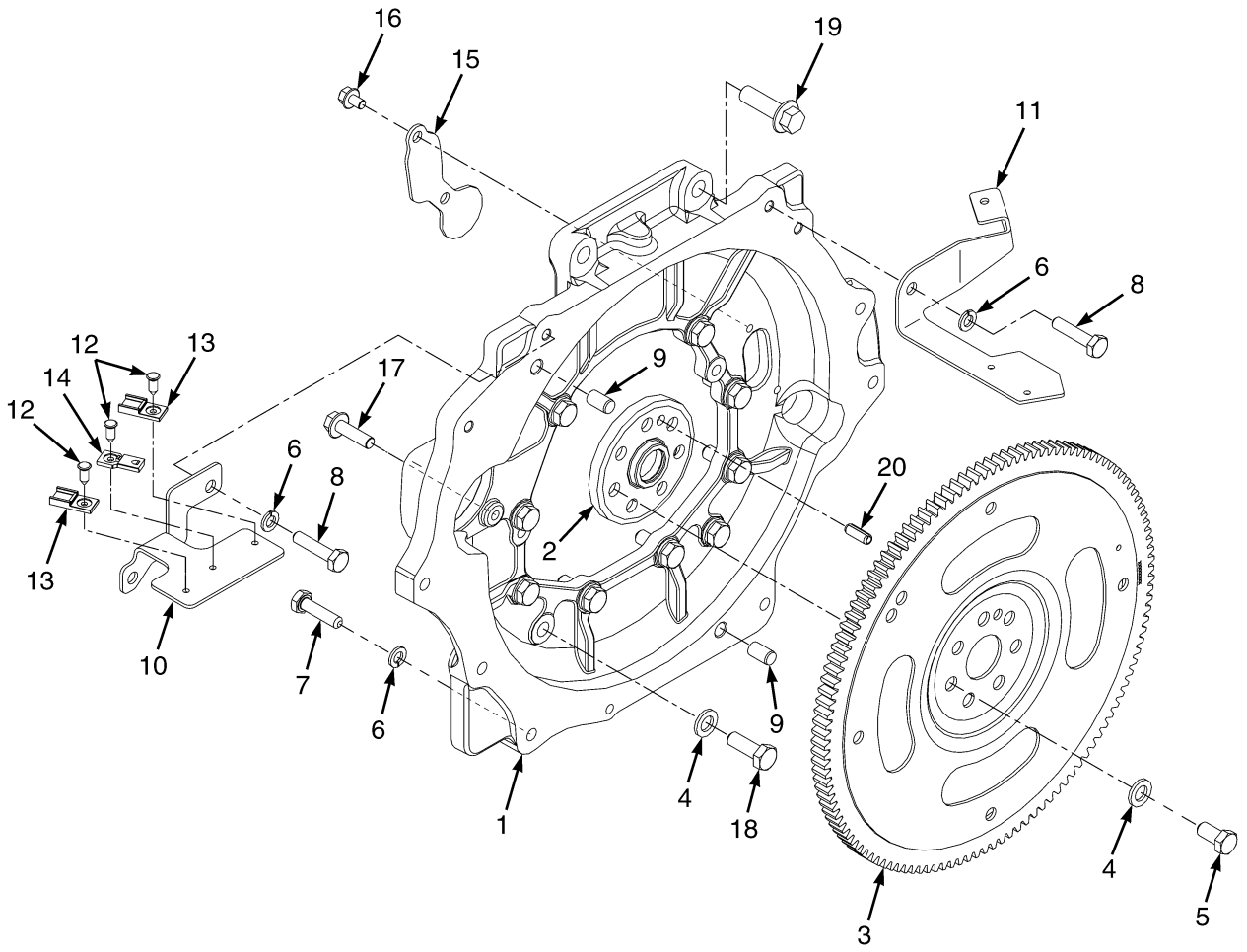

©2015 HYSTER COMPANY

FLYWHEEL AND HOUSING
KUBOTA 3.8L LPG

ITEM	PART NO.	DESCRIPTION	QTY
1	4108193	Flywheel Housing (Kubota 3.8L SI)	1
2	4108520	Adapter (Kubota 3.8L SI)	1
3	4108523	Flywheel (Kubota 3.8L SI)	1
4	296422	Washer	17
5	4630631	Capscrew	7
6	292682	Lockwasher	10
7	292515	Capscrew	6
8	292516	Capscrew	4
9	303150	Dowel	2
10	1623093	Bracket (Harness)	1
11	1660913	Bracket (Tube Retention)	1
12	1582464	Fastener	3
13	1500912	Clip	2
14	1531480	Clip	1
15	4024574	Dust Cover	1
16	1529366	Capscrew	2
17	1527885	Capscrew	2
18	4112428	Capscrew	10
19	4112429	Capscrew	2
20	302473	Roll Pin	1
	2064554	Loctite	AR

©2015 HYSTER COMPANY

ENGINE ASSEMBLY (FIGURE 3-10)
SHORT BLOCK — KUBOTA 3.8L SI LPG

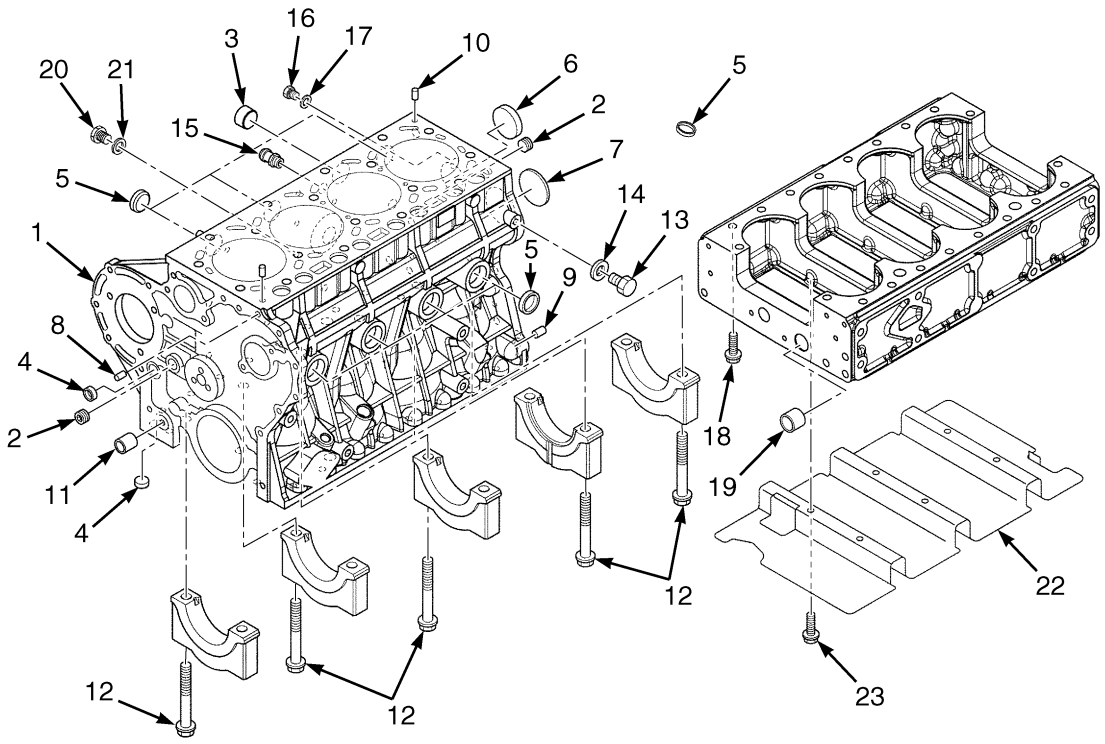

BP090769

ITEM	PART NO.	DESCRIPTION	QTY
	4636102	Engine Assy (Kubota 3.8L LPG)	1
	4637418	Engine Assy (Kubota 3.8L LPG) (Without Catalytic Converter)	1
1	4129101	Short Block (3.8L)	1
2	4041907	Plug	2
3	4041908	Plug	1
4	4041909	Cap (Sealing)	2
5	4041910	Cap (Sealing)	8
6	4041911	Cap (Sealing)	1
7	4041917	Plug	1
8	4054581	PIN	1
9	4041919	Pin	4
10	4041920	Pin	1
11	4041921	Pin	1
12	4041914	Bolt (Bearing Case)	10
13	4096809	Plug	1
14	4050843	Gasket	1
15	4041928	Joint (Water)	1
16	4041929	Plug	1
17	4041930	Gasket	1
18	4041932	Bolt	10
19	4041933	Pin	1
20	4129102	Plug	1
21	. . . . .	Gasket	1
22	4129103	Plate (Baffle)	1
23	4042059	Bolt	6

©2015 HYSTER COMPANY

ENGINE ASSEMBLY (FIGURE 3-11)
OIL PAN — KUBOTA 3.8L SI LPG

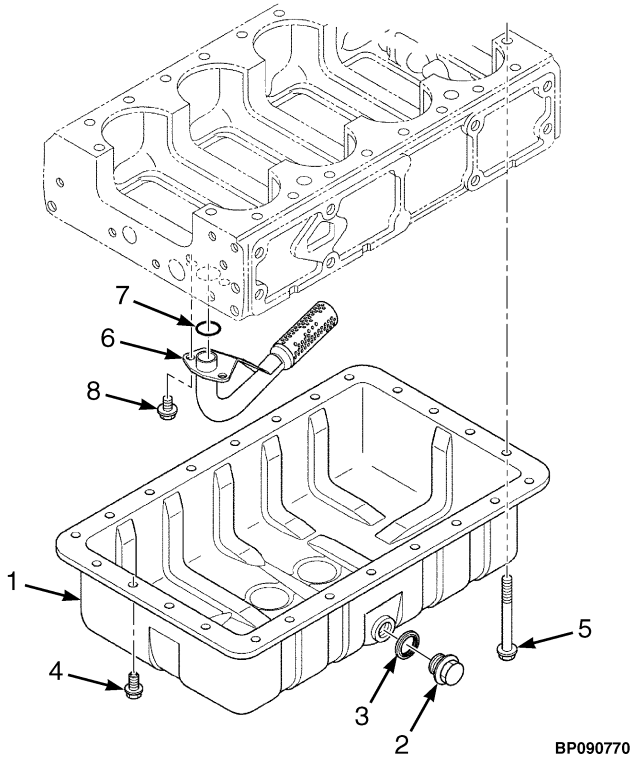

ITEM	PART NO.	DESCRIPTION	QTY
	4636102	Engine Assy (Kubota 3.8L LPG)	1
	4637418	Engine Assy (Kubota 3.8L LPG) (Without Catalytic Converter)	1
1	4129104	Oil Pan	1
2	4041938	Drain Plug	1
3	4041939	Packing (O-Ring)	1
4	4041940	Bolt	20
5	4041941	Bolt	4
6	4129105	Strainer	1
7	4042214	O-Ring	1
8	4042035	Bolt	2

©2015 HYSTER COMPANY

ENGINE ASSEMBLY (FIGURE 3-12)
GEAR CASE — KUBOTA 3.8L SI LPG

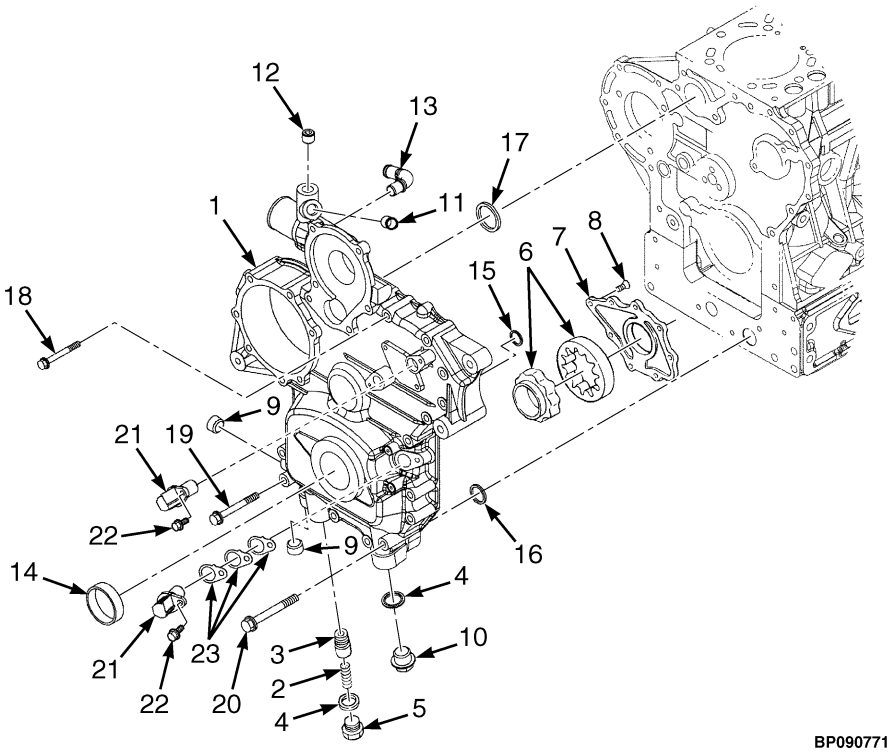

ITEM	PART NO.	DESCRIPTION	QTY
	4636102	Engine Assy (Kubota 3.8L LPG)	1
	4637418	Engine Assy (Kubota 3.8L LPG) (Without Catalytic Converter)	1
1	4129106	Case (Gear Case)	1
2	4041971	Spring	1
3	4041972	Relief Valve	1
4	4041939	Packing (O-Ring)	2
5	4041974	Plug	1
6	4041975	Rotor Assembly (Oil Pump)	1
7	4041978	Cover (Oil Pump)	1
8	4041979	Screw	8
9	4041980	Plug	2
10	4041981	Drain Plug	1
11	4042008	Joint (Breather Pipe)	1
12	4054594	Plug	1
13	4129107	Pipe (Water Return)	1
14	4041982	Oil Seal	1
15	4041983	O-Ring	1
16	4041984	O-Ring	1
17	4042322	Gasket	1
18	4041992	Bolt	10
19	4129108	Bolt	3
20	4041996	Bolt	1
21	4129109	Sensor (Revolution)	2
22	4041991	Bolt	2
23	4042005	Shim (0.25)	1
23	4042006	Shim (.050)	1

©2015 HYSTER COMPANY

ITEM	PART NO.	DESCRIPTION	QTY
23	4042007	Shim (.100)	1

©2015 HYSTER COMPANY

ENGINE ASSEMBLY (FIGURE 3-13)
CYLINDER HEAD COVER — KUBOTA 3.8L SI LPG

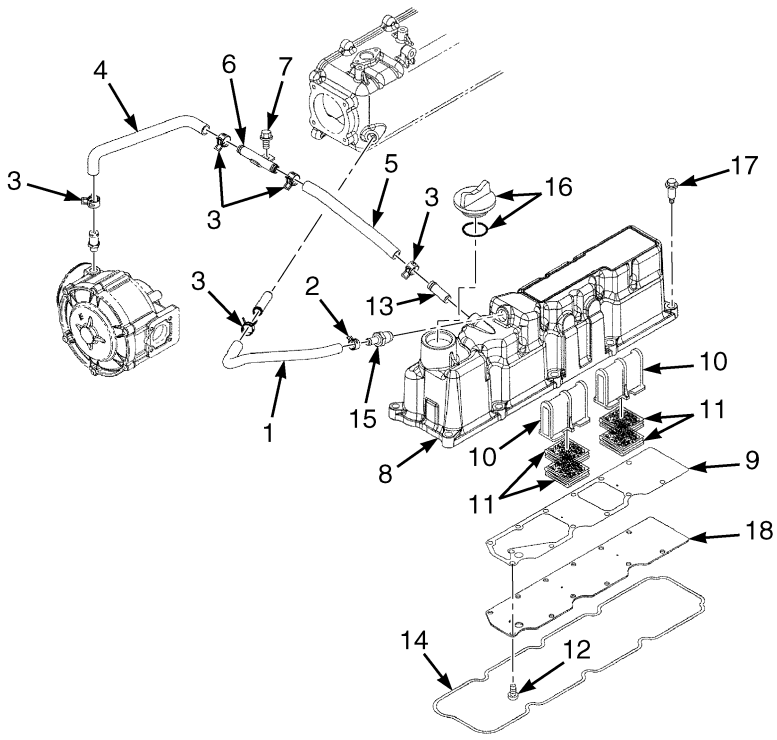

BP090772

ITEM	PART NO.	DESCRIPTION	QTY
	4636102	Engine Assy (Kubota 3.8L LPG)	1
	4637418	Engine Assy (Kubota 3.8L LPG) (Without Catalytic Converter)	1
1	4129119	Tube (Breather)	1
2	4129120	Hose Clamp	1
3	4097702	Hose Clamp	5
4	4129199	Tube (Breather)	1
5	4129200	Tube (Breather)	1
6	4129201	Pipe (Breather)	1
7	4042059	Bolt	1
8	4129202	Cover (Cylinder Head)	1
9	4129204	Gasket	1
10	4129205	Cover (Breather)	2
11	4096867	Element (Breather)	4
12	4042059	Bolt	13
13	4096837	Pipe (Water Return)	1
14	4129206	Gasket (Cylinder Head)	1
15	4129207	Pcv Valve	1
16	4074572	Plug Assembly (Oil Fill)	1
16	4042130	Plug	1
16	4042131	O-Ring	1
17	4096872	Bolt	10
18	4129203	Shield (Oil Breather)	1

©2015 HYSTER COMPANY

ENGINE ASSEMBLY (FIGURE 3-14)
CYLINDER HEAD — KUBOTA 3.8L SI LPG

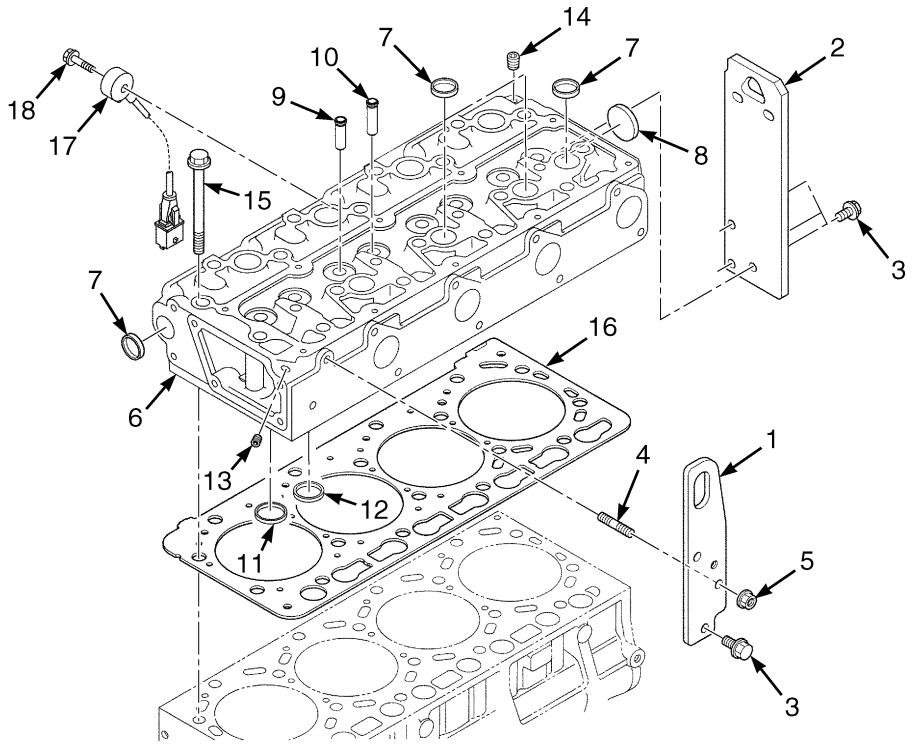

BP090773

ITEM	PART NO.	DESCRIPTION	QTY
	4636102	Engine Assy (Kubota 3.8L LPG)	1
	4637418	Engine Assy (Kubota 3.8L LPG) (Without Catalytic Converter)	1
1	4041968	Lifting Eye	1
2	4054583	Lifting Eye	1
3	4054759	Bolt	4
4	4129110	Stud	1
5	4041946	Nut	1
6	4129111	Cylinder Head Assembly	1
7	4041950	Cap	5
8	4041951	Cap	1
9	4129112	Guide Valve	4
10	4129113	Guide Exhaust Valve	4
11	4129114	Valve Seat (Intake)	4
12	4129115	Valve Seat (Exhaust)	4
13	4041906	Plug	1
14	4041915	Plug	1
15	4041965	Bolt	10
16	4048325	Cylinder Head Gasket	1
17	4096825	Sensor (Knock)	1
18	4096826	Bolt	1

©2015 HYSTER COMPANY

ENGINE ASSEMBLY (FIGURE 3-15)
VALVE AND ROCKER ARM — KUBOTA 3.8L SI LPG

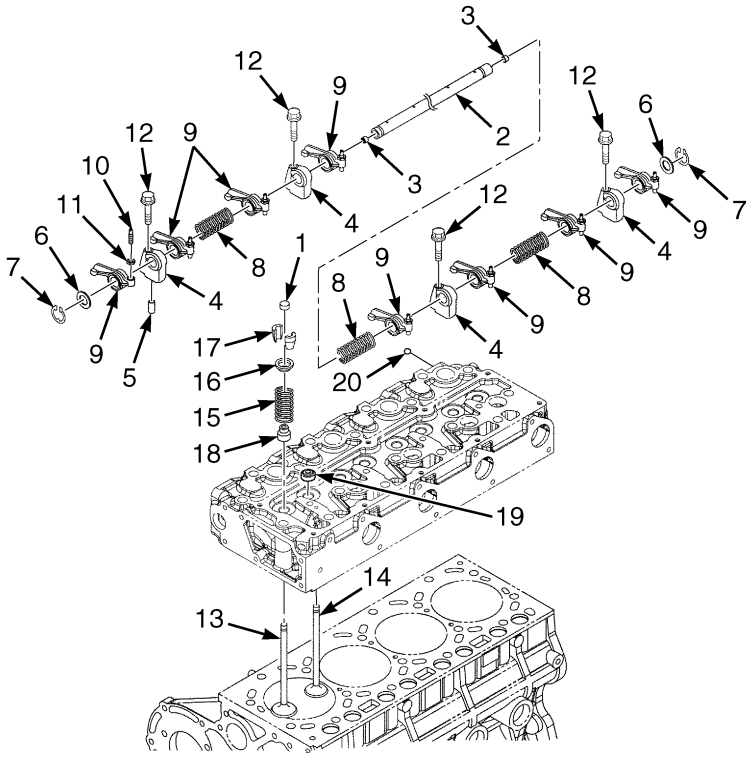

©2015 HYSTER COMPANY

ENGINE ASSEMBLY

VALVE AND ROCKER ARM – KUBOTA 3.8L SI LPG

ITEM	PART NO.	DESCRIPTION	QTY
	4636102	Engine Assy (Kubota 3.8L LPG)	1
	4637418	Engine Assy (Kubota 3.8L LPG) (Without Catalytic Converter)	1
1	4042168	Cap (Valve)	8
2	4042151	Shaft Assembly (Rocker Arm)	1
3	4042094	Screw	2
4	4129247	Bracket (Rocker Arm)	4
5	4042096	Pin (Spring)	1
6	4042097	Washer	2
7	4042098	Retaining Ring	2
8	4042099	Spring	3
9	4129248	Rocker Arm Assembly	1
10	4042155	Screw	2
11	4042103	Nut	1
12	4042161	Bolt	4
13	**a** 4129116	Inlet Valve	4
14	**a** 4129117	Exhaust Valve	4
15	**a** 4129118	Spring	8
16	**a** 4042122	Retainer	8
17	**a** 4042129	Collar	16
18	**a** 4101858	Seal (Valve Stem, Inlet)	4
19	**a** 4042147	Seal (Valve Stem Exhaust)	4
20	**a** 4042026	Ball	4

FOOTNOTES:

a Included in Cylinder Head Assembly

©2015 HYSTER COMPANY

ENGINE ASSEMBLY (FIGURE 3-16)
INTAKE MANIFOLD AND THROTTLE BODY — KUBOTA 3.8L SI LPG

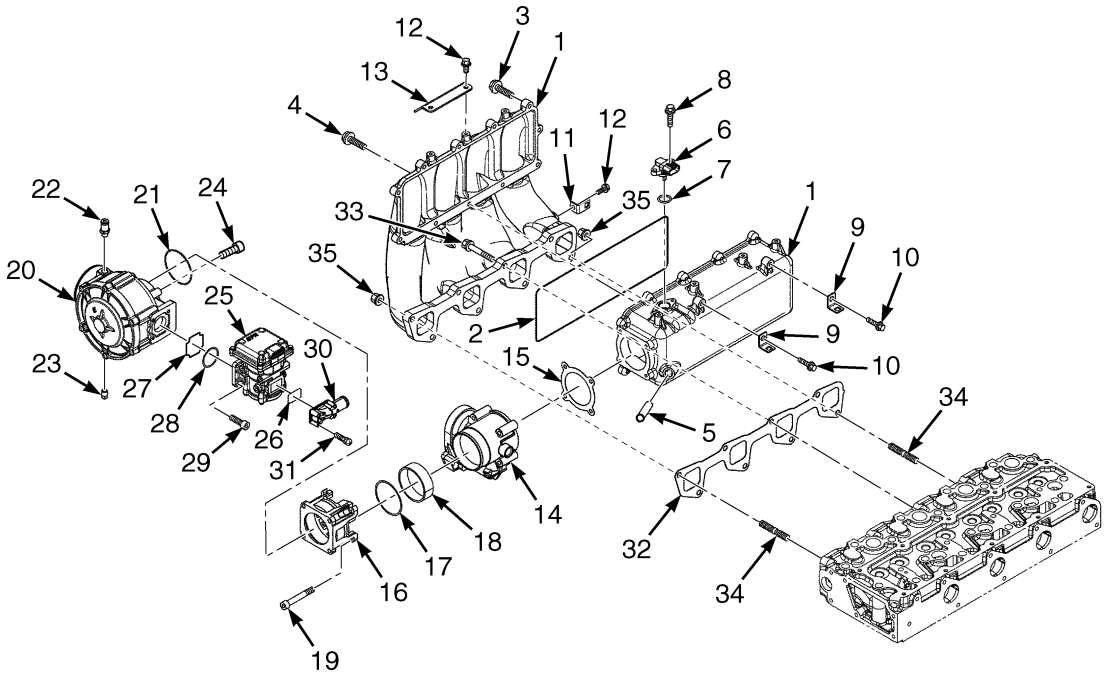

BP090775

ITEM	PART NO.	DESCRIPTION	QTY
	4636102	Engine Assy (Kubota 3.8L LPG)	1
	4637418	Engine Assy (Kubota 3.8L LPG) (Without Catalytic Converter)	1
1	4129249	Intake Manifold	1
2	4129250	Gasket (Intake Manifold)	1
3	4054747	Bolt	10
4	4118621	Bolt	1
5	4097497	Joint (Breather Tube)	1
6	4097498	Sensor (TMAP)	1
7	4097499	O-Ring	1
8	4097500	Bolt	2
9	4097632	Bracket	2
10	4041992	Bolt	2
11	4097690	Bracket	1
12	4042059	Bolt	3
13	4129251	Bracket (Fuse Holder)	1
14	4129252	Throttle Body	1
15	4129259	Gasket (Throttle Body)	1
16	4129260	Adapter	1
17	4129261	O-Ring	1
18	4129262	Spacer	1
19	4129263	Bolt	4
20	4129264	Mixer-LPG	1
21	4129265	Seal	1
22	4129266	Joint (Breather)	1
23	4129267	Plug	1
24	4129268	Bolt	4

©2015 HYSTER COMPANY

ITEM	PART NO.	DESCRIPTION	QTY
25	4097623	Regulator	1
26	4097624	Seal	1
27	4097625	Seal	1
28	4097626	Seal	1
29	4097627	Bolt	4
30	4097628	Flange	1
31	4097629	Screw	4
32	4129269	Gasket (Intake Manifold)	1
33	4042067	Bolt	6
34	4129270	Stud	2
35	4041946	Nut	2

©2015 HYSTER COMPANY

ENGINE ASSEMBLY (FIGURE 3-17)
FAN DRIVE AND MOUNTING — KUBOTA 3.8L SI LPG

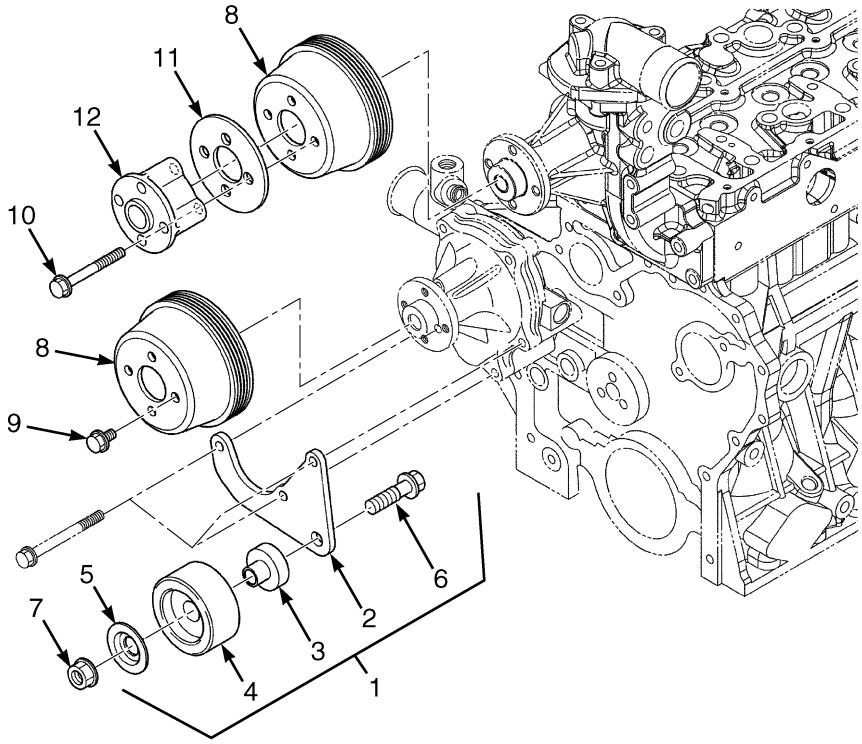

BP090776

ITEM	PART NO.	DESCRIPTION	QTY
	4636102	Engine Assy (Kubota 3.8L LPG)	1
	4637418	Engine Assy (Kubota 3.8L LPG) (Without Catalytic Converter)	1
1	4042325	Pulley Assembly (Idle)	1
2	4042326	Plate	1
3	4042327	Shaft	1
4	4042328	Pulley	1
5	4041916	Cover (Tensioner)	1
6	4041922	Bolt	1
7	4041964	Nut	1
8	4042071	Fan Pulley	2
9	4041992	Bolt	4
10	4042043	Bolt	4
11	4042106	Washer	1
12	4042107	Collar	1

©2015 HYSTER COMPANY

NOTES

©2015 HYSTER COMPANY

ENGINE ASSEMBLY (FIGURE 3-18)
THERMOSTAT AND HOUSING — KUBOTA 3.8L SI LPG

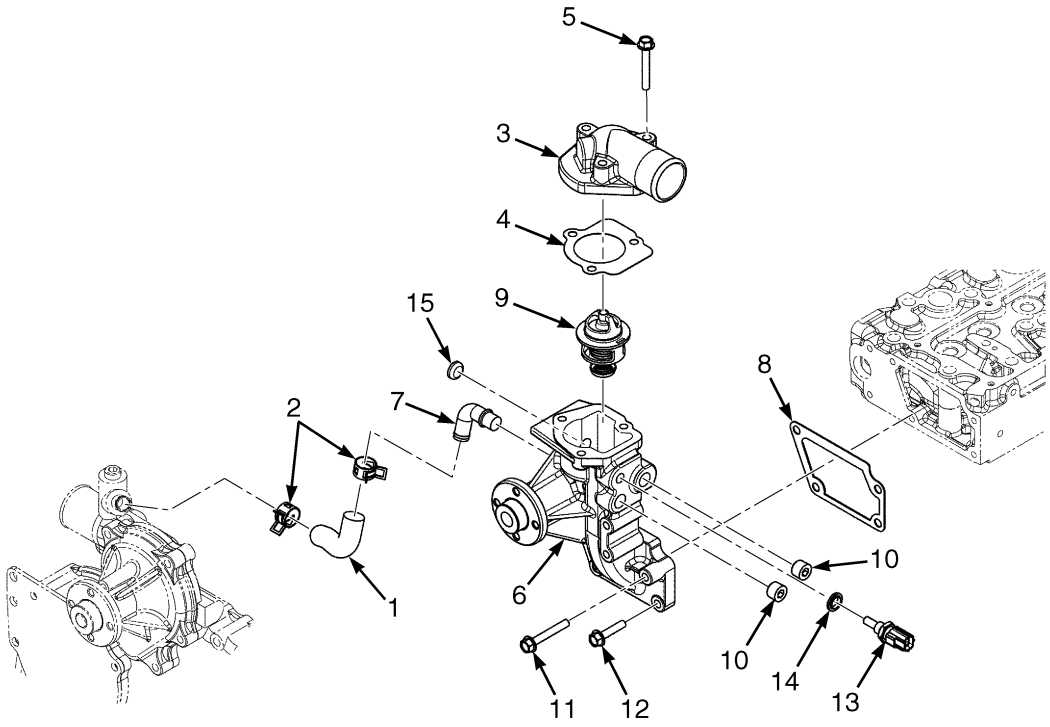

BP090777

©2015 HYSTER COMPANY

ENGINE ASSEMBLY

THERMOSTAT AND HOUSING – KUBOTA 3.8L SI LPG

ITEM	PART NO.	DESCRIPTION	QTY
	4636102	Engine Assy (Kubota 3.8L LPG)	1
	4637418	Engine Assy (Kubota 3.8L LPG) (Without Catalytic Converter)	1
1	4129242	Hose (Water Return)	1
2	4042015	Hose Clamp	2
3	4129243	Cover (Thermostat)	1
4	4041993	Gasket	1
5	4042002	Bolt	3
6	4129244	Flange Assembly	1
7	4129245	Pipe (Water Return)	1
8	4042030	Gasket (Water Flange)	1
9	4042042	Thermostat	1
10	4042049	Plug	2
11	4042066	Bolt	1
12	4042067	Bolt	3
13	4042056	Sensor (Water Temperature)	1
14	4042061	Washer	1
15	4041909	Cap (Sealing)	1

©2015 HYSTER COMPANY

ENGINE ASSEMBLY (FIGURE 3-19)
WATER PUMP — KUBOTA 3.8L SI LPG

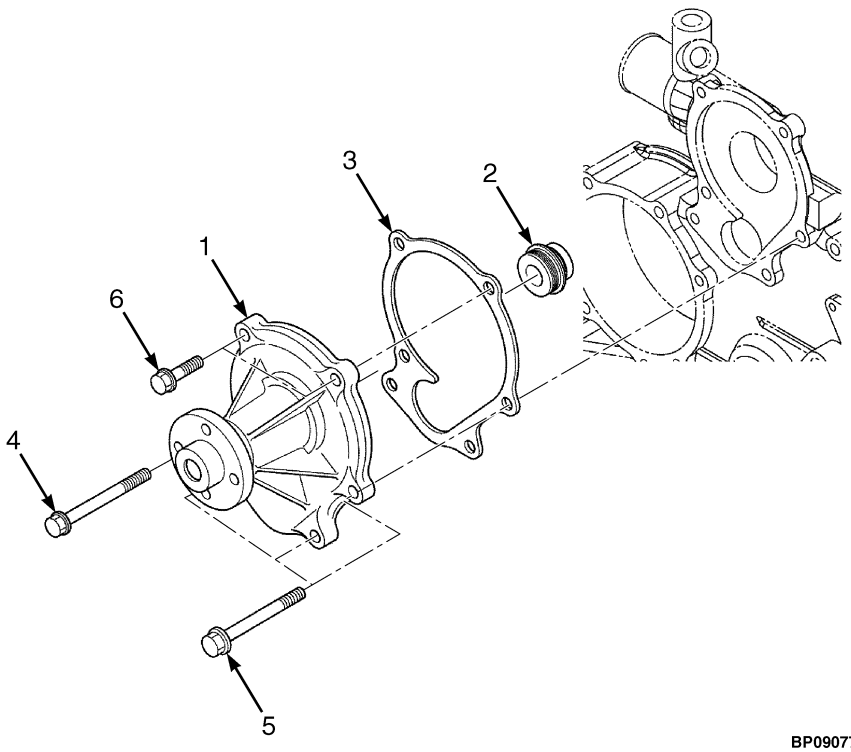

ITEM	PART NO.	DESCRIPTION	QTY
	4636102	Engine Assy (Kubota 3.8L LPG)	1
	4637418	Engine Assy (Kubota 3.8L LPG) (Without Catalytic Converter)	1
1	4042313	Water Pump	1
2	4129246	Seal	1
3	4042318	Gasket	1
4	4042323	Bolt	1
5	4042324	Bolt	3
6	4041997	Bolt	2

©2015 HYSTER COMPANY

ENGINE ASSEMBLY (FIGURE 3-20)
EXHAUST MANIFOLD — KUBOTA 3.8L SI LPG

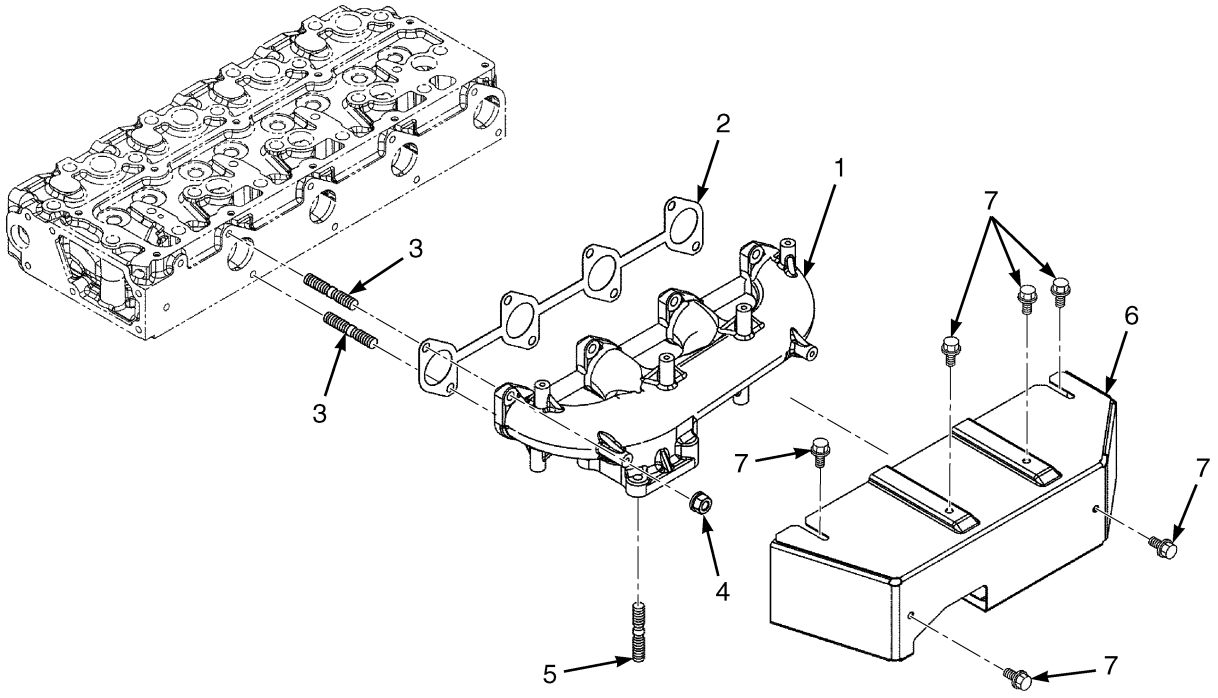

BP090779

ITEM	PART NO.	DESCRIPTION	QTY
	4636102	Engine Assy (Kubota 3.8L LPG)	1
	4637418	Engine Assy (Kubota 3.8L LPG) (Without Catalytic Converter)	1
1	4129272	Exhaust Manifold	1
2	4042087	Gasket (Exhaust Manifold)	1
3	4129110	Stud	8
4	4051050	Nut	8
5	4129273	Stud	4
6	4129274	Cover (Exhaust)	1
7	4054753	Bolt (Flange)	10

©2015 HYSTER COMPANY

ENGINE ASSEMBLY (FIGURE 3-21)
DIPSTICK AND GUIDE — KUBOTA 3.8L SI LPG

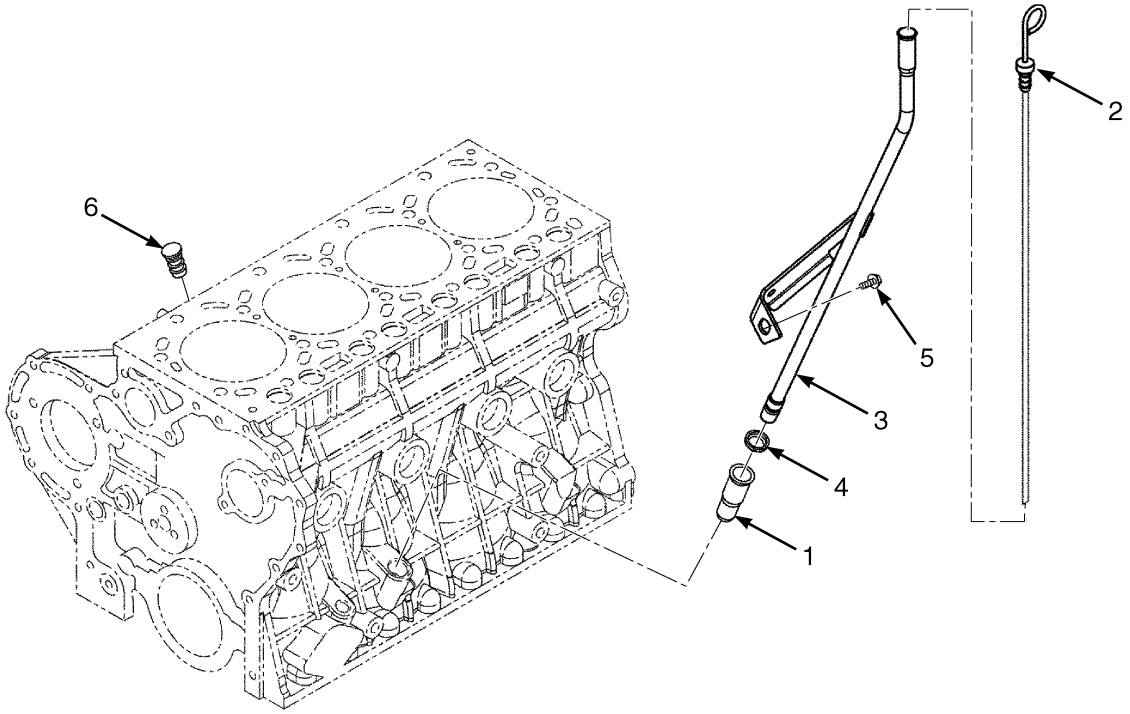

BP090780

ITEM	PART NO.	DESCRIPTION	QTY
	4636102	Engine Assy (Kubota 3.8L LPG)	1
	4637418	Engine Assy (Kubota 3.8L LPG) (Without Catalytic Converter)	1
1	4042232	Guide	1
2	4129208	Dipstick	1
3	4129209	Guide Assembly (Oil Gauge)	1
4	4042233	O-Ring	1
5	4042035	Bolt	1
6	4042234	Plug	1

©2015 HYSTER COMPANY

ENGINE ASSEMBLY (FIGURE 3-22)
OIL COOLER — KUBOTA 3.8L SI LPG

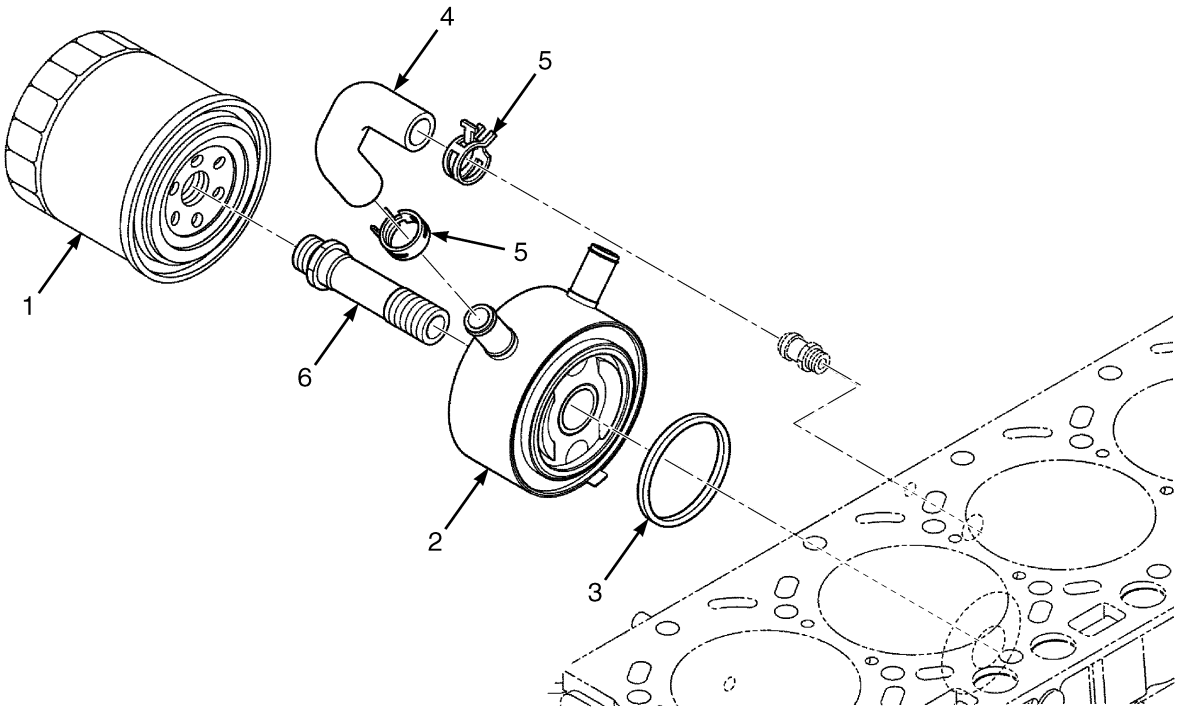

BP090781

ITEM	PART NO.	DESCRIPTION	QTY
	4636102	Engine Assy (Kubota 3.8L LPG)	1
	4637418	Engine Assy (Kubota 3.8L LPG) (Without Catalytic Converter)	1
1	4042216	Cartridge (Oil Filter)	1
2	4054781	Oil Cooler	1
3	4041927	Gasket	1
4	4054782	Hose (Oil Cooler)	1
5	4042015	Hose Clamp	2
6	4054784	Joint (Fitting)	1

©2015 HYSTER COMPANY

ENGINE ASSEMBLY (FIGURE 3-23)
MAIN BEARING CASE — KUBOTA 3.8L SI LPG

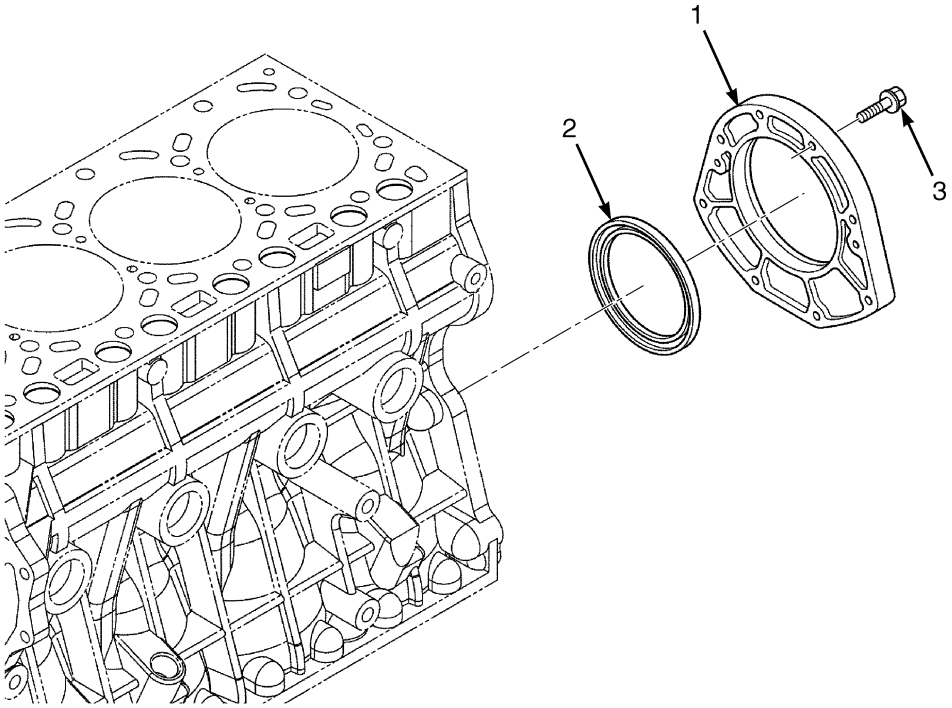

BP090782

ITEM	PART NO.	DESCRIPTION	QTY
	4636102	Engine Assy (Kubota 3.8L LPG)	1
	4637418	Engine Assy (Kubota 3.8L LPG) (Without Catalytic Converter)	1
1	4042009	Cover (Bearing Case)	1
2	4042011	Oil Seal	1
3	4041997	Bolt	8

©2015 HYSTER COMPANY

ENGINE ASSEMBLY (FIGURE 3-24)
CAMSHAFT AND IDLE GEAR SHAFT — KUBOTA 3.8L SI LPG

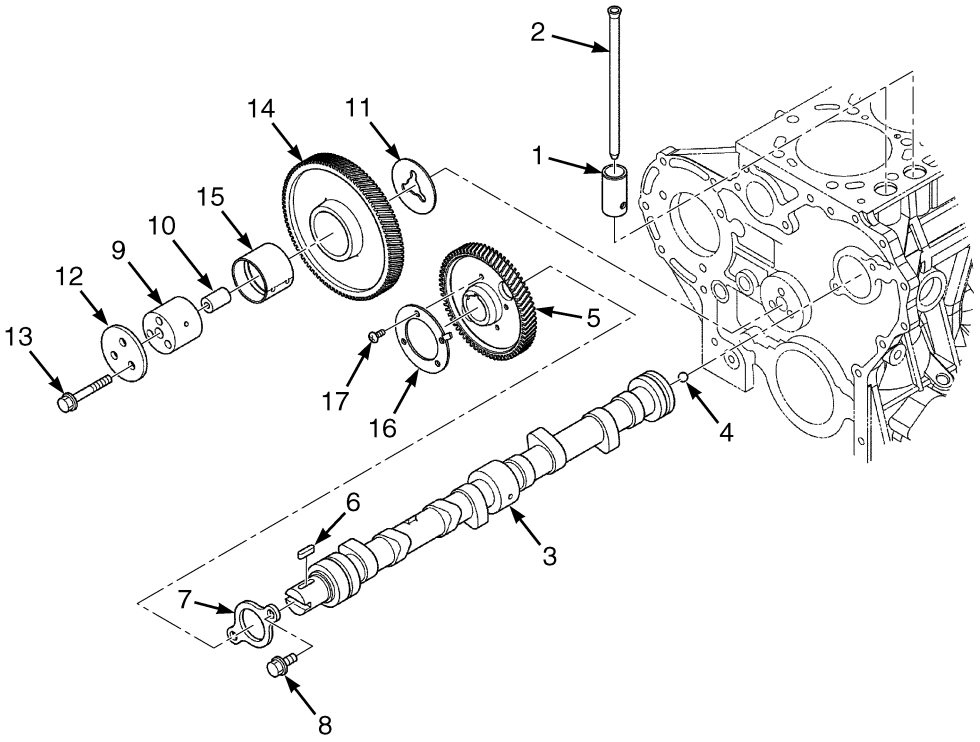

BP090783

ITEM	PART NO.	DESCRIPTION	QTY
	4636102	Engine Assy (Kubota 3.8L LPG)	1
	4637418	Engine Assy (Kubota 3.8L LPG) (Without Catalytic Converter)	1
1	4042134	Tappet	8
2	4042135	Push Rod	8
3	4129210	Camshaft	1
4	4042138	Ball	1
5	4042139	Gear	1
6	4042140	Key	1
7	4042141	Stop	1
8	4041992	Bolt	2
9	4042194	Shaft (Idle Gear)	1
10	4042195	Pin (Idler Gear)	1
11	4042196	Collar (Idle Gear)	1
12	4042197	Collar (Idler Gear)	1
13	4042198	Bolt	3
14	4042199	Idler Gear	1
15	4042225	Bushing (Idler Gear)	1
16	4129211	Gear (G-Pulser)	1
17	4042040	Screw	4

©2015 HYSTER COMPANY

ENGINE ASSEMBLY (FIGURE 3-25)
PISTON AND CRANKSHAFT — KUBOTA 3.8L SI LPG

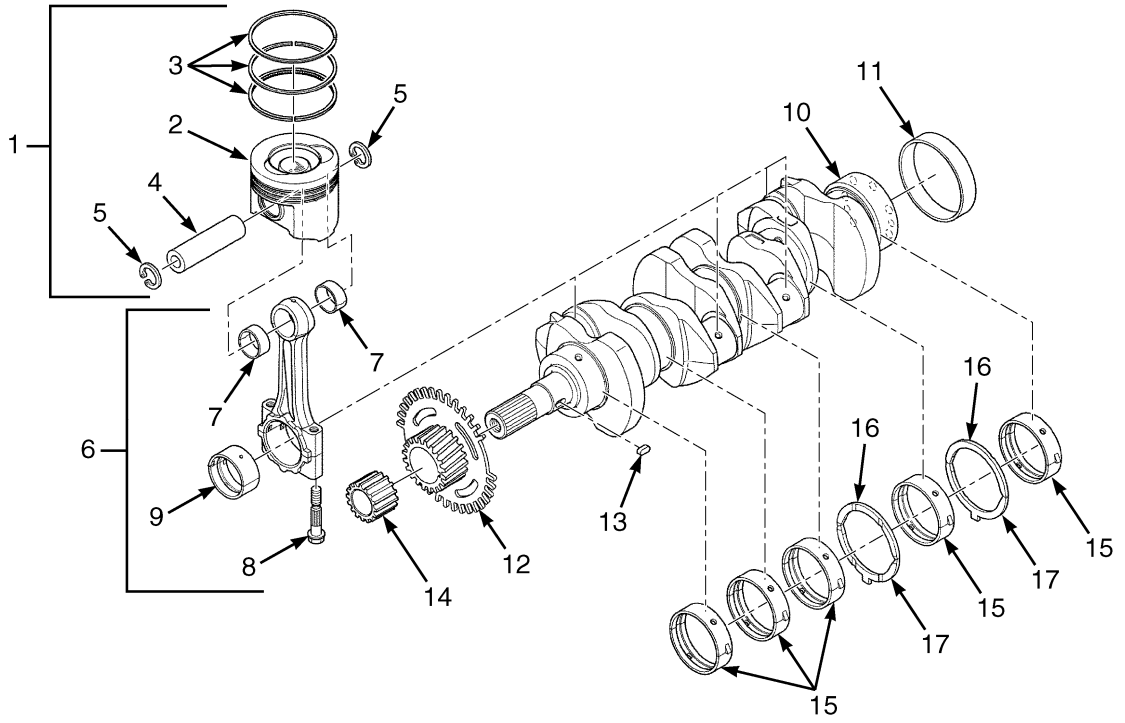

BP090784

ITEM	PART NO.	DESCRIPTION	QTY
	4636102	Engine Assy (Kubota 3.8L LPG)	1
	4637418	Engine Assy (Kubota 3.8L LPG) (Without Catalytic Converter)	1
1	4129221	Kit-Piston (Standard)	4
1	4129222	Kit-Piston (+0.50mm)(Each Kit Services Only One Piston Assembly)	4
2	4129212	Piston (Standard)	1
2	4129213	Piston (+0.50mm)	1
3	4129214	Piston Ring (Standard)	1
3	4129215	Piston Ring (+0.50mm)	1
4	4129216	Pin	1
5	4129217	Retaining Ring	2
6	4129218	Rod Assy (Connecting)	4
7	4129219	Bushing	2
8	4042180	Bolt	2
9	4042181	Piston Rod Bearing (Standard/Blue)	1
9	4042182	Piston Rod Bearing (Standard)	1
9	4042163	Piston Rod Bearing (-0.20mm Green)	1
9	4042165	Piston Rod Bearing (-0.40mm Red)	1
10	4042183	Crankshaft	1
11	4042185	Sleeve	1
12	4129220	Gear (Crankshaft)	1
13	4042189	Key	1
14	4042193	Drive Gear (Oil Pump)	1
15	4042186	Crankshaft Bearing (Standard)	5
15	4042177	Crankshaft Bearing (-0.20mm)	5
15	4042178	Crankshaft Bearing (-0.40mm)	5
16	4042187	Thrust Washer (Standard)	2

©2015 HYSTER COMPANY

ITEM	PART NO.	DESCRIPTION	QTY
16	4042204	Thrust Washer (+0.20 mm)	2
16	4042215	Thrust Washer (+0.40mm)	2
17	4042188	Thrust Washer (Standard)	2
17	4042219	Thrust Washer (+0.20 mm)	2
17	4042224	Thrust Washer (+0.40mm)	2
	4042291	Kit-Crankshaft Bearing (Standard)	1
	4042297	Kit-Crankshaft Bearing (-0.20 mm)	1
	4042303	Kit-Crankshaft Bearing (-0.40mm)	1

©2015 HYSTER COMPANY

ENGINE ASSEMBLY (FIGURE 3-26)
INJECTION PUMP COVER — KUBOTA 3.8L SI LPG

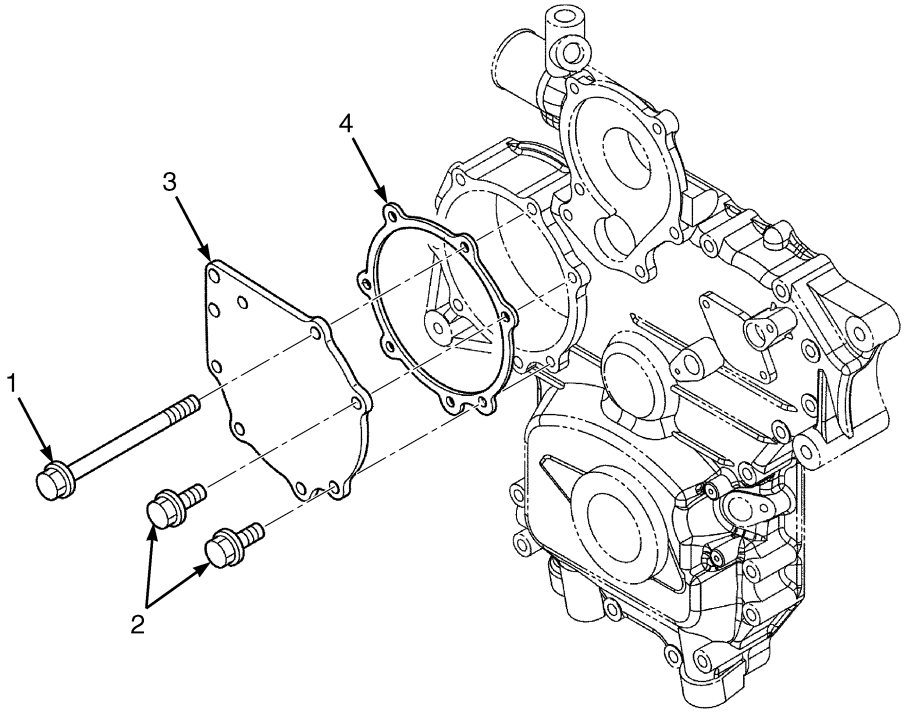

BP090785

ITEM	PART NO.	DESCRIPTION	QTY
	4636102	Engine Assy (Kubota 3.8L LPG)	1
	4637418	Engine Assy (Kubota 3.8L LPG) (Without Catalytic Converter)	1
1	4041995	Bolt	5
2	4041944	Bolt	2
3	4054602	Cover	1
4	4054603	Gasket	1

©2015 HYSTER COMPANY

ENGINE ASSEMBLY (FIGURE 3-27)
IGNITION COIL — KUBOTA 3.8L SI LPG

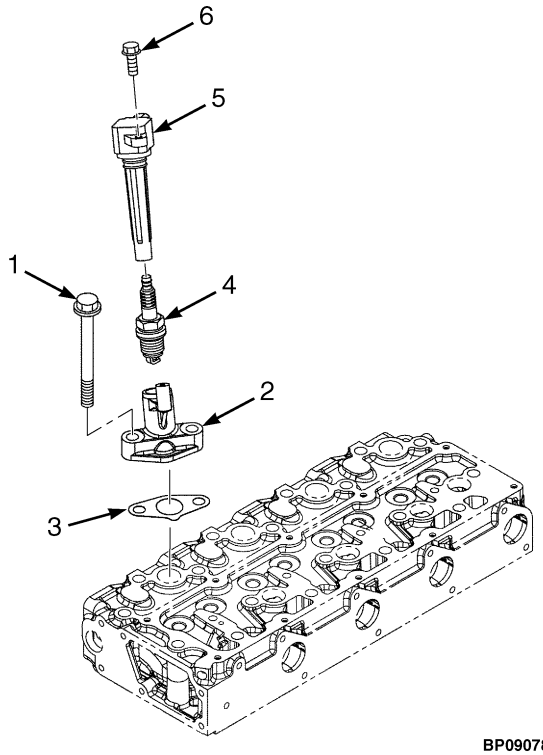

BP090786

ITEM	PART NO.	DESCRIPTION	QTY
	4636102	Engine Assy (Kubota 3.8L LPG)	1
	4637418	Engine Assy (Kubota 3.8L LPG) (Without Catalytic Converter)	1
1	4129223	Bolt (Cylinder Head)	8
2	4129238	Flange (Ignition Coil)	4
3	4129239	Gasket	4
4	4097211	Spark Plug	4
5	4097212	Ignition Coil	4
6	4041991	Bolt	4

©2015 HYSTER COMPANY

ENGINE ASSEMBLY (FIGURE 3-28)
SUPPLY PUMP COVER — KUBOTA 3.8L SI LPG

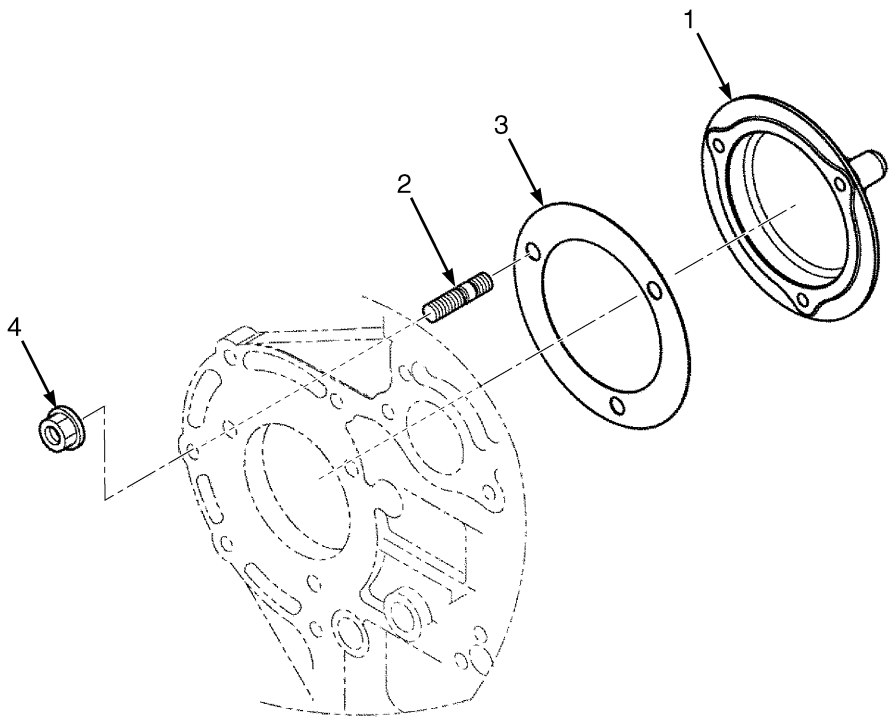

BP090787

ITEM	PART NO.	DESCRIPTION	QTY
	4636102	Engine Assy (Kubota 3.8L LPG)	1
	4637418	Engine Assy (Kubota 3.8L LPG) (Without Catalytic Converter)	1
1	4129240	Cover (Supply Pump)	1
2	4129241	Bolt (Stud)	3
3	4054601	Gasket	1
4	4041946	Nut	3

©2015 HYSTER COMPANY

NOTES

©2015 HYSTER COMPANY

ENGINE ASSEMBLY (FIGURE 3-29)
ALTERNATOR AND PULLEY — KUBOTA 3.8L SI LPG

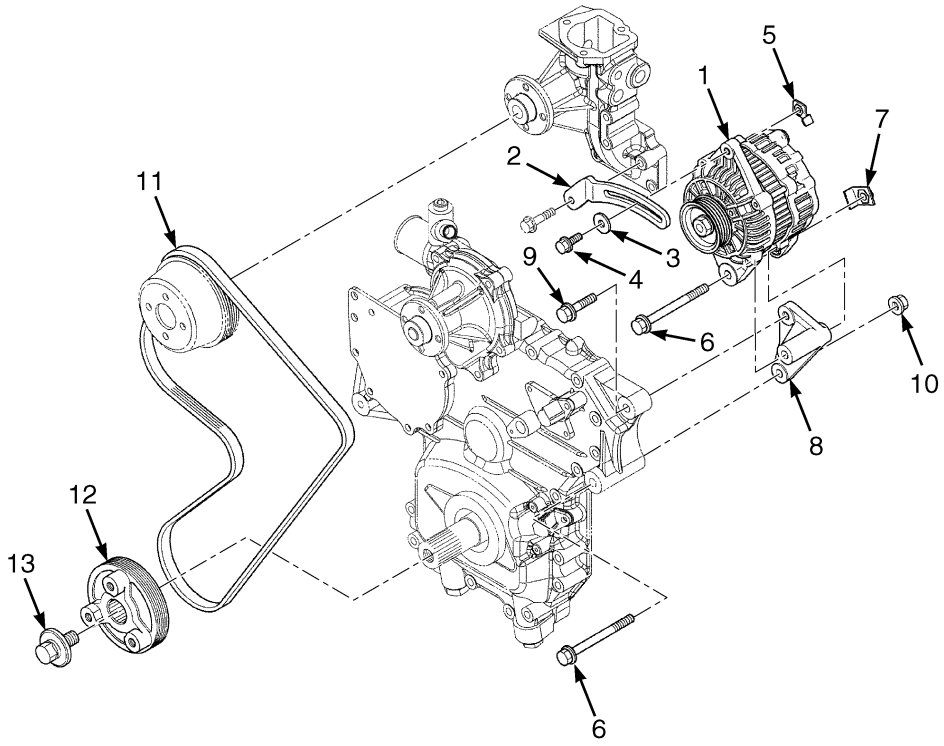

©2015 HYSTER COMPANY

ENGINE ASSEMBLY

ALTERNATOR AND PULLEY – KUBOTA 3.8L SI LPG

ITEM	PART NO.	DESCRIPTION	QTY
	4636102	Engine Assy (Kubota 3.8L LPG)	1
	4637418	Engine Assy (Kubota 3.8L LPG) (Without Catalytic Converter)	1
1	4042286	Alternator	1
2	4042288	Bracket	1
3	4042289	Washer	1
4	4042070	Bolt	1
5	4042290	Bracket	1
6	4042295	Bolt	2
7	4042292	Nut (Clip)	1
8	4042293	Bracket	1
9	4042294	Bolt	1
10	4042108	Nut	1
11	4042142	Belt (multi-ribbed flat)	1
12	4042123	Pulley (Fan Drive)	1
13	4042133	Bolt	1

©2015 HYSTER COMPANY

ENGINE ASSEMBLY (FIGURE 3-30)
STARTER — KUBOTA 3.8L SI LPG

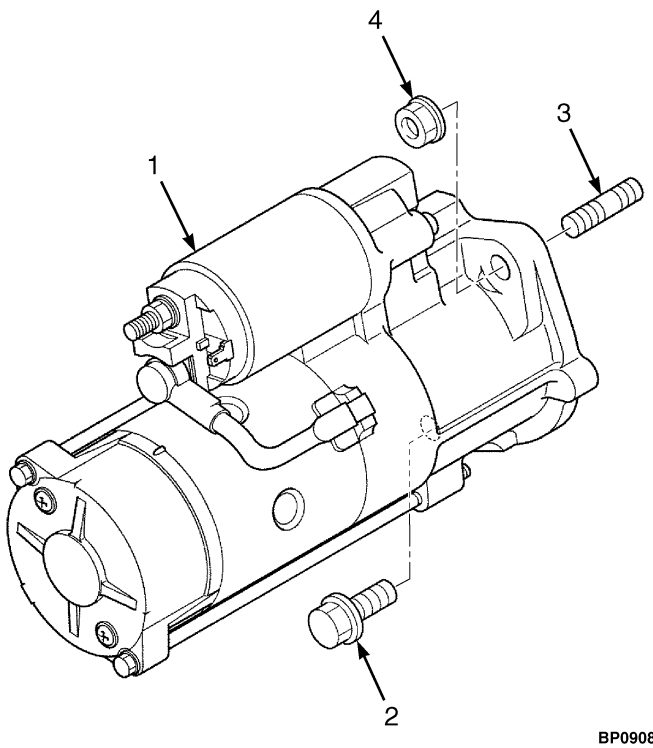

BP090830

ITEM	PART NO.	DESCRIPTION	QTY
	4636102	Engine Assy (Kubota 3.8L LPG)	1
	4637418	Engine Assy (Kubota 3.8L LPG) (Without Catalytic Converter)	1
1	4042280	Starter	1
2	4042284	Bolt	1
3	4054763	Bolt	1
4	4042108	Nut	1

©2015 HYSTER COMPANY

ENGINE ASSEMBLY (FIGURE 3-31)
ELECTRONIC CONTROL MODULE — KUBOTA 3.8L SI LPG

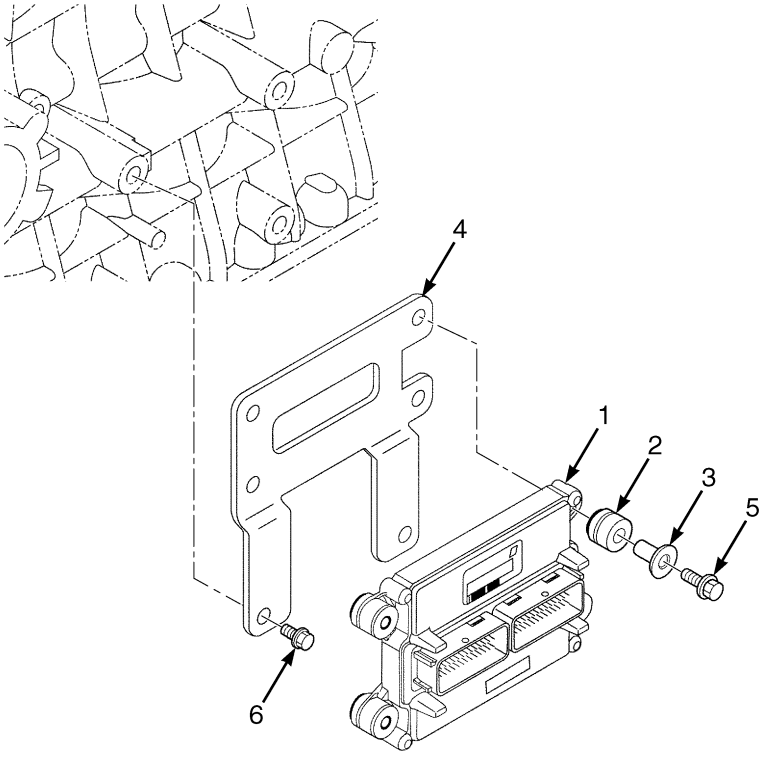

BP090789

ITEM	PART NO.	DESCRIPTION	QTY
	4636102	Engine Assy (Kubota 3.8L LPG)	1
	4637418	Engine Assy (Kubota 3.8L LPG) (Without Catalytic Converter)	1
1	4129382	Electronic Control Module	1
1	4129343	Electronic Control Module (Without Catalytic Converter)	1
2	4097871	Rubber Mount	4
3	4097872	Spacer	4
4	4129278	Bracket	1
5	4097874	Bolt	4
6	4042034	Bolt	2

NOTES

©2015 HYSTER COMPANY

4 FUEL SYSTEM

SECTION 4
FUEL SYSTEM

DESCRIPTION	PAGE
AIR FILTER ASSEMBLY	
KUBOTA DIESEL - 3.6L, 3.8L	4-9
KUBOTA LPG - 3.8L	4-8
AIR INTAKE AND FILTER	
KUBOTA 3.8L LPG	4-6
KUBOTA DIESEL - 3.6L	4-2
KUBOTA DIESEL - 3.8L	4-4
E-THROTTLE LINKAGE	
KUBOTA 3.6L DIESEL	4-18
FUEL CAP	
DIESEL	4-20
FUEL SYSTEM	
3.8L LPG - WITH LOW FUEL SENSOR	4-28
3.8L LPG - W/O LOW FUEL SENSOR	4-30
KUBOTA 3.6L DIESEL	4-22
KUBOTA DIESEL - 3.8L	4-24
LPG BRACKET ASSEMBLY	
SWING OUT DROP DOWN WITH TWIN STEEL STRAPS	4-32
SWING OUT WITH FABRIC STRAP	4-36
SWING OUT, DROP DOWN WITH FABRIC STRAP	4-38
PRE-CLEANER AND MOUNT	
DIESEL	4-10
DIESEL ENGINE - WITH AIR CONDITIONING	4-11
THROTTLE CABLE ASSEMBLY	
KUBOTA DIESEL - 3.6L	4-16
THROTTLE PEDAL ASSEMBLY AND ATTACHING PARTS	
MONOTROL PEDAL	4-14
STANDARD PEDAL	4-12

©2015 HYSTER COMPANY

AIR INTAKE AND FILTER (FIGURE 4-1)
KUBOTA DIESEL — 3.6L

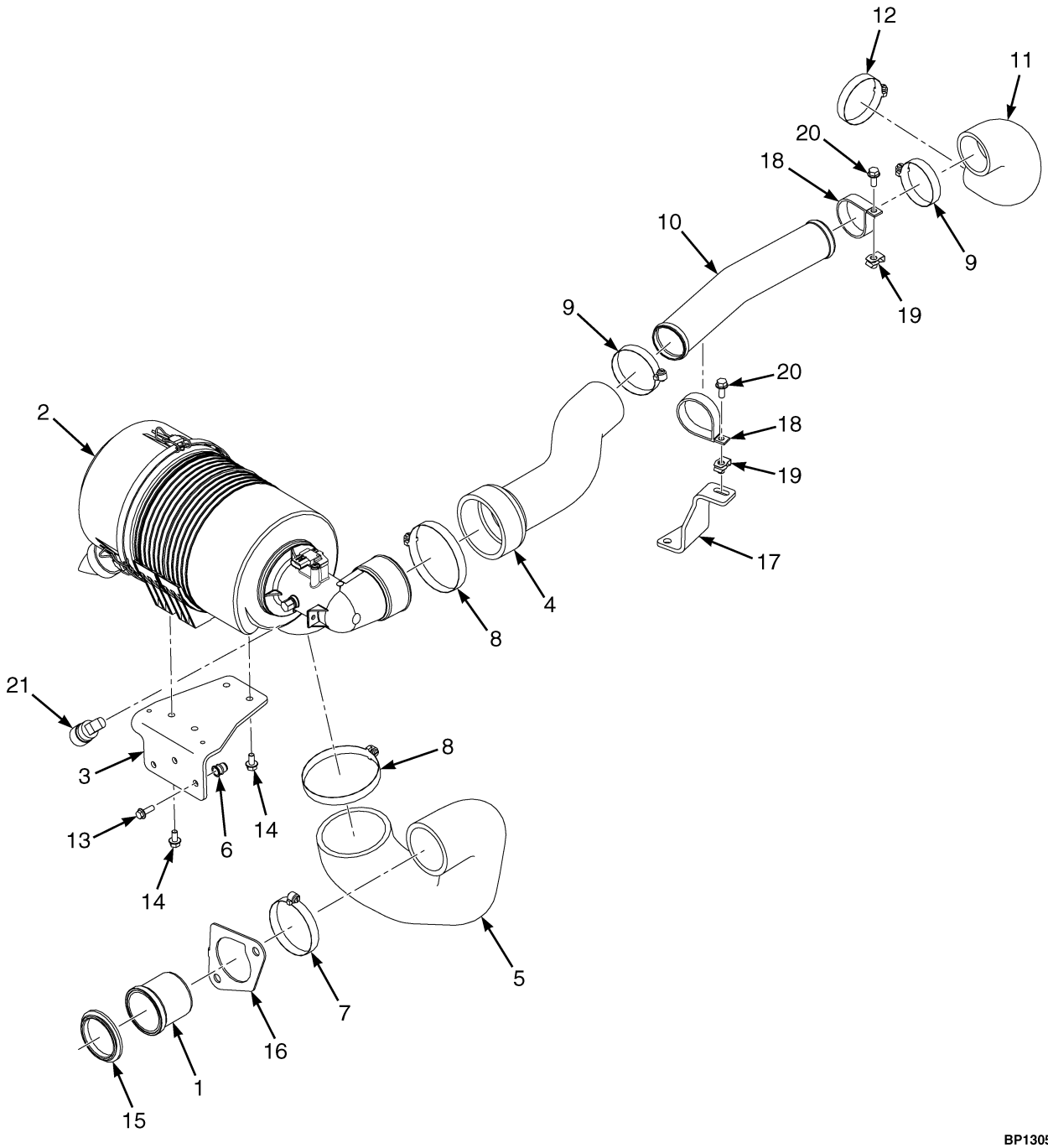

©2015 HYSTER COMPANY

AIR INTAKE AND FILTER
KUBOTA DIESEL – 3.6L

ITEM	PART NO.	DESCRIPTION	QTY
1	1664489	Adapter (Air Intake)	1
2	4623007	Air Filter (☞Figure 4-5)	1
3	4124888	Bracket (Air Cleaner)	1
4	4628377	Hose (Clean Air)	1
5	4624325	Hose (Dirty Air)	1
6	1530243	Insert	3
7	115696	Hose Clamp	1
8	78286	Clamp	2
9	1394008	Hose Clamp	2
10	4614144	Tube (Air Intake)	1
11	4615967	Hose (Clean Air)	1
12	119236	Clamp	1
13	1583611	Capscrew	3
14	1527879	Capscrew	4
15	1502079	Grommet	1
16	1650184	Retainer	1
17	4045100	Bracket	1
18	176453	Clamp	2
19	1398062	Nut (Fold Over)	2
20	1527880	Capscrew	2
21	165991	Indicator (Restriction)	1
21	16151	Fitting	1

©2015 HYSTER COMPANY

AIR INTAKE AND FILTER (FIGURE 4-2)
KUBOTA DIESEL — 3.8L

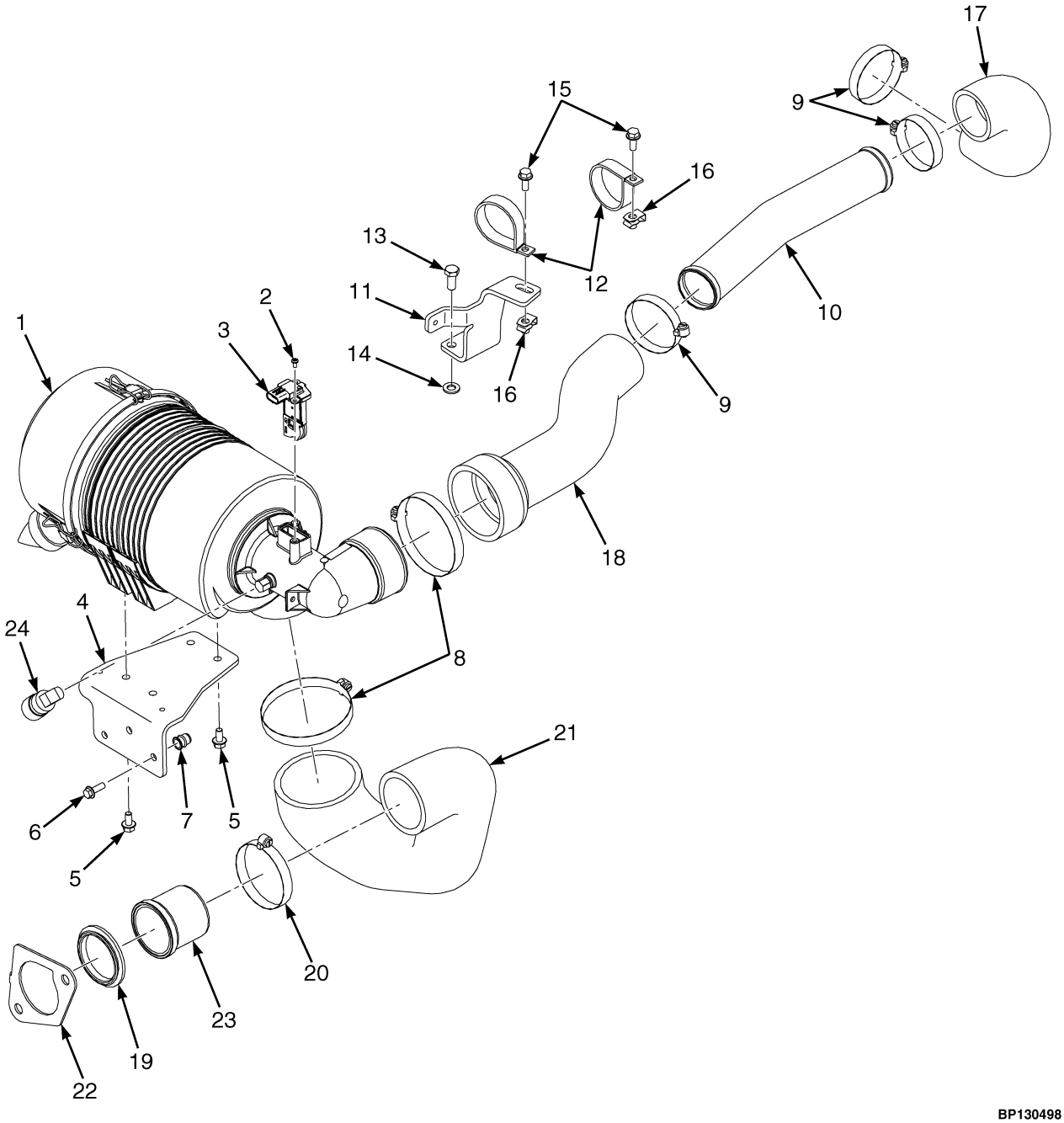

©2015 HYSTER COMPANY

AIR INTAKE AND FILTER
KUBOTA DIESEL – 3.8L

ITEM	PART NO.	DESCRIPTION	QTY
1	4626441	Air Filter (Assembly)	1
1	4626440	Air Filter (☞Figure 4-5)	1
2	302019	Screw	2
3	4055658	Sensor (Mass Airflow)	1
4	4124888	Bracket (Air Cleaner)	1
5	1527879	Capscrew	4
6	1583611	Capscrew	3
7	1530243	Insert	3
8	78286	Clamp	2
9	1394008	Hose Clamp	3
10	4614144	Tube (Air Intake)	1
11	4062311	Bracket	1
12	176453	Clamp	2
13	4616151	Capscrew	2
14	296420	Washer	2
15	1527880	Capscrew	2
16	1398062	Nut (Fold Over)	2
17	4614145	Hose (Clean Air)	1
18	4628377	Hose (Clean Air)	1
19	1502079	Grommet	1
20	115696	Hose Clamp	1
21	4624325	Hose (Dirty Air)	1
22	1650184	Retainer	1
23	1664489	Adapter	1
24	165991	Indicator (Restriction)	1
24	16151	Fitting	1

©2015 HYSTER COMPANY

AIR INTAKE AND FILTER (FIGURE 4-3)
KUBOTA 3.8L LPG

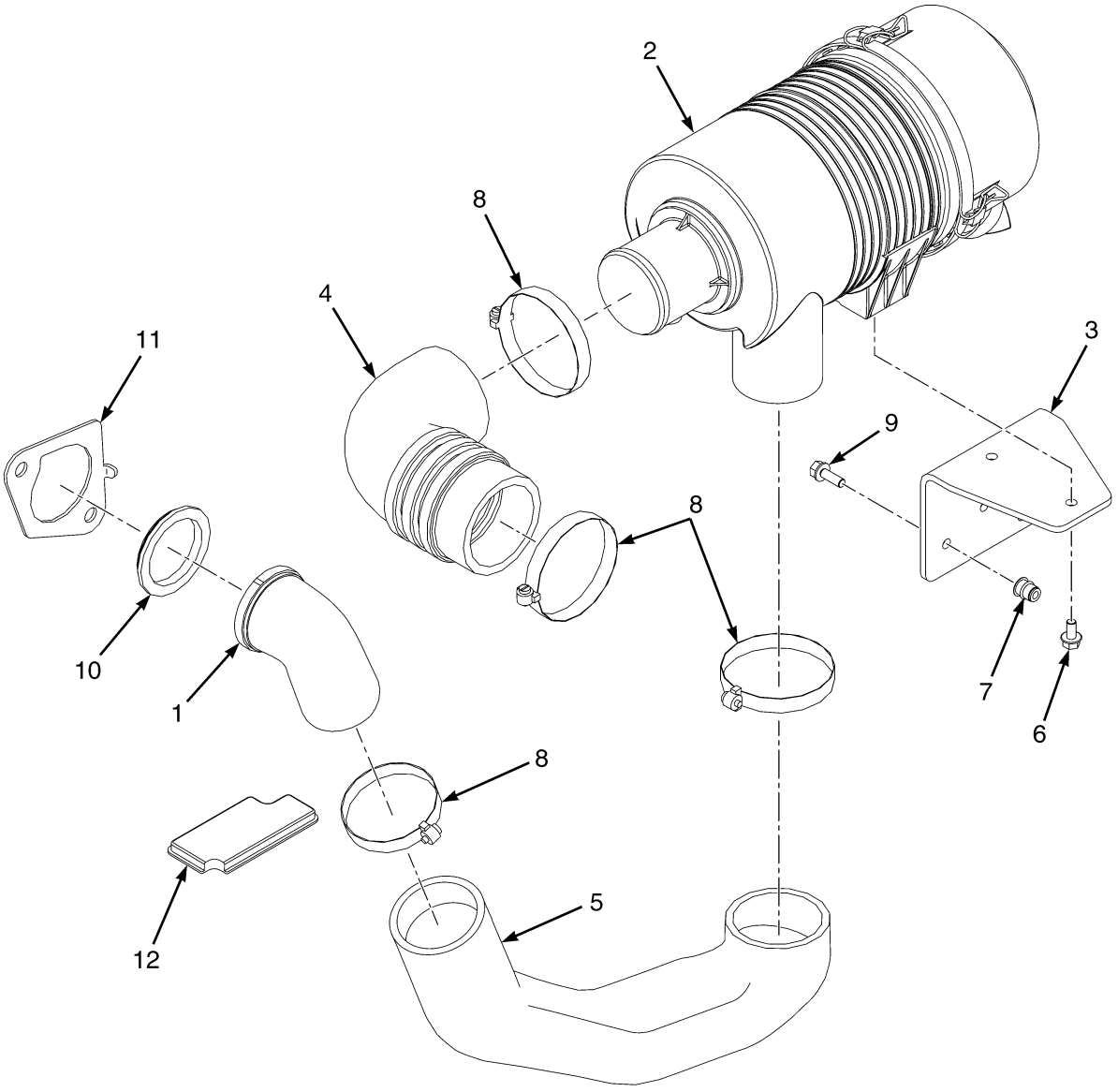

©2015 HYSTER COMPANY

AIR INTAKE AND FILTER
KUBOTA 3.8L LPG

ITEM	PART NO.	DESCRIPTION	QTY
1	4078122	Elbow	1
2	4637273	Air Filter Assembly (☞Figure 4-4)	1
3	4124577	Bracket	1
4	4641691	Hose (Clean Air Intake)	1
5	4637271	Hose (Dirty Air)	1
6	1527879	Capscrew	2
7	1530244	Insert	3
8	115696	Hose Clamp	4
9	1583611	Capscrew	3
10	1502079	Grommet	1
11	1650184	Retainer	1
12	**a**	End Plug (OHG Leg)	1

FOOTNOTES:

a Not used on this application

©2015 HYSTER COMPANY

AIR FILTER ASSEMBLY (FIGURE 4-4)

KUBOTA LPG — 3.8L

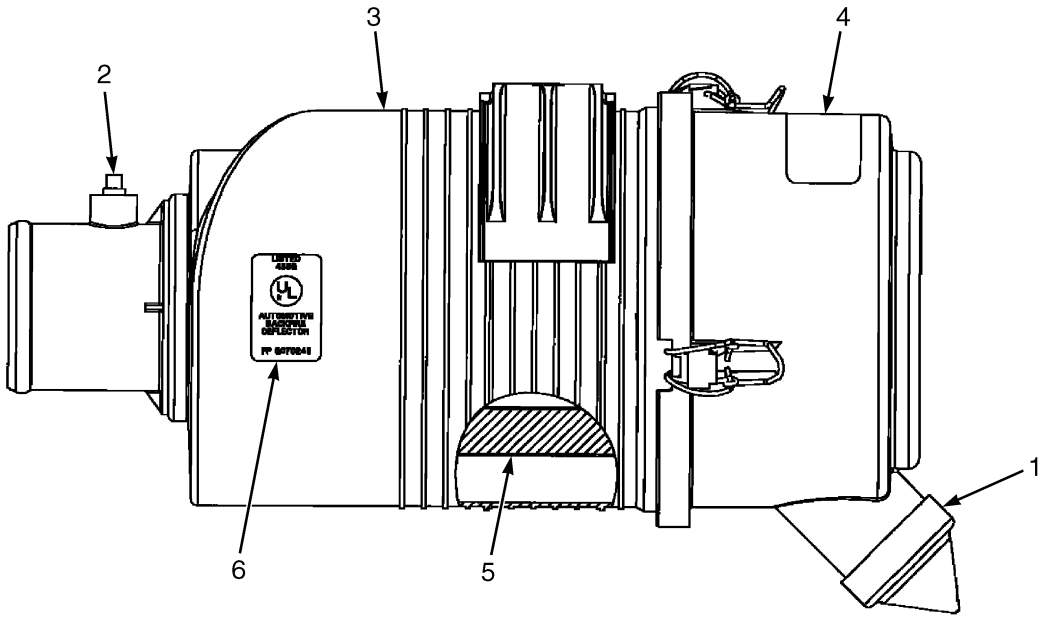

BP130506

ITEM	PART NO.	DESCRIPTION	QTY
	4637273	Air Filter Assembly	1
1	374923	Valve	1
2	1462442	Plug	1
3	4125557	Body (Filter)	1
4	1462441	Cover	1
5	1462439	Filter Element	1
6	. . . . .	Label	1

©2015 HYSTER COMPANY

AIR FILTER ASSEMBLY (FIGURE 4-5)

KUBOTA DIESEL — 3.6L, 3.8L

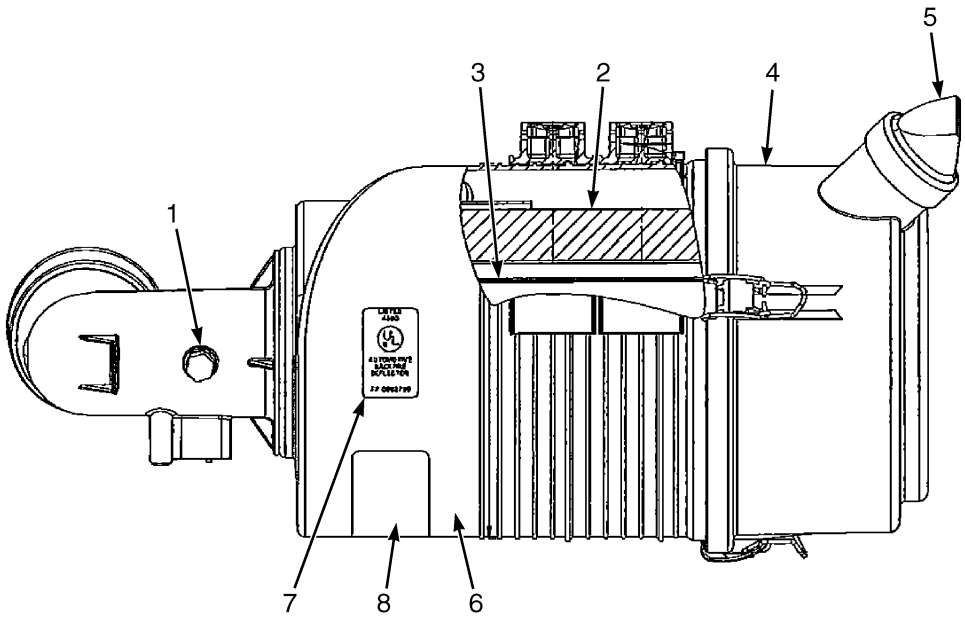

BP130507

KEY:
A: 3.6L
B: 3.8L

ITEM	PART NO.	DESCRIPTION	QTY A	QTY B
	4623007	Air Filter	1	..
	4626440	Air Filter	..	1
1	141331	Cap	1	1
2	4068074	Filter Element (Primary)	1	1
3	4068075	Filter Element (Safety)	1	1
4	4072914	Cover	1	1
5	141331	Cap	1	1
6	. . . . .	Body	1	1
7	4072921	U.L. Plate	1	..
7	4072917	U.L. Plate	..	1
8	4072919	Data Plate	1	..
8	4072916	Data Plate	..	1

©2015 HYSTER COMPANY

PRE-CLEANER AND MOUNT (FIGURE 4-6)
DIESEL

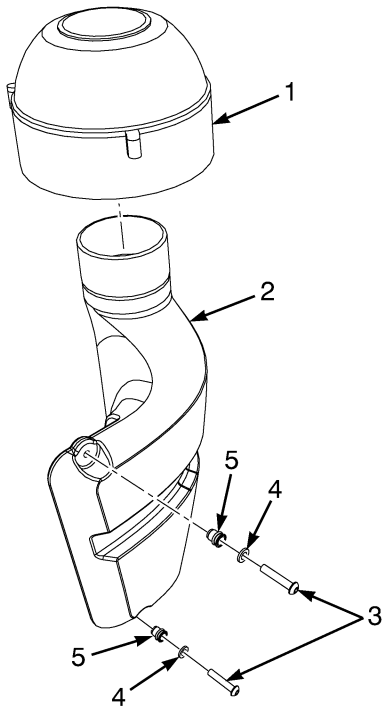

BP130014

ITEM	PART NO.	DESCRIPTION	QTY
1	2102887	Pre-Cleaner	1
1	1678215	Clamp	1
2	1677385	Duct	1
3	2071261	Capscrew	2
4	1506738	Washer	2
5	1531558	Insert	2

©2015 HYSTER COMPANY

PRE-CLEANER AND MOUNT (FIGURE 4-7)

DIESEL ENGINE — WITH AIR CONDITIONING

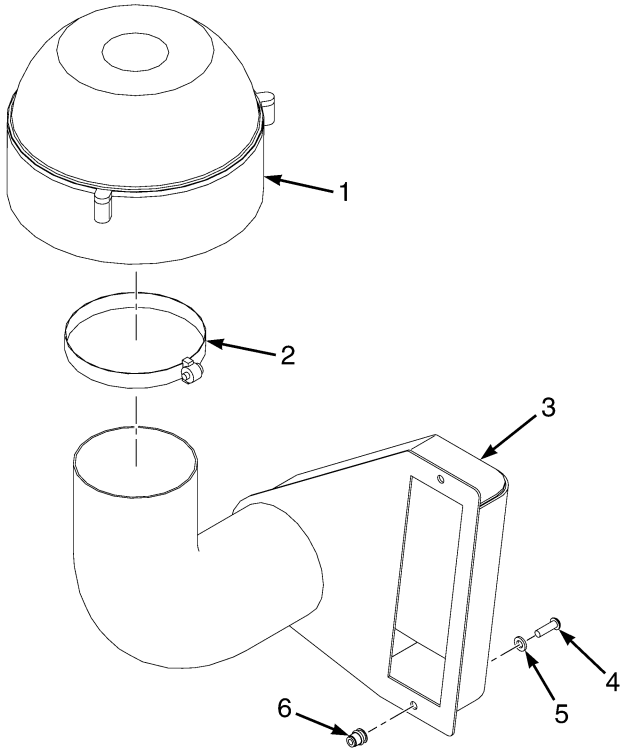

BP130327

ITEM	PART NO.	DESCRIPTION	QTY
1	2102887	Pre-Cleaner	1
2	1678215	Clamp	1
3	4019931	Air Duct	1
4	353144	Capscrew	2
5	1506738	Washer	2
6	1531558	Insert	2

THROTTLE PEDAL ASSEMBLY AND ATTACHING PARTS (FIGURE 4-8)

STANDARD PEDAL

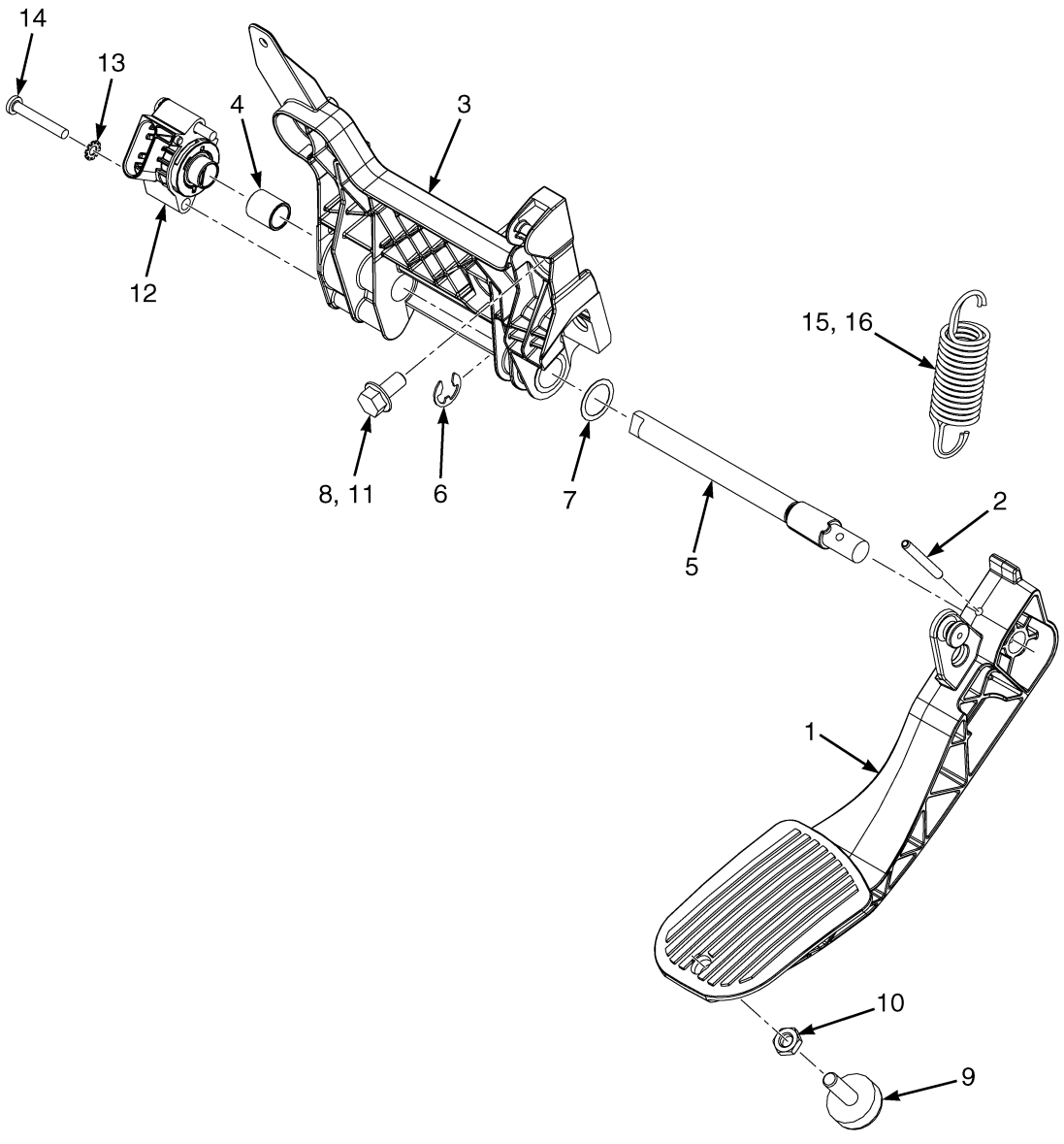

BP130362

©2015 HYSTER COMPANY

THROTTLE PEDAL ASSEMBLY AND ATTACHING PARTS
STANDARD PEDAL

ITEM	PART NO.	DESCRIPTION	QTY
1	2071181	Pedal (Standard)	1
2	302443	Roll Pin	1
3	4051924	Base Assembly (Throttle)	1
4	1524267	Bushing	1
5	1654754	Shaft	1
6	1530971	E-Ring	1
7	1654156	Shim	AR
8	1527879	Capscrew	3
9	1530311	Screw (Stop)	1
10	329069	Nut	1
11	251099	Loctite	AR
12	2063842	Sensor (Hall Throttle Position)	1
13	296378	Washer	2
14	1564752	Capscrew	2
15	1582301	Spring (Inner)	1
15	**a** 1582303	Spring (Inner)	1
16	1582300	Spring (Outer)	1
16	**a** 1582302	Spring (Outer)	1

FOOTNOTES:

a Kubota 3.6L Engine Only

©2015 HYSTER COMPANY

THROTTLE PEDAL ASSEMBLY AND ATTACHING PARTS (FIGURE 4-9)

MONOTROL PEDAL

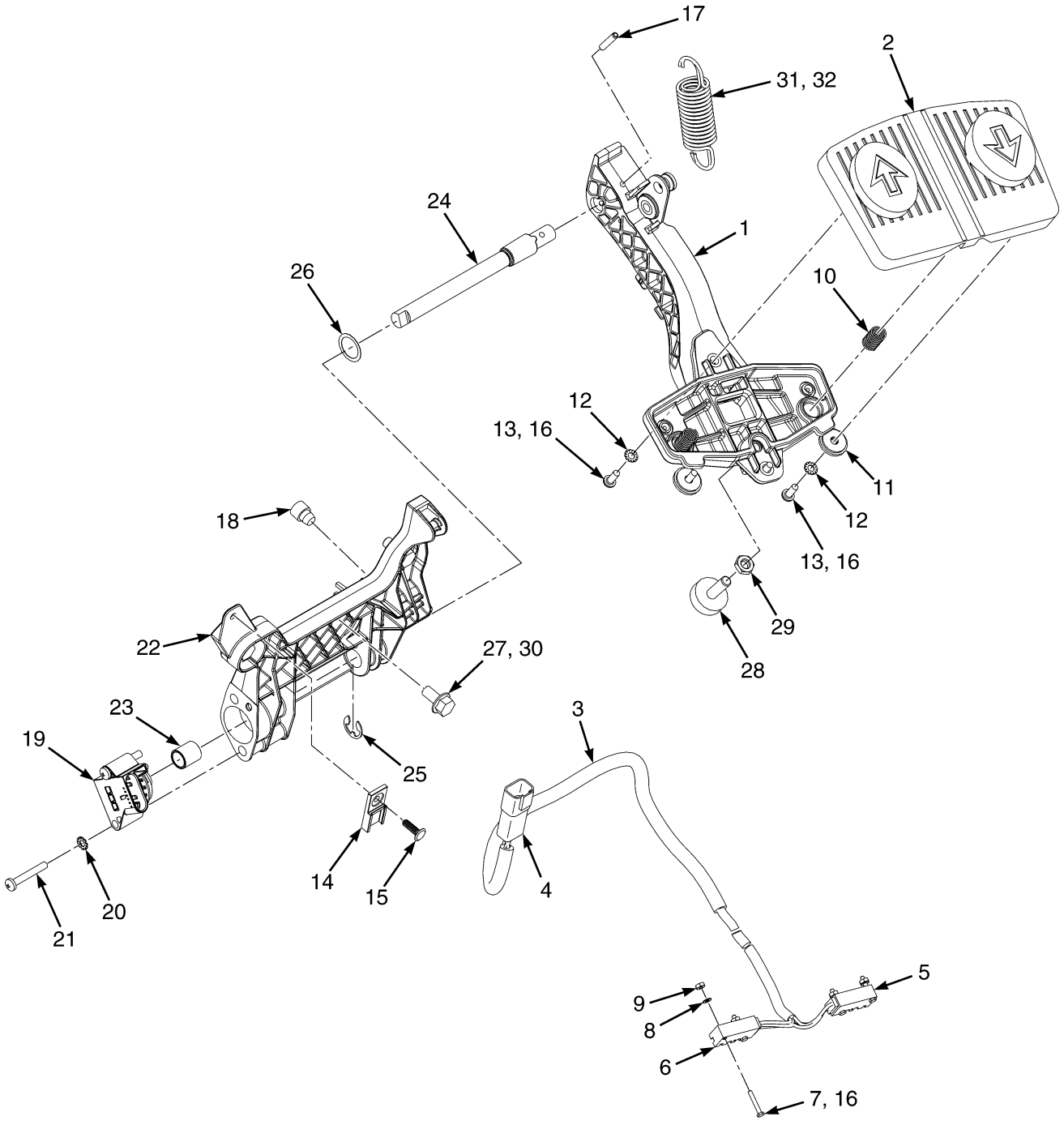

©2015 HYSTER COMPANY

THROTTLE PEDAL ASSEMBLY AND ATTACHING PARTS
MONOTROL PEDAL

ITEM	PART NO.	DESCRIPTION	QTY
	4051938	Pedal Assy (Monotrol)	1
1	2074702	Pedal	1
2	1340470	Pad	1
3	4634485	Wire Harness	1
4	. . . . .	Connector Assembly (To Cowl Harness)	1
4	1489655	Connector (4 Way)	1
4	1330416	Connector	1
4	1531312	Terminal	4
5	. . . . .	Switch (Reverse)	1
6	. . . . .	Switch (Forward)	1
7	220428	Screw	4
8	53162	Lockwasher	4
9	16865	Nut	4
10	325699	Spring	2
11	4040523	Washer (Bonded)	2
12	15931	Lockwasher	4
13	16708	Screw	4
14	1500912	Clip	1
15	1582464	Fastener	1
16	360387	Loctite	AR
17	302437	Roll Pin	1
18	4031769	Isolator (Throttle Pedal)	1
19	2063842	Sensor (Hall Throttle Position) (To Cowl Harness)	1
20	296378	Washer	2
21	1564752	Capscrew	2
22	4051924	Base Assembly (Throttle)	1
23	1524267	Bushing	1
24	1654754	Shaft	1
25	1530971	E-Ring	1
26	1654156	Shim	AR
27	1527879	Capscrew	3
28	1530311	Screw (Stop)	1
29	329069	Nut	1
30	251099	Loctite	AR
31	1582301	Spring (Inner)	1
31	**a** 1582303	Spring (Inner)	1
32	1582300	Spring (Outer)	1
32	**a** 1582302	Spring (Outer)	1

FOOTNOTES:

a Kubota 3.6L Engine Only

©2015 HYSTER COMPANY

THROTTLE CABLE ASSEMBLY (FIGURE 4-10)
KUBOTA DIESEL — 3.6L

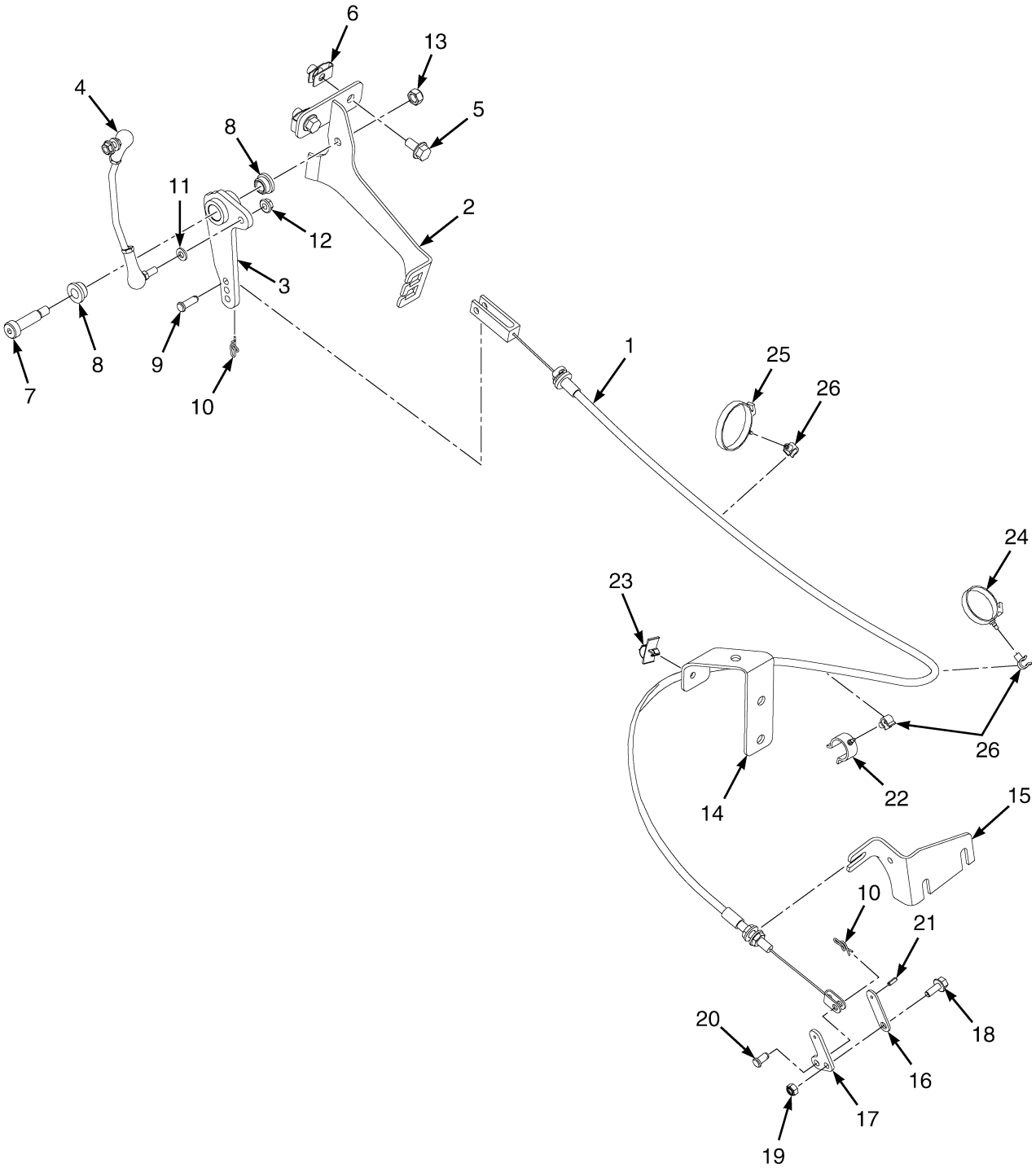

BP130361

©2015 HYSTER COMPANY

THROTTLE CABLE ASSEMBLY
KUBOTA DIESEL – 3.6L

ITEM	PART NO.	DESCRIPTION	QTY
1	4621757	Throttle Cable	1
2	1609374	Bracket	1
3	4047914	Bellcrank	1
4	1538782	Push Rod Assembly	1
5	1527879	Capscrew	2
6	1480237	Nut	2
7	1399802	Bolt	1
8	4048086	Bearing	2
9	126	Pin	1
10	1517361	Locking Ring Cotter Pin	2
11	320156	Washer	2
12	1514429	Nut	2
13	302400	Nut	1
14	4038429	Bracket	1
15	4047925	Bracket	1
16	4038427	Spacer	1
17	4047924	Plate	1
18	1527876	Capscrew	1
19	302399	Nut	1
20	128263	Pin	1
21	302422	Roll Pin	1
22	1502066	Clamp (Swivel)	1
23	1562088	Clip	1
24	1644398	Clamp (Swivel)	1
25	1502061	Clamp	1
26	1542440	Clamp (Swivel)	3

©2015 HYSTER COMPANY

E-THROTTLE LINKAGE (FIGURE 4-11)
KUBOTA 3.6L DIESEL

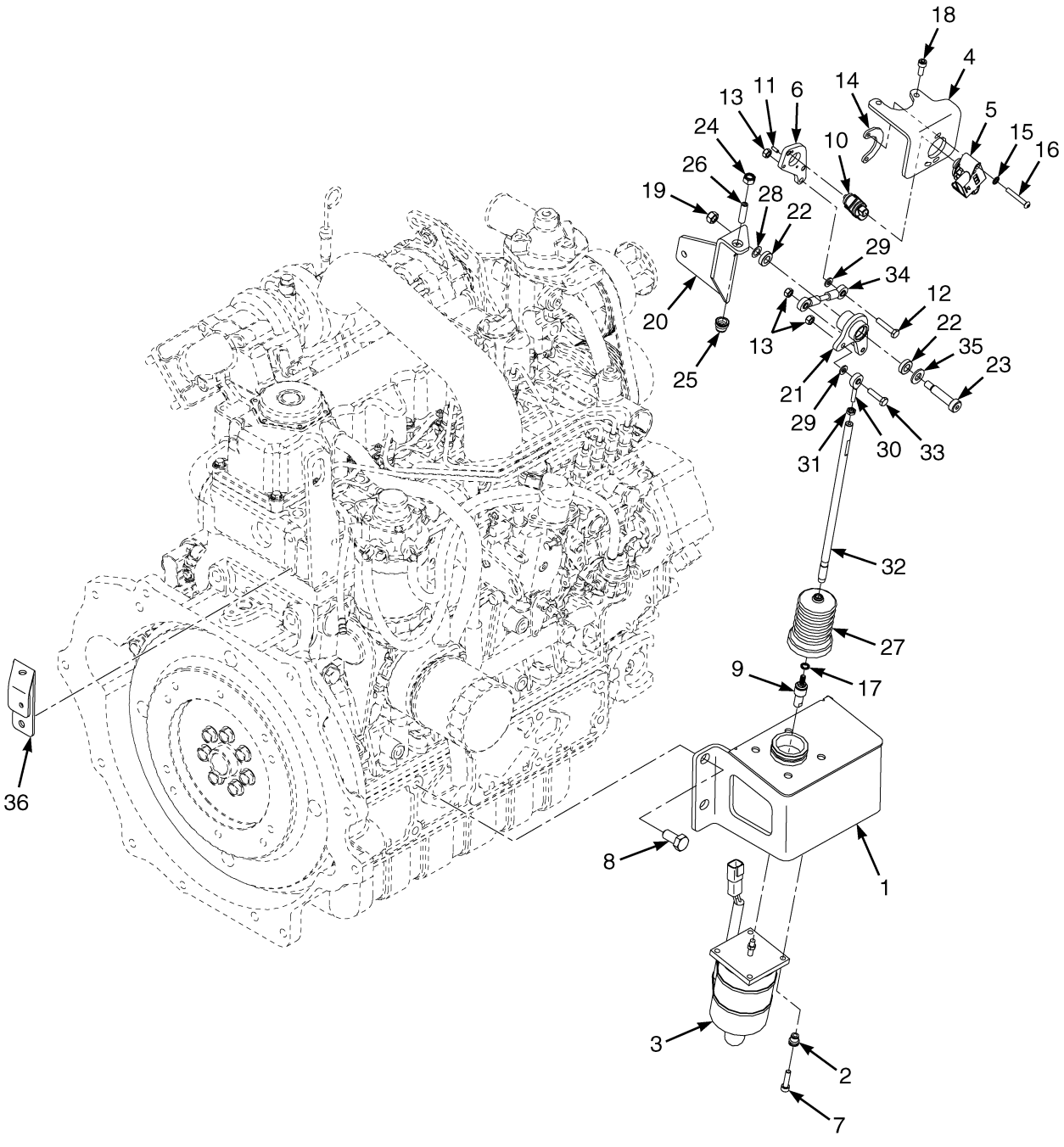

©2015 HYSTER COMPANY

E-THROTTLE LINKAGE
KUBOTA 3.6L DIESEL

ITEM	PART NO.	DESCRIPTION	QTY
1	4077586	Bracket Wldmt	1
2	1531558	Insert	4
3	4629892	Actuator	1
4	4067297	Bracket	1
5	2080376	Sensor (Hall Throttle Postion)	1
6	4069932	Plate	1
7	1581741	Capscrew	4
8	4630631	Capscrew	3
9	4629890	Ball Joint	1
10	2078335	Rotor	1
11	302422	Roll Pin	1
12	292502	Capscrew	1
13	302399	Nut	3
14	1626774	Plate	1
15	296378	Washer	2
16	1553897	Capscrew	2
17	296359	Washer	1
18	293774	Capscrew	2
19	313828	Nut	1
19	316835	Nut (Alternate Part)	1
20	4085741	Bracket	1
20	4142399	Bracket (Alternate Part)	1
21	4085742	Bellcrank	1
21	4142401	Bellcrank (Alternate Part)	1
22	4085743	Bearing	2
23	4073575	Bolt	1
23	4137167	Bolt (Alternate Part)	1
24	302400	Nut	1
25	1531557	Insert	1
26	302153	Setscrew	1
27	4081358	Boot	1
28	4090191	Shim	1
29	320156	Washer	2
30	4085422	Rod End	1
31	1593334	Nut	1
32	4077582	Rod	1
33	287816	Capscrew	1
34	4089962	Rod End	1
35	320159	Washer	1
36	4038429	Bracket	1
	264134	Loctite	AR

©2015 HYSTER COMPANY

FUEL CAP (FIGURE 4-12)
DIESEL

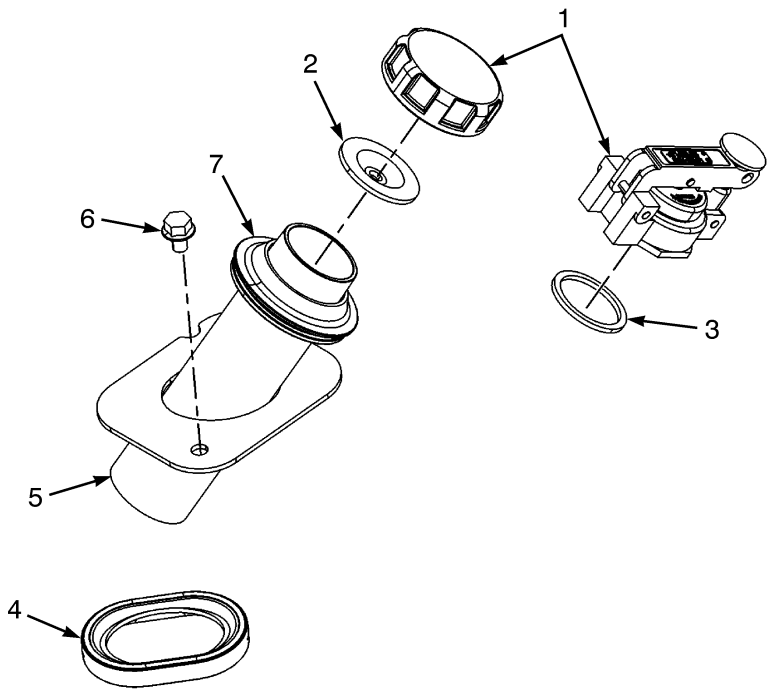

BP130296

ITEM	PART NO.	DESCRIPTION	QTY
1	2081840	Fuel Cap (Diesel)	1
1	1579677	Fuel Cap (Protectoseal)(DS)	1
2	2021683	Gasket (Diesel)	1
3	2021685	Gasket (DS)	1
3	325549	Shim (0,508 mm)	1
4	1593391	Seal	1
5	1564392	Pipe (Fill)	1
6	1529366	Capscrew	2
7	1528608	Grommet (DS)	1

©2015 HYSTER COMPANY

NOTES

©2015 HYSTER COMPANY

FUEL SYSTEM (FIGURE 4-13)
KUBOTA 3.6L DIESEL

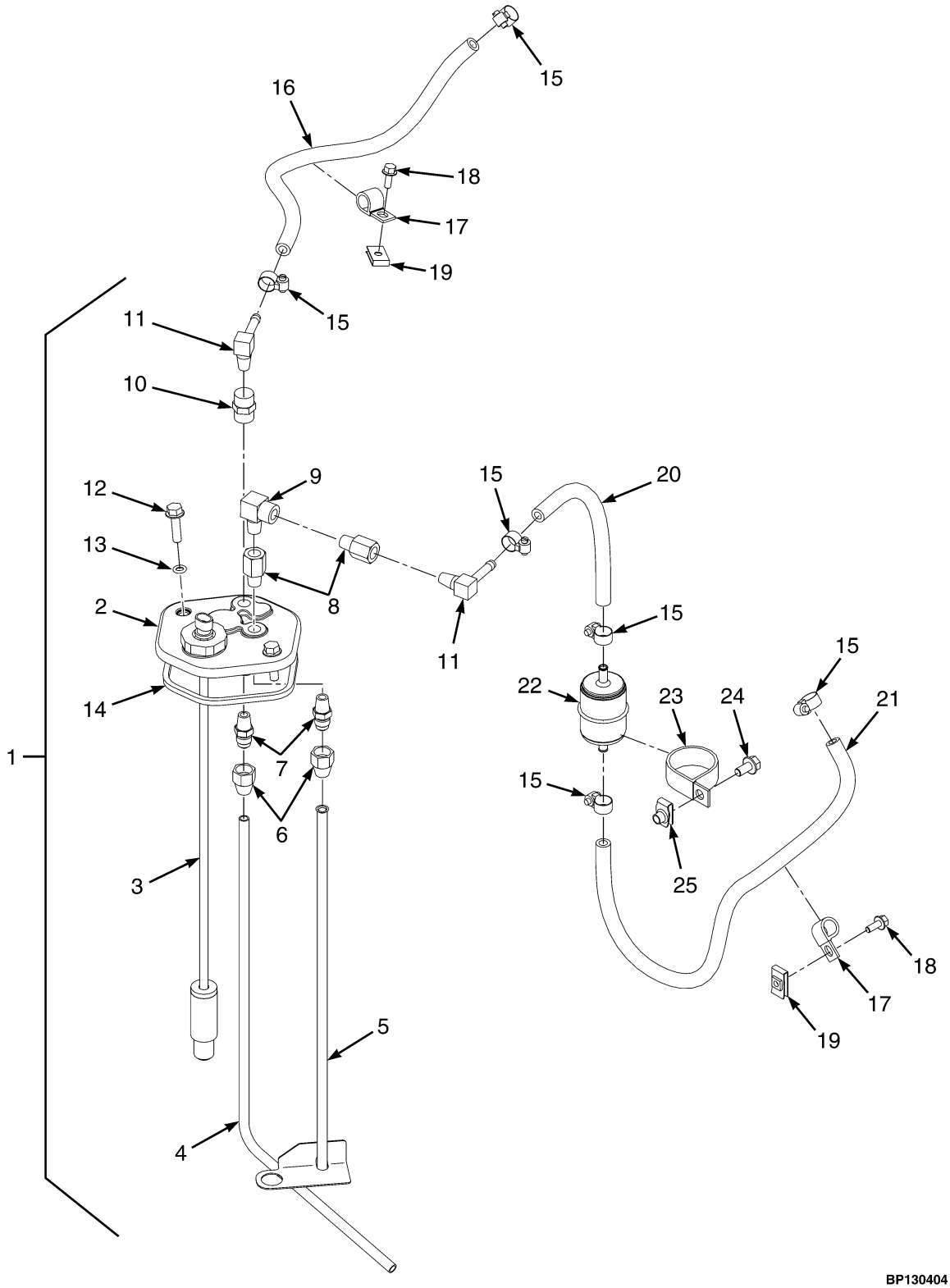

©2015 HYSTER COMPANY

FUEL SYSTEM
KUBOTA 3.6L DIESEL

ITEM	PART NO.	DESCRIPTION	QTY
1	4054055	Fuel Sender	1
2	1584171	Cover	1
3	1371159	Fuel Sender	1
4	1638500	Tube	1
5	1571662	Tube	1
6	. . . . .	Fitting	2
7	16134	Fitting	2
8	12855	Fitting	2
9	17314	Fitting	1
10	63163	Fitting	1
11	192306	Fitting	2
12	1527881	Capscrew	2
13	353000	O-Ring	2
14	1528893	Quad Ring	1
15	168718	Clamp	6
15	166857	Clamp (Optional)	6
16	2063255	Hose	1
17	209266	Clamp	2
18	1527876	Capscrew	2
19	1566420	Nut (Foldover)	2
20	4620889	Hose	1
21	187129	Hose	1
22	4617767	Fuel Filter	1
23	1316496	Clamp	1
24	1527879	Capscrew	1
25	1480237	Nut	1
26	**a** 89482	Fitting (Attaches to Item 10)	1
	2058000	Adhesive	AR

FOOTNOTES:

a Not Illustrated

©2015 HYSTER COMPANY

FUEL SYSTEM (FIGURE 4-14)
KUBOTA DIESEL — 3.8L

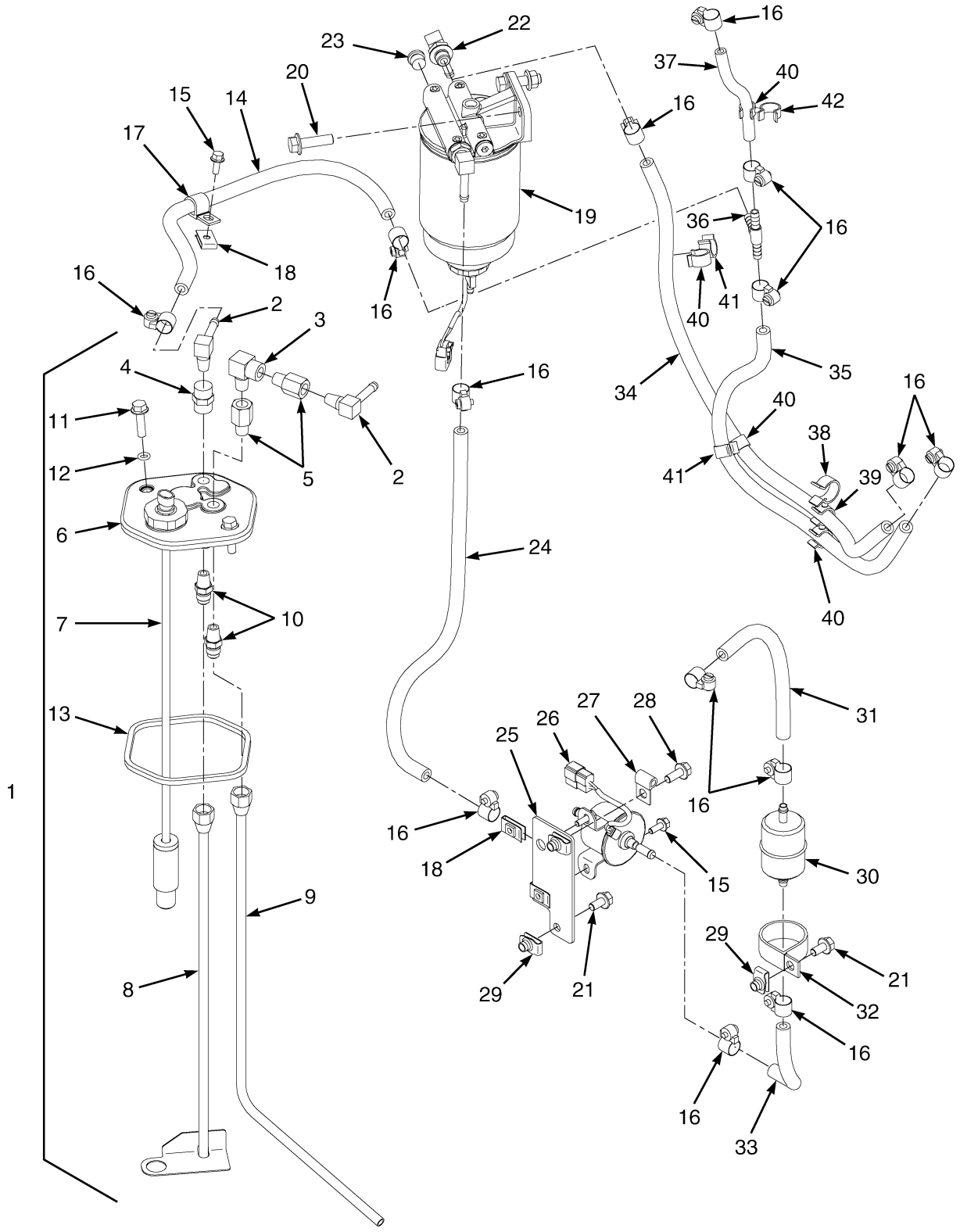

©2015 HYSTER COMPANY

FUEL SYSTEM
KUBOTA DIESEL – 3.8L

ITEM	PART NO.	DESCRIPTION	QTY
1	4054055	Fuel Sender	1
2	192306	Fitting	2
3	17314	Fitting	1
4	63163	Fitting	1
5	12855	Fitting	2
6	1584171	Cover	1
7	1371159	Fuel Sender	1
8	1571662	Tube	1
9	1638500	Tube	1
10	16134	Fitting	2
11	1527881	Capscrew	2
12	353000	O-Ring	2
13	1528893	Quad Ring	1
14	4620888	Hose	1
15	1527876	Capscrew	3
16	168718	Clamp	14
16	166857	Clamp (Optional)	14
17	209266	Clamp	1
18	1566420	Nut (Foldover)	3
19	4024527	Water Separator	1
19	4047982	Water Separator Mounting Head	1
19	4047983	Sensor Drain	1
19	4612789	Water Separator Fuel Filter	1
20	1527883	Capscrew	2
21	1527879	Capscrew	3
22	4026040	Fitting	2
23	222443	Fitting	2
24	4619264	Hose	1
25	4025710	Bracket	1
26	4032744	Lift Pump	1
27	124359	Clamp	1
28	1527880	Capscrew (Optional)	1
29	1480237	Nut	3
30	4617767	Fuel Filter	1
31	4620889	Hose	1
32	1316496	Clamp	1
33	274334	Hose	1
34	4619263	Hose	1
35	1378553	Hose	1
36	4032490	T-Fitting	1
37	225465	Hose	1
38	1543842	Clamp	1
39	1543691	Clamp (Swivel)	1
40	1543698	Clamp (Swivel)	4
41	1606544	Clamp (Swivel)	2
42	1502054	Clamp	1
43	**a** 89482	Fitting (Attaches to Item 4)	1
	2058000	Adhesive	AR

©2015 HYSTER COMPANY

FOOTNOTES:

a Not Illustrated

©2015 HYSTER COMPANY

NOTES

©2015 HYSTER COMPANY

FUEL SYSTEM (FIGURE 4-15)
3.8L LPG — WITH LOW FUEL SENSOR

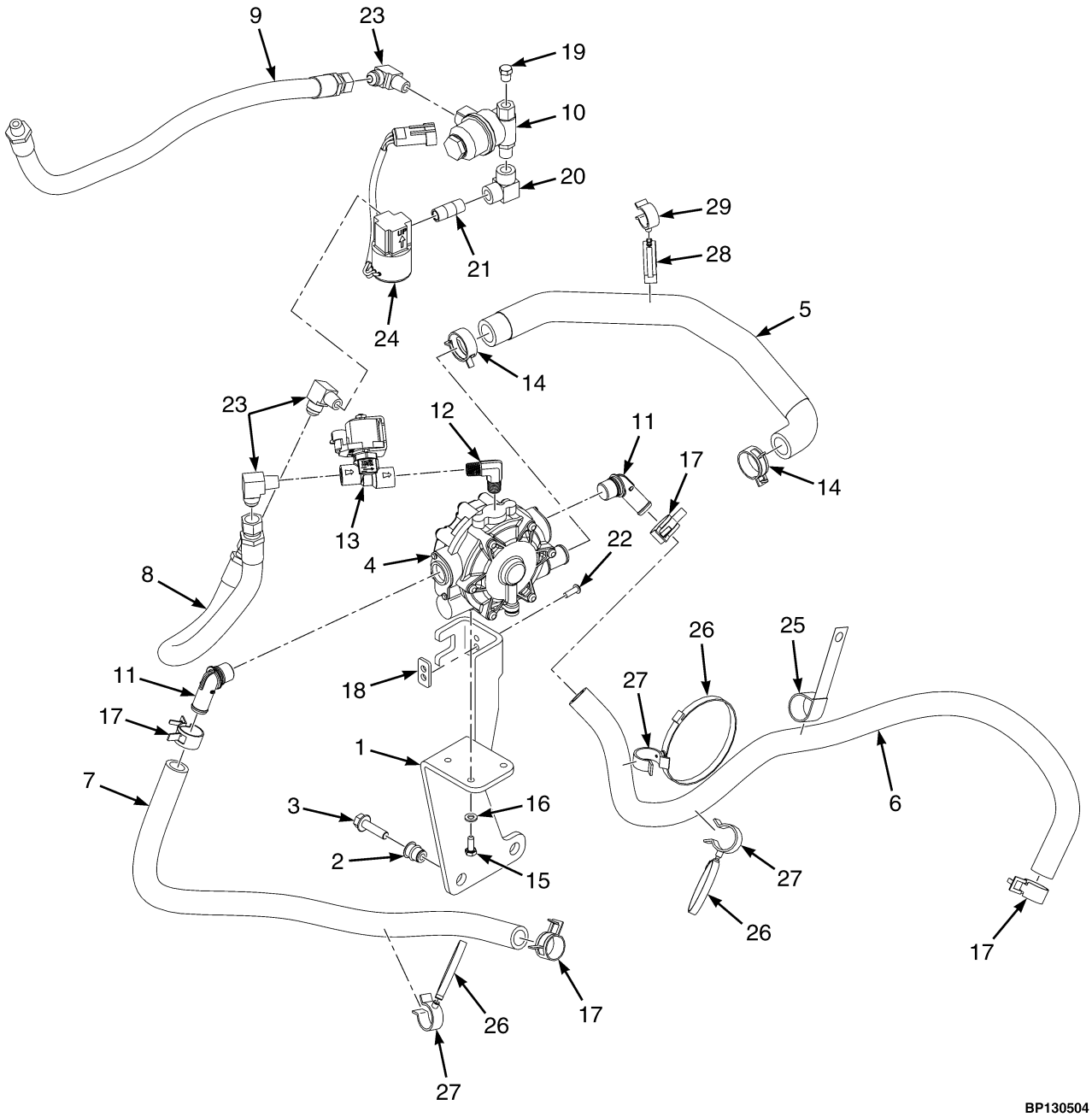

©2015 HYSTER COMPANY

FUEL SYSTEM
3.8L LPG – WITH LOW FUEL SENSOR

ITEM	PART NO.	DESCRIPTION	QTY
1	4109200	Bracket (LPG Vaporizer)	1
2	1530243	Insert	2
3	1527881	Capscrew	2
4	4624999	LPG Converter	1
5	4636833	Hose (Fuel Vapor)	1
6	2092866	Hose	1
7	2104112	Hose-Bulk (FT)	1
8	2090361	Hose Assy	1
9	2090418	Hose Assy	1
10	2105803	Fuel Filter (LPG)	1
11	4064288	Elbow	2
12	4019019	Fitting	1
13	4099352	LPG Lock-Off	1
14	1502009	Hose Clamp	2
15	292500	Capscrew	2
16	320156	Washer	2
17	1501994	Hose Clamp	4
18	4084522	Plate	1
19	14349	Fitting (Pipe Plug)	1
20	17350	Fitting	1
21	89482	Fitting	1
22	296153	Capscrew	2
23	14358	Fitting	3
24	1662253	Sensor	1
25	1564426	Clamp	1
26	1502061	Clamp	3
27	1542436	Clamp (Swivel)	3
28	1561759	Clamp (Swivel)	1
29	1502053	Clamp (Swivel)	1

©2015 HYSTER COMPANY

FUEL SYSTEM (FIGURE 4-16)
3.8L LPG — W/O LOW FUEL SENSOR

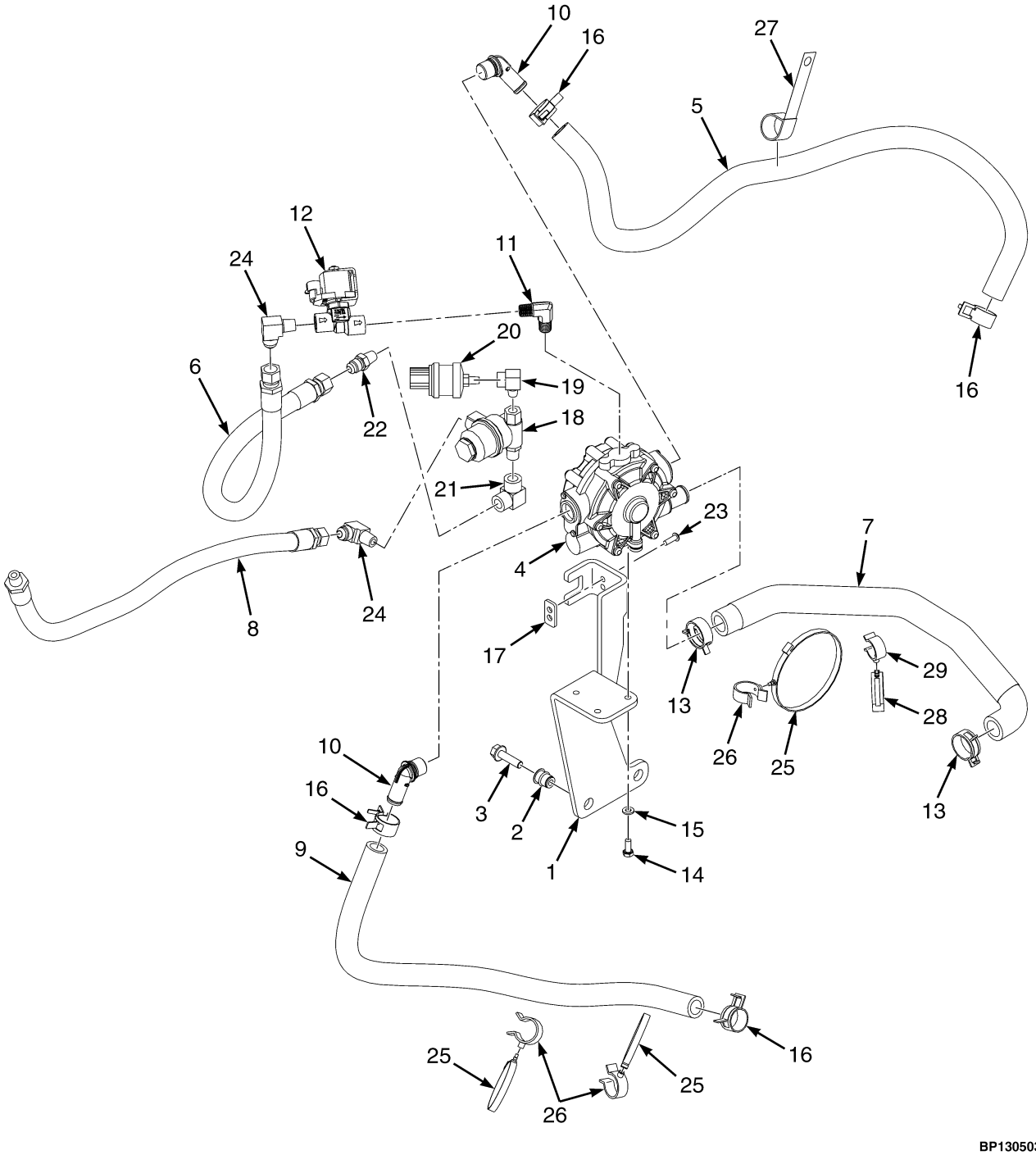

©2015 HYSTER COMPANY

FUEL SYSTEM
3.8L LPG – W/O LOW FUEL SENSOR

ITEM	PART NO.	DESCRIPTION	QTY
1	4109200	Bracket (LPG Vaporizer)	1
2	1530243	Insert	2
3	1527881	Capscrew	2
4	4624999	LPG Converter	1
4	4040288	Kit-Regulator Repair	1
5	2092866	Hose	1
6	2090361	Hose Assy	1
6	**a** 4641320	Hose Assy	1
7	4636833	Hose (Fuel Vapor)	1
8	2090418	Hose Assy	1
8	**a** 4635077	Hose Assy	1
9	2104112	Hose-Bulk (FT)	1
10	4064288	Elbow	2
11	4019019	Fitting	1
12	4099352	LPG Lock-Off	1
13	1502009	Hose Clamp	2
14	292500	Capscrew	2
15	320156	Washer	2
16	1501994	Hose Clamp	4
17	4084522	Plate	1
18	2105803	Fuel Filter (LPG)	1
19	16151	Fitting	1
20	1501970	Pressure Switch (Low Fuel)	1
21	17350	Fitting	1
22	16134	Fitting	1
23	296153	Capscrew	2
24	14358	Fitting	2
25	1502061	Clamp	3
26	1542436	Clamp (Swivel)	3
27	1564426	Clamp	1
28	1561759	Clamp (Swivel)	1
29	1502053	Clamp (Swivel)	1

FOOTNOTES:

a Manufacturing Option

©2015 HYSTER COMPANY

LPG BRACKET ASSEMBLY (FIGURE 4-17)
SWING OUT DROP DOWN WITH TWIN STEEL STRAPS

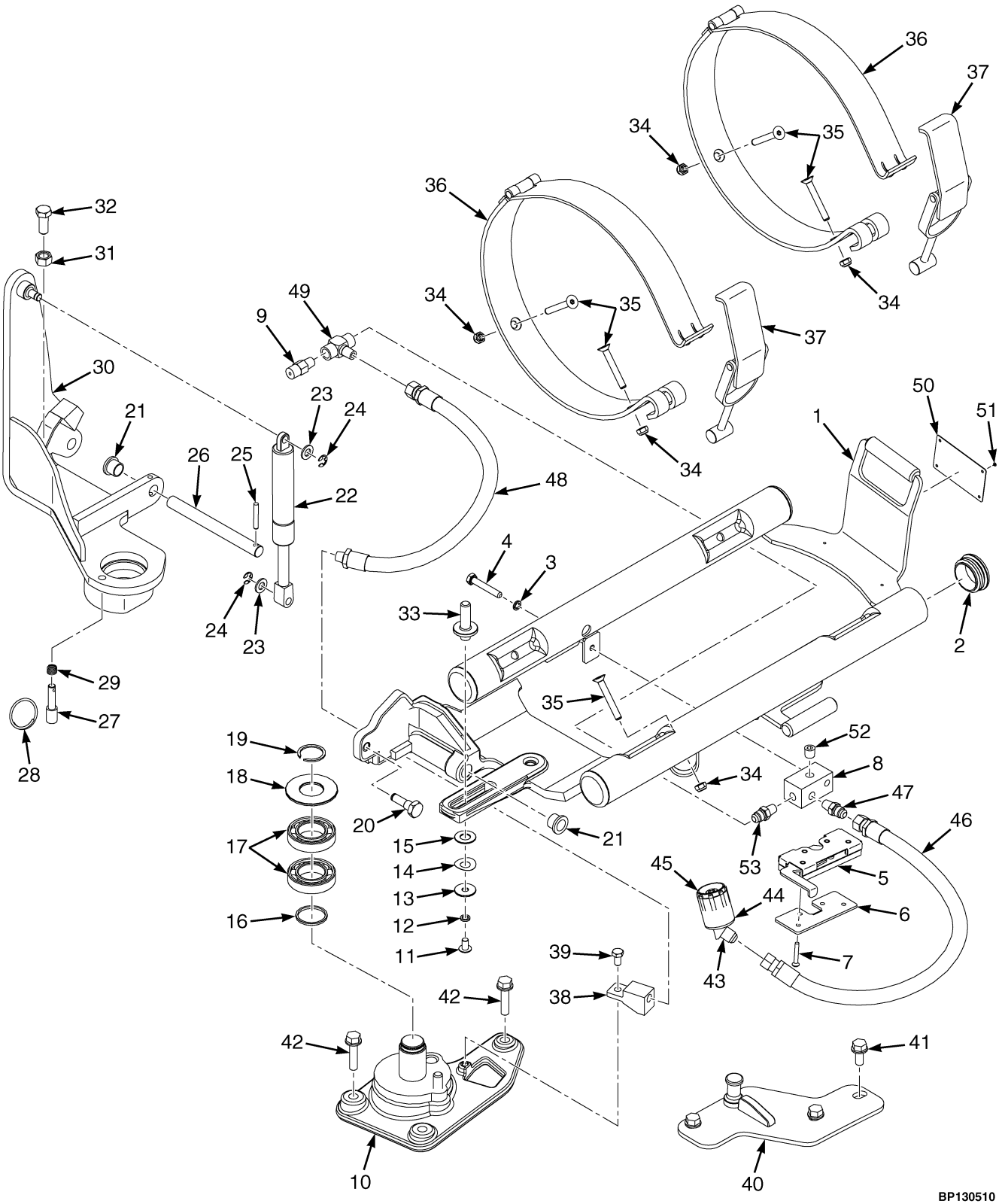

©2015 HYSTER COMPANY

LPG BRACKET ASSEMBLY
SWING OUT DROP DOWN WITH TWIN STEEL STRAPS

ITEM	PART NO.	DESCRIPTION	QTY
1	4102140	LPG Tank Bracket	1
2	1398099	Plug	4
3	1581556	Washer	1
4	1581583	Capscrew	1
5	1656325	Latch	1
6	1649565	Plate	1
7	4054932	Capscrew	4
8	4048941	Fitting (LPG Bulkhead Rear)	1
9	101809	Relief Valve	1
10	1584083	Bracket Wldmt (Shaft)	1
11	4031146	Capscrew	1
12	4032292	Spacer	2
13	4032291	Washer	1
14	4029920	Washer	1
15	4029538	Washer	1
16	1568853	Thrust Washer	1
17	184451	Ball Bearing	2
18	1568839	Washer (Pivot)	1
19	34507	Snap Ring	1
20	1525478	Pin	1
21	1581888	Bushing	2
22	1402414	Gas Spring	1
23	1581557	Washer	2
24	1525442	E-Ring	2
25	302468	Roll Pin	1
26	1581887	Shaft	1
27	1615956	Pin	1
28	1534672	Ring	1
29	1528903	Spring	1
30	1615671	Pivot	1
30	1627827	Pivot (Cast) (Optional)	1
30	1688719	Pivot (Optional)	1
31	1581848	Nut	1
32	1586022	Capscrew	1
33	4029506	Pin (Alignment)	1
34	1581739	Nut	5
35	1581733	Capscrew	4
36	1613749	Strap	2
37	1613755	Latch	2
38	1525451	Fitting	1
39	1581579	Capscrew	1
40	1682752	Striker	1
41	1586013	Capscrew	3
42	1581400	Capscrew	3
43	16863	Fitting	1
44	2071517	Sleeve	1
45	97999	Fitting	1
46	4635043	Hose Assy	1
47	16134	Fitting	1
48	4635042	Hose Assy	1

©2015 HYSTER COMPANY

LPG BRACKET ASSEMBLY
SWING OUT DROP DOWN WITH TWIN STEEL STRAPS

ITEM	PART NO.	DESCRIPTION	QTY
49	63111	Fitting	1
50	. . . . .	Data Plate	1
51	340044	Gripnail	4
52	14385	Fitting	1
53	16271	Fitting	1
	a 246108	Sealant	AR
	a 264134	Loctite	AR
	a 1687377	Activator (Thread Sealant)	AR

FOOTNOTES:

a Not Illustrated

©2015 HYSTER COMPANY

NOTES

©2015 HYSTER COMPANY

LPG BRACKET ASSEMBLY (FIGURE 4-18)
SWING OUT WITH FABRIC STRAP

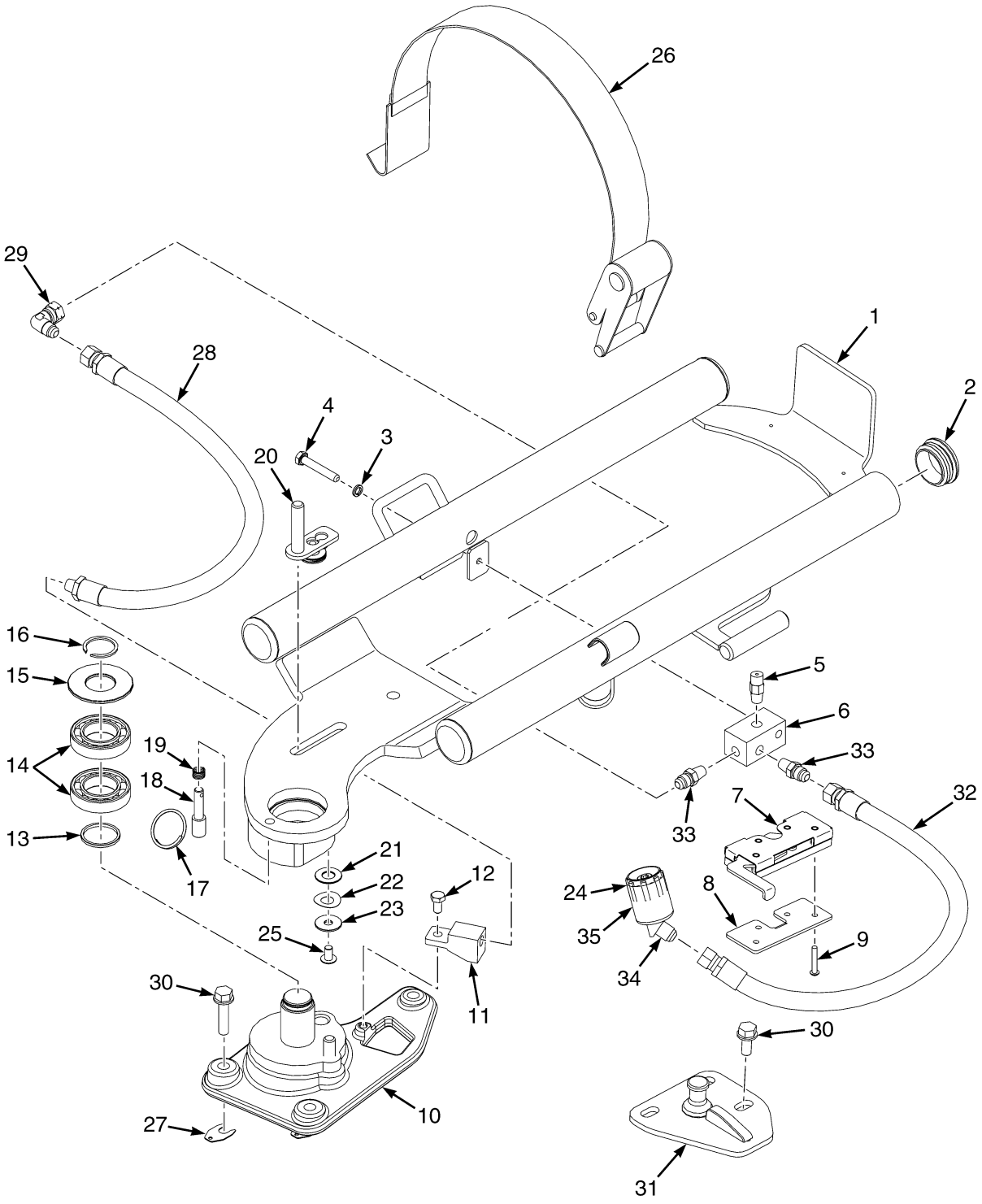

BP130433

©2015 HYSTER COMPANY

LPG BRACKET ASSEMBLY
SWING OUT WITH FABRIC STRAP

ITEM	PART NO.	DESCRIPTION	QTY
1	4067505	LPG Tank Bracket (Swing Out)	1
2	1398099	Plug	4
3	1581556	Washer	1
4	1581583	Capscrew	1
5	101809	Relief Valve	1
6	4048941	Fitting (LPG Bulkhead Rear)	1
7	1656325	Latch	1
8	1649565	Plate	1
9	4054932	Capscrew	4
10	1584083	Bracket Wldmt	1
11	1525451	Fitting	1
12	1581579	Capscrew	1
13	1568853	Thrust Washer	1
14	184451	Ball Bearing	2
15	1568839	Washer (Pivot)	1
16	34507	Snap Ring	1
17	1534672	Ring	1
18	1615956	Pin	1
19	1528903	Spring	1
20	4032607	Pin (Alignment)	1
21	4029538	Washer	1
22	4029920	Washer	1
23	4032291	Washer	1
24	97999	Fitting	1
25	4031146	Capscrew	1
26	1379455	Strap (Retension)	1
27	1688803	Shim	3
28	4619094	Hose Assy	1
29	4051434	Fitting (Elbow)	1
30	1586013	Capscrew	6
31	1682752	Striker	1
32	4619095	Hose Assy	1
33	16134	Fitting	2
34	16863	Fitting	1
35	2071517	Sleeve	1
	a 1581739	Nut (Attaches to Item 3)	1
	a 246108	Sealant	AR
	a 1687376	Sealant (Alternate Part)	AR
	a 1687377	Activator (Thread Sealant)	AR
	a 3043625	Loctite	AR

FOOTNOTES:

a Not Illustrated

©2015 HYSTER COMPANY

LPG BRACKET ASSEMBLY (FIGURE 4-19)
SWING OUT, DROP DOWN WITH FABRIC STRAP

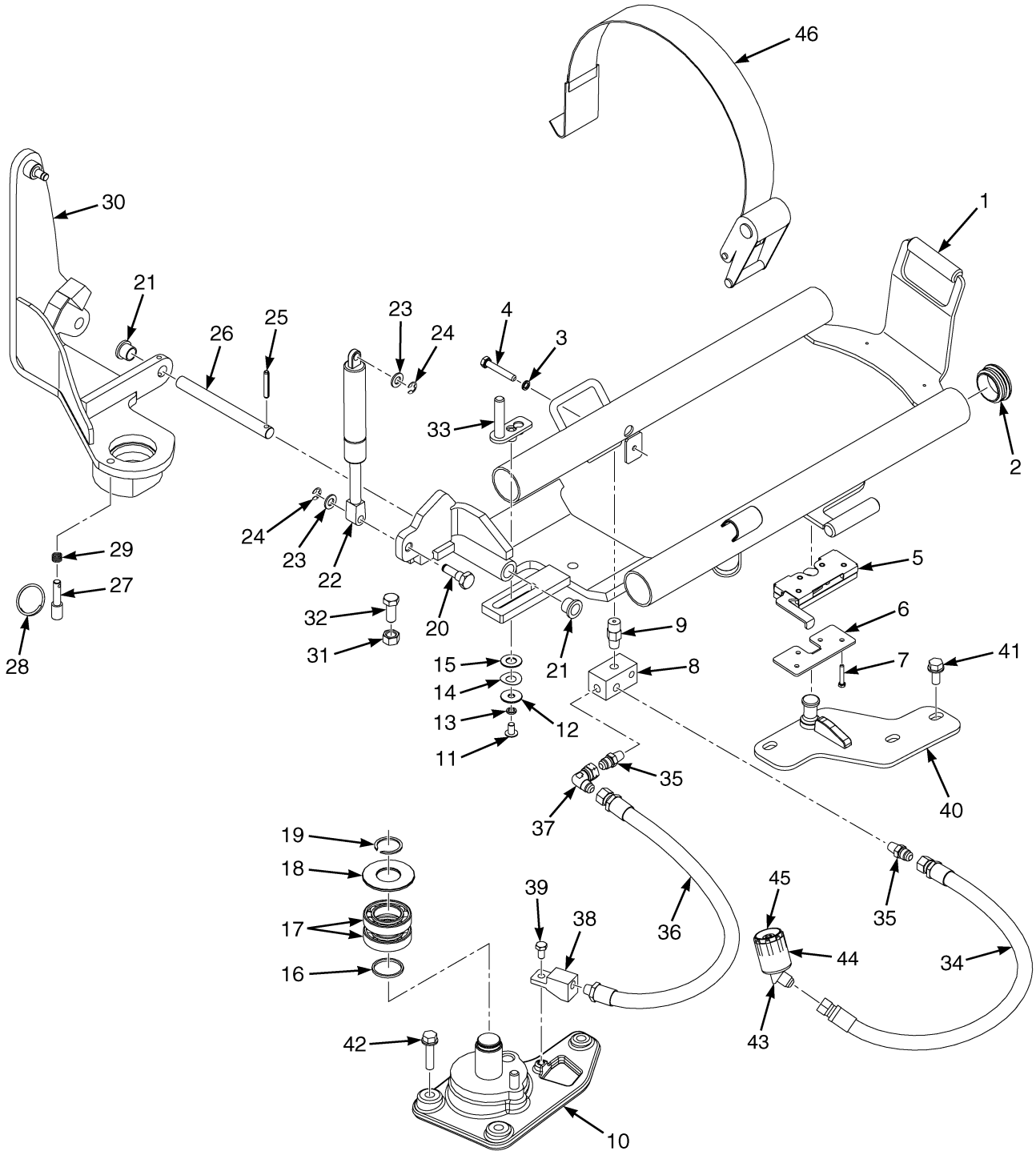

©2015 HYSTER COMPANY

LPG BRACKET ASSEMBLY
SWING OUT, DROP DOWN WITH FABRIC STRAP

ITEM	PART NO.	DESCRIPTION	QTY
1	4067507	LPG Tank Bracket (Swing/Drop Down)	1
2	1398099	Plug	4
3	1581556	Washer	1
4	1581583	Capscrew	1
5	1656325	Latch	1
6	1649565	Plate	1
7	4054932	Capscrew	4
8	4048941	Fitting (LPG Bulkhead Rear)	1
9	101809	Relief Valve	1
10	1584083	Bracket Wldmt (Shaft)	1
11	4031146	Capscrew	1
12	4032292	Spacer	1
13	4032291	Washer	1
14	4029920	Washer	1
15	4029538	Washer	1
16	1568853	Thrust Washer	1
17	184451	Ball Bearing	2
18	1568839	Washer (Pivot)	1
19	34507	Snap Ring	1
20	1525478	Pin	1
21	1581888	Bushing	2
22	1402414	Gas Spring	1
23	1581557	Washer	2
24	1525442	E-Ring	2
25	302468	Roll Pin	1
26	1581887	Shaft	1
27	1615956	Pin	1
28	1534672	Ring	1
29	1528903	Spring	1
30	1615671	Pivot	1
30	1627827	Pivot (Cast) (Optional)	1
30	1688719	Pivot (Optional)	1
31	1581848	Nut	1
32	1586022	Capscrew	1
33	4032607	Pin (Alignment)	1
34	4619574	Hose Assy	1
35	16134	Fitting	2
36	4619094	Hose Assy	1
37	4051434	Fitting (Elbow)	1
38	1525451	Fitting	1
39	1581579	Capscrew	1
40	1682752	Striker	1
41	1586013	Capscrew	6
42	1581400	Capscrew	3
43	16863	Fitting	1
44	2071517	Sleeve	1
45	97999	Fitting	1
46	1379455	Strap (Retension)	1
47	**a** 1581739	Nut (Attaches to Item 3)	1
	a 246108	Sealant	AR

©2015 HYSTER COMPANY

LPG BRACKET ASSEMBLY
SWING OUT, DROP DOWN WITH FABRIC STRAP

ITEM	PART NO.	DESCRIPTION	QTY
	a 1687376	Sealant	AR
	a 3043625	Loctite	AR

FOOTNOTES:

a Not Illustrated

©2015 HYSTER COMPANY

5 ELECTRICAL SYSTEM

SECTION 5
ELECTRICAL SYSTEM

DESCRIPTION	PAGE
BATTERY CABLE	
FUSED-STANDARD ALTERNATOR - KUBOTA 3.6L DIESEL, 3.8L DIESEL/LPG	5-28
BATTERY CABLES	
KUBOTA 3.8L DIESEL/LPG	5-26
CONTROL MODULE	
DIESEL INTERFACE - KUBOTA V3800	5-24
COWL ELECTRICAL	
ELECTRO-HYDRAULIC	5-8
MANUAL HYDRAULIC	5-6
DPF DISPLAY	
3.8L KUBOTA DIESEL	5-20
ELECTRICAL SYSTEM	
RIGHT HAND CHASSIS	5-4
ENGINE ELECTRICAL SYSTEM	
KUBOTA 3.6L DIESEL	5-10
KUBOTA 3.8L DIESEL - WITH STANDARD ALTERNATOR HARNESS	5-16
KUBOTA 3.8L LPG - WITH STANDARD ALTERNATOR HARNESS	5-18
ENGINE ELECTRICAL SYSTEM AND ATTACHING PARTS	
KUBOTA 3.6L DIESEL	5-12
KUBOTA 3.6L DIESEL - WITH ELECTRONIC THROTTLE	5-14
IMPACT SENSOR	5-34
INSTRUMENT CLUSTER	5-29
LIGHTS	
BRAKE, TAIL, BACKUP, SIDE, TURN SIGNALS, WORK, STROBE - WITH OVERHEAD GUARD	5-42
BRAKE, TAIL, BACKUP, SIDE, TURN SIGNALS, WORK, STROBE - WITH CAB	5-44
LOAD WEIGH ELECTRICAL	5-32
MAST TILT SENSOR	5-30
MINI-LEVER CONTROLS	
WITH ARMREST - THREE FUNCTION	5-38
WITH ARMREST - FOUR FUNCTION	5-40
POWER DISTRIBUTION MODULE	5-22
RELAY	
KUBOTA DIESEL	5-25
SEAT BELT SWITCH ADAPTER	5-36
TRANSMISSION HARNESS GROUP	
WITH AND WITHOUT BRAKE TEMP	5-46
WIRE HARNESS	
ADAPTER - LOW FUEL PRESSURE	5-47
AIR CONDITIONER	5-48
COWL - MANUAL HYDRAULICS WITH MONOTROL PEDAL	5-96
COWL - MANUAL HYDRAULICS WITH FORWARD/REVERSE	5-100
COWL - ELECTRO-HYDRAULICS WITH MONOTROL PEDAL	5-104
COWL - ELECTRO-HYDRAULICS WITH FORWARD/REVERSE	5-108
DPF DISPLAY	5-94
ENGINE - KUBOTA 3.8L DIESEL	5-52
ENGINE - KUBOTA DIESEL (3.6L)	5-58
ENGINE - KUBOTA 3.8L SI LPG	5-62
ENGINE WITH ELECTRONIC THROTTLE - KUBOTA DIESEL 3.6L	5-66
LIGHTS - WITH OVERHEAD GUARD	5-112

©2015 HYSTER COMPANY

SECTION 5
ELECTRICAL SYSTEM

DESCRIPTION **PAGE**

RH CHASSIS - KUBOTA 3.8L DIESEL AND LPG 5-70
RH CHASSIS - KUBOTA DIESEL (3.6L) 5-82
RH CHASSIS WITH SEAT BELT SEQUENCE MODULE - KUBOTA 3.8L DIESEL AND LPG 5-76
RH CHASSIS WITH SEAT BELT SEQUENCE MODULE - KUBOTA DIESEL (3.6L) 5-88
TRANSMISSION - SINGLE SPEED 5-120
TRANSMISSION - DUAL SPEED 5-124
TRANSMISSION WITH BRAKE TEMP - SINGLE SPEED 5-128
TRANSMISSION WITH BRAKE TEMP - TWO SPEED 5-132
WIRE HARNESS FOUR FUNCTION
ELECTRONIC CONTROL VALVE - WITH VARIABLE DISPLACEMENT PUMP 5-118
WIRE HARNESS THREE FUNCTION
ELECTRONIC CONTROL VALVE - WITH VARIABLE DISPLACEMENT PUMP 5-116

©2015 HYSTER COMPANY

NOTES

©2015 HYSTER COMPANY

ELECTRICAL SYSTEM (FIGURE 5-1)
RIGHT HAND CHASSIS

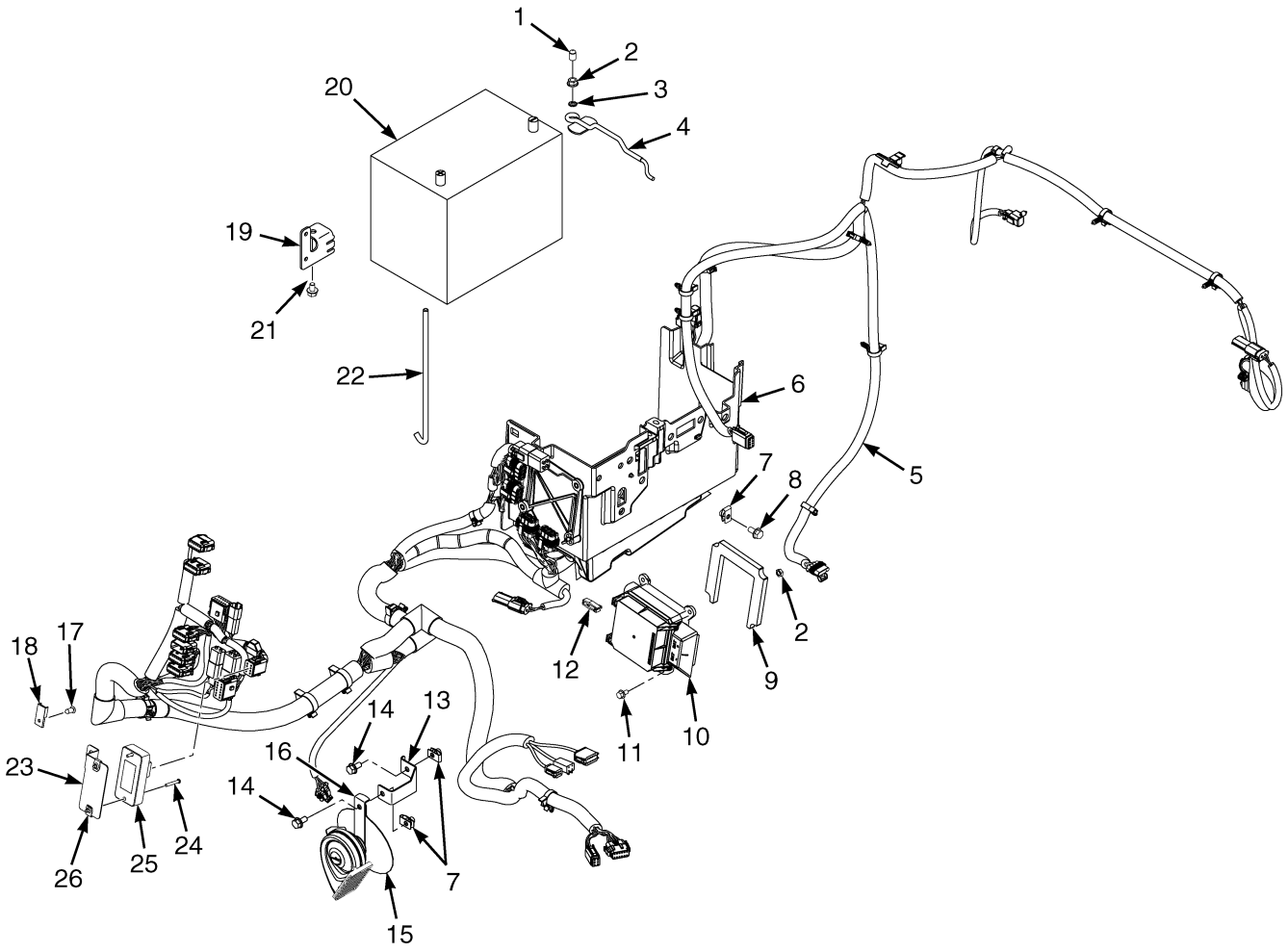

BP082026

©2015 HYSTER COMPANY

ELECTRICAL SYSTEM
RIGHT HAND CHASSIS

KEY:
A: Kubota 3.8L Diesel/LPG
B: Kubota 3.6L

ITEM	PART NO.	DESCRIPTION	QTY A	QTY B
1	1540805	Cap	1	1
2	1502543	Nut (Flange)	3	3
3	296380	Washer	1	1
4	1641368	Link (Battery Hold Down)	1	1
5	4630268	Wire Harness (RH Chassis) (3.8L Diesel and LPG) (☞Figure 5-31)	1	..
5	**a** 4635135	Wire Harness (RH Chassis) (3.8L Diesel and LPG) (☞Figure 5-32)	1	..
5	4629764	Wire Harness (RH Chassis) (3.6L Diesel) (☞Figure 5-33)	..	1
5	**a** 4635136	Wire Harness (RH Chassis) (3.6L Diesel) (☞Figure 5-34)	..	1
6	2097662	Battery Tray	1	1
7	1480237	Nut	5	5
8	1527880	Capscrew	3	3
9	1559928	Seal	1	1
10	2090613	Fuse Box (PDM) (☞Figure 5-10)	1	1
11	1534417	Capscrew	3	3
12	1402883	Fuse Puller	1	1
13	4601681	Bracket	1	1
14	1527879	Capscrew	2	2
15	4601680	Shield	1	1
16	4077726	Horn (Electronic)	1	1
17	1582464	Fastener	6	6
17	1582464	Fastener (3.6L Diesel)	..	7
18	1500912	Clip	4	4
19	1611542	Bracket	1	1
20	1399332	Start Battery Wet	1	1
20	1643937	Start Battery Wet (Optional)	1	1
21	1529366	Capscrew	1	1
22	2065745	Link (Battery Hold Down)	1	1
23	**a** 4102512	Bracket	1	1
24	**a** 1672692	Screw	2	2
25	**a** 4634955	Control Module (Seat Belt Sequence)	1	1
26	**a** 1537551	Nut (Clip)	2	2

FOOTNOTES:

a With Seat Belt Sequence Module

©2015 HYSTER COMPANY

COWL ELECTRICAL (FIGURE 5-2)
MANUAL HYDRAULIC

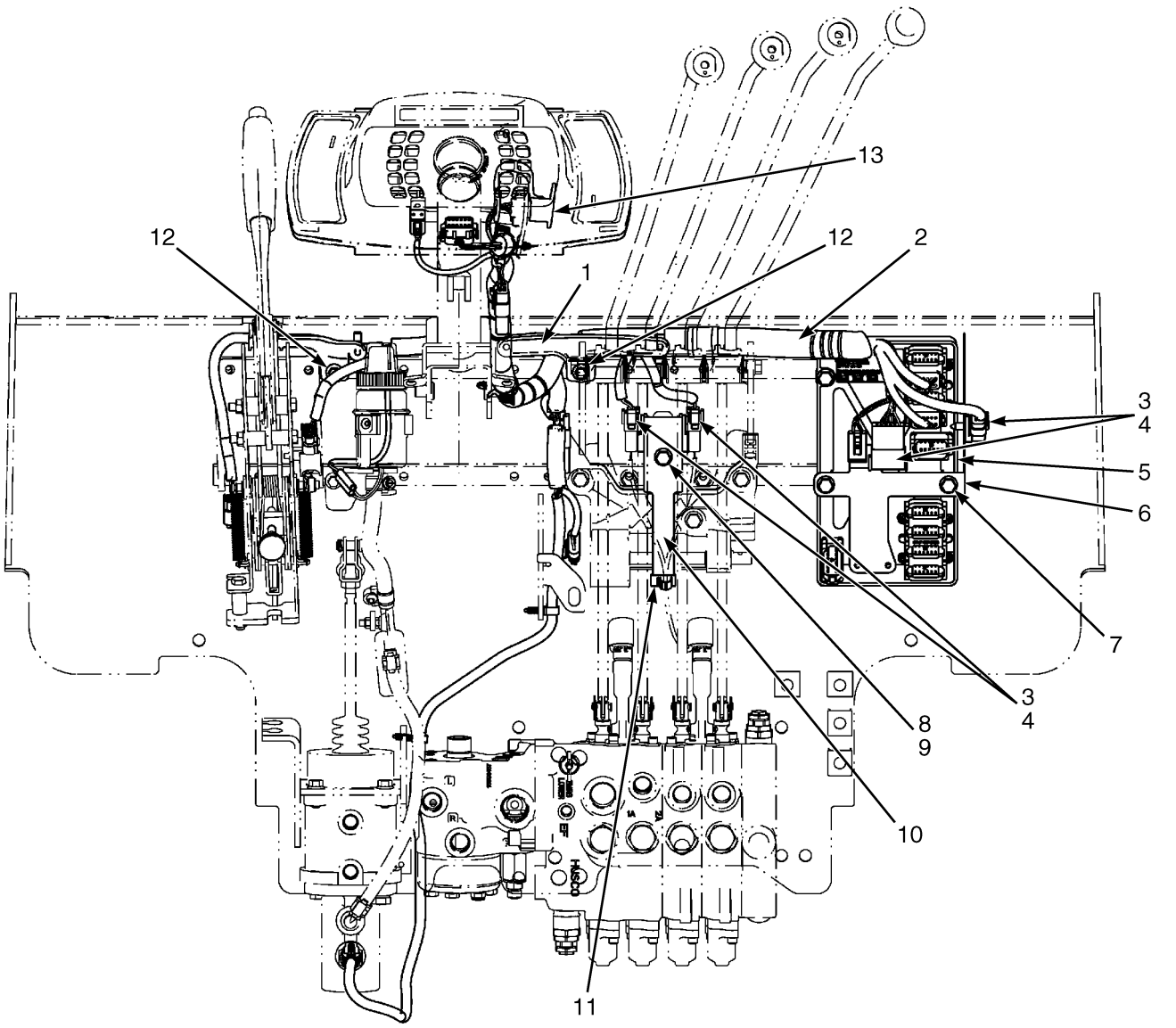

BP081929

©2015 HYSTER COMPANY

COWL ELECTRICAL
MANUAL HYDRAULIC

KEY:
A: With Monotrol Pedal
B: With Forward/Reverse Lever

ITEM	PART NO.	DESCRIPTION	QTY A	QTY B
1	2111004	Bracket (Left Hand)	1	1
1	2111005	Bracket (Right Hand)	1	1
2	4614877	Wire Harness (Cowl) (☞Figure 5-36)	1	..
2	4614878	Wire Harness (Cowl) (☞Figure 5-37)	..	1
3	1582464	Fastener	5	4
4	1500912	Clip	5	4
5	**b** 2068342	Vehicle System Manager (VSM) (w/ Manual Hydraulics)	1	1
5	**a** 2068344	Vehicle System Manager (VSM) (w/ Cab and with or without Electro-Hydraulics)	1	1
6	4035794	Bracket	1	1
7	1510115	Capscrew	3	3
8	1528482	Capscrew	1	1
9	1398062	Nut (Fold Over)	1	1
10	1684542	Bracket	1	1
11	1562088	Clip	1	1
12	4011940	Capscrew	2	2
13	1554902	Screw	2	2

FOOTNOTES:

a With Cab

b With Overhead Guard

©2015 HYSTER COMPANY

COWL ELECTRICAL (FIGURE 5-3)
ELECTRO-HYDRAULIC

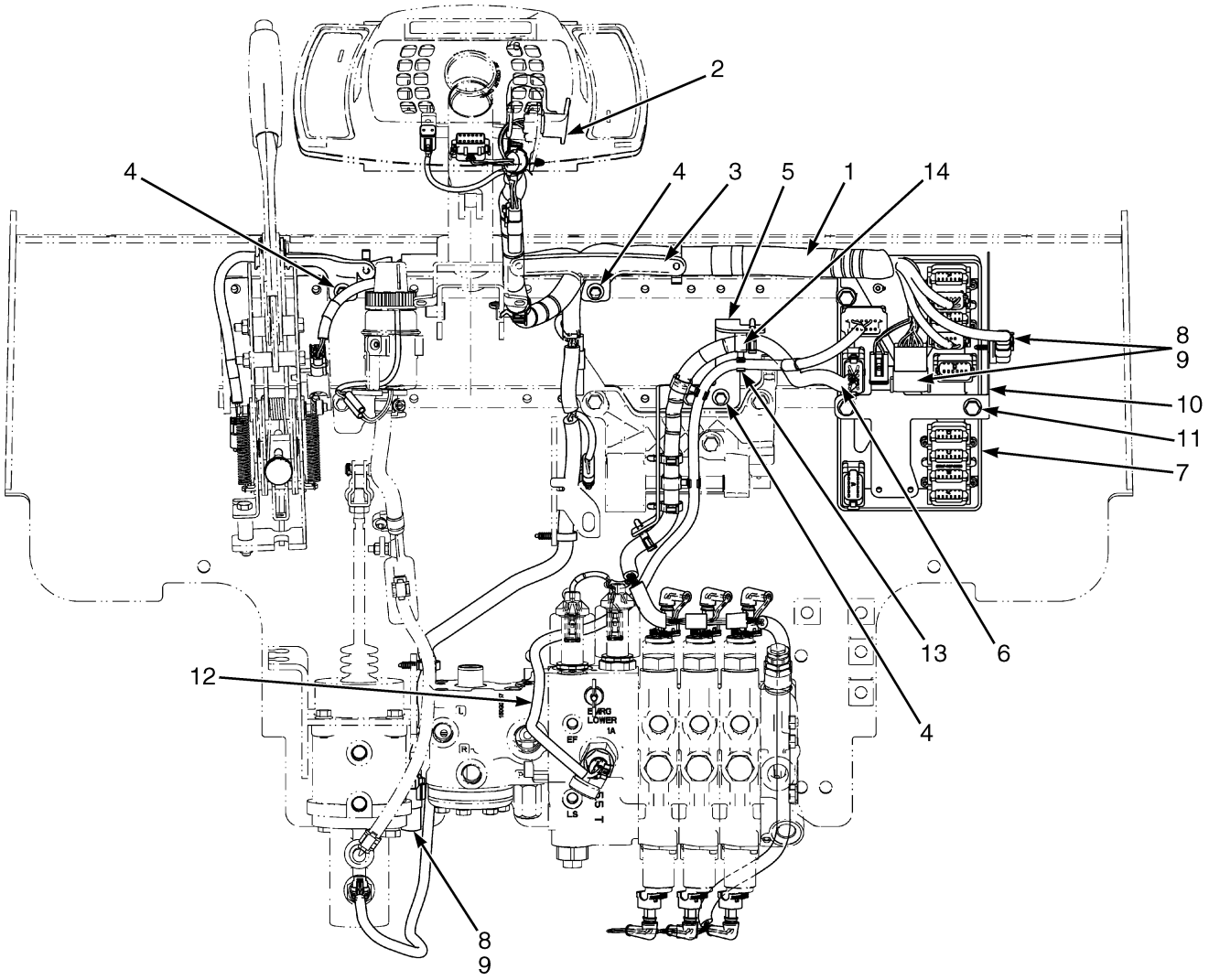

©2015 HYSTER COMPANY

COWL ELECTRICAL
ELECTRO-HYDRAULIC

KEY:
A: With Monotrol Pedal
B: With Forward/Reverse Lever

ITEM	PART NO.	DESCRIPTION	QTY A	QTY B
1	4614879	Wire Harness (Cowl) (With Return to Set Tilt) (☞Figure 5-38)	1	..
1	4614880	Wire Harness (Cowl) (Without Return to Set Tilt) (☞Figure 5-39)	..	1
2	1554902	Screw	2	2
3	2111004	Bracket (Left Hand)	1	1
3	2111005	Bracket (Right Hand)	1	1
4	4011940	Capscrew	4	4
5	1531975	Bracket	1	1
6	4605072	Wire Harness (Electronic Control Valve) (3 Function) (☞Figure 5-41)	1	1
6	4605073	Wire Harness (Electronic Control Valve) (4 Function) (☞Figure 5-39)	1	1
7	**c** 2068343	Vehicle System Manager (VSM) (w/ Electro-Hydraulics)	1	1
7	**b** 2068344	Vehicle System Manager (VSM) (w/ Cab and with or without Electro-Hydraulics)	1	1
8	1500912	Clip	4	2
9	1582464	Fastener	4	2
10	4035794	Bracket	1	1
11	1510115	Capscrew	3	3
12	2079326	Wire Harness (Load Weigh) (☞Figure 5-17)	1	1
13	1573549	Clamp	3	3
14	1606544	Clamp (Swivel)	3	3
	a 1563841	Dust Cap	1	1

FOOTNOTES:

a Not Illustrated
b With Cab
c With Overhead Guard

©2015 HYSTER COMPANY

ENGINE ELECTRICAL SYSTEM (FIGURE 5-4)
KUBOTA 3.6L DIESEL

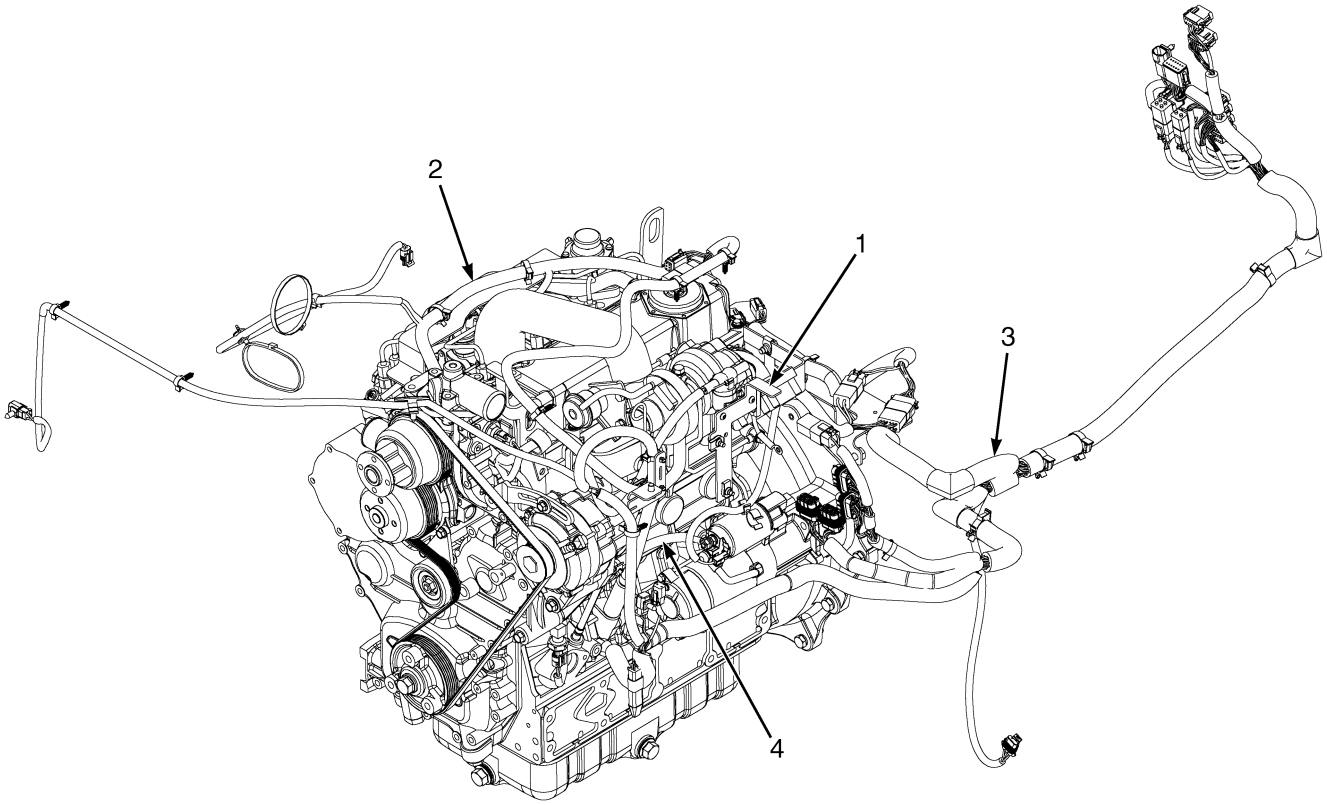

BP081288

ITEM	PART NO.	DESCRIPTION	QTY
1	. . . . .	Relay (☞Figure 5-12).....	1
2	. . . . .	Engine Harness (☞Figure 5-28).....	1
3	. . . . .	Electrical System (☞Figure 5-1).....	1
4	. . . . .	Battery Cable (Fused) (☞Figure 5-14).....	1

©2015 HYSTER COMPANY

NOTES

©2015 HYSTER COMPANY

ENGINE ELECTRICAL SYSTEM AND ATTACHING PARTS (FIGURE 5-5)
KUBOTA 3.6L DIESEL

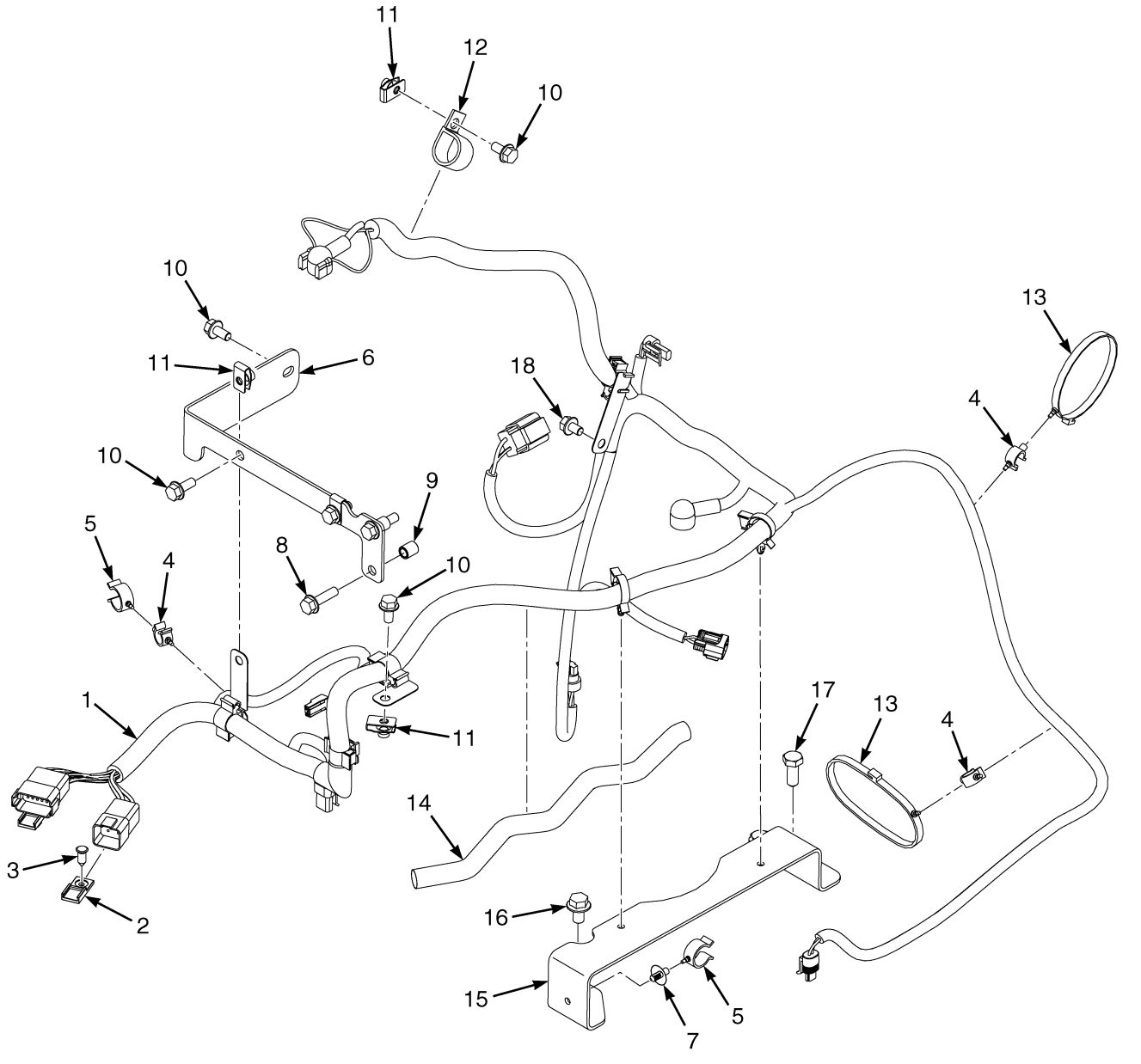

©2015 HYSTER COMPANY

ENGINE ELECTRICAL SYSTEM AND ATTACHING PARTS
KUBOTA 3.6L DIESEL

ITEM	PART NO.	DESCRIPTION	QTY
1	4615505	Wire Harness (Engine) (☞Figure 5-28)	1
2	1500912	Clip	2
3	1582464	Fastener	2
4	1542439	Clamp (Swivel)	4
5	1502066	Clamp (Swivel)	3
6	4040096	Bracket	1
7	1543842	Clamp	1
8	1527881	Capscrew	2
9	2781075	Spacer	2
10	1527879	Capscrew	5
11	1480237	Nut	4
12	178119	Clamp	1
13	1502061	Clamp	2
14	4621031	Hose (Conduit)	1
15	4040097	Bracket	1
16	1556623	Bolt	1
17	4616151	Capscrew	2
18	1529366	Capscrew	1

©2015 HYSTER COMPANY

ENGINE ELECTRICAL SYSTEM AND ATTACHING PARTS (FIGURE 5-6)

KUBOTA 3.6L DIESEL — WITH ELECTRONIC THROTTLE

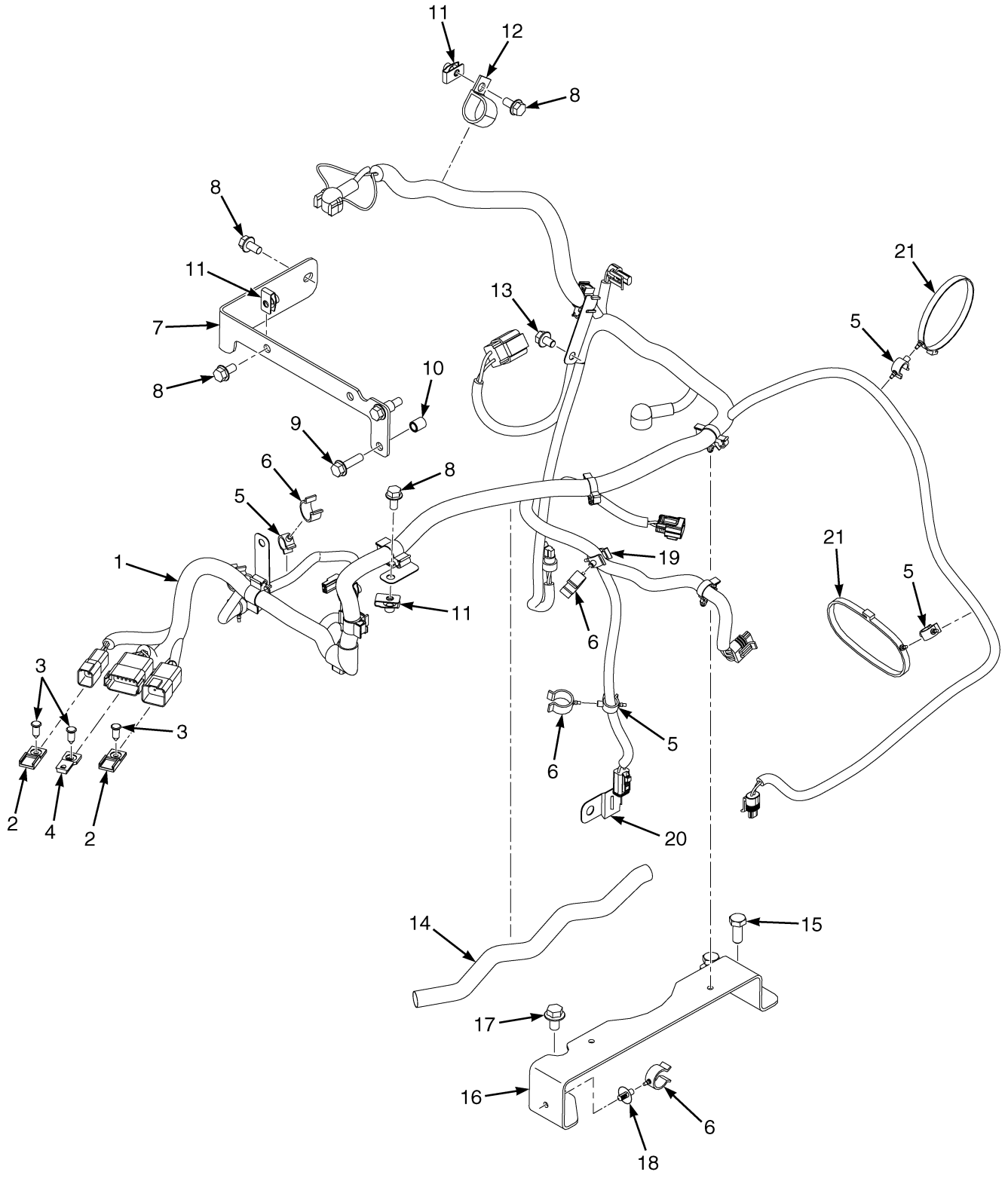

©2015 HYSTER COMPANY

ENGINE ELECTRICAL SYSTEM AND ATTACHING PARTS
KUBOTA 3.6L DIESEL – WITH ELECTRONIC THROTTLE

ITEM	PART NO.	DESCRIPTION	QTY
1	4629824	Wire Harness (Engine) (☞Figure 5-30)	1
2	1500912	Clip	2
3	1582464	Fastener	3
4	1531480	Clip	1
5	1542439	Clamp (Swivel)	5
6	1502066	Clamp (Swivel)	5
7	4040096	Bracket	1
8	1527879	Capscrew	5
9	1527881	Capscrew	2
10	2781075	Spacer	2
11	1480237	Nut	4
12	178119	Clamp	1
13	1529366	Capscrew	1
14	4621031	Hose (Conduit)	1
15	4616151	Capscrew	2
16	4040097	Bracket	1
17	1556623	Bolt	1
18	1543842	Clamp	1
19	1502057	Clamp	1
20	4081548	Clip	1
21	1502061	Clamp	2

©2015 HYSTER COMPANY

ENGINE ELECTRICAL SYSTEM (FIGURE 5-7)
KUBOTA 3.8L DIESEL — WITH STANDARD ALTERNATOR HARNESS

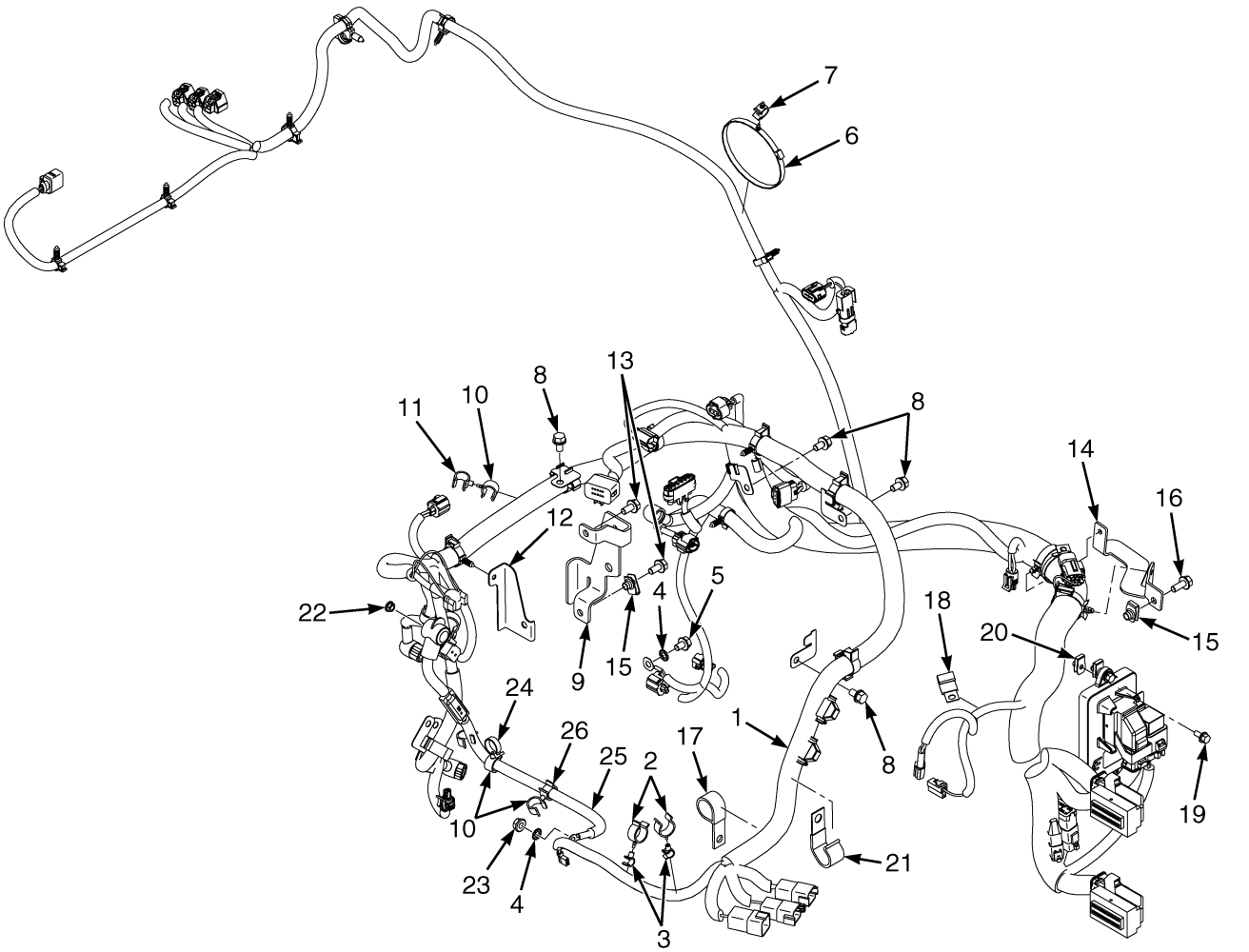

BP081928

©2015 HYSTER COMPANY

ENGINE ELECTRICAL SYSTEM

KUBOTA 3.8L DIESEL – WITH STANDARD ALTERNATOR HARNESS

ITEM	PART NO.	DESCRIPTION	QTY
1	4620676	Wire Harness (Engine) (☞Figure 5-27)	1
2	1502066	Clamp (Swivel)	2
3	1561871	Clamp (Swivel)	2
4	296380	Washer	2
5	1529366	Capscrew	1
6	1502061	Clamp	1
7	1542439	Clamp (Swivel)	1
8	1613324	Capscrew	4
9	4050610	Bracket	1
10	1543698	Clamp (Swivel)	4
11	1502054	Clamp	1
12	4062255	Bracket	1
13	1527879	Capscrew	2
14	4045621	Bracket	1
15	1480237	Nut	2
16	1527880	Capscrew	1
17	1310611	Clamp	1
18	1376782	Clamp	1
19	1693371	Capscrew	1
20	1566420	Nut (Foldover)	1
21	325897	Clamp	1
22	1514429	Nut	1
23	1502543	Nut (Flange)	1
24	4074942	Clamp	1
25	4616862	Battery Cable (☞Figure 5-14)	1
26	1606544	Clamp (Swivel)	3
	a 4075981	Bracket (Hydraulic Sensor)	1
	a 1509888	Clip	1

FOOTNOTES:

a Not Illustrated

©2015 HYSTER COMPANY

ENGINE ELECTRICAL SYSTEM (FIGURE 5-8)
KUBOTA 3.8L LPG — WITH STANDARD ALTERNATOR HARNESS

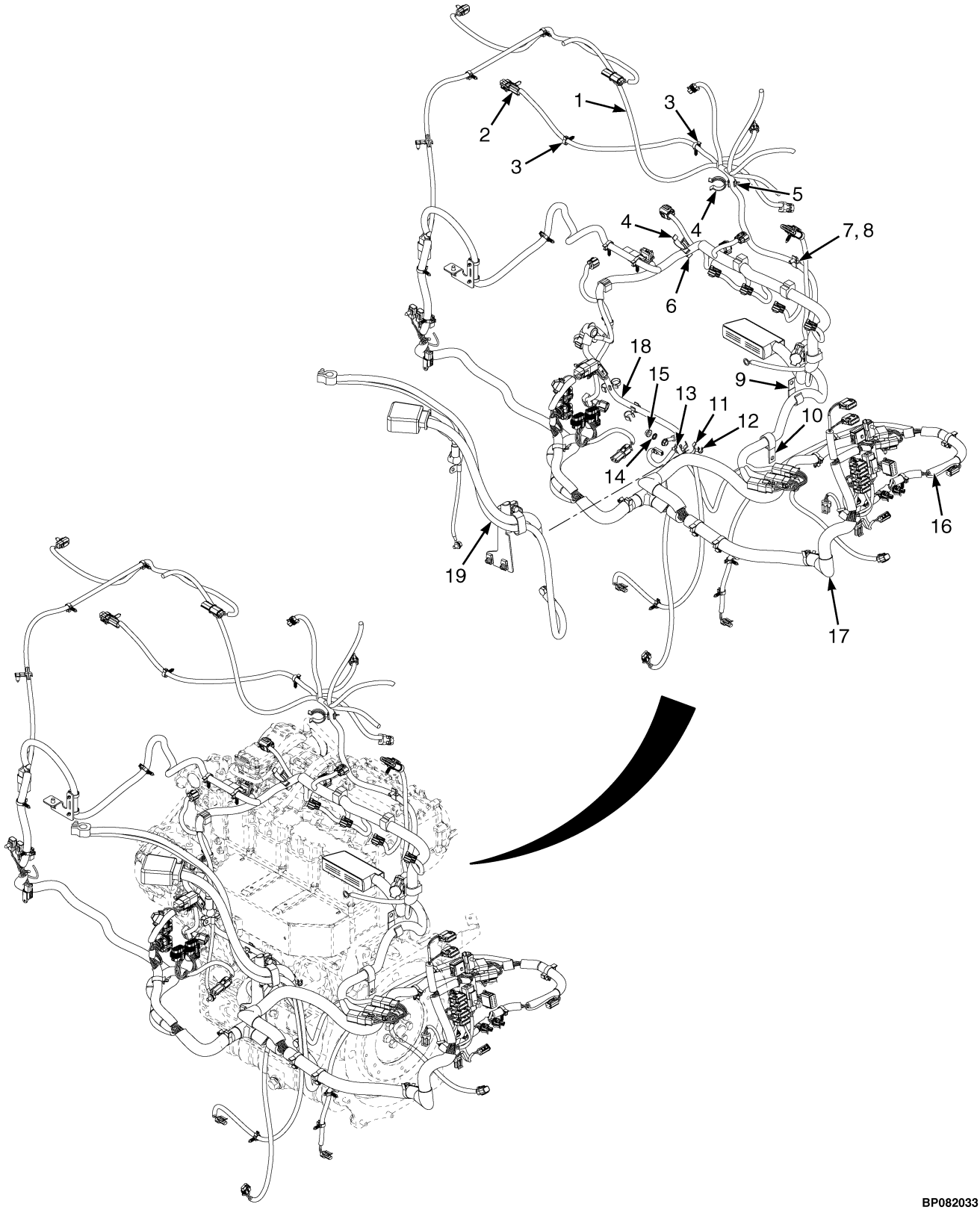

©2015 HYSTER COMPANY

ENGINE ELECTRICAL SYSTEM

KUBOTA 3.8L LPG – WITH STANDARD ALTERNATOR HARNESS

ITEM	PART NO.	DESCRIPTION	QTY
1	4639406	Wire Harness (Engine) (☞Figure 5-29)	1
2	1520513	Clip	1
3	1509888	Clip	2
4	1561759	Clamp (Swivel)	2
5	1543691	Clamp (Swivel)	1
6	1502053	Clamp (Swivel)	1
7	132972	Clamp	1
8	1527876	Capscrew	1
9	325897	Clamp	1
10	1310611	Clamp	1
11	1561871	Clamp (Swivel)	1
12	4054787	Clamp (Swivel)	1
13	1542439	Clamp (Swivel)	1
14	296380	Washer	1
15	1502543	Nut (Flange)	1
16	. . . . .	Transmission Harness Group (☞Figure 5-24)	1
17	. . . . .	RH Chassis (☞Figure 5-1)	1
18	4616862	Battery Cable (☞Figure 5-14)	1
19	. . . . .	Battery Cables (☞Figure 5-13)	1

©2015 HYSTER COMPANY

DPF DISPLAY (FIGURE 5-9)
3.8L KUBOTA DIESEL

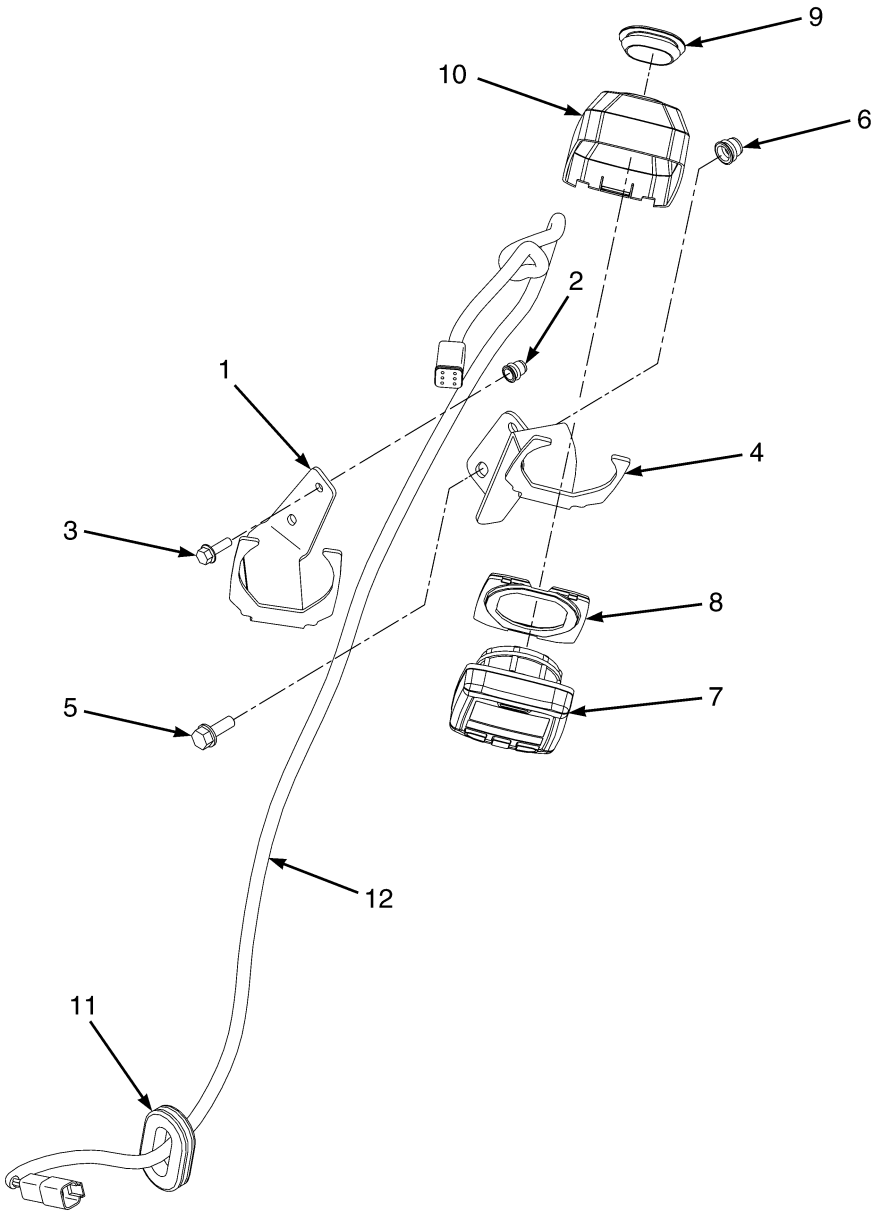

©2015 HYSTER COMPANY

DPF DISPLAY
3.8L KUBOTA DIESEL

ITEM	PART NO.	DESCRIPTION	QTY
1	**b** 4056988	Bracket (With Overhead Guard)	1
2	**b** 1531558	Insert	2
3	**b** 1527877	Capscrew	2
4	**a** 4056983	Bracket (With Cab)	1
5	**a** 1510113	Capscrew	2
6	**a** 1531557	Insert	2
7	4642932	Display	1
7	4131266	Display	1
7	4047442	Lockring	1
7	4047443	Nameplate	1
8	4033057	Base	1
9	4601386	Grommet	1
10	4033056	Cover	1
11	1539584	Grommet	1
12	4614617	Wire Harness (DPF Display) (☞Figure 5-35)	1

FOOTNOTES:

a With Cab

b With Overhead Guard

©2015 HYSTER COMPANY

POWER DISTRIBUTION MODULE (FIGURE 5-10)

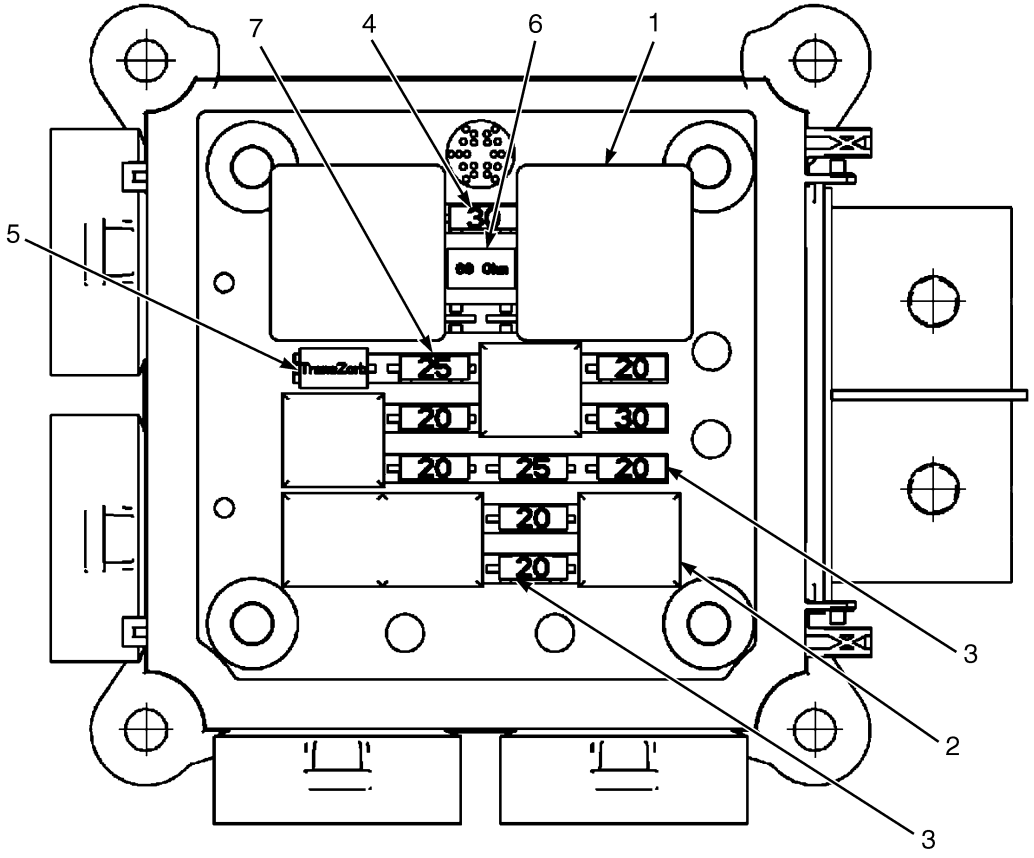

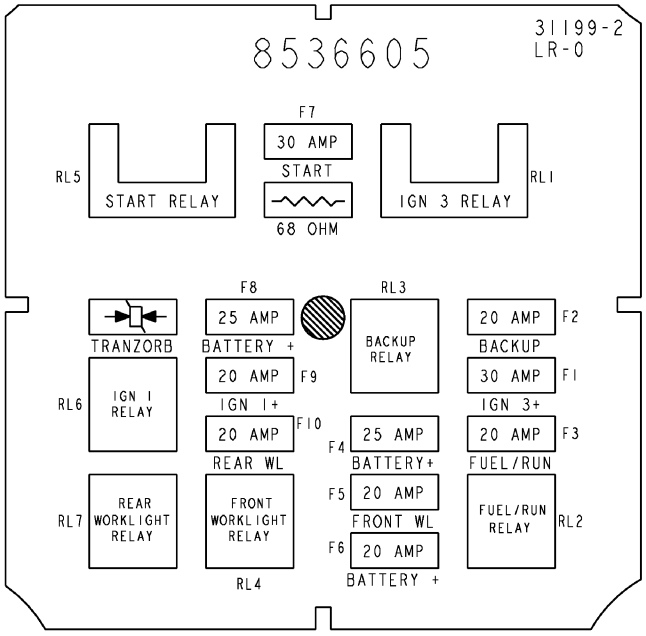

BP080485

©2015 HYSTER COMPANY

POWER DISTRIBUTION MODULE

ITEM	PART NO.	DESCRIPTION	QTY
	2090613	Fuse Box (PDM)	1
1	2044712	Relay (30 Amp)	2
2	1528315	Relay (20 Amp)	5
3	1528132	Fuse (20 Amp)	6
4	1528133	Fuse (30 Amp)	2
5	1528630	Semiconductor	1
6	1528631	Resistor (68 Ohm, 5 Watt)	1
7	1544255	Fuse (25 Amp)	2
	a 4046933	Fuse Box Cover	1

FOOTNOTES:

a Not Illustrated

©2015 HYSTER COMPANY

CONTROL MODULE (FIGURE 5-11)
DIESEL INTERFACE — KUBOTA V3800

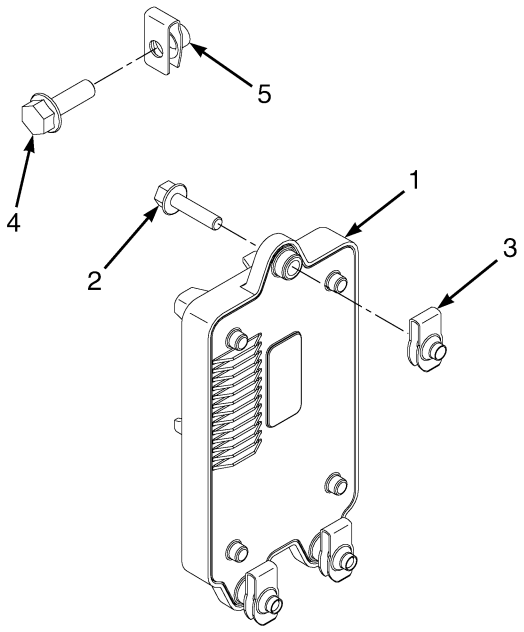

BP081228

ITEM	PART NO.	DESCRIPTION	QTY
1	4612918	Control Module	1
2	1586495	Capscrew	3
3	1566420	Nut (Foldover)	3
4	1510113	Capscrew	4
5	1480237	Nut	4

©2015 HYSTER COMPANY

RELAY (FIGURE 5-12)
KUBOTA DIESEL

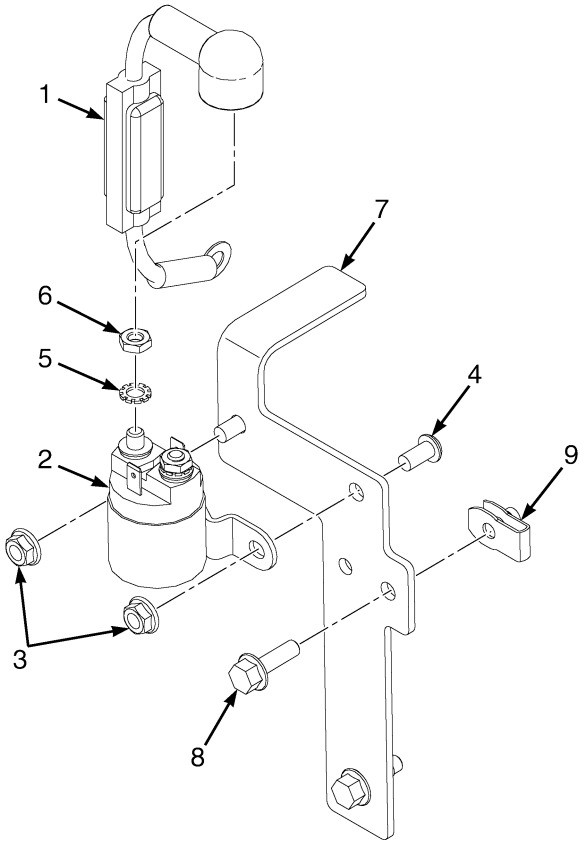

BP081287

ITEM	PART NO.	DESCRIPTION	QTY
1	4612882	Battery Cable	1
2	1454967	Relay (Starter or Glow Plug)	1
3	1514429	Nut	2
4	296158	Capscrew	2
5	296379	Washer	2
6	1560678	Nut	2
7	4026759	Bracket	1
8	1527877	Capscrew	2
9	1566420	Nut (Foldover)	2

©2015 HYSTER COMPANY

BATTERY CABLES (FIGURE 5-13)
KUBOTA 3.8L DIESEL/LPG

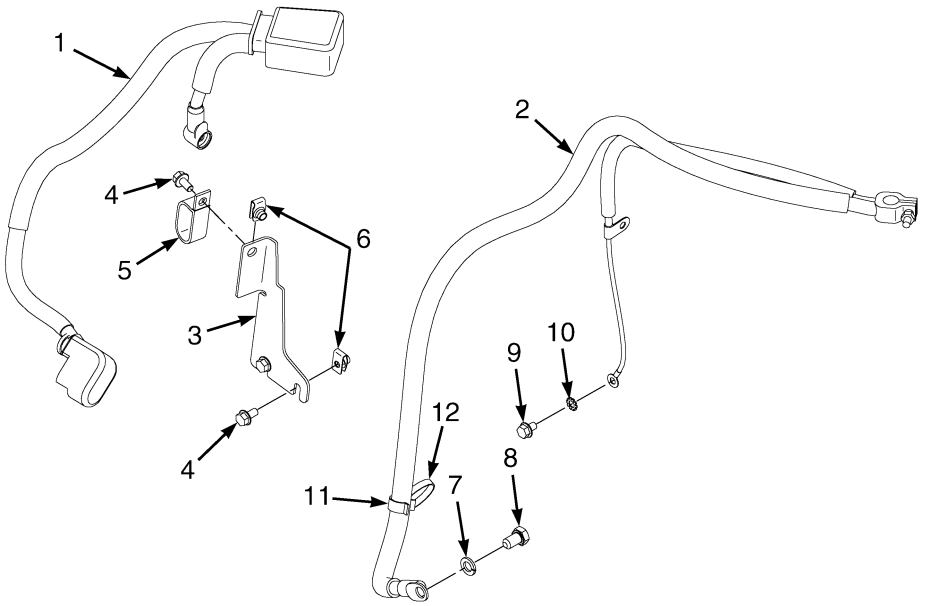

BP081493

ITEM	PART NO.	DESCRIPTION	QTY
1	4612884	Battery Cable (Positive)	1
1	148792	Terminal	1
1	148798	Terminal	1
1	4045322	Ring Terminal	1
1	1536304	Boot	1
1	321158	Boot	1
1	1566146	Boot	1
1	4044099	Boot (Alternate)	1
1	4043195	Boot	1
1	1357266	Battery Cable (Red)	AR
1	1357268	Battery Cable (Red)	AR
1	1539153	Conduit	AR
2	4612885	Battery Cable (Negative)	1
2	16078	Battery Cable (Black)	AR
2	1357533	Wire-Bulk	AR
2	148789	Terminal	1
2	1616122	Terminal (Part not replaceable service with assembly) (Battery)	1
2	148796	Terminal	1
2	1564044	E-Ring	1
2	275495	Conduit	AR
2	275497	Conduit	AR
2	806426	E-Ring	1
3	4027269	Bracket	1
4	1527879	Capscrew	3
5	251994	Clamp	1
6	1480237	Nut	3

©2015 HYSTER COMPANY

ITEM	PART NO.	DESCRIPTION	QTY
7	292683	Lockwasher	1
8	4034828	Capscrew	1
9	1529366	Capscrew	1
10	296380	Washer	1
11	**a** 1502053	Clamp (Swivel)	1
12	**a** 1502061	Clamp	1

FOOTNOTES:

a With Gear Pump

©2015 HYSTER COMPANY

BATTERY CABLE (FIGURE 5-14)

FUSED-STANDARD ALTERNATOR — KUBOTA 3.6L DIESEL, 3.8L DIESEL/LPG

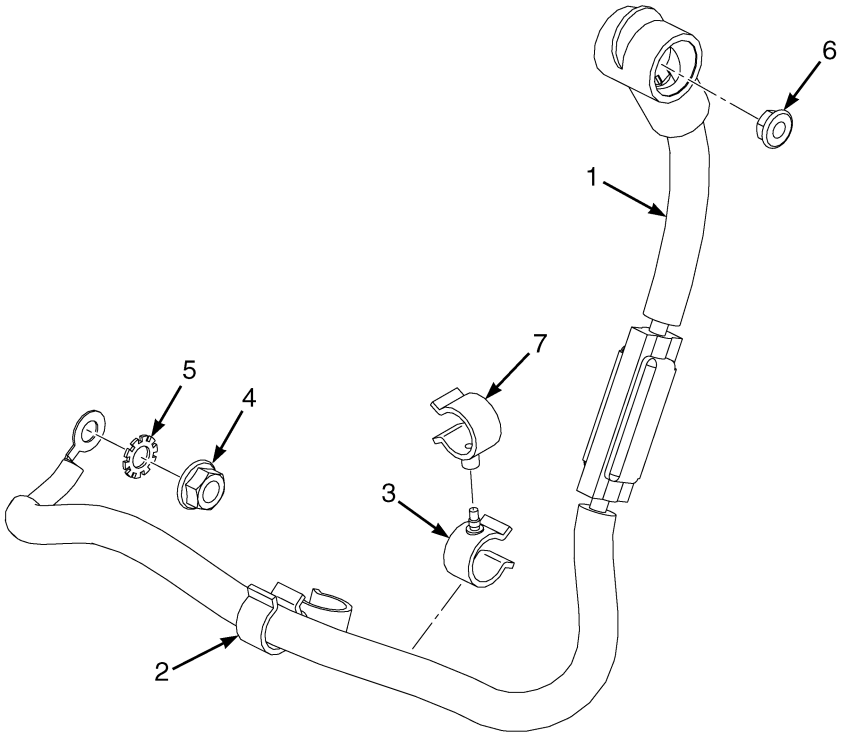

BP081926

ITEM	PART NO.	DESCRIPTION	QTY
1	4616862	Battery Cable	1
2	1606544	Clamp (Swivel)	2
3	1543698	Clamp (Swivel)	2
4	1502543	Nut (Flange)	1
5	296380	Washer	1
6	1514429	Nut	1
7	4074942	Clamp	1

©2015 HYSTER COMPANY

INSTRUMENT CLUSTER (FIGURE 5-15)

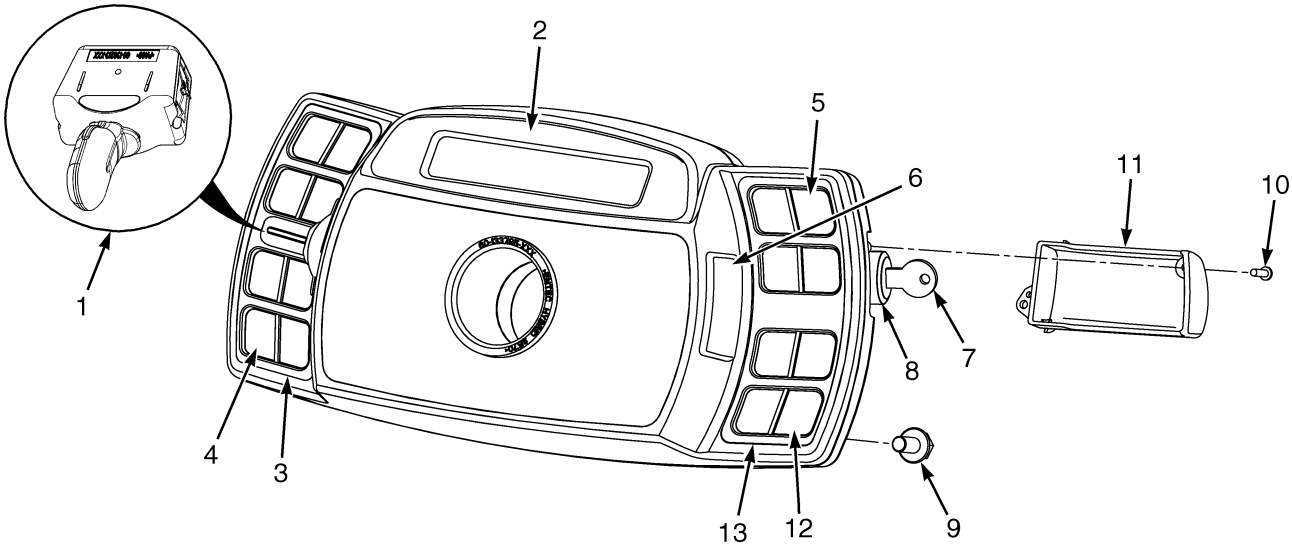

BP081951

ITEM	PART NO.	DESCRIPTION	QTY
1	4604594	Lever (Detent Forward and Reverse)	1
2	2076695	Display (With Overhead Guard)	1
2	2076696	Display (With Cab)	1
3	2066485	Bezel (Display Cluster)	1
4	2066483	Label (LH Display with Cab)	1
4	2069431	Label (Blank) (LH Display with Overhead Guard)	1
5	2066484	Label (RH Display, All Options)	1
6	2060032	Cover (Without Turn Signals)	1
6	**a** 4604595	Lever (Turn Signal Lever)	1
7	1337197	Key Set	1
8	2057948	Ignition Switch	1
9	1527879	Capscrew	4
10	1554902	Screw	5
11	2060033	Cover (Keyswitch)	1
12	**b** 2066482	Label (RH Display)	1
13	2066485	Bezel (Display Cluster)	1

FOOTNOTES:

a Not Illustrated

b Remove Panels From Overlay as Required For Truck Configuration.

©2015 HYSTER COMPANY

MAST TILT SENSOR (FIGURE 5-16)

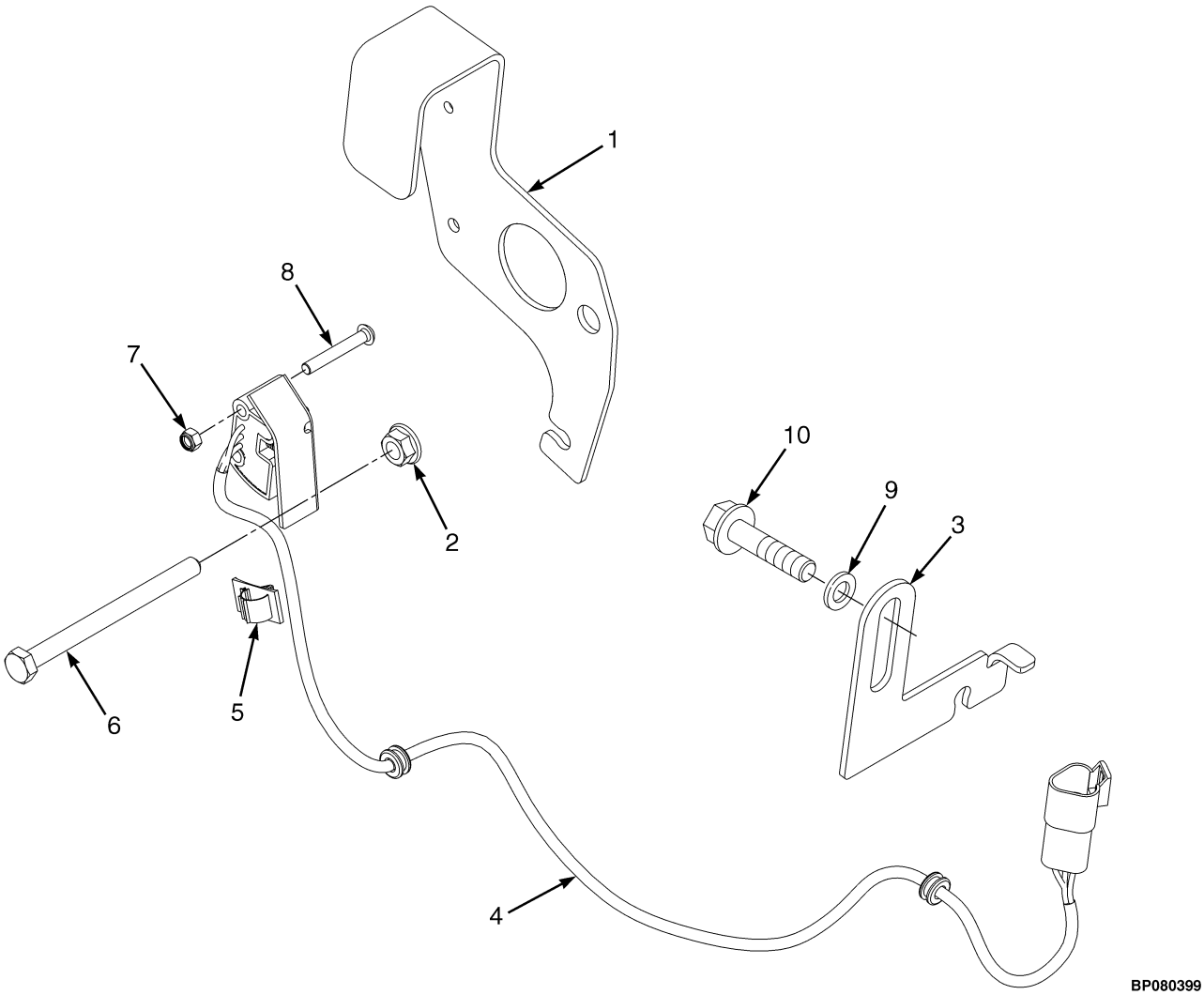

ITEM	PART NO.	DESCRIPTION	QTY
1	1625255	Bracket	1
2	1586430	Nut	1
3	1595731	Bracket	1
4	1595234	Sensor (Mast Tilt Position)	1
5	1562088	Clip	1
6	1597451	Capscrew	1
7	302398	Locknut	2
8	1553897	Capscrew	2
9	1626478	Washer	1
10	1658075	Capscrew	1

©2015 HYSTER COMPANY

NOTES

©2015 HYSTER COMPANY

LOAD WEIGH ELECTRICAL (FIGURE 5-17)

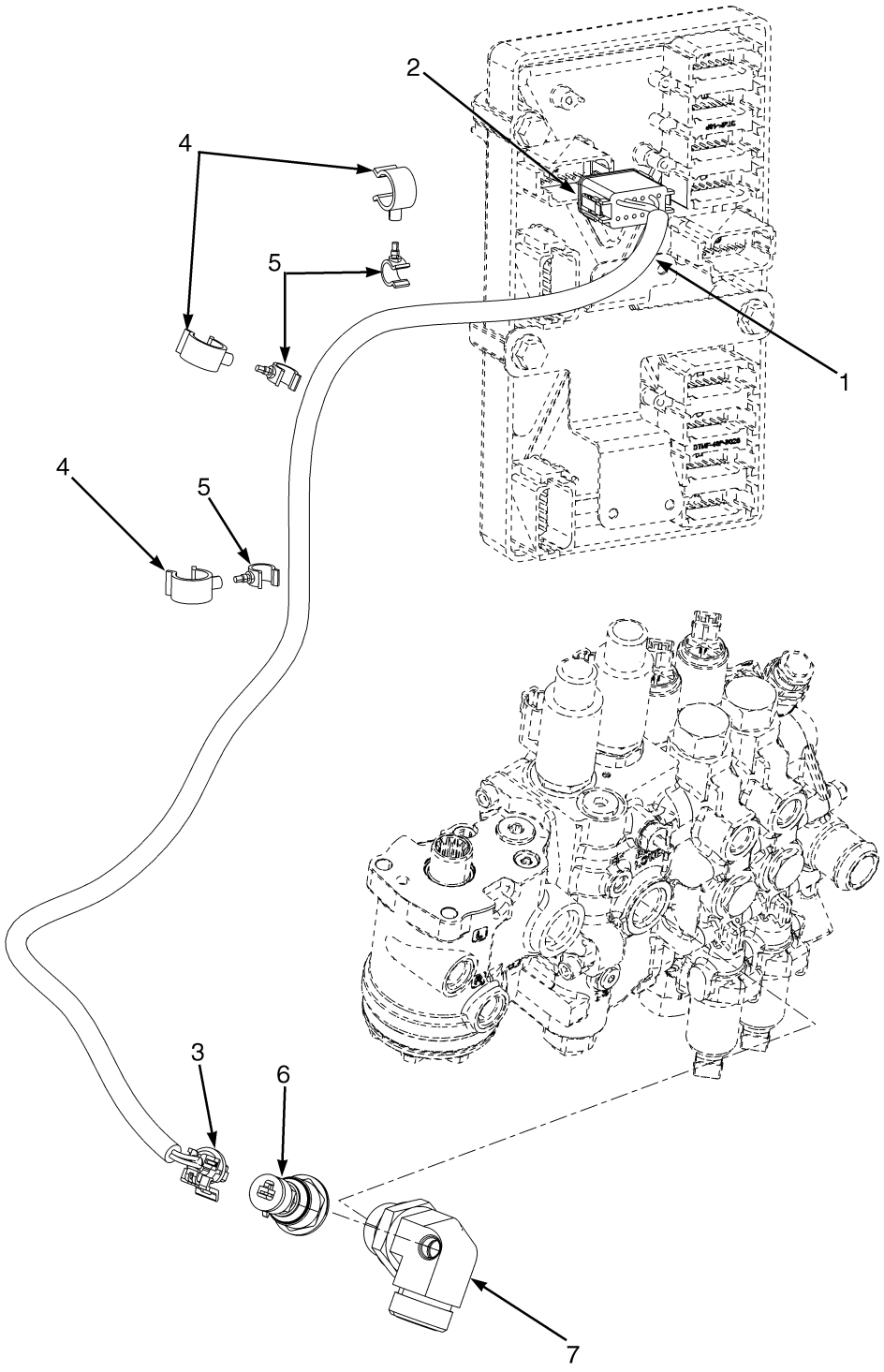

©2015 HYSTER COMPANY

LOAD WEIGH ELECTRICAL

ITEM	PART NO.	DESCRIPTION	QTY
1	2079326	Wire Harness (Load Weigh)	1
2	1525565	Connector	1
2	1500913	Connector	1
2	1330438	Terminal (Socket)	3
2	1484377	Plug	9
3	1603021	Connector	1
3	1603236	Connector (Secondary Lock)	1
3	1548517	Terminal (Socket)	3
3	1548519	Seal	3
4	1606544	Clamp (Swivel)	3
5	1573549	Clamp	3
6	1606735	Sensor (Load Sensing)	1
7	1648259	Fitting	1

©2015 HYSTER COMPANY

IMPACT SENSOR (FIGURE 5-18)

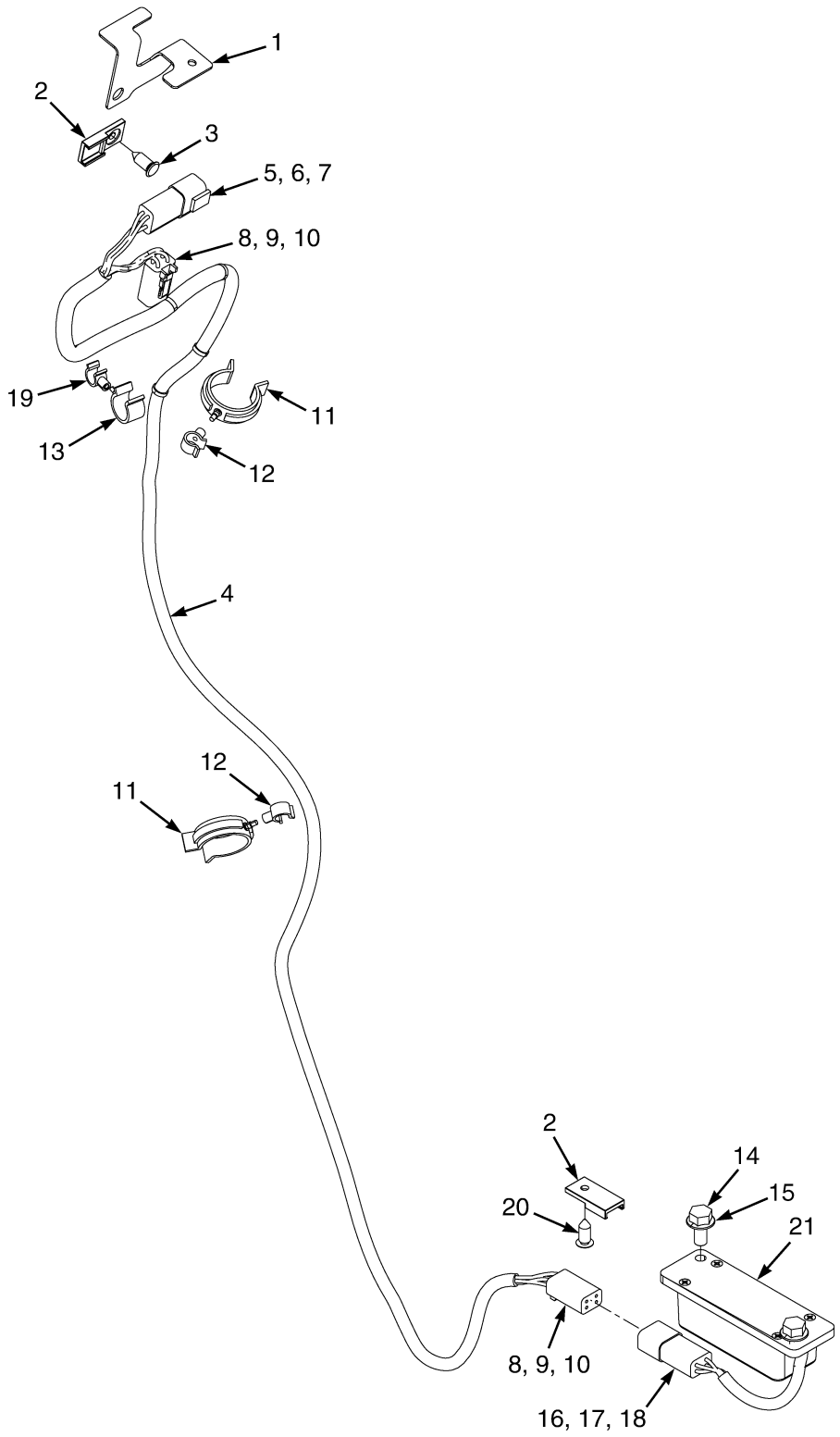

©2015 HYSTER COMPANY

IMPACT SENSOR

ITEM	PART NO.	DESCRIPTION	QTY
1	1535166	Bracket	1
2	1500912	Clip	2
3	1582464	Fastener	2
4	2079281	Wire Harness (Impact Sensor)	1
5	1489655	Connector (4 Way)	1
6	1330416	Connector	1
7	1330437	Terminal (Pin)	4
8	1489656	Connector (4-Way)	2
9	1489657	Connector	2
10	1330438	Terminal (Socket)	8
11	1561759	Clamp (Swivel)	2
12	1542439	Clamp (Swivel)	2
13	1502055	Clamp (Swivel)	1
14	287851	Capscrew	2
15	320157	Washer	2
16	1489655	Connector (4 Way)	1
17	1330416	Connector	1
18	1330433	Terminal	4
19	1502053	Clamp (Swivel)	1
20	2100710	Fastener	1
21	2079843	Sensor (Impact)	1

©2015 HYSTER COMPANY

SEAT BELT SWITCH ADAPTER (FIGURE 5-19)

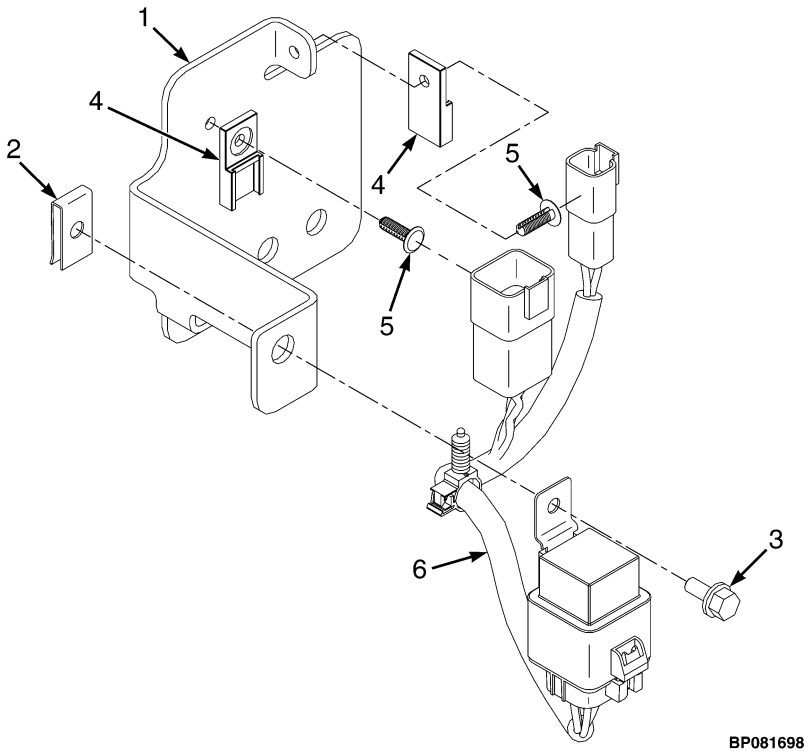

ITEM	PART NO.	DESCRIPTION	QTY
1	4083052	Bracket	1
2	1566420	Nut (Foldover)	1
3	1693371	Capscrew	1
4	1500912	Clip	2
5	1582464	Fastener	2
6	4629813	Wire Harness (Seat Belt Switch Adapter)	1
6	1493465	Connector (2 Pin) (Seat Belt Switch Harness)	1
6	1330414	Connector (Secondary Lock)	1
6	1363885	Terminal (Pin)	2
6	4047669	Connector (RH Chassis Harness)	1
6	1514598	Connector (Lock)	1
6	866401	Terminal	4
6	4030503	Connector (Relay)	1
6	1330283	Terminal	4
6	1323581	Plug	1
6	4039364	Relay (With Diode)	1
6	1509888	Clip	1
	a 4099377	Wrap	2

FOOTNOTES:

a Not Illustrated

©2015 HYSTER COMPANY

NOTES

©2015 HYSTER COMPANY

MINI-LEVER CONTROLS (FIGURE 5-20)
WITH ARMREST — THREE FUNCTION

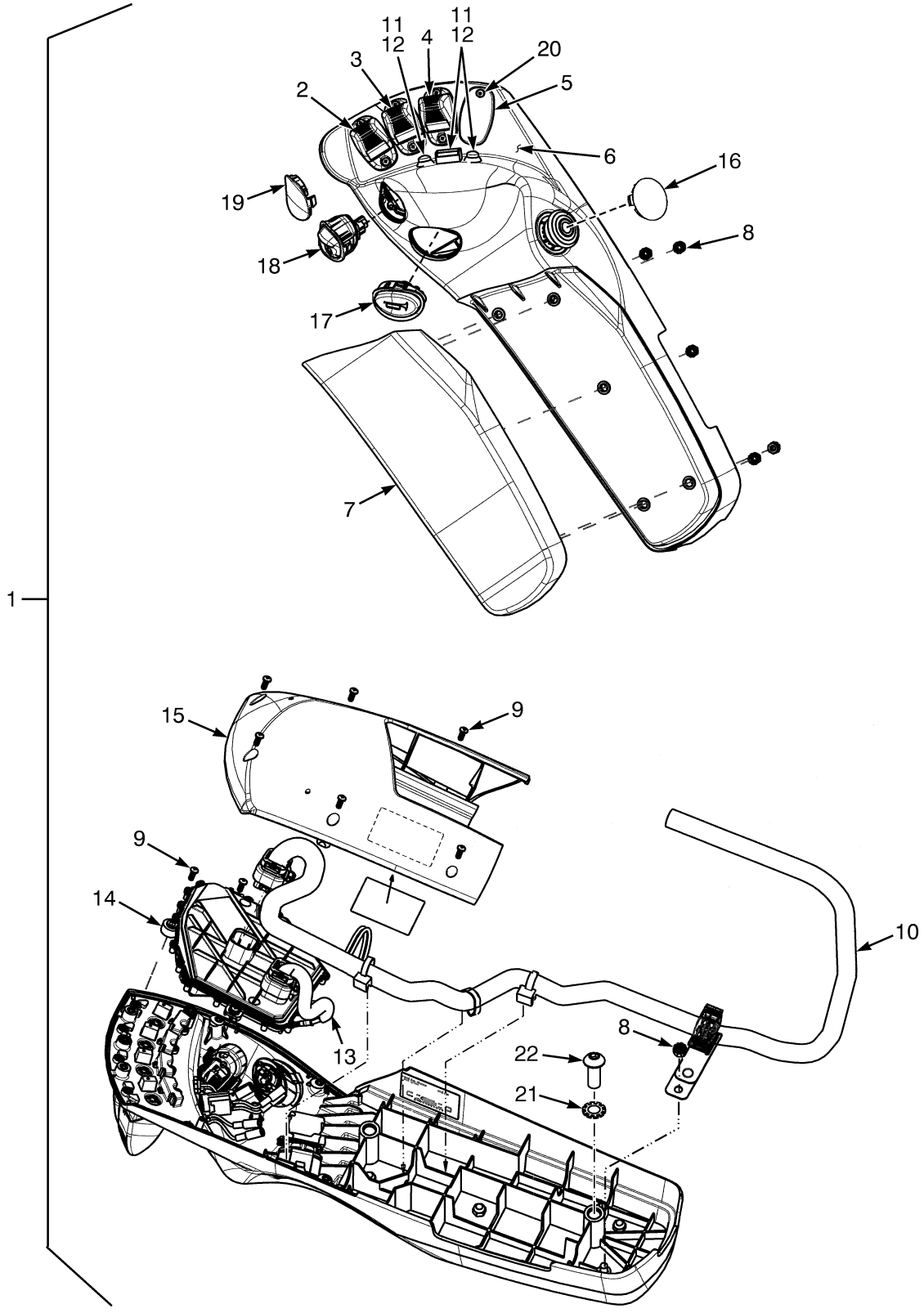

©2015 HYSTER COMPANY

MINI-LEVER CONTROLS
WITH ARMREST – THREE FUNCTION

KEY:
A: Without Directional Control Switch
B: With Directional Control Switch

ITEM	PART NO.	DESCRIPTION	QTY A	QTY B
1	4601093	Mini-Lever Assembly	1	..
1	**b** 4601097	Mini-Lever Assembly	1	..
1	**c** 4601099	Mini-Lever Assembly	1	..
1	4601101	Mini-Lever Assembly	..	1
1	**b** 4601105	Mini-Lever Assembly	..	1
1	**c** 4601107	Mini-Lever Assembly	..	1
2	. . . . .	Lever Position 1	1	1
2	2110791	Lever (Single Function)	1	1
3	. . . . .	Lever Position 2	1	1
3	2110791	Lever (Single Function)	1	1
3	**b** 2110793	Lever (With Override)	1	1
4	. . . . .	Lever Position 3	1	1
4	2110791	Lever (Single Function)	1	1
4	**d** 2110792	Lever (Clamping)	1	1
5	2108249	Plug	1	1
6	2111799	Armrest (Without Push Buttons)	1	1
6	**bd** 4603439	Armrest (With Push Buttons)	1	1
7	2111769	Cushion (Armrest)	1	1
8	1709587	Nut	5	5
9	1703513	Screw	9	9
10	4605336	Wire Harness	1	1
11	**ad** 1704528	Push Button (Position 3)	1	1
11	**ac** 1704528	Push Button (Position 2 and 3)	2	2
11	**ab** 1704528	Push Button (Position 2)	1	1
12	**d** 1705359	Cover (Push Button)	1	1
12	**c** 1705359	Cover (Push Button)	1	1
13	1704529	Wire Harness (Forward/Reverse Switch in the MLM) (Push Buttons)	1	1
14	4605337	Printed Circuit Board	1	1
15	2111800	Cover (Bottom Armrest)	1	1
16	4601120	Plug	1	1
17	2111770	Horn Button	1	1
18	2110943	Switch (Directional Control)	..	1
19	2110942	Plug (Directional Control Switch)	1	..
20	1698449	Capscrew	8	8
21	296380	Washer	2	2
22	296166	Capscrew	2	2

FOOTNOTES:

a Not all Lift Trucks may have all the switches and buttons shown.
b Return to Set Tilt
c Three Function Clamp with Return to Set Tilt
d With Clamping

©2015 HYSTER COMPANY

MINI-LEVER CONTROLS (FIGURE 5-21)
WITH ARMREST — FOUR FUNCTION

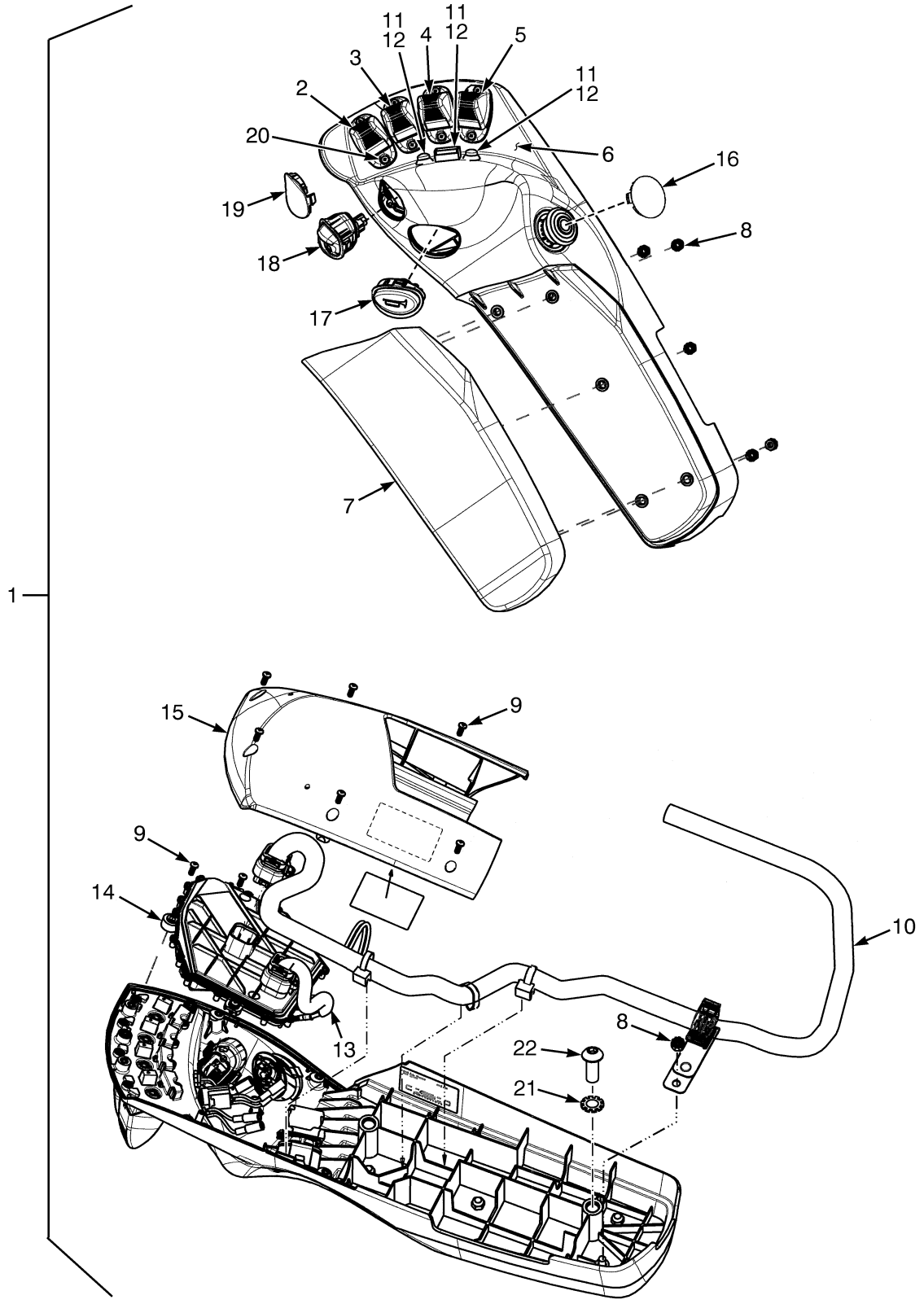

©2015 HYSTER COMPANY

MINI-LEVER CONTROLS
WITH ARMREST – FOUR FUNCTION

KEY:
A: Without Directional Control Switch
B: With Directional Control Switch

ITEM	PART NO.	DESCRIPTION	QTY A	QTY B
1	4601094	Mini-Lever Assembly	1	..
1	**b** 4601096	Mini-Lever Assembly	1	..
1	**d** 4601098	Mini-Lever Assembly	1	..
1	**c** 4601100	Mini-Lever Assembly	1	..
1	4601102	Mini-Lever Assembly	..	1
1	**b** 4601104	Mini-Lever Assembly	..	1
1	**d** 4601106	Mini-Lever Assembly	..	1
1	**c** 4601108	Mini-Lever Assembly	..	1
2	. . . . .	Lever Position 1	1	1
2	2110791	Lever (Single Function)	1	1
3	. . . . .	Lever Position 2	1	1
3	2110791	Lever (Single Function)	1	1
3	**c** 2110793	Lever (With Override)	1	1
4	. . . . .	Lever Position 3	1	1
4	2110791	Lever (Single Function)	1	1
5	. . . . .	Lever Position 4	1	1
5	2110791	Lever (Single Function)	1	1
5	**bc** 2110792	Lever (Clamping)	1	1
6	2111799	Armrest (Without Push Buttons)	1	1
6	**bcd** 4603439	Armrest (With Push Buttons)	1	1
7	2111769	Cushion (Armrest)	1	1
8	1709587	Nut	5	5
9	1703513	Screw	9	9
10	4605336	Wire Harness	1	1
11	**abd** 1704528	Push Button	1	1
11	**ac** 1704528	Push Button	2	2
12	**bd** 1705359	Cover (Push Button)	2	2
12	**c** 1705359	Cover (Push Button)	1	1
13	1704529	Wire Harness (Forward/Reverse Switch in the MLM) (Push Buttons)	1	1
14	4605337	Printed Circuit Board	1	1
15	2111800	Cover (Bottom Armrest)	1	1
16	4601120	Plug	1	1
17	2111770	Horn Button	1	1
18	2110943	Switch (Directional Control)	..	1
19	2110942	Plug (Directional Control Switch)	1	..
20	1698449	Capscrew	8	8
21	296380	Washer	2	2
22	296166	Capscrew	2	2

FOOTNOTES:

a Not all Lift Trucks may have all the switches and buttons shown.
b With Clamping
c With Clamping and Return to Set Tilt
d With Return to Set Tilt

©2015 HYSTER COMPANY

LIGHTS (FIGURE 5-22)

BRAKE, TAIL, BACKUP, SIDE, TURN SIGNALS, WORK, STROBE — WITH OVERHEAD GUARD

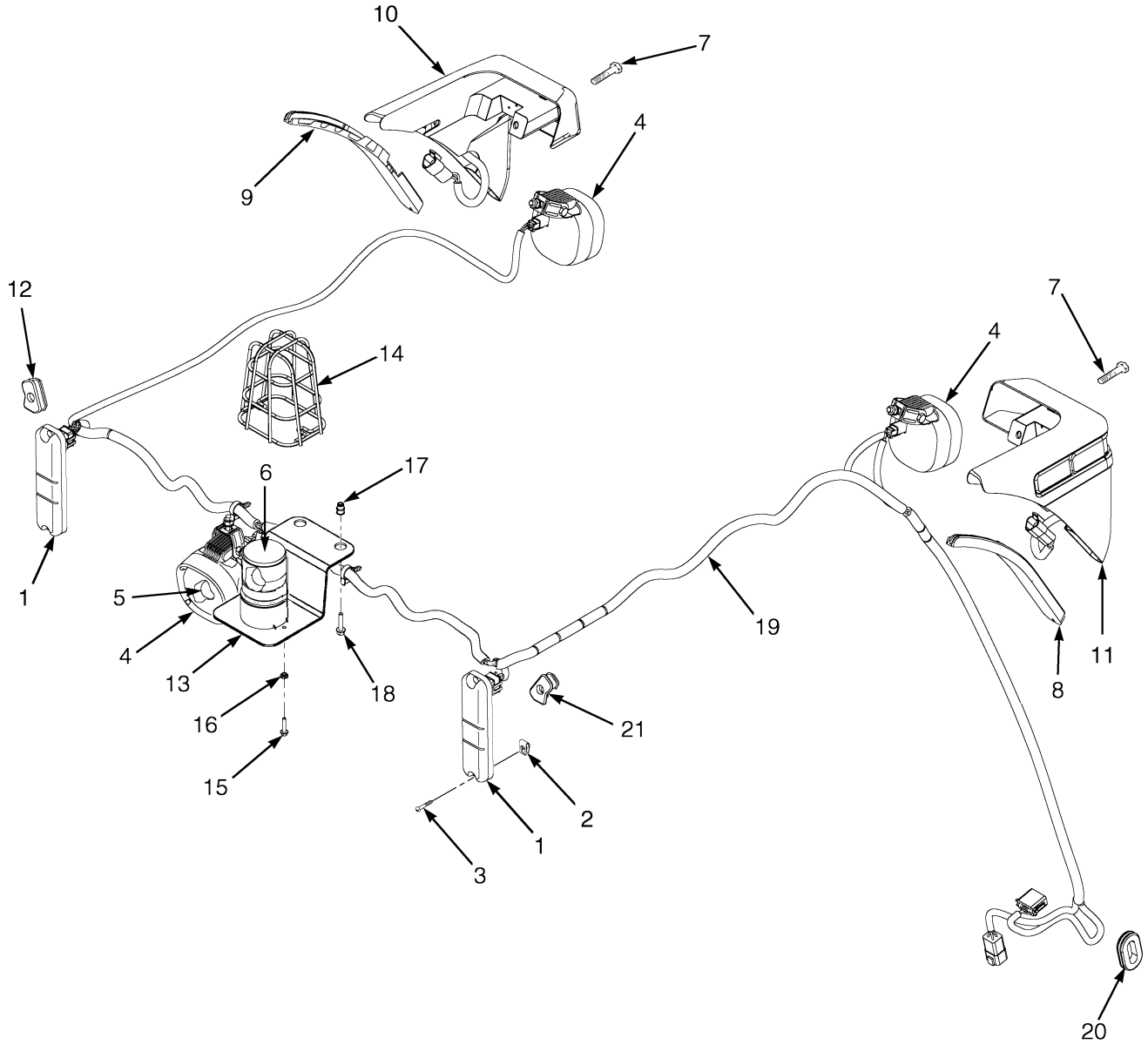

©2015 HYSTER COMPANY

LIGHTS

BRAKE, TAIL, BACKUP, SIDE, TURN SIGNALS, WORK, STROBE – WITH OVERHEAD GUARD

ITEM	PART NO.	DESCRIPTION	QTY
1	2056824	Brake/Backup Light (Stop,Turn,Tail, And Back-Up)	2
2	1537551	Nut (Clip)	2
3	1565125	Screw	2
4	2098083	Work Light (Rear) (Halogen)	1
4	2107382	Worklight (Rear) (LED)	1
4	2098086	Work Light (RH Front) (Halogen)	1
4	2107385	Head/Work Light (RH Front) (LED)	1
4	2098087	Work Light (LH Front) (Halogen)	1
4	2107386	Head/Work Light (LH Front) (LED)	1
5	2098082	Bulb (Halogen)	1
6	1654013	Strobe Light Assembly (☞Figure 14-18)	1
7	1608654	Capscrew	4
8	1608589	Trim (Right Hand)	1
9	1608590	Trim (Left Hand)	1
10	2070562	Turn Signal Light (LH Front)	1
10	2070563	Cap (Black Plastic)	2
10	1493466	Connector	1
10	1330415	Connector	1
10	1330437	Terminal (Pin)	3
11	2070561	Turn Signal Light (RH Front)	1
11	2070563	Cap (Black Plastic)	2
11	1493466	Connector	1
11	1330415	Connector	1
11	1330437	Terminal (Pin)	3
12	1560448	Grommet (Left Hand Tail Light)	1
13	1565076	Bracket Wldmt	1
14	1302024	Guard (Strobe Light)	1
15	1586759	Capscrew	2
16	1586428	Nut	2
17	1531001	Insert	2
18	1586495	Capscrew	2
19	2101862	Wire Harness (Lights) (☞Figure 5-40)	1
20	1539584	Grommet (Vehicle System Manager)	1
21	1560447	Grommet (Right Hand Tail Light)	1

©2015 HYSTER COMPANY

LIGHTS (FIGURE 5-23)

BRAKE, TAIL, BACKUP, SIDE, TURN SIGNALS, WORK, STROBE — WITH CAB

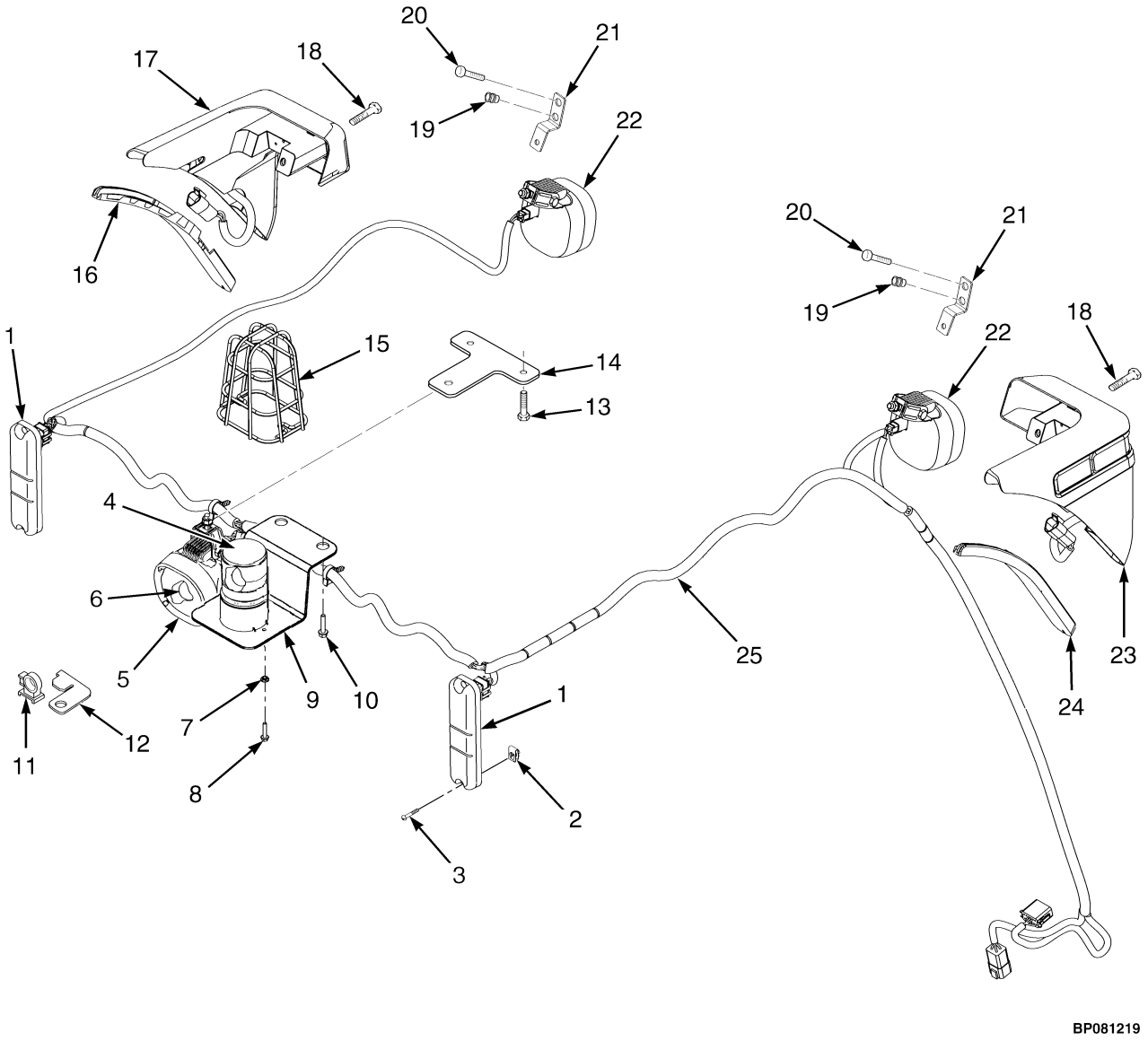

©2015 HYSTER COMPANY

LIGHTS

BRAKE, TAIL, BACKUP, SIDE, TURN SIGNALS, WORK, STROBE – WITH CAB

ITEM	PART NO.	DESCRIPTION	QTY
1	2056824	Brake/Backup Light (Stop,Turn,Tail, And Back-Up)	2
1	2107957	Tail Light Base (RH) (Not Shown)	1
1	2107958	Tail Light Base (LH) (Not Shown)	1
2	1537551	Nut (Clip)	2
3	1565125	Screw	2
4	1654013	Strobe Light Assembly (☞Figure 14-18)	1
5	2098083	Work Light (Rear) (Halogen)	1
5	2107382	Worklight (Rear) (LED)	1
6	2098082	Bulb (Halogen)	1
7	1586428	Nut	2
8	1586759	Capscrew	2
9	1565076	Bracket Wldmt	1
10	1586495	Capscrew	2
11	1532775	Clip	1
12	1532759	Clip	1
13	1586495	Capscrew	2
14	1698541	Bracket	1
15	1302024	Guard (Strobe Light)	1
16	1608592	Trim (LH)	1
17	2070562	Turn Signal Light (LH Front)	1
18	1613324	Capscrew	4
19	1530243	Insert	4
20	1583611	Capscrew	4
21	1698542	Bracket	2
22	2098084	Work Light (RH Front) (Halogen)	1
22	2107383	Worklight (RH Front) (LED)	1
22	2098085	Work Light (LH Front) (Halogen)	1
22	2107384	Worklight (LH Front) (LED)	1
23	2070561	Turn Signal Light (RH Front)	1
24	1608591	Trim (RH)	1
25	1623382	Wire Harness	1
25	2044712	Relay (30 Amp)	1

©2015 HYSTER COMPANY

TRANSMISSION HARNESS GROUP (FIGURE 5-24)
WITH AND WITHOUT BRAKE TEMP

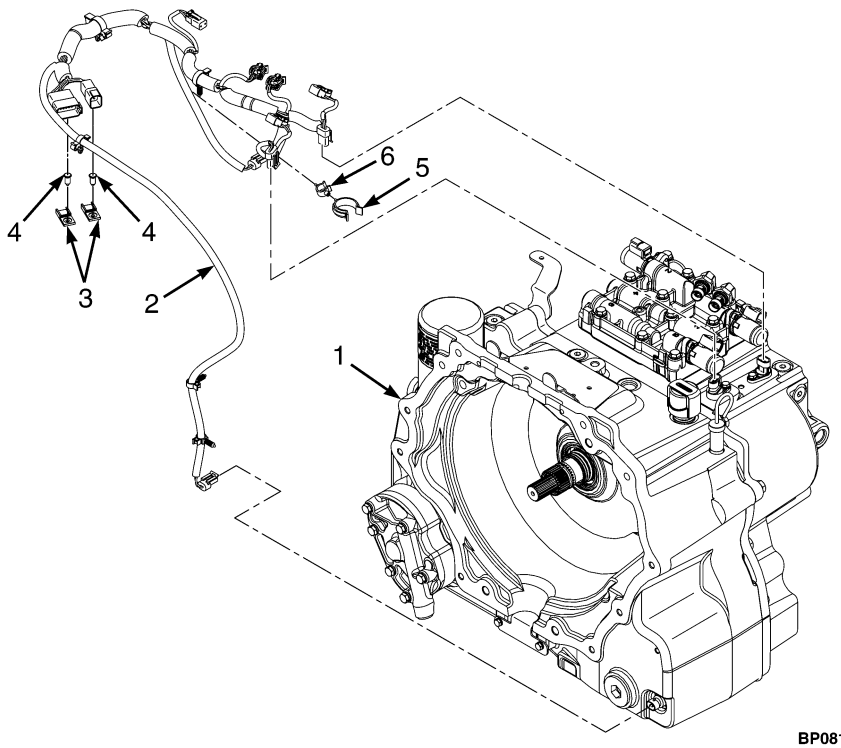

ITEM	PART NO.	DESCRIPTION	QTY
1	. . . . .	Transmission	1
2	2085943	Wire Harness (Transmission) (1 Speed) (☞Figure 5-43)	1
2	2085942	Wire Harness (Transmission) (2 Speed) (☞Figure 5-44)	1
2	4604292	Wire Harness (Transmission) (Transmission) (1 Speed W/ Brake Temp) (☞Figure 5-45)	1
2	4604293	Wire Harness (Transmission) (Transmission) (2 Speed W/ Brake Temp) (☞Figure 5-46)	1
3	1500912	Clip	2
4	1582464	Fastener	2
5	1561759	Clamp (Swivel)	1
6	1542439	Clamp (Swivel)	1

©2015 HYSTER COMPANY

WIRE HARNESS (FIGURE 5-25)
ADAPTER — LOW FUEL PRESSURE

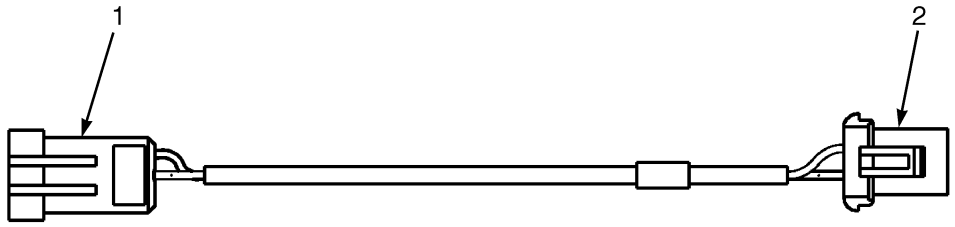

HP082028

ITEM	PART NO.	DESCRIPTION	QTY
	4602843	Wire Harness	1
1	. . . . .	Connector Assembly (To LH Chassis Harness)	1
1	2795583	Connector (3 Way)	1
1	2787350	Pin Terminal	2
1	2069381	Plug	1
1	2060555	Wire Seal (Yellow)	2
2	. . . . .	Connector Assembly (Low LPG Switch)	1
2	1329152	Plug	1
2	1329151	Terminal	1
2	1330281	Terminal	2
2	1402888	Seal (Purple)	2

©2015 HYSTER COMPANY

WIRE HARNESS (FIGURE 5-26)
AIR CONDITIONER

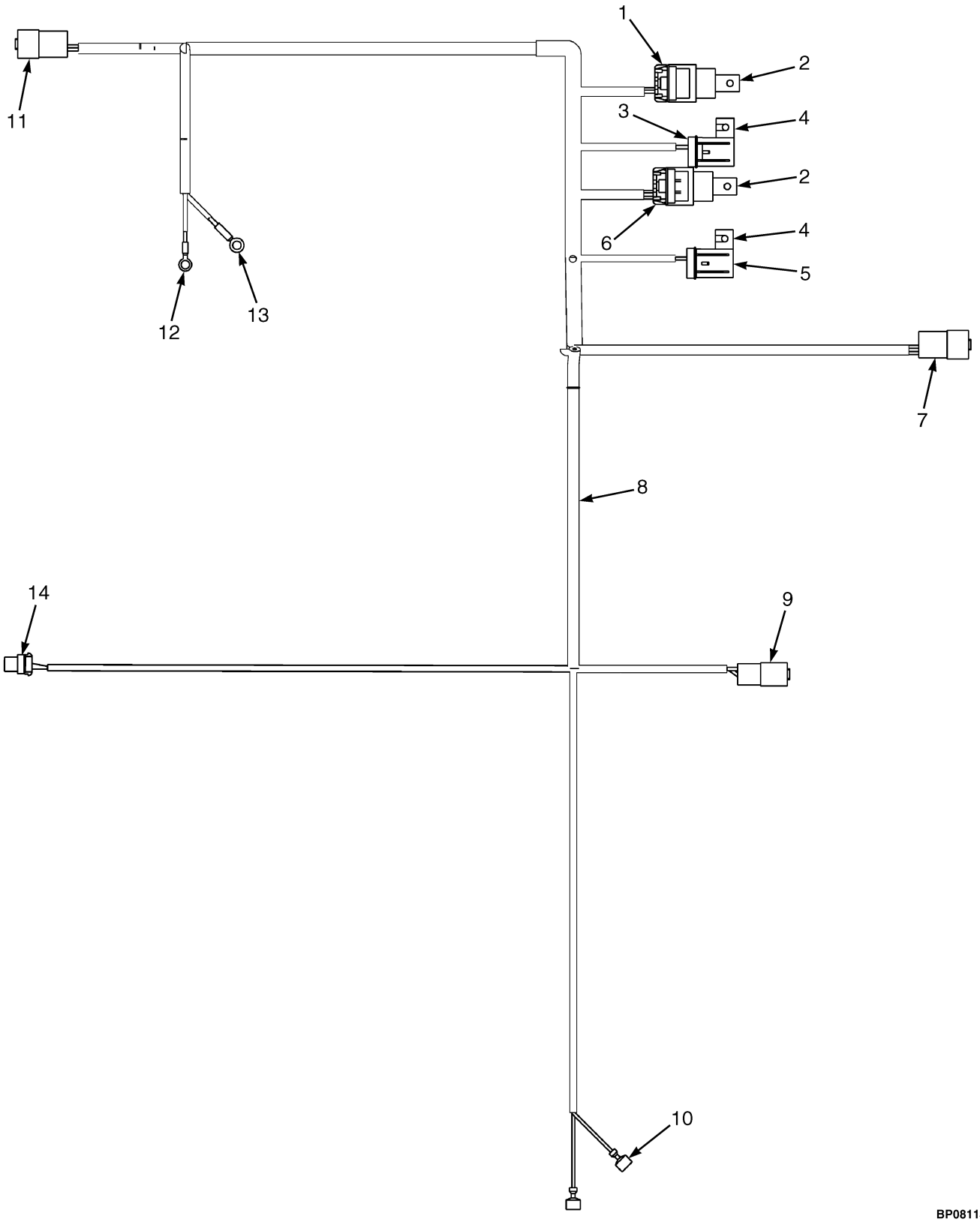

©2015 HYSTER COMPANY

WIRE HARNESS
AIR CONDITIONER

ITEM	PART NO.	DESCRIPTION	QTY
	4616123	Wire Harness	1
1	. . . . .	Connector Assembly (Condenser Relay)	1
1	1461744	Connector Body	1
1	1327164	Seal	1
1	1375797	Terminal	4
1	1323579	Seal	2
1	1329147	Seal	2
1	1503088	Lock	1
2	1461743	Relay	2
3	. . . . .	Connector Assembly (Condenser Fuse Holder)	1
3	1330292	Connector	1
3	1330283	Terminal	2
3	1300134	Fuse (25 Amp)	1
4	1330293	Cover (Fuse)	2
5	. . . . .	Connector Assembly (Compressor Fuse Holder)	1
5	1330292	Connector	1
5	1330283	Terminal	2
5	370646	Fuse (5 Amp)	1
6	. . . . .	Connector Assembly (Blower Relay)	1
6	1461744	Connector Body	1
6	1327164	Seal	1
6	1375797	Terminal	4
6	1323579	Seal	1
6	1329147	Seal	3
6	1503088	Lock	1
7	. . . . .	Connector Assembly (RH Door Harness)	1
7	4047669	Connector	1
7	1514598	Connector	1
7	866401	Terminal	4
8	381919	Braiding	AR
9	. . . . .	Connector Assembly (Condenser)	1
9	4060737	Connector	1
9	1480188	Connector	1
9	866401	Terminal	2
10	. . . . .	Connector Assembly (Pressure Switch)	1
10	1310142	Terminal Housing (Blue)	2
11	. . . . .	Connector Assembly (CPS 18)	1
11	4047669	Connector	1
11	1514598	Connector	1
11	866401	Terminal	3
11	1330439	Plug	1
12	. . . . .	Connector Assembly (B+ at Power Distribution Module)	1
12	148606	E-Ring	1
13	. . . . .	Connector Assembly (B- at Power Distribution Module)	1
13	148611	E-Ring	1
14	. . . . .	Connector Assembly (Compressor Clutch)	1
14	1329152	Plug	1
14	1329151	Terminal	1
14	1521989	Terminal	1
14	1330281	Terminal	1

©2015 HYSTER COMPANY

WIRE HARNESS
AIR CONDITIONER

ITEM	PART NO.	DESCRIPTION	QTY
14	1323579	Seal	1
14	1329147	Seal	1

©2015 HYSTER COMPANY

NOTES

©2015 HYSTER COMPANY

WIRE HARNESS (FIGURE 5-27)
ENGINE — KUBOTA 3.8L DIESEL

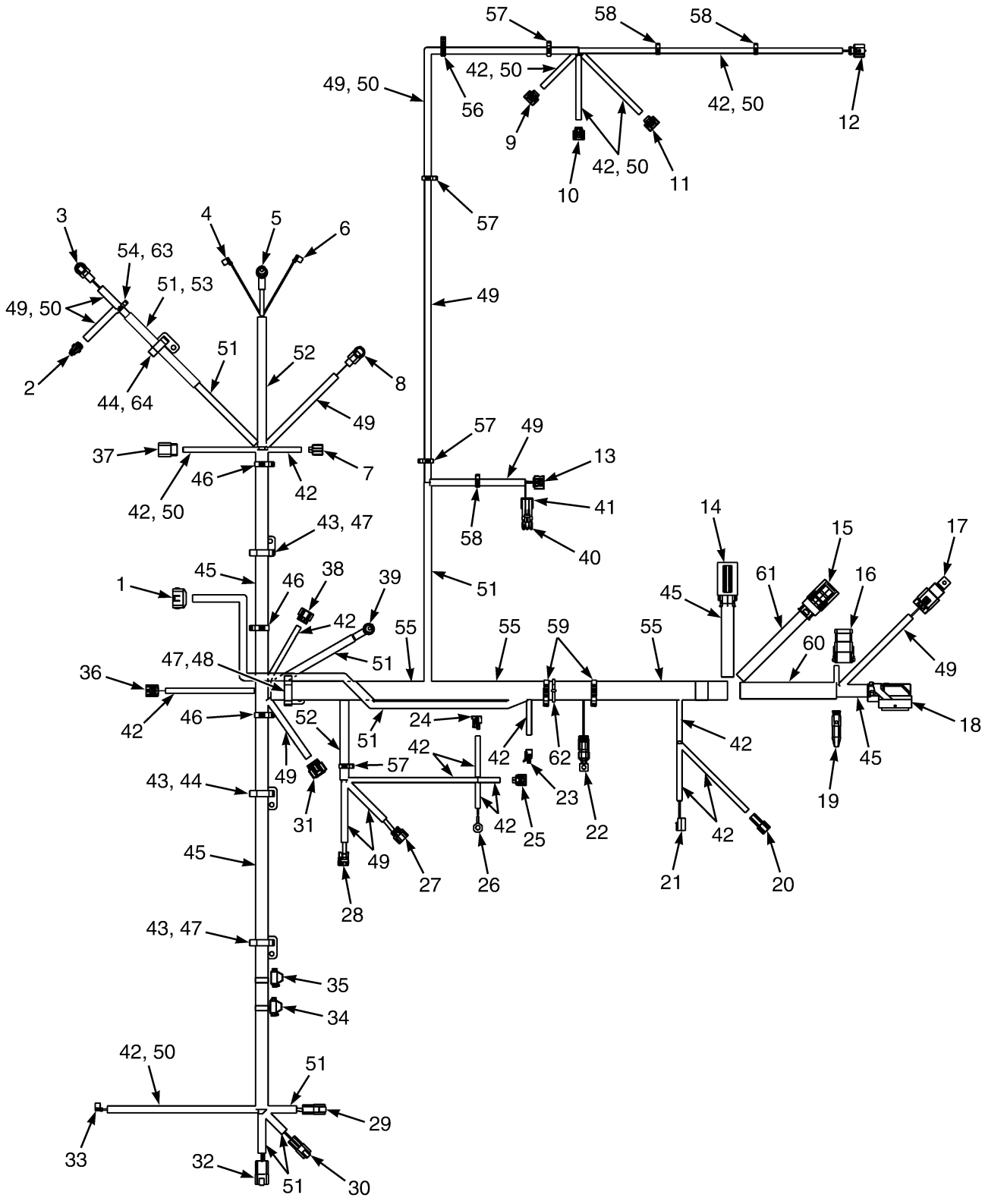

BP081934

©2015 HYSTER COMPANY

WIRE HARNESS
ENGINE – KUBOTA 3.8L DIESEL

ITEM	PART NO.	DESCRIPTION	QTY
	4620676	Wire Harness (Engine)	1
1	. . . . .	Connector Assembly (Injector)	1
1	4023719	Connector	1
1	1476598	Terminal	8
1	4613011	Plug	2
1	1476599	Seal	8
2	. . . . .	Connector Assembly (Oil Pressure)	1
2	1603021	Connector	1
2	1603236	Connector (Secondary Lock)	1
2	1548517	Terminal (Socket)	3
2	1548519	Seal	3
3	. . . . .	Connector Assembly (Crank Sensor)	1
3	4029384	Connector	1
3	4029116	Terminal	3
3	4029117	Wire Seal	3
3	4045249	Boot	1
4	. . . . .	Connector Assembly (Contactor)	1
4	1402823	Connector	1
5	. . . . .	Connector Assembly (Contactor Out)	1
5	806425	E-Ring	1
5	1520864	Boot	1
6	. . . . .	Connector Assembly (Contactor)	1
6	1402823	Connector	1
7	. . . . .	Contactor Assembly (Coolant Temperature)	1
7	4028633	Connector	1
7	4612829	Terminal	2
7	2061333	Wire Seal	2
8	. . . . .	Connector Assembly (Cam Sensor)	1
8	4029383	Connector	1
8	4029116	Terminal	3
8	4029117	Wire Seal	3
8	4045249	Boot	1
9	. . . . .	Connector Assembly (Exhaust Temperature, 0)	1
9	4043881	Connector	1
9	1476598	Terminal	2
9	1476599	Seal	2
10	. . . . .	Connector Assembly (Exhaust Temperature, 1)	1
10	4043882	Connector	1
10	1476598	Terminal	2
10	1476599	Seal	2
11	. . . . .	Connector Assembly (Exhaust Temperature, 2)	1
11	4043880	Connector	1
11	1476598	Terminal	2
11	1476599	Seal	2
12	. . . . .	Connector Assembly (Differential Pressure)	1
12	4028634	Connector	1
12	4043877	Terminal	3
12	1607745	Seal	3
13	. . . . .	Connector Assembly (Mass Air Flow)	1
13	4029113	Connector	1

©2015 HYSTER COMPANY

WIRE HARNESS
ENGINE – KUBOTA 3.8L DIESEL

ITEM	PART NO.	DESCRIPTION	QTY
13	4043876	Terminal	5
13	4029117	Wire Seal	5
14	. . . . .	Connector Assembly (Engine Control Module)	1
14	4024084	Connector	1
14	4028286	Terminal	34
14	4028287	Plug	46
14	4023786	Cover	1
15	. . . . .	Connector Assembly (Interface Module)	1
15	4023785	Connector	1
15	4028286	Terminal	13
15	4028287	Plug	43
15	4029426	Cover	1
16	. . . . .	Connector Assembly (Buss Bar)	1
16	1525564	Connector	1
16	1500913	Connector	1
16	1330438	Terminal (Socket)	12
16	4031497	Connector	1
17	. . . . .	Connector Assembly (Latch Relay)	1
17	4030503	Connector	1
17	1323581	Plug	1
17	1330283	Terminal	4
18	. . . . .	Connector Assembly (Engine Control Module)	1
18	4023784	Connector	1
18	4028286	Terminal	44
18	4028287	Plug	36
18	4023786	Cover	1
19	. . . . .	Connector Assembly (Resistor)	1
19	1490242	Connector (2 Way)	1
19	1490243	Connector	1
19	1330438	Terminal (Socket)	2
19	4031366	Resistor	1
20	. . . . .	Connector Assembly (Forward Separator)	1
20	4028289	Connector	1
20	4036068	Connector Lock	1
20	4036069	Terminal	2
20	4036070	Wire Seal	2
21	. . . . .	Connector Assembly (Feed Pump)	1
21	1308259	Connector Body	1
21	314775	Terminal	2
22	. . . . .	Connector Assembly) (Can Service Tool)	1
22	2314772	Connector	1
22	2314773	Connector Lock	1
22	2314741	Terminal	4
22	2061333	Wire Seal	4
22	4031365	Resistor	1
23	. . . . .	Connector Assembly (Fuel Level)	1
23	1476077	Connector	1
23	1323576	Terminal	2
24	. . . . .	Connector Assembly (SCV)	1
24	4613118	Connector	1

©2015 HYSTER COMPANY

WIRE HARNESS
ENGINE – KUBOTA 3.8L DIESEL

ITEM	PART NO.	DESCRIPTION	QTY
24	4613092	Terminal	2
24	4613127	Wire Seal	2
25	. . . . .	Connector Assembly (Fuel Temperature)	1
25	4028633	Connector	1
25	4612829	Terminal	2
25	2061333	Wire Seal	2
26	. . . . .	Connector Assembly (Engine Ground)	1
26	1402620	Ring Terminal	1
27	. . . . .	Connector Assembly (Rail Pressure)	1
27	4612835	Connector	1
27	2314770	Connector Lock	1
27	2314741	Terminal	3
27	2061333	Wire Seal	3
28	. . . . .	Connector Assembly (Intake Throttle)	1
28	1531231	Connector Body	1
28	1476598	Terminal	2
28	4613011	Plug	1
28	1476599	Seal	5
28	4616920	Terminal	3
29	. . . . .	Connector Assembly (RH Chassis Harness)	1
29	1541988	Connector (8 Pin)	1
29	1541989	Connector	1
29	1463138	Terminal Pin	8
30	. . . . .	Connector Assembly (RH Chassis Harness)	1
30	1623050	Housing (Connector)	1
30	1330418	Connector	1
30	1330437	Terminal (Pin)	6
30	1363885	Terminal (Pin)	2
31	. . . . .	Connector Assembly (EGR Valve)	1
31	4612971	Connector	1
31	4612978	Terminal	4
31	2314800	Wire Seal	2
31	4614516	Wire Seal	2
32	. . . . .	Connector Assembly (RH Chassis Harness)	1
32	1514597	Connector	1
32	1514598	Connector	1
32	866401	Terminal	4
33	. . . . .	Connector Assembly (Starter)	1
33	1521324	Connector	1
34	. . . . .	Connector Assembly (Ignition, 10A)	1
34	1602431	Fuse Holder	1
34	1498046	Fuse (10 Amp)	1
35	. . . . .	Connector Assembly (Start, 5A)	1
35	1602431	Fuse Holder	1
35	1498044	Fuse (5 Amp)	1
36	. . . . .	Connector Assembly (Air Temperature)	1
36	4029337	Connector	1
36	4616920	Terminal	2
36	1476599	Seal	2
37	. . . . .	Connector Assembly (Alternator)	1

©2015 HYSTER COMPANY

WIRE HARNESS
ENGINE – KUBOTA 3.8L DIESEL

ITEM	PART NO.	DESCRIPTION	QTY
37	1302907	Connector	1
37	1302908	Connector Lock	1
37	1302912	Terminal	2
37	1302909	Wire Seal	2
38	. . . . .	Connector Assembly (Boost Pressure)	1
38	4029387	Connector	1
38	4616915	Terminal	3
38	4614848	Wire Seal	3
39	. . . . .	Connector Assembly (Grid Heater)	1
39	806425	E-Ring	1
39	1520864	Boot	1
40	. . . . .	Connector Assembly (End Cap)	1
40	1465468	Connector	1
40	1327164	Seal	2
41	. . . . .	Connector Assembly (Air Filter)	1
41	1465469	Connector	1
41	1323578	Terminal	2
41	1402888	Seal (Purple)	2
42	275493	Conduit	AR
43	1532778	Clip	3
44	1532759	Clip	2
45	275498	Conduit	AR
46	1509889	Clip	3
47	1532761	Clip	3
48	1532781	Clip	1
49	275494	Conduit	AR
50	4044397	Tape-Bulk (FT)	AR
51	275495	Conduit	AR
52	275496	Conduit	AR
53	. . . . .	Sleeve	AR
54	1532757	Bracket	1
55	1540389	Conduit	AR
56	1646457	Clip	1
57	1509890	Clip	4
58	1509888	Clip	3
59	1530964	Clip	2
60	275499	Conduit	AR
61	275497	Conduit	AR
62	137852	Strap Clamp	1
63	1532776	Clip	1
64	1532777	Clip	1

©2015 HYSTER COMPANY

NOTES

©2015 HYSTER COMPANY

WIRE HARNESS (FIGURE 5-28)
ENGINE — KUBOTA DIESEL (3.6L)

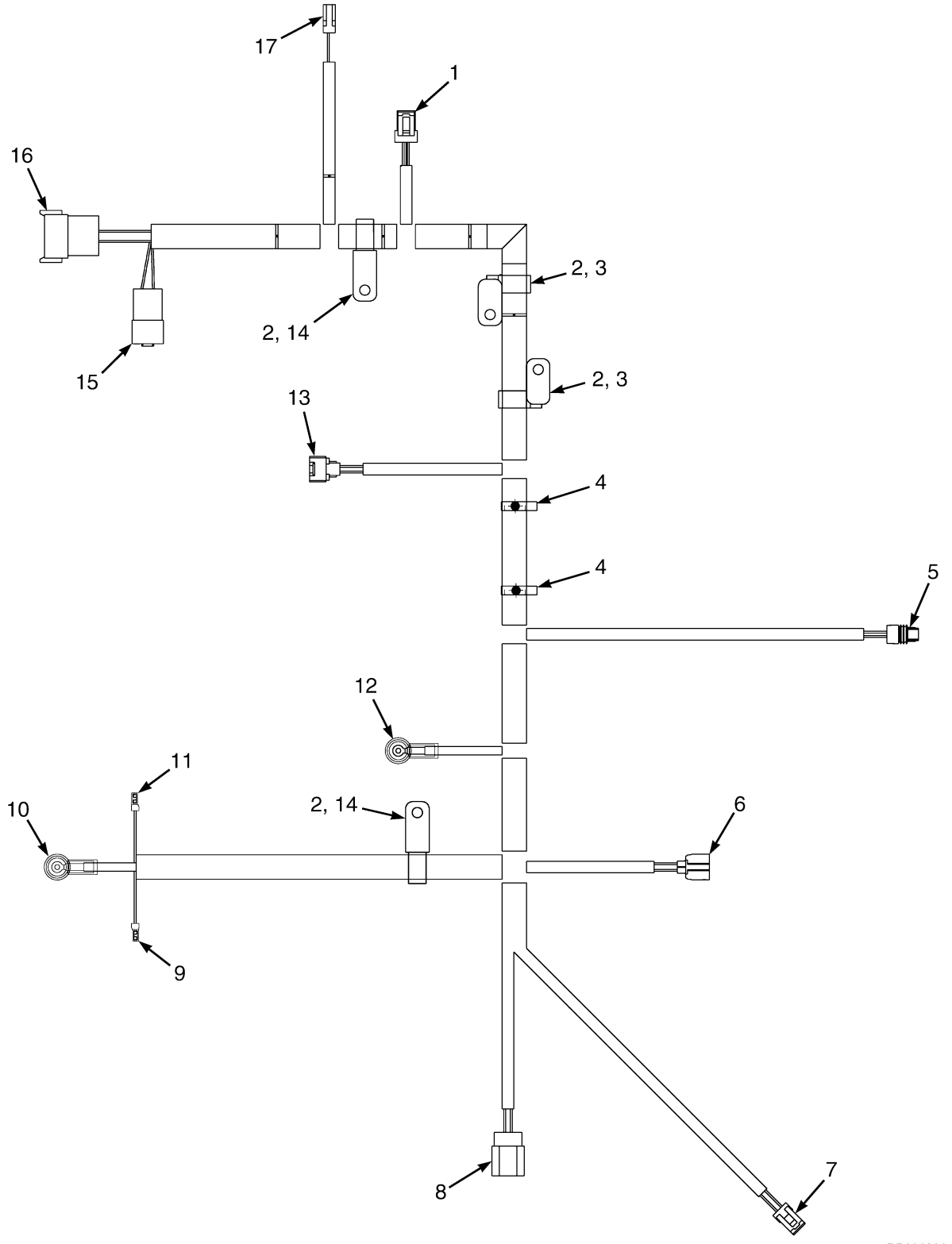

©2015 HYSTER COMPANY

WIRE HARNESS
ENGINE – KUBOTA DIESEL (3.6L)

ITEM	PART NO.	DESCRIPTION	QTY
	4615505	Wire Harness	1
1	. . . . .	Connector Assembly (Engine RPM Sensor)	1
1	1546673	Connector	1
1	1323576	Terminal	3
2	1532776	Clip	4
3	1532759	Clip	2
4	1402624	Clip	2
5	. . . . .	Connector Asssembly (Fuel Level)	1
5	1476077	Connector	1
5	1323576	Terminal	2
6	. . . . .	Connector Assembly (Coolant Temp Sensor)	1
6	1323586	Connector	1
6	1323576	Terminal	2
7	. . . . .	Connector Assembly (Low Engine Oil Pressure)	1
7	1327957	Connector	1
7	1532571	Terminal	3
8	. . . . .	Connector Assembly (Alternator)	1
8	1302907	Connector	1
8	1302908	Connector Lock	1
8	1302912	Terminal	2
8	1302910	Wire Seal	1
8	1302909	Wire Seal	1
9	1402823	Connector (Relay Ground 85)	1
10	. . . . .	Connector Assembly (Relay Power to Glow Plugs)	1
10	148614	E-Ring	1
10	1520864	Boot	1
11	1402823	Connector (Relay Signal 86)	1
12	. . . . .	Connector Assembly (Glow Plug)	1
12	196196	E-Ring	1
12	1520864	Boot	1
13	. . . . .	Connector Assembly (Fuel Shut Off Solenoid)	1
13	4612988	Connector	1
13	4612978	Terminal	2
13	2314800	Wire Seal	2
14	1558226	Clip	2
15	. . . . .	Connector Assembly (Engine to Chassis)	1
15	4047669	Connector	1
15	1514598	Connector	1
15	1330439	Plug	1
15	1484709	Terminal (Pin)	3
16	. . . . .	Connector Assembly (Engine to Chassis)	1
16	4047908	Connector	1
16	1352603	Secondary Lock	1
16	1330437	Terminal (Pin)	10
16	1330439	Plug	2
17	. . . . .	Connector Assembly (Starter Solenoid)	1
17	4029099	Connector	1
17	4028288	Terminal	1
	a	Conduit (Elbow)	1
	a 275493	Conduit	AR

©2015 HYSTER COMPANY

WIRE HARNESS
ENGINE – KUBOTA DIESEL (3.6L)

ITEM	PART NO.	DESCRIPTION	QTY
	a 275494	Conduit	AR
	a 275496	Conduit	AR

FOOTNOTES:

a Not Illustrated

©2015 HYSTER COMPANY

NOTES

©2015 HYSTER COMPANY

WIRE HARNESS (FIGURE 5-29)
ENGINE — KUBOTA 3.8L SI LPG

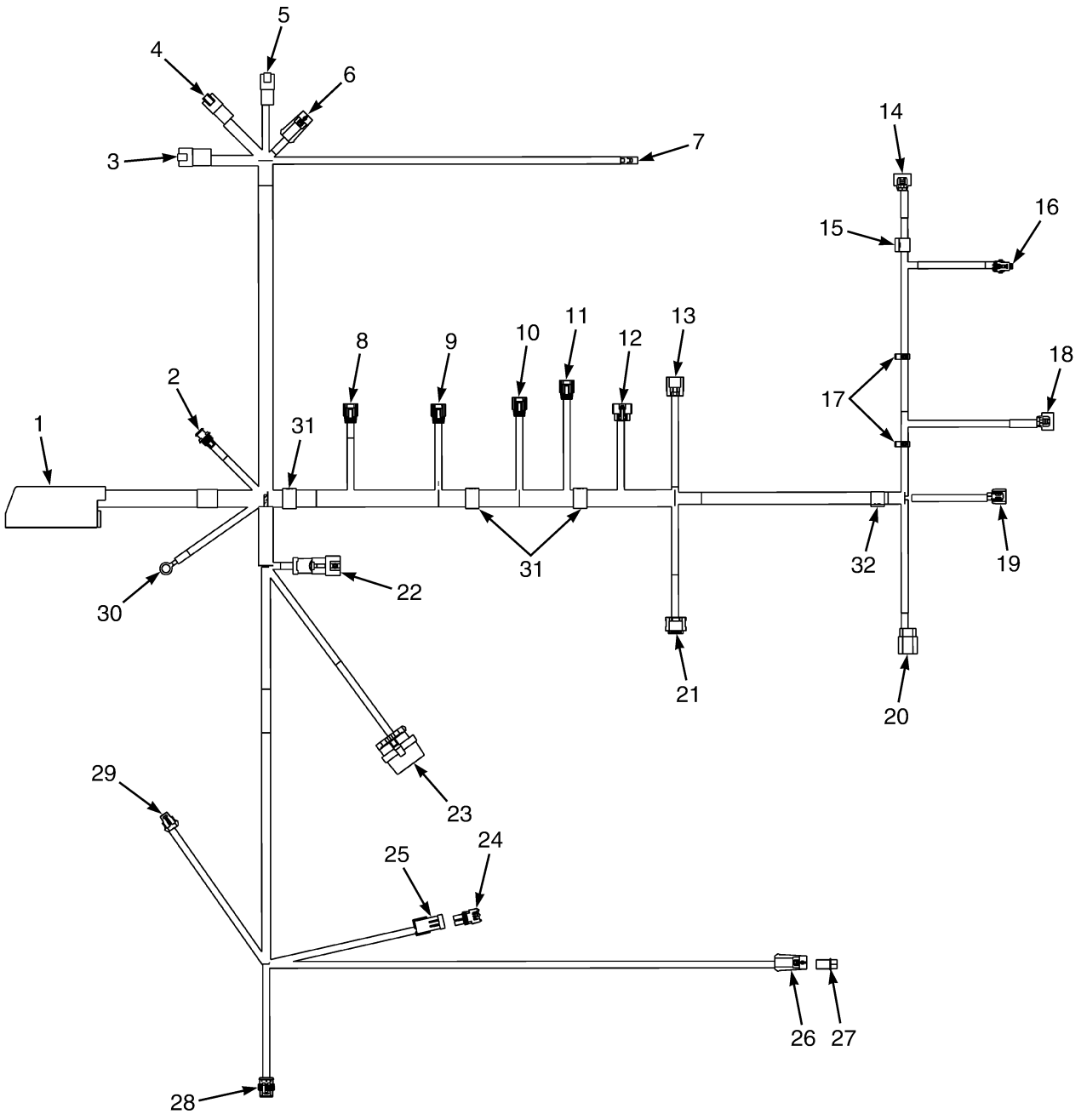

©2015 HYSTER COMPANY

WIRE HARNESS
ENGINE – KUBOTA 3.8L SI LPG

ITEM	PART NO.	DESCRIPTION	QTY
	4639406	Wire Harness (Engine)	1
1	. . . . .	Connector Assembly (Engine Control Unit)	1
1	1641949	Connector	1
1	1607549	Terminal	35
1	4023295	Terminal	5
1	4025685	Plug	50
2	. . . . .	Connector Assembly (Knock Sensor)	1
2	4074907	Connector	1
2	1402814	Terminal	2
2	1562649	Seal	2
3	. . . . .	Connector Assembly (RH Chassis Harness)	1
3	1514597	Connector	1
3	1514598	Connector	1
3	1484709	Terminal (Pin)	2
3	866401	Terminal	2
4	. . . . .	Connector Assembly (RH Chassis Harness)	1
4	1330413	Connector (8 Pin)	1
4	1330418	Connector	1
4	1330437	Terminal (Pin)	6
4	1330439	Plug	2
5	. . . . .	Connector Assembly (RH Chassis Harness)	1
5	1541988	Connector (8 Pin)	1
5	1541989	Connector	1
5	1463138	Terminal Pin	8
6	. . . . .	Connector Assembly (Pre Cat O2 Sensor)	1
6	1498424	Housing	1
6	1650797	Lock	1
6	1330355	Terminal	4
6	1476108	Wire Seal (White)	4
7	1324311	Terminal (Starter Solenoid)	1
7	4110373	Terminal (Starter Solenoid)	1
8	. . . . .	Connector Assembly (Cylinder Coil #4)	1
8	4612988	Connector	1
8	4612978	Terminal	2
8	4614516	Wire Seal	2
9	. . . . .	Connector Assembly (Cylinder Coil #3)	1
9	4612988	Connector	1
9	4612978	Terminal	2
9	4614516	Wire Seal	2
10	. . . . .	Connector Assembly (Cylinder Coil #2)	1
10	4612988	Connector	1
10	4612978	Terminal	2
10	4614516	Wire Seal	2
11	. . . . .	Connector Assembly (Cylinder Coil #1)	1
11	4612988	Connector	1
11	4612978	Terminal	2
11	4614516	Wire Seal	2
12	. . . . .	Connector Assembly (TMAP)	1
12	4074909	Connector	1
13	. . . . .	Connector Assembly (DEPR)	1

©2015 HYSTER COMPANY

WIRE HARNESS
ENGINE – KUBOTA 3.8L SI LPG

ITEM	PART NO.	DESCRIPTION	QTY
13	4612836	Connector	1
13	4612844	Connector Lock	1
13	2070512	Plug	1
13	2314741	Terminal	5
13	2061333	Wire Seal	5
14	. . . . .	Connector Assembly (Crank Sensor)	1
14	4043880	Connector	1
14	1476598	Terminal	2
14	1476599	Seal	2
15	4027767	Clamp	1
16	. . . . .	Connector Assembly (Oil Pressure)	1
16	1603021	Connector	1
16	1603236	Connector (Secondary Lock)	1
16	1548517	Terminal (Socket)	3
16	1548519	Seal	3
17	1509888	Clip	2
18	. . . . .	Connector Assembly (Cam Sensor)	1
18	4043880	Connector	1
18	1476598	Terminal	2
18	1476599	Seal	2
19	. . . . .	Connector Assembly (Coolant Temp)	1
19	4028633	Connector	1
19	2314741	Terminal	2
19	2061333	Wire Seal	2
20	. . . . .	Connector Assembly (Alternator)	1
20	1302907	Connector	1
20	1302908	Connector Lock	1
20	1302911	Terminal	2
20	1302909	Wire Seal	2
21	. . . . .	Connector Assembly (Throttle)	1
21	1569973	Connector Body	1
21	1525596	Terminal	6
21	1533810	Seal (Green)	6
22	. . . . .	Connector Assembly (Diagnostic)	1
22	1641944	Connector	1
22	1641945	Spacer	1
22	1641947	Cap	1
23	. . . . .	Connector Assembly (Fuse Holder)	1
23	1327959	Connector	1
23	1330297	Lock	1
23	1330281	Terminal	4
23	1327164	Seal	2
23	1402888	Seal (Purple)	1
23	1323579	Seal	3
23	1498044	Fuse (5 Amp)	1
23	1498046	Fuse (10 Amp)	1
23	1641937	Cap	1
23	1567333	Clip	1
24	. . . . .	End Cap (Air Filter Indicator)	1
24	1465468	Connector	1

©2015 HYSTER COMPANY

WIRE HARNESS
ENGINE – KUBOTA 3.8L SI LPG

ITEM	PART NO.	DESCRIPTION	QTY
24	1327164	Seal	2
25	. . . . .	Connector Assembly (Air Filter Indicator)	1
25	1465469	Connector	1
25	1323578	Terminal	2
25	1402888	Seal (Purple)	2
26	1498424	Housing	1
26	. . . . .	Connector Assembly (Post Cat 02 Sensor)	1
26	1650797	Lock	1
26	1330355	Terminal	4
26	1476108	Wire Seal (White)	4
27	. . . . .	Cap (Post Cat Sensor)	1
27	1483329	Connector Body	1
27	1487441	Housing	1
27	1482668	Plug (Cavity Plug)	4
28	. . . . .	Connector Assembly (Low LPG Pressure)	1
28	1547629	Connector (3 Way)	1
28	1508232	Terminal (Pin)	3
28	2060555	Wire Seal (Yellow)	3
29	. . . . .	Connector Assembly (LPG Lock Off)	1
29	1539872	Connector	1
29	1476108	Wire Seal (White)	2
29	1330355	Terminal	2
30	4110374	Ring Terminal (Ground)	1
31	4027764	Clamp	3
32	4027766	Clamp	1

©2015 HYSTER COMPANY

WIRE HARNESS (FIGURE 5-30)

ENGINE WITH ELECTRONIC THROTTLE — KUBOTA DIESEL 3.6L

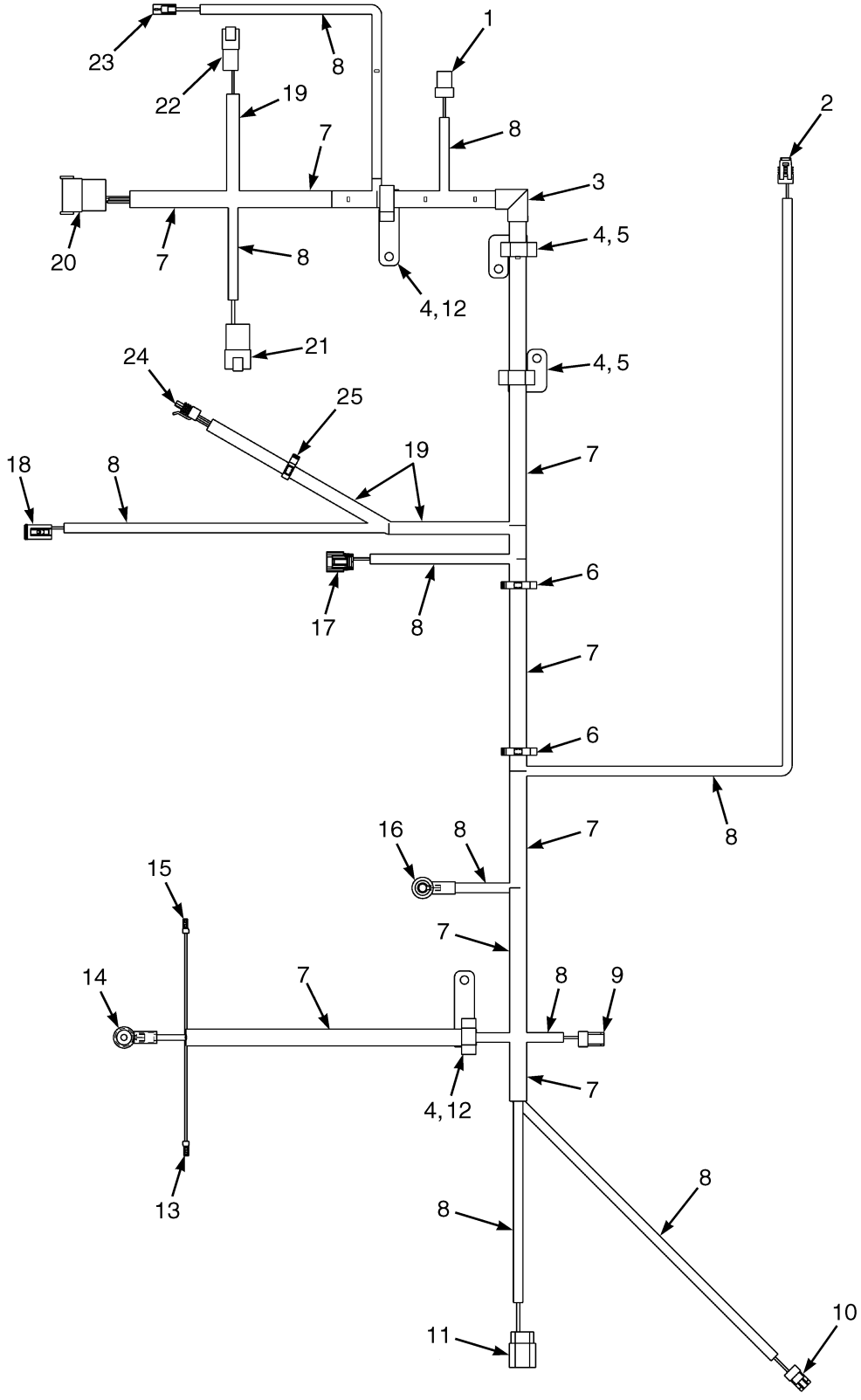

BP081960

©2015 HYSTER COMPANY

WIRE HARNESS
ENGINE WITH ELECTRONIC THROTTLE – KUBOTA DIESEL 3.6L

ITEM	PART NO.	DESCRIPTION	QTY
	4629824	Wire Harness (Engine)	1
1	. . . . .	Connector Assembly (Engine RPM Sensor)	1
1	1546673	Connector	1
1	1323576	Terminal	3
2	. . . . .	Connector Assembly (Fuel Level)	1
2	1476077	Connector	1
2	1323576	Terminal	2
3	. . . . .	Conduit	1
4	1532776	Clip	4
5	1532759	Clip (Bracket)	2
6	1402624	Clip	2
7	275496	Conduit	AR
8	275493	Conduit	AR
9	. . . . .	Connector Assembly (Coolant Temp Sensor)	1
9	1323586	Connector	1
9	1323576	Terminal	2
10	. . . . .	Connector Assembly (Low Engine Oil)	1
10	1327957	Connector	1
10	1532571	Terminal	3
11	. . . . .	Connector Assembly (Alternator Connector)	1
11	1302907	Connector	1
11	1302908	Connector Lock	1
11	1302912	Terminal	2
11	1302910	Wire Seal	1
11	1302909	Wire Seal	1
12	1532758	Clip (Bracket)	2
13	. . . . .	Connector Assembly (Relay Ground 85)	1
13	1402823	Connector	1
14	. . . . .	Connector Assembly (Relay Power to Glow Plug 87)	1
14	148614	E-Ring	1
14	1520864	Boot	1
15	. . . . .	Connector Assembly (Relay Signal 86)	1
15	1402823	Connector	1
16	. . . . .	Connector Assembly (Glow Plug)	1
16	196196	E-Ring	1
16	1520864	Boot	1
17	. . . . .	Connector Assembly (Fuel Shut-Off Solenoid)	1
17	4612988	Connector	1
17	4612978	Terminal	2
17	2314800	Wire Seal	2
18	. . . . .	Connector Assembly (Pull Actuator)	1
18	1490242	Connector (2 Way)	1
18	1490243	Connector	1
18	1330438	Terminal (Socket)	2
19	275494	Conduit	AR
20	. . . . .	Connector Assembly (Engine to Chassis)	1
20	4047908	Connector	1
20	1352603	Secondary Lock	1
20	1330437	Terminal (Pin)	10
20	1330439	Plug	2

©2015 HYSTER COMPANY

WIRE HARNESS

ENGINE WITH ELECTRONIC THROTTLE – KUBOTA DIESEL 3.6L

ITEM	PART NO.	DESCRIPTION	QTY
21	. . . . .	Connector Assembly (Engine To Chassis)	1
21	4047669	Connector	1
21	1514598	Connector (Secondary Lock)	1
21	1330439	Plug	1
21	1484709	Terminal (Pin)	3
22	. . . . .	Connector Assembly (Engine to Chassis)	1
22	1530960	Connector	1
22	1530961	Connector (Secondary Lock)	1
22	1463138	Terminal Pin	6
23	. . . . .	Connector Assembly (Starter Solenoid)	1
23	4029099	Connector	1
23	4028288	Terminal	1
24	. . . . .	Connector Assembly (Throttle Position Sensor)	1
24	1525584	Connector	1
24	1532571	Terminal	6
25	1500901	Clip	1

©2015 HYSTER COMPANY

NOTES

©2015 HYSTER COMPANY

WIRE HARNESS (FIGURE 5-31)
RH CHASSIS — KUBOTA 3.8L DIESEL AND LPG

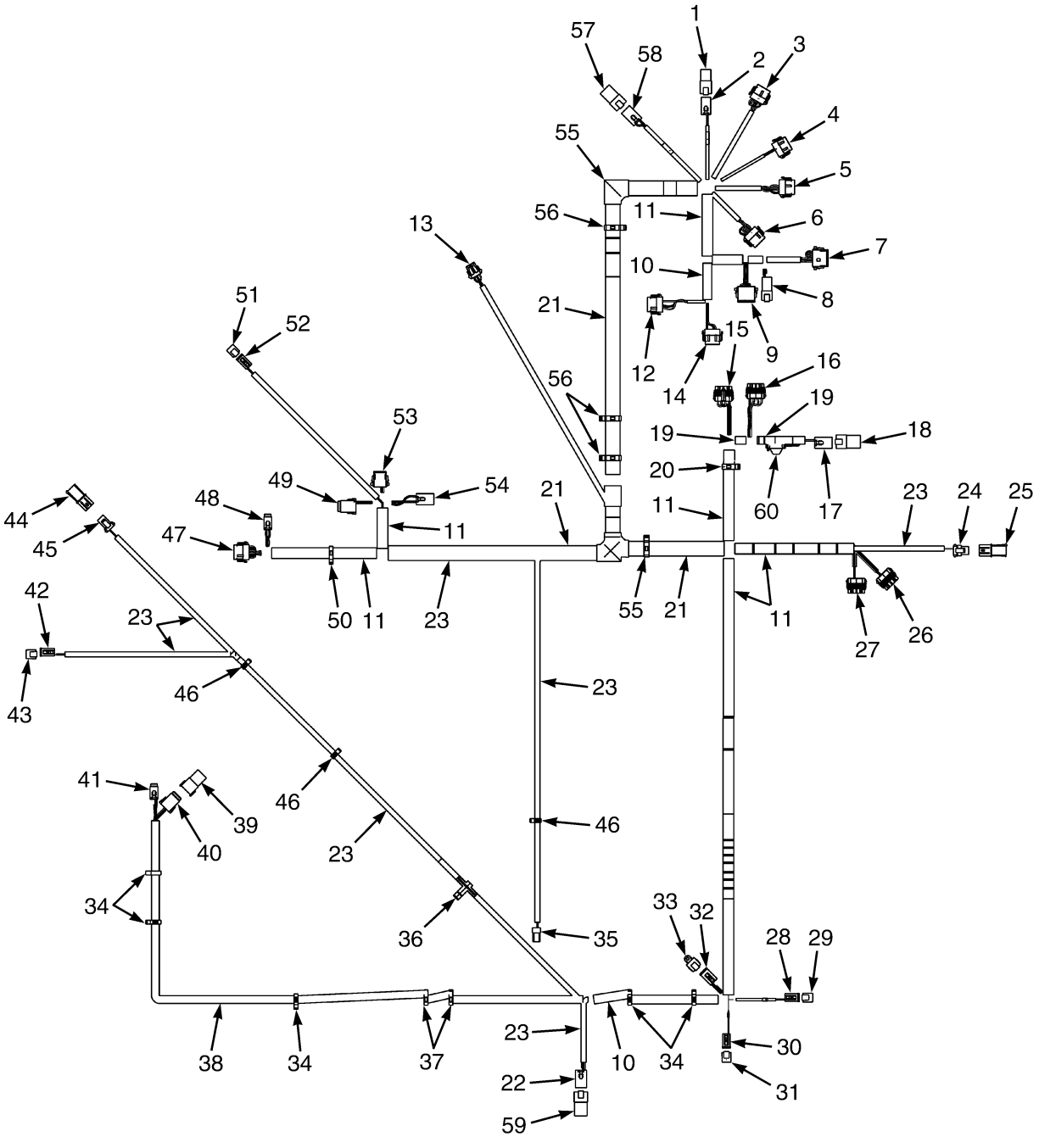

BP081939

©2015 HYSTER COMPANY

WIRE HARNESS
RH CHASSIS – KUBOTA 3.8L DIESEL AND LPG

ITEM	PART NO.	DESCRIPTION	QTY
	4630268	Wire Harness (RH Chassis)	1
1	. . . . .	Connector Assembly (Endcap)	1
1	4060737	Connector	1
1	1330439	Plug	2
2	. . . . .	Connector Assembly (ACC 1)	1
2	4047664	Connector	1
2	1546697	Connector (Secondary Lock)	1
2	1554359	Terminal	2
3	. . . . .	Connector Assembly (Vehicle Systems Manager)	1
3	1525570	Connector	1
3	1530037	Connector (Secondary Lock)	1
3	1463139	Terminal	9
3	1484377	Plug	3
4	. . . . .	Connector Assembly (Vehicle Systems Manager)	1
4	1525569	Connector	1
4	1530037	Connector (Secondary Lock)	1
4	1463139	Terminal	3
4	1484377	Plug	9
5	. . . . .	Connector Assembly (Vehicle Systems Manager)	1
5	1525568	Connector	1
5	1530037	Connector (Secondary Lock)	1
5	1463139	Terminal	7
5	1484377	Plug	5
6	. . . . .	Connector Assembly (Vehicle Systems Manager)	1
6	1525567	Connector	1
6	1530037	Connector (Secondary Lock)	1
6	1463139	Terminal	9
6	1484377	Plug	2
6	4053052	Terminal	1
7	. . . . .	Connector Assembly (Vehicle Systems Manager)	1
7	1525563	Connector	1
7	1500913	Connector	1
7	1330438	Terminal (Socket)	8
7	1363886	Terminal (Socket)	4
8	. . . . .	Connector Assembly (Cowl Harness)	1
8	1489655	Connector (4 Way)	1
8	1330416	Connector	1
8	1330437	Terminal (Pin)	4
9	. . . . .	Connector Assembly (Cowl Harness)	1
9	1493428	Connector (12-Way)	1
9	1500913	Connector	1
9	1330438	Terminal (Socket)	11
9	1484377	Plug	1
10	275496	Conduit	AR
11	275497	Conduit	AR
12	. . . . .	Connector Assembly (Vehicle Systems Manager)	1
12	1525567	Connector	1
12	1529046	Connector (Secondary Lock)	1
12	1463139	Terminal	3
12	1484377	Plug	9

©2015 HYSTER COMPANY

WIRE HARNESS
RH CHASSIS – KUBOTA 3.8L DIESEL AND LPG

ITEM	PART NO.	DESCRIPTION	QTY
13	. . . . .	Connector Assembly (Horn)	1
13	1476064	Connector	1
13	1476109	Connector Lock	1
13	1330356	Seal	2
13	1330355	Terminal	3
13	1476108	Wire Seal (White)	1
14	. . . . .	Connector Assembly (Vehicle Systems Manager)	1
14	1525569	Connector	1
14	1529046	Connector (Secondary Lock)	1
14	1463139	Terminal	3
14	1484377	Plug	9
15	. . . . .	Connector Assembly (Power Distribution Module)	1
15	1521184	Connector	1
15	1521188	Lock	1
15	1323579	Seal	6
15	1327164	Seal	1
15	1330281	Terminal	5
15	1521989	Terminal	2
15	1402888	Seal (Purple)	1
16	. . . . .	Connector Assembly (Power Distribution Module)	1
16	1521183	Connector	1
16	1521188	Lock	1
16	1323579	Seal	7
16	1327164	Seal	1
16	1330281	Terminal	4
16	1521989	Terminal	3
17	. . . . .	Connector Assembly (ACC 2)	1
17	1632865	Connector	1
17	1514603	Connector	1
17	1330439	Plug	1
17	1554359	Terminal	3
18	. . . . .	Connector Assembly (Endcap)	1
18	4047669	Connector	1
18	1330439	Plug	4
19	275495	Conduit	AR
20	1534329	Clip	1
21	1540388	Conduit	AR
22	. . . . .	Connector Assembly (To Seat Switch Harness)	1
22	1632865	Connector	1
22	1514603	Connector	1
22	1554359	Terminal	4
23	275493	Conduit	AR
24	. . . . .	Connector Assembly (Hydraulic Filter)	1
24	1329152	Plug	1
24	1329151	Terminal	1
24	1330281	Terminal	2
24	1402888	Seal (Purple)	2
25	. . . . .	Connector Assembly (Endcap)	1
25	1329150	Connector	1
25	1329151	Terminal	1

©2015 HYSTER COMPANY

WIRE HARNESS
RH CHASSIS – KUBOTA 3.8L DIESEL AND LPG

ITEM	PART NO.	DESCRIPTION	QTY
25	1327164	Seal	2
26	. . . . .	Connector Assembly (Power Distribution Module)	1
26	1521186	Connector	1
26	1521188	Lock	1
26	1323579	Seal	7
26	1327164	Seal	1
26	1521989	Terminal	7
27	. . . . .	Connector Assembly (Power Distribution Module)	1
27	1521185	Connector	1
27	1521188	Lock	1
27	1323579	Seal	8
27	1330281	Terminal	5
27	1521989	Terminal	3
28	. . . . .	Connector Assembly (Hood Switch/Keyswitch)	1
28	1490242	Connector (2 Way)	1
28	1490243	Connector	1
28	1330438	Terminal (Socket)	2
29	. . . . .	Connector Assembly (Endcap)	1
29	1626727	Connector	1
30	. . . . .	Connector Assembly (Alternate Horn Button)	1
30	1490242	Connector (2 Way)	1
30	1490243	Connector	1
30	1330438	Terminal (Socket)	2
31	. . . . .	Connector Assembly (Endcap)	1
31	1626727	Connector	1
32	. . . . .	Connector Assembly (Bus Terminal 2)	1
32	1489656	Connector (4-Way)	1
32	1489657	Connector (Secondary Lock)	1
32	1330438	Terminal (Socket)	4
33	. . . . .	Connector Assembly (Endcap with Resistor)	1
33	4036523	Cap	1
34	1509890	Clip	5
35	. . . . .	Connector Assembly (Hydraulic Temperature)	1
35	1402868	Connector	1
35	1323576	Terminal	2
36	1587778	Clip	1
37	1402815	Clip	2
38	1699754	Conduit	AR
39	. . . . .	Connector Assembly (Endcap)	1
39	1541988	Connector (8 Pin)	1
39	1484377	Plug	8
40	. . . . .	Connector Assembly (MLM Harness)	1
40	1541991	Connector	1
40	1541992	Connector (Secondary Lock)	1
40	1463139	Terminal	5
40	1484377	Plug	3
41	. . . . .	Connector Assembly (Seat Harness)	1
41	1531973	Connector	1
41	1531974	Connector	1
41	1463139	Terminal	4

©2015 HYSTER COMPANY

WIRE HARNESS
RH CHASSIS – KUBOTA 3.8L DIESEL AND LPG

ITEM	PART NO.	DESCRIPTION	QTY
41	1484377	Plug	2
42	. . . . .	Connector Assembly (Backup Alarm)	1
42	1490242	Connector (2 Way)	1
42	1490243	Connector	1
42	1330438	Terminal (Socket)	2
43	. . . . .	Connector Assembly (Endcap)	1
43	1626727	Connector	1
44	. . . . .	Connector Assembly (Endcap)	1
44	1329150	Connector	1
44	1329151	Terminal	1
44	1327164	Seal	2
45	. . . . .	Connector Assembly (Coolant Level)	1
45	4052151	Connector	1
45	1329151	Terminal	1
45	1330281	Terminal	2
45	1402888	Seal (Purple)	2
46	1509888	Clip	3
47	. . . . .	Connector Assembly (Transmission Harness)	1
47	1525567	Connector	1
47	1529046	Connector (Secondary Lock)	1
47	1463139	Terminal	12
48	. . . . .	Connector Assembly (Transmission Harness)	1
48	1531973	Connector	1
48	1531974	Connector	1
48	1463139	Terminal	6
49	. . . . .	Connector Assembly (Engine Harness)	1
49	1541991	Connector	1
49	1541992	Connector (Secondary Lock)	1
49	1463139	Terminal	8
50	1500899	Clip	1
51	. . . . .	Connector Assembly (Endcap)	1
51	1626727	Connector	1
52	. . . . .	Connector Assembly (Hydraulic Solenoid)	1
52	1490242	Connector (2 Way)	1
52	1490243	Connector	1
52	1330438	Terminal (Socket)	2
53	. . . . .	Connector Assembly (Engine Harness)	1
53	1502625	Connector	1
53	1502626	Connector (Secondary Lock)	1
53	1330438	Terminal (Socket)	7
53	1363886	Terminal (Socket)	1
54	. . . . .	Connector Assembly (Engine Harness)	1
54	1632865	Connector	1
54	1514603	Connector	1
54	1554359	Terminal	4
55	1560692	Conduit (Elbow)	3
56	1534282	Clip	4
57	. . . . .	Connector Assembly (Endcap)	1
57	4047669	Connector	1
57	1330439	Plug	4

©2015 HYSTER COMPANY

WIRE HARNESS

RH CHASSIS – KUBOTA 3.8L DIESEL AND LPG

ITEM	PART NO.	DESCRIPTION	QTY
58	. . . . .	Connector Assembly (Lights/Cab Harness)	1
58	1632865	Connector	1
58	1514603	Connector	1
58	1554359	Terminal	4
59	. . . . .	Connector Assembly (End Cap)	1
59	4047669	Connector	1
59	1330439	Plug	4
60	. . . . .	Connector Assembly (Aux IGN 3 Fuse)	1
60	1602431	Fuse Holder	1
60	1498044	Fuse (5 Amp)	1
	a 275499	Conduit	AR

FOOTNOTES:

a Not Illustrated

©2015 HYSTER COMPANY

WIRE HARNESS (FIGURE 5-32)

RH CHASSIS WITH SEAT BELT SEQUENCE MODULE — KUBOTA 3.8L DIESEL AND LPG

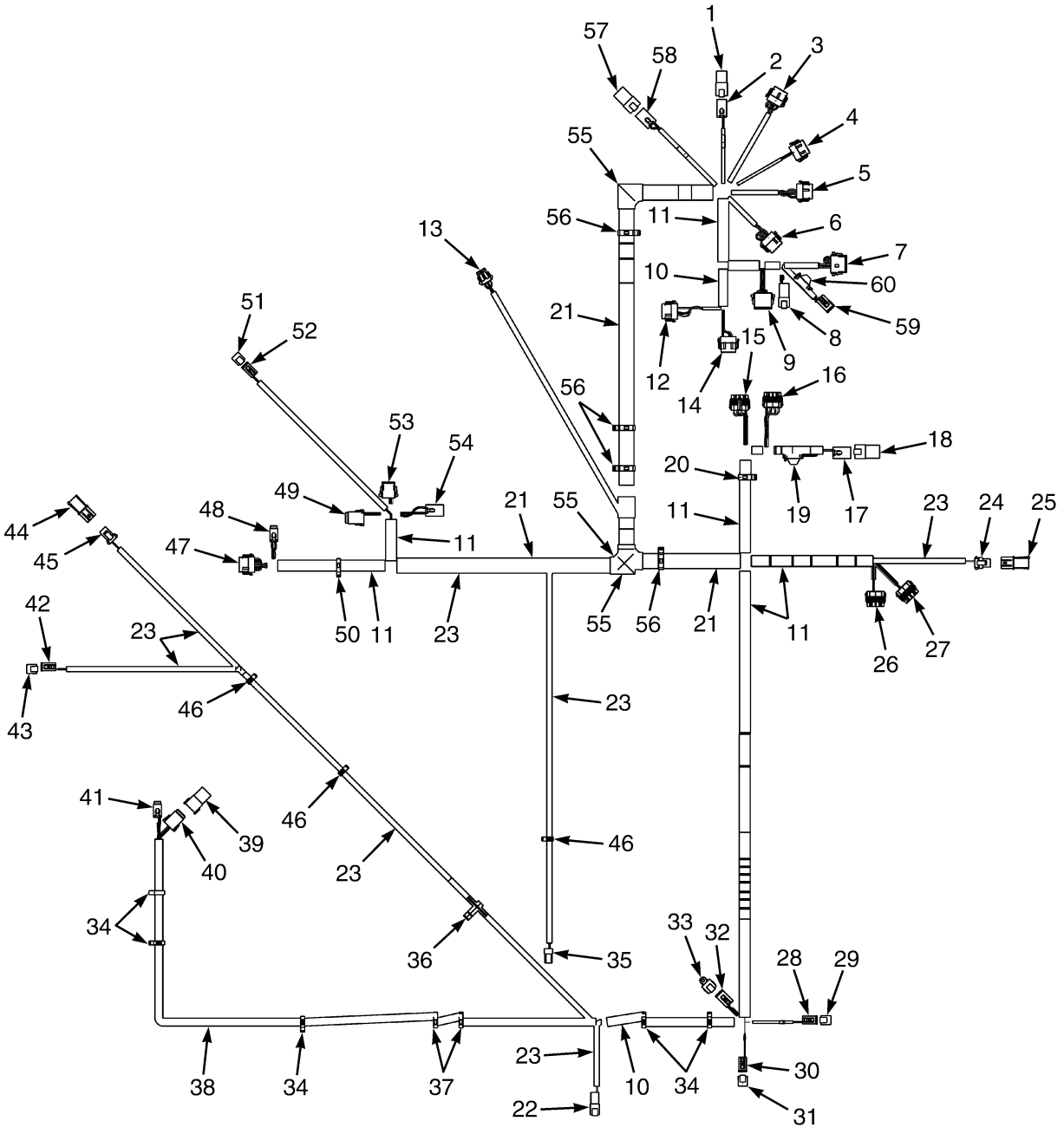

©2015 HYSTER COMPANY

WIRE HARNESS

RH CHASSIS WITH SEAT BELT SEQUENCE MODULE – KUBOTA 3.8L DIESEL AND LPG

ITEM	PART NO.	DESCRIPTION	QTY
	4635135	Wire Harness (RH Chassis)	1
1	. . . . .	Connector Assembly (Endcap)	1
1	4060737	Connector	1
1	1330439	Plug	2
2	. . . . .	Connector Assembly (ACC 1)	1
2	4047664	Connector	1
2	1546697	Connector (Secondary Lock)	1
2	1554359	Terminal	2
3	. . . . .	Connector Assembly (Vehicle Systems Manager)	1
3	1525570	Connector	1
3	1530037	Connector (Secondary Lock)	1
3	1463139	Terminal	9
3	1484377	Plug	3
4	. . . . .	Connector Assembly (Vehicle Systems Manager)	1
4	1525569	Connector	1
4	1530037	Connector (Secondary Lock)	1
4	1463139	Terminal	3
4	1484377	Plug	9
5	. . . . .	Connector Assembly (Vehicle Systems Manager)	1
5	1525568	Connector	1
5	1530037	Connector (Secondary Lock)	1
5	1463139	Terminal	7
5	1484377	Plug	5
6	. . . . .	Connector Assembly (Vehicle Systems Manager)	1
6	1525567	Connector	1
6	1530037	Connector (Secondary Lock)	1
6	1463139	Terminal	9
6	1484377	Plug	3
7	. . . . .	Connector Assembly (Vehicle Systems Manager)	1
7	1525563	Connector	1
7	1500913	Connector	1
7	1330438	Terminal (Socket)	8
7	1363886	Terminal (Socket)	4
8	. . . . .	Connector Assembly (To Cowl Harness)	1
8	1489655	Connector (4 Way)	1
8	1330416	Connector	1
8	1330437	Terminal (Pin)	4
9	. . . . .	Connector Assembly (To Cowl Harness)	1
9	1493428	Connector (12-Way)	1
9	1500913	Connector	1
9	1330438	Terminal (Socket)	11
9	1484377	Plug	1
10	275496	Conduit	AR
11	275497	Conduit	AR
12	. . . . .	Connector Assembly (Vehicle Systems Manager)	1
12	1525567	Connector	1
12	1529046	Connector (Secondary Lock)	1
12	1463139	Terminal	3
12	1484377	Plug	9
13	. . . . .	Connector Assembly (Horn)	1

©2015 HYSTER COMPANY

WIRE HARNESS

RH CHASSIS WITH SEAT BELT SEQUENCE MODULE – KUBOTA 3.8L DIESEL AND LPG

ITEM	PART NO.	DESCRIPTION	QTY
13	1476064	Connector	1
13	1476109	Connector Lock	1
13	1330356	Seal	2
13	1330355	Terminal	3
13	1476108	Wire Seal (White)	1
14	. . . . .	Connector Assembly (Vehicle Systems Manager)	1
14	1525569	Connector	1
14	1529046	Connector (Secondary Lock)	1
14	1463139	Terminal	3
14	1484377	Plug	9
15	. . . . .	Connector Assembly (Power Distribution Module)	1
15	1521184	Connector	1
15	1521188	Lock	1
15	1323579	Seal	6
15	1327164	Seal	1
15	1330281	Terminal	5
15	1521989	Terminal	2
15	1402888	Seal (Purple)	1
16	. . . . .	Connector Assembly (Power Distribution Module)	1
16	1521183	Connector	1
16	1521188	Lock	1
16	1323579	Seal	7
16	1327164	Seal	1
16	1330281	Terminal	4
16	1521989	Terminal	3
17	. . . . .	Connector Assembly (ACC 2)	1
17	1632865	Connector	1
17	1514603	Connector	1
17	1330439	Plug	1
17	1554359	Terminal	3
18	. . . . .	Connector Assembly (Endcap)	1
18	4047669	Connector	1
18	1330439	Plug	4
19	. . . . .	Connector Assembly (Aux IGN 3 Fuse)	1
19	1602431	Fuse Holder	1
19	1498044	Fuse (5 Amp)	1
20	1534329	Clip	1
21	1540388	Conduit	AR
22	. . . . .	Connector Assembly (To Seat Switch Harness)	1
22	1493465	Connector (2 Pin)	1
22	1330414	Connector (Secondary Lock)	1
22	1330437	Terminal (Pin)	2
23	275493	Conduit	AR
24	. . . . .	Connector Assembly (Hydraulic Filter)	1
24	1329152	Plug	1
24	1329151	Terminal	1
24	1330281	Terminal	2
24	1402888	Seal (Purple)	2
25	. . . . .	Connector Assembly (Endcap)	1
25	1329150	Connector	1

©2015 HYSTER COMPANY

WIRE HARNESS

RH CHASSIS WITH SEAT BELT SEQUENCE MODULE – KUBOTA 3.8L DIESEL AND LPG

ITEM	PART NO.	DESCRIPTION	QTY
25	1329151	Terminal	1
25	1327164	Seal	2
26	. . . . .	Connector Assembly (Power Distribution Module)	1
26	1521186	Connector	1
26	1521188	Lock	1
26	1323579	Seal	7
26	1330281	Terminal	1
26	1521989	Terminal	7
26	1402888	Seal (Purple)	1
27	. . . . .	Connector Assembly (Power Distribution Module)	1
27	1521185	Connector	1
27	1521188	Lock	1
27	1323579	Seal	8
27	1330281	Terminal	5
27	1521989	Terminal	3
28	. . . . .	Connector Assembly (Hood Switch/Keyswitch)	1
28	1490242	Connector (2 Way)	1
28	1490243	Connector	1
28	1330438	Terminal (Socket)	2
29	. . . . .	Connector Assembly (Endcap)	1
29	1626727	Connector	1
30	. . . . .	Connector Assembly (Alternate Horn Button)	1
30	1490242	Connector (2 Way)	1
30	1490243	Connector	1
30	1330438	Terminal (Socket)	2
31	. . . . .	Connector Assembly (Endcap)	1
31	1626727	Connector	1
32	. . . . .	Connector Assembly (Bus Terminal 2)	1
32	1489656	Connector (4-Way)	1
32	1489657	Connector (Secondary Lock)	1
32	1330438	Terminal (Socket)	4
33	. . . . .	Connector Assembly (Endcap with Resistor)	1
33	4036523	Cap	1
34	1509890	Clip	5
35	. . . . .	Connector Assembly (Hydraulic Temperature)	1
35	1402868	Connector	1
35	1323576	Terminal	2
36	1587778	Clip	1
37	1402815	Clip	2
38	1699754	Conduit	AR
39	. . . . .	Connector Assembly (Endcap)	1
39	1541988	Connector (8 Pin)	1
39	1484377	Plug	8
40	. . . . .	Connector Assembly (To MLM Harness)	1
40	1541991	Connector	1
40	1541992	Connector (Secondary Lock)	1
40	1463139	Terminal	5
40	1484377	Plug	3
41	. . . . .	Connector Assembly (To Seat Harness)	1
41	1531973	Connector	1

©2015 HYSTER COMPANY

WIRE HARNESS

RH CHASSIS WITH SEAT BELT SEQUENCE MODULE – KUBOTA 3.8L DIESEL AND LPG

ITEM	PART NO.	DESCRIPTION	QTY
41	1531974	Connector	1
41	1463139	Terminal	4
41	1484377	Plug	2
42	. . . . .	Connector Assembly (Backup Alarm)	1
42	1490242	Connector (2 Way)	1
42	1490243	Connector	1
42	1330438	Terminal (Socket)	2
43	. . . . .	Connector Assembly (Endcap)	1
43	1626727	Connector	1
44	. . . . .	Connector Assembly (Endcap)	1
44	1329150	Connector	1
44	1329151	Terminal	1
44	1327164	Seal	2
45	. . . . .	Connector Assembly (Coolant Level)	1
45	4052151	Connector	1
45	1329151	Terminal	1
45	1330281	Terminal	2
45	1402888	Seal (Purple)	2
46	1509888	Clip	3
47	. . . . .	Connector Assembly (To Transmission Harness)	1
47	1525567	Connector	1
47	1529046	Connector (Secondary Lock)	1
47	1463139	Terminal	12
48	. . . . .	Connector Assembly (To Transmission Harness)	1
48	1531973	Connector	1
48	1531974	Connector	1
48	1463139	Terminal	6
49	. . . . .	Connector Assembly (To Engine Harness)	1
49	1541991	Connector	1
49	1541992	Connector (Secondary Lock)	1
49	1463139	Terminal	8
50	1500899	Clip	1
51	. . . . .	Connector Assembly (Endcap)	1
51	1626727	Connector	1
52	. . . . .	Connector Assembly (Hydraulic Solenoid)	1
52	1490242	Connector (2 Way)	1
52	1490243	Connector	1
52	1330438	Terminal (Socket)	2
53	. . . . .	Connector Assembly (To Engine Harness)	1
53	1502625	Connector	1
53	1502626	Connector (Secondary Lock)	1
53	1330438	Terminal (Socket)	7
53	1363886	Terminal (Socket)	1
54	. . . . .	Connector Assembly (To Engine Harness)	1
54	1632865	Connector	1
54	1514603	Connector	1
54	1554359	Terminal	4
55	1560692	Conduit (Elbow)	3
56	1534282	Clip	4
57	. . . . .	Connector Assembly (Endcap)	1

©2015 HYSTER COMPANY

WIRE HARNESS

RH CHASSIS WITH SEAT BELT SEQUENCE MODULE – KUBOTA 3.8L DIESEL AND LPG

ITEM	PART NO.	DESCRIPTION	QTY
57	4047669	Connector	1
57	1330439	Plug	4
58	. . . . .	Connector Assembly (To Lights/Cab Harness)	1
58	1632865	Connector	1
58	1514603	Connector	1
58	1554359	Terminal	4
59	. . . . .	Connector Assembly (Seat Belt Sequence Module)	1
59	1502625	Connector	1
59	1502626	Connector (Secondary Lock)	1
59	1330438	Terminal (Socket)	6
59	1484377	Plug	2
60	. . . . .	Connector Assembly (Batt+ 5A)	1
60	1602431	Fuse Holder	1
60	1498044	Fuse (5 Amp)	1
	a 275499	Conduit	AR
	a 275495	Conduit	AR

FOOTNOTES:

a Not Illustrated

©2015 HYSTER COMPANY

WIRE HARNESS (FIGURE 5-33)
RH CHASSIS — KUBOTA DIESEL (3.6L)

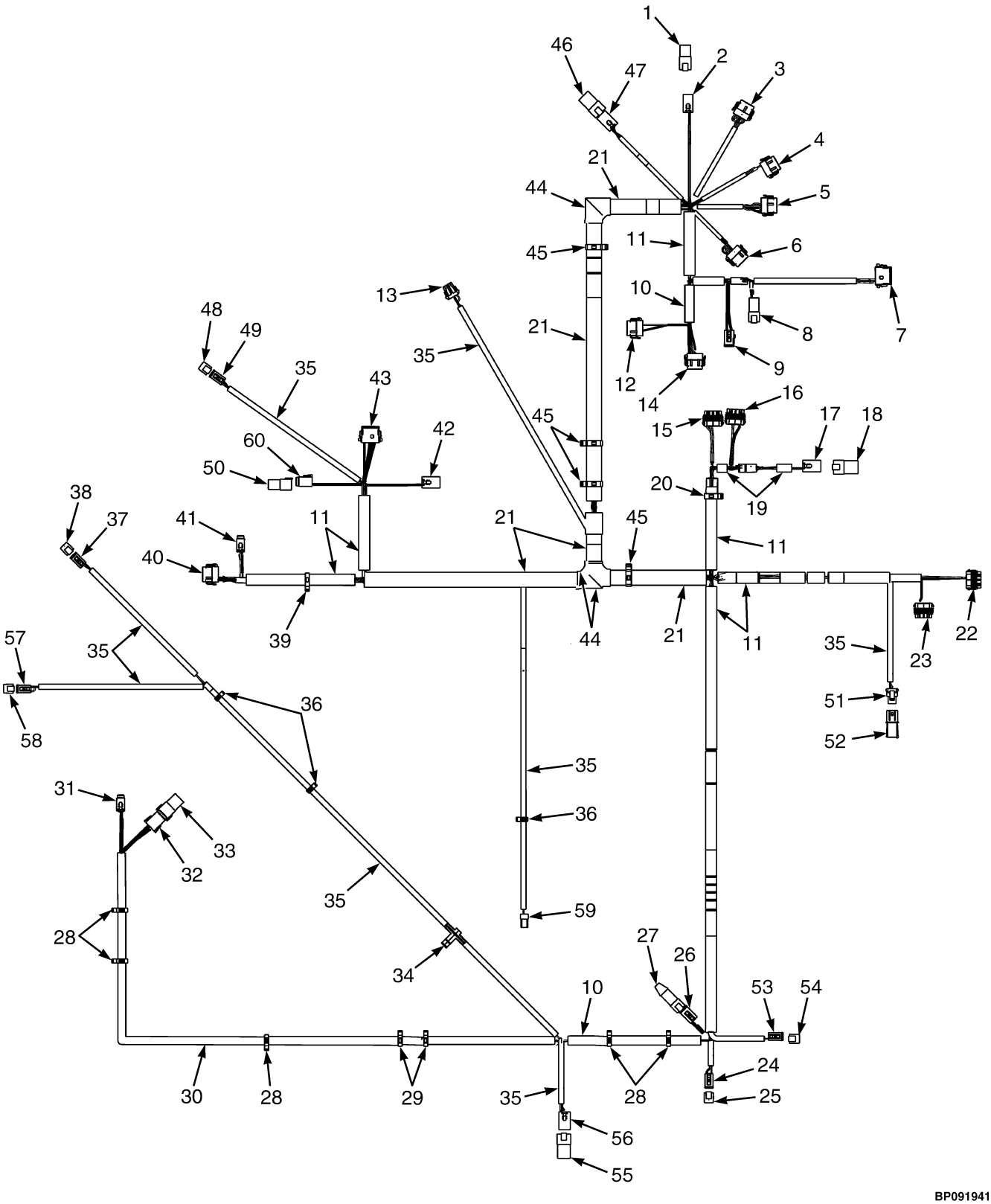

BP091941

©2015 HYSTER COMPANY

WIRE HARNESS
RH CHASSIS – KUBOTA DIESEL (3.6L)

ITEM	PART NO.	DESCRIPTION	QTY
	4629764	Wire Harness (RH Chassis) (RH Chassis)	1
1	. . . . .	Connector Assembly (Endcap)	1
1	4060737	Connector	1
1	1480188	Connector (Secondary Lock)	1
1	1330439	Plug	2
2	. . . . .	Connector Assembly (ACC 1)	1
2	4047664	Connector	1
2	1546697	Connector (Secondary Lock)	1
2	1554359	Terminal	2
3	. . . . .	Connector Assembly (Vehicle Systems Manager)	1
3	1525570	Connector	1
3	1530037	Connector (Secondary Lock)	1
3	1463139	Terminal	9
3	1484377	Plug	3
4	. . . . .	Connector Assembly (Vehicle Systems Manager)	1
4	1525569	Connector	1
4	1530037	Connector (Secondary Lock)	1
4	1463139	Terminal	11
4	1484377	Plug	1
5	. . . . .	Connector Assembly (Vehicle Systems Manager)	1
5	1525568	Connector	1
5	1530037	Connector (Secondary Lock)	1
5	1463139	Terminal	8
5	1484377	Plug	4
6	. . . . .	Connector Assembly (Vehicle Systems Manager)	1
6	1525567	Connector	1
6	1530037	Connector (Secondary Lock)	1
6	1463139	Terminal	9
6	1484377	Plug	2
6	4053052	Terminal	1
7	. . . . .	Connector Assembly (Vehicle Systems Manager)	1
7	1525563	Connector	1
7	1500913	Connector (Secondary Lock)	1
7	1330438	Terminal (Socket)	8
7	1363886	Terminal (Socket)	4
8	. . . . .	Connector Assembly (To Cowl Harness)	1
8	1489655	Connector (4 Way)	1
8	1330416	Connector (Secondary Lock)	1
8	1330437	Terminal (Pin)	4
9	. . . . .	Connector Assembly (To Cowl Harness)	1
9	1493428	Connector (12-Way)	1
9	1500913	Connector (Secondary Lock)	1
9	1330438	Terminal (Socket)	10
9	1484377	Plug	2
10	275496	Conduit	AR
11	275497	Conduit	AR
12	. . . . .	Connector Assembly (Vehicle Systems Manager)	1
12	1525567	Connector	1
12	1529046	Connector (Secondary Lock)	1
12	1463139	Terminal	2

©2015 HYSTER COMPANY

WIRE HARNESS
RH CHASSIS – KUBOTA DIESEL (3.6L)

ITEM	PART NO.	DESCRIPTION	QTY
12	1484377	Plug	10
13	. . . . .	Connector Assembly (Horn)	1
13	1476064	Connector	1
13	1476109	Connector Lock	1
13	1330356	Seal	2
13	1330355	Terminal	3
13	1476108	Wire Seal (White)	1
14	. . . . .	Connector Assembly (Vehicle Systems Manager)	1
14	1525569	Connector	1
14	1529046	Connector (Secondary Lock)	1
14	1463139	Terminal	9
14	1484377	Plug	3
15	. . . . .	Connector Assembly (Power Distribution Module)	1
15	1521184	Connector	1
15	1521188	Lock	1
15	1323579	Seal	5
15	1327164	Seal	2
15	1330281	Terminal	5
15	1521989	Terminal	1
15	1402888	Seal (Purple)	1
16	. . . . .	Connector Assembly (Power Distribution Module)	1
16	1521183	Connector	1
16	1521188	Lock	1
16	1323579	Seal	7
16	1327164	Seal	1
16	1330281	Terminal	4
16	1521989	Terminal	3
17	. . . . .	Connector Assembly (ACC 2)	1
17	1632865	Connector	1
17	1514603	Connector	1
17	1330439	Plug	1
17	1554359	Terminal	3
18	. . . . .	Connector Assembly (Endcap)	1
18	4047669	Connector	1
18	1514598	Connector (Secondary Lock)	1
18	1330439	Plug	4
19	275495	Conduit	AR
20	1534329	Clip	1
21	1540388	Conduit	AR
22	. . . . .	Connector Assembly (Power Distribution Module)	1
22	1521186	Connector	1
22	1521188	Lock	1
22	1323579	Seal	7
22	1327164	Seal	1
22	1521989	Terminal	7
23	. . . . .	Connector Assembly (Power Distribution Module)	1
23	1521185	Connector	1
23	1521188	Lock	1
23	1323579	Seal	8
23	1330281	Terminal	6

©2015 HYSTER COMPANY

WIRE HARNESS
RH CHASSIS – KUBOTA DIESEL (3.6L)

ITEM	PART NO.	DESCRIPTION	QTY
23	1521989	Terminal	2
24	. . . . .	Connector Assembly (Alternate Horn Button)	1
24	1490242	Connector (2 Way)	1
24	1490243	Connector (Secondary Lock)	1
24	1330438	Terminal (Socket)	2
25	. . . . .	Connector Assembly (Endcap)	1
25	1626727	Connector	1
26	. . . . .	Connector Assembly (Bus Terminal 2)	1
26	1489656	Connector (4-Way)	1
26	1489657	Connector (Secondary Lock)	1
26	1330438	Terminal (Socket)	4
27	. . . . .	Connector Assembly (Endcap with Resistor)	1
27	1525577	Connector (With Resistor)	1
28	1509890	Clip	5
29	1402815	Clip	2
30	1699754	Conduit	AR
31	. . . . .	Connector Assembly (To Seat Harness)	1
31	1531973	Connector	1
31	1531974	Connector (Secondary Lock)	1
31	1463139	Terminal	4
31	1484377	Plug	2
32	. . . . .	Connector Assembly (To MLM Harness)	1
32	1541991	Connector	1
32	1541992	Connector (Secondary Lock)	1
32	1463139	Terminal	5
32	1484377	Plug	3
33	. . . . .	Connector Assembly (Endcap)	1
33	1541988	Connector (8 Pin)	1
33	1484377	Plug	8
34	1587778	Clip	1
35	275493	Conduit	AR
36	1509888	Clip	3
37	. . . . .	Connector Assembly (Coolant Level)	1
37	4052151	Connector	1
37	1329151	Terminal	1
37	1330281	Terminal	2
37	1402888	Seal (Purple)	2
38	. . . . .	Connector Assembly (Endcap)	1
38	1329150	Connector	1
38	1329151	Terminal	1
38	1327164	Seal	2
39	1500899	Clip	1
40	. . . . .	Connector Assembly (To Transmission Harness)	1
40	1525567	Connector	1
40	1529046	Connector (Secondary Lock)	1
40	1463139	Terminal	12
41	. . . . .	Connector Assembly (To Transmission Harness)	1
41	1531973	Connector	1
41	1531974	Connector (Secondary Lock)	1
41	1463139	Terminal	6

©2015 HYSTER COMPANY

WIRE HARNESS
RH CHASSIS – KUBOTA DIESEL (3.6L)

ITEM	PART NO.	DESCRIPTION	QTY
42	. . . . .	Connector Assembly (To Engine Harness)	1
42	1632865	Connector	1
42	1514603	Connector (Secondary Lock)	1
42	1330439	Plug	1
42	1554359	Terminal	3
43	. . . . .	Connector Assembly (To Engine Harness)	1
43	1525563	Connector	1
43	1500913	Connector (Secondary Lock)	1
43	1330438	Terminal (Socket)	10
43	1484377	Plug	2
44	1560692	Conduit (Elbow)	3
45	1534282	Clip	4
46	. . . . .	Connector Assembly (Endcap)	1
46	4047669	Connector	1
46	1330439	Plug	4
47	. . . . .	Connector Assembly (To Lights/Cab Harness)	1
47	1632865	Connector	1
47	1514603	Connector (Secondary Lock)	1
47	1554359	Terminal	4
48	. . . . .	Connector Assembly (Hydraulic Solenoid)	1
48	1490242	Connector (2 Way)	1
48	1490243	Connector	1
48	1330438	Terminal (Socket)	2
49	. . . . .	Connector Assembly (End Cap)	1
49	1626727	Connector	1
50	. . . . .	Connector Assembly (End Cap)	1
50	1530960	Connector	1
50	1484377	Plug	6
51	. . . . .	Connector Assembly (Hydraulic Filter)	1
51	1329152	Plug	1
51	1329151	Terminal	1
51	1330281	Terminal	2
51	1402888	Seal (Purple)	2
52	. . . . .	Connector Assembly (End Cap)	1
52	1329150	Connector	1
52	1329151	Terminal	1
52	1327164	Seal	2
53	. . . . .	Connector Assembly (Hood Switch/Key Switch)	1
53	1490242	Connector (2 Way)	1
53	1490243	Connector	1
53	1330438	Terminal (Socket)	2
54	. . . . .	Connector Assembly (End Cap)	1
54	1626727	Connector	1
55	. . . . .	Connector Assembly (End Cap)	1
55	4047669	Connector	1
55	1330439	Plug	4
56	. . . . .	Connector Assembly (To Seat Switch Harness)	1
56	1632865	Connector	1
56	1514603	Connector	1
56	1554359	Terminal	4

©2015 HYSTER COMPANY

WIRE HARNESS

RH CHASSIS – KUBOTA DIESEL (3.6L)

ITEM	PART NO.	DESCRIPTION	QTY
57	. . . . .	Connector Assembly (Back-Up Alarm)	1
57	1490242	Connector (2 Way)	1
57	1490243	Connector	1
57	1330438	Terminal (Socket)	2
58	. . . . .	Connector Assembly (End Cap)	1
58	1626727	Connector	1
59	. . . . .	Connector Assembly (Hydraulic Temperature)	1
59	1402868	Connector	1
59	1323576	Terminal	2
60	. . . . .	Connector Assembly (Engine Harness)	1
60	1531973	Connector	1
60	1531974	Connector	1
60	1463139	Terminal	6

©2015 HYSTER COMPANY

WIRE HARNESS (FIGURE 5-34)

RH CHASSIS WITH SEAT BELT SEQUENCE MODULE — KUBOTA DIESEL (3.6L)

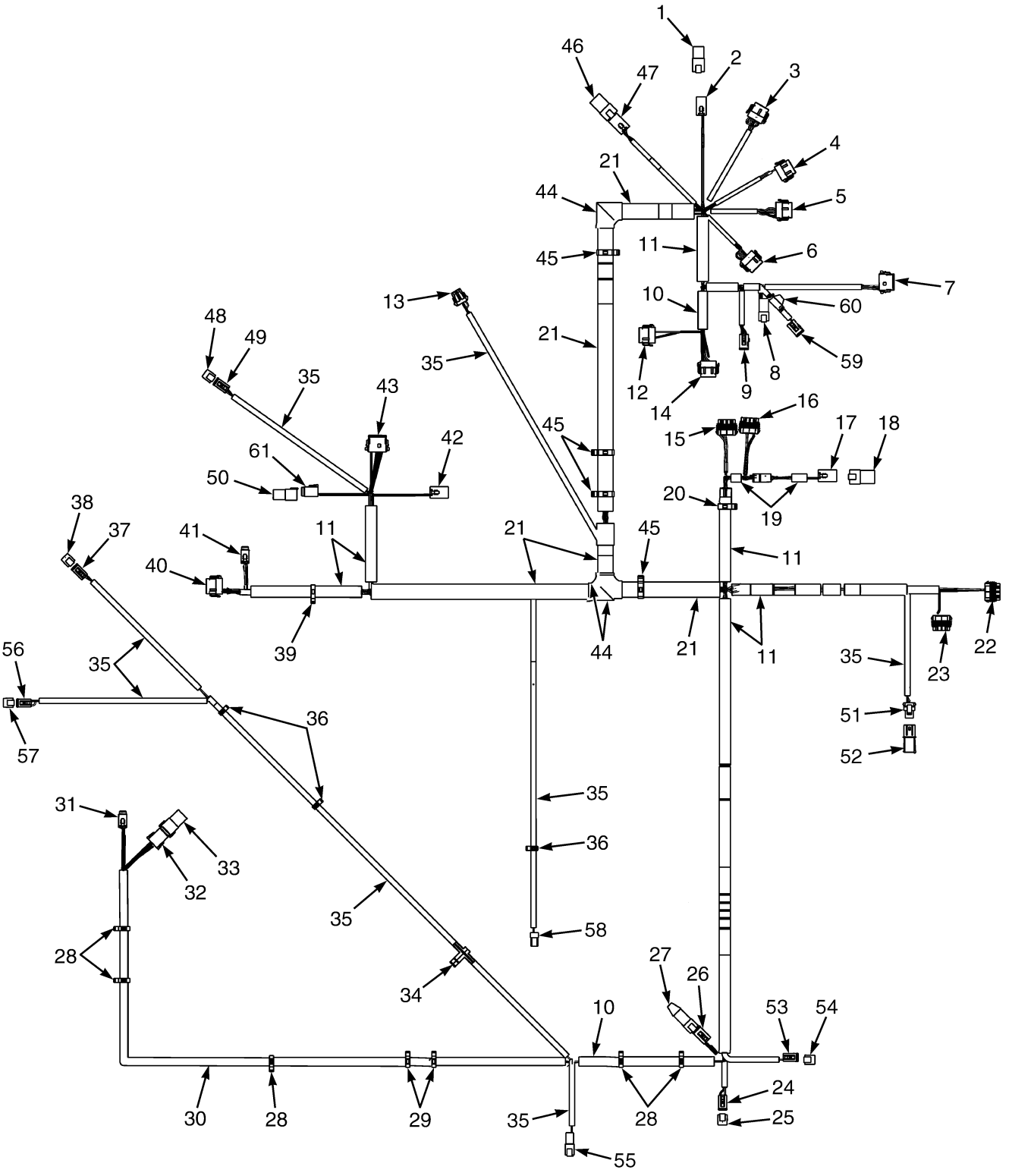

BP081942

©2015 HYSTER COMPANY

WIRE HARNESS

RH CHASSIS WITH SEAT BELT SEQUENCE MODULE – KUBOTA DIESEL (3.6L)

ITEM	PART NO.	DESCRIPTION	QTY
	4635136	Wire Harness (RH Chassis)	1
1	. . . . .	Connector Assembly (Endcap)	1
1	4060737	Connector	1
1	1480188	Connector (Secondary Lock)	1
1	1330439	Plug	2
2	. . . . .	Connector Assembly (ACC 1)	1
2	4047664	Connector	1
2	1546697	Connector (Secondary Lock)	1
2	1554359	Terminal	2
3	. . . . .	Connector Assembly (Vehicle Systems Manager)	1
3	1525570	Connector	1
3	1530037	Connector (Secondary Lock)	1
3	1463139	Terminal	8
3	1484377	Plug	4
4	. . . . .	Connector Assembly (Vehicle Systems Manager)	1
4	1525569	Connector	1
4	1530037	Connector (Secondary Lock)	1
4	1463139	Terminal	11
4	1484377	Plug	1
5	. . . . .	Connector Assembly (Vehicle Systems Manager)	1
5	1525568	Connector	1
5	1530037	Connector (Secondary Lock)	1
5	1463139	Terminal	8
5	1484377	Plug	4
6	. . . . .	Connector Assembly (Vehicle Systems Manager)	1
6	1525567	Connector	1
6	1530037	Connector (Secondary Lock)	1
6	1463139	Terminal	9
6	1484377	Plug	3
7	. . . . .	Connector Assembly (Vehicle Systems Manager)	1
7	1525563	Connector	1
7	1500913	Connector	1
7	1330438	Terminal (Socket)	8
7	1363886	Terminal (Socket)	4
8	. . . . .	Connector Assembly (To Cowl Harness)	1
8	1489655	Connector (4 Way)	1
8	1330416	Connector	1
8	1330437	Terminal (Pin)	4
9	. . . . .	Connector Assembly (To Cowl Harness)	1
9	1493428	Connector (12-Way)	1
9	1500913	Connector	1
9	1330438	Terminal (Socket)	10
9	1484377	Plug	2
10	275496	Conduit	AR
11	275497	Conduit	AR
12	. . . . .	Connector Assembly (Vehicle Systems Manager)	1
12	1525567	Connector	1
12	1529046	Connector (Secondary Lock)	1
12	1463139	Terminal	2
12	1484377	Plug	10

©2015 HYSTER COMPANY

WIRE HARNESS

RH CHASSIS WITH SEAT BELT SEQUENCE MODULE – KUBOTA DIESEL (3.6L)

ITEM	PART NO.	DESCRIPTION	QTY
13	. . . . .	Connector Assembly (Horn)	1
13	1476064	Connector	1
13	1476109	Connector Lock	1
13	1330356	Seal	2
13	1330355	Terminal	3
13	1476108	Wire Seal (White)	1
14	. . . . .	Connector Assembly (Vehicle Systems Manager)	1
14	1525569	Connector	1
14	1529046	Connector (Secondary Lock)	1
14	1463139	Terminal	9
14	1484377	Plug	3
15	. . . . .	Connector Assembly (Power Distribution Module)	1
15	1521184	Connector	1
15	1521188	Lock	1
15	1323579	Seal	5
15	1327164	Seal	2
15	1330281	Terminal	5
15	1521989	Terminal	1
15	1402888	Seal (Purple)	1
16	. . . . .	Connector Assembly (Power Distribution Module)	1
16	1521183	Connector	1
16	1521188	Lock	1
16	1323579	Seal	7
16	1327164	Seal	1
16	1330281	Terminal	4
16	1521989	Terminal	3
17	. . . . .	Connector Assembly (ACC 2)	1
17	1632865	Connector	1
17	1514603	Connector	1
17	1330439	Plug	1
17	1554359	Terminal	3
18	. . . . .	Connector Assembly (Endcap)	1
18	4047669	Connector	1
18	1514598	Connector (Secondary Lock)	1
18	1330439	Plug	4
19	275495	Conduit	AR
20	1534329	Clip	1
21	1540388	Conduit	AR
22	. . . . .	Connector Assembly (Power Distribution Module)	1
22	1521186	Connector	1
22	1521188	Lock	1
22	1323579	Seal	7
22	1330281	Terminal	1
22	1521989	Terminal	7
22	1402888	Seal (Purple)	1
23	. . . . .	Connector Assembly (Power Distribution Module)	1
23	1521185	Connector	1
23	1521188	Lock	1
23	1323579	Seal	8
23	1330281	Terminal	6

©2015 HYSTER COMPANY

WIRE HARNESS

RH CHASSIS WITH SEAT BELT SEQUENCE MODULE – KUBOTA DIESEL (3.6L)

ITEM	PART NO.	DESCRIPTION	QTY
23	1521989	Terminal	2
24	. . . . .	Connector Assembly (Alternate Horn Button)	1
24	1490242	Connector (2 Way)	1
24	1490243	Connector	1
24	1330438	Terminal (Socket)	2
25	. . . . .	Connector Assembly (Endcap)	1
25	1626727	Connector	1
26	. . . . .	Connector Assembly (Bus Terminal 2)	1
26	1489656	Connector (4-Way)	1
26	1489657	Connector (Secondary Lock)	1
26	1330438	Terminal (Socket)	4
27	. . . . .	Connector Assembly (Endcap with Resistor)	1
27	1525577	Connector (With Resistor)	1
28	1509890	Clip	5
29	1402815	Clip	2
30	1699754	Conduit	AR
31	. . . . .	Connector Assembly (To Seat Harness)	1
31	1531973	Connector	1
31	1531974	Connector	1
31	1463139	Terminal	4
31	1484377	Plug	2
32	. . . . .	Connector Assembly (To MLM Harness)	1
32	1541991	Connector	1
32	1541992	Connector (Secondary Lock)	1
32	1463139	Terminal	5
32	1484377	Plug	3
33	. . . . .	Connector Assembly (Endcap)	1
33	1541988	Connector (8 Pin)	1
33	1484377	Plug	8
34	1587778	Clip	1
35	275493	Conduit	AR
36	1509888	Clip	3
37	. . . . .	Connector Assembly (Coolant Level)	1
37	. . . . .	4052121	1
37	1329151	Terminal	1
37	1330281	Terminal	2
37	1402888	Seal (Purple)	2
38	. . . . .	Connector Assembly (Endcap)	1
38	1329150	Connector	1
38	1329151	Terminal	1
38	1327164	Seal	2
39	1500899	Clip	1
40	. . . . .	Connector Assembly (To Transmission Harness)	1
40	1525567	Connector	1
40	1529046	Connector (Secondary Lock)	1
40	1463139	Terminal	11
40	1484377	Plug	1
41	. . . . .	Connector Assembly (To Transmission Harness)	1
41	1531973	Connector	1
41	1531974	Connector	1

©2015 HYSTER COMPANY

WIRE HARNESS

RH CHASSIS WITH SEAT BELT SEQUENCE MODULE – KUBOTA DIESEL (3.6L)

ITEM	PART NO.	DESCRIPTION	QTY
41	1463139	Terminal	6
42	. . . . .	Connector Assembly (To Engine Harness)	1
42	1632865	Connector	1
42	1514603	Connector	1
42	1330439	Plug	1
42	1554359	Terminal	3
43	. . . . .	Connector Assembly (To Engine Harness)	1
43	1525563	Connector	1
43	1500913	Connector	1
43	1330438	Terminal (Socket)	10
43	1484377	Plug	2
44	1560692	Conduit (Elbow)	3
45	1534282	Clip	4
46	. . . . .	Connector Assembly (Endcap)	1
46	4047669	Connector	1
46	1330439	Plug	4
47	. . . . .	Connector Assembly (To Lights/Cab Harness)	1
47	1632865	Connector	1
47	1514603	Connector	1
47	1554359	Terminal	4
48	. . . . .	Connector Assembly (Hydraulic Solenoid)	1
48	1490242	Connector (2 Way)	1
48	1490243	Connector	1
48	1330438	Terminal (Socket)	2
49	. . . . .	Connector Assembly (End Cap)	1
49	1626727	Connector	1
50	. . . . .	Connector Assembly (End Cap)	1
50	1530960	Connector	1
50	1484377	Plug	6
51	. . . . .	Connector Assembly (Hydraulic Filter)	1
51	1329152	Plug	1
51	1329151	Terminal	1
51	1330281	Terminal	2
51	1402888	Seal (Purple)	2
52	. . . . .	Connector Assembly (End Cap)	1
52	1329150	Connector	1
52	1329151	Terminal	1
52	1327164	Seal	2
53	. . . . .	Connector Assembly (Hood Switch/Key Switch)	1
53	1490242	Connector (2 Way)	1
53	1490243	Connector	1
53	1330438	Terminal (Socket)	2
54	. . . . .	Connector Assembly (End Cap)	1
54	1626727	Connector	1
55	. . . . .	Connector Assembly (To Seat Switch Harness)	1
55	1493465	Connector (2 Pin)	1
55	1330414	Connector (Secondary Lock)	1
55	1330437	Terminal (Pin)	2
56	. . . . .	Connector Assembly (Back-Up Alarm)	1
56	1490242	Connector (2 Way)	1

©2015 HYSTER COMPANY

WIRE HARNESS

RH CHASSIS WITH SEAT BELT SEQUENCE MODULE – KUBOTA DIESEL (3.6L)

ITEM	PART NO.	DESCRIPTION	QTY
56	1490243	Connector	1
56	1330438	Terminal (Socket)	2
57	. . . . .	Connector Assembly (End Cap)	1
57	1626727	Connector	1
58	. . . . .	Connector Assembly (Hydraulic Temperature)	1
58	1402868	Connector	1
58	1323576	Terminal	2
59	. . . . .	Connector Assembly (Seat Belt Sequence Module)	1
59	1502625	Connector	1
59	1502626	Connector (Secondary Lock)	1
59	1330438	Terminal (Socket)	6
59	1484377	Plug	2
60	. . . . .	Connector Assembly (Batt+ 5A)	1
60	1602431	Fuse Holder	1
60	1498044	Fuse (5 Amp)	1
61	. . . . .	Connector Assembly (Engine Harness)	1
61	1531973	Connector	1
61	1531974	Connector	1
61	1463139	Terminal	6

©2015 HYSTER COMPANY

WIRE HARNESS (FIGURE 5-35)
DPF DISPLAY

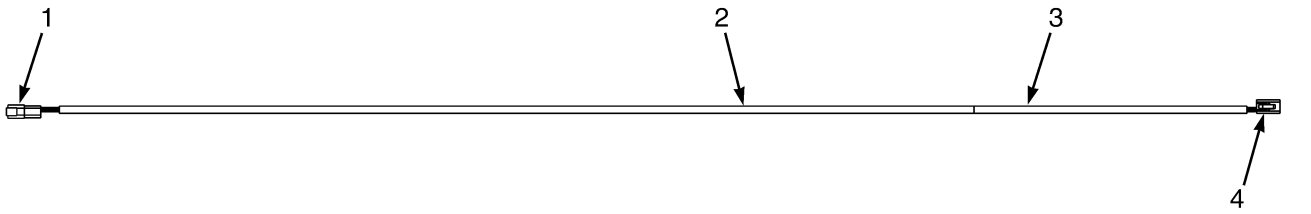

ITEM	PART NO.	DESCRIPTION	QTY
	4614617	Wire Harness (DPF Display)	1
1	. . . . .	Connector Assembly (To Cowl Harness)	1
1	1463184	Connector	1
1	1463193	Connector (Secondary Lock)	1
1	1463138	Terminal Pin	4
2	381919	Braiding	AR
3	175944	Heat Shrink	AR
4	. . . . .	Connector Assembly (DPF Display)	1
4	1493430	Connector (6 Way Housing)	1
4	1529052	Connector (Secondary Lock)	1
4	1330438	Terminal (Socket)	4
4	1484377	Plug	2

©2015 HYSTER COMPANY

NOTES

©2015 HYSTER COMPANY

WIRE HARNESS (FIGURE 5-36)
COWL — MANUAL HYDRAULICS WITH MONOTROL PEDAL

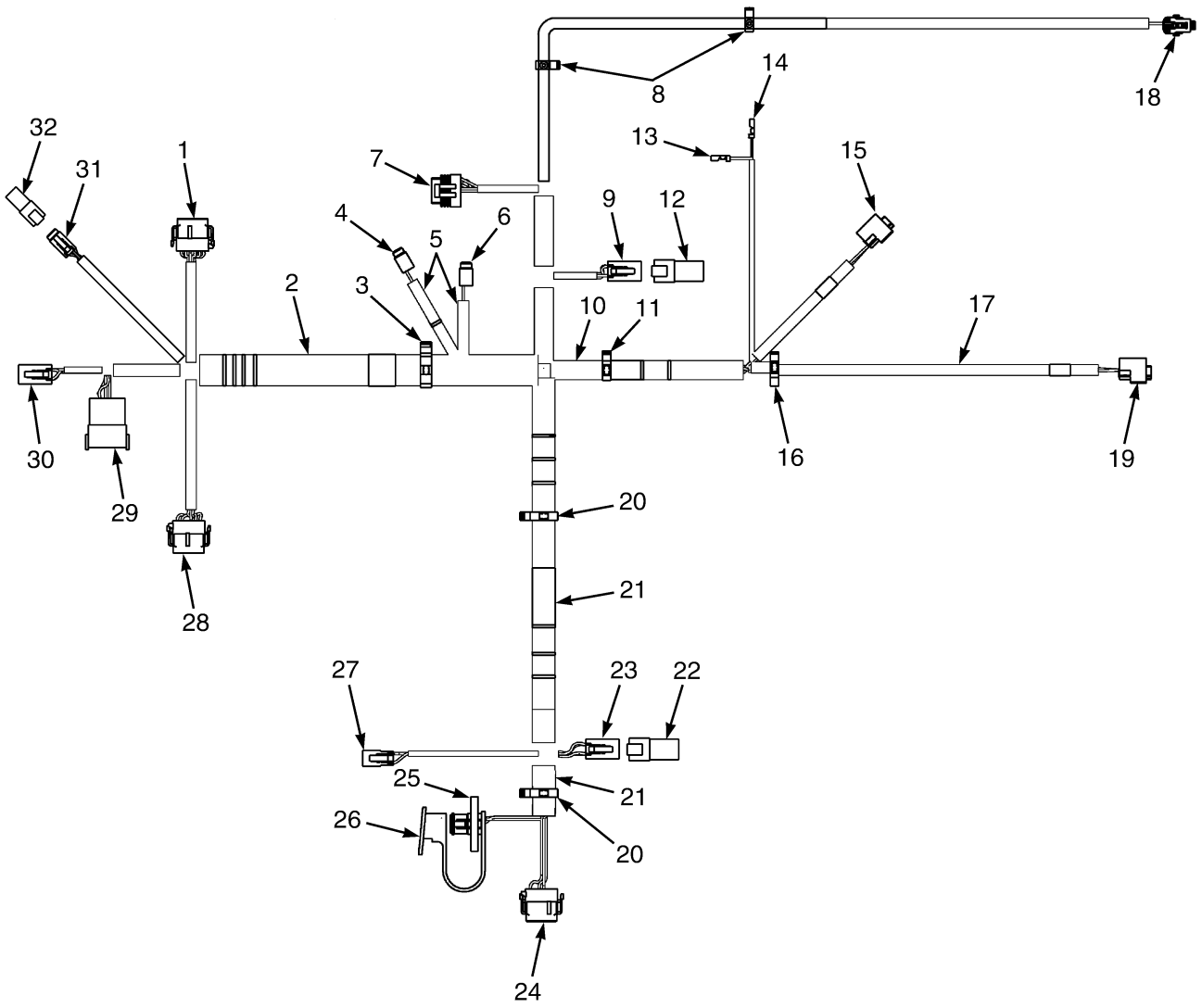

BP081330

©2015 HYSTER COMPANY

WIRE HARNESS
COWL – MANUAL HYDRAULICS WITH MONOTROL PEDAL

ITEM	PART NO.	DESCRIPTION	QTY
	4614877	Wire Harness (Cowl)	1
1	. . . . .	Connector Assembly (Vehicle System Manager)	1
1	1525568	Connector	1
1	1529046	Connector (Secondary Lock)	1
1	1463139	Terminal	12
2	1540388	Conduit	AR
3	1534282	Clip	1
4	. . . . .	Connector Assembly (Hydraulic Lockout Solenoid 2)	1
4	1484557	Connector (2 Socket)	1
4	1484558	Connector (Secondary Lock)	1
4	1463139	Terminal	2
5	275493	Conduit	AR
6	. . . . .	Connector Assembly (Hydraulic Lockout Solenoid 1)	1
6	1484557	Connector (2 Socket)	1
6	1484558	Connector (Secondary Lock)	1
6	1463139	Terminal	2
7	. . . . .	Connector Assembly (Accelerator Pedal Sensor)	1
7	1525584	Connector	1
7	1532571	Terminal	6
8	1509888	Clip	2
9	. . . . .	Connector Assembly (To FDC Harness)	1
9	1489656	Connector (4-Way)	1
9	1489657	Connector (Secondary Lock)	1
9	1330438	Terminal (Socket)	4
10	275496	Conduit	AR
11	1534828	Clip	1
12	. . . . .	Connector Assembly (Endcap)	1
12	1525573	Connector	1
13	. . . . .	Connector Assembly (Brake Fluid)	1
13	1324310	Terminal	1
13	1324309	Sleeve	1
14	. . . . .	Connector Assembly (Brake Fluid)	1
14	1324310	Terminal	1
14	1324309	Sleeve	1
15	. . . . .	Connector Assembly (Park Brake)	1
15	1700460	Connector	1
15	1700461	Terminal	3
16	1402816	Clip	1
17	275493	Conduit	AR
18	. . . . .	Connector Assembly (Brake Pressure)	1
18	1603021	Connector	1
18	1603236	Connector (Secondary Lock)	1
18	1548517	Terminal (Socket)	3
18	1548519	Seal	3
19	. . . . .	Connector Assembly (Brake Pedal)	1
19	1700460	Connector	1
19	1700461	Terminal	3
20	1500899	Clip	2
21	275497	Conduit	AR
22	. . . . .	Connector Assembly (Endcap with Resister)	1

©2015 HYSTER COMPANY

WIRE HARNESS
COWL – MANUAL HYDRAULICS WITH MONOTROL PEDAL

ITEM	PART NO.	DESCRIPTION	QTY
22	1525577	Connector (With Resistor)	1
23	. . . . .	Connector Assembly (Bus Terminal 1)	1
23	1489656	Connector (4-Way)	1
23	1489657	Connector	1
23	1330438	Terminal (Socket)	4
24	. . . . .	Connector Assembly (Display)	1
24	1525567	Connector	1
24	1529046	Connector (Secondary Lock)	1
24	1463139	Terminal	5
24	1484377	Plug	7
25	. . . . .	Connector Assembly (J1939 Diagnostic)	1
25	1566116	Connector	1
25	1532664	Connector	1
25	1330438	Terminal (Socket)	3
26	1566117	Dust Cap (For Diagnostic Cable)	1
27	. . . . .	Connector Assembly (Horn Button)	1
27	1490242	Connector (2 Way)	1
27	1490243	Connector	1
27	1330438	Terminal (Socket)	2
28	. . . . .	Connector Assembly (Vehicle System Manager)	1
28	1525570	Connector	1
28	1529046	Connector (Secondary Lock)	1
28	1463139	Terminal	7
28	1484377	Plug	5
29	. . . . .	Connector Assembly (To RH Chassis Harness)	1
29	1500925	Connector	1
29	1352603	Secondary Lock (Secondary Lock)	1
29	1330437	Terminal (Pin)	8
29	1484377	Plug	4
30	. . . . .	Connector Assembly (To RH Chassis Harness)	1
30	1489656	Connector (4-Way)	1
30	1489657	Connector (Secondary Lock)	1
30	1330438	Terminal (Socket)	4
31	. . . . .	Connector Assembly (DPF Display)	1
31	1463189	Connector	1
31	1463196	Connector	1
31	1463139	Terminal	4
32	. . . . .	Connector Assembly (DPF Display End Cap)	1
32	1463184	Connector	1
32	1484377	Plug	4

©2015 HYSTER COMPANY

NOTES

©2015 HYSTER COMPANY

WIRE HARNESS (FIGURE 5-37)
COWL — MANUAL HYDRAULICS WITH FORWARD/REVERSE

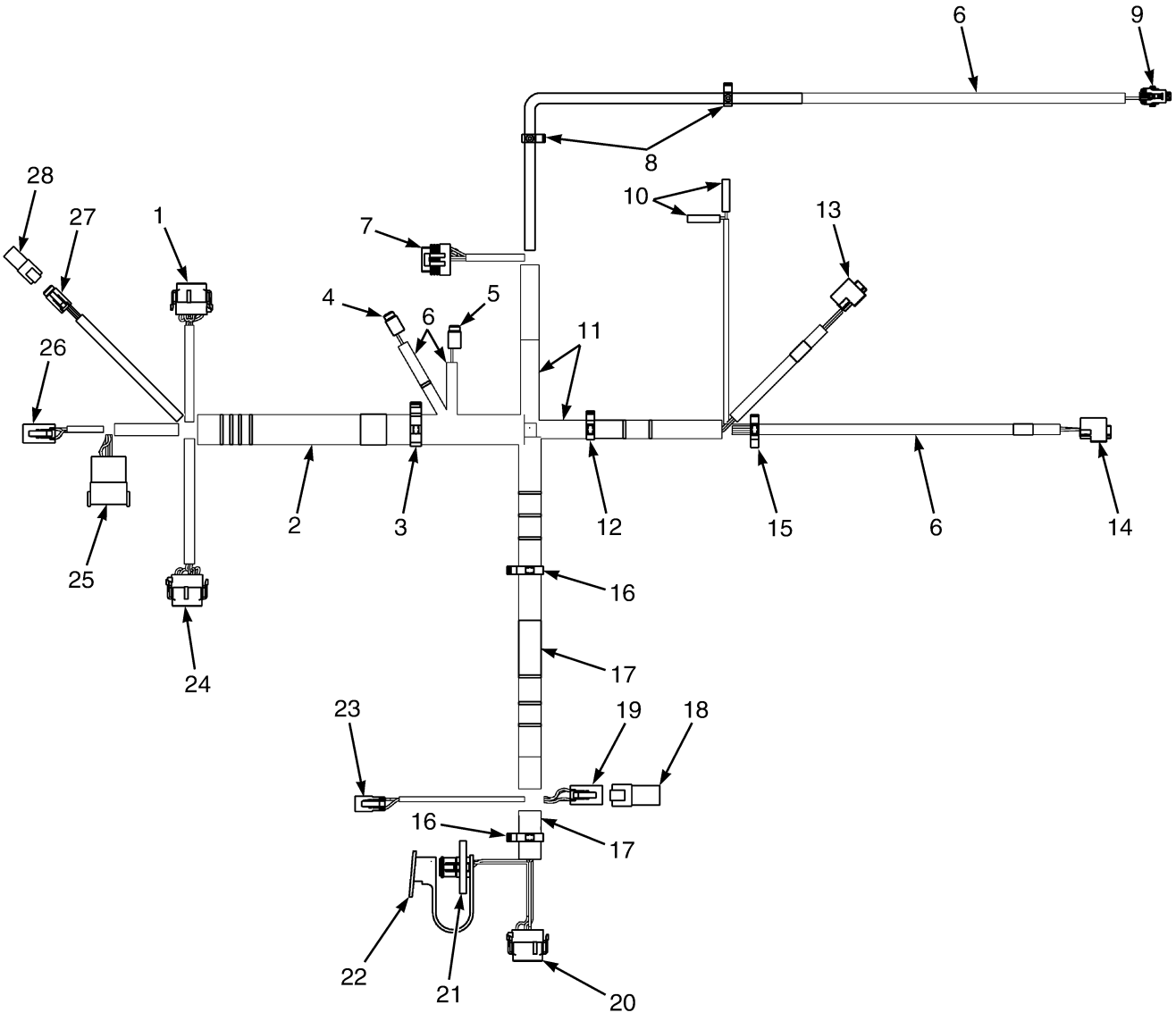

BP081331

©2015 HYSTER COMPANY

WIRE HARNESS
COWL – MANUAL HYDRAULICS WITH FORWARD/REVERSE

ITEM	PART NO.	DESCRIPTION	QTY
	4614878	Wire Harness (Cowl)	1
1	. . . . .	Connector Assembly (VSM)	1
1	1525568	Connector	1
1	1529046	Connector (Secondary Lock)	1
1	1463139	Terminal	8
1	1484377	Plug	4
2	1540388	Conduit	AR
3	1534282	Clip	1
4	. . . . .	Connector Assembly (Hydraulic Lockout Solenoid 2)	2
4	1484557	Connector (2 Socket)	1
4	1484558	Connector (Secondary Lock)	1
4	1463139	Terminal	2
5	. . . . .	Connector Assembly (Hydraulic Lockout Solenoid 1)	1
5	1484557	Connector (2 Socket)	1
5	1484558	Connector (Secondary Lock)	1
5	1463139	Terminal	2
6	275493	Conduit	AR
7	. . . . .	Connector Assembly (Accelerator Pedal Sensor)	1
7	1525584	Connector	1
7	1532571	Terminal	6
8	1509888	Clip	2
9	. . . . .	Connector Assembly (Brake Pressure)	1
9	1603021	Connector	1
9	1603236	Connector (Secondary Lock)	1
9	1548517	Terminal (Socket)	3
9	1548519	Seal	3
10	. . . . .	Connector Assembly (Brake Fluid)	2
10	1324310	Terminal	2
10	1324309	Sleeve	2
11	275496	Conduit	AR
12	1534828	Clip	1
13	. . . . .	Connector Assembly (Park Brake)	1
13	1700460	Connector	1
13	1700461	Terminal	3
14	. . . . .	Connector Assembly (Brake Pedal)	1
14	1700460	Connector	1
14	1700461	Terminal	3
15	1402816	Clip	1
16	1500899	Clip	1
17	275497	Conduit	AR
18	1525577	Connector (With Resistor)	1
19	. . . . .	Connector Assembly (Bus Terminal)	1
19	1489656	Connector (4-Way)	1
19	1489657	Connector (Secondary Lock)	1
19	1330438	Terminal (Socket)	4
20	. . . . .	Connector Assembly (Display)	1
20	1525567	Connector	1
20	1529046	Connector (Secondary Lock)	1
20	1463139	Terminal	5
20	1484377	Plug	7

©2015 HYSTER COMPANY

WIRE HARNESS

COWL – MANUAL HYDRAULICS WITH FORWARD/REVERSE

ITEM	PART NO.	DESCRIPTION	QTY
21	. . . . .	Connector Assembly (J1939 Diagnostic)	1
21	1566116	Connector	1
21	1532664	Connector	1
21	1330438	Terminal (Socket)	3
22	1566117	Dust Cap (For Diagnostic Cable)	1
23	. . . . .	Connector Assembly (Horn Button)	1
23	1490242	Connector (2 Way)	1
23	1490243	Connector	1
23	1330438	Terminal (Socket)	2
24	. . . . .	Connector Assembly (VSM)	1
24	1525570	Connector	1
24	1529046	Connector (Secondary Lock)	1
24	1463139	Terminal	7
24	1484377	Plug	5
25	. . . . .	Connector Assembly (To Right Hand Chassis)	1
25	1500925	Connector	1
25	1352603	Secondary Lock (Secondary Lock)	1
25	1330437	Terminal (Pin)	8
25	1484377	Plug	4
26	. . . . .	Connector Assembly (To Right Hand Chassis Harness)	1
26	1489656	Connector (4-Way)	1
26	1489657	Connector (Secondary Lock)	1
26	1330438	Terminal (Socket)	4
27	. . . . .	Connector Assembly (DPF Display)	1
27	1463189	Connector	1
27	1463196	Connector	1
27	1463139	Terminal	4
28	. . . . .	Endcap Assembly (DPF Display)	1
28	1463184	Connector	1
28	1484377	Plug	4

©2015 HYSTER COMPANY

NOTES

©2015 HYSTER COMPANY

WIRE HARNESS (FIGURE 5-38)
COWL — ELECTRO-HYDRAULICS WITH MONOTROL PEDAL

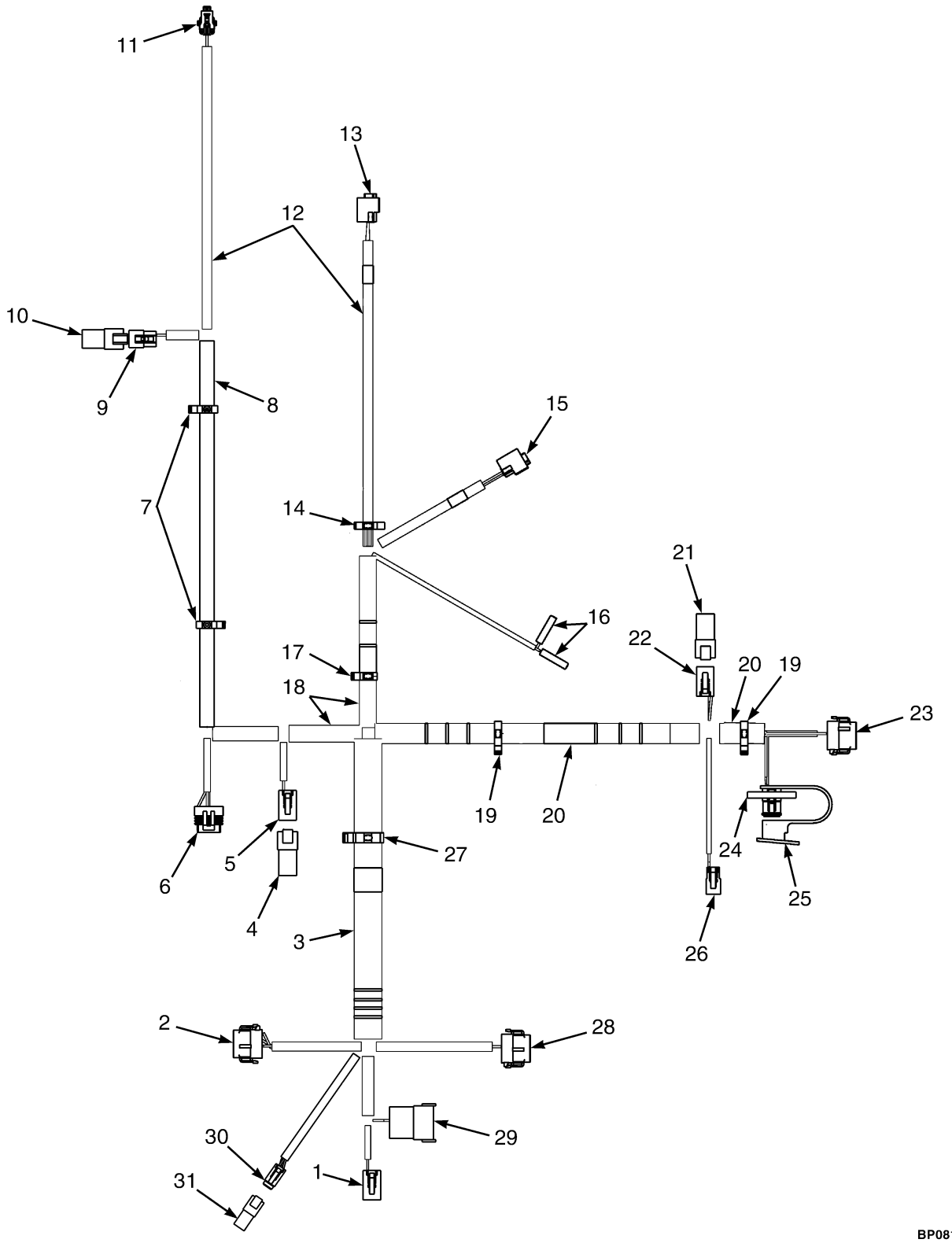

©2015 HYSTER COMPANY

WIRE HARNESS
COWL – ELECTRO-HYDRAULICS WITH MONOTROL PEDAL

ITEM	PART NO.	DESCRIPTION	QTY
	4614879	Wire Harness	1
1	. . . . .	Connector Assembly (RH Chassis Harness)	1
1	1489656	Connector (4-Way)	1
1	1489657	Connector (Secondary Lock)	1
1	1330438	Terminal (Socket)	4
2	. . . . .	Connector Assembly (Vehicle System Manager)	1
2	1525568	Connector	1
2	1529046	Connector (Secondary Lock)	1
2	1463139	Terminal	11
2	1484377	Plug	1
3	1540388	Conduit	AR
4	1525573	Connector (End Cap)	1
5	. . . . .	Connector Assembly (FDC Harness)	1
5	1489656	Connector (4-Way)	1
5	1489657	Connector (Secondary Lock)	1
5	1330438	Terminal (Socket)	4
6	. . . . .	Connector Assembly (Accelerator Pedal Sensor)	1
6	1525584	Connector	1
6	1532571	Terminal	6
7	1509890	Clip	2
8	275495	Conduit	AR
9	. . . . .	Connector Assembly (Mast Harness)	1
9	1484397	Connector (3-Way)	1
9	1463194	Connector (Secondary Lock)	1
9	1330438	Terminal (Socket)	3
10	1351682	Connector (End Cap)	1
11	. . . . .	Connector Assembly (Brake Pressure)	1
11	1603021	Connector	1
11	1603236	Connector (Secondary Lock)	1
11	1548517	Terminal (Socket)	3
11	1548519	Seal	3
12	275493	Conduit	AR
13	. . . . .	Connector Assembly (Brake Pedal)	1
13	1700460	Connector	1
13	1700461	Terminal	3
14	1402816	Clip	1
15	. . . . .	Connector Assembly (Park Brake)	1
15	1700460	Connector	1
15	1700461	Terminal	3
16	. . . . .	Connector Assembly (Brake Fluid)	2
16	1324310	Terminal	2
16	1324309	Sleeve	2
17	1534828	Clip	1
18	275496	Conduit	AR
19	1500899	Clip	2
20	275497	Conduit	AR
21	1525577	Connector (With Resistor) (End Cap)	1
22	. . . . .	Connector Assembly (Bus Term 1)	1
22	1489656	Connector (4-Way)	1
22	1489657	Connector (Secondary Lock)	1

©2015 HYSTER COMPANY

WIRE HARNESS

COWL – ELECTRO-HYDRAULICS WITH MONOTROL PEDAL

ITEM	PART NO.	DESCRIPTION	QTY
22	1330438	Terminal (Socket)	4
23	. . . . .	Connector Assembly (Display)	1
23	1525567	Connector	1
23	1529046	Connector (Secondary Lock)	1
23	1463139	Terminal	5
23	1484377	Plug	7
24	. . . . .	Connector Assembly (J1939 Diagnostic)	1
24	1566116	Connector	1
24	1532664	Connector	1
24	1330438	Terminal (Socket)	3
25	1566117	Dust Cap (For Diagnostic Cable)	1
26	. . . . .	Connector Assembly (Horn Button)	1
26	1490242	Connector (2 Way)	1
26	1490243	Connector (Secondary Lock)	1
26	1330438	Terminal (Socket)	2
27	1534282	Clip	1
28	. . . . .	Connector Assembly (Vehicle System Manager)	1
28	1525570	Connector	1
28	1529046	Connector	1
28	1463139	Terminal	7
28	1484377	Plug	5
29	. . . . .	Connector Assembly (RH Chassis Harness)	1
29	1500925	Connector	1
29	1352603	Secondary Lock (Secondary Lock)	1
29	1330437	Terminal (Pin)	11
29	1484377	Plug	1
30	. . . . .	Connector Assembly (DPF Display)	1
30	1463189	Connector	1
30	1463196	Connector	1
30	1463139	Terminal	4
31	. . . . .	Endcap (DPF Display)	1
31	1463184	Connector	1
31	1484377	Plug	4

©2015 HYSTER COMPANY

NOTES

©2015 HYSTER COMPANY

WIRE HARNESS (FIGURE 5-39)
COWL — ELECTRO-HYDRAULICS WITH FORWARD/REVERSE

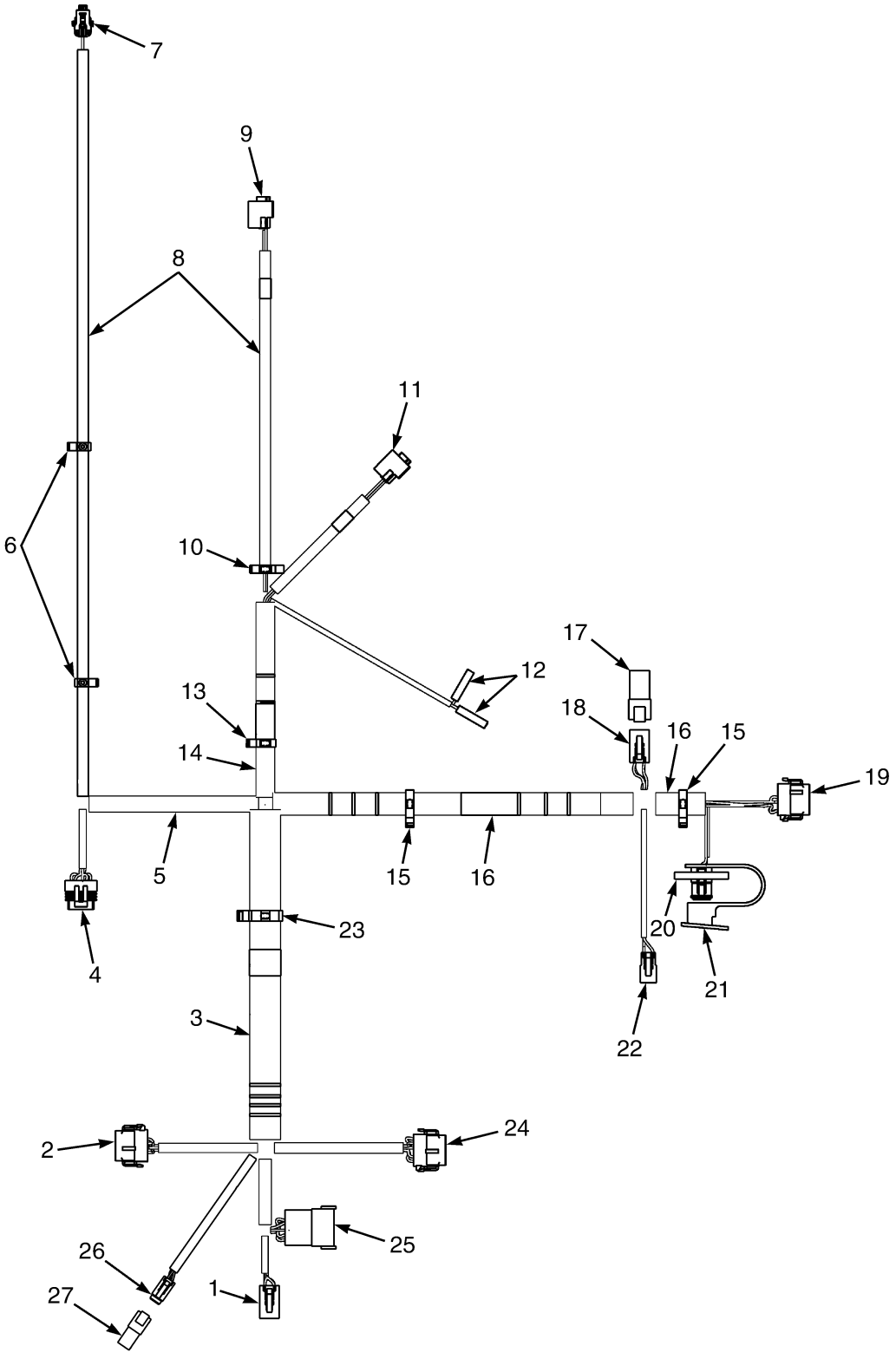

©2015 HYSTER COMPANY

WIRE HARNESS

COWL – ELECTRO-HYDRAULICS WITH FORWARD/REVERSE

ITEM	PART NO.	DESCRIPTION	QTY
	4614880	Wire Harness	1
1	. . . . .	Connector Assembly (RH Chassis Harness)	1
1	1489656	Connector (4-Way)	1
1	1489657	Connector (Secondary Lock)	1
1	1330438	Terminal (Socket)	4
2	. . . . .	Connector Assembly (Vehicle System Manager)	1
2	1525568	Connector	1
2	1529046	Connector (Secondary Lock)	1
2	1463139	Terminal	7
2	1484377	Plug	5
3	1540388	Conduit	AR
4	. . . . .	Connector Assembly (Accelerator Pedal Sensor)	1
4	1525584	Connector	1
4	1532571	Terminal	6
5	275495	Conduit	AR
6	1509888	Clip	2
7	. . . . .	Connector Assembly (Brake Pressure)	1
7	1603021	Connector	1
7	1603236	Connector (Secondary Lock)	1
7	1548517	Terminal (Socket)	3
7	1548519	Seal	3
8	275493	Conduit	AR
9	. . . . .	Connector Assembly (Brake Pedal)	1
9	1700460	Connector	1
9	1700461	Terminal	3
10	1402816	Clip	1
11	. . . . .	Connector Assembly (Park Brake)	1
11	1700460	Connector	1
11	1700461	Terminal	3
12	. . . . .	Connector Assembly (Brake Fluid)	2
12	1324310	Terminal	2
12	1324309	Sleeve	2
13	1534828	Clip	1
14	275496	Conduit	AR
15	1500899	Clip	2
16	275497	Conduit	AR
17	1525577	Connector (With Resistor) (End Cap)	1
18	. . . . .	Connector Assembly (Bus Term 1)	1
18	1489656	Connector (4-Way)	1
18	1489657	Connector (Secondary Lock)	1
18	1330438	Terminal (Socket)	4
19	. . . . .	Connector Assembly (Display)	1
19	1525567	Connector	1
19	1529046	Connector (Secondary Lock)	1
19	1463139	Terminal	5
19	1484377	Plug	7
20	. . . . .	Connector Assembly (J1939 Diagnostic)	1
20	1566116	Connector	1
20	1532664	Connector	1
20	1330438	Terminal (Socket)	3

©2015 HYSTER COMPANY

WIRE HARNESS

COWL – ELECTRO-HYDRAULICS WITH FORWARD/REVERSE

ITEM	PART NO.	DESCRIPTION	QTY
21	1566117	Dust Cap (For Diagnostic Cable)	1
22	. . . . .	Connector Assembly (Horn Button)	1
22	1490242	Connector (2 Way)	1
22	1490243	Connector (Secondary Lock)	1
22	1330438	Terminal (Socket)	2
23	1534282	Clip	1
24	. . . . .	Connector Assembly (Vehicle System Manager)	1
24	1525570	Connector	1
24	1529046	Connector (Secondary Lock)	1
24	1484377	Plug	5
24	1463139	Terminal	7
25	. . . . .	Connector Assembly (RH Chassis Harness)	1
25	1500925	Connector	1
25	1352603	Secondary Lock (Secondary Lock)	1
25	1484377	Plug	4
25	1330437	Terminal (Pin)	8
26	. . . . .	Connector Assembly (DPF Display)	1
26	1463189	Connector	1
26	1463196	Connector (Secondary Lock)	1
26	1463139	Terminal	4
27	. . . . .	Endcap (DPF Display)	1
27	1463184	Connector	1
27	1484377	Plug	4

©2015 HYSTER COMPANY

NOTES

©2015 HYSTER COMPANY

WIRE HARNESS (FIGURE 5-40)
LIGHTS — WITH OVERHEAD GUARD

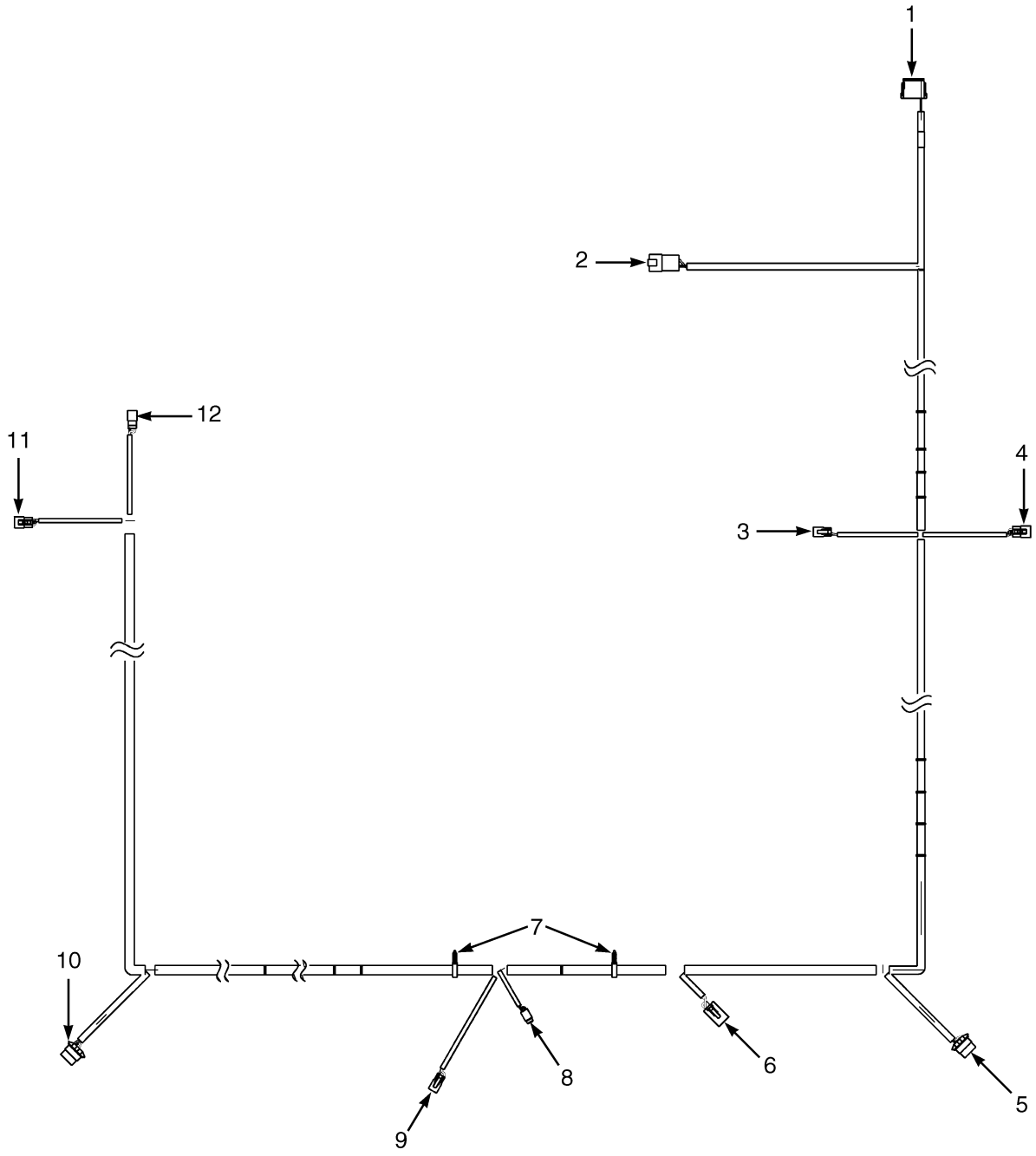

BP080502

©2015 HYSTER COMPANY

WIRE HARNESS
LIGHTS – WITH OVERHEAD GUARD

ITEM	PART NO.	DESCRIPTION	QTY
	2101862	Wire Harness (Lights)	1
1	. . . . .	Connector Assembly (Vehicle System Manager)	1
1	1525566	Connector	1
1	1484377	Plug	7
1	1330438	Terminal (Socket)	5
1	1500913	Connector	1
2	. . . . .	Connector Assembly (To RH Chassis Harness)	1
2	1514597	Connector	1
2	1514598	Connector	1
2	1484709	Terminal (Pin)	4
3	. . . . .	Connector Assembly (RH Front Work Lights)	1
3	1490242	Connector (2 Way)	1
3	1490243	Connector	1
3	1363886	Terminal (Socket)	2
4	. . . . .	Connector Assembly (To RH Front Signal)	1
4	1484397	Connector (3-Way)	1
4	1463194	Connector (Secondary Lock)	1
4	1330438	Terminal (Socket)	3
5	. . . . .	Connector Assembly (RH Rear Signal Lights)	1
5	1531486	Connector	1
5	930591	Connector	1
5	1330356	Seal	1
5	1482668	Plug (Cavity Plug)	1
5	1330355	Terminal	5
5	1476108	Wire Seal (White)	4
6	. . . . .	Connector Assembly (Work Light Resistor)	1
6	1514602	Connector	1
6	1514603	Connector	1
6	1554359	Terminal	4
7	1509890	Clip	2
8	. . . . .	Connector Assembly (Strobe)	1
8	1484557	Connector (2 Socket)	1
8	1484558	Connector (Secondary Lock)	1
8	1463139	Terminal	2
9	. . . . .	Connector Assembly (Rear Front Work Lights)	1
9	1490242	Connector (2 Way)	1
9	1490243	Connector	1
9	1363886	Terminal (Socket)	2
10	. . . . .	Connector Assembly (LH Rear Signal)	1
10	1531486	Connector	1
10	930591	Connector	1
10	1330355	Terminal	5
10	1330356	Seal	1
10	1482668	Plug (Cavity Plug)	1
10	1476108	Wire Seal (White)	4
11	. . . . .	Connector Assembly (LH Front Signal)	1
11	1330438	Terminal (Socket)	3
11	1463194	Connector (Secondary Lock)	1
11	1484397	Connector (3-Way)	1
12	. . . . .	Connector Assembly	1

©2015 HYSTER COMPANY

WIRE HARNESS
LIGHTS – WITH OVERHEAD GUARD

ITEM	PART NO.	DESCRIPTION	QTY
12	1363886	Terminal (Socket)	2
12	1490242	Connector (2 Way)	1
12	1490243	Connector	1

©2015 HYSTER COMPANY

NOTES

©2015 HYSTER COMPANY

WIRE HARNESS THREE FUNCTION (FIGURE 5-41)
ELECTRONIC CONTROL VALVE — WITH VARIABLE DISPLACEMENT PUMP

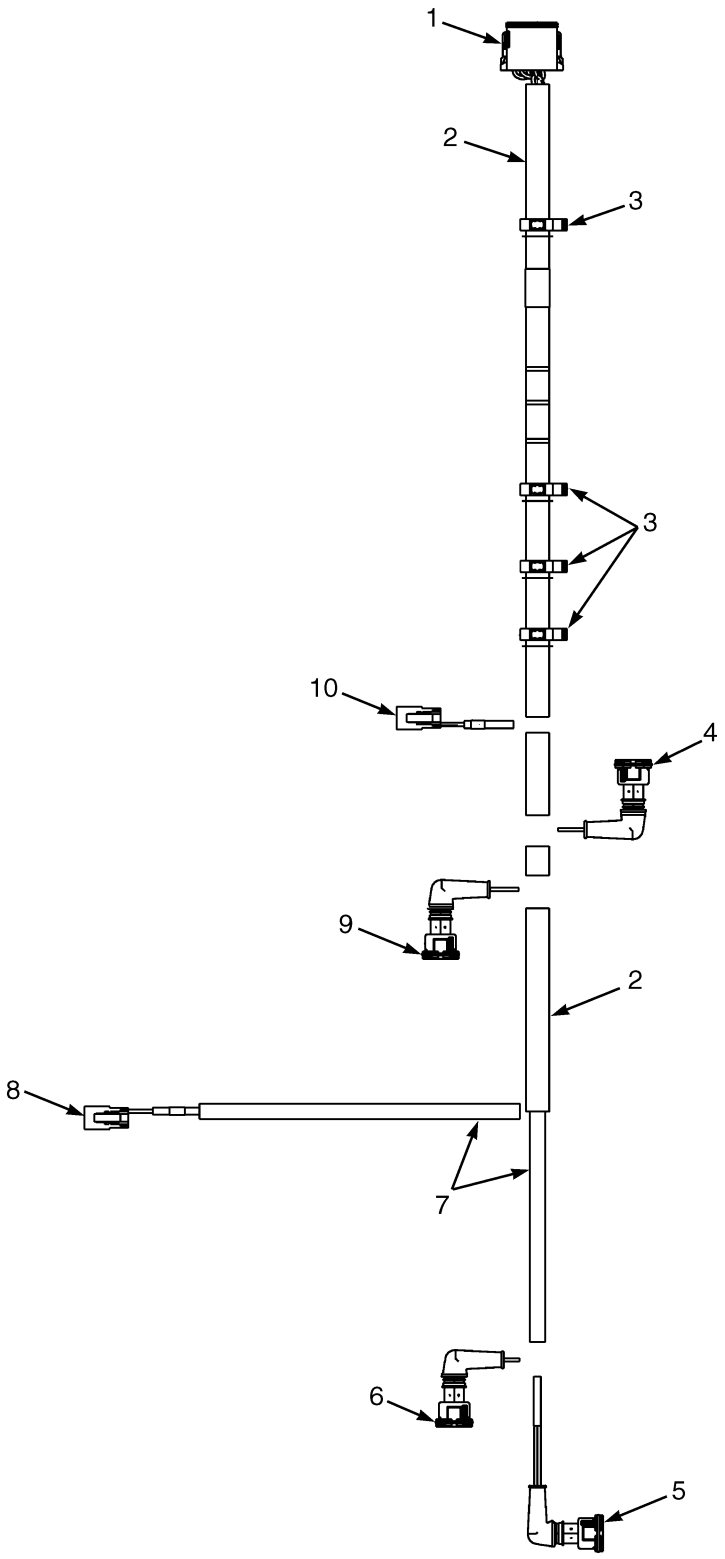

BP081116

©2015 HYSTER COMPANY

WIRE HARNESS THREE FUNCTION
ELECTRONIC CONTROL VALVE – WITH VARIABLE DISPLACEMENT PUMP

ITEM	PART NO.	DESCRIPTION	QTY
	4605072	Wire Harness (Electronic Control Valve)	1
1	. . . . .	Connector Assembly (Vehicle System Manager)	1
1	1525564	Connector	1
1	1330438	Terminal (Socket)	9
1	1484377	Plug	3
1	1500913	Connector (Secondary Lock)	1
2	275495	Conduit	AR
3	1402815	Clip	4
4	. . . . .	Connector Assembly (2A Tilt)	1
4	1531162	Connector	1
4	1402814	Terminal	2
4	1562649	Seal	2
4	190383	Boot	1
5	. . . . .	Connector Assembly (2B Tilt)	1
5	1531162	Connector	1
5	1402814	Terminal	2
5	1562649	Seal	2
5	190383	Boot	1
6	. . . . .	Connector Assembly (3B Aux. 1)	1
6	1493435	Connector (2-Way)	1
6	1402814	Terminal	2
6	1562649	Seal	2
6	190383	Boot	1
7	. . . . .	Conduit	AR
8	. . . . .	Connector Assembly (1A Lift)	1
8	1490242	Connector (2 Way)	1
8	1330438	Terminal (Socket)	2
8	1490243	Connector	1
9	. . . . .	Connector Assembly (3A Aux.1)	1
9	1493435	Connector (2-Way)	1
9	1402814	Terminal	2
9	1562649	Seal	2
9	190383	Boot	1
10	. . . . .	Connector Assembly (1B Lower)	1
10	1490242	Connector (2 Way)	1
10	1330438	Terminal (Socket)	2
10	1490243	Connector	1

©2015 HYSTER COMPANY

WIRE HARNESS FOUR FUNCTION (FIGURE 5-42)
ELECTRONIC CONTROL VALVE — WITH VARIABLE DISPLACEMENT PUMP

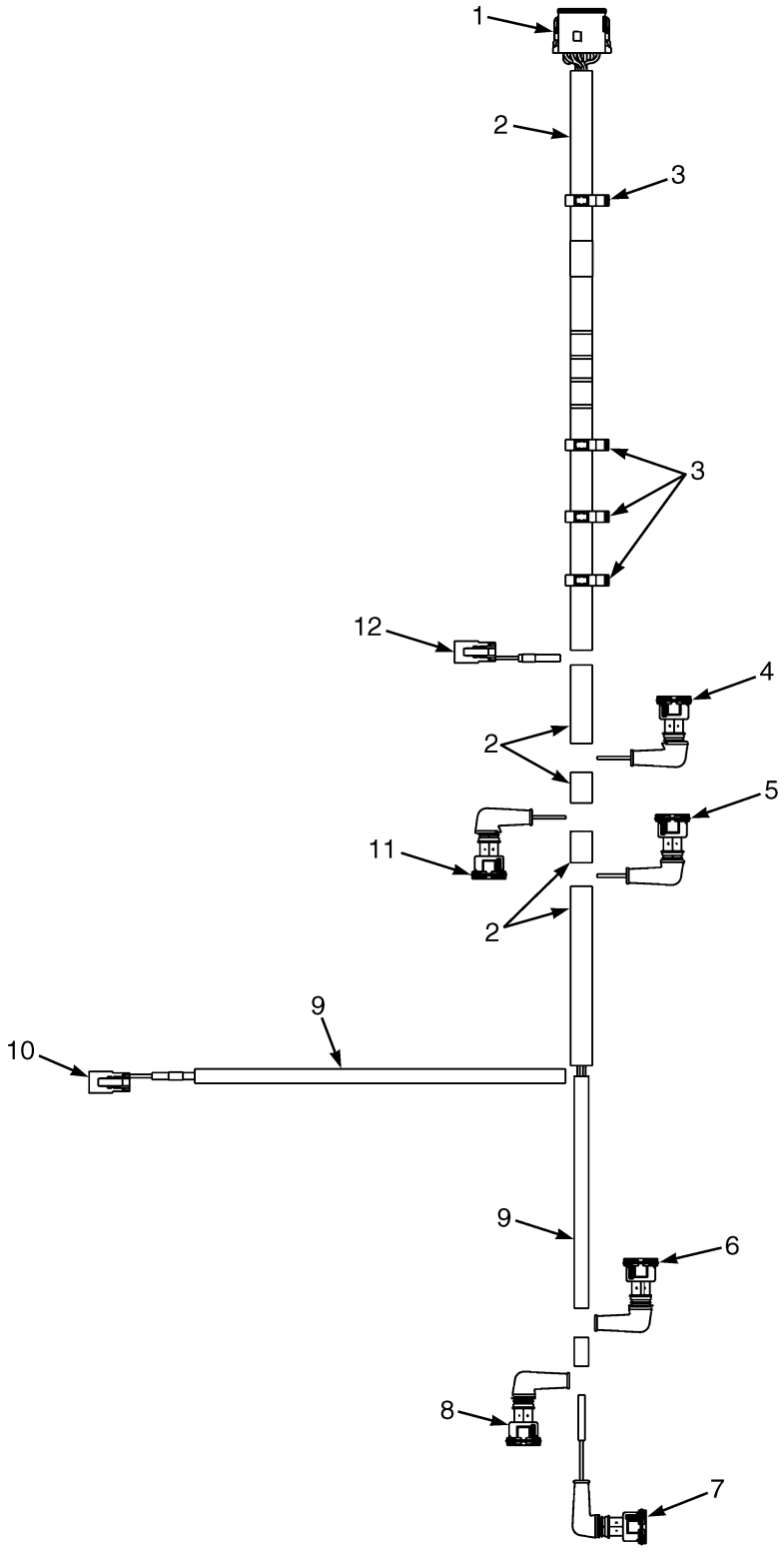

©2015 HYSTER COMPANY

WIRE HARNESS FOUR FUNCTION
ELECTRONIC CONTROL VALVE – WITH VARIABLE DISPLACEMENT PUMP

ITEM	PART NO.	DESCRIPTION	QTY
	4605073	Wire Harness (Electronic Control Valve)	1
1	. . . . .	Connector Assembly (Vehicle System Manager)	1
1	1525564	Connector	1
1	1330438	Terminal (Socket)	12
1	1500913	Connector (Secondary Lock)	1
2	275495	Conduit	AR
3	1402815	Clip	4
4	. . . . .	Connector Assembly (2A Tilt)	1
4	1531162	Connector	1
4	1402814	Terminal	2
4	1562649	Seal	2
4	190383	Boot	1
5	. . . . .	Connector Assembly (4A Aux.2))	1
5	1493447	Connector	1
5	1402814	Terminal	2
5	1562649	Seal	2
5	190383	Boot	1
6	. . . . .	Connector Assembly (4B Aux. 2)	1
6	1493447	Connector	1
6	1402814	Terminal	2
6	1562649	Seal	2
6	190383	Boot	1
7	. . . . .	Connector Assembly (2B Tilt)	1
7	1531162	Connector	1
7	1402814	Terminal	2
7	1562649	Seal	2
7	190383	Boot	1
8	. . . . .	Connector Assembly (3B Aux. 1)	1
8	1493435	Connector (2-Way)	1
8	1402814	Terminal	2
8	1562649	Seal	2
8	190383	Boot	1
9	275494	Conduit	AR
10	. . . . .	Connector Assembly (1A Lift)	1
10	1490242	Connector (2 Way)	1
10	1330438	Terminal (Socket)	2
10	1490243	Connector (Secondary Lock)	1
11	. . . . .	Connector Assembly (3A Aux.1)	1
11	1493435	Connector (2-Way)	1
11	1402814	Terminal	2
11	1562649	Seal	2
11	. . . . .	190838	1
12	. . . . .	Connector Assembly (1B Lower)	1
12	1490242	Connector (2 Way)	1
12	1330438	Terminal (Socket)	2
12	1490243	Connector (Secondary Lock)	1

©2015 HYSTER COMPANY

WIRE HARNESS (FIGURE 5-43)
TRANSMISSION — SINGLE SPEED

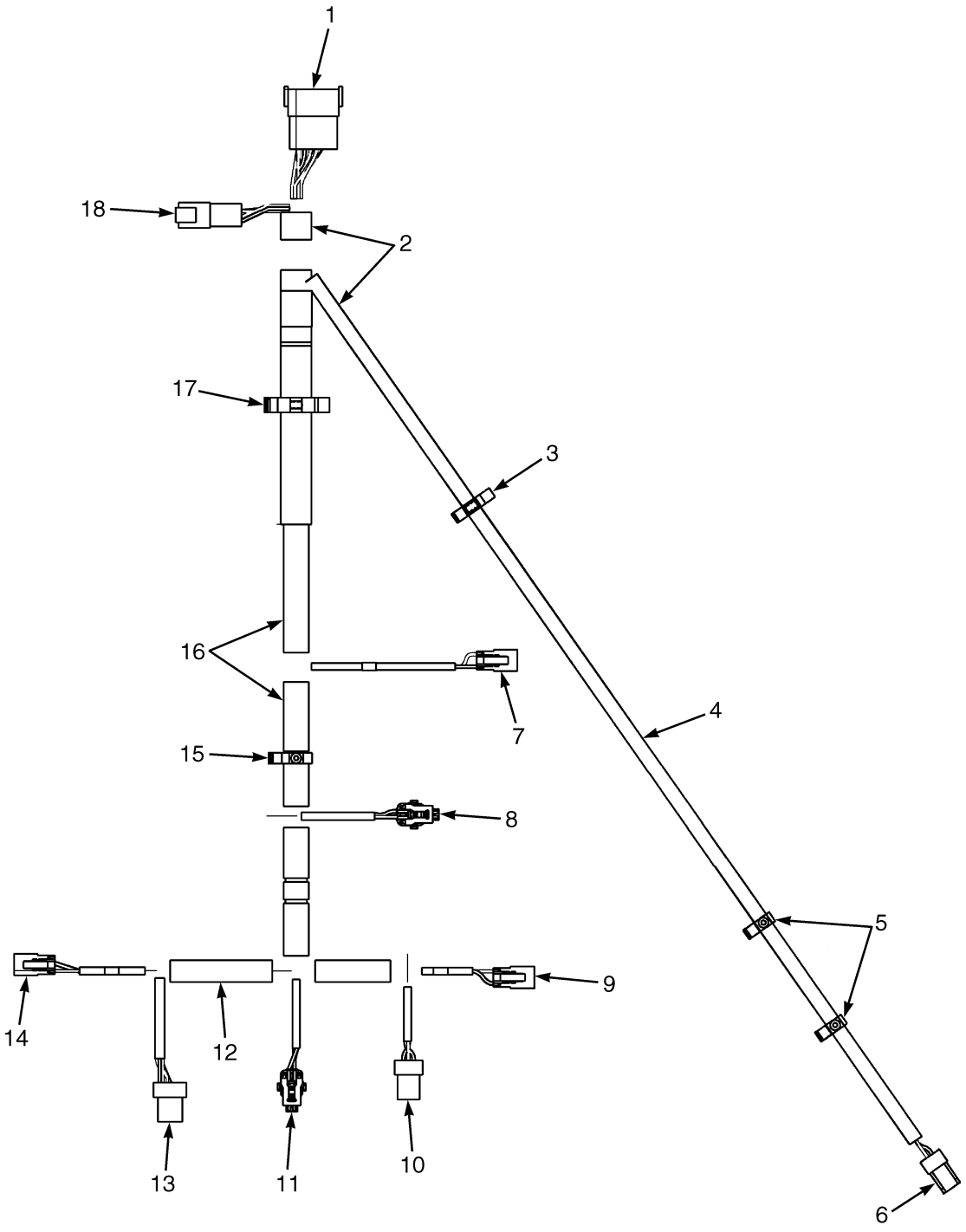

BP081948

©2015 HYSTER COMPANY

WIRE HARNESS
TRANSMISSION – SINGLE SPEED

ITEM	PART NO.	DESCRIPTION	QTY
	2085943	Wire Harness (Transmission)	1
1	. . . . .	Connector Assembly (To RH Chassis Harness)	1
1	1623280	Connector	1
1	1623281	Connector	1
1	1463138	Terminal Pin	10
1	1484377	Plug	2
2	275497	Conduit	AR
3	1402816	Clip	1
4	275493	Conduit	AR
5	1509888	Clip	2
6	. . . . .	Connector Assembly (Temperature)	1
6	1402868	Connector	1
6	1323576	Terminal	2
7	. . . . .	Connector Assembly (Clutch Forward 1)	1
7	1490242	Connector (2 Way)	1
7	1490243	Connector	1
7	1330438	Terminal (Socket)	2
8	. . . . .	Connector Assembly (Forward 1 Pressure)	1
8	1603021	Connector	1
8	1603236	Connector (Secondary Lock)	1
8	1548517	Terminal (Socket)	3
8	1548519	Seal	3
9	. . . . .	Connector Assembly (Clutch Reverse 1)	1
9	1490242	Connector (2 Way)	1
9	1490243	Connector	1
9	1330438	Terminal (Socket)	2
10	. . . . .	Connector Assembly (Turb Shaft RPM)	1
10	1546673	Connector	1
10	1323576	Terminal	3
11	. . . . .	Connector Assembly (Reverse 1 Pressure)	1
11	1603021	Connector	1
11	1603236	Connector (Secondary Lock)	1
11	1548517	Terminal (Socket)	3
11	1548519	Seal	3
12	275495	Conduit	AR
13	. . . . .	Connector Assembly (Tail Shaft RPM)	1
13	1558156	Connector	1
13	1323576	Terminal	4
14	. . . . .	Connector Assembly (Transmission Check Valve)	1
14	1490242	Connector (2 Way)	1
14	1490243	Connector	1
14	1330438	Terminal (Socket)	2
15	1509890	Clip	1
16	275496	Conduit	AR
17	1402813	Clip	1
18	. . . . .	Connector Assembly (To RH Chassis Harness)	1
18	1530960	Connector	1
18	1530961	Connector (Secondary Lock)	1
18	1463138	Terminal Pin	4
18	1484377	Plug	2

©2015 HYSTER COMPANY

WIRE HARNESS
TRANSMISSION – SINGLE SPEED

ITEM	PART NO.	DESCRIPTION	QTY
	a 1500912	Clip	2
	a 1582464	Fastener	2

FOOTNOTES:

a Not Illustrated

©2015 HYSTER COMPANY

NOTES

©2015 HYSTER COMPANY

WIRE HARNESS (FIGURE 5-44)
TRANSMISSION — DUAL SPEED

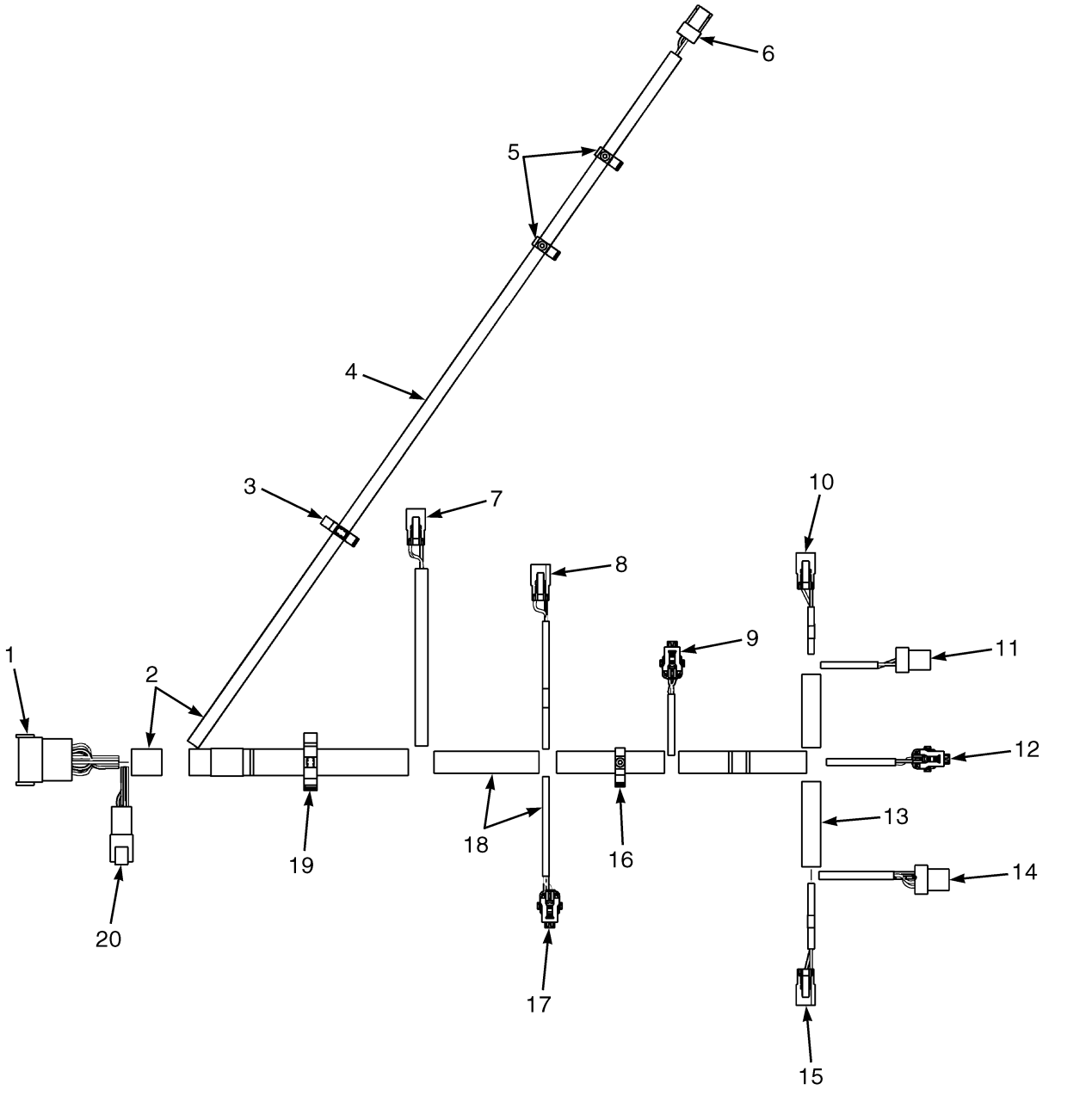

©2015 HYSTER COMPANY

WIRE HARNESS
TRANSMISSION – DUAL SPEED

ITEM	PART NO.	DESCRIPTION	QTY
	2085942	Wire Harness (Transmission)	1
1	. . . . .	Connector Assembly (To RH Chassis Harness)	1
1	1623280	Connector	1
1	1623281	Connector	1
1	1463138	Terminal Pin	11
1	1484377	Plug	1
2	275497	Conduit	AR
3	1402816	Clip	1
4	275493	Conduit	AR
5	1509888	Clip	2
6	. . . . .	Connector Assembly (Temperature)	1
6	1402868	Connector	1
6	1323576	Terminal	2
7	. . . . .	Connector Assembly (Clutch Forward 2)	1
7	1490242	Connector (2 Way)	1
7	1490243	Connector	1
7	1330438	Terminal (Socket)	2
8	. . . . .	Connector Assembly (Clutch Forward 1)	1
8	1490242	Connector (2 Way)	1
8	1490243	Connector	1
8	1330438	Terminal (Socket)	2
9	. . . . .	Connector Assembly (Forward 1 Pressure)	1
9	1603021	Connector	1
9	1603236	Connector (Secondary Lock)	1
9	1548517	Terminal (Socket)	3
9	1548519	Seal	3
10	. . . . .	Connector Assembly (Clutch Reverse 1)	1
10	1490242	Connector (2 Way)	1
10	1490243	Connector	1
10	1330438	Terminal (Socket)	2
11	. . . . .	Connector Assembly (Turbine Shaft RPM)	1
11	1546673	Connector	1
11	1323576	Terminal	3
12	. . . . .	Connector Assembly (Reverse 1 Pressure)	1
12	1603021	Connector	1
12	1603236	Connector (Secondary Lock)	1
12	1548517	Terminal (Socket)	3
12	1548519	Seal	3
13	275495	Conduit	AR
14	. . . . .	Connector Assembly (Tail Shaft RPM)	1
14	1558156	Connector	1
14	1323576	Terminal	4
15	. . . . .	Connector Assembly (Check Valve)	1
15	1490242	Connector (2 Way)	1
15	1490243	Connector	1
15	1330438	Terminal (Socket)	2
16	1509890	Clip	1
17	. . . . .	Connector Assembly (Forward 2 Pressure)	1
17	1603021	Connector	1
17	1603236	Connector (Secondary Lock)	1

©2015 HYSTER COMPANY

WIRE HARNESS
TRANSMISSION – DUAL SPEED

ITEM	PART NO.	DESCRIPTION	QTY
17	1548517	Terminal (Socket)	3
17	1548519	Seal	3
18	275496	Conduit	AR
19	1402813	Clip	1
20	. . . . .	Connector Assembly (To RH Chassis Harness)	1
20	1530960	Connector	1
20	1530961	Connector (Secondary Lock)	1
20	1463138	Terminal Pin	6
	a 1500912	Clip	2
	a 1582464	Fastener	2

FOOTNOTES:

a Not Illustrated

©2015 HYSTER COMPANY

NOTES

©2015 HYSTER COMPANY

WIRE HARNESS (FIGURE 5-45)
TRANSMISSION WITH BRAKE TEMP — SINGLE SPEED

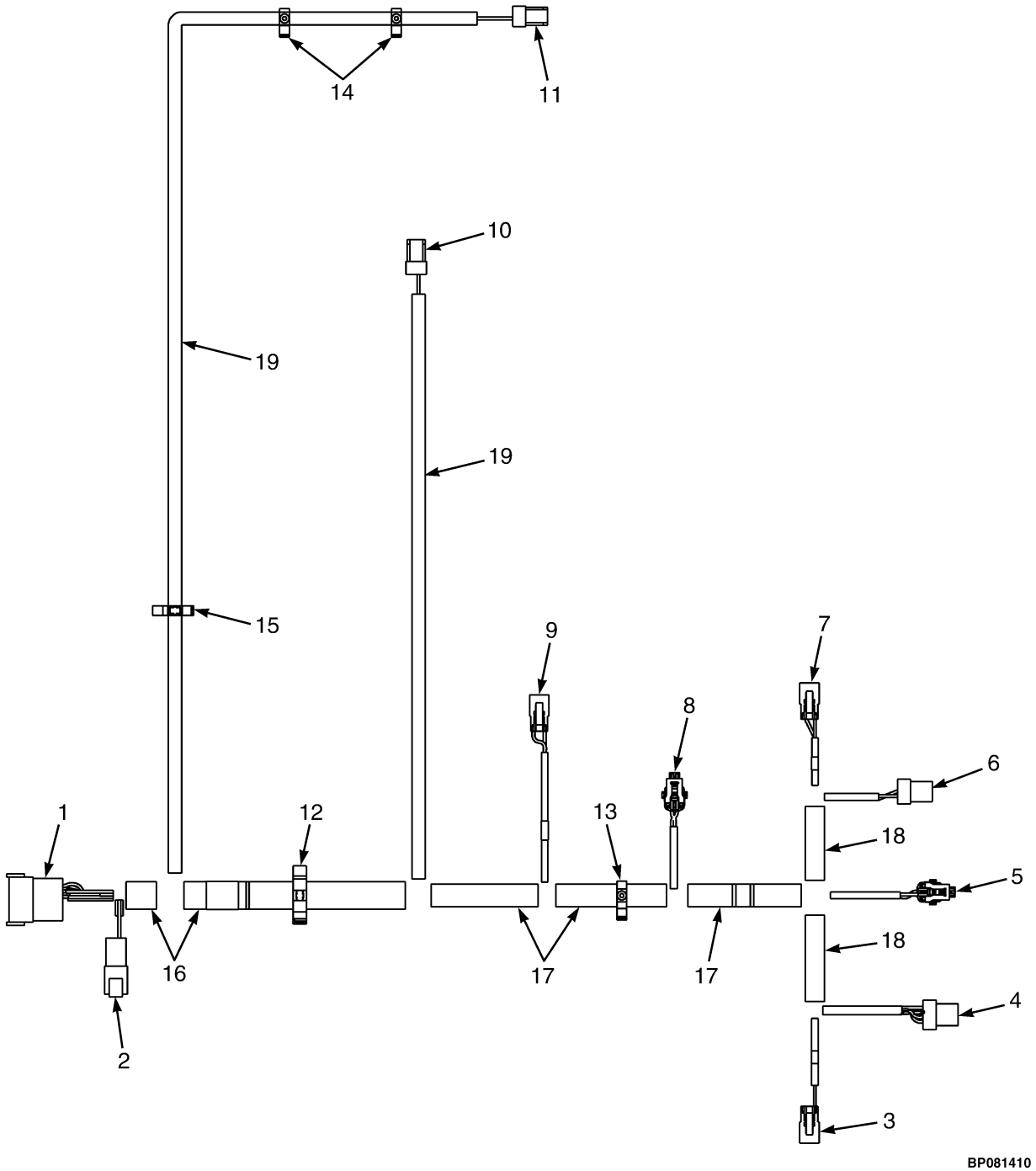

©2015 HYSTER COMPANY

WIRE HARNESS
TRANSMISSION WITH BRAKE TEMP – SINGLE SPEED

ITEM	PART NO.	DESCRIPTION	QTY
	4604292	Wire Harness (Transmission) (Transmission 1 Speed)	1
1	. . . . .	Connector Assembly (CRP85 To RH Chassis Harness)	1
1	1623280	Connector	1
1	1463138	Terminal Pin	11
1	1484377	Plug	1
1	1623281	Connector	1
2	. . . . .	Connector Assembly (CRP161 To RH Chassis Harness)	1
2	1530960	Connector	1
2	1463138	Terminal Pin	4
2	1484377	Plug	2
2	1530961	Connector (Secondary Lock)	1
3	. . . . .	Connector Assembly (CPS86 XMSN Check Valve)	1
3	1490242	Connector (2 Way)	1
3	1330438	Terminal (Socket)	2
3	1490243	Connector	1
4	. . . . .	Connector Assembly (CPS62 Tail Shaft RPM (Toss))	1
4	1558156	Connector	1
4	1323576	Terminal	4
5	. . . . .	Connector Assembly (CPS60 REV 1 Pressure)	1
5	1603021	Connector	1
5	1548517	Terminal (Socket)	3
5	1548519	Seal	3
5	1603236	Connector (Secondary Lock)	1
6	. . . . .	Connector Assembly (CPS63 TURB Shaft RPM (TISS)	1
6	1546673	Connector	1
6	1323576	Terminal	3
7	. . . . .	Connector Assembly (CPS58 Clutch REV 1)	1
7	1490242	Connector (2 Way)	1
7	1330438	Terminal (Socket)	2
7	1490243	Connector	1
8	. . . . .	Connector Assembly (CPS61 FWD 1 Pressure)	1
8	1603021	Connector	1
8	1548517	Terminal (Socket)	3
8	1548519	Seal	3
8	1603236	Connector (Secondary Lock)	1
9	. . . . .	Connector Assembly (CPS57 Clutch FWD 1)	1
9	1490242	Connector (2 Way)	1
9	1330438	Terminal (Socket)	2
9	1490243	Connector	1
10	. . . . .	Connector Assembly (CPS51 Brake Temp)	1
10	1402868	Connector	1
10	1323576	Terminal	2
11	. . . . .	Connector Assembly (CPS64 XMSN Temp)	1
11	1402868	Connector	1
11	1323576	Terminal	2
12	1402813	Clip	1
13	1509890	Clip	1
14	1509888	Clip	2
15	1402816	Clip	1
16	275497	Conduit	AR

©2015 HYSTER COMPANY

WIRE HARNESS

TRANSMISSION WITH BRAKE TEMP – SINGLE SPEED

ITEM	PART NO.	DESCRIPTION	QTY
17	275496	Conduit	AR
18	275495	Conduit	AR
19	275493	Conduit	AR

©2015 HYSTER COMPANY

NOTES

©2015 HYSTER COMPANY

WIRE HARNESS (FIGURE 5-46)
TRANSMISSION WITH BRAKE TEMP — TWO SPEED

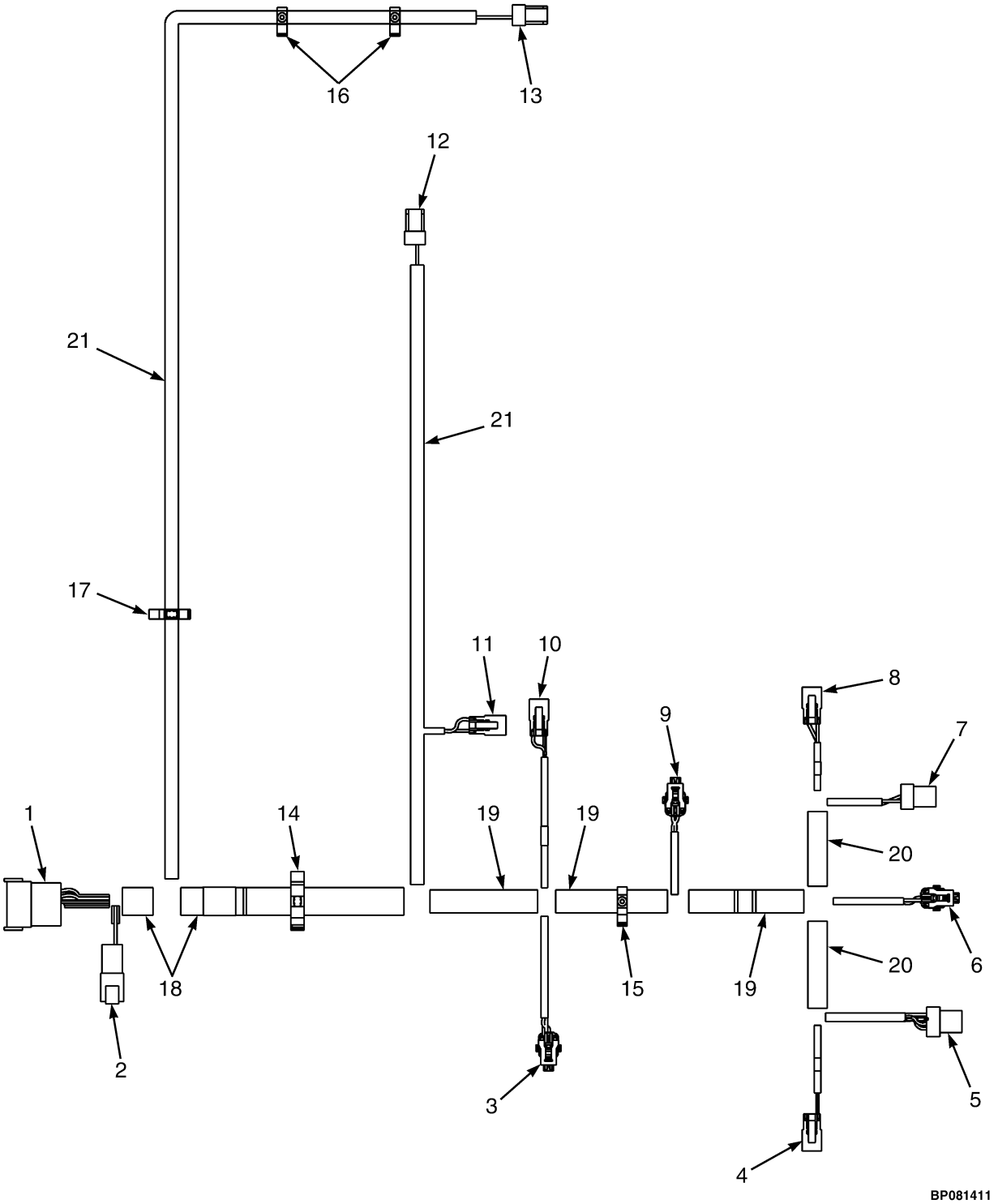

©2015 HYSTER COMPANY

WIRE HARNESS
TRANSMISSION WITH BRAKE TEMP – TWO SPEED

ITEM	PART NO.	DESCRIPTION	QTY
	4604293	Wire Harness (Transmission)	1
1	. . . . .	Connector Assembly (CRP85 To RH Chassis Harness)	1
1	1623280	Connector	1
1	1463138	Terminal Pin	12
1	1623281	Connector	1
2	. . . . .	Connector Assembly (CRP161 To RH Chassis Harness)	1
2	1530960	Connector	1
2	1463138	Terminal Pin	6
2	1530961	Connector (Secondary Lock)	1
3	. . . . .	Connector Assembly (CPS59 FWD 2 Pressure)	1
3	1603021	Connector	1
3	1548517	Terminal (Socket)	3
3	1548519	Seal	3
3	1603236	Connector (Secondary Lock)	1
4	. . . . .	Connector Assembly (CPS86 XMSN Check Valve)	1
4	1490242	Connector (2 Way)	1
4	1330438	Terminal (Socket)	2
4	1490243	Connector	1
5	. . . . .	Connector Assembly (CPS62 Tail Shaft RPM (TOSS))	1
5	1558156	Connector	1
5	1323576	Terminal	4
6	. . . . .	Connector Assembly (CPS60 REV 1 Pressure)	1
6	1603021	Connector	1
6	1548517	Terminal (Socket)	3
6	1548519	Seal	3
6	1603236	Connector (Secondary Lock)	1
7	. . . . .	Connector Assembly (CPS63 TURB Shaft RPM (TISS))	1
7	1546673	Connector	1
7	1323576	Terminal	3
8	. . . . .	Connector Assembly (CPS58 Clutch REV 1)	1
8	1490242	Connector (2 Way)	1
8	1330438	Terminal (Socket)	2
8	1490243	Connector	1
9	. . . . .	Connector Assembly (CPS61 FWD 1 Pressure)	1
9	1603021	Connector	1
9	1548517	Terminal (Socket)	3
9	1548519	Seal	3
9	1603236	Connector (Secondary Lock)	1
10	. . . . .	Connector Assembly (CPS57 Clutch FWD 1)	1
10	1490242	Connector (2 Way)	1
10	1330438	Terminal (Socket)	2
10	1490243	Connector	1
11	. . . . .	Connector Assembly (CPS56 Clutch FWD 2)	1
11	1490242	Connector (2 Way)	1
11	1330438	Terminal (Socket)	2
11	1490243	Connector	1
12	. . . . .	Connector Assembly (CPS51 Brake Temp)	1
12	1402868	Connector	1
12	1323576	Terminal	2
13	. . . . .	Connector Assembly (CPS64 XMSN Temp)	1

©2015 HYSTER COMPANY

WIRE HARNESS

TRANSMISSION WITH BRAKE TEMP – TWO SPEED

ITEM	PART NO.	DESCRIPTION	QTY
13	1402868	Connector	1
13	1323576	Terminal	2
14	1402813	Clip	1
15	1509890	Clip	1
16	1509888	Clip	2
17	1402816	Clip	1
18	275497	Conduit	AR
19	275496	Conduit	AR
20	275495	Conduit	AR
21	275493	Conduit	AR

©2015 HYSTER COMPANY

6 TRANSMISSION

SECTION 6
TRANSMISSION

DESCRIPTION	PAGE
CHARGE PUMP ASSEMBLY	6-34
FORWARD CLUTCH	
SINGLE SPEED TRANSMISSION	6-14
FORWARD CLUTCH, HIGH	
DUAL SPEED TRANSMISSION	6-28
FORWARD CLUTCH, LOW	
DUAL SPEED TRANSMISSION	6-26
REVERSE CLUTCH	
DUAL SPEED TRANSMISSION	6-30
SINGLE SPEED TRANSMISSION	6-16
TORQUE CONVERTER	
KUBOTA 3.8L LPG	6-7
TRANSMISSION	
DUAL SPEED - SHEET 1 OF 3	6-18
DUAL SPEED - SHEET 2 OF 3	6-20
DUAL SPEED - SHEET 3 OF 3	6-22
SINGLE SPEED - SHEET 1 OF 3	6-8
SINGLE SPEED - SHEET 2 OF 3	6-9
SINGLE SPEED - SHEET 3 OF 3	6-12
TRANSMISSION CONTROL VALVE ASSEMBLY	6-32
TRANSMISSION COOLING LINES	
WITH EXTERNAL OIL COOLER - GASOLINE, LPG AND DIESEL	6-4
WITHOUT EXTERNAL OIL COOLER - DIESEL	6-2
TRANSMISSION MOUNT	6-6

©2015 HYSTER COMPANY

TRANSMISSION COOLING LINES (FIGURE 6-1)
WITHOUT EXTERNAL OIL COOLER — DIESEL

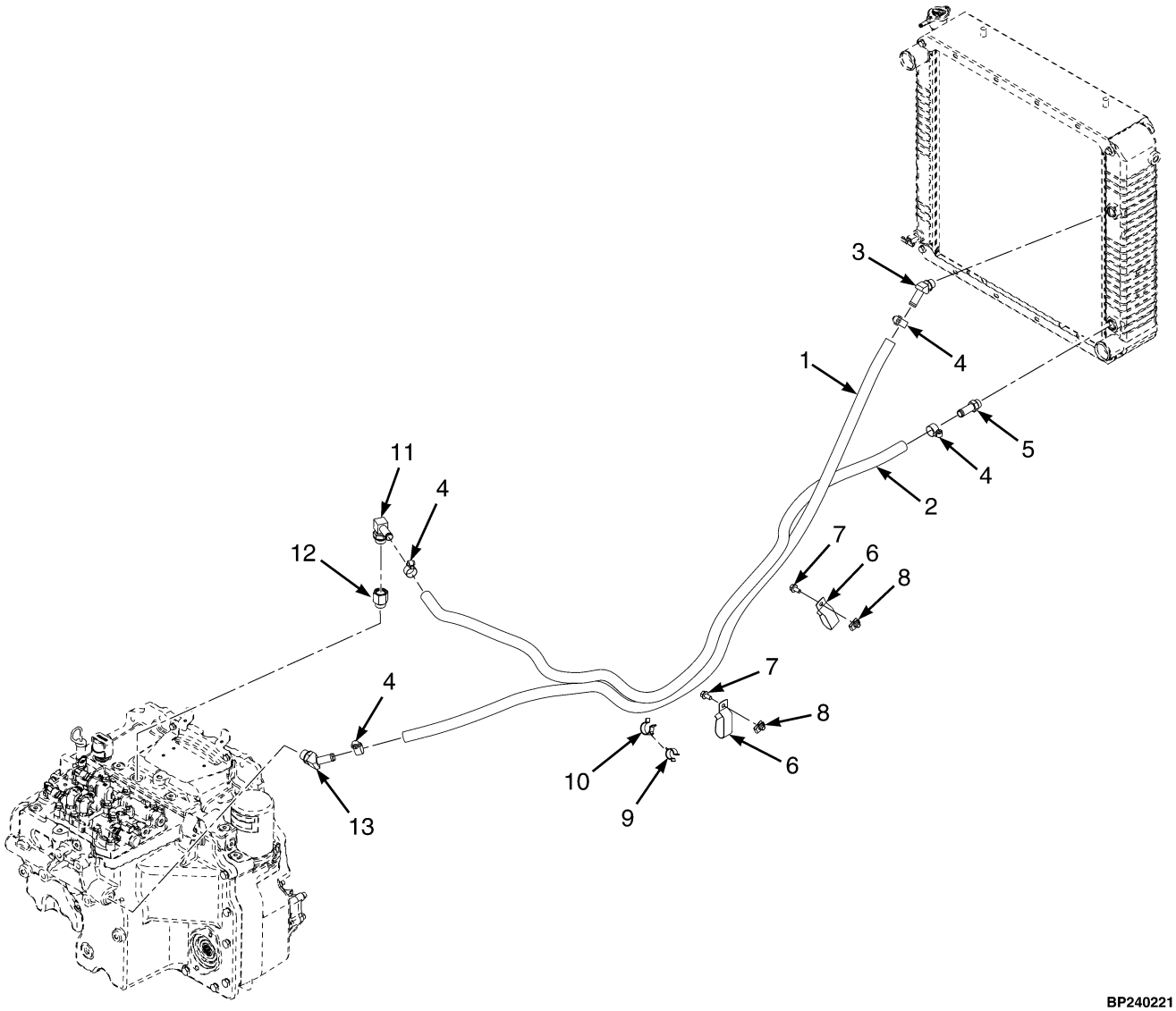

©2015 HYSTER COMPANY

TRANSMISSION COOLING LINES
WITHOUT EXTERNAL OIL COOLER – DIESEL

ITEM	PART NO.	DESCRIPTION	QTY
1	4616203	Hose	1
2	4616202	Hose	1
3	222503	Fitting	1
4	130845	Clamp	4
5	1673198	Fitting	1
6	1562648	Clip	2
7	1527879	Capscrew	2
8	1480237	Nut	2
9	1502066	Clamp (Swivel)	2
10	1542436	Clamp (Swivel)	2
11	222512	Fitting	1
12	1691525	Adapter	1
13	222504	Fitting	1

©2015 HYSTER COMPANY

TRANSMISSION COOLING LINES (FIGURE 6-2)
WITH EXTERNAL OIL COOLER — GASOLINE, LPG AND DIESEL

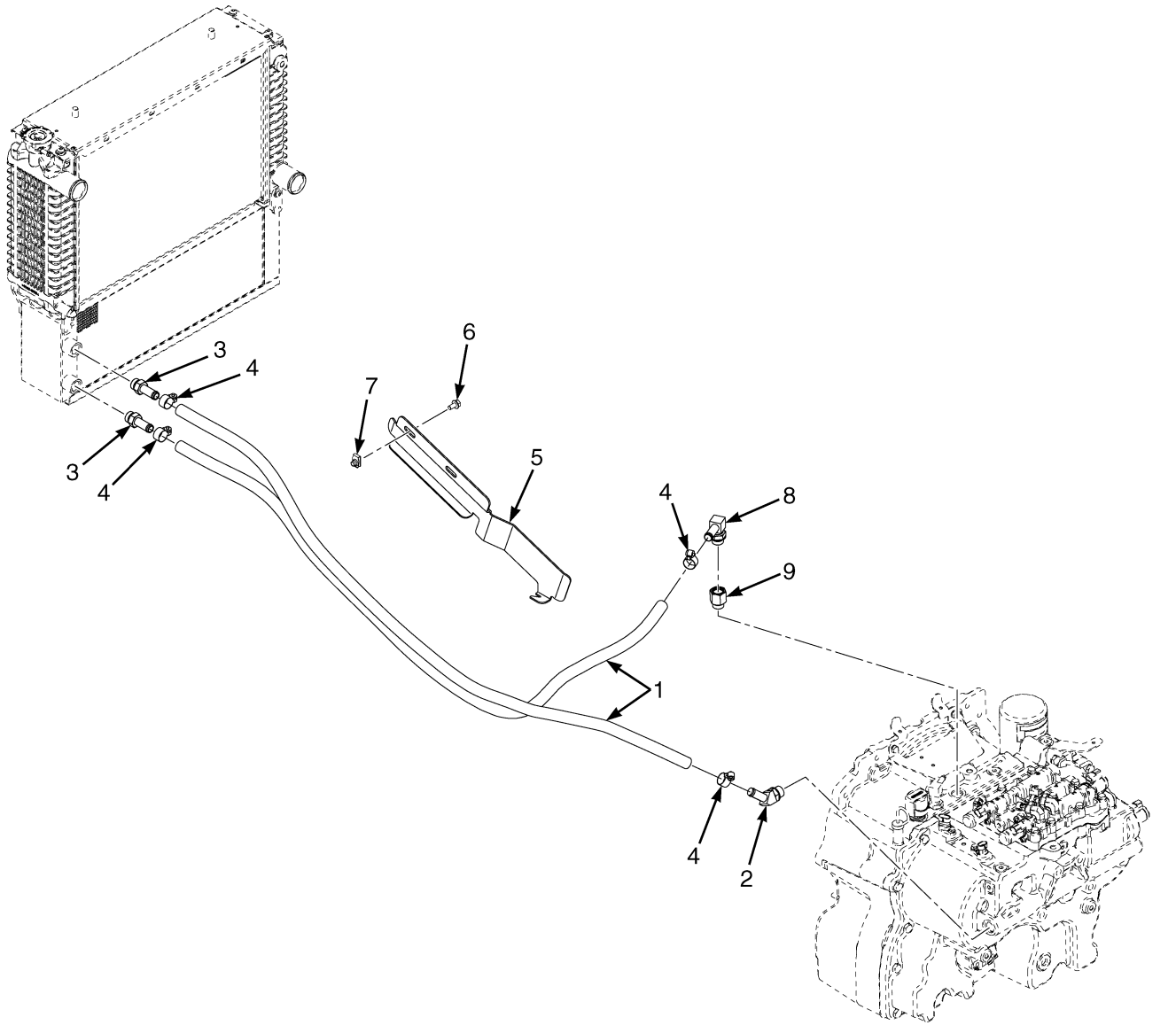

©2015 HYSTER COMPANY

TRANSMISSION COOLING LINES
WITH EXTERNAL OIL COOLER – GASOLINE, LPG AND DIESEL

ITEM	PART NO.	DESCRIPTION	QTY
1	4625652	Hose	2
2	222504	Fitting	1
3	17223	Fitting	2
4	130845	Clamp	4
5	4118329	Heat Shield	1
6	1527879	Capscrew	2
7	1480237	Nut	2
8	222512	Fitting	1
9	1691525	Adapter	1

©2015 HYSTER COMPANY

TRANSMISSION MOUNT (FIGURE 6-3)

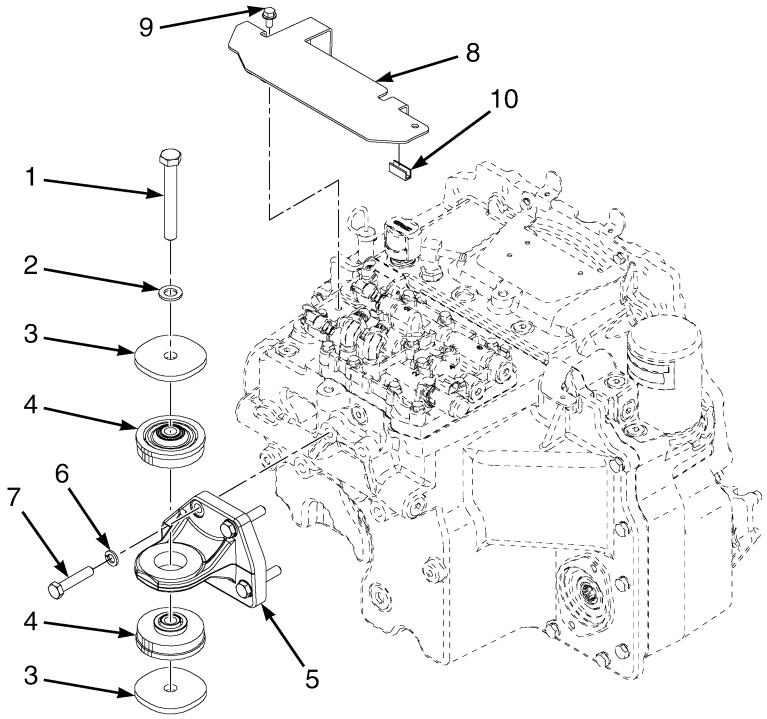

BP240203

ITEM	PART NO.	DESCRIPTION	QTY
1	293697	Capscrew	1
2	320165	Washer	1
3	4129461	Washer	2
4	4643563	Isolator (Blue Stripe)	2
5	4129434	Bracket	1
6	292683	Lockwasher	4
7	292531	Capscrew	4
8	4092328	Shield	1
9	1527879	Capscrew	1
10	1380849	Edge Protector	2
	a 264134	Loctite	AR

FOOTNOTES:

a Not Illustrated

©2015 HYSTER COMPANY

TORQUE CONVERTER (FIGURE 6-4)
KUBOTA 3.8L LPG

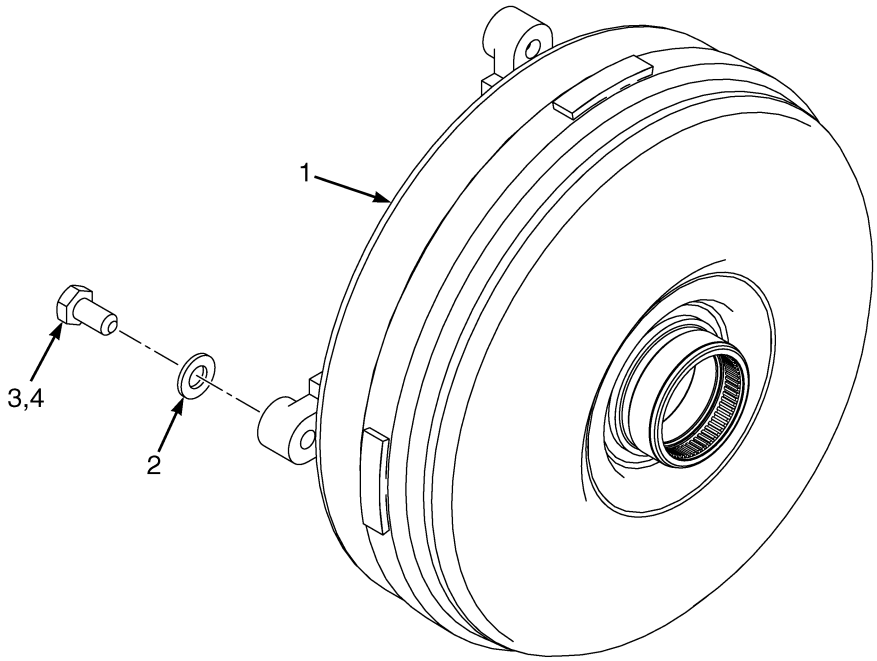

BP240065

ITEM	PART NO.	DESCRIPTION	QTY
1	4020309	Torque Converter	1
2	296420	Washer	4
3	4618189	Special Capscrew	4
4	360387	Loctite	AR

TRANSMISSION (FIGURE 6-5)
SINGLE SPEED — SHEET 1 OF 3

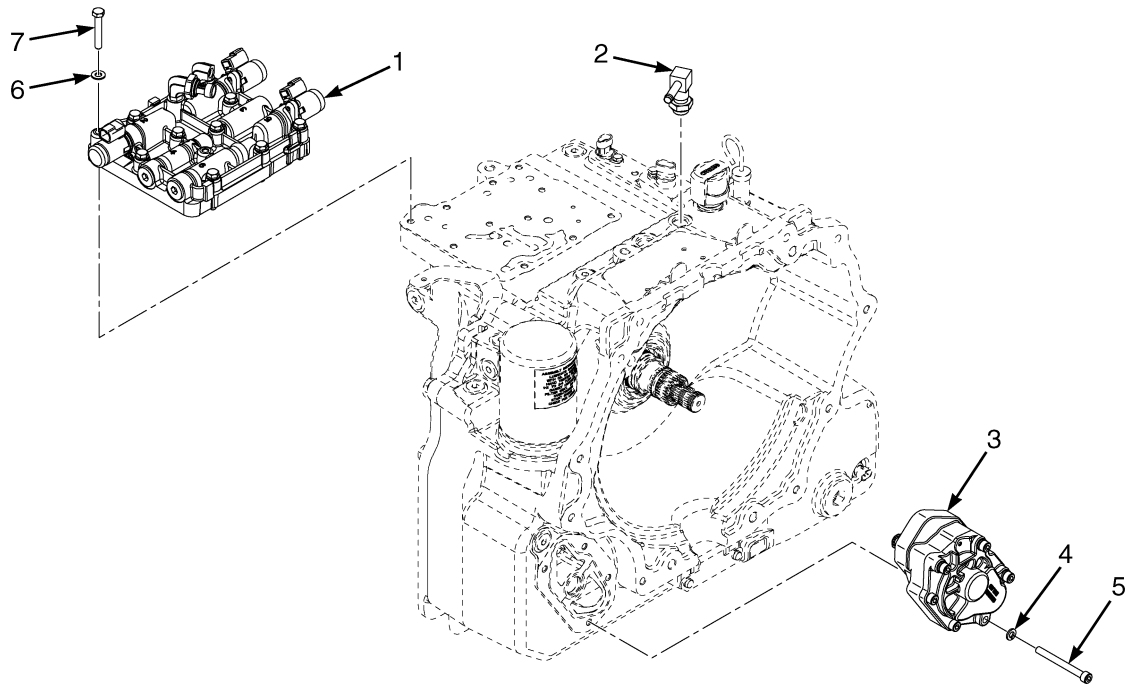

BP240265

ITEM	PART NO.	DESCRIPTION	QTY
	4103570	Transmission Assy (High Pressure)	1
1	1665204	Valve (High Pressure) (☞Figure 6-16)	1
2	1640573	Fitting	1
3	4618047	Charge Pump (☞Figure 6-17)	1
4	292681	Lockwasher	4
5	1676908	Capscrew	4
6	320157	Washer	11
7	292509	Capscrew	11

©2015 HYSTER COMPANY

TRANSMISSION (FIGURE 6-6)
SINGLE SPEED — SHEET 2 OF 3

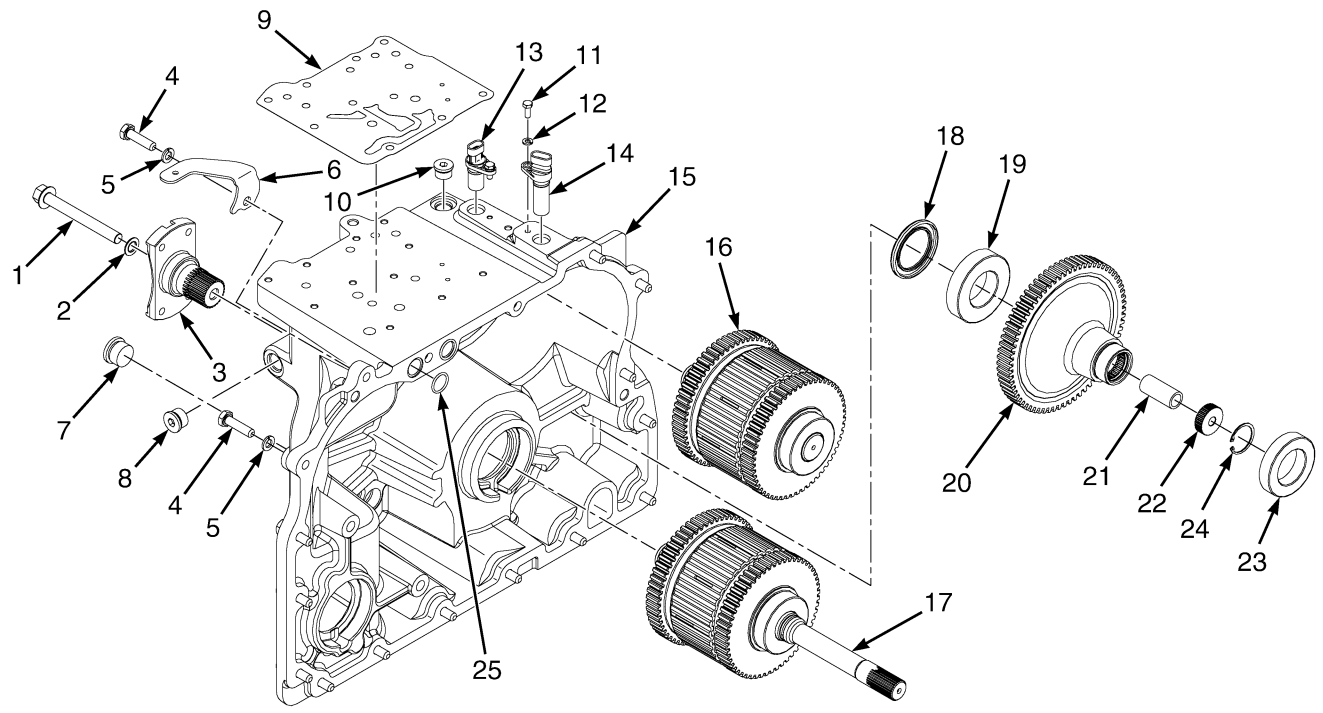

BP240201

ITEM	PART NO.	DESCRIPTION	QTY
	4103570	Transmission Assy (High Pressure)	1
1	1654651	Flange Head Capscrew	1
2	86229	Seal	1
3	1654004	Yoke	1
4	292515	Capscrew	15
5	292682	Lockwasher	15
6	1652575	Bracket	1
7	222444	Fitting	1
8	233693	Fitting	1
9	1570360	Gasket	1
10	235691	Fitting	3
11	292500	Capscrew	2
12	292680	Washer	2
13	1541231	Sensor (Input Speed, TISS)	1
14	1541232	Sensor (Output Speed, TOSS)	1
15	1636643	Transmission Housing	1
16	1646888	Clutch Pack (Reverse) (☞Figure 6-9)	1
17	1646887	Clutch Pack (Forward) (☞Figure 6-8)	1
18	1547447	Oil Seal	1
19	43209	Ball Bearing	1
20	1638793	Gear (Output)	1
21	1636645	Spacer	1
22	1525686	Nut	1
23	44309	Ball Bearing	1
24	213099	Snap Ring	1

©2015 HYSTER COMPANY

ITEM	PART NO.	DESCRIPTION	QTY
25	1553403	O-Ring	2

©2015 HYSTER COMPANY

NOTES

©2015 HYSTER COMPANY

TRANSMISSION (FIGURE 6-7)
SINGLE SPEED — SHEET 3 OF 3

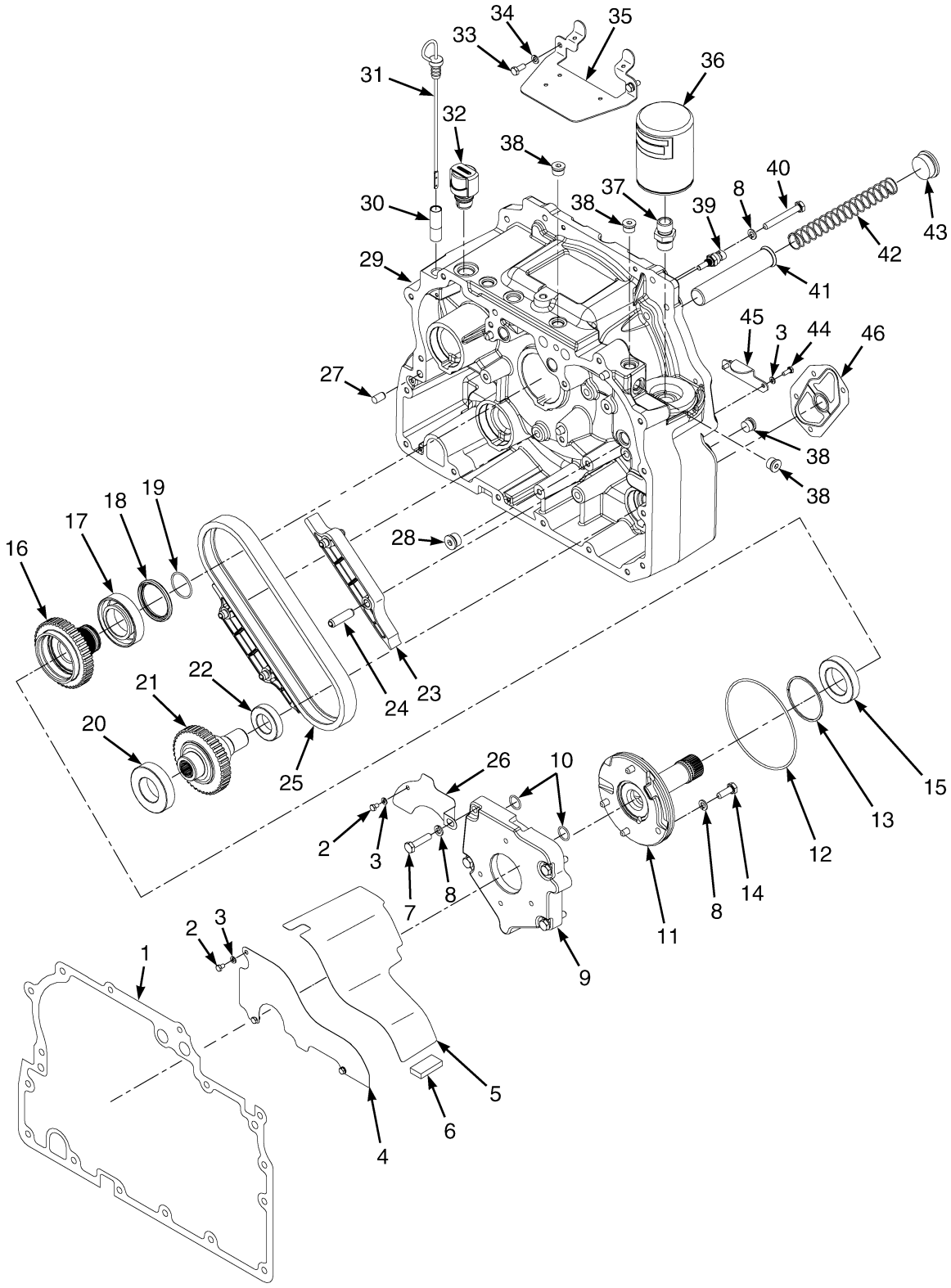

©2015 HYSTER COMPANY

TRANSMISSION
SINGLE SPEED – SHEET 3 OF 3

ITEM	PART NO.	DESCRIPTION	QTY
	4103570	Transmission Assy (High Pressure)	1
1	1636640	Gasket	1
2	148962	Capscrew	4
3	292680	Washer	6
4	1627453	Shield (Lower)	1
5	1622887	Baffle	1
6	334560	Magnet	1
7	292516	Capscrew	4
8	292682	Lockwasher	10
9	1638799	Carrier	1
10	1553403	O-Ring	2
11	1525677	Stator	1
11	1525679	Support	1
11	1516826	Bushing	1
12	16682	O-Ring	1
13	1544218	Sealing Ring	1
14	136985	Capscrew	4
15	44310	Ball Bearing	1
16	1541556	Sprocket (Driving)	1
17	1544216	Bearing	1
18	1544217	Oil Seal (Torque Converter)	1
19	145481	O-Ring	1
20	43209	Ball Bearing	1
21	1529890	Sprocket (Driven)	1
22	44307	Ball Bearing	1
23	1615804	Snubber	2
24	303100	Roll Pin	4
25	1494750	Chain (Drive Pump)	1
26	1624408	Shield (Upper)	1
27	303150	Dowel	4
28	233693	Fitting	1
29	4043361	Housing	1
30	1624406	Dipstick Tube	1
31	4103560	Dipstick	1
32	1632741	Breather	1
33	136681	Capscrew	2
34	292681	Lockwasher	2
35	1699141	Cover Plate (Converter Housing)	1
36	4020588	Transmission Filter	1
37	1558515	Fitting	1
38	235691	Fitting	4
39	1515654	Temperature Sensor	1
40	292522	Capscrew	2
41	1627465	Screen	1
42	1550572	Spring	1
43	188210	Fitting	1
44	292500	Capscrew	2
45	1550567	Cover Plate	1
46	1653815	Gasket (Charge Pump)	1

©2015 HYSTER COMPANY

FORWARD CLUTCH (FIGURE 6-8)
SINGLE SPEED TRANSMISSION

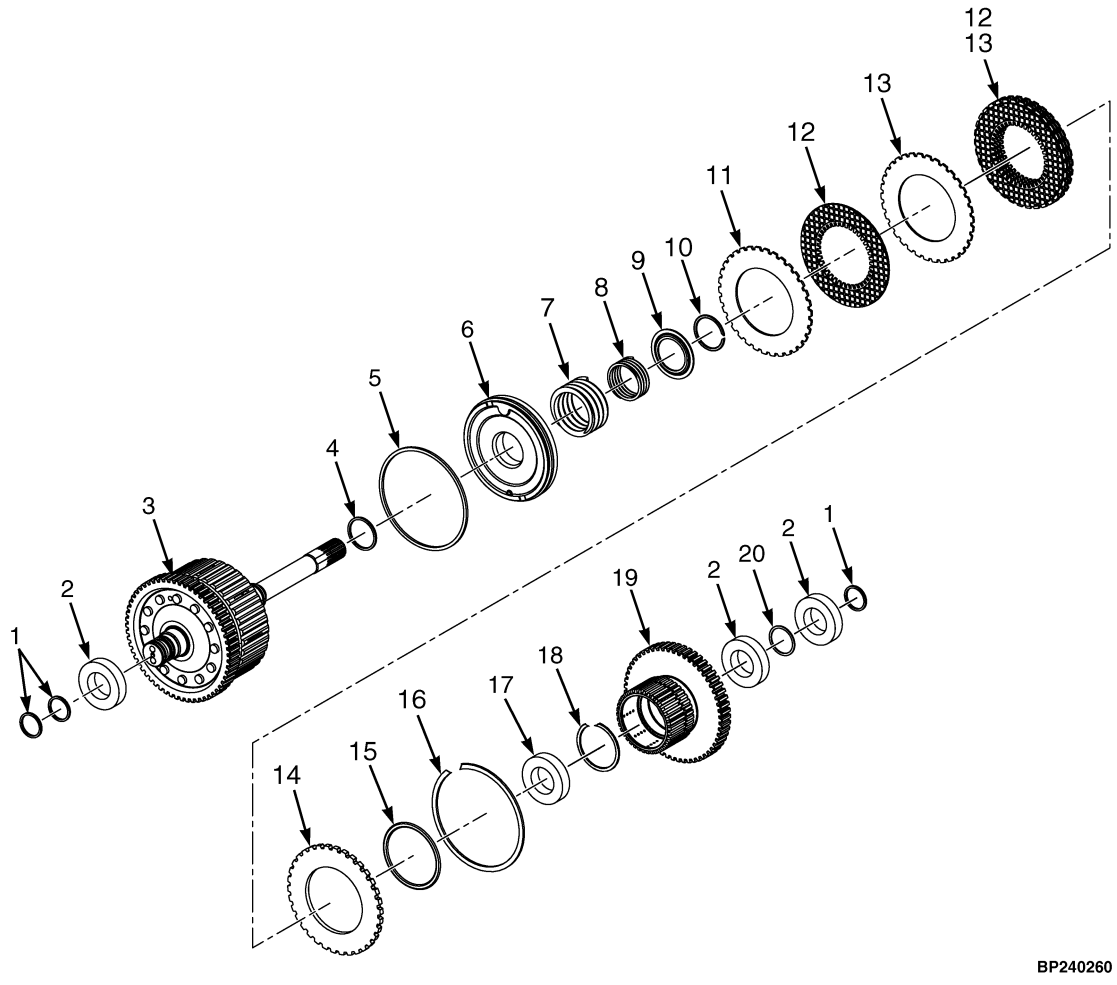

©2015 HYSTER COMPANY

FORWARD CLUTCH
SINGLE SPEED TRANSMISSION

ITEM	PART NO.	DESCRIPTION	QTY
	1646887	Clutch Pack	1
1	. . . . .	Ring Seal	3
2	43207	Ball Bearing	3
3	4025492	Shaft	1
4	. . . . .	Ring Seal	1
5	. . . . .	Ring Seal	1
6	2085129	Piston	1
7	1581108	Spring	1
8	1581098	Spring	1
9	1581099	Spring Guide	1
10	1581100	Snap Ring	1
11	. . . . .	Conical Plate	1
12	. . . . .	Friction Plate	8
13	. . . . .	Separator Plate	7
14	1537449	Pressure Plate (6.0 mm)	1
15	. . . . .	O-Ring	1
16	1537450	Snap Ring	1
17	124603	Ball Bearing	1
18	1581107	Snap Ring	1
19	1651761	Clutch Gear	1
20	1537459	Snap Ring	1
	1652272	Kit-Repair 8 Plate	1
	1571673	Kit-Clutch Pack Plates (Clutch Pack Plates)	1
	1595425	Kit-Clutch Pack Seals	1

©2015 HYSTER COMPANY

REVERSE CLUTCH (FIGURE 6-9)
SINGLE SPEED TRANSMISSION

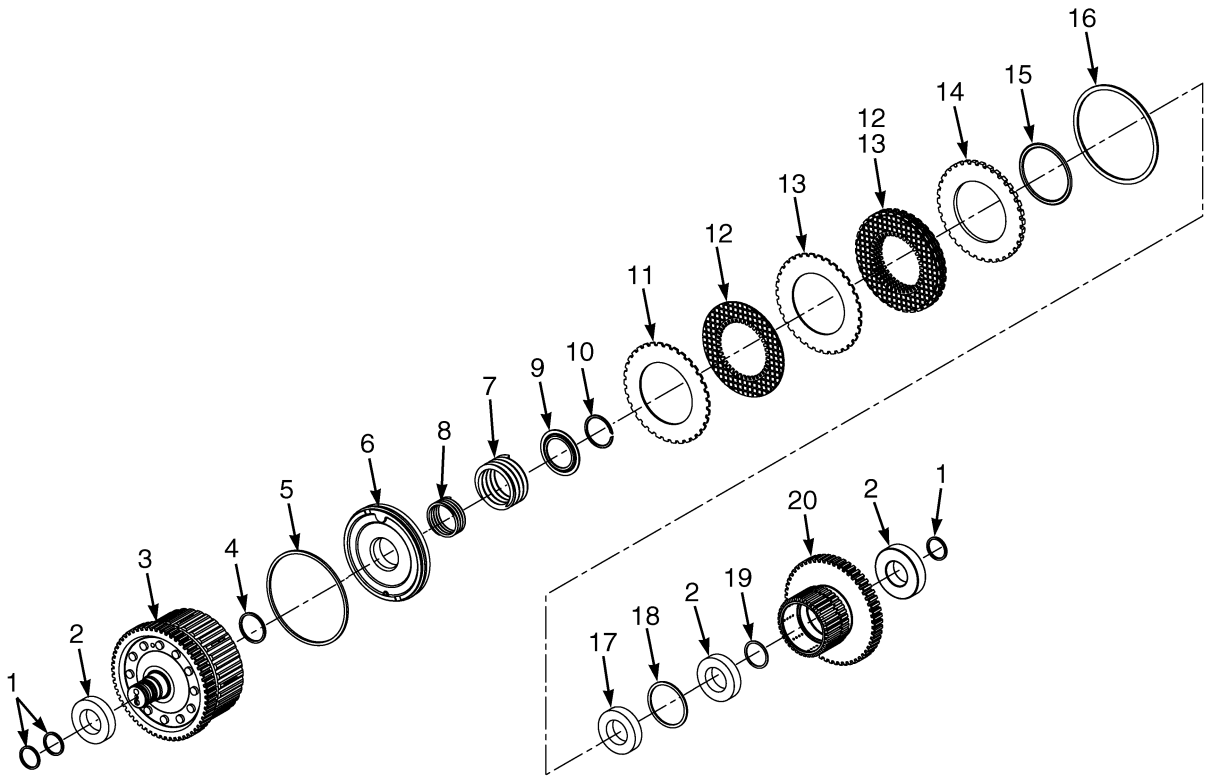

BP240261

©2015 HYSTER COMPANY

REVERSE CLUTCH
SINGLE SPEED TRANSMISSION

ITEM	PART NO.	DESCRIPTION	QTY
	1646888	Clutch Pack	1
1	. . . . .	Seal	3
2	43207	Ball Bearing	3
3	4025493	Shaft	1
4	. . . . .	Seal	1
5	. . . . .	Seal	1
6	2085129	Piston	1
7	1581108	Spring	1
8	1581098	Spring	1
9	1581099	Spring Guide	1
10	1581100	Snap Ring	1
11	. . . . .	Conical Plate	1
12	. . . . .	Friction Plate	8
13	. . . . .	Separator Plate	7
14	1537449	Pressure Plate (6.0 mm)	1
15	. . . . .	O-Ring	1
16	1537450	Snap Ring	1
17	124603	Ball Bearing	1
18	1581107	Snap Ring	1
19	1537459	Snap Ring	1
20	1651761	Clutch Gear	1
	1652272	Kit-Repair 8 Plate	1
	1571673	Kit-Clutch Pack Plates (Clutch Pack Plates)	1
	1595425	Kit-Clutch Pack Seals	1

©2015 HYSTER COMPANY

TRANSMISSION (FIGURE 6-10)
DUAL SPEED — SHEET 1 OF 3

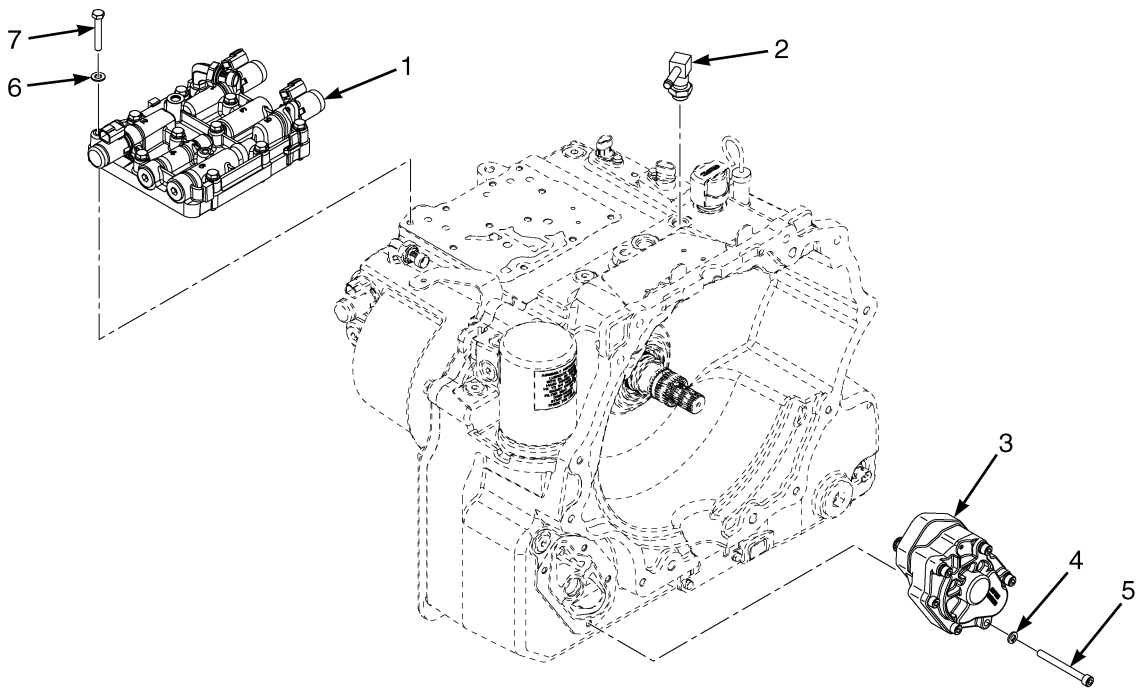

BP240266

ITEM	PART NO.	DESCRIPTION	QTY
	4103571	Transmission Assy (High Pressure)	1
1	1665204	Valve (High Pressure) (☞Figure 6-16)	1
2	1640573	Fitting	1
3	4618047	Charge Pump (Without Auxiliary Pump) (☞Figure 6-17)	1
4	292681	Lockwasher	4
5	1676908	Capscrew	4
6	320157	Washer	11
7	292509	Capscrew	11

©2015 HYSTER COMPANY

NOTES

©2015 HYSTER COMPANY

TRANSMISSION (FIGURE 6-11)
DUAL SPEED — SHEET 2 OF 3

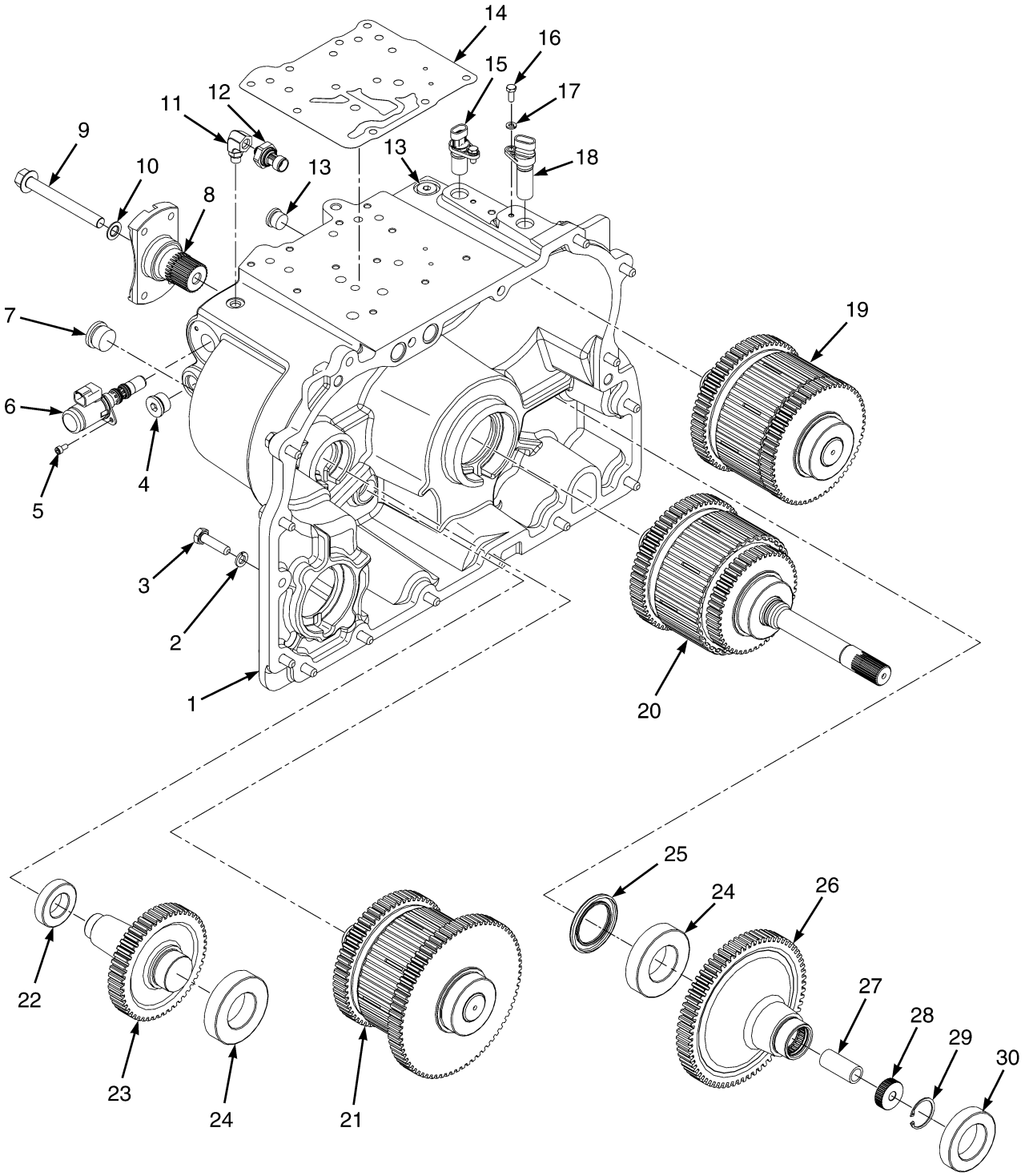

BP240205

©2015 HYSTER COMPANY

TRANSMISSION
DUAL SPEED – SHEET 2 OF 3

ITEM	PART NO.	DESCRIPTION	QTY
	4103571	Transmission Assy (High Pressure)	1
1	1636630	Transmission Housing	1
2	292682	Lockwasher	14
3	292515	Capscrew	14
4	233693	Fitting	1
5	293741	Capscrew	2
6	1660500	Solenoid Valve	1
7	222444	Fitting	1
8	1654004	Yoke	1
9	1654651	Flange Head Capscrew	1
10	86229	Seal	1
11	1545546	Fitting	1
12	2070263	Pressure Transducer	1
13	235691	Fitting	3
14	1570360	Gasket	1
15	1541231	Sensor (Input Speed, TISS)	1
16	292500	Capscrew	2
17	292680	Washer	2
18	1541232	Sensor (Output Speed, TOSS)	1
19	1646886	Clutch Pack (Reverse) (☞Figure 6-15)	1
20	1646884	Clutch Pack (Input/Forward-Low) (☞Figure 6-13)	1
21	1646885	Clutch Pack (Forward-High) (☞Figure 6-14)	1
22	44306	Ball Bearing	1
23	1585750	Gear (Idler)	1
24	43209	Ball Bearing	2
25	1547447	Oil Seal	1
26	1638793	Gear (Output)	1
27	1636645	Spacer	1
28	1525686	Nut	1
29	213099	Snap Ring	1
30	44309	Ball Bearing	1

©2015 HYSTER COMPANY

TRANSMISSION (FIGURE 6-12)
DUAL SPEED — SHEET 3 OF 3

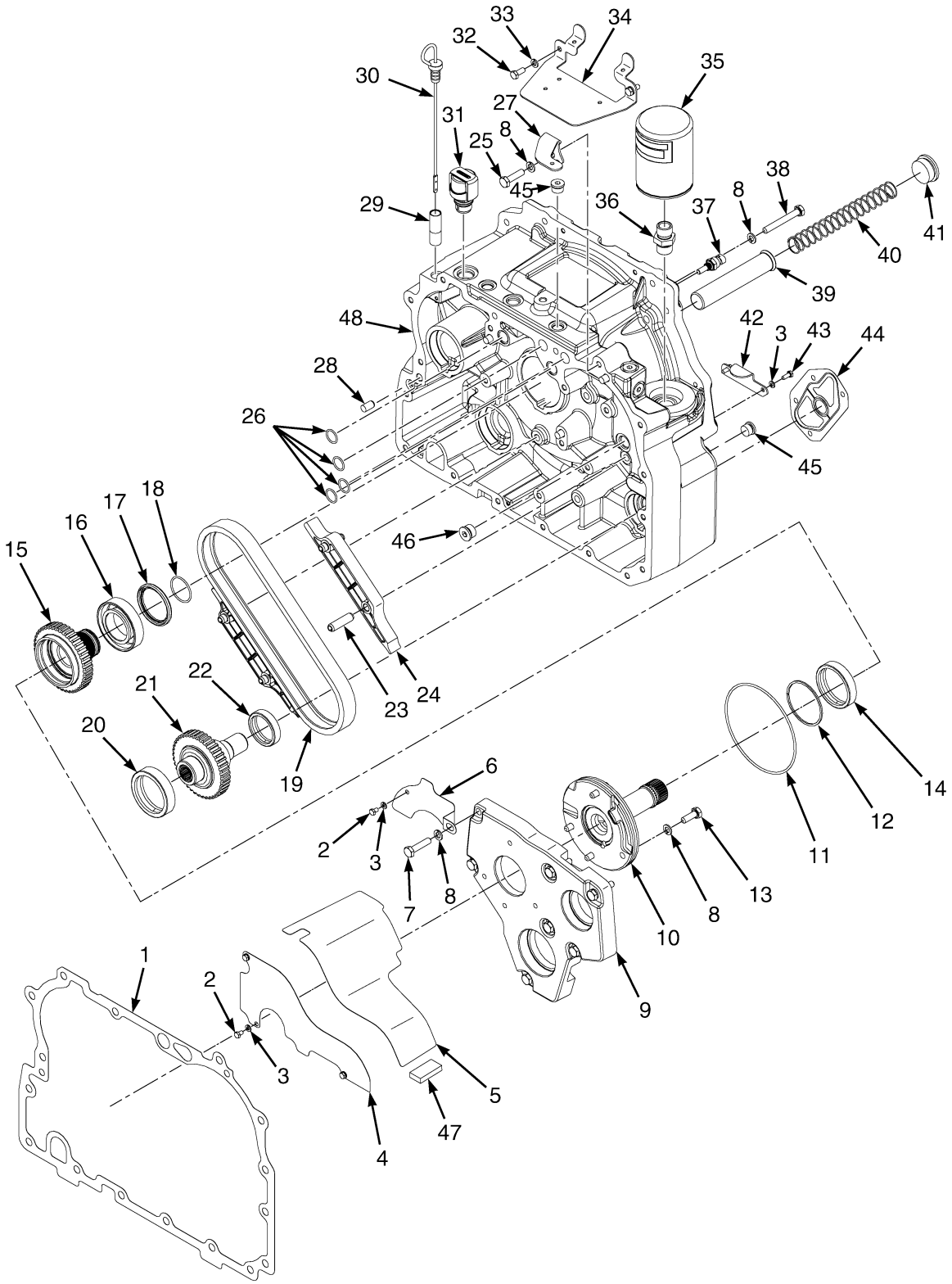

©2015 HYSTER COMPANY

TRANSMISSION
DUAL SPEED – SHEET 3 OF 3

ITEM	PART NO.	DESCRIPTION	QTY
	4103571	Transmission Assy (High Pressure)	1
1	1636640	Gasket	1
2	148962	Capscrew	4
3	292680	Washer	6
4	1627453	Shield (Lower)	1
5	1622887	Baffle	1
6	1624408	Shield (Upper)	1
7	292516	Capscrew	7
8	292682	Lockwasher	14
9	1636626	Carrier	1
10	1525677	Stator	1
10	1525679	Support	1
10	1516826	Bushing	1
11	16682	O-Ring	1
12	1544218	Sealing Ring	1
13	136985	Capscrew	4
14	44310	Ball Bearing	1
15	1541556	Sprocket (Driving)	1
16	1544216	Bearing	1
17	1544217	Oil Seal (Torque Converter)	1
18	145481	O-Ring	1
19	1494750	Chain (Drive Pump)	1
20	43209	Ball Bearing	1
21	1529890	Sprocket (Driven)	1
22	44307	Ball Bearing	1
23	303100	Roll Pin	4
24	1615804	Snubber	2
25	292515	Capscrew	1
26	1553403	O-Ring	4
27	1652575	Bracket	1
28	303150	Dowel	4
29	1624406	Dipstick Tube	1
30	4103560	Dipstick	1
31	1632741	Breather	1
32	136681	Capscrew	2
33	292681	Lockwasher	2
34	1699141	Cover Plate (Converter Housing)	1
35	4020588	Transmission Filter	1
36	1558515	Fitting	1
37	1515654	Temperature Sensor	1
38	292522	Capscrew	2
39	1627465	Screen	1
40	1550572	Spring	1
41	188210	Fitting	1
42	1550567	Cover Plate	1
43	292500	Capscrew	2
44	1653815	Gasket	1
45	235691	Fitting	4
46	233693	Fitting	1
47	334560	Magnet	1

©2015 HYSTER COMPANY

TRANSMISSION
DUAL SPEED – SHEET 3 OF 3

ITEM	PART NO.	DESCRIPTION	QTY
48	4043361	Housing (Torque Converter)	1

©2015 HYSTER COMPANY

NOTES

©2015 HYSTER COMPANY

FORWARD CLUTCH, LOW (FIGURE 6-13)
DUAL SPEED TRANSMISSION

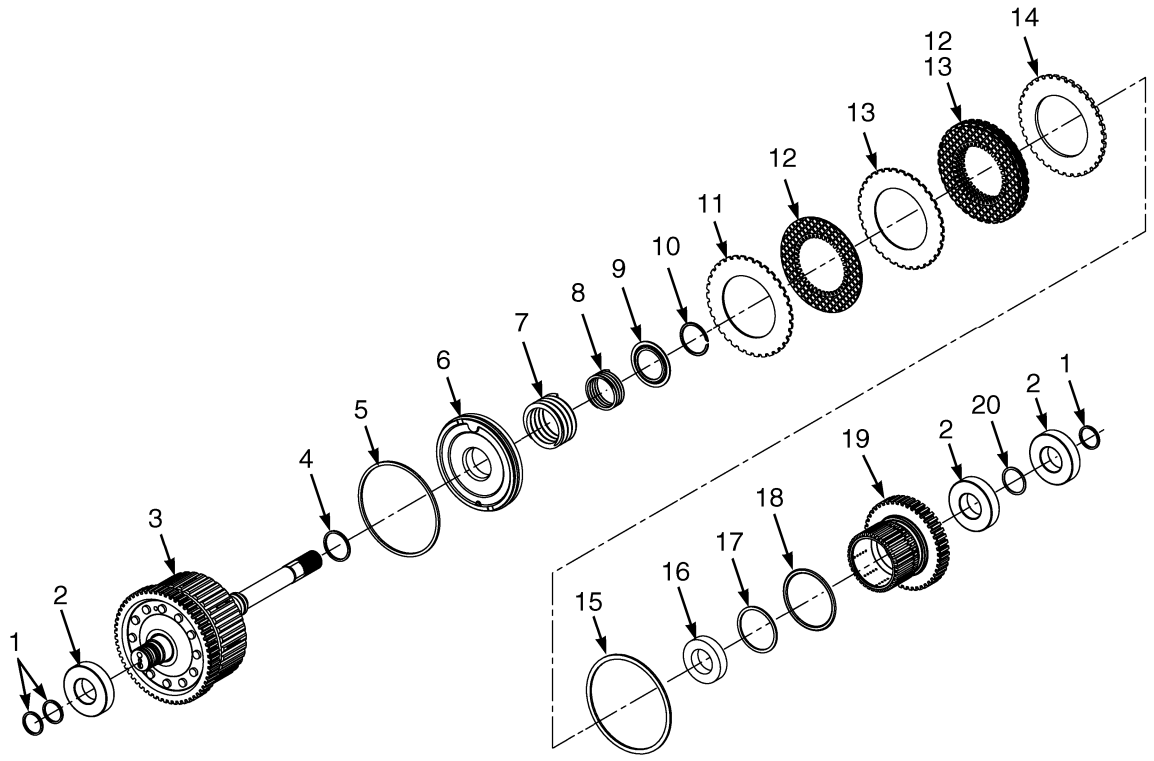

BP240107

©2015 HYSTER COMPANY

FORWARD CLUTCH, LOW
DUAL SPEED TRANSMISSION

ITEM	PART NO.	DESCRIPTION	QTY
	1646884	Clutch Pack (Input/Forward-Low)	1
1	. . . . .	Seal	3
2	43207	Ball Bearing	3
3	4025480	Shaft	1
4	. . . . .	Seal	1
5	. . . . .	Seal	1
6	2085129	Piston	1
7	1581108	Spring	1
8	1581098	Spring	1
9	1581099	Spring Guide	1
10	1581100	Snap Ring	1
11	. . . . .	Conical Plate	1
12	. . . . .	Friction Plate	9
13	. . . . .	Separator Plate	8
14	1537449	Pressure Plate (6.0 mm)	1
15	1537450	Snap Ring	1
16	124603	Ball Bearing	1
17	1581107	Snap Ring	1
18	. . . . .	Seal	1
19	1639866	Gear	1
20	1537459	Snap Ring	1
	1652269	Kit-Clutch Pack Plates/Seals	1
	1651852	Kit-Clutch Pack Plates	1
	1595425	Kit-Clutch Pack Seals	1

©2015 HYSTER COMPANY

FORWARD CLUTCH, HIGH (FIGURE 6-14)
DUAL SPEED TRANSMISSION

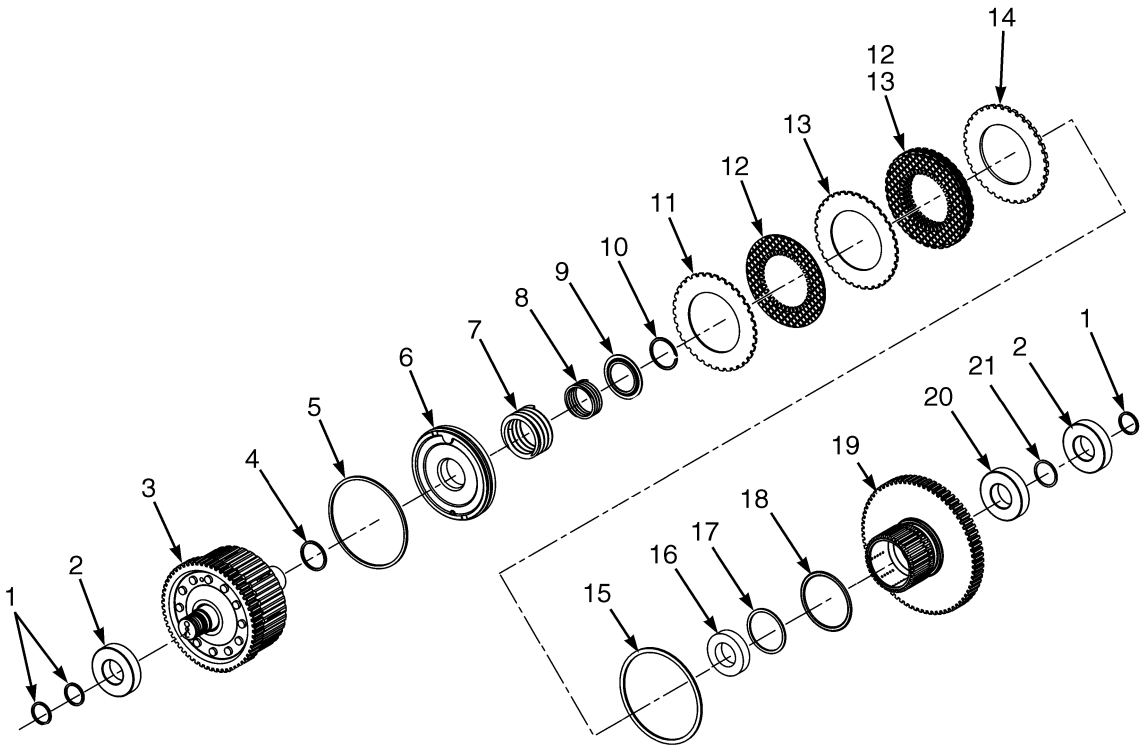

BP240262

©2015 HYSTER COMPANY

FORWARD CLUTCH, HIGH
DUAL SPEED TRANSMISSION

ITEM	PART NO.	DESCRIPTION	QTY
	1646885	Clutch Pack (Forward-High)	1
1	. . . . .	Seal	3
2	1651753	Ball Bearing	2
3	4025491	Shaft	1
4	. . . . .	Seal	1
5	. . . . .	Seal	1
6	2085129	Piston	1
7	1581108	Spring	1
8	1581098	Spring	1
9	1581099	Spring Guide	1
10	1581100	Snap Ring	1
11	. . . . .	Conical Plate	1
12	. . . . .	Friction Plate	9
13	. . . . .	Separator Plate	8
14	1537449	Pressure Plate (6.0 mm)	1
15	1537450	Snap Ring	1
16	124603	Ball Bearing	1
17	1581107	Snap Ring	1
18	. . . . .	Seal	1
19	1639864	Gear	1
20	43207	Ball Bearing	1
21	1537459	Snap Ring	1
	1652269	Kit-Clutch Pack Plates/Seals	1
	1651852	Kit-Clutch Pack Plates	1
	1595425	Kit-Clutch Pack Seals	1

©2015 HYSTER COMPANY

REVERSE CLUTCH (FIGURE 6-15)
DUAL SPEED TRANSMISSION

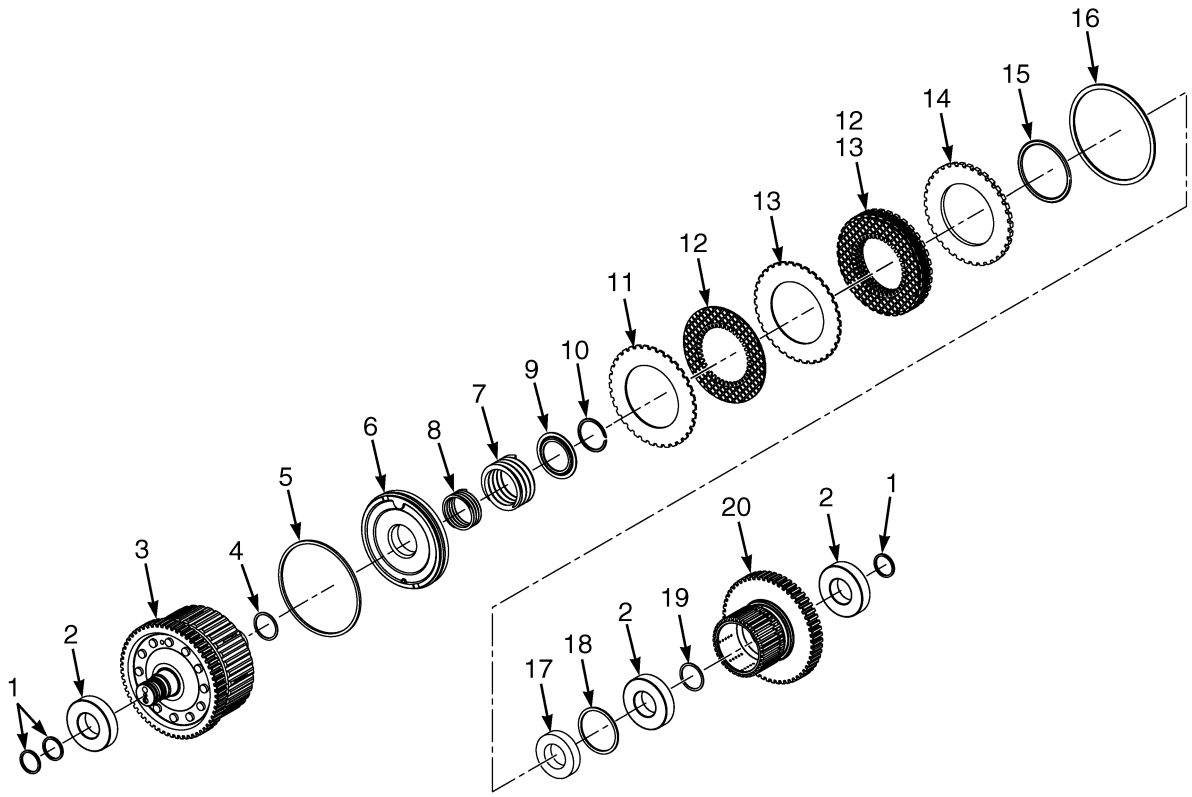

BP240263

©2015 HYSTER COMPANY

REVERSE CLUTCH
DUAL SPEED TRANSMISSION

ITEM	PART NO.	DESCRIPTION	QTY
	1646886	Clutch Pack (Reverse)	1
1	. . . . .	Seal	3
2	43207	Ball Bearing	3
3	4025491	Shaft	1
4	. . . . .	Seal	1
5	. . . . .	Seal	1
6	2085129	Piston	1
7	1581108	Spring	1
8	1581098	Spring	1
9	1581099	Spring Guide	1
10	1581100	Snap Ring	1
11	. . . . .	Conical Plate	1
12	. . . . .	Friction Plate	9
13	. . . . .	Separator Plate	8
14	1537449	Pressure Plate (6.0 mm)	1
15	. . . . .	Seal	1
16	1537450	Snap Ring	1
17	124603	Ball Bearing	1
18	1581107	Snap Ring	1
19	1537459	Snap Ring	1
20	1639863	Gear	1
	1652269	Kit-Clutch Pack Plates/Seals	1
	1651852	Kit-Clutch Pack Plates	1
	1595425	Kit-Clutch Pack Seals	1

©2015 HYSTER COMPANY

TRANSMISSION CONTROL VALVE ASSEMBLY (FIGURE 6-16)

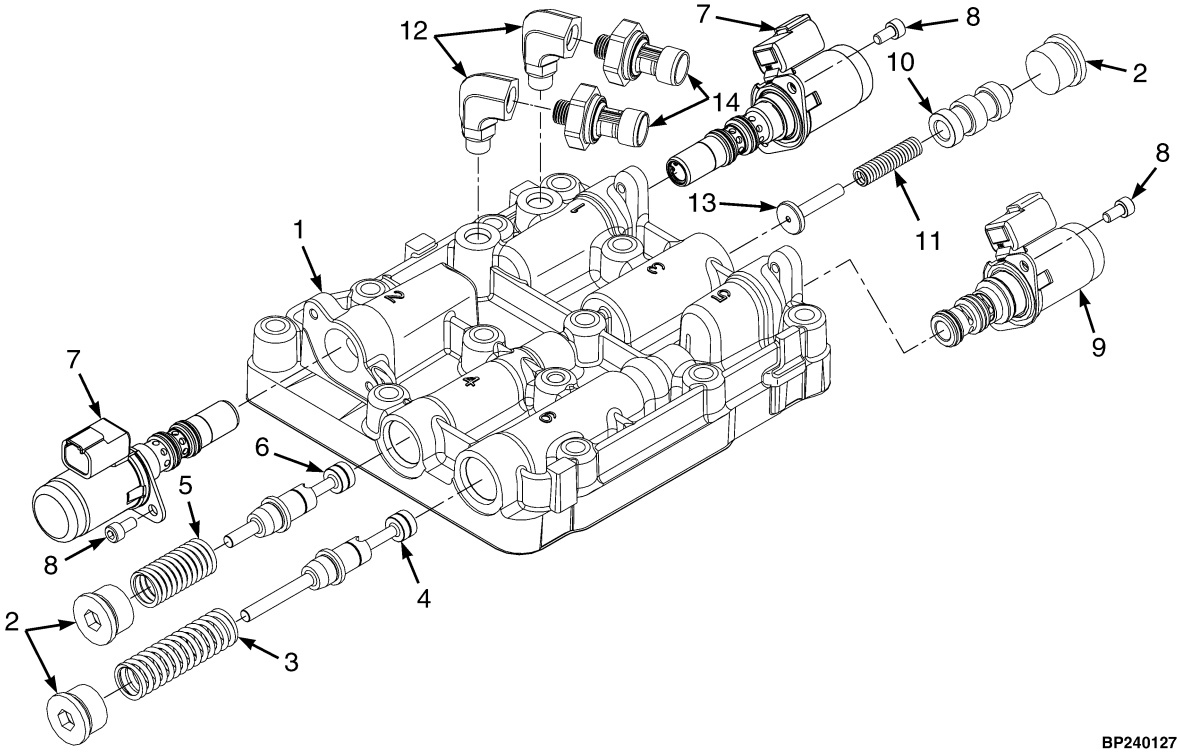

BP240127

ITEM	PART NO.	DESCRIPTION	QTY
	1665204	Valve (High Pressure)	1
1	. . . . .	Body	1
2	233693	Fitting	3
3	1550561	Spring	1
4	1613470	Spool (High Pressure)	1
5	1514138	Spring	1
6	1544759	Spool	1
7	1660500	Solenoid Valve	2
7	1650819	Kit-Seal	1
8	293741	Capscrew	6
9	1520660	Solenoid (Transmission Enable Valve)	1
10	1590865	Spool (Cut-Off)	1
11	1590866	Return Spring	1
12	1545546	Fitting	2
13	1590839	Spool (Stop)	1
14	2070263	Pressure Transducer	2

©2015 HYSTER COMPANY

NOTES

©2015 HYSTER COMPANY

CHARGE PUMP ASSEMBLY (FIGURE 6-17)

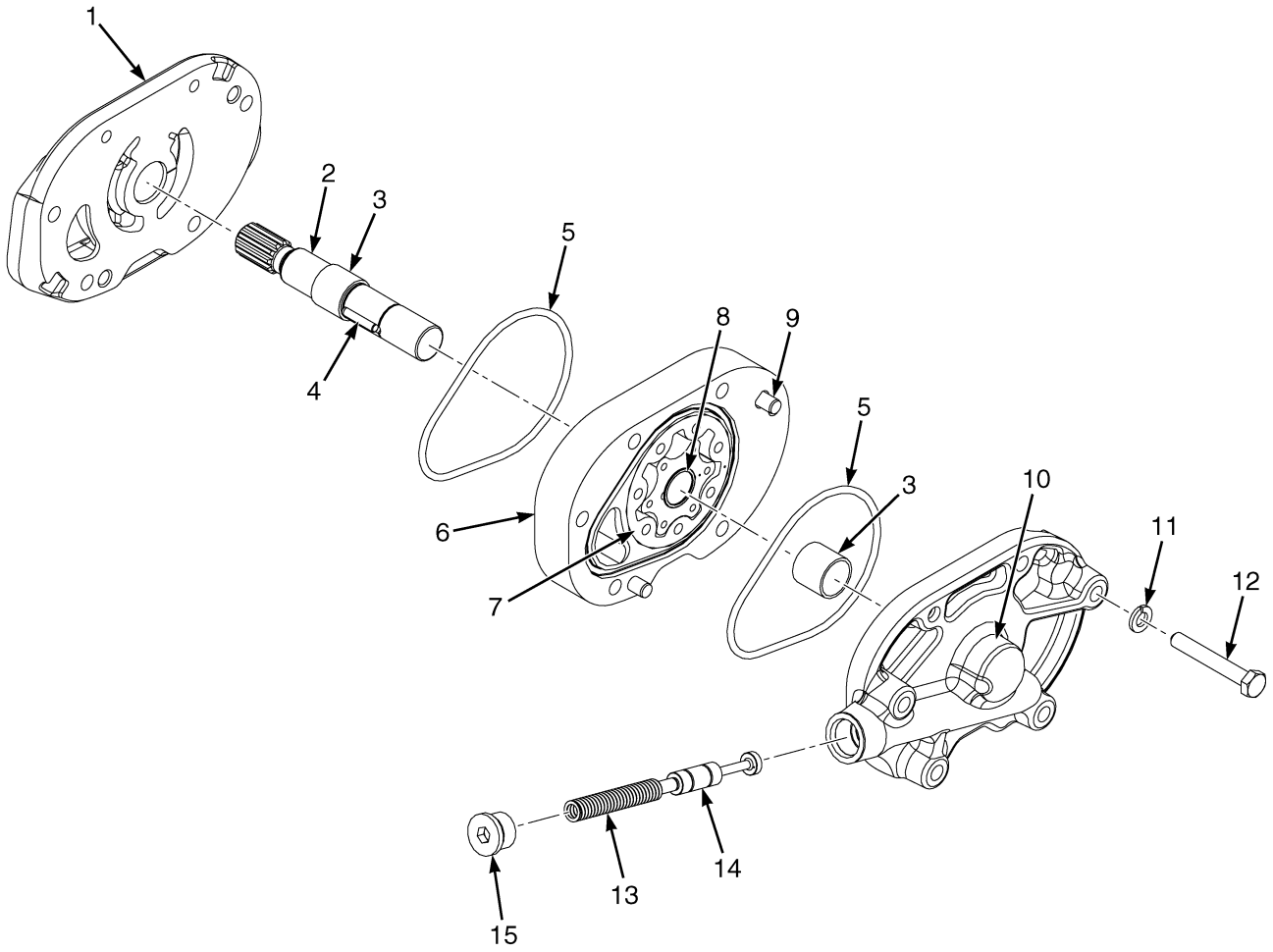

©2015 HYSTER COMPANY

CHARGE PUMP ASSEMBLY

ITEM	PART NO.	DESCRIPTION	QTY
	4618047	Charge Pump	1
1	. . . . .	Base	1
2	. . . . .	Drive Shaft	1
3	1703021	Bushing	2
4	222697	Pin	1
5	4027880	O-Ring	2
6	. . . . .	Housing (Gerotor)	1
7	. . . . .	Rotor (Gerotor)	1
8	. . . . .	Snap Ring	2
9	302377	Dowel	2
10	. . . . .	Cover	1
11	292681	Lockwasher	2
12	293620	Screw	2
13	. . . . .	Spring (Charge Pump Relief)	1
14	. . . . .	Spool (Relief)	1
15	235691	Fitting	1

©2015 HYSTER COMPANY

NOTES

©2015 HYSTER COMPANY

7 DRIVE AXLE

SECTION 7
DRIVE AXLE

DESCRIPTION	PAGE
DIFFERENTIAL ASSEMBLY	
WET BRAKE (NMHG)	7-20
DRIVE AXLE AND ATTACHING PARTS	
WET BRAKE - DANA	7-2
WET BRAKE (NMHG)	7-12
DRIVE AXLE ASSEMBLY	
WET BRAKE (DANA) - HOUSING AND HUB	7-4
WET BRAKE (DANA) - DIFFERENTIAL	7-6
WET BRAKE (DANA) - BRAKE ASSEMBLY	7-10
WET BRAKE (NMHG) - RIGHT AND LEFT HAND HUBS	7-14
WET BRAKE (NMHG) - BRAKES AND DIFFERENTIAL	7-16
WET BRAKE (NMHG) - INPUT PINION CARRIER	7-18
DRIVE TIRE AND WHEEL	
HEAVY DUTY	7-30
PNEUMATIC RADIAL	7-26
SINGLE MOUNT WITH STANDARD TREAD	7-24
SINGLE MOUNT WITH WIDE TREAD	7-25
SNAP-ON SOLID TIRE	7-28
WET BRAKE ASSEMBLY	
NMHG	7-22

©2015 HYSTER COMPANY

DRIVE AXLE AND ATTACHING PARTS (FIGURE 7-1)
WET BRAKE — DANA

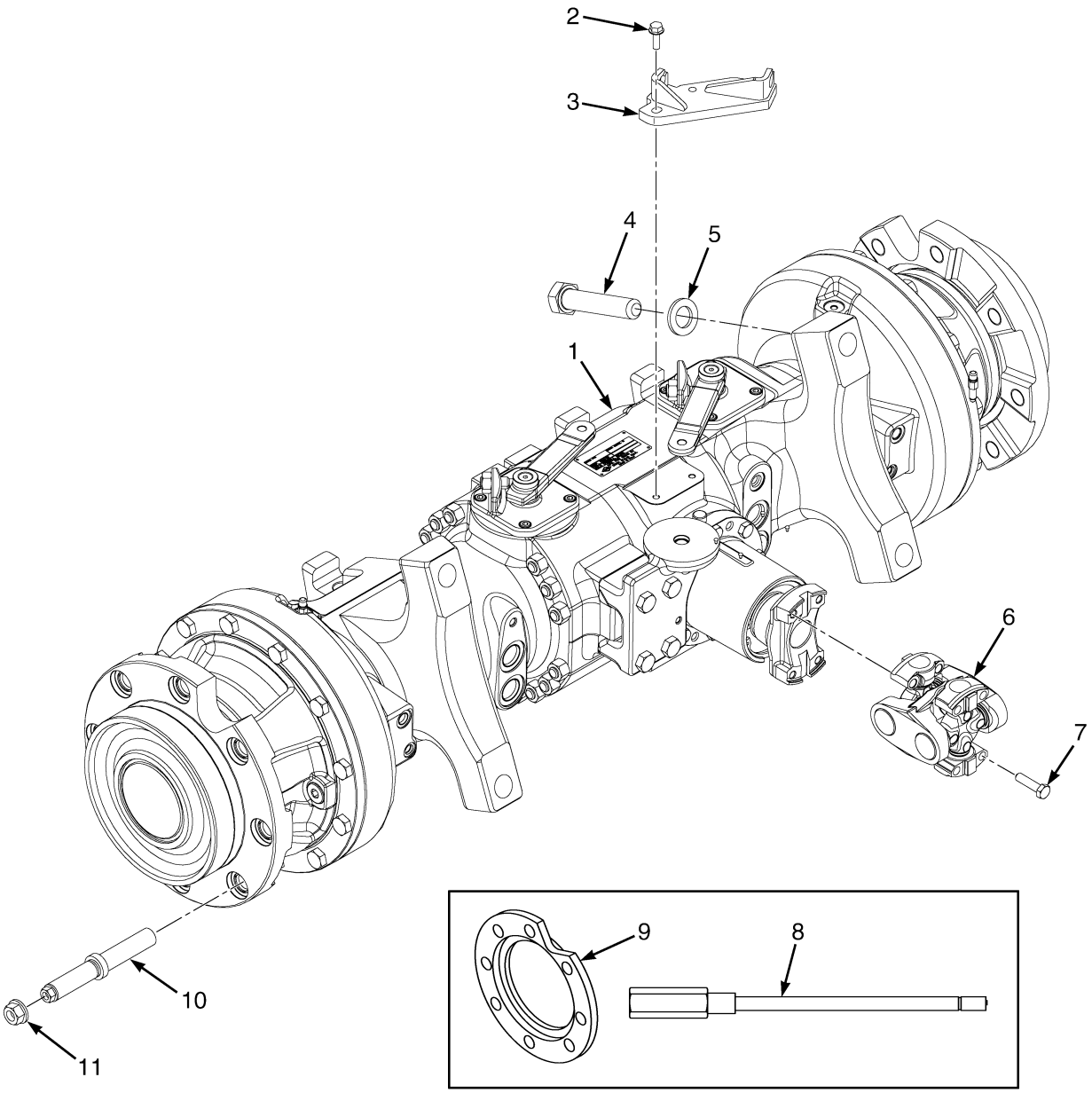

BP070174

©2015 HYSTER COMPANY

DRIVE AXLE AND ATTACHING PARTS
WET BRAKE – DANA

KEY:
A: H4.0FT5/H4.0FT6/H4.5FTS5/H4.5FT6
B: H5.0-H5.5FT

ITEM	PART NO.	DESCRIPTION	QTY A	QTY B
1	2099764	Drive Axle (11.2 Overall Ratio) (☞Figure 7-2, ☞Figure 7-3, ☞Figure 7-4)	1	..
1	2099762	Drive Axle (13.7 Overall Ratio) (☞Figure 7-2, ☞Figure 7-3, ☞Figure 7-4)	..	1
2	1510113	Capscrew	2	2
3	1626353	Bracket	1	1
4	226430	Capscrew	4	4
5	296434	Washer	4	4
6	4112317	Drive Shaft	1	1
7	4094634	Capscrew	8	8
8	1638961	Extension (Single Drive)	2	..
8	**a** 2028341	Extension (Valve Stem) (Dual Drive)	2	2
9	1581561	Spacer	2	2
10	1569463	Wheel Stud (Single Drive)	16	..
10	1501277	Wheel Stud (Dual Drive)	16	..
10	1501278	Wheel Stud (Dual Drive)	..	16
11	376026	Wheel Nut	16	16

FOOTNOTES:

a Radial Tires

©2015 HYSTER COMPANY

DRIVE AXLE ASSEMBLY (FIGURE 7-2)
WET BRAKE (DANA) — HOUSING AND HUB

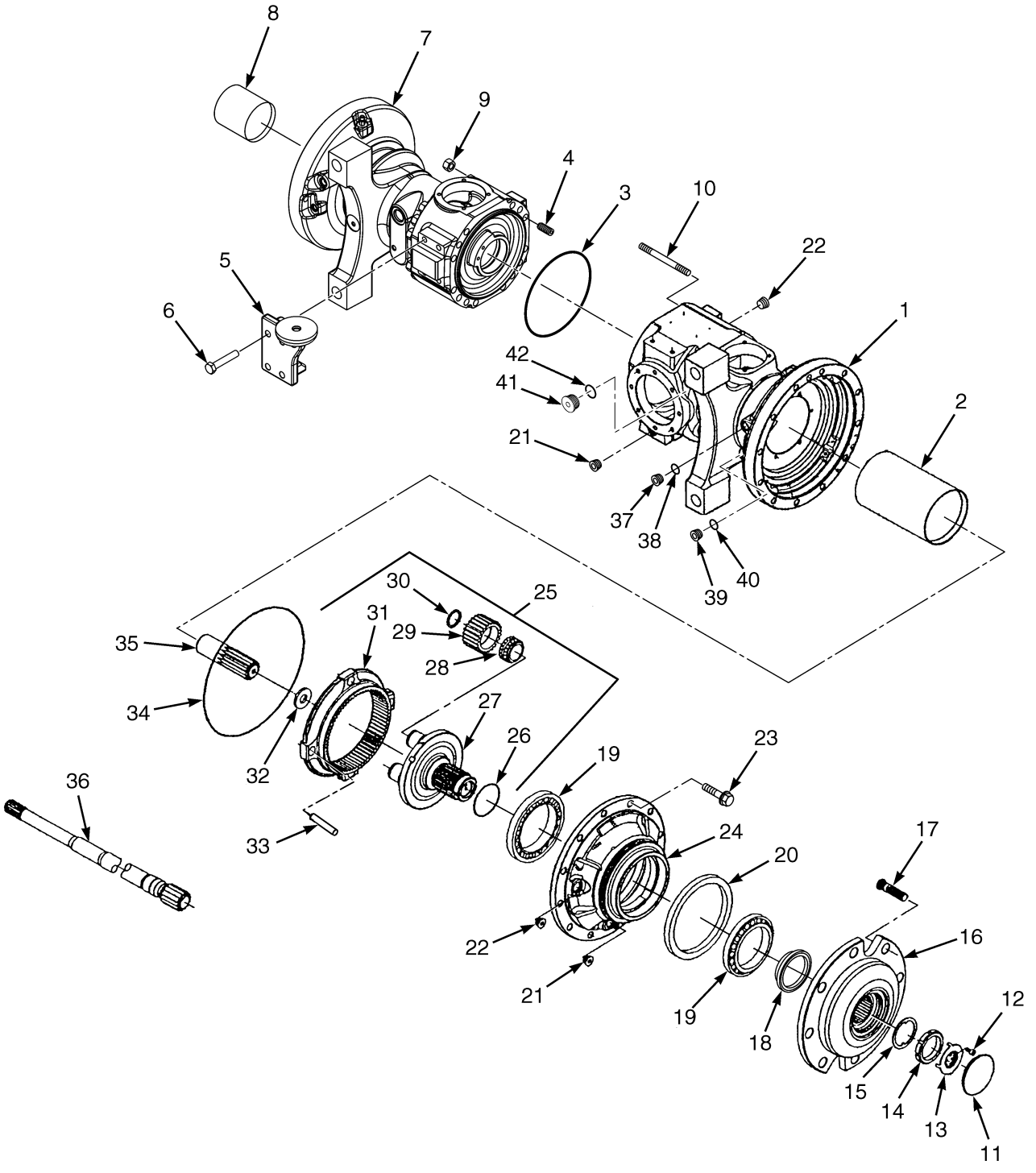

BP070067

©2015 HYSTER COMPANY

DRIVE AXLE ASSEMBLY
WET BRAKE (DANA) – HOUSING AND HUB

ITEM	PART NO.	DESCRIPTION	QTY
	2099764	Drive Axle (11.2 Overall Ratio)	1
	2099762	Drive Axle (13.7 Overall Ratio)	1
1	1644462	Drive Axle Housing (RH)	1
2	1627819	Tube (Long)	1
3	1623654	O-Ring	1
4	1623658	Bolt	4
5	1627817	Support	1
6	1623666	Bolt	4
7	1644463	Drive Axle Housing (LH)	1
8	1627818	Tube (Short)	1
9	1649534	Nut	14
10	1627812	Stud	14
11	1627813	Plug	2
12	1623652	Bolt	2
13	1627806	Cap	2
14	1627805	Nut	2
15	1627804	Washer	2
16	1627803	Wheel Hub	2
17	. . . . .	Wheel Stud	16
18	1627820	Washer (Hub Shaft)	2
19	1623645	Bearing	4
20	1627802	Ring (Oil Seal)	2
21	1623545	Drain Plug (Fluid Drain)	2
22	1623544	Plug (Fluid Check And Fill)	2
23	1623643	Bolt	24
24	1647656	Cover	2
25	1627814	Carrier	2
26	1689459	O-Ring	2
27	1627800	Carrier	2
28	1623640	Bearing	4
29	1623639	Gear	4
30	1623638	Retaining Ring	4
31	1623636	Ring Gear	1
32	1623635	Thrust Washer	1
33	1623637	Dowel	8
34	1623634	O-Ring	2
35	1627799	Pinion	2
36	1627815	Axle Shaft (Short)	1
36	1627816	Axle Shaft (Long)	1
37	1641353	Plug	1
38	1641355	Washer	2
39	1641354	Plug (Fluid Check And Fill)	2
40	1641356	Sealing Ring	2
41	~~1641352~~		
	1703573	Plug	1
42	1623671	O-Ring	1

©2015 HYSTER COMPANY

DRIVE AXLE ASSEMBLY (FIGURE 7-3)
WET BRAKE (DANA) — DIFFERENTIAL

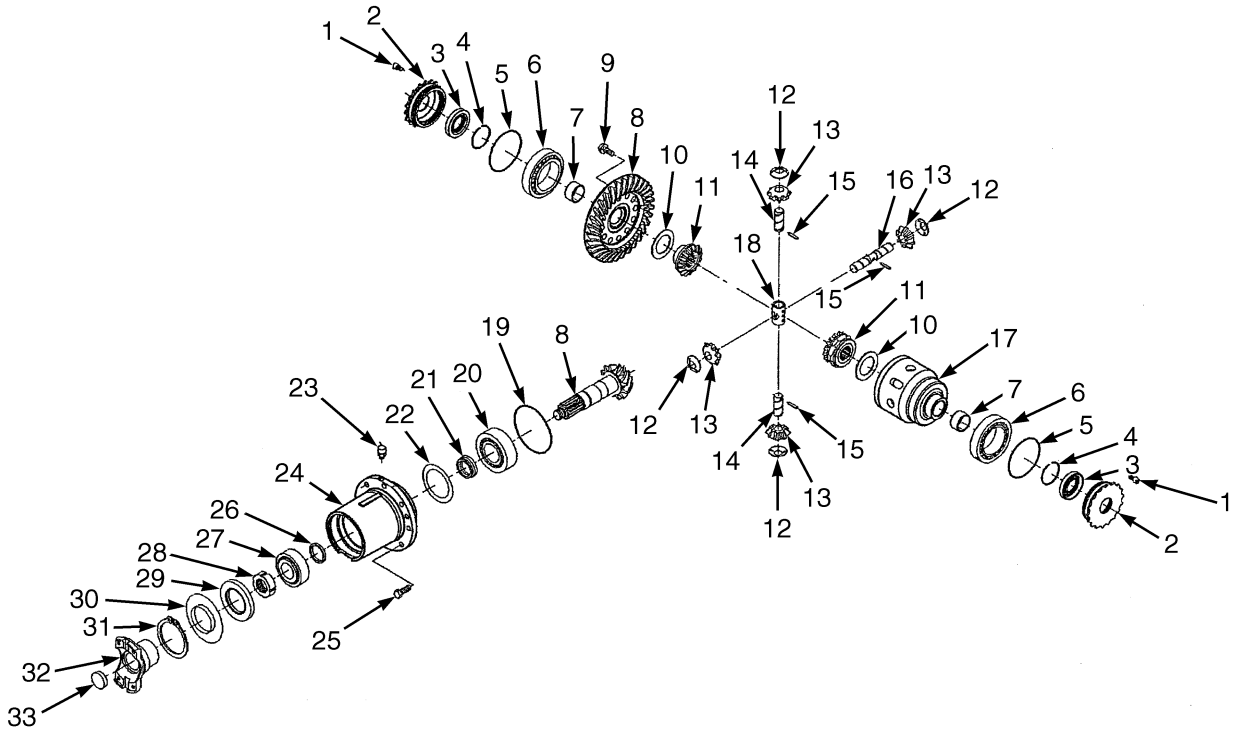

BP070043

©2015 HYSTER COMPANY

DRIVE AXLE ASSEMBLY
WET BRAKE (DANA) – DIFFERENTIAL

ITEM	PART NO.	DESCRIPTION	QTY
	2099764	Drive Axle (11.2 Overall Ratio)	1
	2099762	Drive Axle (13.7 Overall Ratio)	1
1	1623593	Bolt	2
2	1627793	Nut	2
3	1627794	Seal	2
4	1623590	Snap Ring	2
5	1623591	O-Ring	2
6	1623592	Bearing	2
7	1641362	Bushing	2
8	1623575	Bevel Gear (11.2 Overall Ratio)	1
8	1627925	Gear and Pinion (13.7 Overall Ratio)	1
9	1623578	Bolt	12
10	1623580	Thrust Washer	2
11	1623581	Gear	2
12	1623587	Thrust Washer	4
13	1623586	Pinion	4
14	1623584	Pin	2
15	1623585	Dowel	3
16	1623583	Pin	1
17	1623579	Differential Carrier	1
18	1623582	Retainer	1
19	1623574	O-Ring	1
20	1623573	Bearing	1
21	1623572	Spacer	1
22	1627788	Shim (0.10 mm)	1
22	1627789	Shim (0.15 mm)	1
22	1627790	Shim (0.25 mm)	1
22	1641361	Shim (0.50 mm)	1
23	1623576	Plug (Ventilation)	1
24	1623568	Cover	1
25	1627792	Bolt	8
26	1623553	Spacer (5.0 mm)	1
26	1623554	Spacer (5.1 mm)	1
26	1623555	Spacer (5.2 mm)	1
26	1623556	Spacer (5.3 mm)	1
26	1623557	Spacer (5.4 mm)	1
26	1623558	Spacer (5.5 mm)	1
26	1623559	Spacer (5.6 mm)	1
26	1623560	Spacer (5.7 mm)	1
26	1623561	Spacer (5.8 mm)	1
26	1623562	Spacer (5.9 mm)	1
26	1623563	Spacer (3.02 mm)	1
26	1623564	Spacer (3.04 mm)	1
26	1623565	Spacer (3.06 mm)	1
26	1623566	Spacer (3.08 mm)	1
27	1623552	Bearing	1
28	1623551	Nut	1
29	1623550	Seal	1
30	1623549	Cover Plate	1
31	1623548	Retaining Ring	1

©2015 HYSTER COMPANY

DRIVE AXLE ASSEMBLY
WET BRAKE (DANA) – DIFFERENTIAL

ITEM	PART NO.	DESCRIPTION	QTY
32	1623547	Flange (Input Yoke)	1
33	1623546	Plug	1

©2015 HYSTER COMPANY

NOTES

©2015 HYSTER COMPANY

DRIVE AXLE ASSEMBLY (FIGURE 7-4)
WET BRAKE (DANA) — BRAKE ASSEMBLY

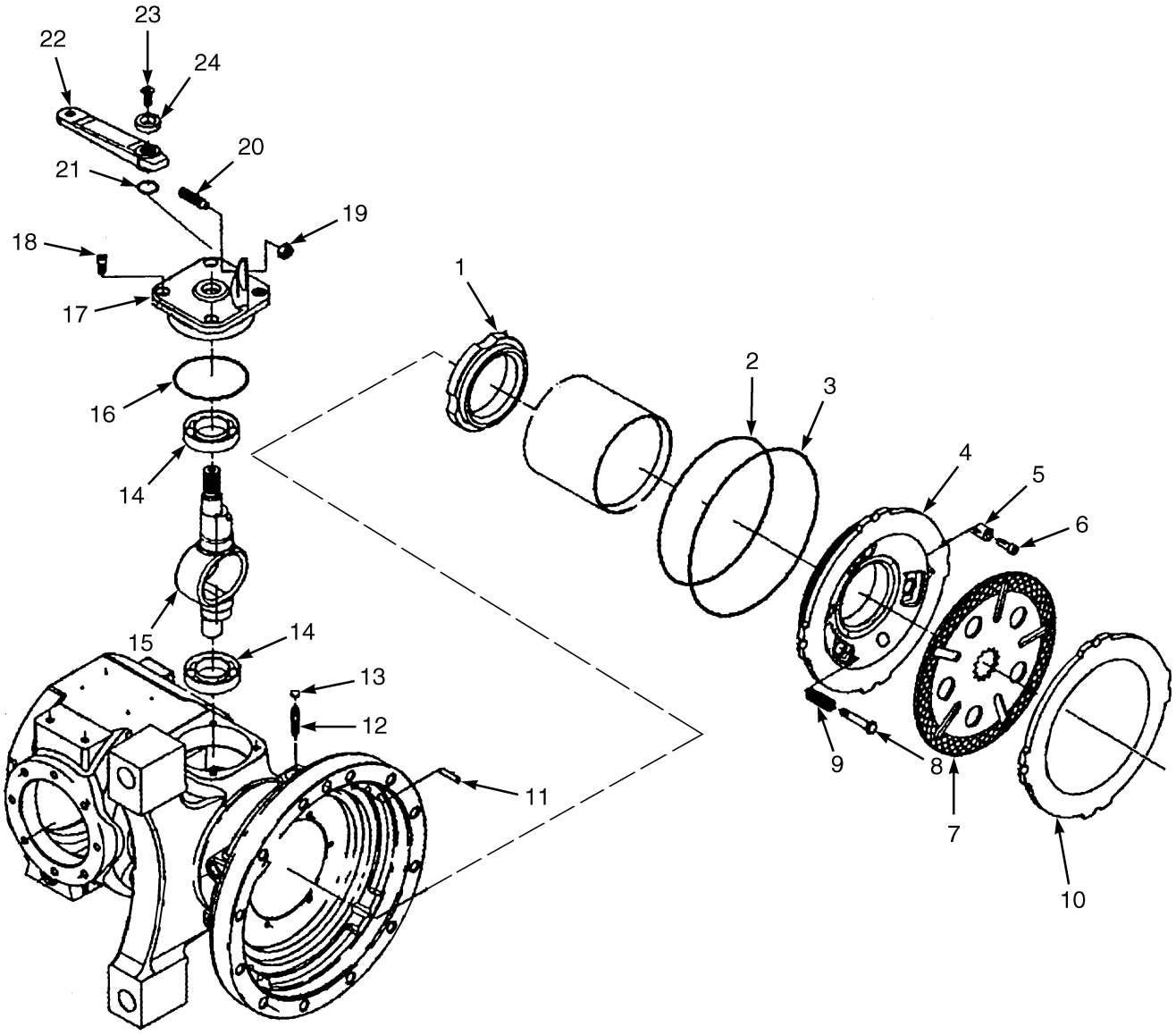

BP070032

©2015 HYSTER COMPANY

DRIVE AXLE ASSEMBLY
WET BRAKE (DANA) – BRAKE ASSEMBLY

ITEM	PART NO.	DESCRIPTION	QTY
	2099764	Drive Axle (11.2 Overall Ratio)	1
	2099762	Drive Axle (13.7 Overall Ratio)	1
1	1627823	Disk	2
2	1623687	Seal	2
3	1623688	Seal	2
4	1644455	Piston	2
5	1623690	Spring	6
6	1623691	Bolt (Adjusting)	6
7	1627837	Brake Disk	4
8	1627826	Bolt (Adjusting)	6
9	1627825	Spring	6
10	1644456	Disk (Intermediate)	4
11	1627822	Dowel	8
12	1623677	Stud (Bleeding)	2
13	1623676	Plug	2
14	1623674	Bearing	4
15	1623675	Lever (Brake)	2
16	1623673	O-Ring	2
17	1627836	Cover Plate (Reduction)	2
18	1623672	Bolt	8
19	1623696	Nut	2
20	1623695	Bolt (Left)	1
20	1646920	Bolt (Right)	1
21	1623671	O-Ring	2
22	1623670	Lever	2
23	1623669	Bolt	2
24	1623694	Spacer	2

©2015 HYSTER COMPANY

DRIVE AXLE AND ATTACHING PARTS (FIGURE 7-5)
WET BRAKE (NMHG)

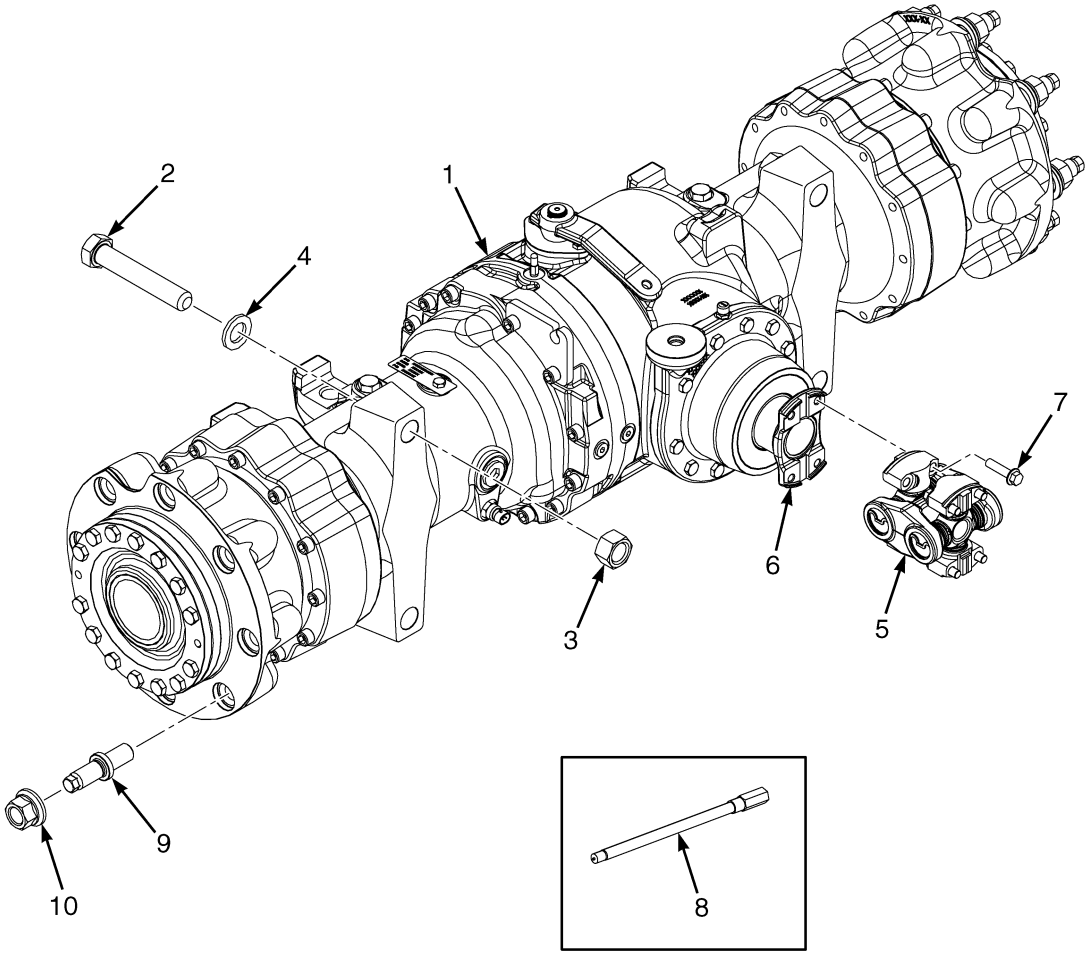

BP070200

©2015 HYSTER COMPANY

DRIVE AXLE AND ATTACHING PARTS
WET BRAKE (NMHG)

ITEM	PART NO.	DESCRIPTION	QTY
1	4641443	Drive Axle (11.25 Overall Ratio)	1
2	293734	Capscrew	4
3	292660	Nut	4
4	296434	Washer	4
5	4112317	Drive Shaft	1
6	1684429	Yoke	1
7	4094634	Capscrew	8
8	**a** 1638961	Extension	2
8	**a** 2028341	Extension (Valve Stem)	2
9	1501277	Wheel Stud (Dual Drive)	16
9	1569463	Wheel Stud (Single Drive)	16
10	376026	Wheel Nut	16

FOOTNOTES:

a Radial Tires

©2015 HYSTER COMPANY

DRIVE AXLE ASSEMBLY (FIGURE 7-6)
WET BRAKE (NMHG) — RIGHT AND LEFT HAND HUBS

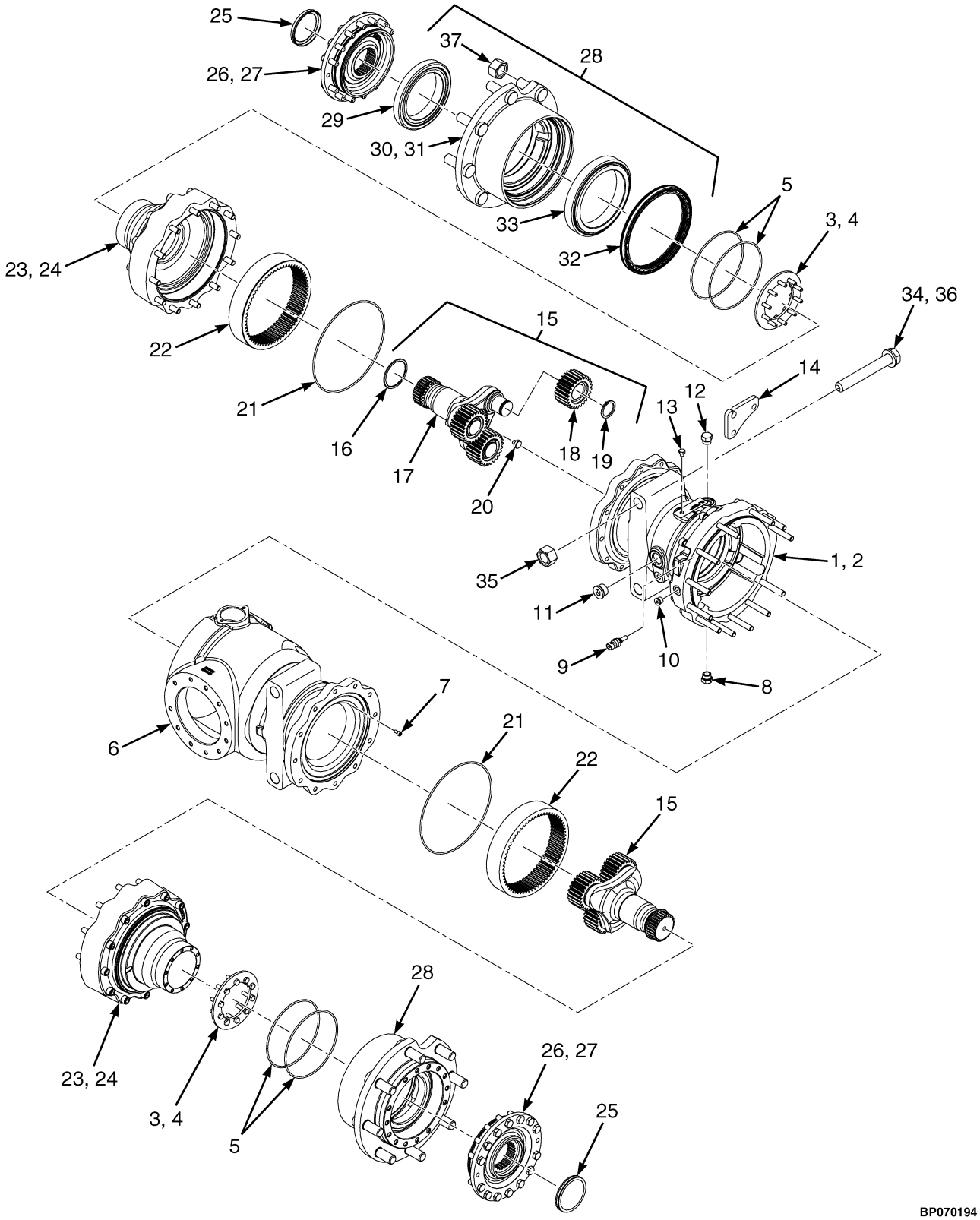

©2015 HYSTER COMPANY

DRIVE AXLE ASSEMBLY
WET BRAKE (NMHG) – RIGHT AND LEFT HAND HUBS

ITEM	PART NO.	DESCRIPTION	QTY
	4641443	Drive Axle	1
1	4057622	Drive Axle Housing (LH)	1
2	4030419	Capscrew	12
3	**b** 4122709	Retainer Plate	2
4	**b** 293619	Capscrew	24
5	109453	O-Ring	4
6	4049014	Drive Axle Housing	1
7	293762	Capscrew	1
8	1521809	Drain Plug	2
9	1515654	Temperature Sensor	1
10	222443	Fitting	1
10	16483	O-Ring	1
11	222444	Fitting	1
11	16486	O-Ring	1
12	14595	Plug Assembly	1
12	199524	Plug	1
12	16484	O-Ring	1
13	283149	Capscrew	1
14	4009853	Bracket (Park Brake Cable)	1
15	4015348	Carrier Assembly (Planetary Gear)	2
16	4019194	Snap Ring	1
17	4015349	Carrier (Planetary Gear)	1
18	4038253	Gear Assembly	3
19	122400	Snap Ring	3
20	4019238	Thrust Block	1
21	1683525	O-Ring	2
22	1675460	Ring Gear	2
23	4122708	Support	2
24	4030418	Capscrew	24
25	4013871	Bearing Cap	2
26	293646	Capscrew	28
27	4009606	Coupler	2
28	4014257	Wheel Hub	2
29	1683374	Bearing Set	1
30	4014258	Wheel Hub	1
31	. . . . .	Stud	8
32	1669384	Oil Seal	1
33	1683375	Bearing Set	1
34	293734	Capscrew	4
35	**a** 292660	Nut	4
36	296434	Washer	4
37	376026	Wheel Nut	16

FOOTNOTES:

a Attaches Drive Axle to Frame

b Not Illustrated

©2015 HYSTER COMPANY

See Service Manual for service procedures.

DRIVE AXLE ASSEMBLY (FIGURE 7-7)
WET BRAKE (NMHG) — BRAKES AND DIFFERENTIAL

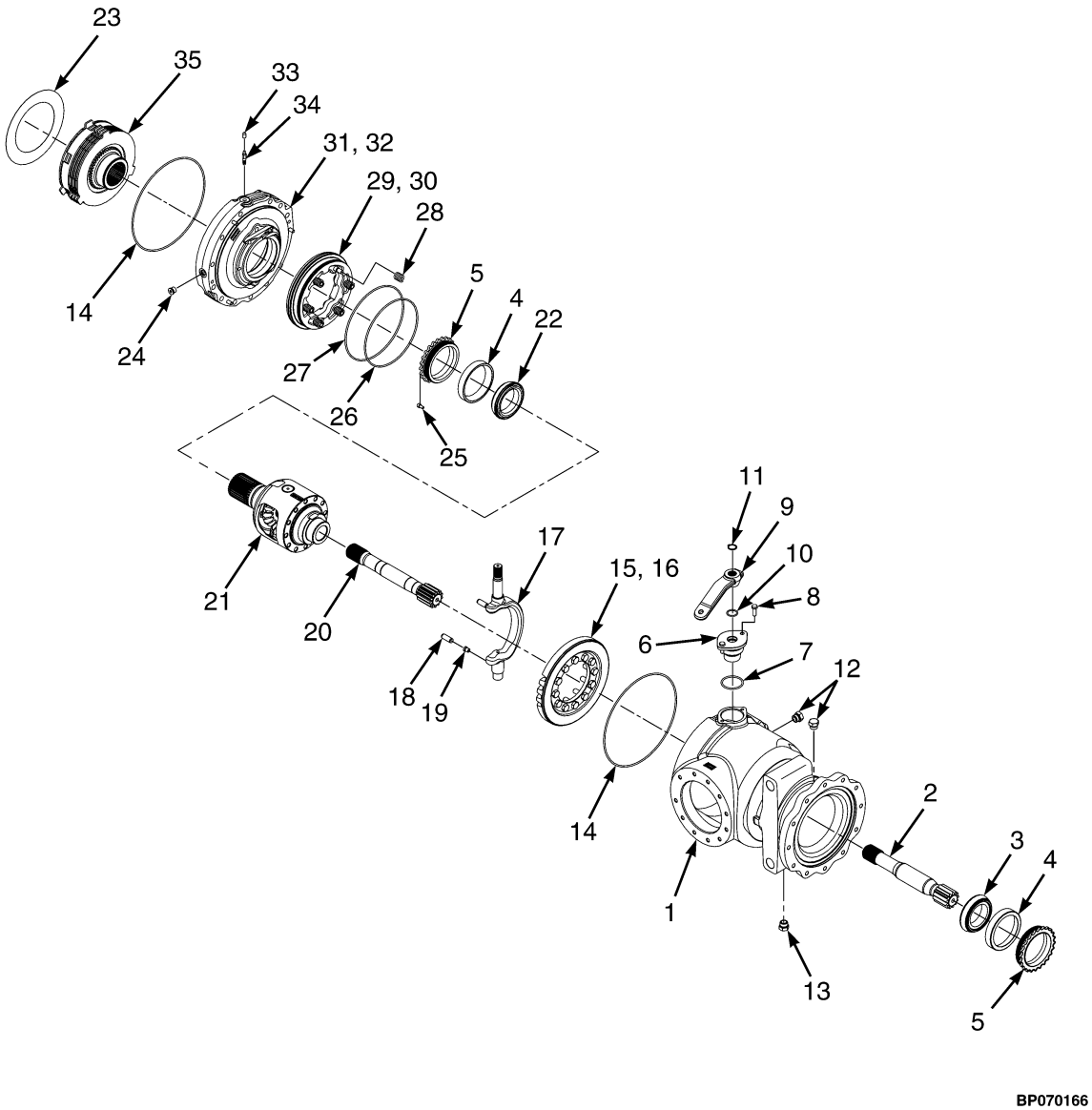

©2015 HYSTER COMPANY

DRIVE AXLE ASSEMBLY
WET BRAKE (NMHG) – BRAKES AND DIFFERENTIAL

ITEM	PART NO.	DESCRIPTION	QTY
	4641443	Drive Axle	1
1	4049014	Drive Axle Housing (RH)	1
2	4055021	Axle Shaft (LH)	1
3	1678059	Bearing Cone (Tapered Roller)	1
4	30076	Bearing Cup	2
5	1672068	Nut	2
6	1668854	Bushing (Park Brake Shaft)	1
7	301991	O-Ring	1
8	136749	Screw	2
9	4009616	Parking Brake Lever	1
10	265732	O-Ring	1
11	58950	Snap Ring	1
12	14595	Plug Assembly	2
12	199524	Plug	1
12	16484	O-Ring	1
13	1521809	Drain Plug	1
14	1683651	O-Ring	2
15	1660533	Gear	1
16	293646	Capscrew	12
17	4016756	Shaft (Park Brake)	1
18	1673002	Dowel	2
19	1673001	Pin	2
20	4055018	Axle Shaft (RH)	1
21	4033638	Differential Assembly (☞Figure 7-9)	1
22	230443	Bearing Cone	1
23	4055570	Shim	1
24	222443	Fitting	1
24	16483	O-Ring	1
25	293762	Capscrew	1
26	4108804	Piston Seal	1
27	4051921	Piston Seal	1
28	4013888	Return Spring (Clutch Return)	6
29	4101617	Piston	1
30	4022812	Bolt	6
31	4052485	Housing (Piston)	1
32	296016	Capscrew	3
33	4014418	Dust Cap	1
34	1672293	Bleeder Screw	1
35	. . . . .	Brake Assembly	1

©2015 HYSTER COMPANY

DRIVE AXLE ASSEMBLY (FIGURE 7-8)
WET BRAKE (NMHG) — INPUT PINION CARRIER

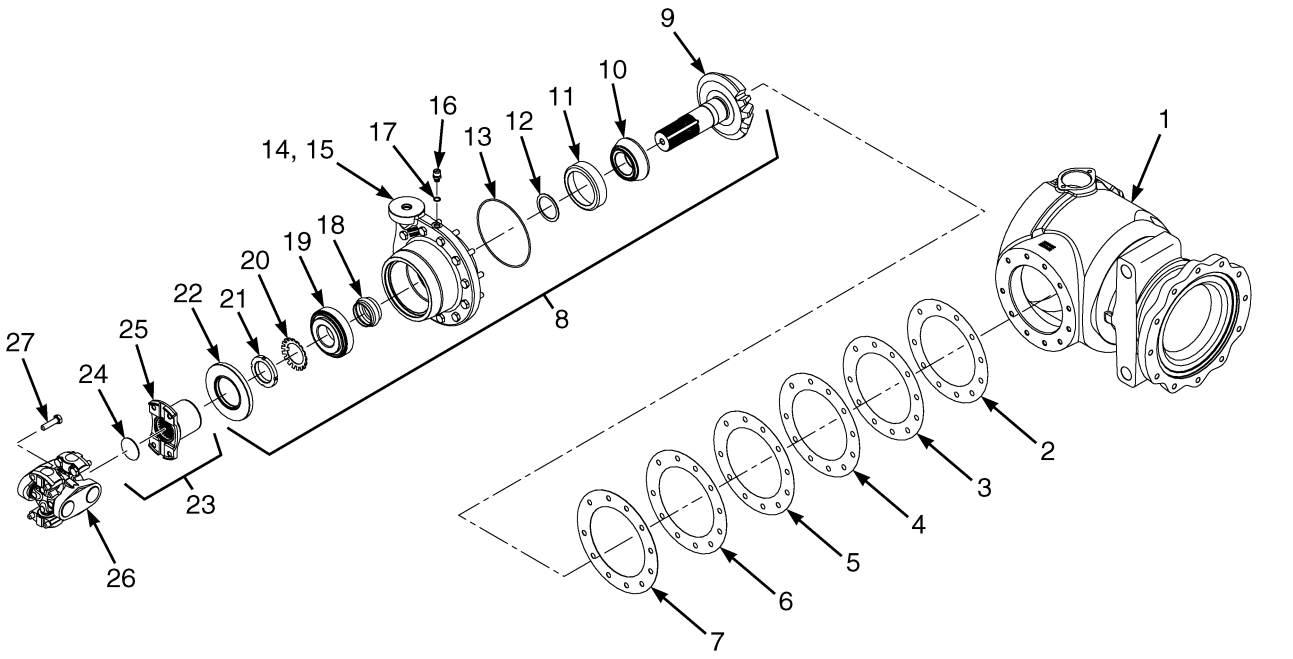

©2015 HYSTER COMPANY

DRIVE AXLE ASSEMBLY
WET BRAKE (NMHG) – INPUT PINION CARRIER

ITEM	PART NO.	DESCRIPTION	QTY
	4641443	Drive Axle	1
1	4049014	Drive Axle Housing	1
2	2101125	Shim	1
3	2101126	Shim	1
4	2101127	Shim	1
5	2101128	Shim	1
6	2101129	Shim	1
7	2101124	Shim	1
8	. . . . .	Carrier Assembly (Input Pinion)	1
9	1660452	Pinion	1
10	230420	Bearing Cone	1
11	230419	Bearing Cup	1
12	1672691	Washer	1
13	39756	O-Ring	1
14	4057297	Carrier (Input Pinion)	1
15	**a** 293632	Capscrew	11
16	**a** 1692643	Plug	1
17	**a** 4014761	Washer (Sealing)	1
18	1672693	Sleeve	1
19	2022352	Tapered Roller Bearing	1
20	2050732	Lockwasher	1
21	2050733	Nut	1
22	1672069	Oil Seal	1
23	1684429	Yoke	1
24	1683530	End Plug	1
25	1677255	Yoke	1
26	4112317	Drive Shaft	1
27	4094634	Capscrew	8

FOOTNOTES:

a Not Included with Input Pinion Carrier Assembly

©2015 HYSTER COMPANY

DIFFERENTIAL ASSEMBLY (FIGURE 7-9)

WET BRAKE (NMHG)

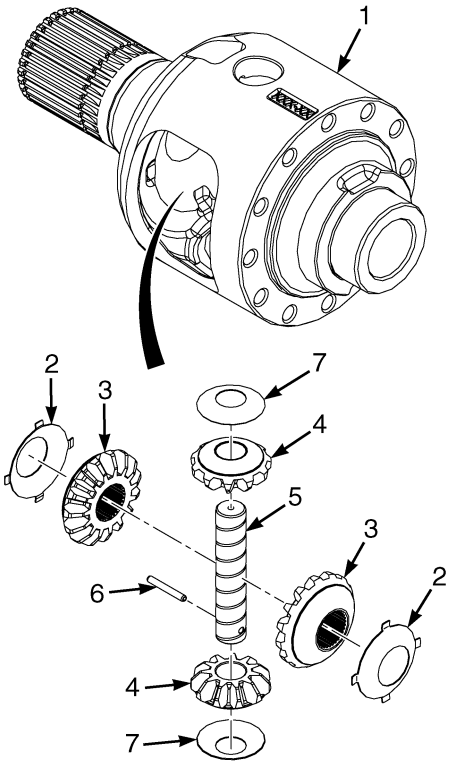

BP070161

ITEM	PART NO.	DESCRIPTION	QTY
	4033638	Differential Assembly	1
	4068066	Kit (Differential) (Optional)	1
1	4033635	Differential Housing	1
2	. . . . .	Washer (Side Gear)	2
3	. . . . .	Gear (Side Differential)	2
4	. . . . .	Gear (Pinion Differential)	2
5	1695326	Shaft (Differential)	1
6	302469	Roll Pin	1
7	4006296	Washer (Pinion Gear)	2

©2015 HYSTER COMPANY

NOTES

©2015 HYSTER COMPANY

WET BRAKE ASSEMBLY (FIGURE 7-10)
NMHG

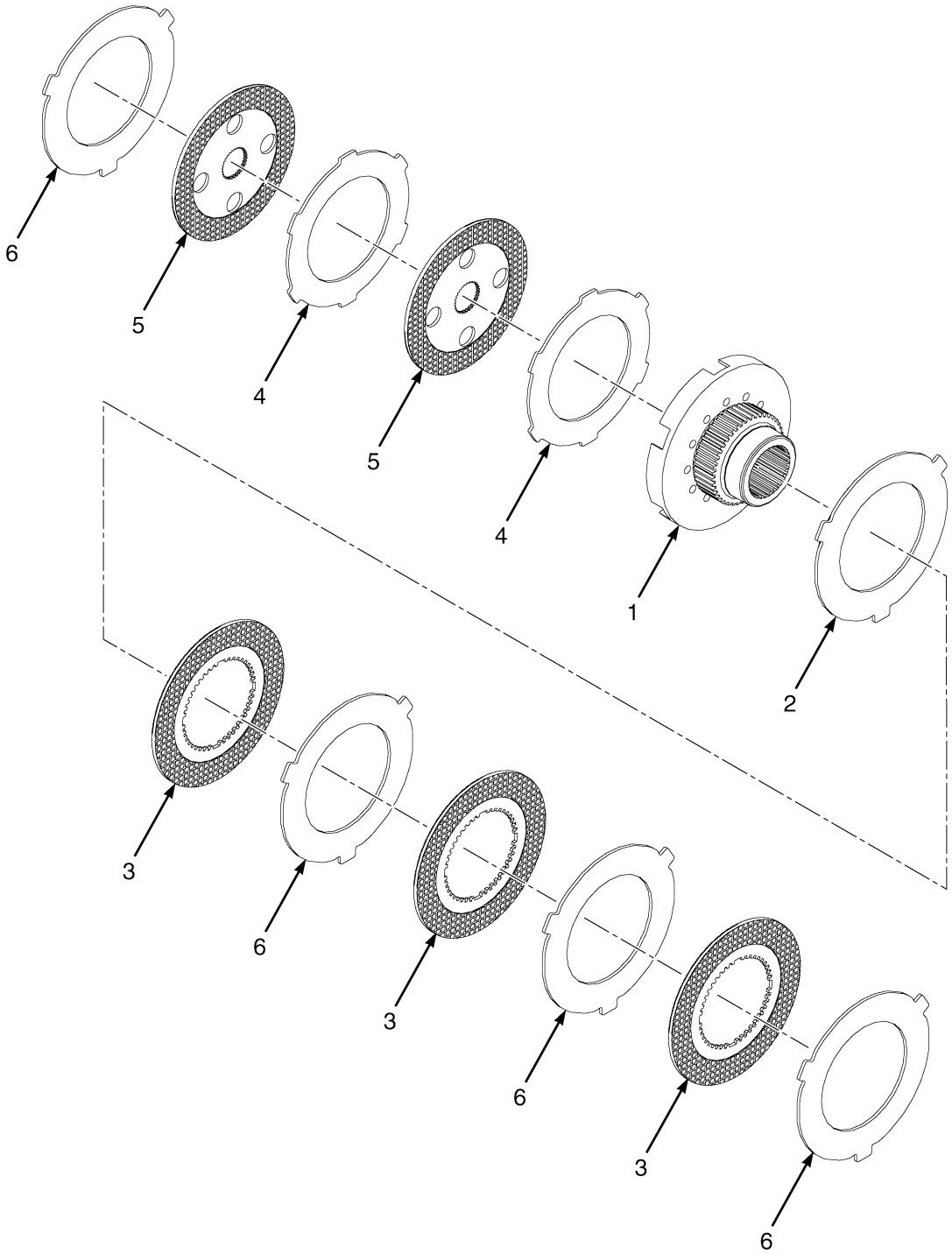

BP070162

©2015 HYSTER COMPANY

WET BRAKE ASSEMBLY
NMHG

ITEM	PART NO.	DESCRIPTION	QTY
1	4000912	Brake Carrier	1
2	. . . . .	Separator Plate	1
3	. . . . .	Friction Disk	3
4	. . . . .	Separator Plate	2
5	. . . . .	Friction Disk	2
6	. . . . .	Separator Plate	4
	4068069	Kit Brake Disks And Plates	1

©2015 HYSTER COMPANY

DRIVE TIRE AND WHEEL (FIGURE 7-11)
SINGLE MOUNT WITH STANDARD TREAD

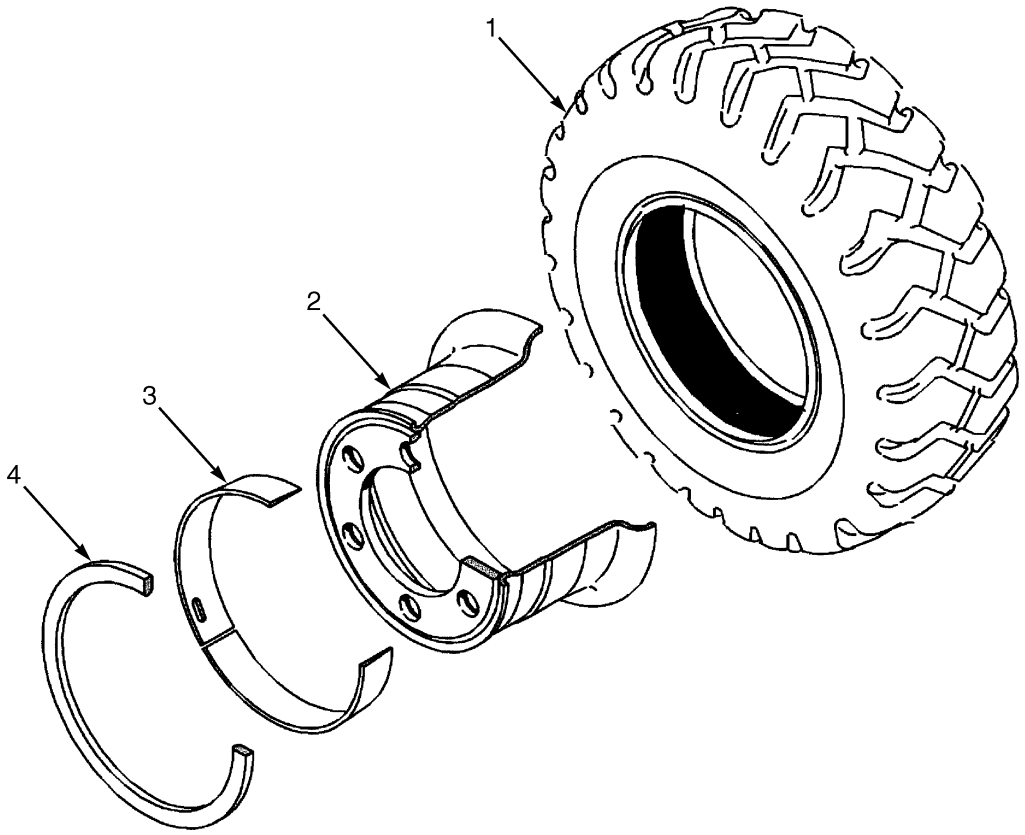

BP070041

KEY:
A: 250 x 15-20 PR (H4.0-4.5FT5)
B: 300 x 15-20 PR (H4.5FT6-H5.5)

ITEM	PART NO.	DESCRIPTION	QTY A	QTY B
	1553144	Wheel And Tire (Assembly)	2	..
	1553152	Wheel And Tire (Assembly)	..	2
1	1547342	Tire	1	..
1	1547348	Tire	..	1
2	2083537	Wheel Assy	1	..
2	2083540	Wheel Assy	..	1
3	1618588	Wheel Side Ring	1	..
3	321124	Wheel Side Ring	..	1
4	1618589	Wheel Lock Ring	1	1
	a 1618586	Ring-Tapered Bead Seat	1	1

FOOTNOTES:

a Not Illustrated

©2015 HYSTER COMPANY

DRIVE TIRE AND WHEEL (FIGURE 7-12)
SINGLE MOUNT WITH WIDE TREAD

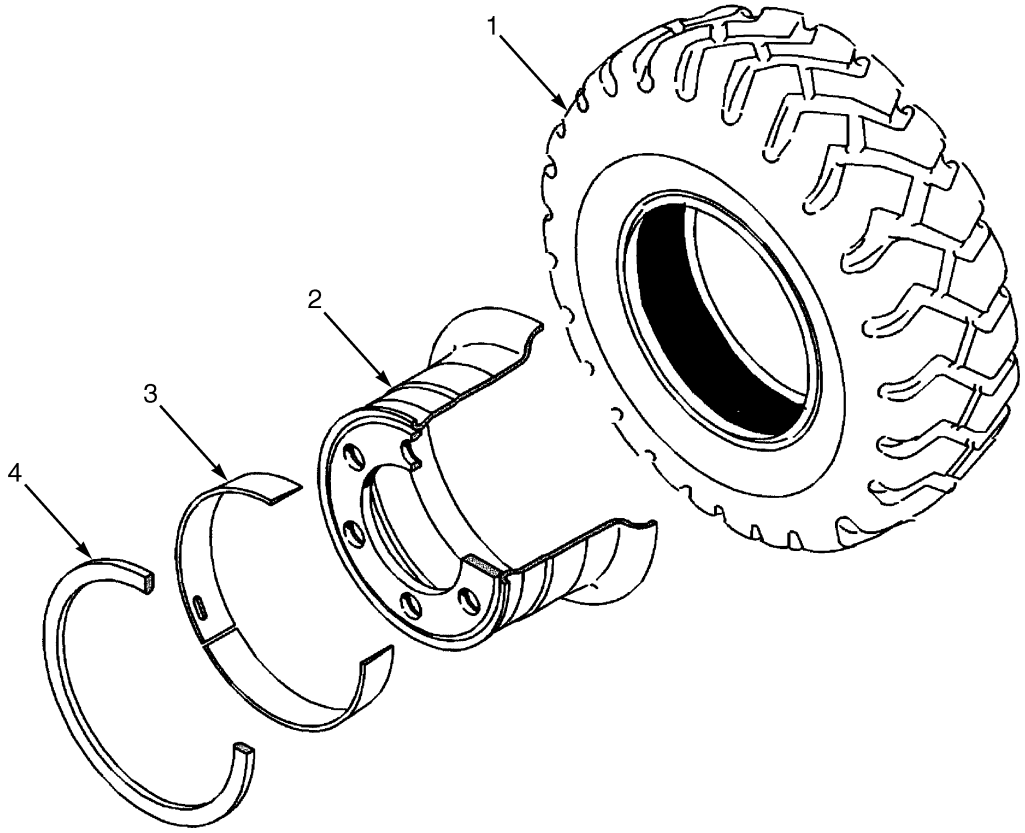

BP070041

KEY:
A: 250 x 15-20PR (H4.0-4.5FT5)
B: 300 x 15-20PR (H40.5FT6-H5.5)

ITEM	PART NO.	DESCRIPTION	QTY A	QTY B
	1553145	Wheel And Tire (Assembly)	2	..
	1553153	Wheel And Tire (Assembly)	..	2
1	1547342	Tire	1	..
1	1547348	Tire	..	1
2	2083538	Wheel Assy	1	..
2	2083541	Wheel Assy	..	1
3	1618588	Wheel Side Ring	1	..
3	321124	Wheel Side Ring	..	1
4	1618589	Wheel Lock Ring	1	1
	1618586	Ring-Tapered Bead Seat	1	1

©2015 HYSTER COMPANY

DRIVE TIRE AND WHEEL (FIGURE 7-13)
PNEUMATIC RADIAL

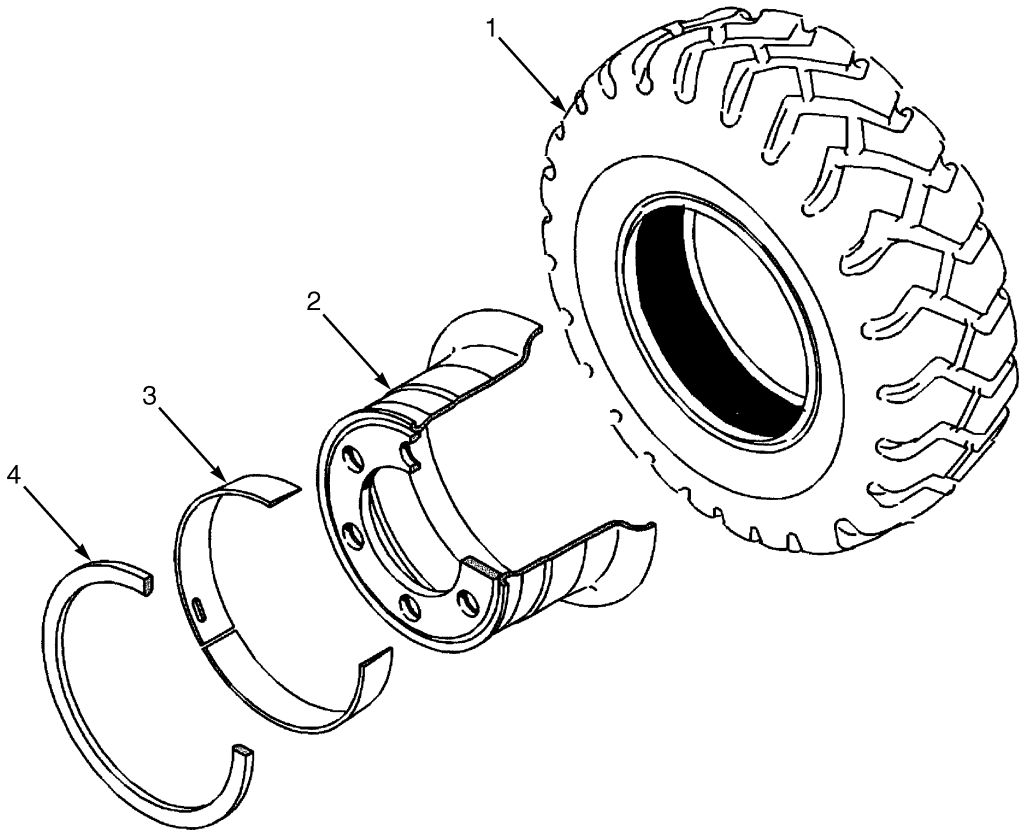

BP070041

KEY:
A: 250/70 R15 Single Mount (H4.0-4.5FT5)
B: 7.00 R15 Dual Mount (H4.0-4.5FT5)
C: 315/70 R15 Single Mount (H4.5FT6-H5.5)
D: 8.25 x R15 PR Dual Mount (H4.5FT6-H5.5)

ITEM	PART NO.	DESCRIPTION	QTY A	B	C	D
	1553148	Wheel And Tire (Assembly)	2	..	..	..
	1553149	Wheel And Tire (Assembly) (Wide Tread)	2	..	..	..
	1553150	Wheel And Tire (Assembly)	..	4	..	..
	1553156	Wheel And Tire (Assembly)	..	..	2	..
	1553157	Wheel And Tire (Assembly) (Wide Tread)	..	..	2	..
	1553158	Wheel And Tire (Assembly)	..	..	..	4
1	1471830	Pneumatic Tire Assembly (TBS)	1	..	..	..
1	1471836	Pneumatic Tire	..	1	..	..
1	1471831	Pneumatic Tire Assembly (TBS)	..	..	1	..
1	1471838	Pneumatic Tire	..	..	..	1
2	2083537	Wheel Assy	1	..	..	..
2	2083538	Wheel Assy (Wide Tread)	1	..	..	..
2	2083539	Wheel Assy	..	1	..	..
2	2083540	Wheel Assy	..	..	1	..

©2015 HYSTER COMPANY

KEY:
A: 250/70 R15 Single Mount (H4.0-4.5FT5)
B: 7.00 R15 Dual Mount (H4.0-4.5FT5)
C: 315/70 R15 Single Mount (H4.5FT6-H5.5)
D: 8.25 x R15 PR Dual Mount (H4.5FT6-H5.5)

ITEM	PART NO.	DESCRIPTION	QTY A	QTY B	QTY C	QTY D
2	2083541	Wheel Assy (Wide Tread)	..	..	1	..
2	2083542	Wheel Assy	..	..	..	1
3	1618588	Wheel Side Ring	1	..	..	..
3	980541	Wheel Side Ring	..	1	..	..
3	321124	Wheel Side Ring	..	..	1	1
4	1618589	Wheel Lock Ring	1	..	1	1
4	980542	Wheel Lock Ring	..	1	..	..
5	1618586	Ring-Tapered Bead Seat (Not Illustrated)	1	1	1	1

©2015 HYSTER COMPANY

DRIVE TIRE AND WHEEL (FIGURE 7-14)
SNAP-ON SOLID TIRE

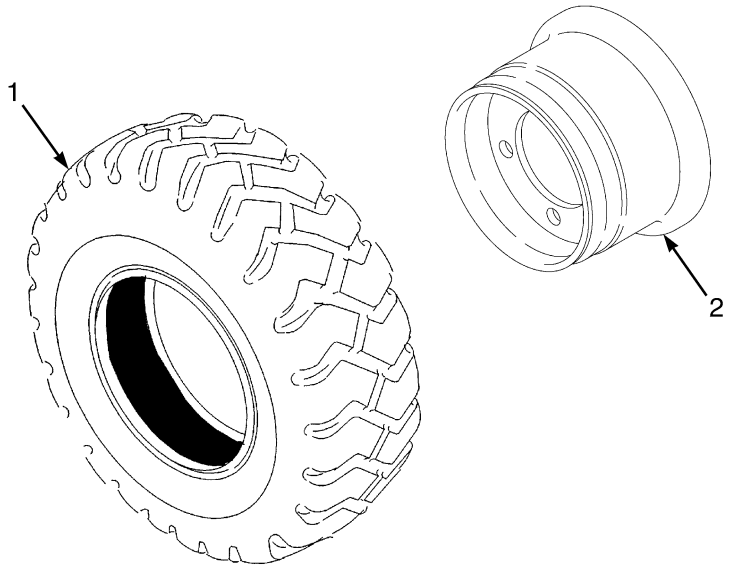

KEY:
A: 250 x 15 (H4.0-4.5FT5)
B: 300 x15 (H4.5FT6-H5.5FT)
C: 7.00 x 15 (H4.0-4.5FT5 Dual)
D: 8.25 x 15 (H4.5FT6-H5.5 Dual)

ITEM	PART NO.	DESCRIPTION	QTY A	B	C	D
	1553146	Wheel And Tire (Assembly)	2	..	..	..
	1638161	Wheel And Tire (Assembly) (Non-Marking)	2	..	..	..
	1553147	Wheel And Tire (Assembly) (Wide)	2	..	..	..
	1553154	Wheel And Tire (Assembly)	..	2	..	..
	1638164	Wheel And Tire (Assembly) (Non-Marking)	..	2	..	..
	1553155	Wheel And Tire (Assembly) (Wide)	..	2	..	..
	1553151	Wheel And Tire (Assembly)	..	..	4	..
	1553159	Wheel And Tire (Assembly)	..	..	..	4
1	1547354	Solid Pneumatic Tire	1	..	..	..
1	2083389	Solid Pneumatic Tire (Non-Marking)	1	..	..	..
1	1547356	Solid Pneumatic Tire	..	1	..	..
1	2083390	Solid Pneumatic Tire (Non-Marking)	..	1	..	..
1	1547355	Solid Pneumatic Tire	..	..	1	..
1	1547357	Solid Pneumatic Tire	..	..	..	1
2	2083523	Wheel	1	..	..	..
2	2083524	Wheel (Wide Tread)	1	..	..	..
2	2083526	Wheel	..	1	..	..
2	2083527	Wheel (Wide Tread)	..	1	..	..
2	2083525	Wheel	..	..	1	..

©2015 HYSTER COMPANY

KEY:
A: 250 x 15 (H4.0-4.5FT5)
B: 300 x15 (H4.5FT6-H5.5FT)
C: 7.00 x 15 (H4.0-4.5FT5 Dual)
D: 8.25 x 15 (H4.5FT6-H5.5 Dual)

ITEM	PART NO.	DESCRIPTION	QTY A	QTY B	QTY C	QTY D
2	2083528	Wheel	..	..	..	1

DRIVE TIRE AND WHEEL (FIGURE 7-15)
HEAVY DUTY

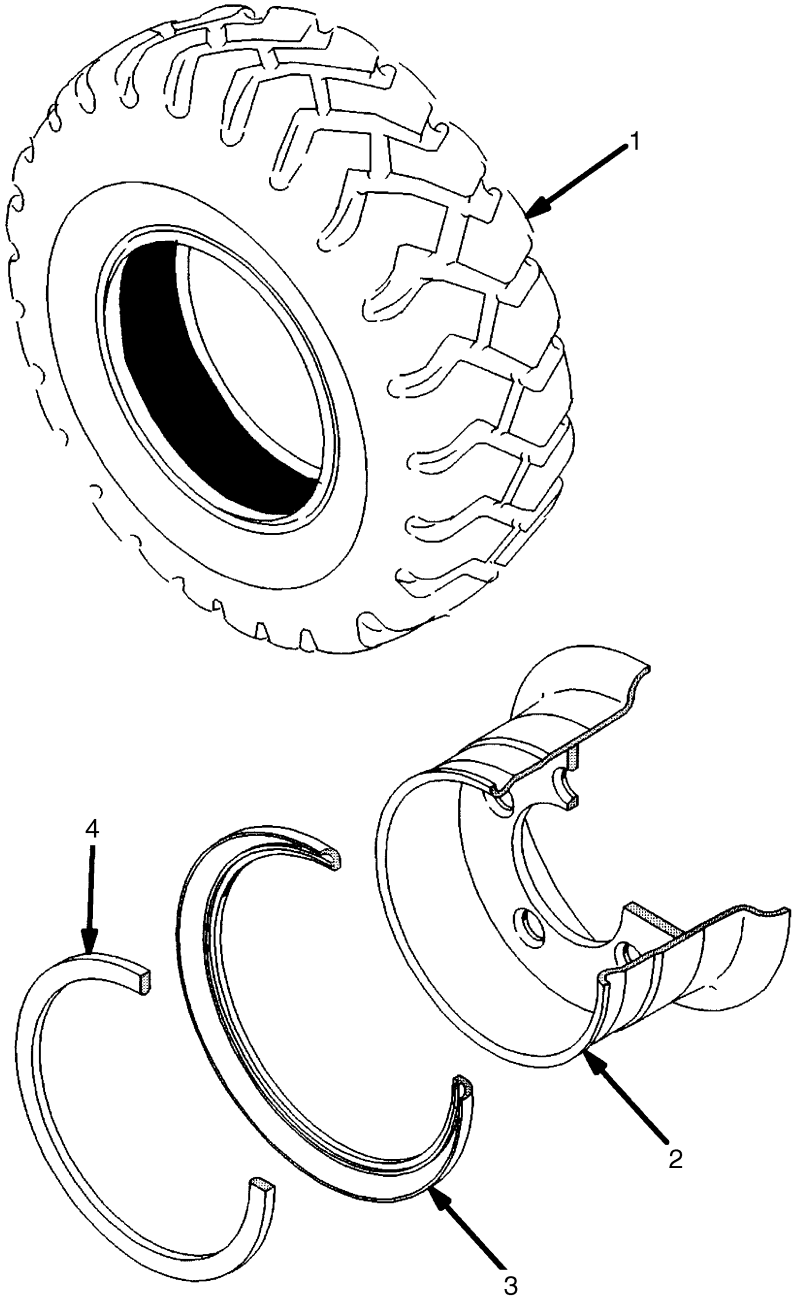

BP070070

©2015 HYSTER COMPANY

DRIVE TIRE AND WHEEL
HEAVY DUTY

KEY:
A: 20x12.5-15 (4.0-4.5S5)
B: 355/65-15 (4.5FT6-5.5)
C: 355/50-20 (4.5FT6-5.5)

ITEM	PART NO.	DESCRIPTION	QTY A	QTY B	QTY C
	1690180	Wheel And Tire (Assembly)	2	..	..
	1690183	Wheel And Tire (Assembly)	..	2	..
	1690187	Wheel And Tire (Assembly)	..	..	2
1	1688187	Solid Pneumatic Tire	1	..	..
1	1688188	Solid Pneumatic Tire	..	1	..
1	1688190	Solid Pneumatic Tire	..	..	1
2	2106024	Wheel	..	..	1
2	2103735	Wheel Assy (9.75 x 15)	1	1	..
3	160653	Wheel Side Ring	1	1	..
4	980542	Wheel Lock Ring	1	1	..
	a 1618586	Ring-Tapered Bead Seat	1	1	..

FOOTNOTES:

a Not Illustrated

©2015 HYSTER COMPANY

NOTES

©2015 HYSTER COMPANY

8 STEERING SYSTEM

SECTION 8
STEERING SYSTEM

DESCRIPTION	PAGE
STEER AXLE	8-12
STEER CYLINDER	8-16
STEER WHEELS AND TIRES	8-18
STEERING COLUMN AND ATTACHING PARTS	8-2
STEERING COLUMN ASSEMBLY	
DIESEL	8-6
LPG	8-4
STEERING CONTROL UNIT	8-8
STEERING HOSES	8-10

©2015 HYSTER COMPANY

STEERING COLUMN AND ATTACHING PARTS (FIGURE 8-1)

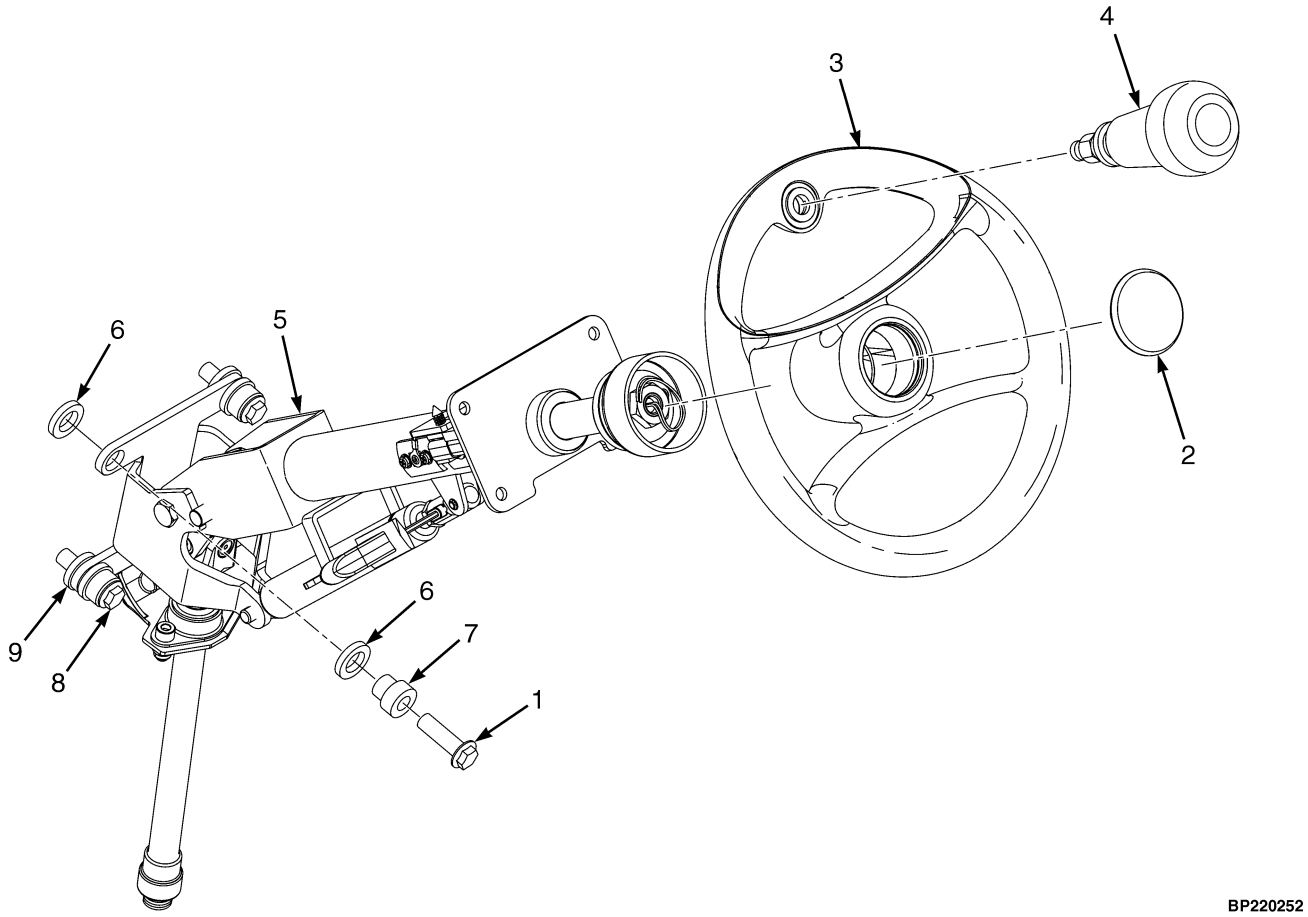

KEY:
A: Isolated
B: Non-Isolated

ITEM	PART NO.	DESCRIPTION	QTY A	QTY B
1	1512403	Capscrew	2	2
2	1608622	Horn Button	1	1
3	1551839	Steering Wheel (Without Spinner Knob)	1	1
3	1531563	Steering Wheel (With Spinner)	1	1
4	1586109	Knob Assembly	1	1
5	4611791	Steering Column (Diesel) (☞Figure 8-3)	1	..
5	4023450	Steering Column (Gasoline and LPG) (☞Figure 8-2)	..	1
6	2079369	Isolator	8	..
7	1606750	Spacer	4	..
8	1527886	Capscrew	2	..
8	1512403	Capscrew	..	2
9	320160	Washer	4	..

©2015 HYSTER COMPANY

NOTES

©2015 HYSTER COMPANY

STEERING COLUMN ASSEMBLY (FIGURE 8-2)
LPG

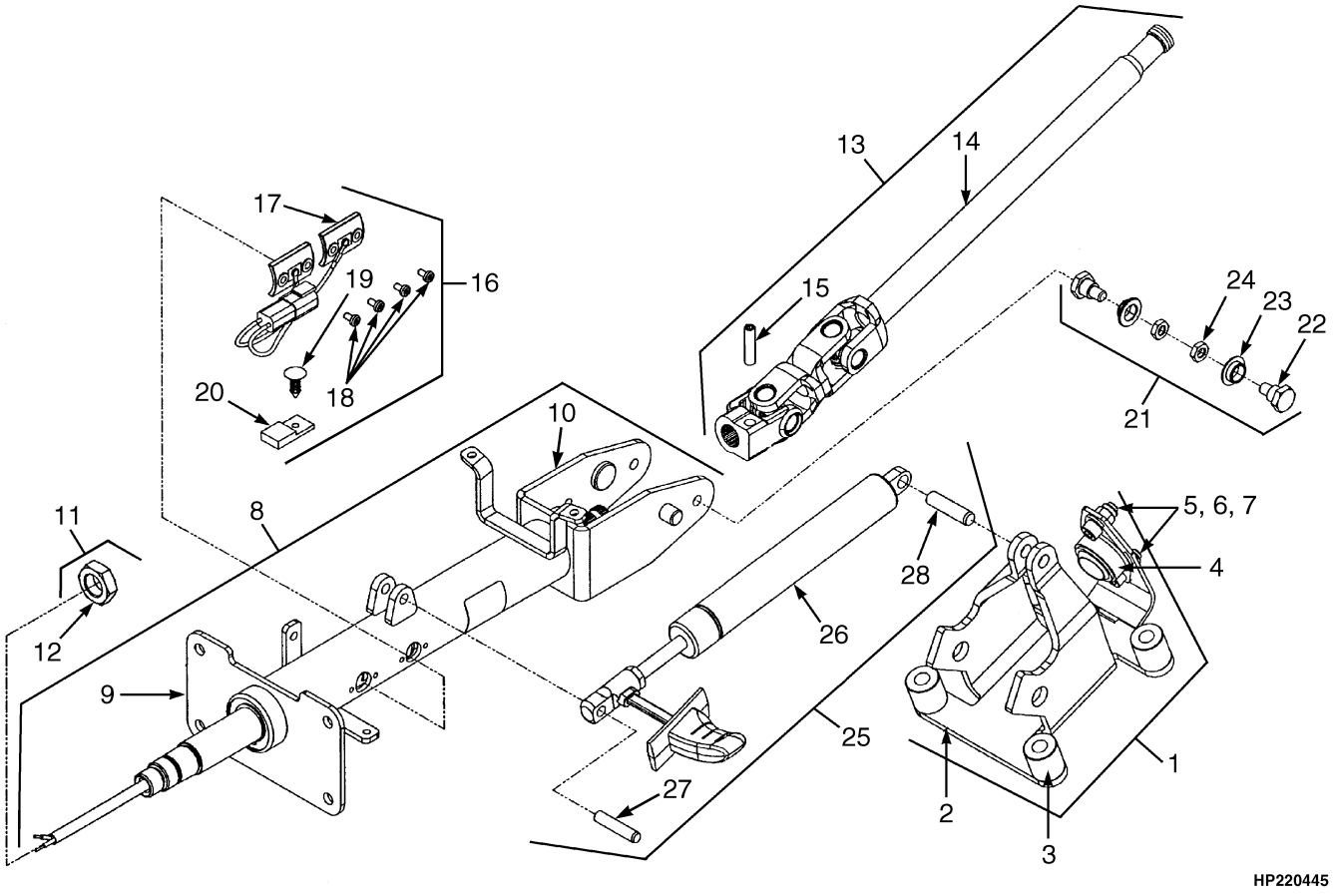

©2015 HYSTER COMPANY

STEERING COLUMN ASSEMBLY
LPG

ITEM	PART NO.	DESCRIPTION	QTY
	4023450	Steering Column	1
1	1562509	Kit-Support	1
2	. . . . .	Support	1
3	. . . . .	Spacer	4
4	. . . . .	Joint	1
5	. . . . .	Nut	2
6	. . . . .	Washer	2
7	. . . . .	Screw	2
8	4028642	Kit (Shaft Upper)	1
9	. . . . .	Shaft Assembly (Upper)	1
10	. . . . .	Housing Assembly	1
11	1562492	Kit-Nut	1
12	. . . . .	Nut	2
13	1562493	Kit-Shaft (Lower)	1
14	. . . . .	Shaft Assembly (Lower)	1
15	. . . . .	Pin	1
16	1562496	Kit-Contact	1
17	. . . . .	Contact Assembly (Horn)	1
18	. . . . .	Screw	4
19	. . . . .	Fastener	1
20	. . . . .	Connector	1
21	1562501	Kit-Pivot (Lower)	1
22	. . . . .	Bolt (Pivot)	2
23	. . . . .	Bushing	2
24	. . . . .	Nut	2
25	1562505	Kit-Gas Spring	1
26	. . . . .	Gas Spring	1
27	. . . . .	Pin	1
28	. . . . .	Pin	1

©2015 HYSTER COMPANY

STEERING COLUMN ASSEMBLY (FIGURE 8-3)
DIESEL

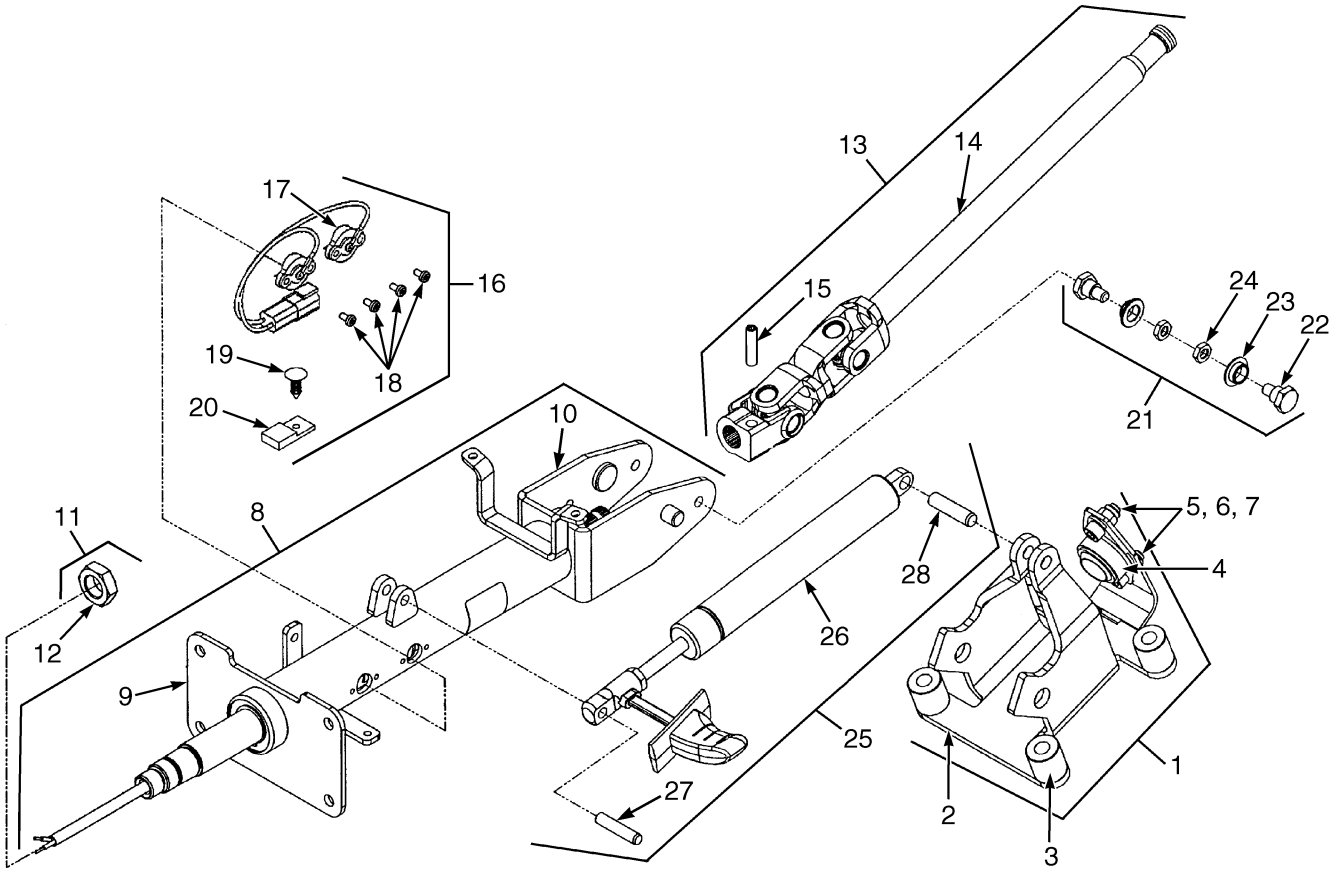

BP220224

©2015 HYSTER COMPANY

STEERING COLUMN ASSEMBLY
DIESEL

ITEM	PART NO.	DESCRIPTION	QTY
	4611791	Steering Column	1
1	4038672	Kit-Support	1
2	. . . . .	Support	1
3	. . . . .	Spacer	4
4	. . . . .	Joint	1
5	. . . . .	Nut	2
6	. . . . .	Washer	2
7	. . . . .	Screw	2
8	4038673	Kit-Shaft (Upper)	1
9	. . . . .	Shaft Assembly (Upper)	1
10	. . . . .	Housing Assembly	1
11	4038674	Kit-Nut	1
12	. . . . .	Nut	2
13	4038675	Kit-Shaft (Lower)	1
14	. . . . .	Shaft Assembly (Lower)	1
15	. . . . .	Pin	1
16	4038676	Kit-Contact	1
17	. . . . .	Contact Assembly (Horn)	1
18	. . . . .	Screw	4
19	. . . . .	Fastener	1
20	. . . . .	Connector	1
21	4038677	Kit Pivot (Lower)	1
22	. . . . .	Bolt (Pivot)	2
23	. . . . .	Bushing	2
24	. . . . .	Nut	2
25	4038678	Kit-Gas Spring	1
26	. . . . .	Gas Spring	1
27	. . . . .	Pin	1
28	. . . . .	Pin	1

©2015 HYSTER COMPANY

STEERING CONTROL UNIT (FIGURE 8-4)

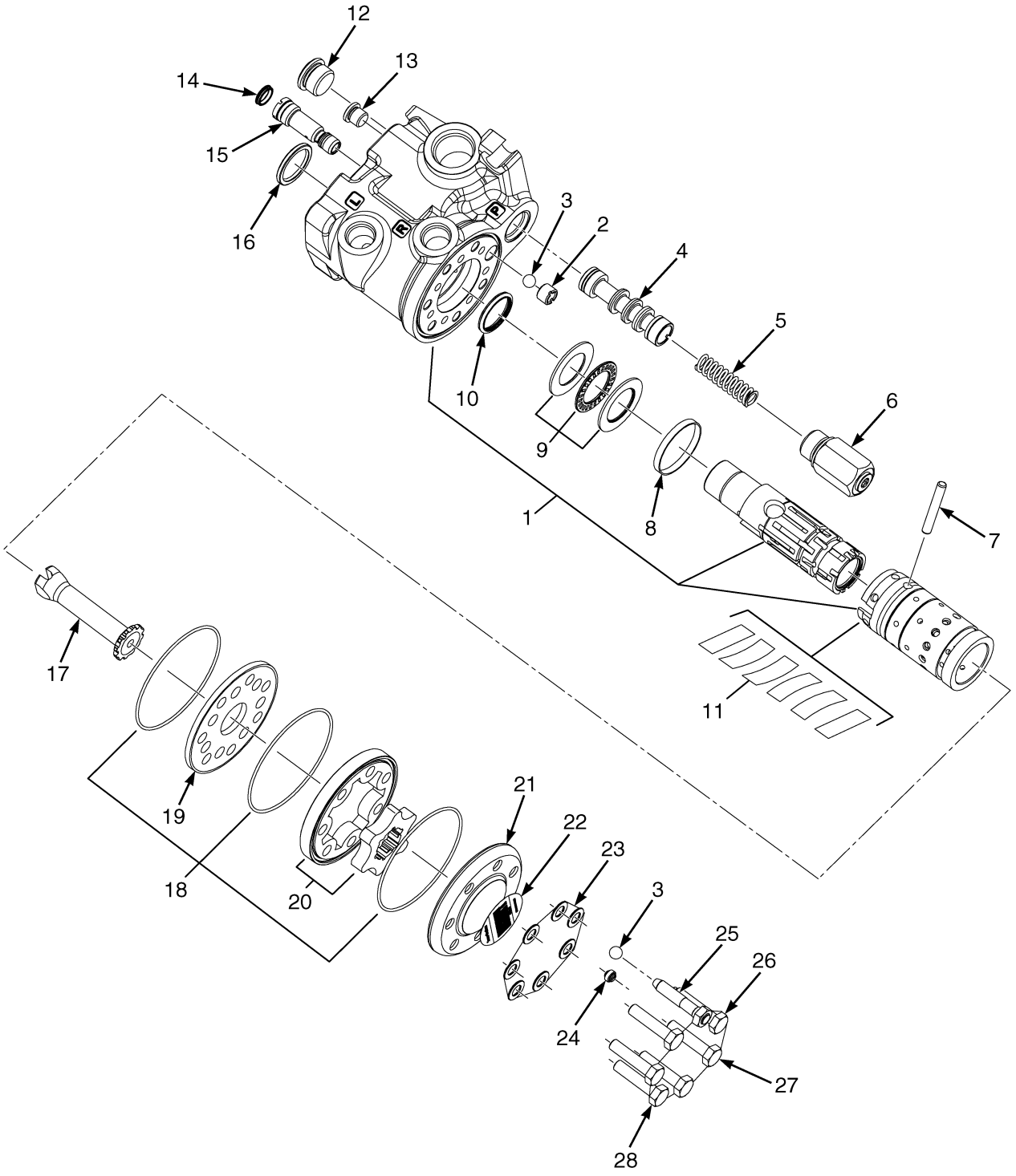

BP220325

©2015 HYSTER COMPANY

STEERING CONTROL UNIT

ITEM	PART NO.	DESCRIPTION	QTY
	4639750	Steering Control Unit	1
	a 4639752	Steering Control Unit	1
1	. . . . .	Housing Spool and Sleeve	1
2	. . . . .	Bushing	1
3	. . . . .	Ball	2
4	. . . . .	Spool	1
5	. . . . .	Spring	1
6	. . . . .	Plug	1
7	. . . . .	Pin	1
8	. . . . .	Ring	1
9	. . . . .	Bearing Assembly	1
10	. . . . .	O-Ring	1
11	. . . . .	Set of Springs	1
12	. . . . .	Plug	1
13	. . . . .	Plug	1
14	. . . . .	Plug	1
15	. . . . .	Relief Valve	1
16	. . . . .	Dust Seal	1
17	. . . . .	Shaft	1
18	. . . . .	O-Ring	3
19	. . . . .	Distributor Plate	1
20	. . . . .	Gear Wheel Set	1
21	. . . . .	End Cover	1
22	. . . . .	Name Plate	1
23	. . . . .	Washer	7
24	. . . . .	Check Valve	1
25	. . . . .	Screw with Pin	1
26	. . . . .	Screw	1
27	. . . . .	Screw	1
28	. . . . .	Screw	4
	1579908	Kit-Seal (Steering Control Unit)	1

FOOTNOTES:

a With Variable Hydraulic Pump

©2015 HYSTER COMPANY

STEERING HOSES (FIGURE 8-5)

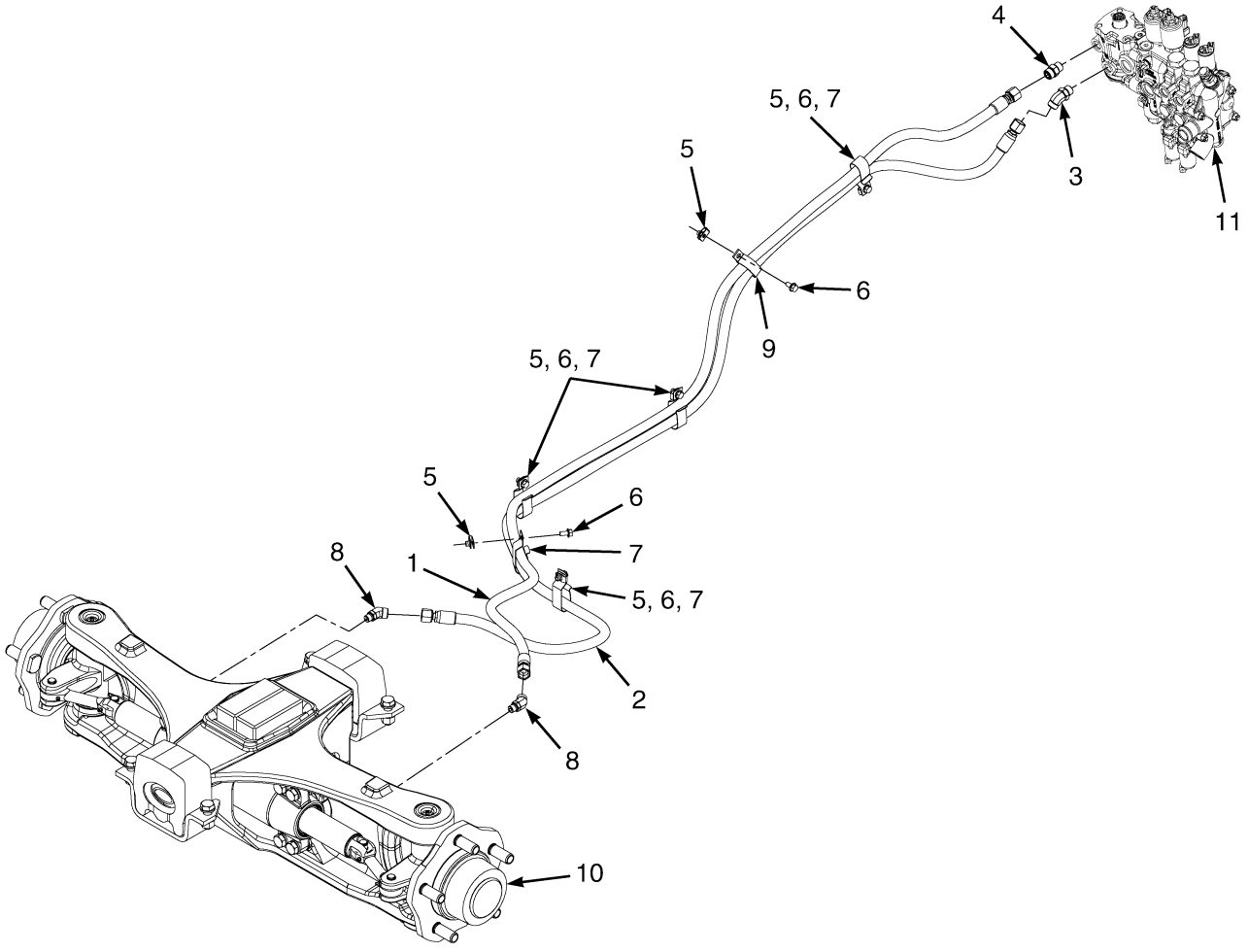

©2015 HYSTER COMPANY

STEERING HOSES

KEY:
A: H4.0FT5/H4.0FT6/H4.5FTS5/H4.5FT6
B: H5.0-5.5FT

ITEM	PART NO.	DESCRIPTION	QTY A	QTY B
1	2104075	Hose Assy (1830 WB)	1	..
1	2104076	Hose Assy (2100 WB)	..	1
2	2103501	Hose Assy (1830 WB)	1	..
2	2104077	Hose Assy (2100 WB)	..	1
3	4022959	Fitting	1	1
4	4022957	Fitting	1	1
5	1480237	Nut	6	7
6	1527879	Capscrew	6	7
7	1562648	Clip	5	6
8	1516203	Fitting	2	2
9	251994	Clamp	1	1
10	1540851	Steer Axle Assembly (☞Figure 8-6)	1	1
11	. . . . .	Hydraulic Control Valve	1	1

©2015 HYSTER COMPANY

STEER AXLE (FIGURE 8-6)

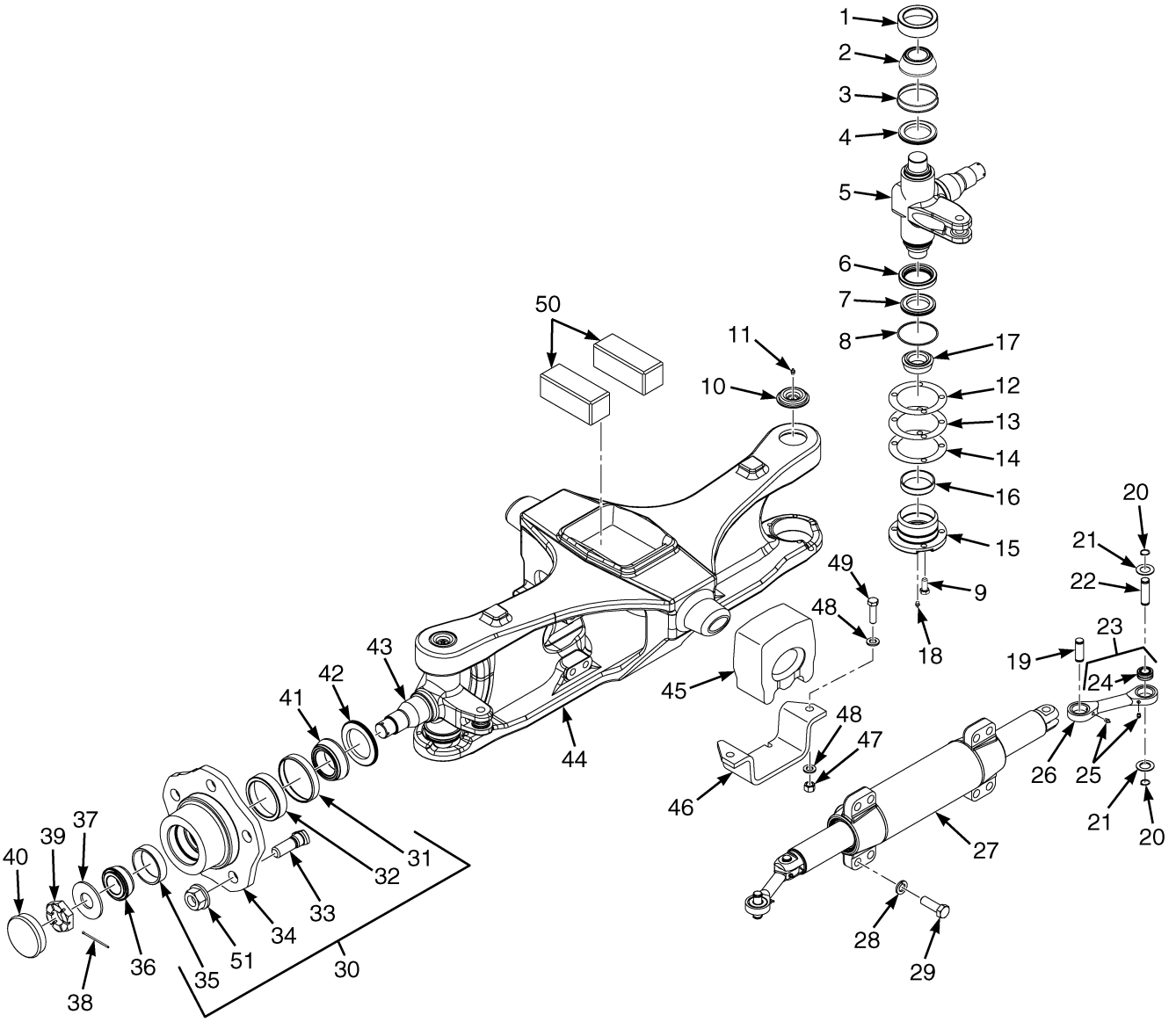

BP220270

©2015 HYSTER COMPANY

STEER AXLE

ITEM	PART NO.	DESCRIPTION	QTY
	1540851	Steer Axle Assembly	1
1	230421	Bearing Cup	2
2	153715	Bearing Cone	2
3	153717	Wear Sleeve	2
4	153716	Seal	2
5	4019946	Spindle (RH)	1
6	266733	Seal	2
7	266728	Seal	2
8	39678	O-Ring	2
9	293628	Capscrew	6
10	1388829	Dust Cap	2
11	13957	Grease Fitting	2
12	1388846	Shim (0.127 mm)	2
13	1388847	Shim (0.178 mm)	2
14	1388848	Shim (0.508 mm)	4
15	4009737	Bearing Cap	2
15	1394552	Bearing Cap	1
16	1374823	Bearing Set	1
16	135658	Bearing Cup	1
17	135657	Bearing Cone	2
18	13957	Grease Fitting	2
19	1568271	Pin	2
20	58903	Snap Ring	8
21	1345684	Seal	8
22	1568272	Pin	2
23	1568079	Tie Rod	2
24	1568039	Bushing	2
25	13957	Grease Fitting	2
26	. . . . .	Tie Rod	1
27	2085232	Steering Cylinder (☞Figure 8-7)	1
28	293686	Capscrew	8
29	292685	Lockwasher	8
30	1614849	Hub	2
31	164639	Wear Sleeve	1
32	30147	Bearing Cup	1
33	1393348	Wheel Stud	5
34	1614850	Wheel Hub	1
35	30019	Bearing Cup	1
36	30289	Bearing Cone	2
37	1388832	Lockwasher	2
38	15229	Cotter Pin	2
39	1383777	Nut	2
40	69029	Cap	2
41	230315	Bearing Cone	2
42	44542	Seal	2
43	4019947	Spindle (LH)	1
44	1540852	Steering Axle (Frame)	1
45	1525354	Rubber Mount	2
46	1543254	Plate	2
47	300937	Nut	4
48	320161	Washer	8

©2015 HYSTER COMPANY

STEER AXLE

ITEM	PART NO.	DESCRIPTION	QTY
49	293648	Capscrew	4
50	352205	Rubber Mount	2
51	376026	Wheel Nut	10
	2064554	Loctite	AR

©2015 HYSTER COMPANY

NOTES

©2015 HYSTER COMPANY

STEER CYLINDER (FIGURE 8-7)

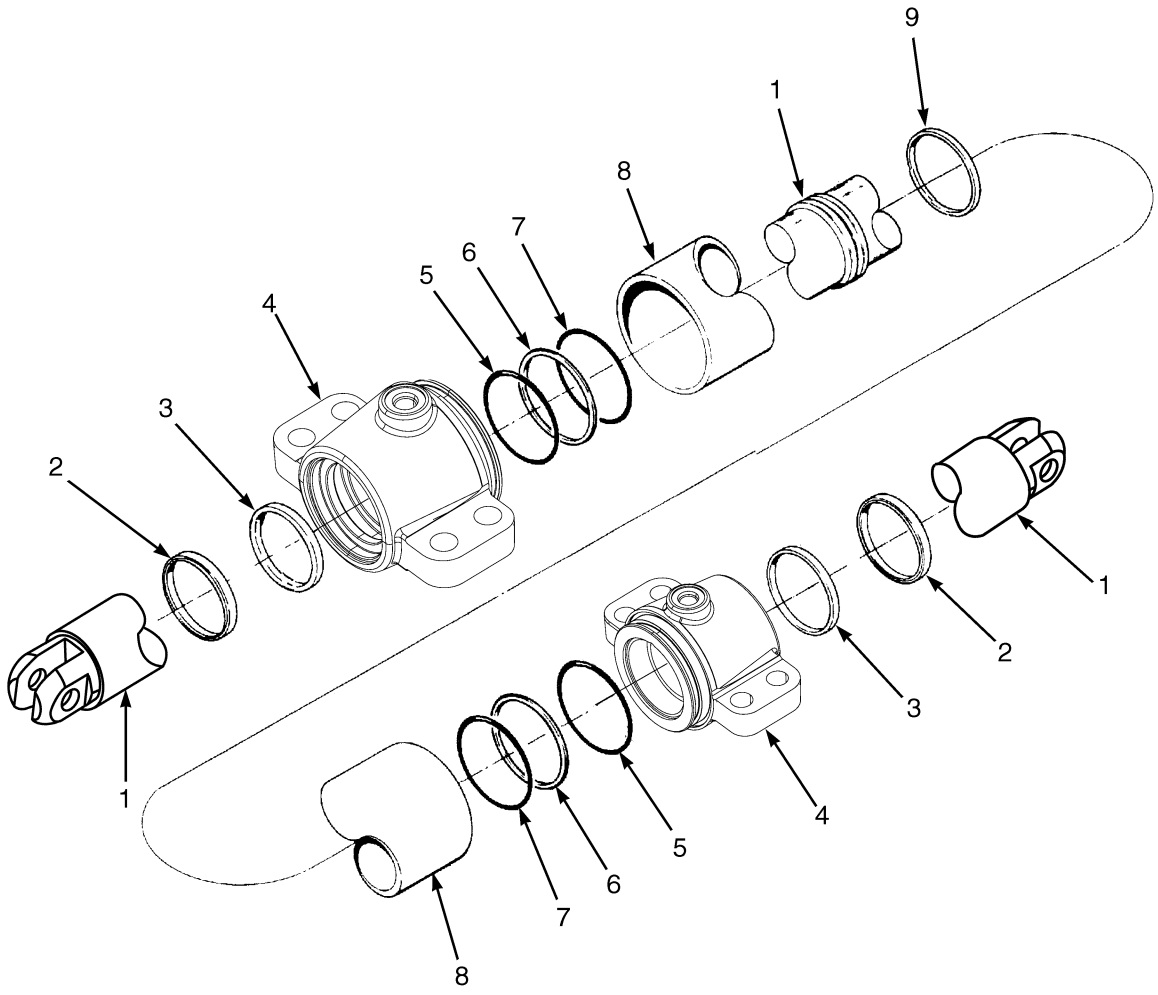

BP220087

©2015 HYSTER COMPANY

STEER CYLINDER

ITEM	PART NO.	DESCRIPTION	QTY
	2085232	Steering Cylinder	1
1	1654465	Cylinder Rod	1
2	2071094	Rod Wiper	2
3	1380092	Rod Seal	2
4	1557651	End Cap	2
5	39713	O-Ring	2
6	270015	Back-Up Ring	2
7	79981	O-Ring	2
8	352199	Tube Wldmt-Cylinder	1
9	2047829	Seal	1
	1586427	Kit-Seal	1

©2015 HYSTER COMPANY

STEER WHEELS AND TIRES (FIGURE 8-8)

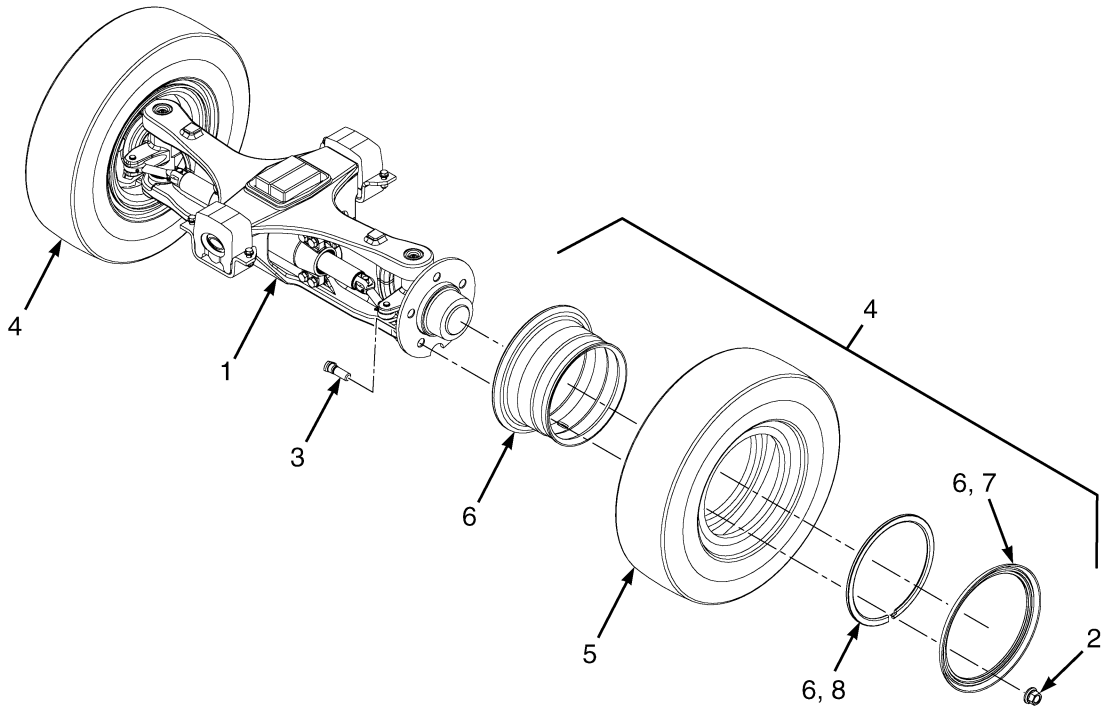

KEY:
A: 5.00 x 12 Wheel
B: 7.00 x 15 Wheel

ITEM	PART NO.	DESCRIPTION	QTY A	QTY B
1	. . . . .	Steer Axle (☞Figure 8-6)	1	1
2	376026	Wheel Nut	10	10
3	. . . . .	Wheel Stud	10	10
4	**c** 1564040	Wheel And Tire Assembly	1	..
4	**d** 1654008	Wheel And Tire Assembly	1	..
4	**b** 1564041	Wheel And Tire Assembly	..	1
4	**a** 1690184	Wheel And Tire Assembly	..	1
5	**c** 1543060	Tire	1	..
5	**d** 1654009	Tire	1	..
5	**b** 1471829	Pneumatic Tire	1	..
5	**a** 1543071	Tire	..	1
6	2083543	Rim (Wheel Assembly)	1	..
6	**a** 2104843	Wheel Assy	..	1
7	1637917	Ring (Wheel Side)	1	..
7	**a** 160653	Wheel Side Ring	..	1
8	1637918	Lockring (Wheel Lock)	1	..
8	**a** 980542	Wheel Lock Ring	..	1
	ae 1618586	Ring-Tapered Bead Seat (Heavy Duty)	..	1

©2015 HYSTER COMPANY

FOOTNOTES:

a 28 x 9 15 Solid Pneumatic Monarch Heavy Duty
b 7.00 R12 Pneumatic Radial
c 7.00 x 12 14 PR Pneumatic Trelleborg
d 7.00 x 12 Solid Pneumatic Monarch
e Not Illustrated

©2015 HYSTER COMPANY

NOTES

©2015 HYSTER COMPANY

9 BRAKE SYSTEM

SECTION 9
BRAKE SYSTEM

DESCRIPTION	PAGE
BRAKE COOLING SYSTEM	
SINGLE AND DUAL PEDAL - DANA WET BRAKE	9-10
BRAKE LINKAGE	
DUAL PEDAL - WET BRAKE	9-6
SINGLE PEDAL - WET BRAKE	9-2
BRAKE MASTER CYLINDER ASSEMBLY	9-14
PARK BRAKE ASSEMBLY	
MANUAL WITH ONE CABLE - NMHG	9-16
MANUAL WITH TWO CABLES - DANA	9-18
WET BRAKE BOOSTER SUPPLY AND RETURN	
NMHG	9-12

©2015 HYSTER COMPANY

BRAKE LINKAGE (FIGURE 9-1)
SINGLE PEDAL — WET BRAKE

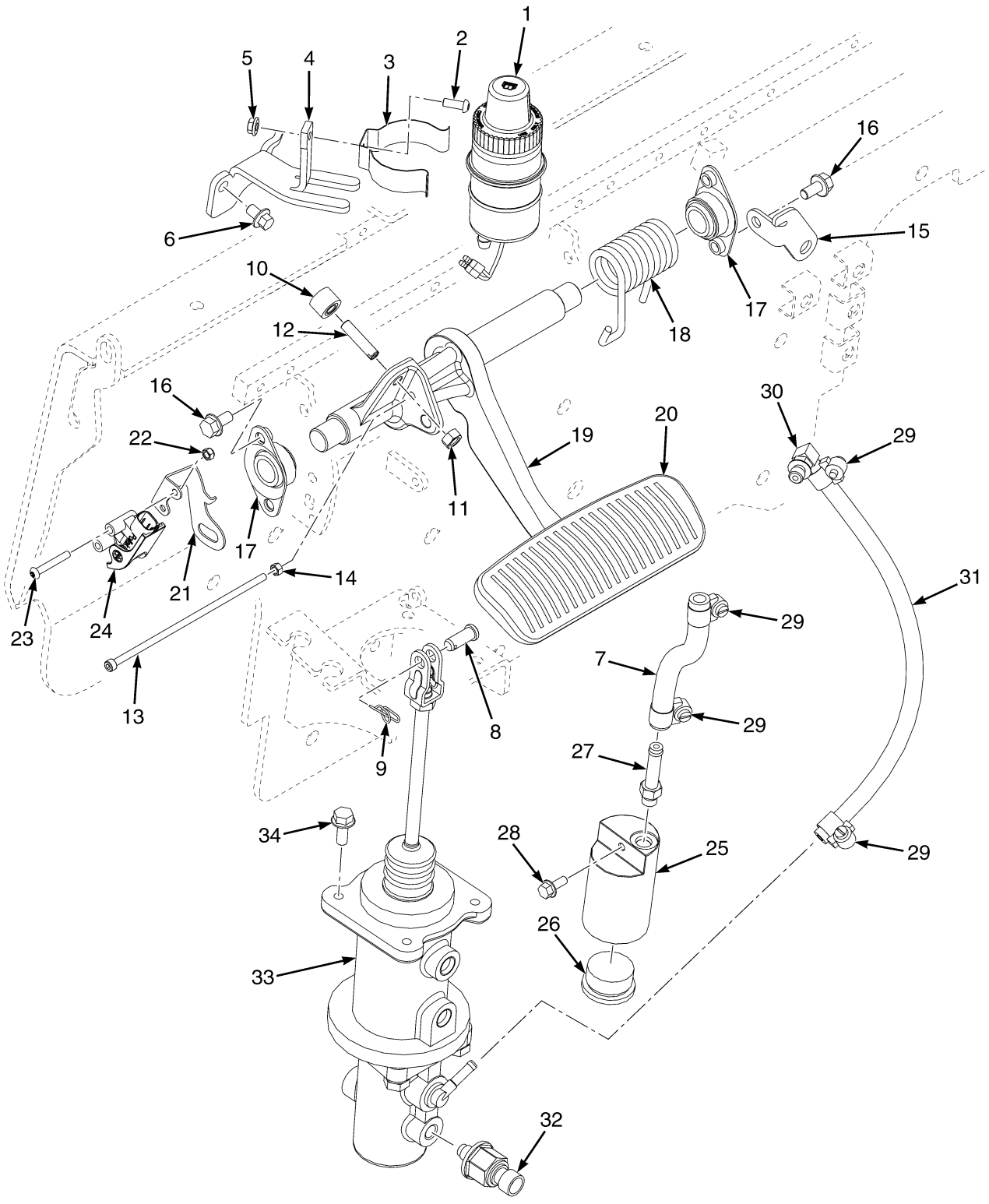

©2015 HYSTER COMPANY

BRAKE LINKAGE
SINGLE PEDAL – WET BRAKE

ITEM	PART NO.	DESCRIPTION	QTY
1	1646439	Reservoir	1
1	2077604	Tank	1
1	1645381	Diaphragm	1
1	1646397	Cap	1
1	2314223	Reservoir	1
2	296159	Capscrew	1
3	2021353	Holder	1
4	1699992	Mount	1
5	1514429	Nut	1
6	4011940	Capscrew	1
7	2092888	Hose	1
8	1375391	Pin (Rod End)	1
9	1351689	Locking Cotter Pin	1
10	1556475	Bumper	1
11	239503	Nut	1
12	1534871	Bolt	1
13	1704902	Capscrew	1
14	292668	Nut	2
15	4053949	Plate	1
16	1527879	Capscrew	4
17	1585575	Bushing	2
18	1568075	Spring (RH)	1
19	1707011	Brake Pedal (42.1 Pedal Radius) (DANA)	1
19	4060688	Brake Pedal (53.0 Pedal Radius) (NMHG)	1
20	1570298	Rubber Pad	1
21	1688503	Mount	1
22	302398	Locknut	2
23	1553897	Capscrew	2
24	1683486	Sensor (Brake Position)	1
25	2092613	Cylinder Block	1
26	233683	Fitting	1
26	16487	O-Ring	1
27	222491	Fitting	1
27	16481	O-Ring	1
28	1527876	Capscrew	1
29	166857	Clamp	4
29	168718	Clamp (Optional)	4
30	222509	Fitting	1
30	16481	O-Ring	1
31	117989	Hose (DANA)	1
31	4050228	Hose (NMHG)	1
32	1590033	Transducer (Brake Pressure)	1
33	4050226	Master Cylinder (38.1 mm Bore) (DANA) (☞Figure 9-5)	1
33	4065584	Master Cylinder (41.28 mm Bore) (NMHG) (☞Figure 9-5)	1
34	1527880	Capscrew	4
	a 2093224	Label (Brake Fluid Warning)	1
	a 114312	Strap Clamp	1
	a 2064554	Loctite	AR

©2015 HYSTER COMPANY

FOOTNOTES:

a Not Illustrated

©2015 HYSTER COMPANY

NOTES

©2015 HYSTER COMPANY

BRAKE LINKAGE (FIGURE 9-2)
DUAL PEDAL — WET BRAKE

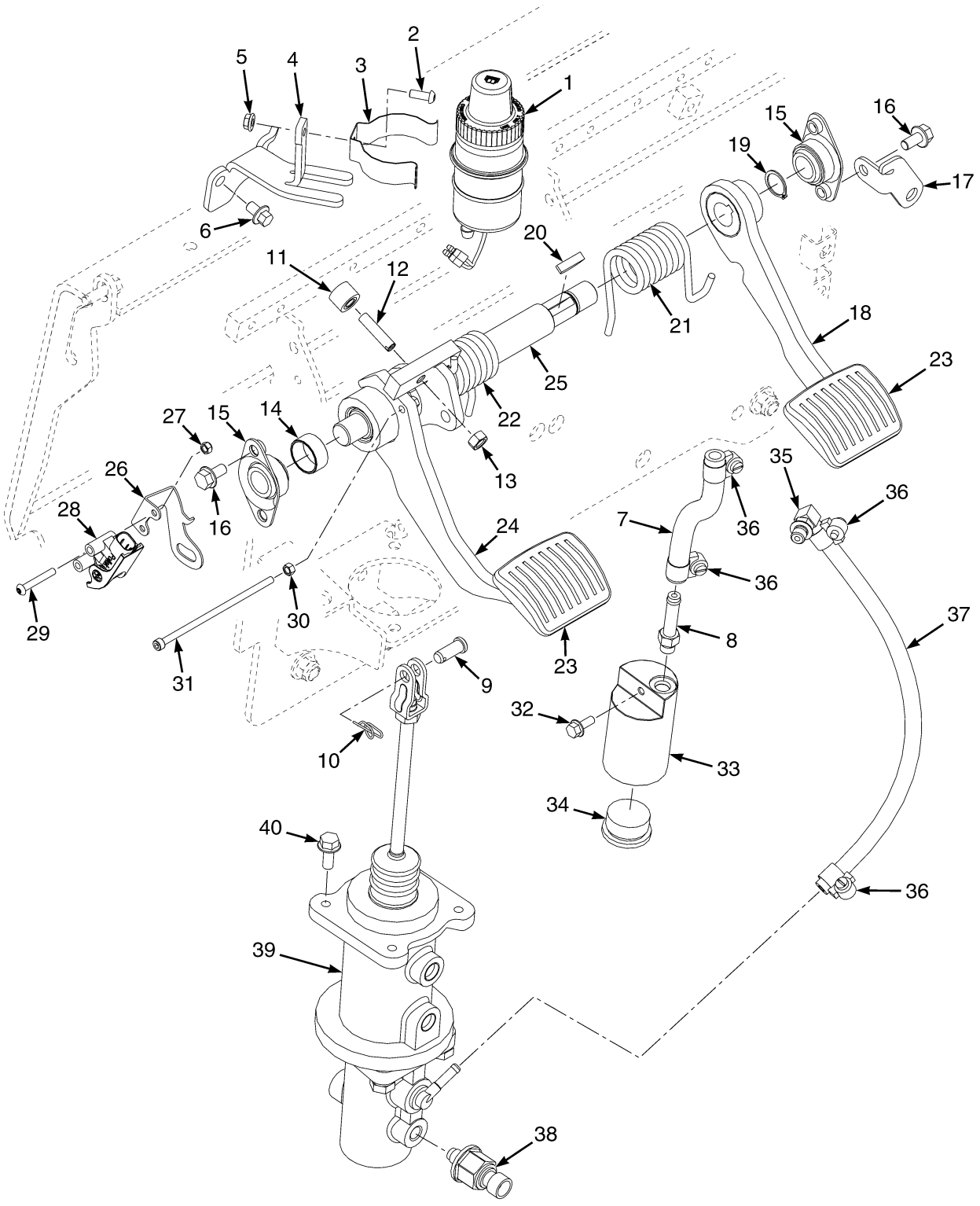

©2015 HYSTER COMPANY

BRAKE LINKAGE
DUAL PEDAL – WET BRAKE

ITEM	PART NO.	DESCRIPTION	QTY
1	1646439	Reservoir	1
1	2077604	Tank	1
1	2314223	Reservoir	1
1	1645381	Diaphragm	1
1	1646397	Cap	1
2	296159	Capscrew	1
3	2021353	Holder	1
4	1699992	Mount	1
5	1514429	Nut	1
6	4011940	Capscrew	1
7	2092888	Hose (DANA)	1
8	222491	Fitting	1
8	16481	O-Ring	1
9	1375391	Pin (Rod End)	1
10	1351689	Locking Cotter Pin	1
11	1556475	Bumper	1
12	1534871	Bolt	1
13	239503	Nut	1
14	244540	Bushing	2
15	1585575	Bushing	2
16	1527879	Capscrew	4
17	4053949	Plate	1
18	1568256	Brake Pedal (RH)	1
19	12929	Snap Ring	1
20	206	Woodruff Key	2
21	1568076	Spring (RH)	1
22	1568077	Spring (LH)	1
23	1570300	Pad	2
24	1701771	Inching Pedal (Left Hand)	1
25	1578922	Crank (DANA)	1
25	4060774	Crank (NMHG)	1
26	1688503	Mount	1
27	302398	Locknut	2
28	1683486	Sensor (Brake Position)	1
29	1553897	Capscrew	2
30	292668	Nut	2
31	1704901	Capscrew	1
32	1527876	Capscrew	1
33	2092613	Cylinder Block	1
34	233683	Fitting	1
34	16487	O-Ring	1
35	222509	Fitting	1
35	16481	O-Ring	1
36	166857	Clamp	4
36	168718	Clamp (Optional)	4
37	117989	Hose (DANA)	1
37	4050228	Hose (NMHG)	1
38	1590033	Transducer (Brake Pressure)	1
39	4050226	Master Cylinder (38.1mm Bore) (DANA) (☞Figure 9-5)	1
39	4065584	Master Cylinder (41.28 mm Bore) (NMHG) (☞Figure 9-5)	1

©2015 HYSTER COMPANY

BRAKE LINKAGE
DUAL PEDAL – WET BRAKE

ITEM	PART NO.	DESCRIPTION	QTY
40	1527880	Capscrew	4
	a 2093224	Label (Brake Fluid Warning)	1
	a 114312	Strap Clamp	1
	a 2064554	Loctite	AR

FOOTNOTES:

a Not Illustrated

©2015 HYSTER COMPANY

NOTES

©2015 HYSTER COMPANY

BRAKE COOLING SYSTEM (FIGURE 9-3)
SINGLE AND DUAL PEDAL — DANA WET BRAKE

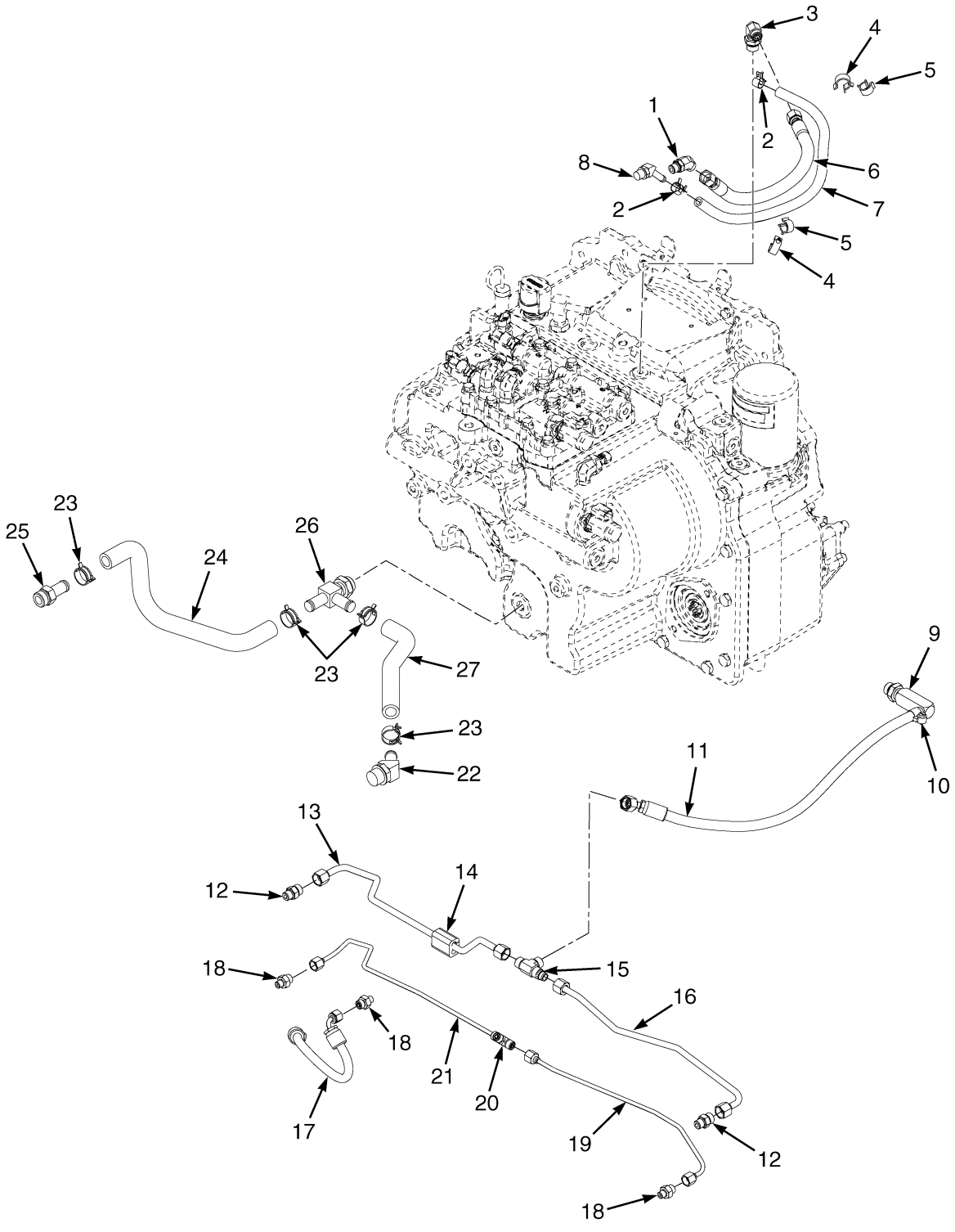

BP040191

©2015 HYSTER COMPANY

BRAKE COOLING SYSTEM

SINGLE AND DUAL PEDAL – DANA WET BRAKE

ITEM	PART NO.	DESCRIPTION	QTY
1	1516199	Fitting	1
2	1569616	Hose Clamp	2
3	1487061	Fitting	1
4	1502053	Clamp (Swivel)	2
5	1543698	Clamp (Swivel)	2
6	2091015	Hose Assy	1
7	112385	Hose	1
8	222501	Fitting	1
8	16483	O-Ring	1
9	4037343	Fitting	1
10	166857	Clamp	1
11	4614775	Hose Assy	1
12	1486740	Fitting	2
12	265787	O-Ring	1
13	2090894	Tube (Cooling Inlet)	1
14	2091513	Block	1
15	1522425	Fitting	1
16	2090895	Tube (Cooling Inlet)	1
17	2073768	Hose Assy (Brake Actuation)	1
18	1486737	Fitting	3
19	2091149	Tube (Brake Tube LH)	1
20	1522425	Fitting	1
21	2091515	Tube (Brake Tube RH)	1
22	222505	Fitting	1
22	16486	O-Ring	1
23	1502009	Hose Clamp	4
24	2090185	Hose	1
25	17758	Fitting	1
25	16486	O-Ring	1
26	1637397	Fitting	1
27	4612564	Hose (From Drive Axle to Pump) (Axle Return)	1

©2015 HYSTER COMPANY

WET BRAKE BOOSTER SUPPLY AND RETURN (FIGURE 9-4)

NMHG

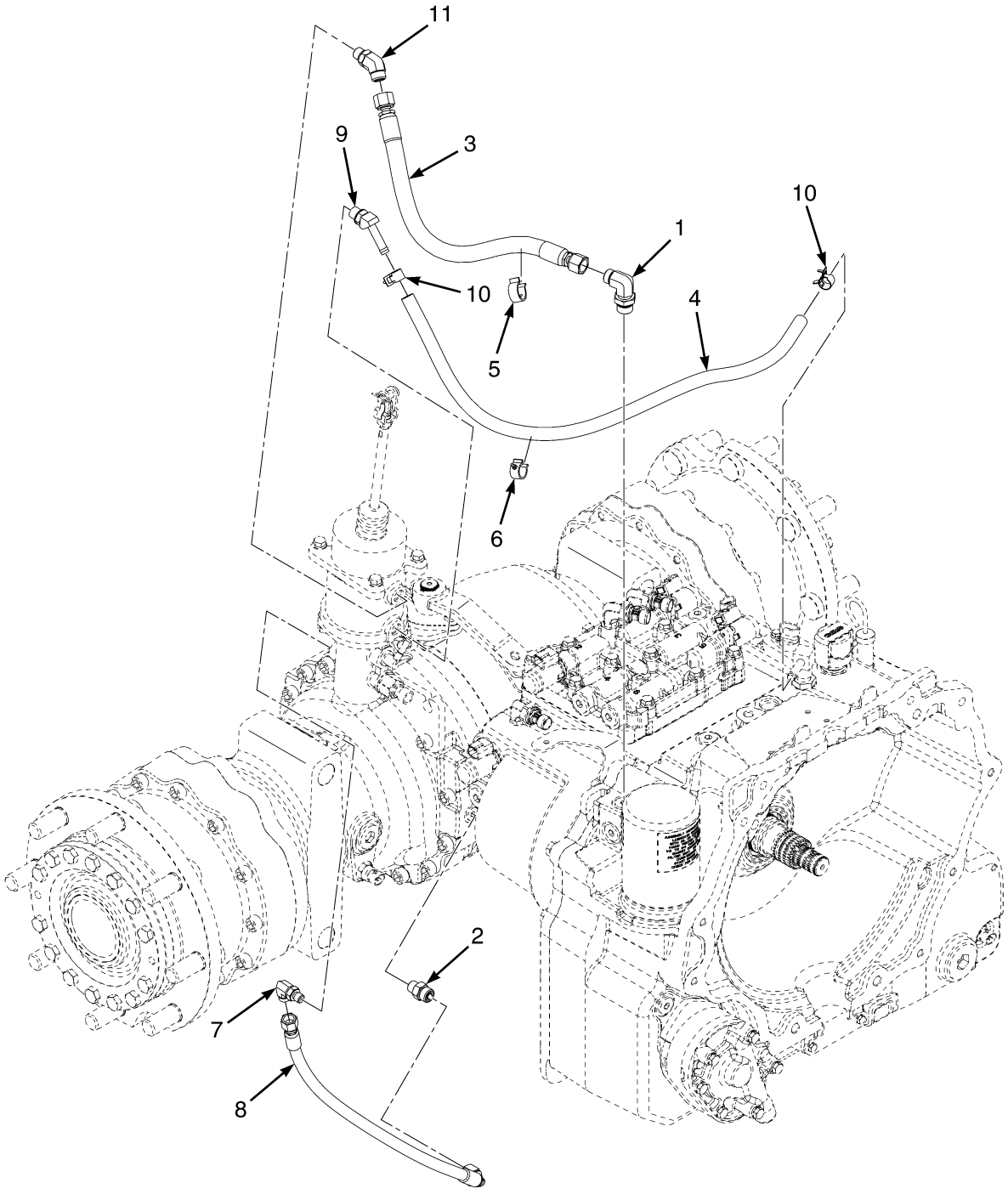

©2015 HYSTER COMPANY

WET BRAKE BOOSTER SUPPLY AND RETURN

NMHG

ITEM	PART NO.	DESCRIPTION	QTY
1	1487061	Fitting	1
2	1486740	Fitting	1
3	2091015	Hose Assy	1
4	112385	Hose	1
5	1502053	Clamp (Swivel)	2
6	1543698	Clamp (Swivel)	2
7	1487058	Fitting	1
8	4619601	Hose Assy	1
9	222501	Fitting	1
10	1569616	Hose Clamp	2
11	1516199	Fitting	1

©2015 HYSTER COMPANY

BRAKE MASTER CYLINDER ASSEMBLY (FIGURE 9-5)

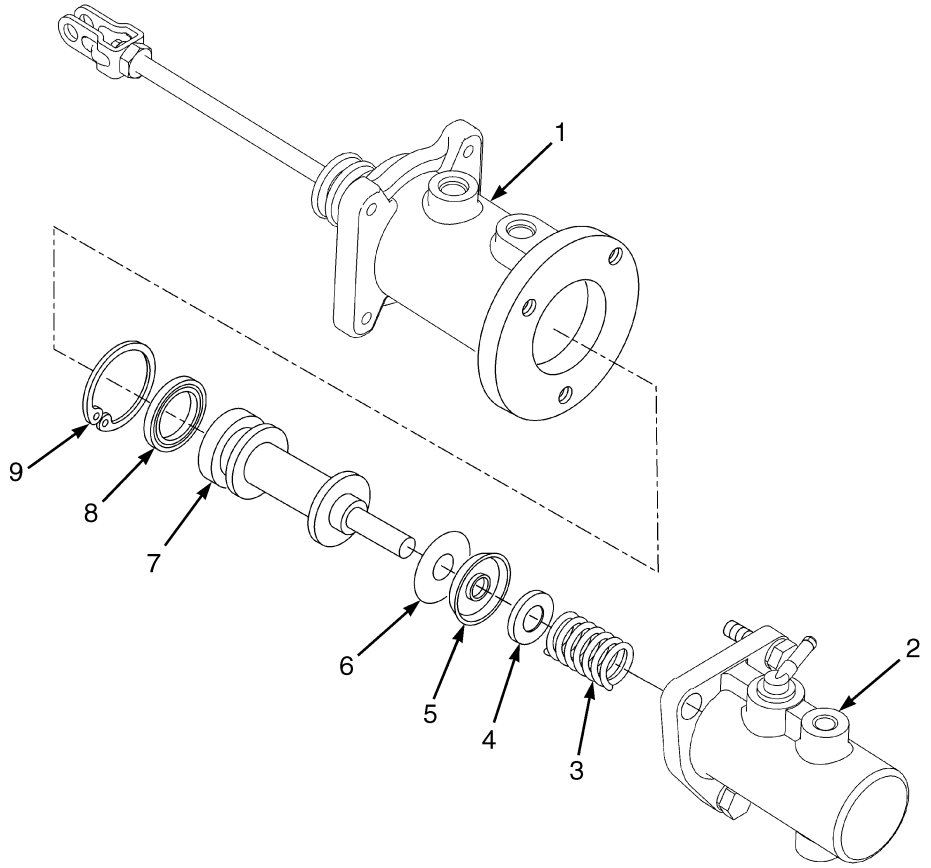

BP040065

KEY:
A: 41.28 Bore (NMHG)
B: 38.10 Bore (DANA)

ITEM	PART NO.	DESCRIPTION	QTY A	QTY B
	4065584	Master Cylinder (NMHG)	1	..
	4050226	Master Cylinder (DANA)	..	1
1	4094087	Brake Booster (NMHG)	1	..
1	1670332	Brake Booster (DANA)	..	1
1	1692229	Kit-Repair Brake Booster (DANA)	..	1
2	1672004	Master Cylinder (NMHG)	1	..
2	1670334	Master Cylinder (DANA)	..	1
2	4064894	Kit-Repair Minor-Master Cyl (DANA)	..	1
2	. . . . .	Housing	1	1
3	. . . . .	Spring	1	1
4	. . . . .	Retainer	1	1
5	. . . . .	Seal (Pressure)	1	1
6	. . . . .	Washer	1	1
7	. . . . .	Piston	1	1
8	. . . . .	Seal (Retaining)	1	1
9	. . . . .	Snap Ring	1	1
	4119634	Kit-Repair Major-Master Cyl (NMHG)	1	..
	1620023	Kit-Repair Major-Master Cyl (DANA)	..	1
	1620024	Kit-Repair Minor-Master Cyl (DANA)	..	1

©2015 HYSTER COMPANY

NOTES

©2015 HYSTER COMPANY

PARK BRAKE ASSEMBLY (FIGURE 9-6)
MANUAL WITH ONE CABLE — NMHG

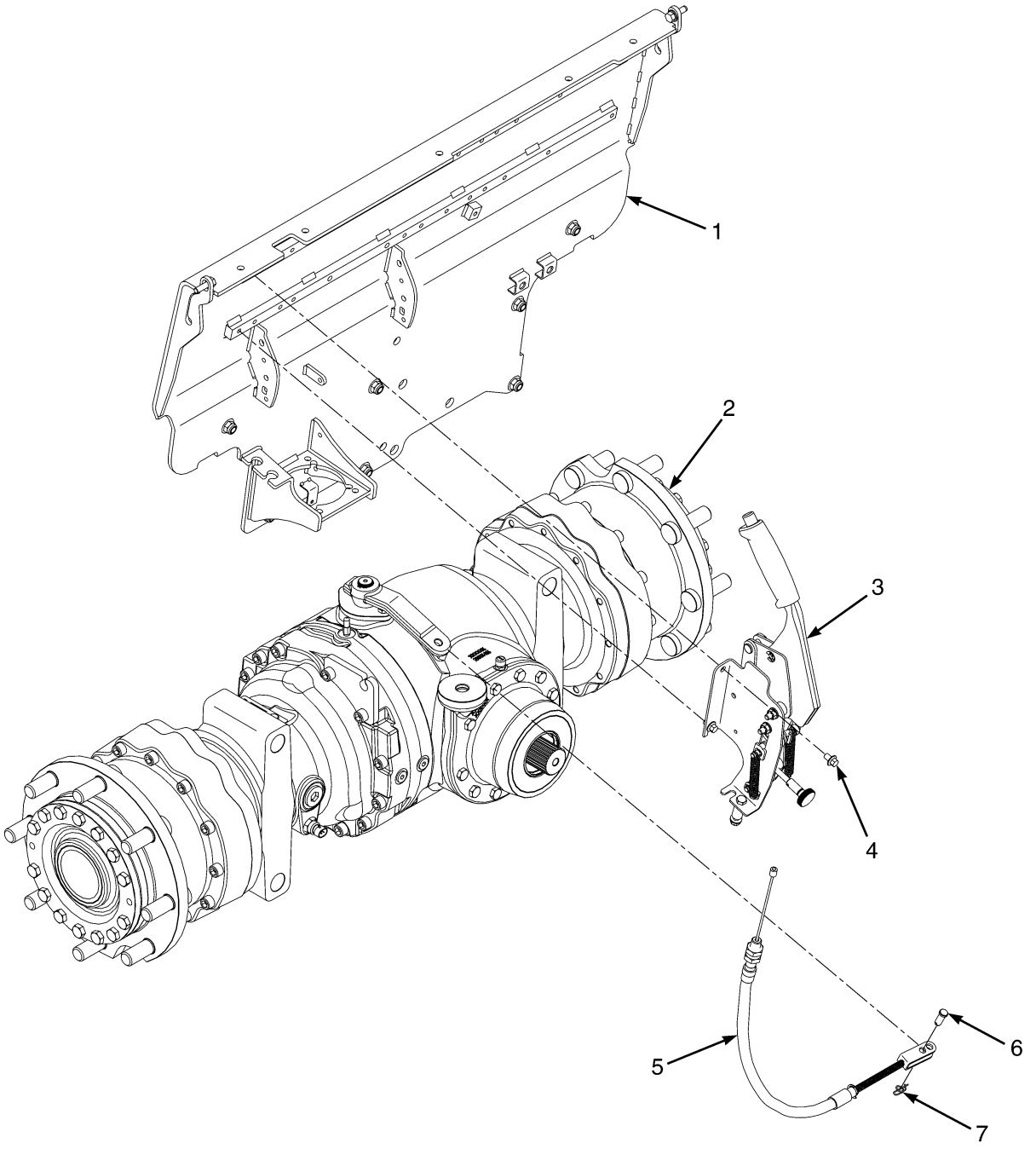

©2015 HYSTER COMPANY

PARK BRAKE ASSEMBLY
MANUAL WITH ONE CABLE – NMHG

ITEM	PART NO.	DESCRIPTION	QTY
1	. . . . .	Cowl	1
2	. . . . .	Drive Axle	1
3	4039376	Parking Brake Assembly (With Cab)	1
3	4039369	Parking Brake Lever (With Cab)	1
3	1683486	Sensor (Brake Position)	1
3	296378	Washer	2
3	1701768	Screw	2
4	4011940	Capscrew	4
5	4627806	Parking Brake Cable	1
6	1375391	Pin (Rod End)	1
7	1351689	Locking Cotter Pin	1

©2015 HYSTER COMPANY

PARK BRAKE ASSEMBLY (FIGURE 9-7)
MANUAL WITH TWO CABLES — DANA

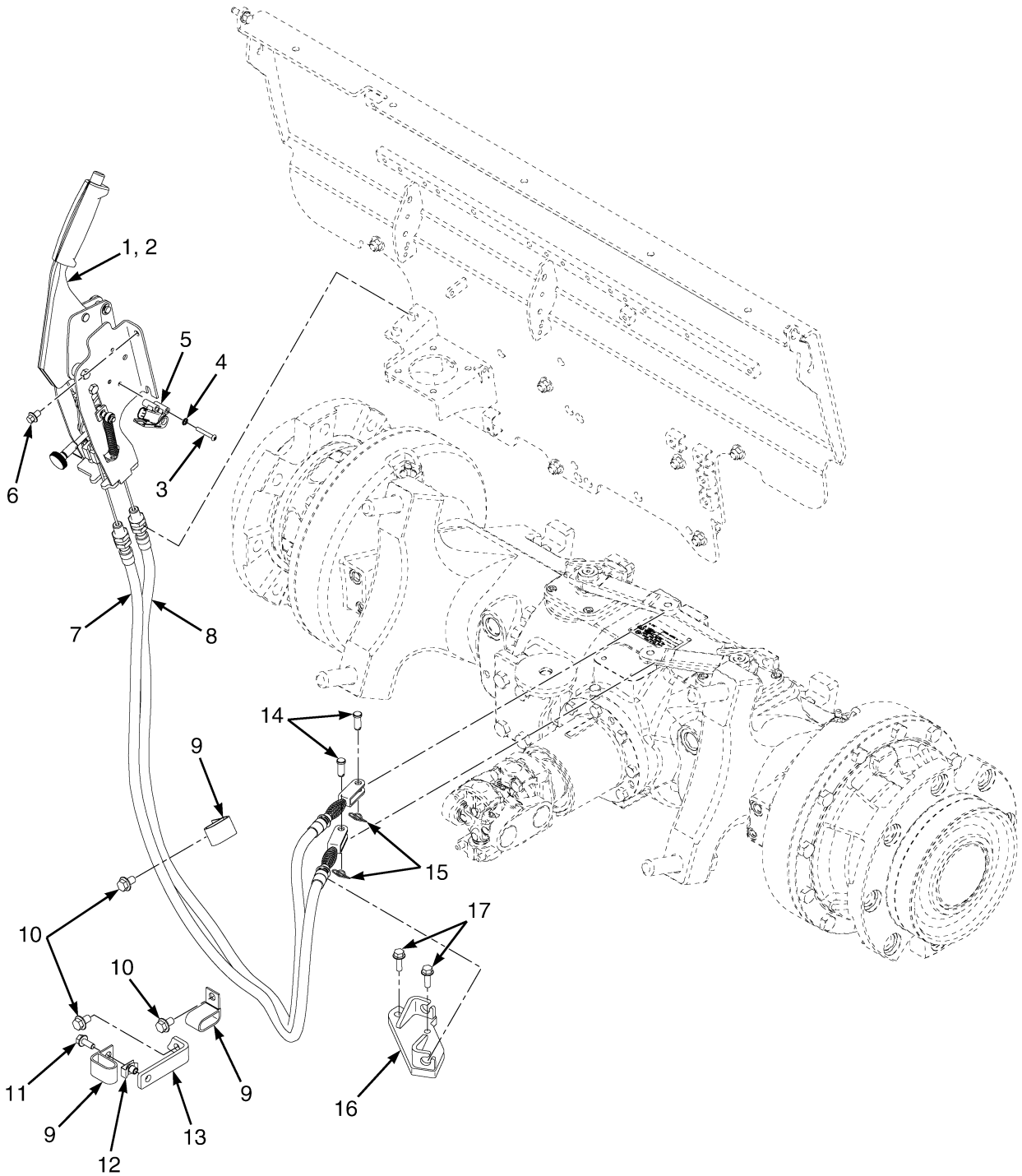

BP040190

©2015 HYSTER COMPANY

PARK BRAKE ASSEMBLY
MANUAL WITH TWO CABLES – DANA

ITEM	PART NO.	DESCRIPTION	QTY
1	4039378	Parking Brake (With Cab)	1
2	4039371	Parking Brake Lever (With Cab)	1
3	1701768	Screw	2
4	296378	Washer	2
5	1683486	Sensor (Brake Position)	1
6	4011940	Capscrew	4
7	2092506	Parking Brake Cable (RH)	1
8	2092505	Parking Brake Cable (LH)	1
9	1326653	Clamp	3
10	1528778	Capscrew	3
11	1527880	Capscrew	1
12	1398062	Nut (Fold Over)	1
13	1637399	Bracket	1
14	1375391	Pin (Rod End)	2
15	1351689	Locking Cotter Pin	2
16	1626353	Bracket	1
17	1510113	Capscrew	2

©2015 HYSTER COMPANY

NOTES

©2015 HYSTER COMPANY

10 HYDRAULIC SYSTEM

SECTION 10
HYDRAULIC SYSTEM

DESCRIPTION **PAGE**

ANTI-STALL
WITH MANUAL HYDRAULIC VALVE - 3.8L LPG AND 3.6L DIESEL 10-28
AUXILIARY HOSES 10-64
CONTROL VALVE ASSEMBLY
ELECTRONIC CONTROL - THREE FUNCTION 10-38
ELECTRONIC CONTROL - FOUR FUNCTION 10-40
ELECTRONIC CONTROL - THREE AND FOUR FUNCTION-WITH VARIABLE DISPLACEMENT PUMP 10-42
CONTROL VALVE LOCKOUT GROUP
MANUAL CONTROL VALVE 10-26
ELECTRONIC CONTROL VALVE
LIFT SECTION - WITH VARIABLE DISPLACEMENT PUMP 10-50
OUTLET SECTION - WITH VARIABLE DISPLACEMENT PUMP 10-62
TILT SECTION - WITH VARIABLE DISPLACEMENT PUMP 10-54
TRANSITION SECTION - WITH VARIABLE DISPLACEMENT PUMP 10-48
GEAR PUMP 10-14
HAND LEVERS
FOUR FUNCTION - WITH DETENTED LEVERS 10-22
FOUR FUNCTION - WITHOUT DETENTED LEVERS 10-24
THREE FUNCTION - WITH DETENTED LEVERS 10-18
THREE FUNCTION - WITHOUT DETENTED LEVERS 10-20
HYDRAULIC CONTROL VALVE (MANUAL)
AUXILIARY ONE AND TWO SECTION - THREE AND FOUR FUNCTION 10-34
LIFT AND TILT - THREE AND FOUR FUNCTION 10-32
OUTLET SECTION - THREE AND FOUR FUNCTION 10-36
THREE AND FOUR FUNCTION 10-30
HYDRAULIC FAN DRIVE 10-6
WITH VARIABLE DISPLACEMENT PUMP 10-8
HYDRAULIC FAN DRIVE MANIFOLD 10-10
HYDRAULIC FILTER 10-12
HYDRAULIC SUPPLY AND RETURN 10-2
WITH VARIABLE DISPLACEMENT PUMP 10-4
TILT HOSES 10-68
TILT CYLINDER AND MAST INSTALLATION 10-70
TILT CYLINDERS 10-72
VALVE ASSEMBLY
AUXILIARY ONE SECTION - ELECTRONIC CONTROL VALVE-THREE AND FOUR FUNCTION 10-56
AUXILIARY TWO SECTION - ELECTRONIC CONTROL VALVE-FOUR FUNCTION 10-58
ELECTRO HYDRAULIC POPPET VALVE - THREE AND FOUR FUNCTION 10-44
LIFT AND LOWER - ELECTRONIC CONTROL VALVE-THREE AND FOUR FUNCTION 10-46
OUTLET SECTION - ELECTRONIC CONTROL VALVE-THREE AND FOUR FUNCTION 10-60
TILT SECTION - ELECTRONIC CONTROL VALVE-THREE AND FOUR FUNCTION 10-52
VARIABLE DISPLACEMENT PUMP
ASSEMBLY 10-17
VARIABLE DISPLACEMENT PUMP AND ADAPTOR 10-16
VENT LINE GROUP
WITH STANDARD CONTROL VALVE 10-66
WITH VARIABLE DISPLACEMENT CONTROL VALVE 10-67

©2015 HYSTER COMPANY

HYDRAULIC SUPPLY AND RETURN (FIGURE 10-1)

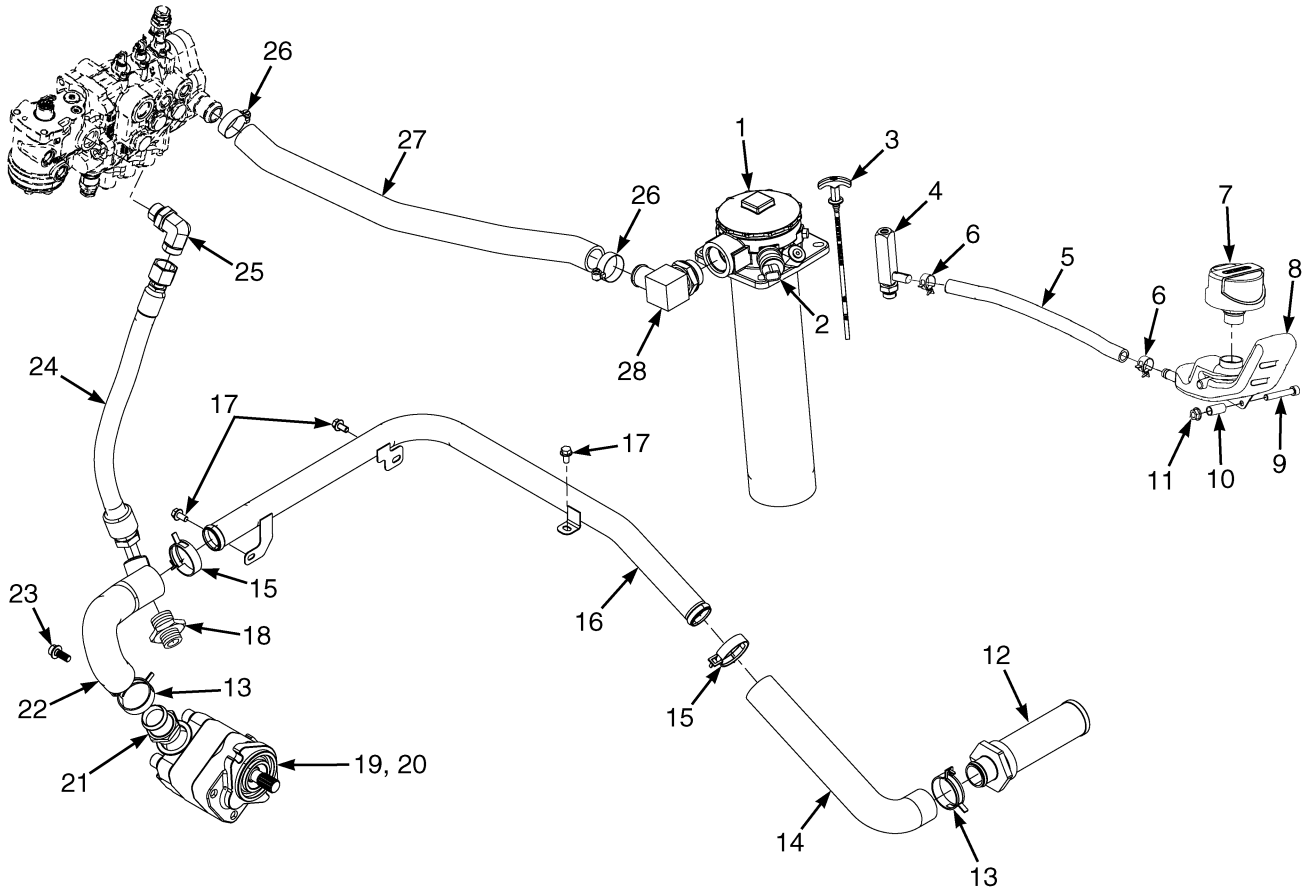

BP150499

©2015 HYSTER COMPANY

HYDRAULIC SUPPLY AND RETURN

ITEM	PART NO.	DESCRIPTION	QTY
1	4001029	Hydraulic Filter (☞Figure 10-6)	1
2	2068337	Pressure Switch (With Electronic Monitoring Package)	1
3	2083335	Dipstick	1
4	1570264	Fitting	1
4	16484	O-Ring	1
5	4627552	Hose	1
5	78456	Hose (Optional)	1
6	1502007	Hose Clamp	2
7	1582161	Breather	1
7	16486	O-Ring	1
8	2081865	Surge Tank	1
9	296016	Capscrew	1
10	1617083	Spacer	1
11	1502543	Nut (Flange)	1
12	**bcd** 1617585	Strainer	1
12	**ac** 4604581	Strainer	1
12	18909	O-Ring	1
13	369804	Clamp	2
14	2079736	Hose (Tank Suction)	1
15	119236	Clamp	2
16	2098326	Tube	1
17	1527879	Capscrew	3
18	1473888	Fitting	1
18	280154	O-Ring	1
19	**a** 4633617	Gear Pump (41.3 cc) (☞Figure 10-7)	1
19	**abc** 4633618	Gear Pump (46.5 cc) (☞Figure 10-7)	1
19	**cd** 4633619	Gear Pump (51.6 cc) (☞Figure 10-7)	1
20	264159	Adhesive	1
21	1566890	Adapter	1
21	16983	O-Ring	1
22	2079735	Hose (Pump Section)	1
23	1564515	Capscrew	2
24	2088916	Hose Assy	1
25	1473898	Fitting	1
26	369804	Clamp	2
27	2105639	Hose Assy (Return Line)	1
28	1612214	Fitting	1

FOOTNOTES:

a H4.0FT5, H4.0FT6 Diesel Standard Displacement
b H4.0FT5, H4.0FT6 LPG Standard Displacement
c H4.5FTS5, H4.5FT6, H5.0FT, H5.5T Diesel Standard Displacement
d H4.5FTS5, H4.5FT6, H5.0FT, H5.5T LPG Standard Displacement

©2015 HYSTER COMPANY

HYDRAULIC SUPPLY AND RETURN (FIGURE 10-2)
WITH VARIABLE DISPLACEMENT PUMP

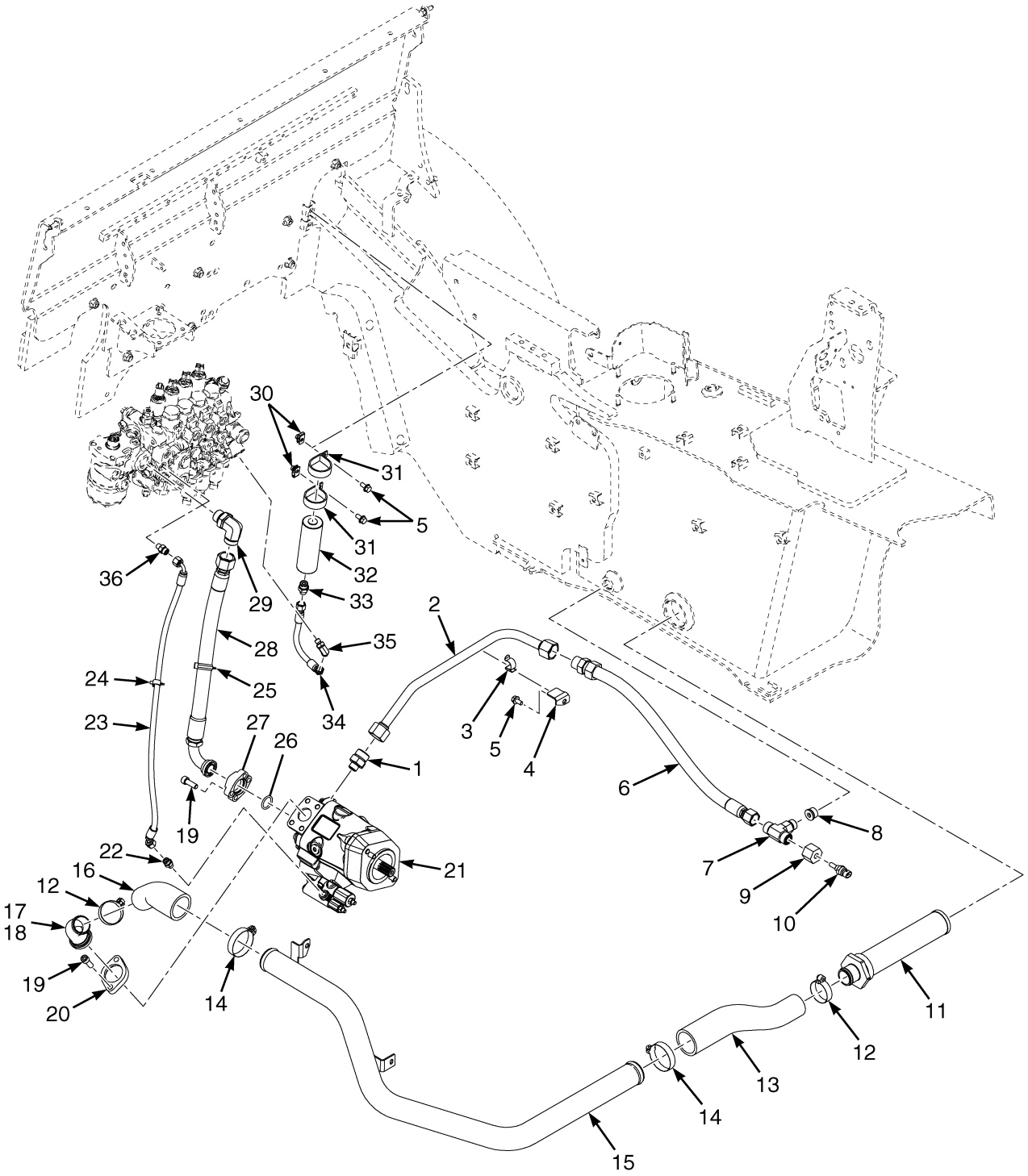

©2015 HYSTER COMPANY

HYDRAULIC SUPPLY AND RETURN
WITH VARIABLE DISPLACEMENT PUMP

ITEM	PART NO.	DESCRIPTION	QTY
1	1486753	Fitting	1
2	4601719	Tube Assy (Hyd Pump Case Drain)	1
3	1582511	Clip	1
4	4003753	Bracket	1
5	1527879	Capscrew	3
6	4601722	Hose Assy	1
7	1532650	Fitting	1
8	233693	Fitting	1
9	4003165	Fitting	1
10	1515654	Temperature Sensor	1
11	4604581	Strainer	1
11	18909	O-Ring	1
12	369804	Clamp	2
13	4613164	Hose (Diesel)	1
13	4612097	Hose (LPG)	1
14	119236	Clamp	2
15	4058524	Tube (Diesel)	1
15	4058522	Tube (LPG)	1
16	4601717	Hose (Pump Suction)	1
17	222567	Fitting	1
18	199917	O-Ring	1
19	296026	Capscrew	6
20	4004390	Flange	1
21	. . . . .	Pump Group (☞Figure 10-8)	1
22	1486737	Fitting	1
23	4643595	Hose Assy	1
24	1542439	Clamp (Swivel)	1
25	1561759	Clamp (Swivel)	1
26	210641	O-Ring	1
27	4010776	Fitting	2
28	4601720	Hose Assy	1
29	1473898	Fitting	1
30	1480237	Nut	2
31	181899	Clamp	2
32	4609405	Accumulator	1
33	1486738	Fitting	1
34	4609300	Hose Assy	1
35	1487058	Fitting	1
36	4100401	Fitting	1
	a 264159	Adhesive	AR

FOOTNOTES:

a Not Illustrated

©2015 HYSTER COMPANY

HYDRAULIC FAN DRIVE (FIGURE 10-3)

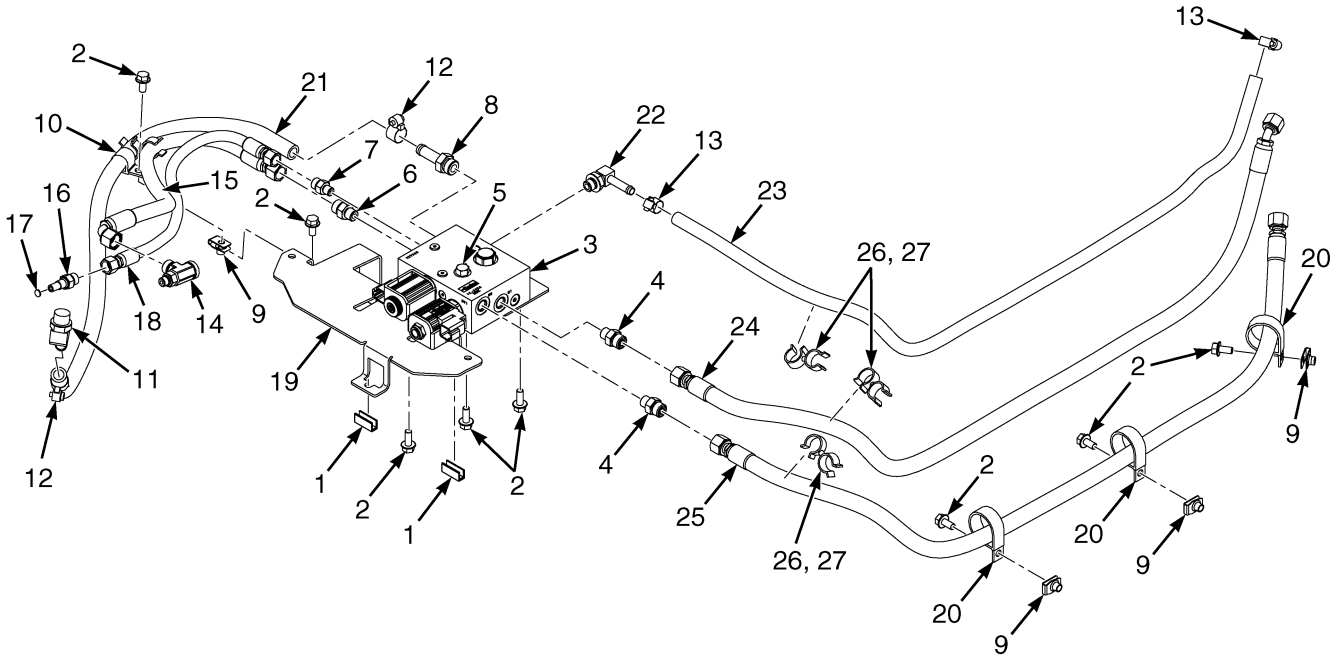

BP150754

ITEM	PART NO.	DESCRIPTION	QTY
1	1380849	Edge Protector	2
2	1527879	Capscrew	8
3	4642935	Manifold (☞Figure 10-5)	1
4	1516199	Fitting	2
5	14591	Plug	1
6	1486740	Fitting	1
7	1486737	Fitting	1
8	171007	Fitting	1
9	1480237	Nut	4
10	89220	Clamp	1
11	222502	Fitting	1
12	166857	Clamp	2
13	168718	Clamp	2
14	4078018	T-Fitting	1
15	4630124	Hose Assy	1
16	4085107	Fitting	1
17	4085108	Disk	1
18	4630245	Hose Assy	1
19	4127817	Shield	1
20	339530	Clamp	3
21	4642849	Hose	1
22	17221	Fitting	1
23	4642839	Hose	1
24	4642969	Hose Assy	1
25	4642970	Hose Assy	1
26	1502053	Clamp (Swivel)	3
27	1502066	Clamp (Swivel)	3

©2015 HYSTER COMPANY

NOTES

©2015 HYSTER COMPANY

HYDRAULIC FAN DRIVE (FIGURE 10-4)
WITH VARIABLE DISPLACEMENT PUMP

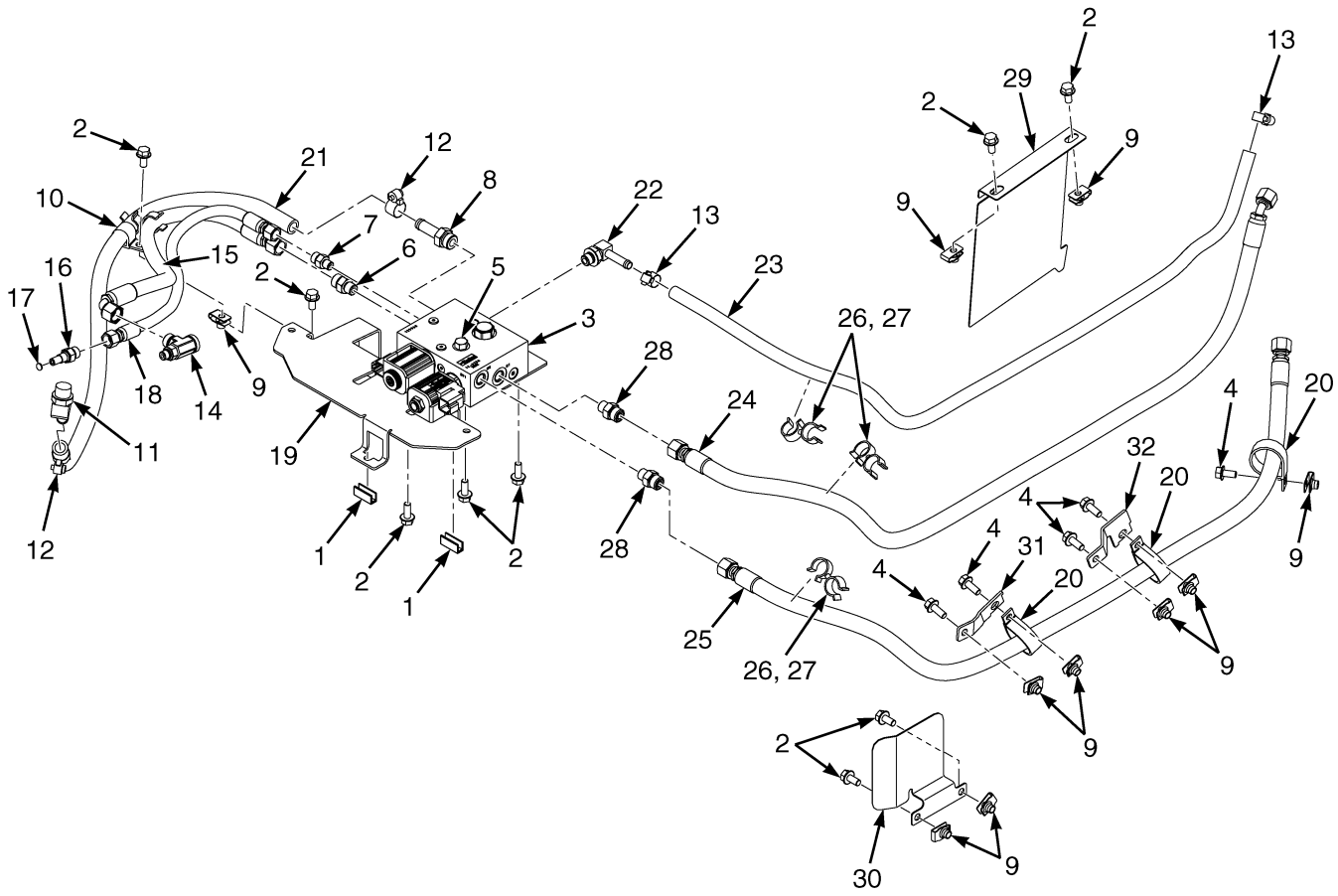

©2015 HYSTER COMPANY

HYDRAULIC FAN DRIVE
WITH VARIABLE DISPLACEMENT PUMP

ITEM	PART NO.	DESCRIPTION	QTY
1	1380849	Edge Protector	2
2	1527879	Capscrew	9
3	4642935	Manifold (☞Figure 10-5)	1
4	1527880	Capscrew	5
5	14591	Plug	1
6	1486740	Fitting	1
7	1486737	Fitting	1
8	171007	Fitting	1
9	1480237	Nut	10
10	89220	Clamp	1
11	222502	Fitting	1
12	166857	Clamp	2
13	168718	Clamp	2
14	4078018	T-Fitting	1
15	4630048	Hose Assy	1
16	4085107	Fitting	1
17	4085108	Disk	1
18	4630245	Hose Assy	1
19	4127817	Shield	1
20	339530	Clamp	3
21	4642849	Hose	1
22	17221	Fitting	1
23	4642972	Hose	1
24	4642973	Hose Assy	1
25	4642974	Hose Assy	1
26	1502053	Clamp (Swivel)	3
27	1502066	Clamp (Swivel)	3
28	1516199	Fitting	2
29	2090425	Heat Shield	1
30	4014164	Shield	1
31	4128351	Bracket	1
32	4128352	Bracket	1

©2015 HYSTER COMPANY

HYDRAULIC FAN DRIVE MANIFOLD (FIGURE 10-5)

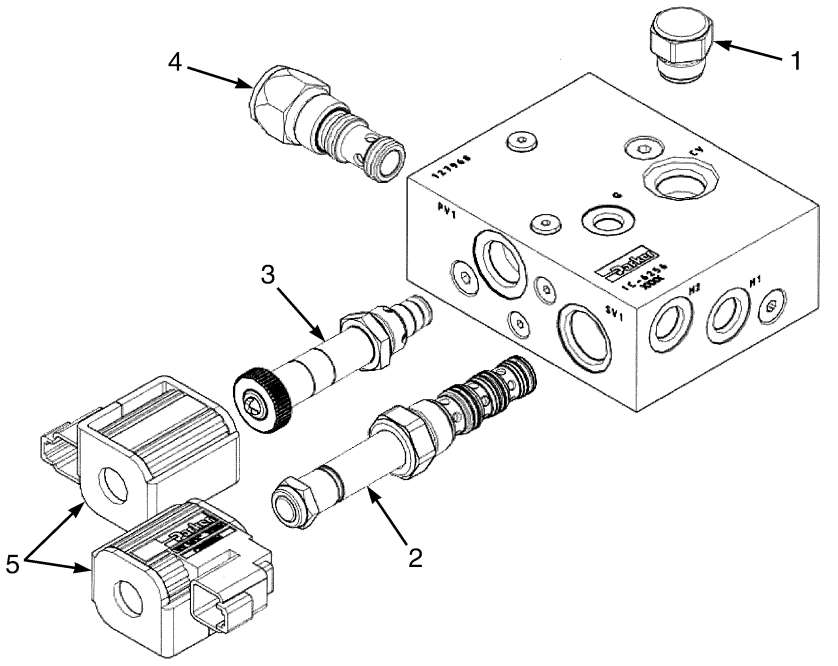

ITEM	PART NO.	DESCRIPTION	QTY
	4642935	Manifold	1
1	1634497	Valve	1
1	4010014	Kit-Seal Valve	1
2	4136489	Spool (Solenoid)	1
2	4136493	Kit-Spool	1
3	4136490	Relief Valve	1
3	4136494	Kit-Valve	1
4	4136492	Spool (Cart, Type Logic)	1
4	4136495	Kit-Spool	1
5	4136491	Coil	2
5	4136493	Kit-Spool	1

©2015 HYSTER COMPANY

NOTES

©2015 HYSTER COMPANY

HYDRAULIC FILTER (FIGURE 10-6)

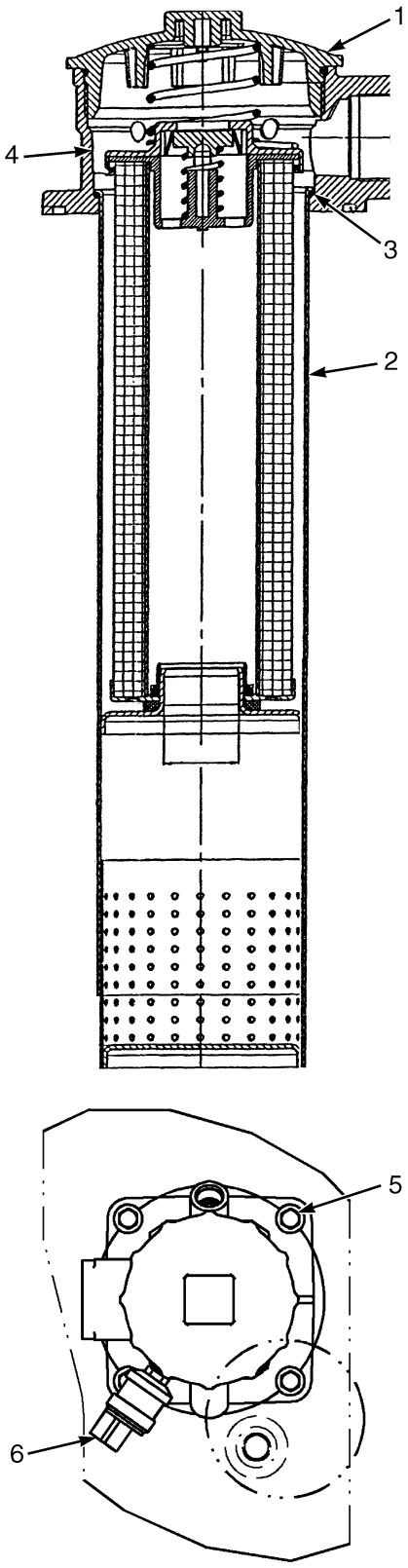

©2015 HYSTER COMPANY

HYDRAULIC FILTER

ITEM	PART NO.	DESCRIPTION	QTY
	4001029	Hydraulic Filter	1
1	1708697	Cap	1
1	**a**	O-Ring	1
1	. . . . .	Spring	1
2	**a**	Filter Element	1
2	. . . . .	O-Ring	1
3	. . . . .	Bowl Assembly	1
3	. . . . .	O-Ring	1
4	. . . . .	Head	1
4	. . . . .	Quad Ring	1
4	14591	Plug	2
4	16481	O-Ring	1
5	1502543	Nut (Flange)	4
6	**b** 2068337	Pressure Switch	1
8	1708691	Kit-O-Ring	1
	1707195	Kit-Filter Element and Cap Seal	1

FOOTNOTES:

a Service with Kit 1707195 Filter Element and Cap Seal

b With Electronic Monitoring Package

©2015 HYSTER COMPANY

GEAR PUMP (FIGURE 10-7)

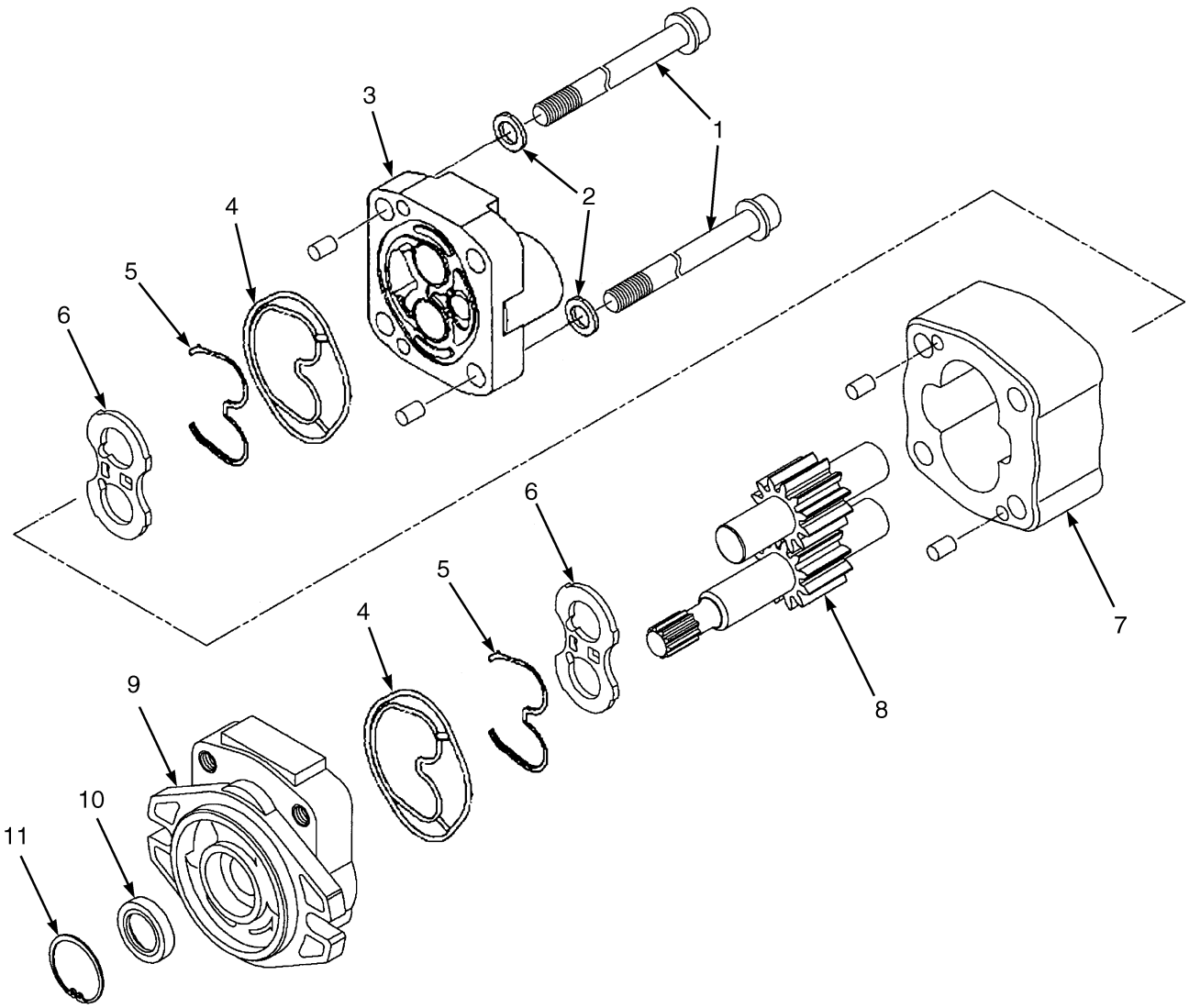

BP150147

©2015 HYSTER COMPANY

GEAR PUMP

ITEM	PART NO.	DESCRIPTION	QTY
	a 4633617	Gear Pump (41.3 cc)	1
	abc 4633618	Gear Pump (46.5 cc)	1
	cd 4633619	Gear Pump (51.6 cc)	1
1	4009235	Screw (Flange Head) (41.3 cc)	4
1	4009237	Screw (Flange Head) (51.6 cc)	4
1	4009236	Screw (Flange Head) (46.5 cc)	4
2	. . . . .	Washer	4
3	4108839	Cover	1
4	1624862	Plate (Seal)	2
5	1624863	Back-Up Ring	2
6	1624861	Pressure Plate	2
7	. . . . .	Gear Plate	1
8	1624869	Gear Set (41.3 cc)	1
8	1624870	Gear Set (51.6 cc)	1
8	1624992	Gear Set (46.5 cc)	1
8	. . . . .	Drive Gear	1
8	. . . . .	Driven Gear	1
9	4108837	Flange	1
10	1624866	Oil Seal	1
11	1624867	Snap Ring	1
	1624868	Kit-Seal	1

FOOTNOTES:

a H4.0FT5, H4.0FT6 Diesel Standard Displacement
b H4.0FT5, H4.0FT6 LPG Standard Displacement
c H4.5FTS5, H4.5FT6, H5.0FT, H5.5T Diesel Standard Displacement
d H4.5FTS5, H4.5FT6, H5.0FT, H5.5T LPG Standard Displacement

©2015 HYSTER COMPANY

VARIABLE DISPLACEMENT PUMP AND ADAPTOR (FIGURE 10-8)

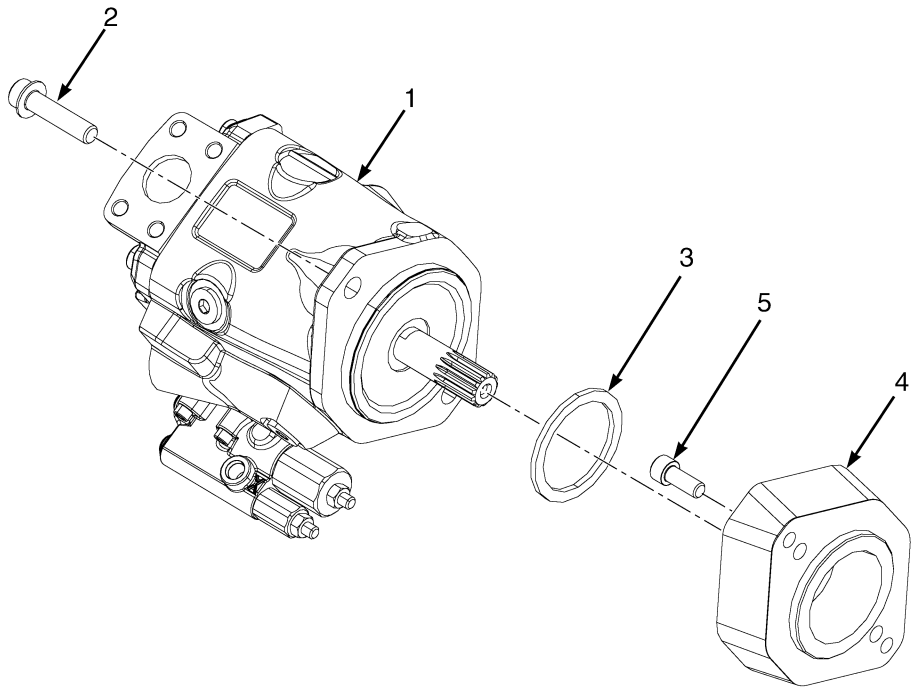

BP150426

ITEM	PART NO.	DESCRIPTION	QTY
1	4601715	Hydraulic Pump (45 cc) (☞Figure 10-9)	1
2	4002921	Capscrew	2
3	4027303	Seal	1
4	4027084	Adapter (1 Speed)	1
4	4027085	Adapter (2 Speed)	1
5	296025	Capscrew	2

©2015 HYSTER COMPANY

VARIABLE DISPLACEMENT PUMP (FIGURE 10-9)
ASSEMBLY

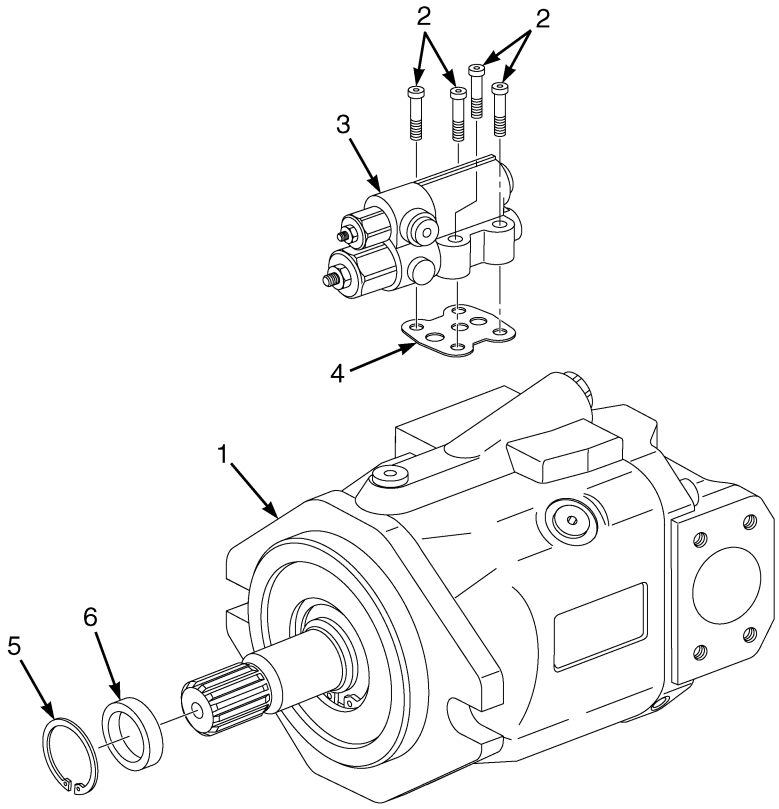

BP150443

ITEM	PART NO.	DESCRIPTION	QTY
1	**ab** 4601715	Hydraulic Pump (45 cc)	1
2	4021485	Screw	4
3	4021472	Valve	1
4	4021490	Seal	1
5	4021492	Retaining Ring	1
6	4021488	Seal	1
	4038424	Kit VDP Shaft Seal Replacement	1
	4038490	Kit VDP Shaft Seal Replacement and Tool	1

FOOTNOTES:

a H4.5FTS5, H4.5FT6, H5.0FT, H5.5FT, One Speed

b H4.5FTS5, H4.5FT6, H5.0FT, H5.5FT, Two Speed

©2015 HYSTER COMPANY

HAND LEVERS (FIGURE 10-10)
THREE FUNCTION — WITH DETENTED LEVERS

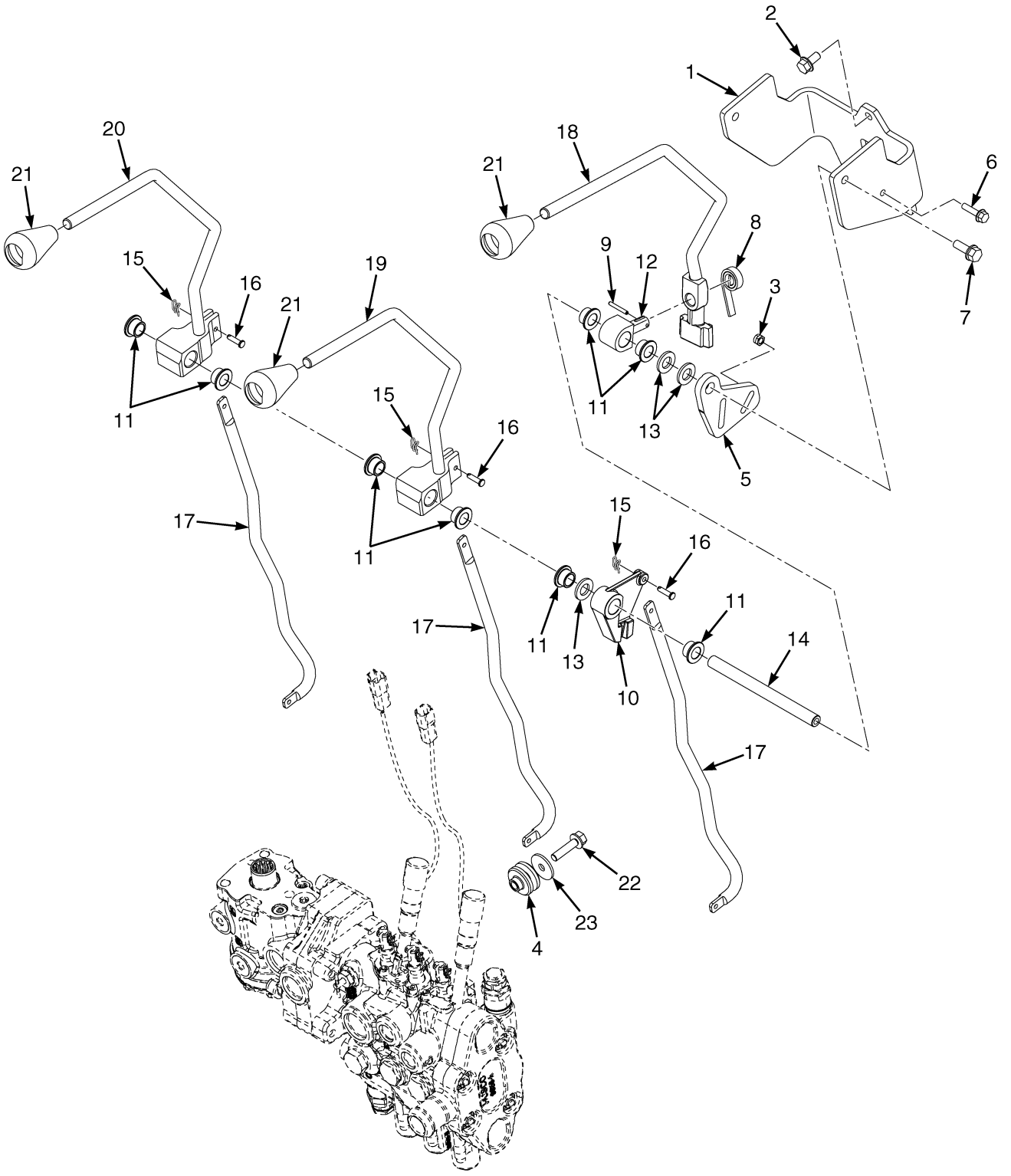

BP150740

©2015 HYSTER COMPANY

HAND LEVERS

THREE FUNCTION – WITH DETENTED LEVERS

ITEM	PART NO.	DESCRIPTION	QTY
1	1670194	Bracket	1
2	1527879	Capscrew	3
3	4116165	Nut	1
4	2063991	Isolator	3
5	1670677	Plate	1
6	1527878	Capscrew	1
7	1583611	Capscrew	2
8	175861	Spring	1
9	302428	Roll Pin	1
10	1542546	Lever	1
11	1564747	Bushing	8
12	306113	Pin (Selector)	1
13	320161	Washer	3
14	1670195	Shaft (Pivot)	1
15	1517361	Locking Ring Cotter Pin	6
16	309109	Pin	6
17	1662420	Link	3
18	2099398	Lever (Auxiliary One and Two)	1
19	2099394	Lever (Tilt)	1
20	2099393	Lever (Lift)	1
21	4038182	Knob	3
22	1586627	Capscrew	3
23	1346752	Washer	3
	4629215	Hyd Valve W/Assembled Parts (☞Figure 10-16)	1
	. . . . .	Lockout Group (☞Figure 10-14)	1

©2015 HYSTER COMPANY

HAND LEVERS (FIGURE 10-11)
THREE FUNCTION — WITHOUT DETENTED LEVERS

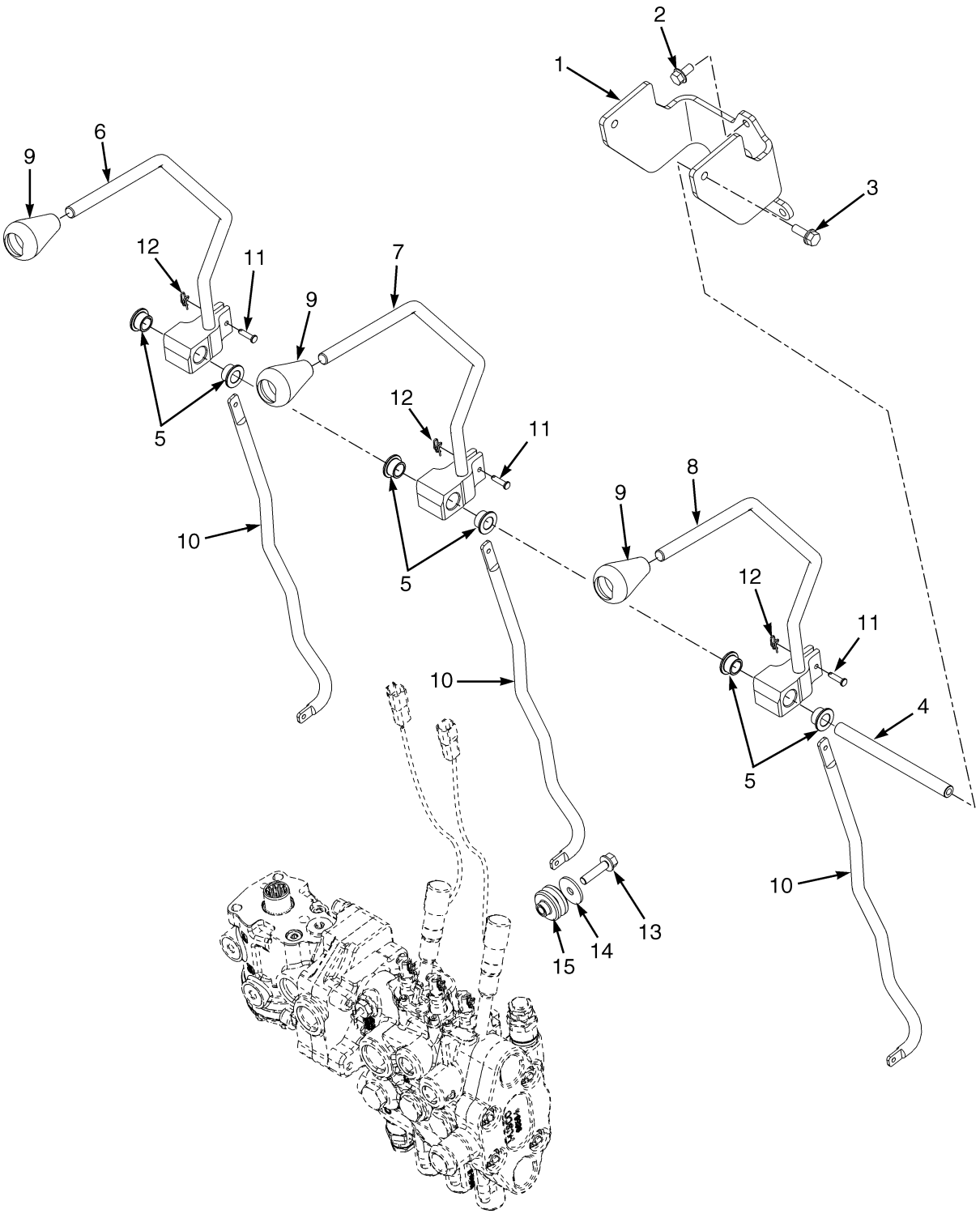

©2015 HYSTER COMPANY

HAND LEVERS

THREE FUNCTION – WITHOUT DETENTED LEVERS

ITEM	PART NO.	DESCRIPTION	QTY
1	1665746	Bracket	1
2	1527879	Capscrew	3
3	1583611	Capscrew	2
4	1670292	Shaft	1
5	1564747	Bushing	6
6	2099393	Lever (Lift)	1
7	2099394	Lever (Tilt)	1
8	2099395	Lever (Auxiliary One)	1
9	4038182	Knob	3
10	1662420	Link	3
11	309109	Pin	6
12	1517361	Locking Ring Cotter Pin	6
13	1586627	Capscrew	3
14	1346752	Washer	3
15	2063991	Isolator	3
	4629215	Hyd Valve W/Assembled Parts (☞Figure 10-16)	1
	. . . . .	Lockout Group (☞Figure 10-14)	1

©2015 HYSTER COMPANY

HAND LEVERS (FIGURE 10-12)
FOUR FUNCTION — WITH DETENTED LEVERS

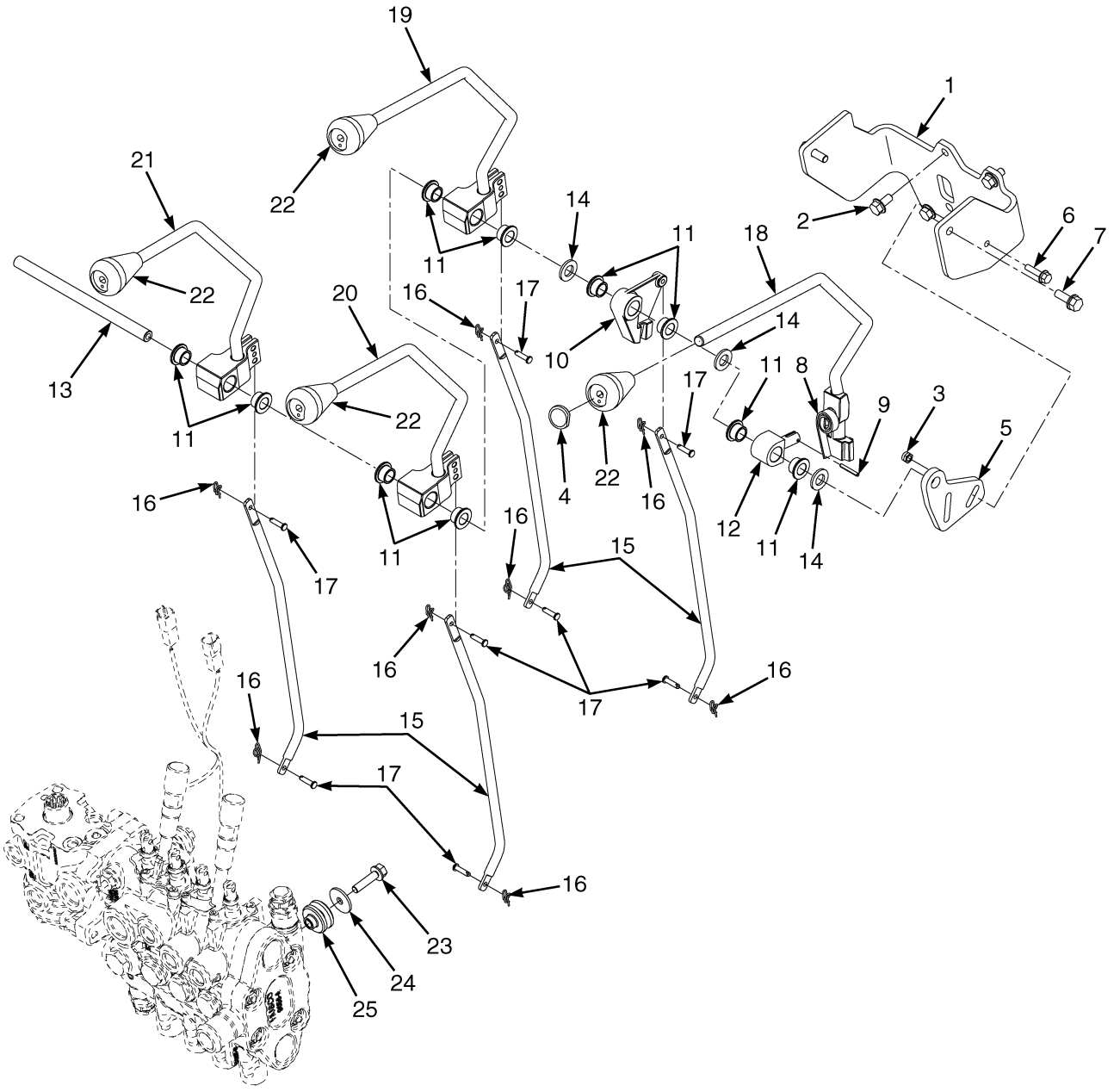

BP150741

©2015 HYSTER COMPANY

HAND LEVERS
FOUR FUNCTION – WITH DETENTED LEVERS

ITEM	PART NO.	DESCRIPTION	QTY
1	1665748	Bracket	1
2	1527879	Capscrew	4
3	4116165	Nut	1
4	2070655	Lens (Blank)	1
5	1670677	Plate (Detent)	1
6	1527878	Capscrew	1
7	1583611	Capscrew	2
8	175861	Spring	1
9	302428	Roll Pin	1
10	1542546	Lever	1
11	1564747	Bushing	10
12	306113	Pin (Selector)	1
13	1670196	Shaft	1
14	320161	Washer	3
15	1662420	Link	4
16	1517361	Locking Ring Cotter Pin	8
17	309109	Pin	8
18	2099397	Lever (Auxiliary Two and Three)	1
19	2099395	Lever (Auxiliary One)	1
20	2099394	Lever (Tilt)	1
21	2099393	Lever (Lift)	1
22	4038182	Knob	4
23	1586627	Capscrew	3
24	1346752	Washer	3
25	2063991	Isolator	3
	4629217	Hyd Valve W/Assembled Parts (☞Figure 10-16)	1
	. . . . .	Lockout Group (☞Figure 10-14)	1

©2015 HYSTER COMPANY

HAND LEVERS (FIGURE 10-13)
FOUR FUNCTION — WITHOUT DETENTED LEVERS

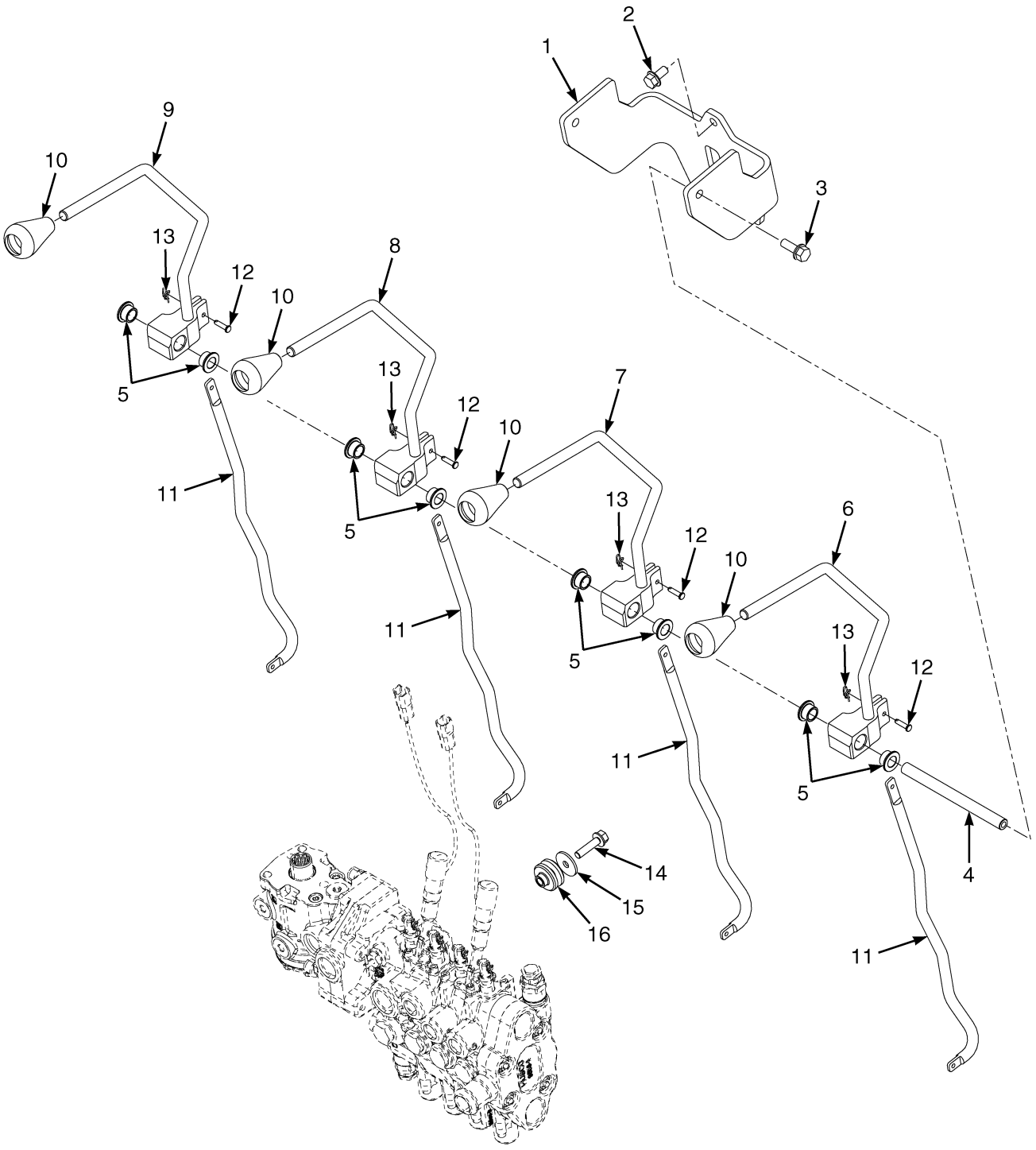

©2015 HYSTER COMPANY

HAND LEVERS

FOUR FUNCTION – WITHOUT DETENTED LEVERS

ITEM	PART NO.	DESCRIPTION	QTY
1	1665747	Bracket	1
2	1527879	Capscrew	3
3	1583611	Capscrew	2
4	1670293	Shaft	1
5	1564747	Bushing	8
6	2099396	Lever (Auxiliary Two)	1
7	2099395	Lever (Auxiliary One)	1
8	2099394	Lever (Tilt)	1
9	2099393	Lever (Lift)	1
10	4038182	Knob	4
10	2070655	Lens (Blank)	1
11	1662420	Link	4
12	309109	Pin	8
13	1517361	Locking Ring Cotter Pin	8
14	1586627	Capscrew	3
15	1346752	Washer	3
16	2063991	Isolator	3
	4629217	Hyd Valve W/Assembled Parts (☞Figure 10-16)	1
	. . . . .	Lockout Group (☞Figure 10-14)	1

©2015 HYSTER COMPANY

CONTROL VALVE LOCKOUT GROUP (FIGURE 10-14)
MANUAL CONTROL VALVE

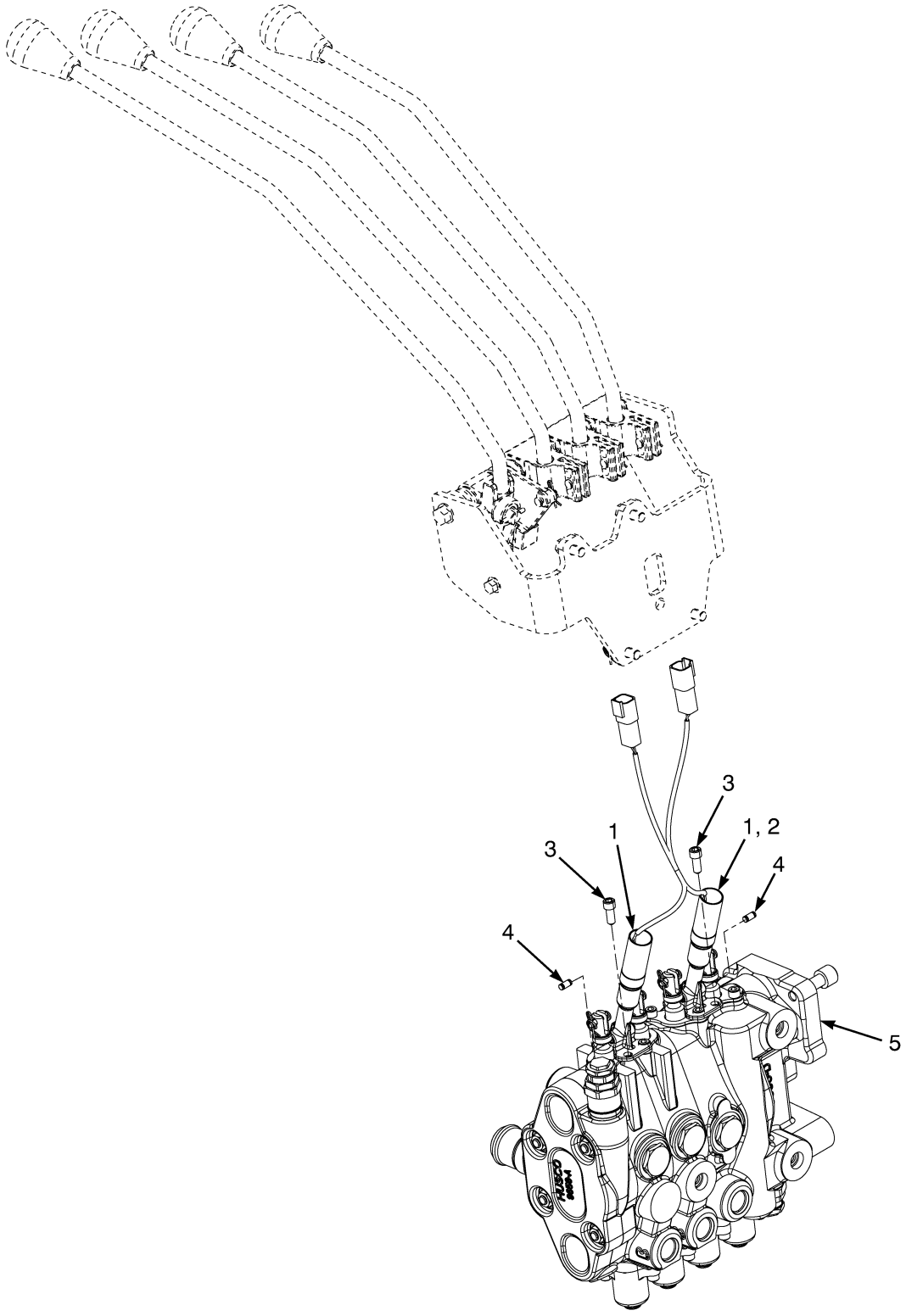

©2015 HYSTER COMPANY

CONTROL VALVE LOCKOUT GROUP
MANUAL CONTROL VALVE

KEY:
A: 3 Function
B: 4 Function

ITEM	PART NO.	DESCRIPTION	QTY A	QTY B
1	1683529	Solenoid Assembly (Double Function)	1	2
2	1683621	Solenoid Assembly (Single Function)	1	..
3	18748	Capscrew	4	4
4	1670413	Needle Roller	3	4
5	. . . . .	Manual Control Valve (☞Figure 10-16)	1	1

©2015 HYSTER COMPANY

ANTI-STALL (FIGURE 10-15)
WITH MANUAL HYDRAULIC VALVE — 3.8L LPG AND 3.6L DIESEL

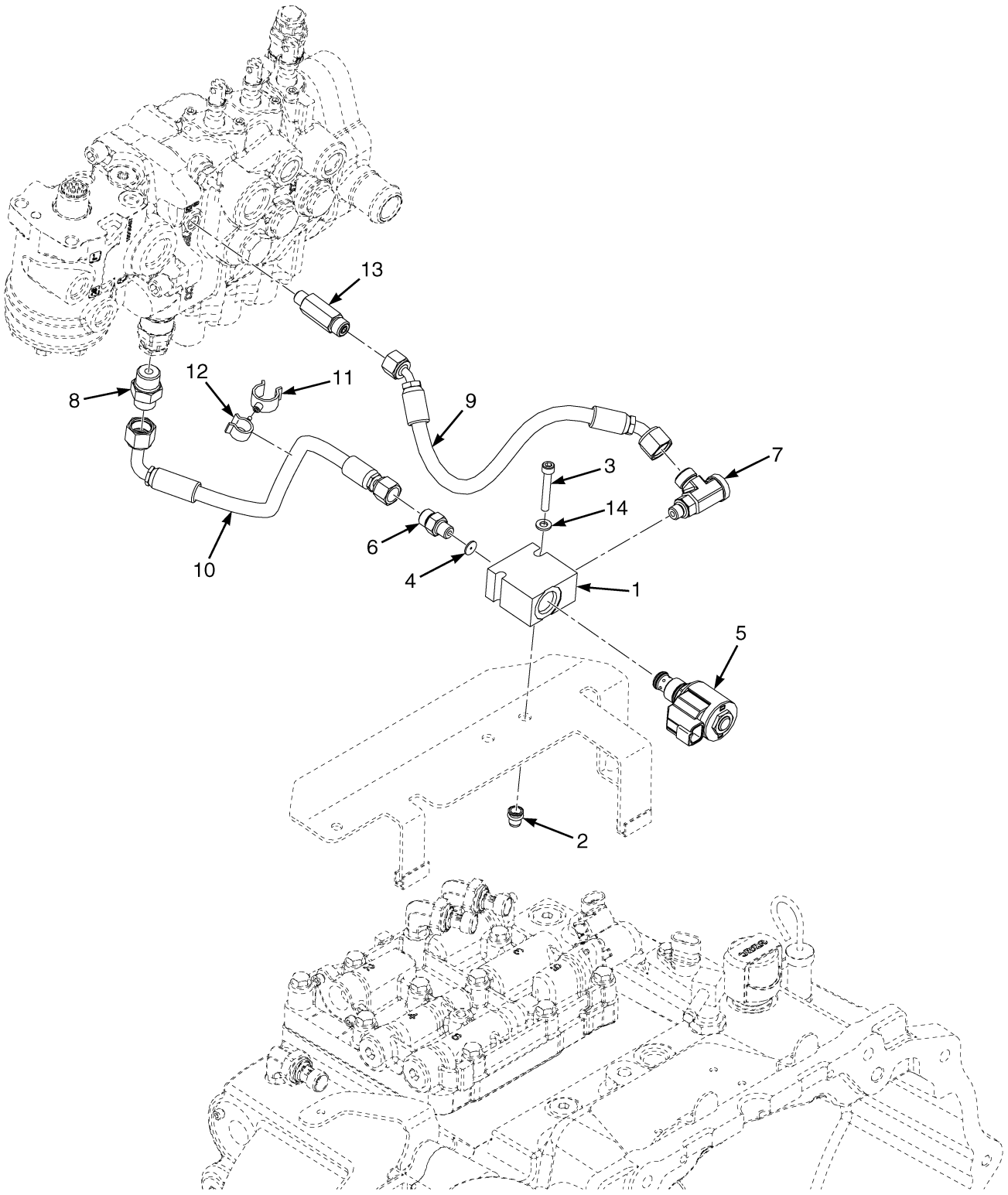

©2015 HYSTER COMPANY

ANTI-STALL

WITH MANUAL HYDRAULIC VALVE – 3.8L LPG AND 3.6L DIESEL

ITEM	PART NO.	DESCRIPTION	QTY
1	4630267	Valve Block	1
2	1531558	Insert	2
3	293799	Capscrew	2
4	1695754	Disk	1
5	1678165	Solenoid Valve	1
6	1486737	Fitting	1
7	4078018	T-Fitting	1
8	1486742	Fitting	1
9	4634854	Hose Assy	1
10	4631745	Hose Assy	1
11	1502054	Clamp	1
12	1502055	Clamp (Swivel)	1
13	4100401	Fitting	1
14	1673754	Washer	2

©2015 HYSTER COMPANY

HYDRAULIC CONTROL VALVE (MANUAL) (FIGURE 10-16)
THREE AND FOUR FUNCTION

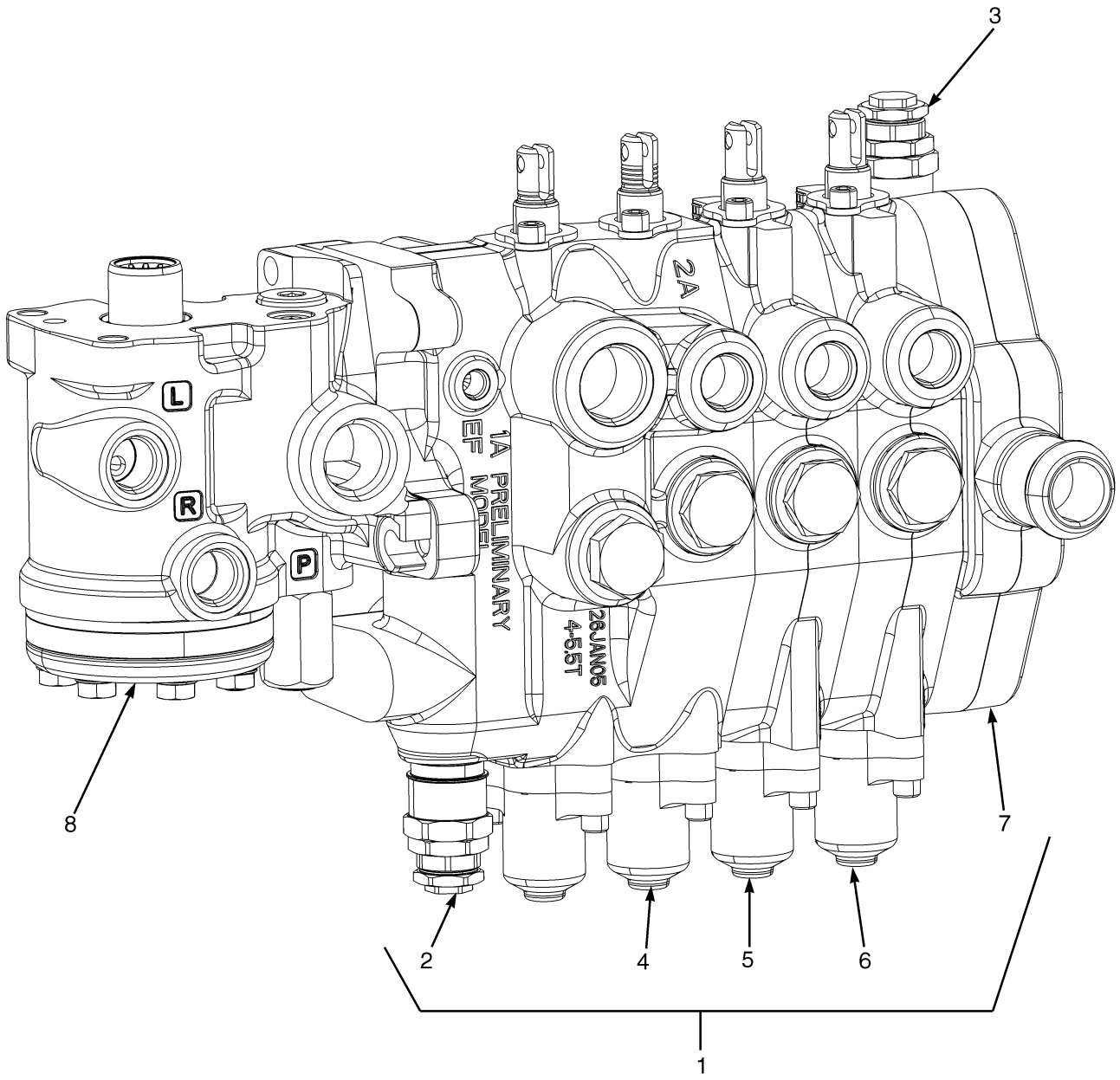

BP140077

©2015 HYSTER COMPANY

HYDRAULIC CONTROL VALVE (MANUAL)
THREE AND FOUR FUNCTION

KEY:
A: Three Function
B: Four Function

ITEM	PART NO.	DESCRIPTION	QTY A	QTY B
	4629215	Hyd Valve W/Assembled Parts	1	..
	4629217	Hyd Valve W/Assembled Parts	..	1
1	4629212	Hyd Control Valve	1	..
1	4629213	Hyd Control Valve	..	1
1	1670434	Kit-Seal (Three Function)	1	..
1	1670054	Kit-Seal (Four Function)	..	1
2	4095653	Relief Valve (3200 PSI)	1	1
2	1580097	Kit-Seal and Spring	1	1
3	1578707	Relief Valve (Secondary) (15.5 MPa)	1	1
3	1580131	Kit-Seal and Spring	1	1
4	4095651	Valve Section (Lift and Tilt) (☞Figure 10-17)	1	1
5	4095652	Valve Section (Auxiliary One) (☞Figure 10-18)	1	1
6	4089066	Valve Section (Auxiliary Two) (☞Figure 10-18)	..	1
7	1578746	Valve Section (Outlet Section) (☞Figure 10-19)	1	1
8	4639750	Steering Control Unit (☞Figure 8-4)	1	1

©2015 HYSTER COMPANY

HYDRAULIC CONTROL VALVE (MANUAL) (FIGURE 10-17)

LIFT AND TILT — THREE AND FOUR FUNCTION

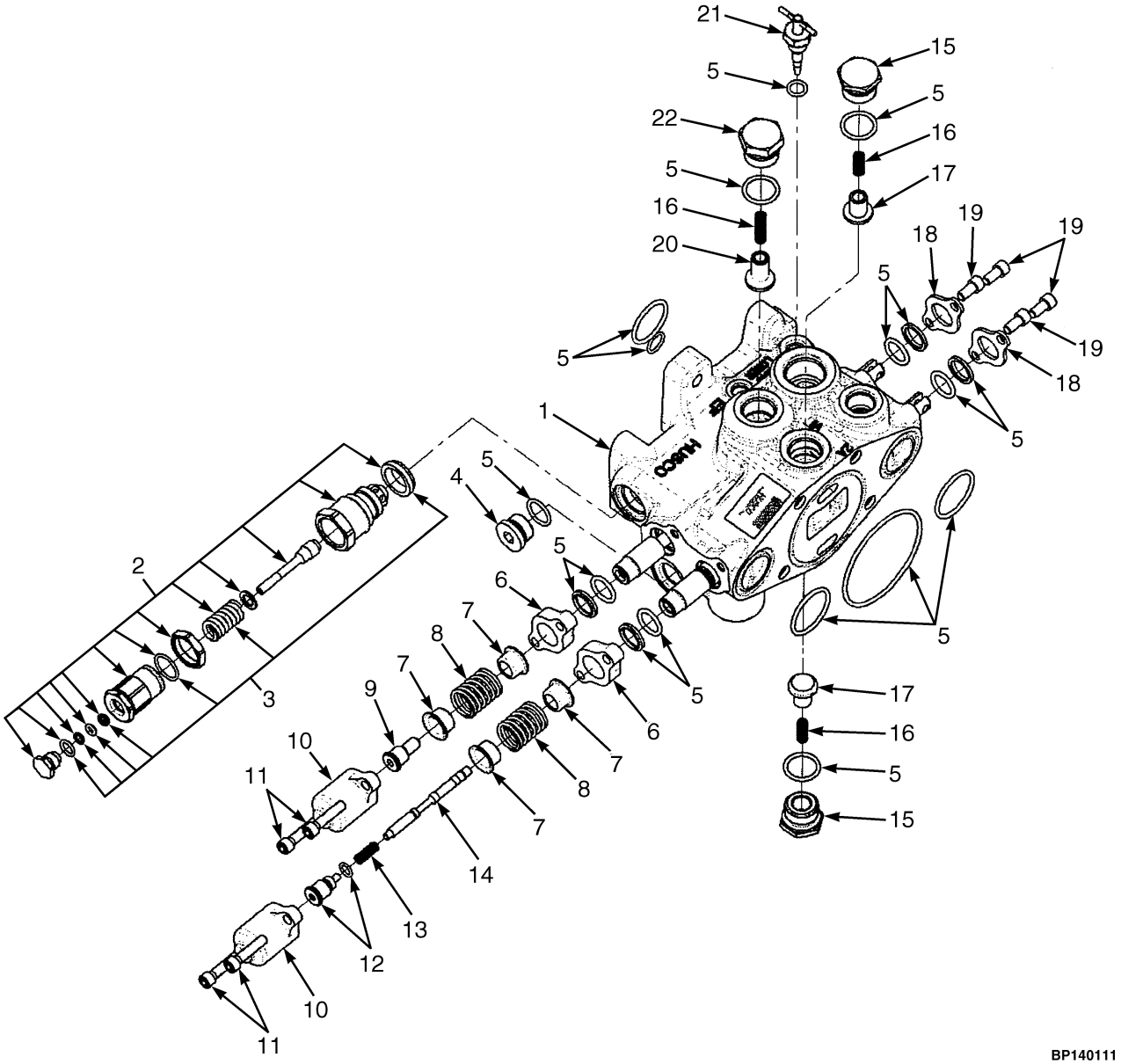

©2015 HYSTER COMPANY

HYDRAULIC CONTROL VALVE (MANUAL)
LIFT AND TILT – THREE AND FOUR FUNCTION

ITEM	PART NO.	DESCRIPTION	QTY
1	4095651	Valve Section (Lift and Tilt)	1
2	4095653	Relief Valve (3200 PSI)	1
3	1580097	Kit-Seal and Spring	1
4	1569602	Plug	1
5	1670445	Kit-Seal (Lift and Tilt)	1
6	. . . . .	Seal Plate	2
7	320289	Spring Seat	4
8	1581860	Spring	2
9	4088045	Spool End	1
10	1560681	Cap	2
11	1578705	Capscrew	4
12	4088044	Spool End	1
13	341462	Spring	1
14	1581861	Piston	1
15	1578713	Plug Assembly	1
16	77442	Spring	3
17	77443	Poppet	2
18	188515	Plate	2
19	16706	Screw	4
20	1578943	Poppet	1
21	1670522	Kit-Valve (Manual Lower Assembly)	1
22	1578940	Plug	1

©2015 HYSTER COMPANY

HYDRAULIC CONTROL VALVE (MANUAL) (FIGURE 10-18)
AUXILIARY ONE AND TWO SECTION — THREE AND FOUR FUNCTION

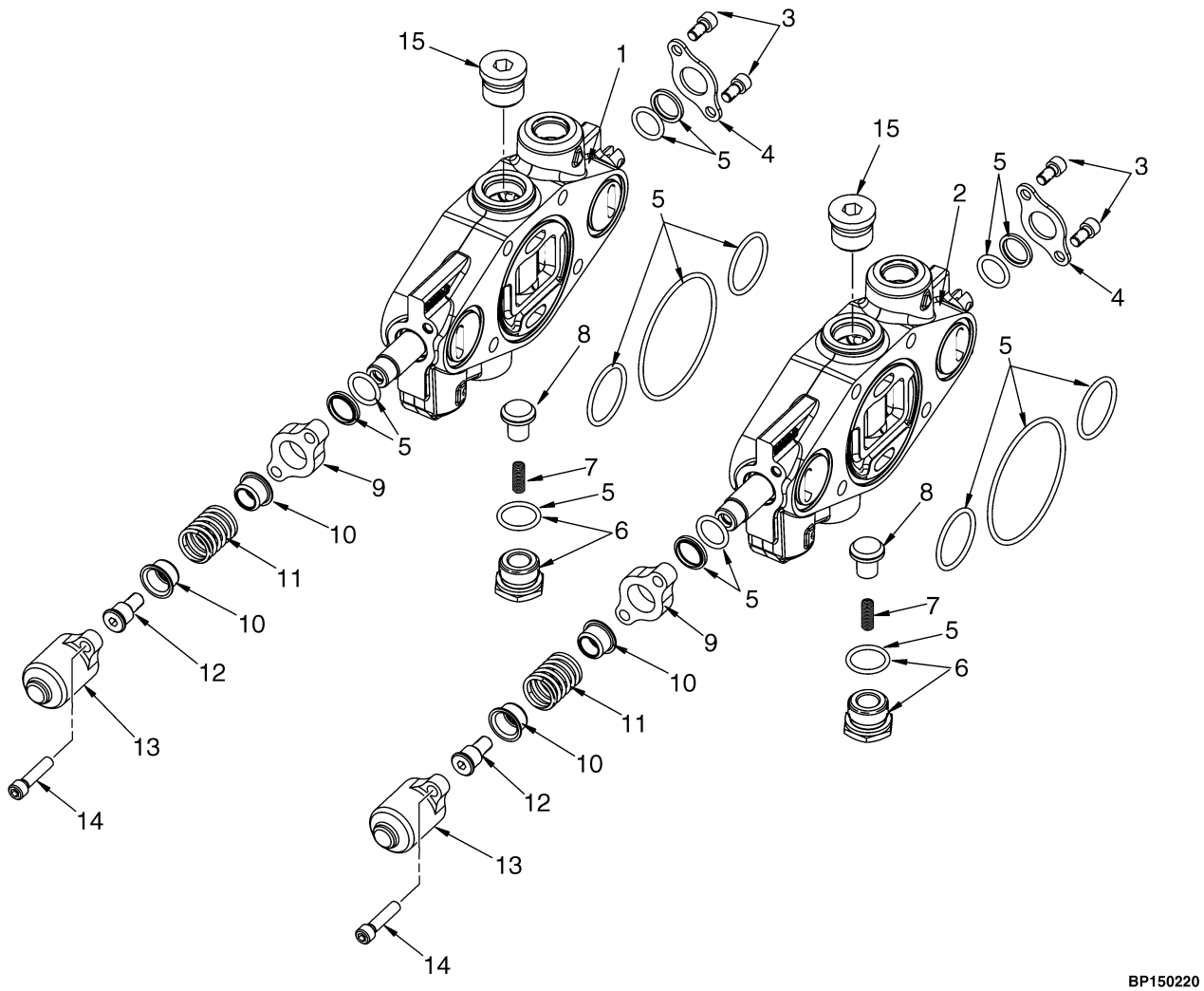

©2015 HYSTER COMPANY

HYDRAULIC CONTROL VALVE (MANUAL)
AUXILIARY ONE AND TWO SECTION – THREE AND FOUR FUNCTION

KEY:
A: Three Function
B: Four Function

ITEM	PART NO.	DESCRIPTION	QTY A	QTY B
1	4095652	Valve Section (Auxiliary One)	1	1
2	4089066	Valve Section (Auxiliary Two)	..	1
3	16706	Screw	2	2
4	188515	Plate	1	1
5	1580147	Kit-Seal (Auxiliary Functions)	1	1
6	1578713	Plug Assembly	1	1
6	77441	Plug	1	1
7	77442	Spring	1	1
8	77443	Poppet	1	1
9	. . . . .	Seal Plate	1	1
10	320289	Spring Seat	2	2
11	1581860	Spring	1	1
12	4088045	Spool End	1	1
13	1560681	Cap	1	1
14	1578705	Capscrew	2	2
15	4031469	Plug Assembly	1	..
15	1578714	Plug Assembly	..	1

©2015 HYSTER COMPANY

HYDRAULIC CONTROL VALVE (MANUAL) (FIGURE 10-19)

OUTLET SECTION — THREE AND FOUR FUNCTION

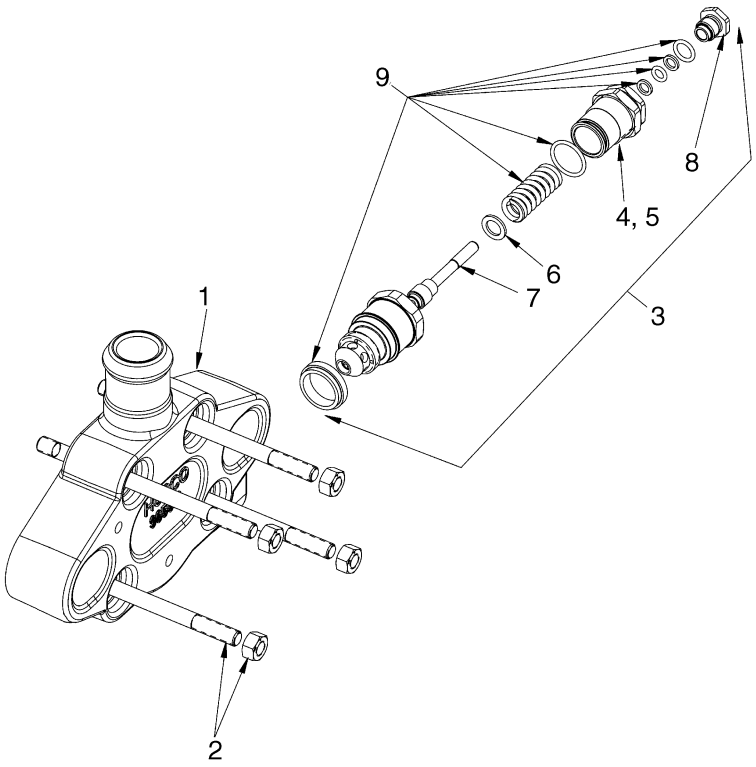

BP140079

ITEM	PART NO.	DESCRIPTION	QTY
1	1578746	Valve Section (Outlet Section)	1
2	1580155	Kit-Tie Rod (Three Function)	1
2	1580156	Kit-Tie Rod (Four Function)	1
2	15055	Nut	4
3	1578707	Relief Valve (Secondary) (15.5 MPa)	1
4	. . . . .	Nut	1
5	. . . . .	Screw	1
6	. . . . .	Washer	1
7	. . . . .	Poppet	1
8	. . . . .	Plug	1
9	1580131	Kit-Seal and Spring	1

©2015 HYSTER COMPANY

NOTES

©2015 HYSTER COMPANY

CONTROL VALVE ASSEMBLY (FIGURE 10-20)
ELECTRONIC CONTROL — THREE FUNCTION

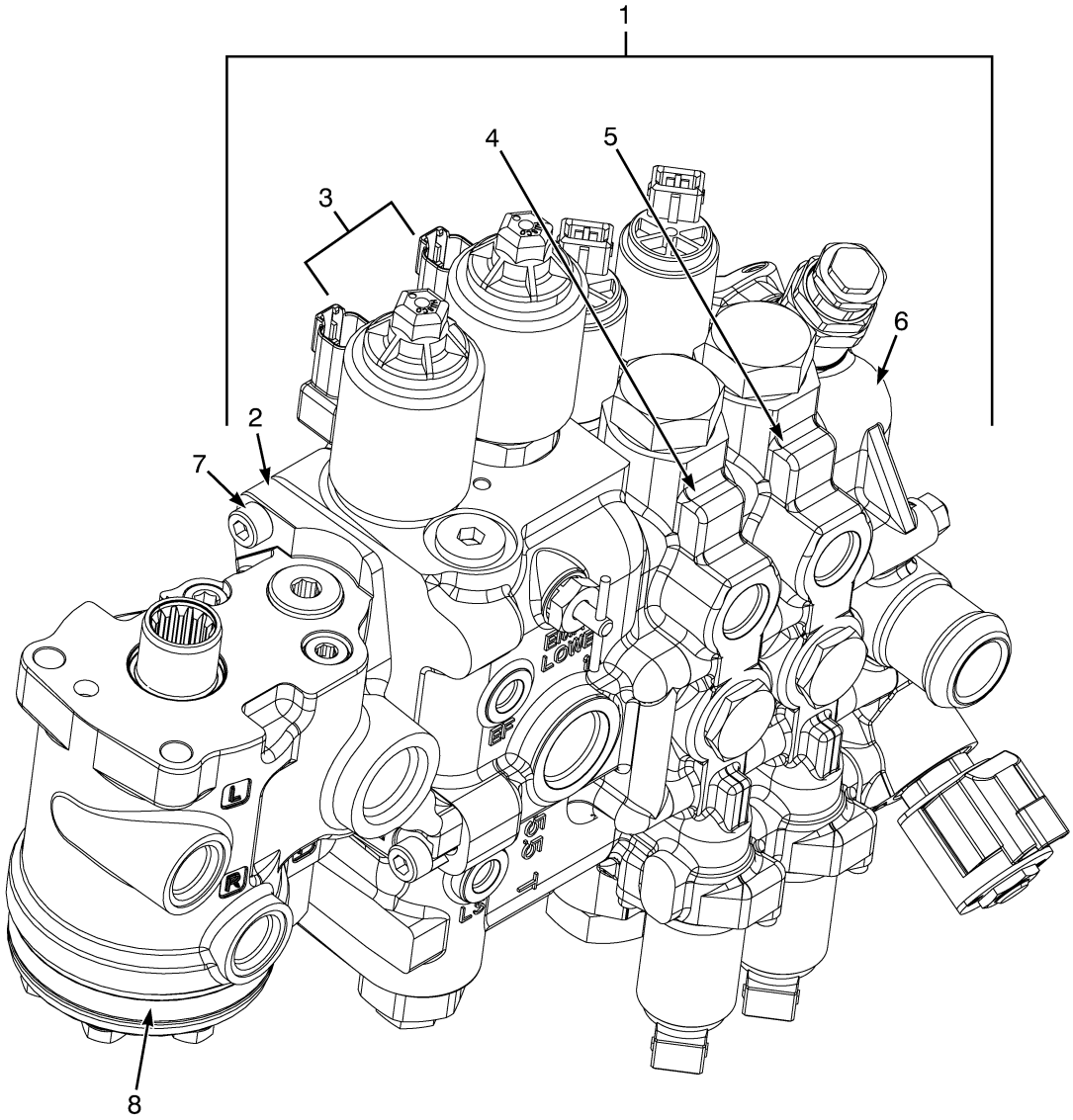

BP140154

©2015 HYSTER COMPANY

CONTROL VALVE ASSEMBLY
ELECTRONIC CONTROL – THREE FUNCTION

ITEM	PART NO.	DESCRIPTION	QTY
	2103013	Hydraulic Control Valve	1
1	2103017	Hydraulic Control Valve (Assembly)	1
2	1629196	Valve Section (Inlet) (☞Figure 10-24)	1
3	1699590	Poppet Valve (☞Figure 10-23)	1
4	1708317	Valve Section (Tilt) (☞Figure 10-27)	1
5	1708263	Valve Section (Aux. 1) (☞Figure 10-29)	1
6	1708262	Valve Section (Outlet) (☞Figure 10-30)	1
7	1581858	Kit-Capscrew	1
8	4639750	Steering Control Unit (☞Figure 8-4)	1
	a 1678166	Plug (Diesel)	1
	a 1578909	Kit-Seal (Master 3 Function)	1

FOOTNOTES:

a Not Illustrated

©2015 HYSTER COMPANY

CONTROL VALVE ASSEMBLY (FIGURE 10-21)
ELECTRONIC CONTROL — FOUR FUNCTION

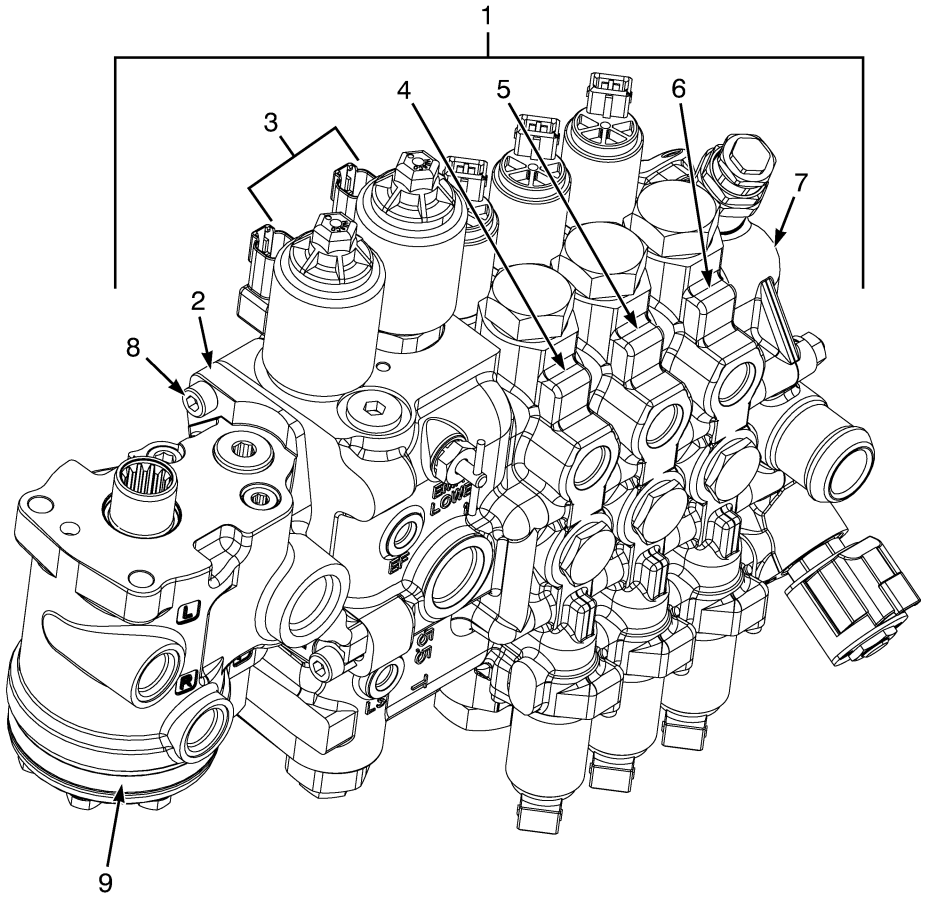

ITEM	PART NO.	DESCRIPTION	QTY
	2103015	Hydraulic Control Valve	1
1	2103018	Hydraulic Control Valve	1
2	1629196	Valve Section (Inlet) (☞Figure 10-24)	1
3	1699590	Poppet Valve (☞Figure 10-23)	1
4	1708317	Valve Section (Tilt) (☞Figure 10-27)	1
5	1708298	Valve Section (Aux. 1) (☞Figure 10-29)	1
6	1708299	Valve Section (Auxiliary Two) (☞Figure 10-30)	1
7	1708262	Valve Section (Outlet) (☞Figure 10-31)	1
8	1581858	Kit-Capscrew	1
9	4639750	Steering Control Unit (☞Figure 8-4)	1
	a 1678166	Plug	1
	a 1578908	Kit-Seal (Master 4 Function)	1

FOOTNOTES:

a Not Illustrated

©2015 HYSTER COMPANY

NOTES

©2015 HYSTER COMPANY

CONTROL VALVE ASSEMBLY (FIGURE 10-22)

ELECTRONIC CONTROL — THREE AND FOUR FUNCTION-WITH VARIABLE DISPLACEMENT PUMP

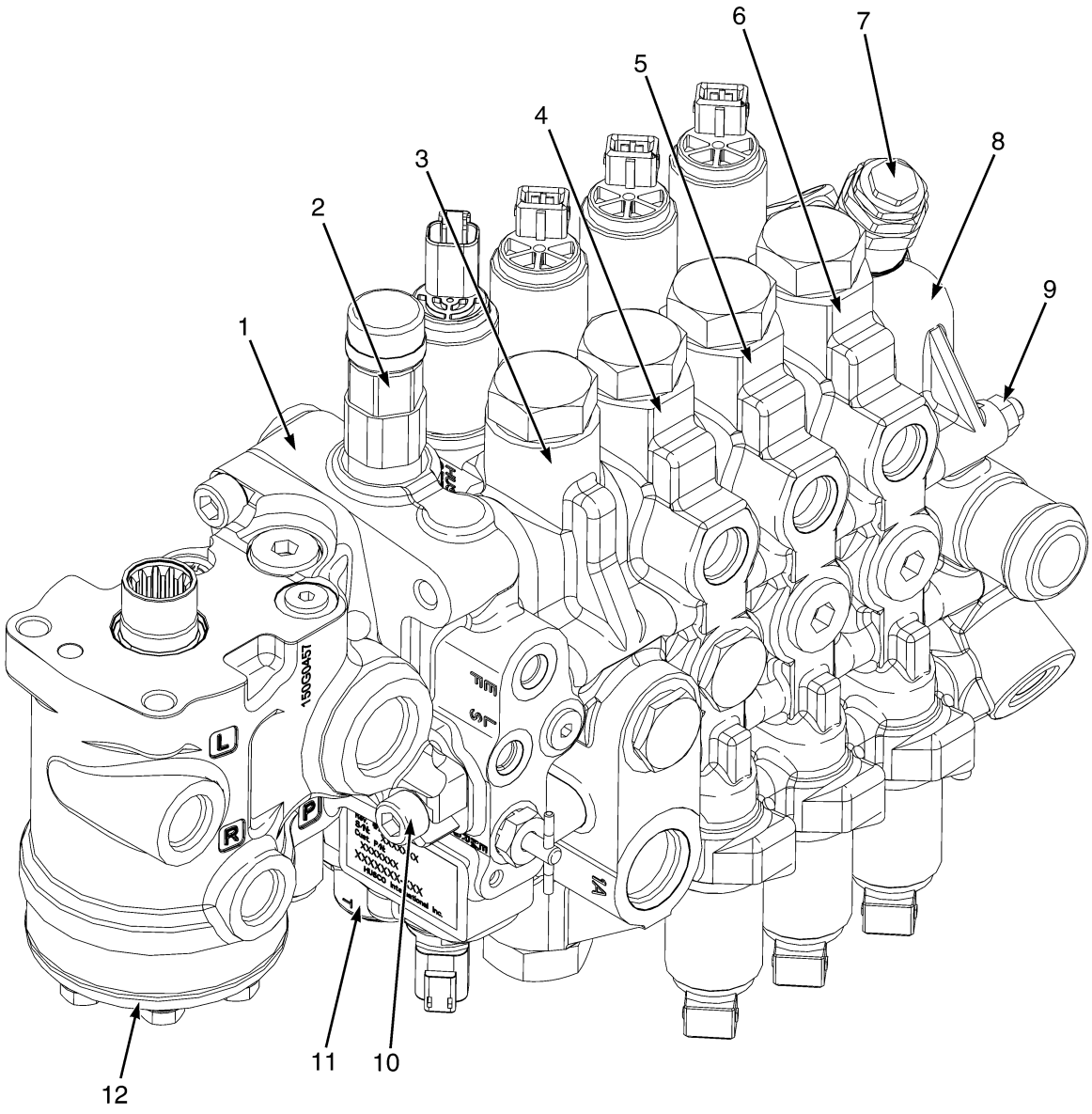

BP140206

©2015 HYSTER COMPANY

CONTROL VALVE ASSEMBLY

ELECTRONIC CONTROL – THREE AND FOUR FUNCTION-WITH VARIABLE DISPLACEMENT PUMP

KEY:
A: 3 Function
B: 4 Function

ITEM	PART NO.	DESCRIPTION	QTY A	QTY B
	4614581	Hydraulic Control Valve (H4.0FT5, H4.0FT6)	1	..
	4614582	Hydraulic Control Valve (H4.0FT5, H4.0FT6)	..	1
	4604780	Hydraulic Control Valve (H4.5FTS5, H4.5FT6, H5.0FT, H5.5T)	1	..
	4604781	Hydraulic Control Valve (H4.5FTS5, H4.5FT6, H5.0FT, H5.5T)	..	1
	4614583	Hydraulic Control Valve (H4.0FT5, H4.0FT6)	1	..
	4614584	Hydraulic Control Valve (H4.0FT5, H4.0FT6)	..	1
	4605236	Hydraulic Control Valve (H4.5FTS5, H4.5FT6, H5.0FT, H5.5T)	1	..
	4605237	Hydraulic Control Valve (H4.5FTS5, H4.5FT6, H5.0FT, H5.5T)	..	1
	4031377	Kit-Seal (Valve Master Seal Kit)	1	..
	4031378	Kit-Seal (Valve Master Seal Kit)	..	1
1	4031384	Valve Section (Transition) (☞Figure 10-25)	1	1
2	4031502	Relief Valve (Main) (23.7 MPa)	1	1
2	4031372	Kit-Relief Valve	1	1
3	4031501	Valve Section (Lift) (☞Figure 10-26)	1	1
4	4031500	Valve Section (Tilt) (☞Figure 10-28)	1	1
5	4031499	Valve Section (Auxiliary One) (☞Figure 10-29)	1	1
6	4031527	Valve Section (Auxiliary Two) (☞Figure 10-30)	..	1
7	1578707	Relief Valve (Secondary) (15.5 MPa)	1	1
7	1580131	Kit-Seal and Spring	1	1
8	4031498	Valve Section (Outlet) (☞Figure 10-31)	1	1
9	4031370	Kit-Tie Rod	1	..
9	4031371	Kit-Tie Rod	..	1
10	1581858	Kit-Capscrew	1	1
10	1629155	Washer	2	2
10	. . . . .	Capscrew	2	2
11	1569602	Plug	1	1
12	4639752	Steering Control Unit (☞Figure 8-4)	1	1
12	1579908	Kit-Seal (Steering Control Unit)	1	1
	a 1578712	Plug Assembly (Diagnostic)	1	1

FOOTNOTES:

a Not Illustrated

©2015 HYSTER COMPANY

VALVE ASSEMBLY (FIGURE 10-23)
ELECTRO HYDRAULIC POPPET VALVE — THREE AND FOUR FUNCTION

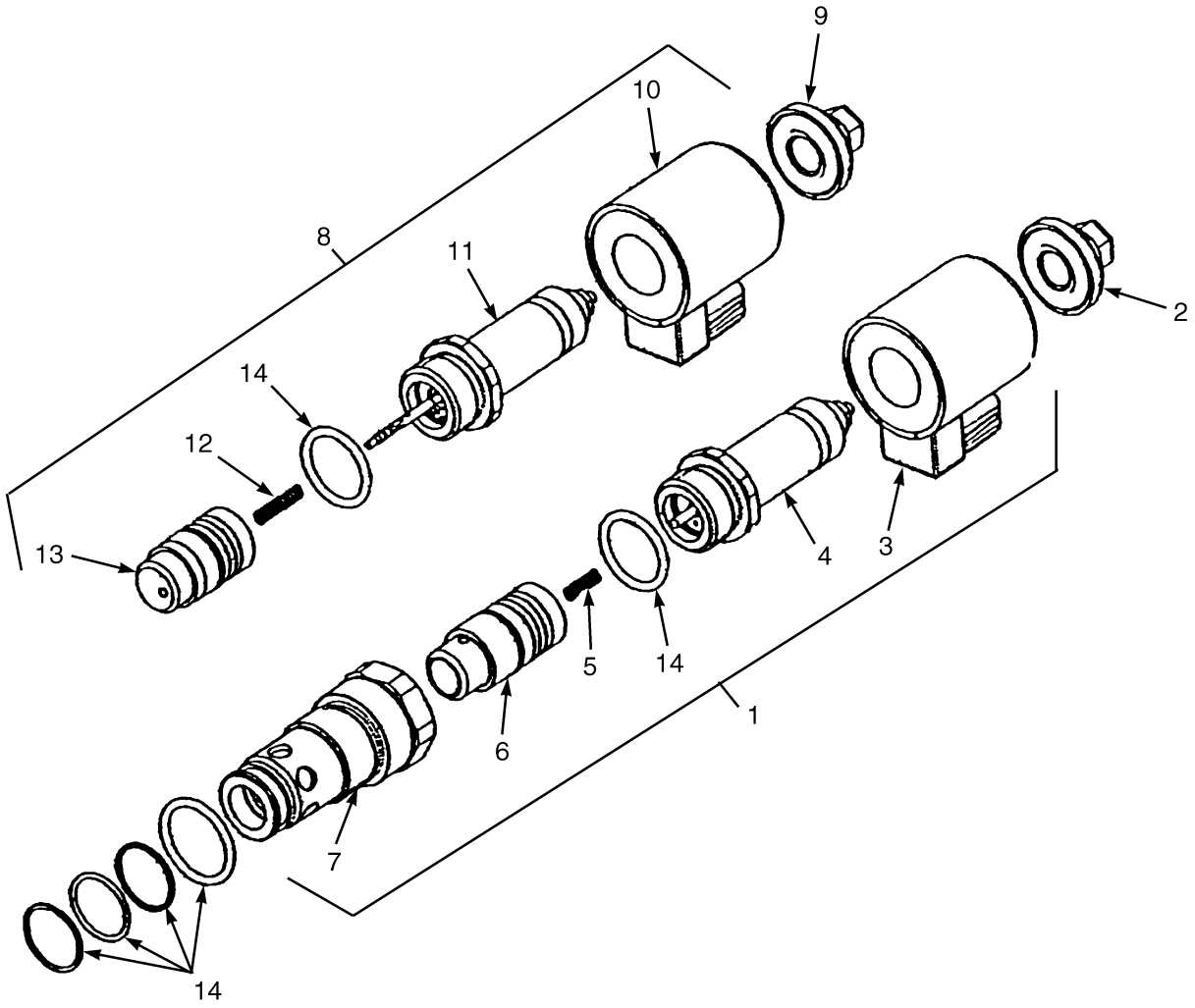

BP140002

©2015 HYSTER COMPANY

VALVE ASSEMBLY

ELECTRO HYDRAULIC POPPET VALVE – THREE AND FOUR FUNCTION

ITEM	PART NO.	DESCRIPTION	QTY
1	1699590	Poppet Valve	1
2	1629163	Nut	1
3	1629162	Coil	1
4	1629160	Tube (Solenoid)	1
5	1629165	Spring	1
6	1699591	Poppet Valve	1
7	1586020	Sleeve	1
8	1629200	Kit-Valve (Lift)	1
9	1629163	Nut	1
10	1629162	Coil	1
11	1629161	Tube Assy (Solenoid)	1
12	1629164	Spring	1
13	1629158	Poppet Valve	1
14	1586279	Kit-Seal (Electro Hydraulic Poppet Valve)	1

©2015 HYSTER COMPANY

VALVE ASSEMBLY (FIGURE 10-24)

LIFT AND LOWER — ELECTRONIC CONTROL VALVE-THREE AND FOUR FUNCTION

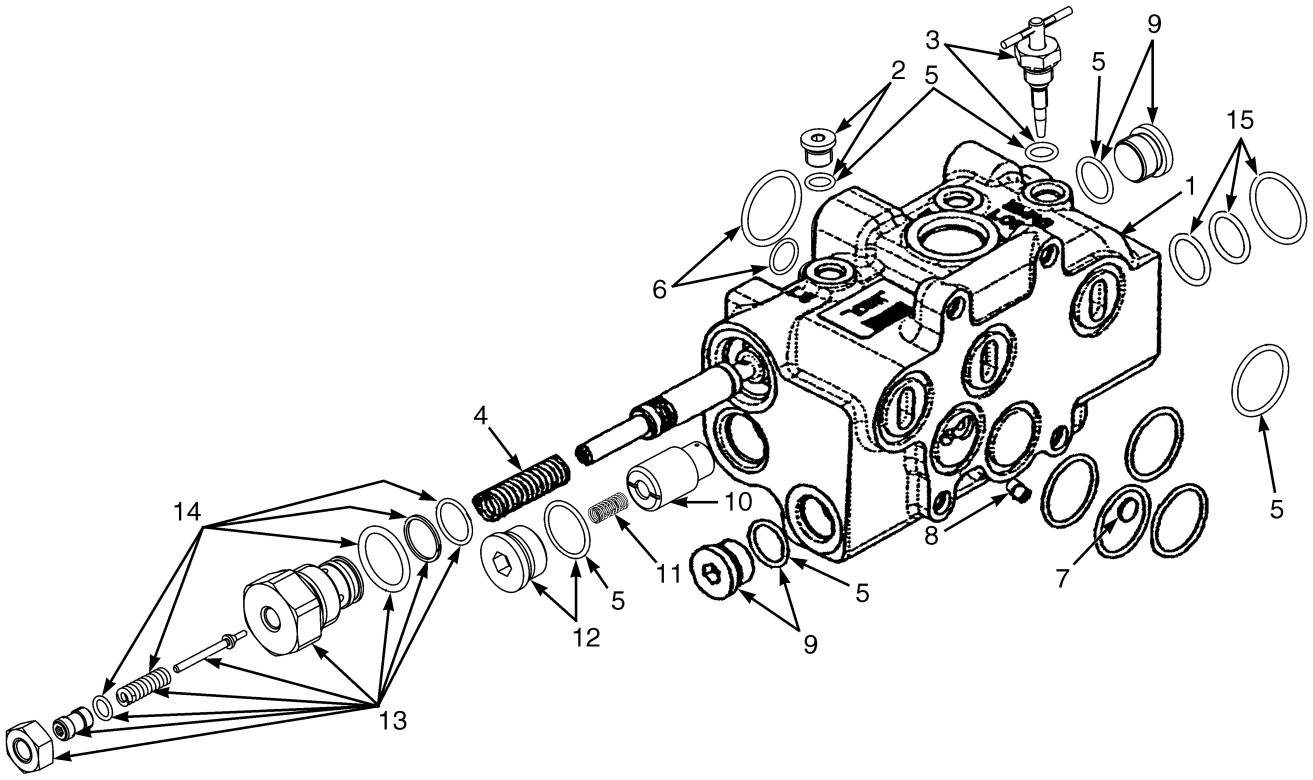

©2015 HYSTER COMPANY

VALVE ASSEMBLY

LIFT AND LOWER – ELECTRONIC CONTROL VALVE-THREE AND FOUR FUNCTION

ITEM	PART NO.	DESCRIPTION	QTY
1	1629196	Valve Section (Inlet)	1
2	1578712	Plug Assembly	1
2	204128	Plug	1
3	1581862	Kit-Valve (Manual Lowering)	1
4	1629211	Spring	1
5	1578904	Kit-Seal (Inlet)	1
6	1578911	Kit-Seal (Steering Control Unit Interface)	1
7	1578875	Shuttle Valve	1
8	1578888	Setscrew	1
9	1569602	Plug	2
10	1586280	Poppet	1
11	1578876	Spring	1
12	1578714	Plug Assembly	1
13	1629209	Relief Valve (Main)	1
14	1580132	Kit-Relief Valve	1
15	1586279	Kit-Seal (Electro Hydraulic Poppet Valve) (Caged Lower Poppet Valve)	AR
	1578908	Kit-Seal (Master 4 Function) (Four Function)	1
	1578909	Kit-Seal (Master 3 Function) (Three Function)	1

©2015 HYSTER COMPANY

ELECTRONIC CONTROL VALVE (FIGURE 10-25)
TRANSITION SECTION — WITH VARIABLE DISPLACEMENT PUMP

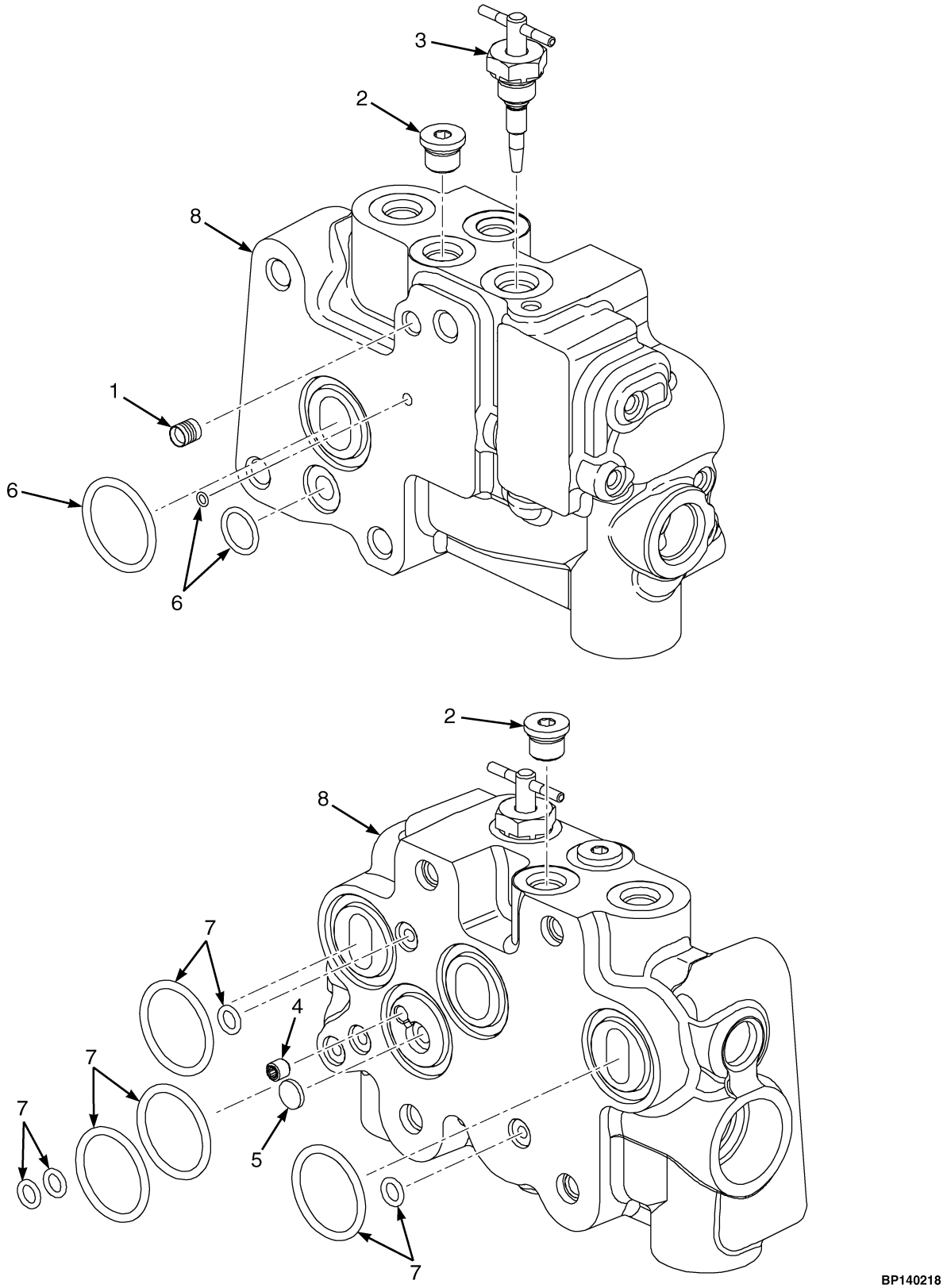

©2015 HYSTER COMPANY

ELECTRONIC CONTROL VALVE

TRANSITION SECTION – WITH VARIABLE DISPLACEMENT PUMP

ITEM	PART NO.	DESCRIPTION	QTY
	4031384	Valve Section (Transition)	1
1	1371250	Plug	1
2	1578712	Plug Assembly	2
2	204128	Plug	1
3	1581862	Kit-Valve (Manual Lowering)	1
3	1658142	Valve	1
4	1578888	Setscrew	1
5	1578875	Shuttle Valve	1
6	4031373	Kit-Seal (Valve to Steering Control Unit)	1
7	4031374	Kit-Seal (Transition Section)	1
8	. . . . .	Housing	1

©2015 HYSTER COMPANY

ELECTRONIC CONTROL VALVE (FIGURE 10-26)
LIFT SECTION — WITH VARIABLE DISPLACEMENT PUMP

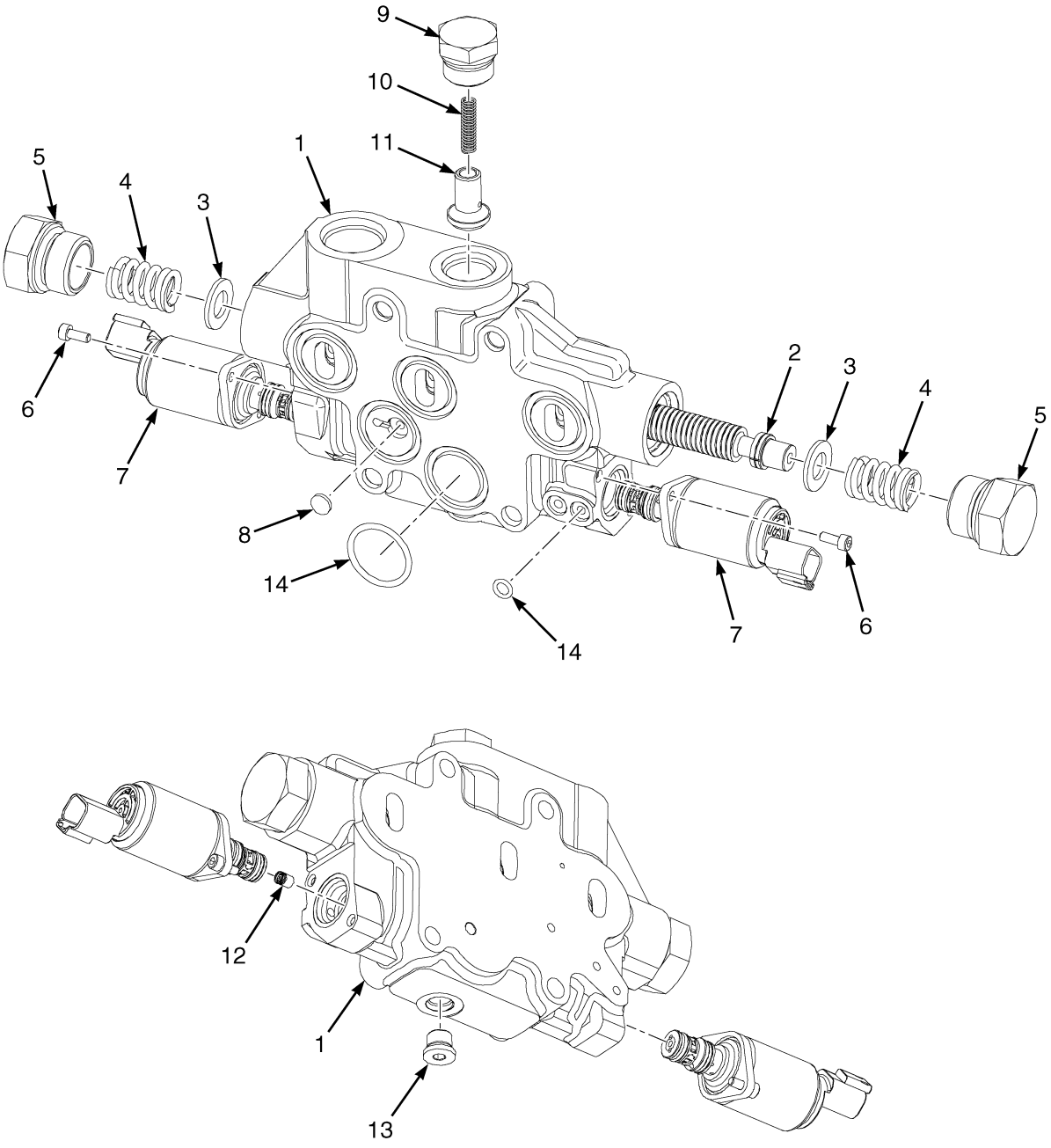

BP140258

©2015 HYSTER COMPANY

ELECTRONIC CONTROL VALVE
LIFT SECTION – WITH VARIABLE DISPLACEMENT PUMP

ITEM	PART NO.	DESCRIPTION	QTY
	4031501	Valve Section	1
1	. . . . .	Housing	1
2	. . . . .	Spool	1
3	1578883	Washer	2
4	4031471	Spring	2
5	1578889	Plug	2
6	1664395	Capscrew	4
7	4031472	Solenoid Valve	2
8	1578875	Shuttle Valve	1
9	1578940	Plug	1
10	77442	Spring	1
11	1578943	Poppet	1
12	4031473	Check Valve	1
13	1578712	Plug Assembly	1
13	204128	Plug	1
14	4031375	Kit-Seal (Lift Section)	1
	a 1687534	Kit-Seal (Solenoid Pressure Reducing)	2

FOOTNOTES:

a Not Illustrated

©2015 HYSTER COMPANY

VALVE ASSEMBLY (FIGURE 10-27)

TILT SECTION — ELECTRONIC CONTROL VALVE-THREE AND FOUR FUNCTION

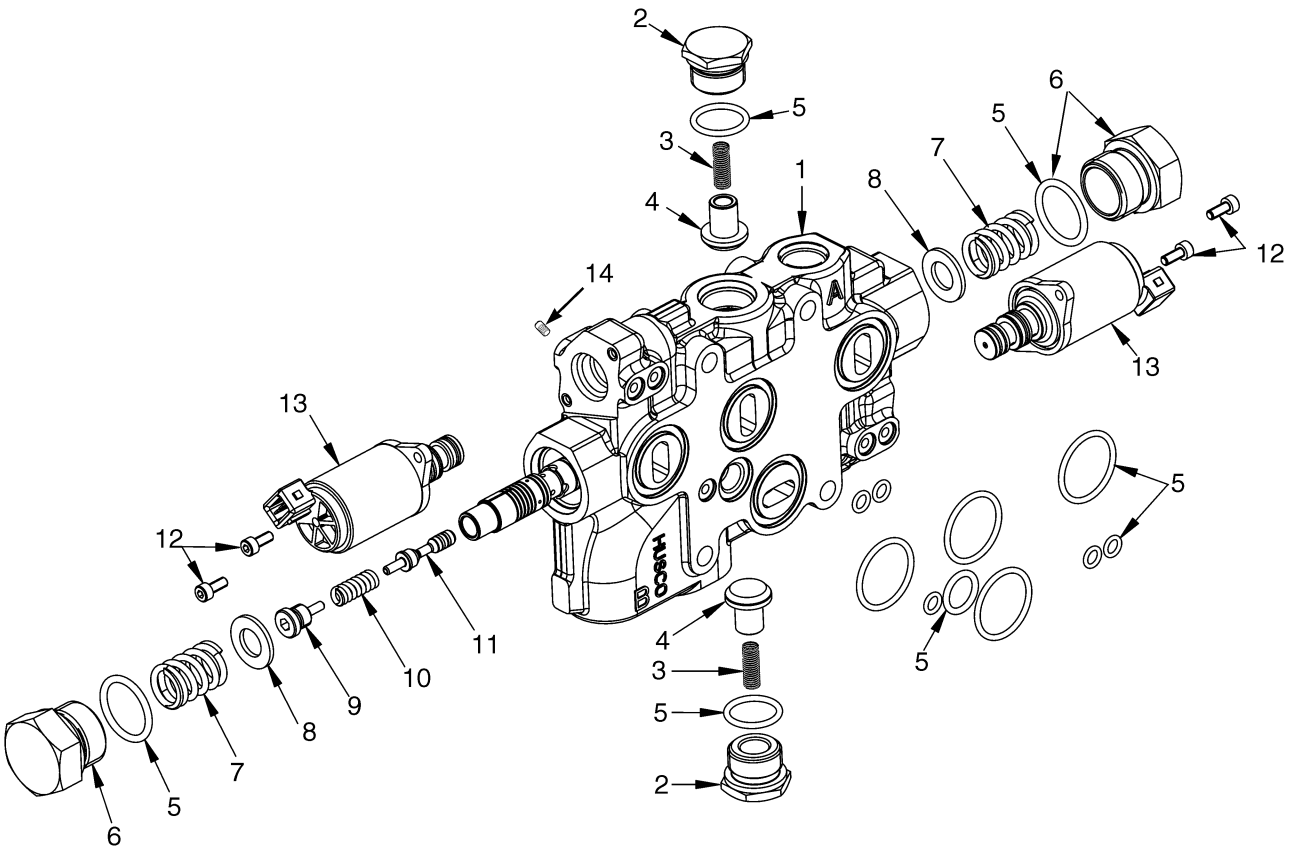

©2015 HYSTER COMPANY

VALVE ASSEMBLY

TILT SECTION – ELECTRONIC CONTROL VALVE-THREE AND FOUR FUNCTION

ITEM	PART NO.	DESCRIPTION	QTY
	1708317	Valve Section (Tilt)	1
1	. . . . .	Housing	1
2	1578713	Plug Assembly	2
3	77442	Spring	2
4	77443	Poppet	2
5	1578905	Kit-Seal (Tilt)	1
6	1578889	Plug	2
7	1578882	Spring	2
8	1578883	Washer	2
9	1580760	Spool End	1
10	1580759	Spring	1
11	1580099	Piston and Rod	1
12	1664395	Capscrew	4
13	1578711	Valve (Pressure Reducing)	2
14	1578887	Setscrew	1
	a 1687534	Kit-Seal (Solenoid Pressure Reducing)	2

FOOTNOTES:

a Not Illustrated

©2015 HYSTER COMPANY

ELECTRONIC CONTROL VALVE (FIGURE 10-28)
TILT SECTION — WITH VARIABLE DISPLACEMENT PUMP

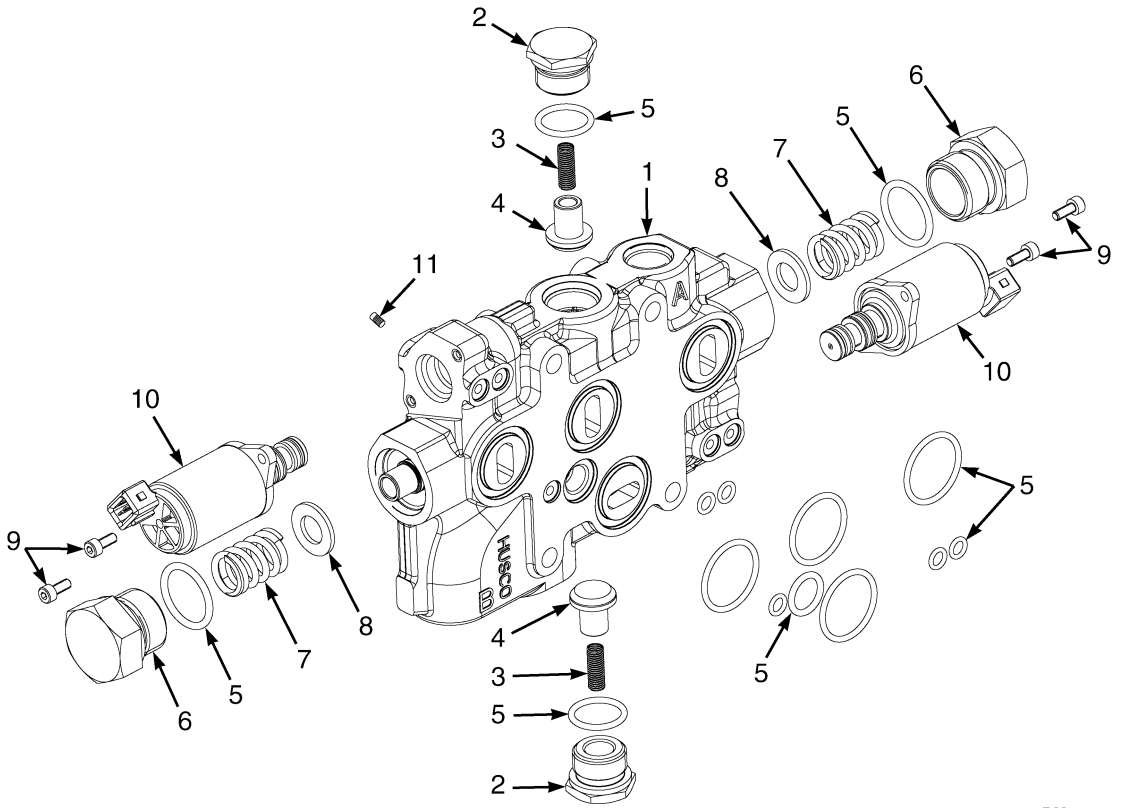

ITEM	PART NO.	DESCRIPTION	QTY
	4031500	Valve Section (Tilt)	1
1	. . . . .	Housing	1
2	1578713	Plug Assembly	2
2	77441	Plug	1
3	77442	Spring	2
4	77443	Poppet	2
5	1578905	Kit-Seal (Tilt)	1
6	1578889	Plug	2
7	1578882	Spring	2
8	1578883	Washer	2
9	1664395	Capscrew	4
10	1578711	Valve (Pressure Reducing)	2
11	1578887	Setscrew	1
	a 1687534	Kit-Seal (Solenoid Pressure Reducing)	2

FOOTNOTES:

a Not Illustrated

©2015 HYSTER COMPANY

NOTES

©2015 HYSTER COMPANY

VALVE ASSEMBLY (FIGURE 10-29)

AUXILIARY ONE SECTION — ELECTRONIC CONTROL VALVE-THREE AND FOUR FUNCTION

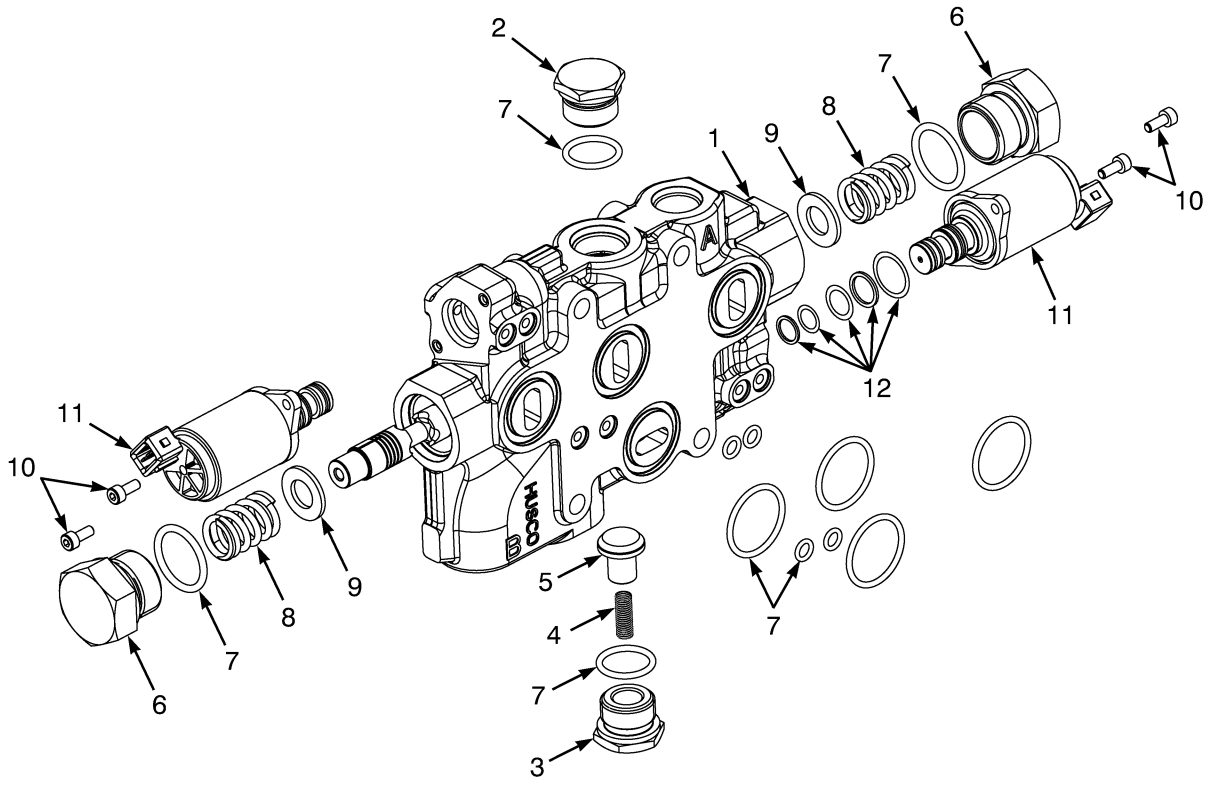

BP140153

©2015 HYSTER COMPANY

VALVE ASSEMBLY

AUXILIARY ONE SECTION – ELECTRONIC CONTROL VALVE-THREE AND FOUR FUNCTION

ITEM	PART NO.	DESCRIPTION	QTY
1	1708263	Valve Section (Aux. 1) (3 Function)	1
1	1708298	Valve Section (Aux. 1) (4 Function)	1
1	**a** 4031499	Valve Section (Auxiliary One)	1
2	1578714	Plug Assembly (4 Function)	1
2	**a** 4031469	Plug Assembly	1
3	1578713	Plug Assembly (3 Function)	1
4	77442	Spring	1
5	77443	Poppet	1
6	1578889	Plug	1
7	1578906	Kit-Seal (Auxiliary Section)	1
8	1578882	Spring	2
9	1578883	Washer	2
10	1664395	Capscrew	4
11	1578711	Valve (Pressure Reducing)	2
12	1687534	Kit-Seal (Solenoid Pressure Reducing)	2

FOOTNOTES:

a Variable Displacement Pump

©2015 HYSTER COMPANY

VALVE ASSEMBLY (FIGURE 10-30)
AUXILIARY TWO SECTION — ELECTRONIC CONTROL VALVE-FOUR FUNCTION

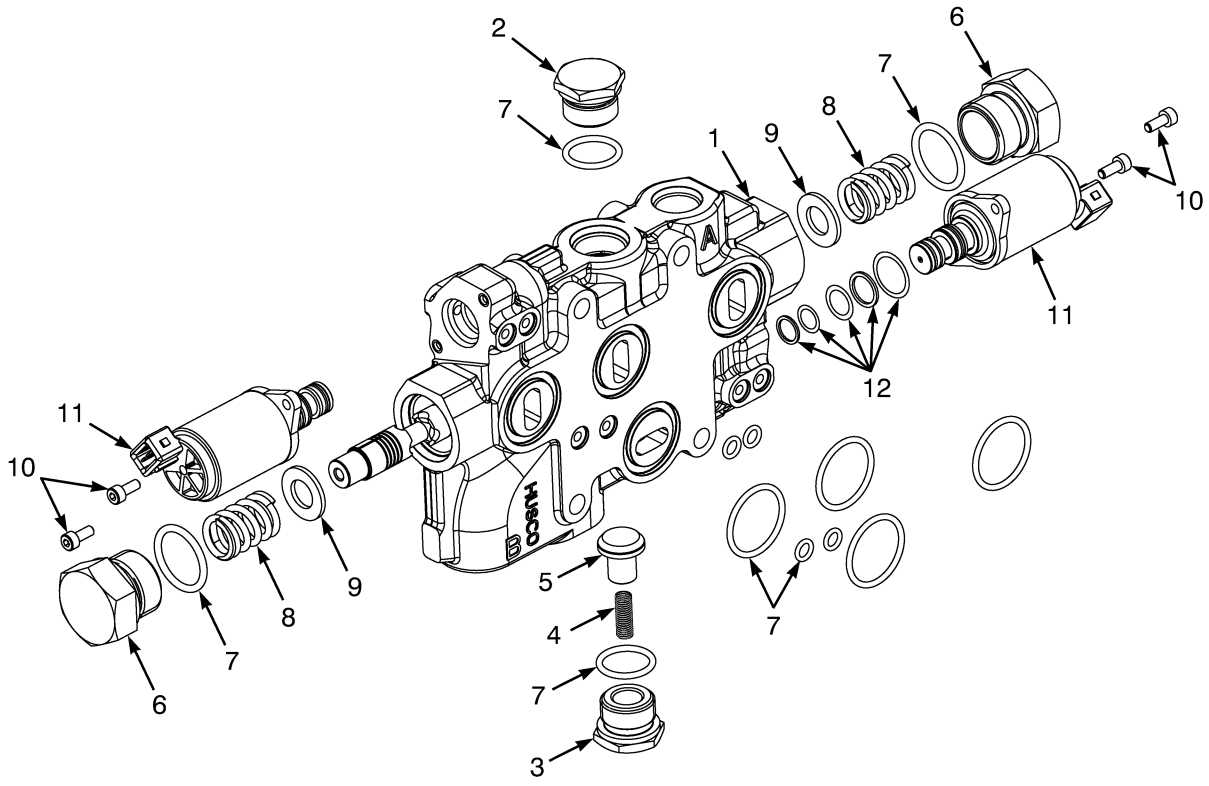

BP140153

©2015 HYSTER COMPANY

VALVE ASSEMBLY

AUXILIARY TWO SECTION – ELECTRONIC CONTROL VALVE-FOUR FUNCTION

ITEM	PART NO.	DESCRIPTION	QTY
1	1708299	Valve Section (Auxiliary Two)	1
1	**a** 4031527	Valve Section (Auxiliary Two)	1
2	1578714	Plug Assembly	1
3	1578713	Plug Assembly	1
4	77442	Spring	1
5	77443	Poppet	1
6	1578889	Plug	2
7	1578907	Kit-Seal (Auxiliary Section)	1
8	1578882	Spring	2
9	1578883	Washer	2
10	1664395	Capscrew	4
11	1578711	Valve (Pressure Reducing)	2
12	1687534	Kit-Seal (Solenoid Pressure Reducing)	2

FOOTNOTES:

a Variable Displacement Pump

©2015 HYSTER COMPANY

VALVE ASSEMBLY (FIGURE 10-31)

OUTLET SECTION — ELECTRONIC CONTROL VALVE-THREE AND FOUR FUNCTION

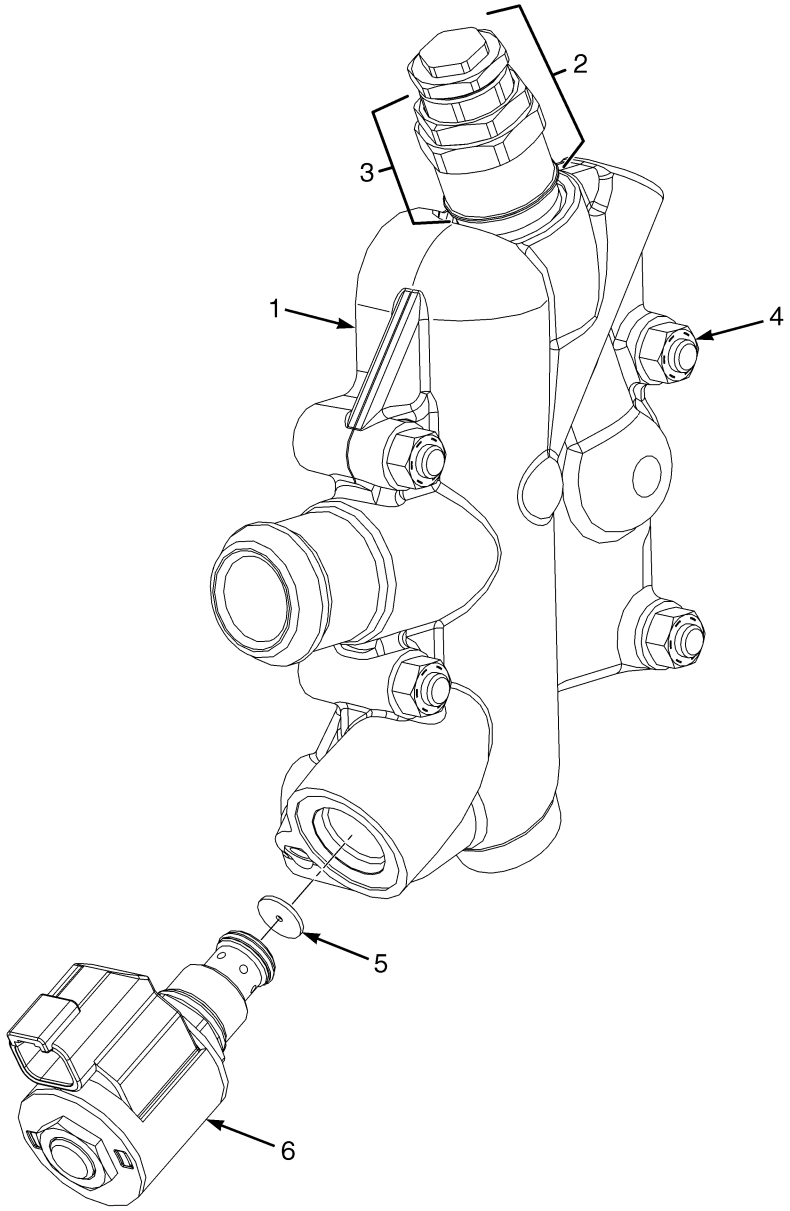

BP140177

©2015 HYSTER COMPANY

VALVE ASSEMBLY

OUTLET SECTION – ELECTRONIC CONTROL VALVE-THREE AND FOUR FUNCTION

ITEM	PART NO.	DESCRIPTION	QTY
1	1708262	Valve Section (Outlet)	1
2	1708054	Relief Valve	1
3	1580131	Kit-Seal and Spring	1
4	1578715	Kit-Tie Rod (Three Function)	1
4	1580151	Kit-Tie Rod (Four Function)	1
5	1695754	Disk	1
6	1678165	Solenoid Valve	1

©2015 HYSTER COMPANY

ELECTRONIC CONTROL VALVE (FIGURE 10-32)
OUTLET SECTION — WITH VARIABLE DISPLACEMENT PUMP

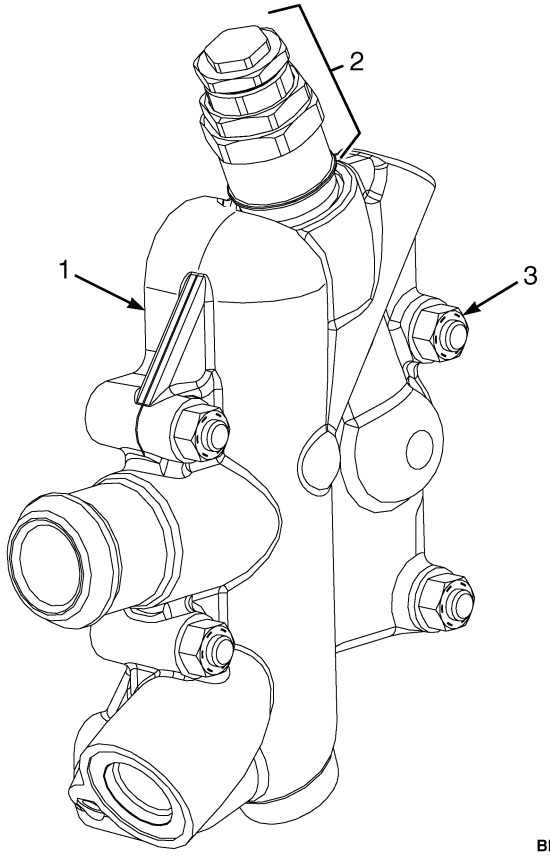

KEY:
A: Three Function
B: Four Function

ITEM	PART NO.	DESCRIPTION	QTY A	QTY B
1	4031498	Valve Section (Outlet)	1	1
1	4031376	Kit-Seal (Outlet Section)	1	1
2	1578707	Relief Valve (Secondary) (15.5 MPa)	1	1
2	1580131	Kit-Seal and Spring	1	1
3	4031370	Kit-Tie Rod	1	..
3	4031371	Kit-Tie Rod	..	1
3	15055	Nut	3	3
3	188534	Nut	1	1

©2015 HYSTER COMPANY

NOTES

©2015 HYSTER COMPANY

AUXILIARY HOSES (FIGURE 10-33)

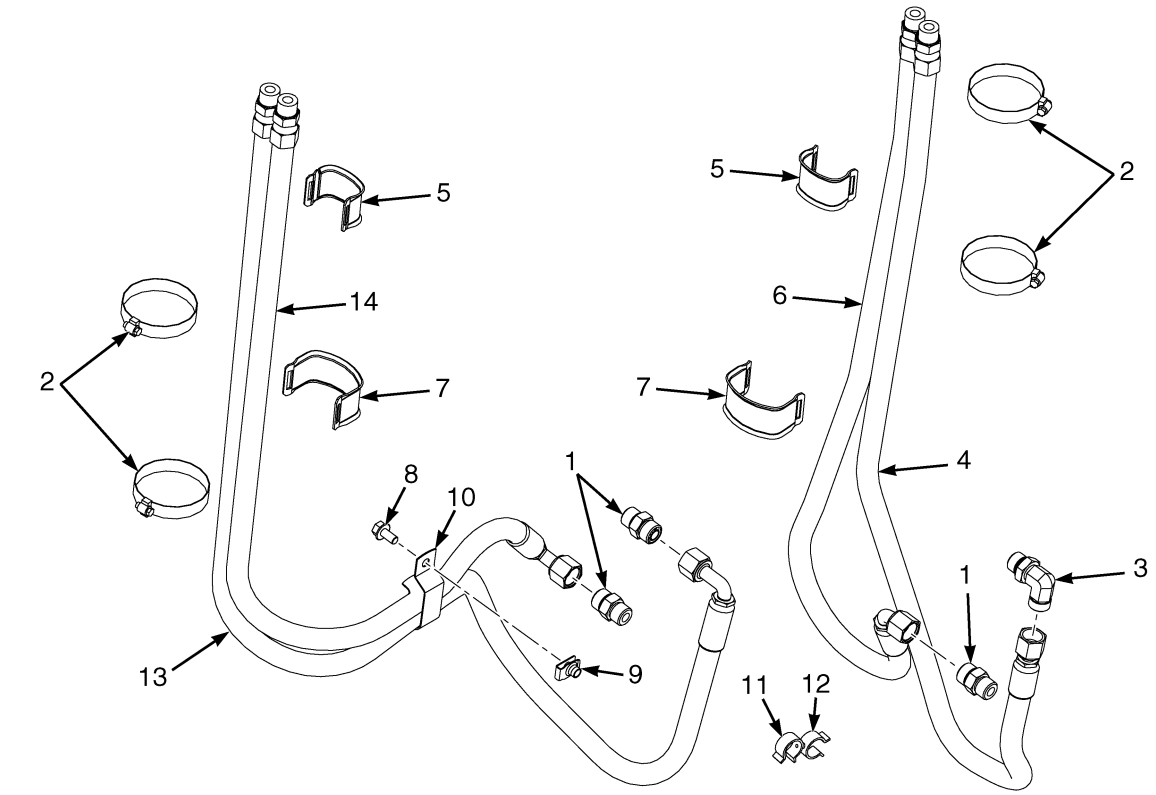

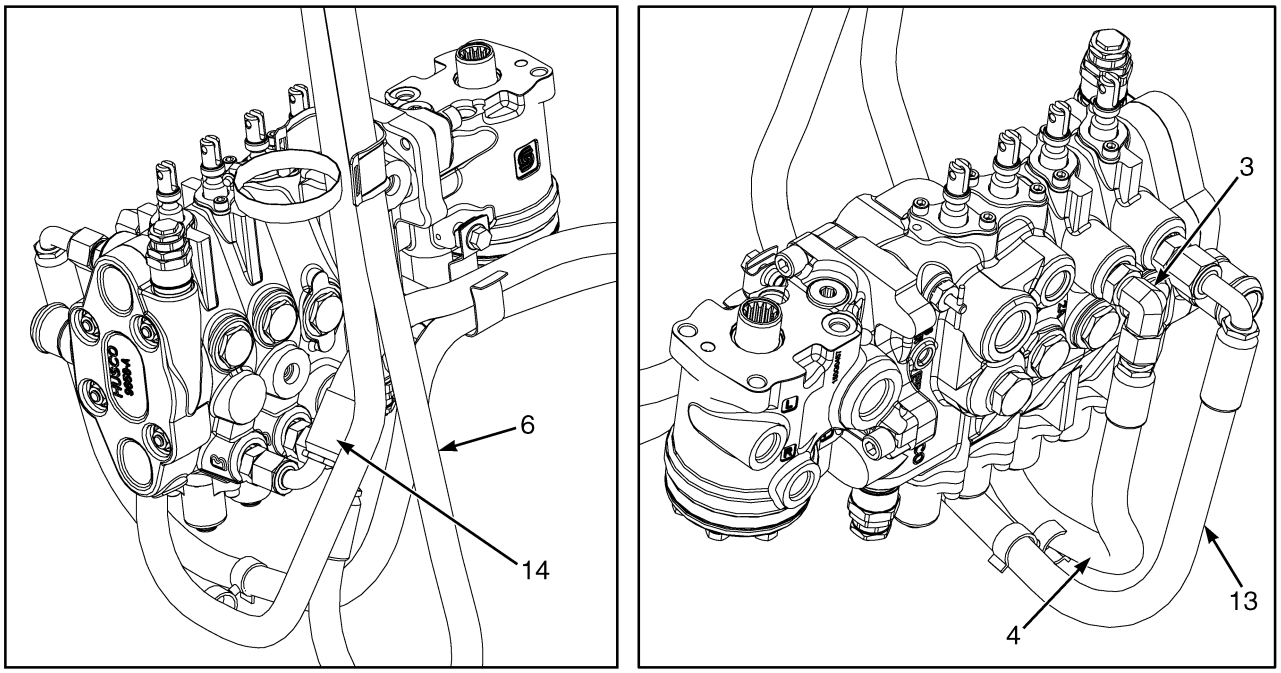

BP140228

©2015 HYSTER COMPANY

AUXILIARY HOSES

KEY:
A: Third Function
B: Fourth Function

ITEM	PART NO.	DESCRIPTION	QTY A	QTY B
1	1473887	Fitting	1	2
1	265731	O-Ring	1	1
2	1617658	Clamp	2	2
2	1360507	Clamp (Optional)	2	2
3	1473897	Fitting	1	1
4	2104429	Hose Assy	1	1
5	1502809	Hose Clamp	1	1
6	4614655	Hose Assy	1	1
7	1465489	Hose Clamp	1	2
8	1527879	Capscrew	..	1
9	1480237	Nut	..	1
10	1544157	Clip (Hose Retention)	..	1
11	1502053	Clamp (Swivel)	..	1
12	1502066	Clamp (Swivel)	..	1
13	2084867	Hose Assy	..	1
14	2086157	Hose Assy	..	1
15	. . . . .	Control Valve Assembly (☞Figure 10-16, ☞Figure 10-20, ☞Figure 10-21, ☞Figure 10-22)	1	1

©2015 HYSTER COMPANY

VENT LINE GROUP (FIGURE 10-34)
WITH STANDARD CONTROL VALVE

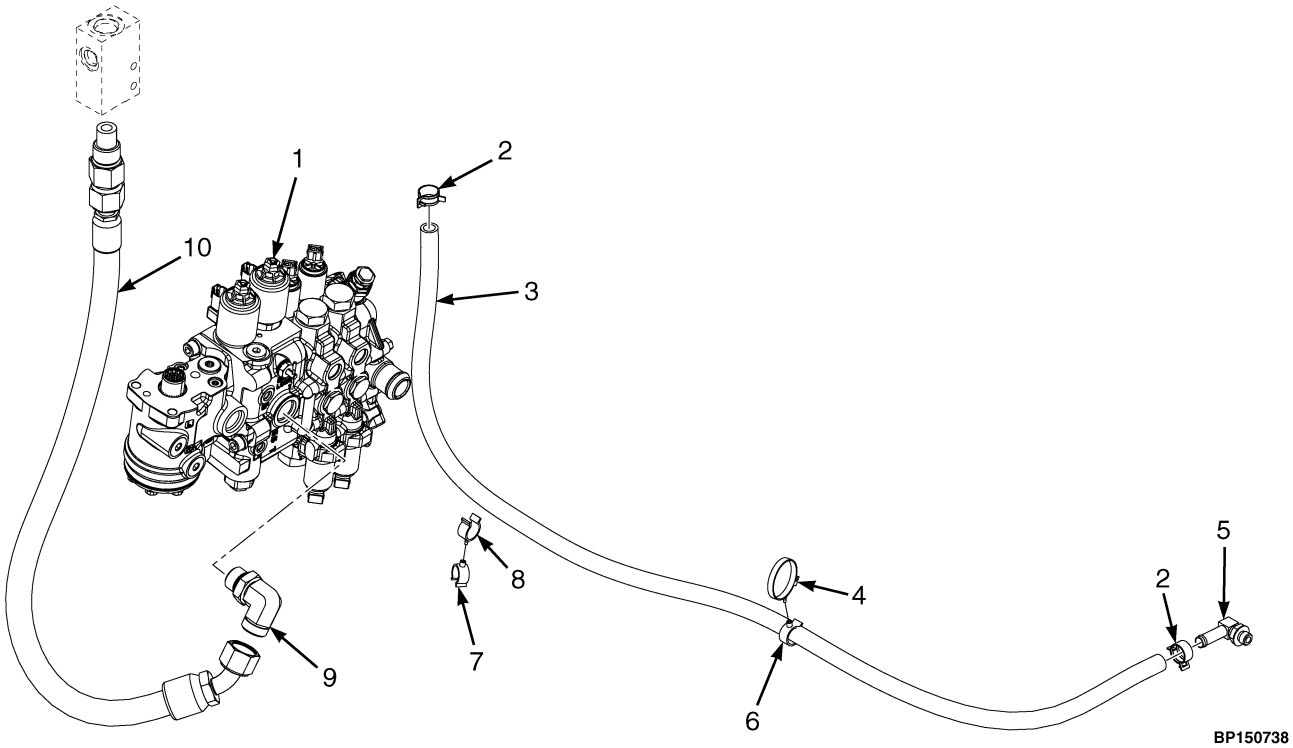

ITEM	PART NO.	DESCRIPTION	QTY
1	. . . . .	Hydraulic Control Valve (☞Figure 10-16, ☞Figure 10-20, ☞Figure 10-21).....	1
2	1502007	Hose Clamp	2
3	**a** 1399086	Hose Assy	1
4	1502061	Clamp	1
5	110178	Fitting (Two Stage Limited Free-Lift and Three Stage Full Free-Lift)	1
5	16483	O-Ring	1
5	222443	Fitting (Two Stage Full Free-Lift and No Mast)	1
5	16483	O-Ring	1
6	1502053	Clamp (Swivel)	1
7	1502059	Clamp (Swivel)	1
8	1502066	Clamp (Swivel)	1
9	1473898	Fitting	1
9	1648259	Fitting (Load Weight Display Option)	1
10	2076763	Hose Assy (Hoist)	1
	1550197	Lowering Control Valve (H4.0FT5-H4.0FT6)	1
	1550198	Lowering Control Valve (H4.5FTS5, H4.5FT6, H5.0-5.5FT)	1

FOOTNOTES:

a Attaches to Vent Line on Mast

©2015 HYSTER COMPANY

VENT LINE GROUP (FIGURE 10-35)
WITH VARIABLE DISPLACEMENT CONTROL VALVE

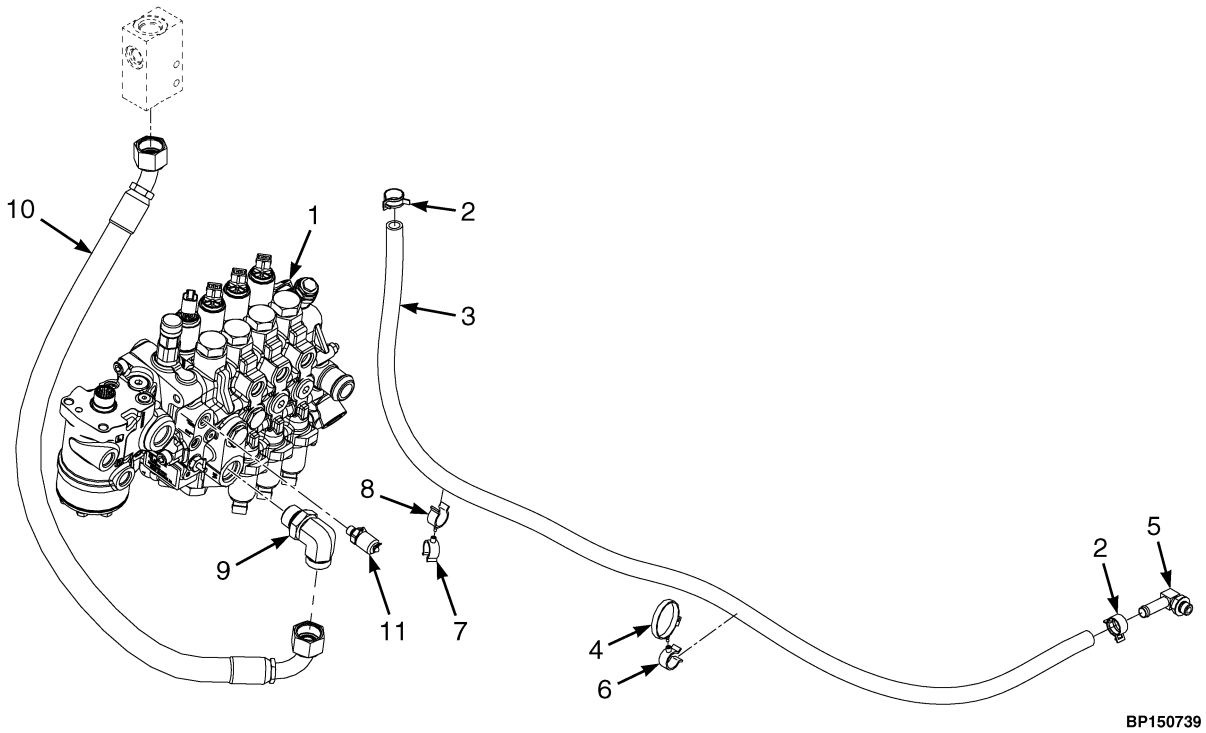

ITEM	PART NO.	DESCRIPTION	QTY
1	. . . . .	Hydraulic Control Valve (☞Figure 10-22)	1
2	1502007	Hose Clamp	2
3	**a** 1399086	Hose Assy	1
4	1502061	Clamp	1
5	110178	Fitting (Two Stage Limited Free-Lift and Three Stage Full Free-Lift)	1
5	16483	O-Ring	1
5	222443	Fitting (Two Stage Full Free-Lift and No Mast)	1
5	16483	O-Ring	1
6	1502053	Clamp (Swivel)	1
7	1502059	Clamp (Swivel)	1
8	1502066	Clamp (Swivel)	1
9	1473898	Fitting	1
9	1648259	Fitting (Load Weight Display Option)	1
10	4627627	Hose Assy (Hoist)	1
11	2061646	Fitting (Diagnostic)	1
	1550197	Lowering Control Valve (H4.0FT5-H4.0FT6)	1
	1550198	Lowering Control Valve (H4.5FTS5, H4.5FT6, H5.0-5.5FT)	1

FOOTNOTES:

a Attaches to Vent Line on Mast

©2015 HYSTER COMPANY

TILT HOSES (FIGURE 10-36)

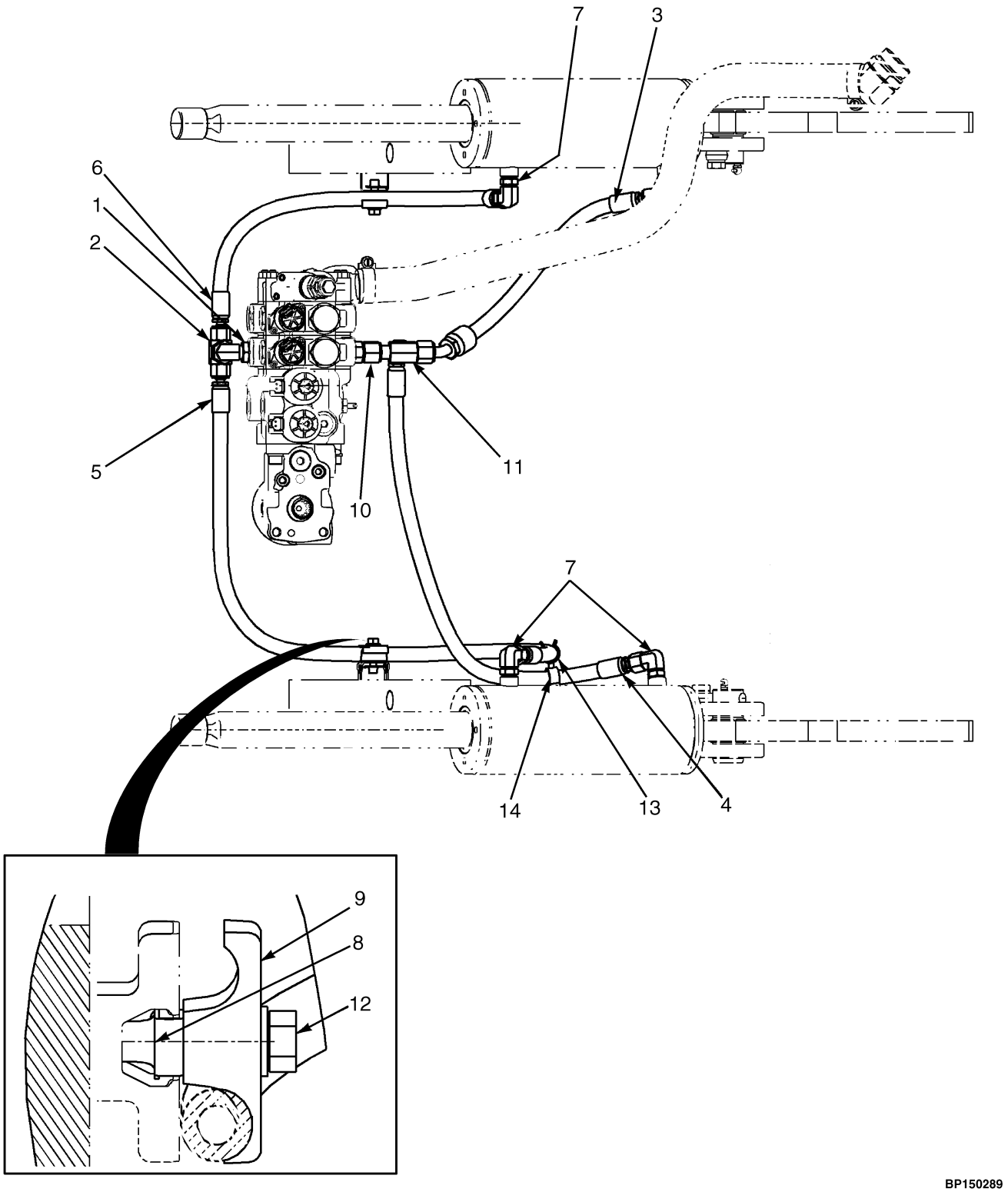

©2015 HYSTER COMPANY

TILT HOSES

ITEM	PART NO.	DESCRIPTION	QTY
1	1487061	Fitting	1
2	1487097	Fitting	1
3	2103985	Hose Assy	1
4	4622423	Hose Assy	1
5	4604826	Hose Assy	1
6	2088913	Hose Assy	1
7	1487063	Fitting	4
8	1480237	Nut	2
9	1605479	Hose Clamp (Dual Hose)	2
10	1473887	Fitting	1
11	1487095	Fitting	1
12	1586627	Capscrew	2
13	1502066	Clamp (Swivel)	1
14	1502059	Clamp (Swivel)	1

©2015 HYSTER COMPANY

TILT CYLINDER AND MAST INSTALLATION (FIGURE 10-37)

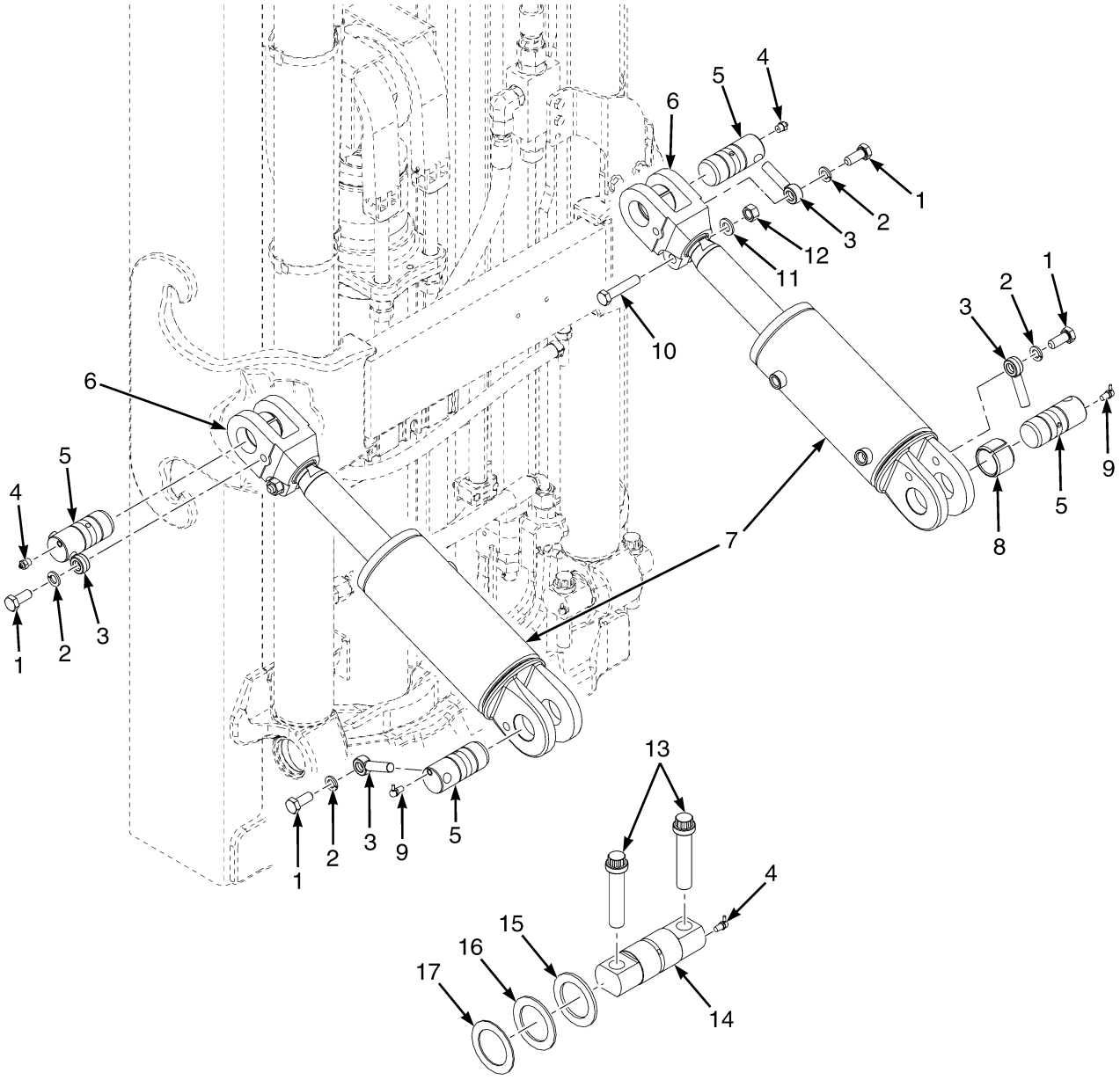

©2015 HYSTER COMPANY

TILT CYLINDER AND MAST INSTALLATION

ITEM	PART NO.	DESCRIPTION	QTY
1	1615240	Capscrew	4
2	1581564	Lockwasher	4
3	241079	Anchor	4
4	16015	Grease Fitting	4
5	1570303	Pin	4
6	**bcd** 1566792	Rod End	2
6	**a** 1578545	Rod End	2
7	. . . . .	Tilt Cylinder (☞Figure 10-38)	2
8	192429	Bushing	2
9	16001	Grease Fitting	2
10	1597381	Capscrew	2
11	1581852	Washer	2
12	1581848	Nut	2
13	1646441	Capscrew	4
14	1599316	Pin	2
15	1670900	Shim	1
16	1670901	Shim	1
17	1670902	Shim	1

FOOTNOTES:

a 12° Forward/6° Back
b 6° Forward/10° Back
c 6° Forward/5° Back
d 6° Forward/6° Back

©2015 HYSTER COMPANY

TILT CYLINDERS (FIGURE 10-38)

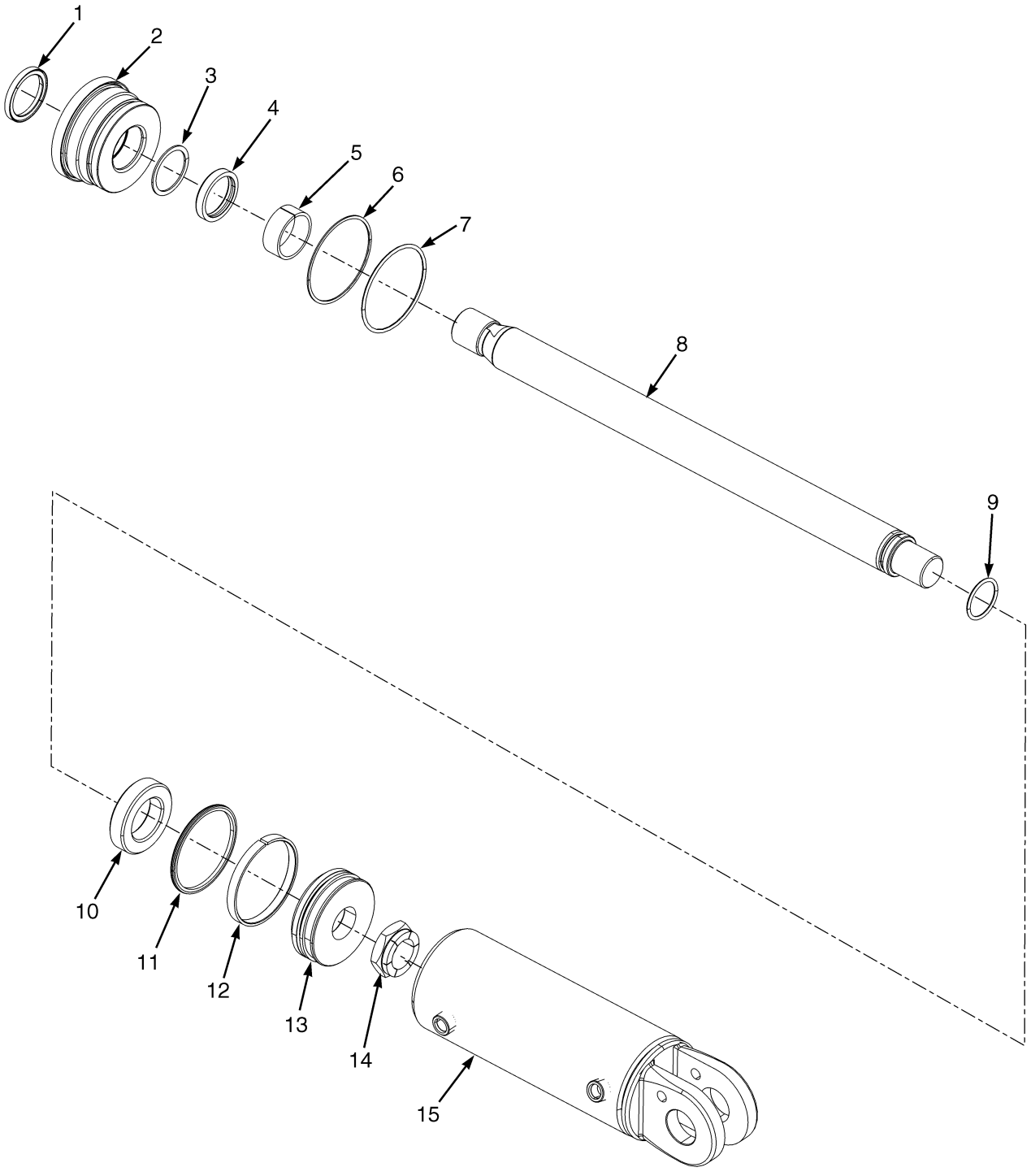

©2015 HYSTER COMPANY

TILT CYLINDERS

ITEM	PART NO.	DESCRIPTION	QTY
	b 2085566	Tilt Cylinder	1
	d 2081138	Tilt Cylinder	1
	a 2081137	Tilt Cylinder	1
	c 2094938	Tilt Cylinder	1
1	193554	Rod Wiper	1
2	1380878	Gland	1
3	638248	Back-Up Ring	1
4	1381085	Rod Seal	1
5	334155	Wear Ring	1
6	270330	Back-Up Ring	1
7	46629	O-Ring	1
8	**d** 2035318	Cylinder Rod	1
8	**a** 2035316	Cylinder Rod	1
8	**b** 2035317	Cylinder Rod	1
8	**c** 2062535	Cylinder Rod	1
9	199917	O-Ring	1
10	**b** 1313196	Spacer	1
10	**d** 1383031	Spacer	1
10	**c** 1551303	Spacer	1
11	2044372	Piston Seal	1
12	352287	Wear Ring	1
13	352247	Piston	1
14	2036547	Locknut	1
15	2082190	Tube Wldmt-Cylinder	1
	1493306	Kit-Seal	1

FOOTNOTES:

a 12° Forward/6° Back
b 6° Forward/10° Back
c 6° Forward/5° Back
d 6° Forward/6° Back

©2015 HYSTER COMPANY

NOTES

©2015 HYSTER COMPANY

11 MAST-TWO STAGE LIMITED FREE-LIFT

SECTION 11
MAST-TWO STAGE LIMITED FREE-LIFT

DESCRIPTION	PAGE
CARRIAGE	
STANDARD - TWO STAGE LIMITED FREE LIFT	11-22
HEADER HOSE	
TWO STAGE LIMITED FREE LIFT	11-16
HEADER HOSE AUXILIARY TUBE EXTENSIONS	
TWO STAGE LIMITED FREE LIFT - STANDARD CARRIAGE	11-20
MAIN LIFT CYLINDER	
TWO STAGE LIMITED FREE LIFT - H4.0FT5-H4.0FT6	11-10
TWO STAGE LIMITED FREE LIFT - H4.5FTS5, H4.5FT6, H5.0-5.5FT	11-12
MAST	
TWO STAGE LIMITED FREE LIFT - OUTER MAST AND MAIN LIFT	11-2
TWO STAGE LIMITED FREE LIFT - INNER MAST	11-6

©2015 HYSTER COMPANY

MAST (FIGURE 11-1)
TWO STAGE LIMITED FREE LIFT — OUTER MAST AND MAIN LIFT

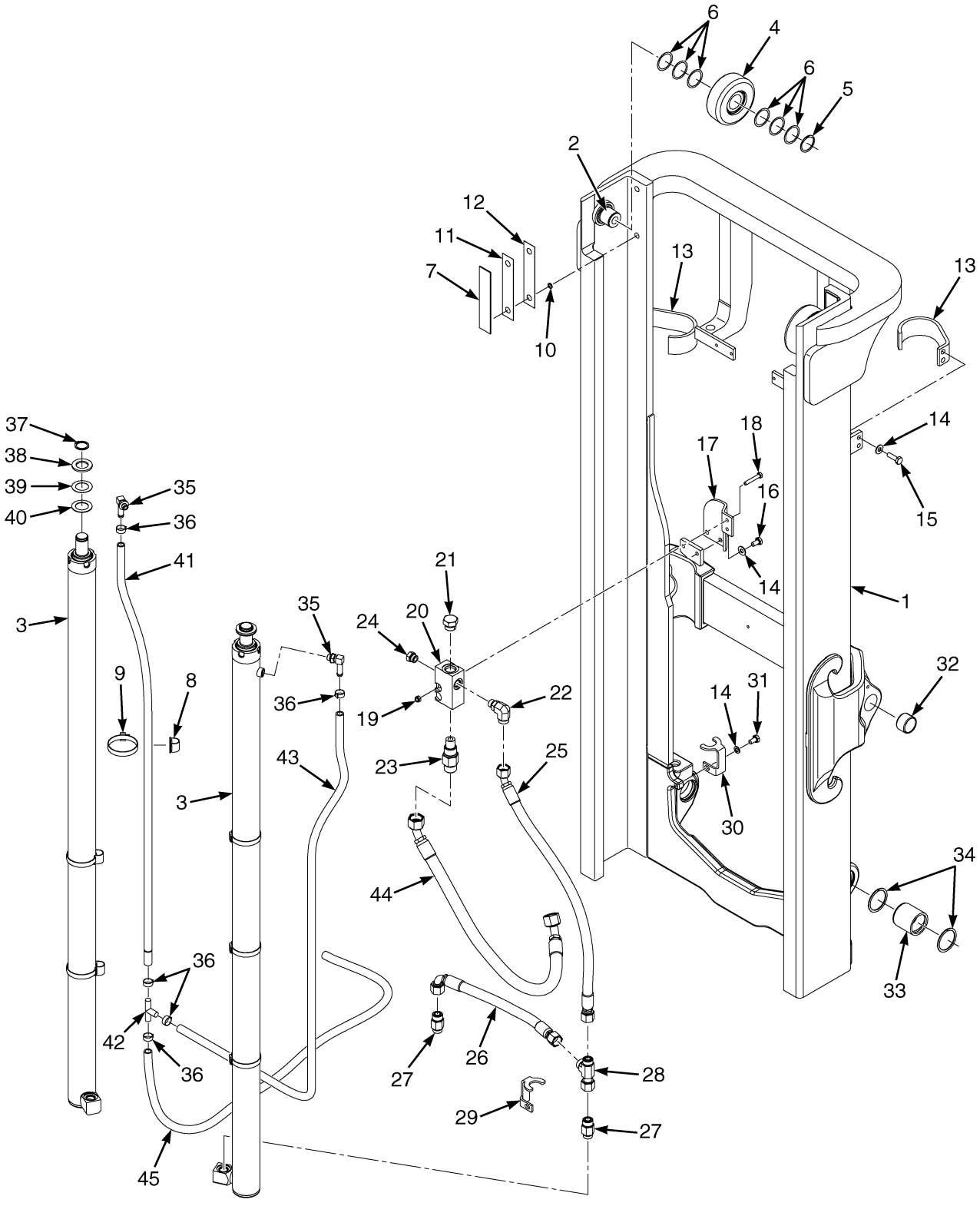

©2015 HYSTER COMPANY

MAST

TWO STAGE LIMITED FREE LIFT – OUTER MAST AND MAIN LIFT

H4.0FT5-H4.0FT6

ITEM	DESCRIPTION 1 2 3 4	LIFT HEIGHT TO BOTTOM OF FORKS			
		3000 mm (118.1 in.)	3600 mm (141.7 in.)	4200 mm (165.4 in.)	4900 mm (192.9 in.)
	Mast Group Number	B749 3000	B749 3600	B749 4200	B749 4900
	Mast Assy	2071745	2071750	2071756	2071763
1	Outer Mast	1573127	1573133	1573139	1573146
41	Hose Assy	1399081	1399093	1399105	1399123
43	Hose Assy	1399100	1399112	1399124	1399142

H4.5FTS5, H4.5FT6, H5.0-5.5FT

ITEM	DESCRIPTION 1 2 3 4	LIFT HEIGHT TO BOTTOM OF FORKS			
		2740 mm (107.9 in.)	3340 mm (131.5 in.)	3940 mm (155.1 in.)	4640 mm (182.7 in.)
	Mast Group Number	B750 2740	B750 3340	B750 3940	B750 4640
	Mast Assy	2071818	2071824	2071830	2071837
1	Outer Mast	1573127	1573133	1573139	1573146
41	Hose Assy	78561	1399088	1399100	1399118
43	Hose Assy	1399095	1399107	1399119	1399137

H4.5FTS5, H4.5FT6, H5.0-5.5FT

ITEM	DESCRIPTION 1 2 3 4	LIFT HEIGHT TO BOTTOM OF FORKS	
		5240 mm (206.3 in.)	5840 mm (229.9 in.)
	Mast Group Number	B750 5240	B750 5840
	Mast Assy	2071843	2071849
1	Outer Mast	1573152	1573158
41	Hose Assy	1399134	1399150
43	Hose Assy	1399153	1399169

KEY:
A: H4.0FT5-H4.0FT6
B: H4.5FTS5, H4.5FT6, H5.0-5.5FT

ITEM	PART NO.	DESCRIPTION	QTY A	QTY B
	a	Mast Assy	1	1
1	**a**	Outer Mast	1	1
2	1500744	Stubshaft	2	2
3	. . . . .	Main Lift Cylinder (LH/RH) (☞Figure 11-3, ☞Figure 11-4).....	2	2

©2015 HYSTER COMPANY

MAST

TWO STAGE LIMITED FREE LIFT – OUTER MAST AND MAIN LIFT

KEY:
A: H4.0FT5-H4.0FT6
B: H4.5FTS5, H4.5FT6, H5.0-5.5FT

ITEM	PART NO.	DESCRIPTION	QTY A	QTY B
4	1399203	Load Roller ("A") (126.75/126.49)	2	2
4	1399204	Load Roller ("B") (127.51/127.25)	2	2
4	1399205	Load Roller ("C") (128.27/128.01)	2	2
5	1465072	Snap Ring	2	2
6	126765	Shim	12	12
7	104264	Wear Strip	2	2
8	1465585	Hose Clamp	6	6
9	1360529	Clamp	6	6
10	104506	O-Ring	4	4
11	161272	Shim (0.178 mm)	AR	AR
12	161273	Shim (0.508 mm)	AR	AR
13	4104235	Bracket (Cylinder Restraint)	2	2
13	1474399	Bracket Wldmt	1	1
13	4104236	Bracket (Cylinder Restraint) (Optional)	2	2
13	1474398	Bracket Wldmt (Optional)	1	1
13	4058158	Rubber Pad	2	2
14	1581558	Washer	8	8
15	1581588	Capscrew	4	4
16	1581585	Capscrew	2	2
17	1477559	Bracket	1	1
18	1581583	Capscrew	2	2
19	1581566	Nut	2	2
20	1388019	Housing	1	1
21	14603	Plug	1	1
21	16486	O-Ring	1	1
22	1487068	Fitting	1	1
23	1550197	Lowering Control Valve	1	..
23	1550198	Lowering Control Valve	..	1
23	16982	O-Ring	1	1
23	280154	O-Ring	1	1
24	14595	Plug Assembly	1	1
24	199524	Plug	1	1
24	16484	O-Ring	1	1
25	2087555	Hose Assy	1	1
26	4604938	Hose Assy	1	1
27	1550157	Hyd Velocity Fuse	2	..
27	1550158	Hyd Velocity Fuse (Lift Cylinder)	..	2
27	16485	O-Ring	1	1
27	252729	O-Ring	1	1
28	1487096	Fitting	1	1
29	1550384	Bracket (LH)	1	1
30	1550386	Bracket (RH)	1	1
31	1581586	Capscrew	2	2
32	192429	Bushing	2	2
33	1485449	Bushing	2	2

©2015 HYSTER COMPANY

MAST

TWO STAGE LIMITED FREE LIFT – OUTER MAST AND MAIN LIFT

KEY:
A: H4.0FT5-H4.0FT6
B: H4.5FTS5, H4.5FT6, H5.0-5.5FT

ITEM	PART NO.	DESCRIPTION	QTY A	QTY B
34	1465518	Snap Ring	4	4
35	110178	Fitting	2	2
35	16483	O-Ring	1	1
36	379405	Clamp	4	4
36	1452463	Hose Clamp (Optional)	4	4
37	304523	Snap Ring	2	2
38	332061	Washer	2	2
39	142247	Shim	AR	AR
40	1325120	Shim	AR	AR
41	**a**	Hose Assy	1	1
42	2046871	Fitting	1	1
43	**a**	Hose Assy	1	1
44	2076763	Hose Assy (Hoist)	1	1
45	1399086	Hose Assy	1	1

FOOTNOTES:

a Refer to Table

©2015 HYSTER COMPANY

MAST (FIGURE 11-2)
TWO STAGE LIMITED FREE LIFT — INNER MAST

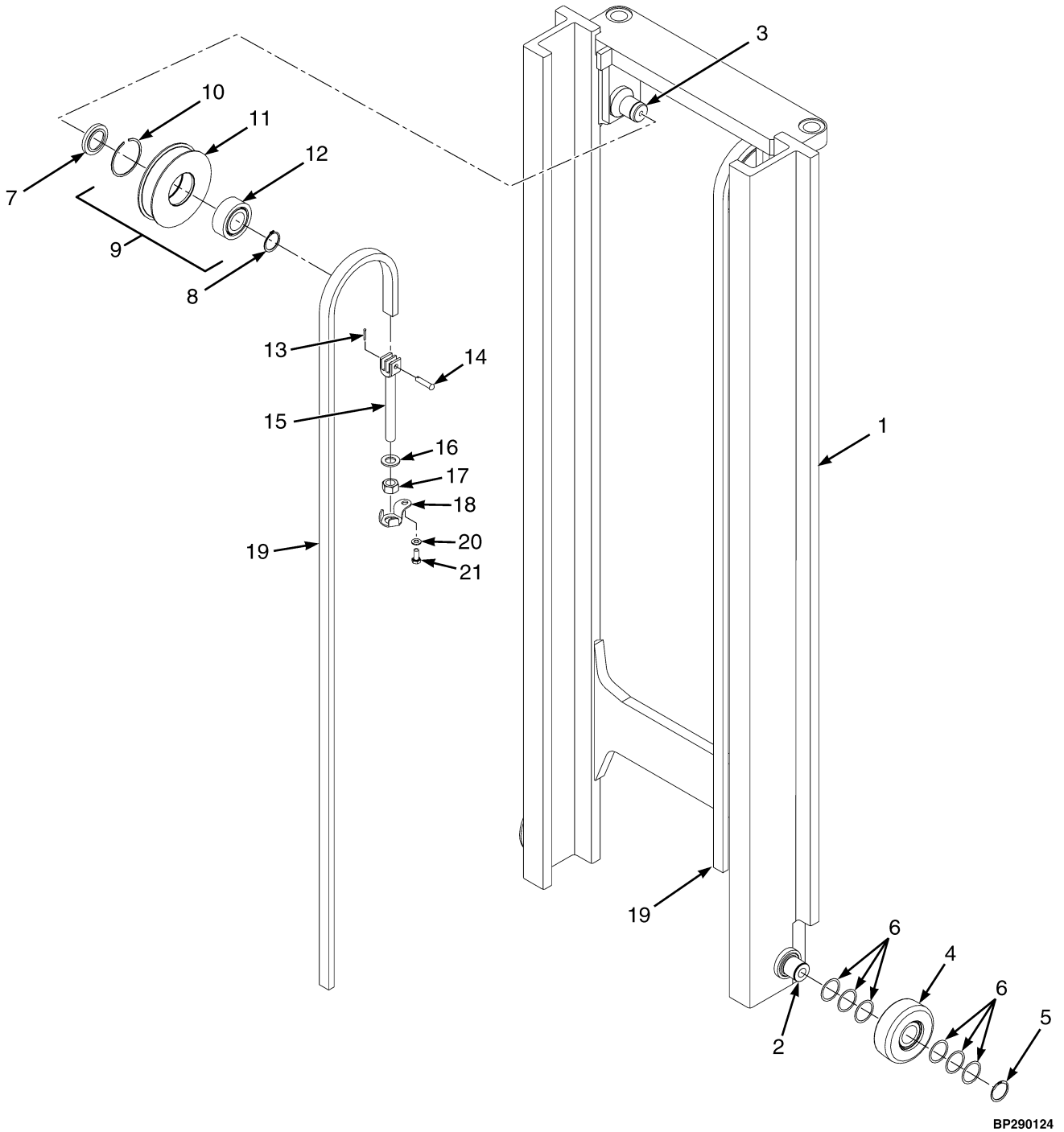

©2015 HYSTER COMPANY

MAST

TWO STAGE LIMITED FREE LIFT – INNER MAST

H4.0FT5-H4.0FT6

ITEM	DESCRIPTION 1 2 3 4	LIFT HEIGHT TO BOTTOM OF FORKS			
		3000 mm (118.1 in.)	3600 mm (141.7 in.)	4200 mm (165.4 in.)	4900 mm (192.9 in.)
	Mast Group Number	B749 3000	B749 3600	B749 4200	B749 4900
	Mast Assy	2071745	2071750	2071756	2071763
1	Inner Mast	1395384	1395390	1395396	1395403
19	Chain	182342	191072	191076	291256

H4.5FTS5, H4.5FT6, H5.0-5.5FT

ITEM	DESCRIPTION 1 2 3 4	LIFT HEIGHT TO BOTTOM OF FORKS			
		2740 mm (107.9 in.)	3340 mm (131.5 in.)	3940 mm (155.1 in.)	4640 mm (182.7 in.)
	Mast Group Number	B750 2740	B750 3340	B750 3940	B750 4640
	Mast Assy	2071818	2071824	2071830	2071837
1	Inner Mast	1395384	1395390	1395396	1395403
19	Chain	338647	348149	356917	357025

H4.5FTS5, H4.5FT6, H5.0-5.5FT

ITEM	DESCRIPTION 1 2 3 4	LIFT HEIGHT TO BOTTOM OF FORKS	
		5240 mm (206.3 in.)	5840 mm (229.9 in.)
	Mast Group Number	B750 5240	B750 5840
	Mast Assy	2071843	2071849
1	Inner Mast	1395409	1395415
19	Chain	1395492	1395499

KEY:
A: H4.0FT5-H4.0FT6
B: H4.5FTS5, H4.5FT6, H5.0-5.5FT

ITEM	PART NO.	DESCRIPTION	QTY A	QTY B
	a	Mast Assy	1	1
1	**a**	Inner Mast	1	1
2	1500744	Stubshaft	2	2
3	1389932	Stubshaft	2	2
4	1399203	Load Roller ("A") (126.75/126.49)	2	2
4	1399204	Load Roller ("B") (127.51/127.25)	2	2
4	1399205	Load Roller ("C") (128.27/128.01)	2	2
5	1465072	Snap Ring	2	2

©2015 HYSTER COMPANY

MAST

TWO STAGE LIMITED FREE LIFT – INNER MAST

KEY:
A: H4.0FT5-H4.0FT6
B: H4.5FTS5, H4.5FT6, H5.0-5.5FT

ITEM	PART NO.	DESCRIPTION	QTY A	QTY B
6	126765	Shim	12	12
7	1389846	Spacer	2	2
8	12891	Snap Ring	2	2
9	1387745	Chain Sheave (Assembly)	2	..
9	1387744	Chain Sheave (Assembly)	..	2
10	41531	Snap Ring	1	1
11	1387742	Chain Sheave	1	..
11	1387741	Chain Sheave	..	1
12	126764	Double Row Bearing	1	1
13	15222	Cotter Pin	2	2
14	327591	Pin	2	..
14	339932	Pin	..	2
15	1331990	Chain Anchor	2	..
15	1331991	Chain Anchor	..	2
16	1626490	Washer	2	2
17	1581896	Nut	4	4
18	4038137	Bracket (Retainer Nut)	2	2
19	**a**	Chain	2	2
20	1581556	Washer	2	2
21	1581580	Capscrew	2	2

FOOTNOTES:

a Refer to Table

©2015 HYSTER COMPANY

NOTES

©2015 HYSTER COMPANY

MAIN LIFT CYLINDER (FIGURE 11-3)
TWO STAGE LIMITED FREE LIFT — H4.0FT5-H4.0FT6

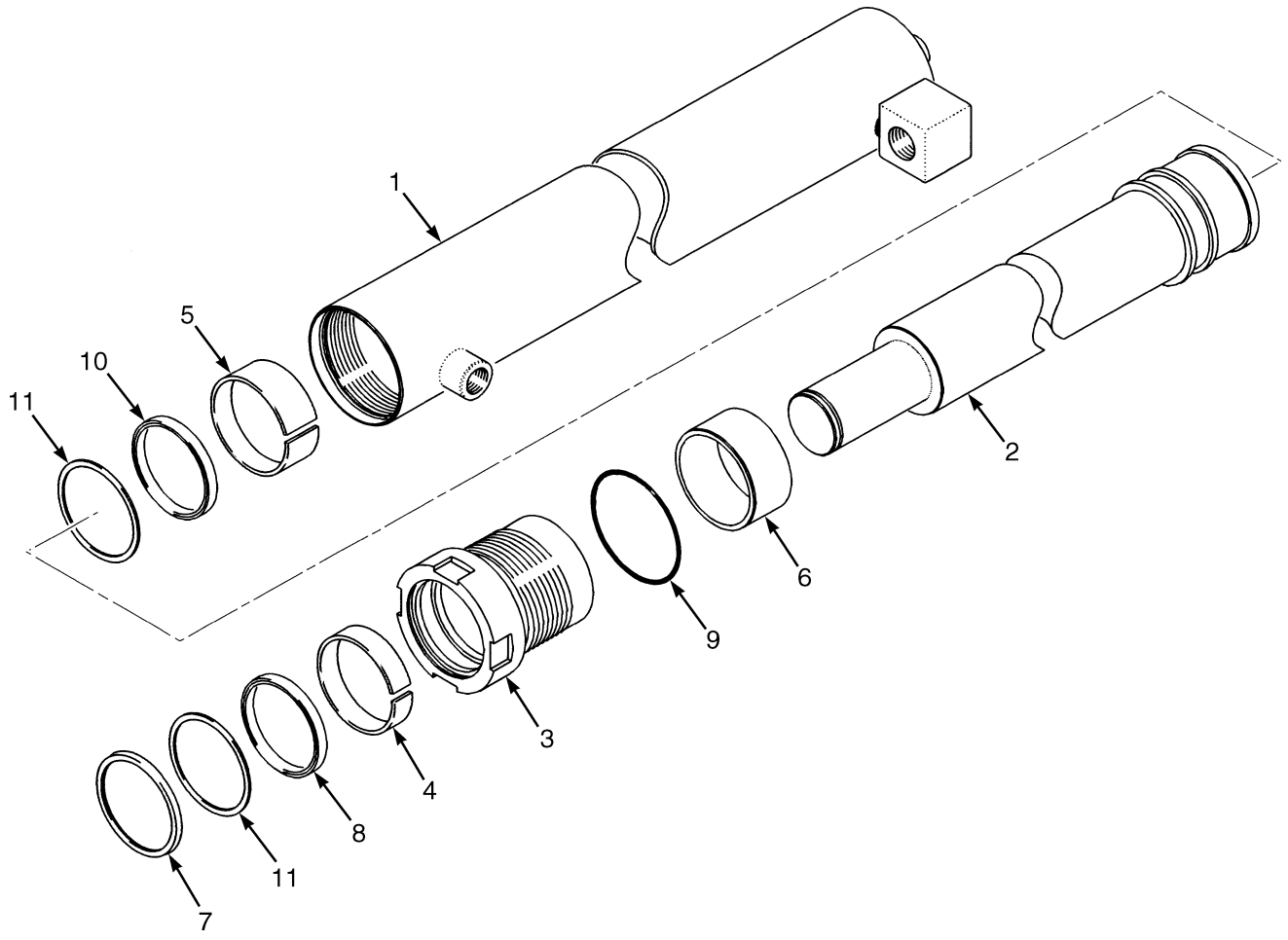

BP170571

©2015 HYSTER COMPANY

MAIN LIFT CYLINDER
TWO STAGE LIMITED FREE LIFT – H4.0FT5-H4.0FT6

B749

ITEM	DESCRIPTION 1 2 3 4	LIFT HEIGHT TO BOTTOM OF FORKS			
		3000 mm (118.1 in.)	3600 mm (141.7 in.)	4200 mm (165.4 in.)	4900 mm (192.9 in.)
	Mast Group Number	**B749 3000**	**B749 3600**	**B749 4200**	**B749 4900**
	Cylinder Group Number	**8527601**	**8527607**	**8527613**	**8527620**
	Cylinder Assy	2074622	2074629	2074637	2074645
1	Tube Wldmt-Cylinder	2075005	2075011	2075067	2075075
2	Cylinder Rod	2075442	2075127	2075133	2075140
6	Spacer	----	----	----	367139

ITEM	PART NO.	DESCRIPTION	QTY
	a	Cylinder Assy	2
1	**a**	Tube Wldmt-Cylinder	1
2	**a**	Cylinder Rod	1
3	2033243	Gland	1
4	215425	Wear Ring	1
5	297532	Wear Ring	1
6	**a**	Spacer	1
7	1383066	Rod Wiper	1
8	270077	Rod Seal	1
9	57664	O-Ring	1
10	1381061	Rod Seal	1
11	638249	Back-Up Ring	2
	2035784	Kit-Seal	1

FOOTNOTES:

a Refer to Table

©2015 HYSTER COMPANY

MAIN LIFT CYLINDER (FIGURE 11-4)

TWO STAGE LIMITED FREE LIFT — H4.5FTS5, H4.5FT6, H5.0-5.5FT

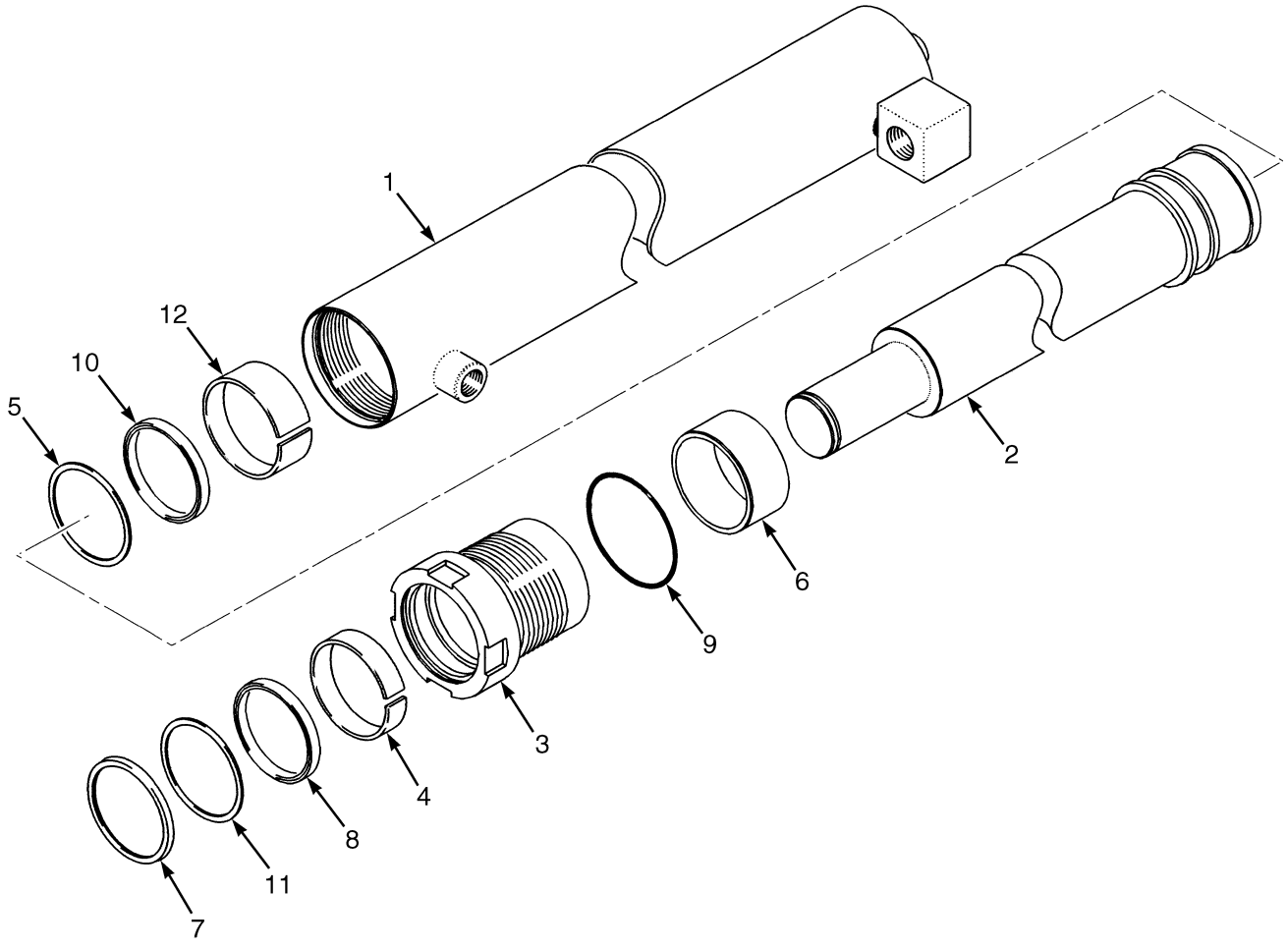

BP170572

©2015 HYSTER COMPANY

MAIN LIFT CYLINDER

TWO STAGE LIMITED FREE LIFT – H4.5FTS5, H4.5FT6, H5.0-5.5FT

B750

ITEM	DESCRIPTION 1 2 3 4	LIFT HEIGHT TO BOTTOM OF FORKS			
		2740 mm (107.9 in.)	3340 mm (131.5 in.)	3940 mm (155.1 in.)	4640 mm (182.7 in.)
	Mast Group Number	B750 2740	B750 3340	B750 3940	B750 4640
	Cylinder Group Number	8527701	8527707	8527713	8527720
	Cylinder Assy	2074895	2074901	2074954	2074962
1	Tube Wldmt-Cylinder	2075089	2075095	2075101	2075108
2	Cylinder Rod	2075151	2075157	2075163	2075165
6	Spacer	----	----	----	2036209

B750

ITEM	DESCRIPTION 1 2 3 4	LIFT HEIGHT TO BOTTOM OF FORKS	
		5240 mm (206.3 in.)	5840 mm (229.9 in.)
	Mast Group Number	B750 5240	B750 5840
	Cylinder Group Number	8527726	8527753
	Cylinder Assy	2074968	2075819
1	Tube Wldmt-Cylinder	2075114	2075791
2	Cylinder Rod	2075171	2075761
6	Spacer	2036210	381110

ITEM	PART NO.	DESCRIPTION	QTY
	a	Cylinder Assy	1
1	**a**	Tube Wldmt-Cylinder	1
2	**a**	Cylinder Rod	1
3	2033281	Gland	1
4	297532	Wear Ring	1
5	351532	Back-Up Ring	1
6	**a**	Spacer	1
7	1383067	Rod Wiper	1
8	327807	Rod Seal	1
9	15879	O-Ring	1
10	1381062	Rod Seal	1
11	327808	Back-Up Ring	1
12	351531	Wear Ring	1
	2035785	Kit-Seal	1

©2015 HYSTER COMPANY

FOOTNOTES:

a Refer to Table

©2015 HYSTER COMPANY

NOTES

©2015 HYSTER COMPANY

HEADER HOSE (FIGURE 11-5)
TWO STAGE LIMITED FREE LIFT

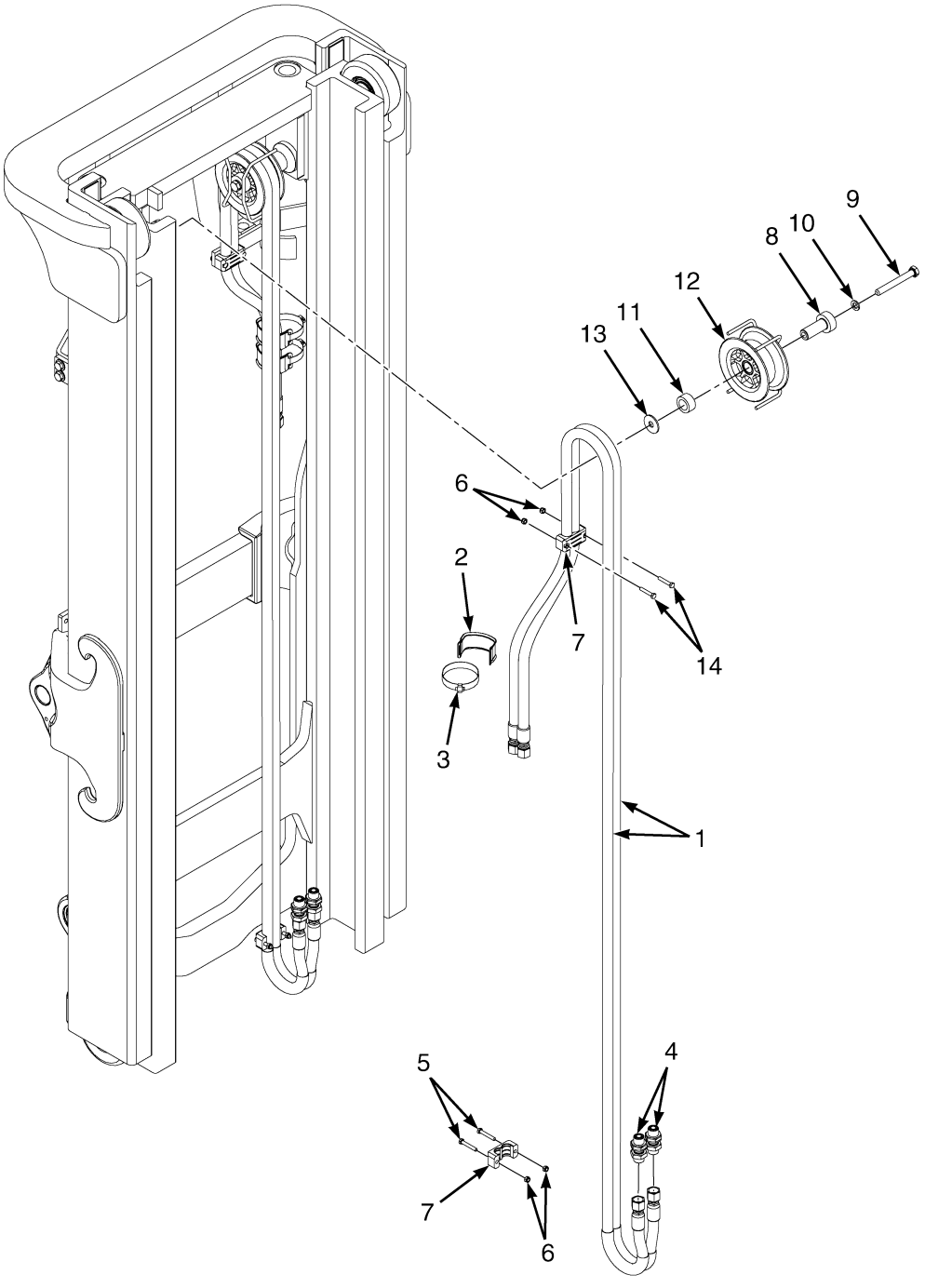

©2015 HYSTER COMPANY

HEADER HOSE
TWO STAGE LIMITED FREE LIFT

H4.0FT5-H4.0FT6

ITEM	DESCRIPTION 1 2 3 4	LIFT HEIGHT TO BOTTOM OF FORKS			
		3000 mm (118.1 in.)	3600 mm (141.7 in.)	4200 mm (165.4 in.)	4900 mm (192.9 in.)
	Mast Group Number	B749 3000	B749 3600	B749 4200	B749 4900
	Mast Assy	2071745	2071750	2071756	2071763
1	Hose Assy	2083261	2083267	2083273	2083279

H4.5FTS5, H4.5FT6, H5.0-5.5FT

ITEM	DESCRIPTION 1 2 3 4	LIFT HEIGHT TO BOTTOM OF FORKS			
		2740 mm (107.9 in.)	3340 mm (131.5 in.)	3940 mm (155.1 in.)	4640 mm (182.7 in.)
	Mast Group Number	B750 2740	B750 3340	B750 3940	B750 4640
	Mast Assy	2071818	2071824	2071830	2071837
1	Hose Assy	2083261	2083267	2083273	2083279

H4.5FTS5, H4.5FT6, H5.0-5.5FT

ITEM	DESCRIPTION 1 2 3 4	LIFT HEIGHT TO BOTTOM OF FORKS	
		5240 mm (206.3 in.)	5840 mm (229.9 in.)
	Mast Group Number	B750 5240	B750 5840
	Mast Assy	2071843	2071849
1	Hose Assy	2083282	2087925

KEY:
A: Three Function
B: Four Function

ITEM	PART NO.	DESCRIPTION	QTY A	QTY B
	b	Mast Assy	1	1
1	**b**	Hose Assy	2	4
2	1465489	Hose Clamp	2	4
3	1360507	Clamp	2	4
4	816591	Fitting	2	4
5	1581578	Capscrew	2	4
6	1581565	Nut	4	8
7	2035791	Hose Clamp	2	4
8	1477570	Stubshaft	1	2
9	1581594	Capscrew	1	2
10	1581564	Lockwasher	1	2
11	1477578	Spacer	1	2

©2015 HYSTER COMPANY

HEADER HOSE
TWO STAGE LIMITED FREE LIFT

KEY:
A: Three Function
B: Four Function

ITEM	PART NO.	DESCRIPTION	QTY A	QTY B
12	1495279	Hose Sheave	1	2
13	1345190	Washer	1	2
14	1581577	Capscrew	2	4
	a 1529016	Fitting (Cap)	2	4

FOOTNOTES:

a Not Illustrated

b Refer to Table

©2015 HYSTER COMPANY

NOTES

©2015 HYSTER COMPANY

HEADER HOSE AUXILIARY TUBE EXTENSIONS (FIGURE 11-6)

TWO STAGE LIMITED FREE LIFT — STANDARD CARRIAGE

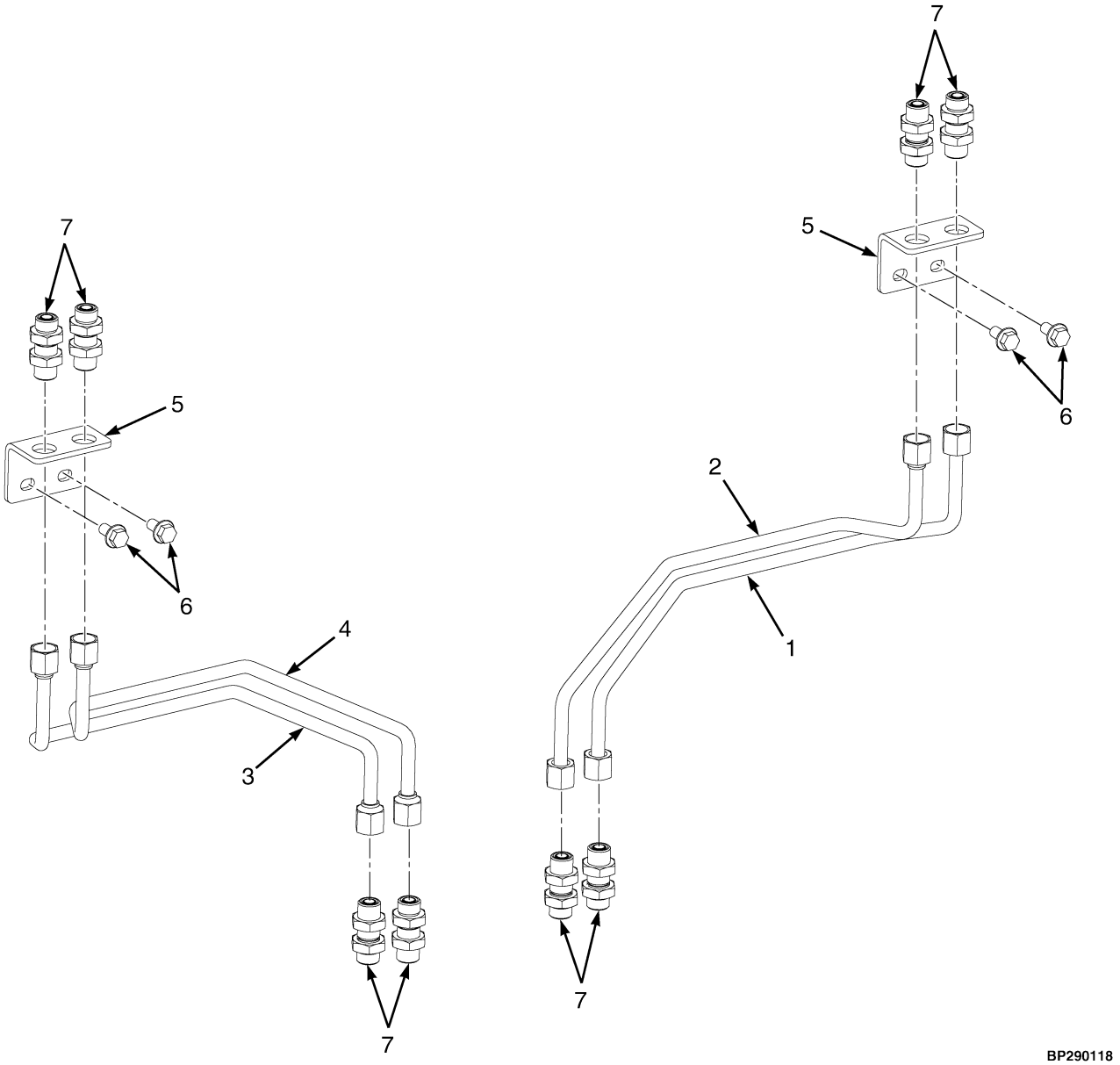

©2015 HYSTER COMPANY

HEADER HOSE AUXILIARY TUBE EXTENSIONS
TWO STAGE LIMITED FREE LIFT – STANDARD CARRIAGE

KEY:
A: H4.0FT5-H4.0FT6 — Three Function
B: H4.0FT5-H4.0FT6 — Four Function
C: H4.5FTS5, H4.5FT6, H5.0-5.5FT — Three Function
D: H4.5FTS5, H4.5FT6, H5.0-5.5FT — Four Function

ITEM	PART NO.	DESCRIPTION	QTY A	QTY B	QTY C	QTY D
1	2093179	Tube Assy	1	1	..	..
1	2093183	Tube Assy	..	..	1	1
2	2093180	Tube Assy	1	1	..	..
2	2093184	Tube Assy	..	..	1	1
3	2093181	Tube Assy	..	1	..	..
3	2093185	Tube Assy	..	..	..	1
4	2093182	Tube Assy	..	1	..	..
4	2093186	Tube Assy	..	..	..	1
5	1692933	Bracket (RH and LH Bolt On)	1	2	1	2
6	1527883	Capscrew	2	4	2	4
7	816591	Fitting	4	8	4	8

©2015 HYSTER COMPANY

CARRIAGE (FIGURE 11-7)
STANDARD — TWO STAGE LIMITED FREE LIFT

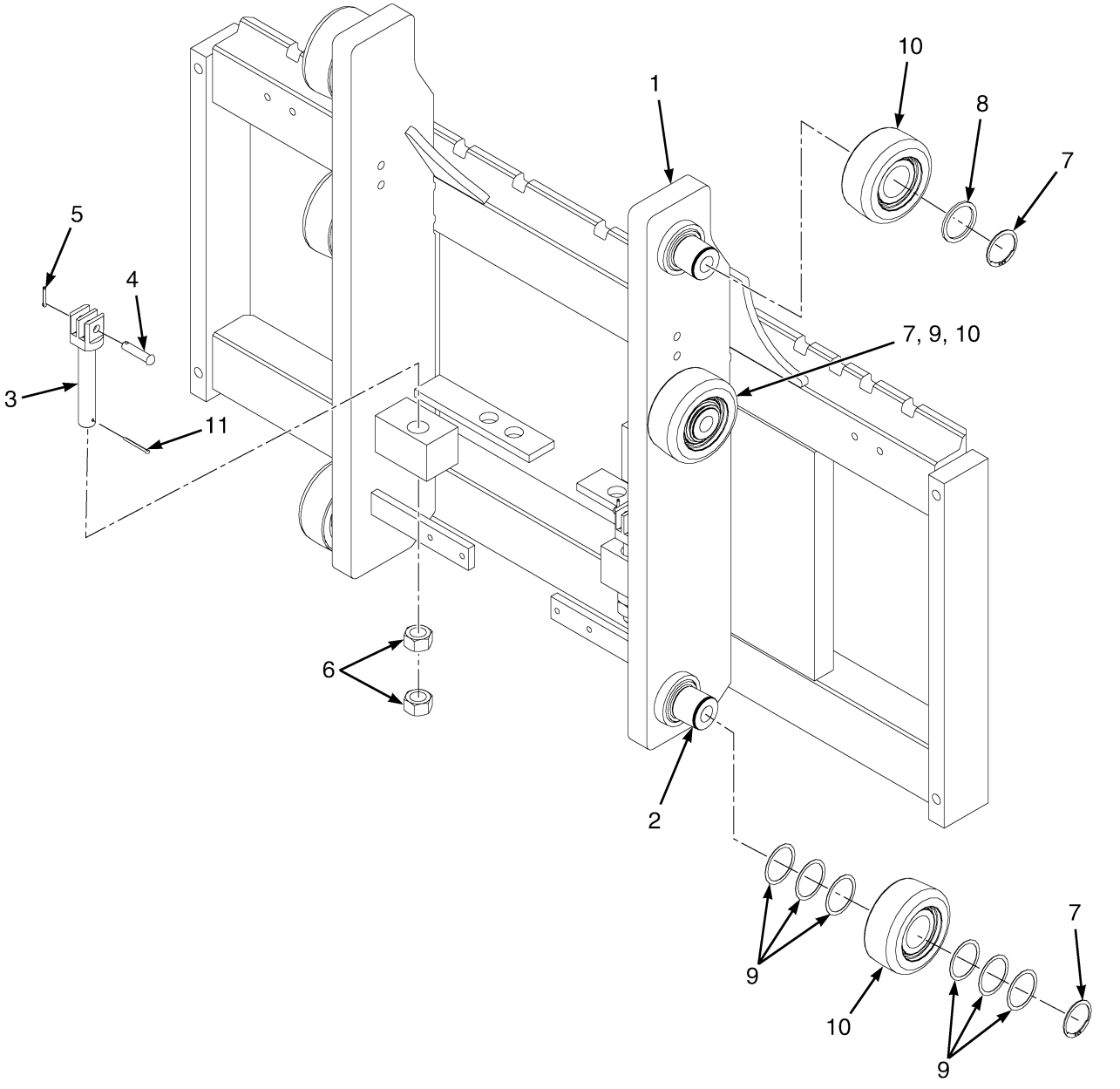

©2015 HYSTER COMPANY

CARRIAGE

STANDARD – TWO STAGE LIMITED FREE LIFT

KEY:
A: H4.0FTS, H4.0FT6
B: H4.5FTS5, H4.5FT6, H5.0-5.5FT

ITEM	PART NO.	DESCRIPTION	QTY A	QTY B
	2035667	Carriage (1219 mm)	1	..
	2035669	Carriage (1524 mm)	1	..
	2035671	Carriage (1372 mm)	..	1
	2035672	Carriage (1524 mm)	..	1
	2035670	Carriage (1219 mm)	..	1
1	1388092	Carriage Wldmt (1219 mm)	1	..
1	1388094	Carriage Wldmt (1524 mm)	1	..
1	1387447	Carriage Wldmt (1372 mm)	..	1
1	1387448	Carriage Wldmt (1524 mm)	..	1
1	1387446	Carriage Wldmt (1219 mm)	..	1
2	1500744	Stubshaft	6	6
3	1387285	Chain Anchor	2	..
3	1387286	Chain Anchor	..	2
4	327591	Pin	2	..
4	339932	Pin	..	2
5	15222	Cotter Pin	2	2
6	1581896	Nut	4	4
7	1465072	Snap Ring	6	6
8	1399224	Spacer	2	2
9	126765	Shim	24	24
10	1511883	Load Roller ("B") (104.44/104.18)	6	6
10	1511882	Load Roller ("A") (103.68/103.42) (Alternate)	6	6
10	1511884	Load Roller ("C") (105.20/104.94) (Alternate)	6	6
11	15224	Cotter Pin	2	2

©2015 HYSTER COMPANY

NOTES

©2015 HYSTER COMPANY

12 MAST-TWO STAGE FULL FREE-LIFT

SECTION 12
MAST-TWO STAGE FULL FREE-LIFT

DESCRIPTION	PAGE
CARRIAGE	
TWO STAGE FULL FREE LIFT	12-28
FREE LIFT CYLINDER	
TWO STAGE FULL FREE LIFT	12-18
HEADER HOSE	
TWO STAGE FULL FREE LIFT	12-22
HEADER HOSE AUXILIARY TUBE EXTENSIONS	
TWO STAGE FULL FREE LIFT - STANDARD CARRIAGE	12-26
MAIN LIFT CYLINDER	
TWO STAGE FULL FREE LIFT - H4.0FT5-H4.0FT6	12-10
TWO STAGE FULL FREE LIFT - H4.5FTS5, H4.5FT6, H5.0-5.5FT	12-14
MAST	
TWO STAGE FULL FREE LIFT - OUTER MAST AND MAIN LIFT	12-2
TWO STAGE FULL FREE LIFT - INNER MAST AND FREE LIFT	12-6

©2015 HYSTER COMPANY

MAST (FIGURE 12-1)
TWO STAGE FULL FREE LIFT — OUTER MAST AND MAIN LIFT

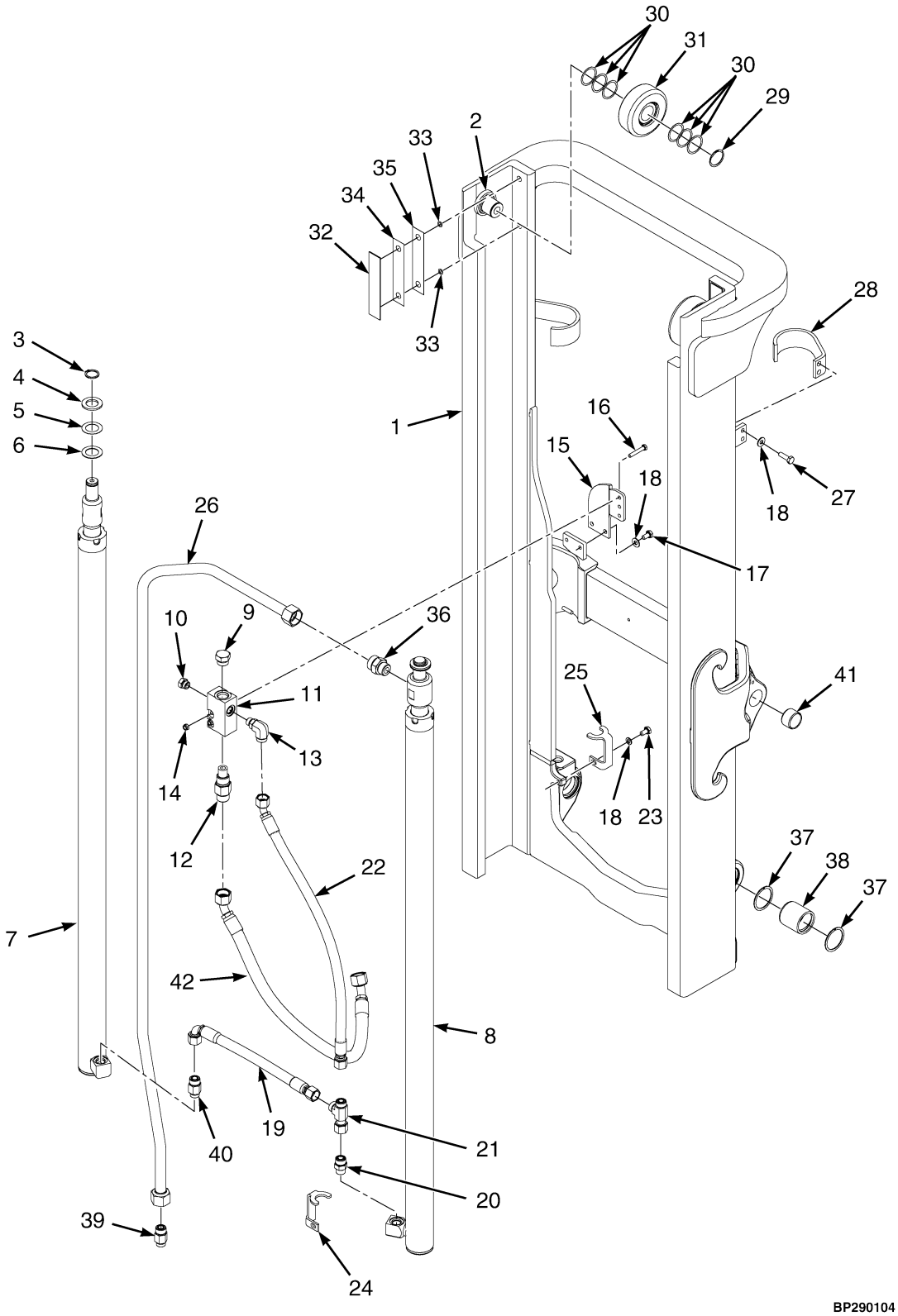

©2015 HYSTER COMPANY

MAST

TWO STAGE FULL FREE LIFT – OUTER MAST AND MAIN LIFT

H4.0FT5-H4.0FT6

ITEM	DESCRIPTION 1 2 3 4	LIFT HEIGHT TO BOTTOM OF FORKS	
		3025 mm (119.1 in.)	3625 mm (142.7 in.)
	Mast Group Number	B753 3025	B753 3625
	Mast Assy	2071931	2071937
1	Outer Mast	1573779	1573785
26	Tube Assy	2072127	2072133

H4.5FTS5, H4.5FT6, H5.0-5.5FT

ITEM	DESCRIPTION 1 2 3 4	LIFT HEIGHT TO BOTTOM OF FORKS	
		2765 mm (108.9 in.)	3365 mm (132.5 in.)
	Mast Group Number	B754 2765	B754 3365
	Mast Assy	2071969	2071975
1	Outer Mast	1573779	1573785
26	Tube Assy	2072127	2072133

KEY:
A: H4.0FT5-H4.0FT6
B: H4.5FTS5, H4.5FT6, H5.0-5.5FT

ITEM	PART NO.	DESCRIPTION	QTY A	QTY B
	a	Mast Assy	1	1
1	**a**	Outer Mast	1	1
2	1500744	Stubshaft	2	2
3	304523	Snap Ring	2	2
4	332061	Washer	2	2
5	1325120	Shim	AR	AR
6	142247	Shim	AR	AR
7	. . . . .	Main Cylinder (RH) (☞Figure 12-3, ☞Figure 12-4)	1	1
8	. . . . .	Main Cylinder (LH) (☞Figure 12-3, ☞Figure 12-4)	1	1
9	14603	Plug	1	1
9	16486	O-Ring	1	1
10	14595	Plug Assembly	1	1
10	199524	Plug	1	1
10	16484	O-Ring	1	1
11	1388019	Housing (Control Valve)	1	1
12	1550197	Lowering Control Valve	1	..
12	16982	O-Ring	1	..
12	280154	O-Ring	1	..
12	1550198	Lowering Control Valve	..	1
12	16982	O-Ring	..	1

©2015 HYSTER COMPANY

MAST

TWO STAGE FULL FREE LIFT – OUTER MAST AND MAIN LIFT

KEY:
A: H4.0FT5-H4.0FT6
B: H4.5FTS5, H4.5FT6, H5.0-5.5FT

ITEM	PART NO.	DESCRIPTION	QTY A	QTY B
12	280154	O-Ring	..	1
13	1487068	Fitting	1	1
14	1581566	Nut	3	3
15	1477559	Bracket	1	1
16	1581583	Capscrew	2	2
17	1581585	Capscrew	2	2
18	1581558	Washer	8	8
19	4604938	Hose Assy	1	1
20	1486749	Fitting	1	1
21	1487096	Fitting	1	1
22	4627873	Hose Assy	1	1
23	1581586	Capscrew	2	2
24	1550385	Bracket (LH)	1	1
25	1550387	Bracket (RH)	1	1
26	**a**	Tube Assy	1	1
27	1581588	Capscrew	4	4
28	4104235	Bracket (Cylinder Restraint)	2	2
28	1474399	Bracket Wldmt	1	1
28	4104236	Bracket (Cylinder Restraint) (Optional)	2	2
28	1474398	Bracket Wldmt (Optional)	1	1
28	4058158	Rubber Pad	2	2
29	1465072	Snap Ring	2	2
30	126765	Shim	12	12
31	1399204	Load Roller ("B") (127.51/127.25)	2	2
31	1399203	Load Roller ("A") (126.75/126.49) (Alternate)	2	2
31	1399205	Load Roller ("C") (128.27/128.01) (Alternate)	2	2
32	104264	Wear Strip	2	2
33	104506	O-Ring	4	4
34	161272	Shim (0.178 mm)	AR	AR
35	161273	Shim (0.508 mm)	AR	AR
36	1550199	Fitting	1	1
37	1465518	Snap Ring	4	4
38	1485449	Bushing	2	2
39	1550193	Hyd Velocity Fuse	1	..
39	1550194	Hyd Velocity Fuse	..	1
39	244167	O-Ring	1	1
39	16487	O-Ring	1	1
40	1550159	Velocity Fuse	1	..
40	1550157	Hyd Velocity Fuse	..	1
40	252729	O-Ring	1	1
40	16485	O-Ring	1	1
41	192429	Bushing	2	2
42	2076763	Hose Assy (Hoist)	1	1

©2015 HYSTER COMPANY

FOOTNOTES:

a Refer to Table

MAST (FIGURE 12-2)

TWO STAGE FULL FREE LIFT — INNER MAST AND FREE LIFT

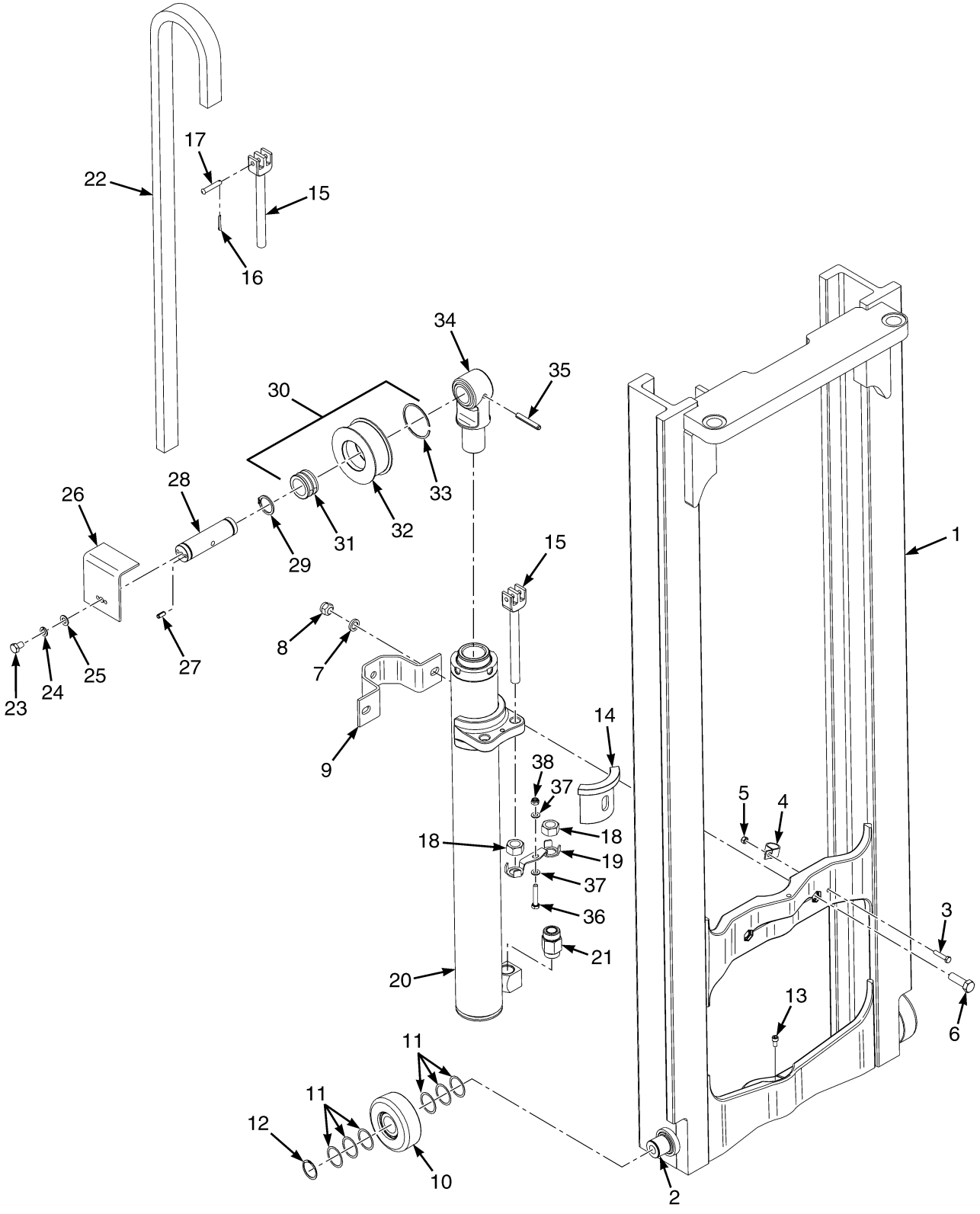

©2015 HYSTER COMPANY

MAST

TWO STAGE FULL FREE LIFT – INNER MAST AND FREE LIFT

H4.0FT5-H4.0FT6

ITEM	DESCRIPTION 1 2 3 4	LIFT HEIGHT TO BOTTOM OF FORKS	
		3025 mm (119.1 in.)	3625 mm (142.7 in.)
	Mast Group Number	B753 3025	B753 3625
	Mast Assy	2071931	2071937
1	Inner Mast	1573809	1573815
22	Chain	337189	339897

H4.5FTS5, H4.5FT6, H5.0-5.5FT

ITEM	DESCRIPTION 1 2 3 4	LIFT HEIGHT TO BOTTOM OF FORKS	
		2765 mm (108.9 in.)	3365 mm (132.5 in.)
	Mast Group Number	B754 2765	B754 3365
	Mast Assy	2071969	2071975
1	Inner Mast	1573809	1573815
22	Chain	386885	337189

KEY:
A: H4.0FT5-H4.0FT6
B: H4.5FTS5, H4.5FT6, H5.0-5.5FT

ITEM	PART NO.	DESCRIPTION	QTY A	QTY B
	b	Mast Assy	1	1
1	**b**	Inner Mast	1	1
2	1500744	Stubshaft	2	2
3	1581582	Capscrew	1	1
4	178119	Clamp	1	1
5	1581566	Nut	1	1
6	188479	Capscrew	2	2
6	221631	Capscrew (Optional)	2	2
7	297649	Ring	2	2
8	161003	Nut	2	2
9	**a** 4057049	Clamp (One Piece Formed Bracket)	1	..
9	**a** 4057050	Clamp (One Piece Formed Bracket)	..	1
10	1399203	Load Roller ("A") (126.75/126.49)	2	2
10	1399204	Load Roller ("B") (127.51/127.25)	2	2
10	1399205	Load Roller ("C") (128.27/128.01)	2	2
11	126765	Shim	12	12
12	1465072	Snap Ring	2	2
13	296009	Capscrew	1	1
14	1611061	Collar	1	..
15	1331991	Chain Anchor	2	2

©2015 HYSTER COMPANY

MAST

TWO STAGE FULL FREE LIFT – INNER MAST AND FREE LIFT

KEY:
A: H4.0FT5-H4.0FT6
B: H4.5FTS5, H4.5FT6, H5.0-5.5FT

ITEM	PART NO.	DESCRIPTION	QTY A	QTY B
16	15222	Cotter Pin	2	2
17	339932	Pin	2	2
18	1581896	Nut	2	2
19	4038861	Bracket (Dual Retainer Nut)	1	1
20	. . . . .	Freelift Cylinder (☞Figure 12-5)	1	1
21	1550193	Hyd Velocity Fuse	1	..
21	1550194	Hyd Velocity Fuse	..	1
21	244167	O-Ring	1	1
21	16487	O-Ring	1	1
22	**b**	Chain	2	2
23	1581589	Capscrew	2	2
24	1581564	Lockwasher	2	2
25	1581559	Washer	2	2
26	1387519	Guard (Chain)	2	2
27	302472	Roll Pin	4	4
28	1387281	Pin	1	1
29	304527	Snap Ring	2	2
30	1387743	Chain Sheave Assembly (Assembly)	2	2
31	126764	Double Row Bearing	1	1
32	1387740	Chain Sheave	1	1
33	41531	Snap Ring	1	1
34	1389825	Crosshead	1	1
35	302493	Roll Pin	1	1
36	1581835	Capscrew	1	1
37	1581556	Washer	2	2
38	1581739	Nut	1	1

FOOTNOTES:

a Optional

b Refer to Table

©2015 HYSTER COMPANY

NOTES

©2015 HYSTER COMPANY

MAIN LIFT CYLINDER (FIGURE 12-3)
TWO STAGE FULL FREE LIFT — H4.0FT5-H4.0FT6

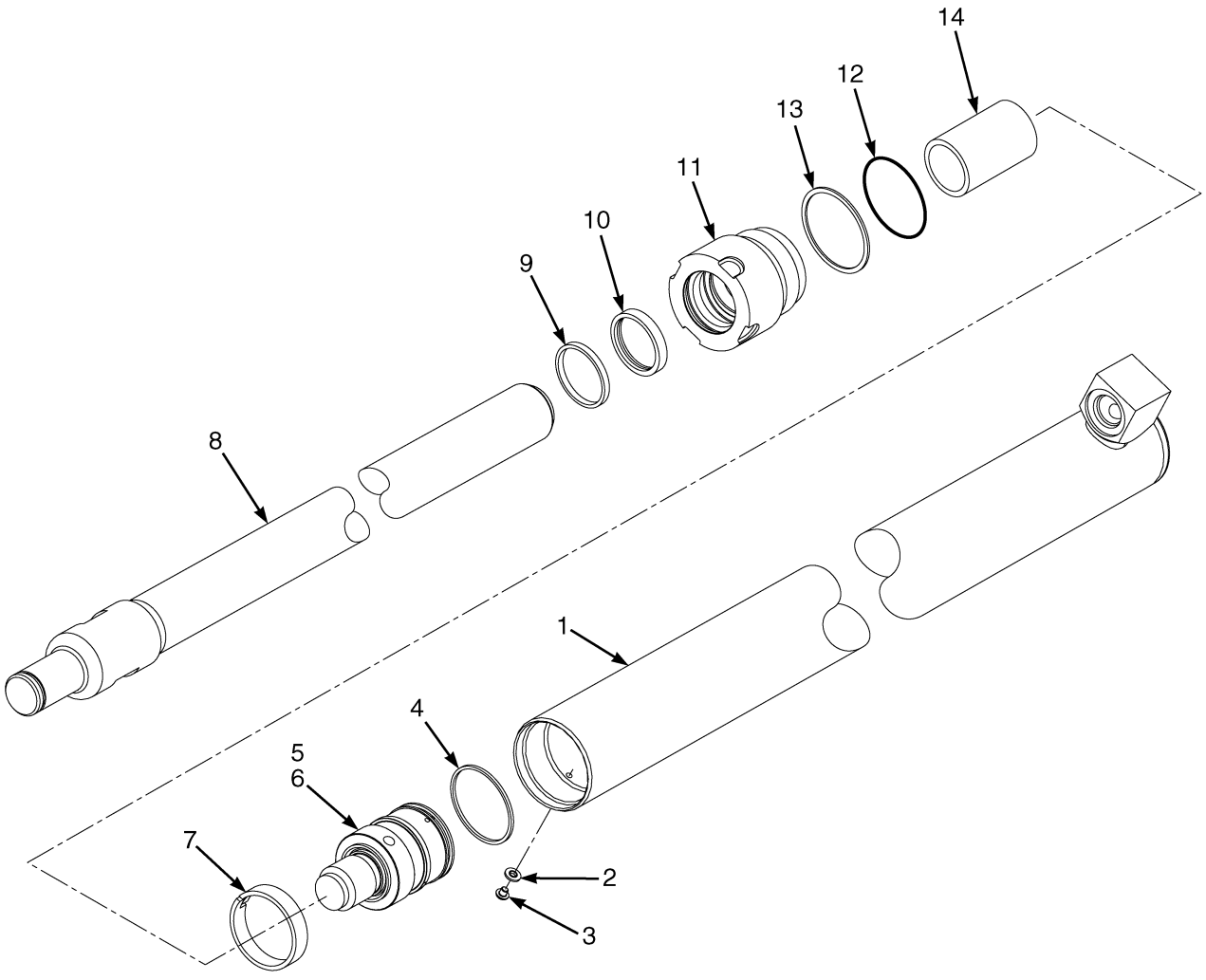

©2015 HYSTER COMPANY

MAIN LIFT CYLINDER
TWO STAGE FULL FREE LIFT – H4.0FT5-H4.0FT6

LEFT HAND

ITEM	DESCRIPTION 1 2 3 4	LIFT HEIGHT TO BOTTOM OF FORKS	
		3025 mm (119.1 in.)	3625 mm (142.7 in.)
	Mast Group Number	B753 3025	B753 3625
	Cylinder Group Number	8503251	8503257
	Cylinder Assy	2073992	2073998
1	Tube Wldmt-Cylinder	2074022	2074042
8	Cylinder Rod	1400551	1400557

RIGHT HAND

ITEM	DESCRIPTION 1 2 3 4	LIFT HEIGHT TO BOTTOM OF FORKS	
		3025 mm (119.1 in.)	3625 mm (142.7 in.)
	Mast Group Number	B753 3025	B753 3625
	Cylinder Group Number	8503201	8503207
	Cylinder Assy	2073953	2073968
1	Tube Wldmt-Cylinder	2074022	2074042
8	Cylinder Rod	1400501	1400507

ITEM	PART NO.	DESCRIPTION	QTY
	c	Cylinder Assy	1
1	**c**	Tube Wldmt-Cylinder	1
2	190887	Sealing Ring	1
3	295649	Screw	1
4	1379063	Piston Ring	1
5	1381056	Piston (RH)	1
5	1381055	Piston (LH)	1
6	264134	Loctite	1
7	2038675	Wear Ring	1
8	**c**	Cylinder Rod	1
9	1310370	Rod Wiper	1
10	1381084	Rod Seal	1
11	2033295	Gland	1
12	198518	O-Ring	1
13	166659	Back-Up Ring	1
14	**b**	Spacer	AR
	a 2094192	Sleeve (Included with Kits 2038676 and 2104947)	1

©2015 HYSTER COMPANY

MAIN LIFT CYLINDER

TWO STAGE FULL FREE LIFT – H4.0FT5-H4.0FT6

ITEM	PART NO.	DESCRIPTION	QTY
	2038676	Kit-Seal	1
	2104947	Kit-Seal	..

FOOTNOTES:

a Not Illustrated
b Not used on the H4.0FT5-H4.0FT6
c Refer to Table

©2015 HYSTER COMPANY

NOTES

©2015 HYSTER COMPANY

MAIN LIFT CYLINDER (FIGURE 12-4)
TWO STAGE FULL FREE LIFT — H4.5FTS5, H4.5FT6, H5.0-5.5FT

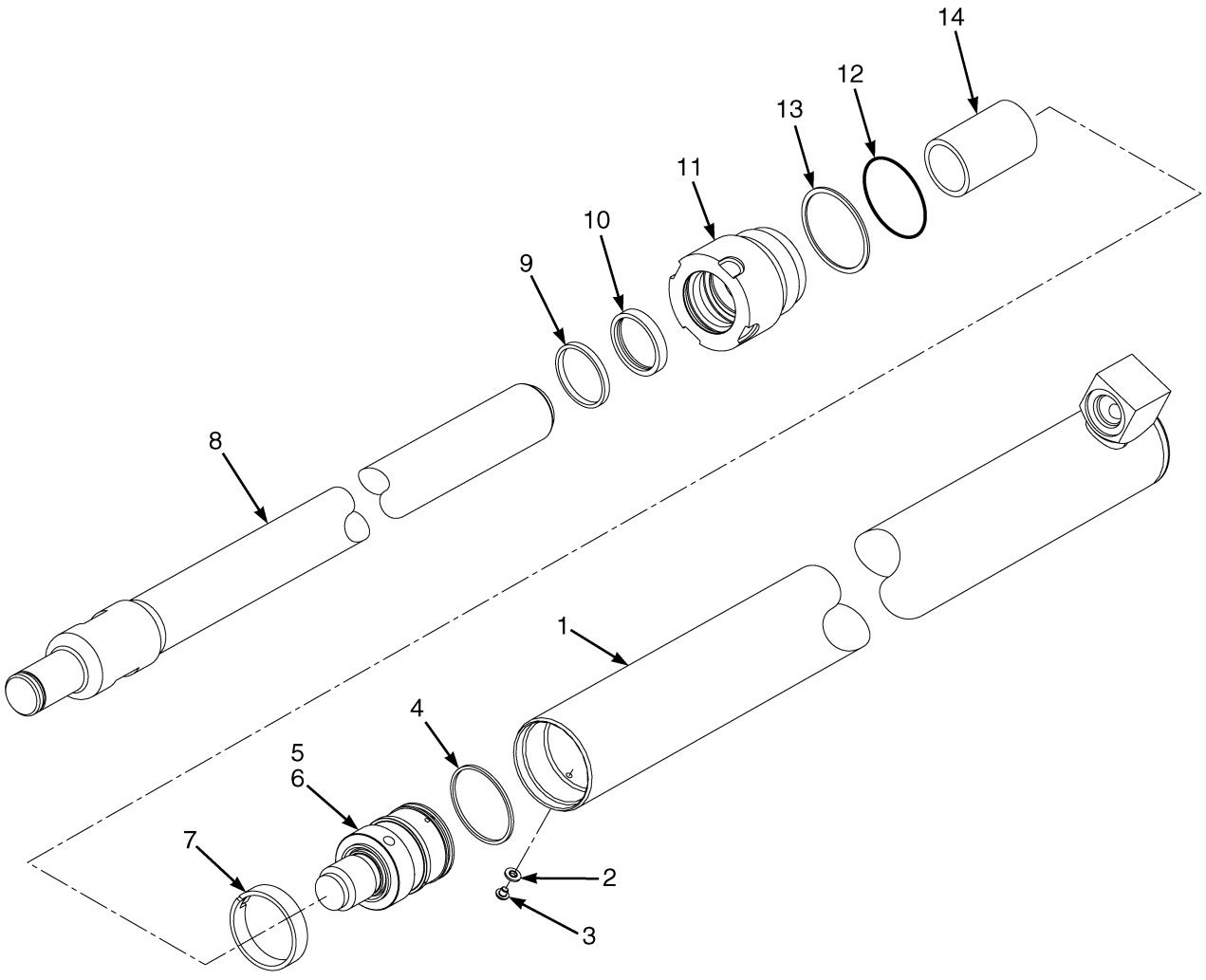

©2015 HYSTER COMPANY

MAIN LIFT CYLINDER

TWO STAGE FULL FREE LIFT – H4.5FTS5, H4.5FT6, H5.0-5.5FT

LEFT HAND

ITEM	DESCRIPTION 1 2 3 4	LIFT HEIGHT TO BOTTOM OF FORKS	
		2765 mm (108.9 in.)	3365 mm (132.5 in.)
	Mast Group Number	B754 2765	B754 3365
	Cylinder Group Number	8503351	8503357
	Cylinder Assy	2074126	2074138
1	Tube Wldmt-Cylinder	2074022	2074042
8	Cylinder Rod	1400851	1400857

RIGHT HAND

ITEM	DESCRIPTION 1 2 3 4	LIFT HEIGHT TO BOTTOM OF FORKS	
		2765 mm (108.9 in.)	3365 mm (132.5 in.)
	Mast Group Number	B754 2765	B754 3365
	Cylinder Group Number	8503301	8503307
	Cylinder Assy	2074087	2074093
1	Tube Wldmt-Cylinder	2074022	2074042
8	Cylinder Rod	1400801	1400807

ITEM	PART NO.	DESCRIPTION	QTY
	b	Cylinder Assy	1
1	**b**	Tube Wldmt-Cylinder	1
2	190887	Sealing Ring	1
3	295649	Screw	1
4	1379063	Piston Ring	1
5	1381056	Piston (RH)	1
5	1381055	Piston (LH)	1
6	264134	Loctite	1
7	2038675	Wear Ring	1
8	**b**	Cylinder Rod	1
9	1310371	Rod Wiper	1
10	1381086	Rod Seal	1
11	2033296	Gland	1
12	198518	O-Ring	1
13	166659	Back-Up Ring	1
14	357626	Spacer	1
	a 2094192	Sleeve (Included with Kits 2038676 and 2104947)	1

©2015 HYSTER COMPANY

MAIN LIFT CYLINDER

TWO STAGE FULL FREE LIFT – H4.5FTS5, H4.5FT6, H5.0-5.5FT

ITEM	PART NO.	DESCRIPTION	QTY
	2038676	Kit-Seal	..
	2104947	Kit-Seal	1

FOOTNOTES:

a Not Illustrated

b Refer to Table

©2015 HYSTER COMPANY

NOTES

©2015 HYSTER COMPANY

FREE LIFT CYLINDER (FIGURE 12-5)
TWO STAGE FULL FREE LIFT

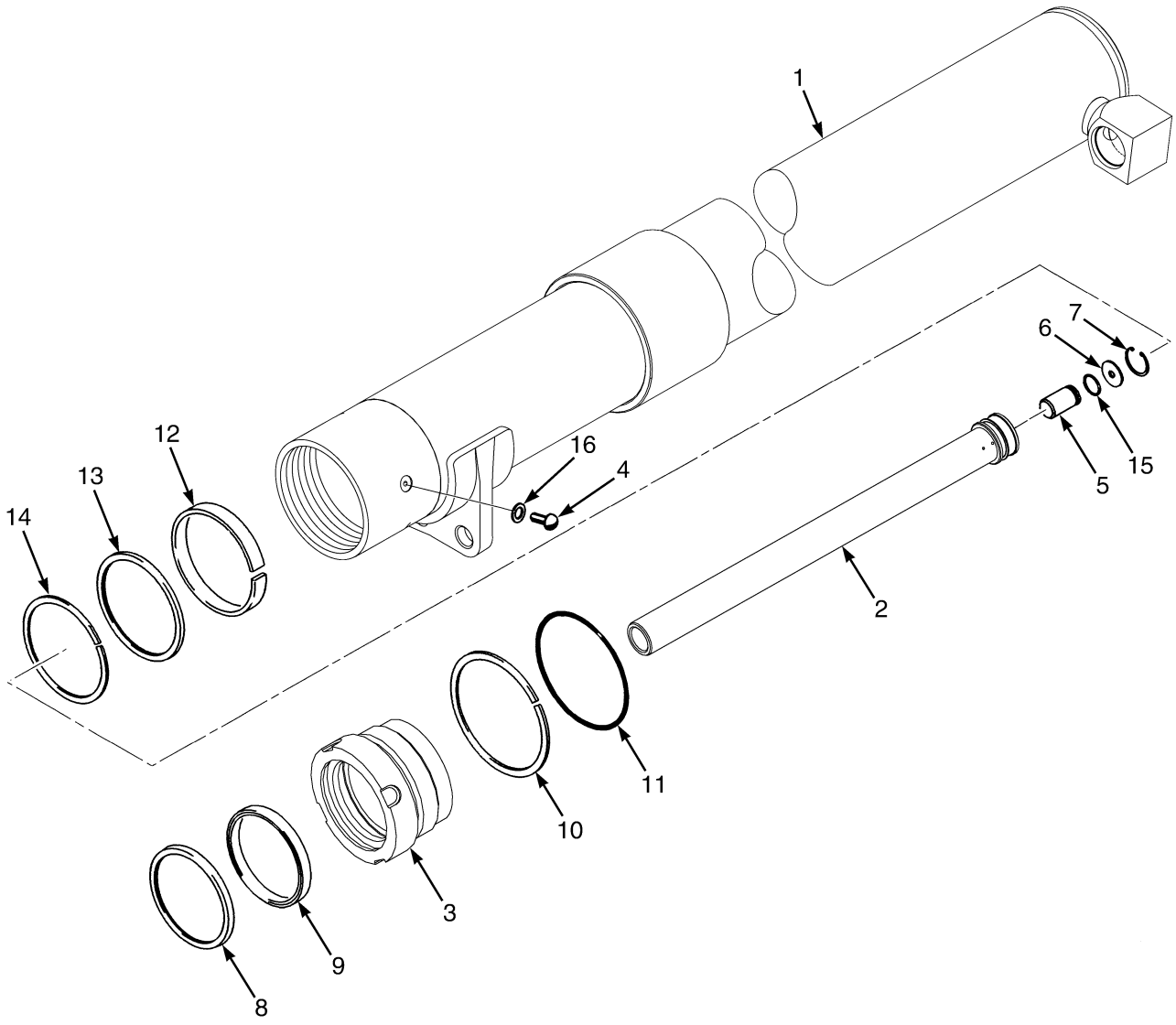

BP170446

©2015 HYSTER COMPANY

FREE LIFT CYLINDER
TWO STAGE FULL FREE LIFT

H4.0FT5-H4.0FT6

ITEM	DESCRIPTION 1 2 3 4	LIFT HEIGHT TO BOTTOM OF FORKS	
		3025 mm (119.1 in.)	3625 mm (142.7 in.)
	Mast Group Number	B753 3025	B753 3625
	Cylinder Group Number	8544051	8544057
	Cylinder Assy	2104542	2104548
1	Tube Wldmt-Cylinder	2073257	2073263
2	Cylinder Rod	2037833	2037837

H4.5FTS5, H4.5FT6, H5.0-5.5FT

ITEM	DESCRIPTION 1 2 3 4	LIFT HEIGHT TO BOTTOM OF FORKS	
		2765 mm (108.9 in.)	3365 mm (132.5 in.)
	Mast Group Number	B754 2765	B754 3365
	Cylinder Group Number	8518451	8518457
	Cylinder Assy	2104508	2104514
1	Tube Wldmt-Cylinder	2073626	2073634
2	Cylinder Rod	2062074	2062079

KEY:
A: H4.0FT5-H4.0FT6
B: H4.5FTS5, H4.5FT6, H5.0-5.5FT

ITEM	PART NO.	DESCRIPTION	QTY A	QTY B
	a	Cylinder Assy	1	1
1	**a**	Tube Wldmt-Cylinder	1	1
2	**a**	Cylinder Rod	1	1
3	2036282	Gland	1	..
3	1541640	Gland	..	1
4	1361302	Screw	1	1
5	297538	Check Valve	1	1
6	297531	Washer	1	1
7	187388	Snap Ring	1	1
8	1383070	Rod Wiper	1	1
9	2033395	Seal	1	1
10	164632	Back-Up Ring	1	..
10	615145	Back-Up Ring	..	1

©2015 HYSTER COMPANY

FREE LIFT CYLINDER
TWO STAGE FULL FREE LIFT

KEY:
A: H4.0FT5-H4.0FT6
B: H4.5FTS5, H4.5FT6, H5.0-5.5FT

ITEM	PART NO.	DESCRIPTION	QTY A	QTY B
11	46629	O-Ring	1	..
11	15885	O-Ring	..	1
12	636950	Wear Ring	1	..
12	1380982	Wear Ring	..	1
13	637162	Rod Seal	1	..
13	364059	Rod Seal	..	1
14	638293	Back-Up Ring	1	..
14	1381074	Back-Up Ring	..	1
15	190580	O-Ring	1	1
16	190887	Sealing Ring	1	1
	2036279	Kit-Seal	1	..
	2065889	Kit-Seal	..	1

FOOTNOTES:

a Refer to Table

©2015 HYSTER COMPANY

NOTES

©2015 HYSTER COMPANY

HEADER HOSE (FIGURE 12-6)
TWO STAGE FULL FREE LIFT

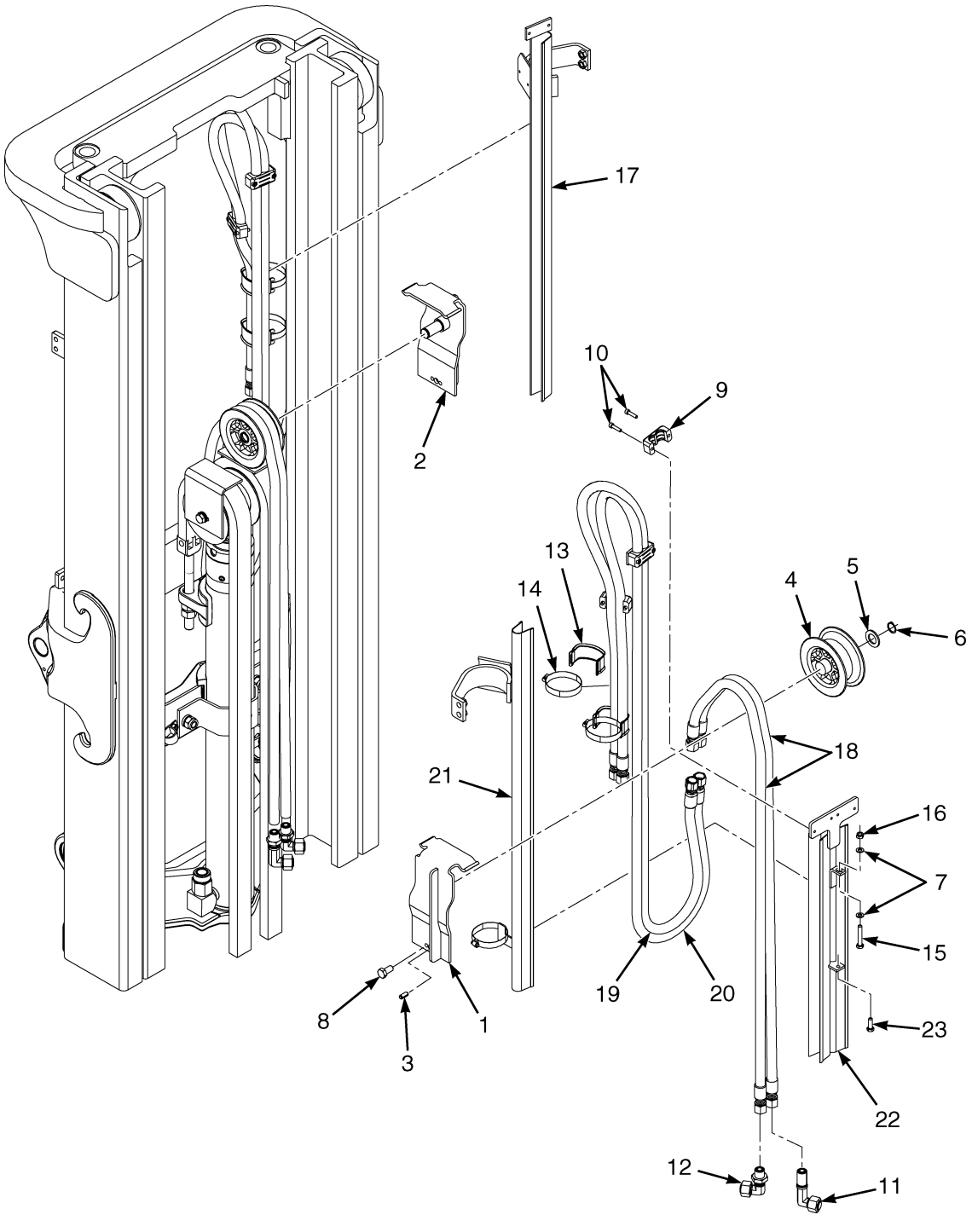

©2015 HYSTER COMPANY

HEADER HOSE

TWO STAGE FULL FREE LIFT

FOUR FUNCTION H4.0FT5-H4.0FT6

ITEM	DESCRIPTION 1 2 3 4	LIFT HEIGHT TO BOTTOM OF FORKS	
		3025 mm (119.1 in.)	3625 mm (142.7 in.)
	Mast Group Number	B753 3025	B753 3625
17	Channel	1614331	1614337
18	Hose Assy	2078657	2078663
19	Hose Assy	2083195	2083201
20	Hose Assy	2089674	2089690
21	Channel	1614230	1614236
22	Channel	1614406	1614412

THREE FUNCTION H4.0FT5-H4.0FT6

ITEM	DESCRIPTION 1 2 3 4	LIFT HEIGHT TO BOTTOM OF FORKS	
		3025 mm (119.1 in.)	3625 mm (142.7 in.)
	Mast Group Number	B753 3025	B753 3625
18	Hose Assy	2078657	2078663
19	Hose Assy	2083195	2083201
20	Hose Assy	2089674	2089690
21	Channel	1614230	1614236
22	Channel	1614406	1614412

FOUR FUNCTION H4.5FTS5, H4.5FT6, H5.0-5.5FT

ITEM	DESCRIPTION 1 2 3 4	LIFT HEIGHT TO BOTTOM OF FORKS	
		2765 mm (108.9 in.)	3365 mm (132.5 in.)
	Mast Group Number	B754 2765	B754 3365
17	Channel	1614331	1614337
18	Hose Assy	2078688	2078694
19	Hose Assy	2083196	2083202
20	Hose Assy	2089685	2089691
21	Channel	1614230	1614236
22	Channel	1614403	1614409

©2015 HYSTER COMPANY

HEADER HOSE
TWO STAGE FULL FREE LIFT
THREE FUNCTION H4.5FTS5, H4.5FT6, H5.0-5.5FT

ITEM	DESCRIPTION 1 2 3 4	LIFT HEIGHT TO BOTTOM OF FORKS	
		2765 mm (108.9 in.)	3365 mm (132.5 in.)
	Mast Group Number	B754 2765	B754 3365
18	Hose Assy	2078688	2078694
19	Hose Assy	2083196	2083202
20	Hose Assy	2089685	2089691
21	Channel	1614230	1614236
22	Channel	1614403	1614409

KEY:
A: Three Function
B: Four Function

ITEM	PART NO.	DESCRIPTION	QTY A	QTY B
1	1541242	Bracket Wldmt (RH)	1	1
2	1541243	Bracket Wldmt (LH)	..	1
3	302472	Roll Pin	1	2
4	1495279	Hose Sheave	1	2
5	1581560	Washer	1	2
6	58902	Snap Ring	1	2
7	1581556	Washer	2	2
8	1581590	Capscrew	1	2
9	2035791	Hose Clamp	3	6
10	1581742	Capscrew	4	8
11	1550425	Fitting	1	2
12	1528580	Fitting	1	2
13	1465489	Hose Clamp	2	4
14	1569979	Clamp	3	6
15	1581583	Capscrew	1	1
16	1581566	Nut	1	1
17	**b**	Channel	..	1
18	**b**	Hose Assy	2	4
19	**b**	Hose Assy	1	2
20	**b**	Hose Assy	1	2
21	**b**	Channel	1	1
22	**b**	Channel	1	1
23	136749	Screw	1	1
98	1581741	Capscrew	2	4
	a 1529016	Fitting (Cap)	2	4

FOOTNOTES:

a Not Illustrated

b Refer to Table

©2015 HYSTER COMPANY

NOTES

©2015 HYSTER COMPANY

HEADER HOSE AUXILIARY TUBE EXTENSIONS (FIGURE 12-7)

TWO STAGE FULL FREE LIFT — STANDARD CARRIAGE

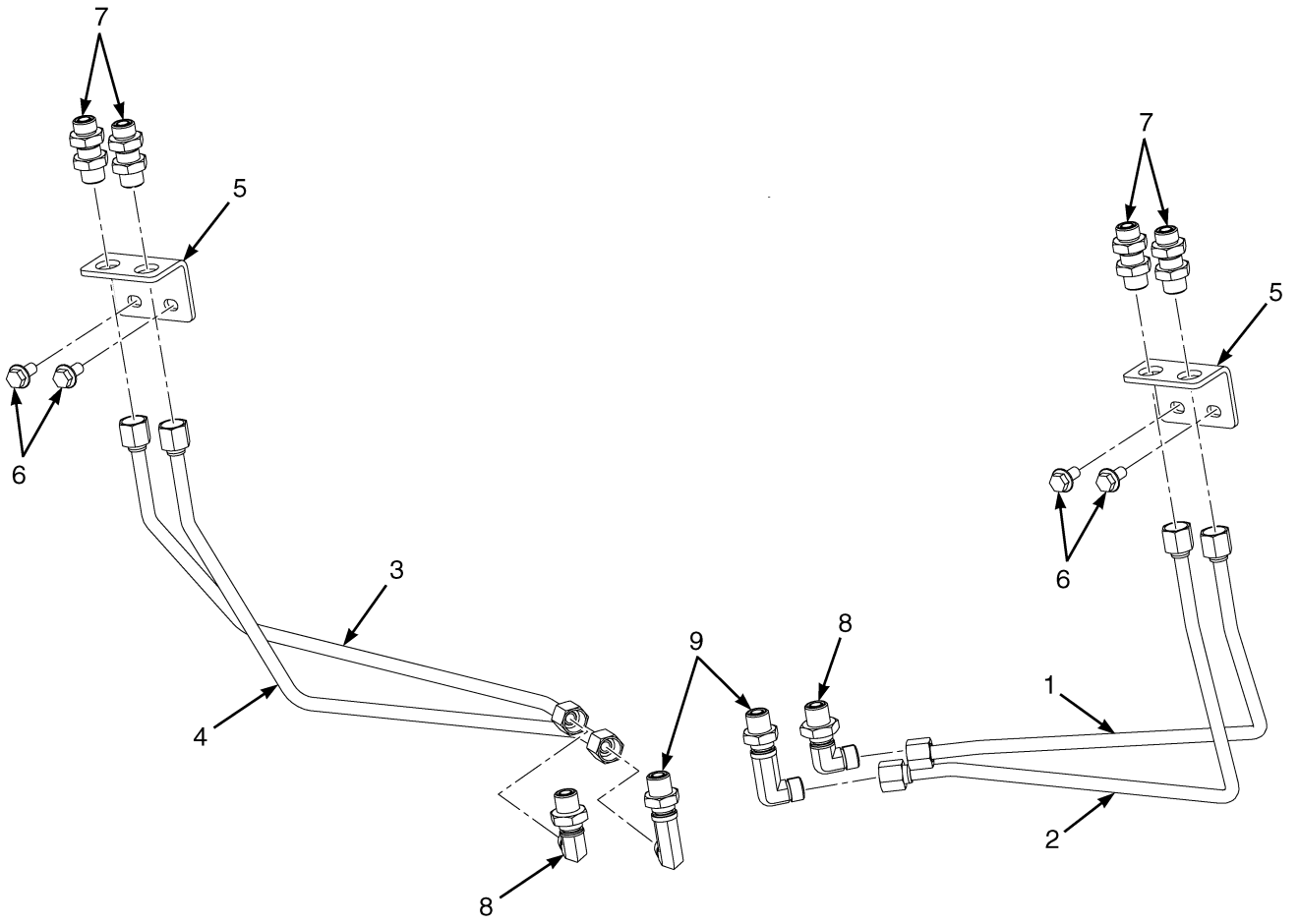

©2015 HYSTER COMPANY

HEADER HOSE AUXILIARY TUBE EXTENSIONS

TWO STAGE FULL FREE LIFT – STANDARD CARRIAGE

KEY:

A: H4.0FT5-H4.0FT6 — Three Function
B: H4.0FT5-H4.0FT6 — Four Function
C: H4.5FTS5, H4.5FT6, H5.0-5.5FT — Three Function
D: H4.5FTS5, H4.5FT6, H5.0-5.5FT — Four Function

ITEM	PART NO.	DESCRIPTION	QTY A	QTY B	QTY C	QTY D
1	2093653	Tube Assy	1	1	..	..
1	2093657	Tube Assy	..	..	1	1
2	2093654	Tube Assy	1	1	..	..
2	2093658	Tube Assy	..	..	1	1
3	2093655	Tube Assy	..	1	..	..
3	2093659	Tube Assy	..	..	..	1
4	2093656	Tube Assy	..	1	..	..
4	2093660	Tube Assy	..	..	..	1
5	1692933	Bracket (RH and LH Bolt On)	1	2	1	2
6	1527883	Capscrew	2	4	2	4
7	816591	Fitting	2	4	2	4
8	1528580	Fitting	1	2	1	2
9	1550425	Fitting	1	2	1	2

©2015 HYSTER COMPANY

CARRIAGE (FIGURE 12-8)
TWO STAGE FULL FREE LIFT

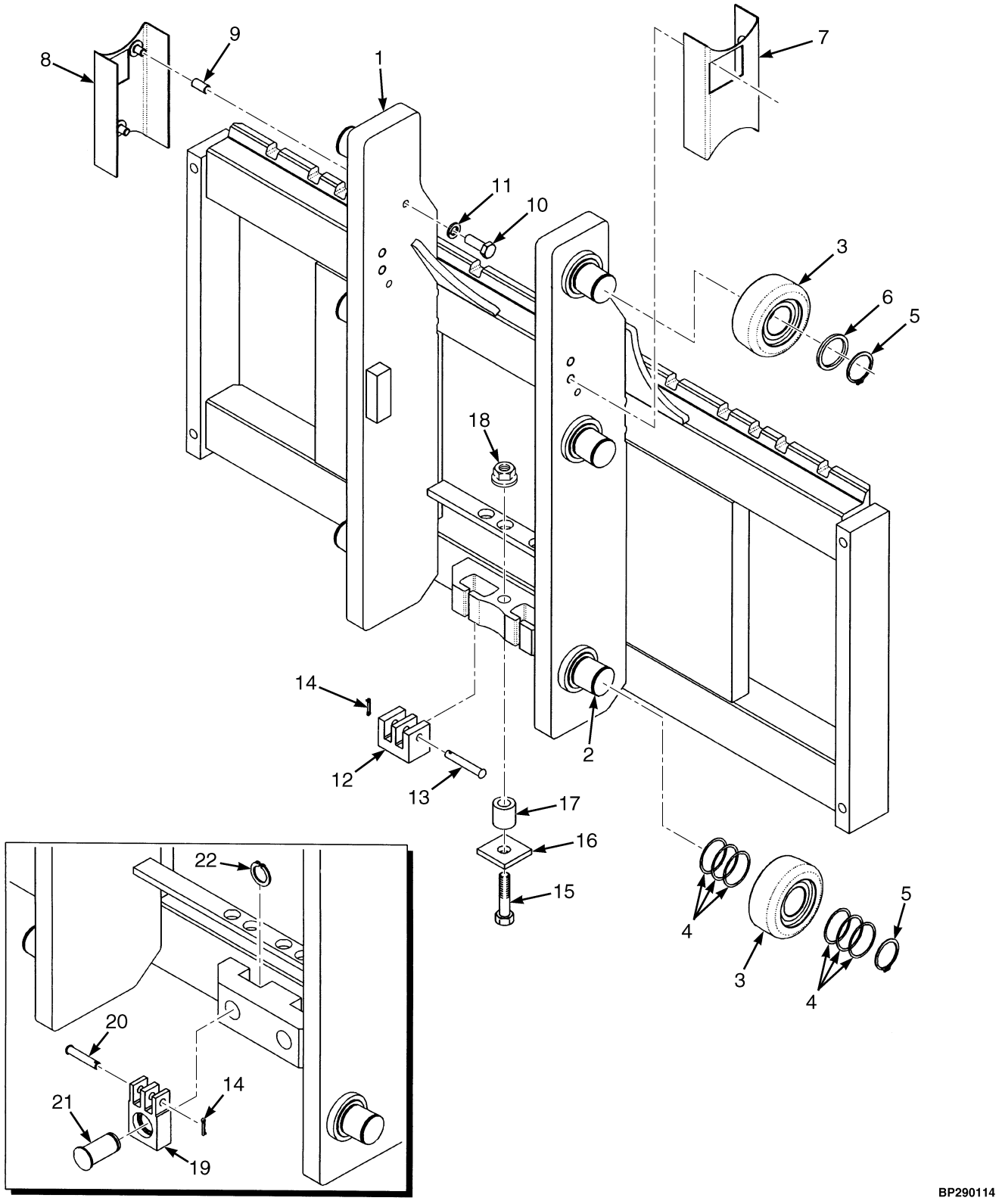

©2015 HYSTER COMPANY

CARRIAGE
TWO STAGE FULL FREE LIFT

KEY:
A: H4.0FT5-H4.0FT6
B: H4.5FTS5, H4.5FT6, H5.0-5.5FT

ITEM	PART NO.	DESCRIPTION	QTY A	QTY B
	2109343	Carriage (1219 mm)	1	..
	4622824	Carriage (1372 mm)	..	1
1	1699955	Carriage Wldmt (1219 mm)	1	..
1	4058054	Carriage Wldmt (1372 mm)	..	1
2	1500744	Stubshaft	6	6
3	1511883	Load Roller ("B") (104.44/104.18)	6	6
3	1511882	Load Roller ("A") (103.68/103.42) (Alternate)	6	6
3	1511884	Load Roller ("C") (105.20/104.94) (Alternate)	6	6
4	126765	Shim	24	24
5	1465072	Snap Ring	6	6
6	1399224	Spacer	2	2
7	319322	Bracket Wldmt (Guard RH)	1	1
8	319323	Bracket Wldmt (Guard LH)	1	1
9	317292	Spacer	4	4
10	18518	Capscrew (5/16 x 3)	4	1
10	18520	Capscrew (5/16 x 3 1/4))	..	3
11	15155	Lockwasher	4	4
12	1387548	Chain Anchor	2	..
13	1387549	Pin	2	..
14	15222	Cotter Pin	2	2
15	18520	Capscrew	1	..
16	1400126	Plate	1	..
17	1400125	Spacer	1	..
18	191941	Nut	1	..
19	1480392	Chain Anchor	..	2
20	339932	Pin	..	2
21	320327	Pin	..	2
22	131358	Snap Ring	..	2

©2015 HYSTER COMPANY

NOTES

©2015 HYSTER COMPANY

13 MAST-THREE STAGE FULL FREE-LIFT

SECTION 13
MAST-THREE STAGE FULL FREE-LIFT

DESCRIPTION	PAGE
CARRIAGE	
THREE STAGE FULL FREE LIFT	13-34
FREE LIFT CYLINDER	
THREE STAGE FULL FREE LIFT	13-24
HEADER HOSE	
THREE STAGE FULL FREE LIFT	13-28
HEADER HOSE AUXILIARY TUBE EXTENSIONS	
THREE STAGE FULL FREE LIFT - STANDARD CARRIAGE	13-32
INNER MAST	
THREE STAGE FULL FREE-LIFT	13-10
INNER MAST AND FREE-LIFT	
THREE STAGE FULL FREE-LIFT	13-12
INTERMEDIATE MAST	
THREE STAGE FULL FREE LIFT	13-6
MAIN LIFT	
THREE STAGE FULL FREE-LIFT	13-16
MAIN LIFT CYLINDER	
THREE STAGE FULL FREE LIFT	13-20
OUTER MAST	
THREE STAGE FULL FREE-LIFT	13-2

©2015 HYSTER COMPANY

OUTER MAST (FIGURE 13-1)
THREE STAGE FULL FREE-LIFT

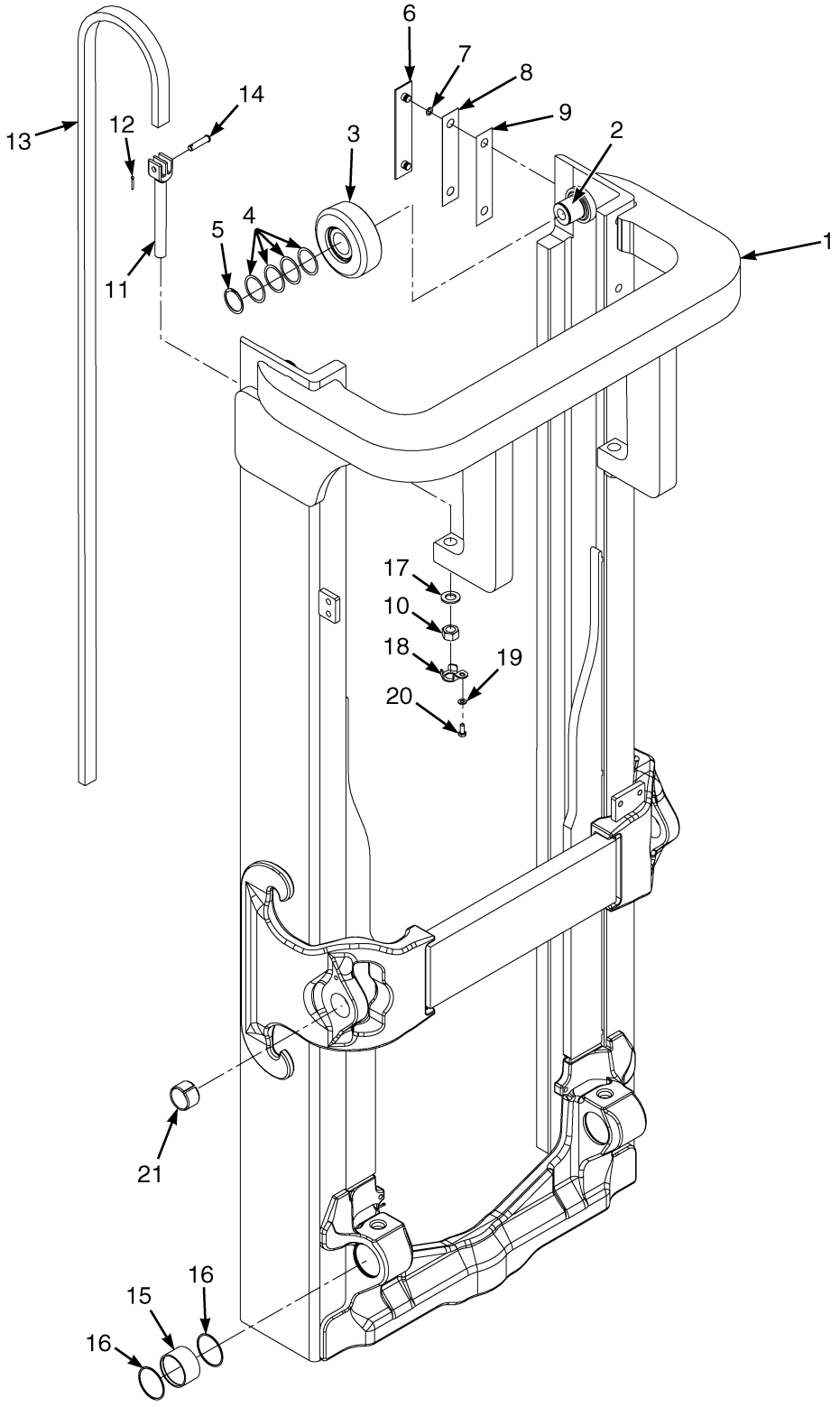

©2015 HYSTER COMPANY

OUTER MASS

THREE STAGE FULL FREE-LIFT

H4.0FT5-H4.0FT6

ITEM	DESCRIPTION 1 2 3 4	LIFT HEIGHT TO BOTTOM OF FORKS				
		4365 mm (171.9 in.)	4900 mm (192.9 in.)	5200 mm (204.7 in.)	5500 mm (216.5 in.)	5950 mm (234.3 in.)
	Mast Group Number	B751 4365	B751 4900	B751 5200	B751 5500	B751 5950
	Mast Assy	2071871	2071874	2071876	2071878	2071881
1	Outer Mast	1573520	1573523	1573525	1573527	1573530
13	Chain	191081	194607	191085	191072	206749

H4.5FTS5, H4.5FT6, H5.0-5.5FT

ITEM	DESCRIPTION 1 2 3 4	LIFT HEIGHT TO BOTTOM OF FORKS		
		4087 mm (160.9 in.)	4940 mm (194.5 in.)	5240 mm (206.3 in.)
	Mast Group Number	B752 4087	B752 4940	B752 5240
	Mast Assy	2071898	2071903	2071905
1	Outer Mast	1573520	1573525	1573527
13	Chain	280878	339934	356916

ITEM	PART NO.	DESCRIPTION	QTY
	a	Mast Assy	1
1	**a**	Outer Mast	1
2	1500744	Stubshaft	2
3	1399203	Load Roller ("A") (126.75/126.49)	2
3	1399204	Load Roller ("B") (127.51/127.25)	2
3	1399205	Load Roller ("C") (128.27/128.01)	2
4	126765	Shim	AR
5	1465072	Snap Ring	2
6	104264	Wear Strip	2
7	104506	O-Ring	4
8	161273	Shim (0.508 mm)	AR
9	161272	Shim (0.178 mm)	AR
10	1581896	Nut	2
11	1331990	Chain Anchor (H4.0FT5-H4.0FT6)	2
11	1331991	Chain Anchor (H4.5FTS5, H4.5FT6, H5.0-5.5FT)	2
12	15222	Cotter Pin	2
13	**a**	Chain	2
14	339932	Pin (H4.5FTS5, H4.5FT6, H5.0-5.5FT)	2
14	327591	Pin (H4.0FT5-H4.0FT6)	2
15	1485449	Bushing	2
16	1465518	Snap Ring	4
17	1626490	Washer	2
18	4038137	Bracket (Retainer nut)	2
19	1581556	Washer	2
20	1581580	Capscrew	2

©2015 HYSTER COMPANY

OUTER MAST
THREE STAGE FULL FREE-LIFT

ITEM	PART NO.	DESCRIPTION	QTY
21	192429	Bushing	2

FOOTNOTES:

a Refer to Table

©2015 HYSTER COMPANY

NOTES

©2015 HYSTER COMPANY

INTERMEDIATE MAST (FIGURE 13-2)
THREE STAGE FULL FREE LIFT

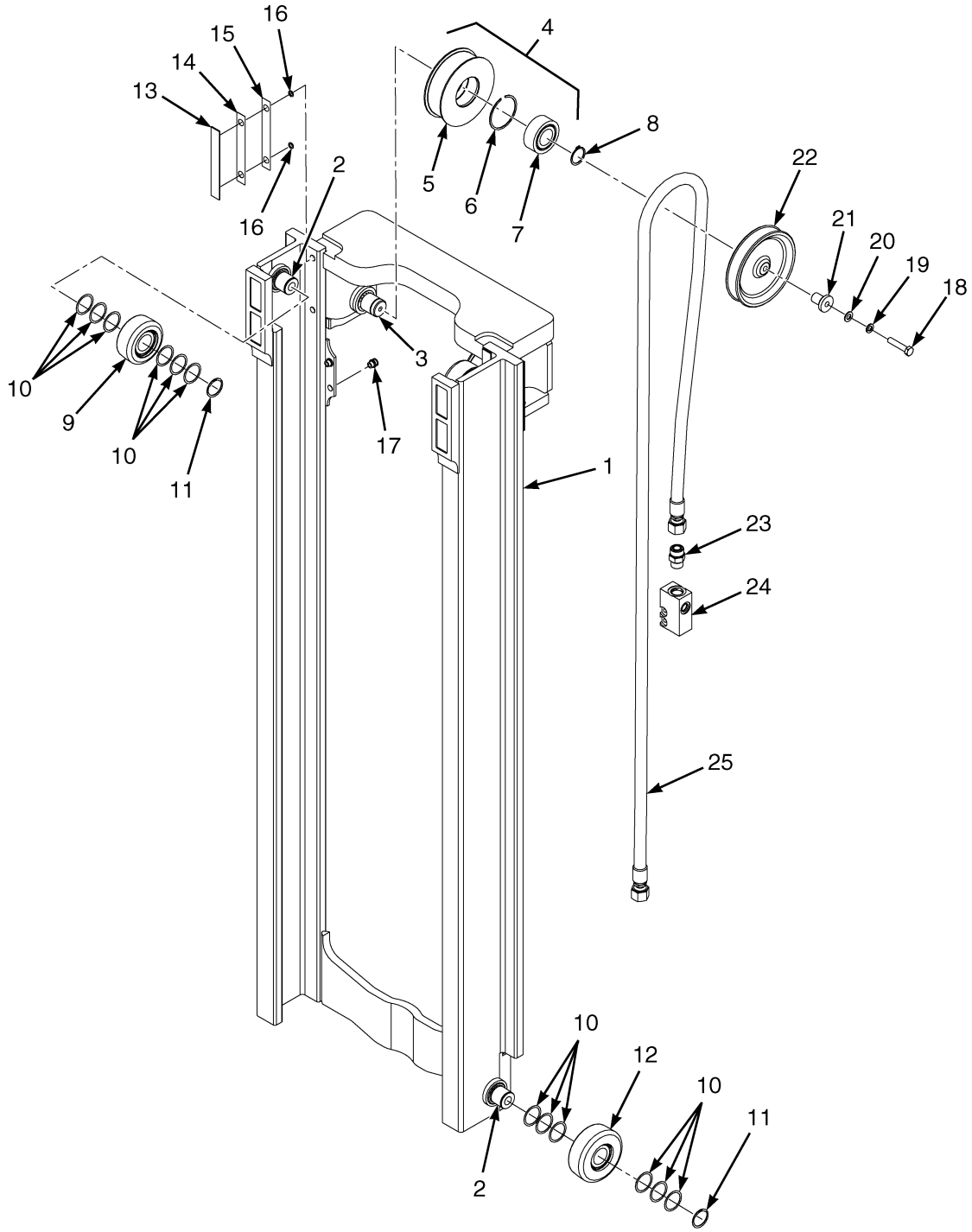

©2015 HYSTER COMPANY

INTERMEDIATE MAST
THREE STAGE FULL FREE LIFT

H4.0FT5-H4.0FT6

ITEM	DESCRIPTION 1 2 3 4	LIFT HEIGHT TO BOTTOM OF FORKS				
		4365 mm (171.9 in.)	4900 mm (192.9 in.)	5200 mm (204.7 in.)	5500 mm (216.5 in.)	5950 mm (234.3 in.)
	Mast Group Number	B751 4365	B751 4900	B751 5200	B751 5500	B751 5950
	Mast Assy	2071871	2071874	2071876	2071878	2071881
1	Intermediate Mast	1574162	1574165	1574167	1574169	1574172
25	Hose Assy	2072080	2072083	2072085	2072087	2072090

H4.5FTS5, H4.5FT6, H5.0-5.5FT

ITEM	DESCRIPTION 1 2 3 4	LIFT HEIGHT TO BOTTOM OF FORKS		
		4087 mm (160.9 in.)	4940 mm (194.5 in.)	5240 mm (206.3 in.)
	Mast Group Number	B752 4087	B752 4940	B752 5240
	Mast Assy	2071898	2071903	2071905
1	Intermediate Mast	1574162	1574167	1574169
25	Hose Assy	2072080	2072085	2072087

ITEM	PART NO.	DESCRIPTION	QTY
	a	Mast Assy	1
1	**a**	Intermediate Mast	1
2	1500744	Stubshaft	4
3	1389932	Stubshaft	2
4	1389780	Chain Sheave (Assembly) (H4.0FT5-H4.0FT6)	2
4	1389779	Chain Sheave (Assembly) (H4.5FTS5, H4.5FT6, H5.0-5.5FT)	2
5	1389673	Chain Sheave (H4.0FT5-H4.0FT6)	1
5	1389672	Chain Sheave (H4.5FTS5, H4.5FT6, H5.0-5.5FT)	1
6	41531	Snap Ring (Internal)	1
7	126764	Double Row Bearing	1
8	12891	Snap Ring	2
9	1399204	Load Roller ("B") (127.51/127.25)	2
9	1399203	Load Roller ("A") (126.75/126.49) (Alternate)	2
9	1399205	Load Roller ("C") (128.27/128.01) (Alternate)	2
10	126765	Shim	24
11	1465072	Snap Ring	2
12	1511883	Load Roller ("B") (104.44/104.18)	2
12	1511882	Load Roller ("A") (103.68/103.42) (Alternate)	2
12	1511884	Load Roller ("C") (105.20/104.94) (Alternate)	2
13	215211	Wear Strip	2
14	131716	Shim (0.508 mm)	AR
15	131715	Shim (0.178 mm)	AR
16	104506	O-Ring	4
17	1466633	Insert	4
18	1581592	Capscrew	1

©2015 HYSTER COMPANY

INTERMEDIATE MAST
THREE STAGE FULL FREE LIFT

ITEM	PART NO.	DESCRIPTION	QTY
19	1581564	Lockwasher	1
20	1581559	Washer	1
21	1387552	Stubshaft	1
22	2036778	Hose Sheave	1
23	1473888	Fitting	1
24	1388019	Housing (Lowering Control) (☞Figure 13-5)	1
25	**a**	Hose Assy	1

FOOTNOTES:

a Refer to Table

©2015 HYSTER COMPANY

NOTES

©2015 HYSTER COMPANY

INNER MAST (FIGURE 13-3)
THREE STAGE FULL FREE-LIFT

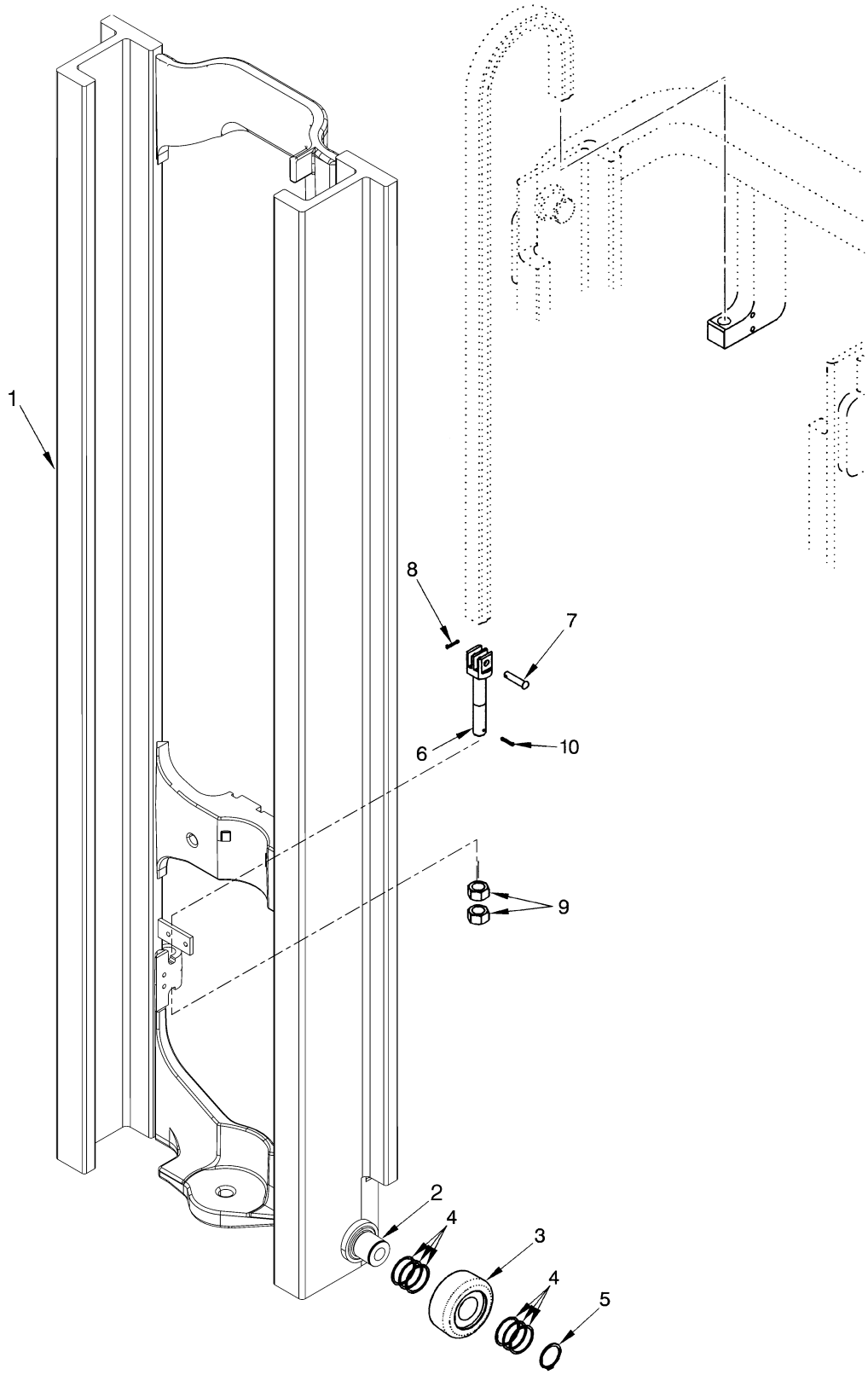

©2015 HYSTER COMPANY

INNER MAST
THREE STAGE FULL FREE-LIFT

H4.0FT5-H4.0FT6

ITEM	DESCRIPTION 1 2 3 4	LIFT HEIGHT TO BOTTOM OF FORKS				
		4365 mm (171.9 in.)	4900 mm (192.9 in.)	5200 mm (204.7 in.)	5500 mm (216.5 in.)	5950 mm (234.3 in.)
	Mast Group Number	B751 4365	B751 4900	B751 5200	B751 5500	B751 5950
	Mast Assy	2071871	2071874	2071876	2071878	2071881
1	Inner Mast	1573599	1573602	1573604	1573606	1573609

H4.5FTS5, H4.5FT6, H5.0-5.5FT

ITEM	DESCRIPTION 1 2 3 4	LIFT HEIGHT TO BOTTOM OF FORKS		
		4087 mm (160.9 in.)	4940 mm (194.5 in.)	5240 mm (206.3 in.)
	Mast Group Number	B752 4087	B752 4940	B752 5240
	Mast Assy	2071898	2071903	2071905
1	Inner Mast	1573599	1573604	1573606

ITEM	PART NO.	DESCRIPTION	QTY
	a	Mast Assy	1
1	**a**	Inner Mast	1
2	1500744	Stubshaft	2
3	1511882	Load Roller ("A") (103.68/103.42)	2
3	1511883	Load Roller ("B") (104.44/104.18)	2
3	1511884	Load Roller ("C") (105.20/104.94)	2
4	126765	Shim	AR
5	1465072	Snap Ring	2
6	1387285	Chain Anchor (H4.0FT5-H4.0FT6)	2
6	1387286	Chain Anchor (H4.5FTS5, H4.5FT6, H5.0-5.5FT)	2
7	327591	Pin (H4.0FT5-H4.0FT6)	2
7	339932	Pin (H4.5FTS5, H4.5FT6, H5.0-5.5FT)	2
8	15222	Cotter Pin	2
9	1581896	Nut	4
10	15224	Cotter Pin	2

FOOTNOTES:

a Refer to Table

©2015 HYSTER COMPANY

INNER MAST AND FREE-LIFT (FIGURE 13-4)
THREE STAGE FULL FREE-LIFT

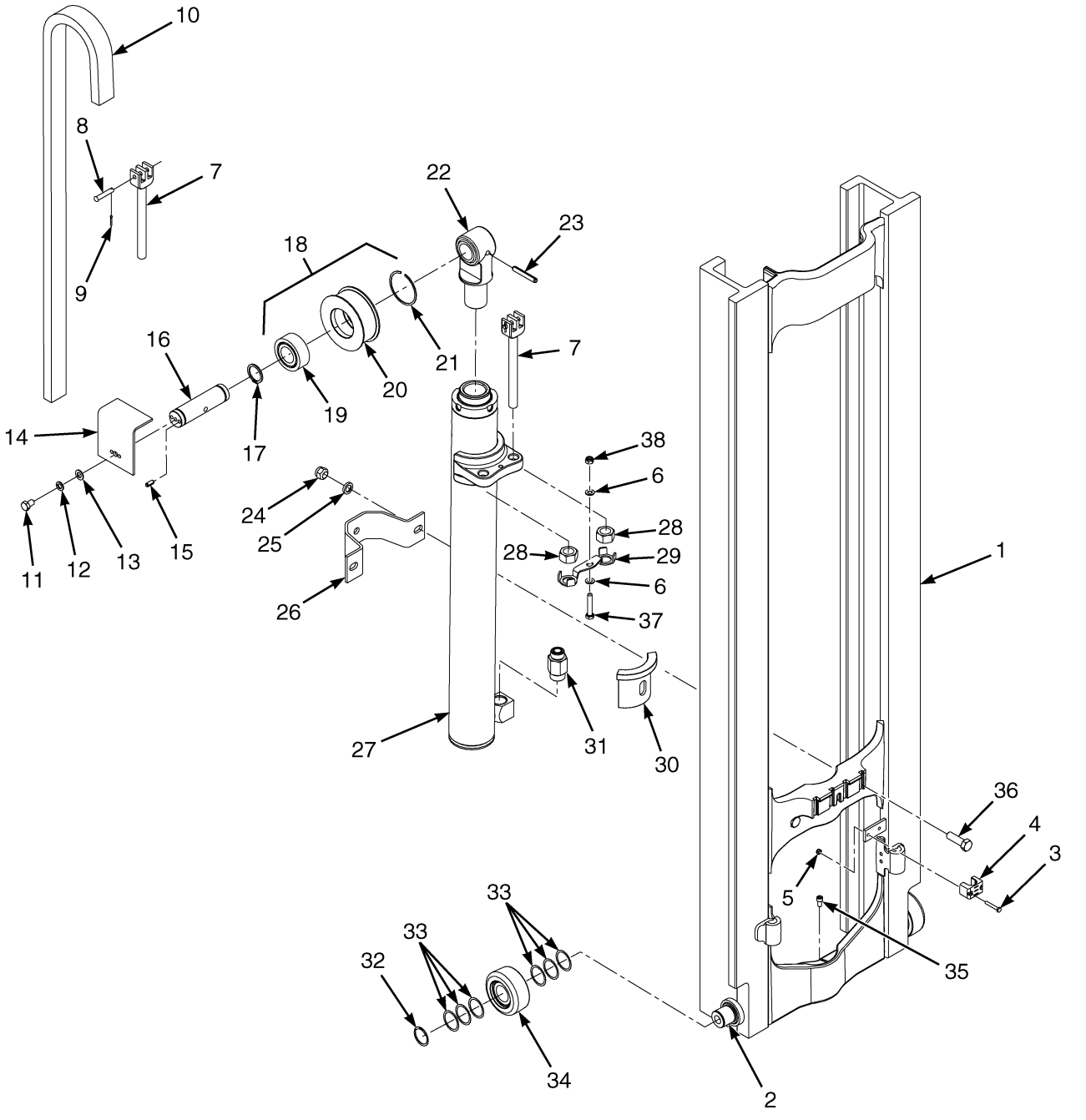

©2015 HYSTER COMPANY

INNER MAST AND FREE-LIFT
THREE STAGE FULL FREE-LIFT

H4.0FT5-H4.0FT6

ITEM	DESCRIPTION 1 2 3 4	LIFT HEIGHT TO BOTTOM OF FORKS				
		4365 mm (171.9 in.)	4900 mm (192.9 in.)	5200 mm (204.7 in.)	5500 mm (216.5 in.)	5950 mm (234.3 in.)
	Mast Group Number	B751 4365	B751 4900	B751 5200	B751 5500	B751 5950
	Mast Assy	2071871	2071874	2071876	2071878	2071881
1	Inner Mast	1573599	1573602	1573604	1573606	1573609
10	Chain	337189	337190	339897	348827	339933

H4.5FTS5, H4.5FT6, H5.0-5.5FT

ITEM	DESCRIPTION 1 2 3 4	LIFT HEIGHT TO BOTTOM OF FORKS		
		4087 mm (160.9 in.)	4940 mm (194.5 in.)	5240 mm (206.3 in.)
	Mast Group Number	B752 4087	B752 4940	B752 5240
	Mast Assy	2071898	2071903	2071905
1	Inner Mast	1573599	1573604	1573606
10	Chain	386885	337189	320396

KEY:
A: H4.0FT5-H4.0FT6
B: H4.5FTS5, H4.5FT6, H5.0-5.5FT

ITEM	PART NO.	DESCRIPTION	QTY A	QTY B
	a	Mast Assy	1	1
1	**a**	Inner Mast	1	1
2	1500744	Stubshaft	2	2
3	1581578	Capscrew	2	2
4	1387479	Hose Clamp	1	1
5	1581565	Nut	2	2
6	1581556	Washer	2	2
7	1331991	Chain Anchor	2	4
8	339932	Pin	2	2
9	15222	Cotter Pin	2	2
10	**a**	Chain	2	2
11	1581589	Capscrew	2	2
12	1581564	Lockwasher	2	2
13	1581559	Washer	2	2
14	1387519	Guard (w/ Header Hose)	1	1
14	1387519	Guard (w/o Header Hose)	2	2
15	302472	Roll Pin	4	4
16	1387281	Pin	1	1
17	304527	Snap Ring	2	2
18	1387743	Chain Sheave Assembly (Assembly)	2	2

©2015 HYSTER COMPANY

INNER MAST AND FREE-LIFT
THREE STAGE FULL FREE-LIFT

KEY:
A: H4.0FT5-H4.0FT6
B: H4.5FTS5, H4.5FT6, H5.0-5.5FT

ITEM	PART NO.	DESCRIPTION	QTY A	QTY B
19	126764	Double Row Bearing	1	1
20	1387740	Chain Sheave	1	1
21	41531	Snap Ring	1	1
22	1389825	Crosshead	1	1
23	302493	Roll Pin	1	1
24	161003	Nut	2	2
25	297649	Ring	2	2
26	4057049	Clamp (One Piece Formed Bracket)	1	..
26	4057050	Clamp (One Piece Formed Bracket)	..	1
27	. . . . .	Free Lift Cylinder (☞Figure 13-7)	1	1
28	1581896	Nut	2	2
29	4038861	Bracket (Retainer Nut)	2	2
30	1611061	Collar	1	..
31	1550195	Hyd Velocity Fuse (Free-Lift Cylinder)	1	..
31	1550196	Hyd Velocity Fuse (Free-Lift Cylinder)	..	1
31	16487	O-Ring	1	1
31	280154	O-Ring	1	1
32	1465072	Snap Ring	2	2
33	126765	Shim	12	12
34	1511883	Load Roller ("B") (104.44/104.18)	2	2
34	1511882	Load Roller ("A") (103.68/103.42) (Alternate)	2	2
34	1511884	Load Roller ("C") (105.20/104.94) (Alternate)	2	2
35	296009	Capscrew	1	1
36	188479	Capscrew	2	2
36	221631	Capscrew (Optional)	2	2
37	1581835	Capscrew	1	1
38	1581739	Nut	1	1

FOOTNOTES:

a Refer to Table

©2015 HYSTER COMPANY

NOTES

©2015 HYSTER COMPANY

MAIN LIFT (FIGURE 13-5)
THREE STAGE FULL FREE-LIFT

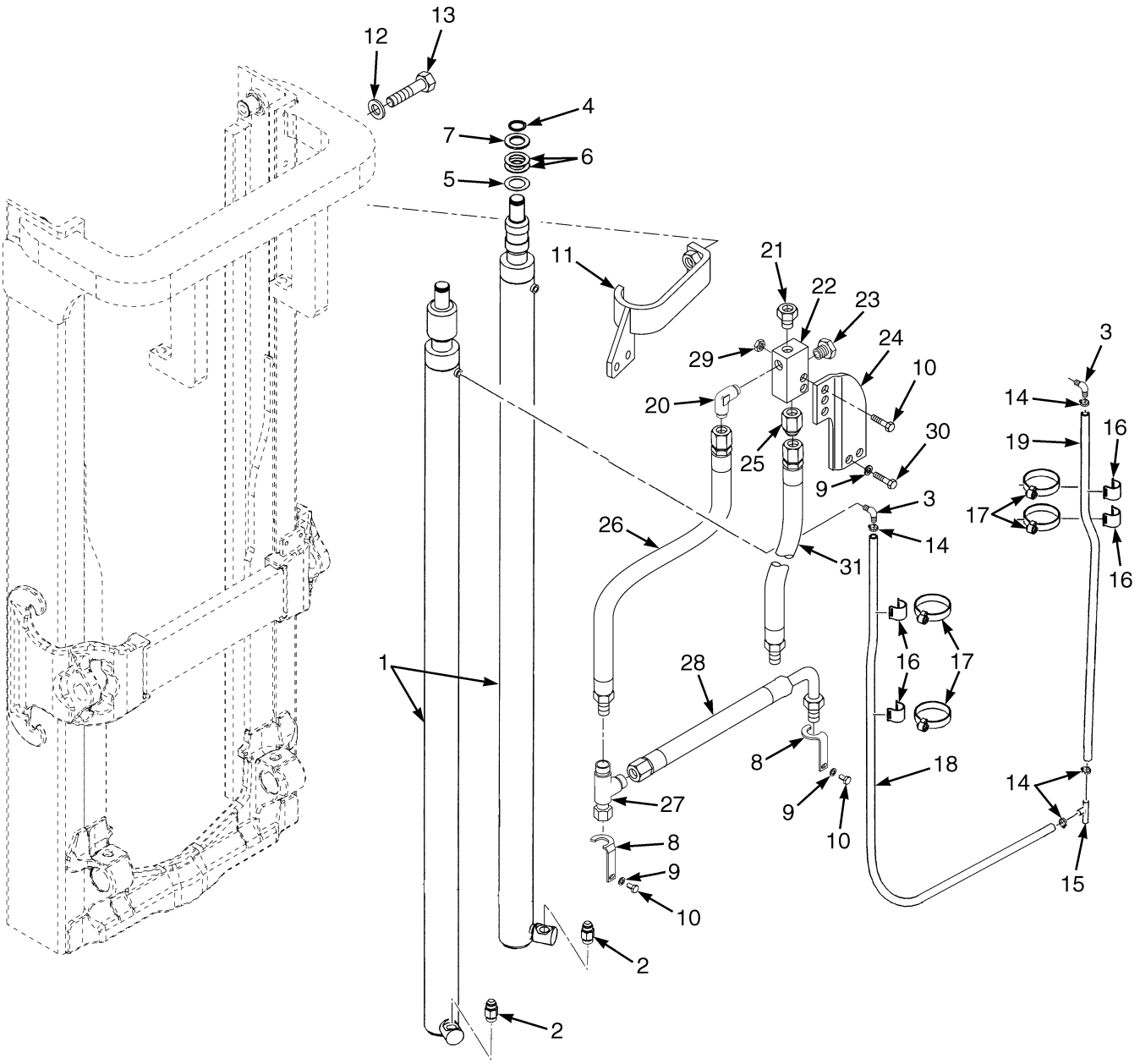

BP170259

©2015 HYSTER COMPANY

MAIN LIFT
THREE STAGE FULL FREE-LIFT

H4.0FT5-H4.0FT6

ITEM	DESCRIPTION 1 2 3 4	LIFT HEIGHT TO BOTTOM OF FORKS				
		4365 mm (171.9 in.)	4900 mm (192.9 in.)	5200 mm (204.7 in.)	5500 mm (216.5 in.)	5950 mm (234.3 in.)
	Mast Group Number	B751 4365	B751 4900	B751 5200	B751 5500	B751 5950
18	Hose Assy	1399096	1399104	1399108	1399112	1399120
19	Hose Assy	1399077	1399084	1399088	1399092	1399100

H4.5FTS5, H4.5FT6, H5.0-5.5FT

ITEM	DESCRIPTION 1 2 3 4	LIFT HEIGHT TO BOTTOM OF FORKS		
		4087 mm (160.9 in.)	4940 mm (194.5 in.)	5240 mm (206.3 in.)
	Mast Group Number	B752 4087	B752 4940	B752 5240
18	Hose Assy	1399094	1399106	1399110
19	Hose Assy	1399076	1399086	1399090

ITEM	PART NO.	DESCRIPTION	QTY
1	. . . . .	Main Cylinder (☞Figure 13-6)	2
2	**a** 1550157	Hyd Velocity Fuse (Main Cylinder)	2
2	**b** 1550158	Hyd Velocity Fuse (Lift Cylinder) (Main Cylinder)	2
3	110178	Fitting	2
3	16483	O-Ring	1
4	304523	Snap Ring	2
5	1325120	Shim	AR
6	142247	Shim	AR
7	332061	Washer	2
8	1634463	Bracket (LH)	1
8	1634462	Bracket (RH)	1
9	1581558	Washer	4
10	1581586	Capscrew	2
11	4111502	Bracket (Cylinder Restraint) (RH)	1
11	1474496	Bracket (RH)	1
11	4111503	Bracket (Cylinder Restraint) (LH)	1
11	1474497	Bracket (LH)	1
11	4058158	Rubber Pad	2
12	1581558	Washer	4
13	1581588	Capscrew	4
14	379405	Clamp	4
14	1452463	Hose Clamp (Optional)	4
15	2046871	Fitting	1
16	1465585	Hose Clamp	6
17	1360529	Clamp	6
18	**c**	Hose Assy	1
19	**c**	Hose Assy	1

©2015 HYSTER COMPANY

MAIN LIFT
THREE STAGE FULL FREE-LIFT

ITEM	PART NO.	DESCRIPTION	QTY
20	1487068	Fitting	1
20	16484	O-Ring	1
20	252729	O-Ring	1
21	1473888	Fitting	1
21	280154	O-Ring	1
21	16486	O-Ring	1
22	1388019	Housing (Lowering Control)	1
23	14595	Plug Assembly	1
23	16484	O-Ring	1
24	1474387	Bracket	1
25	1550197	Lowering Control Valve (H4.0FT5-H4.0FT6)	1
25	1550198	Lowering Control Valve (H4.5FTS5, H4.5FT6, H5.0-5.5FT)	1
25	16982	O-Ring	1
25	280154	O-Ring	1
26	4627873	Hose Assy	1
27	1487096	Fitting	1
28	4604938	Hose Assy	1
29	1581566	Nut	2
30	1581585	Capscrew	2
31	2076763	Hose Assy (Hoist)	1

FOOTNOTES:

a H4.0FT5-H4.0FT6
b H4.5FTS5, H4.5FT6, H5.0-5.5FT
c Refer to Table

©2015 HYSTER COMPANY

NOTES

©2015 HYSTER COMPANY

MAIN LIFT CYLINDER (FIGURE 13-6)
THREE STAGE FULL FREE LIFT

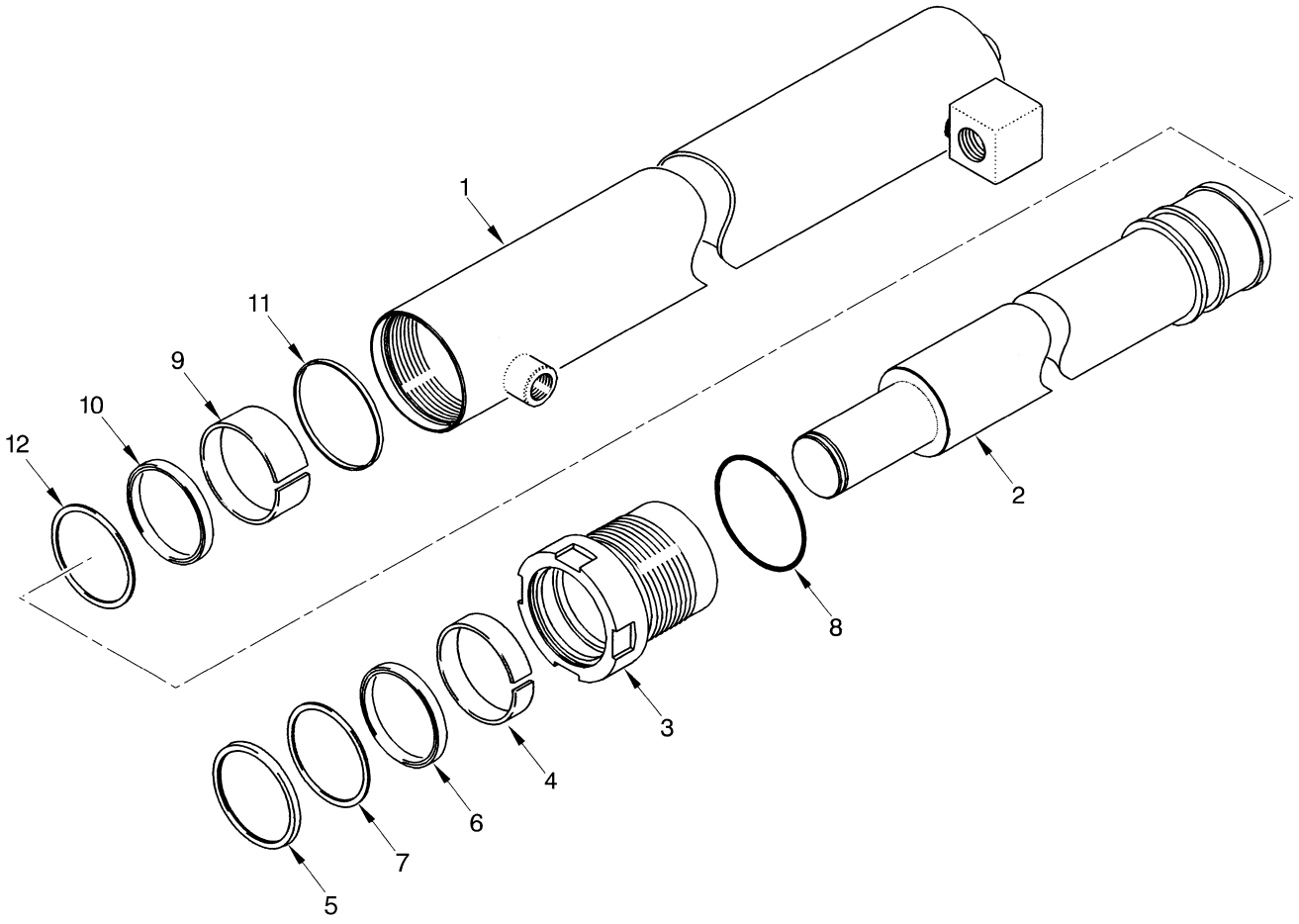

BP170222

©2015 HYSTER COMPANY

MAIN LIFT CYLINDER
THREE STAGE FULL FREE LIFT

H4.0FT5-H4.0FT6

ITEM	DESCRIPTION 1 2 3 4	LIFT HEIGHT TO BOTTOM OF FORKS				
		4365 mm (171.9 in.)	4900 mm (192.9 in.)	5200 mm (204.7 in.)	5500 mm (216.5 in.)	5950 mm (234.3 in.)
	Mast Group Number	**B751 4365**	**B751 4900**	**B751 5200**	**B751 5500**	**B751 5950**
	Cylinder Group Number	**8509701**	**8509704**	**8509706**	**8509708**	**8509711**
	Cylinder Assy	2073852	2073857	2073856	2073859	2073874
1	Tube Wldmt-Cylinder	2073888	2073891	2073893	2073895	2073898
2	Cylinder Rod	2037856	2037858	2037859	2037860	2037861

H4.5FTS5, H4.5FT6, H5.0-5.5FT

ITEM	DESCRIPTION 1 2 3 4	LIFT HEIGHT TO BOTTOM OF FORKS		
		4087 mm (160.9 in.)	4940 mm (194.5 in.)	5240 mm (206.3 in.)
	Mast Group Number	**B752 4087**	**B752 4940**	**B752 5240**
	Cylinder Group Number	**8509801**	**8509806**	**8509808**
	Cylinder Assy	2073912	2073917	2073919
1	Tube Wldmt-Cylinder	2073932	2073937	2073939
2	Cylinder Rod	2037841	2037845	2037846

KEY:
A: H4.0FT5-H4.0FT6
B: H4.5FTS5, H4.5FT6, H5.0-5.5FT

ITEM	PART NO.	DESCRIPTION	QTY A	QTY B
	d.....	Cylinder Assy	2	2
1	**d**.....	Tube Wldmt-Cylinder	1	1
2	**d**.....	Cylinder Rod	1	1
3	2033243	Gland	1	..
3	2033299	Gland	..	1
4	215425	Wear Ring	1	..
4	215301	Wear Ring	..	1
5	1383066	Rod Wiper	1	..
5	1383068	Rod Wiper	..	1
6	270077	Rod Seal	1	..
6	201829	Rod Seal	..	1
7	638249	Back-Up Ring	2	..
7	638250	Back-Up Ring	..	1

©2015 HYSTER COMPANY

MAIN LIFT CYLINDER
THREE STAGE FULL FREE LIFT

KEY:
A: H4.0FT5-H4.0FT6
B: H4.5FTS5, H4.5FT6, H5.0-5.5FT

ITEM	PART NO.	DESCRIPTION	QTY A	QTY B
8	57664	O-Ring	1	..
8	15879	O-Ring	..	1
9	297532	Wear Ring	1	..
9	351531	Wear Ring	..	1
10	1381061	Rod Seal	1	..
10	1381062	Rod Seal	..	1
11	1379063	Piston Ring	1	..
11	2036479	Piston Ring	..	1
12	351532	Back-Up Ring	..	1
bc	351673	Spacer	1	..
ac	2078399	Spacer	..	1
c	1378722	Sleeve (Included with Kit 2036277)	1	..
c	4602849	Sleeve (Included with Kit 2036278)	..	1
	2036277	Kit-Seal	1	..
	2036278	Kit-Seal	..	1

FOOTNOTES:

a For lift heights of 4640, 4940, 5240 mm
b For lift heights of 4900, 5200, 5500 mm
c Not Illustrated
d Refer to Table

©2015 HYSTER COMPANY

NOTES

©2015 HYSTER COMPANY

FREE LIFT CYLINDER (FIGURE 13-7)
THREE STAGE FULL FREE LIFT

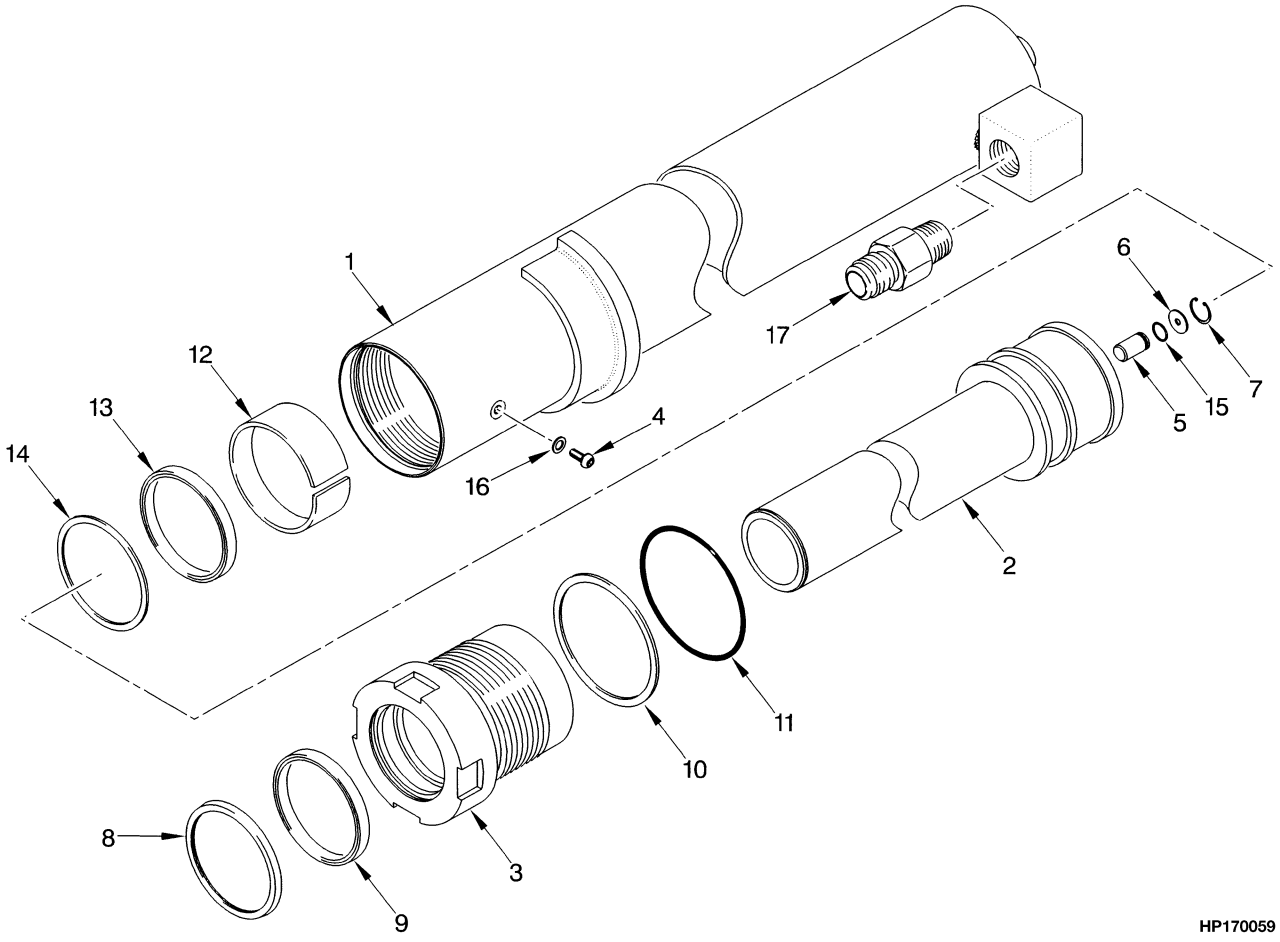

©2015 HYSTER COMPANY

FREE LIFT CYLINDER
THREE STAGE FULL FREE LIFT

H4.0FT5-H4.0FT6

ITEM	DESCRIPTION 1 2 3 4	LIFT HEIGHT TO BOTTOM OF FORKS				
		4365 mm (171.9 in.)	4900 mm (192.9 in.)	5200 mm (204.7 in.)	5500 mm (216.5 in.)	5950 mm (234.3 in.)
	Mast Group Number	**B751 4365**	**B751 4900**	**B751 5200**	**B751 5500**	**B751 5950**
	Cylinder Group Number	**8544051**	**8544055**	**8544057**	**8544059**	**8544063**
	Cylinder Assy	2104542	2104546	2104548	2104550	2104554
1	Tube Wldmt-Cylinder	2073257	2073261	2073263	2073265	2073269
2	Cylinder Rod	2037833	2037836	2037837	2037838	2037840

H4.5FTS5, H4.5FT6, H5.0-5.5FT

ITEM	DESCRIPTION 1 2 3 4	LIFT HEIGHT TO BOTTOM OF FORKS		
		4087 mm (160.9 in.)	4940 mm (194.5 in.)	5240 mm (206.3 in.)
	Mast Group Number	**B752 4087**	**B752 4940**	**B752 5240**
	Cylinder Group Number	**8518451**	**8518457**	**8518459**
	Cylinder Assy	2104508	2104514	2104516
1	Tube Wldmt-Cylinder	2073626	2073634	2073636
2	Cylinder Rod	2062074	2062079	2062081

KEY:
A: H4.0FT5-H4.0FT6
B: H4.5FTS5, H4.5FT6, H5.0-5.5FT

ITEM	PART NO.	DESCRIPTION	QTY A	QTY B
	a	Cylinder Assy	1	1
1	**a**	Tube Wldmt-Cylinder	1	1
2	**a**	Cylinder Rod	1	1
3	2036282	Gland	1	..
3	1541640	Gland	..	1
4	1361302	Screw	1	1
5	297538	Check Valve	1	1
6	297531	Washer	1	1
6	637635	Washer (Optional)	1	1
7	187388	Snap Ring	1	1
8	1383070	Rod Wiper	1	1
9	2033395	Seal	1	1
10	164632	Back-Up Ring	1	..

©2015 HYSTER COMPANY

FREE LIFT CYLINDER
THREE STAGE FULL FREE LIFT

KEY:
A: H4.0FT5-H4.0FT6
B: H4.5FTS5, H4.5FT6, H5.0-5.5FT

ITEM	PART NO.	DESCRIPTION	QTY A	QTY B
10	615145	Back-Up Ring	..	1
11	46629	O-Ring	1	..
11	15885	O-Ring	..	1
12	636950	Wear Ring	1	..
12	1380982	Wear Ring	..	1
13	637162	Rod Seal	1	..
13	364059	Rod Seal	..	1
14	638293	Back-Up Ring	1	..
14	1381074	Back-Up Ring	..	1
15	190580	O-Ring	1	1
16	190887	Sealing Ring	1	1
17	1550195	Hyd Velocity Fuse (Free-Lift Cylinder)	1	..
17	1550196	Hyd Velocity Fuse (Free-Lift Cylinder)	..	1
17	16487	O-Ring	1	1
17	280154	O-Ring	1	1
	2036279	Kit-Seal	1	..
	2065889	Kit-Seal	..	1

FOOTNOTES:

a Refer to Table

©2015 HYSTER COMPANY

NOTES

©2015 HYSTER COMPANY

HEADER HOSE (FIGURE 13-8)
THREE STAGE FULL FREE LIFT

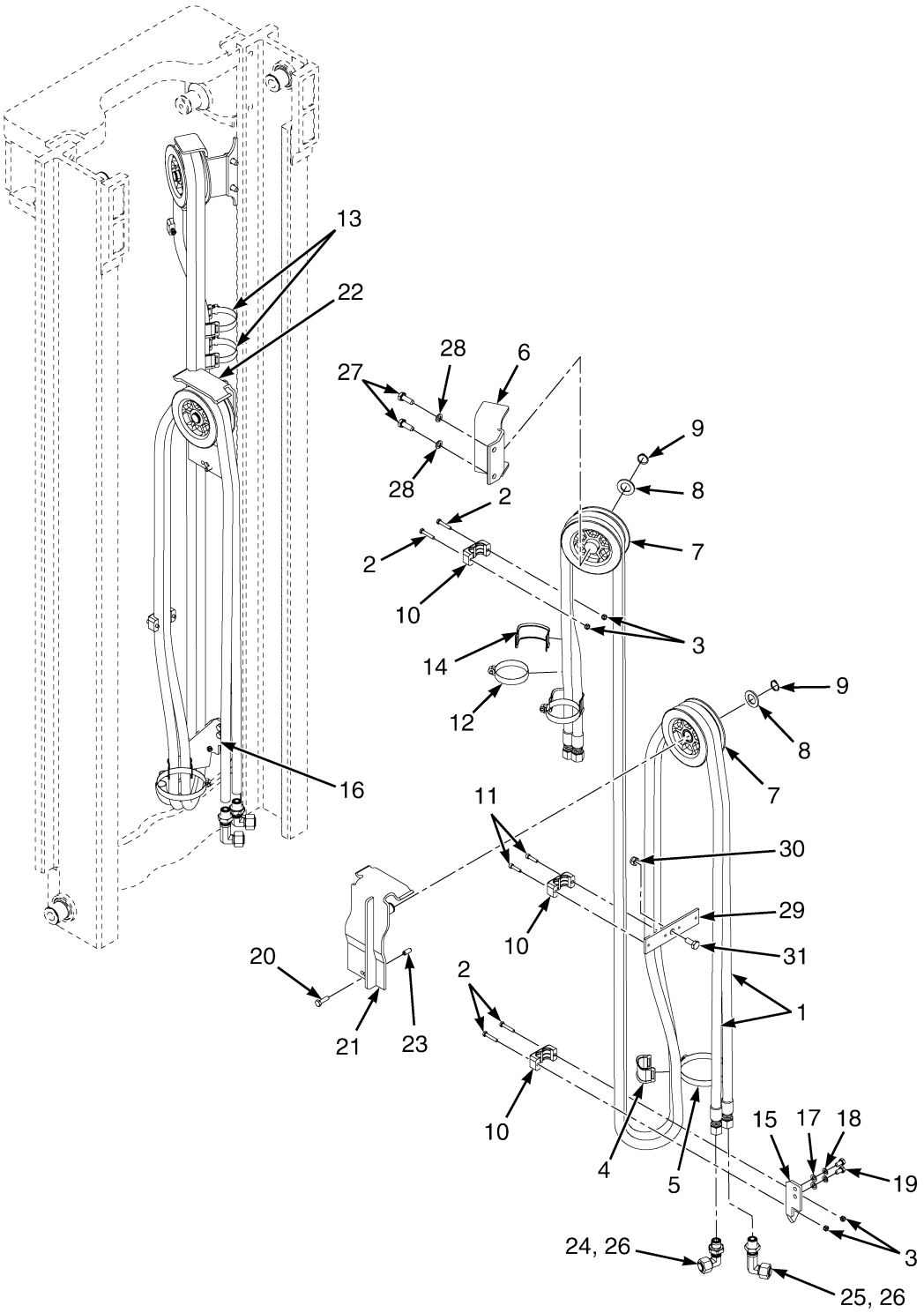

BP290110

©2015 HYSTER COMPANY

HEADER HOSE
THREE STAGE FULL FREE LIFT

H4.0FT5-H4.0FT6

ITEM	DESCRIPTION 1 2 3 4	LIFT HEIGHT TO BOTTOM OF FORKS				
		4365 mm (171.9 in.)	4900 mm (192.9 in.)	5200 mm (204.7 in.)	5500 mm (216.5 in.)	5950 mm (234.3 in.)
	Mast Group Number	B751 4365	B751 4900	B751 5200	B751 5500	B751 5950
	Mast Assy	2071871	2071874	2071876	2071878	2071881
1	Hose Assy	2083432	2083435	2083437	2083439	2083442

H4.5FTS5, H4.5FT6, H5.0-5.5FT

ITEM	DESCRIPTION 1 2 3 4	LIFT HEIGHT TO BOTTOM OF FORKS		
		4087 mm (160.9 in.)	4940 mm (194.5 in.)	5240 mm (206.3 in.)
	Mast Group Number	B752 4087	B752 4940	B752 5240
	Mast Assy	2071898	2071903	2071905
1	Hose Assy	2083459	2083464	2083466

KEY:
A: Three Function
B: Four Function

ITEM	PART NO.	DESCRIPTION	QTY A	QTY B
	b	Mast Assy	1	1
1	**b**	Hose Assy	2	4
2	1581577	Capscrew	4	8
3	1581565	Nut	4	8
4	1502809	Hose Clamp	1	2
5	1399243	Clamp	1	2
6	1387523	Bracket Wldmt	1	2
7	1495279	Hose Sheave	2	4
8	1581560	Washer	2	4
9	58902	Snap Ring	2	4
10	2035791	Hose Clamp	3	6
11	1581741	Capscrew	2	4
12	1569979	Clamp	2	2
13	1617658	Clamp	..	2
14	1465489	Hose Clamp	2	4
15	1387327	Bracket (RH)	1	1
16	1389854	Bracket (LH)	..	2
17	1581556	Washer	2	4
18	1581562	Lockwasher	2	4
19	1581579	Capscrew	2	4
20	1581590	Capscrew	1	2
21	1541242	Bracket Wldmt (RH)	1	1
22	1541243	Bracket Wldmt (LH)	..	1

©2015 HYSTER COMPANY

HEADER HOSE
THREE STAGE FULL FREE LIFT

KEY:
A: Three Function
B: Four Function

ITEM	PART NO.	DESCRIPTION	QTY A	QTY B
23	302472	Roll Pin	1	2
24	1528580	Fitting	1	2
25	1550425	Fitting	1	2
26	1529016	Fitting (Cap)	2	4
27	1581587	Capscrew	2	4
28	1581563	Lockwasher	2	4
29	1389828	Bracket	1	1
30	1581567	Nut	1	1
31	1581586	Capscrew	1	1
	a 1566565	Cap	1	2

FOOTNOTES:

a Not Illustrated

b Refer to Table

©2015 HYSTER COMPANY

NOTES

©2015 HYSTER COMPANY

HEADER HOSE AUXILIARY TUBE EXTENSIONS (FIGURE 13-9)

THREE STAGE FULL FREE LIFT — STANDARD CARRIAGE

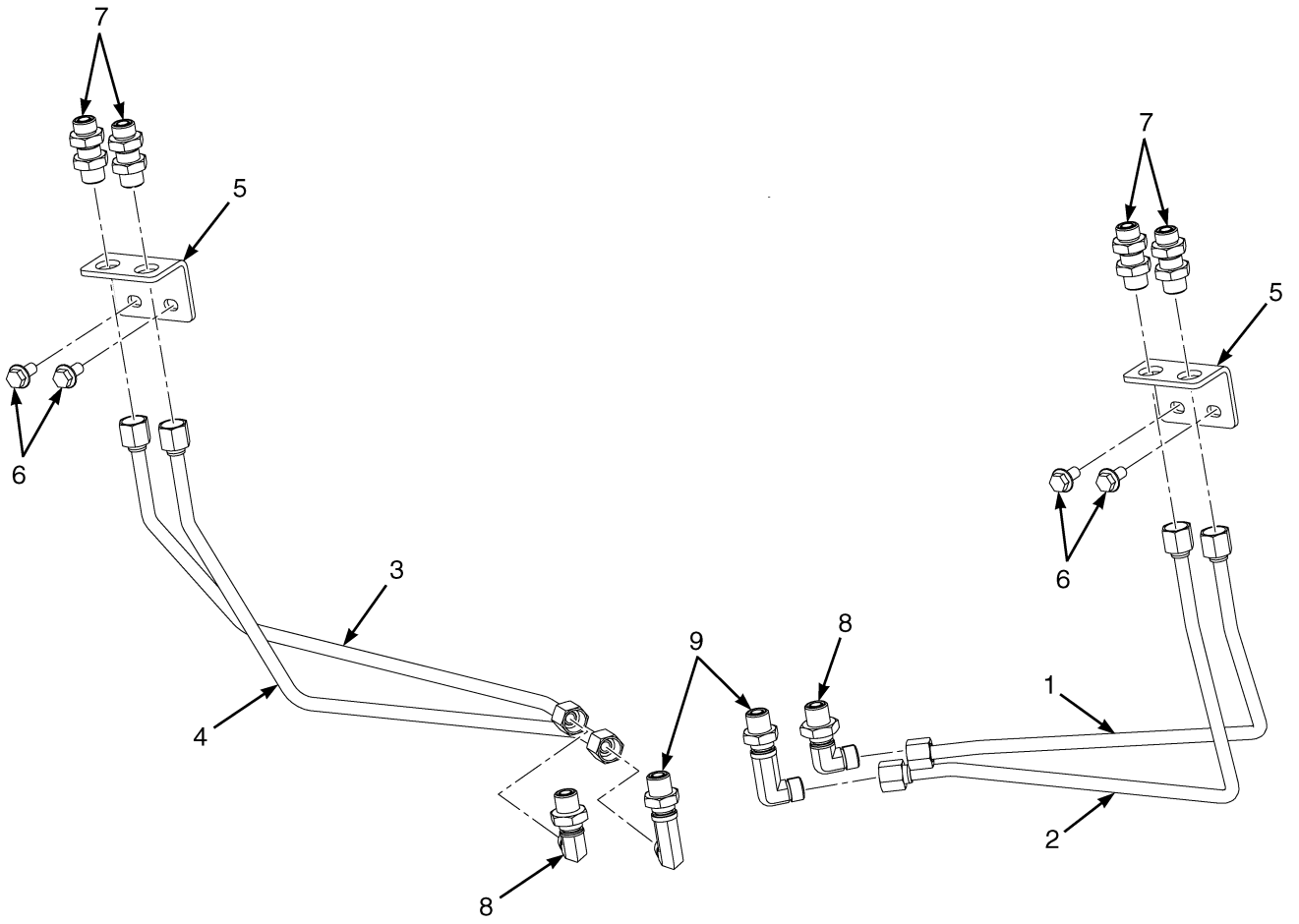

©2015 HYSTER COMPANY

HEADER HOSE AUXILIARY TUBE EXTENSIONS
THREE STAGE FULL FREE LIFT – STANDARD CARRIAGE

KEY:
A: H4.0FT5-H4.0FT6 — Three Function
B: H4.0FT5-H4.0FT6 — Four Function
C: H4.5FTS5, H4.5FT6, H5.0-5.5FT — Three Function
D: H4.5FTS5, H4.5FT6, H5.0-5.5FT — Four Function

			QTY			
ITEM	**PART NO.**	**DESCRIPTION**	**A**	**B**	**C**	**D**
1	2093669	Tube Assy	1	1	..	..
1	2093657	Tube Assy	..	..	1	1
2	2093670	Tube Assy	1	1	..	..
2	2093658	Tube Assy	..	..	1	1
3	2093671	Tube Assy	..	1	..	..
3	2093659	Tube Assy	..	..	..	1
4	2093672	Tube Assy	..	1	..	..
4	2093660	Tube Assy	..	..	..	1
5	1692933	Bracket (RH and LH Bolt On)	1	2	1	2
6	1527883	Capscrew	2	4	2	4
7	816591	Fitting	2	4	2	4
8	1528580	Fitting	1	2	1	2
9	1550425	Fitting	1	2	1	2

©2015 HYSTER COMPANY

CARRIAGE (FIGURE 13-10)
THREE STAGE FULL FREE LIFT

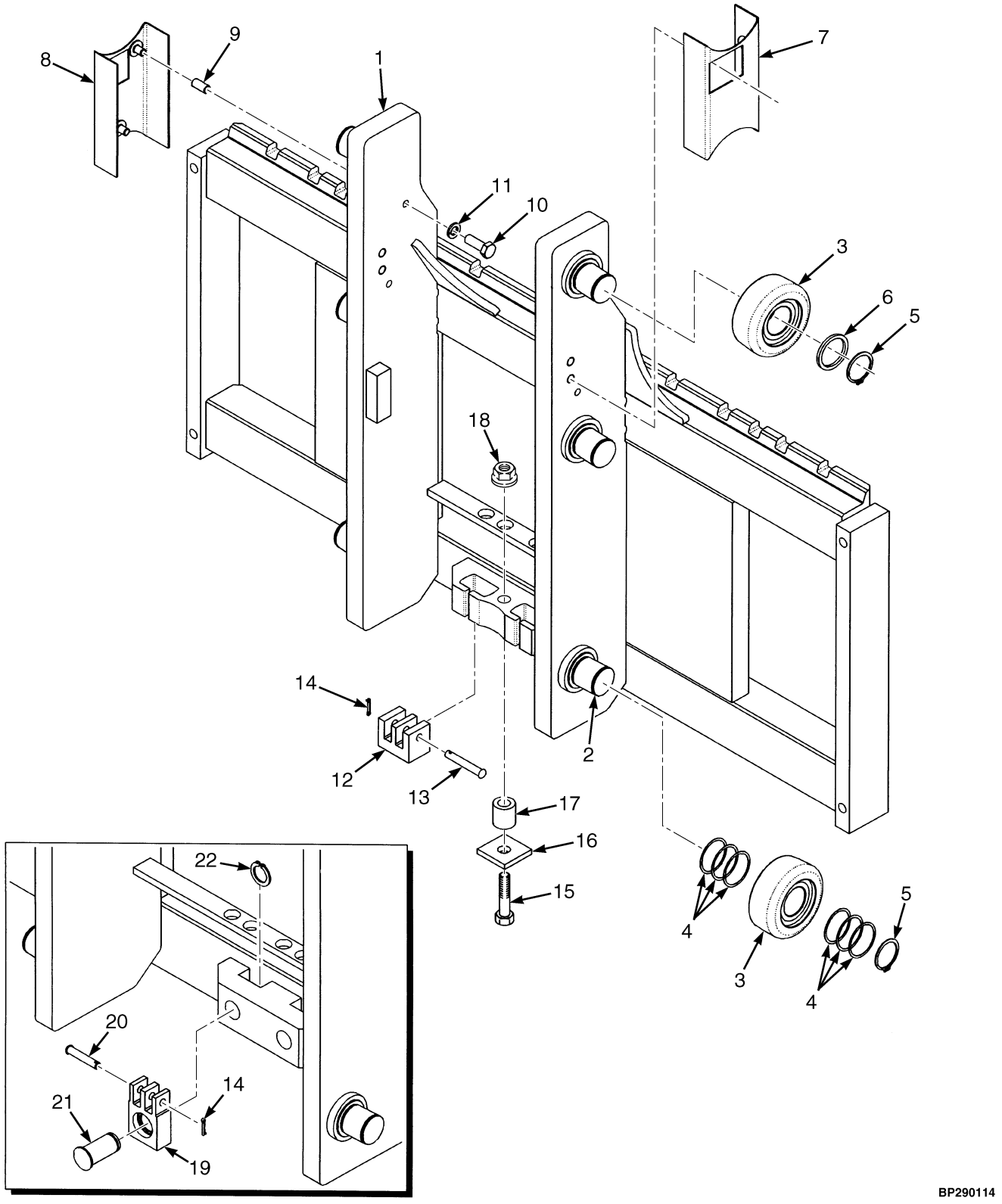

©2015 HYSTER COMPANY

CARRIAGE
THREE STAGE FULL FREE LIFT

KEY:
A: H4.0FT5-H4.0FT6
B: H4.5FTS5, H4.5FT6, H5.0-5.5FT

ITEM	PART NO.	DESCRIPTION	QTY A	QTY B
	2109388	Carriage (1219 mm)	1	..
	2109423	Carriage (1524 mm)	1	..
	4622827	Carriage (1354 mm)	..	1
	4622828	Carriage (1524 mm)	..	1
1	1700060	Carriage Wldmt (1219 mm)	1	..
1	1700217	Carriage Wldmt (1524 mm)	1	..
1	4058048	Carriage Wldmt (1354 mm)	..	1
1	4058049	Carriage Wldmt (1524 mm)	..	1
2	1500744	Stubshaft	6	6
3	1511883	Load Roller ("B") (104.44/104.18)	6	6
3	1511882	Load Roller ("A") (103.68/103.42) (Alternate)	6	6
3	1511884	Load Roller ("C") (105.20/104.94) (Alternate)	6	6
4	126765	Shim	24	24
5	1465072	Snap Ring	6	6
6	1399224	Spacer	2	2
7	319322	Bracket Wldmt (Guard RH)	1	1
8	319323	Bracket Wldmt (Guard LH)	1	1
9	317292	Spacer	4	4
10	18518	Capscrew	4	4
11	15155	Lockwasher	4	4
12	1387548	Chain Anchor	2	..
13	1387549	Pin	2	..
14	15222	Cotter Pin	2	2
15	18520	Capscrew	1	..
16	1400126	Plate	1	..
17	1400125	Spacer	1	..
18	191941	Nut	1	..
19	1480392	Chain Anchor	..	2
20	339932	Pin	..	2
21	320327	Pin	..	2
22	131358	Snap Ring	..	2

©2015 HYSTER COMPANY

NOTES

©2015 HYSTER COMPANY

14 OPTIONS

SECTION 14
OPTIONS

DESCRIPTION	PAGE
ACCUMULATOR	14-50
BACK-UP ALARM	14-46
DUAL MIRRORS	
WITH CAB	14-49
HEADER HOSE AUX. TUBE EXTENSIONS WITH QUICK DISCONNECTS	
THREE STAGE FULL FREE-LIFT - STANDARD CARRIAGE	14-20
THREE STAGE FULL FREE-LIFT - INTEGRAL SIDE-SHIFT CARRIAGE	14-28
TWO STAGE FULL FREE- LIFT - STANDARD CARRIAGE	14-16
TWO STAGE FULL FREE-LIFT - INTEGRAL SIDE-SHIFT CARRIAGE	14-26
TWO STAGE LIMITED FREE-LIFT - STANDARD CARRIAGE	14-12
TWO STAGE LIMITED FREE-LIFT - INTEGRAL SIDE-SHIFT CARRIAGE	14-24
HEADER HOSE AUXILIARY TUBE EXTENSIONS	
THREE STAGE FULL FREE- LIFT - INTEGRAL SIDE-SHIFT CARRIAGE WITHOUT QUICK DISCONNECTS	14-5
THREE STAGE FULL FREE- LIFT - ATTACHMENT CARRIAGE WITHOUT QUICK DISCONNECTS	14-10
TWO STAGE FULL FREE- LIFT - INTEGRAL SIDE-SHIFT CARRIAGE WITHOUT QUICK DISCONNECTS	14-4
TWO STAGE FULL FREE- LIFT - ATTACHMENT CARRIAGE WITHOUT QUICK DISCONNECTS	14-8
TWO STAGE LIMITED FREE-LIFT - INTEGRAL SIDE-SHIFT CARRIAGE WITHOUT QUICK DISCONNECTS	14-3
TWO STAGE LIMITED FREE-LIFT - ATTACHMENT CARRIAGE WITHOUT QUICK DISCONNECTS	14-6
INTEGRAL SIDE-SHIFT CARRIAGE ASSEMBLY	
CHAIN ANCHOR GROUPS	14-42
THREE STAGE FULL FREE LIFT	14-38
TWO STAGE FULL FREE LIFT	14-34
TWO STAGE LIMITED FREE-LIFT	14-30
LIFTING EYES	14-52
MIRROR	
WITHOUT CAB	14-48
REAR DRIVE HANDLE	14-2
STROBE LIGHT	
LED	14-44

©2015 HYSTER COMPANY

REAR DRIVE HANDLE (FIGURE 14-1)

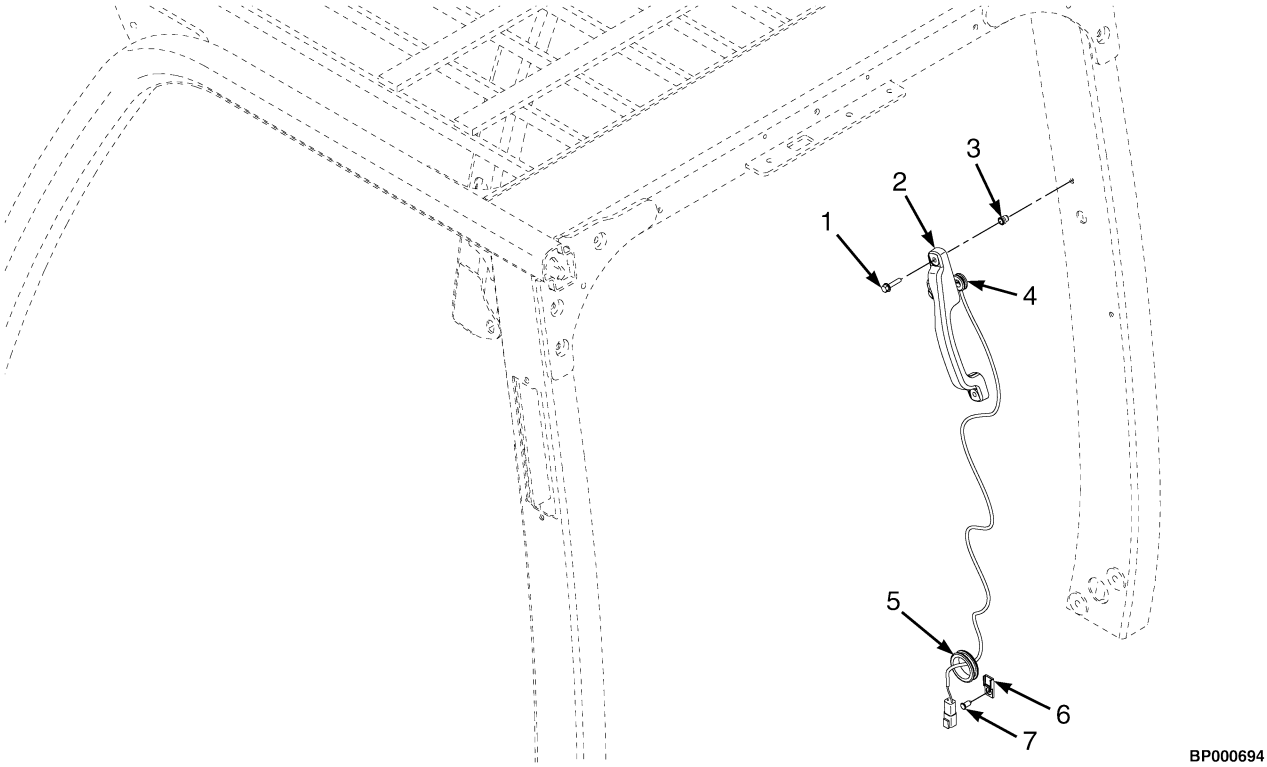

ITEM	PART NO.	DESCRIPTION	QTY
1	1586495	Capscrew	2
2	2070223	Handle (Assembly)	1
3	1531558	Insert	2
4	1598220	Grommet	1
5	362255	Grommet	1
6	1500912	Clip	1
7	1582464	Fastener	1

©2015 HYSTER COMPANY

HEADER HOSE AUXILIARY TUBE EXTENSIONS (FIGURE 14-2)

TWO STAGE LIMITED FREE-LIFT — INTEGRAL SIDE-SHIFT CARRIAGE WITHOUT QUICK DISCONNECTS

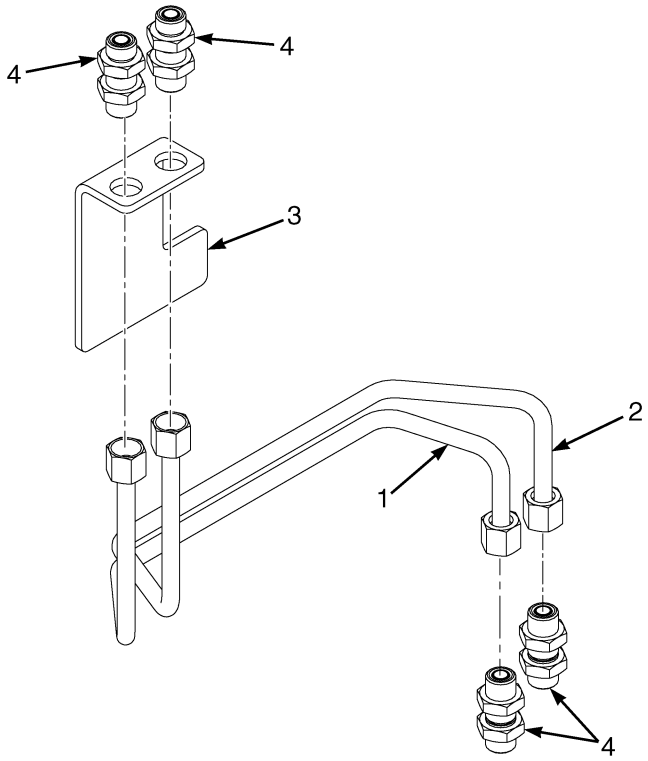

BP000712

KEY:

A: H4.0FT5-H4.0FT6 — Four Function

B: H4.5FTS5, H4.5FT6, H5.0-5.5FT — Four Function

ITEM	PART NO.	DESCRIPTION	QTY A	QTY B
1	2093187	Tube Assy	1	..
1	2093189	Tube Assy	..	1
2	2093188	Tube Assy	1	..
2	2093190	Tube Assy	..	1
3	**a** 4107727	Bracket	1	1
3	**b** 4107728	Bracket	1	1
4	816591	Fitting	4	4
4	816593	Locknut	1	1
4	265731	O-Ring	2	2

FOOTNOTES:

a Used on all Integral Side-Shift Carriages except 1524 mm.

b Used only on 1524 mm Integral Side-Shift Carriage

©2015 HYSTER COMPANY

HEADER HOSE AUXILIARY TUBE EXTENSIONS (FIGURE 14-3)

TWO STAGE FULL FREE- LIFT — INTEGRAL SIDE-SHIFT CARRIAGE WITHOUT QUICK DISCONNECTS

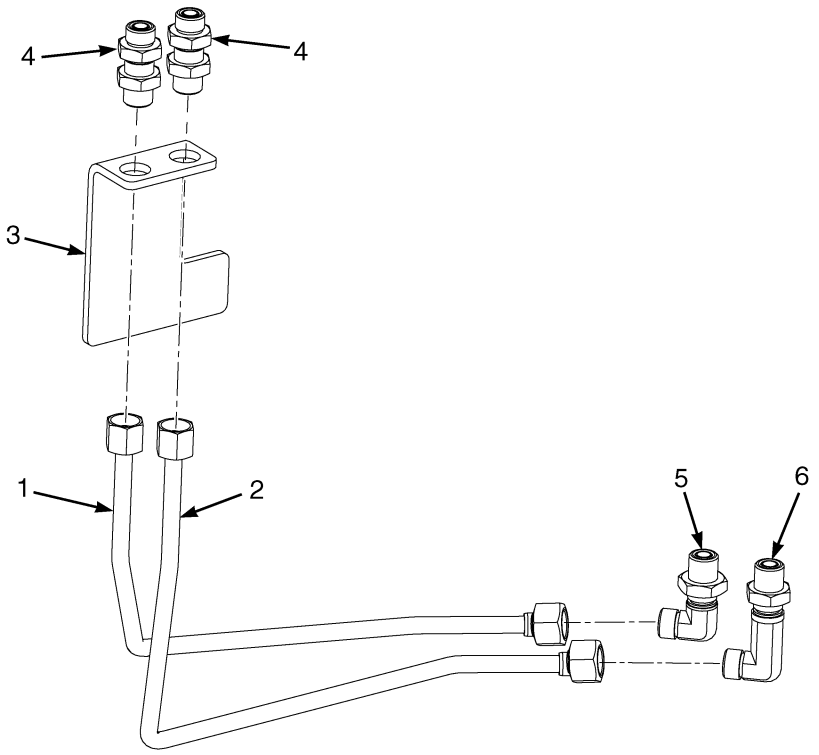

BP000711

KEY:
A: H4.0FT5-H4.0FT6 — Four Function
B: H4.5FTS5, H4.5FT6, H5.0-5.5FT — Four Function

ITEM	PART NO.	DESCRIPTION	QTY A	QTY B
1	2093661	Tube Assy	1	..
1	2093663	Tube Assy	..	1
2	2093662	Tube Assy	1	..
2	2093664	Tube Assy	..	1
3	**a** 4107727	Bracket	1	1
3	**b** 4107728	Bracket	1	1
4	816591	Fitting	2	2
4	265731	O-Ring	2	2
4	816593	Locknut	1	1
5	1528580	Fitting	1	1
5	265731	O-Ring	2	2
5	816593	Locknut	1	1
6	1550425	Fitting	1	1
6	265731	O-Ring	2	2
6	816593	Locknut	1	1

FOOTNOTES:

a Used on all Integral Side-Shift Carriages except 1524 mm.

b Used only on 1524 mm Integral Side-Shift Carriage

©2015 HYSTER COMPANY

HEADER HOSE AUXILIARY TUBE EXTENSIONS (FIGURE 14-4)

THREE STAGE FULL FREE- LIFT — INTEGRAL SIDE-SHIFT CARRIAGE WITHOUT QUICK DISCONNECTS

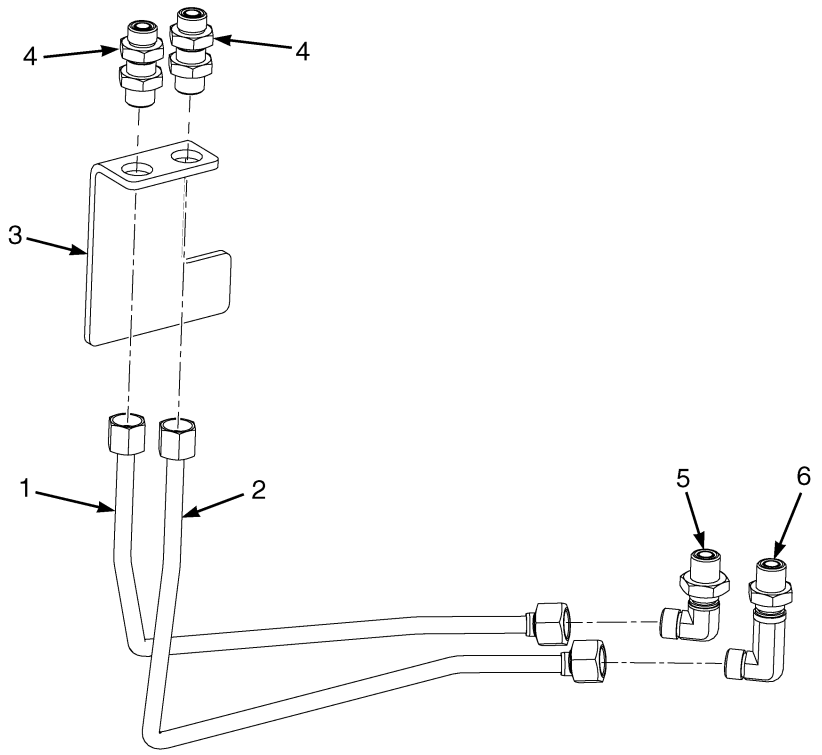

BP000711

KEY:
A: H4.0FT5-H4.0FT6 — Four Function
B: H4.5FTS5, H4.5FT6, H5.0-5.5FT — Four Function

ITEM	PART NO.	DESCRIPTION	QTY A	QTY B
1	2093677	Tube Assy	1	..
1	2093663	Tube Assy	..	1
2	2093678	Tube Assy	1	..
2	2093664	Tube Assy	..	1
3	**a** 4107727	Bracket	1	1
3	**b** 4107728	Bracket	1	1
4	816591	Fitting	2	2
4	265731	O-Ring	2	2
4	816593	Locknut	1	1
5	1528580	Fitting	1	1
5	265731	O-Ring	2	2
5	816593	Locknut	1	1
6	1550425	Fitting	1	1
6	265731	O-Ring	2	2
6	816593	Locknut	1	1

FOOTNOTES:

a Used on all Integral Side-Shift Carriages except 1524 mm.

b Used only on 1524 mm Integral Side-Shift Carriage

©2015 HYSTER COMPANY

HEADER HOSE AUXILIARY TUBE EXTENSIONS (FIGURE 14-5)
TWO STAGE LIMITED FREE-LIFT — ATTACHMENT CARRIAGE WITHOUT QUICK DISCONNECTS

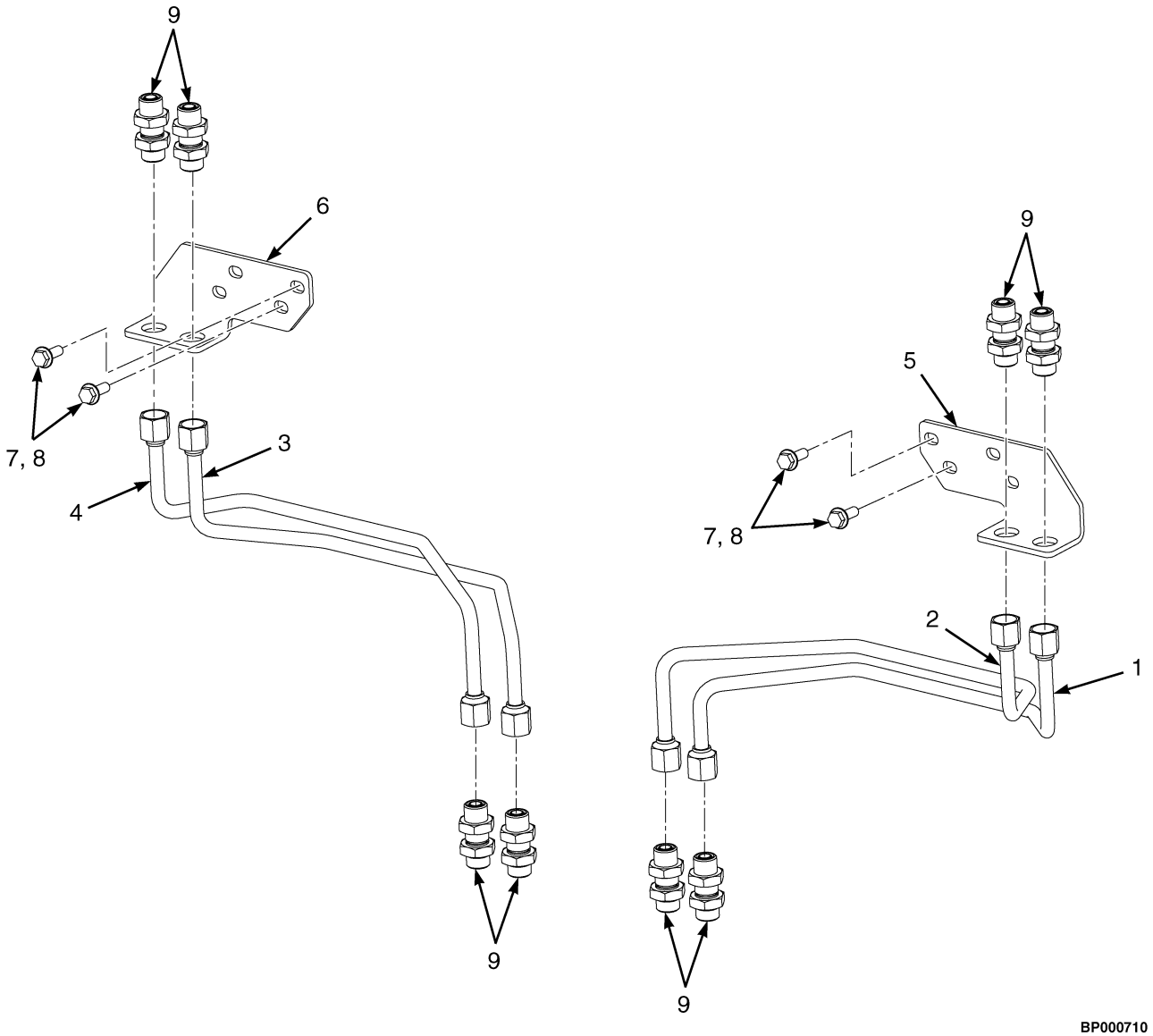

©2015 HYSTER COMPANY

HEADER HOSE AUXILIARY TUBE EXTENSIONS

TWO STAGE LIMITED FREE-LIFT – ATTACHMENT CARRIAGE WITHOUT QUICK DISCONNECTS

KEY:
A: H4.0FT5-H4.0FT6 — Three Function
B: H4.0FT5-H4.0FT6 — Four Function

ITEM	PART NO.	DESCRIPTION	QTY A	QTY B
1	2093191	Tube Assy	1	1
2	2093192	Tube Assy	1	1
3	2093193	Tube Assy	..	1
4	2093194	Tube Assy	..	1
5	1692931	Bracket (Bolt-On) (RH)	1	1
6	1692932	Bracket (Bolt-On) (LH)	..	1
7	1527884	Capscrew	2	4
8	136692	Nut	2	4
9	816591	Fitting	4	8
9	265731	O-Ring	2	2
9	816593	Locknut	1	1

©2015 HYSTER COMPANY

HEADER HOSE AUXILIARY TUBE EXTENSIONS (FIGURE 14-6)

TWO STAGE FULL FREE- LIFT — ATTACHMENT CARRIAGE WITHOUT QUICK DISCONNECTS

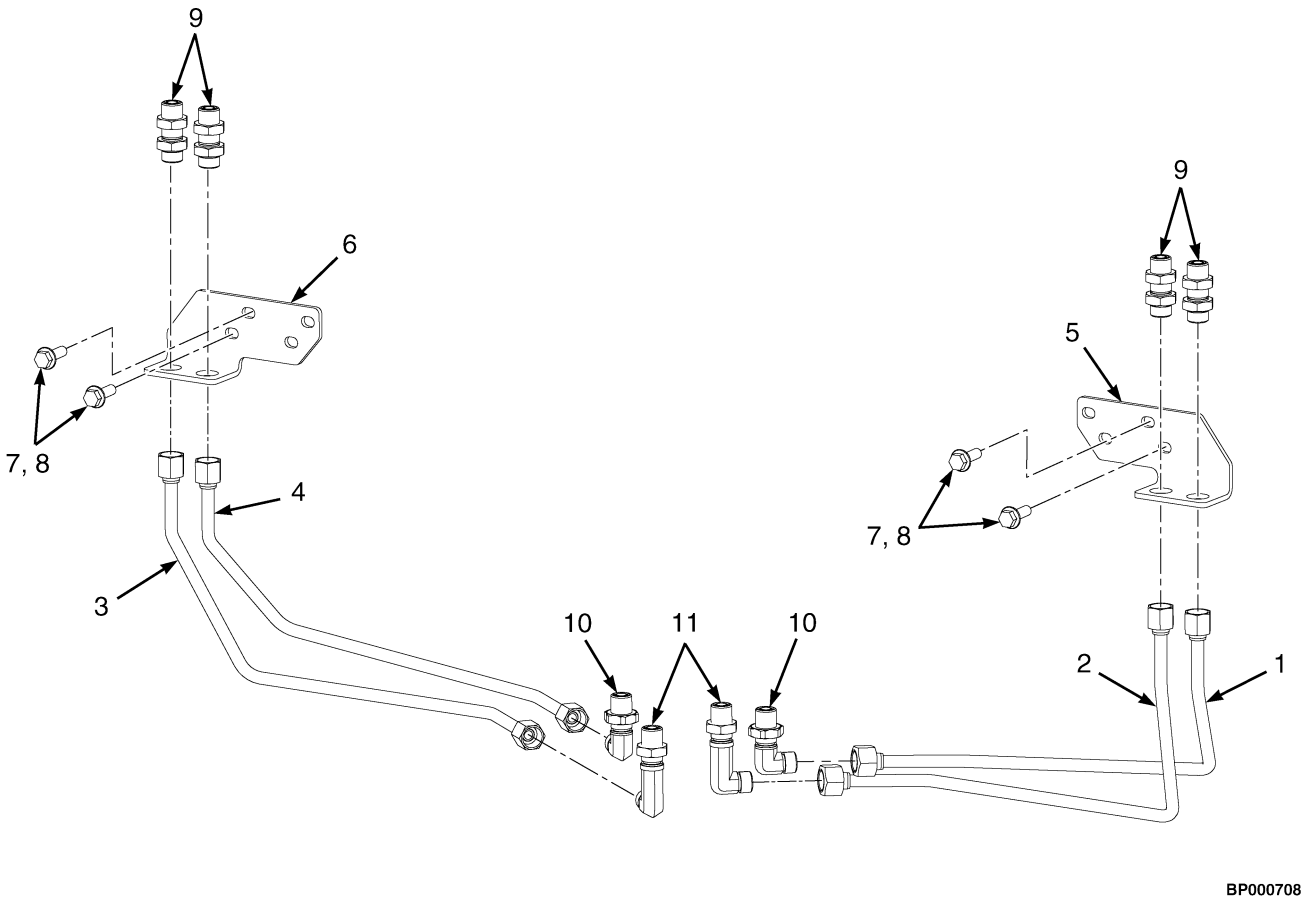

©2015 HYSTER COMPANY

HEADER HOSE AUXILIARY TUBE EXTENSIONS

TWO STAGE FULL FREE- LIFT – ATTACHMENT CARRIAGE WITHOUT QUICK DISCONNECTS

KEY:
A: H4.0FT5-H4.0FT6 — Three Function
B: H4.0FT5-H4.0FT6 — Four Function

ITEM	PART NO.	DESCRIPTION	QTY A	QTY B
1	2093665	Tube Assy	1	1
2	2093666	Tube Assy	1	1
3	2093667	Tube Assy	..	1
4	2093668	Tube Assy	..	1
5	1692931	Bracket (Bolt-On) (RH)	1	1
6	1692932	Bracket (Bolt-On) (LH)	..	1
7	1527884	Capscrew	2	4
8	136692	Nut	2	4
9	816591	Fitting	2	4
9	265731	O-Ring	2	2
9	816593	Locknut	1	1
10	1528580	Fitting	1	2
10	265731	O-Ring	2	2
10	816593	Locknut	1	1
11	1550425	Fitting	1	2
11	265731	O-Ring	2	2
11	816593	Locknut	1	1

©2015 HYSTER COMPANY

HEADER HOSE AUXILIARY TUBE EXTENSIONS (FIGURE 14-7)

THREE STAGE FULL FREE- LIFT — ATTACHMENT CARRIAGE WITHOUT QUICK DISCONNECTS

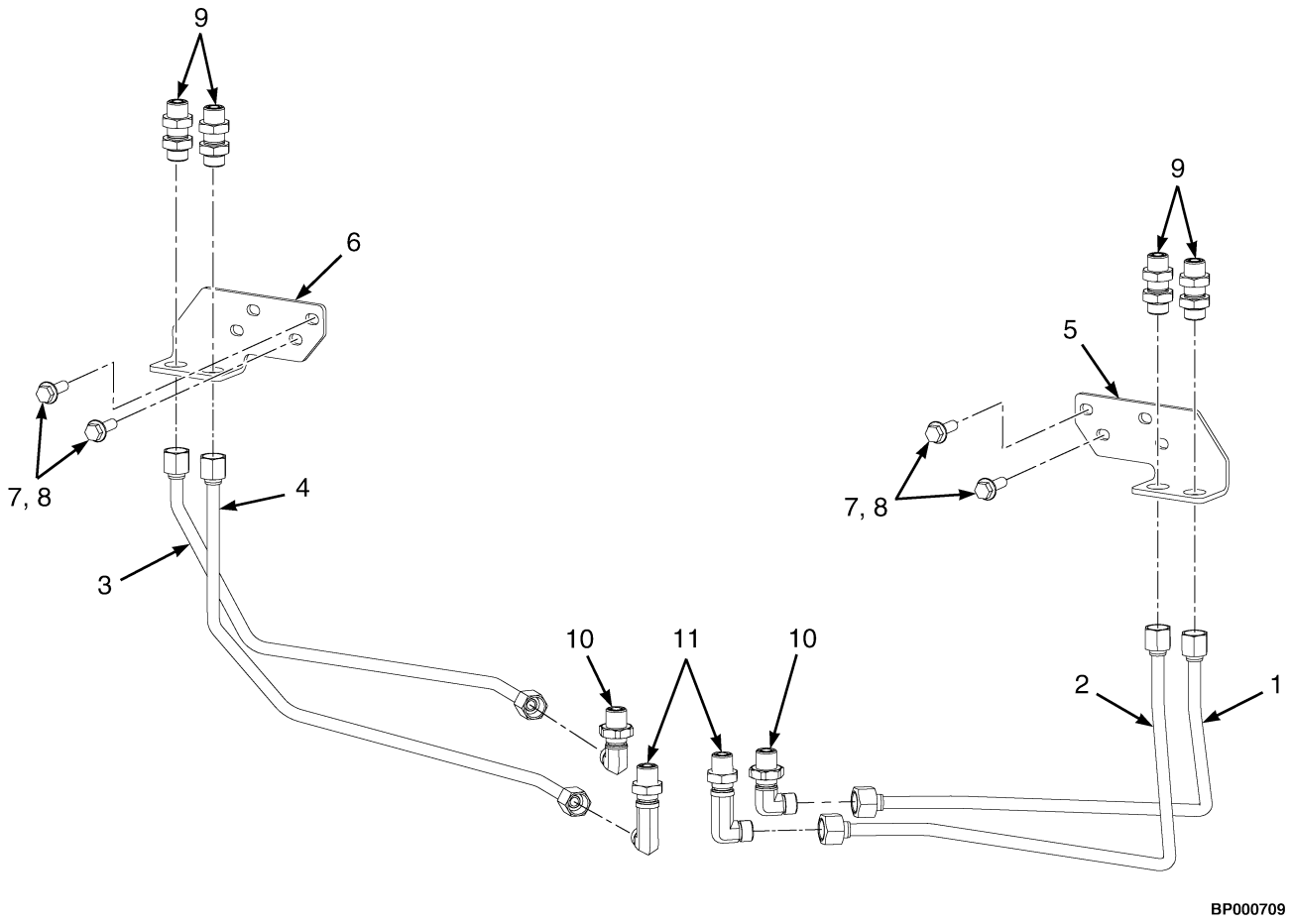

©2015 HYSTER COMPANY

HEADER HOSE AUXILIARY TUBE EXTENSIONS

THREE STAGE FULL FREE- LIFT – ATTACHMENT CARRIAGE WITHOUT QUICK DISCONNECTS

KEY:
A: H4.0FT5-H4.0FT6 — Three Function
B: H4.0FT5-H4.0FT6 — Four Function

ITEM	PART NO.	DESCRIPTION	QTY A	QTY B
1	2093665	Tube Assy	1	1
2	2093666	Tube Assy	1	1
3	2093667	Tube Assy	..	1
4	2093668	Tube Assy	..	1
5	1692931	Bracket (Bolt-On) (RH)	1	1
6	1692932	Bracket (Bolt-On) (LH)	..	1
7	1527884	Capscrew	2	4
8	136692	Nut	2	4
9	816591	Fitting	2	4
9	265731	O-Ring	2	2
9	816593	Locknut	1	1
10	1528580	Fitting	1	2
10	265731	O-Ring	2	2
10	816593	Locknut	1	1
11	1550425	Fitting	1	2
11	265731	O-Ring	2	2
11	816593	Locknut	1	1

©2015 HYSTER COMPANY

HEADER HOSE AUX. TUBE EXTENSIONS WITH QUICK DISCONNECTS (FIGURE 14-8)

TWO STAGE LIMITED FREE-LIFT — STANDARD CARRIAGE

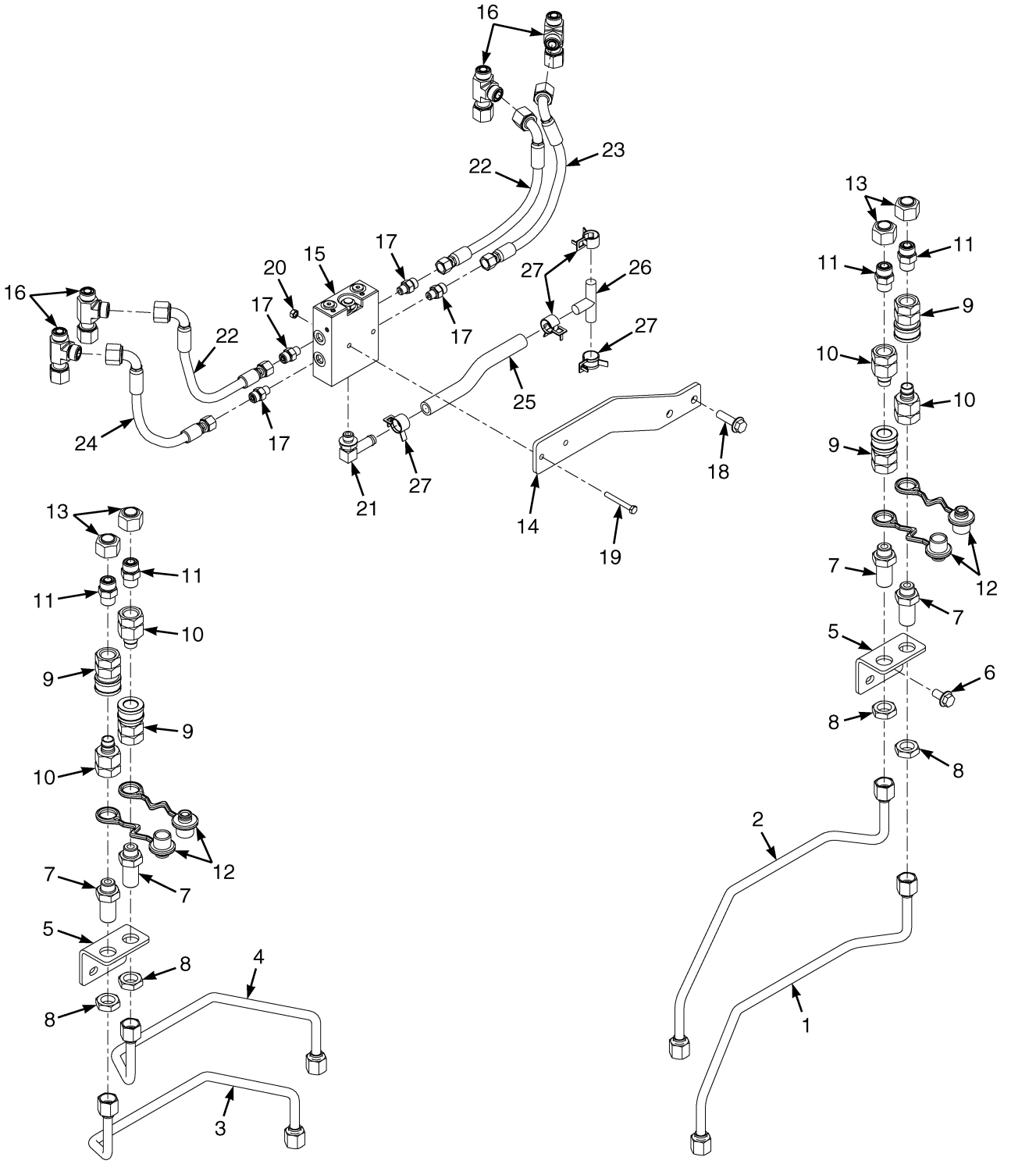

©2015 HYSTER COMPANY

HEADER HOSE AUX. TUBE EXTENSIONS WITH QUICK DISCONNECTS

TWO STAGE LIMITED FREE-LIFT – STANDARD CARRIAGE

KEY:
A: H4.0FT5-H4.0FT6 — Three Function
B: H4.0FT5-H4.0FT6 — Four Function
C: H4.5FTS5, H4.5FT6, H5.0-5.5FT — Three function
D: H4.5FTS5, H4.5FT6, H5.0-5.5FT — Four Function

ITEM	PART NO.	DESCRIPTION	QTY A	B	C	D
1	2093179	Tube Assy	1	1	..	..
1	2093183	Tube Assy	..	..	1	1
2	2093180	Tube Assy	1	1	..	..
2	2093184	Tube Assy	..	..	1	1
3	2093181	Tube Assy	..	1	..	..
3	2093185	Tube Assy	..	..	..	1
4	2093182	Tube Assy	..	1	..	..
4	2093186	Tube Assy	..	..	..	1
5	1692933	Bracket (RH and LH Bolt On)	1	2	1	2
6	1527883	Capscrew	2	4	2	4
7	1708365	Bulkhead	2	4	2	4
8	816593	Locknut	2	4	2	4
9	1377953	Quick Disconnect Fitting	2	4	2	4
10	1377954	Fitting	2	4	2	4
11	1473887	Fitting	2	4	2	4
11	265731	O-Ring	1	1	1	1
11	16484	O-Ring	1	1	1	1
12	1708368	Dust Cover	2	4	2	4
13	1529016	Fitting	2	4	2	4
14	**a** 1708373	Bracket	1	1	1	1
15	**ab** 2111754	Valve	1	..	1	..
15	**a** 2111755	Valve	..	1	..	1
15	**a** 4010971	Check Valve	2	4	2	4
15	**a** 4010972	Valve	1	1	1	1
16	**a** 1487095	Fitting	2	4	2	4
16	**a** 265731	O-Ring	2	2	2	2
17	**a** 1486737	Fitting	2	4	2	4
17	**a** 1527813	O-Ring	1	1	1	1
17	**a** 16481	O-Ring	1	1	1	1
18	**a** 1527885	Capscrew	2	2	2	2
19	**a** 292505	Capscrew	2	2	2	2
20	**a** 302399	Nut	2	2	2	2
21	**a** 110178	Fitting	1	1	1	1
21	**a** 16483	O-Ring	1	1	1	1
22	**a** 4604565	Hose Assy	1	2	1	2
23	**a** 4604566	Hose Assy	1	1	1	1
24	**a** 4604568	Hose Assy	..	1	..	1
25	**a** 1614069	Hose	1	1	1	1
26	**a** 2046871	Fitting	1	1	1	1
27	**a** 1527979	Hose Clamp	4	4	4	4

©2015 HYSTER COMPANY

FOOTNOTES:

a Electronic Hydraulic Control Option Only

b Not Illustrated

©2015 HYSTER COMPANY

NOTES

©2015 HYSTER COMPANY

HEADER HOSE AUX. TUBE EXTENSIONS WITH QUICK DISCONNECTS (FIGURE 14-9)

TWO STAGE FULL FREE- LIFT — STANDARD CARRIAGE

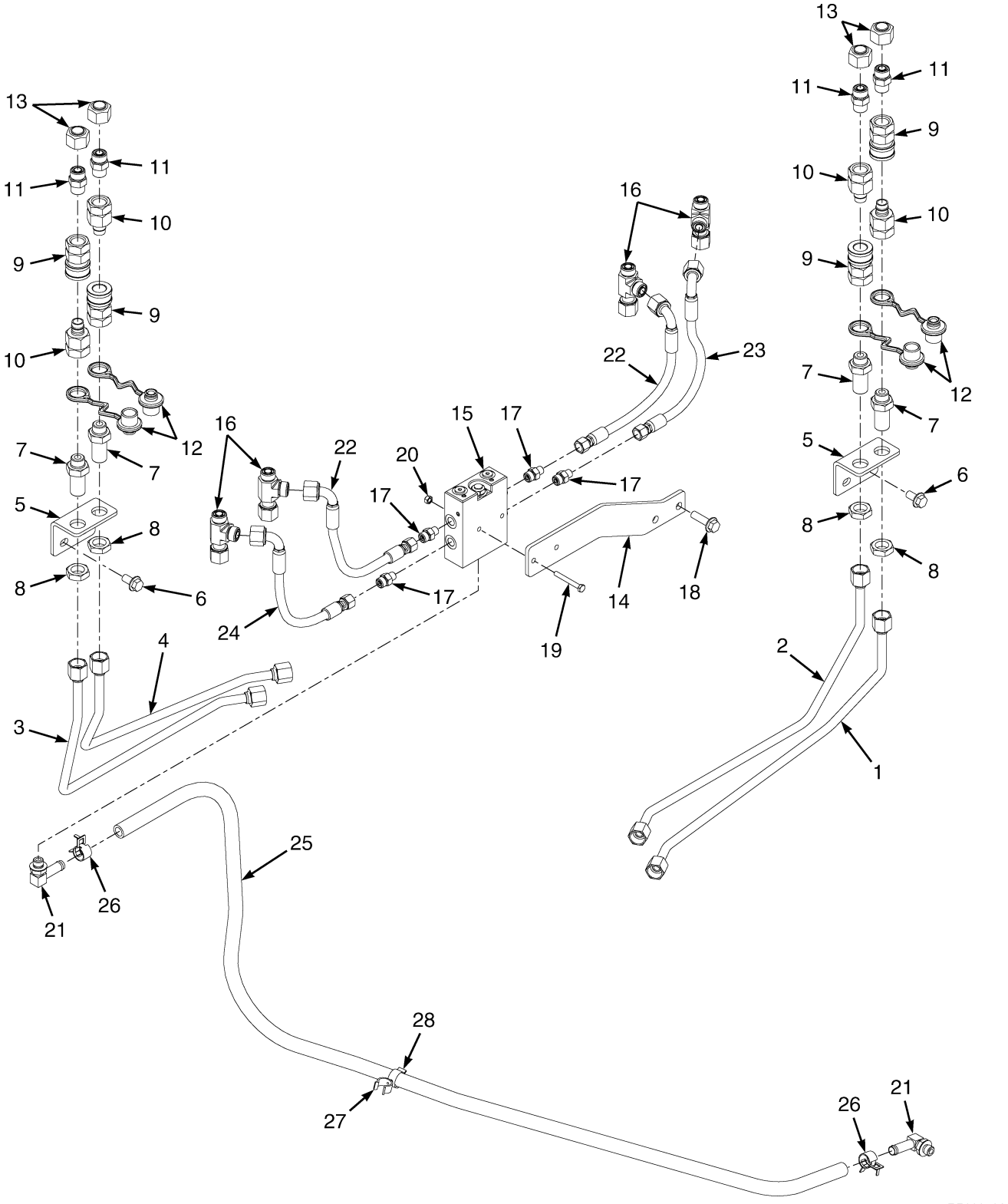

©2015 HYSTER COMPANY

HEADER HOSE AUX. TUBE EXTENSIONS WITH QUICK DISCONNECTS

TWO STAGE FULL FREE- LIFT – STANDARD CARRIAGE

KEY:

A: H4.0FT5-H4.0FT6 — Three Function
B: H4.0FT5-H4.0FT6 — Four Function
C: H4.5FTS5, H4.5FT6, H5.0-5.5FT — Three Function
D: H4.5FTS5, H4.5FT6, H5.0-5.5FT — Four Function

ITEM	PART NO.	DESCRIPTION	QTY A	B	C	D
1	2093653	Tube Assy	1	1	..	..
1	2093657	Tube Assy	..	..	1	1
2	2093654	Tube Assy	1	1	..	..
2	2093658	Tube Assy	..	..	1	1
3	2093655	Tube Assy	..	1	..	..
3	2093659	Tube Assy	..	..	..	1
4	2093656	Tube Assy	..	1	..	..
4	2093660	Tube Assy	..	..	..	1
5	1692933	Bracket (RH and LH Bolt On)	1	2	1	2
6	1527883	Capscrew	2	4	2	4
7	1708365	Bulkhead	2	4	2	4
8	816593	Locknut	2	4	2	4
9	1377953	Quick Disconnect Fitting	2	4	2	4
10	1377954	Fitting	2	4	2	4
11	1473887	Fitting	2	4	2	4
11	265731	O-Ring	1	1	1	1
11	16484	O-Ring	1	1	1	1
12	1708368	Dust Cover	2	4	2	4
13	1529016	Fitting	2	4	2	4
14	**a** 1708373	Bracket	1	1	1	1
15	**ab** 2111754	Valve	1	..	1	..
15	**a** 2111755	Valve	..	1	..	1
15	**a** 4010971	Check Valve	2	4	2	4
15	**a** 4010972	Valve	1	1	1	1
16	**a** 1487095	Fitting	2	4	2	4
16	**a** 265731	O-Ring	2	2	2	2
17	**a** 1486737	Fitting	2	4	2	4
17	**a** 1527813	O-Ring	1	1	1	1
17	**a** 16481	O-Ring	1	1	1	1
18	**a** 1527885	Capscrew	2	2	2	2
19	**a** 292505	Capscrew	2	2	2	2
20	**a** 302399	Nut	2	2	2	2
21	**a** 110178	Fitting	2	2	2	2
22	**a** 4604565	Hose Assy	1	2	1	2
23	**a** 4604566	Hose Assy	1	1	1	1
24	**a** 4604568	Hose Assy	..	1	..	1
25	**a** 1399093	Hose Assy	1	1	1	1
26	**a** 1527979	Hose Clamp	2	2	2	2
27	**a** 1502059	Clamp (Swivel)	1	1	1	1
28	**a** 1502066	Clamp (Swivel)	1	1	1	1

©2015 HYSTER COMPANY

FOOTNOTES:

a Electronic Hydraulic Control Only

b Not Illustrated

©2015 HYSTER COMPANY

NOTES

©2015 HYSTER COMPANY

HEADER HOSE AUX. TUBE EXTENSIONS WITH QUICK DISCONNECTS (FIGURE 14-10)

THREE STAGE FULL FREE-LIFT — STANDARD CARRIAGE

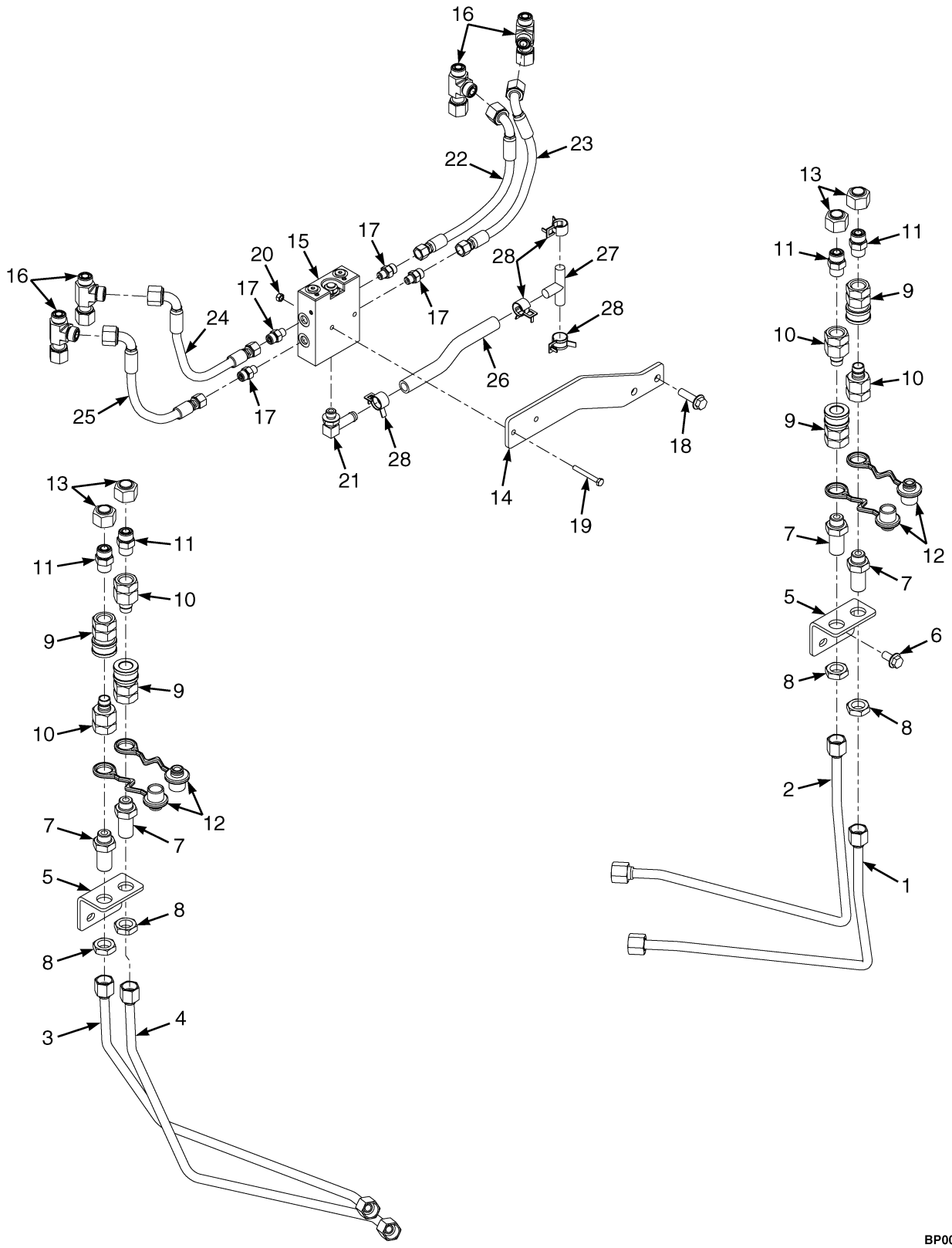

©2015 HYSTER COMPANY

HEADER HOSE AUX. TUBE EXTENSIONS WITH QUICK DISCONNECTS

THREE STAGE FULL FREE-LIFT – STANDARD CARRIAGE

KEY:
A: H4.0FT5-H4.0FT6 — Three Function
B: H4.0FT5-H4.0FT6 — Four Function
C: H4.5FTS5, H4.5FT6, H5.0-5.5FT — Three function
D: H4.5FTS5, H4.5FT6, H5.0-5.5FT — Four Function

ITEM	PART NO.	DESCRIPTION	QTY A	B	C	D
1	2093669	Tube Assy	1	1	..	..
1	2093657	Tube Assy	..	..	1	1
2	2093670	Tube Assy	1	1	..	..
2	2093658	Tube Assy	..	..	1	1
3	2093671	Tube Assy	..	1	..	..
3	2093659	Tube Assy	..	..	..	1
4	2093672	Tube Assy	..	1	..	..
4	2093660	Tube Assy	..	..	..	1
5	1692933	Bracket (RH and LH Bolt On)	1	2	1	2
6	1527883	Capscrew	2	4	2	4
7	1708365	Bulkhead	2	4	2	4
8	816593	Locknut	2	4	2	4
9	1377953	Quick Disconnect Fitting	2	4	2	4
10	1377954	Fitting	2	4	2	4
11	1473887	Fitting	2	4	2	4
11	265731	O-Ring	1	1	1	1
11	16484	O-Ring	1	1	1	1
12	1708368	Dust Cover	2	4	2	4
13	1529016	Fitting	2	4	2	4
14	**a** 1708373	Bracket	1	1	1	1
15	**ab** 2111754	Valve	1	..	1	..
15	**a** 2111755	Valve	..	1	..	1
15	**a** 4010971	Check Valve	2	4	2	4
15	**a** 4010972	Valve	1	1	1	1
16	**a** 1487095	Fitting	2	4	2	4
16	**a** 265731	O-Ring	2	2	2	2
17	**a** 1486737	Fitting	2	4	2	4
17	**a** 1527813	O-Ring	1	1	1	1
17	**a** 16481	O-Ring	1	1	1	1
18	**a** 1527885	Capscrew	2	2	2	2
19	**a** 292505	Capscrew	2	2	2	2
20	**a** 302399	Nut	2	2	2	2
21	**a** 110178	Fitting	1	1	1	1
21	**a** 16483	O-Ring	1	1	1	1
22	**a** 4604565	Hose Assy	1	1	1	1
23	**a** 4604566	Hose Assy	1	1	1	1
24	**a** 4604569	Hose Assy	..	1	..	1
25	**a** 4604570	Hose Assy	..	1	..	1
26	**a** 1614069	Hose	1	1	1	1
27	**a** 2046871	Fitting	1	1	1	1
28	**a** 1527979	Hose Clamp	4	4	4	4

©2015 HYSTER COMPANY

FOOTNOTES:

a Electronic Hydraulic Control Option Only
b Not Illustrated

©2015 HYSTER COMPANY

NOTES

©2015 HYSTER COMPANY

HEADER HOSE AUX. TUBE EXTENSIONS WITH QUICK DISCONNECTS (FIGURE 14-11)

TWO STAGE LIMITED FREE-LIFT — INTEGRAL SIDE-SHIFT CARRIAGE

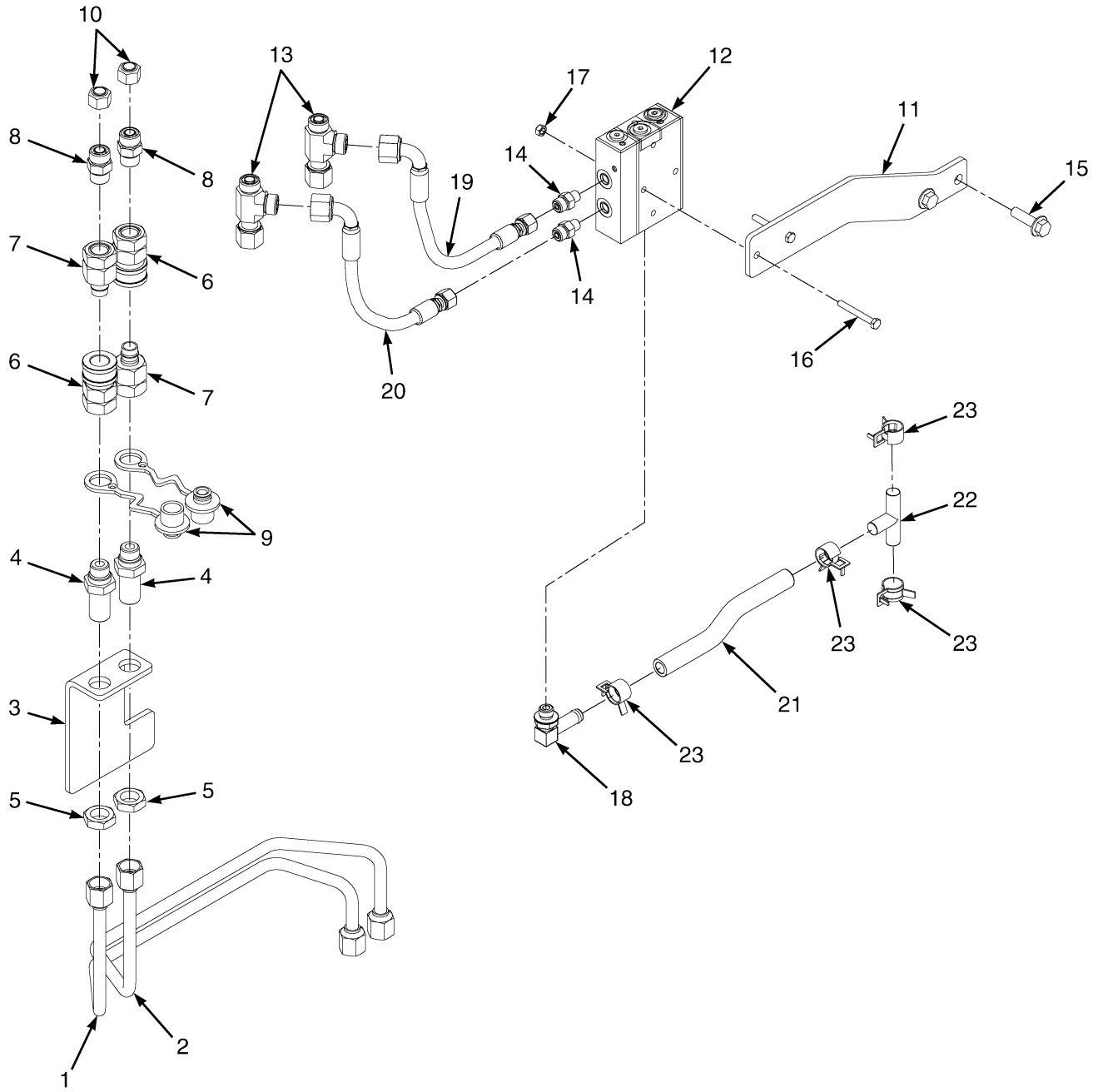

©2015 HYSTER COMPANY

HEADER HOSE AUX. TUBE EXTENSIONS WITH QUICK DISCONNECTS

TWO STAGE LIMITED FREE-LIFT – INTEGRAL SIDE-SHIFT CARRIAGE

KEY:
A: H4.0FT5-H4.0FT6 — Four Function
B: H4.5FTS5, H4.5FT6, H5.0-5.5FT — Four Function

ITEM	PART NO.	DESCRIPTION	QTY A	QTY B
1	2093187	Tube Assy	1	..
1	2093189	Tube Assy	..	1
2	2093188	Tube Assy	1	..
2	2093190	Tube Assy	..	1
3	1647864	Bracket	1	1
4	1708365	Bulkhead	2	2
5	816593	Locknut	2	2
6	1377953	Quick Disconnect Fitting	2	2
7	1377954	Fitting	2	2
8	1473887	Fitting	2	2
8	265731	O-Ring	1	1
8	16484	O-Ring	1	1
9	1708368	Dust Cover	2	2
10	1529016	Fitting	2	2
11	**a** 1708373	Bracket	1	1
12	**a** 2111754	Valve	1	1
12	**a** 4010971	Check Valve	2	2
12	**a** 4010972	Valve	1	1
13	**a** 1487095	Fitting	2	2
13	**a** 265731	O-Ring	2	2
14	**a** 1486737	Fitting	2	2
14	**a** 1527813	O-Ring	1	1
14	**a** 16481	O-Ring	1	1
15	**a** 1527885	Capscrew	2	2
16	**a** 292505	Capscrew	2	2
17	**a** 302399	Nut	2	2
18	**a** 110178	Fitting	1	1
18	**a** 16483	O-Ring	1	1
19	**a** 4604566	Hose Assy	1	1
20	**a** 4604567	Hose Assy	1	1
21	**a** 1614069	Hose	1	1
22	**a** 2046871	Fitting	1	1
23	**a** 1527979	Hose Clamp	4	4

FOOTNOTES:

a Electronic Hydraulic Control Only

©2015 HYSTER COMPANY

HEADER HOSE AUX. TUBE EXTENSIONS WITH QUICK DISCONNECTS (FIGURE 14-12)

TWO STAGE FULL FREE-LIFT — INTEGRAL SIDE-SHIFT CARRIAGE

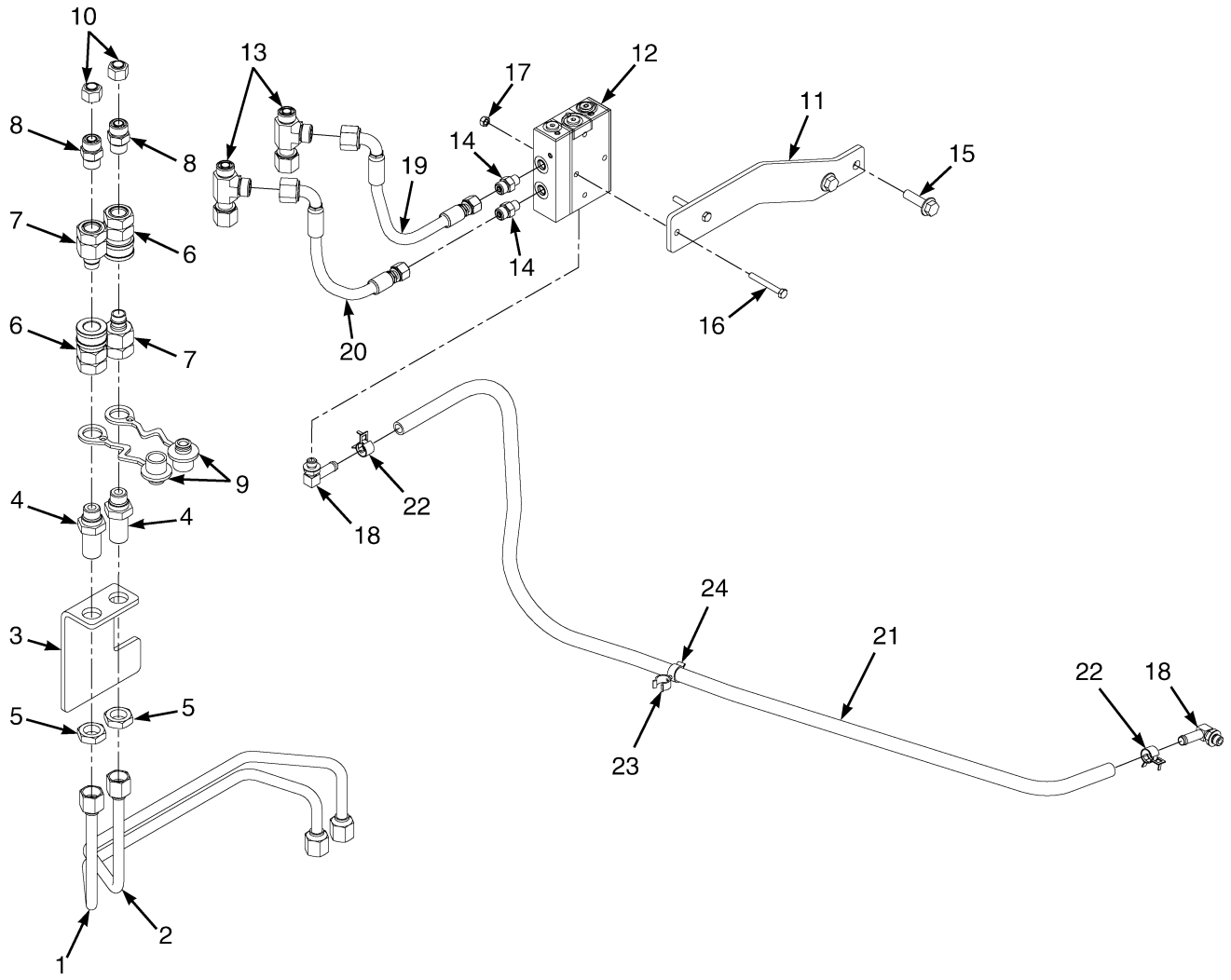

©2015 HYSTER COMPANY

HEADER HOSE AUX. TUBE EXTENSIONS WITH QUICK DISCONNECTS

TWO STAGE FULL FREE-LIFT – INTEGRAL SIDE-SHIFT CARRIAGE

KEY:
A: H4.0FT5-H4.0FT6 — Four Function
B: H4.5FTS5, H4.5FT6, H5.0-5.5FT — Four Function

ITEM	PART NO.	DESCRIPTION	QTY A	QTY B
1	2093661	Tube Assy	1	..
1	2093663	Tube Assy	..	1
2	2093662	Tube Assy	1	..
2	2093664	Tube Assy	..	1
3	1647864	Bracket	1	1
4	1708365	Bulkhead	2	2
5	816593	Locknut	2	2
6	1377953	Quick Disconnect Fitting	2	2
7	1377954	Fitting	2	2
8	1473887	Fitting	2	2
8	265731	O-Ring	1	1
8	16484	O-Ring	1	1
9	1708368	Dust Cover	2	2
10	1529016	Fitting	2	2
11	**a** 1708373	Bracket	1	1
12	**a** 2111754	Valve	1	1
12	**a** 4010971	Check Valve	2	2
12	**a** 4010972	Valve	1	1
13	**a** 1487095	Fitting	2	2
13	**a** 265731	O-Ring	2	2
14	**a** 1486737	Fitting	2	2
14	**a** 1527813	O-Ring	1	1
14	**a** 16481	O-Ring	1	1
15	**a** 1527885	Capscrew	2	2
16	**a** 292505	Capscrew	2	2
17	**a** 302399	Nut	2	2
18	**a** 110178	Fitting	2	2
18	**a** 16483	O-Ring	1	1
19	**a** 4604566	Hose Assy	1	1
20	**a** 4604567	Hose Assy	1	1
21	**a** 1399093	Hose Assy	1	1
22	**a** 1527979	Hose Clamp	2	2
23	**a** 1502059	Clamp (Swivel)	1	1
24	**a** 1502066	Clamp (Swivel)	1	1

FOOTNOTES:

a Electronic Hydraulic Control Only

©2015 HYSTER COMPANY

HEADER HOSE AUX. TUBE EXTENSIONS WITH QUICK DISCONNECTS (FIGURE 14-13)

THREE STAGE FULL FREE-LIFT — INTEGRAL SIDE-SHIFT CARRIAGE

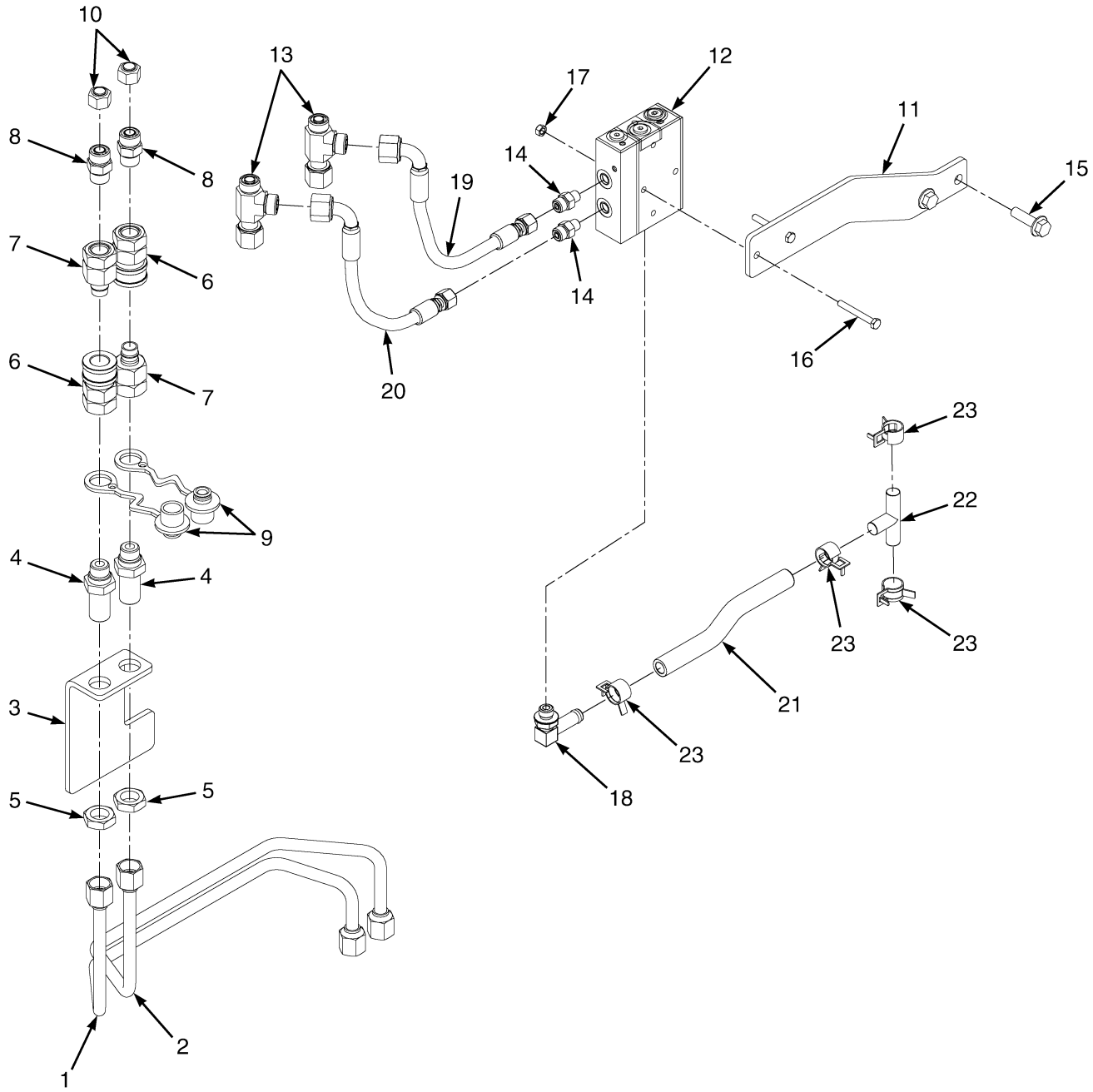

©2015 HYSTER COMPANY

HEADER HOSE AUX. TUBE EXTENSIONS WITH QUICK DISCONNECTS
THREE STAGE FULL FREE-LIFT – INTEGRAL SIDE-SHIFT CARRIAGE

KEY:
A: H4.0FT5-H4.0FT6 — Four Function
B: H4.5FTS5, H4.5FT6, H5.0-5.5FT — Four Function

ITEM	PART NO.	DESCRIPTION	QTY A	QTY B
1	2093677	Tube Assy	1	..
1	2093663	Tube Assy	..	1
2	2093678	Tube Assy	1	..
2	2093664	Tube Assy	..	1
3	1647864	Bracket	1	1
4	1708365	Bulkhead	2	2
5	816593	Locknut	2	2
6	1377953	Quick Disconnect Fitting	2	2
7	1377954	Fitting	2	2
8	1473887	Fitting	2	2
8	265731	O-Ring	1	1
8	16484	O-Ring	1	1
9	1708368	Dust Cover	2	2
10	1529016	Fitting	2	2
11	**a** 1708373	Bracket	1	1
12	**a** 2111754	Valve	1	1
12	**a** 4010971	Check Valve	2	2
12	**a** 4010972	Valve	1	1
13	**a** 1487095	Fitting	2	2
13	**a** 265731	O-Ring	2	2
14	**a** 1486737	Fitting	2	2
14	**a** 1527813	O-Ring	1	1
14	**a** 16481	O-Ring	1	1
15	**a** 1527885	Capscrew	2	2
16	**a** 292505	Capscrew	2	2
17	**a** 302399	Nut	2	2
18	**a** 110178	Fitting	1	1
18	**a** 16483	O-Ring	1	1
19	**a** 4604569	Hose Assy	1	1
20	**a** 4604566	Hose Assy	1	1
21	**a** 1614069	Hose	1	1
22	**a** 2046871	Fitting	1	1
23	**a** 1527979	Hose Clamp	4	4

FOOTNOTES:

a Electronic Hydraulic Control Only

©2015 HYSTER COMPANY

INTEGRAL SIDE-SHIFT CARRIAGE ASSEMBLY (FIGURE 14-14)
TWO STAGE LIMITED FREE-LIFT

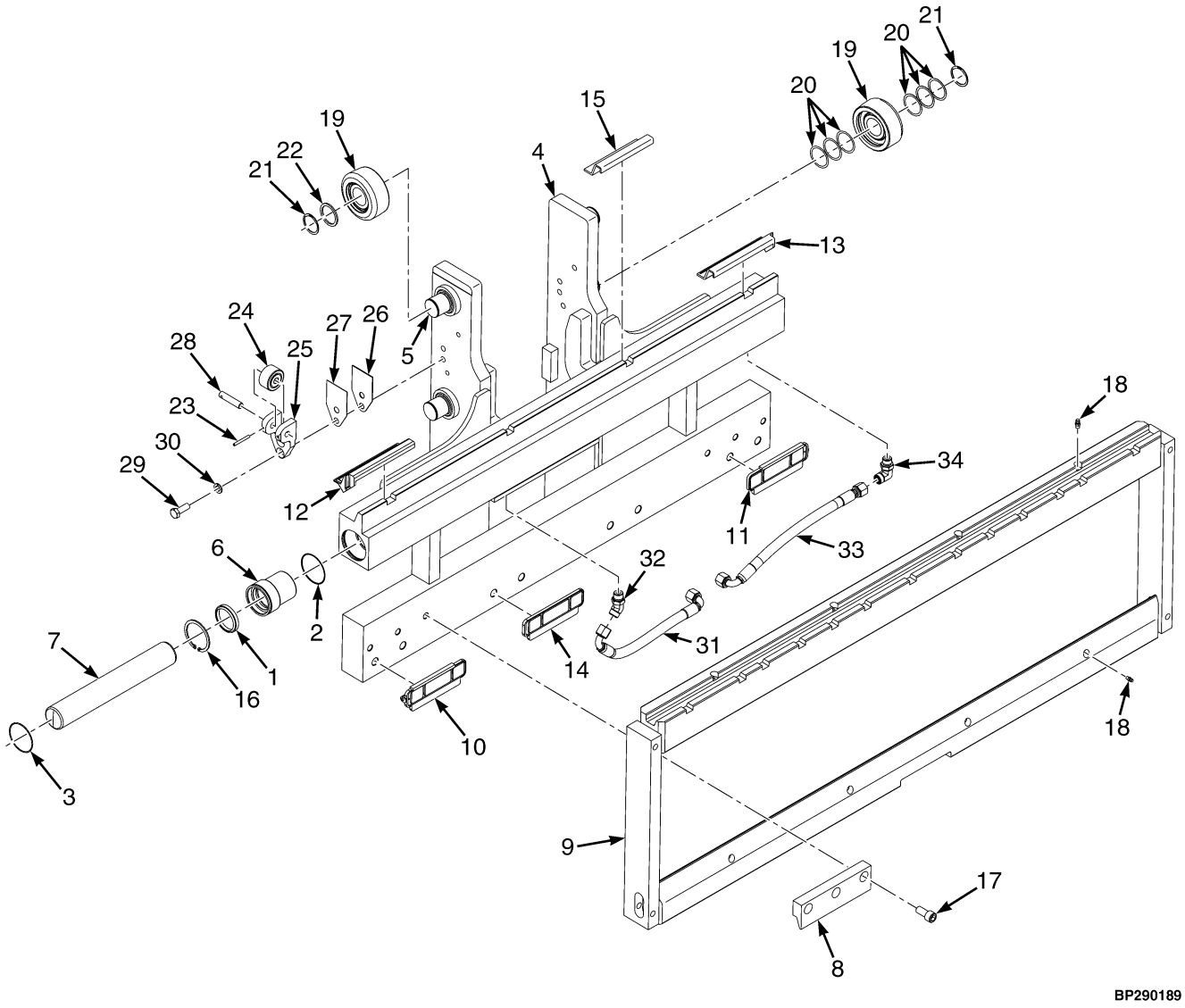

©2015 HYSTER COMPANY

INTEGRAL SIDE-SHIFT CARRIAGE ASSEMBLY
TWO STAGE LIMITED FREE-LIFT

KEY:
A: H4.0FT5-H4.0FT6
B: H4.5FTS5, H4.5FT6, H5.0-5.5FT

ITEM	PART NO.	DESCRIPTION	QTY A	QTY B
	4636442	Carriage (1219 mm) (Assembly)	1	..
	4636443	Carriage (1524 mm) (Assembly)	1	..
	4636444	Carriage (1372 mm) (Assembly)	..	1
	4636445	Carriage (1524 mm) (Assembly)	..	1
	b 2037943	Side-Shift Carriage (1219 mm)	1	..
	c 2037944	Side-Shift Carriage (1524 mm)	1	..
	c 2037945	Side-Shift Carriage (1372 mm)	..	1
	c 2037946	Side-Shift Carriage (1524 mm)	..	1
1	1467150	Rod Wiper	2	..
1	1467203	Rod Wiper	..	2
2	1622935	Seal	2	..
2	1622936	Seal	..	2
3	39365	O-Ring	2	..
3	39366	O-Ring	..	2
4	1467769	Side Shift Carriage Fixed Frame (1219 mm)	1	..
4	1467771	Side Shift Carriage Fixed Frame (1524 mm)	1	..
4	1467774	Side Shift Carriage Fixed Frame (1372 mm)	..	1
4	1467776	Side Shift Carriage Fixed Frame (1524 mm)	..	1
5	1500744	Stubshaft	6	6
6	1467151	Bushing	2	..
6	1467204	Bushing	..	2
7	1467153	Rod	2	..
7	1467205	Rod	..	2
8	1467154	Hook	2	..
8	1467206	Hook	..	2
9	1532640	Apron (1219 mm)	1	..
9	1532643	Apron (1524 mm)	1	..
9	1532638	Apron (1372 mm)	..	1
9	1532639	Apron (1524 mm)	..	1
10	1467145	Wear Strip (Right Lower)	1	1
11	1467146	Wear Strip (Left Lower)	1	1
12	1467147	Wear Strip (Right Upper)	1	1
13	1467148	Wear Strip (Left Upper)	1	1
14	**a** 1467201	Wear Strip (Central Lower)	2	2
15	**a** 1467200	Wear Strip (Central Upper)	2	2
16	1467632	Snap Ring	2	..
16	1467634	Snap Ring	..	2
17	1467633	Screw	6	8
18	16041	Grease Fitting	4	..
18	**a** 16041	Grease Fitting	8	8
19	1511883	Load Roller ("B") (104.44/104.18)	6	6
19	1511882	Load Roller ("A") (103.68/103.42) (Alternate)	6	6
19	1511884	Load Roller ("C") (105.20/104.94) (Alternate)	6	6
20	126765	Shim	24	24
21	1465072	Snap Ring	6	6

©2015 HYSTER COMPANY

INTEGRAL SIDE-SHIFT CARRIAGE ASSEMBLY
TWO STAGE LIMITED FREE-LIFT

KEY:
A: H4.0FT5-H4.0FT6
B: H4.5FTS5, H4.5FT6, H5.0-5.5FT

ITEM	PART NO.	DESCRIPTION	QTY A	QTY B
22	1399224	Spacer	2	2
23	66333	Roll Pin	2	2
24	1670064	Thrust Bearing (Side Thrust Roller)	2	2
25	1465177	Bracket	2	2
26	192425	Shim (1.575 mm)	6	6
27	192424	Shim (0.762 mm)	8	8
28	1670065	Pin	2	2
29	292528	Capscrew	4	4
30	292683	Lockwasher	4	4
31	2093348	Hose Assy	1	..
31	2093346	Hose Assy	..	1
32	1473897	Fitting	1	1
32	265731	O-Ring	1	1
32	16484	O-Ring	1	1
33	2093345	Hose Assy	..	1
33	2093347	Hose Assy	1	..
34	1473887	Fitting	1	1
34	265731	O-Ring	1	1
34	16484	O-Ring	1	1
	. . . . .	Chain Anchor Group (☞Figure 14-17)	1	1
	2083999	Kit-Seal (Class III)	1	..
	2083998	Kit-Seal (Class IV)	..	1

FOOTNOTES:

a Carriages greater than 48 in.
b Includes parts 1-13 and 16-18
c Includes parts 1-18

©2015 HYSTER COMPANY

NOTES

©2015 HYSTER COMPANY

INTEGRAL SIDE-SHIFT CARRIAGE ASSEMBLY (FIGURE 14-15)
TWO STAGE FULL FREE LIFT

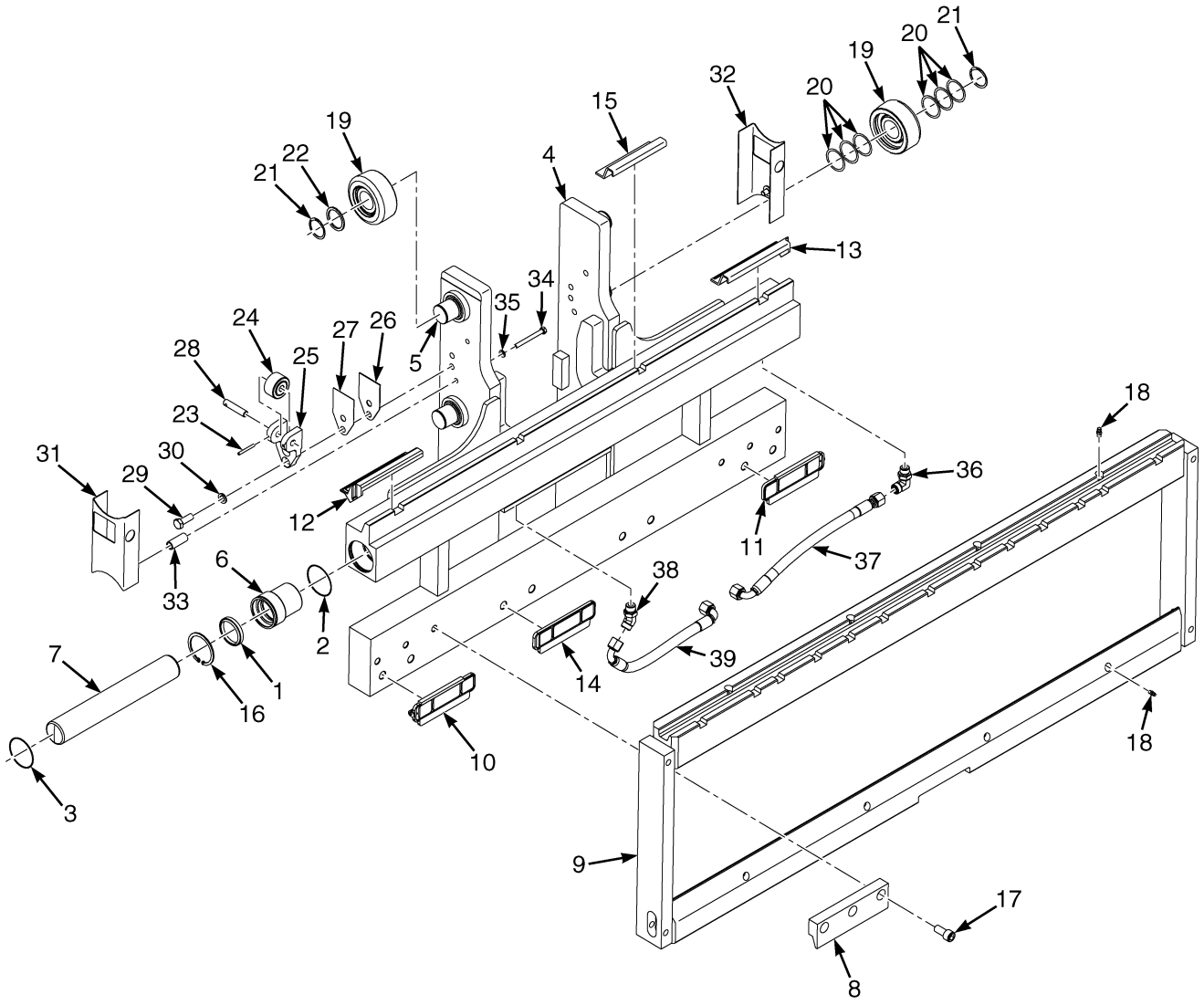

BP290115

©2015 HYSTER COMPANY

INTEGRAL SIDE-SHIFT CARRIAGE ASSEMBLY
TWO STAGE FULL FREE LIFT

KEY:
A: H4.0FT5-H4.0FT6
B: H4.5FTS5, H4.5FT6, H5.0-5.5FT

ITEM	PART NO.	DESCRIPTION	QTY A	QTY B
	4636454	Carriage (1219 mm) (Assembly)	1	..
	4636455	Carriage (1524 mm) (Assembly)	1	..
	4636448	Carriage (1372 mm) (Assembly)	..	1
	4636449	Carriage (1524 mm) (Assembly)	..	1
	b 4614288	Side-Shift Carriage (1219 mm)	1	..
	c 4614289	Side-Shift Carriage (1524 mm)	1	..
	c 4623997	Side-Shift Carriage (1372 mm)	..	1
	c 4623998	Side-Shift Carriage (1524 mm)	..	1
1	1467150	Rod Wiper	2	..
1	1467203	Rod Wiper	..	2
2	1622935	Seal	2	..
2	1622936	Seal	..	2
3	39365	O-Ring	2	..
3	39366	O-Ring	..	2
4	1705946	Side-Shift Carriage Fixed Frame (1219 mm)	1	..
4	1705947	Side-Shift Carriage Fixed Frame (1524 mm)	1	..
4	4070451	Frame (1372 mm)	..	1
4	4070452	Frame (1524 mm)	..	1
5	1500744	Stubshaft	6	6
6	1467151	Bushing	2	..
6	1467204	Bushing	..	2
7	1467153	Rod	2	..
7	1467205	Rod	..	2
8	1467154	Hook	2	..
8	1467206	Hook	..	2
9	1532640	Apron (1219 mm)	1	..
9	1532643	Apron (1524 mm)	1	..
9	1532638	Apron (1372 mm)	..	1
9	1532639	Apron (1524 mm)	..	1
10	1467145	Wear Strip (Right Lower)	1	1
11	1467146	Wear Strip (Left Lower)	1	1
12	1467147	Wear Strip (Right Upper)	1	1
13	1467148	Wear Strip (Left Upper)	1	1
14	**a** 1467201	Wear Strip (Central Lower)	2	2
15	**a** 1467200	Wear Strip (Central Upper)	2	2
16	1467632	Snap Ring	2	..
16	1467634	Snap Ring	..	2
17	1467633	Screw	6	8
18	16041	Grease Fitting	4	..
18	**a** 16041	Grease Fitting	8	8
19	1511883	Load Roller ("B") (104.44/104.18)	6	6
19	1511882	Load Roller ("A") (103.68/103.42) (Alternate)	6	6
19	1511884	Load Roller ("C") (105.20/104.94) (Alternate)	6	6
20	126765	Shim	24	24
21	1465072	Snap Ring	6	6

©2015 HYSTER COMPANY

INTEGRAL SIDE-SHIFT CARRIAGE ASSEMBLY
TWO STAGE FULL FREE LIFT

KEY:
A: H4.0FT5-H4.0FT6
B: H4.5FTS5, H4.5FT6, H5.0-5.5FT

ITEM	PART NO.	DESCRIPTION	QTY A	QTY B
22	1399224	Spacer	2	2
23	66333	Roll Pin	2	2
24	1670064	Thrust Bearing (Side Thrust Roller)	2	2
25	1465177	Bracket	2	2
26	192425	Shim (1.575 mm)	6	6
27	192424	Shim (0.762 mm)	8	8
28	1670065	Pin	2	2
29	292528	Capscrew	4	4
30	292683	Lockwasher	4	4
31	**a** 319322	Bracket Wldmt (Guard RH)	1	1
32	**a** 319323	Bracket Wldmt (Guard LH)	1	1
33	**a** 317292	Spacer	4	4
34	**a** 18518	Capscrew (5/16 x 3)	4	1
34	**a** 18520	Capscrew (5/16 x 3 1/4)	..	3
35	**a** 15155	Lockwasher	4	4
36	1473897	Fitting	1	1
36	265731	O-Ring	1	1
36	16484	O-Ring	1	1
37	2093349	Hose Assy	1	..
37	2093351	Hose Assy	..	1
38	1516202	Fitting	1	..
38	1473887	Fitting	..	1
38	265731	O-Ring	1	1
38	16484	O-Ring	1	1
39	2093350	Hose Assy	1	..
39	2093352	Hose Assy	..	1
	. . . . .	Chain Anchor Group (☞Figure 14-17)	1	1
	2083999	Kit-Seal (Class III)	1	..
	2083998	Kit-Seal (Class IV)	..	1

FOOTNOTES:

a Carriages greater than 48 in.
b Includes parts 1-13 and 16-18
c Includes parts 1-18

©2015 HYSTER COMPANY

NOTES

©2015 HYSTER COMPANY

INTEGRAL SIDE-SHIFT CARRIAGE ASSEMBLY (FIGURE 14-16)
THREE STAGE FULL FREE LIFT

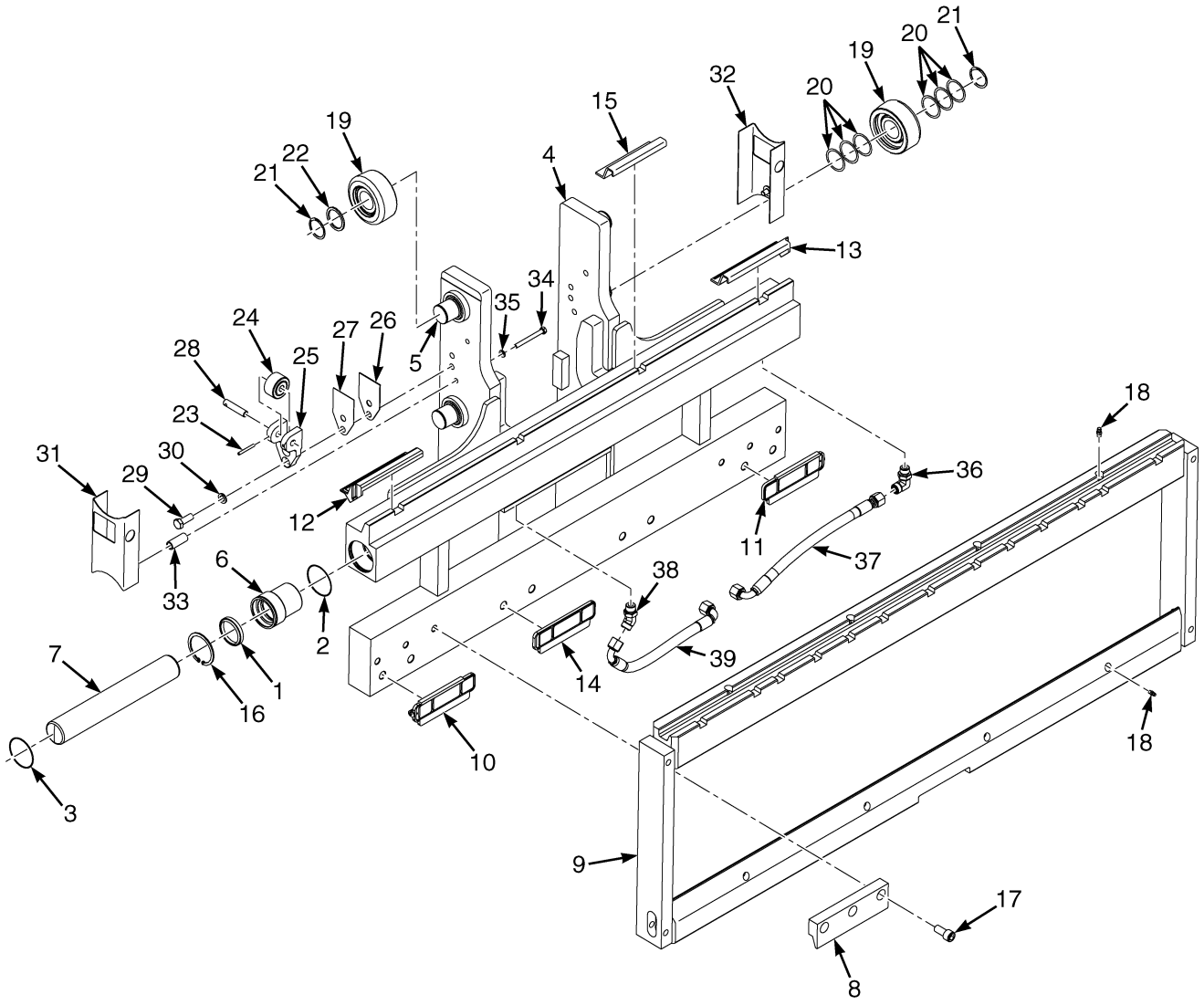

BP290115

©2015 HYSTER COMPANY

INTEGRAL SIDE-SHIFT CARRIAGE ASSEMBLY
THREE STAGE FULL FREE LIFT

KEY:
A: H4.0FT5-H4.0FT6
B: H4.5FTS5, H4.5FT6, H5.0-5.5FT

ITEM	PART NO.	DESCRIPTION	QTY A	QTY B
	4636452	Carriage (1219 mm) (Assembly)	1	..
	4636453	Carriage (1524 mm) (Assembly)	1	..
	4636450	Carriage (1372 mm) (Assembly)	..	1
	4636451	Carriage (1524 mm) (Assembly)	..	1
	b 4614286	Side-Shift Carriage (1219 mm)	1	..
	c 4614496	Side-Shift Carriage (1524 mm)	1	..
	c 4623999	Side-Shift Carriage (1372 mm)	..	1
	c 4624000	Side-Shift Carriage (1524 mm)	..	1
1	1467150	Rod Wiper	2	..
1	1467203	Rod Wiper	..	2
2	1622935	Seal	2	..
2	1622936	Seal	..	2
3	39365	O-Ring	2	..
3	39366	O-Ring	..	2
4	1705944	Side-Shift Carriage Fixed Frame (1219 mm)	1	..
4	1705945	Side-Shift Carriage Fixed Frame (1524 mm)	1	..
4	4070454	Frame (1372 mm) (54 inch)	..	1
4	4070453	Frame (1524 mm) (60 inch)	..	1
5	1500744	Stubshaft	6	6
6	1467151	Bushing	2	..
6	1467204	Bushing	..	2
7	1467153	Rod	2	..
7	1467205	Rod	..	2
8	1467154	Hook	2	..
8	1467206	Hook	..	2
9	1532640	Apron (1219 mm)	1	..
9	1532643	Apron (1524 mm)	1	..
9	1532638	Apron (1372 mm)	..	1
9	1532639	Apron (1524 mm)	..	1
10	1467145	Wear Strip (Right Lower)	1	1
11	1467146	Wear Strip (Left Lower)	1	1
12	1467147	Wear Strip (Right Upper)	1	1
13	1467148	Wear Strip (Left Upper)	1	1
14	**a** 1467201	Wear Strip (Central Lower)	2	2
15	**a** 1467200	Wear Strip (Central Upper)	2	2
16	1467632	Snap Ring	2	..
16	1467634	Snap Ring	..	2
17	1467633	Screw	6	8
18	16041	Grease Fitting	4	..
18	**a** 16041	Grease Fitting	8	8
19	1511883	Load Roller ("B") (104.44/104.18)	6	6
19	1511882	Load Roller ("A") (103.68/103.42) (Alternate)	6	6
19	1511884	Load Roller ("C") (105.20/104.94) (Alternate)	6	6
20	126765	Shim	24	24
21	1465072	Snap Ring	6	6

©2015 HYSTER COMPANY

INTEGRAL SIDE-SHIFT CARRIAGE ASSEMBLY
THREE STAGE FULL FREE LIFT

KEY:
A: H4.0FT5-H4.0FT6
B: H4.5FTS5, H4.5FT6, H5.0-5.5FT

ITEM	PART NO.	DESCRIPTION	QTY A	QTY B
22	1399224	Spacer	2	2
23	66333	Roll Pin	2	2
24	1670064	Thrust Bearing (Side Thrust Roller)	2	2
25	1465177	Bracket	2	2
26	192425	Shim (1.575 mm)	6	6
27	192424	Shim (0.762 mm)	8	8
28	1670065	Pin	2	2
29	292528	Capscrew	4	4
30	292683	Lockwasher	4	4
31	**a** 319322	Bracket Wldmt (Guard RH)	1	1
32	**a** 319323	Bracket Wldmt (Guard LH)	1	1
33	**a** 317292	Spacer	4	4
34	**a** 18518	Capscrew (5/16 x 3)	4	1
34	**a** 18520	Capscrew (5/16 x 3 1/4)	..	3
35	**a** 15155	Lockwasher	4	4
36	1473897	Fitting	1	1
36	1473887	Fitting	1	1
36	265731	O-Ring	1	1
36	16484	O-Ring	1	1
37	2093349	Hose Assy	1	..
37	2093351	Hose Assy	..	1
38	1516202	Fitting	1	..
38	1473887	Fitting	..	1
38	265731	O-Ring	1	1
38	16484	O-Ring	1	1
39	2093350	Hose Assy	1	..
39	2093352	Hose Assy	..	1
	. . . . .	Chain Anchor Group (☞Figure 14-17)	1	1
	2083999	Kit-Seal (Class III)	1	..
	2083998	Kit-Seal (Class IV)	..	1

FOOTNOTES:

a Carriages greater than 48 in.
b Includes parts 1-13 and 16-18.
c Includes parts 1-18

©2015 HYSTER COMPANY

NOTES

©2015 HYSTER COMPANY

INTEGRAL SIDE-SHIFT CARRIAGE ASSEMBLY (FIGURE 14-17)
CHAIN ANCHOR GROUPS

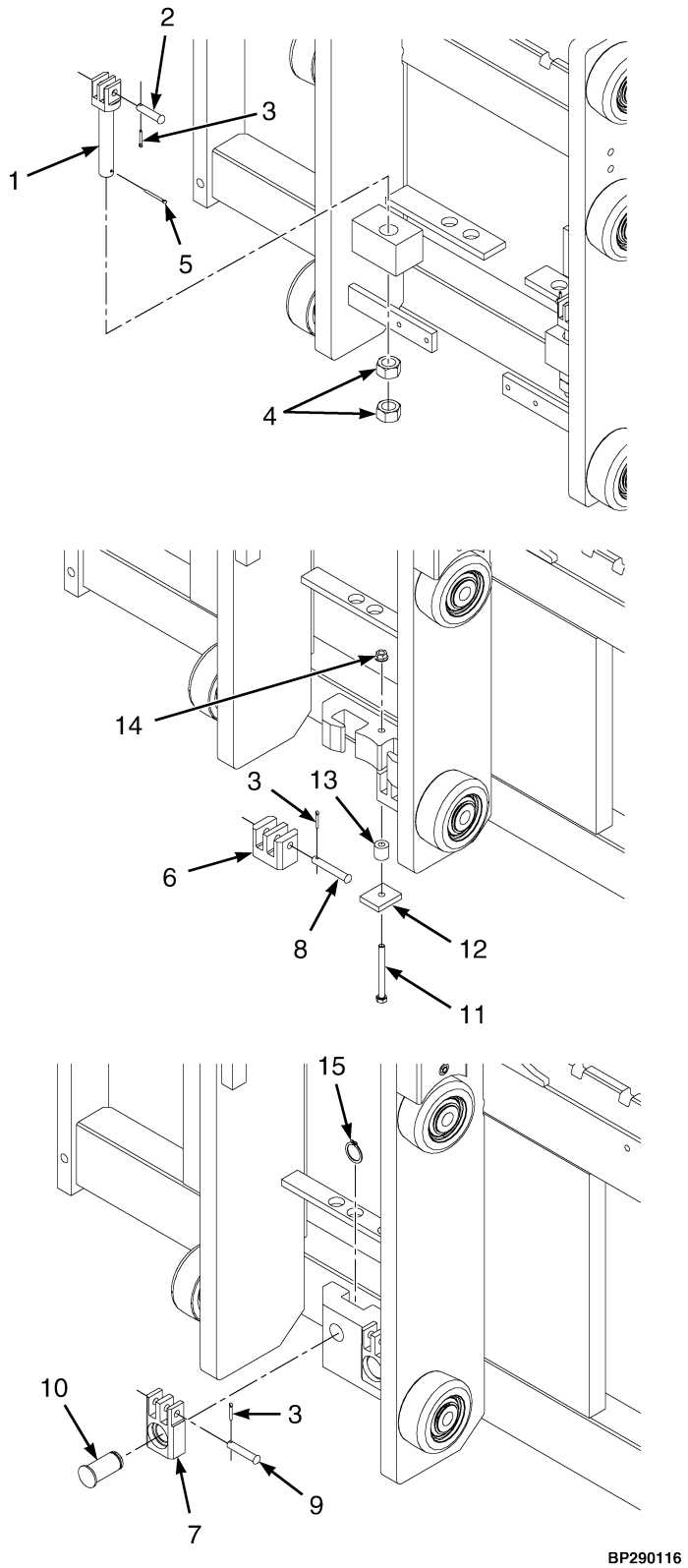

©2015 HYSTER COMPANY

INTEGRAL SIDE-SHIFT CARRIAGE ASSEMBLY
CHAIN ANCHOR GROUPS

KEY:
A: H4.0FT5-H4.0FT6
B: H4.5FTS5, H4.5FT6, H5.0-5.5FT

ITEM	PART NO.	DESCRIPTION	QTY A	QTY B
	. . . . .	Side-Shift Carriage Assy (☞Figure 14-14, ☞Figure 14-15, ☞Figure 14-16)	1	1
1	**b** 1387285	Chain Anchor	2	..
1	**b** 1387286	Chain Anchor	..	2
2	**b** 327591	Pin	2	..
2	**b** 339932	Pin	..	2
3	**ab** 15222	Cotter Pin	2	2
4	**b** 1581896	Nut	4	4
5	**b** 15224	Cotter Pin	2	2
6	**a** 1387548	Chain Anchor	2	..
7	**a** 1480392	Chain Anchor	..	2
8	**a** 1387549	Pin	2	..
9	**a** 339932	Pin	..	2
10	**a** 320327	Pin	..	2
11	**a** 18520	Capscrew	1	..
12	**a** 1400126	Plate	1	..
13	**a** 1400125	Spacer	1	..
14	**a** 191941	Nut	1	..
15	**a** 131358	Snap Ring	..	2

FOOTNOTES:

a Full Free-Lift

b Limited Free-Lift

©2015 HYSTER COMPANY

STROBE LIGHT (FIGURE 14-18)
LED

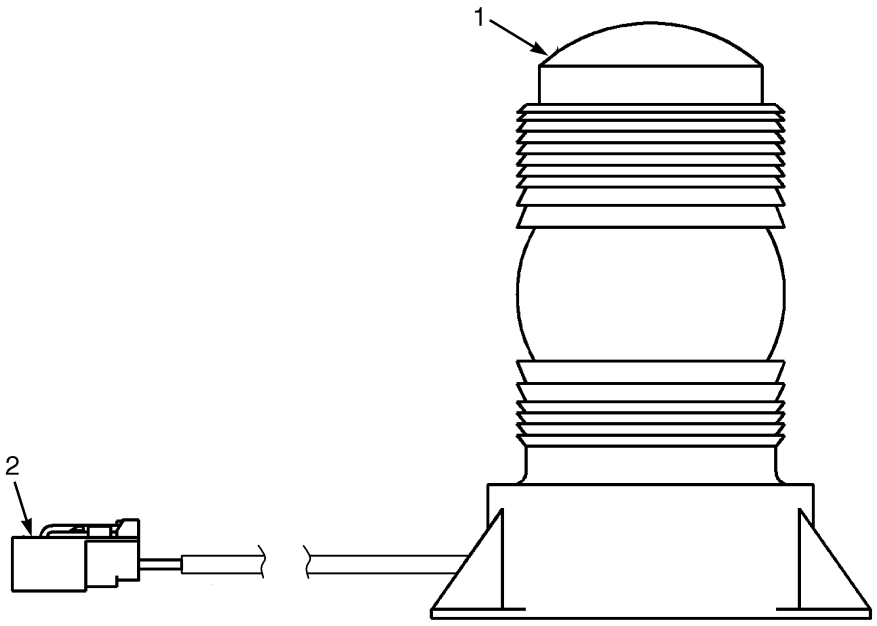

BP000363

©2015 HYSTER COMPANY

STROBE LIGHT
LED

ITEM	PART NO.	DESCRIPTION	QTY
	1654013	Strobe Light Assembly	1
1	1652290	Strobe Light (Amber LED)	1
2	1463138	Terminal Pin	1
2	1561559	Connector (2 Pin)	1
2	1561755	Connector (Secondary Lock)	1

©2015 HYSTER COMPANY

BACK-UP ALARM (FIGURE 14-19)

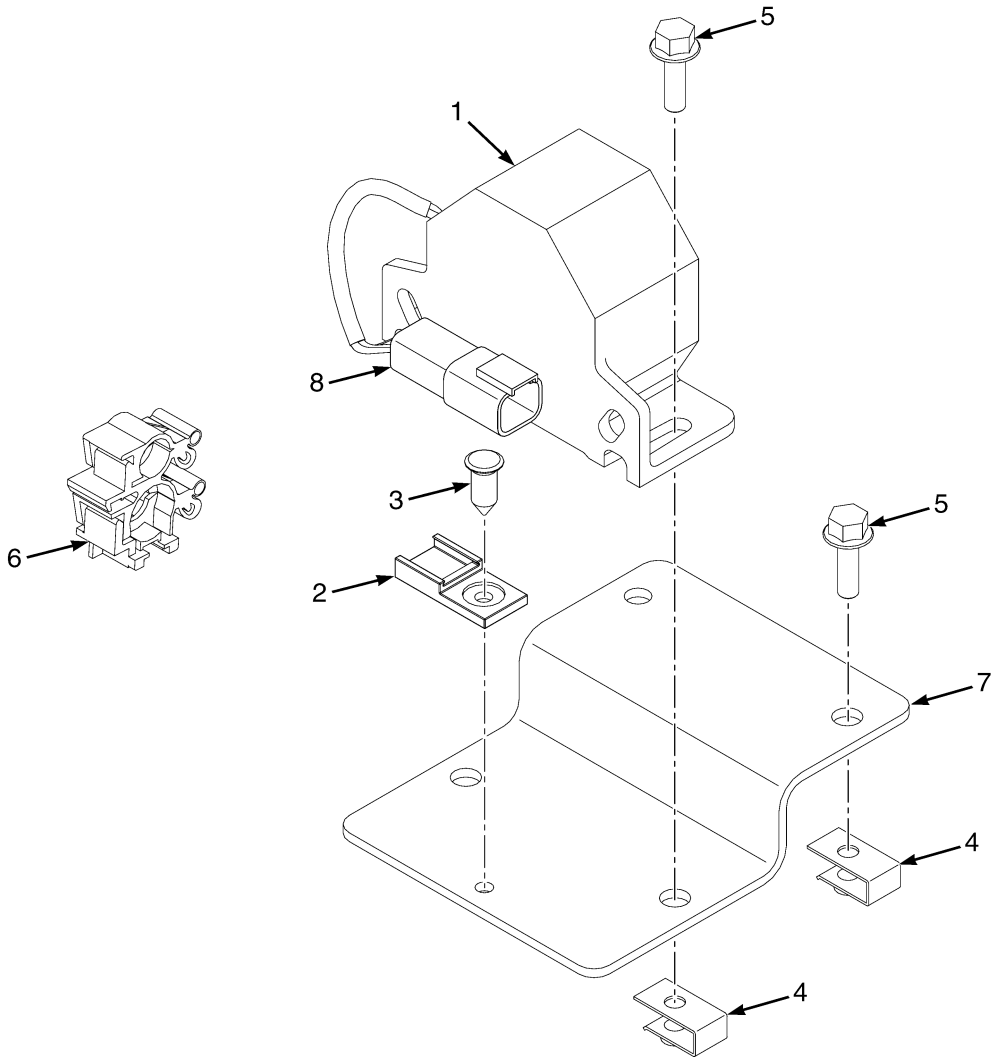

©2015 HYSTER COMPANY

BACK-UP ALARM

KEY:
A: Short Wheel Base
B: Long Wheel Base

ITEM	PART NO.	DESCRIPTION	QTY A	QTY B
1	2064929	Back-Up Alarm (82-102 dbA)	1	1
2	1500912	Clip	1	1
3	1582464	Fastener	1	1
4	1566420	Nut (Foldover)	2	4
5	1527877	Capscrew	2	4
6	1579403	Clip (To RH Chassis Harness)	1	..
7	4072273	Bracket	..	1
8	. . . . .	Connector Assembly (To RH Chassis Harness)	1	1

©2015 HYSTER COMPANY

MIRROR (FIGURE 14-20)
WITHOUT CAB

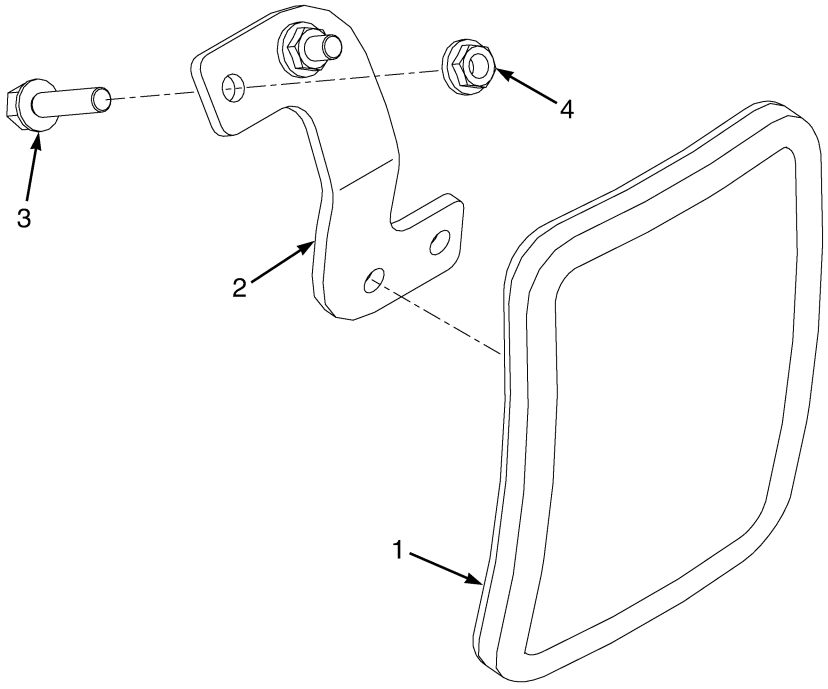

ITEM	PART NO.	DESCRIPTION	QTY
1	4009488	Mirror	2
2	1656215	Bracket (RH)	1
2	1656216	Bracket (LH)	1
3	1586627	Capscrew	4
4	1586430	Nut	4

©2015 HYSTER COMPANY

DUAL MIRRORS (FIGURE 14-21)
WITH CAB

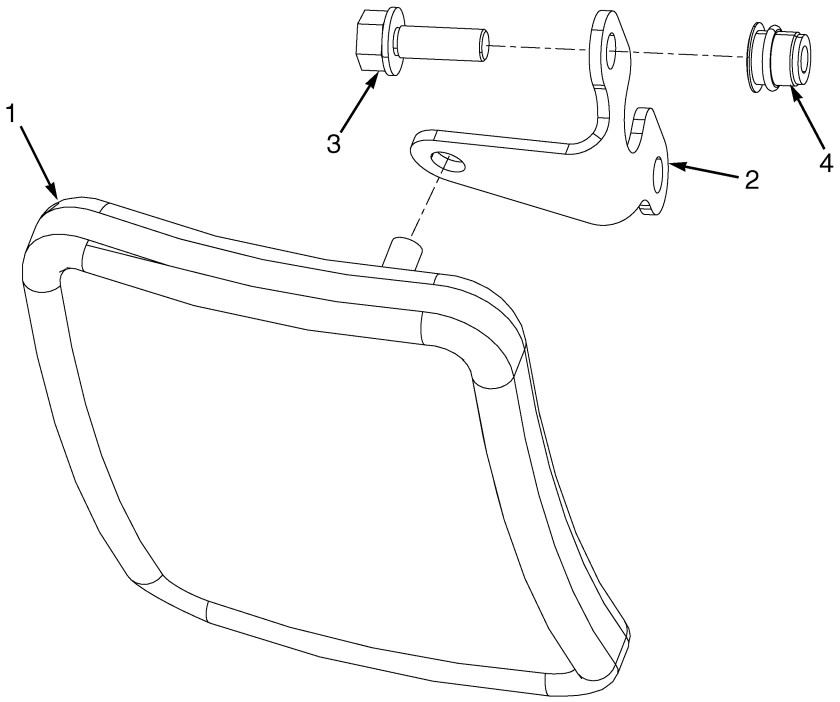

HP000896

ITEM	PART NO.	DESCRIPTION	QTY
1	4009488	Mirror	2
2	1579412	Bracket	2
3	1583611	Capscrew	4
4	1531557	Insert	4

©2015 HYSTER COMPANY

ACCUMULATOR (FIGURE 14-22)

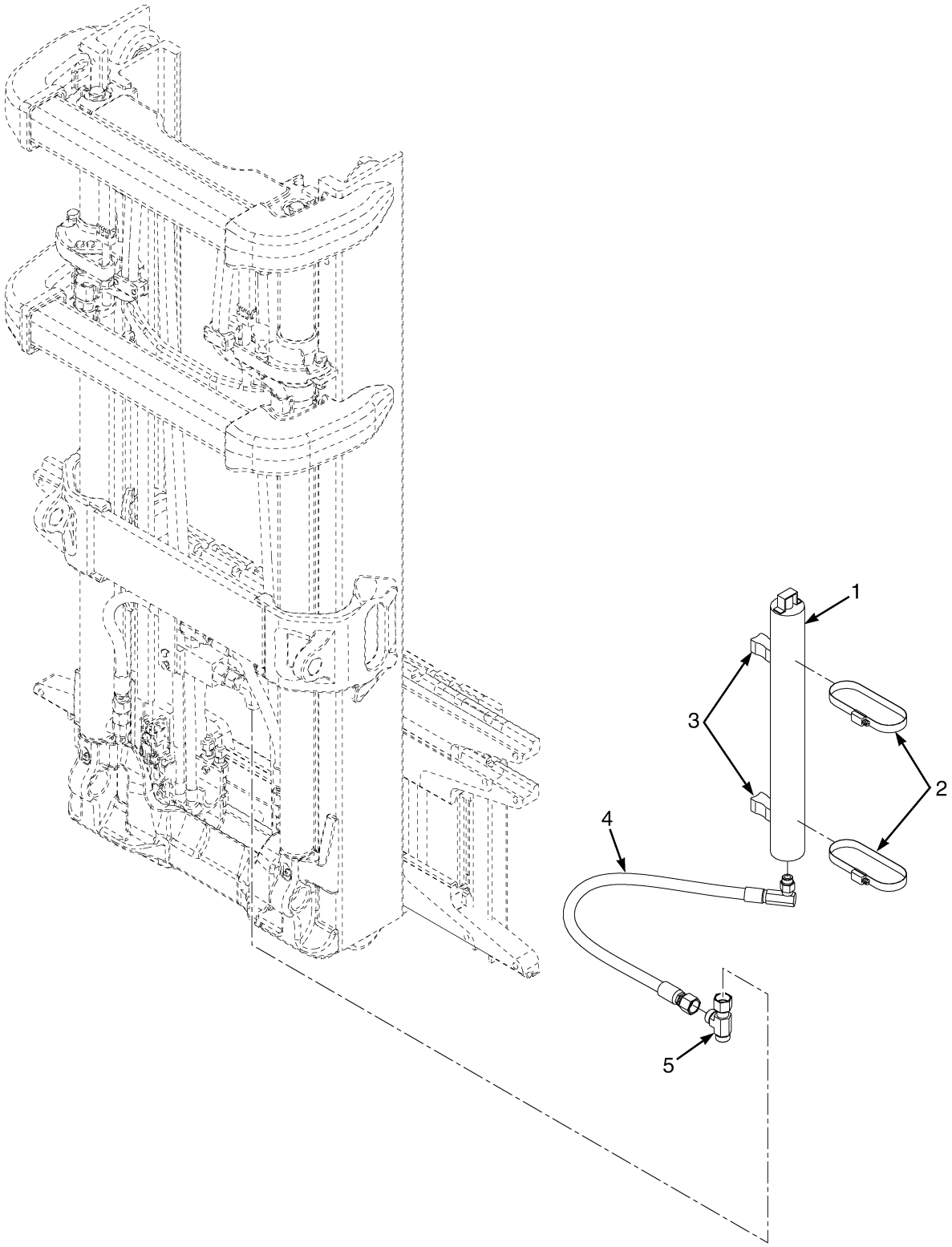

©2015 HYSTER COMPANY

ACCUMULATOR

ITEM	PART NO.	DESCRIPTION	QTY
1	1629185	Accumulator	1
1	1695807	Accumulator (Alternate Part)	1
2	1609864	Spacer	2
3	4031653	Strap Clamp	2
4	2091868	Hose Assy	1
5	1487096	Fitting	1
5	252729	O-Ring	3

©2015 HYSTER COMPANY

LIFTING EYES (FIGURE 14-23)

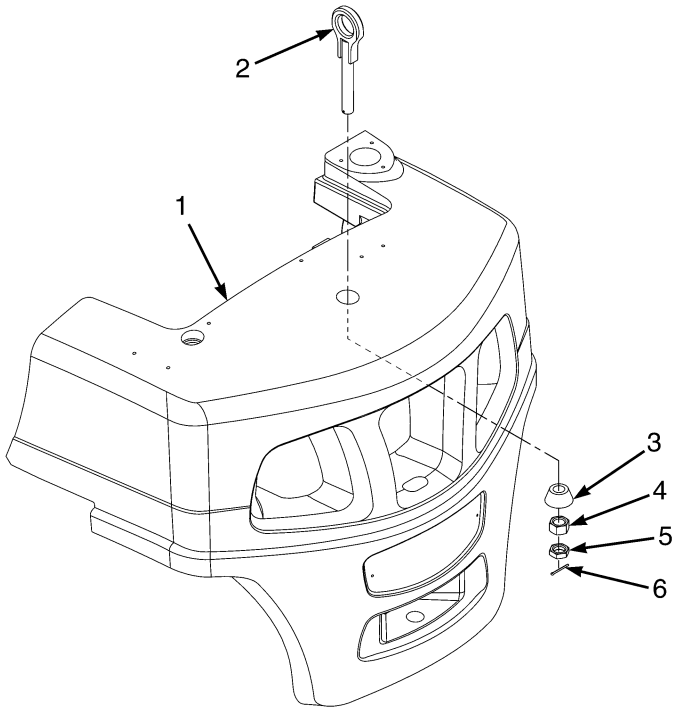

ITEM	PART NO.	DESCRIPTION	QTY
1	. . . . .	Counterweight	1
2	1651797	Eyebolt	1
3	1474318	Anchor	1
4	292661	Nut	1
5	**a** 1593341	Nut	1
6	15246	Cotter Pin	1

FOOTNOTES:

a Not Illustrated

©2015 HYSTER COMPANY

15 FIELD CONVERSION KITS

SECTION 15
FIELD CONVERSION KITS

DESCRIPTION	PAGE
ADD-ON OPTION KITS	15-7
CARRIAGE LOCKOUT ROD	
CLASS III AND IV	15-6
DIRECTIONAL CONTROL	15-6
HOSE GROUPS	
THREE STAGE FULL FREE-LIFT	15-5
TWO STAGE FULL FREE-LIFT	15-4
TWO STAGE LIMITED FREE-LIFT	15-3
MANUAL HYDRAULIC CONTROLS AND CONTROL VALVES	15-7
MINI-LEVER HYDRAULIC CONTROLS AND CONTROL VALVES	15-6
START OPTIONS	15-2
SWIVEL SEATS	15-2
WIDE TREAD AND DUAL TREAD TIRES	15-2

©2015 HYSTER COMPANY

WIDE TREAD AND DUAL TREAD TIRES

DESCRIPTION	PART NUMBER
Kit-Wide Tread Does not include Tires (250 x 15 Pneumatic or 250/70 R15 Pneumatic Radial)	1622903
Kit-Wide Tread Does not include Tires (250 x 15 SIT Solid)	1622904
Kit-Wide Tread Does not include Tires (300 x 15 Pneumatic or 300/70 R15 Pneumatic Radial)	1622905
Kit-Wide Tread Does not include Tires (300 x 15 SIT Solid)	1622907
Kit-Dual Drive Wheels Does not include Tires (7.00 R15 Pneumatic Radial)	1623084
Kit-Dual Drive Wheels Does not include Tires (7.00 x 15 SIT Solid)	1623085
Kit-Dual Drive Wheels Does not include Tires (8.25 R15 Pneumatic Radial)	1623088
Kit-Dual Drive Wheels Does not include Tires (8.25 x 15 SIT Solid)	1623089

SWIVEL SEATS

DESCRIPTION	PART NUMBER
Kit-Seat-Full Susp Swivel (Vinly w/E-Hydraulics)	4060579
Kit-Seat-Full Susp Swivel (Cloth w/E-Hydraulics)	4060580

START OPTIONS

DESCRIPTION	PART NUMBER
Keyswitch without Operator I.D. to Push Button Start with Operator I.D.	**a**1623184
Keyswitch with Operator I.D. to Push Button with I.D.	**a**1623199
Kit-Push-Button to Keyswitch	**a**1624518

FOOTNOTES:

a Kit requires Software that must be Dealer installed.

©2015 HYSTER COMPANY

HOSE GROUPS
TWO STAGE LIMITED FREE-LIFT

HEADER HOSE CONVERSION KITS

DESCRIPTION	LIFT HEIGHT TO BOTTOM OF FORKS				
	2740 mm (107.9 in.)	3000 mm (118.1 in.)	3340 mm (131.5 in.)	3600 mm (141.7 in.)	3940 mm (155.1 in.)
Mast Group Number	**B750 2740**	**B749 3000**	**B750 3340**	**B749 3600**	**B750 3940**
Kit-Hose Group 2 to 3 Way and 3 to 4 Way	1635133	1635133	1635135	1635135	1635137

HEADER HOSE CONVERSION KITS

DESCRIPTION	LIFT HEIGHT TO BOTTOM OF FORKS				
	4200 mm (165.4 in.)	4640 mm (182.7 in.)	4900 mm (192.9 in.)	5240 mm (206.3 in.)	5840 mm (229.9 in.)
Mast Group Number	**B749 4200**	**B750 4640**	**B749 4900**	**B750 5240**	**B750 5840**
Kit-Hose Group 2 to 3 Way and 3 to 4 Way	1635137	1635139	1635139	1635141	1635143

HEADER HOSE CONVERSION KITS

DESCRIPTION	LIFT HEIGHT TO BOTTOM OF FORKS				
	2740 mm (107.9 in.)	3000 mm (118.1 in.)	3340 mm (131.5 in.)	3600 mm (141.7 in.)	3940 mm (155.1 in.)
Mast Group Number	**B750 2740**	**B749 3000**	**B750 3340**	**B749 3600**	**B750 3940**
Kit-Hose Group 2 to 4 Way	1635134	1635134	1635136	1635136	1635138

HEADER HOSE CONVERSION KITS

DESCRIPTION	LIFT HEIGHT TO BOTTOM OF FORKS				
	4200 mm (165.4 in.)	4640 mm (182.7 in.)	4900 mm (192.9 in.)	5240 mm (206.3 in.)	5840 mm (229.9 in.)
Mast Group Number	**B749 4200**	**B750 4640**	**B749 4900**	**B750 5240**	**B750 5840**
Kit-Hose Group 2 to 4 Way	1635138	1635140	1635140	1635142	1635144

©2015 HYSTER COMPANY

HOSE GROUPS
TWO STAGE FULL FREE-LIFT

HEADER HOSE CONVERSION KITS

DESCRIPTION	LIFT HEIGHT TO BOTTOM OF FORKS			
	2765 mm (108.9 in.)	**3025 mm (119.1 in.)**	**3365 mm (132.5 in.)**	**3625 mm (142.7 in.)**
Mast Group Number	**B754 2765**	**B753 3025**	**B754 3365**	**B753 3625**
Kit-Hose Group 2 to 3 Way	1635124	1635118	1635127	1635121

HEADER HOSE CONVERSION KITS

DESCRIPTION	LIFT HEIGHT TO BOTTOM OF FORKS			
	2765 mm (108.9 in.)	**3025 mm (119.1 in.)**	**3365 mm (132.5 in.)**	**3625 mm (142.7 in.)**
Mast Group Number	**B754 2765**	**B753 3025**	**B754 3365**	**B753 3625**
Kit-Hose Group 2 to 4 Way	1635126	1635120	1635129	1635123

HEADER HOSE CONVERSION KITS

DESCRIPTION	LIFT HEIGHT TO BOTTOM OF FORKS			
	2765 mm (108.9 in.)	**3025 mm (119.1 in.)**	**3365 mm (132.5 in.)**	**3625 mm (142.7 in.)**
Mast Group Number	**B754 2765**	**B753 3025**	**B754 3365**	**B753 3625**
Kit-Hose Group 3 to 4 Way	1635125	1635119	1635128	1635122

©2015 HYSTER COMPANY

HOSE GROUPS
THREE STAGE FULL FREE-LIFT

HEADER HOSE CONVERSION KITS

DESCRIPTION	LIFT HEIGHT TO BOTTOM OF FORKS			
	4087 mm (160.9 in.)	4365 mm (171.9 in.)	4900 mm (192.9 in.)	4940 mm (194.5 in.)
Mast Group Number	**B752 4087**	**B751 4365**	**B751 4900**	**B752 4940**
Kit-Hose Group 2 to 3 Way	1635540	1635522	1635528	1635549

HEADER HOSE CONVERSION KITS

DESCRIPTION	LIFT HEIGHT TO BOTTOM OF FORKS			
	5200 mm (204.7 in.)	5240 mm (206.3 in.)	5500 mm (216.5 in.)	5950 mm (234.3 in.)
Mast Group Number	**B751 5200**	**B752 5240**	**B751 5500**	**B751 5950**
Kit-Hose Group 2 to 3 Way	1635531	1635552	1635534	1635537

HEADER HOSE CONVERSION KITS

DESCRIPTION	LIFT HEIGHT TO BOTTOM OF FORKS			
	4087 mm (160.9 in.)	4365 mm (171.9 in.)	4900 mm (192.9 in.)	4940 mm (194.5 in.)
Mast Group Number	**B752 4087**	**B751 4365**	**B751 4900**	**B752 4940**
Kit-Hose Group 2 to 4 Way	1635542	1635524	1635530	1635551

HEADER HOSE CONVERSION KITS

DESCRIPTION	LIFT HEIGHT TO BOTTOM OF FORKS			
	5200 mm (204.7 in.)	5240 mm (206.3 in.)	5500 mm (216.5 in.)	5950 mm (234.3 in.)
Mast Group Number	**B751 5200**	**B752 5240**	**B751 5500**	**B751 5950**
Kit-Hose Group 2 to 4 Way	1635533	1635554	1635536	1635539

©2015 HYSTER COMPANY

HEADER HOSE CONVERSION KITS

DESCRIPTION	LIFT HEIGHT TO BOTTOM OF FORKS			
	4087 mm (160.9 in.)	4365 mm (171.9 in.)	4900 mm (192.9 in.)	4940 mm (194.5 in.)
Mast Group Number	**B752 4087**	**B751 4365**	**B751 4900**	**B752 4940**
Kit-Hose Group 3 to 4 Way	1635541	1635523	1635529	1635550

HEADER HOSE CONVERSION KITS

DESCRIPTION	LIFT HEIGHT TO BOTTOM OF FORKS			
	5200 mm (204.7 in.)	5240 mm (206.3 in.)	5500 mm (216.5 in.)	5950 mm (234.3 in.)
Mast Group Number	**B751 5200**	**B752 5240**	**B751 5500**	**B751 5950**
Kit-Hose Group 3 to 4 Way	1635532	1635553	1635535	1635538

DIRECTIONAL CONTROL

DESCRIPTION	PART NUMBER
Kit-Fwd/Rev Lever to Monotrol	**a**1625467
Kit-Monotrol to Fwd/Rev Lever	**a**1583198
Kit-Conversion Ctrl Switch to Monotrol	**a**4040531

FOOTNOTES:
a Kit Requires Software that must be Dealer installed

CARRIAGE LOCKOUT ROD
CLASS III AND IV

DESCRIPTION	PART NUMBER
Kit-Service (Lock-Out Rod 50 DIA Rods)	1665701
Kit-Service (Lock-Out Rod 55 DIA Rods)	1665702

MINI-LEVER HYDRAULIC CONTROLS AND CONTROL VALVES

DESCRIPTION	PART NUMBER
Kit-Mini Lever Conv 3 Way (Without Lockout to with Lockout)	**a**1701683
Kit-Mini Lever Conv 3 Way (With Lockout to without Lockout)	**a**1701682
Kit-Mini Lever Conv 3 Way (w/o clamp to 4 way w/o clamp)	**a**4035267
Kit-Mini Lever Conv 3 Way (w/o clamp to 4 way with clamp)	**a**4035268
Kit-Mini Lever Conv 4 Way (With Lockout to without Lockout)	**a**1701684
Kit-Mini Lever Conv 4 Way (Without Lockout to with Lockout)	**a**1701685

©2015 HYSTER COMPANY

MINI-LEVER HYDRAULIC CONTROLS AND CONTROL VALVES (CONTINUED)

DESCRIPTION	PART NUMBER
Kit Return to Set Tilt	**a**4074590

FOOTNOTES:
a Kit requires Software that must be Dealer installed.

MANUAL HYDRAULIC CONTROLS AND CONTROL VALVES

DESCRIPTION	PART NUMBER
Kit-Manual Lever Conv 3 Way (w/o Clamp to 3 Way w/Clamp)	1677913
Kit-Manual Lever Conv 3 Way (w/o Clamp to 4 Way w/o Clamp)	4090086
Kit-Manual Lever Conv 3 Way (w/o Clamp to 4 Way w/Clamp)	4090087

ADD-ON OPTION KITS

DESCRIPTION	PART NUMBER
Kit (Load Weigh Display) (E-HYD ONLY)	**a**1622580
Kit-Powertrain Protection (English — Non US)	**a**1585855
Kit-Powertrain Protection (Danish Language)	**a**1585856
Kit-Powertrain Protection (Dutch Language)	**a**1585857
Kit-Powertrain Protection (Finnish Language)	**a**1585858
Kit-Powertrain Protection (French Language)	**a**1585859
Kit-Powertrain Protection (German Language)	**a**1585860
Kit-Powertrain Protection (Italian Language)	**a**1585861
Kit-Powertrain Protection (Norwegian Language)	**a**1585862
Kit-Powertrain Protection (Portuguese Language)	**a**1585863
Kit-Powertrain Protection (Spanish Language)	**a**1585864
Kit-Powertrain Protection (Swedish Language)	**a**1585865
Kit-Powertrain Protection (Greek Language)	**a**1585866
Kit-Powertrain Protection (Czech Language)	**a**1585867
Kit-Powertrain Protection (Hungarian Language)	**a**1585868
Kit-Powertrain Protection (Polish Language)	**a**1585869
Kit-Powertrain Protection (Russian Language)	**a**1585870
Kit-Powertrain Protection (Slovakian Language)	**a**1585871
Kit-Powertrain Protection (Icelandic Language)	**a**1585872
Kit-Powertrain Protection (Brazilian Language)	**a**1655742
Kit-Powertrain Protection (Bulgarian Language)	**a**1655743
Kit-Powertrain Protection (Croation Language)	**a**1655744
Kit-Powertrain Protection (Estonian Language)	**a**1655745
Kit-Powertrain Protection (Latvian Language)	**a**1655746

©2015 HYSTER COMPANY

ADD-ON OPTION KITS (CONTINUED)

DESCRIPTION	PART NUMBER
Kit-Powertrain Protection (Lithuanian Language)	**a**1655747
Kit-Powertrain Protection (Romanian Language)	**a**1655748
Kit-Powertrain Protection (Slovenian Language)	**a**1655749
Kit-Powertrain Protection (Turkish Language)	**a**1655750
Kit-Light (Flash Tube Strobe with Other Lights and Overhead Guard, w/o Harness)	1583710
Kit-Strobe Light (Amber Flash Tube Strobe Light for Cab)	1625728
Kit-Strobe Light (Amber LED Strobe Light for Cab)	1655298
Kit-Light (LED Strobe with other lights for Overhead Guard, w/o Harness)	1655205
Kit-Back-Up Alarm (82-102 DB(A))	1626371
Kit-Impact Monitoring (With Immediate Shutdown)	**a**1629135
Kit-Impact Monitoring (With 30 Second Shutdown)	**a**1637768
Kit (Lifting Eye)	1634340
Kit-Quick Disconnect Fitting	1650605
Kit-Aux Tube Extension (3 Function, Class III Std Carriage, 2 Stg LFL)	1653366
Kit-Aux Tube Extension (4 Function, Class III Std Carriage, 2 Stg LFL)	1653367
Kit-Aux Tube Extension (3 Function, Class IV, Std Carriage, 2 Stg LFL)	1653368
Kit-Aux Tube Extension (4 Function, Class IV, Std Carriage, 2 Stg LFL)	1653369
Kit-Aux Tube Extension (4 Function, Class III Integral Side-Shift Carriage, 2 Stg LFL)	1653371
Kit-Aux Tube Extension (4 Function, Class IV, Integral Side-Shift Carriage, 2 Stg LFL)	1653373
Kit-Aux Tube Extension (3 Function, Class III, Attachment Carriage, 2 LFL)	1653374
Kit-Aux Tube Extension (4 Function, Class III, Attachment Carriage, 2 LFL)	1653375
Kit-Aux Tube Extension (3 Function, Class III Std Carriage, 2 Stg FFL)	1653620
Kit-Aux Tube Extension (4 Function, Class III Std Carriage, 2 Stg FFL)	1653621
Kit-Aux Tube Extension (3 Function, Class IV, Std Carriage, 2 Stg FFL)	1653622
Kit-Aux Tube Extension (4 Function, Class IV Std Carriage, 2 Stg FFL)	1653623
Kit-Aux Tube Extension (4 Function, Class III Integral Side-Shift Carriage, 2 Stg FFL)	1653625
Kit-Aux Tube Extension (4 Function, Class IV, Integral Side-Shift Carriage, 2 Stg FFL)	1653627
Kit-Aux Tube Extension (3 Function, Class III, Attachment Carriage, 2 Stg FFL)	1653628
Kit-Aux Tube Extension (4 Function, Class III, Attachment Carriage, 2 Stg FFL)	1653629
Kit-Aux Tube Extension (3 Function, Class III Std Carriage, 3 Stg FFL)	1652135
Kit-Aux Tube Extension (4 Function, Class III Std Carriage, 3 Stg FFL)	1652136
Kit-Aux Tube Extension (3 Function, Class IV, Std Carriage, 3 Stg FFL)	1652137
Kit-Aux Tube Extension (4 Function, Class IV Std Carriage, 3 Stg FFL)	1652138
Kit-Aux Tube Extension (4 Function, Class III Integral Side-Shift Carriage, 3 Stg FFL)	1651306
Kit-Aux Tube Extension (4 Function, Class IV, Integral Side-Shift Carriage, 3 Stg FFL)	1652142
Kit-Aux Tube Extension (3 Function, Class III Attachment Carriage, 3 Stg FFL)	1652143
Kit-Aux Tube Extension (4 Function, Class III, Attachment Carriage, 3 Stg FFL)	1652144

©2015 HYSTER COMPANY

ADD-ON OPTION KITS (CONTINUED)

DESCRIPTION	PART NUMBER
Kit (E-Hydraulic QD Fittings, Single Aux 3 Fun 2 Stage LFL and 3 Stage FFL)	4010077
Kit (E-Hydraulic QD Fittings, Dual Aux 3rd and 4th Fun, 2 Stage LFL)	4006954
Kit (E-Hydraulic QD Fittings, Single Aux 4 Fun 2 Stage LFL with Integral Sideshift)	4010095
Kit (E-Hydraulic QD Fittings, Dual Aux 3 and 4 Fun 3 Stage FFL)	4008805
Kit (E-Hydraulic QD Fittings, Single Aux 3 Stage FFL with Integral Sideshift)	4010582
Kit (E-Hydraulic QD Fittings, Single Aux 3 Fun 2 Stage FFL)	4010923
Kit (E-Hydraulic QD Fittings, Dual Aux 3 and 4 Fun 2 Stage FFL)	4010924
Kit (E-Hydraulic QD Fittings, Single Aux 4th Fun 2 Stage FFL with Integral Sideshift)	4010925
Kit-Service (GM LPG regulator Drain GM2.4L and 4.32)	1664940
Kit-Electronic Monitoring (Gas/LPG Engine)	**a**1629208
Kit-Electronic Monitoring (Diesel Engine)	**a**1677791
Kit-Air Intake W Pre-Cleaner	1682761
Kit (Radiator Screen)	1695751
Kit-Sensor (Low LPG Fuel)	**a**4008497
Kit-Sensor (Low LPG Fuel)	**a**4007653
Kit Mini Lever Reinforcement	4079340
Traction Speed Limit Kit	1581970
Kit-Front Screen With Wipers	4092603
Kit-Top Screen	4092600
Kit-Rear Screen With Wipers	4092601
Kit-Door (PVC RH and LH For High Overhead Guard)	4092602
Kit-Heater	4100256

FOOTNOTES:

a Kit requires Software that must be Dealer installed.

©2015 HYSTER COMPANY

NOTES

©2015 HYSTER COMPANY

SECTION 16
NUMERICAL INDEX

PART NO.	PAGE	ITEM
126	4-17	9
206	9-7	20
12855	4-23	8
	4-25	5
12891	11-8	8
	13-7	8
12929	9-7	19
13957	8-13	11
	8-13	18
	8-13	25
14349	4-29	19
14358	4-29	23
	4-31	24
14385	2-13	8
	3-3	8
	4-34	52
14591	10-6	5
	10-9	5
	10-13	4
14595	7-15	12
	7-17	12
	11-4	24
	12-3	10
	13-18	23
14603	11-4	21
	12-3	9
15055	10-36	2
	10-62	3
15127	1-57	23
15155	12-29	11
	13-35	11
	14-36	35
	14-40	35
15222	11-8	13
	11-23	5
	12-8	16
	12-29	14
	13-3	12
	13-11	8
	13-13	9
	13-35	14
	14-43	3
15224	11-23	11
	13-11	10
	14-43	5
15229	8-13	38
15246	14-52	6
15879	11-13	9
	13-22	8
15885	12-20	11
	13-26	11
15931	4-15	12
16001	10-71	9
16015	10-71	4
16041	14-31	18
	14-31	18
	14-35	18
	14-35	18
	14-39	18
	14-39	18
16078	5-26	2
16134	4-23	7
	4-25	10
	4-31	22
	4-33	47
	4-37	33
	4-39	35
16143	1-50	4
16151	2-5	20
	2-7	22
	3-15	6
	4-3	21
	4-5	24
	4-31	19
16271	4-34	53
16481	9-3	27
	9-3	30
	9-7	8
	9-7	35
	10-13	4
	14-13	17
	14-17	17
	14-21	17
	14-25	14
	14-27	14
	14-29	14
16483	7-15	10
	7-17	24
	9-11	8
	10-66	5
	10-66	5
	10-67	5
	10-67	5
	11-5	35
	13-17	3
	14-13	21
	14-21	21
	14-25	18
	14-27	18
	14-29	18
16484	7-15	12
	7-17	12
	10-3	4
	11-4	24
	12-3	10
	13-18	20
	13-18	23
	14-13	11
	14-17	11
	14-21	11
	14-25	8
	14-27	8
	14-29	8
	14-32	32
	14-32	34
	14-36	36
	14-36	38
	14-40	36
	14-40	38
16485	11-4	27
	12-4	40
16486	7-15	11
	9-11	22
	9-11	25
	10-3	7
	11-4	21
	12-3	9
	13-18	21
16487	9-3	26
	9-7	34
	12-4	39
	12-8	21
	13-14	31
	13-26	17
16682	6-13	12
	6-23	11
16706	10-33	19
	10-35	3
16708	4-15	13
16863	4-33	43
	4-37	34
	4-39	43
16865	4-15	9
16982	11-4	23
	12-3	12
	12-3	12
	13-18	25
16983	10-3	21
17221	10-6	22
	10-9	22
17223	6-5	3
17314	4-23	9
	4-25	3
17350	4-29	20
	4-31	21
17758	9-11	25
18462	1-57	19
	1-61	11
	1-69	21
	1-77	22
18471	1-57	20
	1-61	9
	1-69	18
	1-77	23
18515	2-21	7
	2-23	7
	2-25	9
	2-27	9
	2-29	19
	2-31	21
	2-33	19
	2-35	21
18518	12-29	10
	13-35	10
	14-36	34
	14-40	34
18520	12-29	10
	12-29	15
	13-35	15
	14-36	34
	14-40	34
	14-43	11
18735	1-57	9
	1-61	13
	1-69	16
18738	1-77	19
18748	10-27	3
18909	10-3	12
	10-5	11
19901	1-53	11
	1-55	16
	1-57	14
	1-61	20
	1-70	29
30019	8-13	35
30076	7-17	4

©2015 HYSTER COMPANY

See Service Manual for service procedures.

NUMERICAL INDEX (continued)

PART NO.	PAGE	ITEM
30147	8-13	32
30289	8-13	36
30370	3-11	5
	3-13	5
30372	2-21	3
	2-21	17
	2-23	3
	2-23	21
	2-25	3
	2-25	15
	2-27	3
	2-27	19
	2-33	23
	2-35	25
	3-7	4
	3-9	4
30374	2-21	17
	2-23	21
	2-25	15
	2-27	19
30375	2-29	3
	2-31	3
	2-33	3
	2-35	3
34507	4-33	19
	4-37	16
	4-39	19
39365	14-31	3
	14-35	3
	14-39	3
39366	14-31	3
	14-35	3
	14-39	3
39678	8-13	8
39713	8-17	5
39756	7-19	13
41531	11-8	10
	12-8	33
	13-7	6
	13-14	21
43207	6-15	2
	6-17	2
	6-27	2
	6-29	20
	6-31	2
43209	6-9	19
	6-13	20
	6-21	24
	6-23	20
44306	6-21	22
44307	6-13	22
	6-23	22
44309	6-9	23
	6-21	30
44310	6-13	15
	6-23	14
44542	8-13	42
46629	10-73	7
	12-20	11
	13-26	11
53162	4-15	8
57664	11-11	9
	13-22	8
58902	12-24	6
	13-29	9
58903	8-13	20
58950	7-17	11
63111	4-34	49
63116	3-7	13
	3-9	13
63163	4-23	10
	4-25	4
66333	14-32	23
	14-36	23
	14-40	23
69029	8-13	40
77441	10-35	6
	10-54	2
77442	10-33	16
	10-35	7
	10-51	10
	10-53	3
	10-54	3
	10-57	4
	10-59	4
77443	10-33	17
	10-35	8
	10-53	4
	10-54	4
	10-57	5
	10-59	5
78286	4-3	8
	4-5	8
78456	10-3	5
78561	11-5	41
79981	8-17	7
86229	6-9	2
	6-21	10
89220	10-6	10
	10-9	10
89482	4-23	26
	4-25	43
	4-29	21
97999	4-33	45
	4-37	24
	4-39	45
101809	4-33	9
	4-37	5
	4-39	9
104264	11-4	7
	12-4	32
	13-3	6
104506	11-4	10
	12-4	33
	13-3	7
	13-7	16
109453	7-15	5
110178	10-66	5
	10-67	5
	11-5	35
	13-17	3
	14-13	21
	14-17	21
	14-21	21
	14-25	18
	14-27	18
	14-29	18
112385	9-11	7
	9-13	4
114312	1-58	
	1-61	
	1-70	
	9-3	
	9-8	
115696	4-3	7
	4-5	20
	4-7	8
117989	9-3	31
	9-7	37
118389	1-51	8
119236	2-13	22
	2-15	9
	3-3	22
	3-5	9
	4-3	12
	10-3	15
	10-5	14
122400	7-15	19
124359	4-25	27
124603	6-15	17
	6-17	17
	6-27	16
	6-29	16
	6-31	17
126764	11-8	12
	12-8	31
	13-7	7
	13-14	19
126765	11-4	6
	11-8	6
	11-23	9
	12-4	30
	12-7	11
	12-29	4
	13-3	4
	13-7	10
	13-11	4
	13-14	33
	13-35	4
	14-31	20
	14-35	20
	14-39	20
128263	4-17	20
129563	1-13	26
130845	1-50	3
	1-51	3
	6-3	4
	6-5	4
131358	12-29	22
	13-35	22
	14-43	15
131715	13-7	15
131716	13-7	14
132972	5-19	7
135657	8-13	17
135658	8-13	16
136681	1-25	3
	6-13	33
	6-23	32
136687	1-25	16
136692	14-7	8
	14-9	8
	14-11	8
136749	7-17	8
	12-24	23
136985	6-13	14
	6-23	13
137852	5-56	62
138710	1-50	5
	1-51	6
141331	4-9	1
	4-9	5
142247	11-5	39
	12-3	6
	13-17	6
145481	6-13	19
	6-23	18
148606	5-49	12

©2015 HYSTER COMPANY

NUMERICAL INDEX (continued)

PART NO.	PAGE	ITEM
148611	5-49	13
148614	5-59	10
	5-67	14
148789	5-26	2
148792	5-26	1
148796	5-26	2
148798	5-26	1
148962	6-13	2
	6-23	2
153715	8-13	2
153716	8-13	4
153717	8-13	3
160653	7-31	3
	8-18	7
161003	12-7	8
	13-14	24
161272	11-4	11
	12-4	34
	13-3	9
161273	11-4	12
	12-4	35
	13-3	8
164632	12-19	10
	13-25	10
164639	8-13	31
165991	4-3	21
	4-5	24
166659	12-11	13
	12-15	13
166857	4-23	15
	4-25	16
	9-3	29
	9-7	36
	9-11	10
	10-6	12
	10-9	12
168718	4-23	15
	4-25	16
	9-3	29
	9-7	36
	10-6	13
	10-9	13
169874	1-57	24
	1-61	10
	1-69	20
	1-77	26
170658	1-97	3
	1-99	1
171007	10-6	8
	10-9	8
175861	10-19	8
	10-23	8
175944	5-94	3
176453	4-3	18
	4-5	12
178119	5-13	12
	5-15	12
	12-7	4
178899	2-13	2
	3-3	2
181899	10-5	31
182342	11-8	19
184451	4-33	17
	4-37	14
	4-39	17
187129	4-23	21
187388	12-19	7
	13-25	7
188210	6-13	43
	6-23	41
188479	12-7	6
	13-14	36
188515	10-33	18
	10-35	4
188534	10-62	3
190383	5-117	4
	5-117	5
	5-117	6
	5-117	9
	5-119	4
	5-119	5
	5-119	6
	5-119	7
	5-119	8
190580	12-20	15
	13-26	15
190887	12-11	2
	12-15	2
	12-20	16
	13-26	16
191072	11-8	19
	13-3	13
191076	11-8	19
191081	13-3	13
191085	13-3	13
191941	12-29	18
	13-35	18
	14-43	14
192306	4-23	11
	4-25	2
192424	14-32	27
	14-36	27
	14-40	27
192425	14-32	26
	14-36	26
	14-40	26
192429	10-71	8
	11-4	32
	12-4	41
	13-4	21
193554	10-73	1
194607	13-3	13
196196	5-59	12
	5-67	16
198518	12-11	12
	12-15	12
199524	7-15	12
	7-17	12
	11-4	24
	12-3	10
199917	10-5	18
	10-73	9
201829	13-21	6
204128	10-47	2
	10-49	2
	10-51	13
206749	13-3	13
209266	4-23	17
	4-25	17
210641	10-5	26
213099	6-9	24
	6-21	29
215211	13-7	13
215301	13-21	4
215425	11-11	4
	13-21	4
220428	4-15	7
221353	1-55	15
	1-57	11
	1-61	19
	1-70	25
221355	2-9	9
	2-11	9
221530	1-55	14
	1-58	29
	1-61	21
	1-70	26
221533	1-53	14
	1-55	13
221536	1-57	13
	1-61	18
	1-70	27
221631	12-7	6
	13-14	36
221771	1-91	3
	2-9	8
	2-11	8
222036	2-16	8
	2-17	6
222443	4-25	23
	7-15	10
	7-17	24
	10-66	5
	10-67	5
222444	6-9	7
	6-21	7
	7-15	11
222491	9-3	27
	9-7	8
222501	2-9	11
	2-11	11
	9-11	8
	9-13	9
222502	10-6	11
	10-9	11
222503	6-3	3
222504	6-3	13
	6-5	2
222505	9-11	22
222509	9-3	30
	9-7	35
222512	6-3	11
	6-5	8
222567	10-5	17
222697	6-35	4
225465	4-25	37
226430	7-3	4
227157	1-75	4
	1-75	13
	1-77	4
	1-77	13
230315	8-13	41
230419	7-19	11
230420	7-19	10
230421	8-13	1
230443	7-17	22
233683	9-3	26
	9-7	34
233693	6-9	8
	6-13	28
	6-21	4
	6-23	46
	6-32	2
	10-5	8
235691	6-9	10
	6-13	38
	6-21	13
	6-23	45

©2015 HYSTER COMPANY

NUMERICAL INDEX (continued)

PART NO.	PAGE	ITEM
	6-35	15
239503	1-17	16
	1-33	9
	1-83	31
	9-3	11
	9-7	13
241079	10-71	3
244167	12-4	39
	12-8	21
244540	9-7	14
246108	1-50	
	2-13	
	3-3	
	4-34	
	4-37	
	4-39	
251099	4-13	11
	4-15	30
251979	2-5	
	2-7	
251994	5-26	5
	8-11	9
252729	11-4	27
	12-4	40
	13-18	20
	14-51	5
264134	4-19	
	4-34	
	6-6	
	12-11	6
	12-15	6
264159	10-3	20
	10-5	
265731	10-65	1
	14-3	4
	14-4	4
	14-4	5
	14-4	6
	14-5	4
	14-5	5
	14-5	6
	14-7	9
	14-9	9
	14-9	10
	14-9	11
	14-11	9
	14-11	10
	14-11	11
	14-13	11
	14-13	16
	14-17	11
	14-17	16
	14-21	11
	14-21	16
	14-25	8
	14-25	13
	14-27	8
	14-27	13
	14-29	8
	14-29	13
	14-32	32
	14-32	34
	14-36	36
	14-36	38
	14-40	36
	14-40	38
265732	7-17	10
265787	9-11	12
266728	8-13	7
266733	8-13	6
270015	8-17	6
270077	11-11	8
	13-21	6
270330	10-73	6
274334	4-25	33
275493	5-56	42
	5-59	
	5-67	8
	5-72	23
	5-78	23
	5-85	35
	5-91	35
	5-97	5
	5-97	17
	5-101	6
	5-105	12
	5-109	8
	5-121	4
	5-125	4
	5-130	19
	5-134	21
275494	5-56	49
	5-60	
	5-67	19
	5-119	9
275495	5-26	2
	5-56	51
	5-72	19
	5-81	
	5-84	19
	5-90	19
	5-105	8
	5-109	5
	5-117	2
	5-119	2
	5-121	12
	5-125	13
	5-130	18
	5-134	20
275496	5-56	52
	5-60	
	5-67	7
	5-71	10
	5-77	10
	5-83	10
	5-89	10
	5-97	10
	5-101	11
	5-105	18
	5-109	14
	5-121	16
	5-126	18
	5-130	17
	5-134	19
275497	5-26	2
	5-56	61
	5-71	11
	5-77	11
	5-83	11
	5-89	11
	5-97	21
	5-101	17
	5-105	20
	5-109	16
	5-121	2
	5-125	2
	5-129	16
	5-134	18
275498	5-56	45
275499	5-56	60
	5-75	
	5-81	
280154	10-3	18
	11-4	23
	12-3	12
	12-4	12
	13-14	31
	13-18	21
	13-18	25
	13-26	17
280878	13-3	13
283149	7-15	13
287816	4-19	33
287851	1-17	7
	1-17	12
	5-35	14
291256	11-8	19
292500	1-75	22
	4-29	15
	4-31	14
	6-9	11
	6-13	44
	6-21	16
	6-23	43
292502	4-19	12
292505	14-13	19
	14-17	19
	14-21	19
	14-25	16
	14-27	16
	14-29	16
292509	6-8	7
	6-18	7
292515	2-5	14
	2-7	16
	3-15	15
	3-19	7
	6-9	4
	6-21	3
	6-23	25
292516	2-5	13
	2-7	15
	3-15	12
	3-19	8
	6-13	7
	6-23	7
292522	6-13	40
	6-23	38
292524	1-49	16
	2-41	25
292528	14-32	29
	14-36	29
	14-40	29
292531	1-49	18
	2-41	23
	6-6	7
292626	1-5	4
292656	1-91	5
292660	7-13	3
	7-15	35
292661	14-52	4
292667	1-23	31
	1-33	
	1-37	
292668	9-3	14
	9-7	30
292680	6-9	12
	6-13	3

See Service Manual for service procedures.
©2015 HYSTER COMPANY

NUMERICAL INDEX (continued)

PART NO.	PAGE	ITEM
	6-21	17
	6-23	3
292681	6-8	4
	6-13	34
	6-18	4
	6-23	33
	6-35	11
292682	2-5	15
	2-7	17
	3-15	11
	3-19	6
	6-9	5
	6-13	8
	6-21	2
	6-23	8
292683	1-91	4
	3-11	21
	3-13	21
	5-27	7
	6-6	6
	14-32	30
	14-36	30
	14-40	30
292685	8-13	29
293619	7-15	4
293620	6-35	12
293622	2-13	17
	2-15	12
	3-3	17
	3-5	12
293625	1-49	11
	2-41	9
293627	2-5	26
	2-7	32
293628	8-13	9
293632	7-19	15
293646	7-15	26
	7-17	16
293648	8-14	49
293686	8-13	28
293697	6-6	1
293698	2-5	4
	3-16	5
293699	2-7	4
293734	7-13	2
	7-15	34
293741	6-21	5
	6-32	8
293762	7-15	7
	7-17	25
293774	4-19	18
293799	10-29	3
295649	12-11	3
	12-15	3
296009	12-7	13
	13-14	35
296016	7-17	32
	10-3	9
296025	10-16	5
296026	10-5	19
296029	1-79	32
296128	2-9	14
	2-11	14
296149	1-79	9
296153	4-29	22
	4-31	23
296158	5-25	4
296159	9-3	2
	9-7	2
296165	1-75	9
	1-77	9
296166	5-39	22
	5-41	22
296229	1-29	7
	1-33	14
	1-37	14
296357	1-53	17
	1-55	18
	1-57	27
296359	4-19	17
296360	1-75	6
	1-75	21
	1-77	6
	1-77	20
296378	4-13	13
	4-15	20
	4-19	15
	9-17	3
	9-19	4
296379	1-58	30
	1-61	23
	1-70	
	5-25	5
296380	5-5	3
	5-17	4
	5-19	14
	5-27	10
	5-28	5
	5-39	21
	5-41	21
296415	1-23	37
	1-27	2
296418	1-49	9
	2-13	18
	2-15	13
	2-41	10
	3-3	18
	3-5	13
296419	1-27	8
296420	2-5	24
	2-7	30
	4-5	14
	6-7	2
296422	1-49	20
	2-41	22
	3-19	4
296423	1-49	27
	1-91	3
	2-5	7
	2-7	7
	2-41	27
	3-16	8
296434	7-3	5
	7-13	4
	7-15	36
297531	12-19	6
	13-25	6
297532	11-11	5
	11-13	4
	13-22	9
297538	12-19	5
	13-25	5
297649	12-7	7
	13-14	25
300937	8-13	47
301991	7-17	7
302019	1-23	34
	4-5	2
302023	2-18	5
302024	2-9	23
	2-11	20
	2-16	1
	2-17	1
302033	1-9	9
	1-11	9
	1-19	10
302047	1-29	9
	1-33	44
	1-37	20
302153	4-19	26
302244	1-13	27
302377	6-35	9
302381	1-79	14
302398	5-30	7
	9-3	22
	9-7	27
302399	4-17	19
	4-19	13
	14-13	20
	14-17	20
	14-21	20
	14-25	17
	14-27	17
	14-29	17
302400	1-9	22
	1-11	5
	4-17	13
	4-19	24
302422	4-17	21
	4-19	11
302428	10-19	9
	10-23	9
302437	4-15	17
302443	4-13	2
302468	4-33	25
	4-39	25
302469	7-20	6
302472	12-8	27
	12-24	3
	13-13	15
	13-30	23
302473	3-19	20
302493	12-8	35
	13-14	23
303100	6-13	24
	6-23	23
303150	2-5	12
	2-7	14
	3-15	14
	3-19	9
	6-13	27
	6-23	28
304523	11-5	37
	12-3	3
	13-17	4
304527	12-8	29
	13-13	17
306113	10-19	12
	10-23	12
309109	10-19	16
	10-21	11
	10-23	17
	10-25	12
313828	1-53	20
	1-55	21
	1-58	32
	1-69	10
	1-75	7

©2015 HYSTER COMPANY

NUMERICAL INDEX (continued)

PART NO.	PAGE	ITEM
	1-75	20
	1-77	7
	1-77	21
	4-19	19
314775	5-54	21
316448	1-97	25
316826	1-75	17
	1-77	15
316835	1-23	27
	1-29	14
	1-33	20
	1-37	30
	4-19	19
317292	12-29	9
	13-35	9
	14-36	33
	14-40	33
319322	12-29	7
	13-35	7
	14-36	31
	14-40	31
319323	12-29	8
	13-35	8
	14-36	32
	14-40	32
320154	2-9	24
	2-11	21
	2-16	3
	2-17	2
	2-18	4
320156	1-25	8
	1-29	11
	1-33	43
	1-37	19
	4-17	11
	4-19	29
	4-29	16
	4-31	15
320157	5-35	15
	6-8	6
	6-18	6
320158	1-17	6
	1-17	11
	1-17	14
	1-22	11
	1-25	2
	1-33	5
	1-37	5
	1-85	24
	2-21	16
	2-23	20
	2-25	14
	2-27	18
	3-7	11
	3-9	11
	3-11	20
	3-13	20
320159	4-19	35
320160	1-75	18
	1-77	16
	1-80	3
	8-2	9
320161	8-13	48
	10-19	13
	10-23	14
320165	6-6	2
320289	10-33	7
	10-35	10
320327	12-29	21
	13-35	21
	14-43	10
320396	13-13	10
321124	7-24	3
	7-25	3
	7-27	3
321158	5-26	1
325549	4-20	3
325699	4-15	10
325897	5-17	21
	5-19	9
326488	1-49	12
	2-41	29
327591	11-8	14
	11-23	4
	13-3	14
	13-11	7
	14-43	2
327807	11-13	8
327808	11-13	11
329069	1-79	10
	1-79	36
	4-13	10
	4-15	29
332061	11-5	38
	12-3	4
	13-17	7
334155	10-73	5
334560	6-13	6
	6-23	47
336550	2-13	14
	2-15	21
	3-3	14
	3-5	21
337189	12-8	22
	12-8	22
	13-13	10
	13-13	10
337190	13-13	10
338647	11-8	19
339530	10-6	20
	10-9	20
339897	12-8	22
	13-13	10
339932	11-8	14
	11-23	4
	12-8	17
	12-29	20
	13-3	14
	13-11	7
	13-13	8
	13-35	20
	14-43	2
	14-43	9
339933	13-13	10
339934	13-3	13
340044	4-34	51
341462	10-33	13
345453	2-13	13
	2-15	19
	3-3	13
	3-5	19
345454	2-13	12
	2-15	18
	3-3	12
	3-5	18
348149	11-8	19
348827	13-13	10
351531	11-13	12
	13-22	9
351532	11-13	5
	13-22	12
351673	13-22	
352199	8-17	8
352205	8-14	50
352247	10-73	13
352287	10-73	12
353000	4-23	13
	4-25	12
353144	4-11	4
353206	1-85	23
356916	13-3	13
356917	11-8	19
357025	11-8	19
357626	12-15	14
360387	2-5	
	2-7	
	4-15	16
	6-7	4
362255	14-2	5
364059	12-20	13
	13-26	13
364868	1-79	6
367139	11-11	6
367224	2-5	19
	2-7	21
	3-15	5
369804	10-3	13
	10-3	26
	10-5	12
369815	2-13	11
	2-15	17
	3-3	11
	3-5	17
370646	5-49	5
374923	4-8	1
376026	7-3	11
	7-13	10
	7-15	37
	8-14	51
	8-18	2
379405	11-5	36
	13-17	14
381110	11-13	6
381919	5-49	8
	5-94	2
386885	12-8	22
	13-13	10
389688	1-99	2
397676	1-49	3
	2-41	4
399898	1-49	26
	2-41	28
615145	12-19	10
	13-26	10
636950	12-20	12
	13-26	12
637162	12-20	13
	13-26	13
637635	13-25	6
638248	10-73	3
638249	11-11	11
	13-21	7
638250	13-21	7
638293	12-20	14
	13-26	14
806425	5-53	5
	5-56	39
806426	5-26	2

See Service Manual for service procedures.
©2015 HYSTER COMPANY

NUMERICAL INDEX (continued)

PART NO.	PAGE	ITEM
816591	11-17	4
	11-21	7
	12-27	7
	13-33	7
	14-3	4
	14-4	4
	14-5	4
	14-7	9
	14-9	9
	14-11	9
816593	14-3	4
	14-4	4
	14-4	5
	14-4	6
	14-5	4
	14-5	5
	14-5	6
	14-7	9
	14-9	9
	14-9	10
	14-9	11
	14-11	9
	14-11	10
	14-11	11
	14-13	8
	14-17	8
	14-21	8
	14-25	5
	14-27	5
	14-29	5
866401	5-36	6
	5-49	7
	5-49	9
	5-49	11
	5-55	32
	5-63	3
930591	5-113	5
	5-113	10
980541	7-27	3
980542	7-27	4
	7-31	4
	8-18	8
1300094	1-97	8
1300134	5-49	3
1302024	5-43	14
	5-45	15
1302907	5-56	37
	5-59	8
	5-64	20
	5-67	11
1302908	5-56	37
	5-59	8
	5-64	20
	5-67	11
1302909	5-56	37
	5-59	8
	5-64	20
	5-67	11
1302910	5-59	8
	5-67	11
1302911	5-64	20
1302912	5-56	37
	5-59	8
	5-67	11
1304971	1-79	23
	1-79	23
1307737	1-85	16
1308259	5-54	21
1310142	5-49	10
1310370	12-11	9
1310371	12-15	9
1310611	5-17	17
	5-19	10
1311260	1-25	12
1313196	10-73	10
1316496	4-23	23
	4-25	32
1323576	5-54	23
	5-59	1
	5-59	5
	5-59	6
	5-67	1
	5-67	2
	5-67	9
	5-73	35
	5-79	35
	5-87	59
	5-93	58
	5-121	6
	5-121	10
	5-121	13
	5-125	6
	5-125	11
	5-125	14
	5-129	4
	5-129	6
	5-129	10
	5-129	11
	5-133	5
	5-133	7
	5-133	12
	5-134	13
1323578	5-56	41
	5-65	25
1323579	5-49	1
	5-49	6
	5-50	14
	5-64	23
	5-72	15
	5-72	16
	5-73	26
	5-73	27
	5-78	15
	5-78	16
	5-79	26
	5-79	27
	5-84	15
	5-84	16
	5-84	22
	5-84	23
	5-90	15
	5-90	16
	5-90	22
	5-90	23
1323581	5-36	6
	5-54	17
1323586	5-59	6
	5-67	9
1324309	5-97	13
	5-97	14
	5-101	10
	5-105	16
	5-109	12
1324310	5-97	13
	5-97	14
	5-101	10
	5-105	16
	5-109	12
1324311	5-63	7
1325120	11-5	40
	12-3	5
	13-17	5
1326653	9-19	9
1327164	5-49	1
	5-49	6
	5-56	40
	5-64	23
	5-65	24
	5-72	15
	5-72	16
	5-73	25
	5-73	26
	5-74	44
	5-78	15
	5-78	16
	5-79	25
	5-80	44
	5-84	15
	5-84	16
	5-84	22
	5-85	38
	5-86	52
	5-90	15
	5-90	16
	5-91	38
	5-92	52
1327957	5-59	7
	5-67	10
1327959	5-64	23
1329147	2-41	1
	5-49	1
	5-49	6
	5-50	14
1329149	2-41	1
1329150	2-41	1
	5-72	25
	5-74	44
	5-78	25
	5-80	44
	5-85	38
	5-86	52
	5-91	38
	5-92	52
1329151	2-41	1
	5-47	2
	5-49	14
	5-72	24
	5-72	25
	5-74	44
	5-74	45
	5-78	24
	5-79	25
	5-80	44
	5-80	45
	5-85	37
	5-85	38
	5-86	51
	5-86	52
	5-91	37
	5-91	38
	5-92	51
	5-92	52
1329152	5-47	2
	5-49	14
	5-72	24
	5-78	24
	5-86	51
	5-92	51

©2015 HYSTER COMPANY

NUMERICAL INDEX (continued)

PART NO.	PAGE	ITEM
1330281	5-47	2
	5-49	14
	5-64	23
	5-72	15
	5-72	16
	5-72	24
	5-73	27
	5-74	45
	5-78	15
	5-78	16
	5-78	24
	5-79	26
	5-79	27
	5-80	45
	5-84	15
	5-84	16
	5-84	23
	5-85	37
	5-86	51
	5-90	15
	5-90	16
	5-90	22
	5-90	23
	5-91	37
	5-92	51
1330283	5-36	6
	5-49	3
	5-49	5
	5-54	17
1330292	5-49	3
	5-49	5
1330293	5-49	4
1330297	5-64	23
1330355	5-63	6
	5-65	26
	5-65	29
	5-72	13
	5-78	13
	5-84	13
	5-90	13
	5-113	5
	5-113	10
1330356	5-72	13
	5-78	13
	5-84	13
	5-90	13
	5-113	5
	5-113	10
1330413	5-63	4
1330414	1-7	9
	5-36	6
	5-78	22
	5-92	55
1330415	5-43	10
	5-43	11
1330416	4-15	4
	5-35	6
	5-35	17
	5-71	8
	5-77	8
	5-83	8
	5-89	8
1330418	5-55	30
	5-63	4
1330433	5-35	18
1330437	1-7	10
	5-35	7
	5-43	10
	5-43	11
	5-55	30
	5-59	16
	5-63	4
	5-67	20
	5-71	8
	5-77	8
	5-78	22
	5-83	8
	5-89	8
	5-92	55
	5-98	29
	5-102	25
	5-106	29
	5-110	25
1330438	5-33	2
	5-35	10
	5-54	16
	5-54	19
	5-67	18
	5-71	7
	5-71	9
	5-73	28
	5-73	30
	5-73	32
	5-74	42
	5-74	52
	5-74	53
	5-77	7
	5-77	9
	5-79	28
	5-79	30
	5-79	32
	5-80	42
	5-80	52
	5-80	53
	5-81	59
	5-83	7
	5-83	9
	5-85	24
	5-85	26
	5-86	43
	5-86	48
	5-86	53
	5-87	57
	5-89	7
	5-89	9
	5-91	24
	5-91	26
	5-92	43
	5-92	48
	5-92	53
	5-93	56
	5-93	59
	5-94	4
	5-97	9
	5-98	23
	5-98	25
	5-98	27
	5-98	30
	5-101	19
	5-102	21
	5-102	23
	5-102	26
	5-105	1
	5-105	5
	5-105	9
	5-106	22
	5-106	24
	5-106	26
	5-109	1
	5-109	18
	5-109	20
	5-110	22
	5-113	1
	5-113	4
	5-113	11
	5-117	1
	5-117	8
	5-117	10
	5-119	1
	5-119	10
	5-119	12
	5-121	7
	5-121	9
	5-121	14
	5-125	7
	5-125	8
	5-125	10
	5-125	15
	5-129	3
	5-129	7
	5-129	9
	5-133	4
	5-133	8
	5-133	10
	5-133	11
1330439	5-49	11
	5-59	15
	5-59	16
	5-63	4
	5-67	20
	5-68	21
	5-71	1
	5-72	17
	5-72	18
	5-74	57
	5-75	59
	5-77	1
	5-78	17
	5-78	18
	5-81	57
	5-83	1
	5-84	17
	5-84	18
	5-86	42
	5-86	46
	5-86	55
	5-89	1
	5-90	17
	5-90	18
	5-92	42
	5-92	46
1331990	11-8	15
	13-3	11
1331991	11-8	15
	12-7	15
	13-3	11
	13-13	7
1337197	5-29	7
1339828	1-97	21
1339832	1-97	24
1340470	4-15	2
1343276	1-97	27
1345190	11-18	13
1345684	8-13	21
1345926	1-97	10
1346752	10-19	23
	10-21	14
	10-23	24

See Service Manual for service procedures.
©2015 HYSTER COMPANY

NUMERICAL INDEX (continued)

PART NO.	PAGE	ITEM
	10-25	15
1347043	2-21	19
	2-25	17
	2-29	21
	2-31	24
1347045	1-79	33
	1-85	31
	2-21	20
	2-25	18
	2-29	22
	2-31	25
1350215	1-83	20
1351178	3-11	4
	3-13	4
1351682	5-105	10
1351689	9-3	9
	9-7	10
	9-17	7
	9-19	15
1352140	2-15	2
	3-5	2
1352603	5-59	16
	5-67	20
	5-98	29
	5-102	25
	5-106	29
	5-110	25
1354165	1-97	9
1354172	1-97	4
1357266	5-26	1
1357268	5-26	1
1357533	5-26	2
1359588	1-97	28
1360507	10-65	2
	11-17	3
1360529	11-4	9
	13-17	17
1361302	12-19	4
	13-25	4
1362049	1-53	3
	1-55	3
1362229	1-92	1
1362231	1-92	1
1362233	1-92	1
1362235	1-92	1
1363885	5-36	6
	5-55	30
1363886	5-71	7
	5-74	53
	5-77	7
	5-80	53
	5-83	7
	5-89	7
	5-113	3
	5-113	9
	5-114	12
1365922	1-97	3
1367150	1-65	7
	1-65	10
	1-69	6
	1-73	7
	1-73	10
1371159	4-23	3
	4-25	7
1371250	10-49	1
1374823	8-13	16
1375391	9-3	8
	9-7	9
	9-17	6
	9-19	14
1375676	1-97	12
1375797	5-49	1
	5-49	6
1376782	5-17	18
1377953	14-13	9
	14-17	9
	14-21	9
	14-25	6
	14-27	6
	14-29	6
1377954	14-13	10
	14-17	10
	14-21	10
	14-25	7
	14-27	7
	14-29	7
1378553	4-25	35
1378722	13-22	
1379063	12-11	4
	12-15	4
	13-22	11
1379455	4-37	26
	4-39	46
1379945	1-57	25
	1-69	23
1380092	8-17	3
1380849	6-6	10
	10-6	1
	10-9	1
1380878	10-73	2
1380982	12-20	12
	13-26	12
1381055	12-11	5
	12-15	5
1381056	12-11	5
	12-15	5
1381061	11-11	10
	13-22	10
1381062	11-13	10
	13-22	10
1381074	12-20	14
	13-26	14
1381084	12-11	10
1381085	10-73	4
1381086	12-15	10
1382111	1-53	1
	1-55	1
1382112	1-53	3
	1-55	3
1383031	10-73	10
1383066	11-11	7
	13-21	5
1383067	11-13	7
1383068	13-21	5
1383070	12-19	8
	13-25	8
1383777	8-13	39
1385801	1-92	1
1385802	1-92	1
1385803	1-92	1
1385804	1-92	1
1387281	12-8	28
	13-13	16
1387285	11-23	3
	13-11	6
	14-43	1
1387286	11-23	3
	13-11	6
	14-43	1
1387327	13-29	15
1387330	1-91	2
1387341	1-91	1
1387345	1-91	1
1387348	1-91	1
1387349	1-91	1
1387446	11-23	1
1387447	11-23	1
1387448	11-23	1
1387479	13-13	4
1387519	12-8	26
	13-13	14
	13-13	14
1387523	13-29	6
1387548	12-29	12
	13-35	12
	14-43	6
1387549	12-29	13
	13-35	13
	14-43	8
1387552	13-8	21
1387740	12-8	32
	13-14	20
1387741	11-8	11
1387742	11-8	11
1387743	12-8	30
	13-13	18
1387744	11-8	9
1387745	11-8	9
1387904	1-91	1
1388019	11-4	20
	12-3	11
	13-8	24
	13-18	22
1388092	11-23	1
1388094	11-23	1
1388829	8-13	10
1388832	8-13	37
1388846	8-13	12
1388847	8-13	13
1388848	8-13	14
1389672	13-7	5
1389673	13-7	5
1389779	13-7	4
1389780	13-7	4
1389825	12-8	34
	13-14	22
1389828	13-30	29
1389846	11-8	7
1389854	13-29	16
1389932	11-7	3
	13-7	3
1393348	8-13	33
1393458	1-27	17
1393463	1-29	13
	1-33	34
	1-37	34
1393472	1-22	26
	1-29	15
	1-33	21
	1-37	31
1393479	1-29	12
1393488	1-22	9
1393499	1-25	5
	1-33	25
	1-37	37
1393527	1-27	5
1393528	1-27	4
1393879	1-83	18

©2015 HYSTER COMPANY

NUMERICAL INDEX (continued)

PART NO.	PAGE	ITEM
	2-9	5
	2-11	5
	2-13	6
	2-15	7
	2-21	13
	2-23	13
	2-31	22
	2-35	22
	3-3	6
	3-5	7
1394008	2-7	27
	4-3	9
	4-5	9
1394552	8-13	15
1395384	11-7	1
	11-7	1
1395390	11-7	1
	11-7	1
1395396	11-7	1
	11-7	1
1395403	11-7	1
	11-7	1
1395409	11-7	1
1395415	11-7	1
1395492	11-8	19
1395499	11-8	19
1396780	1-49	23
	2-41	20
1396781	1-49	22
	2-41	17
1398062	4-3	19
	4-5	16
	5-7	9
	9-19	12
1398099	4-33	2
	4-37	2
	4-39	2
1399076	13-17	19
1399077	13-17	19
1399081	11-5	41
1399084	13-17	19
1399086	10-66	3
	10-67	3
	11-5	45
	13-17	19
1399088	11-5	41
	13-17	19
1399090	13-17	19
1399092	13-17	19
1399093	11-5	41
	14-17	25
	14-27	21
1399094	13-17	18
1399095	11-5	43
1399096	13-17	18
1399100	11-5	41
	11-5	43
	13-17	19
1399104	13-17	18
1399105	11-5	41
1399106	13-17	18
1399107	11-5	43
1399108	13-17	18
1399110	13-17	18
1399112	11-5	43
	13-17	18
1399118	11-5	41
1399119	11-5	43
1399120	13-17	18
1399123	11-5	41
1399124	11-5	43
1399134	11-5	41
1399137	11-5	43
1399142	11-5	43
1399150	11-5	41
1399153	11-5	43
1399169	11-5	43
1399203	11-4	4
	11-7	4
	12-4	31
	12-7	10
	13-3	3
	13-7	9
1399204	11-4	4
	11-7	4
	12-4	31
	12-7	10
	13-3	3
	13-7	9
1399205	11-4	4
	11-7	4
	12-4	31
	12-7	10
	13-3	3
	13-7	9
1399224	11-23	8
	12-29	6
	13-35	6
	14-32	22
	14-36	22
	14-40	22
1399243	13-29	5
1399332	5-5	20
1399802	4-17	7
1400125	12-29	17
	13-35	17
	14-43	13
1400126	12-29	16
	13-35	16
	14-43	12
1400501	12-11	8
1400507	12-11	8
1400551	12-11	8
1400557	12-11	8
1400801	12-15	8
1400807	12-15	8
1400851	12-15	8
1400857	12-15	8
1402189	3-11	15
	3-13	15
1402414	4-33	22
	4-39	22
1402620	5-55	26
1402624	5-59	4
	5-67	6
1402813	5-121	17
	5-126	19
	5-129	12
	5-134	14
1402814	5-63	2
	5-117	4
	5-117	5
	5-117	6
	5-117	9
	5-119	4
	5-119	5
	5-119	6
	5-119	7
	5-119	8
	5-119	11
1402815	1-13	29
	5-73	37
	5-79	37
	5-85	29
	5-91	29
	5-117	3
	5-119	3
1402816	5-97	16
	5-101	15
	5-105	14
	5-109	10
	5-121	3
	5-125	3
	5-129	15
	5-134	17
1402823	5-53	4
	5-53	6
	5-59	9
	5-59	11
	5-67	13
	5-67	15
1402868	5-73	35
	5-79	35
	5-87	59
	5-93	58
	5-121	6
	5-125	6
	5-129	10
	5-129	11
	5-133	12
	5-134	13
1402883	5-5	12
1402888	5-47	2
	5-56	41
	5-64	23
	5-65	25
	5-72	15
	5-72	24
	5-74	45
	5-78	15
	5-78	24
	5-79	26
	5-80	45
	5-84	15
	5-85	37
	5-86	51
	5-90	15
	5-90	22
	5-91	37
	5-92	51
1452463	11-5	36
	13-17	14
1453882	1-53	2
	1-55	2
1453883	1-53	9
1453887	1-53	10
	1-55	10
	1-69	13
1454967	5-25	2
1460477	1-79	3
	1-79	31
	2-9	21
	2-21	23
	2-23	26
	2-25	21
	2-27	24
	2-29	11
	2-31	13

See Service Manual for service procedures.
©2015 HYSTER COMPANY

NUMERICAL INDEX (continued)

PART NO.	PAGE	ITEM
	2-33	11
	2-35	13
	3-7	20
	3-9	17
	3-11	10
	3-13	10
1461743	5-49	2
1461744	5-49	1
	5-49	6
1462439	4-8	5
1462441	4-8	4
1462442	4-8	2
1463138	5-55	29
	5-63	5
	5-68	22
	5-94	1
	5-121	1
	5-121	18
	5-125	1
	5-126	20
	5-129	1
	5-129	2
	5-133	1
	5-133	2
	14-45	2
1463139	5-71	3
	5-71	4
	5-71	5
	5-71	6
	5-71	12
	5-72	14
	5-73	40
	5-73	41
	5-74	47
	5-74	48
	5-74	49
	5-77	3
	5-77	4
	5-77	5
	5-77	6
	5-77	12
	5-78	14
	5-79	40
	5-80	41
	5-80	47
	5-80	48
	5-80	49
	5-83	3
	5-83	4
	5-83	5
	5-83	6
	5-83	12
	5-84	14
	5-85	31
	5-85	32
	5-85	40
	5-85	41
	5-87	60
	5-89	3
	5-89	4
	5-89	5
	5-89	6
	5-89	12
	5-90	14
	5-91	31
	5-91	32
	5-91	40
	5-92	41
	5-93	61
	5-97	1
	5-97	4
	5-97	6
	5-98	24
	5-98	28
	5-98	31
	5-101	1
	5-101	4
	5-101	5
	5-101	20
	5-102	24
	5-102	27
	5-105	2
	5-106	23
	5-106	28
	5-106	30
	5-109	2
	5-109	19
	5-110	24
	5-110	26
	5-113	8
1463184	5-94	1
	5-98	32
	5-102	28
	5-106	31
	5-110	27
1463189	5-98	31
	5-102	27
	5-106	30
	5-110	26
1463193	5-94	1
1463194	5-105	9
	5-113	4
	5-113	11
1463196	5-98	31
	5-102	27
	5-106	30
	5-110	26
1465072	11-4	5
	11-7	5
	11-23	7
	12-4	29
	12-7	12
	12-29	5
	13-3	5
	13-7	11
	13-11	5
	13-14	32
	13-35	5
	14-31	21
	14-35	21
	14-39	21
1465177	14-32	25
	14-36	25
	14-40	25
1465468	5-56	40
	5-64	24
1465469	5-56	41
	5-65	25
1465489	10-65	7
	11-17	2
	12-24	13
	13-29	14
1465518	11-5	34
	12-4	37
	13-3	16
1465585	11-4	8
	13-17	16
1466633	13-7	17
1467145	14-31	10
	14-35	10
	14-39	10
1467146	14-31	11
	14-35	11
	14-39	11
1467147	14-31	12
	14-35	12
	14-39	12
1467148	14-31	13
	14-35	13
	14-39	13
1467150	14-31	1
	14-35	1
	14-39	1
1467151	14-31	6
	14-35	6
	14-39	6
1467153	14-31	7
	14-35	7
	14-39	7
1467154	14-31	8
	14-35	8
	14-39	8
1467200	14-31	15
	14-35	15
	14-39	15
1467201	14-31	14
	14-35	14
	14-39	14
1467203	14-31	1
	14-35	1
	14-39	1
1467204	14-31	6
	14-35	6
	14-39	6
1467205	14-31	7
	14-35	7
	14-39	7
1467206	14-31	8
	14-35	8
	14-39	8
1467632	14-31	16
	14-35	16
	14-39	16
1467633	14-31	17
	14-35	17
	14-39	17
1467634	14-31	16
	14-35	16
	14-39	16
1467769	14-31	4
1467771	14-31	4
1467774	14-31	4
1467776	14-31	4
1468308	1-17	4
1468311	1-27	6
1468312	1-15	3
	1-17	2
	1-17	9
1468313	1-22	10
1468314	1-22	20
1468315	1-22	19
1468316	1-22	18
1468317	1-22	13
1468318	1-33	27
	1-37	2
1468319	1-27	3
1469405	3-11	22
	3-13	22

©2015 HYSTER COMPANY

NUMERICAL INDEX (continued)

PART NO.	PAGE	ITEM
1470155	1-58	
	1-61	
1471829	8-18	5
1471830	7-26	1
1471831	7-26	1
1471836	7-26	1
1471838	7-26	1
1473887	10-65	1
	10-69	10
	14-13	11
	14-17	11
	14-21	11
	14-25	8
	14-27	8
	14-29	8
	14-32	34
	14-36	38
	14-40	36
	14-40	38
1473888	10-3	18
	13-8	23
	13-18	21
1473897	10-65	3
	14-32	32
	14-36	36
	14-40	36
1473898	10-3	25
	10-5	29
	10-66	9
	10-67	9
1474318	14-52	3
1474387	13-18	24
1474398	11-4	13
	12-4	28
1474399	11-4	13
	12-4	28
1474496	13-17	11
1474497	13-17	11
1476064	5-72	13
	5-78	13
	5-84	13
	5-90	13
1476077	5-54	23
	5-59	5
	5-67	2
1476108	5-63	6
	5-65	26
	5-65	29
	5-72	13
	5-78	13
	5-84	13
	5-90	13
	5-113	5
	5-113	10
1476109	5-72	13
	5-78	13
	5-84	13
	5-90	13
1476421	2-16	6
	2-17	10
1476598	5-53	1
	5-53	9
	5-53	10
	5-53	11
	5-55	28
	5-64	14
	5-64	18
1476599	5-53	1
	5-53	9
	5-53	10
	5-53	11
	5-55	28
	5-55	36
	5-64	14
	5-64	18
1477559	11-4	17
	12-4	15
1477570	11-17	8
1477578	11-17	11
1479090	1-92	1
1479132	1-92	1
1479133	1-92	1
1479134	1-92	1
1480188	5-49	9
	5-83	1
	5-89	1
1480237	1-83	16
	1-83	36
	1-85	5
	2-21	8
	2-23	8
	2-25	7
	2-27	7
	2-29	5
	2-31	5
	2-33	5
	2-35	5
	4-17	6
	4-23	25
	4-25	29
	5-5	7
	5-13	11
	5-15	11
	5-17	15
	5-24	5
	5-26	6
	6-3	8
	6-5	7
	8-11	5
	10-5	30
	10-6	9
	10-9	9
	10-65	9
	10-69	8
1480392	12-29	19
	13-35	19
	14-43	7
1482668	5-65	27
	5-113	5
	5-113	10
1482905	1-65	4
	1-73	4
1482906	1-65	6
	1-73	6
1482925	1-69	11
1482949	1-69	12
1483329	5-65	27
1484377	5-33	2
	5-71	3
	5-71	4
	5-71	5
	5-71	6
	5-71	9
	5-71	12
	5-72	14
	5-73	39
	5-73	40
	5-74	41
	5-77	3
	5-77	4
	5-77	5
	5-77	6
	5-77	9
	5-77	12
	5-78	14
	5-79	39
	5-79	40
	5-80	41
	5-81	59
	5-83	3
	5-83	4
	5-83	5
	5-83	6
	5-83	9
	5-84	12
	5-84	14
	5-85	31
	5-85	32
	5-85	33
	5-86	43
	5-86	50
	5-89	3
	5-89	4
	5-89	5
	5-89	6
	5-89	9
	5-89	12
	5-90	14
	5-91	31
	5-91	32
	5-91	33
	5-91	40
	5-92	43
	5-92	50
	5-93	59
	5-94	4
	5-98	24
	5-98	28
	5-98	29
	5-98	32
	5-101	1
	5-101	20
	5-102	24
	5-102	25
	5-102	28
	5-105	2
	5-106	23
	5-106	28
	5-106	29
	5-106	31
	5-109	2
	5-109	19
	5-110	24
	5-110	25
	5-110	27
	5-113	1
	5-117	1
	5-121	1
	5-121	18
	5-125	1
	5-129	1
	5-129	2
1484397	5-105	9
	5-113	4
	5-113	11
1484557	5-97	4
	5-97	6
	5-101	4

©2015 HYSTER COMPANY

NUMERICAL INDEX (continued)

PART NO.	PAGE	ITEM
	5-101	5
	5-113	8
1484558	5-97	4
	5-97	6
	5-101	4
	5-101	5
	5-113	8
1484709	5-59	15
	5-63	3
	5-68	21
	5-113	2
1485449	11-4	33
	12-4	38
	13-3	15
1486737	9-11	18
	10-5	22
	10-6	7
	10-9	7
	10-29	6
	14-13	17
	14-17	17
	14-21	17
	14-25	14
	14-27	14
	14-29	14
1486738	10-5	33
1486740	9-11	12
	9-13	2
	10-6	6
	10-9	6
1486742	10-29	8
1486749	12-4	20
1486753	10-5	1
1487058	9-13	7
	10-5	35
1487061	2-9	10
	2-11	10
	9-11	3
	9-13	1
	10-69	1
1487063	10-69	7
1487068	11-4	22
	12-4	13
	13-18	20
1487095	10-69	11
	14-13	16
	14-17	16
	14-21	16
	14-25	13
	14-27	13
	14-29	13
1487096	11-4	28
	12-4	21
	13-18	27
	14-51	5
1487097	10-69	2
1487122	1-47	16
1487441	5-65	27
1487945	1-47	15
1487954	1-47	10
1487956	1-13	7
1487957	1-13	5
1489655	4-15	4
	5-35	5
	5-35	16
	5-71	8
	5-77	8
	5-83	8
	5-89	8
1489656	5-35	8
	5-73	32
	5-79	32
	5-85	26
	5-91	26
	5-97	9
	5-98	23
	5-98	30
	5-101	19
	5-102	26
	5-105	1
	5-105	5
	5-105	22
	5-109	1
	5-109	18
1489657	5-35	9
	5-73	32
	5-79	32
	5-85	26
	5-91	26
	5-97	9
	5-98	23
	5-98	30
	5-101	19
	5-102	26
	5-105	1
	5-105	5
	5-105	22
	5-109	1
	5-109	18
1490242	5-54	19
	5-67	18
	5-73	28
	5-73	30
	5-74	42
	5-74	52
	5-79	28
	5-79	30
	5-80	42
	5-80	52
	5-85	24
	5-86	48
	5-86	53
	5-87	57
	5-91	24
	5-92	48
	5-92	53
	5-92	56
	5-98	27
	5-102	23
	5-106	26
	5-110	22
	5-113	3
	5-113	9
	5-114	12
	5-117	8
	5-117	10
	5-119	10
	5-119	12
	5-121	7
	5-121	9
	5-121	14
	5-125	7
	5-125	8
	5-125	10
	5-125	15
	5-129	3
	5-129	7
	5-129	9
	5-133	4
	5-133	8
	5-133	10
	5-133	11
1490243	5-54	19
	5-67	18
	5-73	28
	5-73	30
	5-74	42
	5-74	52
	5-79	28
	5-79	30
	5-80	42
	5-80	52
	5-85	24
	5-86	48
	5-86	53
	5-87	57
	5-91	24
	5-92	48
	5-92	53
	5-92	56
	5-93	56
	5-98	27
	5-102	23
	5-106	26
	5-110	22
	5-113	3
	5-113	9
	5-114	12
	5-117	8
	5-117	10
	5-119	10
	5-119	12
	5-121	7
	5-121	9
	5-121	14
	5-125	7
	5-125	8
	5-125	10
	5-125	15
	5-129	3
	5-129	7
	5-129	9
	5-133	4
	5-133	8
	5-133	10
	5-133	11
1492140	1-27	18
1492167	1-9	9
	1-11	9
	1-19	10
1493306	10-73	
1493336	1-22	2
1493428	5-71	9
	5-77	9
	5-83	9
	5-89	9
1493430	5-94	4
1493435	5-117	6
	5-117	9
	5-119	8
	5-119	11
1493447	5-119	5
	5-119	6
1493465	1-7	8
	5-36	6
	5-78	22
	5-92	55
1493466	5-43	10
	5-43	11

©2015 HYSTER COMPANY

NUMERICAL INDEX (continued)

PART NO.	PAGE	ITEM
1493480	1-9	9
	1-11	9
	1-19	10
1494750	6-13	25
	6-23	19
1494888	1-7	17
	1-9	8
	1-11	2
	1-19	2
1495279	11-18	12
	12-24	4
	13-29	7
1495441	1-22	16
1498044	5-55	35
	5-64	23
	5-75	60
	5-78	19
	5-81	60
	5-93	60
1498046	5-55	34
	5-64	23
1498336	1-25	14
	1-31	11
	1-41	10
1498424	5-63	6
	5-65	26
1500744	11-3	2
	11-7	2
	11-23	2
	12-3	2
	12-7	2
	12-29	2
	13-3	2
	13-7	2
	13-11	2
	13-13	2
	13-35	2
	14-31	5
	14-35	5
	14-39	5
1500784	1-92	4
1500786	1-92	4
1500899	5-74	50
	5-80	50
	5-85	39
	5-91	39
	5-97	20
	5-101	16
	5-105	19
	5-109	15
1500901	5-68	25
1500912	1-79	7
	2-7	24
	3-15	8
	3-19	13
	4-15	14
	5-5	18
	5-7	4
	5-9	8
	5-13	2
	5-15	2
	5-35	2
	5-36	4
	5-46	3
	5-122	
	5-126	
	14-2	6
	14-47	2
1500913	5-33	2
	5-54	16
	5-71	7
	5-71	9
	5-77	7
	5-77	9
	5-83	7
	5-83	9
	5-86	43
	5-89	7
	5-89	9
	5-92	43
	5-113	1
	5-117	1
	5-119	1
1500925	5-98	29
	5-102	25
	5-106	29
	5-110	25
1501259	1-97	2
1501277	7-3	10
	7-13	9
1501278	7-3	10
1501970	4-31	20
1501994	1-51	9
	4-29	17
	4-31	16
1502007	10-3	6
	10-66	2
	10-67	2
1502009	4-29	14
	4-31	13
	9-11	23
1502053	4-29	29
	4-31	29
	5-19	6
	5-27	11
	5-35	19
	9-11	4
	9-13	5
	10-6	26
	10-9	26
	10-65	11
	10-66	6
	10-67	6
1502054	4-25	42
	5-17	11
	10-29	11
1502055	5-35	13
	10-29	12
1502057	5-15	19
1502059	10-66	7
	10-67	7
	10-69	14
	14-17	27
	14-27	23
1502061	1-50	6
	1-51	4
	4-17	25
	4-29	26
	4-31	25
	5-13	13
	5-15	21
	5-17	6
	5-27	12
	10-66	4
	10-67	4
1502066	4-17	22
	5-13	5
	5-15	6
	5-17	2
	6-3	9
	10-6	27
	10-9	27
	10-65	12
	10-66	8
	10-67	8
	10-69	13
	14-17	28
	14-27	24
1502079	4-3	15
	4-5	19
	4-7	10
1502543	5-5	2
	5-17	23
	5-19	15
	5-28	4
	10-3	11
	10-13	5
1502625	5-74	53
	5-80	53
	5-81	59
	5-93	59
1502626	5-74	53
	5-80	53
	5-81	59
	5-93	59
1502809	10-65	5
	13-29	4
1503088	5-49	1
	5-49	6
1503877	1-97	7
1503879	1-97	7
1503958	1-15	4
	1-17	17
1503959	1-15	8
	1-17	3
1504075	2-5	3
	2-7	3
	3-16	4
1504941	1-9	9
	1-11	9
	1-19	10
	1-22	14
1506738	4-10	4
	4-11	5
1506825	1-29	22
	1-33	39
	1-37	27
1507003	1-22	5
1508229	1-33	8
	1-37	7
1508232	5-65	28
1509888	2-29	17
	2-31	19
	2-33	17
	2-35	19
	5-17	
	5-19	3
	5-36	6
	5-56	58
	5-64	17
	5-74	46
	5-80	46
	5-85	36
	5-91	36
	5-97	8
	5-101	8
	5-109	6
	5-121	5

©2015 HYSTER COMPANY

NUMERICAL INDEX (continued)

PART NO.	PAGE	ITEM
	5-125	5
	5-129	14
	5-134	16
1509889	5-56	46
1509890	2-29	16
	2-31	18
	2-33	16
	2-35	18
	5-56	57
	5-73	34
	5-79	34
	5-85	28
	5-91	28
	5-105	7
	5-113	7
	5-121	15
	5-125	16
	5-129	13
	5-134	15
1510113	1-80	1
	2-9	18
	2-11	18
	2-21	9
	2-23	9
	2-25	8
	2-27	8
	2-31	9
	2-35	9
	3-9	10
	5-21	5
	5-24	4
	7-3	2
	9-19	17
1510115	3-7	10
	3-11	18
	3-13	18
	5-7	7
	5-9	11
1510117	2-9	20
	2-23	16
	2-27	14
	2-33	27
	2-35	29
	3-7	3
	3-9	3
	3-11	3
	3-13	3
1510126	1-9	10
	1-11	12
	1-19	13
1511882	11-23	10
	12-29	3
	13-7	12
	13-11	3
	13-14	34
	13-35	3
	14-31	19
	14-35	19
	14-39	19
1511883	11-23	10
	12-29	3
	13-7	12
	13-11	3
	13-14	34
	13-35	3
	14-31	19
	14-35	19
	14-39	19
1511884	11-23	10
	12-29	3
	13-7	12
	13-11	3
	13-14	34
	13-35	3
	14-31	19
	14-35	19
	14-39	19
1512403	1-49	15
	2-41	24
	8-2	1
	8-2	8
1512536	1-57	10
	1-61	12
	1-69	15
1513089	1-69	5
1514138	6-32	5
1514429	2-29	13
	2-31	15
	2-33	13
	2-35	15
	4-17	12
	5-17	22
	5-25	3
	5-28	6
	9-3	5
	9-7	5
1514597	5-55	32
	5-63	3
	5-113	2
1514598	5-36	6
	5-49	7
	5-49	11
	5-55	32
	5-59	15
	5-63	3
	5-68	21
	5-84	18
	5-90	18
	5-113	2
1514602	5-113	6
1514603	5-72	17
	5-72	22
	5-74	54
	5-75	58
	5-78	17
	5-80	54
	5-81	58
	5-84	17
	5-86	42
	5-86	47
	5-86	56
	5-90	17
	5-92	42
	5-92	47
	5-113	6
1515337	1-33	33
	1-37	33
1515654	6-13	39
	6-23	37
	7-15	9
	10-5	10
1516199	9-11	1
	9-13	11
	10-6	4
	10-9	28
1516202	14-36	38
	14-40	38
1516203	8-11	8
1516826	6-13	11
	6-23	10
1517361	4-17	10
	10-19	15
	10-21	12
	10-23	16
	10-25	13
1517656	1-83	33
1519439	1-92	1
1519440	1-92	1
1519442	1-92	1
1519444	1-92	1
1520513	5-19	2
1520660	6-32	9
1520864	5-53	5
	5-56	39
	5-59	10
	5-59	12
	5-67	14
	5-67	16
1520927	1-22	23
1521183	5-72	16
	5-78	16
	5-84	16
	5-90	16
1521184	5-72	15
	5-78	15
	5-84	15
	5-90	15
1521185	5-73	27
	5-79	27
	5-84	23
	5-90	23
1521186	5-73	26
	5-79	26
	5-84	22
	5-90	22
1521188	5-72	15
	5-72	16
	5-73	26
	5-73	27
	5-78	15
	5-78	16
	5-79	26
	5-79	27
	5-84	15
	5-84	16
	5-84	22
	5-84	23
	5-90	15
	5-90	16
	5-90	22
	5-90	23
1521324	5-55	33
1521809	7-15	8
	7-17	13
1521989	5-49	14
	5-72	15
	5-72	16
	5-73	26
	5-73	27
	5-78	15
	5-78	16
	5-79	26
	5-79	27
	5-84	15
	5-84	16
	5-84	22
	5-85	23
	5-90	15

©2015 HYSTER COMPANY

NUMERICAL INDEX (continued)

PART NO.	PAGE	ITEM
	5-90	16
	5-90	22
	5-91	23
1522425	9-11	15
	9-11	20
1523732	1-92	3
1523734	1-92	2
1523737	1-92	5
1523741	1-93	5
1523742	1-93	
1524267	4-13	4
	4-15	23
1525354	8-13	45
1525442	4-33	24
	4-39	24
1525451	4-33	38
	4-37	11
	4-39	38
1525478	4-33	20
	4-39	20
1525563	5-71	7
	5-77	7
	5-83	7
	5-86	43
	5-89	7
	5-92	43
1525564	5-54	16
	5-117	1
	5-119	1
1525565	5-33	2
1525566	5-113	1
1525567	5-71	6
	5-71	12
	5-74	47
	5-77	6
	5-77	12
	5-80	47
	5-83	6
	5-83	12
	5-85	40
	5-89	6
	5-89	12
	5-91	40
	5-98	24
	5-101	20
	5-106	23
	5-109	19
1525568	5-71	5
	5-77	5
	5-83	5
	5-89	5
	5-97	1
	5-101	1
	5-105	2
	5-109	2
1525569	5-71	4
	5-72	14
	5-77	4
	5-78	14
	5-83	4
	5-84	14
	5-89	4
	5-90	14
1525570	5-71	3
	5-77	3
	5-83	3
	5-89	3
	5-98	28
	5-102	24
	5-106	28
	5-110	24
1525573	5-97	12
	5-105	4
1525577	5-85	27
	5-91	27
	5-98	22
	5-101	18
	5-105	21
	5-109	17
1525584	5-68	24
	5-97	7
	5-101	7
	5-105	6
	5-109	4
1525596	5-64	21
1525677	6-13	11
	6-23	10
1525679	6-13	11
	6-23	10
1525686	6-9	22
	6-21	28
1527813	14-13	17
	14-17	17
	14-21	17
	14-25	14
	14-27	14
	14-29	14
1527876	1-79	17
	2-5	29
	2-29	15
	2-31	17
	2-33	15
	2-35	17
	4-17	18
	4-23	18
	4-25	15
	5-19	8
	9-3	28
	9-7	32
1527877	5-21	3
	5-25	8
	14-47	5
1527878	1-79	21
	10-19	6
	10-23	6
1527879	2-7	34
	4-3	14
	4-5	5
	4-7	6
	4-13	8
	4-15	27
	4-17	5
	4-23	24
	4-25	21
	5-5	14
	5-13	10
	5-15	8
	5-17	13
	5-26	4
	5-29	9
	6-3	7
	6-5	6
	6-6	9
	8-11	6
	9-3	16
	9-7	16
	10-3	17
	10-5	5
	10-6	2
	10-9	2
	10-19	2
	10-21	2
	10-23	2
	10-25	2
	10-65	8
1527880	1-79	12
	2-7	13
	2-9	15
	2-11	15
	2-21	11
	2-23	11
	2-25	6
	2-27	6
	2-29	6
	2-31	6
	2-33	6
	2-35	6
	4-3	20
	4-5	15
	4-25	28
	5-5	8
	5-17	16
	9-3	34
	9-8	40
	9-19	11
	10-9	4
1527881	2-9	3
	2-11	3
	2-13	4
	2-13	4
	2-15	6
	3-3	4
	3-3	4
	3-5	6
	4-23	12
	4-25	11
	4-29	3
	4-31	3
	5-13	8
	5-15	9
1527883	4-25	20
	11-21	6
	12-27	6
	13-33	6
	14-13	6
	14-17	6
	14-21	6
1527884	2-9	13
	2-11	13
	14-7	7
	14-9	7
	14-11	7
1527885	2-21	22
	2-23	25
	2-25	20
	2-27	23
	2-29	10
	2-31	12
	2-33	10
	2-35	12
	3-7	19
	3-9	16
	3-11	27
	3-13	27
	3-19	17
	14-13	18
	14-17	18
	14-21	18

See Service Manual for service procedures.
©2015 HYSTER COMPANY

NUMERICAL INDEX (continued)

PART NO.	PAGE	ITEM
	14-25	15
	14-27	15
	14-29	15
1527886	8-2	8
1527888	1-19	7
1527979	14-13	27
	14-17	26
	14-21	28
	14-25	23
	14-27	22
	14-29	23
1528132	5-23	3
1528133	5-23	4
1528315	5-23	2
1528482	5-7	8
1528580	12-24	12
	12-27	8
	13-30	24
	13-33	8
	14-4	5
	14-5	5
	14-9	10
	14-11	10
1528608	4-20	7
1528630	5-23	5
1528631	5-23	6
1528778	1-79	4
	9-19	10
1528888	1-7	12
	1-9	18
	1-11	18
	1-19	6
	1-49	25
	2-41	18
1528889	1-79	29
1528893	4-23	14
	4-25	13
1528903	4-33	29
	4-37	19
	4-39	29
1529016	11-18	
	12-24	
	13-30	26
	14-13	13
	14-17	13
	14-21	13
	14-25	10
	14-27	10
	14-29	10
1529046	5-71	12
	5-72	14
	5-74	47
	5-77	12
	5-78	14
	5-80	47
	5-83	12
	5-84	14
	5-85	40
	5-89	12
	5-90	14
	5-91	40
	5-97	1
	5-98	24
	5-98	28
	5-101	1
	5-101	20
	5-102	24
	5-105	2
	5-106	23
	5-106	28
	5-109	2
	5-109	19
	5-110	24
1529052	5-94	4
1529366	2-5	18
	2-7	20
	3-15	13
	3-19	16
	4-20	6
	5-5	21
	5-13	18
	5-15	13
	5-17	5
	5-27	9
1529428	1-85	4
1529787	2-9	4
	2-11	4
	2-13	7
	2-15	4
	3-3	7
	3-5	4
1529890	6-13	21
	6-23	21
1530037	5-71	3
	5-71	4
	5-71	5
	5-71	6
	5-77	3
	5-77	4
	5-77	5
	5-77	6
	5-83	3
	5-83	4
	5-83	5
	5-83	6
	5-89	3
	5-89	4
	5-89	5
	5-89	6
1530135	1-85	7
1530221	1-79	24
1530243	1-79	39
	2-9	2
	2-11	2
	2-13	5
	2-13	5
	2-15	5
	3-3	5
	3-3	5
	3-5	5
	4-3	6
	4-5	7
	4-29	2
	4-31	2
	5-45	19
1530244	1-49	14
	2-41	13
	4-7	7
1530311	4-13	9
	4-15	28
1530960	5-68	22
	5-86	50
	5-92	50
	5-121	18
	5-126	20
	5-129	2
	5-133	2
1530961	5-68	22
	5-121	18
	5-126	20
	5-129	2
	5-133	2
1530964	5-56	59
1530971	4-13	6
	4-15	25
1531001	1-85	15
	1-85	35
	2-29	14
	2-31	16
	2-33	14
	2-35	16
	5-43	17
1531162	5-117	4
	5-117	5
	5-119	4
	5-119	7
1531231	5-55	28
1531312	4-15	4
1531404	2-13	8
	3-3	8
1531480	2-7	25
	3-15	9
	3-19	14
	5-15	4
1531486	5-113	5
	5-113	10
1531557	1-7	13
	4-19	25
	5-21	6
	14-49	4
1531558	1-7	3
	1-75	8
	1-77	8
	1-83	19
	1-85	32
	4-10	5
	4-11	6
	4-19	2
	5-21	2
	10-29	2
	14-2	3
1531563	8-2	3
1531973	5-73	41
	5-74	48
	5-79	41
	5-80	48
	5-85	31
	5-85	41
	5-87	60
	5-91	31
	5-91	41
	5-93	61
1531974	5-73	41
	5-74	48
	5-80	41
	5-80	48
	5-85	31
	5-85	41
	5-87	60
	5-91	31
	5-91	41
	5-93	61
1531975	5-9	5
1532571	5-59	7
	5-67	10
	5-68	24
	5-97	7
	5-101	7

©2015 HYSTER COMPANY

NUMERICAL INDEX (continued)

PART NO.	PAGE	ITEM
	5-105	6
	5-109	4
1532585	3-7	15
	3-9	20
	3-11	23
	3-13	23
1532638	14-31	9
	14-35	9
	14-39	9
1532639	14-31	9
	14-35	9
	14-39	9
1532640	14-31	9
	14-35	9
	14-39	9
1532643	14-31	9
	14-35	9
	14-39	9
1532650	10-5	7
1532664	5-98	25
	5-102	21
	5-106	24
	5-109	20
1532757	5-56	54
1532758	5-67	12
1532759	5-45	12
	5-56	44
	5-59	3
	5-67	5
1532761	5-56	47
1532775	5-45	11
1532776	5-56	63
	5-59	2
	5-67	4
1532777	5-56	64
1532778	5-56	43
1532781	5-56	48
1533810	5-64	21
1534282	5-74	56
	5-80	56
	5-86	45
	5-92	45
	5-97	3
	5-101	3
	5-106	27
	5-110	23
1534329	5-72	20
	5-78	20
	5-84	20
	5-90	20
1534417	1-79	15
	5-5	11
1534660	1-99	7
1534672	4-33	28
	4-37	17
	4-39	28
1534828	5-97	11
	5-101	12
	5-105	17
	5-109	13
1534871	9-3	12
	9-7	12
1535166	5-35	1
1535257	2-9	25
	2-11	22
	2-16	4
	2-17	7
	2-18	3
1536304	5-26	1
1536813	1-7	14
	1-9	13
	1-11	14
	1-19	15
1537449	6-15	14
	6-17	14
	6-27	14
	6-29	14
	6-31	14
1537450	6-15	16
	6-17	16
	6-27	15
	6-29	15
	6-31	16
1537459	6-15	20
	6-17	19
	6-27	20
	6-29	21
	6-31	19
1537551	1-79	8
	5-5	26
	5-43	2
	5-45	2
1538782	4-17	4
1539153	5-26	1
1539584	5-21	11
	5-43	20
1539872	5-65	29
1540388	5-72	21
	5-78	21
	5-84	21
	5-90	21
	5-97	2
	5-101	2
	5-105	3
	5-109	3
1540389	5-56	55
1540643	1-85	34
1540805	5-5	1
1540851	8-11	10
	8-13	
1540852	8-13	44
1541231	2-5	27
	6-9	13
	6-21	15
1541232	6-9	14
	6-21	18
1541242	12-24	1
	13-29	21
1541243	12-24	2
	13-29	22
1541556	6-13	16
	6-23	15
1541640	12-19	3
	13-25	3
1541988	5-55	29
	5-63	5
	5-73	39
	5-79	39
	5-85	33
	5-91	33
1541989	5-55	29
	5-63	5
1541991	5-73	40
	5-74	49
	5-79	40
	5-80	49
	5-85	32
	5-91	32
1541992	5-73	40
	5-74	49
	5-79	40
	5-80	49
	5-85	32
	5-91	32
1542436	4-29	27
	4-31	26
	6-3	10
1542439	5-13	4
	5-15	5
	5-17	7
	5-19	13
	5-35	12
	5-46	6
	10-5	24
1542440	4-17	26
1542546	10-19	10
	10-23	10
1543060	8-18	5
1543071	8-18	5
1543254	8-13	46
1543691	4-25	39
	5-19	5
1543698	4-25	40
	5-17	10
	5-28	3
	9-11	5
	9-13	6
1543842	4-25	38
	5-13	7
	5-15	18
1544153	1-88	4
	1-88	4
1544157	10-65	10
1544216	6-13	17
	6-23	16
1544217	6-13	18
	6-23	17
1544218	6-13	13
	6-23	12
1544255	5-23	7
1544413	1-83	14
1544415	1-83	15
1544759	6-32	6
1545546	6-21	11
	6-32	12
1546673	5-59	1
	5-67	1
	5-121	10
	5-125	11
	5-129	6
	5-133	7
1546697	5-71	2
	5-77	2
	5-83	2
	5-89	2
1547342	7-24	1
	7-25	1
1547348	7-24	1
	7-25	1
1547354	7-28	1
1547355	7-28	1
1547356	7-28	1
1547357	7-28	1
1547447	6-9	18
	6-21	25
1547629	5-65	28
1548517	5-33	3
	5-53	2

See Service Manual for service procedures.
©2015 HYSTER COMPANY

NUMERICAL INDEX (continued)

PART NO.	PAGE	ITEM
	5-64	16
	5-97	18
	5-101	9
	5-105	11
	5-109	7
	5-121	8
	5-121	11
	5-125	9
	5-125	12
	5-126	17
	5-129	5
	5-129	8
	5-133	3
	5-133	6
	5-133	9
1548519	5-33	3
	5-53	2
	5-64	16
	5-97	18
	5-101	9
	5-105	11
	5-109	7
	5-121	8
	5-121	11
	5-125	9
	5-125	12
	5-126	17
	5-129	5
	5-129	8
	5-133	3
	5-133	6
	5-133	9
1550157	11-4	27
	12-4	40
	13-17	2
1550158	11-4	27
	13-17	2
1550159	12-4	40
1550193	12-4	39
	12-8	21
1550194	12-4	39
	12-8	21
1550195	13-14	31
	13-26	17
1550196	13-14	31
	13-26	17
1550197	10-66	
	10-67	
	11-4	23
	12-3	12
	13-18	25
1550198	10-66	
	10-67	
	11-4	23
	12-3	12
	13-18	25
1550199	12-4	36
1550384	11-4	29
1550385	12-4	24
1550386	11-4	30
1550387	12-4	25
1550425	12-24	11
	12-27	9
	13-30	25
	13-33	9
	14-4	6
	14-5	6
	14-9	11
	14-11	11
1550561	6-32	3
1550567	6-13	45
	6-23	42
1550572	6-13	42
	6-23	40
1551303	10-73	10
1551663	2-9	26
	2-11	23
	2-18	2
1551839	8-2	3
1553144	7-24	
1553145	7-25	
1553146	7-28	
1553147	7-28	
1553148	7-26	
1553149	7-26	
1553150	7-26	
1553151	7-28	
1553152	7-24	
1553153	7-25	
1553154	7-28	
1553155	7-28	
1553156	7-26	
1553157	7-26	
1553158	7-26	
1553159	7-28	
1553403	6-10	25
	6-13	10
	6-23	26
1553897	4-19	16
	5-30	8
	9-3	23
	9-7	29
1554359	5-71	2
	5-72	17
	5-72	22
	5-74	54
	5-75	58
	5-77	2
	5-78	17
	5-80	54
	5-81	58
	5-83	2
	5-84	17
	5-86	42
	5-86	47
	5-86	56
	5-89	2
	5-90	17
	5-92	42
	5-92	47
	5-113	6
1554902	5-7	13
	5-9	2
	5-29	10
1556475	9-3	10
	9-7	11
1556623	5-13	16
	5-15	17
1557651	8-17	4
1557737	2-7	2
1558035	1-25	24
1558036	1-25	4
1558052	1-23	30
1558156	5-121	13
	5-125	14
	5-129	4
	5-133	5
1558219	1-7	16
1558226	5-59	14
1558294	1-29	
	1-33	
	1-37	
1558515	6-13	37
	6-23	36
1559928	5-5	9
1560255	2-5	28
1560447	5-43	21
1560448	5-43	12
1560643	1-34	4
1560671	1-7	2
1560678	5-25	6
1560681	10-33	10
	10-35	13
1560692	5-74	55
	5-80	55
	5-86	44
	5-92	44
1561559	14-45	2
1561755	14-45	2
1561759	4-29	28
	4-31	28
	5-19	4
	5-35	11
	5-46	5
	10-5	25
1561871	5-17	3
	5-19	11
1562088	4-17	23
	5-7	11
	5-30	5
1562353	1-97	26
1562492	8-5	11
1562493	8-5	13
1562496	8-5	16
1562501	8-5	21
1562505	8-5	25
1562509	8-5	1
1562648	6-3	6
	8-11	7
1562649	5-63	2
	5-117	4
	5-117	5
	5-117	6
	5-117	9
	5-119	4
	5-119	5
	5-119	6
	5-119	7
	5-119	8
	5-119	11
1563208	1-57	7
	1-61	7
	1-70	
1563227	1-53	4
	1-55	4
1563230	1-57	8
	1-61	8
	1-69	14
1563231	1-57	18
	1-69	17
1563369	1-79	35
	1-79	35
1563841	5-9	
1564040	8-18	4
1564041	8-18	4
1564044	5-26	2
1564263	1-79	16
1564392	4-20	5

©2015 HYSTER COMPANY

NUMERICAL INDEX (continued)

PART NO.	PAGE	ITEM
1564426	4-29	25
	4-31	27
1564515	10-3	23
1564747	10-19	11
	10-21	5
	10-23	11
	10-25	5
1564752	4-13	14
	4-15	21
1565076	5-43	13
	5-45	9
1565125	5-43	3
	5-45	3
1565453	2-5	5
	2-7	5
	3-16	6
1565962	1-83	4
1565964	1-83	5
1566116	5-98	25
	5-102	21
	5-106	24
	5-109	20
1566117	5-98	26
	5-102	22
	5-106	25
	5-110	21
1566146	5-26	1
1566210	1-34	
1566420	4-23	19
	4-25	18
	5-17	20
	5-24	3
	5-25	9
	5-36	2
	14-47	4
1566505	1-49	10
	2-41	11
1566565	13-30	
1566654	2-5	21
	2-7	23
	3-15	7
1566726	1-7	7
1566767	1-27	19
1566792	10-71	6
1566853	1-7	11
	1-9	11
	1-11	17
1566890	10-3	21
1567328	1-85	3
1567329	1-83	11
1567333	5-64	23
1567821	1-79	13
1568039	8-13	24
1568075	9-3	18
1568076	9-7	21
1568077	9-7	22
1568079	8-13	23
1568256	9-7	18
1568271	8-13	19
1568272	8-13	22
1568839	4-33	18
	4-37	15
	4-39	18
1568853	4-33	16
	4-37	13
	4-39	16
1569463	7-3	10
	7-13	9
1569465	1-50	7
	1-51	5
1569602	10-33	4
	10-43	11
	10-47	9
1569616	9-11	2
	9-13	10
1569973	5-64	21
1569979	12-24	14
	13-29	12
1570264	10-3	4
1570298	9-3	20
1570300	9-7	23
1570303	10-71	5
1570360	6-9	9
	6-21	14
1571029	1-22	7
1571610	1-5	3
1571662	4-23	5
	4-25	8
1571673	6-15	
	6-17	
1573127	11-3	1
	11-3	1
1573133	11-3	1
	11-3	1
1573139	11-3	1
	11-3	1
1573146	11-3	1
	11-3	1
1573152	11-3	1
1573158	11-3	1
1573520	13-3	1
	13-3	1
1573523	13-3	1
1573525	13-3	1
	13-3	1
1573527	13-3	1
	13-3	1
1573530	13-3	1
1573549	5-9	13
	5-33	5
1573597	1-85	17
1573598	1-85	17
1573599	13-11	1
	13-11	1
	13-13	1
	13-13	1
1573602	13-11	1
	13-13	1
1573604	13-11	1
	13-11	1
	13-13	1
	13-13	1
1573606	13-11	1
	13-11	1
	13-13	1
	13-13	1
1573609	13-11	1
	13-13	1
1573779	12-3	1
	12-3	1
1573785	12-3	1
	12-3	1
1573809	12-7	1
	12-7	1
1573815	12-7	1
	12-7	1
1574162	13-7	1
	13-7	1
1574165	13-7	1
1574167	13-7	1
	13-7	1
1574169	13-7	1
	13-7	1
1574172	13-7	1
1574286	2-18	6
1574301	1-9	6
	1-11	8
	1-19	11
1578545	10-71	6
1578570	1-87	1
1578571	1-87	1
1578572	1-87	7
1578573	1-87	7
1578574	1-87	2
1578575	1-87	2
1578576	1-87	8
1578577	1-87	8
1578705	10-33	11
	10-35	14
1578707	10-31	3
	10-36	3
	10-43	7
	10-62	2
1578711	10-53	13
	10-54	10
	10-57	11
	10-59	11
1578712	10-43	
	10-47	2
	10-49	2
	10-51	13
1578713	10-33	15
	10-35	6
	10-53	2
	10-54	2
	10-57	3
	10-59	3
1578714	10-35	15
	10-47	12
	10-57	2
	10-59	2
1578715	10-61	4
1578746	10-31	7
	10-36	1
1578873	3-11	11
	3-13	11
1578875	10-47	7
	10-49	5
	10-51	8
1578876	10-47	11
1578882	10-53	7
	10-54	7
	10-57	8
	10-59	8
1578883	10-51	3
	10-53	8
	10-54	8
	10-57	9
	10-59	9
1578887	10-53	14
	10-54	11
1578888	10-47	8
	10-49	4
1578889	10-51	5
	10-53	6
	10-54	6
	10-57	6
	10-59	6

See Service Manual for service procedures.
©2015 HYSTER COMPANY

NUMERICAL INDEX (continued)

PART NO.	PAGE	ITEM
1578904	10-47	5
1578905	10-53	5
	10-54	5
1578906	10-57	7
1578907	10-59	7
1578908	10-40	
	10-47	
1578909	10-39	
	10-47	
1578911	10-47	6
1578922	9-7	25
1578940	10-33	22
	10-51	9
1578943	10-33	20
	10-51	11
1579403	14-47	6
1579412	14-49	2
1579677	4-20	1
1579908	8-9	
	10-43	12
1580097	10-31	2
	10-33	3
1580099	10-53	11
1580131	10-31	3
	10-36	9
	10-43	7
	10-61	3
	10-62	2
1580132	10-47	14
1580147	10-35	5
1580151	10-61	4
1580155	10-36	2
1580156	10-36	2
1580759	10-53	10
1580760	10-53	9
1581024	2-13	10
	2-15	16
	3-3	10
	3-5	16
1581068	3-13	2
1581072	3-11	2
1581079	1-83	
1581098	6-15	8
	6-17	8
	6-27	8
	6-29	8
	6-31	8
1581099	6-15	9
	6-17	9
	6-27	9
	6-29	9
	6-31	9
1581100	6-15	10
	6-17	10
	6-27	10
	6-29	10
	6-31	10
1581107	6-15	18
	6-17	18
	6-27	17
	6-29	17
	6-31	18
1581108	6-15	7
	6-17	7
	6-27	7
	6-29	7
	6-31	7
1581400	4-33	42
	4-39	42
1581556	4-33	3
	4-37	3
	4-39	3
	11-8	20
	12-8	37
	12-24	7
	13-3	19
	13-13	6
	13-29	17
1581557	4-33	23
	4-39	23
1581558	11-4	14
	12-4	18
	13-17	9
	13-17	12
1581559	12-8	25
	13-8	20
	13-13	13
1581560	12-24	5
	13-29	8
1581561	7-3	9
1581562	13-29	18
1581563	13-30	28
1581564	10-71	2
	11-17	10
	12-8	24
	13-8	19
	13-13	12
1581565	11-17	6
	13-13	5
	13-29	3
1581566	11-4	19
	12-4	14
	12-7	5
	12-24	16
	13-18	29
1581567	1-80	3
	13-30	30
1581577	11-18	14
	13-29	2
1581578	11-17	5
	13-13	3
1581579	4-33	39
	4-37	12
	4-39	39
	13-29	19
1581580	11-8	21
	13-3	20
1581581	1-83	32
1581582	12-7	3
1581583	4-33	4
	4-37	4
	4-39	4
	11-4	18
	12-4	16
	12-24	15
1581585	11-4	16
	12-4	17
	13-18	30
1581586	11-4	31
	12-4	23
	13-17	10
	13-30	31
1581587	13-30	27
1581588	11-4	15
	12-4	27
	13-17	13
1581589	12-8	23
	13-13	11
1581590	12-24	8
	13-29	20
1581592	13-7	18
1581594	11-17	9
1581733	4-33	35
1581739	4-33	34
	4-37	
	4-39	47
	12-8	38
	13-14	38
1581741	4-19	7
	12-24	98
	13-29	11
1581742	12-24	10
1581835	12-8	36
	13-14	37
1581848	4-33	31
	4-39	31
	10-71	12
1581851	1-83	30
1581852	1-53	13
	1-55	12
	1-57	12
	1-61	17
	1-70	28
	10-71	11
1581858	10-39	7
	10-40	8
	10-43	10
1581860	10-33	8
	10-35	11
1581861	10-33	14
1581862	10-47	3
	10-49	3
1581887	4-33	26
	4-39	26
1581888	4-33	21
	4-39	21
1581896	11-8	17
	11-23	6
	12-8	18
	13-3	10
	13-11	9
	13-14	28
	14-43	4
1582072	1-83	21
1582161	10-3	7
1582222	2-21	15
	2-23	19
	2-25	13
	2-27	17
	3-7	12
	3-9	12
	3-11	19
	3-13	19
1582300	4-13	16
	4-15	32
1582301	4-13	15
	4-15	31
1582302	4-13	16
	4-15	32
1582303	4-13	15
	4-15	31
1582462	2-7	35
1582464	2-7	26
	3-11	
	3-13	
	3-15	10
	3-19	12
	4-15	15

©2015 HYSTER COMPANY

NUMERICAL INDEX (continued)

PART NO.	PAGE	ITEM
	5-5	17
	5-5	17
	5-7	3
	5-9	9
	5-13	3
	5-15	3
	5-35	3
	5-36	5
	5-46	4
	5-122	
	5-126	
	14-2	7
	14-47	3
1582511	10-5	3
1583581	1-83	8
1583582	1-83	9
1583583	1-83	10
1583611	1-7	15
	1-9	14
	1-11	15
	1-13	34
	1-19	16
	1-79	28
	1-80	1
	1-83	17
	1-83	37
	1-85	6
	4-3	13
	4-5	6
	4-7	9
	5-45	20
	10-19	7
	10-21	3
	10-23	7
	10-25	3
	14-49	3
1584083	4-33	10
	4-37	10
	4-39	10
1584129	1-83	34
1584130	1-83	35
1584135	1-83	1
1584142	1-79	22
1584171	4-23	2
	4-25	6
1584632	1-65	9
	1-73	9
1584638	1-65	11
	1-73	11
1584643	1-69	2
1584654	1-79	27
1585575	9-3	17
	9-7	15
1585581	1-79	11
1585750	6-21	23
1586013	1-5	7
	4-33	41
	4-37	30
	4-39	41
1586020	10-45	7
1586022	4-33	32
	4-39	32
1586109	8-2	4
1586279	10-45	14
	10-47	15
1586280	10-47	10
1586427	8-17	
1586428	5-43	16
	5-45	7
1586430	1-79	36
	5-30	2
	14-48	4
1586432	1-87	4
1586440	1-97	19
1586495	1-7	4
	1-85	33
	5-24	2
	5-43	18
	5-45	10
	5-45	13
	14-2	1
1586627	1-83	25
	10-19	22
	10-21	13
	10-23	23
	10-25	14
	10-69	12
	14-48	3
1586629	1-80	4
1586759	5-43	15
	5-45	8
1586762	1-83	12
1587778	5-73	36
	5-79	36
	5-85	34
	5-91	34
1587872	1-85	21
1588247	1-85	22
1588766	1-83	13
1589377	1-99	4
1589397	1-99	5
1589437	1-99	6
1589787	1-9	17
	1-11	19
	1-19	17
1590033	9-3	32
	9-7	38
1590332	1-85	25
1590370	1-79	20
1590488	1-79	18
1590839	6-32	13
1590865	6-32	10
1590866	6-32	11
1593334	1-75	24
	4-19	31
1593341	14-52	5
1593391	4-20	4
1593629	1-29	21
	1-33	38
	1-37	28
1593845	1-9	4
1594807	1-97	17
1594808	1-97	17
1594809	1-97	17
1595161	1-19	5
1595234	5-30	4
1595425	6-15	
	6-17	
	6-27	
	6-29	
	6-31	
1595731	5-30	3
1597381	10-71	10
1597410	1-83	2
1597412	1-83	3
1597448	1-49	5
	2-41	6
1597451	5-30	6
1597837	1-83	23
1597838	1-83	24
1598210	1-22	12
1598220	14-2	4
1598291	1-23	33
1598295	1-22	4
1598296	1-23	39
1598297	1-23	38
1598301	1-23	36
1598302	1-23	35
1598327	1-9	2
	1-13	33
	1-19	19
1598332	1-25	13
1598389	1-29	6
	1-33	7
	1-37	6
1598390	1-33	30
1598392	1-29	5
1598393	1-29	3
	1-33	17
	1-37	17
1598394	1-29	4
1598395	1-29	19
1598397	1-9	20
	1-11	4
	1-29	16
1598398	1-33	3
1598399	1-33	11
	1-37	11
1598404	1-33	31
	1-34	
1598408	1-33	41
	1-37	21
1598409	1-33	40
	1-37	23
1598410	1-33	35
	1-37	24
1598411	1-33	15
	1-37	15
1598412	1-33	42
	1-37	22
1598414	1-9	20
	1-11	4
	1-37	32
1598424	1-27	20
1598425	1-27	1
1598504	1-53	12
	1-55	11
	1-57	15
	1-61	16
	1-69	24
1598669	1-33	29
1598670	1-33	24
	1-37	36
1598671	1-34	3
1598672	1-34	2
1598673	1-34	
1598674	1-34	1
	1-39	2
1598675	1-34	4
1599316	10-71	14
1599415	1-7	18
	1-9	3
	1-11	3
	1-19	3
1601748	1-97	18
1602431	5-55	34
	5-55	35
	5-75	60

©2015 HYSTER COMPANY

NUMERICAL INDEX (continued)

PART NO.	PAGE	ITEM
	5-78	19
	5-81	60
	5-93	60
1603021	5-33	3
	5-53	2
	5-64	16
	5-97	18
	5-101	9
	5-105	11
	5-109	7
	5-121	8
	5-121	11
	5-125	9
	5-125	12
	5-125	17
	5-129	5
	5-129	8
	5-133	3
	5-133	6
	5-133	9
1603236	5-33	3
	5-53	2
	5-64	16
	5-97	18
	5-101	9
	5-105	11
	5-109	7
	5-121	8
	5-121	11
	5-125	9
	5-125	12
	5-125	17
	5-129	5
	5-129	8
	5-133	3
	5-133	6
	5-133	9
1603285	1-85	26
1603681	1-5	2
1603893	1-85	27
1603959	1-85	28
1605479	10-69	9
1606544	4-25	41
	5-9	14
	5-17	26
	5-28	2
	5-33	4
1606735	5-33	6
1606750	8-2	7
1607549	5-63	1
1607745	5-53	12
1608589	5-43	8
1608590	5-43	9
1608591	5-45	24
1608592	5-45	16
1608622	8-2	2
1608654	5-43	7
1608879	1-79	5
1609374	4-17	2
1609864	14-51	2
1611061	12-7	14
	13-14	30
1611542	5-5	19
1612214	10-3	28
1613246	1-79	38
1613324	5-17	8
	5-45	18
1613433	1-87	5
1613434	1-87	6
1613470	6-32	4
1613743	1-19	8
1613749	4-33	36
1613755	4-33	37
1614069	14-13	25
	14-21	26
	14-25	21
	14-29	21
1614230	12-24	21
	12-24	21
	12-24	21
	12-24	21
1614236	12-24	21
	12-24	21
	12-24	21
	12-24	21
	12-24	21
1614331	12-24	17
	12-24	17
1614337	12-24	17
	12-24	17
1614403	12-24	22
	12-24	22
1614406	12-24	22
	12-24	22
1614409	12-24	22
	12-24	22
1614412	12-24	22
	12-24	22
1614849	8-13	30
1614850	8-13	34
1615149	1-69	4
1615240	10-71	1
1615671	4-33	30
	4-39	30
1615804	6-13	23
	6-23	24
1615902	1-9	9
	1-11	9
	1-19	10
1615956	4-33	27
	4-37	18
	4-39	27
1615998	1-43	17
1615999	1-43	18
1616122	5-26	2
1616379	1-79	25
1617083	10-3	10
1617585	10-3	12
1617658	10-65	2
	13-29	13
1618586	7-24	
	7-25	
	7-27	5
	7-31	
	8-18	
1618588	7-24	3
	7-25	3
	7-27	3
1618589	7-24	4
	7-25	4
	7-27	4
1620023	9-14	
1620024	9-14	
1622887	6-13	5
	6-23	5
1622935	14-31	2
	14-35	2
	14-39	2
1622936	14-31	2
	14-35	2
	14-39	2
1623050	5-55	30
1623093	2-5	11
	2-7	11
	3-15	3
	3-19	10
1623280	5-121	1
	5-125	1
	5-129	1
	5-133	1
1623281	5-121	1
	5-125	1
	5-129	1
	5-133	1
1623358	1-15	7
	1-33	1
1623359	1-15	5
	1-17	18
	1-29	1
1623364	1-22	15
1623365	1-22	1
	1-43	
1623366	1-23	32
1623367	1-23	28
1623369	1-22	22
1623370	1-27	15
1623371	1-27	7
1623377	1-9	5
	1-11	10
	1-19	4
1623380	1-25	7
1623382	1-25	21
	5-45	25
1623391	1-29	8
	1-33	10
	1-37	10
1623392	1-33	19
	1-37	29
	1-41	
1623393	1-29	10
	1-33	18
	1-37	18
1623395	1-17	13
	1-33	4
	1-37	4
1623396	1-9	5
	1-9	9
	1-11	9
	1-11	10
	1-19	4
	1-19	10
	1-27	12
	1-29	17
1623398	1-33	12
	1-37	12
1623399	1-33	13
	1-37	13
1623400	1-33	32
	1-37	8
1623402	1-34	
	1-39	3
1623403	1-33	28
1623404	1-29	2
	1-31	
1623406	1-29	18
	1-33	26
	1-37	1
1623544	7-5	22
1623545	7-5	21

©2015 HYSTER COMPANY

NUMERICAL INDEX (continued)

PART NO.	PAGE	ITEM
1623546	7-8	33
1623547	7-8	32
1623548	7-7	31
1623549	7-7	30
1623550	7-7	29
1623551	7-7	28
1623552	7-7	27
1623553	7-7	26
1623554	7-7	26
1623555	7-7	26
1623556	7-7	26
1623557	7-7	26
1623558	7-7	26
1623559	7-7	26
1623560	7-7	26
1623561	7-7	26
1623562	7-7	26
1623563	7-7	26
1623564	7-7	26
1623565	7-7	26
1623566	7-7	26
1623568	7-7	24
1623572	7-7	21
1623573	7-7	20
1623574	7-7	19
1623575	7-7	8
1623576	7-7	23
1623578	7-7	9
1623579	7-7	17
1623580	7-7	10
1623581	7-7	11
1623582	7-7	18
1623583	7-7	16
1623584	7-7	14
1623585	7-7	15
1623586	7-7	13
1623587	7-7	12
1623590	7-7	4
1623591	7-7	5
1623592	7-7	6
1623593	7-7	1
1623634	7-5	34
1623635	7-5	32
1623636	7-5	31
1623637	7-5	33
1623638	7-5	30
1623639	7-5	29
1623640	7-5	28
1623643	7-5	23
1623645	7-5	19
1623652	7-5	12
1623654	7-5	3
1623658	7-5	4
1623666	7-5	6
1623669	7-11	23
1623670	7-11	22
1623671	7-5	42
	7-11	21
1623672	7-11	18
1623673	7-11	16
1623674	7-11	14
1623675	7-11	15
1623676	7-11	13
1623677	7-11	12
1623687	7-11	2
1623688	7-11	3
1623690	7-11	5
1623691	7-11	6
1623694	7-11	24
1623695	7-11	20
1623696	7-11	19
1624406	6-13	30
	6-23	29
1624408	6-13	26
	6-23	6
1624861	10-15	6
1624862	10-15	4
1624863	10-15	5
1624866	10-15	10
1624867	10-15	11
1624868	10-15	
1624869	10-15	8
1624870	10-15	8
1624992	10-15	8
1625255	5-30	1
1626353	7-3	3
	9-19	16
1626478	5-30	9
1626490	11-8	16
	13-3	17
1626727	5-73	29
	5-73	31
	5-74	43
	5-74	51
	5-79	29
	5-79	31
	5-80	43
	5-80	51
	5-85	25
	5-86	49
	5-86	54
	5-87	58
	5-91	25
	5-92	49
	5-92	54
	5-93	57
1626734	1-83	26
1626735	1-83	27
1626774	4-19	14
1627172	1-21	1
1627200	1-99	6
1627453	6-13	4
	6-23	4
1627465	6-13	41
	6-23	39
1627788	7-7	22
1627789	7-7	22
1627790	7-7	22
1627792	7-7	25
1627793	7-7	2
1627794	7-7	3
1627799	7-5	35
1627800	7-5	27
1627802	7-5	20
1627803	7-5	16
1627804	7-5	15
1627805	7-5	14
1627806	7-5	13
1627812	7-5	10
1627813	7-5	11
1627814	7-5	25
1627815	7-5	36
1627816	7-5	36
1627817	7-5	5
1627818	7-5	8
1627819	7-5	2
1627820	7-5	18
1627822	7-11	11
1627823	7-11	1
1627825	7-11	9
1627826	7-11	8
1627827	4-33	30
	4-39	30
1627836	7-11	17
1627837	7-11	7
1627925	7-7	8
1628690	1-97	17
1629155	10-43	10
1629158	10-45	13
1629160	10-45	4
1629161	10-45	11
1629162	10-45	3
	10-45	10
1629163	10-45	2
	10-45	9
1629164	10-45	12
1629165	10-45	5
1629185	14-51	1
1629196	10-39	2
	10-40	2
	10-47	1
1629200	10-45	8
1629209	10-47	13
1629211	10-47	4
1632741	6-13	32
	6-23	31
1632865	5-72	17
	5-72	22
	5-74	54
	5-75	58
	5-78	17
	5-80	54
	5-81	58
	5-84	17
	5-86	42
	5-86	47
	5-86	56
	5-90	17
	5-92	42
	5-92	47
1634462	13-17	8
1634463	13-17	8
1634497	10-10	1
1635003	1-22	3
1635026	1-25	11
1635118		
1635119		
1635120		
1635121		
1635122		
1635123		
1635124		
1635125		
1635126		
1635127		
1635128		
1635129		
1635133		
1635134		
1635135		
1635136		
1635137		
1635138		
1635139		
1635140		
1635141		
1635142		
1635143		

See Service Manual for service procedures.
©2015 HYSTER COMPANY

NUMERICAL INDEX (continued)

PART NO.	PAGE	ITEM
1635144		
1635522		
1635523		
1635524		
1635528		
1635529		
1635530		
1635531		
1635532		
1635533		
1635534		
1635535		
1635536		
1635537		
1635538		
1635539		
1635540		
1635541		
1635542		
1635549		
1635550		
1635551		
1635552		
1635553		
1635554		
1635652	1-9	15
	1-19	14
1636120	1-53	12
	1-55	11
	1-57	15
	1-61	16
	1-70	24
1636626	6-23	9
1636630	6-21	1
1636640	6-13	1
	6-23	1
1636643	6-9	15
1636645	6-9	21
	6-21	27
1636647	1-9	19
	1-11	21
	1-19	9
1636853	1-9	12
	1-11	16
	1-19	18
1637285	1-69	5
1637397	9-11	26
1637399	9-19	13
1637917	8-18	7
1637918	8-18	8
1638161	7-28	
1638164	7-28	
1638500	4-23	4
	4-25	9
1638793	6-9	20
	6-21	26
1638799	6-13	9
1638961	7-3	8
	7-13	8
1639863	6-31	20
1639864	6-29	19
1639866	6-27	19
1640573	6-8	2
	6-18	2
1640776	1-80	3
1641353	7-5	37
1641354	7-5	39
1641355	7-5	38
1641356	7-5	40
1641361	7-7	22
1641362	7-7	7
1641368	5-5	4
1641637	1-43	4
1641640	1-31	3
	1-41	7
	1-43	5
1641937	5-64	23
1641944	5-64	22
1641945	5-64	22
1641947	5-64	22
1641949	5-63	1
1643342	2-13	9
	2-15	15
	3-3	9
	3-5	15
1643937	5-5	20
1644398	4-17	24
1644455	7-11	4
1644456	7-11	10
1644462	7-5	1
1644463	7-5	7
1644804	1-31	1
	1-41	5
1645381	9-3	1
	9-7	1
1646397	9-3	1
	9-7	1
1646439	9-3	1
	9-7	1
1646441	10-71	13
1646457	5-56	56
1646709	1-21	
1646710	1-21	
1646711	1-21	3
1646712	1-21	4
1646713	1-21	5
1646714	1-21	2
1646717	1-21	4
1646718	1-21	5
1646719	1-21	2
1646720	1-21	3
1646722	1-25	10
1646725	1-25	1
1646726	1-25	6
1646728	1-25	19
1646729	1-25	17
1646730	1-25	20
1646731	1-27	11
1646732	1-27	10
1646733	1-27	13
1646884	6-21	20
	6-27	
1646885	6-21	21
	6-29	
1646886	6-21	19
	6-31	
1646887	6-9	17
	6-15	
1646888	6-9	16
	6-17	
1646920	7-11	20
1646922	1-25	11
1647656	7-5	24
1647864	14-25	3
	14-27	3
	14-29	3
1648259	5-33	7
	10-66	9
	10-67	9
1649534	7-5	9
1649565	4-33	6
	4-37	8
	4-39	6
1650184	4-3	16
	4-5	22
	4-7	11
1650640	1-75	19
	1-77	17
1650668	3-11	1
	3-13	1
1650797	5-63	6
	5-65	26
1650819	6-32	7
1651739	1-33	2
	1-37	3
1651753	6-29	2
1651761	6-15	19
	6-17	20
1651797	14-52	2
1651852	6-27	
	6-29	
	6-31	
1652269	6-27	
	6-29	
	6-31	
1652272	6-15	
	6-17	
1652290	14-45	1
1652575	6-9	6
	6-23	27
1653630	1-22	6
1653815	6-13	46
	6-23	44
1654004	6-9	3
	6-21	8
1654008	8-18	4
1654009	8-18	5
1654013	5-43	6
	5-45	4
	14-45	
1654156	4-13	7
	4-15	26
1654298	1-34	
1654465	8-17	1
1654651	6-9	1
	6-21	9
1654754	4-13	5
	4-15	24
1655865	1-75	3
	1-75	12
	1-77	3
	1-77	12
1656215	14-48	2
1656216	14-48	2
1656325	4-33	5
	4-37	7
	4-39	5
1658075	5-30	10
1658142	10-49	3
1660452	7-19	9
1660500	6-21	6
	6-32	7
1660533	7-17	15
1660913	2-5	10
	2-7	10
	3-15	2
	3-19	11
1661511	1-75	2

©2015 HYSTER COMPANY

NUMERICAL INDEX (continued)

PART NO.	PAGE	ITEM
	1-75	11
	1-77	2
	1-77	11
1661564	1-9	2
	1-13	32
	1-19	19
1661567	1-9	5
	1-19	4
1662253	4-29	24
1662420	10-19	17
	10-21	10
	10-23	15
	10-25	11
1663877	2-13	15
	2-15	20
	3-3	15
	3-5	20
1664395	10-51	6
	10-53	12
	10-54	9
	10-57	10
	10-59	10
1664474	2-23	14
	2-27	12
	2-33	26
	2-35	28
	3-7	1
	3-9	1
1664475	2-27	13
1664478	2-23	15
1664489	4-3	1
	4-5	23
1665204	6-8	1
	6-18	1
	6-32	
1665746	10-21	1
1665747	10-25	1
1665748	10-23	1
1668335	1-5	5
1668428	2-23	17
	2-27	15
	2-33	20
	2-35	30
	3-7	5
	3-9	5
1668665	1-21	
1668666	1-9	5
	1-11	10
	1-19	4
1668667	1-9	5
	1-19	4
1668854	7-17	6
1669384	7-15	32
1670054	10-31	1
1670064	14-32	24
	14-36	24
	14-40	24
1670065	14-32	28
	14-36	28
	14-40	28
1670194	10-19	1
1670195	10-19	14
1670196	10-23	13
1670240	1-9	1
	1-15	
1670242	1-19	1
	1-21	
1670292	10-21	4
1670293	10-25	4
1670332	9-14	1
1670334	9-14	2
1670413	10-27	4
1670421	1-43	10
1670422	1-43	19
1670423	1-43	13
1670427	1-43	6
1670428	1-43	7
1670429	1-43	8
1670430	1-43	20
1670434	10-31	1
1670440	1-43	15
1670443	1-43	2
1670445	10-33	5
1670518	1-43	16
1670519	1-43	3
1670520	1-43	11
1670521	1-43	14
1670522	10-33	21
1670524	1-43	1
1670525	1-43	9
1670526	1-43	12
1670677	10-19	5
	10-23	5
1670900	10-71	15
1670901	10-71	16
1670902	10-71	17
1672004	9-14	2
1672068	7-17	5
1672069	7-19	22
1672293	7-17	34
1672691	7-19	12
1672692	5-5	24
1672693	7-19	18
1673001	7-17	19
1673002	7-17	18
1673198	6-3	5
1673754	10-29	14
1674069	1-15	1
1674070	1-15	6
1674072	1-19	
1674073	1-33	23
	1-37	35
1674087	1-22	24
1674088	1-23	29
1674089	1-22	21
1674090	1-22	17
1674101	1-22	8
1674102	1-25	15
1674103	1-25	9
1674104	1-25	23
1674106	1-25	18
1674107	1-27	16
1674108	1-27	14
1674112	1-25	22
1675460	7-15	22
1676093	2-16	2
	2-17	3
1676908	6-8	5
	6-18	5
1677255	7-19	25
1677286	1-53	19
	1-55	20
	1-58	31
	1-69	9
1677385	4-10	2
1677428	1-97	6
1678059	7-17	3
1678165	10-29	5
	10-61	6
1678166	10-39	
	10-40	
1678215	4-10	1
	4-11	2
1682752	4-33	40
	4-37	31
	4-39	40
1683374	7-15	29
1683375	7-15	33
1683486	9-3	24
	9-7	28
	9-17	3
	9-19	5
1683525	7-15	21
1683529	10-27	1
1683530	7-19	24
1683621	10-27	2
1683651	7-17	14
1684275	2-17	11
1684429	7-13	6
	7-19	23
1684542	5-7	10
1687376	4-37	
	4-40	
1687377	4-34	
	4-37	
1687534	10-51	
	10-53	
	10-54	
	10-57	12
	10-59	12
1688187	7-31	1
1688188	7-31	1
1688190	7-31	1
1688244	1-85	20
1688503	9-3	21
	9-7	26
1688719	4-33	30
	4-39	30
1688803	4-37	27
1689459	7-5	26
1689504	1-97	30
1689908	1-21	7
1690180	7-31	
1690183	7-31	
1690184	8-18	4
1690187	7-31	
1690792	1-29	
	1-31	7
	1-41	2
1690995	1-53	5
	1-55	5
1691525	6-3	12
	6-5	9
1692229	9-14	1
1692643	7-19	16
1692931	14-7	5
	14-9	5
	14-11	5
1692932	14-7	6
	14-9	6
	14-11	6
1692933	11-21	5
	12-27	5
	13-33	5
	14-13	5
	14-17	5
	14-21	5
1693291	1-11	1

See Service Manual for service procedures.
©2015 HYSTER COMPANY

NUMERICAL INDEX (continued)

PART NO.	PAGE	ITEM
	1-13	
	1-17	
1693371	5-17	19
	5-36	3
1693705	2-16	9
	2-17	13
1694830	1-53	18
	1-55	19
	1-57	26
1695326	7-20	5
1695754	10-29	4
	10-61	5
1695807	14-51	1
1696451	2-21	10
	2-23	10
1698449	5-39	20
	5-41	20
1698541	5-45	14
1698542	5-45	21
1699135	2-13	3
	2-15	3
	3-3	3
	3-5	3
1699141	6-13	35
	6-23	34
1699590	10-39	3
	10-40	3
	10-45	1
1699591	10-45	6
1699754	5-73	38
	5-79	38
	5-85	30
	5-91	30
1699955	12-29	1
1699992	9-3	4
	9-7	4
1700060	13-35	1
1700217	13-35	1
1700460	5-97	15
	5-97	19
	5-101	13
	5-101	14
	5-105	13
	5-105	15
	5-109	9
	5-109	11
1700461	5-97	15
	5-97	19
	5-101	13
	5-101	14
	5-105	13
	5-105	15
	5-109	9
	5-109	11
1701768	9-17	3
	9-19	3
1701771	9-7	24
1701963	1-39	5
1703021	6-35	3
1703513	5-39	9
	5-41	9
1703573	7-5	41
1703890	1-65	8
	1-73	8
1703891	1-65	1
	1-73	1
1703892	1-57	4
	1-61	4
	1-67	8
	1-69	7
1703893	1-57	5
	1-61	5
	1-67	1
	1-69	8
1703894	1-57	5
	1-61	5
	1-67	4
1703895	1-58	
	1-61	
	1-70	
1703896	1-58	
	1-62	
1703897	1-58	
	1-62	
1703898	1-57	2
	1-61	2
1703899	1-57	3
	1-61	3
	1-69	5
1703900	1-57	1
	1-61	1
	1-69	5
1703901	1-57	2
	1-61	2
1703902	1-57	3
	1-61	3
	1-69	5
1703903	1-57	1
	1-61	1
	1-69	5
1703904	1-57	6
	1-61	6
1704528	5-39	11
	5-39	11
	5-41	11
	5-41	11
	5-41	11
1704529	5-39	13
	5-41	13
1704901	9-7	31
1704902	9-3	13
1705156	1-25	11
1705359	5-39	12
	5-39	12
	5-41	12
	5-41	12
1705944	14-39	4
1705945	14-39	4
1705946	14-35	4
1705947	14-35	4
1707011	9-3	19
1707195	10-13	
1708054	10-61	2
1708262	10-39	6
	10-40	7
	10-61	1
1708263	10-39	5
	10-57	1
1708298	10-40	5
	10-57	1
1708299	10-40	6
	10-59	1
1708317	10-39	4
	10-40	4
	10-53	
1708350	1-79	26
1708365	14-13	7
	14-17	7
	14-21	7
	14-25	4
	14-27	4
	14-29	4
1708368	14-13	12
	14-17	12
	14-21	12
	14-25	9
	14-27	9
	14-29	9
1708373	14-13	14
	14-17	14
	14-21	14
	14-25	11
	14-27	11
	14-29	11
1708540	2-23	23
	2-27	21
1708691	10-13	8
1708697	10-13	1
1709587	5-39	8
	5-41	8
1709876	1-53	6
	1-55	6
1709980	1-83	7
1709996	3-7	14
	3-9	19
	3-11	16
	3-13	16
1710006	1-83	6
1710007	1-85	14
2021353	9-3	3
	9-7	3
2021395	1-85	13
2021683	4-20	2
2021685	4-20	3
2022352	7-19	19
2027655	1-85	9
2028341	7-3	8
	7-13	8
2033243	11-11	3
	13-21	3
2033281	11-13	3
2033295	12-11	11
2033296	12-15	11
2033299	13-21	3
2033395	12-19	9
	13-25	9
2034460	1-97	1
2035316	10-73	8
2035317	10-73	8
2035318	10-73	8
2035667	11-23	
2035669	11-23	
2035670	11-23	
2035671	11-23	
2035672	11-23	
2035784	11-11	
2035785	11-13	
2035791	11-17	7
	12-24	9
	13-29	10
2036209	11-13	6
2036210	11-13	6
2036277	13-22	
2036278	13-22	
2036279	12-20	
	13-26	
2036282	12-19	3
	13-25	3

©2015 HYSTER COMPANY

NUMERICAL INDEX (continued)

PART NO.	PAGE	ITEM
2036479	13-22	11
2036547	10-73	14
2036778	13-8	22
2037833	12-19	2
	13-25	2
2037836	13-25	2
2037837	12-19	2
	13-25	2
2037838	13-25	2
2037840	13-25	2
2037841	13-21	2
2037845	13-21	2
2037846	13-21	2
2037856	13-21	2
2037858	13-21	2
2037859	13-21	2
2037860	13-21	2
2037861	13-21	2
2037943	14-31	
2037944	14-31	
2037945	14-31	
2037946	14-31	
2038100	1-99	3
2038675	12-11	7
	12-15	7
2038676	12-12	
	12-16	
2044372	10-73	11
2044712	5-23	1
	5-45	25
2046871	11-5	42
	13-17	15
	14-13	26
	14-21	27
	14-25	22
	14-29	22
2047829	8-17	9
2050732	7-19	20
2050733	7-19	21
2056824	5-43	1
	5-45	1
2057948	5-29	8
2058000	4-23	
	4-25	
2060032	5-29	6
2060033	5-29	11
2060555	5-47	1
	5-65	28
2061333	5-53	7
	5-54	22
	5-55	25
	5-55	27
	5-64	13
	5-64	19
2061646	10-67	11
2062074	12-19	2
	13-25	2
2062079	12-19	2
	13-25	2
2062081	13-25	2
2062535	10-73	8
2062875	1-75	16
	1-77	28
2063255	4-23	16
2063842	4-13	12
	4-15	19
2063991	10-19	4
	10-21	15
	10-23	25
	10-25	16
2064554	3-19	
	8-14	
	9-3	
	9-8	
2064929	14-47	1
2065666	1-85	2
2065667	1-85	8
2065745	5-5	22
2065889	12-20	
	13-26	
2066482	5-29	12
2066483	5-29	4
2066484	5-29	5
2066485	5-29	3
	5-29	13
2067475	1-85	29
2067476	1-7	
2068337	10-3	2
	10-13	6
2068342	5-7	5
2068343	5-9	7
2068344	5-7	5
	5-9	7
2069381	5-47	1
2069431	5-29	4
2069454	1-7	6
2069951	2-7	6
2070223	1-7	5
	14-2	2
2070263	6-21	12
	6-32	14
2070512	5-64	13
2070561	5-43	11
	5-45	23
2070562	5-43	10
	5-45	17
2070563	5-43	10
	5-43	11
2070655	1-101	
	10-23	4
	10-25	10
2070726	1-85	19
2070975	1-85	18
2071094	8-17	2
2071181	4-13	1
2071261	4-10	3
2071517	4-33	44
	4-37	35
	4-39	44
2071647	1-88	1
2071745	11-3	
	11-7	
	11-17	
2071750	11-3	
	11-7	
	11-17	
2071756	11-3	
	11-7	
	11-17	
2071763	11-3	
	11-7	
	11-17	
2071818	11-3	
	11-7	
	11-17	
2071824	11-3	
	11-7	
	11-17	
2071830	11-3	
	11-7	
	11-17	
2071837	11-3	
	11-7	
	11-17	
2071843	11-3	
	11-7	
	11-17	
2071849	11-3	
	11-7	
	11-17	
2071871	13-3	
	13-7	
	13-11	
	13-13	
	13-29	
2071874	13-3	
	13-7	
	13-11	
	13-13	
	13-29	
2071876	13-3	
	13-7	
	13-11	
	13-13	
	13-29	
2071878	13-3	
	13-7	
	13-11	
	13-13	
	13-29	
2071881	13-3	
	13-7	
	13-11	
	13-13	
	13-29	
2071898	13-3	
	13-7	
	13-11	
	13-13	
	13-29	
2071903	13-3	
	13-7	
	13-11	
	13-13	
	13-29	
2071905	13-3	
	13-7	
	13-11	
	13-13	
	13-29	
2071931	12-3	
	12-7	
2071937	12-3	
	12-7	
2071969	12-3	
	12-7	
2071975	12-3	
	12-7	
2072080	13-8	25
	13-8	25
2072083	13-8	25
2072085	13-8	25
	13-8	25
2072087	13-8	25
	13-8	25
2072090	13-8	25
2072127	12-4	26
	12-4	26

See Service Manual for service procedures.
©2015 HYSTER COMPANY

NUMERICAL INDEX (continued)

PART NO.	PAGE	ITEM
2072133	12-4	26
	12-4	26
2073198	1-97	20
2073257	12-19	1
	13-25	1
2073261	13-25	1
2073263	12-19	1
	13-25	1
2073265	13-25	1
2073269	13-25	1
2073626	12-19	1
	13-25	1
2073634	12-19	1
	13-25	1
2073636	13-25	1
2073768	9-11	17
2073852	13-21	
2073856	13-21	
2073857	13-21	
2073859	13-21	
2073874	13-21	
2073888	13-21	1
2073891	13-21	1
2073893	13-21	1
2073895	13-21	1
2073898	13-21	1
2073912	13-21	
2073917	13-21	
2073919	13-21	
2073932	13-21	1
2073937	13-21	1
2073939	13-21	1
2073953	12-11	
2073968	12-11	
2073992	12-11	
2073998	12-11	
2074022	12-11	1
	12-11	1
	12-15	1
	12-15	1
2074042	12-11	1
	12-11	1
	12-15	1
	12-15	1
2074087	12-15	
2074093	12-15	
2074126	12-15	
2074138	12-15	
2074210	1-99	9
2074256	1-97	5
2074436	1-88	2
2074437	1-88	2
2074438	1-88	2
2074439	1-88	2
2074440	1-88	3
2074441	1-88	3
2074442	1-88	3
2074443	1-88	3
2074622	11-11	
2074629	11-11	
2074637	11-11	
2074645	11-11	
2074702	4-15	1
2074895	11-13	
2074901	11-13	
2074954	11-13	
2074962	11-13	
2074968	11-13	
2075005	11-11	1
2075011	11-11	1
2075067	11-11	1
2075075	11-11	1
2075089	11-13	1
2075095	11-13	1
2075101	11-13	1
2075108	11-13	1
2075114	11-13	1
2075127	11-11	2
2075133	11-11	2
2075140	11-11	2
2075151	11-13	2
2075157	11-13	2
2075163	11-13	2
2075165	11-13	2
2075171	11-13	2
2075417	1-97	16
2075442	11-11	2
2075614	1-97	13
2075655	1-97	22
2075761	11-13	2
2075791	11-13	1
2075819	11-13	
2076171	1-97	14
2076204	1-85	19
2076289	1-87	3
2076695	5-29	2
2076696	5-29	2
2076760	2-13	26
	3-3	26
2076763	10-66	10
	11-5	44
	12-4	42
	13-18	31
2077209	1-83	22
2077604	9-3	1
	9-7	1
2078335	4-19	10
2078353	3-11	7
	3-13	7
2078399	13-22	
2078657	12-24	18
	12-24	18
2078663	12-24	18
	12-24	18
2078688	12-24	18
	12-24	18
2078694	12-24	18
	12-24	18
2079281	5-35	4
2079326	5-9	12
	5-33	1
2079369	8-2	6
2079735	10-3	22
2079736	10-3	14
2079843	5-35	21
2080376	4-19	5
2081137	10-73	
2081138	10-73	
2081840	4-20	1
2081865	10-3	8
2082190	10-73	15
2082680	1-97	15
2083195	12-24	19
	12-24	19
2083196	12-24	19
	12-24	19
2083201	12-24	19
	12-24	19
2083202	12-24	19
	12-24	19
2083261	11-17	1
	11-17	1
2083267	11-17	1
	11-17	1
2083273	11-17	1
	11-17	1
2083279	11-17	1
	11-17	1
2083282	11-17	1
2083335	10-3	3
2083389	7-28	1
2083390	7-28	1
2083432	13-29	1
2083435	13-29	1
2083437	13-29	1
2083439	13-29	1
2083442	13-29	1
2083459	13-29	1
2083464	13-29	1
2083466	13-29	1
2083523	7-28	2
2083524	7-28	2
2083525	7-28	2
2083526	7-28	2
2083527	7-28	2
2083528	7-29	2
2083537	7-24	2
	7-26	2
2083538	7-25	2
	7-26	2
2083539	7-26	2
2083540	7-24	2
	7-26	2
2083541	7-25	2
	7-27	2
2083542	7-27	2
2083543	8-18	6
2083998	14-32	
	14-36	
	14-40	
2083999	14-32	
	14-36	
	14-40	
2084867	10-65	13
2085129	6-15	6
	6-17	6
	6-27	6
	6-29	6
	6-31	6
2085232	8-13	27
	8-17	
2085566	10-73	
2085942	5-46	2
	5-125	
2085943	5-46	2
	5-121	
2086157	10-65	14
2087555	11-4	25
2087925	11-17	1
2088763	2-5	8
	2-7	8
	3-16	9
2088913	10-69	6
2088916	10-3	24
2089201	1-85	11
2089202	1-85	12
2089674	12-24	20
	12-24	20

©2015 HYSTER COMPANY

NUMERICAL INDEX (continued)

PART NO.	PAGE	ITEM
2089685	12-24	20
	12-24	20
2089690	12-24	20
	12-24	20
2089691	12-24	20
	12-24	20
2090185	9-11	24
2090361	4-29	8
	4-31	6
2090418	4-29	9
	4-31	8
2090425	10-9	29
2090613	5-5	10
	5-23	
2090695	1-9	7
	1-11	13
	1-19	12
2090894	9-11	13
2090895	9-11	16
2091015	9-11	6
	9-13	3
2091149	9-11	19
2091513	9-11	14
2091515	9-11	21
2091868	14-51	4
2092505	9-19	8
2092506	9-19	7
2092613	9-3	25
	9-7	33
2092866	4-29	6
	4-31	5
2092888	9-3	7
	9-7	7
2093179	11-21	1
	14-13	1
2093180	11-21	2
	14-13	2
2093181	11-21	3
	14-13	3
2093182	11-21	4
	14-13	4
2093183	11-21	1
	14-13	1
2093184	11-21	2
	14-13	2
2093185	11-21	3
	14-13	3
2093186	11-21	4
	14-13	4
2093187	14-3	1
	14-25	1
2093188	14-3	2
	14-25	2
2093189	14-3	1
	14-25	1
2093190	14-3	2
	14-25	2
2093191	14-7	1
2093192	14-7	2
2093193	14-7	3
2093194	14-7	4
2093224	9-3	
	9-8	
2093225	1-97	11
2093345	14-32	33
2093346	14-32	31
2093347	14-32	33
2093348	14-32	31
2093349	14-36	37
	14-40	37
2093350	14-36	39
	14-40	39
2093351	14-36	37
	14-40	37
2093352	14-36	39
	14-40	39
2093653	12-27	1
	14-17	1
2093654	12-27	2
	14-17	2
2093655	12-27	3
	14-17	3
2093656	12-27	4
	14-17	4
2093657	12-27	1
	13-33	1
	14-17	1
	14-21	1
2093658	12-27	2
	13-33	2
	14-17	2
	14-21	2
2093659	12-27	3
	13-33	3
	14-17	3
	14-21	3
2093660	12-27	4
	13-33	4
	14-17	4
	14-21	4
2093661	14-4	1
	14-27	1
2093662	14-4	2
	14-27	2
2093663	14-4	1
	14-5	1
	14-27	1
	14-29	1
2093664	14-4	2
	14-5	2
	14-27	2
	14-29	2
2093665	14-9	1
	14-11	1
2093666	14-9	2
	14-11	2
2093667	14-9	3
	14-11	3
2093668	14-9	4
	14-11	4
2093669	13-33	1
	14-21	1
2093670	13-33	2
	14-21	2
2093671	13-33	3
	14-21	3
2093672	13-33	4
	14-21	4
2093677	14-5	1
	14-29	1
2093678	14-5	2
	14-29	2
2094192	12-11	
	12-15	
2094420	1-49	29
	2-41	14
2094938	10-73	
2097662	5-5	6
2098082	5-43	5
	5-45	6
2098083	5-43	4
	5-45	5
2098084	5-45	22
2098085	5-45	22
2098086	5-43	4
2098087	5-43	4
2098120	1-51	1
2098326	10-3	16
2098330	1-85	1
2099393	10-19	20
	10-21	6
	10-23	21
	10-25	9
2099394	10-19	19
	10-21	7
	10-23	20
	10-25	8
2099395	10-21	8
	10-23	19
	10-25	7
2099396	10-25	6
2099397	10-23	18
2099398	10-19	18
2099762	7-3	1
	7-5	
	7-7	
	7-11	
2099764	7-3	1
	7-5	
	7-7	
	7-11	
2099947	1-57	8
	1-61	8
	1-69	14
2099949	1-57	18
	1-69	17
2099950	1-57	17
	1-69	22
2100710	5-35	20
2101124	7-19	7
2101125	7-19	2
2101126	7-19	3
2101127	7-19	4
2101128	7-19	5
2101129	7-19	6
2101862	5-43	19
	5-113	
2102313	2-15	1
	3-5	1
2102513	1-83	29
2102514	1-83	28
2102640	1-103	1
2102887	4-10	1
	4-11	1
2103013	10-39	
2103015	10-40	
2103017	10-39	1
2103018	10-40	1
2103501	8-11	2
2103735	7-31	2
2103985	10-69	3
2104075	8-11	1
2104076	8-11	1
2104077	8-11	2
2104112	4-29	7
	4-31	9
2104429	10-65	4
2104508	12-19	

See Service Manual for service procedures.
©2015 HYSTER COMPANY

NUMERICAL INDEX (continued)

PART NO.	PAGE	ITEM
	13-25	
2104514	12-19	
	13-25	
2104516	13-25	
2104542	12-19	
	13-25	
2104546	13-25	
2104548	12-19	
	13-25	
2104550	13-25	
2104554	13-25	
2104843	8-18	6
2104947	12-12	
	12-16	
2105639	10-3	27
2105803	4-29	10
	4-31	18
2106024	7-31	2
2107382	5-43	4
	5-45	5
2107383	5-45	22
2107384	5-45	22
2107385	5-43	4
2107386	5-43	4
2107957	1-85	10
	5-45	1
2107958	1-85	30
	5-45	1
2107969	1-53	15
	1-55	17
	1-58	28
2108249	5-39	5
2109343	12-29	
2109388	13-35	
2109423	13-35	
2110791	5-39	2
	5-39	3
	5-39	4
	5-41	2
	5-41	3
	5-41	4
	5-41	5
2110792	5-39	4
	5-41	5
2110793	5-39	3
	5-41	3
2110942	5-39	19
	5-41	19
2110943	5-39	18
	5-41	18
2111004	5-7	1
	5-9	3
2111005	5-7	1
	5-9	3
2111754	14-13	15
	14-17	15
	14-21	15
	14-25	12
	14-27	12
	14-29	12
2111755	14-13	15
	14-17	15
	14-21	15
2111769	5-39	7
	5-41	7
2111770	5-39	17
	5-41	17
2111799	5-39	6
	5-41	6
2111800	5-39	15
	5-41	15
2307400	1-99	1
2308673	1-97	3
2314223	9-3	1
	9-7	1
2314741	5-54	22
	5-55	27
	5-64	13
	5-64	19
2314770	5-55	27
2314772	5-54	22
2314773	5-54	22
2314800	5-55	31
	5-59	13
	5-67	17
2781075	5-13	9
	5-15	10
2787350	5-47	1
2795583	5-47	1
3043625	4-37	
	4-40	
4000086	2-13	3
	2-15	3
	3-3	3
	3-5	3
4000912	7-23	1
4001029	10-3	1
	10-13	
4002494	1-45	5
4002495	1-45	6
4002682	1-53	7
	1-55	7
4002921	10-16	2
4003079	1-45	2
4003165	10-5	9
4003753	10-5	4
4003844	2-17	8
4004065	1-47	1
4004150	1-13	4
4004163	1-13	6
4004167	1-13	10
4004168	1-13	9
4004390	10-5	20
4004775	1-77	5
	1-77	14
4004776	1-57	22
	1-61	24
	1-77	25
4005010	1-55	22
	1-61	15
	1-75	
	1-77	
4005338	1-49	6
	2-41	5
4005339	1-49	4
	2-41	7
4005596	1-49	19
	2-41	16
4005607	1-49	21
	2-41	21
4005608	1-49	24
	2-41	19
4005619	1-49	17
	2-41	15
4005633	1-11	10
4005634	1-11	11
4005805	1-75	23
4006017	2-17	9
4006020	2-17	5
4006031	1-47	4
4006296	7-20	7
4006911	1-47	7
4007052	1-75	5
4007073	1-47	3
4007074	1-47	2
4007210	1-45	
4007211	1-45	
4007318	1-57	21
	1-61	14
	1-69	19
	1-77	24
4007319	1-77	18
4008420	1-53	16
4009235	10-15	1
4009236	10-15	1
4009237	10-15	1
4009488	14-48	1
	14-49	1
4009606	7-15	27
4009616	7-17	9
4009664	1-53	
4009667	1-55	
4009730	1-79	37
4009734	1-79	37
4009737	8-13	15
4009779	1-31	10
	1-41	8
4009782	1-31	5
	1-41	11
4009783	1-31	2
	1-41	4
4009853	7-15	14
4009902	1-9	21
	1-11	6
4010014	10-10	1
4010776	10-5	27
4010830	1-33	22
4010971	14-13	15
	14-17	15
	14-21	15
	14-25	12
	14-27	12
	14-29	12
4010972	14-13	15
	14-17	15
	14-21	15
	14-25	12
	14-27	12
	14-29	12
4011395	1-79	34
4011397	1-79	35
4011940	5-7	12
	5-9	4
	9-3	6
	9-7	6
	9-17	4
	9-19	6
4013095	1-53	8
	1-55	8
	1-57	7
	1-61	7
4013559	1-31	9
	1-41	6
4013616	1-31	6
4013617	1-31	8
4013618	1-31	4
4013619	1-41	9
4013871	7-15	25

©2015 HYSTER COMPANY

NUMERICAL INDEX (continued)

PART NO.	PAGE	ITEM
4013888	7-17	28
4014164	10-9	30
4014257	7-15	28
4014258	7-15	30
4014295	1-13	
	1-17	1
	1-37	
	1-39	1
4014418	7-17	33
4014557	1-79	34
	1-79	34
4014560	1-17	
4014598	1-55	9
4014761	7-19	17
4015348	7-15	15
4015349	7-15	17
4015889	1-79	1
4016238	1-79	
4016241	1-79	
4016756	7-17	17
4016924	1-69	1
4016926	1-69	3
4016928	1-69	1
4016930	1-69	3
4017718	1-39	6
4018204	2-7	1
4018452	1-22	25
4019019	4-29	12
	4-31	11
4019192	1-13	28
4019194	7-15	16
4019238	7-15	20
4019931	4-11	3
4019946	8-13	5
4019947	8-13	43
4020220	1-33	6
4020309	2-5	22
	2-7	28
	6-7	1
4020310	2-5	23
	2-7	29
4020588	6-13	36
	6-23	35
4020926	2-25	1
	2-27	1
4021472	10-17	3
4021485	10-17	2
4021488	10-17	6
4021490	10-17	4
4021492	10-17	5
4022812	7-17	30
4022957	8-11	4
4022959	8-11	3
4023295	5-63	1
4023450	8-2	5
	8-5	
4023719	5-53	1
4023784	5-54	18
4023785	5-54	15
4023786	5-54	14
	5-54	18
4023867	1-13	31
4023959	1-27	9
4024084	5-54	14
4024527	4-25	19
4024571	2-21	4
	2-23	4
	2-25	4
	2-27	4
4024574	2-5	17
	2-7	19
	3-15	4
	3-19	15
4025092	2-21	5
	2-23	5
	2-25	5
	2-27	5
4025271	1-79	2
4025480	6-27	3
4025491	6-29	3
	6-31	3
4025492	6-15	3
4025493	6-17	3
4025685	5-63	1
4025710	4-25	25
4026040	4-25	22
4026695	1-41	1
4026759	5-25	7
4027084	10-16	4
4027085	10-16	4
4027269	5-26	3
4027303	10-16	3
4027330	2-21	6
	2-23	6
	2-25	10
	2-27	10
	2-29	7
	2-31	7
	2-33	7
	2-33	25
	2-35	7
	2-35	27
	3-7	8
	3-9	8
	3-11	9
	3-13	9
4027341	1-58	
	1-61	
	1-70	
4027764	5-65	31
4027766	5-65	32
4027767	5-64	15
4027880	6-35	5
4028286	5-54	14
	5-54	15
	5-54	18
4028287	5-54	14
	5-54	15
	5-54	18
4028288	5-59	17
	5-68	23
4028289	5-54	20
4028633	5-53	7
	5-55	25
	5-64	19
4028634	5-53	12
4028642	8-5	8
4028787	1-41	3
4028788	1-31	4
4028789	1-31	4
4029099	5-59	17
	5-68	23
4029113	5-53	13
4029116	5-53	3
	5-53	8
4029117	5-53	3
	5-53	8
	5-54	13
4029337	5-55	36
4029383	5-53	8
4029384	5-53	3
4029387	5-56	38
4029426	5-54	15
4029506	4-33	33
4029538	4-33	15
	4-37	21
	4-39	15
4029920	4-33	14
	4-37	22
	4-39	14
4030418	7-15	24
4030419	7-15	2
4030503	5-36	6
	5-54	17
4030620	2-21	1
	2-23	1
4031146	4-33	11
	4-37	25
	4-39	11
4031365	5-54	22
4031366	5-54	19
4031370	10-43	9
	10-62	3
4031371	10-43	9
	10-62	3
4031372	10-43	2
4031373	10-49	6
4031374	10-49	7
4031375	10-51	14
4031376	10-62	1
4031377	10-43	
4031378	10-43	
4031384	10-43	1
	10-49	
4031469	10-35	15
	10-57	2
4031471	10-51	4
4031472	10-51	7
4031473	10-51	12
4031497	5-54	16
4031498	10-43	8
	10-62	1
4031499	10-43	5
	10-57	1
4031500	10-43	4
	10-54	
4031501	10-43	3
	10-51	
4031502	10-43	2
4031527	10-43	6
	10-59	1
4031653	14-51	3
4031769	4-15	18
4031944	1-79	30
4032291	4-33	13
	4-37	23
	4-39	13
4032292	4-33	12
	4-39	12
4032460	1-70	
4032461	1-70	
4032490	4-25	36
4032607	4-37	20
	4-39	33
4032744	4-25	26
4032888	2-21	12
	2-23	12
	2-25	11

©2015 HYSTER COMPANY

NUMERICAL INDEX (continued)

PART NO.	PAGE	ITEM
	2-27	11
	2-29	4
	2-31	4
	2-33	4
	2-33	24
	2-35	4
	2-35	26
4033056	5-21	10
4033057	5-21	8
4033435	1-93	
4033635	7-20	1
4033638	7-17	21
	7-20	
4033832	1-17	10
4033833	1-17	20
4033834	1-17	15
4033835	1-17	5
4034608	1-49	28
	2-41	26
4034724	1-49	8
	2-41	8
4034828	5-27	8
4034931	1-101	1
4034932	1-101	2
4034933	1-101	3
4034934	1-101	4
4034935	1-101	5
4034936	1-101	6
4034937	1-101	7
4034938	1-101	8
4034939	1-101	9
4034940	1-101	10
4034941	1-101	11
4034942	1-101	12
4035794	5-7	6
	5-9	10
4035980	1-29	20
4036068	5-54	20
4036069	5-54	20
4036070	5-54	20
4036523	5-73	33
	5-79	33
4036586	1-67	
4036587	1-67	
4036744	1-49	8
	2-41	8
4036761	1-49	13
	2-41	12
4037343	9-11	9
4038137	11-8	18
	13-3	18
4038182	10-19	21
	10-21	9
	10-23	22
	10-25	10
4038253	7-15	18
4038256	2-13	1
	3-3	1
4038262	2-13	1
	3-3	1
4038264	2-13	1
	3-3	1
4038265	2-13	1
	3-3	1
4038266	2-13	1
	3-3	1
4038267	2-13	1
	3-3	1
4038424	10-17	
4038427	4-17	16
4038429	4-17	14
	4-19	36
4038490	10-17	
4038672	8-7	1
4038673	8-7	8
4038674	8-7	11
4038675	8-7	13
4038676	8-7	16
4038677	8-7	21
4038678	8-7	25
4038861	12-8	19
	13-14	29
4039098	1-13	30
4039364	5-36	6
4039369	9-17	3
4039371	9-19	2
4039376	9-17	3
4039378	9-19	1
4040096	5-13	6
	5-15	7
4040097	5-13	15
	5-15	16
4040288	4-31	4
4040523	4-15	11
4040607	1-9	16
	1-11	20
4041292	3-11	
	3-13	
4041906	2-48	5
	2-49	9
	2-65	2
	3-25	13
4041907	2-65	4
	2-66	2
	3-20	2
4041908	2-65	5
	2-66	3
	3-20	3
4041909	2-65	6
	2-66	4
	3-20	4
	3-33	15
4041910	2-65	7
	2-66	5
	3-20	5
4041911	2-65	8
	2-66	6
	3-20	6
4041913	2-65	1
4041914	2-65	14
	2-66	12
	3-20	12
4041915	2-48	6
	2-65	3
	3-25	14
4041916	2-43	4
	3-30	5
4041917	2-65	9
	2-66	7
	3-20	7
4041918	2-65	10
4041919	2-65	11
	2-66	9
	3-20	9
4041920	2-65	12
	2-66	10
	3-20	10
4041921	2-65	13
	2-66	11
	3-20	11
4041922	2-43	5
	3-30	6
4041923	2-65	15
	2-66	13
4041925	2-66	14
4041927	2-80	4
	2-81	7
	3-37	3
4041928	2-65	16
	2-66	15
	2-77	4
	3-20	15
4041929	2-65	17
	2-66	16
	3-20	16
4041930	2-65	18
	2-66	17
	3-20	17
4041932	2-39	6
	2-65	20
	2-66	19
	2-100	3
	3-20	18
4041933	2-65	21
	2-66	20
	3-20	19
4041936	2-75	1
4041938	2-75	2
	3-21	2
4041939	2-60	4
	2-62	8
	2-75	3
	3-21	3
	3-22	4
4041940	2-75	4
	3-21	4
4041941	2-75	5
	3-21	5
4041944	2-54	5
	2-57	7
	2-85	5
	2-89	6
	2-93	5
	2-95	4
	2-106	3
	3-42	2
4041946	2-48	13
	2-49	5
	2-60	
	2-67	25
	2-89	5
	2-89	20
	2-92	10
	2-95	21
	2-96	6
	2-103	15
	3-25	5
	3-29	35
	3-44	4
4041947	2-49	6
4041950	2-48	2
	2-49	7
	3-25	7
4041951	2-48	3
	2-49	8
	3-25	8
4041952	2-51	1
	2-53	1

©2015 HYSTER COMPANY

NUMERICAL INDEX (continued)

PART NO.	PAGE	ITEM
4041953	2-65	19
4041955	2-53	2
4041956	2-53	3
4041957	2-51	5
	2-53	4
4041958	2-51	7
	2-53	5
4041959	2-51	9
	2-53	6
4041960	2-51	11
	2-53	7
4041962	2-51	13
	2-53	8
4041963	2-49	10
4041964	2-43	6
	2-103	27
	3-30	7
4041965	2-48	7
	2-49	12
	3-25	15
4041966	2-49	13
4041968	2-48	9
	2-49	1
	3-25	1
4041971	2-60	2
	2-62	11
	3-22	2
4041972	2-60	3
	2-62	12
	3-22	3
4041973	2-76	3
	2-78	3
4041974	2-60	5
	2-62	10
	3-22	5
4041975	2-60	6
	2-62	5
	3-22	6
4041978	2-60	7
	2-62	7
	3-22	7
4041979	2-60	8
	2-62	6
	2-95	11
	3-22	8
4041980	2-60	9
	2-62	13
	3-22	9
4041981	2-60	10
	2-62	9
	3-22	10
4041982	2-60	11
	2-62	16
	3-22	14
4041983	2-60	12
	2-62	19
	3-22	15
4041984	2-60	13
	2-62	14
	3-22	16
4041988	2-89	3
	2-95	2
4041989	2-95	3
4041991	2-95	6
	2-106	7
	3-22	22
	3-43	6
4041992	2-43	8
	2-48	11
	2-60	15
	2-62	18
	2-72	8
	2-73	3
	2-84	8
	3-22	18
	3-28	10
	3-30	9
	3-39	8
4041993	2-76	4
	2-78	4
	3-33	4
4041994	2-60	16
4041995	2-89	7
	2-95	5
	3-42	1
4041996	2-60	17
	2-62	15
	3-22	20
4041997	2-63	3
	2-77	10
	2-79	5
	2-105	4
	3-34	6
	3-38	3
4041999	2-95	8
4042000	2-106	10
4042001	2-106	11
4042002	2-76	5
	2-78	5
	3-33	5
4042003	2-76	6
	2-78	6
4042004	2-48	10
4042005	2-106	12
	3-22	23
4042006	2-106	12
	3-22	23
4042007	2-106	12
	3-23	23
4042008	2-44	4
	2-47	13
	2-62	4
	2-76	7
	2-77	5
	2-78	7
	3-22	11
4042009	2-63	1
	3-38	1
4042010	2-48	12
	2-49	4
	2-58	4
	2-59	2
	2-66	24
4042011	2-63	2
	3-38	2
4042012	2-48	14
	2-54	7
4042014	2-84	1
4042015	2-76	2
	2-78	2
	2-79	9
	2-80	9
	2-81	4
	2-84	2
	2-94	12
	3-33	2
	3-37	5
4042017	2-84	4
4042018	2-84	5
4042020	2-84	7
	2-87	10
	2-88	12
4042022	2-48	1
	2-51	
4042023	2-84	9
4042026	2-48	4
	3-27	20
4042028	2-85	1
4042030	2-76	8
	2-78	8
	3-33	8
4042031	2-85	3
4042032	2-85	10
	2-93	10
4042033	2-37	10
	2-85	4
4042034	2-44	16
	2-85	9
	3-49	6
4042035	2-74	6
	2-75	8
	2-79	8
	2-80	11
	2-81	3
	3-21	8
	3-36	5
4042040	2-73	10
	3-39	17
4042041	2-57	6
4042042	2-76	9
	2-78	9
	3-33	9
4042043	2-43	9
	2-54	6
	2-57	8
	3-30	10
4042045	2-48	8
4042046	2-57	10
4042048	2-106	9
4042049	2-76	10
	2-78	10
	3-33	10
4042050	2-106	8
4042053	2-57	16
4042054	2-104	5
4042056	2-106	2
	3-33	13
4042058	2-93	15
4042059	2-57	4
	2-57	12
	2-87	8
	2-88	6
	2-93	14
	3-20	23
	3-24	7
	3-24	12
	3-28	12
4042061	2-106	1
	3-33	14
4042063	2-83	1
4042064	2-82	2
	2-83	10
4042066	2-76	11
	2-78	11
	3-33	11
4042067	2-76	12
	2-78	12
	2-96	7

See Service Manual for service procedures.
©2015 HYSTER COMPANY

NUMERICAL INDEX (continued)

PART NO.	PAGE	ITEM
	3-29	33
	3-33	12
4042068	2-83	6
4042069	2-83	4
4042070	2-105	4
	3-47	4
4042071	2-43	7
	3-30	8
4042072	2-82	11
4042074	2-88	1
4042075	2-87	2
	2-88	2
4042076	2-87	3
	2-88	3
	2-103	12
4042077	2-88	4
4042078	2-87	7
	2-88	5
4042079	2-48	8
4042080	2-87	11
	2-88	7
4042081	2-87	12
	2-88	8
4042085	2-86	2
4042086	2-86	3
4042087	2-58	2
	2-59	3
	3-35	2
4042088	2-58	3
	2-59	7
4042092	2-52	1
4042093	2-48	8
4042094	2-51	15
	2-52	2
	3-27	3
4042095	2-52	3
4042096	2-51	17
	2-52	4
	3-27	5
4042097	2-51	18
	2-52	5
	3-27	6
4042098	2-51	19
	2-52	6
	3-27	7
4042099	2-51	20
	2-52	7
	3-27	8
4042100	2-52	8
4042101	2-51	2
4042103	2-51	23
	2-51	26
	2-52	10
	2-52	13
	3-27	11
4042104	2-52	11
4042105	2-51	3
4042106	2-43	10
	3-30	11
4042107	2-13	19
	2-15	14
	2-43	11
	3-3	19
	3-5	14
	3-30	12
4042108	2-52	14
	2-105	13
	2-107	4
	3-47	10
	3-48	4
4042109	2-51	28
	2-53	9
4042110	2-51	29
	2-53	10
4042111	2-51	4
4042114	2-47	2
4042115	2-47	4
4042116	2-44	12
	2-47	3
4042119	2-51	6
4042120	2-91	2
4042122	2-51	8
	3-27	16
4042123	2-105	10
	3-47	12
4042124	2-47	10
4042125	2-47	11
4042126	2-44	8
	2-47	12
4042127	2-47	6
4042128	2-47	7
	2-47	15
4042129	2-51	10
	3-27	17
4042130	2-44	10
	2-47	8
	3-24	16
4042131	2-44	11
	2-47	9
	2-80	2
	3-24	16
4042133	2-105	11
	3-47	13
4042134	2-72	1
	2-73	2
	3-39	1
4042135	2-72	2
	2-73	1
	3-39	2
4042136	2-73	4
4042138	2-52	15
	2-72	4
	2-73	7
	3-39	4
4042139	2-73	8
	3-39	5
4042140	2-72	6
	2-73	6
	3-39	6
4042141	2-72	7
	2-73	5
	3-39	7
4042142	2-105	12
	3-47	11
4042143	2-65	22
	2-106	5
4042144	2-71	1
4042145	2-73	9
4042146	2-71	2
4042147	2-51	12
	3-27	19
4042150	2-93	4
	2-94	10
4042151	2-51	14
	3-27	2
4042153	2-51	16
4042154	2-51	21
4042155	2-51	22
	2-51	25
	2-52	9
	2-52	12
	3-27	10
4042157	2-51	24
4042161	2-51	27
	3-27	12
4042163	2-69	8
	2-71	8
	3-40	9
4042165	2-69	8
	2-71	8
	3-40	9
4042166	2-71	1
4042167	2-71	2
4042168	2-51	30
	3-27	1
4042170	2-44	1
4042171	2-44	2
4042172	2-44	3
4042173	2-69	3
	2-71	3
4042174	2-69	4
	2-71	4
4042175	2-69	5
	2-71	5
4042176	2-44	5
4042177	2-69	14
	2-71	14
	3-40	15
4042178	2-69	14
	2-71	14
	3-40	15
4042180	2-69	7
	2-71	7
	3-40	8
4042181	2-69	8
	2-71	8
	3-40	9
4042182	2-69	8
	2-71	8
	3-40	9
4042183	2-71	9
	3-40	10
4042185	2-69	10
	2-71	10
	3-40	11
4042186	2-69	14
	2-71	14
	3-40	15
4042187	2-69	15
	2-71	15
	3-40	16
4042188	2-69	16
	2-71	16
	3-41	17
4042189	2-69	12
	2-71	12
	3-40	13
4042190	2-71	11
4042191	2-44	6
4042192	2-44	7
4042193	2-69	13
	2-71	13
	3-40	14
4042194	2-72	9
	2-73	13
	3-39	9
4042195	2-72	10
	2-73	14

©2015 HYSTER COMPANY

NUMERICAL INDEX (continued)

PART NO.	PAGE	ITEM
	3-39	10
4042196	2-72	11
	2-73	17
	3-39	11
4042197	2-72	12
	2-73	12
	3-39	12
4042198	2-72	13
	2-73	11
	3-39	13
4042199	2-73	15
	3-39	14
4042200	2-44	9
4042201	2-44	13
4042203	2-44	14
4042204	2-69	15
	2-71	15
	3-41	16
4042206	2-44	15
4042207	2-42	2
4042208	2-42	3
	2-42	3
4042209	2-42	4
4042210	2-42	5
4042211	2-42	6
4042212	2-42	7
4042213	2-75	6
4042214	2-75	7
	3-21	7
4042215	2-69	15
	2-71	15
	3-41	16
4042216	2-80	12
	2-81	10
	3-37	1
4042217	2-80	1
4042218	2-80	1
4042219	2-69	16
	2-71	16
	3-41	17
4042220	2-66	21
4042221	2-44	17
4042222	2-66	22
4042223	2-66	23
4042224	2-69	16
	2-71	16
	3-41	17
4042225	2-72	15
	2-72	17
	2-73	16
	3-39	15
4042226	2-87	4
	2-88	9
	2-92	19
4042227	2-87	5
	2-88	10
	2-92	9
4042228	2-87	9
	2-88	11
4042229	2-69	6
	2-71	6
4042230	2-74	2
4042231	2-74	3
4042232	2-74	1
	3-36	1
4042233	2-74	4
	3-36	4
4042234	2-74	5
	3-36	6
4042236	2-80	3
4042237	2-80	6
4042238	2-80	10
4042239	2-71	
4042240	2-80	5
4042241	2-92	1
4042242	2-92	2
4042245	2-71	
4042246	2-60	1
4042247	2-60	14
4042249	2-89	12
	2-96	2
4042251	2-89	14
4042252	2-69	1
4042254	2-89	17
4042256	2-89	19
	2-95	10
4042258	2-90	3
4042263	2-69	1
4042265	2-92	5
4042266	2-92	6
4042267	2-92	7
4042268	2-92	8
4042269	2-69	2
4042274	2-90	6
	2-92	15
	2-97	14
4042275	2-90	8
	2-92	16
	2-97	15
4042276	2-90	9
	2-92	17
	2-97	16
4042280	2-107	2
	3-48	1
4042282	2-69	2
4042283	2-69	9
4042284	2-107	3
	3-48	2
4042285	2-107	1
4042286	2-105	1
	3-47	1
4042287	2-69	11
4042288	2-105	2
	3-47	2
4042289	2-105	3
	2-105	3
	3-47	3
4042290	2-105	5
	3-47	5
4042291	2-69	
	2-71	
	3-41	
4042292	2-105	7
	2-105	7
	3-47	7
4042293	2-105	8
	3-47	8
4042294	2-105	9
	3-47	9
4042295	2-105	6
	2-105	6
	3-47	6
4042297	2-69	
	2-71	
	3-41	
4042303	2-69	
	2-71	
	3-41	
4042304	2-69	
4042305	2-69	
4042307	2-72	3
4042309	2-76	1
4042310	2-72	5
4042311	2-80	7
4042312	2-80	8
4042313	2-77	1
	2-79	1
	3-34	1
4042314	2-72	14
4042315	2-72	16
4042317	2-42	4
4042318	2-77	2
	2-79	2
	3-34	3
4042319	2-77	3
4042321	2-77	6
4042322	2-62	20
	2-77	7
	3-22	17
4042323	2-77	8
	2-79	4
	3-34	4
4042324	2-77	9
	2-79	3
	3-34	5
4042325	2-43	
	3-30	1
4042326	2-43	1
	3-30	2
4042327	2-43	2
	3-30	3
4042328	2-43	3
	3-30	4
4042337	2-95	1
4042339	2-99	
	2-103	
	2-104	
4042340	2-95	14
4042342	2-95	16
4042343	2-95	15
4042350	2-95	19
4042351	2-95	12
4042352	2-95	17
4043082	1-57	6
	1-61	6
	1-69	6
4043195	5-26	1
4043361	6-13	29
	6-24	48
4043876	5-54	13
4043877	5-53	12
4043880	5-53	11
	5-64	14
	5-64	18
4043881	5-53	9
4043882	5-53	10
4044099	5-26	1
4044151	1-13	1
	1-39	4
4044153	1-13	
4044154	1-13	2
4044155	1-13	22
	1-17	8
	1-45	
4044156	1-13	12
4044158	1-13	17
4044159	1-13	20
4044160	1-13	16

©2015 HYSTER COMPANY

NUMERICAL INDEX (continued)

PART NO.	PAGE	ITEM
4044161	1-13	21
4044162	1-13	23
4044163	1-13	8
4044164	1-13	11
4044165	1-13	3
4044397	5-56	50
4044428	1-9	9
	1-11	9
	1-19	10
4044429	1-9	9
	1-11	9
	1-19	10
4044430	1-9	9
	1-11	9
	1-19	10
4045100	4-3	17
4045249	5-53	3
	5-53	8
4045322	5-26	1
4045621	5-17	14
4045698	1-39	7
4045699	1-39	8
4046492	1-67	12
	1-70	
4046933	5-23	
4047237	2-85	2
4047442	5-21	7
4047443	5-21	7
4047641	2-7	33
4047664	5-71	2
	5-77	2
	5-83	2
	5-89	2
4047669	5-36	6
	5-49	7
	5-49	11
	5-59	15
	5-68	21
	5-72	18
	5-74	57
	5-75	59
	5-78	18
	5-81	57
	5-84	18
	5-86	46
	5-86	55
	5-90	18
	5-92	46
4047823	1-13	23
4047908	5-59	16
	5-67	20
4047914	4-17	3
4047924	4-17	17
4047925	4-17	15
4047982	4-25	19
4047983	4-25	19
4048086	4-17	8
4048324	2-49	13
4048325	2-49	13
	3-25	16
4048941	4-33	8
	4-37	6
	4-39	8
4049014	7-15	6
	7-17	1
	7-19	1
4049150	2-7	12
4050187	2-23	22
	2-27	20
4050226	9-3	33
	9-7	39
	9-14	
4050228	9-3	31
	9-7	37
4050610	5-17	9
4050750	1-45	1
4050752	1-45	15
4050754	1-45	10
4050760	1-47	6
4050761	1-47	14
4050762	1-47	8
4050770	1-47	13
4050838	2-95	20
4050839	2-95	18
4050840	2-95	13
4050841	2-95	9
4050843	3-20	14
4050844	2-95	22
	2-96	1
4050845	2-96	8
4050846	2-96	4
4050847	2-96	5
4050848	2-96	3
4050849	2-99	1
4050850	2-99	2
4050851	2-93	2
	2-99	3
4050852	2-103	1
4050854	2-103	2
4050855	2-103	24
4050856	2-103	21
4050857	2-103	22
4050858	2-103	23
4050859	2-103	25
4050860	2-103	3
4050861	2-103	4
4050862	2-103	5
4050863	2-103	20
4050864	2-103	6
4050865	2-103	7
4050866	2-103	8
4050867	2-103	19
4050868	2-103	18
4050869	2-103	9
4050870	2-103	10
4050871	2-103	11
4050872	2-103	13
4050873	2-103	14
4050885	2-103	29
4050907	2-54	4
4050914	2-104	1
4050915	2-104	2
4050919	2-104	3
4050921	2-97	4
	2-104	4
4050922	2-103	16
4050923	2-103	17
4050927	2-100	1
4050928	2-100	1
4050929	2-100	2
	2-100	12
4050930	2-100	4
4050931	2-100	5
4050932	2-100	6
4050933	2-100	10
4050934	2-100	9
4050935	2-100	8
4050936	2-100	7
4050937	2-100	11
4050938	2-100	11
4050939	2-97	1
4050940	2-97	2
4050941	2-97	3
4050942	2-97	5
4050943	2-97	
	2-98	
4050944	2-97	10
4050945	2-97	11
4050946	2-97	12
4050947	2-97	13
4050985	2-97	17
4050986	2-97	18
4050987	2-97	19
4050988	2-97	6
	2-98	1
4050989	2-97	7
	2-98	9
4050990	2-98	2
4050991	2-98	3
4050992	2-98	4
4050993	2-98	5
4050994	2-98	6
4050995	2-98	7
4050996	2-98	8
4050997	2-98	
4051041	2-97	8
	2-98	10
4051042	2-97	9
	2-98	11
4051044	2-76	13
4051045	2-76	14
4051046	2-54	1
4051047	2-54	2
4051048	2-54	3
4051049	2-58	1
4051050	2-58	5
	2-59	6
	2-83	12
	2-94	5
	3-35	4
4051051	2-82	1
4051052	2-82	3
	2-83	11
4051053	2-82	4
4051054	2-82	5
	2-83	13
4051055	2-82	6
4051061	2-82	7
4051062	2-82	8
	2-83	9
4051063	2-82	9
	2-83	5
4051064	2-82	10
4051065	2-82	12
4051066	2-82	14
4051067	2-87	1
4051068	2-87	6
4051069	2-44	
	2-51	
	2-54	
	2-58	
	2-76	
	2-82	
	2-87	
	2-97	
	2-103	
	2-104	
4051070	2-60	

©2015 HYSTER COMPANY

NUMERICAL INDEX (continued)

PART NO.	PAGE	ITEM
	2-63	
	2-75	
	2-77	
	2-95	
	2-99	
4051434	4-37	29
	4-39	37
4051527	2-29	9
	2-31	11
	2-33	9
	2-35	11
4051593	1-5	1
4051594	1-5	1
4051595	1-5	1
4051596	1-5	1
4051597	1-5	1
4051598	1-5	1
4051921	7-17	27
4051924	4-13	3
	4-15	22
4051938	4-15	
4052059	1-99	4
4052151	5-74	45
	5-80	45
	5-85	37
4052206	2-21	21
	2-23	24
	2-25	19
	2-27	22
	3-7	17
	3-9	14
	3-11	25
	3-13	25
4052207	2-21	21
	2-23	24
	2-25	19
	2-27	22
	3-7	18
	3-9	15
	3-11	26
	3-13	26
4052485	7-17	31
4052515	2-31	1
	2-35	1
4053052	5-71	6
	5-83	6
4053055	2-35	24
4053065	2-33	21
	2-35	23
4053068	2-29	2
	2-31	2
	2-33	2
	2-35	2
4053079	1-53	12
	1-55	11
	1-57	15
	1-61	16
	1-70	24
4053250	2-29	12
	2-31	14
	2-33	12
	2-35	14
4053949	9-3	15
	9-7	17
4054055	4-23	1
	4-25	1
4054231	2-31	8
	2-35	8
4054347	2-29	1
	2-33	1
4054352	2-33	22
4054580	2-66	1
4054581	2-66	8
	3-20	8
4054582	2-66	18
4054583	2-49	2
	3-25	2
4054584	2-49	11
4054588	2-47	1
4054589	2-47	5
4054590	2-47	14
4054593	2-62	1
4054594	2-62	2
	3-22	12
4054595	2-62	3
4054596	2-62	17
4054599	2-89	1
4054600	2-89	2
4054601	2-89	4
	3-44	3
4054602	2-89	8
	3-42	3
4054603	2-89	9
	3-42	4
4054604	2-89	11
4054605	2-89	13
4054606	2-89	15
4054607	2-89	18
4054618	2-92	3
4054619	2-92	4
4054620	2-92	11
4054621	2-92	12
4054622	2-92	13
4054623	2-92	14
4054624	2-92	18
4054646	2-90	1
4054647	2-90	10
4054648	2-90	7
4054653	2-106	6
4054654	2-91	1
4054677	2-78	1
4054678	2-79	6
4054679	2-79	7
4054680	2-79	10
4054696	2-57	1
4054697	2-57	2
4054698	2-57	3
4054699	2-57	5
4054723	2-57	13
4054727	2-57	17
4054728	2-57	18
4054738	2-59	4
4054739	2-59	8
4054740	2-59	9
	2-94	7
4054741	2-59	1
4054742	2-59	5
4054744	2-93	1
4054745	2-93	9
4054746	2-93	13
4054747	2-37	15
	2-93	3
	3-28	3
4054748	2-93	6
4054749	2-93	8
	2-94	4
4054750	2-93	11
4054751	2-93	7
4054752	2-93	16
4054753	2-93	12
	3-35	7
4054755	2-94	1
4054756	2-94	2
4054757	2-94	3
4054758	2-94	11
4054759	2-49	3
	2-94	8
	3-25	3
4054760	2-94	9
4054761	2-94	6
4054762	2-94	13
4054763	2-37	4
	2-83	8
	2-107	1
	3-48	3
4054771	2-85	6
4054772	2-85	8
4054781	2-81	6
	3-37	2
4054782	2-81	9
	3-37	4
4054783	2-81	5
4054784	2-81	8
	3-37	6
4054785	2-81	2
4054786	2-81	1
4054787	5-19	12
4054805	2-39	4
4054806	2-39	5
4054807	2-39	7
4054808	2-39	8
4054809	2-37	11
4054810	2-37	12
4054812	2-37	14
4054817	2-37	9
4054932	4-33	7
	4-37	9
	4-39	7
4055018	7-17	20
4055021	7-17	2
4055570	7-17	23
4055658	4-5	3
4055754	1-7	1
4055755	1-7	1
4056498	2-106	4
4056983	5-21	4
4056988	5-21	1
4057049	12-7	9
	13-14	26
4057050	12-7	9
	13-14	26
4057297	7-19	14
4057622	7-15	1
4058048	13-35	1
4058049	13-35	1
4058054	12-29	1
4058158	11-4	13
	12-4	28
	13-17	11
4058522	10-5	15
4058524	10-5	15
4060528	2-37	13
4060688	9-3	19
4060737	5-49	9
	5-71	1
	5-77	1
	5-83	1
	5-89	1

See Service Manual for service procedures.
©2015 HYSTER COMPANY

NUMERICAL INDEX (continued)

PART NO.	PAGE	ITEM
4060774	9-7	25
4060809	2-5	16
	2-7	18
4062255	5-17	12
4062311	4-5	11
4062685	2-21	2
	2-23	2
	2-25	2
	2-27	2
4064288	4-29	11
	4-31	10
4064894	9-14	2
4065584	9-3	33
	9-7	39
	9-14	
4066055	1-51	7
4066321	2-9	6
	2-13	24
	3-3	24
4066325	2-13	20
	2-18	1
	3-3	20
4066616	2-29	20
	2-31	23
4066964	1-34	6
4066965	1-34	
4066966	1-34	5
4066967	1-34	7
4066968	1-34	4
4066969	1-34	4
4066970	1-34	4
4066971	1-34	4
4067297	4-19	4
4067335	2-13	25
	3-3	25
4067505	4-37	1
4067507	4-39	1
4068066	7-20	
4068069	7-23	
4068074	4-9	2
4068075	4-9	3
4069932	4-19	6
4070380	3-11	14
	3-13	14
4070451	14-35	4
4070452	14-35	4
4070453	14-39	4
4070454	14-39	4
4070544	1-33	16
	1-37	16
4070545	1-33	36
	1-37	25
4070546	1-33	37
	1-37	26
4072273	14-47	7
4072914	4-9	4
4072916	4-9	8
4072917	4-9	7
4072919	4-9	8
4072921	4-9	7
4073575	4-19	23
4074188	2-39	
4074569	2-74	3
4074572	2-47	8
	3-24	16
4074574	2-62	21
4074580	2-42	1
4074584	2-89	16
4074585	2-90	5
4074599	1-80	2
4074793	2-57	9
4074794	2-57	11
4074795	2-57	14
4074796	2-57	15
4074799	2-86	1
4074802	2-83	2
4074803	2-83	3
4074804	2-83	7
4074805	2-84	3
4074806	2-84	6
4074807	2-84	11
4074907	5-63	2
4074909	5-63	12
4074934	2-37	3
4074935	2-39	1
4074936	2-39	3
4074937	2-37	2
4074938	2-37	5
4074939	2-37	6
4074940	2-37	7
4074941	2-37	8
4074942	5-17	24
	5-28	7
4075462	2-31	20
	2-35	20
4075981	5-17	
4076676	2-9	22
	2-11	19
4076774	2-21	18
	2-25	16
4076784	2-9	12
	2-11	12
4076790	2-9	19
4076791	2-9	1
	2-11	1
4077036	2-9	16
	2-11	16
4077582	4-19	32
4077586	4-19	1
4077726	5-5	16
4077826	2-11	6
4078018	10-6	14
	10-9	14
	10-29	7
4078122	4-7	1
4081358	4-19	27
4081548	5-15	20
4082011	2-29	23
	2-31	26
	2-33	28
	2-35	31
4082013	2-29	24
	2-31	27
	2-33	29
	2-35	32
4082219	2-29	18
	2-33	18
4083052	5-36	1
4083681	1-94	1
4083682	1-94	1
4083683	1-94	1
4083684	1-94	1
4083889	1-94	
4084034	1-94	1
4084035	1-94	1
4084037	1-94	1
4084038	1-94	1
4084046	1-94	1
4084047	1-94	1
4084048	1-94	1
4084049	1-94	1
4084061	1-94	1
4084063	1-94	1
4084066	1-94	1
4084069	1-94	1
4084522	4-29	18
	4-31	17
4085107	10-6	16
	10-9	16
4085108	10-6	17
	10-9	17
4085422	4-19	30
4085741	4-19	20
4085742	4-19	21
4085743	4-19	22
4087688	1-5	6
4088044	10-33	12
4088045	10-33	9
	10-35	12
4089066	10-31	6
	10-35	2
4089962	4-19	34
4090191	4-19	28
4092328	6-6	8
4092600	1-109	
4092601	1-111	
	1-113	
4092602	1-114	
4092603	1-105	
	1-107	
4093215	2-7	1
4094087	9-14	1
4094113	2-89	11
4094114	2-89	11
4094634	7-3	7
	7-13	7
	7-19	27
4095651	10-31	4
	10-33	1
4095652	10-31	5
	10-35	1
4095653	10-31	2
	10-33	2
4096809	3-20	13
4096825	3-25	17
4096826	3-25	18
4096837	3-24	13
4096867	3-24	11
4096872	3-24	17
4097211	3-43	4
4097212	3-43	5
4097497	3-28	5
4097498	3-28	6
4097499	3-28	7
4097500	3-28	8
4097623	3-29	25
4097624	3-29	26
4097625	3-29	27
4097626	3-29	28
4097627	3-29	29
4097628	3-29	30
4097629	3-29	31
4097632	3-28	9
4097690	3-28	11
4097702	3-24	3
4097871	3-49	2
4097872	3-49	3
4097874	3-49	5

©2015 HYSTER COMPANY

NUMERICAL INDEX (continued)

PART NO.	PAGE	ITEM
4098976	3-11	13
	3-13	13
4098977	3-11	12
	3-13	12
4099352	4-29	13
	4-31	12
4099377	5-36	
4100051	1-97	
4100326	2-82	13
	2-84	10
4100401	10-5	36
	10-29	13
4101617	7-17	29
4101858	3-27	18
4102140	4-33	1
4102512	5-5	23
4103560	6-13	31
	6-23	30
4103570	6-8	
	6-9	
	6-13	
4103571	6-18	
	6-21	
	6-23	
4104235	11-4	13
	12-4	28
4104236	11-4	13
	12-4	28
4104893	3-7	
	3-9	
	3-11	
	3-13	
4105239	3-11	6
4107727	14-3	3
	14-4	3
	14-5	3
4107728	14-3	3
	14-4	3
	14-5	3
4108193	3-19	1
4108520	3-19	2
4108523	3-19	3
4108694	1-114	4
4108695	1-114	5
4108697	1-109	2
4108698	1-109	3
4108700	1-109	9
4108701	1-109	10
	1-111	9
4108702	1-109	11
4108703	1-109	7
4108704	1-109	6
4108705	1-109	5
4108706	1-109	8
4108709	1-105	6
	1-107	7
	1-111	26
4108710	1-107	10
4108711	1-107	9
4108712	1-107	8
4108718	1-105	10
	1-111	22
4108719	1-105	17
4108720	1-105	18
4108721	1-105	9
	1-111	20
4108722	1-105	7
4108723	1-105	5
	1-113	5
4108724	1-105	4
	1-113	4
4108725	1-105	3
4108726	1-105	11
4108727	1-105	14
4108728	1-105	15
4108729	1-105	16
4108731	1-105	12
	1-111	18
4108732	1-111	16
	1-113	2
4108733	1-107	5
4108734	1-107	4
4108736	1-107	2
4108737	1-107	1
4108738	1-105	8
4108739	1-107	6
4108742	1-111	31
4108743	1-111	14
4108744	1-111	17
4108745	1-111	13
4108746	1-111	15
4108749	1-111	30
4108750	1-111	34
4108751	1-111	35
4108752	1-111	33
4108753	1-111	10
4108754	1-111	8
4108755	1-111	7
4108756	1-111	6
4108757	1-111	5
4108758	1-111	12
4108759	1-111	3
4108760	1-111	4
4108761	1-111	24
4108762	1-111	25
4108763	1-111	29
4108765	1-111	23
4108766	1-111	19
4108767	1-111	21
4108768	1-113	1
4108769	1-113	6
4108770	1-107	12
4108771	1-107	14
4108772	1-107	13
4108773	1-105	1
4108774	1-105	2
4108775	1-105	13
4108776	1-109	1
4108777	1-109	4
4108804	7-17	26
4108837	10-15	9
4108839	10-15	3
4109200	4-29	1
	4-31	1
4109470	1-111	27
4109471	1-111	28
4109472	1-111	1
4109473	1-111	2
4109474	1-111	36
4109475	1-111	37
4109476	1-114	1
4109477	1-114	2
4109478	1-114	3
4109479	1-107	11
4110373	5-63	7
4110374	5-65	30
4111502	13-17	11
4111503	13-17	11
4112317	7-3	6
	7-13	5
	7-19	26
4112428	3-19	18
4112429	3-19	19
4112651	1-113	7
4114090	3-13	6
4116165	10-19	3
	10-23	3
4116825	1-111	32
4116826	1-107	3
	1-111	11
	1-111	38
	1-113	3
4116835	1-107	15
4118329	6-5	5
4118621	3-28	4
4119634	9-14	
4119706	1-111	
	1-113	
4122708	7-15	23
4122709	7-15	3
4122906	2-95	
	2-96	
4122916	2-95	7
4124257	3-7	16
	3-9	18
	3-11	17
	3-13	17
4124577	4-7	3
4124888	4-3	3
	4-5	4
4125557	4-8	3
4125619	1-53	19
	1-55	20
	1-58	31
	1-69	9
4126305	1-111	
4126730	1-79	19
4127425	2-13	13
	2-15	19
	3-3	13
	3-5	19
4127817	10-6	19
	10-9	19
4128351	10-9	31
4128352	10-9	32
4129101	3-20	1
4129102	3-20	20
4129103	3-20	22
4129104	3-21	1
4129105	3-21	6
4129106	3-22	1
4129107	3-22	13
4129108	3-22	19
4129109	3-22	21
4129110	3-25	4
	3-35	3
4129111	3-25	6
4129112	3-25	9
4129113	3-25	10
4129114	3-25	11
4129115	3-25	12
4129116	3-27	13
4129117	3-27	14
4129118	3-27	15
4129119	3-24	1
4129120	3-24	2
4129199	3-24	4
4129200	3-24	5

See Service Manual for service procedures.
©2015 HYSTER COMPANY

NUMERICAL INDEX (continued)

PART NO.	PAGE	ITEM
4129201	3-24	6
4129202	3-24	8
4129203	3-24	18
4129204	3-24	9
4129205	3-24	10
4129206	3-24	14
4129207	3-24	15
4129208	3-36	2
4129209	3-36	3
4129210	3-39	3
4129211	3-39	16
4129212	3-40	2
4129213	3-40	2
4129214	3-40	3
4129215	3-40	3
4129216	3-40	4
4129217	3-40	5
4129218	3-40	6
4129219	3-40	7
4129220	3-40	12
4129221	3-40	1
4129222	3-40	1
4129223	3-43	1
4129238	3-43	2
4129239	3-43	3
4129240	3-44	1
4129241	3-44	2
4129242	3-33	1
4129243	3-33	3
4129244	3-33	6
4129245	3-33	7
4129246	3-34	2
4129247	3-27	4
4129248	3-27	9
4129249	3-28	1
4129250	3-28	2
4129251	3-28	13
4129252	3-28	14
4129259	3-28	15
4129260	3-28	16
4129261	3-28	17
4129262	3-28	18
4129263	3-28	19
4129264	3-28	20
4129265	3-28	21
4129266	3-28	22
4129267	3-28	23
4129268	3-28	24
4129269	3-29	32
4129270	3-29	34
4129272	3-35	1
4129273	3-35	5
4129274	3-35	6
4129278	3-49	4
4129343	3-49	1
4129382	3-49	1
4129434	6-6	5
4129461	2-5	2
	3-16	3
	6-6	3
4129891	2-5	1
	3-16	1
4129892	2-5	1
	3-16	2
4131183	3-7	6
4131194	3-9	6
4131266	5-21	7
4131493	3-7	7
	3-9	7
	3-11	8
	3-13	8
4132980	1-13	1
	1-47	
4132981	1-13	19
4135721	3-7	2
4135722	3-9	2
4136489	10-10	2
4136490	10-10	3
4136491	10-10	5
4136492	10-10	4
4136493	10-10	2
	10-10	5
4136494	10-10	3
4136495	10-10	4
4137167	4-19	23
4141716	1-111	
4141717	1-111	21
4142399	4-19	20
4142401	4-19	21
4601093	5-39	1
4601094	5-41	1
4601096	5-41	1
4601097	5-39	1
4601098	5-41	1
4601099	5-39	1
4601100	5-41	1
4601101	5-39	1
4601102	5-41	1
4601104	5-41	1
4601105	5-39	1
4601106	5-41	1
4601107	5-39	1
4601108	5-41	1
4601120	5-39	16
	5-41	16
4601386	1-11	7
	1-19	20
	5-21	9
4601680	5-5	15
4601681	5-5	13
4601715	10-16	1
	10-17	1
4601717	10-5	16
4601719	10-5	2
4601720	10-5	28
4601722	10-5	6
4602843	5-47	
4602849	13-22	
4603382	1-57	
	1-61	
4603383	1-57	
	1-61	
4603384	1-57	
	1-61	
4603385	1-57	
	1-61	
4603387	1-99	
4603439	5-39	6
	5-41	6
4603492	1-75	25
	1-77	27
4603493	1-75	15
	1-77	29
4603551	2-13	1
	3-3	1
4604292	5-46	2
	5-129	
4604293	5-46	2
	5-133	
4604565	14-13	22
	14-17	22
	14-21	22
4604566	14-13	23
	14-17	23
	14-21	23
	14-25	19
	14-27	19
	14-29	20
4604567	14-25	20
	14-27	20
4604568	14-13	24
	14-17	24
4604569	14-21	24
	14-29	19
4604570	14-21	25
4604581	10-3	12
	10-5	11
4604594	5-29	1
4604595	5-29	6
4604780	10-43	
4604781	10-43	
4604826	10-69	5
4604938	11-4	26
	12-4	19
	13-18	28
4605072	5-9	6
	5-117	
4605073	5-9	6
	5-119	
4605236	10-43	
4605237	10-43	
4605336	5-39	10
	5-41	10
4605337	5-39	14
	5-41	14
4605389	1-49	7
	2-41	1
4609300	10-5	34
4609405	10-5	32
4611791	8-2	5
	8-7	
4612097	10-5	13
4612321	1-99	8
4612564	9-11	27
4612789	4-25	19
4612829	5-53	7
	5-55	25
4612835	5-55	27
4612836	5-64	13
4612844	5-64	13
4612849	2-13	20
	2-15	22
	2-16	5
	2-17	4
	3-3	20
	3-5	22
4612850	2-13	20
	2-15	22
	2-16	7
	2-17	12
	3-3	20
	3-5	22
4612882	5-25	1
4612884	5-26	1
4612885	5-26	2
4612918	5-24	1
4612971	5-55	31
4612978	5-55	31

©2015 HYSTER COMPANY

NUMERICAL INDEX (continued)

PART NO.	PAGE	ITEM
	5-59	13
	5-63	8
	5-63	9
	5-63	10
	5-63	11
	5-67	17
4612988	5-59	13
	5-63	8
	5-63	9
	5-63	10
	5-63	11
	5-67	17
4613011	5-53	1
	5-55	28
4613092	5-55	24
4613118	5-54	24
4613127	5-55	24
4613164	10-5	13
4613963	1-97	5
4613972	1-50	2
4613973	1-50	1
4614144	4-3	10
	4-5	10
4614145	4-5	17
4614228	1-49	2
	2-41	3
4614229	1-49	1
	2-41	2
4614286	14-39	
4614288	14-35	
4614289	14-35	
4614480	1-69	
4614481	1-69	
4614496	14-39	
4614516	5-55	31
	5-63	8
	5-63	9
	5-63	10
	5-63	11
4614581	10-43	
4614582	10-43	
4614583	10-43	
4614584	10-43	
4614617	5-21	12
	5-94	
4614655	10-65	6
4614775	9-11	11
4614848	5-56	38
4614877	5-7	2
	5-97	
4614878	5-7	2
	5-101	
4614879	5-9	1
	5-105	
4614880	5-9	1
	5-109	
4615470	2-5	9
	2-42	
	2-43	
	2-44	
	2-48	
	2-51	
	2-54	
	2-58	
	2-60	
	2-63	
	2-65	
	2-69	
	2-72	
	2-74	
	2-75	
	2-76	
	2-77	
	2-80	
	2-82	
	2-87	
	2-95	
	2-96	
	2-97	
	2-99	
	2-100	
	2-103	
	2-104	
	2-105	
	2-107	
4615505	5-13	1
	5-59	
4615967	4-3	11
4616119	2-15	10
	3-5	10
4616123	1-13	25
	5-49	
4616151	4-5	13
	5-13	17
	5-15	15
4616174	1-49	11
	2-41	9
4616202	6-3	2
4616203	6-3	1
4616658	1-97	29
4616862	5-17	25
	5-19	18
	5-28	1
4616915	5-56	38
4616920	5-55	28
	5-55	36
4617767	4-23	22
	4-25	30
4618047	6-8	3
	6-18	3
	6-35	
4618180	1-13	
4618189	2-5	25
	2-7	31
	6-7	3
4619094	4-37	28
	4-39	36
4619095	4-37	32
4619263	4-25	34
4619264	4-25	24
4619574	4-39	34
4619601	9-13	8
4620363	2-29	8
	2-31	10
	2-33	8
	2-35	10
4620483	2-7	9
	2-42	
	2-43	
	2-47	
	2-49	
	2-52	
	2-53	
	2-57	
	2-59	
	2-62	
	2-63	
	2-66	
	2-71	
	2-73	
	2-74	
	2-75	
	2-78	
	2-79	
	2-81	
	2-83	
	2-84	
	2-85	
	2-86	
	2-88	
	2-89	
	2-90	
	2-91	
	2-92	
	2-93	
	2-94	
	2-105	
	2-106	
	2-107	
4620676	5-17	1
	5-53	
4620888	4-25	14
4620889	4-23	20
	4-25	31
4621031	5-13	14
	5-15	14
4621757	4-17	1
4622423	10-69	4
4622824	12-29	
4622827	13-35	
4622828	13-35	
4623007	4-3	2
	4-9	
4623997	14-35	
4623998	14-35	
4623999	14-39	
4624000	14-39	
4624325	4-3	5
	4-5	21
4624999	4-29	4
	4-31	4
4625652	6-5	1
4625662	1-97	
4625663	1-97	
4625946	2-13	23
	2-15	8
	3-3	23
	3-5	8
4625947	2-13	21
	3-3	21
4626430	1-51	2
4626440	4-5	1
	4-9	
4626441	4-5	1
4627552	10-3	5
4627627	10-67	10
4627806	9-17	5
4627873	12-4	22
	13-18	26
4628377	4-3	4
	4-5	18
4628472	2-9	7
	2-11	7
4629212	10-31	1
4629213	10-31	1
4629215	10-19	
	10-21	
	10-31	

See Service Manual for service procedures.
©2015 HYSTER COMPANY

NUMERICAL INDEX (continued)

PART NO.	PAGE	ITEM
4629217	10-23	
	10-25	
	10-31	
4629764	5-5	5
	5-83	
4629813	5-36	6
4629824	5-15	1
	5-67	
4629890	4-19	9
4629892	4-19	3
4630048	10-9	15
4630124	10-6	15
4630245	10-6	18
	10-9	18
4630267	10-29	1
4630268	5-5	5
	5-71	
4630519	2-21	14
	2-23	18
	2-25	12
	2-27	16
4630631	3-19	5
	4-19	8
4631745	10-29	10
4633617	10-3	19
	10-15	
4633618	10-3	19
	10-15	
4633619	10-3	19
	10-15	
4634121	2-9	17
	2-11	17
	2-13	16
	2-15	11
	3-3	16
	3-5	11
4634485	4-15	3
4634854	10-29	9
4634955	5-5	25
4635042	4-33	48
4635043	4-33	46
4635077	4-31	8
4635135	5-5	5
	5-77	
4635136	5-5	5
	5-89	
4636102	3-15	1
	3-20	
	3-21	
	3-22	
	3-24	
	3-25	
	3-27	
	3-28	
	3-30	
	3-33	
	3-34	
	3-35	
	3-36	
	3-37	
	3-38	
	3-39	
	3-40	
	3-42	
	3-43	
	3-44	
	3-47	
	3-48	
	3-49	
4636442	14-31	
4636443	14-31	
4636444	14-31	
4636445	14-31	
4636448	14-35	
4636449	14-35	
4636450	14-39	
4636451	14-39	
4636452	14-39	
4636453	14-39	
4636454	14-35	
4636455	14-35	
4636833	4-29	5
	4-31	7
4637271	4-7	5
4637273	4-7	2
	4-8	
4637418	3-20	
	3-21	
	3-22	
	3-24	
	3-25	
	3-27	
	3-28	
	3-30	
	3-33	
	3-34	
	3-35	
	3-36	
	3-37	
	3-38	
	3-39	
	3-40	
	3-42	
	3-43	
	3-44	
	3-47	
	3-48	
4639014	3-11	24
	3-13	24
4639406	5-19	1
	5-63	
4639750	8-9	
	10-31	8
	10-39	8
	10-40	9
4639752	8-9	
	10-43	12
4641320	4-31	6
4641443	7-13	1
	7-15	
	7-17	
	7-19	
4641691	4-7	4
4642839	10-6	23
4642849	10-6	21
	10-9	21
4642932	5-21	7
4642935	10-6	3
	10-9	3
	10-10	
4642969	10-6	24
4642970	10-6	25
4642972	10-9	23
4642973	10-9	24
4642974	10-9	25
4643563	2-5	6
	3-16	7
	6-6	4
4643595	10-5	23
4643625	3-7	9
	3-9	9

©2015 HYSTER COMPANY

NUMERICAL INDEX (continued)

NOTES

©2015 HYSTER COMPANY


HYSTER