RUTHZIL TRATOR COMERCIAL DE PEÇAS LTDA 11 97083-6812 ROLANDO

PARTS MANUAL

HYSTER

CHALLENGER
H440-700F, H550FS, H620FS, H700FS
(E008)

CUSTOMER EDITION

HYSTER

1523725
11/2011

©2011 HYSTER COMPANY

SECTIONS

1	FRAME
2	ENGINE ASSEMBLY
3	FUEL SYSTEM
4	ELECTRICAL SYSTEM
5	TRANSMISSION
6	DRIVE AXLE
7	STEERING SYSTEM
8	BRAKE SYSTEM
9	HYDRAULIC SYSTEM
10	MAST-TWO STAGE VISTA
11	OPTIONS
12	FIELD CONVERSION KITS
13	NUMERICAL INDEX

This Parts Manual is divided into 13 major sections which are listed above. Quick reference to these sections can be made by placing the right thumb on the tab of the desired section, bending the book back and thumbing the pages to the corresponding tab.

TABLE OF CONTENTS

DESCRIPTION **PAGE**

A

ACCESSORY DRIVE BELT AND TENSIONER
TIER II ENGINE (→ S/N E008E02099D) 4-184
WATER PUMP - TIER III ENGINE (S/N E008E02100D →) 2-162
ACCUMULATOR AND ATTACHING PARTS 9-42
ACCUMULATOR ASSEMBLY
PISTON TYPE 9-45
ACCUMULATOR CHARGE VALVE
→ S/N E008D01522 9-36
S/N E008D01523 ↔ S/N E008D01525 9-38
S/N E008D01526 → 9-40
ATTACHING PARTS (→ S/N E008E01984B) 9-130
AIR COMPRESSOR PLUGS
TIER II ENGINE 2-34
AIR INLET
H440FS, H550FS, H620FS, H700FS - TIER II ENGINE (→ S/N E008E02099D) 3-22
H550F, H620F, H650F, H700F - TIER II ENGINE (→ S/N E008E02099D) 3-20
TIER I ENGINE 3-16
TIER III ENGINE - H550F, H620F, H650F, H700F (S/N E008E02100D →) 3-24
TIER III ENGINE - H440FS, H550FS, H620FS, H700FS (S/N E008E02100D →) 3-26
AIR INTAKE
TIER III ENGINE (S/N E008E02100D →) 2-96
AIR INTAKE CONNECTION
TIER II AND III ENGINES 2-92
AIR INTAKE HEATER CONNECTION
TIER II ENGINE 2-94
AIR TRANSFER CONNECTION
TIER II AND III ENGINES 2-98
ALTERNATOR
→ S/N E008D01608 4-174
S/N E008D01609 ↔ S/N E008E01885Z 4-176
S/N E008E01886Z ↔ S/N E008E02066C 4-178
S/N E008E02067C ↔ S/N E008E02099D 4-181
ALTERNATOR AND MOUNTING
TIER III ENGINE (S/N E008E02100D →) 4-182
ALTERNATOR MOUNT
TIER II ENGINE 4-186
ANTI-SLACK DEVICE
→ S/N E008E01984B 9-162
ANTI-SLACK DEVICE AND LIFT INTERRUPT
S/N E008E01811X ↔ S/N E008E01984B 9-164
ATTACHING PARTS
SHUT-OFF COCK AND SHUTTLE VALVE (S/N E008D01589 ↔ S/N E008E001984B)
(S/N E008E01657 ↔ S/N E008E001984B) 9-152
ATTACHMENT CONTROL VALVE
→ S/N E008E01753 → S/N E008D01602 9-90
AUXILIARY COOLANT PUMP
OPTIONAL 5-76

©2011 HYSTER COMPANY

TABLE OF CONTENTS (continued)

DESCRIPTION	PAGE
AXLE HOUSING AND ATTACHING PARTS	
WET BRAKE - H440FS, H550F, H550FS (S/N E008E01985B →)	6-12
WET BRAKE - H620F, H650F, H700F, H620FS, H700FS (S/N E008E01985B →)	6-14
B	
BRAKE	
FOUR PISTON - H620F, H650F, H700F, H620FS, H700FS (S/N E008E01533 →)	8-6
H440FS, H550F, H550FS	8-2
SIX PISTON - H620F, H650F, H700F, H620FS, H700FS (→ S/N E008E01532)	8-4
BRAKE ASSEMBLY	
H440FS, H550F, H550FS (→ S/N E008E-1837)	6-48
H620F, H650F, H700F, H620FS, H700FS (→ S/N E008E01837)	6-52
WET BRAKE - H440FS, H550F, H550FS (S/N E008E01985B →)	6-56
WET BRAKE - H620F, H650F, H700F, H620FS, H700FS (S/N E008E01985B →)	6-58
BRAKE LINES	
S/N E008E01866 →	8-18
DECLUTCH AND SERVICE BRAKE (S/N E008E01866 →)	8-12
TREADLE VALVE AND PARK BRAKE VALVE (→ S/N E008E01865)	8-8
WET BRAKE (S/N E008E01985B ↔ S/N E008E02016B)	8-22
WET BRAKE (S/N E008E02017B ↔ S/N E008E02105D)	8-26
WET BRAKE (S/N E008E02106D →)	8-30
WITH SHUTTLE VALVE (S/N E008D01501 ↔ S/N E008D01526)	8-38
WITH SHUTTLE VALVE - H550F, H620F, H650F, H700F (S/N E008D01618 ↔ S/N E008D01865) (S/N E008E01666 ↔ S/N E008E01865)	8-42
WITHOUT SHUTTLE VALVE (S/N E008D01527 →) (S/N E008E01501 ↔ S/N E008E01514)	8-14
WITHOUT SHUTTLE VALVE - H440FS, H550FS, H620FS, H700FS (S/N E008D01618 ↔ S/N E008D01865) (S/N E008E01666 ↔ S/N E008E001865)	8-34
C	
CABIN HEATER PLUMBING	
TIER II AND III ENGINES	2-125
CAMSHAFT AND TIMING GEAR	
TIER II ENGINE (→ S/N E008E02099D)	2-35
TIER III ENGINE (S/N E008E02100D →)	2-36
CARRIAGE	10-28
CHARGE PUMP	5-32
CLUTCH	
FORWARD AND SECOND	5-22
LOW GEAR (→ S/N E008D01910Z)	5-16
LOW GEAR (S/N E008D01911Z ↔ S/N E008D02323F)	5-18
LOW GEAR (S/N E008D02324F →)	5-20
REVERSE AND THIRD (→ S/N E008D02323F)	5-26
REVERSE AND THIRD (S/N E008D02324F →)	5-30
CONTROL	
LIFT AND TILT (→ S/N E008E01984B)	9-48
LIFT AND TILT (S/N E008E01985B →)	9-52
CONTROL VALVE	
→ S/N E008E01656 → S/N E008D01588	9-70
S/N E008E01657 → S/N E008D01589 →	9-74

©2011 HYSTER COMPANY

TABLE OF CONTENTS (continued)

DESCRIPTION	PAGE
S/N E008D01603 ↔ S/N E008E001984B S/N E008E01754 ↔ S/N E008E001984B	9-94
CONTROL VALVE ATTACHING PARTS	
ATTACHMENT CONTROL VALVE AND PRESSURE SWITCH (→ S/N E008E01810X)	9-132
ONE FUNCTION (→ S/N E008E01656) (→ S/N E008D01588)	9-136
ONE FUNCTION (S/N E008D01589 ↔ S/N E008E001984B) (S/N E008E01657 ↔ S/N E008E001984B)	9-140
TWO FUNCTION (→ S/N E008D01588) (→ S/N E008E01656)	9-144
TWO FUNCTION (S/N E008D01589 ↔ S/N E008E001984B) (S/N E008E01657 ↔ S/N E008E001984B)	9-148
WITH ANTI-SLIPPING DEVICE AND LIFT INTERRUPT (S/N E008E01811X ↔ S/N E008E01984B)	9-154
CONVERTER HOUSING	5-8
COOLANT HEATER STARTING AID PLUGS	
TIER II AND III ENGINES	2-119
COOLING	
→ S/N E008E01697 → S/N E008D01602	2-140
TIER I ENGINE (S/N E008E01698 →) (S/N E008D01603 →)	2-142
TIER II ENGINE - H550F, H620F, H650F, H700F (→ S/N E008E02099D)	2-144
TIER II ENGINE - H440FS, H550FS, H620FS, H700FS (→ S/N E008E02099D)	2-148
TIER III ENGINE - H550F, H620F, H650F, H700F (S/N E008E02100D →)	2-150
TIER III ENGINE - H440FS, H550FS, H620FS, H700FS (S/N E008E02100D →)	2-154
CORROSION RESISTOR	
H440FS, H550FS, H620FS, H700FS - TIER II ENGINE (S/N E008E01985B ↔ S/N E008E02099D)	2-78
H550F, H620F, H650F, H700F - TIER II ENGINE (S/N E008E01985B ↔ S/N E008E02099D)	2-76
TIER III ENGINE (S/N E008E02100D →)	2-80
COUNTERWEIGHT	1-46
CRANKCASE BREATHER	
TIER II ENGINE (→ S/N E008E02099D)	2-100
TIER III ENGINE (S/N E008E02100D →)	2-102
CRANKSHAFT	
TIER II ENGINE (→ S/N E008E02099D)	2-18
TIER III ENGINE (S/N E008E02100D →)	2-19
CRANKSHAFT MAIN BEARINGS	
TIER II ENGINE (→ S/N E008E02099D)	2-20
TIER III ENGINE (S/N E008E02100D →)	2-22
CYLINDER BLOCK	
TIER II ENGINE (→ S/N E008E02099D)	2-6
TIER III ENGINE (S/N E008E02100D →)	2-8
CYLINDER HEAD	
TIER II ENGINE (→ S/N E008E02099D)	2-10
TIER III ENGINE (S/N E008E02100D →)	2-12
D	
DIFFERENTIAL AND CARRIER	
H440FS, H550F, H550FS (→ S/N E008D01538 (AXLE 1336960))	6-16
H440FS, H550F, H550FS (S/N E008D01539 →)	6-24
H620F, H650F, H700F, H620FS, H700FS (→ S/N E008E01837)	6-20
H620F, H650F, H700F, H620FS, H700FS (S/N E008E01838 →)	6-28
WET BRAKE - H440FS, H550F, H550FS (S/N E008E02078D → INC. 02076)	6-32
WET BRAKE - H620F, H650F, H700F, H620FS, H700FS (S/N E008E02078D → INC. 02076)	6-36

©2011 HYSTER COMPANY

TABLE OF CONTENTS (continued)

DESCRIPTION	PAGE
DIRECTIONAL CONTROL VALVE	
S/N E008E01811X ↔ S/N E008E01984B	9-92
ATTACHING PARTS (S/N E008E01811X ↔ S/N E008E01984B)	9-134
DRIVE AXLE	
H440FS, H550F, H550FS (→ S/N E008E01984B)	6-2
H620F, H650F, H700F, H620FS, H700FS (→ S/N E008E01837)	6-6
H620F, H650F, H700F, H620FS, H700FS (S/N E008E01838 ↔ S/N E008E001984B)	6-10
DRIVE SHAFT	6-64
DRIVE TIRES AND WHEELS	
BRIDGESTONE TUBED PNEUMATIC TIRES - 14 X 24	11-2
BRIDGESTONE TUBELESS PNEUMATIC TIRES - 16 X 25	11-4
MICHELIN PNEUMATIC RADIAL TIRES - 14 X 24	11-6
TRELLEBORG TUBED PNEUMATIC TIRES - 14 X 24	11-7
DUST SHIELD	
TIER II ENGINE (→ S/N E008E02099D)	2-24
E	
ELECTRICAL	
FRAME, TIER I ENGINE - SHEET 1 OF 2	4-4
FRAME, TIER I ENGINE - SHEET 2 OF 2	4-8
FRAME, TIER II AND III ENGINES - SHEET 1 OF 4	4-10
FRAME, TIER II AND III ENGINES - SHEET 2 OF 4	4-14
FRAME, TIER II AND III ENGINES - SHEET 3 OF 4 (S/N E008E01985B →)	4-20
FRAME, TIER II AND III ENGINES - SHEET 4 OF 4 (S/N E008E01985B →)	4-24
FRAME, TIER II ENGINE - SHEET 3 OF 4 (→ S/N E008E01984B)	4-18
SIDE-SHIFT CARRIAGE	11-22
STANDARD CARRIAGE	10-32
ELECTRONIC FOOT PEDAL MOUNT	
TIER II AND III ENGINES	3-32
ENGINE AND TRANSMISSION MOUNT	2-160
ENGINE ASSEMBLY	2-4
ENGINE CONTROL SYSTEM	
TIER II ENGINE	4-222
TIER III ENGINE (S/N E008E02100D →)	4-224
ENGINE OIL PRESSURE SENDER KIT	12-2
EXHAUST	
TIER I AND TIER II ENGINE	2-130
TIER II ENGINE (S/N E008E01886Z ↔ S/N E008E02099D)	2-132
TIER III ENGINE (S/N E008E02100D →)	2-134
EXHAUST CONNECTION	
TURBOCHARGER - TIER II ENGINE	2-126
EXHAUST MANIFOLD	
TIER II ENGINE	2-127
TIER III ENGINE	2-128
F	
FAN DRIVE	
TIER II AND III ENGINES	2-64
FAN SPACER	2-66

©2011 HYSTER COMPANY

TABLE OF CONTENTS (continued)

DESCRIPTION	PAGE
FIRE EXTINGUISHER	11-32
FLOORPLATES AND COVERS	
H440FS, H550FS, H620FS, H700FS	1-42
H550F, H620F, H650F, H700F	1-38
FLOW AMPLIFIER	9-156
ATTACHING PARTS (→ S/N E008E01984B)	9-158
FLYWHEEL	
TIER II ENGINE (→ S/N E008E02099D)	2-26
TIER III ENGINE (S/N E008E02100D →)	2-27
FLYWHEEL HOUSING	
TIER II ENGINE (→ S/N E008E02099D)	2-56
TIER III ENGINE (S/N E008E02100D →)	2-58
FORK POSITIONER	
SIDE-SHIFT CARRIAGE	11-28
STANDARD CARRIAGE	10-34
FORKS	11-31
FRONT ENGINE SUPPORT	
TIER II AND III ENGINES	2-159
FRONT GEAR COVER	
TIER II ENGINE (→ S/N E008E02099D)	2-42
TIER III ENGINE (S/N E008E02100D →)	2-44
FRONT GEAR TRAIN ACCESSORY DRIVE	
TIER II ENGINE	2-48
FUEL FILTER	
H440FS, H550FS, H620FS, H700FS - TIER II ENGINE (S/N E008E01985B ↔ S/N E008E02099D)	3-40
H550F, H620F, H650F, H700F - TIER II ENGINE (S/N E008E01985B ↔ S/N E008E02099D)	3-38
TIER III ENGINE (S/N E008E02100D →)	3-42
FUEL FILTER PLUMBING	
TIER II ENGINE (→ S/N E008E02099D)	3-44
TIER III ENGINE (S/N E008E02100D →)	3-46
FUEL INJECTION PUMP	
TIER II ENGINE (→ S/N E008E02099D)	3-56
TIER III ENGINE (S/N E008E02100D →)	3-58
FUEL INJECTION PUMP MOUNTING	
TIER II ENGINE	3-60
TIER III ENGINE (S/N E008E02100D →)	3-62
FUEL INJECTOR AND INJECTOR PLUMBING	
TIER II ENGINE (→ S/N E008E02099D)	3-64
TIER III ENGINE (S/N E008E02100D →)	3-66
FUEL PLUMBING	
TIER II ENGINE (→ S/N E008E02099D)	3-52
TIER III ENGINE (S/N E008E02100D →)	3-54
FUEL SYSTEM	
→ S/N E008E01697 → S/N E008D01602	3-2
S/N E008D01603 ↔ S/N E008E001984B S/N E008E01698 ↔ S/N E008E001984B	3-4
TIER II ENGINE (S/N E008E01985B ↔ S/N E008E02099D)	3-8
TIER III ENGINE - H550F, H620F, H650F, H700F (S/N E008E02100D →)	3-12
TIER III ENGINE - H550FS, H620FS, H700FS (S/N E008E02100D →)	3-14

©2011 HYSTER COMPANY

TABLE OF CONTENTS (continued)

DESCRIPTION	PAGE
FUEL TRANSFER PUMP	
TIER II ENGINE (→ S/N E008E02099D)	3-48
TIER III ENGINE (S/N E008E02100D →)	3-50
FUSE PANEL AND RELAYS	
TIER II ENGINE (S/N E008E01886Z ↔ S/N E008E01984B)	4-88
TIER II ENGINE (S/N E008E01985B → INC. 01979)	4-92
G	
GEAR HOUSING	
TIER II ENGINE (→ S/N E008E02099D)	2-52
TIER III ENGINE (S/N E008E02100D →)	2-54
GEAR TRAIN ACCESSORY PLUMBING	
FRONT - TIER II ENGINE	2-50
H	
HAND PUMP	
OPERATOR COMPARTMENT (→ S/N E008E01592)	1-16
OPERATOR COMPARTMENT (S/N E008E01593 →)	1-18
HEADER HOSES	11-14
HEATER	1-32
HEATER CONTROL	1-35
HOOD	
TIER I ENGINE - H550FS, H620FS, H700FS	1-66
TIER II AND III ENGINES - H440FS, H550FS, H620FS, H700FS	1-68
HOOD AND LINKAGE	
TIER I ENGINE	1-58
TIER II AND III ENGINES	1-62
HUB AND SHAFT ASSEMBLY	
WET BRAKE - H440FS, H550F, H550FS (S/N E008E01985B →)	6-38
WET BRAKE - H620F, H650F, H700F, H620FS, H700FS (S/N E008E01985B →)	6-40
WET BRAKE - H440FS, H550F, H550FS (S/N E008E02078D → INC. 02076)	6-42
WET BRAKE - H620F, H650F, H700F, H620FS, H70FS (S/N E008E02078D → INC. 02076)	6-44
HYDRAULIC	
PRESSURE CHECK LINE (→ S/N E008E01984B)	9-108
SIDE-SHIFT CARRIAGE	11-24
HYDRAULIC PUMP	
BRAKE COOLING CIRCUIT, HOIST (→ S/N E008E01984B)	9-102
BRAKE COOLING CIRCUIT, HOIST (S/N E008E01985B ↔ S/N E008E02016B)	9-104
BRAKE COOLING CIRCUIT, HOIST (S/N E008E02017B →)	9-106
STEERING AND AUXILIARY, HOIST AND TILT (→ S/N E008E01906Z)	9-98
STEERING AND AUXILIARY, HOIST AND TILT (S/N E008E01907Z →)	9-100
HYDRAULIC SUPPLY AND RETURN	
H440FS, H550FS, H620FS, H700FS - SHEET 1 OF 2 (S/N E008E01985B →)	9-20
H440FS, H550FS, H620FS, H700FS - SHEET 2 OF 2 (S/N E008E01985B →)	9-24
H550F, H620F, H650F, H700F - SHEET 1 OF 2 (S/N E008E01985B →)	9-12
H550F, H620F, H650F, H700F - SHEET 2 OF 2 (S/N E008E01985B →)	9-16
SHEET 1 OF 2 (→ S/N E008E01984B)	9-4
SHEET 2 OF 2 (→ S/N E008E01984B)	9-8

©2011 HYSTER COMPANY

TABLE OF CONTENTS (continued)

DESCRIPTION	PAGE
I	
INCHING VALVE ASSEMBLY	
S/N E008D01911Z →	5-48
INSTRUMENT PANEL	
TIER I ENGINE - SHEET 1 OF 2 (→ S/N E008E01885Z)	4-62
TIER I ENGINE - SHEET 2 OF 2 (→ S/N E008E01810X)	4-66
TIER I ENGINE - SHEET 2 OF 2 (S/N E008E01811X ↔ S/N E008E01865Y)	4-70
TIER I ENGINE - SHEET 2 OF 2 (S/N E008E01866 ↔ S/N E008E01885Z)	4-74
TIER II ENGINE (S/N E008E01886Z →)	4-80
J	
JUNCTION BLOCK	
→ S/N E008E01542 → S/N E008D01523	9-32
L	
LABELS	1-70
LATCH	
HYDRAULIC	1-14
LIFT	10-10
LIFT CYLINDER	
H440FS, H550F, H550FS (→ S/N E008E01546X)	10-14
H440FS, H550F, H550FS (S/N E008E01547X →)	10-18
H620F, H650F, H700F, H620FS, H700FS (→ S/N E008E01546X)	10-22
H620F, H650F, H700F, H620FS, H700FS (S/N E008E01547X →)	10-24
LIFTING BRACKET	
TIER II ENGINE (→ S/N E008E02099D)	2-157
TIER III ENGINE (S/N E008E02100D →)	2-158
LIGHT BAR AND MOUNT	
TWISTLOCK MODULE	4-220
LIGHTS	4-194
M	
MANIFOLD PLATE AND ATTACHING PARTS	
S/N E008E01985B →	9-58
MANIFOLD PLATE ASSEMBLY	
SHEET 1 OF 2	9-62
SHEET 2 OF 2	9-66
MAST	
H440FS, H550F, H550FS	10-2
H620F, H650F, H700F, H620FS, H700FS	10-6
MODULATOR VALVE	
→ S/N E008D01910Z	5-36
O	
OIL COOLER AND ATTACHING PARTS	
S/N E008E01886Z ↔ S/N E008E02041C	9-28
S/N E008E02042C →	9-30
OIL DRAIN CONNECTION AND ACCESSORY HOLE COVER	
TIER III ENGINE (S/N E008E02100D →)	2-163

©2011 HYSTER COMPANY

TABLE OF CONTENTS (continued)

DESCRIPTION	PAGE
OIL FILLER	
H440FS, H550FS, H620FS, H700FS - TIER II ENGINE (S/N E008E01985B ↔ S/N E008E02099D)	2-88
H550F, H620F, H650F, H700F - TIER II ENGINE (S/N E008E01985B ↔ S/N E008E02099D)	2-86
TIER III ENGINE (S/N E008E02100D →)	2-90
OIL FILTER AND COOLER	
TIER II ENGINE (→ S/N E008E02099D)	2-68
TIER III ENGINE (S/N E008E02100D →)	2-70
OIL LEVEL GAUGE	
H440FS, H550FS, H620FS, H700FS - TIER II ENGINE (S/N E008E01985B ↔ S/N E008E02099D)	2-83
H550F, H620F, H650F, H700F - TIER II ENGINE (S/N E008E01985B ↔ S/N E008E02099D)	2-82
TIER III ENGINE (S/N E008E02100D →)	2-85
OIL PAN	
TIER II ENGINE (→ S/N E008E02099D)	2-60
TIER III ENGINE (S/N E008E02100D →)	2-62
OIL PUMP	
TIER II ENGINE (→ S/N E008E02099D)	2-46
TIER III ENGINE (S/N E008E02100D →)	2-47
OPERATOR COMPARTMENT	
ELECTRICAL COMPONENTS - TIER II ENGINE (S/N E008E01886Z ↔ S/N E008E01984B)	4-94
ELECTRICAL COMPONENTS - TIER II ENGINE (S/N E008E01985B → INC. 01979)	4-98
SHEET 1 OF 3	1-20
SHEET 2 OF 3	1-24
SHEET 3 OF 3	1-28
WITHOUT CAB	1-2
OUTPUT YOKE	
→ S/N E008D02024C	5-15
P	
PARK BRAKE	
WET BRAKE (→ S/N E008E01984B)	6-60
WET BRAKE (S/N E008E01985B →)	6-62
PARK BRAKE SOLENOID VALVE	
ATTACHING PARTS	9-124
PARK BRAKE SWITCH	
S/N E008D01582 → S/N E008E01656 →	4-198
PILOT VALVE	9-56
ATTACHING PARTS (→ S/N E008E01655) (→ S/N E008D01581)	9-122
PARK BRAKE (→ S/N E008D01581) (→ S/N E008E01655)	9-79
PISTON AND CONNECTING ROD	
TIER II ENGINE (→ S/N E008E02099D)	2-14
TIER III ENGINE (S/N E008E02100D →)	2-16
PLATFORM	
OPERATOR COMPARTMENT	1-4
PRESSURE REDUCING VALVE	
ATTACHING PARTS (→ S/N E008E01723)	9-116
ATTACHING PARTS (S/N E008E01724 ↔ S/N E008E01984B)	9-120
PARK BRAKE (→ S/N E008E01984B)	9-78
PILOT CIRCUIT (→ S/N E008E01984B)	9-77

©2011 HYSTER COMPANY

TABLE OF CONTENTS (continued)

DESCRIPTION	PAGE
PRESSURE SWITCH	
→ S/N E008D01581 → S/N E008E01655	4-197
R	
RADIATOR	
→ S/N E008E02099D	2-136
TIER III ENGINE (S/N E008E02100D →)	2-138
RADIATOR PLUMBING	
H440FS, H550FS, H620FS, H700FS - TIER II ENGINE (S/N E008E01985B ↔ S/N E008E02099D)	2-121
H550F, H620F, H650F, H700F - TIER II ENGINE (S/N E008E01985B ↔ S/N E008E02099D)	2-120
TIER III ENGINE (S/N E008E02100D →)	2-122
RELIEF VALVE	
→ S/N E008E01984B	9-80
ATTACHING PARTS (→ S/N E008E01664) (→ S/N E008D01614)	9-126
ATTACHING PARTS (S/N E008D01518 ↔ S/N E008E001984B) (S/N E008E01544 ↔ S/N E008E001984B)	9-128
TILT CYLINDER	9-88
RETURN MANIFOLD	
ATTACHING PARTS - SHEET 1 OF 2 (→ S/N E008E01984B)	9-110
ATTACHING PARTS - SHEET 2 OF 2 (→ S/N E008E01984B)	9-114
ROCKER LEVERS	
TIER II ENGINE (→ S/N E008E02099D)	2-38
TIER III ENGINE (S/N E008E02100D →)	2-40
S	
SEAT ASSEMBLY	
→ S/N E008E02064C	1-48
S/N E008E02065C →	1-50
SERVICE BRAKE	
→ S/N E008E01984B	6-46
SHIFT LEVER	
→ S/N E008D01865Y	5-38
SHUTTLE VALVE	
→ S/N E008E01984B	9-89
ATTACHING PARTS (→ S/N E008E01984B)	9-96
SIDE-SHIFT CARRIAGE	11-18
SIDE-SHIFT CYLINDER	
→ S/N E008E01810X	11-26
SOLENOID ASSEMBLY	
S/N E008D01911Z →	5-46
SOLENOID VALVE	
PARK BRAKE (S/N E008D01582 →) (S/N E008E01656 →)	9-81
STARTER MOTOR	
TIER I ENGINE	4-188
TIER II ENGINE	4-190
TIER III ENGINE (S/N E008E02100D →)	4-192
STEER AXLE	7-2
STEER COLUMN AND LINES	7-8
STEER CYLINDER	7-12

©2011 HYSTER COMPANY

TABLE OF CONTENTS (continued)

DESCRIPTION	PAGE
STEER TIRES AND WHEELS	
BRIDGESTONE TUBED PNEUMATIC TIRES - 14 X 24	11-8
BRIDGESTONE TUBELESS PNEUMATIC TIRES - 16 X 25	11-10
MICHELIN PNEUMATIC RADIAL TIRES - 14 X 24	11-13
TRELLEBORG TUBED PNEUMATIC TIRES - 14 X 24	11-12
STEERING CONTROL VALVE	7-14
STROBE LIGHT	
S/N E008E02226E →	11-33
SUSPENSION SEAT	
GRAMMER HIGH BACK - SHEET 1 OF 2 (9/1999 →)	1-52
GRAMMER HIGH BACK - SHEET 2 OF 2 (9/1999 →)	1-56
T	
TANK AND FILTER	9-46
THERMOSTAT	
TIER II ENGINE (→ S/N E008E02099D)	2-114
TIER III ENGINE (S/N E008E02100D →)	2-116
THROTTLE LINKAGE	
TIER I ENGINE	3-28
THROTTLE PEDAL	
TIER I ENGINE	3-34
THROTTLE PEDAL ASSEMBLY	
ELECTRONIC - TIER III ENGINES	3-36
TILT CYLINDER	
OPERATOR COMPARTMENT (→ S/N E008E01676) (→ S/N E008D01594)	1-8
OPERATOR COMPARTMENT (S/N E008E01677 ↔ S/N E008E01698) (S/N E008D01595 ↔ S/N E008D01617)	1-10
OPERATOR COMPARTMENT (S/N E008D01618 →) (S/N E008E01699 →)	1-12
TILT HYDRAULIC	
→ S/N E008E01984B	9-82
S/N E008E01985B →	9-84
TORQUE CONVERTER	5-12
TORQUE CONVERTER AND OIL COOLER FITTINGS	
TIER II ENGINE - H550F, H620F, H650F, H700F (S/N E008E01985B ↔ S/N E008E02099D)	2-72
TIER II ENGINE - H550FS, H620FS, H700FS (S/N E008E01985B →)	2-73
TIER III ENGINE (S/N E008E02100D →)	2-74
TRANSMISSION	
ATTACHING PARTS (→ S/N E008D01910Z)	5-50
ATTACHING PARTS (S/N E008D01680W ↔ S/N E008D01910Z)	5-52
ATTACHING PARTS COOLING AND FILTER (→ S/N E008D02024C INC. 02027)	5-60
TRANSMISSION ASSEMBLY	5-2
TRANSMISSION ATTACHING PARTS	
TIER II ENGINE - H550F, H620F, H650F, H700F (S/N E008D01911Z ↔ S/N E008D02024C)	5-54
TIER II ENGINE - H550FS, H620FS, H700FS (S/N E008D01985B ↔ S/N E008D02024C)	5-56
TRANSMISSION CONTROL VALVE	
→ S/N E008D01865Y	5-40
S/N E008D01866Y ↔ S/N E008D01910Z	5-42
S/N E008D01911Z →	5-44

©2011 HYSTER COMPANY

TABLE OF CONTENTS (continued)

DESCRIPTION	PAGE
TRANSMISSION CONTROLLER	
7/2009 →	4-86
TIER I ENGINE	4-83
TIER II ENGINE (→ 7/2009)	4-84
TRANSMISSION COOLING	
S/N E008D02100D →	5-72
H440FS, H550FS, H620FS, H700FS (S/N E008D02025C ↔ S/N E008D02099D)	5-68
H550F, H620F, H650F, H700F (S/N E008D02025C ↔ S/N E008D02099D)	5-64
OPTIONAL (S/N E008D01680W →)	5-78
TRANSMISSION HOUSING	5-4
TURBOCHARGER	
TIER II ENGINE (→ S/N E008E02099D)	2-108
TIER III ENGINE (S/N E008E02100D →)	2-110
TURBOCHARGER PLUMBING	
TIER II ENGINE (→ S/N E008E02099D)	2-104
TIER III ENGINE (S/N E008E02100D →)	2-106
TWO-SPEED LIFT VALVE	
S/N E008D01524 → S/N E008E01543 →	9-34
V	
VALVE	
INCHING (→ S/N E008D01588) (→ S/N E008E01656)	8-56
INCHING (S/N E008D01589 ↔ S/N E008E001865) (S/N E008E01656 ↔ S/N E008E001865)	8-60
PARK BRAKE (→ S/N E008D01581)	8-50
RELAY	8-52
SHUTTLE	8-54
TREADLE (→ S/N E008E01984B)	8-46
TREADLE (S/N E008E01985B →)	8-48
VALVE COVER	
TIER II ENGINE (→ S/N E008E02099D)	2-28
TIER III ENGINE (S/N E008E02100D →)	2-30
VALVE TAPPET	
TIER II ENGINE (→ S/N E008E02099D)	2-32
TIER III ENGINE (S/N E008E02100D →)	2-33
VIBRATION DAMPER	
TIER II AND III ENGINES	2-25
W	
WATER INLET CONNECTION	
TIER II ENGINE (→ S/N E008E02099D)	2-112
TIER III ENGINE (S/N E008E02100D →)	2-113
WATER OULET CONNECTION	
TIER II ENGINE	2-123
WATER OUTLET CONNECTION	
TIER III ENGINE	2-124
WATER PUMP	
TIER II ENGINE (→ S/N E008E02099D)	2-117
TIER III ENGINE (S/N E008E02100D →)	2-118
WINDSCREEN WASHER	1-36

©2011 HYSTER COMPANY

TABLE OF CONTENTS (continued)

DESCRIPTION	PAGE
WIRE HARNESS	
APC122 CONVERSION	4-239
AUTOSHIFT ADAPTER (S/N E008E01866Y →)	4-166
AUTOSHIFT CONTROLLER (→ S/N E008E01865Y)	4-164
AUTOSHIFT FUSE PANEL - TIER I ENGINE (→ S/N E008E01910Z)	4-168
AUTOSHIFT FUSE PANEL - TIER I ENGINE (S/N E008E01911Z ↔ S/N E008E01984B)	4-170
AUTOSHIFT FUSE PANEL - TIER II ENGINE (S/N E008E01866Y →)	4-172
BACK-UP ALARM	4-43
BRAKE INDICATOR	4-212
BRAKE TEMPERATURE SWITCH (S/N E008E01985B → INC. 01979)	4-40
CARRIAGE - TO HARNESS SWITCHES	4-232
CARRIAGE (S/N E008E01811X →)	4-234
CARRIAGE (→ S/N E008E01810X)	4-235
CONTROL VALVE (S/N E008E01985B → INC. 01979)	4-38
DIAGNOSIS	4-206
ENGINE (→ S/N E008E01865)	4-44
ENGINE (→ S/N E008E01912Z)	4-46
ENGINE - TIER II (S/N E008E01991B ↔ S/N E008E02066C)	4-52
ENGINE - TIER II (S/N E008E02067C ↔ S/N E008E02099D)	4-54
ENGINE - TIER III ENGINE (S/N E008E02100D →)	4-56
ENGINE COMPARTMENT (→ S/N E008D01679) (→ S/N E008E01773)	4-26
ENGINE COMPARTMENT (→ S/N E008E01774) (→ S/N E008D01680)	4-28
ENGINE COMPARTMENT (→ S/N E008E01866Y) (→ S/N E008E01984B)	4-30
ENGINE COMPARTMENT - TIER II ENGINE (S/N E008E01985B ↔ S/N E008E01990B)	4-32
ENGINE COMPARTMENT - CHASSIS, TIER II ENGINE (S/N E008E01991B →)	4-34
ENGINE CONTROL MODULE - TIER III ENGINE (S/N E008E02100D →)	4-226
GAUGE - TIER I AND TIER II ENGINE	4-146
GAUGE - TIER II ENGINE	4-208
GEAR SHIFT (S/N E008E01811X ↔ S/N E008E01865Y)	4-112
HYDRAULIC OIL COOLER (→ S/N E008E02041C)	4-214
HYDRAULIC OIL COOLER (S/N E008E02042C →)	4-216
IDLE VALIDATION SWITCH	4-217
LIGHTING SWITCH	4-158
LOCKING AND LIFT CONTROL (S/N E008E01811X ↔ 10/2001)	4-160
LOCKING AND LIFT CONTROL (10/2003 →)	4-162
LOWERING INTERRUPT	4-202
MAIN LIGHT	4-201
MODULE - WITH EC CAB (→ S/N E008E01810X)	4-118
MODULE - WITH EC CAB (S/N E008E01811X →)	4-119
MODULE - WITH STANDARD CAB (→ S/N E008E01810X)	4-120
MODULE - WITH STANDARD CAB (S/N E008E01811X →)	4-121
OPERATOR COMPARTMENT (→ S/N E008D01515) (S/N E008E01522 ↔ S/N E008E001810X)	4-132
OPERATOR COMPARTMENT - TIER I AND TIER II ENGINE	4-134
OPERATOR COMPARTMENT - TIER I ENGINE (S/N E008E01781W ↔ S/N E008E01984B)	4-136
OPERATOR COMPARTMENT - TIER II ENGINES (S/N E008E01886Z ↔ S/N E008E-01984B EXC. 1979)	4-138
OPERATOR COMPARTMENT - TIER II ENGINES (S/N E008E01985B ↔ S/N E008E01990B INC. 1979)	4-140
OPERATOR COMPARTMENT - TIER II ENGINES (S/N E008E01991B ↔ S/N E008E02225E)	4-142

©2011 HYSTER COMPANY

TABLE OF CONTENTS (continued)

DESCRIPTION	PAGE
OPERATOR COMPARTMENT - TIER II ENGINES (S/N E008E02226E →)	4-144
OPS II (S/N E008E02286F →)	4-130
PARK BRAKE (→ S/N E008E01865)	4-102
PARK BRAKE (S/N E008E01866 →)	4-104
POWER SUPPLY	4-204
PRESSURE SWITCH - LIGHTS	4-159
RADIATOR COOLANT LEVEL SWITCH (→ S/N E008E02099D)	4-213
REAR LIGHT	4-200
SEALED FUSE BOX (→ S/N E008E02099D)	4-237
SEALED FUSE BOX (S/N E008E02100D →)	4-238
SENSOR - TIER I ENGINE (S/N E008E01866Y →)	4-60
SOLENOID VALVE (→ S/N E008E01810X)	4-36
SOLENOID VALVE (S/N E008E01811X ↔ S/N E008E01984B)	4-37
STEERING POD - TIER I AND TIER II ENGINE (→ S/N E008E01984B)	4-147
STEERING POD - TIER II ENGINE (S/N E008E01985B →)	4-148
SWITCH - EC CAB (S/N E008E01811X ↔ 10/2001)	4-125
SWITCH - EC CAB (10/2003 ↔ S/N E008E02285F)	4-126
SWITCH - EC CAB (S/N E008E02286F →)	4-128
SWITCH AND RELAY	4-210
SWITCHES - WITH STANDARD CAB (→ S/N E008E01984B)	4-122
SWITCHES - WITH STANDARD CAB (S/N E008E01985B ↔ S/N E008E02285F)	4-123
SWITCHES - WITH STANDARD CAB (S/N E008E02286F →)	4-124
TRANSMISSION (→ S/N E008E01865Y)	4-42
TRANSMISSION AND ATTACHMENT (→ S/N E008E01810X)	4-110
TRANSMISSION CONTROL - TIER I ENGINE (S/N E008E01866Y ↔ S/N E008E01885Z)	4-150
TRANSMISSION CONTROL - TIER II ENGINE (S/N E008E01886Z ↔ S/N E008E01910Z)	4-152
TRANSMISSION CONTROL - TIER II ENGINE (S/N E008E01911Z ↔ S/N E008E02064C)	4-154
TRANSMISSION CONTROL (S/N E008E02065C →)	4-156
TURN SIGNAL	4-236
WASH PUMPS	4-203
WITH EC CAB (→ S/N E008E01810X)	4-106
WITH EC CAB (S/N E008E01811X ↔ 10/2001)	4-107
WITH EC CAB - CONTAINER ATTACHMENT (10/2003 →)	4-108
WITH EC CAB	4-114
WITH STANDARD CAB	4-116
WORK LIGHTS	4-199
WIRE HARNESS (ENGINE)	
TIER II (S/N E008E01913Z ↔ S/N E008E01984B)	4-48
TIER II (S/N E008E01985B ↔ S/N E008E01990B)	4-50
WIRING ACCESSORIES	
H440FS, H550FS, H620FS, H700FS - TIER II ENGINE (S/N E008E01985B →)	4-230
H550F, H620F, H650F, H700F - TIER II ENGINE (S/N E008E01985B →)	4-228

©2011 HYSTER COMPANY

ABBREVIATIONS QUICK REFERENCE SHEET

Listed below are abbreviations used in parts manuals to denote the following expressions:

TERM	DEFINITION
Amp	Amperes
AR	As Required
BDI	Battery Discharge Indicators
BWI	Brush Wear Indicator
CE	Communicator End
CRE	Corrosive Environment
D/B	Date Break
dbA	Decibel "A" Scale
DE	Drive End
ECH	Empty Container Handler
ECH-3	Empty Container Handler - 3 High Stacking
ECH-4	Empty Container Handler - 4 High Stacking
ECH-5	Empty Container Handler - 5 High Stacking
ECH-6	Empty Container Handler - 6 High Stacking
ECH-7	Empty Container Handler - 7 High Stacking
ECM	Electronic Control Module
ECN	Engineering Change Notice
EEPROM	Electrically Erasable Programmable Read Only Memory
EPA	US Environmental Protection Agency
EPROM	Electrically Programmable Read Only Memory

TERM	DEFINITION
FRE	Freezer Environment
in.	inches
LPG	Liquefied Petroleum Gas
MAP	Manifold Absolute Pressure
mm	millimeters
MSTS	Microprocessor Spark Timing System
NPT	National Pipe Threads
O/S	Oversize
PTO	Power Take Off
RPM	Revolutions per Minute
S/N	Serial Number
TMM	Truck Management Module
UL Type D	Diesel-Powered Safety Rating
UL Type DS	Diesel-Powered Safety Rating
UL Type E	Battery-Powered Safety Rating
UL Type EE	Battery-Powered Safety Rating
UL Type ES	Battery-Powered Safety Rating
UL Type G	Gasoline-Powered Safety Rating
UL Type GS	Gasoline-Powered Safety Rating
UL Type LP	Gas-Powered Safety Rating
UL Type LPS	LP Gas-Powered Safety Rating
U/S	Undersize
UL	Underwriters Laboratory
V	Volts

See Service Manual for service procedures.
©2011 HYSTER COMPANY

HOW TO USE THE ILLUSTRATED PARTS MANUAL

This parts manual describes and illustrates assemblies, subassemblies, and detail parts needed for service replacement.

The different constructions are indicated by keys and footnotes. The callouts correspond to descriptions found on the next page.

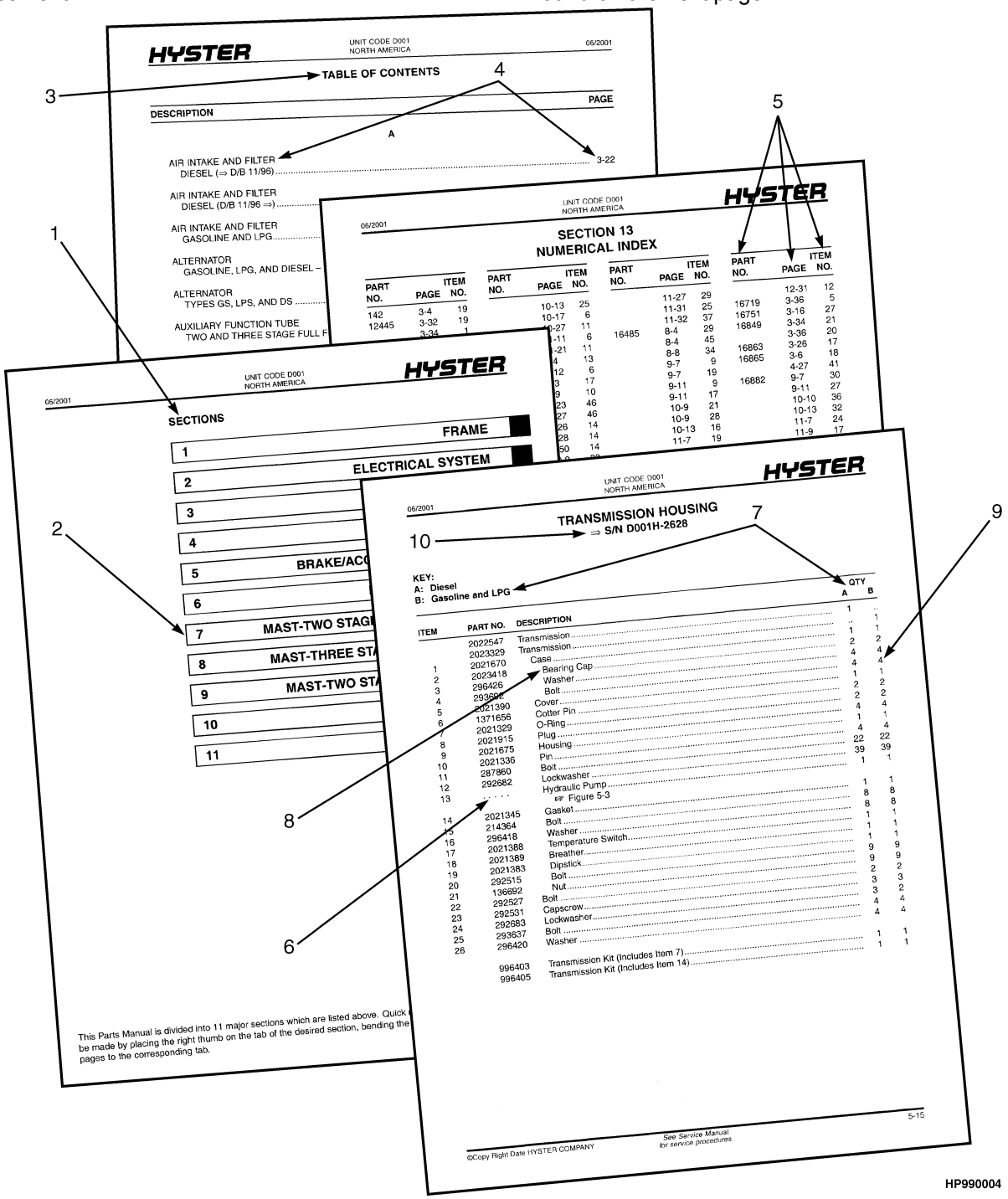

HOW TO FIND THE DESIRED PART NUMBER

WHEN THE PART NUMBER AND THE NEXT HIGHER ASSEMBLY IS NOT KNOWN:

1. Determine the function and application of the part required. Turn to the Sections Page. Choose the general area of reference most likely to include the part.
2. Turn to the section you chose. Use the Section Table of Contents to determine the assembly which would normally contain the part required. Then locate the part on the assembly breakdown page.

WHEN THE PART NUMBER IS NOT KNOWN AND THE NEXT HIGHER ASSEMBLY IS KNOWN:

3. Determine the assembly the required part is used on. Turn to the Table of Contents (Page i).
4. Locate the assembly the required part is used on and turn to the page indicated for that assembly. Then locate the part on the assembly breakdown page.

WHEN THE PART NUMBER IS KNOWN:

5. Use the Numerical Index (Page 13-1) to find the part number. Turn to the page listed and locate the part as indicated by the item number.

GENERAL:

The assembly breakdowns include part numbers, descriptions, quantities required, keys and footnotes to help in selecting correct parts.

6. Parts Supersession Information. Part numbers that have this history will be displayed in the parts list in the order that they were superseded (from oldest to newest). The superseded part numbers will be shown with a line through them.

   Five periods in the PART NO. column (. . . . .) indicate that the part is either *Not Serviced Separately* or there is a reference to another figure. A figure reference is denoted by a pointing hand followed by a figure number in the DESCRIPTION column (☞Figure 10)
7. Keys are used to show two or more similar assemblies, RH and LH assembly parts, etc. Select the appropriate key, "A", "B", "C", "D", or "E" and the corresponding quantity column to find the required parts. Two periods in the QTY column (..) indicate that the part is not used for that assembly.
8. Indented descriptions under the DESCRIPTION column are used to indicate assemblies and subparts of assemblies. In the example on the previous page, *BEARING CAP* (Item 2) is a subpart of the major assembly *CASE*.
9. Quantities shown are for one assembly. The quantities of the subpart *BEARING CAP* are indicated as two and two. This means two per *CASE* assembly.
10. Serial number breaks identify the most current parts information and are shown as follows:
    → S/N D001H2628
    Indicates last serial number affected.
    S/N D001H2629 →
    Indicates the first serial number affected.
    S/N D001H1553 ↔ S/N D001H3291
    Indicates a range of serial numbers affected.

    ECN numbers for pending serial numbers are shown to allow for the inclusion of the most current parts information and are identified as follows:
    → S/N Pending Per ECN 63243
    Indicates a pending serial number for last unit affected.
    S/N Pending Per ECN 63243 →
    Indicates a pending serial number for first unit affected.

    Date breaks are used to indicate when a change occurred but a subsequent serial number break was not recorded. This is an arbitrary date usually based on the ECN release and are identified as follows:
    → D/B 3/00
    Indicates that a change occurred sometime within that month for the item affected.
    D/B 3/00 →
    Indicates that a change occurred sometime within that month for the item affected.
    D/B 3/00 ↔ D/B 4/00
    Indicates a range of production dates of the item affected.

    Contact your local dealer for Hyster lift trucks for serial number information for items with a ECN or a date break.

ORDERING PARTS:

When ordering replacement parts, give the unit serial number, part number, name of part and quantity required.

For any further information on parts, service, or ordering, consult your local dealer for Hyster lift trucks.

See Service Manual for service procedures.
©2011 HYSTER COMPANY

IDENTIFICATION OF TRUCK SERIAL NUMBERS

X OOO X OOOO X

(1) (2) (3) (4) (5)

(1) and (2) The first letter and three numbers indicate the truck unit code.

(3) The second letter indicates the plant of manufacture.

(4) The four or five digit number indicates the production sequence number of the truck.

(5) The final letter indicates the year of manufacture starting with "A" in 1957, 1980, and 2003. The letters "I", "O", and "Q" will not be used.

For pending serial numbers contact your local dealer for Hyster lift trucks.

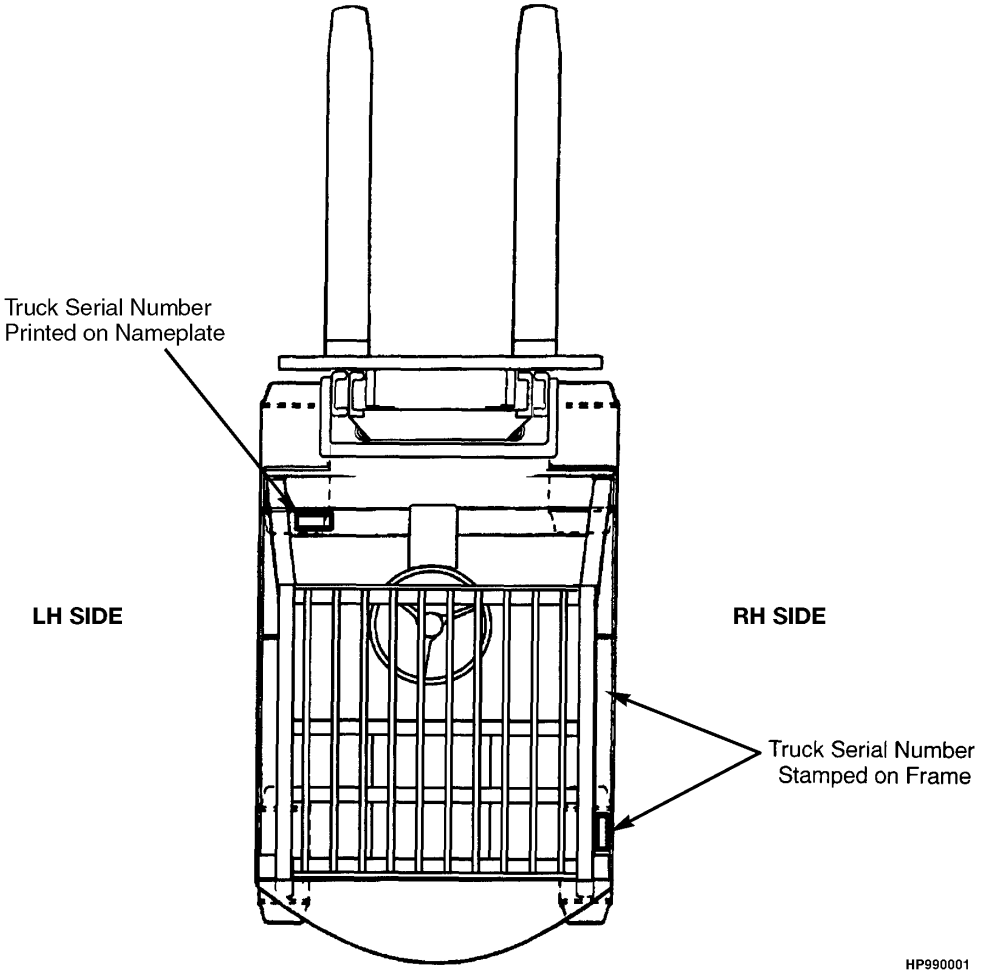

Parts referred to in this book as right or left hand parts are in accordance with the illustration above.

IDENTIFICATION OF MAST SERIAL NUMBERS

X OOO X OOOO
(1) (2) (3) (4)
OOOO
(5)

(1) and (2) The first letter and number indicates the mast unit code.

(3) The second letter indicates the plant of manufacture.

(4) The four or five digit number indicates the production sequence number of the mast.

(5) Carriage travel in millimeters stamped just below the serial number.

Mast Group identification consists of mast unit code (1) and (2) plus carriage travel (5).

For pending production sequence numbers contact your local dealer for Hyster lift trucks.

LIFT EQUIPMENT IDENTIFICATION

1. Fork part number, capacity rating, plant code letter, and date of manufacture are stamped approximately six inches below the top of most forks.
2. The carriage group number is stamped on the right hand side of the top crossmember (pin type) or on the back of the right hand end of the bottom crossmember (hook type). A date code has two letters in line with or below the carriage group number.
3. The mast identification number has a unit code, a letter indicating the plant of manufacture, and a serial number. Underneath the production sequence number is a four digit number that indicates the carriage travel in millimeters.
4. Tilt and lift cylinder group numbers are stamped on the cylinder shell.

   Always refer to the group, serial, or part number when ordering service parts.

   Modification of masts and carriages by SPED (Special Products Engineering Department) are identified by a model prefix code beginning with the letter "S". contact your dealer for Hyster lift trucks for information on these assemblies.

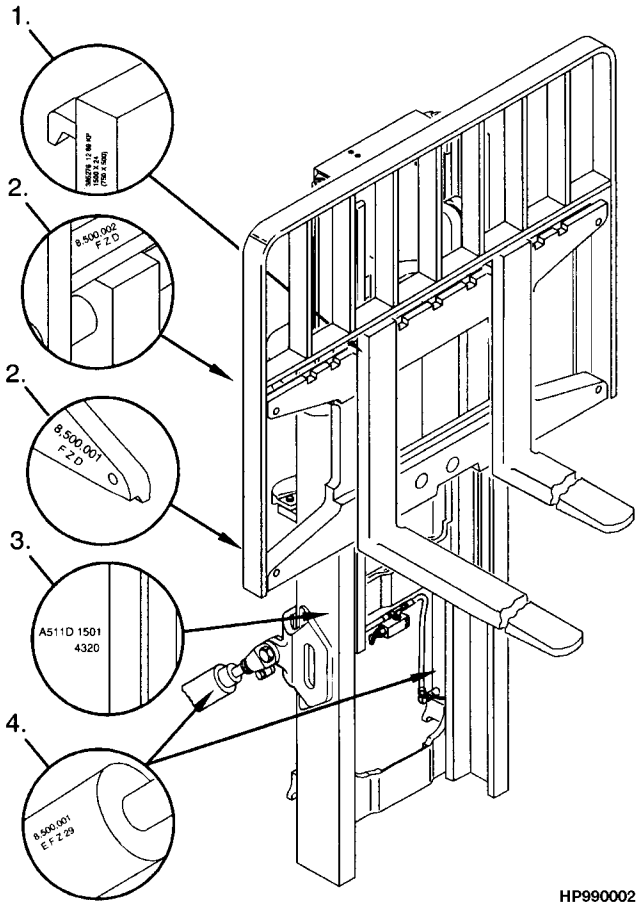

©2011 HYSTER COMPANY

IDENTIFICATION OF ATTACHMENT AND SIDE-SHIFT CARRIAGE SERIAL NUMBERS

X OOO X OOOO

(1) (2) (3) (4)

(1) and (2) The first letter and three numbers indicate the attachment unit code.

(3) The second letter indicates the plant of manufacture.

(4) The four or five digit number indicates the production sequence number.

For pending production sequence numbers contact your local dealer for Hyster lift trucks.

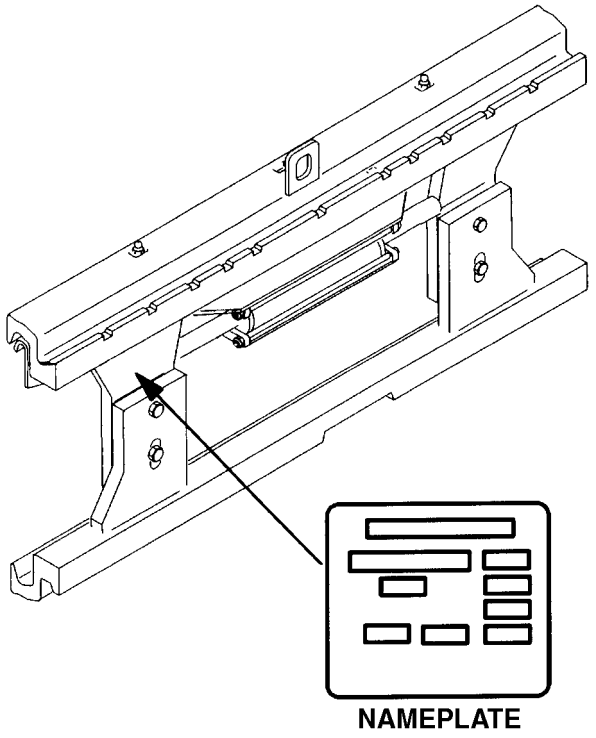

Side-shift carriages and attachments have nameplates. Use the serial number found on the nameplate to identify the attachment.

Always refer to the group, serial, or part number when ordering service parts.

Modifications of attachments and side-shift carriages by SPED (Special Products Engineering Department) are identified by a model prefix code beginning with the letter "S". Contact your dealer for Hyster lift trucks for information on these assemblies.

©2011 HYSTER COMPANY

PUBLICATIONS

Every new lift truck is provided with an OPERATING MANUAL. This manual has information that the operator must know for inspection and operation of the lift truck.

SERVICE MAINTENANCE MANUALS, which provide service and overhaul procedures, and PARTS MANUALS with complete replacement part identification, are available at a nominal fee from your Hyster dealer to assist users in effectively maintaining Hyster lift trucks in a safe, useful condition. See the list below for information on ordering specific publications for this model lift truck.

PUBLICATION	HYSTER PART NUMBER
Operating Manual	897461
Service Manual (Complete)	897452
Parts Manual	1523725

©2011 HYSTER COMPANY

1 FRAME

SECTION 1
FRAME

DESCRIPTION	PAGE
COUNTERWEIGHT	1-46
FLOORPLATES AND COVERS	
H440FS, H550FS, H620FS, H700FS	1-42
H550F, H620F, H650F, H700F	1-38
HAND PUMP	
OPERATOR COMPARTMENT (→ S/N E008E01592)	1-16
OPERATOR COMPARTMENT (S/N E008E01593 →)	1-18
HEATER	1-32
HEATER CONTROL	1-35
HOOD	
TIER I ENGINE - H550FS, H620FS, H700FS	1-66
TIER II AND III ENGINES - H440FS, H550FS, H620FS, H700FS	1-68
HOOD AND LINKAGE	
TIER I ENGINE	1-58
TIER II AND III ENGINES	1-62
LABELS	1-70
LATCH	
HYDRAULIC	1-14
OPERATOR COMPARTMENT	
SHEET 1 OF 3	1-20
SHEET 2 OF 3	1-24
SHEET 3 OF 3	1-28
WITHOUT CAB	1-2
PLATFORM	
OPERATOR COMPARTMENT	1-4
SEAT ASSEMBLY	
→ S/N E008E02064C	1-48
S/N E008E02065C →	1-50
SUSPENSION SEAT	
GRAMMER HIGH BACK - SHEET 1 OF 2 (9/1999 →)	1-52
GRAMMER HIGH BACK - SHEET 2 OF 2 (9/1999 →)	1-56
TILT CYLINDER	
OPERATOR COMPARTMENT (→ S/N E008E01676) (→ S/N E008D01594)	1-8
OPERATOR COMPARTMENT (S/N E008E01677 ↔ S/N E008E01698) (S/N E008D01595 ↔ S/N E008D01617)	1-10
OPERATOR COMPARTMENT (S/N E008D01618 →) (S/N E008E01699 →)	1-12
WINDSCREEN WASHER	1-36

©2011 HYSTER COMPANY

OPERATOR COMPARTMENT (FIGURE 1-1)
WITHOUT CAB

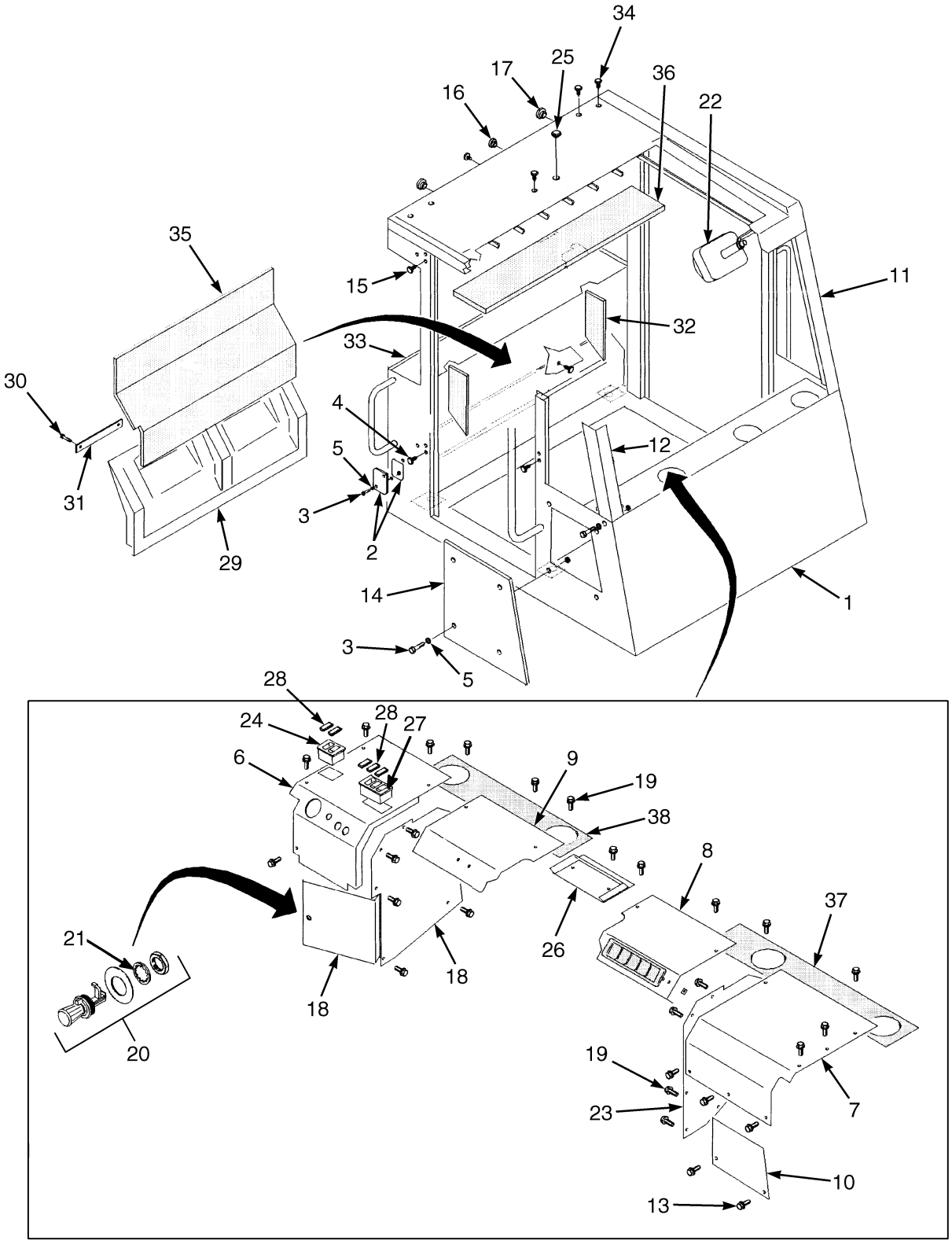

HP121076

©2011 HYSTER COMPANY

OPERATOR COMPARTMENT
WITHOUT CAB

ITEM	PART NO.	DESCRIPTION	QTY
1	1462733	Operator Compartment	1
2	. . . . .	Plate	1
3	. . . . .	Capscrew	1
4	. . . . .	Nut	1
5	. . . . .	Lockwasher	1
6	1553748	Cover (LH)	1
7	1301113	Cover (RH)	1
8	1325725	Cover Plate	1
9	1504471	Cover Plate	1
10	. . . . .	Plate	1
11	. . . . .	Angle	1
12	. . . . .	Angle	1
13	. . . . .	Screw	1
14	. . . . .	Plate	1
15	. . . . .	Plug	1
16	. . . . .	Plug	1
17	. . . . .	Fastener	1
18	1311388	Door	1
19	1301177	Screw	29
20	1311288	Latch	1
21	1311287	Washer	1
22	1301286	Mirror	2
23	1301255	Panel (RH Access)	1
24	376948	Bezel	2
25	1311217	Plug	2
26	1301189	Cover	1
27	376947	Frame	1
28	376949	Cover	5
29	1342664	Sound Liner	2
30	329067	Screw	2
31	1301297	Plate	1
32	1301263	Sound Liner	1
33	1301264	Sound Liner	1
34	1307737	Fastener	4
35	1301554	Sound Liner	1
36	1301265	Sound Liner	1
37	1301292	Gasket (RH)	1
38	1301293	Gasket (LH)	1
	280472	Sealant	AR

©2011 HYSTER COMPANY

PLATFORM (FIGURE 1-2)
OPERATOR COMPARTMENT

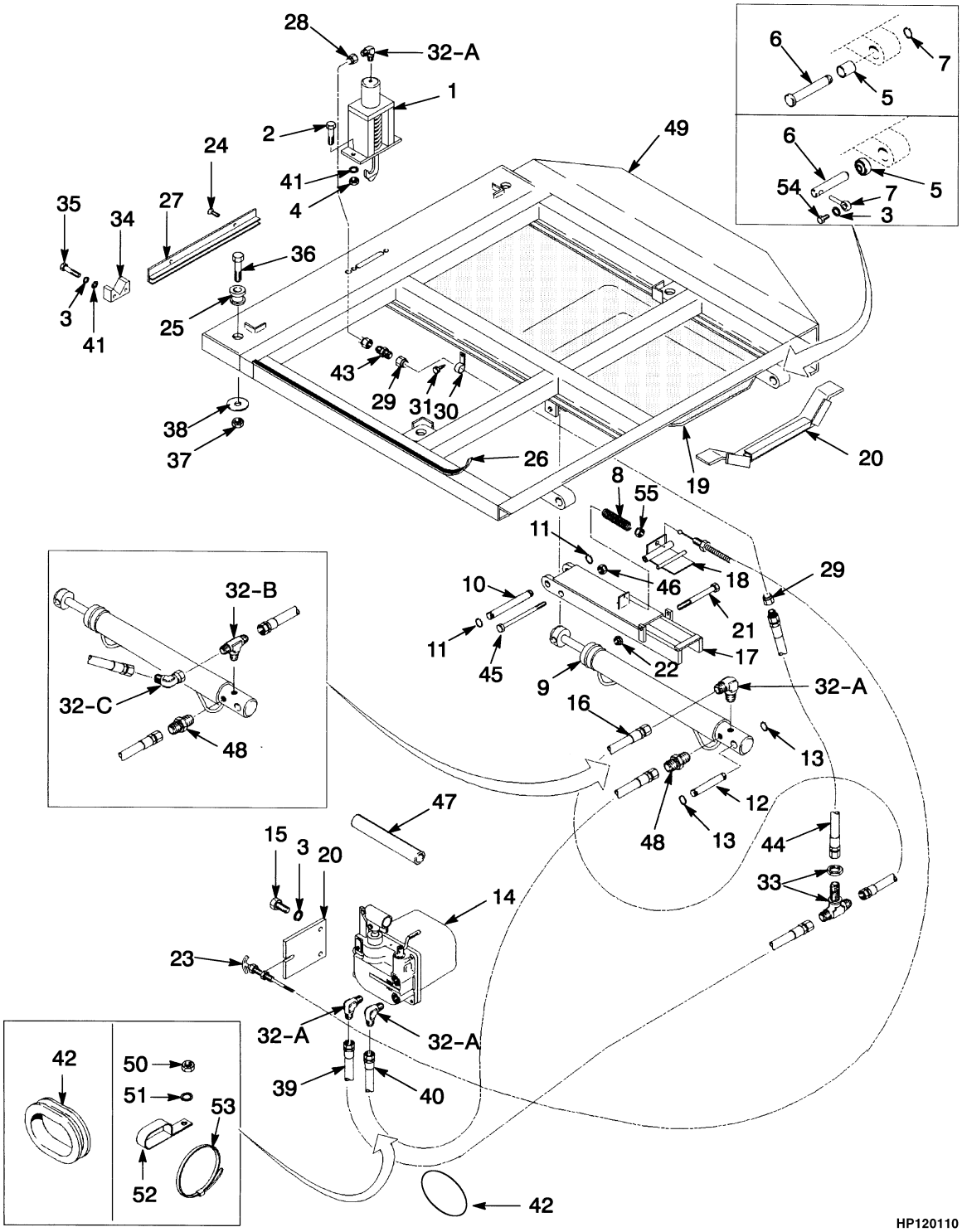

©2011 HYSTER COMPANY

PLATFORM
OPERATOR COMPARTMENT

KEY:
A: Center Compartment (H550F, H620F, H650F, H700F)
B: Left Compartment (H550F, H620F, H650F, H700F)
C: Center Compartment (H550FS, H620FS, H700FS)
D: Left Compartment (H550FS, H620FS, H700FS)

ITEM	PART NO.	DESCRIPTION	QTY A	B	C	D
1	1335659	Latch (Hydraulic) (☞Figure 1-6)	1	1	1	1
2	16815	Capscrew	2	2	2	2
3	**cg** 15156	Lockwasher	12	12	12	12
3	**wt** 15156	Lockwasher	8	8	8	8
4	156133	Nut	2	2	2	2
5	**bf** 1333065	Bushing	2	2	2	2
5	**vs** 192970	Bushing	2	2	2	2
6	**bf** 1335661	Pin	2	2	2	2
6	**vs** 1354548	Pin	2	2	2	2
7	**bf** 131358	Snap Ring	2	2	2	2
7	**vs** 195566	Anchor	2	2	2	2
8	1359434	Spring	1	1	1	1
9	**di** 1335658	Tilt Cylinder (☞Figure 1-3)	1	1	1	1
9	**mn** 1367339	Tilt Cylinder (☞Figure 1-4)	1	1	1	1
9	**rq** 816345	Tilt Cylinder (☞Figure 1-5)	1	1	1	1
10	1336921	Pin	1	1	1	1
11	1194630	Snap Ring	2	2	2	2
12	1336920	Pin	1	1	1	1
13	131357	Snap Ring	2	2	2	2
14	**h** 1335657	Hydraulic Pump (☞Figure 1-7)	1	1	1	1
14	**u** 816344	Hydraulic Pump (☞Figure 1-8)	1	1	1	1
15	16805	Capscrew	2	2	2	2
16	139721	Hose Assy	1	1	..	..
17	1359435	Link	1	1	1	1
18	1344284	Bracket	1	1	1	1
19	1336907	Noise Panel	2	2	2	2
20	**wt** 1359444	Support	2	2	2	2
21	18547	Capscrew	1	1	1	1
22	192077	Nut	1	1	1	1
23	1336910	Cable Assy (Control)	1	1	..	..
23	1353946	Cable (Control)	..	..	1	1
24	18337	Capscrew	4	4	4	4
25	1325519	Motor Mount (Cab)	4	4	4	4
26	178901	Tape	AR	AR	AR	AR
27	1331886	Bracket	2	2	2	2
28	1337259	Tube Assy	1	1	1	1
29	1337260	Tube Assy	1	1	1	1
30	124359	Clamp	4	4	4	4
31	277279	Screw	4	4	4	4
32	14500	Fitting (A)	1	1	3	3
32	14602	Fitting (B)	..	..	1	1
32	16556	Fitting (D)	2	2	2	2
32	16997	Fitting (C)	..	..	1	1

©2011 HYSTER COMPANY

PLATFORM
OPERATOR COMPARTMENT

KEY:
A: Center Compartment (H550F, H620F, H650F, H700F)
B: Left Compartment (H550F, H620F, H650F, H700F)
C: Center Compartment (H550FS, H620FS, H700FS)
D: Left Compartment (H550FS, H620FS, H700FS)

ITEM	PART NO.	DESCRIPTION	QTY A	QTY B	QTY C	QTY D
33	16472	Fitting	1	1	..	..
34	1336090	Support	2	2	2	2
35	16816	Capscrew	4	4	4	4
36	**a** 292535	Capscrew	4	4	4	4
36	292538	Capscrew	4	4	4	4
37	300937	Nut	4	4	4	4
38	300939	Washer	4	4	4	4
38	816574	Spacer	4	4	4	4
39	1337300	Hose Assy	1	1	..	..
39	146236	Hose Assy	..	..	1	1
40	146236	Hose Assy	..	..	1	1
40	265325	Hose Assy	1	1	..	..
41	15176	Washer	6	6	6	6
42	1337281	Molding	1	1	1	1
43	14689	Fitting	1	1	1	1
44	1339532	Hose Assy	1	1	1	1
45	18486	Capscrew	1	1	1	1
46	169874	Nut	1	1	1	1
47	1360658	Handle (Pump)	..	..	1	1
47	815996	Handle (Pump)	1	1	..	..
47	816346	Handle Grip	1	1	..	..
48	14668	Fitting	1	1	1	1
49	**ej** 1331920	Platform	1	..	..	..
49	**lo** 1466330	Platform	1	..	..	..
49	**p** 1507767	Platform	1	..	..	..
49	**ej** 1331921	Platform	..	1	..	..
49	**p** 1507768	Platform	..	1	..	..
49	**ej** 1349783	Platform	..	..	1	..
49	**lo** 1466327	Platform	..	..	1	..
49	**p** 1514838	Platform	..	..	1	..
49	**k** 1349784	Platform	..	..	..	1
49	**p** 1514839	Platform	..	..	..	1
49	1515579	Operator Compartment	..	..	..	1
50	15056	Nut	..	..	1	1
51	15134	Washer	..	..	1	1
52	128408	Clamp	..	..	2	2
53	114312	Strap Clamp	..	..	2	2
54	**vs** 16598	Capscrew	2	2	2	2
55	15026	Nut	1	1	1	1

©2011 HYSTER COMPANY

FOOTNOTES:

a With EC Cab
b → S/N E008D01514
c → S/N E008D01519
d → S/N E008D01594
e → S/N E008D01701X
f → S/N E008E01537
g → S/N E008E01542
h → S/N E008E01592
i → S/N E008E01676
j → S/N E008E01749W
k → S/N E008E01888Z
l S/N E008D01701X ↔ S/N E008E01888Z
m S/N E008D01595 ↔ S/N E008D01618
n S/N E008E01677 ↔ S/N E008E01699
o S/N E008E01749W ↔ S/N E008E01888Z
p S/N E008E01889Z →
q S/N E008E01699 →
r S/N E008D01618 →
s S/N E008E01538 →
t S/N E008E01543 →
u S/N E008E01593 →
v S/N E008D01515 →
w S/N E008D01520 →

©2011 HYSTER COMPANY

TILT CYLINDER (FIGURE 1-3)

OPERATOR COMPARTMENT (→ S/N E008E01676) (→ S/N E008D01594)

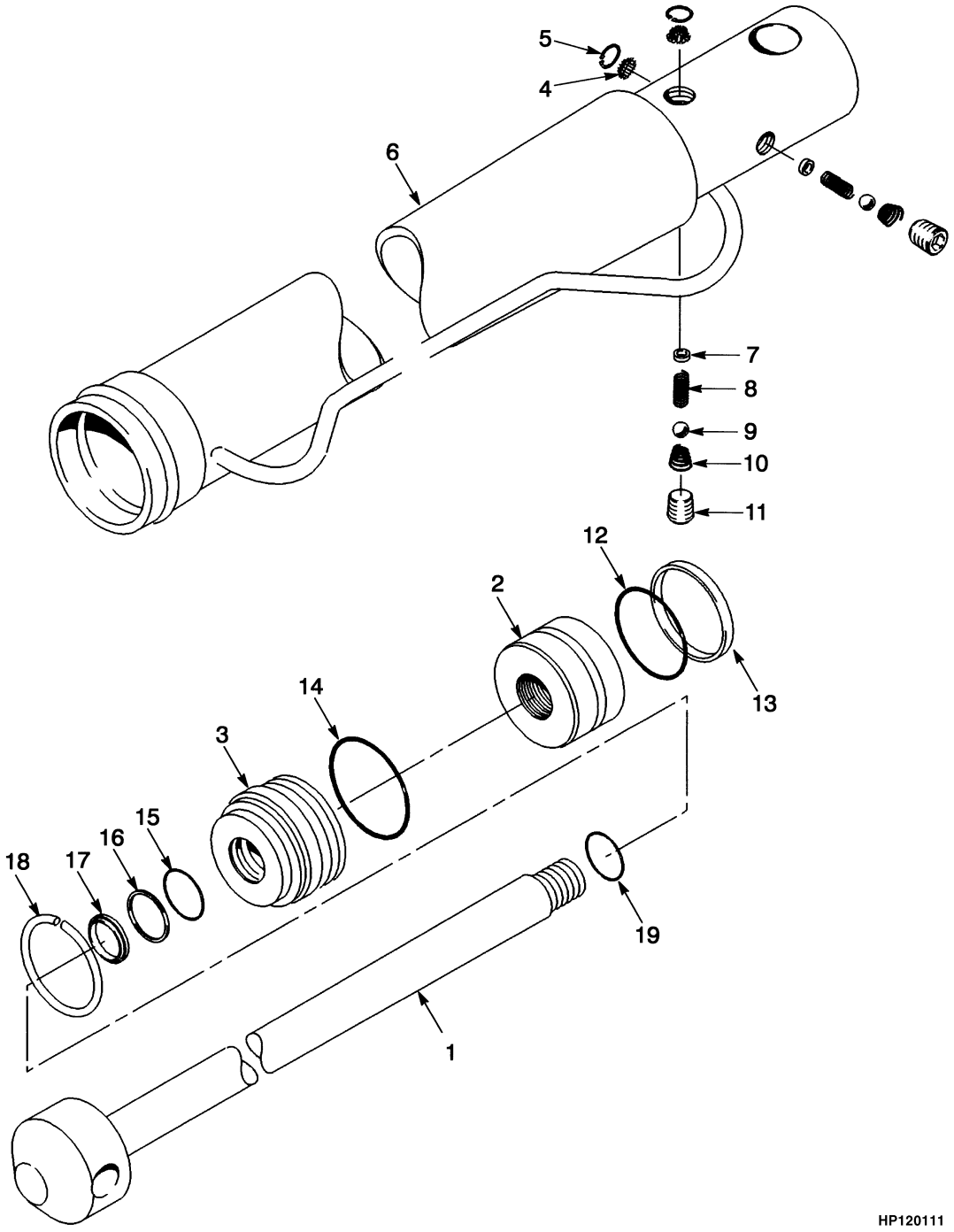

©2011 HYSTER COMPANY

TILT CYLINDER

OPERATOR COMPARTMENT (→ S/N E008E01676) (→ S/N E008D01594)

ITEM	PART NO.	DESCRIPTION	QTY
	1335658	Tilt Cylinder	1
1	1338719	Rod	1
2	1338720	Piston	1
3	1338721	Gland	1
4	. . . . .	Screen	2
5	. . . . .	Retaining Ring	2
6	. . . . .	Shell	1
7	. . . . .	Screw (Lock)	2
8	. . . . .	Spring	2
9	. . . . .	Ball	2
10	. . . . .	Spring	2
11	. . . . .	Plug	2
12	. . . . .	O-Ring	1
13	. . . . .	Seal	1
14	. . . . .	O-Ring	1
15	. . . . .	O-Ring	1
16	. . . . .	Back-Up Ring	1
17	. . . . .	Wiper	1
18	. . . . .	Retaining Ring	1
19	. . . . .	O-Ring	1
	1338723	Kit-Seal	1

©2011 HYSTER COMPANY

TILT CYLINDER (FIGURE 1-4)

OPERATOR COMPARTMENT (S/N E008E01677 ↔ S/N E008E01698) (S/N E008D01595 ↔ S/N E008D01617)

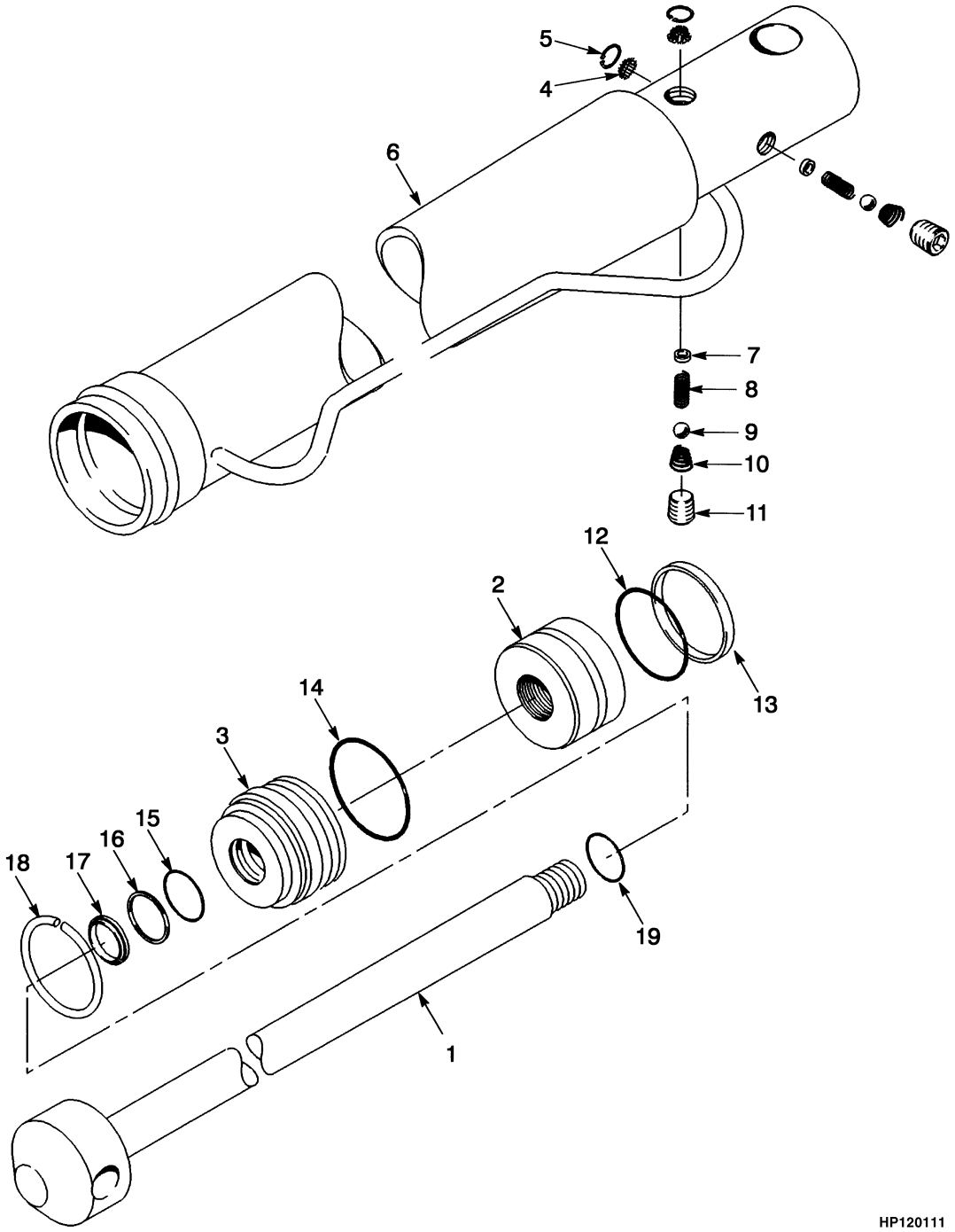

©2011 HYSTER COMPANY

TILT CYLINDER

OPERATOR COMPARTMENT (S/N E008E01677 ↔ S/N E008E01698) (S/N E008D01595 ↔ S/N E008D01617)

ITEM	PART NO.	DESCRIPTION	QTY
	1367339	Tilt Cylinder	1
1	. . . . .	Rod	1
2	. . . . .	Piston	1
3	. . . . .	Gland	1
4	. . . . .	Spring	2
5	. . . . .	Retaining Ring	2
6	. . . . .	Shell	1
7	. . . . .	Screw (Lock)	2
8	. . . . .	Spring	2
9	. . . . .	Ball	2
10	. . . . .	Spring	2
11	. . . . .	Plug	2
12	. . . . .	Seal	1
13	. . . . .	O-Ring	1
14	. . . . .	O-Ring	1
15	. . . . .	O-Ring	1
16	. . . . .	Back-Up Ring	1
17	. . . . .	Wiper	1
18	. . . . .	Ring	1
19	. . . . .	O-Ring	1
	1338723	Kit-Seal	1

©2011 HYSTER COMPANY

TILT CYLINDER (FIGURE 1-5)

OPERATOR COMPARTMENT (S/N E008D01618 →) (S/N E008E01699 →)

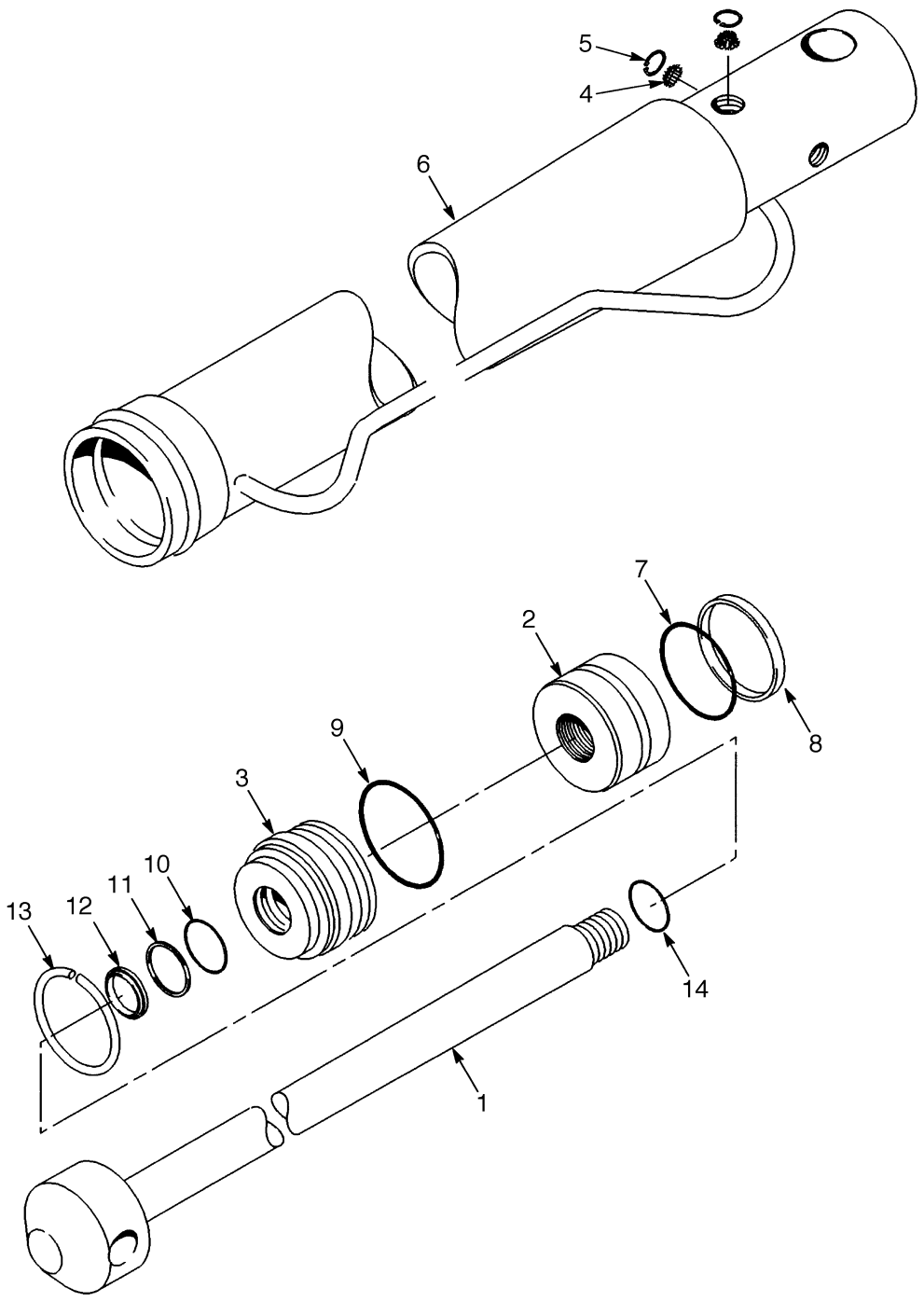

©2011 HYSTER COMPANY

TILT CYLINDER

OPERATOR COMPARTMENT (S/N E008D01618 →) (S/N E008E01699 →)

ITEM	PART NO.	DESCRIPTION	QTY
	816345	Tilt Cylinder	1
1	. . . . .	Rod	1
2	1338720	Piston	1
3	1452221	Gland	1
4	. . . . .	Screen	2
5	. . . . .	Retaining Ring	2
6	. . . . .	Shell	1
7	. . . . .	Seal	1
8	. . . . .	O-Ring	1
9	. . . . .	O-Ring	1
10	. . . . .	O-Ring	1
11	. . . . .	Back-Up Ring	1
12	. . . . .	Wiper	1
13	. . . . .	Ring	1
14	. . . . .	O-Ring	1
	1452222	Kit-Service	1

©2011 HYSTER COMPANY

LATCH (FIGURE 1-6)
HYDRAULIC

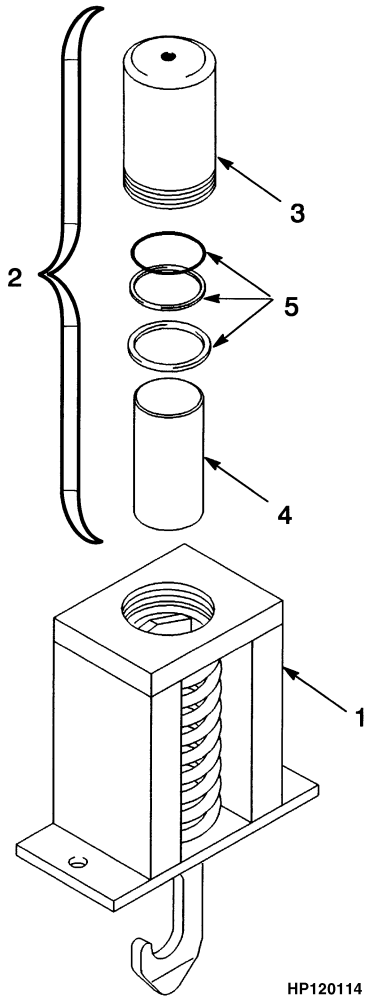

ITEM	PART NO.	DESCRIPTION	QTY
	1335659	Latch (Hydraulic)	1
1	. . . . .	Latch	1
2	. . . . .	Cylinder Assy	1
3	. . . . .	Cylinder Assy	1
4	. . . . .	Plunger	1
5	. . . . .	O-Ring	1
5	. . . . .	Back-Up Ring	1
5	. . . . .	Wiper	1
	. . . . .	Kit-Service	1

©2011 HYSTER COMPANY

NOTES

©2011 HYSTER COMPANY

HAND PUMP (FIGURE 1-7)
OPERATOR COMPARTMENT (→ S/N E008E01592)

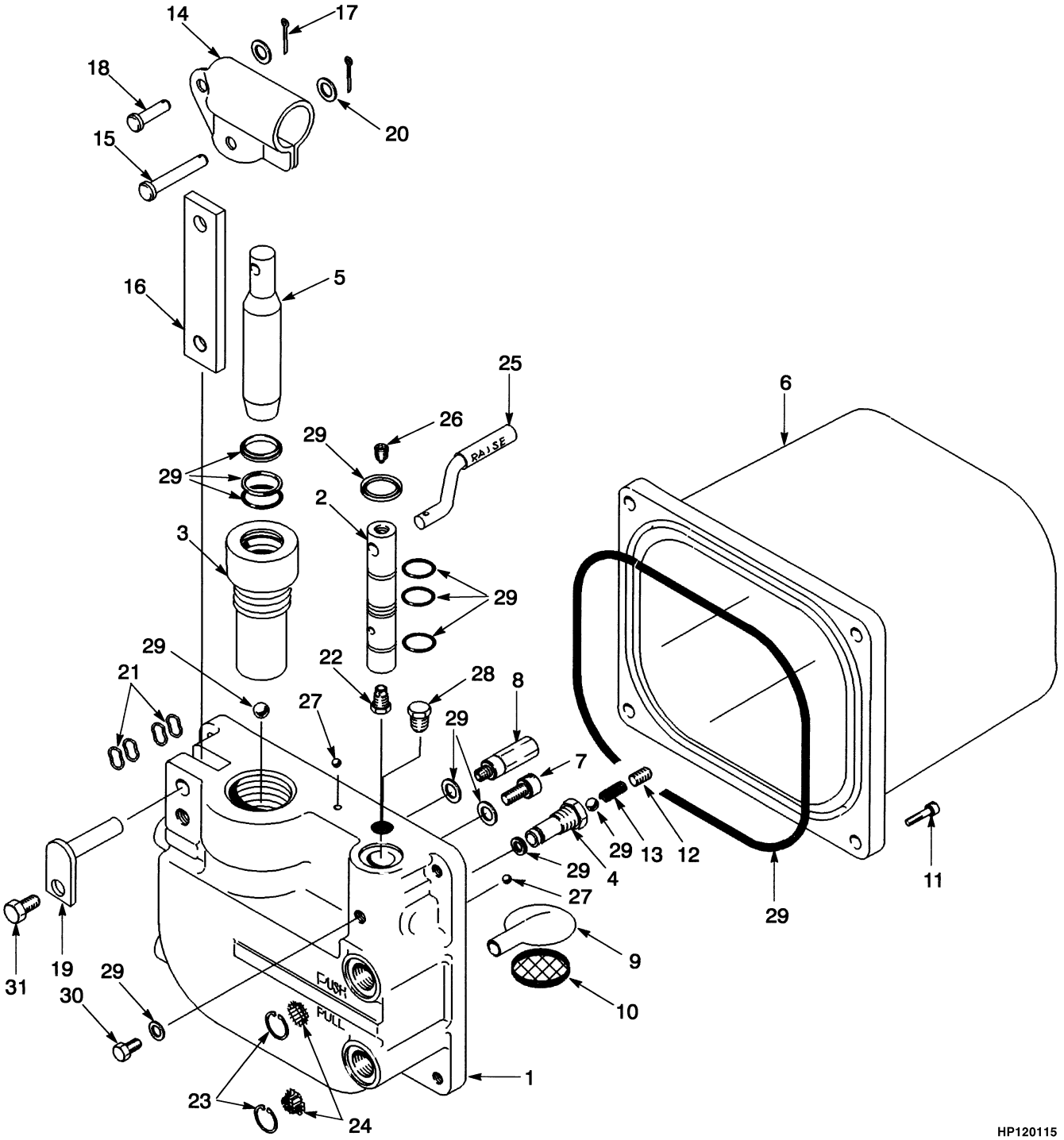

©2011 HYSTER COMPANY

HAND PUMP

OPERATOR COMPARTMENT (→ S/N E008E01592)

ITEM	PART NO.	DESCRIPTION	QTY
	1335657	Hydraulic Pump	1
1	. . . . .	Body	1
2	1338691	Spool	1
3	. . . . .	Cylinder	1
4	1338692	Seat Assy	1
5	1338693	Plunger	1
6	1338694	Reservoir	1
7	1338695	Plug	1
8	1338696	Relief Valve	1
9	1338697	Adapter (Inlet)	1
10	1338698	Screen	1
11	1338699	Capscrew	4
12	1338700	Plug	1
13	1338701	Spring	1
14	1338702	Beam	1
15	1338703	Pin	1
16	1338704	Link	1
17	1338705	Cotter Pin	2
18	1338706	Pin	1
19	1338707	Pin	1
20	1338708	Washer	2
21	1338709	Washer	4
22	1338710	Fitting	1
23	1338711	Retaining Ring	2
24	1338712	Screen	2
25	1338713	Handle	1
26	1338714	Setscrew	1
27	1338715	Ball	7
28	1338716	Plug	1
29	1338676	Kit-Service	AR
30	1338717	Capscrew	1
31	1338718	Screw	1

©2011 HYSTER COMPANY

HAND PUMP (FIGURE 1-8)
OPERATOR COMPARTMENT (S/N E008E01593 →)

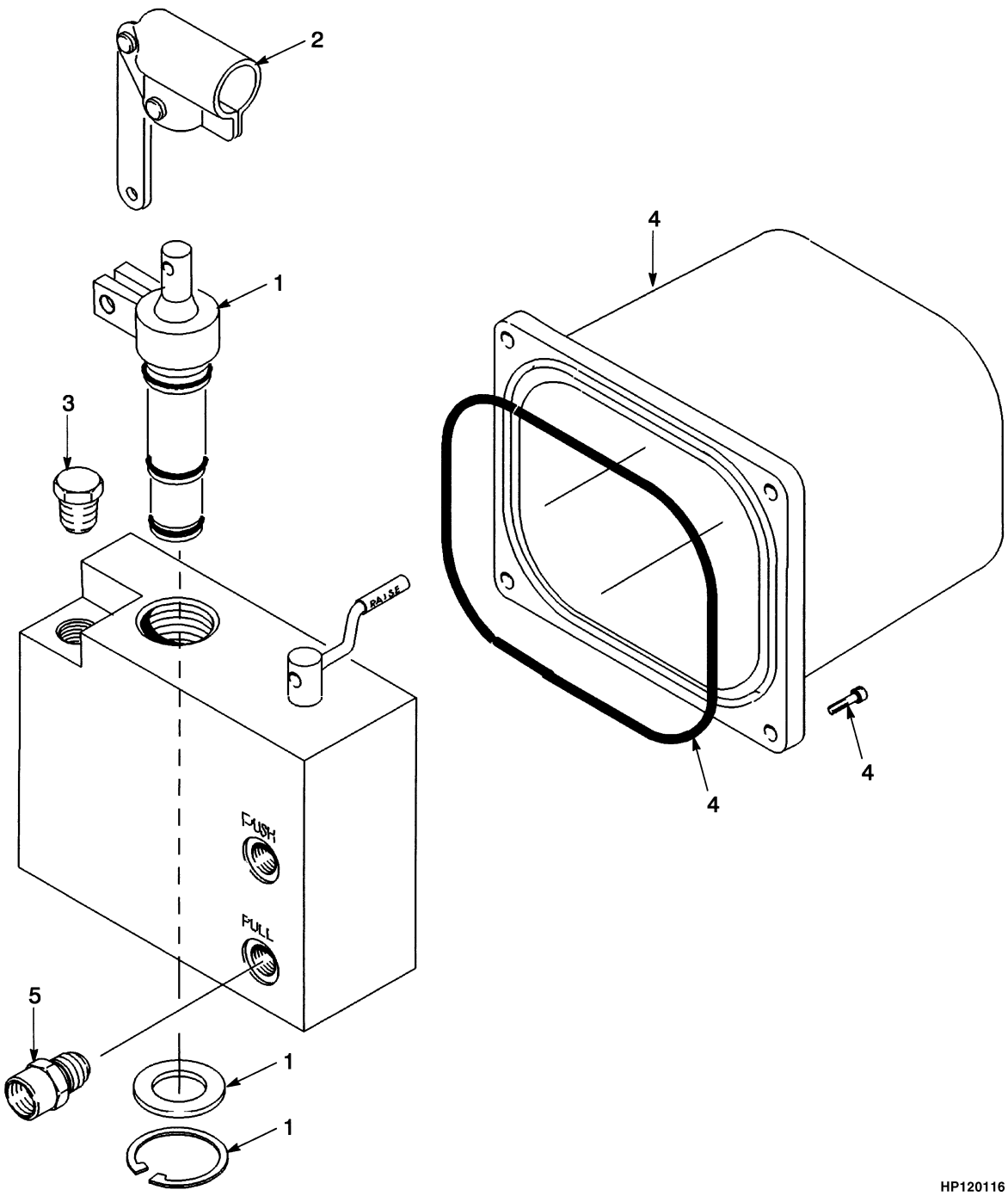

©2011 HYSTER COMPANY

HAND PUMP

OPERATOR COMPARTMENT (S/N E008E01593 →)

ITEM	PART NO.	DESCRIPTION	QTY
	816344	Hydraulic Pump	1
1	1452226	Cylinder Assy (Insert)	1
2	1452227	Beam (Link Assembly)	1
3	1452228	Plug	1
4	1452229	Reservoir	1
5	1452230	Adapter	2

©2011 HYSTER COMPANY

OPERATOR COMPARTMENT (FIGURE 1-9)
SHEET 1 OF 3

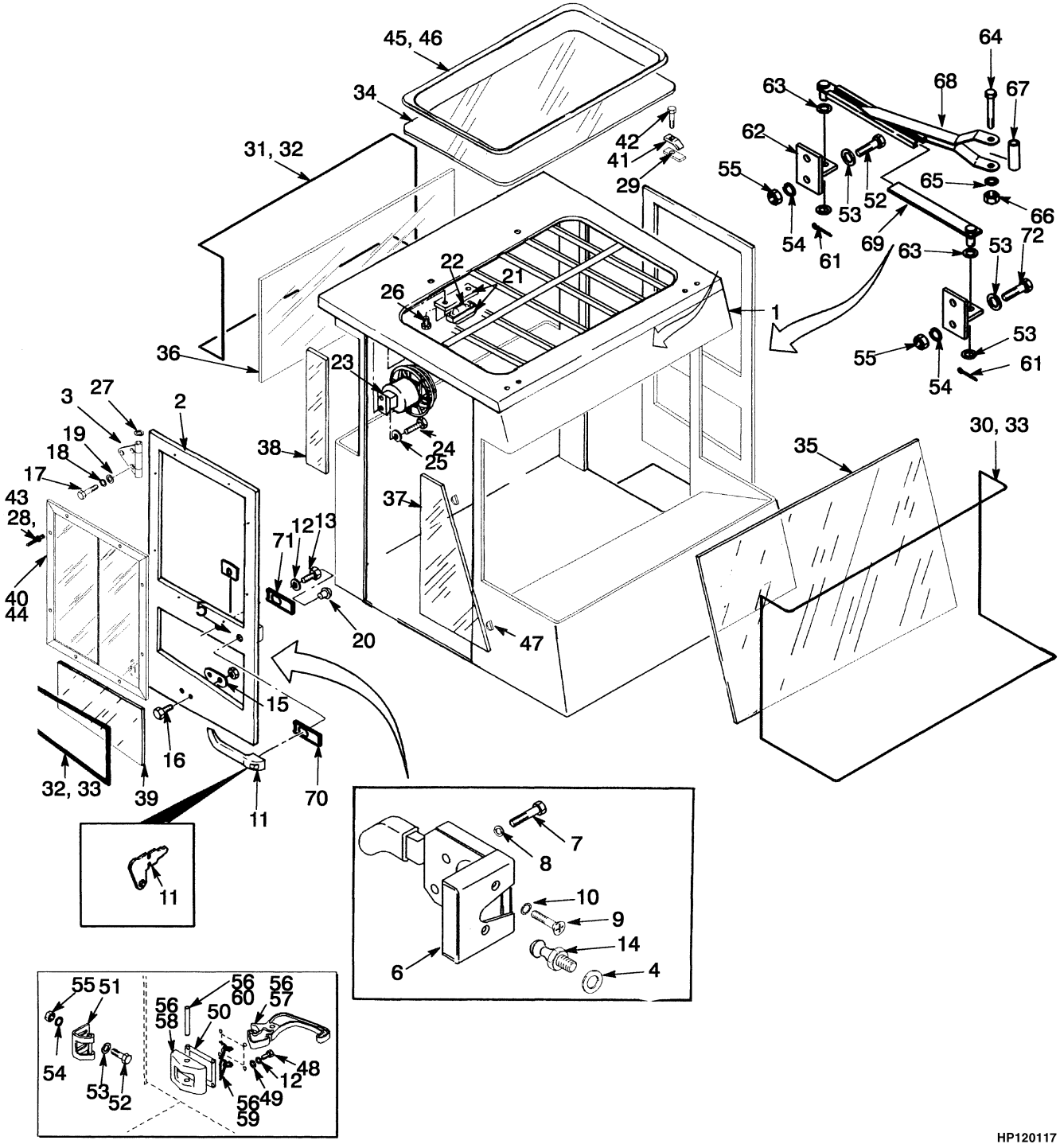

HP120117

©2011 HYSTER COMPANY

OPERATOR COMPARTMENT
SHEET 1 OF 3

KEY:
A: Last Used on E8E-1750
B: First Used on E8E-1751

ITEM	PART NO.	DESCRIPTION	QTY A	QTY B
1	**c** 1375947	Operator Compartment	..	1
1	1346460	Operator Compartment	1	..
1	1463263	Cab	..	1
2	**f** 1300995	Door (LH)	1	..
2	**f** 1300996	Door (RH)	1	..
2	1377726	Door (LH)	..	1
2	1377727	Door (RH)	..	1
3	**f** 1300978	Hinge (LH)	2	..
3	**f** 1300979	Hinge (RH)	2	..
4	296423	Washer	2	2
5	**f** ~~1512440~~			
	302399	Nut	4	..
6	1309824	Door Handle (RH)	1	1
6	1312450	Door Handle (LH)	1	1
7	302248	Capscrew	4	4
8	292679	Washer	4	4
9	296464	Screw	4	4
10	296396	Washer	4	4
11	1319177	Handle	2	2
11	1360777	Key	1	1
12	292680	Washer	2	6
13	302256	Capscrew	2	2
14	365344	Bolt	2	2
15	**f** 3047418	Retainer	2	..
16	**f** 353144	Capscrew	4	..
17	**f** 1301705	Capscrew	12	..
18	**f** 1301707	Washer	12	..
19	**f** 1301706	Lockwasher	12	..
20	309666	Plug	2	2
21	1301254	Dome Light	1	1
22	1301256	Bulb	..	2
22	**f** 1307051	Bulb	2	..
23	1307755	Fan	1	1
23	134810	Terminal	1	1
23	181045	Connector Body	1	1
24	16750	Screw	4	4
25	15152	Lockwasher	4	4
26	302236	Capscrew	2	2
27	1301700	Ring (Brass)	4	4
28	280472	Sealant	AR	AR
29	1342660	Strip Seal	3	4
30	1346426	Seal (Front Window)	1	1
31	376064	Seal (Rear Window)	1	1
32	376867	Seal (LH Window)	1	1
32	376868	Seal (RH Window)	1	1

©2011 HYSTER COMPANY

OPERATOR COMPARTMENT
SHEET 1 OF 3

KEY:
A: Last Used on E8E-1750
B: First Used on E8E-1751

ITEM	PART NO.	DESCRIPTION	QTY A	QTY B
33	376922	Strip Seal	AR	AR
34	**c** 1346422	Window	1	1
34	1463773	Window	..	1
35	1346424	Front Window (Front)	1	1
36	1301372	Glass (Rear)	1	1
37	1346425	Front Window	2	2
38	1301374	Glass	2	2
39	1301375	Glass	2	2
40	**de** 1311302	Sliding Window (RH)	1	..
40	**de** 1324084	Latch	1	..
40	**gh** 1375984	Sliding Window (RH)	1	1
40	**gh** 1377704	Glass (Stationary)	..	1
40	**gh** 1377703	Glass (Sliding)	..	1
40	**gh** 1377702	Latch	1	1
40	**gh** 1377271	Screw	4	4
40	**de** 1311303	Sliding Window (LH)	1	..
40	**de** 1324084	Latch	1	..
40	**gh** 1375985	Sliding Window (LH)	1	1
40	**gh** 1377704	Glass (Stationary)	..	1
40	**gh** 1377703	Glass (Sliding)	..	1
40	**gh** 1377702	Latch	1	1
40	**gh** 1377271	Screw	4	4
41	1301184	Plate	4	4
42	302244	Capscrew	4	4
43	265817	Rivet	16	16
44	. . . . .	Glue (Silicone)	AR	AR
45	365337	Primer	AR	AR
46	318352	Sealant	AR	AR
47	376840	Spacer	2	AR
48	292500	Capscrew	..	8
49	320156	Washer	..	8
50	1369496	Seal	..	2
51	**a** 1393748	Striker (Center Mount)	..	2
51	1393748	Striker (LH Mount)	..	1
52	**a** 292513	Capscrew (Center Mount)	..	4
52	**b** 292513	Capscrew (Center Mount)	..	2
52	136985	Capscrew (LH Mount)	..	4
53	**a** 320159	Washer (Center Mount)	..	4
53	**b** 320159	Washer (Center Mount)	..	12
53	320159	Washer (LH Mount)	..	6
54	**a** ~~388049~~ 292682	Lockwasher (Center Mount)	..	4
54	**b** ~~388049~~ 292682	Lockwasher (Center Mount)	..	8
54	~~388049~~	Lockwasher (LH Mount)	..	6

©2011 HYSTER COMPANY

OPERATOR COMPARTMENT
SHEET 1 OF 3

KEY:
A: Last Used on E8E-1750
B: First Used on E8E-1751

ITEM	PART NO.	DESCRIPTION	QTY A	QTY B
	292682			
55	**a** 136692	Nut (Center Mount)	..	4
55	**b** 136692	Nut (Center Mount)	..	8
55	136692	Nut (LH Mount)	..	6
56	1374428	Latch	..	2
57	1356943	Latch	..	1
58	1356948	Bracket	..	1
59	1358734	Spring	..	1
60	226774	Pin	..	1
61	**b** 18839	Cotter Pin (Center Mount)	..	4
61	18839	Cotter Pin (LH Mount)	..	2
62	**b** 1378439	Plate Wldmt (Center Mount)	..	4
62	1378439	Plate Wldmt (LH Mount)	..	2
63	**b** 334340	Washer (Center Mount)	..	4
63	334340	Washer (LH Mount)	..	2
64	**b** 18518	Capscrew (Center Mount)	..	2
64	18518	Capscrew (LH Mount)	..	1
65	**b** 18515	Washer (Center Mount)	..	4
65	18515	Washer (LH Mount)	..	2
66	**b** 15114	Locknut (Center Mount)	..	2
66	15114	Locknut (LH Mount)	..	1
67	**b** 1378429	Roller (Center Mount)	..	2
67	1378429	Roller (LH Mount)	..	1
68	**b** 1458111	Channel (Center Mount, RH)	..	1
68	**b** 1458115	Channel (Center Mount, LH)	..	1
68	1378430	Hose Guide (LH Mount)	..	1
69	**b** 1378436	Rail (Center Mount)	..	2
69	1378436	Rail (LH Mount)	..	1
70	816377	Seal	2	..
71	816378	Seal	2	..
72	287854	Capscrew (LH Mount)	..	2

FOOTNOTES:

a Excluding H550FS
b H550FS Only
c With EC Cab
d → S/N E008D01581
e → S/N E008E01654
f → S/N E008E01750
g S/N E008D01582 →
h S/N E008E01655 →

©2011 HYSTER COMPANY

OPERATOR COMPARTMENT (FIGURE 1-10)
SHEET 2 OF 3

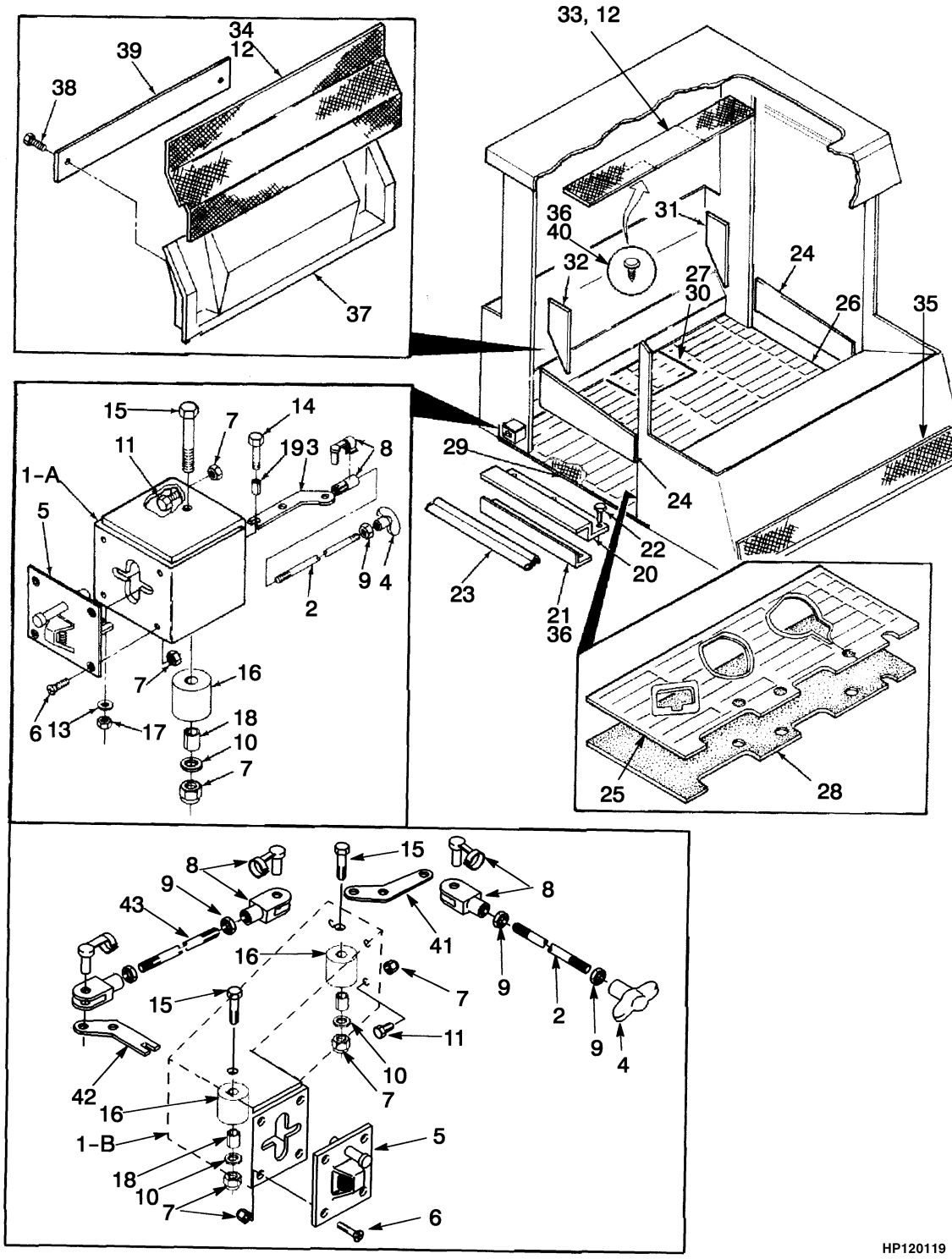

©2011 HYSTER COMPANY

OPERATOR COMPARTMENT
SHEET 2 OF 3

KEY:
A: Center Compartment
B: Left Compartment
C: Without Cab

ITEM	PART NO.	DESCRIPTION	QTY A	QTY B	QTY C
1	**c** 1346391	Bracket (B)	..	1	..
1	**c** 376972	Bracket Wldmt (A)	2	1	..
2	**c** 376971	Link	2	2	..
3	**c** 376968	Link	2	1	..
4	**c** 3047329	Knob	2	2	..
5	**c** 3047417	Retainer (Door)	2	2	..
6	**c** 296472	Screw	8	8	..
7	**c** ~~1512440~~ 302399	Nut	16	17	..
8	**c** 3047330	Rod End	2	4	..
9	**c** 292668	Nut	4	5	..
10	**c** 320156	Washer	2	3	..
11	**c** 292501	Capscrew	6	6	..
12	280644	Button	6	6	..
13	**c** 320155	Washer	2	2	..
14	**c** 302248	Capscrew	1	1	..
15	**c** 292505	Capscrew	2	3	..
16	**c** 376970	Spacer	2	3	..
17	**c** 302398	Locknut	2	2	..
18	**c** 1301026	Spacer	2	3	..
19	**c** 1301027	Spacer	2	2	..
20	1325567	Bracket	2	2	..
21	1325576	Bracket	2	2	..
22	309637	Screw	12	12	..
23	1325582	Seal-Bulk	AR	AR	..
24	**c** 1311432	Sound Liner (RH Door)	1	1	..
24	**c** 1311433	Sound Liner (LH Door)	1	1	..
24	**f** 1377728	Liner (RH Door)	1	1	..
24	**f** 1377729	Liner (LH Door)	1	1	..
25	**ab** 1336373	Floormat (Front)	1	1	..
25	**d** 1463943	Floormat (Front)	1	1	..
25	**g** 1471762	Floormat (Front)	1	1	..
25	**f** 1355110	Floormat (Front, With EC Cab)	1	1	..
25	**g** 1467054	Floormat (Front, With EC Cab)	1	1	..
26	1355028	Floormat (Rear)	1	1	..
27	1301419	Floormat	1	1	..
27	**d** 1325731	Floormat (With EC Cab)	1	1	..
27	**g** 1460962	Floormat (With EC Cab)	1	1	..
28	1301714	Barrier (Front)	1	1	..
28	**ab** 1336374	Barrier (Front)	1	1	..
28	**e** 1355111	Barrier (Front, With EC Cab)	1	1	..
28	**g** 1467055	Barrier (Front, With EC Cab)	1	1	..
29	1355027	Barrier (Rear)	1	1	..
30	**d** 1301714	Barrier (Autoshift)	1	1	..

©2011 HYSTER COMPANY

OPERATOR COMPARTMENT
SHEET 2 OF 3

KEY:
A: Center Compartment
B: Left Compartment
C: Without Cab

ITEM	PART NO.	DESCRIPTION	QTY A	QTY B	QTY C
30	1463945	Barrier	1	1	..
30	**g** 1471763	Barrier	1	1	..
30	**g** 1456552	Barrier (Autoshift, With EC Cab)	1	1	..
31	1301263	Sound Liner (LH)	..	..	1
31	1311430	Sound Liner (LH)	1	1	..
32	1301264	Sound Liner (RH)	..	..	1
32	1336986	Liner (RH)	1	1	..
33	1325624	Liner (Top)	..	..	1
33	1325726	Liner (Top)	1	1	..
34	1325623	Liner	..	..	1
34	1325729	Liner	1	1	..
35	1301746	Liner (Cowl)	1	1	..
36	288394	Sealant	AR	AR	AR
37	1342664	Sound Liner	2	2	2
38	329067	Screw	2	2	2
39	1301297	Plate	1	1	1
40	1307737	Fastener	4	4	..
41	**c** 1346388	Link	..	1	..
42	**c** 1346389	Link	..	1	..
43	**c** 1346394	Link	..	1	..

FOOTNOTES:

a → S/N E008D01521
b → S/N E008E01545
c → S/N E008E01750
d → S/N E008E01865Y
e S/N E008E01546 ↔ S/N E008E1750
f S/N E008E01751 →
g S/N E008E01866Y →

See Service Manual for service procedures.
©2011 HYSTER COMPANY

NOTES

©2011 HYSTER COMPANY

OPERATOR COMPARTMENT (FIGURE 1-11)
SHEET 3 OF 3

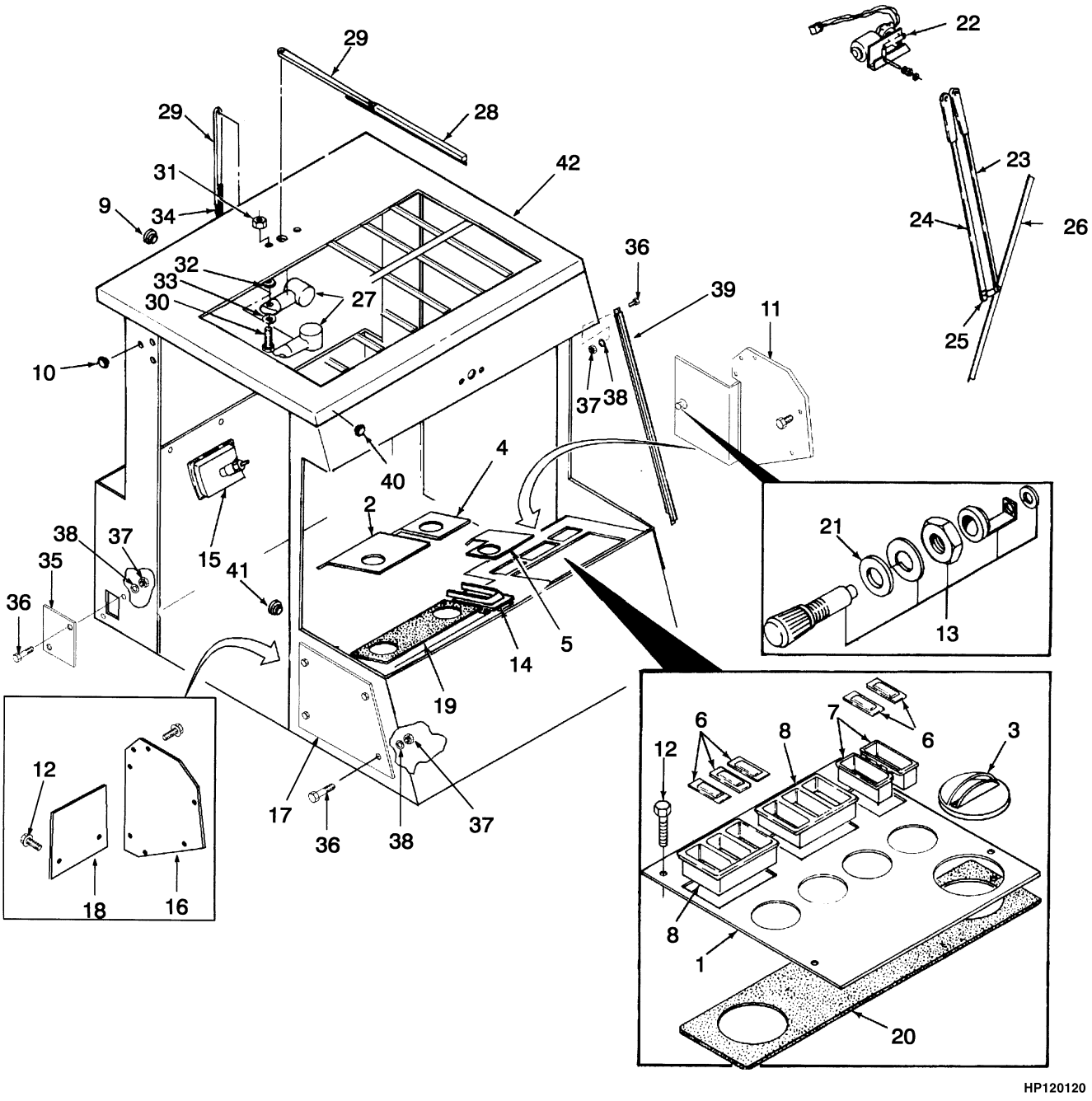

©2011 HYSTER COMPANY

OPERATOR COMPARTMENT
SHEET 3 OF 3

KEY:
A: With Cab
B: Without Cab

ITEM	PART NO.	DESCRIPTION	QTY A	QTY B
1	1336353	Cover (LH)	1	..
1	**b** 1336354	Cover (LH)	..	1
1	**g** 1359659	Cover (LH)	..	1
1	**k** 1470271	Cover (LH)	1	1
1	**l** 1466305	Cover (LH)	1	1
1	**k** 1461425	Cover (LH, With EC Cab)	1	..
1	**l** 1553746	Cover (LH, With EC Cab)	1	..
1	**k** 1461426	Cover (LH, With EC Cab)	..	1
1	**l** 1553747	Cover (LH, With EC Cab)	..	1
2	1325550	Cover (RH)	1	..
2	1325597	Cover (RH)	..	1
3	376276	Nozzle	5	..
4	1307007	Cover Plate	1	..
4	1325725	Cover Plate	..	1
5	**ac** 1336356	Cover	1	..
5	**ac** 1336357	Cover	..	1
5	**fh** 1385637	Cover	..	1
5	**m** 1460984	Cover Plate	1	..
5	**fh** 1385636	Cover (With EC Cab)	1	..
5	1465590	Cover Plate (Hybrid Tier I Engine)	..	1
5	1504471	Cover Plate (Hybrid Tier II Engine)	..	1
5	1462282	Cover Plate (Tier I Engine)	1	1
5	1476441	Cover Plate (Tier II Engine)	1	1
5	1460985	Cover Plate (Tier I, With EC Cab)	..	1
5	1503995	Cover Plate (Tier II, With EC Cab)	..	1
6	376949	Cover	5	5
7	376948	Bezel	2	2
8	376947	Frame	2	1
9	1311217	Plug	2	2
10	**b** 1301288	Fastener	..	12
11	1311388	Door	1	1
12	1301177	Screw	31	31
13	1311288	Latch	1	1
14	1301189	Cover	1	1
15	1301286	Mirror	2	2
16	1301255	Panel (RH Access) (RH)	1	1
17	**b** 1301195	Plate	..	1
18	**b** 1325600	Plate	..	1
19	1301292	Gasket (RH)	1	1
20	1301293	Gasket (LH)	1	1
21	1311287	Washer	1	1
22	**e** 1306902	Wiper Motor	1	..
22	**j** 1517976	Wiper Motor	2	..
22	**j** 1504383	Wiper Motor	2	..
23	1491260	Wiper Arm	2	..

©2011 HYSTER COMPANY

OPERATOR COMPARTMENT
SHEET 3 OF 3

KEY:
A: With Cab
B: Without Cab

ITEM	PART NO.	DESCRIPTION	QTY A	QTY B
23	334234	Wiper Arm	2	..
24	334233	Wiper Arm	2	..
24	816045	Wiper Arm (Optional)	2	..
25	334229	Bracket	2	..
26	334230	Wiper Blade	1	..
26	816046	Wiper Blade (Optional)	1	..
27	1321912	Wiper Motor	2	..
28	376953	Wiper Blade	2	..
29	376954	Arm	2	..
30	302248	Capscrew	2	..
31	292668	Nut	2	..
32	292679	Washer	2	..
33	320155	Washer	2	..
34	1318443	Wiper Blade	1	..
35	**b** 1301066	Plate	..	2
36	**b** 353144	Capscrew	..	12
37	**b** 136687	Nut	..	12
38	**b** 292680	Washer	..	12
39	**b** 1346452	Bracket (LH)	..	1
39	**b** 1346454	Bracket (RH)	..	1
40	**b** 1311346	Fastener	..	2
41	**b** 1304971	Fastener	..	2
42	**d** 1346423	Operator Compartment	..	1
42	**i** 1375944	Operator Compartment	..	1

FOOTNOTES:

a → S/N E008D01581
b → S/N E008D01585
c → S/N E008E01654
d → S/N E008E01750
e → S/N E008E01850Y
f S/N E008D01582 →
g S/N E008D01586 →
h S/N E008E01655 →
i S/N E008E01751 →
j S/N E008E01851Y →
k S/N E008E01865Y →
l S/N E008E01866 →
m S/N E008E01866Y →

©2011 HYSTER COMPANY

NOTES

©2011 HYSTER COMPANY

HEATER (FIGURE 1-12)

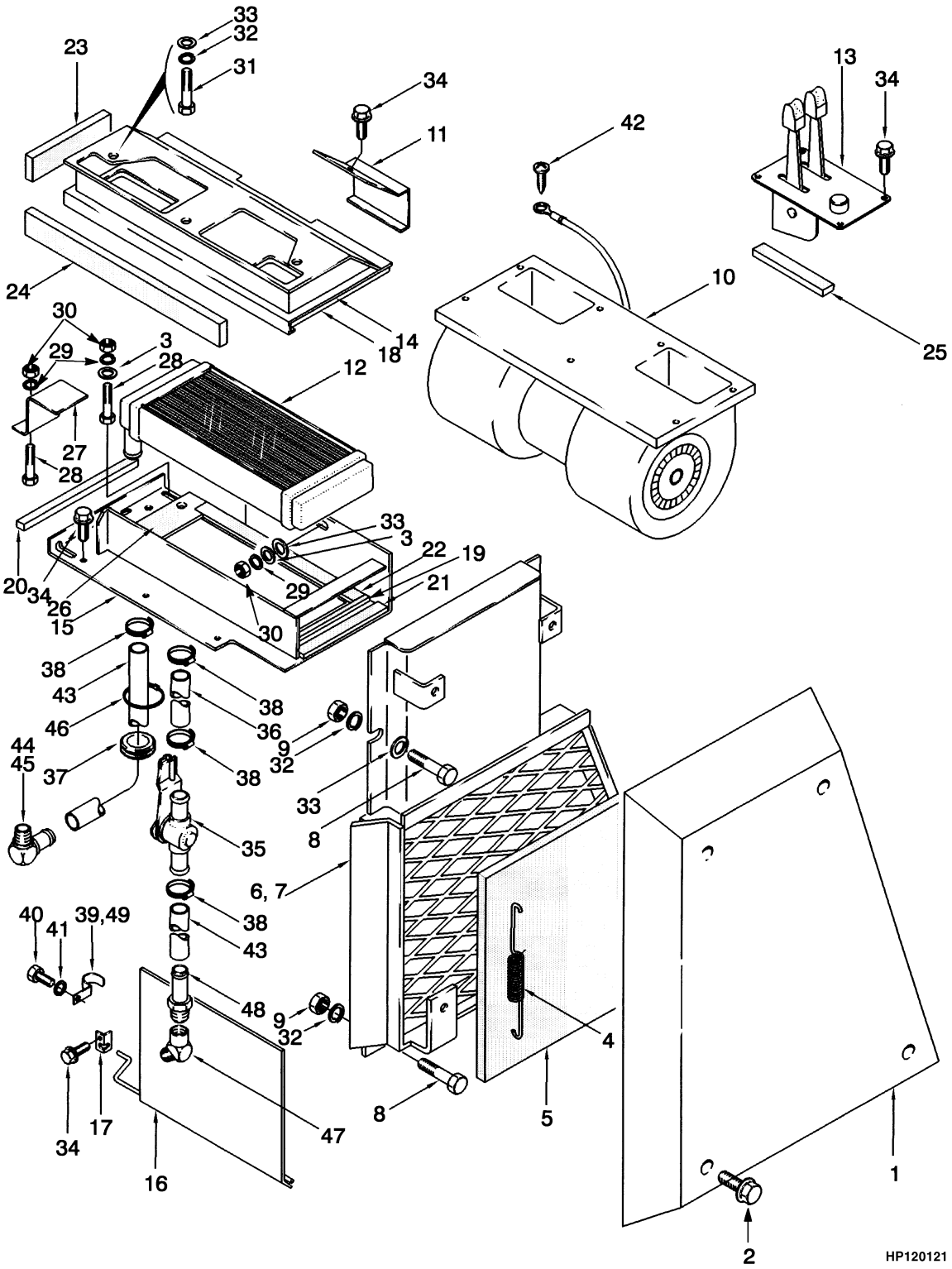

©2011 HYSTER COMPANY

HEATER

ITEM	PART NO.	DESCRIPTION	QTY
1	1301326	Cover	1
2	1301708	Capscrew	4
3	320156	Washer	3
4	1301323	Spring	2
5	1301127	Filter (Heater)	1
6	280472	Sealant	AR
7	1301310	Plate	1
8	136681	Capscrew	4
9	239503	Nut	4
10	1301587	Blower	1
10	1368151	Blower	1
10	1453031	Resistor	1
11	1301389	Retainer	1
12	376137	Core (Heater)	1
13	1301020	Heater Control (☞Figure 1-13)	1
14	1301393	Flange	1
15	1325585	Support	1
16	1325548	Damper (With EC Cab)	1
16	1301188	Damper	1
17	1301121	Bracket	2
18	1311273	Gasket	1
19	1301395	Foam	1
20	1301396	Foam	1
21	1301397	Foam	1
22	1301398	Foam	2
23	1301404	Foam	4
24	1301405	Foam	1
25	1301589	Foam	1
26	1301399	Foam (Sound Barrier)	1
27	1301400	Clamp	1
28	292501	Capscrew	2
29	292680	Washer	3
30	136687	Nut	3
31	287851	Capscrew	3
32	292681	Lockwasher	7
33	320157	Washer	6
34	1301177	Screw	11
35	1301001	Drain Valve (Heater)	1
36	1301598	Hose	1
37	279752	Grommet	2
38	130845	Clamp	6
39	18901	Clamp	1
40	302244	Capscrew	1
41	292679	Washer	1
42	1301284	Screw	1
43	**a** 163521	Hose	2
43	**b** 300541	Hose	2
43	**c** 815873	Hose	2
43	**d** 134131	Hose	2
44	12824	Fitting (Tier I Engine)	1
44	100792	Fitting (Tier II Engine)	1

©2011 HYSTER COMPANY

HEATER

ITEM	PART NO.	DESCRIPTION	QTY
45	246108	Sealant	AR
46	323864	Strap Clamp	AR
47	127852	Fitting (Tier Engine)	1
47	352783	Fitting (Tier II Engine)	1
48	16156	Fitting (Tier I Engine)	1
48	138710	Fitting (Tier II Engine)	1
49	176455	Clamp	3

FOOTNOTES:

a Center Compartment (H550F, H620F, H700F)
b Center Compartment (Short Wheel Base)
c Left Compartment (H550F, H620F, H700F)
d Left Compartment (Short Wheel Base)

©2011 HYSTER COMPANY

HEATER CONTROL (FIGURE 1-13)

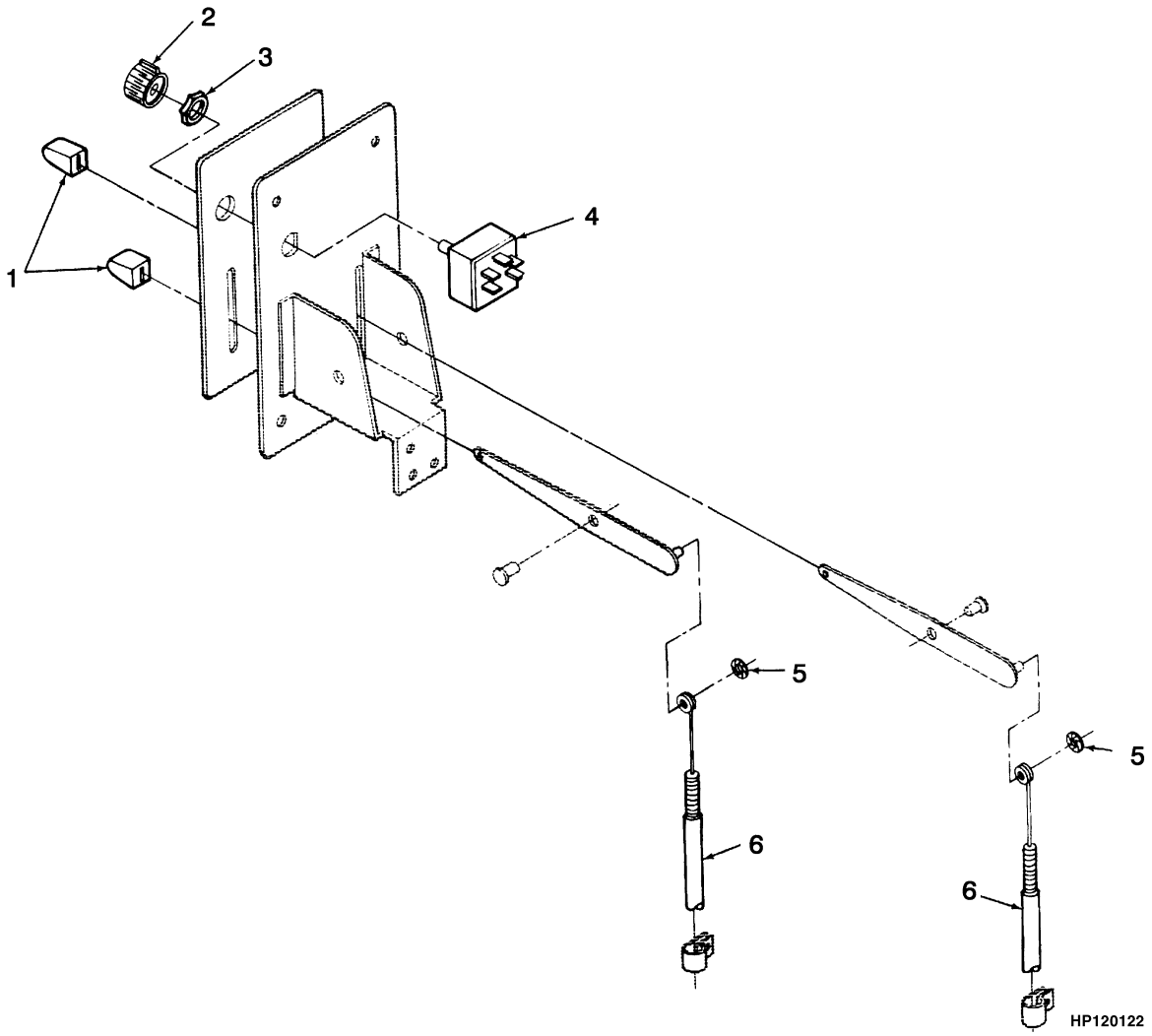

ITEM	PART NO.	DESCRIPTION	QTY
	1301020	Heater Control	1
1	1313733	Knob	2
2	1313734	Knob	1
3	1313744	Nut	1
4	1313735	Switch (Fan)	1
5	1313736	Nut	2
6	1313737	Cable Assy	2

WINDSCREEN WASHER (FIGURE 1-14)

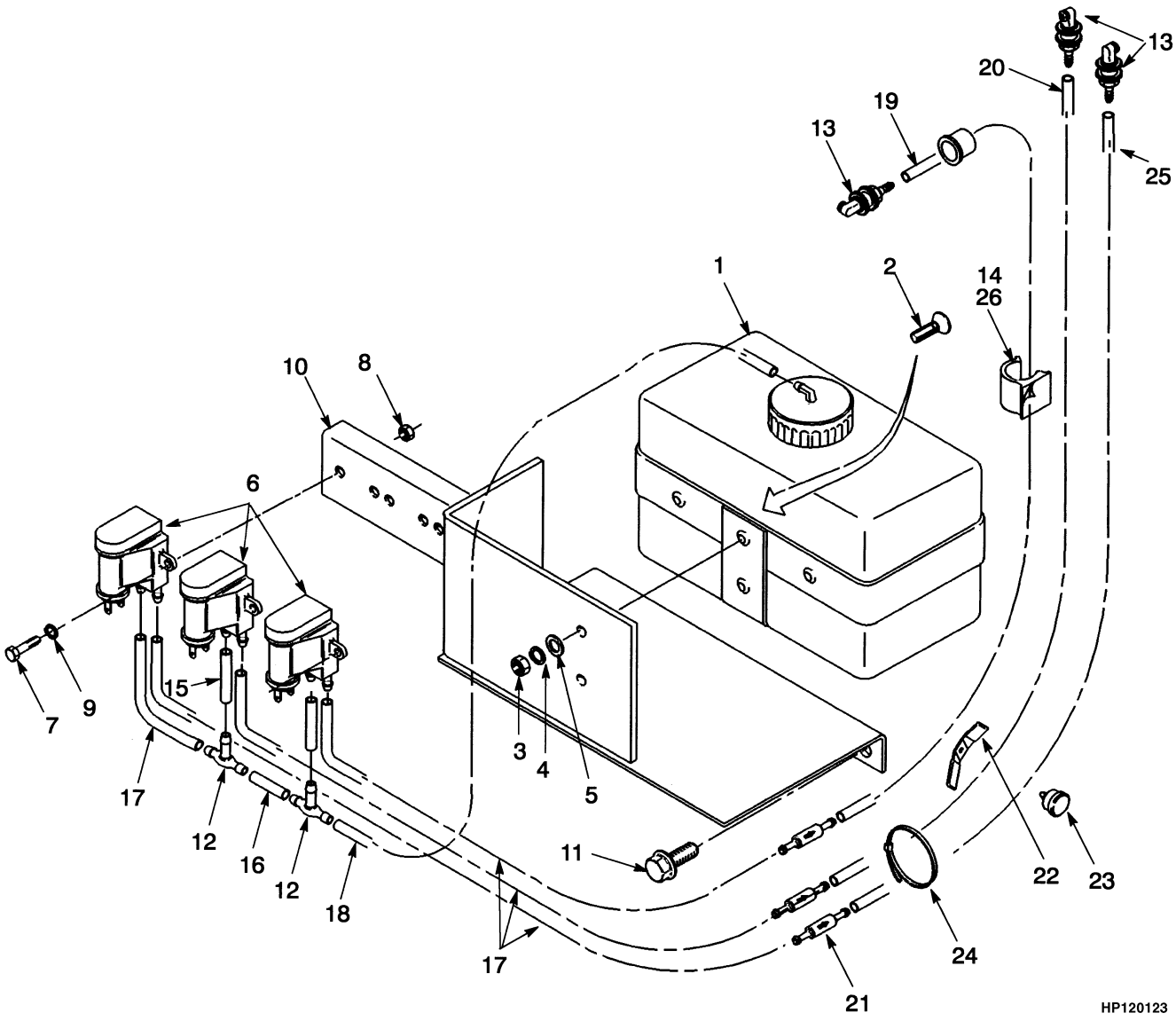

©2011 HYSTER COMPANY

WINDSCREEN WASHER

ITEM	PART NO.	DESCRIPTION	QTY
1	1311267	Reservoir	1
2	296472	Screw	2
3	136687	Nut	2
4	292680	Washer	2
5	197068	Washer	2
6	1316593	Pump (24 Volt)	3
7	302036	Screw	6
8	292668	Nut	6
9	292679	Washer	6
10	1339557	Bracket Wldmt	1
11	329067	Screw	2
12	1311260	Fitting	2
13	1301686	Nozzle	3
14	1301727	Clamp (Adhesive)	1
15	1311295	Hose	2
16	1311296	Hose	1
17	1311297	Hose	4
18	1343396	Hose	1
19	**b** 1467588	Hose	1
19	**a** 86520	Hose	1
20	1311300	Hose	1
21	1301685	Check Valve	3
22	1301593	Clamp	2
23	340044	Gripnail	2
24	114312	Strap Clamp	1
25	**b** 1467586	Hose	1
26	**b** 279740	Clamp (Adhesive)	1

FOOTNOTES:

a → S/N E008E01793

b S/N E008E01794 →

©2011 HYSTER COMPANY

FLOORPLATES AND COVERS (FIGURE 1-15)

H550F, H620F, H650F, H700F

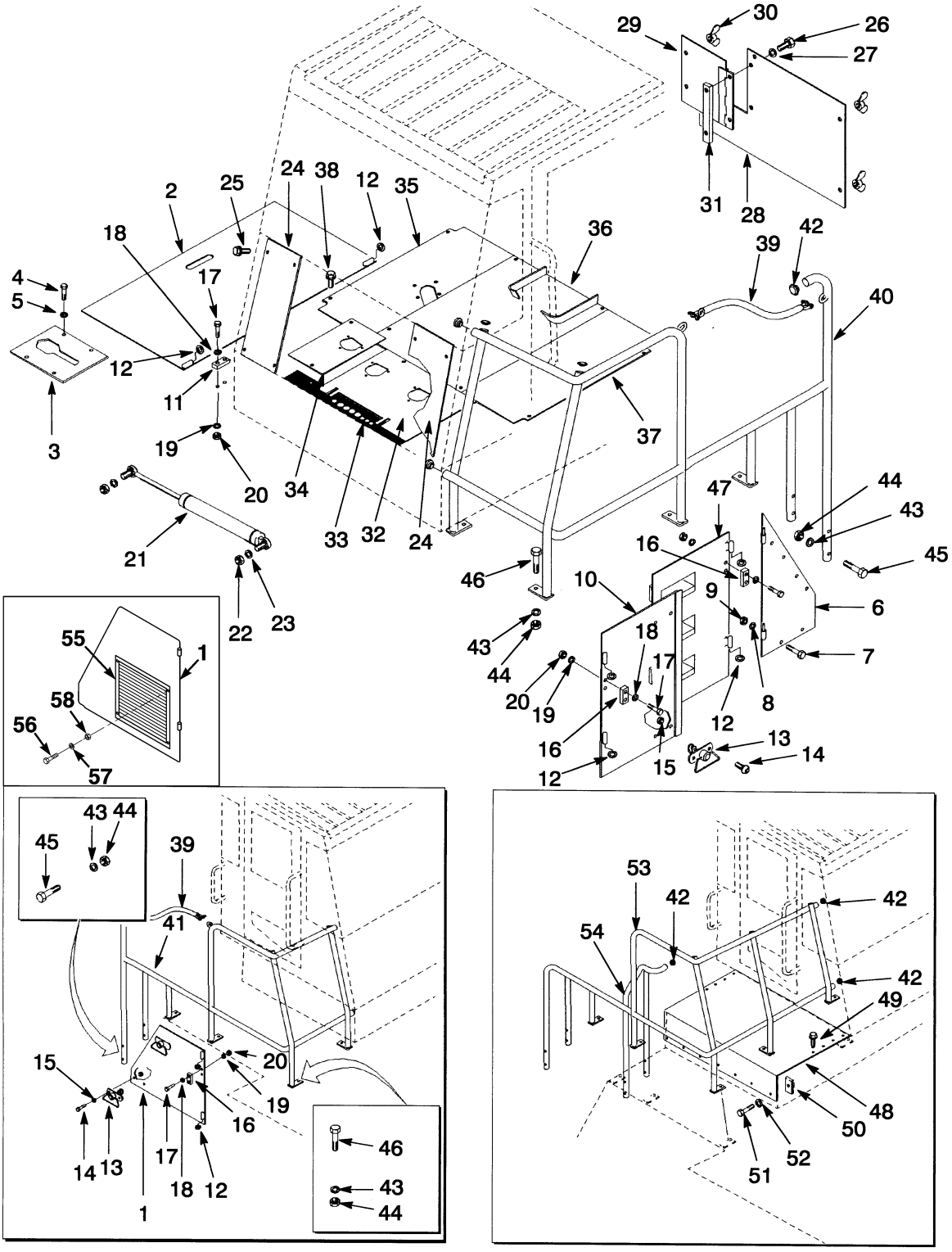

©2011 HYSTER COMPANY

FLOORPLATES AND COVERS

H550F, H620F, H650F, H700F

KEY:
A: Center Compartment
B: Left Compartment

ITEM	PART NO.	DESCRIPTION	QTY A	QTY B
1	**d** 1344215	Door (RH)	1	1
1	3047452	Hinge	2	2
1	**c** 1511749	Door (RH)	1	1
2	1344212	Cover	1	1
2	3047451	Hinge	3	3
3	1344233	Plate	1	1
4	16805	Capscrew	4	4
5	15134	Washer	4	4
6	1344217	Cover (LH)	1	1
6	3047451	Hinge	3	3
7	197853	Screw	6	6
8	15156	Lockwasher	6	6
9	15056	Nut	6	6
10	1344219	Door	1	1
10	3047452	Hinge	2	2
11	1343387	Plate (Stop)	1	1
12	1301700	Ring (Brass)	9	9
13	1336942	Latch	4	4
14	18707	Capscrew	8	8
15	264148	Nut	8	8
16	1336038	Plate (Stop)	3	3
17	18465	Capscrew	8	8
18	15127	Washer	8	8
19	15154	Lockwasher	8	8
20	15054	Nut	8	8
21	806667	Gas Spring	1	1
22	239503	Nut	2	2
23	292681	Lockwasher	2	2
24	1312192	Cover	2	2
25	1301708	Capscrew	8	8
26	136985	Capscrew	7	7
27	~~388049~~ 292682	Lockwasher	7	7
28	1344239	Plate	1	1
29	1343374	Door	1	1
30	1312209	Screw	2	2
31	1344238	Strip	1	1
32	**e** 1336207	Floorplate	1	1
32	**f** 1471494	Floorplate	1	1
32	**e** 1336911	Floorplate (With EC Cab)	1	1
32	**f** 1467051	Floorplate (With EC Cab)	1	1
33	**a** 1336912	Seal	1	1
33	**b** 1508250	Seal	1	1
34	**e** 1339482	Floorplate (RH Front)	1	1
34	**af** 1355113	Floorplate (RH Front)	1	1

©2011 HYSTER COMPANY

FLOORPLATES AND COVERS

H550F, H620F, H650F, H700F

KEY:
A: Center Compartment
B: Left Compartment

ITEM	PART NO.	DESCRIPTION	QTY A	QTY B
34	**b** 1508108	Floorplate	1	1
35	1336201	Floorplate	1	1
35	1336914	Floorplate (With EC Cab)	1	1
36	**e** 1337254	Floorplate (Center)	1	1
36	**f** 1465404	Floorplate (Center)	1	1
36	**f** 1465405	Floorplate (Optional)	1	1
36	**f** 1465374	Floorplate (Center)	1	1
37	1301054	Floorplate	1	1
37	1325557	Floorplate (With EC Cab)	1	1
38	329067	Screw	15	15
39	1356817	Chain	1	..
39	222524	Heat Shrink	AR	..
39	815848	Shackle	4	2
39	815850	Chain	2	..
40	1339607	Hand Rail (LH)	1	..
41	1339590	Hand Rail (RH)	1	..
42	1344237	Plug	10	6
43	221354	Locknut	16	13
44	151920	Nut	16	13
45	18589	Capscrew	8	8
46	18588	Capscrew	8	5
47	1344222	Door	1	..
47	3047452	Hinge	2	2
47	1516889	Door (With Step)	..	1
47	3047452	Hinge	2	2
48	1336044	Floorplate	..	1
49	277279	Screw	..	8
50	815682	Nut	..	7
51	132861	Capscrew	..	7
52	320157	Washer	..	7
53	1336940	Hand Rail	..	1
54	1336939	Hand Rail	..	1
55	**c** 1511748	Grill	1	..
56	**c** 292501	Capscrew	4	..
57	**c** 320156	Washer	8	..
58	**c** 136687	Nut	4	..

FOOTNOTES:

a Tier I Engine
b Tier II Engine
c With Heat Exchanger
d Without Heat Exchanger
e → S/N E008E01865Y
f S/N E008E01866Y →

©2011 HYSTER COMPANY

NOTES

©2011 HYSTER COMPANY

FLOORPLATES AND COVERS (FIGURE 1-16)

H440FS, H550FS, H620FS, H700FS

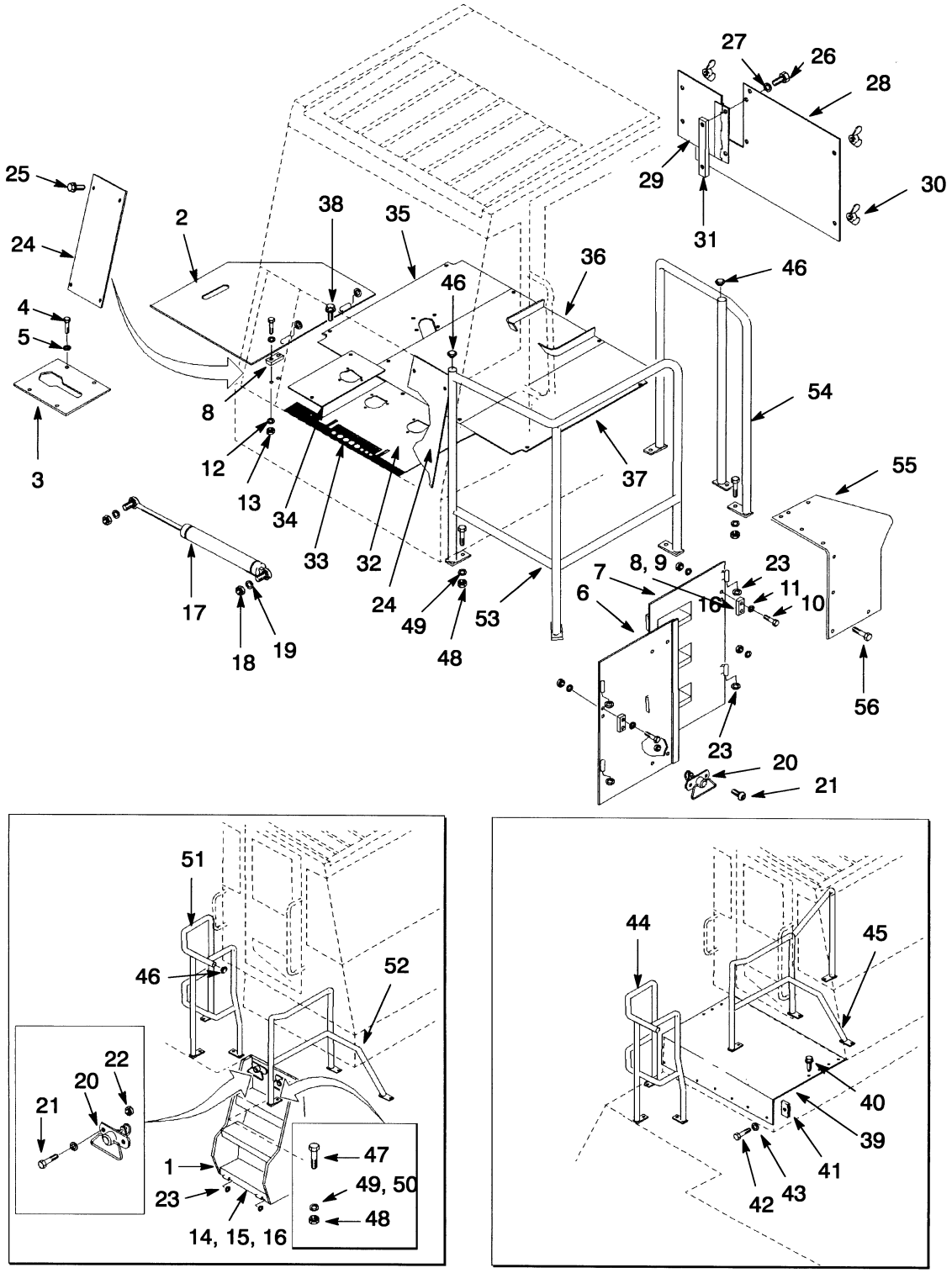

©2011 HYSTER COMPANY

FLOORPLATES AND COVERS

H440FS, H550FS, H620FS, H700FS

KEY:
A: Center Compartment
B: Left Compartment

ITEM	PART NO.	DESCRIPTION	QTY A	QTY B
1	1354461	Step	1	1
1	3047452	Hinge	1	1
2	1354459	Cover	1	1
2	3047451	Hinge	2	2
3	1344233	Plate	1	1
4	16805	Capscrew	4	4
5	15134	Washer	4	4
6	1344219	Door	1	1
6	3047452	Hinge	2	2
7	1516891	Door	1	1
7	3047452	Hinge	1	1
8	1343387	Plate	1	1
9	1336038	Plate	2	2
10	18465	Capscrew	6	6
11	15127	Washer	6	6
12	15154	Lockwasher	6	6
13	15054	Nut	6	6
14	1354470	Plate	1	1
15	18709	Capscrew	2	2
16	15152	Lockwasher	2	2
17	806667	Gas Spring	1	1
18	239503	Nut	2	2
19	292681	Lockwasher	2	2
20	1336942	Latch	4	4
21	18707	Capscrew	8	8
22	264148	Nut	8	8
23	1301700	Ring (Brass)	8	8
24	1312192	Cover	2	2
25	1301708	Capscrew	8	8
26	136985	Capscrew	7	7
27	320159	Washer	7	7
28	1344239	Plate	1	1
29	1343374	Door	1	1
30	1312209	Screw	2	2
31	1344238	Strip	1	1
32	**e** 1336207	Floorplate	1	1
32	**h** 1471494	Floorplate	1	1
32	**j** 1458197	Floorplate	1	1
32	**e** 1336911	Floorplate (With EC Cab)	1	1
32	**h** 1467051	Floorplate (With EC Cab)	1	1
32	**j** 1542510	Floorplate (With EC Cab)	1	1
33	**bf** 1336912	Seal	1	1
33	**cj** 1508250	Seal	1	1
34	**d** 1339482	Floorplate (RH Front)	1	1
34	**bg** 1355113	Floorplate (RH Front)	1	1

©2011 HYSTER COMPANY

FLOORPLATES AND COVERS

H440FS, H550FS, H620FS, H700FS

KEY:
A: Center Compartment
B: Left Compartment

ITEM	PART NO.	DESCRIPTION	QTY A	QTY B
34	**cj** 1508108	Floorplate (RH Front)	1	1
35	1336201	Floorplate	1	1
35	1336914	Floorplate (With EC Cab)	1	1
36	**e** 1337254	Floorplate (Center)	1	1
36	**e** 1465404	Floorplate (Center)	1	1
36	**e** 1465405	Floorplate (Optional)	1	1
36	**i** 1465374	Floorplate (Center)	1	1
37	1301054	Floorplate	1	1
37	1325557	Floorplate (With EC Cab)	1	1
38	329067	Screw	15	15
39	**bf** 1354515	Floorplate	..	1
39	**cj** 1541171	Floorplate	..	1
40	277279	Screw	..	8
41	815682	Nut	..	7
42	132861	Capscrew	..	7
43	320157	Washer	..	7
44	1354472	Hand Rail	..	1
45	**bf** 1354488	Hand Rail	..	1
45	**cj** 1541336	Hand Rail	..	1
46	1344237	Plug	3	1
47	18588	Capscrew	13	8
48	151920	Nut	13	8
49	221354	Locknut	13	8
50	15178	Washer	..	1
51	1354502	Hand Rail	1	..
52	1354496	Hand Rail	1	..
53	1356811	Hand Rail	1	..
54	1356812	Hand Rail	1	..
55	1349797	Cover (H700FS)	1	1
55	1349798	Cover (H550FS, H620FS)	1	1
56	277280	Screw	8	9
	a 1491360	Seal-Bulk (Battery Compartment Door)	AR	AR

FOOTNOTES:

a Not Illustrated
b Tier I Engine
c Tier II Engine
d → S/N E008E01545
e → S/N E008E01865Y
f → S/N E008E01984B
g S/N E008E01546 ↔ S/N E008E001984B
h S/N E008E01866Y ↔ S/N E008E01984B
i S/N E008E01866Y →
j S/N E008E01985B →

©2011 HYSTER COMPANY

NOTES

©2011 HYSTER COMPANY

COUNTERWEIGHT (FIGURE 1-17)

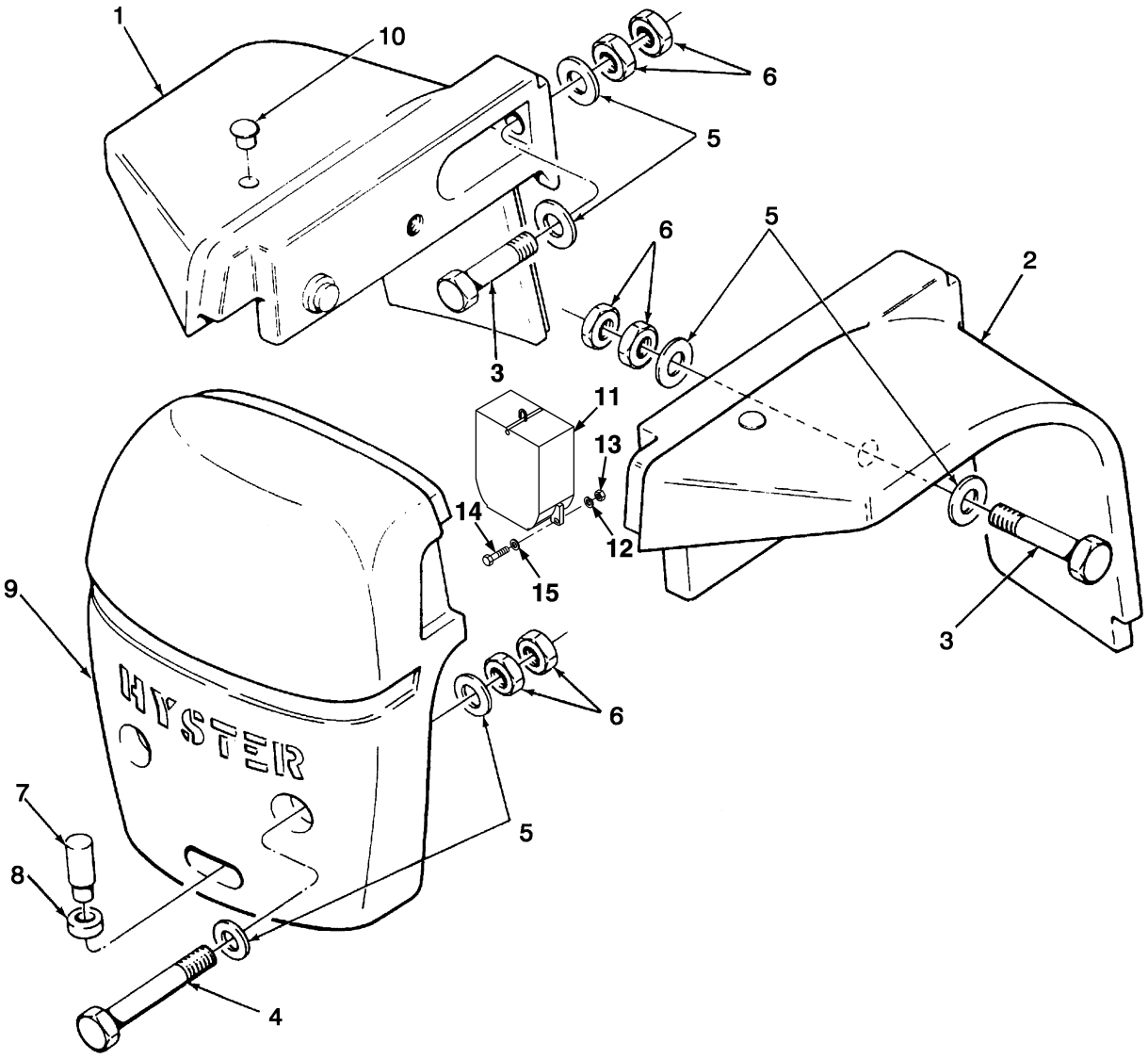

HP120126

©2011 HYSTER COMPANY

COUNTERWEIGHT

ITEM	PART NO.	DESCRIPTION	QTY
1	1349952	Fender (LH)	1
1	320181	Washer	1
2	1349953	Fender (RH)	1
3	159831	Bolt	4
4	206164	Bolt	2
5	320184	Washer	12
6	15088	Nut	12
7	87758	Pin	1
8	87759	Ring	1
9	1316536	Counterweight (H440FS, H550F, H650F, H550FS)	1
9	1316537	Counterweight (H620F, H700F, H620FS, H700FS)	1
10	368470	Plug	2
11	1495168	Slab	1
12	292693	Lockwasher	2
13	302408	Locknut	2
14	293771	Capscrew	2
15	320181	Washer	2

©2011 HYSTER COMPANY

SEAT ASSEMBLY (FIGURE 1-18)

(→ S/N E008E02064C)

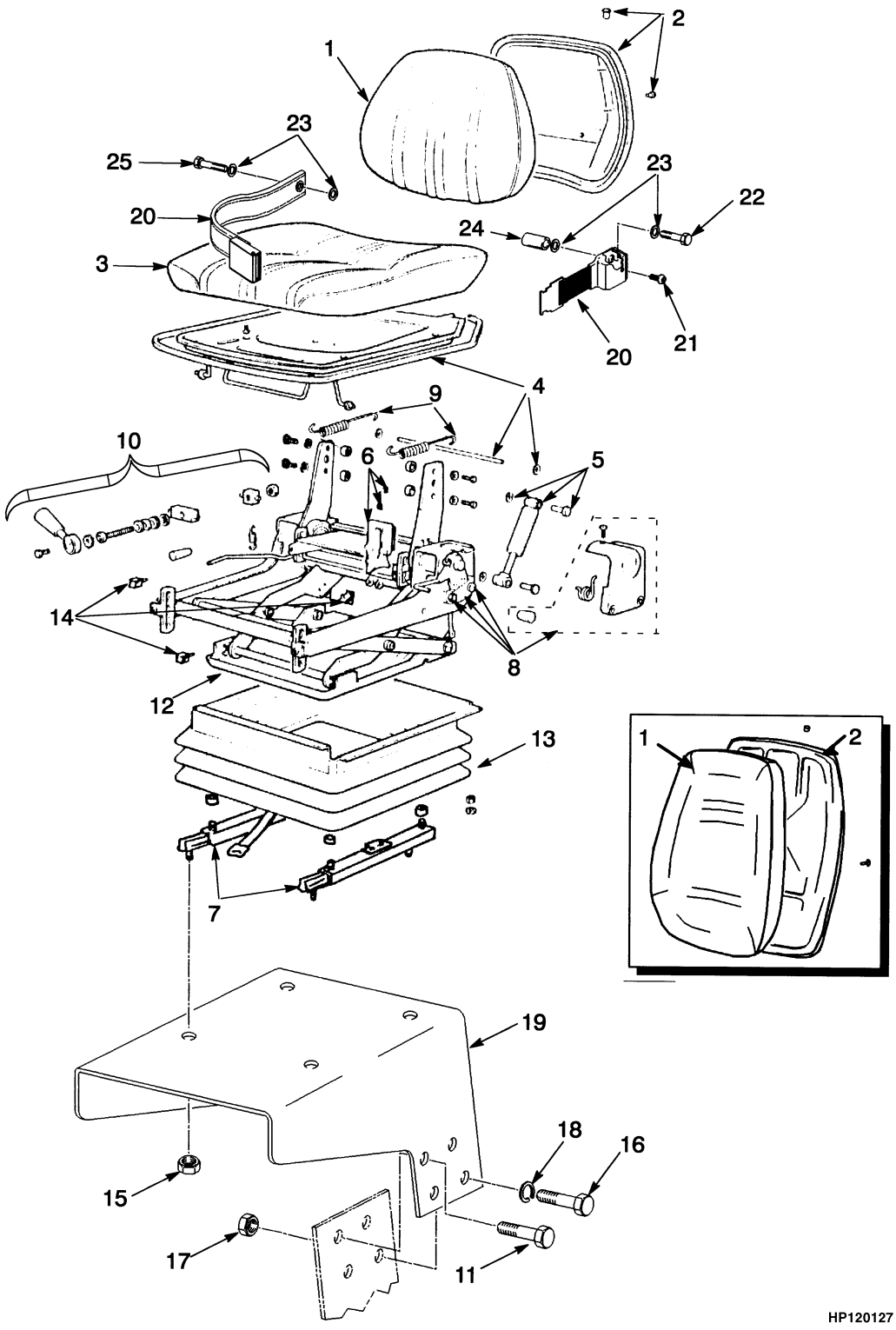

©2011 HYSTER COMPANY

SEAT ASSEMBLY
(→ S/N E008E02064C)

KEY:
A: Vinyl Cover
B: Fabric Cover

ITEM	PART NO.	DESCRIPTION	QTY A	QTY B
	356821	Seat-Full Suspension	..	1
	a 1453798	Seat-Full Suspension	..	1
	a 1453799	Seat-Full Suspension	1	..
1	359767	Cushion-Back Assy	..	1
1	**a** 1454002	Seat Cushion	..	1
1	**a** 1454003	Seat Cushion	1	..
1	1377068	Clip	8	..
2	1334458	Pan	..	1
2	**a** 1454004	Pan	1	1
3	1334470	Seat Cushion	..	1
3	1335578	Seat Cushion	1	..
3	**a** 1454006	Seat Cushion (With Switch)	1	..
4	1334461	Pan	1	1
5	1334463	Kit-Damper	..	1
5	1335579	Kit-Damper	1	..
6	1334465	Kit-Indicator Ride	1	1
7	1334468	Kit-Seat Rail	1	1
8	1334464	Kit-Recliner	1	1
9	1334466	Kit-Height Adjuster	1	1
10	1334462	Handle	1	1
11	136985	Capscrew (RH Side)	2	2
12	1335575	Kit-Suspension	1	1
13	1325346	Kit-Cover	1	1
14	1334467	Kit-Bumper	1	1
15	313828	Nut	4	4
16	287854	Capscrew	6	6
17	136692	Nut	8	8
18	~~388049~~			
	292682	Lockwasher	8	8
19	1508454	Seat Pan	1	1
20	**b** 1374750	Seat Belt	1	1
21	**b** 379650	Screw (Special)	1	1
22	**b** 1323115	Capscrew (Special)	1	1
23	**b** 1323117	Washer (Special)	4	4
24	**b** 385516	Spacer	1	1
25	**b** 1323116	Capscrew (Special)	1	1

FOOTNOTES:

a High Back Seat

b With Operator Restraint

©2011 HYSTER COMPANY

SEAT ASSEMBLY (FIGURE 1-19)

(S/N E008E02065C →)

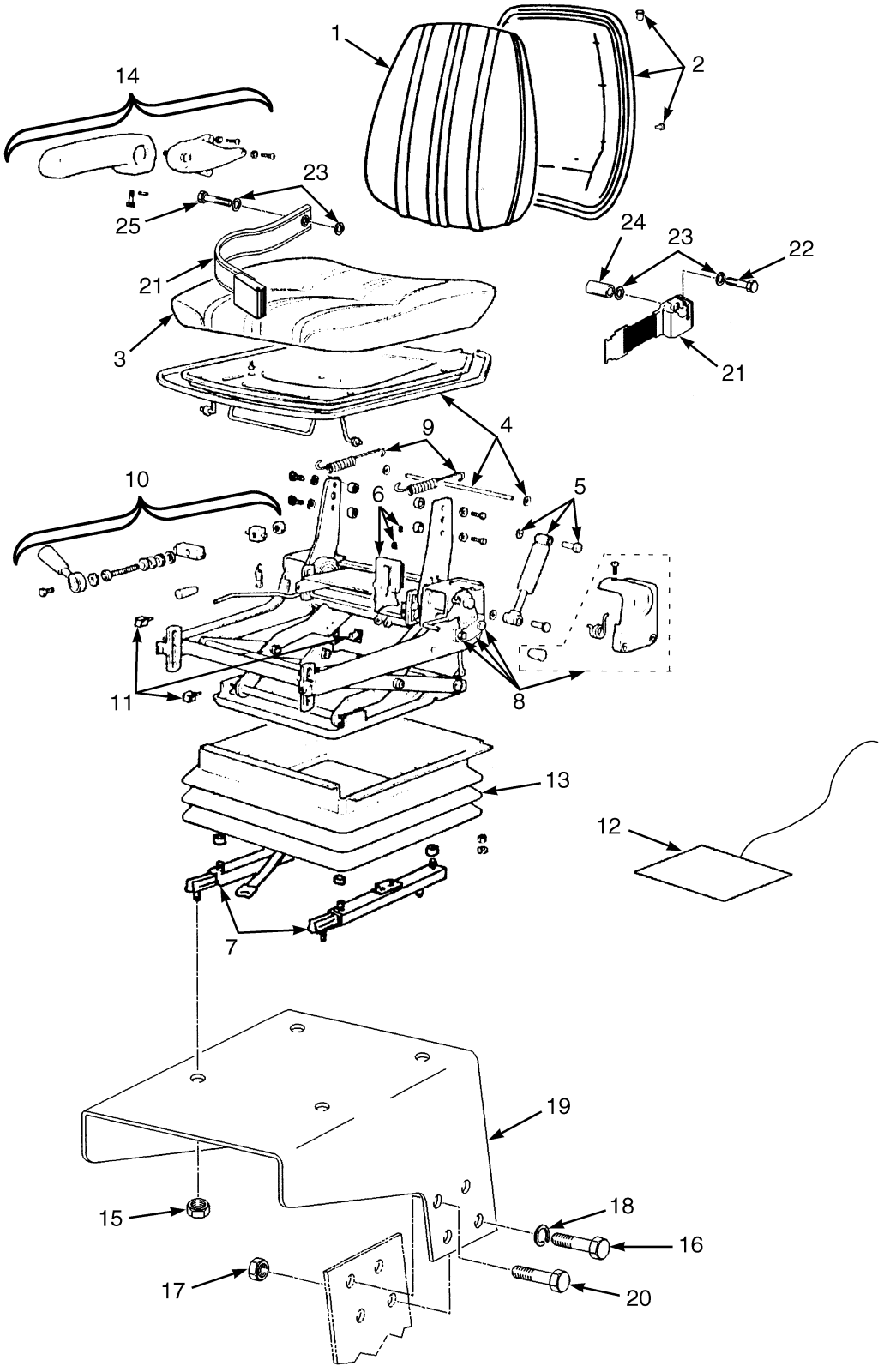

©2011 HYSTER COMPANY

SEAT ASSEMBLY
(S/N E008E02065C →)

KEY:
A: Fabric Cover
B: Vinyl Cover

ITEM	PART NO.	DESCRIPTION	QTY A	QTY B
	1611639	Seat-Full Suspension	1	..
	1611640	Seat-Full Suspension	..	1
1	1613832	Cushion	1	..
1	1613831	Seat Cushion	..	1
2	1454004	Pan (Back)	1	1
3	1613833	Seat Cushion	1	..
3	1335578	Seat Cushion	..	1
4	1334461	Pan (Seat Assembly)	1	1
5	1334463	Kit-Damper	1	1
6	1334465	Kit-Indicator Ride	1	1
7	1613834	Kit-Seat Rail (Fore and Aft)	1	1
8	1334464	Kit-Recliner (Knob)	1	1
9	1334466	Kit-Height Adjuster	1	1
10	1334462	Handle	1	1
11	1334467	Kit-Bumper	1	1
12	1613835	Switch	1	1
13	1325346	Kit-Cover	1	1
14	1453800	Kit-Armrest	1	1
15	313828	Nut	4	4
16	287854	Capscrew	6	6
17	136692	Nut	8	8
18	~~388049~~			
	292682	Lockwasher	8	8
19	1508454	Seat Pan	1	1
20	136985	Capscrew	2	2
21	1374750	Seat Belt	..	1
22	1323115	Capscrew	..	1
23	1323117	Washer	..	4
24	385516	Spacer	..	1
25	1323116	Capscrew	..	1

©2011 HYSTER COMPANY

SUSPENSION SEAT (FIGURE 1-20)

GRAMMER HIGH BACK — SHEET 1 OF 2 (9/1999 →)

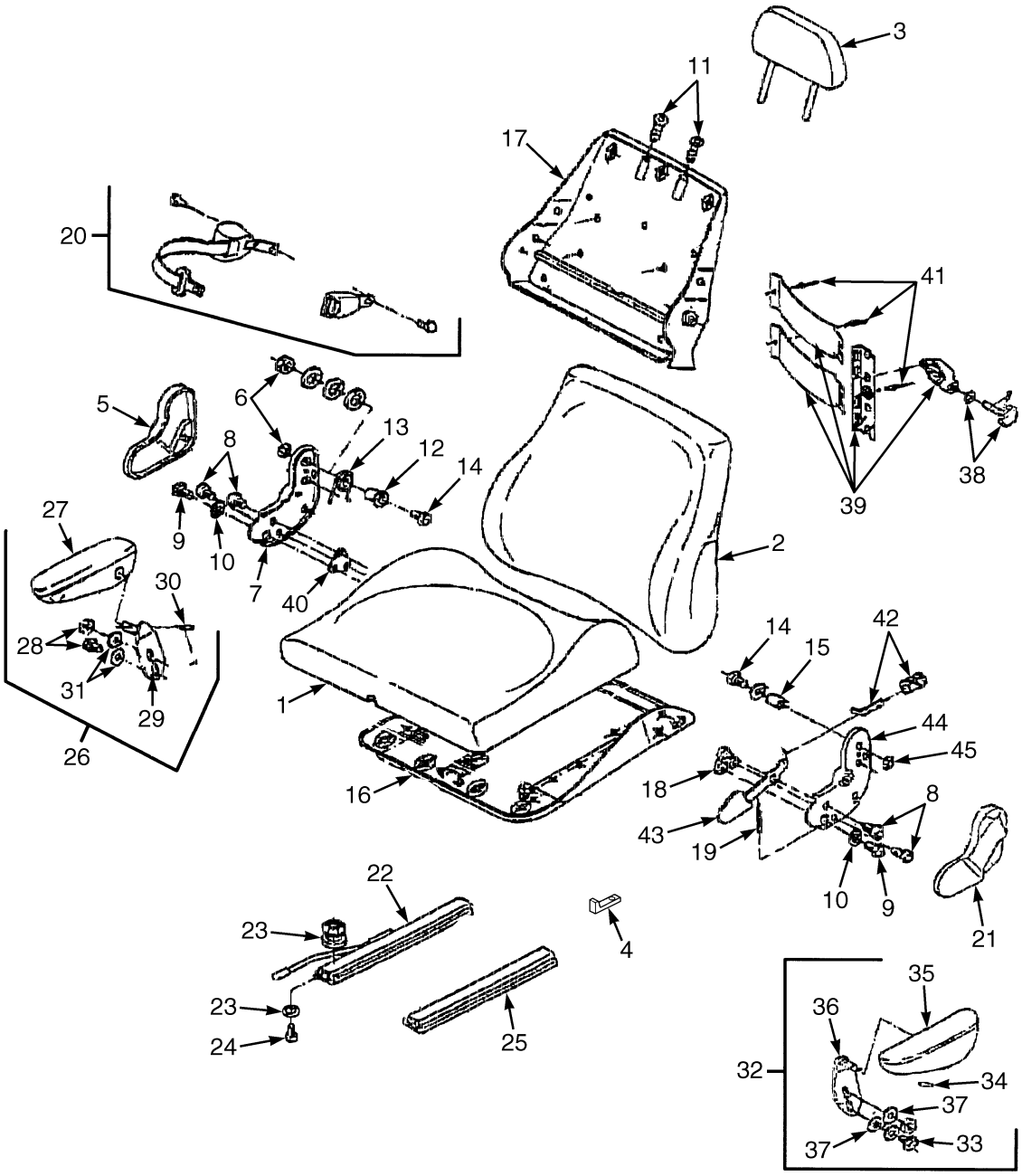

HP120128

©2011 HYSTER COMPANY

SUSPENSION SEAT

GRAMMER HIGH BACK – SHEET 1 OF 2 (9/1999 →)

KEY:
A: Fabric Cover
B: Vinyl Cover

ITEM	PART NO.	DESCRIPTION	QTY A	QTY B
	1465401	Seat-Full Suspension	1	..
	1465402	Seat-Full Suspension	..	1
1	1473699	Seat Cushion	1	..
1	1474624	Seat Cushion	..	1
2	1315643	Seat Cushion	..	1
2	1473700	Cushion	1	..
3	1473701	Cushion (Extension)	1	..
3	1474626	Cushion (Extension)	..	1
4	1473630	Stop	1	1
5	1473674	Cover	1	1
6	1474647	Nut	2	2
7	1473676	Plate	1	1
8	1473677	Capscrew	4	4
9	1473678	Capscrew	2	2
10	1473679	Washer	2	2
11	1473681	Bushing	2	2
12	1473684	Bushing	1	1
13	1473683	Spring	1	1
14	1473685	Capscrew	2	2
15	1473694	Tube	1	1
16	1473703	Seat Pan	1	1
17	1473717	Cushion	1	1
18	1473689	Plate	1	1
19	1473692	Spring	1	1
20	1473713	Seat Belt	1	1
21	1473693	Cover	1	1
22	1473632	Rail	1	1
23	1473631	Washer	4	4
24	1473704	Screw	4	4
25	1473633	Rail	1	1
26	1473617	Armrest (RH)	1	1
27	1473705	Armrest	1	1
28	1473706	Screw	1	1
29	1473707	Support	1	1
30	1473708	Screw	2	2
31	1473631	Washer	2	2
32	1473618	Armrest (LH)	1	1
33	1473706	Screw	1	1
34	1473708	Screw	2	2
35	1473709	Armrest	1	1
36	1473710	Support	1	1
37	1473631	Washer	2	2
38	1473698	Plate	1	1
39	1473714	Support	1	1
40	1473715	Spindle	1	1

©2011 HYSTER COMPANY

SUSPENSION SEAT

GRAMMER HIGH BACK – SHEET 1 OF 2 (9/1999 →)

KEY:
A: Fabric Cover
B: Vinyl Cover

ITEM	PART NO.	DESCRIPTION	QTY A	QTY B
41	1473716	Rivet	3	3
42	1473718	Kit-Support	1	1
43	1473691	Lever	1	1
44	1473688	Plate	1	1
45	1474647	Nut	1	1

©2011 HYSTER COMPANY

NOTES

©2011 HYSTER COMPANY

SUSPENSION SEAT (FIGURE 1-21)

GRAMMER HIGH BACK — SHEET 2 OF 2 (9/1999 →)

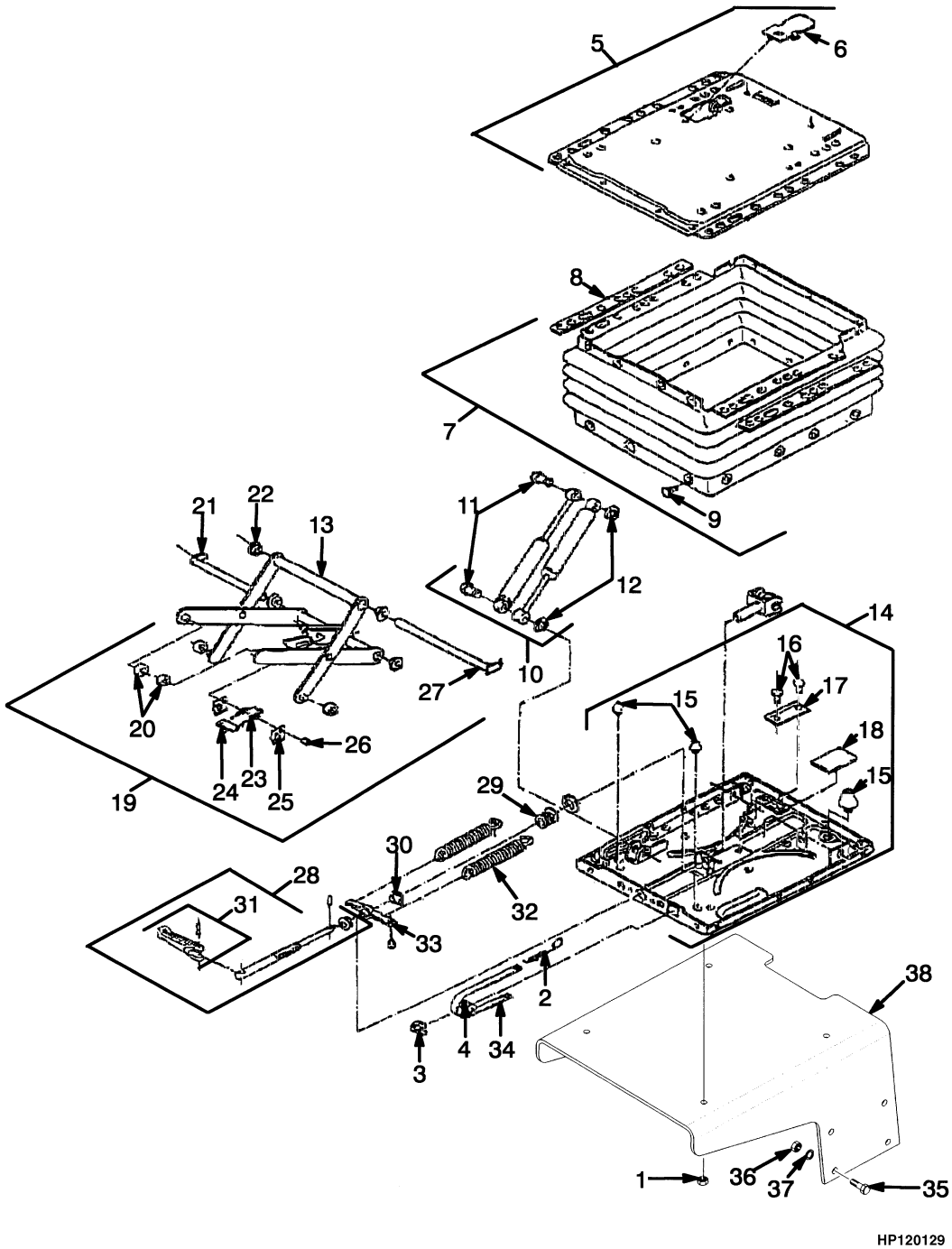

©2011 HYSTER COMPANY

SUSPENSION SEAT

GRAMMER HIGH BACK – SHEET 2 OF 2 (9/1999 →)

ITEM	PART NO.	DESCRIPTION	QTY
1	313828	Nut	4
2	1315641	Spring	1
3	1473670	Guide	1
4	1473671	Roller	1
5	1473637	Suspension (Upper)	1
6	1473636	Cover	1
7	1473639	Bellows	1
8	1473638	Strap	1
9	306957	Plug	21
10	1473643	Gas Spring	1
11	1473640	Bolt	2
12	1473641	Washer	2
13	1473644	Fork	1
14	1473652	Base (Plate)	1
15	1473647	Bumper (Set)	1
16	1473648	Rivet	2
17	1473649	Rail	1
18	1473650	Plate	1
19	1473661	Arm	1
20	306954	Roller	4
21	1473653	Bolt	1
22	1473654	Bushing	4
23	1473656	Spring	2
24	1473657	Plate	1
25	1473658	Plate	2
26	1473659	Bolt	1
27	1473660	Bolt	1
28	1473666	Spindle	1
29	1473662	Thrust Washer Set	1
30	1473663	Nut	1
31	1473664	Switch	1
32	306952	Spring	2
33	1473668	Bracket	1
34	1474655	Tape	AR
35	287854	Capscrew	8
36	136692	Nut	8
37	~~388049~~		
	292682	Lockwasher	8
38	1508454	Seat Pan	1

©2011 HYSTER COMPANY

HOOD AND LINKAGE (FIGURE 1-22)
TIER I ENGINE

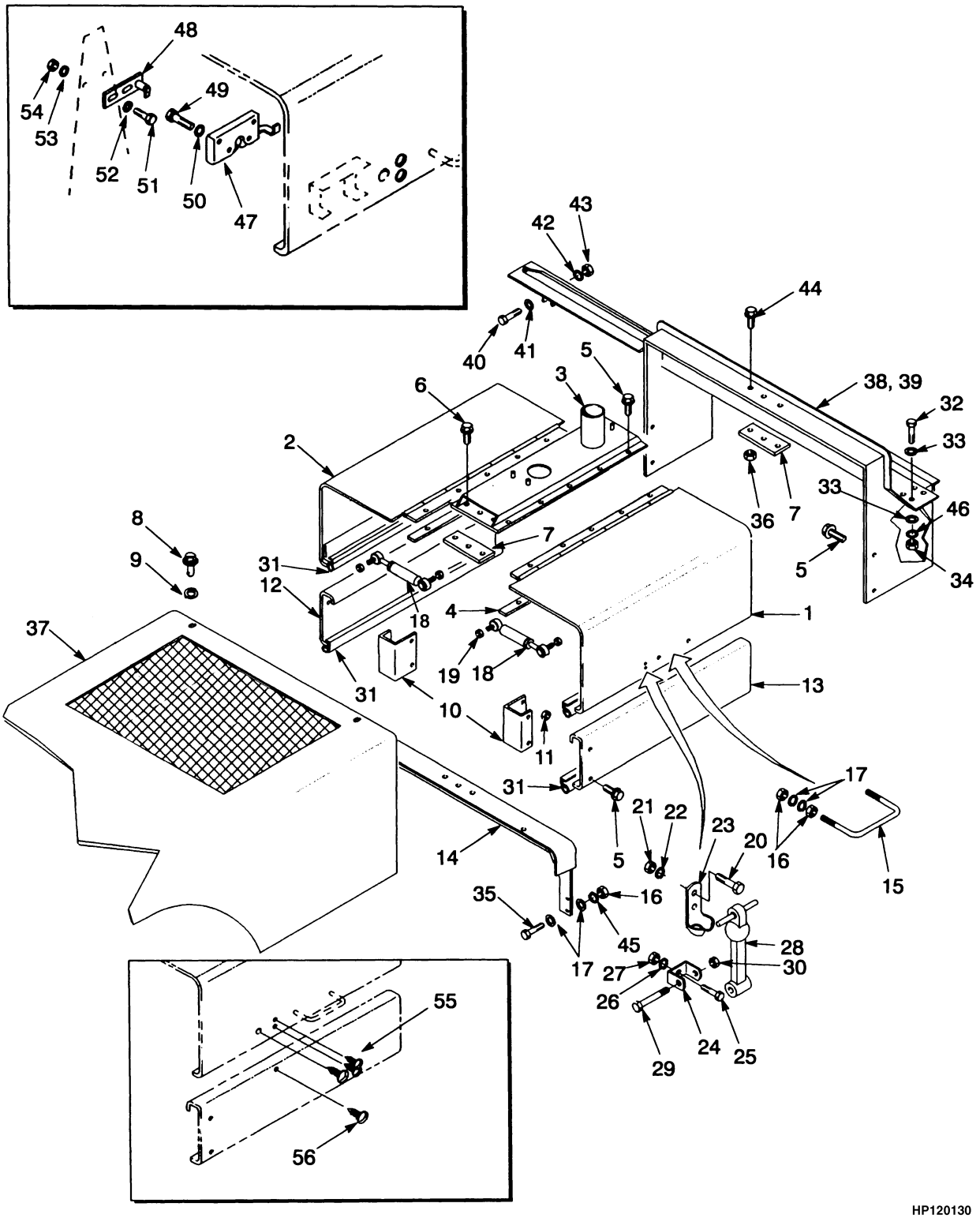

HP120130

©2011 HYSTER COMPANY

HOOD AND LINKAGE
TIER I ENGINE

KEY:
A: Non-EEC
B: EEC

ITEM	PART NO.	DESCRIPTION	QTY A	QTY B
1	**g** 816301	Hood (RH)	1	1
1	816450	Hood (RH)	1	..
2	**g** 816302	Hood (LH)	1	1
2	816451	Hood (LH)	1	..
3	1336402	Support	1	1
4	1336414	Strip	2	2
5	1309993	Screw	18	18
6	197853	Screw	3	3
7	1309950	Bar	2	2
8	160863	Stud	4	4
9	160865	Lockwasher	4	4
9	334922	Lockwasher (Optional)	4	4
10	1336380	Bracket Wldmt	2	2
11	191534	Nut	4	4
12	1336408	Panel (LH)	1	1
13	1336409	Panel (RH)	1	1
14	1336378	Bracket Wldmt	1	1
15	336821	Handle	2	2
16	15058	Nut	12	12
17	15135	Washer	16	16
18	806667	Gas Spring (RH)	1	1
19	239503	Nut	4	4
20	220500	Screw	4	..
21	15052	Nut	4	..
22	15152	Lockwasher	4	..
23	1315918	Bracket (Hood)	2	..
24	177991	Bracket (Anchor)	2	..
25	16836	Capscrew	2	..
26	15155	Lockwasher	2	..
27	15055	Nut	2	..
28	177989	Latch (Hood)	2	..
29	18470	Capscrew	2	..
30	221341	Locknut	2	..
31	300088	Seal (Door)	AR	AR
32	16376	Capscrew	8	8
33	221767	Washer	16	16
34	15056	Nut	8	8
35	16085	Capscrew	4	4
36	156133	Nut	3	3
37	**acd** 1336425	Hood	1	1
37	**bcd** 1336426	Hood	1	1
37	**afh** 1367294	Hood	1	1
37	**a** 1519030	Hood	1	1
37	**bfh** 1367295	Hood	1	1
37	**b** 1519031	Hood	1	1

©2011 HYSTER COMPANY

HOOD AND LINKAGE
TIER I ENGINE

KEY:
A: Non-EEC
B: EEC

ITEM	PART NO.	DESCRIPTION	QTY A	QTY B
38	**e** 1336107	Crossmember (Center Compartment)	1	1
38	**i** 1506984	Crossmember (Center Compartment)	1	1
39	**e** 1336114	Crossmember (LH Compartment)	1	1
39	**i** 1507248	Crossmember (LH Compartment)	1	1
40	200454	Capscrew (LH Compartment)	2	2
41	15135	Washer (LH Compartment)	2	2
42	15158	Washer (LH Compartment)	2	2
43	15058	Nut (LH Compartment)	2	2
44	196898	Screw	3	3
45	15158	Washer	4	4
46	15156	Lockwasher	8	8
47	**g** 816107	Latch	..	2
48	**g** 816124	Bracket (LH)	..	1
48	**g** 816125	Bracket (RH)	..	1
49	**g** 18462	Capscrew	..	4
50	**g** 15154	Lockwasher	..	4
51	**g** 16085	Capscrew	..	4
52	**g** 15135	Washer	..	4
53	**g** 15158	Washer	..	4
54	**g** 15058	Nut	..	4
55	**g** 1301288	Fastener	..	4
56	**g** 1307737	Fastener	..	2

FOOTNOTES:

a Wheel Base (4318 mm, 170 in.)
b Wheel Base (4826 mm, 190 in.)
c → S/N E008D01521
d → S/N E008E01548
e → S/N E008E01888
f S/N E008D01522 →
g S/N E008D01616 →
h S/N E008E01549 →
i S/N E008E01889 →

©2011 HYSTER COMPANY

NOTES

©2011 HYSTER COMPANY

HOOD AND LINKAGE (FIGURE 1-23)
TIER II AND III ENGINES

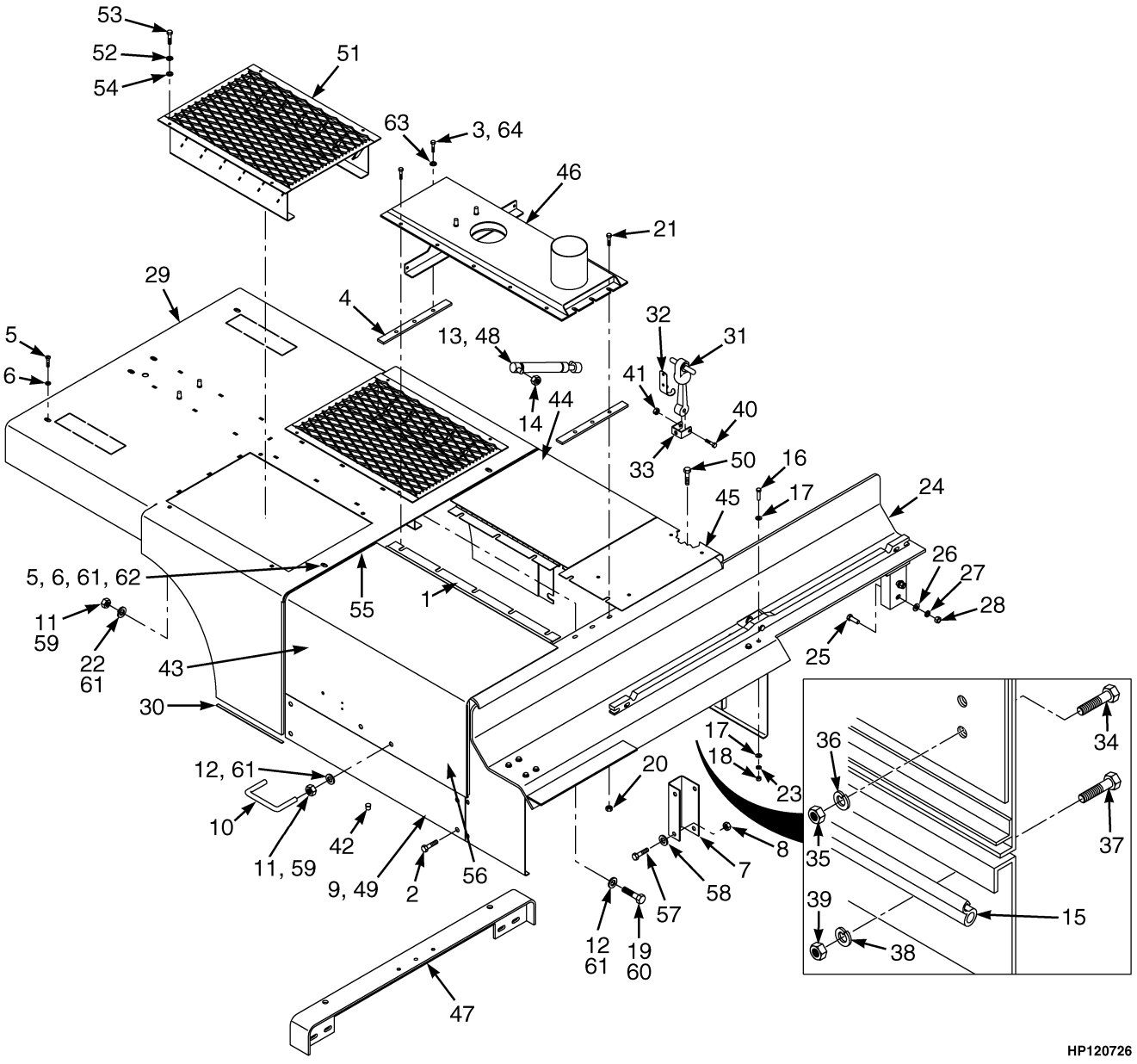

©2011 HYSTER COMPANY

HOOD AND LINKAGE
TIER II AND III ENGINES

ITEM	PART NO.	DESCRIPTION	QTY
1	1336414	Strip	2
2	1309993	Screw	18
3	**e** 197853	Screw	3
4	1309950	Bar	2
5	**e** 160863	Stud	4
5	**f** 160863	Stud	2
6	**e** 160865	Lockwasher	4
6	**f** 160865	Lockwasher	2
7	1336380	Bracket Wldmt	2
8	**e** 191534	Nut	4
9	1336409	Panel	1
10	336821	Handle	2
11	**e** 15058	Nut	12
11	**f** 15058	Nut	8
12	**e** 15135	Washer	16
12	**f** 15135	Washer	12
13	806667	Gas Spring	1
14	239503	Nut	4
15	300088	Seal (Door)	AR
16	16815	Capscrew	8
17	221767	Washer	16
18	15056	Nut	8
19	**e** 16085	Capscrew	4
19	**f** 16085	Capscrew	2
20	156133	Nut	3
21	196898	Screw	3
22	**e** 15158	Washer	4
23	15156	Lockwasher	8
24	**c** 1506984	Crossmember	1
24	**d** 1507248	Crossmember	1
25	**d** 200454	Capscrew	2
26	**d** 15135	Washer	2
27	**d** 15158	Washer	2
28	**d** 15058	Nut	2
29	**a** 1519030	Hood	1
29	**b** 1519031	Hood	1
30	300088	Seal (Door)	AR
31	177989	Latch (Hood)	2
32	1315918	Bracket (Hood)	2
33	177991	Bracket (Anchor)	2
34	220500	Screw	4
35	15052	Nut	4
36	15152	Lockwasher	4
37	16836	Capscrew	2
38	15155	Lockwasher	2
39	15055	Nut	2
40	18470	Capscrew	2
41	221341	Locknut	2
42	1311346	Fastener	2
43	816301	Hood	1

©2011 HYSTER COMPANY

HOOD AND LINKAGE
TIER II AND III ENGINES

ITEM	PART NO.	DESCRIPTION	QTY
44	1519028	Hood	1
45	**e** 1519032	Hood	1
45	**f** 1634341	Hood	1
46	1518354	Support	1
47	**e** 1519029	Bracket Wldmt	1
47	**f** 1634519	Bracket Wldmt	1
48	1519034	Gas Spring	1
49	1519035	Panel	1
50	392620	Screw	2
51	1519033	Grill	2
52	293780	Lockwasher	8
53	136749	Screw	8
54	**f** 320157	Washer	8
55	**f** 1634954	Liner	2
56	**f** 1635608	Plate	1
57	**f** 292508	Capscrew	4
58	**f** 320157	Washer	4
59	**f** 302402	Locknut	4
60	**f** 246001	Capscrew	4
61	**f** 320161	Washer	10
62	**f** 292527	Capscrew	2
63	**f** 320159	Washer	3
64	**f** 136985	Capscrew	3

FOOTNOTES:

a 4318 mm, 170 in. Wheel Base
b 4826 mm, 190 in. Wheel Base
c Center Compartment
d Left Compartment
e → S/N E008E02099D
f S/N E008E02100D →

©2011 HYSTER COMPANY

NOTES

©2011 HYSTER COMPANY

HOOD (FIGURE 1-24)
TIER I ENGINE — H550FS, H620FS, H700FS

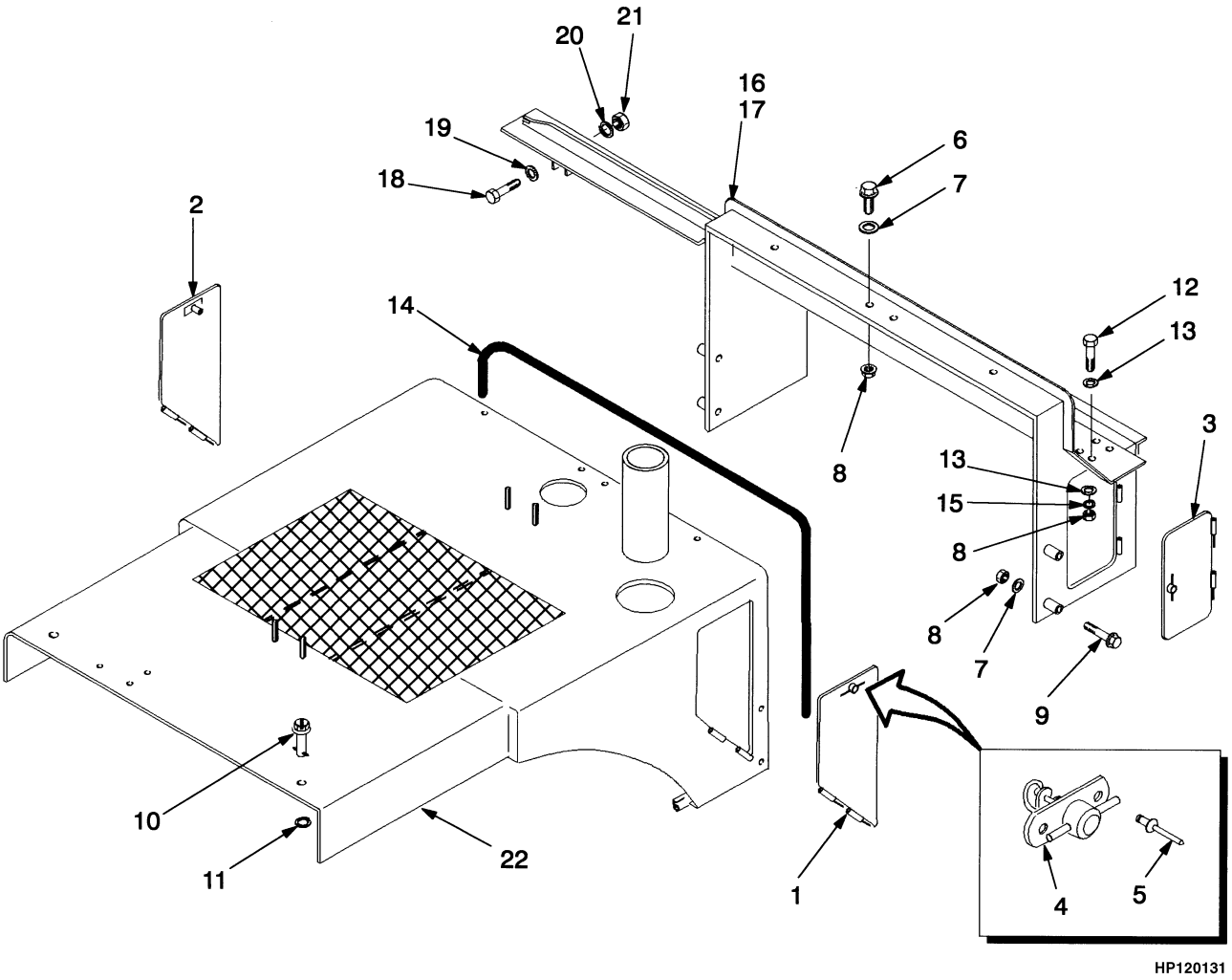

©2011 HYSTER COMPANY

HOOD

TIER I ENGINE – H550FS, H620FS, H700FS

KEY:
A: H550FS, H620FS
B: H700FS

ITEM	PART NO.	DESCRIPTION	QTY A	QTY B
1	1353999	Door (RH)	1	1
2	1354450	Door (LH)	1	1
3	1353996	Door	1	1
4	1353998	Latch	3	3
5	166818	Rivet	6	6
6	197853	Screw	4	4
7	15134	Washer	8	8
8	15056	Nut	16	16
9	197858	Screw	4	4
10	160863	Stud	2	2
11	160865	Lockwasher	2	2
12	16376	Capscrew	8	8
13	221767	Washer	16	16
14	300088	Seal (Door) (2500 mm)	AR	AR
15	15156	Lockwasher	8	8
16	**a** 1353927	Crossmember	1	1
16	3047451	Hinge	1	1
17	**b** 1353937	Crossmember	1	1
17	3047451	Hinge	1	1
18	**b** 200454	Capscrew	2	2
19	**b** 15135	Washer	2	2
20	**b** 15158	Washer	2	2
21	**b** 15058	Nut	2	2
22	**c** 1353979	Hood	..	1
22	**c** 1353980	Hood	1	..
22	**d** 1367292	Hood	..	1
22	**d** 1367293	Hood	1	..

FOOTNOTES:

a Center Compartment
b Left Compartment
c → S/N E8E01548
d S/N E8E01549 →

©2011 HYSTER COMPANY

HOOD (FIGURE 1-25)

TIER II AND III ENGINES — H440FS, H550FS, H620FS, H700FS

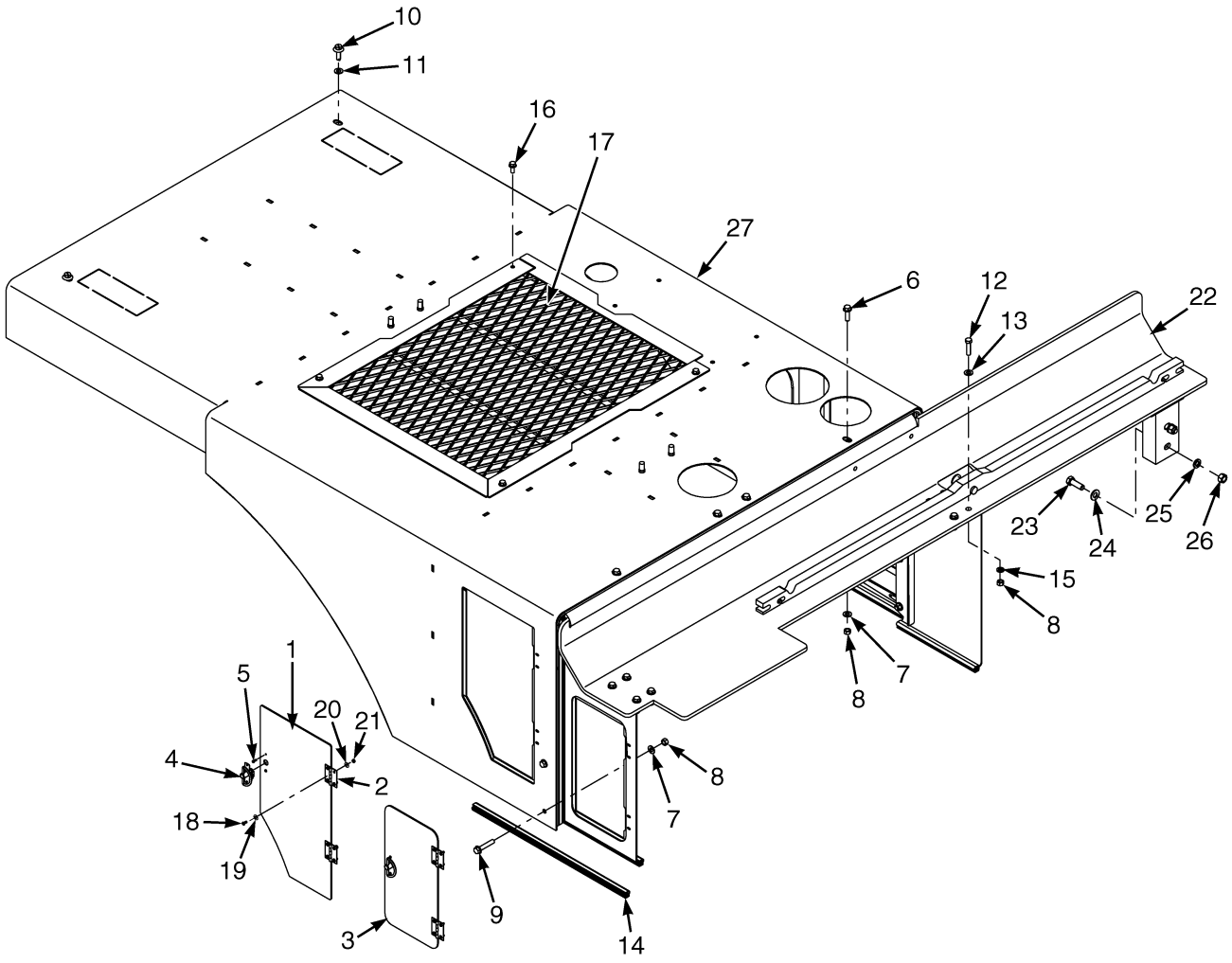

HP120725

©2011 HYSTER COMPANY

HOOD

TIER II AND III ENGINES – H440FS, H550FS, H620FS, H700FS

ITEM	PART NO.	DESCRIPTION	QTY
1	1546717	Plate	2
2	1546622	Hinge	6
3	1546744	Plate	1
4	1353998	Latch	3
5	166818	Rivet	6
6	197853	Screw	4
7	15134	Washer	8
8	15056	Nut	16
9	197858	Screw	4
10	160863	Stud	2
11	160865	Lockwasher	2
12	16815	Capscrew	8
13	221767	Washer	16
14	300088	Seal (Door)	AR
15	15156	Lockwasher	8
16	1527880	Capscrew	4
17	1546561	Cover	1
18	296149	Capscrew	24
19	320154	Washer	24
20	292678	Lockwasher	24
21	1463912	Nut	24
22	**a** 1541226	Crossmember	1
22	**b** 1541228	Crossmember	1
23	**b** 200454	Capscrew	2
24	**b** 15135	Washer	2
25	**b** 15158	Washer	2
26	**b** 15058	Nut	2
27	**c** 1546525	Hood (H440FS, H550FS, H620FS)	1
27	**d** 1634812	Hood (H440FS, H550FS, H620FS)	1
27	**c** 1546526	Hood (H700FS)	1
27	**d** 1634813	Hood (H700FS)	1

FOOTNOTES:

a Center Compartment
b Left Compartment
c → S/N E008E02099D
d S/N E008E02100D →

©2011 HYSTER COMPANY

LABELS (FIGURE 1-26)

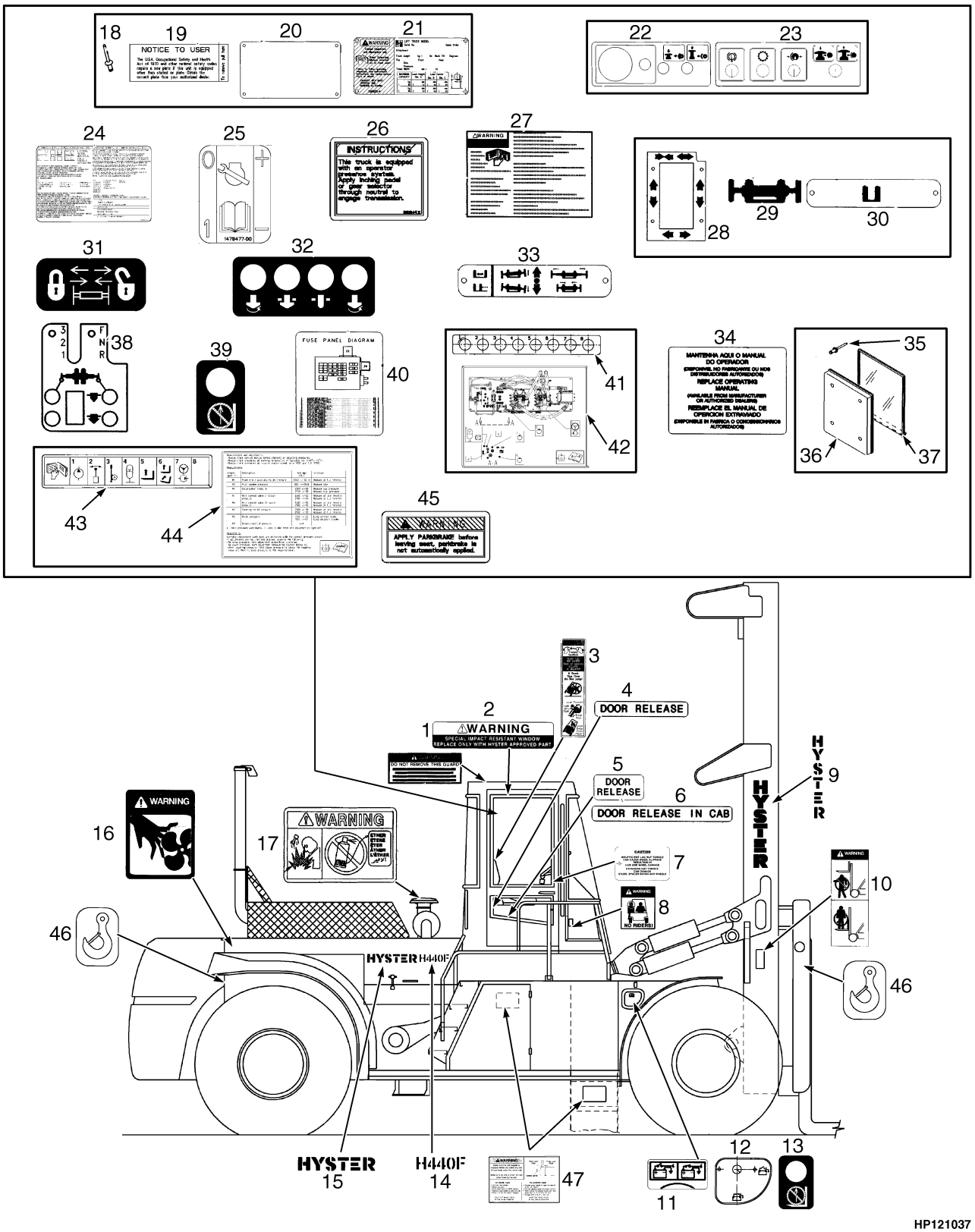

HP121037

©2011 HYSTER COMPANY

LABELS

ITEM	PART NO.	DESCRIPTION	QTY
1	**a**	Plate (Impact Test)	1
2	2038590	Label (Impact Resistant Window)	1
3	1330917	Label (Operator Restraint)	2
4	**oq** 1451416	Label (Door Release) (Cab)	2
5	**ce** 377618	Label (Door Release)	2
6	**ce** 1301744	Label (Door Release) (Cab)	2
7	322668	Label (Lug Nut Torque)	1
7	137852	Strap Clamp	1
8	1330920	Label (No Riders)	2
9	1345736	Label (Hyster) (Vertical)	2
10	1335126	Label (Mast Warning)	2
11	**p** 1352190	Label (Battery Disconnect) (Tier I Engine)	1
12	**d** 1355003	Label (Battery Disconnect) (Tier I Engine)	1
13	1515475	Label (Battery Disconnect) (Tier II Engine)	1
14	1339499	Label (Model 440)	2
14	1339500	Label (Model 500)	2
14	345957	Label (Model 550)	2
14	327487	Label (Model 620)	2
14	345951	Label (Model 650)	2
14	327488	Label (Model 700)	2
15	264168	Label (Hyster) (Horizontal)	2
16	1345939	Label (Fan Warning)	2
17	2034459	Label (Ether Warning)	2
18	166818	Rivet	4
19	1335137	Label (Nameplate Tag)	1
20	389688	Nameplate Cover (Nameplate)	1
21	**a**	Nameplate	1
22	**f** 1332230	Label (Parking Brake And Hydraulic Pressure)	1
23	**m** 1553413	Label (Parking Brake, Hydraulic And Oil Pressure, Brake Temperature)	1
24	1534660	Label (Patents and Trademarks)	1
25	1479477	Label (Diagnosis)	1
26	2084159	Label (Operator Presence)	1
27	1336605	Label (Operator Warning)	1
28	1316544	Label (Control Switches)	1
29	1316543	Label (Control) (With Container Attachment)	1
30	1316542	Label (Control) (Without Container Attachment)	1
31	**l** 1461478	Label (Hydraulic Stops)	1
32	**l** 1461477	Label (Twistlocks) (With Container Attachment)	1
33	331536	Label (Control) (Lift and Tilt)	1
34	1328205	Label	1
35	222029	Rivet	4
36	335989	Information Case (Information Case)	1
37	335991	Cover (Information Case) (Information Case)	1
38	**f** 1315830	Label (Shift Lever)	1
39	**h** 1461476	Label (Lift Interrupt)	1
40	**bf** 1332196	Label (Fuse Panel)	1
40	**n** 1385633	Label (Fuse Panel)	1
40	**m** 1464869	Label (Fuse Panel)	1
40	1508524	Label (Fuse Panel) (Tier I Engine)	1
40	**g** 1509832	Label (Fuse Panel) (Tier II Engine)	1
40	**i** 1553828	Label (Fuse Panel)	1

©2011 HYSTER COMPANY

LABELS

ITEM	PART NO.	DESCRIPTION	QTY
40	**k** 1670896	Label (Fuse Panel)	1
41	**g** 1350850	Label (Check Port)	1
42	**j** 1485420	Label (Check Port)	1
43	**g** 1350851	Label (Check Port) (Hydraulic Pressure)	1
44	**j** 1553919	Label (Check Port) (Hydraulic Pressure)	1
44	4009508	Label (Hydraulic Pressure Check Ports) (Alternate Part)	1
45	1335146	Label (Park Brake Warning)	1
46	316448	Label (Lifting Eye)	4
47	1350852	Label (Hand Pump)	1

FOOTNOTES:

a Contact Your Local Hyster Dealer
b → S/N E008D01581
c → S/N E008D016929U
d → S/N E008E01550
e → S/N E008E01751V
f → S/N E008E01865Y
g → S/N E008E01984B
h S/N E008E01811X ↔ S/N E008E01984B
i S/N E008E01985B ↔ S/N E008E02225E
j S/N E008E01985B →
k S/N E008E02226E →
l S/N E008E01811X →
m S/N E008E01866Y →
n S/N E008D01582 →
o S/N E008D016930U →
p S/N E008E01551 →
q S/N E008E01752V →

©2011 HYSTER COMPANY

2 ENGINE ASSEMBLY

SECTION 2
ENGINE ASSEMBLY

DESCRIPTION **PAGE**

ACCESSORY DRIVE BELT AND TENSIONER
WATER PUMP - TIER III ENGINE (S/N E008E02100D →) 2-162
AIR COMPRESSOR PLUGS
TIER II ENGINE 2-34
AIR INTAKE
TIER III ENGINE (S/N E008E02100D →) 2-96
AIR INTAKE CONNECTION
TIER II AND III ENGINES 2-92
AIR INTAKE HEATER CONNECTION
TIER II ENGINE 2-94
AIR TRANSFER CONNECTION
TIER II AND III ENGINES 2-98
CABIN HEATER PLUMBING
TIER II AND III ENGINES 2-125
CAMSHAFT AND TIMING GEAR
TIER II ENGINE (→ S/N E008E02099D) 2-35
TIER III ENGINE (S/N E008E02100D →) 2-36
COOLANT HEATER STARTING AID PLUGS
TIER II AND III ENGINES 2-119
COOLING
→ S/N E008E01697 → S/N E008D01602 2-140
TIER I ENGINE (S/N E008E01698 →) (S/N E008D01603 →) 2-142
TIER II ENGINE - H550F, H620F, H650F, H700F (→ S/N E008E02099D) 2-144
TIER II ENGINE - H440FS, H550FS, H620FS, H700FS (→ S/N E008E02099D) 2-148
TIER III ENGINE - H550F, H620F, H650F, H700F (S/N E008E02100D →) 2-150
TIER III ENGINE - H440FS, H550FS, H620FS, H700FS (S/N E008E02100D →) 2-154
CORROSION RESISTOR
H440FS, H550FS, H620FS, H700FS - TIER II ENGINE (S/N E008E01985B ↔ S/N E008E02099D) 2-78
H550F, H620F, H650F, H700F - TIER II ENGINE (S/N E008E01985B ↔ S/N E008E02099D) 2-76
TIER III ENGINE (S/N E008E02100D →) 2-80
CRANKCASE BREATHER
TIER II ENGINE (→ S/N E008E02099D) 2-100
TIER III ENGINE (S/N E008E02100D →) 2-102
CRANKSHAFT
TIER II ENGINE (→ S/N E008E02099D) 2-18
TIER III ENGINE (S/N E008E02100D →) 2-19
CRANKSHAFT MAIN BEARINGS
TIER II ENGINE (→ S/N E008E02099D) 2-20
TIER III ENGINE (S/N E008E02100D →) 2-22
CYLINDER BLOCK
TIER II ENGINE (→ S/N E008E02099D) 2-6
TIER III ENGINE (S/N E008E02100D →) 2-8
CYLINDER HEAD
TIER II ENGINE (→ S/N E008E02099D) 2-10
TIER III ENGINE (S/N E008E02100D →) 2-12
DUST SHIELD
TIER II ENGINE (→ S/N E008E02099D) 2-24
ENGINE AND TRANSMISSION MOUNT 2-160
ENGINE ASSEMBLY 2-4

©2011 HYSTER COMPANY

SECTION 2
ENGINE ASSEMBLY

DESCRIPTION **PAGE**

EXHAUST
TIER I AND TIER II ENGINE 2-130
TIER II ENGINE (S/N E008E01886Z ↔ S/N E008E02099D) 2-132
TIER III ENGINE (S/N E008E02100D →) 2-134
EXHAUST CONNECTION
TURBOCHARGER - TIER II ENGINE 2-126
EXHAUST MANIFOLD
TIER II ENGINE 2-127
TIER III ENGINE 2-128
FAN DRIVE
TIER II AND III ENGINES 2-64
FAN SPACER 2-66
FLYWHEEL
TIER II ENGINE (→ S/N E008E02099D) 2-26
TIER III ENGINE (S/N E008E02100D →) 2-27
FLYWHEEL HOUSING
TIER II ENGINE (→ S/N E008E02099D) 2-56
TIER III ENGINE (S/N E008E02100D →) 2-58
FRONT ENGINE SUPPORT
TIER II AND III ENGINES 2-159
FRONT GEAR COVER
TIER II ENGINE (→ S/N E008E02099D) 2-42
TIER III ENGINE (S/N E008E02100D →) 2-44
FRONT GEAR TRAIN ACCESSORY DRIVE
TIER II ENGINE 2-48
GEAR HOUSING
TIER II ENGINE (→ S/N E008E02099D) 2-52
TIER III ENGINE (S/N E008E02100D →) 2-54
GEAR TRAIN ACCESSORY PLUMBING
FRONT - TIER II ENGINE 2-50
LIFTING BRACKET
TIER II ENGINE (→ S/N E008E02099D) 2-157
TIER III ENGINE (S/N E008E02100D →) 2-158
OIL DRAIN CONNECTION AND ACCESSORY HOLE COVER
TIER III ENGINE (S/N E008E02100D →) 2-163
OIL FILLER
H440FS, H550FS, H620FS, H700FS - TIER II ENGINE (S/N E008E01985B ↔ S/N E008E02099D) 2-88
H550F, H620F, H650F, H700F - TIER II ENGINE (S/N E008E01985B ↔ S/N E008E02099D) 2-86
TIER III ENGINE (S/N E008E02100D →) 2-90
OIL FILTER AND COOLER
TIER II ENGINE (→ S/N E008E02099D) 2-68
TIER III ENGINE (S/N E008E02100D →) 2-70
OIL LEVEL GAUGE
H440FS, H550FS, H620FS, H700FS - TIER II ENGINE (S/N E008E01985B ↔ S/N E008E02099D) 2-83
H550F, H620F, H650F, H700F - TIER II ENGINE (S/N E008E01985B ↔ S/N E008E02099D) 2-82
TIER III ENGINE (S/N E008E02100D →) 2-85
OIL PAN
TIER II ENGINE (→ S/N E008E02099D) 2-60
TIER III ENGINE (S/N E008E02100D →) 2-62

©2011 HYSTER COMPANY

SECTION 2
ENGINE ASSEMBLY

DESCRIPTION **PAGE**

OIL PUMP
TIER II ENGINE (→ S/N E008E02099D) 2-46
TIER III ENGINE (S/N E008E02100D →) 2-47
PISTON AND CONNECTING ROD
TIER II ENGINE (→ S/N E008E02099D) 2-14
TIER III ENGINE (S/N E008E02100D →) 2-16
RADIATOR
→ S/N E008E02099D 2-136
TIER III ENGINE (S/N E008E02100D →) 2-138
RADIATOR PLUMBING
H440FS, H550FS, H620FS, H700FS - TIER II ENGINE (S/N E008E01985B ↔ S/N E008E02099D) 2-121
H550F, H620F, H650F, H700F - TIER II ENGINE (S/N E008E01985B ↔ S/N E008E02099D) 2-120
TIER III ENGINE (S/N E008E02100D →) 2-122
ROCKER LEVERS
TIER II ENGINE (→ S/N E008E02099D) 2-38
TIER III ENGINE (S/N E008E02100D →) 2-40
THERMOSTAT
TIER II ENGINE (→ S/N E008E02099D) 2-114
TIER III ENGINE (S/N E008E02100D →) 2-116
TORQUE CONVERTER AND OIL COOLER FITTINGS
TIER II ENGINE - H550F, H620F, H650F, H700F (S/N E008E01985B ↔ S/N E008E02099D) 2-72
TIER II ENGINE - H550FS, H620FS, H700FS (S/N E008E01985B →) 2-73
TIER III ENGINE (S/N E008E02100D →) 2-74
TURBOCHARGER
TIER II ENGINE (→ S/N E008E02099D) 2-108
TIER III ENGINE (S/N E008E02100D →) 2-110
TURBOCHARGER PLUMBING
TIER II ENGINE (→ S/N E008E02099D) 2-104
TIER III ENGINE (S/N E008E02100D →) 2-106
VALVE COVER
TIER II ENGINE (→ S/N E008E02099D) 2-28
TIER III ENGINE (S/N E008E02100D →) 2-30
VALVE TAPPET
TIER II ENGINE (→ S/N E008E02099D) 2-32
TIER III ENGINE (S/N E008E02100D →) 2-33
VIBRATION DAMPER
TIER II AND III ENGINES 2-25
WATER INLET CONNECTION
TIER II ENGINE (→ S/N E008E02099D) 2-112
TIER III ENGINE (S/N E008E02100D →) 2-113
WATER OULET CONNECTION
TIER II ENGINE 2-123
WATER OUTLET CONNECTION
TIER III ENGINE 2-124
WATER PUMP
TIER II ENGINE (→ S/N E008E02099D) 2-117
TIER III ENGINE (S/N E008E02100D →) 2-118

©2011 HYSTER COMPANY

ENGINE ASSEMBLY (FIGURE 2-1)

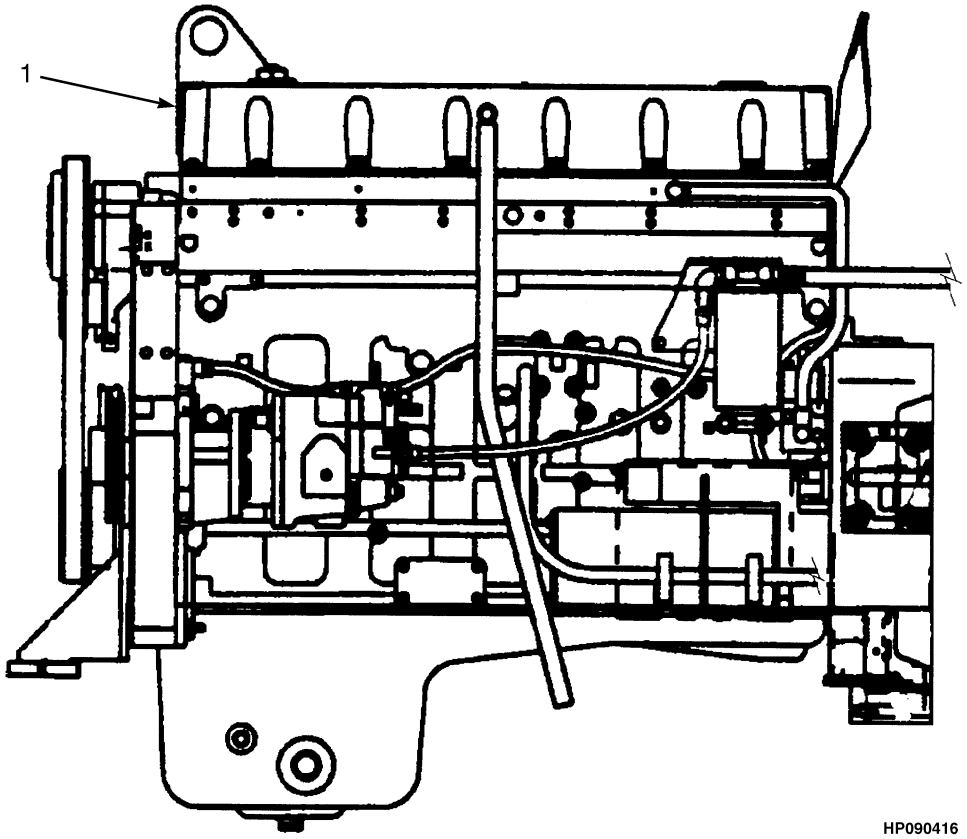

ITEM	PART NO.	DESCRIPTION	QTY
1	**a** 1394094	Engine Assy-Diesel (Tier I Engine)	1
1	**a** 1394093	Engine Assy-Diesel (Tier I Engine)	1
1	**abd** 1499324	Engine Assy-Diesel (Tier II Engine)	1
1	**be** 1532628	Engine Assy-Diesel (Tier II Engine)	1
1	**bf** 1606762	Engine Assy-Diesel (Tier II Engine)	1
1	**ce** 1542383	Engine Assy-Diesel (Tier II Engine)	1
1	**cf** 1607372	Engine Assy-Diesel (Tier II Engine)	1
1	**g** 1663666	Engine Assy-Diesel (Tier III Engine)	1

FOOTNOTES:

a For additional Cummins engine parts and service information during the warranty period, please contact your local Cummins Dealer
b H550F, H620F, H650F, H700F
c H550FS, H620FS, H700FS
d → S/N E008E01984B
e S/N E008E01985B ↔ S/N E008E02066C
f S/N E008E02067C ↔ S/N E008E02099D
g S/N E008E02100D →

©2011 HYSTER COMPANY

NOTES

©2011 HYSTER COMPANY

CYLINDER BLOCK (FIGURE 2-2)

TIER II ENGINE (→ S/N E008E02099D)

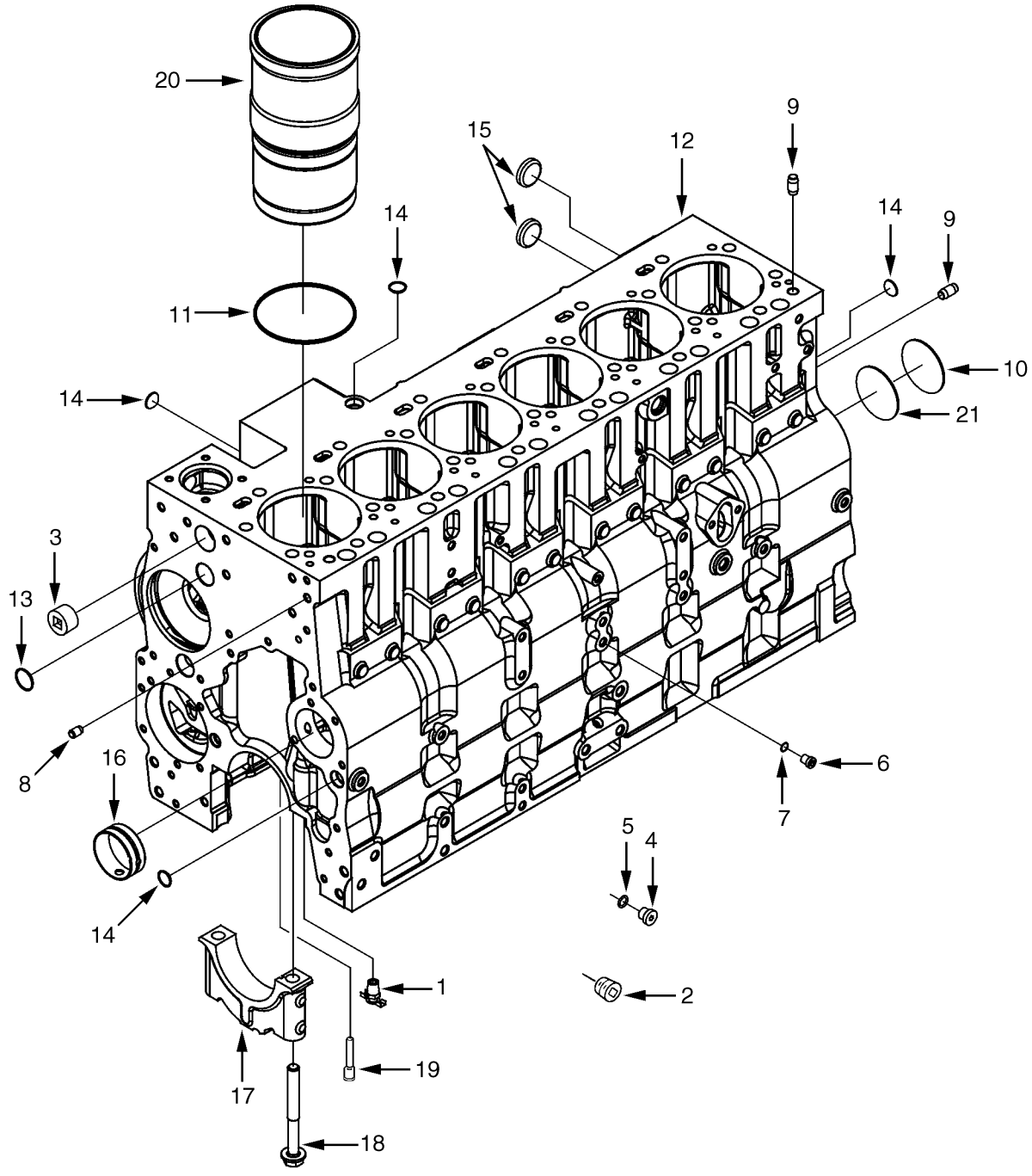

HP091241

©2011 HYSTER COMPANY

CYLINDER BLOCK

TIER II ENGINE (→ S/N E008E02099D)

KEY:
A: H550F, H620F, H650F, H700F
B: H550FS, H620FS, H700FS

ITEM	PART NO.	DESCRIPTION	QTY A	QTY B
	a 1499324	Engine Assy-Diesel	1	..
	b 1532628	Engine Assy-Diesel	1	..
	b 1542383	Engine Assy-Diesel	..	1
	c 1606762	Engine Assy-Diesel	1	..
	c 1607372	Engine Assy-Diesel	..	1
1	1513822	Drain Valve	1	1
2	1511952	Fitting	1	..
3	1513116	Plug	1	1
4	1521695	Plug Assembly	1	..
5	1517119	O-Ring	1	..
6	1517010	Plug Assembly	6	6
7	1517011	O-Ring	1	1
8	1513878	Dowel	2	2
9	1513879	Dowel	4	4
10	1513880	Plug	1	1
11	1514332	Seal	1	1
12	1597834	Kit-Cylinder Block	1	..
12	1519286	Cylinder Block	..	1
13	1513815	Plug	2	2
14	1513816	Plug	4	4
15	1513788	Plug	4	4
16	1513819	Bushing	7	7
17	1597831	Cap (Main Bearing)	7	..
17	1513818	Cap (Main Bearing)	..	7
18	1597830	Capscrew	14	..
18	1513820	Screw	..	14
19	1513881	Nozzle	12	..
19	1513881	Nozzle	..	6
20	. . . . .	Cylinder Liner	1	1
21	1519284	O-Ring	..	1
	1513882	Kit-Cylinder Liner	6	6
	d 1565709	Kit-Hardware	..	1
	1588054	Kit-Gasket (Lower Engine)	1	1
	1588056	Kit-Gasket (Upper Engine)	1	1

FOOTNOTES:

a → S/N E008E01984B
b S/N E008E01985B ↔ S/N E008E02066C
c S/N E008E02067C ↔ S/N E008E02099D
d S/N E008E01985B →

©2011 HYSTER COMPANY

CYLINDER BLOCK (FIGURE 2-3)

TIER III ENGINE (S/N E008E02100D →)

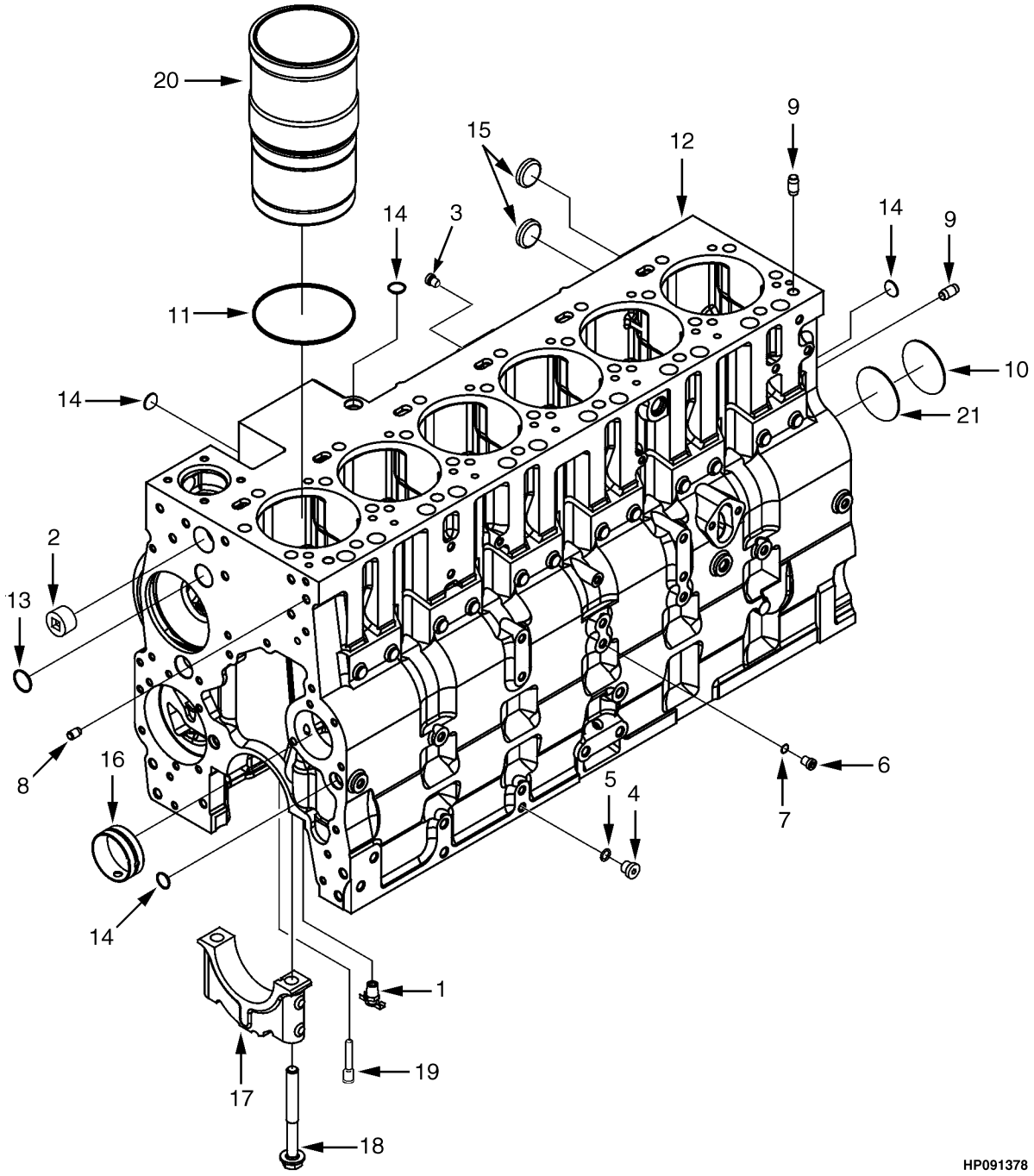

©2011 HYSTER COMPANY

CYLINDER BLOCK

TIER III ENGINE (S/N E008E02100D →)

ITEM	PART NO.	DESCRIPTION	QTY
	1663666	Engine Assy-Diesel	1
1	1513822	Drain Valve	1
2	1511952	Fitting	1
3	1512304	Plug	3
4	1521695	Plug Assembly	1
4	1585283	Plug	1
5	1517119	O-Ring	1
6	1517010	Plug Assembly	6
6	1543354	Plug	1
7	1517011	O-Ring	1
8	1513878	Dowel	2
9	1513879	Dowel	4
10	1513880	Plug	1
11	1514332	Seal	6
12	1643859	Cylinder Block Assembly	1
12	**b**	Block	1
13	1513815	Plug	2
14	1513816	Plug	4
15	1513788	Plug	4
16	1513819	Bushing	7
17	1597831	Cap (Main Bearing)	7
18	1597830	Capscrew	14
19	1643861	Nozzle	6
20	1519294	Cylinder Liner	6
	a 1614516	Capscrew	6
	a 1643857	Capscrew	1
	a 1643856	Guide	12
	a 1512292	Plug	4
	1513882	Kit-Cylinder Liner	1

FOOTNOTES:

a Not Illustrated

b Not Serviced Separately

©2011 HYSTER COMPANY

CYLINDER HEAD (FIGURE 2-4)

TIER II ENGINE (→ S/N E008E02099D)

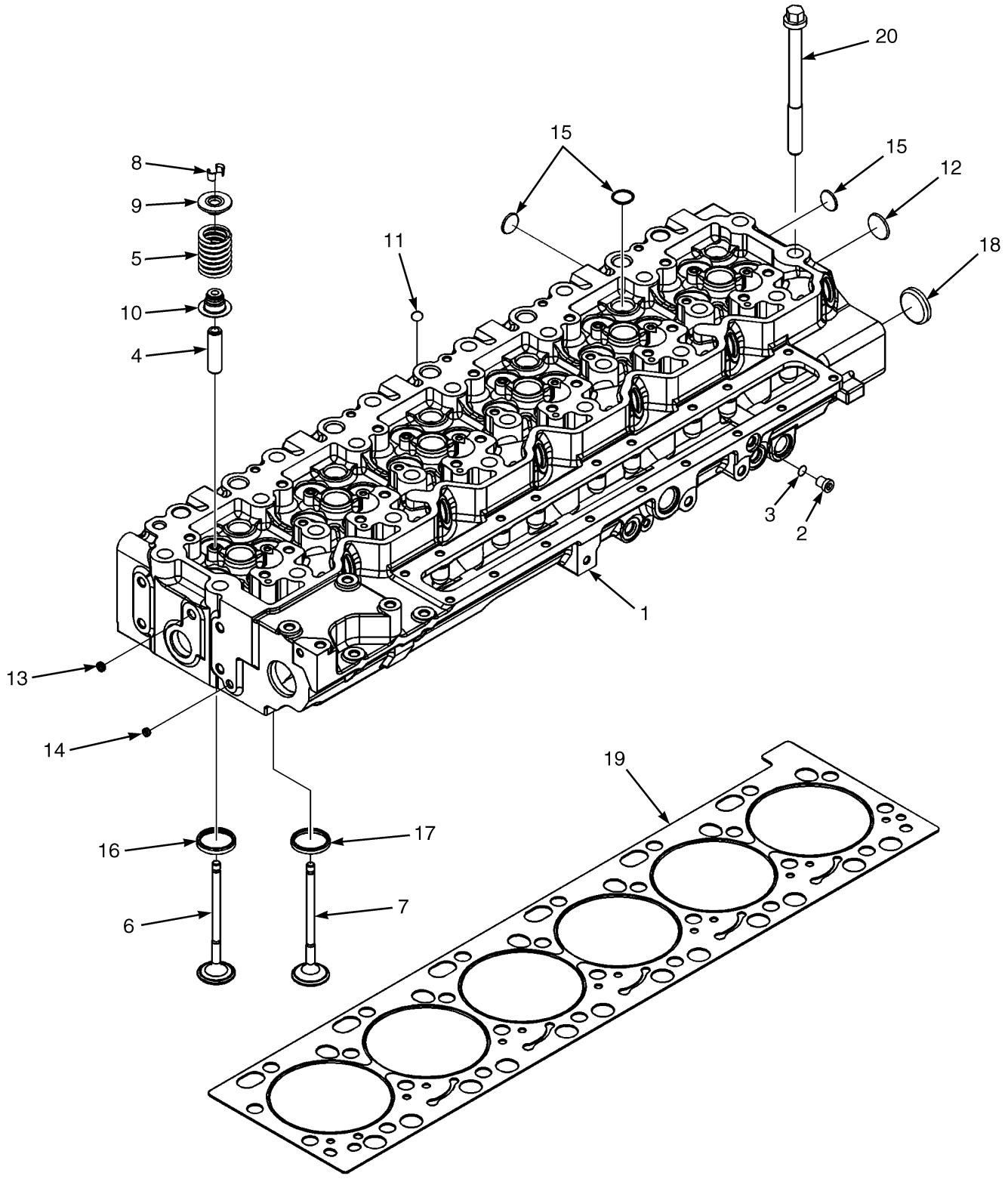

HP091206

©2011 HYSTER COMPANY

CYLINDER HEAD

TIER II ENGINE (→ S/N E008E02099D)

ITEM	PART NO.	DESCRIPTION	QTY
	1499324	Engine Assy-Diesel (H550F, H620F, H650F, H700F)	1
	c 1532628	Engine Assy-Diesel (H550F, H620F, H650F, H700F)	1
	c 1542383	Engine Assy-Diesel (H550FS, H620FS, H700FS)	1
	d 1606762	Engine Assy-Diesel (H550F, H620F, H650F, H700F)	1
	d 1607372	Engine Assy-Diesel (H550FS, H620FS, H700FS)	1
1	1517182	Cylinder Head	1
1	1589202	Cylinder Head	1
2	1517010	Plug Assembly	1
3	1517011	O-Ring	1
4	1589203	Guide (Valve Stem)	24
5	1517183	Spring	24
6	**a** 1517184	Inlet Valve (Intake)	12
7	**a** 1517186	Exhaust Valve (Exhaust)	12
8	1517185	Keeper	2
9	1517187	Retainer	24
10	1517188	Seal (Valve Stem)	12
10	1588066	Seal (Valve Stem)	12
11	1589206	Plug	6
12	1514541	Plug	2
13	1517189	Plug	1
14	1589207	Plug	1
15	**b** 1514339	Plug	17
16	. . . . .	Valve Insert (Intake)	12
17	. . . . .	Valve Insert (Exhaust)	12
18	1517190	Plug	2
19	1517191	Cylinder Head Gasket (Cylinder Head)	1
20	1514558	Capscrew	26
	1588054	Kit-Gasket (Lower Engine)	1
	1588056	Kit-Gasket (Upper Engine)	1

FOOTNOTES:

a Includes Item 8
b Not used on engines with Turbo
c S/N E008E01985B ↔ S/N E008E02066C
d S/N E008E02067C ↔ S/N E008E02099D

©2011 HYSTER COMPANY

CYLINDER HEAD (FIGURE 2-5)

TIER III ENGINE (S/N E008E02100D →)

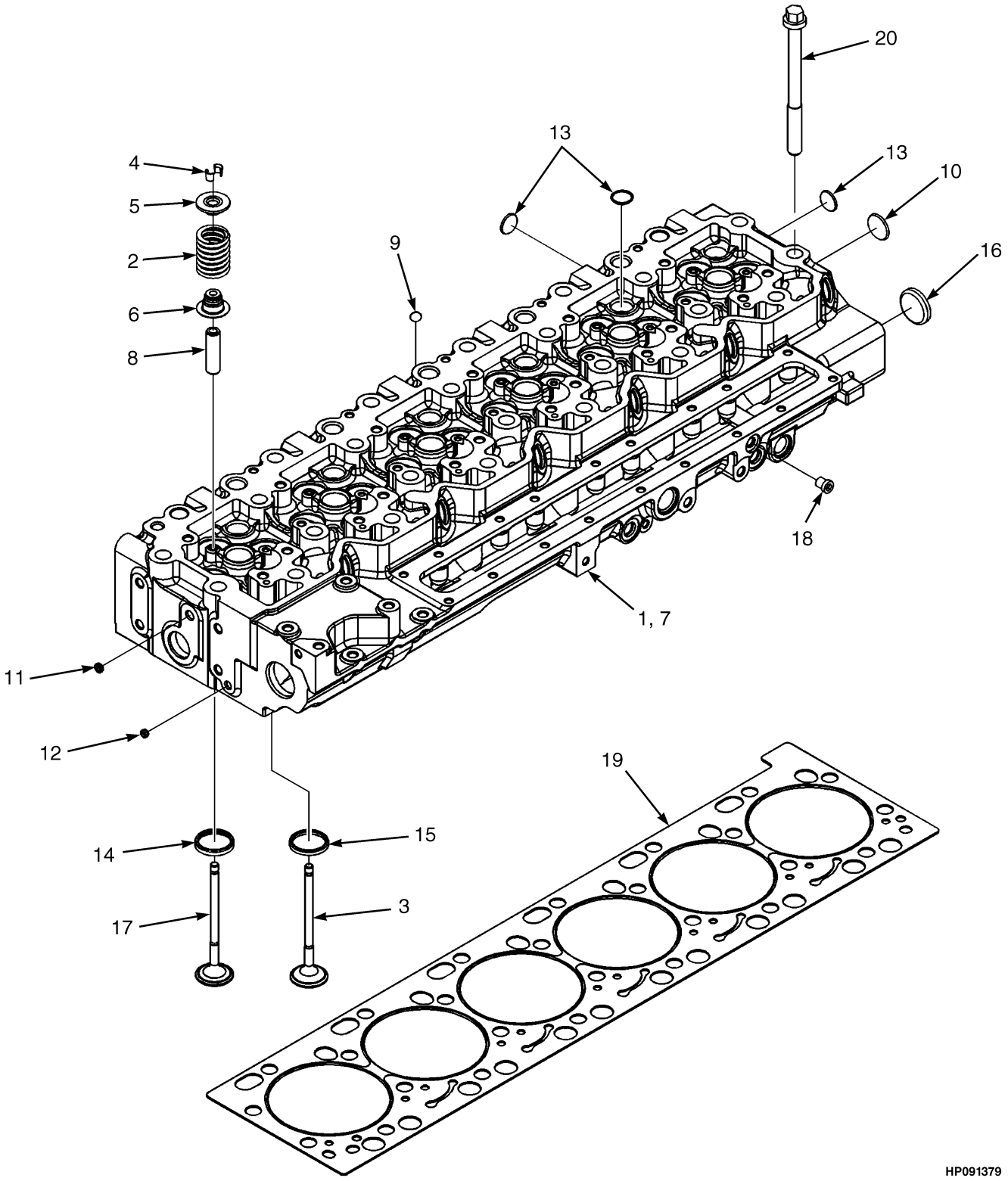

©2011 HYSTER COMPANY

CYLINDER HEAD

TIER III ENGINE (S/N E008E02100D →)

ITEM	PART NO.	DESCRIPTION	QTY
	1663666	Engine Assy-Diesel	1
	. . . . .	Cylinder Head Assembly	1
1	1649350	Cylinder Head	1
2	1649351	Spring	24
3	1644164	Exhaust Valve	12
4	1517185	Keeper	48
5	1517187	Retainer	24
6	1517188	Seal (Valve Stem)	12
6	1588066	Seal (Valve Stem) (Alternate Part)	24
7	1644065	Cylinder Head	1
8	1644059	Guide (Valve Stem)	24
9	1589206	Plug	6
10	1514541	Plug	2
11	1517189	Plug	1
12	1589207	Plug	1
13	1514339	Plug	18
14	1589208	Insert (Intake Valve)	12
15	1644074	Insert (Exhaust Valve)	12
16	1517190	Plug	2
17	1644165	Inlet Valve	12
18	1643866	Plug	2
19	1644051	Cylinder Head Gasket	1
19	4007619	Cylinder Head Gasket (Alternate Part)	1
20	1514558	Capscrew	26
	1649732	Kit-Gasket (Upper)	..

©2011 HYSTER COMPANY

PISTON AND CONNECTING ROD (FIGURE 2-6)

TIER II ENGINE (→ S/N E008E02099D)

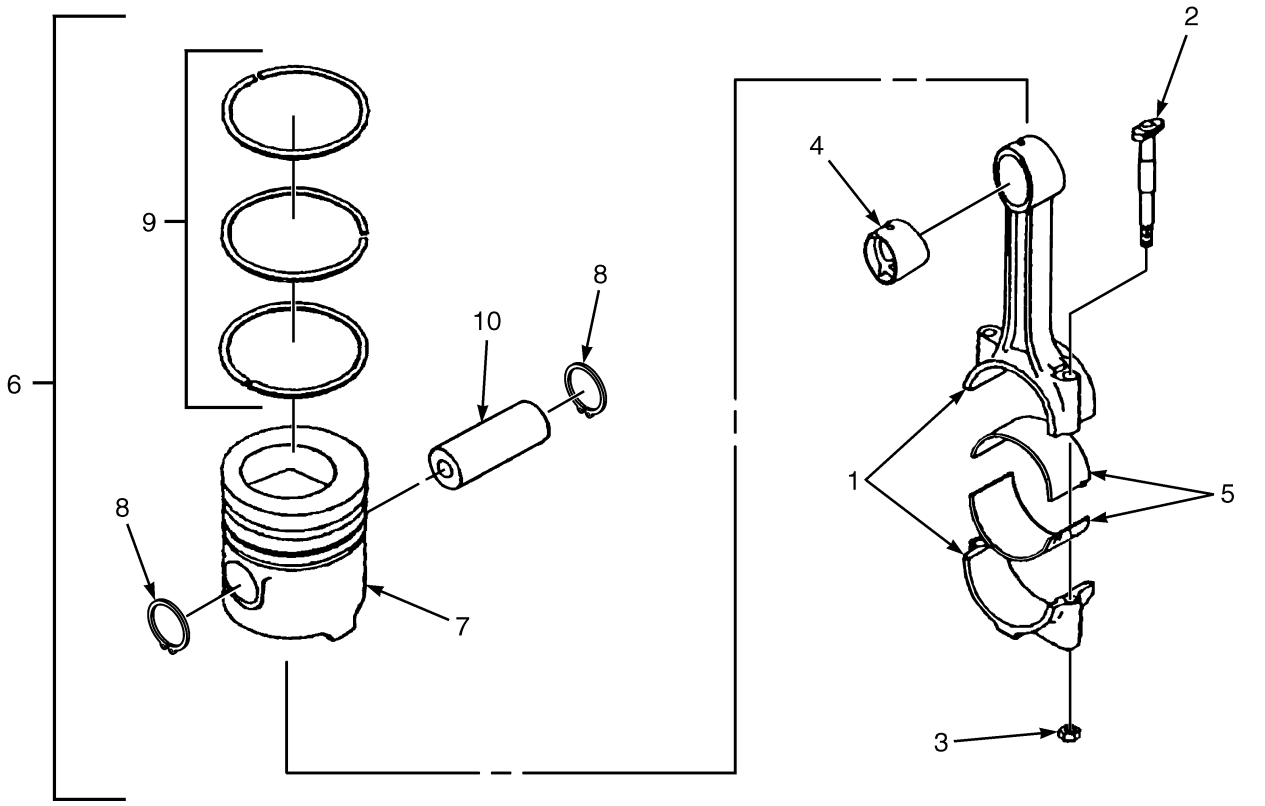

HP091200

©2011 HYSTER COMPANY

PISTON AND CONNECTING ROD

TIER II ENGINE (→ S/N E008E02099D)

ITEM	PART NO.	DESCRIPTION	QTY
	a 1499324	Engine Assy-Diesel (H550F, H620F, H650F, H700F)	1
	b 1532628	Engine Assy-Diesel (H550F, H620F, H650F, H700F)	1
	b 1542383	Engine Assy-Diesel (H550FS, H620FS, H700FS)	1
	c 1606762	Engine Assy-Diesel (H550F, H620F, H650F, H700F)	1
	c 1607372	Engine Assy-Diesel (H550FS, H620FS, H700FS)	1
1	1514519	Cylinder Rod	6
2	1514520	Bolt	2
3	1514521	Nut	2
4	1514522	Bushing	1
5	**d** 1588067	Bearing (Standard)	12
5	**d** 1514523	Bearing (Standard)	12
5	1514528	Bearing (0.010 in.)	12
5	1514529	Bearing (0.020 in.)	12
5	1514530	Bearing (0.030 in.)	12
5	1514531	Bearing (0.040 in.)	12
6	1565889	Kit-Piston	6
7	. . . . .	Piston	1
8	1514525	Retaining Ring	2
9	1514526	Kit-Piston Ring	1
10	1514527	Pin	6

FOOTNOTES:

a → S/N E008E01984B
b S/N E008E01985B ↔ S/N E008E02066C
c S/N E008E02067C ↔ S/N E008E02099D
d S/N E008E01985B →

©2011 HYSTER COMPANY

PISTON AND CONNECTING ROD (FIGURE 2-7)

TIER III ENGINE (S/N E008E02100D →)

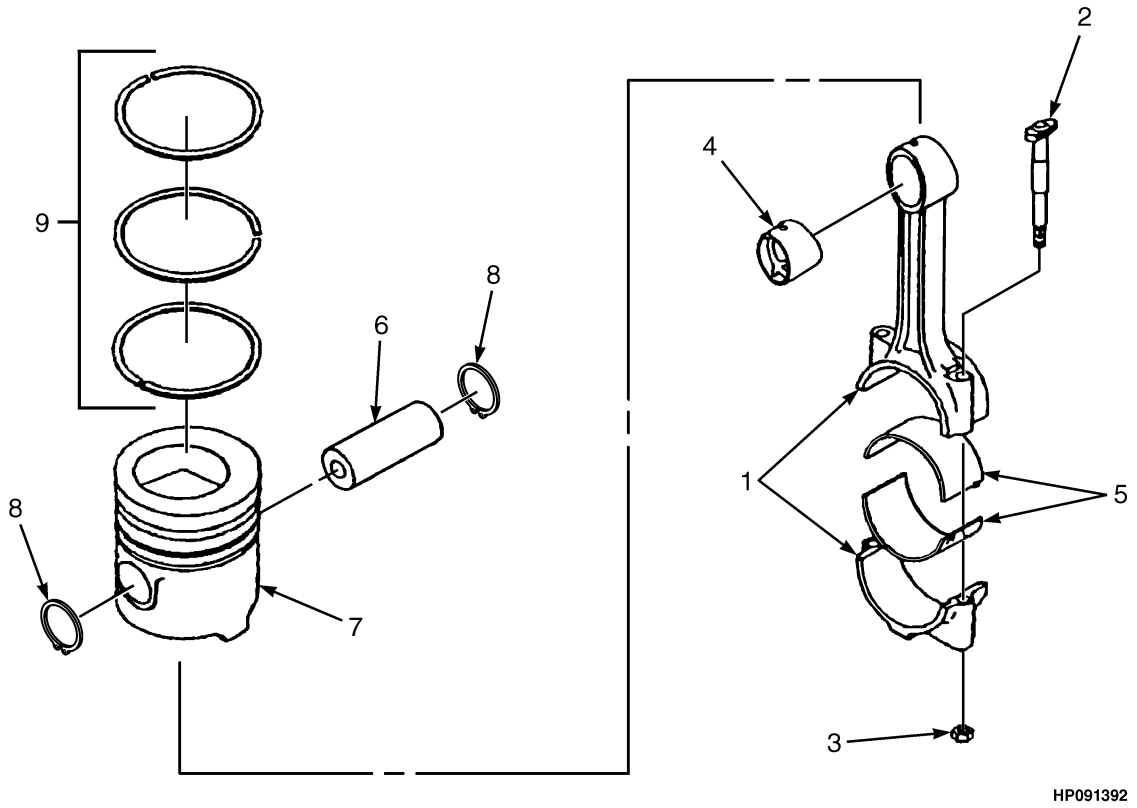

©2011 HYSTER COMPANY

PISTON AND CONNECTING ROD

TIER III ENGINE (S/N E008E02100D →)

ITEM	PART NO.	DESCRIPTION	QTY
	1663666	Engine Assy-Diesel	1
1	1644108	Piston Rod Assembly	6
1	1644107	Rod	1
2	1514520	Bolt	2
3	1514521	Nut	2
4	1644019	Bushing	1
5	1588067	Bearing (Standard)	12
6	1644090	Pin	6
7	1644092	Piston	6
8	1514525	Retaining Ring	12
9	1644943	Kit-Piston Ring	6

©2011 HYSTER COMPANY

CRANKSHAFT (FIGURE 2-8)

TIER II ENGINE (→ S/N E008E02099D)

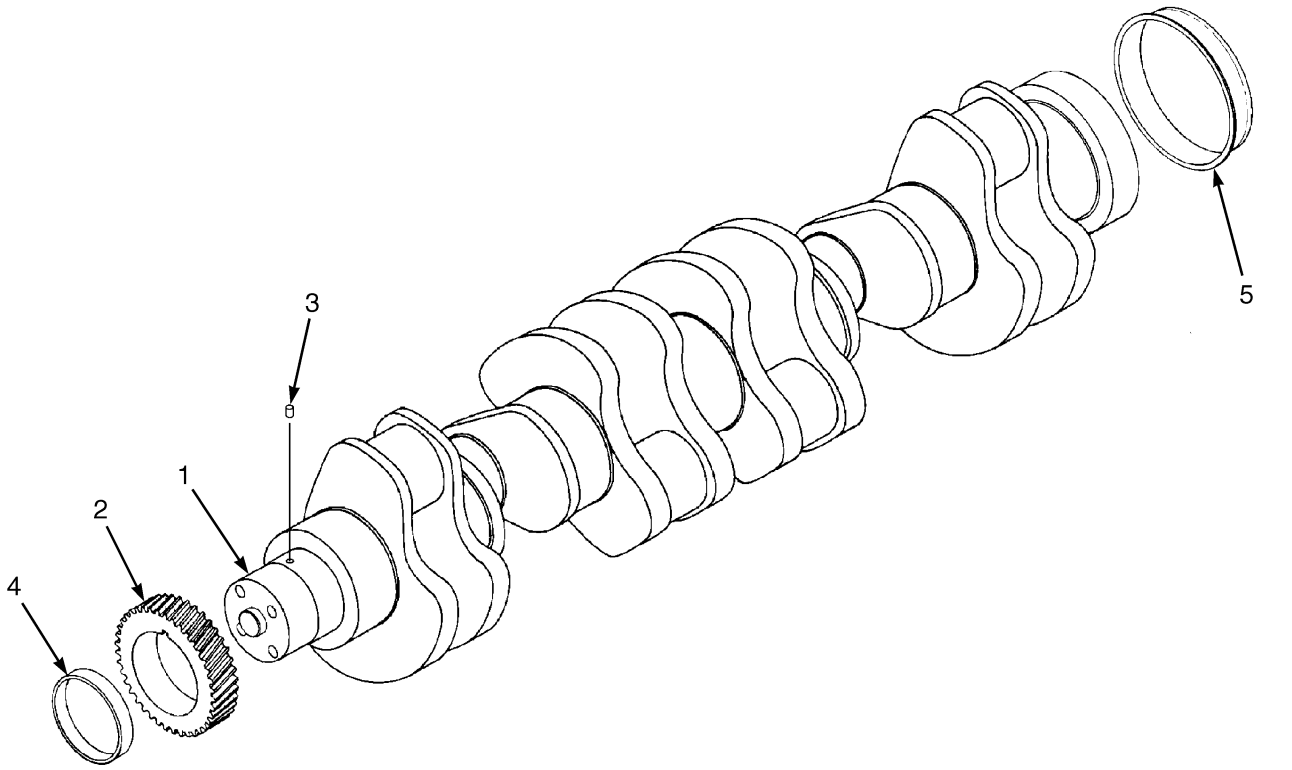

HP091203

ITEM	PART NO.	DESCRIPTION	QTY
	a 1499324	Engine Assy-Diesel (H550F, H620F, H650F, H700F)	1
	b 1532628	Engine Assy-Diesel (H550F, H620F, H650F, H700F)	1
	b 1542383	Engine Assy-Diesel (H550FS, H620FS, H700FS)	1
	c 1606762	Engine Assy-Diesel (H550F, H620F, H650F, H700F)	1
	c 1607372	Engine Assy-Diesel (H550FS, H620FS, H700FS)	1
1	1514344	Crankshaft	1
1	1597976	Crankshaft	1
2	1514345	Gear	1
3	1514346	Dowel	1
4	1587034	Kit-Seal (Front)	1
4	1514353	Kit-Seal (Crankshaft, Front) (With Wear Sleeve)	1
5	1514354	Kit-Wear Sleeve (Rear)	1

FOOTNOTES:

a → S/N E008E01984B

b S/N E008E01985B ↔ S/N E008E02066C

c S/N E008E02067C ↔ S/N E008E02099D

©2011 HYSTER COMPANY

CRANKSHAFT (FIGURE 2-9)

TIER III ENGINE (S/N E008E02100D →)

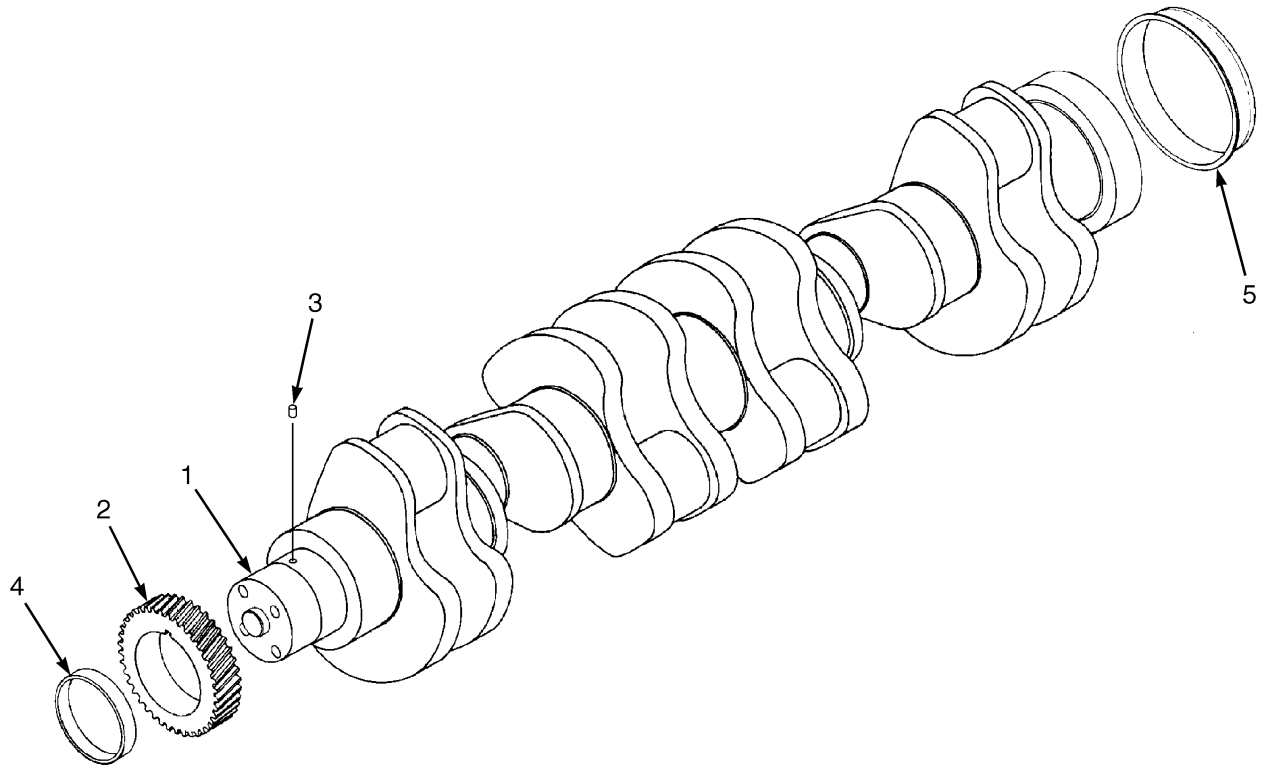

HP091203

ITEM	PART NO.	DESCRIPTION	QTY
	1663666	Engine Assy-Diesel	1
1	1643854	Crankshaft Assembly	1
1	1645273	Crankshaft	1
2	1514345	Gear	1
3	1514346	Dowel	1
4	1564992	Kit-Seal (Crankshaft)	1
4	. . . . .	Seal Installation Tool A	1
4	. . . . .	Oil Seal	1
4	. . . . .	Seal Installation Tool B	1
4	1514353	Kit-Seal (Crankshaft, Front)	1
4	. . . . .	Oil Seal	1
4	. . . . .	Wear Sleeve	1
4	. . . . .	Dust Shield	1
5	1514354	Kit-Wear Sleeve (Rear)	1
5	. . . . .	Oil Seal	1
5	. . . . .	Wear Sleeve	1
	1646671	Kit-Gasket (Lower)	..

©2011 HYSTER COMPANY

CRANKSHAFT MAIN BEARINGS (FIGURE 2-10)

TIER II ENGINE (→ S/N E008E02099D)

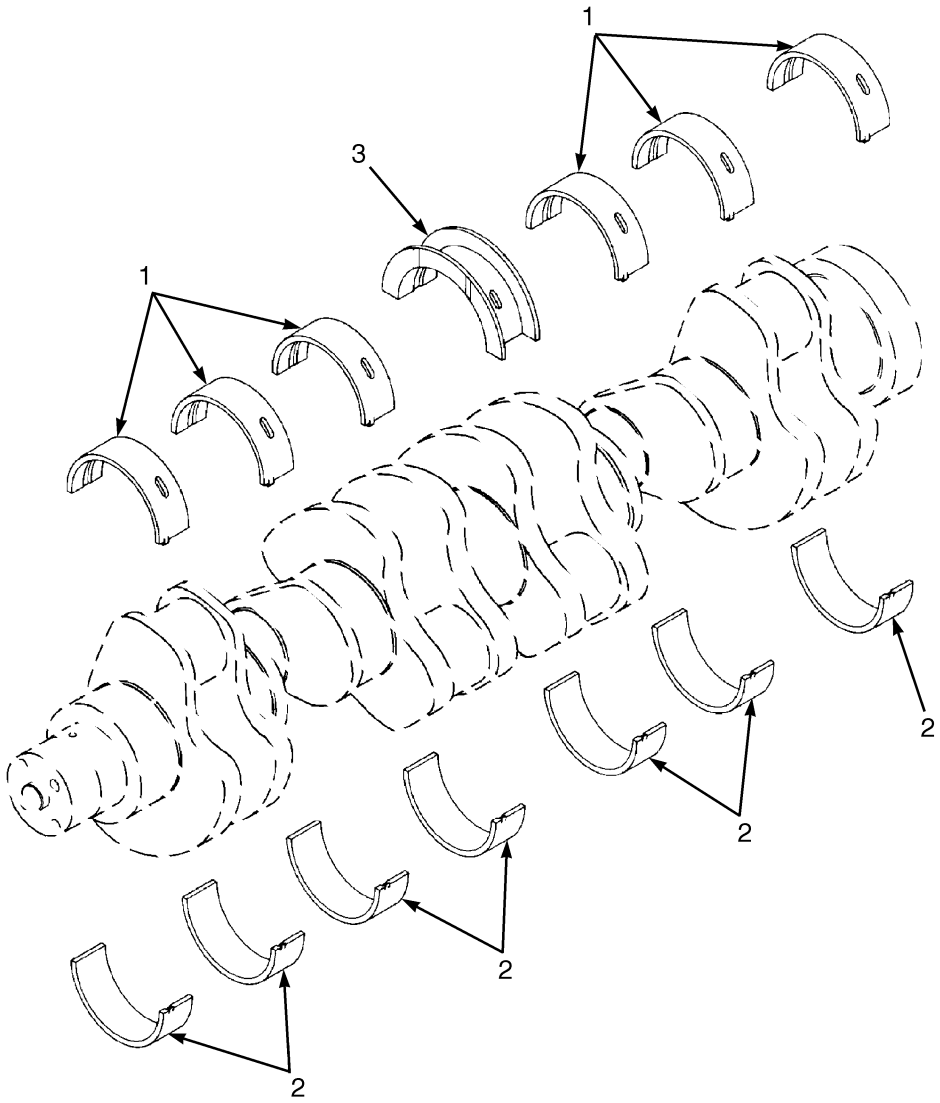

HP091220

©2011 HYSTER COMPANY

CRANKSHAFT MAIN BEARINGS

TIER II ENGINE (→ S/N E008E02099D)

ITEM	PART NO.	DESCRIPTION	QTY
	d 1499324	Engine Assy-Diesel (H550F, H620F, H650F, H700F)	1
	e 1532628	Engine Assy-Diesel (H550F, H620F, H650F, H700F)	1
	e 1542383	Engine Assy-Diesel (H550FS, H620FS, H700FS)	1
	f 1606762	Engine Assy-Diesel (H550F, H620F, H650F, H700F)	1
	f 1607372	Engine Assy-Diesel (H550FS, H620FS, H700FS)	1
	1514347	Kit-Bearing (Standard)	1
	1588792	Bearing Set (0.010 in.)	1
	1588796	Bearing Set (0.020 in.)	1
	1588800	Bearing Set (0.030 in.)	1
	1588804	Bearing Set (0.040 in.)	1
1	. . . . .	Main Bearing	6
2	. . . . .	Main Bearing	7
3	. . . . .	Main Bearing (Thrust)	1
3	**b** 1588809	Thrust Bearing	1
3	**c** 1588810	Bearing (Thrust)	1
3	**a** 1588811	Bearing (Thrust)	1

FOOTNOTES:

a 0.020 in. Oversize Journal Diameter, 0.639 in. Thrust Face
b Standard Journal Diameter, 0.010 in. Oversize Thrust Face
c Standard Journal Diameter, 0.020 in. Oversize Thrust Face
d → S/N E008E01984B
e S/N E008E01985B ↔ S/N E008E02066C
f S/N E008E02067C ↔ S/N E008E02099D

©2011 HYSTER COMPANY

CRANKSHAFT MAIN BEARINGS (FIGURE 2-11)

TIER III ENGINE (S/N E008E02100D →)

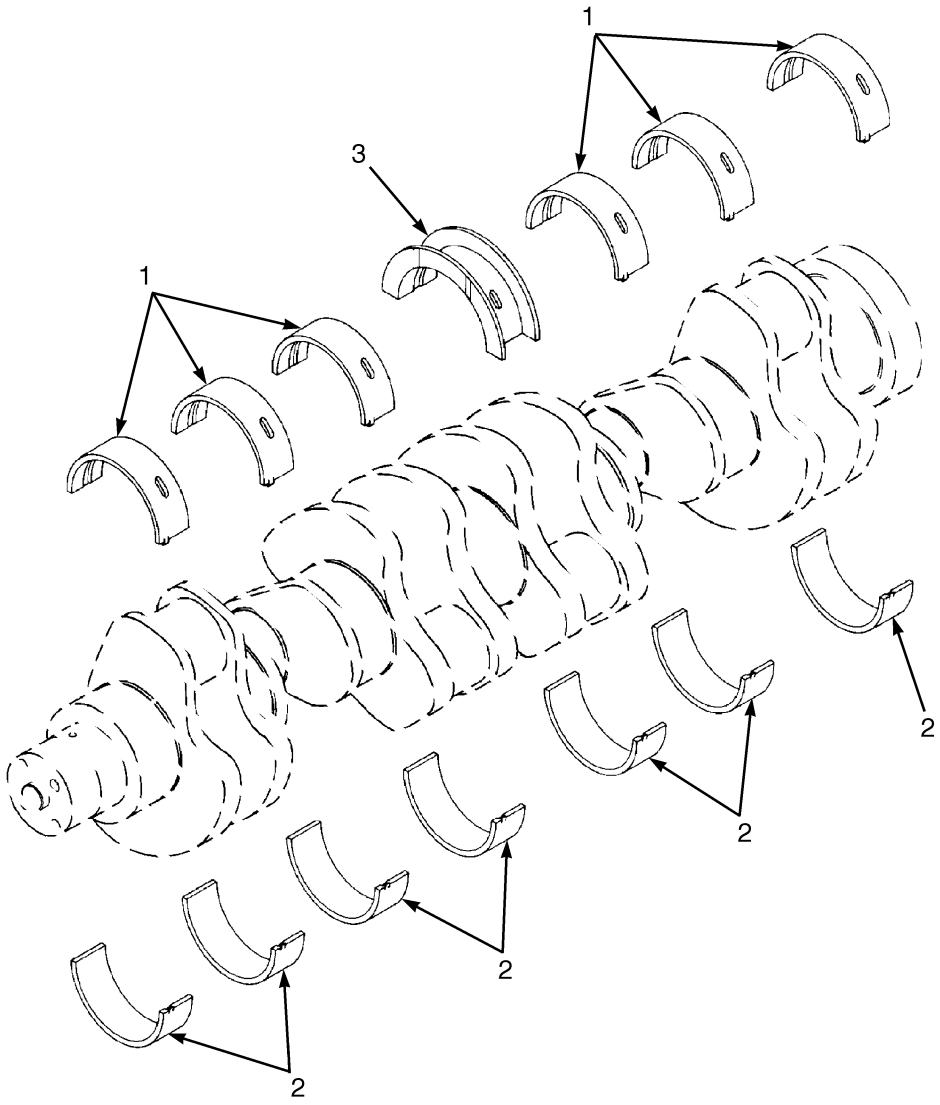

HP091220

©2011 HYSTER COMPANY

CRANKSHAFT MAIN BEARINGS

TIER III ENGINE (S/N E008E02100D →)

ITEM	PART NO.	DESCRIPTION	QTY
	1663666	Engine Assy-Diesel	1
	1514347	Kit-Bearing (Standard) (Includes Thrust Bearing 1519290)	1
	1588792	Bearing Set (0.010 in.) (Includes Thrust Bearing 1588794)	1
	1588796	Bearing Set (0.020 in.) (Includes Thrust Bearing 1588798)	1
	1588800	Bearing Set (0.030 in.) (Includes Thrust Bearing 1588802)	1
	1588804	Bearing Set (0.040 in.) (Includes Thrust Bearing 1588806)	1
1	. . . . .	Main Bearing	6
2	. . . . .	Main Bearing	7
3	1519290	Thrust Bearing	1
3	1588794	Thrust Bearing	1
3	1588798	Thrust Bearing	1
3	1588802	Thrust Bearing	1
3	1588806	Thrust Bearing	1
3	1645274	Thrust Bearing (Standard Journal, Oversize Thrust)	AR
3	1645275	Thrust Bearing (Standard Journal, Oversize Thrust)	AR
3	1645276	Thrust Bearing (Standard Journal, Oversize Thrust)	AR

©2011 HYSTER COMPANY

DUST SHIELD (FIGURE 2-12)

TIER II ENGINE (→ S/N E008E02099D)

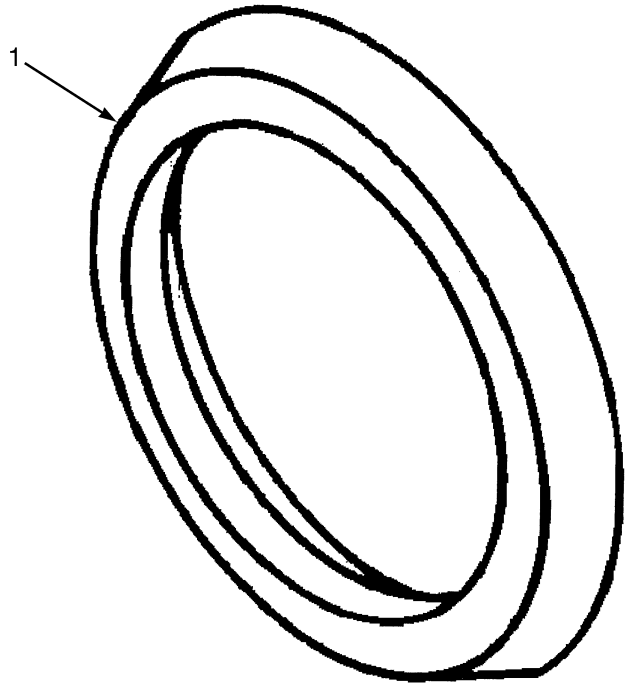

HP090727

ITEM	PART NO.	DESCRIPTION	QTY
	a 1499324	Engine Assy-Diesel (H550F, H620F, H650F, H700F)	1
	b 1532628	Engine Assy-Diesel (H550F, H620F, H650F, H700F)	1
	b 1542383	Engine Assy-Diesel (H550FS, H620FS, H700FS)	1
	c 1606762	Engine Assy-Diesel (H550F, H620F, H650F, H700F)	1
	c 1607372	Engine Assy-Diesel (H550FS, H620FS, H700FS)	1
1	1513823	Dust Shield	1

FOOTNOTES:

a → S/N E008E01984B
b S/N E008E01985B ↔ S/N E008E02066C
c S/N E008E02067C ↔ S/N E008E02099D

©2011 HYSTER COMPANY

VIBRATION DAMPER (FIGURE 2-13)
TIER II AND III ENGINES

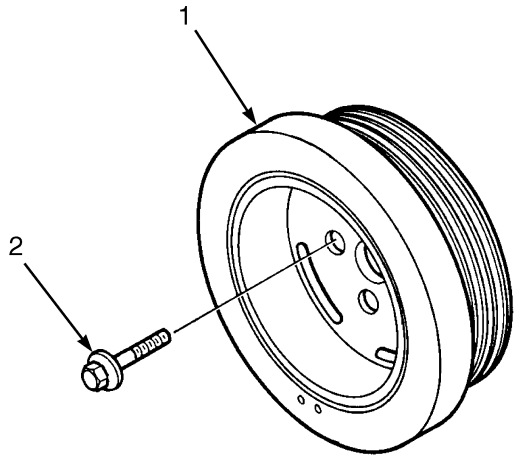

HP091219

ITEM	PART NO.	DESCRIPTION	QTY
	a 1499324	Engine Assy-Diesel (H550F, H620F, H650F, H700F)	1
	b 1532628	Engine Assy-Diesel (H550F, H620F, H650F, H700F)	1
	b 1542383	Engine Assy-Diesel (H550FS, H620FS, H700FS)	1
	c 1606762	Engine Assy-Diesel (H550F, H620F, H650F, H700F)	1
	c 1607372	Engine Assy-Diesel (H550FS, H620FS, H700FS)	1
	d 1663666	Engine Assy-Diesel	1
1	1564947	Vibration Damper	1
2	1513706	Capscrew	4

FOOTNOTES:

a → S/N E008E01984B
b S/N E008E01985B ↔ S/N E008E02066C
c S/N E008E02067C ↔ S/N E008E02099D
d S/N E008E02100D →

©2011 HYSTER COMPANY

FLYWHEEL (FIGURE 2-14)

TIER II ENGINE (→ S/N E008E02099D)

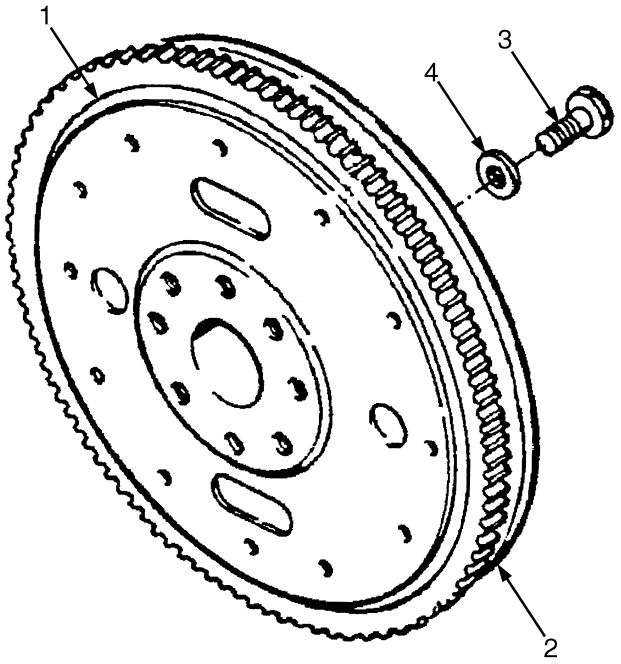

HP090751

ITEM	PART NO.	DESCRIPTION	QTY
	a 1499324	Engine Assy-Diesel (H550F, H620F, H650F, H700F)	1
	b 1532628	Engine Assy-Diesel (H550F, H620F, H650F, H700F)	1
	b 1542383	Engine Assy-Diesel (H550FS, H620FS, H700FS)	1
	c 1606762	Engine Assy-Diesel (H550F, H620F, H650F, H700F)	1
	c 1607372	Engine Assy-Diesel (H550FS, H620FS, H700FS)	1
1	1598354	Flywheel Assembly	1
2	1512445	Ring Gear	1
3	1512106	Capscrew	8
4	1512107	Washer	8

FOOTNOTES:

a → S/N E008E01984B
b S/N E008E01985B ↔ S/N E008E02066C
c S/N E008E02067C ↔ S/N E008E02099D

©2011 HYSTER COMPANY

FLYWHEEL (FIGURE 2-15)

TIER III ENGINE (S/N E008E02100D →)

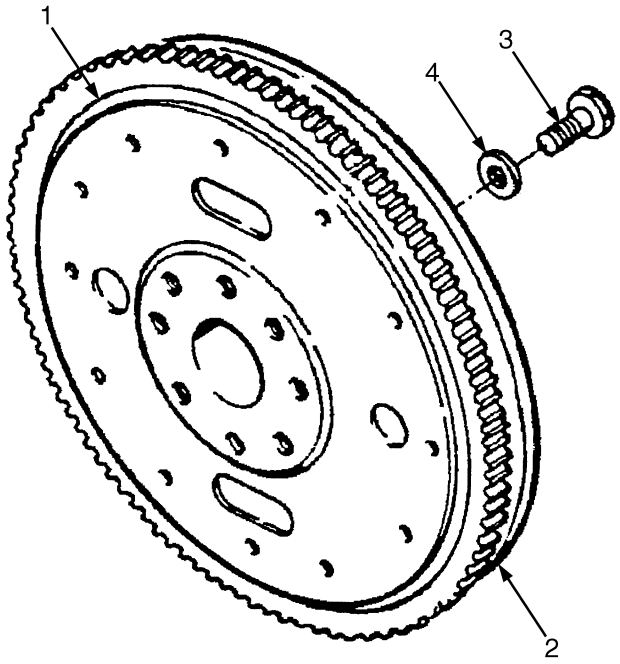

HP090751

ITEM	PART NO.	DESCRIPTION	QTY
	1663666	Engine Assy-Diesel	1
1	1649403	Flywheel	1
1	. . . . .	Flywheel	1
2	1512445	Ring Gear	1
3	1512106	Capscrew	8
4	1512107	Washer	8

©2011 HYSTER COMPANY

VALVE COVER (FIGURE 2-16)

TIER II ENGINE (→ S/N E008E02099D)

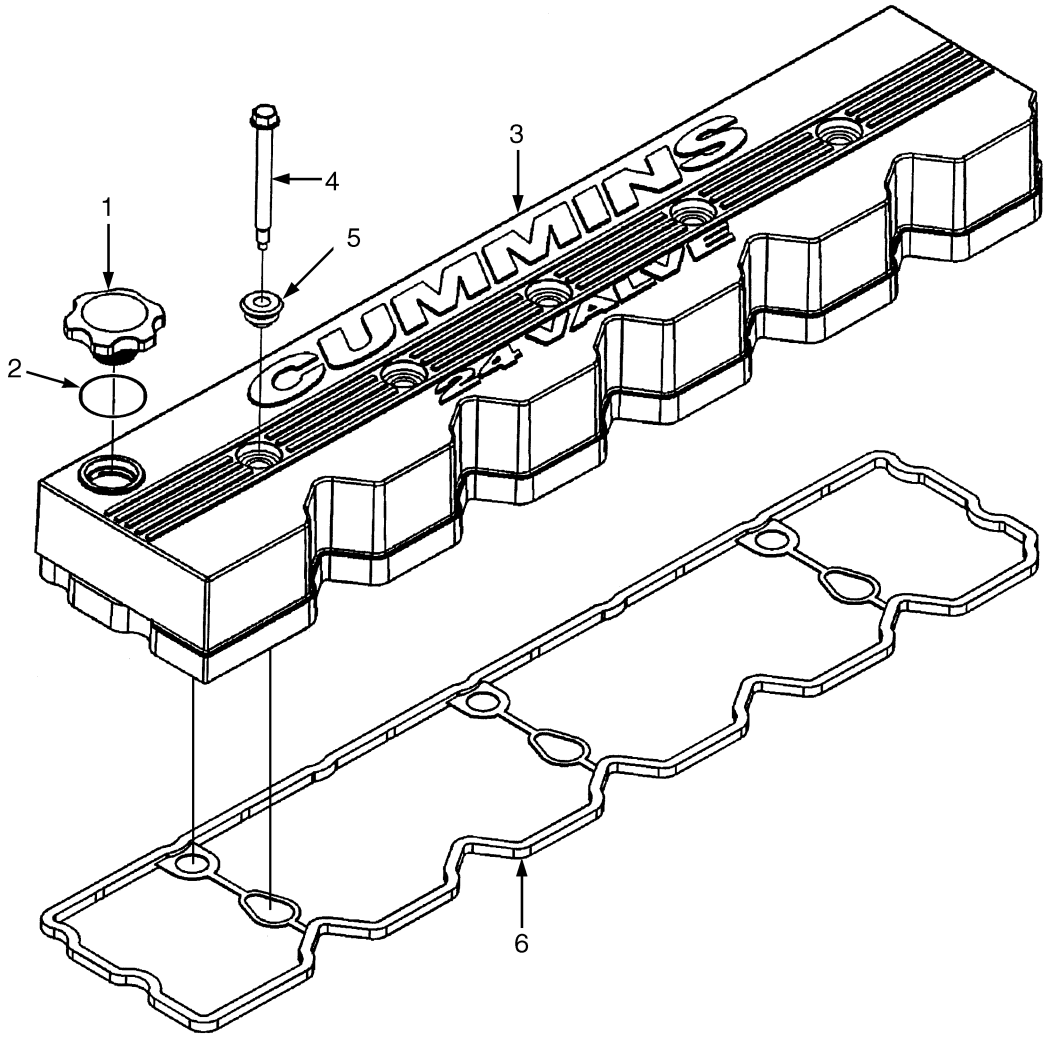

HP090771

©2011 HYSTER COMPANY

VALVE COVER

TIER II ENGINE (→ S/N E008E02099D)

ITEM	PART NO.	DESCRIPTION	QTY
	a 1499324	Engine Assy-Diesel (H550F, H620F, H650F, H700F)	1
	b 1532628	Engine Assy-Diesel (H550F, H620F, H650F, H700F)	1
	b 1542383	Engine Assy-Diesel (H550FS, H620FS, H700FS)	1
	c 1606762	Engine Assy-Diesel (H550F, H620F, H650F, H700F)	1
	c 1607372	Engine Assy-Diesel (H550FS, H620FS, H700FS)	1
1	1588069	Cap	1
2	1588072	O-Ring	1
3	1517277	Cover	1
4	1517276	Screw	5
5	1588788	Isolator	5
6	1519136	Gasket	1
	1588056	Kit-Gasket (Upper Engine)	1

FOOTNOTES:

a → S/N E008E01984B
b S/N E008E01985B ↔ S/N E008E02066C
c S/N E008E02067C ↔ S/N E008E02099D

©2011 HYSTER COMPANY

VALVE COVER (FIGURE 2-17)

TIER III ENGINE (S/N E008E02100D →)

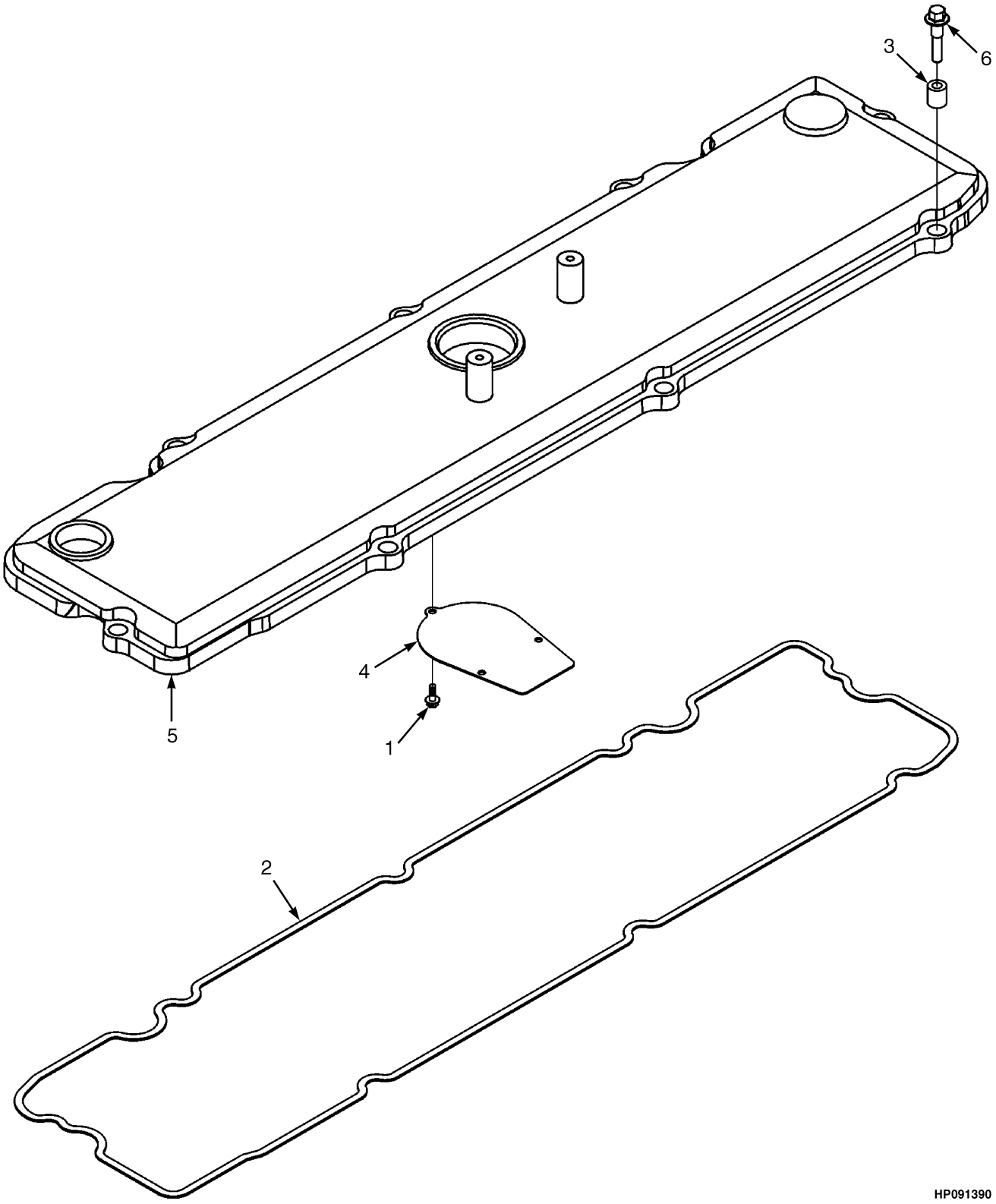

©2011 HYSTER COMPANY

VALVE COVER

TIER III ENGINE (S/N E008E02100D →)

ITEM	PART NO.	DESCRIPTION	QTY
	1663666	Engine Assy-Diesel	1
	1644041	Cover	1
1	1644125	Screw (Self Tapping)	3
2	1644057	Gasket	1
3	1644076	Isolator	8
4	. . . . .	Baffle (Breather)	1
5	. . . . .	Valve Cover	1
6	1512033	Capscrew (M8 x 1.25 x 35)	7
6	1644120	Capscrew (M8 x 1.25 x 45)	1
	1649732	Kit-Gasket (Upper)	..

©2011 HYSTER COMPANY

VALVE TAPPET (FIGURE 2-18)

TIER II ENGINE (→ S/N E008E02099D)

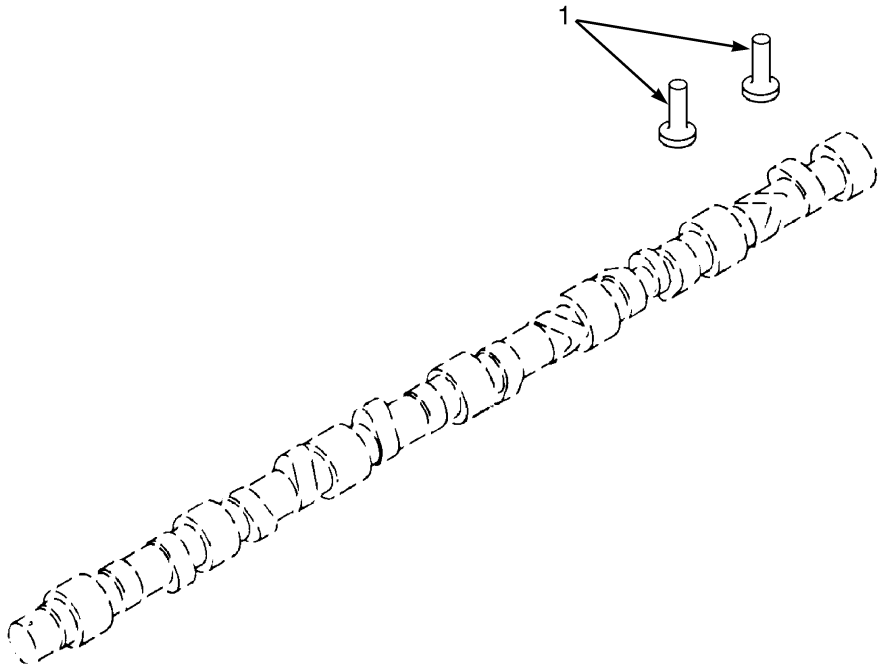

HP091202

ITEM	PART NO.	DESCRIPTION	QTY
	a 1532628	Engine Assy-Diesel (H550F, H620F, H650F, H700F)	1
	a 1542383	Engine Assy-Diesel (H550FS, H620FS, H700FS)	1
	b 1606762	Engine Assy-Diesel (H550F, H620F, H650F, H700F)	1
	b 1607372	Engine Assy-Diesel (H550FS, H620FS, H700FS)	1
1	1519293	Valve Tappet	12

FOOTNOTES:

a S/N E008E01985B ↔ S/N E008E02066C

b S/N E008E02067C ↔ S/N E008E02099D

©2011 HYSTER COMPANY

VALVE TAPPET (FIGURE 2-19)

TIER III ENGINE (S/N E008E02100D →)

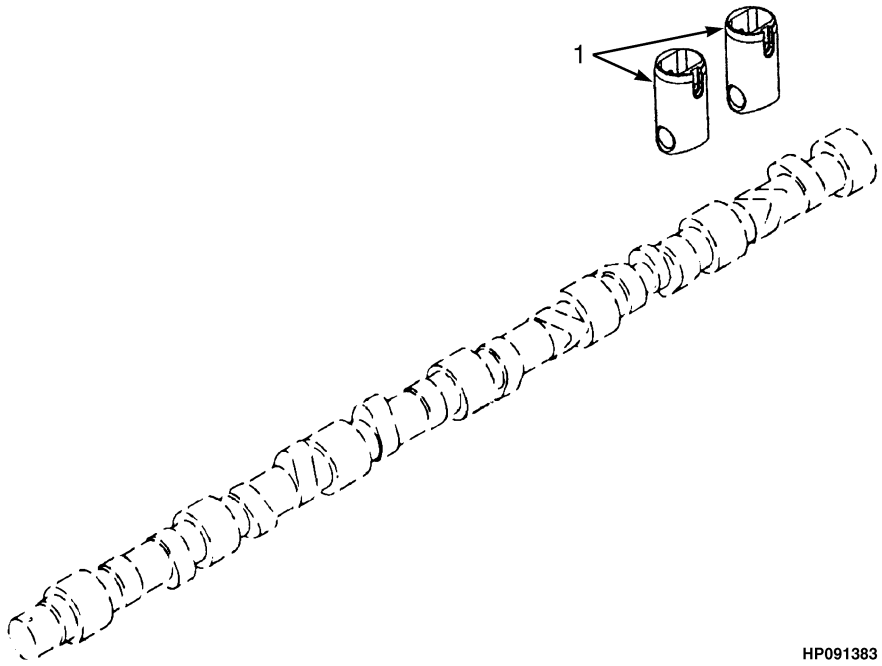

ITEM	PART NO.	DESCRIPTION	QTY
	1663666	Engine Assy-Diesel	1
1	1643855	Tappet	12

AIR COMPRESSOR PLUGS (FIGURE 2-20)
TIER II ENGINE

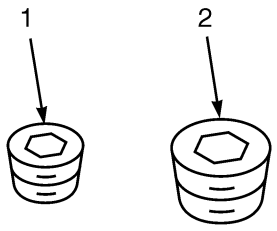

HP091217

ITEM	PART NO.	DESCRIPTION	QTY
	a 1499324	Engine Assy-Diesel (H550F, H620F, H650F, H700F)	1
	b 1532628	Engine Assy-Diesel (H550F, H620F, H650F, H700F)	1
	b 1542383	Engine Assy-Diesel (H550FS, H620FS, H700FS)	1
	c 1606762	Engine Assy-Diesel (H550F, H620F, H650F, H700F)	1
	c 1607372	Engine Assy-Diesel (H550FS, H620FS, H700FS)	1
1	1511952	Fitting	2
2	1512292	Plug	1

FOOTNOTES:

a → S/N E008E01984B
b S/N E008E01985B ↔ S/N E008E02066C
c S/N E008E02067C ↔ S/N E008E02099D

©2011 HYSTER COMPANY

CAMSHAFT AND TIMING GEAR (FIGURE 2-21)

TIER II ENGINE (→ S/N E008E02099D)

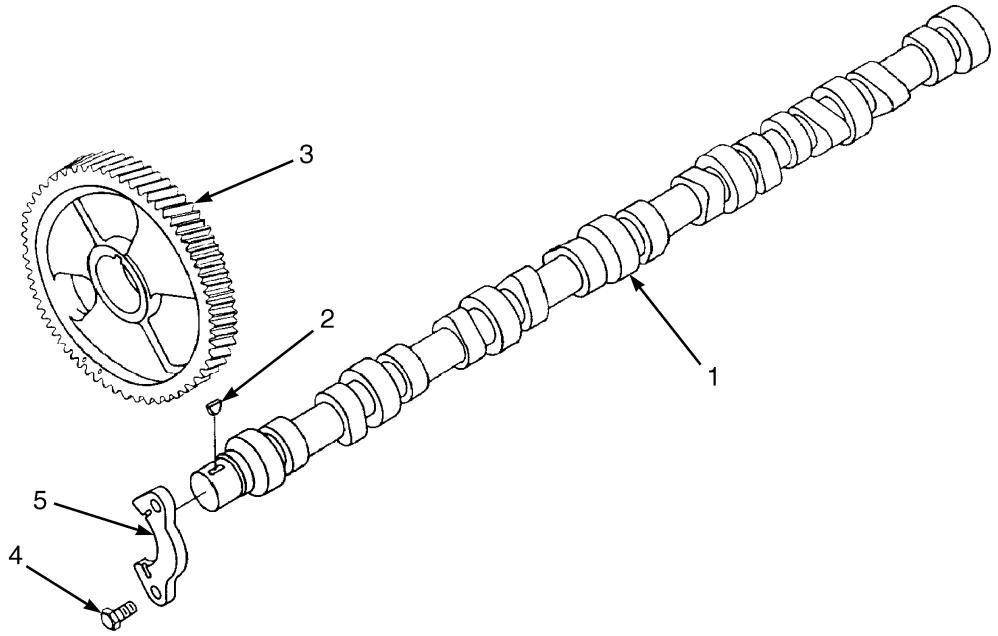

HP091207

ITEM	PART NO.	DESCRIPTION	QTY
	a 1499324	Engine Assy-Diesel (H550F, H620F, H650F, H700F)	1
	b 1532628	Engine Assy-Diesel (H550F, H620F, H650F, H700F)	1
	b 1542383	Engine Assy-Diesel (H550FS, H620FS, H700FS)	1
	c 1606762	Engine Assy-Diesel (H550F, H620F, H650F, H700F)	1
	c 1607372	Engine Assy-Diesel (H550FS, H620FS, H700FS)	1
1	1517178	Camshaft	1
2	1512161	Woodruff Key	1
3	1517179	Gear (Camshaft)	1
4	1512163	Capscrew	2
5	1517180	Support	1

FOOTNOTES:

a → S/N E008E01984B
b S/N E008E01985B ↔ S/N E008E02066C
c S/N E008E02067C ↔ S/N E008E02099D

©2011 HYSTER COMPANY

CAMSHAFT AND TIMING GEAR (FIGURE 2-22)

TIER III ENGINE (S/N E008E02100D →)

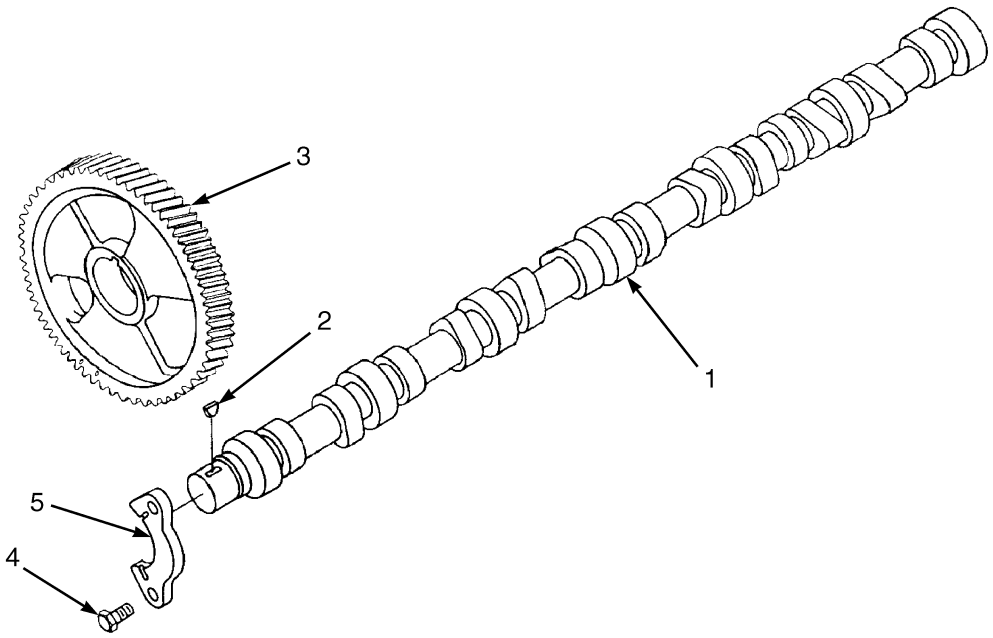

HP091207

ITEM	PART NO.	DESCRIPTION	QTY
	1663666	Engine Assy-Diesel	1
1	1644020	Camshaft Assembly	1
1	1644021	Camshaft	1
2	1644045	Pin	1
3	1644058	Gear	1
4	1512163	Capscrew	2
5	1517180	Support	1

©2011 HYSTER COMPANY

NOTES

©2011 HYSTER COMPANY

ROCKER LEVERS (FIGURE 2-23)

TIER II ENGINE (→ S/N E008E02099D)

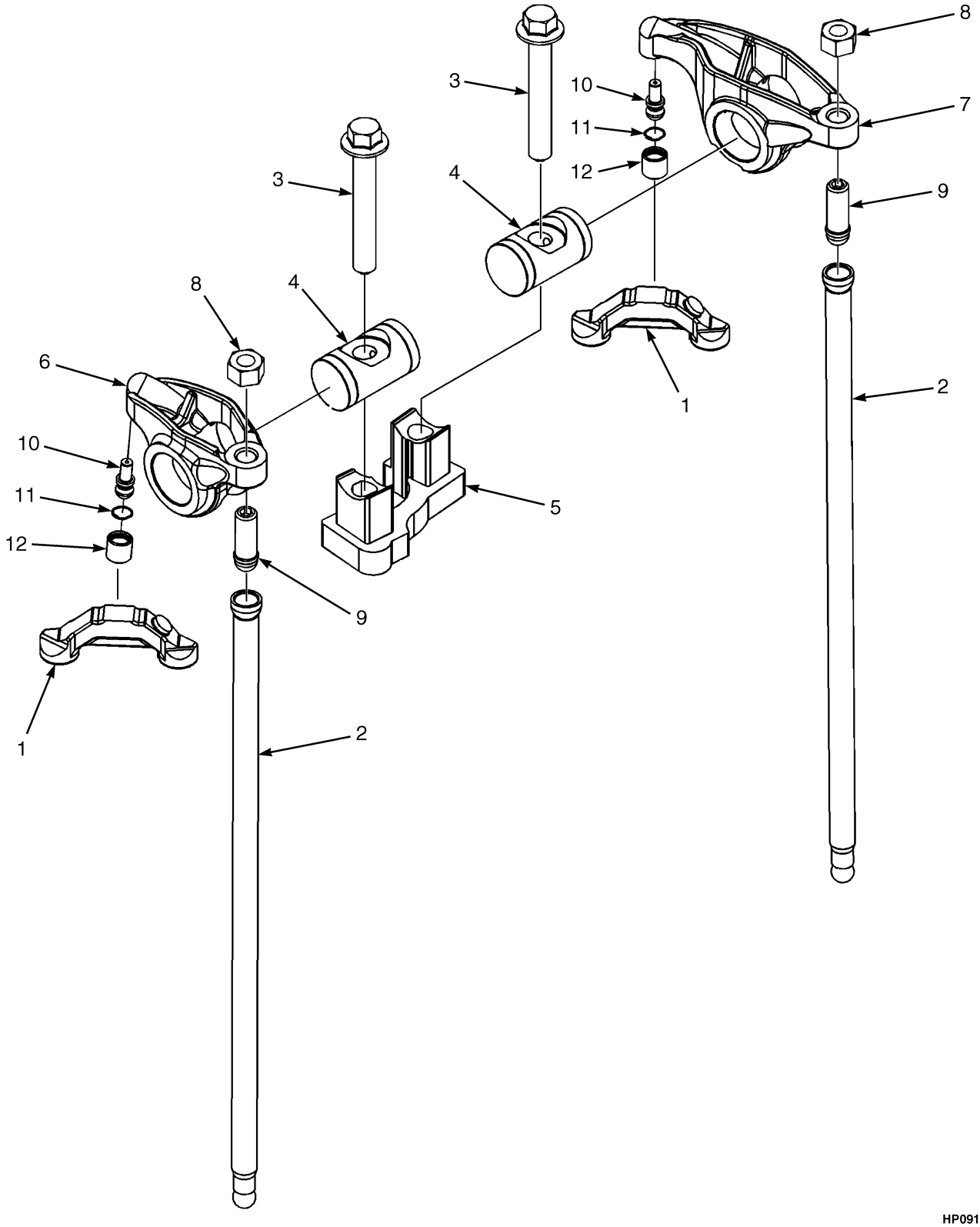

HP091204

©2011 HYSTER COMPANY

ROCKER LEVERS

TIER II ENGINE (→ S/N E008E02099D)

ITEM	PART NO.	DESCRIPTION	QTY
	a 1499324	Engine Assy-Diesel (H550F, H620F, H650F, H700F)	1
	b 1532628	Engine Assy-Diesel (H550F, H620F, H650F, H700F)	1
	b 1542383	Engine Assy-Diesel (H550FS, H620FS, H700FS)	1
	c 1606762	Engine Assy-Diesel (H550F, H620F, H650F, H700F)	1
	c 1607372	Engine Assy-Diesel (H550FS, H620FS, H700FS)	1
1	1517240	Valve	12
2	1517241	Push Rod	12
3	1517242	Screw	12
4	1517243	Shaft	12
5	1517244	Support	6
6	1517245	Rocker	6
7	1517248	Rocker	6
8	1513806	Nut	1
9	1553956	Screw	1
10	1553959	Ball	1
11	. . . . .	Retainer	1
12	1553954	Socket	1

FOOTNOTES:

a → S/N E008E01984B
b S/N E008E01985B ↔ S/N E008E02066C
c S/N E008E02067C ↔ S/N E008E02099D

©2011 HYSTER COMPANY

ROCKER LEVERS (FIGURE 2-24)

TIER III ENGINE (S/N E008E02100D →)

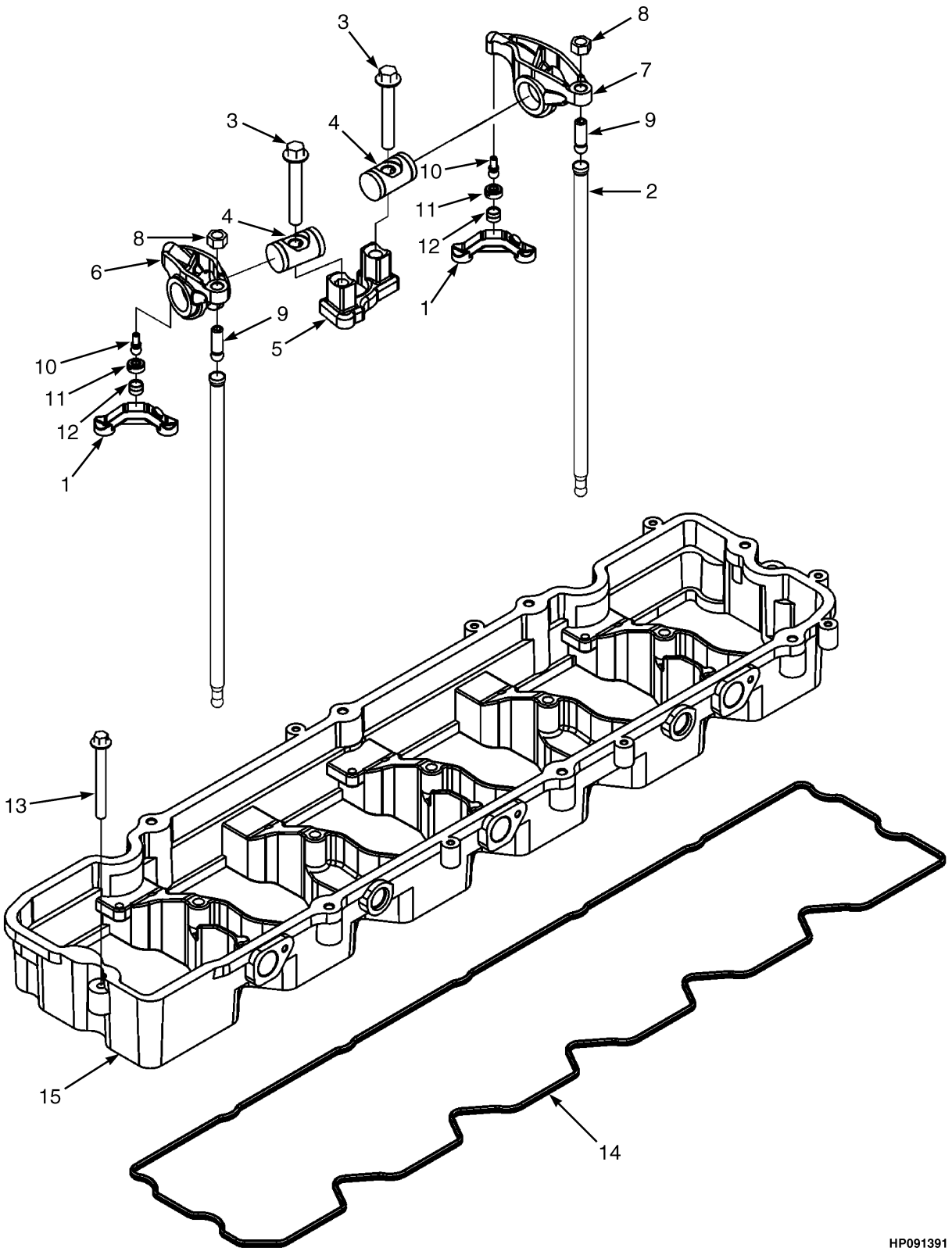

©2011 HYSTER COMPANY

ROCKER LEVERS

TIER III ENGINE (S/N E008E02100D →)

ITEM	PART NO.	DESCRIPTION	QTY
	1663666	Engine Assy-Diesel	1
1	1517240	Valve	12
2	1644109	Push Rod	12
3	1517242	Screw	2
4	1644136	Rocker Shaft	2
5	1517244	Support	6
6	1644079	Rocker Lever (Assembly)	6
7	1644080	Rocker Lever (Assembly)	6
7	. . . . .	Rocker Lever	1
8	1517246	Nut	1
9	1644124	Screw	1
10	. . . . .	Ball	1
11	. . . . .	Retainer	1
12	. . . . .	Socket	1
13	1512488	Screw	7
14	1644056	Gasket	1
15	1644072	Housing	1
	1649732	Kit-Gasket (Upper)	..

©2011 HYSTER COMPANY

FRONT GEAR COVER (FIGURE 2-25)

TIER II ENGINE (→ S/N E008E02099D)

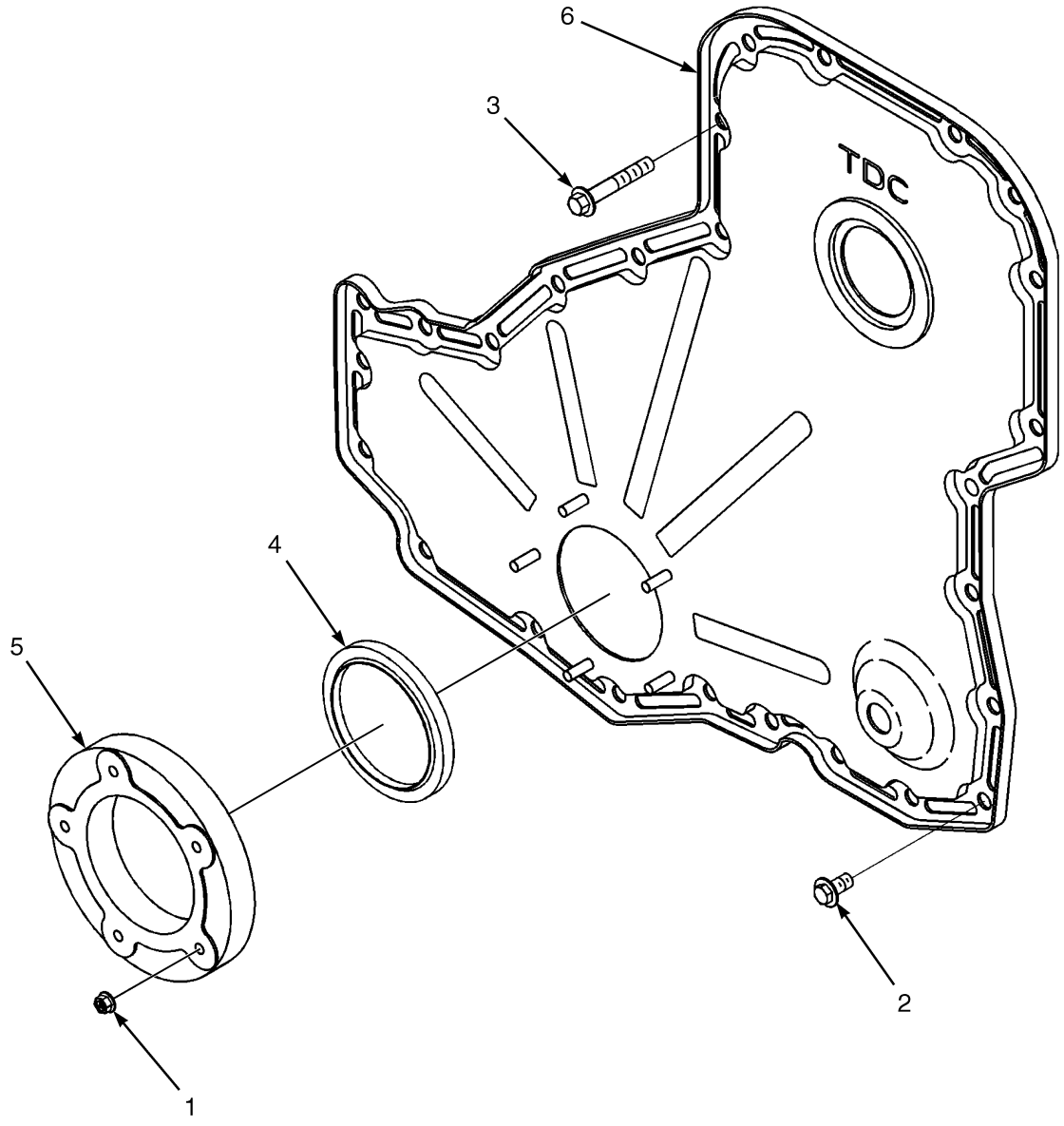

©2011 HYSTER COMPANY

FRONT GEAR COVER

TIER II ENGINE (→ S/N E008E02099D)

ITEM	PART NO.	DESCRIPTION	QTY
	a 1499324	Engine Assy-Diesel (H550F, H620F, H650F, H700F)	1
	b 1532628	Engine Assy-Diesel (H550F, H620F, H650F, H700F)	1
	b 1542383	Engine Assy-Diesel (H550FS, H620FS, H700FS)	1
	c 1606762	Engine Assy-Diesel (H550F, H620F, H650F, H700F)	1
	c 1607372	Engine Assy-Diesel (H550FS, H620FS, H700FS)	1
1	1517084	Locknut	5
1	4012437	Locknut (Alternate Part)	5
2	1513749	Capscrew	13
3	1513782	Screw	12
4	. . . . .	Seal	1
5	1517085	Seal (Carrier)	1
6	1517086	Cover	1
	1513789	Capscrew	1
	1588815	Kit-Seal	1
	1588054	Kit-Gasket (Lower Engine)	1

FOOTNOTES:

a → S/N E008E01984B
b S/N E008E01985B ↔ S/N E008E02066C
c S/N E008E02067C ↔ S/N E008E02099D

©2011 HYSTER COMPANY

FRONT GEAR COVER (FIGURE 2-26)

TIER III ENGINE (S/N E008E02100D →)

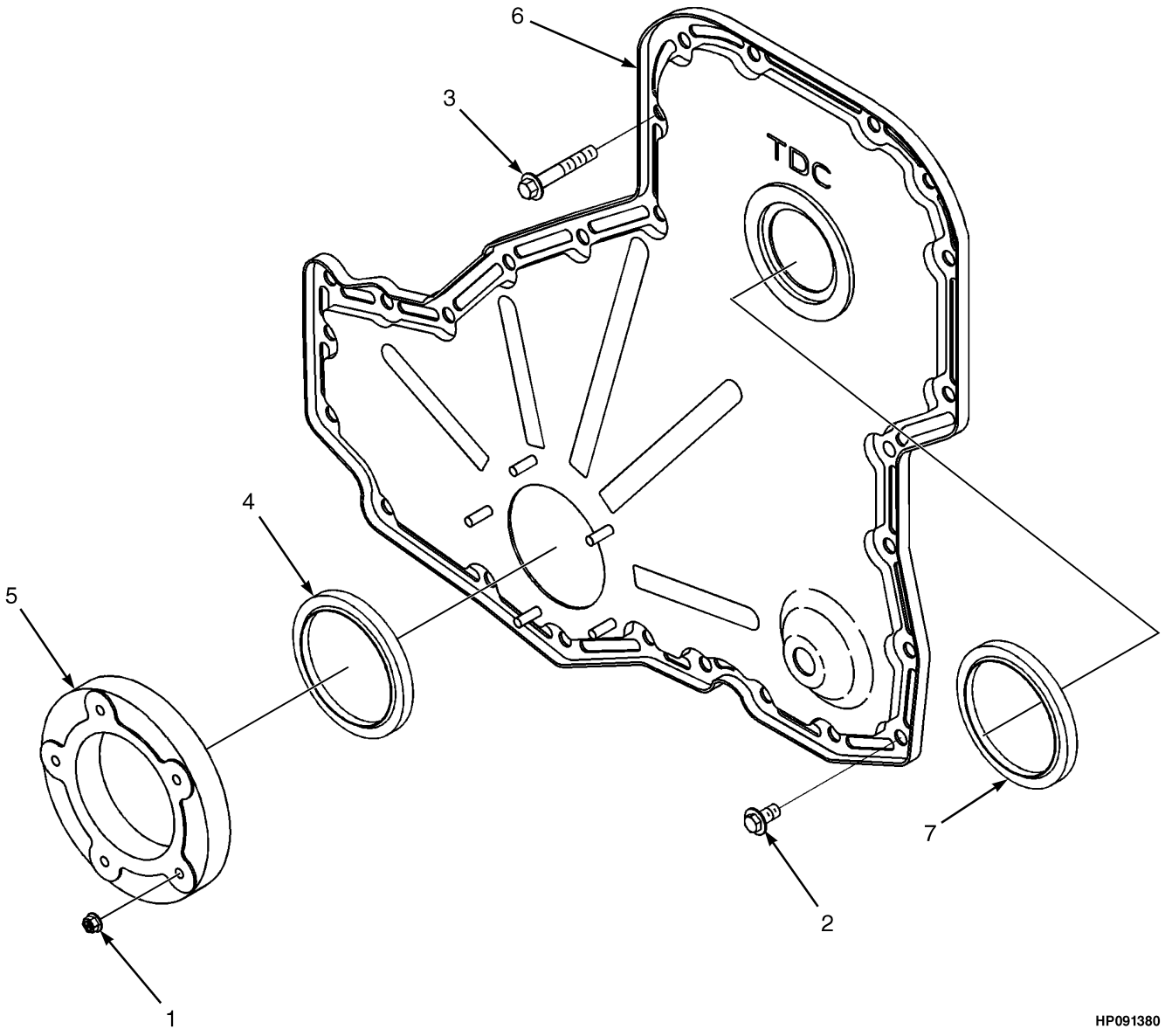

©2011 HYSTER COMPANY

FRONT GEAR COVER

TIER III ENGINE (S/N E008E02100D →)

ITEM	PART NO.	DESCRIPTION	QTY
	1663666	Engine Assy-Diesel	1
1	1517084	Locknut	5
1	4012437	Locknut (Alternate Part)	5
2	1513749	Capscrew	12
3	1513782	Screw	11
4	. . . . .	Oil Seal Assembly	1
4	. . . . .	Oil Seal	1
5	1517085	Seal (Carrier)	1
6	1644037	Cover	1
7	1513823	Dust Shield	1
	a 1513789	Capscrew (Mounting)	1
	a 1513749	Capscrew (Mounting)	1
	1646671	Kit-Gasket (Lower)	..

FOOTNOTES:

a Not Illustrated

©2011 HYSTER COMPANY

OIL PUMP (FIGURE 2-27)

TIER II ENGINE (→ S/N E008E02099D)

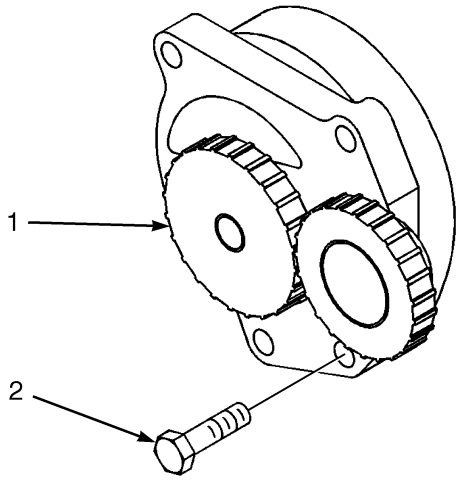

HP091209

ITEM	PART NO.	DESCRIPTION	QTY
	a 1499324	Engine Assy-Diesel (H550F, H620F, H650F, H700F)	1
	b 1532628	Engine Assy-Diesel (H550F, H620F, H650F, H700F)	1
	b 1542383	Engine Assy-Diesel (H550FS, H620FS, H700FS)	1
	c 1606762	Engine Assy-Diesel (H550F, H620F, H650F, H700F)	1
	c 1607372	Engine Assy-Diesel (H550FS, H620FS, H700FS)	1
1	1535033	Plate	1
2	1512456	Capscrew	4

FOOTNOTES:

a → S/N E008E01984B
b S/N E008E01985B ↔ S/N E008E02066C
c S/N E008E02067C ↔ S/N E008E02099D

©2011 HYSTER COMPANY

OIL PUMP (FIGURE 2-28)

TIER III ENGINE (S/N E008E02100D →)

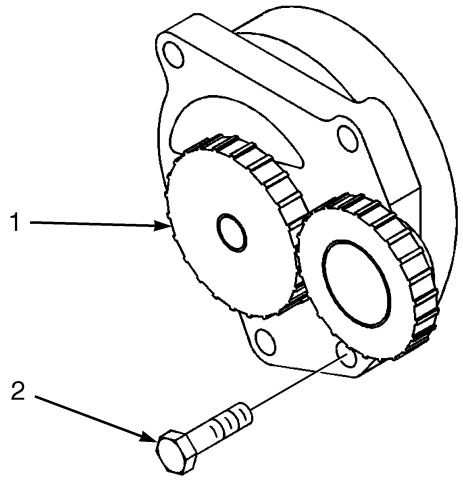

HP091209

ITEM	PART NO.	DESCRIPTION	QTY
	1663666	Engine Assy-Diesel	1
1	1644103	Oil Pump	1
2	1512456	Capscrew	4

©2011 HYSTER COMPANY

FRONT GEAR TRAIN ACCESSORY DRIVE (FIGURE 2-29)
TIER II ENGINE

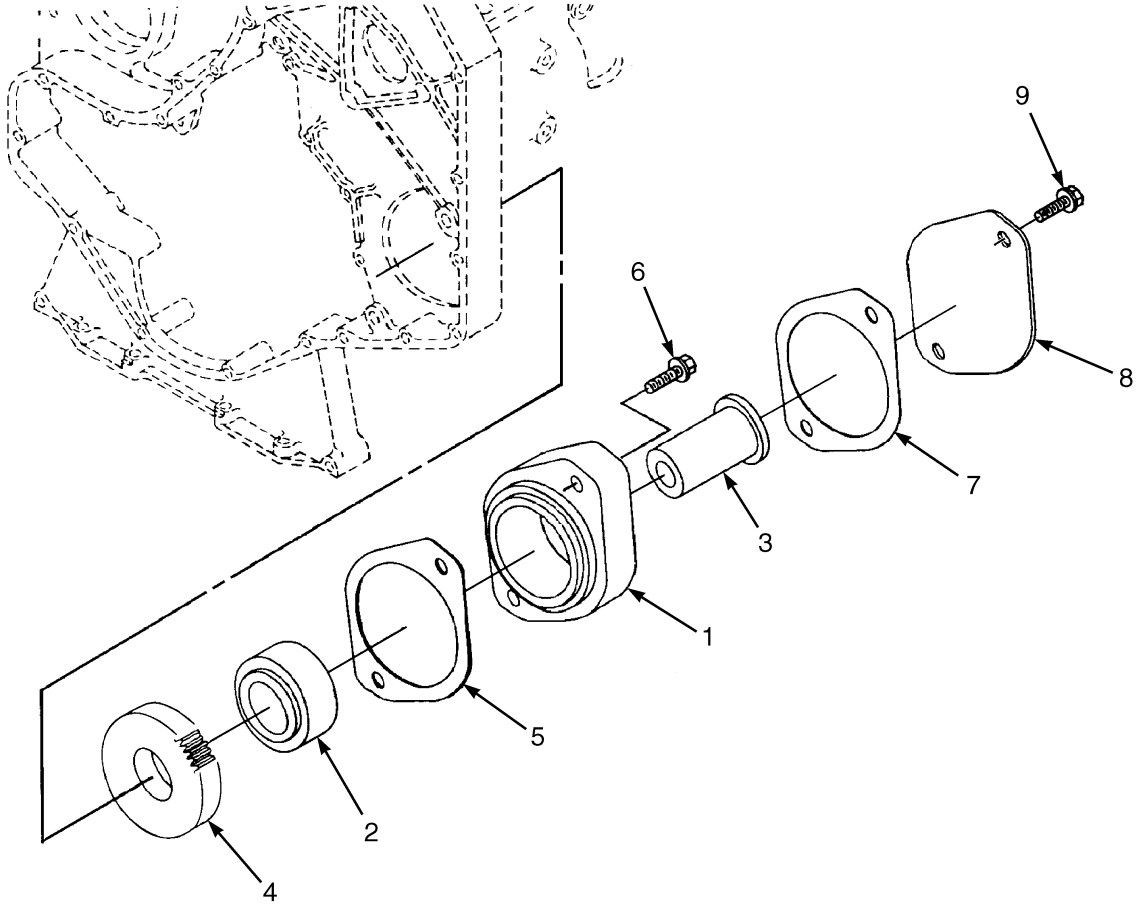

HP091201

©2011 HYSTER COMPANY

FRONT GEAR TRAIN ACCESSORY DRIVE
TIER II ENGINE

ITEM	PART NO.	DESCRIPTION	QTY
	a 1499324	Engine Assy-Diesel (H550F, H620F, H650F, H700F)	1
	b 1532628	Engine Assy-Diesel (H550F, H620F, H650F, H700F)	1
	b 1542383	Engine Assy-Diesel (H550FS, H620FS, H700FS)	1
	c 1606762	Engine Assy-Diesel (H550F, H620F, H650F, H700F)	1
	c 1607372	Engine Assy-Diesel (H550FS, H620FS, H700FS)	1
1	1564978	Adapter	1
2	1512330	Bearing	1
3	1513709	Drive Shaft	1
4	1602497	Drive Gear	1
5	. . . . .	Gasket	1
6	1511976	Capscrew	2
7	1512336	Gasket	1
8	1512327	Cover Plate	1
9	1512328	Capscrew	2

FOOTNOTES:

a → S/N E008E01984B
b S/N E008E01985B ↔ S/N E008E02066C
c S/N E008E02067C ↔ S/N E008E02099D

©2011 HYSTER COMPANY

GEAR TRAIN ACCESSORY PLUMBING (FIGURE 2-30)

FRONT — TIER II ENGINE

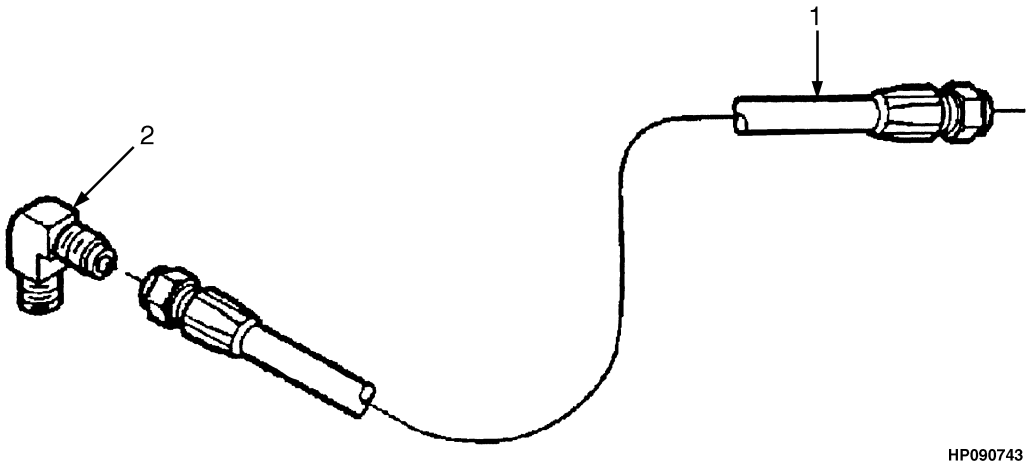

ITEM	PART NO.	DESCRIPTION	QTY
	a 1499324	Engine Assy-Diesel (H550F, H620F, H650F, H700F)	1
	b 1532628	Engine Assy-Diesel (H550F, H620F, H650F, H700F)	1
	b 1542383	Engine Assy-Diesel (H550FS, H620FS, H700FS)	1
	c 1606762	Engine Assy-Diesel (H550F, H620F, H650F, H700F)	1
	c 1607372	Engine Assy-Diesel (H550FS, H620FS, H700FS)	1
1	1565648	Hose	1
2	1511989	Elbow	1

FOOTNOTES:

a → S/N E008E01984B
b S/N E008E01985B ↔ S/N E008E02066C
c S/N E008E02067C ↔ S/N E008E02099D

©2011 HYSTER COMPANY

NOTES

©2011 HYSTER COMPANY

GEAR HOUSING (FIGURE 2-31)

TIER II ENGINE (→ S/N E008E02099D)

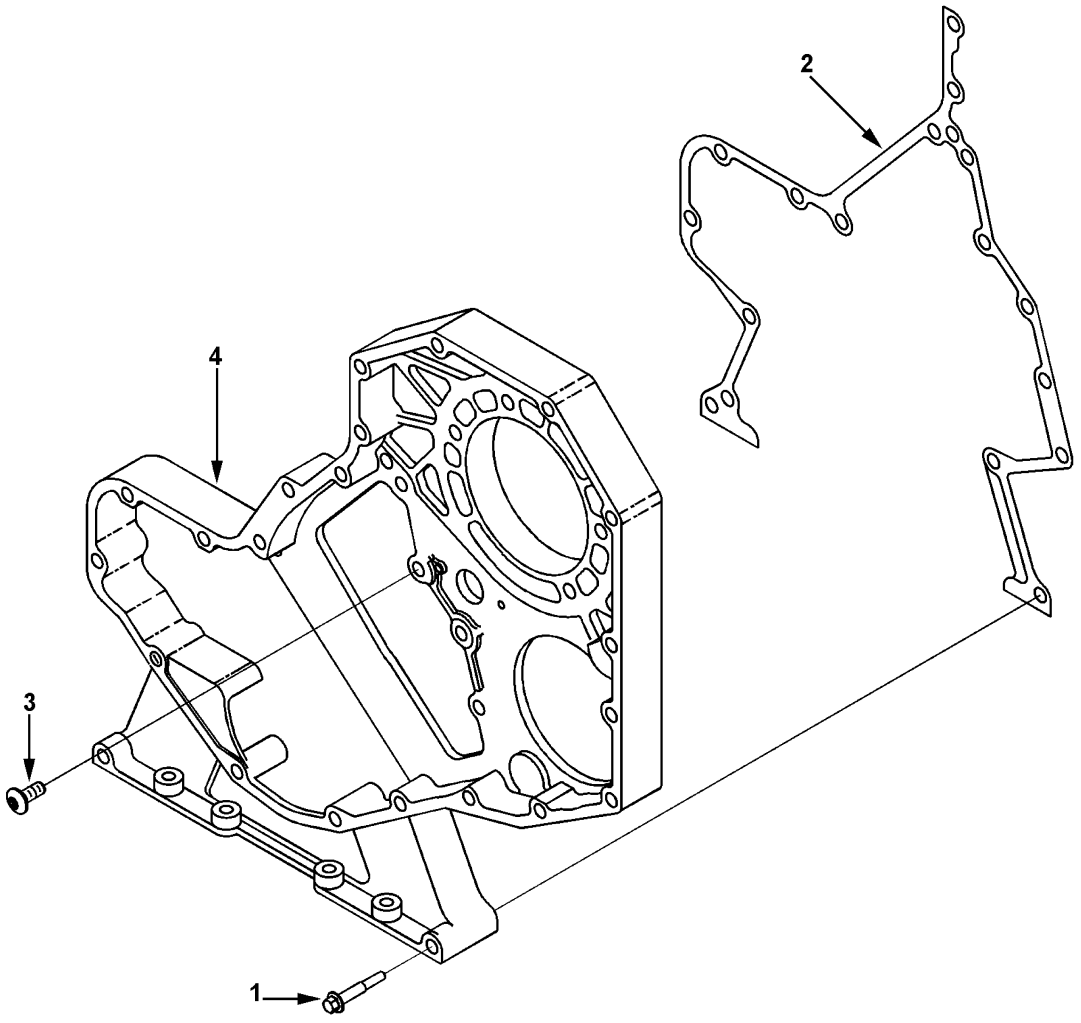

HP091144

©2011 HYSTER COMPANY

GEAR HOUSING

TIER II ENGINE (→ S/N E008E02099D)

ITEM	PART NO.	DESCRIPTION	QTY
	a 1499324	Engine Assy-Diesel (H550F, H620F, H650F, H700F)	1
	b 1532628	Engine Assy-Diesel (H550F, H620F, H650F, H700F)	1
	b 1542383	Engine Assy-Diesel (H550FS, H620FS, H700FS)	1
	c 1606762	Engine Assy-Diesel (H550F, H620F, H650F, H700F)	1
	c 1607372	Engine Assy-Diesel (H550FS, H620FS, H700FS)	1
1	1519287	Screw	2
2	1519291	Gasket	1
3	1513751	Screw	5
4	1519292	Housing (Gear)	1
	1588054	Kit-Gasket (Lower Engine)	1

FOOTNOTES:

a → S/N E008E01984B
b S/N E008E01985B ↔ S/N E008E02066C
c S/N E008E02067C ↔ S/N E008E02099D

©2011 HYSTER COMPANY

GEAR HOUSING (FIGURE 2-32)

TIER III ENGINE (S/N E008E02100D →)

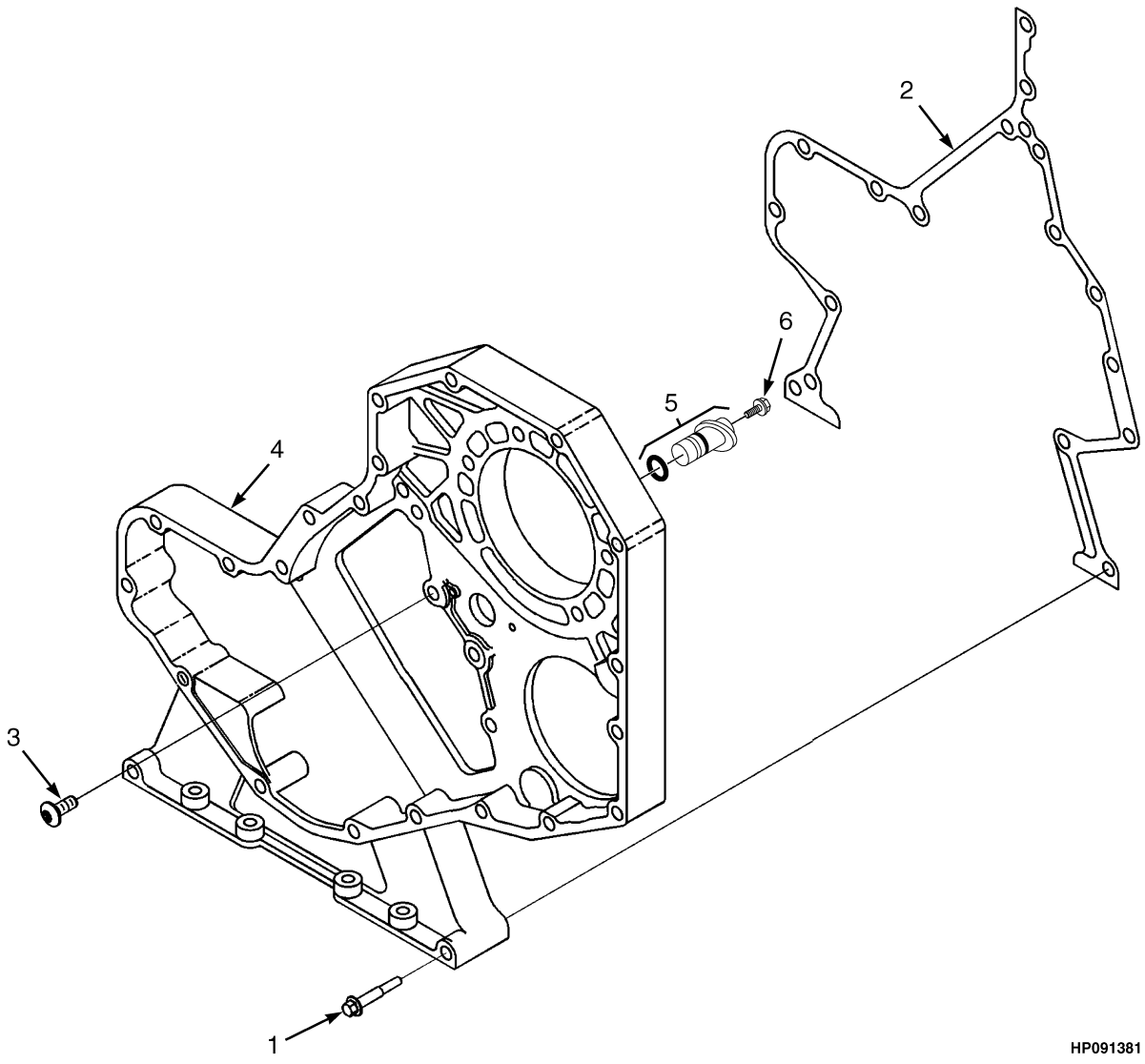

©2011 HYSTER COMPANY

GEAR HOUSING

TIER III ENGINE (S/N E008E02100D →)

ITEM	PART NO.	DESCRIPTION	QTY
	1663666	Engine Assy-Diesel	1
1	1519287	Screw	2
2	1519291	Gasket	1
3	1513751	Screw	3
4	1643839	Clutch Housing	1
5	1643858	Plug Assembly	1
5	. . . . .	Plug	1
5	1635342	O-Ring	1
6	1512051	Capscrew	1
	1646671	Kit-Gasket (Lower)	..
	1649732	Kit-Gasket (Upper)	..

©2011 HYSTER COMPANY

FLYWHEEL HOUSING (FIGURE 2-33)

TIER II ENGINE (→ S/N E008E02099D)

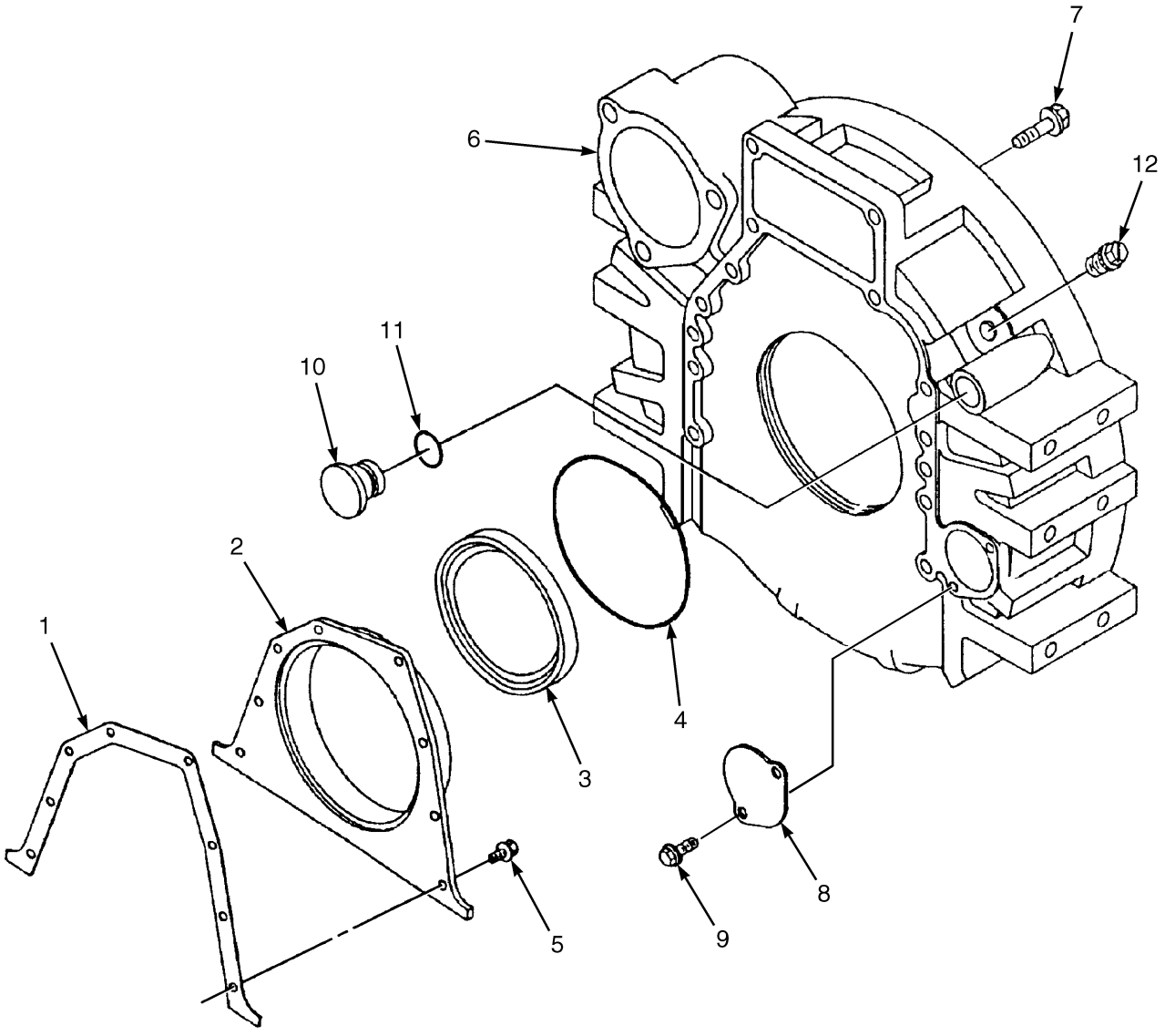

©2011 HYSTER COMPANY

FLYWHEEL HOUSING

TIER II ENGINE (→ S/N E008E02099D)

KEY:
A: H550F, H620F, H650F, H700F
B: H550FS, H620FS, H700FS

ITEM	PART NO.	DESCRIPTION	QTY A	QTY B
	a 1499324	Engine Assy-Diesel	1	..
	b 1532628	Engine Assy-Diesel	1	..
	b 1542383	Engine Assy-Diesel	..	1
	c 1606762	Engine Assy-Diesel	1	..
	c 1607372	Engine Assy-Diesel	..	1
1	1564991	Gasket	1	1
2	**d** 1588565	Cover Assembly (Rear)	1	..
2	**d** 1513730	Cover (Rear)	..	1
3	**d** 1564992	Kit-Seal (Crankshaft)	1	..
3	**d** 1512049	Seal (Rear Crank)	..	1
4	1512050	O-Ring	1	1
5	1543362	Capscrew	8	8
6	1513732	Flywheel Housing	1	1
7	1512053	Capscrew	12	12
8	1512056	Cover Plate	1	1
9	1512045	Screw	2	2
10	1512047	Fitting	1	1
11	1512048	O-Ring	1	1
12	1512046	Plug	1	1
	1588054	Kit-Gasket (Lower Engine)	1	1

FOOTNOTES:

a → S/N E008E01984B
b S/N E008E01985B ↔ S/N E008E02066C
c S/N E008E02067C ↔ S/N E008E02099D
d S/N E008E01985B →

©2011 HYSTER COMPANY

FLYWHEEL HOUSING (FIGURE 2-34)

TIER III ENGINE (S/N E008E02100D →)

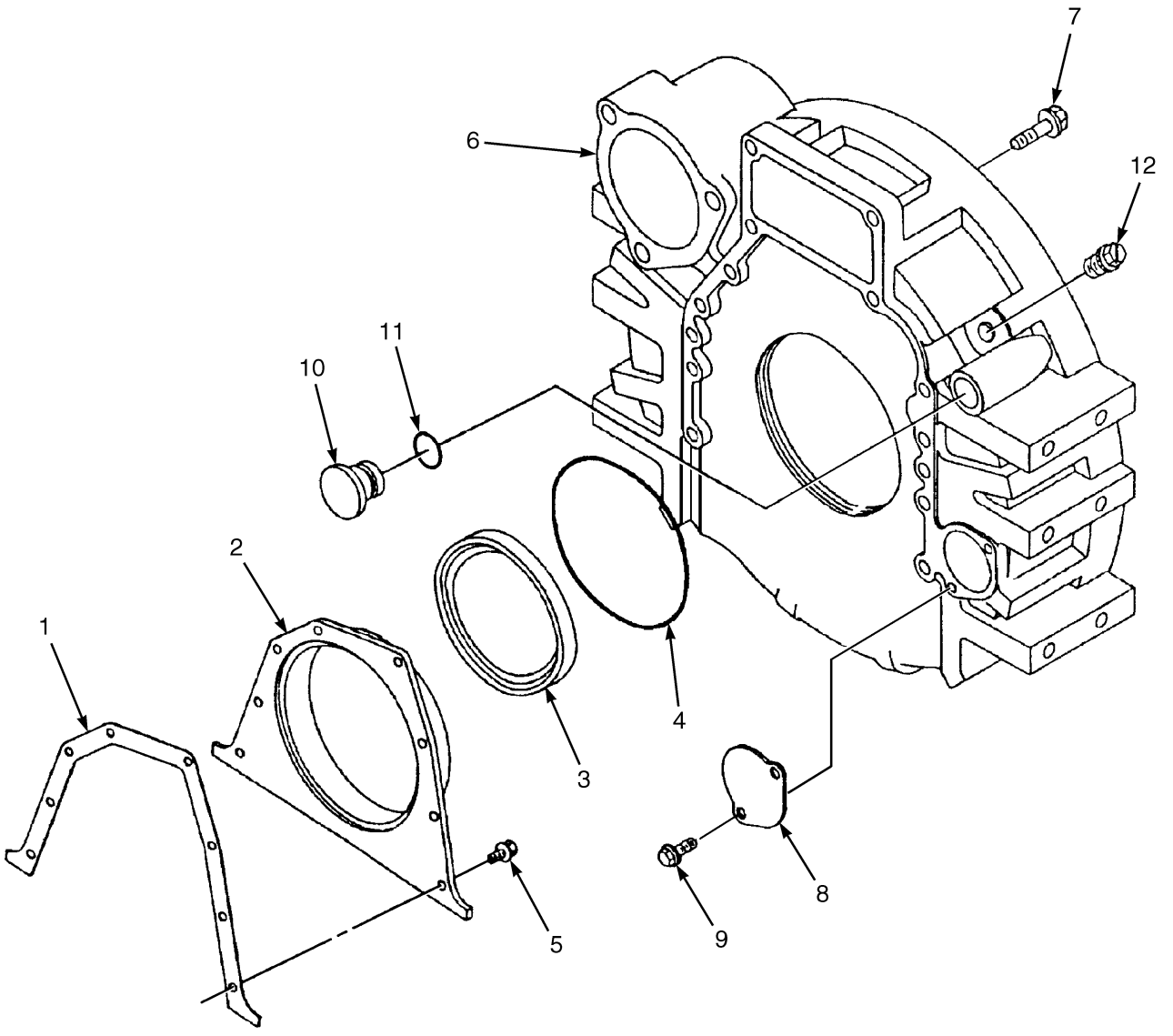

©2011 HYSTER COMPANY

FLYWHEEL HOUSING

TIER III ENGINE (S/N E008E02100D →)

ITEM	PART NO.	DESCRIPTION	QTY
	1663666	Engine Assy-Diesel	1
1	1564991	Gasket	1
2	. . . . .	Rear Cover Assembly	1
2	1513730	Cover (Rear)	1
3	1564993	Oil Seal	1
4	1512050	O-Ring	1
5	1543362	Capscrew	8
6	1513732	Flywheel Housing	1
7	1512053	Capscrew	12
8	1512056	Cover Plate	1
9	1512045	Screw	2
10	1512047	Fitting	1
11	1512048	O-Ring	1
12	1512046	Plug	1
	1646671	Kit-Gasket (Lower)	..

©2011 HYSTER COMPANY

OIL PAN (FIGURE 2-35)

TIER II ENGINE (→ S/N E008E02099D)

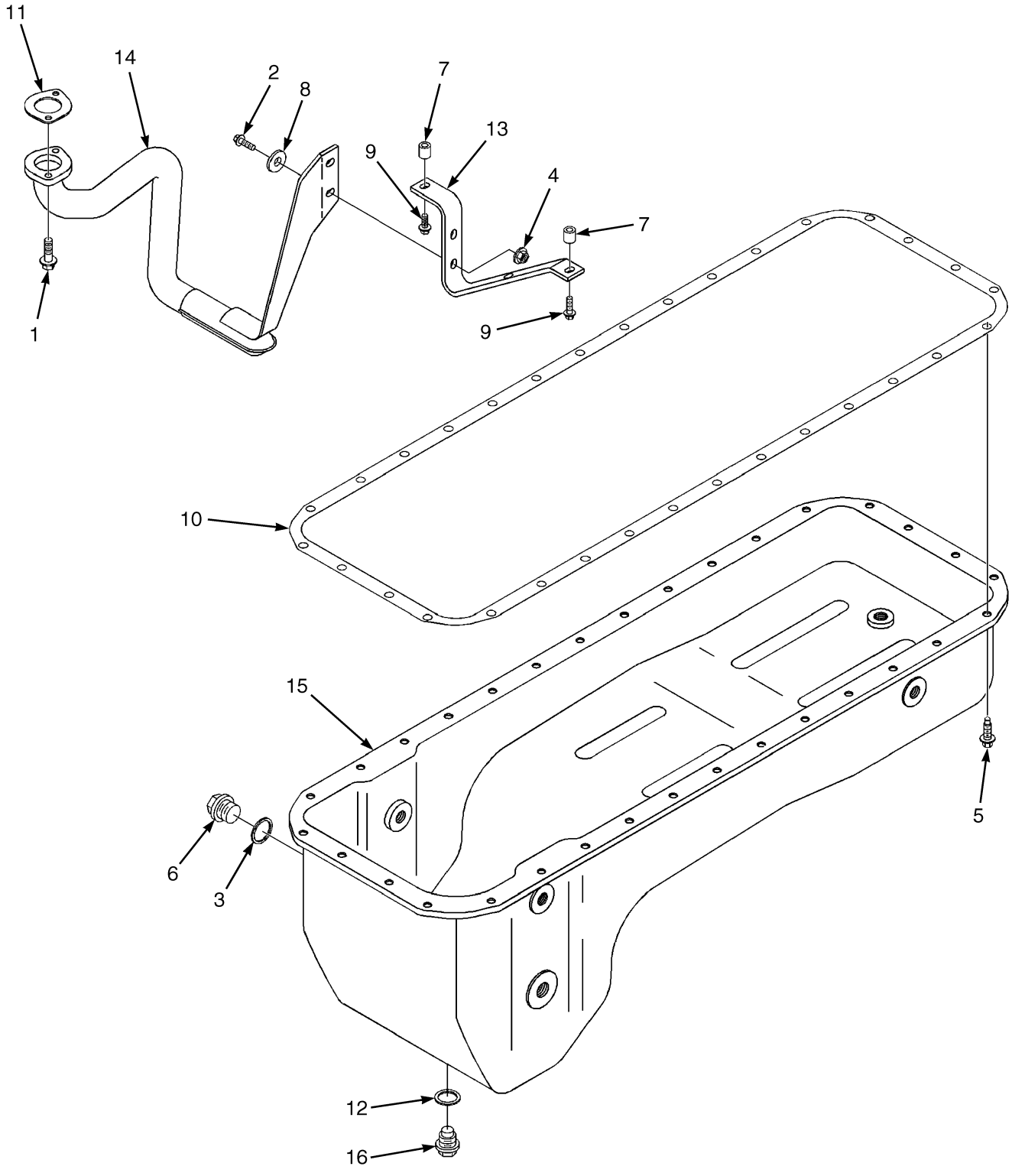

©2011 HYSTER COMPANY

OIL PAN

TIER II ENGINE (→ S/N E008E02099D)

KEY:
A: H550F, H620F, H650F, H700F
B: H550FS, H620FS, H700FS

ITEM	PART NO.	DESCRIPTION	QTY A	QTY B
	a 1499324	Engine Assy-Diesel	1	..
	b 1532628	Engine Assy-Diesel	1	..
	b 1542383	Engine Assy-Diesel	..	1
	c 1606762	Engine Assy-Diesel	1	..
	c 1607372	Engine Assy-Diesel	..	1
1	1513791	Screw	2	2
2	1513792	Capscrew	1	1
3	1512137	Seal	1	1
4	1513793	Nut	1	1
5	1513794	Capscrew	16	16
5	**d** 1513769	Capscrew	16	..
5	**d** 1513794	Capscrew	..	16
6	1512138	Plug	1	1
7	1513795	Spacer	2	2
8	1513797	Washer	1	1
9	1512051	Capscrew	2	2
10	1513800	Gasket (Oil Pan)	1	1
11	**d** 1565035	Gasket	1	..
11	**d** 1513801	Gasket	..	1
12	1512135	Seal	1	1
13	1513798	Brace	1	1
14	1513796	Adapter (Oil Suction)	1	1
15	1513799	Oil Pan	1	1
16	1512134	Plug	1	1
	d	Plate (Clamping)	4	..
	1588054	Kit-Gasket (Lower Engine)	1	1

FOOTNOTES:

a → S/N E008E01984B
b S/N E008E01985B ↔ S/N E008E02066C
c S/N E008E02067C ↔ S/N E008E02099D
d S/N E008E01985B →

©2011 HYSTER COMPANY

OIL PAN (FIGURE 2-36)

TIER III ENGINE (S/N E008E02100D →)

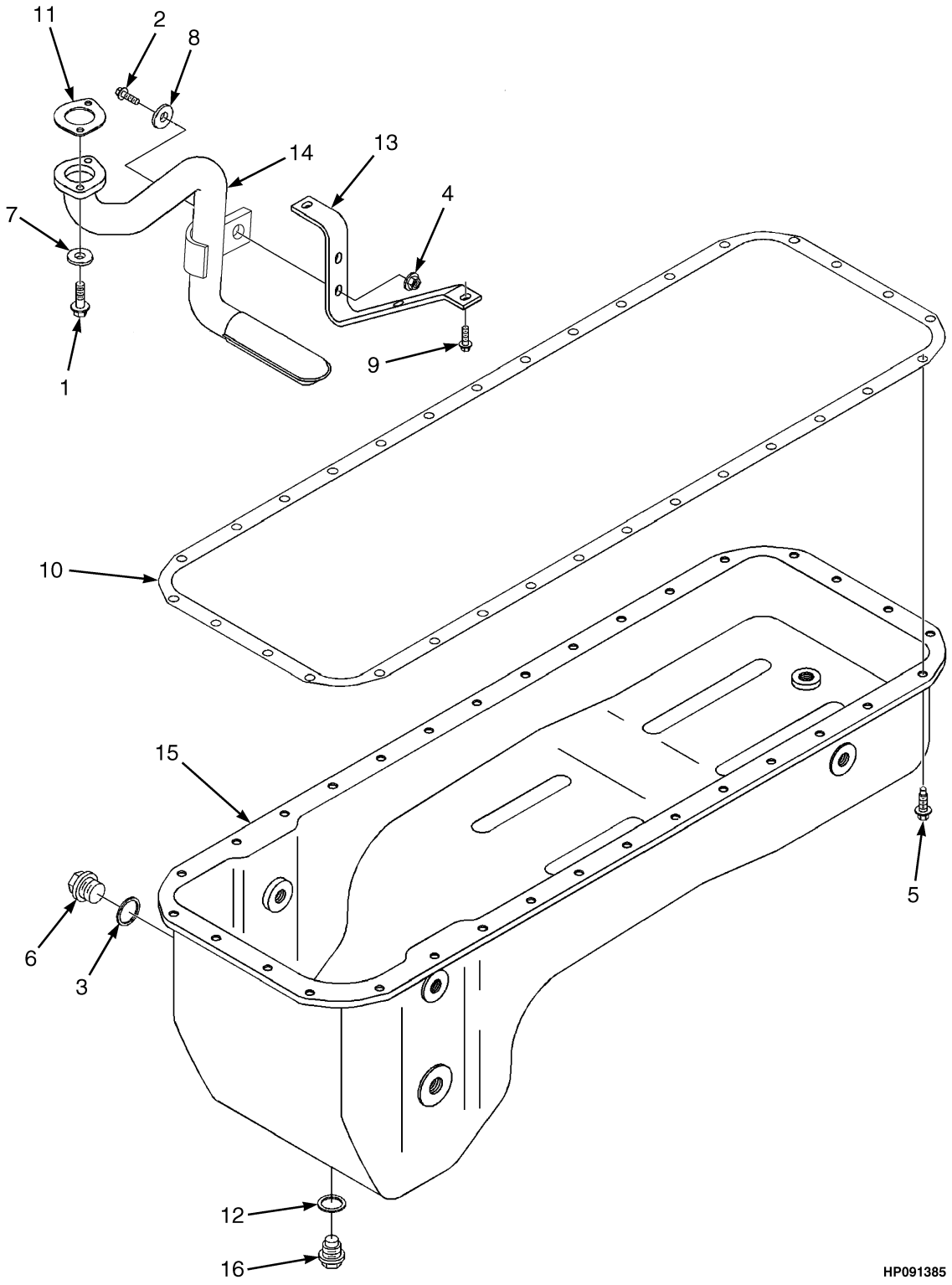

©2011 HYSTER COMPANY

OIL PAN

TIER III ENGINE (S/N E008E02100D →)

ITEM	PART NO.	DESCRIPTION	QTY
	1663666	Engine Assy-Diesel	1
1	1513791	Screw	2
2	1513792	Capscrew	1
3	1512137	Seal	1
4	1513793	Nut	1
5	1513769	Capscrew (M8 x 1.25 x 25)	16
5	1513794	Capscrew (M8 x 1.25 x 21)	16
6	1512138	Plug	1
7	1513795	Spacer	2
8	1513797	Washer	1
9	1512051	Capscrew	2
10	1644055	Gasket	1
11	1565035	Gasket	1
12	1512135	Seal	1
13	1513798	Brace	1
14	1513796	Adapter (Oil Suction)	1
14	1644110	Screen	1
14	1644011	Brace	1
15	1644089	Oil Pan Assembly	1
	a 1644093	Plate (Clamping)	1
	a 1644094	Plate (Clamping)	1
	a 1512134	Plug	1
	a 1589200	Plate (Clamping)	2
	1646671	Kit-Gasket (Lower)	..
	1649732	Kit-Gasket (Upper)	..

FOOTNOTES:

a Not Illustrated

©2011 HYSTER COMPANY

FAN DRIVE (FIGURE 2-37)
TIER II AND III ENGINES

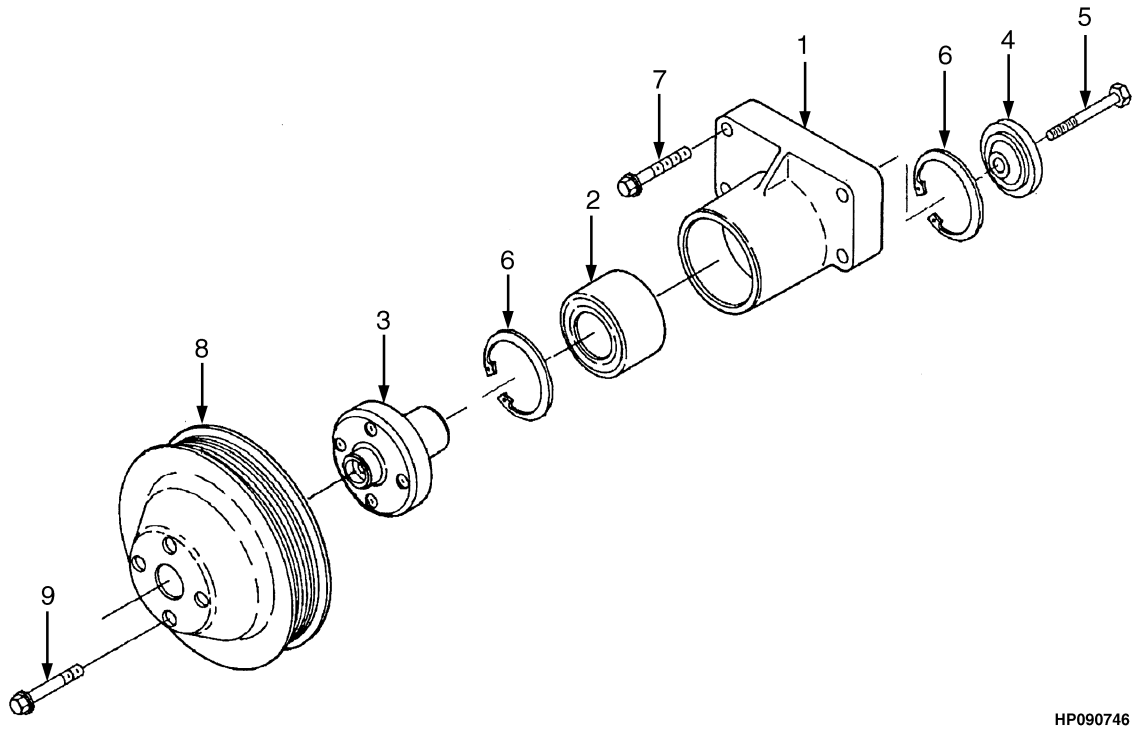

©2011 HYSTER COMPANY

FAN DRIVE
TIER II AND III ENGINES

ITEM	PART NO.	DESCRIPTION	QTY
	a 1499324	Engine Assy-Diesel (H550F, H620F, H650F, H700F)	1
	c 1532628	Engine Assy-Diesel (H550F, H620F, H650F, H700F)	1
	c 1542383	Engine Assy-Diesel (H550FS, H620FS, H700FS)	1
	d 1606762	Engine Assy-Diesel (H550F, H620F, H650F, H700F)	1
	d 1607372	Engine Assy-Diesel (H550FS, H620FS, H700FS)	1
	e 1663666	Engine Assy-Diesel	1
1	1517002	Support	1
1	1564964	Support	1
2	1512015	Ball Bearing	1
3	1512024	Hub (Fan)	1
4	1512025	Hub	1
5	1512027	Capscrew	1
6	1512026	Retaining Ring	2
7	1517003	Capscrew	4
8	**b** 1513727	Fan Pulley	1
8	**e** 1649726	Fan Pulley	1
9	1512328	Capscrew	4

FOOTNOTES:

a → S/N E008E01984B
b → S/N E008E02099D
c S/N E008E01985B ↔ S/N E008E02066C
d S/N E008E02067C ↔ S/N E008E02099D
e S/N E008E02100D →

©2011 HYSTER COMPANY

FAN SPACER (FIGURE 2-38)

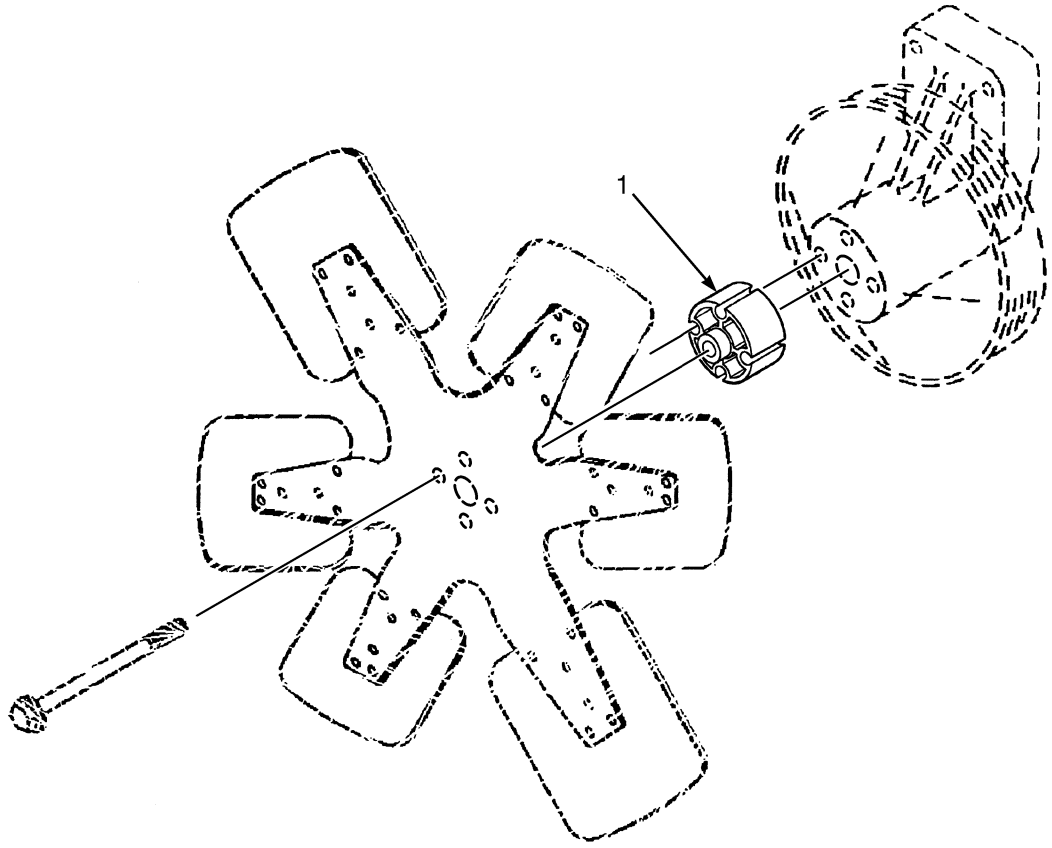

HP090726

ITEM	PART NO.	DESCRIPTION	QTY
	a 1499324	Engine Assy-Diesel (H550F, H620F, H650F, H700F)	1
	b 1532628	Engine Assy-Diesel (H550F, H620F, H650F, H700F)	1
	b 1542383	Engine Assy-Diesel (H550FS, H620FS, H700FS)	1
	c 1606762	Engine Assy-Diesel (H550F, H620F, H650F, H700F)	1
	c 1607372	Engine Assy-Diesel (H550FS, H620FS, H700FS)	1
	d 1663666	Engine Assy-Diesel	1
1	1512287	Spacer (Fan Pilot) (50.8 mm)	1

FOOTNOTES:

a → S/N E008E01984B
b S/N E008E01985B ↔ S/N E008E02066C
c S/N E008E02067C ↔ S/N E008E02099D
d S/N E008E02100D →

©2011 HYSTER COMPANY

NOTES

©2011 HYSTER COMPANY

OIL FILTER AND COOLER (FIGURE 2-39)

TIER II ENGINE (→ S/N E008E02099D)

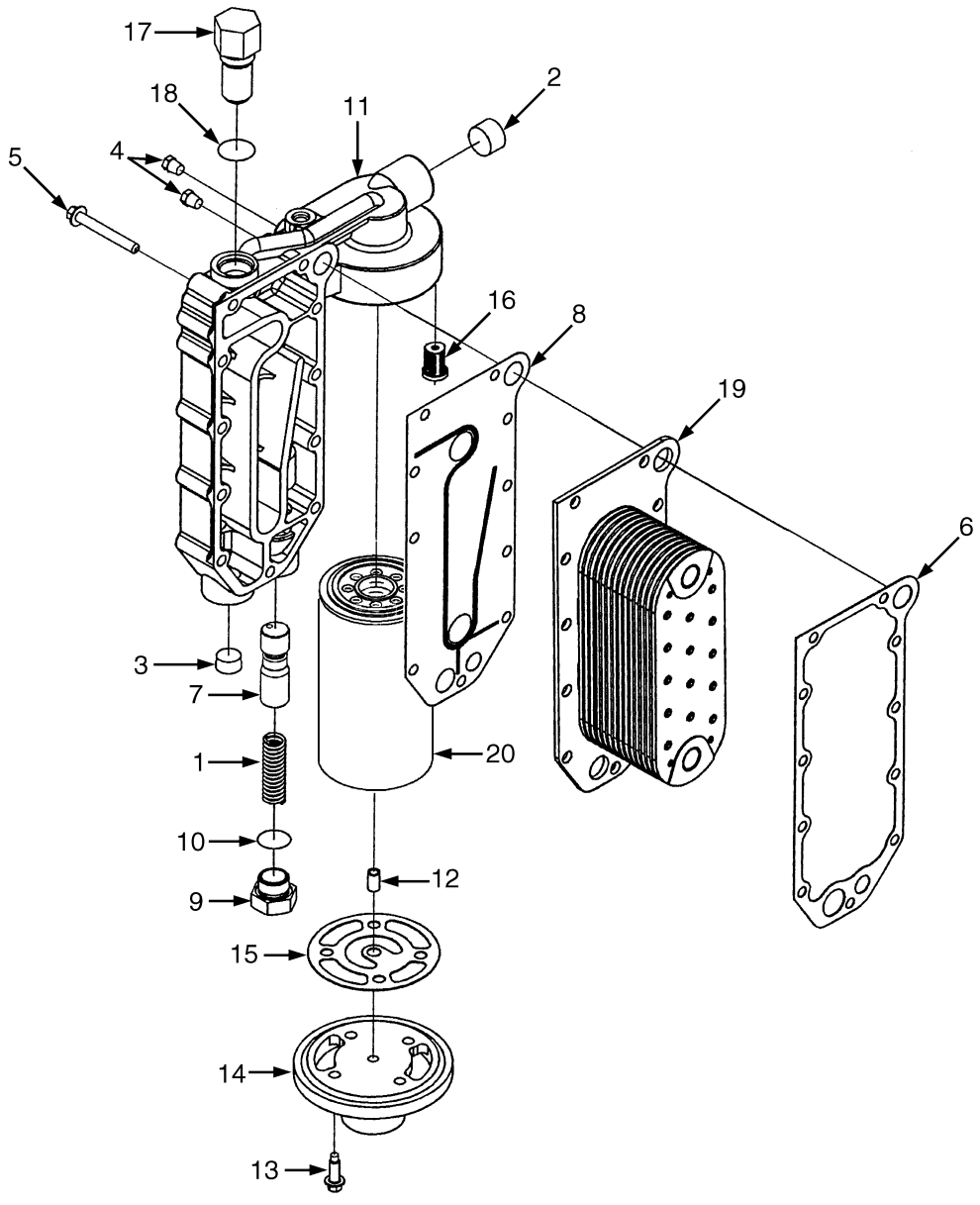

©2011 HYSTER COMPANY

OIL FILTER AND COOLER

TIER II ENGINE (→ S/N E008E02099D)

KEY:
A: H550F, H620F, H650F, H700F
B: H550FS, H620FS, H700FS

ITEM	PART NO.	DESCRIPTION	QTY A	QTY B
	a 1499324	Engine Assy-Diesel	1	..
	b 1532628	Engine Assy-Diesel	1	..
	b 1542383	Engine Assy-Diesel	..	1
	c 1606762	Engine Assy-Diesel	1	..
	c 1607372	Engine Assy-Diesel	..	1
1	1597829	Spring	1	..
1	1513757	Spring	..	1
2	1512292	Plug	1	1
3	1511952	Fitting	1	..
3	1513758	Plug	..	1
4	1512448	Fitting	2	2
5	1553781	Capscrew	11	11
6	1513761	Gasket	1	1
7	1513763	Plunger (Pressure Regulator)	1	1
8	1513764	Gasket	1	1
9	1513765	Plug Assembly	1	1
10	1513766	O-Ring	1	1
11	1513767	Filter Head	1	1
12	1513768	Ring	1	1
13	1513769	Capscrew	4	4
14	1513770	Filter Head (Oil Filter)	1	1
15	1513771	Gasket	1	..
15	1565733	Gasket	..	1
16	1513772	Relief Valve (Pressure)	1	1
17	1513773	By-Pass Valve Assembly	1	1
18	1513774	O-Ring	1	1
19	1588071	Core (Cooler)	1	1
20	1513759	Oil Filter	1	1
	1588054	Kit-Gasket (Lower Engine)	1	1

FOOTNOTES:

a → S/N E008E01984B
b S/N E008E01985B ↔ S/N E008E02066C
c S/N E008E02067C ↔ S/N E008E02099D

©2011 HYSTER COMPANY

OIL FILTER AND COOLER (FIGURE 2-40)

TIER III ENGINE (S/N E008E02100D →)

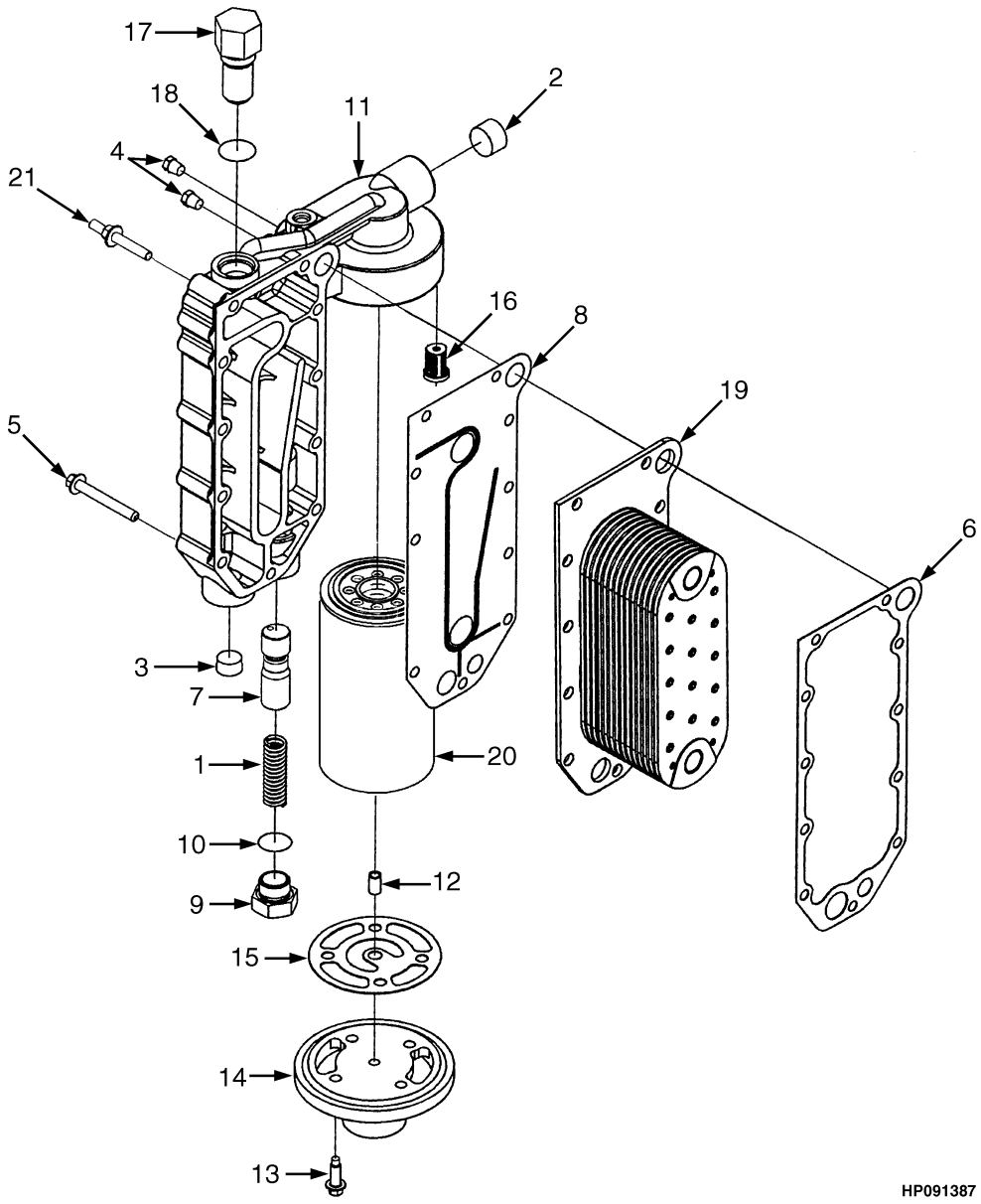

©2011 HYSTER COMPANY

OIL FILTER AND COOLER

TIER III ENGINE (S/N E008E02100D →)

ITEM	PART NO.	DESCRIPTION	QTY
	1663666	Engine Assy-Diesel	1
1	1597829	Spring	1
2	1512292	Plug	1
3	1511952	Fitting	1
4	1512448	Fitting	2
5	1553781	Capscrew	8
6	1513761	Gasket	1
7	1513763	Plunger (Pressure Regulator)	1
8	1513764	Gasket	1
9	1513765	Plug Assembly	1
9	1588816	Plug	1
10	1513766	O-Ring	1
11	1644068	Filter Head Assembly	1
12	1513768	Ring	1
13	1513769	Capscrew	4
14	1644039	Cover	1
14	1644069	Filter Head	1
15	1565733	Gasket	1
16	1513772	Relief Valve (Pressure)	1
17	1513773	By-Pass Valve Assembly	1
17	1589199	Valve	1
18	1513774	O-Ring	1
19	1644036	Core (Cooler)	1
20	1513759	Oil Filter	1
21	1644119	Capscrew	3
	1646671	Kit-Gasket (Lower)	..

©2011 HYSTER COMPANY

TORQUE CONVERTER AND OIL COOLER FITTINGS (FIGURE 2-41)

TIER II ENGINE — H550F, H620F, H650F, H700F (S/N E008E01985B ↔ S/N E008E02099D)

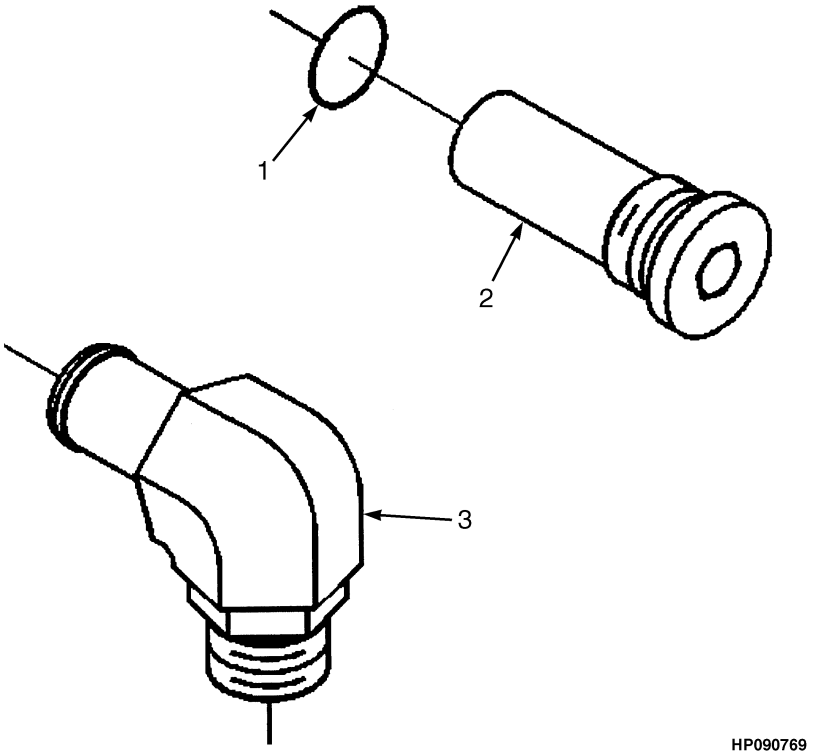

ITEM	PART NO.	DESCRIPTION	QTY
	a 1532628	Engine Assy-Diesel	1
	b 1606762	Engine Assy-Diesel	1
1	1517262	O-Ring	1
2	1517261	Plug (By-Pass)	1
3	1517263	Coupling	1
	1588054	Kit-Gasket (Lower Engine)	1

FOOTNOTES:

a S/N E008E01985B ↔ S/N E008E02066C

b S/N E008E02067C ↔ S/N E008E02099D

©2011 HYSTER COMPANY

TORQUE CONVERTER AND OIL COOLER FITTINGS (FIGURE 2-42)

TIER II ENGINE — H550FS, H620FS, H700FS (S/N E008E01985B →)

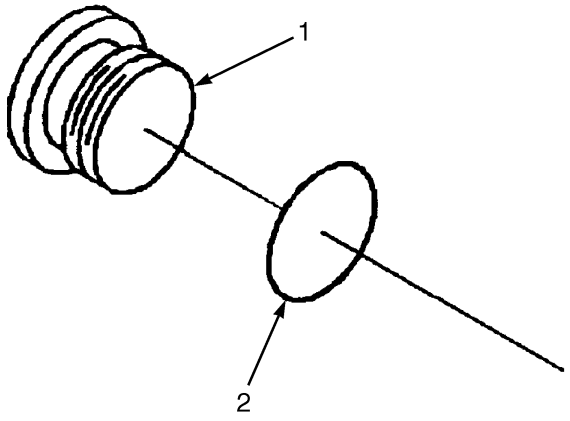

HP091240

ITEM	PART NO.	DESCRIPTION	QTY
	a 1542383	Engine Assy-Diesel	1
	b 1607372	Engine Assy-Diesel	1
1	1589584	Plug Assembly	2
2	1517262	O-Ring	1
	1588054	Kit-Gasket (Lower Engine)	1

FOOTNOTES:

a S/N E008E01985B ↔ S/N E008E02066C

b S/N E008E02067C ↔ S/N E008E02099D

©2011 HYSTER COMPANY

TORQUE CONVERTER AND OIL COOLER FITTINGS (FIGURE 2-43)

TIER III ENGINE (S/N E008E02100D →)

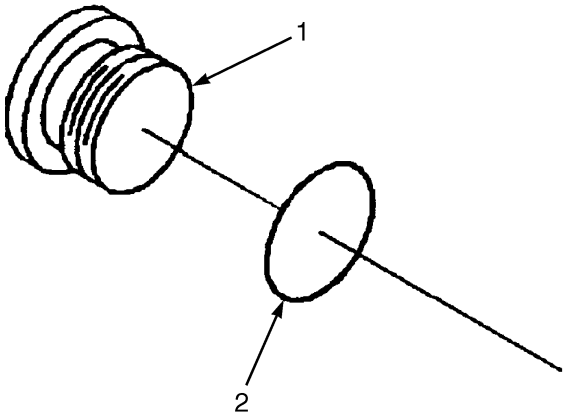

HP091240

ITEM	PART NO.	DESCRIPTION	QTY
	1663666	Engine Assy-Diesel	1
1	1589584	Plug Assembly	2
1	. . . . .	Plug	1
2	1517262	O-Ring	1

©2011 HYSTER COMPANY

NOTES

©2011 HYSTER COMPANY

CORROSION RESISTOR (FIGURE 2-44)

H550F, H620F, H650F, H700F — TIER II ENGINE (S/N E008E01985B ↔ S/N E008E02099D)

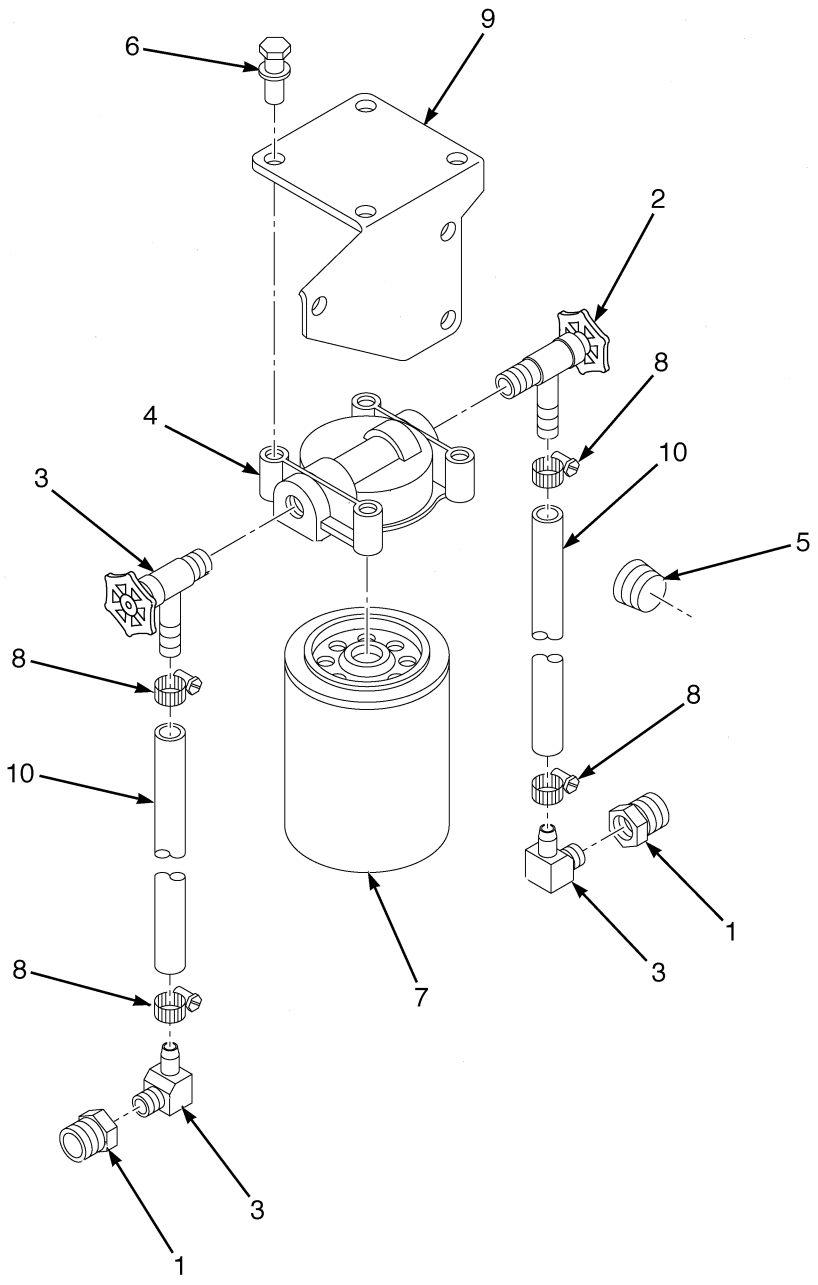

HP091079

©2011 HYSTER COMPANY

CORROSION RESISTOR

H550F, H620F, H650F, H700F – TIER II ENGINE (S/N E008E01985B ↔ S/N E008E02099D)

ITEM	PART NO.	DESCRIPTION	QTY
	a 1532628	Engine Assy-Diesel	1
	b 1606762	Engine Assy-Diesel	1
1	1543328	Bushing	2
2	1565948	Shutoff Valve	2
3	1565947	Coupling	2
4	1565949	Head	1
5	1512292	Plug	2
6	1517007	Capscrew	4
7	1565950	Corrosion Resistor Filter	1
8	1516981	Hose Clamp	4
9	1565951	Bracket	1
10	1565952	Hose	2

FOOTNOTES:

a S/N E008E01985B ↔ S/N E008E02066C

b S/N E008E02067C ↔ S/N E008E02099D

©2011 HYSTER COMPANY

CORROSION RESISTOR (FIGURE 2-45)

H440FS, H550FS, H620FS, H700FS — TIER II ENGINE (S/N E008E01985B ↔ S/N E008E02099D)

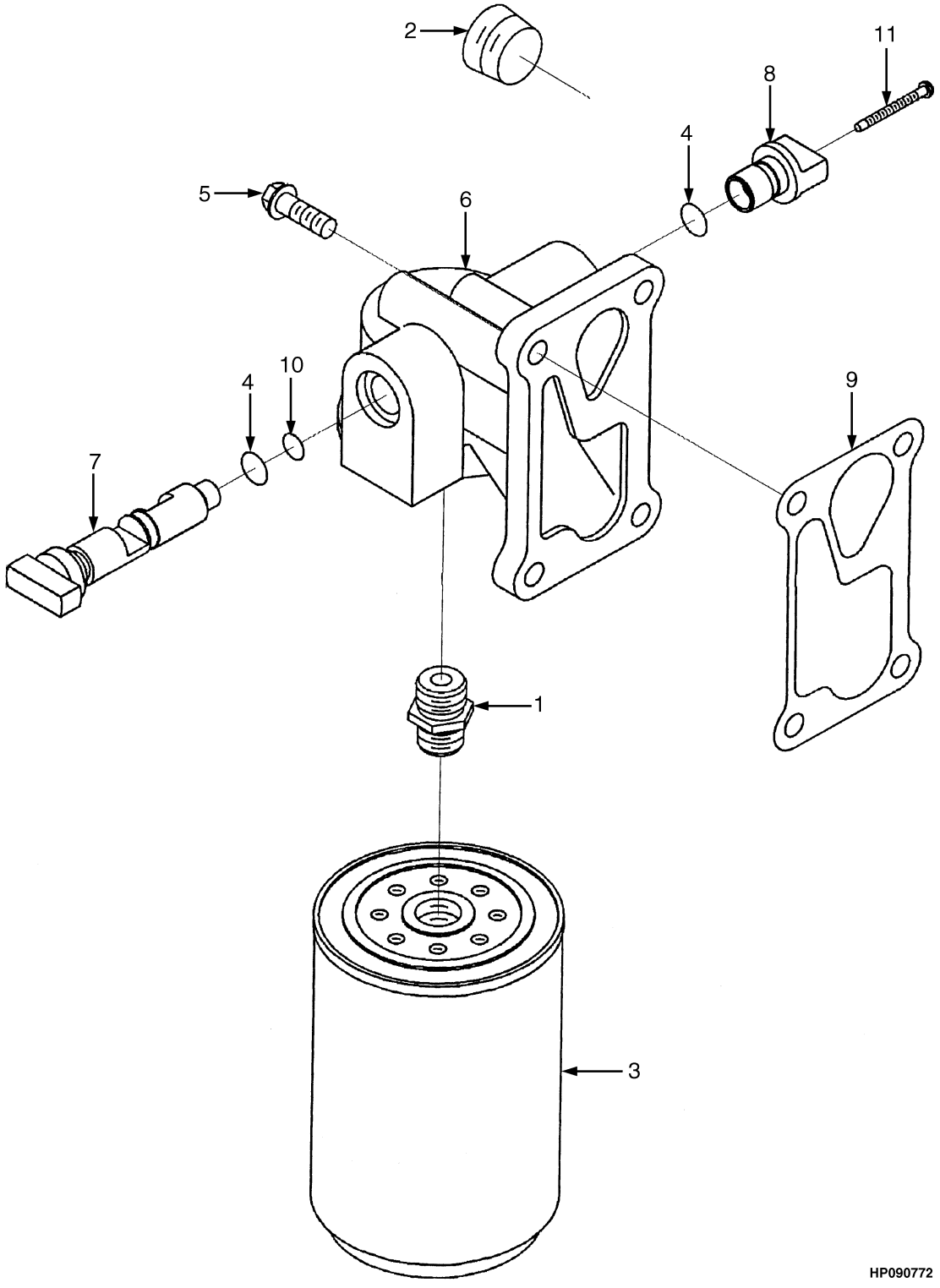

©2011 HYSTER COMPANY

CORROSION RESISTOR

H440FS, H550FS, H620FS, H700FS – TIER II ENGINE (S/N E008E01985B ↔ S/N E008E02099D)

ITEM	PART NO.	DESCRIPTION	QTY
	a 1542383	Engine Assy-Diesel	1
	b 1607372	Engine Assy-Diesel	1
1	1513457	Insert (Filter Head)	1
2	1512292	Plug	2
3	1513849	Corrosion Resistor Filter	1
4	1513455	O-Ring	2
5	1512005	Capscrew	4
6	1517279	Head	1
7	1517280	Shaft (Shut-Off Valve)	1
8	1517281	Shaft	1
9	1589587	Gasket (Corrosion Resistor)	1
10	1517282	O-Ring	1
11	1517283	Screw	1
	1588054	Kit-Gasket (Lower Engine)	1

FOOTNOTES:

a S/N E008E01985B ↔ S/N E008E02066C

b S/N E008E02067C ↔ S/N E008E02099D

©2011 HYSTER COMPANY

CORROSION RESISTOR (FIGURE 2-46)

TIER III ENGINE (S/N E008E02100D →)

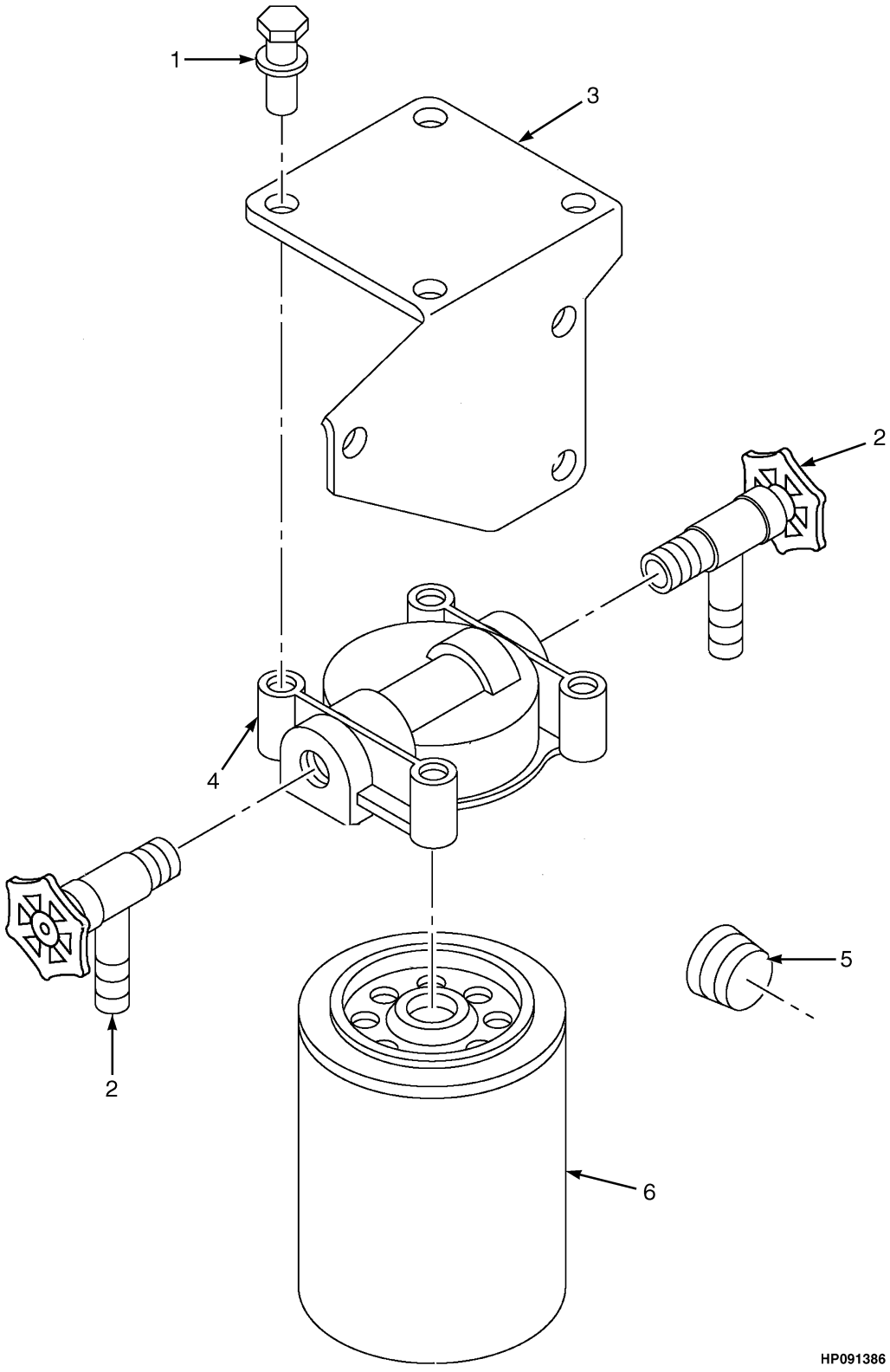

©2011 HYSTER COMPANY

CORROSION RESISTOR

TIER III ENGINE (S/N E008E02100D →)

ITEM	PART NO.	DESCRIPTION	QTY
	1663666	Engine Assy-Diesel	1
1	1517007	Capscrew	4
2	1565948	Shutoff Valve	2
3	1565951	Bracket	1
4	1565949	Head	1
5	1512292	Plug	2
6	1513849	Corrosion Resistor Filter	1

©2011 HYSTER COMPANY

OIL LEVEL GAUGE (FIGURE 2-47)

H550F, H620F, H650F, H700F — TIER II ENGINE (S/N E008E01985B ↔ S/N E008E02099D)

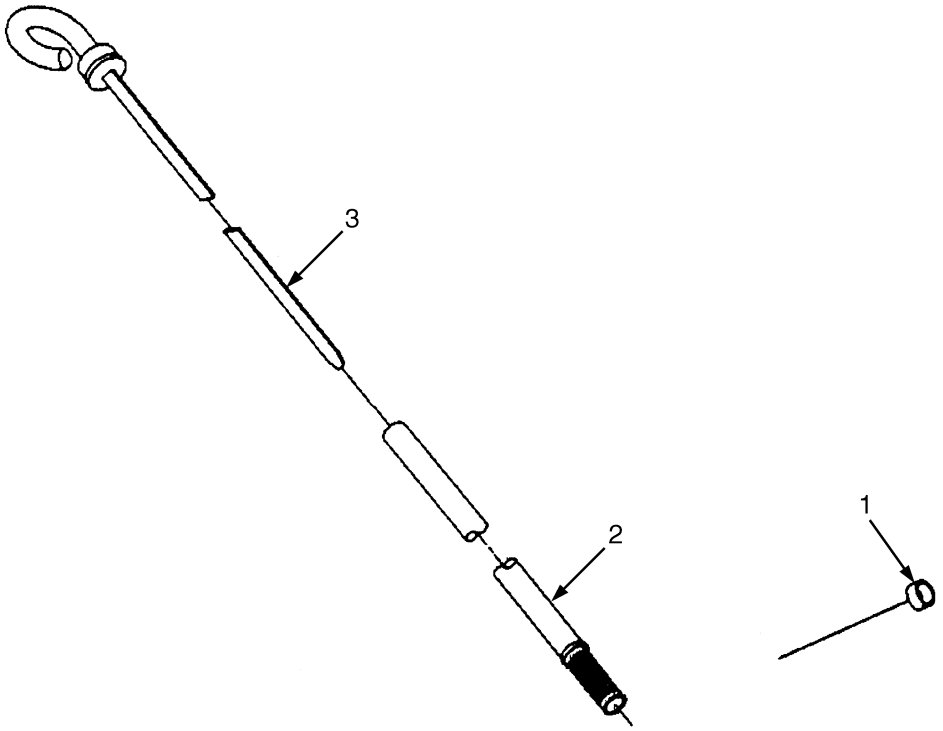

HP090756

ITEM	PART NO.	DESCRIPTION	QTY
	a 1532628	Engine Assy-Diesel	1
	b 1606762	Engine Assy-Diesel	1
1	1517104	Plug	1
2	1513777	Dipstick Tube	1
3	1517105	Dipstick	1

FOOTNOTES:

a S/N E008E01985B ↔ S/N E008E02066C

b S/N E008E02067C ↔ S/N E008E02099D

©2011 HYSTER COMPANY

OIL LEVEL GAUGE (FIGURE 2-48)

H440FS, H550FS, H620FS, H700FS — TIER II ENGINE (S/N E008E01985B ↔ S/N E008E02099D)

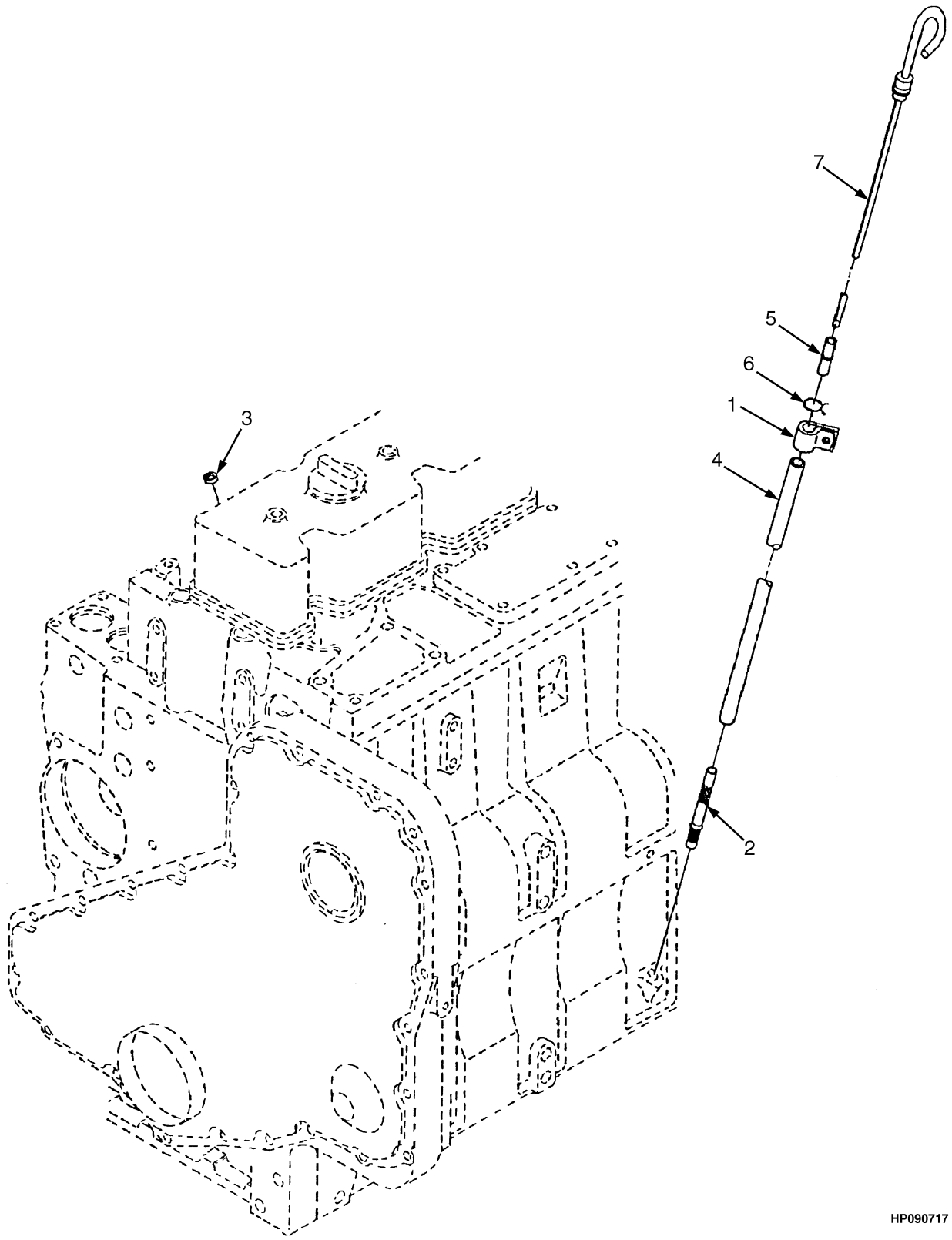

ITEM	PART NO.	DESCRIPTION	QTY
	a 1542383	Engine Assy-Diesel	1
	b 1607372	Engine Assy-Diesel	1
1	1513776	Clip	1
2	1513777	Dipstick Tube	1
3	1517104	Plug	1
4	1513778	Dipstick Tube	1
5	1513779	Tube (End)	1
6	1513780	Hose Clamp	2
7	1513781	Dipstick	1

FOOTNOTES:

a S/N E008E01985B ↔ S/N E008E02066C

b S/N E008E02067C ↔ S/N E008E02099D

©2011 HYSTER COMPANY

OIL LEVEL GAUGE (FIGURE 2-49)

TIER III ENGINE (S/N E008E02100D →)

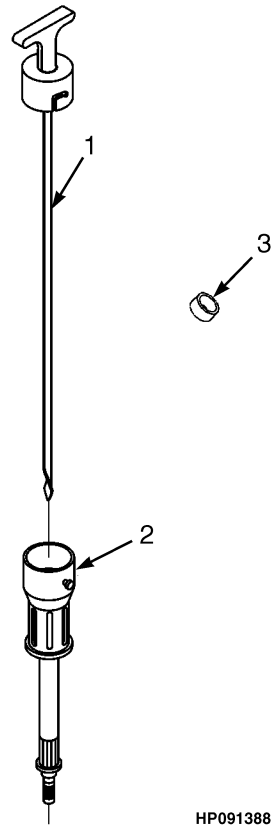

ITEM	PART NO.	DESCRIPTION	QTY
	1663666	Engine Assy-Diesel	1
1	1644044	Dipstick Assembly	1
1	1644043	Dipstick	1
2	1644159	Dipstick Tube	1
3	1517104	Plug	1

©2011 HYSTER COMPANY

OIL FILLER (FIGURE 2-50)

H550F, H620F, H650F, H700F — TIER II ENGINE (S/N E008E01985B ↔ S/N E008E02099D)

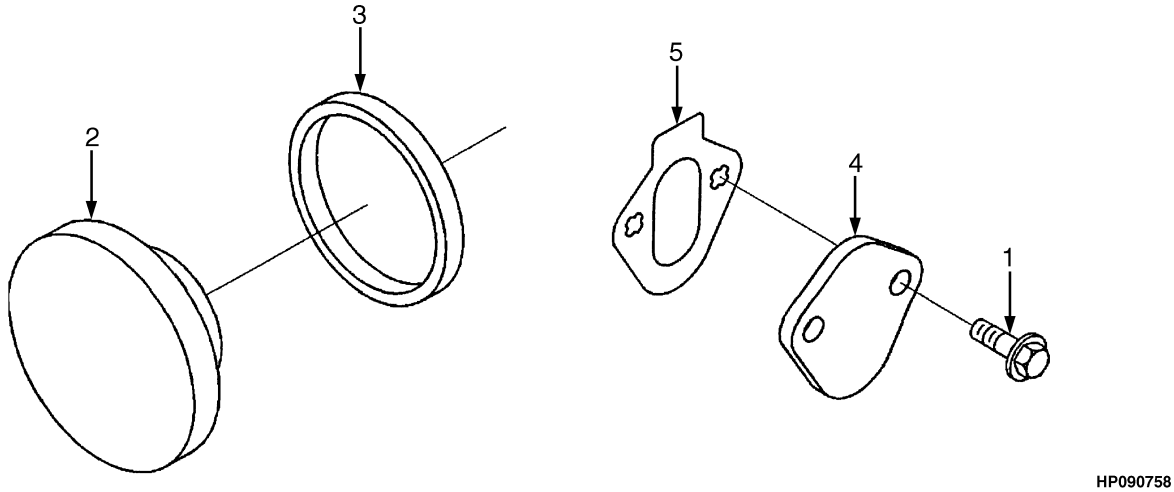

HP090758

ITEM	PART NO.	DESCRIPTION	QTY
	a 1532628	Engine Assy-Diesel	1
	b 1606762	Engine Assy-Diesel	1
1	1512004	Capscrew	2
2	1512011	Cover	1
3	1512012	Sealing Ring	1
4	1517110	Cover Plate	1
5	~~1517111~~		
	1513743	Gasket (Cover Plate)	1
	1588056	Kit-Gasket (Upper Engine)	1
	1588054	Kit-Gasket (Lower Engine)	1

FOOTNOTES:

a S/N E008E01985B ↔ S/N E008E02066C

b S/N E008E02067C ↔ S/N E008E02099D

©2011 HYSTER COMPANY

NOTES

©2011 HYSTER COMPANY

OIL FILLER (FIGURE 2-51)

H440FS, H550FS, H620FS, H700FS — TIER II ENGINE (S/N E008E01985B ↔ S/N E008E02099D)

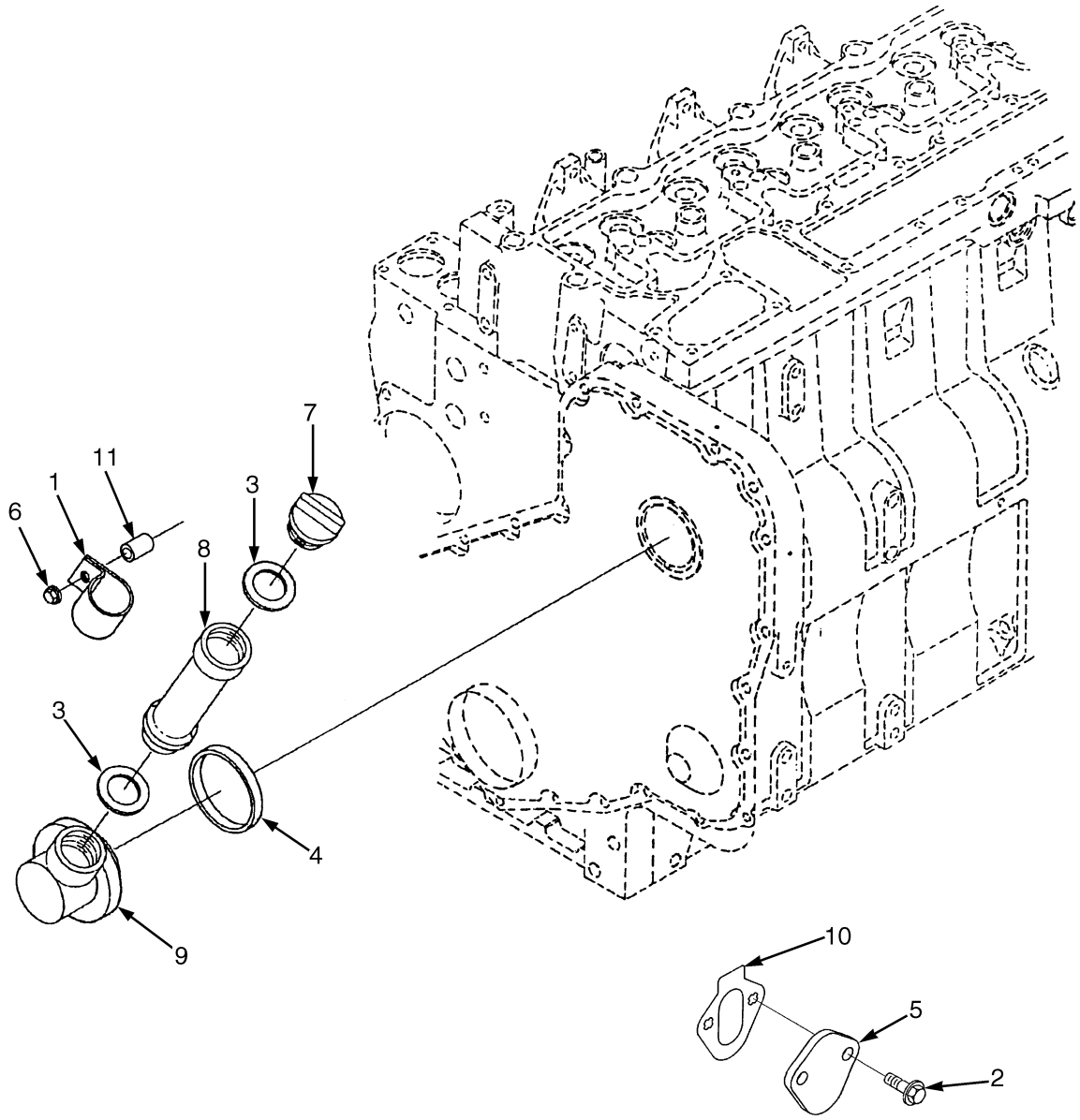

HP091242

©2011 HYSTER COMPANY

OIL FILLER

H440FS, H550FS, H620FS, H700FS – TIER II ENGINE (S/N E008E01985B ↔ S/N E008E02099D)

ITEM	PART NO.	DESCRIPTION	QTY
	a 1542383	Engine Assy-Diesel	1
	b 1607372	Engine Assy-Diesel	1
1	1513787	Clip	1
2	1512004	Capscrew	2
3	1512312	Sealing Ring	2
4	1512012	Sealing Ring	1
5	1517110	Cover Plate	1
6	1513793	Nut	1
7	1512463	Cap	1
8	1512464	Tube	1
9	1512461	Connector	1
10	~~1517111~~		
	1513743	Gasket (Cover Plate)	1
11	1589583	Spacer (Mounting)	1
	1588056	Kit-Gasket (Upper Engine)	1
	1588054	Kit-Gasket (Lower Engine)	1

FOOTNOTES:

a S/N E008E01985B ↔ S/N E008E02066C

b S/N E008E02067C ↔ S/N E008E02099D

©2011 HYSTER COMPANY

OIL FILLER (FIGURE 2-52)

TIER III ENGINE (S/N E008E02100D →)

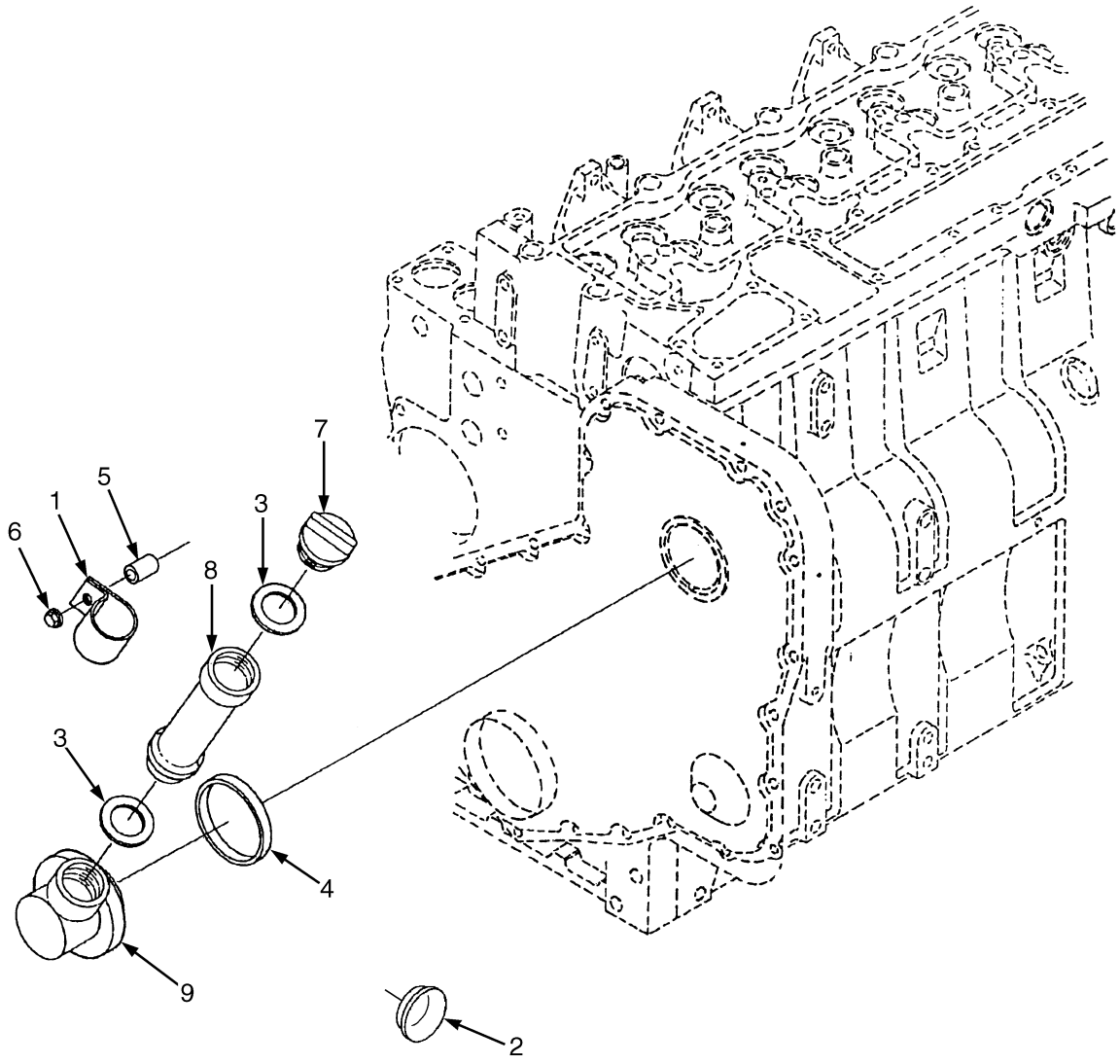

HP091389

©2011 HYSTER COMPANY

OIL FILLER

TIER III ENGINE (S/N E008E02100D →)

ITEM	PART NO.	DESCRIPTION	QTY
	1663666	Engine Assy-Diesel	1
1	1513787	Clip	1
2	1513788	Plug	1
3	1512312	Sealing Ring	1
4	1512012	Sealing Ring	1
5	1589583	Spacer	1
6	1513793	Nut	1
7	1512463	Cap	1
8	1512464	Tube	1
9	1512461	Connector	1

©2011 HYSTER COMPANY

AIR INTAKE CONNECTION (FIGURE 2-53)

TIER II AND III ENGINES

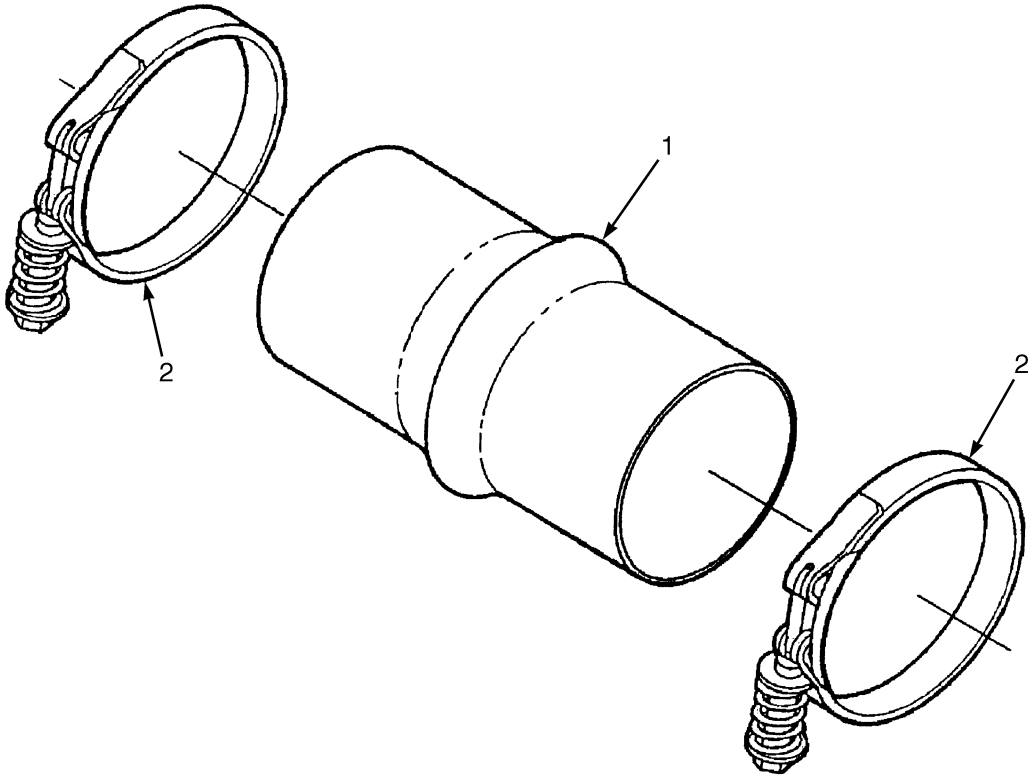

HP090753

ITEM	PART NO.	DESCRIPTION	QTY
	a 1499324	Engine Assy-Diesel (H550F, H620F, H650F, H700F)	1
	b 1532628	Engine Assy-Diesel (H550F, H620F, H650F, H700F)	1
	b 1542383	Engine Assy-Diesel (H550FS, H620FS, H700FS)	1
	c 1606762	Engine Assy-Diesel (H550F, H620F, H650F, H700F)	1
	c 1607372	Engine Assy-Diesel (H550FS, H620FS, H700FS)	1
	d 1663666	Engine Assy-Diesel	1
1	1517090	Hose	4
2	1517091	Hose Clamp	8

FOOTNOTES:

a → S/N E008E01984B
b S/N E008E01985B ↔ S/N E008E02066C
c S/N E008E02067C ↔ S/N E008E02099D
d S/N E008E02100D →

©2011 HYSTER COMPANY

NOTES

©2011 HYSTER COMPANY

AIR INTAKE HEATER CONNECTION (FIGURE 2-54)
TIER II ENGINE

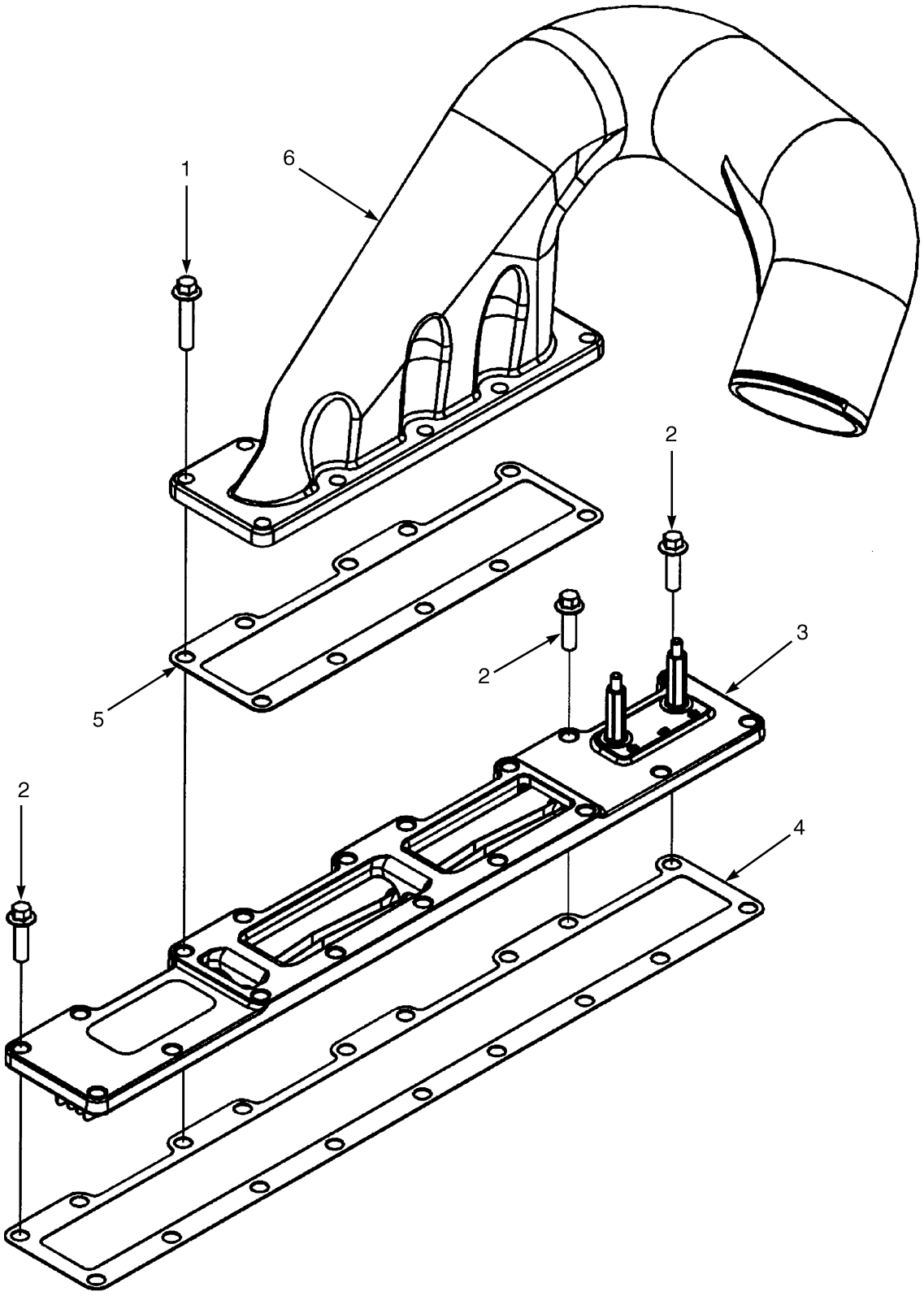

HP091212

©2011 HYSTER COMPANY

AIR INTAKE HEATER CONNECTION
TIER II ENGINE

KEY:
A: H550F, H620F, H650F, H700F
B: H550FS, H620FS, H700FS

ITEM	PART NO.	DESCRIPTION	QTY A	QTY B
	a 1499324	Engine Assy-Diesel	1	..
	b 1532628	Engine Assy-Diesel	1	..
	b 1542383	Engine Assy-Diesel	..	1
	c 1606762	Engine Assy-Diesel	1	..
	c 1607372	Engine Assy-Diesel	..	1
1	1565007	Capscrew	10	10
2	1512423	Capscrew	3	3
3	1565008	Heater (Intake Air)	1	1
4	1565009	Gasket	1	1
5	1565016	Gasket	1	..
5	1589582	Gasket	..	1
6	1565010	Connector	1	1
	1588056	Kit-Gasket (Upper Engine)	1	1

FOOTNOTES:

a → S/N E008E01984B
b S/N E008E01985B ↔ S/N E008E02066C
c S/N E008E02067C ↔ S/N E008E02099D

©2011 HYSTER COMPANY

AIR INTAKE (FIGURE 2-55)

TIER III ENGINE (S/N E008E02100D →)

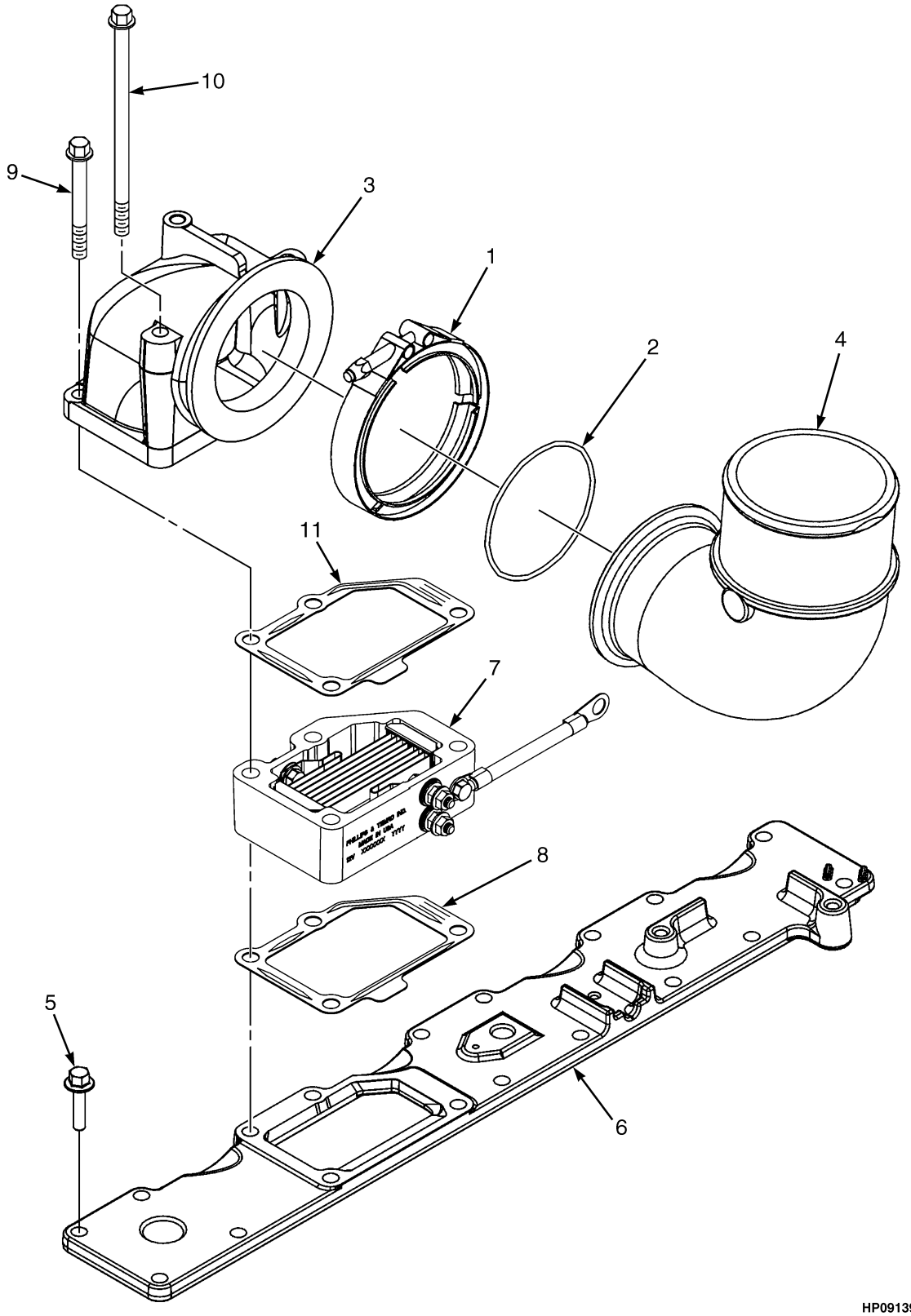

©2011 HYSTER COMPANY

AIR INTAKE

TIER III ENGINE (S/N E008E02100D →)

ITEM	PART NO.	DESCRIPTION	QTY
	1663666	Engine Assy-Diesel	1
1	1568692	Clamp	1
2	1612790	O-Ring	1
3	1644029	Connector (Air Intake)	1
4	1644030	Connector (Air Intake)	1
5	1512423	Capscrew	14
6	1644038	Cover (Intake Manifold)	1
7	1643864	Heater (Intake Air)	1
8	1643865	Gasket	1
9	1514535	Screw (M8 x 1.25 x 80)	2
10	1644118	Capscrew (M8 x 1.25 x 160)	2
11	1646667	Gasket	1
	1649732	Kit-Gasket (Upper)	..

©2011 HYSTER COMPANY

AIR TRANSFER CONNECTION (FIGURE 2-56)

TIER II AND III ENGINES

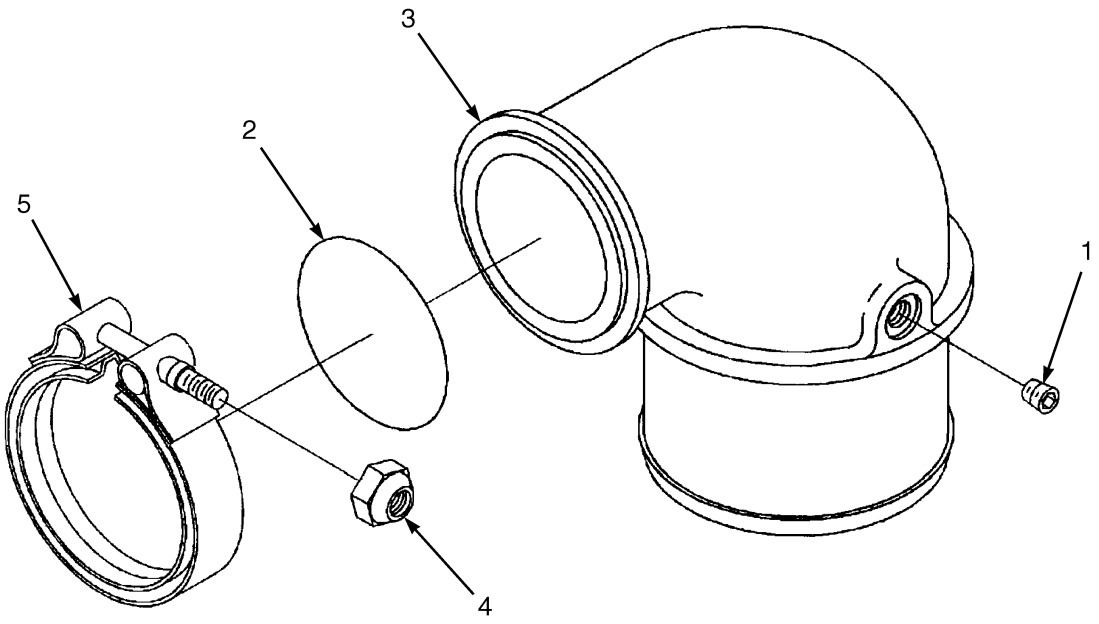

ITEM	PART NO.	DESCRIPTION	QTY
	a 1499324	Engine Assy-Diesel (H550F, H620F, H650F, H700F)	1
	c 1532628	Engine Assy-Diesel (H550F, H620F, H650F, H700F)	1
	c 1542383	Engine Assy-Diesel (H550FS, H620FS, H700FS)	1
	d 1606762	Engine Assy-Diesel (H550F, H620F, H650F, H700F)	1
	d 1607372	Engine Assy-Diesel (H550FS, H620FS, H700FS)	1
	e 1663666	Engine Assy-Diesel	1
1	1513191	Fitting	1
2	1515787	O-Ring	1
3	1517093	Pipe	1
4	1517094	Locknut	1
5	**b** 1597806	Clamp	1
5	**e** 1649346	Clamp	1
	1588056	Kit-Gasket (Upper Engine)	1

FOOTNOTES:

a → S/N E008E01984B
b → S/N E008E02099D
c S/N E008E01985B ↔ S/N E008E02066C
d S/N E008E02067C ↔ S/N E008E02099D
e S/N E008E02100D →

©2011 HYSTER COMPANY

NOTES

©2011 HYSTER COMPANY

CRANKCASE BREATHER (FIGURE 2-57)

TIER II ENGINE (→ S/N E008E02099D)

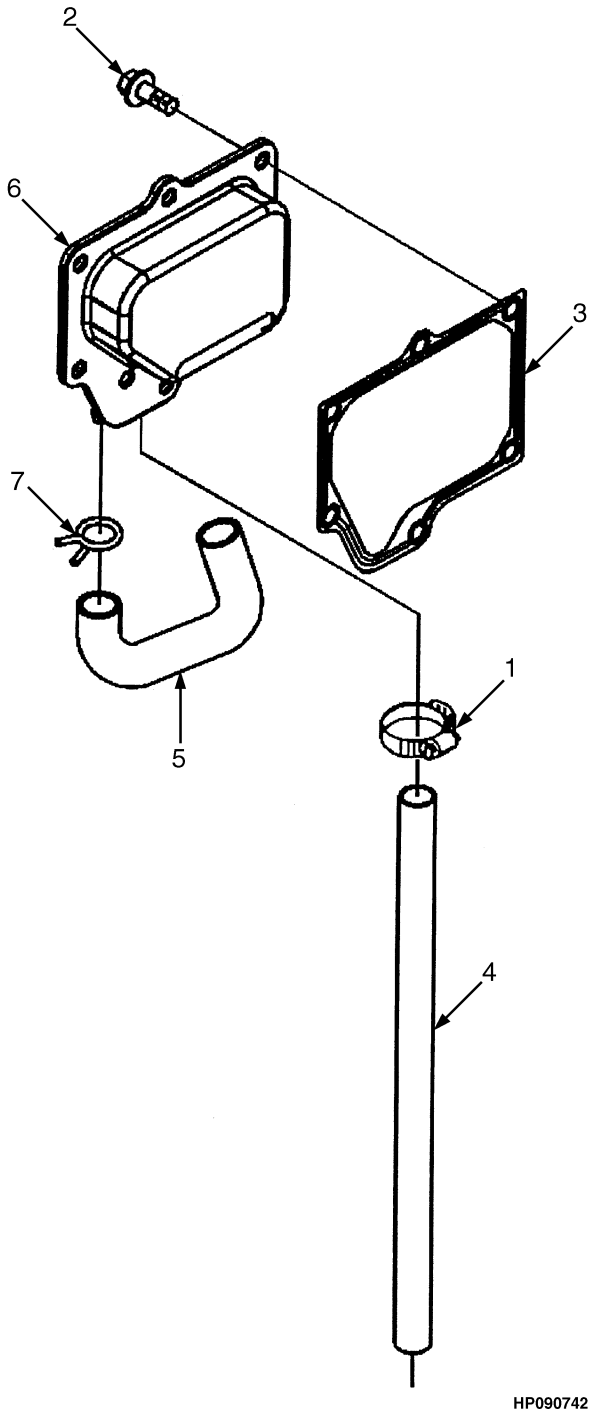

©2011 HYSTER COMPANY

CRANKCASE BREATHER

TIER II ENGINE (→ S/N E008E02099D)

KEY:
A: H550F, H620F, H650F, H700F
B: H550FS, H620FS, H700FS

ITEM	PART NO.	DESCRIPTION	QTY A	QTY B
	a 1499324	Engine Assy-Diesel	1	..
	b 1532628	Engine Assy-Diesel	1	..
	b 1542383	Engine Assy-Diesel	..	1
	c 1606762	Engine Assy-Diesel	1	..
	c 1607372	Engine Assy-Diesel	..	1
1	1513696	Hose Clamp	1	..
1	1516981	Hose Clamp	..	1
2	1543362	Capscrew	6	..
2	1512051	Capscrew	..	6
3	1564873	Gasket	1	1
4	1588065	Hose	1	..
4	1516983	Hose	..	1
5	1588070	Hose	1	..
5	1516984	Hose	..	1
6	1588556	Breather	1	..
6	1516985	Breather	..	1
7	1588557	Hose Clamp	2	..
7	1516986	Hose Clamp	..	2

FOOTNOTES:

a → S/N E008E01984B
b S/N E008E01985B ↔ S/N E008E02066C
c S/N E008E02067C ↔ S/N E008E02099D

©2011 HYSTER COMPANY

CRANKCASE BREATHER (FIGURE 2-58)

TIER III ENGINE (S/N E008E02100D →)

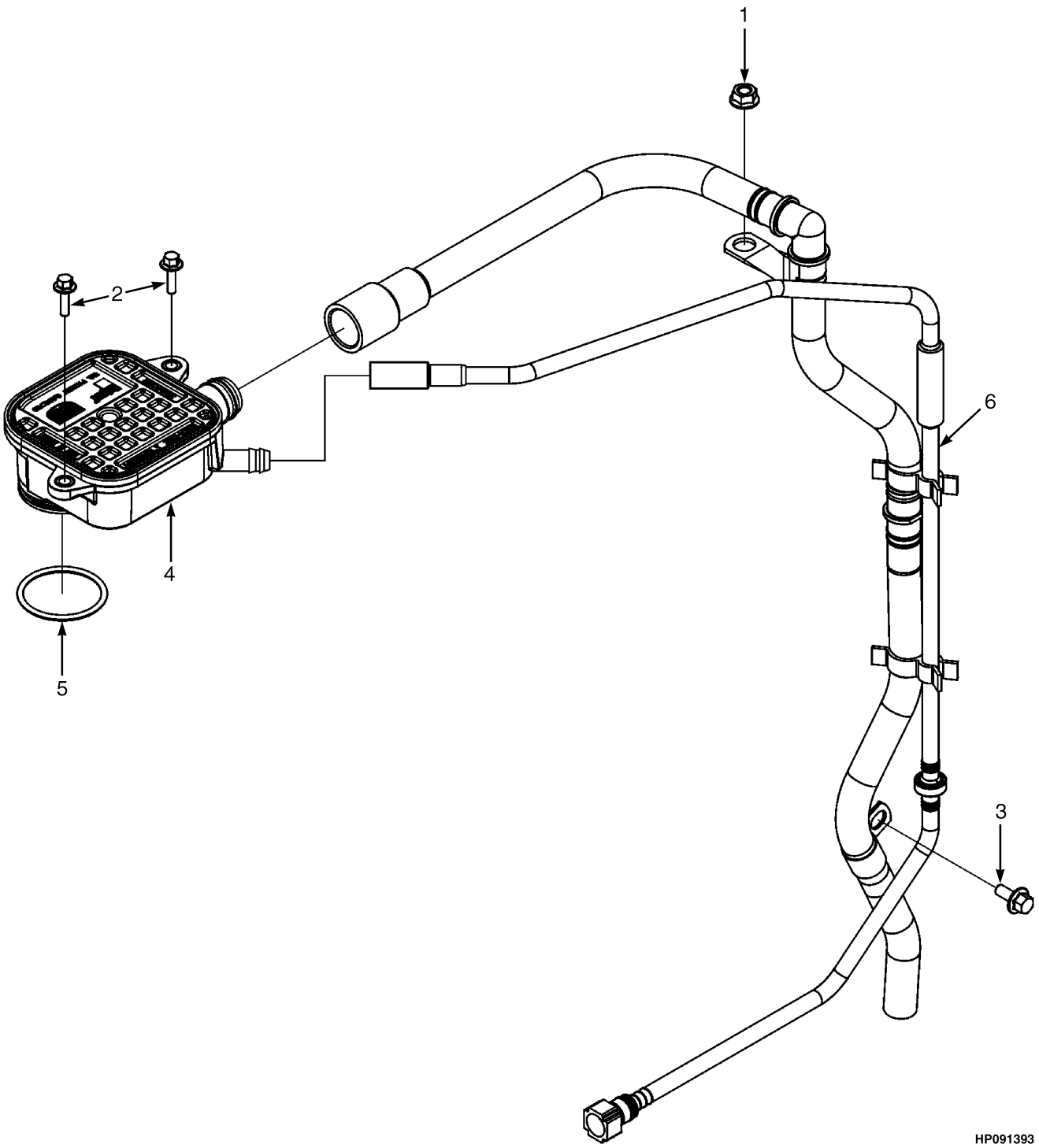

©2011 HYSTER COMPANY

CRANKCASE BREATHER

TIER III ENGINE (S/N E008E02100D →)

ITEM	PART NO.	DESCRIPTION	QTY
	1663666	Engine Assy-Diesel	1
1	1513712	Nut	1
2	1513792	Capscrew	2
3	1513749	Capscrew	1
4	1643841	Housing (Breather)	1
5	1643838	O-Ring	1
6	1643863	Tube	1
	1649732	Kit-Gasket (Upper)	..

©2011 HYSTER COMPANY

TURBOCHARGER PLUMBING (FIGURE 2-59)

TIER II ENGINE (→ S/N E008E02099D)

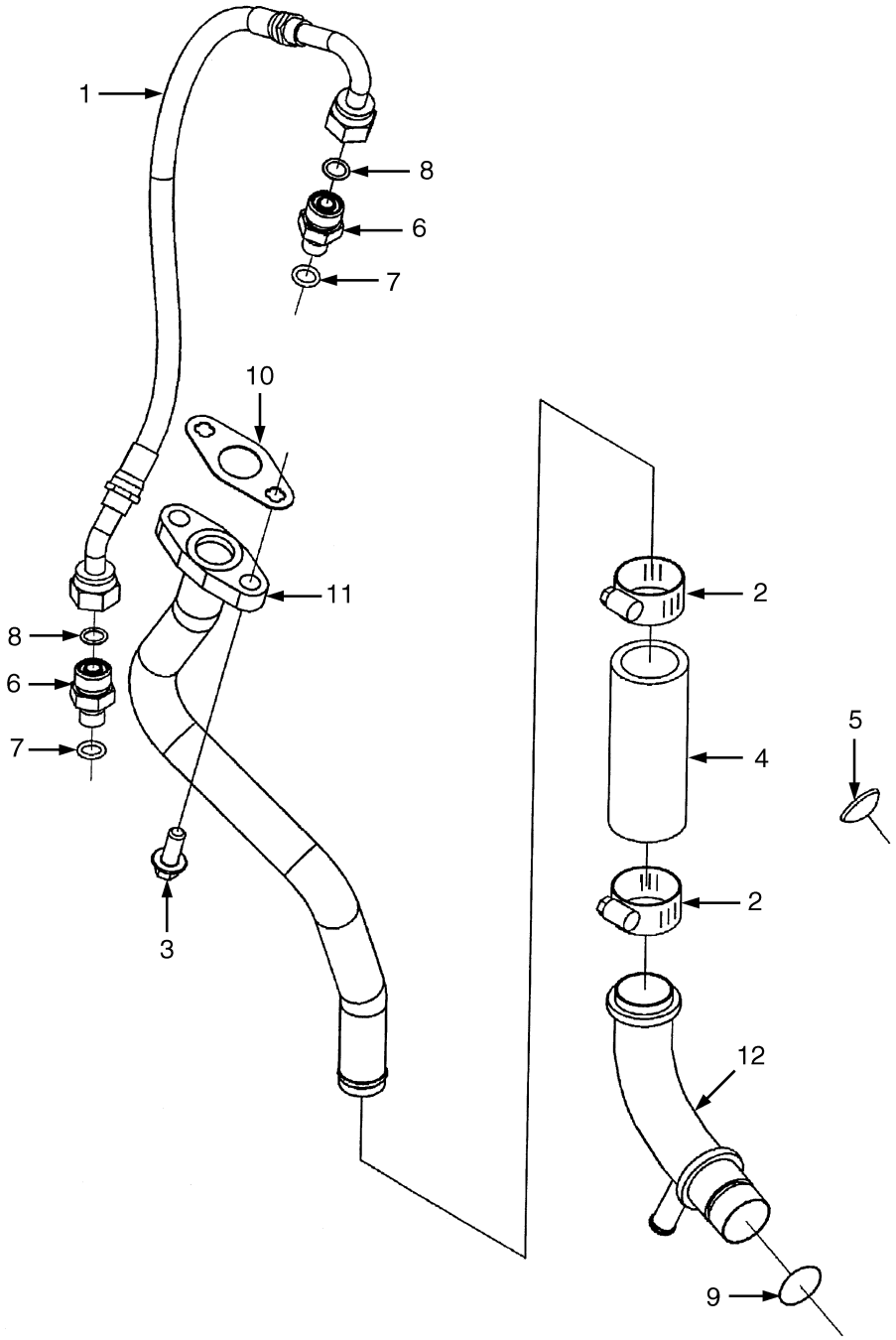

HP091233

©2011 HYSTER COMPANY

TURBOCHARGER PLUMBING

TIER II ENGINE (→ S/N E008E02099D)

KEY:
A: H550F, H620F, H650F, H700F
B: H550FS, H620FS, H700FS

ITEM	PART NO.	DESCRIPTION	QTY A	QTY B
	a 1499324	Engine Assy-Diesel	1	..
	b 1532628	Engine Assy-Diesel	1	..
	b 1542383	Engine Assy-Diesel	..	1
	c 1606762	Engine Assy-Diesel	1	..
	c 1607372	Engine Assy-Diesel	..	1
1	1517267	Hose	1	..
1	1588059	Hose	..	1
2	1517268	Hose Clamp	2	2
3	1512004	Capscrew	2	2
4	1517269	Hose	1	1
5	1514339	Plug	1	1
6	1521960	Connector Assembly	2	2
6	. . . . .	Connector	1	1
7	1517069	O-Ring	1	1
8	1513430	O-Ring	1	1
9	1517270	O-Ring	1	1
10	1514565	Gasket (Oil Drain)	1	1
11	1517271	Adapter (Oil Drain)	1	..
11	1589588	Adapter (Oil Drain)	..	1
12	1588786	Tube (Oil Drain)	1	..
12	1565918	Tube (Oil Drain)	..	1
	1588056	Kit-Gasket (Upper Engine)	1	1

FOOTNOTES:

a → S/N E008E01984B
b S/N E008E01985B ↔ S/N E008E02066C
c S/N E008E02067C ↔ S/N E008E02099D

©2011 HYSTER COMPANY

TURBOCHARGER PLUMBING (FIGURE 2-60)

TIER III ENGINE (S/N E008E02100D →)

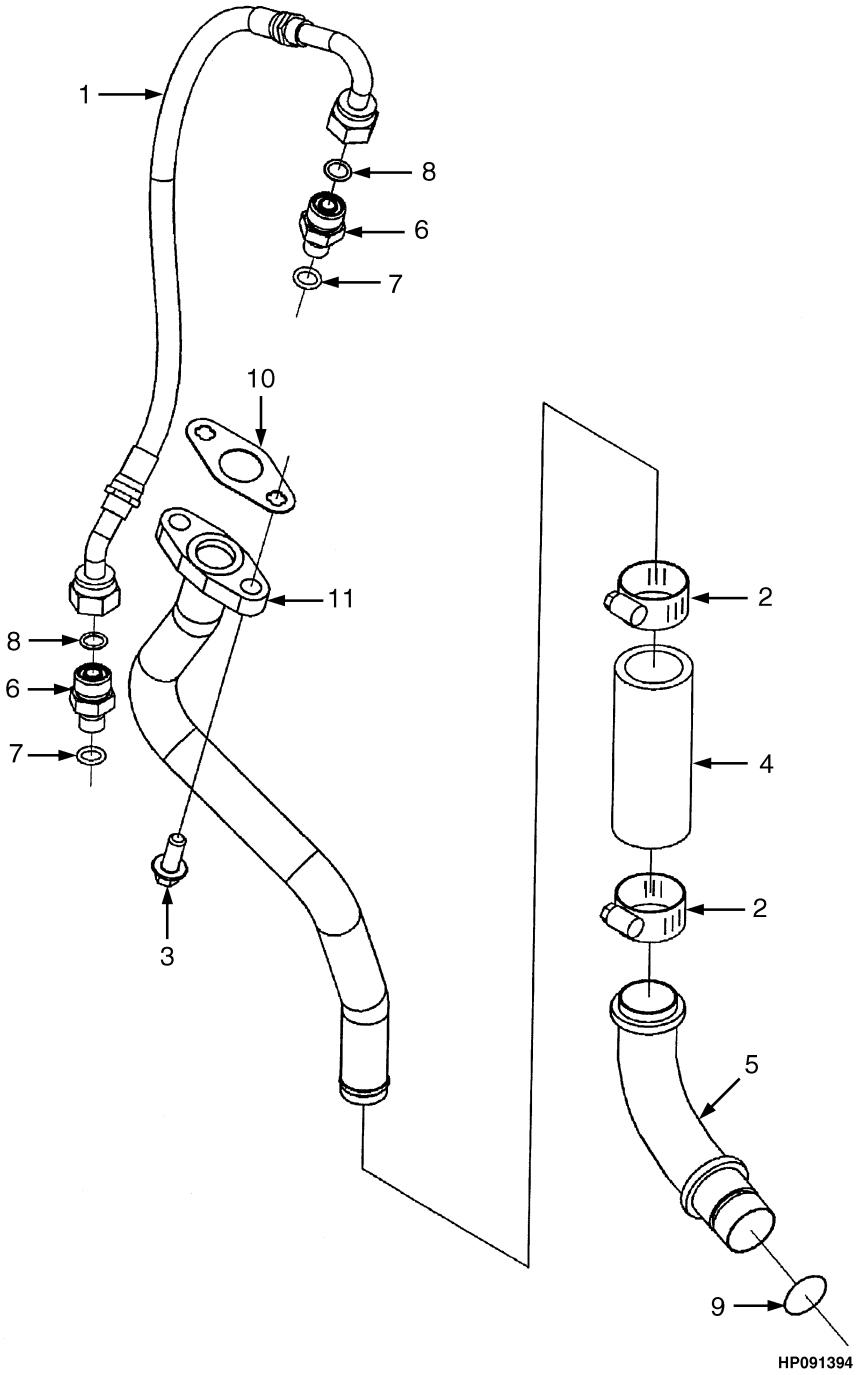

©2011 HYSTER COMPANY

TURBOCHARGER PLUMBING

TIER III ENGINE (S/N E008E02100D →)

ITEM	PART NO.	DESCRIPTION	QTY
	1663666	Engine Assy-Diesel	1
1	1588059	Hose	1
2	1517268	Hose Clamp	2
3	1512004	Capscrew	2
4	1644070	Hose	1
5	1521962	Tube (Oil Drain)	1
6	1521960	Connector Assembly	2
6	. . . . .	Connector	1
7	1517069	O-Ring	1
8	1513430	O-Ring	1
9	1517270	O-Ring	1
10	1514565	Gasket (Oil Drain)	1
11	1644160	Tube (Oil Drain)	1
	1649732	Kit-Gasket (Upper)	..

©2011 HYSTER COMPANY

TURBOCHARGER (FIGURE 2-61)

TIER II ENGINE (→ S/N E008E02099D)

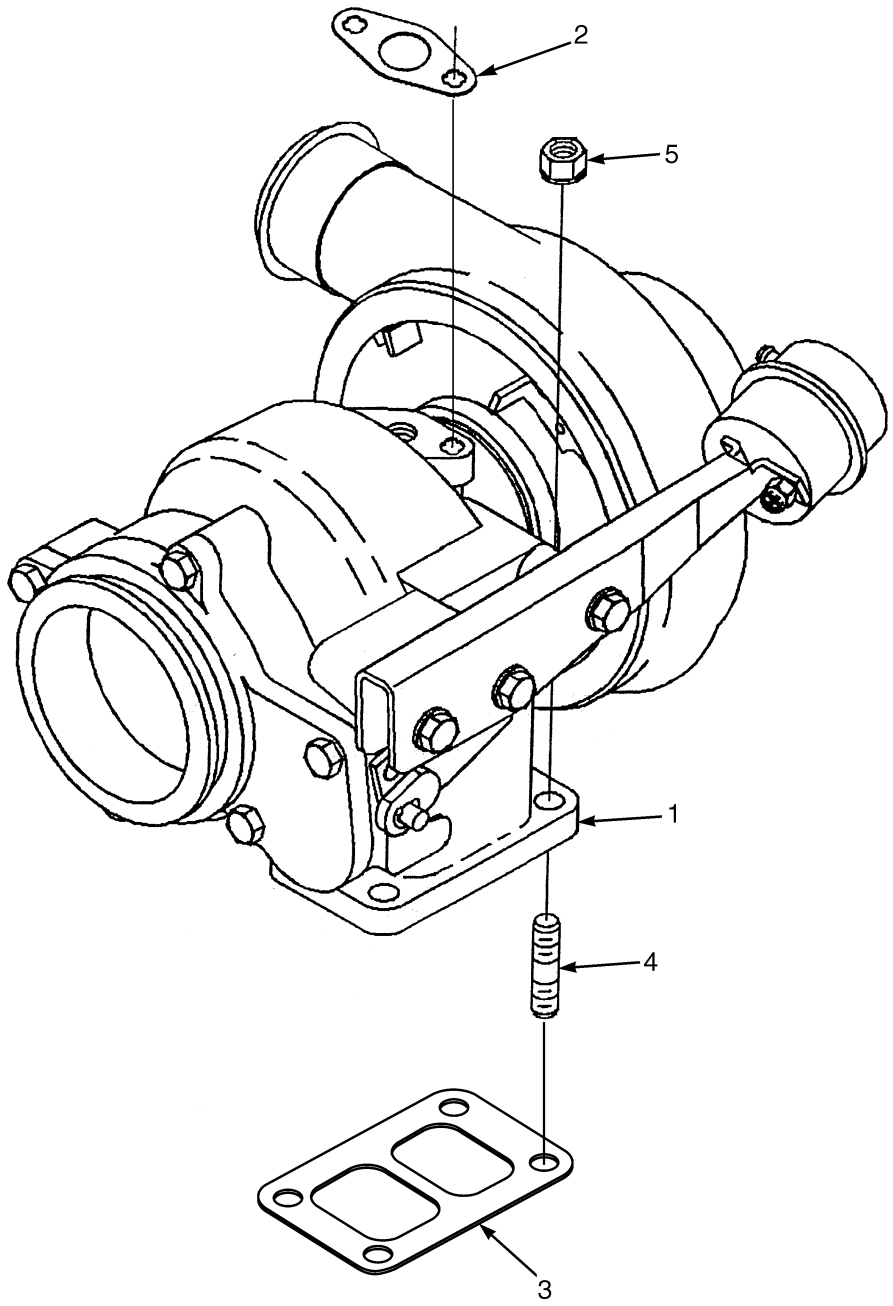

HP091243

©2011 HYSTER COMPANY

KEY:
A: H550F, H620F, H650F, H700F
B: H550FS, H620FS, H700FS

ITEM	PART NO.	DESCRIPTION	QTY A	QTY B
	a 1499324	Engine Assy-Diesel	1	..
	b 1532628	Engine Assy-Diesel	1	..
	b 1542383	Engine Assy-Diesel	..	1
	c 1606762	Engine Assy-Diesel	1	..
	c 1607372	Engine Assy-Diesel	..	1
1	1588074	Turbocharger	1	1
1	. . . . .	Turbocharger	1	1
2	1586183	Gasket	..	1
3	1517238	Gasket (Turbocharger)	1	1
4	1513337	Stud	4	4
5	1513338	Nut	4	4

FOOTNOTES:

a → S/N E008E01984B
b S/N E008E01985B ↔ S/N E008E02066C
c S/N E008E02067C ↔ S/N E008E02099D

©2011 HYSTER COMPANY

TURBOCHARGER (FIGURE 2-62)

TIER III ENGINE (S/N E008E02100D →)

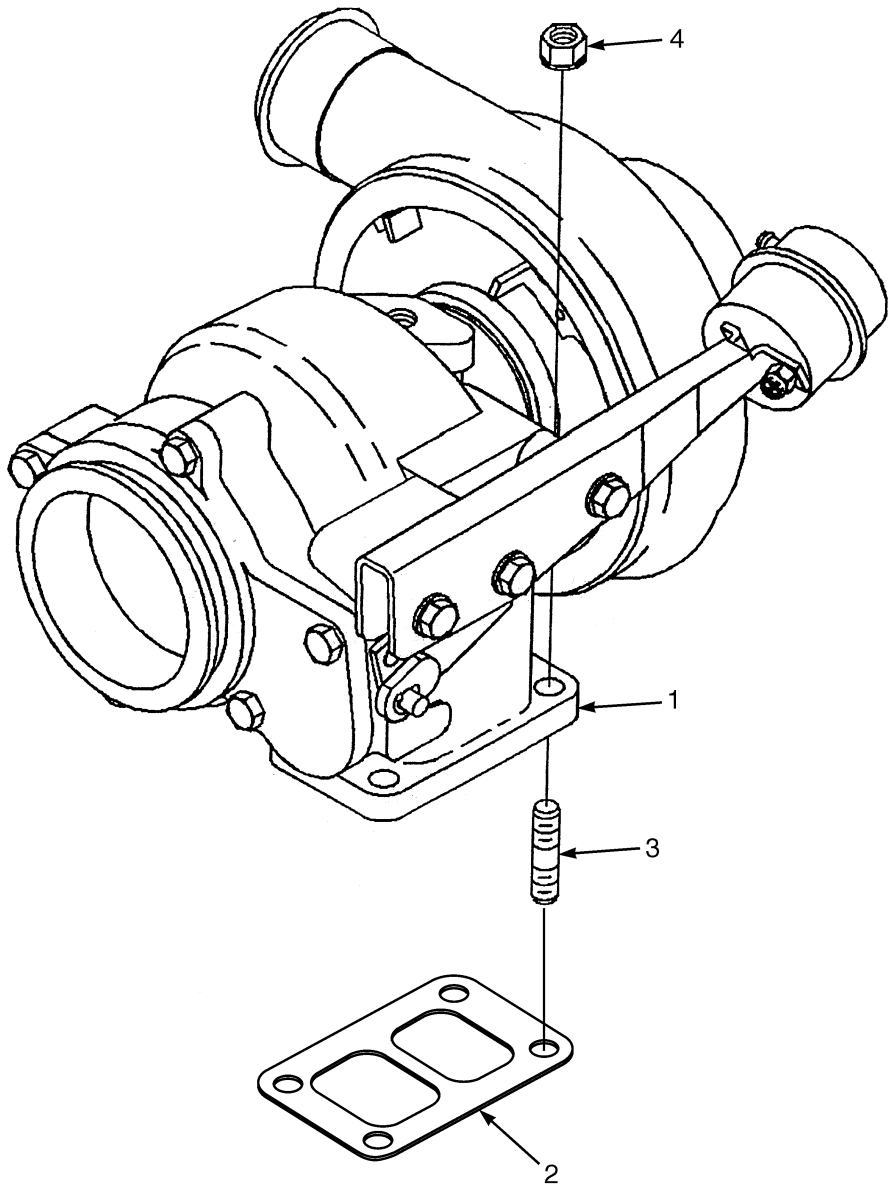

HP090724

©2011 HYSTER COMPANY

TURBOCHARGER

TIER III ENGINE (S/N E008E02100D →)

ITEM	PART NO.	DESCRIPTION	QTY
	1663666	Engine Assy-Diesel	1
1	1645272	Turbocharger	1
2	1517238	Gasket (Turbocharger)	1
3	1513337	Stud	4
4	1513338	Nut	4
	a 1513885	Clamp (Exhuast Outlet Connection)	1
	1644966	Kit -Turbocharger	1

FOOTNOTES:

a Not Illustrated

©2011 HYSTER COMPANY

WATER INLET CONNECTION (FIGURE 2-63)

TIER II ENGINE (→ S/N E008E02099D)

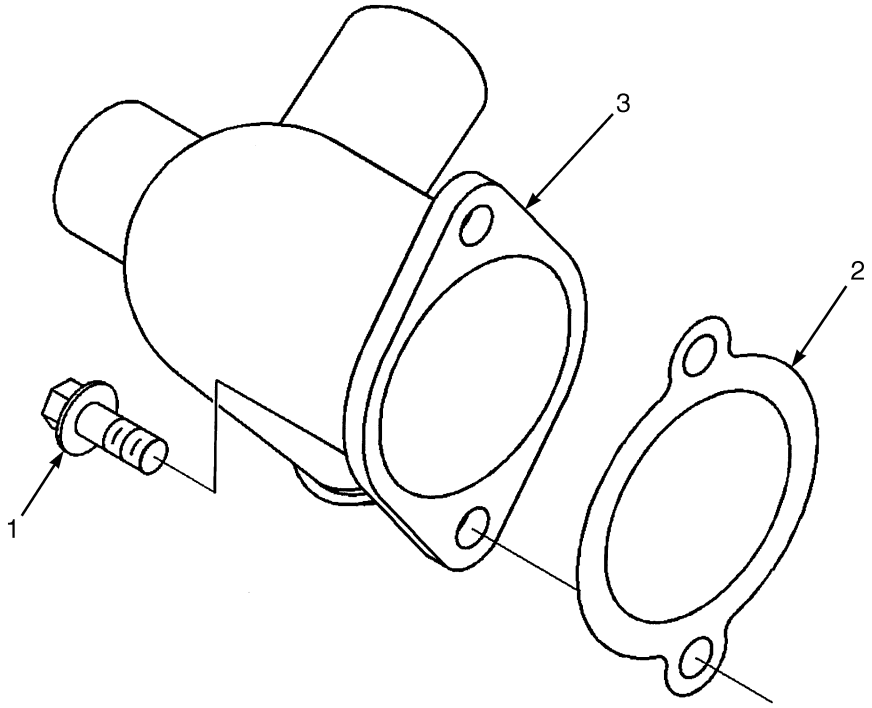

HP090779

ITEM	PART NO.	DESCRIPTION	QTY
	a 1499324	Engine Assy-Diesel (H550F, H620F, H650F, H700F)	1
	b 1532628	Engine Assy-Diesel (H550F, H620F, H650F, H700F)	1
	b 1542383	Engine Assy-Diesel (H550FS, H620FS, H700FS)	1
	c 1606762	Engine Assy-Diesel (H550F, H620F, H650F, H700F)	1
	c 1607372	Engine Assy-Diesel (H550FS, H620FS, H700FS)	1
1	1512004	Capscrew	2
2	1517285	Gasket	1
3	1517286	Water Inlet	1

FOOTNOTES:

a → S/N E008E01984B

b S/N E008E01985B ↔ S/N E008E02066C

c S/N E008E02067C ↔ S/N E008E02099D

©2011 HYSTER COMPANY

WATER INLET CONNECTION (FIGURE 2-64)

TIER III ENGINE (S/N E008E02100D →)

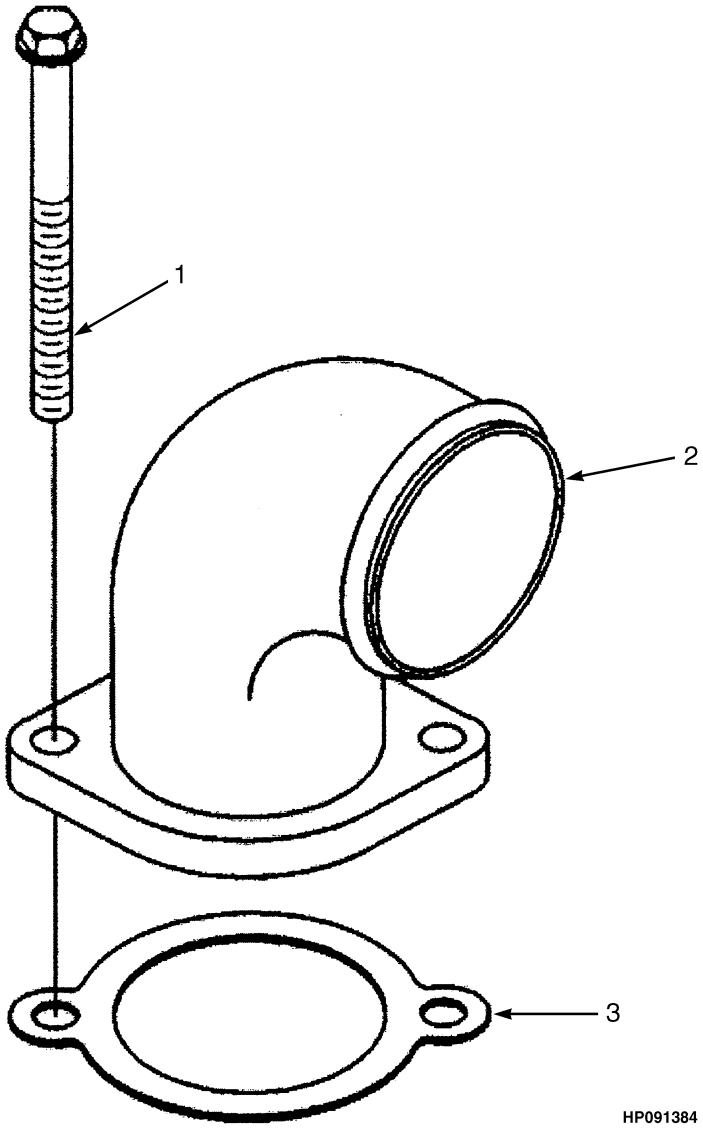

ITEM	PART NO.	DESCRIPTION	QTY
	1663666	Engine Assy-Diesel	1
1	1512004	Capscrew	2
2	1644032	Water Inlet	1
3	1517285	Gasket	1
	1646671	Kit-Gasket (Lower)	..

THERMOSTAT (FIGURE 2-65)

TIER II ENGINE (→ S/N E008E02099D)

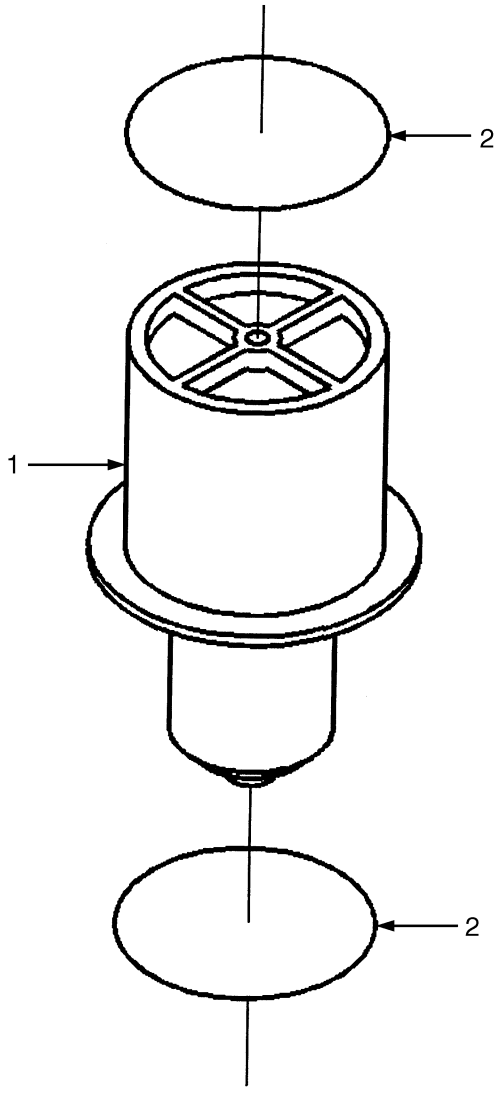

HP090744

©2011 HYSTER COMPANY

THERMOSTAT

TIER II ENGINE (→ S/N E008E02099D)

ITEM	PART NO.	DESCRIPTION	QTY
	a 1499324	Engine Assy-Diesel (H550F, H620F, H650F, H700F)	1
	c 1532628	Engine Assy-Diesel (H550F, H620F, H650F, H700F)	1
	c 1542383	Engine Assy-Diesel (H550FS, H620FS, H700FS)	1
	d 1606762	Engine Assy-Diesel (H550F, H620F, H506F, H700F)	1
	d 1607372	Engine Assy-Diesel (H550FS, H620FS, H700FS)	1
1	**b** 1516994	Thermostat	1
2	1516995	O-Ring	2

FOOTNOTES:

a → S/N E008E01984B
b → S/N E008E02099D
c S/N E008E01985B ↔ S/N E008E02066C
d S/N E008E02067C ↔ S/N E008E02099D

©2011 HYSTER COMPANY

THERMOSTAT (FIGURE 2-66)

TIER III ENGINE (S/N E008E02100D →)

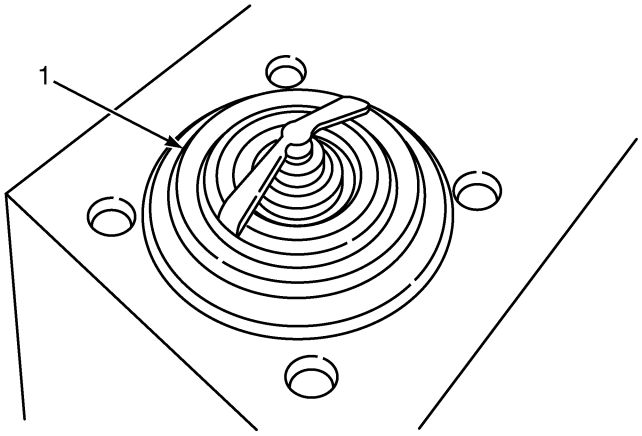

HP091403

ITEM	PART NO.	DESCRIPTION	QTY
	1663666	Engine Assy-Diesel	1
1	1650188	Thermostat	1
2	. . . . .	Seal (Rectangular Ring)	1

©2011 HYSTER COMPANY

WATER PUMP (FIGURE 2-67)
TIER II ENGINE (→ S/N E008E02099D)

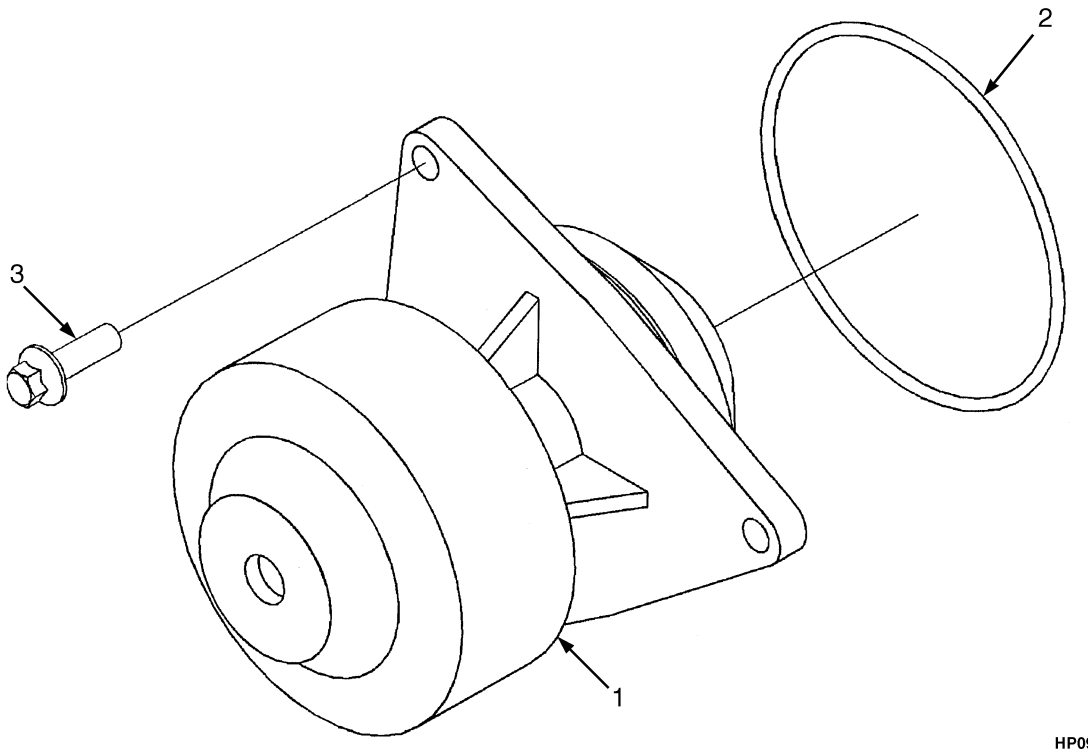

ITEM	PART NO.	DESCRIPTION	QTY
	a 1499324	Engine Assy-Diesel (H550F, H620F, H650F, H700F)	1
	b 1532628	Engine Assy-Diesel (H550F, H620F, H650F, H700F)	1
	b 1542383	Engine Assy-Diesel (H550FS, H620FS, H700FS)	1
	c 1606762	Engine Assy-Diesel (H550F, H620F, H650F, H700F)	1
	c 1607372	Engine Assy-Diesel (H550FS, H620FS, H700FS)	1
1	. . . . .	Water Pump	1
2	1517291	O-Ring	1
3	~~1691854~~		
	1597807	Capscrew (Flange)	3
	1588058	Kit-Repair	1
	1588054	Kit-Gasket (Lower Engine)	1

FOOTNOTES:

a → S/N E008E01984B
b S/N E008E01985B ↔ S/N E008E02066C
c S/N E008E02067C ↔ S/N E008E02099D

WATER PUMP (FIGURE 2-68)

TIER III ENGINE (S/N E008E02100D →)

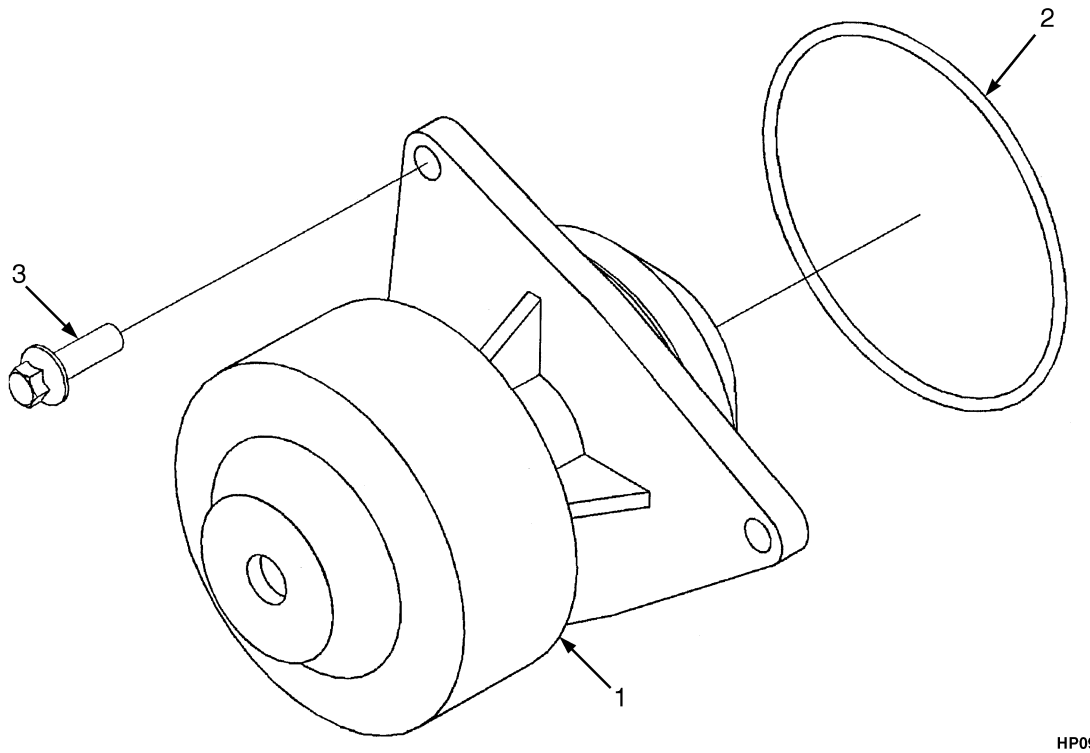

HP090778

ITEM	PART NO.	DESCRIPTION	QTY
	1663666	Engine Assy-Diesel	1
	1644078	Water Pump	1
1	1517290	Water Pump	1
2	1517291	O-Ring	1
3	~~1691854~~		
	1597807	Capscrew (Flange)	3
	1646671	Kit-Gasket (Lower)	..

©2011 HYSTER COMPANY

COOLANT HEATER STARTING AID PLUGS (FIGURE 2-69)

TIER II AND III ENGINES

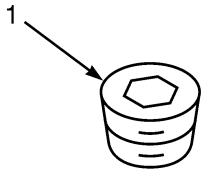

HP091218

ITEM	PART NO.	DESCRIPTION	QTY
	a 1499324	Engine Assy-Diesel (H550F, H620F, H650F, H700F)	1
	b 1532628	Engine Assy-Diesel (H550F, H620F, H650F, H700F)	1
	b 1542383	Engine Assy-Diesel (H55FS, H620FS, H700FS)	1
	c 1606762	Engine Assy-Diesel (H550F, H620F, H650F, H700F)	1
	c 1607372	Engine Assy-Diesel (H550FS, H620FS, H700FS)	1
	d 1663666	Engine Assy-Diesel	1
1	1512292	Plug	1

FOOTNOTES:

a → S/N E008E01984B
b S/N E008E01985B ↔ S/N E008E02066C
c S/N E008E02067C ↔ S/N E008E02099D
d S/N E008E02100D →

©2011 HYSTER COMPANY

RADIATOR PLUMBING (FIGURE 2-70)

H550F, H620F, H650F, H700F — TIER II ENGINE (S/N E008E01985B ↔ S/N E008E02099D)

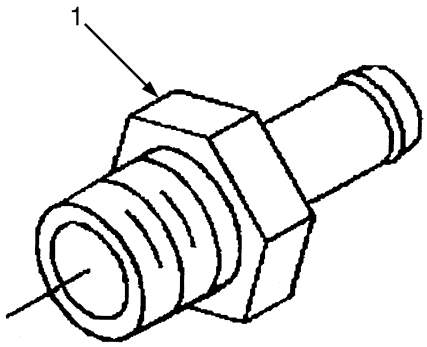

HP090764

ITEM	PART NO.	DESCRIPTION	QTY
	a 1532628	Engine Assy-Diesel	1
	b 1606762	Engine Assy-Diesel	1
1	1517250	Fitting	1

FOOTNOTES:

a S/N E008E01985B ↔ S/N E008E02066C

b S/N E008E02067C ↔ S/N E008E02099D

©2011 HYSTER COMPANY

RADIATOR PLUMBING (FIGURE 2-71)

H440FS, H550FS, H620FS, H700FS — TIER II ENGINE (S/N E008E01985B ↔ S/N E008E02099D)

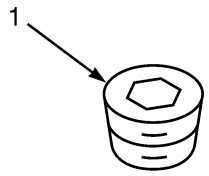

HP091218

ITEM	PART NO.	DESCRIPTION	QTY
	a 1542383	Engine Assy-Diesel	1
	b 1607372	Engine Assy-Diesel	1
1	1512584	Plug	1

FOOTNOTES:

a S/N E008E01985B ↔ S/N E008E02066C

b S/N E008E02067C ↔ S/N E008E02099D

©2011 HYSTER COMPANY

RADIATOR PLUMBING (FIGURE 2-72)

TIER III ENGINE (S/N E008E02100D →)

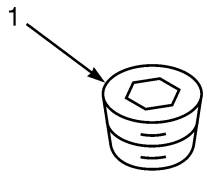

HP091218

ITEM	PART NO.	DESCRIPTION	QTY
	1663666	Engine Assy-Diesel	1
1	1649393	Plug	1

©2011 HYSTER COMPANY

WATER OULET CONNECTION (FIGURE 2-73)

TIER II ENGINE

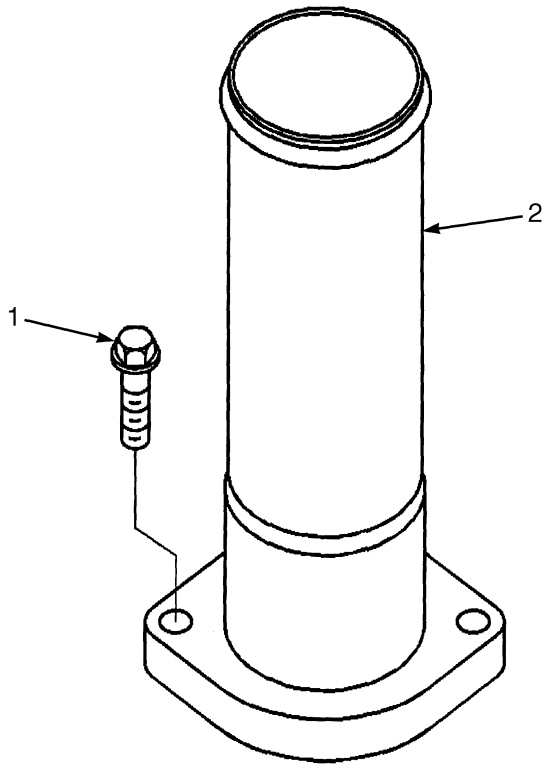

KEY:
A: H550F, H620F, H650F, H700F
B: H550FS, H620FS, H700FS

ITEM	PART NO.	DESCRIPTION	QTY A	QTY B
	a 1499324	Engine Assy-Diesel	1	..
	b 1532628	Engine Assy-Diesel	1	..
	b 1542383	Engine Assy-Diesel	..	1
	c 1606762	Engine Assy-Diesel	1	..
	c 1607372	Engine Assy-Diesel	..	1
1	1512005	Capscrew	2	2
2	1517288	Connector	1	..
2	1589586	Water Outlet	..	1

FOOTNOTES:

a → S/N E008E01984B
b S/N E008E01985B ↔ S/N E008E02066C
c S/N E008E02067C ↔ S/N E008E02099D

WATER OUTLET CONNECTION (FIGURE 2-74)

TIER III ENGINE

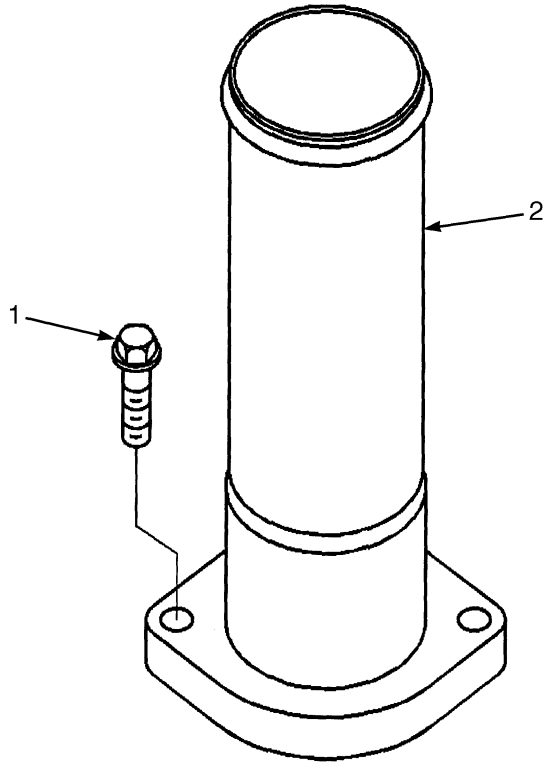

ITEM	PART NO.	DESCRIPTION	QTY
	1663666	Engine Assy-Diesel	1
1	1512005	Capscrew	2
2	1589586	Water Outlet	1

©2011 HYSTER COMPANY

CABIN HEATER PLUMBING (FIGURE 2-75)
TIER II AND III ENGINES

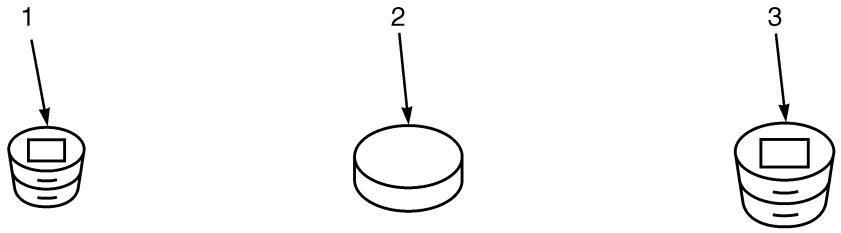

HP091213

ITEM	PART NO.	DESCRIPTION	QTY
	a 1499324	Engine Assy-Diesel (H550F, H620F, H650F, H700F)	1
	c 1532628	Engine Assy-Diesel (H550F, H620F, H650F, H700F)	1
	c 1542383	Engine Assy-Diesel (H550FS, H620FS, H700FS)	1
	d 1606762	Engine Assy-Diesel (H550F, H620F, H650F, H700F)	1
	d 1607372	Engine Assy-Diesel (H550FS, H620FS, H700FS)	1
	e 1663666	Engine Assy-Diesel	1
1	1511952	Fitting	5
2	**b** 1512292	Plug	3
2	**e** 1644095	Fitting	3
3	1513817	Plug	2

FOOTNOTES:

a → S/N E008E01984B
b → S/N E008E02099D
c S/N E008E01985B ↔ S/N E008E02066C
d S/N E008E02067C ↔ S/N E008E02099D
e S/N E008E02100D →

©2011 HYSTER COMPANY

EXHAUST CONNECTION (FIGURE 2-76)

TURBOCHARGER — TIER II ENGINE

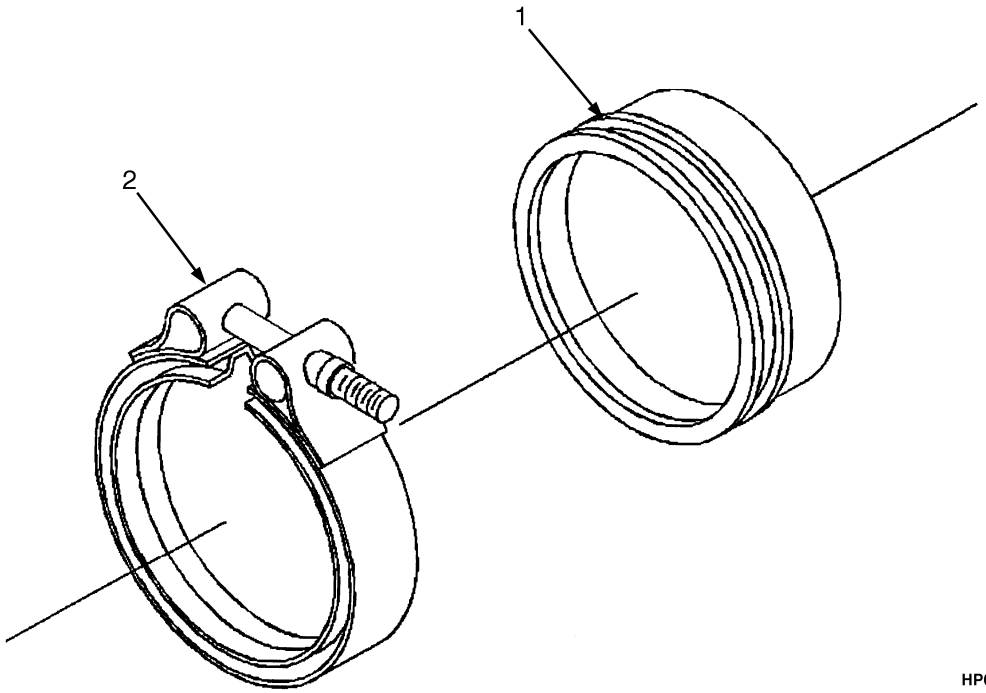

ITEM	PART NO.	DESCRIPTION	QTY
	a 1499324	Engine Assy-Diesel (H550F, H620F, H650F, H700F)	1
	b 1532628	Engine Assy-Diesel (H550F, H620F, H650F, H700F)	1
	b 1542383	Engine Assy-Diesel (H550FS, H620FS, H700FS)	1
	c 1606762	Engine Assy-Diesel (H550F, H620F, H650F, H700F)	1
	c 1607372	Engine Assy-Diesel (H550FS, H620FS, H700FS)	1
1	1336089	Flange (Outlet)	1
2	1513885	Clamp (V-Band)	1

FOOTNOTES:

a → S/N E008E01984B

b S/N E008E01985B ↔ S/N E008E02066C

c S/N E008E02067C ↔ S/N E008E02099D

©2011 HYSTER COMPANY

EXHAUST MANIFOLD (FIGURE 2-77)

TIER II ENGINE

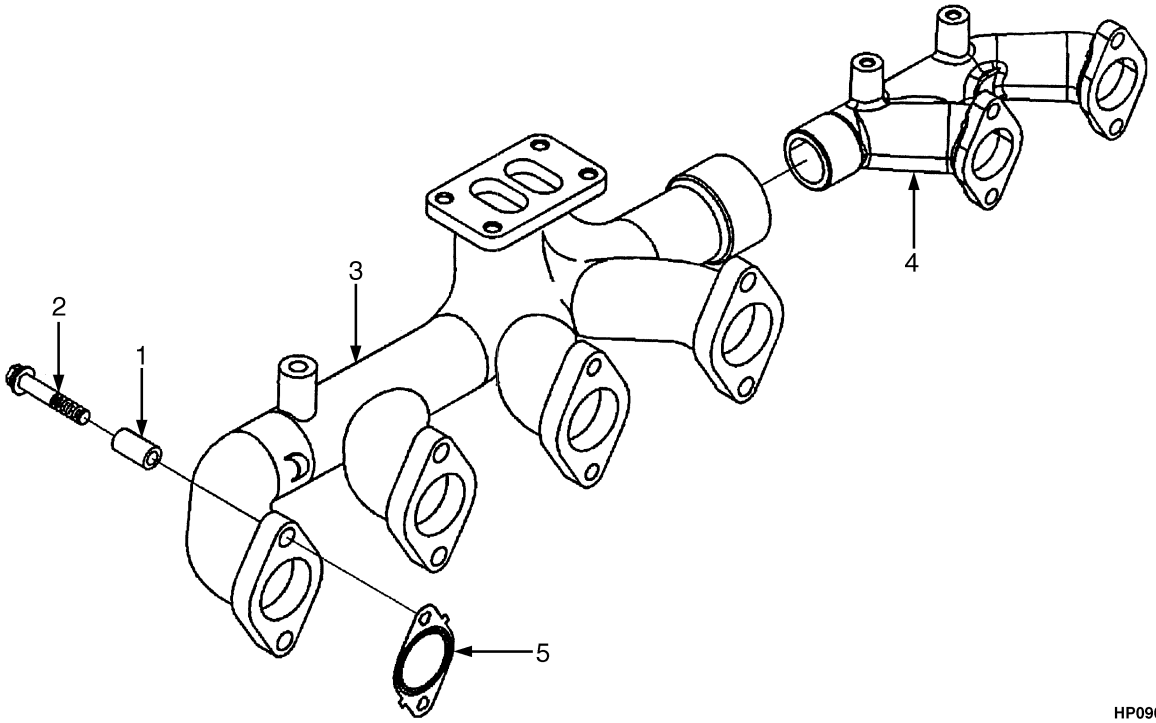

KEY:
A: H550F, H620F, H650F, H700F
B: H550FS, H620FS, H700FS

ITEM	PART NO.	DESCRIPTION	QTY A	QTY B
	a 1499324	Engine Assy-Diesel	1	..
	b 1532628	Engine Assy-Diesel	1	..
	b 1542383	Engine Assy-Diesel	..	1
	c 1606762	Engine Assy-Diesel	1	..
	c 1607372	Engine Assy-Diesel	..	1
1	1517256	Spacer	12	12
2	1517257	Screw	11	11
2	1565045	Capscrew	1	..
2	1517257	Screw	..	1
3	1565046	Exhaust Manifold	1	1
4	1517258	Exhaust Manifold	1	1
5	1517259	Gasket	6	6
	1588056	Kit-Gasket (Upper Engine)	1	1

FOOTNOTES:

a → S/N E008E01984B
b S/N E008E01985B ↔ S/N E008E02066C
c S/N E008E02067C ↔ S/N E008E02099D

©2011 HYSTER COMPANY

EXHAUST MANIFOLD (FIGURE 2-78)

TIER III ENGINE

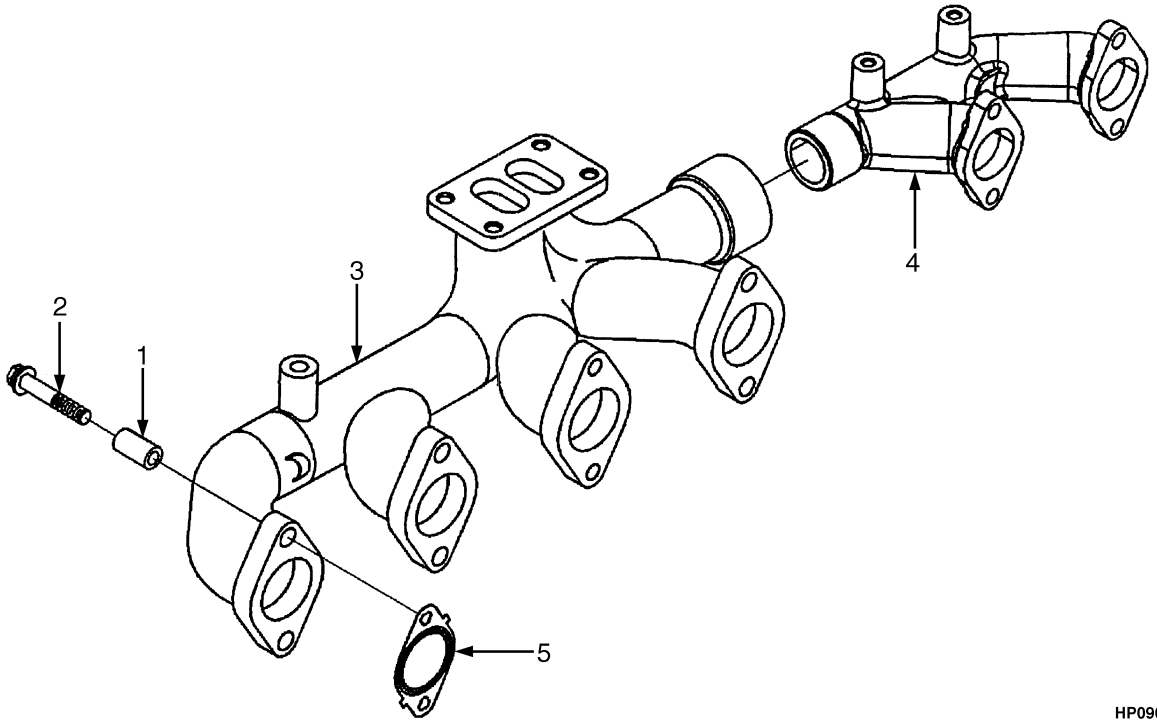

HP090768

ITEM	PART NO.	DESCRIPTION	QTY
	1663666	Engine Assy-Diesel	1
1	1517256	Spacer	12
2	1517257	Screw	12
3	1644084	Exhaust Manifold	1
4	1644083	Exhaust Manifold	1
5	1517259	Gasket	6
	1649732	Kit-Gasket (Upper)	..

©2011 HYSTER COMPANY

NOTES

©2011 HYSTER COMPANY

EXHAUST (FIGURE 2-79)
TIER I AND TIER II ENGINE

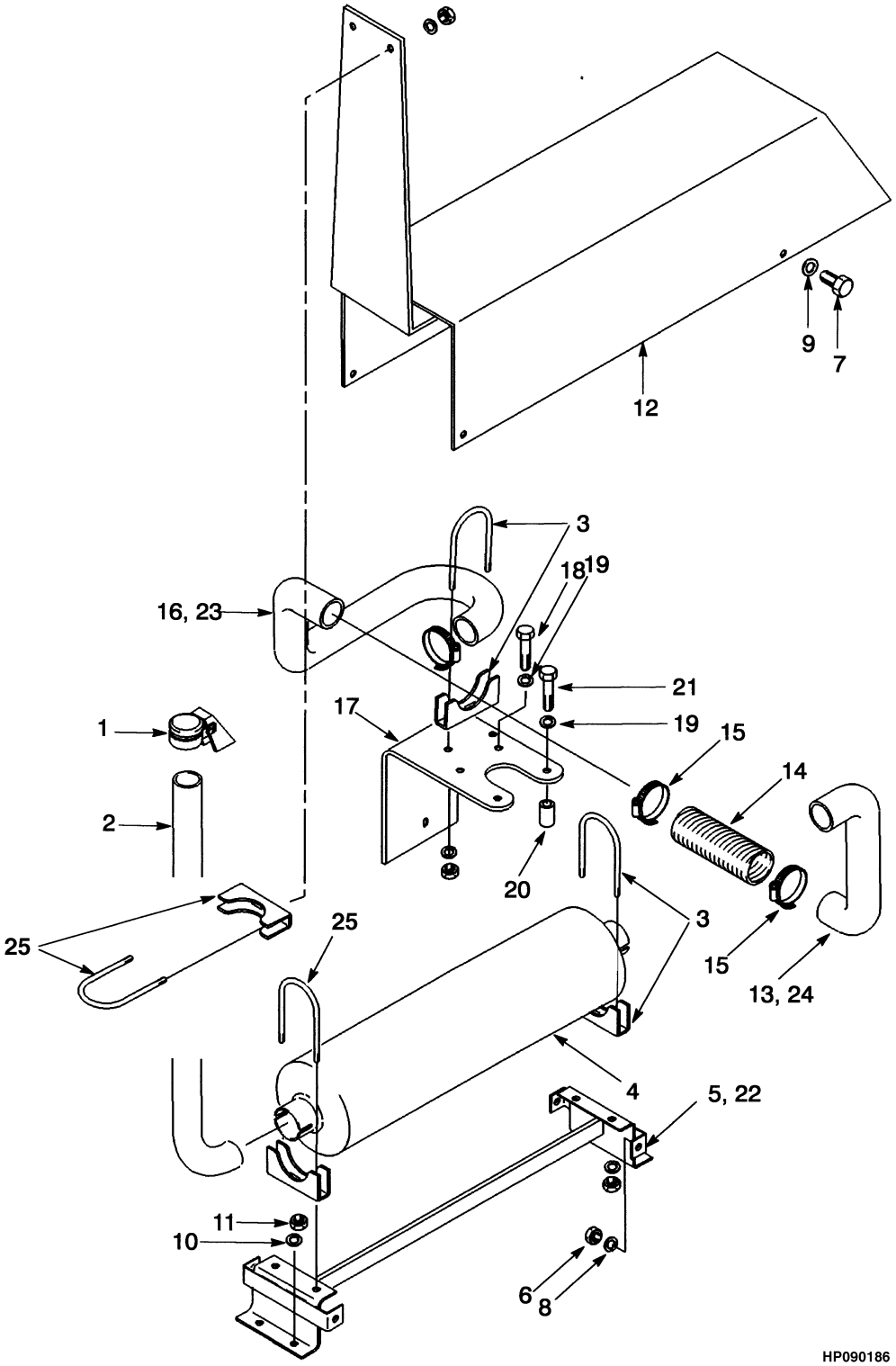

©2011 HYSTER COMPANY

EXHAUST
TIER I AND TIER II ENGINE

KEY:
A: Tier I Engine
B: Tier II Engine

ITEM	PART NO.	DESCRIPTION	QTY A	QTY B
1	**d** 1305839	Rain Cap	1	1
1	**g** 1513902	Rain Cap	1	1
2	**d** 1305840	Exhaust Pipe	1	1
2	**g** 1513899	Exhaust Pipe	1	1
3	131878	Clamp	4	4
4	**d** 380114	Muffler	1	1
4	**g** 1513898	Muffler	1	1
5	**d** 1336066	Bracket Wldmt	1	1
5	**g** 1514976	Bracket Wldmt	1	1
6	15056	Nut	4	4
7	16805	Capscrew	4	4
8	15156	Lockwasher	4	4
9	15134	Washer	AR	AR
10	15178	Washer	4	4
11	151920	Nut	4	4
12	**d** 1336079	Shield	1	1
12	**g** 1514432	Shield	1	1
13	1339533	Exhaust Pipe	1	..
13	1507830	Exhaust Pipe	..	1
14	1331909	Flex Tube	1	1
15	1322010	Clamp	2	2
16	**bc** 1339535	Exhaust Pipe	1	1
16	**ef** 1367363	Exhaust Pipe	1	..
16	1509189	Exhaust Pipe	1	1
17	**bc** 1355029	Bracket	..	1
17	**ef** 1452566	Bracket	1	..
18	292514	Capscrew	2	..
19	~~388049~~			
	292682	Lockwasher	4	..
20	1339536	Spacer	2	..
21	292519	Capscrew	2	..
22	**ad** 1352234	Bracket Wldmt	1	1
22	**ag** 1514978	Bracket Wldmt	1	..
23	**abc** 1352231	Tube	1	1
23	**aef** 1367364	Exhaust Pipe	1	1
24	**a** 1352232	Exhaust Pipe	1	..
25	**g** 134881	Clamp	2	2

FOOTNOTES:

a H550FS, H620FS, H700FS
b → S/N E008D01602
c → S/N E008E01697
d → S/N E008E01885Z
e S/N E008D01603 →
f S/N E008E01698 →
g S/N E008E01886Z →

©2011 HYSTER COMPANY

EXHAUST (FIGURE 2-80)

TIER II ENGINE (S/N E008E01886Z ↔ S/N E008E02099D)

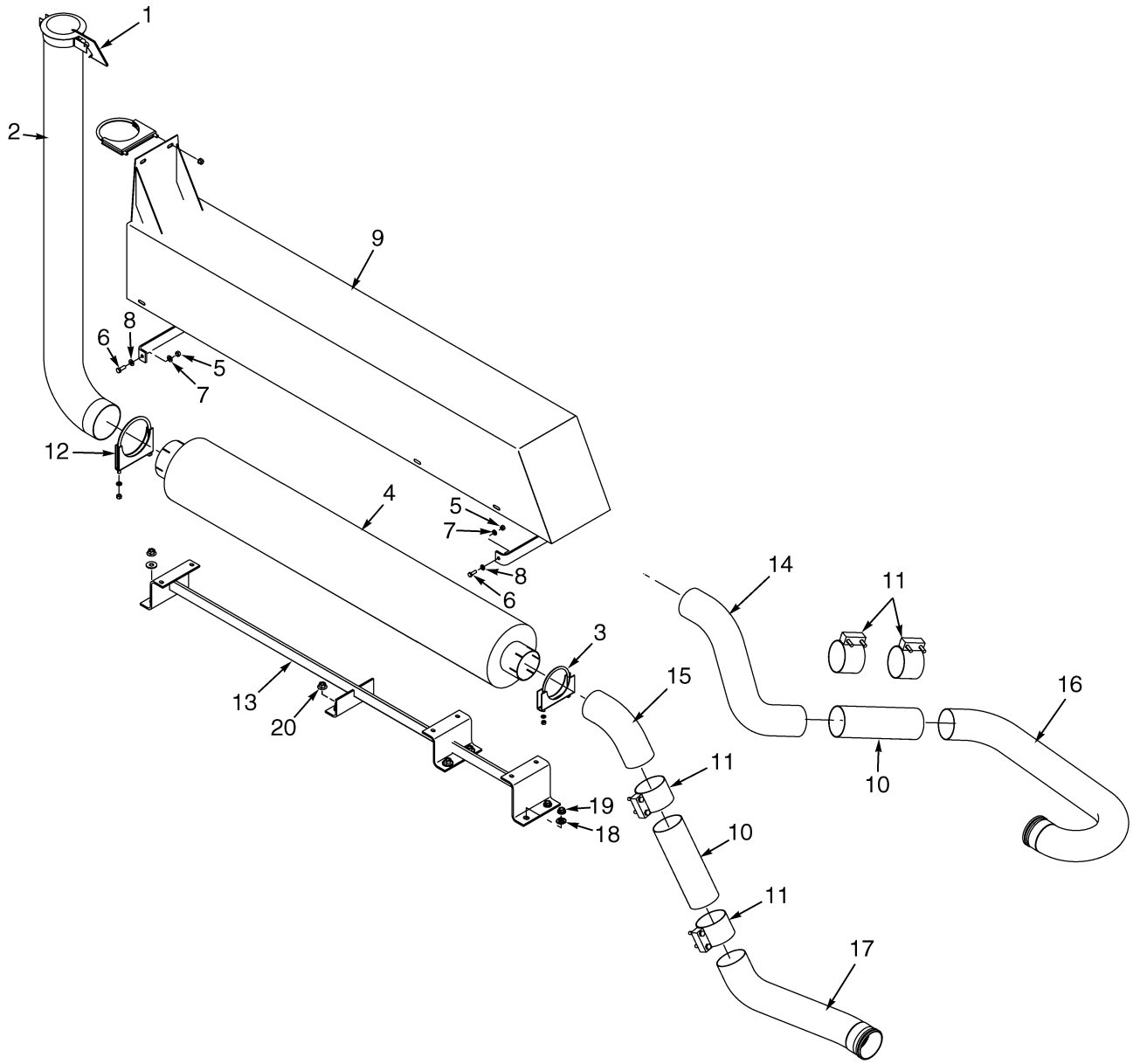

HP110008

©2011 HYSTER COMPANY

EXHAUST

TIER II ENGINE (S/N E008E01886Z ↔ S/N E008E02099D)

KEY:
A: H550F, H620F, H650F, H700F
B: H550FS, H620FS, H700FS

ITEM	PART NO.	DESCRIPTION	QTY A	QTY B
1	1513902	Rain Cap	1	1
2	1513899	Exhaust Pipe	1	1
3	131878	Clamp	1	1
4	1513898	Muffler	1	1
5	239503	Nut	4	4
6	136749	Screw	4	4
7	292681	Lockwasher	4	4
8	320157	Washer	AR	AR
9	1514432	Shield	1	1
10	1331909	Flex Tube	1	1
11	1322010	Clamp	2	2
12	134881	Clamp	2	2
13	1514976	Bracket Wldmt	1	..
13	1514978	Bracket Wldmt	..	1
14	1507830	Exhaust Pipe	1	..
15	1542981	Exhaust Pipe	..	1
16	1509189	Exhaust Pipe	1	..
17	1542982	Exhaust Pipe	..	1
18	15178	Washer	4	..
19	151920	Nut	4	..
20	~~1370949~~			
	1528888	Nut (Shoulder)	..	4

©2011 HYSTER COMPANY

EXHAUST (FIGURE 2-81)
TIER III ENGINE (S/N E008E02100D →)

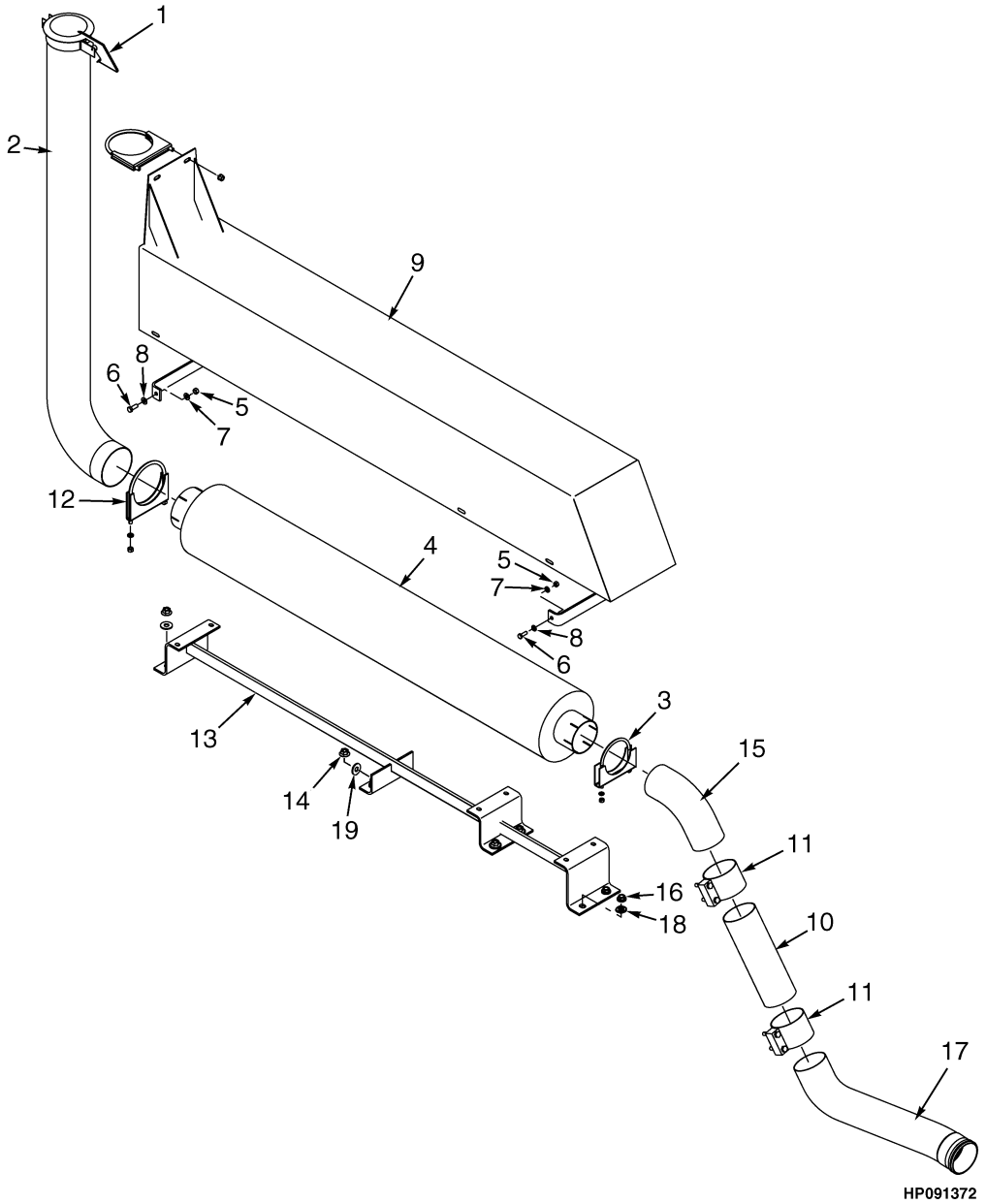

©2011 HYSTER COMPANY

EXHAUST

TIER III ENGINE (S/N E008E02100D →)

KEY:
A: H550F, H620F, H650F, H700F
B: H550FS, H620FS, H700FS

ITEM	PART NO.	DESCRIPTION	QTY A	QTY B
1	1513902	Rain Cap	1	1
2	1513899	Exhaust Pipe	1	1
3	131878	Clamp	1	1
4	1513898	Muffler	1	1
5	239503	Nut	4	4
6	136749	Screw	4	4
7	292681	Lockwasher	4	4
8	320157	Washer	AR	AR
9	1514432	Shield	1	1
10	1331909	Flex Tube	1	1
11	1322010	Clamp	2	2
12	134881	Clamp	2	2
13	1514976	Bracket Wldmt	1	..
13	1514978	Bracket Wldmt	..	1
14	302402	Locknut	..	4
15	1542981	Exhaust Pipe	..	1
15	1628947	Tube	1	..
16	151920	Nut	4	..
17	1628945	Exhaust Pipe	1	..
17	1628951	Exhaust Pipe	..	1
18	15178	Washer	4	..
19	320161	Washer	..	4

©2011 HYSTER COMPANY

RADIATOR (FIGURE 2-82)

(→ S/N E008E02099D)

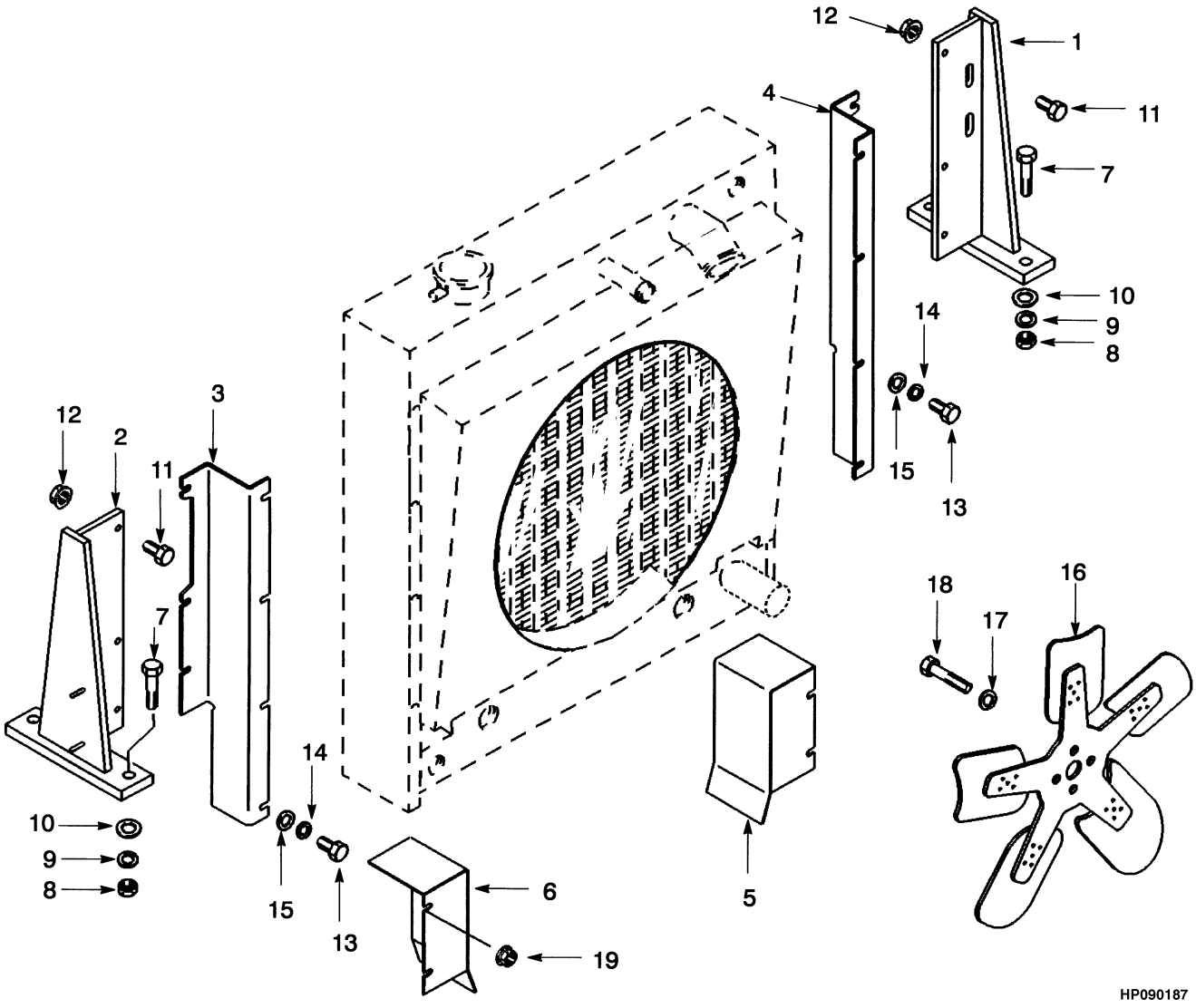

©2011 HYSTER COMPANY

RADIATOR

(→ S/N E008E02099D)

KEY:
A: H550F, H620F, H650F, H700F
B: H550FS, H620FS, H700FS

ITEM	PART NO.	DESCRIPTION	QTY A	QTY B
1	1336447	Bracket	1	..
2	1336446	Bracket	1	..
3	378344	Bracket (RH)	1	..
4	378345	Bracket (LH)	1	..
5	378500	Baffle (LH)	1	..
6	378501	Baffle (RH)	1	..
7	18624	Capscrew	4	..
8	15062	Nut	4	..
9	15162	Lockwasher	4	..
10	15136	Washer	8	..
11	16828	Capscrew	6	..
12	156133	Nut	6	..
13	16805	Capscrew	8	6
14	15156	Lockwasher	8	6
15	15134	Washer	6	4
16	**ab** 1335703	Fan	1	1
16	**df** 1367342	Fan	1	1
17	~~388049~~ 292682	Lockwasher	4	4
18	136718	Capscrew	4	4
19	**ce** 191534	Nut	4	..

FOOTNOTES:

a → S/N E008D01602
b → S/N E008E01697
c S/N E008D01519 →
d S/N E008D01603 →
e S/N E008E01538 →
f S/N E008E01698 →

©2011 HYSTER COMPANY

RADIATOR (FIGURE 2-83)
TIER III ENGINE (S/N E008E02100D →)

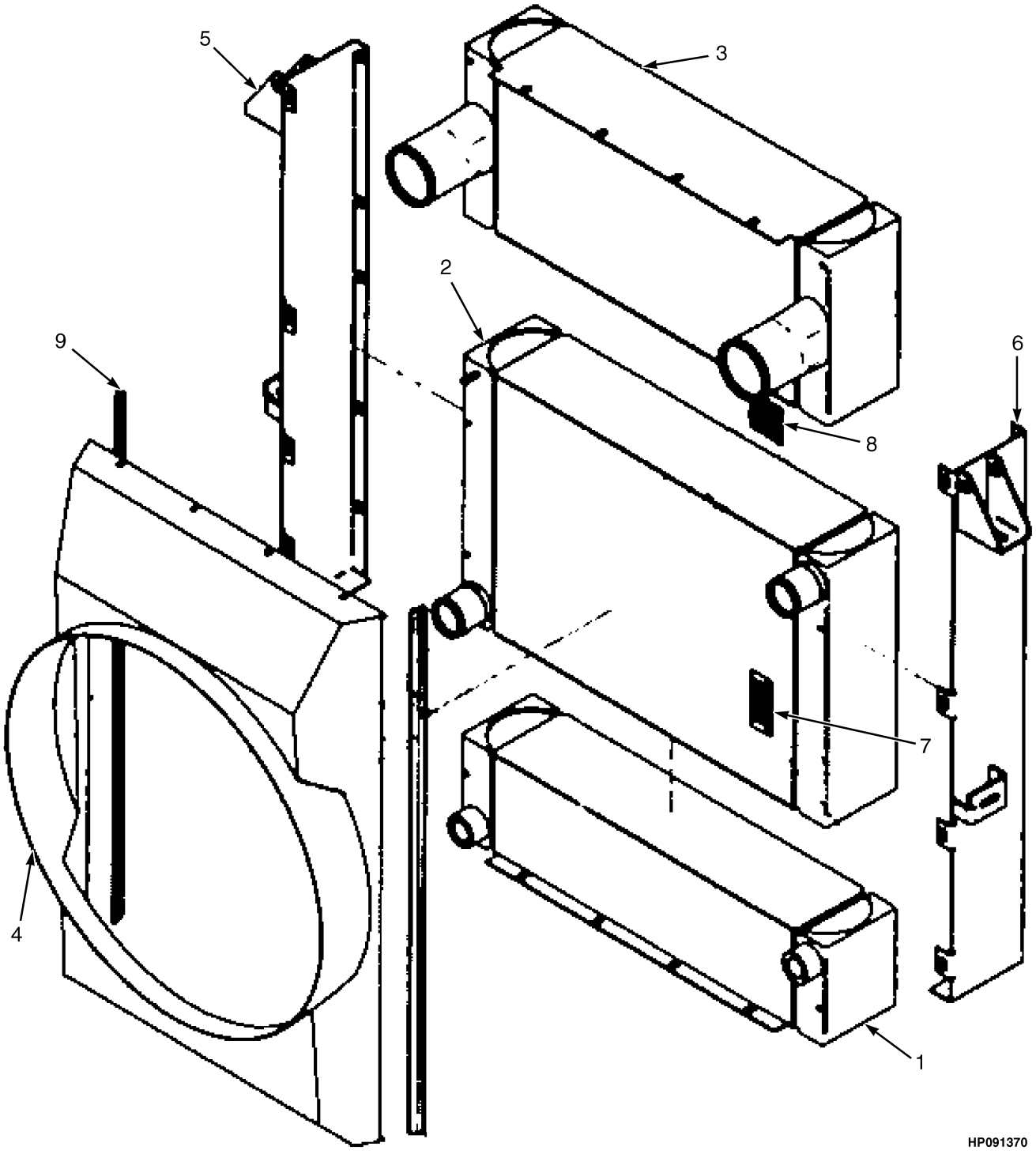

©2011 HYSTER COMPANY

RADIATOR

TIER III ENGINE (S/N E008E02100D →)

ITEM	PART NO.	DESCRIPTION	QTY
	1628943	Radiator	1
1	1639854	Oil Cooler	1
2	1639855	Radiator	1
3	1639856	Cooler	1
4	1639857	Shroud	1
5	1639858	Side Plate	1
6	1639859	Side Plate	1
7	1639860	Label	1
8	1636871	Nameplate	1
9	1639861	Gasket	2

©2011 HYSTER COMPANY

COOLING (FIGURE 2-84)

(→ S/N E008E01697) (→ S/N E008D01602)

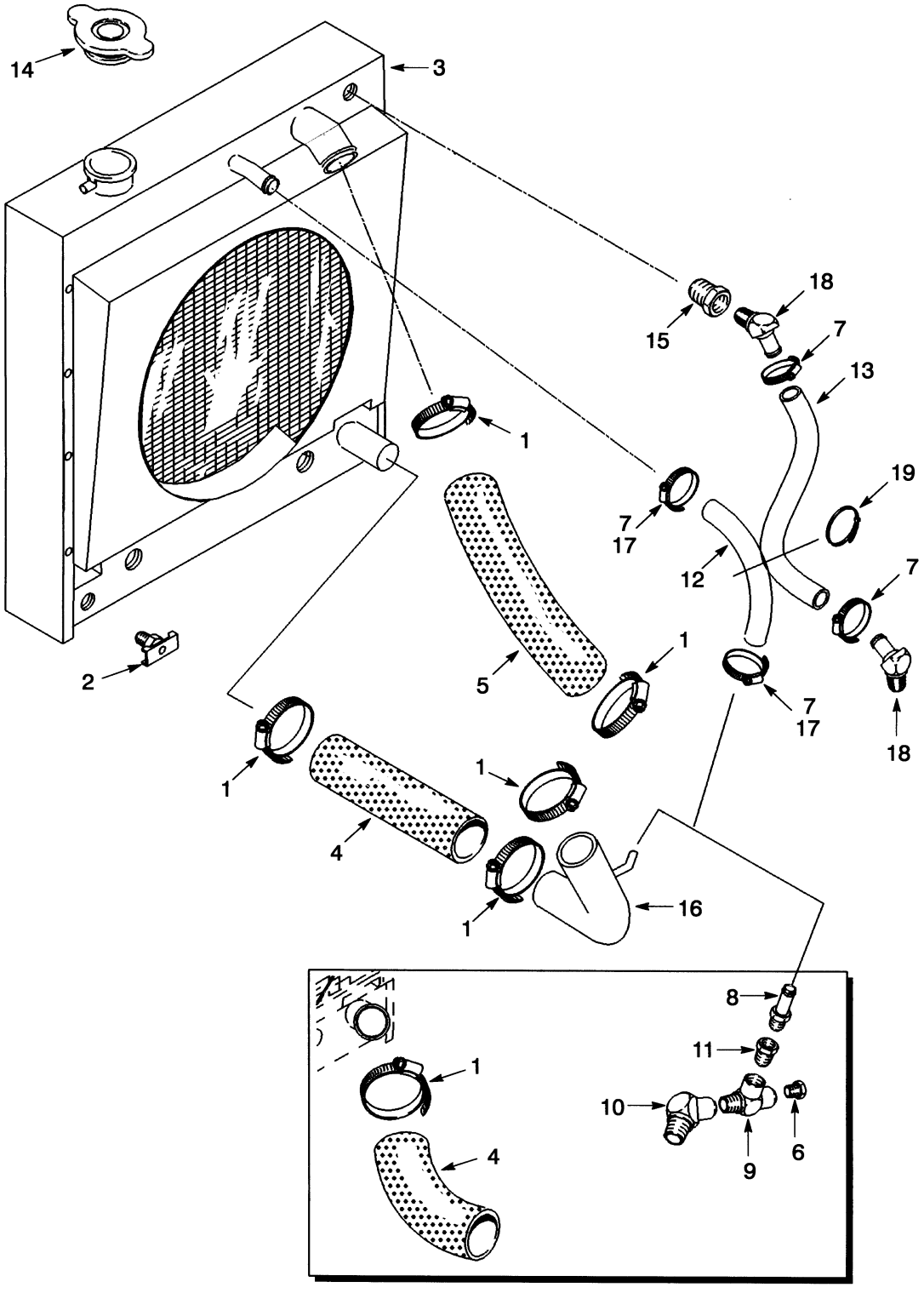

©2011 HYSTER COMPANY

COOLING

(→ S/N E008E01697) (→ S/N E008D01602)

ITEM	PART NO.	DESCRIPTION	QTY
1	112989	Hose Clamp	5
2	12815	Drain Valve (Drain)	1
3	**cd** 1349788	Radiator	1
3	**ab** 1353940	Radiator	1
3	**cd** 1355317	Core	1
3	**cd** 1358216	Oil Cooler	1
4	**ab** 1335701	Hose	1
4	**cd** 145367	Radiator Hose	1
5	1335702	Radiator Hose	1
6	14387	Fitting	1
7	166857	Clamp	2
8	**ab** 17220	Fitting	1
9	**ab** 201757	Fitting	1
10	**ab** 12824	Fitting	1
11	**ab** 12861	Fitting	1
12	**cd** 119344	Hose	1
12	**ab** 384449	Hose	1
13	**cd** 147007	Hose	1
13	**ab** 329073	Hose	1
14	119055	Radiator Cap	1
15	**cd** 16187	Fitting	1
15	**ab** 17353	Fitting	1
16	**cd** 1349786	Tube Assy	1
17	**cd** 130845	Clamp	1
18	**cd** 174374	Fitting	2
19	129563	Strap Clamp	1

FOOTNOTES:

a → S/N E008D01518
b → S/N E008E01537
c S/N E008D01519 →
d S/N E008E01538 →

©2011 HYSTER COMPANY

COOLING (FIGURE 2-85)

TIER I ENGINE (S/N E008E01698 →) (S/N E008D01603 →)

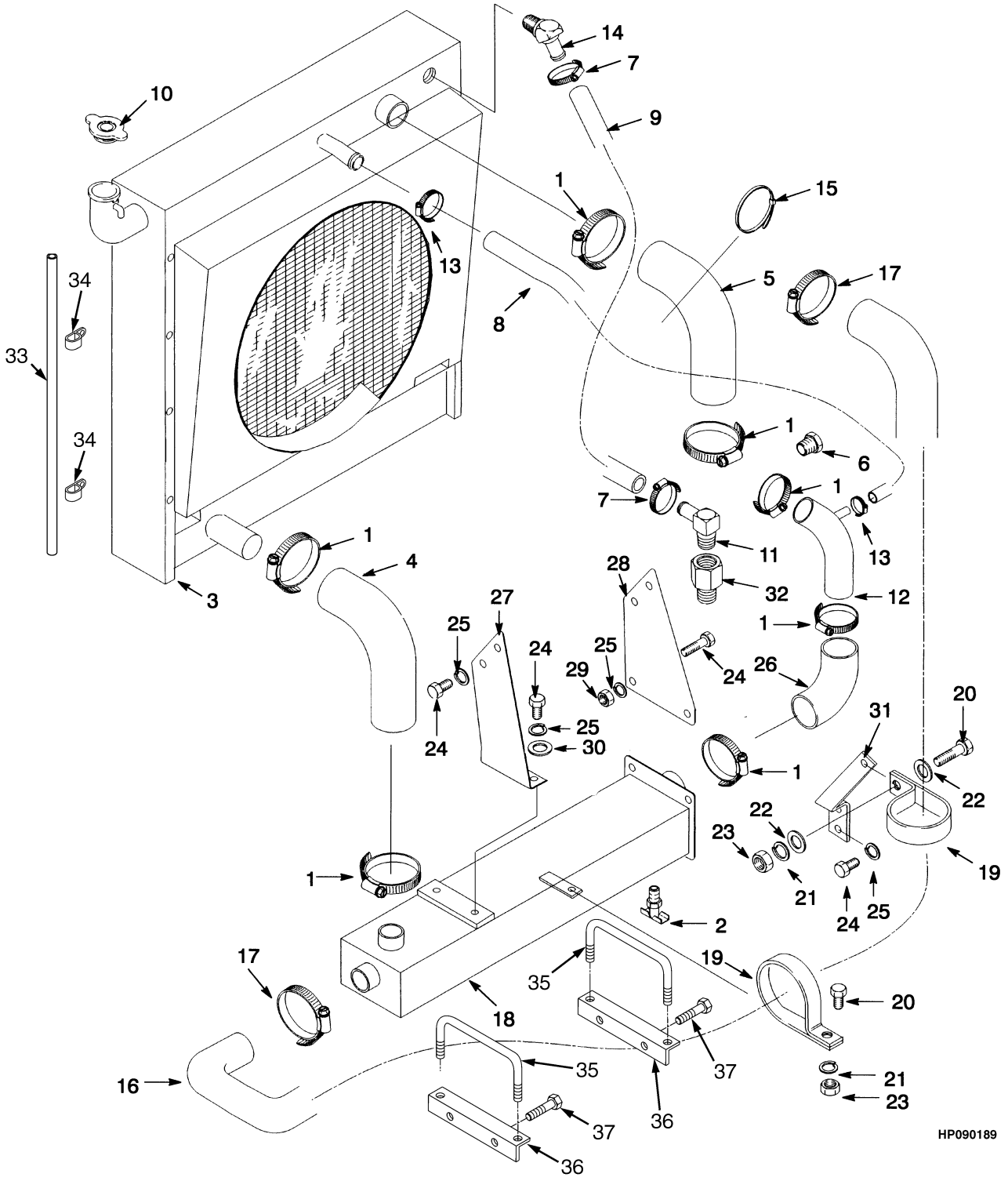

©2011 HYSTER COMPANY

COOLING

TIER I ENGINE (S/N E008E01698 →) (S/N E008D01603 →)

ITEM	PART NO.	DESCRIPTION	QTY
	1394094	Engine Assy-Diesel	1
	1394093	Engine Assy-Diesel	1
1	112989	Hose Clamp	5
2	12815	Drain Valve (Drain)	1
3	1452425	Radiator	1
4	1453590	Radiator Hose	1
5	1452351	Radiator Hose	1
6	14387	Fitting	1
7	168718	Clamp	2
8	119344	Hose	1
9	147007	Hose	1
10	119055	Radiator Cap	1
11	**a** 174374	Fitting	1
12	1367354	Tube Assy	1
13	130845	Clamp	1
14	17217	Fitting	1
15	129563	Strap Clamp	1
16	1367357	Radiator Hose	1
17	119236	Clamp	2
18	1367347	Oil Cooler	1
19	313221	Clamp	2
20	136985	Capscrew	2
21	320159	Washer	2
22	~~388049~~		
	292682	Lockwasher	3
23	136692	Nut	2
24	132860	Capscrew	10
25	292683	Lockwasher	10
26	1367355	Radiator Hose	1
27	1367353	Bracket	1
28	1367352	Bracket	1
29	~~1318914~~		
	216877	Nut	2
30	320161	Washer	2
31	1367349	Bracket	1
32	17343	Fitting	1
33	1305436	Hose	1
34	124297	Clamp	2
35	1514237	Clamp	2
36	1514236	Angle	2
37	292528	Capscrew	4

FOOTNOTES:

a → 10/2000

©2011 HYSTER COMPANY

COOLING (FIGURE 2-86)

TIER II ENGINE — H550F, H620F, H650F, H700F (→ S/N E008E02099D)

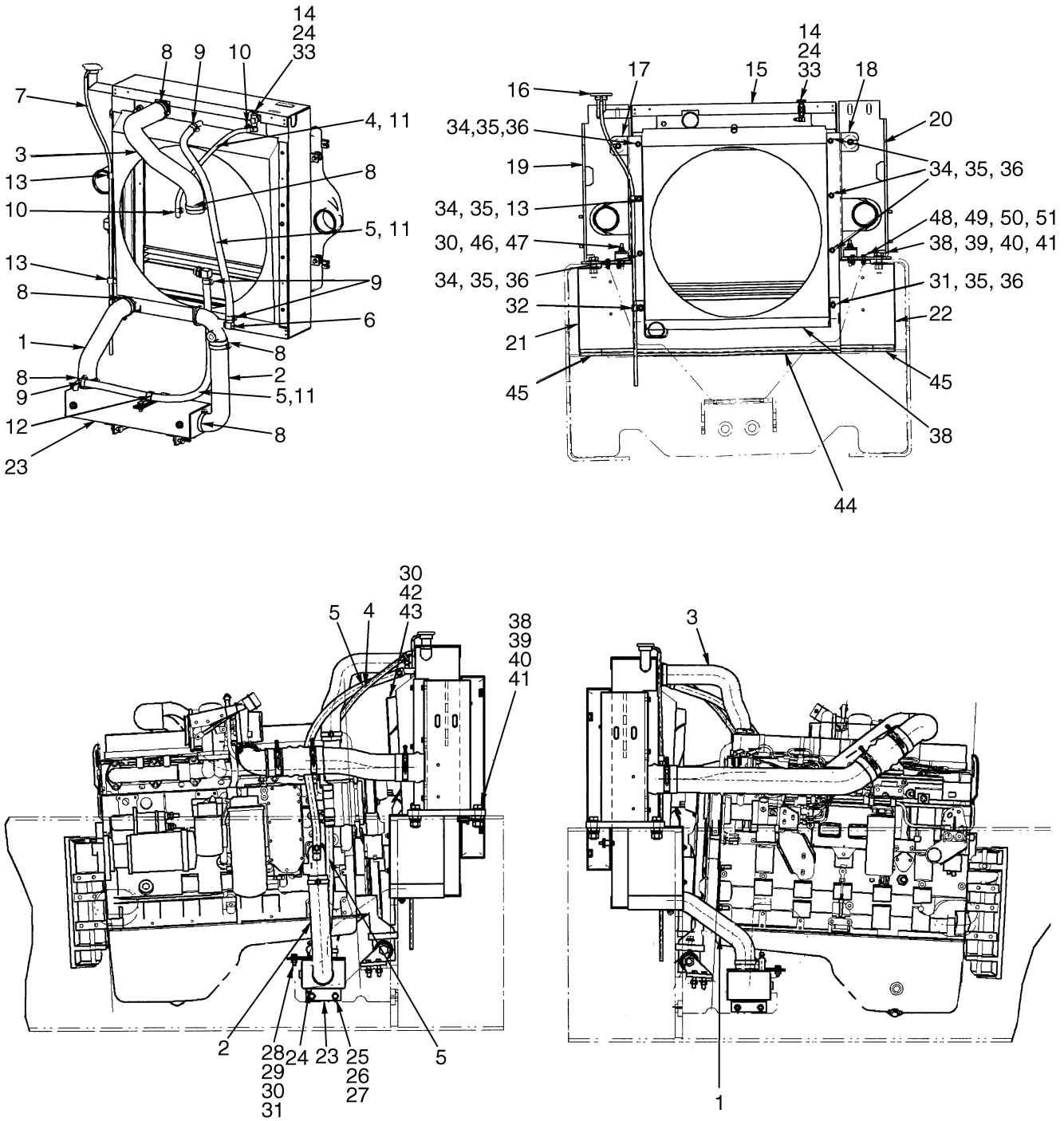

HP060011

©2011 HYSTER COMPANY

COOLING

TIER II ENGINE – H550F, H620F, H650F, H700F (→ S/N E008E02099D)

ITEM	PART NO.	DESCRIPTION	QTY
	1499324	Engine Assy-Diesel	1
1	1509061	Radiator Hose	1
2	1509062	Radiator Hose	1
3	1452351	Radiator Hose	1
4	1378537	Hose	1
5	126262	Hose	2
6	201800	Fitting	1
7	1305436	Hose	1
8	112989	Hose Clamp	6
9	130845	Clamp	4
10	166857	Clamp	2
11	129563	Strap Clamp	AR
12	1399400	Clamp	1
13	124297	Clamp	2
14	17353	Fitting	1
15	1504636	Radiator	1
16	119055	Radiator Cap	1
17	1519589	Bracket (RH)	1
18	1519588	Bracket (LH)	1
19	1519586	Bracket Wldmt (RH)	1
20	1519581	Bracket Wldmt (LH)	1
21	1519637	Baffle (RH)	1
22	1519636	Baffle (LH)	1
23	1509033	Oil Cooler (Transmission)	1
24	12815	Drain Valve (Drain)	2
25	292528	Capscrew	4
26	292683	Lockwasher	4
27	~~1318914~~		
	216877	Nut	4
28	136985	Capscrew	1
29	320159	Washer	1
30	~~388049~~		
	292682	Lockwasher	13
31	136692	Nut	9
32	16828	Capscrew	2
33	17664	Fitting	1
34	16805	Capscrew	6
35	15156	Lockwasher	8
36	15134	Washer	6
37	1519649	Plate	4
38	18624	Capscrew	4
39	15062	Nut	4
40	15162	Lockwasher	4
41	15136	Washer	8
42	1510388	Fan (Puller)	1
43	292522	Capscrew	4
44	1519578	Trim Seal	1
45	1519579	Trim Seal	2
46	1519855	Isolator	4
47	320160	Washer	8

©2011 HYSTER COMPANY

COOLING

TIER II ENGINE – H550F, H620F, H650F, H700F (→ S/N E008E02099D)

ITEM	PART NO.	DESCRIPTION	QTY
48	320157	Washer	8
49	292681	Lockwasher	4
50	239503	Nut	4
51	176640	Bolt	4

©2011 HYSTER COMPANY

NOTES

©2011 HYSTER COMPANY

COOLING (FIGURE 2-87)

TIER II ENGINE — H440FS, H550FS, H620FS, H700FS (→ S/N E008E02099D)

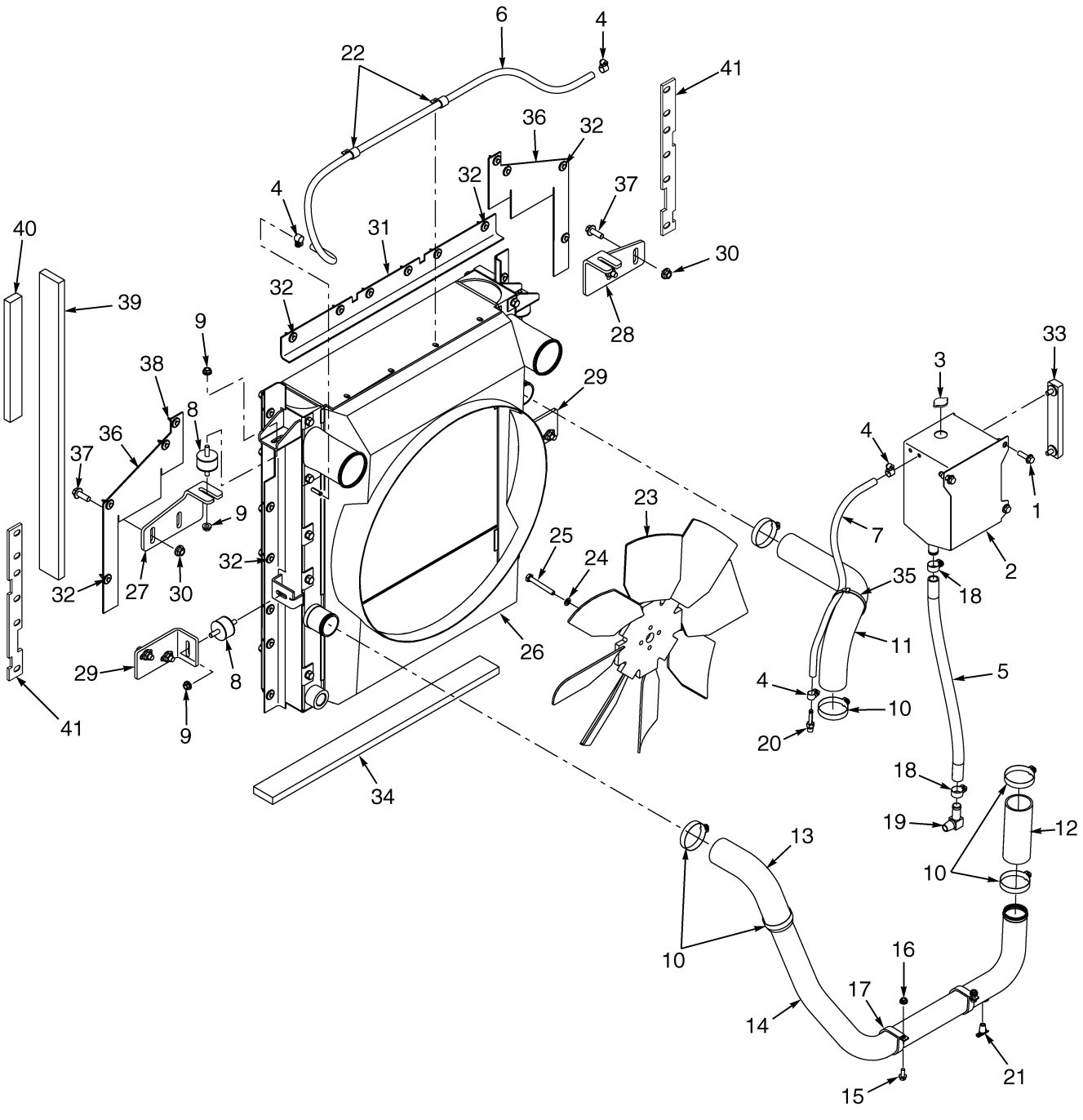

HP060032

©2011 HYSTER COMPANY

COOLING

TIER II ENGINE – H440FS, H550FS, H620FS, H700FS (→ S/N E008E02099D)

ITEM	PART NO.	DESCRIPTION	QTY
	1542383	Engine Assy-Diesel	1
1	1527885	Capscrew	3
2	1546530	Reservoir	1
2	4017884	Cap	1
3	119055	Radiator Cap	1
4	166857	Clamp	5
5	213024	Hose	1
6	305914	Hose	1
7	1550965	Hose	1
8	1519855	Isolator	4
9	1460477	Nut	8
10	1394008	Hose Clamp	6
11	1544028	Radiator Hose	1
12	1544043	Radiator Hose	1
13	1544044	Radiator Hose	1
14	1544046	Tube	1
15	1527880	Capscrew	2
16	~~1382472~~		
	1502543	Nut (Flange)	2
17	176453	Clamp	2
18	130845	Clamp	2
19	201800	Fitting	1
20	1502038	Fitting	1
21	12815	Drain Valve (Drain)	1
22	128408	Clamp	2
23	1510388	Fan (Puller)	1
24	~~388049~~		
	292682	Lockwasher	4
25	292522	Capscrew	4
26	1543569	Radiator	1
27	1546533	Bracket (RH)	1
28	1546534	Bracket (LH)	1
29	1546535	Bracket	2
30	~~1370949~~		
	1528888	Nut (Shoulder)	8
31	1551266	Seal	1
32	1484308	Rivet	14
33	1550937	Indicator	1
33	1553358	Label	1
34	1551691	Liner	1
35	129563	Strap Clamp	AR
36	1551444	Seal (H550FS, H620FS)	2
37	1527888	Capscrew (H700FS)	8
38	1484308	Rivet (H700FS)	4
39	1551690	Liner (H550FS, H620FS)	2
40	1551688	Liner (H550FS, H620FS)	2
41	1551213	Seal (H700FS)	2

©2011 HYSTER COMPANY

COOLING (FIGURE 2-88)

TIER III ENGINE — H550F, H620F, H650F, H700F (S/N E008E02100D →)

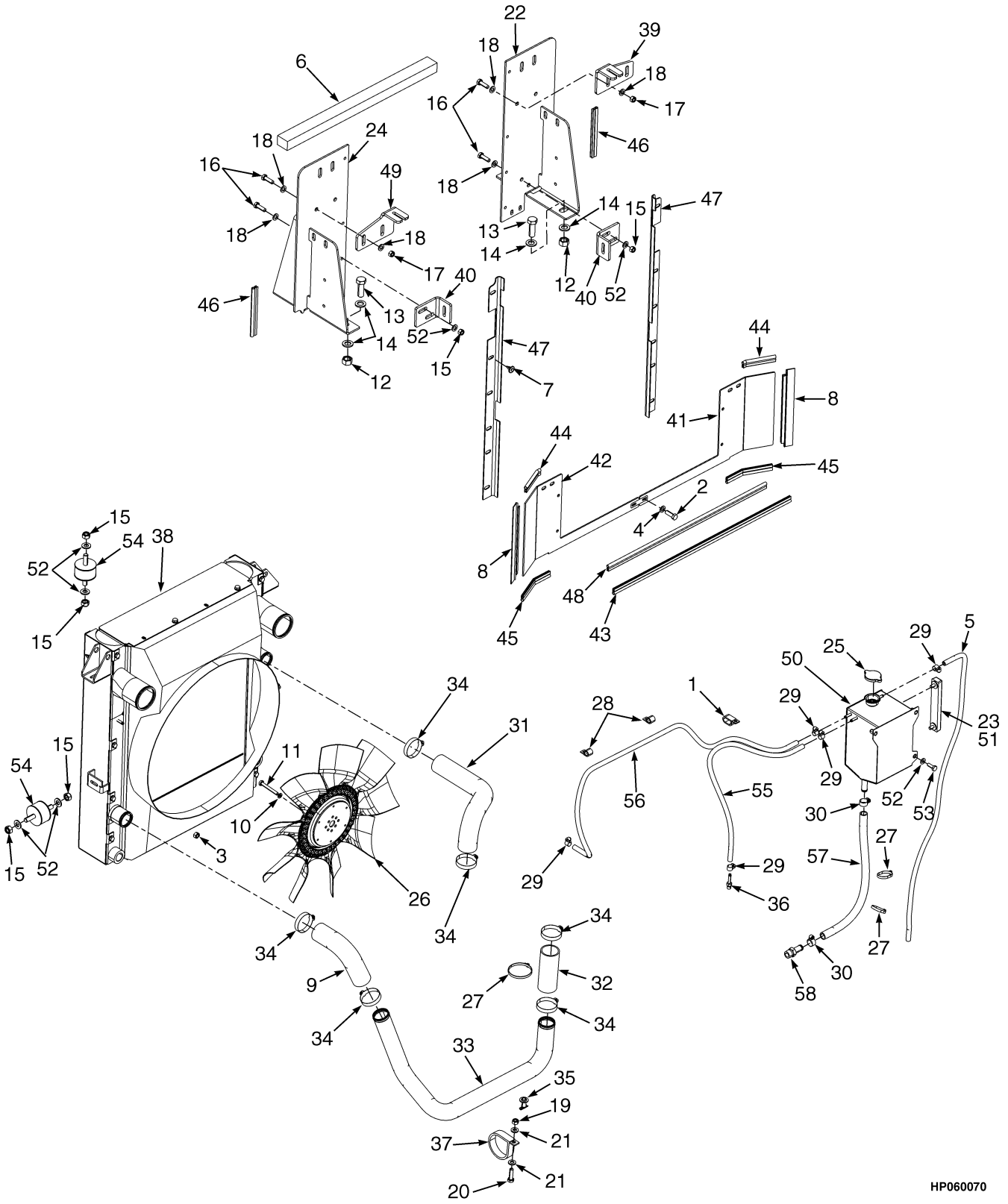

©2011 HYSTER COMPANY

COOLING

TIER III ENGINE – H550F, H620F, H650F, H700F (S/N E008E02100D →)

ITEM	PART NO.	DESCRIPTION	QTY
	1663666	Engine Assy-Diesel	1
1	110322	Clamp	1
2	292501	Capscrew	2
3	~~1512440~~		
	302399	Nut	2
4	320156	Washer	4
5	305914	Hose	1
6	1633199	Liner	1
7	1484308	Rivet	12
8	1491360	Seal-Bulk	2
9	1544044	Radiator Hose	1
10	292522	Capscrew	4
11	~~388049~~		
	292682	Lockwasher	4
12	292620	Nut	4
13	292584	Capscrew	4
14	320169	Washer	8
15	302401	Locknut	12
16	246001	Capscrew	8
17	302402	Locknut	8
18	320161	Washer	16
19	302400	Nut	3
20	176640	Bolt	3
21	320157	Washer	6
22	1632281	Bracket Wldmt (LH)	1
23	1553358	Label	1
24	1632280	Bracket Wldmt (RH)	1
25	119055	Radiator Cap	1
26	1629351	Fan (Puller)	1
27	129563	Strap Clamp	4
28	128408	Clamp	2
29	166857	Clamp	5
30	130845	Clamp	2
31	1632267	Radiator Hose	1
32	1544043	Radiator Hose	1
33	1544046	Tube	1
34	1394008	Hose Clamp	6
35	12815	Drain Valve (Drain)	1
36	1502038	Fitting	1
37	176453	Clamp	2
38	1628943	Radiator	1
39	1632273	Bracket (RH)	1
40	1632275	Bracket	2
41	1633192	Baffle (LH)	1
42	1633193	Baffle (RH)	1
43	1633194	Trim Seal	1
44	1633195	Trim Seal	2
45	1633196	Trim Seal	2
46	1633197	Trim Seal	2
47	1633198	Seal	2

©2011 HYSTER COMPANY

COOLING

TIER III ENGINE – H550F, H620F, H650F, H700F (S/N E008E02100D →)

ITEM	PART NO.	DESCRIPTION	QTY
48	1519578	Trim Seal	1
49	1632274	Bracket (LH)	1
50	1546530	Reservoir	1
50	4017884	Cap	1
51	1550937	Indicator	1
52	320159	Washer	19
53	136985	Capscrew	7
54	1519855	Isolator	4
55	316695	Hose	1
56	110153	Hose	1
57	213024	Hose	1
58	17585	Fitting	1

©2011 HYSTER COMPANY

NOTES

©2011 HYSTER COMPANY

COOLING (FIGURE 2-89)

TIER III ENGINE — H440FS, H550FS, H620FS, H700FS (S/N E008E02100D →)

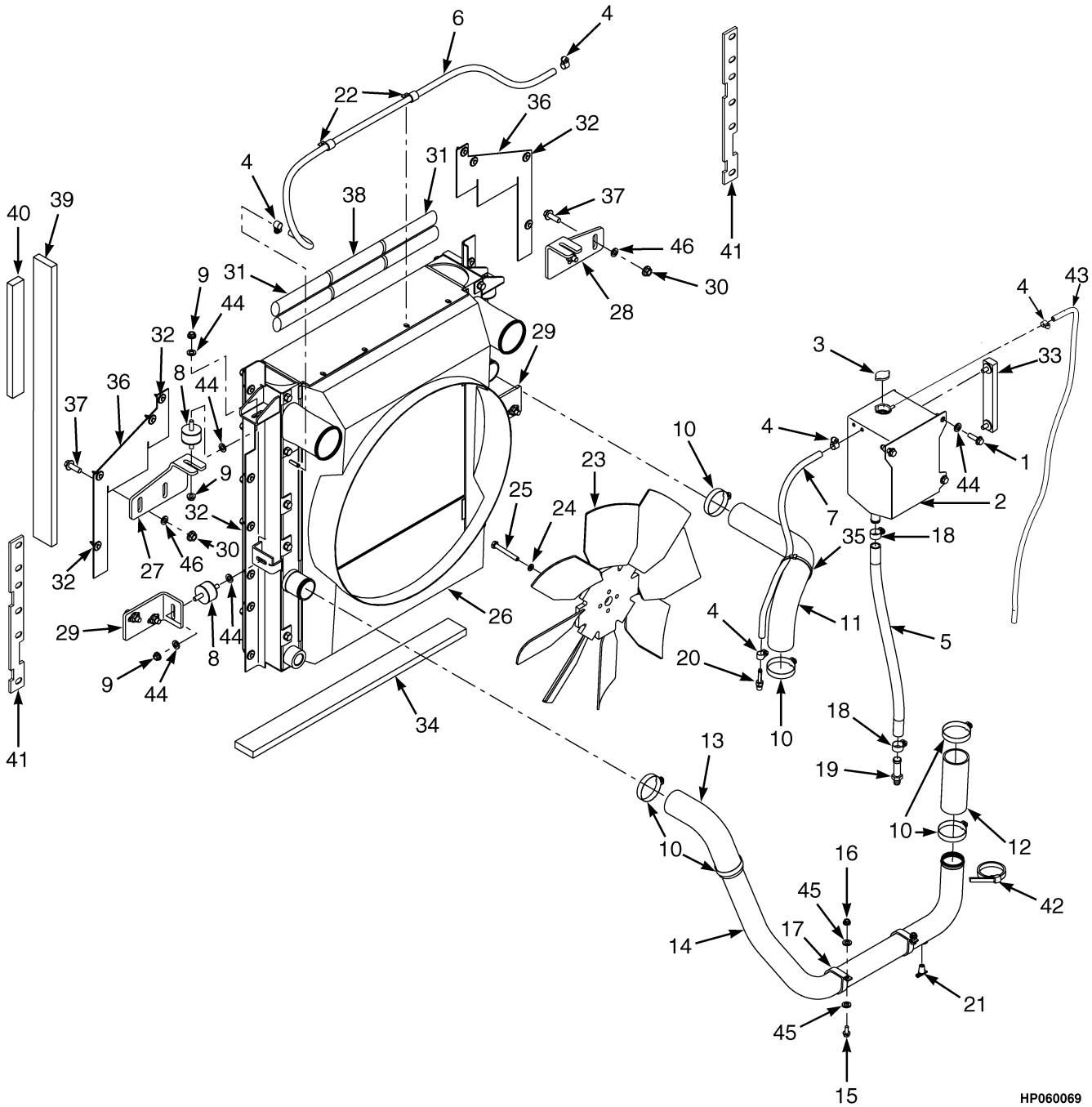

©2011 HYSTER COMPANY

COOLING

TIER III ENGINE – H440FS, H550FS, H620FS, H700FS (S/N E008E02100D →)

KEY:
A: H440FS, H550FS, H620FS
B: H700FS

ITEM	PART NO.	DESCRIPTION	QTY A	QTY B
	1663666	Engine Assy-Diesel	1	1
1	136985	Capscrew	3	3
2	1546530	Reservoir	1	1
2	4017884	Cap	1	1
3	119055	Radiator Cap	1	1
4	166857	Clamp	5	5
5	295529	Hose	1	1
6	369813	Hose	1	1
7	1550965	Hose	1	1
8	1519855	Isolator	4	4
9	302401	Locknut	8	8
10	1394008	Hose Clamp	6	6
11	1632267	Radiator Hose	1	1
12	1544043	Radiator Hose	1	1
13	1544044	Radiator Hose	1	1
14	1544046	Tube	1	1
15	176640	Bolt	2	2
16	302400	Nut	2	2
17	176453	Clamp	2	2
18	130845	Clamp	2	2
19	17585	Fitting	1	1
20	1502038	Fitting	1	1
21	12815	Drain Valve (Drain)	1	1
22	128408	Clamp	2	2
23	1629351	Fan (Puller)	1	1
24	~~388049~~			
	292682	Lockwasher	4	4
25	292522	Capscrew	4	4
26	1628943	Radiator	1	1
27	1546533	Bracket (RH)	1	1
28	1546534	Bracket (LH)	1	1
29	1546535	Bracket	2	2
30	302402	Locknut	8	8
31	1632269	Trim Seal	2	2
32	1484308	Rivet	8	..
32	1484308	Rivet	..	12
33	1550937	Indicator	1	1
33	1553358	Label	1	1
34	1551691	Liner	1	1
35	129563	Strap Clamp	4	4
36	1551444	Seal	2	..
37	246001	Capscrew	..	8
38	1632268	Trim Seal	1	1
39	1551690	Liner	2	..
40	1551688	Liner	2	..

©2011 HYSTER COMPANY

COOLING

TIER III ENGINE – H440FS, H550FS, H620FS, H700FS (S/N E008E02100D →)

KEY:
A: H440FS, H550FS, H620FS
B: H700FS

ITEM	PART NO.	DESCRIPTION	QTY A	QTY B
41	1551213	Seal	..	2
42	129563	Strap Clamp	4	4
43	305914	Hose	1	1
44	320159	Washer	11	11
45	320157	Washer	4	4
46	320161	Washer	8	..
46	320161	Washer	..	16

©2011 HYSTER COMPANY

LIFTING BRACKET (FIGURE 2-90)

TIER II ENGINE (→ S/N E008E02099D)

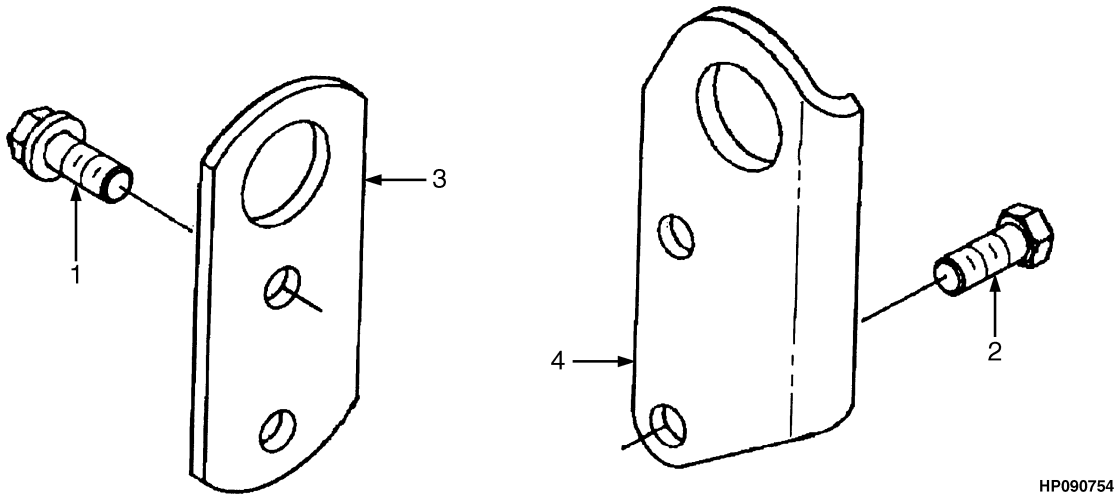

ITEM	PART NO.	DESCRIPTION	QTY
	a 1499324	Engine Assy-Diesel (H550F, H620F, H650F, H700F)	1
	b 1532628	Engine Assy-Diesel (H550F, H620F, H650F, H700F)	1
	b 1542383	Engine Assy-Diesel (H550FS, H620FS, H700FS)	1
	c 1606762	Engine Assy-Diesel (H550F, H620F, H650F, H700F)	1
	c 1607372	Engine Assy-Diesel (H550FS, H720FS, H700FS)	1
1	1512418	Capscrew	2
2	1513753	Capscrew	2
3	1517097	Bracket	1
4	1517098	Bracket	1

FOOTNOTES:

a → S/N E008E01984B
b S/N E008E01985B ↔ S/N E008E02066C
c S/N E008E02067C ↔ S/N E008E02099D

LIFTING BRACKET (FIGURE 2-91)

TIER III ENGINE (S/N E008E02100D →)

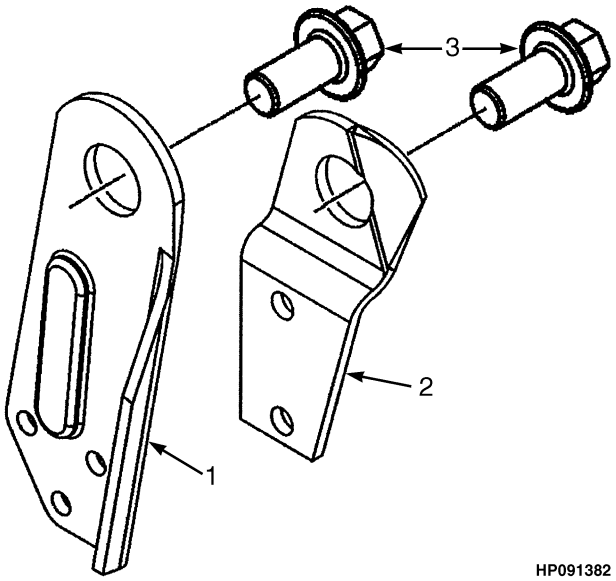

HP091382

ITEM	PART NO.	DESCRIPTION	QTY
	1663666	Engine Assy-Diesel	1
1	1644016	Bracket	1
2	1644017	Bracket	1
3	1512418	Capscrew (Rear Bracket)	2

©2011 HYSTER COMPANY

FRONT ENGINE SUPPORT (FIGURE 2-92)

TIER II AND III ENGINES

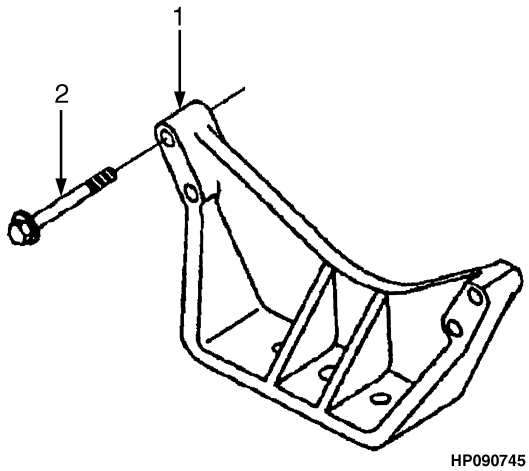

ITEM	PART NO.	DESCRIPTION	QTY
	a 1499324	Engine Assy-Diesel (H550F, H620F, H650F, H700F)	1
	b 1532628	Engine Assy-Diesel (H550F, H620F, H650F, H700F)	1
	b 1542383	Engine Assy-Diesel (H550FS, H620FS, H700FS)	1
	c 1606762	Engine Assy-Diesel (H550F, H620F, H650F, H700F)	1
	c 1607372	Engine Assy-Diesel (H550FS, H620FS, H700FS)	1
	d 1663666	Engine Assy-Diesel	1
1	1517000	Support	1
2	1513722	Capscrew	4

FOOTNOTES:

a → S/N E008E01984B
b S/N E008E01985B ↔ S/N E008E02066C
c S/N E008E02067C ↔ S/N E008E02099D
d S/N E008E02100D →

ENGINE AND TRANSMISSION MOUNT (FIGURE 2-93)

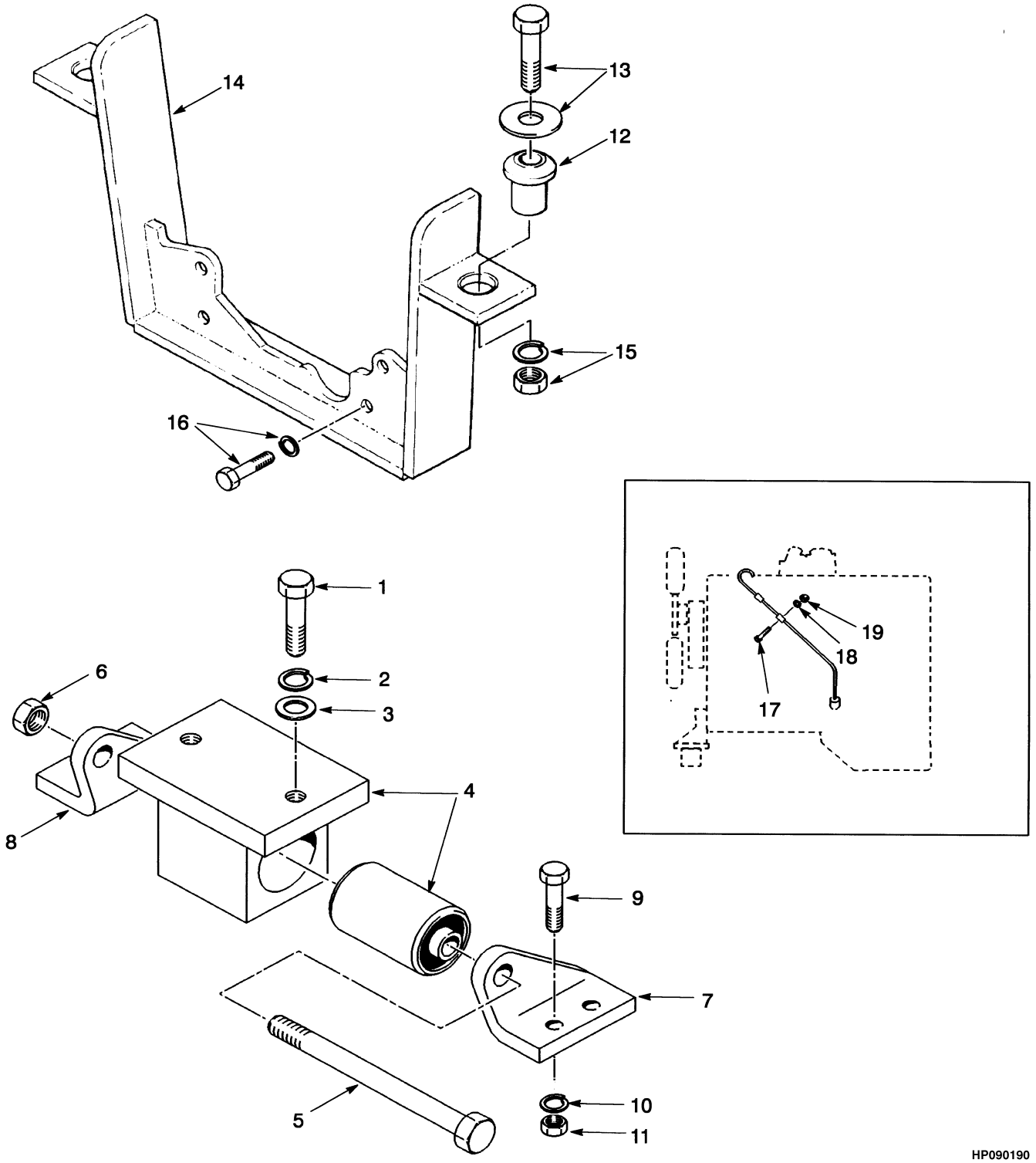

©2011 HYSTER COMPANY

ENGINE AND TRANSMISSION MOUNT

ITEM	PART NO.	DESCRIPTION	QTY
1	18588	Capscrew	2
2	15158	Washer	2
3	320162	Washer	2
4	1335681	Mount	1
5	18635	Capscrew	1
6	221358	Locknut	1
7	1331861	Bracket (LH)	1
8	1331862	Bracket (RH)	1
9	18559	Capscrew	4
10	15157	Lockwasher	4
11	15057	Nut	4
12	159367	Mount	2
13	159368	Washer	2
13	16793	Capscrew	2
14	1507251	Bracket Wldmt	1
15	221777	Washer	2
15	248320	Wheel Nut	2
16	15162	Lockwasher	4
16	18622	Capscrew	4
17	16597	Capscrew	1
18	15156	Lockwasher	1
19	15056	Nut	1
	ab 1486706	Hose (Turbo Compressor)	1
	ab 1625338	Hose Clamp (Turbo Compressor)	2

FOOTNOTES:

a Not Illustrated

b S/N E008E02100D →

©2011 HYSTER COMPANY

ACCESSORY DRIVE BELT AND TENSIONER (FIGURE 2-94)

WATER PUMP — TIER III ENGINE (S/N E008E02100D →)

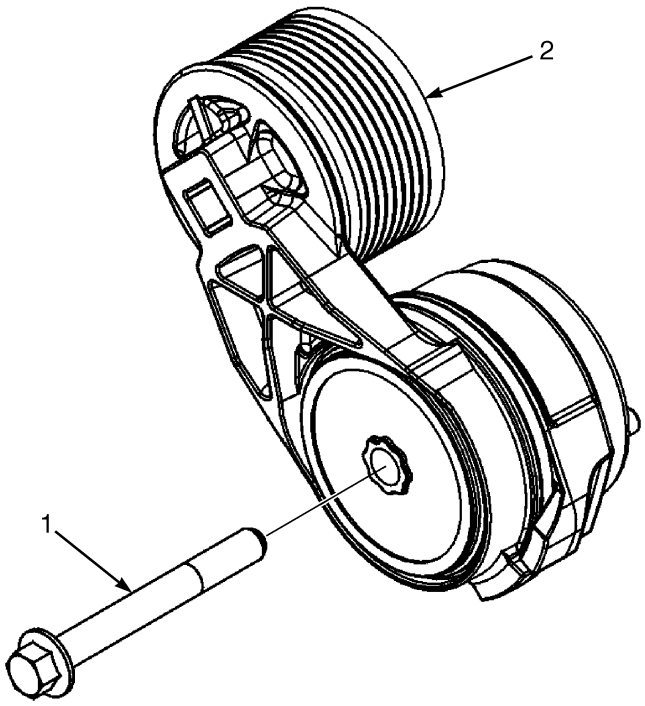

ITEM	PART NO.	DESCRIPTION	QTY
	1663666	Engine Assy-Diesel	1
1	1517293	Screw	1
2	1644143	Belt Tensioner	1
	a 1649727	V-Belt (V Ribbed)	1

FOOTNOTES:

a Not Illustrated

©2011 HYSTER COMPANY

OIL DRAIN CONNECTION AND ACCESSORY HOLE COVER (FIGURE 2-95)

TIER III ENGINE (S/N E008E02100D →)

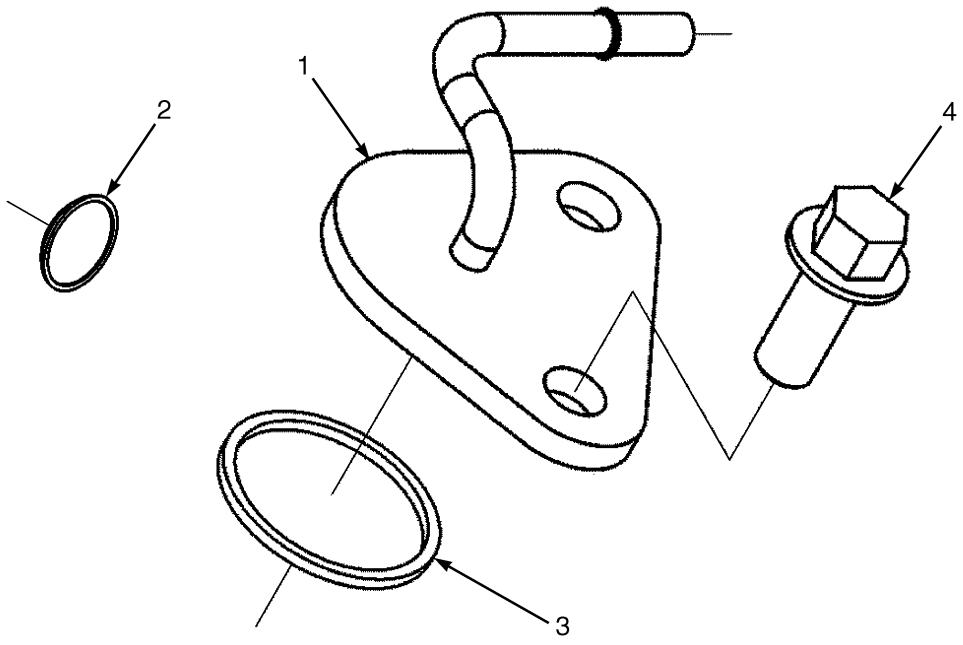

HP091397

ITEM	PART NO.	DESCRIPTION	QTY
	1663666	Engine Assy-Diesel	1
1	1644031	Connector (Oil Drain)	1
2	1514339	Plug	1
3	1511979	O-Ring	1
4	1511953	Capscrew	2

NOTES

©2011 HYSTER COMPANY

3 FUEL SYSTEM

SECTION 3
FUEL SYSTEM

DESCRIPTION	PAGE
AIR INLET	
H440FS, H550FS, H620FS, H700FS - TIER II ENGINE (→ S/N E008E02099D)	3-22
H550F, H620F, H650F, H700F - TIER II ENGINE (→ S/N E008E02099D)	3-20
TIER I ENGINE	3-16
TIER III ENGINE - H550F, H620F, H650F, H700F (S/N E008E02100D →)	3-24
TIER III ENGINE - H440FS, H550FS, H620FS, H700FS (S/N E008E02100D →)	3-26
ELECTRONIC FOOT PEDAL MOUNT	
TIER II AND III ENGINES	3-32
FUEL FILTER	
H440FS, H550FS, H620FS, H700FS - TIER II ENGINE (S/N E008E01985B ↔ S/N E008E02099D)	3-40
H550F, H620F, H650F, H700F - TIER II ENGINE (S/N E008E01985B ↔ S/N E008E02099D)	3-38
TIER III ENGINE (S/N E008E02100D →)	3-42
FUEL FILTER PLUMBING	
TIER II ENGINE (→ S/N E008E02099D)	3-44
TIER III ENGINE (S/N E008E02100D →)	3-46
FUEL INJECTION PUMP	
TIER II ENGINE (→ S/N E008E02099D)	3-56
TIER III ENGINE (S/N E008E02100D →)	3-58
FUEL INJECTION PUMP MOUNTING	
TIER II ENGINE	3-60
TIER III ENGINE (S/N E008E02100D →)	3-62
FUEL INJECTOR AND INJECTOR PLUMBING	
TIER II ENGINE (→ S/N E008E02099D)	3-64
TIER III ENGINE (S/N E008E02100D →)	3-66
FUEL PLUMBING	
TIER II ENGINE (→ S/N E008E02099D)	3-52
TIER III ENGINE (S/N E008E02100D →)	3-54
FUEL SYSTEM	
→ S/N E008E01697 → S/N E008D01602	3-2
S/N E008D01603 ↔ S/N E008E001984B S/N E008E01698 ↔ S/N E008E001984B	3-4
TIER II ENGINE (S/N E008E01985B ↔ S/N E008E02099D)	3-8
TIER III ENGINE - H550F, H620F, H650F, H700F (S/N E008E02100D →)	3-12
TIER III ENGINE - H550FS, H620FS, H700FS (S/N E008E02100D →)	3-14
FUEL TRANSFER PUMP	
TIER II ENGINE (→ S/N E008E02099D)	3-48
TIER III ENGINE (S/N E008E02100D →)	3-50
THROTTLE LINKAGE	
TIER I ENGINE	3-28
THROTTLE PEDAL	
TIER I ENGINE	3-34
THROTTLE PEDAL ASSEMBLY	
ELECTRONIC - TIER III ENGINES	3-36

©2011 HYSTER COMPANY

FUEL SYSTEM (FIGURE 3-1)

(→ S/N E008E01697) (→ S/N E008D01602)

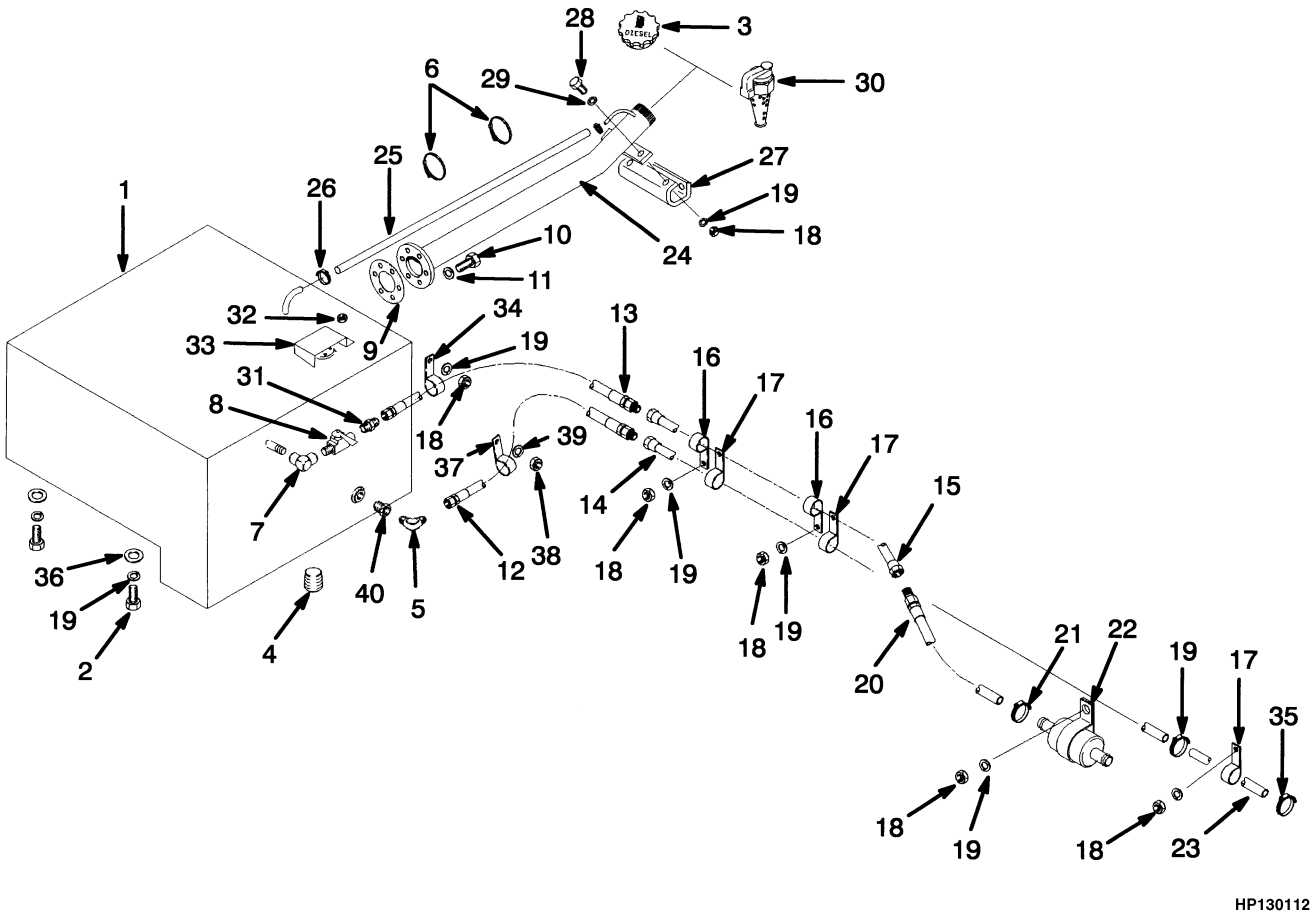

HP130112

©2011 HYSTER COMPANY

FUEL SYSTEM

(→ S/N E008E01697) (→ S/N E008D01602)

KEY:
A: H550F, H620F, H650F, H700F
B: H550FS, H620FS, H700FS

ITEM	PART NO.	DESCRIPTION	QTY A	QTY B
1	1333460	Fuel Tank Wldmt	1	..
1	1352783	Fuel Tank Wldmt	..	1
2	16815	Capscrew	4	4
3	298832	Fuel Cap	1	1
3	311245	Gasket	1	1
4	15962	Fitting	1	1
5	17752	Fitting	1	1
6	129563	Strap Clamp	2	2
7	12817	Fitting	1	1
8	184324	Valve	1	1
9	1333437	Gasket	1	1
10	16836	Capscrew	6	6
11	15155	Lockwasher	6	6
12	1365119	Hose Assy	1	1
13	1359439	Hose Assy	1	1
14	1337286	Tube Assy	1	..
14	1353939	Tube	..	1
15	1337287	Tube Assy	1	..
16	164488	Clamp	2	2
17	198675	Clamp	3	3
18	15056	Nut	9	9
19	15156	Lockwasher	13	13
20	1337291	Hose Assy	1	1
21	166857	Clamp	1	1
22	1316496	Clamp	1	1
23	309656	Hose	1	1
24	1359440	Tube	1	1
25	124788	Hose	1	1
26	130845	Clamp	2	2
27	1343660	Bracket	1	1
28	16805	Capscrew	4	4
29	15134	Washer	12	12
30	63899	Fuel Cap (Optional)	1	1
31	21798	Fitting	1	1
32	191534	Nut	1	1
33	358414	Cover	1	1
34	128408	Clamp	1	1
35	168718	Clamp	3	3
36	221767	Washer	4	4
37	113341	Clamp	1	..
38	15056	Nut	1	..
39	15156	Lockwasher	1	..
40	16116	Fitting	1	1

©2011 HYSTER COMPANY

FUEL SYSTEM (FIGURE 3-2)

(S/N E008D01603 ↔ S/N E008E001984B) (S/N E008E01698 ↔ S/N E008E001984B)

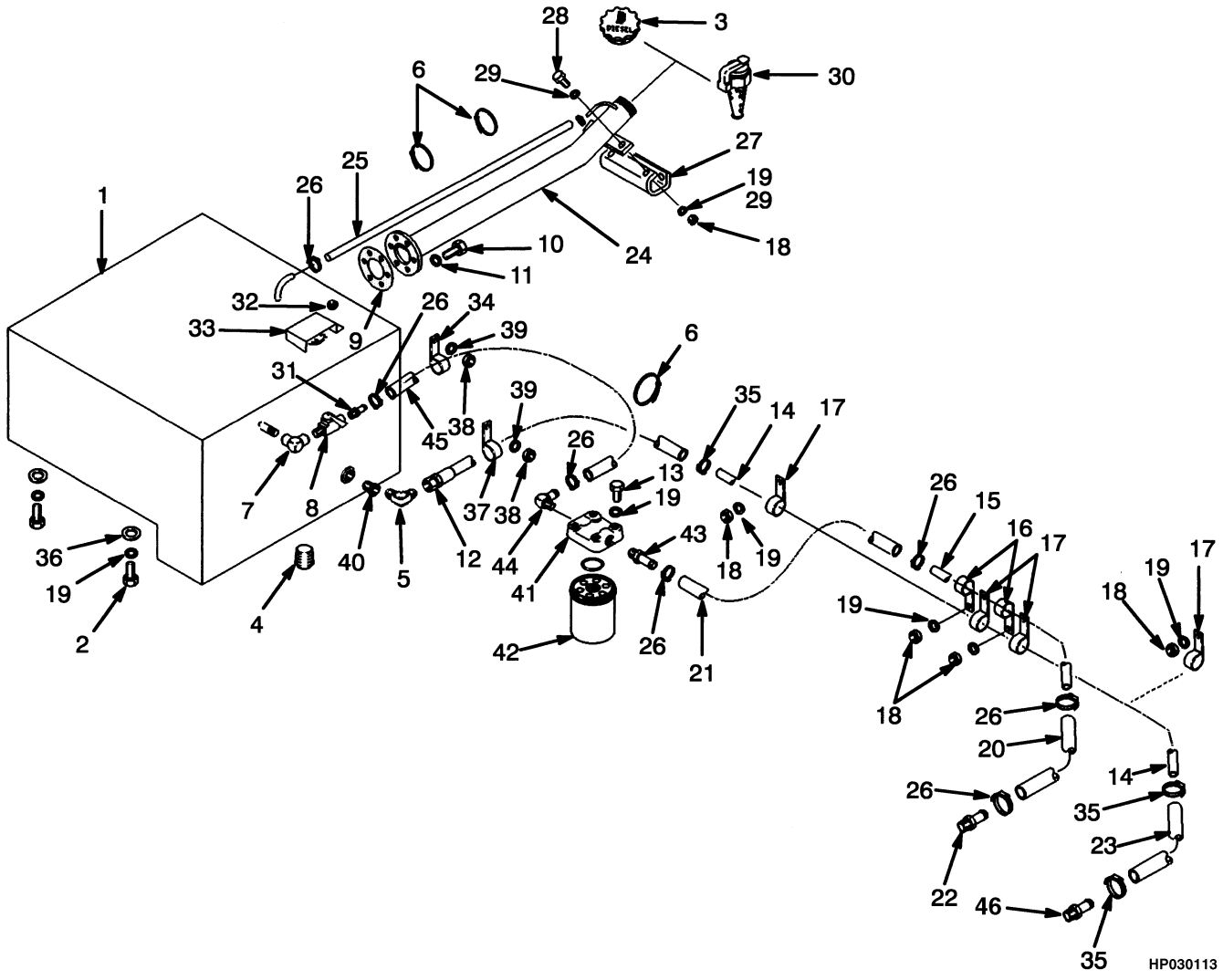

©2011 HYSTER COMPANY

FUEL SYSTEM

(S/N E008D01603 ↔ S/N E008E001984B) (S/N E008E01698 ↔ S/N E008E001984B)

KEY:
A: H550F, H620F, H650F, H700F
B: H550FS, H620FS, H700FS

ITEM	PART NO.	DESCRIPTION	QTY A	QTY B
1	1333460	Fuel Tank Wldmt (Tier I, and Tier II)	1	..
1	1352783	Fuel Tank Wldmt	..	1
2	16815	Capscrew	4	4
3	298832	Fuel Cap	1	1
4	15962	Fitting	1	1
5	17752	Fitting (Tier I)	1	1
5	17174	Fitting (Tier II)	1	..
6	129563	Strap Clamp	3	3
7	12817	Fitting	1	1
8	184324	Valve	1	1
9	1333437	Gasket	1	1
10	18497	Capscrew	6	6
10	268789	Seal	6	6
11	18515	Washer	6	6
12	1365119	Hose Assy (Tier I)	1	1
12	1515754	Hose (Tier II)	1	..
13	16598	Capscrew	4	4
14	1337286	Tube Assy	1	..
14	1353939	Tube	..	1
15	1367344	Tube Assy	..	1
15	1367345	Tube Assy	1	..
16	136516	Clamp	2	2
17	198675	Clamp	4	4
18	15056	Nut	8	8
19	15156	Lockwasher	16	16
20	1367370	Hose	1	1
21	1367369	Hose (Tier I)	1	1
21	1477439	Hose (Tier II)	1	..
22	17177	Fitting (Tier I)	1	1
22	1514867	Fitting (Tier II)	1	..
23	309656	Hose	1	1
24	1359440	Tube	1	1
25	124788	Hose	1	1
26	130845	Clamp	8	8
27	1343660	Bracket	1	1
28	16805	Capscrew	4	4
29	15134	Washer	8	8
30	63899	Fuel Cap (Optional)	1	1
31	102919	Fitting	1	1
32	191534	Nut	1	1
33	358414	Cover	1	1
34	298132	Clamp (Tier I)	1	..
34	298132	Clamp (Tier II)	5	..
35	168718	Clamp	3	3
36	221767	Washer	4	4

©2011 HYSTER COMPANY

FUEL SYSTEM

(S/N E008D01603 ↔ S/N E008E001984B) (S/N E008E01698 ↔ S/N E008E001984B)

KEY:
A: H550F, H620F, H650F, H700F
B: H550FS, H620FS, H700FS

ITEM	PART NO.	DESCRIPTION	QTY A	QTY B
37	113341	Clamp	1	..
38	15056	Nut	2	..
39	15156	Lockwasher	2	..
40	16116	Fitting	1	1
41	1373415	Filter Head	1	1
42	1373416	Filter Element	1	1
43	1151378	Fitting	1	1
44	1373684	Fitting	1	1
45	1367371	Hose	..	1
45	1389525	Hose	1	..
46	222502	Fitting (Tier II)	1	..

©2011 HYSTER COMPANY

NOTES

©2011 HYSTER COMPANY

FUEL SYSTEM (FIGURE 3-3)

TIER II ENGINE (S/N E008E01985B ↔ S/N E008E02099D)

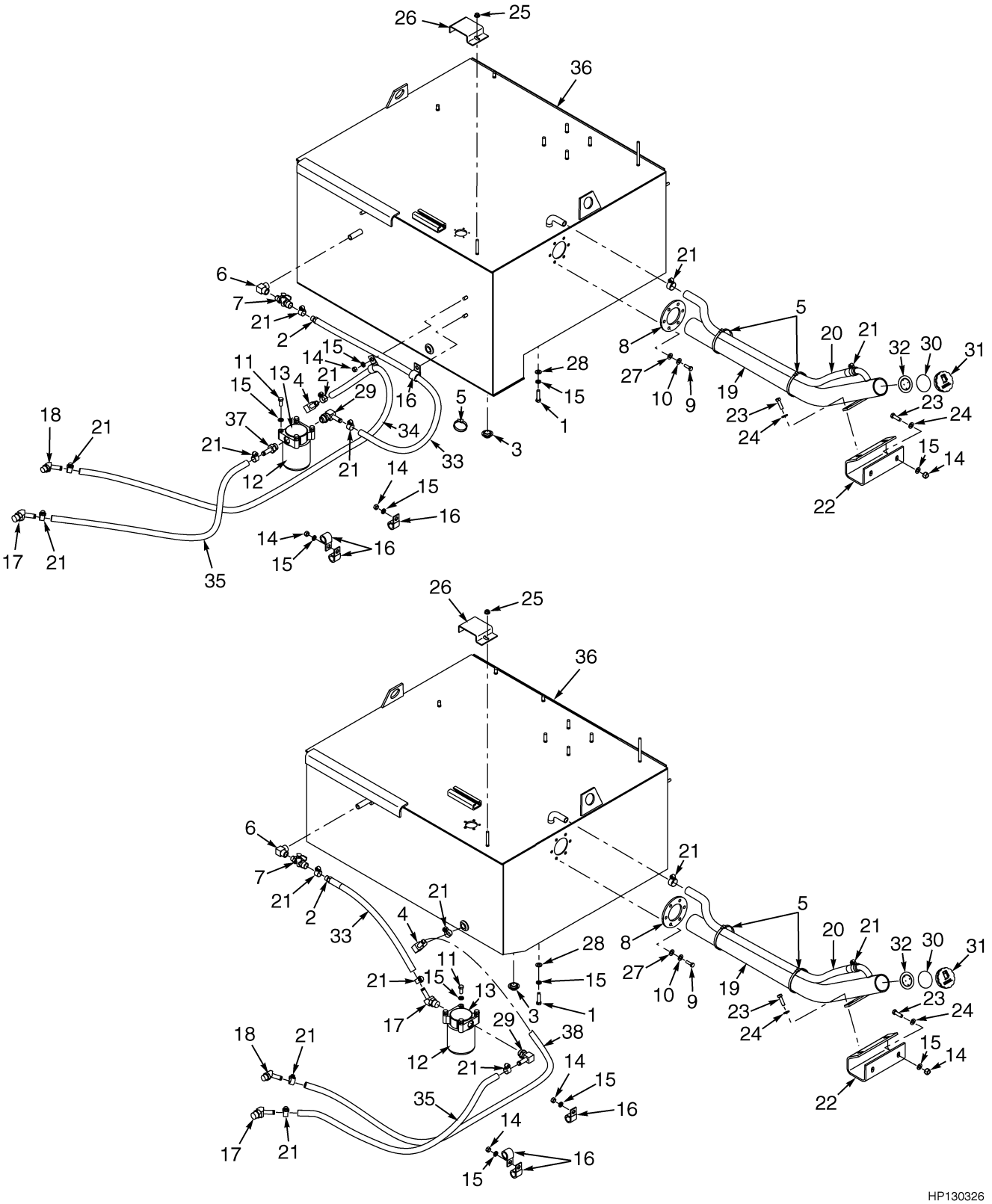

©2011 HYSTER COMPANY

FUEL SYSTEM

TIER II ENGINE (S/N E008E01985B ↔ S/N E008E02099D)

KEY:
A: H550F, H620F, H650F, H700F
B: H550FS, H620FS, H700FS

ITEM	PART NO.	DESCRIPTION	QTY A	QTY B
1	16815	Capscrew	4	4
2	**a** 102919	Fitting	1	1
2	**b** 222473	Fitting	1	1
3	15962	Fitting	1	1
4	17174	Fitting	1	1
5	129563	Strap Clamp	3	2
6	12817	Fitting	1	1
7	**a** 184324	Valve	1	1
7	**b** 1384669	Drain Valve	1	1
8	1333437	Gasket	1	1
9	18497	Capscrew	6	6
10	18515	Washer	6	6
11	16598	Capscrew	4	4
12	1373416	Filter Element	1	1
13	1373415	Filter Head	1	1
14	15056	Nut	8	6
15	15156	Lockwasher	16	14
16	298132	Clamp	5	3
17	1514867	Fitting	1	2
18	222502	Fitting	1	1
19	1359440	Tube	1	1
20	124788	Hose	1	1
21	130845	Clamp	8	8
22	1343660	Bracket	1	1
23	**a** 16805	Capscrew	4	4
23	**b** 16828	Capscrew	4	4
24	15134	Washer	8	8
25	191534	Nut	1	1
26	358414	Cover	1	1
27	268789	Seal	6	6
28	221767	Washer	4	4
28	296421	Washer (Optional)	4	4
29	1373684	Fitting	1	1
30	298832	Fuel Cap	1	1
31	63899	Fuel Cap	1	1
32	311245	Gasket	1	1
33	1389525	Hose	1	..
33	1367370	Hose	..	1
34	1515754	Hose	1	..
35	1477439	Hose	1	..
35	1477439	Hose	..	1
36	1333460	Fuel Tank Wldmt	1	..
36	1352783	Fuel Tank Wldmt	..	1
37	1151378	Fitting	1	..
38	1542034	Hose	..	1

©2011 HYSTER COMPANY

FOOTNOTES:

a → S/N E008E02041C

b S/N E008E02042C →

©2011 HYSTER COMPANY

NOTES

©2011 HYSTER COMPANY

FUEL SYSTEM (FIGURE 3-4)

TIER III ENGINE — H550F, H620F, H650F, H700F (S/N E008E02100D →)

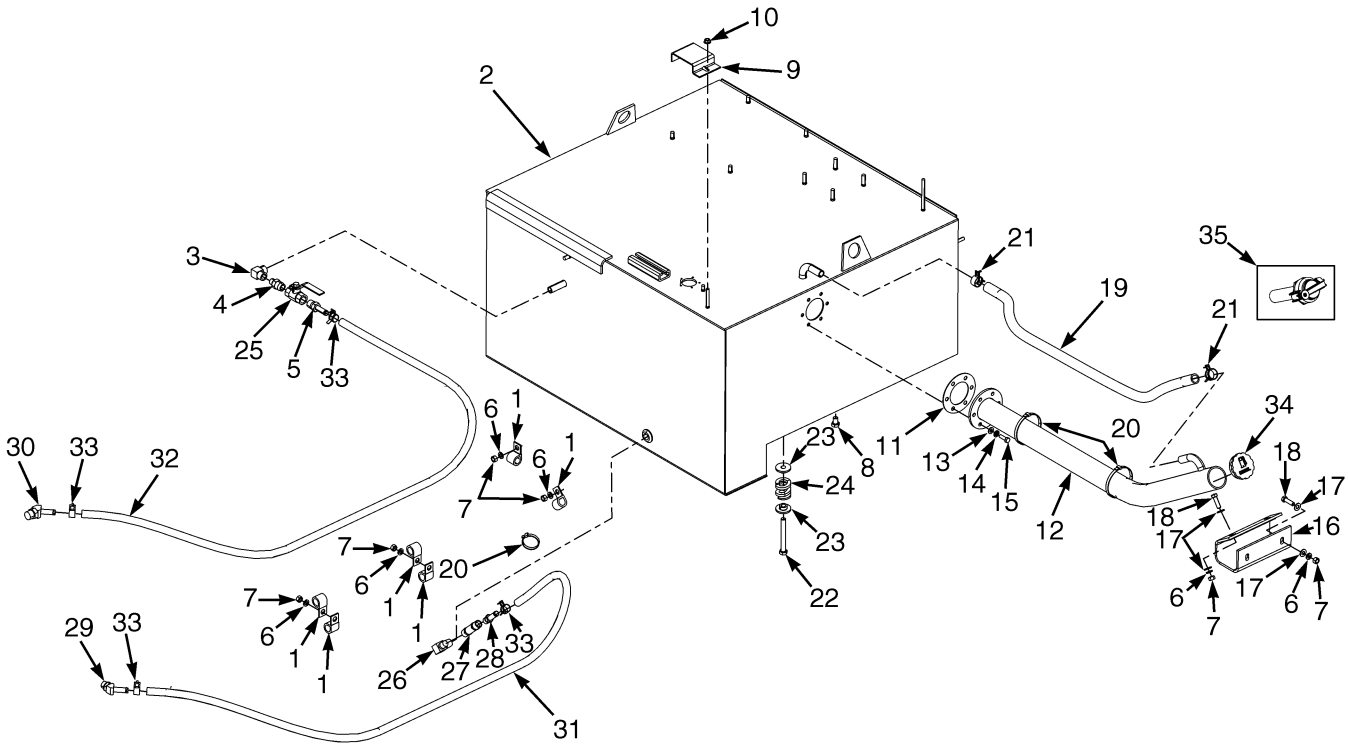

HP130404

©2011 HYSTER COMPANY

FUEL SYSTEM

TIER III ENGINE – H550F, H620F, H650F, H700F (S/N E008E02100D →)

ITEM	PART NO.	DESCRIPTION	QTY
1	298132	Clamp	6
2	1333460	Fuel Tank Wldmt	1
3	12817	Fitting	1
4	12837	Fitting	1
5	222473	Fitting	1
6	15156	Lockwasher	8
7	15056	Nut	8
8	15962	Fitting	1
9	358414	Cover	1
10	191534	Nut	1
11	1333437	Gasket	1
12	1359440	Tube	1
13	18515	Washer	6
14	268789	Seal	6
15	18497	Capscrew	6
16	1343660	Bracket	1
17	15134	Washer	8
18	16828	Capscrew	4
19	124788	Hose	1
20	129563	Strap Clamp	3
21	1501996	Hose Clamp	2
22	16741	Capscrew	4
23	1636482	Washer	8
24	1601870	Spring	4
25	1384669	Drain Valve	1
26	17744	Fitting	1
27	1628436	Check Valve	1
28	102919	Fitting	1
29	222502	Fitting	1
30	1514867	Fitting	1
31	1515754	Hose	1
32	1636613	Hose	1
33	1527979	Hose Clamp	4
34	298832	Fuel Cap	1
35	63899	Fuel Cap (Safety)	1
35	311245	Gasket (Safety Fuel Cap)	1

©2011 HYSTER COMPANY

FUEL SYSTEM (FIGURE 3-5)

TIER III ENGINE — H550FS, H620FS, H700FS (S/N E008E02100D →)

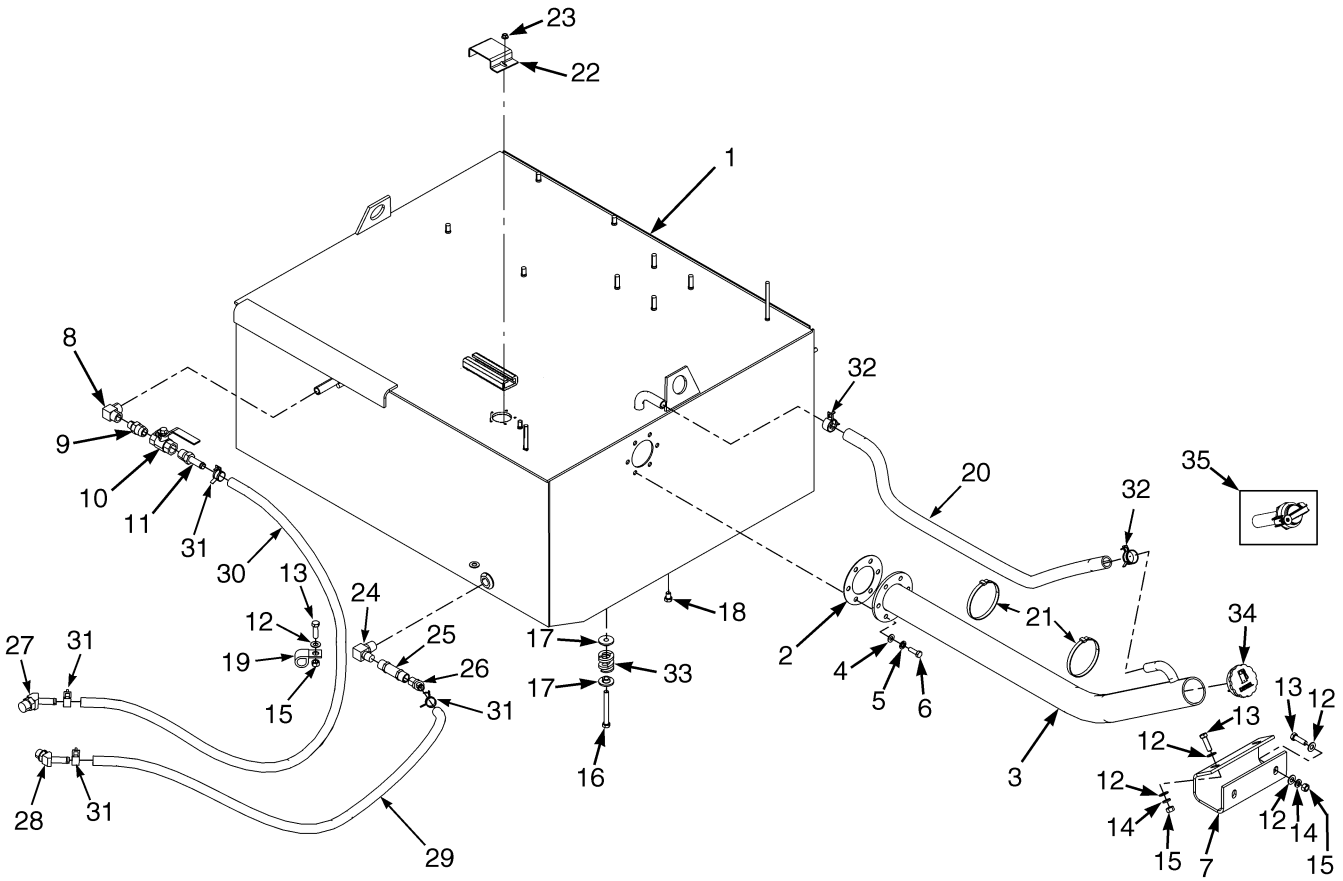

HP130405

©2011 HYSTER COMPANY

FUEL SYSTEM

TIER III ENGINE – H550FS, H620FS, H700FS (S/N E008E02100D →)

ITEM	PART NO.	DESCRIPTION	QTY
1	1352783	Fuel Tank Wldmt	1
2	1333437	Gasket	1
3	1359440	Tube	1
4	18515	Washer	6
5	268789	Seal	6
6	18497	Capscrew	6
7	1343660	Bracket	1
8	12817	Fitting	1
9	12837	Fitting	1
10	1384669	Drain Valve	1
11	222473	Fitting	1
12	15134	Washer	10
13	16828	Capscrew	5
14	15156	Lockwasher	5
15	15056	Nut	6
16	16741	Capscrew	4
17	1636482	Washer	8
18	15962	Fitting	1
19	298132	Clamp	3
20	124788	Hose	1
21	129563	Strap Clamp	2
22	358414	Cover	1
23	191534	Nut	1
24	17744	Fitting	1
25	1628436	Check Valve	1
26	16764	Fitting	1
27	1514867	Fitting	1
28	222502	Fitting	1
29	1501323	Hose	1
30	1542034	Hose	1
31	1527979	Hose Clamp	4
32	1501996	Hose Clamp	2
33	1601870	Spring	4
34	298832	Fuel Cap	1
35	63899	Fuel Cap (Safety)	1
35	311245	Gasket (Safety Fuel Cap)	1

©2011 HYSTER COMPANY

AIR INLET (FIGURE 3-6)
TIER I ENGINE

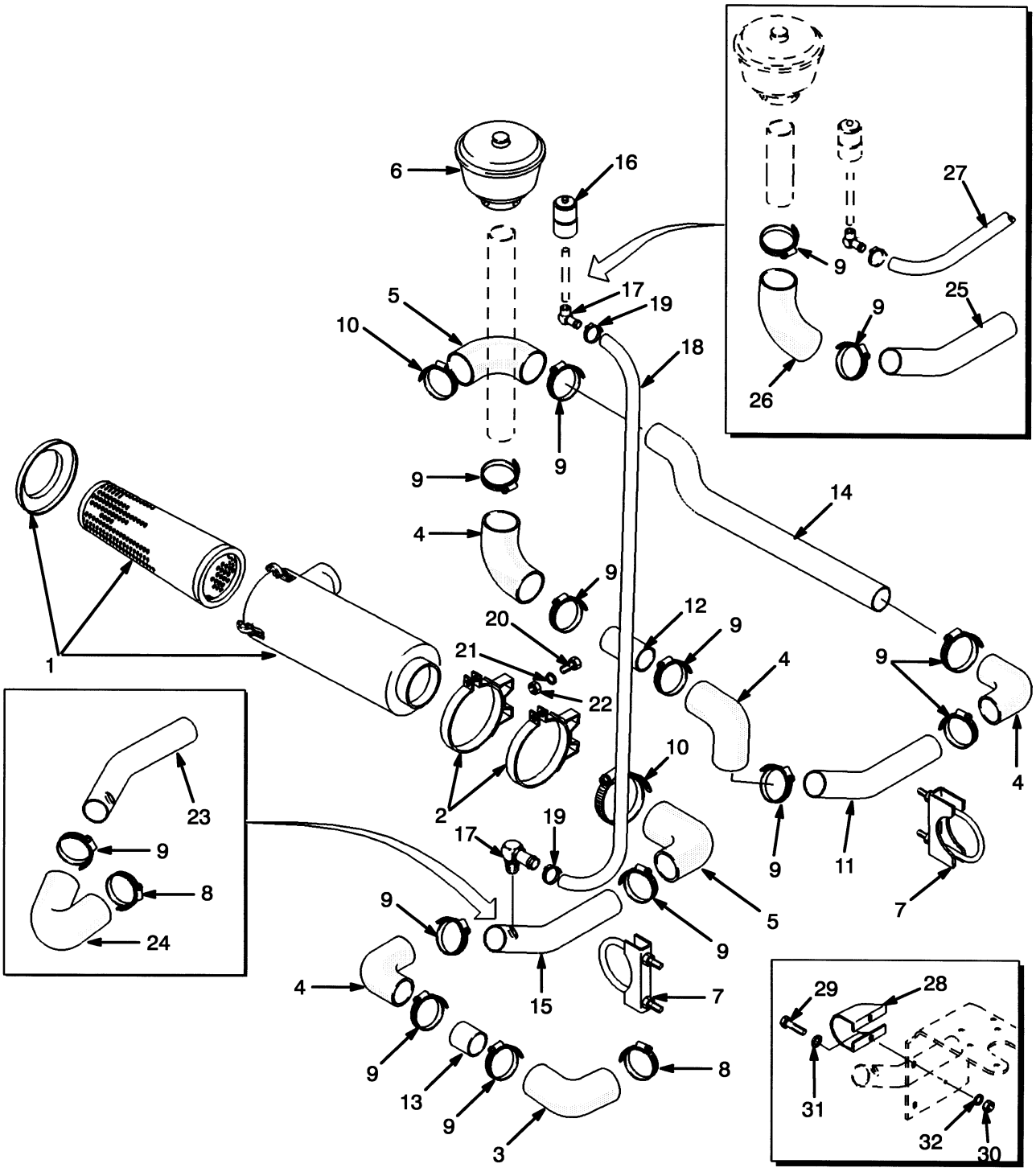

HP030114

©2011 HYSTER COMPANY

AIR INLET
TIER I ENGINE

KEY:
A: H550F, H620F, H650F, H700F
B: H550FS, H620FS, H700FS

ITEM	PART NO.	DESCRIPTION	QTY A	QTY B
1	1365120	Air Filter	1	1
1	. . . . .	Body	1	1
1	1344037	Filter Element	1	1
1	1344038	Cover	1	1
2	1331928	Clamp	2	2
3	1331916	Elbow	1	..
4	1312201	Elbow	4	1
5	1331917	Elbow	2	2
6	196959	Pre-Cleaner (Bowl Type)	1	1
6	227220	Clamp	1	1
6	147983	Cover	1	1
6	147985	Body	1	1
6	214336	Sleeve	1	1
7	134881	Clamp	2	2
8	227220	Clamp	1	1
9	144157	Hose Clamp	22	14
10	227221	Clamp	4	4
11	1339515	Tube	1	..
12	1331907	Tube	1	..
13	1331912	Tube	1	..
14	1339516	Tube	1	1
15	1331955	Tube	1	..
16	156478	Air Restriction Indicator	1	1
17	17343	Fitting	2	2
18	349365	Hose	1	..
19	**ab** 166857	Clamp	2	2
19	**de** 168718	Clamp	2	2
20	16598	Capscrew	4	4
21	15156	Lockwasher	4	4
22	15056	Nut	4	4
23	1352256	Tube	..	1
24	1352228	Elbow	..	1
25	**c** 1352230	Tube	..	1
25	**f** 1510383	Tube	..	1
26	1352266	Elbow	..	1
27	1352267	Hose	..	1
28	1452594	Heat Shield	1	..
29	292514	Capscrew	2	..
30	136692	Nut	2	..
31	320159	Washer	2	..
32	~~388049~~			
	292682	Lockwasher	2	..

©2011 HYSTER COMPANY

FOOTNOTES:

a → S/N E008D01602
b → S/N E008E01697
c → S/N E008E01888Z
d S/N E008D01603 →
e S/N E008E01698 →
f S/N E008E01889Z →

©2011 HYSTER COMPANY

NOTES

©2011 HYSTER COMPANY

AIR INLET (FIGURE 3-7)

H550F, H620F, H650F, H700F — TIER II ENGINE (→ S/N E008E02099D)

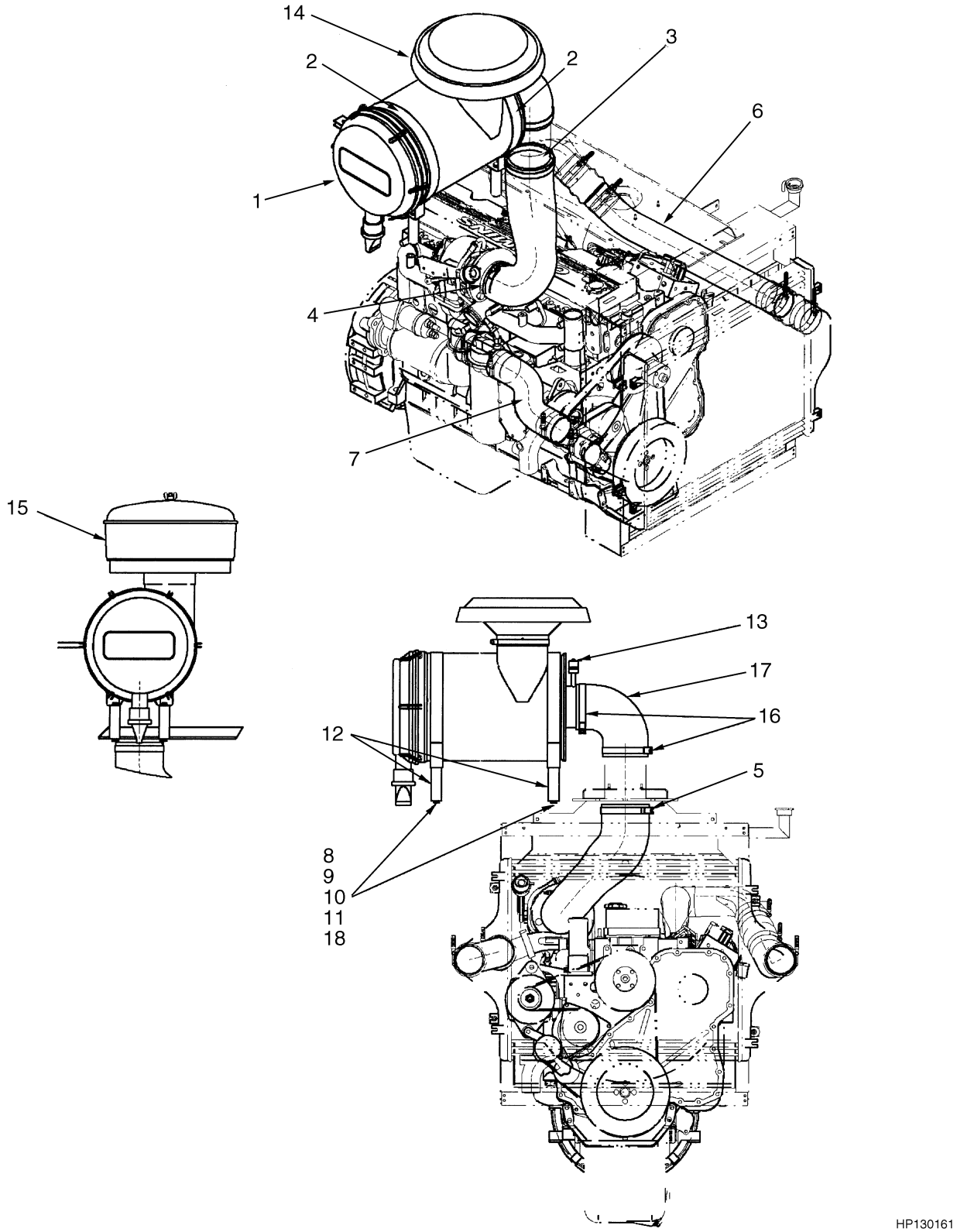

©2011 HYSTER COMPANY

AIR INLET

H550F, H620F, H650F, H700F – TIER II ENGINE (→ S/N E008E02099D)

ITEM	PART NO.	DESCRIPTION	QTY
1	1507391	Air Filter Assembly	1
1	1506806	Air Filter	1
1	1507234	Filter Element	1
1	1507235	Filter Element (Inner)	1
2	1506773	Clamp	2
3	1518360	Hose	1
4	1507361	Clamp	1
5	1507362	Clamp	1
6	1506758	Tube	1
7	1506761	Tube	1
8	18549	Capscrew	4
9	15134	Washer	4
10	15156	Lockwasher	4
11	15056	Nut	4
12	1456624	Spacer	4
13	165991	Indicator (Restriction)	1
14	**a** 1507268	Rain Cap	1
15	1506832	Pre-Cleaner	1
15	1458358	Cover	1
15	1458361	Bowl	1
16	1518717	Clamp	2
17	1312201	Elbow	1
18	15176	Washer	4

FOOTNOTES:

a Without Additional Pre-Cleaner

©2011 HYSTER COMPANY

AIR INLET (FIGURE 3-8)

H440FS, H550FS, H620FS, H700FS — TIER II ENGINE (→ S/N E008E02099D)

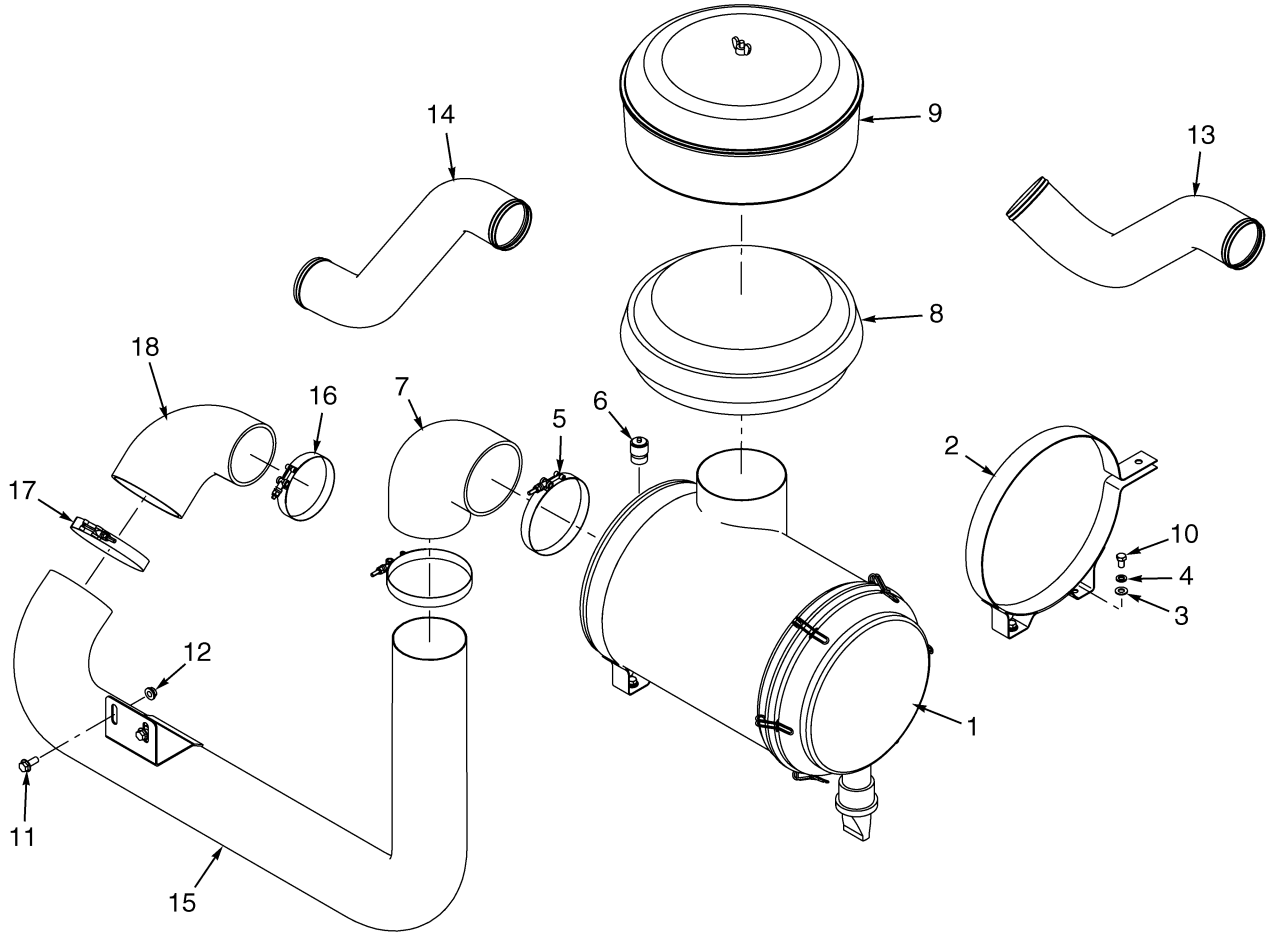

HP130327

©2011 HYSTER COMPANY

AIR INLET

H440FS, H550FS, H620FS, H700FS – TIER II ENGINE (→ S/N E008E02099D)

ITEM	PART NO.	DESCRIPTION	QTY
1	1507391	Air Filter Assembly	1
1	1506806	Air Filter	1
1	1507234	Filter Element	1
1	1507235	Filter Element (Inner)	1
2	1506773	Clamp	2
3	15134	Washer	4
4	15156	Lockwasher	4
5	1518717	Clamp	2
6	165991	Indicator (Restriction)	1
7	1312201	Elbow	1
8	1507268	Rain Cap	1
9	1506832	Pre-Cleaner	1
9	1458358	Cover	1
9	1458361	Bowl	1
10	18535	Capscrew	4
11	1510117	Capscrew	2
12	1460477	Nut	2
13	1543571	Tube	1
14	1543574	Tube	1
15	1543746	Tube (Air Intake)	1
16	1552483	Clamp	1
17	1518717	Clamp	1
18	1331916	Elbow	1

©2011 HYSTER COMPANY

AIR INLET (FIGURE 3-9)

TIER III ENGINE — H550F, H620F, H650F, H700F (S/N E008E02100D →)

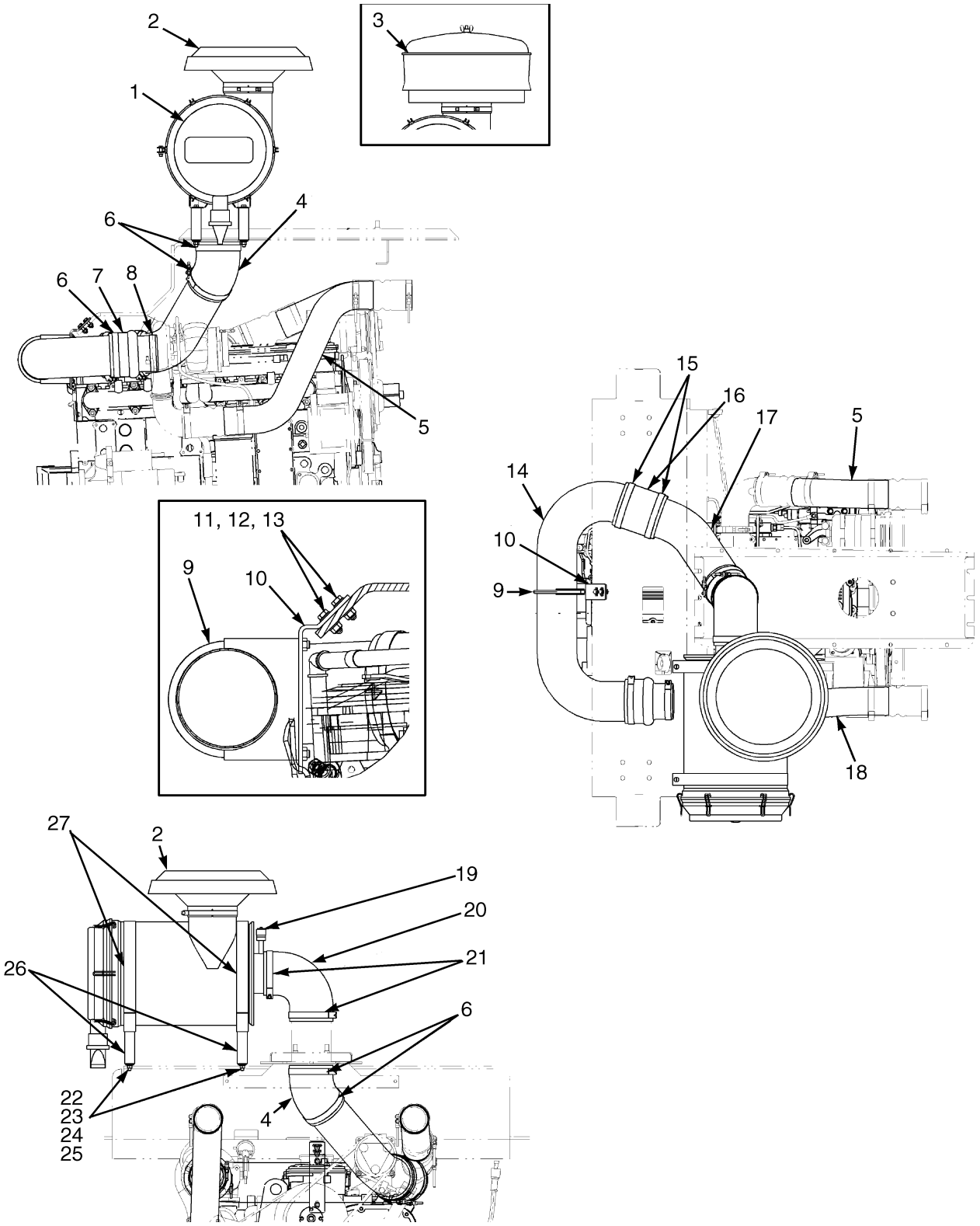

HP130425

©2011 HYSTER COMPANY

AIR INLET

TIER III ENGINE – H550F, H620F, H650F, H700F (S/N E008E02100D →)

ITEM	PART NO.	DESCRIPTION	QTY
1	1507391	Air Filter Assembly	1
1	1506806	Air Filter	1
1	1507234	Filter Element	1
1	1507235	Filter Element (Inner)	1
2	**a** 1507268	Rain Cap	1
3	1506832	Pre-Cleaner	1
3	1458358	Cover	1
3	1458361	Bowl	1
4	1654071	Hose (Air Intake)	1
5	1618752	Tube	1
6	1518717	Clamp	1
7	1623149	Reducer	1
8	1514903	Clamp	1
9	134881	Clamp	1
10	1654069	Plate	1
11	320157	Washer	4
12	176640	Bolt	2
13	302400	Nut	2
14	1654494	Tube (Air Intake)	1
15	1561567	Clamp	2
16	1654496	Hose (Air Intake)	1
17	1654495	Tube (Air Intake)	1
18	1618751	Tube	1
19	165991	Indicator (Restriction)	1
20	1312201	Elbow	1
21	1518717	Clamp	2
22	15134	Washer	4
23	18549	Capscrew	4
24	15115	Locknut	4
25	15176	Washer	4
26	1456624	Spacer	4
27	1506773	Clamp	2

FOOTNOTES:

a Without Additional Pre-Cleaner

©2011 HYSTER COMPANY

AIR INLET (FIGURE 3-10)

TIER III ENGINE — H440FS, H550FS, H620FS, H700FS (S/N E008E02100D →)

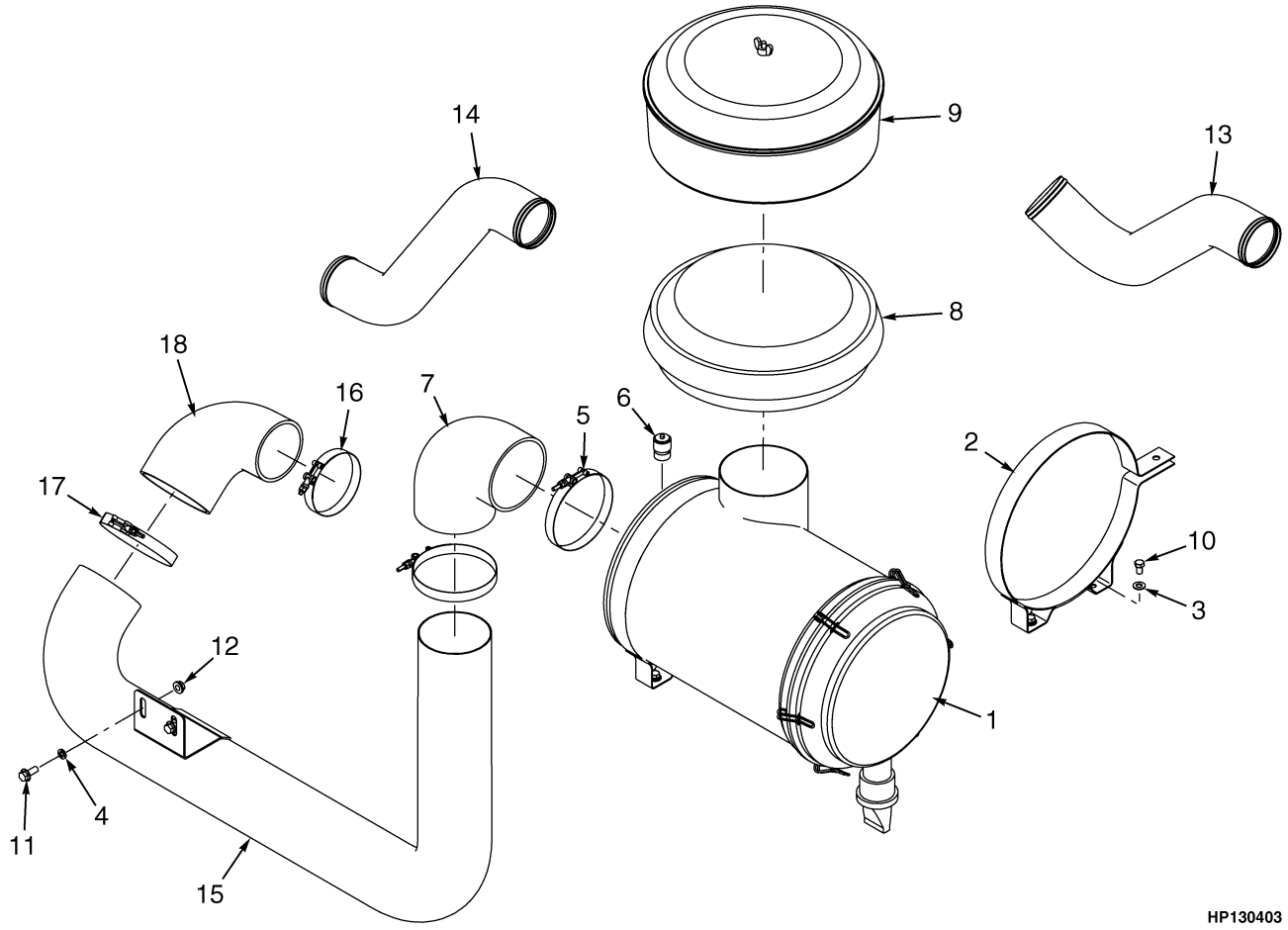

©2011 HYSTER COMPANY

AIR INLET

TIER III ENGINE – H440FS, H550FS, H620FS, H700FS (S/N E008E02100D →)

ITEM	PART NO.	DESCRIPTION	QTY
1	1507391	Air Filter Assembly	1
1	1506806	Air Filter	1
1	1507234	Filter Element	1
1	1507235	Filter Element (Inner)	1
2	1506773	Clamp	2
3	15134	Washer	4
4	320159	Washer	4
5	1518717	Clamp	2
6	165991	Indicator (Restriction)	1
7	1312201	Elbow	1
8	1507268	Rain Cap	1
9	1506832	Pre-Cleaner	1
9	1458358	Cover	1
9	1458361	Bowl	1
10	18535	Capscrew	4
11	136985	Capscrew	2
12	302401	Locknut	2
13	1618751	Tube	1
14	1618752	Tube	1
15	1629077	Tube (Air Intake)	1
16	1514903	Clamp	1
17	1561567	Clamp	1
18	1629081	Elbow	1

©2011 HYSTER COMPANY

THROTTLE LINKAGE (FIGURE 3-11)
TIER I ENGINE

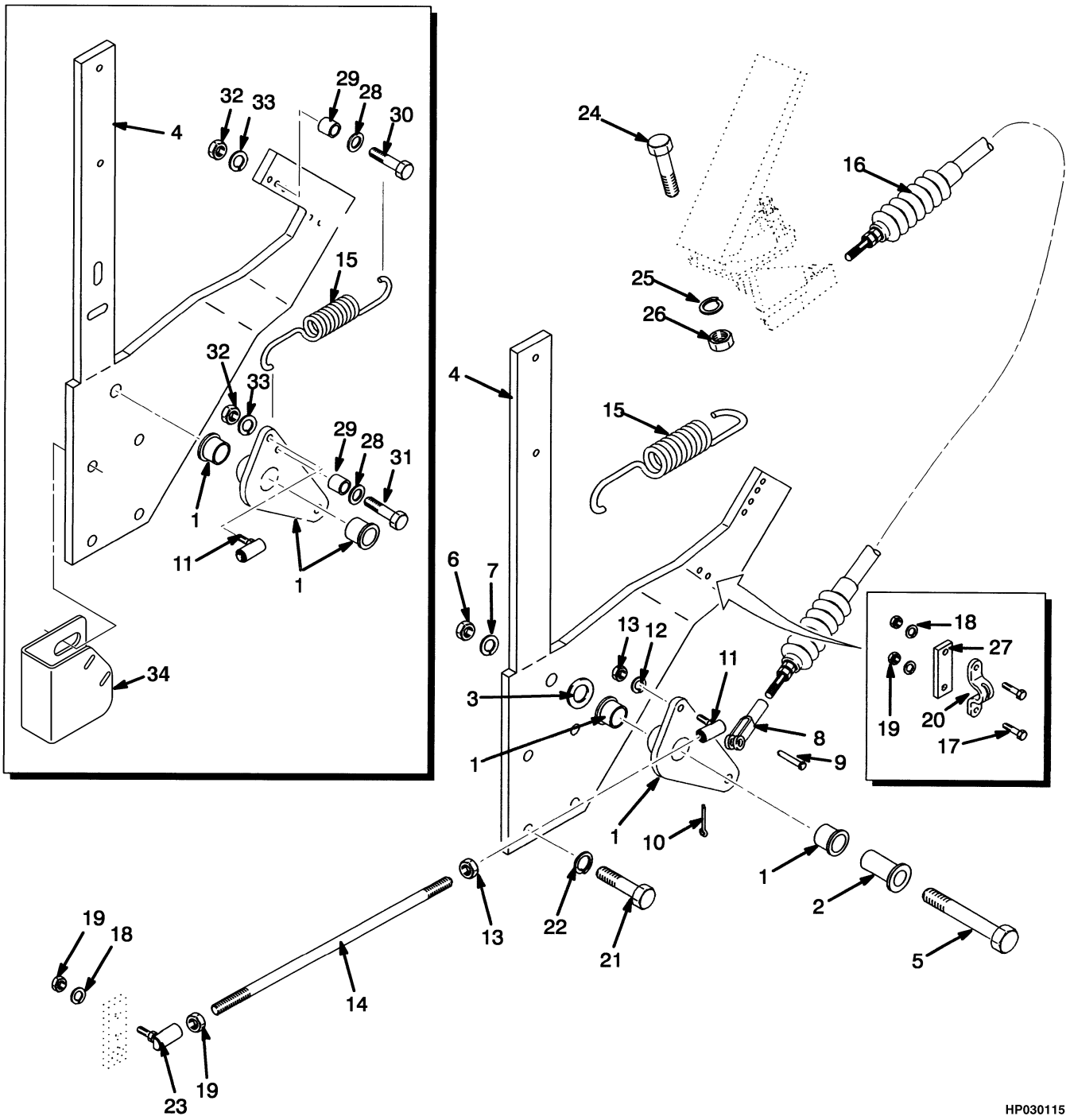

©2011 HYSTER COMPANY

THROTTLE LINKAGE
TIER I ENGINE

KEY:
A: H550F, H620F, H650F, H700F
B: H550FS, H620FS, H700FS

ITEM	PART NO.	DESCRIPTION	QTY A	QTY B
1	**c** 1336083	Lever	1	1
1	**c** 1336082	Arm	1	1
1	**c** 1464640	Lever	1	1
1	1305909	Bushing	2	2
2	1305904	Spacer	1	1
3	15180	Washer	1	1
4	**a** 1339513	Bracket Wldmt	1	1
4	**b** 816087	Bracket Wldmt	1	1
5	221635	Capscrew	1	1
6	15010	Nut	1	1
7	15160	Washer	1	1
8	125	Rod End	1	1
9	126	Pin	1	1
10	15200	Cotter Pin	1	1
11	139024	Ball Joint	1	1
12	18425	Lockwasher	1	1
13	15024	Nut	4	4
14	1336088	Link	1	1
15	**a** 338240	Spring	1	1
15	**b** 353143	Spring	1	1
16	1359442	Cable Assy	..	1
16	314166	Throttle Cable	1	..
17	220449	Screw	2	..
17	220497	Screw	..	2
18	15152	Lockwasher	3	3
19	15002	Nut	4	4
20	392016	Clamp	1	1
21	293643	Capscrew	..	4
21	293646	Capscrew	4	..
22	15165	Lockwasher	..	4
22	292683	Lockwasher	4	..
23	227210	Ball Joint	1	1
24	18460	Capscrew	3	3
25	15154	Lockwasher	3	3
26	15054	Nut	3	3
27	314170	Shim	1	1
28	**b** 15127	Washer	2	2
29	**b** 1301026	Spacer	2	2
30	**b** 287816	Capscrew	1	1
31	**b** 292501	Capscrew	1	1
32	**b** 136687	Nut	2	2
33	**b** 292680	Washer	2	..
34	**c** 1508460	Bracket (Sensor)	1	1

©2011 HYSTER COMPANY

FOOTNOTES:

a → S/N E008E01632
b S/N E008E01633 →
c S/N E008E01866Y →

©2011 HYSTER COMPANY

NOTES

©2011 HYSTER COMPANY

ELECTRONIC FOOT PEDAL MOUNT (FIGURE 3-12)
TIER II AND III ENGINES

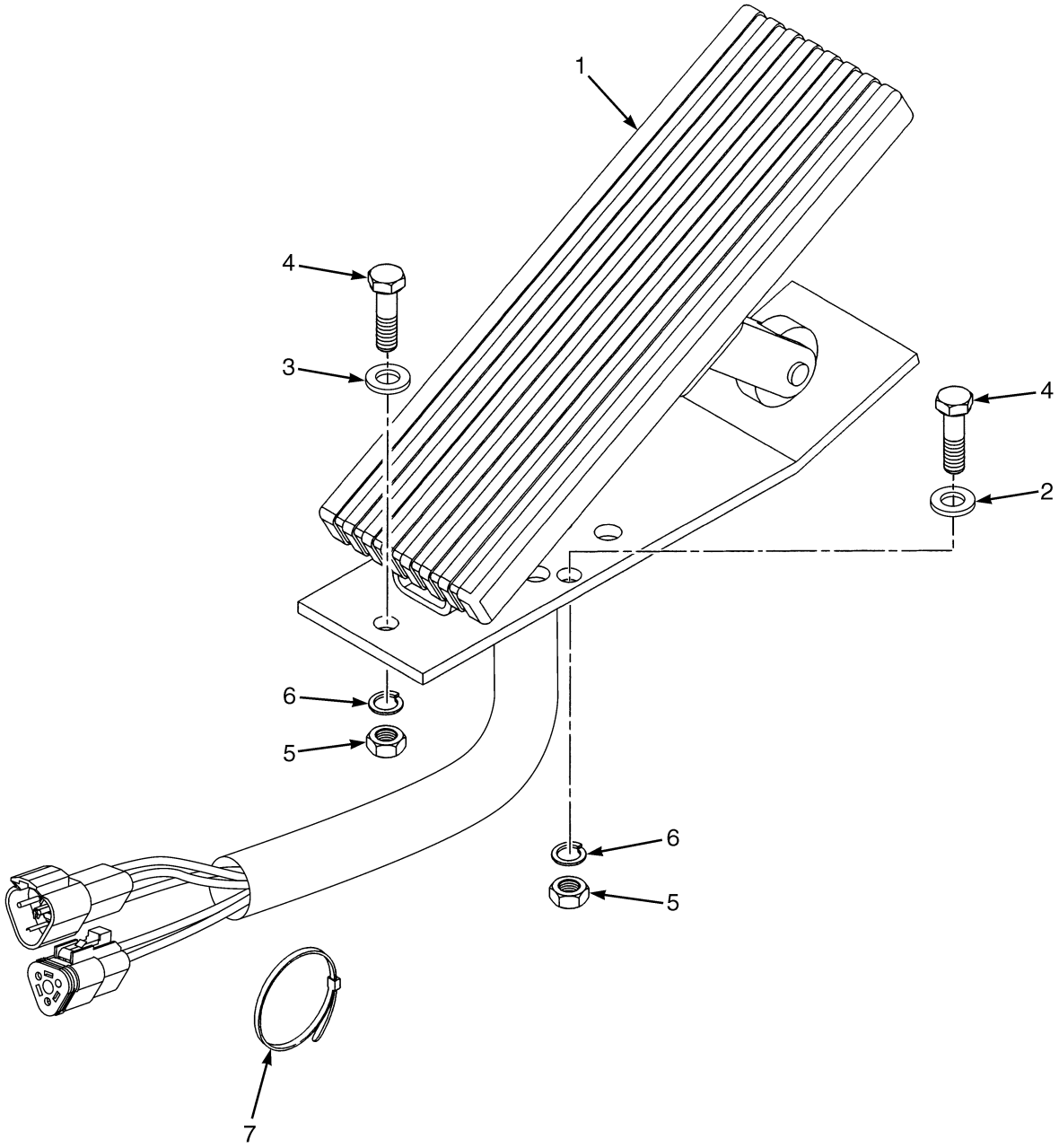

©2011 HYSTER COMPANY

ELECTRONIC FOOT PEDAL MOUNT

TIER II AND III ENGINES

ITEM	PART NO.	DESCRIPTION	QTY
1	1508451	Accelerator Pedal (Tier III Engines) (☞Figure 3-14)	1
1	4016302	Pedal (Electronic) (Tier II Engines)	1
2	320157	Washer	2
3	320158	Washer	1
4	136749	Screw	3
5	239503	Nut	3
6	292681	Lockwasher	3
7	137852	Strap Clamp	3

©2011 HYSTER COMPANY

THROTTLE PEDAL (FIGURE 3-13)
TIER I ENGINE

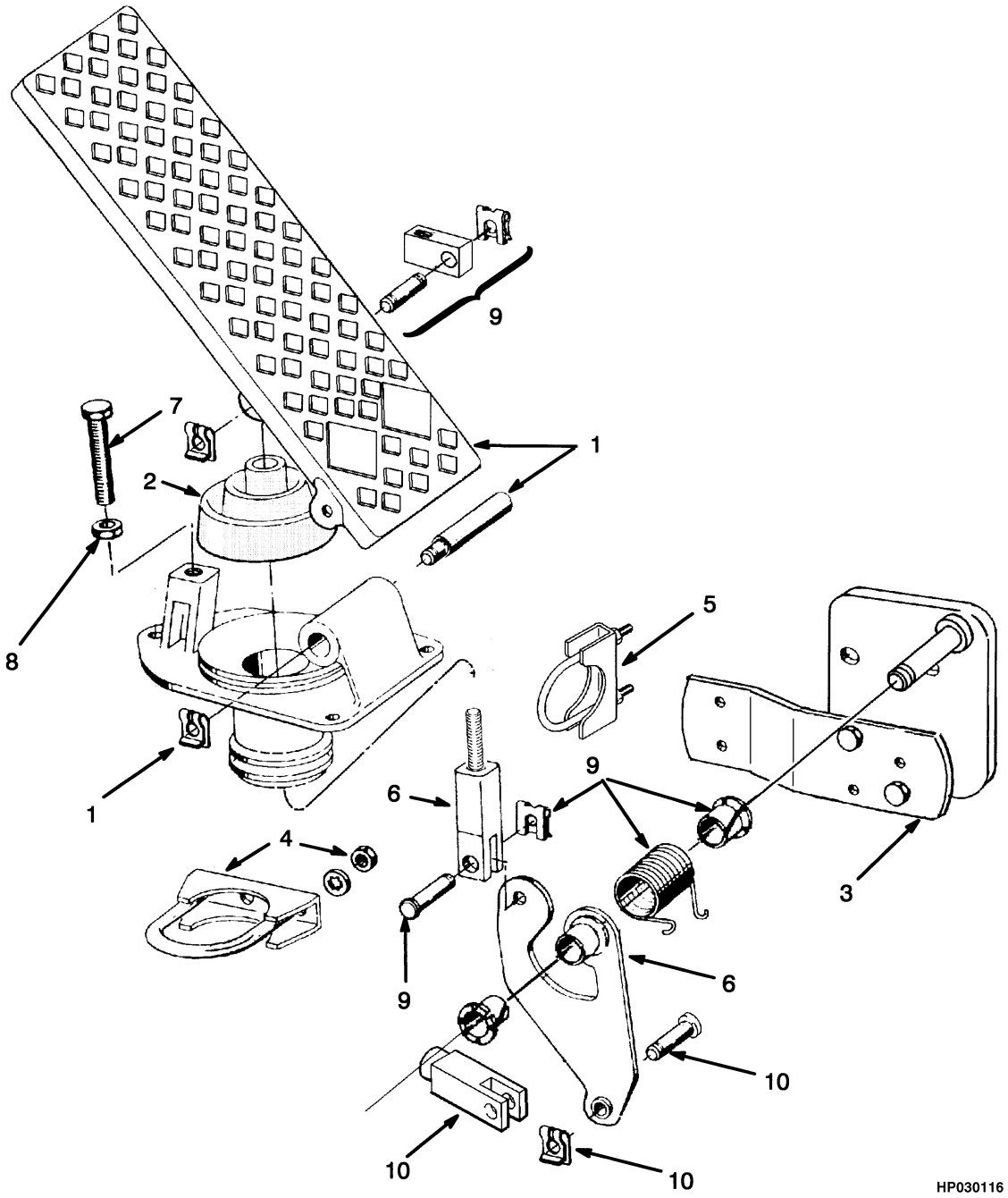

©2011 HYSTER COMPANY

THROTTLE PEDAL
TIER I ENGINE

ITEM	PART NO.	DESCRIPTION	QTY
	284847	Pedal Assy	1
1	**a**	Pedal Assembly	1
2	344247	Bellows	1
3	344245	Bracket	1
4	344243	Bolt	1
5	344246	Anchor	1
6	344244	Lever	1
7	1354812	Screw (Stop)	1
8	1354813	Nut	1
9	344242	Kit-Bearing	1
10	345400	Clevis	1

FOOTNOTES:

a Not Serviced Separately

©2011 HYSTER COMPANY

THROTTLE PEDAL ASSEMBLY (FIGURE 3-14)
ELECTRONIC — TIER III ENGINES

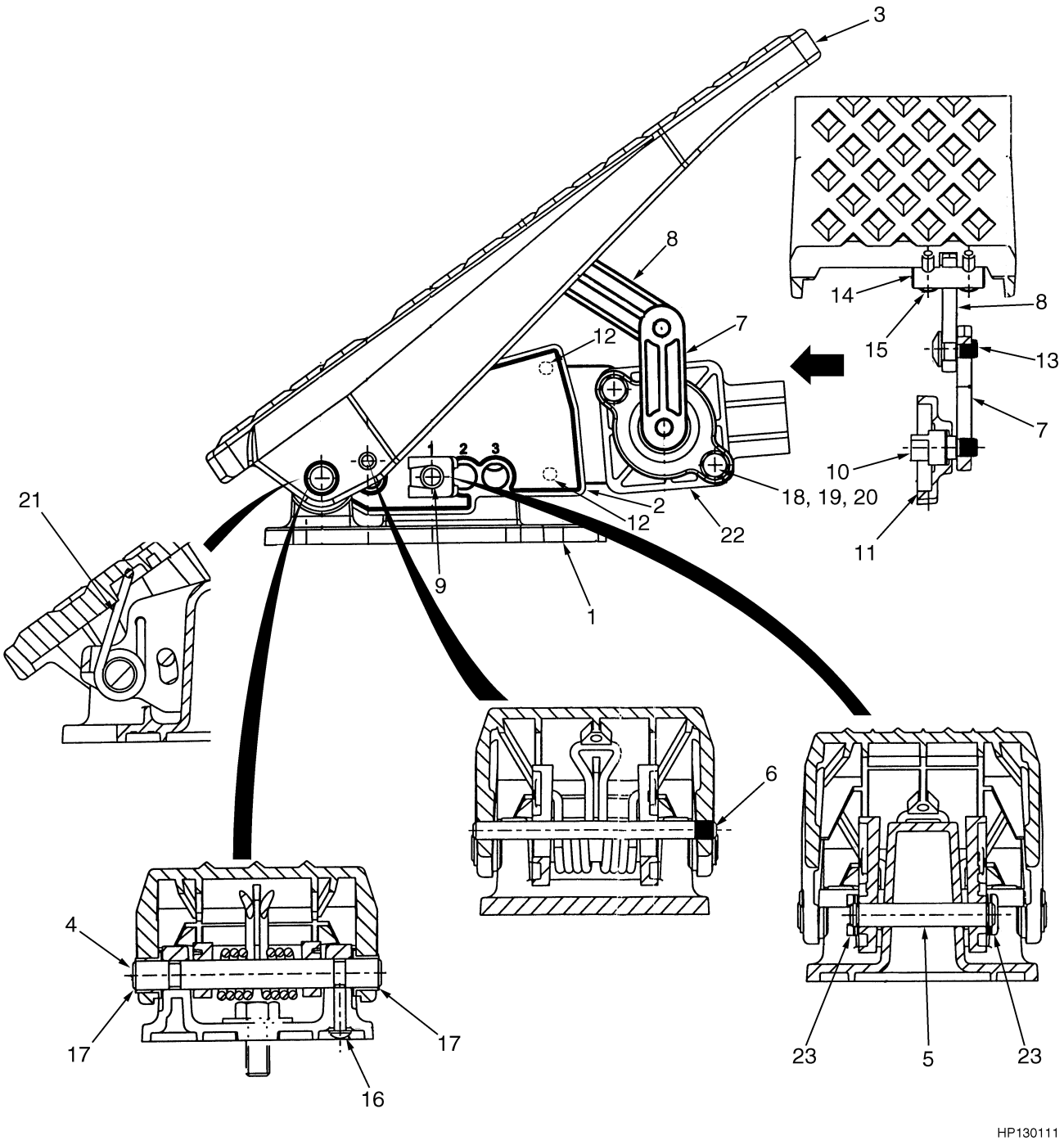

©2011 HYSTER COMPANY

THROTTLE PEDAL ASSEMBLY
ELECTRONIC – TIER III ENGINES

ITEM	PART NO.	DESCRIPTION	QTY
	1508451	Accelerator Pedal	1
1	. . . . .	Base	1
2	. . . . .	Frame (Potentiometer)	1
3	. . . . .	Threadle Pedal	1
4	. . . . .	Pin (Pivot)	1
5	. . . . .	Pin (Positioning)	1
6	. . . . .	Pin (Restraining)	1
7	. . . . .	Link (Lower)	1
8	. . . . .	Link (Upper)	1
9	. . . . .	Plate	1
10	. . . . .	Drive Shaft	1
11	. . . . .	Bearing	1
12	. . . . .	Screw (Flange)	2
13	. . . . .	Pin (Hinge)	1
14	. . . . .	Pin (Potentiometer)	1
15	. . . . .	Screw	2
16	. . . . .	Screw	1
17	. . . . .	Bearing	2
18	. . . . .	Nut	2
19	. . . . .	Washer	2
20	. . . . .	Bolt	2
21	. . . . .	Return Spring	1
22	. . . . .	Potentiometer	1
23	. . . . .	Clip (Spring)	2

©2011 HYSTER COMPANY

FUEL FILTER (FIGURE 3-15)

H550F, H620F, H650F, H700F — TIER II ENGINE (S/N E008E01985B ↔ S/N E008E02099D)

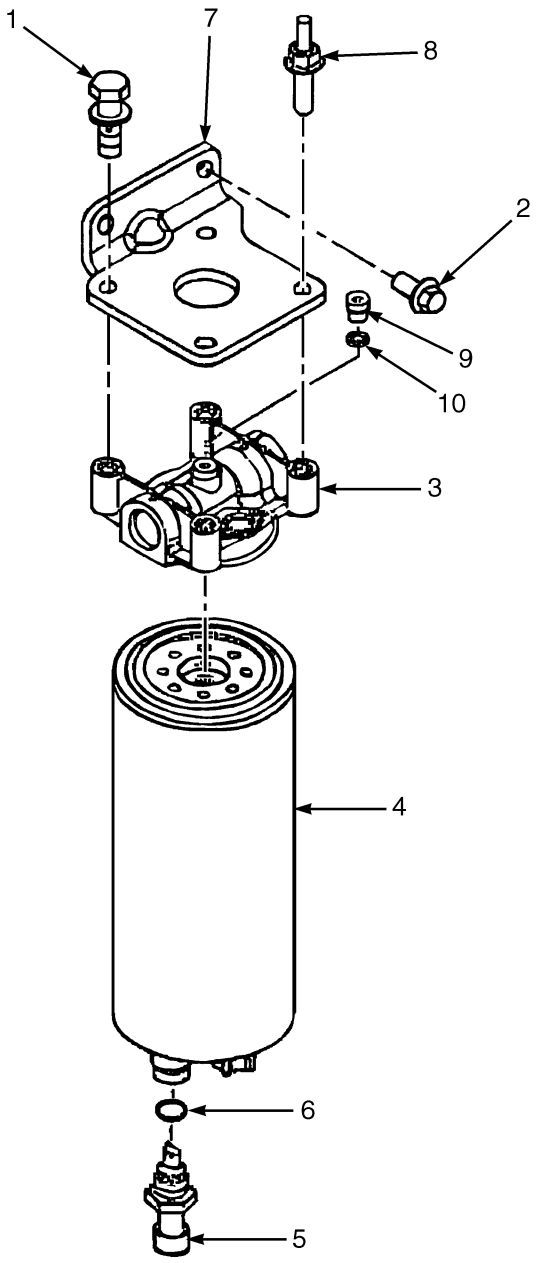

HP091078

©2011 HYSTER COMPANY

FUEL FILTER

H550F, H620F, H650F, H700F – TIER II ENGINE (S/N E008E01985B ↔ S/N E008E02099D)

ITEM	PART NO.	DESCRIPTION	QTY
	1532628	Engine Assy-Diesel (H550F, H620F, H650F, H700F)	1
1	1517007	Capscrew	3
2	1512328	Capscrew	2
3	1564972	Filter Head	1
4	1564973	Water Separator	1
5	1564974	Sensor	1
6	1513455	O-Ring	1
7	1517009	Bracket (Filter)	1
8	1517008	Screw	1
9	1517010	Plug Assembly	1
10	1517011	O-Ring	1
	1588054	Kit-Gasket (Lower Engine)	1
	1588056	Kit-Gasket (Upper Engine)	1

©2011 HYSTER COMPANY

FUEL FILTER (FIGURE 3-16)

H440FS, H550FS, H620FS, H700FS — TIER II ENGINE (S/N E008E01985B ↔ S/N E008E02099D)

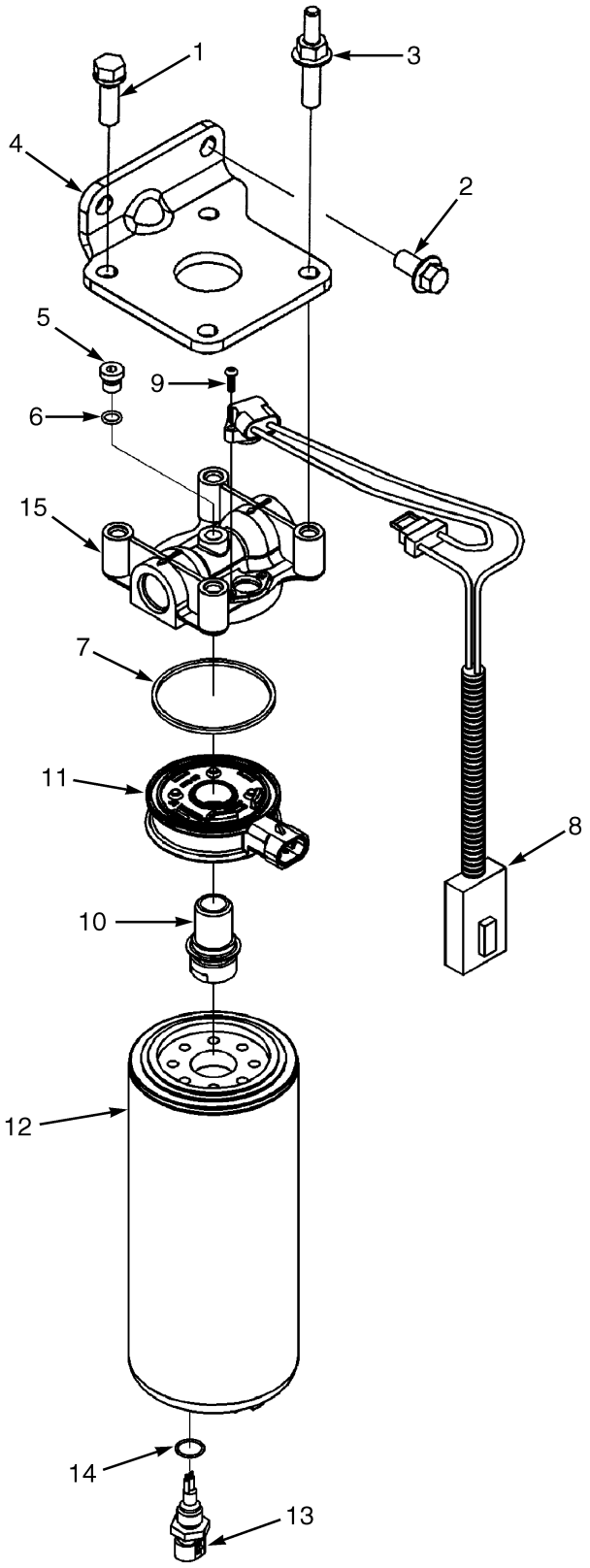

©2011 HYSTER COMPANY

FUEL FILTER

H440FS, H550FS, H620FS, H700FS – TIER II ENGINE (S/N E008E01985B ↔ S/N E008E02099D)

ITEM	PART NO.	DESCRIPTION	QTY
	1542383	Engine Assy-Diesel (H550FS, H620FS, H700FS)	1
1	1517007	Capscrew	3
2	1512328	Capscrew	2
3	1517008	Screw	1
4	1517009	Bracket (Filter)	1
	. . . . .	Filter Assembly	1
5	1517010	Plug Assembly	1
6	1517011	O-Ring	1
7	1517013	Sealing Ring	1
8	. . . . .	Sensor (Temperature)	1
9	1517012	Screw	2
10	1517014	Adapter (Filter Head)	1
11	1588064	Heater Element	1
12	1517016	Kit-Water Separator	1
13	. . . . .	Sensor (Water)	1
14	1513455	O-Ring	1
15	1517017	Filter Head (Filter)	1
	1597460	Kit-Thermostat	1
	1588056	Kit-Gasket (Upper Engine)	1
	1588054	Kit-Gasket (Lower Engine)	1

©2011 HYSTER COMPANY

FUEL FILTER (FIGURE 3-17)
TIER III ENGINE (S/N E008E02100D →)

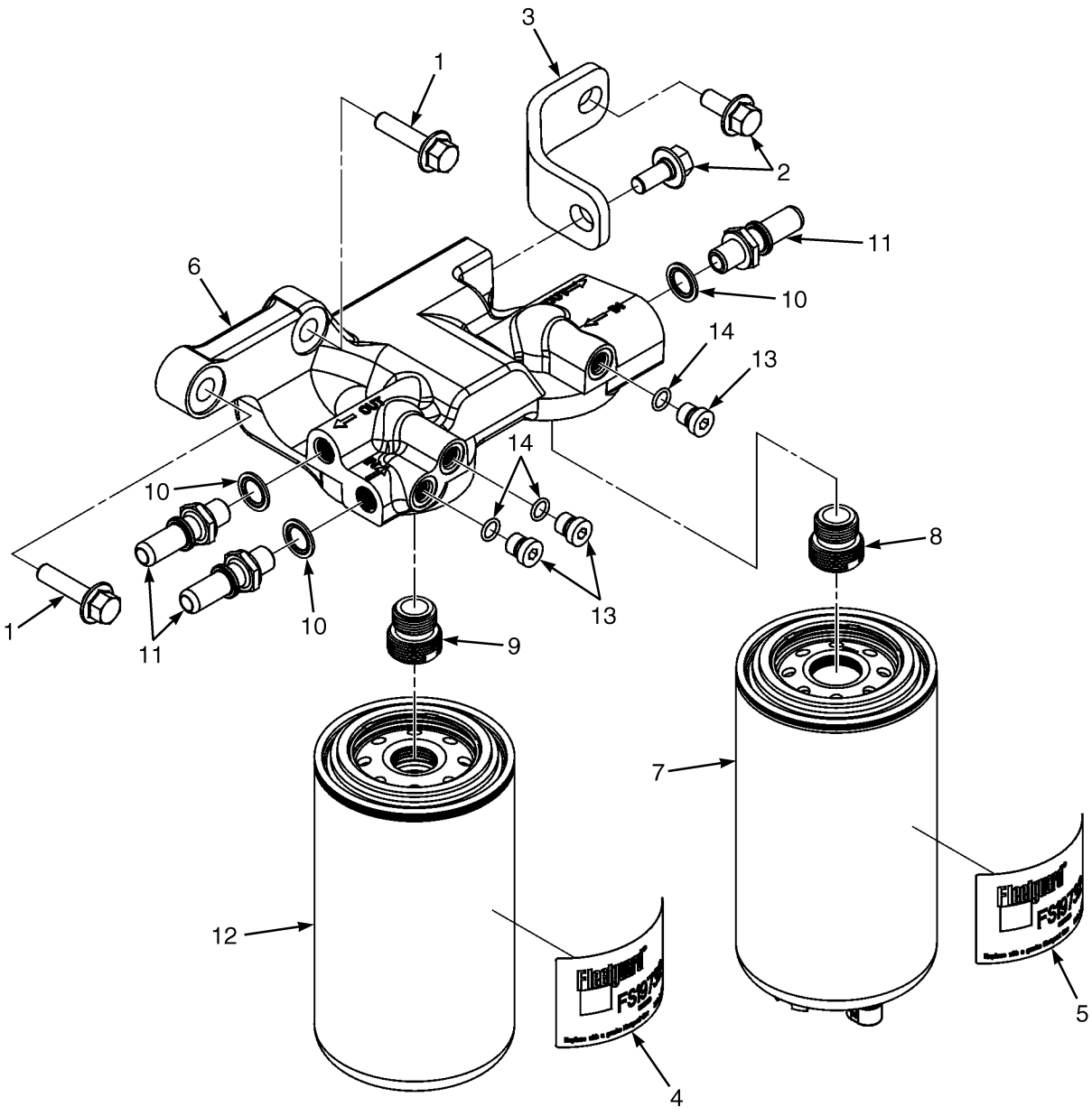

©2011 HYSTER COMPANY

FUEL FILTER

TIER III ENGINE (S/N E008E02100D →)

ITEM	PART NO.	DESCRIPTION	QTY
	1663666	Engine Assy-Diesel	1
1	1515845	Screw	2
2	1512328	Capscrew	1
3	1644010	Bracket (Filter)	1
4	. . . . .	Decal	1
5	. . . . .	Decal	1
6	. . . . .	Fuel Filter Head Assembly	1
6	. . . . .	Fuel Filter Head	1
7	1635303	Fuel Filter	1
8	1644314	Adapter (Filter Head)	1
9	1643814	Adapter (Filter Head)	1
10	1644166	Sealing Ring	3
11	1644027	Adapter	3
12	1644048	Fuel Filter	1
13	. . . . .	Plug Assembly	3
13	1543354	Plug	1
14	1517011	O-Ring	1

©2011 HYSTER COMPANY

FUEL FILTER PLUMBING (FIGURE 3-18)

TIER II ENGINE (→ S/N E008E02099D)

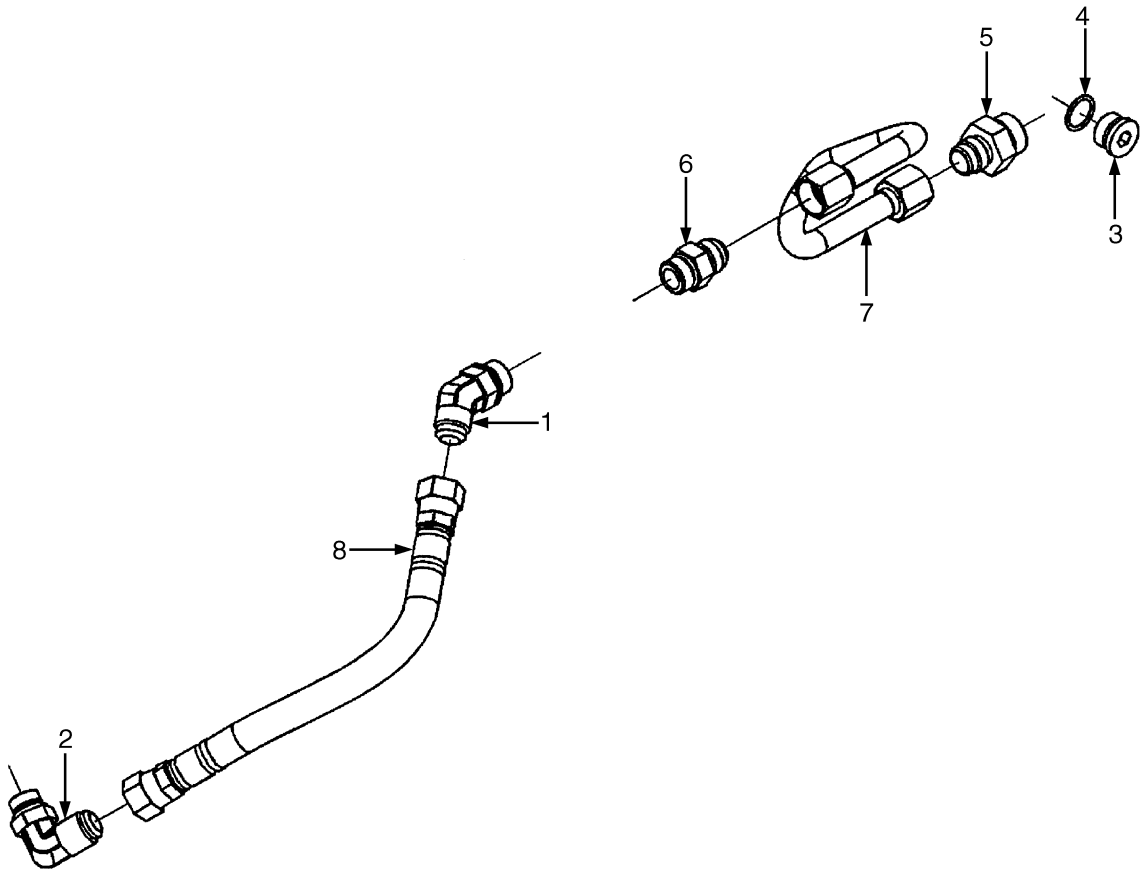

HP090748

©2011 HYSTER COMPANY

FUEL FILTER PLUMBING

TIER II ENGINE (→ S/N E008E02099D)

ITEM	PART NO.	DESCRIPTION	QTY
	a 1532628	Engine Assy-Diesel (H550F, H620F, H650F, H700F)	1
	a 1542383	Engine Assy-Diesel (H550FS, H620FS, H700FS)	1
1	1517019	Fitting	1
2	1517020	Fitting	1
3	1513637	Plug	1
4	1512740	O-Ring	1
5	1517021	Fitting (Union)	1
6	1517022	Fitting (Union)	1
7	1517023	Tube Assy (Fuel Supply)	1
8	1517024	Hose	1
	1588054	Kit-Gasket (Lower Engine)	1

FOOTNOTES:

a S/N E008E01985B →

©2011 HYSTER COMPANY

FUEL FILTER PLUMBING (FIGURE 3-19)

TIER III ENGINE (S/N E008E02100D →)

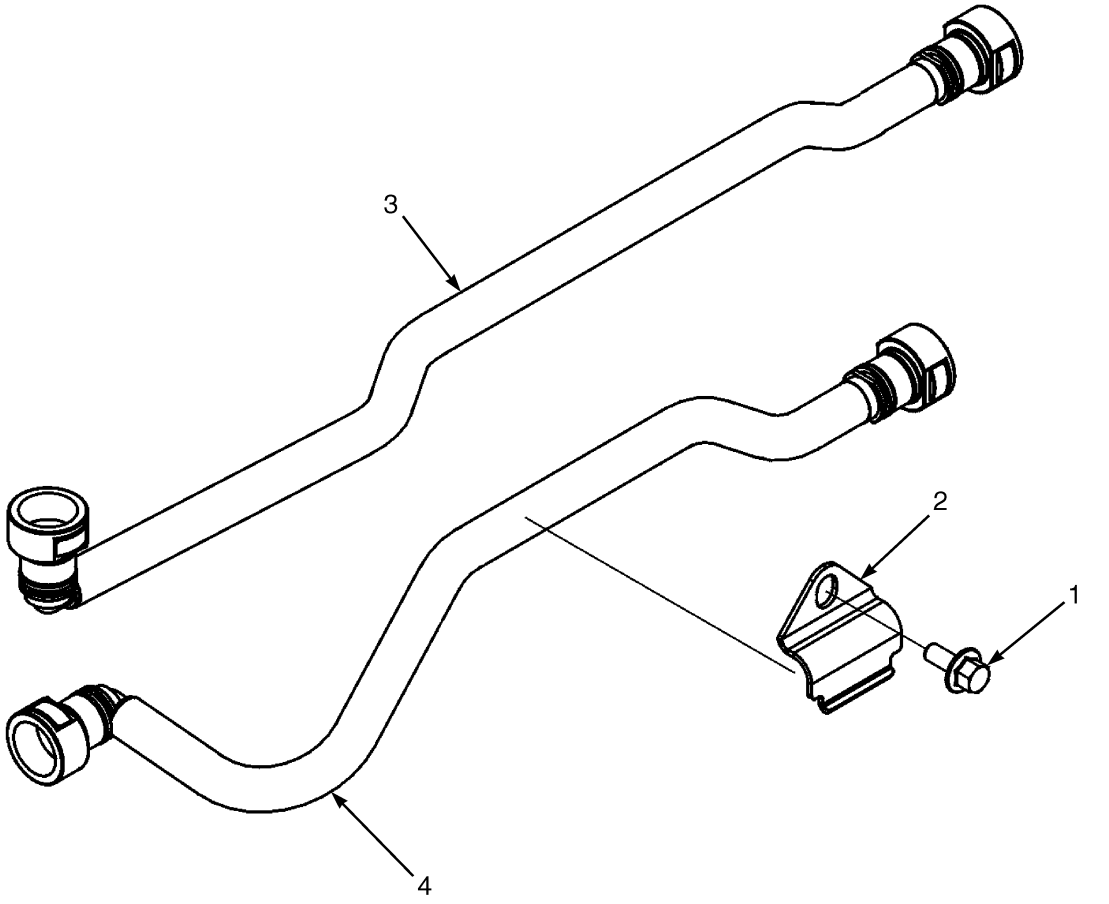

HP091398

©2011 HYSTER COMPANY

ITEM	PART NO.	DESCRIPTION	QTY
	1663666	Engine Assy-Diesel	1
1	1513749	Capscrew	1
2	1644012	Brace	1
3	1644151	Tube Assy (Fuel Supply)	1
4	1644150	Tube Assy (Fuel Supply)	1

©2011 HYSTER COMPANY

FUEL TRANSFER PUMP (FIGURE 3-20)

TIER II ENGINE (→ S/N E008E02099D)

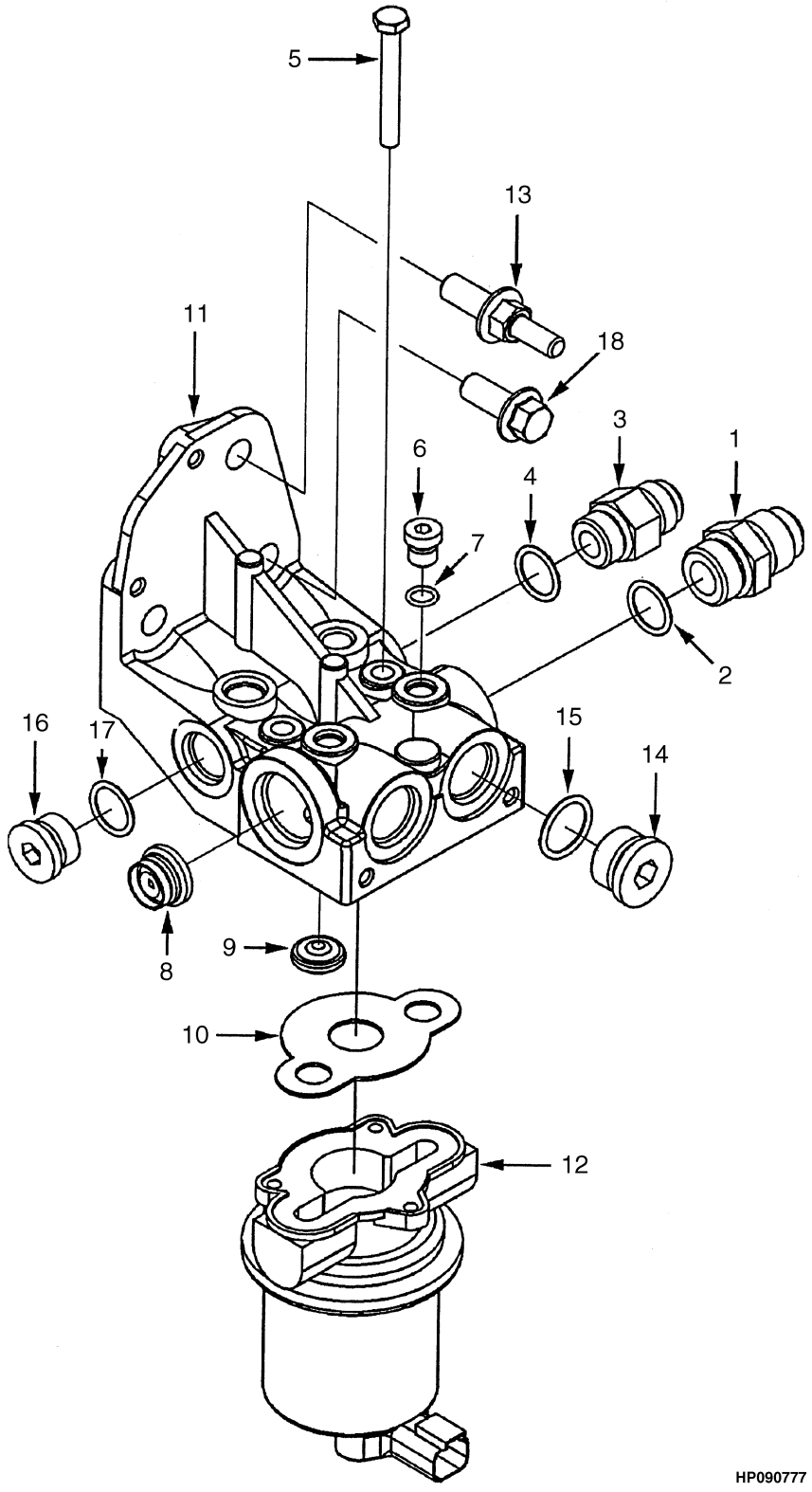

©2011 HYSTER COMPANY

FUEL TRANSFER PUMP

TIER II ENGINE (→ S/N E008E02099D)

ITEM	PART NO.	DESCRIPTION	QTY
	a 1532628	Engine Assy-Diesel (H550F, H620F, H650F, H700F)	1
	a 1542383	Engine Assy-Diesel (H550FS, H620FS, H700FS)	1
1	1517022	Fitting (Union)	1
2	1512740	O-Ring	1
3	1513427	Fitting (Union)	1
4	1511961	O-Ring	1
	1565718	Fuel Pump	1
5	1517061	Capscrew	3
6	. . . . .	Plug	2
7	1517011	O-Ring	2
8	. . . . .	Check Valve	1
9	. . . . .	Check Valve	1
10	. . . . .	Gasket	1
11	. . . . .	Bracket	1
12	. . . . .	Fuel Pump	1
13	1517070	Screw	1
14	1513637	Plug	1
15	1512740	O-Ring	1
16	1512589	Plug Assembly	1
17	1511961	O-Ring	1
18	1512503	Capscrew	2
	1588054	Kit-Gasket (Lower Engine)	1
	1588056	Kit-Gasket (Upper Engine)	1

FOOTNOTES:

a S/N E008E01985B →

©2011 HYSTER COMPANY

FUEL TRANSFER PUMP (FIGURE 3-21)

TIER III ENGINE (S/N E008E02100D →)

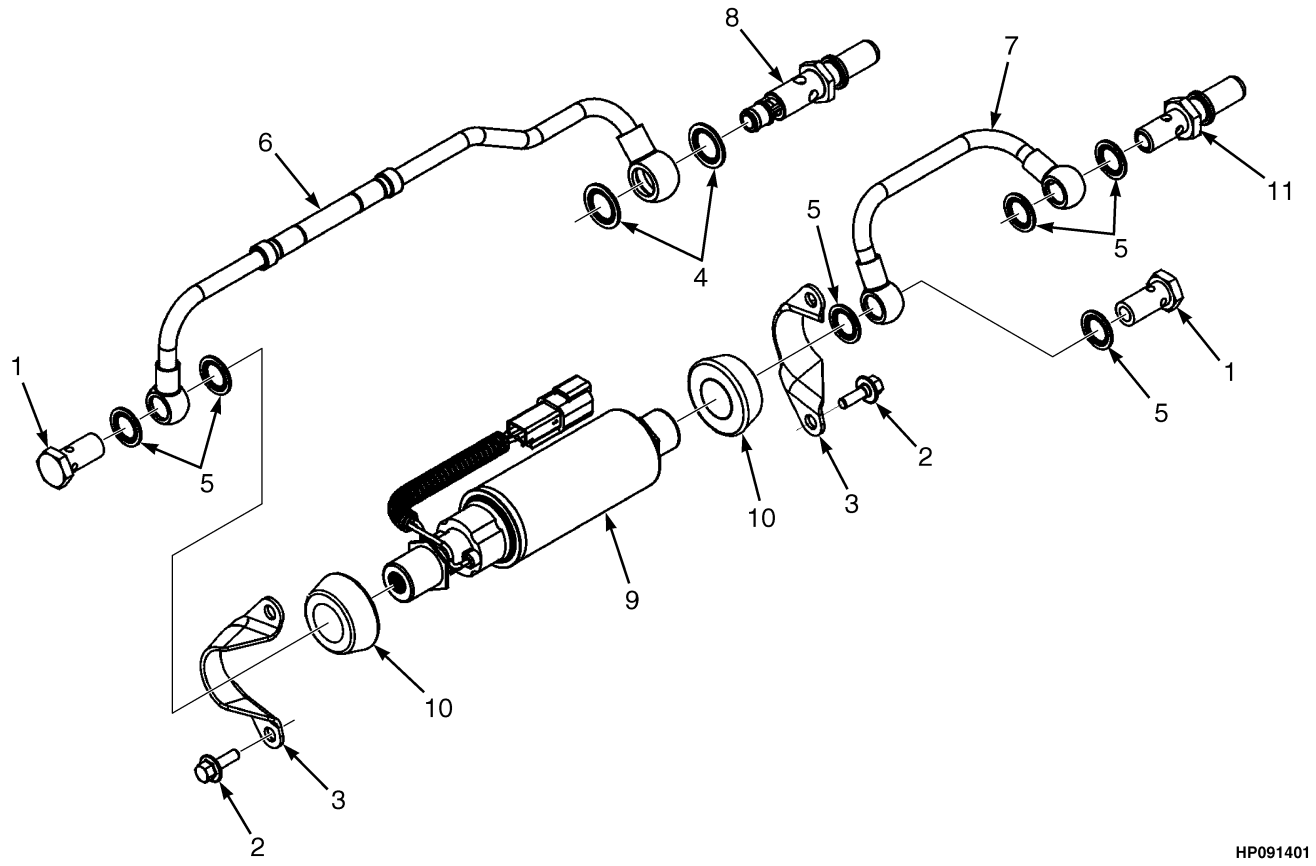

©2011 HYSTER COMPANY

FUEL TRANSFER PUMP

TIER III ENGINE (S/N E008E02100D →)

ITEM	PART NO.	DESCRIPTION	QTY
	1663666	Engine Assy-Diesel	1
1	1514371	Capscrew	2
2	1512051	Capscrew	4
3	1644018	Bracket	2
4	1584546	Sealing Ring	2
5	1644166	Sealing Ring	6
6	1644147	Tube Assy (Fuel Supply)	1
7	1644148	Tube Assy (Fuel Supply)	1
8	1644163	Check Valve	1
9	1644102	Pump Assembly	1
10	1644075	Isolator	2
11	1644028	Adapter	1
	1649732	Kit-Gasket (Upper)	..

©2011 HYSTER COMPANY

FUEL PLUMBING (FIGURE 3-22)

TIER II ENGINE (→ S/N E008E02099D)

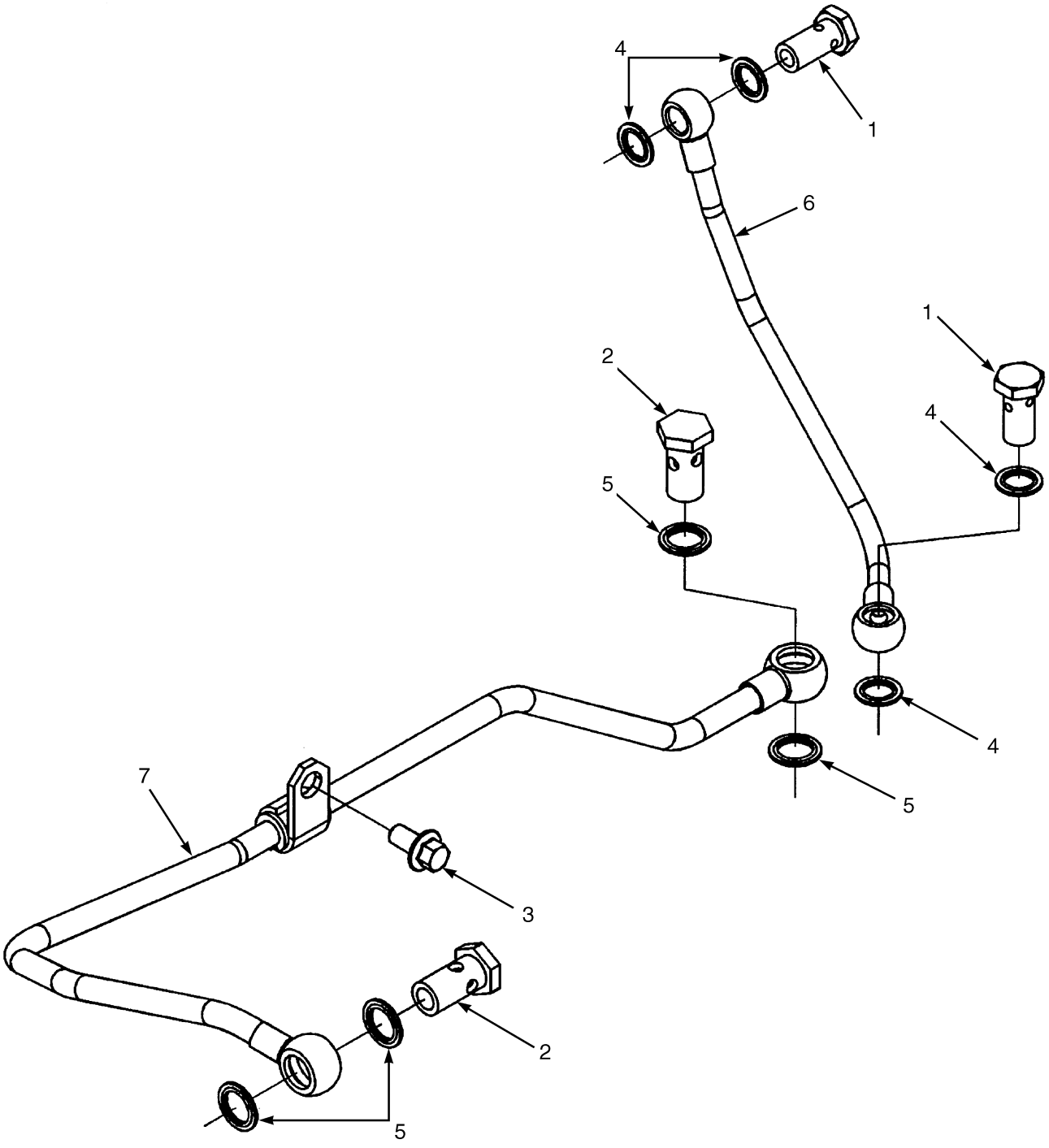

HP091214

©2011 HYSTER COMPANY

FUEL PLUMBING

TIER II ENGINE (→ S/N E008E02099D)

ITEM	PART NO.	DESCRIPTION	QTY
	a 1532628	Engine Assy-Diesel (H550F, H620F, H650F, H700F)	1
	a 1542383	Engine Assy-Diesel (H550FS, H620FS, H700FS)	1
1	1514371	Capscrew	2
2	1514382	Screw	2
3	1513749	Capscrew	1
4	1543359	Sealing Ring	4
5	1511998	Sealing Ring	4
6	1517081	Tube (Fuel Drain)	1
7	1588814	Tube Assy (Fuel Drain)	1
	1588054	Kit-Gasket (Lower Engine)	1

FOOTNOTES:

a S/N E008E01985B →

©2011 HYSTER COMPANY

FUEL PLUMBING (FIGURE 3-23)

TIER III ENGINE (S/N E008E02100D →)

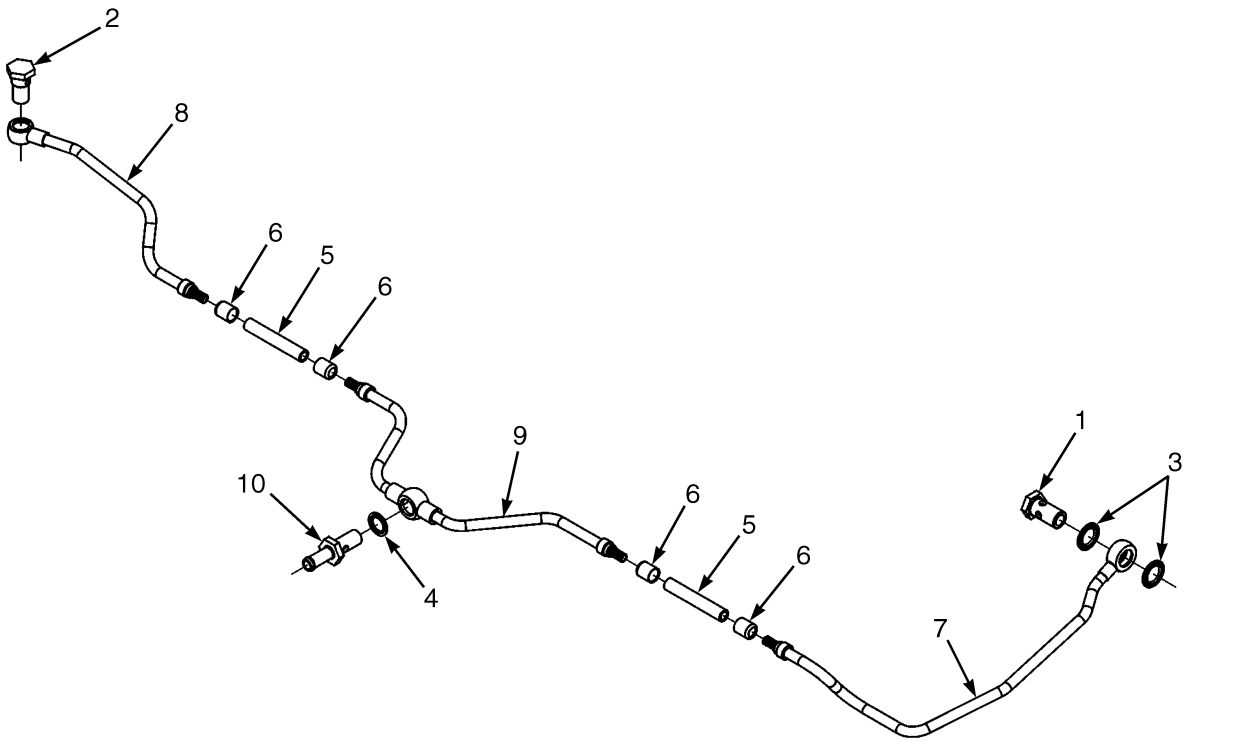

©2011 HYSTER COMPANY

FUEL PLUMBING

TIER III ENGINE (S/N E008E02100D →)

ITEM	PART NO.	DESCRIPTION	QTY
	1663666	Engine Assy-Diesel	1
1	1514382	Screw	1
2	1635279	Check Valve	1
3	1584546	Sealing Ring	2
4	1644166	Sealing Ring	1
5	. . . . .	Tube Assembly	1
6	. . . . .	Hose	2
7	. . . . .	Socket	4
8	. . . . .	Tube	1
9	. . . . .	Tube	1
10	. . . . .	Tube	1
10	1641748	Capscrew (Banjo Connector)	1

©2011 HYSTER COMPANY

FUEL INJECTION PUMP (FIGURE 3-24)

TIER II ENGINE (→ S/N E008E02099D)

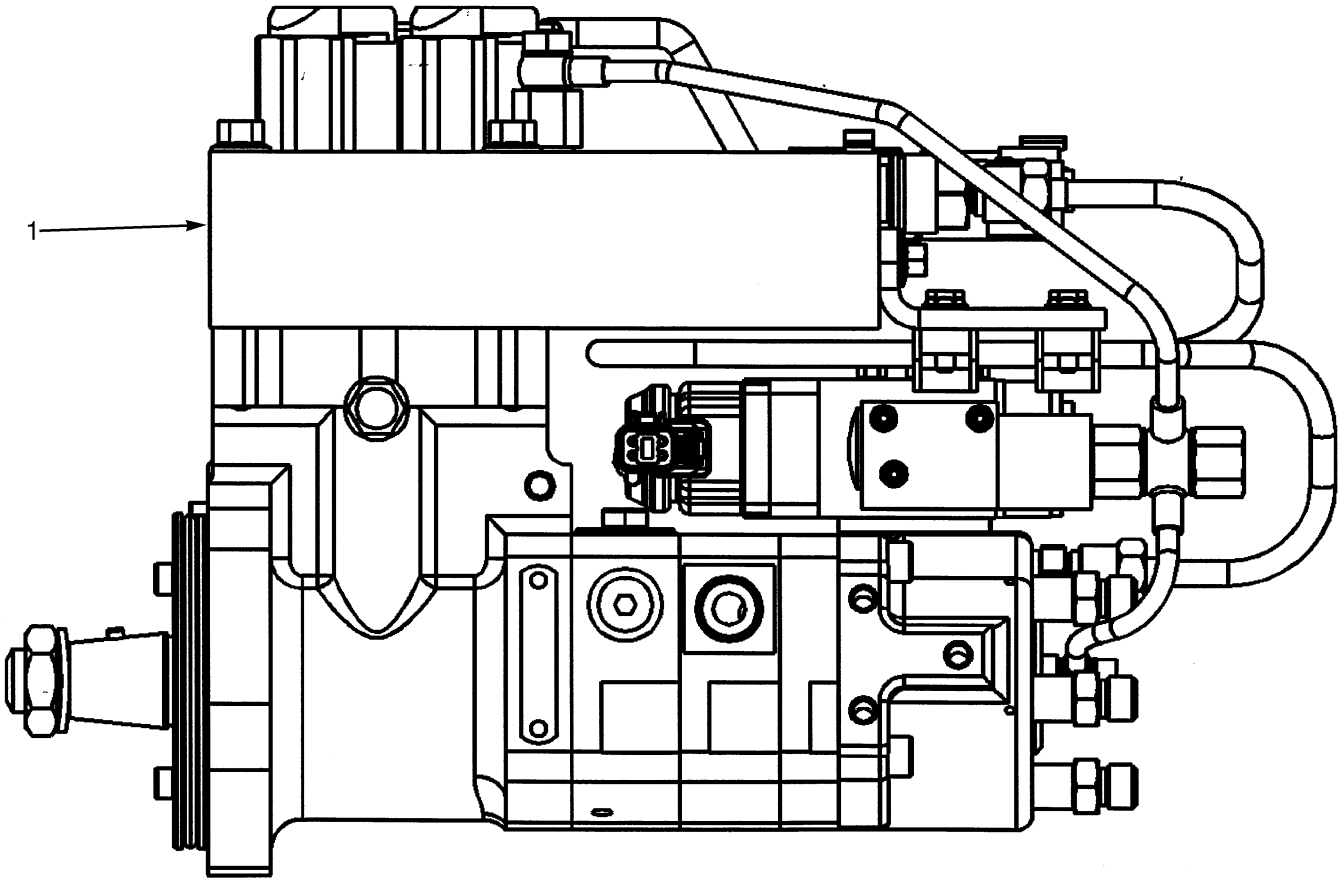

HP130372

©2011 HYSTER COMPANY

FUEL INJECTION PUMP

TIER II ENGINE (→ S/N E008E02099D)

ITEM	PART NO.	DESCRIPTION	QTY
	a 1532628	Engine Assy-Diesel (H550F, H620F, H650F, H700F)	1
	a 1542383	Engine Assy-Diesel (H550FS, H620FS, H700FS)	1
1	1565680	Injection Pump	1

FOOTNOTES:

a S/N E008E01985B →

FUEL INJECTION PUMP (FIGURE 3-25)

TIER III ENGINE (S/N E008E02100D →)

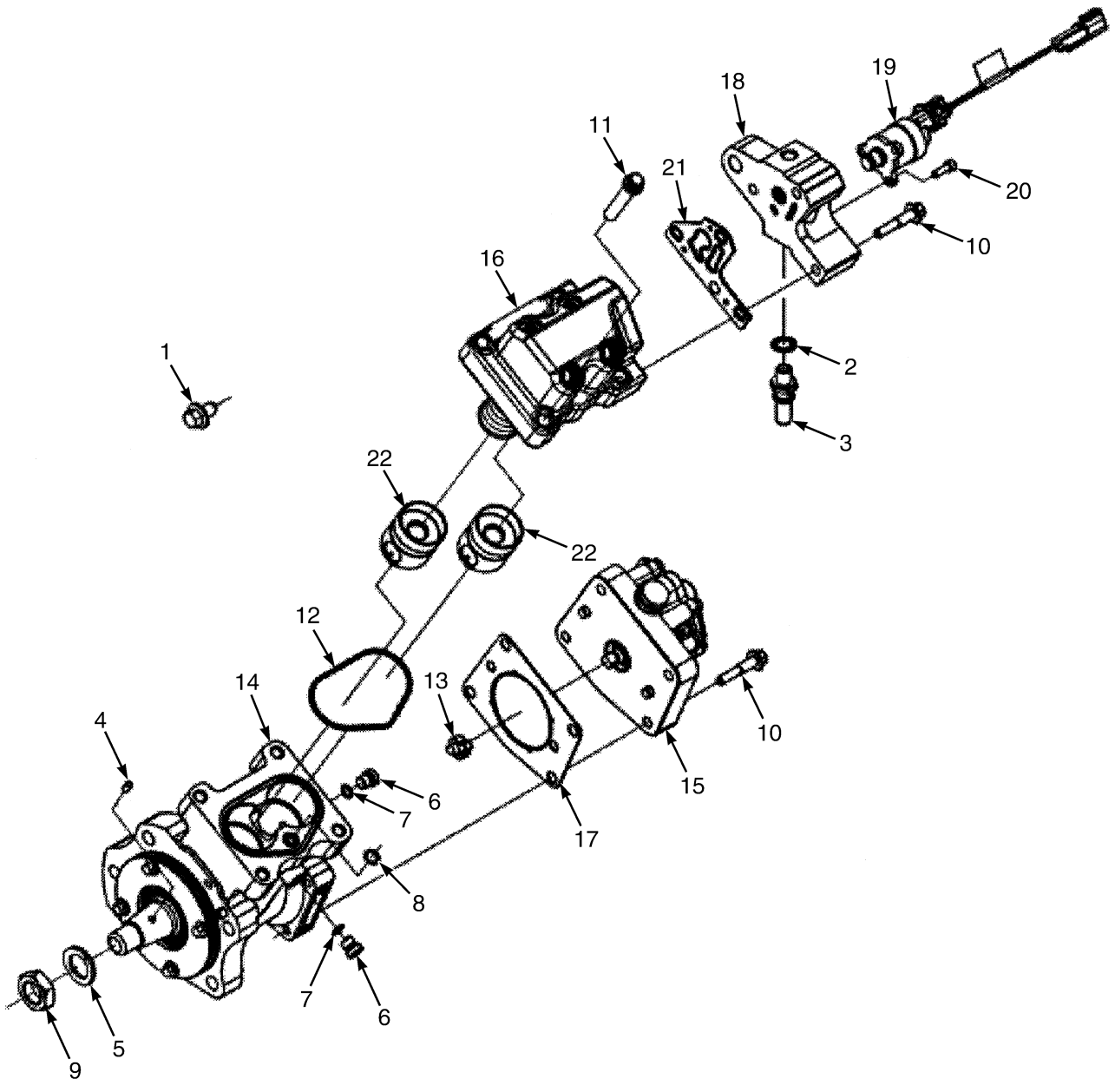

©2011 HYSTER COMPANY

FUEL INJECTION PUMP

TIER III ENGINE (S/N E008E02100D →)

ITEM	PART NO.	DESCRIPTION	QTY
	1663666	Engine Assy-Diesel	1
	1644100	Injection Pump Assembly	1
1	4013332	Capscrew	1
2	1644166	Sealing Ring	3
3	1644027	Adapter	3
4	1517033	Dowel	1
5	1517034	Lockwasher	1
6	1517010	Plug Assembly	3
6	1543354	Plug	1
7	1517011	O-Ring	1
8	1517046	O-Ring	1
9	1644087	Nut	1
10	1512029	Screw	7
11	1644126	Capscrew	4
12	1565684	Seal	1
13	1588728	Hub	1
14	~~1611235~~		
	4018821	Fuel Pump Body	1
15	4018822	Fuel Pump	1
16	1644389	Pump Head	1
17	1644053	Gasket	1
18	1643815	Adapter Assembly	1
18	1645379	Adapter	1
19	1645378	Actuator	1
20	1644111	Screw	3
21	1644052	Gasket (Fuel Pump)	1
22	1644141	Pump	2
	a 1650567	Gasket (Cover Plate)	1

FOOTNOTES:

a Not Illustrated

©2011 HYSTER COMPANY

FUEL INJECTION PUMP MOUNTING (FIGURE 3-26)

TIER II ENGINE

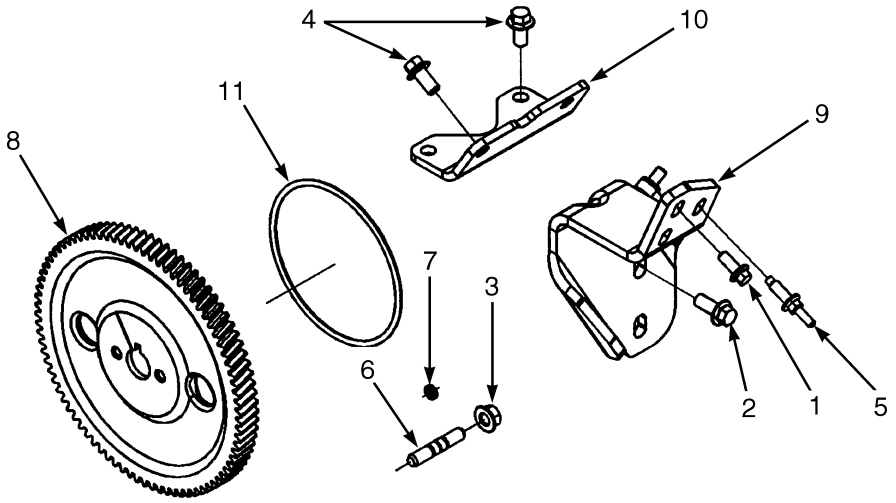

HP091215

KEY:
A: H550F, H620F, H650F, H700F
B: H550FS, H620FS, H700FS

ITEM	PART NO.	DESCRIPTION	QTY A	QTY B
	a 1532628	Engine Assy-Diesel	1	..
	a 1542383	Engine Assy-Diesel	..	1
1	1512004	Capscrew	2	2
2	1512503	Capscrew	2	2
3	1514483	Nut	4	4
4	1565649	Capscrew	4	4
5	1513742	Screw	1	1
6	1565650	Stud	4	4
7	1517027	Sealing Ring	1	1
8	1517028	Gear (Fuel Pump)	1	1
9	1517029	Bracket	1	1
10	1565651	Support	1	1
11	1515795	O-Ring	1	..
11	1517031	O-Ring	..	1
	1588054	Kit-Gasket (Lower Engine)	1	1

FOOTNOTES:

a S/N E008E01985B →

©2011 HYSTER COMPANY

NOTES

©2011 HYSTER COMPANY

FUEL INJECTION PUMP MOUNTING (FIGURE 3-27)

TIER III ENGINE (S/N E008E02100D →)

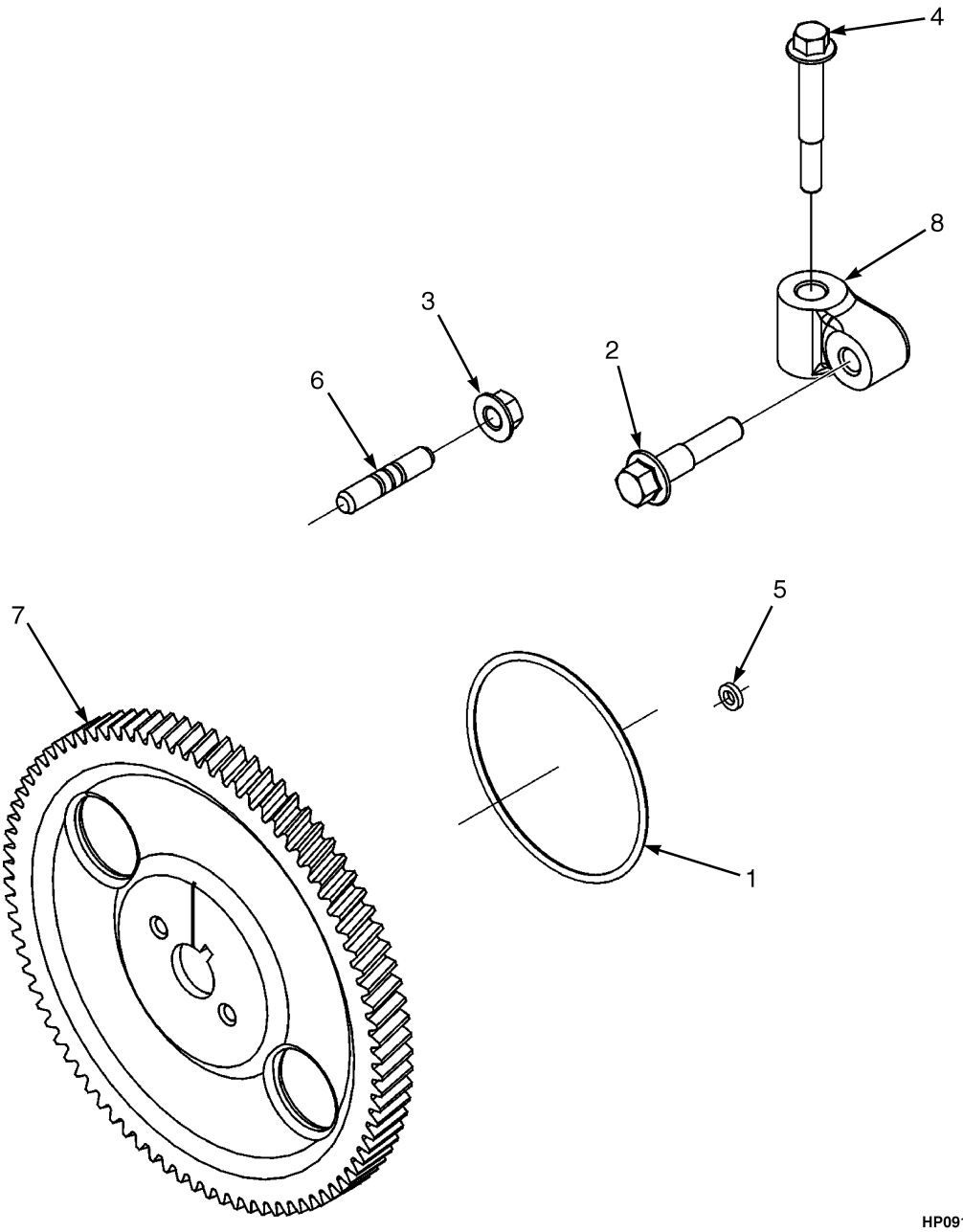

©2011 HYSTER COMPANY

FUEL INJECTION PUMP MOUNTING

TIER III ENGINE (S/N E008E02100D →)

ITEM	PART NO.	DESCRIPTION	QTY
	1663666	Engine Assy-Diesel	1
1	1515795	O-Ring	1
2	1644115	Capscrew	1
3	1514483	Nut	4
4	1614515	Capscrew	1
5	1517027	Sealing Ring	1
6	1553768	Stud	4
7	1517028	Gear (Fuel Pump)	1
8	1644138	Support	1

©2011 HYSTER COMPANY

FUEL INJECTOR AND INJECTOR PLUMBING (FIGURE 3-28)

TIER II ENGINE (→ S/N E008E02099D)

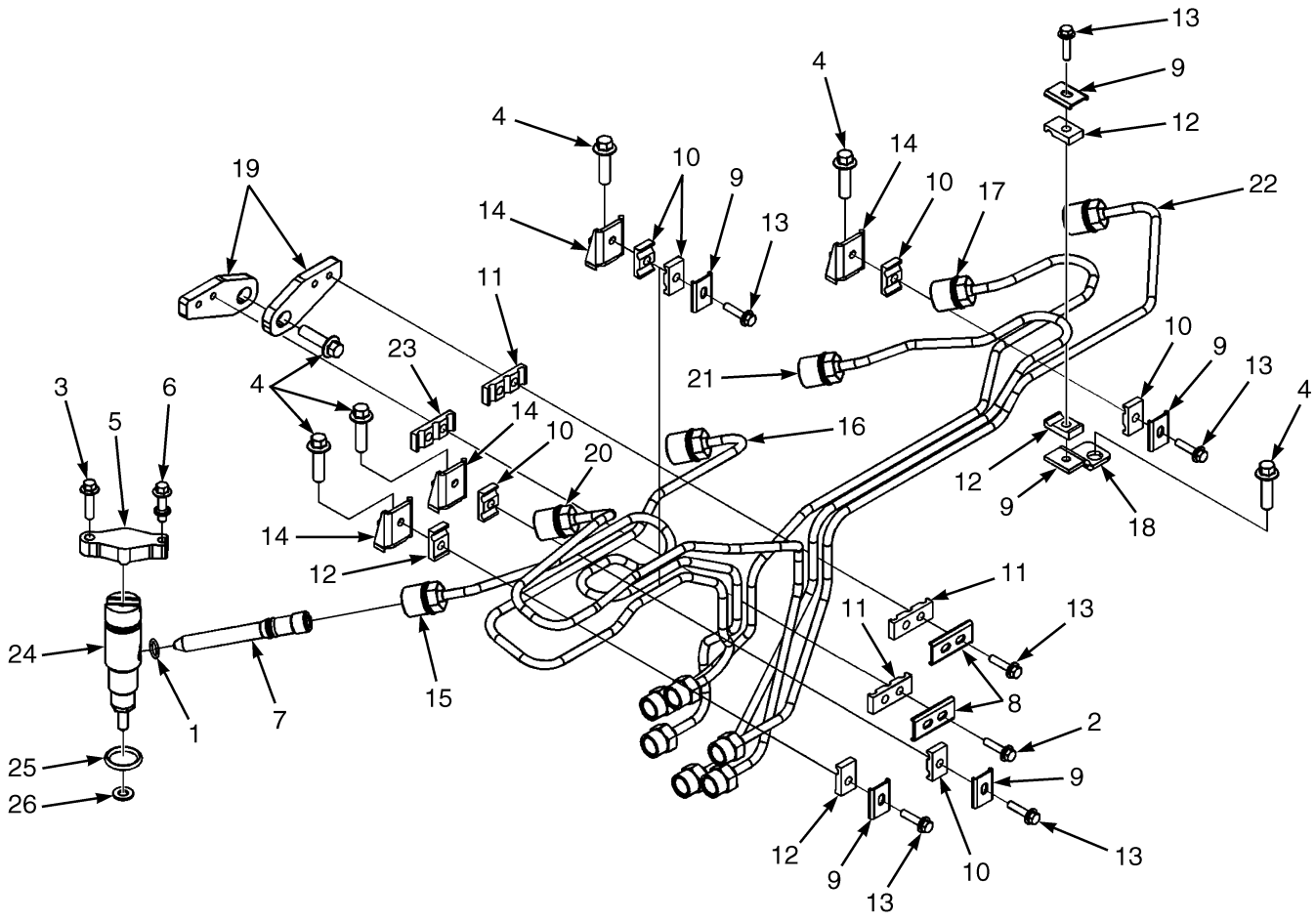

©2011 HYSTER COMPANY

FUEL INJECTOR AND INJECTOR PLUMBING

TIER II ENGINE (→ S/N E008E02099D)

ITEM	PART NO.	DESCRIPTION	QTY
	a 1532628	Engine Assy-Diesel (H550F, H620F, H650F, H700F)	1
	a 1542383	Engine Assy-Diesel (H550FS, H620FS, H700FS)	1
1	1584910	Sealing Ring	6
2	1517193	Capscrew	2
3	1517194	Screw	6
4	1512423	Capscrew	6
5	1517195	Clamp	6
6	1517196	Screw	6
7	1517197	Fitting	6
8	1514497	Brace	2
9	1514498	Brace	6
10	1514501	Isolator	6
11	1514502	Isolator	3
12	1517198	Isolator	4
13	1514504	Capscrew	7
14	1517199	Brace	4
15	1517200	Tube (Fuel Supply)	1
16	1517201	Tube (Fuel Supply)	1
17	1517202	Tube (Fuel Supply)	1
18	1517203	Brace	1
19	1517204	Brace	2
20	1517205	Tube (Fuel Supply)	1
21	1517206	Tube (Fuel Supply)	1
22	1517207	Tube (Fuel Supply)	1
23	1517208	Isolator	1
24	1517209	Injector	6
25	1517210	O-Ring	1
26	1584914	Seal	1

FOOTNOTES:

a S/N E008E01985B →

©2011 HYSTER COMPANY

FUEL INJECTOR AND INJECTOR PLUMBING (FIGURE 3-29)

TIER III ENGINE (S/N E008E02100D →)

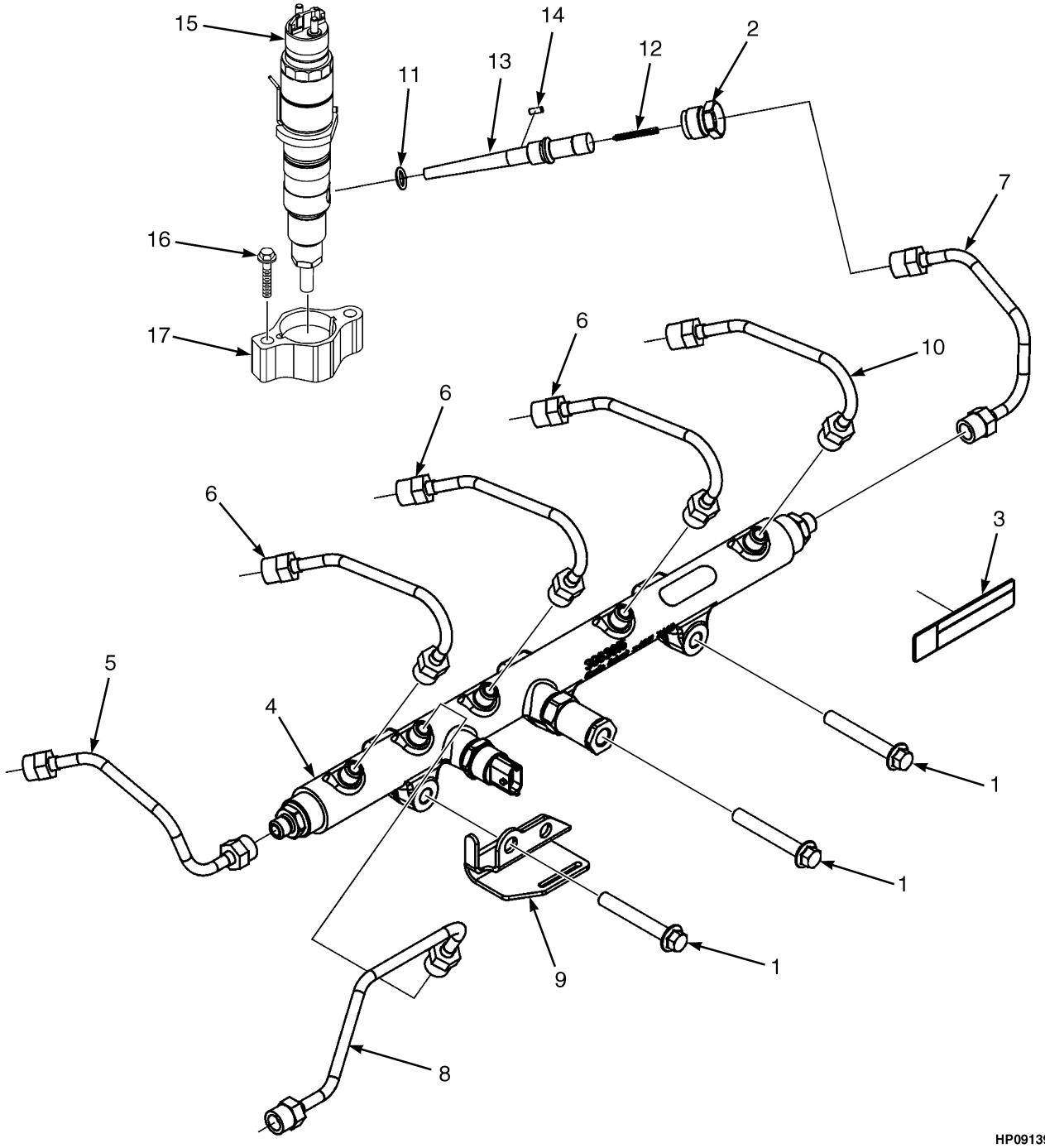

©2011 HYSTER COMPANY

FUEL INJECTOR AND INJECTOR PLUMBING

TIER III ENGINE (S/N E008E02100D →)

ITEM	PART NO.	DESCRIPTION	QTY
	1663666	Engine Assy-Diesel	1
1	1614515	Capscrew	3
2	~~1635264~~		
	4023965	Retainer	6
3	1649353	Label	2
4	1644085	Manifold (Fuel)	1
4	4012463	Relief Valve	1
4	1635304	Sensor	1
5	1644153	Tube Assy	1
6	1644154	Tube Assy	1
7	1644155	Tube Assy	1
8	1644156	Tube	1
9	1644013	Brace	1
10	1644157	Tube Assy	1
10	1644034	Connector Assembly	6
11	1637934	O-Ring	1
12	. . . . .	Injector Fuel Supply Connector Assembly	1
12	. . . . .	Fuel Injector Supply Connector	1
13	. . . . .	Dowel Pin	1
14	. . . . .	Fuel Filter	1
15	4004394	Injector	6
16	1644122	Capscrew	12
17	1644023	Clamp	6
	1649732	Kit-Gasket (Upper)	..

©2011 HYSTER COMPANY

NOTES

©2011 HYSTER COMPANY

4 ELECTRICAL SYSTEM

SECTION 4
ELECTRICAL SYSTEM

DESCRIPTION **PAGE**

ACCESSORY DRIVE BELT AND TENSIONER
TIER II ENGINE (→ S/N E008E02099D) 4-184
ALTERNATOR
→ S/N E008D01608 4-174
S/N E008D01609 ↔ S/N E008E01885Z 4-176
S/N E008E01886Z ↔ S/N E008E02066C 4-178
S/N E008E02067C ↔ S/N E008E02099D 4-181
ALTERNATOR AND MOUNTING
TIER III ENGINE (S/N E008E02100D →) 4-182
ALTERNATOR MOUNT
TIER II ENGINE 4-186
ELECTRICAL
FRAME, TIER I ENGINE - SHEET 1 OF 2 4-4
FRAME, TIER I ENGINE - SHEET 2 OF 2 4-8
FRAME, TIER II AND III ENGINES - SHEET 1 OF 4 4-10
FRAME, TIER II AND III ENGINES - SHEET 2 OF 4 4-14
FRAME, TIER II AND III ENGINES - SHEET 3 OF 4 (S/N E008E01985B →) 4-20
FRAME, TIER II AND III ENGINES - SHEET 4 OF 4 (S/N E008E01985B →) 4-24
FRAME, TIER II ENGINE - SHEET 3 OF 4 (→ S/N E008E01984B) 4-18
ENGINE CONTROL SYSTEM
TIER II ENGINE 4-222
TIER III ENGINE (S/N E008E02100D →) 4-224
FUSE PANEL AND RELAYS
TIER II ENGINE (S/N E008E01886Z ↔ S/N E008E01984B) 4-88
TIER II ENGINE (S/N E008E01985B → INC. 01979) 4-92
INSTRUMENT PANEL
TIER I ENGINE - SHEET 1 OF 2 (→ S/N E008E01885Z) 4-62
TIER I ENGINE - SHEET 2 OF 2 (→ S/N E008E01810X) 4-66
TIER I ENGINE - SHEET 2 OF 2 (S/N E008E01811X ↔ S/N E008E01865Y) 4-70
TIER I ENGINE - SHEET 2 OF 2 (S/N E008E01866 ↔ S/N E008E01885Z) 4-74
TIER II ENGINE (S/N E008E01886Z →) 4-80
LIGHT BAR AND MOUNT
TWISTLOCK MODULE 4-220
LIGHTS 4-194
OPERATOR COMPARTMENT
ELECTRICAL COMPONENTS - TIER II ENGINE (S/N E008E01886Z ↔ S/N E008E01984B) 4-94
ELECTRICAL COMPONENTS - TIER II ENGINE (S/N E008E01985B → INC. 01979) 4-98
PARK BRAKE SWITCH
S/N E008D01582 → S/N E008E01656 → 4-198
PRESSURE SWITCH
→ S/N E008D01581 → S/N E008E01655 4-197
STARTER MOTOR
TIER I ENGINE 4-188
TIER II ENGINE 4-190
TIER III ENGINE (S/N E008E02100D →) 4-192
TRANSMISSION CONTROLLER
7/2009 → 4-86
TIER I ENGINE 4-83
TIER II ENGINE (→ 7/2009) 4-84

©2011 HYSTER COMPANY

SECTION 4
ELECTRICAL SYSTEM

DESCRIPTION **PAGE**

WIRE HARNESS
APC122 CONVERSION 4-239
AUTOSHIFT ADAPTER (S/N E008E01866Y →) 4-166
AUTOSHIFT CONTROLLER (→ S/N E008E01865Y) 4-164
AUTOSHIFT FUSE PANEL - TIER I ENGINE (→ S/N E008E01910Z) 4-168
AUTOSHIFT FUSE PANEL - TIER I ENGINE (S/N E008E01911Z ↔ S/N E008E01984B) 4-170
AUTOSHIFT FUSE PANEL - TIER II ENGINE (S/N E008E01866Y →) 4-172
BACK-UP ALARM 4-43
BRAKE INDICATOR 4-212
BRAKE TEMPERATURE SWITCH (S/N E008E01985B → INC. 01979) 4-40
CARRIAGE - TO HARNESS SWITCHES 4-232
CARRIAGE (S/N E008E01811X →) 4-234
CARRIAGE (→ S/N E008E01810X) 4-235
CONTROL VALVE (S/N E008E01985B → INC. 01979) 4-38
DIAGNOSIS 4-206
ENGINE (→ S/N E008E01865) 4-44
ENGINE (→ S/N E008E01912Z) 4-46
ENGINE - TIER II (S/N E008E01991B ↔ S/N E008E02066C) 4-52
ENGINE - TIER II (S/N E008E02067C ↔ S/N E008E02099D) 4-54
ENGINE - TIER III ENGINE (S/N E008E02100D →) 4-56
ENGINE COMPARTMENT (→ S/N E008D01679) (→ S/N E008E01773) 4-26
ENGINE COMPARTMENT (→ S/N E008E01774) (→ S/N E008D01680) 4-28
ENGINE COMPARTMENT (→ S/N E008E01866Y) (→ S/N E008E01984B) 4-30
ENGINE COMPARTMENT - TIER II ENGINE (S/N E008E01985B ↔ S/N E008E01990B) 4-32
ENGINE COMPARTMENT - CHASSIS, TIER II ENGINE (S/N E008E01991B →) 4-34
ENGINE CONTROL MODULE - TIER III ENGINE (S/N E008E02100D →) 4-226
GAUGE - TIER I AND TIER II ENGINE 4-146
GAUGE - TIER II ENGINE 4-208
GEAR SHIFT (S/N E008E01811X ↔ S/N E008E01865Y) 4-112
HYDRAULIC OIL COOLER (→ S/N E008E02041C) 4-214
HYDRAULIC OIL COOLER (S/N E008E02042C →) 4-216
IDLE VALIDATION SWITCH 4-217
LIGHTING SWITCH 4-158
LOCKING AND LIFT CONTROL (S/N E008E01811X ↔ 10/2001) 4-160
LOCKING AND LIFT CONTROL (10/2003 →) 4-162
LOWERING INTERRUPT 4-202
MAIN LIGHT 4-201
MODULE - WITH EC CAB (→ S/N E008E01810X) 4-118
MODULE - WITH EC CAB (S/N E008E01811X →) 4-119
MODULE - WITH STANDARD CAB (→ S/N E008E01810X) 4-120
MODULE - WITH STANDARD CAB (S/N E008E01811X →) 4-121
OPERATOR COMPARTMENT (→ S/N E008D01515) (S/N E008E01522 ↔ S/N E008E001810X) 4-132
OPERATOR COMPARTMENT - TIER I AND TIER II ENGINE 4-134
OPERATOR COMPARTMENT - TIER I ENGINE (S/N E008E01781W ↔ S/N E008E01984B) 4-136
OPERATOR COMPARTMENT - TIER II ENGINES (S/N E008E01886Z ↔ S/N E008E-01984B EXC. 1979) 4-138
OPERATOR COMPARTMENT - TIER II ENGINES (S/N E008E01985B ↔ S/N E008E01990B INC. 1979) 4-140
OPERATOR COMPARTMENT - TIER II ENGINES (S/N E008E01991B ↔ S/N E008E02225E) 4-142

©2011 HYSTER COMPANY

SECTION 4
ELECTRICAL SYSTEM

DESCRIPTION **PAGE**

OPERATOR COMPARTMENT - TIER II ENGINES (S/N E008E02226E →) 4-144
OPS II (S/N E008E02286F →) 4-130
PARK BRAKE (→ S/N E008E01865) 4-102
PARK BRAKE (S/N E008E01866 →) 4-104
POWER SUPPLY 4-204
PRESSURE SWITCH - LIGHTS 4-159
RADIATOR COOLANT LEVEL SWITCH (→ S/N E008E02099D) 4-213
REAR LIGHT 4-200
SEALED FUSE BOX (→ S/N E008E02099D) 4-237
SEALED FUSE BOX (S/N E008E02100D →) 4-238
SENSOR - TIER I ENGINE (S/N E008E01866Y →) 4-60
SOLENOID VALVE (→ S/N E008E01810X) 4-36
SOLENOID VALVE (S/N E008E01811X ↔ S/N E008E01984B) 4-37
STEERING POD - TIER I AND TIER II ENGINE (→ S/N E008E01984B) 4-147
STEERING POD - TIER II ENGINE (S/N E008E01985B →) 4-148
SWITCH - EC CAB (S/N E008E01811X ↔ 10/2001) 4-125
SWITCH - EC CAB (10/2003 ↔ S/N E008E02285F) 4-126
SWITCH - EC CAB (S/N E008E02286F →) 4-128
SWITCH AND RELAY 4-210
SWITCHES - WITH STANDARD CAB (→ S/N E008E01984B) 4-122
SWITCHES - WITH STANDARD CAB (S/N E008E01985B ↔ S/N E008E02285F) 4-123
SWITCHES - WITH STANDARD CAB (S/N E008E02286F →) 4-124
TRANSMISSION (→ S/N E008E01865Y) 4-42
TRANSMISSION AND ATTACHMENT (→ S/N E008E01810X) 4-110
TRANSMISSION CONTROL - TIER I ENGINE (S/N E008E01866Y ↔ S/N E008E01885Z) 4-150
TRANSMISSION CONTROL - TIER II ENGINE (S/N E008E01886Z ↔ S/N E008E01910Z) 4-152
TRANSMISSION CONTROL - TIER II ENGINE (S/N E008E01911Z ↔ S/N E008E02064C) 4-154
TRANSMISSION CONTROL (S/N E008E02065C →) 4-156
TURN SIGNAL 4-236
WASH PUMPS 4-203
WITH EC CAB (→ S/N E008E01810X) 4-106
WITH EC CAB (S/N E008E01811X ↔ 10/2001) 4-107
WITH EC CAB - CONTAINER ATTACHMENT (10/2003 →) 4-108
WITH EC CAB 4-114
WITH STANDARD CAB 4-116
WORK LIGHTS 4-199
WIRE HARNESS (ENGINE)
TIER II (S/N E008E01913Z ↔ S/N E008E01984B) 4-48
TIER II (S/N E008E01985B ↔ S/N E008E01990B) 4-50
WIRING ACCESSORIES
H440FS, H550FS, H620FS, H700FS - TIER II ENGINE (S/N E008E01985B →) 4-230
H550F, H620F, H650F, H700F - TIER II ENGINE (S/N E008E01985B →) 4-228

©2011 HYSTER COMPANY

ELECTRICAL (FIGURE 4-1)
FRAME, TIER I ENGINE — SHEET 1 OF 2

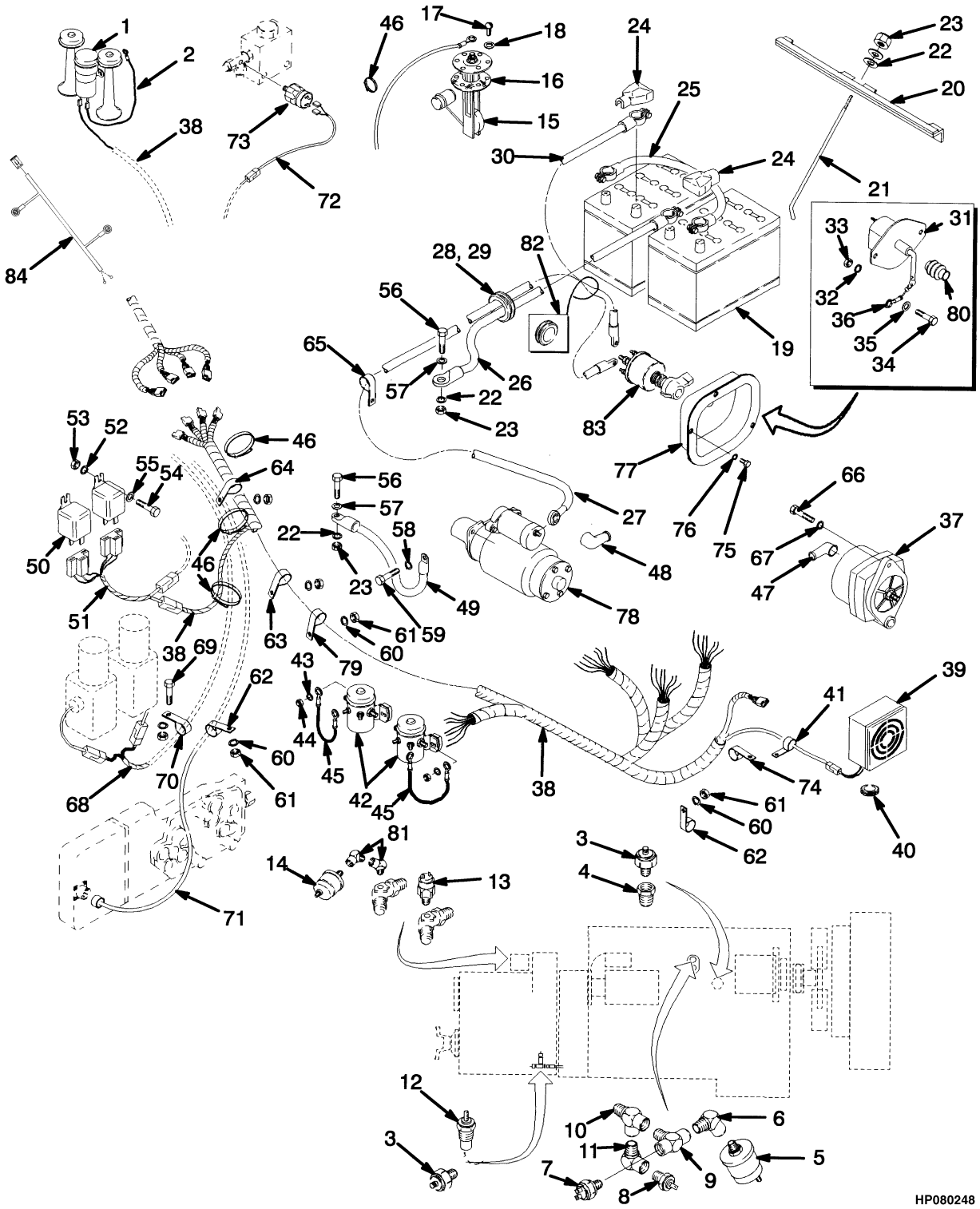

©2011 HYSTER COMPANY

ELECTRICAL

FRAME, TIER I ENGINE – SHEET 1 OF 2

KEY:
A: H550F, H620F, H650F, H700F
B: H550FS, H620FS, H700FS

ITEM	PART NO.	DESCRIPTION	QTY A	QTY B
1	**gp** 1332190	Kit-Horn (24 Volt)	1	1
1	**abaf** 816467	Kit-Horn	1	1
1	**abaf** 1307687	Relay (24 Volt)	1	1
2	**gp** 1332241	Wire	1	1
3	1319190	Temperature Sender	2	2
4	12845	Fitting	1	1
5	**u** 169776	Pressure Sender	1	1
5	**aa** 1393788	Pressure Sender	1	1
6	12821	Fitting	2	2
7	**bj** 1301299	Pressure Switch (Low Pressure)	1	1
8	190252	Pressure Switch	1	1
9	**bj** 16199	Fitting	1	1
10	**bj** 16186	Fitting	1	1
11	**bj** 16151	Fitting	1	1
12	114662	Switch (Transmission)	1	1
13	1311398	Pressure Switch	1	1
14	231958	Pressure Sender (Oil Pressure)	1	1
15	321004	Fuel Sender	1	1
16	111561	Gasket	1	1
17	16708	Screw	5	5
18	350483	Sealing Ring	5	5
19	284094	Start Battery Wet	2	2
19	351711	Start Battery Dry (Dry, Optional)	2	2
20	1344675	Bracket Wldmt	1	1
21	1344679	Link	1	1
22	15155	Lockwasher	2	2
23	15055	Nut	2	2
24	321158	Boot	2	2
25	**t** 1310689	Battery Cable	1	1
25	**z** 1521112	Battery Cable	1	1
26	**t** 1336228	Battery Cable (Earth)	1	1
26	**z** 1521113	Battery Cable	1	1
27	**t** 1336229	Battery Cable	1	..
27	**z** 1520771	Battery Cable	1	..
27	**ahac** 1354500	Battery Cable	..	1
28	**i** 1307816	Molding	1	1
28	**ahac** 1336085	Molding	1	..
28	264297	Molding	..	1
29	238810	Adhesive	AR	AR
30	**t** 1323130	Battery Cable	1	..
30	**z** 1520769	Battery Cable	1	..
30	**ahac** 1354501	Battery Cable	..	1
31	**dm** 1323127	Switch (Battery Disconnect)	1	1
32	**dm** 292680	Washer	2	2
33	**dm** 136687	Nut	2	2

©2011 HYSTER COMPANY

ELECTRICAL
FRAME, TIER I ENGINE – SHEET 1 OF 2

KEY:
A: H550F, H620F, H650F, H700F
B: H550FS, H620FS, H700FS

ITEM	PART NO.	DESCRIPTION	QTY A	QTY B
34	**dm** 292502	Capscrew	2	2
35	**dm** 320156	Washer	2	2
36	**dm** 1323132	Keeper	1	1
37	**fo** 1336968	Alternator (☞Figure 4-82)	1	1
37	**wv** 1367338	Alternator (☞Figure 4-83)	1	1
37	**z** 1480320	Alternator (☞Figure 4-84)	1	1
38	**i** 1336775	Wire Harness	1	..
38	**bk** 1354483	Wire Harness (Engine)	1	1
38	**hq** 1367296	Wire Harness (Engine Compartment) (☞Figure 4-8)	1	1
38	**hq** 816478	Wire Harness (Engine Compartment) (☞Figure 4-8)	1	1
38	**x** 1467480	Wire Harness (Engine Compartment) (☞Figure 4-9)	1	1
38	**y** 1472706	Wire Harness (Engine Compartment) (☞Figure 4-10)	1	1
38	1367302	Wire Harness (Engine) (☞Figure 4-19)	1	1
38	1472697	Wire Harness (Engine) (☞Figure 4-20)	1	1
38	1355106	Wire Harness (Transmission) (☞Figure 4-17)	1	1
38	**s** 816484	Wire Harness (Transmission) (☞Figure 4-17)	1	1
39	**cl** 1367282	Back-Up Alarm	1	1
39	**cl** 1367281	Alarm	1	1
39	1330438	Terminal (Socket)	2	2
39	1472697	Wire Harness (Engine) (☞Figure 4-20)	1	1
40	**cl** 26283	Grommet	1	1
41	241878	Clamp	8	8
42	1307121	Switch (Magnetic, 24V) (24 Volt)	2	2
43	15154	Lockwasher	4	4
44	15054	Nut	4	4
45	1315871	Wire	2	2
46	137852	Strap Clamp	AR	AR
47	204223	Boot	1	1
48	370009	Boot	1	1
49	**t** 1336231	Battery Cable (Earth)	1	..
49	**z** 1520772	Battery Cable (Earth)	1	..
49	1356823	Battery Cable (Earth)	..	1
50	1307687	Relay (24 Volt)	2	2
51	**r** 1336793	Wire Harness (Solenoid Valve) (☞Figure 4-13)	1	1
51	**ag** 1461739	Wire Harness (Solenoid Valve) (☞Figure 4-14)	1	1
52	292679	Washer	2	2
53	292668	Nut	2	2
54	302248	Capscrew	2	2
55	320155	Washer	2	2
56	18498	Capscrew	2	2
57	18515	Washer	2	2
58	292683	Lockwasher	1	1
59	292526	Capscrew	1	1
60	15156	Lockwasher	10	10
61	15056	Nut	10	10

©2011 HYSTER COMPANY

ELECTRICAL

FRAME, TIER I ENGINE – SHEET 1 OF 2

KEY:
A: H550F, H620F, H650F, H700F
B: H550FS, H620FS, H700FS

ITEM	PART NO.	DESCRIPTION	QTY A	QTY B
62	136516	Clamp	2	2
63	173247	Clamp	3	3
64	166112	Clamp	1	1
65	391484	Clamp (Insulated)	2	2
66	18586	Capscrew	1	1
67	15158	Washer	1	1
68	**en** 1336950	Wire Harness (Switch Relay)	1	1
69	**en** 16805	Capscrew	2	2
70	**en** 146047	Clamp	2	2
71	1336778	Wire Harness (Transmission and Attachment) (☞Figure 4-44)	1	1
72	**a** 1316538	Wire Harness (Switch) (☞Figure 4-74)	1	1
73	**a** 1332206	Pressure Switch	1	1
74	164488	Clamp	2	2
75	**ahac** 16374	Capscrew	..	3
76	**ahac** 15155	Lockwasher	..	3
77	**dm** 1354487	Box (Switch)	..	1
77	**ajae** 1367305	Box (Switch)	..	1
78	. . . . .	Starter Motor (☞Figure 4-89)	1	1
79	128408	Clamp	2	2
80	**dm** 289166	Boot	1	1
81	**aiad** 12821	Fitting	..	2
82	**ahac** 362255	Grommet	..	1
83	**ajae** 1324518	Switch (Disconnect)	1	1
84	**y** 1508254	Wire Harness (Sensor) (☞Figure 4-26)	1	1

FOOTNOTES:

a With Lights
b → S/N E008D01516
c → S/N E008D01521
d → S/N E008D01527
e → S/N E008D01581
f → S/N E008D01608
g → S/N E008D01673
h → S/N E008D01679
i → S/N E008E01514
j → S/N E008E01528
k → S/N E008E01542
l → S/N E008E01548
m → S/N E008E01550
n → S/N E008E01655
o → S/N E008E01678
p → S/N E008E01742
q → S/N E008E01773
r → S/N E008E01810
s → S/N E008E01865Y
t → S/N E008E01885Z
u → S/N E008E01972A
v S/N E008E01679 ↔ S/N E008E001885Z
w S/N E008D01609 ↔ S/N E008E001885Z
x S/N E008E01811X ↔ S/N E008E1865Y
y S/N E008E01866Y →
z S/N E008E01886Z →
aa S/N E008E01973A →
ab S/N E008D01674 →
ac S/N E008E01515 →
ad S/N E008E01543 →
ae S/N E008E01551 →
af S/N E008E01743 →
ag S/N E008E01811 →
ah S/N E008D01501 →
ai S/N E008D01517 →
aj S/N E008D01528 →

©2011 HYSTER COMPANY

ELECTRICAL (FIGURE 4-2)
FRAME, TIER I ENGINE — SHEET 2 OF 2

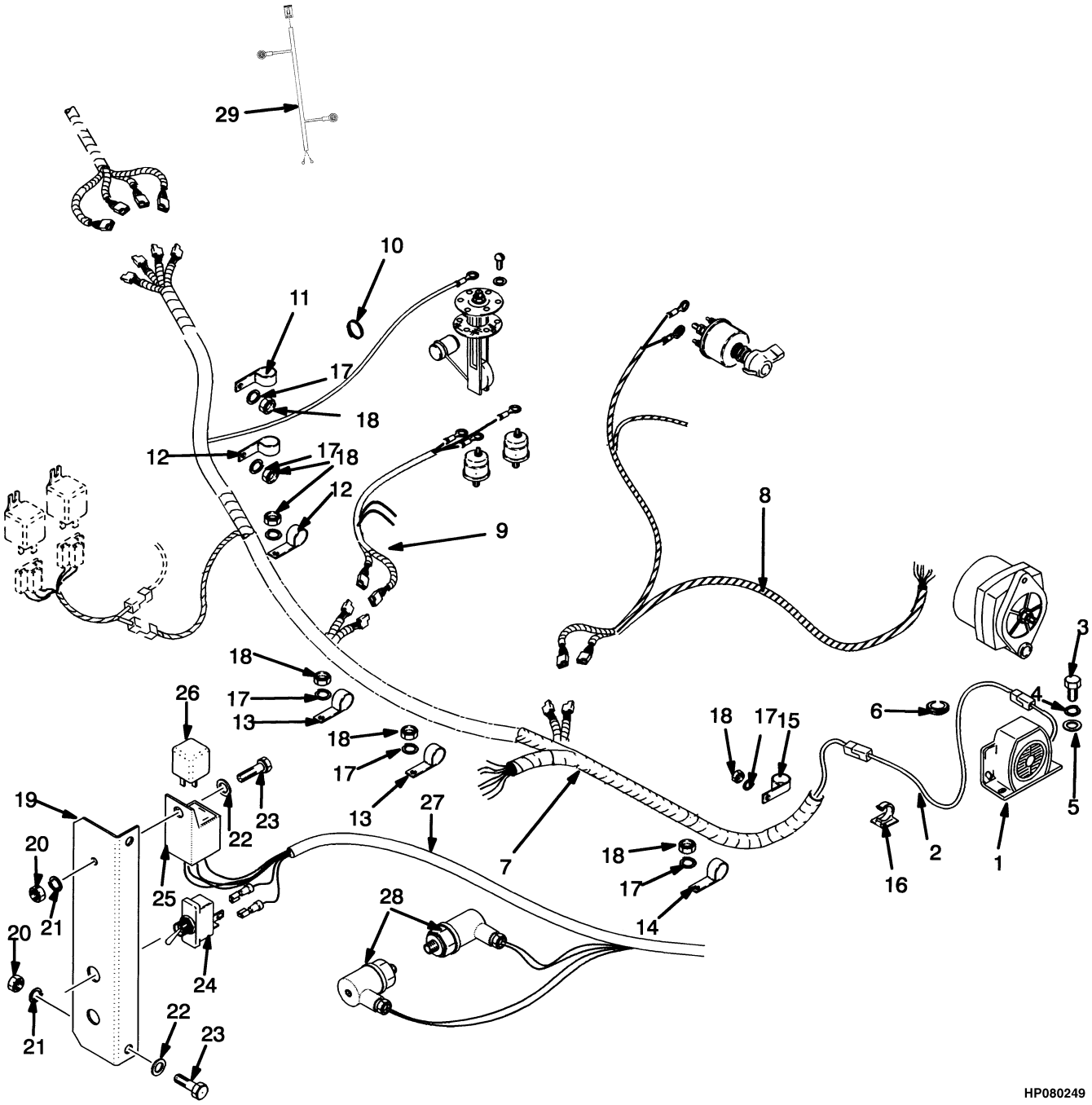

©2011 HYSTER COMPANY

ELECTRICAL

FRAME, TIER I ENGINE – SHEET 2 OF 2

ITEM	PART NO.	DESCRIPTION	QTY
1	**ig**	Back-Up Alarm	1
1	1330419	Connector	1
1	1330424	Connector (Secondary Lock)	1
1	1330438	Terminal (Socket)	2
1	**ig** 1367281	Alarm	1
2	**ig** 1367298	Wire Harness (☞Figure 4-18)	1
3	**ig** 16805	Capscrew	2
4	**ig** 15156	Lockwasher	2
5	**ig** 15134	Washer	2
6	**ig** 1152816	Grommet	1
7	**c** 1367296	Wire Harness (Engine Compartment) (☞Figure 4-8)	1
7	816478	Wire Harness (Engine Compartment) (☞Figure 4-8)	1
7	1467480	Wire Harness (Engine Compartment) (☞Figure 4-9)	1
7	1472706	Wire Harness (Engine Compartment) (☞Figure 4-10)	1
7	**ab** 1355108	Wire Harness (Engine)	1
8	1367302	Wire Harness (Engine) (☞Figure 4-19)	1
8	1472697	Wire Harness (Engine) (☞Figure 4-20)	1
9	1355106	Wire Harness (Transmission) (☞Figure 4-17)	1
9	816484	Wire Harness (Transmission) (☞Figure 4-17)	1
10	137852	Strap Clamp	AR
11	166112	Clamp	1
12	173247	Clamp	3
13	128408	Clamp	2
14	136516	Clamp	1
15	164488	Clamp	2
16	241878	Clamp (Adhesive)	8
17	15156	Lockwasher	9
18	15056	Nut	9
19	**e** 1461072	Plate	1
20	**e** 292668	Nut	3
21	**e** 292679	Washer	3
22	**e** 320155	Washer	3
23	**e** 302248	Capscrew	3
24	**e** 1455064	Switch	1
25	**e** 1347224	Socket (Relay)	1
26	**e** 1307687	Relay (24 Volt)	1
27	**e** 816472	Wire Harness (Anti-Slipping Device) (☞Figure 4-98)	1
28	**d** 1394076	Pressure Switch	2
28	**h** 1473985	Pressure Switch	2
29	**f** 1508254	Wire Harness (Sensor) (☞Figure 4-26)	1

FOOTNOTES:

a → S/N E008D01521
b → S/N E008E01548
c S/N E008D01552 ↔ S/N E008D01673
d S/N E008E01789 ↔ S/N E008E001723Y
e S/N E008E01789 →
f S/N E008E01866Y →
g S/N E008E01549 →
h S/N E008E01724Y →
i S/N E008D01522 →

©2011 HYSTER COMPANY

ELECTRICAL (FIGURE 4-3)
FRAME, TIER II AND III ENGINES — SHEET 1 OF 4

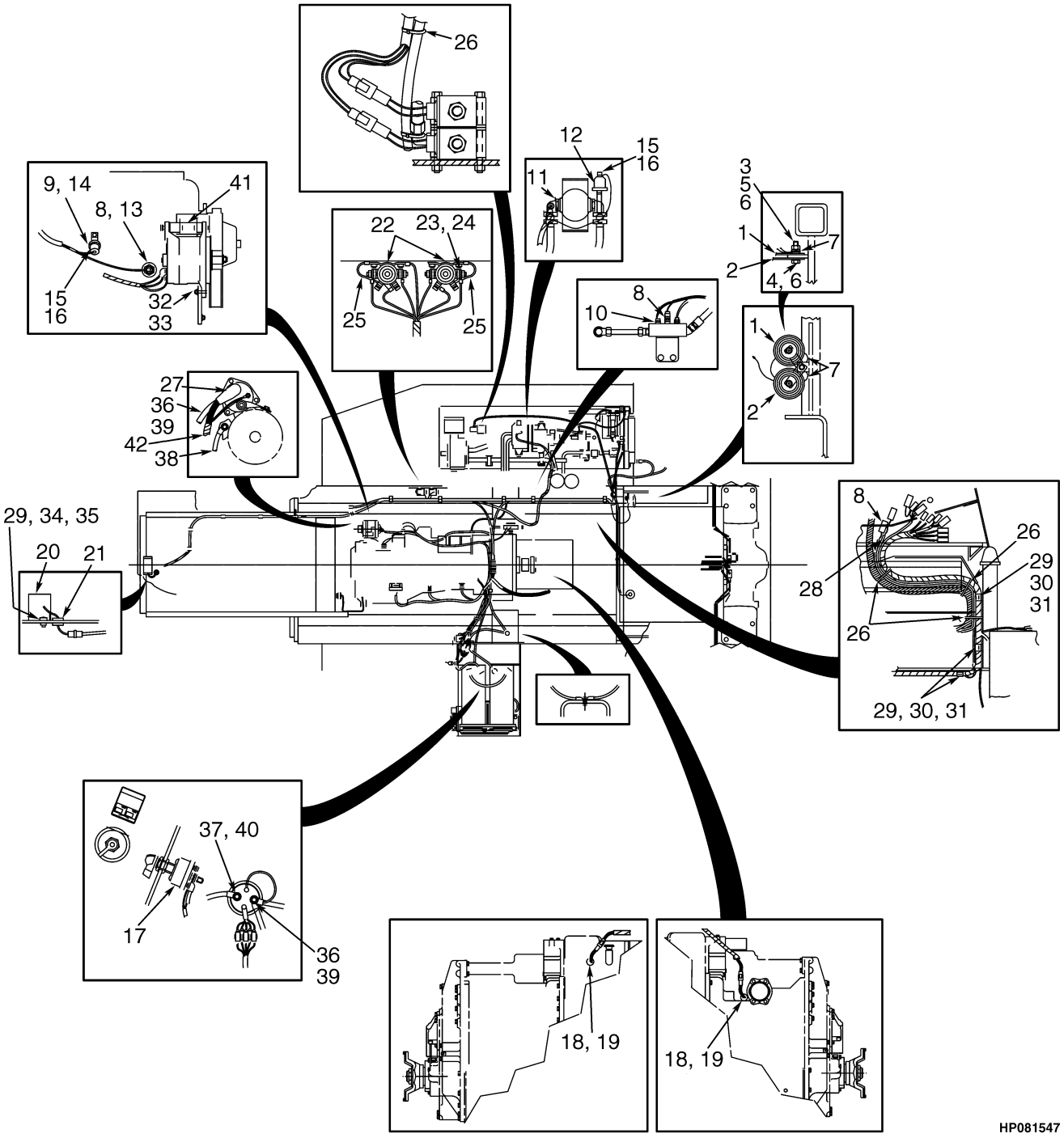

©2011 HYSTER COMPANY

ELECTRICAL

FRAME, TIER II AND III ENGINES – SHEET 1 OF 4

ITEM	PART NO.	DESCRIPTION	QTY
1	1451327	Horn (335 dBA)	1
1	1451328	Horn (400 dBA)	1
2	292681	Lockwasher	1
3	132861	Capscrew	1
4	239503	Nut	1
5	320157	Washer	2
6	296380	Washer	1
7	816534	Wire	1
7	1671922	Wire	1
8	1319190	Temperature Sender	2
9	**ce** 169776	Pressure Sender	1
9	**m** 1393788	Pressure Sender	1
10	114662	Switch	1
11	1311398	Pressure Switch	1
12	231958	Pressure Sender	1
13	12845	Fitting	1
14	12821	Fitting	1
15	15002	Nut	5
16	15152	Lockwasher	5
17	1324518	Switch (Disconnect)	1
18	1314149	O-Ring	2
19	1388286	Sensor (Engine)	1
20	1367282	Back-Up Alarm	1
21	1152816	Grommet	1
22	1307121	Switch (Magnetic, 24V)	2
23	15154	Lockwasher	4
24	15054	Nut	4
25	1315871	Wire	2
26	137852	Strap Clamp	AR
27	370009	Boot	1
28	1461739	Wire Harness (☞Figure 4-14)	1
29	15156	Lockwasher	11
30	15056	Nut	9
31	166112	Clamp	1
32	18586	Capscrew	1
33	15158	Washer	1
34	15134	Washer	2
35	16805	Capscrew	2
36	**a** 1520771	Battery Cable	1
37	**a** 1520769	Battery Cable	1
38	**a** 1520772	Battery Cable	1
39	**b** 1354500	Battery Cable	1
40	**b** 1354501	Battery Cable	1
41	**f** 1480320	Alternator (☞Figure 4-84)	1
41	**k** 1588820	Alternator	1
41	**h** 1649349	Alternator	1
41	**n** ~~1693006~~ 4020872	Alternator	1
42	**d** 1518464	Wire Harness (Engine) (☞Figure 4-20)	1
42	**g** 1529308	Wire Harness (Engine) (☞Figure 4-21)	1

©2011 HYSTER COMPANY

ELECTRICAL

FRAME, TIER II AND III ENGINES – SHEET 1 OF 4

ITEM	PART NO.	DESCRIPTION	QTY
42	**i** 1544045	Wire Harness (Engine) (☞Figure 4-22).....	1
42	**j** 1570450	Wire Harness (Engine) (☞Figure 4-23).....	1
42	**l** 1606672	Wire Harness (Engine) (☞Figure 4-24).....	1

FOOTNOTES:

a H550F, H620F, H650F, H700F
b H550FS, H620FS, H700FS
c Service with 1393788
d → S/N E008E01912Z
e → S/N E008E01972A
f → S/N E008E02066C
g S/N E008E01913Z ↔ S/N E008E01984B
h S/N E008E02100D ↔ 11/2008
i S/N E008E01985B ↔ S/N E008E01990B
j S/N E008E01991B ↔ S/N E008E02066C
k S/N E008E02067C ↔ S/N E008E02099D
l S/N E008E02067C →
m S/N E008E01973A →
n 11/2008 →

©2011 HYSTER COMPANY

NOTES

©2011 HYSTER COMPANY

ELECTRICAL (FIGURE 4-4)
FRAME, TIER II AND III ENGINES — SHEET 2 OF 4

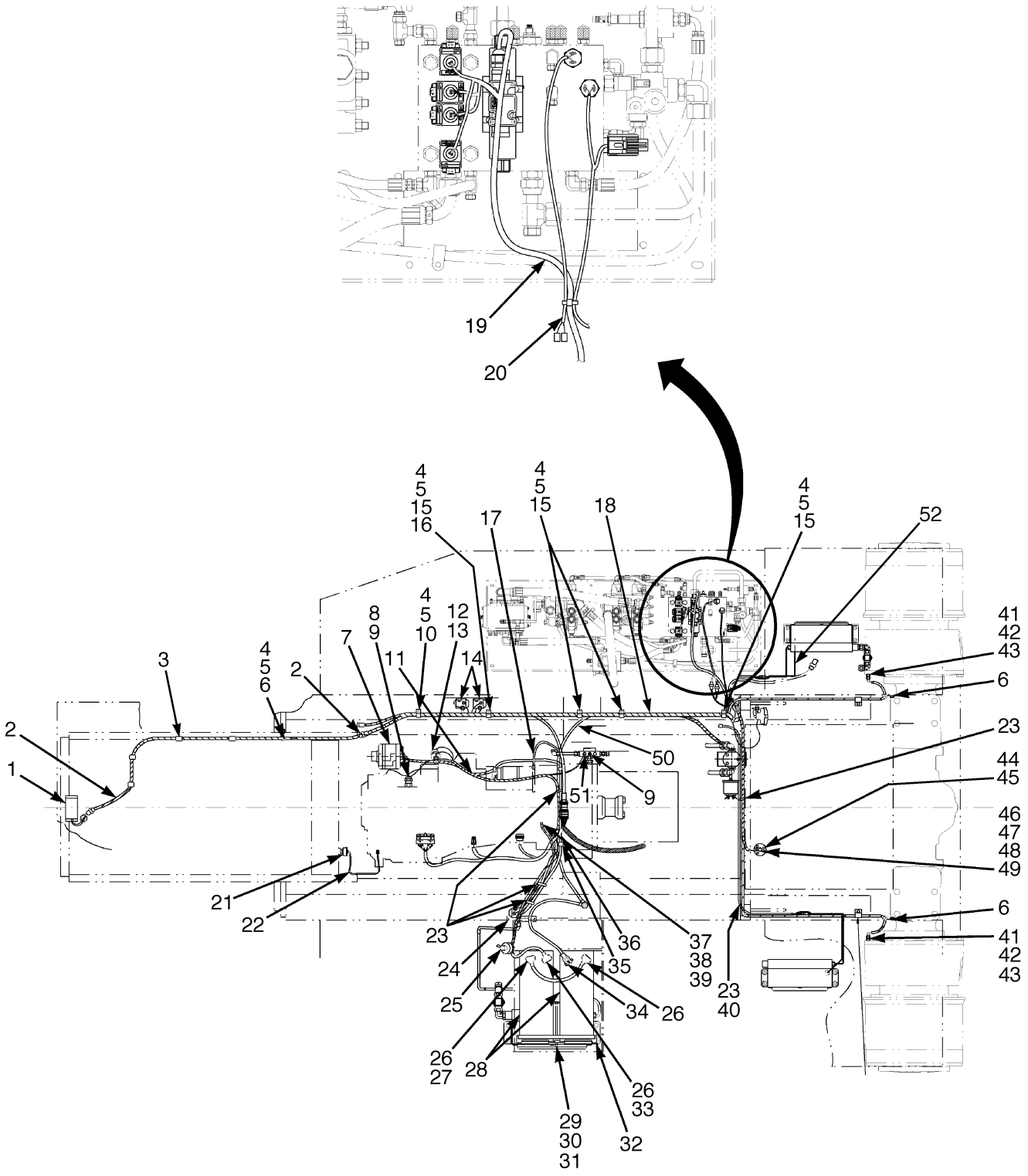

HP081549

©2011 HYSTER COMPANY

ELECTRICAL

FRAME, TIER II AND III ENGINES – SHEET 2 OF 4

ITEM	PART NO.	DESCRIPTION	QTY
1	1367282	Back-Up Alarm	1
2	1500974	Wire Harness (Alarm) (☞Figure 4-18)	1
3	241878	Clamp	8
4	15156	Lockwasher	11
5	15056	Nut	9
6	164488	Clamp	2
7	**e** 1480320	Alternator	1
7	**i** 1588820	Alternator	1
7	**j** 1649349	Alternator	1
7	**p** ~~1693006~~		
	4020872	Alternator	1
8	12845	Fitting	1
9	1319190	Temperature Sender	2
10	136516	Clamp	1
11	**g** 1544045	Wire Harness (Engine) (☞Figure 4-22)	1
11	**h** 1570450	Wire Harness (Engine) (☞Figure 4-23)	1
11	**l** 1606672	Wire Harness (Engine) (☞Figure 4-24)	1
12	**c** 169776	Pressure Sender	1
12	**o** 1393788	Pressure Sender	1
13	12821	Fitting	1
14	1307121	Switch (Magnetic, 24V)	2
15	321487	Clamp	4
16	136516	Clamp	1
17	1520772	Battery Cable	1
18	**c** 1508478	Wire Harness (Engine Compartment) (☞Figure 4-10)	1
18	**g** 1544560	Wire Harness (Engine Compartment) (☞Figure 4-11)	1
18	**m** 1570453	Wire Harness (Engine Compartment) (☞Figure 4-12)	1
19	1517977	Wire Harness (Control Valve) (☞Figure 4-15)	1
20	1316538	Wire Harness (Pressure Switch) (☞Figure 4-74)	1
21	**f** 1499053	Wire Harness (Coolant Level Switch)	1
21	15055	Nut	3
22	**f** 1476852	Switch (Coolant Level)	1
	k 1633622	Sensor (Coolant Level)	1
23	137852	Strap Clamp	AR
24	238810	Adhesive	AR
25	1324518	Switch (Disconnect)	1
26	321158	Boot	3
27	1521112	Battery Cable	1
28	284094	Start Battery Wet	2
28	351711	Start Battery Dry	2
29	1344679	Link	1
30	15155	Lockwasher	1
31	15055	Nut	1
32	1344675	Bracket Wldmt	1
33	**a** 1520769	Battery Cable	1
33	**b** 1354501	Battery Cable	1
34	1521113	Battery Cable	1
35	391484	Clamp (Insulated)	2
36	**a** 1520771	Battery Cable	1
36	**b** 1354500	Battery Cable	1

©2011 HYSTER COMPANY

ELECTRICAL

FRAME, TIER II AND III ENGINES – SHEET 2 OF 4

ITEM	PART NO.	DESCRIPTION	QTY
37	1520767	Wire	1
38	292680	Washer	1
39	136687	Nut	1
40	**ad** 1520867	Wire Harness (Hydraulic Oil Cooler) (☞Figure 4-106)	1
40	**bd** 1519129	Wire Harness (Hydraulic Oil Cooler) (☞Figure 4-106)	1
40	**an** 1583745	Wire Harness (Hydraulic Oil Cooler) (☞Figure 4-107)	1
40	**bn** 1583746	Wire Harness (Hydraulic Oil Cooler) (☞Figure 4-107)	1
41	1521310	Adapter	2
42	2043634	Switch (Temperature) (Drive Axle)	2
43	1552482	Wire Harness (Brake Temperature Switch) (☞Figure 4-16)	1
44	16708	Screw	5
45	350483	Sealing Ring	5
46	321004	Fuel Sender	1
47	111561	Gasket	1
48	15002	Nut	5
49	15152	Lockwasher	5
50	**d** 1520867	Wire Harness (Hydraulic Oil Cooler)	1
50	**n** 1583745	Wire Harness (Hydraulic Oil Cooler)	1
50	**bd** 1519129	Wire Harness (Hydraulic Oil Cooler)	1
50	**bn** 1583746	Wire Harness (Hydraulic Oil Cooler)	1
51	114662	Switch	1

FOOTNOTES:

a H550F, H620F, H650F, H700F
b H550FS, H620FS, H700FS
c → S/N E008E01984B
d → S/N E008E02041C
e → S/N E008E02066C
f → S/N E008E02099D
g S/N E008E01985B ↔ S/N E008E01990B
h S/N E008E01991B ↔ S/N E008E02066C
i S/N E008E02067C ↔ S/N E008E02099D
j S/N E008E02100D ↔ 11/2008
k S/N E008E02100D →
l S/N E008E02067C →
m S/N E008E01991B →
n S/N E008E02042C →
o S/N E008E01985B →
p 11/2008 →

©2011 HYSTER COMPANY

NOTES

©2011 HYSTER COMPANY

ELECTRICAL (FIGURE 4-5)

FRAME, TIER II ENGINE — SHEET 3 OF 4 (→ S/N E008E01984B)

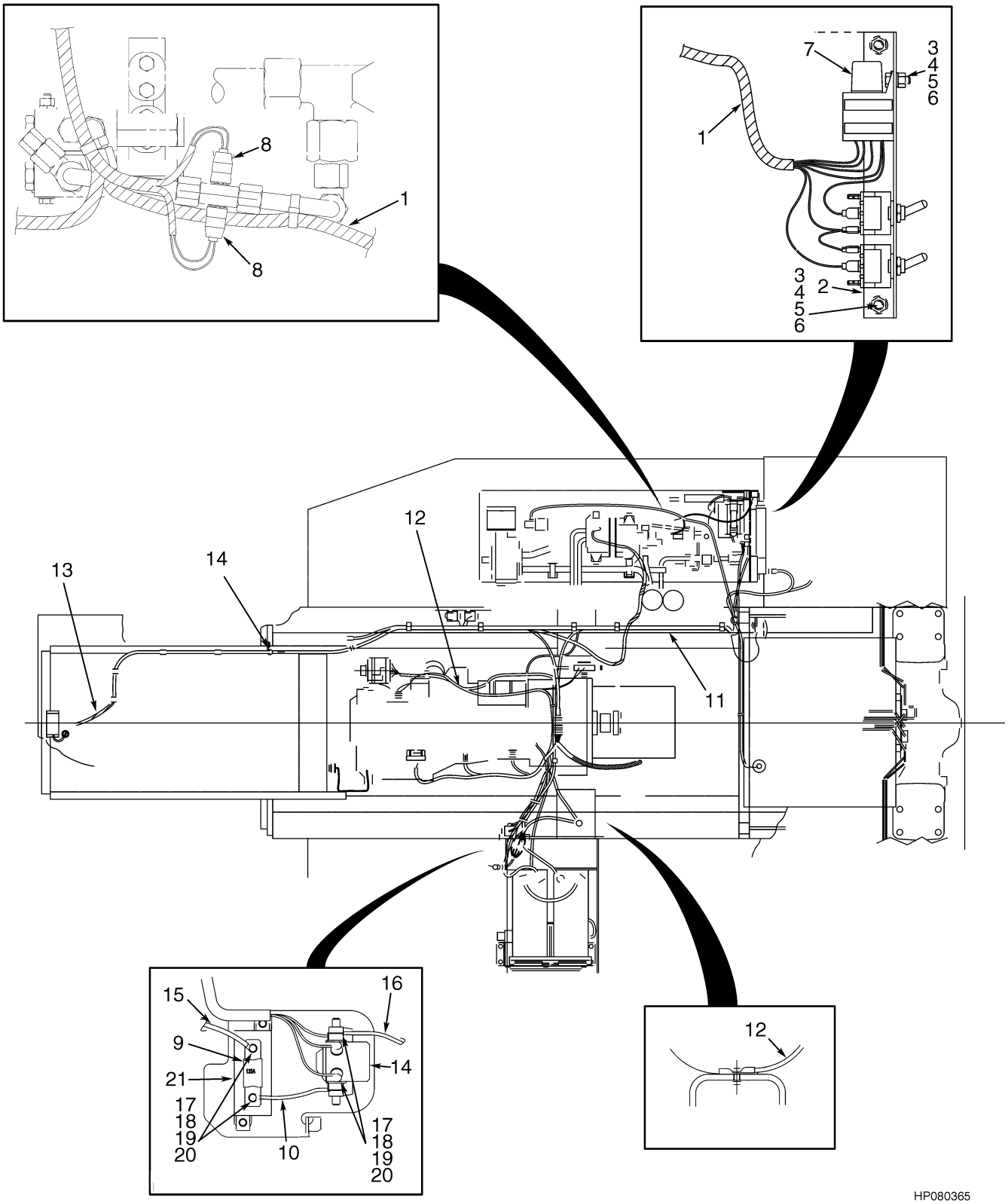

©2011 HYSTER COMPANY

ELECTRICAL

FRAME, TIER II ENGINE – SHEET 3 OF 4 (→ S/N E008E01984B)

ITEM	PART NO.	DESCRIPTION	QTY
1	**b** 816472	Wire Harness	1
2	**b** 1461072	Plate	1
3	292679	Washer	3
4	292668	Nut	3
5	302248	Capscrew	3
6	320155	Washer	3
7	**c** 1307687	Relay (24 Volt)	1
8	**cd** 1473985	Pressure Switch	2
9	1508300	Fuse (125 Amp)	1
10	1391864	Power Cable	1
11	**g** 1508478	Wire Harness (Engine Compartment) (☞Figure 4-10)	1
12	**f** 1518464	Wire Harness (Engine) (☞Figure 4-20)	1
12	**h** 1529308	Wire Harness (Engine) (☞Figure 4-21)	1
13	1500974	Wire Harness (Back-Up Alarm) (☞Figure 4-18)	1
14	1307121	Switch (Magnetic, 24V)	1
15	1520765	Battery Cable	1
16	1520767	Wire	1
17	320156	Washer	6
18	292501	Capscrew	4
19	292680	Washer	4
20	136687	Nut	4
21	1385519	Fuse Holder	1
	ae 1455064	Switch (Not Illustrated)	1

FOOTNOTES:

a With Anti-Slack
b With Anti-Slack and Lift Interrupt
c With Lift Interrupt
d → S/N E008E01724Y
e → S/N E008E01789W
f → S/N E008E01912Z
g → S/N E008E01984B
h S/N E008E01913Z ↔ S/N E008E01984B

©2011 HYSTER COMPANY

ELECTRICAL (FIGURE 4-6)

FRAME, TIER II AND III ENGINES — SHEET 3 OF 4 (S/N E008E01985B →)

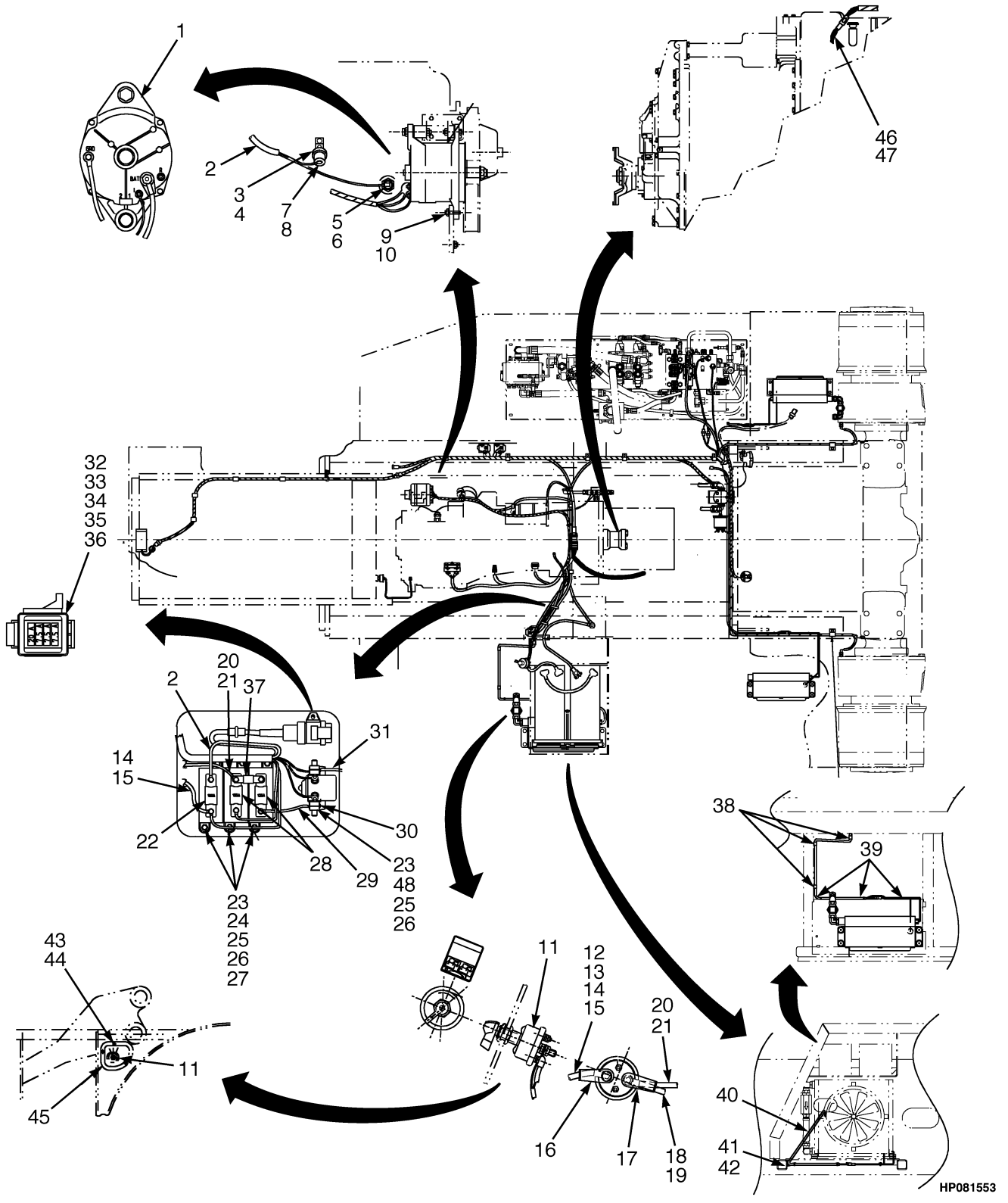

©2011 HYSTER COMPANY

ELECTRICAL

FRAME, TIER II AND III ENGINES – SHEET 3 OF 4 (S/N E008E01985B →)

ITEM	PART NO.	DESCRIPTION	QTY
1	**c** 1480320	Alternator	1
1	**f** 1588820	Alternator	1
1	**h** 1649349	Alternator	1
1	**k** ~~1693006~~ 4020872	Alternator	1
2	**b** 1544045	Wire Harness (Engine) (☞Figure 4-22)	1
2	**e** 1570450	Wire Harness (Engine) (☞Figure 4-23)	1
2	**f** 1606672	Wire Harness (Engine) (☞Figure 4-24)	1
2	**i** 1632783	Wire Harness (Engine) (☞Figure 4-25)	1
3	**a** 169776	Pressure Sender	1
3	**l** 1393788	Pressure Sender	1
4	12821	Fitting	1
5	12845	Fitting	1
6	1319190	Temperature Sender	2
7	15002	Nut	1
8	15152	Lockwasher	1
9	18586	Capscrew	1
10	15158	Washer	1
11	1324518	Switch (Disconnect)	1
12	1520769	Battery Cable	1
13	1354501	Battery Cable (H550FS, H620FS, H700FS)	1
14	1531418	Wire	1
15	1544779	Wire (H550FS, H620FS, H700FS)	1
16	204223	Boot	1
17	370009	Boot	1
18	1520771	Battery Cable	1
19	1354500	Battery Cable (H550FS, H620FS, H700FS)	1
20	1538226	Battery Cable	1
21	1544778	Battery Cable (H550FS, H620FS, H700FS)	1
22	1529581	Fuse (100 Amp)	1
23	320156	Washer	10
24	302048	Screw	6
25	292680	Washer	9
26	136687	Nut	9
27	1385519	Fuse Holder	3
28	1508300	Fuse (125 Amp)	2
29	1391864	Power Cable	1
30	1307121	Switch (Magnetic, 24V)	1
31	1520767	Wire	1
31	**d** 1592027	Wire (H550FS, H620FS, H700FS)	1
31	**i** 1635053	Wire (H550FS, H620FS, H700FS)	1
32	**d** 2062055	Fuse Box (Sealed) (☞Figure 4-119)	1
32	**g** 1597430	Fuse Box (Sealed)	1
32	**j** 4016659	Fuse Box (Sealed)	1
33	370647	Fuse (10 Amp)	1
34	302398	Locknut	1
35	2072353	Capscrew	1
36	1534793	Spacer	1
37	1544905	Plate	1
38	136516	Clamp	3

©2011 HYSTER COMPANY

ELECTRICAL

FRAME, TIER II AND III ENGINES – SHEET 3 OF 4 (S/N E008E01985B →)

ITEM	PART NO.	DESCRIPTION	QTY
39	137852	Strap Clamp	AR
40	1520867	Wire Harness (Hydraulic Oil Cooler) (☞Figure 4-106)	1
41	221707	Nut	2
42	15134	Washer	2
43	16374	Capscrew	3
44	15155	Lockwasher	3
45	1538863	Switch (H550FS, H620FS, H700FS)	1
46	1388287	Sensor (Transmission)	1
47	1314149	O-Ring	2
48	292501	Capscrew	2

FOOTNOTES:

a → S/N E008E01972A
b → S/N E008E01990B
c → S/N E008E02066C
d → S/N E008E02099D
e S/N E008E01991B ↔ S/N E008E02066C
f S/N E008E02067C ↔ S/N E008E02099D
g S/N E008E02100D ↔ 10/2010
h S/N E008E02100D ↔ 11/2008
i S/N E008E02100D →
j 10/2010 →
k 11/2008 →
l S/N E008E01973A →

©2011 HYSTER COMPANY

NOTES

©2011 HYSTER COMPANY

ELECTRICAL (FIGURE 4-7)

FRAME, TIER II AND III ENGINES — SHEET 4 OF 4 (S/N E008E01985B →)

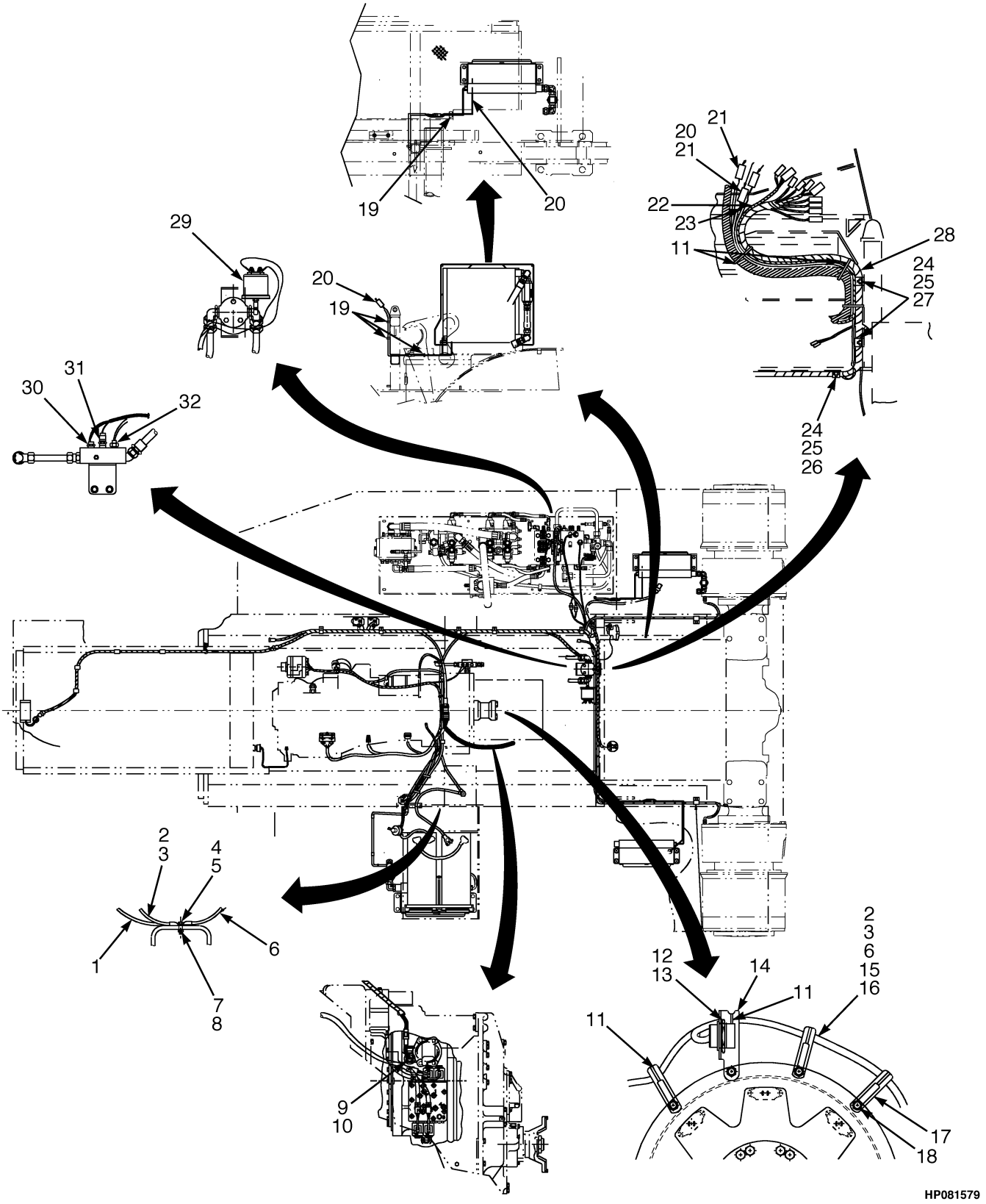

©2011 HYSTER COMPANY

ELECTRICAL

FRAME, TIER II AND III ENGINES – SHEET 4 OF 4 (S/N E008E01985B →)

ITEM	PART NO.	DESCRIPTION	QTY
1	15211	Cotter Pin	1
2	1520772	Battery Cable	1
3	1520772	Battery Cable	1
4	18498	Capscrew	2
5	18515	Washer	2
6	**a** 1544045	Wire Harness (Engine) (☞Figure 4-22)	1
6	**c** 1570450	Wire Harness (Engine) (☞Figure 4-23)	1
6	**e** 1606672	Wire Harness (Engine) (☞Figure 4-24)	1
7	15055	Nut	2
8	15155	Lockwasher	2
9	1314149	O-Ring	2
10	1388286	Sensor (Engine)	1
11	137852	Strap Clamp	AR
12	1484685	Locknut	1
13	1484686	Washer (Spring)	1
14	1529560	Bracket	1
15	1520771	Battery Cable	1
16	1354500	Battery Cable	1
17	1350914	Strap	3
18	320159	Washer	3
19	137852	Strap Clamp	AR
20	**b** 1519129	Wire Harness (Hydraulic Oil Cooler) (H550FS, H620FS, H700FS) (☞Figure 4-106)	1
21	**b** 1520867	Wire Harness (Hydraulic Oil Cooler) (H550F, H620F, H650F, H700F) (☞Figure 4-106)	1
21	**d** 1583745	Wire Harness (Hydraulic Oil Cooler) (H550F, H620F, H650F, H700F) (☞Figure 4-107)	1
21	**d** 1583746	Wire Harness (Hydraulic Oil Cooler) (H550FS, H620FS, H700FS) (☞Figure 4-107)	1
22	1517977	Wire Harness (Control Valve) (☞Figure 4-15)	1
23	1552482	Wire Harness (Brake Temperature Switch) (☞Figure 4-16)	1
24	15156	Lockwasher	17
25	15056	Nut	15
26	321487	Clamp	4
27	144067	Clamp	2
28	**a** 1544560	Wire Harness (Engine Compartment) (☞Figure 4-11)	1
28	**f** 1570453	Wire Harness (Engine Compartment) (☞Figure 4-12)	1
29	1483645	Sensor (Transmission Oil)	1
30	114662	Switch	1
31	1319190	Temperature Sender	2
32	1508523	Switch (Temperature)	1

FOOTNOTES:

a → S/N E008E01990
b → S/N E008E02041C
c S/N E008E01991B ↔ S/N E008E02066C
d S/N E008E02042C →
e S/N E008E02067C →
f S/N E008E01991 →

©2011 HYSTER COMPANY

WIRE HARNESS (FIGURE 4-8)

ENGINE COMPARTMENT (→ S/N E008D01679) (→ S/N E008E01773)

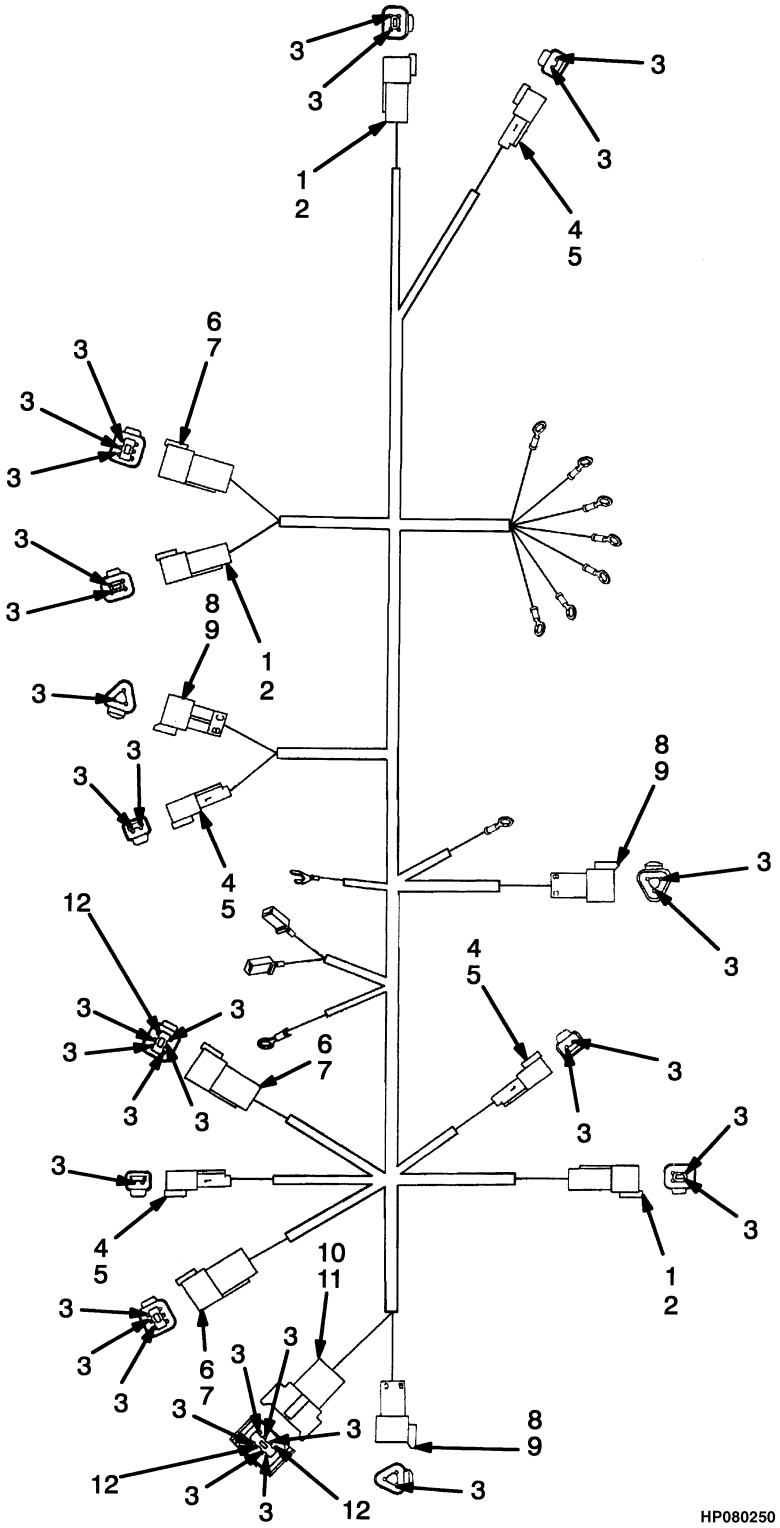

©2011 HYSTER COMPANY

WIRE HARNESS

ENGINE COMPARTMENT (→ S/N E008D01679) (→ S/N E008E01773)

ITEM	PART NO.	DESCRIPTION	QTY
	ab 1367296	Wire Harness (Engine Compartment)	1
	cd 816478	Wire Harness (Engine Compartment)	1
1	1330411	Connector	3
2	1330416	Connector	3
3	1330437	Terminal (Pin)	52
4	1330409	Connector	4
5	1330414	Connector (Secondary Lock)	4
6	1330412	Connector	3
7	1330417	Connector	3
8	1330410	Connector	3
9	1330415	Connector	3
10	1330413	Connector	1
11	1330418	Connector	1
12	1330439	Plug	3

FOOTNOTES:

a → S/N E008D01673
b → S/N E008E01742
c S/N E008D01674 →
d S/N E008E01743 →

©2011 HYSTER COMPANY

WIRE HARNESS (FIGURE 4-9)

ENGINE COMPARTMENT (→ S/N E008E01774) (→ S/N E008D01680)

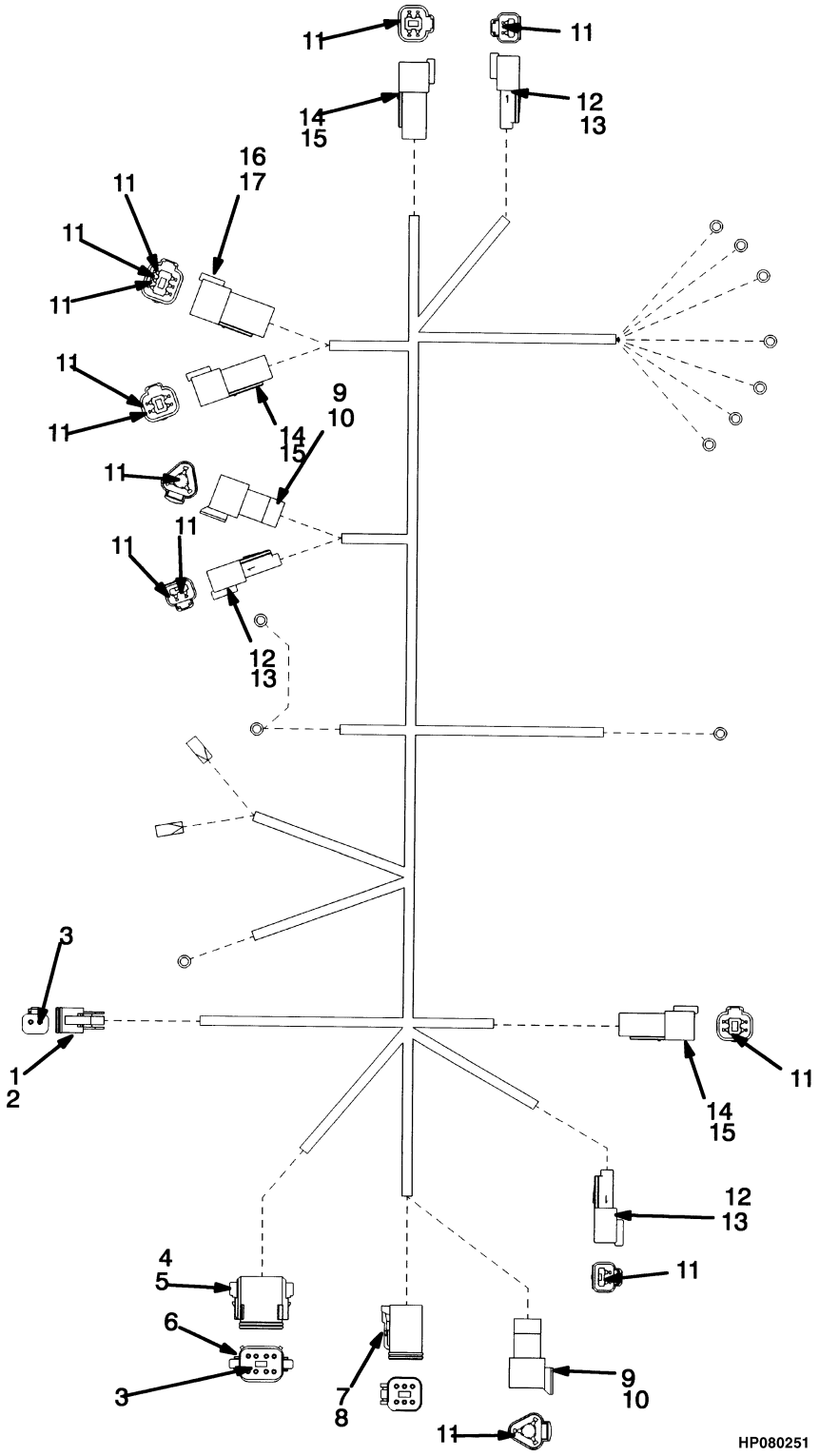

©2011 HYSTER COMPANY

WIRE HARNESS

ENGINE COMPARTMENT (→ S/N E008E01774) (→ S/N E008D01680)

ITEM	PART NO.	DESCRIPTION	QTY
	1467480	Wire Harness (Engine Compartment)	1
1	1330419	Connector	1
2	1330424	Connector (Secondary Lock)	1
3	1363886	Terminal (Socket)	15
4	1330423	Connector	1
5	1330429	Connector	1
6	1330439	Plug	1
7	1330422	Connector	1
8	1330428	Connector	1
9	1330410	Connector	3
10	1330415	Connector	3
11	1363885	Terminal (Pin)	30
12	1330409	Connector	3
13	1330414	Connector (Secondary Lock)	3
14	1330411	Connector	3
15	1330416	Connector	3
16	1330412	Connector	1
17	1330417	Connector	1

©2011 HYSTER COMPANY

WIRE HARNESS (FIGURE 4-10)

ENGINE COMPARTMENT (→ S/N E008E01866Y) (→ S/N E008E01984B)

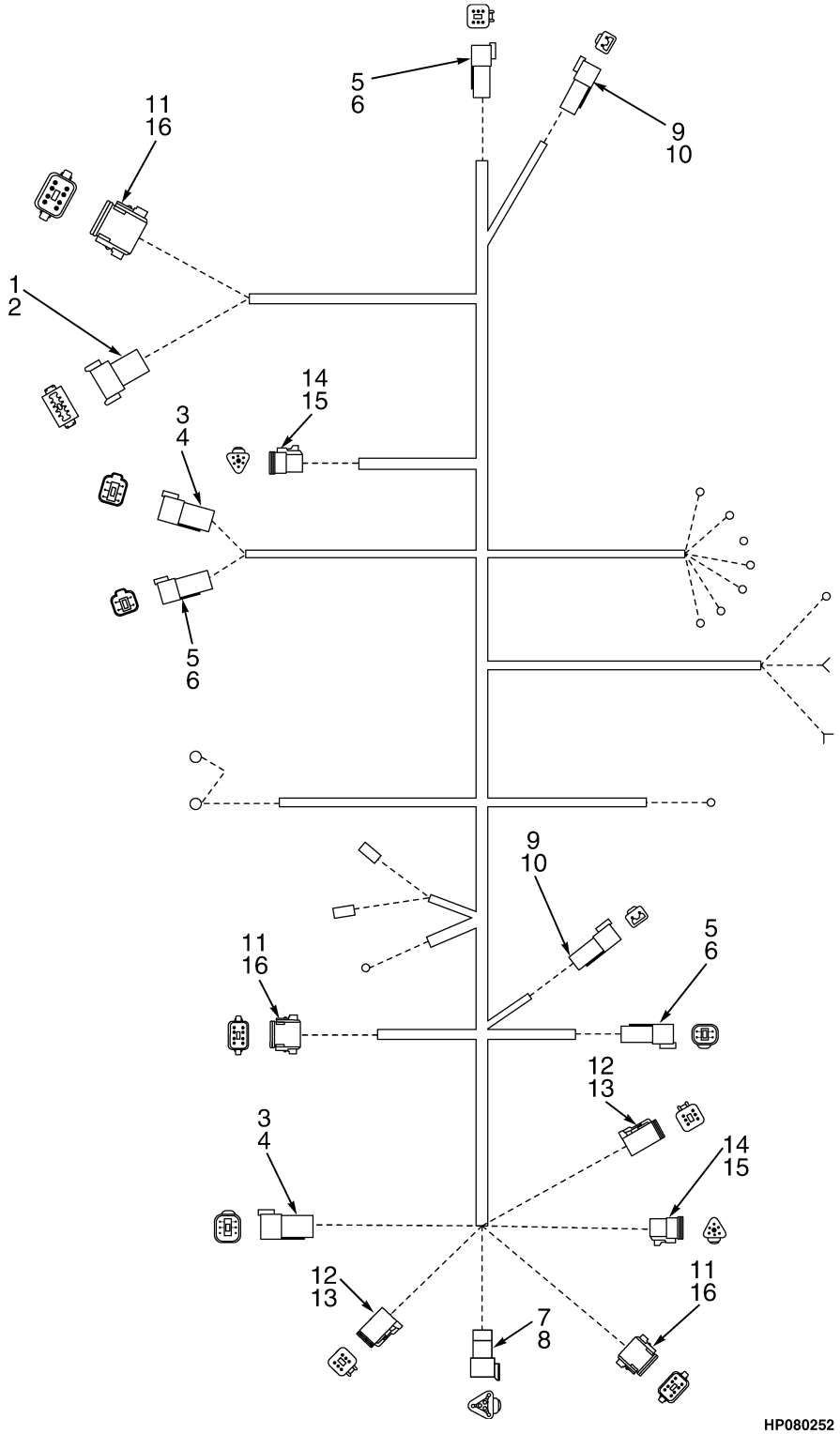

©2011 HYSTER COMPANY

WIRE HARNESS

ENGINE COMPARTMENT (→ S/N E008E01866Y) (→ S/N E008E01984B)

ITEM	PART NO.	DESCRIPTION	QTY
	1472706	Wire Harness (Tier I Engine)	1
	1508478	Wire Harness (Engine Compartment) (Tier II Engine)	1
1	1330413	Connector	1
2	1330418	Connector	1
3	1330412	Connector	1
4	1330417	Connector	1
5	1330411	Connector	3
6	1330416	Connector	3
7	1330410	Connector	1
8	1330415	Connector	1
9	1330409	Connector	7
10	1330414	Connector (Secondary Lock)	2
11	1330423	Connector	2
12	1330428	Connector	2
13	1330422	Connector	1
16	1330429	Connector	2

©2011 HYSTER COMPANY

WIRE HARNESS (FIGURE 4-11)

ENGINE COMPARTMENT — TIER II ENGINE (S/N E008E01985B ↔ S/N E008E01990B)

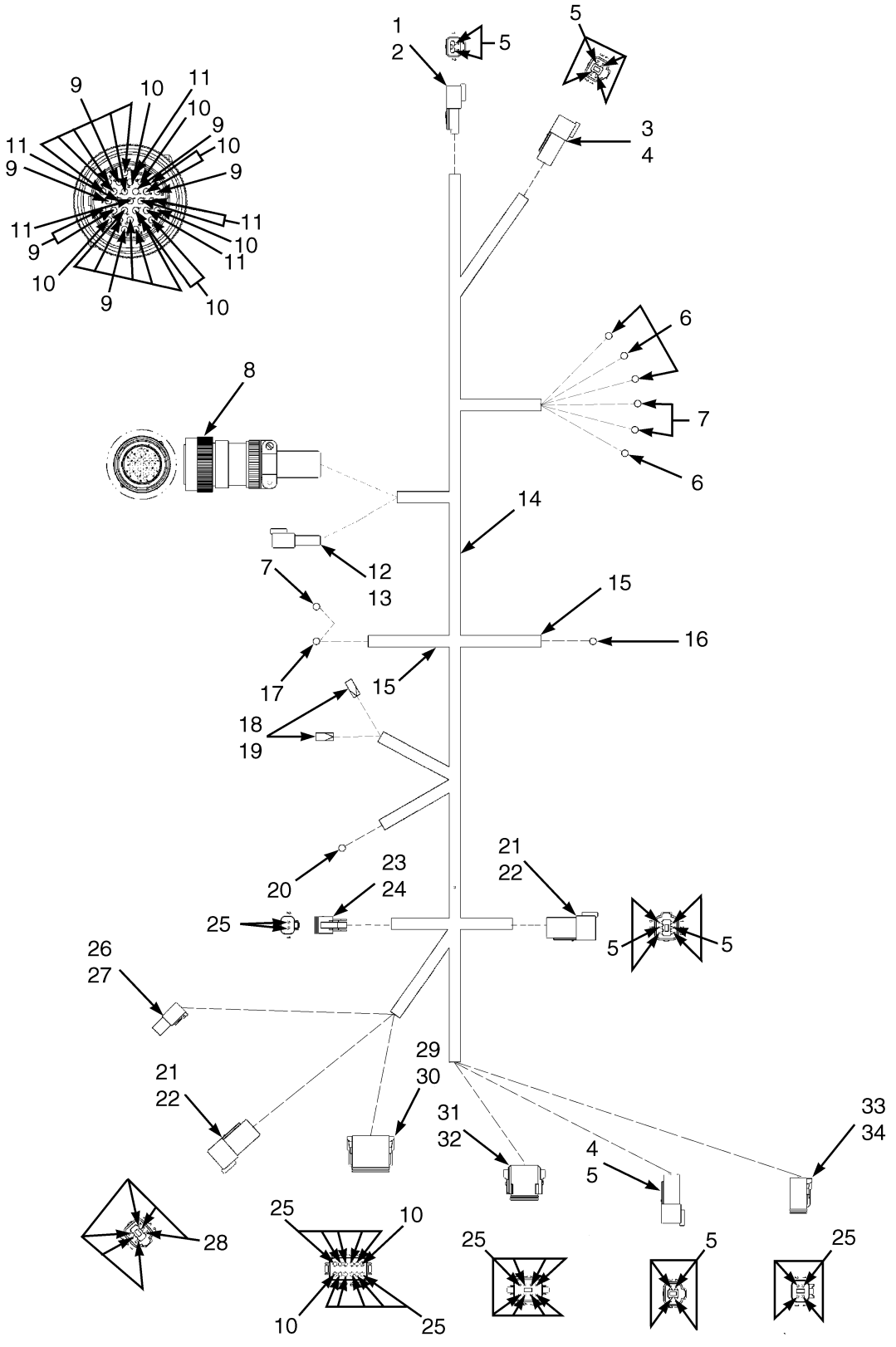

©2011 HYSTER COMPANY

WIRE HARNESS

ENGINE COMPARTMENT – TIER II ENGINE (S/N E008E01985B ↔ S/N E008E01990B)

ITEM	PART NO.	DESCRIPTION	QTY
	1544560	Wire Harness (Engine Compartment)	1
1	1330409	Connector	1
2	1330414	Connector (Secondary Lock)	1
3	1330411	Connector	2
4	1330416	Connector	2
5	1363885	Terminal (Pin)	16
6	148606	E-Ring	4
7	148605	Ring Terminal	3
8	1495142	Plug	1
9	1330438	Terminal (Socket)	17
10	1330439	Plug	10
11	1518112	Terminal (Socket)	6
12	1544731	Receptacle	1
13	1544733	Pin	1
14	381919	Braiding	AR
15	16906	Conduit (Optional)	AR
16	148607	E-Ring	1
17	148609	E-Ring	1
18	181046	Connector Body	2
19	134812	Terminal	2
20	129887	E-Ring	1
21	1330412	Connector	2
22	1330417	Connector	2
23	1330419	Connector	1
24	1330424	Connector (Secondary Lock)	1
25	1363886	Terminal (Socket)	24
26	1544729	Connector Body	1
27	1544730	Socket	1
28	1502712	Terminal (Pin)	6
29	1351068	Connector	1
30	1351069	Connector	1
31	1330423	Connector	1
32	1330429	Connector	1
33	1330421	Connector	1
34	1330427	Connector	1

©2011 HYSTER COMPANY

WIRE HARNESS (FIGURE 4-12)

ENGINE COMPARTMENT — CHASSIS, TIER II ENGINE (S/N E008E01991B →)

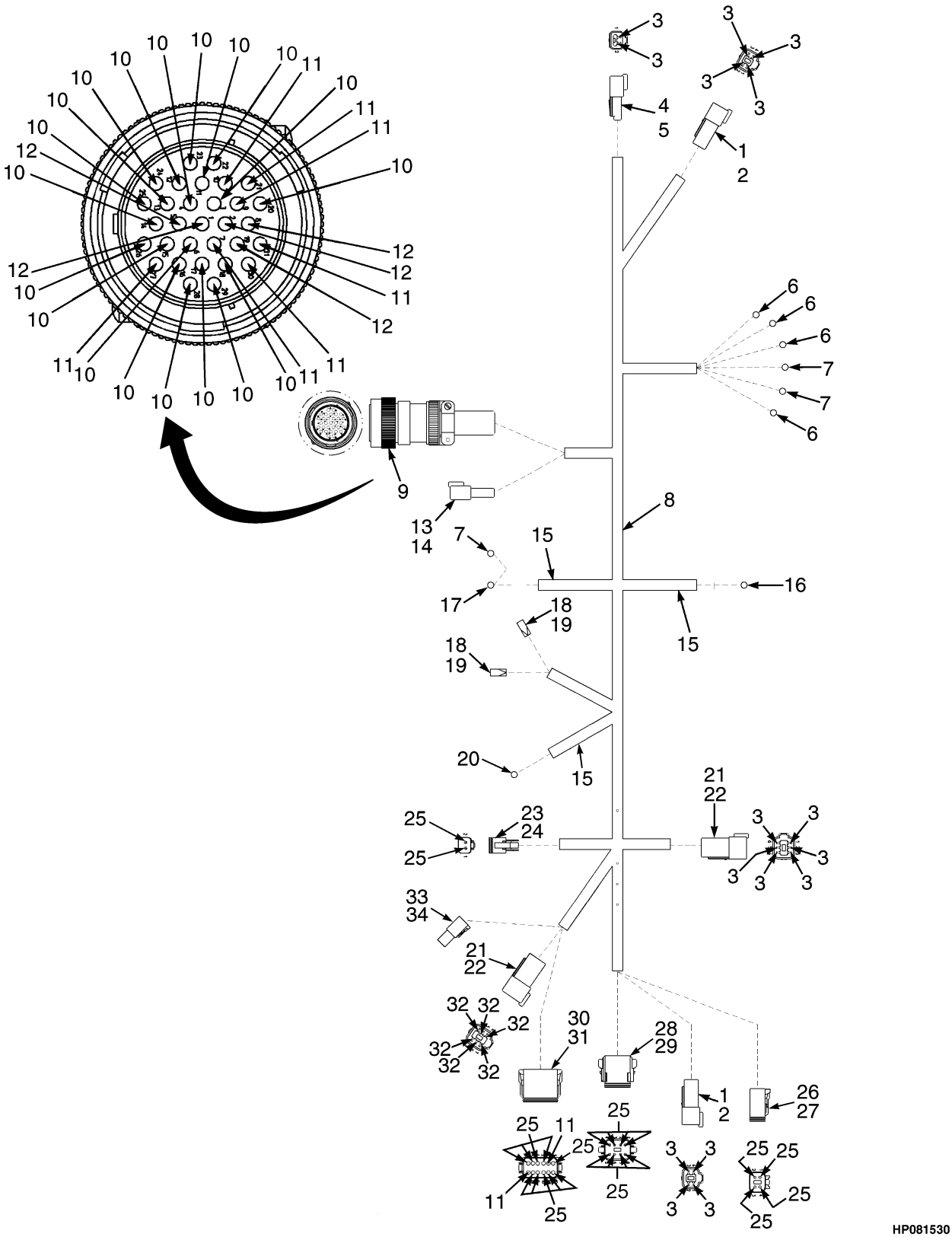

©2011 HYSTER COMPANY

WIRE HARNESS

ENGINE COMPARTMENT – CHASSIS, TIER II ENGINE (S/N E008E01991B →)

ITEM	PART NO.	DESCRIPTION	QTY
	1570453	Wire Harness (Engine Compartment)	1
1	1330411	Connector	2
2	1330416	Connector	2
3	1363885	Terminal (Pin)	16
4	1330409	Connector	1
5	1330414	Connector (Secondary Lock)	1
6	148606	E-Ring	4
7	148605	Ring Terminal	3
8	381919	Braiding	AR
9	1495142	Plug	1
10	1330438	Terminal (Socket)	19
11	1330439	Plug	8
12	1518112	Terminal (Socket)	6
13	1544731	Receptacle	1
14	1544733	Pin	1
15	16906	Conduit (Optional)	AR
16	148607	E-Ring	1
17	148609	E-Ring	1
18	134812	Terminal	2
19	181046	Connector Body	2
20	129887	E-Ring	1
21	1330412	Connector	2
22	1330417	Connector	2
23	1330419	Connector	1
24	1330424	Connector (Secondary Lock)	1
25	1363886	Terminal (Socket)	24
26	1330421	Connector	1
27	1330427	Connector	1
28	1330423	Connector	1
29	1330429	Connector	1
30	1351068	Connector	1
31	1351069	Connector	1
32	1502712	Terminal (Pin)	6
33	1544729	Connector Body	1
34	1544730	Socket	1

©2011 HYSTER COMPANY

WIRE HARNESS (FIGURE 4-13)
SOLENOID VALVE (→ S/N E008E01810X)

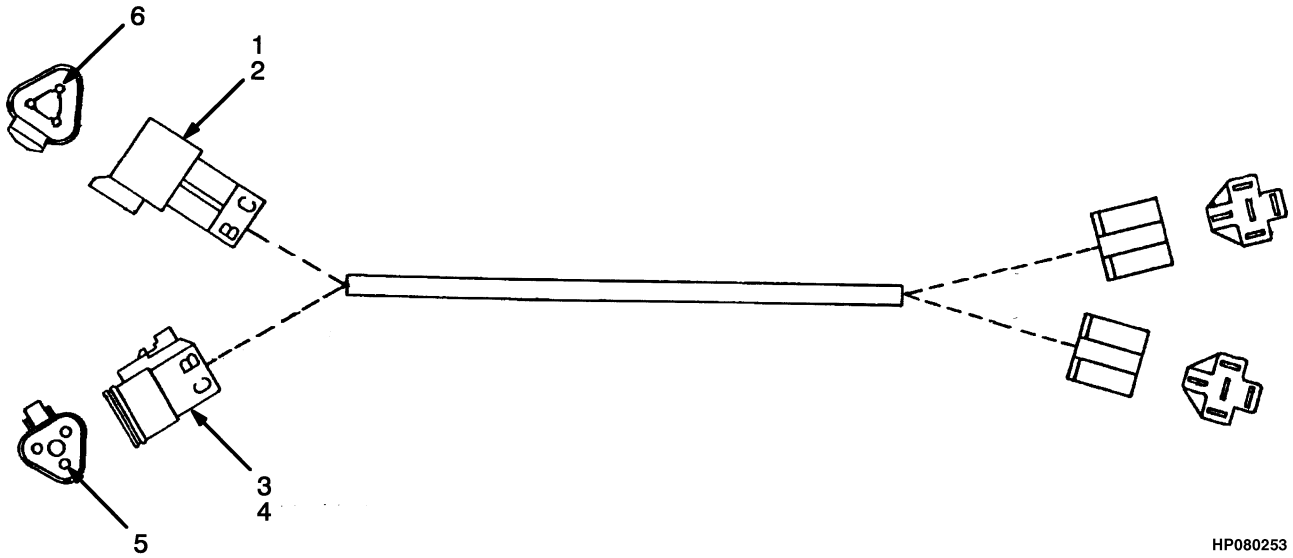

ITEM	PART NO.	DESCRIPTION	QTY
	1336793	Wire Harness	1
1	1330410	Connector	1
2	1330415	Connector	1
3	1330420	Connector	1
4	1330426	Connector	1
5	1330438	Terminal (Socket)	3
6	1330437	Terminal (Pin)	3

©2011 HYSTER COMPANY

WIRE HARNESS (FIGURE 4-14)

SOLENOID VALVE (S/N E008E01811X ↔ S/N E008E01984B)

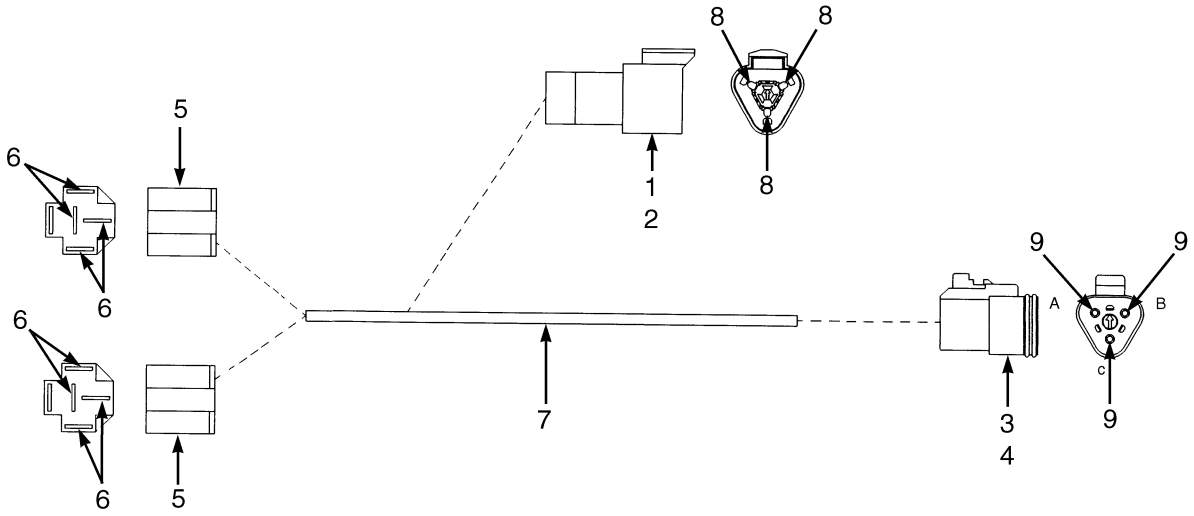

HP081531

ITEM	PART NO.	DESCRIPTION	QTY
	1461739	Wire Harness	1
1	1330410	Connector	1
2	1330415	Connector	1
3	1330420	Connector	1
4	1330426	Connector	1
5	1301228	Connector Body	3
6	1331233	Terminal	8
7	381919	Braiding	AR
8	1363885	Terminal (Pin)	3
9	1363886	Terminal (Socket)	3

©2011 HYSTER COMPANY

WIRE HARNESS (FIGURE 4-15)

CONTROL VALVE (S/N E008E01985B → INC. 01979)

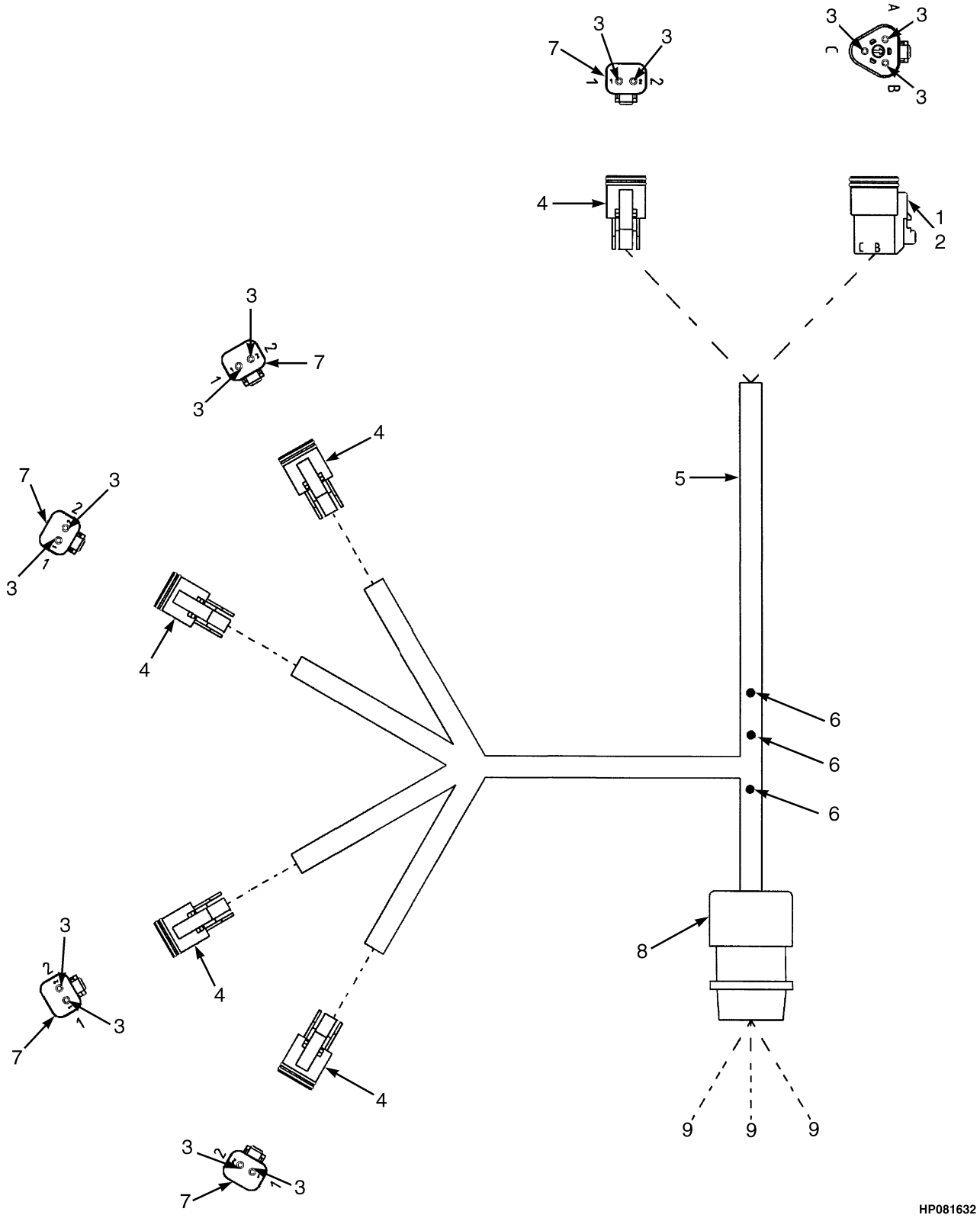

©2011 HYSTER COMPANY

WIRE HARNESS

CONTROL VALVE (S/N E008E01985B → INC. 01979)

ITEM	PART NO.	DESCRIPTION	QTY
	1517977	Wire Harness (Control Valve)	1
1	1330420	Connector	1
2	1330426	Connector	1
3	1363886	Terminal (Socket)	13
4	1330419	Connector	5
5	381919	Braiding	AR
6	1345029	Splice	3
7	1330424	Connector (Secondary Lock)	5
8	1310026	Fitting	1
9	2003181	Pin	3

©2011 HYSTER COMPANY

WIRE HARNESS (FIGURE 4-16)

BRAKE TEMPERATURE SWITCH (S/N E008E01985B → INC. 01979)

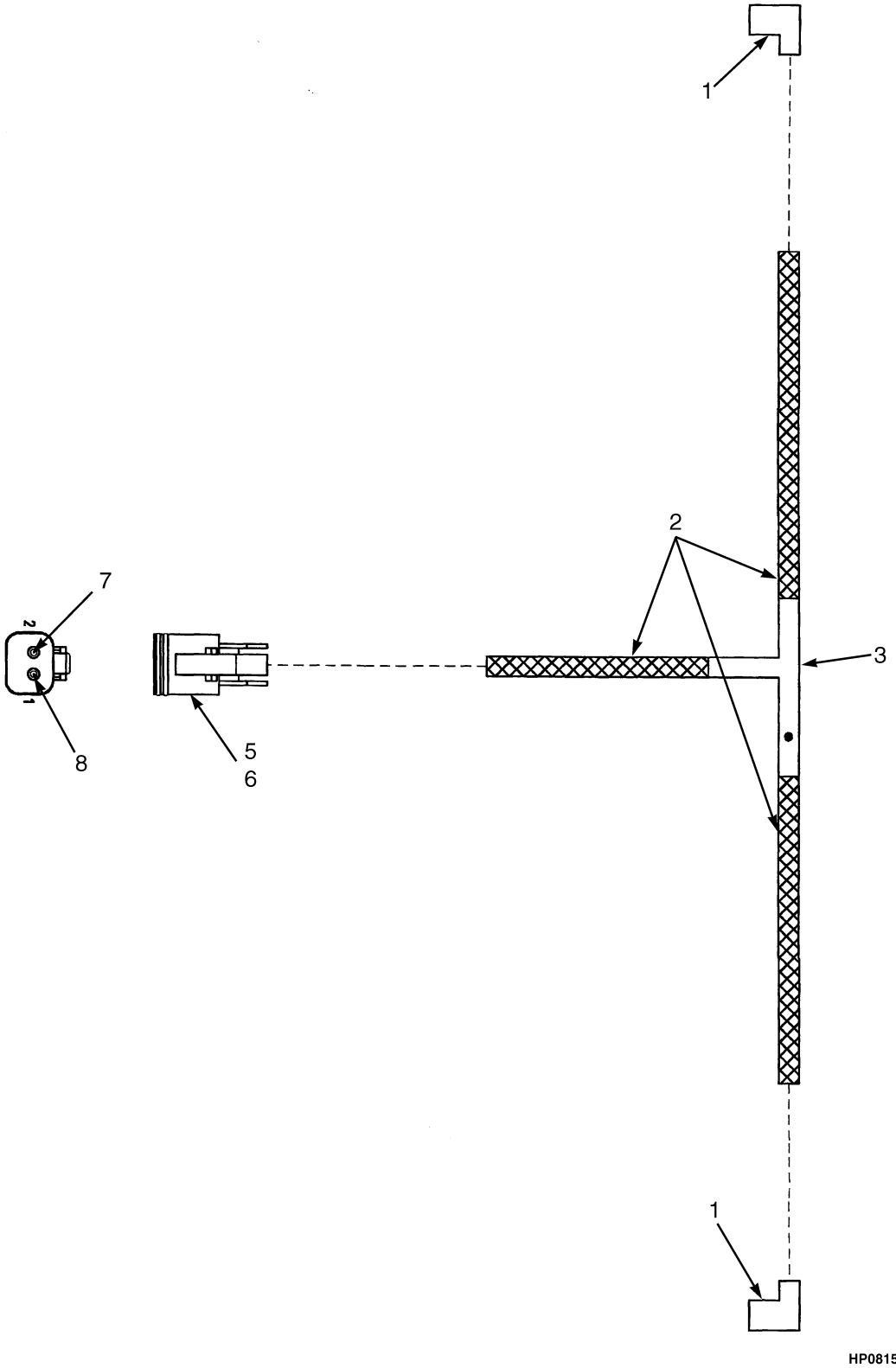

©2011 HYSTER COMPANY

ITEM	PART NO.	DESCRIPTION	QTY
	1552482	Wire Harness (Brake Temperature Switch)	1
1	367540	Terminal (Female)	2
2	16906	Conduit	AR
3	381919	Braiding	AR
4	1345029	Splice	1
5	1330419	Connector	1
6	1330424	Connector (Secondary Lock)	1
7	1330439	Plug	1
8	1363886	Terminal (Socket)	1

©2011 HYSTER COMPANY

WIRE HARNESS (FIGURE 4-17)
TRANSMISSION (→ S/N E008E01865Y)

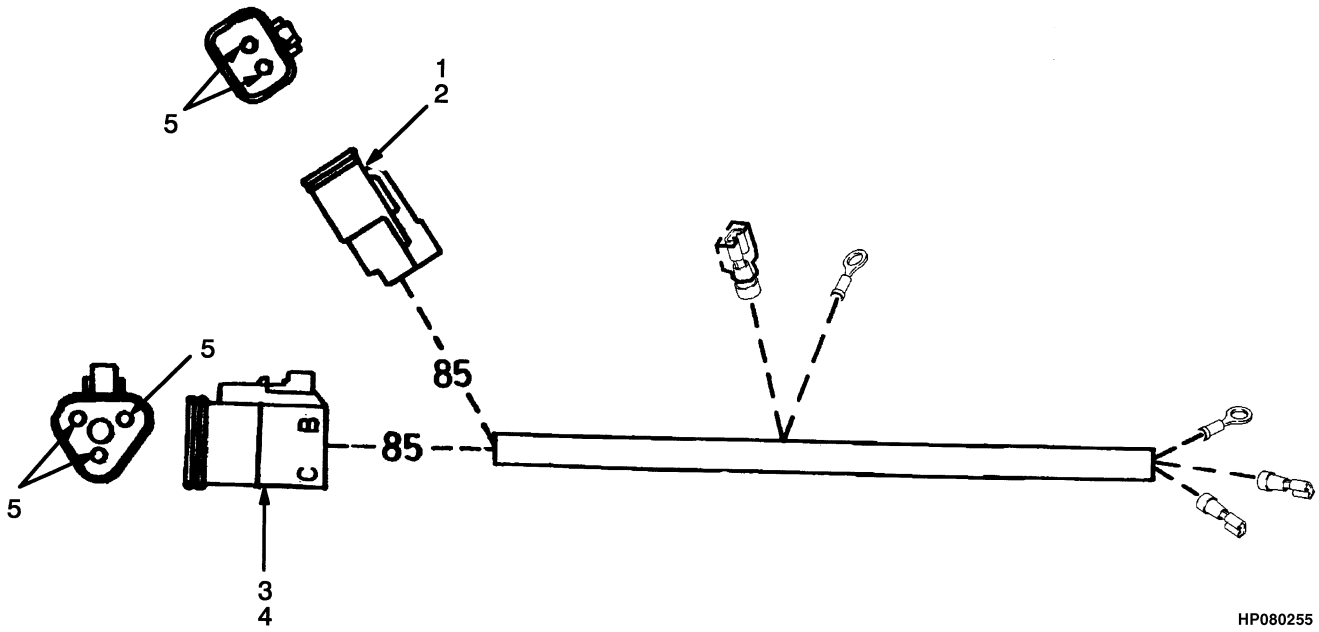

ITEM	PART NO.	DESCRIPTION	QTY
	a 1355106	Wire Harness	1
	b 816484	Wire Harness	1
1	1330419	Connector	1
2	1330424	Connector (Secondary Lock)	1
3	1330420	Connector	1
4	1330426	Connector	1
5	1330434	Terminal	5

FOOTNOTES:

a → S/N E008E01773

b S/N E008E01774 →

©2011 HYSTER COMPANY

WIRE HARNESS (FIGURE 4-18)
BACK-UP ALARM



HP080256

ITEM	PART NO.	DESCRIPTION	QTY
	1367298	Wire Harness (Tier I Engine)	1
	1500974	Wire Harness (Tier II Engine)	1
1	1330409	Connector	1
2	1330414	Connector (Secondary Lock)	1
3	1330437	Terminal (Pin)	2
4	1330419	Connector	1
5	1330424	Connector (Secondary Lock)	1
6	1330438	Terminal (Socket)	2

©2011 HYSTER COMPANY

WIRE HARNESS (FIGURE 4-19)

ENGINE (→ S/N E008E01865)

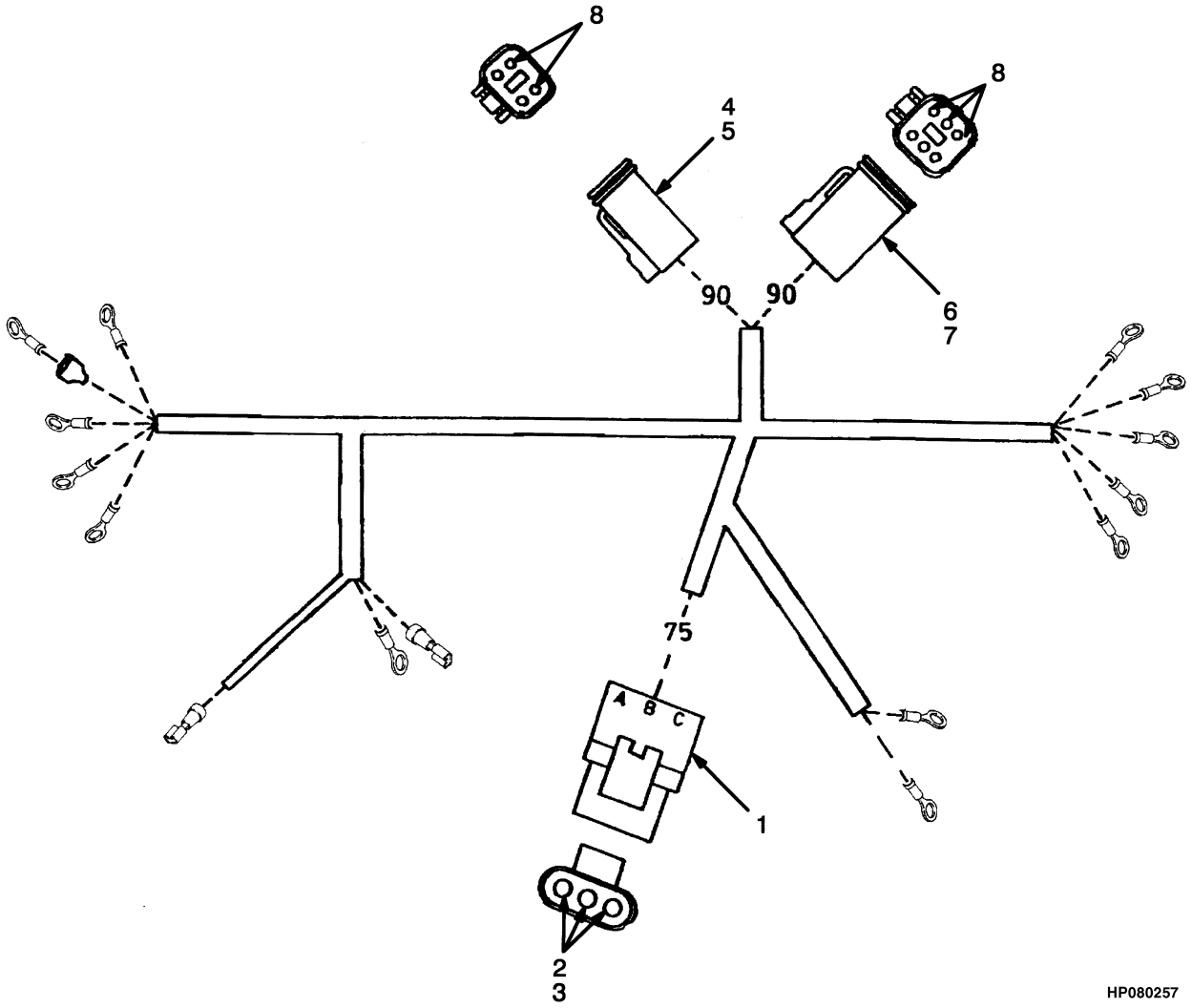

©2011 HYSTER COMPANY

WIRE HARNESS

ENGINE (→ S/N E008E01865)

ITEM	PART NO.	DESCRIPTION	QTY
	1367302	Wire Harness (Engine)	1
1	1323577	Connector	1
2	1323583	Terminal	3
3	1329147	Seal	3
4	1330421	Connector	1
5	1330427	Connector	1
6	1330422	Connector	1
7	1330428	Connector	1
8	1330434	Terminal	10

©2011 HYSTER COMPANY

WIRE HARNESS (FIGURE 4-20)
ENGINE (→ S/N E008E01912Z)

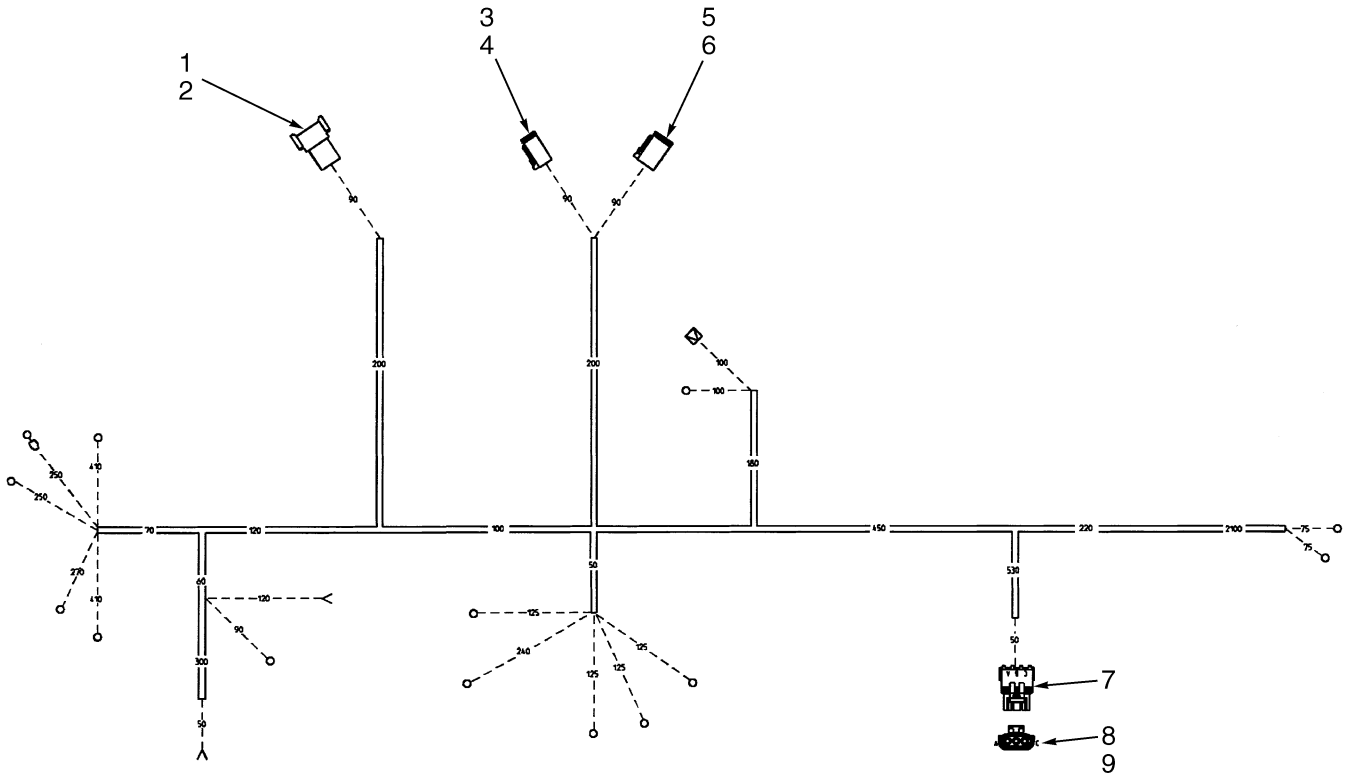

©2011 HYSTER COMPANY

WIRE HARNESS

ENGINE (→ S/N E008E01912Z)

ITEM	PART NO.	DESCRIPTION	QTY
	1518464	Wire Harness (Engine) (Tier II)	1
	1472697	Wire Harness (Engine) (Tier I)	1
1	1330413	Connector	1
1	1463196	Connector	1
2	1330418	Connector	1
3	1330421	Connector	1
4	1330427	Connector	1
5	1330422	Connector	1
6	1330428	Connector	1
7	1323577	Connector	1
8	1323583	Terminal	3
9	1329147	Seal	3

©2011 HYSTER COMPANY

WIRE HARNESS (ENGINE) (FIGURE 4-21)

TIER II (S/N E008E01913Z ↔ S/N E008E01984B)

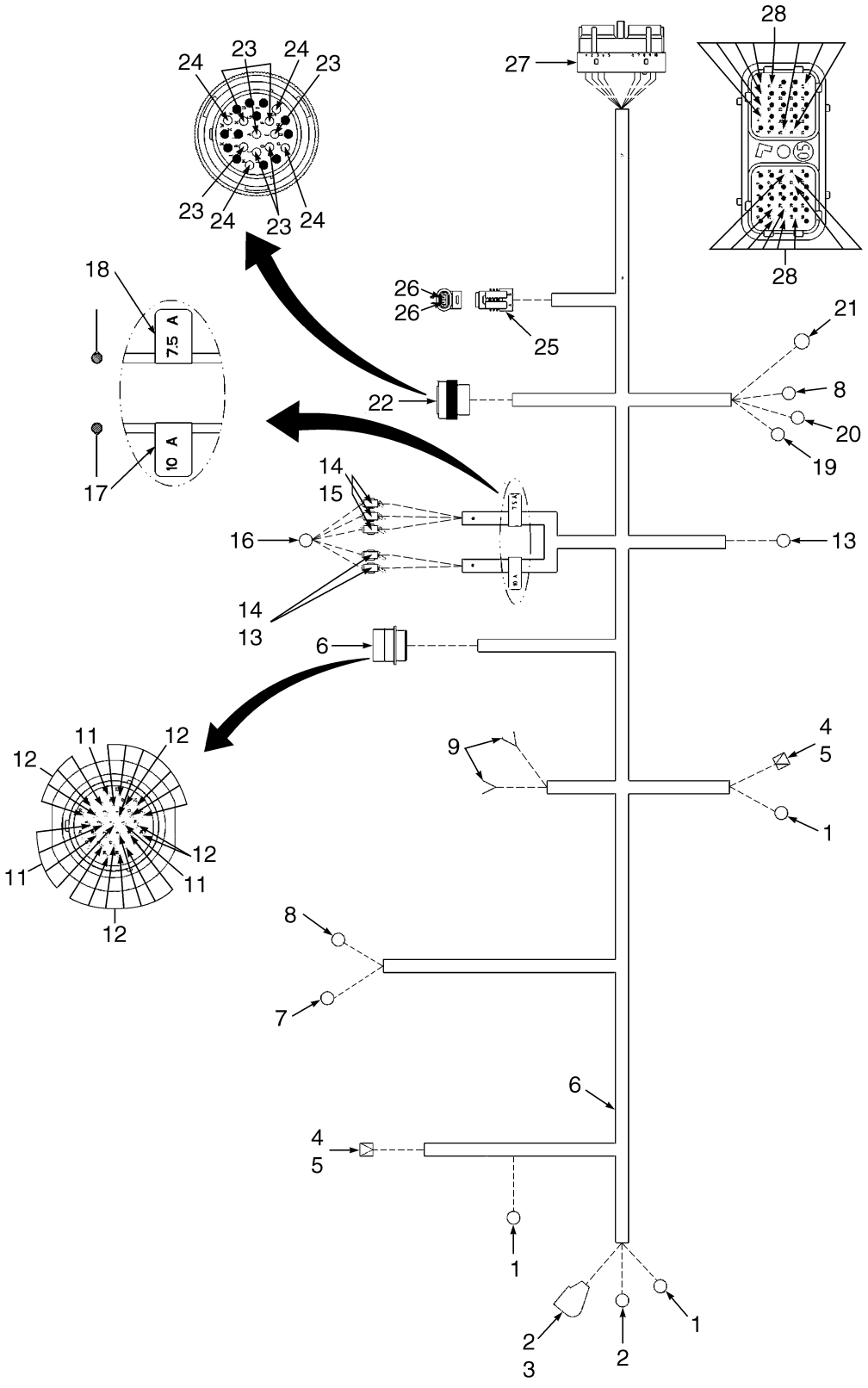

©2011 HYSTER COMPANY

WIRE HARNESS (ENGINE)

TIER II (S/N E008E01913Z ↔ S/N E008E01984B)

ITEM	PART NO.	DESCRIPTION	QTY
	1529308	Wire Harness (Engine) (Tier II)	1
1	148612	E-Ring	3
2	806425	E-Ring	2
3	157065	Boot	1
4	1301720	Connector Body	2
5	370730	Terminal	2
6	381919	Braiding	AR
7	1354497	E-Ring	1
8	129894	E-Ring	2
9	325789	Terminal	1
10	1517552	Connector	1
11	1502712	Terminal (Pin)	6
12	1330437	Terminal (Pin)	20
13	195489	Terminal	1
14	1480432	Fuse Holder	5
15	1300057	Fuse (7.5 Amp)	3
16	148616	E-Ring	1
17	1519577	Label (Fuse)	1
18	1519576	Label (Fuse)	1
19	148605	Ring Terminal	1
20	206027	E-Ring	1
21	806426	E-Ring	1
22	1503634	Connector	1
23	1330438	Terminal (Socket)	7
24	1363886	Terminal (Socket)	4
25	1323586	Connector	1
26	1323576	Terminal	2
27	1503633	Connector	1
28	1507725	Terminal	16
	a 1330439	Plug	17
	a 1484377	Plug	34
	a 370647	Fuse (10 Amp)	2

FOOTNOTES:

a Not Illustrated

©2011 HYSTER COMPANY

WIRE HARNESS (ENGINE) (FIGURE 4-22)

TIER II (S/N E008E01985B ↔ S/N E008E01990B)

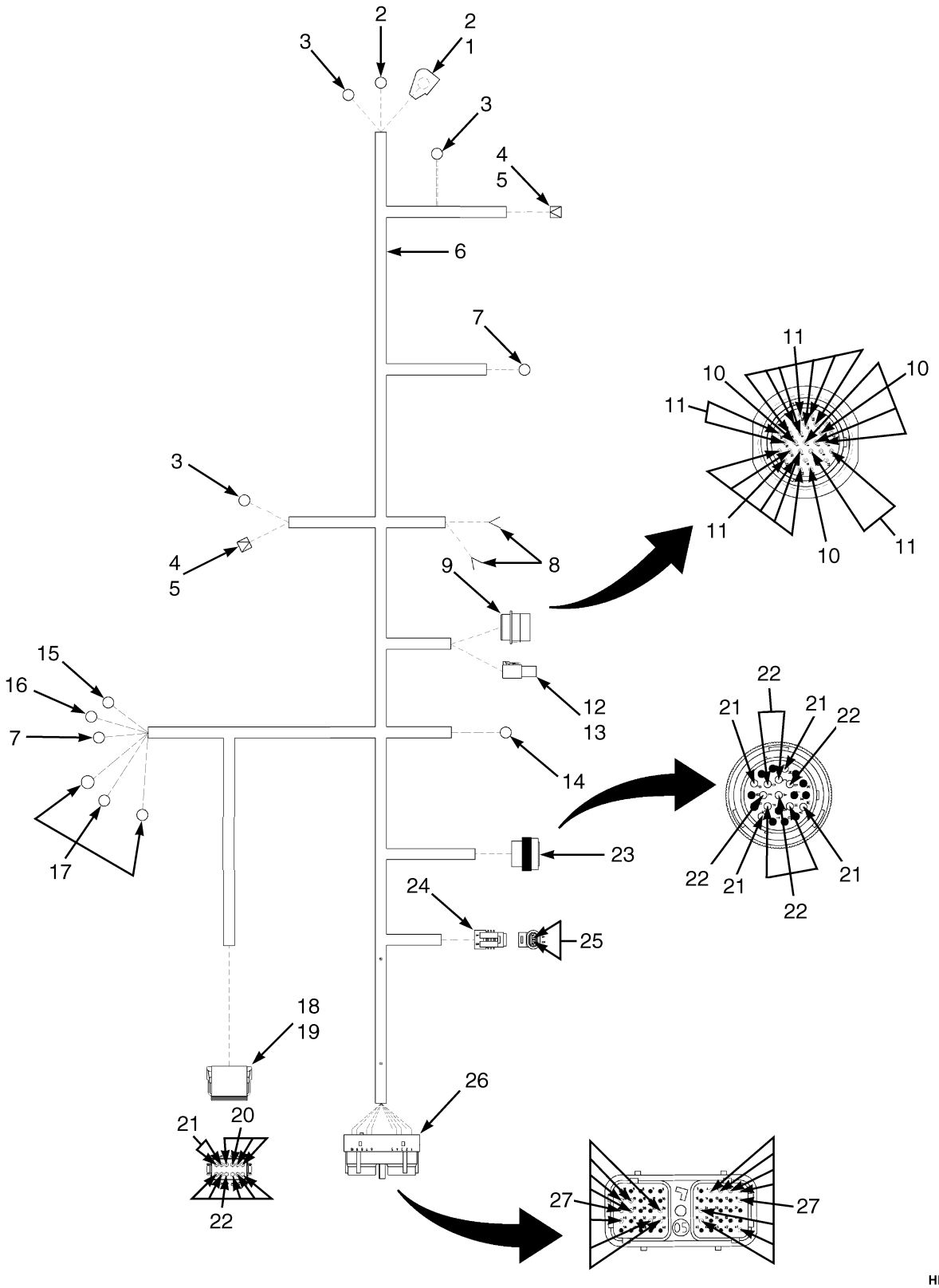

©2011 HYSTER COMPANY

WIRE HARNESS (ENGINE)

TIER II (S/N E008E01985B ↔ S/N E008E01990B)

ITEM	PART NO.	DESCRIPTION	QTY
	1544045	Wire Harness (Engine)	1
1	157065	Boot	1
2	806425	E-Ring	2
3	129887	E-Ring	3
4	370730	Terminal	2
5	1301720	Connector Body	2
6	381919	Braiding	AR
7	129894	E-Ring	2
8	325789	Terminal	1
9	1517552	Connector	1
10	1502712	Terminal (Pin)	6
11	1330437	Terminal (Pin)	17
12	1544729	Connector Body	1
13	1544730	Socket	1
14	195489	Terminal	1
15	148605	Ring Terminal	1
16	206027	E-Ring	1
17	806426	E-Ring	3
18	1351068	Connector	1
19	1351069	Connector	1
20	1330439	Plug	24
21	1363886	Terminal (Socket)	6
22	1330438	Terminal (Socket)	13
23	1503634	Connector	1
24	1323586	Connector	1
25	1323576	Terminal	2
26	1503633	Connector	2
27	1507725	Terminal	16
	1484377	Plug (Not Illustrated)	34

©2011 HYSTER COMPANY

WIRE HARNESS (FIGURE 4-23)

ENGINE — TIER II (S/N E008E01991B ↔ S/N E008E02066C)

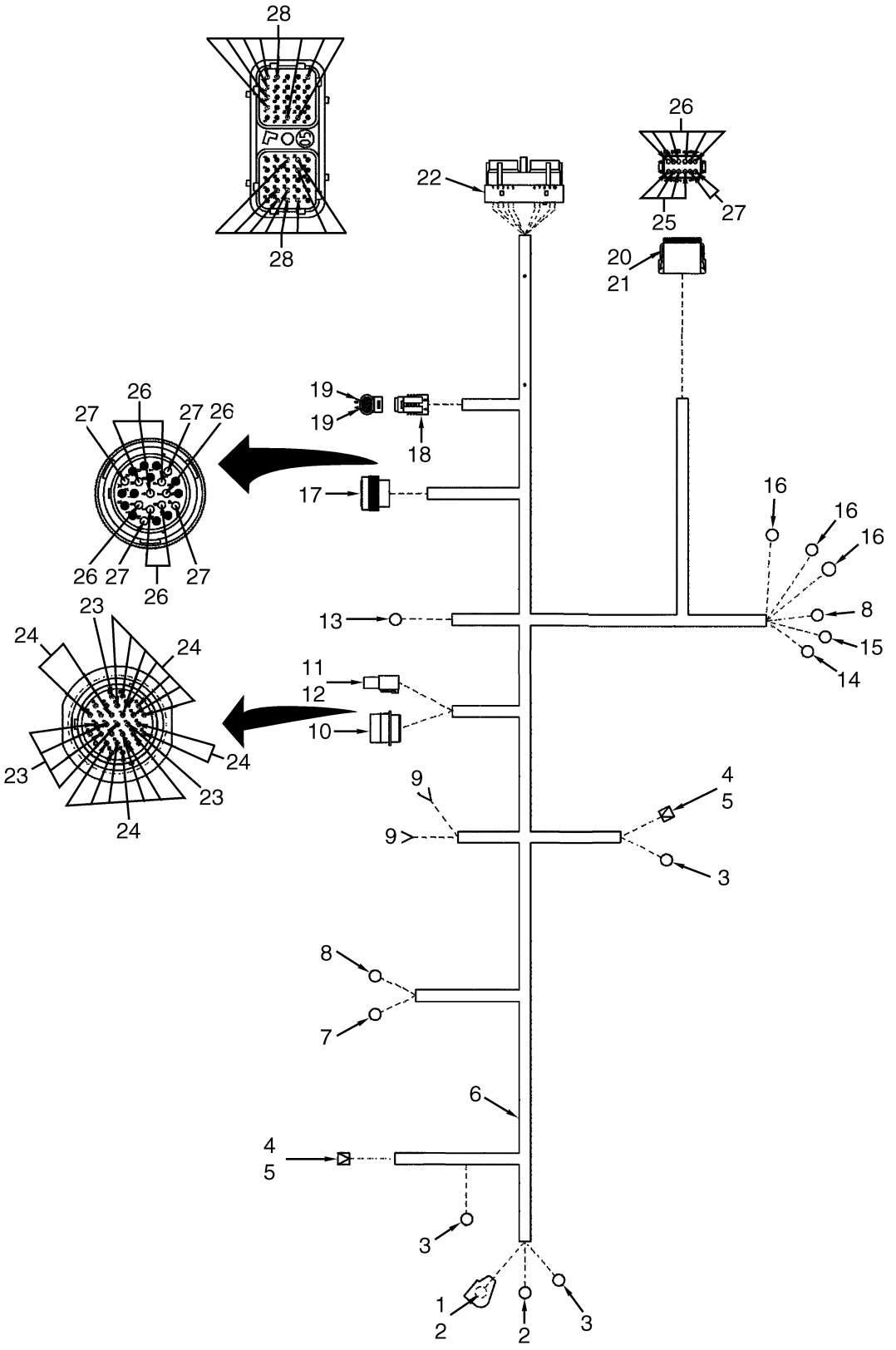

©2011 HYSTER COMPANY

WIRE HARNESS

ENGINE – TIER II (S/N E008E01991B ↔ S/N E008E02066C)

ITEM	PART NO.	DESCRIPTION	QTY
	1570450	Wire Harness (Engine)	1
1	157065	Boot	1
2	806425	E-Ring	2
3	129887	E-Ring	3
4	1301720	Connector Body	2
5	370730	Terminal	2
6	381919	Braiding	AR
7	160245	E-Ring	1
8	129894	E-Ring	2
9	325789	Terminal	2
10	1517552	Connector	1
11	1544729	Connector Body	3
12	1544730	Socket	1
13	195489	Terminal	1
14	148605	Ring Terminal	1
15	206027	E-Ring	34
16	806426	E-Ring	1
17	1503634	Connector	1
18	1323586	Connector	1
19	1323576	Terminal	2
20	1351068	Connector	1
21	1351069	Connector	1
22	1503633	Connector	1
23	1502712	Terminal (Pin)	1
24	1330437	Terminal (Pin)	17
25	1330439	Plug	23
26	1330438	Terminal (Socket)	13
27	1363886	Terminal (Socket)	6
28	1507725	Terminal	16
	a 1484377	Plug	6

FOOTNOTES:

a Not Illustrated

©2011 HYSTER COMPANY

WIRE HARNESS (FIGURE 4-24)

ENGINE — TIER II (S/N E008E02067C ↔ S/N E008E02099D)

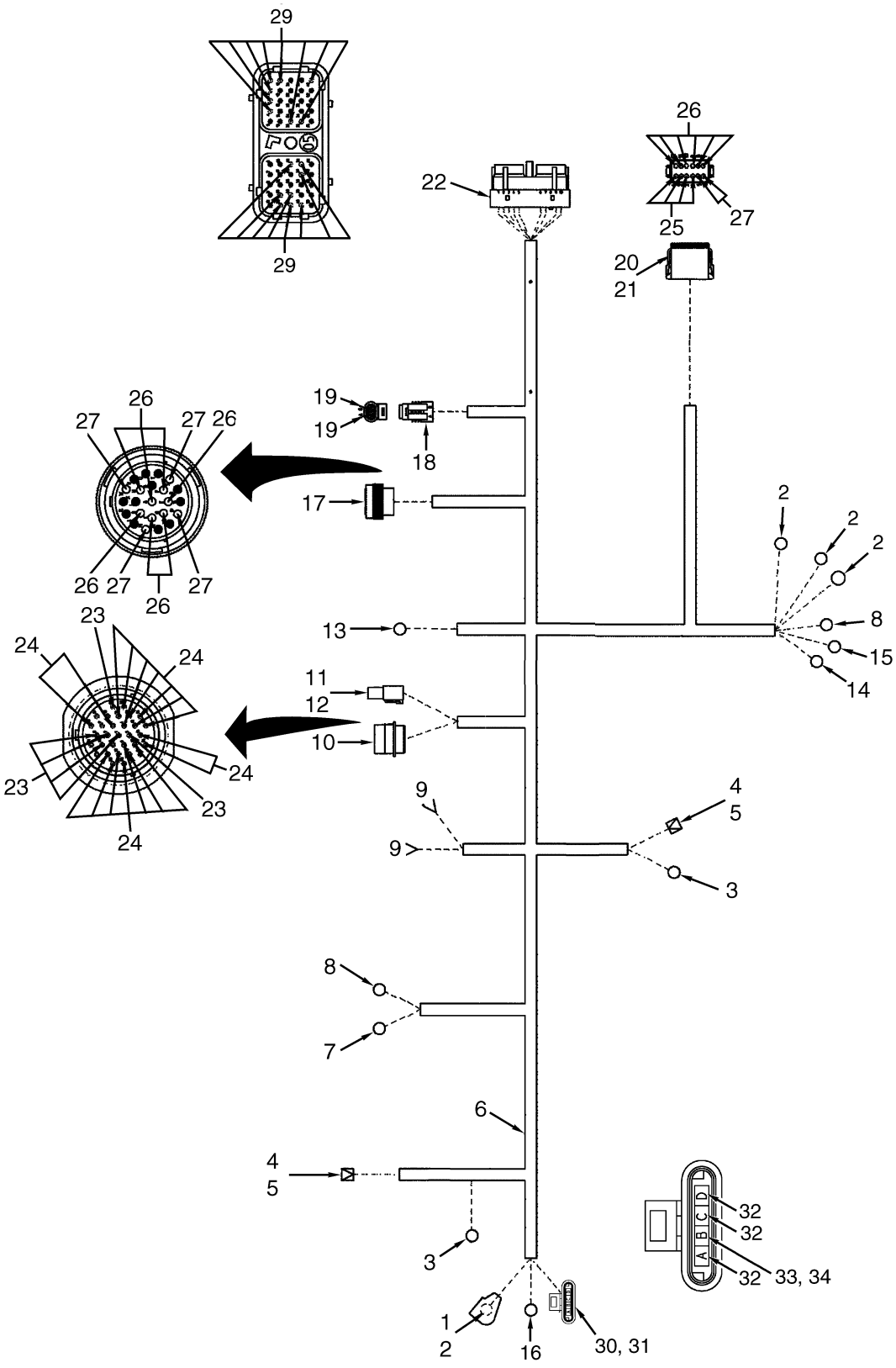

HP081701

©2011 HYSTER COMPANY

WIRE HARNESS

ENGINE – TIER II (S/N E008E02067C ↔ S/N E008E02099D)

ITEM	PART NO.	DESCRIPTION	QTY
	1606672	Wire Harness (Engine)	1
1	157065	Boot	1
2	806426	E-Ring	4
3	129887	E-Ring	2
4	1301720	Connector Body	2
5	370730	Terminal	2
6	381919	Braiding	AR
7	160245	E-Ring	1
8	129894	E-Ring	2
9	325789	Terminal	2
10	1517552	Connector	1
11	1544729	Connector Body	3
12	1544730	Socket	1
13	195489	Terminal	1
14	148605	Ring Terminal	1
15	206027	E-Ring	1
16	806425	E-Ring	1
17	1503634	Connector	1
18	1323586	Connector	1
19	1323576	Terminal	2
20	1351068	Connector	1
21	1351069	Connector	1
22	1503633	Connector	1
23	1502712	Terminal (Pin)	1
24	1330437	Terminal (Pin)	17
25	1330439	Plug	23
26	1330438	Terminal (Socket)	13
27	1363886	Terminal (Socket)	6
28	1507725	Terminal	16
29	1484377	Plug	34
30	1501919	Connector	1
31	1482663	Connector	1
32	1482668	Plug	3
33	1330355	Terminal	1
34	1330356	Seal	1

©2011 HYSTER COMPANY

WIRE HARNESS (FIGURE 4-25)

ENGINE — TIER III ENGINE (S/N E008E02100D →)

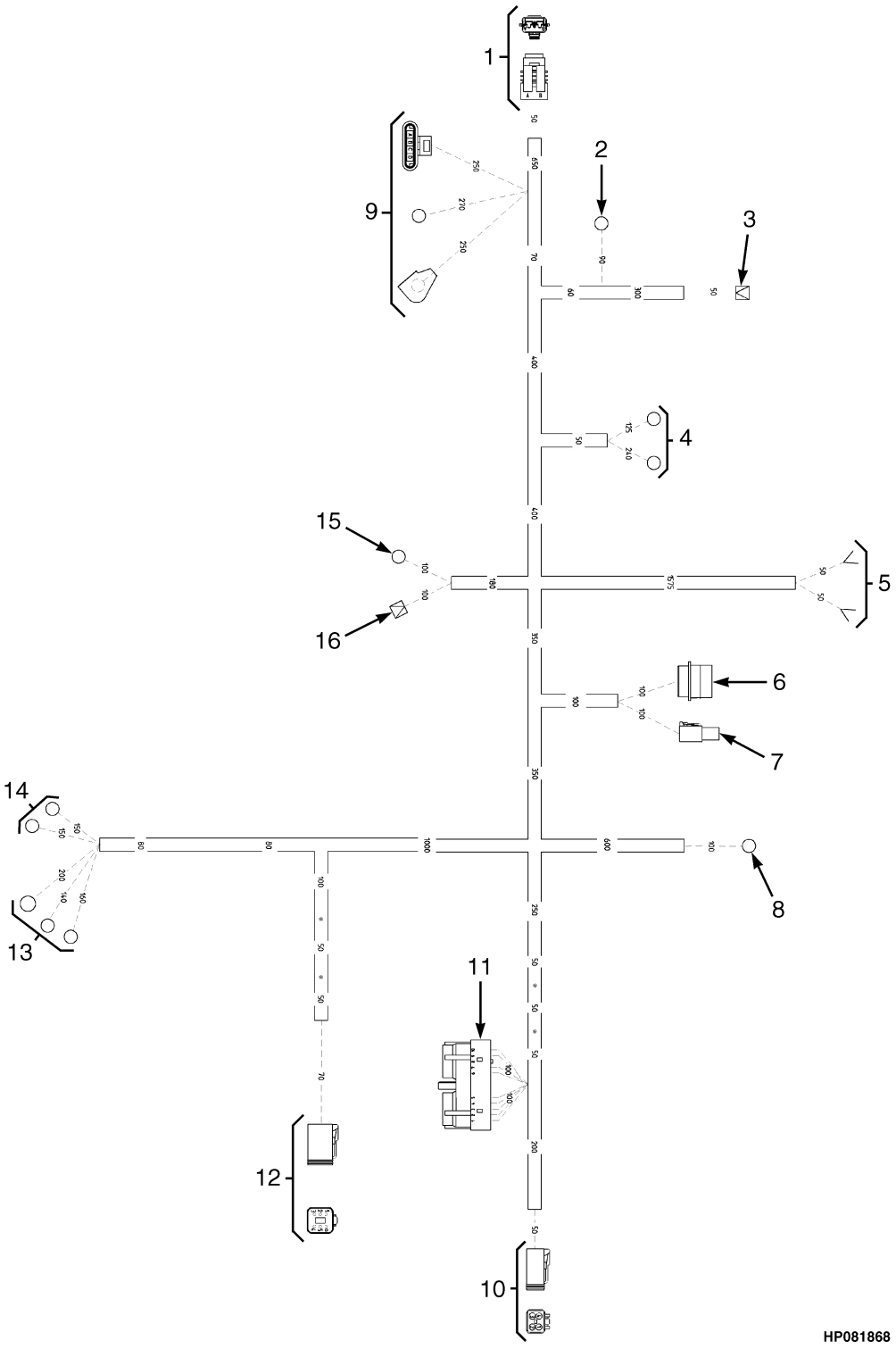

©2011 HYSTER COMPANY

WIRE HARNESS

ENGINE – TIER III ENGINE (S/N E008E02100D →)

ITEM	PART NO.	DESCRIPTION	QTY
	1632783	Wire Harness (Engine)	1
1	. . . . .	Connector Assembly (Engine Coolant Level Sender)	1
1	1329152	Plug	1
1	1329148	Terminal	2
1	1402888	Seal	2
2	. . . . .	Connector Assembly (Engine Oil Pressure Sender)	1
2	129887	E-Ring	1
3	. . . . .	Connector Assembly (Engine Coolant Temperature Sender)	1
3	370730	Terminal	1
3	1301720	Connector Body	1
4	. . . . .	Connector Assembly (Starter Switch Terminals)	1
4	160245	E-Ring	1
4	129894	E-Ring	1
5	. . . . .	Connector Assembly (Transmission Oil Pressure Sender And Switch)	1
5	325789	Terminal	2
6	. . . . .	Connector Assembly (Chassis Harness)	1
6	1517552	Connector	1
6	1330437	Terminal (Pin)	16
6	1502712	Terminal (Pin)	6
7	. . . . .	Connector Assembly (Fuse)	1
7	1544729	Connector Body	1
7	1544730	Socket	1
8	. . . . .	Connector Assembly (Ground)	1
8	195489	Terminal	1
9	. . . . .	Connector Assembly (Terminating Resistor)	1
9	1532664	Connector (Secondary Lock)	1
9	1484397	Connector (3-Way)	1
9	1607772	Connector (Termination)	1
9	1518112	Terminal (Socket)	2
9	1330439	Plug	1
10	. . . . .	Connector Assembly (Cummins Engine Four-Pin Power Connector J3)	1
10	1632865	Connector	1
10	1514603	Connector	1
10	1493434	Terminal (Socket)	2
10	1330439	Plug	2
11	. . . . .	Connector Assembly (Cummins Engine 50-Pin ECM Connector J1)	1
11	1632864	Housing	1
11	1507725	Terminal	21
12	. . . . .	Connector Assembly (Fuse Box)	1
12	1330438	Terminal (Socket)	2
12	1363886	Terminal (Socket)	4
12	1493430	Connector (6 Way Housing)	1
12	1529052	Connector	1
13	. . . . .	Connector Assembly (Fuses)	1
13	806426	E-Ring	2
13	148611	E-Ring	1
14	. . . . .	Connector Assembly (Grid Heater Relay)	1
14	206027	E-Ring	2
15	. . . . .	Connector Assembly (Terminating Resistor)	1
15	1532664	Connector (Secondary Lock)	1

©2011 HYSTER COMPANY

WIRE HARNESS

ENGINE – TIER III ENGINE (S/N E008E02100D →)

ITEM	PART NO.	DESCRIPTION	QTY
15	1484397	Connector (3-Way)	1
15	1607772	Connector (Termination)	1
15	1518112	Terminal (Socket)	2
15	1330439	Plug	1
16	. . . . .	Connector Assembly (Nine-Pin Datalink Connector)	1
16	1330439	Plug	1
16	1502712	Terminal (Pin)	5
16	1632866	Connector	1
16	1632867	Cap	1
17	. . . . .	Connector Assembly (Transmission Temperature Sender)	1
17	370730	Terminal	1
17	1301720	Connector Body	1
18	. . . . .	Connector Assembly (Transmission Temperature Switch)	1
18	129887	E-Ring	1
19	. . . . .	Connector Assembly (Alternator)	1
19	157065	Boot	1
19	806425	E-Ring	1
19	806426	E-Ring	1
19	1330355	Terminal	1
19	1330356	Seal	1
19	1501919	Connector	1
19	1482663	Connector	1
19	1482668	Plug	3

©2011 HYSTER COMPANY

NOTES

©2011 HYSTER COMPANY

WIRE HARNESS (FIGURE 4-26)
SENSOR — TIER I ENGINE (S/N E008E01866Y →)

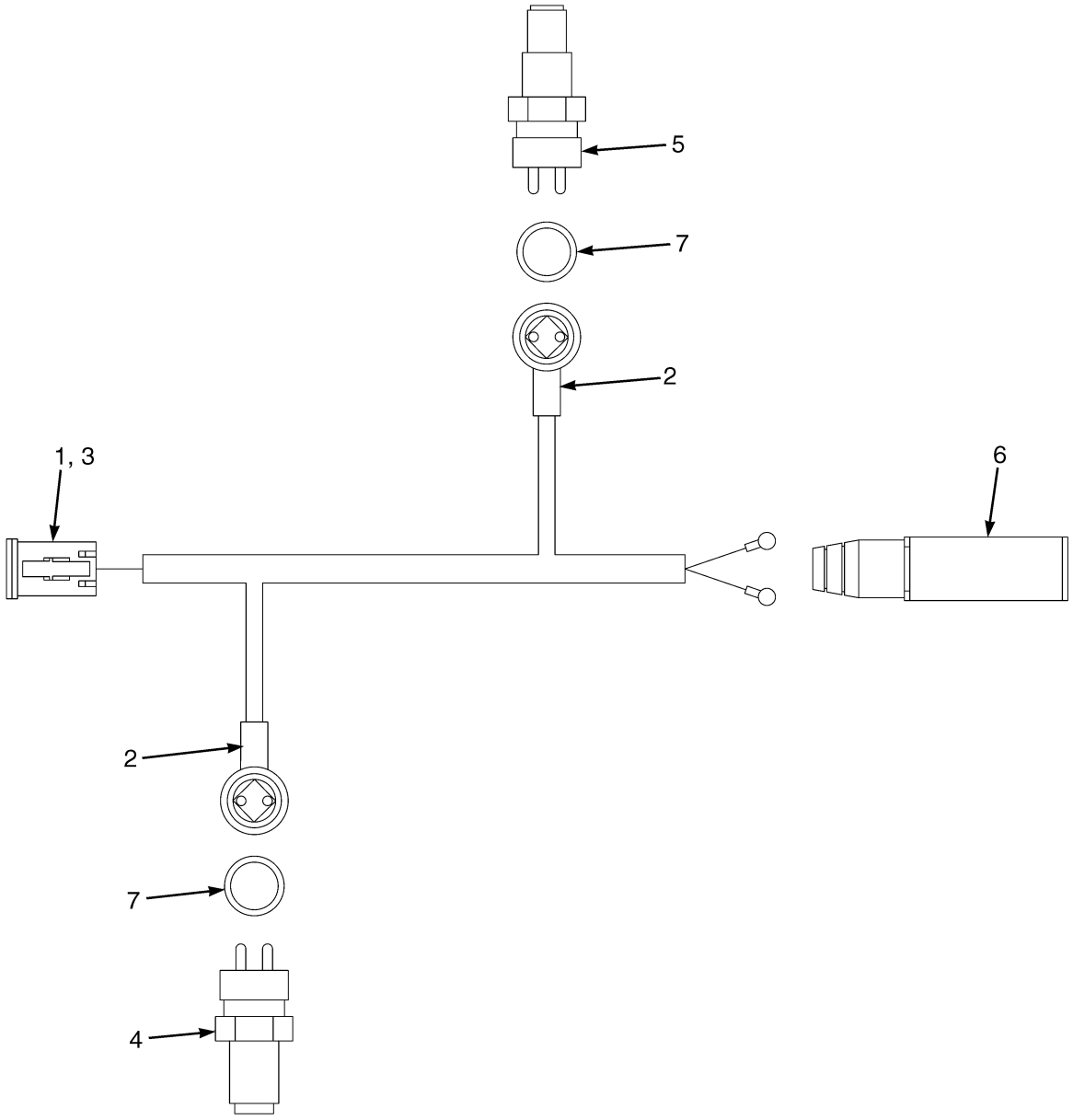

HP081286

©2011 HYSTER COMPANY

WIRE HARNESS

SENSOR – TIER I ENGINE (S/N E008E01866Y →)

ITEM	PART NO.	DESCRIPTION	QTY
	1508254	Wire Harness (Sensor)	1
1	1330423	Connector	1
2	1388219	Connector	2
3	1330429	Connector	1
4	1388287	Sensor (Transmission) (Engine Output)	1
5	1388286	Sensor (Engine) (Transmission Output)	1
6	1322038	Switch (Throttle Position)	1
7	1314149	O-Ring	2

©2011 HYSTER COMPANY

INSTRUMENT PANEL (FIGURE 4-27)

TIER I ENGINE — SHEET 1 OF 2 (→ S/N E008E01885Z)

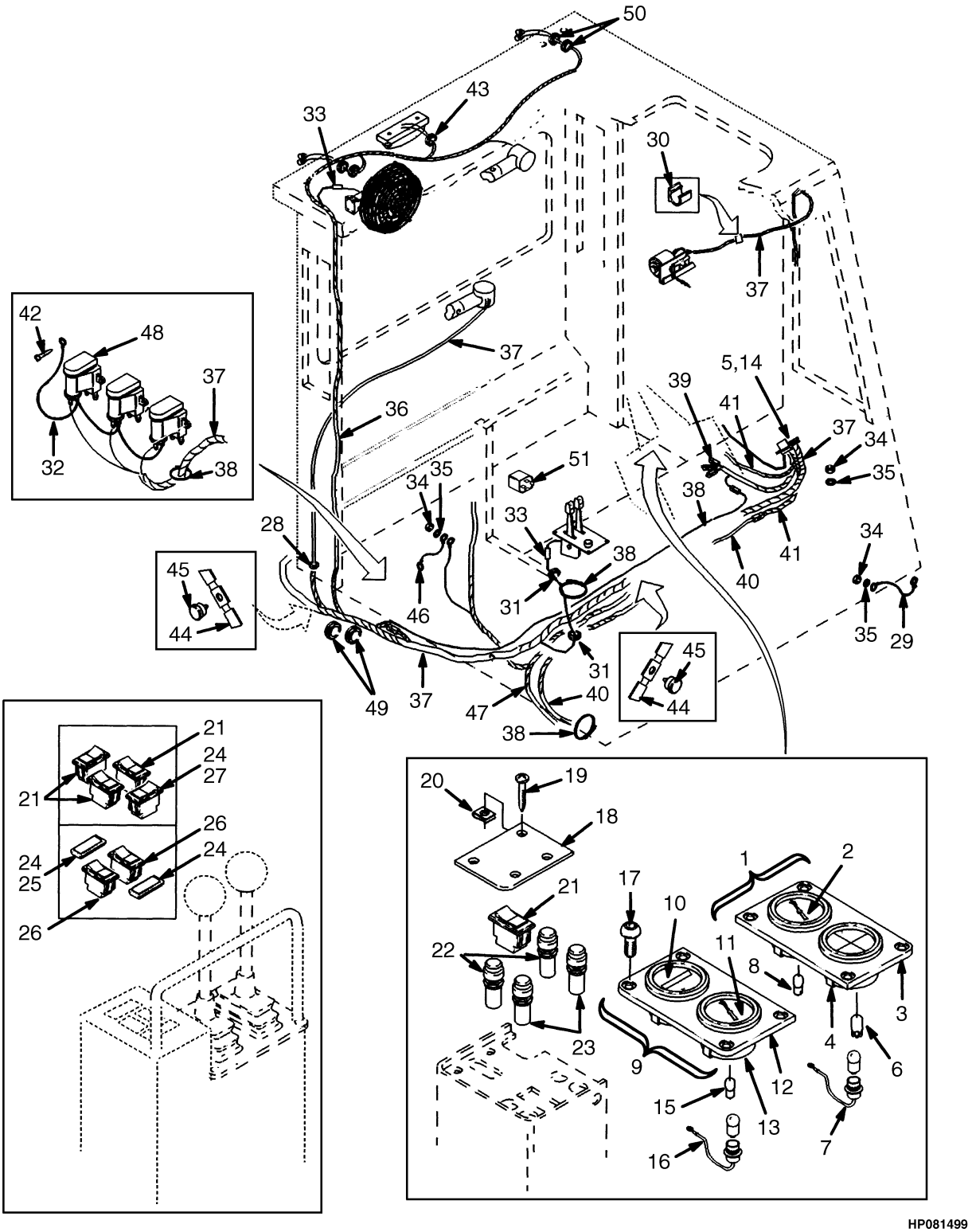

©2011 HYSTER COMPANY

INSTRUMENT PANEL

TIER I ENGINE – SHEET 1 OF 2 (→ S/N E008E01885Z)

ITEM	PART NO.	DESCRIPTION	QTY
1	. . . . .	Instrument Panel (RH)	1
1	1301645	Instrument Cluster	1
2	1312344	Fuel Gauge	1
3	1312339	Gasket	2
3	1312473	Bezel	1
4	1312340	Bracket	1
5	1317393	Connector Body	1
5	367966	Pin	8
6	1320001	Bulb (24 Volt)	2
7	169785	Wire	1
7	1317394	Terminal	4
8	1320001	Bulb (24 Volt)	2
9	. . . . .	Instrument Panel (LH)	1
9	370471	Instrument Cluster	1
10	1312337	Hourmeter	1
11	1312338	Temperature Gauge (Engine Coolant Water Temperature)	1
12	1312339	Gasket	2
12	1312473	Bezel	1
13	1312340	Bracket	2
14	367953	Connector Body	1
14	367966	Pin	8
15	1310692	Bulb (24 Volt)	1
16	169785	Wire	1
16	169784	Socket	1
17	1330574	Screw	8
18	**b** 1315837	Plate	1
19	**b** 284078	Screw	4
20	**b** 270871	Nut	4
21	**a** 1316527	Switch	4
22	**a**	Lamp Assembly	2
22	**a** 1310712	Lamp	2
22	**a** 1377186	Lens (Amber)	1
22	**a** 134810	Terminal	2
22	**a** 181045	Connector Body	2
22	**a** 380121	Terminal	2
23	**a**	Lamp Assembly	2
23	**a** 1310713	Lamp	2
23	**a** 1377188	Lens (Green)	1
23	**a** 134810	Terminal	2
23	**a** 181045	Connector Body	2
23	**a** 380121	Terminal	2
24	376949	Cover	AR
25	**b** 1316527	Switch (Side-Shift Carriage)	1
26	**b** 1316527	Switch (With Fork Positioner)	2
27	1316527	Switch (With Extendable Attachment)	1
28	1301424	Bushing	4
29	150179	Wire	1
30	1301727	Clamp	3
31	1300757	Grommet	2
32	1311268	Wire Harness (☞Figure 4-99)	1

©2011 HYSTER COMPANY

INSTRUMENT PANEL

TIER I ENGINE – SHEET 1 OF 2 (→ S/N E008E01885Z)

ITEM	PART NO.	DESCRIPTION	QTY
33	181046	Connector Body	2
34	15056	Nut	3
35	15905	Lockwasher	3
36	**g** 1336785	Wire Harness (Module) (☞Figure 4-48)	1
36	**j** 1467783	Wire Harness (Module) (☞Figure 4-49)	1
36	**g** 1464313	Wire Harness (☞Figure 4-50)	1
36	**j** 1467784	Wire Harness (☞Figure 4-51)	1
37	1336784	Wire Harness (With EC Cab) (☞Figure 4-46, ☞Figure 4-47)	1
37	1336784	Wire Harness (With EC Cab) (☞Figure 4-47)	1
38	137852	Strap Clamp	AR
39	**de** 1336786	Wire Harness (Operator Compartment)	1
39	**g** 1360659	Wire Harness (Operator Compartment) (☞Figure 4-59)	1
39	**j** 1467746	Wire Harness (Operator Compartment) (☞Figure 4-60)	1
40	**a** 1336777	Wire Harness (☞Figure 4-41)	1
40	**a** 1460958	Wire Harness (☞Figure 4-42)	1
41	1336778	Wire Harness (Transmission and Attachment) (☞Figure 4-44)	1
42	309637	Screw	1
43	102990	Grommet	3
44	1301593	Clamp	6
45	340044	Gripnail	6
46	1336238	Wire	1
47	**acf** 1336797	Wire Harness (Switch)	1
47	**hi** 1355024	Wire Harness (Switch) (☞Figure 4-52)	1
47	1465877	Wire Harness (Switch) (☞Figure 4-52)	1
47	1461011	Wire Harness (Switch) (☞Figure 4-55)	1
47	1552687	Wire Harness (Switches) (☞Figure 4-53)	1
48	1316593	Pump (24 Volt)	3
49	102990	Grommet	2
50	102990	Grommet	AR
50	216735	Grommet	AR
51	1307687	Relay (24 Volt)	1

FOOTNOTES:

a With EC Cab
b With Standard Cab
c → S/N E008D01511
d → S/N E008D01514
e → S/N E008E01531
f → S/N E008E01542
g → S/N E008E01810X
h S/N E008D01512 →
i S/N E008E01543 →
j S/N E008E01811X →

©2011 HYSTER COMPANY

NOTES

©2011 HYSTER COMPANY

INSTRUMENT PANEL (FIGURE 4-28)

TIER I ENGINE — SHEET 2 OF 2 (→ S/N E008E01810X)

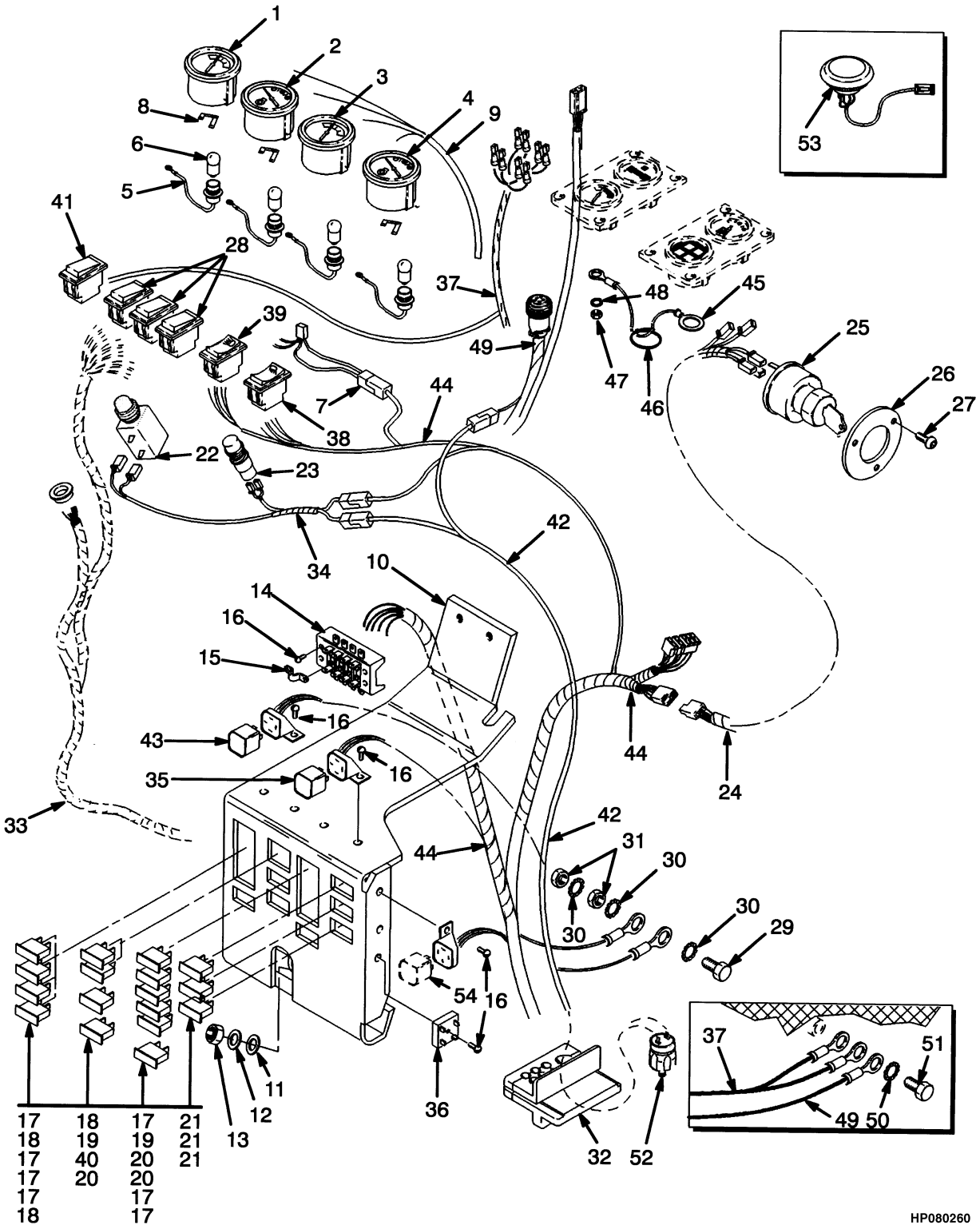

©2011 HYSTER COMPANY

INSTRUMENT PANEL

TIER I ENGINE – SHEET 2 OF 2 (→ S/N E008E01810X)

ITEM	PART NO.	DESCRIPTION	QTY
1	169781	Temperature Gauge (Transmission Oil Temperature)	1
2	1326108	Oil Pressure Gauge (Transmission Oil)	1
3	1310688	Gauge (Volt Meter)	1
4	169759	Oil Pressure Gauge (Engine Oil)	1
5	169785	Wire	4
6	1310692	Bulb (24 Volt)	4
7	1336790	Wire Harness (Lighting Switch) (☞Figure 4-73)	1
8	1307110	Resistor	3
9	1336796	Wire Harness (Gauge) (☞Figure 4-66)	1
10	1301235	Fuse Panel	1
11	320157	Washer	2
12	320156	Washer	2
13	136687	Nut	2
14	1301296	Terminal Block	1
15	1301704	Jumper	1
16	1301284	Screw	9
17	370647	Fuse (10 Amp)	6
18	370646	Fuse (5 Amp)	2
19	370648	Fuse (20 Amp)	2
20	1310630	Fuse (15 Amp)	3
21	1301282	Breaker (5 Amp)	3
22	1307694	Alarm	1
23	. . . . .	Lamp (Assembly)	1
23	1315877	Lamp	1
23	134810	Terminal	2
23	1377187	Lens (Red)	1
23	181045	Connector Body	2
24	1336788	Wire Harness (Steering Pod) (☞Figure 4-67)	1
25	379902	Ignition Switch	1
25	186304	Key	2
26	1301739	Plate	1
27	379650	Screw (Special)	3
28	1301613	Switch	3
29	136749	Screw	1
30	296380	Washer	3
31	239503	Nut	2
32	1301640	Seal	1
33	1336784	Wire Harness (With EC Cab) (☞Figure 4-47)	1
34	**ce** 1336230	Wire Harness (Brake Indicator) (☞Figure 4-104)	1
35	2003859	Flasher	1
36	1301224	Diode Block	1
37	**a** 1336777	Wire Harness (☞Figure 4-41)	1
38	1301617	Switch Assembly (Work Light)	1
38	1310627	Switch	1
38	1301157	Lens (Green) (Work Light)	1
39	1301619	Switch Assembly (Lights)	1
39	1310627	Switch	1
39	1301156	Lens (Green) (Light)	1
40	**a** 1310630	Fuse (15 Amp)	1
41	**a** 1310626	Switch	1

©2011 HYSTER COMPANY

INSTRUMENT PANEL

TIER I ENGINE – SHEET 2 OF 2 (→ S/N E008E01810X)

ITEM	PART NO.	DESCRIPTION	QTY
42	**ce** 1336950	Wire Harness (Park Brake) (☞Figure 4-103)	1
42	**gi** 1385625	Wire Harness (Park Brake) (☞Figure 4-39)	1
42	1472705	Wire Harness (Park Brake) (☞Figure 4-40)	1
43	1307687	Relay (24 Volt) (Transmission)	1
44	**bd** 1336786	Wire Harness (Operator Compartment)	1
44	**fh** 1360659	Wire Harness (Operator Compartment) (☞Figure 4-59)	1
45	1311403	Wire	1
46	137852	Strap Clamp	1
47	15049	Nut	1
48	16743	Lockwasher	1
49	1336778	Wire Harness (Transmission and Attachment) (☞Figure 4-44)	1
50	15905	Lockwasher	1
51	16805	Capscrew	1
52	**gi** 1385634	Pressure Switch	1
53	**gi** 1383831	Switch (Park Brake)	1
54	1357210	Relay (Horn)	1

FOOTNOTES:

a With EC Cab
b → S/N E008D01514
c → S/N E008D01581
d → S/N E008E01531
e → S/N E008E01654
f S/N E008D01515 →
g S/N E008D01582 →
h S/N E008E01532 →
i S/N E008E01655 →

©2011 HYSTER COMPANY

NOTES

©2011 HYSTER COMPANY

INSTRUMENT PANEL (FIGURE 4-29)

TIER I ENGINE — SHEET 2 OF 2 (S/N E008E01811X ↔ S/N E008E01865Y)

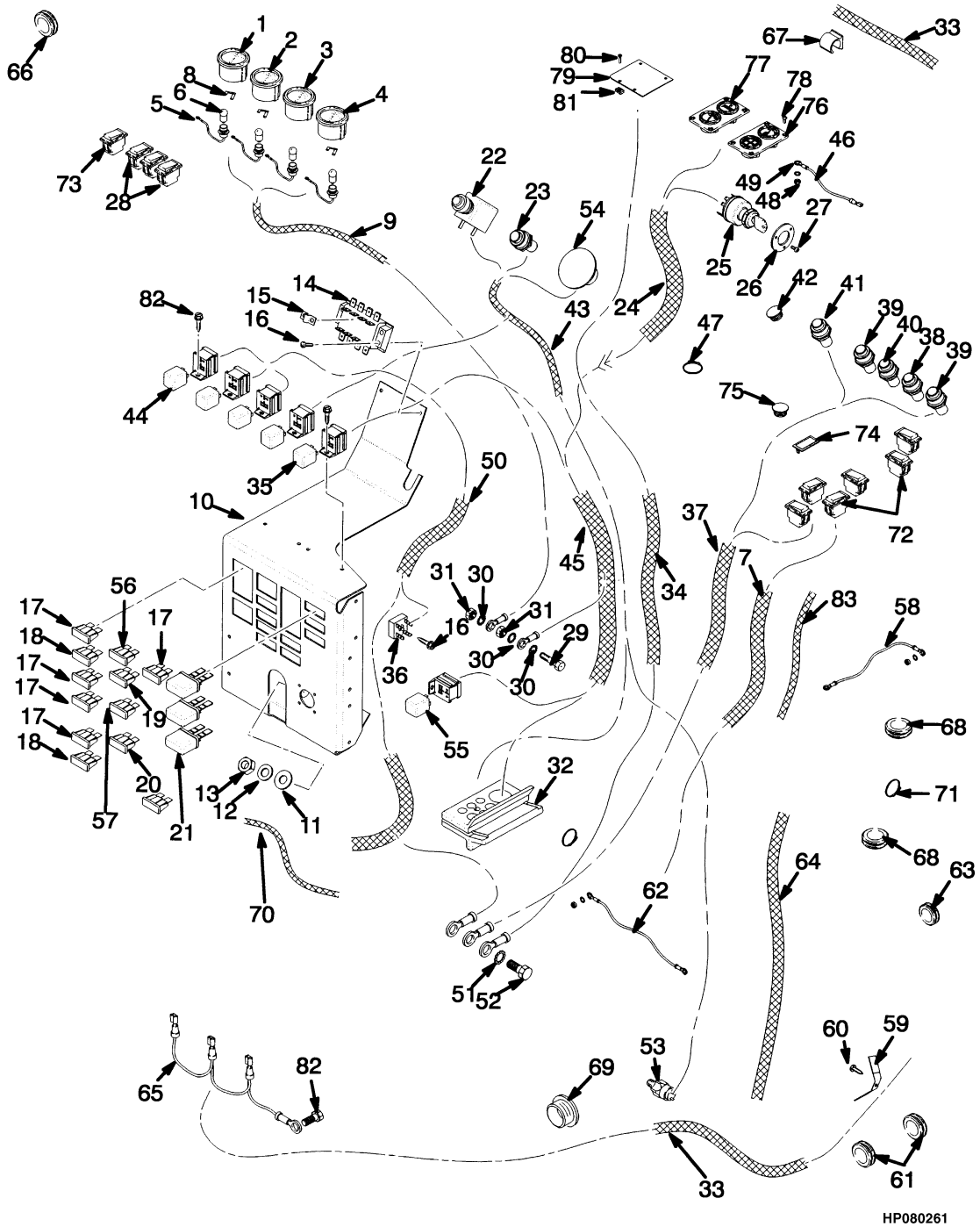

©2011 HYSTER COMPANY

INSTRUMENT PANEL

TIER I ENGINE – SHEET 2 OF 2 (S/N E008E01811X ↔ S/N E008E01865Y)

ITEM	PART NO.	DESCRIPTION	QTY
1	169781	Temperature Gauge (Transmission Oil Temperature)	1
2	1326108	Oil Pressure Gauge (Transmission Oil)	1
3	1310688	Gauge (Volt Meter)	1
4	169759	Oil Pressure Gauge (Engine Oil)	1
5	169785	Wire	4
6	1310692	Bulb (24 Volt)	4
7	**b** 1461011	Wire Harness (Switch) (☞Figure 4-55)	1
7	**c** 1465877	Wire Harness (Switch) (☞Figure 4-52)	1
8	1307110	Resistor	3
9	1336796	Wire Harness (Gauge) (☞Figure 4-66)	1
10	1301235	Fuse Panel	1
11	320157	Washer	2
12	320156	Washer	2
13	136687	Nut	2
14	1301296	Terminal Block	1
15	1301704	Jumper	1
16	1301284	Screw	2
17	370647	Fuse (10 Amp)	5
18	370646	Fuse (5 Amp)	2
19	**a** 370648	Fuse (20 Amp)	1
20	1310630	Fuse (15 Amp)	1
21	1301282	Breaker (5 Amp)	3
22	1307694	Alarm	1
23	1315877	Lamp	1
23	134810	Terminal	2
23	1377187	Lens (Red)	1
23	181045	Connector Body	2
24	1336788	Wire Harness (Steering Pod) (☞Figure 4-67)	1
25	379902	Ignition Switch	1
25	186304	Key	2
26	1301739	Plate	1
27	379650	Screw	3
28	1301613	Switch	3
29	136749	Screw	1
30	296380	Washer	3
31	239503	Nut	2
32	1301640	Seal	1
33	**b** 1336784	Wire Harness (With EC Cab) (☞Figure 4-46)	1
33	**c** 1464312	Wire Harness (Cab) (☞Figure 4-47)	1
34	1467481	Wire Harness (Gear Shift) (☞Figure 4-45)	1
35	2003859	Flasher	1
36	1301224	Diode Block	1
37	1460958	Wire Harness (Container Handling Attachment) (☞Figure 4-55)	1
38	**b** 1315872	Lamp	1
39	**b** 1310714	Lamp (Assembly)	2
40	**b** 1310723	Lamp (Assembly)	1
41	1315872	Lamp (With Lift Interrupt)	1
42	1466657	Plug (Without Lift Interrupt)	1
43	1385625	Wire Harness (Park Brake) (☞Figure 4-39)	1
44	1307687	Relay (24 Volt) (Transmission)	1

©2011 HYSTER COMPANY

INSTRUMENT PANEL

TIER I ENGINE – SHEET 2 OF 2 (S/N E008E01811X ↔ S/N E008E01865Y)

ITEM	PART NO.	DESCRIPTION	QTY
45	1467746	Wire Harness (Operator Compartment) (☞Figure 4-60)	1
46	1311403	Wire	1
47	137852	Strap Clamp	1
48	15049	Nut	1
49	16743	Lockwasher	1
50	1461008	Wire Harness (Locking and Lift Control) (☞Figure 4-75)	1
51	15905	Lockwasher	1
52	16805	Capscrew	1
53	1385634	Pressure Switch	1
54	1383831	Switch (Park Brake)	1
55	1357210	Relay	1
56	**a** 370646	Fuse (5 Amp)	1
57	**b** 1310630	Fuse (15 Amp)	1
58	1336238	Wire	1
59	1301593	Clamp	5
60	340044	Gripnail	5
61	102990	Grommet	2
62	150179	Wire	1
63	164658	Grommet	1
64	1336785	Wire Harness (Module) (☞Figure 4-48)	1
65	**ab** 1311268	Wire Harness (☞Figure 4-99)	1
66	**a** 102990	Grommet	1
67	1301727	Clamp	3
68	1300757	Grommet	2
69	**a** 1301424	Bushing	1
70	**b** 1463536	Wire Harness (Power Supply) (☞Figure 4-100)	1
71	**a** 137652	Bracket	1
72	1316527	Switch	6
73	**b** 1310626	Switch	1
74	**c** 376949	Cover	1
75	**b** 1466656	Plug	1
76	1307683	Instrument Cluster (RH)	1
77	1307684	Instrument Cluster (LH) (Includes Hourmeter and Water Temperature gauge)	1
78	1330574	Screw	8
79	1315837	Plate	1
80	284078	Screw	4
81	270871	Nut	4
82	309637	Screw	1
83	**b** 1461691	Wire Harness (Lighting Switch)	1

FOOTNOTES:

a With Cab
b With EC Cab
c With Standard Cab

©2011 HYSTER COMPANY

NOTES

©2011 HYSTER COMPANY

INSTRUMENT PANEL (FIGURE 4-30)

TIER I ENGINE — SHEET 2 OF 2 (S/N E008E01866 ↔ S/N E008E01885Z)

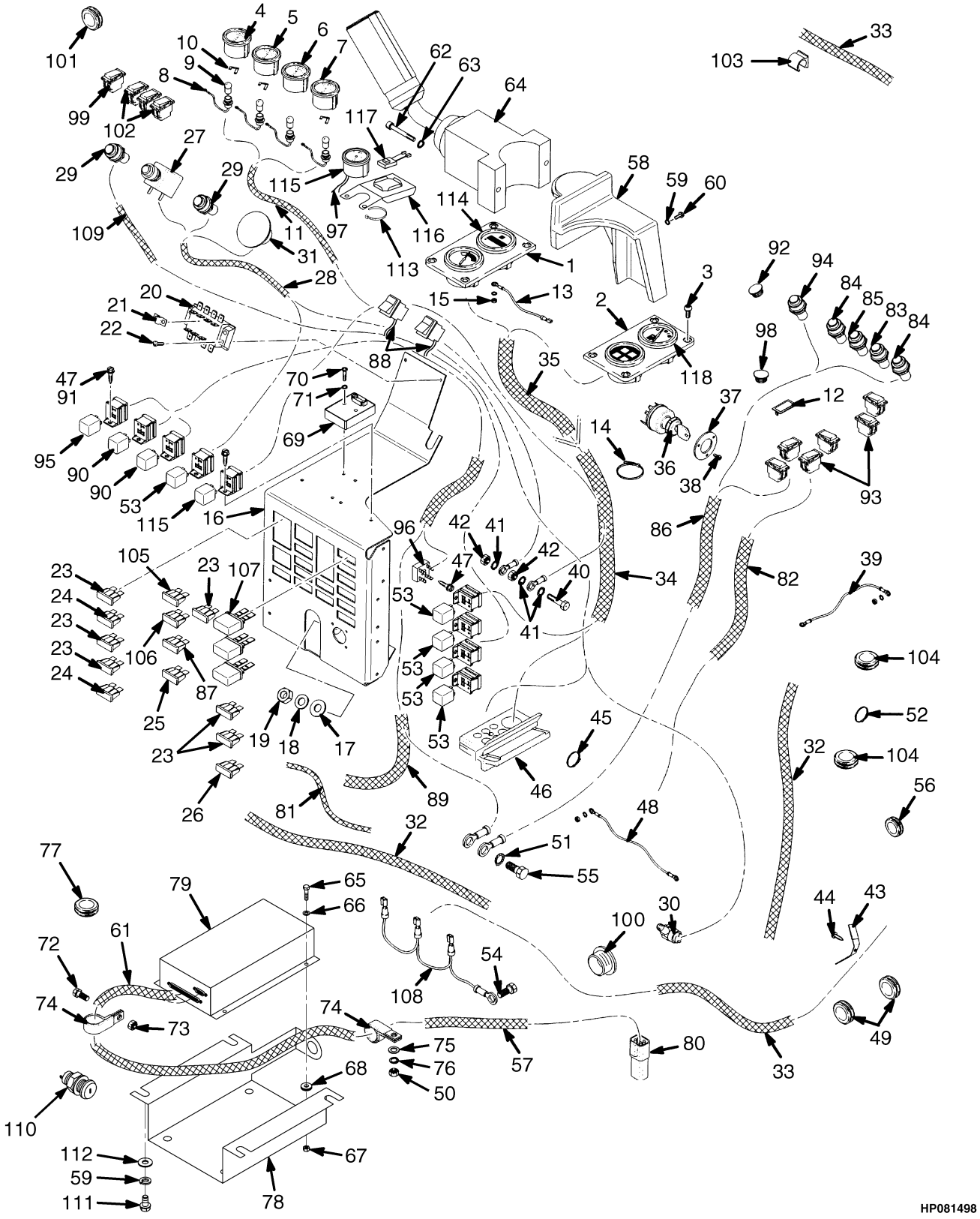

©2011 HYSTER COMPANY

INSTRUMENT PANEL

TIER I ENGINE – SHEET 2 OF 2 (S/N E008E01866 ↔ S/N E008E01885Z)

ITEM	PART NO.	DESCRIPTION	QTY
1	1307684	Instrument Cluster (LH) (Includes Hourmeter and Water Temperature gauge)	1
2	1307683	Instrument Cluster (RH)	1
3	1330574	Screw	8
4	169781	Temperature Gauge (Transmission Oil Temperature)	1
5	1326108	Oil Pressure Gauge (Transmission Oil)	1
6	1310688	Gauge (Volt Meter)	1
7	169759	Oil Pressure Gauge (Engine Oil)	1
8	169785	Wire	4
9	1310692	Bulb (24 Volt)	4
10	1307110	Resistor	3
11	1336796	Wire Harness (Gauge) (☞Figure 4-66)	1
12	376949	Cover	AR
13	1311403	Wire	1
14	137852	Strap Clamp	1
15	15049	Nut	1
15	16743	Lockwasher	1
16	1458373	Fuse Panel	1
17	320157	Washer	2
18	320156	Washer	2
19	136687	Nut	2
20	1301296	Terminal Block	1
21	1301704	Jumper	1
22	1301284	Screw	2
23	370647	Fuse (10 Amp)	6
24	370646	Fuse (5 Amp)	2
25	1310630	Fuse (15 Amp)	1
26	1378661	Fuse (1 Amp)	1
27	1307694	Alarm	1
28	**g** 1385625	Wire Harness (Park Brake) (☞Figure 4-39)	1
28	**m** 1472705	Wire Harness (Park Brake) (☞Figure 4-40)	1
29	1315872	Lamp	2
29	1315877	Lamp	2
29	1377187	Lens (Red)	1
29	1377189	Bulb	1
29	134810	Terminal	1
29	181045	Connector Body	1
30	1385634	Pressure Switch	1
31	1383831	Switch (Park Brake)	1
32	**e** 1336785	Wire Harness (Module) (☞Figure 4-48)	1
32	**k** 1467783	Wire Harness (Module) (☞Figure 4-49)	1
32	**e** 1464313	Wire Harness (Module) (☞Figure 4-50)	1
32	**k** 1467784	Wire Harness (Module) (☞Figure 4-51)	1
33	**bf** 1336784	Wire Harness (With EC Cab) (☞Figure 4-46)	1
33	**bl** 1499071	Wire Harness (Cab) (☞Figure 4-46)	1
33	**df** 1464312	Wire Harness (Cab) (☞Figure 4-47)	1
33	**dl** 1499353	Wire Harness (Cab) (☞Figure 4-47)	1
34	**e** 1360659	Wire Harness (Operator Compartment) (☞Figure 4-59)	1
34	**j** 1467746	Wire Harness (Operator Compartment) (☞Figure 4-60)	1
34	**i** 1525412	Wire Harness (Operator Compartment) (☞Figure 4-61)	1

©2011 HYSTER COMPANY

INSTRUMENT PANEL

TIER I ENGINE – SHEET 2 OF 2 (S/N E008E01866 ↔ S/N E008E01885Z)

ITEM	PART NO.	DESCRIPTION	QTY
35	1336788	Wire Harness (Steering Pod) (☞Figure 4-67)	1
36	379902	Ignition Switch	1
36	1337197	Key Set	1
37	1301739	Plate	1
38	379650	Screw	3
39	1336238	Wire	1
40	136749	Screw	1
41	296380	Washer	3
42	239503	Nut	2
43	1301593	Clamp	5
44	340044	Gripnail	5
45	137852	Strap Clamp	3
46	1301640	Seal	1
47	1301284	Screw	8
48	150179	Wire	1
49	102990	Grommet	2
50	15056	Nut	5
51	15905	Lockwasher	5
52	323864	Strap Clamp	3
53	1307687	Relay (24 Volt)	4
54	309637	Screw	1
55	16805	Capscrew	1
56	164658	Grommet	1
57	**g** 1472703	Wire Harness (Controller) (☞Figure 4-77)	1
57	1508253	Wire Harness (Autoshift Adaptor) (☞Figure 4-79)	1
58	1455928	Bracket	1
59	292681	Lockwasher	6
60	1324996	Capscrew	2
61	**m** 1508252	Wire Harness (Transmission Control) (Tier I Engine) (☞Figure 4-69)	1
62	293758	Capscrew	2
63	292679	Washer	2
64	2036895	Gear Selector	1
65	302248	Capscrew	4
66	320155	Washer	4
67	316833	Nut	4
68	385005	Grommet	4
69	2038895	Controller (By-Pass)	1
70	227113	Screw	2
71	15154	Lockwasher	2
72	287854	Capscrew	1
73	136692	Nut	1
74	128408	Clamp	2
75	15134	Washer	1
76	15156	Lockwasher	1
77	260045	Grommet	1
78	1508452	Plate	1
79	1508251	Controller (Transmission) (Autoshift)	1
79	1467413	Fuse (10 Amp)	1
79	1516227	EPROM	1
79	1352606	Strap Clamp	1

©2011 HYSTER COMPANY

INSTRUMENT PANEL

TIER I ENGINE – SHEET 2 OF 2 (S/N E008E01866 ↔ S/N E008E01885Z)

ITEM	PART NO.	DESCRIPTION	QTY
80	1351681	Connector	1
81	1463536	Wire Harness (Supply) (☞Figure 4-100)	1
82	**e** 1355024	Wire Harness (Switch) (☞Figure 4-52)	1
82	1465877	Wire Harness (Switch) (☞Figure 4-52)	1
82	**b** 1461011	Wire Harness (Switch) (☞Figure 4-55)	1
83	**b** 1315872	Lamp	1
84	**b** 1310714	Lamp	2
85	**b** 1310723	Lamp	1
86	1460958	Wire Harness (Container Handling Attachment) (☞Figure 4-42)	1
87	**b** 1300057	Fuse (7.5 Amp) (Tier I Engine)	1
88	**b** 1301615	Switch (Work Lights)	1
88	1310626	Switch	1
88	1301157	Lens (Green) (Work Light)	1
89	**b** 1461008	Wire Harness (Locking and Lift Control) (☞Figure 4-75)	1
90	**b** 1307687	Relay (24 Volt)	2
91	**b** 1301284	Screw	1
92	**b** 1466656	Plug	1
93	1316527	Switch	6
93	1520356	Switch	1
93	1310625	Lens	1
94	**c** 1315872	Lamp	1
95	**c** 1307687	Relay (24 Volt)	1
96	**c** 1301224	Diode Block	1
97	1514948	Wire Harness (Gauge) (Fuel) (☞Figure 4-102)	1
98	1466657	Plug (Without Lift Interrupt)	1
99	1316527	Switch (With Hydraulic Stop)	1
100	**a** 1301424	Bushing	1
101	**a** 102990	Grommet	1
102	**a** 1301613	Switch	3
103	**a** 1301727	Clamp	4
104	**a** 1300757	Grommet	2
105	**a** 370646	Fuse (5 Amp)	1
106	**a** 370648	Fuse (20 Amp)	1
107	**al** 1499598	Breaker (5 Amp)	3
108	**a** 1311268	Wire Harness	1
109	**h** 1472704	Wire Harness (Autoshift Fuse Panel) (Tier I Engine) (☞Figure 4-79)	1
109	**n** 1514439	Wire Harness (Autoshift Fuse Panel) (Tier 1 Engine)	1
110	1385181	Ignition Switch	1
111	316678	Screw	4
112	320158	Washer	4
113	**a** 137852	Strap Clamp	1
114	1480539	Hourmeter	1
115	2003859	Flasher	1
116	1479105	Bracket	1
117	1479227	Switch	1
117	1479226	Switch	1
117	181045	Connector Body	1
117	243272	Terminal	1
118	169775	Fuel Gauge	1

©2011 HYSTER COMPANY

INSTRUMENT PANEL

TIER I ENGINE – SHEET 2 OF 2 (S/N E008E01866 ↔ S/N E008E01885Z)

ITEM	PART NO.	DESCRIPTION	QTY
	c 1455064	Switch (Not Illustrated)	1

FOOTNOTES:

a With Cab
b With Container Attachment
c With Lift Interrupt
d With Standard Cab
e → S/N E008E01810X
f → S/N E008E01850Y
g → S/N E008E01865Y
h → S/N E008E01910Z
i S/N E008E01781W ↔ S/N E008E01984B
j S/N E008E01811X ↔ S/N E008E01780W
k S/N E008E01811X →
l S/N E008E01851Y →
m S/N E008E01866Y →
n S/N E008E01911Z →

©2011 HYSTER COMPANY

NOTES

©2011 HYSTER COMPANY

INSTRUMENT PANEL (FIGURE 4-31)

TIER II ENGINE (S/N E008E01886Z →)

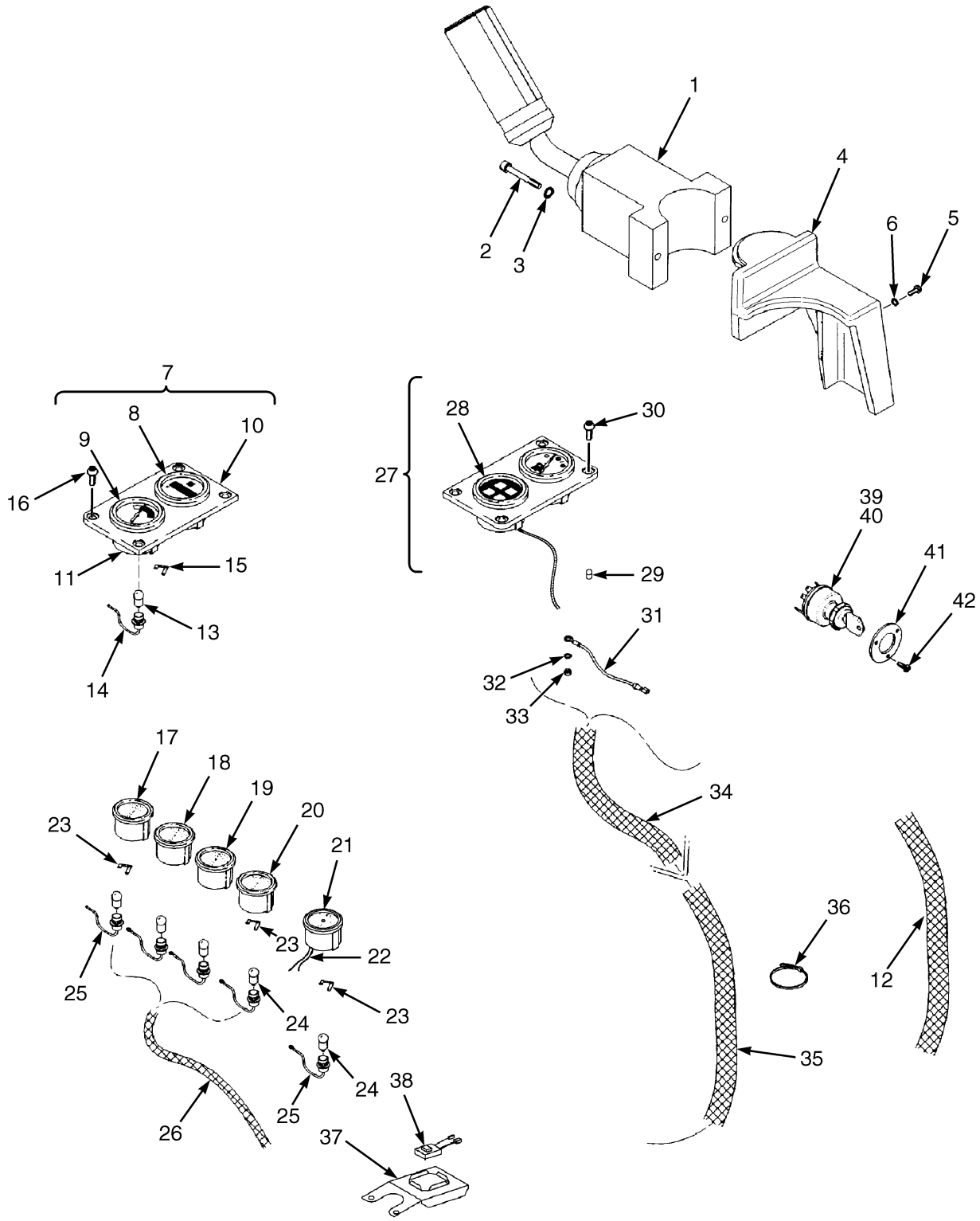

©2011 HYSTER COMPANY

INSTRUMENT PANEL

TIER II ENGINE (S/N E008E01886Z →)

ITEM	PART NO.	DESCRIPTION	QTY
1	2036895	Gear Selector (Forward/Reverse Lever)	1
2	293758	Capscrew	2
3	292679	Washer	2
4	1455928	Bracket	1
5	1324996	Capscrew	2
6	292681	Lockwasher	6
7	1307684	Instrument Cluster (LH)	1
7	370471	Instrument Cluster	1
7	367953	Connector Body (Not Illustrated)	1
7	367966	Pin (Not Illustrated)	3
7	18419	Lockwasher (Not Illustrated)	6
7	227131	Screw (Not Illustrated)	6
7	15049	Nut (Not Illustrated)	3
7	16743	Lockwasher (Not Illustrated)	3
8	1480539	Hourmeter	1
9	1312338	Temperature Gauge (Engine Coolant Water Temperature)	1
10	1312339	Gasket	2
10	1312473	Bezel	1
11	1312340	Bracket	2
12	1515917	Wire Harness (Autoshift Fuse Panel) (☞Figure 4-81)	1
13	1310692	Bulb	1
14	169785	Wire	1
14	169784	Socket	1
14	206027	E-Ring	1
15	1307110	Resistor	1
16	1330574	Screw	4
17	169781	Temperature Gauge (Transmission Oil Temperature)	1
18	1487908	Oil Pressure Gauge (Transmission Oil Pressure)	1
19	1310688	Gauge (Volt Meter)	1
20	169759	Oil Pressure Gauge (Engine Oil)	1
21	169775	Fuel Gauge	1
22	1514948	Wire Harness (Gauge) (Fuel) (☞Figure 4-102)	1
23	1307110	Resistor	3
24	1310692	Bulb	5
25	169785	Wire	5
25	169784	Socket	1
25	206027	E-Ring	1
26	1514947	Wire Harness (Gauge) (☞Figure 4-66)	1
27	1507210	Instrument Cluster (RH)	1
28	1507359	Instrument Cluster (Diesel)	1
29	1307682	Bulb	8
30	1330574	Screw	4
31	1311403	Wire	1
32	16743	Lockwasher	1
33	15049	Nut	1
34	**a** 1507236	Wire Harness (Steering Pod) (☞Figure 4-67)	1
34	**e** 1518935	Wire Harness (Steering Pod) (☞Figure 4-68)	1
35	**a** 1544565	Wire Harness (Operator Compartment) (☞Figure 4-62)	1
35	**b** 1552863	Wire Harness (Operator Compartment) (☞Figure 4-63)	1
35	**c** 1570452	Wire Harness (Operator Compartment) (☞Figure 4-64)	1

©2011 HYSTER COMPANY

INSTRUMENT PANEL

TIER II ENGINE (S/N E008E01886Z →)

ITEM	PART NO.	DESCRIPTION	QTY
35	**d** 1670741	Wire Harness (Operator Compartment) (☞Figure 4-65)	1
36	137852	Strap Clamp	2
37	1479105	Bracket	1
38	1479227	Switch	1
39	379902	Ignition Switch	1
40	1337197	Key Set	1
41	1301739	Plate	1
42	379650	Screw	3

FOOTNOTES:

a S/N E008E01886Z ↔ S/N E008E01984B
b S/N E008E01985B ↔ S/N E008E01990B
c S/N E008E01991B ↔ S/N E008E02225E
d S/N E008E02226E →
e S/N E008E01985B → INC. 01979

©2011 HYSTER COMPANY

TRANSMISSION CONTROLLER (FIGURE 4-32)

TIER I ENGINE

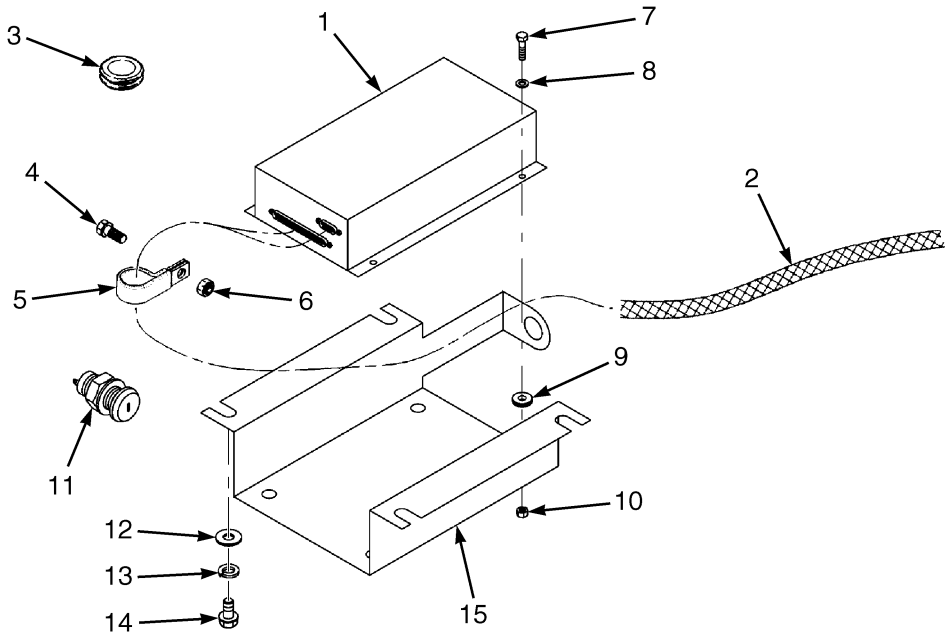

HP081558

ITEM	PART NO.	DESCRIPTION	QTY
1	1508251	Controller	1
1	1467413	Fuse (10 Amp)	1
1	1516227	EPROM	1
1	1352606	Strap Clamp	1
2	1508252	Wire Harness (Transmission Control) (☞Figure 4-69)	1
3	260045	Grommet	1
4	287854	Capscrew	1
5	128408	Clamp	1
6	136692	Nut	1
7	302246	Capscrew	4
8	197067	Washer	4
9	385005	Grommet	4
10	316833	Nut	4
11	1385181	Ignition Switch	1
12	320158	Washer	4
13	292681	Lockwasher	4
14	316678	Screw	4
15	1521528	Plate	1

©2011 HYSTER COMPANY

TRANSMISSION CONTROLLER (FIGURE 4-33)

TIER II ENGINE (→ 7/2009)

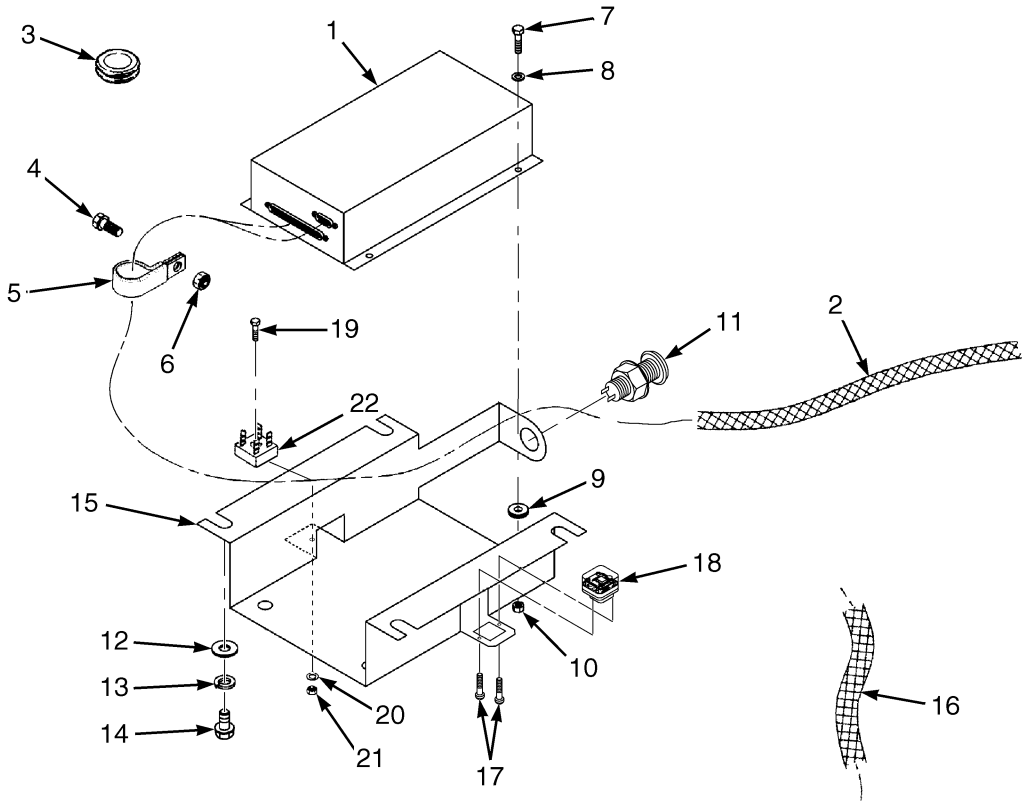

HP081503

ITEM	PART NO.	DESCRIPTION	QTY
1	**b** 1508251	Controller	1
1	**d** 1583685	Controller	1
1	**b** 1516227	EPROM	1
1	**d** 1638437	EPROM	1
1	1467413	Fuse (10 Amp)	1
1	1352606	Strap Clamp	1
2	**a** 1520346	Wire Harness (Transmission Control) (☞Figure 4-70)	1
2	**c** 1515918	Wire Harness (Transmission Control) (☞Figure 4-71)	1
2	**d** 1606249	Wire Harness (Transmission Control) (☞Figure 4-72)	1
3	260045	Grommet	1
4	287854	Capscrew	1
5	128408	Clamp	2
6	136692	Nut	1
7	302246	Capscrew	4
8	197067	Washer	4
9	385005	Grommet	4
10	316833	Nut	4

©2011 HYSTER COMPANY

ITEM	PART NO.	DESCRIPTION	QTY
11	1385181	Ignition Switch	1
12	320158	Washer	4
13	292681	Lockwasher	4
14	316678	Screw	4
15	1521528	Plate	1
16	1508476	Wire Harness (Idle Validation Switch) (☞Figure 4-108)	1
17	164507	Screw	2
18	1508522	Switch (Idle Validation)	1
19	302248	Capscrew	1
20	292679	Washer	1
21	292668	Nut	1
22	1301224	Diode Block	1

FOOTNOTES:

a S/N E008E01886Z ↔ S/N E008E01910Z
b S/N E008E01886Z ↔ S/N E008E02064C
c S/N E008E01911Z →
d S/N E008E02065C →

©2011 HYSTER COMPANY

TRANSMISSION CONTROLLER (FIGURE 4-34)
(7/2009 →)

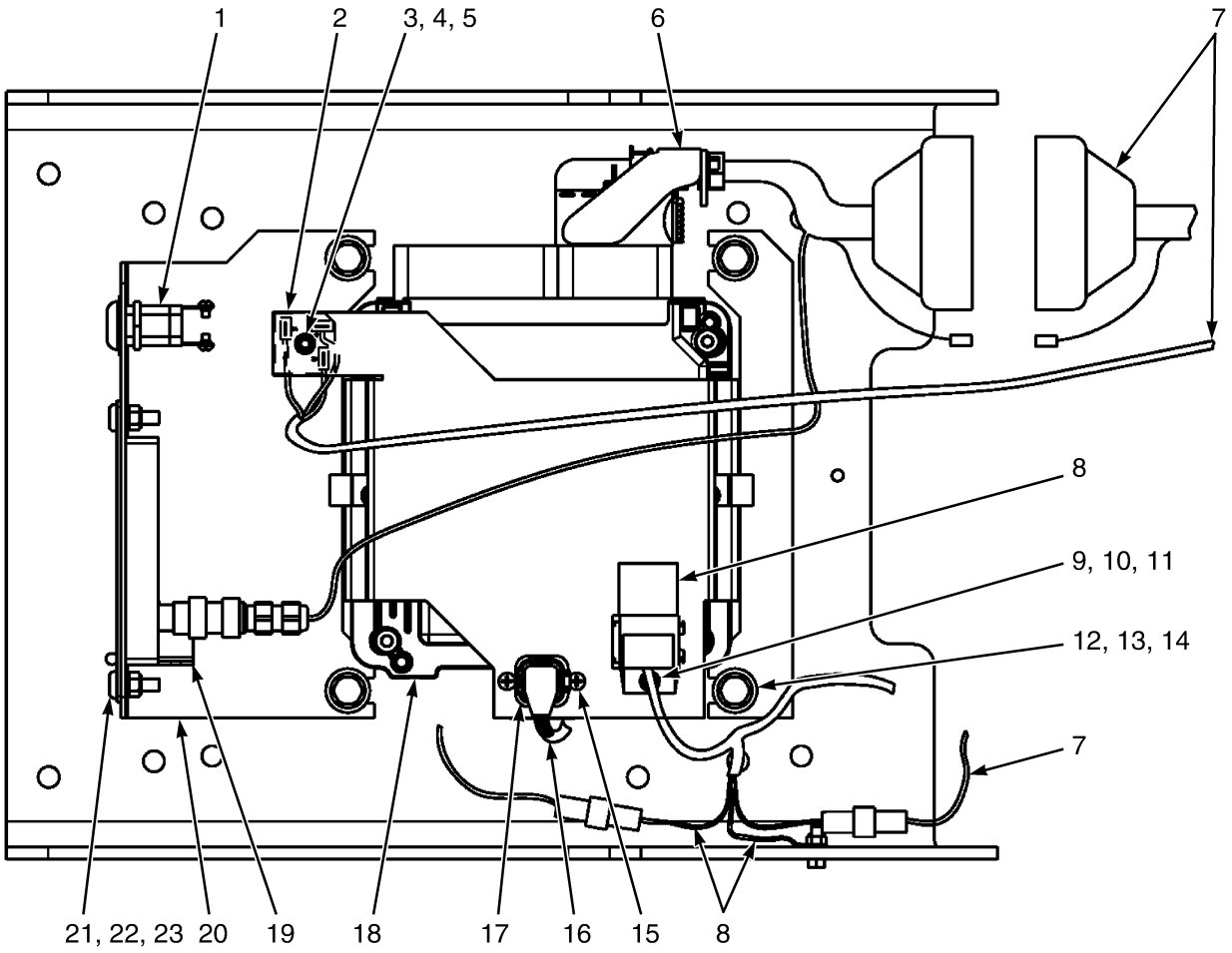

HP082072

©2011 HYSTER COMPANY

TRANSMISSION CONTROLLER

(7/2009 →)

ITEM	PART NO.	DESCRIPTION	QTY
1	1385181	Ignition Switch	1
2	1301224	Diode Block	1
3	302248	Capscrew	1
4	292679	Washer	1
5	292668	Nut	1
6	4006043	Wire Harness (APC122 Conversion) (☞Figure 4-121)	1
7	1606249	Wire Harness (Transmission Control) (☞Figure 4-72)	1
8	1684579	Wire Harness (Ops II) (☞Figure 4-58)	1
9	302246	Capscrew	1
10	197067	Washer	1
11	316833	Nut	1
12	292681	Lockwasher	1
13	316678	Screw	4
14	320158	Washer	4
15	164507	Screw	2
16	1508476	Wire Harness (Idle Validation Switch) (☞Figure 4-108)	1
17	1508522	Switch (Idle Validation)	1
18	4005697	Controller (APC122)	1
19	4005696	Display , Remote (APC122 Controller)	1
20	4005374	Bracket (APC122 Controller)	1
21	302048	Screw	2
22	320156	Washer	2
23	~~1512440~~		
	302399	Nut	2
	ab 287854	Capscrew	1
	ab 136692	Nut	1
	ab 128408	Clamp	2
	ab 260045	Grommet	1

FOOTNOTES:

a For Transmission Control Wire Harness

b Not Illustrated

©2011 HYSTER COMPANY

FUSE PANEL AND RELAYS (FIGURE 4-35)

TIER II ENGINE (S/N E008E01886Z ↔ S/N E008E01984B)

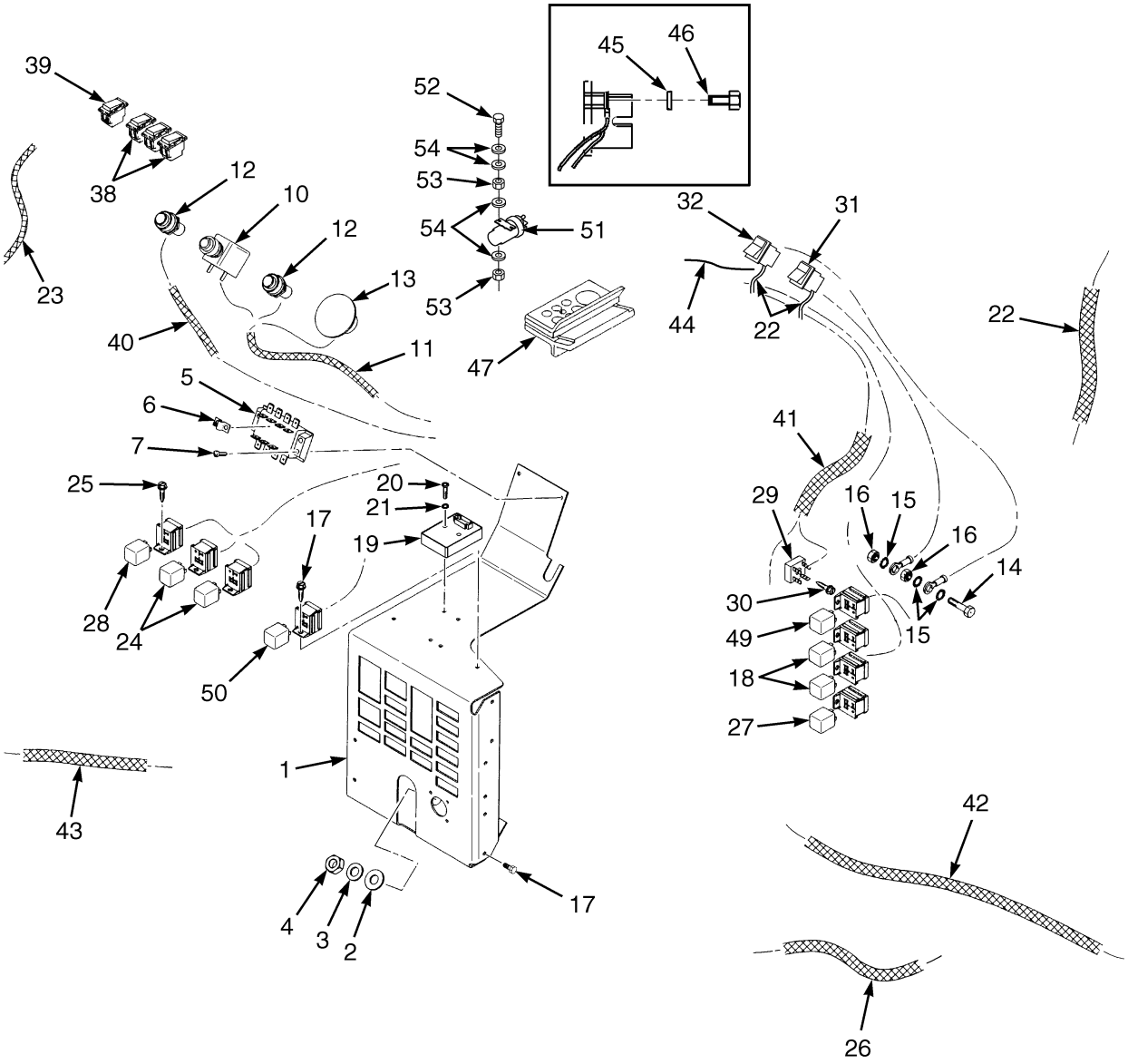

TIER 2 ENGINE

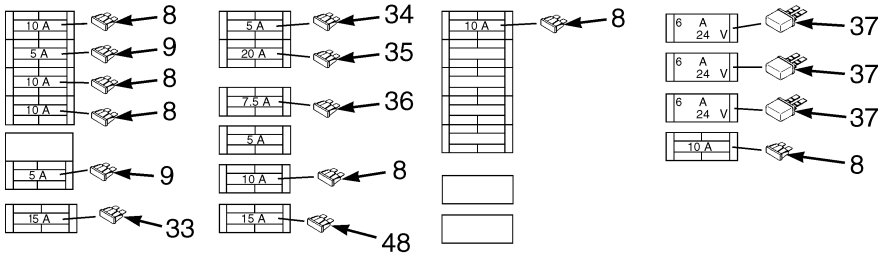

HP081510

©2011 HYSTER COMPANY

FUSE PANEL AND RELAYS

TIER II ENGINE (S/N E008E01886Z ↔ S/N E008E01984B)

ITEM	PART NO.	DESCRIPTION	QTY
1	1458373	Fuse Panel	1
2	320157	Washer	2
3	320156	Washer	2
4	136687	Nut	2
5	1301296	Terminal Block	1
6	1301704	Jumper	1
7	1301284	Screw	2
8	370647	Fuse (10 Amp)	6
9	370646	Fuse (5 Amp)	2
10	1307694	Alarm (24 Volt)	1
11	1472705	Wire Harness (Park Brake) (☞Figure 4-40)	1
12	1315872	Lamp	2
12	1315877	Lamp	1
12	1377189	Bulb	1
12	1377187	Lens (Red)	1
12	134810	Terminal	2
12	181045	Connector Body	2
13	1383831	Switch (Park Brake) (☞Figure 4-94)	1
13	1382397	Switch	1
13	1330421	Connector	1
13	1330427	Connector	1
13	1330438	Terminal (Socket)	1
14	136749	Screw	1
15	296380	Washer	3
16	239503	Nut	2
17	1301284	Screw	8
18	1307687	Relay (24 Volt) (Horn)	2
19	2038895	Controller (By-Pass)	1
20	227113	Screw	2
21	15154	Lockwasher	2
22	**b** 1460958	Wire Harness (Lamps) (☞Figure 4-42)	1
23	**b** 1461691	Wire Harness (Light Switch)	1
24	**b** 1307687	Relay (24 Volt)	2
25	**b** 1301284	Screw	1
26	**c** 1499071	Wire Harness (Cab) (☞Figure 4-46)	1
26	**a** 1499353	Wire Harness (Cab) (☞Figure 4-47)	1
27	**d** 1307687	Relay (24 Volt)	1
28	**e** 1307687	Relay (24 Volt)	1
29	**e** 1301224	Diode Block	1
30	**e** 1301284	Screw	1
31	1316527	Switch	1
31	1520356	Switch	1
31	1310625	Lens (Black)	1
32	1527404	Switch	1
32	. . . . .	Switch	1
32	1310625	Lens (Black)	1
33	**d** 1310630	Fuse (15 Amp)	1
34	**a** 370646	Fuse (5 Amp)	1
35	**a** 370648	Fuse (20 Amp)	1
36	**b** 1300057	Fuse (7.5 Amp)	1

©2011 HYSTER COMPANY

FUSE PANEL AND RELAYS

TIER II ENGINE (S/N E008E01886Z ↔ S/N E008E01984B)

ITEM	PART NO.	DESCRIPTION	QTY
37	**a** 1499598	Breaker (5 Amp)	3
38	**a** 1301613	Switch	3
38	1307006	Switch	1
38	1323994	Socket	1
38	1310641	Bulb	1
38	1301675	Lens (Windshield Wiper)	1
39	**b** 1301615	Switch	1
39	1310626	Switch	1
39	1323994	Socket	1
39	1310641	Bulb	1
39	1301157	Lens (Green) (Work Light)	1
40	1515917	Wire Harness (Autoshift Fuse Panel) (☞Figure 4-81)	1
41	**b** 1461008	Wire Harness (Locking Lift Control) (☞Figure 4-75)	1
42	**f** 1463536	Wire Harness (Power Supply) (☞Figure 4-100)	1
43	**h** 1520346	Wire Harness (Transmission Control) (☞Figure 4-70)	1
43	**i** 1515918	Wire Harness (Transmission Control) (☞Figure 4-71)	1
44	1514947	Wire Harness (Gauge) (☞Figure 4-66)	1
45	15905	Lockwasher	1
46	16805	Capscrew	1
47	1301640	Seal	1
48	1310630	Fuse (15 Amp)	1
49	1307687	Relay (24 Volt)	1
50	2003859	Flasher	1
51	1659016	Relay (Main Power)	1
52	302036	Screw	2
53	292668	Nut	4
54	320155	Washer	8
	g 1495149	Wire Harness (Diagnosis) (☞Figure 4-101)	1

FOOTNOTES:

a With Cab
b With Container Attachment
c With EC Cab
d With Hydraulic Oil Cooler
e With Lift Interrupt
f Without Container Attachment
g Not Illustrated
h → S/N E008E01910Z
i S/N E008E01911Z →

©2011 HYSTER COMPANY

NOTES

©2011 HYSTER COMPANY

FUSE PANEL AND RELAYS (FIGURE 4-36)

TIER II ENGINE (S/N E008E01985B → INC. 01979)

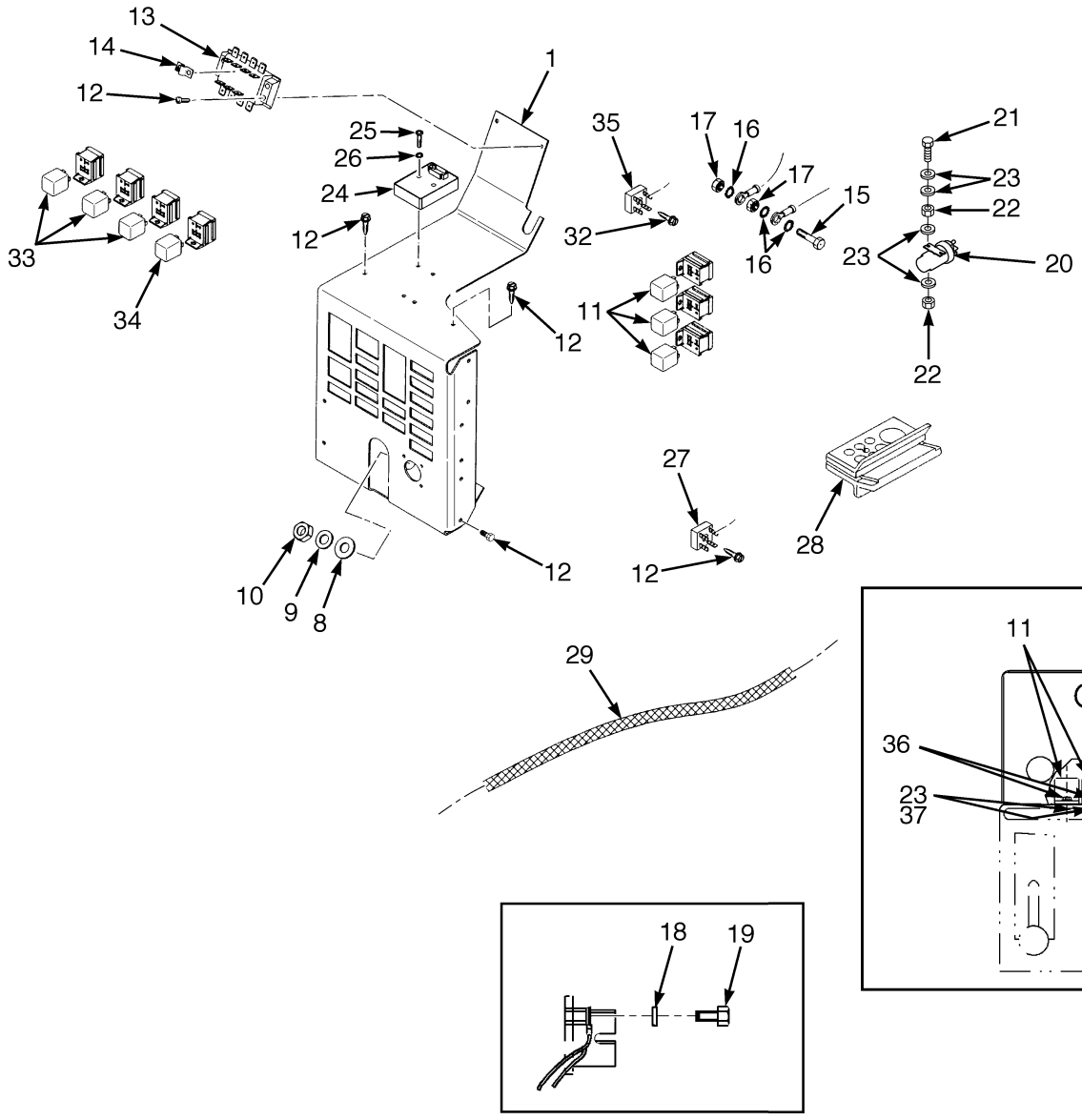

©2011 HYSTER COMPANY

FUSE PANEL AND RELAYS

TIER II ENGINE (S/N E008E01985B → INC. 01979)

ITEM	PART NO.	DESCRIPTION	QTY
1	1458373	Fuse Panel	1
2	**a** 1499598	Breaker (5 Amp)	3
3	370647	Fuse (10 Amp)	6
4	370646	Fuse (5 Amp)	2
5	**ce** 1310630	Fuse (15 Amp)	1
5	**cf** 370648	Fuse (20 Amp)	1
6	**b** 370646	Fuse (5 Amp)	1
7	**ad** 370648	Fuse (20 Amp)	1
8	320157	Washer	2
9	320156	Washer	2
10	136687	Nut	2
11	1307687	Relay (24 Volt)	5
12	1301284	Screw	11
13	1301296	Terminal Block	1
14	1301704	Jumper	1
15	136749	Screw	1
16	296380	Washer	3
17	239503	Nut	2
18	15905	Lockwasher	5
19	16805	Capscrew	1
20	1659016	Relay (Main Power)	1
21	302036	Screw	2
22	292668	Nut	4
23	320155	Washer	10
24	2038895	Controller (By-Pass)	1
25	227113	Screw	2
26	15154	Lockwasher	2
27	1301224	Diode Block	1
28	1301640	Seal	1
29	1515917	Wire Harness (Autoshift Fuse Panel) (☞Figure 4-81)	1
30	**b** 1300057	Fuse (7.5 Amp)	1
31	1310630	Fuse (15 Amp)	1
32	**b** 1301284	Screw	1
33	**b** 1307687	Relay (24 Volt)	3
34	**c** 1307687	Relay (24 Volt)	1
35	**b** 1301224	Diode Block	1
36	302033	Screw	2
37	302398	Locknut	2
38	**e** 1310630	Fuse (15 Amp)	1
38	**f** 370648	Fuse (20 Amp)	1

FOOTNOTES:

a With Cab
b With Container Attachment
c With Hydraulic Oil Cooler
d → S/N E008E02099D
e S/N E008E01985B ↔ S/N E008E02064C INC. 01979
f S/N E008E02065C →

©2011 HYSTER COMPANY

OPERATOR COMPARTMENT (FIGURE 4-37)

ELECTRICAL COMPONENTS — TIER II ENGINE (S/N E008E01886Z ↔ S/N E008E01984B)

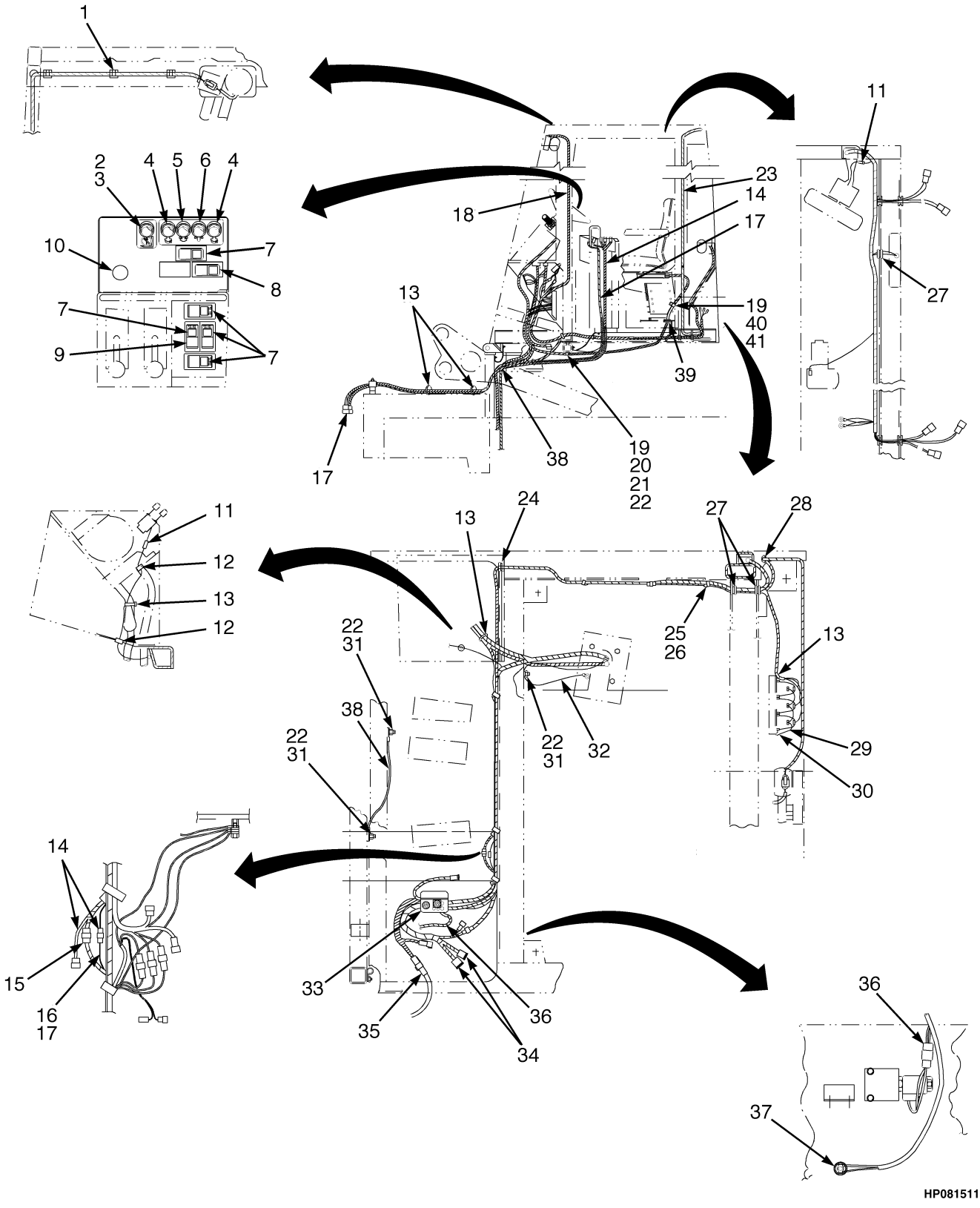

©2011 HYSTER COMPANY

OPERATOR COMPARTMENT

ELECTRICAL COMPONENTS – TIER II ENGINE (S/N E008E01886Z ↔ S/N E008E01984B)

ITEM	PART NO.	DESCRIPTION	QTY
1	**a** 1301727	Clamp	3
2	**e** 1315872	Lamp	1
3	**g** 1466657	Plug	1
4	**b** 1310714	Lamp	2
4	1310712	Lamp	1
4	1377189	Bulb	1
4	1377186	Lens (Amber)	1
4	380121	Terminal	2
5	**b** 1310723	Lamp	1
5	1310713	Lamp	1
5	1377189	Bulb	1
5	1377188	Lens (Green)	1
5	380121	Terminal	2
6	**b** 1315872	Lamp	1
6	1315877	Lamp	1
6	1377189	Bulb	1
6	1377187	Lens (Red)	1
6	134810	Terminal	2
6	181045	Connector Body	2
7	1316527	Switch	5
7	1520356	Switch	1
7	1310625	Lens (Black)	1
8	**d** 1316527	Switch	1
8	1520356	Switch	1
8	1310625	Lens (Black)	1
9	376949	Cover	AR
10	**b** 1466656	Plug	1
11	**a** 181046	Connector Body	2
12	**a** 1300757	Grommet	2
13	137852	Strap Clamp	AR
14	**b** 1461011	Wire Harness (Switches) (☞Figure 4-55)	1
14	**f** 1465877	Wire Harness (Switches) (☞Figure 4-52)	1
15	**b** 1461008	Wire Harness (Locking Lift Control) (☞Figure 4-75)	1
16	**f** 1463536	Wire Harness (Power Supply) (☞Figure 4-100)	1
17	**b** 1460958	Wire Harness (Container Attachment) (☞Figure 4-42)	1
18	**c** 1499071	Wire Harness (Cab) (☞Figure 4-46)	1
18	**a** 1499353	Wire Harness (Cab) (☞Figure 4-47)	1
19	128408	Clamp	2
20	15134	Washer	1
21	15156	Lockwasher	1
22	15056	Nut	5
23	**c** 1467783	Wire Harness (Module) (☞Figure 4-49)	1
23	**a** 1467784	Wire Harness (Module) (☞Figure 4-51)	1
24	164658	Grommet	1
25	1301593	Clamp	5
26	340044	Gripnail	5
27	102990	Grommet	2
27	**a** 102990	Grommet	1
28	**a** 1301424	Bushing	1
29	**a** 1311268	Wire Harness (☞Figure 4-99)	1

©2011 HYSTER COMPANY

OPERATOR COMPARTMENT

ELECTRICAL COMPONENTS – TIER II ENGINE (S/N E008E01886Z ↔ S/N E008E01984B)

ITEM	PART NO.	DESCRIPTION	QTY
30	309637	Screw	1
31	15905	Lockwasher	5
32	1336238	Wire	1
33	1301640	Seal	1
34	1515429	Wire Harness (Operator Compartment) (☞Figure 4-60)	1
35	1515917	Wire Harness (Autoshift Fuse Panel) (☞Figure 4-81)	1
36	1472705	Wire Harness (Park Brake) (☞Figure 4-40)	1
37	1385634	Pressure Switch	1
38	150179	Wire	1
39	260045	Grommet	1
40	287854	Capscrew	1
41	136692	Nut	1

FOOTNOTES:

a With Cab
b With Container Attachment
c With EC Cab
d With Hydraulic Stops
e With Lift Interrupt
f Without Container Attachment
g Without Lift Interrupt

©2011 HYSTER COMPANY

NOTES

©2011 HYSTER COMPANY

OPERATOR COMPARTMENT (FIGURE 4-38)

ELECTRICAL COMPONENTS — TIER II ENGINE (S/N E008E01985B → INC. 01979)

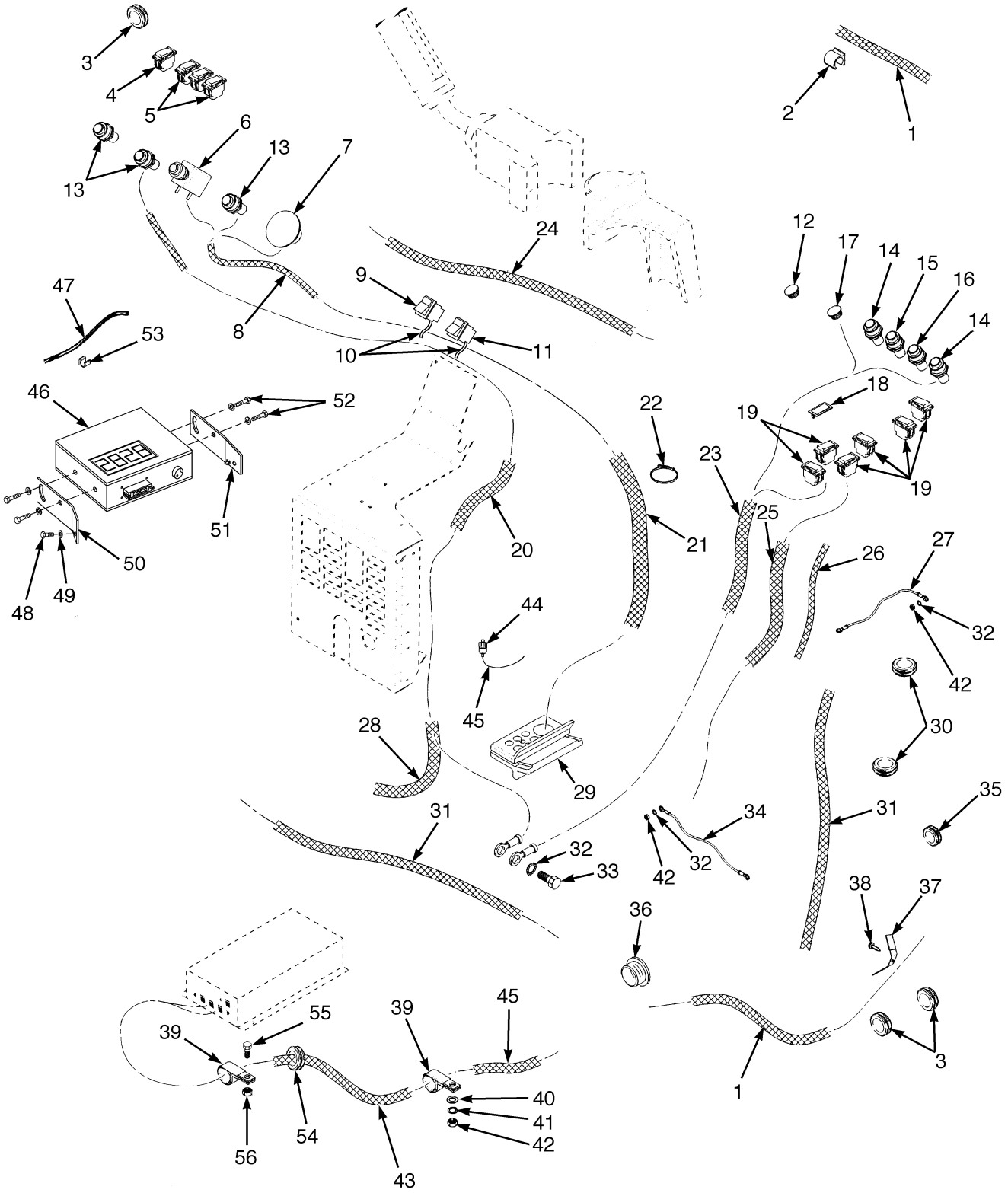

HP081522

©2011 HYSTER COMPANY

OPERATOR COMPARTMENT

ELECTRICAL COMPONENTS – TIER II ENGINE (S/N E008E01985B → INC. 01979)

ITEM	PART NO.	DESCRIPTION	QTY
1	**f** 1499071	Wire Harness (Cab) (☞Figure 4-46)	1
1	**d** 1499353	Wire Harness (Cab) (☞Figure 4-47)	1
2	**dh** 1301727	Clamp	3
3	102990	Grommet	2
3	**d** 102990	Grommet	1
4	**e** 1301615	Switch (Lights)	1
5	**d** 1301613	Switch	3
6	1307694	Alarm	1
7	1383831	Switch (Park Brake) (☞Figure 4-94)	1
8	1472705	Wire Harness (Park Brake) (☞Figure 4-40)	1
9	**g** 1527404	Switch	1
10	**g** 1495149	Wire Harness (Diagnosis) (☞Figure 4-101)	1
11	**g** 1316527	Switch	1
12	1466656	Plug	1
13	1315872	Lamp	3
13	1315877	Lamp	1
13	1377189	Bulb	1
13	1377187	Lens (Red)	1
13	134810	Terminal	2
13	181045	Connector Body	2
14	**e** 1310714	Lamp	2
14	1310712	Lamp	1
14	1377189	Bulb	1
14	1377186	Lens (Amber)	1
14	380121	Terminal	2
15	**e** 1310723	Lamp	1
15	1310713	Lamp	1
15	1377189	Bulb	1
15	1377188	Lens (Green)	1
15	380121	Terminal	2
16	**e** 1315872	Lamp	1
17	1466657	Plug	1
18	376949	Cover	AR
19	**h** 1316527	Switch	3
19	1520356	Switch	1
19	1310625	Lens (Black)	1
19	**ae** 1316527	Switch	3
19	**be** 1316527	Switch	4
19	**ce** 1316527	Switch	5
20	**d** 1311268	Wire Harness (☞Figure 4-99)	1
21	**i** 1552863	Wire Harness (Operator Compartment) (☞Figure 4-63)	1
21	**j** 1570452	Wire Harness (Operator Compartment) (☞Figure 4-64)	1
22	137852	Strap Clamp	AR
23	**e** 1517924	Wire Harness (Container Attachment) (☞Figure 4-43)	1
24	**h** 1463536	Wire Harness (Power Supply) (☞Figure 4-100)	1
25	**e** 1517542	Wire Harness (Switches) (☞Figure 4-55)	1
25	**h** 1552687	Wire Harness (Switches) (☞Figure 4-53)	1
26	**e** 1461691	Wire Harness (Container Attachment Light Switch)	1
27	1336238	Wire	1
28	**e** 1517914	Wire Harness (Locking And Lift Control) (☞Figure 4-76)	1

©2011 HYSTER COMPANY

OPERATOR COMPARTMENT

ELECTRICAL COMPONENTS – TIER II ENGINE (S/N E008E01985B → INC. 01979)

ITEM	PART NO.	DESCRIPTION	QTY
29	1301640	Seal	1
30	**d** 1300757	Grommet	2
31	**f** 1467783	Wire Harness (Module) (☞Figure 4-49)	1
31	**d** 1467784	Wire Harness (Module) (☞Figure 4-51)	1
32	15905	Lockwasher	5
33	16805	Capscrew	1
34	150179	Wire	1
35	164658	Grommet	1
36	**d** 1301424	Bushing	1
37	1301593	Clamp	5
38	340044	Gripnail	5
39	128408	Clamp	2
40	15134	Washer	1
41	15156	Lockwasher	1
42	15056	Nut	5
43	1508476	Wire Harness (Idle Validation Switch) (☞Figure 4-108)	1
44	1350955	Pressure Switch	1
45	1515918	Wire Harness (Transmission Control) (☞Figure 4-71)	1
46	**e** 1506674	Control Box (Twistlock) (☞Figure 4-109)	1
47	**e** 1507163	Wire Harness	1
48	**e** 16073	Screw	2
49	**e** 320156	Washer	6
50	**e** 1506665	Plate	1
51	**e** 1506666	Plate	1
52	**e** 292500	Capscrew	4
53	**e** 279740	Clamp	3
54	260045	Grommet	1
55	287854	Capscrew	1
56	136692	Nut	1
	d 181046	Connector Body (Not Illustrated)	2

FOOTNOTES:

a 3, 4, or 5 Auxilliary Functions
b 4 or 5 Auxilliary Functions
c 5 Auxilliary Functions
d With Cab
e With Container Attachment
f With EC Cab
g With QS Cummins Engine
h Without Container Attachment
i → S/N E008E01990B
j S/N E008E01991B →

©2011 HYSTER COMPANY

NOTES

©2011 HYSTER COMPANY

WIRE HARNESS (FIGURE 4-39)
PARK BRAKE (→ S/N E008E01865)

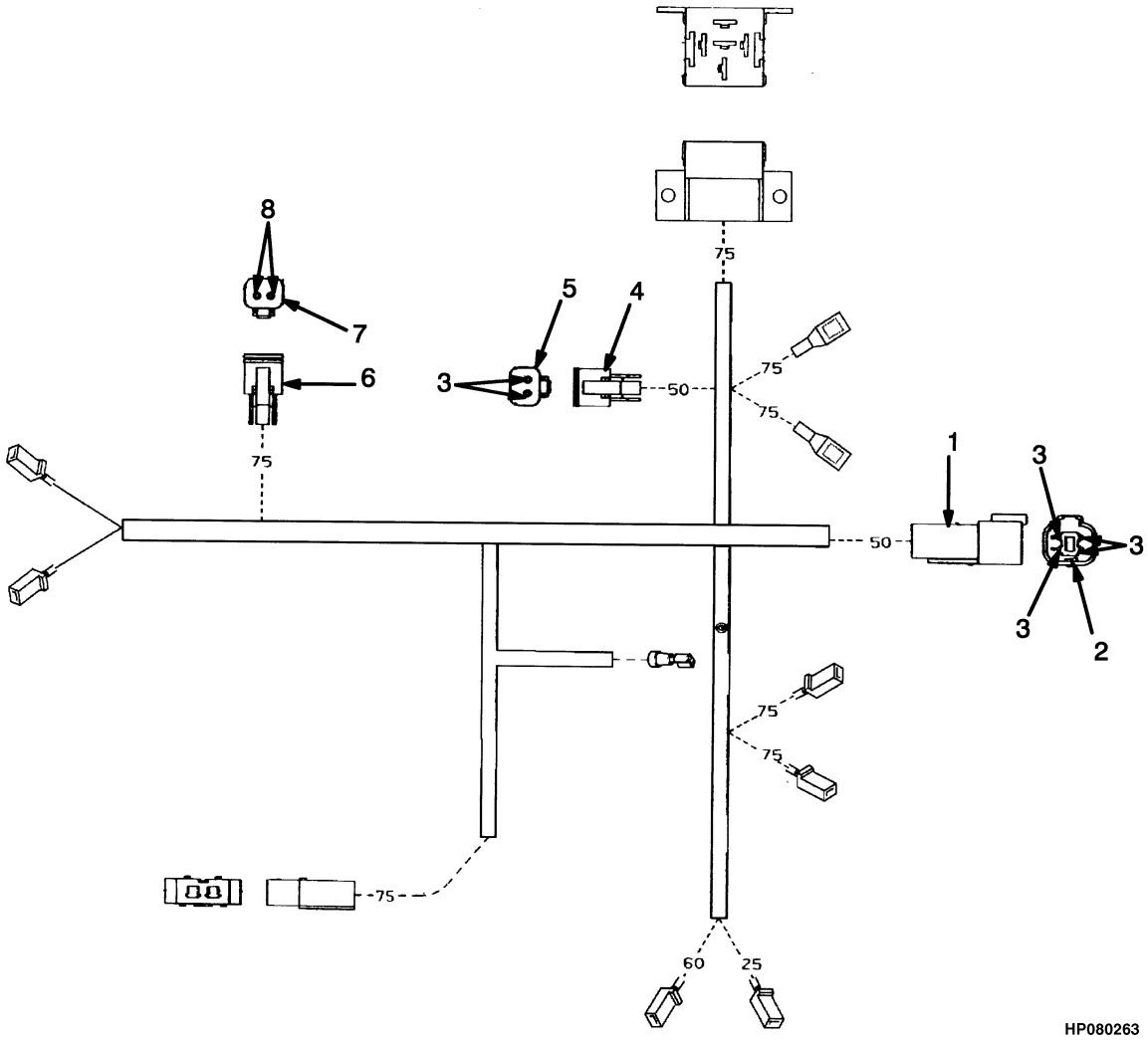

©2011 HYSTER COMPANY

WIRE HARNESS

PARK BRAKE (→ S/N E008E01865)

ITEM	PART NO.	DESCRIPTION	QTY
	1385625	Wire Harness	1
1	1330411	Connector	1
2	1330416	Connector	1
3	1330437	Terminal (Pin)	6
4	1330409	Connector	1
5	1330414	Connector (Secondary Lock)	1
6	1330419	Connector	1
7	1330424	Connector (Secondary Lock)	1
8	1330438	Terminal (Socket)	2

©2011 HYSTER COMPANY

WIRE HARNESS (FIGURE 4-40)
PARK BRAKE (S/N E008E01866 →)

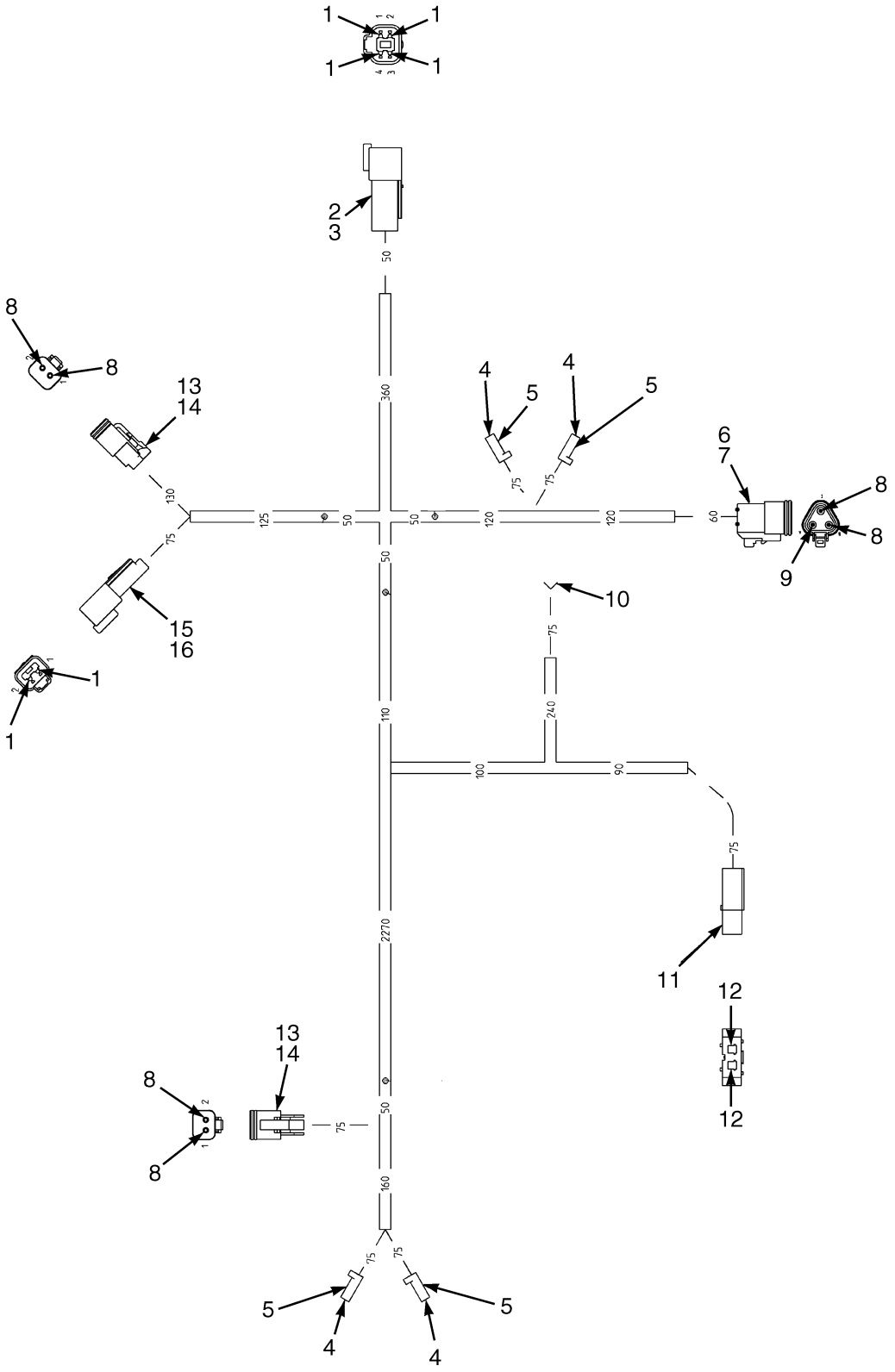

HP081945

©2011 HYSTER COMPANY

WIRE HARNESS

PARK BRAKE (S/N E008E01866 →)

ITEM	PART NO.	DESCRIPTION	QTY
	1472705	Wire Harness	1
1	1330437	Terminal (Pin)	6
2	1330416	Connector	1
3	1330411	Connector	1
4	134812	Terminal	4
5	181046	Connector Body	4
6	1330420	Connector	1
7	1330426	Connector	1
8	1330438	Terminal (Socket)	6
9	1330439	Plug	1
10	148648	Terminal	1
11	381846	Fuse Holder	1
12	381847	Terminal	2
13	1330419	Connector	2
14	1330424	Connector (Secondary Lock)	2
15	1330414	Connector (Secondary Lock)	1
16	1330409	Connector	1

©2011 HYSTER COMPANY

WIRE HARNESS (FIGURE 4-41)

WITH EC CAB (→ S/N E008E01810X)

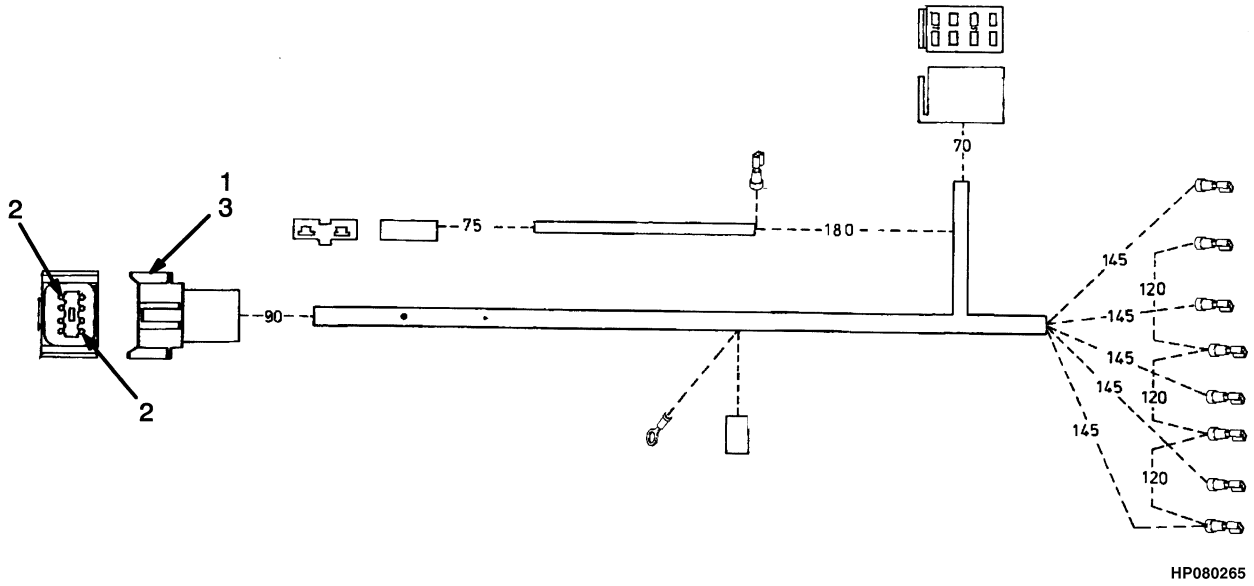

HP080265

ITEM	PART NO.	DESCRIPTION	QTY
	1336777	Wire Harness	1
1	1330413	Connector	1
2	1330437	Terminal (Pin)	8
3	1330418	Connector	1

©2011 HYSTER COMPANY

WIRE HARNESS (FIGURE 4-42)

WITH EC CAB (S/N E008E01811X ↔ 10/2001)

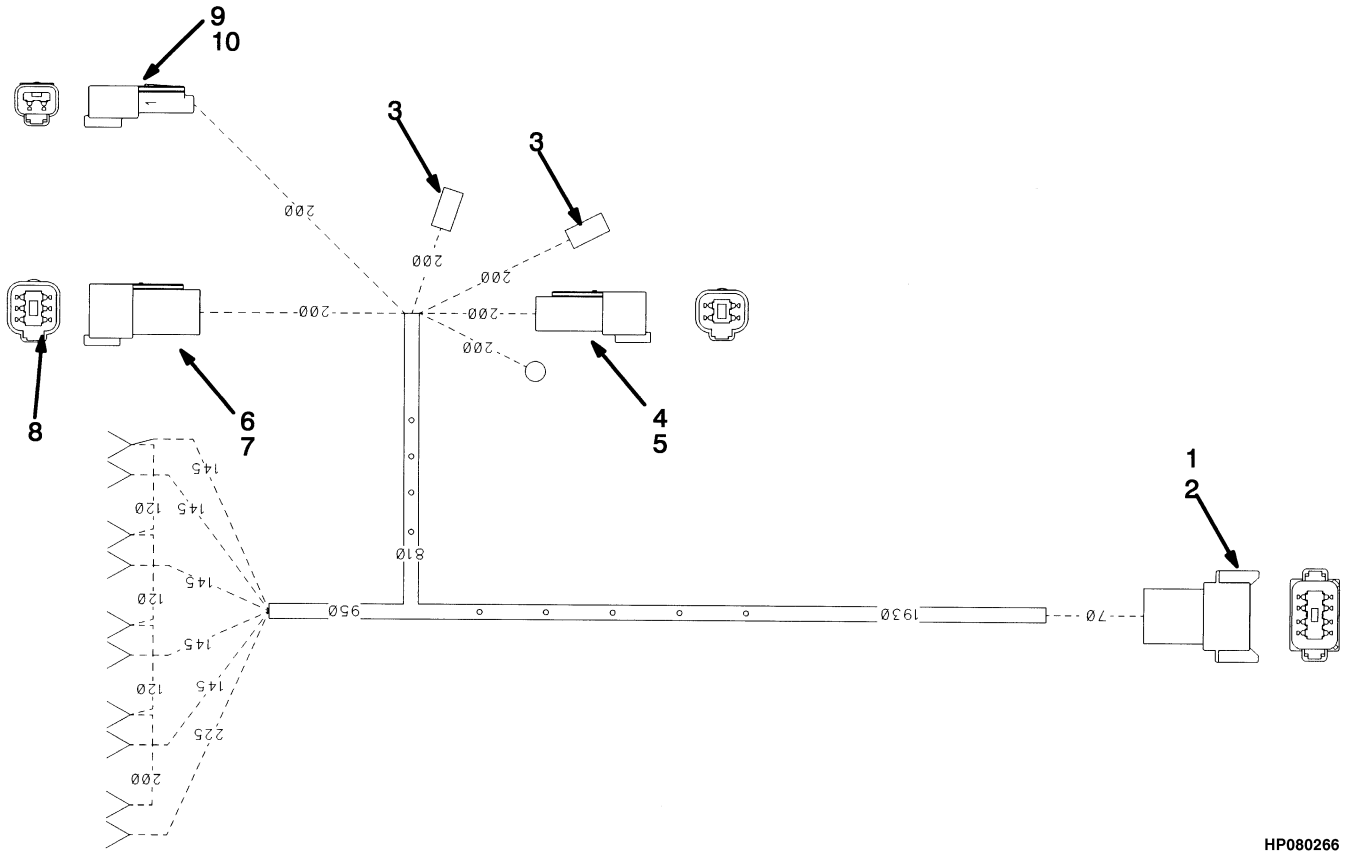

HP080266

ITEM	PART NO.	DESCRIPTION	QTY
	1460958	Wire Harness	1
1	1330413	Connector (Mast 1)	1
2	1330418	Connector	1
3	181046	Connector Body	2
4	1330411	Connector (Locking and Lift Control)	1
5	1330416	Connector	1
6	1330412	Connector	1
7	1330417	Connector	1
8	1330439	Plug	1
9	1330409	Connector (Twist Lock Indicator Lights)	1
10	1330414	Connector (Secondary Lock)	1

WIRE HARNESS (FIGURE 4-43)

WITH EC CAB — CONTAINER ATTACHMENT (10/2003 →)

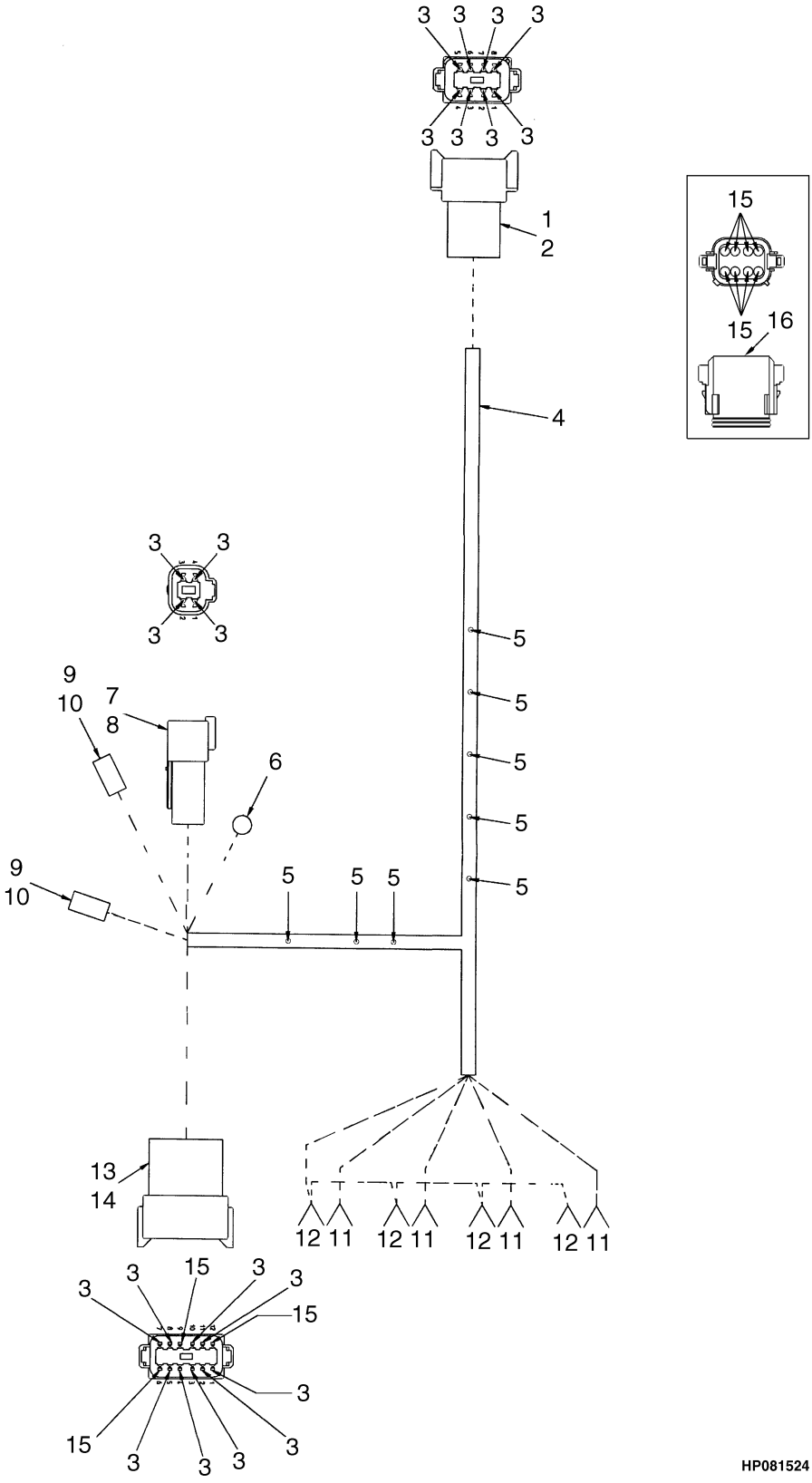

©2011 HYSTER COMPANY

WIRE HARNESS

WITH EC CAB – CONTAINER ATTACHMENT (10/2003 →)

ITEM	PART NO.	DESCRIPTION	QTY
	1517924	Wire Harness (Container Attachment)	1
1	1330413	Connector	1
2	1330418	Connector	1
3	1363885	Terminal (Pin)	21
4	381919	Braiding	AR
5	1345029	Splice	8
5	148607	E-Ring	1
7	1330411	Connector	1
8	1330416	Connector	1
9	181046	Connector Body	2
10	134812	Terminal	2
11	325789	Terminal	4
12	378451	Fitting	4
13	1352602	Connector	1
14	1352603	Connector	1
15	1330439	Plug	11
16	1330423	Connector (Dust)	1

©2011 HYSTER COMPANY

WIRE HARNESS (FIGURE 4-44)
TRANSMISSION AND ATTACHMENT (→ S/N E008E01810X)

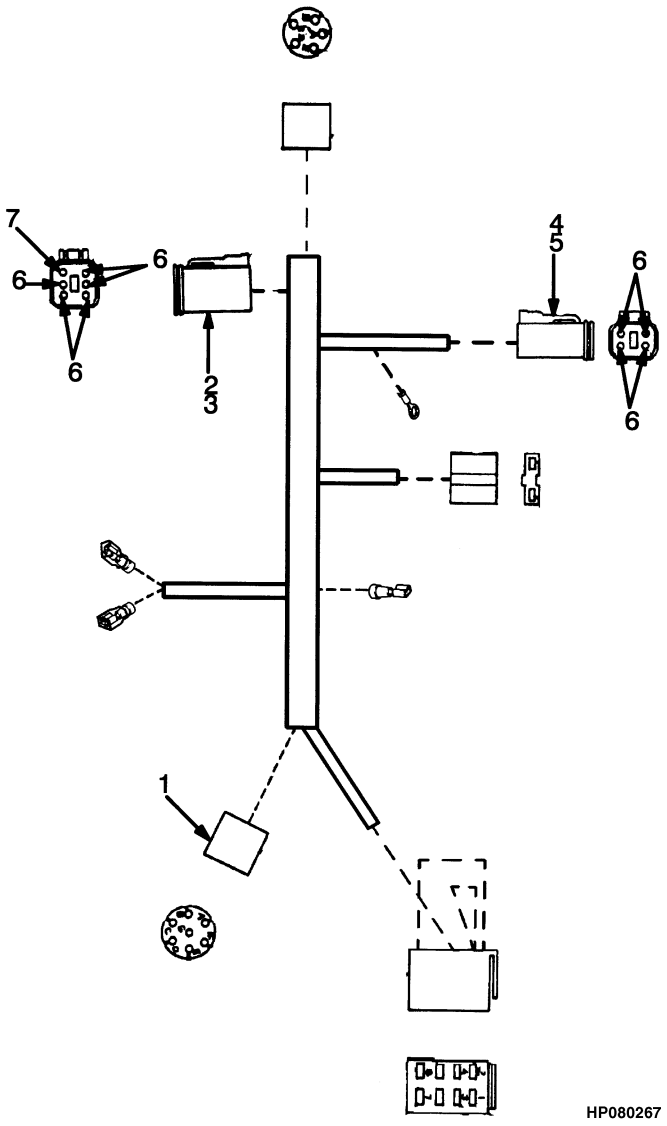

©2011 HYSTER COMPANY

WIRE HARNESS

TRANSMISSION AND ATTACHMENT (→ S/N E008E01810X)

ITEM	PART NO.	DESCRIPTION	QTY
	1336778	Wire Harness	1
1	1307123	Connector	1
2	1330422	Connector	1
3	1330428	Connector	1
4	1330421	Connector	1
5	1330427	Connector	1
6	1330438	Terminal (Socket)	9
7	1330439	Plug	1

©2011 HYSTER COMPANY

WIRE HARNESS (FIGURE 4-45)
GEAR SHIFT (S/N E008E01811X ↔ S/N E008E01865Y)

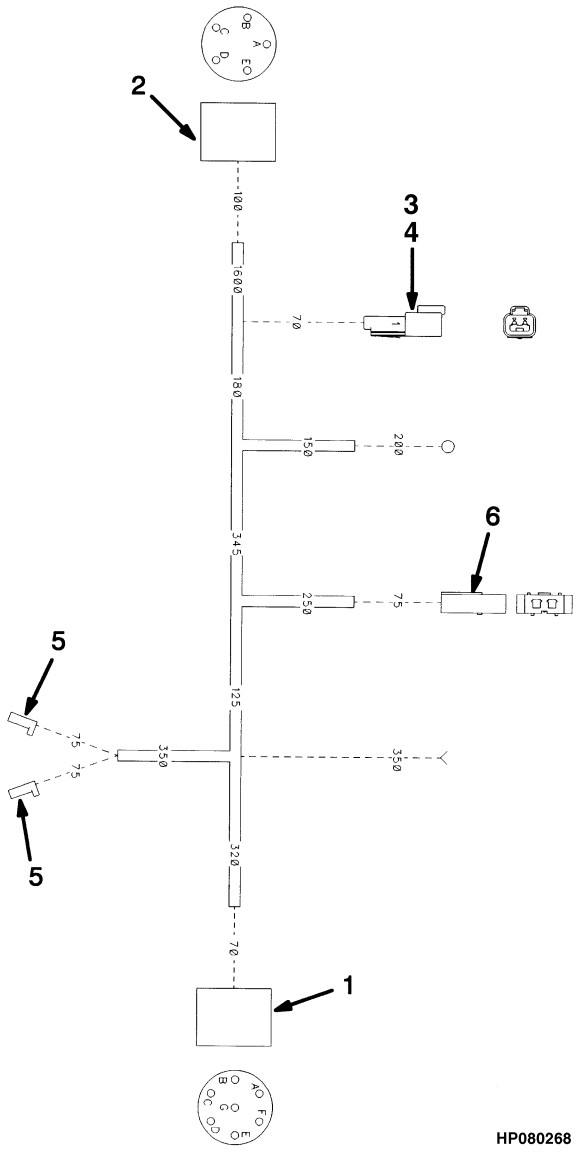

©2011 HYSTER COMPANY

WIRE HARNESS

GEAR SHIFT (S/N E008E01811X ↔ S/N E008E01865Y)

ITEM	PART NO.	DESCRIPTION	QTY
	1467481	Wire Harness	1
1	1307123	Connector (Transmission Control)	1
2	378149	Connector (Control Valve)	1
3	1330409	Connector (Harness Engine Compartment)	1
4	1330414	Connector (Secondary Lock)	1
5	181046	Connector Body (Transmission Switch)	2
6	381846	Fuse Holder	1

©2011 HYSTER COMPANY

WIRE HARNESS (FIGURE 4-46)
WITH EC CAB

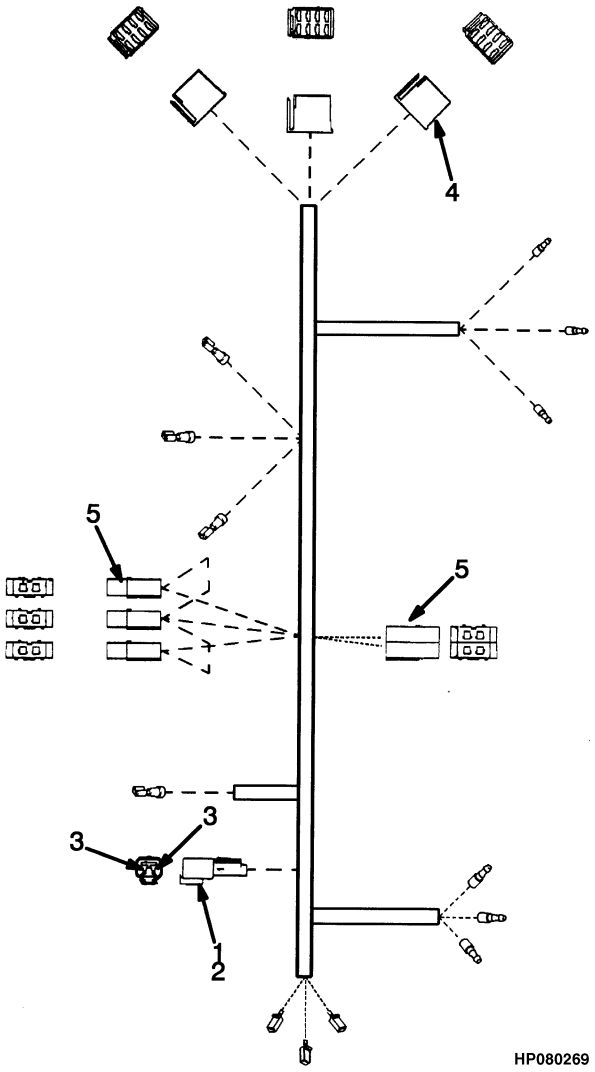

©2011 HYSTER COMPANY

WIRE HARNESS
WITH EC CAB

ITEM	PART NO.	DESCRIPTION	QTY
	a 1336784	Wire Harness (With EC Cab)	1
	b 1499071	Wire Harness	1
1	1330409	Connector	1
2	1330414	Connector (Secondary Lock)	1
3	1330437	Terminal (Pin)	2
4	1301154	Housing	3
5	381846	Fuse Holder	5

FOOTNOTES:

a → S/N E008E01850Y

b S/N E008E01851Y →

©2011 HYSTER COMPANY

WIRE HARNESS (FIGURE 4-47)
WITH STANDARD CAB

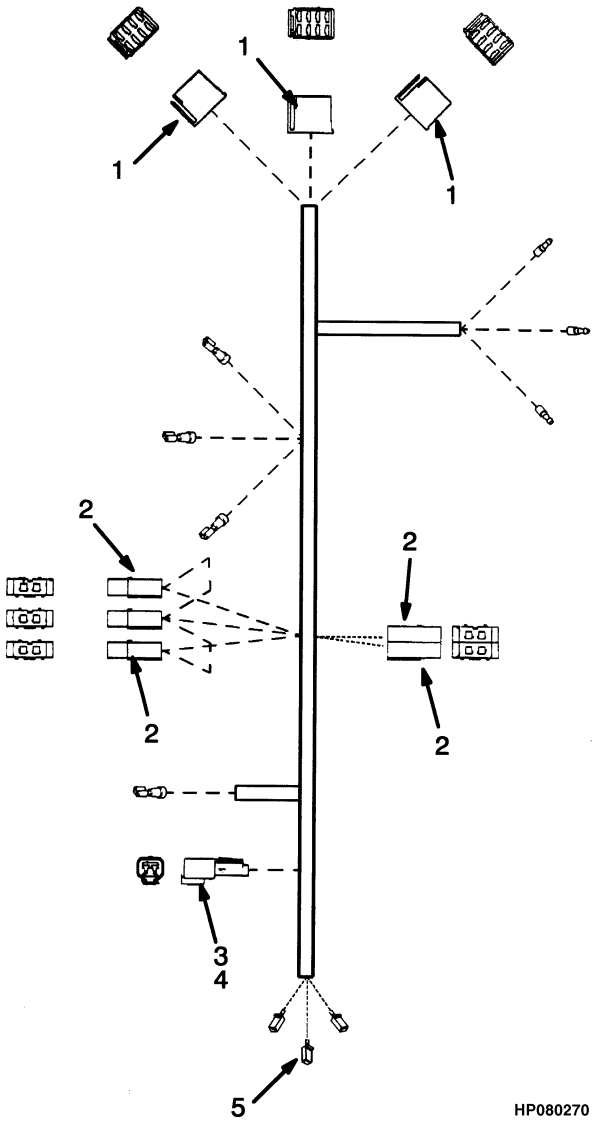

©2011 HYSTER COMPANY

WIRE HARNESS
WITH STANDARD CAB

ITEM	PART NO.	DESCRIPTION	QTY
	a 1464312	Wire Harness	1
	b 1499353	Wire Harness	1
1	1301154	Housing	3
2	381846	Fuse Holder	5
3	1330420	Connector	1
4	1330426	Connector	1
5	181046	Connector Body	3

FOOTNOTES:

a → S/N E008E01850Y

b S/N E008E01851Y →

©2011 HYSTER COMPANY

WIRE HARNESS (FIGURE 4-48)

MODULE — WITH EC CAB (→ S/N E008E01810X)

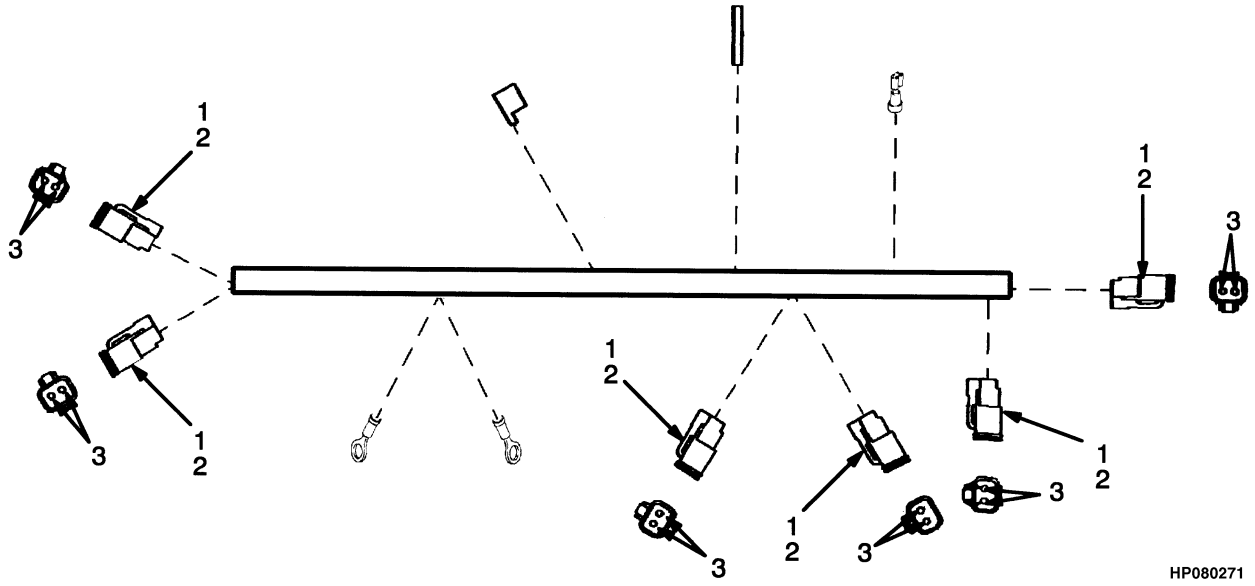

ITEM	PART NO.	DESCRIPTION	QTY
	1336785	Wire Harness	1
1	1330419	Connector	6
2	1330424	Connector (Secondary Lock)	6
3	1330438	Terminal (Socket)	12

©2011 HYSTER COMPANY

WIRE HARNESS (FIGURE 4-49)

MODULE — WITH EC CAB (S/N E008E01811X →)

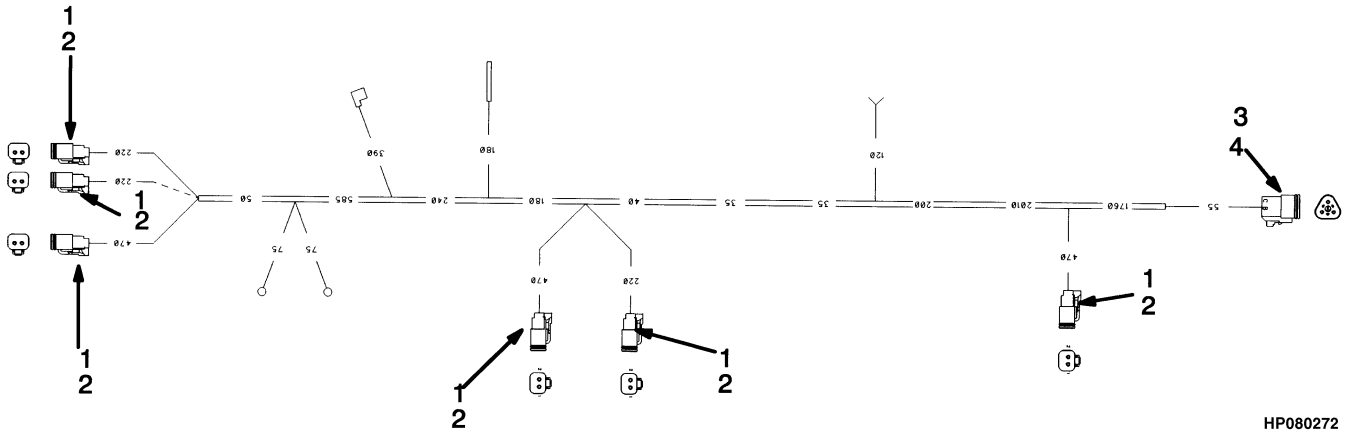

ITEM	PART NO.	DESCRIPTION	QTY
	1467783	Wire Harness	1
1	1330419	Connector	6
2	1330424	Connector (Secondary Lock)	6
3	1330420	Connector (Cab Harness)	1
4	1330416	Connector	1

WIRE HARNESS (FIGURE 4-50)

MODULE — WITH STANDARD CAB (→ S/N E008E01810X)

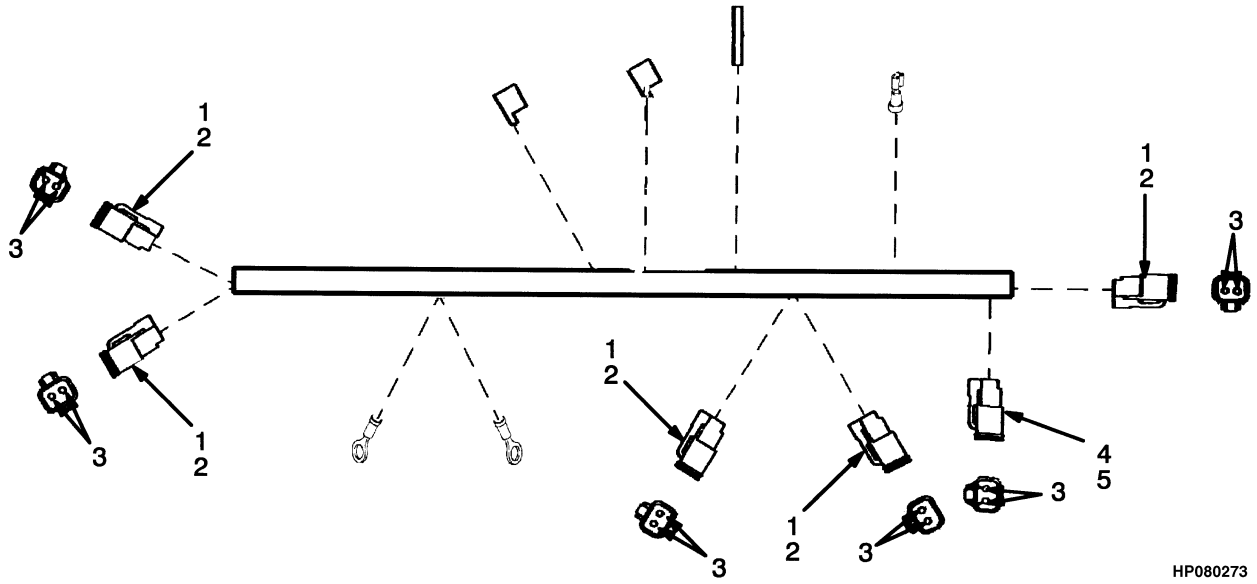

ITEM	PART NO.	DESCRIPTION	QTY
	1464313	Wire Harness	1
1	1330419	Connector	5
2	1330424	Connector (Secondary Lock)	5
3	1330438	Terminal (Socket)	13
4	1330410	Connector	1
5	1330415	Connector	1

©2011 HYSTER COMPANY

WIRE HARNESS (FIGURE 4-51)

MODULE — WITH STANDARD CAB (S/N E008E01811X →)

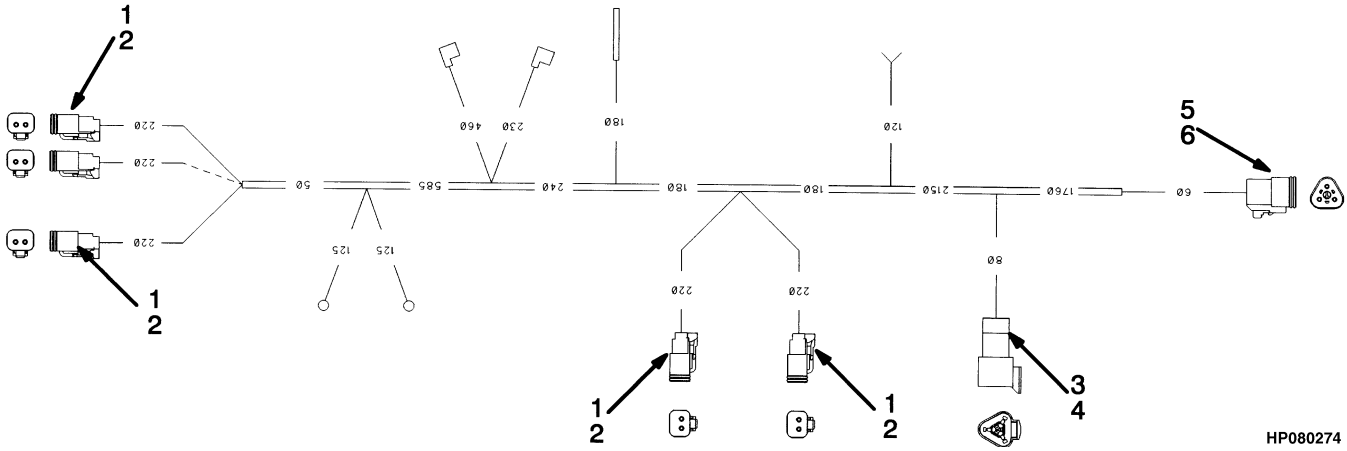

ITEM	PART NO.	DESCRIPTION	QTY
	1467784	Wire Harness	1
1	1330419	Connector	5
2	1330424	Connector (Secondary Lock)	5
3	1330410	Connector	1
4	1330415	Connector	1
5	1330420	Connector	1
6	1330426	Connector	1

WIRE HARNESS (FIGURE 4-52)

SWITCHES — WITH STANDARD CAB (→ S/N E008E01984B)

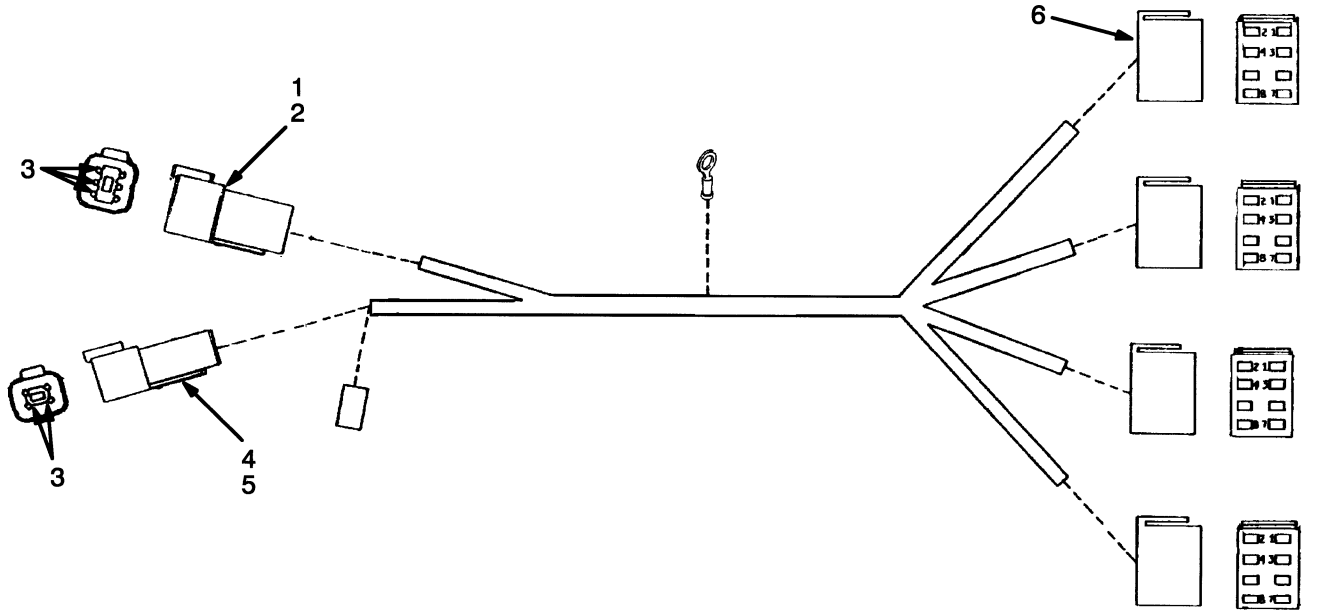

HP080275

ITEM	PART NO.	DESCRIPTION	QTY
	a 1355024	Wire Harness	1
	b 1465877	Wire Harness	1
1	1330412	Connector	1
2	1330417	Connector	1
3	1330437	Terminal (Pin)	10
4	**b** 1330410	Connector	1
4	**a** 1330411	Connector	1
5	**b** 130415	Hub	1
5	**b** 1330416	Connector	1
6	1301154	Housing	4

FOOTNOTES:

a → S/N E008E01810

b S/N E008E01811 →

©2011 HYSTER COMPANY

WIRE HARNESS (FIGURE 4-53)

SWITCHES — WITH STANDARD CAB (S/N E008E01985B ↔ S/N E008E02285F)

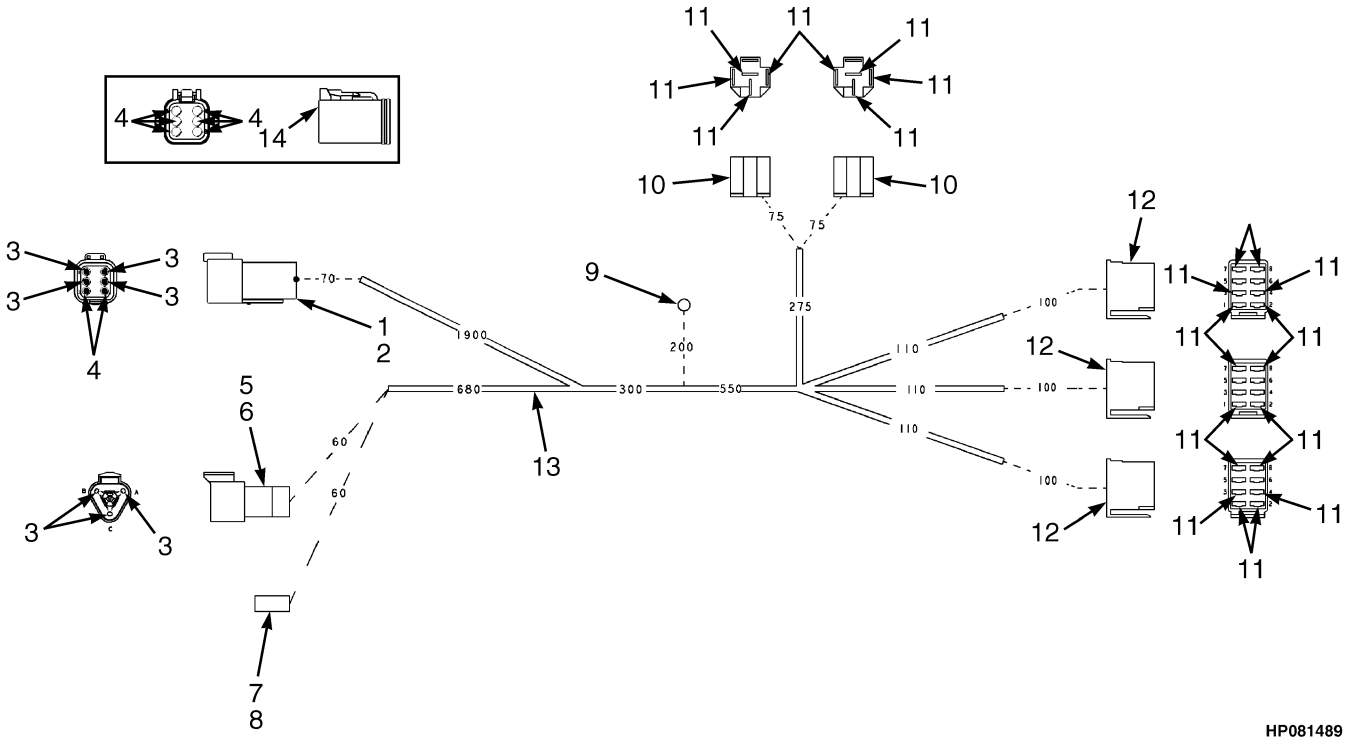

HP081489

ITEM	PART NO.	DESCRIPTION	QTY
	1552687	Wire Harness (Switches)	1
1	1330412	Connector	1
2	1330417	Connector	1
3	1363885	Terminal (Pin)	7
4	1330439	Plug	12
5	1330410	Connector	1
6	1330415	Connector	1
7	181045	Connector Body	1
8	134810	Terminal	1
9	129886	E-Ring	1
10	1301228	Connector Body	2
11	1331233	Terminal	26
12	1301154	Housing	3
13	381919	Braiding	AR
14	1330422	Connector	1

©2011 HYSTER COMPANY

WIRE HARNESS (FIGURE 4-54)

SWITCHES — WITH STANDARD CAB (S/N E008E02286F →)

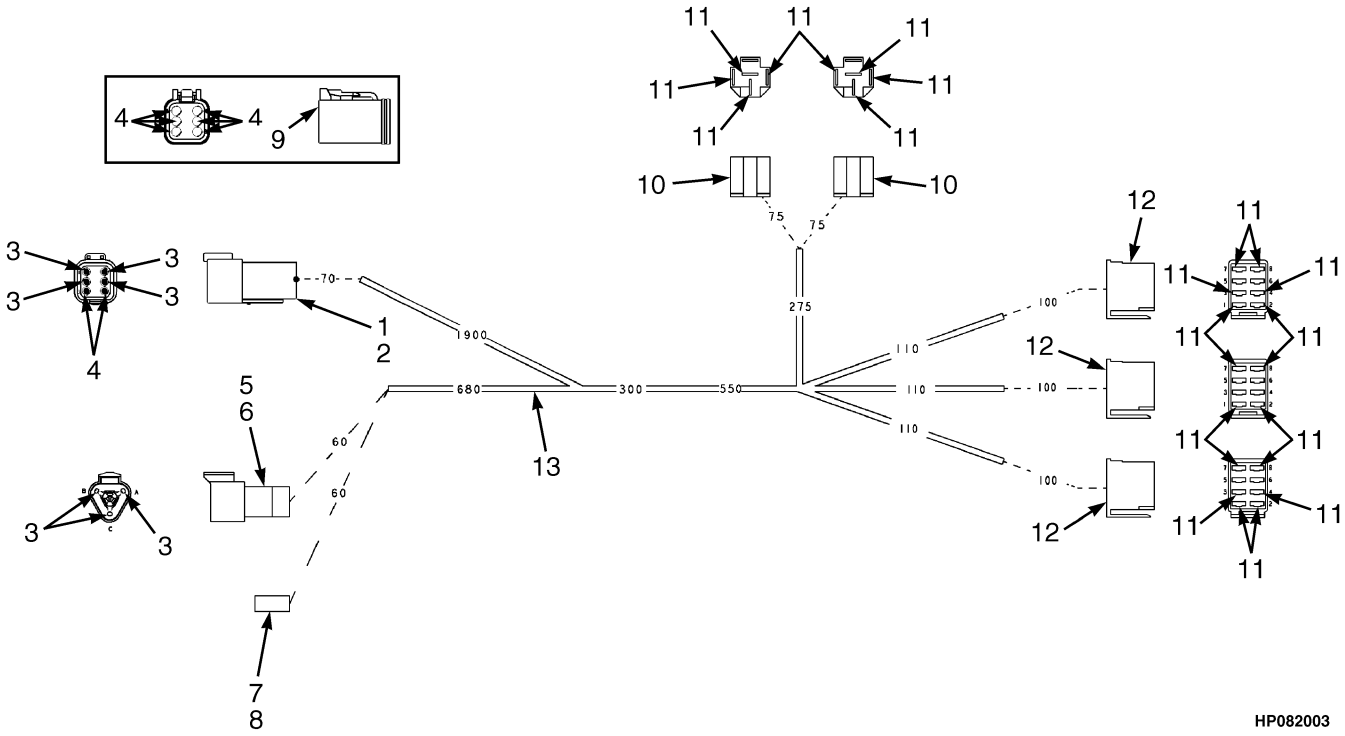

HP082003

ITEM	PART NO.	DESCRIPTION	QTY
	1684476	Wire Harness (Switches)	1
1	1330412	Connector	1
2	1330417	Connector	1
3	1363885	Terminal (Pin)	7
4	1330439	Plug	12
5	1330410	Connector	1
6	1330415	Connector	1
7	181045	Connector Body	1
8	134810	Terminal	1
9	1330422	Connector	1
10	1301228	Connector Body	2
11	1331233	Terminal	26
12	1301154	Housing	3
13	381919	Braiding	AR

©2011 HYSTER COMPANY

WIRE HARNESS (FIGURE 4-55)

SWITCH — EC CAB (S/N E008E01811X ↔ 10/2001)

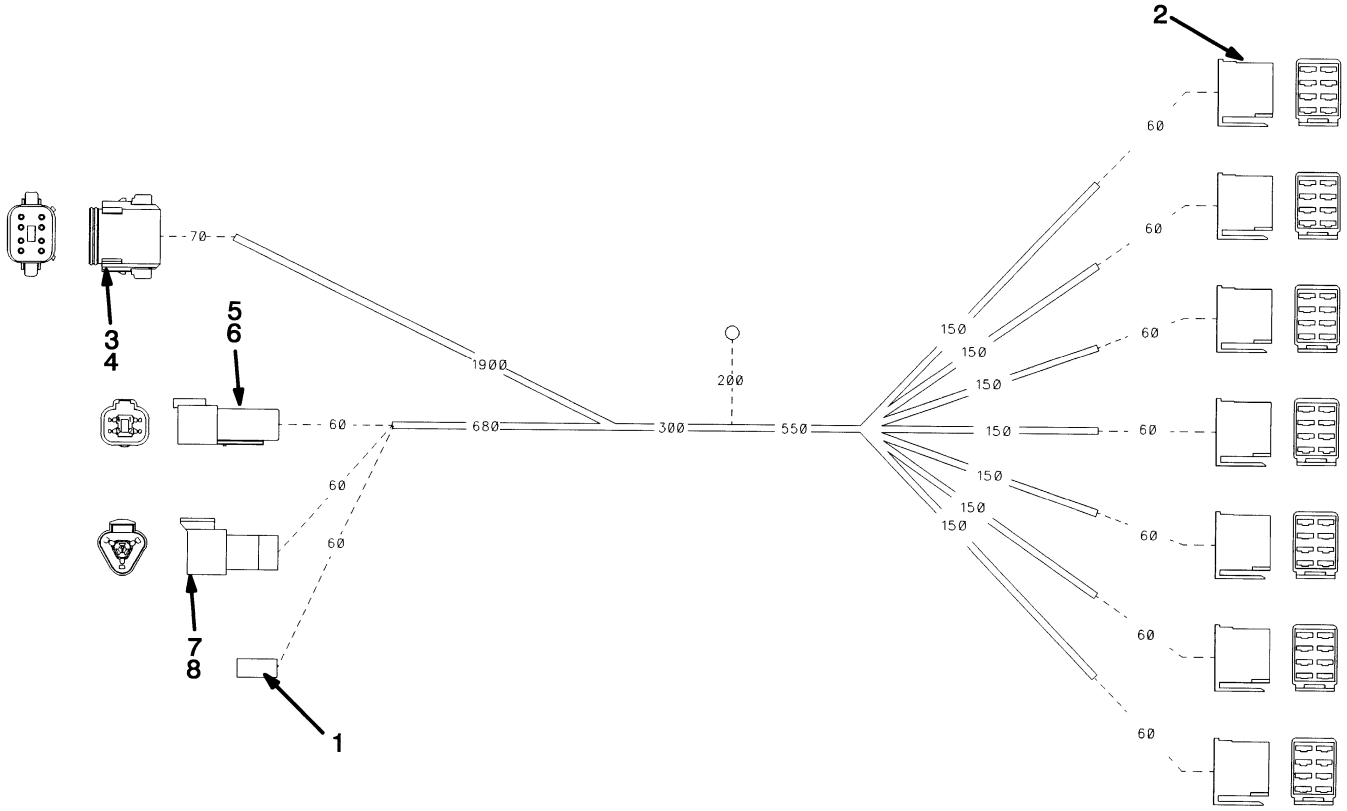

HP080276

ITEM	PART NO.	DESCRIPTION	QTY
	1461011	Wire Harness	1
1	181045	Connector Body	1
2	1301154	Housing (Switch)	7
3	1351068	Connector	1
4	1351069	Connector	1
5	1330411	Connector	1
6	1330416	Connector	1
7	1330410	Connector	1
8	1330415	Connector	1

©2011 HYSTER COMPANY

WIRE HARNESS (FIGURE 4-56)

SWITCH — EC CAB (10/2003 ↔ S/N E008E02285F)

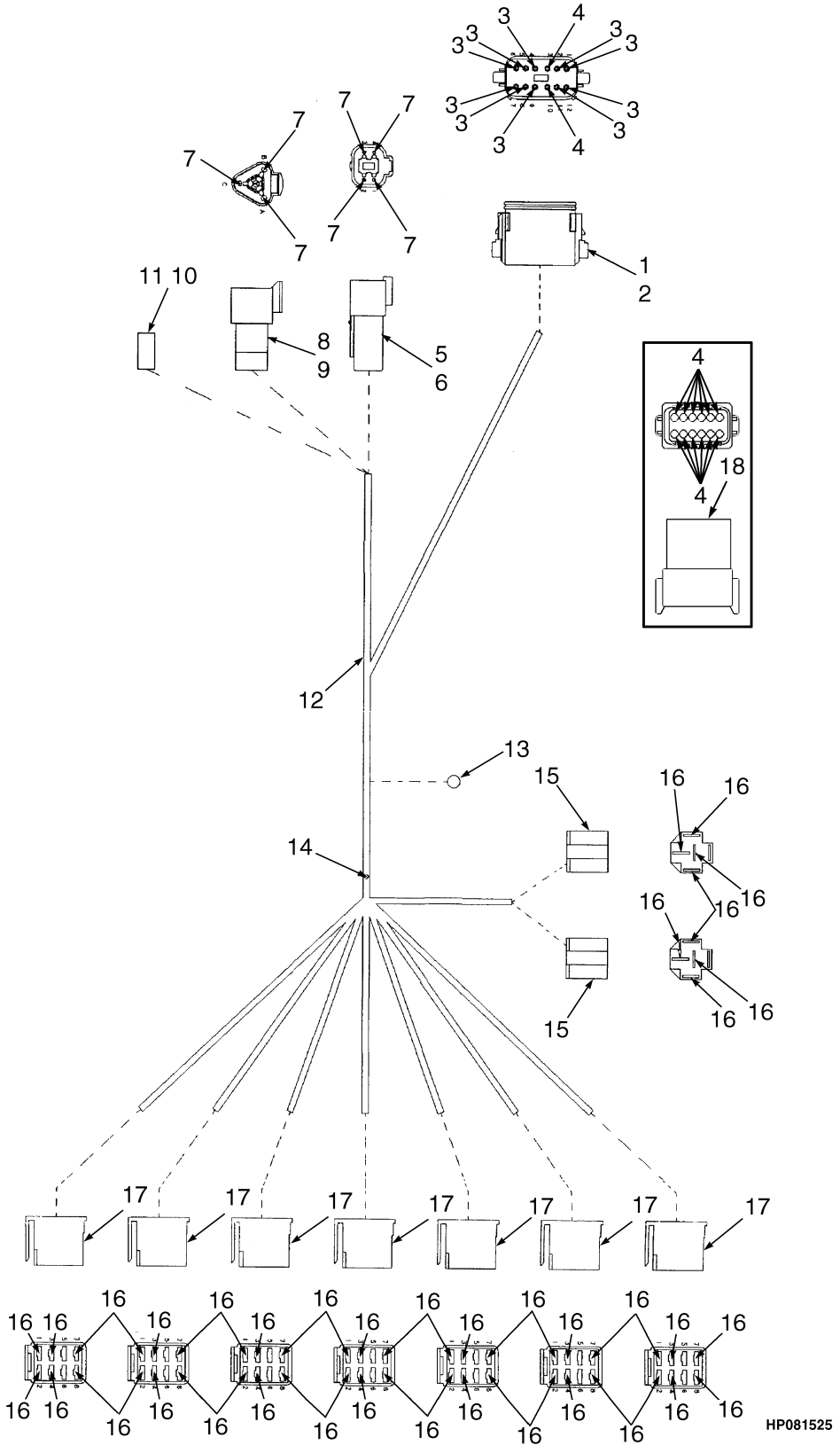

©2011 HYSTER COMPANY

WIRE HARNESS

SWITCH – EC CAB (10/2003 ↔ S/N E008E02285F)

ITEM	PART NO.	DESCRIPTION	QTY
	1517542	Wire Harness (Switches)	1
1	1351068	Connector	1
2	1351069	Connector	1
3	1363886	Terminal (Socket)	15
4	1330439	Plug	3
5	1330411	Connector	1
6	1330416	Connector	1
7	1363885	Terminal (Pin)	7
8	1330410	Connector	1
9	1330415	Connector	1
10	181045	Connector Body	1
11	134810	Terminal	1
12	381919	Braiding	AR
13	129886	E-Ring	1
14	1345029	Splice	1
15	1301228	Connector Body	2
16	1331233	Terminal	50
17	1301154	Housing	7
18	1352602	Connector (Dust)	1

©2011 HYSTER COMPANY

WIRE HARNESS (FIGURE 4-57)

SWITCH — EC CAB (S/N E008E02286F →)

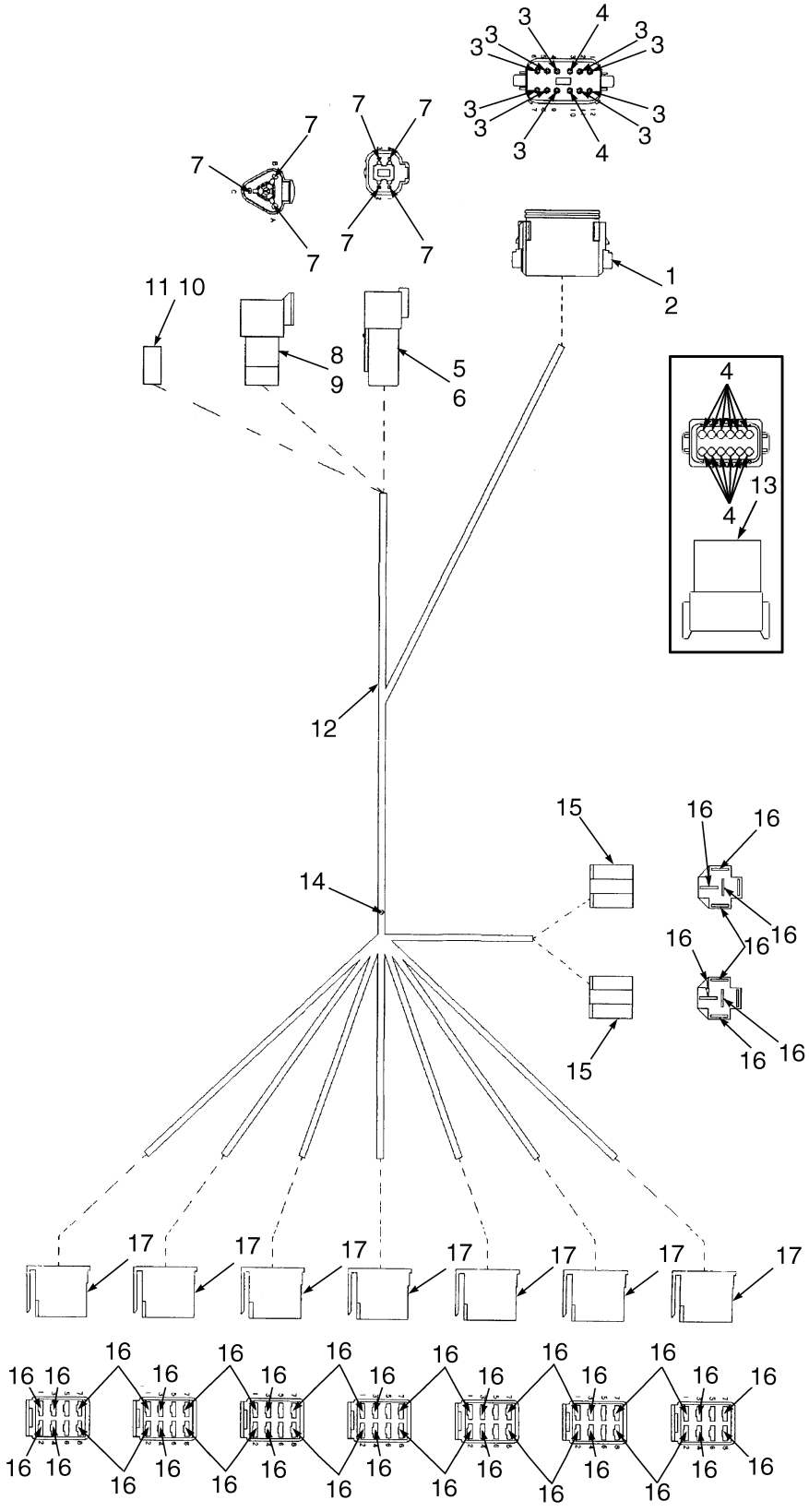

©2011 HYSTER COMPANY

WIRE HARNESS

SWITCH – EC CAB (S/N E008E02286F →)

ITEM	PART NO.	DESCRIPTION	QTY
	1684475	Wire Harness (Switches)	1
1	1351068	Connector	1
2	1351069	Connector	1
3	1363886	Terminal (Socket)	15
4	1330439	Plug	3
5	1330411	Connector	1
6	1330416	Connector	1
7	1363885	Terminal (Pin)	7
8	1330410	Connector	1
9	1330415	Connector	1
10	181045	Connector Body	1
11	134810	Terminal	1
12	381919	Braiding	AR
13	1352602	Connector (Dust)	1
14	1345029	Splice	1
15	1301228	Connector Body	2
16	1331233	Terminal	50
17	1301154	Housing	7

©2011 HYSTER COMPANY

WIRE HARNESS (FIGURE 4-58)

OPS II (S/N E008E02286F →)

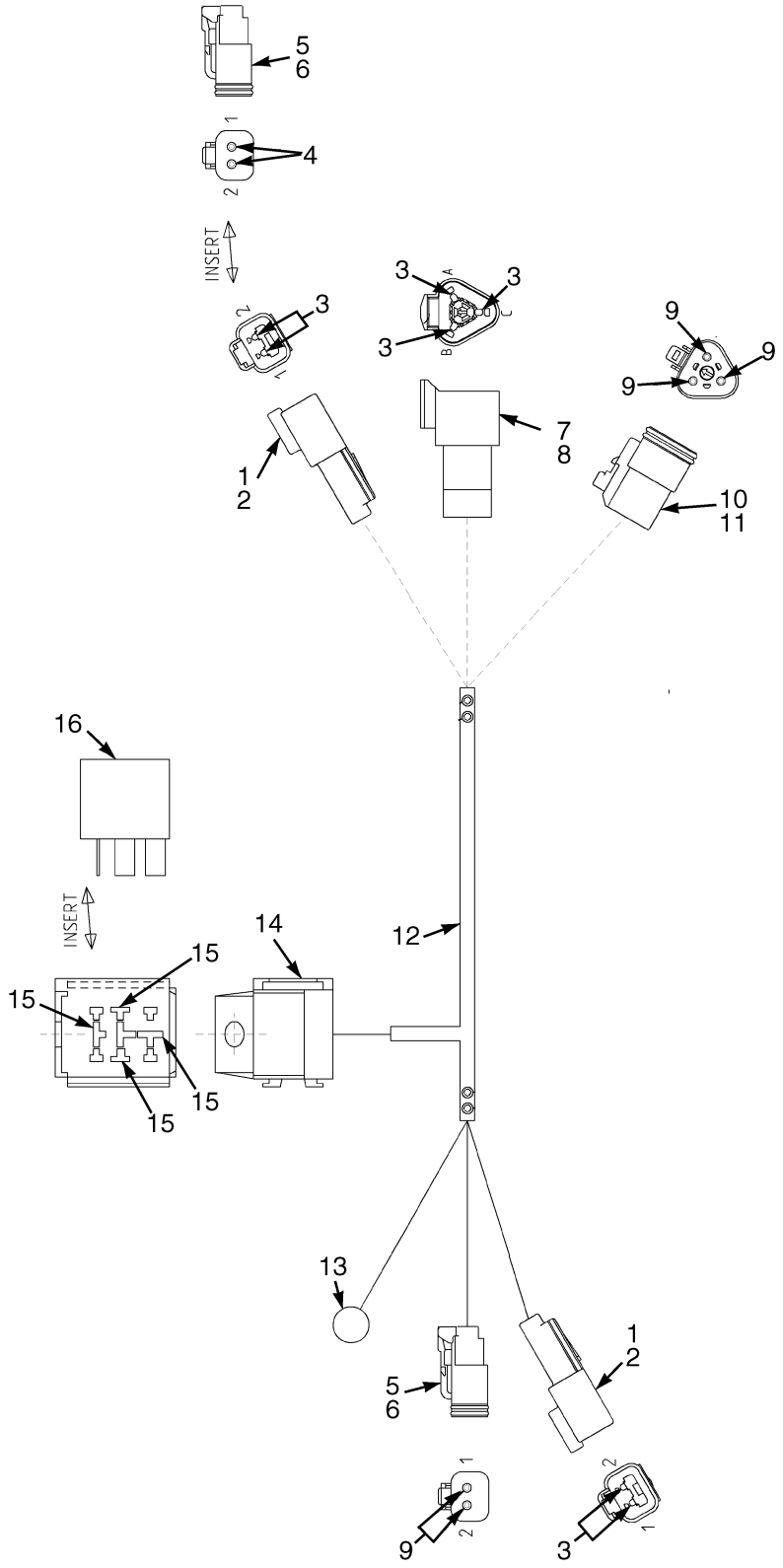

©2011 HYSTER COMPANY

ITEM	PART NO.	DESCRIPTION	QTY
	1684579	Wire Harness (Ops II) (Ops II)	1
1	1330409	Connector	2
2	1330414	Connector (Secondary Lock)	2
3	1363885	Terminal (Pin)	7
4	1330439	Plug	2
5	1330419	Connector	2
6	1330424	Connector (Secondary Lock)	2
7	1330410	Connector	1
8	1330415	Connector	1
9	1363886	Terminal (Socket)	5
10	1330420	Connector	1
11	1330426	Connector	1
12	381919	Braiding	AR
13	148607	E-Ring	1
14	1347224	Socket	1
15	1331233	Terminal	4
16	1616235	Relay	1

©2011 HYSTER COMPANY

WIRE HARNESS (FIGURE 4-59)

OPERATOR COMPARTMENT (→ S/N E008D01515) (S/N E008E01522 ↔ S/N E008E001810X)

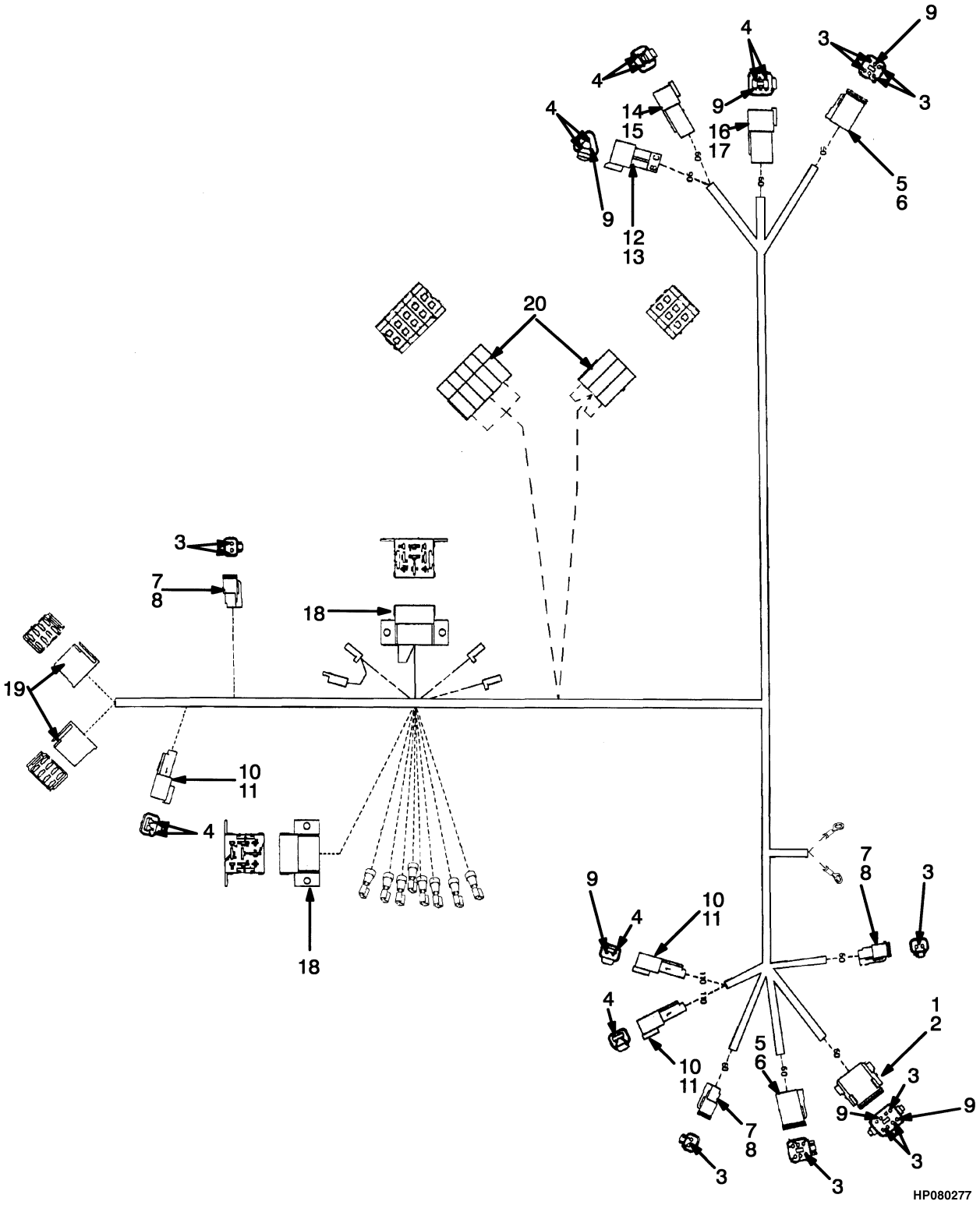

©2011 HYSTER COMPANY

WIRE HARNESS

OPERATOR COMPARTMENT (→ S/N E008D01515) (S/N E008E01522 ↔ S/N E008E001810X)

ITEM	PART NO.	DESCRIPTION	QTY
	1360659	Wire Harness	1
1	1330423	Connector	1
2	1330429	Connector	1
3	1330438	Terminal (Socket)	23
4	1330437	Terminal (Pin)	16
5	1330422	Connector	2
6	1330428	Connector	2
7	1330419	Connector	3
8	1330424	Connector (Secondary Lock)	3
9	1330439	Plug	6
10	1330409	Connector	3
11	1330414	Connector (Secondary Lock)	3
12	1330410	Connector	1
13	1330415	Connector	1
14	1330411	Connector	1
15	1330416	Connector	1
16	1330412	Connector	1
17	1330417	Connector	1
18	1301229	Connector	2
19	1301154	Housing	2
20	381846	Fuse Holder	8

©2011 HYSTER COMPANY

WIRE HARNESS (FIGURE 4-60)
OPERATOR COMPARTMENT — TIER I AND TIER II ENGINE

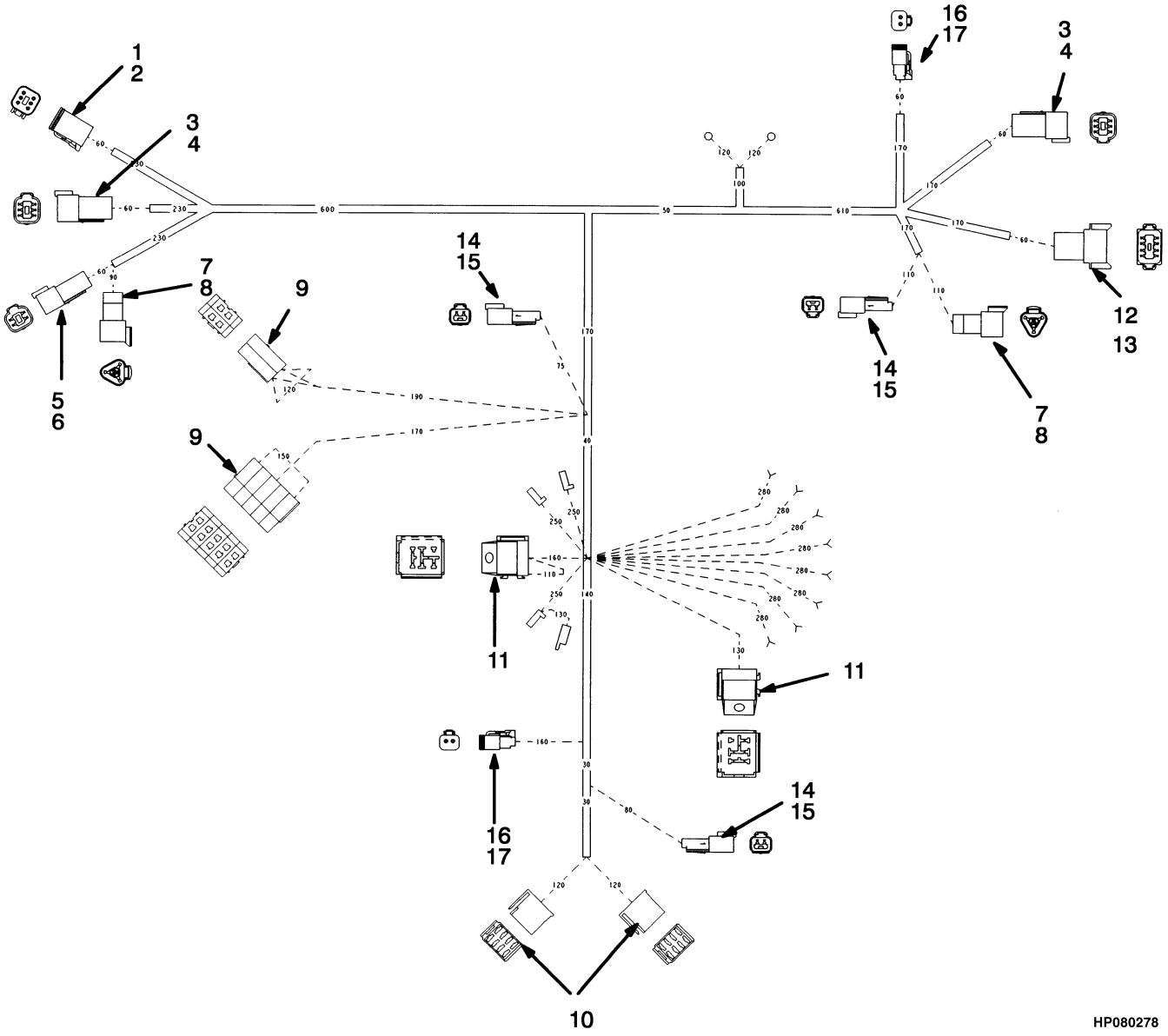

©2011 HYSTER COMPANY

WIRE HARNESS

OPERATOR COMPARTMENT – TIER I AND TIER II ENGINE

ITEM	PART NO.	DESCRIPTION	QTY
	a 1467746	Wire Harness (Tier I Engine)	1
	b 1515429	Wire Harness (Tier II Engine)	1
1	1330422	Connector (Steering Harness)	1
2	1330428	Connector	1
3	1330412	Connector (Steering)	2
4	1330417	Connector	2
5	1330411	Connector	1
6	1330416	Connector	1
7	1330410	Connector	2
8	1330415	Connector	2
9	381846	Fuse Holder	7
10	1301154	Housing (Switch)	2
11	1347224	Socket (Relay)	2
12	1330413	Connector	1
13	1330418	Connector	1
14	1330409	Connector	3
15	1330414	Connector (Secondary Lock)	3
16	1330419	Connector	2
17	1330424	Connector (Secondary Lock)	2

FOOTNOTES:

a S/N E008E01811Y ↔ S/N E008E01884Z

b S/N E008E01884Z →

©2011 HYSTER COMPANY

WIRE HARNESS (FIGURE 4-61)

OPERATOR COMPARTMENT — TIER I ENGINE (S/N E008E01781W ↔ S/N E008E01984B)

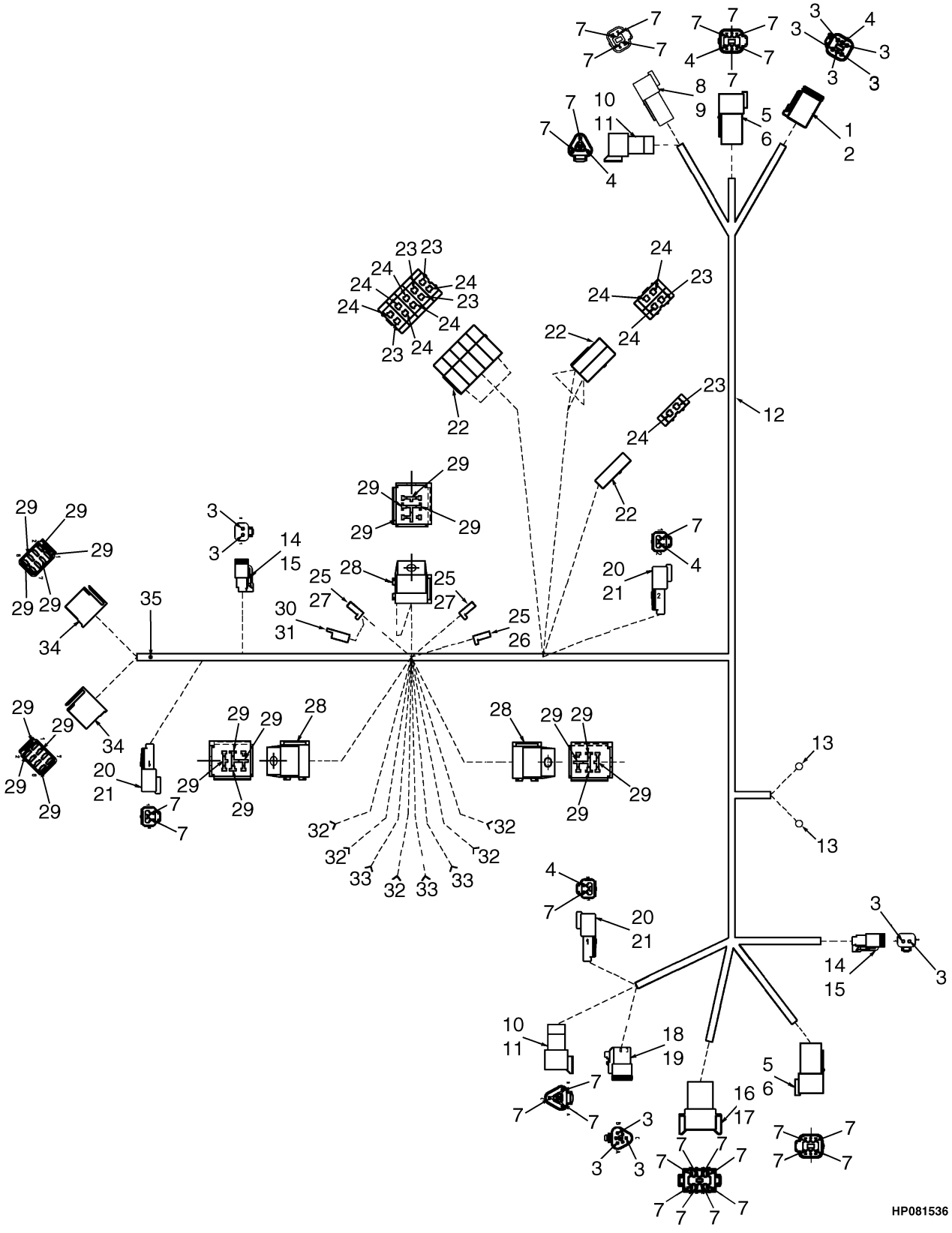

©2011 HYSTER COMPANY

WIRE HARNESS

OPERATOR COMPARTMENT – TIER I ENGINE (S/N E008E01781W ↔ S/N E008E01984B)

ITEM	PART NO.	DESCRIPTION	QTY
	1525412	Wire Harness (Operator Compartment)	1
1	1330422	Connector	1
2	1330428	Connector	1
3	1363886	Terminal (Socket)	12
4	1330439	Plug	6
5	1330412	Connector	2
6	1330417	Connector	2
7	1363885	Terminal (Pin)	31
8	1330411	Connector	1
9	1330416	Connector	1
10	1330410	Connector	2
11	1330415	Connector	2
12	381919	Braiding	AR
13	129886	E-Ring	2
14	1330419	Connector	2
15	1330424	Connector (Secondary Lock)	2
16	1330413	Connector	1
17	1330418	Connector	1
18	1330420	Connector	1
19	1330426	Connector	1
20	1330409	Connector	3
21	1330414	Connector (Secondary Lock)	3
22	381846	Fuse Holder	8
23	1300231	Terminal	6
24	381847	Terminal	10
25	181046	Connector Body	3
26	134812	Terminal	1
27	134811	Terminal	2
28	1347224	Socket	3
29	1331233	Terminal	21
30	134810	Terminal	1
31	181045	Connector Body	1
32	148648	Terminal	5
33	148649	Terminal	3
34	1301154	Housing	2
35	1345029	Splice	1

©2011 HYSTER COMPANY

WIRE HARNESS (FIGURE 4-62)

OPERATOR COMPARTMENT — TIER II ENGINES (S/N E008E01886Z ↔ S/N E008E-01984B EXC. 1979)

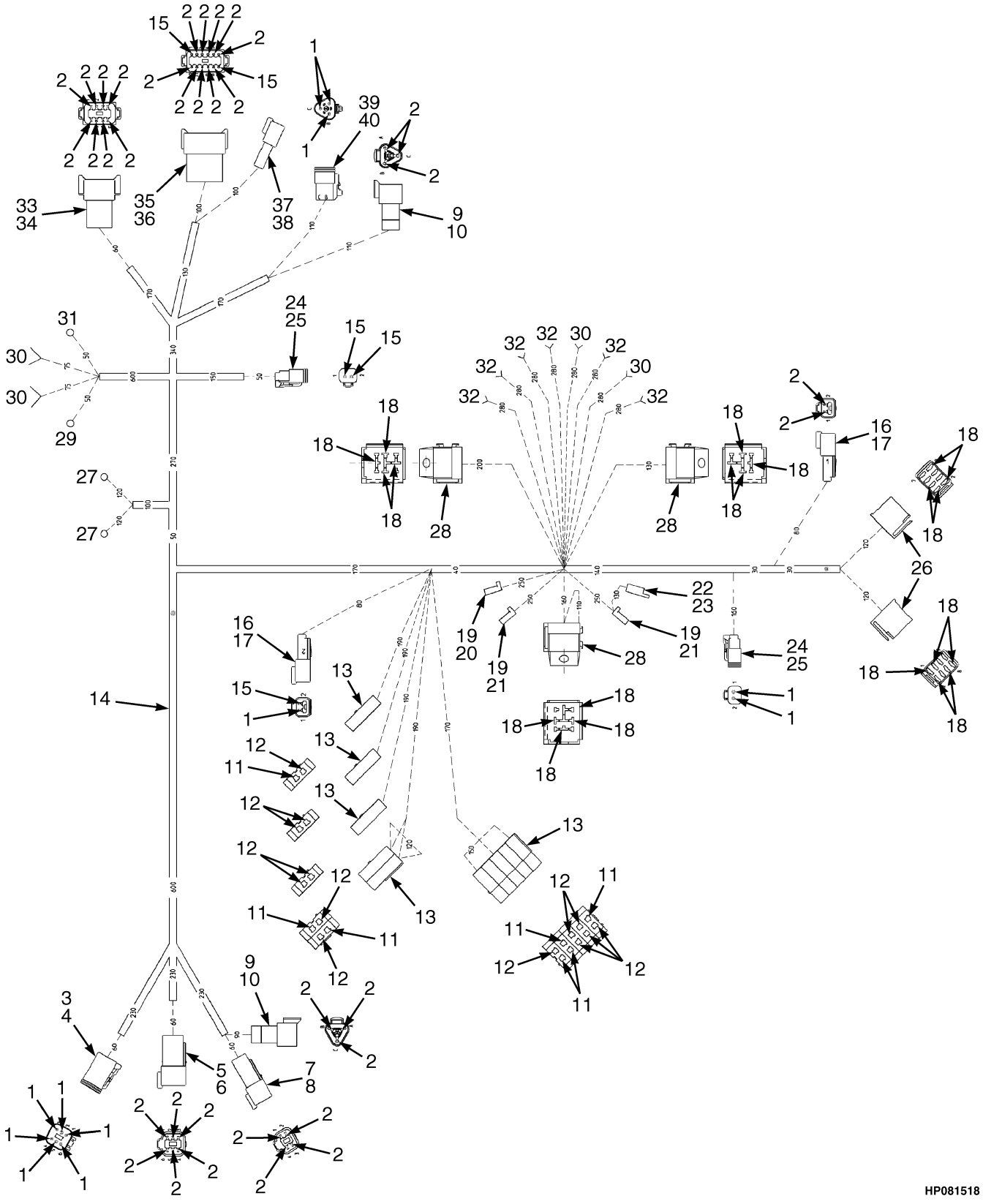

©2011 HYSTER COMPANY

WIRE HARNESS

OPERATOR COMPARTMENT – TIER II ENGINES (S/N E008E01886Z ↔ S/N E008E-01984B EXC. 1979)

ITEM	PART NO.	DESCRIPTION	QTY
	1544565	Wire Harness (Operator Compartment)	1
1	1363886	Terminal (Socket)	13
2	1363885	Terminal (Pin)	37
3	1330422	Connector	1
4	1330428	Connector	1
5	1330412	Connector	1
6	1330417	Connector	1
7	1330411	Connector	1
8	1330416	Connector	1
9	1330410	Connector	2
10	1330415	Connector	2
11	1300231	Terminal	7
12	381847	Terminal	13
13	381846	Fuse Holder	10
14	381919	Braiding	AR
15	1330439	Plug	3
16	1330409	Connector	2
17	1330414	Connector (Secondary Lock)	2
18	1331233	Terminal	21
19	181046	Connector Body	3
20	134812	Terminal	1
21	134811	Terminal	2
22	134810	Terminal	1
23	181045	Connector Body	1
24	1330419	Connector	2
25	1330424	Connector (Secondary Lock)	2
26	1301154	Housing	2
27	129886	E-Ring	2
28	1347224	Socket	3
29	148800	Terminal (Battery)	1
30	148648	Terminal	4
31	806426	E-Ring	1
32	148649	Terminal	6
33	1330413	Connector	1
34	1330418	Connector	1
35	1352602	Connector	1
36	1352603	Connector	1
37	1544731	Receptacle	1
38	1544733	Pin	1
39	1330420	Connector	1
40	1330426	Connector	1

©2011 HYSTER COMPANY

WIRE HARNESS (FIGURE 4-63)

OPERATOR COMPARTMENT — TIER II ENGINES (S/N E008E01985B ↔ S/N E008E01990B INC. 1979)

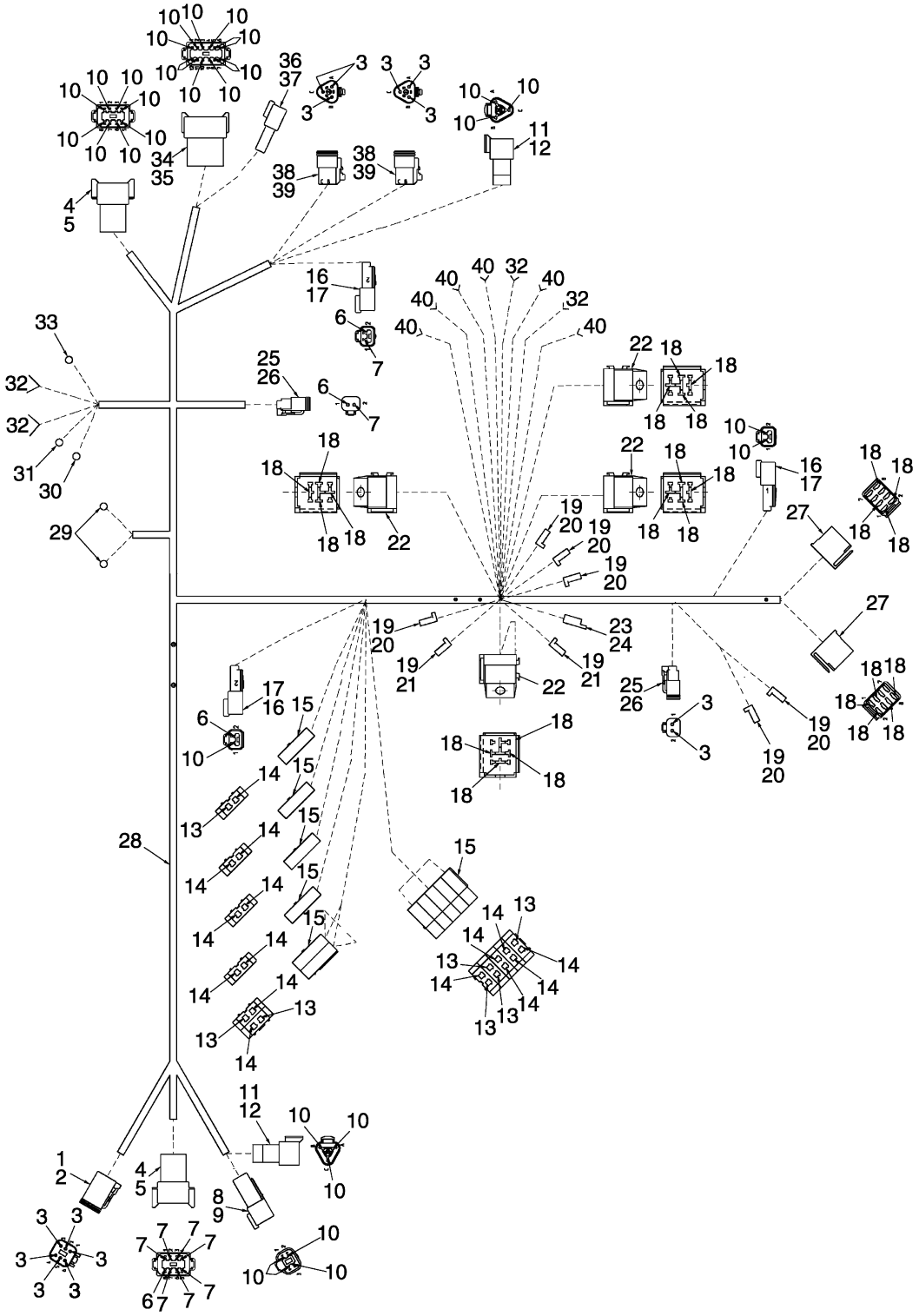

HP081527

©2011 HYSTER COMPANY

WIRE HARNESS

OPERATOR COMPARTMENT – TIER II ENGINES (S/N E008E01985B ↔ S/N E008E01990B INC. 1979)

ITEM	PART NO.	DESCRIPTION	QTY
	1552863	Wire Harness	1
1	1330422	Connector	1
2	1330428	Connector	1
3	1363886	Terminal (Socket)	16
4	1330413	Connector	2
5	1330418	Connector	2
6	1330439	Plug	4
7	1330437	Terminal (Pin)	8
8	1330411	Connector	1
9	1330416	Connector	1
10	1363885	Terminal (Pin)	37
11	1330410	Connector	2
12	1330415	Connector	2
13	1300231	Terminal	7
14	381847	Terminal	15
15	381846	Fuse Holder	11
16	1330409	Connector	3
17	1330414	Connector (Secondary Lock)	3
18	1331233	Terminal	25
19	181046	Connector Body	8
20	134812	Terminal	6
21	134811	Terminal	2
22	1347224	Socket	4
23	134810	Terminal	1
24	181045	Connector Body	1
25	1330419	Connector	2
26	1330424	Connector (Secondary Lock)	2
27	1301154	Housing	2
28	381919	Braiding	AR
29	129886	E-Ring	2
30	148611	E-Ring	1
31	148615	E-Ring	1
32	148648	Terminal	4
33	806426	E-Ring	1
34	1352602	Connector	1
35	1352603	Connector	1
36	1544731	Receptacle	1
37	1544733	Pin	1
38	1330420	Connector	2
39	1330426	Connector	2
40	148649	Terminal	6

©2011 HYSTER COMPANY

WIRE HARNESS (FIGURE 4-64)

OPERATOR COMPARTMENT — TIER II ENGINES (S/N E008E01991B ↔ S/N E008E02225E)

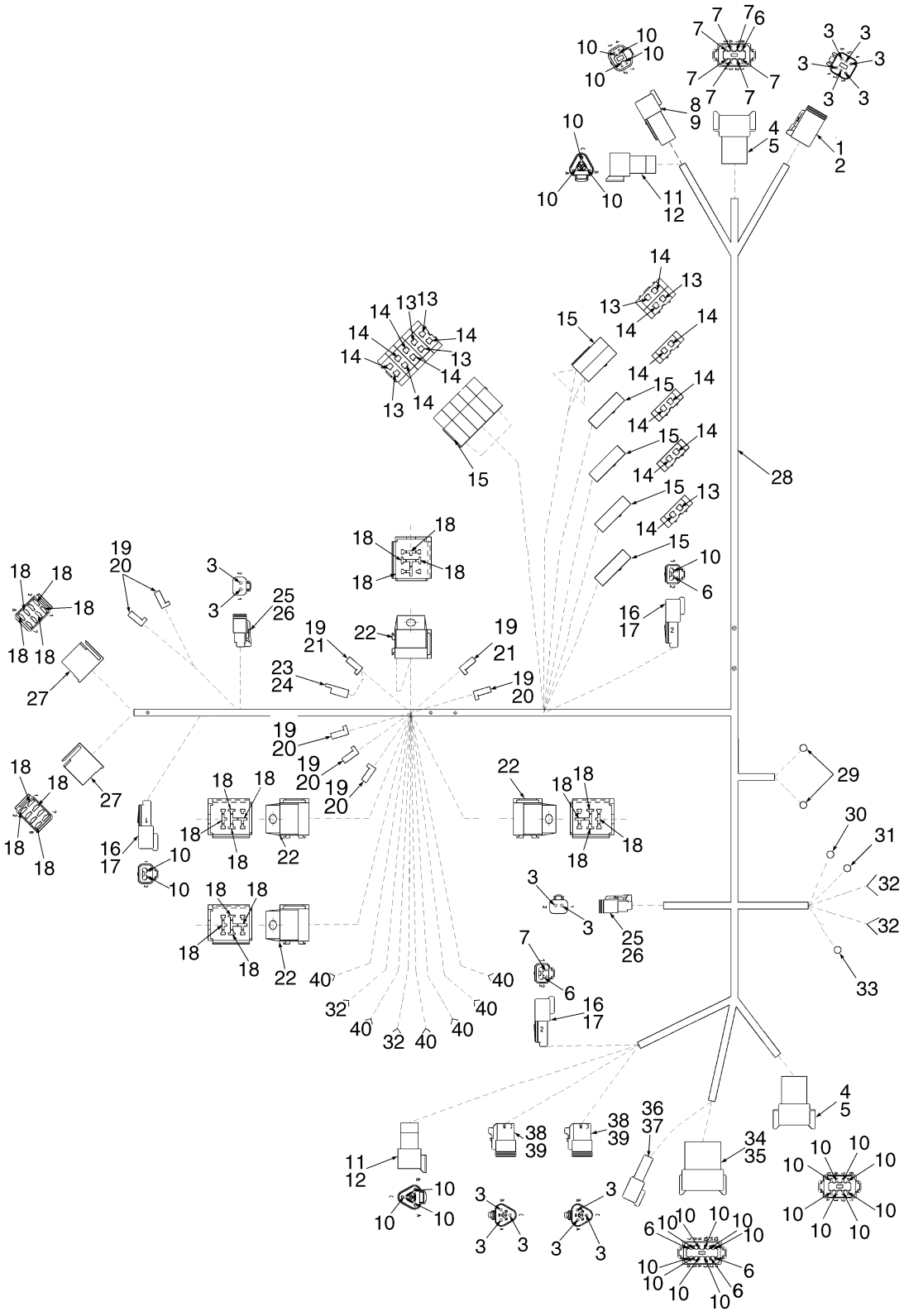

©2011 HYSTER COMPANY

WIRE HARNESS

OPERATOR COMPARTMENT – TIER II ENGINES (S/N E008E01991B ↔ S/N E008E02225E)

ITEM	PART NO.	DESCRIPTION	QTY
	1570452	Wire Harness (Operator Compartment)	1
1	1330422	Connector	1
2	1330428	Connector	1
3	1363886	Terminal (Socket)	16
4	1330413	Connector	2
5	1330418	Connector	2
6	1330439	Plug	5
7	1330437	Terminal (Pin)	8
8	1330411	Connector	1
9	1330416	Connector	1
10	1363885	Terminal (Pin)	36
11	1330410	Connector	2
12	1330415	Connector	2
13	1300231	Terminal	7
14	381847	Terminal	15
15	381846	Fuse Holder	11
16	1330409	Connector	3
17	1330414	Connector (Secondary Lock)	3
18	1331233	Terminal	25
19	181046	Connector Body	8
20	134812	Terminal	6
21	134811	Terminal	2
22	1347224	Socket	4
23	134810	Terminal	1
24	181045	Connector Body	1
25	1330419	Connector	2
26	1330424	Connector (Secondary Lock)	2
27	1301154	Housing	2
28	381919	Braiding	AR
29	129886	E-Ring	2
30	148611	E-Ring	1
31	148615	E-Ring	1
32	148648	Terminal	4
33	806426	E-Ring	1
34	1352602	Connector	1
35	1352603	Connector	1
36	1544731	Receptacle	1
37	1544733	Pin	1
38	1330420	Connector	2
39	1330426	Connector	2
40	148649	Terminal	6

©2011 HYSTER COMPANY

WIRE HARNESS (FIGURE 4-65)

OPERATOR COMPARTMENT — TIER II ENGINES (S/N E008E02226E →)

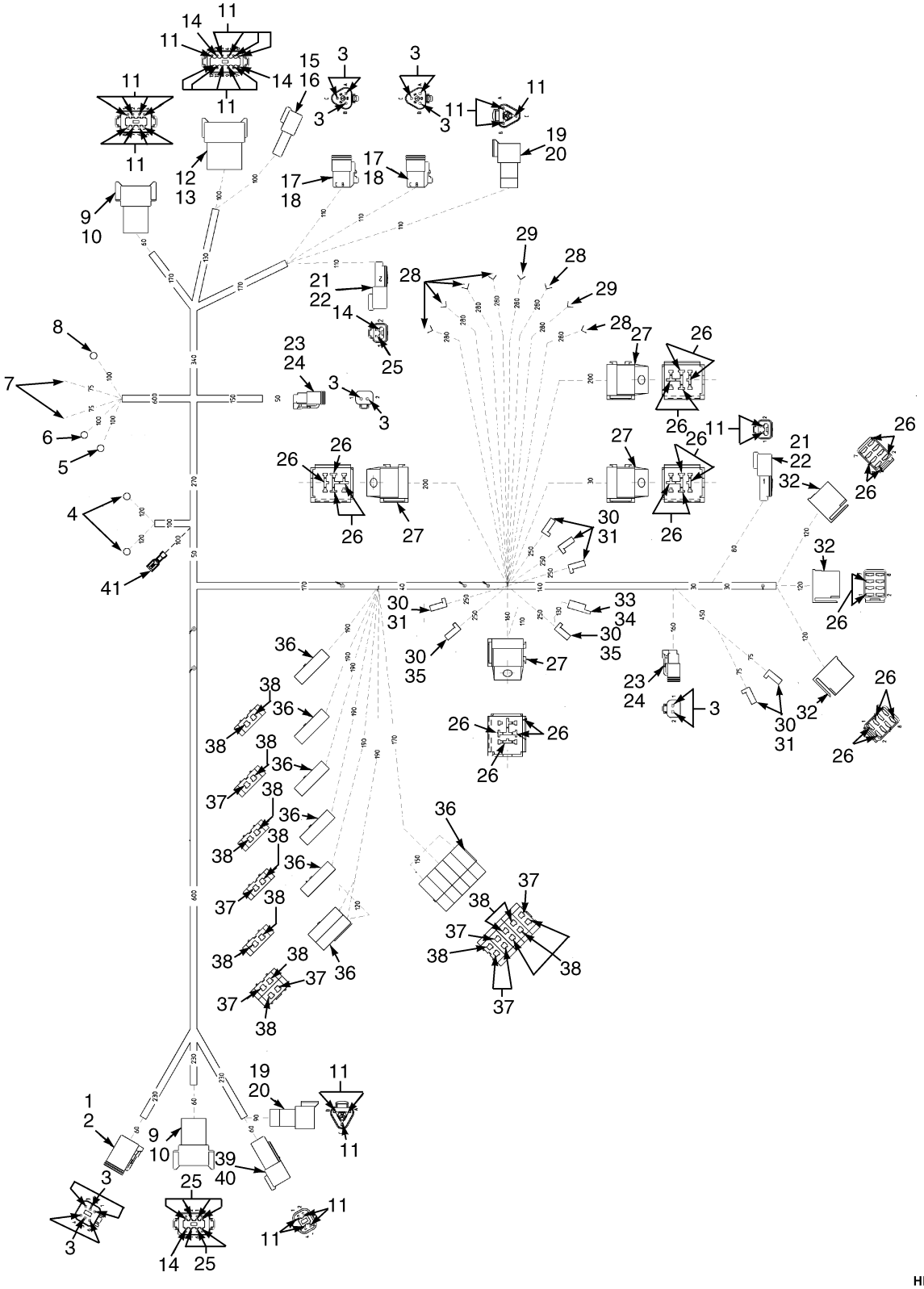

©2011 HYSTER COMPANY

WIRE HARNESS

OPERATOR COMPARTMENT – TIER II ENGINES (S/N E008E02226E →)

ITEM	PART NO.	DESCRIPTION	QTY
	1670741	Wire Harness (Operator Compartment)	1
1	1330422	Connector	1
2	1330428	Connector	1
3	1363886	Terminal (Socket)	16
4	129886	E-Ring	2
5	148611	E-Ring (Battery)	1
6	148615	E-Ring (Battery)	1
7	148648	Terminal	2
8	806426	E-Ring	1
9	1330413	Connector	2
10	1330418	Connector	2
11	1363885	Terminal (Pin)	36
12	1352602	Connector	1
13	1352603	Connector	1
14	1330439	Plug	4
15	1544731	Receptacle	1
16	1544733	Pin	1
17	1330420	Connector	2
18	1330426	Connector	2
19	1330410	Connector	2
20	1330415	Connector	2
21	1330409	Connector	2
22	1330414	Connector (Secondary Lock)	2
23	1330419	Connector	2
24	1330424	Connector (Secondary Lock)	2
25	1330437	Terminal (Pin)	8
26	1331233	Terminal (Female)	27
27	1347224	Socket	4
28	148649	Terminal	6
29	148648	Terminal	2
30	181046	Connector Body	8
31	134812	Terminal	6
32	1301154	Housing	3
33	134810	Terminal	1
34	181045	Connector Body	1
35	134811	Terminal	2
36	381846	Fuse Holder	12
37	1300231	Terminal	7
38	381847	Terminal	17
39	1330411	Connector	1
40	1330416	Connector	1

©2011 HYSTER COMPANY

WIRE HARNESS (FIGURE 4-66)
GAUGE — TIER I AND TIER II ENGINE

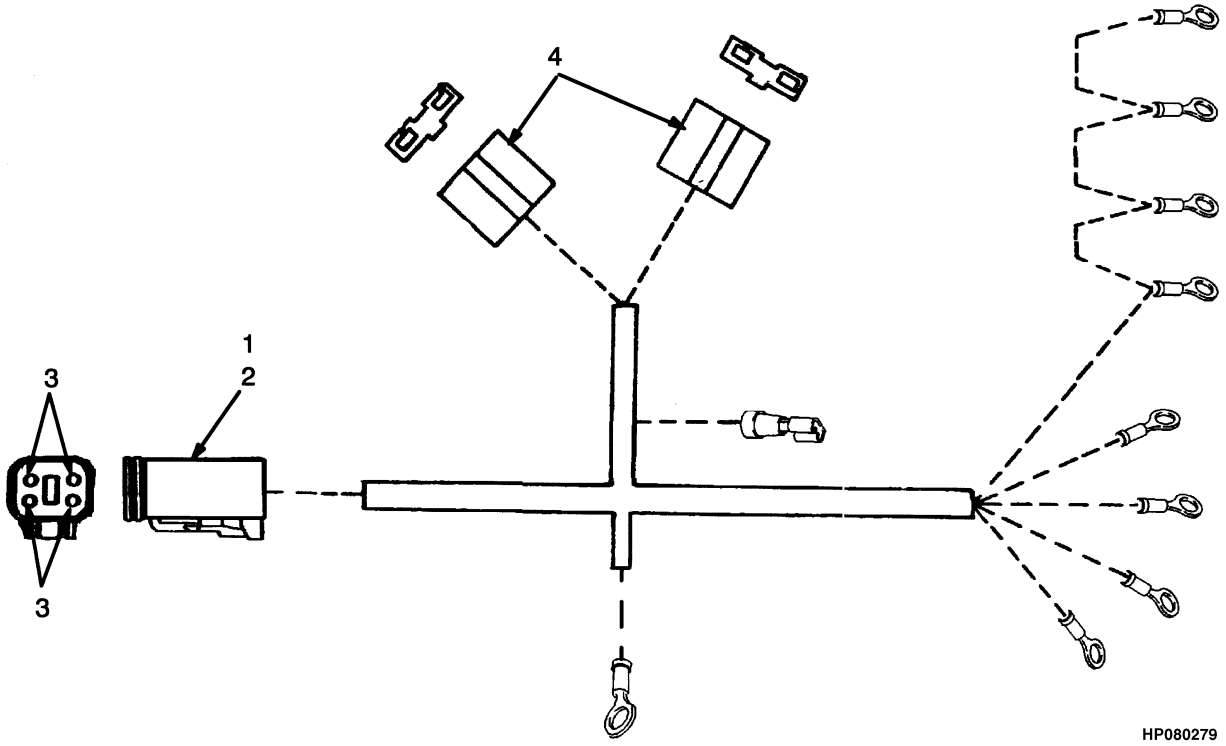

ITEM	PART NO.	DESCRIPTION	QTY
	1336796	Wire Harness (Gauge) (Tier I Engine)	1
	1514947	Wire Harness (Gauge) (Tier II Engine)	1
1	1330421	Connector	1
2	1330427	Connector	1
3	1330438	Terminal (Socket) (Tier I Engine)	4
3	1363886	Terminal (Socket) (Tier II Engine)	4
4	381846	Fuse Holder	2

©2011 HYSTER COMPANY

WIRE HARNESS (FIGURE 4-67)

STEERING POD — TIER I AND TIER II ENGINE (→ S/N E008E01984B)

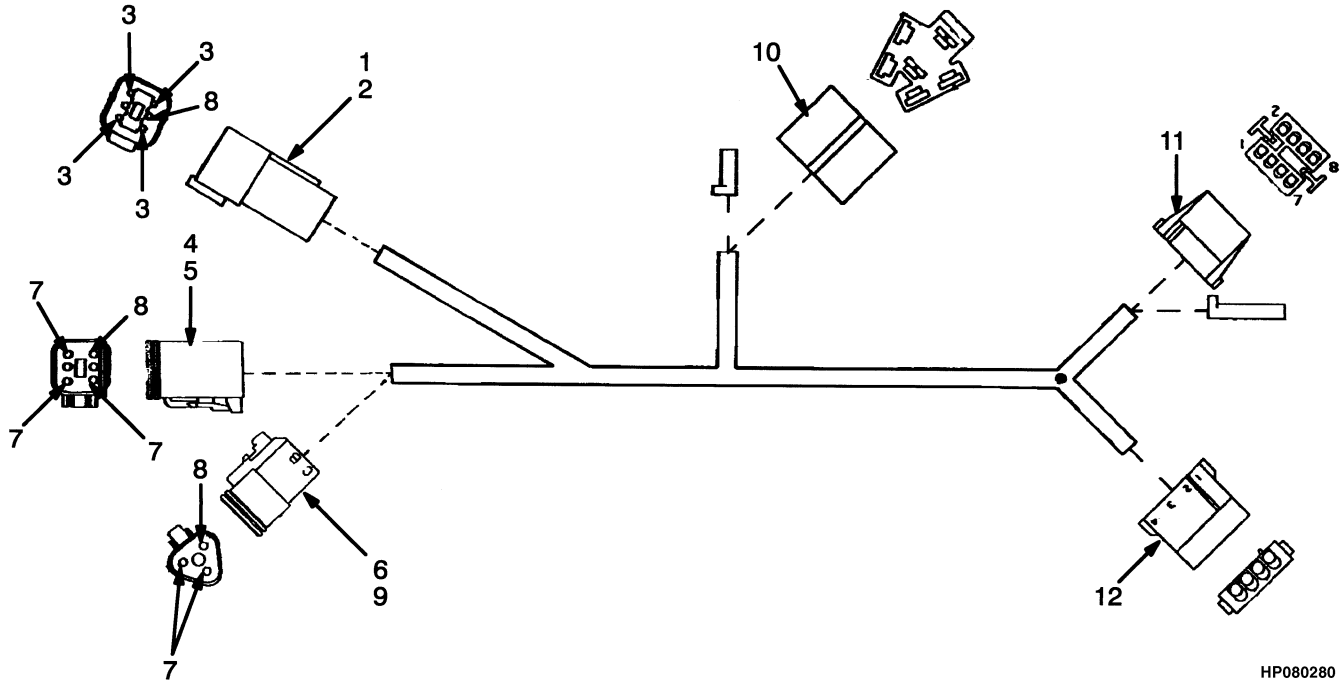

ITEM	PART NO.	DESCRIPTION	QTY
	a 1336788	Wire Harness (Tier I Engine)	1
	b 1507236	Wire Harness (Tier II Engine)	1
1	1330412	Connector	1
2	1330417	Connector	1
3	**a** 1330437	Terminal (Pin)	5
3	**b** 1363885	Terminal (Pin)	6
4	1330422	Connector	1
5	1330428	Connector	1
6	1330420	Connector	1
7	**a** 1330438	Terminal (Socket)	7
7	**b** 1363886	Terminal (Socket)	9
8	**a** 1330439	Plug	3
9	1330426	Connector	1
10	370728	Connector Body	1
11	370727	Connector Body	1
12	367960	Socket	1

FOOTNOTES:

a → S/N E008E01885Z

b S/N E008E01886Z →

©2011 HYSTER COMPANY

WIRE HARNESS (FIGURE 4-68)

STEERING POD — TIER II ENGINE (S/N E008E01985B →)

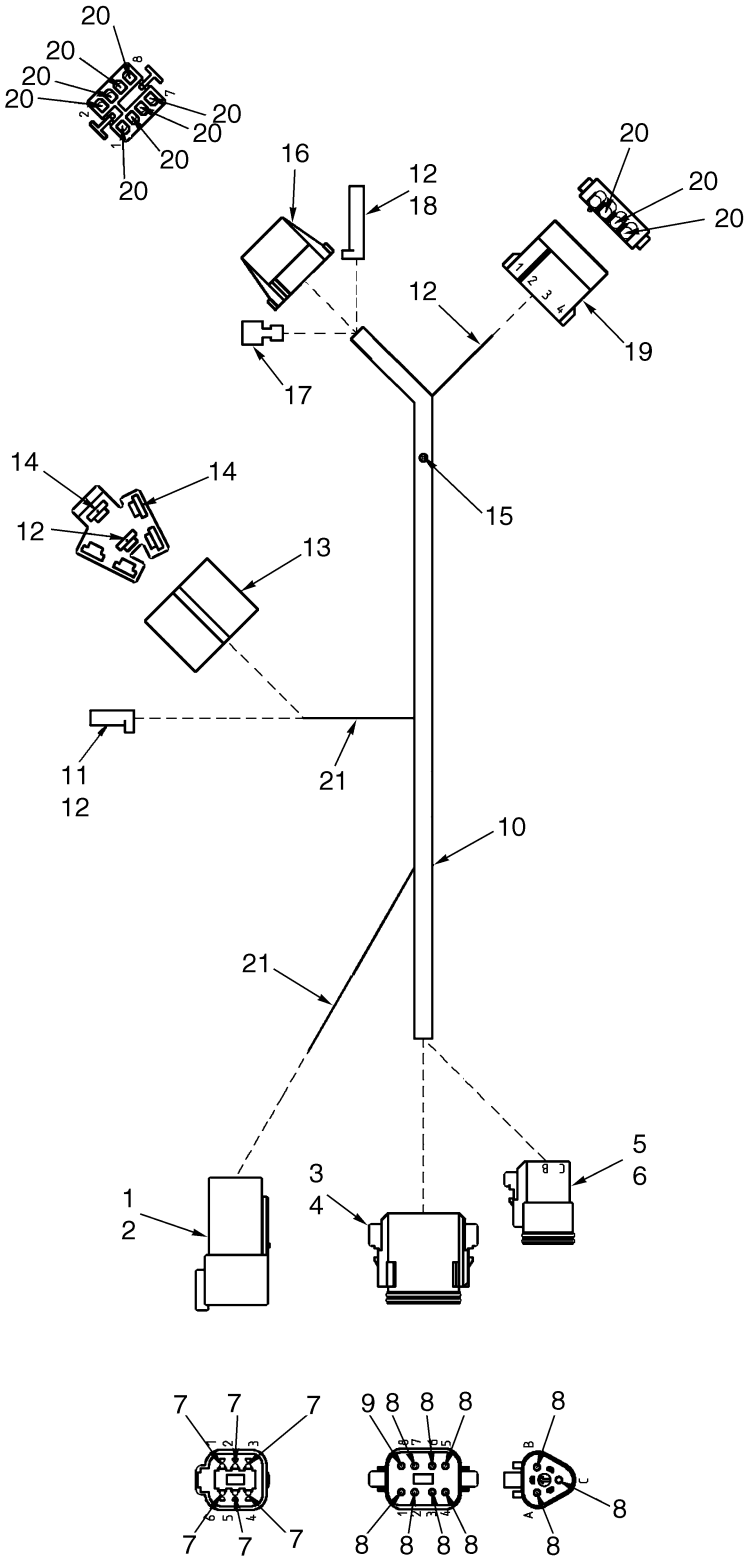

HP081529

©2011 HYSTER COMPANY

WIRE HARNESS

STEERING POD – TIER II ENGINE (S/N E008E01985B →)

ITEM	PART NO.	DESCRIPTION	QTY
	1518935	Wire Harness (Steering Pod)	1
1	1330412	Connector	1
2	1330417	Connector	1
3	1330423	Connector	1
4	1330429	Connector	1
5	1330420	Connector	1
6	1330426	Connector	1
7	1363885	Terminal (Pin)	6
8	1363886	Terminal (Socket)	10
9	1330439	Plug	1
10	381919	Braiding	AR
11	181046	Connector Body	1
12	134812	Terminal	3
13	370728	Connector Body	1
14	1322673	Terminal	2
15	1345029	Splice	1
16	370727	Connector Body	1
17	1310143	Terminal	1
18	129889	Connector Body	1
19	367960	Socket	1
20	367968	Socket	11
21	175899	Tape	AR

©2011 HYSTER COMPANY

WIRE HARNESS (FIGURE 4-69)

TRANSMISSION CONTROL — TIER I ENGINE (S/N E008E01866Y ↔ S/N E008E01885Z)

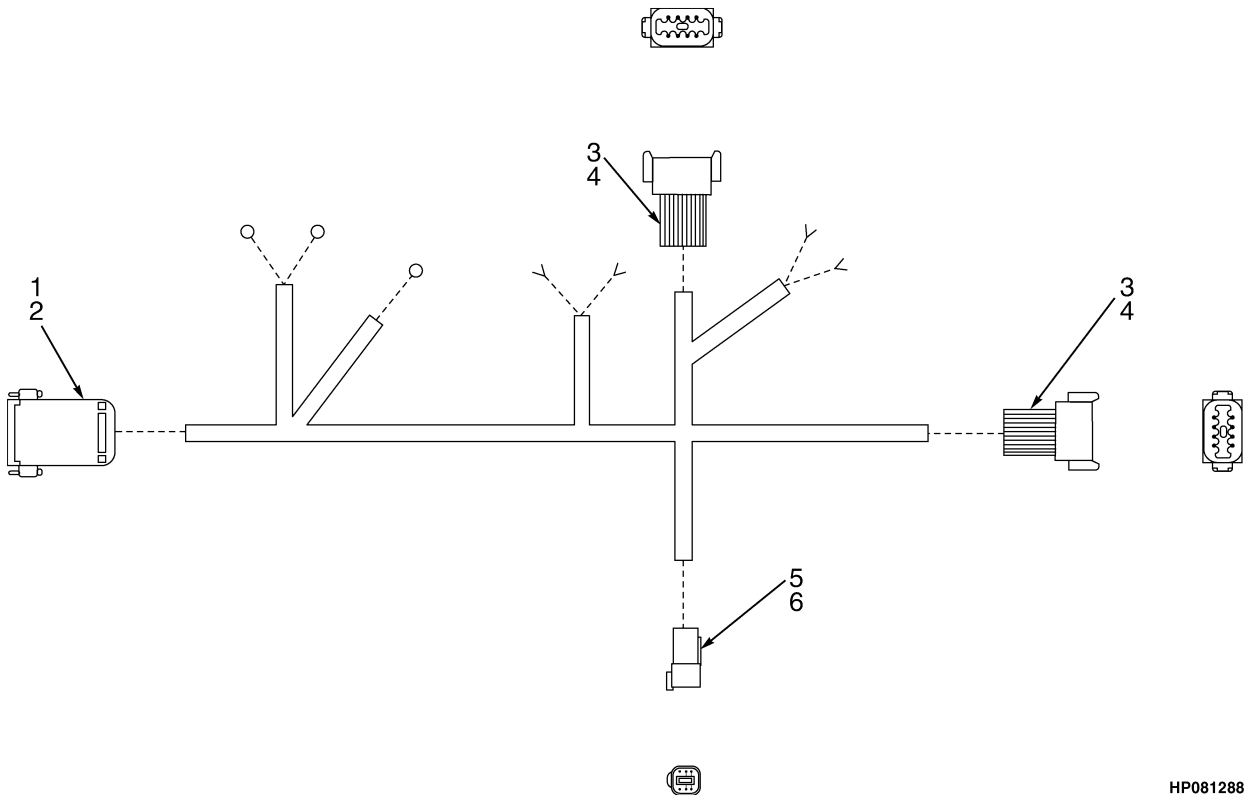

©2011 HYSTER COMPANY

ITEM	PART NO.	DESCRIPTION	QTY
	1508252	Wire Harness (Transmission Control)	1
1	. . . . .	Connector Body	1
2	1390718	Connector	1
3	1330413	Connector	2
4	1330418	Connector	2
5	1330412	Connector	1
6	1330417	Connector	1

©2011 HYSTER COMPANY

WIRE HARNESS (FIGURE 4-70)

TRANSMISSION CONTROL — TIER II ENGINE (S/N E008E01886Z ↔ S/N E008E01910Z)

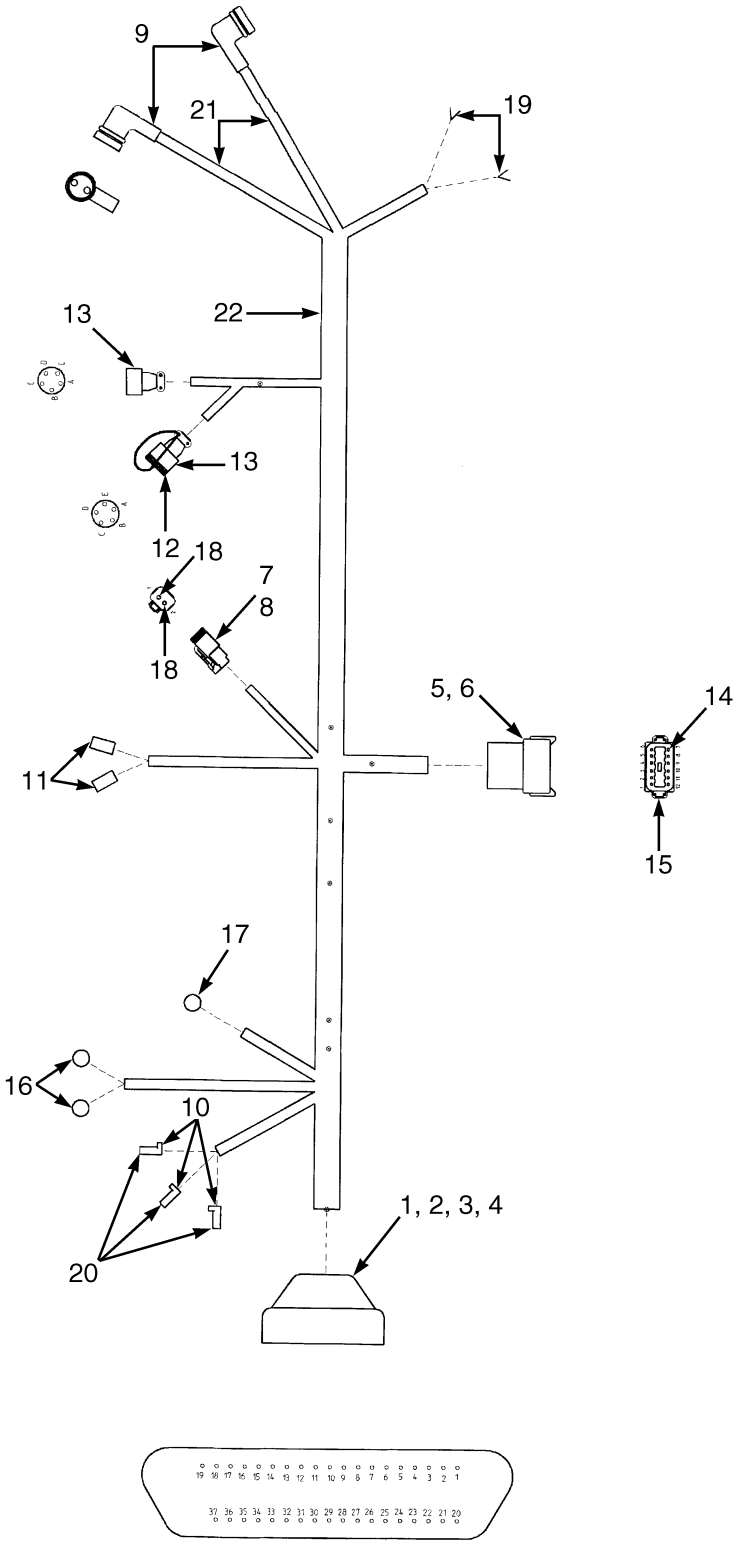

HP081513

©2011 HYSTER COMPANY

WIRE HARNESS

TRANSMISSION CONTROL – TIER II ENGINE (S/N E008E01886Z ↔ S/N E008E01910Z)

ITEM	PART NO.	DESCRIPTION	QTY
	1520346	Wire Harness (Transmission Control)	1
1	1379452	Socket	37
2	1390718	Connector	1
3	. . . . .	Connector Body	1
4	816410	Washer	2
5	1352602	Connector	1
6	1352603	Connector	1
7	1330419	Connector	1
8	1330424	Connector (Secondary Lock)	1
9	1388219	Connector	2
10	181046	Connector Body	3
11	248196	Terminal	2
12	1385183	Cap	1
13	378149	Connector	2
14	1363885	Terminal (Pin)	11
15	1330439	Plug	1
16	206026	E-Ring	2
17	148607	E-Ring	1
18	1363886	Terminal (Socket)	2
19	2003745	Blade (Female)	2
20	236900	Terminal	3
21	1388214	Cable	AR
22	381919	Braiding	AR

©2011 HYSTER COMPANY

WIRE HARNESS (FIGURE 4-71)

TRANSMISSION CONTROL — TIER II ENGINE (S/N E008E01911Z ↔ S/N E008E02064C)

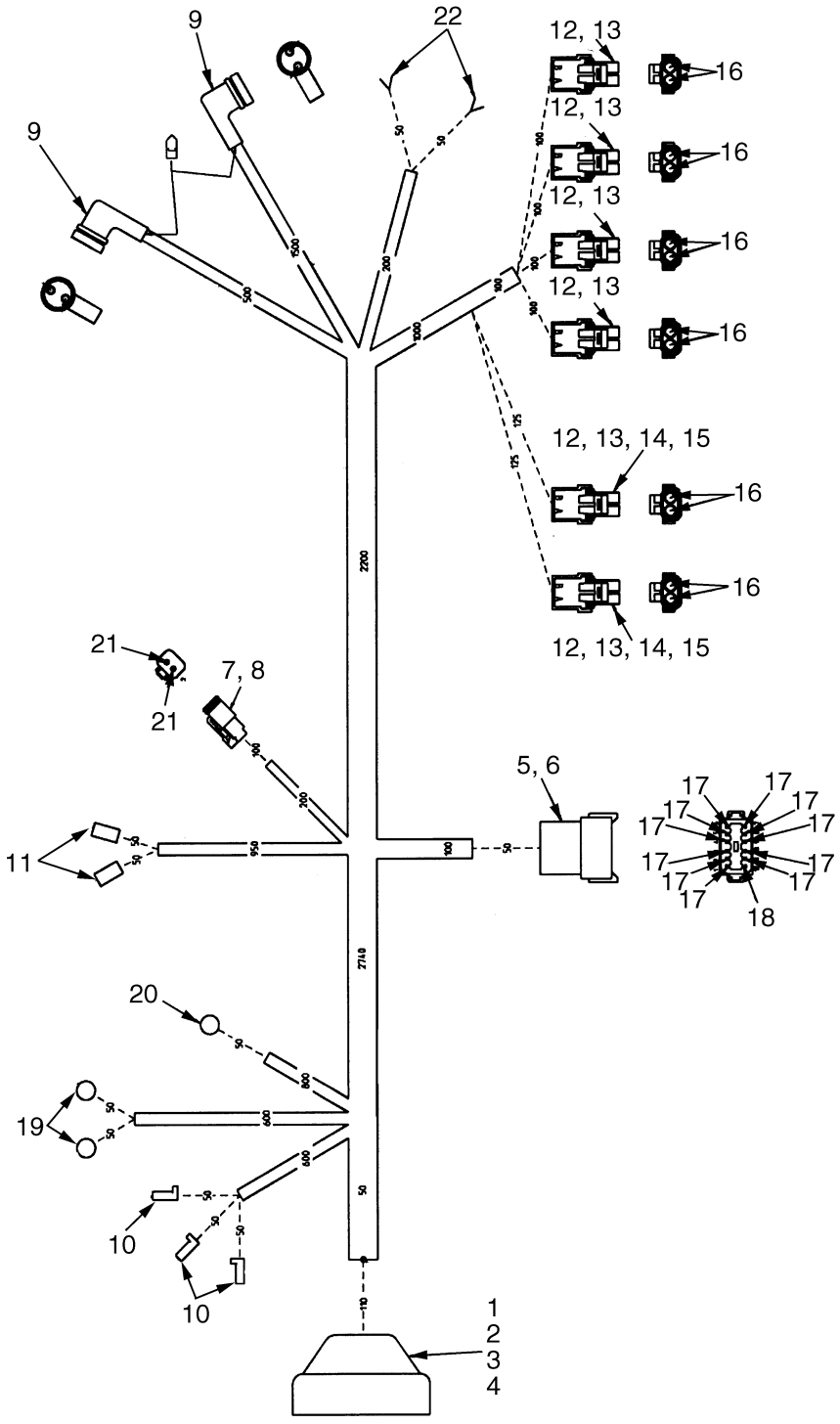

©2011 HYSTER COMPANY

WIRE HARNESS

TRANSMISSION CONTROL – TIER II ENGINE (S/N E008E01911Z ↔ S/N E008E02064C)

ITEM	PART NO.	DESCRIPTION	QTY
	1515918	Wire Harness (Transmission Control)	1
1	1379452	Socket	37
2	1390718	Connector	1
3	. . . . .	Connector Body	1
4	816410	Washer	2
5	1352602	Connector	1
6	1352603	Connector	1
7	1330419	Connector	1
8	1330424	Connector (Secondary Lock)	1
9	1388219	Connector	2
10	181046	Connector Body	3
11	248196	Terminal	2
12	1465468	Connector	6
13	1323579	Seal	12
14	1465469	Connector	2
15	1327164	Seal	4
16	1323583	Terminal	12
17	1363885	Terminal (Pin)	11
18	1330439	Plug	1
19	206026	E-Ring	2
20	148607	E-Ring	1
21	1363886	Terminal (Socket)	2
22	2003745	Blade (Female)	2

©2011 HYSTER COMPANY

WIRE HARNESS (FIGURE 4-72)
TRANSMISSION CONTROL (S/N E008E02065C →)

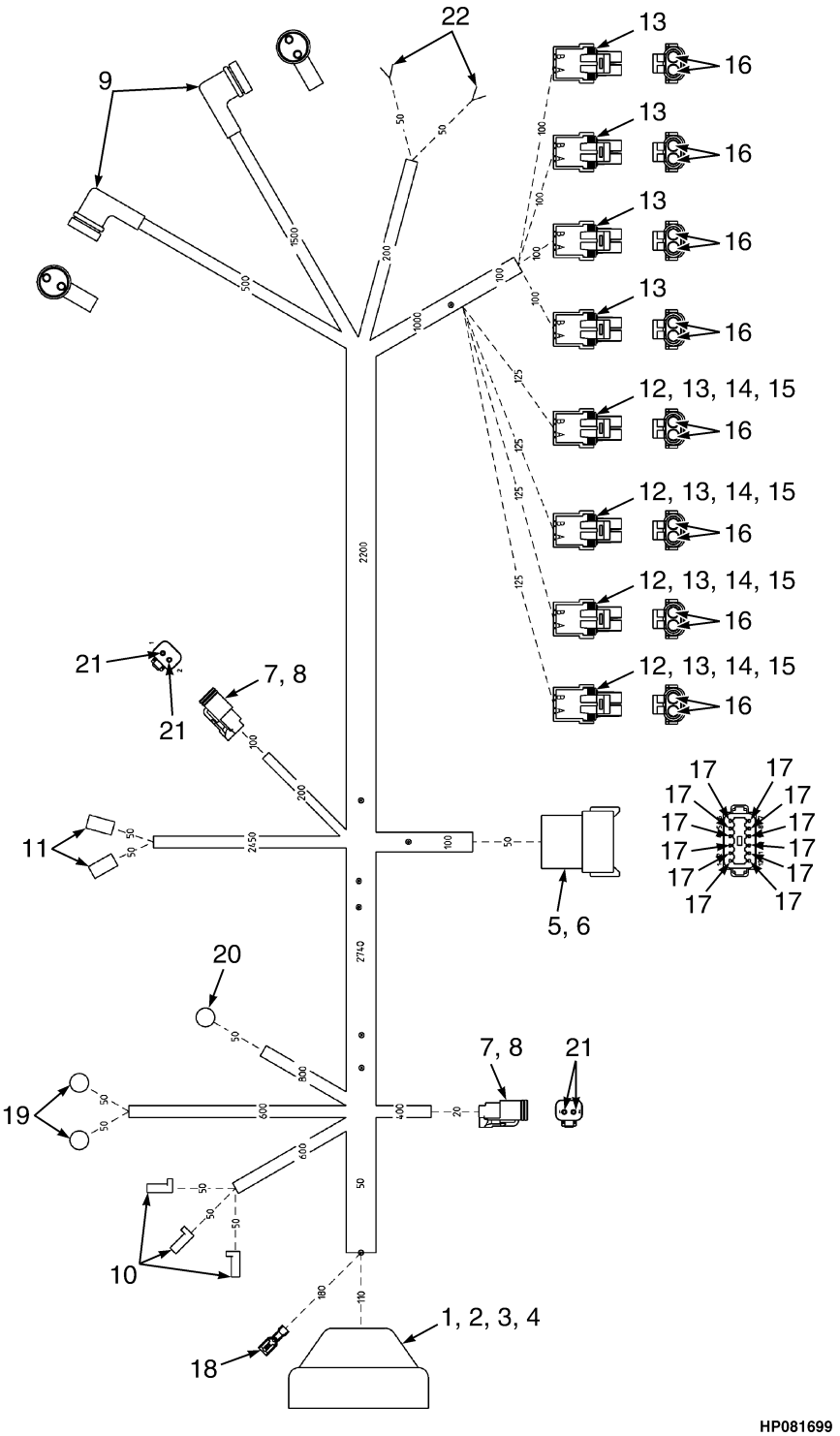

©2011 HYSTER COMPANY

WIRE HARNESS

TRANSMISSION CONTROL (S/N E008E02065C →)

ITEM	PART NO.	DESCRIPTION	QTY
	1606249	Wire Harness (Transmission Control)	1
1	1379452	Socket	37
2	1390718	Connector	1
3	. . . . .	Connector Body	1
4	816410	Washer	2
5	1352602	Connector	1
6	1352603	Connector	1
7	1330419	Connector	2
8	1330424	Connector (Secondary Lock)	2
9	1388219	Connector	2
10	181046	Connector Body	3
11	248196	Terminal	2
12	1465468	Connector	6
13	1323579	Seal	16
14	1465469	Connector	4
15	1327164	Seal	8
16	1323583	Terminal	16
17	1363885	Terminal (Pin)	12
18	1306270	Terminal	1
19	206026	E-Ring	2
20	148607	E-Ring	1
21	1363886	Terminal (Socket)	2
22	2003745	Blade (Female)	2

©2011 HYSTER COMPANY

WIRE HARNESS (FIGURE 4-73)
LIGHTING SWITCH

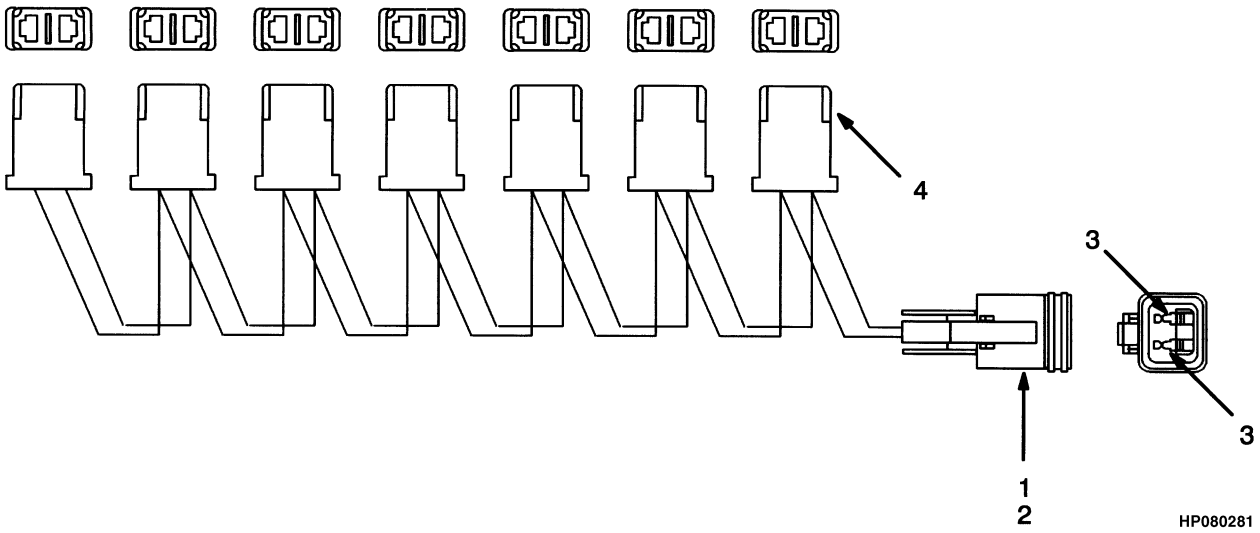

ITEM	PART NO.	DESCRIPTION	QTY
	1336790	Wire Harness	1
1	1330419	Connector	1
2	1330424	Connector (Secondary Lock)	1
3	1330438	Terminal (Socket)	2
4	1301155	Socket	7

©2011 HYSTER COMPANY

WIRE HARNESS (FIGURE 4-74)
PRESSURE SWITCH — LIGHTS

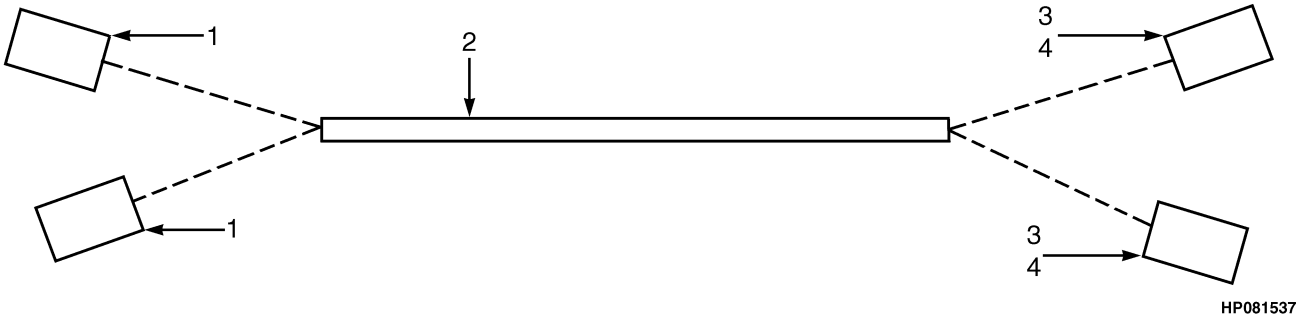

ITEM	PART NO.	DESCRIPTION	QTY
	1316538	Wire Harness (Switch)	1
1	325789	Terminal	2
2	381919	Braiding	AR
3	134810	Terminal	2
4	181045	Connector Body	2

WIRE HARNESS (FIGURE 4-75)
LOCKING AND LIFT CONTROL (S/N E008E01811X ↔ 10/2001)

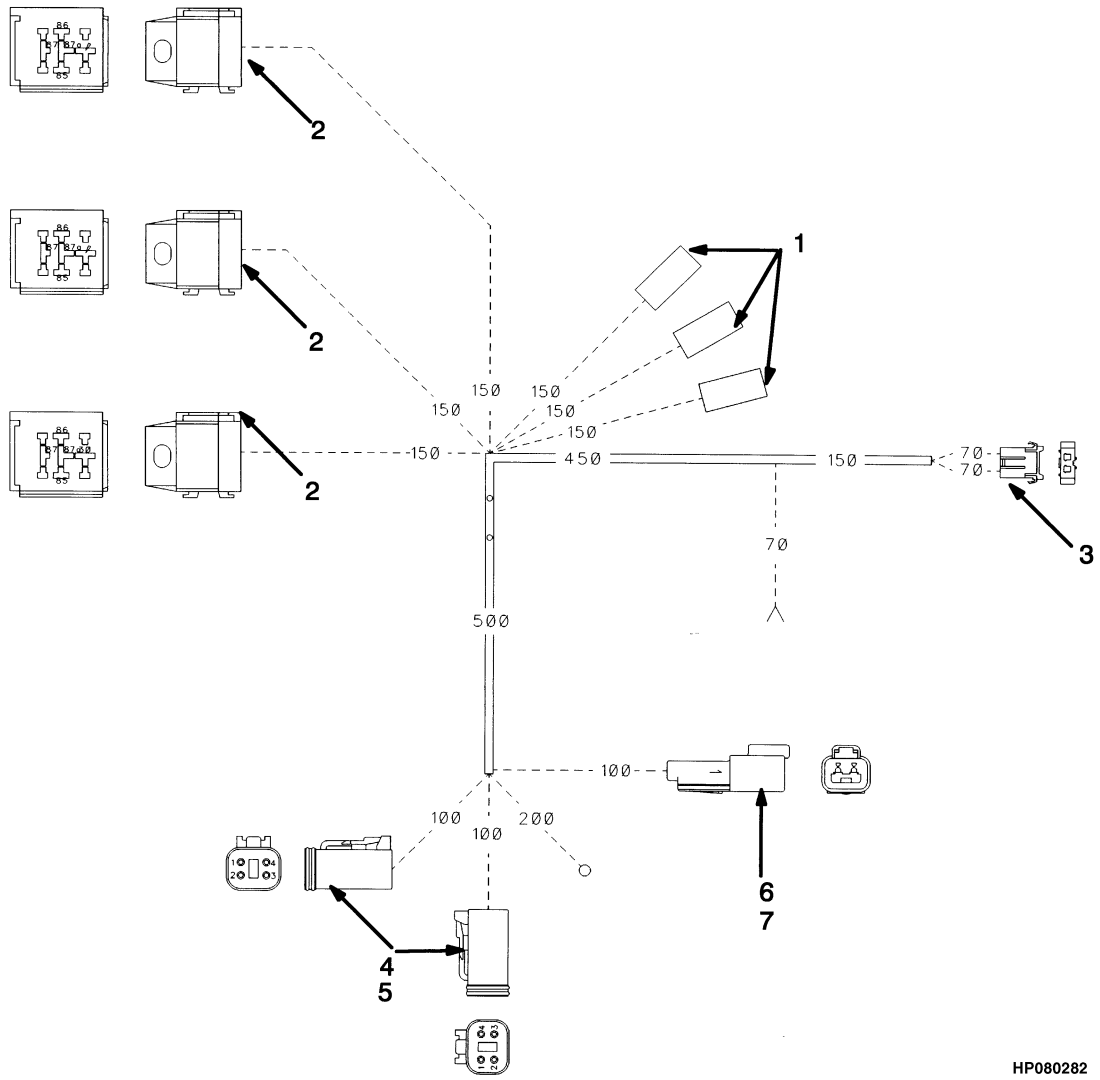

©2011 HYSTER COMPANY

WIRE HARNESS

LOCKING AND LIFT CONTROL (S/N E008E01811X ↔ 10/2001)

ITEM	PART NO.	DESCRIPTION	QTY
	1461008	Wire Harness	1
1	181046	Connector Body	3
2	1347224	Socket (Relay)	3
3	381846	Fuse Holder	1
4	1330421	Connector	2
5	1330427	Connector	2
6	1330409	Connector	1
7	1330414	Connector (Secondary Lock)	1

©2011 HYSTER COMPANY

WIRE HARNESS (FIGURE 4-76)
LOCKING AND LIFT CONTROL (10/2003 →)

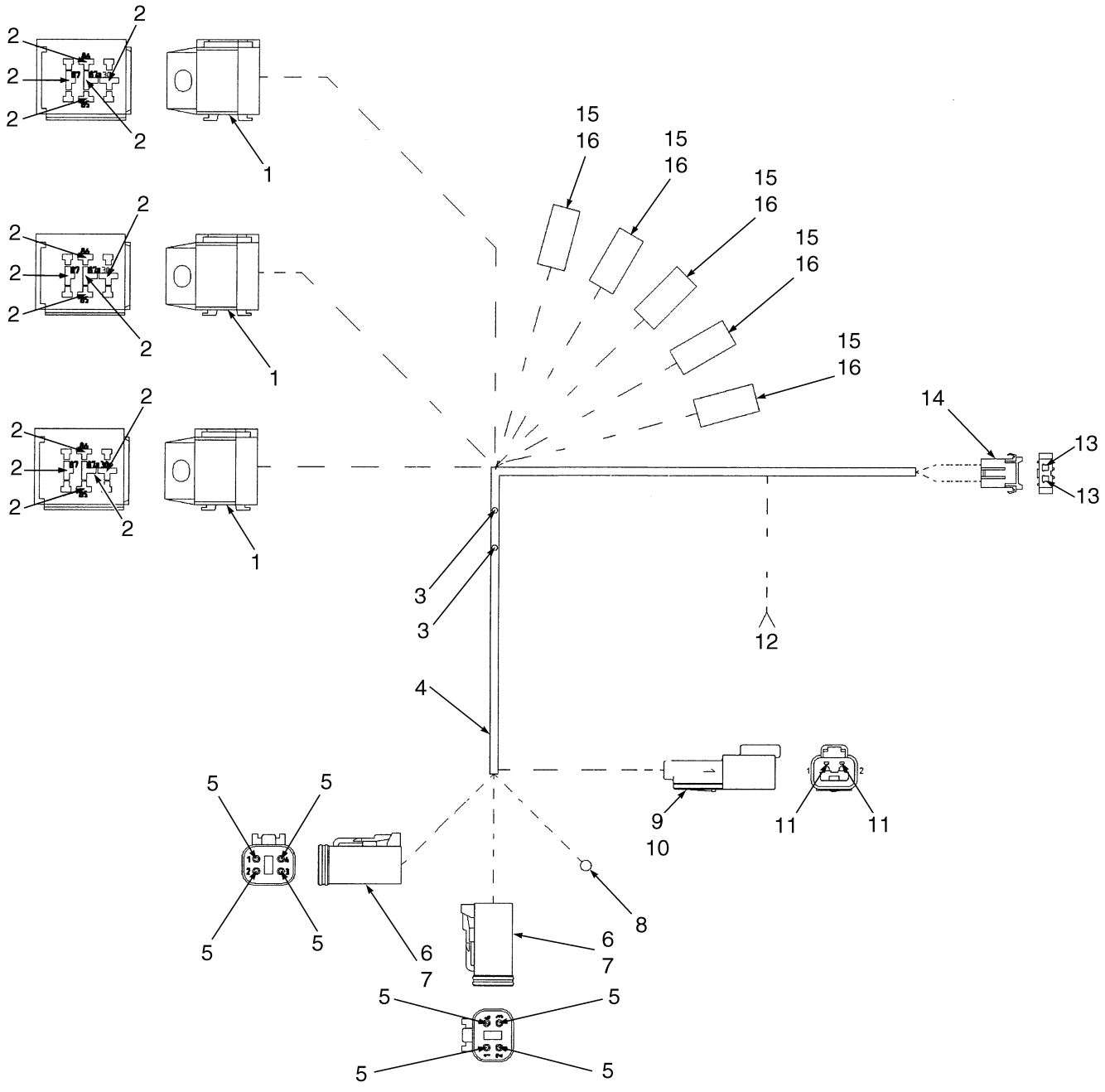

©2011 HYSTER COMPANY

WIRE HARNESS

LOCKING AND LIFT CONTROL (10/2003 →)

ITEM	PART NO.	DESCRIPTION	QTY
	a 1517914	Wire Harness (Locking And Lift Control)	1
	b 1686801	Wire Harness (Locking And Lift Control)	1
1	1347224	Socket	3
2	1331233	Terminal	14
3	1345029	Splice	2
4	381919	Braiding	AR
5	1363886	Terminal (Socket)	8
6	1330421	Connector	2
7	1330427	Connector	2
8	148607	E-Ring	1
9	1330409	Connector	1
10	1330414	Connector (Secondary Lock)	1
11	1363885	Terminal (Pin)	2
12	148648	Terminal	1
13	381847	Terminal	2
14	381846	Fuse Holder	1
15	134812	Terminal	5
16	181046	Connector Body	5

FOOTNOTES:

a → S/N E008E02285F

b S/N E008E02286F →

©2011 HYSTER COMPANY

WIRE HARNESS (FIGURE 4-77)
AUTOSHIFT CONTROLLER (→ S/N E008E01865Y)

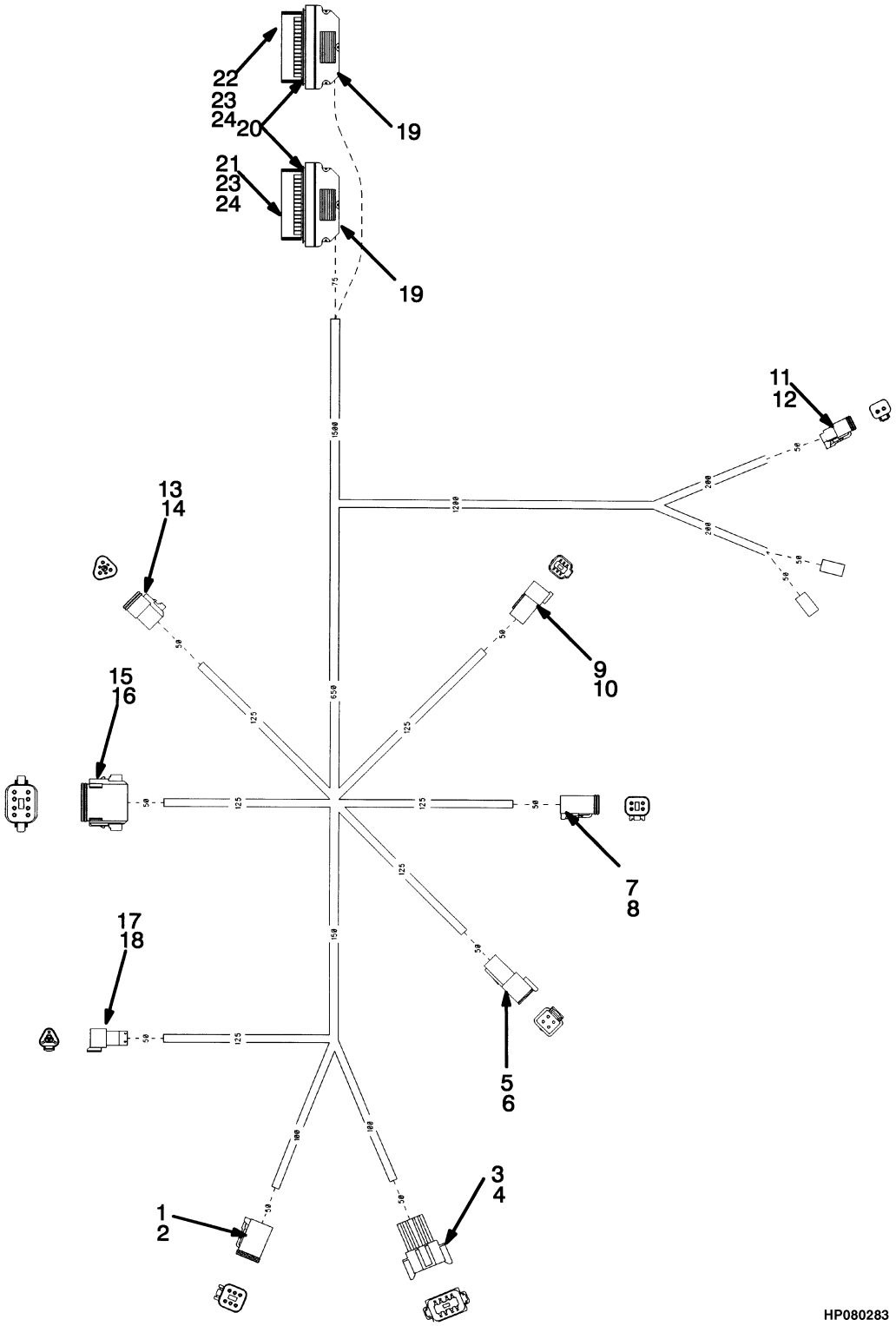

©2011 HYSTER COMPANY

WIRE HARNESS

AUTOSHIFT CONTROLLER (→ S/N E008E01865Y)

ITEM	PART NO.	DESCRIPTION	QTY
	1472703	Wire Harness	1
1	1330422	Connector	1
2	1330428	Connector	1
3	1330413	Connector	1
4	1330418	Connector	1
5	1330411	Connector	1
6	1330416	Connector	1
7	1330421	Connector	1
8	1330427	Connector	1
9	1330412	Connector	1
10	1330417	Connector	1
11	1330419	Connector	1
12	1330424	Connector (Secondary Lock)	1
13	1330420	Connector	1
14	1330426	Connector	1
15	1330423	Connector	1
16	1330429	Connector	1
17	1330410	Connector	1
18	1330415	Connector	1
19	1471960	Strain Relief	2
20	1471957	Seal	2
21	1471959	Retainer	1
22	1471956	Retainer	1
23	1471958	Connector	2
24	1474822	Socket	38

©2011 HYSTER COMPANY

WIRE HARNESS (FIGURE 4-78)
AUTOSHIFT ADAPTER (S/N E008E01866Y →)

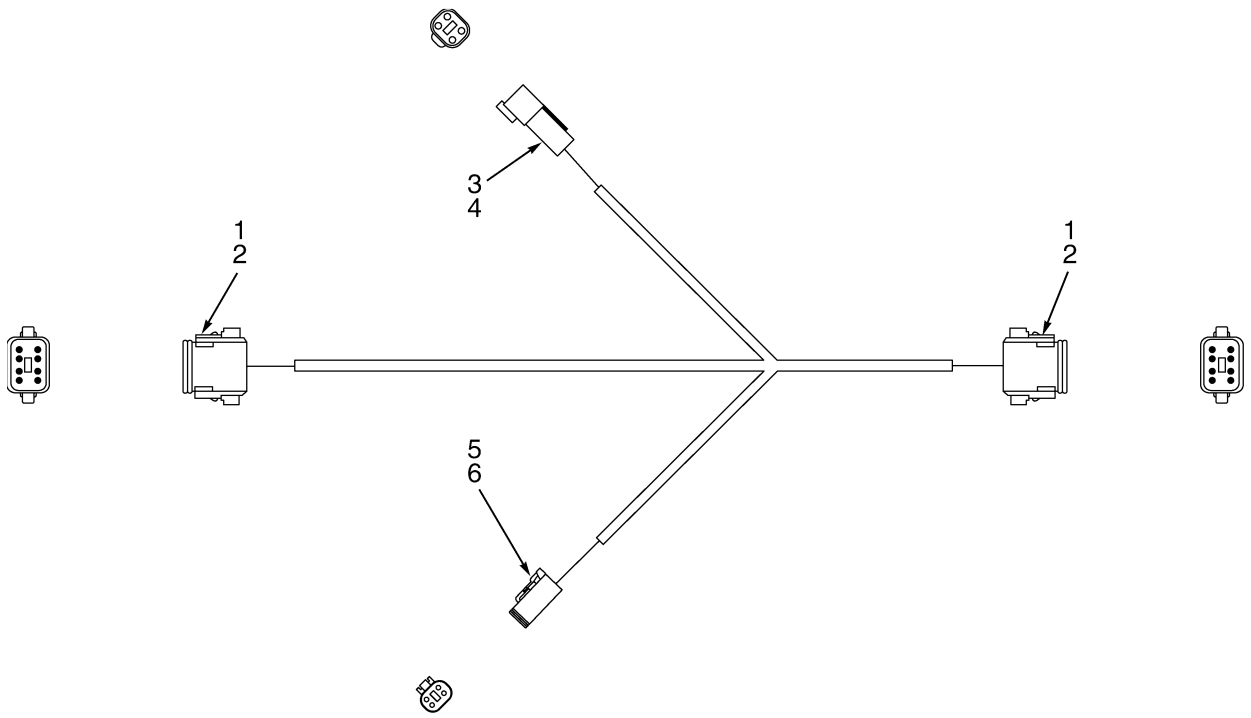

HP081290

©2011 HYSTER COMPANY

ITEM	PART NO.	DESCRIPTION	QTY
	1508253	Wire Harness	1
1	1330423	Connector	2
2	1330429	Connector	2
3	1330411	Connector	1
4	1330416	Connector	1
5	1330421	Connector	1
6	1330427	Connector	1

©2011 HYSTER COMPANY

WIRE HARNESS (FIGURE 4-79)
AUTOSHIFT FUSE PANEL — TIER I ENGINE (→ S/N E008E01910Z)

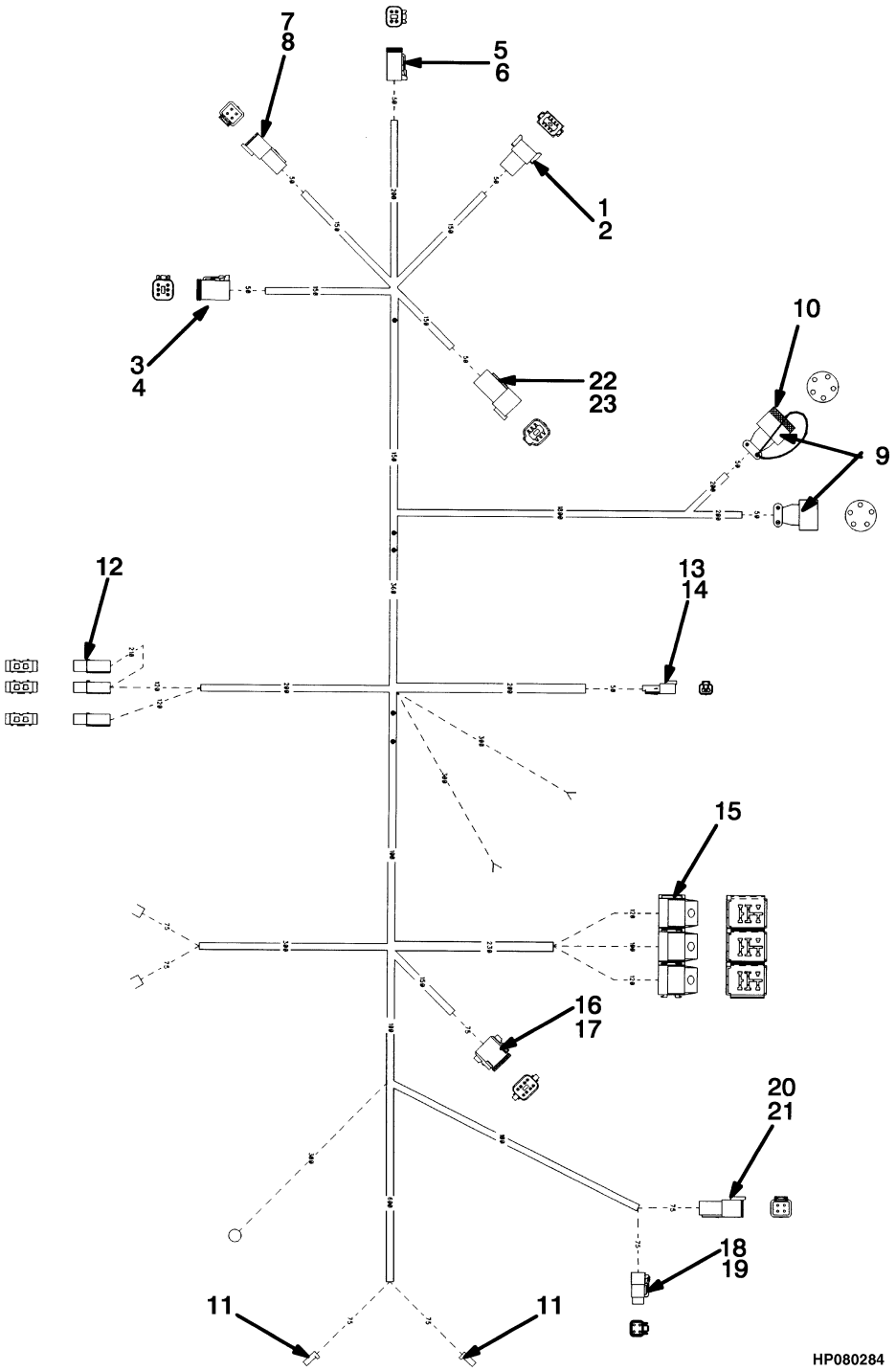

©2011 HYSTER COMPANY

WIRE HARNESS

AUTOSHIFT FUSE PANEL – TIER I ENGINE (→ S/N E008E01910Z)

ITEM	PART NO.	DESCRIPTION	QTY
	1472704	Wire Harness (Autoshift Fuse Panel)	1
1	1330413	Connector	1
2	1330418	Connector	1
3	1330422	Connector	1
4	1330428	Connector	1
5	1330421	Connector	1
6	1330427	Connector	1
7	1330411	Connector	1
8	1330416	Connector	1
9	378149	Connector	2
10	1385183	Cap	1
11	181046	Connector Body	2
12	381846	Fuse Holder	3
13	1330409	Connector	1
14	1330414	Connector (Secondary Lock)	1
15	1347224	Socket (Relay)	3
16	1330423	Connector	1
17	1330429	Connector	1
18	1463189	Connector	1
19	1463196	Connector	1
20	1463184	Connector	1
21	1463193	Connector	1
22	1330412	Connector	1
23	1330417	Connector	1

©2011 HYSTER COMPANY

WIRE HARNESS (FIGURE 4-80)

AUTOSHIFT FUSE PANEL — TIER I ENGINE (S/N E008E01911Z ↔ S/N E008E01984B)

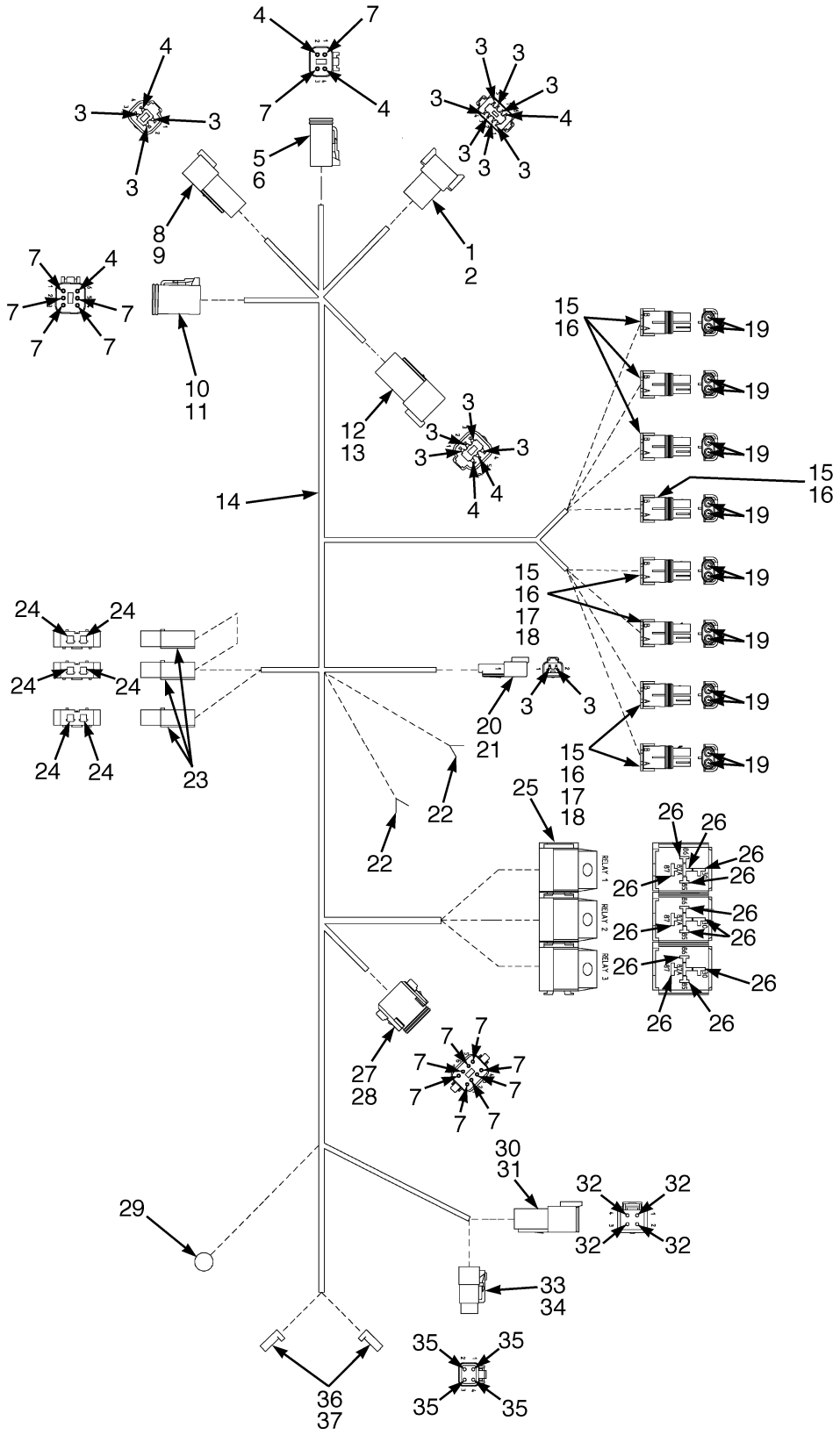

©2011 HYSTER COMPANY

WIRE HARNESS

AUTOSHIFT FUSE PANEL – TIER I ENGINE (S/N E008E01911Z ↔ S/N E008E01984B)

ITEM	PART NO.	DESCRIPTION	QTY
	1514439	Wire Harness (Autoshift Fuse Panel)	1
1	1330413	Connector	1
2	1330418	Connector	1
3	1330437	Terminal (Pin)	16
4	1330439	Plug	7
5	1330421	Connector	1
6	1330427	Connector	1
7	1330438	Terminal (Socket)	15
8	1330411	Connector	1
9	1330416	Connector	1
10	1330422	Connector	1
11	1330428	Connector	1
12	1330412	Connector	1
13	1330417	Connector	1
14	381919	Braiding	AR
15	1465468	Connector	8
16	1323579	Seal	16
17	1465469	Connector	4
18	1327164	Seal	8
19	1323583	Terminal	16
20	1330409	Connector	1
21	1330414	Connector (Secondary Lock)	1
22	325791	Terminal	2
23	381846	Fuse Holder	3
24	381847	Terminal	6
25	1347224	Socket	3
26	1331233	Terminal	13
27	1330423	Connector	1
28	1330429	Connector	1
29	148607	E-Ring	1
30	1463184	Connector	1
31	1463193	Connector	1
32	1463136	Terminal	4
33	1463189	Connector	1
34	1463196	Connector	1
35	1463137	Terminal	4
36	181046	Connector Body	2
37	134812	Terminal	2

©2011 HYSTER COMPANY

WIRE HARNESS (FIGURE 4-81)

AUTOSHIFT FUSE PANEL — TIER II ENGINE (S/N E008E01866Y →)

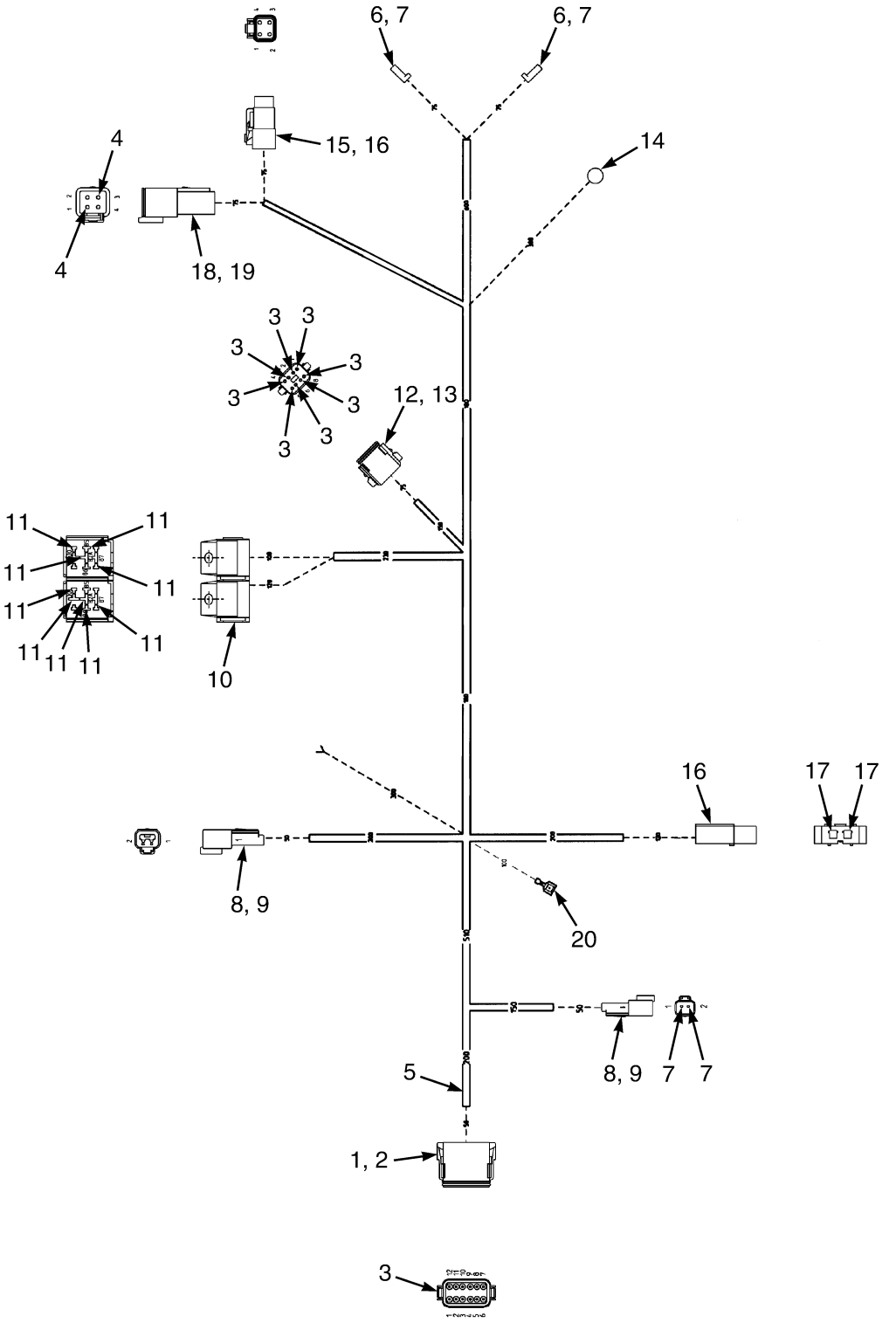

©2011 HYSTER COMPANY

WIRE HARNESS

AUTOSHIFT FUSE PANEL – TIER II ENGINE (S/N E008E01866Y →)

ITEM	PART NO.	DESCRIPTION	QTY
	1515917	Wire Harness (Autoshift Fuse Panel)	1
1	1351068	Connector	1
2	1351069	Connector	1
3	1363886	Terminal (Socket)	20
4	1330439	Plug	2
5	381919	Braiding	AR
6	181046	Connector Body	2
7	134812	Terminal	2
8	1330409	Connector	2
9	1330414	Connector (Secondary Lock)	2
10	1347224	Socket	2
11	1517064	Terminal	9
12	1330423	Connector	1
13	1330429	Connector	1
14	148607	E-Ring	1
15	1463189	Connector	1
16	1463196	Connector	1
17	1463137	Terminal	4
18	1463184	Connector	1
19	1463193	Connector	1
20	1306271	Terminal	1

©2011 HYSTER COMPANY

ALTERNATOR (FIGURE 4-82)

(→ S/N E008D01608)

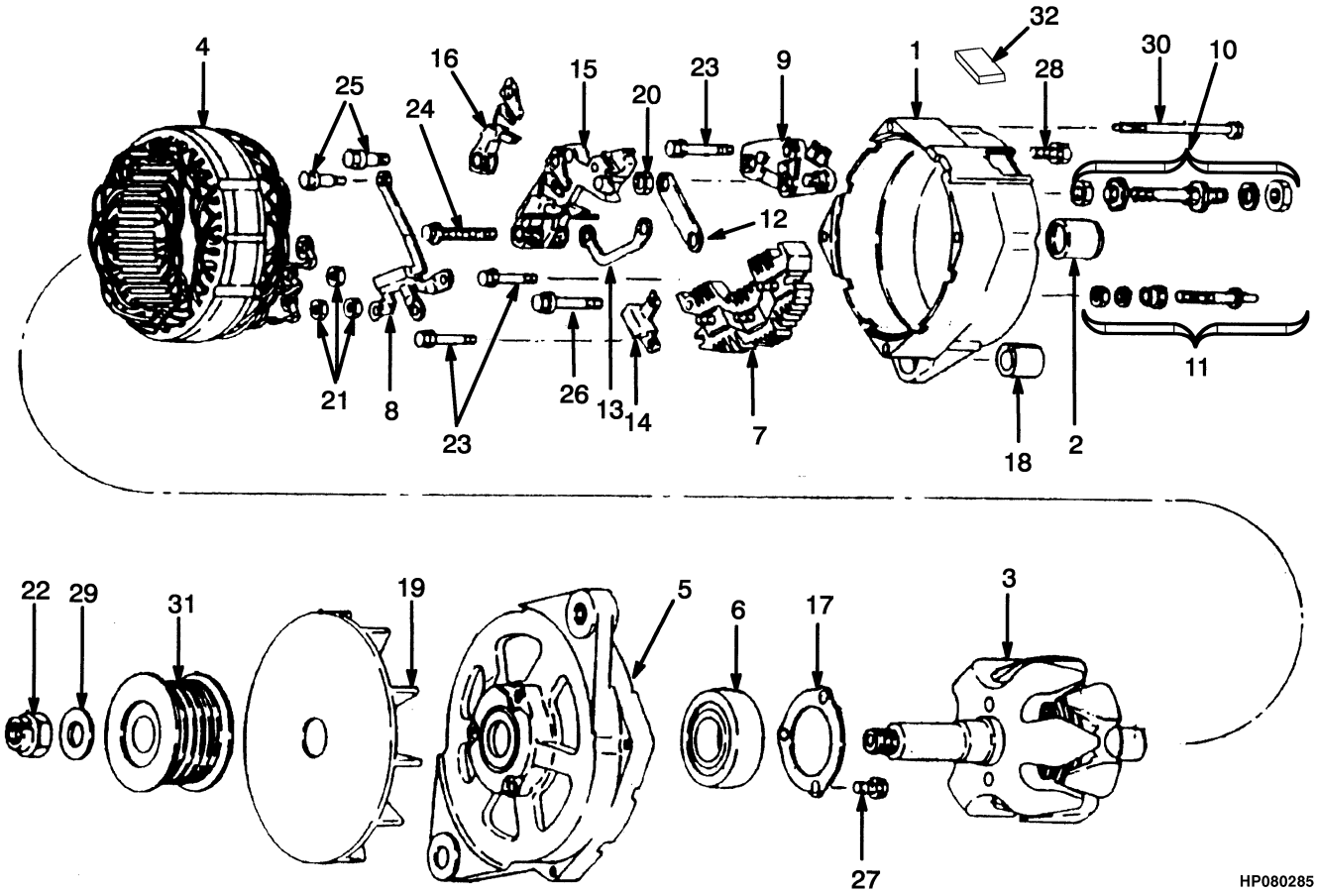

©2011 HYSTER COMPANY

ALTERNATOR
(→ S/N E008D01608)

ITEM	PART NO.	DESCRIPTION	QTY
	1336968	Alternator	1
1	1344255	Frame	1
2	1344256	Bearing	1
3	1344257	Rotor	1
4	1344258	Stator	1
5	1344259	Frame (DE)	1
6	~~1344260~~		
	1495973	Ball Bearing	1
7	1344261	Rectifier	1
8	1344262	Diode	1
9	1344263	Regulator	1
10	1344264	Terminal (Output)	1
11	1344265	Terminal (Relay)	1
12	1344266	Connector	1
13	1344267	Connector	1
14	1344268	Capacitor	1
15	1344269	Brush Holder	1
16	1344270	Brush	2
17	1344271	Retainer	1
18	198733	Bushing	1
19	1344273	Fan	1
20	274847	Nut (Regulator)	1
21	1344274	Nut	3
22	1344700	Nut	1
23	1344701	Screw	3
24	1344721	Screw (Brush Holder)	1
25	268356	Screw (Regulator)	2
26	1344702	Screw	1
27	1344703	Screw	3
28	1344705	Screw	1
29	133699	Washer	1
30	1344704	Bolt	4
31	. . . . .	Pulley	1
32	1390751	Cover (Terminal)	1

©2011 HYSTER COMPANY

ALTERNATOR (FIGURE 4-83)

(S/N E008D01609 ↔ S/N E008E01885Z)

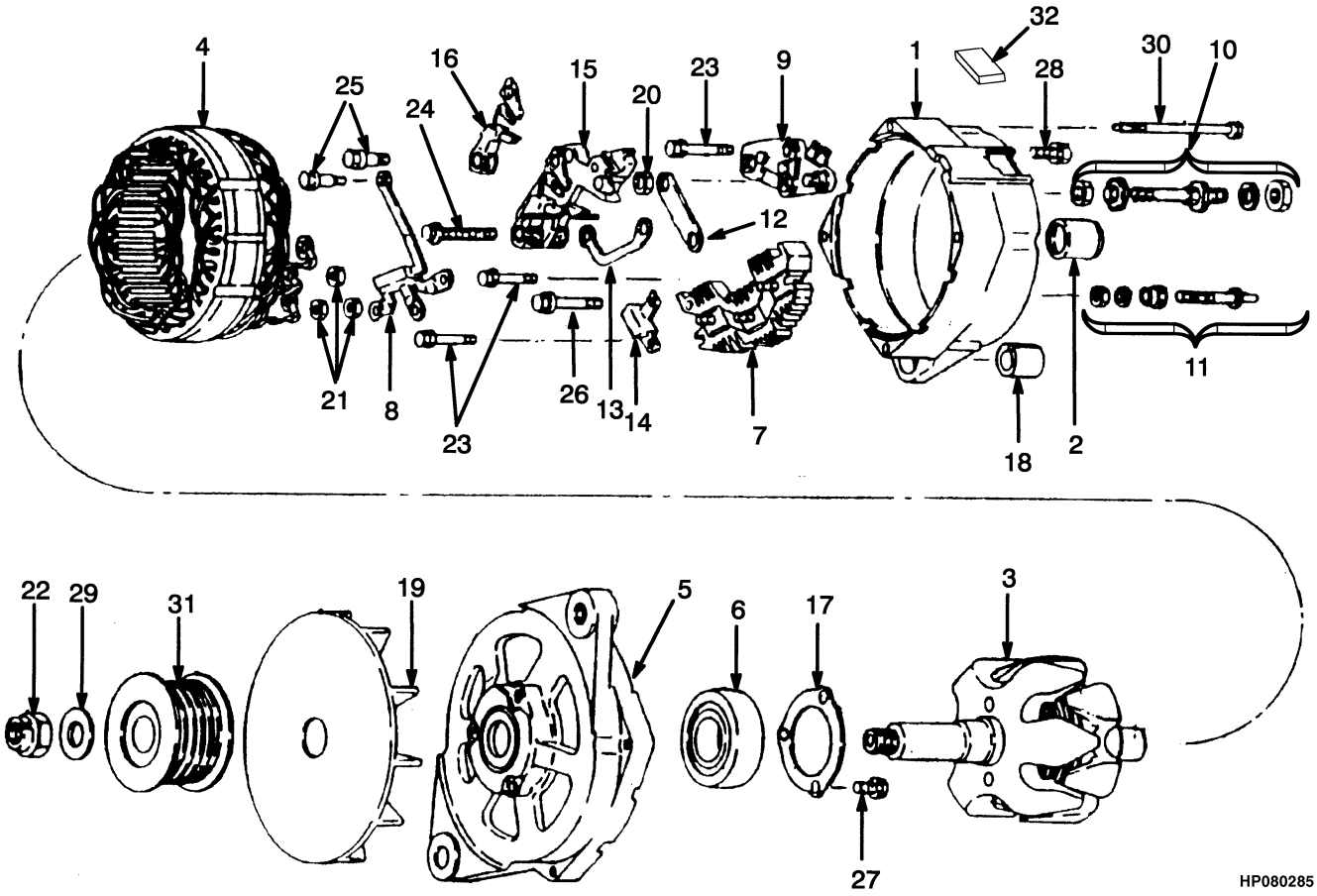

©2011 HYSTER COMPANY

ALTERNATOR

(S/N E008D01609 ↔ S/N E008E01885Z)

ITEM	PART NO.	DESCRIPTION	QTY
	1367338	Alternator	1
1	1390754	Frame	1
2	354390	Bearing	1
3	1390755	Rotor	1
4	1344258	Stator	1
5	1344259	Frame (DE)	1
6	~~1344260~~		
	1495973	Ball Bearing	1
7	1390756	Rectifier	1
8	1344262	Diode	1
9	1344263	Regulator	1
10	1344264	Terminal (Output)	1
11	1344265	Terminal (Relay)	2
12	1344266	Connector	1
13	1344267	Connector	1
14	1344268	Capacitor	1
15	1344269	Brush Holder	1
16	1344270	Brush	2
17	1344271	Retainer	1
18	198733	Bushing	1
19	1390750	Fan	1
20	274847	Nut (Regulator)	1
21	1344274	Nut	3
22	1344700	Nut	1
23	1344701	Screw	3
24	1344721	Screw (Brush Holder)	1
25	268356	Screw (Regulator)	2
26	1344702	Screw	1
27	1344703	Screw	3
28	1390752	Screw	1
29	133699	Washer	1
30	1344704	Bolt	4
31	. . . . .	Pulley	1
32	1390751	Cover (Terminal)	1

©2011 HYSTER COMPANY

ALTERNATOR (FIGURE 4-84)

(S/N E008E01886Z ↔ S/N E008E02066C)

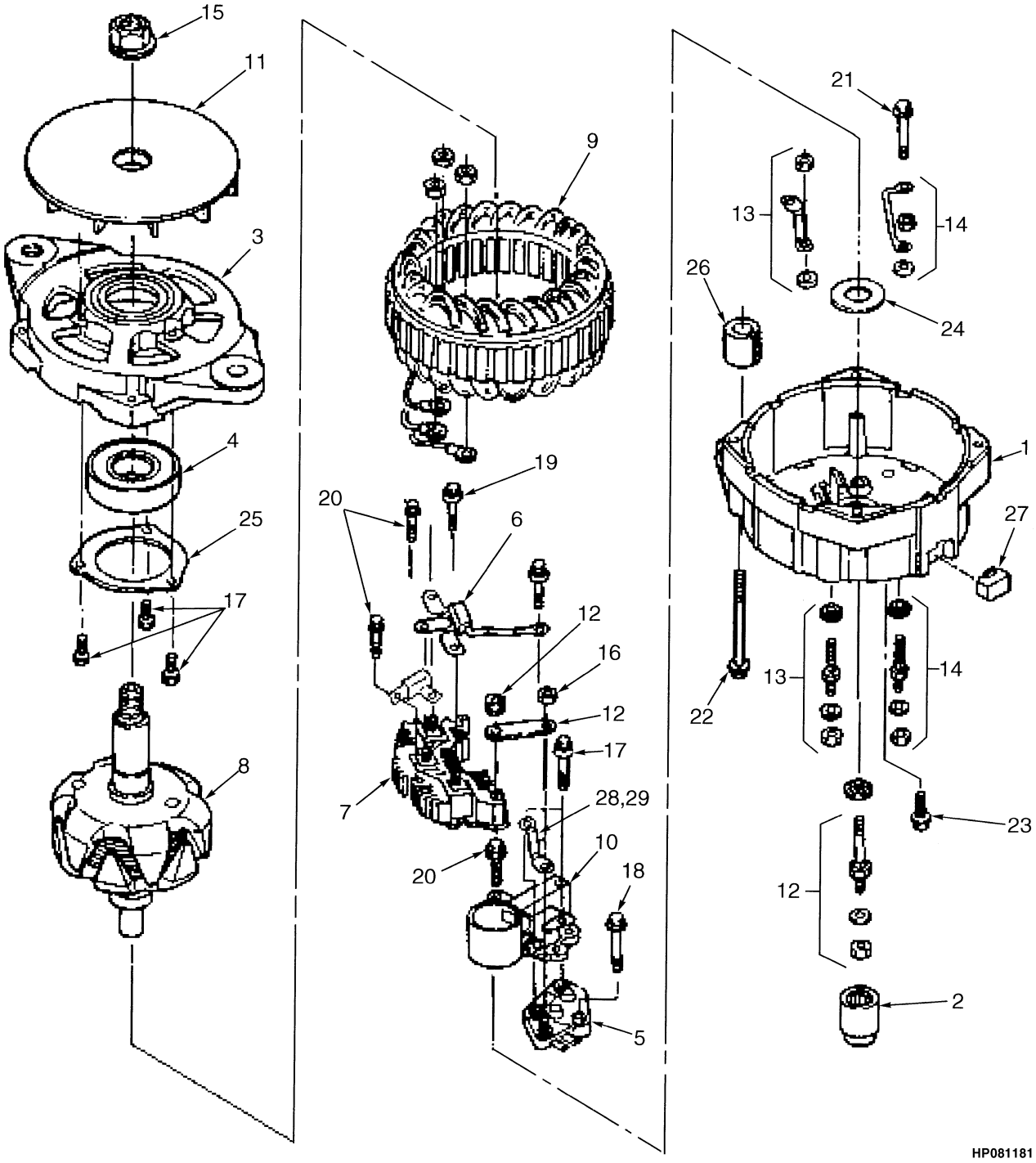

©2011 HYSTER COMPANY

ALTERNATOR

(S/N E008E01886Z ↔ S/N E008E02066C)

ITEM	PART NO.	DESCRIPTION	QTY
	1480320	Alternator	1
1	1495970	Housing	1
2	1495971	Bearing (SRE)	1
3	1495972	Frame (DE)	1
4	~~1344260~~		
	1495973	Ball Bearing	1
5	1495974	Regulator	1
6	1495975	Diode	1
7	1496236	Rectifier	1
8	1496236	Rectifier	1
9	1496238	Stator	1
10	1496239	Brush Holder	1
11	1496240	Fan	1
12	1496241	Kit-Terminal	1
12	1498893	Nut	1
12	1498894	Insulator	1
12	1498895	Nut	1
12	1498896	Washer	1
12	1498897	Terminal (Stud)	1
12	1498898	Connector	1
13	1491286	Nut	1
13	1496242	Kit-Relay	1
13	1496255	Connector	1
13	1498900	Nut	1
13	1498901	Washer	1
13	1498902	Bushing	1
13	1498903	Washer	1
13	1498904	Rectifier	1
13	1498905	Insulator	1
13	1498907	Stud	1
14	1491286	Nut	1
14	1496243	Indicator Light	1
14	1498903	Washer	1
14	1498905	Insulator	1
14	1498911	Lockwasher	..
14	1498912	Terminal (Stud)	1
14	1498913	Nut	1
15	1496244	Nut	1
16	1491286	Nut	1
17	1496245	Screw (Retainer)	3
18	1496246	Screw	3
19	1496247	Screw	1
20	1491290	Screw	2
21	1496248	Screw	1
22	1496249	Bolt	4
23	1496250	Screw	1
24	1496251	Washer	1
25	1496252	Plate	1
26	1496253	Bushing	1
27	1496254	Boot	1

©2011 HYSTER COMPANY

ALTERNATOR

(S/N E008E01886Z ↔ S/N E008E02066C)

ITEM	PART NO.	DESCRIPTION	QTY
28	1496255	Connector	1
29	1496256	Connector	1

©2011 HYSTER COMPANY

ALTERNATOR (FIGURE 4-85)

(S/N E008E02067C ↔ S/N E008E02099D)

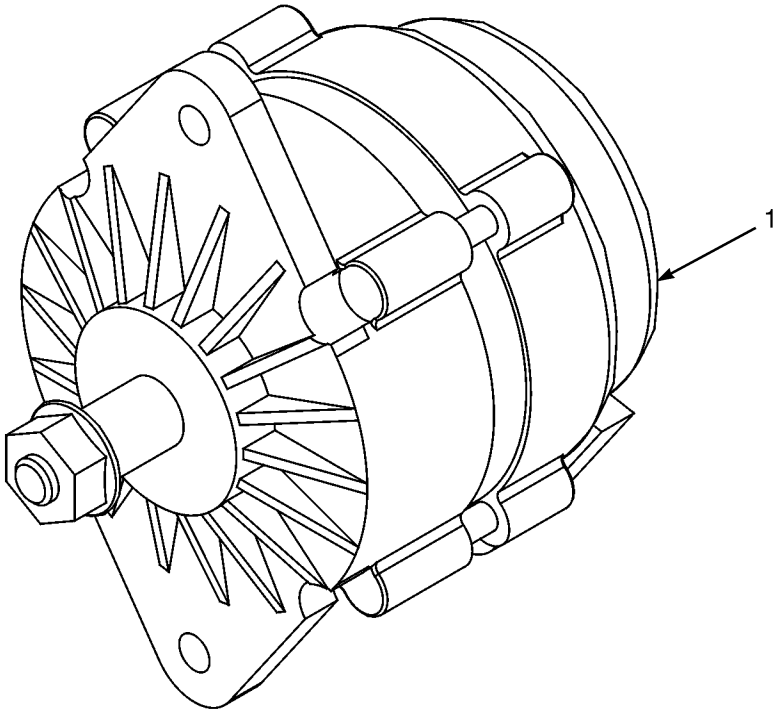

HP081671

ITEM	PART NO.	DESCRIPTION	QTY
	1606762	Engine Assy-Diesel	1
1	1588820	Alternator	1

ALTERNATOR AND MOUNTING (FIGURE 4-86)

TIER III ENGINE (S/N E008E02100D →)

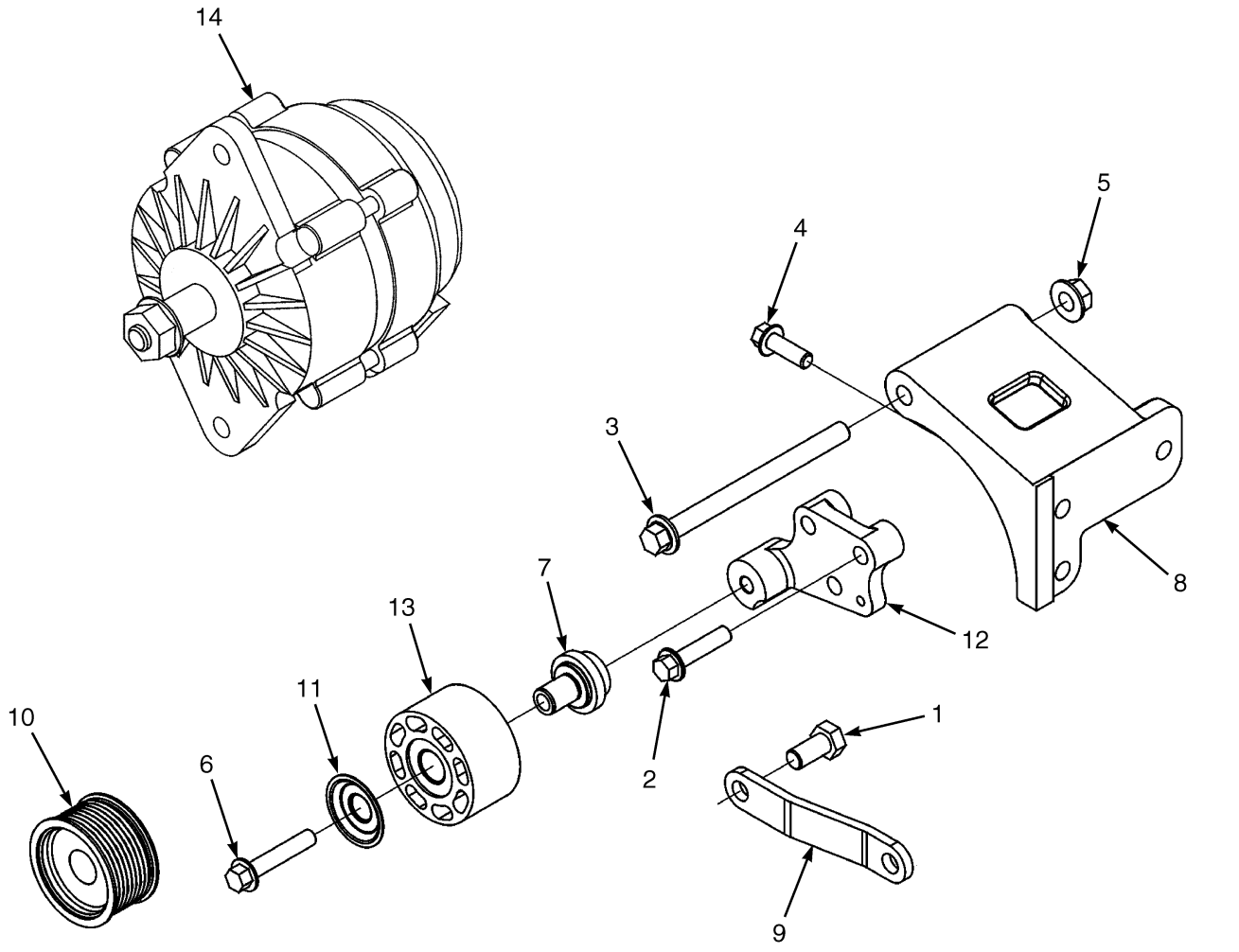

HP091396

©2011 HYSTER COMPANY

ALTERNATOR AND MOUNTING

TIER III ENGINE (S/N E008E02100D →)

ITEM	PART NO.	DESCRIPTION	QTY
	1663666	Engine Assy-Diesel	1
1	1512003	Capscrew	1
2	1644113	Capscrew	3
3	1512006	Capscrew	1
4	1511977	Capscrew	4
5	1511978	Nut	1
6	1644116	Capscrew	1
7	1635262	Drive Shaft	1
8	1516997	Support (Alternator)	1
9	1516998	Brace	1
10	~~1588068~~		
	4012350	Pulley (Alternator)	1
11	1644137	Dust Shield	1
12	1644139	Support (Idler Pulley)	1
13	1635337	Idler Pulley	1
14	**a** 1649349	Alternator	1
14	**b** ~~1693006~~		
	4020872	Alternator	1

FOOTNOTES:

a → 11/2008

b 11/2008 →

©2011 HYSTER COMPANY

ACCESSORY DRIVE BELT AND TENSIONER (FIGURE 4-87)

TIER II ENGINE (→ S/N E008E02099D)

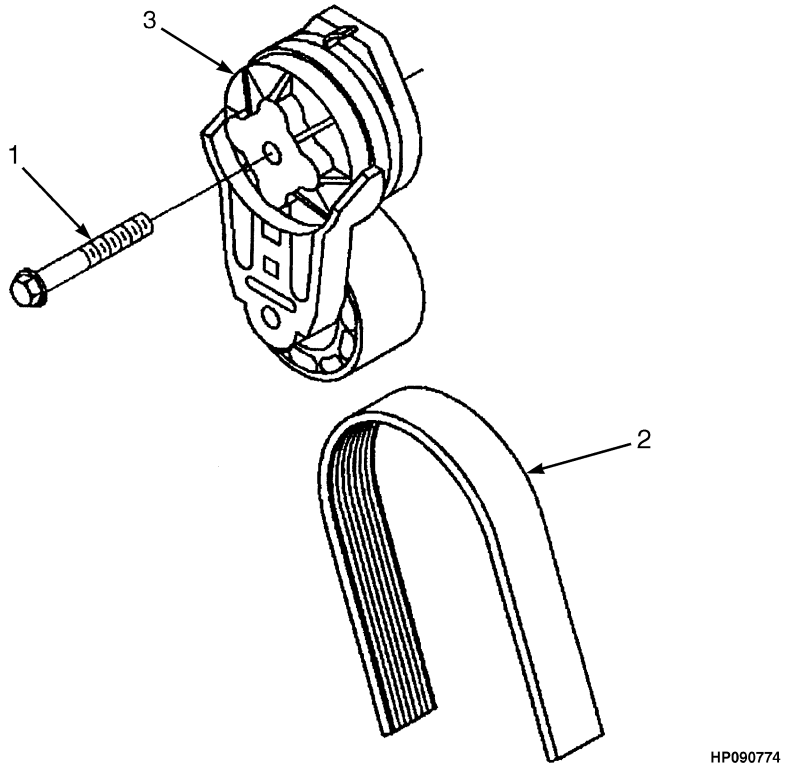

©2011 HYSTER COMPANY

ACCESSORY DRIVE BELT AND TENSIONER

TIER II ENGINE (→ S/N E008E02099D)

KEY:
A: H550F, H620F, H650F, H700F
B: H550FS, H620FS, H700FS

ITEM	PART NO.	DESCRIPTION	QTY A	QTY B
	a 1532628	Engine Assy-Diesel	1	..
	a 1542383	Engine Assy-Diesel	..	1
1	1517293	Screw	1	1
2	1565955	V-Belt	1	..
2	1588053	V-Belt	..	1
3	1517295	Belt Tensioner	1	1

FOOTNOTES:

a S/N E008E01985B →

©2011 HYSTER COMPANY

ALTERNATOR MOUNT (FIGURE 4-88)
TIER II ENGINE

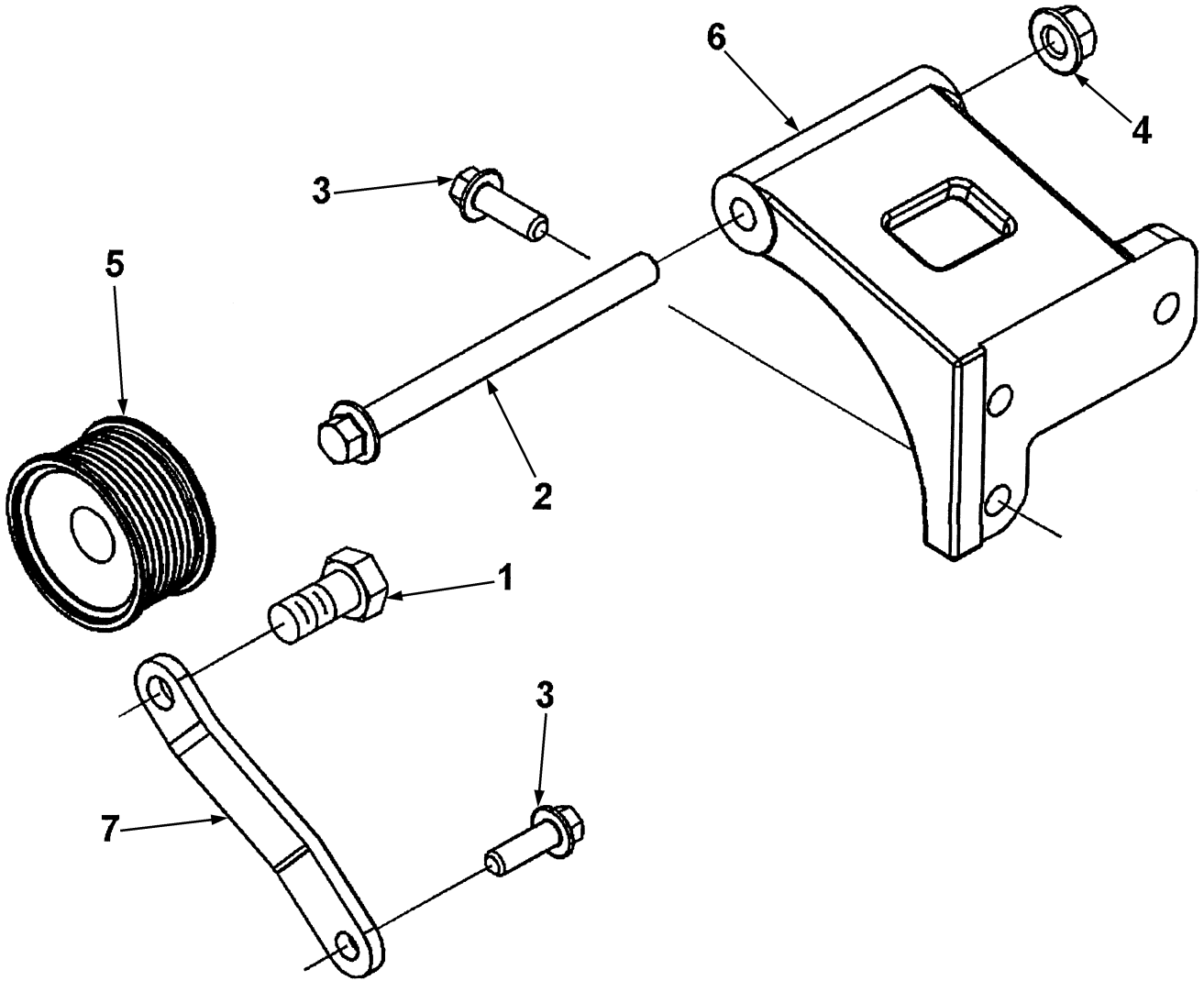

©2011 HYSTER COMPANY

ALTERNATOR MOUNT
TIER II ENGINE

KEY:
A: H550F, H620F, H650F, H700F
B: H550FS, H620FS, H700FS

ITEM	PART NO.	DESCRIPTION	QTY A	QTY B
	a 1532628	Engine Assy-Diesel	1	..
	a 1542383	Engine Assy-Diesel	..	1
1	1512003	Capscrew	1	1
2	1512006	Capscrew	1	1
3	1511977	Capscrew	4	4
4	1511978	Nut	1	1
5	~~1588068~~			
	4012350	Pulley (Alternator)	1	..
5	1513719	Pulley	..	1
6	1516997	Support (Alternator)	1	1
7	1516998	Brace	1	1

FOOTNOTES:

a S/N E008E01985B →

©2011 HYSTER COMPANY

STARTER MOTOR (FIGURE 4-89)
TIER I ENGINE

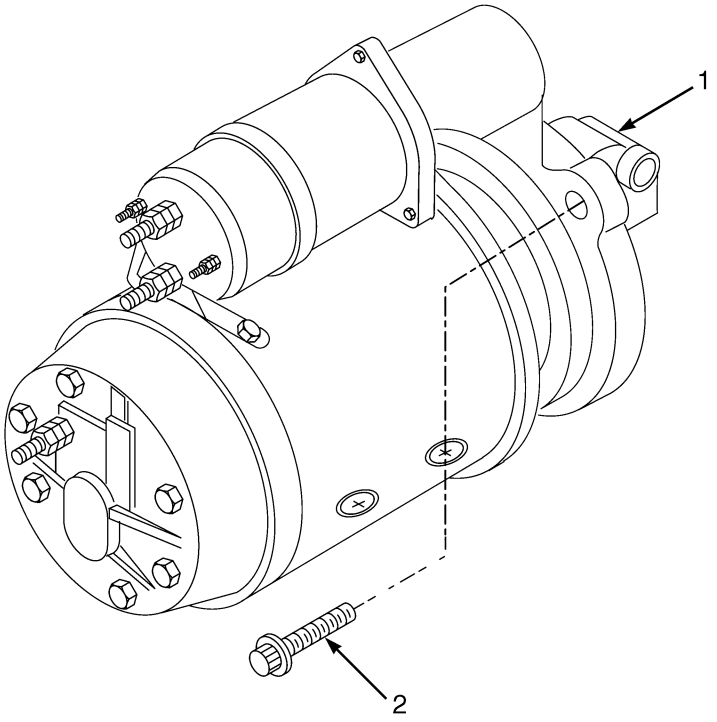

HP090725

©2011 HYSTER COMPANY

STARTER MOTOR
TIER I ENGINE

ITEM	PART NO.	DESCRIPTION	QTY
	1394093	Engine Assy-Diesel (H550F, H620F, H650F, H700F)	1
	1394094	Engine Assy-Diesel (H550FS, H620FS, H700FS)	1
1	1513824	Starter	1
2	~~1514562~~		
	1593856	Capscrew	3

©2011 HYSTER COMPANY

STARTER MOTOR (FIGURE 4-90)
TIER II ENGINE

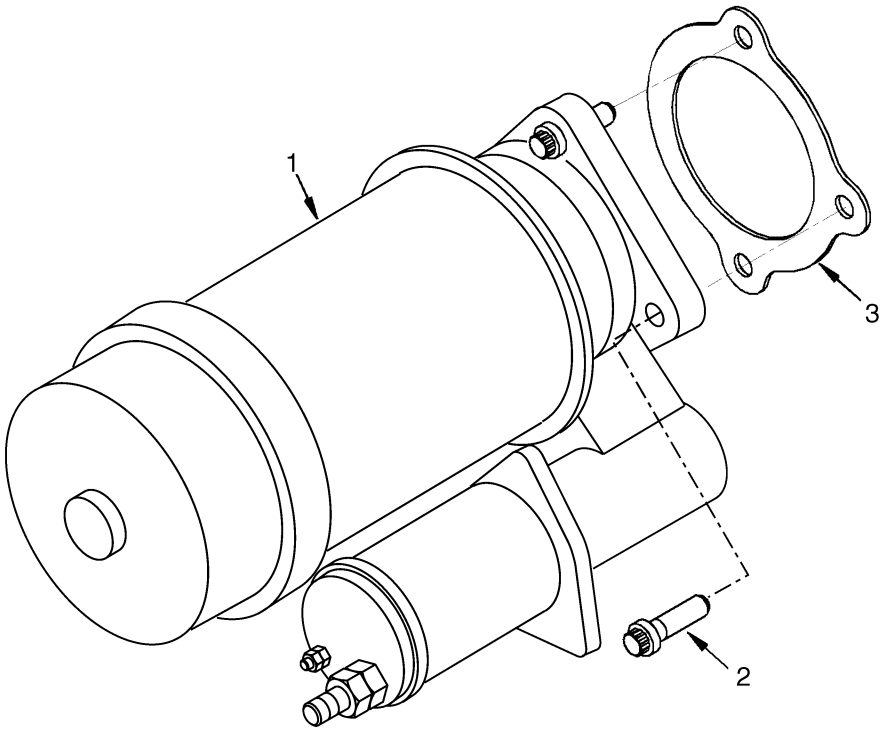

HP091129

KEY:
A: H550F, H620F, H650F, H700F
B: H550FS, H620FS, H700FS

ITEM	PART NO.	DESCRIPTION	QTY A	QTY B
	a 1532628	Engine Assy-Diesel (H550F, H620F, H650F, H700F)	1	..
	a 1542383	Engine Assy-Diesel (H550FS, H620FS, H700FS)	..	1
1	1513824	Starter	1	1
2	~~1514562~~			
	1593856	Capscrew	3	..
2	~~1514562~~			
	1593856	Capscrew	..	3
3	1593855	Spacer	1	..

FOOTNOTES:

a S/N E008E01985B →

©2011 HYSTER COMPANY

NOTES

©2011 HYSTER COMPANY

STARTER MOTOR (FIGURE 4-91)
TIER III ENGINE (S/N E008E02100D →)

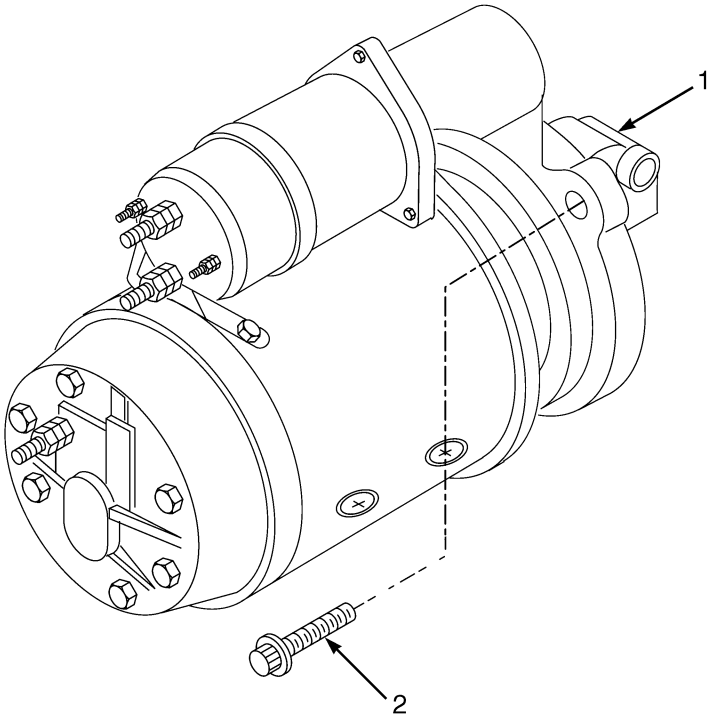

©2011 HYSTER COMPANY

STARTER MOTOR

TIER III ENGINE (S/N E008E02100D →)

ITEM	PART NO.	DESCRIPTION	QTY
	1663666	Engine Assy-Diesel	1
1	1513824	Starter	1
2	~~1514562~~		
	1593856	Capscrew	3
	a 1593855	Spacer	1

FOOTNOTES:

a Not Illustrated

LIGHTS (FIGURE 4-92)

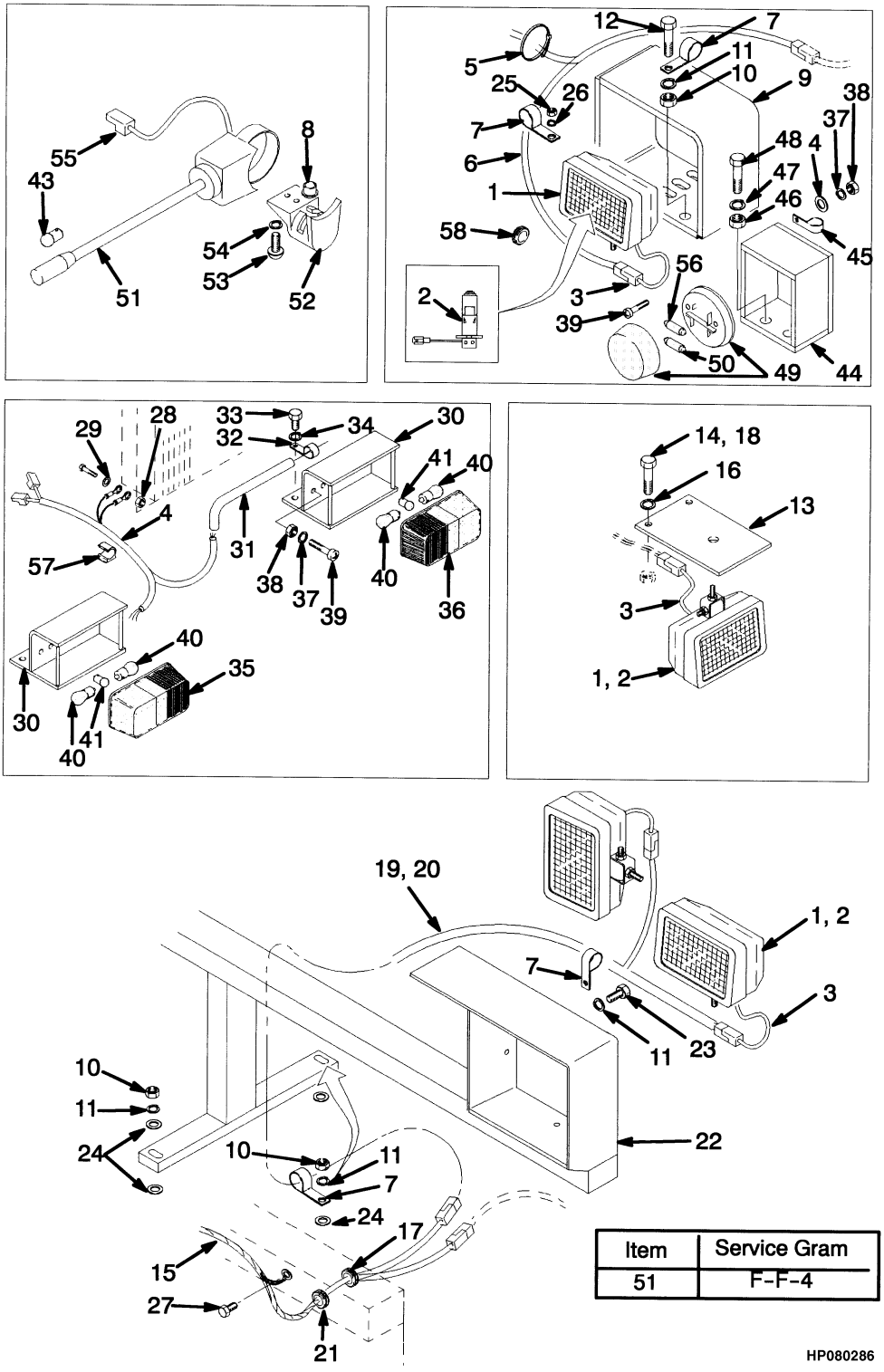

Item	Service Gram
51	F-F-4

©2011 HYSTER COMPANY

LIGHTS

ITEM	PART NO.	DESCRIPTION	QTY
1	1382867	Head/Work Light (Halogen) (Optional)	8
1	1476614	Work Light (24 Volt)	1
1	1383998	Head/Work Light	1
1	1330409	Connector	1
1	1330414	Connector (Secondary Lock)	1
1	1363885	Terminal (Pin)	2
1	1310667	Light	8
2	1310668	Bulb (24 Volt)	8
3	133481	Heat Shrink	AR
3	1336781	Wire	8
3	1330409	Connector	1
3	1330414	Connector (Secondary Lock)	1
3	1330437	Terminal (Pin)	2
3	134812	Terminal	8
3	142871	Terminal	8
4	197067	Washer	4
5	137852	Strap Clamp	AR
6	1336783	Wire Harness (Main Light) (☞Figure 4-97)	1
7	164488	Clamp	14
8	286901	Bushing	1
9	816442	Bracket Wldmt	2
10	136692	Nut	8
11	~~388049~~		
	292682	Lockwasher	14
12	287860	Capscrew	4
13	353379	Plate	2
14	176640	Bolt	4
15	1336785	Wire Harness (Module) (☞Figure 4-48)	1
15	1464313	Wire Harness (Module) (☞Figure 4-50)	1
15	1467784	Wire Harness (Module) (☞Figure 4-51)	1
15	1467783	Wire Harness (Module) (☞Figure 4-49)	1
16	292681	Lockwasher	4
17	216735	Grommet	2
18	280472	Sealant	AR
19	**a** 1339489	Wire Harness (Work Lights) (☞Figure 4-95)	2
20	**b** 1339490	Wire Harness (LH) (Work Lights) (☞Figure 4-95)	1
20	**b** 1339491	Wire Harness (RH) (Work Lights) (☞Figure 4-95)	1
21	102990	Grommet	2
22	**b** 1461419	Bracket (Light)	1
22	**a** 1461420	Bracket Wldmt (Light)	1
23	292513	Capscrew	7
24	320160	Washer	8
25	15056	Nut	2
26	15156	Lockwasher	2
27	136681	Capscrew	1
28	239503	Nut	1
29	320157	Washer	1
30	1301717	Bracket Wldmt	2
31	1310721	Tube	2
32	154278	Clamp	4
33	287854	Capscrew	4

©2011 HYSTER COMPANY

LIGHTS

ITEM	PART NO.	DESCRIPTION	QTY
34	~~388049~~		
	292682	Lockwasher	4
35	373106	Rear Light (LH)	1
36	373107	Rear Light (RH)	1
37	292679	Washer	8
38	292668	Nut	8
39	302036	Screw	8
40	~~1491811~~		
	345355	Bulb	4
41	345369	Bulb	2
42	1336787	Wire Harness (Rear Lights) (☞Figure 4-96)	1
43	1310641	Bulb	1
44	374021	Bracket Wldmt	2
45	18905	Clamp	2
46	239503	Nut	4
47	292681	Lockwasher	4
48	176640	Bolt	4
49	373091	Turn Signal Light (Direction)	2
50	384014	Bulb	2
51	**de** 356741	Switch	1
51	**fg** 815914	Switch (Turn Signal)	1
52	**de** 1311256	Mount (Switch)	1
52	**fg** 1360660	Mount (Switch)	1
53	369242	Capscrew	2
54	379675	Washer (Special)	2
55	1336789	Wire Harness (Turn Signal) (☞Figure 4-118)	1
56	1310638	Bulb	2
57	241878	Clamp (Adhesive)	AR
58	204208	Grommet	2
59	**c** 322784	Lubricant (Corrosion Preventive)	AR

FOOTNOTES:

a Center Compartment
b Left Compartment
c Not Illustrated (Cab Electrical Connector)
d → S/N E008D01514
e → S/N E008E01531
f S/N E008D01515 →
g S/N E008E01532 →

©2011 HYSTER COMPANY

PRESSURE SWITCH (FIGURE 4-93)

(→ S/N E008D01581) (→ S/N E008E01655)

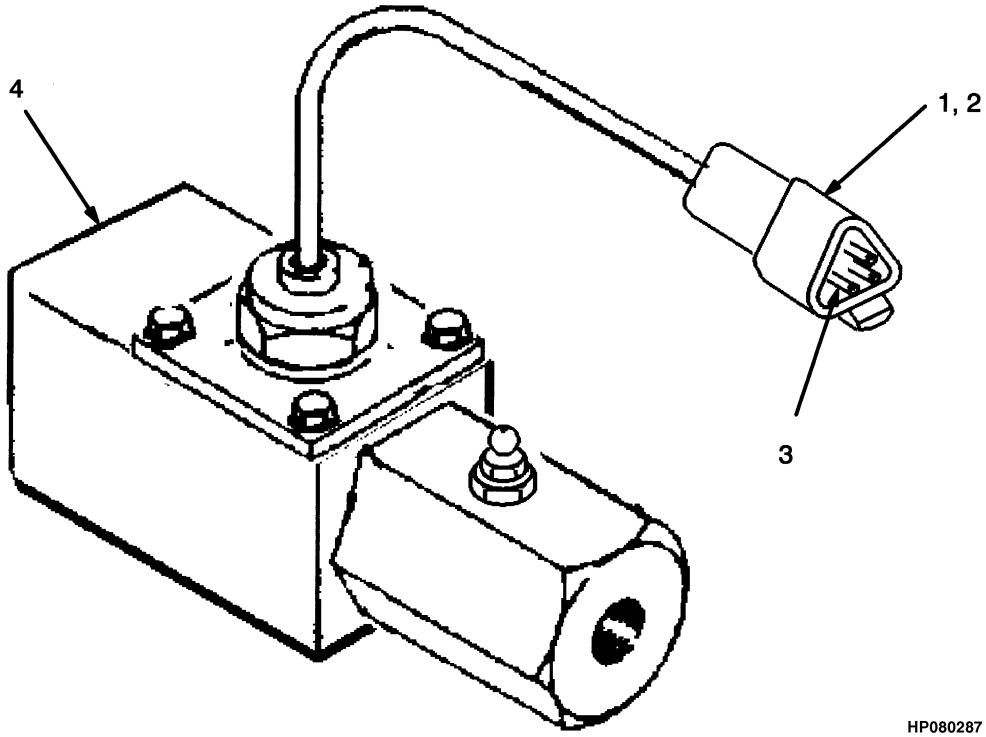

ITEM	PART NO.	DESCRIPTION	QTY
	ab 1336959	Pressure Switch (Assembly)	2
	cd 1376839	Switch (Assembly)	2
1	**cd** 1330410	Connector	2
2	**cd** 1330415	Connector	2
3	**cd** 1330437	Terminal (Pin)	6
4	**ab** 1330168	Pressure Switch	2
4	**cd** 1376838	Pressure Switch	2

FOOTNOTES:

a → S/N E008D01533
b → S/N E008E01577
c S/N E008D01534 →
d S/N E008E01578 →

©2011 HYSTER COMPANY

PARK BRAKE SWITCH (FIGURE 4-94)

(S/N E008D01582 →) (S/N E008E01656 →)

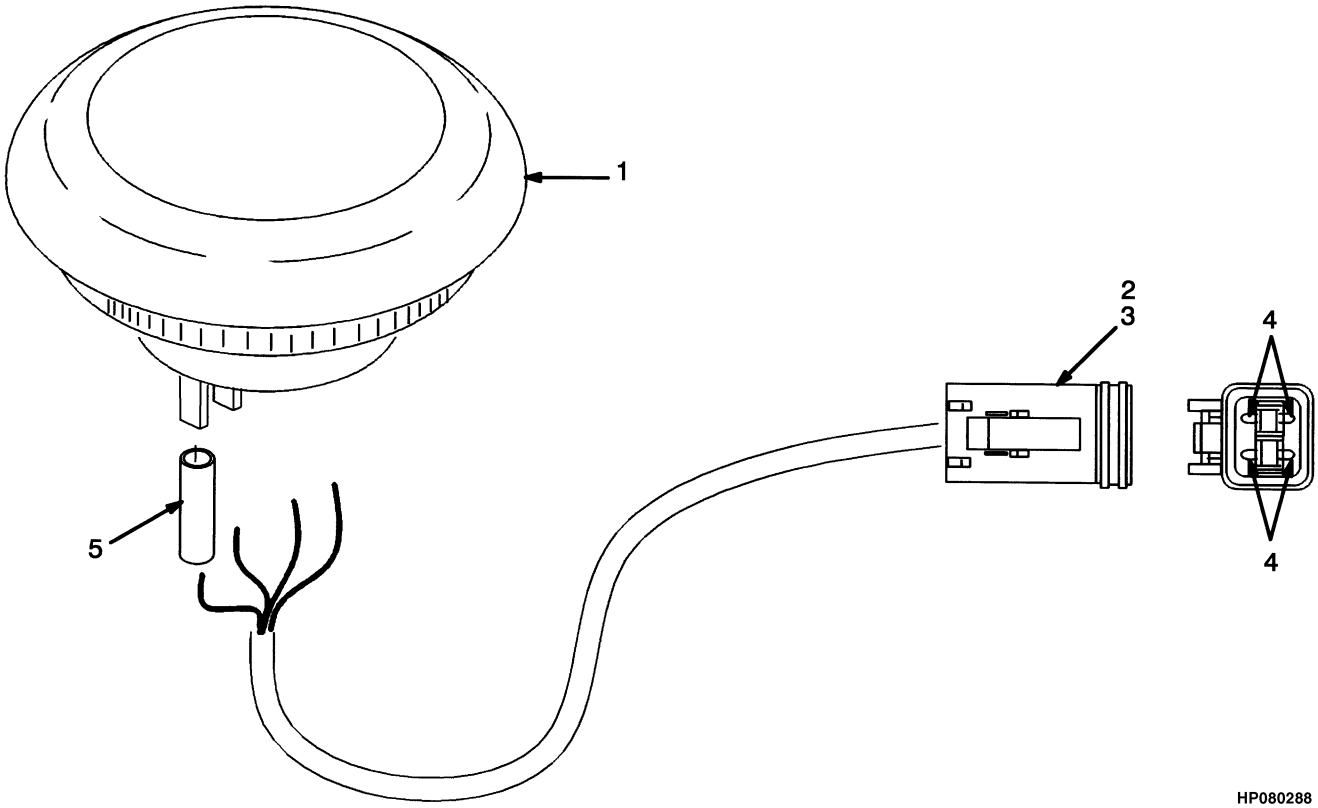

ITEM	PART NO.	DESCRIPTION	QTY
	1383831	Switch (Park Brake)	1
1	1382397	Switch	1
2	1330421	Connector	1
3	1330427	Connector	1
4	1330438	Terminal (Socket)	1
5	133481	Heat Shrink	AR

©2011 HYSTER COMPANY

WIRE HARNESS (FIGURE 4-95)
WORK LIGHTS

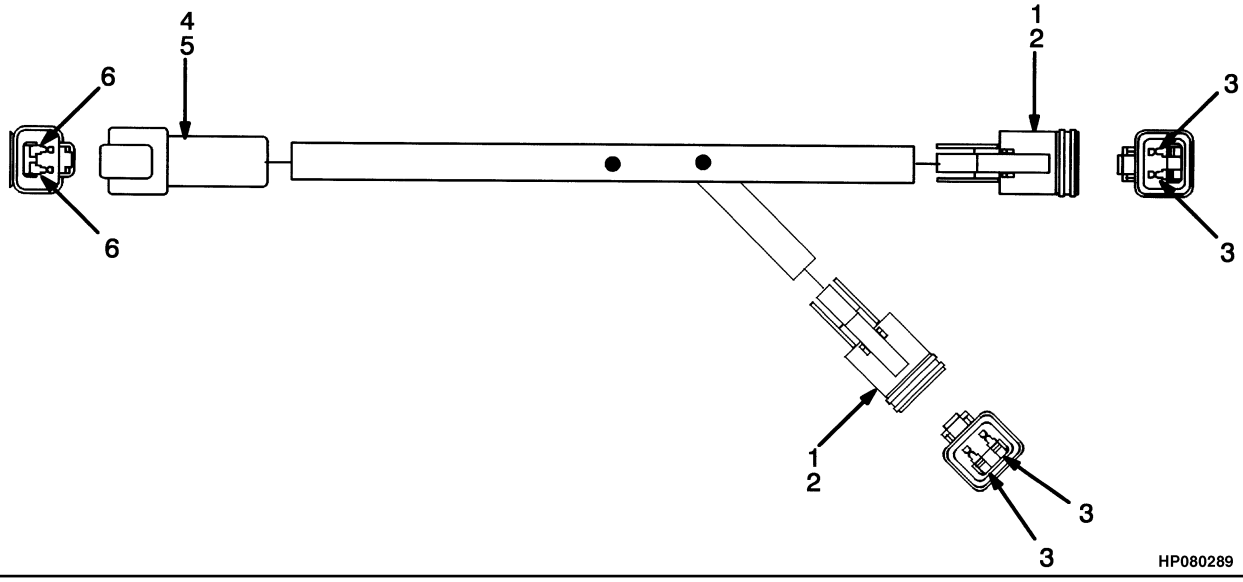

ITEM	PART NO.	DESCRIPTION	QTY
	1339490	Wire Harness (Center Compartment)	2
	1339489	Wire Harness (LH Left Compartment)	1
	1339491	Wire Harness (RH Left Compartment)	1
1	1330419	Connector	2
2	1330424	Connector (Secondary Lock)	2
3	1330438	Terminal (Socket)	4
4	1330409	Connector	1
5	1330414	Connector (Secondary Lock)	1
6	1330437	Terminal (Pin)	2

©2011 HYSTER COMPANY

WIRE HARNESS (FIGURE 4-96)

REAR LIGHT

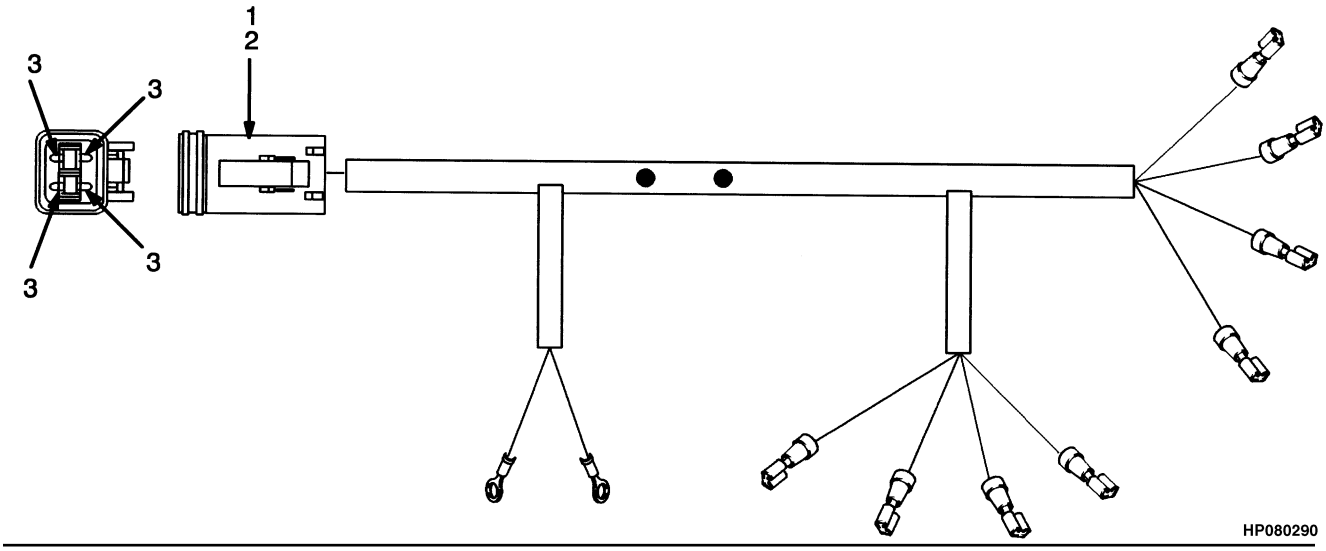

ITEM	PART NO.	DESCRIPTION	QTY
	1336787	Wire Harness (Rear Lights)	1
1	1330421	Connector	1
2	1330427	Connector	1
3	1330438	Terminal (Socket)	4

©2011 HYSTER COMPANY

WIRE HARNESS (FIGURE 4-97)

MAIN LIGHT

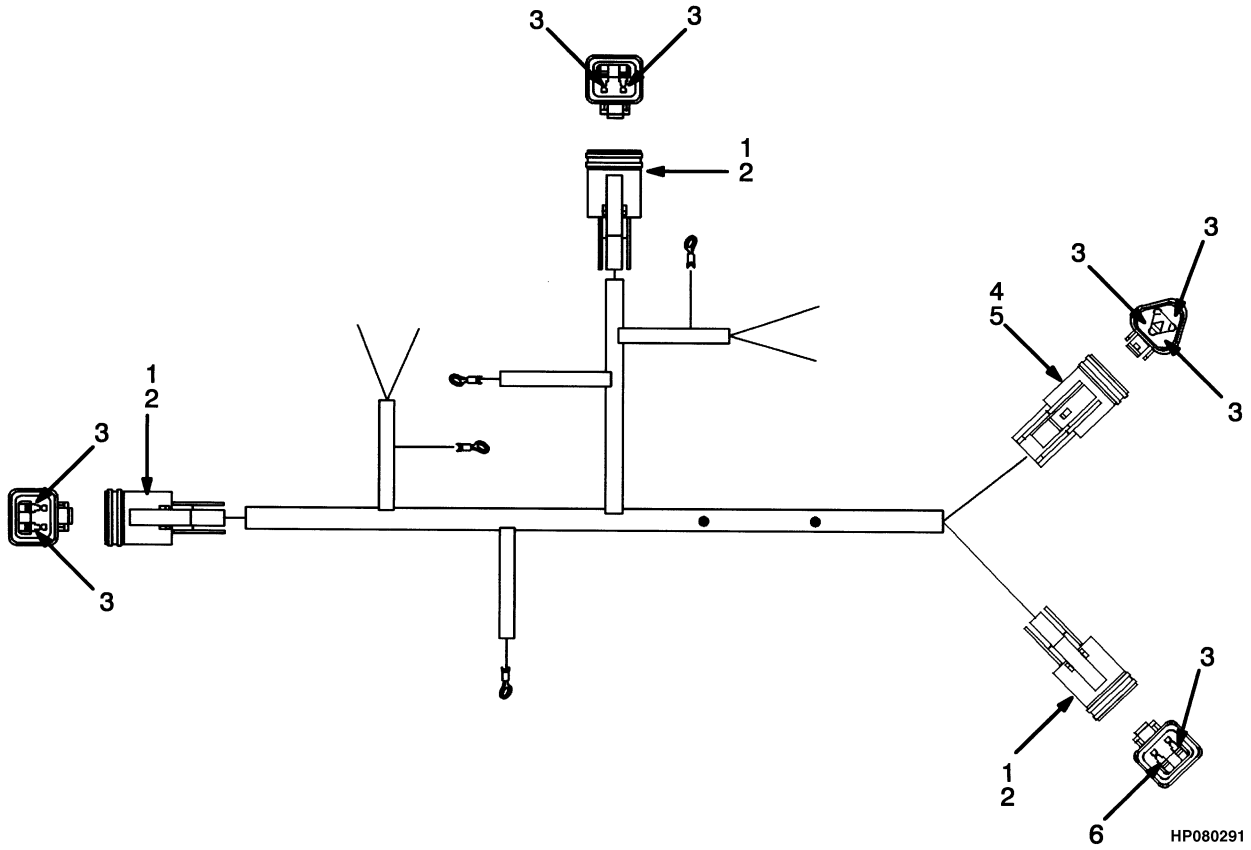

ITEM	PART NO.	DESCRIPTION	QTY
	1336783	Wire Harness	1
1	1330419	Connector	3
2	1330424	Connector (Secondary Lock)	3
3	1330438	Terminal (Socket)	8
4	1330420	Connector	1
5	1330426	Connector	1
6	1330439	Plug	1

WIRE HARNESS (FIGURE 4-98)
LOWERING INTERRUPT

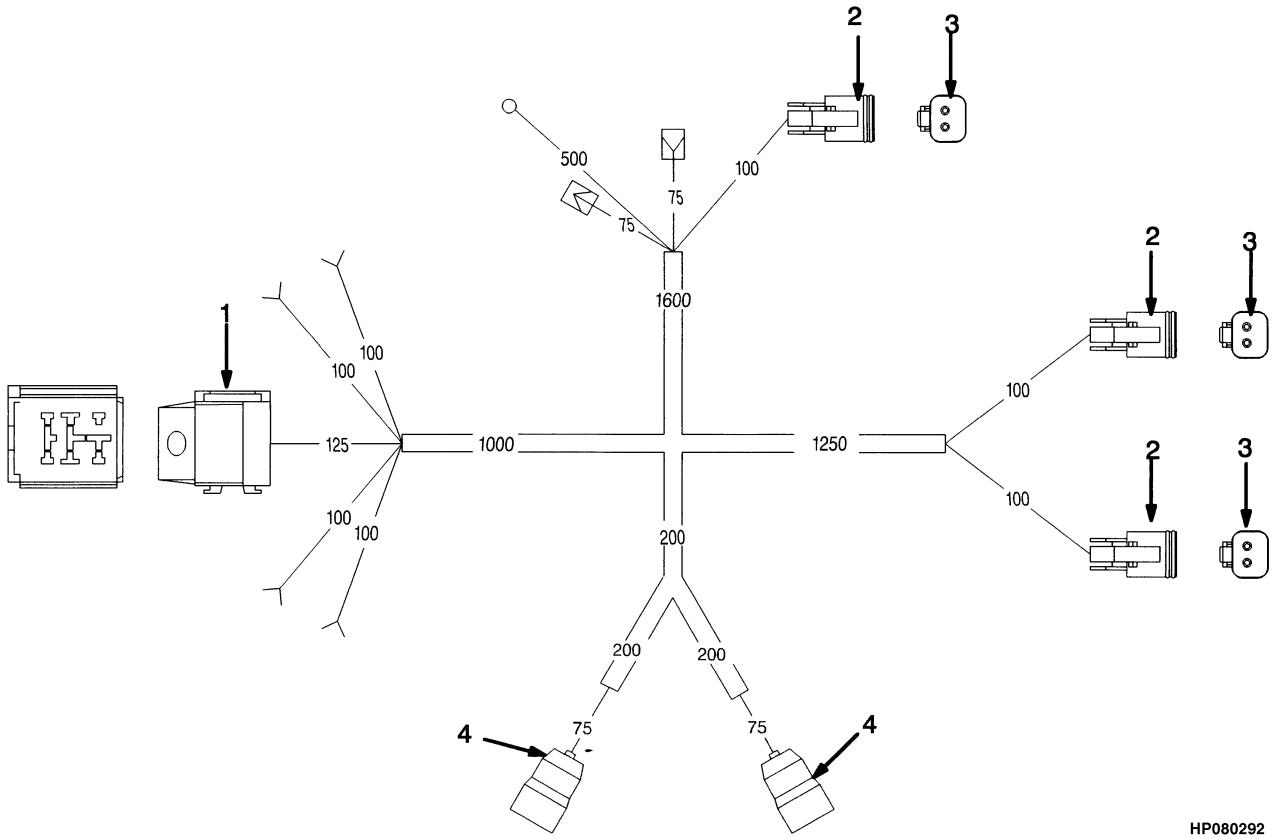

ITEM	PART NO.	DESCRIPTION	QTY
	816472	Wire Harness	1
1	1347224	Socket	1
2	1330419	Connector	3
3	1330424	Connector (Secondary Lock)	1
4	1476740	Cover (Switch)	2

©2011 HYSTER COMPANY

WIRE HARNESS (FIGURE 4-99)
WASH PUMPS

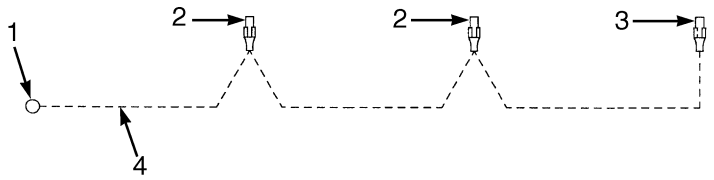

HP081505

ITEM	PART NO.	DESCRIPTION	QTY
	1311268	Wire Harness	1
1	148607	E-Ring	1
2	1322673	Terminal	2
3	370730	Terminal	1
4	. . . . .	Conduit	AR

WIRE HARNESS (FIGURE 4-100)
POWER SUPPLY

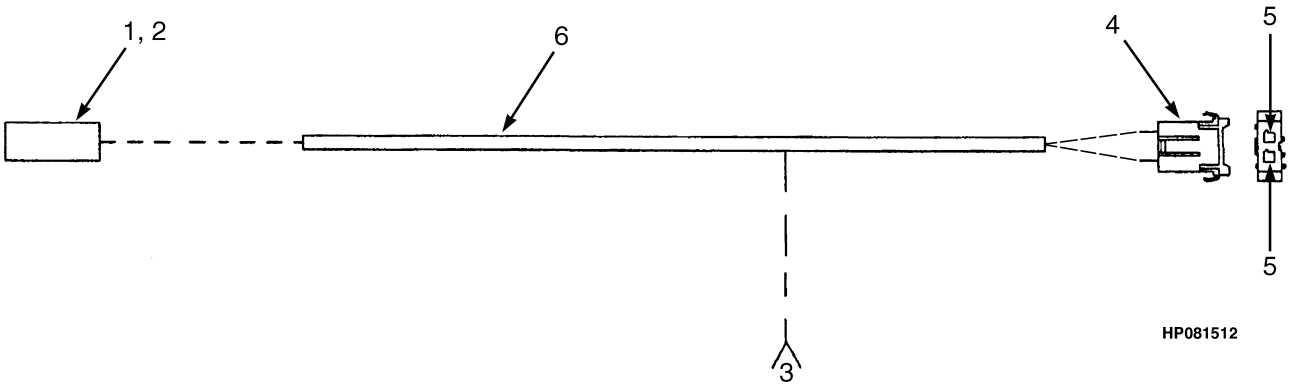

ITEM	PART NO.	DESCRIPTION	QTY
	1463536	Wire Harness (Power Supply)	1
1	181046	Connector Body	1
2	134812	Terminal	1
3	148648	Terminal	2
4	381846	Fuse Holder	1
5	381847	Terminal	2
6	381919	Braiding	AR

©2011 HYSTER COMPANY

NOTES

©2011 HYSTER COMPANY

WIRE HARNESS (FIGURE 4-101)
DIAGNOSIS

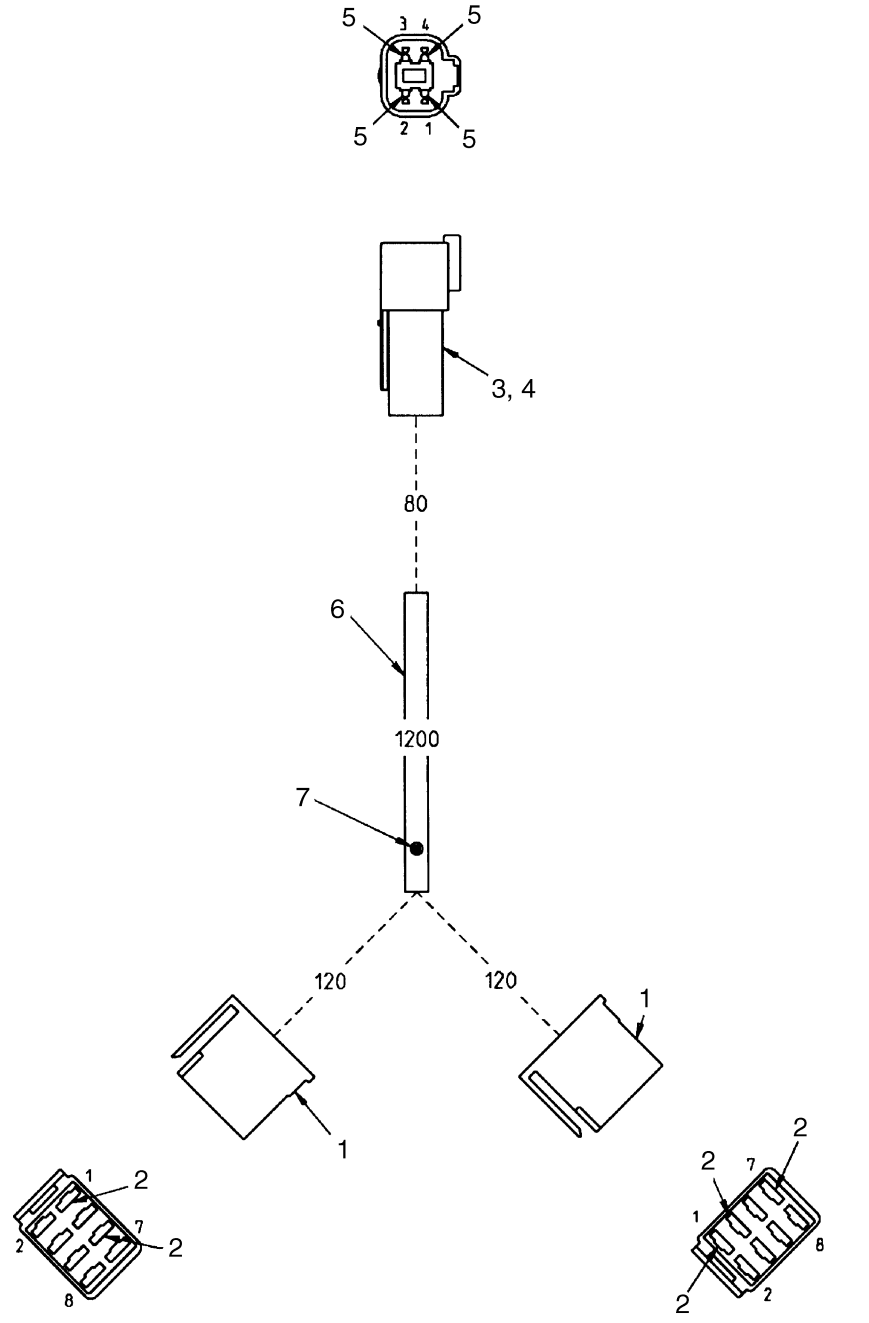

HP080294

©2011 HYSTER COMPANY

WIRE HARNESS
DIAGNOSIS

ITEM	PART NO.	DESCRIPTION	QTY
	1495149	Wire Harness (Diagnosis)	1
1	1301154	Housing	2
2	1331233	Terminal	5
3	1330411	Connector	1
4	1330416	Connector	1
5	1363885	Terminal (Pin)	4
6	381919	Braiding	AR
7	1345029	Splice	1

©2011 HYSTER COMPANY

WIRE HARNESS (FIGURE 4-102)
GAUGE — TIER II ENGINE

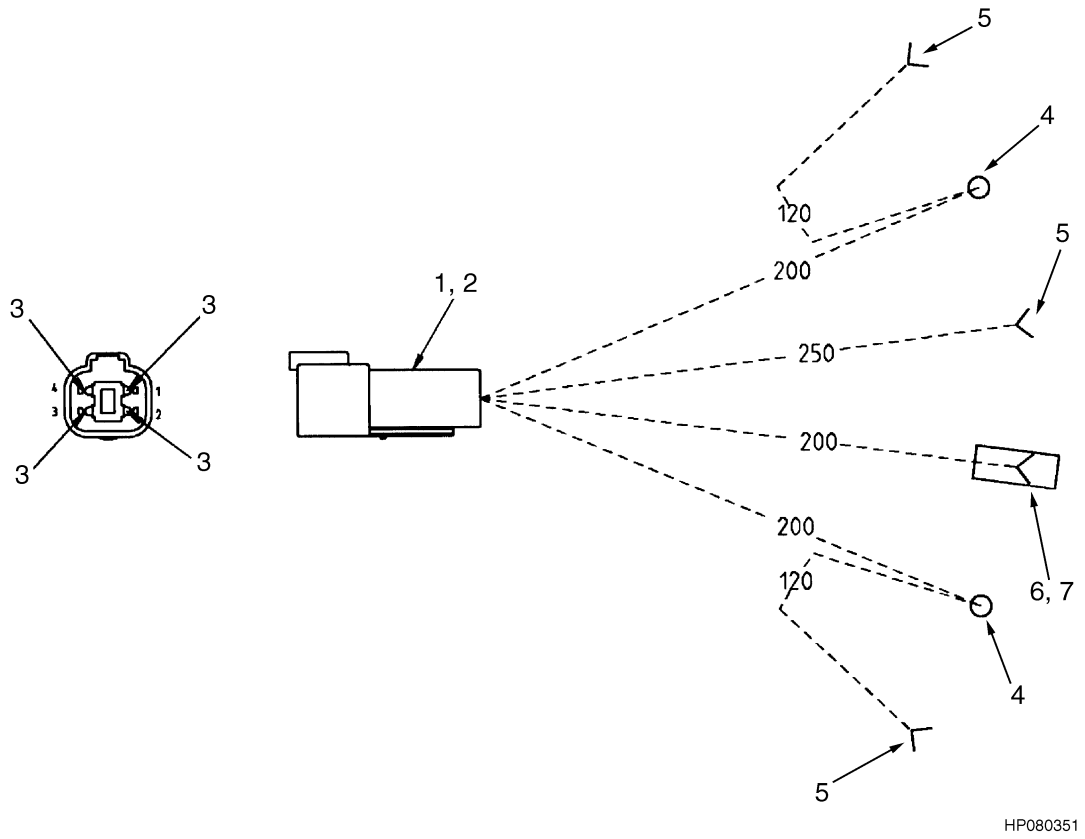

ITEM	PART NO.	DESCRIPTION	QTY
	1514948	Wire Harness (Gauge)	1
1	1330411	Connector	1
2	1330416	Connector	1
3	1363885	Terminal (Pin)	4
4	172661	E-Ring	2
5	148648	Terminal	3
6	181046	Connector Body	1
7	134812	Terminal	1

©2011 HYSTER COMPANY

NOTES

©2011 HYSTER COMPANY

WIRE HARNESS (FIGURE 4-103)
SWITCH AND RELAY

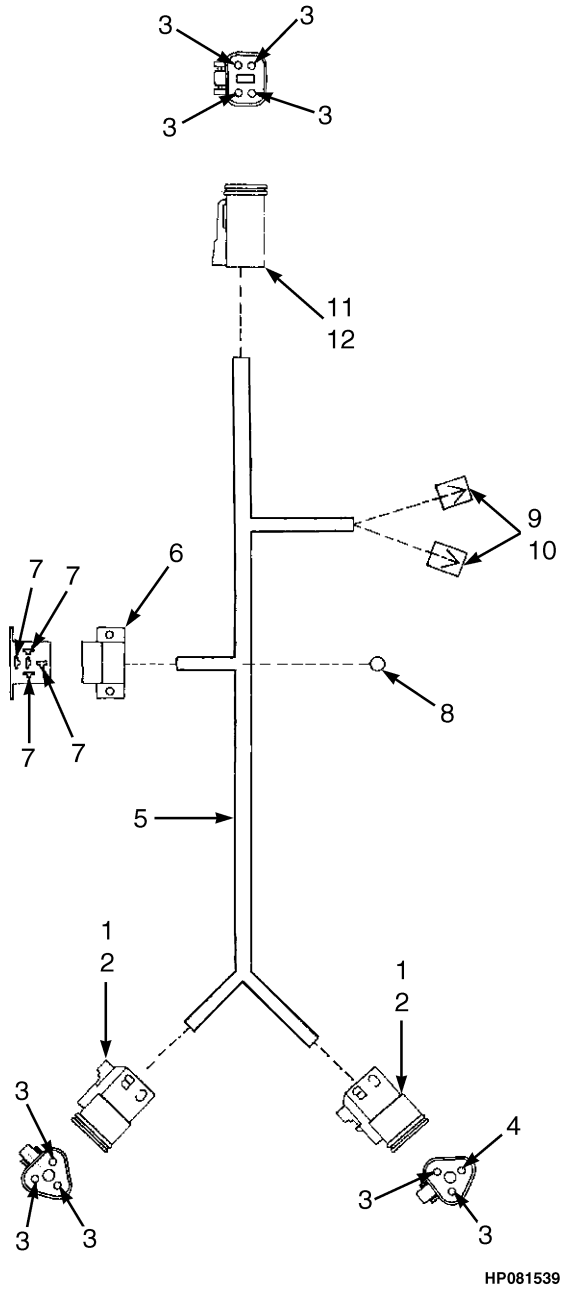

©2011 HYSTER COMPANY

WIRE HARNESS
SWITCH AND RELAY

ITEM	PART NO.	DESCRIPTION	QTY
	1336950	Wire Harness (Switch and Relay)	1
1	1330420	Connector	2
2	1330426	Connector	2
3	1330438	Terminal (Socket)	9
4	1330439	Plug	1
5	381919	Braiding	AR
6	1301229	Connector	1
7	1331233	Terminal	4
8	148607	E-Ring	1
9	181045	Connector Body	2
10	134810	Terminal	2
11	1330421	Connector	1
12	1330427	Connector	1

©2011 HYSTER COMPANY

WIRE HARNESS (FIGURE 4-104)
BRAKE INDICATOR

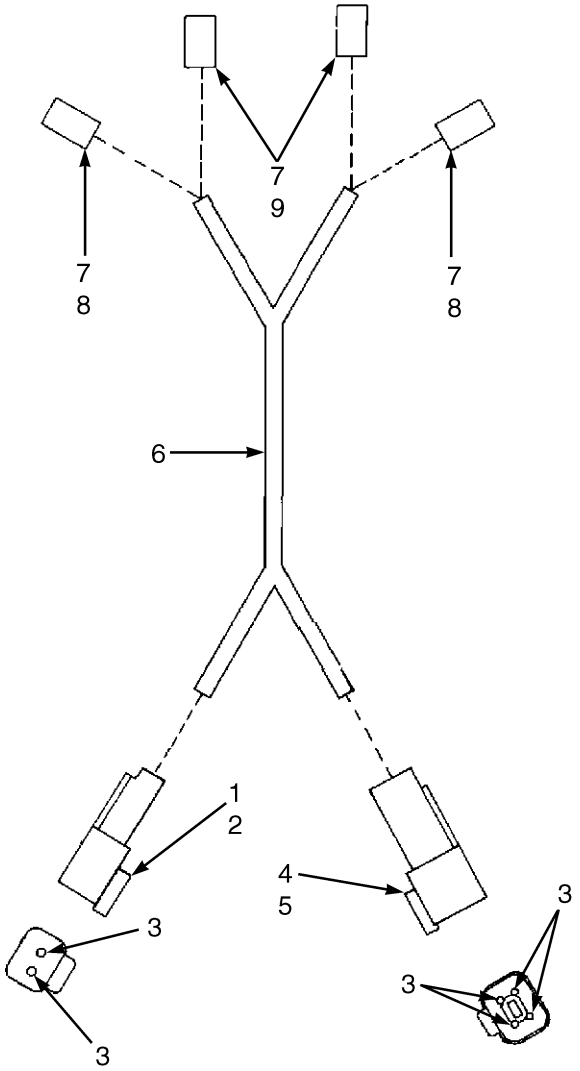

HP081540

ITEM	PART NO.	DESCRIPTION	QTY
	1336230	Wire Harness (Brake Indicator) (Brake Indicator)	1
1	1330409	Connector	1
2	1330414	Connector (Secondary Lock)	1
3	1330437	Terminal (Pin)	6
4	1330411	Connector	1
5	1330416	Connector	1
6	381919	Braiding	AR
7	181046	Connector Body	4
8	134811	Terminal	2
9	134812	Terminal	2

©2011 HYSTER COMPANY

WIRE HARNESS (FIGURE 4-105)

RADIATOR COOLANT LEVEL SWITCH (→ S/N E008E02099D)

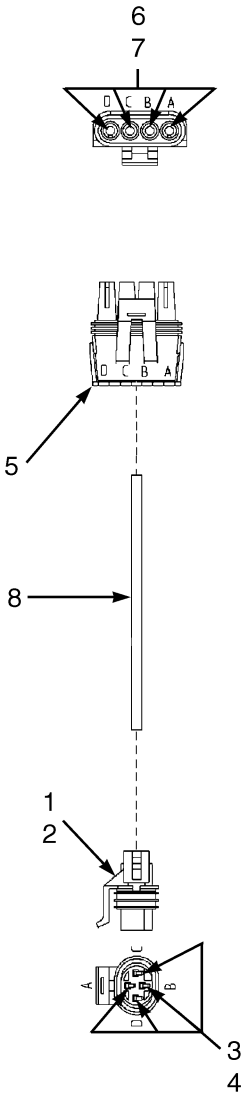

HP081541

ITEM	PART NO.	DESCRIPTION	QTY
	1499053	Wire Harness (Switch)	1
1	1477400	Connector	1
2	1330357	Terminal	1
3	1330355	Terminal	4
4	1330356	Seal	4
5	1383804	Connector	1
6	1336173	Terminal	4
7	1323579	Seal	4
8	381919	Braiding	AR

WIRE HARNESS (FIGURE 4-106)

HYDRAULIC OIL COOLER (→ S/N E008E02041C)

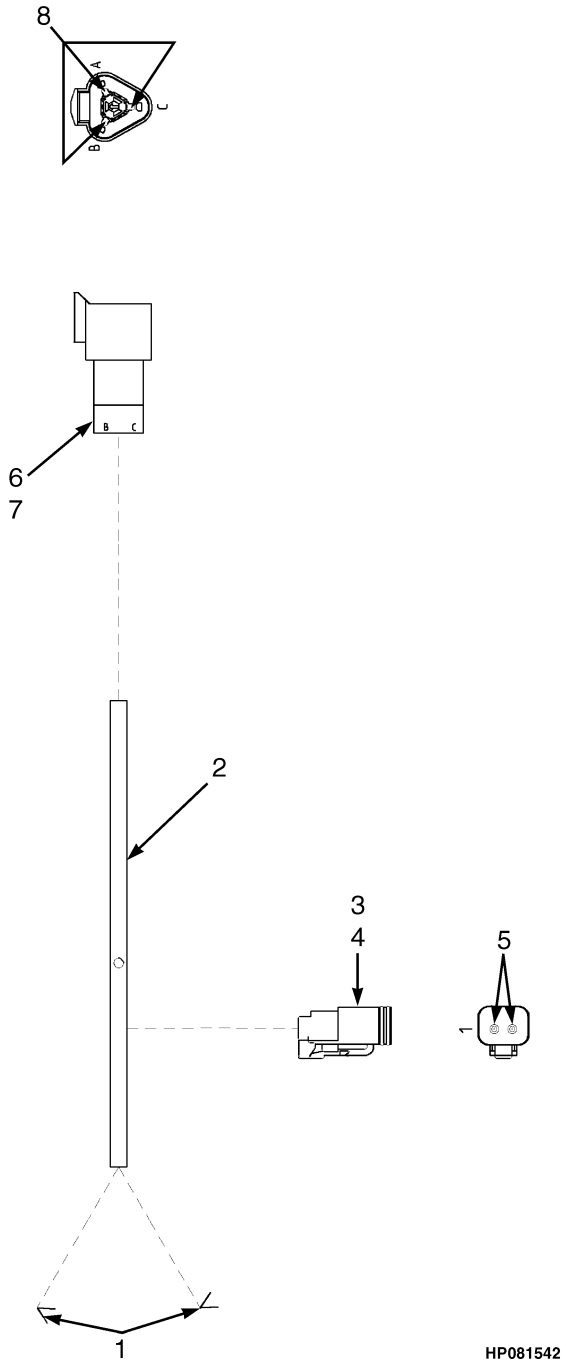

©2011 HYSTER COMPANY

WIRE HARNESS

HYDRAULIC OIL COOLER (→ S/N E008E02041C)

ITEM	PART NO.	DESCRIPTION	QTY
	1520867	Wire Harness (Hydraulic Oil Cooler) (H550-700F)	1
	1519129	Wire Harness (Hydraulic Oil Cooler) (H440-700FS)	1
1	367540	Terminal (Female)	1
2	381919	Braiding	AR
3	1330419	Connector	1
4	1330424	Connector (Secondary Lock)	1
5	1363886	Terminal (Socket)	2
6	1330410	Connector	1
7	1330415	Connector	1
8	1363885	Terminal (Pin)	3

©2011 HYSTER COMPANY

WIRE HARNESS (FIGURE 4-107)

HYDRAULIC OIL COOLER (S/N E008E02042C →)

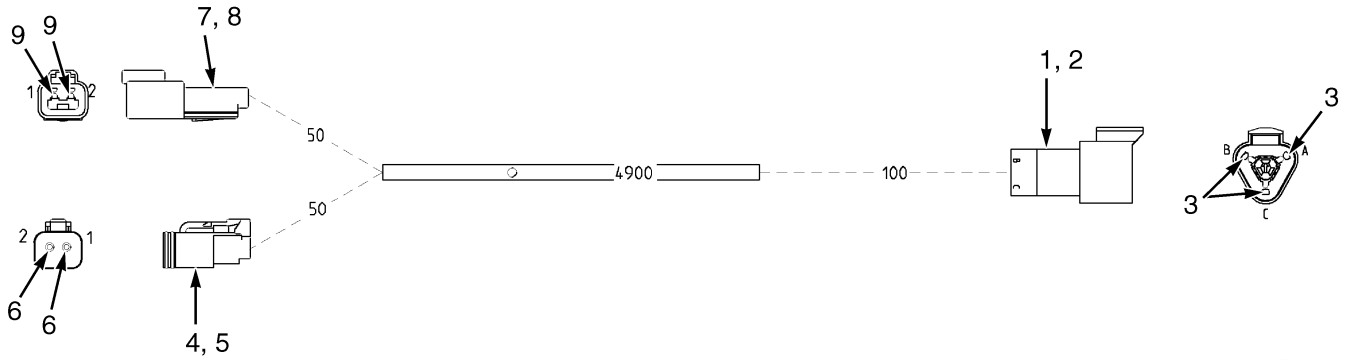

HP081860

ITEM	PART NO.	DESCRIPTION	QTY
	1583745	Wire Harness (Hydraulic Oil Cooler) (H550-700F)	1
	1583746	Wire Harness (Hydraulic Oil Cooler) (H440-700FS)	1
1	1330410	Connector	1
2	1330415	Connector	1
3	1363885	Terminal (Pin)	3
4	1330419	Connector	1
5	1330424	Connector (Secondary Lock)	1
6	1363886	Terminal (Socket)	2
7	1330409	Connector	1
8	1330414	Connector (Secondary Lock)	1
9	1330437	Terminal (Pin)	2

©2011 HYSTER COMPANY

WIRE HARNESS (FIGURE 4-108)
IDLE VALIDATION SWITCH

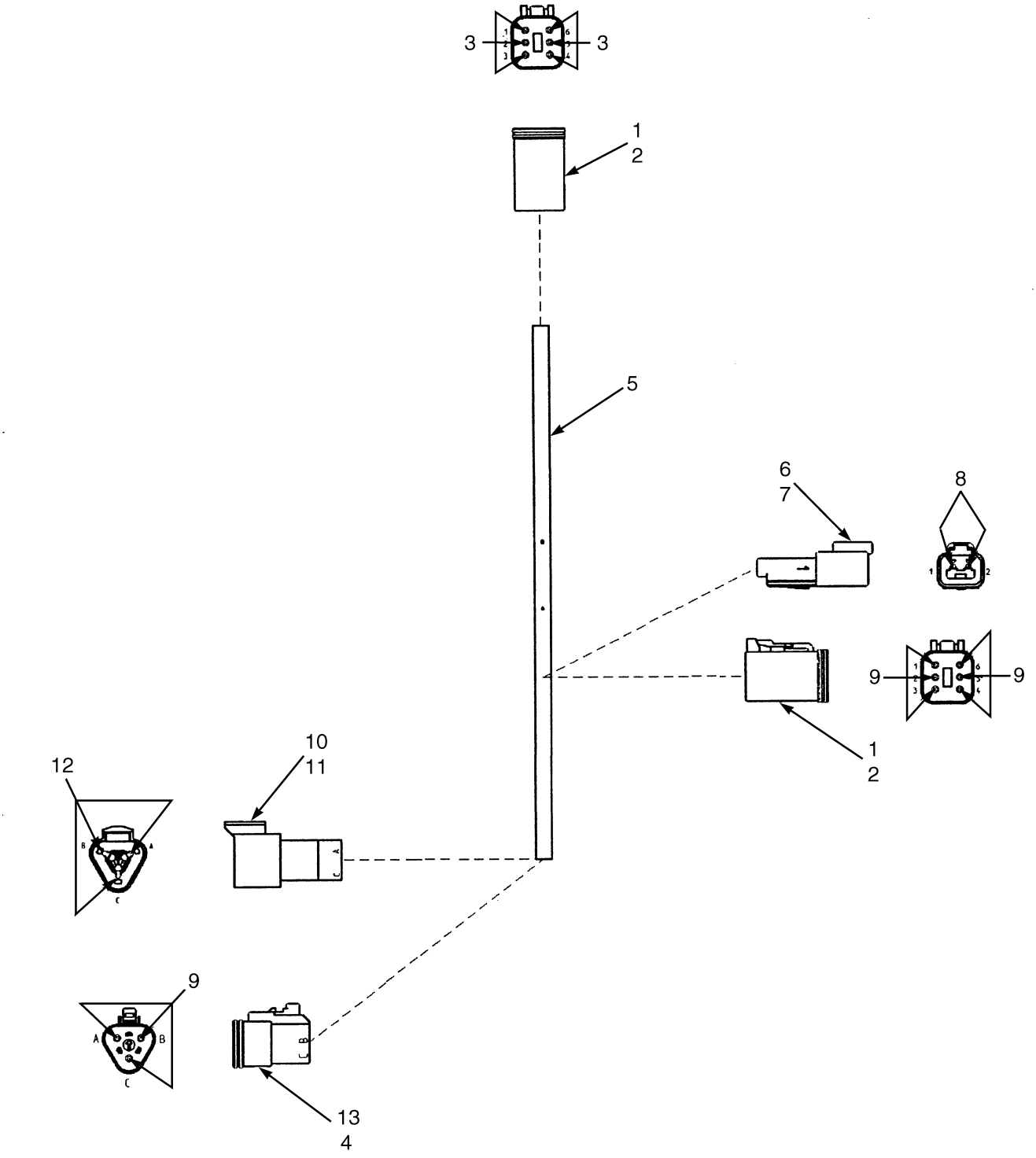

ITEM	PART NO.	DESCRIPTION	QTY
	1508476	Wire Harness (Idle Validation Switch)	1
1	1330422	Connector	2
2	1330428	Connector	2
3	1330438	Terminal (Socket)	6
4	1330426	Connector	1
5	381919	Braiding	AR
6	1330409	Connector	1
7	1330414	Connector (Secondary Lock)	1
8	1330437	Terminal (Pin)	2
9	1518112	Terminal (Socket)	9
10	1330410	Connector	1
11	1330415	Connector	1
12	1502712	Terminal (Pin)	3
13	1330420	Connector	1

©2011 HYSTER COMPANY

NOTES

©2011 HYSTER COMPANY

LIGHT BAR AND MOUNT (FIGURE 4-109)
TWISTLOCK MODULE

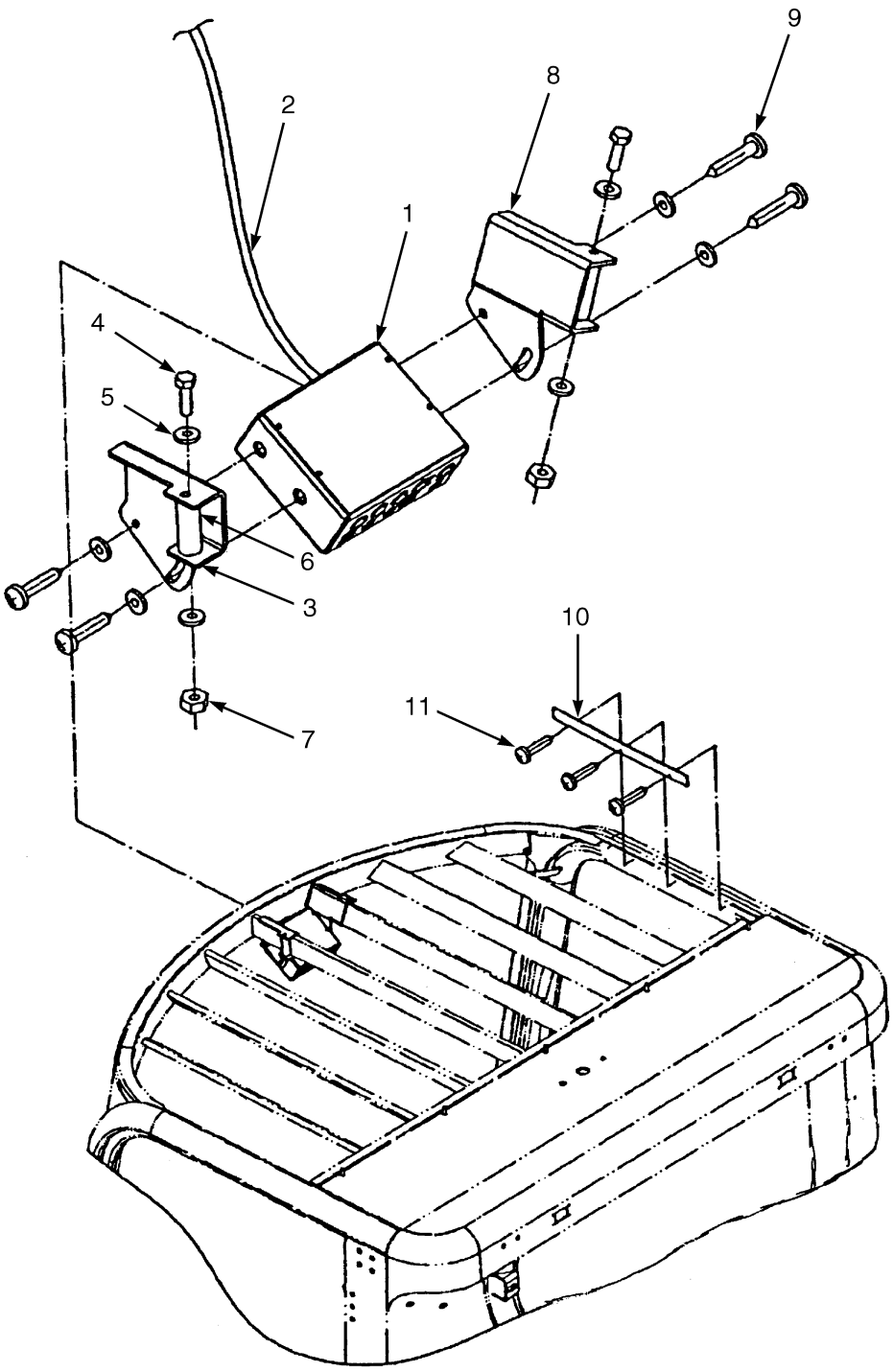

HP081545

©2011 HYSTER COMPANY

LIGHT BAR AND MOUNT
TWISTLOCK MODULE

ITEM	PART NO.	DESCRIPTION	QTY
	1506674	Control Box (Twistlock)	1
1	1571806	Bar	1
2	1571805	Wire Harness (Light Bar)	1
3	1506673	Bracket (LH)	1
4	1506669	Screw	2
5	1506738	Washer	8
6	1506671	Plate	2
7	1506670	Nut	2
8	1506672	Bracket (RH)	1
9	1506668	Screw	4
10	1506667	Plate	1
11	1468319	Screw	3
	1554156	Key Set (Not Illustrated)	1

©2011 HYSTER COMPANY

ENGINE CONTROL SYSTEM (FIGURE 4-110)
TIER II ENGINE

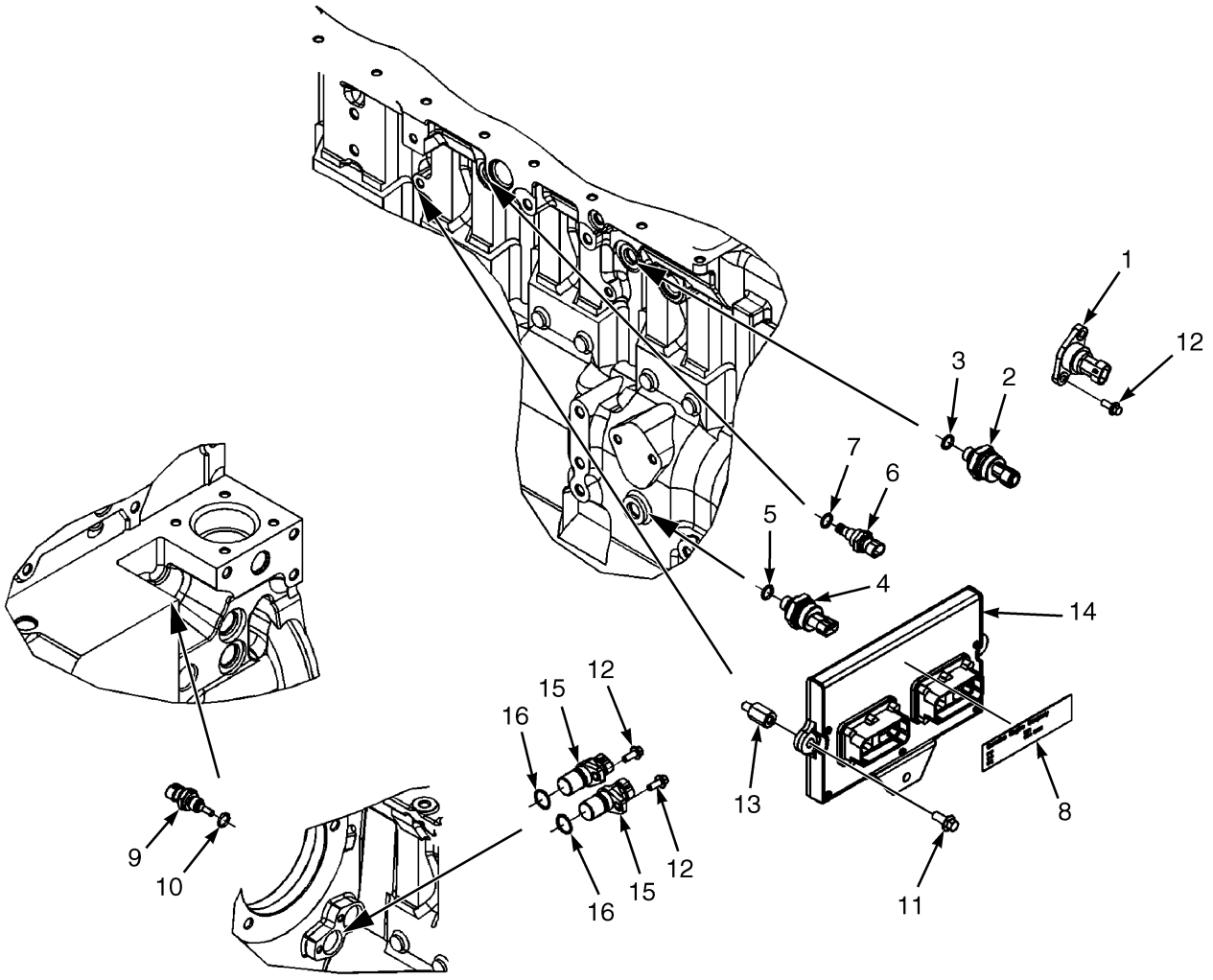

©2011 HYSTER COMPANY

ENGINE CONTROL SYSTEM
TIER II ENGINE

ITEM	PART NO.	DESCRIPTION	QTY
	a 1532628	Engine Assy-Diesel (H550F, H620F, H650F, H700F)	1
	a 1542383	Engine Assy-Diesel (H550FS, H620FS, H700FS)	1
1	1517114	Sensor (Air)	1
2	1659572	Sensor (Boost Pressure)	1
3	1517116	O-Ring	1
4	1543439	Switch, Oil Pressure (Oil)	1
4	1543440	Pressure Switch	1
5	1543435	O-Ring	1
6	1517118	Sensor (Air Intake Temperature)	1
6	1543434	Temperature Sender	1
7	1543435	O-Ring	1
8	1517120	Data Plate	1
9	1565040	Temperature Sensor (Water)	1
9	1691873	Sensor Assembly (Temperature) (Alternate Part)	1
10	1543435	O-Ring	1
11	1512004	Capscrew	3
12	1512051	Capscrew	4
13	1517122	Spacer	2
14	1517172	Electronic Control Module	1
15	1619371	Sensor (Camshaft Position)	2
16	1552288	O-Ring	1
	1588054	Kit-Gasket (Lower Engine)	1
18	1588056	Kit-Gasket (Upper Engine)	1

FOOTNOTES:

a S/N E008E01985B →

©2011 HYSTER COMPANY

ENGINE CONTROL SYSTEM (FIGURE 4-111)

TIER III ENGINE (S/N E008E02100D →)

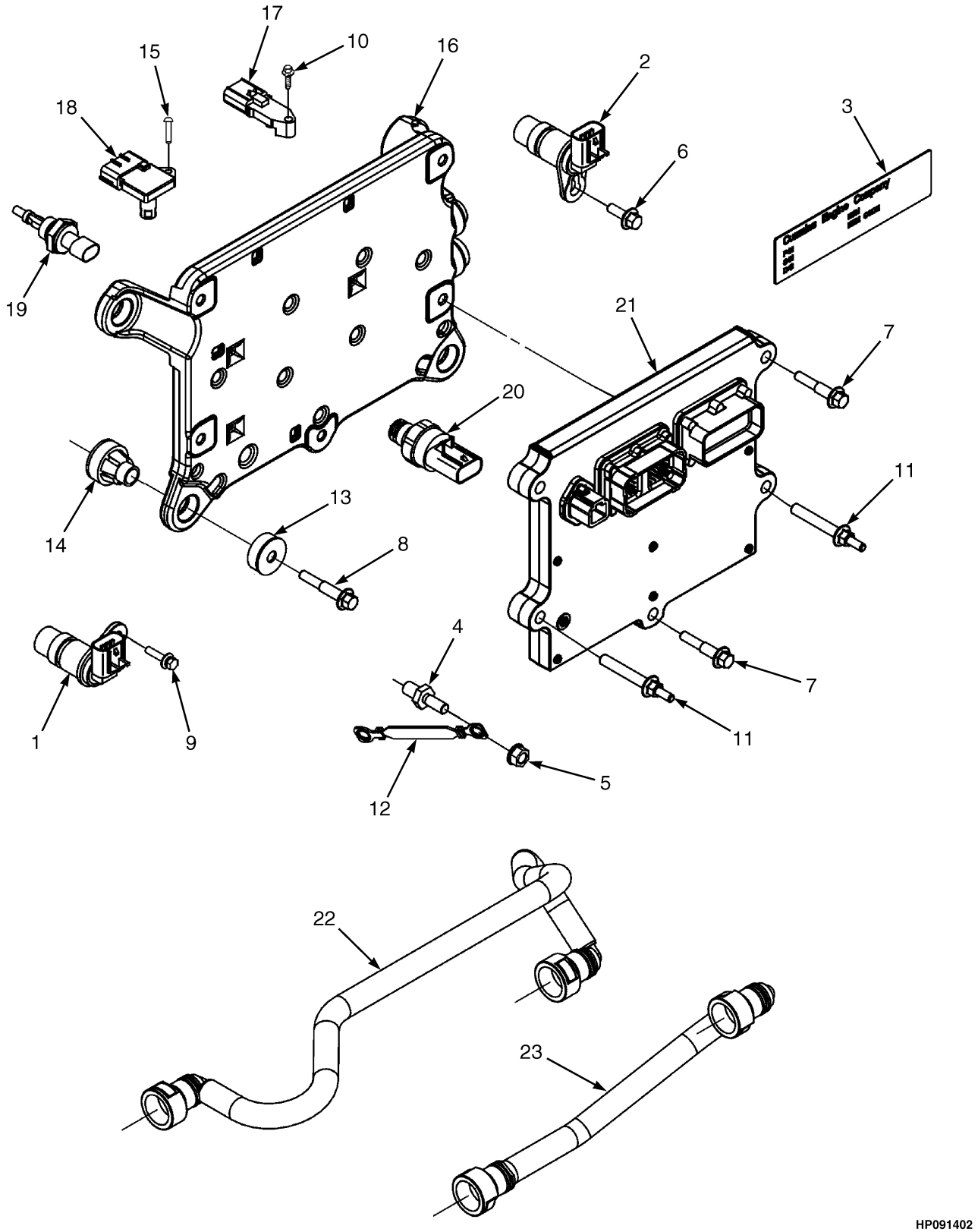

©2011 HYSTER COMPANY

ENGINE CONTROL SYSTEM

TIER III ENGINE (S/N E008E02100D →)

ITEM	PART NO.	DESCRIPTION	QTY
	1663666	Engine Assy-Diesel	1
1	1635457	Sensor Assembly (Camshaft Position)	1
2	1644129	Crank Position Sensor	1
2	1644131	Cam Position Sensor	1
2	1644128	O-Ring	1
3	1517120	Data Plate	1
4	1644123	Capscrew	1
5	1513712	Nut	1
6	1512004	Capscrew	1
7	1565007	Capscrew	2
8	1512111	Capscrew	4
9	1512051	Capscrew	1
10	1514504	Capscrew	1
11	1521876	Screw	3
12	1635325	Wire	1
13	1635277	Isolator	4
14	1635278	Isolator	4
15	1635280	Capscrew	1
16	1644035	Cooler (Electronic Control)	1
17	1635345	Sensor (Pressure)	1
18	1565040	Temperature Sensor	1
18	1691873	Sensor Assembly (Temperature) (Alternate Part)	1
18	1543435	O-Ring	1
19	1661205	Sensor Assembly (Pressure And Temperature)	1
19	1635387	O-Ring	1
20	1644133	Sensor (Oil Pressure)	1
21	1635421	Electronic Control Module	1
22	1644152	Tube Assy (Fuel Supply)	1
23	1644149	Tube Assy (Fuel Supply)	1
	a 1649347	Cover	1
	a 1649732	Kit-Gasket (Upper)	..

FOOTNOTES:

a Not Illustrated

©2011 HYSTER COMPANY

WIRE HARNESS (FIGURE 4-112)

ENGINE CONTROL MODULE — TIER III ENGINE (S/N E008E02100D →)

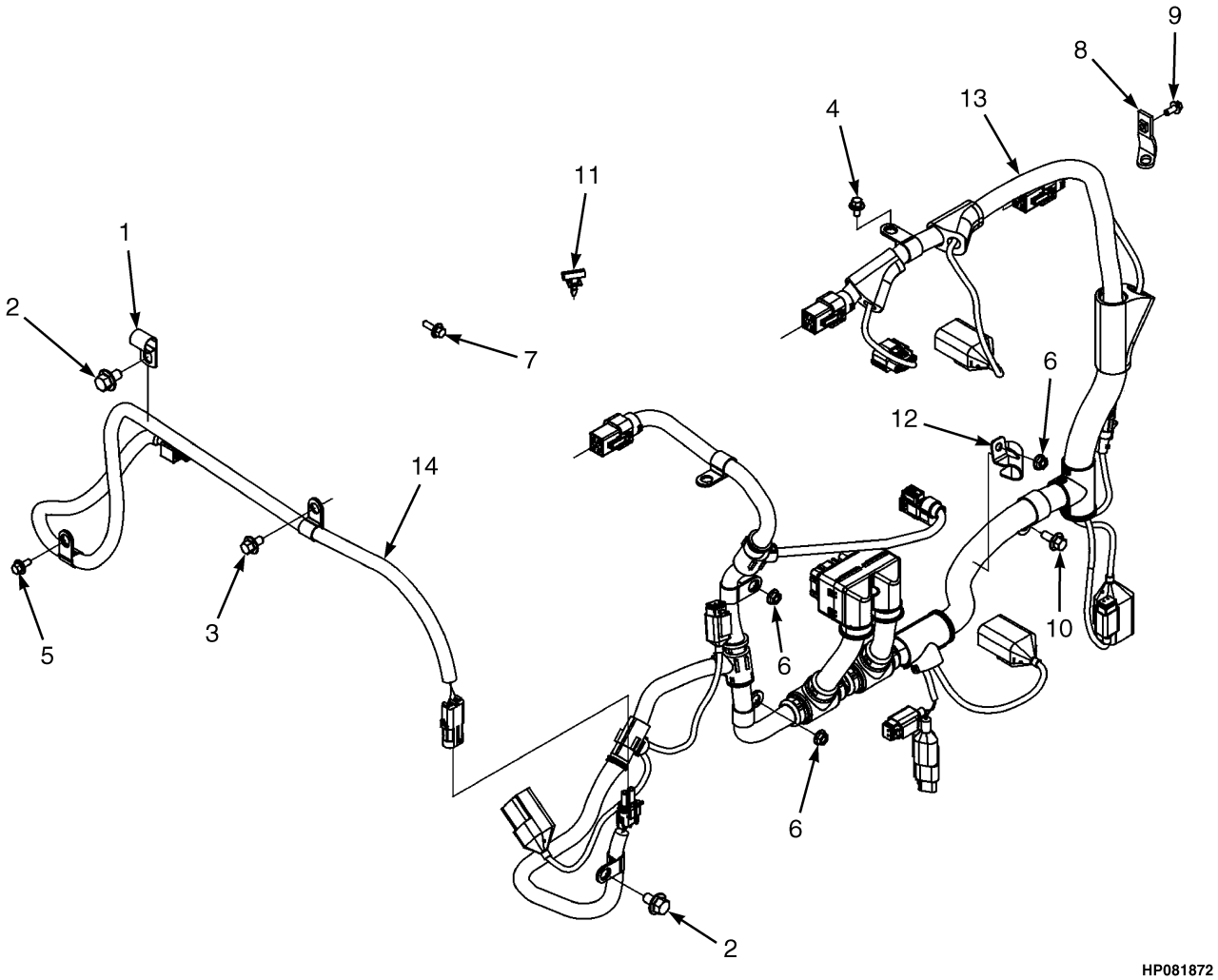

©2011 HYSTER COMPANY

WIRE HARNESS

ENGINE CONTROL MODULE – TIER III ENGINE (S/N E008E02100D →)

ITEM	PART NO.	DESCRIPTION	QTY
	1663666	Engine Assy-Diesel	1
1	1644025	Clip	1
2	1517297	Screw	2
3	1517266	Capscrew	1
4	1513836	Screw	1
5	1512097	Capscrew	1
6	1513793	Nut	3
7	1512051	Capscrew	1
8	1521921	Brace	1
9	1644117	Capscrew	1
10	1513749	Capscrew	1
11	1644026	Clip	8
12	1644015	Brace	1
13	1644060	Wire Harness	1
14	1644061	Wire Harness	1
	a 1644062	Wire Harness	1

FOOTNOTES:

a Not Illustrated

©2011 HYSTER COMPANY

WIRING ACCESSORIES (FIGURE 4-113)

H550F, H620F, H650F, H700F — TIER II ENGINE (S/N E008E01985B →)

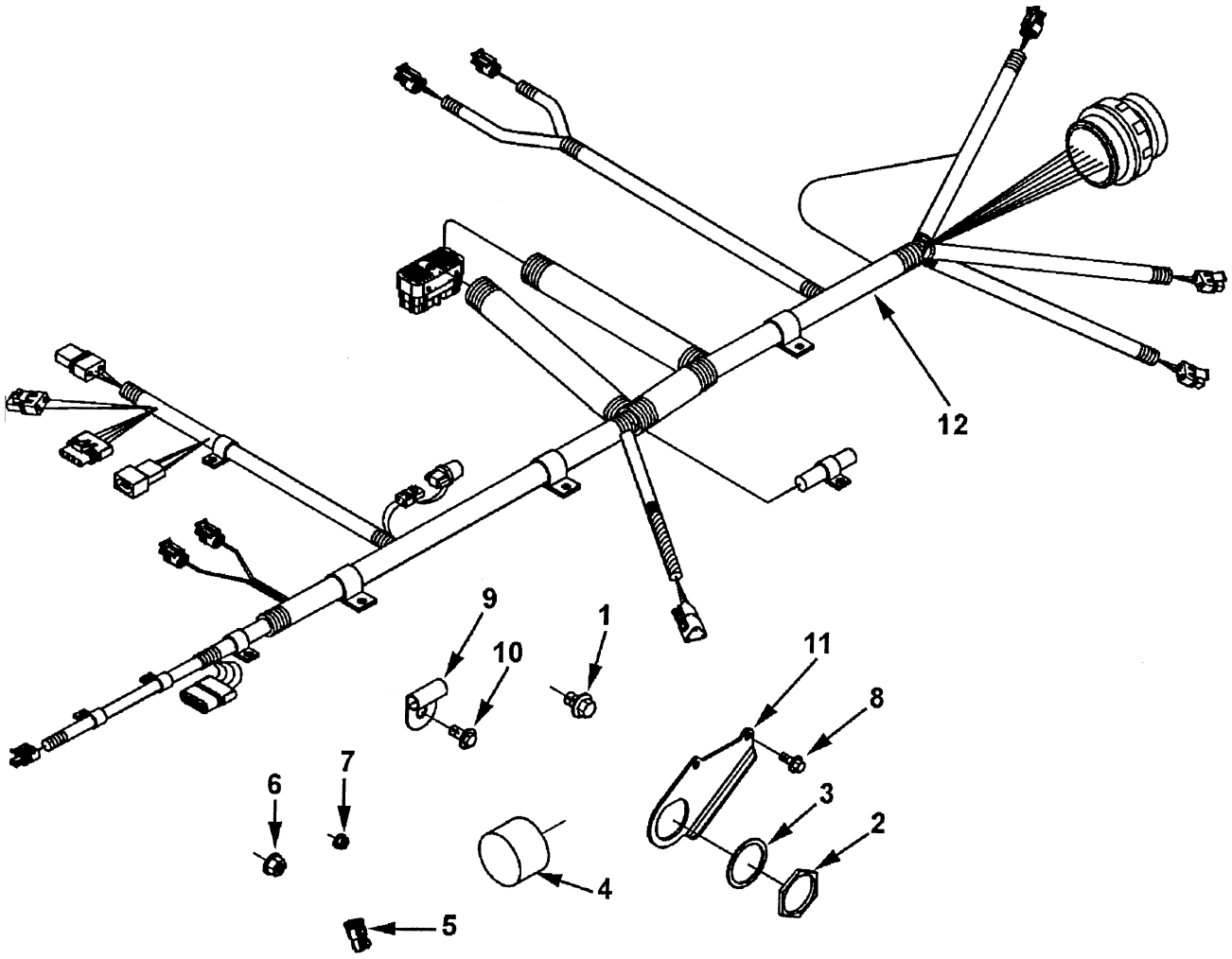

HP090775

©2011 HYSTER COMPANY

WIRING ACCESSORIES

H550F, H620F, H650F, H700F – TIER II ENGINE (S/N E008E01985B →)

ITEM	PART NO.	DESCRIPTION	QTY
	1532628	Engine Assy-Diesel (H550F, H620F, H650F, HH700F)	1
1	1517297	Screw	6
2	1515694	Nut	1
3	1517299	Lockwasher	1
4	1521981	Cover (Protective)	1
5	1521982	Cover (Protective)	1
6	1513712	Nut	1
7	1513793	Nut	1
8	1512051	Capscrew	2
9	1517300	Clip	1
10	1513749	Capscrew	1
11	1517301	Bracket	1
12	1565958	Wire Harness	1

©2011 HYSTER COMPANY

WIRING ACCESSORIES (FIGURE 4-114)

H440FS, H550FS, H620FS, H700FS — TIER II ENGINE (S/N E008E01985B →)

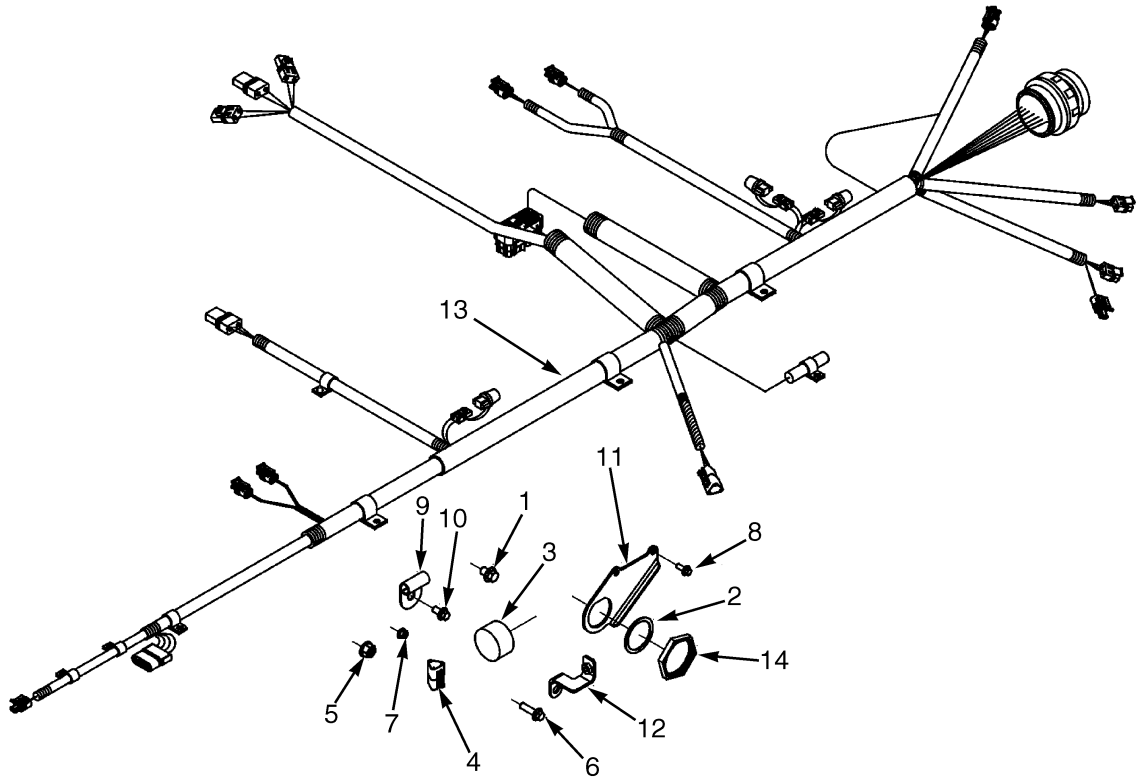

HP081630

©2011 HYSTER COMPANY

WIRING ACCESSORIES

H440FS, H550FS, H620FS, H700FS – TIER II ENGINE (S/N E008E01985B →)

ITEM	PART NO.	DESCRIPTION	QTY
	1542383	Engine Assy-Diesel (H550FS, H620FS, H700FS)	1
1	1517297	Screw	6
2	1517299	Lockwasher	1
3	1521981	Cover (Protective)	1
4	1521982	Cover (Protective)	1
5	1513712	Nut	1
6	1512423	Capscrew	1
7	1513793	Nut	1
8	1512051	Capscrew	3
9	1517300	Clip	1
10	1513749	Capscrew	1
11	1517301	Bracket	1
12	1565956	Bracket	1
13	1565958	Wire Harness	1
14	1515694	Nut	1

©2011 HYSTER COMPANY

WIRE HARNESS (FIGURE 4-115)
CARRIAGE — TO HARNESS SWITCHES

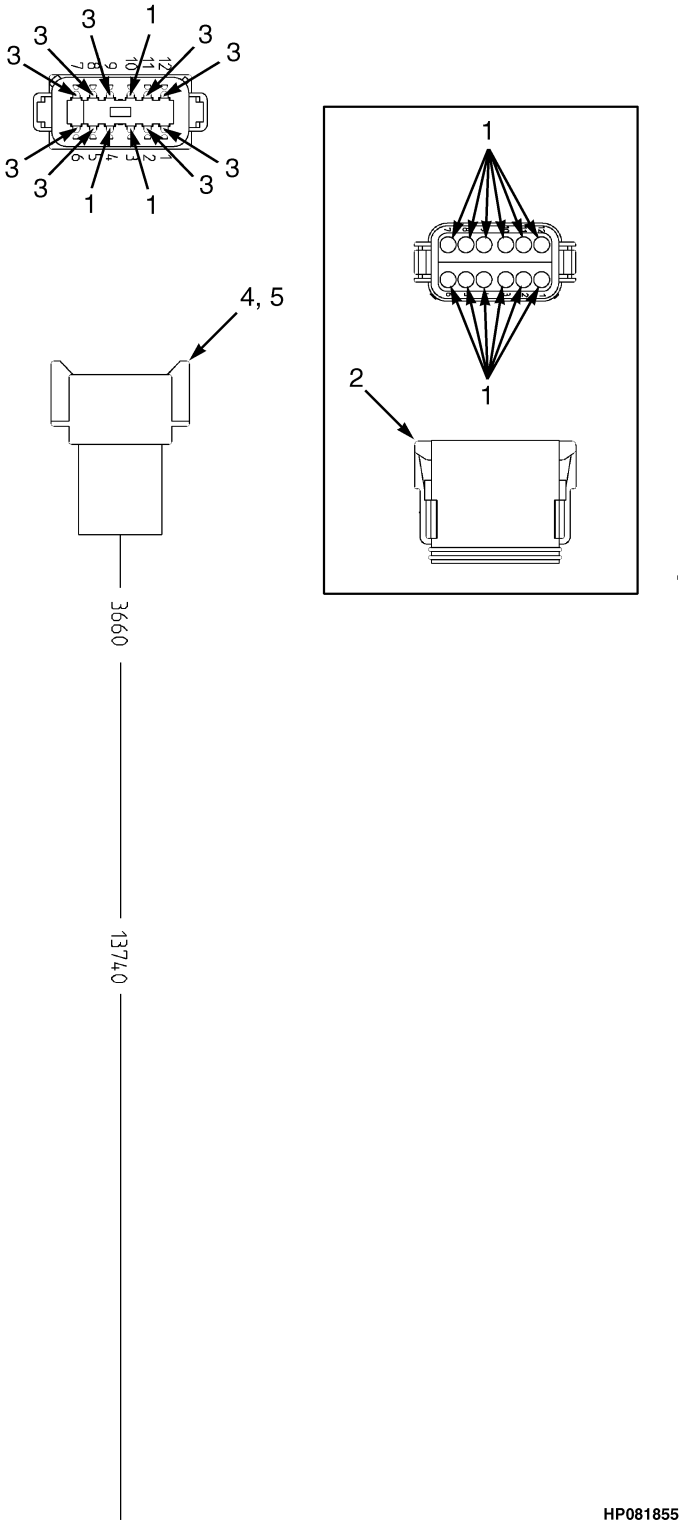

©2011 HYSTER COMPANY

ITEM	PART NO.	DESCRIPTION	QTY
	1460927	Wire Harness	1
1	1330439	Plug	15
2	1351068	Connector	1
3	1363885	Terminal (Pin)	9
4	1352603	Connector	1
5	1352602	Connector	1

©2011 HYSTER COMPANY

WIRE HARNESS (FIGURE 4-116)

CARRIAGE (S/N E008E01811X →)

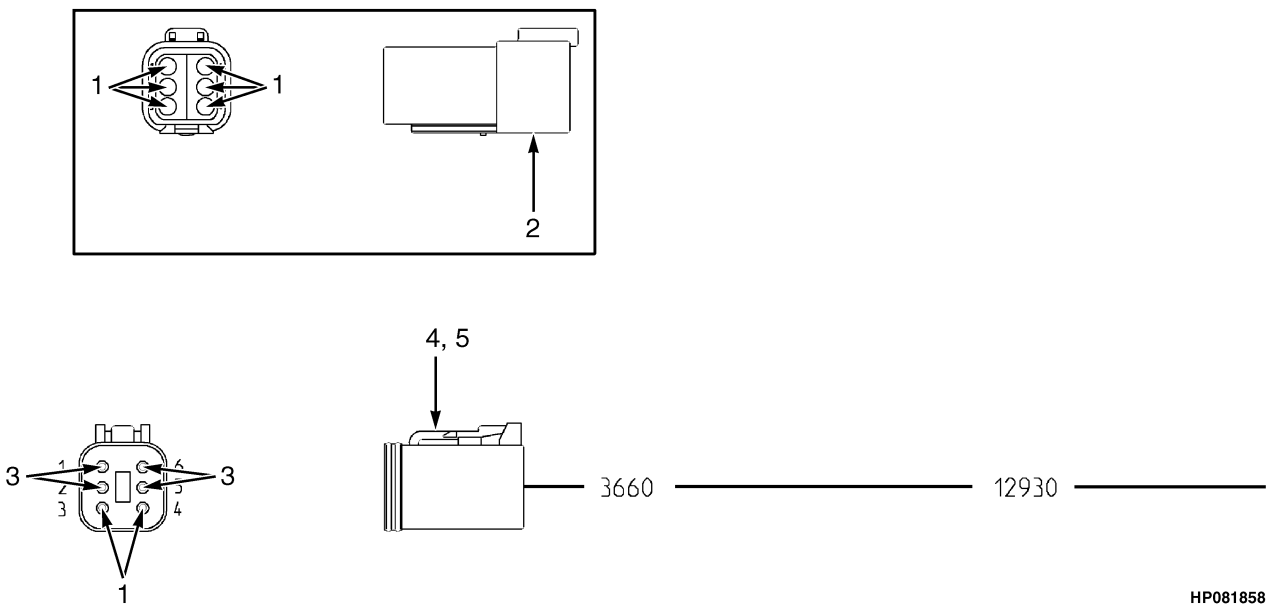

ITEM	PART NO.	DESCRIPTION	QTY
	1468075	Wire Harness	1
1	1330439	Plug	8
2	1330412	Connector	1
3	1363886	Terminal (Socket)	4
4	1330428	Connector	1
5	1330422	Connector	1

©2011 HYSTER COMPANY

WIRE HARNESS (FIGURE 4-117)

CARRIAGE (→ S/N E008E01810X)

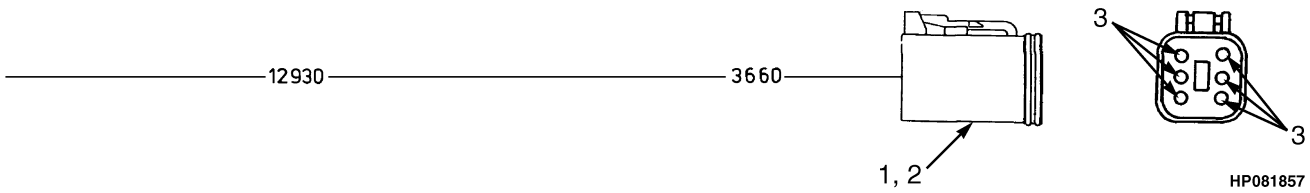

ITEM	PART NO.	DESCRIPTION	QTY
	1337341	Wire Harness	1
1	1330422	Connector	1
2	1330428	Connector	1
3	1330438	Terminal (Socket)	6

WIRE HARNESS (FIGURE 4-118)
TURN SIGNAL

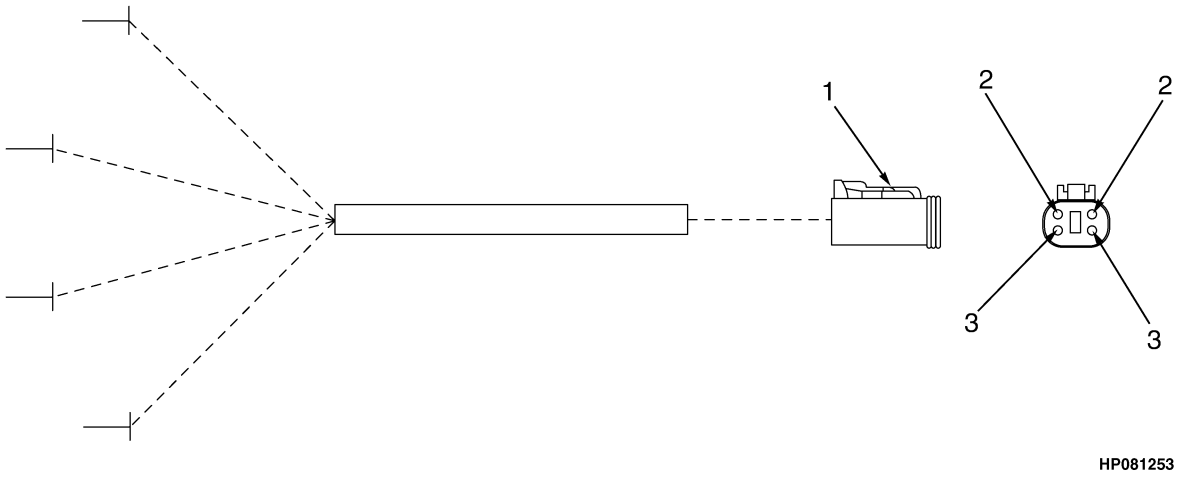

ITEM	PART NO.	DESCRIPTION	QTY
	1336789	Wire Harness (Turn Signal)	1
1	1330421	Connector	1
2	1330427	Connector	1
3	1330438	Terminal (Socket)	4

©2011 HYSTER COMPANY

WIRE HARNESS (FIGURE 4-119)

SEALED FUSE BOX (→ S/N E008E02099D)

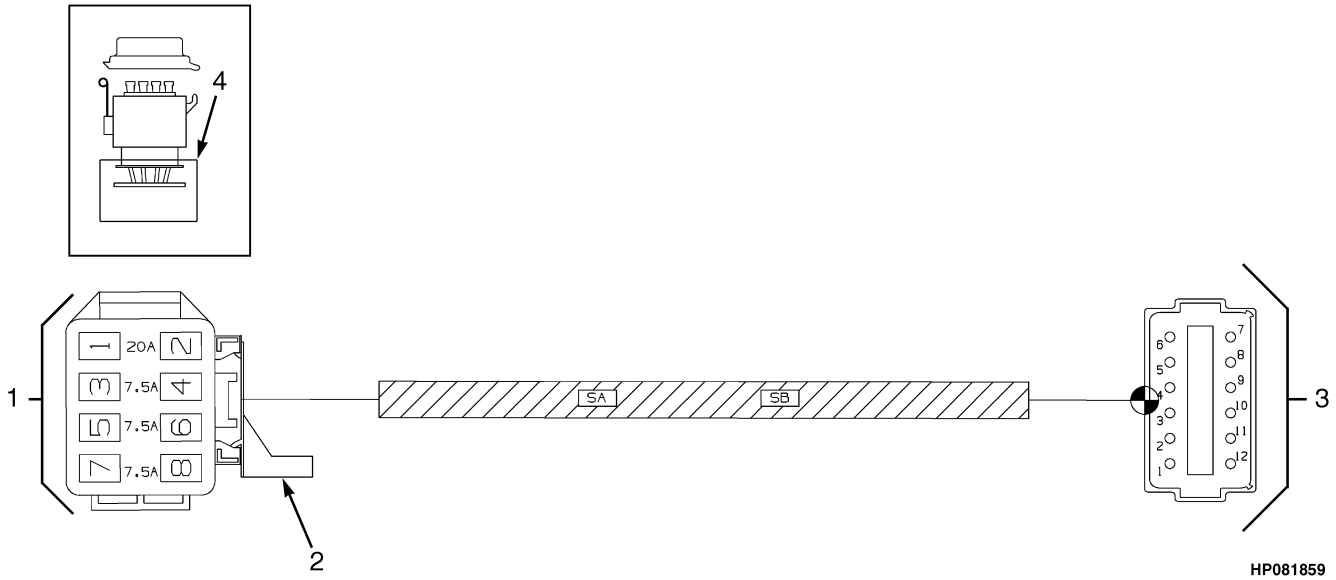

ITEM	PART NO.	DESCRIPTION	QTY
	2062055	Fuse Box (Sealed)	1
1	. . . . .	Connector Assembly (Fuse Carrier)	1
1	1573113	Fuse Box	1
1	1573114	Cover	1
1	1607778	Terminal	2
1	1573115	Terminal	6
2	1484715	Clip	1
3	. . . . .	Connector Assembly	1
3	1500925	Connector	1
3	1352603	Connector	1
3	1330439	Plug	2
3	1363885	Terminal (Pin)	10
4	1573116	Cover	1

©2011 HYSTER COMPANY

WIRE HARNESS (FIGURE 4-120)

SEALED FUSE BOX (S/N E008E02100D →)

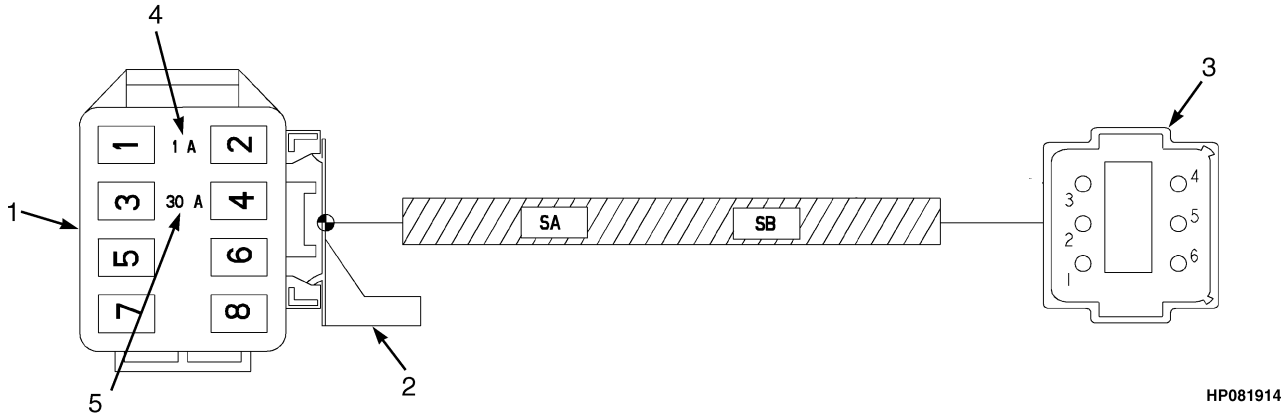

ITEM	PART NO.	DESCRIPTION	QTY
	b 1597430	Fuse Box (Sealed)	1
	c 4016659	Fuse Box (Sealed)	1
1	. . . . .	Connector Assembly (Fuse Carrier)	1
1	1573113	Fuse Box	1
1	1573114	Cover	1
1	1573115	Terminal	2
1	1607778	Terminal	2
2	1484715	Clip	1
3	. . . . .	Connector Assembly (Frame Connector)	1
3	1525589	Connector	1
3	1330417	Connector	1
3	1502712	Terminal (Pin)	2
3	1363885	Terminal (Pin)	4
4	1378661	Fuse (1 Amp)	1
5	1320669	Fuse (30 Amp)	1
	a 1607526	Boot	1
	ac 4609580	Label (Fuse Box)	1

FOOTNOTES:

a Not Illustrated
b → 10/2010
c 10/2010 →

©2011 HYSTER COMPANY

WIRE HARNESS (FIGURE 4-121)
APC122 CONVERSION

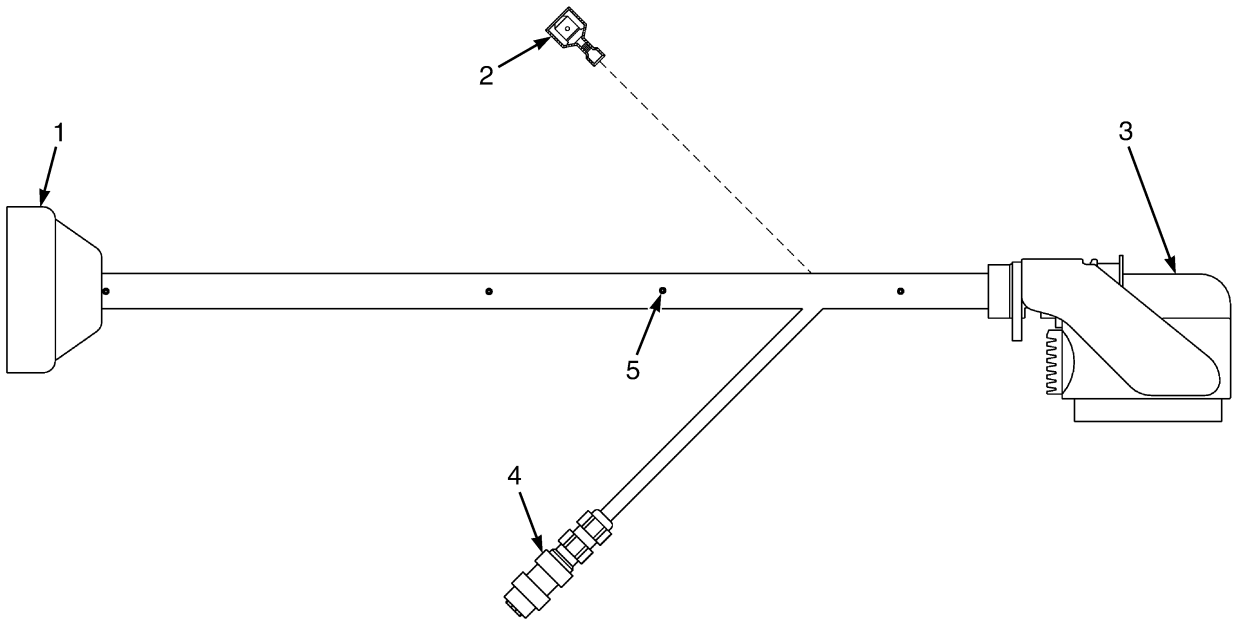

HP082071

ITEM	PART NO.	DESCRIPTION	QTY
	4006043	Wire Harness (APC122 Conversion)	1
1	. . . . .	Connector Assembly	1
1	4009267	Connector Body	1
1	4007377	Connector	1
1	4007378	Pin	37
1	4009266	Screw	2
2	4006410	Receptacle	1
3	. . . . .	Connector Assembly	1
3	4006406	Connector Body	1
3	4006410	Receptacle	14
3	4006507	Plug	10
3	4006409	Receptacle	21
3	4006506	Plug	15
4	. . . . .	Connector Assembly	1
4	4006765	Connector Body	1
4	4006766	Receptacle	4
5	. . . . .	Resistors	1
5	4006626	Resistor	2
5	4006627	Resistor	2

©2011 HYSTER COMPANY

NOTES

©2011 HYSTER COMPANY

5 TRANSMISSION

SECTION 5
TRANSMISSION

DESCRIPTION	PAGE
AUXILIARY COOLANT PUMP	
OPTIONAL	5-76
CHARGE PUMP	5-32
CLUTCH	
FORWARD AND SECOND	5-22
LOW GEAR (→ S/N E008D01910Z)	5-16
LOW GEAR (S/N E008D01911Z ↔ S/N E008D02323F)	5-18
LOW GEAR (S/N E008D02324F →)	5-20
REVERSE AND THIRD (→ S/N E008D02323F)	5-26
REVERSE AND THIRD (S/N E008D02324F →)	5-30
CONVERTER HOUSING	5-8
INCHING VALVE ASSEMBLY	
S/N E008D01911Z →	5-48
MODULATOR VALVE	
→ S/N E008D01910Z	5-36
OUTPUT YOKE	
→ S/N E008D02024C	5-15
SHIFT LEVER	
→ S/N E008D01865Y	5-38
SOLENOID ASSEMBLY	
S/N E008D01911Z →	5-46
TORQUE CONVERTER	5-12
TRANSMISSION	
ATTACHING PARTS (→ S/N E008D01910Z)	5-50
ATTACHING PARTS (S/N E008D01680W ↔ S/N E008D01910Z)	5-52
ATTACHING PARTS COOLING AND FILTER (→ S/N E008D02024C INC. 02027)	5-60
TRANSMISSION ASSEMBLY	5-2
TRANSMISSION ATTACHING PARTS	
TIER II ENGINE - H550F, H620F, H650F, H700F (S/N E008D01911Z ↔ S/N E008D02024C)	5-54
TIER II ENGINE - H550FS, H620FS, H700FS (S/N E008D01985B ↔ S/N E008D02024C)	5-56
TRANSMISSION CONTROL VALVE	
→ S/N E008D01865Y	5-40
S/N E008D01866Y ↔ S/N E008D01910Z	5-42
S/N E008D01911Z →	5-44
TRANSMISSION COOLING	
S/N E008D02100D →	5-72
H440FS, H550FS, H620FS, H700FS (S/N E008D02025C ↔ S/N E008D02099D)	5-68
H550F, H620F, H650F, H700F (S/N E008D02025C ↔ S/N E008D02099D)	5-64
OPTIONAL (S/N E008D01680W →)	5-78
TRANSMISSION HOUSING	5-4

©2011 HYSTER COMPANY

TRANSMISSION ASSEMBLY (FIGURE 5-1)

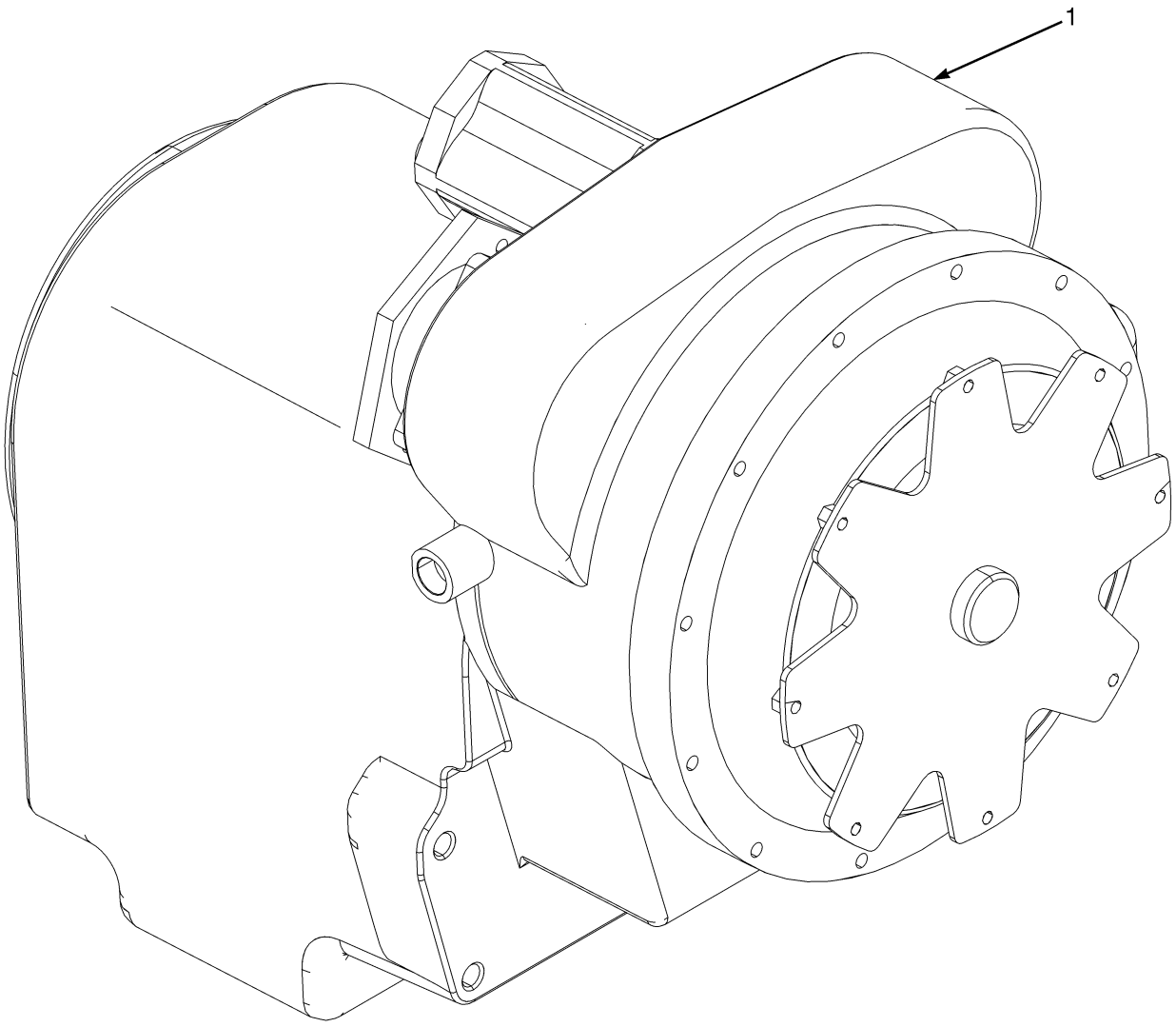

HP240497

ITEM	PART NO.	DESCRIPTION	QTY
1	**bc** 1367372	Transmission Assy	1
1	**ad** 1454950	Transmission Assy	1
1	**e** 1465583	Transmission Assy	1
1	**f** 1515497	Transmission Assy	1
1	**g** 1603626	Transmission Assy	1
1	**h** 1699364	Transmission Assy	1
	1608649	Kit-Gasket	1
	1313908	Kit-Seal	1

©2011 HYSTER COMPANY

FOOTNOTES:

a Remanufactured Transmission 1455613 (U.S.)
b Remanufactured Transmission 864701 (U.S.)
c → S/N E008D01679W
d S/N E008D01680W ↔ S/N E008D01865Y
e S/N E008D01866Y ↔ S/N E008D01910Z
f S/N E008D01911Z ↔ S/N E008D02024C
g S/N E008D02025C ↔ S/N E008D02324F
h S/N E008D02324F →

©2011 HYSTER COMPANY

TRANSMISSION HOUSING (FIGURE 5-2)

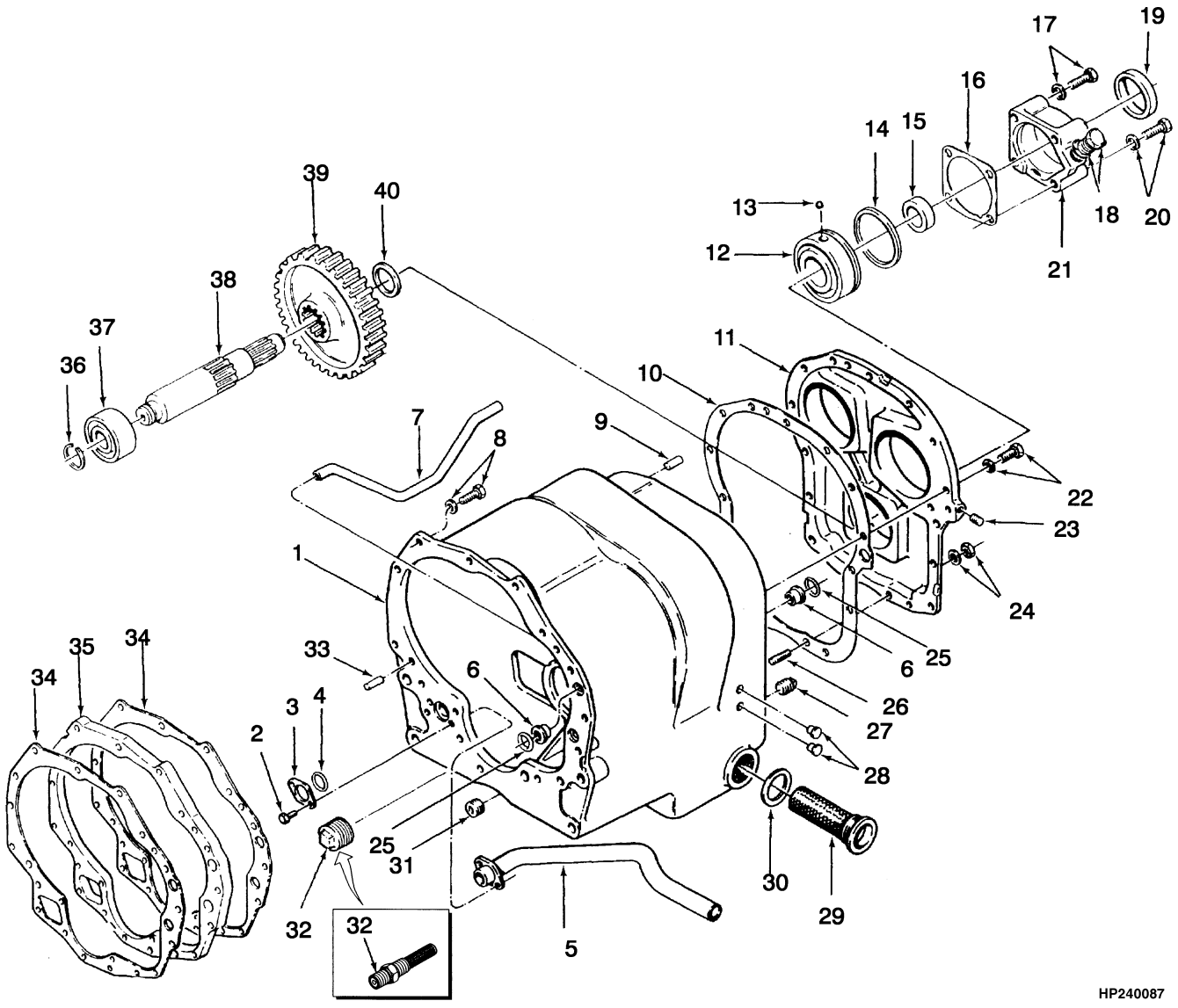

©2011 HYSTER COMPANY

TRANSMISSION HOUSING

ITEM	PART NO.	DESCRIPTION	QTY
	cd 1367372	Transmission Assy	1
	bh 1454950	Transmission Assy	1
	i 1465583	Transmission Assy	1
	k 1515497	Transmission Assy	1
	l 1603626	Transmission Assy	1
	n 1699364	Transmission Assy	1
1	**f** 1393418	Transmission Housing	1
1	**o** 1530582	Transmission Housing	1
1	1479823	Baffle	1
1	1479824	Baffle	1
1	1479822	Rivet	4
1	1607836	Rivet	2
2	221458	Capscrew	2
3	330507	Washer	1
4	15865	O-Ring	1
5	330506	Tube Assy (Suction)	1
6	330504	Nut	2
7	330505	Tube Assy (Low Speed Clutch)	1
8	15157	Lockwasher	10
8	18563	Capscrew	10
8	1530508	Screw	10
9	330508	Pin	2
10	382215	Gasket	1
11	**f** 382216	Cover	1
11	**o** 1530585	Cover	1
12	382292	Bearing	1
13	330596	Ball	1
14	330606	Ring	1
15	382293	Spacer	1
16	382294	Gasket	1
17	143452	Capscrew	2
17	**g** 50014	Lockwasher	2
17	**n** 1556990	Lockwasher	2
18	14603	Plug	1
18	16486	O-Ring	1
19	382295	Oil Seal	1
20	220789	Capscrew	2
20	**g** 50014	Lockwasher	4
20	**n** 1556990	Lockwasher	2
21	382296	Bearing Cap	1
22	**f** 177948	Lockwasher	21
22	**o** 15158	Washer	21
22	221532	Capscrew	21
23	330511	Plug	1
24	**f** 177948	Lockwasher	2
24	**o** 15157	Lockwasher	2
24	221710	Nut	2
25	**g** 15862	O-Ring	3
25	**n** 130625	O-Ring	3
26	330512	Stud	2
27	35504	Fitting	1

©2011 HYSTER COMPANY

TRANSMISSION HOUSING

ITEM	PART NO.	DESCRIPTION	QTY
28	14385	Fitting	3
29	330514	Screen	1
30	330513	Gasket	1
31	**e** 246869	Plug (Magnetic)	1
31	**j** 15316	Fitting	2
31	**n** 1607835	Plug	2
32	**e** 15302	Plug	1
32	**i** 1394087	Fitting	1
32	**o** ~~1530584~~		
	1389144	Plug	1
32	**m** 1394087	Fitting	1
33	382212	Dowel	2
34	330501	Gasket	2
35	382213	Spacer	1
36	**d** 304527	Snap Ring	1
36	**p** 330570	Retaining Ring	1
37	1342522	Ball Bearing	1
38	382289	Shaft	1
39	382290	Gear	1
40	382291	Spacer	1
	a 1389130	Bushing	1
	a 1389129	Plug	1
	a 1314149	O-Ring	1
	a 1389131	Shim	AR
	a 1607835	Plug	1

FOOTNOTES:

a Not Illustrated
b Remanufactured Transmission 1455613 (U.S.)
c Remanufactured Transmission 864701 (U.S.)
d → S/N E008D01679W
e → S/N E008D01865Y
f → S/N E008D01910Z
g → S/N E008D02323F
h S/N E008D01680W ↔ S/N E008D01865Y
i S/N E008D01866Y ↔ S/N E008D01910Z
j S/N E008D01866Y ↔ S/N E008D02323F
k S/N E008D01911Z ↔ S/N E008D02024C
l S/N E008D02025C ↔ S/N E008D02323F
m S/N E008D02025C →
n S/N E008D02324F →
o S/N E008D01911Z →
p S/N E008D01680W →

©2011 HYSTER COMPANY

NOTES

©2011 HYSTER COMPANY

CONVERTER HOUSING (FIGURE 5-3)

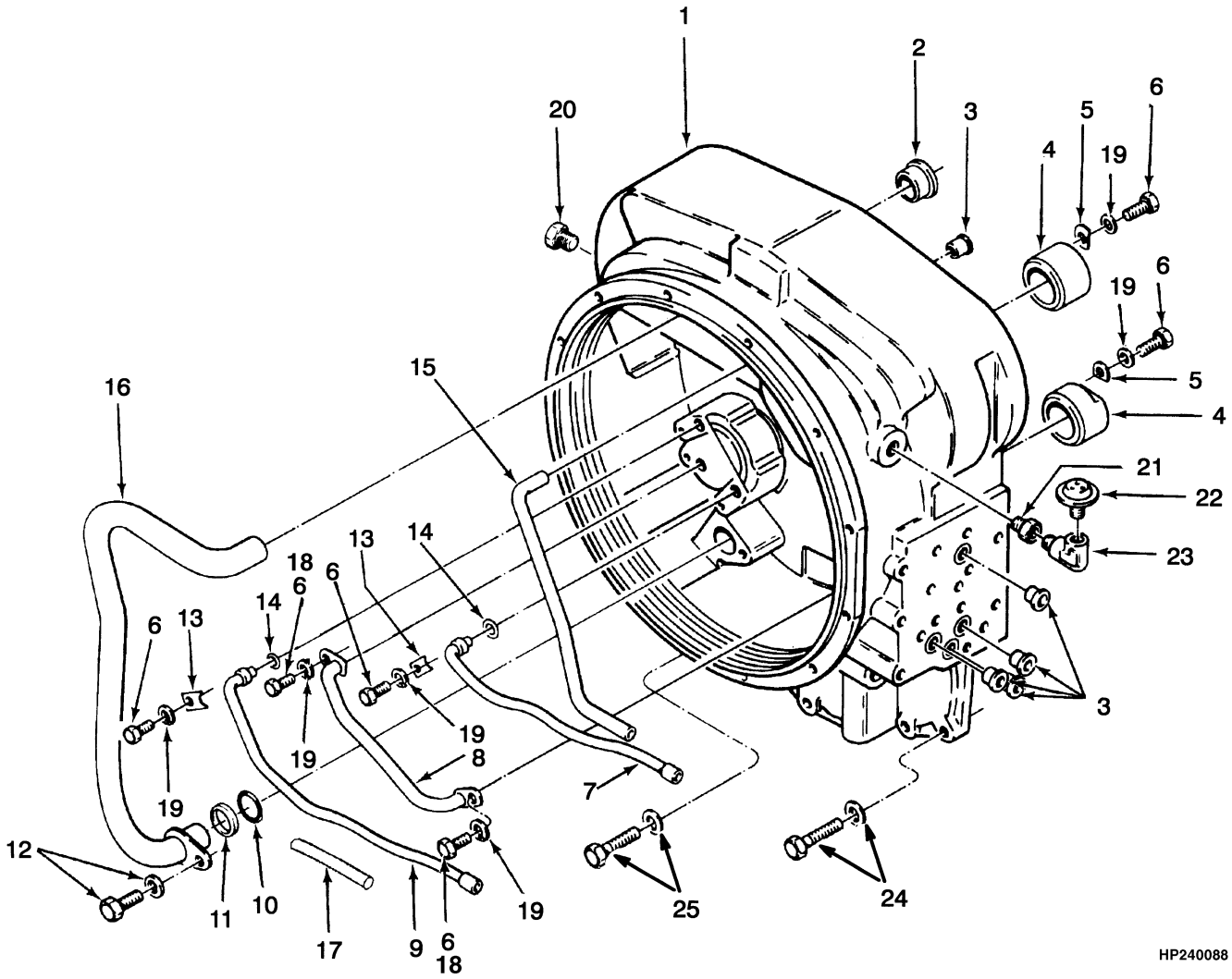

©2011 HYSTER COMPANY

CONVERTER HOUSING

ITEM	PART NO.	DESCRIPTION	QTY
	bc 1367372	Transmission Assy	1
	ag 1454950	Transmission Assy	1
	h 1465583	Transmission Assy	1
	j 1515497	Transmission Assy	1
	f 1603626	Transmission Assy	1
	m 1699364	Transmission Assy	1
1	**d** 1393417	Housing	1
1	**k** 1530507	Housing	1
2	330518	Sleeve	1
3	**d** 330504	Nut	5
3	**k** 330504	Nut	4
4	330519	Sleeve	2
5	330520	Washer	2
6	**d** 16374	Capscrew	4
6	**k** 16374	Capscrew	6
7	330522	Tube (Third Gear)	1
8	330524	Tube (Lube)	1
9	330525	Tube (Reverse)	1
10	15863	O-Ring	1
11	348476	Spacer	1
12	15156	Lockwasher	1
12	**c** 330526	Screw	1
12	**l** 16597	Capscrew	1
13	330523	Clip	2
14	104506	O-Ring	2
15	330521	Tube (Valve Oil Supply)	1
16	330517	Tube Assy (Suction)	1
17	**d** 1339958	Tube	1
18	**i** 16394	Capscrew	2
18	**m** 16374	Capscrew	2
19	15155	Lockwasher	6
20	**e** 15304	Fitting	1
20	**m** 15316	Fitting	1
21	15370	Fitting	1
22	330527	Breather	1
23	15345	Fitting	1
24	15157	Lockwasher	4
24	16834	Capscrew	4
25	15157	Lockwasher	4
25	**d** 18572	Capscrew	4
25	**k** 1504229	Screw	4
	1313907	Kit-Seal	1

©2011 HYSTER COMPANY

FOOTNOTES:

a Remanufactured Transmission 1455613 (U.S.)
b Remanufactured Transmission 864701 (U.S.)
c → S/N E008D01679W
d → S/N E008D01910Z
e → S/N E008D02323F
f S/N E008D02025C ↔ S/N E008D02323F
g S/N E008D01680W ↔ S/N E008D01865Y
h S/N E008D01866Y ↔ S/N E008D01910Z
i S/N E008D01910Z ↔ S/N E008D02324F
j S/N E008D01911Z ↔ S/N E008D02024C
k S/N E008D01911Z →
l S/N E008D01680W →
m S/N E008D02324F →

©2011 HYSTER COMPANY

NOTES

©2011 HYSTER COMPANY

TORQUE CONVERTER (FIGURE 5-4)

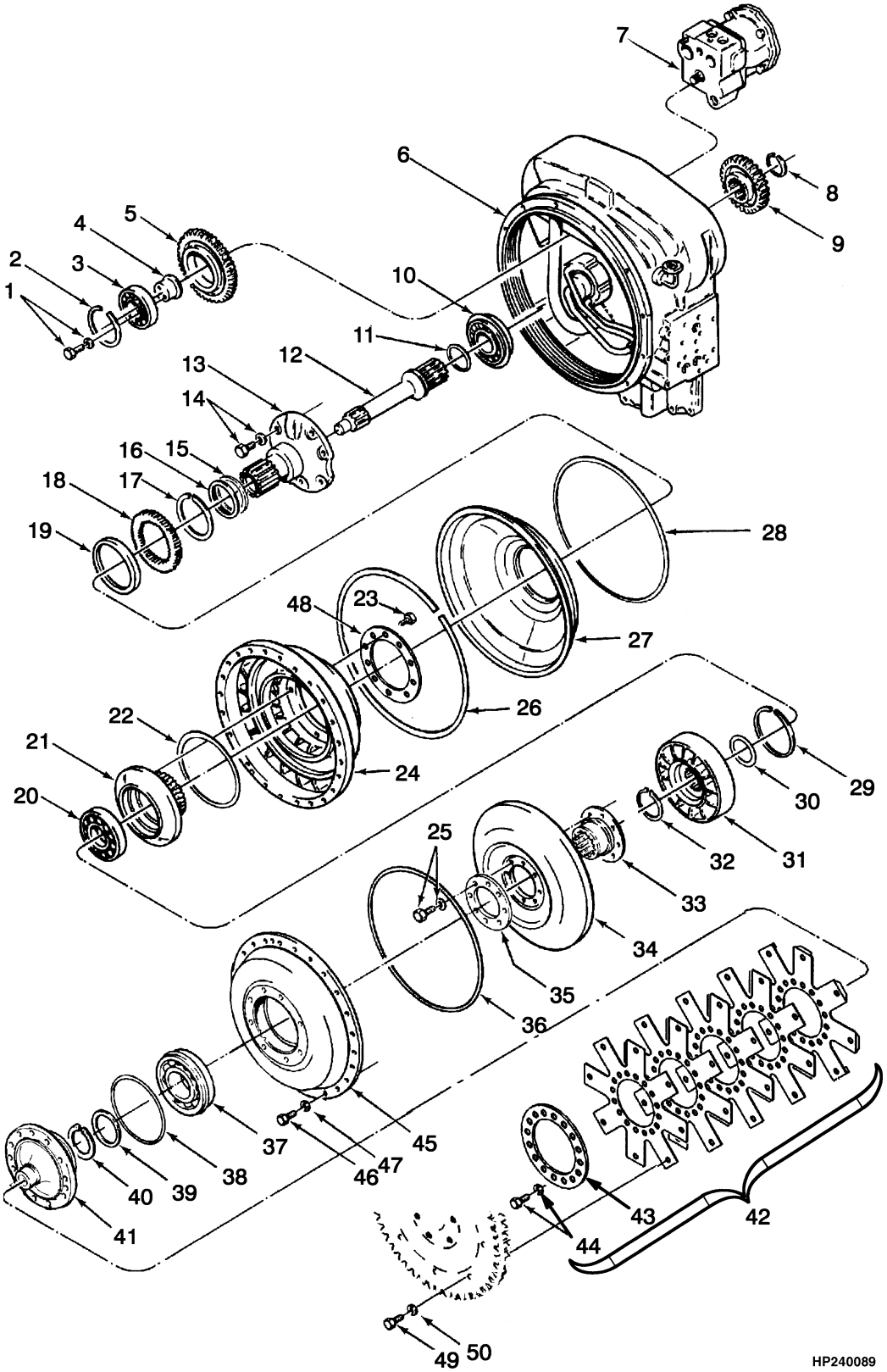

©2011 HYSTER COMPANY

TORQUE CONVERTER

ITEM	PART NO.	DESCRIPTION	QTY
	ah 1454950	Transmission Assy	1
	bc 1367372	Transmission Assy	1
	f 1465583	Transmission Assy	1
	g 1515497	Transmission Assy	1
	i 1603626	Transmission Assy	1
	j 1699364	Transmission Assy	1
1	15157	Lockwasher	6
1	16806	Capscrew	6
2	**e** ~~330529~~		
	1704299	Snap Ring	3
2	**j** ~~330529~~		
	1704299	Snap Ring	3
3	**e** 382217	Bearing	3
3	**j** 43209	Ball Bearing	3
4	330530	Support	3
5	330531	Drive Gear	3
6	**d** 1393417	Housing (☞Figure 5-3)	1
6	**l** 1530507	Housing (☞Figure 5-3)	1
7	1342518	Charge Pump (☞Figure 5-12)	1
8	330539	Retaining Ring	1
9	1347915	Gear (Turbine Shaft)	1
10	**e** ~~348478~~		
	1704196	Bearing	1
10	**j** ~~348478~~		
	1704196	Bearing	1
11	1450658	Sealing Ring	1
12	382218	Shaft	1
13	330536	Support	1
14	15924	Lockwasher	6
14	16830	Capscrew	6
15	330539	Retaining Ring	1
16	1450657	Sealing Ring	1
17	330534	Snap Ring	1
18	330533	Gear (Hub)	1
19	330532	Seal	1
20	1339366	Bearing	1
21	1339367	Hub	1
22	1313922	O-Ring	1
23	1339371	Capscrew	12
24	1339369	Impeller	1
25	**e** 1307970	Screw	8
25	**j** 162572	Capscrew	8
26	1312376	Retaining Ring	1
27	**e** 330546	Baffle (Oil)	1
27	**j** 1704197	Baffle (Oil)	1
28	330547	Sealing Ring	1
29	1339365	Snap Ring	1
30	330564	Spacer	1
31	1339364	Stator	1
32	330562	Retaining Ring	1
33	382220	Hub	1

©2011 HYSTER COMPANY

TORQUE CONVERTER

ITEM	PART NO.	DESCRIPTION	QTY
34	348480	Turbine	1
35	1307969	Ring	1
36	330558	O-Ring	1
37	382252	Ball Bearing	1
38	1326375	Bearing Cap	1
39	382253	Washer	1
40	382254	Snap Ring	2
41	1326298	Bearing	1
42	**d** 1326297	Drive Plate	1
42	**l** 1479830	Kit-Drive Plate Transmission	1
43	1312373	Back-Up Ring	1
44	**k** 1479832	Screw	10
44	**k** 330552	Washer	10
44	**c** 330555	Kit-Screw	10
45	1326299	Cover	1
46	330593	Screw	24
47	15156	Lockwasher	24
48	1339370	Ring (Hub)	1
49	16594	Capscrew	8
50	15156	Lockwasher	8
	1313907	Kit-Seal	1

FOOTNOTES:

a Remanufactured Transmission 1455613 (U.S.)
b Remanufactured Transmission 864701 (U.S.)
c → S/N E008D01679W
d → S/N E008D01910Z
e → S/N E008D02323F
f S/N E008D01866Y ↔ S/N E008D01910Z
g S/N E008D01911Z ↔ S/N E008D02024C
h S/N E008D01680W ↔ S/N E008D01865Y
i S/N E008D02025C ↔ S/N E008D02323F
j S/N E008D02324F →
k S/N E008D01680W →
l S/N E008D01911Z →

©2011 HYSTER COMPANY

OUTPUT YOKE (FIGURE 5-5)
(→ S/N E008D02024C)

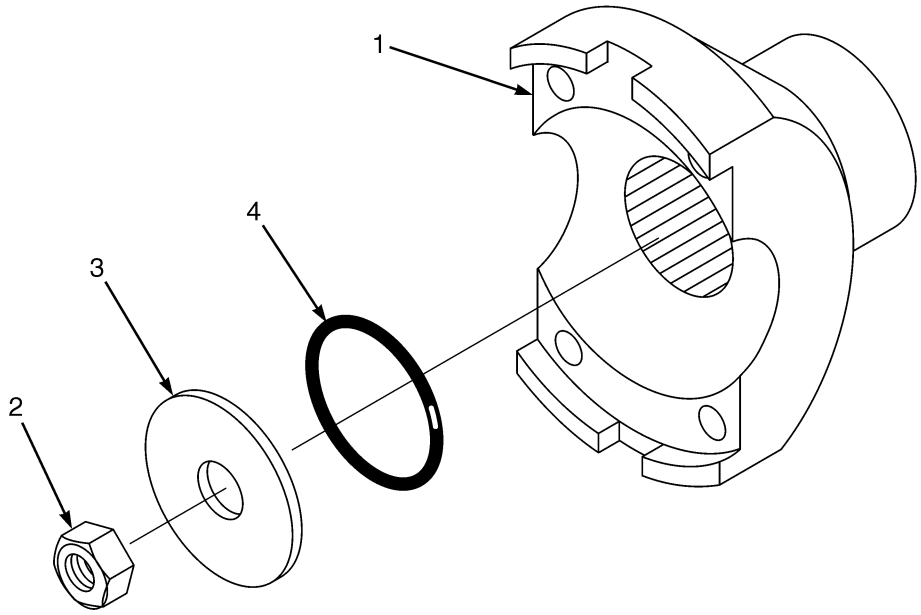

HP240426

ITEM	PART NO.	DESCRIPTION	QTY
	1515497	Transmission Assy	1
1	1532693	Flange	1
2	1313921	O-Ring	1
3	385465	Washer	1
4	385456	Nut	1

©2011 HYSTER COMPANY

CLUTCH (FIGURE 5-6)
LOW GEAR (→ S/N E008D01910Z)

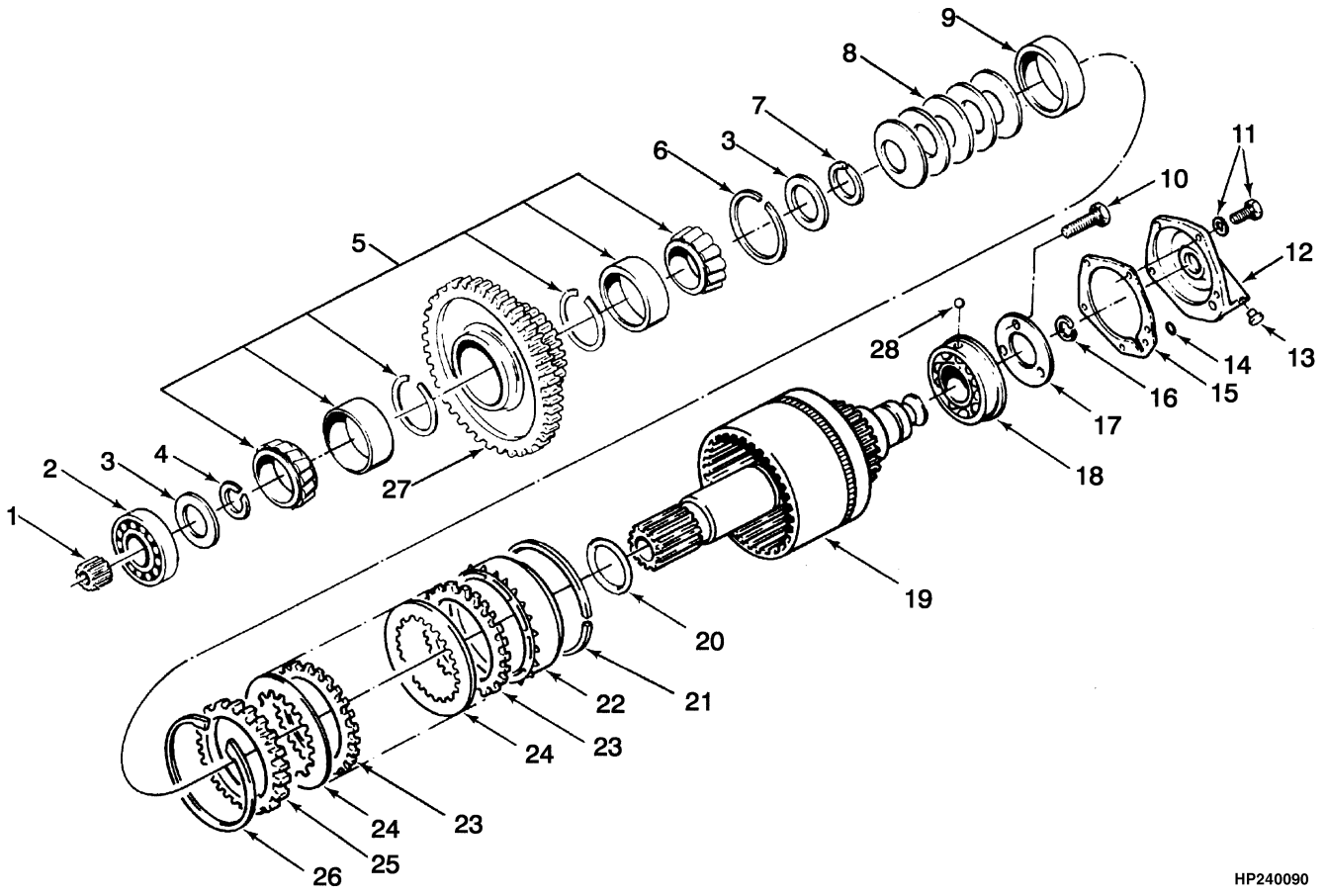

©2011 HYSTER COMPANY

CLUTCH

LOW GEAR (→ S/N E008D01910Z)

ITEM	PART NO.	DESCRIPTION	QTY
	ad 1454950	Transmission Assy	1
	bc 1367372	Transmission Assy	1
	f 1465583	Transmission Assy	1
1	330588	Bearing	1
2	382283	Bearing	1
3	382281	Retainer	2
4	348488	Snap Ring	1
5	348487	Bearing	1
6	330574	Baffle (Baffle)	1
7	348486	Ring	1
8	1351995	Disk Spring	1
9	382279	Spacer	1
10	221496	Capscrew	3
11	15156	Lockwasher	5
11	**e** 330593	Screw	5
11	**c** 348485	Capscrew (And Lockwasher)	5
12	382286	Bearing Cap	1
13	330511	Plug	1
14	60653	O-Ring	1
15	330600	Gasket	1
16	1450659	Sealing Ring	1
17	382285	Retainer Plate	1
18	382284	Bearing	1
18	382288	Ring	1
19	382278	Clutch Assy	1
19	**e** 1479839	Snap Ring	1
19	**e** 1479840	Brake Drum (And Hub Assembly)	1
19	**e** 1479841	O-Ring	1
19	**e** 1479842	Shaft	1
20	330623	Kit-Clutch Pack Plates	1
21	**e** 1479838	Kit-Clutch Pack Plates	1
21	**c** 330622	Sealing Ring	1
22	1342524	Piston	1
23	1339374	Separator Plate (Outer)	9
24	330619	Friction Disk (Inner)	9
25	330618	Plate	1
26	330617	Retainer Plate	1
27	382282	Gear (Low)	1
28	330596	Ball	1

FOOTNOTES:

a Remanufactured Transmission 1455613 (U.S.)
b Remanufactured Transmission 864701 (U.S.)
c → S/N E008D01679W
d S/N E008D01680W ↔ S/N E008D01865Y
e S/N E008D01680W ↔ S/N E008D01910Z
f S/N E008D01866Y ↔ S/N E008D01910Z

©2011 HYSTER COMPANY

CLUTCH (FIGURE 5-7)

LOW GEAR (S/N E008D01911Z ↔ S/N E008D02323F)

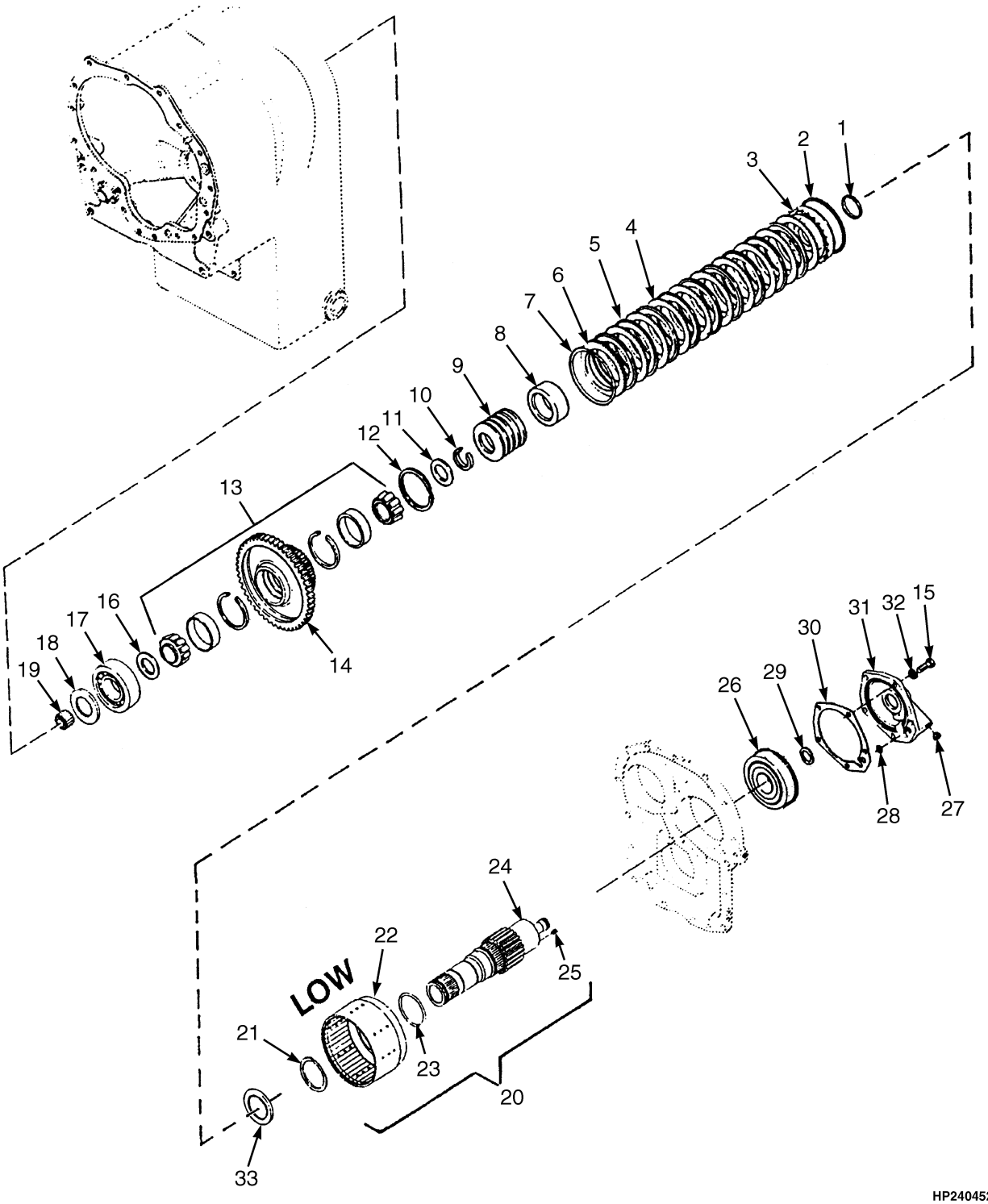

©2011 HYSTER COMPANY

CLUTCH

LOW GEAR (S/N E008D01911Z ↔ S/N E008D02323F)

ITEM	PART NO.	DESCRIPTION	QTY
	a 1515497	Transmission Assy	1
	b 1603626	Transmission Assy	1
1	330623	Kit-Clutch Pack Plates	1
2	1479838	Kit-Clutch Pack Plates	1
3	**a** 1530620	Piston (Piston Assembly)	1
3	1530611	Seal (Inner)	1
3	**b** 1607927	Kit-Clutch Pack Plates (Piston Assembly)	1
4	330620	Clutch Disk	9
5	330619	Friction Disk	9
6	330618	Plate	1
7	330617	Retainer Plate	1
8	1530621	Retainer (Retainer)	1
9	1530687	Return Spring (Piston Return)	1
10	1530688	Retainer	1
11	1530689	Retaining Ring (Spring)	1
12	330574	Baffle	1
13	1530690	Bearing (Low Speed)	1
14	1530691	Gear (Low Speed)	1
15	330593	Screw	5
16	1530692	Retaining Ring	1
17	1530693	Bearing Cup (Front)	1
18	1530694	Bearing Cone (Front)	1
19	330588	Bearing	1
20	**a** 1530700	Shaft	1
20	**b** 1607930	Shaft	1
21	1479839	Snap Ring	1
22	**a** 1530695	Clutch Housing	1
22	**b** 1607928	Hub	1
23	1530696	O-Ring	1
24	1530697	Shaft	1
25	1530699	Plug	1
26	30068	Bearing Cup (Rear)	1
26	1530702	Bearing (Rear)	1
27	330511	Plug	1
28	1530709	Bearing Cap (Rear Bearing)	1
29	1450659	Sealing Ring	1
30	1530703	Shim (.004 in.)	1
30	1530704	Shim (.007 in.)	1
30	1530705	Shim (.010 in.)	1
30	1530706	Shim (.020 in.)	1
31	1530707	Bearing Cap (Rear)	1
31	1530708	O-Ring	1
32	15156	Lockwasher	5
33	1607921	Seal	1

FOOTNOTES:

a S/N E008D01911Z ↔ S/N E008D02024C

b S/N E008D02025C ↔ S/N E008D02323F

©2011 HYSTER COMPANY

CLUTCH (FIGURE 5-8)
LOW GEAR (S/N E008D02324F →)

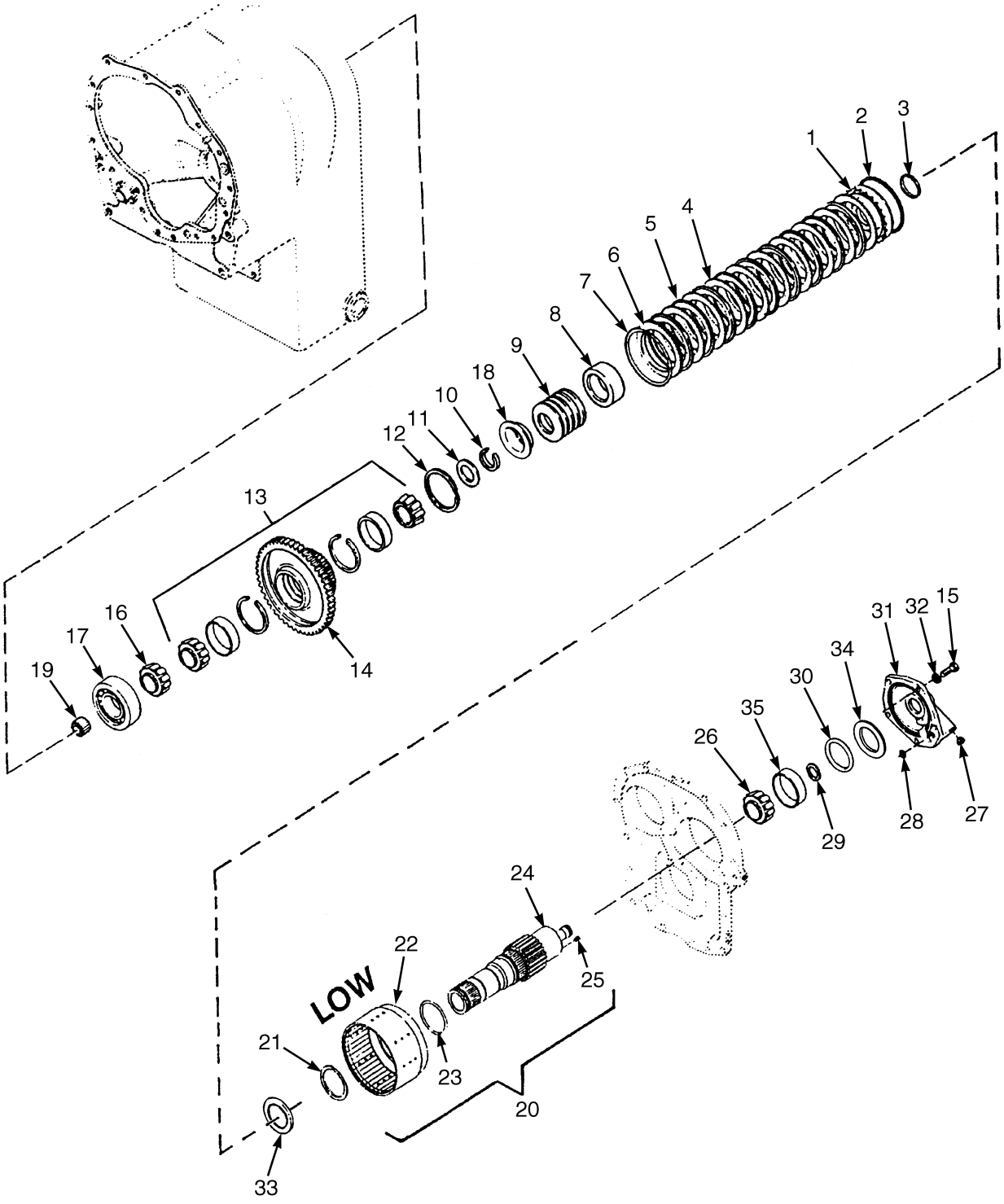

HP240601

©2011 HYSTER COMPANY

CLUTCH

LOW GEAR (S/N E008D02324F →)

ITEM	PART NO.	DESCRIPTION	QTY
	1699364	Transmission Assy	1
1	1704574	Clutch Assy	1
2	1479838	Kit-Clutch Pack Plates	1
3	330623	Kit-Clutch Pack Plates	1
4	330620	Clutch Disk	9
5	330619	Friction Disk	9
6	330618	Plate	1
7	330617	Retainer Plate	1
8	1530621	Retainer	1
9	1530687	Return Spring (Piston Return)	1
10	330539	Retaining Ring	1
11	1530689	Retaining Ring (Spring)	1
12	1530692	Retaining Ring	1
13	1530690	Bearing (Low Speed)	1
14	1530691	Gear (Low Speed)	1
15	330593	Screw	5
16	1530694	Bearing Cone (Front)	1
17	1530693	Bearing Cup (Front)	1
18	1530688	Retainer	1
19	330588	Bearing	1
20	1607930	Shaft	1
21	1479839	Snap Ring	1
22	1607928	Hub	1
23	1530626	Support	1
24	1530697	Shaft	1
25	1530699	Plug	1
26	1530702	Bearing (Rear)	1
27	330511	Plug	1
28	1530709	Bearing Cap (Rear Bearing)	1
29	1450659	Sealing Ring	1
30	1530708	O-Ring	1
31	1530707	Bearing Cap (Rear)	1
32	15156	Lockwasher	5
33	1607921	Seal	1
34	1530703	Shim (.004 in.)	1
34	1530706	Shim (.020 in.)	1
34	1530705	Shim (.010 in.)	1
34	1530704	Shim (.007 in.)	1
35	30068	Bearing Cup (Rear)	1

©2011 HYSTER COMPANY

CLUTCH (FIGURE 5-9)
FORWARD AND SECOND

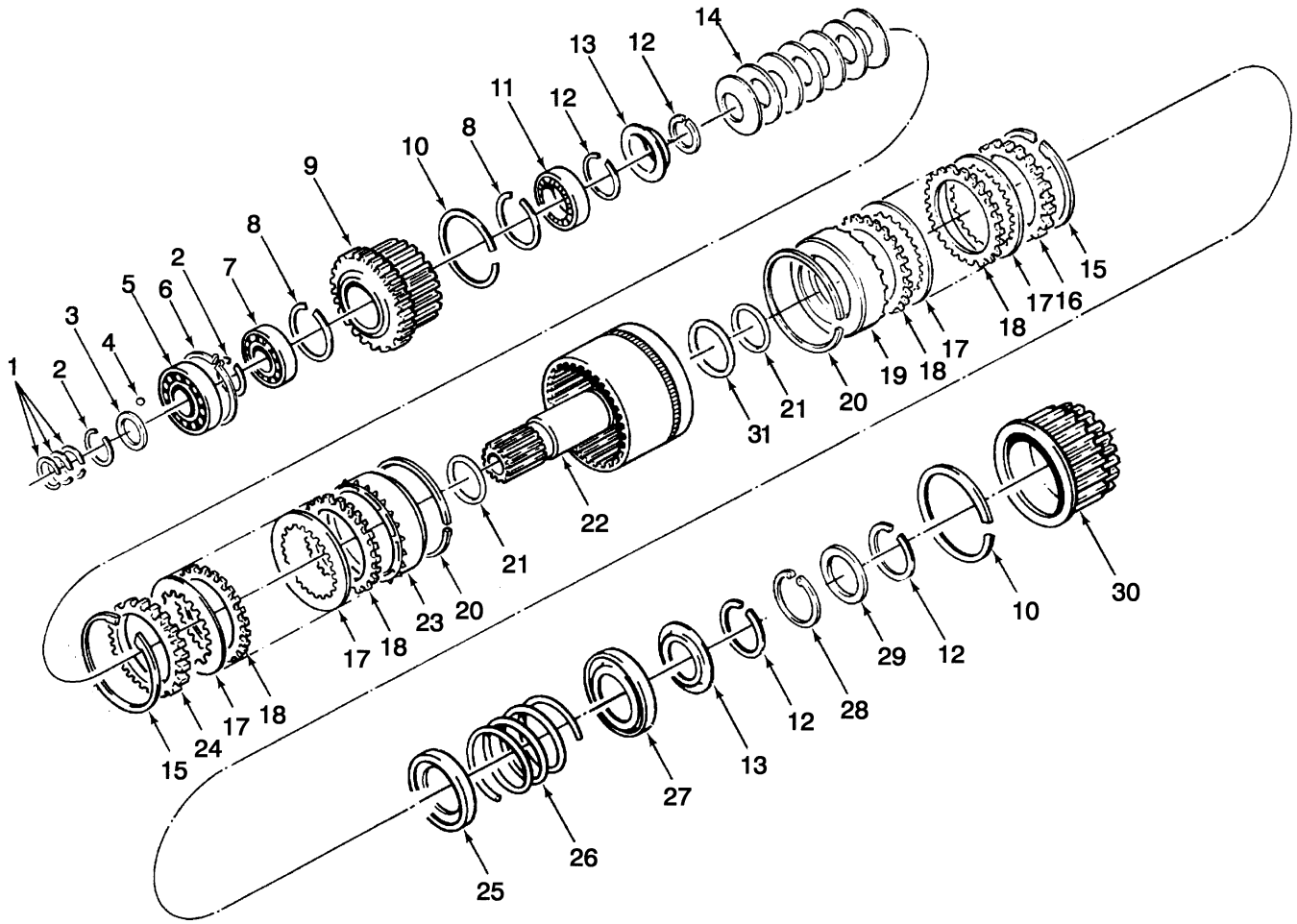

HP240091

©2011 HYSTER COMPANY

CLUTCH
FORWARD AND SECOND

ITEM	PART NO.	DESCRIPTION	QTY
	bc 1367372	Transmission Assy	1
	ak 1454950	Transmission Assy	1
	e 1465583	Transmission Assy	1
	f 1515497	Transmission Assy	1
	g 1603626	Transmission Assy	1
	i 1699364	Transmission Assy	1
1	**c** 1376890	Kit-Seal	3
1	**k** 1556985	Piston Ring	3
2	**d** 304527	Snap Ring	2
2	**j** 330570	Retaining Ring	2
3	382259	Plate	1
4	149616	Ball	1
5	382260	Bearing	1
6	330586	Ring	1
7	382261	Bearing	1
8	382262	Snap Ring	2
9	1377125	Gear	1
10	330574	Baffle (Baffle)	2
11	330590	Bearing (Gear)	1
12	382269	Snap Ring	4
13	382268	Retainer	2
14	1351992	Disk Spring	1
15	330617	Retainer Plate	2
16	**d** 330618	Plate	1
16	**j** 1530619	Clutch Plate	1
17	382263	Friction Disk	18
18	**d** 1339374	Separator Plate (Outer)	18
18	**j** 330620	Clutch Disk (Outer)	18
19	**d** 1342524	Piston	1
19	**j** 1530610	Piston	1
19	**g** 1607920	Piston	1
19	**i** 1704505	Clutch Assy	1
20	1479838	Kit-Clutch Pack Plates	2
21	330623	Kit-Clutch Pack Plates	2
22	**d** 382276	Clutch Assy	1
22	**j** 1530622	Brake Drum	1
22	**g** 1607929	Brake Drum	1
22	**i** 1607939	Plate	1
23	1339956	Piston	1
24	382266	Plate	1
25	330579	Retainer	1
26	330578	Spring (Return)	1
27	330577	Spring	1
28	**c** 382274	Snap Ring	1
28	**k** 1479836	Ring	1
29	382273	Retainer	1
30	382277	Gear (Second)	1
31	**h** 1607921	Seal	1

©2011 HYSTER COMPANY

FOOTNOTES:

a Remanufactured Transmission 1455613 (U.S.)
b Remanufactured Transmission 864701 (U.S.)
c → S/N E008D01679W
d → S/N E008D01910Z
e S/N E008D01866Y ↔ S/N E008D01910Z
f S/N E008D01911Z ↔ S/N E008D02024C
g S/N E008D02025C ↔ S/N E008D02323F
h S/N E008D02025C →
i S/N E008D02324F →
j S/N E008D01911Z →
k S/N E008D01680W →

©2011 HYSTER COMPANY

NOTES

©2011 HYSTER COMPANY

CLUTCH (FIGURE 5-10)
REVERSE AND THIRD (→ S/N E008D02323F)

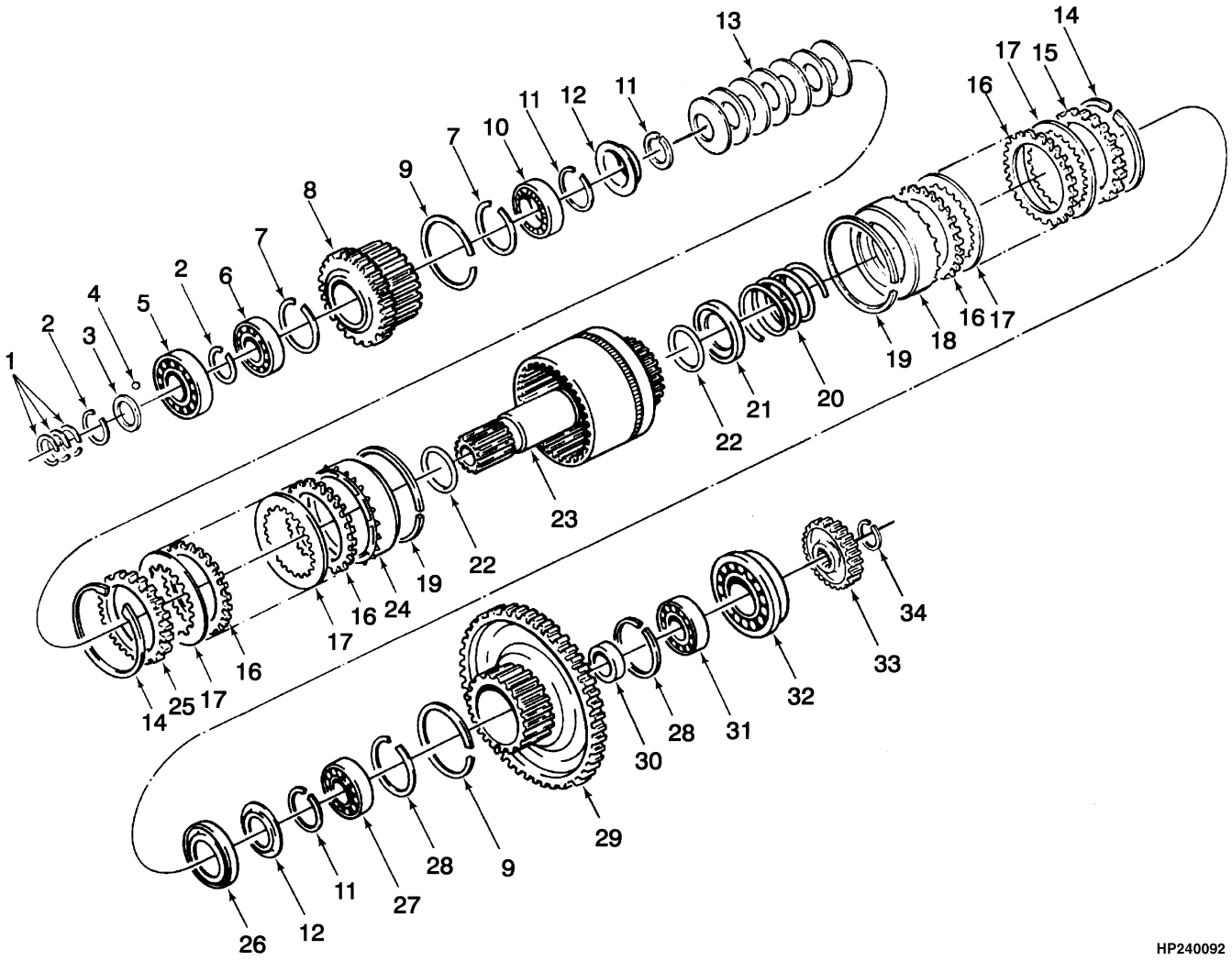

HP240092

©2011 HYSTER COMPANY

CLUTCH

REVERSE AND THIRD (→ S/N E008D02323F)

ITEM	PART NO.	DESCRIPTION	QTY
	bc 1367372	Transmission Assy	1
	af 1454950	Transmission Assy	1
	g 1465583	Transmission Assy	1
	h 1515497	Transmission Assy	1
	j 1603626	Transmission Assy	1
1	**d** 1376890	Kit-Seal	3
1	**d** 1556985	Piston Ring	3
2	**e** 304527	Snap Ring	2
2	**i** 330570	Retaining Ring	2
3	382259	Plate	1
4	149616	Ball	1
5	382260	Bearing	1
6	382261	Bearing	1
7	382262	Snap Ring	2
8	1377125	Gear	1
9	330574	Baffle (Baffle)	2
10	330590	Bearing	1
11	382269	Snap Ring	3
12	382268	Retainer	2
13	1351992	Disk Spring	1
14	330617	Retainer Plate	2
15	**e** 330618	Plate	1
15	**i** 1530619	Clutch Plate (Third Clutch)	1
16	**e** 1339374	Separator Plate (Outer)	18
16	**i** 330620	Clutch Disk (Outer)	18
17	382263	Friction Disk	18
18	**e** 1342524	Piston	1
18	**i** 1530610	Piston	1
18	**j** 1607920	Piston	1
19	1479838	Kit-Clutch Pack Plates	2
20	330578	Spring (Return)	1
21	330579	Retainer	1
22	330623	Kit-Clutch Pack Plates	2
23	**e** 382264	Clutch Assy	1
23	**i** 1530612	Brake Drum	1
24	1339956	Piston	1
25	382266	Plate (Reverse Clutch)	1
26	330577	Spring	1
27	330580	Bearing	1
28	330581	Snap Ring	2
29	330582	Gear	1
30	330583	Spacer	1
31	124608	Ball Bearing	1
32	382270	Bearing	1
33	**e** 382271	Gear	1
33	**i** 1530613	Gear	1
34	330594	Drive Gear	1

©2011 HYSTER COMPANY

FOOTNOTES:

a Remanufactured Transmission 1455613 (U.S.)
b Remanufactured Transmission 864701 (U.S.)
c → S/N E008D01679
d → S/N E008D01679W
e → S/N E008D01910Z
f S/N E008D01680W ↔ S/N E008D01865Y
g S/N E008D01866Y ↔ S/N E008D01910Z
h S/N E008D01911Z ↔ S/N E008D02024C
i S/N E008D01911Z ↔ S/N E008D02323F
j S/N E008D02025C ↔ S/N E008D02323F

©2011 HYSTER COMPANY

NOTES

©2011 HYSTER COMPANY

CLUTCH (FIGURE 5-11)
REVERSE AND THIRD (S/N E008D02324F →)

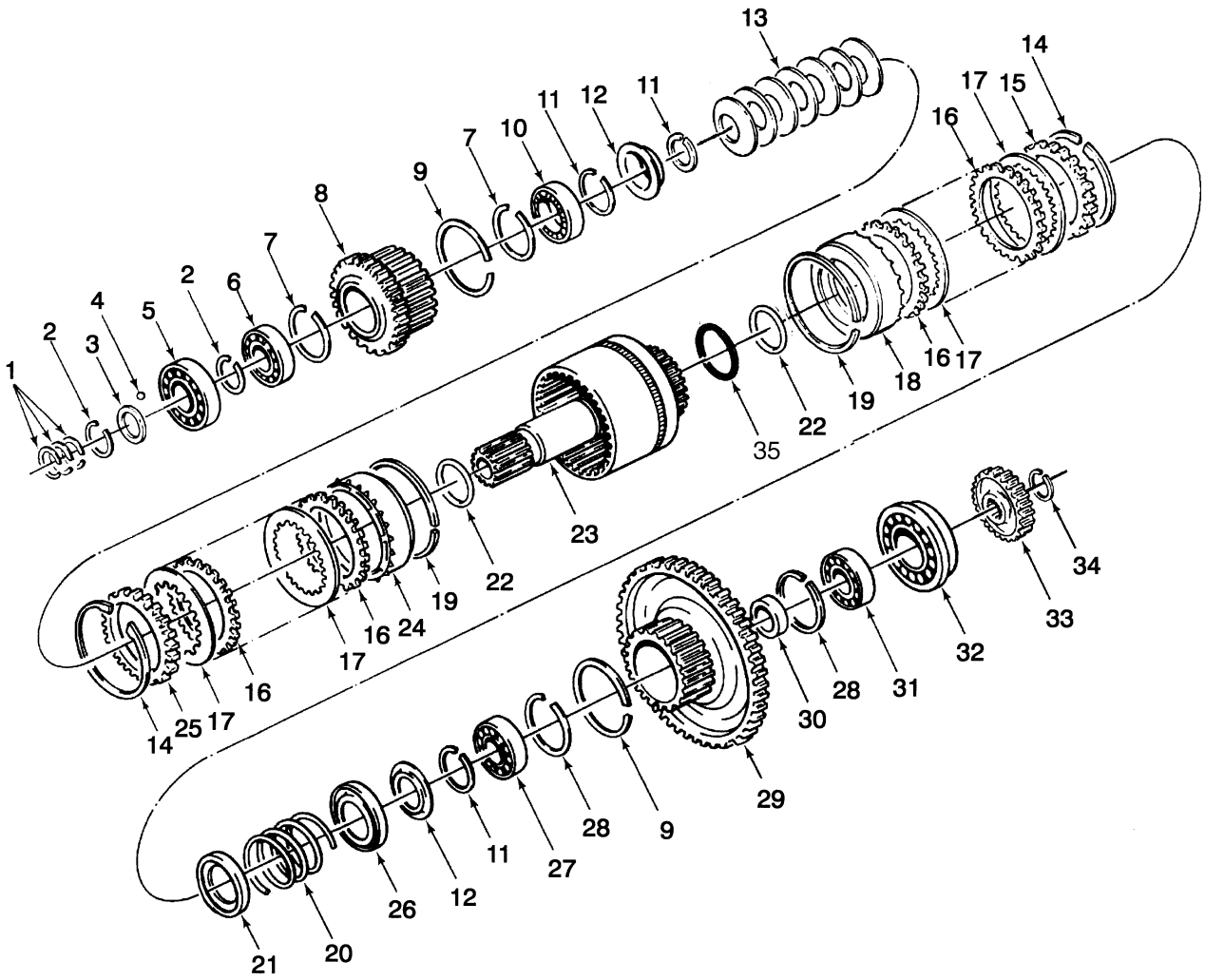

BP240153

©2011 HYSTER COMPANY

CLUTCH

REVERSE AND THIRD (S/N E008D02324F →)

ITEM	PART NO.	DESCRIPTION	QTY
	1699364	Transmission Assy	1
1	1556985	Piston Ring	3
2	330570	Retaining Ring	2
3	382259	Plate	1
4	149616	Ball	1
5	382260	Bearing	1
6	382261	Bearing	1
7	382262	Snap Ring	2
8	1377125	Gear	1
9	330574	Baffle (Baffle)	2
10	330590	Bearing	1
11	382269	Snap Ring	3
12	382268	Retainer	2
13	1351992	Disk Spring	1
14	330617	Retainer Plate	2
15	1530619	Clutch Plate (Third Clutch)	1
16	382263	Friction Disk	18
17	330620	Clutch Disk (Outer)	18
18	1704505	Clutch Assy	1
19	1479838	Kit-Clutch Pack Plates	2
20	330578	Spring (Return)	1
21	330579	Retainer	1
22	330623	Kit-Clutch Pack Plates	2
23	1607922	Clutch	1
24	1339956	Piston	1
25	382266	Plate (Reverse Clutch)	1
26	330577	Spring	1
27	330580	Bearing	1
28	330581	Snap Ring	2
29	330582	Gear	1
30	330583	Spacer	1
31	124608	Ball Bearing	1
32	382270	Bearing	1
33	1530613	Gear	1
34	330594	Drive Gear	1
35	1607921	Seal	1

©2011 HYSTER COMPANY

CHARGE PUMP (FIGURE 5-12)

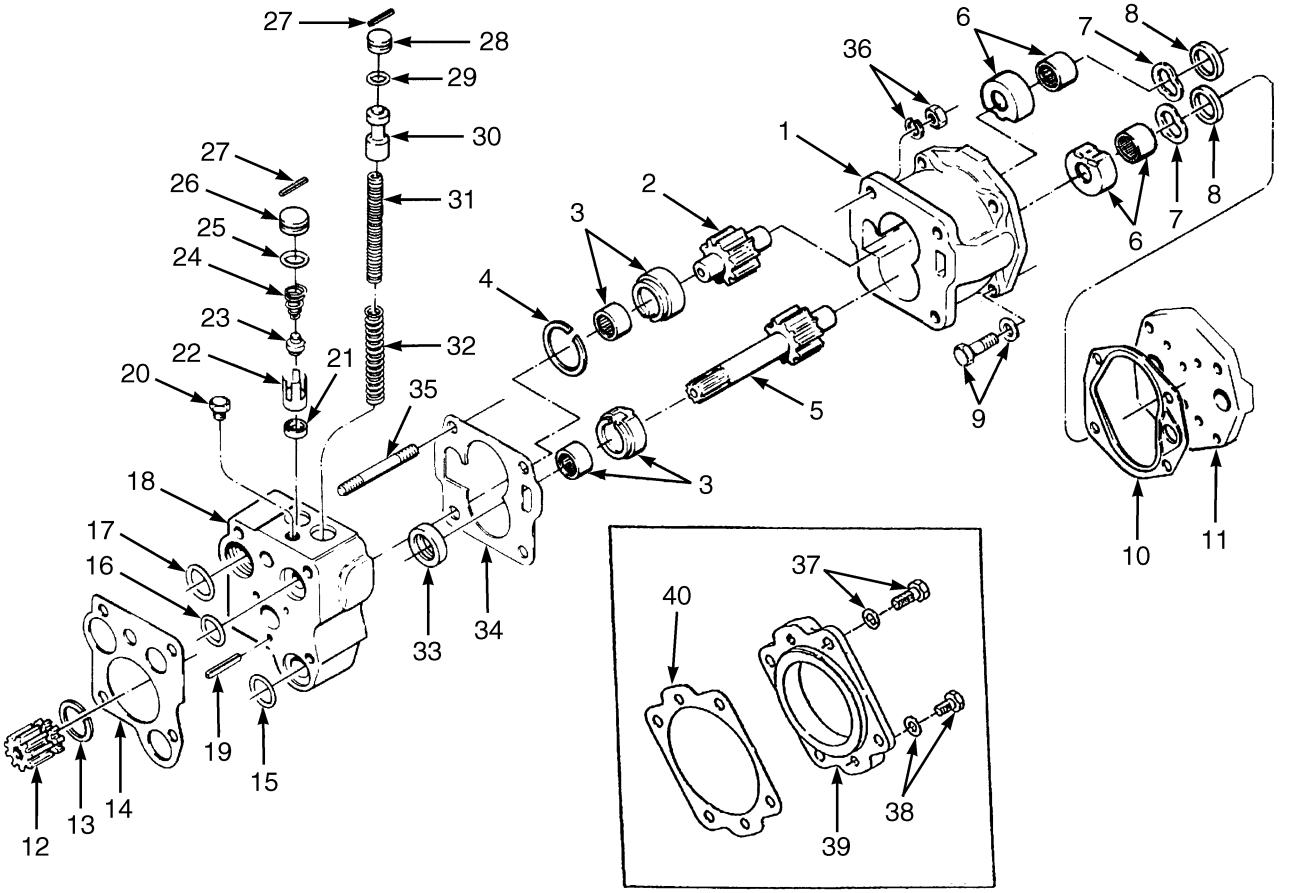

HP240532

©2011 HYSTER COMPANY

CHARGE PUMP

ITEM	PART NO.	DESCRIPTION	QTY
1	**a** 330645	Charge Pump	1
1	**b** 1704651	Charge Pump	1
2	**a** 382299	Shaft	1
3	**a** 382298	Bearing	2
4	**a** 382297	Snap Ring	1
5	**a** 382301	Drive Shaft	1
6	**a** 382300	Bearing	2
7	**a** 330646	Spring	2
8	**a** 330647	Seal	2
9	1371239	Washer	4
9	1371240	Capscrew	4
10	330648	Gasket	1
11	1342517	Cover	1
12	**a** 330657	Sleeve	1
13	**a** 330658	Snap Ring	1
14	330659	Gasket (Valve)	1
15	132003	O-Ring	1
16	130625	O-Ring	1
17	281066	O-Ring	1
18	330631	Pressure Valve	1
19	330643	Pin	3
20	14385	Fitting	1
21	330632	Valve Seat	1
22	330633	Spacer	1
23	330634	Plunger (Valve)	1
24	330635	Spring	1
25	79973	O-Ring	1
26	330636	Valve Stop	1
27	1479845	Pin	2
28	330638	Valve Stop	1
29	87281	O-Ring	1
30	~~330639~~		
	1704649	Piston	1
31	330640	Spring	1
32	330641	Spring	1
33	330642	Seal	1
34	330630	Gasket	1
35	330629	Stud	4
36	15007	Nut	4
36	15157	Lockwasher	4
37	16377	Capscrew	2
38	1479848	Screw	2
39	382331	Adapter (Hydraulic Pump)	1
40	382330	Gasket	1
41	**a** 15157	Lockwasher	2
42	**a** 15156	Lockwasher	2
43	**a** 1313908	Kit-Seal	1

©2011 HYSTER COMPANY

FOOTNOTES:

a → S/N E008D02323F

b S/N E008D02324F →

©2011 HYSTER COMPANY

NOTES

©2011 HYSTER COMPANY

MODULATOR VALVE (FIGURE 5-13)

(→ S/N E008D01910Z)

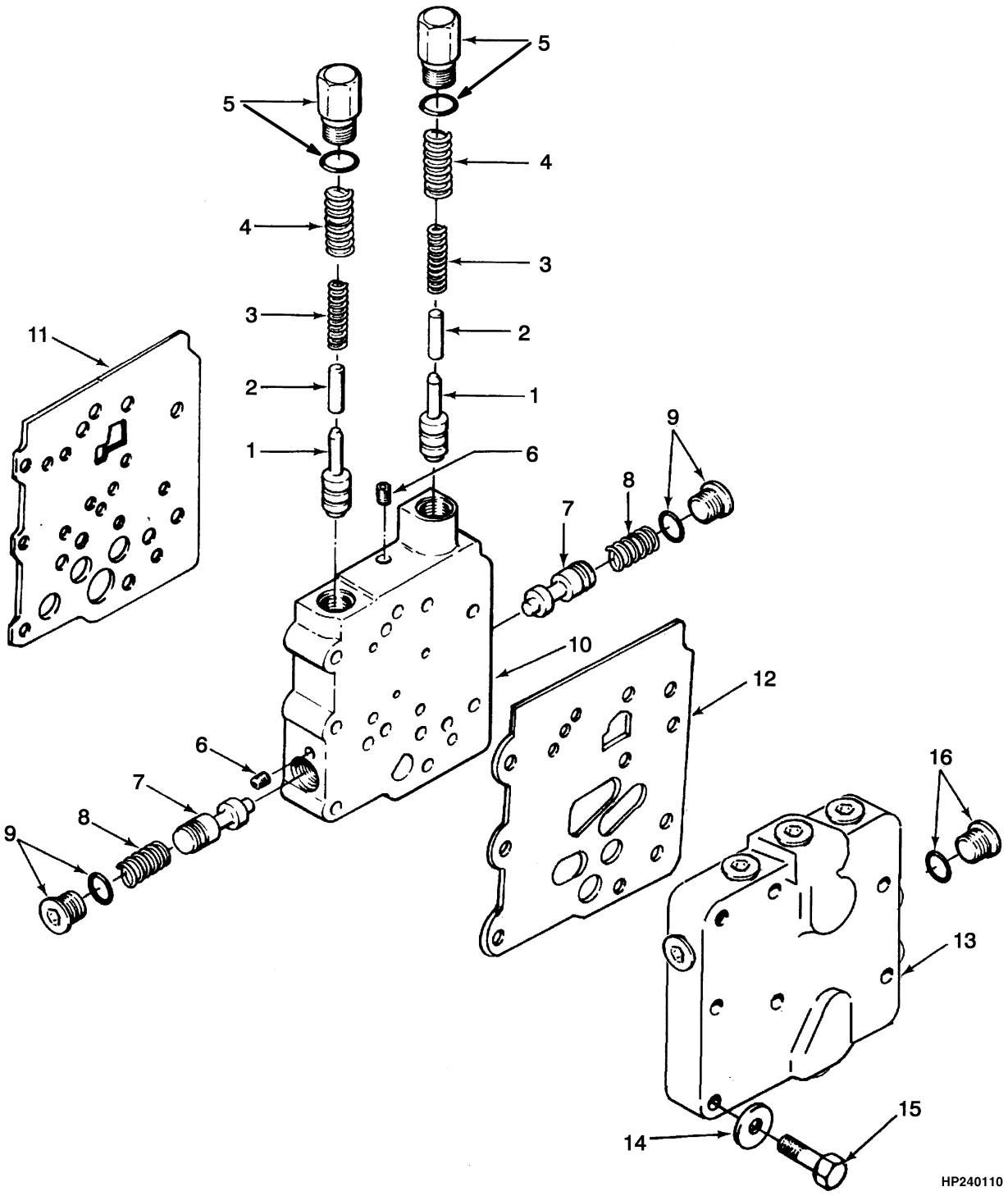

©2011 HYSTER COMPANY

MODULATOR VALVE
(→ S/N E008D01910Z)

ITEM	PART NO.	DESCRIPTION	QTY
	cd 1367372	Transmission Assy	1
	bf 1454950	Transmission Assy	1
	e 1465583	Transmission Assy	1
	1566714	Valve	1
1	. . . . .	Valve	2
2	382336	Pin	2
3	382335	Spring	2
4	382334	Spring	2
5	382333	Plug	2
5	16485	O-Ring	1
6	330511	Plug	2
7	. . . . .	Spool	2
8	382337	Spring	2
9	233693	Fitting	2
9	16485	O-Ring	1
10	. . . . .	Body	1
11	1342515	Gasket	1
12	330674	Gasket	1
13	1319540	Plate	1
14	15156	Lockwasher	9
15	16741	Capscrew	9
16	14594	Plug	1
16	16483	O-Ring	1
	ag 14595	Plug Assembly	1
	ag 1311538	Fitting	1

FOOTNOTES:

a Not Illustrated
b Remanufactured Transmission 1455613 (U.S.)
c Remanufactured Transmission 864701 (U.S.)
d → S/N E008D01679W
e S/N E008D01866Y ↔ S/N E008D01910Z
f S/N E008D01680W ↔ S/N E008D01865Y
g S/N E008D01680W →

©2011 HYSTER COMPANY

SHIFT LEVER (FIGURE 5-14)
(→ S/N E008D01865Y)

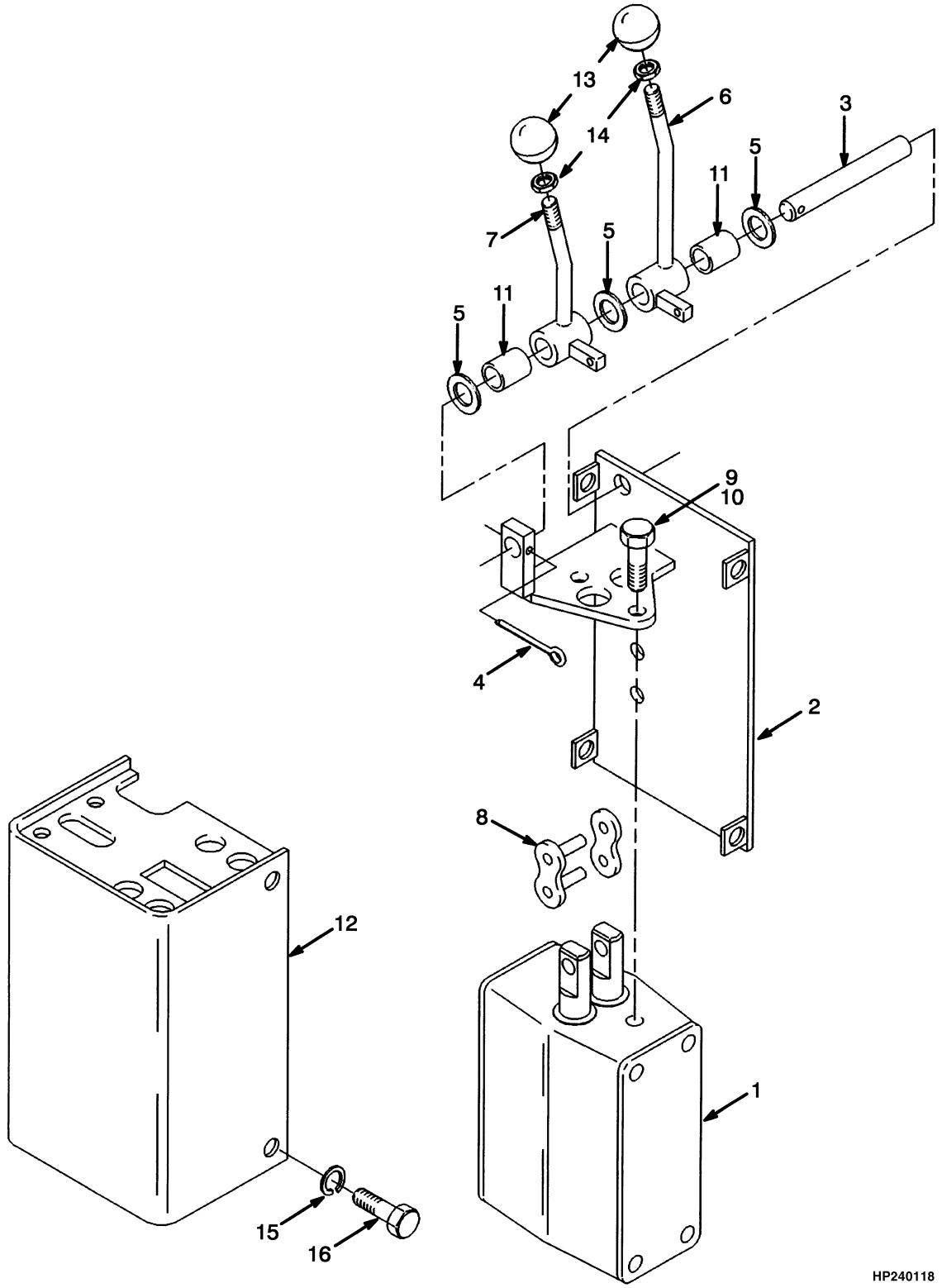

©2011 HYSTER COMPANY

SHIFT LEVER
(→ S/N E008D01865Y)

ITEM	PART NO.	DESCRIPTION	QTY
1	1336799	Valve	1
2	1308504	Bracket	1
3	1305924	Pin	1
4	221972	Roll Pin	1
5	1305920	Thrust Washer	3
6	1308500	Lever	1
7	1308501	Lever (Range)	1
8	239150	Link	2
9	16080	Capscrew	2
10	226414	Loctite	AR
11	1305915	Bushing	4
12	1315832	Cover	1
13	190481	Knob	2
14	15026	Nut	2
15	197067	Washer	4
16	16712	Screw	4

©2011 HYSTER COMPANY

TRANSMISSION CONTROL VALVE (FIGURE 5-15)

(→ S/N E008D01865Y)

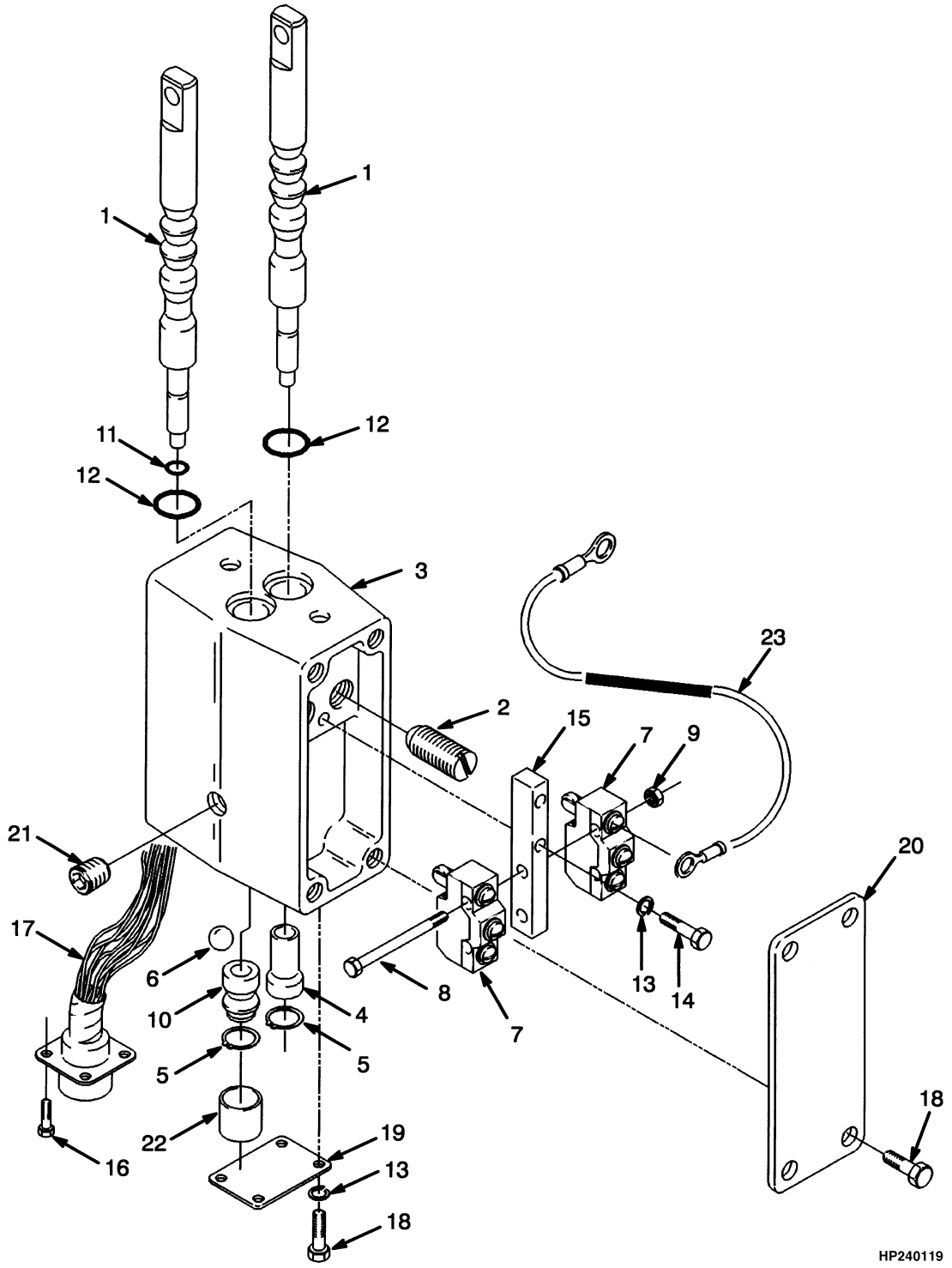

©2011 HYSTER COMPANY

TRANSMISSION CONTROL VALVE

(→ S/N E008D01865Y)

ITEM	PART NO.	DESCRIPTION	QTY
	1336799	Valve	1
1	1303577	Shaft	2
2	1304410	Plunger	4
3	1303576	Housing	1
4	1307732	Bushing	1
5	304513	Snap Ring	2
6	40736	Ball Bearing	1
7	75775	Microswitch	4
8	1308521	Screw	4
9	15049	Nut	4
10	1303581	Bushing	1
11	57568	O-Ring	1
12	63105	O-Ring	2
13	15163	Lockwasher	8
14	220475	Screw	4
15	1303584	Bar	2
16	220418	Screw	4
17	1336798	Wire Harness	1
18	220470	Screw	12
19	1303583	Cover Plate	1
20	1303582	Cover Plate	2
21	15483	Fitting	1
22	1308520	Bushing	1
23	304884	Wire	1

©2011 HYSTER COMPANY

TRANSMISSION CONTROL VALVE (FIGURE 5-16)

(S/N E008D01866Y ↔ S/N E008D01910Z)

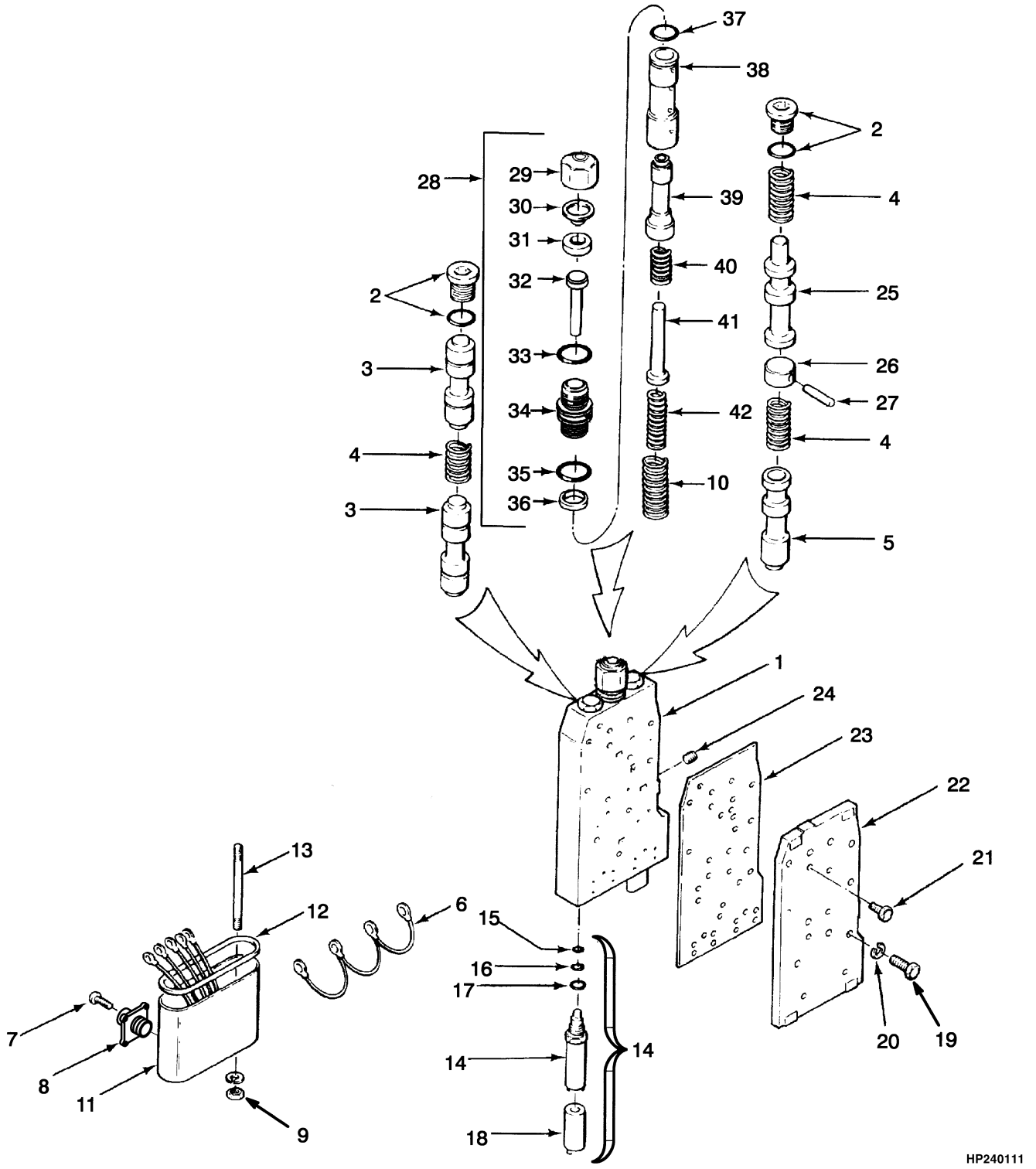

©2011 HYSTER COMPANY

TRANSMISSION CONTROL VALVE

(S/N E008D01866Y ↔ S/N E008D01910Z)

ITEM	PART NO.	DESCRIPTION	QTY
	1509203	Valve	1
1	1342503	Housing	1
2	235691	Fitting	2
2	16484	O-Ring	1
3	1326289	Spool	2
4	1326290	Spring	1
5	1326292	Spool (Range)	1
6	382309	Wire Harness	1
7	16656	Screw	4
8	382310	Receptacle	1
9	1509205	Nut	2
	. . . . .	Outer Spring	1
11	382311	Dust Cover	1
12	382312	Seal	1
13	382313	Stud	2
14	1342504	Solenoid Valve	4
15	382627	O-Ring	1
16	382628	O-Ring	1
17	382629	O-Ring	1
18	1534781	Coil (Dia 25 mm Length 70 mm)	1
18	1534782	Coil (Dia 33 mm Length 55 mm)	1
19	16815	Capscrew	3
20	15156	Lockwasher	3
21	14349	Fitting (Pipe Plug)	8
22	1305693	Cover	1
23	1342507	Gasket	1
24	330511	Plug	1
25	384345	Spool	1
26	1326393	Plug (Stop)	1
26	382319	Stop	1
27	302449	Roll Pin	1
28	1509206	Spool (Valve)	1
29	. . . . .	End Cup	1
30	. . . . .	Cup	1
31	. . . . .	Cup (Piston)	1
32	. . . . .	Piston	1
33	. . . . .	O-Ring	1
34	. . . . .	Filter	1
35	. . . . .	O-Ring	1
36	. . . . .	Seal	1
37	. . . . .	Retainer	1
38	. . . . .	Sleeve	1
39	. . . . .	Spool	1
40	. . . . .	Spring	1
41	. . . . .	Rod	1
42	. . . . .	Spring (Inner)	1

©2011 HYSTER COMPANY

TRANSMISSION CONTROL VALVE (FIGURE 5-17)

(S/N E008D01911Z →)

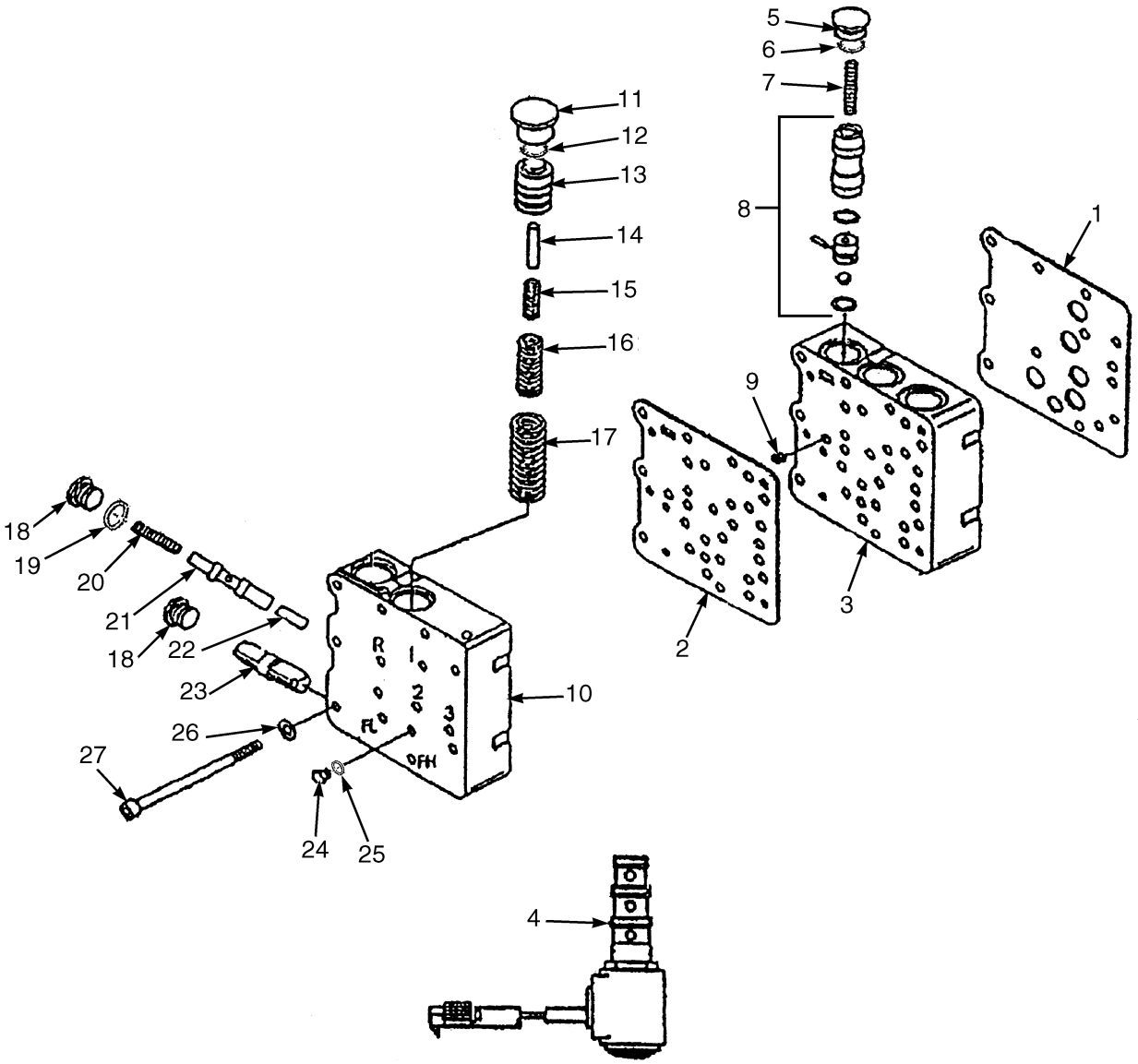

HP240587

©2011 HYSTER COMPANY

TRANSMISSION CONTROL VALVE

(S/N E008D01911Z →)

ITEM	PART NO.	DESCRIPTION	QTY
	1530723	Valve	1
1	1530730	Gasket	1
2	1530738	Gasket	1
3	1530728	Housing (Control Valve)	1
3	1704665	Hydraulic Control Valve	1
4	~~1704666~~		
	1530726	Solenoid (☞Figure 5-18)	4
5	233693	Fitting	1
6	16485	O-Ring	1
7	1530731	Spring	1
8	1530729	Spool	1
9	1530699	Plug	1
10	1530725	Cover	1
11	233693	Fitting	1
12	16485	O-Ring	1
13	1389317	Spool	1
14	1389321	Pin	1
15	1315594	Spring (Inner)	1
16	1530739	Spring (Middle)	1
17	1530740	Spring (Outer)	1
18	1389125	Plug	2
19	15860	O-Ring	1
20	1530741	Spring	1
21	1530742	Spring	1
22	1530743	Pin	1
23	1530744	Shuttle Valve	1
24	14591	Plug	7
25	16481	O-Ring	1
26	15156	Lockwasher	9
27	1389993	Screw	9

©2011 HYSTER COMPANY

SOLENOID ASSEMBLY (FIGURE 5-18)

(S/N E008D01911Z →)

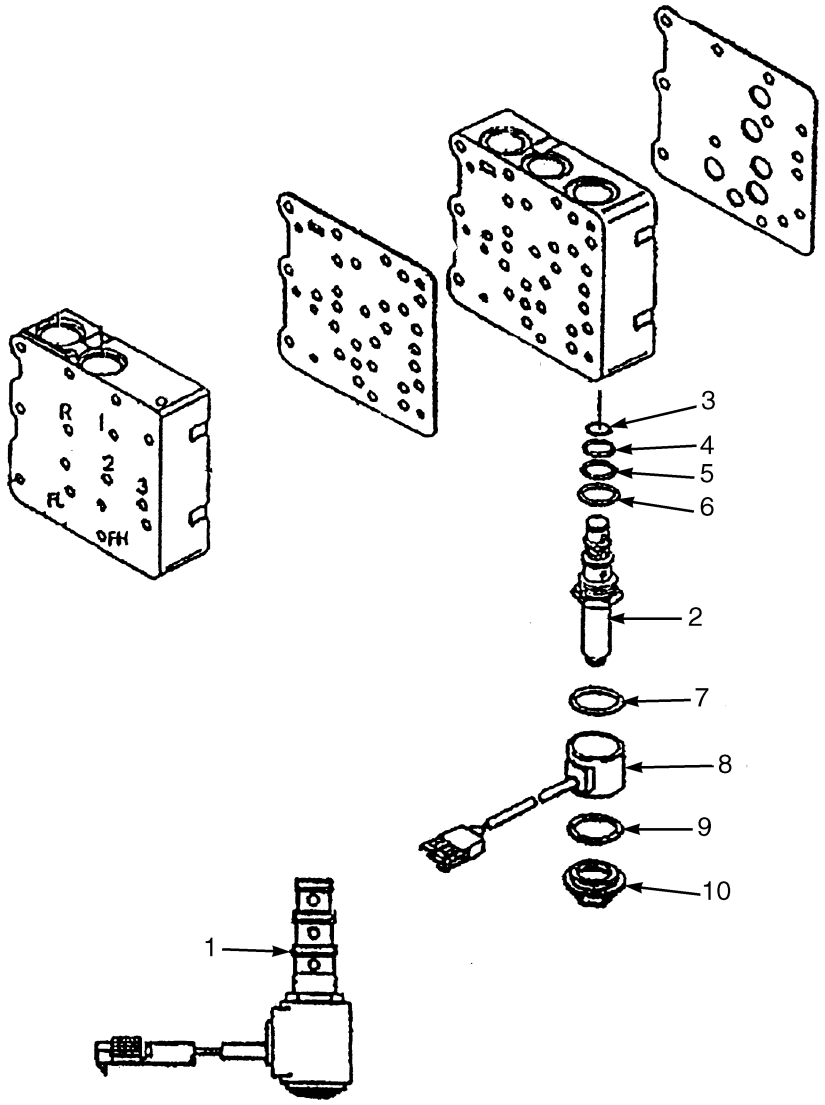

HP240589

©2011 HYSTER COMPANY

SOLENOID ASSEMBLY

(S/N E008D01911Z →)

ITEM	PART NO.	DESCRIPTION	QTY
1	~~1704666~~		
	1530726	Solenoid	4
2	1530727	Cartridge Valve	1
3	1504400	O-Ring	1
4	1324790	Retainer	1
5	1530732	O-Ring	1
6	1530733	O-Ring	1
7	1530734	O-Ring	1
8	1530735	Coil (Solenoid)	1
9	1530736	O-Ring	1
10	1530737	Nut	1

©2011 HYSTER COMPANY

INCHING VALVE ASSEMBLY (FIGURE 5-19)

(S/N E008D01911Z →)

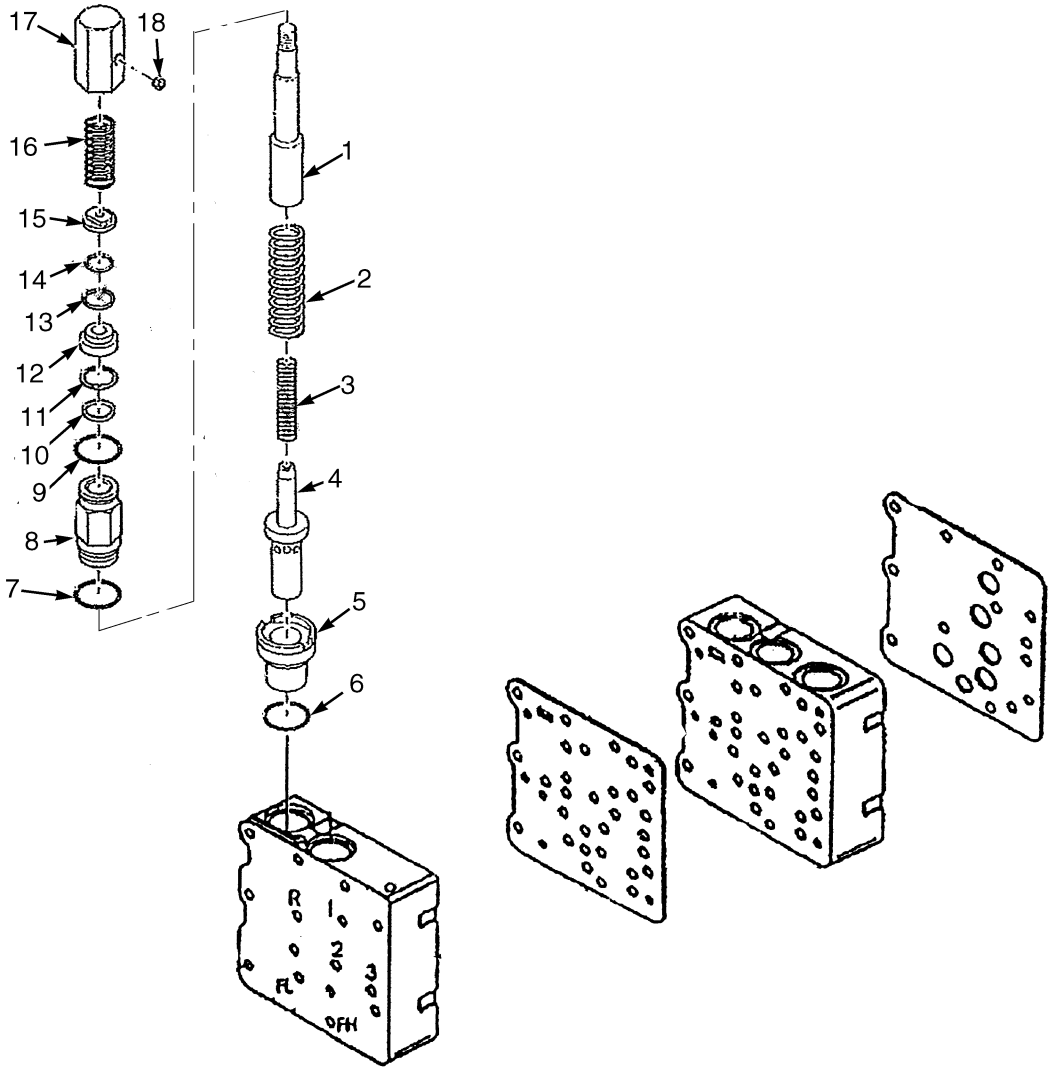

HP240588

©2011 HYSTER COMPANY

INCHING VALVE ASSEMBLY

(S/N E008D01911Z →)

ITEM	PART NO.	DESCRIPTION	QTY
	1530724	Inching Valve	1
1	1530749	Rod	1
2	1530751	Spring	1
3	1530747	Spring	1
4	1530772	Spool (Inching)	1
5	1530746	Sleeve (Inching)	1
6	1530745	O-Ring	1
7	281066	O-Ring	1
8	1530753	Housing (Inching)	1
9	1530754	O-Ring	1
10	1530755	Seal	1
11	1530756	Snap Ring	1
12	1530759	Piston (Lower)	1
13	1530760	Piston	1
14	1530758	O-Ring	1
15	1530761	Piston (Upper)	1
16	1530762	Spring	1
17	1530763	Cover	1
18	1389981	Plug	3

©2011 HYSTER COMPANY

TRANSMISSION (FIGURE 5-20)
ATTACHING PARTS (→ S/N E008D01910Z)

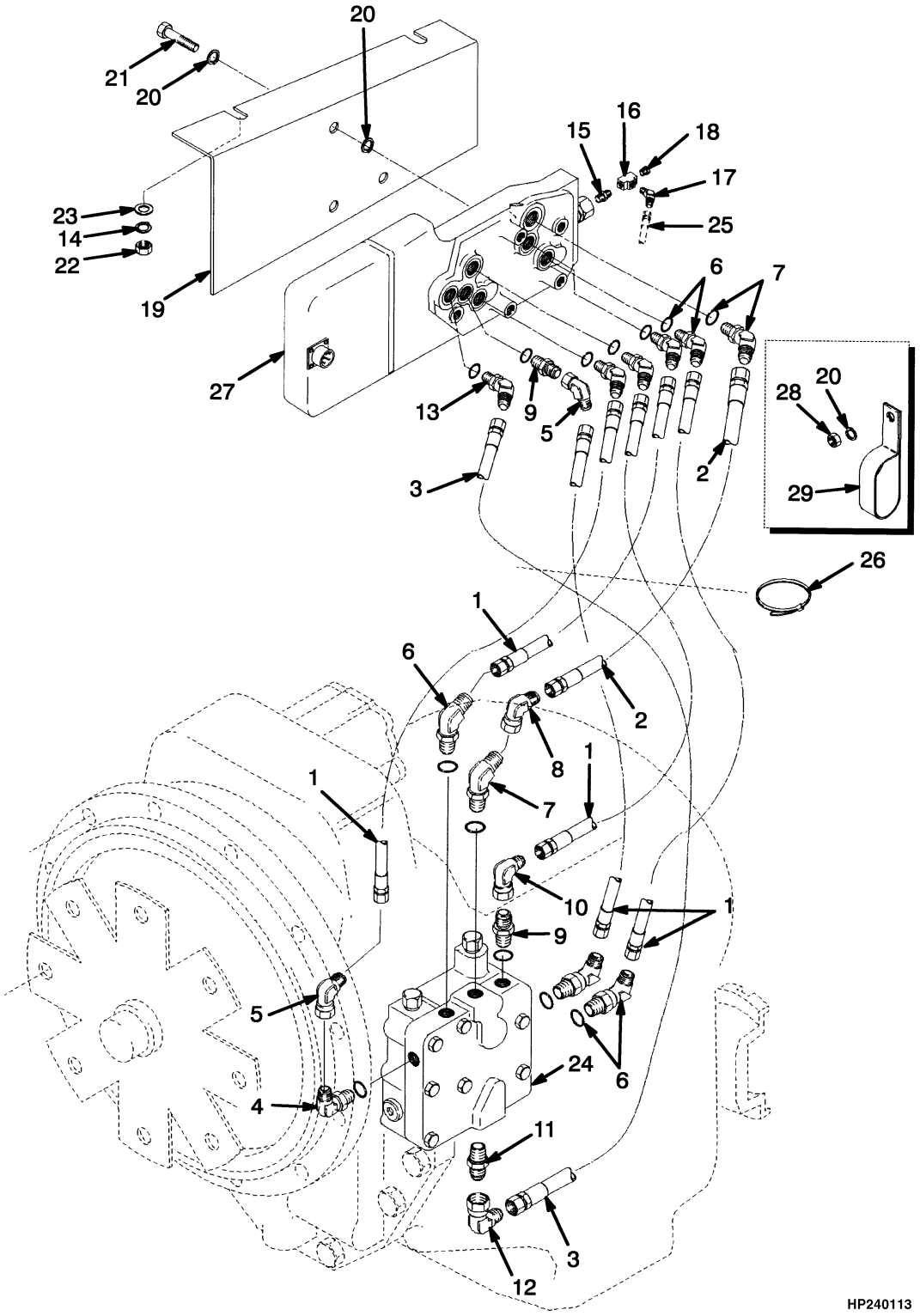

©2011 HYSTER COMPANY

TRANSMISSION

ATTACHING PARTS (→ S/N E008D01910Z)

ITEM	PART NO.	DESCRIPTION	QTY
	bc 1367372	Transmission Assy	1
	ad 1454950	Transmission Assy	1
	e 1465583	Transmission Assy	1
1	815790	Hose Assy	5
2	181351	Hose Assy	1
3	117582	Hose Assy	1
4	16558	Fitting	1
4	16483	O-Ring	1
5	16999	Fitting	2
6	16567	Fitting	7
6	16483	O-Ring	1
7	16568	Fitting	2
7	16484	O-Ring	1
8	17038	Fitting	1
9	16540	Connector	2
9	16483	O-Ring	1
10	16883	Fitting	1
11	17302	Fitting	1
12	16989	Fitting	1
13	14550	Fitting	1
14	15158	Washer	2
15	16150	Fitting	1
16	12838	Fitting	1
17	14544	Fitting	1
18	14349	Fitting (Pipe Plug)	3
19	1335733	Plate	1
20	15156	Lockwasher	7
21	18543	Capscrew	3
22	15058	Nut	2
23	15135	Washer	2
24	1566714	Valve (Modulator Valve) (☞Figure 5-13)	1
25	370921	Hose Assy (Center Compartment)	1
25	815798	Hose Assy (LH Compartment)	1
26	273775	Strap Clamp	AR
27	**e** 1342500	Valve	1
27	**d** 1509203	Valve	1
28	15056	Nut	1
29	385107	Clamp (Insulated)	1

FOOTNOTES:

a Remanufactured Transmission 1455613 (U.S.)
b Remanufactured Transmission 864701 (U.S.)
c → S/N E008D01679W
d S/N E008D01680W ↔ S/N E008D01865Y
e S/N E008D01866Y ↔ S/N E008D01910Z

©2011 HYSTER COMPANY

TRANSMISSION (FIGURE 5-21)

ATTACHING PARTS (S/N E008D01680W ↔ S/N E008D01910Z)

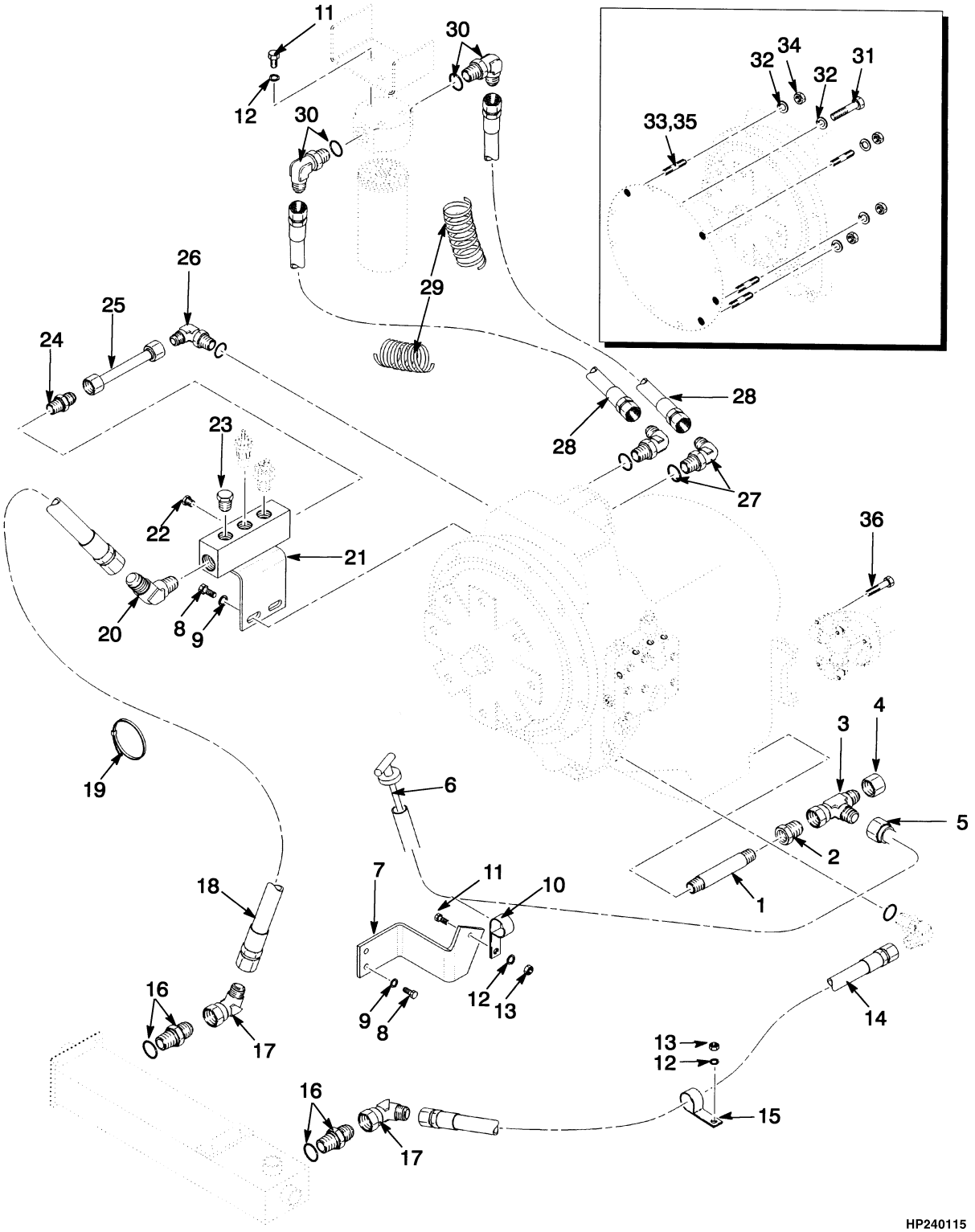

©2011 HYSTER COMPANY

TRANSMISSION

ATTACHING PARTS (S/N E008D01680W ↔ S/N E008D01910Z)

ITEM	PART NO.	DESCRIPTION	QTY
	ab 1454950	Transmission Assy	1
	c 1465583	Transmission Assy	1
1	19636	Fitting	1
2	16295	Fitting	1
3	17591	Fitting	1
4	17619	Nut	1
5	1379833	Tube Assy	1
6	1379836	Dipstick	1
7	1344613	Bracket	1
8	132860	Capscrew	4
9	292683	Lockwasher	4
10	144067	Clamp	1
11	16598	Capscrew	4
12	15156	Lockwasher	4
13	15056	Nut	3
14	1315835	Hose Assy	1
15	258590	Clamp	1
16	1337330	Fitting	2
17	1337331	Fitting	2
18	1367343	Hose Assy	1
19	273775	Strap Clamp	AR
20	114555	Crank	1
21	1394083	Manifold	1
22	**b** 14349	Fitting (Pipe Plug)	2
22	**c** 15483	Fitting	2
23	**b** 14387	Fitting	1
24	17346	Fitting	1
25	1394086	Tube Assy	1
26	16561	Elbow	1
27	16570	Fitting	2
28	1304549	Hose Assy	2
29	239308	Sleeve	2
30	164657	Fitting	2
31	292519	Capscrew	8
32	292680	Washer	12
33	382392	Stud	4
34	136692	Nut	4
35	264134	Loctite	AR
36	177051	Capscrew	8

FOOTNOTES:

a Remanufactured Transmission 1455613 (U.S.)
b S/N E008D01680W ↔ S/N E008D01865Y
c S/N E008D01866Y ↔ S/N E008D01910Z

©2011 HYSTER COMPANY

TRANSMISSION ATTACHING PARTS (FIGURE 5-22)

TIER II ENGINE — H550F, H620F, H650F, H700F (S/N E008D01911Z ↔ S/N E008D02024C)

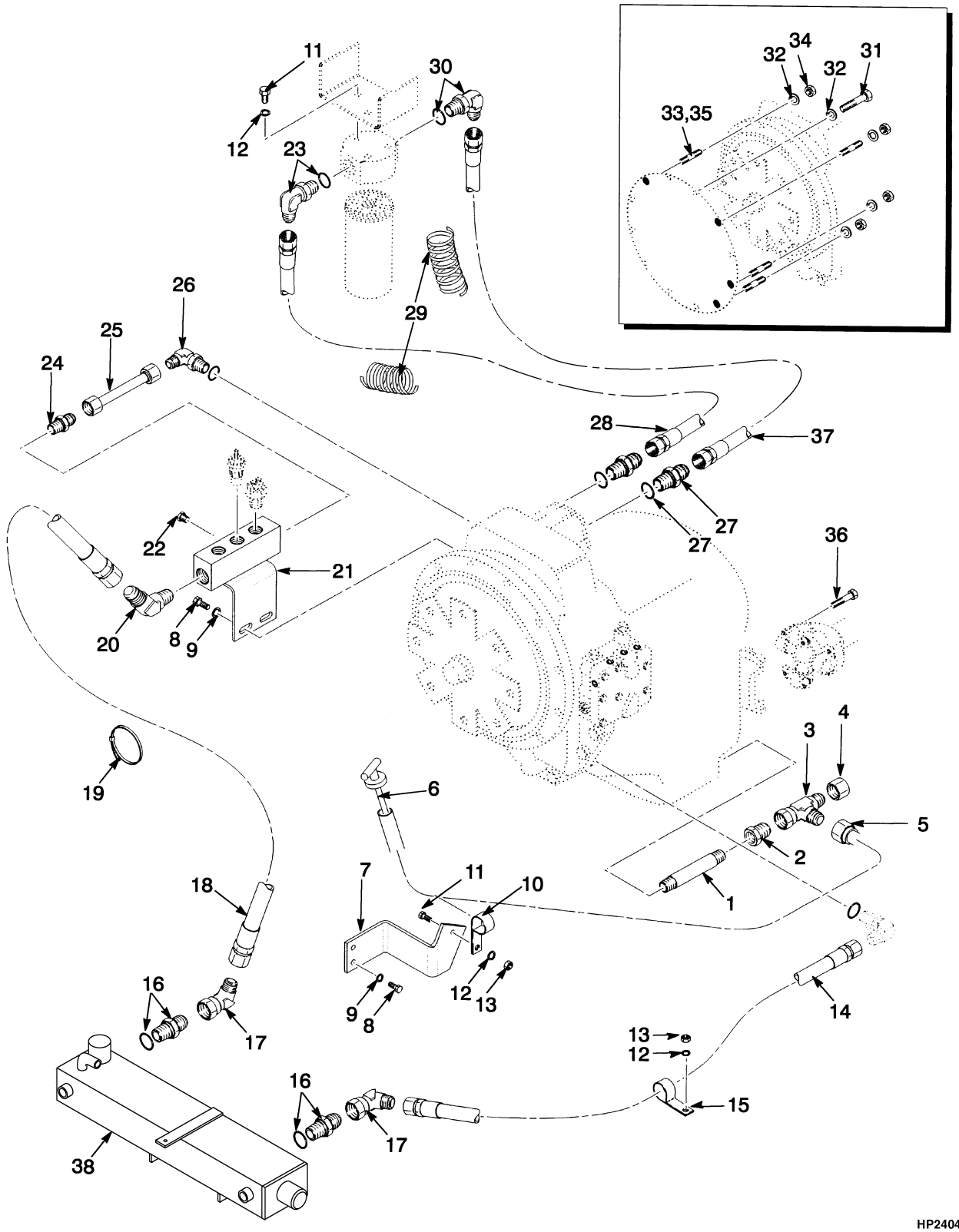

©2011 HYSTER COMPANY

TRANSMISSION ATTACHING PARTS

TIER II ENGINE – H550F, H620F, H650F, H700F (S/N E008D01911Z ↔ S/N E008D02024C)

ITEM	PART NO.	DESCRIPTION	QTY
	b 1515497	Transmission Assy	1
1	19636	Fitting	1
2	16295	Fitting	1
3	17591	Fitting	1
4	17619	Nut	1
5	1379833	Tube Assy	1
6	1379836	Dipstick	1
7	1344613	Bracket	1
8	296026	Capscrew	4
9	293781	Lockwasher	4
10	144067	Clamp	1
11	16598	Capscrew	4
12	15156	Lockwasher	4
13	15056	Nut	3
14	1315835	Hose Assy	1
15	258590	Clamp	1
16	1337330	Fitting	2
17	1337331	Fitting	2
18	1367343	Hose Assy	1
19	273775	Strap Clamp	AR
20	114555	Crank	1
21	1394083	Manifold	1
22	15483	Fitting	2
23	1473898	Fitting	1
24	17346	Fitting	1
25	1394086	Tube Assy	1
26	16561	Elbow	1
26	16486	O-Ring	1
27	1473888	Fitting	2
28	**a** 1520487	Hose Assy	1
28	**c** 1529589	Hose Assy	1
29	239308	Sleeve	2
30	1520485	Fitting	1
31	292519	Capscrew	8
32	~~388049~~		
	292682	Lockwasher	12
33	382392	Stud	4
34	136692	Nut	4
35	264134	Loctite	AR
36	177051	Capscrew	8
37	**a** 1520488	Hose Assy	1
37	**c** 1529589	Hose Assy	1
38	1509033	Oil Cooler (☞Figure 2-86)	1

FOOTNOTES:

a S/N E008D01911Z ↔ S/N E008D01984B
b S/N E008D01911Z ↔ S/N E008D02024C
c S/N E008D01985B ↔ S/N E008D02024C

©2011 HYSTER COMPANY

TRANSMISSION ATTACHING PARTS (FIGURE 5-23)

TIER II ENGINE — H550FS, H620FS, H700FS (S/N E008D01985B ↔ S/N E008D02024C)

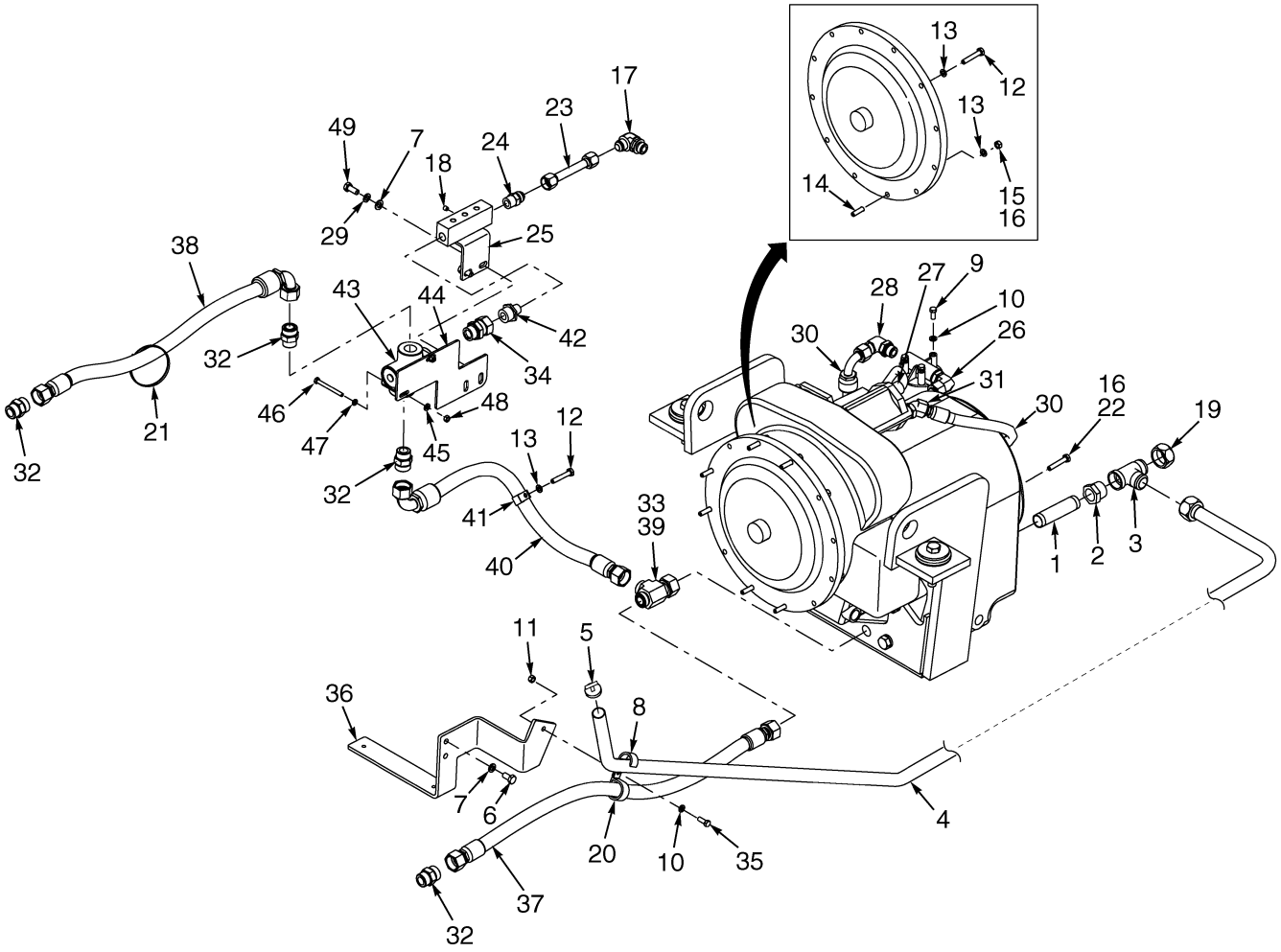

HP240449

©2011 HYSTER COMPANY

TRANSMISSION ATTACHING PARTS

TIER II ENGINE – H550FS, H620FS, H700FS (S/N E008D01985B ↔ S/N E008D02024C)

ITEM	PART NO.	DESCRIPTION	QTY
	1515497	Transmission Assy	1
1	19636	Fitting	1
2	16295	Fitting	1
3	17591	Fitting	1
4	1379833	Tube Assy	1
5	1379836	Dipstick	1
6	132860	Capscrew	2
7	292683	Lockwasher	4
8	144067	Clamp	1
9	16598	Capscrew	3
10	15156	Lockwasher	4
11	15056	Nut	1
12	292519	Capscrew	8
13	~~388049~~		
	292682	Lockwasher	12
14	382392	Stud	4
15	136692	Nut	4
16	264134	Loctite	AR
17	16561	Elbow	1
18	15483	Fitting	1
19	17619	Nut	1
20	258590	Clamp	1
21	273775	Strap Clamp	AR
22	177051	Capscrew	8
23	1394086	Tube Assy	1
24	17346	Fitting	1
25	1394083	Manifold	1
26	1520485	Fitting	1
27	1473888	Fitting	1
28	1473898	Fitting	1
29	320161	Washer	2
30	1529589	Hose Assy	2
31	1516208	Fitting	1
32	1470852	Fitting	1
33	1480747	Fitting	1
34	1475137	Adapter	1
35	16805	Capscrew	2
36	1545410	Bracket	2
37	1545411	Hose Assy	1
38	1545412	Hose Assy	1
39	1487099	Fitting	1
40	1553315	Hose Assy	1
41	1310611	Clamp	1
42	886552	Fitting	2
43	1483901	By-Pass Valve (Thermo By-Pass)	1
44	1553320	Plate	1
45	292681	Lockwasher	2
46	287750	Capscrew	2
47	320157	Washer	2
48	239503	Nut	2

©2011 HYSTER COMPANY

TRANSMISSION ATTACHING PARTS

TIER II ENGINE – H550FS, H620FS, H700FS (S/N E008D01985B ↔ S/N E008D02024C)

ITEM	PART NO.	DESCRIPTION	QTY
49	292527	Capscrew	2

©2011 HYSTER COMPANY

NOTES

©2011 HYSTER COMPANY

TRANSMISSION (FIGURE 5-24)

ATTACHING PARTS COOLING AND FILTER (→ S/N E008D02024C INC. 02027)

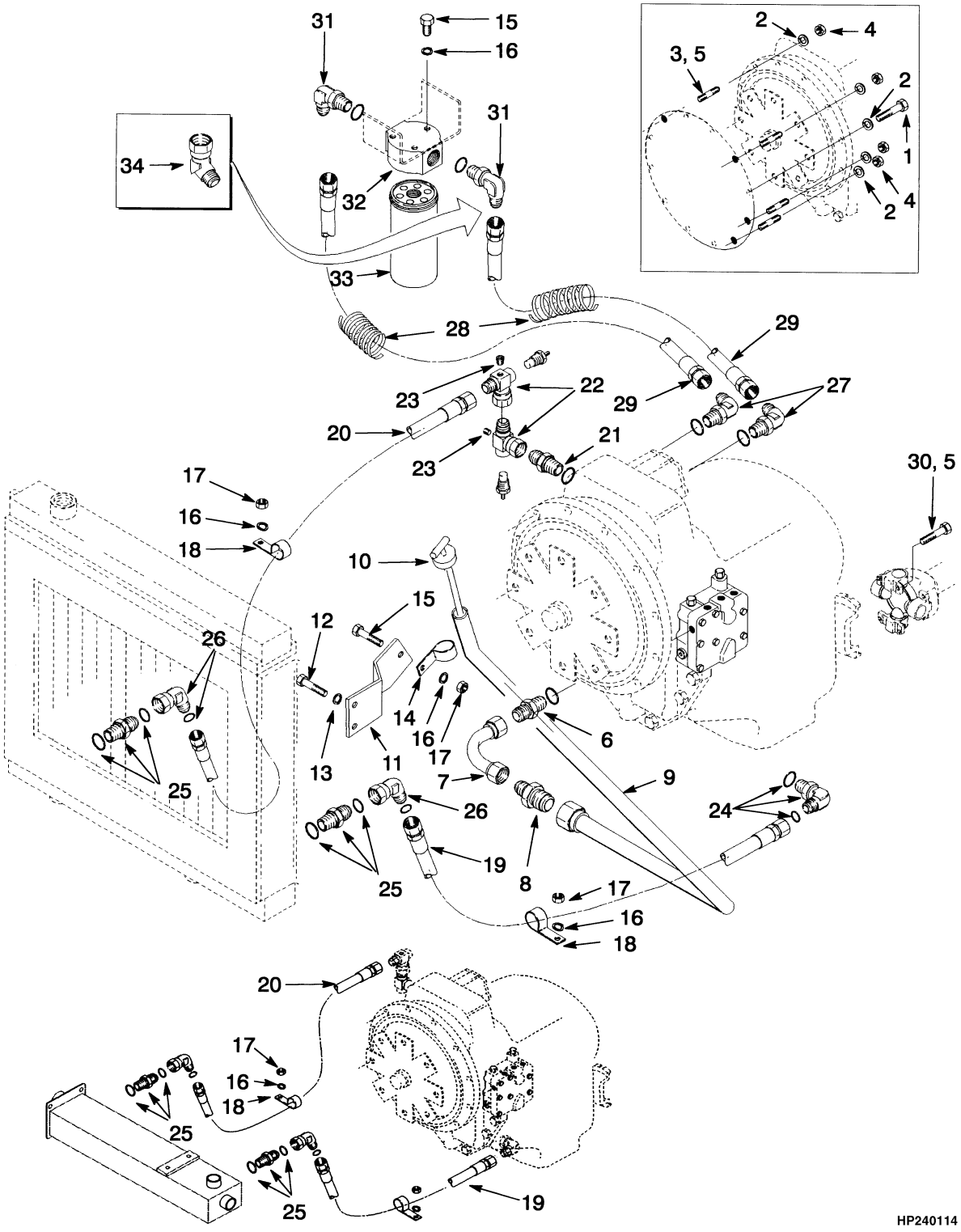

©2011 HYSTER COMPANY

TRANSMISSION

ATTACHING PARTS COOLING AND FILTER (→ S/N E008D02024C INC. 02027)

ITEM	PART NO.	DESCRIPTION	QTY
	bc 1367372	Transmission Assy	1
	af 1454950	Transmission Assy	1
	d 1465583	Transmission Assy	1
	e 1515497	Transmission Assy	1
1	292519	Capscrew	8
2	~~388049~~		
	292682	Lockwasher	12
3	382392	Stud	4
4	136692	Nut	4
5	**c** 226414	Loctite	AR
6	**c** 1337328	Fitting	1
6	**c** 280156	O-Ring	1
7	**c** 1335712	Tube Assy	1
8	**c** 1337329	Fitting	1
8	**c** 280156	O-Ring	1
8	**c** 1336254	O-Ring	1
9	**c** 1344612	Tube Assy	1
10	**c** 378128	Dipstick	1
11	1344613	Bracket	1
12	132860	Capscrew	2
13	292683	Lockwasher	2
14	144067	Clamp	1
15	16598	Capscrew	4
16	15156	Lockwasher	6
17	15056	Nut	3
18	258590	Clamp	2
19	**c** 1337332	Hose Assy	1
19	**g** 1367360	Hose Assy (H550FS, H620FS, H700FS)	1
19	**g** 1367365	Hose Assy (H550F, H620F, H650F, H700F)	1
20	**g** 1315836	Hose Assy (H550F, H620F, H650F, H700F)	1
20	**c** 1337333	Hose Assy	1
20	**h** 1367343	Hose Assy (H550FS, H620FS, H700FS)	1
21	**c** 16543	Connector	1
21	**c** 16486	O-Ring	1
22	**c** 329273	Fitting	2
23	14349	Fitting (Pipe Plug)	2
24	**c** 1331939	Fitting	1
24	**c** 16486	O-Ring	1
24	**c** 280156	O-Ring	1
25	1337330	Fitting	2
25	280156	O-Ring	1
26	1337331	Fitting	2
26	280156	O-Ring	1
27	**c** 1336225	Fitting	2
27	**c** 16486	O-Ring	1
28	239308	Sleeve	2
29	1304549	Hose Assy	2
30	177051	Capscrew	8
31	16561	Elbow	2
31	16486	O-Ring	1

©2011 HYSTER COMPANY

TRANSMISSION

ATTACHING PARTS COOLING AND FILTER (→ S/N E008D02024C INC. 02027)

ITEM	PART NO.	DESCRIPTION	QTY
32	1347921	Adapter (Filter)	1
33	2048273	Transmission Filter	1
34	17040	Fitting (H550FS, H620FS, H700FS)	1

FOOTNOTES:

a Remanufactured Transmission 1455613 (U.S.)
b Remanufactured Transmission 864701 (U.S.)
c → S/N E008D01679W
d S/N E008D01866Y ↔ S/N E008D01910Z
e S/N E008D01911Z ↔ S/N E008D02024C
f S/N E008D01680W ↔ S/N E008D01865Y
g S/N E008D01680W →
h S/N E008E01680W →

©2011 HYSTER COMPANY

NOTES

©2011 HYSTER COMPANY

TRANSMISSION COOLING (FIGURE 5-25)

H550F, H620F, H650F, H700F (S/N E008D02025C ↔ S/N E008D02099D)

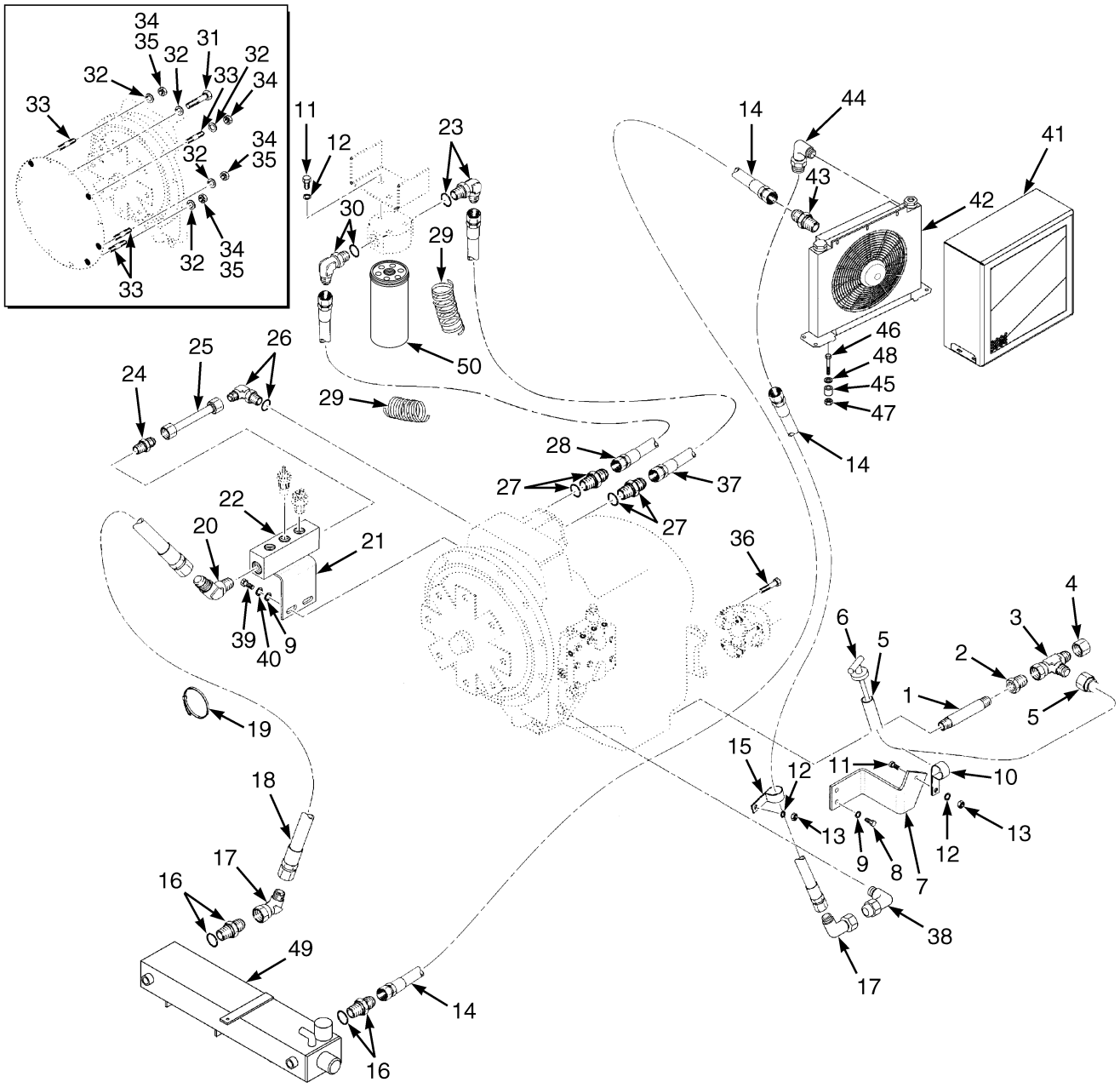

HP240531

©2011 HYSTER COMPANY

TRANSMISSION COOLING

H550F, H620F, H650F, H700F (S/N E008D02025C ↔ S/N E008D02099D)

ITEM	PART NO.	DESCRIPTION	QTY
	1603626	Transmission Assy	1
1	19636	Fitting	1
2	16295	Fitting	1
3	17591	Fitting	1
4	17619	Nut	4
5	1617843	Tube	1
6	1617844	Dipstick	1
7	1344613	Bracket	7
8	132860	Capscrew	8
9	292683	Lockwasher	4
10	144067	Clamp	1
11	16598	Capscrew	2
12	15156	Lockwasher	13
13	15056	Nut	2
14	1582284	Hose Assy	2
15	298829	Clamp	2
16	1337330	Fitting	2
17	1337331	Fitting	2
18	1367343	Hose Assy	1
19	273775	Strap Clamp	AR
20	14555	Fitting	1
21	1394083	Manifold	1
22	15483	Fitting	1
23	1520485	Fitting	1
24	17346	Fitting	1
25	1394086	Tube Assy	1
26	16561	Elbow	1
27	1473888	Fitting	2
28	1520487	Hose Assy	1
29	239308	Sleeve	4
30	1473898	Fitting	1
31	292519	Capscrew	8
32	~~388049~~		
	292682	Lockwasher	12
33	382392	Stud	4
34	136692	Nut	4
35	264134	Loctite	AR
36	177051	Capscrew	8
37	1520488	Hose Assy	1
38	184761	Fitting	1
39	132860	Capscrew	2
40	320161	Washer	2
41	1583626	Plate	1
42	1566466	Oil Cooler	1
42	4027739	Thermostat	1
42	4027738	Fan	1
42	4027737	Frame	1
42	4027736	Radiator	1
43	1470852	Fitting	1
44	1568104	Fitting	1

©2011 HYSTER COMPANY

TRANSMISSION COOLING

H550F, H620F, H650F, H700F (S/N E008D02025C ↔ S/N E008D02099D)

ITEM	PART NO.	DESCRIPTION	QTY
45	353453	Mount	4
46	287851	Capscrew	4
47	302400	Nut	4
48	320158	Washer	8
49	1509033	Oil Cooler	1
50	2048273	Transmission Filter	1

©2011 HYSTER COMPANY

NOTES

©2011 HYSTER COMPANY

TRANSMISSION COOLING (FIGURE 5-26)

H440FS, H550FS, H620FS, H700FS (S/N E008D02025C ↔ S/N E008D02099D)

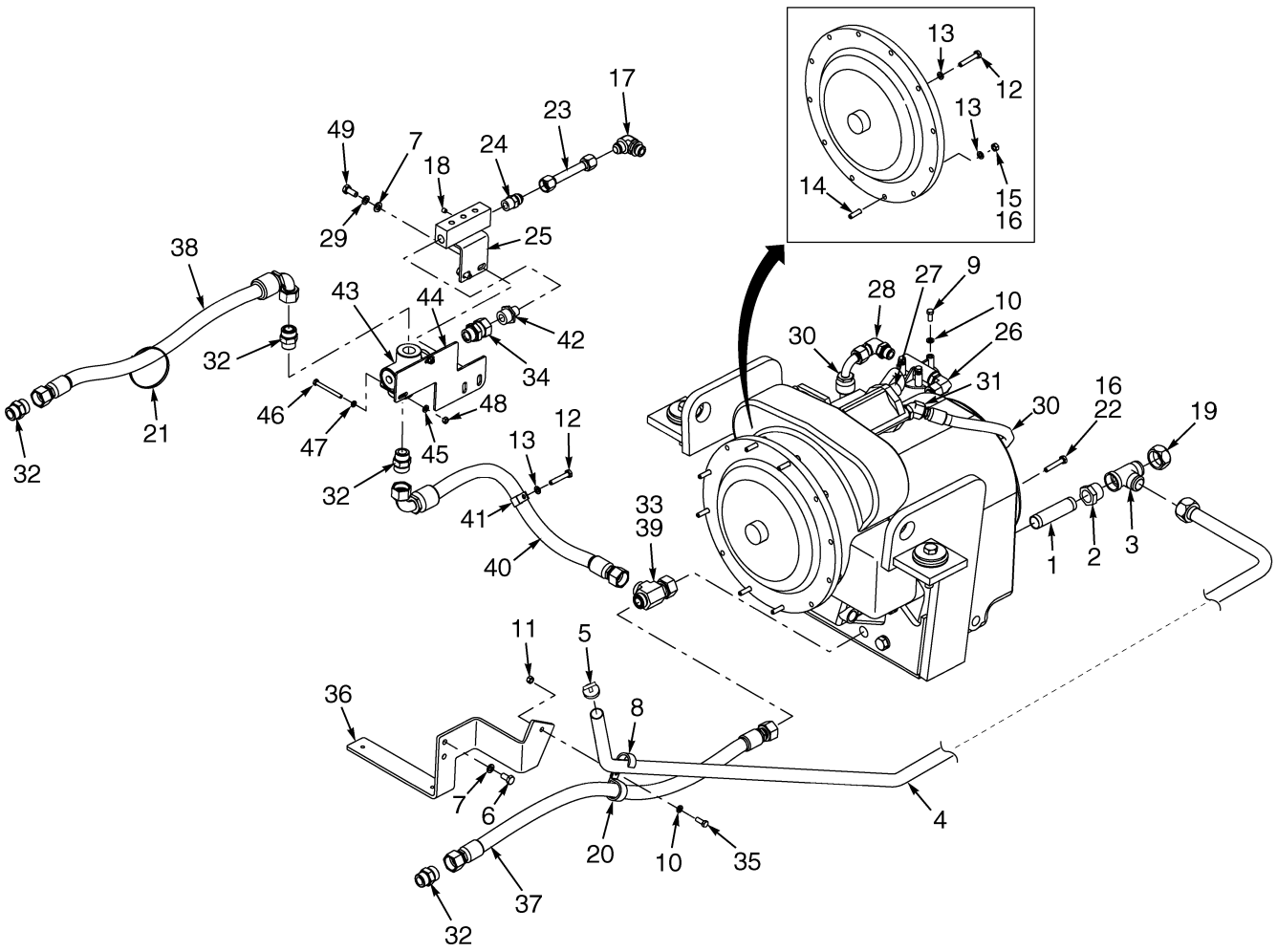

HP240449

©2011 HYSTER COMPANY

TRANSMISSION COOLING

H440FS, H550FS, H620FS, H700FS (S/N E008D02025C ↔ S/N E008D02099D)

ITEM	PART NO.	DESCRIPTION	QTY
	1603626	Transmission Assy	1
1	19636	Fitting	1
2	16295	Fitting	1
3	17591	Fitting	1
4	1617843	Tube	1
5	1617844	Dipstick	1
6	132860	Capscrew	2
7	292683	Lockwasher	4
8	144067	Clamp	1
9	16598	Capscrew	3
10	15156	Lockwasher	4
11	15056	Nut	1
12	292519	Capscrew	8
13	~~388049~~		
	292682	Lockwasher	12
14	382392	Stud	4
15	136692	Nut	4
16	264134	Loctite	AR
17	16561	Elbow	1
18	15483	Fitting	1
19	17619	Nut	1
20	258590	Clamp	1
21	273775	Strap Clamp	AR
22	177051	Capscrew	8
23	1394086	Tube Assy	1
24	17346	Fitting	1
25	1394083	Manifold	1
26	1520485	Fitting	1
27	1473888	Fitting	1
28	1473898	Fitting	1
29	320161	Washer	2
30	1529589	Hose Assy	2
31	1516208	Fitting	1
32	1470852	Fitting	1
33	1480747	Fitting	1
34	1475137	Adapter	1
34	888333	Seal	1
35	16805	Capscrew	2
36	1545410	Bracket	2
37	1545411	Hose Assy	1
38	1545412	Hose Assy	1
39	1487099	Fitting	1
40	1553315	Hose Assy	1
41	1310611	Clamp	1
42	886552	Fitting	2
43	1483901	By-Pass Valve (Thermo By-Pass)	1
44	1553320	Plate	1
45	292681	Lockwasher	2
46	287750	Capscrew	2
47	320157	Washer	2

©2011 HYSTER COMPANY

TRANSMISSION COOLING

H440FS, H550FS, H620FS, H700FS (S/N E008D02025C ↔ S/N E008D02099D)

ITEM	PART NO.	DESCRIPTION	QTY
48	239503	Nut	2
49	292527	Capscrew	2
	a 2048273	Transmission Filter	1

FOOTNOTES:

a Not Illustrated

©2011 HYSTER COMPANY

NOTES

©2011 HYSTER COMPANY

TRANSMISSION COOLING (FIGURE 5-27)

(S/N E008D02100D →)

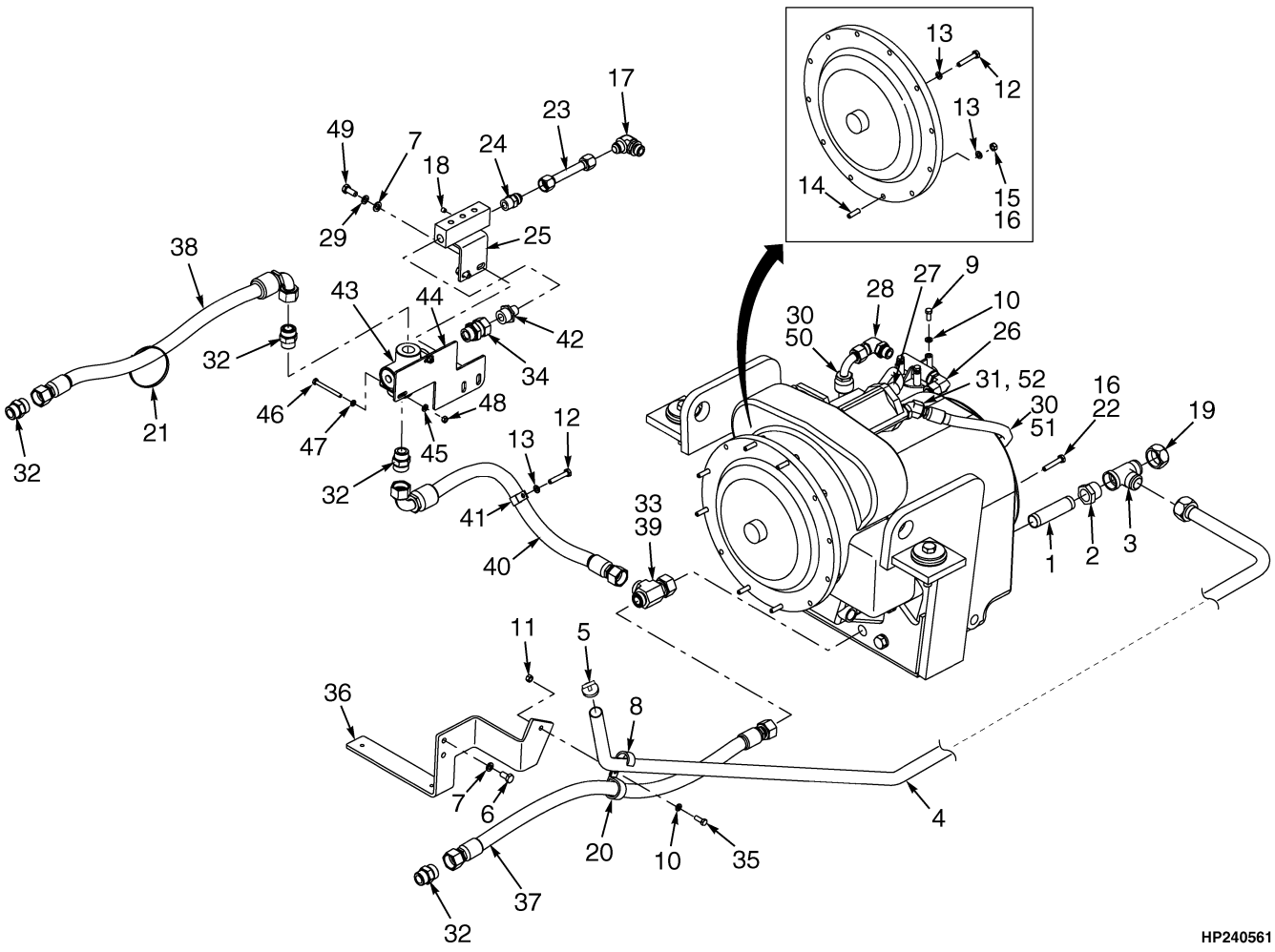

©2011 HYSTER COMPANY

TRANSMISSION COOLING

(S/N E008D02100D →)

ITEM	PART NO.	DESCRIPTION	QTY
	1603626	Transmission Assy	1
1	19636	Fitting	1
2	16295	Fitting	1
3	17591	Fitting	1
4	1617843	Tube	1
5	1617844	Dipstick	1
6	132860	Capscrew	2
7	292683	Lockwasher	4
8	144067	Clamp	1
9	16598	Capscrew	3
10	15156	Lockwasher	4
11	15056	Nut	1
12	292519	Capscrew	8
13	~~388049~~		
	292682	Lockwasher	12
14	382392	Stud	4
15	136692	Nut	4
16	264134	Loctite	AR
17	16561	Elbow	1
18	15483	Fitting	1
19	17619	Nut	1
20	258590	Clamp	1
21	273775	Strap Clamp	AR
22	177051	Capscrew	8
23	1394086	Tube Assy	1
24	17346	Fitting	1
25	1394083	Manifold	1
26	1520485	Fitting	1
27	1473888	Fitting	1
28	1473898	Fitting	1
29	320161	Washer	2
30	1529589	Hose Assy (Short Wheel Base Only)	2
31	1516208	Fitting (Short Wheel Base Only)	1
32	1470852	Fitting	1
33	1480747	Fitting	1
34	1475137	Adapter	1
34	888333	Seal	1
35	16805	Capscrew	2
36	1545410	Bracket	2
37	1545411	Hose Assy	1
38	1545412	Hose Assy	1
39	1487099	Fitting	1
40	1553315	Hose Assy	1
41	1310611	Clamp	1
42	886552	Fitting	2
43	1483901	By-Pass Valve (Thermo By-Pass)	1
44	1553320	Plate	1
45	292681	Lockwasher	2
46	287750	Capscrew	2
47	320157	Washer	2

©2011 HYSTER COMPANY

TRANSMISSION COOLING

(S/N E008D02100D →)

ITEM	PART NO.	DESCRIPTION	QTY
48	239503	Nut	2
49	292527	Capscrew	2
50	1520487	Hose Assy (H550F, H620F, H650F, H700F)	1
51	1520488	Hose Assy (H550F, H620F, H650F, H700F)	1
52	1473888	Fitting (F550F, H620F, H650F, H700F)	1
	a 2048273	Transmission Filter	1

FOOTNOTES:

a Not Illustrated

©2011 HYSTER COMPANY

NOTES

©2011 HYSTER COMPANY

AUXILIARY COOLANT PUMP (FIGURE 5-28)

OPTIONAL

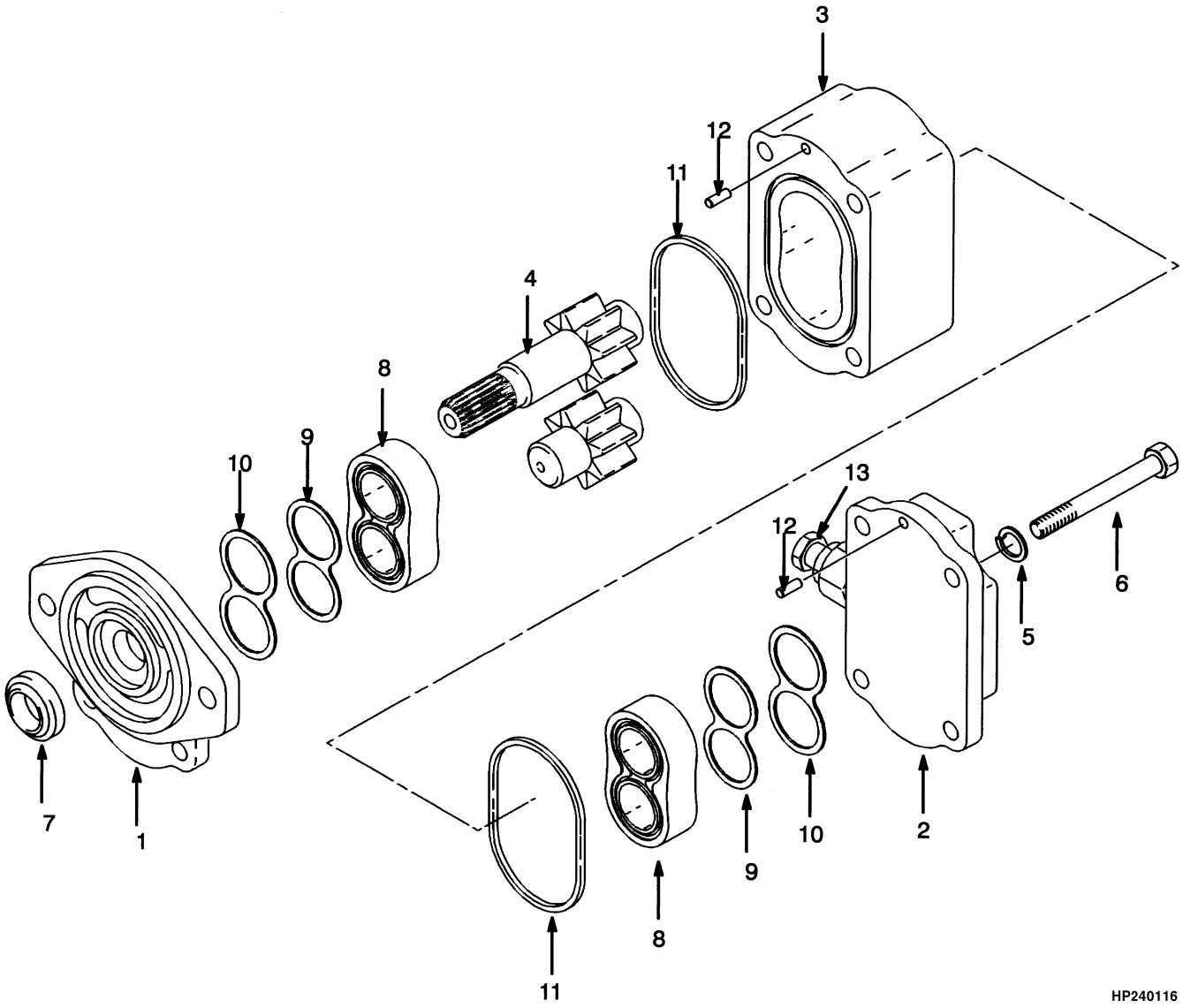

©2011 HYSTER COMPANY

AUXILIARY COOLANT PUMP
OPTIONAL

ITEM	PART NO.	DESCRIPTION	QTY
	1394088	Hydraulic Pump	1
1	. . . . .	Housing	1
2	. . . . .	Housing	1
3	. . . . .	Housing (Gear)	1
3	16486	O-Ring	1
4	. . . . .	Gear Set	1
5	. . . . .	Washer	4
6	. . . . .	Bolt (Hex Head)	4
7	. . . . .	Seal	1
8	. . . . .	Bushing	2
9	. . . . .	Seal (Channel)	2
10	. . . . .	Back-Up Seal	2
11	. . . . .	Seal	2
12	. . . . .	Dowel Pin	2
13	1460201	Relief Valve	1
	1460200	Kit-Seal	1

©2011 HYSTER COMPANY

TRANSMISSION COOLING (FIGURE 5-29)

OPTIONAL (S/N E008D01680W →)

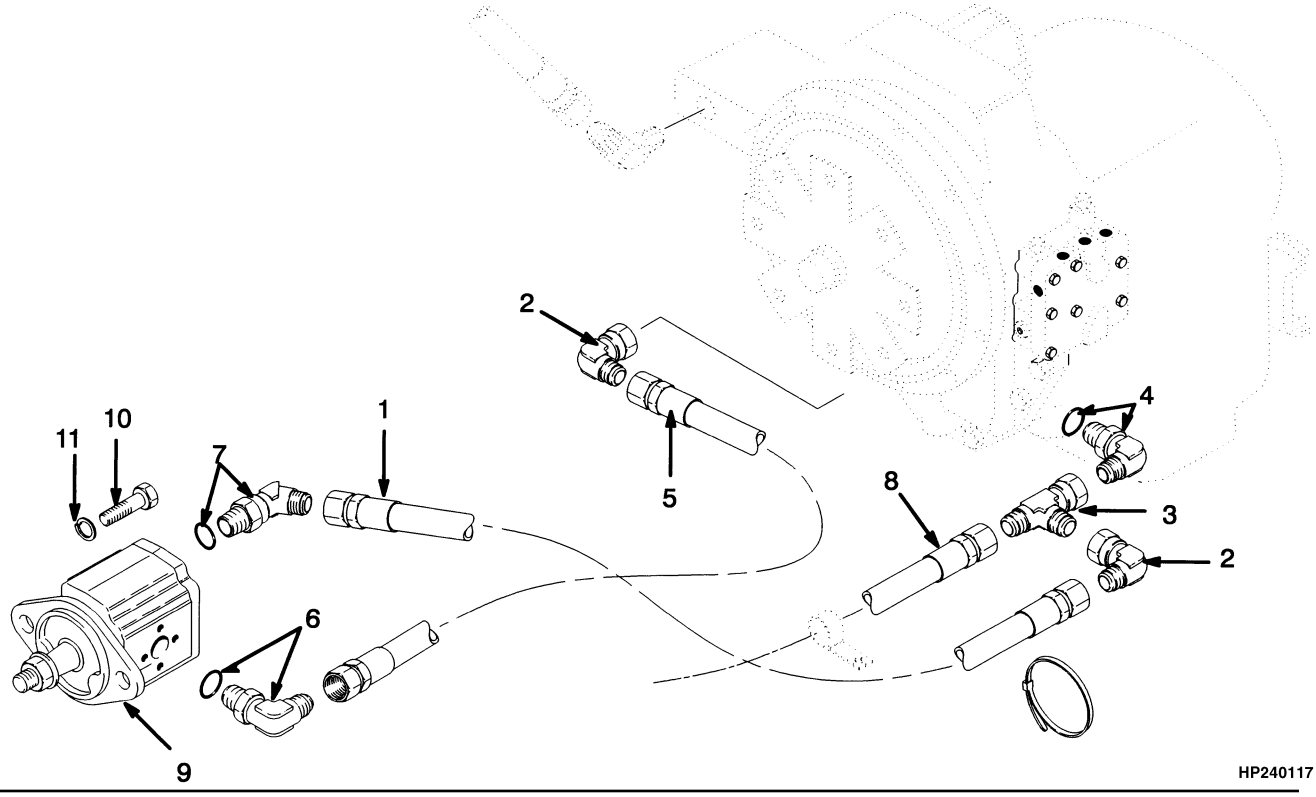

HP240117

ITEM	PART NO.	DESCRIPTION	QTY
1	1315836	Hose Assy	1
2	1350840	Fitting	1
3	184761	Fitting	1
4	17066	Fitting	1
5	**b** 378137	Hose Assy	1
5	**a** 378522	Hose Assy	1
6	16562	Fitting	1
6	16487	O-Ring	1
7	222392	Fitting	1
7	16486	O-Ring	1
8	1350849	Tube Assy	1
9	1394088	Hydraulic Pump (Auxiliary Coolant) (☞Figure 5-28)	1
10	132860	Capscrew	2
11	292683	Lockwasher	2

FOOTNOTES:

a → S/N E008D01865Y

b S/N E008D01866Y →

©2011 HYSTER COMPANY

6 DRIVE AXLE

SECTION 6
DRIVE AXLE

DESCRIPTION	PAGE
AXLE HOUSING AND ATTACHING PARTS	
WET BRAKE - H440FS, H550F, H550FS (S/N E008E01985B →)	6-12
WET BRAKE - H620F, H650F, H700F, H620FS, H700FS (S/N E008E01985B →)	6-14
BRAKE ASSEMBLY	
H440FS, H550F, H550FS (→ S/N E008E-1837)	6-48
H620F, H650F, H700F, H620FS, H700FS (→ S/N E008E01837)	6-52
WET BRAKE - H440FS, H550F, H550FS (S/N E008E01985B →)	6-56
WET BRAKE - H620F, H650F, H700F, H620FS, H700FS (S/N E008E01985B →)	6-58
DIFFERENTIAL AND CARRIER	
H440FS, H550F, H550FS (→ S/N E008D01538 (AXLE 1336960))	6-16
H440FS, H550F, H550FS (S/N E008D01539 →)	6-24
H620F, H650F, H700F, H620FS, H700FS (→ S/N E008E01837)	6-20
H620F, H650F, H700F, H620FS, H700FS (S/N E008E01838 →)	6-28
WET BRAKE - H440FS, H550F, H550FS (S/N E008E02078D → INC. 02076)	6-32
WET BRAKE - H620F, H650F, H700F, H620FS, H700FS (S/N E008E02078D → INC. 02076)	6-36
DRIVE AXLE	
H440FS, H550F, H550FS (→ S/N E008E01984B)	6-2
H620F, H650F, H700F, H620FS, H700FS (→ S/N E008E01837)	6-6
H620F, H650F, H700F, H620FS, H700FS (S/N E008E01838 ↔ S/N E008E001984B)	6-10
DRIVE SHAFT	6-64
HUB AND SHAFT ASSEMBLY	
WET BRAKE - H440FS, H550F, H550FS (S/N E008E01985B →)	6-38
WET BRAKE - H620F, H650F, H700F, H620FS, H700FS (S/N E008E01985B →)	6-40
WET BRAKE - H440FS, H550F, H550FS (S/N E008E02078D → INC. 02076)	6-42
WET BRAKE - H620F, H650F, H700F, H620FS, H70FS (S/N E008E02078D → INC. 02076)	6-44
PARK BRAKE	
WET BRAKE (→ S/N E008E01984B)	6-60
WET BRAKE (S/N E008E01985B →)	6-62
SERVICE BRAKE	
→ S/N E008E01984B	6-46

©2011 HYSTER COMPANY

DRIVE AXLE (FIGURE 6-1)

H440FS, H550F, H550FS (→ S/N E008E01984B)

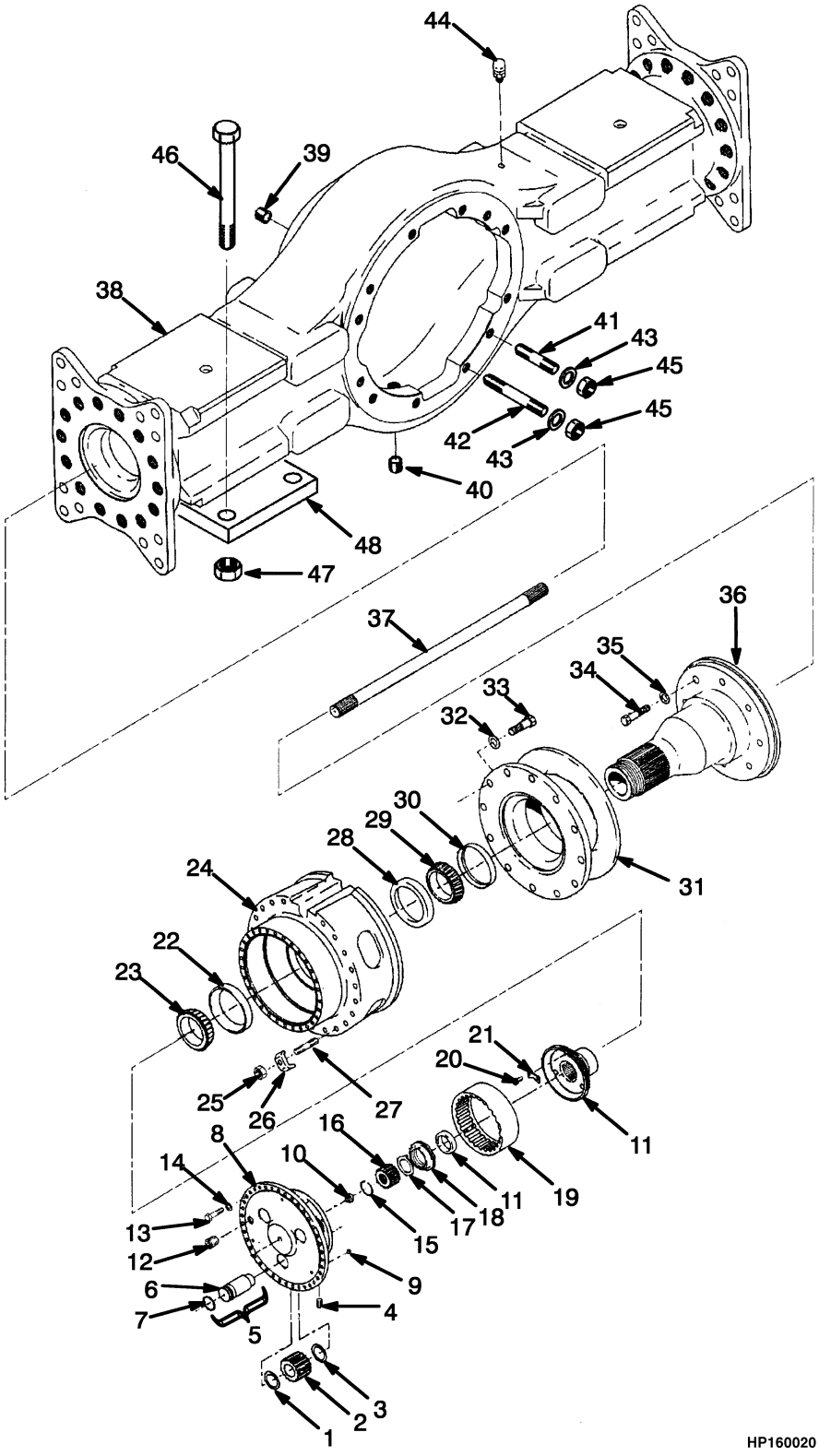

©2011 HYSTER COMPANY

DRIVE AXLE

H440FS, H550F, H550FS (→ S/N E008E01984B)

ITEM	PART NO.	DESCRIPTION	QTY
	ab 1336960	Drive Axle	1
	de 1378889	Drive Axle	1
	1347787	Spider Assembly	2
1	200471	Washer	3
2	1347791	Pinion	3
3	1347795	Washer	3
4	321290	Setscrew	3
5	. . . . .	Shaft	3
6	. . . . .	Pinion (Shaft)	1
7	**c** 1347794	O-Ring	1
7	**g** 1502133	O-Ring	1
8	. . . . .	Spider	1
9	273969	Button (Thrust)	3
10	1303551	Button (Thrust)	1
11	1347777	Hub Assembly (Includes Sleeve)	2
12	321293	Plug	2
13	221623	Screw	60
14	1347590	Washer	60
15	208107	Snap Ring	2
16	1347785	Gear	2
17	1347784	Thrust Washer	2
18	1347782	Wheel Nut	2
19	1347780	Gear	2
20	1309853	Capscrew	4
21	1352498	Lock	2
22	1312072	Bearing Cup	2
23	1347781	Bearing Cone	2
24	1384894	Hub And Cup Assembly	2
25	1475419	Wheel Nut	44
26	1347597	Wheel Clamp	44
27	200452	Wheel Stud	44
28	30258	Bearing Cup	2
29	30257	Bearing Cone	2
30	1347776	Oil Seal	2
31	1347599	Brake Disk (Brake)	2
32	268980	Washer	24
33	**c** 168054	Capscrew	24
34	221695	Screw	28
35	1346636	Washer	28
36	1347589	Spindle	2
37	1347783	Shaft (LH)	1
37	1347786	Shaft (RH)	1
38	**ab** 1347586	Drive Axle Housing	1
38	**hf** 1382057	Drive Axle Housing	1
38	. . . . .	Axle Housing	1
39	15316	Fitting	1
40	321293	Plug	1
41	**ab** 1347588	Capscrew (Short)	8
41	**hf** 214195	Bolt (Short)	8
42	**hf** 1380784	Stud (Long)	4

©2011 HYSTER COMPANY

See Service Manual for service procedures.

DRIVE AXLE

H440FS, H550F, H550FS (→ S/N E008E01984B)

ITEM	PART NO.	DESCRIPTION	QTY
42	**ab** 329420	Capscrew (Long)	4
43	**ab** 154782	Washer	12
43	**hf** 86007	Washer	12
44	200445	Breather	1
45	**hf** 358099	Nut	12
46	115954	Bolt	8
47	221376	Locknut	8
48	115953	Plate	2

FOOTNOTES:

a → S/N E008D01538
b → S/N E008E01606
c → S/N E008E01819
d S/N E008D01539 ↔ S/N E008E01819
e S/N E008E01607 ↔ S/N E008E01820
f S/N E008E01607 →
g S/N E008E01820 →
h S/N E008D01539 →

©2011 HYSTER COMPANY

NOTES

©2011 HYSTER COMPANY

DRIVE AXLE (FIGURE 6-2)

H620F, H650F, H700F, H620FS, H700FS (→ S/N E008E01837)

Item	Service Gram
31	C-G-11

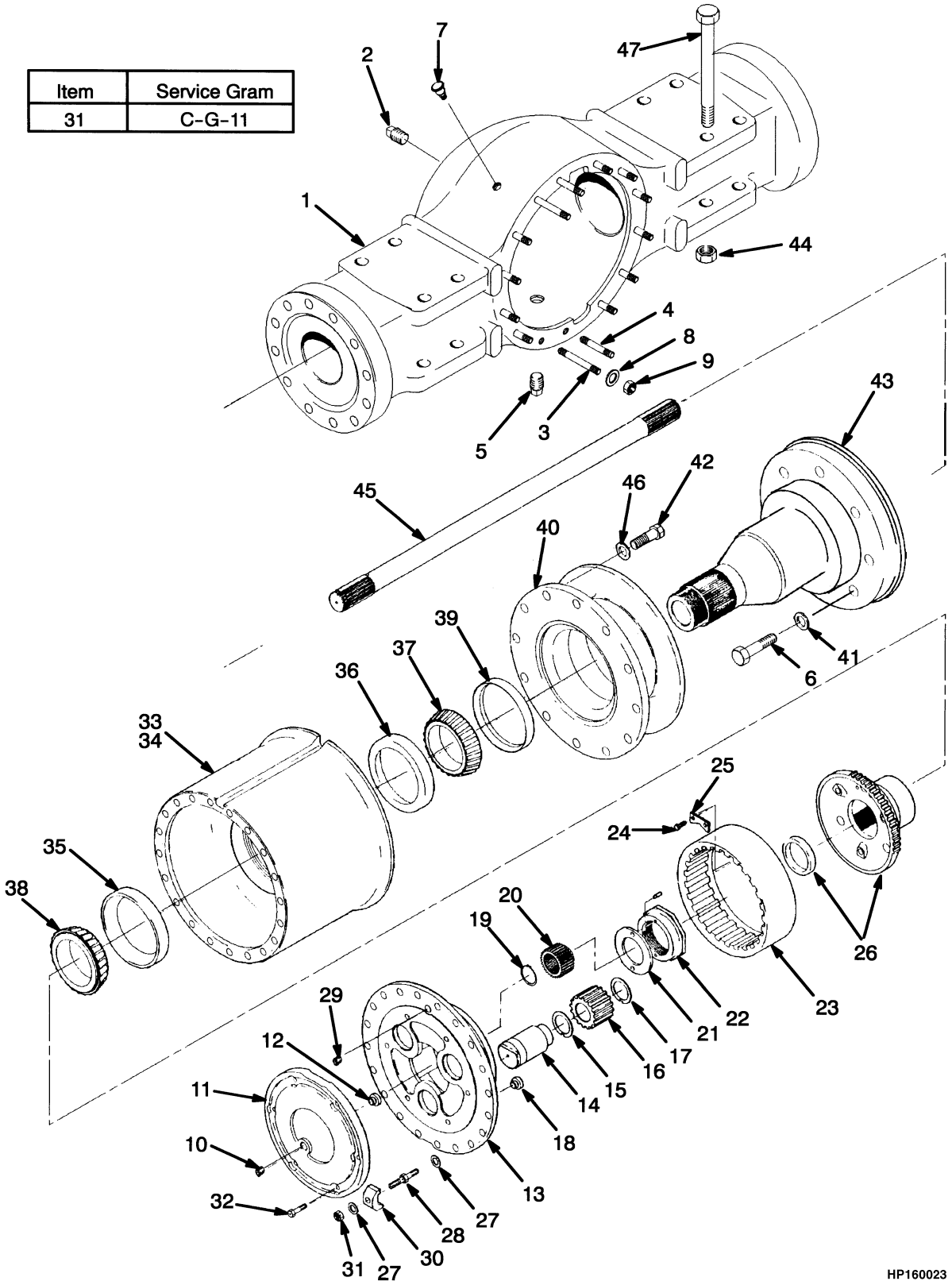

©2011 HYSTER COMPANY

DRIVE AXLE

H620F, H650F, H700F, H620FS, H700FS (→ S/N E008E01837)

ITEM	PART NO.	DESCRIPTION	QTY
	b 1339614	Drive Axle	1
	a 1346364	Drive Axle	1
	c 1355036	Drive Axle	1
	d 1378884	Drive Axle	1
	e 1378888	Drive Axle	1
1	**a** 1312063	Drive Axle Housing	1
1	**f** 1350650	Drive Axle Housing	1
2	15316	Fitting	1
3	208646	Stud (Long)	4
4	307811	Stud (Short)	10
5	321293	Plug	1
6	**a** 1312086	Stud	32
6	**f** 1350655	Capscrew	32
7	1613651	Breather	1
8	86007	Washer	14
9	358099	Nut	14
10	15316	Fitting	2
11	**f** 1309105	Cover Assembly (Spider)	2
11	**a** 1312064	Cover (Spider)	2
12	1303551	Button (Thrust)	1
13	**a** 1312065	Spider	2
13	**f** 1346635	Spider Assembly	2
14	1312066	Shaft (Shaft)	3
15	351278	Thrust Washer	3
16	1312067	Gear	3
17	167201	Washer	3
18	273969	Button (Thrust)	3
19	200467	Snap Ring	2
20	1312068	Gear	2
21	1312087	Washer	2
22	1312088	Nut	2
23	**a** 1312069	Gear	2
23	**f** 1346631	Gear	2
24	**f** 1309853	Capscrew	4
24	**a** 1312089	Capscrew	4
25	**f** 1352498	Lock	2
25	**a** 200495	Lock	2
26	167190	Hub Assembly (And Sleeve)	2
27	1312090	Washer	92
28	167182	Wheel Stud	46
29	321293	Plug	2
30	**a** 1309103	Clamp (Rim)	46
30	**f** 1324799	Wheel Clamp (Rim)	46
31	**f** 221717	Nut	46
31	**a** 248320	Wheel Nut	46
32	**f** 1351960	Bolt	12
32	**a** 153597	Capscrew	12
33	**a** 1312071	Wheel Hub	2
33	**f** 1350656	Hub	2
34	. . . . .	Hub	1

©2011 HYSTER COMPANY

DRIVE AXLE

H620F, H650F, H700F, H620FS, H700FS (→ S/N E008E01837)

ITEM	PART NO.	DESCRIPTION	QTY
35	231012	Bearing Cup (Outer)	1
36	1312072	Bearing Cup (Inner)	1
37	1312073	Bearing Cone	2
38	167178	Bearing Cone	2
39	1312074	Oil Seal	2
40	**a** 1309102	Brake Disk	2
40	**f** 1350657	Brake Disk	2
41	**a** 125590	Washer	32
41	**f** 1346636	Washer	32
42	**a** 1312091	Capscrew	24
42	**f** 1313898	Capscrew	24
43	**a** 1312075	Spindle	2
43	**f** 1350654	Spindle	2
44	221376	Locknut	8
45	1312076	Axle Shaft	2
46	268980	Washer	24
47	160255	Bolt	8

FOOTNOTES:

a → S/N E008E01532
b S/N E008E01533 ↔ S/N E008E01554
c S/N E008E01555 ↔ S/N E008E01560
d S/N E008E01561 ↔ S/N E008E01588
e S/N E008E01589 →
f S/N E008E01533 →

©2011 HYSTER COMPANY

NOTES

©2011 HYSTER COMPANY

DRIVE AXLE (FIGURE 6-3)

H620F, H650F, H700F, H620FS, H700FS (S/N E008E01838 ↔ S/N E008E001984B)

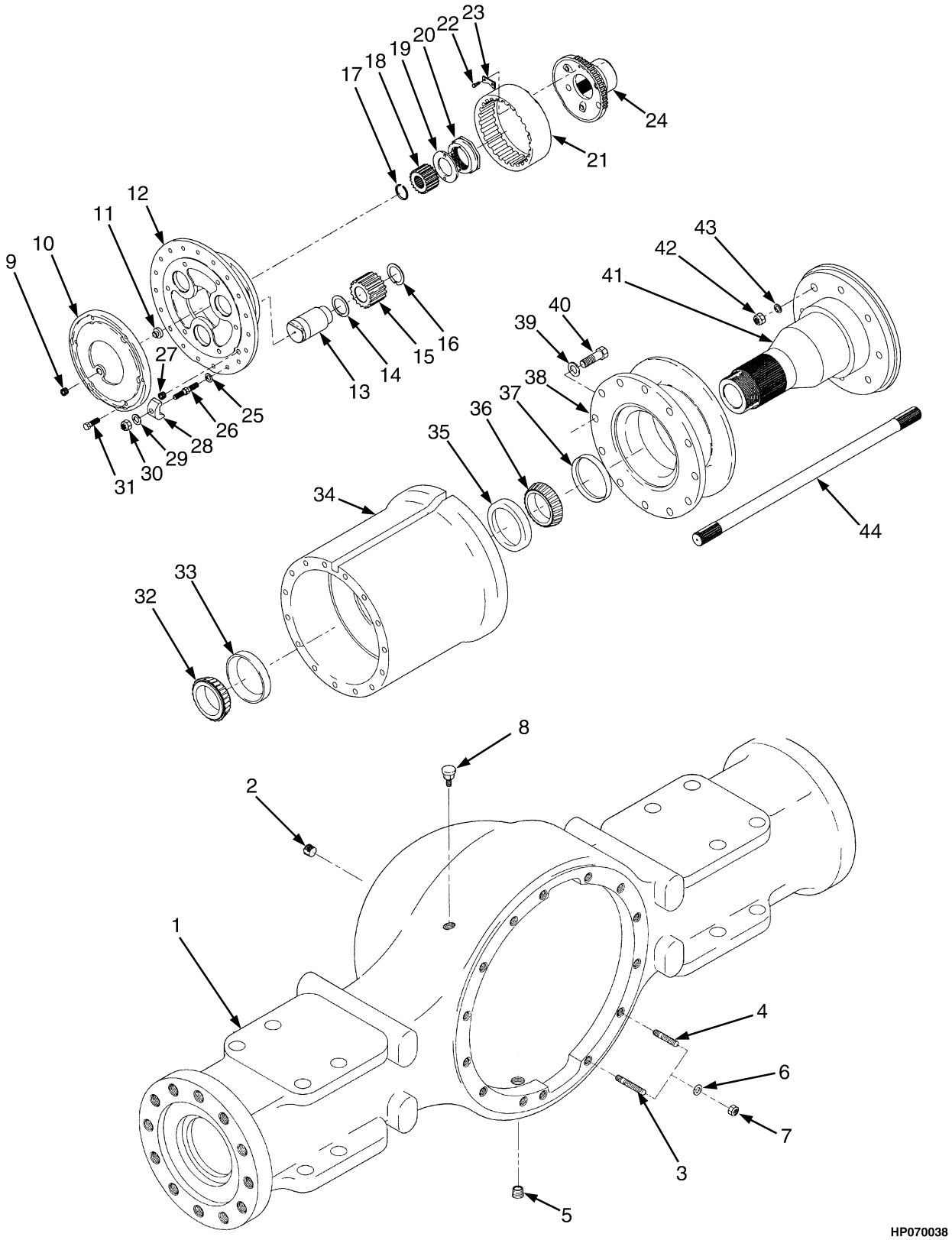

©2011 HYSTER COMPANY

DRIVE AXLE

H620F, H650F, H700F, H620FS, H700FS (S/N E008E01838 ↔ S/N E008E001984B)

ITEM	PART NO.	DESCRIPTION	QTY
	1478761	Drive Axle	1
1	1350650	Drive Axle Housing	1
2	15316	Fitting	1
3	208646	Stud	4
4	307811	Stud	10
5	321293	Plug	1
6	86007	Washer	14
7	358099	Nut	14
8	1613651	Breather	1
9	15316	Fitting	2
10	1347846	Cover	1
11	1303551	Button (Thrust)	1
12	1346635	Spider Assembly	2
13	1312066	Shaft	3
14	351278	Thrust Washer	3
15	1312067	Gear	3
16	167201	Washer	3
17	200467	Snap Ring	1
18	1312068	Gear	1
19	1312087	Washer	1
20	1312088	Nut	2
21	1346631	Gear	1
22	1309853	Capscrew	2
23	1352498	Lock	1
24	167190	Hub Assembly	1
25	1312090	Washer	23
26	167182	Wheel Stud	23
27	321293	Plug	1
28	1324799	Wheel Clamp	23
29	1312090	Washer	23
30	221717	Nut	23
31	1351960	Bolt	6
32	167178	Bearing Cone	1
33	231012	Bearing Cup	1
34	1350656	Hub	1
35	1312072	Bearing Cup	1
36	1312073	Bearing Cone	1
37	1312074	Oil Seal	1
38	1350657	Brake Disk	1
39	268980	Washer	12
40	221659	Capscrew	12
41	1350654	Spindle	2
42	1350655	Capscrew	32
43	1346636	Washer	32
44	1312076	Axle Shaft	1

©2011 HYSTER COMPANY

AXLE HOUSING AND ATTACHING PARTS (FIGURE 6-4)

WET BRAKE — H440FS, H550F, H550FS (S/N E008E01985B →)

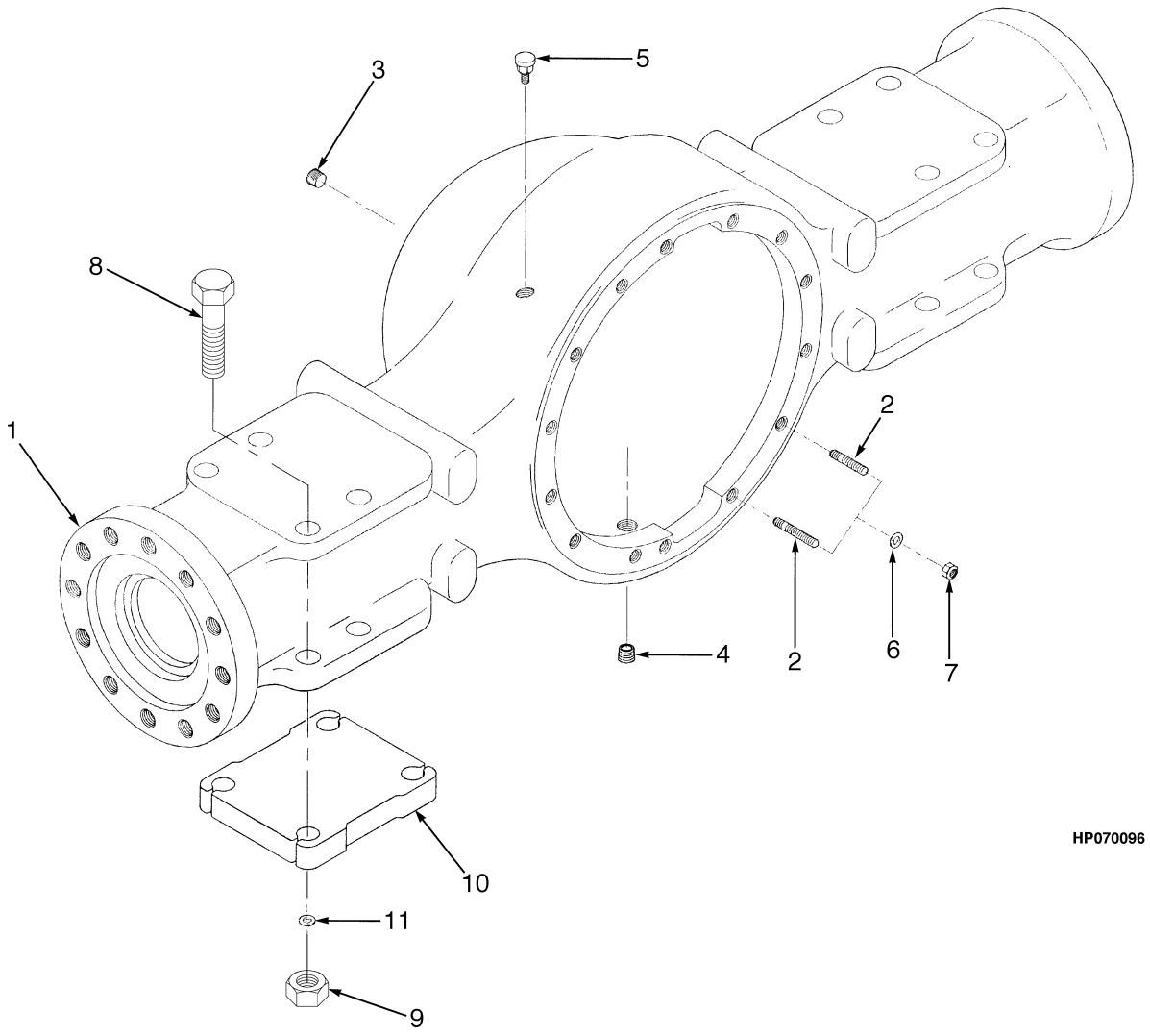

©2011 HYSTER COMPANY

AXLE HOUSING AND ATTACHING PARTS

WET BRAKE – H440FS, H550F, H550FS (S/N E008E01985B →)

ITEM	PART NO.	DESCRIPTION	QTY
	a 1502752	Drive Axle	1
	c 1584428	Drive Axle	1
	f 1635619	Drive Axle	1
1	**a** 1554334	Housing	1
1	**d** 1618131	Housing	1
2	214195	Bolt	8
2	1380784	Stud	4
3	15316	Fitting	1
4	321293	Plug	1
5	200445	Breather	1
6	86007	Washer	12
7	358099	Nut	12
8	115954	Bolt	8
9	**b** 221376	Locknut	8
9	**e** 221728	Nut	8
10	115953	Plate	2
11	**e** 221786	Washer	8

FOOTNOTES:

a → S/N E008E02075C INC. 02077
b → S/N E008E02096D
c S/N E008E02076C ↔ 3/2006 EXC. 02077
d S/N E008E02076C → EXC. 02077
e S/N E008E02097D →
f 4/2006 →

©2011 HYSTER COMPANY

AXLE HOUSING AND ATTACHING PARTS (FIGURE 6-5)

WET BRAKE — H620F, H650F, H700F, H620FS, H700FS (S/N E008E01985B →)

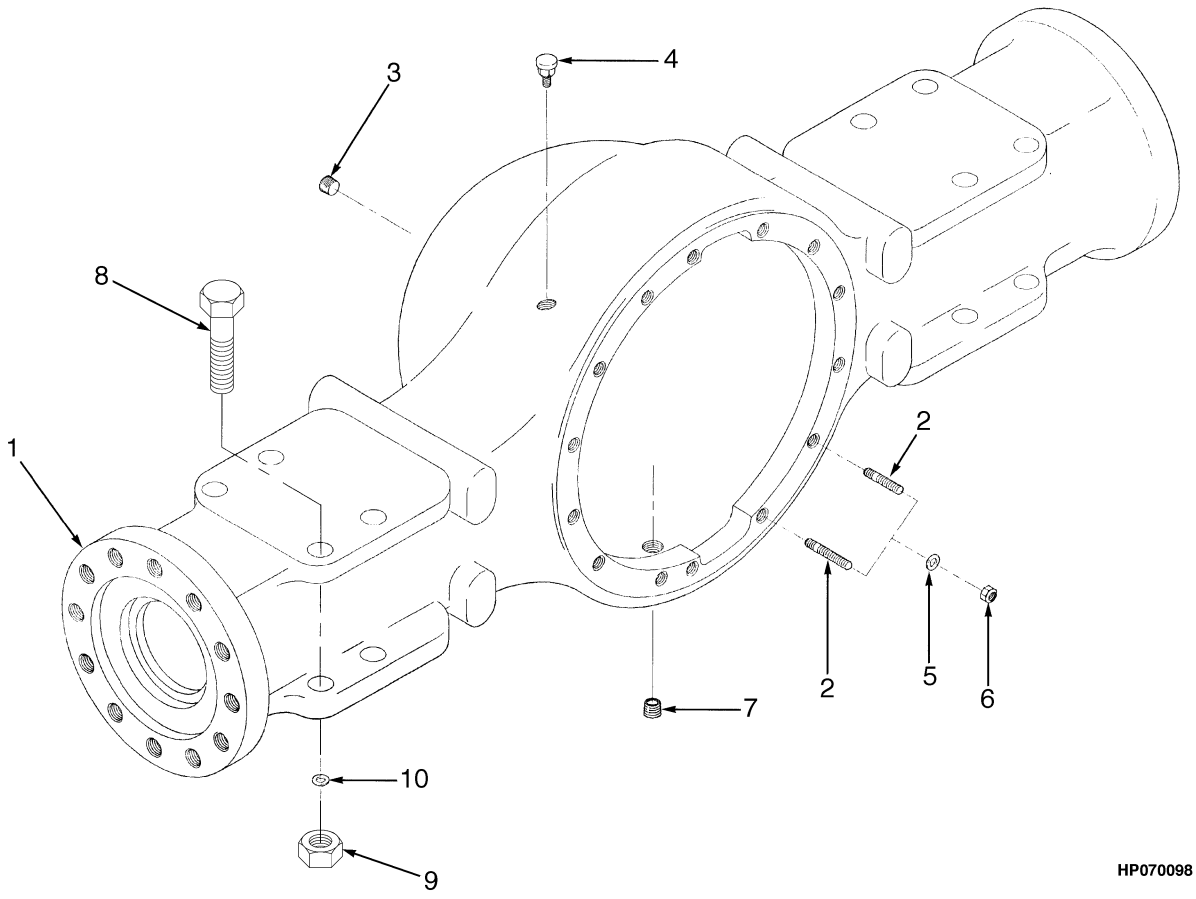

©2011 HYSTER COMPANY

AXLE HOUSING AND ATTACHING PARTS

WET BRAKE – H620F, H650F, H700F, H620FS, H700FS (S/N E008E01985B →)

ITEM	PART NO.	DESCRIPTION	QTY
	a 1502753	Drive Axle	1
	c 1584427	Drive Axle	1
	f 1635598	Drive Axle	1
1	**a** 1554730	Drive Axle Housing	1
1	**d** 1618318	Housing	1
1	**f** 1473777	Magnet (Not Shown)	6
2	**a** 1554732	Stud (Short)	10
2	**d** 1618321	Stud	8
2	**a** 208646	Stud (Long)	4
2	**d** 1618320	Stud	4
3	15316	Fitting	1
4	1613651	Breather	1
5	86007	Washer	14
6	358099	Nut	14
7	321293	Plug	1
8	160255	Bolt	8
9	**b** 221376	Locknut	8
9	**e** 221728	Nut	8
10	**e** 221786	Washer	8

FOOTNOTES:

a → S/N E008E02075C INC. 02077
b → S/N E008E02097D
c S/N E008E02076C ↔ 3/2006 EXC. 02077
d S/N E008E02076C → EXC. 02077
e S/N E008E02098D →
f 4/2006 →

©2011 HYSTER COMPANY

DIFFERENTIAL AND CARRIER (FIGURE 6-6)

H440FS, H550F, H550FS (→ S/N E008D01538 (AXLE 1336960))

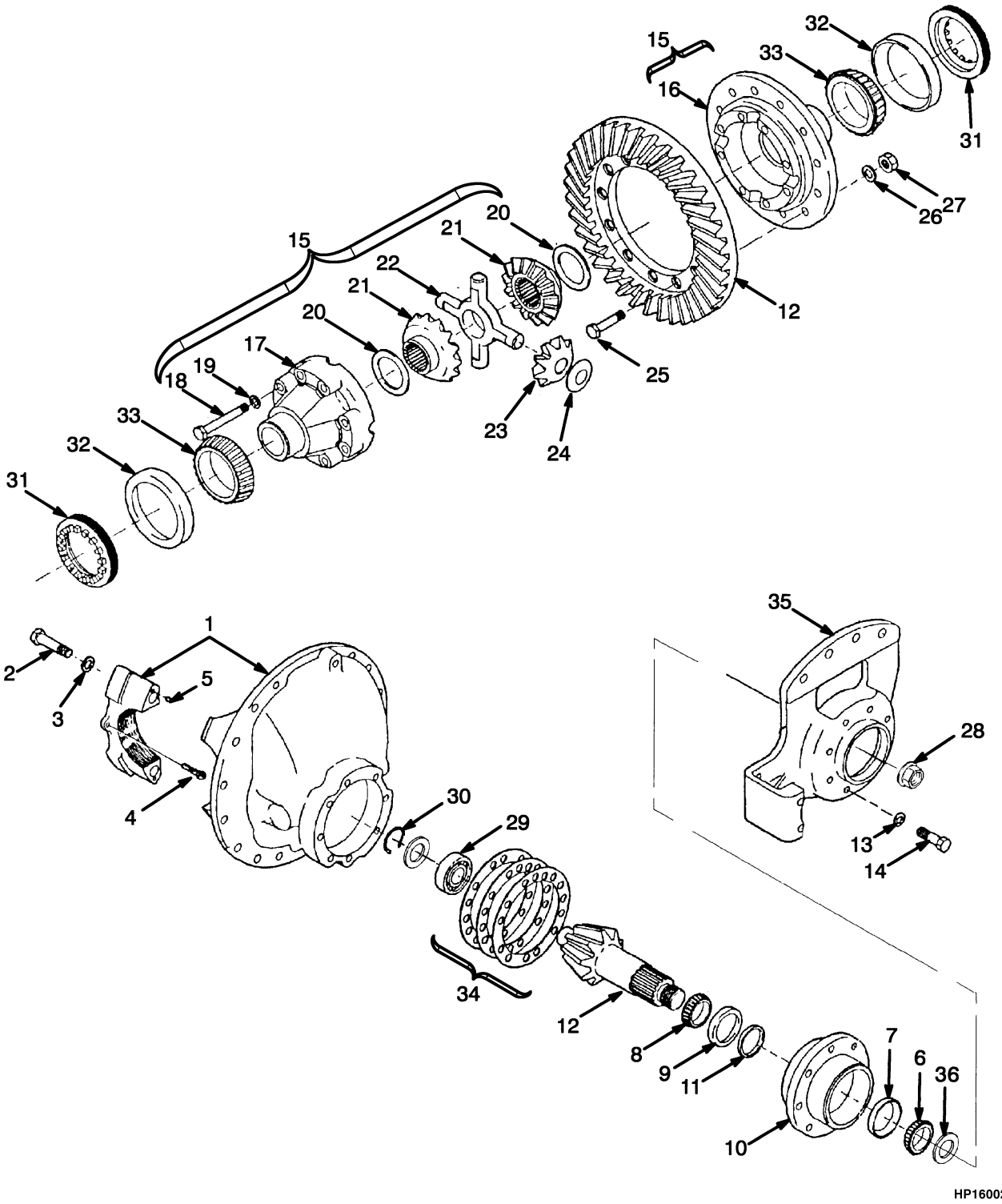

HP160021

©2011 HYSTER COMPANY

DIFFERENTIAL AND CARRIER

H440FS, H550F, H550FS (→ S/N E008D01538 (AXLE 1336960))

ITEM	PART NO.	DESCRIPTION	QTY
	1347768	Differential	1
1	1347769	Carrier	1
1	1489285	Differential (Carriage) (Alternate Part)	1
2	293716	Capscrew	4
3	1347770	Washer	4
4	86008	Cotter Pin	2
5	234038	Dowel	4
6	1347812	Bearing Cone	1
7	200972	Bearing Cup (Tapered) (Outer)	1
8	1347774	Bearing Cone	1
9	30062	Bearing Cup (Inner)	1
10	1347772	Pinion (Cage Assembly)	1
11	. . . . .	Spacer (8,75 mm)	AR
11	. . . . .	Spacer (8,78 mm)	AR
11	. . . . .	Spacer (8,80 mm)	AR
11	. . . . .	Spacer (8,83 mm)	AR
11	. . . . .	Spacer (8,85 mm)	AR
11	. . . . .	Spacer (8,98 mm)	AR
11	. . . . .	Spacer (9,10 mm)	AR
11	. . . . .	Spacer (9,13 mm)	AR
11	. . . . .	Spacer (9,15 mm)	AR
11	. . . . .	Spacer (9,18 mm)	AR
11	. . . . .	Spacer (9,20 mm)	AR
12	1347824	Gear Set	1
13	88587	Washer	8
14	293654	Capscrew	8
15	1347826	Differential	1
15	1347827	Differential Housing	1
16	. . . . .	Case (Flange Side)	1
17	. . . . .	Case	1
18	1347831	Capscrew	16
19	88587	Washer	16
20	~~1379752~~		
	1380797	Thrust Washer	2
21	1379753	Gear	2
22	~~1318626~~		
	1374588	Washer	1
23	1347835	Pinion	4
24	200982	Washer	4
25	1347822	Bolt	12
26	125428	Washer	12
27	1347823	Nut	12
28	1357734	Locknut	1
29	296844	Bearing	1
30	240683	Snap Ring	1
31	1347839	Ring	2
32	1475420	Bearing Cup	2
33	1475421	Bearing Cone	2
34	1347814	Shim (0,075 mm)	AR
34	1347815	Shim (0,125 mm)	AR

©2011 HYSTER COMPANY

DIFFERENTIAL AND CARRIER

H440FS, H550F, H550FS (→ S/N E008D01538 (AXLE 1336960))

ITEM	PART NO.	DESCRIPTION	QTY
34	1347816	Shim (0,200 mm)	AR
34	1347817	Shim (0,500 mm)	AR
35	1347842	Adapter (Brake)	1
36	1312083	Washer	1
	1347800	Kit-Spacer	1
	1379751	Kit-Differential	1
	1347821	Kit-Carrier	1
	1347813	Kit-Shim	1
	1380796	Kit-Differential	1

©2011 HYSTER COMPANY

NOTES

©2011 HYSTER COMPANY

DIFFERENTIAL AND CARRIER (FIGURE 6-7)

H620F, H650F, H700F, H620FS, H700FS (→ S/N E008E01837)

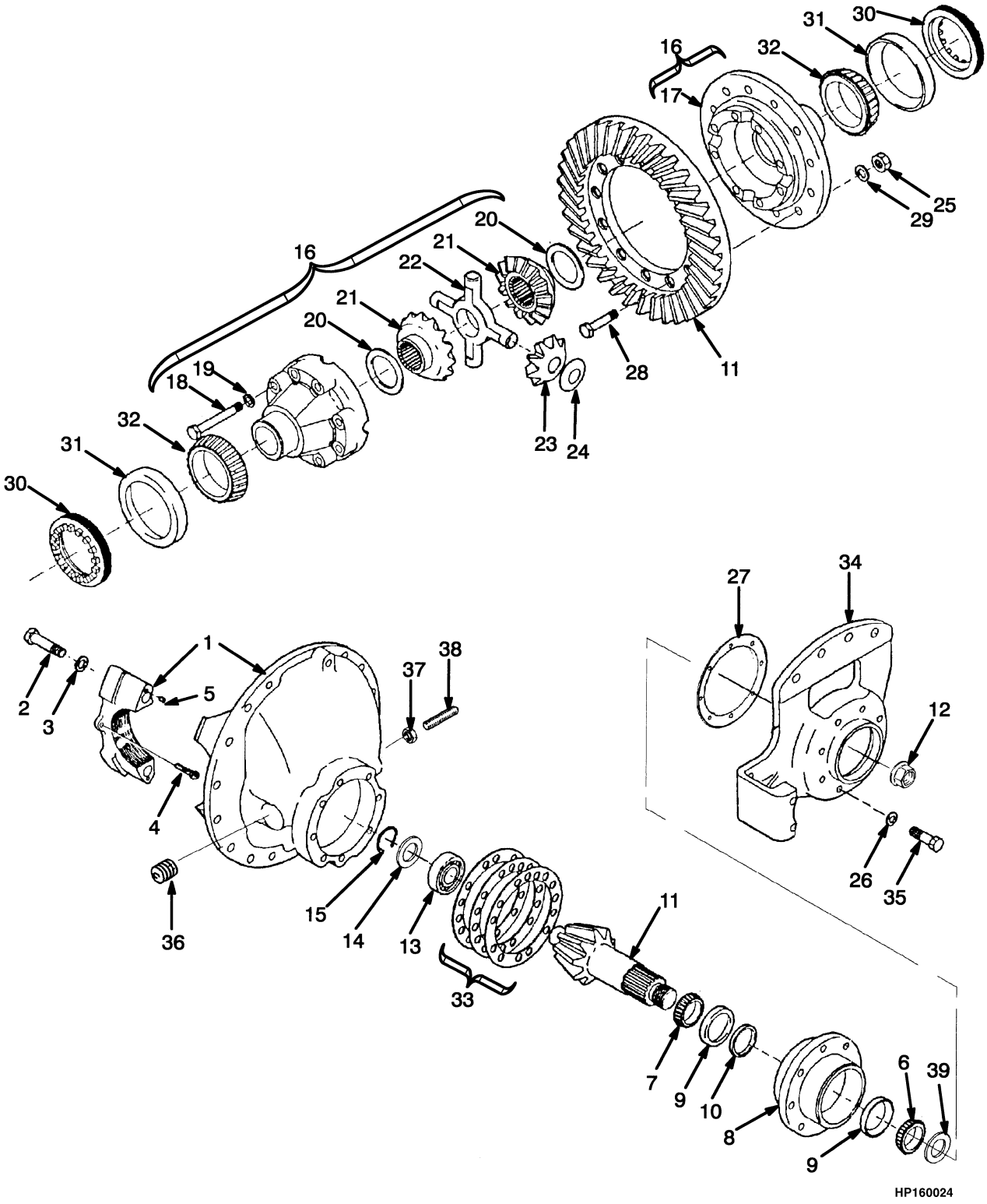

©2011 HYSTER COMPANY

DIFFERENTIAL AND CARRIER

H620F, H650F, H700F, H620FS, H700FS (→ S/N E008E01837)

ITEM	PART NO.	DESCRIPTION	QTY
	ac 1346081	Differential Carrier	1
	dfh 1360788	Differential Carrier	1
	bei 1379725	Differential Carrier	1
	gj 1380787	Differential Carrier	1
	1358212	Carrier (Without Brake and Yoke)	1
1	1312056	Carrier	1
2	230685	Capscrew	4
3	79473	Washer	4
4	141933	Cotter Pin	2
5	234038	Dowel	4
6	79482	Bearing Cone	1
7	79481	Bearing Cone	1
8	130849	Cage	1
9	79483	Bearing Cup	2
10	53769	Spacer (0.248 in.)	AR
10	53770	Spacer (0.249 in.)	AR
10	53771	Spacer (0.250 in.)	AR
10	53772	Spacer (0.251 in.)	AR
10	53773	Spacer (0.252 in.)	AR
10	53774	Spacer (0.253 in.)	AR
10	53775	Spacer (0.259 in.)	AR
10	53776	Spacer (0.265 in.)	AR
10	53777	Spacer (0.271 in.)	AR
10	53778	Spacer (0.277 in.)	AR
10	53779	Spacer (0.283 in.)	AR
11	1346088	Gear and Pinion	1
12	1312094	Nut	1
13	103013	Bearing	1
14	53791	Retainer	1
15	58902	Snap Ring	1
16	1346084	Differential	1
16	1312055	Differential Housing	1
17	. . . . .	Case (Flange)	1
18	329420	Capscrew (Short)	4
18	329421	Capscrew (Long)	8
19	125428	Washer	12
20	53786	Washer	2
21	200439	Gear	2
22	1328669	Spider	1
23	141501	Pinion	4
24	1303550	Thrust Washer	4
25	358099	Nut	12
26	125428	Washer	8
27	176134	Gasket	1
28	291528	Bolt	12
29	125428	Washer	12
30	53798	Ring	2
31	30295	Bearing Cup	2
32	30296	Bearing Cone	2
33	130850	Shim (0.003 in.)	AR

©2011 HYSTER COMPANY

DIFFERENTIAL AND CARRIER

H620F, H650F, H700F, H620FS, H700FS (→ S/N E008E01837)

ITEM	PART NO.	DESCRIPTION	QTY
33	130851	Shim (0.005 in.)	AR
33	130852	Shim (0.010 in.)	AR
34	1360789	Adapter (Brake)	1
35	1312084	Capscrew	8
36	15316	Fitting	1
37	53811	Nut	1
38	161686	Screw	1
39	53789	Thrust Washer	1
	329422	Kit-Spacer	1
	340481	Kit-Gear	1
	300427	Kit-Differential	1

FOOTNOTES:

a → S/N E008D01513
b → S/N E008D01556
c → S/N E008E01554
d → S/N E008E01560
e → S/N E008E01588
f S/N E008D01514 →
g S/N E008D01557 →
h S/N E008E01555 →
i S/N E008E01561 →
j S/N E008E01589 →

©2011 HYSTER COMPANY

NOTES

©2011 HYSTER COMPANY

DIFFERENTIAL AND CARRIER (FIGURE 6-8)

H440FS, H550F, H550FS (S/N E008D01539 →)

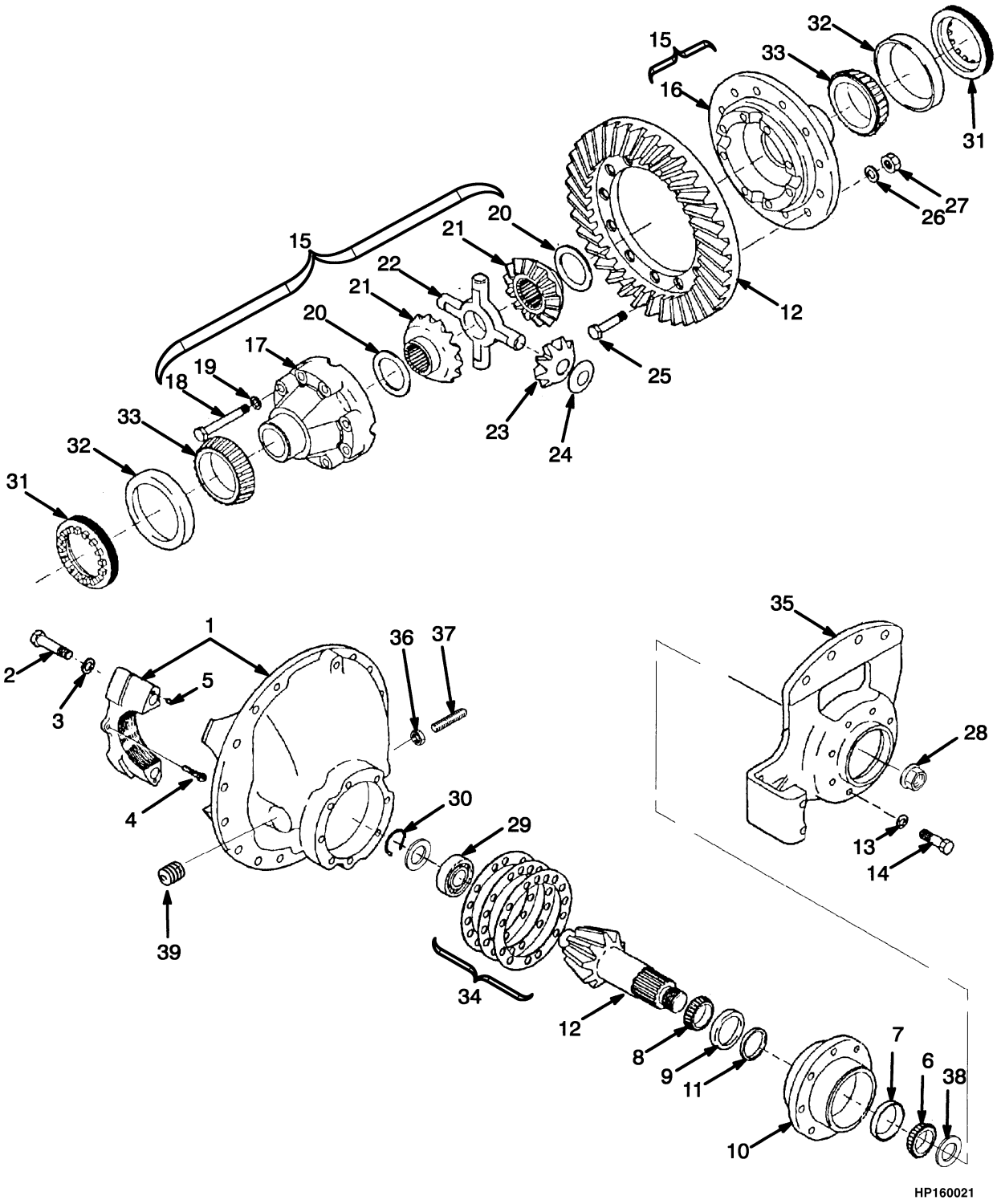

©2011 HYSTER COMPANY

DIFFERENTIAL AND CARRIER

H440FS, H550F, H550FS (S/N E008D01539 →)

ITEM	PART NO.	DESCRIPTION	QTY
	cd 1378889	Drive Axle	1
	e 1478760	Drive Axle	1
	f 1502752	Drive Axle	1
1	1380798	Carrier	1
2	293716	Capscrew	4
3	1347770	Washer	4
4	86008	Cotter Pin	2
5	1380777	Ball	4
6	1347812	Bearing Cone	1
7	200972	Bearing Cup (Tapered) (Outer)	1
8	1347774	Bearing Cone	1
9	30062	Bearing Cup (Inner)	1
10	**a** 1347772	Pinion (Cage Assembly)	1
10	**e** 1499559	Cage	1
10	**f** 1347772	Pinion (Cage Assembly)	1
11	. . . . .	Spacer (8,75 mm)	AR
11	. . . . .	Spacer (8,78 mm)	AR
11	. . . . .	Spacer (8,80 mm)	AR
11	. . . . .	Spacer (8,83 mm)	9
11	. . . . .	Spacer (8,83 mm)	AR
11	. . . . .	Spacer (8,85 mm)	AR
11	. . . . .	Spacer (8,98 mm)	AR
11	. . . . .	Spacer (9,10 mm)	AR
11	. . . . .	Spacer (9,13 mm)	AR
11	. . . . .	Spacer (9,15 mm)	AR
11	. . . . .	Spacer (9,18 mm)	AR
11	. . . . .	Spacer (9,20 mm)	AR
12	**a** 1380793	Gear Set	1
12	**e** 1502132	Bevel Gear	1
12	**f** 1493183	Gear Set	1
13	1450861	Washer	8
14	**a** 293654	Capscrew	8
14	**e** 1489308	Capscrew	8
14	**f** 1566125	Capscrew	8
15	**b** 1380794	Differential Housing	1
15	**b** 1374554	Differential Housing	1
15	**f** 1347827	Differential Housing	1
16	. . . . .	Case (Flange Side)	1
17	. . . . .	Case	1
18	1347831	Capscrew	16
19	**a** 88587	Washer	16
19	**e** 1450861	Washer	16
20	~~1379752~~		
	1380797	Thrust Washer	2
21	1379753	Gear	2
22	**a** ~~1502130~~		
	1374558	Spider	1
22	**e** ~~1502130~~		
	1374558	Spider	1
22	**f** 1346635	Spider Assembly	1

©2011 HYSTER COMPANY

DIFFERENTIAL AND CARRIER

H440FS, H550F, H550FS (S/N E008D01539 →)

ITEM	PART NO.	DESCRIPTION	QTY
23	1347835	Pinion	4
24	200982	Washer	4
25	1347822	Bolt	12
26	125428	Washer	12
27	1374550	Nut	12
28	1357734	Locknut	1
29	296844	Bearing	1
30	240683	Snap Ring	1
31	1347839	Ring	2
32	1475420	Bearing Cup	2
33	1475421	Bearing Cone	2
34	1347814	Shim (0,075 mm)	AR
34	1347814	Shim	AR
34	1347815	Shim (0,125 mm)	AR
34	1347815	Shim	AR
34	1347816	Shim (0,200 mm)	AR
34	1347816	Shim	AR
34	1347817	Shim (0,500 mm)	AR
34	1347817	Shim	AR
35	**b** 1347842	Adapter (Brake)	1
35	**f** 1554338	Adapter (Brake)	1
36	1312616	Locknut	1
37	1374097	Screw	1
38	1642099	Oil Seal	1
39	1312616	Locknut	1
	1347800	Kit-Spacer	1
	1379751	Kit-Differential	1
	1347821	Kit-Carrier	1
	1347813	Kit-Shim	1
	1347813	Kit-Shim	1
	1380796	Kit-Differential	1

FOOTNOTES:

a → S/N E008E01819
b → S/N E008E01984B
c S/N E008D01539 ↔ S/N E008E01819
d S/N E008E01607 ↔ S/N E008E01819
e S/N E008E01820 ↔ S/N E008E001984B
f S/N E008E01985B →

©2011 HYSTER COMPANY

NOTES

©2011 HYSTER COMPANY

DIFFERENTIAL AND CARRIER (FIGURE 6-9)

H620F, H650F, H700F, H620FS, H700FS (S/N E008E01838 →)

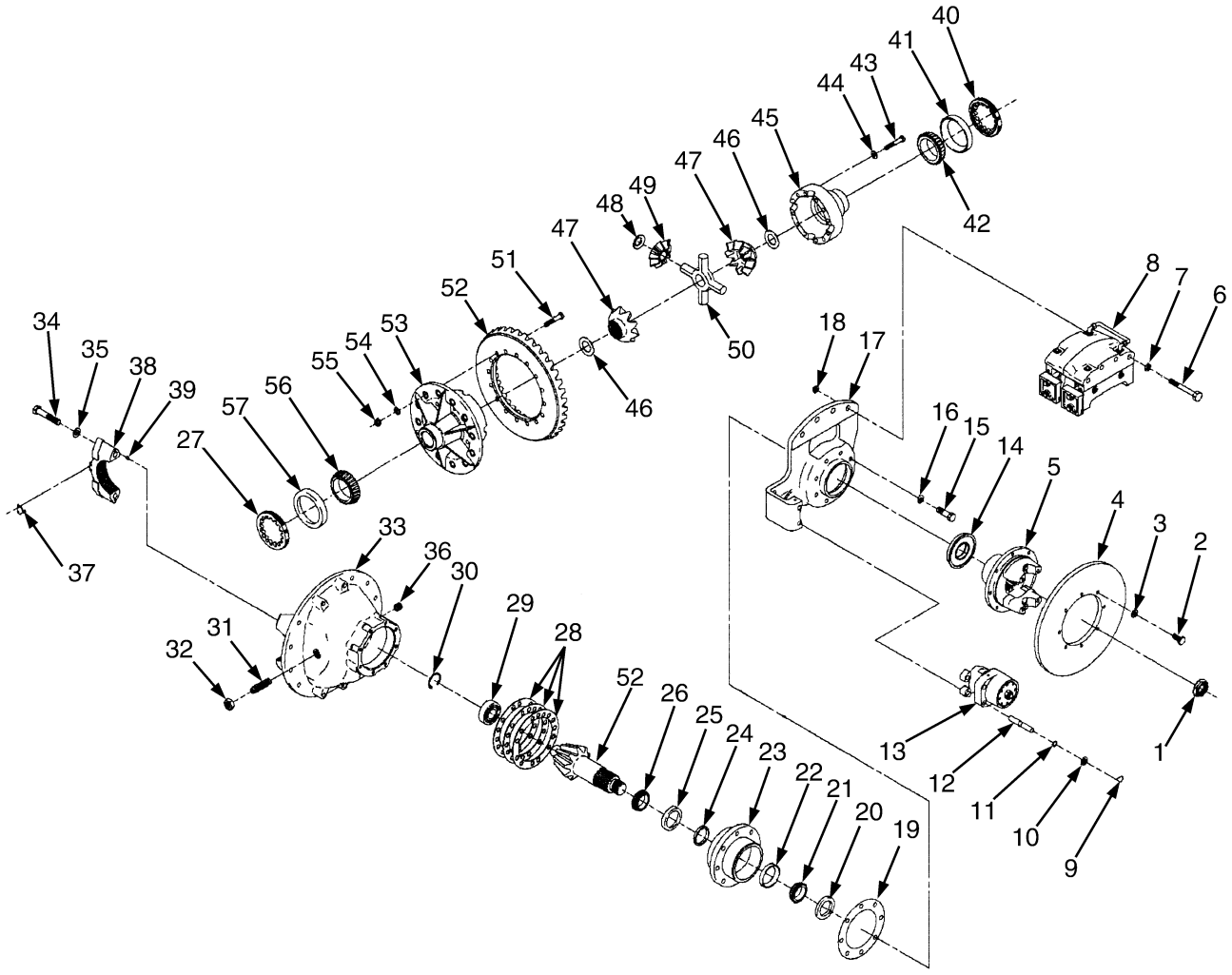

HP070033

©2011 HYSTER COMPANY

DIFFERENTIAL AND CARRIER

H620F, H650F, H700F, H620FS, H700FS (S/N E008E01838 →)

ITEM	PART NO.	DESCRIPTION	QTY
	b 1478761	Drive Axle	1
	c 1502753	Drive Axle	1
	a 1502336	Carrier	1
	c 1554503	Differential	1
1	1312094	Nut	1
1	1312083	Washer	1
2	**a** 1355345	Capscrew	8
2	**c** 1473839	Capscrew	8
3	88587	Washer	8
4	1346601	Brake Disk	1
5	**a** 1360790	Flange	1
5	**c** 1554505	Flange	1
6	1332797	Capscrew	4
7	132451	Washer	4
8	. . . . .	Service Brake (Disc) (☞Figure 6-16)	1
9	1355346	Pin	2
10	1379726	Washer	2
11	1332805	O-Ring	2
12	1332801	Pin	2
13	. . . . .	Park Brake (☞Figure 6-21)	1
14	**a** 1554527	Oil Seal	1
14	**c** 1554527	Oil Seal	1
15	1312084	Capscrew	8
16	125428	Washer	8
17	**a** 1360789	Adapter	1
17	**c** 1554529	Adapter	1
18	**a** 221359	Locknut	4
18	**c** 221354	Locknut	4
19	176134	Gasket	1
20	53789	Thrust Washer	1
21	79482	Bearing Cone	1
22	79483	Bearing Cup	1
23	130849	Cage	1
24	53769	Spacer (0.248 in.)	AR
24	53770	Spacer (0.249 in.)	AR
24	53771	Spacer (0.250 in.)	AR
24	53772	Spacer (0.251 in.)	AR
24	53773	Spacer (0.252 in.)	AR
24	53774	Spacer (0.253 in.)	AR
24	53775	Spacer (0.259 in.)	AR
24	53776	Spacer (0.265 in.)	AR
24	53777	Spacer (0.271 in.)	AR
24	53778	Spacer (0.277 in.)	AR
24	53779	Spacer (0.283 in.)	AR
25	79483	Bearing Cup	1
26	79481	Bearing Cone	1
27	53798	Ring	1
28	130850	Shim (0.003 in.)	2
28	130851	Shim (0.005 in.)	6
28	130852	Shim (0.010 in.)	5

©2011 HYSTER COMPANY

DIFFERENTIAL AND CARRIER

H620F, H650F, H700F, H620FS, H700FS (S/N E008E01838 →)

ITEM	PART NO.	DESCRIPTION	QTY
29	103013	Bearing	1
29	53791	Retainer	1
30	58902	Snap Ring	1
31	161686	Screw	1
32	53811	Nut	1
33	1312056	Carrier	1
34	230685	Capscrew	4
35	79473	Washer	4
36	15316	Fitting	1
37	141933	Cotter Pin	2
38	. . . . .	Cap Assembly	2
39	. . . . .	Dowel	4
40	53798	Ring	1
41	30295	Bearing Cup	1
42	30296	Bearing Cone	1
43	329420	Capscrew	4
43	329421	Capscrew	8
44	125428	Washer	12
45	. . . . .	Case (Differential)	1
46	53786	Washer	2
47	1525484	Gear	2
48	1303550	Thrust Washer	4
49	1502337	Pinion	4
50	1328669	Spider	1
51	291528	Bolt	12
52	1346088	Gear and Pinion	1
52	. . . . .	Bevel Gear	1
53	1312055	Differential Housing	1
53	. . . . .	Case	1
54	125428	Washer	12
55	358099	Nut	12
56	30296	Bearing Cone	1
57	30295	Bearing Cup	1
	340481	Kit-Gear	1
	329422	Kit-Spacer	1
	1502339	Differential Housing	1

FOOTNOTES:

a → S/N E008E01984B
b S/N E008E01838 →
c S/N E008E01985B →

©2011 HYSTER COMPANY

NOTES

©2011 HYSTER COMPANY

DIFFERENTIAL AND CARRIER (FIGURE 6-10)

WET BRAKE — H440FS, H550F, H550FS (S/N E008E02078D → INC. 02076)

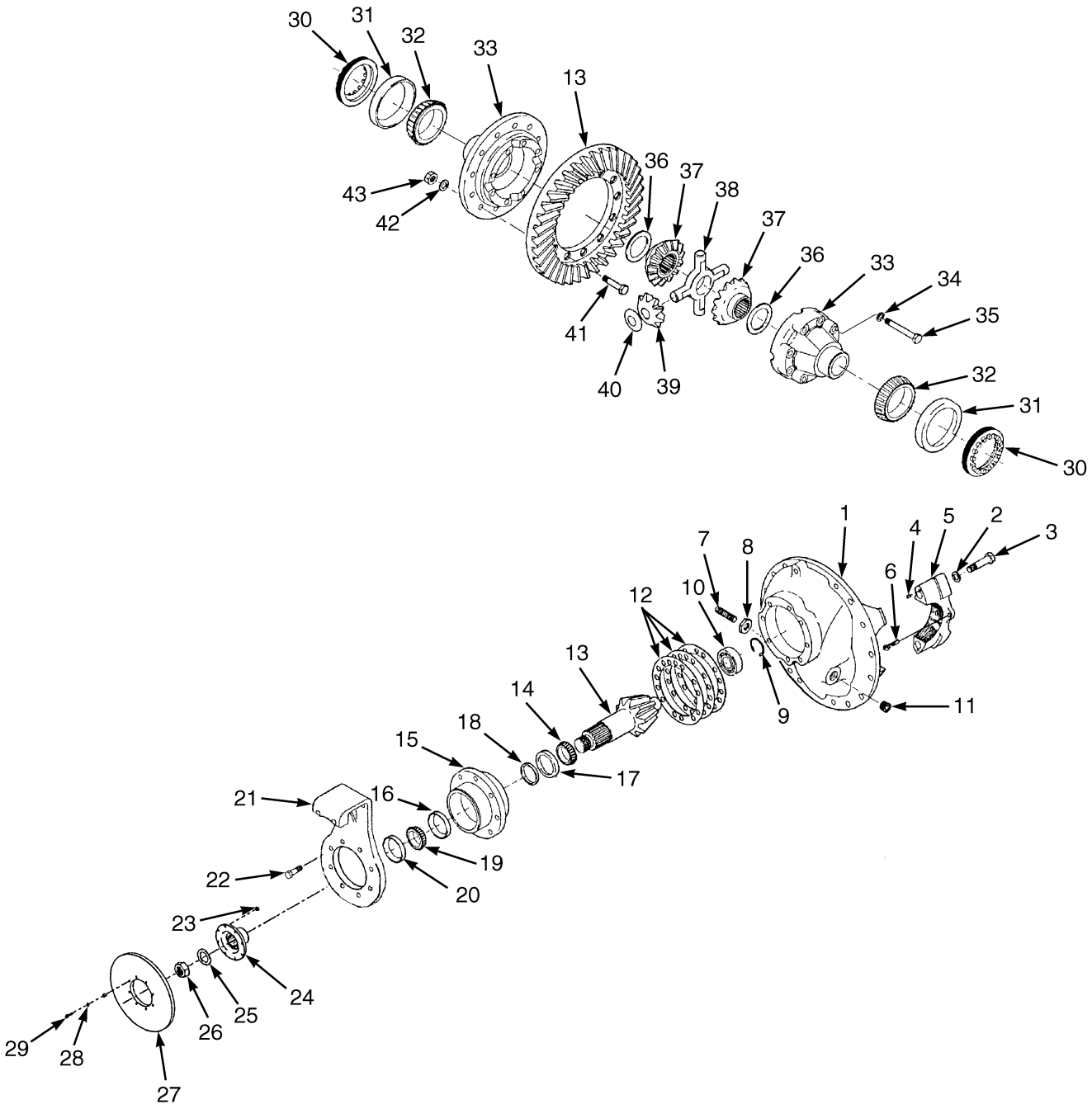

HP070123

©2011 HYSTER COMPANY

DIFFERENTIAL AND CARRIER

WET BRAKE – H440FS, H550F, H550FS (S/N E008E02078D → INC. 02076)

ITEM	PART NO.	DESCRIPTION	QTY
	a 1584428	Drive Axle	1
	b 1635619	Drive Axle	1
1	1380798	Carrier	1
2	1347770	Washer	4
3	293716	Capscrew	4
4	1380777	Ball	2
5	. . . . .	Cap	2
6	86008	Cotter Pin	2
7	1374097	Screw	1
8	1312616	Locknut	1
9	240683	Snap Ring	1
10	296844	Bearing	1
11	. . . . .	Fitting	1
12	1347813	Kit-Shim	1
13	1493183	Gear Set	1
14	1347774	Bearing Cone	1
15	1347772	Pinion (Cage Assembly)	1
16	200972	Bearing Cup (Tapered)	1
17	30062	Bearing Cup	1
18	1347800	Kit-Spacer	1
19	1347812	Bearing Cone	1
20	1642099	Oil Seal	1
21	1554338	Adapter	1
22	293654	Capscrew	8
23	1450861	Washer	8
24	1554339	Flange	1
25	1312083	Washer	1
26	1357734	Locknut	1
27	1554340	Brake Disk	1
28	1554341	Capscrew	8
29	88587	Washer	8
30	1347839	Ring	2
31	1475420	Bearing Cup	2
32	1475421	Bearing Cone	2
33	1347827	Differential Housing	1
34	1450861	Washer	16
35	1347831	Capscrew	16
36	1642102	Kit-Differential	1
36	~~1379752~~		
	1380797	Thrust Washer	2
37	1379753	Gear	2
38	~~1318626~~		
	1374588	Washer	1
39	1347835	Pinion	4
40	200982	Washer	4
41	1347822	Bolt	12
42	125428	Washer	12
43	1374550	Nut	12

©2011 HYSTER COMPANY

FOOTNOTES:

a S/N E008E02076C ↔ 3/2006 EXC. 02077

b 4/2006 →

©2011 HYSTER COMPANY

NOTES

©2011 HYSTER COMPANY

DIFFERENTIAL AND CARRIER (FIGURE 6-11)

WET BRAKE — H620F, H650F, H700F, H620FS, H700FS (S/N E008E02078D → INC. 02076)

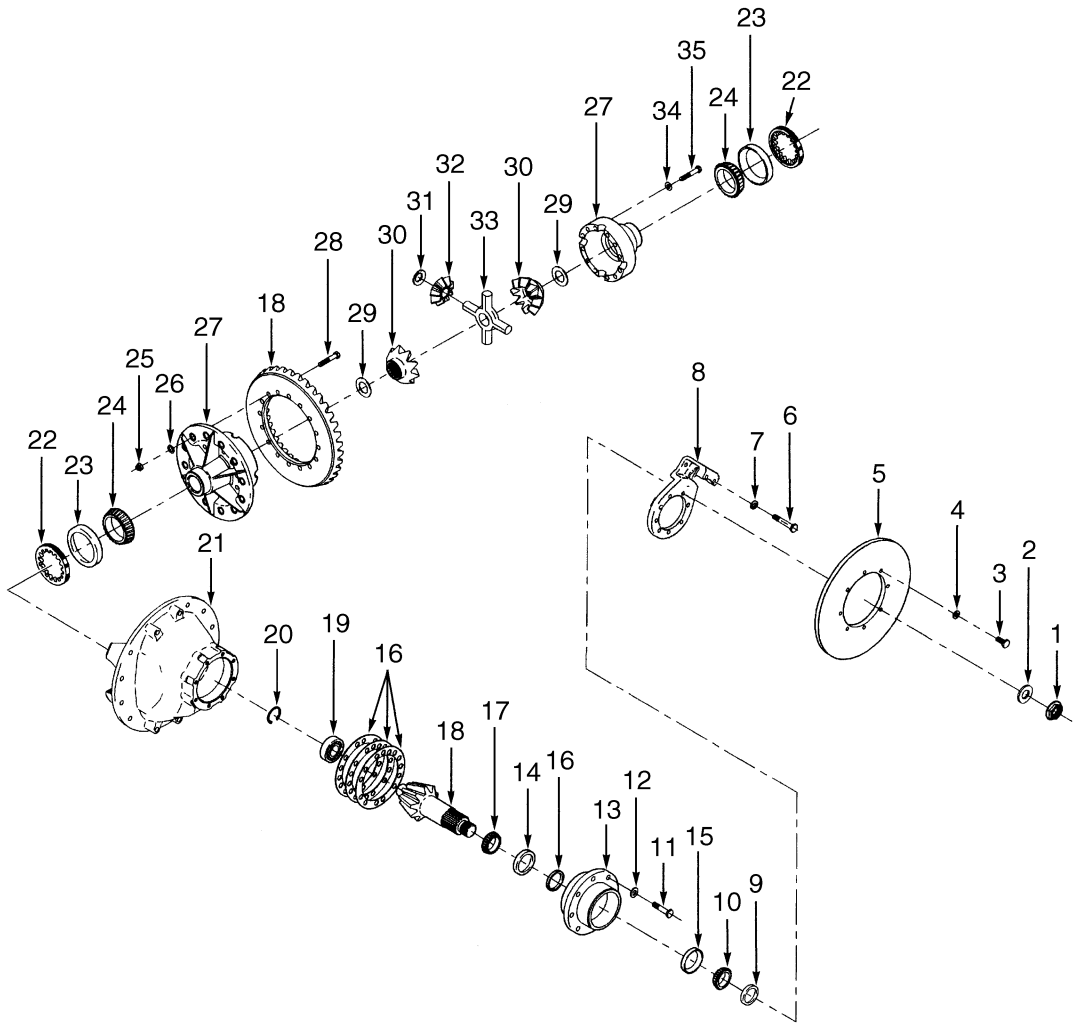

HP070122

©2011 HYSTER COMPANY

DIFFERENTIAL AND CARRIER

WET BRAKE – H620F, H650F, H700F, H620FS, H700FS (S/N E008E02078D → INC. 02076)

ITEM	PART NO.	DESCRIPTION	QTY
	a 1584427	Drive Axle	1
	b 1635598	Drive Axle	1
1	1483741	Locknut	1
2	208631	Washer	1
3	1554341	Capscrew	8
4	88587	Washer	16
5	1473719	Brake Disk	1
6	1618365	Capscrew	8
7	296422	Washer	8
8	1618364	Adapter	1
9	1314255	Oil Seal	1
10	1618352	Bearing Cone	1
11	1347819	Capscrew	8
12	1450861	Washer	8
13	1618347	Cage	1
14	1618349	Bearing Cup	1
15	1618350	Bearing Cup	1
16	1618342	Shim (.002 in.)	4
16	1618343	Shim (.005 in.)	3
16	1618344	Shim (.008 in.)	3
16	1618345	Shim (.020 in.)	1
17	1483779	Bearing Cone	1
18	1618356	Gear and Pinion	1
19	1618353	Bearing	1
20	1618354	Lockring	1
21	1618341	Differential Carrier	1
22	1618346	Ring	2
23	30109	Bearing Cup	2
24	328987	Bearing Cone	2
25	1374550	Nut	12
26	125428	Washer	12
27	1618360	Differential Housing	1
28	1374551	Bolt	12
29	1309868	Thrust Washer	2
30	1618363	Gear	2
31	1303550	Thrust Washer	4
32	1483797	Pinion	4
33	1328669	Spider	1
34	125428	Washer	12
35	1483793	Screw	12

FOOTNOTES:

a S/N E008E02076C ↔ 3/2006 EXC. 02077

b 4/2006 →

©2011 HYSTER COMPANY

HUB AND SHAFT ASSEMBLY (FIGURE 6-12)

WET BRAKE — H440FS, H550F, H550FS (S/N E008E01985B →)

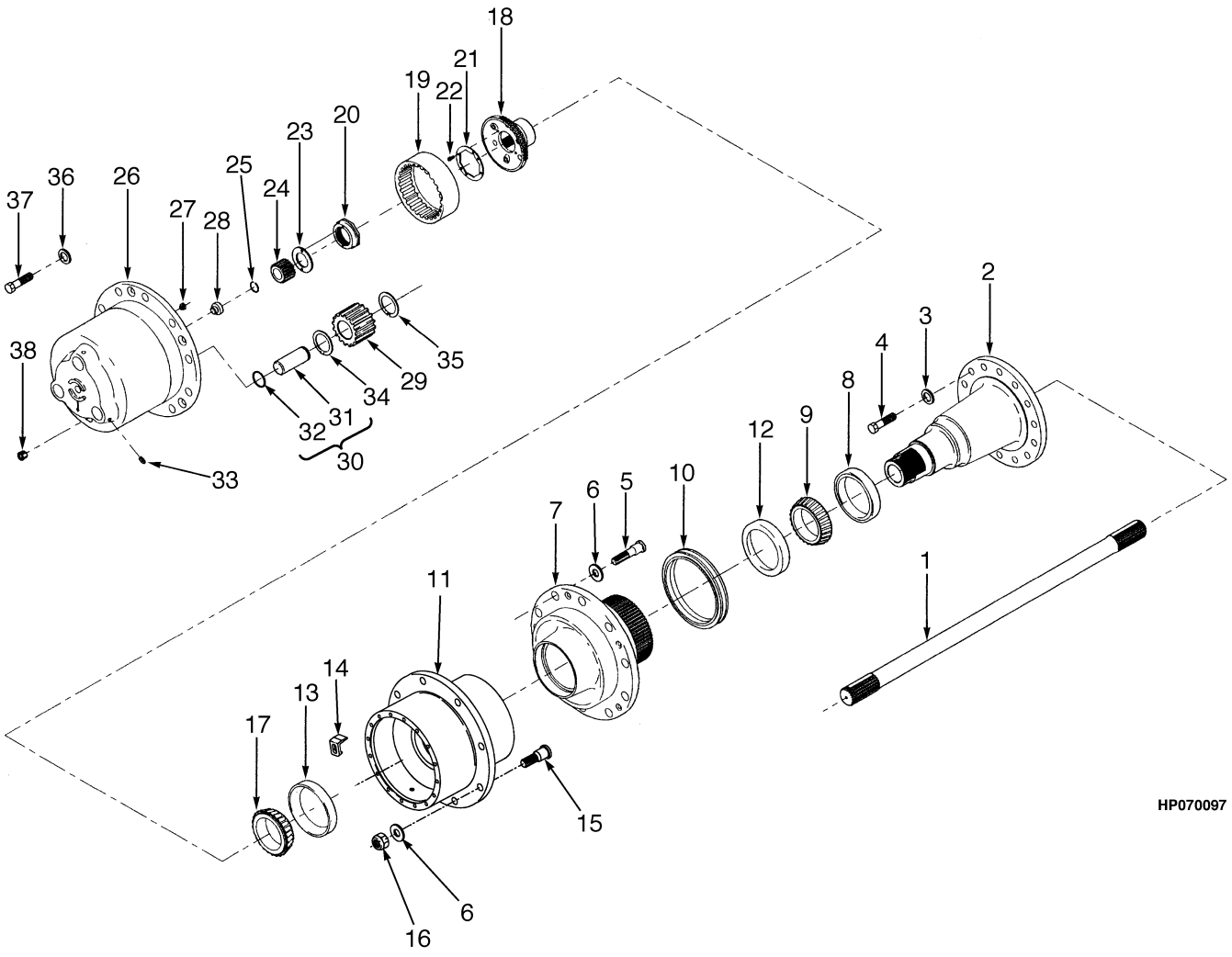

©2011 HYSTER COMPANY

HUB AND SHAFT ASSEMBLY

WET BRAKE – H440FS, H550F, H550FS (S/N E008E01985B →)

ITEM	PART NO.	DESCRIPTION	QTY
	1502752	Drive Axle	1
1	1347786	Shaft (RH)	1
1	1554348	Axle Shaft (LH)	1
2	1554349	Spindle	2
3	1346636	Washer	28
4	1554350	Capscrew	28
5	168054	Capscrew	24
6	268980	Washer	68
7	1554351	Driver	2
8	1554502	Oil Seal	2
9	30257	Bearing Cone	2
10	1483803	Seal	2
11	1384894	Hub And Cup Assembly	2
11	. . . . .	Hub	1
12	30258	Bearing Cup	1
13	1312072	Bearing Cup	1
14	1347597	Wheel Clamp	44
15	200452	Wheel Stud	44
16	1475419	Wheel Nut	44
17	1347781	Bearing Cone	2
18	1347777	Hub Assembly	2
18	. . . . .	Hub	1
18	. . . . .	Sleeve	1
19	1347780	Gear	2
20	1347782	Wheel Nut	2
21	1352498	Lock	2
22	1309853	Capscrew	4
23	1347784	Thrust Washer	2
24	1347785	Gear	2
25	208107	Snap Ring	2
26	1347787	Spider Assembly	2
27	273969	Button (Thrust)	3
28	1303551	Button (Thrust)	1
29	1347791	Pinion	3
30	1347792	Shaft	3
31	. . . . .	Shaft	1
32	1502133	O-Ring	1
33	321290	Setscrew	3
34	200471	Washer	3
35	1347795	Washer	3
36	1347590	Washer	60
37	221623	Screw	60
38	321293	Plug	2

©2011 HYSTER COMPANY

HUB AND SHAFT ASSEMBLY (FIGURE 6-13)

WET BRAKE — H620F, H650F, H700F, H620FS, H700FS (S/N E008E01985B →)

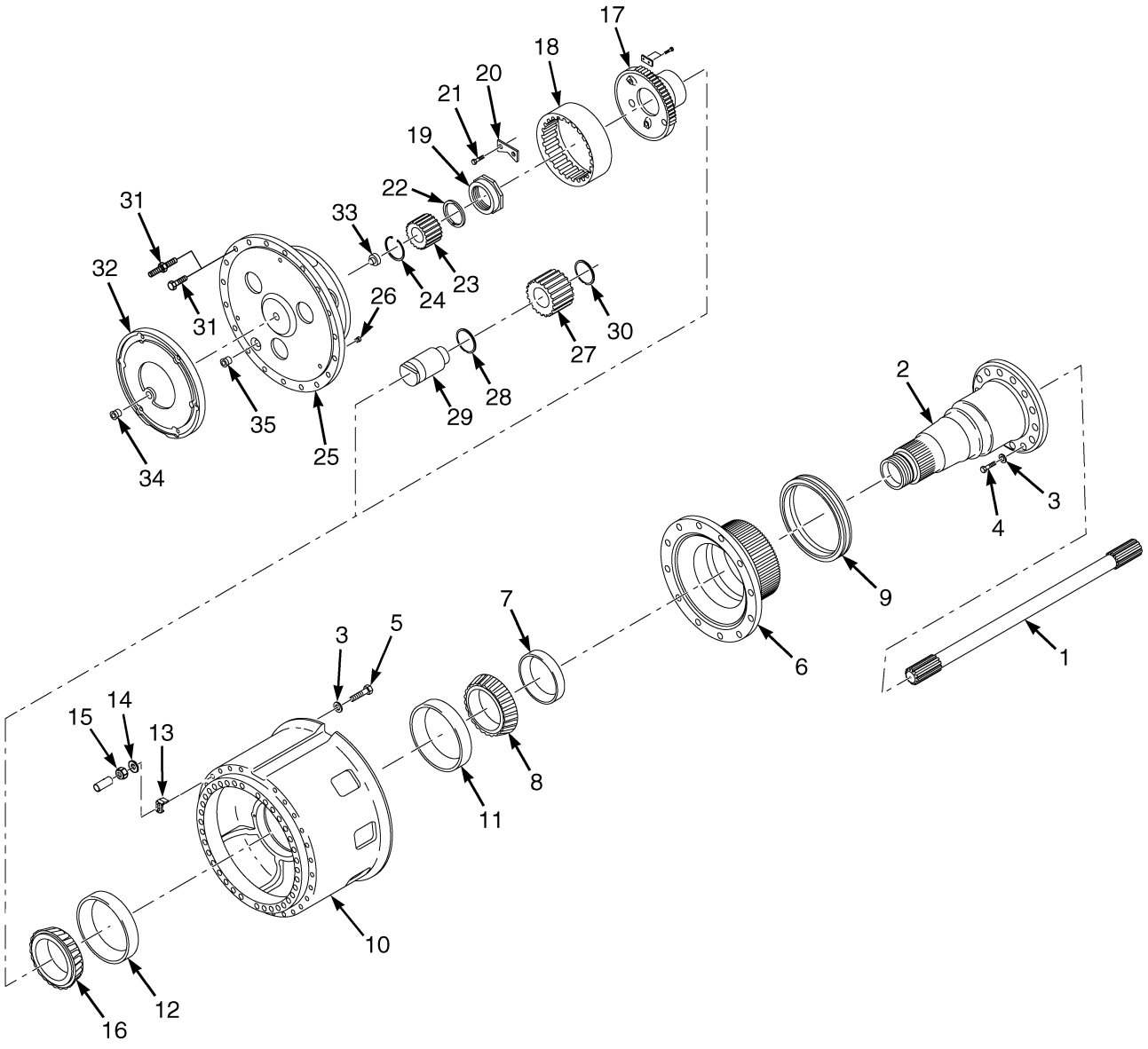

©2011 HYSTER COMPANY

HUB AND SHAFT ASSEMBLY

WET BRAKE – H620F, H650F, H700F, H620FS, H700FS (S/N E008E01985B →)

ITEM	PART NO.	DESCRIPTION	QTY
	1502753	Drive Axle	1
1	1312076	Axle Shaft	2
2	1554739	Spindle	2
3	1346636	Washer	56
4	1554740	Capscrew	32
5	1384852	Capscrew	24
6	1384854	Driver	2
7	1554744	Oil Seal	2
8	1312073	Bearing Cone	2
9	1483803	Seal	2
10	1554800	Hub And Cup Assembly	2
11	1312072	Bearing Cup	1
12	231012	Bearing Cup	1
13	1324799	Wheel Clamp	46
14	1312090	Washer	92
15	221717	Nut	46
16	167178	Bearing Cone	2
17	167190	Hub Assembly	2
17	231012	Bearing Cup	1
17	1312072	Bearing Cup	1
18	1346631	Gear	2
19	1312088	Nut	2
20	1352498	Lock	2
21	1309853	Capscrew	4
22	1312087	Washer	2
23	1312068	Gear	2
24	200467	Snap Ring	2
25	1346635	Spider Assembly	2
26	273969	Button (Thrust)	3
27	1312067	Gear	3
28	351278	Thrust Washer	3
29	1312066	Shaft	3
30	167201	Washer	3
31	1351960	Bolt	12
31	167182	Wheel Stud	46
32	1309105	Cover Assembly	2
32	1347846	Cover	1
33	1303551	Button (Thrust)	1
34	321293	Plug	2
35	15316	Fitting	2

©2011 HYSTER COMPANY

HUB AND SHAFT ASSEMBLY (FIGURE 6-14)

WET BRAKE — H440FS, H550F, H550FS (S/N E008E02078D → INC. 02076)

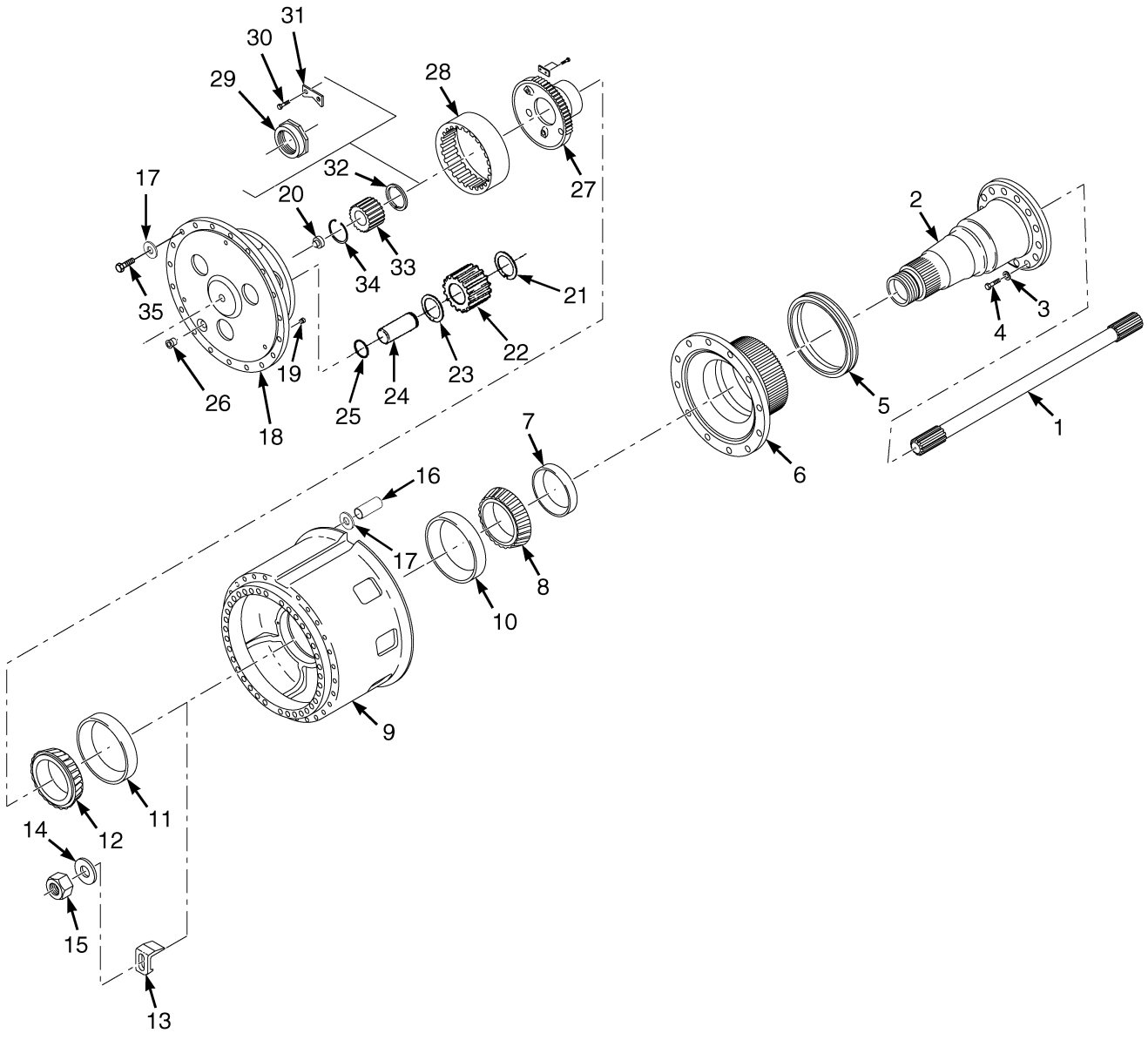

HP070121

©2011 HYSTER COMPANY

HUB AND SHAFT ASSEMBLY

WET BRAKE – H440FS, H550F, H550FS (S/N E008E02078D → INC. 02076)

ITEM	PART NO.	DESCRIPTION	QTY
	a 1584428	Drive Axle	1
	b 1635619	Drive Axle	1
1	1347786	Shaft (RH)	1
1	1554348	Axle Shaft (LH)	1
2	1554349	Spindle	2
3	1346636	Washer	28
4	1554350	Capscrew	28
5	1483803	Seal	2
6	1554351	Driver	2
7	1554502	Oil Seal	2
8	30257	Bearing Cone	2
9	1384894	Hub And Cup Assembly	2
10	30258	Bearing Cup	1
11	1312072	Bearing Cup	1
12	1347781	Bearing Cone	2
13	1347597	Wheel Clamp	44
14	268980	Washer	44
15	1475419	Wheel Nut	44
16	200452	Wheel Stud	44
17	1347590	Washer	60
18	1347787	Spider Assembly	2
19	273969	Button (Thrust)	3
20	1303551	Button (Thrust)	1
21	1347795	Washer	3
22	1347791	Pinion	3
23	200471	Washer	3
24	1347792	Shaft	3
25	1502133	O-Ring	1
26	321290	Setscrew	3
27	1347777	Hub Assembly	1
28	1347780	Gear	2
29	1347782	Wheel Nut	2
30	1309853	Capscrew	8
31	1352498	Lock	4
32	1347784	Thrust Washer	2
33	1347785	Gear	2
34	208107	Snap Ring	2
35	221623	Screw	60

FOOTNOTES:

a S/N E008E02076C ↔ 3/2006 EXC. 02077

b 4/2006 →

©2011 HYSTER COMPANY

HUB AND SHAFT ASSEMBLY (FIGURE 6-15)

WET BRAKE — H620F, H650F, H700F, H620FS, H70FS (S/N E008E02078D → INC. 02076)

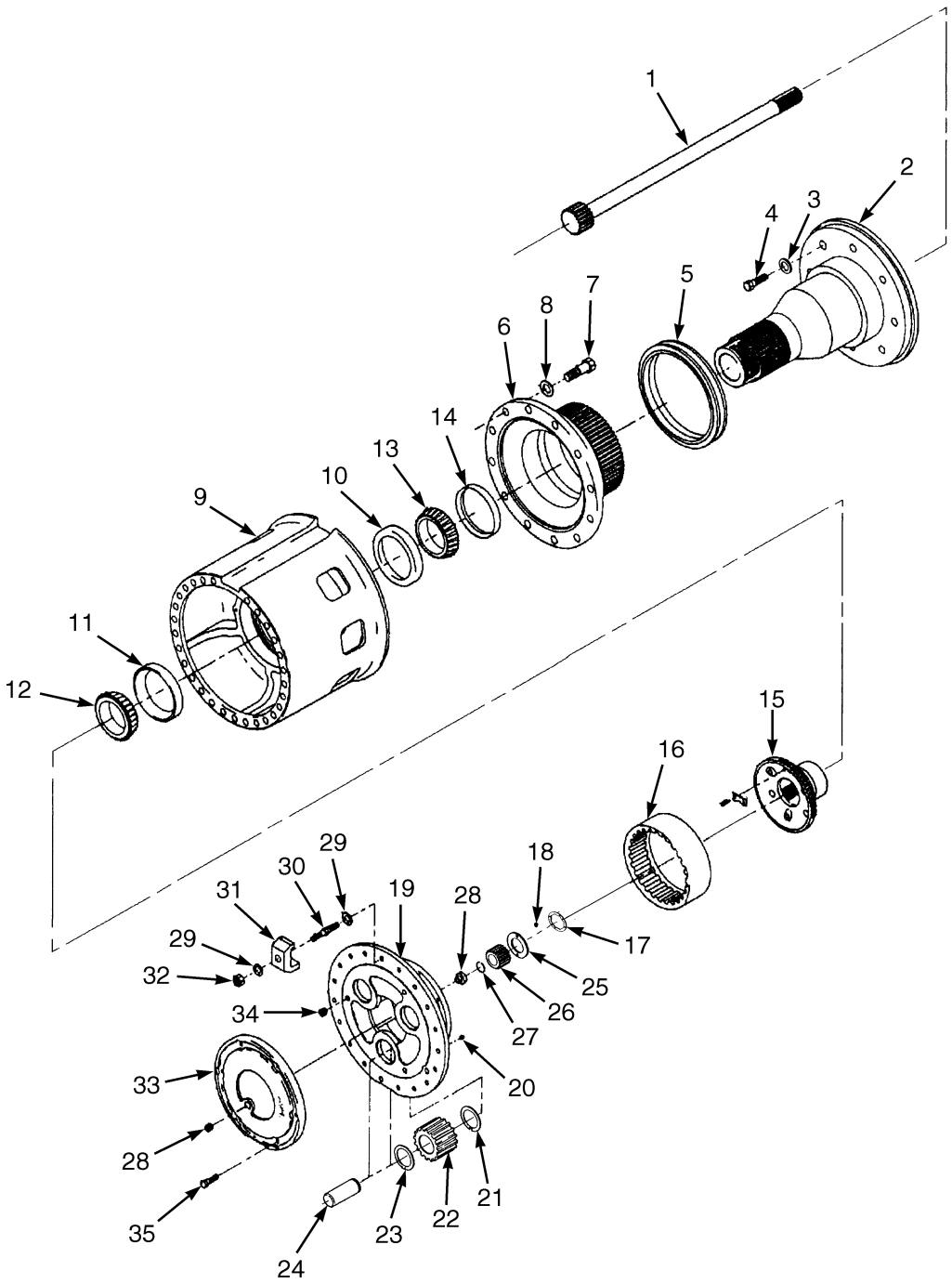

HP070120

©2011 HYSTER COMPANY

HUB AND SHAFT ASSEMBLY

WET BRAKE – H620F, H650F, H700F, H620FS, H70FS (S/N E008E02078D → INC. 02076)

ITEM	PART NO.	DESCRIPTION	QTY
	a 1584427	Drive Axle	1
	b 1635598	Drive Axle	1
1	1618371	Axle Shaft (RH)	1
1	1618372	Axle Shaft (LH)	1
2	1554739	Spindle	2
3	1346636	Washer	32
4	1554740	Capscrew	32
5	1642014	Seal	2
6	1642010	Driver	2
7	1384852	Capscrew	24
8	1346636	Washer	24
9	1554800	Hub And Cup Assembly	2
10	1312072	Bearing Cup	1
11	231012	Bearing Cup	1
12	167178	Bearing Cone	2
13	1312073	Bearing Cone	2
14	1554744	Oil Seal	2
15	167190	Hub Assembly	2
15	231012	Bearing Cup	1
15	1312072	Bearing Cup	1
16	1346631	Gear	2
17	1352498	Lock	2
18	1309853	Capscrew	4
19	1346635	Spider Assembly	2
20	273969	Button (Thrust)	3
21	167201	Washer	3
22	1312067	Gear	3
23	351278	Thrust Washer	3
24	1312066	Shaft	3
25	1312087	Washer	2
26	1618373	Gear	2
27	200467	Snap Ring	2
28	1303551	Button (Thrust)	1
29	1312090	Washer	92
30	167182	Wheel Stud	46
31	1324799	Wheel Clamp	46
32	221717	Nut	46
33	1309105	Cover Assembly	2
33	1347846	Cover	1
34	321293	Plug	2
35	1351960	Bolt	12

FOOTNOTES:

a S/N E008E02076C ↔ 3/2006 EXC. 02077

b 4/2006 →

©2011 HYSTER COMPANY

SERVICE BRAKE (FIGURE 6-16)

(→ S/N E008E01984B)

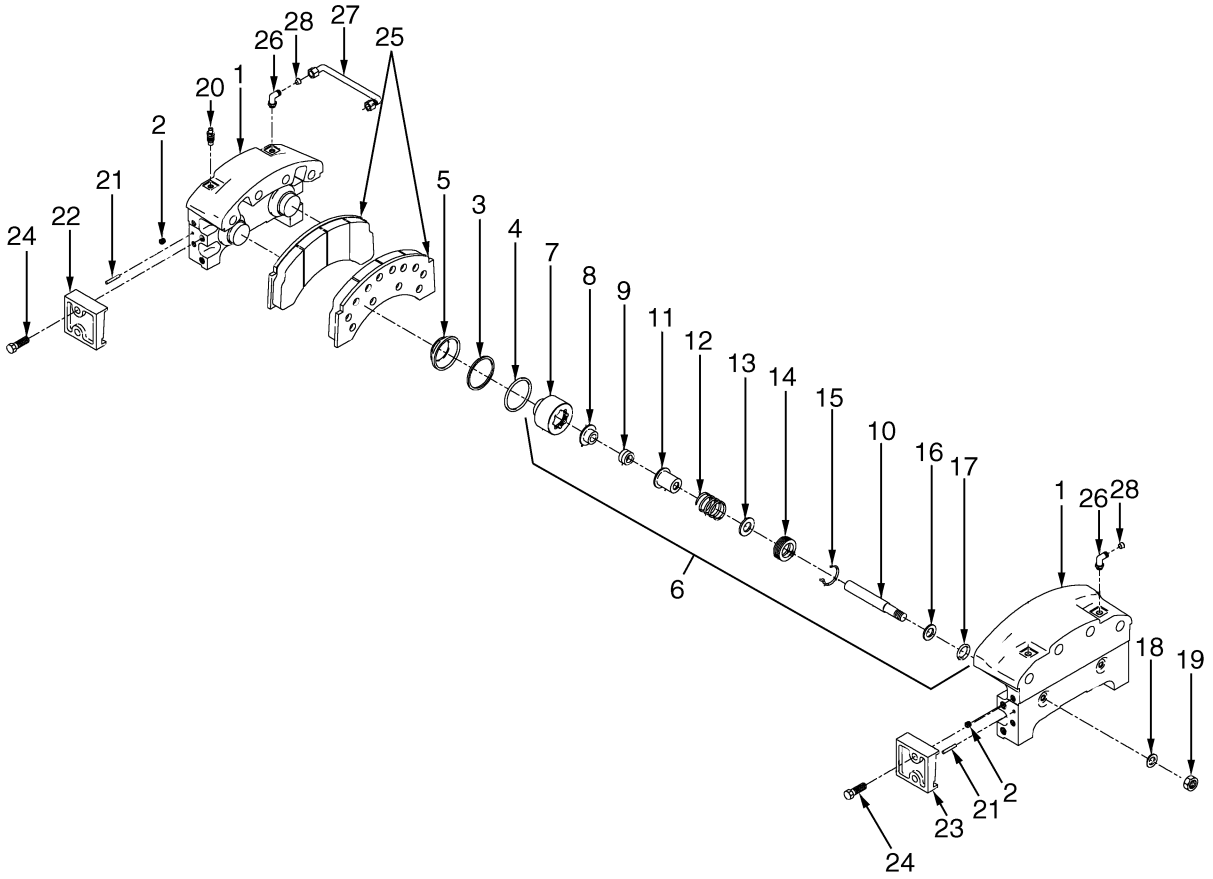

HP070039

©2011 HYSTER COMPANY

SERVICE BRAKE
(→ S/N E008E01984B)

ITEM	PART NO.	DESCRIPTION	QTY
	b 1478761	Drive Axle (H620F, H650F, H700F, H620FS, H700FS]	1
	a 1478760	Drive Axle (H550F, H550FS)	1
	1502125	Brake Assembly	1
1	1343113	Housing	2
2	1347751	Plug	8
3	1502126	Back-Up Ring	4
4	1456932	O-Ring	4
5	1343166	Protector	4
6	. . . . .	Piston Assembly	4
7	1347611	Piston	1
8	1343124	Spring (Guide) (Inner)	1
9	1343123	Adjuster	2
10	1343117	Pin	1
11	1343122	Spring (Guide) (Outer)	1
12	1343121	Spring	1
13	1343120	Spring	1
14	1343119	Ring (Threaded)	1
15	1343118	Lockring	1
16	1343116	Washer	1
17	1343115	O-Ring	1
18	1343114	Lockwasher	4
19	221351	Locknut	4
20	1309120	Screw	5
21	1343141	Roll Pin	4
22	1343143	Plate	2
23	1343142	Plate	2
24	1502127	Capscrew	8
25	1343137	Brake Lining	2
26	1343139	Fitting	2
27	1343140	Tube Assy	1
28	1502128	Protector	2

FOOTNOTES:

a S/N E008E01820 →

b S/N E008E01838 →

©2011 HYSTER COMPANY

BRAKE ASSEMBLY (FIGURE 6-17)

H440FS, H550F, H550FS (→ S/N E008E-1837)

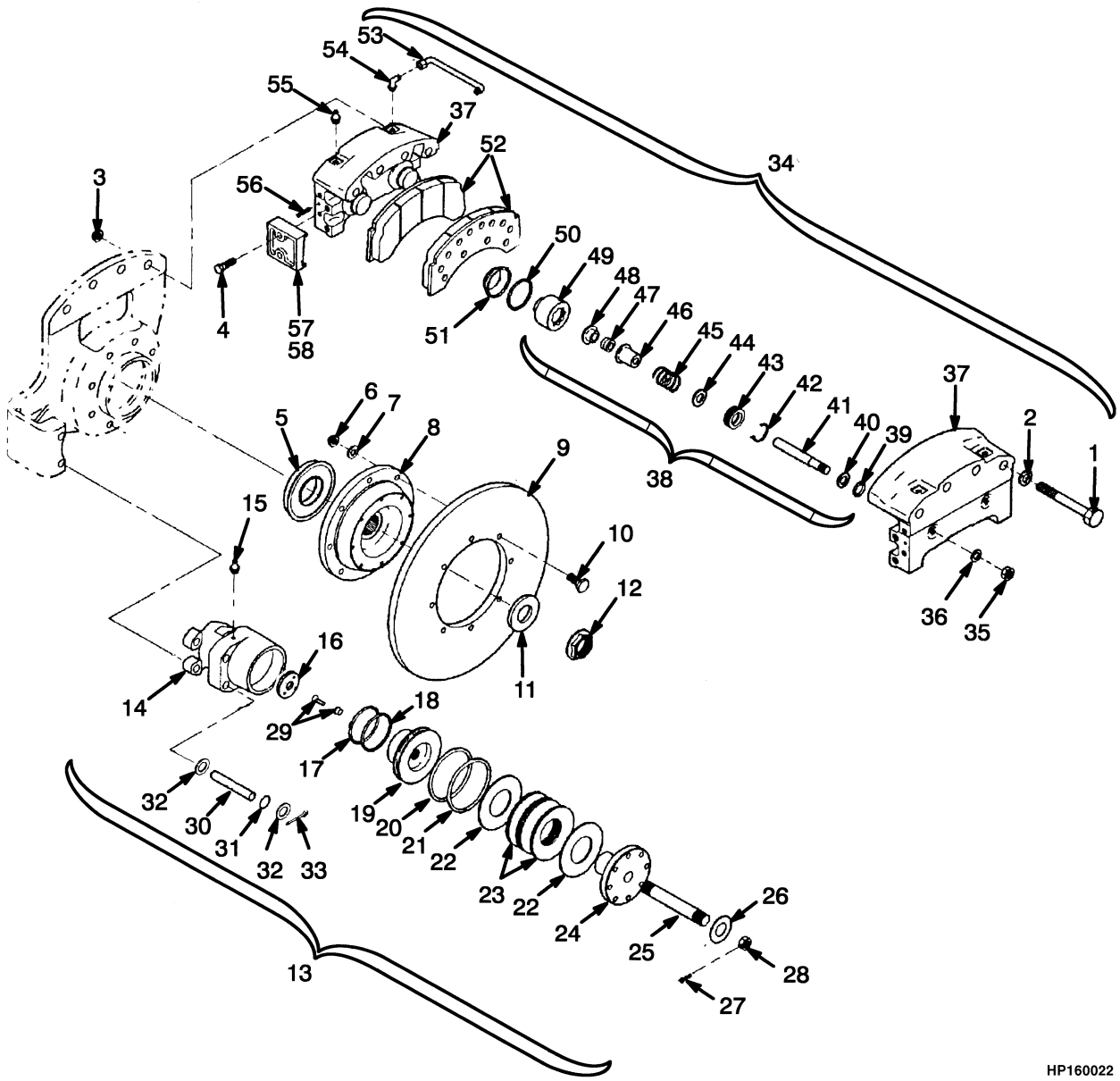

©2011 HYSTER COMPANY

BRAKE ASSEMBLY

H440FS, H550F, H550FS (→ S/N E008E-1837)

ITEM	PART NO.	DESCRIPTION	QTY
1	1332797	Capscrew	4
2	132451	Washer	4
3	221359	Locknut	4
4	1343144	Capscrew	8
5	**ab** 1347773	Seal	1
5	**de** 1642099	Oil Seal	1
6	**c** 221354	Locknut	8
6	**f** 221355	Locknut	8
7	88587	Washer	8
8	**c** 1347843	Flange	1
8	**f** 1554339	Flange	1
9	1332803	Brake Disk	1
10	**c** 1332796	Capscrew	8
10	**f** 1554341	Capscrew	8
11	1312083	Washer	1
12	1357734	Locknut	1
13	**ab** 1343112	Parking Brake	1
13	**de** 1380789	Parking Brake	1
14	**ab** 1339120	Housing	1
14	**de** 1379755	Housing	1
15	**de** 1309120	Screw	1
15	**ab** 14349	Fitting (Pipe Plug)	1
16	1339121	Brake Lining	2
17	1339119	Back-Up Ring	1
18	1339118	O-Ring	1
19	**ab** 1339117	Piston	1
19	**de** 1379749	Piston	1
20	1339116	O-Ring	1
21	1339115	Back-Up Ring	1
22	1339113	Spring Washer	2
23	1339114	Spring	8
24	1343149	Cap (Spring)	1
25	1343148	Stud	1
26	1312090	Washer	1
27	15224	Cotter Pin	1
28	1343145	Nut	1
29	**de** 1379750	Retainer	2
29	**ab** 918924	Screw	2
29	**ab** 918925	Snap Ring	2
30	1332801	Pin	2
31	1332805	O-Ring	4
32	**de** 1379726	Washer	4
32	**ab** 268980	Washer	4
33	**ab** 1332802	Cotter Pin	4
33	**de** 1355346	Pin	4
34	1347608	Brake Assembly	1
35	221351	Locknut	4
36	1343114	Lockwasher	4
37	1343113	Housing	2
38	. . . . .	Piston	4

©2011 HYSTER COMPANY

See Service Manual for service procedures.

BRAKE ASSEMBLY

H440FS, H550F, H550FS (→ S/N E008E-1837)

ITEM	PART NO.	DESCRIPTION	QTY
39	. . . . .	O-Ring	1
40	. . . . .	Washer	1
41	. . . . .	Guide (Pin)	1
42	. . . . .	Lockring	1
43	. . . . .	Ring	1
44	. . . . .	Retainer	1
45	. . . . .	Spring	1
46	. . . . .	Spring Guide (Outer)	1
47	. . . . .	Adjuster	2
48	. . . . .	Spring Guide (Inner)	1
49	. . . . .	Piston	1
50	1343134	O-Ring	4
50	1343135	Back-Up Ring	4
51	1343166	Protector (Piston)	4
52	1343137	Brake Lining	2
53	1343140	Tube Assy	1
54	1343139	Fitting	2
55	1309120	Screw	4
56	1343141	Roll Pin	4
57	1343142	Plate (LH)	2
58	1343143	Plate (RH)	2
	1357731	Kit-Hardware	1
	1352026	Kit-Brake	4
	1343153	Kit-Seal	1
	1357735	Kit-Seal	1
	1379754	Kit-Repair Parking Brake	1

FOOTNOTES:

a → S/N E008D01538 (With Axle 1336960)
b → S/N E008E01606 (With Axle 1336960)
c → S/N E008E01984B
d S/N E008D01539 → (With Axle 1378889)
e S/N E008E01607 → (With Axle 1378889)
f S/N E008E01985B →

©2011 HYSTER COMPANY

NOTES

©2011 HYSTER COMPANY

BRAKE ASSEMBLY (FIGURE 6-18)

H620F, H650F, H700F, H620FS, H700FS (→ S/N E008E01837)

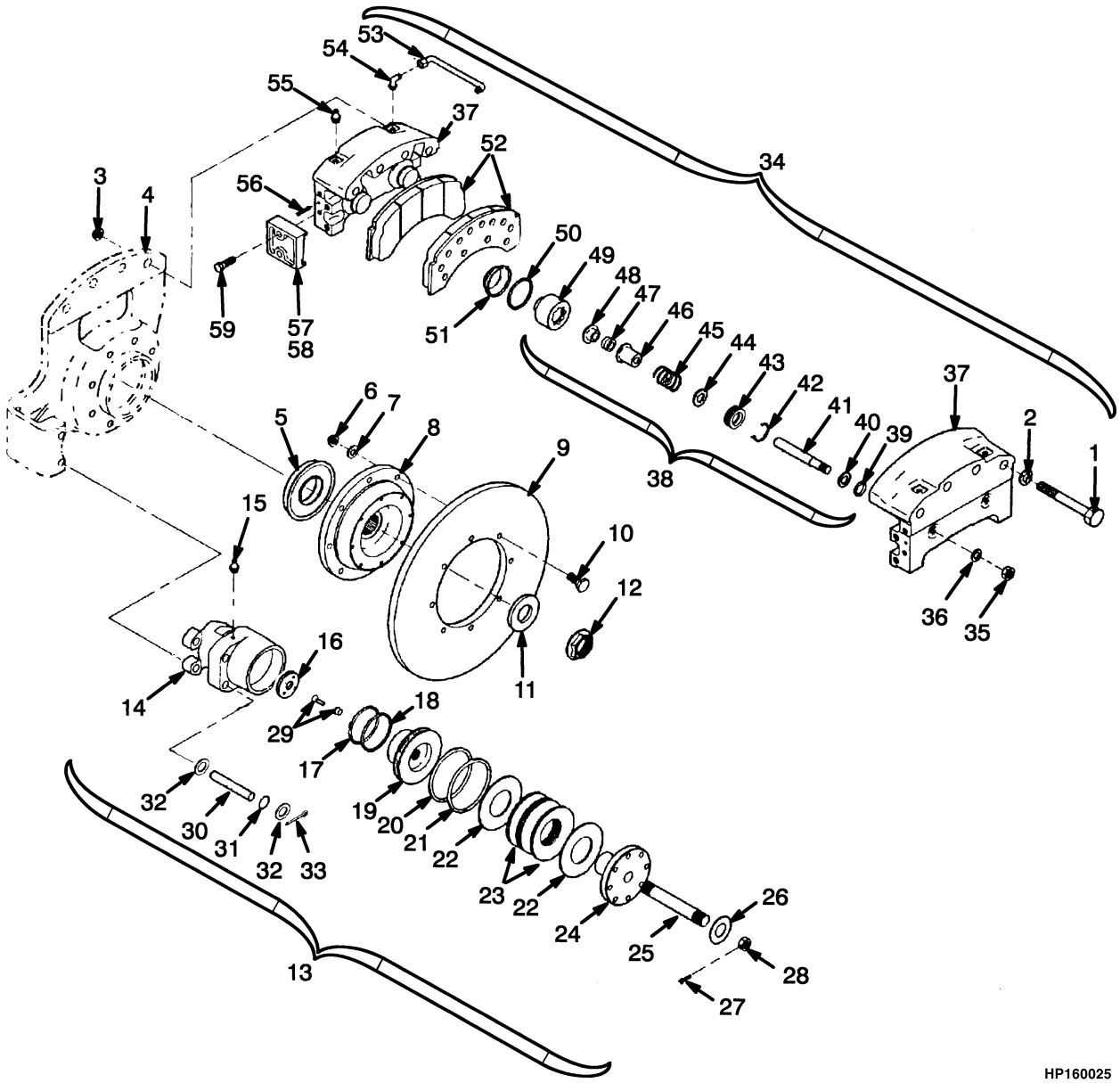

©2011 HYSTER COMPANY

BRAKE ASSEMBLY

H620F, H650F, H700F, H620FS, H700FS (→ S/N E008E01837)

ITEM	PART NO.	DESCRIPTION	QTY
1	1332797	Capscrew	4
2	132451	Washer	4
3	221359	Locknut	4
4	1360789	Adapter (Brake) (☞Figure 6-7)	1
5	1554527	Oil Seal	1
6	221354	Locknut	8
7	88587	Washer	8
8	**ac** 1350671	Flange	1
8	**gi** 1360790	Flange	1
9	1332803	Brake Disk	1
10	**gi** 1360791	Capscrew	8
10	**ac** 221573	Capscrew	8
11	1312083	Washer	1
12	1312094	Nut	1
13	**bd** 1343112	Parking Brake	1
13	**e** 1375045	Parking Brake	1
13	**hf** 1380789	Parking Brake	1
14	**bd** 1339120	Housing	1
14	**e** 1375046	Housing	1
14	**hf** 1379755	Housing	1
15	1309120	Screw	1
15	**bd** 14349	Fitting (Pipe Plug)	1
16	1339121	Brake Lining	2
17	1339119	Back-Up Ring	1
18	1339118	O-Ring	1
19	**bd** 1339117	Piston	1
19	**hf** 1379749	Piston	1
20	1339116	O-Ring	1
21	1339115	Back-Up Ring	1
22	1339113	Spring Washer	2
23	1339114	Spring	8
24	1343149	Cap	1
25	1343148	Stud	1
26	1312090	Washer	1
27	15224	Cotter Pin	1
28	1343145	Nut	1
29	**hf** 1379750	Retainer	2
29	**bd** 918924	Screw	2
29	**bd** 918925	Snap Ring	2
30	1332801	Pin	2
31	1332805	O-Ring	4
32	**hf** 1379726	Washer	4
32	**bd** 268980	Washer	4
33	**bd** 1332802	Cotter Pin	4
33	1355346	Pin	4
34	1347608	Brake Assembly	1
35	221351	Locknut	4
36	1343114	Lockwasher	4
37	1343113	Housing	2
38	. . . . .	Piston	4

©2011 HYSTER COMPANY

BRAKE ASSEMBLY

H620F, H650F, H700F, H620FS, H700FS (→ S/N E008E01837)

ITEM	PART NO.	DESCRIPTION	QTY
39	. . . . .	O-Ring	1
40	. . . . .	Washer	1
41	. . . . .	Guide (Pin)	1
42	. . . . .	Lockring	1
43	. . . . .	Lockring	1
44	. . . . .	Retainer (Spring)	1
45	. . . . .	Spring	1
46	. . . . .	Spring Guide (Outer)	1
47	. . . . .	Adjuster	2
48	. . . . .	Spring Guide (Inner)	1
49	. . . . .	Piston	1
50	1343134	O-Ring	4
50	1343135	Back-Up Ring	4
51	1343166	Protector (Piston)	4
52	1343137	Brake Lining	2
53	1343140	Tube Assy	1
54	1343139	Fitting	2
55	1309120	Screw	4
56	1343141	Roll Pin	4
57	1343142	Plate (LH)	2
58	1343143	Plate (RH)	2
59	1343144	Capscrew	8
	1343153	Kit-Seal	1
	1379754	Kit-Repair Parking Brake	1
	1352026	Kit-Brake	4
	1379748	Kit-Piston	1
	1375045	Parking Brake	1
	1380789	Parking Brake	1

FOOTNOTES:

a → S/N E008D01513
b → S/N E008D01556 (With Axle 1355036)
c → S/N E008E01554
d → S/N E008E01560 (With Axle 1355036)
e S/N E008E01561 ↔ S/N E008E01588 (With Axle 1378884)
f S/N E008E01589 → (With Axle 1378888)
g S/N E008D01514 →
h S/N E008D01557 → (With Axle 1378888)
i S/N E008E01555 →

©2011 HYSTER COMPANY

NOTES

©2011 HYSTER COMPANY

BRAKE ASSEMBLY (FIGURE 6-19)

WET BRAKE — H440FS, H550F, H550FS (S/N E008E01985B →)

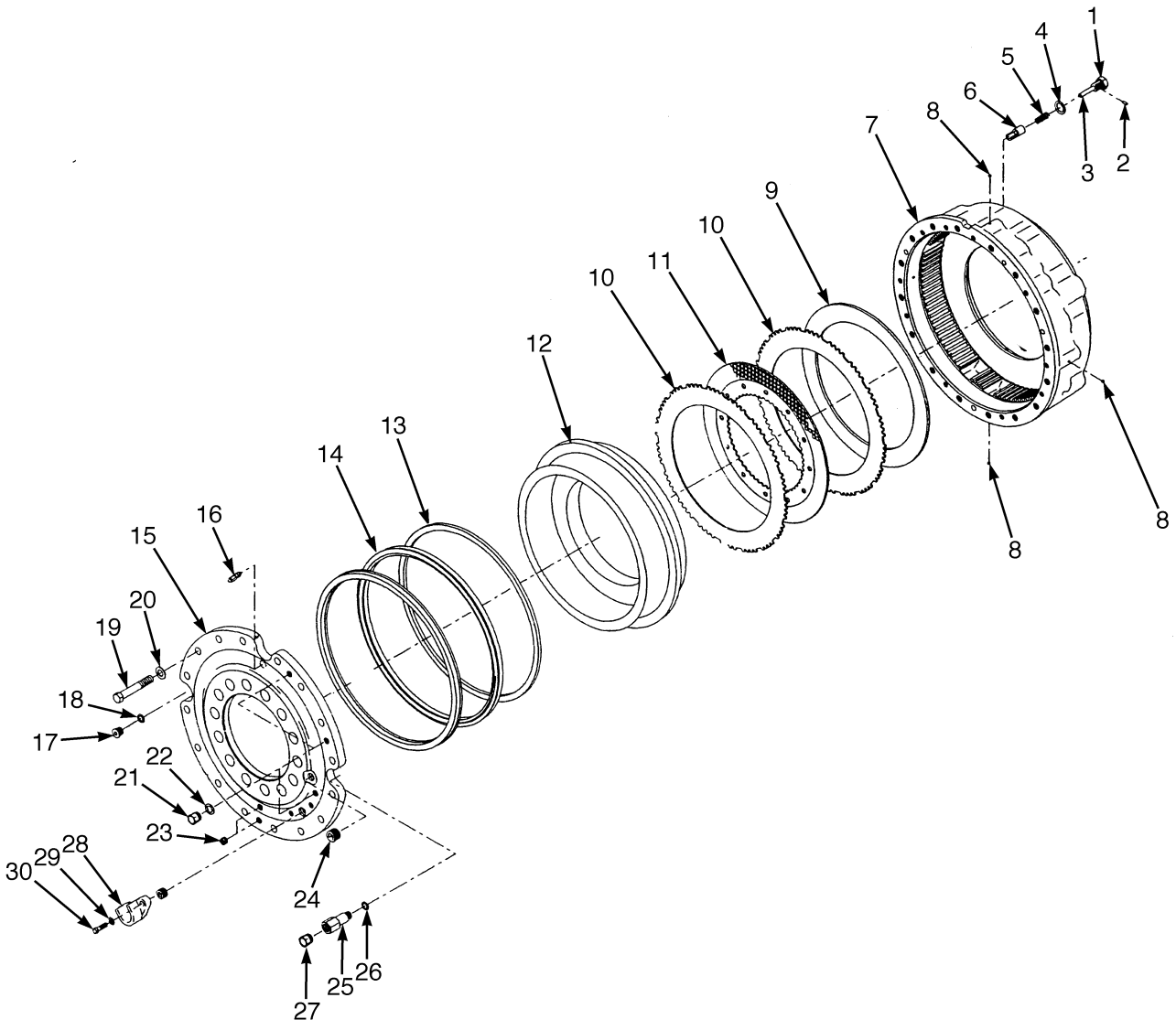

HP040394

©2011 HYSTER COMPANY

BRAKE ASSEMBLY

WET BRAKE – H440FS, H550F, H550FS (S/N E008E01985B →)

ITEM	PART NO.	DESCRIPTION	QTY
	a 1502752	Drive Axle	1
	b 1584428	Drive Axle	1
	d 1635619	Drive Axle	1
1	**a** 1554507	Plug	8
1	**c** 1618222	Plug Assembly	8
2	1554512	Pin	1
3	**a** 1554513	Rod	1
3	**c** 1618223	Rod	1
4	1384863	O-Ring	1
5	1554514	Spring	8
6	1554516	Spring Guide (Spring)	8
7	1554517	Housing	2
8	15483	Fitting	6
9	1384882	Spacer	2
10	1384873	Separator Plate	18
11	1532251	Friction Disk	16
12	1554520	Piston	2
13	1384870	Seal	4
14	1384871	Spring	2
15	1554523	Cover	1
15	1554525	Cover	1
16	1384861	Bleeder Screw	2
17	1384859	Plug Assembly	2
18	1382902	O-Ring	1
19	168054	Capscrew	32
20	268980	Washer	32
21	1384862	Plug Assembly	6
22	1384863	O-Ring	1
23	1384864	Plug	4
24	15316	Fitting	2
25	1384867	Fitting	2
26	1382902	O-Ring	1
27	1483805	Plug	1
28	1483804	Bracket	1
29	221767	Washer	2
30	16815	Capscrew	2

FOOTNOTES:

a → S/N E008E02075C INC. 02077
b S/N E008E02076C ↔ 3/2006 EXC. 02077
c S/N E008E02076C → EXC. 02077
d 4/2006 →

©2011 HYSTER COMPANY

BRAKE ASSEMBLY (FIGURE 6-20)

WET BRAKE — H620F, H650F, H700F, H620FS, H700FS (S/N E008E01985B →)

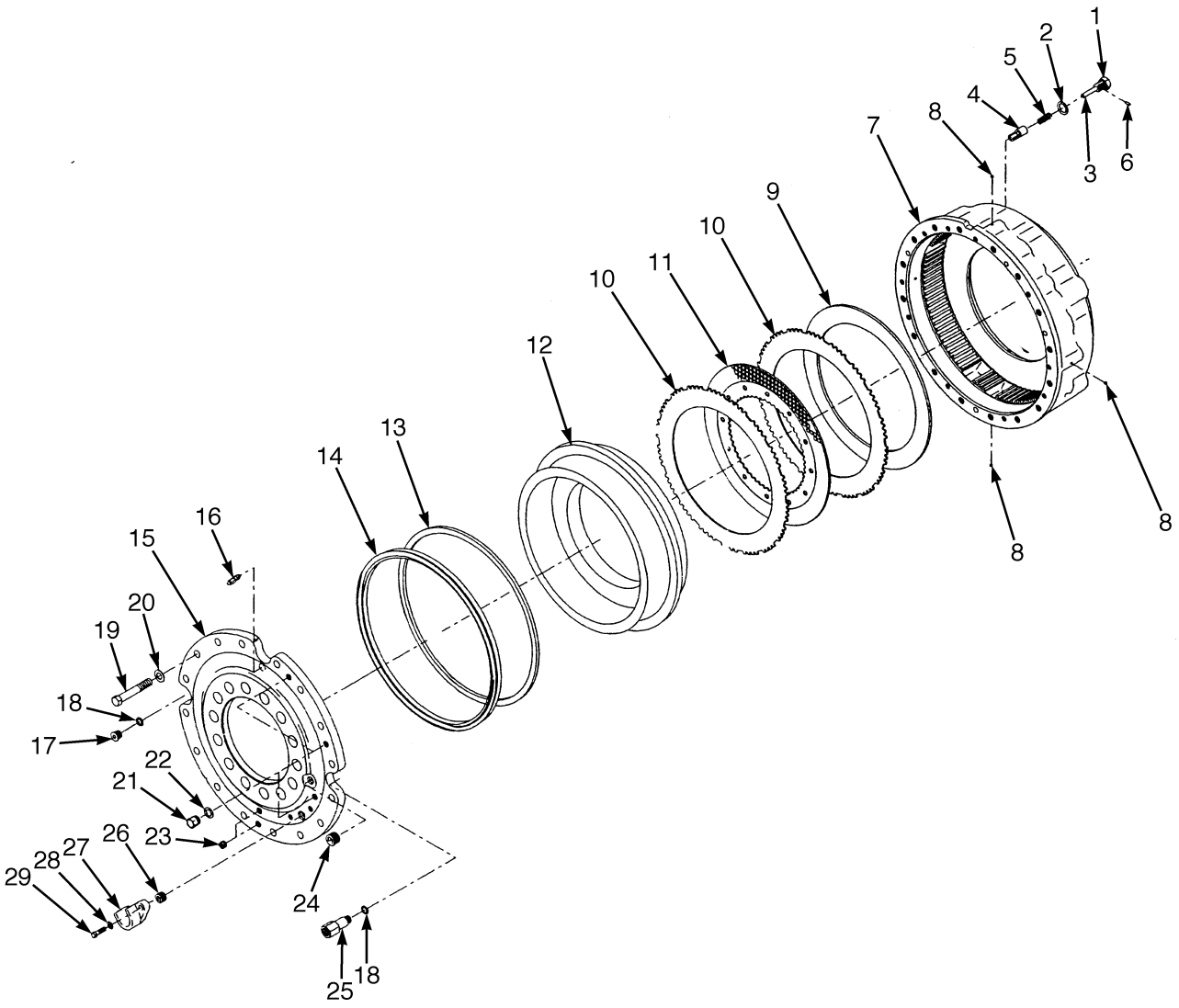

HP070099

©2011 HYSTER COMPANY

BRAKE ASSEMBLY

WET BRAKE – H620F, H650F, H700F, H620FS, H700FS (S/N E008E01985B →)

ITEM	PART NO.	DESCRIPTION	QTY
	a 1502753	Drive Axle	1
	b 1584427	Drive Axle	1
	c 1635598	Drive Axle	1
1	1384876	Plug Assembly	8
2	1384884	O-Ring	1
3	1384878	Rod	1
4	1384879	Spring Guide	1
5	1384880	Spring	1
6	1384881	Roll Pin	1
7	**b** 1384883	Housing	2
7	**c** 1642015	Housing	2
8	15483	Fitting	6
9	1384882	Spacer	2
10	1384873	Separator Plate	22
11	1532251	Friction Disk	20
12	1384872	Piston	2
13	1384870	Seal	4
14	1384871	Spring	2
15	1554819	Cover (RH)	1
15	1554821	Cover (LH)	1
16	1384861	Bleeder Screw	2
17	1384859	Plug Assembly	2
18	1382902	O-Ring	1
19	1554920	Capscrew	32
20	132451	Washer	32
21	1384862	Plug Assembly	6
22	1384863	O-Ring	1
23	1384864	Plug	4
24	15316	Fitting	2
25	1384867	Fitting	2
25	1382902	O-Ring	1
26	1483805	Plug	1
27	1483804	Bracket	1
28	221767	Washer	2
29	16815	Capscrew	2

FOOTNOTES:

a → S/N E008E02075C INC. 02077
b S/N E008E02076C ↔ 3/2006 EXC. 02077
c 4/2006 →

©2011 HYSTER COMPANY

PARK BRAKE (FIGURE 6-21)
WET BRAKE (→ S/N E008E01984B)

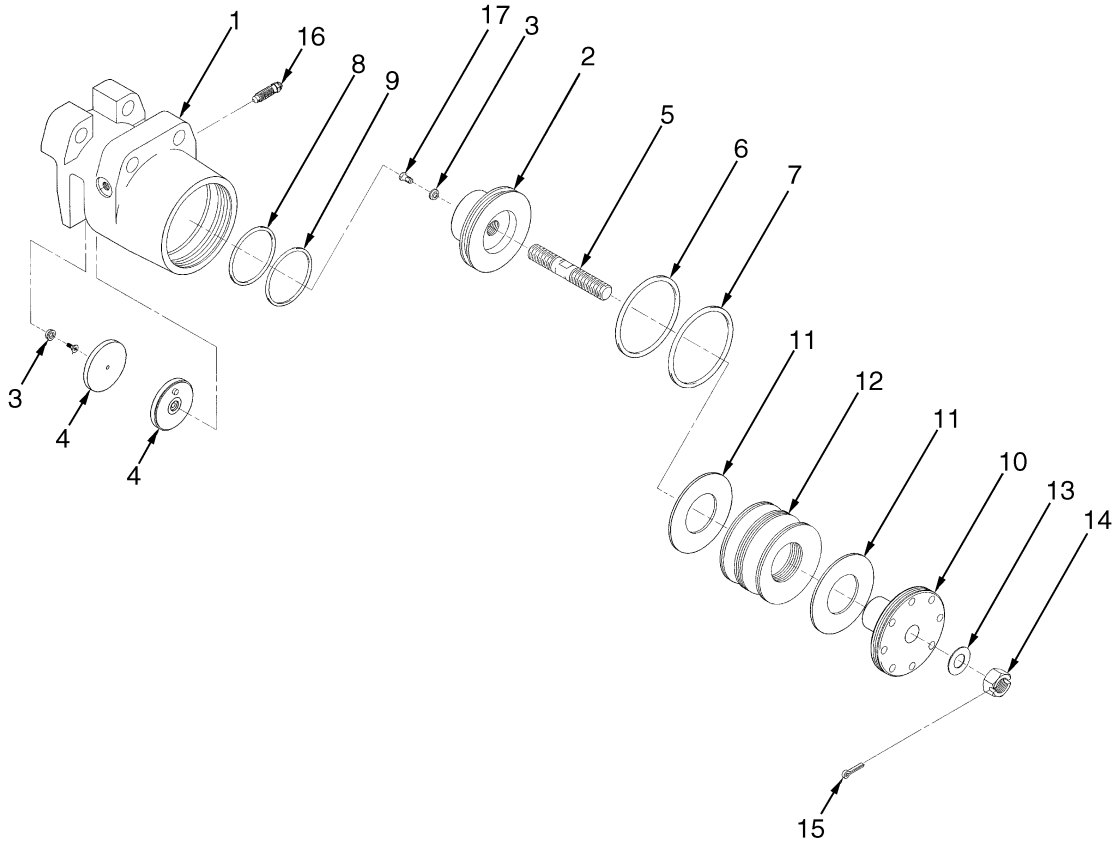

HP070040

©2011 HYSTER COMPANY

PARK BRAKE

WET BRAKE (→ S/N E008E01984B)

ITEM	PART NO.	DESCRIPTION	QTY
	b 1478761	Drive Axle (H620F, H650F, H700F, H620FS, H700FS)	1
	a 1478760	Drive Axle (H550F, H550FS)	1
	1380789	Parking Brake	1
1	1379755	Housing	1
2	1379749	Piston	1
3	1379750	Retainer	2
4	1339121	Brake Lining	2
5	1343148	Stud	1
6	1339115	Back-Up Ring	1
7	1339116	O-Ring	1
8	1339119	Back-Up Ring	1
9	1339118	O-Ring	1
10	1343149	Cap	1
11	1339113	Spring Washer	2
12	1339114	Spring	8
13	1312090	Washer	1
14	1343145	Nut	1
15	15224	Cotter Pin	1
16	1309120	Screw	1

FOOTNOTES:

a S/N E008E01820 →

b S/N E008E01838 →

©2011 HYSTER COMPANY

PARK BRAKE (FIGURE 6-22)

WET BRAKE (S/N E008E01985B →)

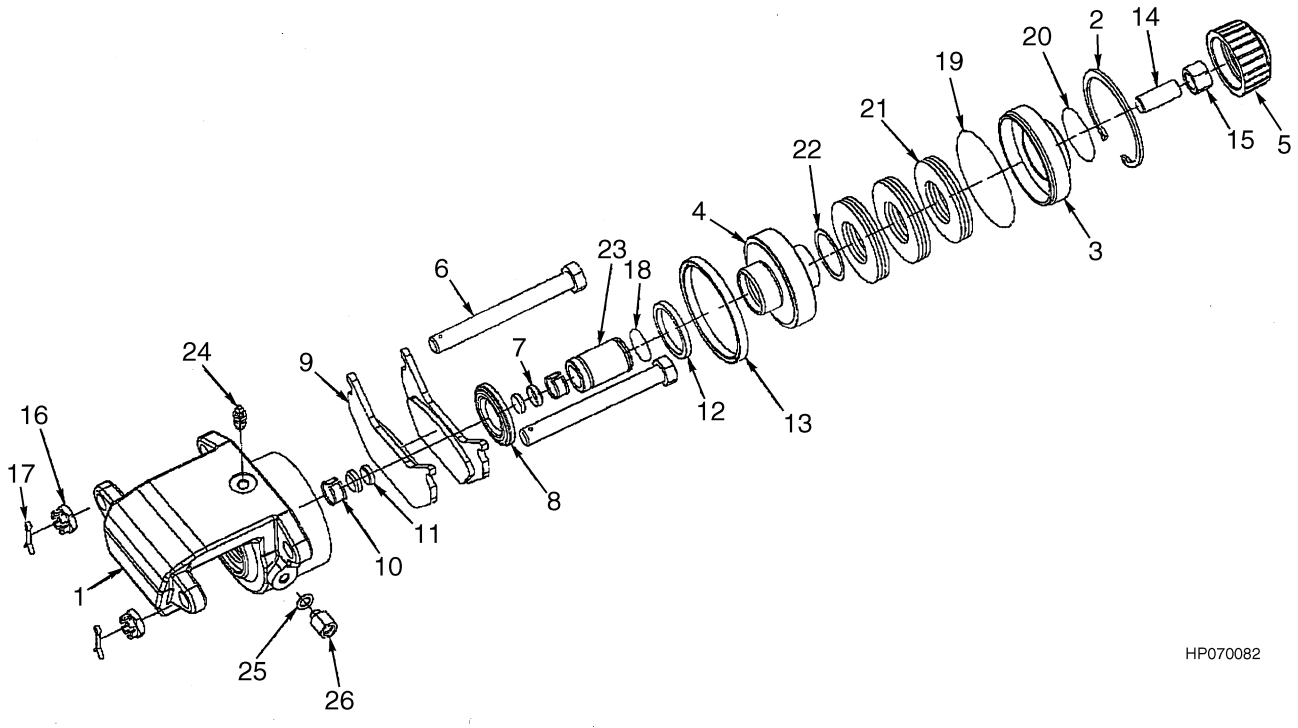

©2011 HYSTER COMPANY

PARK BRAKE

WET BRAKE (S/N E008E01985B →)

ITEM	PART NO.	DESCRIPTION	QTY
	a 1489408	Brake Assembly (Disc)	1
	b 1561604	Brake Assembly (Park Brake)	1
1	1495623	Housing	1
2	1495624	Retaining Ring	1
3	1495625	Piston (Stop)	1
4	1495626	Piston	1
5	1495627	Cap	1
6	1495628	Bolt	2
7	1495629	Cup	2
8	1495630	Boot	1
9	1495631	Brake Lining	2
10	1495632	Sleeve (Friction)	2
11	1495633	Magnet	2
11	. . . . .	Retaining Ring	1
12	1495634	Seal (Cup)	1
13	1495635	Seal (Cup)	1
14	1495636	Setscrew	1
15	1495637	Locknut	1
16	1495638	Nut	2
17	1495639	Cotter Pin	2
18	1495640	O-Ring	1
19	1495641	O-Ring	1
20	1495642	O-Ring	1
21	1495643	Disk Spring	6
22	1495644	Wear Plate	1
23	1495645	Cylinder Rod	1
24	1495646	Bleeder Valve	1
25	1495647	Washer	1
26	1495648	Adapter	1
	1514331	Kit-Repair Parking Brake	1

FOOTNOTES:

a → 8/2006

b 8/2006 →

©2011 HYSTER COMPANY

DRIVE SHAFT (FIGURE 6-23)

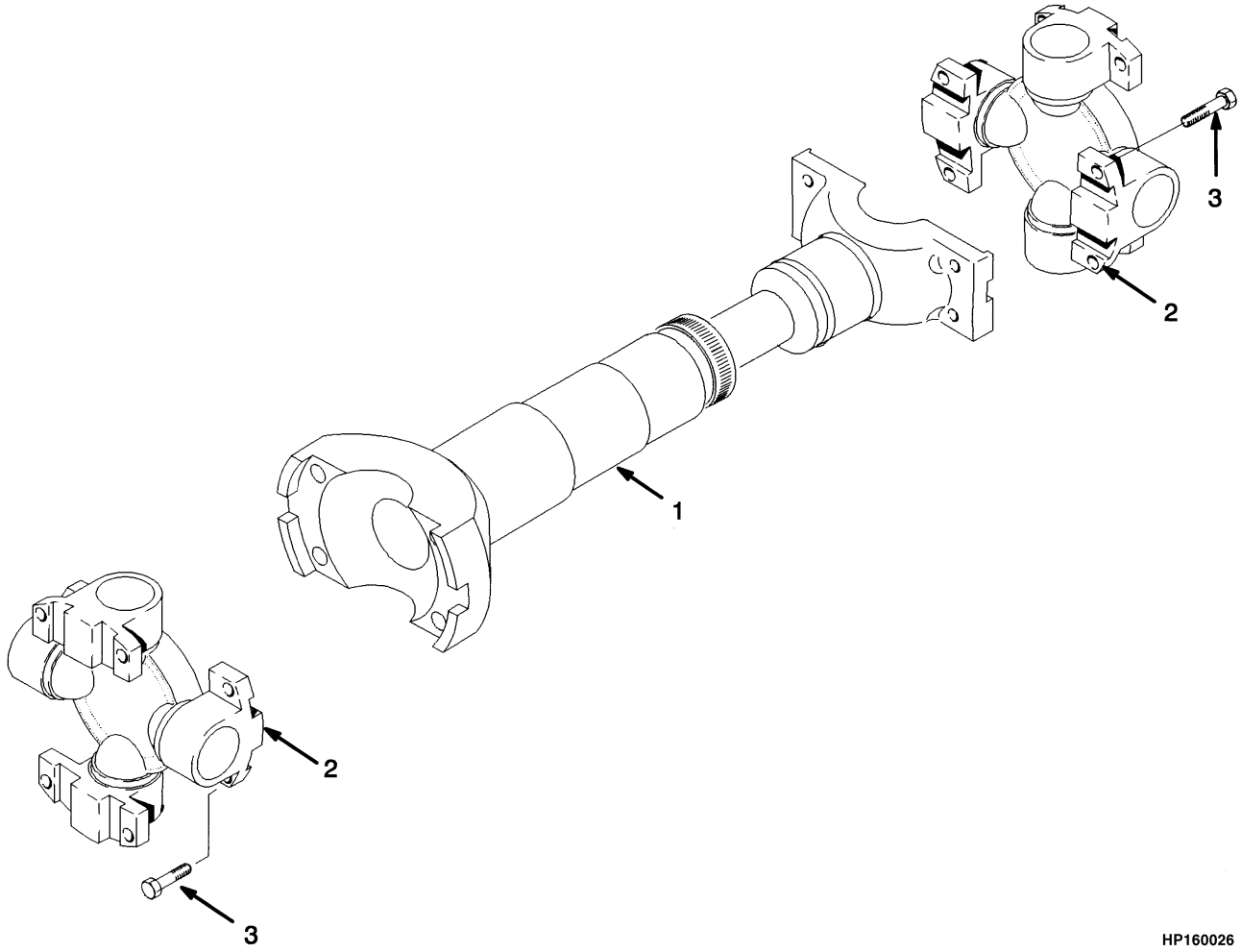

KEY:
A: H550F, H620F, H650F, H700F
B: H550FS
C: H620FS, H700FS

ITEM	PART NO.	DESCRIPTION	QTY A	QTY B	QTY C
	1352273	Universal Joint	..	1	..
	1535376	Shaft	..	..	1
	1353981	Universal Joint	1	..	..
1	1354816	Shaft	..	1	..
1	1354817	Shaft	..	..	1
1	1356834	Tube Assy	1	..	..
2	1344044	Spider	2	2	2
3	1344254	Screw	8	8	8

©2011 HYSTER COMPANY

7 STEERING SYSTEM

SECTION 7
STEERING SYSTEM

DESCRIPTION	PAGE
STEER AXLE	7-2
STEER COLUMN AND LINES	7-8
STEER CYLINDER	7-12
STEERING CONTROL VALVE	7-14

©2011 HYSTER COMPANY

STEER AXLE (FIGURE 7-1)

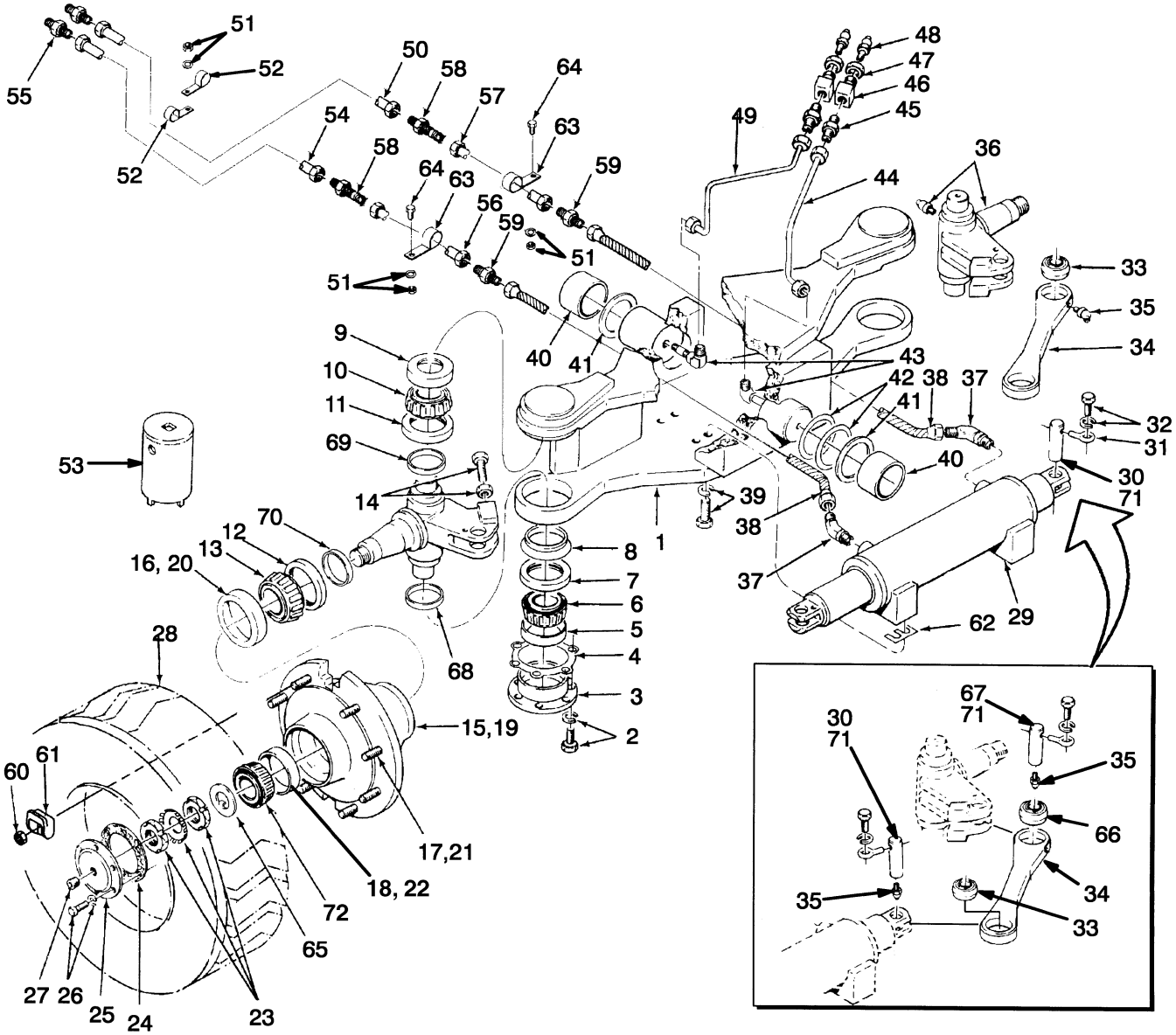

©2011 HYSTER COMPANY

STEER AXLE

KEY:
A: H550F, H550FS
B: H620F, H650F, H700F, H620FS, H700FS
C: H550F, H620F, H650F, H700F
D: H550FS, H620FS, H700FS

ITEM	PART NO.	DESCRIPTION	QTY A	B	C	D
1	**h** 1322023	Steering Axle	1	1	1	1
1	**lm** 1355035	Steering Axle	1	1	1	1
1	**fp** 1462357	Steering Axle	1	1	1	1
1	**z** 1483709	Steering Axle	1	1	1	1
1	**z** 1476489	Steering Axle (Optional)	1	1	1	1
2	15158	Washer	12	12	12	12
2	18588	Capscrew	12	12	12	12
3	**j** 159175	Bearing Cap	2	2	2	2
3	**p** 1462364	Carrier	2	2	2	2
4	95033	Shim (0.005 in.)	6	6	6	6
4	95034	Shim (0.020 in.)	10	10	10	10
5	159179	Bearing Cup	2	2	2	2
6	159180	Bearing Cone	2	2	2	2
7	1520831	Seal	2	2	2	2
8	159181	Dust Seal	2	2	2	2
9	185178	Bearing Cup	2	2	2	2
10	185179	Bearing Cone	4	4	4	4
11	**gi** 1330148	Seal	2	2	2	2
11	**yu** 1375050	Seal	2	2	2	2
12	**gi** 159183	Seal	2	2	2	2
12	**yu** 1375051	Seal	2	2	2	2
13	185211	Bearing Cone	2	2	2	2
14	15021	Nut	4	4	4	4
14	18670	Capscrew	4	4	..	..
15	1478781	Wheel Hub	2	..	..	..
15	1343651	Wheel Hub (Optional)	2	..	..	..
15	1343650	Hub (Optional)	1	..	..	..
15	1478777	Hub	1	..	..	..
16	30124	Bearing Cup	1	..	..	..
17	1346804	Stud	12	..	..	..
18	185178	Bearing Cup	1	..	..	..
19	1478782	Wheel Hub	..	2	..	..
19	1329017	Wheel Hub (Optional)	..	2	..	..
19	1329015	Hub (Optional)	..	1	..	..
19	1478780	Hub	..	1	..	..
20	30124	Bearing Cup	..	1	..	..
21	116031	Wheel Stud	..	12	..	..
22	185178	Bearing Cup	..	1	..	..
23	**j** 6059	Lockwasher	2	2	2	2
23	**j** 6060	Locknut	4	4	4	4
23	**p** 1492279	Locknut	2	2	2	2
23	**r** 1548046	Nut	2	2	2	2
24	185180	Gasket	2	2	2	2
25	95490	Retainer	2	2	2	2

©2011 HYSTER COMPANY

STEER AXLE

KEY:
A: H550F, H550FS
B: H620F, H650F, H700F, H620FS, H700FS
C: H550F, H620F, H650F, H700F
D: H550FS, H620FS, H700FS

ITEM	PART NO.	DESCRIPTION	QTY A	B	C	D
26	15158	Washer	12	12	12	12
26	16829	Capscrew	12	12	12	12
27	15962	Fitting	2	2	2	2
28	. . . . .	Tire and Wheel	2	2	2	2
29	1303762	Steering Cylinder (☞Figure 7-3)	1	1	1	1
30	**n** 1355076	Pin	4	4	4	4
30	**v** 1394063	Pin	2	2	2	2
31	82270	Eyebolt	4	4	4	4
32	15158	Washer	4	4	4	4
32	16830	Capscrew	4	4	4	4
33	**iy** 185074	Bushing	2	2	2	2
33	**gu** 185074	Bushing	4	4	4	4
34	**i** 816128	Tie Rod	2	2	2	2
34	**u** 1371376	Tie Rod	2	2	2	2
35	**j** 16009	Grease Fitting	4	4	4	4
35	**t** 16009	Grease Fitting	8	8	8	8
36	**gi** 1355073	Spindle (RH)	1	1	1	1
36	**o** 1371378	Spindle (RH)	1	1	1	1
36	**p** 1462359	Spindle (RH)	1	1	1	1
36	**q** 1523701	Spindle (RH)	1	1	1	1
36	**s** 1603915	Spindle (RH)	1	1	1	1
36	**gi** 1355074	Spindle (LH)	1	1	1	1
36	**o** 1371379	Spindle (LH)	1	1	1	1
36	**p** 1462362	Spindle (LH)	1	1	1	1
36	**q** 1523700	Spindle (LH)	1	1	1	1
36	**s** 1603916	Spindle (LH)	1	1	1	1
36	**j** 14349	Fitting (Pipe Plug)	4	4	4	4
37	16569	Fitting	2	2	2	4
38	1336360	Hose Assy	2	2	2	..
39	221780	Washer	8	8	8	..
39	339637	Capscrew	8	8	8	..
40	1335868	Bushing	2	2	2	2
41	1335869	Thrust Washer	2	2	2	2
42	185183	Shim (0.020 in.)	13	13	13	13
42	185184	Shim (0.007 in.)	4	4	4	4
43	14516	Fitting	2	2	2	2
43	15485	Fitting	2	2	2	1
44	**xw** 1355034	Tube Assy	1	1	1	1
44	**h** 340387	Tube Assy	1	1	1	1
45	14668	Fitting	2	2	2	2
46	302512	Connector	2	2	2	2
47	302522	Locknut	2	2	2	2
48	16041	Grease Fitting	2	2	2	2
49	**xw** 1355033	Tube Assy	1	1	1	1

©2011 HYSTER COMPANY

STEER AXLE

KEY:
A: H550F, H550FS
B: H620F, H650F, H700F, H620FS, H700FS
C: H550F, H620F, H650F, H700F
D: H550FS, H620FS, H700FS

ITEM	PART NO.	DESCRIPTION	QTY A	QTY B	QTY C	QTY D
49	**h** 340388	Tube Assy	1	1	..	1
50	1336119	Tube Assy	..	..	1	..
50	**a** 833388	Hose Assy	..	..	..	1
50	**b** 833389	Hose Assy	..	..	..	1
50	**ck** 833390	Hose Assy	..	..	1	1
50	**s** 1547909	Hose Assy	..	1	1	..
51	15056	Nut	1	1	3	7
51	15156	Lockwasher	1	1	3	7
52	1457235	Clamp	2	2	2	..
53	228820	Tool	AR	AR	..	..
54	1336120	Tube Assy	..	..	1	..
54	**a** 833388	Hose Assy	..	..	..	1
54	**b** 833389	Hose Assy	..	..	..	1
54	**ck** 833390	Hose Assy	..	..	..	1
54	**s** 1547908	Hose Assy	..	1	1	..
55	14694	Fitting	2	2	2	..
56	**d** 1336122	Tube Assy	..	..	1	..
56	**e** 1336370	Tube Assy	..	..	1	..
57	**d** 1336121	Tube Assy	..	..	1	..
57	**e** 1336369	Tube Assy	..	..	1	..
58	16450	Fitting	..	..	2	..
59	201807	Fitting	2	2	2	..
60	116030	Wheel Nut	24	24	..	..
61	1343394	Clamp	24	..	..	..
61	173240	Wheel Clamp	..	24	..	..
62	302501	Shim	AR	AR	AR	..
63	176455	Clamp	..	..	..	2
63	183779	Clamp	..	..	2	..
64	16597	Capscrew	2	2	..	2
65	155328	Washer	5	5	5	5
66	**yu** 178015	Bushing	2	2	2	2
67	**yu** 1369149	Pin	2	2	2	2
68	**yu** 387225	Wear Sleeve	2	2	2	2
69	**yu** 1371397	Wear Sleeve	2	2	2	2
70	**yu** 1371398	Wear Sleeve	2	2	2	2
71	251979	Lubricant	AR	AR	AR	AR
72	185179	Bearing Cone	1	1	1	1

©2011 HYSTER COMPANY

FOOTNOTES:

a Wheel Base (3454 mm, 136 in.)
b Wheel Base (3657 mm, 144 in.)
c Wheel Base (3937 mm, 155 in.)
d Wheel Base (4318 mm, 170 in.)
e Wheel Base (4826 mm, 190 in.)
f → 8/2000
g → S/N E008D01589
h → S/N E008E01529
i → S/N E008E01600
j → S/N E008E01845
k → S/N E008E01984B
l S/N E008D01501 ↔ S/N E008E01845
m S/N E008E01530 ↔ S/N E008E01845
n S/N E008E01600 ↔ S/N E008E01682
o S/N E008E01601 ↔ S/N E008E01845
p S/N E008E01846 ↔ S/N E008E001902Z
q S/N E008E01902Z ↔ S/N E008E01984B
r S/N E008E01902Z →
s S/N E008E01985B →
t S/N E008E01846 →
u S/N E008E01601 →
v S/N E008E01683 →
w S/N E008E01530 →
x S/N E008D01501 →
y S/N E008D01590 →
z 8/2000 →

©2011 HYSTER COMPANY

NOTES

©2011 HYSTER COMPANY

STEER COLUMN AND LINES (FIGURE 7-2)

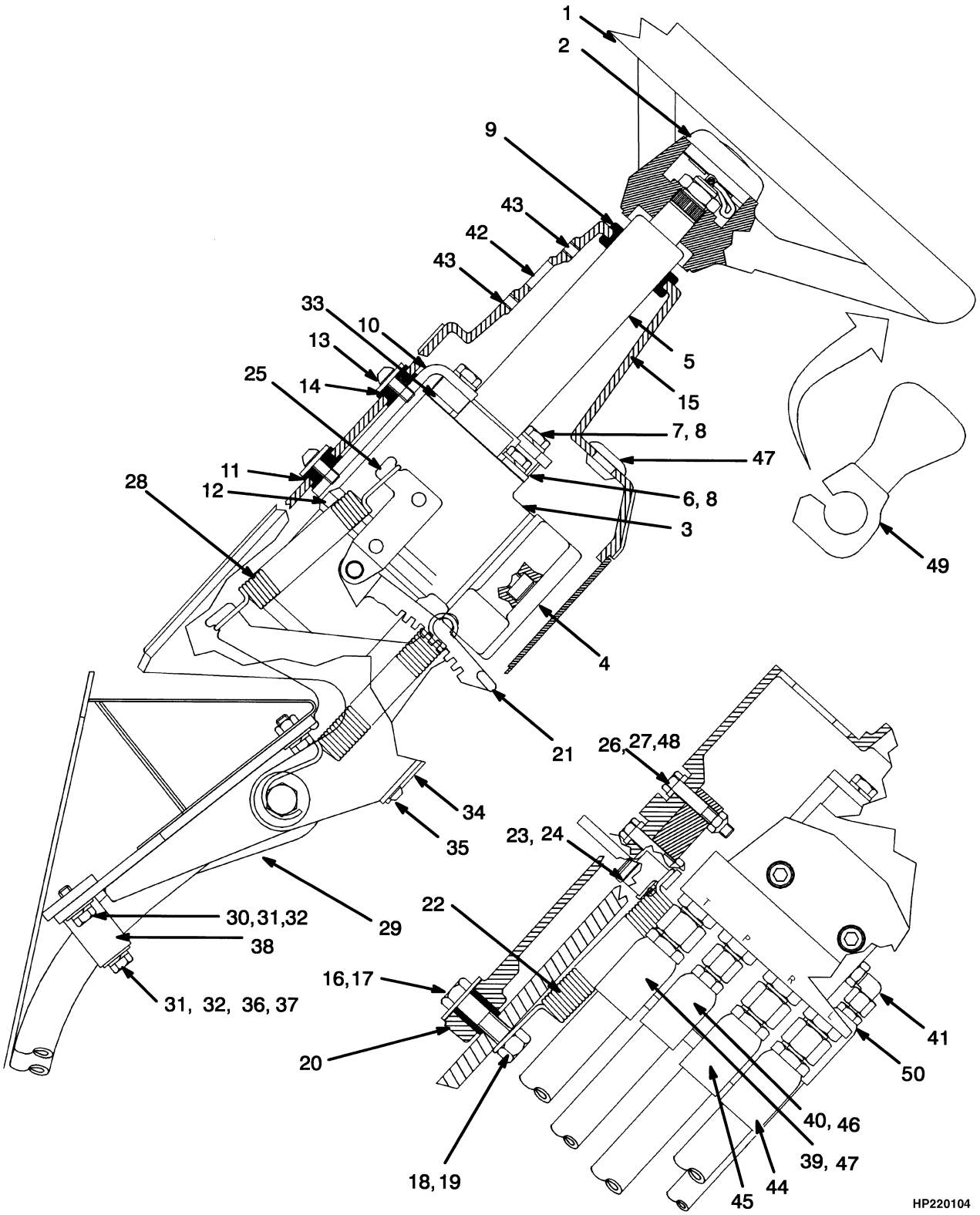

©2011 HYSTER COMPANY

STEER COLUMN AND LINES

ITEM	PART NO.	DESCRIPTION	QTY
1	1327895	Steering Wheel	1
2	371666	Horn Button	1
3	**e** 384428	Steering Valve (☞Figure 7-4)	1
3	**h** 1524213	Steering Valve (☞Figure 7-4)	1
4	**e** 389435	Hydraulic Control Valve	1
4	265732	O-Ring	4
4	**h** 1524173	Valve Block	1
4	**h** 366066	Kit-Repair Valve	1
4	1462890	O-Ring	4
4	1462891	Screw	2
5	1301422	Steering Column	1
5	345423	Nut	1
5	362816	Kit-Terminal	1
6	16597	Capscrew	1
7	16815	Capscrew	3
8	~~388049~~		
	292682	Lockwasher	4
9	2005059	Grommet	1
9	362255	Grommet (Optional)	1
10	376504	Bracket	1
11	216735	Grommet	4
12	376505	Spacer	4
13	369242	Capscrew	4
14	1300117	Washer	4
15	376510	Cover	1
16	292529	Capscrew	2
17	379697	Washer	2
18	~~1318914~~		
	216877	Nut	2
19	293782	Lockwasher	2
20	376506	Spacer	2
21	324896	Latch	1
22	1301437	Spring	1
23	133683	Pin	1
24	15212	Cotter Pin	1
25	1301426	Bracket	1
26	**f** 136704	Capscrew	2
26	**i** 379674	Capscrew	2
27	313828	Nut	2
28	1301425	Spring	1
29	1325564	Plate	1
30	136681	Capscrew	8
31	320158	Washer	9
32	292681	Lockwasher	9
33	1300165	Spacer	3
34	1301676	Plate	1
35	1330574	Screw	4
36	136704	Capscrew	1
37	1301585	Spacer	1
38	**f** 1307716	Clamp	1
38	**i** 1332941	Clamp	1

©2011 HYSTER COMPANY

STEER COLUMN AND LINES

ITEM	PART NO.	DESCRIPTION	QTY
39	16541	Fitting	3
39	1473887	Fitting	1
40	1473887	Fitting	1
40	16484	O-Ring	1
41	16556	Fitting	1
41	16481	O-Ring	1
42	**f** 1307736	Plug	1
42	**i** 1331037	Plug	1
43	**f** 1307737	Fastener	2
44	**dg** 815779	Hose Assy	1
44	**bdj** 1544429	Hose Assy	1
44	**cdj** 1544571	Hose Assy	1
44	**ag** 815795	Hose Assy	1
44	**abj** 1544435	Hose Assy	1
44	**abcj** 1544437	Hose Assy	1
45	**dg** 1303440	Hose Assy	2
45	**bdj** 1544428	Hose Assy	1
45	**bdj** 1544436	Hose Assy	1
45	**ag** 815796	Hose Assy	2
45	**abj** 1544433	Hose Assy	1
45	**abj** 1544437	Hose Assy	2
46	**dg** 815780	Hose Assy	1
46	**bdj** 1544428	Hose Assy	2
46	**cdj** 1544576	Hose Assy	1
46	**ag** 815794	Hose Assy	1
46	**abj** 1544436	Hose Assy	1
46	**acj** 1544425	Hose Assy	1
47	**dg** 1304615	Hose Assy	1
47	**bdj** 1544433	Hose Assy	1
47	**cdj** 1544574	Hose Assy	1
47	**ag** 268133	Hose Assy	1
47	**abj** 1544437	Hose Assy	1
47	**acj** 1544424	Hose Assy	1
47	1311217	Plug	1
48	**i** 375629	Washer	2
49	895468	Wheelspinner (Optional)	1
50	**cj** 1544423	Hose Assy	1
50	**bj** 1544432	Hose Assy	1
50	**cj** 1544568	Hose Assy	1
50	**bj** 1544438	Hose Assy	1

FOOTNOTES:

a Center Compartment
b H550F, H620F, H650F, H700F
c H550FS, H620FS, H700FS
d Left Compartment
e → 8/2002
f → S/N E008E01865Y
g → S/N E008E01984B
h 8/2002 →
i S/N E008E01866Y →
j S/N E008E01985B →

©2011 HYSTER COMPANY

NOTES

©2011 HYSTER COMPANY

STEER CYLINDER (FIGURE 7-3)

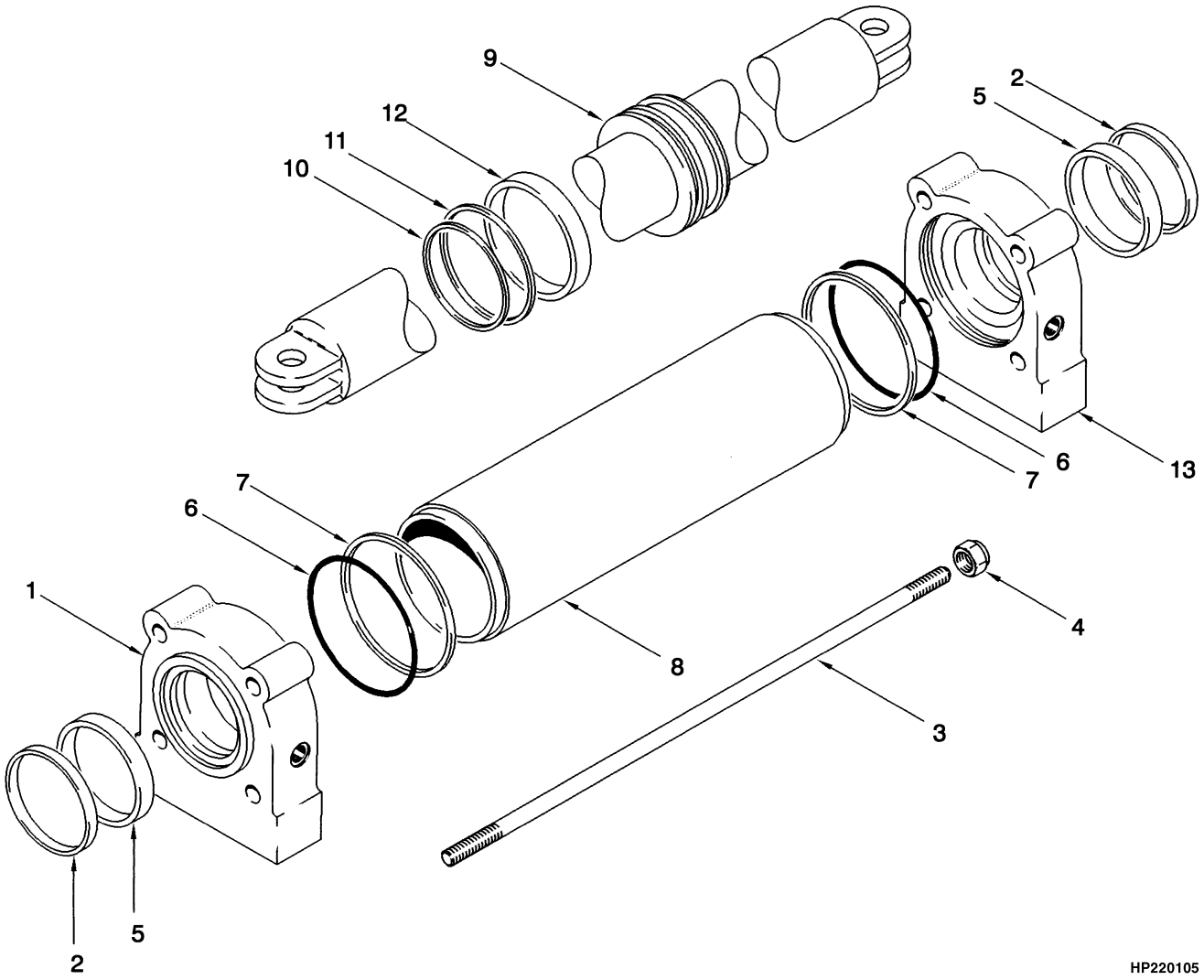

©2011 HYSTER COMPANY

STEER CYLINDER

ITEM	PART NO.	DESCRIPTION	QTY
	a 1303762	Steering Cylinder	1
	c 1483179	Steering Cylinder	1
1	**a** 1303769	Cap (LH)	1
1	**c** 1483178	End Cap (LH)	1
2	**b** 298548	Wiper	2
2	**d** 816544	Rod Wiper	2
3	1304400	Tie Rod	4
4	316829	Nut	8
5	**b** 298536	Rod Seal	2
5	**d** 816545	Rod Seal	2
6	18973	O-Ring	2
7	53092	Back-Up Ring	2
8	1303766	Tube Wldmt-Cylinder	1
9	1303767	Cylinder Rod	1
10	1303774	Quad Ring	1
11	366328	Seal	1
12	366327	Wear Ring	1
13	**a** 1303770	Cap (RH)	1
13	**c** 1483178	End Cap (RH)	1
	c 216590	Fitting (Not Illustrated)	1
	c 16485	O-Ring (Not Illustrated)	1
	1307734	Kit-Seal	1

FOOTNOTES:

a → 5/2000
b → S/N E008E01799
c 5/2000 →
d S/N E008E01800 →

©2011 HYSTER COMPANY

STEERING CONTROL VALVE (FIGURE 7-4)

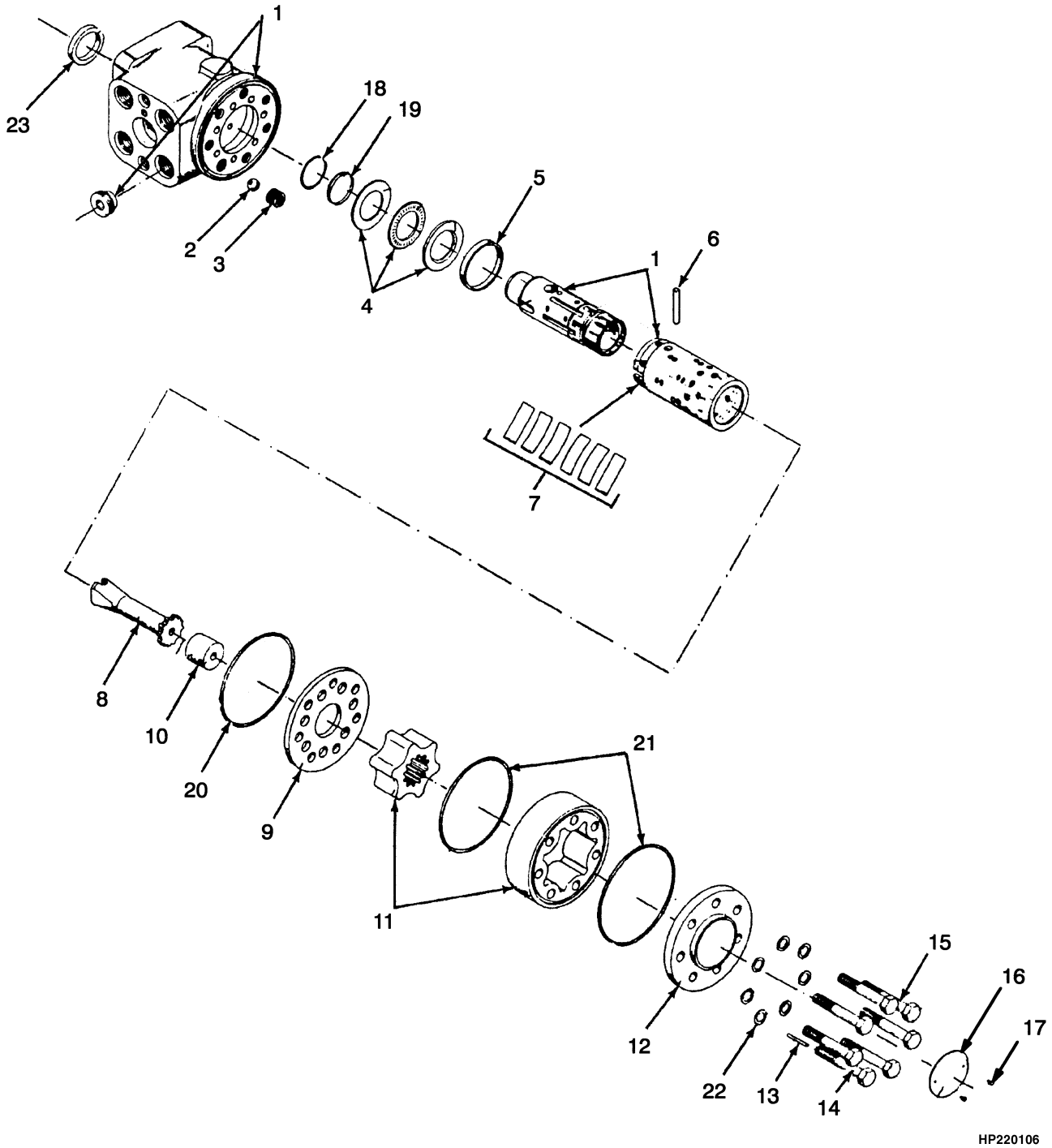

©2011 HYSTER COMPANY

STEERING CONTROL VALVE

ITEM	PART NO.	DESCRIPTION	QTY
	a 384428	Steering Valve	1
	c 1524213	Steering Valve	1
1	. . . . .	Sleeve	1
1	. . . . .	Housing	1
1	. . . . .	Spool	1
2	345408	Ball (8,50 mm)	1
3	345409	Bushing	1
4	345410	Bearing Set	1
5	345411	Ring	1
6	345412	Pin	1
7	**a** 345413	Spring	1
7	**b** 1303787	Spring	1
8	**a** 345414	Shaft	1
8	**c** 1355326	Shaft	1
9	**c** 1357026	Plate (Distributor)	1
9	**a** 345416	Plate (Distributor)	1
10	366067	Spacer	1
11	366068	Gear Set	1
12	345424	End Cover	1
13	345418	Pin	1
14	366069	Screw	1
15	371344	Capscrew	6
16	. . . . .	Nameplate	1
17	. . . . .	Screw	2
18	. . . . .	O-Ring	1
19	. . . . .	Ring	1
20	. . . . .	O-Ring	1
21	. . . . .	O-Ring	2
22	. . . . .	Washer	7
23	. . . . .	Seal Ring	1
	a 345421	Kit-Seal	1
	c 2032229	Kit-Seal	1

FOOTNOTES:

a → 8/2002
b 8/2002 ↔ PENDING PER ECN 105865
c 8/2002 →

©2011 HYSTER COMPANY

NOTES

©2011 HYSTER COMPANY

8 BRAKE SYSTEM

SECTION 8
BRAKE SYSTEM

DESCRIPTION	PAGE
BRAKE	
FOUR PISTON - H620F, H650F, H700F, H620FS, H700FS (S/N E008E01533 →)	8-6
H440FS, H550F, H550FS	8-2
SIX PISTON - H620F, H650F, H700F, H620FS, H700FS (→ S/N E008E01532)	8-4
BRAKE LINES	
S/N E008E01866 →	8-18
DECLUTCH AND SERVICE BRAKE (S/N E008E01866 →)	8-12
TREADLE VALVE AND PARK BRAKE VALVE (→ S/N E008E01865)	8-8
WET BRAKE (S/N E008E01985B ↔ S/N E008E02016B)	8-22
WET BRAKE (S/N E008E02017B ↔ S/N E008E02105D)	8-26
WET BRAKE (S/N E008E02106D →)	8-30
WITH SHUTTLE VALVE (S/N E008D01501 ↔ S/N E008D01526)	8-38
WITH SHUTTLE VALVE - H550F, H620F, H650F, H700F (S/N E008D01618 ↔ S/N E008D01865) (S/N E008E01666 ↔ S/N E008E01865)	8-42
WITHOUT SHUTTLE VALVE (S/N E008D01527 →) (S/N E008E01501 ↔ S/N E008E01514)	8-14
WITHOUT SHUTTLE VALVE - H440FS, H550FS, H620FS, H700FS (S/N E008D01618 ↔ S/N E008D01865) (S/N E008E01666 ↔ S/N E008E001865)	8-34
VALVE	
INCHING (→ S/N E008D01588) (→ S/N E008E01656)	8-56
INCHING (S/N E008D01589 ↔ S/N E008E001865) (S/N E008E01656 ↔ S/N E008E001865)	8-60
PARK BRAKE (→ S/N E008D01581)	8-50
RELAY	8-52
SHUTTLE	8-54
TREADLE (→ S/N E008E01984B)	8-46
TREADLE (S/N E008E01985B →)	8-48

©2011 HYSTER COMPANY

BRAKE (FIGURE 8-1)
H440FS, H550F, H550FS

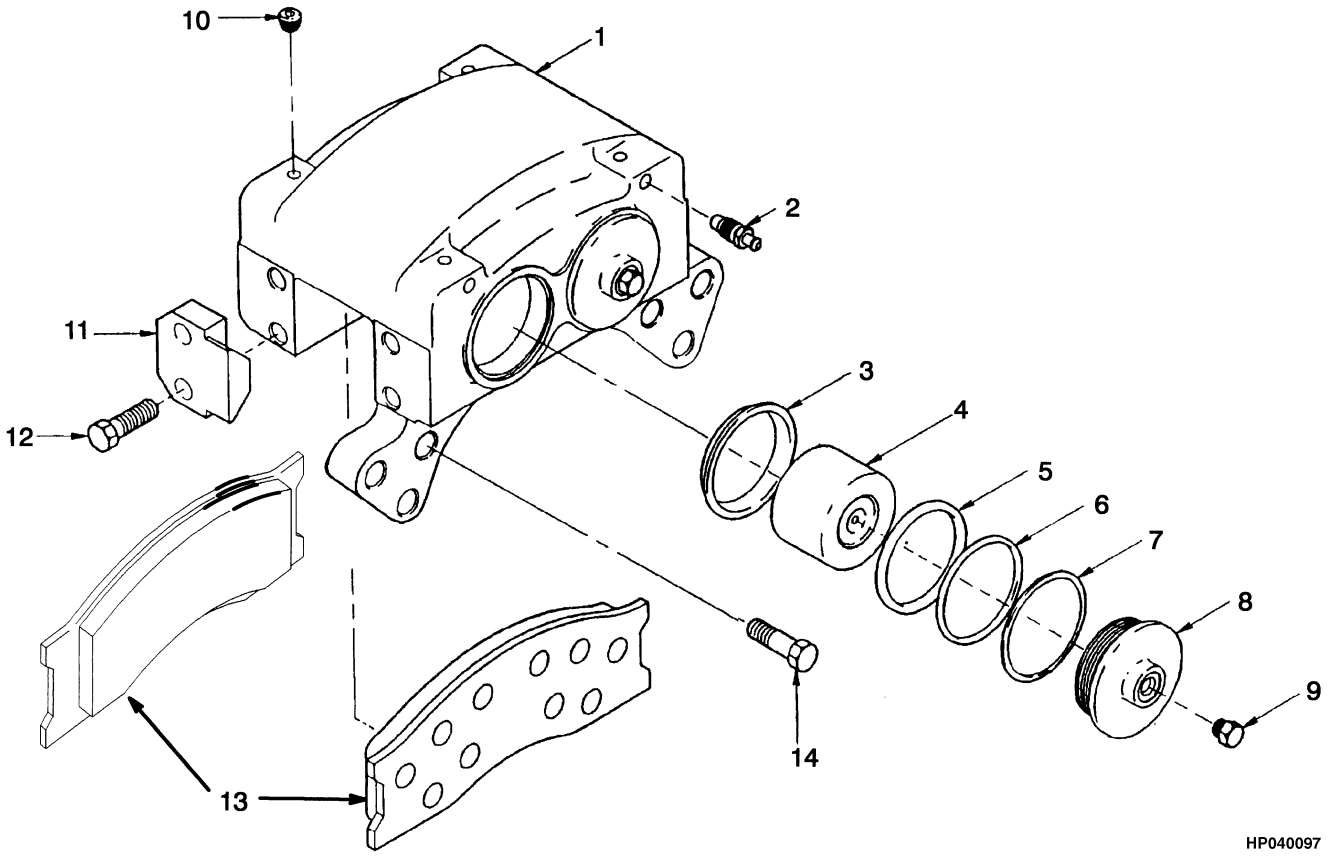

©2011 HYSTER COMPANY

BRAKE

H440FS, H550F, H550FS

ITEM	PART NO.	DESCRIPTION	QTY
	1354436	Brake Assembly	4
1	1347750	Housing	1
2	1309120	Screw	2
3	1337628	Dust Seal	4
4	1309115	Piston	4
5	1309122	Ring	4
6	1339124	O-Ring	4
7	1502137	O-Ring	2
8	1347753	Cap	2
9	1347751	Plug	4
10	1347752	Plug	1
11	1328656	Plate	4
12	1343151	Capscrew	8
13	. . . . .	Lining	2
	1347592	Kit-Seal	1
	1379729	Kit-Brake Lining	2
	1350662	Brake Shoe	2
	1502136	Kit-Seal	1
	1379728	Kit-Seal	1
14	1367748	Screw	24

©2011 HYSTER COMPANY

BRAKE (FIGURE 8-2)

SIX PISTON — H620F, H650F, H700F, H620FS, H700FS (→ S/N E008E01532)

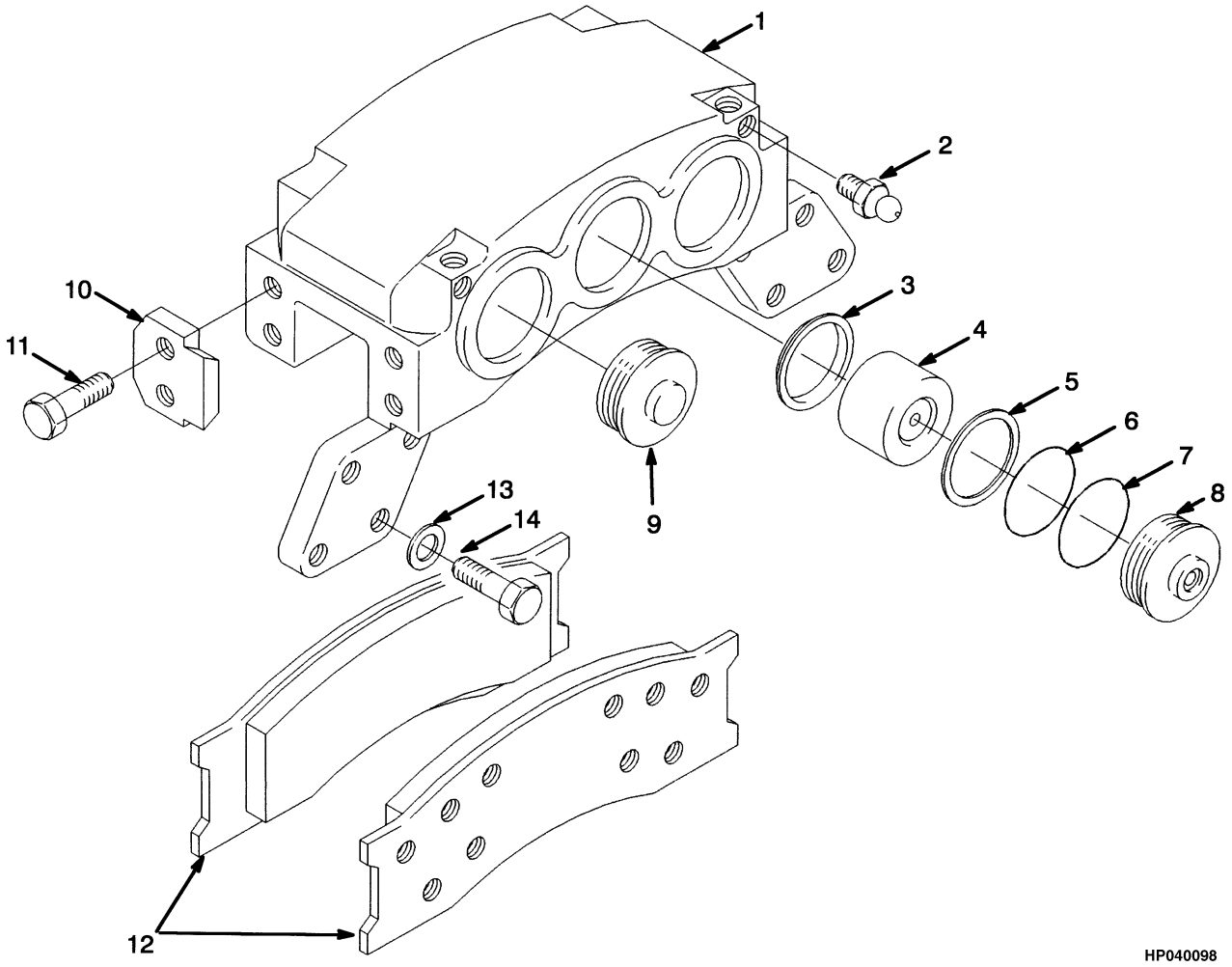

©2011 HYSTER COMPANY

BRAKE

SIX PISTON – H620F, H650F, H700F, H620FS, H700FS (→ S/N E008E01532)

ITEM	PART NO.	DESCRIPTION	QTY
	1350314	Brake Assembly	4
1	1312078	Housing	1
2	1309120	Screw	2
3	1337628	Dust Seal	6
4	1309115	Piston	6
5	1309122	Ring	6
6	1339124	O-Ring	6
7	1343150	O-Ring	3
8	1347753	Cap (Housing)	1
9	1309117	Cap (Housing)	2
10	1328656	Plate	4
11	1343151	Capscrew	8
12	1336275	Brake Lining	2
13	296431	Washer	32
14	1309851	Capscrew	32
	1343155	Kit-Seal (Hydraulic Oil)	1

©2011 HYSTER COMPANY

BRAKE (FIGURE 8-3)

FOUR PISTON — H620F, H650F, H700F, H620FS, H700FS (S/N E008E01533 →)

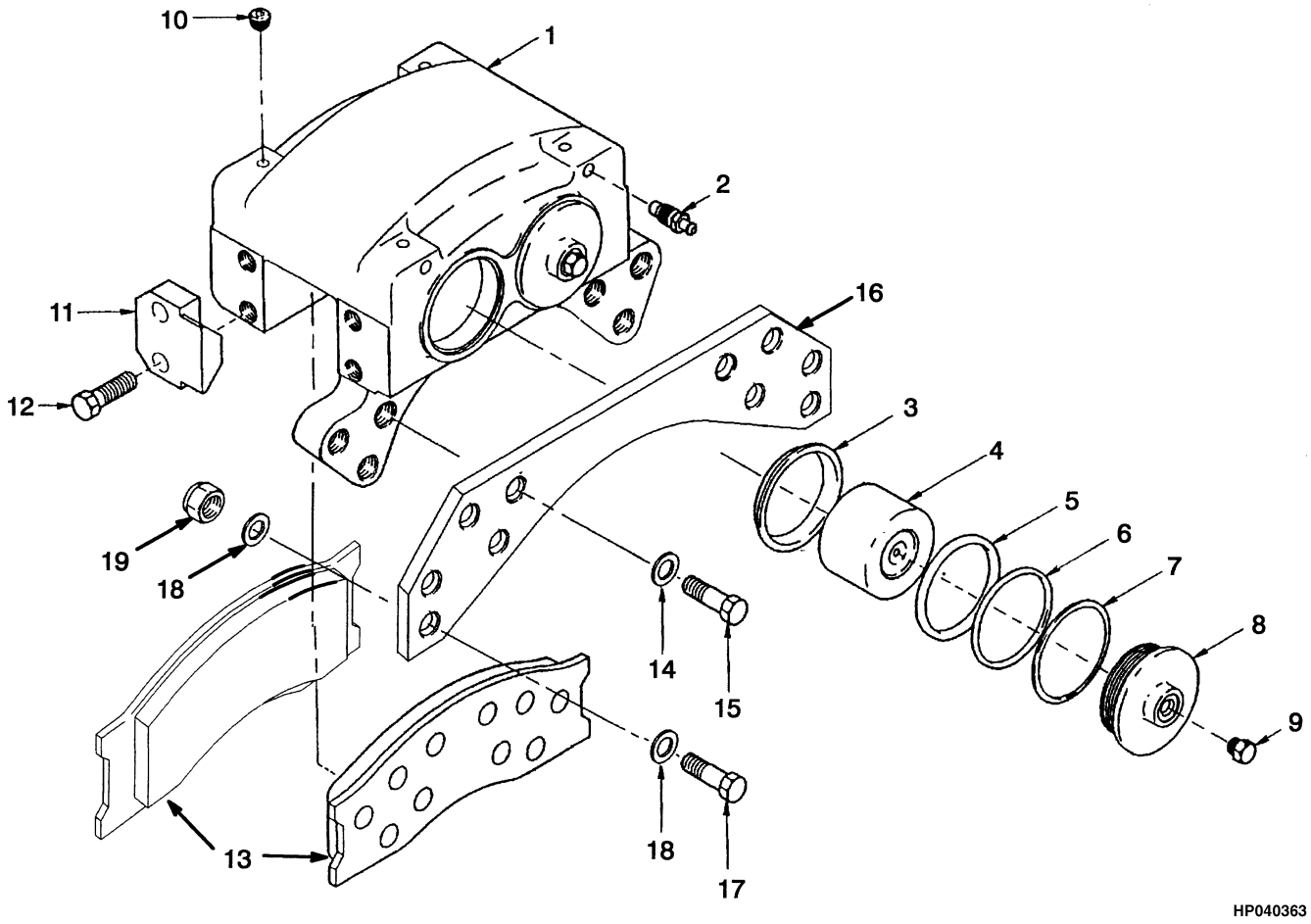

©2011 HYSTER COMPANY

BRAKE

FOUR PISTON – H620F, H650F, H700F, H620FS, H700FS (S/N E008E01533 →)

ITEM	PART NO.	DESCRIPTION	QTY
	1350653	Brake Assembly	4
1	1350663	Housing	1
2	1309120	Screw	2
3	1337628	Dust Seal	4
4	1309115	Piston	4
5	1309122	Ring	4
6	1339124	O-Ring	4
7	1339116	O-Ring	2
8	1347753	Cap	2
9	1347751	Plug	4
10	1347752	Plug	1
11	1347756	Plate	4
12	1343151	Capscrew	8
13	. . . . .	Lining	2
14	268980	Washer	24
15	142270	Capscrew	24
16	1350652	Adapter	4
17	1351959	Capscrew	16
18	132451	Washer	32
19	221359	Locknut	16
	1347592	Kit-Seal	1
	a 1351966	Kit-Brake Lining	1
	b 1379729	Kit-Brake Lining	1

FOOTNOTES:

a → S/N E008E01560

b S/N E008E01561 →

©2011 HYSTER COMPANY

BRAKE LINES (FIGURE 8-4)

TREADLE VALVE AND PARK BRAKE VALVE (→ S/N E008E01865)

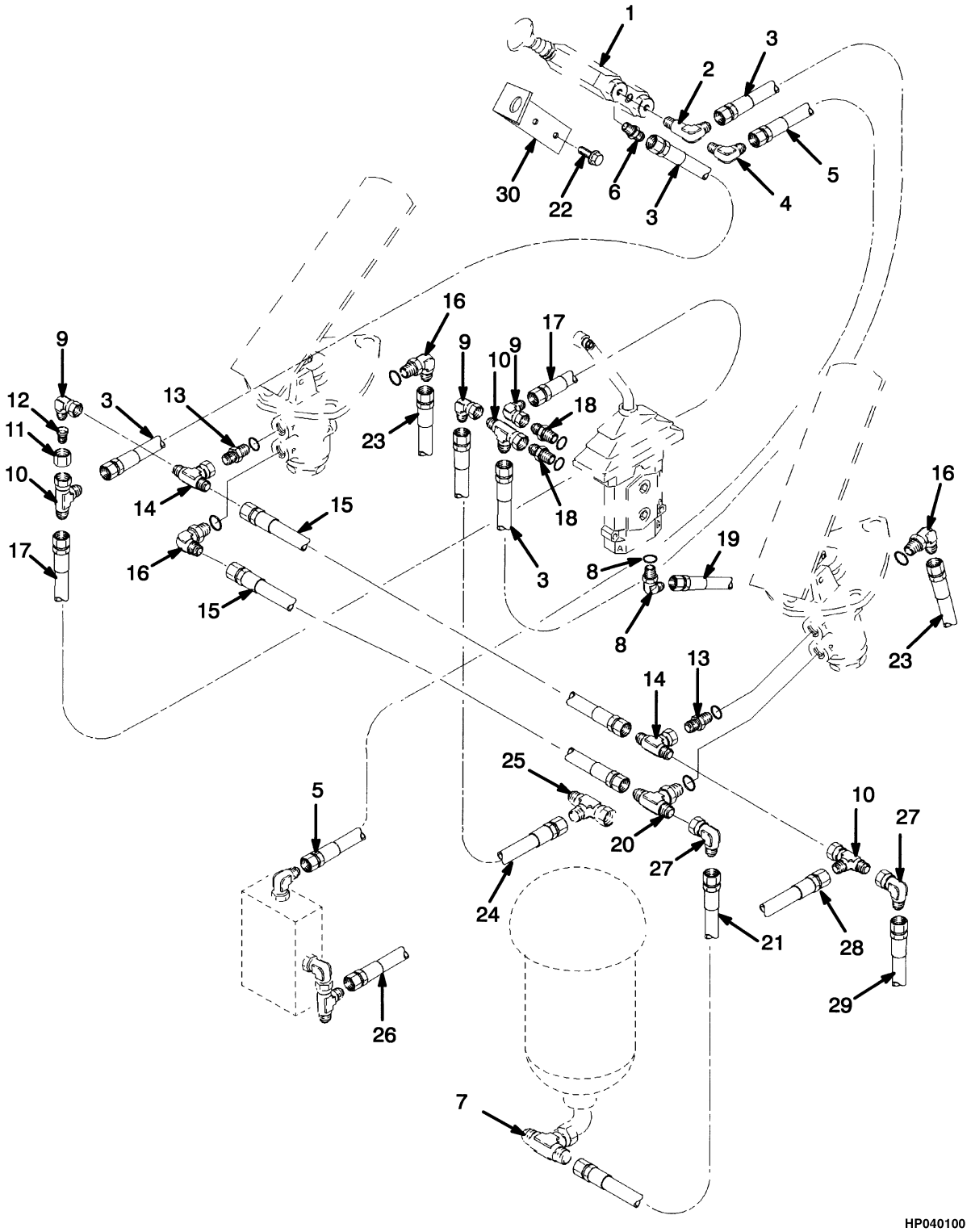

©2011 HYSTER COMPANY

BRAKE LINES

TREADLE VALVE AND PARK BRAKE VALVE (→ S/N E008E01865)

ITEM	PART NO.	DESCRIPTION	QTY
1	**df** 1332187	Parking Brake Valve (☞Figure 8-16)	1
2	**df** 17213	Fitting	1
3	**df** 309171	Hose Assy	2
4	**df** 14500	Fitting	1
5	**bdf** 1350892	Hose Assy	1
5	**adf** 815800	Hose Assy	1
6	**df** 14668	Fitting	1
7	17050	Fitting	1
8	16567	Fitting	1
8	16483	O-Ring	1
9	16987	Fitting	2
10	**df** 17059	Fitting	2
11	14489	Sleeve	1
12	17776	Fitting	1
13	16540	Connector	2
13	16483	O-Ring	1
14	17049	Fitting	2
15	1367252	Hose Assy	2
16	16558	Fitting	3
16	16483	O-Ring	1
17	157156	Hose Assy	1
18	17753	Adapter	2
18	16483	O-Ring	1
19	**a** 370921	Hose Assy	1
19	**b** 815798	Hose Assy	1
20	16576	Fitting	1
20	16483	O-Ring	1
21	**bgh** 1367250	Hose Assy	1
21	**ace** 1367251	Hose Assy	1
21	**agh** 1371388	Hose Assy	1
21	**bce** 389926	Hose Assy	1
22	**df** 1301177	Screw	2
23	**b** 1336947	Hose Assy	2
23	**a** 815799	Hose Assy	2
24	**b** 1332204	Hose Assy	1
24	**a** 1336943	Hose Assy	1
25	17061	Fitting	1
26	1337327	Hose Assy	1
27	16883	Fitting	3
28	**b** 188701	Hose Assy	1
28	**a** 73462	Hose Assy	1
29	**a** 188701	Hose Assy	1
29	**b** 73462	Hose Assy	1
30	**df** 815877	Bracket	1

©2011 HYSTER COMPANY

FOOTNOTES:

a Center Compartment
b Left Compartment
c → S/N E008D01535
d → S/N E008D01581
e → S/N E008E01564
f → S/N E008E01655
g S/N E008D01536 →
h S/N E008E01565 →

©2011 HYSTER COMPANY

NOTES

©2011 HYSTER COMPANY

BRAKE LINES (FIGURE 8-5)
DECLUTCH AND SERVICE BRAKE (S/N E008E01866 →)

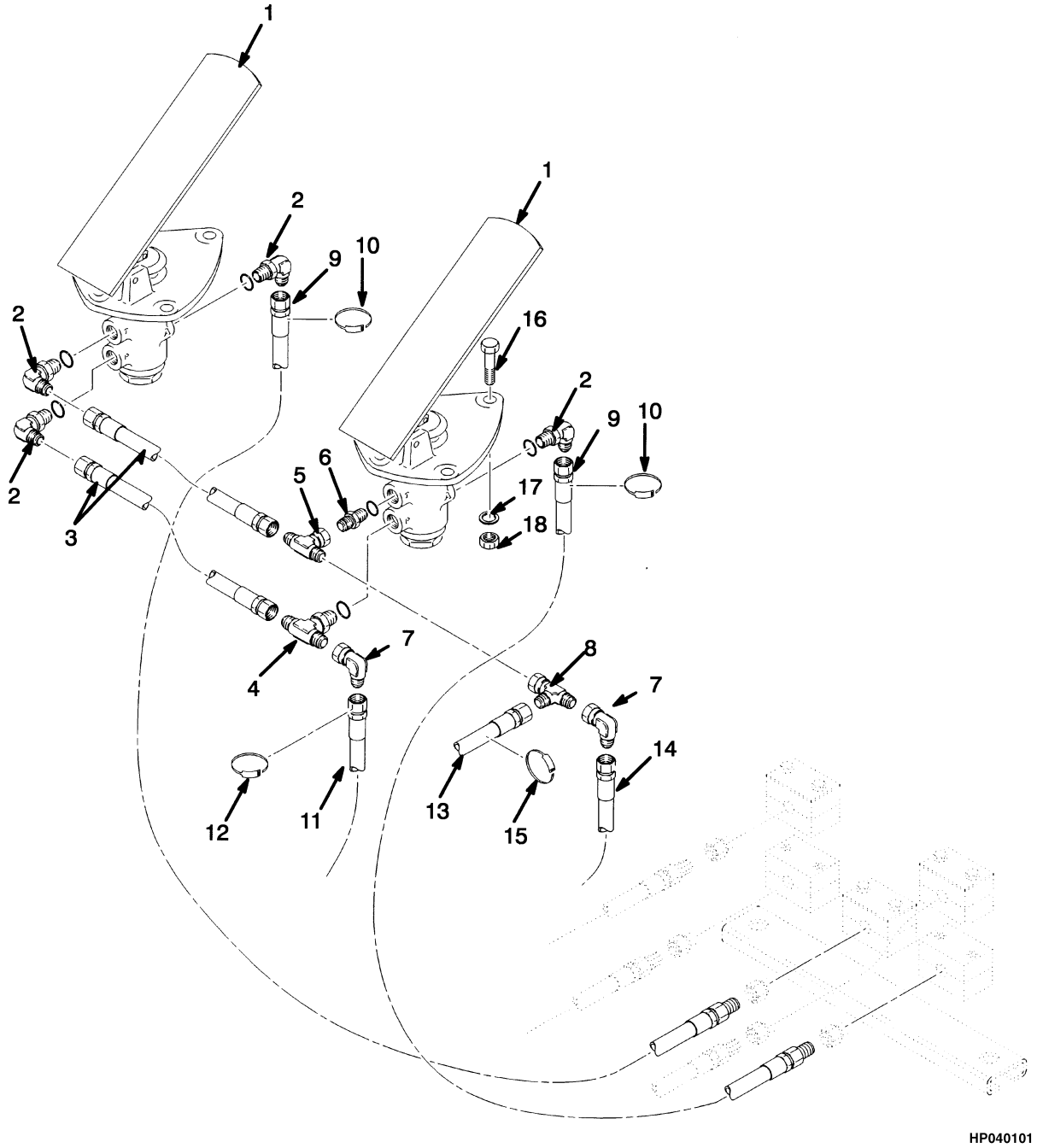

©2011 HYSTER COMPANY

BRAKE LINES

DECLUTCH AND SERVICE BRAKE (S/N E008E01866 →)

ITEM	PART NO.	DESCRIPTION	QTY
1	1330167	Valve	2
2	16558	Fitting	4
2	16483	O-Ring	1
3	1367251	Hose Assy	2
4	16576	Fitting	1
4	16482	O-Ring	1
5	17049	Fitting	1
6	16540	Connector	2
6	16483	O-Ring	1
7	16883	Fitting	2
8	17059	Fitting	1
9	**b** 1336947	Hose Assy	2
9	**a** 815798	Hose Assy	2
10	1464622	Identification Band	2
11	**b** 1367250	Hose Assy	1
11	**a** 1371388	Hose Assy	1
12	342677	Identification Band	1
13	**b** 188701	Hose Assy	1
13	**a** 73462	Hose Assy	1
14	**a** 188701	Hose Assy	1
14	**b** 73462	Hose Assy	1
15	1344294	Identification Band	1
16	18499	Capscrew	6
17	15155	Lockwasher	6
18	15005	Nut	6

FOOTNOTES:

a Center Compartment

b Left Compartment

©2011 HYSTER COMPANY

BRAKE LINES (FIGURE 8-6)

WITHOUT SHUTTLE VALVE (S/N E008D01527 →) (S/N E008E01501 ↔ S/N E008E01514)

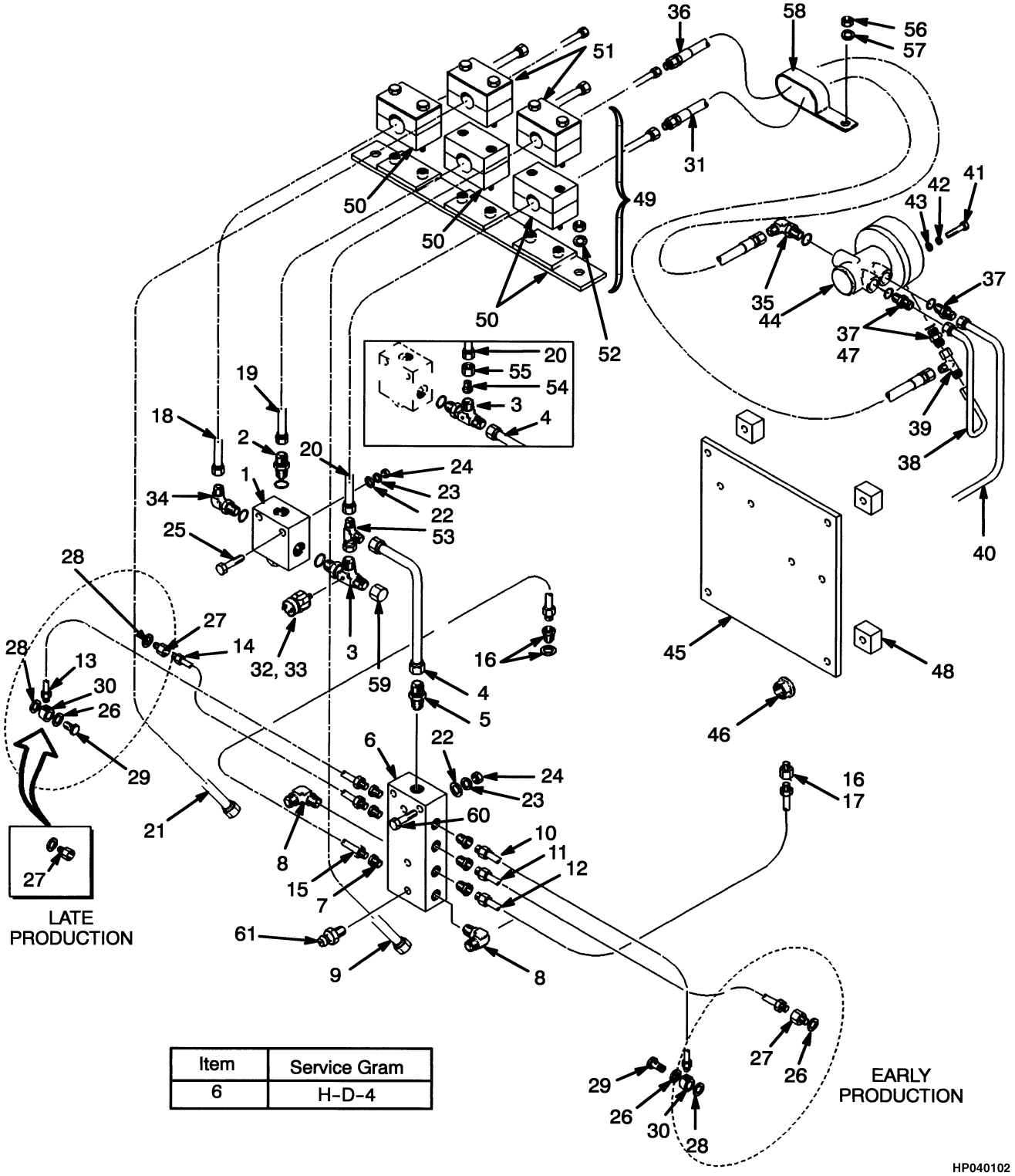

Item	Service Gram
6	H-D-4

©2011 HYSTER COMPANY

BRAKE LINES

WITHOUT SHUTTLE VALVE (S/N E008D01527 →) (S/N E008E01501 ↔ S/N E008E01514)

KEY:
A: H550F, H550FS
B: H620F, H650F, H700F, H620FS, H700FS

ITEM	PART NO.	DESCRIPTION	QTY A	QTY B
1	1330171	Shuttle Valve (☞Figure 8-18)	1	1
2	16540	Connector	1	1
2	16483	O-Ring	1	1
3	1332207	Fitting	1	1
3	16483	O-Ring	1	1
4	**a** 1336445	Tube Assy	1	1
4	**b** 1360674	Tube Assy	1	1
5	14675	Fitting	1	1
6	1391558	Manifold	1	1
7	16142	Fitting	6	6
8	14501	Fitting	2	2
9	1337303	Tube Assy	1	1
10	**a** 1339540	Tube Assy	1	..
10	**b** 1350882	Tube Assy	1	..
10	**a** 1336443	Tube Assy	..	1
10	**b** 1367317	Tube Assy	..	1
11	**a** 1339541	Tube Assy	1	..
11	**b** 1350884	Tube Assy	1	..
11	**a** 1336441	Tube Assy	..	1
11	**b** 1367320	Tube Assy	..	1
12	**a** 1337335	Tube Assy	1	1
12	**b** 1350891	Tube Assy	1	..
12	**b** 1337335	Tube Assy	..	1
13	**a** 1339539	Tube Assy	1	..
13	**b** 1350880	Tube Assy	1	..
13	**a** 1336444	Tube Assy	..	1
13	**b** 1367318	Tube Assy	..	1
14	**a** 1339538	Tube Assy	1	..
14	**b** 1350878	Tube Assy	1	..
14	**a** 1336442	Tube Assy	..	1
14	**b** 1367319	Tube Assy	..	1
15	**a** 1337334	Tube Assy	1	1
15	**b** 1350890	Tube Assy	1	..
15	**b** 1354463	Tube Assy	..	1
16	**f** 26801	Fitting	1	1
16	26801	Fitting	2	2
16	**f** 29344	Gasket (Copper)	1	1
16	29344	Gasket (Copper)	2	2
17	**f** 16115	Fitting	1	1
18	1336915	Tube Assy	1	1
19	1336916	Tube Assy	1	1
20	**a** 1336917	Tube Assy	1	1
20	**b** 1365109	Tube Assy	1	1
21	1337302	Tube Assy	1	1
22	15127	Washer	6	6

©2011 HYSTER COMPANY

BRAKE LINES

WITHOUT SHUTTLE VALVE (S/N E008D01527 →) (S/N E008E01501 ↔ S/N E008E01514)

KEY:
A: H550F, H550FS
B: H620F, H650F, H700F, H620FS, H700FS

ITEM	PART NO.	DESCRIPTION	QTY A	QTY B
23	15154	Lockwasher	5	5
24	15054	Nut	4	4
25	18471	Capscrew	2	2
26	**d** 29582	Gasket (Copper)	2	..
26	**e** 29582	Gasket (Copper)	4	4
27	**e** 390063	Adapter	2	2
27	**d** 390063	Adapter	2	2
28	**e** 24092	Gasket	2	2
28	**d** 24092	Gasket	4	4
29	**d** 29583	Bolt	2	..
29	**e** 29583	Bolt	2	2
30	**d** 54624	Fitting	2	..
30	**e** 54624	Fitting	2	2
31	**a** 1337327	Hose Assy	1	1
31	**b** 815867	Hose Assy	1	1
32	1336959	Pressure Switch (With Lights)	1	1
32	1376839	Switch (With Lights)	1	1
33	14349	Fitting (Pipe Plug)	1	1
34	16558	Fitting	4	4
34	16483	O-Ring	1	1
35	201766	Fitting	1	1
35	16483	O-Ring	1	1
36	1337327	Hose Assy	1	1
37	**a** 17753	Adapter	3	3
37	16483	O-Ring	1	1
37	**b** 17753	Adapter	1	1
37	16483	O-Ring	1	1
38	**a** 1332177	Tube Assy	1	1
39	**b** 16883	Fitting	1	1
39	**a** 17059	Fitting	1	1
40	815770	Tube Assy	1	1
41	18496	Capscrew	2	2
42	15155	Lockwasher	2	2
43	18515	Washer	2	2
44	1330169	Valve (Relay) (☞Figure 8-17)	1	1
45	1336908	Plate	1	1
46	156133	Nut	4	4
47	**b** 16540	Connector	2	2
47	16483	O-Ring	1	1
48	330435	Spacer	4	4
49	. . . . .	Clamp Assembly	1	1
50	1337295	Clamp	1	1
51	1337323	Clamp	2	2
52	**c** 15127	Washer	1	1
52	264150	Nut	2	2

©2011 HYSTER COMPANY

BRAKE LINES

WITHOUT SHUTTLE VALVE (S/N E008D01527 →) (S/N E008E01501 ↔ S/N E008E01514)

KEY:
A: H550F, H550FS
B: H620F, H650F, H700F, H620FS, H700FS

ITEM	PART NO.	DESCRIPTION	QTY A	QTY B
53	**b** 17061	Fitting	1	1
54	**a** 17776	Fitting	1	1
55	**a** 14489	Sleeve	1	1
56	**b** 15056	Nut	1	1
57	**b** 15156	Lockwasher	1	1
58	**b** 176455	Clamp	1	1
59	**b** 16693	Nut	1	1
60	18477	Capscrew	2	2
61	267262	Plug	3	3

FOOTNOTES:

a H550F, H620F, H650F, H700F
b H550FS, H620FS, H700FS
c → S/N E008E01531
d → S/N E008E01560 (H28.00-32.00F)
e S/N E008E01532 →
f S/N E008E01561 → (H28.00-32.00F)

©2011 HYSTER COMPANY

BRAKE LINES (FIGURE 8-7)

(S/N E008E01866 →)

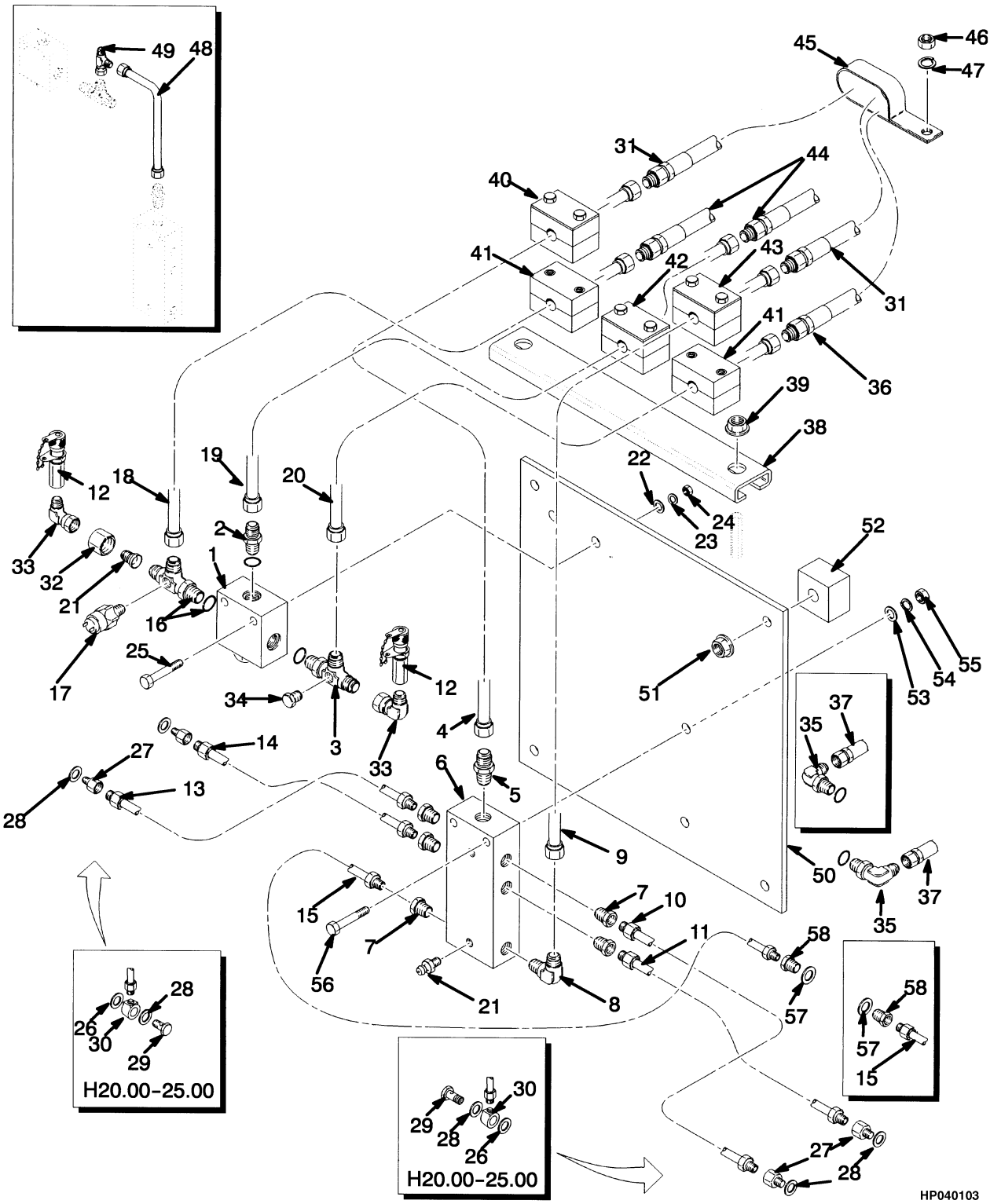

©2011 HYSTER COMPANY

BRAKE LINES
(S/N E008E01866 →)

KEY:
A: H550FS, H550F
B: H620F, H620FS, H650F, H700F, H700FS

ITEM	PART NO.	DESCRIPTION	QTY A	QTY B
1	1330171	Shuttle Valve (☞Figure 8-18)	1	1
2	16540	Connector	2	2
2	16483	O-Ring	1	1
4	815872	Tube Assy	1	1
5	14675	Fitting	1	1
6	1393118	Manifold	1	1
7	16142	Fitting	5	5
8	14501	Fitting	1	1
9	1337303	Tube Assy	1	1
10	1350882	Tube Assy	1	1
10	1367317	Tube Assy	..	1
11	1350884	Tube Assy	1	..
11	1367320	Tube Assy	..	1
12	816117	Quick Disconnect Fitting	2	..
13	1350880	Tube Assy	1	..
13	1367318	Tube Assy	..	1
14	1350878	Tube Assy	1	..
14	1367319	Tube Assy	..	1
15	1350890	Tube Assy	1	..
15	1354463	Tube Assy	..	1
16	1465846	Fitting	1	1
17	1350955	Pressure Switch	1	1
18	1336915	Tube Assy	1	1
19	1336916	Tube Assy	1	1
20	815869	Tube Assy	1	1
21	17778	Fitting	1	1
22	15127	Washer	6	6
23	15154	Lockwasher	6	6
24	15054	Nut	4	4
25	18471	Capscrew	2	2
26	29582	Gasket (Copper)	2	..
27	390063	Adapter	2	4
28	24092	Gasket	4	4
29	29583	Bolt	2	..
30	54624	Fitting	2	..
31	1337327	Hose Assy	2	2
32	14489	Sleeve	1	1
33	16883	Fitting	2	2
34	14349	Fitting (Pipe Plug)	1	1
35	16556	Fitting	2	2
35	16481	O-Ring	1	1
36	815867	Hose Assy	1	2
37	265325	Hose Assy	2	1
38	816323	Channel	1	1
39	264150	Nut	1	1

©2011 HYSTER COMPANY

BRAKE LINES

(S/N E008E01866 →)

KEY:
A: H550FS, H550F
B: H620F, H620FS, H650F, H700F, H700FS

ITEM	PART NO.	DESCRIPTION	QTY A	QTY B
40	1350862	Clamp	1	1
41	1373510	Clamp	2	2
42	816290	Clamp	1	1
43	1337323	Clamp	1	1
44	1336947	Hose Assy (Left Compartment)	2	2
44	815799	Hose Assy (Center Compartment)	2	2
45	176455	Clamp	1	1
46	15056	Nut	1	1
47	15156	Lockwasher	1	1
48	1360674	Tube Assy (H440FS-H700FS)	1	1
49	17061	Fitting (H440FS-H700FS)	1	1
50	1336908	Plate	1	1
51	156133	Nut	4	4
52	330435	Spacer	4	4
53	15127	Washer	4	4
54	15154	Lockwasher	4	4
55	15054	Nut	4	4
56	18477	Capscrew	2	2
57	29344	Gasket (Copper)	1	1
58	26801	Fitting	1	1

©2011 HYSTER COMPANY

NOTES

©2011 HYSTER COMPANY

BRAKE LINES (FIGURE 8-8)

WET BRAKE (S/N E008E01985B ↔ S/N E008E02016B)

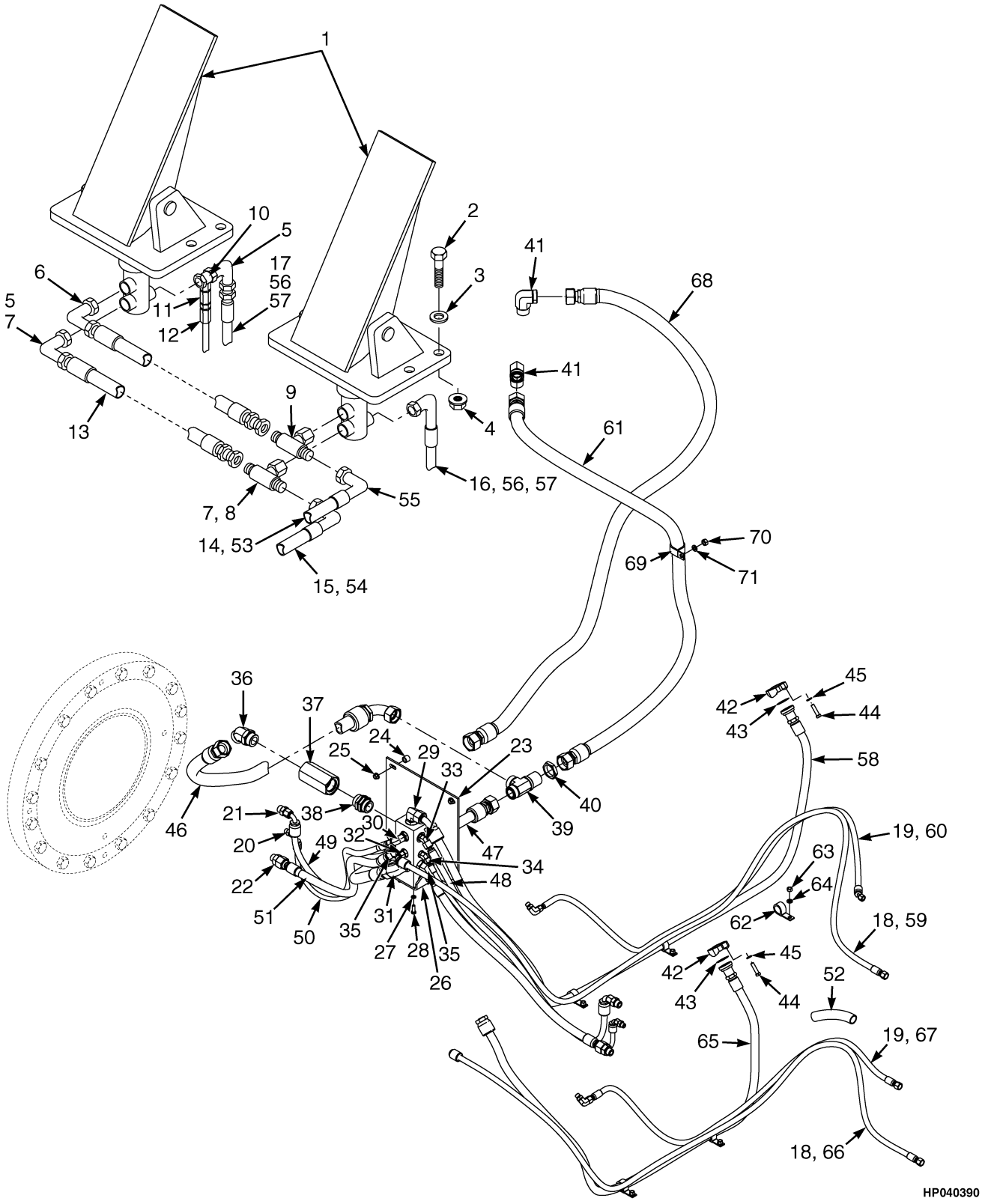

©2011 HYSTER COMPANY

BRAKE LINES

WET BRAKE (S/N E008E01985B ↔ S/N E008E02016B)

KEY:
A: Center Mount
B: LH Mount

ITEM	PART NO.	DESCRIPTION	QTY A	QTY B
1	1373604	Brake Valve (☞Figure 8-15)	2	2
2	176640	Bolt	6	6
3	320158	Washer	6	6
4	302400	Nut	6	6
5	16883	Fitting	2	2
6	16558	Fitting	2	2
7	16540	Connector	2	2
8	17049	Fitting	1	1
9	16576	Fitting	1	1
10	16969	T-Fitting	1	1
11	1385632	Fitting	1	1
12	12843	Fitting	1	1
13	1367252	Hose Assy	2	2
14	1344294	Identification Band	2	2
15	342677	Identification Band	2	2
16	1357170	Identification Band	2	2
17	1332235	Identification Band	2	2
18	1388294	Identification Band	2	2
19	1332237	Identification Band	2	2
20	1486739	Fitting	2	2
21	1486746	Fitting	2	2
22	1486754	Fitting	2	2
23	1541978	Plate	1	1
24	330435	Spacer	4	4
25	156133	Nut	4	4
26	1543566	Manifold	1	1
27	292681	Lockwasher	4	4
28	136749	Screw	4	4
29	1473898	Fitting	1	1
30	1487065	Fitting	1	1
31	1487075	Fitting	1	1
32	1486742	Fitting	1	1
33	1516204	Fitting	1	1
34	1516198	Fitting	2	2
35	1516208	Fitting	2	2
36	1516214	Fitting	1	1
37	1459254	Fitting	1	1
38	816232	Check Valve	1	1
39	1544685	Fitting	1	1
40	1528606	Locknut	1	1
41	1543375	Adapter	1	1
42	190757	Clamp (Split Half)	2	2
43	199085	O-Ring	1	1
44	16815	Capscrew	4	4
45	15156	Lockwasher	4	4

©2011 HYSTER COMPANY

BRAKE LINES

WET BRAKE (S/N E008E01985B ↔ S/N E008E02016B)

KEY:
A: Center Mount
B: LH Mount

ITEM	PART NO.	DESCRIPTION	QTY A	QTY B
46	1543557	Hose Assy	1	1
47	1543556	Hose Assy	1	1
48	1541964	Hose Assy	1	1
49	1545019	Hose Assy	1	1
50	1542849	Hose Assy	2	2
51	1541965	Hose Assy	2	2
52	239308	Sleeve	2	2
53	1545082	Hose Assy	1	..
53	1545085	Hose Assy	..	1
54	**a** 1545081	Hose Assy	1	..
54	**a** 1545084	Hose Assy	..	1
54	**b** 1545088	Hose Assy	1	..
54	**b** 1545090	Hose Assy	..	1
55	**a** 1545082	Hose Assy	1	..
55	**a** 1545085	Hose Assy	..	1
56	**a** 1545080	Hose Assy	2	1
56	**b** 1545086	Hose Assy	1	1
57	**a** 1545083	Hose Assy	..	1
57	**b** 1545087	Hose Assy	1	..
57	**b** 1545089	Hose Assy	..	1
58	**a** 1541960	Hose Assy	1	1
59	**a** 1542184	Hose Assy	1	1
60	**a** 1542186	Hose Assy	1	1
61	**a** 1541969	Hose Assy	1	1
62	1310611	Clamp	3	3
63	15056	Nut	3	3
64	15156	Lockwasher	3	3
65	**b** 1543570	Hose Assy	1	1
66	**b** 1544220	Hose Assy	1	1
67	**b** 1544221	Hose Assy	1	1
68	**b** 1543558	Hose Assy	1	1
69	**a** 258590	Clamp	1	1
70	**a** 15057	Nut	1	1
71	**a** 15157	Lockwasher	1	1

FOOTNOTES:

a H550F, H620F, H650F, H700F

b H550FS, H620FS, H700FS

©2011 HYSTER COMPANY

NOTES

©2011 HYSTER COMPANY

BRAKE LINES (FIGURE 8-9)

WET BRAKE (S/N E008E02017B ↔ S/N E008E02105D)

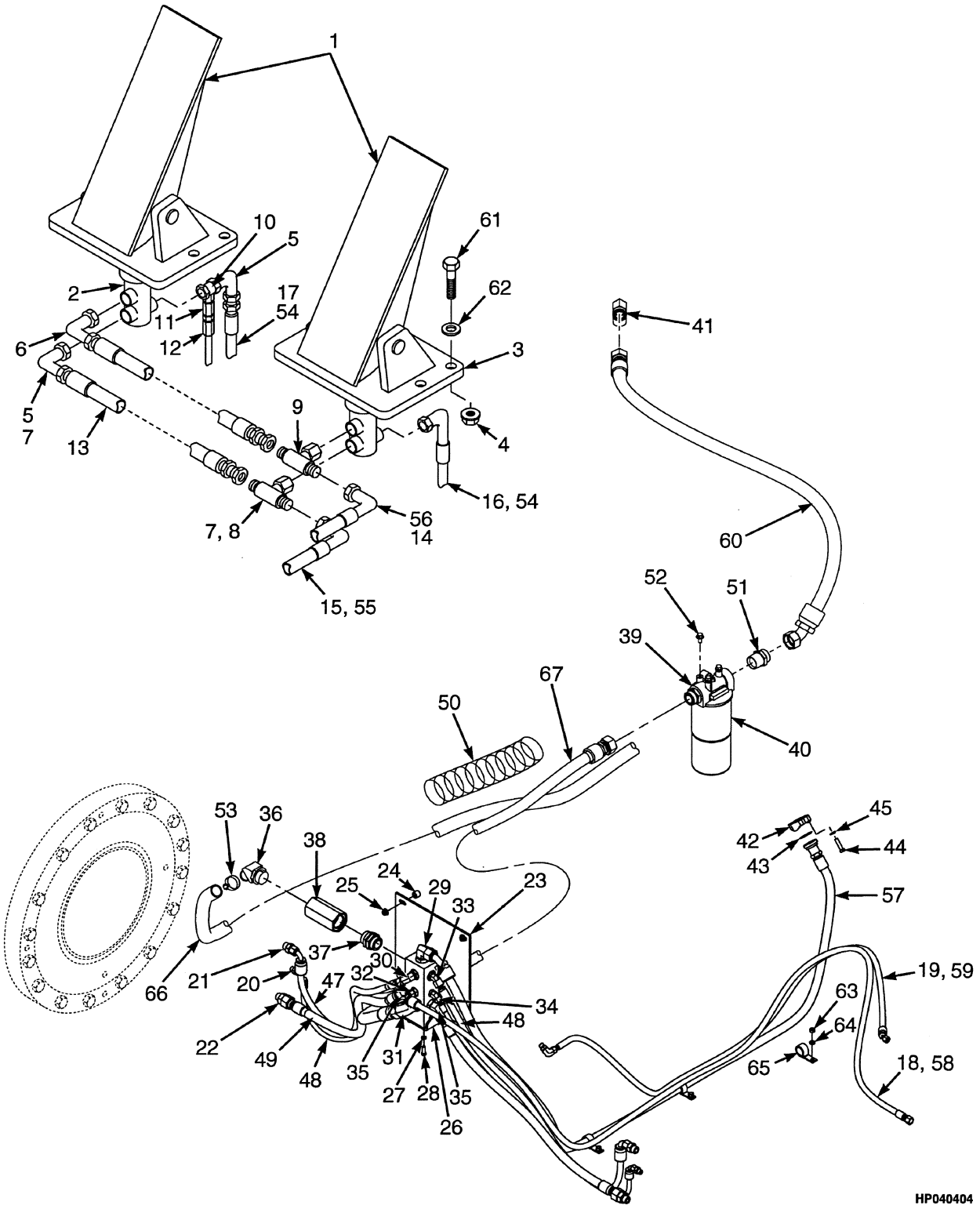

©2011 HYSTER COMPANY

BRAKE LINES

WET BRAKE (S/N E008E02017B ↔ S/N E008E02105D)

KEY:
A: Center Mount
B: LH Mount

ITEM	PART NO.	DESCRIPTION	QTY A	QTY B
1	1579407	Brake Valve	2	2
1	1450390	Kit-Shim	1	1
1	1391745	Kit-Hardware	1	1
1	1391729	Pedal Assy	1	1
2	1493237	Hydraulic Control Valve	1	1
2	1391744	Kit-Seal	1	1
3	1391741	Base	1	1
4	302400	Nut	6	6
5	16883	Fitting	2	2
6	16558	Fitting	2	2
7	16540	Connector	2	2
8	17049	Fitting	1	1
9	16576	Fitting	1	1
10	16969	T-Fitting	1	1
11	1385632	Fitting	1	1
12	12843	Fitting	1	1
13	1367252	Hose Assy	2	2
14	1344294	Identification Band	2	2
15	342677	Identification Band	2	2
16	1357170	Identification Band	2	2
17	1332235	Identification Band	2	2
18	1388294	Identification Band	2	2
19	1332237	Identification Band	2	2
20	1486739	Fitting	2	2
21	1486746	Fitting	2	2
22	1486754	Fitting	2	2
23	1541978	Plate	1	1
24	330435	Spacer	4	4
25	156133	Nut	4	4
26	1543566	Manifold	1	1
27	292681	Lockwasher	4	4
28	136749	Screw	4	4
29	1473898	Fitting	1	1
30	1487065	Fitting	1	1
31	1487075	Fitting	1	1
32	1486742	Fitting	1	1
33	1516204	Fitting	1	1
34	1516198	Fitting	2	2
35	1516208	Fitting	2	2
36	1516214	Fitting	1	1
37	1459254	Fitting	1	1
38	816232	Check Valve	1	1
39	1390701	Filter Head	1	1
40	1390702	Hydraulic Filter	1	1
41	1543375	Adapter	1	1

©2011 HYSTER COMPANY

BRAKE LINES

WET BRAKE (S/N E008E02017B ↔ S/N E008E02105D)

KEY:
A: Center Mount
B: LH Mount

ITEM	PART NO.	DESCRIPTION	QTY A	QTY B
42	190757	Clamp (Split Half)	2	2
43	199085	O-Ring	1	1
44	16815	Capscrew	4	4
45	15156	Lockwasher	4	4
46	1541964	Hose Assy	1	1
47	1545019	Hose Assy	1	1
48	1542849	Hose Assy	2	2
49	1541965	Hose Assy	2	2
50	239308	Sleeve	2	2
51	1488421	Fitting	2	2
52	134803	Screw	3	3
53	369804	Clamp	3	3
54	1545080	Hose Assy	2	1
54	1545083	Hose Assy	..	1
55	1545081	Hose Assy	1	..
55	1545084	Hose Assy	..	1
56	1545082	Hose Assy	1	..
56	1545085	Hose Assy	..	1
57	1541960	Hose Assy	1	1
58	1542184	Hose Assy	1	1
59	1542186	Hose Assy	1	1
60	1568217	Hose Assy	1	1
61	176640	Bolt	6	6
62	320158	Washer	6	6
63	15056	Nut	3	3
64	15156	Lockwasher	3	3
65	1310611	Clamp	3	3
66	1568218	Hose Assy	1	1
67	1568238	Hose Assy	1	1

©2011 HYSTER COMPANY

NOTES

©2011 HYSTER COMPANY

BRAKE LINES (FIGURE 8-10)

WET BRAKE (S/N E008E02106D →)

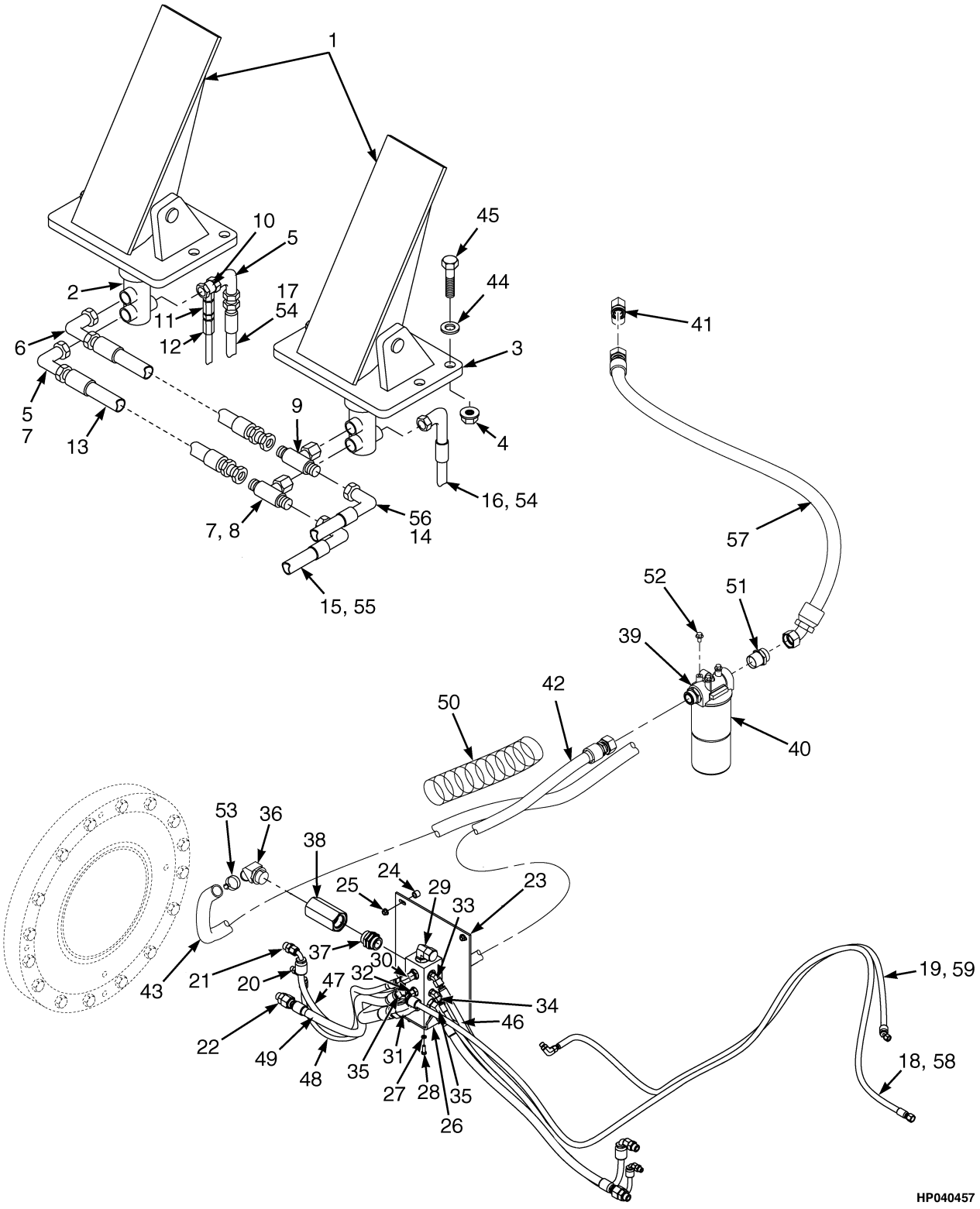

©2011 HYSTER COMPANY

BRAKE LINES

WET BRAKE (S/N E008E02106D →)

KEY:
A: Center Mount
B: LH Mount

ITEM	PART NO.	DESCRIPTION	QTY A	QTY B
1	1579407	Brake Valve	2	2
1	1450390	Kit-Shim	1	1
1	1391745	Kit-Hardware	1	1
1	1391729	Pedal Assy	1	1
2	1493237	Hydraulic Control Valve	1	1
2	1391744	Kit-Seal	1	1
3	1391741	Base	1	1
4	302400	Nut	6	6
5	16883	Fitting	2	2
6	16558	Fitting	2	2
7	16540	Connector	2	2
8	17049	Fitting	1	1
9	16576	Fitting	1	1
10	16969	T-Fitting	1	1
11	1385632	Fitting	1	1
12	12843	Fitting	1	1
13	1367252	Hose Assy	2	2
14	1344294	Identification Band	2	2
15	342677	Identification Band	2	2
16	1357170	Identification Band	2	2
17	1332235	Identification Band	2	2
18	1388294	Identification Band	2	2
19	1332237	Identification Band	2	2
20	1486739	Fitting	2	2
21	1486746	Fitting	2	2
22	1486754	Fitting	2	2
23	1541978	Plate	1	1
24	330435	Spacer	4	4
25	156133	Nut	4	4
26	1543566	Manifold	1	1
27	292681	Lockwasher	4	4
28	136749	Screw	4	4
29	1473898	Fitting	1	1
30	1487065	Fitting	1	1
31	1487075	Fitting	1	1
32	1486742	Fitting	1	1
33	1516204	Fitting	1	1
34	1516198	Fitting	2	2
35	1516208	Fitting	2	2
36	1516214	Fitting	1	1
37	1459254	Fitting	1	1
38	816232	Check Valve	1	1
39	1390701	Filter Head	1	1
40	1390702	Hydraulic Filter	1	1
41	1543375	Adapter	1	1

©2011 HYSTER COMPANY

BRAKE LINES

WET BRAKE (S/N E008E02106D →)

KEY:
A: Center Mount
B: LH Mount

ITEM	PART NO.	DESCRIPTION	QTY A	QTY B
42	1568238	Hose Assy	1	1
43	1568218	Hose Assy	1	1
44	320158	Washer	6	6
45	176640	Bolt	6	6
46	1541964	Hose Assy	1	1
47	1545019	Hose Assy	1	1
48	1542849	Hose Assy	2	2
49	1541965	Hose Assy	2	2
50	239308	Sleeve	2	2
51	1488421	Fitting	2	2
52	134803	Screw	3	3
53	369804	Clamp	3	3
54	1545080	Hose Assy	2	1
54	1545083	Hose Assy	..	1
55	1545081	Hose Assy	1	..
55	1545084	Hose Assy	..	1
56	1545082	Hose Assy	1	..
56	1545085	Hose Assy	..	1
57	1568217	Hose Assy	1	1
58	1542184	Hose Assy	1	1
59	1542186	Hose Assy	1	1

©2011 HYSTER COMPANY

NOTES

©2011 HYSTER COMPANY

BRAKE LINES (FIGURE 8-11)

WITHOUT SHUTTLE VALVE — H440FS, H550FS, H620FS, H700FS (S/N E008D01618 ↔ S/N E008D01865) (S/N E008E01666 ↔ S/N E008E001865)

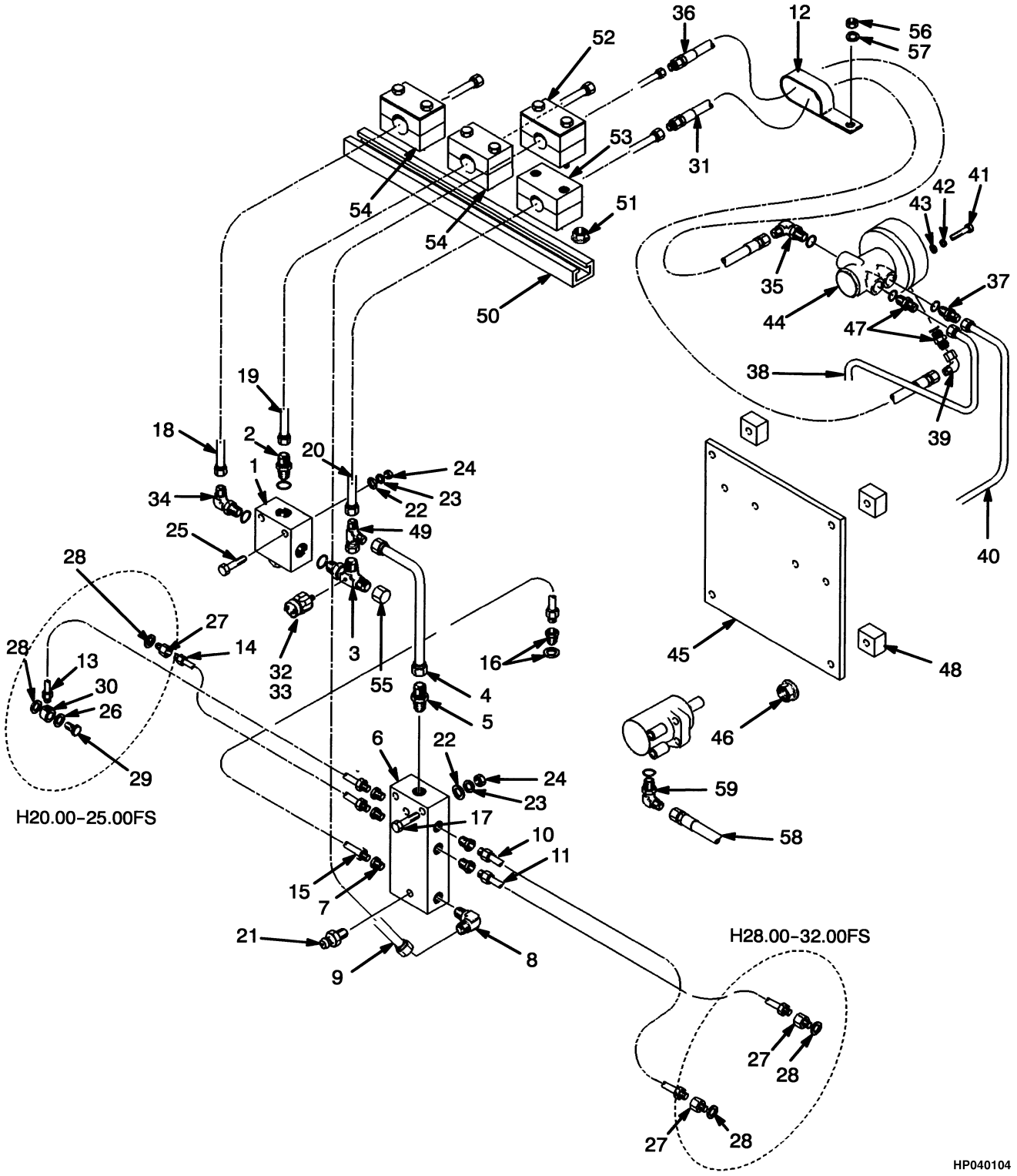

©2011 HYSTER COMPANY

BRAKE LINES

WITHOUT SHUTTLE VALVE – H440FS, H550FS, H620FS, H700FS (S/N E008D01618 ↔ S/N E008D01865) (S/N E008E01666 ↔ S/N E008E001865)

KEY:
A: H440FS, H550FS
B: H620FS, H700FS

ITEM	PART NO.	DESCRIPTION	QTY A	QTY B
1	1330171	Shuttle Valve (☞Figure 8-18)	1	1
2	16540	Connector	1	1
2	16483	O-Ring	1	1
3	1332207	Fitting	1	1
3	16483	O-Ring	1	1
4	1360674	Tube Assy	1	1
5	14675	Fitting	1	1
6	1393118	Manifold	1	1
7	16142	Fitting	5	5
8	14501	Fitting	1	1
9	1337303	Tube Assy	1	1
10	1350882	Tube Assy	1	..
10	1367317	Tube Assy	..	1
11	1350884	Tube Assy	1	..
11	1367320	Tube Assy	..	1
12	176455	Clamp	1	1
13	1350880	Tube Assy	1	..
13	1367318	Tube Assy	..	1
14	1350878	Tube Assy	1	..
14	1367319	Tube Assy	..	1
15	1350890	Tube Assy	1	..
15	1354463	Tube Assy	..	1
16	26801	Fitting	1	1
16	29344	Gasket	1	1
17	18477	Capscrew	2	2
18	1336915	Tube Assy	1	1
19	1336916	Tube Assy	1	1
20	1365109	Tube Assy	1	1
21	267262	Plug	2	2
22	15127	Washer	4	4
23	15154	Lockwasher	5	5
24	15054	Nut	4	4
25	18471	Capscrew	2	2
26	29582	Gasket	2	..
27	390063	Adapter	2	4
28	24092	Gasket	4	4
29	29583	Bolt	2	..
30	54624	Fitting	2	..
31	1332235	Identification Band (CC)	2	2
31	815867	Hose Assy	1	1
32	1336959	Pressure Switch (With Lights)	1	1
32	1376839	Switch (With Lights)	1	1
33	14349	Fitting (Pipe Plug)	1	1
34	16558	Fitting	1	1

©2011 HYSTER COMPANY

BRAKE LINES

WITHOUT SHUTTLE VALVE – H440FS, H550FS, H620FS, H700FS (S/N E008D01618 ↔ S/N E008D01865) (S/N E008E01666 ↔ S/N E008E001865)

KEY:
A: H440FS, H550FS
B: H620FS, H700FS

ITEM	PART NO.	DESCRIPTION	QTY A	QTY B
34	16483	O-Ring	1	1
35	**cd** 17059	Fitting	1	..
35	**ab** 201766	Fitting	1	1
36	1332236	Identification Band (DD)	2	2
36	1337327	Hose Assy	1	1
37	17753	Adapter	1	1
37	16483	O-Ring	1	1
38	815871	Tube Assy	1	1
39	16883	Fitting	1	1
40	815770	Tube Assy	1	1
41	18496	Capscrew	2	2
42	15155	Lockwasher	2	2
43	18515	Washer	2	2
44	1330169	Valve (Relay) (☞Figure 8-17)	1	1
45	1336908	Plate	1	1
46	156133	Nut	4	4
47	16540	Connector	2	2
47	16483	O-Ring	1	1
48	330435	Spacer	4	4
49	17061	Fitting	1	1
50	816323	Channel	1	1
51	264150	Nut	2	2
52	1337323	Clamp	1	1
53	1373510	Clamp	1	1
54	816290	Clamp	2	2
55	**cd** 14489	Sleeve	1	..
55	**ab** 16693	Nut	1	1
55	**cd** 16883	Fitting	1	..
55	**cd** 17776	Fitting	1	..
55	**cd** 816117	Quick Disconnect Fitting	1	..
56	15056	Nut	1	1
57	15156	Lockwasher	1	1
58	265325	Hose Assy	1	1
59	16556	Fitting	1	1
59	16481	O-Ring	1	1

FOOTNOTES:

a → S/N E008D01614
b → S/N E008E01664
c S/N E008D01615 →
d S/N E008E01665 →

©2011 HYSTER COMPANY

NOTES

©2011 HYSTER COMPANY

BRAKE LINES (FIGURE 8-12)

WITH SHUTTLE VALVE (S/N E008D01501 ↔ S/N E008D01526)

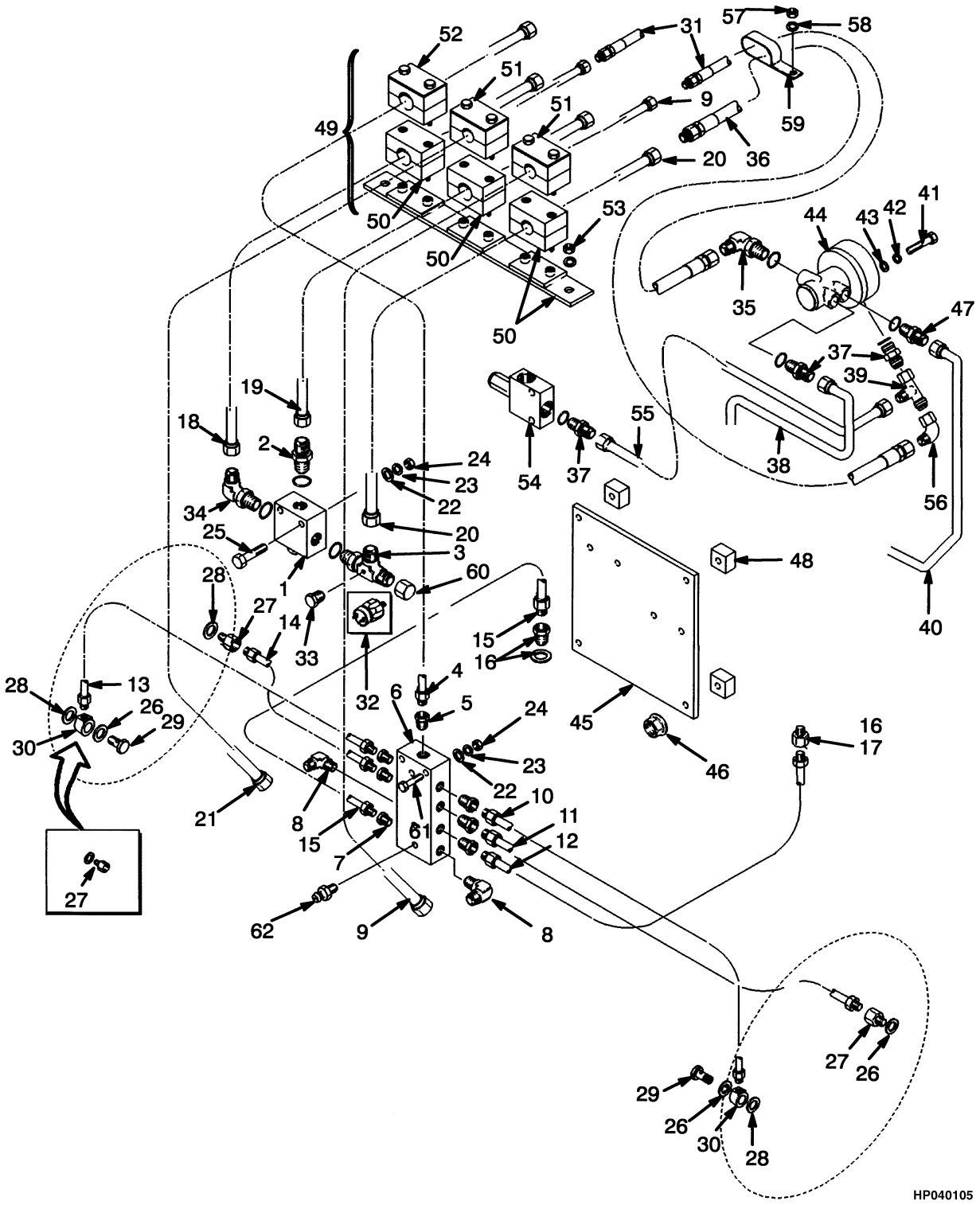

©2011 HYSTER COMPANY

BRAKE LINES

WITH SHUTTLE VALVE (S/N E008D01501 ↔ S/N E008D01526)

KEY:
A: H550F, H550FS
B: H620F, H650F, H700F

ITEM	PART NO.	DESCRIPTION	QTY A	QTY B
1	1330171	Shuttle Valve (☞Figure 8-18)	1	1
2	16540	Connector	3	3
2	16483	O-Ring	1	1
3	1332207	Fitting	1	1
3	16483	O-Ring	1	1
4	815872	Tube Assy	1	1
5	14675	Fitting	1	1
6	1391558	Manifold	1	1
7	16142	Fitting	6	6
8	14501	Fitting	2	2
9	1337303	Tube Assy	1	1
10	**ac** 1350881	Tube Assy	..	1
10	1350882	Tube Assy	1	..
10	**eg** 1367317	Tube Assy	..	1
11	**ac** 1350883	Tube Assy	..	1
11	1350884	Tube Assy	1	..
11	**eg** 1367320	Tube Assy	..	1
12	1337335	Tube Assy	..	1
12	1350891	Tube Assy	1	..
13	**ac** 1350879	Tube Assy	..	1
13	1350880	Tube Assy	1	..
13	**eg** 1367318	Tube Assy	..	1
14	**ac** 1350877	Tube Assy	..	1
14	1350878	Tube Assy	1	..
14	**eg** 1367319	Tube Assy	..	1
15	1350890	Tube Assy	1	..
15	1354463	Tube Assy	..	1
16	**h** 26801	Fitting	1	1
16	26801	Fitting	2	2
16	**h** 29344	Gasket (Copper)	1	1
16	29344	Gasket (Copper)	2	2
17	**h** 16115	Fitting	1	1
18	1336915	Tube Assy	1	1
19	1336916	Tube Assy	1	1
20	815869	Tube Assy	1	1
21	1337302	Tube Assy	1	1
22	15127	Washer	6	6
23	15154	Lockwasher	6	6
24	15054	Nut	4	4
25	18471	Capscrew	2	2
26	**eg** 29582	Gasket (Copper)	2	..
26	**ac** 29582	Gasket (Copper)	4	4
27	**ac** 390063	Adapter	2	2
27	**eg** 390063	Adapter	2	4
28	**ac** 24092	Gasket	2	2

©2011 HYSTER COMPANY

BRAKE LINES

WITH SHUTTLE VALVE (S/N E008D01501 ↔ S/N E008D01526)

KEY:
A: H550F, H550FS
B: H620F, H650F, H700F

ITEM	PART NO.	DESCRIPTION	QTY A	QTY B
28	24092	Gasket	4	4
29	**eg** 29583	Bolt	2	..
29	**ac** 29583	Bolt	2	2
30	**eg** 54624	Fitting	2	..
30	**ac** 54624	Fitting	2	2
31	1337327	Hose Assy	2	2
32	1336959	Pressure Switch (With Lights)	1	1
32	1376839	Switch (With Lights)	1	1
33	14349	Fitting (Pipe Plug)	1	1
34	16558	Fitting	1	1
34	16483	O-Ring	1	1
35	**fi** 17059	Fitting	1	..
35	16483	O-Ring	1	..
35	**bd** 201766	Fitting	1	1
35	16483	O-Ring	1	1
36	815867	Hose Assy	1	1
37	16540	Connector	3	3
37	16483	O-Ring	1	1
38	815871	Tube Assy	1	1
39	17061	Fitting	1	1
40	815770	Tube Assy	1	1
41	18496	Capscrew	2	2
42	15155	Lockwasher	2	2
43	18515	Washer	2	2
44	1330169	Valve (Relay) (☞Figure 8-17)	1	1
45	1336908	Plate	1	1
46	156133	Nut	4	4
47	17753	Adapter	1	1
47	16483	O-Ring	1	1
48	330435	Spacer	4	4
49	. . . . .	Clamp (Assembly)	1	1
50	1337295	Clamp	3	3
51	1337323	Clamp	2	2
52	1350862	Clamp	1	1
53	264150	Nut	1	1
54	1355088	Valve	1	1
54	1343161	Body	1	1
54	1366648	Cartridge	1	1
54	371172	Kit-Seal	1	1
55	815870	Tube Assy	1	1
56	16883	Fitting	1	1
57	15056	Nut	1	1
58	15156	Lockwasher	1	1
59	176455	Clamp	1	1
60	**fi** 14489	Sleeve	1	..

©2011 HYSTER COMPANY

BRAKE LINES

WITH SHUTTLE VALVE (S/N E008D01501 ↔ S/N E008D01526)

KEY:
A: H550F, H550FS
B: H620F, H650F, H700F

ITEM	PART NO.	DESCRIPTION	QTY A	QTY B
60	**bd** 16693	Nut	1	1
60	**fi** 16883	Fitting	1	..
60	**fi** 17776	Fitting	1	..
60	**fi** 816117	Quick Disconnect Fitting	1	..
61	18477	Capscrew	2	2
62	267262	Plug	3	3

FOOTNOTES:

a → S/N E008D01522
b → S/N E008D01614
c → S/N E008E01531
d → S/N E008E01664
e S/N E008D01523 →
f S/N E008D01615 →
g S/N E008E01532 →
h S/N E008E01561 → (H28.00-32.00F)
i S/N E008E01665 →

©2011 HYSTER COMPANY

BRAKE LINES (FIGURE 8-13)

WITH SHUTTLE VALVE — H550F, H620F, H650F, H700F (S/N E008D01618 ↔ S/N E008D01865)
(S/N E008E01666 ↔ S/N E008E01865)

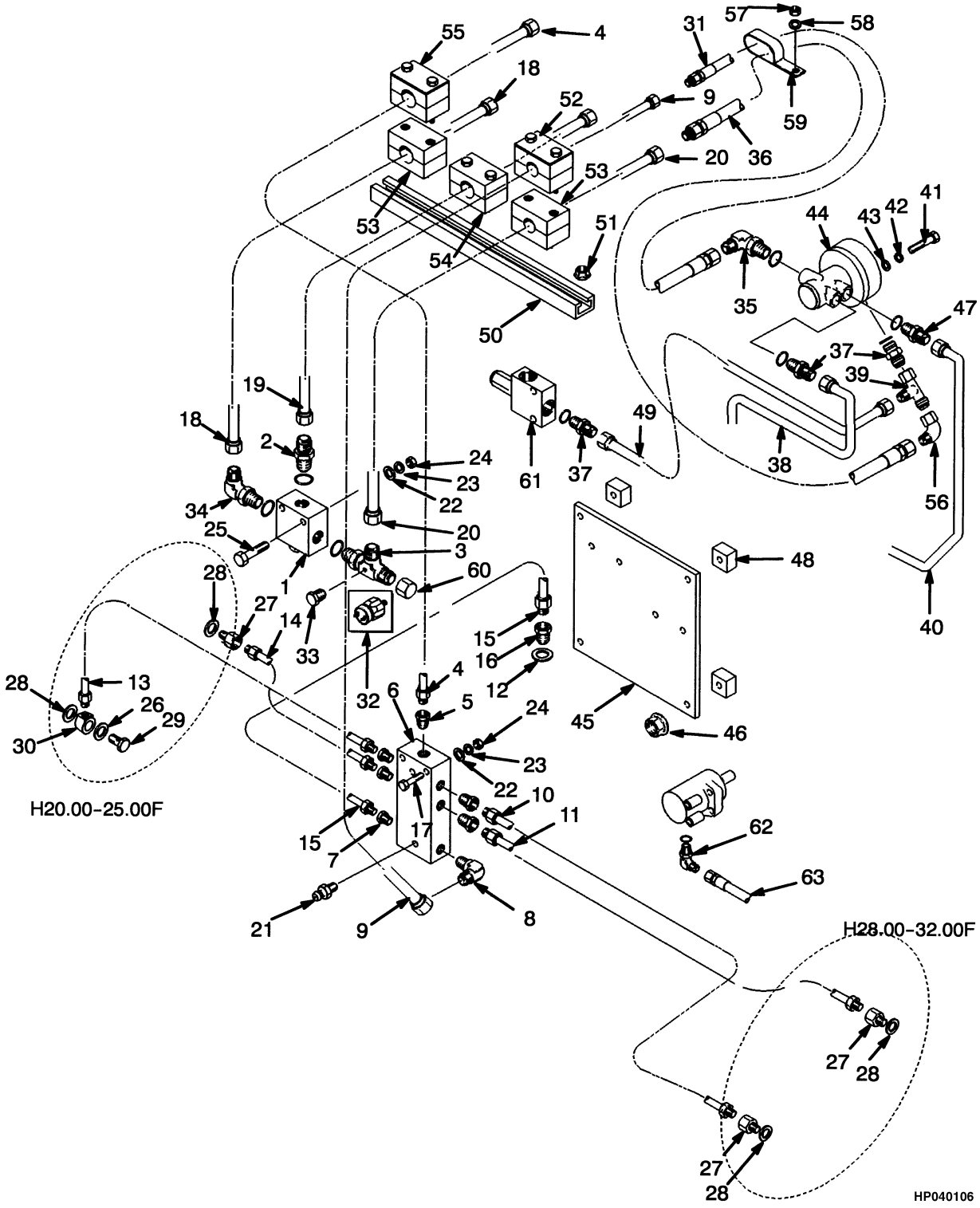

©2011 HYSTER COMPANY

BRAKE LINES

WITH SHUTTLE VALVE – H550F, H620F, H650F, H700F (S/N E008D01618 ↔ S/N E008D01865) (S/N E008E01666 ↔ S/N E008E01865)

KEY:
A: H550F
B: H620F, H650F, H700F

ITEM	PART NO.	DESCRIPTION	QTY A	QTY B
	1330171	Shuttle Valve (☞Figure 8-18)	1	1
2	16540	Connector	3	3
2	16483	O-Ring	1	1
3	1332207	Fitting	1	1
3	16483	O-Ring	1	1
4	815872	Tube Assy	1	1
5	14675	Fitting	1	1
6	1393118	Manifold	1	1
7	16142	Fitting	5	5
8	14501	Fitting	1	1
9	1337303	Tube Assy	1	1
10	1350882	Tube Assy	1	..
10	1367317	Tube Assy	..	1
11	1350884	Tube Assy	1	..
11	1367320	Tube Assy	..	1
12	29344	Gasket	1	1
13	1350880	Tube Assy	1	..
13	1367318	Tube Assy	..	1
14	1350878	Tube Assy	1	..
14	1367319	Tube Assy	..	1
15	1350890	Tube Assy	1	..
15	1354463	Tube Assy	..	1
16	26801	Fitting	1	1
17	18477	Capscrew	2	2
18	1336915	Tube Assy	1	1
19	1336916	Tube Assy	1	1
20	815869	Tube Assy	1	1
21	267262	Plug	2	2
22	15127	Washer	6	6
23	15154	Lockwasher	6	6
24	15054	Nut	4	4
25	18471	Capscrew	2	2
26	29582	Gasket	2	..
27	390063	Adapter	2	4
28	24092	Gasket	4	4
29	29583	Bolt	2	..
30	54624	Fitting	2	..
31	1332236	Identification Band (DD)	2	2
31	1337327	Hose Assy	1	1
32	1336959	Pressure Switch (With Lights)	1	1
32	1376839	Switch (With Lights)	1	1
33	14349	Fitting (Pipe Plug)	1	1
34	16558	Fitting	1	1
34	16483	O-Ring	1	1

©2011 HYSTER COMPANY

BRAKE LINES

WITH SHUTTLE VALVE – H550F, H620F, H650F, H700F (S/N E008D01618 ↔ S/N E008D01865) (S/N E008E01666 ↔ S/N E008E01865)

KEY:
A: H550F
B: H620F, H650F, H700F

ITEM	PART NO.	DESCRIPTION	QTY A	QTY B
35	**cd** 17059	Fitting	1	1
35	16483	O-Ring	1	1
35	**ab** 201766	Fitting	1	1
35	**ab** 16483	O-Ring	1	1
36	1332235	Identification Band (CC)	2	2
36	815867	Hose Assy	1	1
37	16540	Connector	3	3
37	16483	O-Ring	1	1
38	815871	Tube Assy	1	1
39	17061	Fitting	1	1
40	815770	Tube Assy	1	1
41	18496	Capscrew	2	2
42	15155	Lockwasher	2	2
43	18515	Washer	2	2
44	1330169	Valve (Relay) (☞Figure 8-17)	1	1
45	1336908	Plate	1	1
46	156133	Nut	4	4
47	17753	Adapter	1	1
47	16483	O-Ring	1	1
48	330435	Spacer	4	4
49	815870	Tube Assy	1	1
50	816323	Channel	1	1
51	264150	Nut	2	2
52	1337323	Clamp	1	1
53	1373510	Clamp	2	2
54	816290	Clamp	1	1
55	1350862	Clamp	1	1
56	16883	Fitting	1	1
57	15056	Nut	1	1
58	15156	Lockwasher	1	1
59	176455	Clamp	1	1
60	**cd** 14489	Sleeve	1	1
60	**ab** 16693	Nut	1	1
60	**cd** 16883	Fitting	1	1
60	**cd** 17776	Fitting	1	1
60	**cd** 816117	Quick Disconnect Fitting	1	1
61	1355088	Valve	1	1
62	16556	Fitting	1	1
62	16481	O-Ring	1	1
63	265325	Hose Assy	1	1

©2011 HYSTER COMPANY

FOOTNOTES:

a → S/N E008D01614
b → S/N E008E01664
c S/N E008D01615 →
d S/N E008E01665 →

©2011 HYSTER COMPANY

VALVE (FIGURE 8-14)
TREADLE (→ S/N E008E01984B)

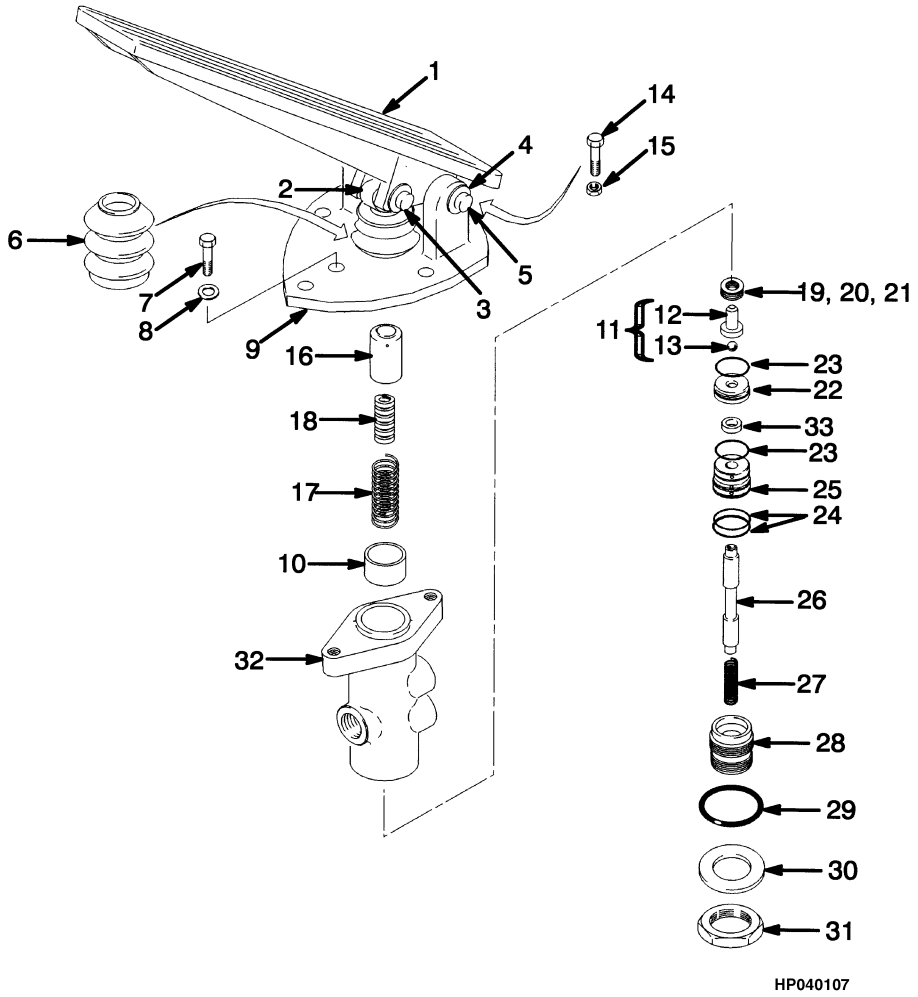

©2011 HYSTER COMPANY

VALVE

TREADLE (→ S/N E008E01984B)

ITEM	PART NO.	DESCRIPTION	QTY
	1330167	Valve	1
1	. . . . .	Pedal	1
2	1336701	Cam	1
3	1336702	Pin	1
4	1336703	E-Ring	4
5	1336704	Pin	1
6	. . . . .	Boot	1
7	18498	Capscrew	2
8	1336772	Washer	2
9	1336706	Base	1
10	. . . . .	Bearing	1
11	1336709	Retainer	1
12	1336708	Retainer	1
13	1336693	Ball	1
14	18508	Capscrew	1
15	1336773	Nut	1
16	1336712	Piston	1
17	. . . . .	Spring	1
18	. . . . .	Spring	1
19	. . . . .	Shim	AR
20	. . . . .	Shim	AR
21	. . . . .	Shim	AR
22	. . . . .	Spacer	1
23	. . . . .	O-Ring	2
24	. . . . .	O-Ring	2
25	1336710	Sleeve	1
26	. . . . .	Spool	1
27	. . . . .	Spring	1
28	1336711	End Plug	1
29	. . . . .	O-Ring	1
30	. . . . .	Washer	1
31	. . . . .	Nut	1
32	1336720	Housing	1
33	. . . . .	Cup	1
	1336722	Kit-Repair Treadle Valve	1

©2011 HYSTER COMPANY

VALVE (FIGURE 8-15)

TREADLE (S/N E008E01985B →)

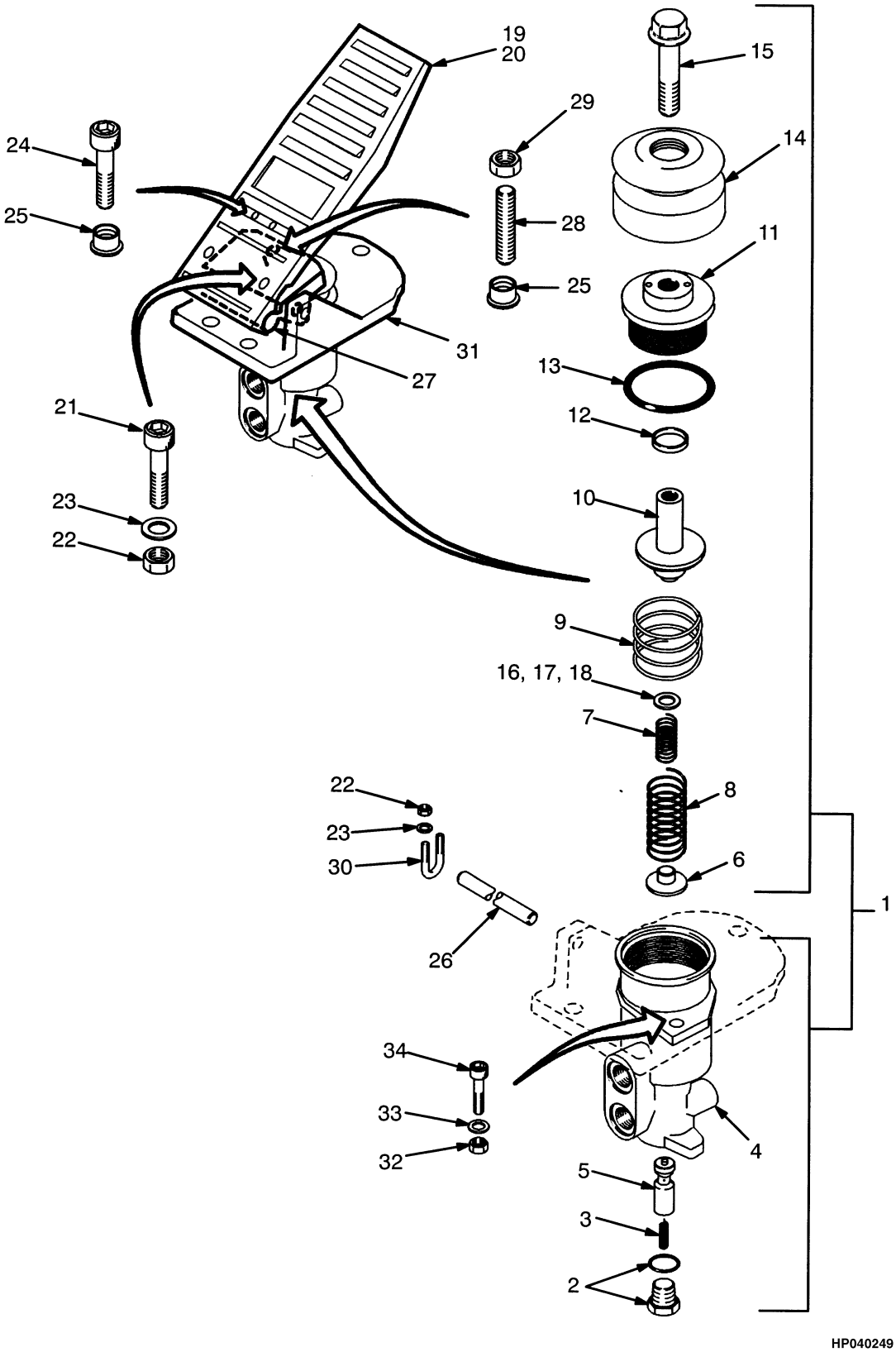

©2011 HYSTER COMPANY

VALVE

TREADLE (S/N E008E01985B →)

ITEM	PART NO.	DESCRIPTION	QTY
	1373604	Brake Valve	1
1	. . . . .	Valve	1
2	. . . . .	Plug	1
3	. . . . .	Spring (Return)	1
4	. . . . .	Body	1
5	. . . . .	Spool	1
6	. . . . .	Seat (Spring)	1
7	. . . . .	Spring (Secondary)	1
8	. . . . .	Spring	1
9	. . . . .	Spring (Return)	1
10	. . . . .	Piston	1
11	. . . . .	Guide (Piston)	1
12	. . . . .	Piston Seal	1
13	. . . . .	O-Ring	1
14	. . . . .	Boot	1
15	. . . . .	Screw	1
16	. . . . .	Shim (0,635 mm)	AR
17	. . . . .	Shim (0,254 mm)	AR
18	. . . . .	Shim (0,127 mm)	AR
19	1391729	Pedal Assy	1
20	. . . . .	Pedal	1
21	. . . . .	Screw	2
22	. . . . .	Nut	6
23	. . . . .	Washer	6
24	. . . . .	Setscrew	2
25	. . . . .	Insert	3
26	. . . . .	Pin	1
27	. . . . .	Cam	1
28	. . . . .	Setscrew	1
29	. . . . .	Nut	1
30	. . . . .	U-Bolt	2
31	1391741	Base (Actuator)	1
32	. . . . .	Nut	2
33	. . . . .	Lockwasher	2
34	. . . . .	Screw	2
	1391745	Kit-Hardware	1
	1450390	Kit-Shim	1
	1391744	Kit-Seal	1

©2011 HYSTER COMPANY

VALVE (FIGURE 8-16)
PARK BRAKE (→ S/N E008D01581)

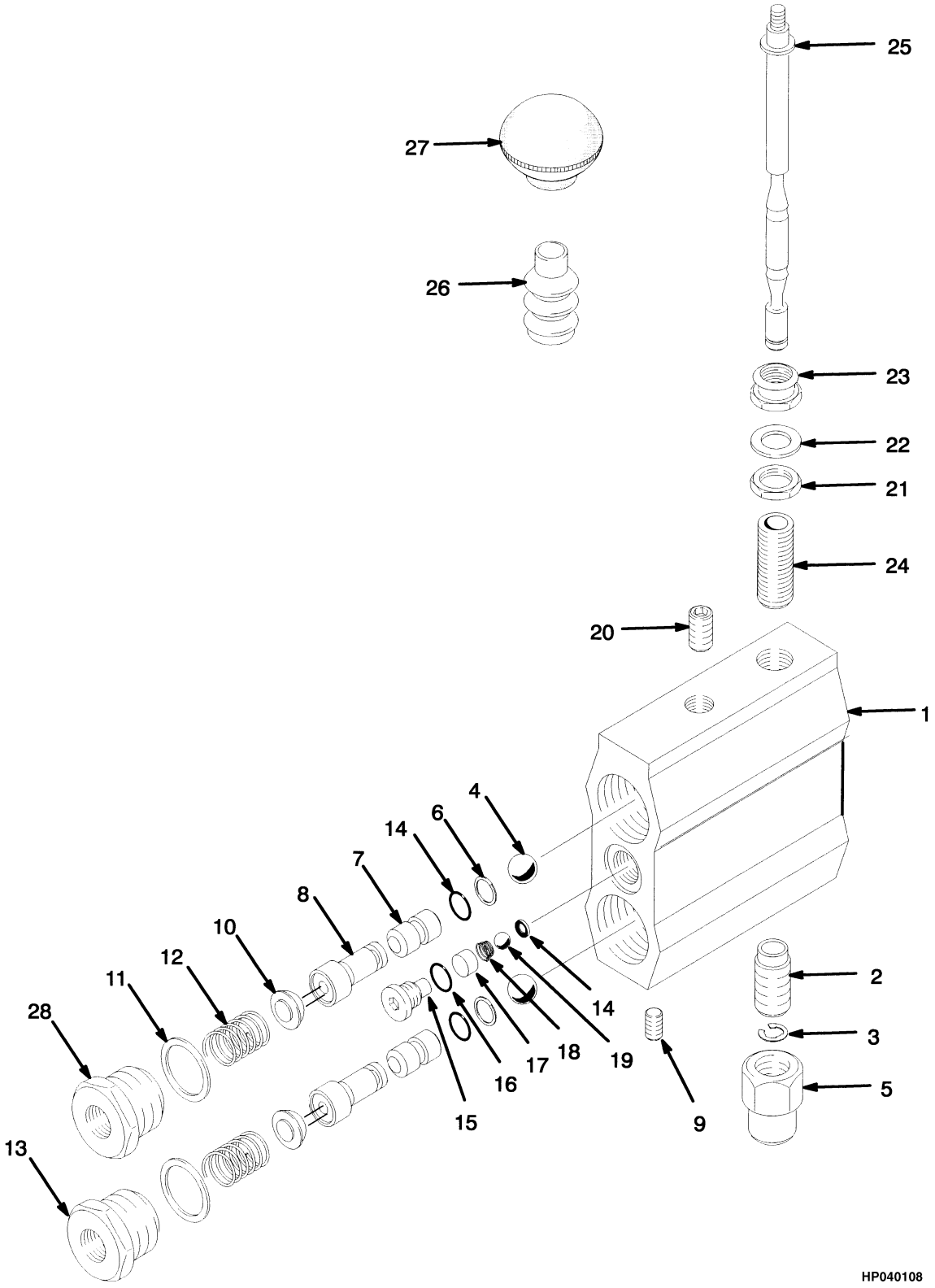

©2011 HYSTER COMPANY

VALVE

PARK BRAKE (→ S/N E008D01581)

ITEM	PART NO.	DESCRIPTION	QTY
	1332187	Parking Brake Valve	1
1	1336675	Housing	1
2	. . . . .	Plug	1
3	1336677	Retaining Ring	2
4	1336678	Ball	2
5	1336679	End Cap	1
6	1336680	Back-Up Ring	2
7	1336681	Piston	2
8	. . . . .	Valve	2
9	1336683	Plug	1
10	. . . . .	Valve Stem	2
11	1336685	Gasket	2
12	1336686	Spring	2
13	1336687	End Plug	1
14	1336688	O-Ring	3
15	1336689	Plug	1
16	1336690	O-Ring	1
17	1336691	Cable	1
18	1336692	Spring	1
19	1336693	Ball	1
20	1336694	Plug	1
21	1339248	Nut	1
22	15906	Lockwasher	1
23	1336767	Nut	1
24	1336695	Adapter	1
25	1336696	Rod	1
26	1336697	Boot	1
27	1336698	Knob	1
28	1336699	End Plug	1

©2011 HYSTER COMPANY

VALVE (FIGURE 8-17)
RELAY

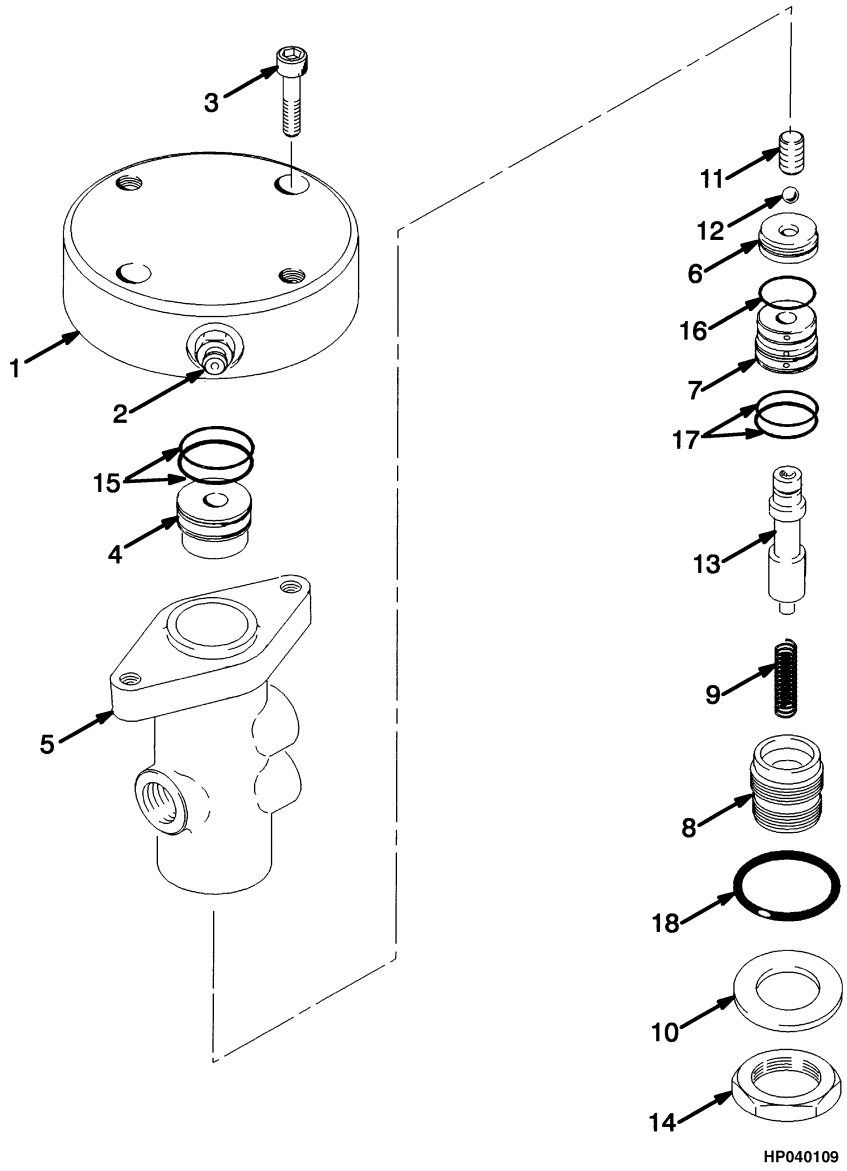

©2011 HYSTER COMPANY

VALVE
RELAY

ITEM	PART NO.	DESCRIPTION	QTY
	1330169	Valve (Relay)	1
1	1336723	Base	1
2	1336724	Bleeder Screw	1
3	1336774	Capscrew	2
4	. . . . .	Sleeve	1
5	1336726	Housing	1
6	1336727	Spacer	1
7	1336728	Sleeve	1
8	1336711	End Plug	1
9	. . . . .	Spring	1
10	. . . . .	Washer	1
11	. . . . .	Spool	1
12	1336693	Ball	1
13	1336730	Spool	1
14	. . . . .	Nut	1
15	. . . . .	O-Ring	2
16	. . . . .	O-Ring	1
17	. . . . .	O-Ring	2
18	. . . . .	O-Ring	1
	1336731	Kit-Valve	1

©2011 HYSTER COMPANY

VALVE (FIGURE 8-18)
SHUTTLE

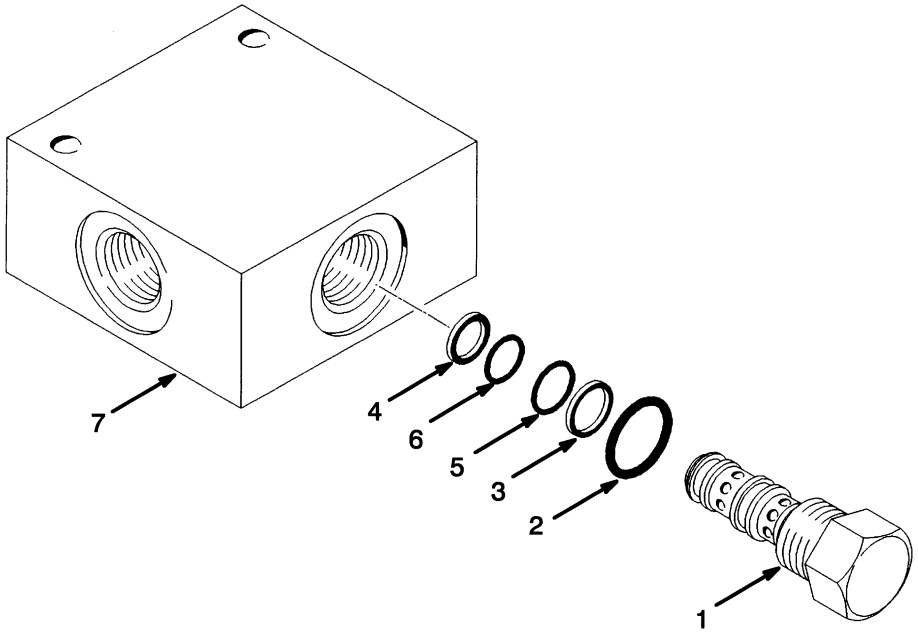

HP040110

ITEM	PART NO.	DESCRIPTION	QTY
	1330171	Shuttle Valve	1
1	1343162	Cartridge	1
2	. . . . .	Seal Ring	1
3	. . . . .	Back-Up Ring	1
4	. . . . .	Back-Up Ring	1
5	. . . . .	O-Ring	1
6	. . . . .	O-Ring	1
7	1343161	Body	1
	359756	Kit-Seal	1

©2011 HYSTER COMPANY

NOTES

©2011 HYSTER COMPANY

VALVE (FIGURE 8-19)

INCHING (→ S/N E008D01588) (→ S/N E008E01656)

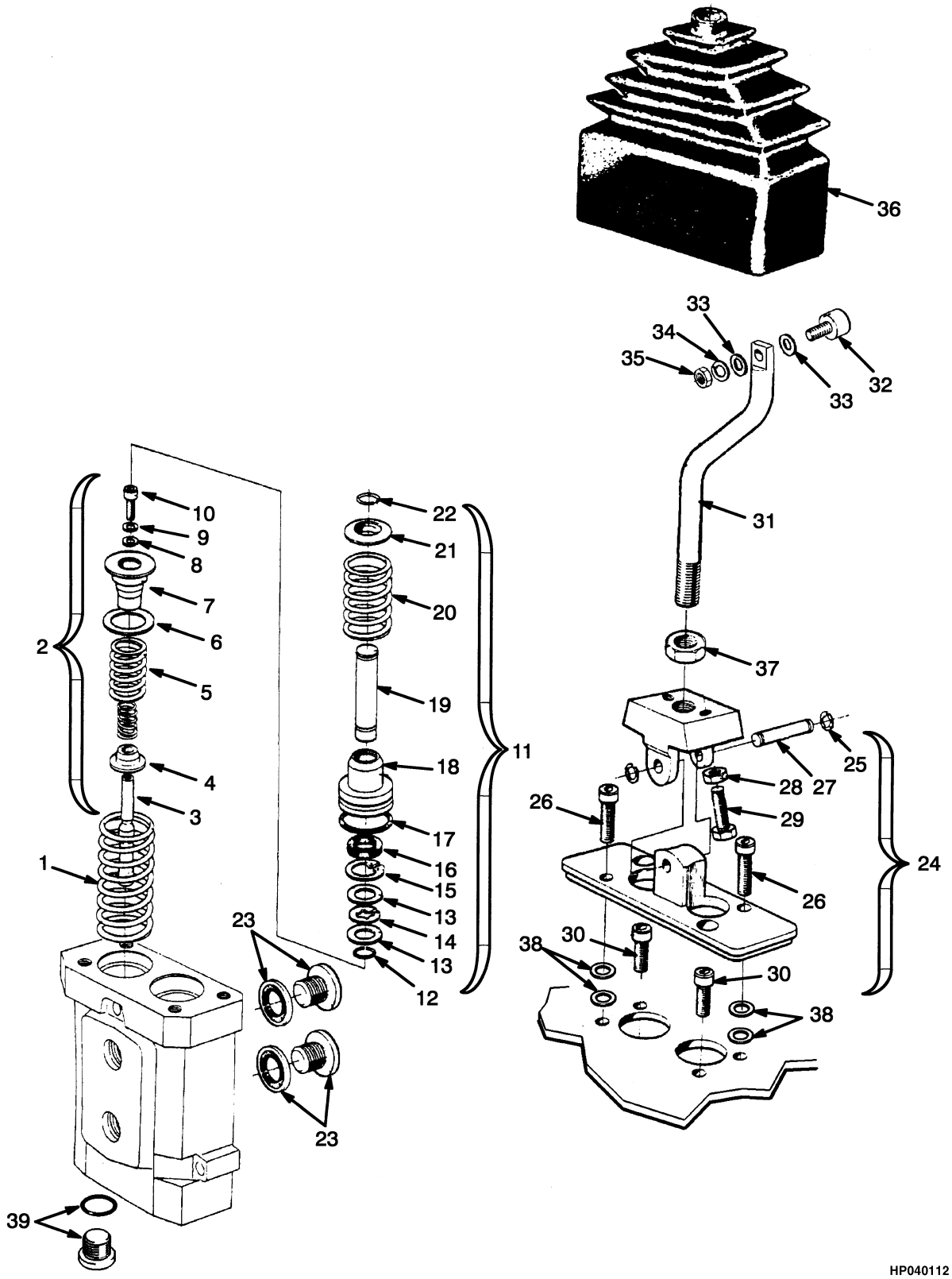

©2011 HYSTER COMPANY

VALVE

INCHING (→ S/N E008D01588) (→ S/N E008E01656)

ITEM	PART NO.	DESCRIPTION	QTY
	1355039	Inching Valve	1
1	1318025	Return Spring	1
2	1342702	Kit-Spring	1
3	. . . . .	Spool	1
4	. . . . .	Seat	1
5	1342644	Spring	1
6	1318029	Spacer (0,1 mm)	1
6	1318030	Spacer (0,5 mm)	1
7	. . . . .	Seat	1
8	1318031	Washer	1
9	1318032	Spacer (0,1 mm)	1
9	1318033	Spacer (0,5 mm)	1
10	1318034	Screw	1
11	1328548	Pin	1
12	. . . . .	Retainer	1
13	1318036	Spacer (0.008 in.)	AR
13	1318037	Spacer (0.012 in.)	AR
13	1318038	Spacer (.020 in.)	AR
14	. . . . .	Retainer	1
15	. . . . .	Circlip	1
16	. . . . .	Seal	1
17	. . . . .	O-Ring	1
18	. . . . .	Seat	1
19	. . . . .	Rod	1
20	1328707	Spring	1
21	. . . . .	Keeper	1
22	. . . . .	Retainer	1
23	1318045	Kit-Plug	1
23	1318301	O-Ring	1
23	1318302	Plug	1
23	1318303	O-Ring	1
23	1318304	Plug	1
24	1318047	Pressure Plate	1
25	1318048	Lockring	2
26	1318049	Screw	2
27	1318022	Shaft	1
28	1318023	Nut	2
29	1318024	Screw	2
30	1316396	Screw	2
31	1355040	Link	1
32	815647	Cam Follower	1
33	320156	Washer	2
34	15154	Lockwasher	1
35	15004	Nut	1
36	345735	Boot	1
37	296128	Nut	1
38	320155	Washer	AR
39	222443	Fitting	1
39	16483	O-Ring	1

©2011 HYSTER COMPANY

VALVE

INCHING (→ S/N E008D01588) (→ S/N E008E01656)

ITEM	PART NO.	DESCRIPTION	QTY
	1342701	Kit-Seal	1

©2011 HYSTER COMPANY

NOTES

©2011 HYSTER COMPANY

VALVE (FIGURE 8-20)

INCHING (S/N E008D01589 ↔ S/N E008E001865) (S/N E008E01656 ↔ S/N E008E001865)

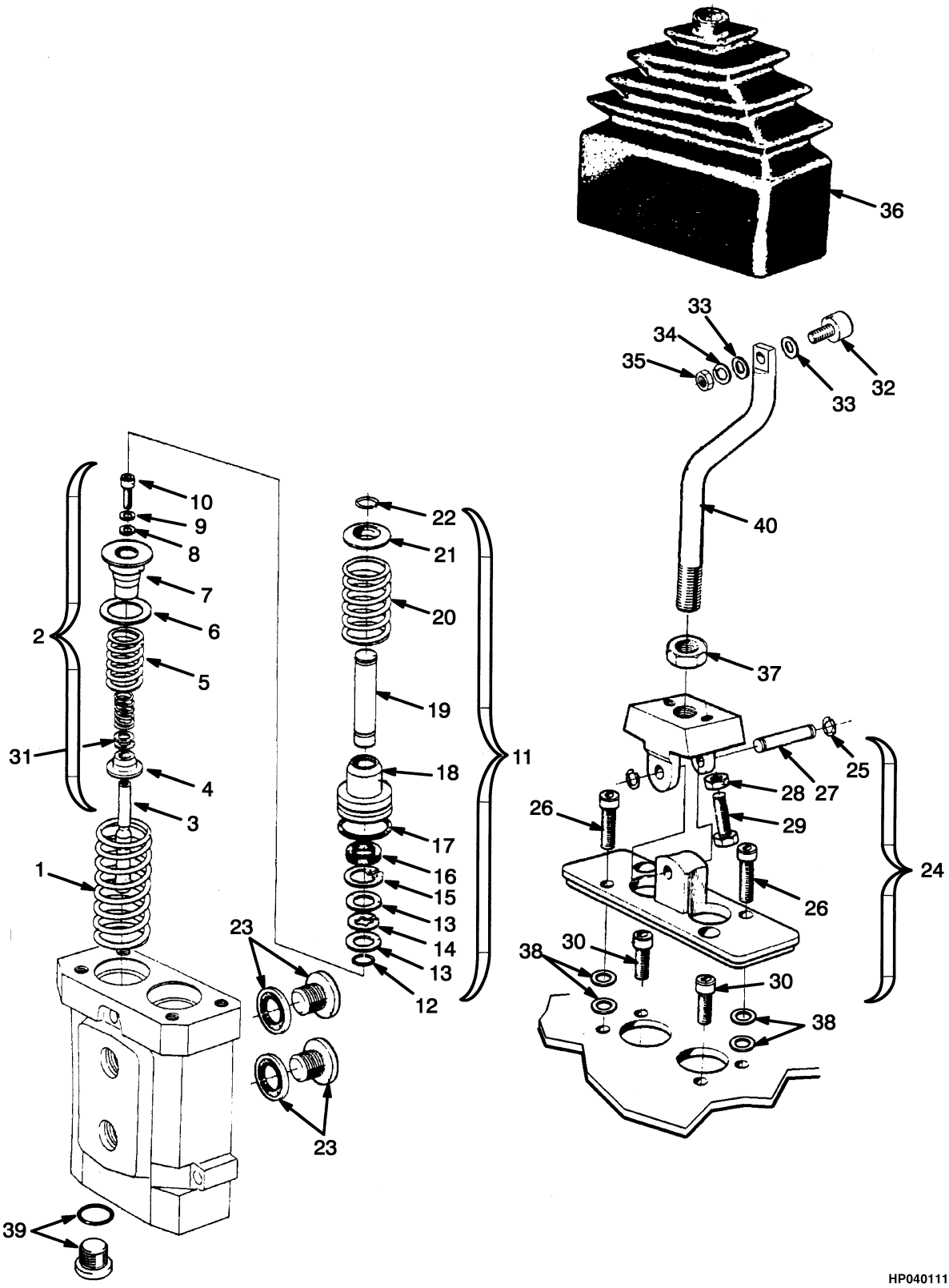

©2011 HYSTER COMPANY

VALVE

INCHING (S/N E008D01589 ↔ S/N E008E001865) (S/N E008E01656 ↔ S/N E008E001865)

ITEM	PART NO.	DESCRIPTION	QTY
	1367341	Valve (Inching)	1
1	1318025	Return Spring	1
2	1393420	Kit-Spring	1
3	. . . . .	Spool	1
4	. . . . .	Seat	1
5	1450279	Spring	1
6	1318029	Spacer (0,1 mm)	1
6	1318030	Spacer (0,5 mm)	1
7	. . . . .	Seat	1
8	1318031	Washer	1
9	1318032	Spacer (0,1 mm)	1
9	1318033	Spacer (0,5 mm)	1
10	1318034	Screw	1
11	1328548	Pin	1
12	. . . . .	Retainer	1
13	1318036	Spacer (0.008 in.)	AR
13	1318037	Spacer (0.012 in.)	AR
13	1318038	Spacer (.020 in.)	AR
14	. . . . .	Retainer	1
15	. . . . .	Circlip	1
16	. . . . .	Seal	1
17	. . . . .	O-Ring	1
18	. . . . .	Seat	1
19	. . . . .	Rod	1
20	1328707	Spring	1
21	. . . . .	Keeper	1
22	. . . . .	Retainer	1
23	1318045	Kit-Plug	1
23	1318301	O-Ring	1
23	1318302	Plug	1
23	1318303	O-Ring	1
23	1318304	Plug	1
24	1318047	Pressure Plate	1
25	1318048	Lockring	2
26	1318049	Screw	2
27	1318022	Shaft	1
28	1318023	Nut	2
29	1318024	Screw	2
30	1316396	Screw	2
31	1318026	Spacer (0,1 mm)	AR
31	1318027	Spacer (0,5 mm)	AR
32	815647	Cam Follower	1
33	320156	Washer	2
34	15154	Lockwasher	1
35	15004	Nut	1
36	345735	Boot	1
37	296128	Nut	1
38	320155	Washer	AR
39	222443	Fitting	1
39	16483	O-Ring	1

©2011 HYSTER COMPANY

VALVE

INCHING (S/N E008D01589 ↔ S/N E008E001865) (S/N E008E01656 ↔ S/N E008E001865)

ITEM	PART NO.	DESCRIPTION	QTY
40	1367348	Link	1
	1342701	Kit-Seal	1

©2011 HYSTER COMPANY

9 HYDRAULIC SYSTEM

SECTION 9
HYDRAULIC SYSTEM

DESCRIPTION **PAGE**

ACCUMULATOR AND ATTACHING PARTS 9-42
ACCUMULATOR ASSEMBLY
PISTON TYPE 9-45
ACCUMULATOR CHARGE VALVE
→ S/N E008D01522 9-36
S/N E008D01523 ↔ S/N E008D01525 9-38
S/N E008D01526 → 9-40
ATTACHING PARTS (→ S/N E008E01984B) 9-130
ANTI-SLACK DEVICE
→ S/N E008E01984B 9-162
ANTI-SLACK DEVICE AND LIFT INTERRUPT
S/N E008E01811X ↔ S/N E008E01984B 9-164
ATTACHING PARTS
SHUT-OFF COCK AND SHUTTLE VALVE (S/N E008D01589 ↔ S/N E008E001984B)
(S/N E008E01657 ↔ S/N E008E001984B) 9-152
ATTACHMENT CONTROL VALVE
→ S/N E008E01753 → S/N E008D01602 9-90
CONTROL
LIFT AND TILT (→ S/N E008E01984B) 9-48
LIFT AND TILT (S/N E008E01985B →) 9-52
CONTROL VALVE
→ S/N E008E01656 → S/N E008D01588 9-70
S/N E008E01657 → S/N E008D01589 → 9-74
S/N E008D01603 ↔ S/N E008E001984B S/N E008E01754 ↔ S/N E008E001984B 9-94
CONTROL VALVE ATTACHING PARTS
ATTACHMENT CONTROL VALVE AND PRESSURE SWITCH (→ S/N E008E01810X) 9-132
ONE FUNCTION (→ S/N E008E01656) (→ S/N E008D01588) 9-136
ONE FUNCTION (S/N E008D01589 ↔ S/N E008E001984B) (S/N E008E01657 ↔ S/N E008E001984B)
..... 9-140
TWO FUNCTION (→ S/N E008D01588) (→ S/N E008E01656) 9-144
TWO FUNCTION (S/N E008D01589 ↔ S/N E008E001984B) (S/N E008E01657 ↔ S/N E008E001984B)
..... 9-148
WITH ANTI-SLIPPING DEVICE AND LIFT INTERRUPT (S/N E008E01811X ↔ S/N E008E01984B) 9-154
DIRECTIONAL CONTROL VALVE
S/N E008E01811X ↔ S/N E008E01984B 9-92
ATTACHING PARTS (S/N E008E01811X ↔ S/N E008E01984B) 9-134
FLOW AMPLIFIER 9-156
ATTACHING PARTS (→ S/N E008E01984B) 9-158
HYDRAULIC
PRESSURE CHECK LINE (→ S/N E008E01984B) 9-108
HYDRAULIC PUMP
BRAKE COOLING CIRCUIT, HOIST (→ S/N E008E01984B) 9-102
BRAKE COOLING CIRCUIT, HOIST (S/N E008E01985B ↔ S/N E008E02016B) 9-104
BRAKE COOLING CIRCUIT, HOIST (S/N E008E02017B →) 9-106
STEERING AND AUXILIARY, HOIST AND TILT (→ S/N E008E01906Z) 9-98
STEERING AND AUXILIARY, HOIST AND TILT (S/N E008E01907Z →) 9-100
HYDRAULIC SUPPLY AND RETURN
H440FS, H550FS, H620FS, H700FS - SHEET 1 OF 2 (S/N E008E01985B →) 9-20
H440FS, H550FS, H620FS, H700FS - SHEET 2 OF 2 (S/N E008E01985B →) 9-24

©2011 HYSTER COMPANY

SECTION 9
HYDRAULIC SYSTEM

DESCRIPTION **PAGE**

H550F, H620F, H650F, H700F - SHEET 1 OF 2 (S/N E008E01985B →) 9-12
H550F, H620F, H650F, H700F - SHEET 2 OF 2 (S/N E008E01985B →) 9-16
SHEET 1 OF 2 (→ S/N E008E01984B) 9-4
SHEET 2 OF 2 (→ S/N E008E01984B) 9-8
JUNCTION BLOCK
→ S/N E008E01542 → S/N E008D01523 9-32
MANIFOLD PLATE AND ATTACHING PARTS
S/N E008E01985B → 9-58
MANIFOLD PLATE ASSEMBLY
SHEET 1 OF 2 9-62
SHEET 2 OF 2 9-66
OIL COOLER AND ATTACHING PARTS
S/N E008E01886Z ↔ S/N E008E02041C 9-28
S/N E008E02042C → 9-30
PARK BRAKE SOLENOID VALVE
ATTACHING PARTS 9-124
PILOT VALVE 9-56
ATTACHING PARTS (→ S/N E008E01655) (→ S/N E008D01581) 9-122
PARK BRAKE (→ S/N E008D01581) (→ S/N E008E01655) 9-79
PRESSURE REDUCING VALVE
ATTACHING PARTS (→ S/N E008E01723) 9-116
ATTACHING PARTS (S/N E008E01724 ↔ S/N E008E01984B) 9-120
PARK BRAKE (→ S/N E008E01984B) 9-78
PILOT CIRCUIT (→ S/N E008E01984B) 9-77
RELIEF VALVE
→ S/N E008E01984B 9-80
ATTACHING PARTS (→ S/N E008E01664) (→ S/N E008D01614) 9-126
ATTACHING PARTS (S/N E008D01518 ↔ S/N E008E001984B)
(S/N E008E01544 ↔ S/N E008E001984B) 9-128
TILT CYLINDER 9-88
RETURN MANIFOLD
ATTACHING PARTS - SHEET 1 OF 2 (→ S/N E008E01984B) 9-110
ATTACHING PARTS - SHEET 2 OF 2 (→ S/N E008E01984B) 9-114
SHUTTLE VALVE
→ S/N E008E01984B 9-89
ATTACHING PARTS (→ S/N E008E01984B) 9-96
SOLENOID VALVE
PARK BRAKE (S/N E008D01582 →) (S/N E008E01656 →) 9-81
TANK AND FILTER 9-46
TILT CYLINDER 9-86
TILT HYDRAULIC
→ S/N E008E01984B 9-82
S/N E008E01985B → 9-84
TWO-SPEED LIFT VALVE
S/N E008D01524 → S/N E008E01543 → 9-34

©2011 HYSTER COMPANY

NOTES

©2011 HYSTER COMPANY

HYDRAULIC SUPPLY AND RETURN (FIGURE 9-1)

SHEET 1 OF 2 (→ S/N E008E01984B)

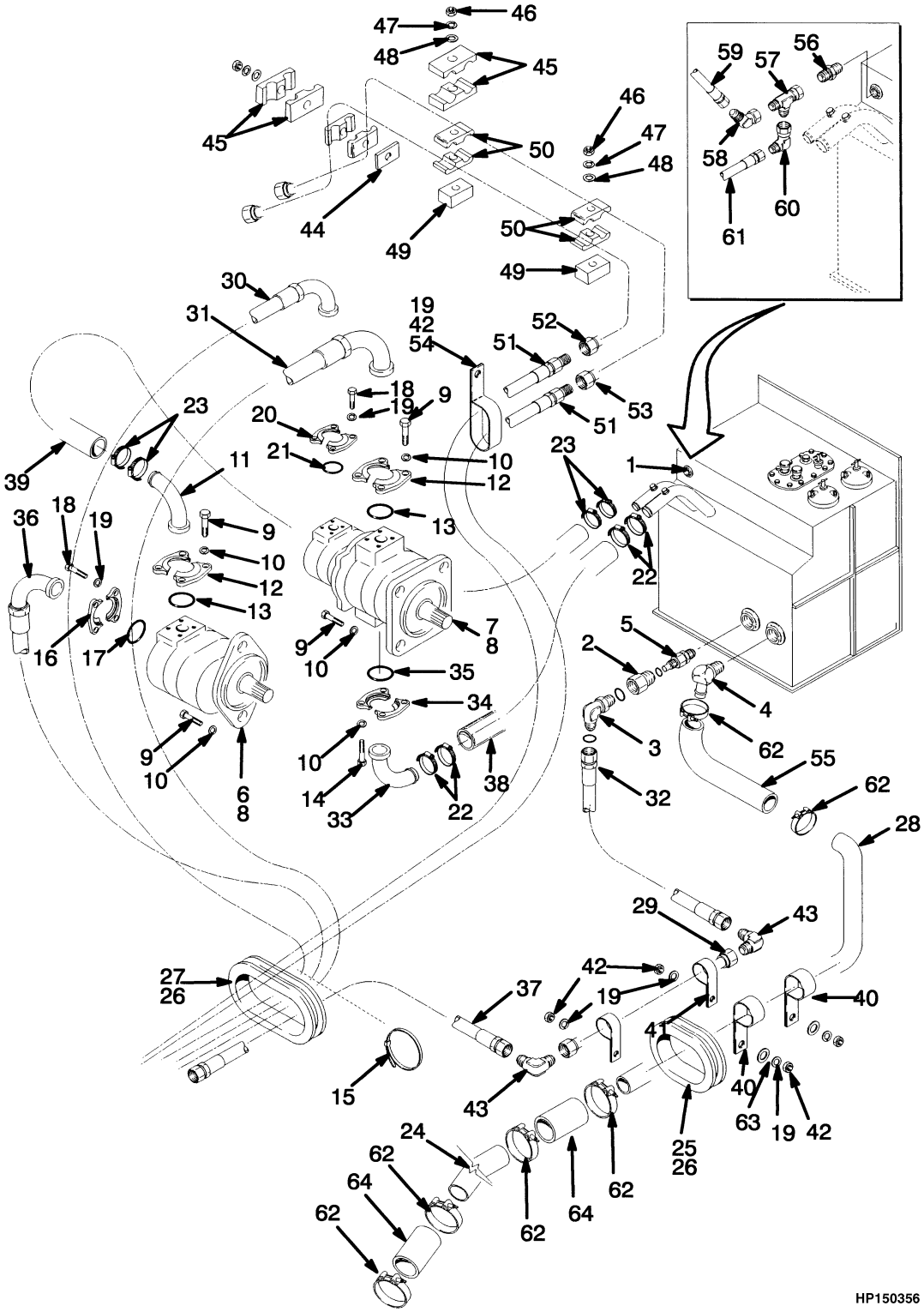

©2011 HYSTER COMPANY

HYDRAULIC SUPPLY AND RETURN

SHEET 1 OF 2 (→ S/N E008E01984B)

KEY:
A: H550F, H620F, H650F, H700F
B: H550FS, H620FS, H700FS

ITEM	PART NO.	DESCRIPTION	QTY A	QTY B
1	**bf** 14676	Fitting	1	1
2	**di** 1336051	Adapter	1	1
3	**di** 1331938	Fitting	1	1
3	16983	O-Ring	1	1
3	280156	O-Ring	1	1
4	222479	Fitting	1	1
5	**di** 1383516	Check Valve	1	1
5	**qv** 15321	Fitting	1	1
6	1335718	Hydraulic Pump (Small) (☞Figure 9-41)	1	1
7	**m** 1335719	Hydraulic Pump (Large) (☞Figure 9-39)	1	1
7	**z** 1516902	Hydraulic Pump (Large) (☞Figure 9-40)	1	1
8	264159	Adhesive	AR	AR
9	18588	Capscrew	14	14
10	15158	Washer	18	18
11	172988	Fitting	1	..
12	17765	Clamp	4	4
13	210642	O-Ring	2	2
14	16085	Capscrew	4	4
15	323864	Strap Clamp	AR	AR
16	190757	Clamp (Split Half)	2	2
17	169787	O-Ring	1	1
18	16828	Capscrew	8	8
19	15156	Lockwasher	11	11
20	160266	Clamp (Split Half)	2	2
21	210641	O-Ring	1	1
22	112989	Hose Clamp	4	4
23	119236	Clamp	4	4
24	**ch** 1375058	Hose	..	1
24	**chnt** 1375058	Hose	1	..
24	**kpu** 1376834	Hose	..	1
24	**ag** 184631	Hose	1	..
24	**x** 816496	Label (Transmission Warning Light)	1	1
25	1307816	Molding	1	1
26	238810	Adhesive	AR	AR
27	1336085	Molding	1	1
28	**ch** 1346401	Tube Assy	1	1
28	**pu** 1376836	Tube Assy	1	1
29	**di** 1346402	Tube Assy	1	1
30	**ej** 1331899	Hose Assy	1	..
30	1350873	Tube Assy	..	1
30	**rw** 816457	Hose Assy	1	..
31	1331898	Hose Assy	1	..
31	1350874	Hose Assy	..	1
32	**di** 190189	Hose Assy	1	1
33	**m** 1350871	Tube	..	1

©2011 HYSTER COMPANY

HYDRAULIC SUPPLY AND RETURN

SHEET 1 OF 2 (→ S/N E008E01984B)

KEY:
A: H550F, H620F, H650F, H700F
B: H550FS, H620FS, H700FS

ITEM	PART NO.	DESCRIPTION	QTY A	QTY B
33	**z** 1517963	Tube	..	1
33	162231	Fitting	1	..
34	**l** 88291	Clamp (Split Half)	1	1
34	**y** 1516084	Fitting	1	1
35	268619	O-Ring	1	1
36	**ej** 1331900	Hose Assy	1	1
36	1350875	Hose Assy	1	1
36	**rw** 816455	Hose Assy	1	..
37	**di** 815791	Hose Assy	1	1
38	191519	Hose	1	1
39	104940	Hose	1	1
40	176451	Clamp	2	2
41	**di** 178119	Clamp	2	2
42	15056	Nut	3	3
43	**di** 1346410	Fitting	2	2
43	280156	O-Ring	2	2
44	1338037	Plate	1	1
45	1310027	Clamp	2	2
46	15055	Nut	3	3
47	15155	Lockwasher	3	3
48	18515	Washer	3	3
49	1346408	Spacer	2	2
50	219302	Clamp	6	6
51	1307374	Hose Assy	2	2
52	1346396	Tube Assy	1	..
52	1350893	Tube Assy	..	1
53	1346397	Tube Assy	1	..
53	1350894	Tube Assy	..	1
54	176455	Clamp	1	1
55	1375059	Hose	1	1
56	**os** 14676	Fitting	1	1
57	**os** 17061	Fitting	1	1
58	**os** 16999	Fitting	1	..
59	188701	Hose Assy (Left Compartment)	1	..
59	**os** 189370	Hose Assy	..	1
59	73462	Hose Assy (Center Compartment)	1	.
60	**os** 16883	Fitting	1	..
61	**os** 117265	Hose Assy	1	..
61	188701	Hose Assy (Left Compartment)	..	1
61	73462	Hose Assy (Center Compartment)	..	1
62	1376831	Clamp	6	6
63	15176	Washer	2	2
64	**x** 1375057	Hose	2	..

©2011 HYSTER COMPANY

FOOTNOTES:

a → S/N E008D01516
b → S/N E008D01523
c → S/N E008D01536
d → S/N E008D01588
e → S/N E008D01614
f → S/N E008E01542
g → S/N E008E01550
h → S/N E008E01577
i → S/N E008E01656
j → S/N E008E01664
k → S/N E008E01731
l → S/N E008E01865
m → S/N E008E01906Z
n S/N E008D01517 →
o S/N E008D01524 →
p S/N E008D01537 →
q S/N E008D01589 →
r S/N E008D01615 →
s S/N E008E01543 →
t S/N E008E01551 →
u S/N E008E01578 →
v S/N E008E01657 →
w S/N E008E01665 →
x S/N E008E01732 →
y S/N E008E01866 →
z S/N E008E01907Z →

©2011 HYSTER COMPANY

HYDRAULIC SUPPLY AND RETURN (FIGURE 9-2)

SHEET 2 OF 2 (→ S/N E008E01984B)

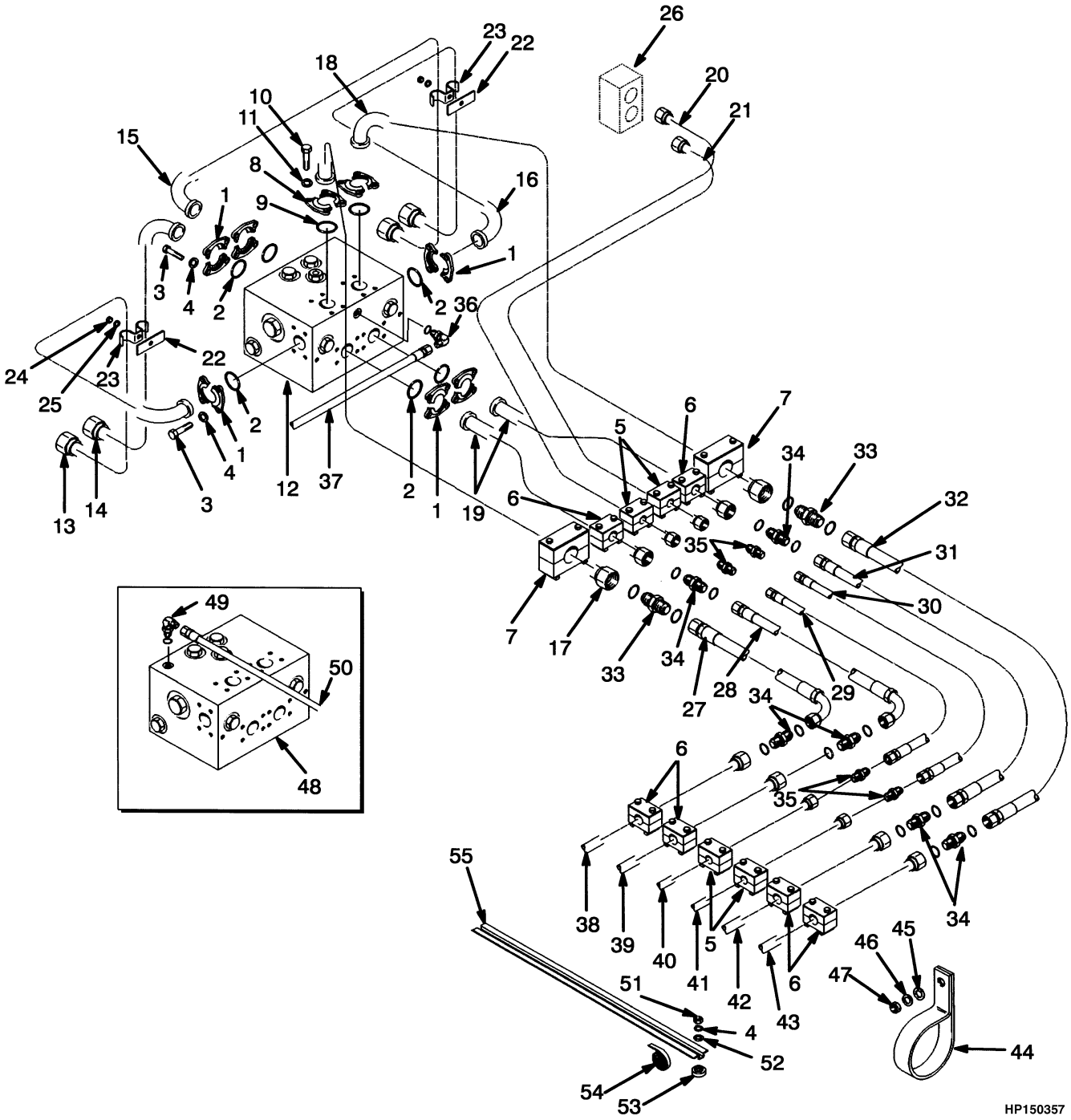

©2011 HYSTER COMPANY

HYDRAULIC SUPPLY AND RETURN

SHEET 2 OF 2 (→ S/N E008E01984B)

KEY:
A: H550F, H620F, H650F, H700F
B: H550FS, H620FS, H700FS

ITEM	PART NO.	DESCRIPTION	QTY A	QTY B
1	190757	Clamp (Split Half)	12	12
2	169787	O-Ring	6	6
3	16828	Capscrew	24	24
4	15156	Lockwasher	26	26
5	1331851	Clamp	4	4
6	1339480	Clamp	6	6
7	1331852	Clamp	2	2
8	17764	Clamp (Split Half)	4	4
9	199917	O-Ring	2	2
10	18558	Capscrew	8	8
11	15157	Lockwasher	8	8
12	1331725	Junction Block (☞Figure 9-9)	1	1
13	1338038	Tube Assy	1	1
14	1338028	Tube Assy	1	1
15	1338027	Tube Assy	1	1
16	1338029	Tube Assy	1	1
17	1346376	Tube Assy	1	1
18	1346375	Tube Assy	1	1
19	1346377	Tube Assy	2	2
20	1346380	Tube Assy	1	1
21	1346379	Tube Assy	1	1
22	1338037	Plate	2	2
23	198691	Clamp	2	2
24	15055	Nut	2	2
25	15155	Lockwasher	2	2
26	1332227	Manifold (☞Figure 9-45)	1	1
27	**ei** 1350895	Hose Assy	..	1
27	815786	Hose Assy	1	..
28	**ei** 1350896	Hose Assy	..	1
28	815784	Hose Assy	1	..
29	**ei** 1350897	Hose Assy	..	1
29	815788	Hose Assy	1	..
30	**ei** 1350898	Hose Assy	..	1
30	815789	Hose Assy	1	..
31	**ei** 1350899	Hose Assy	..	1
31	815785	Hose Assy	1	..
32	**ei** 1307802	Hose Assy	..	1
32	815787	Hose Assy	1	..
33	1337329	Fitting	2	2
33	1336254	O-Ring	1	1
33	280156	O-Ring	1	1
34	1336054	Fitting	6	6
34	280156	O-Ring	2	2
35	14694	Fitting	4	4
36	**ac** 16556	Fitting	1	1

©2011 HYSTER COMPANY

HYDRAULIC SUPPLY AND RETURN

SHEET 2 OF 2 (→ S/N E008E01984B)

KEY:
A: H550F, H620F, H650F, H700F
B: H550FS, H620FS, H700FS

ITEM	PART NO.	DESCRIPTION	QTY A	QTY B
36	**ac** 16481	O-Ring	1	1
37	**ac** 165504	Hose Assy	1	1
38	1331758	Tube Assy	1	..
38	1350863	Tube Assy	..	1
39	1331759	Tube Assy	1	..
39	1350849	Tube Assy	..	1
40	**bd** 1331761	Tube Assy	1	..
40	**bd** 1350865	Tube Assy	..	1
40	**gj** 1384822	Tube Assy	1	..
40	**gj** 1391551	Tube Assy	..	1
41	**bd** 1331760	Tube Assy	1	..
41	**bd** 1350864	Tube Assy	..	1
41	**gj** 1384821	Tube Assy	1	..
41	**gj** 1391550	Tube Assy	..	1
42	1331762	Tube Assy	1	..
42	1350867	Tube Assy	..	1
43	1331763	Tube Assy	1	..
43	1350866	Tube Assy	..	1
44	176453	Clamp	2	2
45	18515	Washer	2	2
46	15155	Lockwasher	2	2
47	15055	Nut	2	2
48	**fh** 1357100	Valve (Two-Speed) (☞Figure 9-10)	1	1
49	**fh** 16558	Fitting	1	1
50	**fh** 117265	Hose Assy	1	..
50	**fh** 189370	Hose Assy	..	1
51	**gj** 15056	Nut	2	2
52	**gj** 15176	Washer	2	2
53	**gj** 223216	Bushing	2	2
54	**gj** 261162	Foam Tape (Sponge Rubber)	1	1
55	**gj** 816131	Channel	1	1

FOOTNOTES:

a → S/N E008D01523
b → S/N E008D01588
c → S/N E008E01542
d → S/N E008E01656
e S/N E008D01521 →
f S/N E008D01524 →
g S/N E008D01589 →
h S/N E008E01543 →
i S/N E008E01556 →
j S/N E008E01657 →

©2011 HYSTER COMPANY

NOTES

©2011 HYSTER COMPANY

HYDRAULIC SUPPLY AND RETURN (FIGURE 9-3)

H550F, H620F, H650F, H700F — SHEET 1 OF 2 (S/N E008E01985B →)

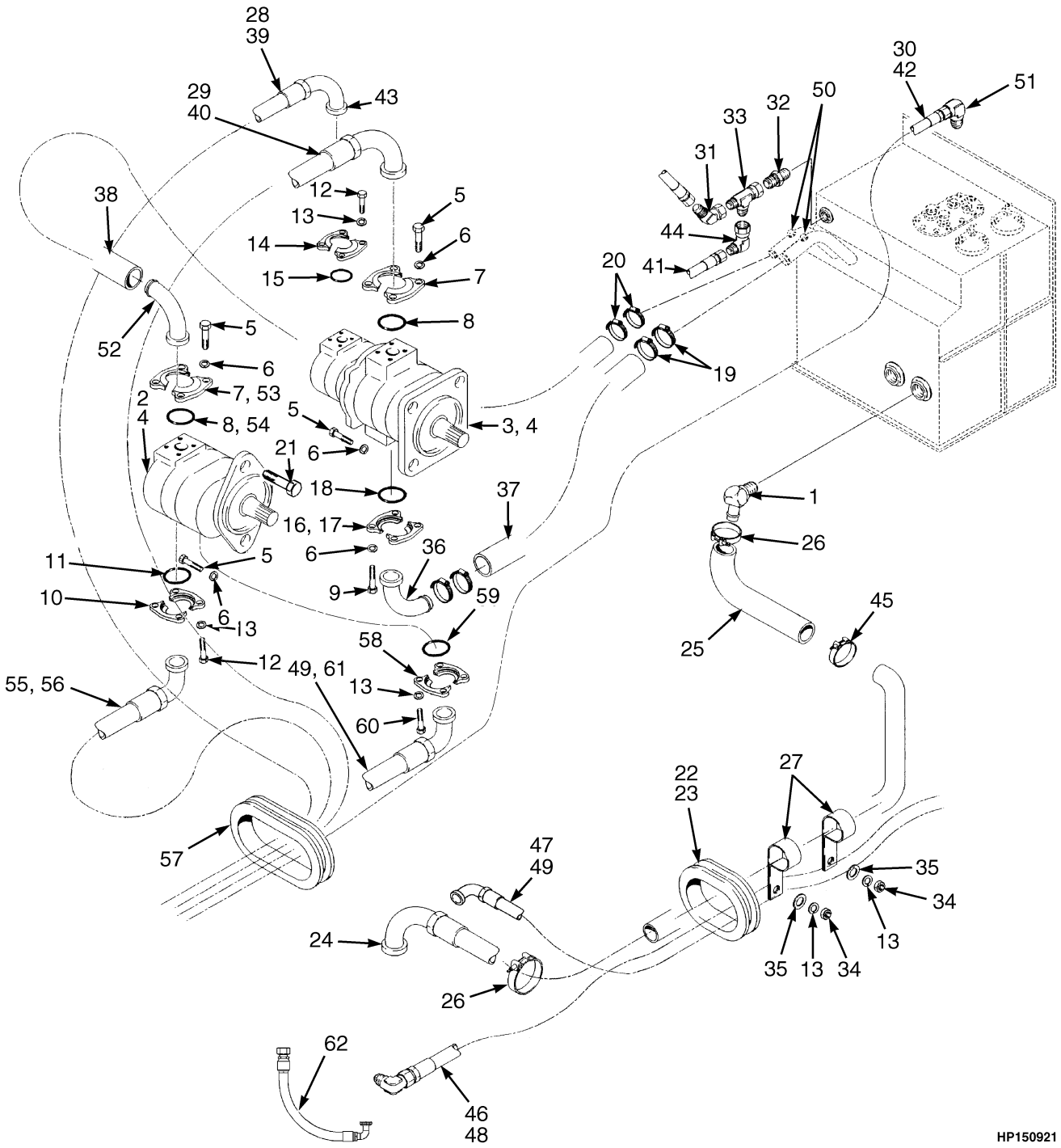

©2011 HYSTER COMPANY

HYDRAULIC SUPPLY AND RETURN

H550F, H620F, H650F, H700F – SHEET 1 OF 2 (S/N E008E01985B →)

ITEM	PART NO.	DESCRIPTION	QTY
1	222479	Fitting	1
2	**b** 1538950	Hydraulic Pump (Small) (☞Figure 9-42)	1
2	**d** 1578831	Hydraulic Pump (Small) (☞Figure 9-43)	1
3	1516902	Hydraulic Pump (Large) (☞Figure 9-40)	1
4	264159	Adhesive	AR
5	18588	Capscrew	14
6	15158	Washer	20
7	**b** 17765	Clamp	4
7	**e** 17765	Clamp	2
8	**b** 210642	O-Ring	2
8	**e** 210642	O-Ring	1
9	16085	Capscrew	4
10	190757	Clamp (Split Half)	10
11	169787	O-Ring	5
12	16828	Capscrew	24
13	15156	Lockwasher	35
14	160266	Clamp (Split Half)	2
15	210641	O-Ring	1
16	88291	Clamp (Split Half)	1
17	1516084	Fitting	1
18	268619	O-Ring	1
19	1394008	Hose Clamp	4
20	**b** 119236	Clamp	4
20	**e** 112989	Hose Clamp	4
21	16830	Capscrew	2
22	1307816	Molding	1
23	238810	Adhesive	AR
24	222590	Fitting	1
25	1545210	Hose (Return)	1
26	1376831	Clamp	2
27	1545418	Clamp (Insulated)	2
28	1350858	Identification Band	2
29	1350861	Identification Band	2
30	1385288	Identification Band	2
31	16999	Fitting	1
32	14676	Fitting	1
33	17061	Fitting	1
34	15056	Nut	5
35	15176	Washer	8
36	162231	Fitting	1
37	88292	Hose	1
38	**b** 104940	Hose	1
38	**e** 1578994	Hose	1
39	1545214	Hose Assy	1
40	1544782	Hose Assy	1
41	117265	Hose Assy	1
42	1547266	Hose Assy	1
43	1544777	Adapter	1
44	16883	Fitting	1
45	**c** 140612	Hose Clamp	1

©2011 HYSTER COMPANY

HYDRAULIC SUPPLY AND RETURN

H550F, H620F, H650F, H700F – SHEET 1 OF 2 (S/N E008E01985B →)

ITEM	PART NO.	DESCRIPTION	QTY
45	**f** 178119	Clamp	1
46	**a** 1546299	Hose Assy	1
47	**a** 1546300	Hose Assy	1
48	1391861	Identification Band	1
49	1391862	Identification Band	1
50	14386	Fitting	2
51	1385283	Fitting	1
52	**b** 172988	Fitting	1
52	**e** 1578957	Fitting	1
53	**e** 222531	Clamp (Split Half)	2
54	**e** 198518	O-Ring	1
55	1350857	Identification Band	2
56	1545215	Hose Assy	1
57	1336085	Molding	1
58	**e** 190757	Clamp (Split Half)	2
59	**e** 199085	O-Ring	1
60	**e** 16815	Capscrew	4
61	**e** 1637643	Hose Assy	1
62	**g** 1637646	Hose Assy	1

FOOTNOTES:

a → 10/2004
b → S/N E008E02016B
c → S/N E008E02028C
d S/N E008E02017B →
e S/N E008E02017B → EXC. 02026
f S/N E008E02029C →
g S/N E008E02106D →

©2011 HYSTER COMPANY

NOTES

©2011 HYSTER COMPANY

HYDRAULIC SUPPLY AND RETURN (FIGURE 9-4)

H550F, H620F, H650F, H700F — SHEET 2 OF 2 (S/N E008E01985B →)

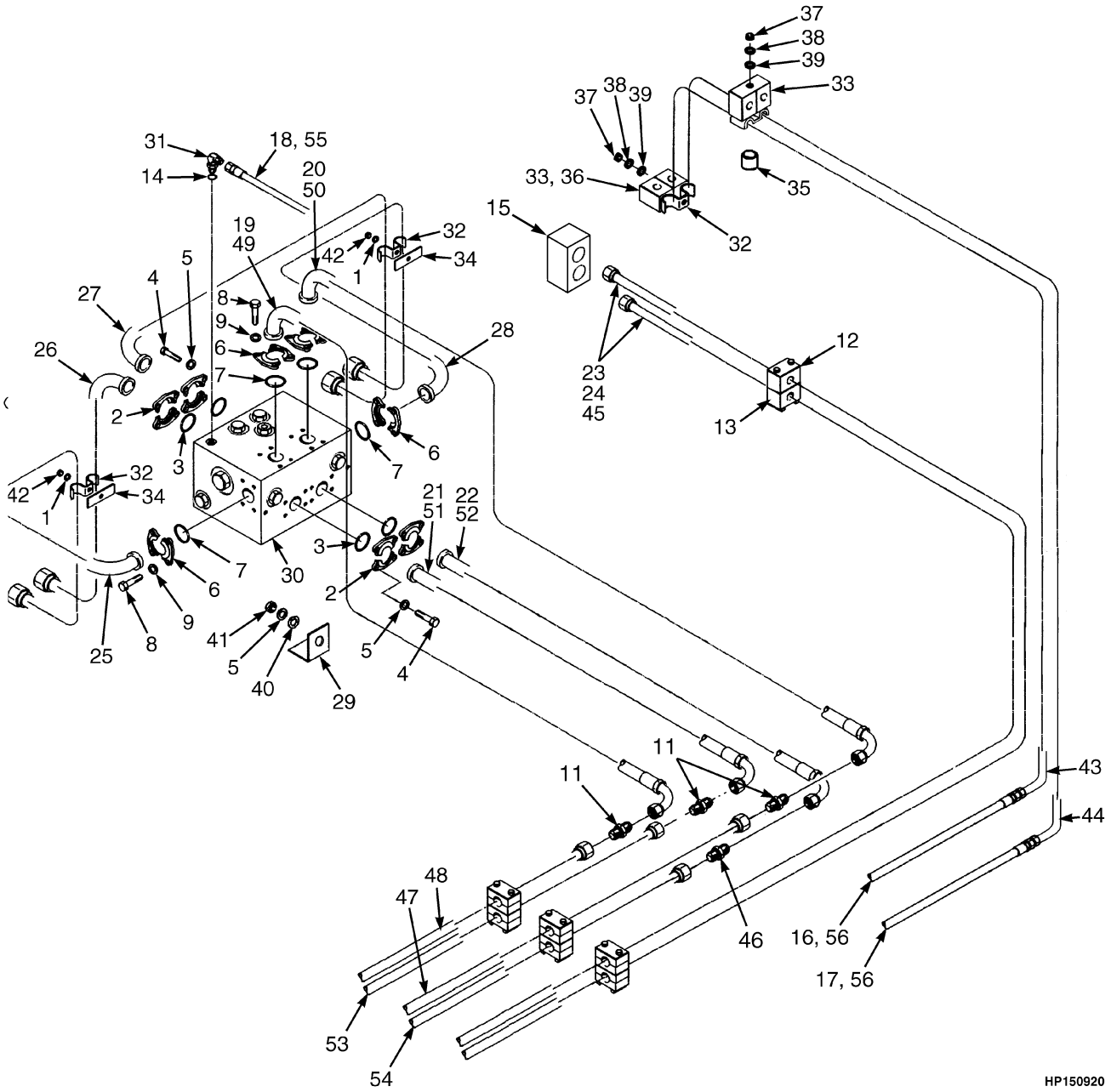

©2011 HYSTER COMPANY

HYDRAULIC SUPPLY AND RETURN

H550F, H620F, H650F, H700F – SHEET 2 OF 2 (S/N E008E01985B →)

ITEM	PART NO.	DESCRIPTION	QTY
1	15158	Washer	20
2	190757	Clamp (Split Half)	10
3	169787	O-Ring	5
4	16828	Capscrew	24
5	15156	Lockwasher	35
6	17764	Clamp (Split Half)	8
7	199917	O-Ring	4
8	18558	Capscrew	16
9	15157	Lockwasher	16
10	238810	Adhesive	AR
11	1545843	Fitting	3
12	1469189	Clamp	1
13	**a** 1469188	Clamp	1
13	**b** 1476461	Clamp	1
14	323864	Strap Clamp	AR
15	373057	Manifold (Tilt Cylinder)	1
16	1309206	Identification Band	2
17	1309205	Identification Band	2
18	1350860	Identification Band	2
19	1355041	Identification Band	4
20	1355042	Identification Band	4
21	1355043	Identification Band	4
22	1355044	Identification Band	4
23	1357166	Identification Band	2
24	1357167	Identification Band	2
25	1338038	Tube Assy	1
26	1338028	Tube Assy	1
27	1338027	Tube Assy	1
28	1338029	Tube Assy	1
29	1335742	Bracket	4
30	1357100	Valve	1
31	16558	Fitting	1
32	1338037	Plate	3
33	1373335	Clamp	2
34	198691	Clamp	2
35	1346408	Spacer	2
36	1393802	Clamp	6
37	15055	Nut	3
38	15155	Lockwasher	3
39	18515	Washer	3
40	15056	Nut	5
41	15176	Washer	8
42	15058	Nut	2
43	1346396	Tube Assy	1
44	1346397	Tube Assy	1
45	1544782	Hose Assy	1
46	1522441	Fitting	1
47	1545221	Hose Assy	1
48	1545222	Hose Assy	1
49	1545223	Hose Assy	1

©2011 HYSTER COMPANY

HYDRAULIC SUPPLY AND RETURN

H550F, H620F, H650F, H700F – SHEET 2 OF 2 (S/N E008E01985B →)

ITEM	PART NO.	DESCRIPTION	QTY
50	1545224	Hose Assy	1
51	1545834	Hose Assy	1
52	1545835	Hose Assy	1
53	1545836	Hose Assy	1
54	1545837	Hose Assy	1
55	117265	Hose Assy	1
56	1547277	Hose Assy	2

FOOTNOTES:

a S/N E008E01985B ↔ PENDING PER ECN 68453-22

b PENDING PER ECN 68453-22 →

©2011 HYSTER COMPANY

NOTES

©2011 HYSTER COMPANY

HYDRAULIC SUPPLY AND RETURN (FIGURE 9-5)

H440FS, H550FS, H620FS, H700FS — SHEET 1 OF 2 (S/N E008E01985B →)

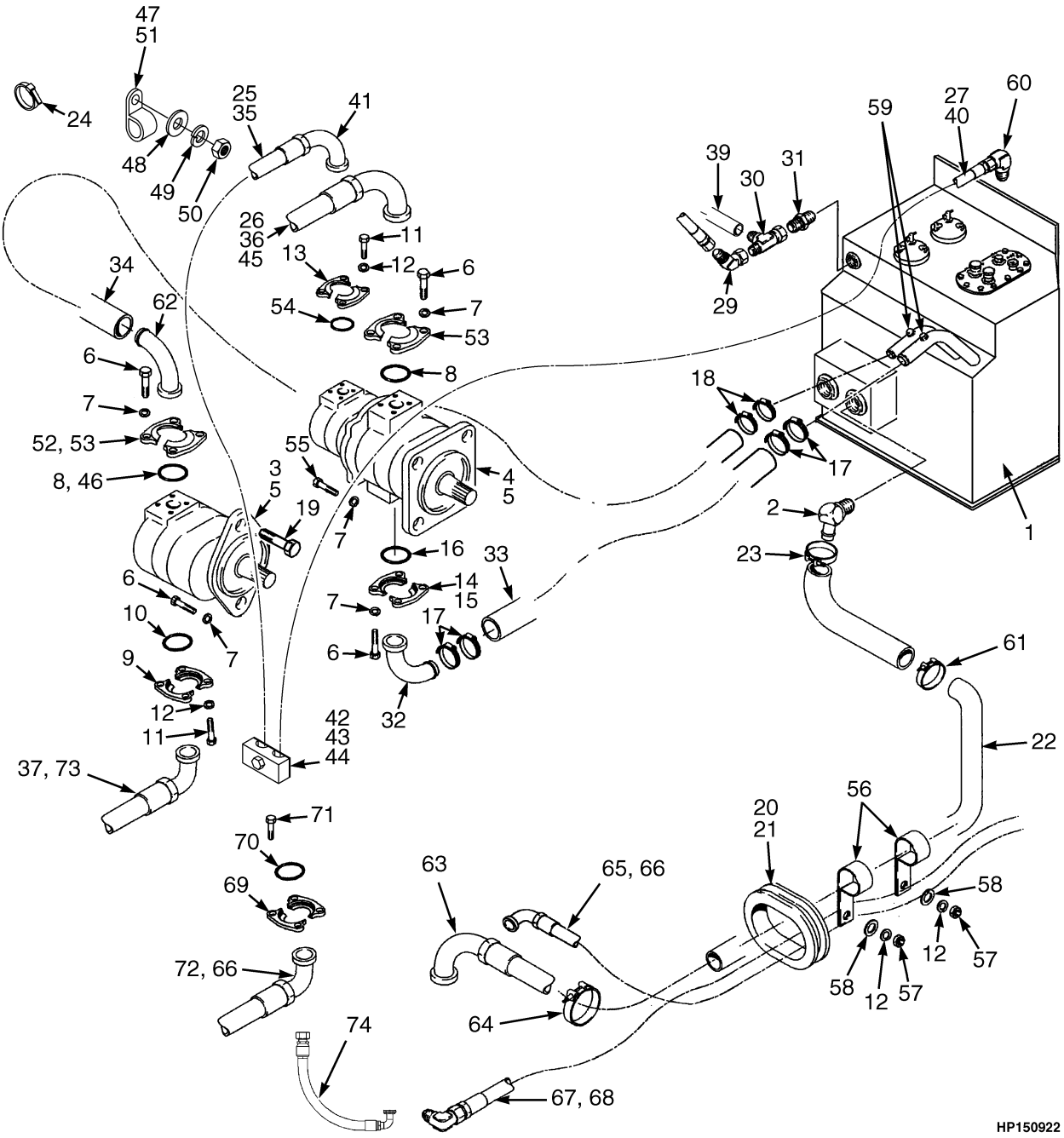

©2011 HYSTER COMPANY

HYDRAULIC SUPPLY AND RETURN

H440FS, H550FS, H620FS, H700FS – SHEET 1 OF 2 (S/N E008E01985B →)

ITEM	PART NO.	DESCRIPTION	QTY
1	1394062	Hyd Tank Wldmt (☞Figure 9-16)	1
2	222479	Fitting	1
3	**b** 1538950	Hydraulic Pump (☞Figure 9-42)	1
3	**f** 1578831	Hydraulic Pump (☞Figure 9-43)	1
4	1516902	Hydraulic Pump (☞Figure 9-40)	1
5	264159	Adhesive	AR
6	18588	Capscrew	14
7	15158	Washer	20
8	**b** 210642	O-Ring	2
8	**g** 210642	O-Ring	1
9	190757	Clamp (Split Half)	10
10	169787	O-Ring	5
11	16828	Capscrew	24
12	15156	Lockwasher	35
13	160266	Clamp (Split Half)	2
14	88291	Clamp (Split Half)	1
15	1516084	Fitting	1
16	268619	O-Ring	1
17	1394008	Hose Clamp	4
18	**b** 119236	Clamp	4
18	**g** 112989	Hose Clamp	4
19	16830	Capscrew	2
20	1307816	Molding	1
21	238810	Adhesive	AR
22	1545210	Hose (Return)	1
23	1376831	Clamp	2
24	323864	Strap Clamp	AR
25	1350858	Identification Band	2
26	1350861	Identification Band	2
27	1385288	Identification Band	2
28	1357166	Identification Band	2
29	16999	Fitting	1
30	14676	Fitting	1
31	17061	Fitting	1
32	1517963	Tube	1
33	1355037	Hose	1
34	**b** 392877	Hose	1
34	**g** 1578994	Hose	1
35	1545211	Hose Assy	1
36	1544783	Hose Assy	1
37	1545212	Hose Assy	1
38	1545213	Hose Assy	2
39	189370	Hose Assy	1
40	1547171	Hose Assy	1
41	1544776	Adapter (Flange)	1
42	1511938	Clamp	1
43	1511943	Cover Plate (Cover)	4
44	302400	Nut	1
45	316596	Sleeve (Coil)	1
46	**g** 198518	O-Ring	1

©2011 HYSTER COMPANY

HYDRAULIC SUPPLY AND RETURN

H440FS, H550FS, H620FS, H700FS – SHEET 1 OF 2 (S/N E008E01985B →)

ITEM	PART NO.	DESCRIPTION	QTY
47	**c** 1350911	Strap	1
48	**c** 15134	Washer	1
49	**c** 15156	Lockwasher	1
50	**c** 15056	Nut	1
51	323864	Strap Clamp	1
52	**g** 222531	Clamp (Split Half)	2
53	**b** 17765	Clamp	4
53	**g** 17765	Clamp	2
54	210641	O-Ring	1
55	16085	Capscrew	4
56	1545418	Clamp (Insulated)	2
57	15056	Nut	5
58	15176	Washer	8
59	14386	Fitting	2
60	1385283	Fitting	1
61	**d** 1469189	Clamp	1
61	**e** 888090	Clamp	1
62	**b** 1360164	Fitting	1
62	**g** 1568677	Fitting	1
63	222590	Fitting	1
64	1376831	Clamp	2
65	**a** 1546300	Hose Assy	1
66	1391862	Identification Band	1
67	**a** 1546299	Hose Assy	1
68	1391861	Identification Band	1
69	**g** 190757	Clamp (Split Half)	2
70	**g** 199085	O-Ring	1
71	**g** 16815	Capscrew	4
72	**g** 1638833	Hose Assy	1
73	1350857	Identification Band	1
74	**e** 1637646	Hose Assy	1

FOOTNOTES:

a → 10/2004
b → S/N E008E02016B
c → S/N E008E02028C
d S/N E008E02029C ↔ S/N E008E02105D
e S/N E008E02106D →
f S/N E008E02017B →
g S/N E008E02017B → EXC. 02026

©2011 HYSTER COMPANY

NOTES

©2011 HYSTER COMPANY

HYDRAULIC SUPPLY AND RETURN (FIGURE 9-6)

H440FS, H550FS, H620FS, H700FS — SHEET 2 OF 2 (S/N E008E01985B →)

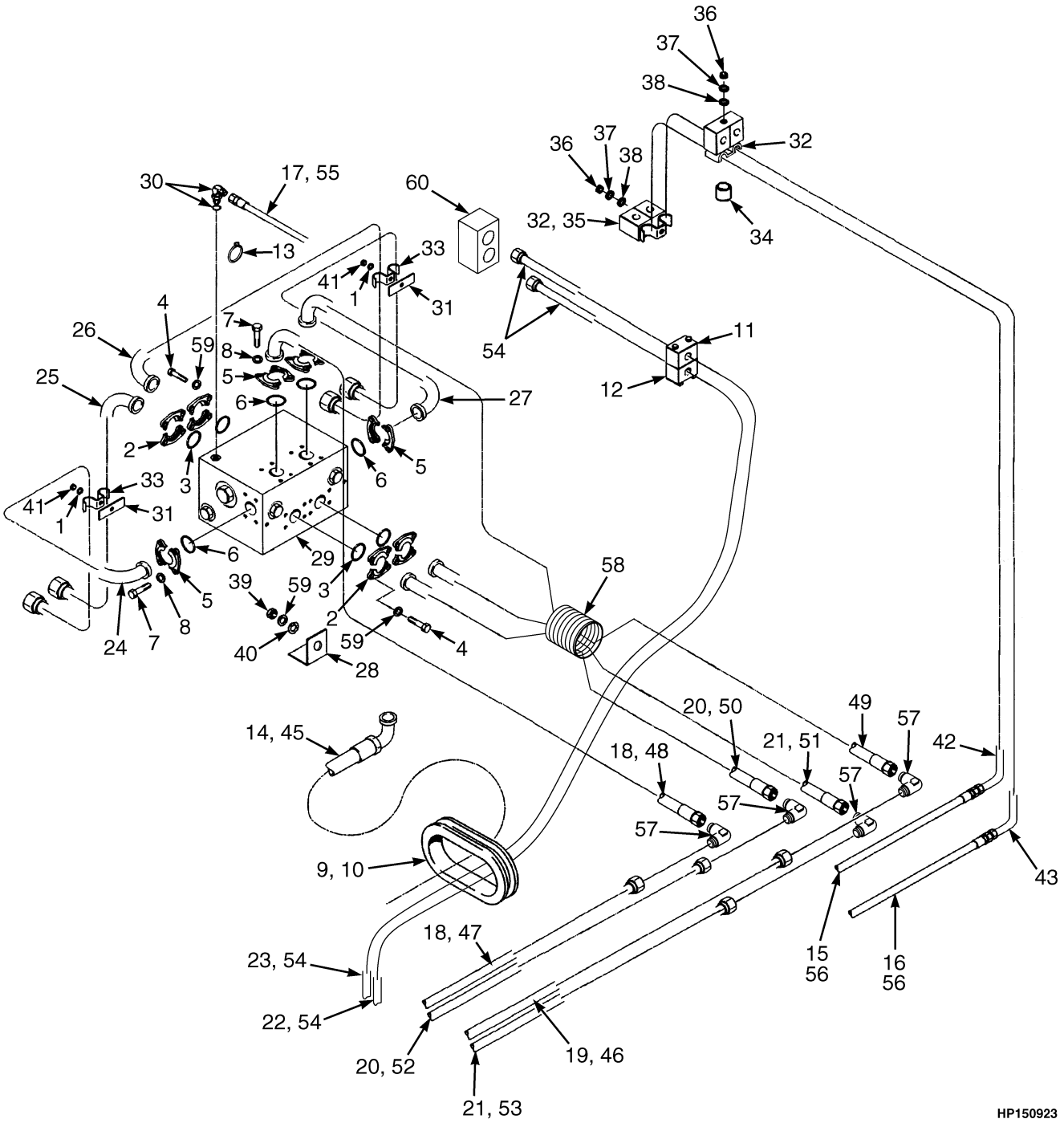

©2011 HYSTER COMPANY

HYDRAULIC SUPPLY AND RETURN

H440FS, H550FS, H620FS, H700FS – SHEET 2 OF 2 (S/N E008E01985B →)

ITEM	PART NO.	DESCRIPTION	QTY
1	15158	Washer	20
2	190757	Clamp (Split Half)	10
3	169787	O-Ring	5
4	16828	Capscrew	24
5	17764	Clamp (Split Half)	8
6	199917	O-Ring	4
7	18558	Capscrew	16
8	15157	Lockwasher	16
9	238810	Adhesive	AR
10	1336085	Molding	1
11	1469189	Clamp	1
12	**a** 1476461	Clamp	1
12	**b** 1476461	Clamp	1
13	323864	Strap Clamp	AR
14	1350857	Identification Band	2
15	1309206	Identification Band	2
16	1309205	Identification Band	2
17	1350860	Identification Band	2
18	1355041	Identification Band	4
19	1355042	Identification Band	4
20	1355043	Identification Band	4
21	1355044	Identification Band	4
22	1357166	Identification Band	2
23	1357167	Identification Band	2
24	1338038	Tube Assy	1
25	1338028	Tube Assy	1
26	1338027	Tube Assy	1
27	1338029	Tube Assy	1
28	1335742	Bracket	4
29	1357100	Valve (☞Figure 9-10)	1
30	16558	Fitting	1
30	16483	O-Ring	1
31	1338037	Plate	3
32	1373335	Clamp	2
33	198691	Clamp	2
34	1346408	Spacer	2
35	1393802	Clamp	6
36	15055	Nut	3
37	15155	Lockwasher	3
38	18515	Washer	3
39	15056	Nut	5
40	15176	Washer	8
41	15058	Nut	2
42	1350893	Tube Assy	1
43	1350894	Tube Assy	1
44	1544783	Hose Assy	2
45	1545212	Hose Assy	1
46	1545218	Hose Assy	1
47	1545217	Hose Assy	1
48	1656479	Hose Assy	1

©2011 HYSTER COMPANY

HYDRAULIC SUPPLY AND RETURN

H440FS, H550FS, H620FS, H700FS – SHEET 2 OF 2 (S/N E008E01985B →)

ITEM	PART NO.	DESCRIPTION	QTY
49	1656480	Hose Assy	1
50	1656481	Hose Assy	1
51	1656482	Hose Assy	1
52	1545840	Hose Assy	1
53	1545841	Hose Assy	1
54	1545213	Hose Assy	2
55	189370	Hose Assy	1
56	1547276	Hose Assy	2
57	1545843	Fitting	4
58	23908	Sleeve	2
59	15156	Lockwasher	35
60	373057	Manifold (Tilt Cylinder)	1

FOOTNOTES:

a S/N E008E01985B ↔ PENDING PER ECN 68453-22

b PENDING PER ECN 68453-22 →

©2011 HYSTER COMPANY

NOTES

©2011 HYSTER COMPANY

OIL COOLER AND ATTACHING PARTS (FIGURE 9-7)

(S/N E008E01886Z ↔ S/N E008E02041C)

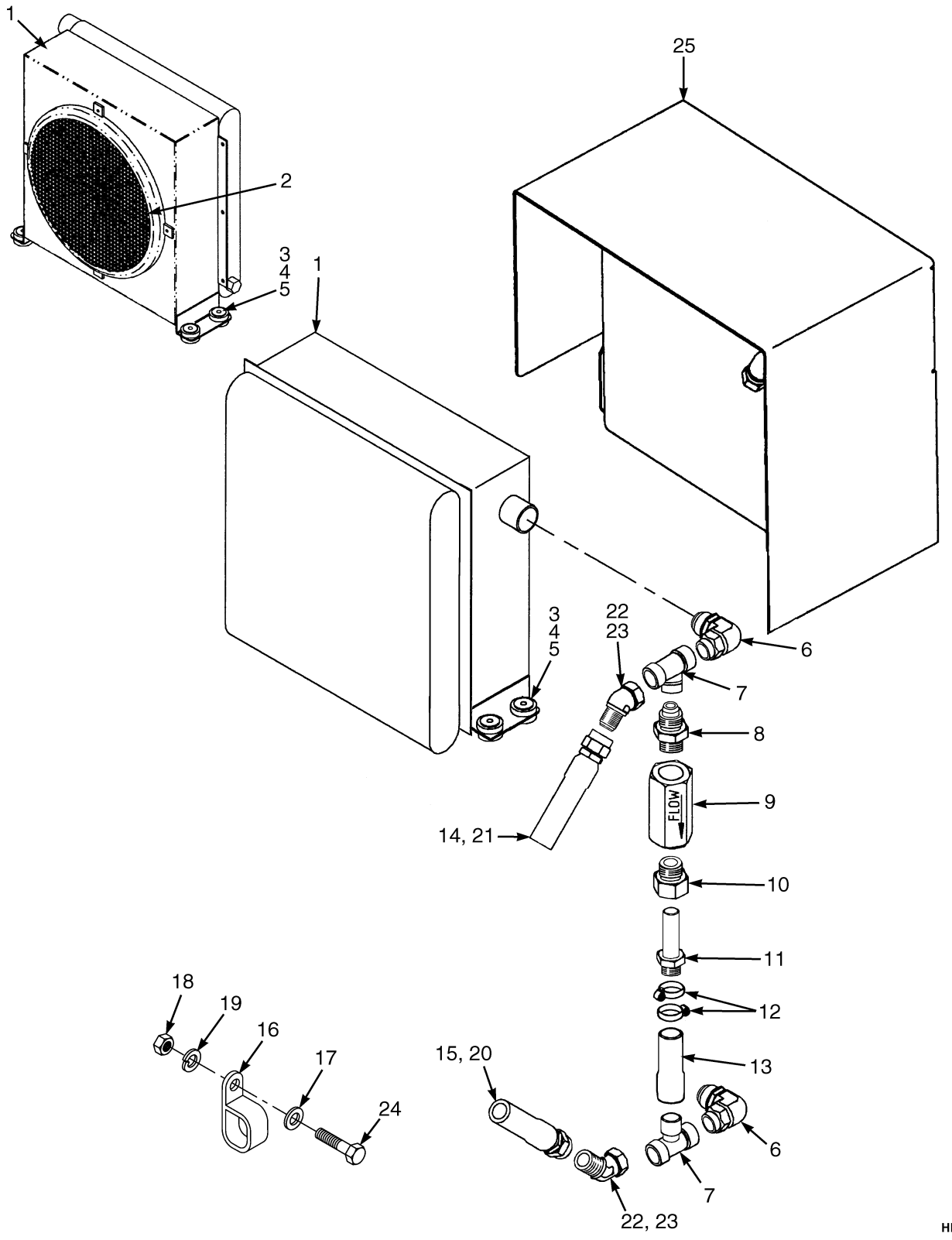

©2011 HYSTER COMPANY

OIL COOLER AND ATTACHING PARTS

(S/N E008E01886Z ↔ S/N E008E02041C)

KEY:
A: H550F, H620F, H650F, H700F
B: H550FS, H620FS, H700FS

ITEM	PART NO.	DESCRIPTION	QTY A	QTY B
1	1495139	Cooler	1	1
	a 1384009	Core	1	1
	a 1384010	Frame	1	1
	a 1384013	Switch (Thermo)	1	1
2	1384011	Shroud	1	1
2	1384012	Fan	1	1
3	1384014	Rubber Cushion	8	8
4	1569595	Spacer	4	4
5	1569596	Washer	8	8
6	1518578	Fitting	2	2
7	1514910	Swivel	2	2
8	97540	Fitting	1	1
9	816232	Check Valve	1	1
10	222466	Fitting	1	1
11	88195	Fitting	1	1
12	127045	Clamp (Hose)	2	2
13	1514980	Hose Assy	1	1
14	1546299	Hose Assy	1	1
15	1546300	Hose Assy	1	1
15	1546301	Hose Assy	..	1
16	298829	Clamp	4	1
17	15176	Washer	3	1
18	15056	Nut	3	1
19	15156	Lockwasher	3	1
20	1391861	Identification Band	2	2
21	1391862	Identification Band	2	2
22	17042	Fitting	2	..
23	1350840	Fitting	..	2
24	16598	Capscrew	1	..
25	1531748	Plate	..	1

FOOTNOTES:

a Not Illustrated

©2011 HYSTER COMPANY

OIL COOLER AND ATTACHING PARTS (FIGURE 9-8)

(S/N E008E02042C →)

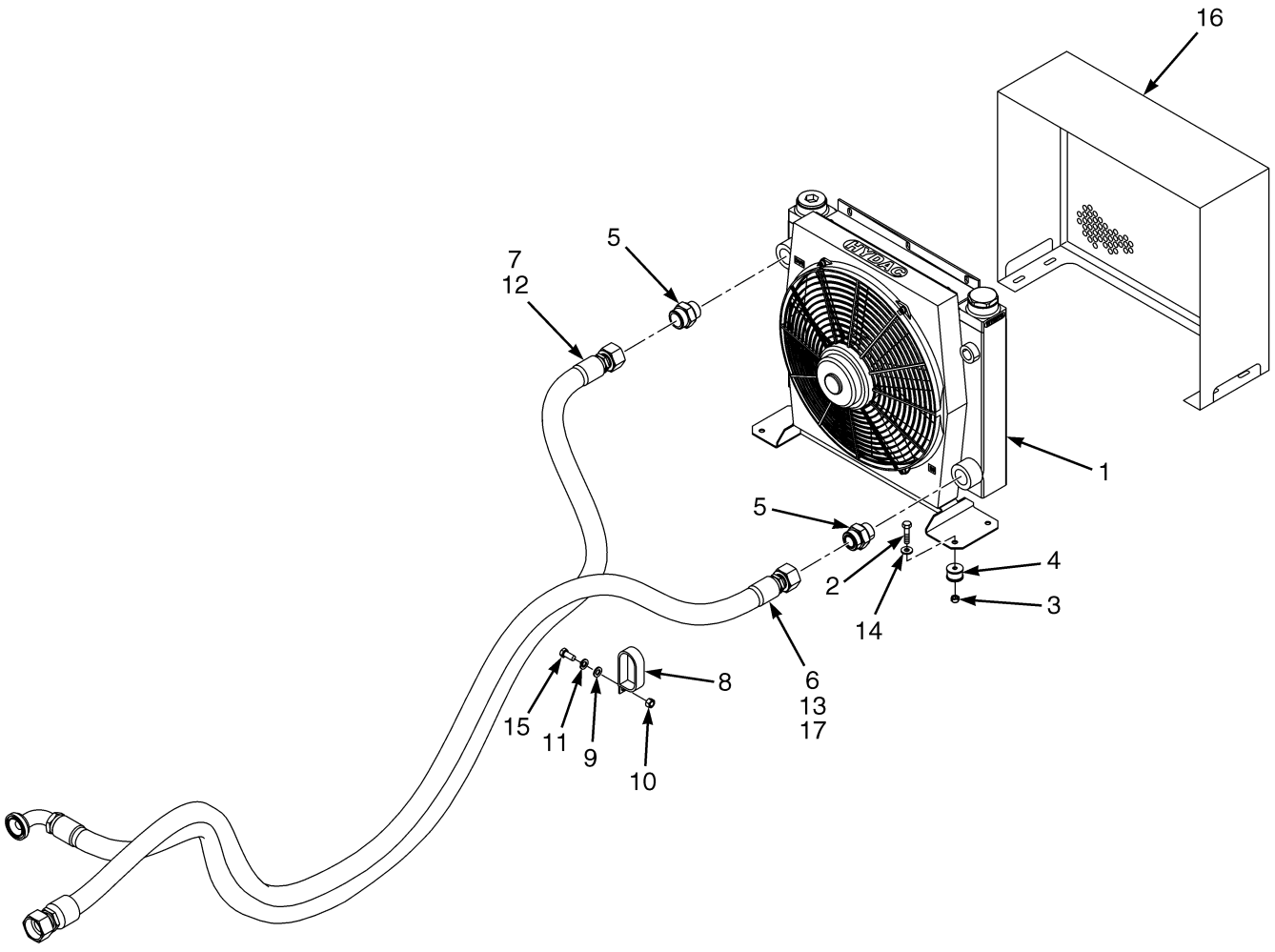

©2011 HYSTER COMPANY

OIL COOLER AND ATTACHING PARTS

(S/N E008E02042C →)

KEY:
A: H550F, H620F, H650F, H700F
B: H550FS, H620FS, H700FS

ITEM	PART NO.	DESCRIPTION	QTY A	QTY B
1	1566466	Oil Cooler	1	1
1	4027739	Thermostat	1	1
1	4027738	Fan	1	1
1	4027737	Frame	1	1
1	4027736	Radiator	1	1
2	287805	Capscrew	4	4
3	302400	Nut	4	4
4	353453	Mount	4	4
5	**a** 1470852	Fitting	2	2
5	**b** 1470850	Fitting	2	2
6	**a** 1582281	Hose Assy	1	..
6	**b** 1637643	Hose Assy	1	..
6	**a** 1582282	Hose Assy	..	1
6	**b** 1638833	Hose Assy	..	1
7	**a** 1582280	Hose Assy	1	..
7	**b** 1637644	Hose Assy	1	..
7	**a** 1582283	Hose Assy	..	1
7	**b** 1638834	Hose Assy	..	1
8	**a** 298829	Clamp	4	1
8	**b** 212786	Clamp	4	1
9	15176	Washer	3	1
10	**a** 15056	Nut	3	1
10	**b** 15056	Nut	6	3
11	**a** 15156	Lockwasher	3	1
11	**b** 15156	Lockwasher	10	7
12	1391861	Identification Band	2	2
13	1391862	Identification Band	2	2
14	320158	Washer	8	8
15	16598	Capscrew	1	..
16	1583626	Plate	..	1
17	**b** 316596	Sleeve (Coil)	1	1

FOOTNOTES:

a → S/N E008E02105D

b S/N E008E02106D →

©2011 HYSTER COMPANY

JUNCTION BLOCK (FIGURE 9-9)

(→ S/N E008E01542) (→ S/N E008D01523)

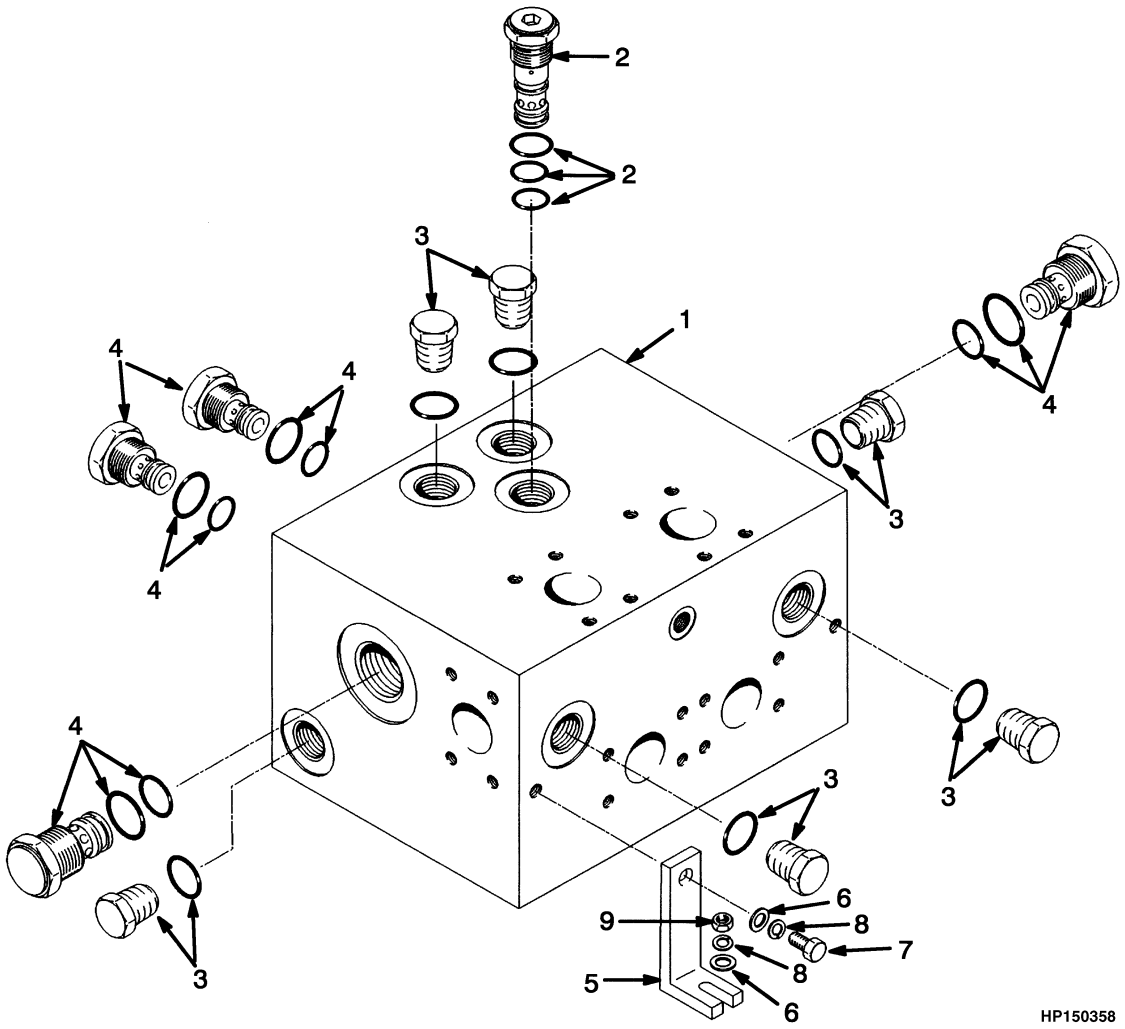

©2011 HYSTER COMPANY

JUNCTION BLOCK

(→ S/N E008E01542) (→ S/N E008D01523)

ITEM	PART NO.	DESCRIPTION	QTY
1	1331725	Junction Block	1
2	351943	Valve (Two-Speed)	1
2	1357722	Kit-Shim	1
2	338544	Kit-Seal	AR
3	14604	Plug	6
3	16487	O-Ring	1
4	331490	Check Valve	4
4	334200	Kit-Seal	AR
5	1335742	Bracket	4
6	15176	Washer	8
7	16805	Capscrew	4
8	15156	Lockwasher	8
9	15056	Nut	4

©2011 HYSTER COMPANY

TWO-SPEED LIFT VALVE (FIGURE 9-10)

(S/N E008D01524 →) (S/N E008E01543 →)

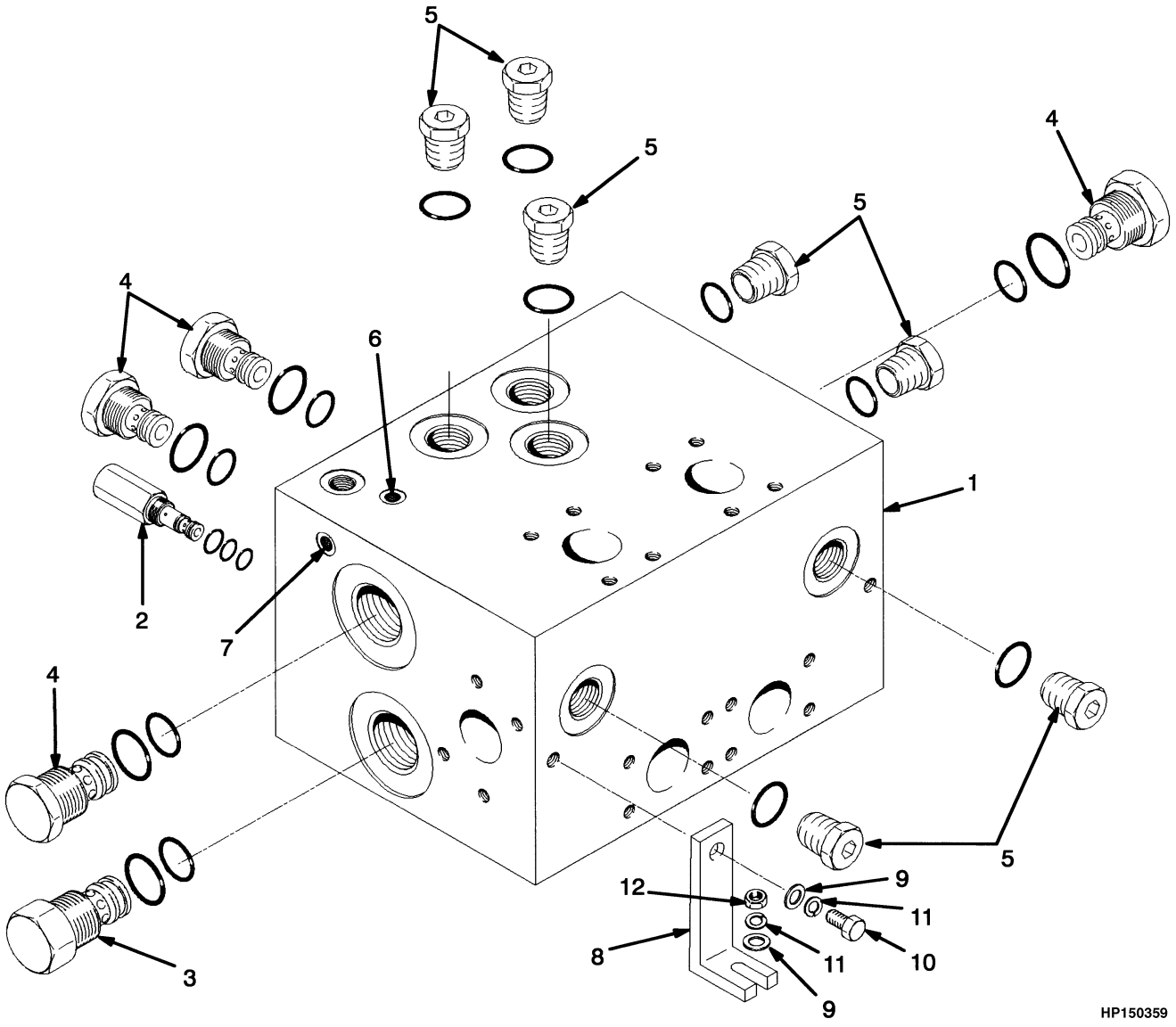

©2011 HYSTER COMPANY

TWO-SPEED LIFT VALVE

(S/N E008D01524 →) (S/N E008E01543 →)

ITEM	PART NO.	DESCRIPTION	QTY
	1357100	Valve	1
1	. . . . .	Body	1
2	1367122	Valve	1
2	359756	Kit-Seal	1
3	1367121	Valve	1
3	1367123	Kit-Seal	1
4	1526591	Check Valve	4
4	334200	Kit-Seal	1
5	233683	Fitting	7
5	16487	O-Ring	1
6	222441	Fitting	2
6	16479	O-Ring	1
7	222442	Fitting	1
7	16481	O-Ring	1
8	1335742	Bracket	4
9	15176	Washer	8
10	16805	Capscrew	4
11	15156	Lockwasher	8
12	15056	Nut	4

©2011 HYSTER COMPANY

ACCUMULATOR CHARGE VALVE (FIGURE 9-11)

(→ S/N E008D01522)

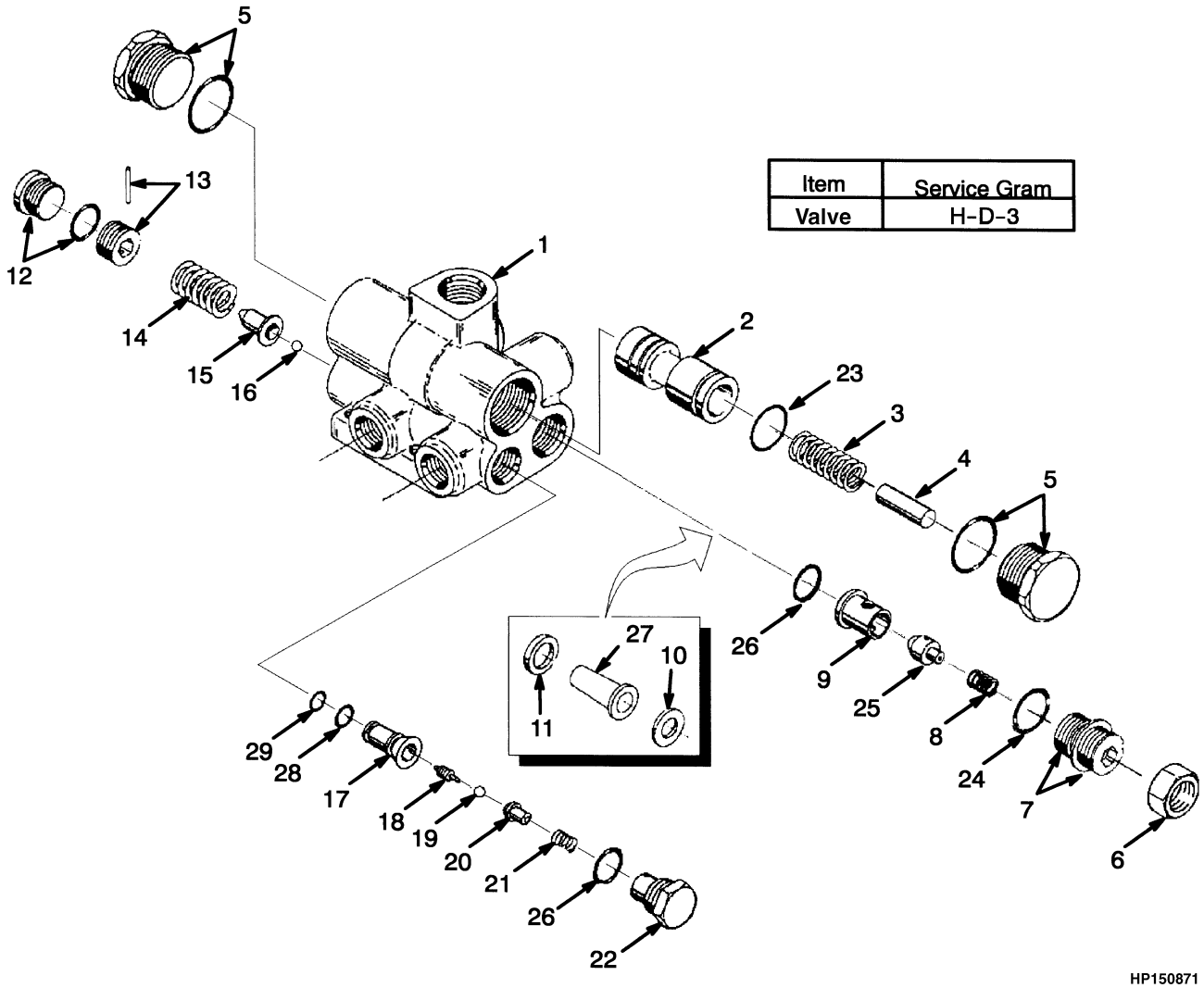

©2011 HYSTER COMPANY

ACCUMULATOR CHARGE VALVE

(→ S/N E008D01522)

ITEM	PART NO.	DESCRIPTION	QTY
	1330170	Valve	1
1	. . . . .	Housing	1
2	. . . . .	Spool	1
3	1331671	Spring	1
4	. . . . .	Rod	1
5	1336749	Plug	2
5	1331673	Plug	1
5	. . . . .	O-Ring	1
6	1331682	Nut	1
7	1331674	Screw	1
7	1336764	Screw	1
7	1336765	Washer	1
8	1331676	Spring	1
9	1331677	Seat Assy	1
10	1331678	Washer	1
11	1331679	Washer	1
12	1331691	Plug	1
12	. . . . .	O-Ring	1
13	1367480	Screw	
13	1331681	Screw	1
13	. . . . .	Plug	1
14	1336755	Spring	1
15	1331680	Retainer	1
16	1331689	Ball	1
17	1336753	Insert	1
18	1331687	Spool	1
19	1331686	Ball	1
20	1331685	Stop	1
21	1331684	Spring	1
22	1331683	Plug	1
23	. . . . .	Seal	1
24	. . . . .	O-Ring	1
25	. . . . .	Poppet	1
26	. . . . .	O-Ring	2
27	. . . . .	Filter	1
28	. . . . .	O-Ring	1
29	. . . . .	O-Ring	1
	1355123	Kit-Repair Charge Valve	1

©2011 HYSTER COMPANY

ACCUMULATOR CHARGE VALVE (FIGURE 9-12)

(S/N E008D01523 ↔ S/N E008D01525)

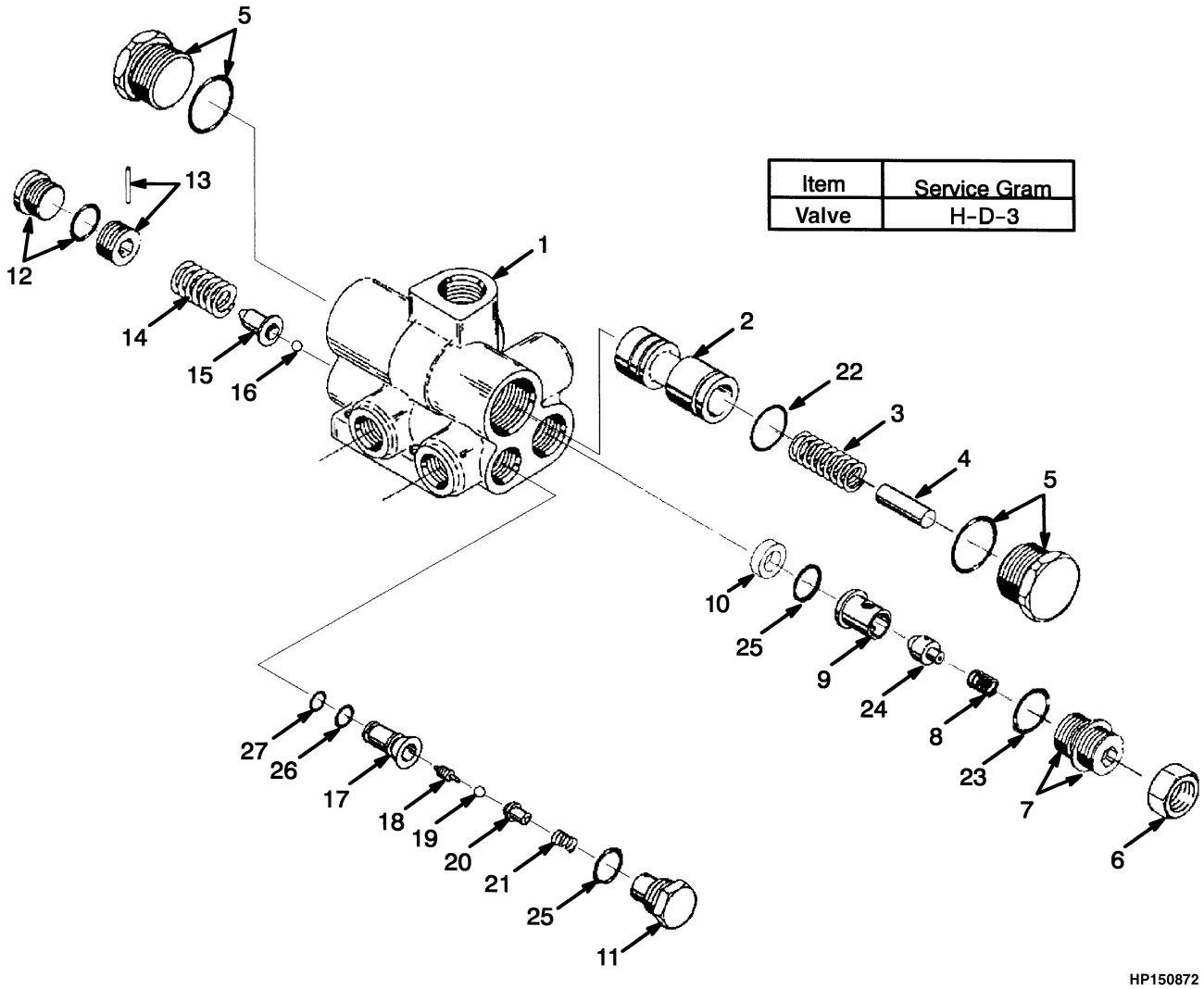

©2011 HYSTER COMPANY

ACCUMULATOR CHARGE VALVE

(S/N E008D01523 ↔ S/N E008D01525)

ITEM	PART NO.	DESCRIPTION	QTY
	1355114	Valve	1
1	. . . . .	Housing	1
2	. . . . .	Spool	1
3	1331671	Spring	1
4	. . . . .	Rod	1
5	1336749	Plug	2
5	1331673	Plug	1
5	. . . . .	O-Ring	1
6	1331682	Nut	1
7	1331674	Screw	1
7	1336764	Screw	1
7	1336765	Washer	1
8	1331676	Spring	1
9	1331677	Seat Assy	1
10	1355124	Washer	1
11	1331683	Plug	1
12	1331691	Plug	1
12	. . . . .	O-Ring	1
13	1367480	Screw	
13	1331681	Screw	1
13	. . . . .	Plug	1
14	1336755	Spring	1
15	1331680	Retainer	1
16	1331689	Ball	1
17	1336753	Insert	1
18	1331687	Spool	1
19	1331686	Ball	1
20	1331685	Stop	1
21	1331684	Spring	1
22	. . . . .	Seal	1
23	. . . . .	O-Ring	1
24	. . . . .	Poppet	1
25	. . . . .	O-Ring	2
26	. . . . .	O-Ring	1
27	. . . . .	O-Ring	1
	1355123	Kit-Repair Charge Valve	1

©2011 HYSTER COMPANY

ACCUMULATOR CHARGE VALVE (FIGURE 9-13)

(S/N E008D01526 →)

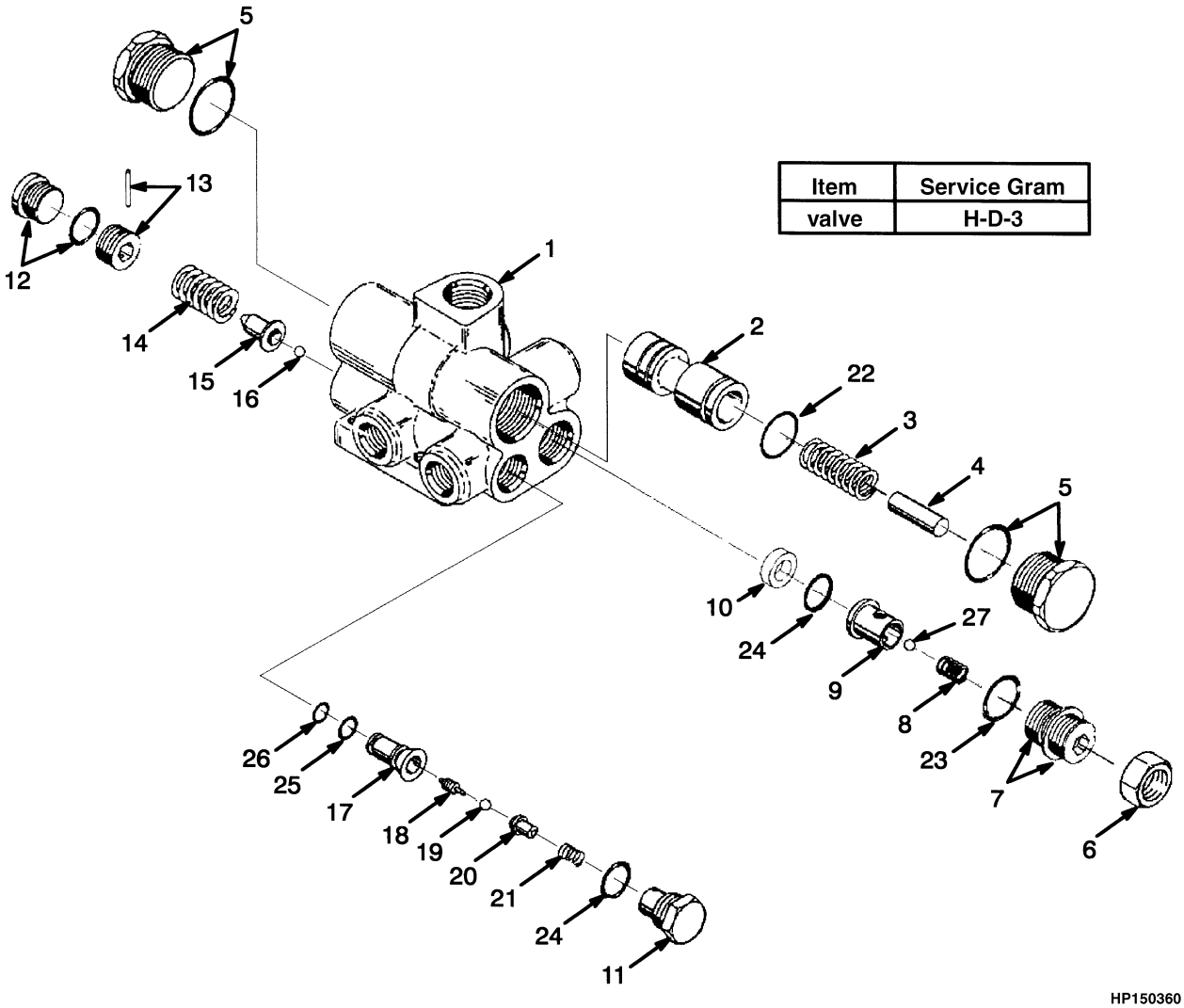

Item	Service Gram
valve	H-D-3

©2011 HYSTER COMPANY

ACCUMULATOR CHARGE VALVE

(S/N E008D01526 →)

ITEM	PART NO.	DESCRIPTION	QTY
	1371389	Valve	1
1	. . . . .	Housing	1
2	. . . . .	Spool	1
3	1331671	Spring	1
4	. . . . .	Rod	1
5	1376936	Plug	2
6	1331682	Nut	1
7	. . . . .	Screw (Adjusting)	1
7	. . . . .	Screw	1
7	1336765	Washer	1
8	1331676	Spring	1
9	. . . . .	Seat	1
10	1355124	Washer	1
11	1331683	Plug	1
12	1331691	Plug	1
12	. . . . .	O-Ring	1
13	1367480	Screw	
13	1331681	Screw	1
13	. . . . .	Plug	1
14	1336755	Spring	1
15	1331680	Retainer	1
16	1331689	Ball	1
17	1336753	Insert	1
18	1331687	Spool	1
19	1331686	Ball	1
20	1331685	Stop	1
21	1331684	Spring	1
22	. . . . .	Seal	1
23	. . . . .	O-Ring	1
24	. . . . .	O-Ring	2
25	. . . . .	O-Ring	1
26	. . . . .	O-Ring	1
27	1376939	Ball	1
	1355123	Kit-Repair Charge Valve	1

©2011 HYSTER COMPANY

ACCUMULATOR AND ATTACHING PARTS (FIGURE 9-14)

Item	Service Gram
1	H-D-2
1	H-D-6

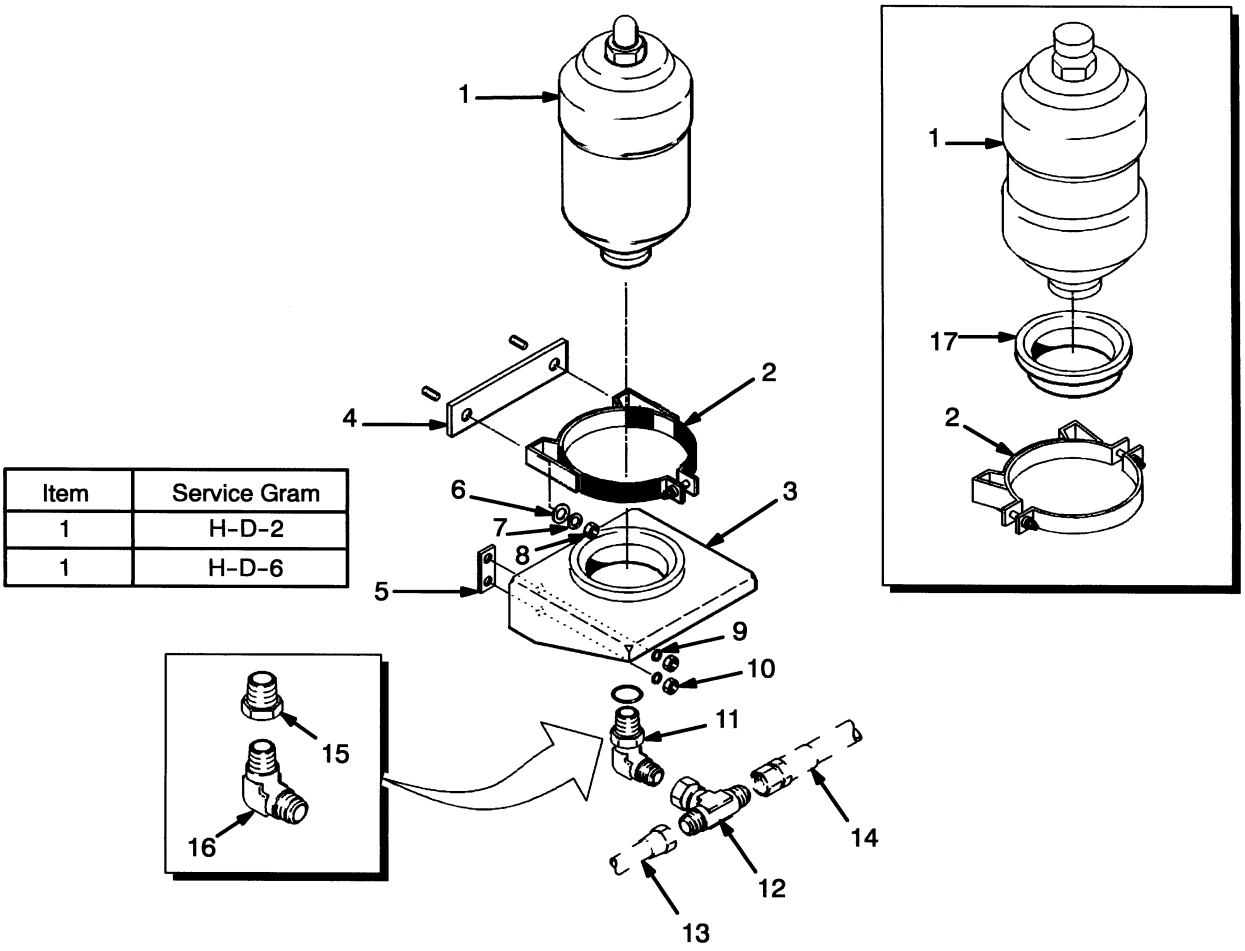

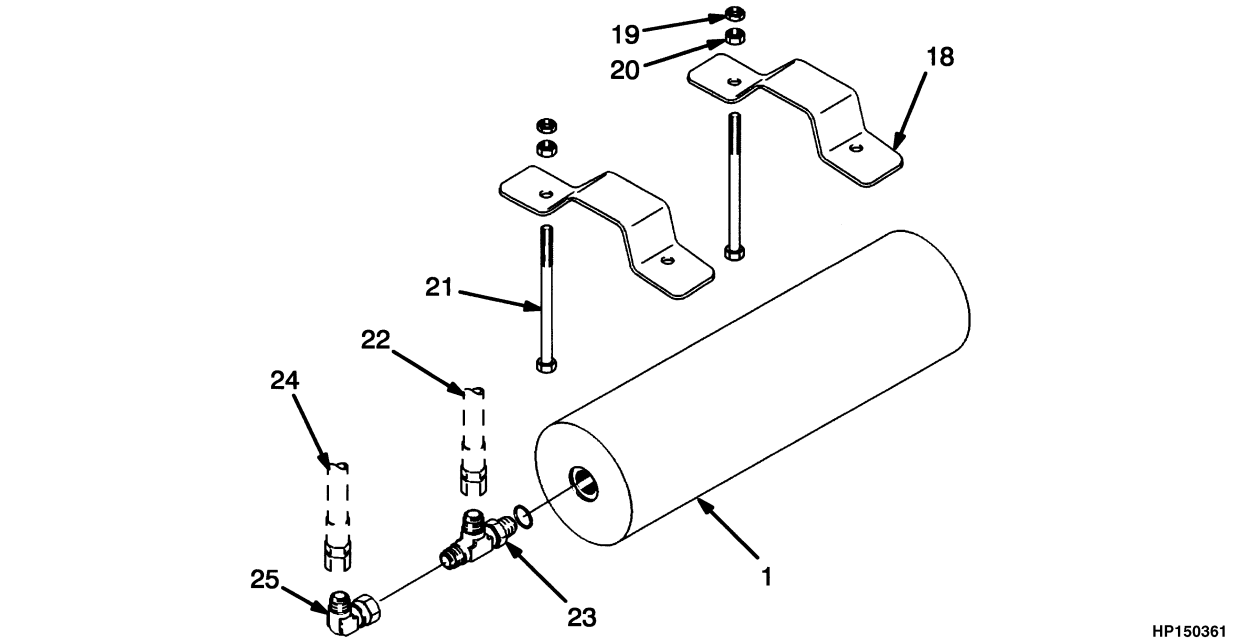

©2011 HYSTER COMPANY

ACCUMULATOR AND ATTACHING PARTS

KEY:
A: Bladder Type
B: Piston Type

ITEM	PART NO.	DESCRIPTION	QTY A	QTY B
1	**ad** 1330165	Accumulator	1	..
1	**begj** 815828	Accumulator	1	..
1	**cfhk** 1355115	Accumulator	1	..
1	**il** 1496496	Accumulator (☞Figure 9-15)	..	1
2	**ad** 1332244	Clamp	1	..
2	**cfgj** 815829	Clamp	1	..
3	**ad** 1332245	Bracket	1	..
4	**ad** 1332200	Spacer	1	..
4	**cfgj** 815866	Spacer	1	..
5	**ad** 1332199	Spacer	2	..
6	**cf** 18515	Washer	2	..
7	**cf** 15155	Lockwasher	2	..
8	**cf** 15055	Nut	2	..
9	**ad** 15158	Washer	4	..
10	**ad** 15058	Nut	4	..
11	**ad** 138811	Fitting	1	..
11	**ad** 16486	O-Ring	1	..
12	**cf** 17050	Fitting	1	..
13	**hk** 1195634	Hose Assy	1	..
13	**be** 273150	Hose Assy	1	..
14	**il** 1367250	Hose Assy (Left Compartment)	1	..
14	**cf** 1367251	Hose Assy (Center Compartment)	1	..
14	**il** 1371388	Hose Assy (Center Compartment)	1	..
15	**cfgj** 12845	Fitting	1	..
16	**cfgj** 17306	Fitting	1	..
17	**cfgj** 815830	Ring	1	..
18	1376844	Bracket	..	2
19	15011	Nut	..	4
20	15058	Nut	..	4
21	16918	Capscrew	..	4
22	**il** 1367250	Hose Assy (Left Compartment)	..	1
22	**cf** 1367251	Hose Assy (Center Compartment)	..	
22	**il** 1371388	Hose Assy (Center Compartment)	..	
23	16970	T-Fitting	..	1
23	16484	O-Ring	..	1
24	1195634	Hose Assy	..	1
25	16989	Fitting	..	1
	1367311	Kit-Accumulator	1	1
	1450672	Kit-Accumulator (Left Compartment)	1	1
	1450675	Kit-Accumulator (Center Compartment)	1	1

©2011 HYSTER COMPANY

FOOTNOTES:

a → S/N E008D01501
b → S/N E008D01517
c → S/N E008D01535
d → S/N E008E01512
e → S/N E008E01541
f → S/N E008E01564
g S/N E008D01502 →
h S/N E008D01518 →
i S/N E008D01536 →
j S/N E008E01513 →
k S/N E008E01542 →
l S/N E008E01565 →

©2011 HYSTER COMPANY

ACCUMULATOR ASSEMBLY (FIGURE 9-15)

PISTON TYPE

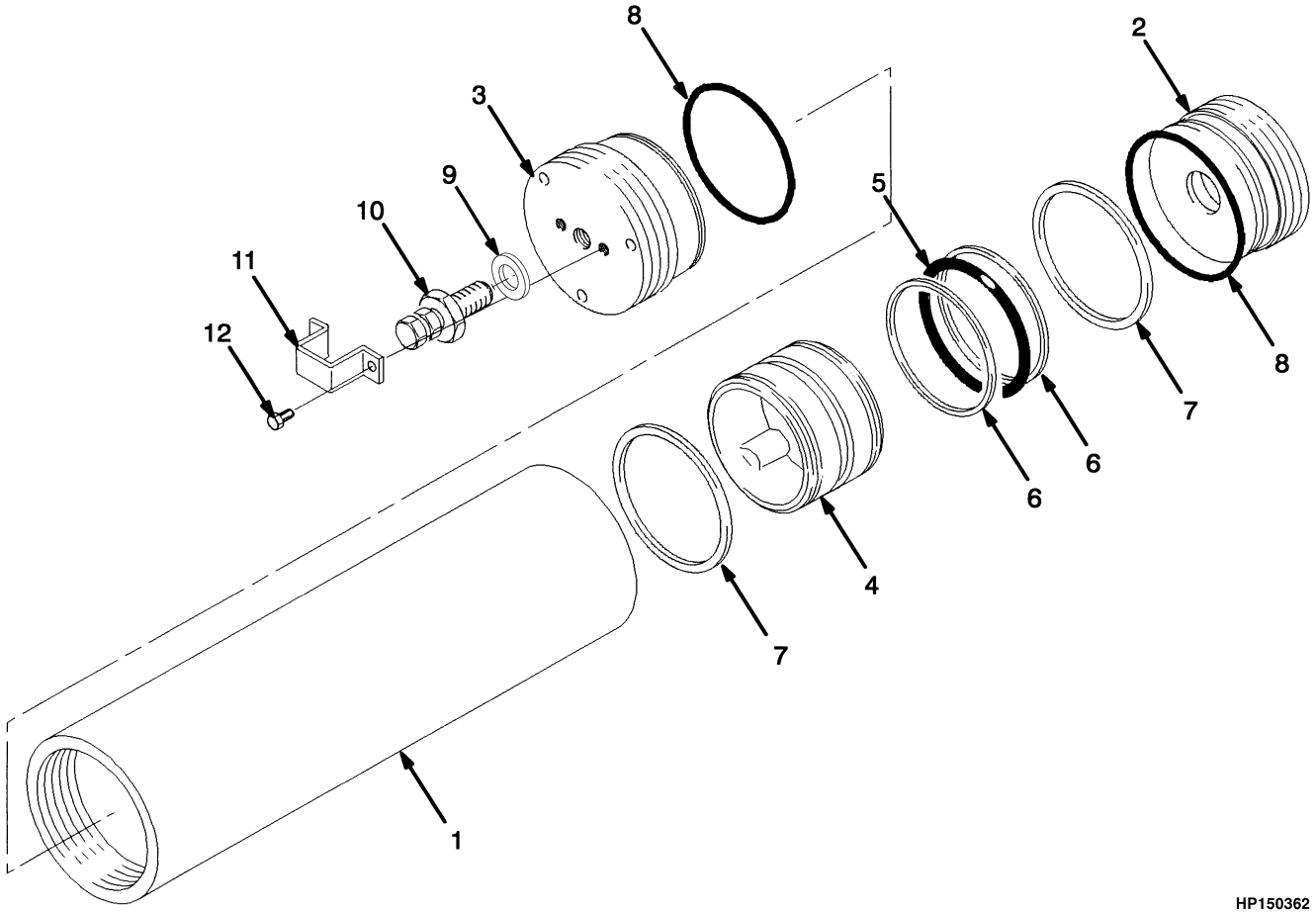

HP150362

ITEM	PART NO.	DESCRIPTION	QTY
	1496496	Accumulator	1
1	. . . . .	Shell	1
2	. . . . .	Hydraulic End Cap	1
3	. . . . .	Gasoline End Cap	1
4	1502883	Piston	1
5	. . . . .	Seal	1
6	. . . . .	Back-Up Ring	2
7	1376933	Ring	2
8	. . . . .	O-Ring	2
9	1502887	O-Ring	1
10	. . . . .	Gas Valve	1
11	1376934	Protector	1
12	1502888	Screw	2
	1502879	Kit-Accumulator	1

©2011 HYSTER COMPANY

TANK AND FILTER (FIGURE 9-16)

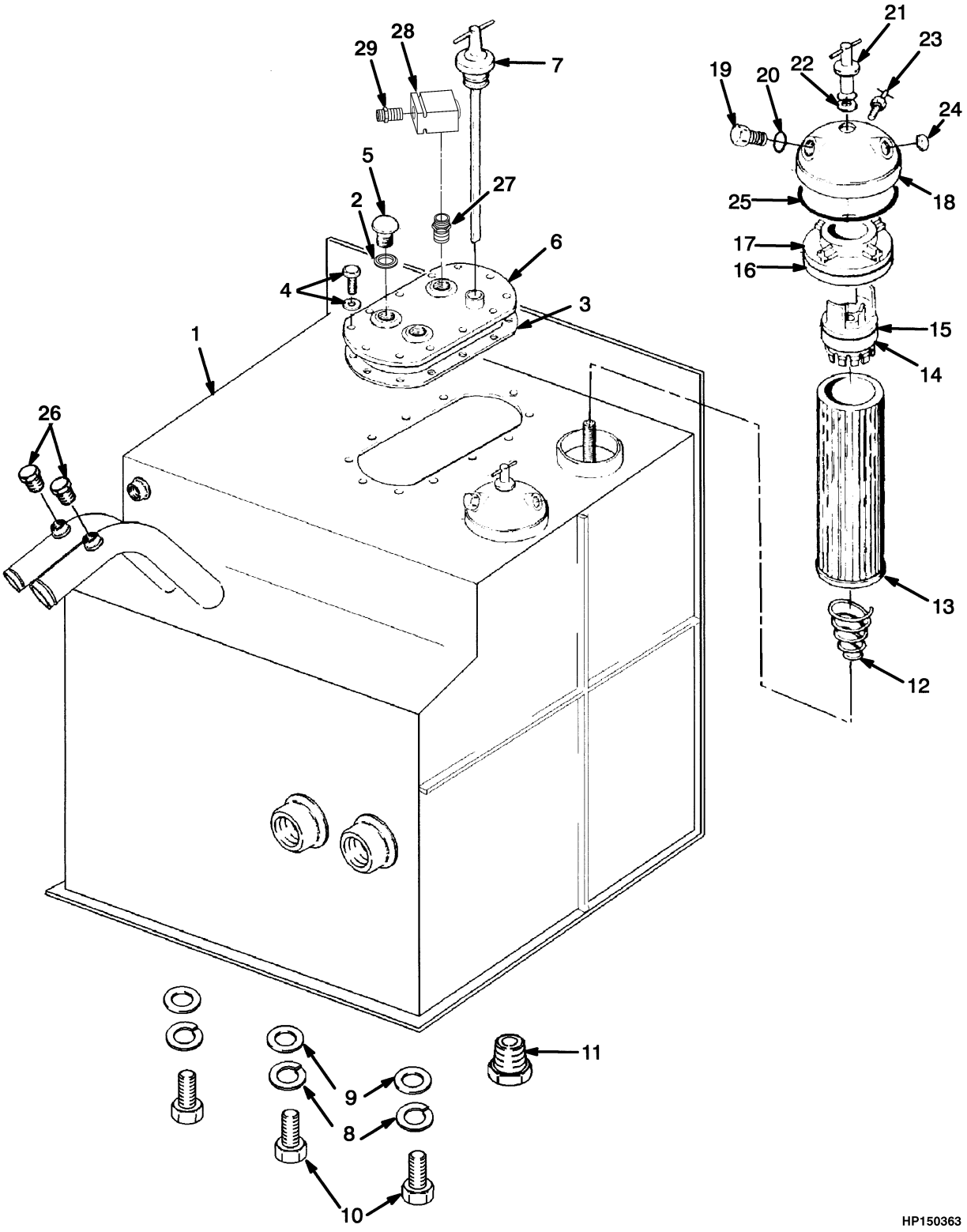

©2011 HYSTER COMPANY

TANK AND FILTER

ITEM	PART NO.	DESCRIPTION	QTY
1	**ac** 1344289	Hyd Tank Wldmt (H550F, H620F, H650F, H700F)	1
1	**ac** 1352760	Hyd Tank Wldmt (H550FS, H620FS, H700FS)	1
1	**eg** 1394061	Hyd Tank Wldmt (H550F, H620F, H650F, H700F)	1
1	3047451	Hinge	2
1	**eg** 1394062	Hyd Tank Wldmt (H550FS, H620FS, H700FS)	1
2	**f** 888333	Seal	1
3	321167	Gasket	1
4	112902	Washer	12
4	18497	Capscrew	12
5	**b** 75649	Air Filter	2
5	**f** 1475141	Breather	1
5	**b** 78122	Filter Element	1
5	**f** 1494312	Filter Element	1
5	16704	Screw	1
5	15152	Lockwasher	1
6	**b** 1302800	Cover	1
6	**f** 1495828	Cover	1
7	162234	Dipstick	1
8	15156	Lockwasher	3
9	15177	Washer	3
10	16805	Capscrew	3
11	14387	Fitting	3
12	266415	Spring	2
13	**d** 256226	Element	2
13	**h** 1505085	Filter Element	2
14	266414	Indicator	2
15	57664	O-Ring	1
16	266413	Baffle	2
17	282972	Seal	1
18	282974	Filter Head	2
19	266411	Plug	1
20	16983	O-Ring	1
21	266401	Nut	1
22	282973	Kit-Seal	1
23	266410	Valve	1
24	281562	Window	1
24	281563	Indicator	1
25	266409	O-Ring	1
26	14386	Fitting	2
27	1385283	Fitting	1
28	1383523	Check Valve	1
29	16544	Connector	1
30	1394059	Hose Assy	1

FOOTNOTES:

a → S/N E008D01615
b → S/N E008D01712Y
c → S/N E008E01664
d → S/N E008E01909Z
e S/N E008D01615 →
f S/N E008D01713Y →
g S/N E008E01665 →
h S/N E008E01910Z →

©2011 HYSTER COMPANY

CONTROL (FIGURE 9-17)

LIFT AND TILT (→ S/N E008E01984B)

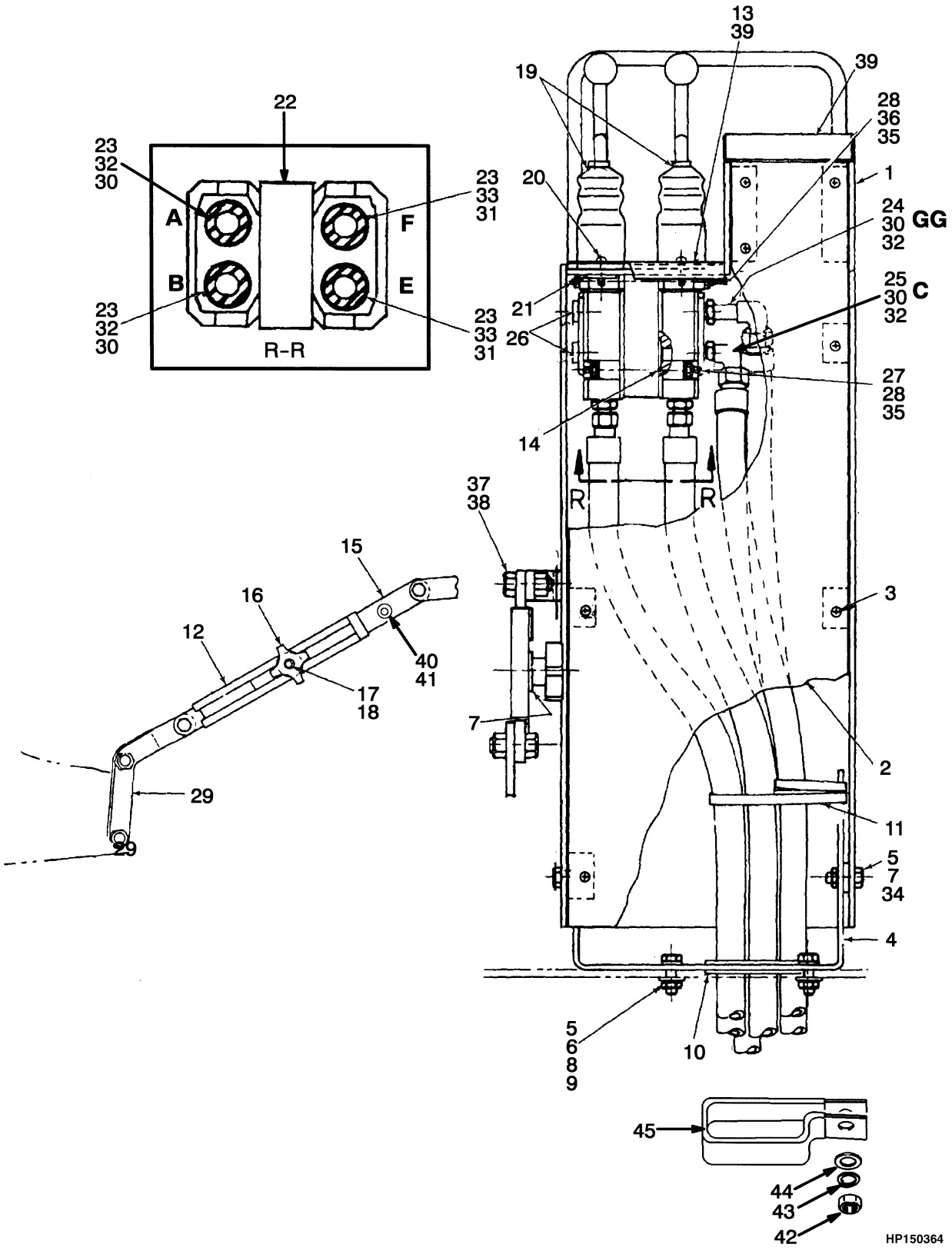

©2011 HYSTER COMPANY

CONTROL

LIFT AND TILT (→ S/N E008E01984B)

ITEM	PART NO.	DESCRIPTION	QTY
1	**eg** 1307776	Housing	1
1	**jm** 1454177	Housing	1
2	**eg** 1307784	Cover	1
2	**jm** 1454180	Plate	1
3	**jm** 1301177	Screw	10
3	**eg** 379650	Screw	10
4	1307775	Bracket	1
5	287854	Capscrew	6
6	136692	Nut	4
7	334340	Washer	AR
8	320159	Washer	4
9	~~388049~~		
	292682	Lockwasher	4
10	1323052	Trim	1
11	273775	Strap Clamp	2
12	1310710	Channel	1
13	1310715	Plate	1
14	39767	O-Ring	4
15	**c** 1310709	Arm	1
15	**hk** 1352202	Plate	1
16	334325	Knob	1
17	16334	Capscrew	1
18	226414	Loctite	..
19	1307729	Pilot Valve	2
20	380292	Capscrew (Special)	4
21	330100	Nut	4
22	1332202	Spacer	1
23	16540	Connector	4
23	16483	O-Ring	1
24	17222	Fitting	1
24	16483	O-Ring	1
25	16558	Fitting	1
25	16483	O-Ring	1
26	222443	Fitting	2
26	16483	O-Ring	1
27	394101	Link	2
28	15002	Nut	6
29	**c** 1307820	Bracket	1
29	**hk** 1350014	Bracket	1
30	**bdf** 1331946	Hose Assy	4
30	**bil** 188698	Hose Assy	4
31	**bdf** 1331947	Hose Assy	2
31	**bil** 197483	Hose Assy	2
32	**adf** 1331947	Hose Assy	4
32	**ail** 197483	Hose Assy	4
33	**ail** 260803	Hose Assy	2
33	**adf** 815793	Hose Assy	2
34	316826	Nut	2
35	320155	Washer	14
36	1355038	Link	1

©2011 HYSTER COMPANY

CONTROL

LIFT AND TILT (→ S/N E008E01984B)

ITEM	PART NO.	DESCRIPTION	QTY
37	145641	Locknut (Prevailing Torque)	2
38	16805	Capscrew	2
39	. . . . .	Label	AR
40	18425	Lockwasher	1
41	18097	Capscrew	1
42	15056	Nut	3
43	15156	Lockwasher	3
44	15134	Washer	3
45	153667	Clamp	3

FOOTNOTES:

a Center Compartment
b Left Compartment
c → S/N E008D01509
d → S/N E008D01588
e → S/N E008D01665
f → S/N E008E01656
g → S/N E008E01718
h S/N E008D01501 →
i S/N E008D01589 →
j S/N E008D01666 →
k S/N E008E01510 →
l S/N E008E01657 →
m S/N E008E01719 →

©2011 HYSTER COMPANY

NOTES

©2011 HYSTER COMPANY

CONTROL (FIGURE 9-18)

LIFT AND TILT (S/N E008E01985B →)

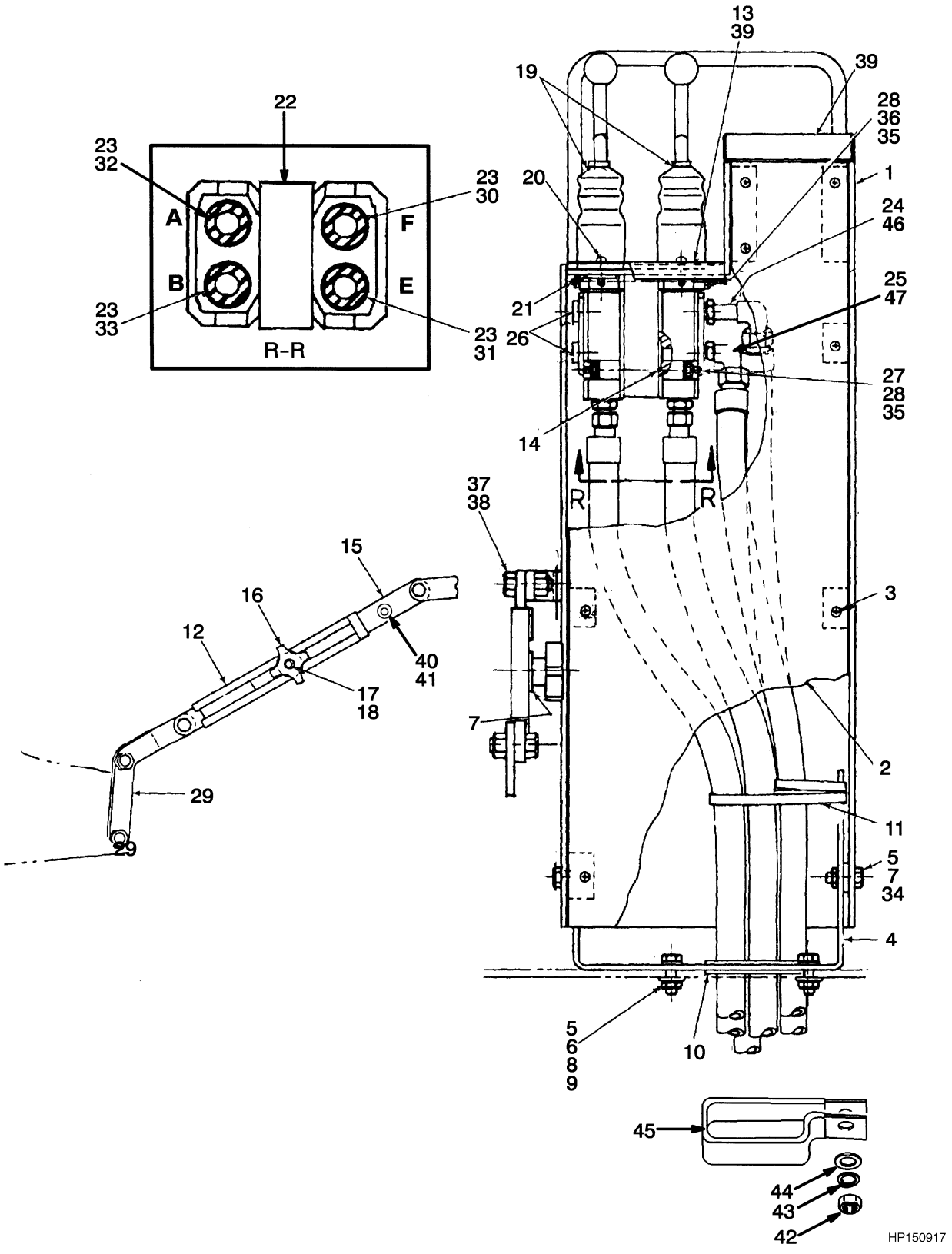

©2011 HYSTER COMPANY

CONTROL

LIFT AND TILT (S/N E008E01985B →)

ITEM	PART NO.	DESCRIPTION	QTY
1	1454177	Housing	1
2	1454180	Plate	1
3	1301177	Screw	10
4	1307775	Bracket	1
5	287854	Capscrew	6
6	136692	Nut	4
7	334340	Washer	AR
8	320159	Washer	4
9	~~388049~~		
	292682	Lockwasher	4
10	1323052	Trim	1
11	273775	Strap Clamp	2
12	1310710	Channel	1
13	1310715	Plate	1
14	39767	O-Ring	4
15	1352202	Plate	1
16	334325	Knob	1
17	16334	Capscrew	1
18	264134	Loctite	..
19	1307729	Pilot Valve (☞Figure 9-19)	2
20	380292	Capscrew (Special)	4
21	330100	Nut	4
22	1332202	Spacer	1
23	1486740	Fitting	4
23	16483	O-Ring	1
24	1486558	Fitting	1
24	1527816	O-Ring	1
24	1527813	O-Ring	1
25	1487063	Fitting	1
25	16483	O-Ring	1
26	222443	Fitting	2
26	16483	O-Ring	1
27	394101	Link	2
28	15002	Nut	6
29	1350014	Bracket	1
30	**b** 1547286	Hose Assy (H550F-H700F)	1
30	**a** 1553383	Hose Assy (H550F-H700F)	1
30	**b** 1547294	Hose Assy (H440FS-H700FS)	1
30	**ab** 1547288	Hose Assy (H440FS-H700FS)	1
31	**b** 1547304	Hose Assy (H440FS-H700FS, H550F-H700F)	1
31	**a** 1547287	Hose Assy (H550F-H700F)	1
32	**b** 1547289	Hose Assy (H550F-H700F)	1
32	**a** 1553381	Hose Assy (H550F-H700F)	1
32	**b** 1547287	Hose Assy (H440FS-H700FS)	1
32	**a** 1547285	Hose Assy (H440FS-H700FS)	1
33	**b** 1547303	Hose Assy (H550F-H700F)	1
33	**a** 1553382	Hose Assy (H550F-H700F)	1
33	**b** 1547291	Hose Assy (H440FS-H700FS)	1
33	**a** 1547286	Hose Assy (H440FS-H700FS)	1
34	316826	Nut	2

©2011 HYSTER COMPANY

CONTROL

LIFT AND TILT (S/N E008E01985B →)

ITEM	PART NO.	DESCRIPTION	QTY
35	320155	Washer	14
36	1355038	Link	1
37	145641	Locknut (Prevailing Torque)	2
38	16805	Capscrew	2
39	. . . . .	Label	AR
40	18425	Lockwasher	1
41	18097	Capscrew	1
42	15056	Nut	4
42	**c** 15055	Nut	1
43	15156	Lockwasher	4
43	**c** 15155	Lockwasher	1
44	15134	Washer	4
44	**c** 18515	Washer	1
45	153667	Clamp	3
45	**c** 176455	Clamp	1
45	**c** 176453	Clamp	1
46	**b** 1547294	Hose Assy (H550F, H620F, H650F, H700F)	1
46	**a** 1553385	Hose Assy (H550F, H620F, H650F, H700F)	1
46	**b** 1547293	Hose Assy (H550FS, H620FS, H700FS)	1
46	**a** 1547288	Hose Assy (H550FS, H620FS, H700FS)	1
47	**b** 1547286	Hose Assy (H550F, H620F, H650F, H700F)	1
47	**a** 1553384	Hose Assy (H550F, H620F, H650F, H700F)	1
47	**b** 1553387	Hose Assy (H550FS, H620FS, H700FS)	1
47	**a** 1553388	Hose Assy (H550FS, H620FS, H700FS)	1

FOOTNOTES:

a Center Compartment
b Left Compartment
c S/N E008E02017B →

©2011 HYSTER COMPANY

NOTES

©2011 HYSTER COMPANY

PILOT VALVE (FIGURE 9-19)

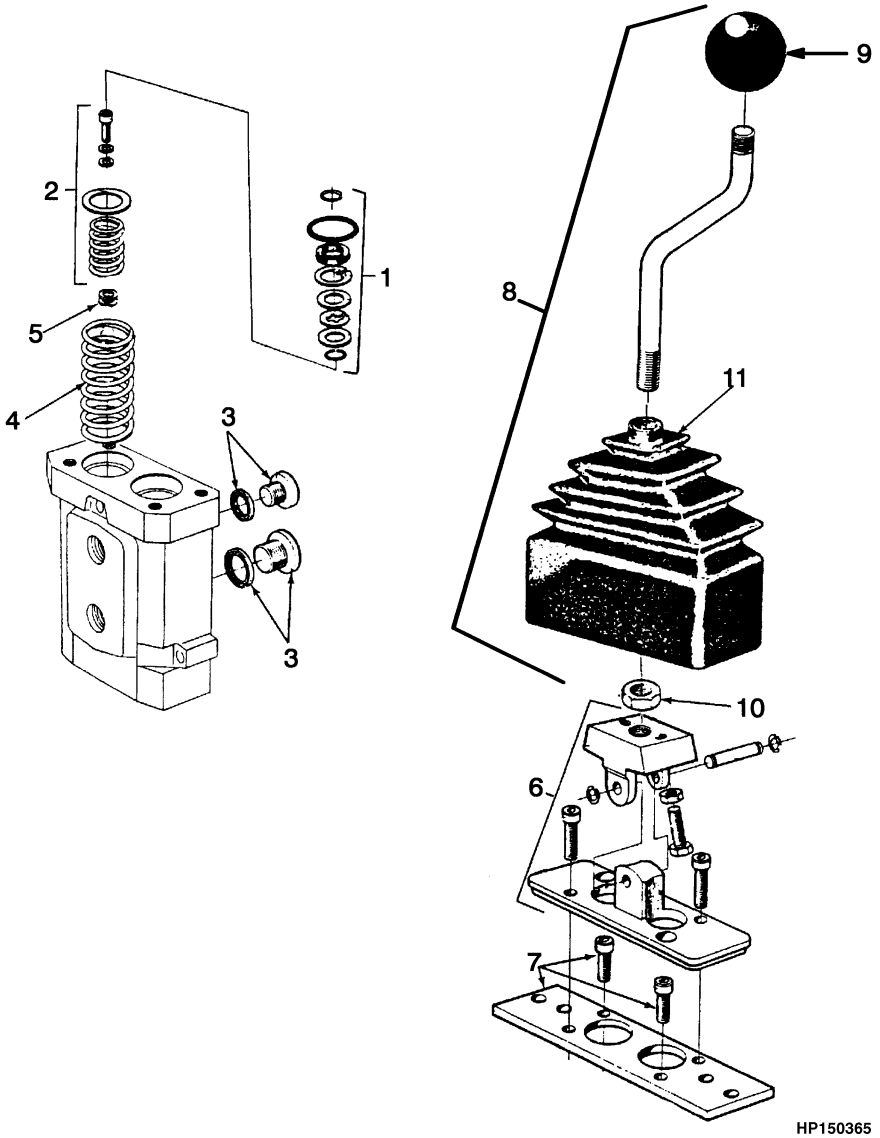

©2011 HYSTER COMPANY

PILOT VALVE

ITEM	PART NO.	DESCRIPTION	QTY
	1307729	Pilot Valve	1
1	1328548	Pin	1
2	1318044	Kit-Spring	1
3	1318045	Kit-Plug	1
4	1318025	Return Spring	1
5	1318026	Spacer (0,1 mm)	1
5	1318027	Spacer (0,5 mm)	1
6	1318047	Pressure Plate	1
7	1316395	Mounting Plate	1
8	1316397	Lever	1
9	345929	Ball Bearing	1
10	1316398	Nut	1
11	345735	Boot	1

©2011 HYSTER COMPANY

MANIFOLD PLATE AND ATTACHING PARTS (FIGURE 9-20)

(S/N E008E01985B →)

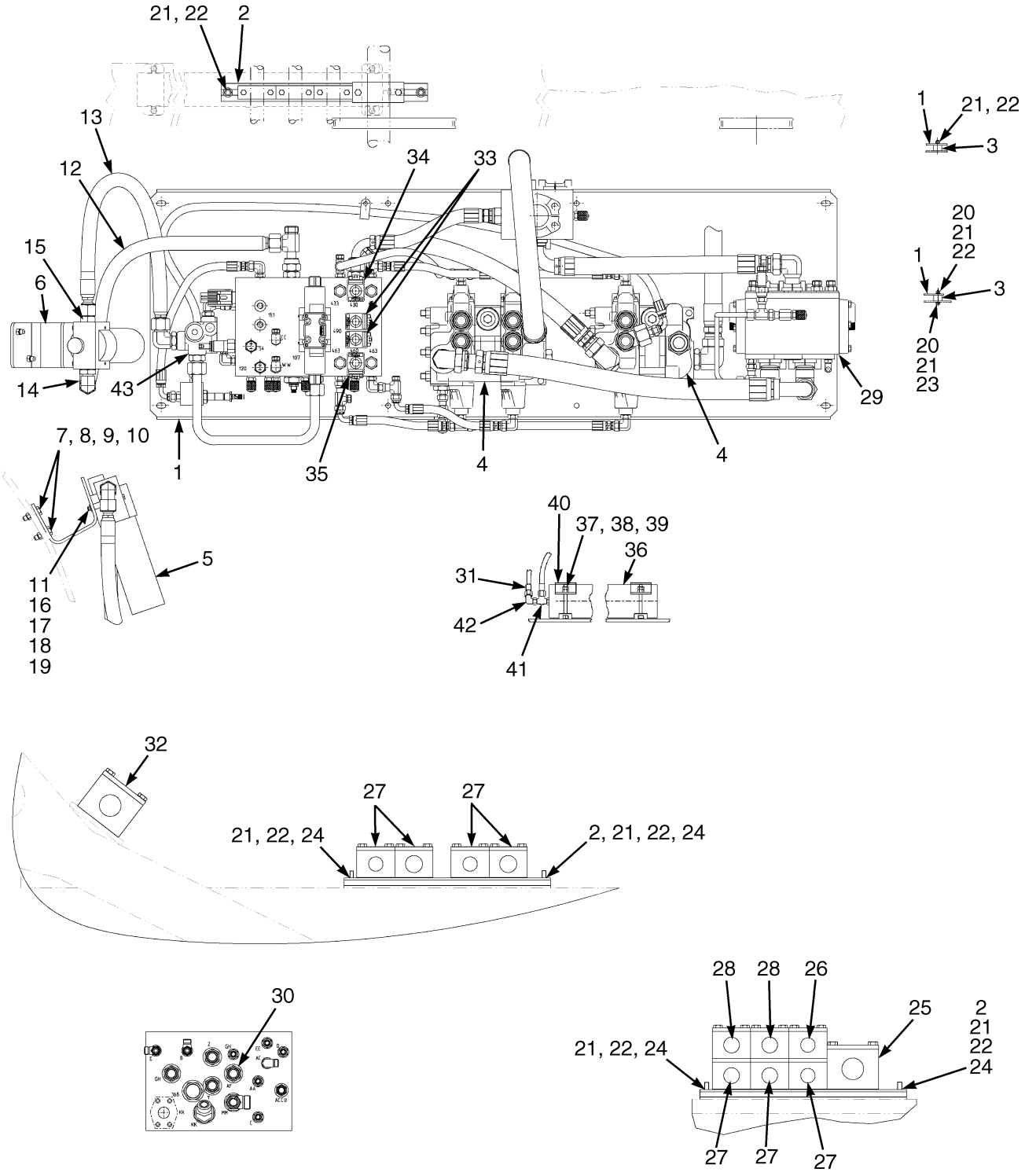

HP150925

©2011 HYSTER COMPANY

MANIFOLD PLATE AND ATTACHING PARTS

(S/N E008E01985B →)

ITEM	PART NO.	DESCRIPTION	QTY
1	1536343	Manifold Assy (☞Figure 9-21, ☞Figure 9-22)	1
2	1469183	Channel	1
3	1307730	Mount	8
4	1385284	Hydraulic Control Valve (Single Function) (☞Figure 9-24)	1
4	1385285	Hydraulic Control Valve (Dual Function) (☞Figure 9-24)	1
5	1539987	Hydraulic Filter	1
5	1508671	Filter Element	1
5	1550841	Indicator	1
5	1550842	Kit-Seal	1
6	1505180	Bracket	1
7	287860	Capscrew	2
8	136692	Nut	2
9	~~388049~~		
	292682	Lockwasher	2
10	320159	Washer	2
11	1542240	Spacer	2
12	1505026	Hose Assy	1
13	1546291	Hose Assy	1
14	1473898	Fitting	1
15	1473888	Fitting	1
16	18480	Capscrew	2
17	15054	Nut	2
18	15128	Washer	4
19	15154	Lockwasher	2
20	15134	Washer	8
21	15156	Lockwasher	14
22	15056	Nut	10
23	16598	Capscrew	4
24	15176	Washer	2
25	**a** 1545807	Clamp	1
26	**a** 1469189	Clamp	1
27	**ae** 1469188	Clamp	1
27	**be** 1469188	Clamp	2
27	**bg** 1476461	Clamp	4
28	**a** 1476462	Clamp	2
29	384427	Flow Valve	1
30	**a** 1473888	Fitting	1
30	**b** 1528597	Fitting	1
31	**a** 1544663	Hose Assy	1
31	**b** 1546446	Hose Assy	1
32	**b** 1545436	Clamp	1
33	1474932	Kit-Hyd Control Valve (Without Return)	1
34	**d** 1474925	Kit-Valve W/O Lower Interrupt	1
34	**f** 1684629	Kit-Hyd Control Valve	1
35	**d** 1474930	Kit-Valve W/O Lift Interrupt	1
35	**f** 1474928	Kit-Lift Interrupt	1
36	1496496	Accumulator (☞Figure 9-15)	1
37	16918	Capscrew	4
38	15058	Nut	4
39	15011	Nut	4

©2011 HYSTER COMPANY

MANIFOLD PLATE AND ATTACHING PARTS

(S/N E008E01985B →)

ITEM	PART NO.	DESCRIPTION	QTY
40	1376844	Bracket	2
41	1592852	Fitting	1
42	1486772	Fitting	1
43	1371389	Valve (☞Figure 9-13)	1
	cd 1474924	Kit-Lower Interrupt (With Container Attachment)	1

FOOTNOTES:

a H550F, H620F, H650F, H700F
b H550FS, H620FS, H700FS
c Not Illustrated
d → S/N E008E02285F
e S/N E008E01985B ↔ PENDING PER ECN 68453-22
f S/N E008E02286F →
g PENDING PER ECN 67453-22 →

©2011 HYSTER COMPANY

NOTES

©2011 HYSTER COMPANY

MANIFOLD PLATE ASSEMBLY (FIGURE 9-21)
SHEET 1 OF 2

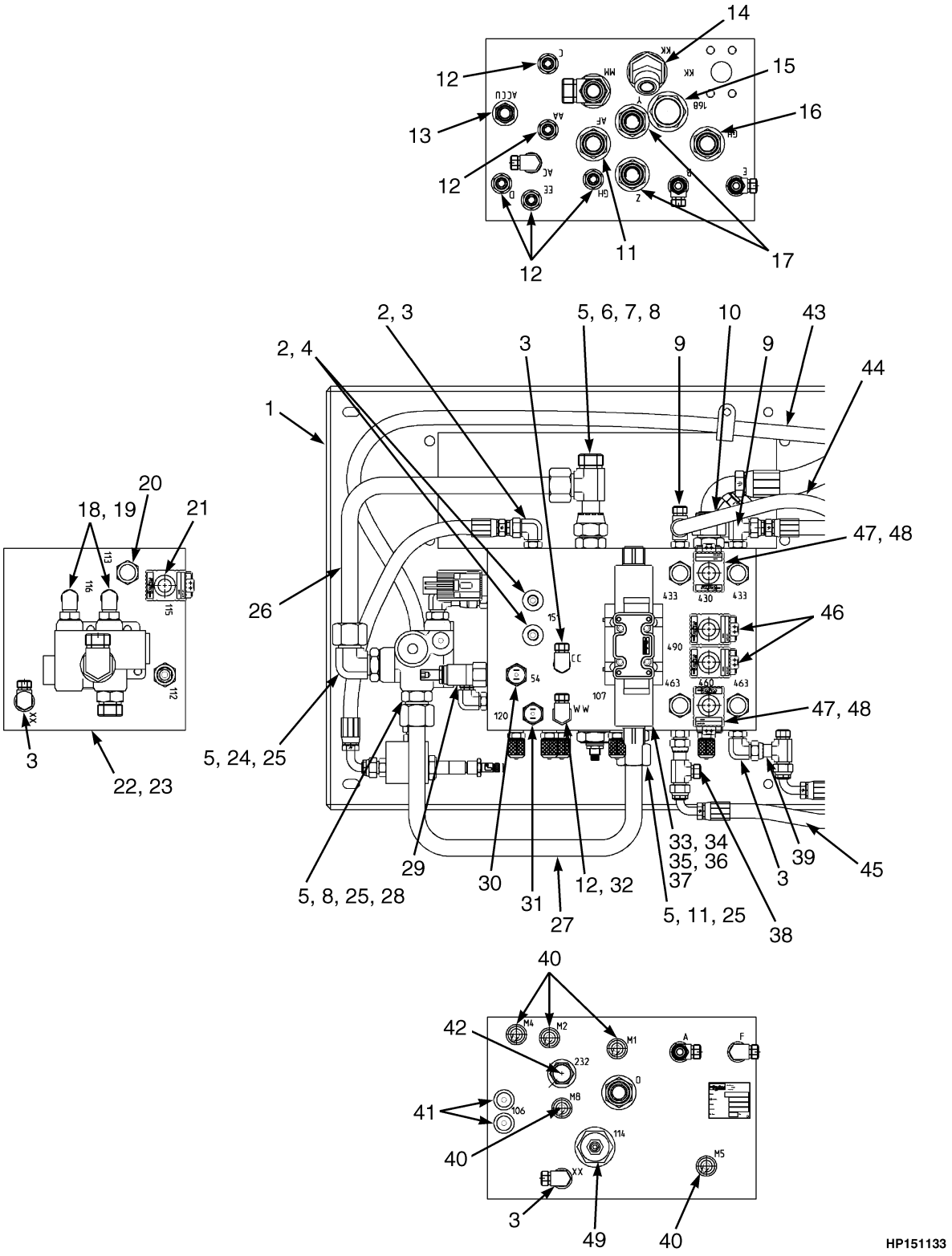

©2011 HYSTER COMPANY

MANIFOLD PLATE ASSEMBLY

SHEET 1 OF 2

ITEM	PART NO.	DESCRIPTION	QTY
	1536343	Manifold Assy	1
1	1607737	Mounting Plate	1
2	1473883	Nozzle	3
3	1487063	Fitting	5
4	1474926	Plug	2
5	1473903	Sleeve	4
6	1473901	Nut	4
7	1473892	Fitting	1
8	1473888	Fitting	4
9	1473890	Fitting	2
10	1473881	Nozzle	1
11	1473888	Fitting	4
12	1486740	Fitting	7
13	1473887	Fitting	1
14	1607720	Adapter	1
15	1473878	Check Valve	1
15	1502554	Kit-Seal	1
16	1607721	Adapter	1
17	1607736	Adapter	2
18	1473894	Fitting	2
19	1473897	Fitting	2
20	1474922	Check Valve	1
20	1502552	Kit-Seal	1
21	1554093	Valve	1
22	1607700	Bolt	4
23	1607701	Washer	4
24	1473898	Fitting	1
25	1473901	Nut	4
26	1473909	Tube	1
27	1473910	Tube	1
28	1371389	Valve	1
29	1473875	Pressure Valve	1
29	1502553	Kit-Seal	1
30	**a** 1638217	Pressure Switch (Low Brake Pressure)	1
	b 12856	Fitting	1
31	1332206	Pressure Switch	1
32	1473895	Fitting	1
33	1473872	Valve	1
33	1473873	Terminal	1
33	1502551	Kit-Seal	1
34	1607717	Capscrew	2
35	1607718	Screw	2
36	1607722	Plate	1
37	1607714	Capscrew	4
38	1487097	Fitting	1
39	1488464	Fitting	1
40	1473882	Quick Disconnect Fitting	5
41	222443	Fitting	4
42	1473879	Shuttle Valve	1
42	1502552	Kit-Seal	1

©2011 HYSTER COMPANY

See Service Manual for service procedures.

MANIFOLD PLATE ASSEMBLY

SHEET 1 OF 2

ITEM	PART NO.	DESCRIPTION	QTY
43	1473976	Hose Assy	1
44	1473965	Hose Assy	1
45	1473960	Hose Assy	1
46	1474927	Plug	2
47	1474926	Plug	2
47	1474927	Plug	2
48	16485	O-Ring	1
48	233693	Fitting	1
49	1473877	Relief Valve	1
49	1502554	Kit-Seal	1
	ab 1667222	Kit Brake Pressure Warning	1

FOOTNOTES:

a For models with Parker Hydraulic Block only.

b Not Illustrated

©2011 HYSTER COMPANY

NOTES

©2011 HYSTER COMPANY

MANIFOLD PLATE ASSEMBLY (FIGURE 9-22)
SHEET 2 OF 2

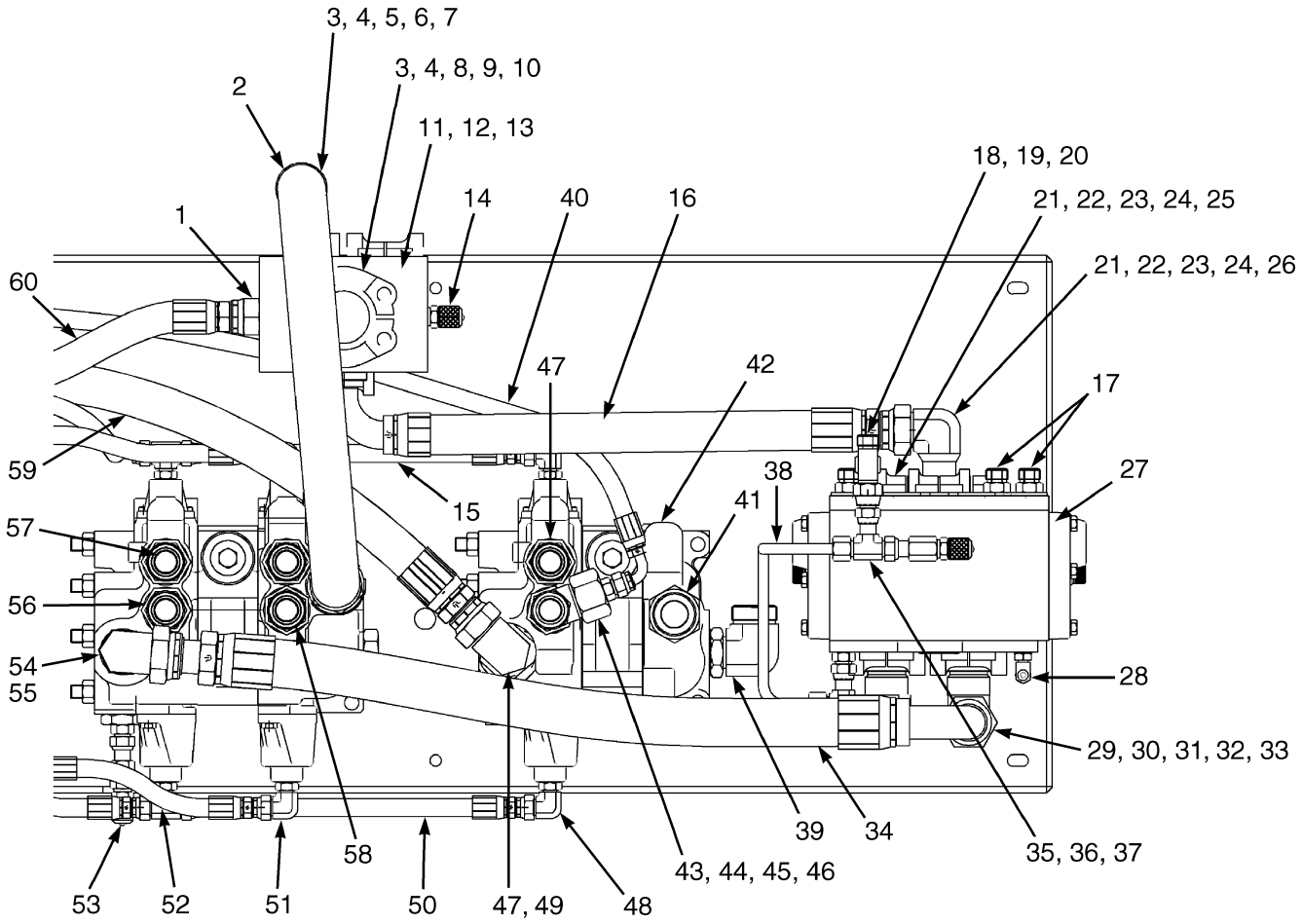

©2011 HYSTER COMPANY

MANIFOLD PLATE ASSEMBLY
SHEET 2 OF 2

ITEM	PART NO.	DESCRIPTION	QTY
	1536343	Manifold Assy	1
1	1473919	Fitting	1
2	1608643	Hose Assy	1
3	1607704	Bolt	8
4	1607705	Washer	8
5	1607723	Adapter	1
6	1473893	Fitting	2
7	1473933	O-Ring	1
8	222531	Clamp (Split Half)	2
9	1473874	O-Ring	1
10	1473947	Flange	1
11	1473918	Block	1
12	1607702	Bolt	4
13	1607703	Washer	4
14	1473882	Quick Disconnect Fitting	1
15	1473971	Hose Assy	1
16	1608644	Hose Assy	1
17	1473887	Fitting	3
18	1473897	Fitting	1
19	1473948	Fitting	1
20	1473949	Fitting	1
21	1473944	O-Ring	3
22	1473945	Fitting (Split Half)	6
23	1607711	Bolt	12
24	1607712	Washer	12
25	1473880	Flange	2
26	1607738	Flange	1
27	384427	Flow Valve	1
28	1607729	Adapter	1
29	1473893	Fitting	4
30	1607704	Bolt	8
31	1473933	O-Ring	2
32	1607705	Washer	8
33	1607723	Adapter	2
34	1607739	Hose Assy	1
35	1488464	Fitting	1
36	1473926	Fitting	1
37	1473927	Quick Disconnect Fitting	1
38	1518955	Tube	1
39	1473923	Fitting	1
40	1473976	Hose Assy	1
41	1607728	Adapter	1
42	1385284	Hydraulic Control Valve	1
43	1473939	Reducer	1
44	1473941	Nut	1
45	1473899	Fitting	1
46	1607727	Adapter	1
47	1473889	Fitting	2
48	1487063	Fitting	2
49	1473936	Fitting	1

©2011 HYSTER COMPANY

MANIFOLD PLATE ASSEMBLY

SHEET 2 OF 2

ITEM	PART NO.	DESCRIPTION	QTY
50	1473971	Hose Assy	1
51	1487063	Fitting	1
52	1473968	Hose Assy	1
53	1487063	Fitting	2
54	1607724	Adapter	1
55	1607726	Adapter	1
56	1607721	Adapter	1
57	1473889	Fitting	1
58	1473918	Block	2
59	1608692	Hose Assy	1
60	1608642	Hose Assy	1

See Service Manual for service procedures.
©2011 HYSTER COMPANY

NOTES

©2011 HYSTER COMPANY

CONTROL VALVE (FIGURE 9-23)

(→ S/N E008E01656) (→ S/N E008D01588)

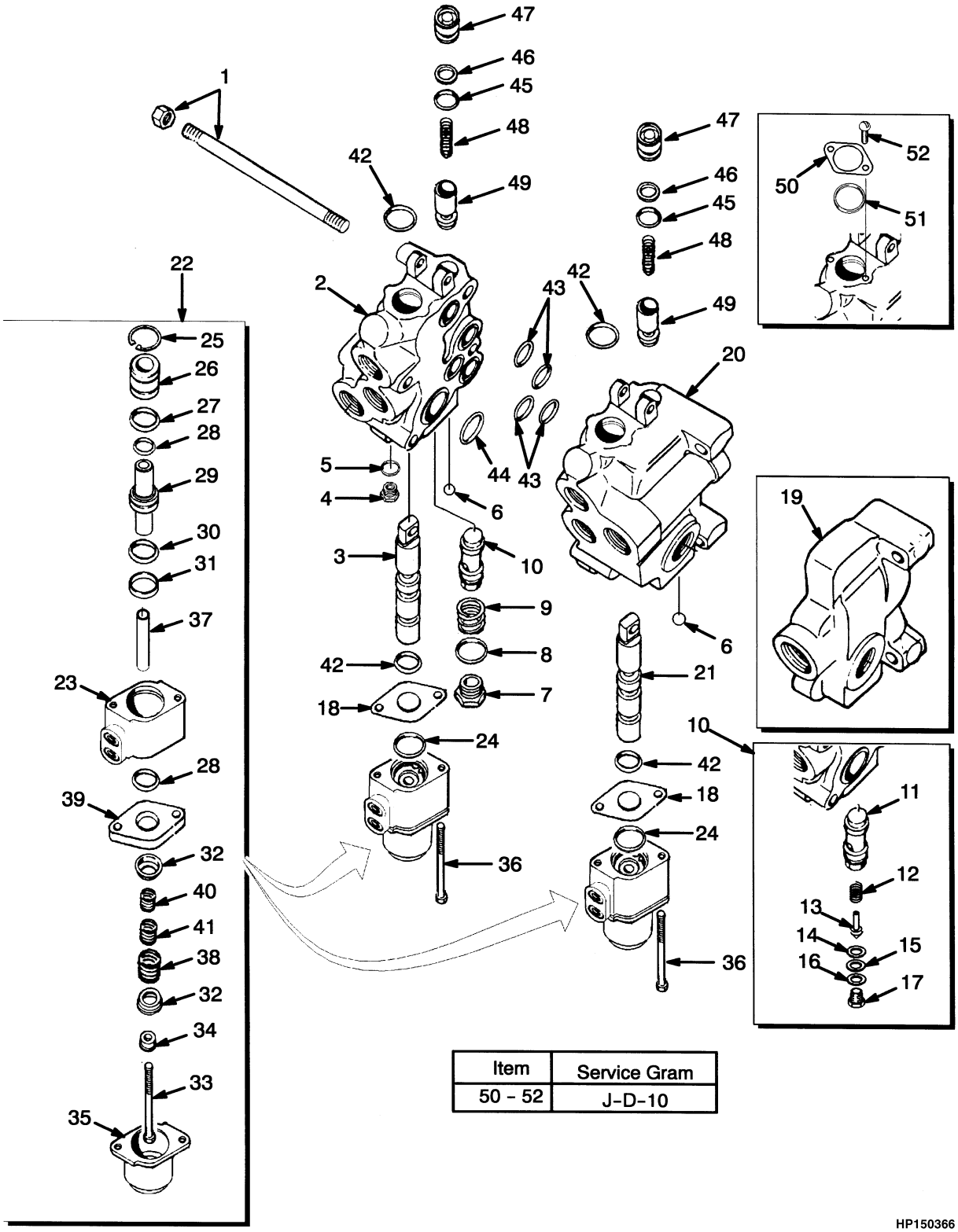

Item	Service Gram
50 – 52	J-D-10

©2011 HYSTER COMPANY

CONTROL VALVE

(→ S/N E008E01656) (→ S/N E008D01588)

KEY:
A: One Function
B: Two Function

ITEM	PART NO.	DESCRIPTION	QTY A	QTY B
	1331801	Hydraulic Control Valve (Lift and Tilt)	..	1
	1331802	Hydraulic Control Valve (Lift)	1	..
1	1352713	Kit-Stud	..	1
1	1353813	Kit-Stud	1	..
2	. . . . .	Body (Inlet)	1	1
3	. . . . .	Spool	1	1
4	1353807	Plug	1	1
5	. . . . .	O-Ring	1	1
6	1352722	Ball	1	2
7	1353809	Plug	1	1
8	16982	O-Ring	1	1
9	1353806	Spring	1	1
10	1352716	Hydraulic Control Valve	1	1
11	1352720	Plunger	1	1
12	1199287	Spring	1	1
13	1199286	Poppet	1	1
14	150157	Shim (0.010 in.)	AR	AR
15	1352717	Shim (0.015 in.)	AR	AR
16	1352718	Shim (0.030 in.)	AR	AR
17	1352719	Plug	1	1
18	1337597	Retainer	1	2
19	. . . . .	Body (Outlet)	1	..
20	. . . . .	Body (Outlet)	..	1
21	. . . . .	Spool	..	1
22	1354038	Cap	1	2
23	. . . . .	Body	1	1
24	1337957	Spacer	1	1
25	1337958	Retaining Ring	1	1
26	1337959	Adapter	1	1
27	. . . . .	O-Ring	1	1
28	. . . . .	O-Ring	2	2
29	1337588	Piston	1	1
30	. . . . .	O-Ring	1	1
31	. . . . .	Retainer	1	1
32	1337595	Retainer	2	2
33	1337593	Screw	1	1
34	1350975	Guide	1	1
35	1350994	Cap (Spring)	1	1
36	1350724	Screw	2	2
37	1350723	Spacer	1	1
38	1350982	Spring	1	1
39	1350979	Spacer	1	1
40	1350980	Spring (Inner)	1	1
41	1350981	Spring	1	1
42	. . . . .	O-Ring	2	4

©2011 HYSTER COMPANY

CONTROL VALVE

(→ S/N E008E01656) (→ S/N E008D01588)

KEY:
A: One Function
B: Two Function

ITEM	PART NO.	DESCRIPTION	QTY A	QTY B
43	. . . . .	O-Ring	4	4
44	. . . . .	O-Ring	1	1
45	. . . . .	O-Ring	1	2
46	. . . . .	Back-Up Ring	1	2
47	1353800	Plug	1	2
48	1352712	Spring	1	2
49	1352711	Poppet	1	2
50	1374245	Retainer	1	2
51	1374246	Wiper	1	2
52	1374247	Screw	2	4
	1350714	Kit-O-Ring	1	1
	1331802	Hydraulic Control Valve	1	1
	1352704	Kit-O-Ring	1	1
	1331801	Hydraulic Control Valve	1	1
	1367275	Kit-Seal (Spool Wiper Kit)	1	1

©2011 HYSTER COMPANY

NOTES

©2011 HYSTER COMPANY

CONTROL VALVE (FIGURE 9-24)

(S/N E008E01657 →) (S/N E008D01589 →)

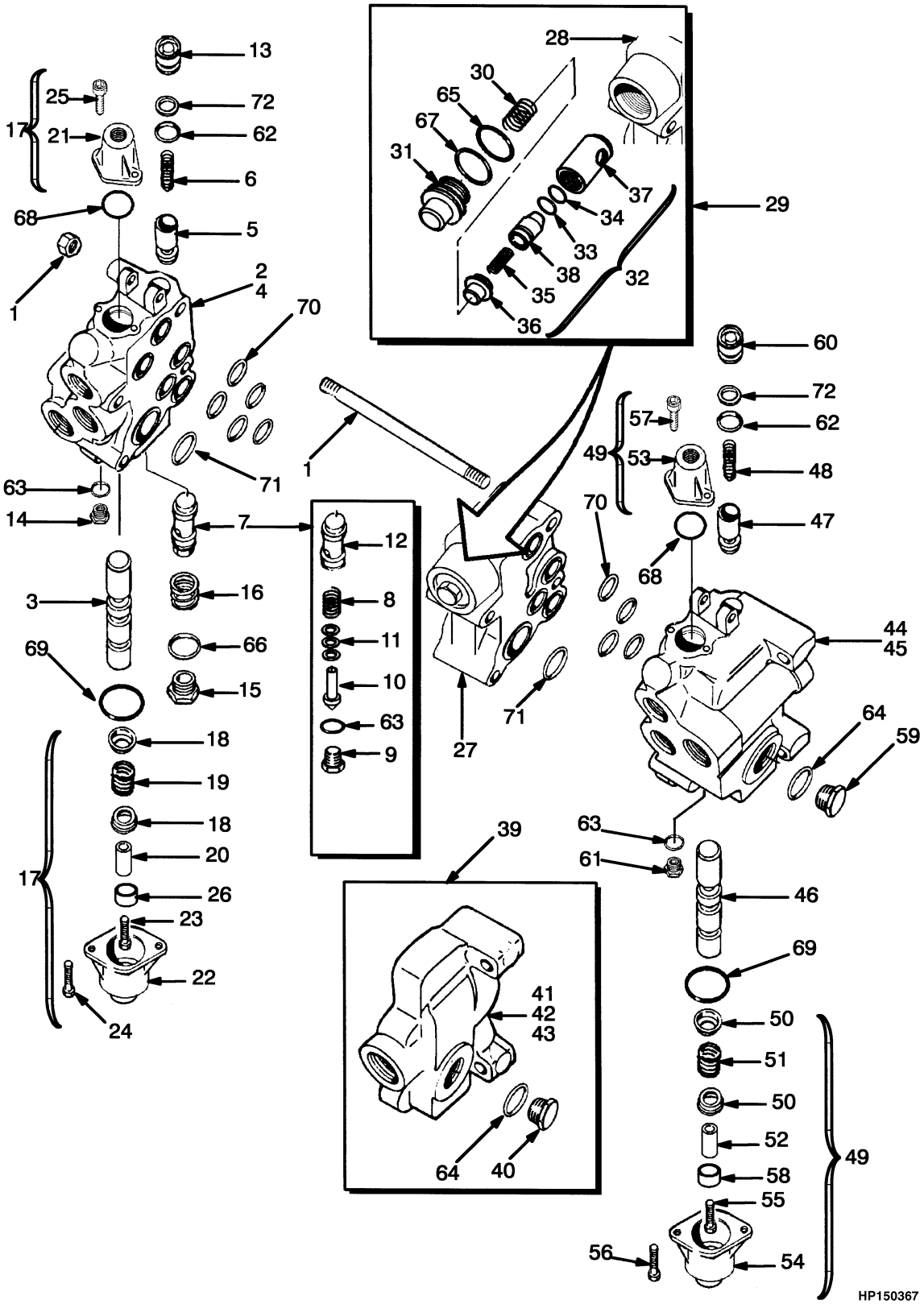

©2011 HYSTER COMPANY

CONTROL VALVE

(S/N E008E01657 →) (S/N E008D01589 →)

KEY:
A: One Function
B: Two Function

ITEM	PART NO.	DESCRIPTION	QTY A	QTY B
	1385284	Hydraulic Control Valve	1	..
	1385285	Hydraulic Control Valve	..	1
1	1450360	Kit-Hardware	1	..
1	1450361	Kit-Hardware	..	1
2	1393366	Valve Section	1	1
3	. . . . .	Spool	1	1
4	. . . . .	Body (Inlet)	1	1
5	1352711	Poppet	1	1
6	1352712	Spring	1	1
7	1393369	Relief Valve	1	1
7	1393379	Kit-Relief Valve	1	1
8	1393381	Spring	1	1
9	1393382	Plug	1	1
10	1393383	Poppet	1	1
11	1393384	Shim (0.003 in.)	1	1
11	1393385	Shim (0.006 in.)	1	1
11	1393386	Shim (0.010 in.)	1	1
11	1393387	Shim (0.018 in.)	1	1
11	1393388	Shim (0.022 in.)	1	1
11	1393389	Shim (0.030 in.)	1	1
12	1393390	Plunger	1	1
13	1353800	Plug (Check Valve)	1	1
14	1353807	Plug	2	2
15	1353809	Plug	1	1
16	1337952	Spring	1	1
17	1393394	Kit-End Cap (Assembly)	1	1
18	1337595	Retainer	2	2
19	1350982	Spring	1	1
20	1350975	Guide	1	1
21	1393395	Cap	1	1
22	1393396	Cap (Spring)	1	1
23	1520849	Screw	1	1
24	1450195	Screw	2	2
25	1450196	Screw	2	2
26	1450197	Spacer	1	1
27	1393371	Valve Section	1	1
28	1393372	Body	1	1
29	1393378	Relief Valve	1	1
30	338570	Spring	1	1
31	338569	Plug	1	1
32	1450193	Relief Valve (Assembly)	1	1
33	127656	O-Ring	1	1
34	1393374	Retainer	1	1
35	1393375	Spring	1	1
36	1450199	Plug	1	1

©2011 HYSTER COMPANY

CONTROL VALVE

(S/N E008E01657 →) (S/N E008D01589 →)

KEY:
A: One Function
B: Two Function

ITEM	PART NO.	DESCRIPTION	QTY A	QTY B
37	. . . . .	Body	1	1
38	1450201	Plunger	1	1
39	1393376	Valve Section	1	..
40	1393377	Plug	1	..
41	1352723	Plug	1	..
42	1352724	Plug	1	..
43	. . . . .	Body	1	..
44	1393391	Valve Section	..	1
45	. . . . .	Body	..	1
46	. . . . .	Spool	..	1
47	1352711	Poppet	..	1
48	1352712	Spring	..	1
49	1393394	Kit-End Cap (Assembly)	..	1
50	1337595	Retainer	..	2
51	1350982	Spring	..	1
52	1350975	Guide	..	1
53	1393395	Cap	..	1
54	1393396	Cap (Spring)	..	1
55	1520849	Screw	..	1
56	1450195	Screw	..	2
57	1450196	Screw	..	2
58	1450197	Spacer	..	1
59	1393377	Plug	..	1
60	1353800	Plug (Check Valve)	..	1
61	1353807	Plug	..	1
62	1393398	O-Ring	1	2
63	16480	O-Ring	2	3
64	. . . . .	O-Ring	1	1
65	338568	O-Ring	1	1
66	16982	O-Ring	1	1
67	338926	Back-Up Ring	1	1
68	1393399	O-Ring	1	2
69	1393400	O-Ring	1	2
70	1350719	O-Ring	9	9
71	1350720	O-Ring	2	2
72	1337970	Back-Up Ring	1	2
	1393397	Kit-Seal	1	1

©2011 HYSTER COMPANY

PRESSURE REDUCING VALVE (FIGURE 9-25)

PILOT CIRCUIT (→ S/N E008E01984B)

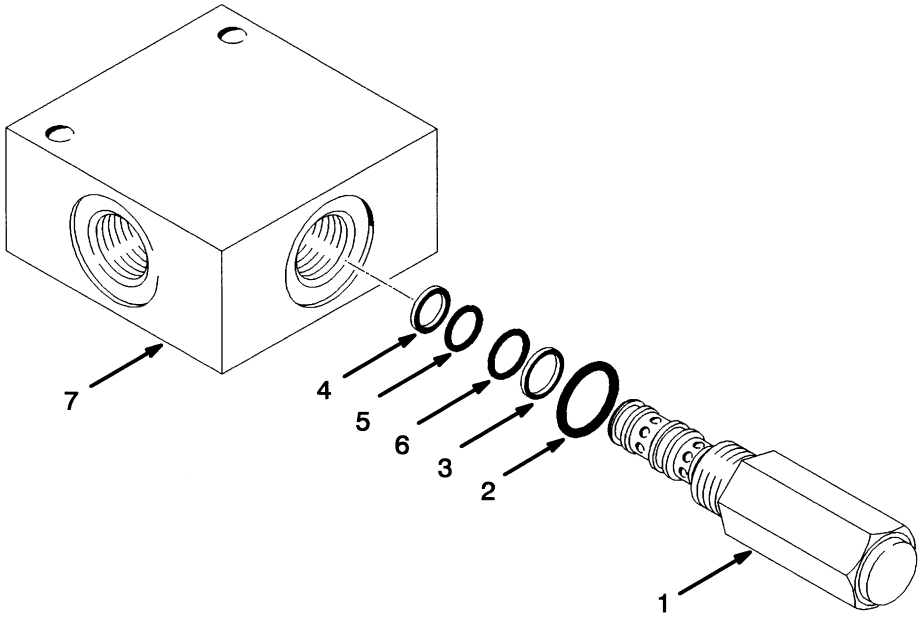

HP150368

ITEM	PART NO.	DESCRIPTION	QTY
	a 1330172	Valve	1
	b 1383500	Pressure Valve	1
1	**a** 1343160	Cartridge	1
1	**b** 1383607	Cartridge	1
1	**b** 1390151	Plug (Nylon)	2
1	**b** 166209	Snap Ring	1
2	**ab**	O-Ring	1
3	**ab**	Back-Up Ring	1
4	**ab**	Back-Up Ring	1
5	**ab**	O-Ring	1
6	**ab**	O-Ring	1
7	**ab** 1343161	Body	1
	359756	Kit-Seal (Used on Part No. 1330172)	1
	371172	Kit-Seal (Used on Part No. 1383500)	1

FOOTNOTES:

a → S/N E008E01614

b S/N E008E01615 →

©2011 HYSTER COMPANY

PRESSURE REDUCING VALVE (FIGURE 9-26)

PARK BRAKE (→ S/N E008E01984B)

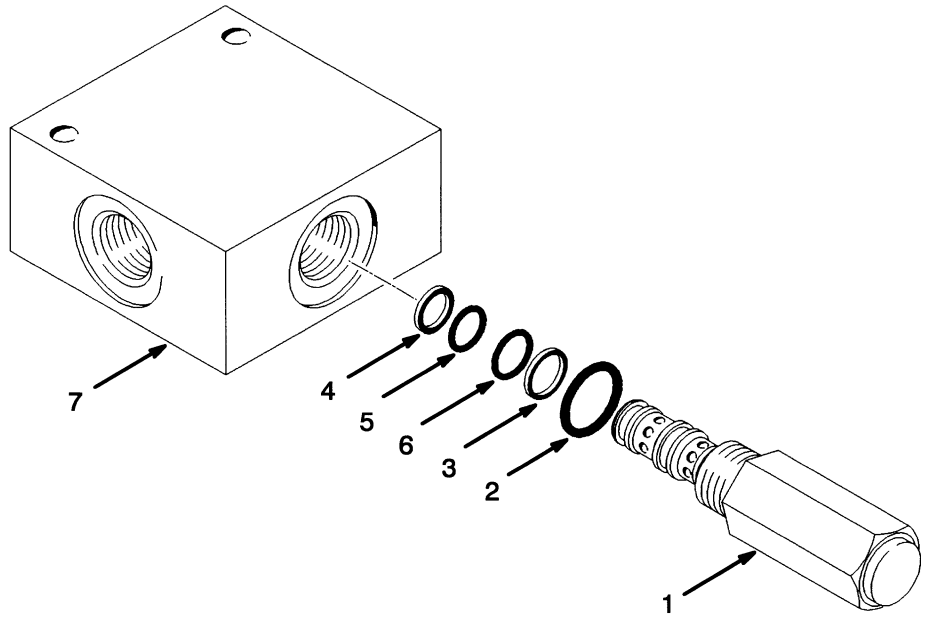

HP150369

ITEM	PART NO.	DESCRIPTION	QTY
	a 1332186	Valve	1
	b 1383501	Pressure Valve	1
1	**a** 1343158	Cartridge	1
1	**b** 1383608	Cartridge	1
1	**b** 1390151	Plug (Nylon)	2
1	**b** 166209	Snap Ring	1
2	**ab**	O-Ring	1
3	**ab**	Back-Up Ring	1
4	**ab**	Back-Up Ring	1
5	**ab**	O-Ring	1
6	**ab**	O-Ring	1
7	**a** 1343159	Body	1
7	**b** 1343161	Body	1
	359756	Kit-Seal (Used on Part No. 1332186)	
	371172	Kit-Seal (Used on Part No. 1383501)	

FOOTNOTES:

a → S/N E008E01614

b S/N E008E01615 →

©2011 HYSTER COMPANY

PILOT VALVE (FIGURE 9-27)

PARK BRAKE (→ S/N E008D01581) (→ S/N E008E01655)

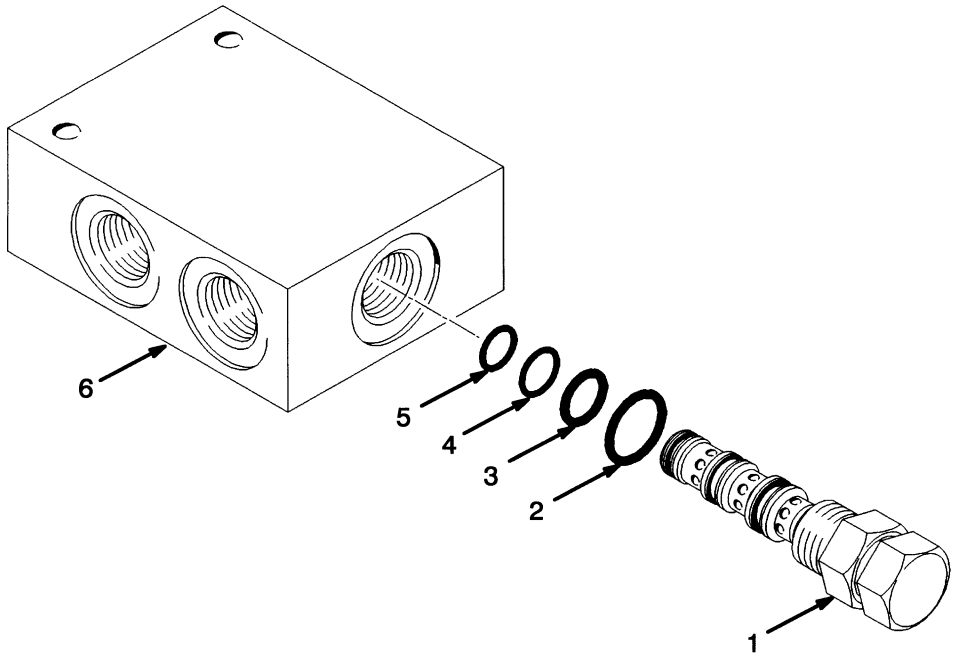

HP150370

ITEM	PART NO.	DESCRIPTION	QTY
	1462492	Kit-Valve	1
1	306258	Cartridge	1
2	. . . . .	O-Ring	1
3	. . . . .	O-Ring	1
4	. . . . .	O-Ring	1
5	. . . . .	O-Ring	1
6	1343157	Body	1
	340739	Kit-Seal	1

RELIEF VALVE (FIGURE 9-28)

(→ S/N E008E01984B)

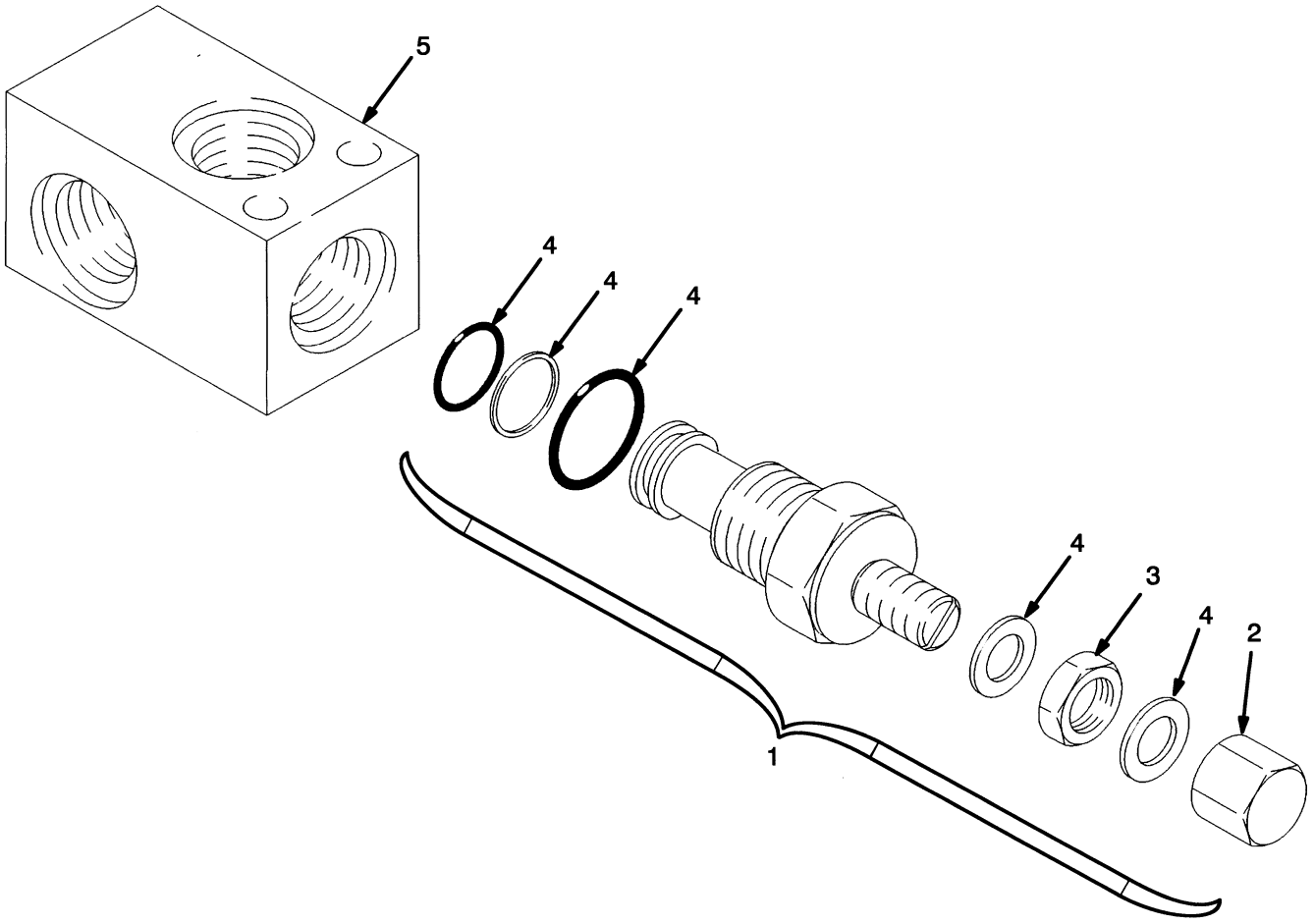

HP150371

ITEM	PART NO.	DESCRIPTION	QTY
	cd 1394055	Relief Valve	1
	ab 815670	Relief Valve	1
1	**ab** 1342603	Cartridge	1
2	**ab** 1342601	Cap	1
3	**ab** 1342602	Nut	1
4	**ab** 1342607	Kit-Seal	1
4	**cd** 1458297	Kit-Seal	1
5	**abcd** 1342605	Valve Block	1

FOOTNOTES:

a → S/N E008D01614
b → S/N E008E01664
c S/N E008D01615 →
d S/N E008E01665 →

©2011 HYSTER COMPANY

SOLENOID VALVE (FIGURE 9-29)

PARK BRAKE (S/N E008D01582 →) (S/N E008E01656 →)

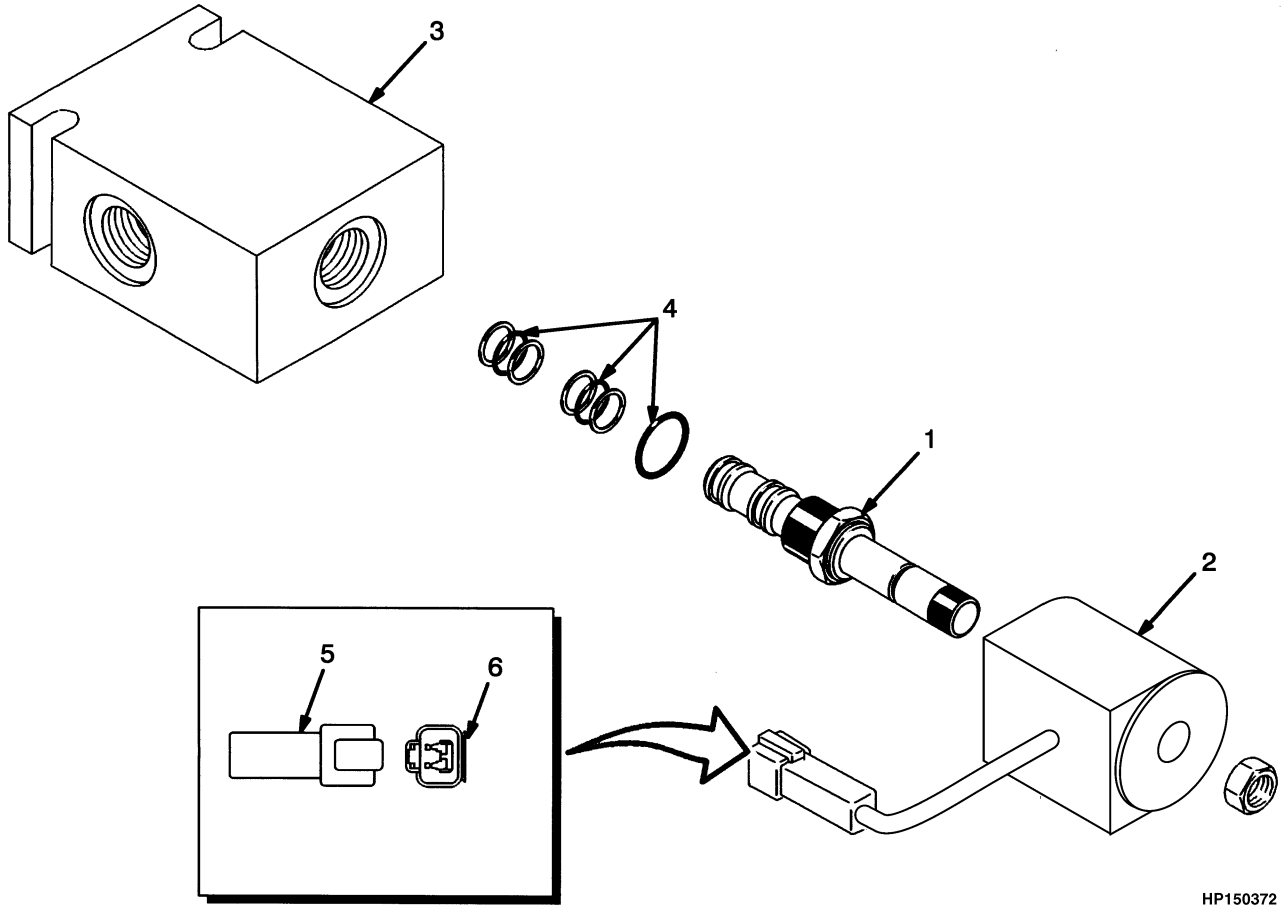

ITEM	PART NO.	DESCRIPTION	QTY
	1383517	Solenoid Valve Assembly	1
1	1388379	Actuator	1
2	1388380	Coil	1
3	1343161	Body	1
4	371172	Kit-Seal	1
5	1330409	Connector	1
6	1330414	Connector (Secondary Lock)	1

TILT HYDRAULIC (FIGURE 9-30)

(→ S/N E008E01984B)

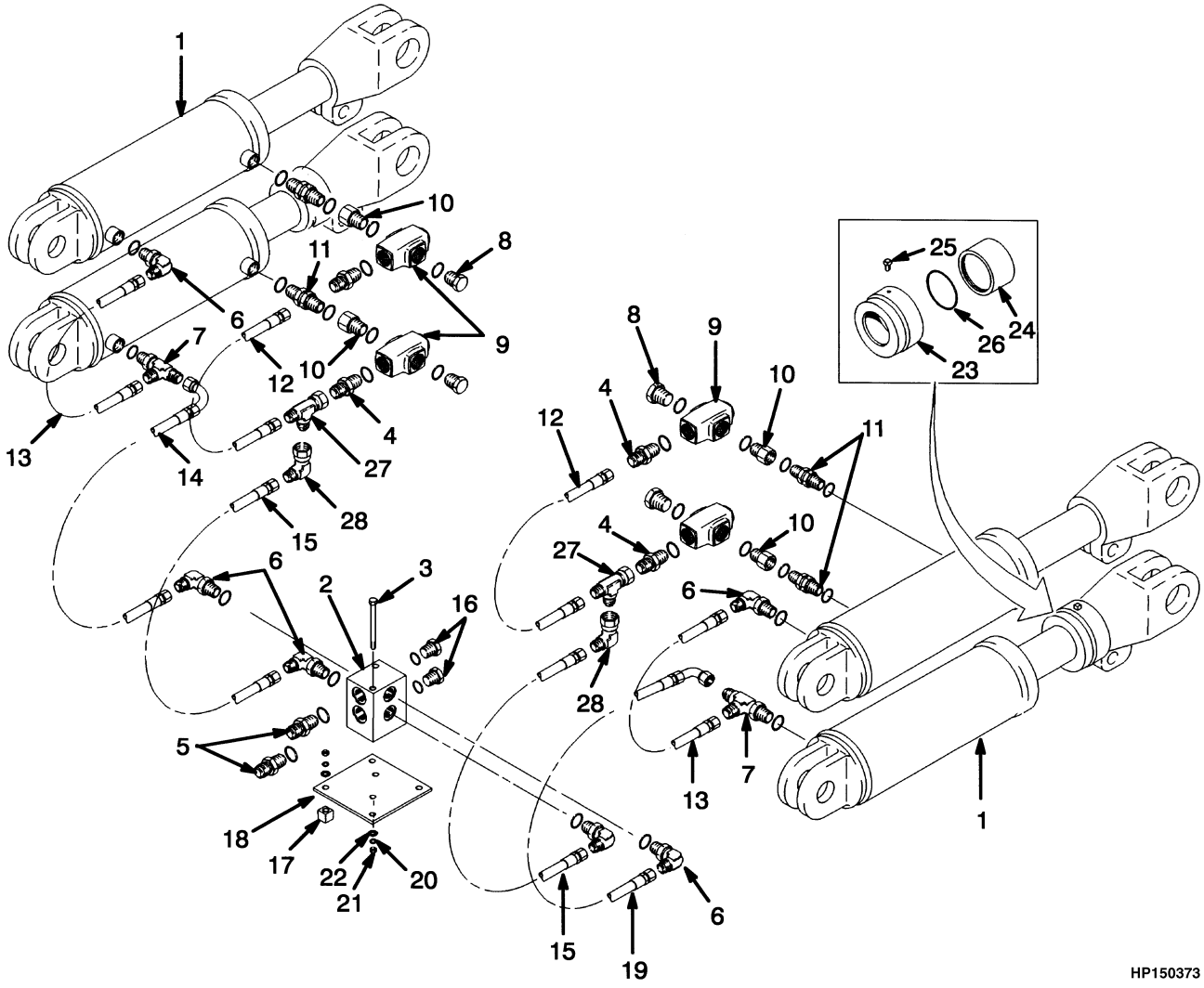

©2011 HYSTER COMPANY

TILT HYDRAULIC

(→ S/N E008E01984B)

ITEM	PART NO.	DESCRIPTION	QTY
1	1335667	Tilt Cylinder (☞Figure 9-32)	4
1	1344694	Tilt Cylinder (☞Figure 9-32)	4
2	373057	Manifold	1
3	18549	Capscrew	2
4	17761	Fitting	4
4	16486	O-Ring	1
5	16543	Connector	2
5	16486	O-Ring	1
6	16559	Fitting	6
6	16484	O-Ring	1
7	16970	T-Fitting	2
7	16484	O-Ring	1
8	14603	Plug	4
8	16486	O-Ring	1
8	222444	Fitting (Optional)	4
9	1346421	Relief Valve (☞Figure 9-33)	4
10	222456	Fitting	4
10	16484	O-Ring	1
11	1336112	Fitting	4
11	16484	O-Ring	2
12	165278	Hose Assy	2
13	210850	Hose Assy	2
14	1336105	Hose Assy	1
15	373063	Hose Assy	2
16	14595	Plug Assembly	2
16	16484	O-Ring	1
17	330435	Spacer	4
18	1336104	Plate	1
19	1307706	Hose Assy	1
20	15156	Lockwasher	6
21	192077	Nut	6
22	15134	Washer	6
23	1344619	Spacer	2
24	1344618	Spacer	2
25	220903	Screw	2
26	15871	O-Ring	2
27	17062	Fitting	2
28	16989	Fitting	2

©2011 HYSTER COMPANY

TILT HYDRAULIC (FIGURE 9-31)

(S/N E008E01985B →)

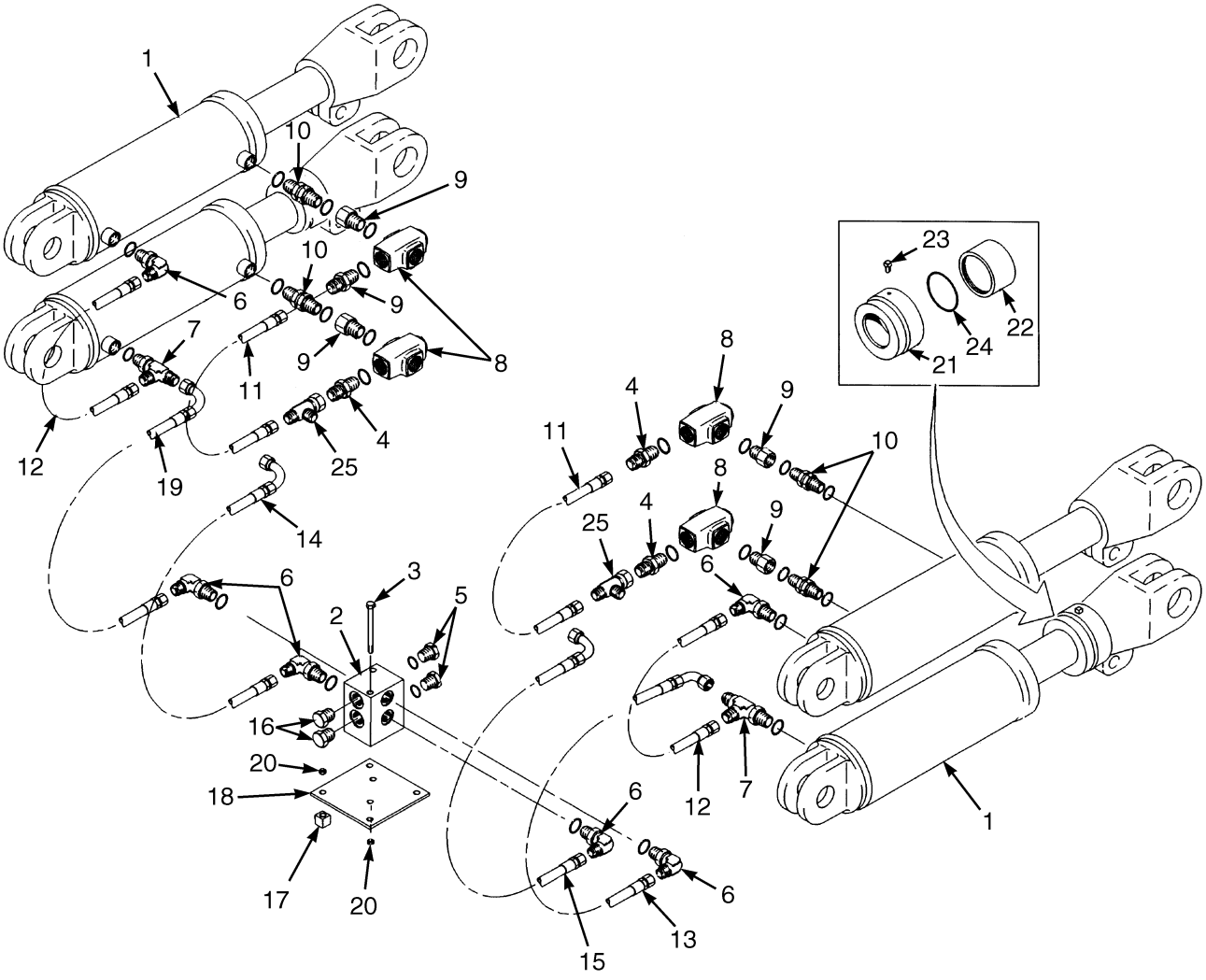

HP150926

©2011 HYSTER COMPANY

TILT HYDRAULIC
(S/N E008E01985B →)

ITEM	PART NO.	DESCRIPTION	QTY
1	1344694	Tilt Cylinder (☞Figure 9-32)	4
2	373057	Manifold	1
3	18549	Capscrew	2
4	1473887	Fitting	4
5	1473888	Fitting	2
6	1473897	Fitting	6
7	1592852	Fitting	2
8	1564349	Relief Valve (☞Figure 9-33)	4
9	**a** 222456	Fitting	4
10	1336112	Fitting	4
11	1542825	Hose Assy	2
12	1542826	Hose Assy	2
13	1542829	Hose Assy	1
14	1542828	Hose Assy	1
15	1542830	Hose Assy	1
16	14595	Plug Assembly	2
17	330435	Spacer	4
18	1336104	Plate	1
19	1542827	Hose Assy	1
20	156133	Nut	6
21	1344619	Spacer	2
22	1344618	Spacer	2
23	220903	Screw	2
24	15871	O-Ring	2
25	1487095	Fitting	2

FOOTNOTES:

a → 11/2004

©2011 HYSTER COMPANY

TILT CYLINDER (FIGURE 9-32)

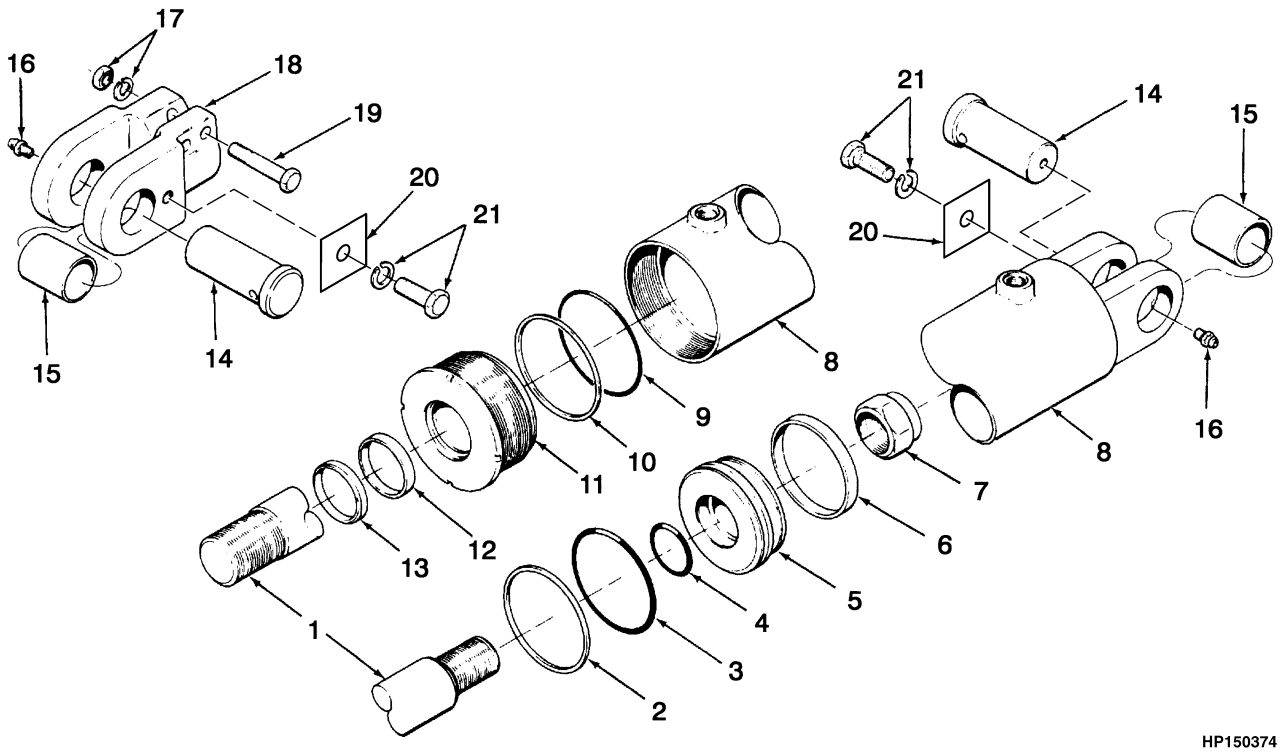

©2011 HYSTER COMPANY

TILT CYLINDER

ITEM	PART NO.	DESCRIPTION	QTY
	a 1335667	Tilt Cylinder	4
	bc 1344694	Tilt Cylinder	4
1	**a** 1335675	Piston Rod	1
1	**bc** 1344698	Piston Rod	1
2	370197	Sealing Ring	1
3	90207	O-Ring	1
4	46388	O-Ring	1
5	370175	Piston	1
6	370196	Wear Ring	1
7	1349793	Locknut	1
8	**a** 1335671	Tube Wldmt-Cylinder	1
8	**bc** 1344697	Tube Wldmt-Cylinder	1
9	15895	O-Ring	1
10	53086	Back-Up Ring	1
11	370176	End Plug	1
12	309062	Rod Seal	1
13	225334	Rod Wiper	1
14	249557	Pin	8
15	284534	Bushing	8
16	16001	Grease Fitting	8
17	15060	Nut	8
17	15160	Washer	8
18	806562	Rod End	4
19	18613	Capscrew	8
20	27133	Keeper	8
21	15156	Lockwasher	8
21	16597	Capscrew	8
	1308786	Kit-Seal	1
	1330134	Kit-Seal (High Temperature)	1

FOOTNOTES:

a → S/N E008E01512
b S/N E008D01501 →
c S/N E008E01513 →

©2011 HYSTER COMPANY

RELIEF VALVE (FIGURE 9-33)
TILT CYLINDER

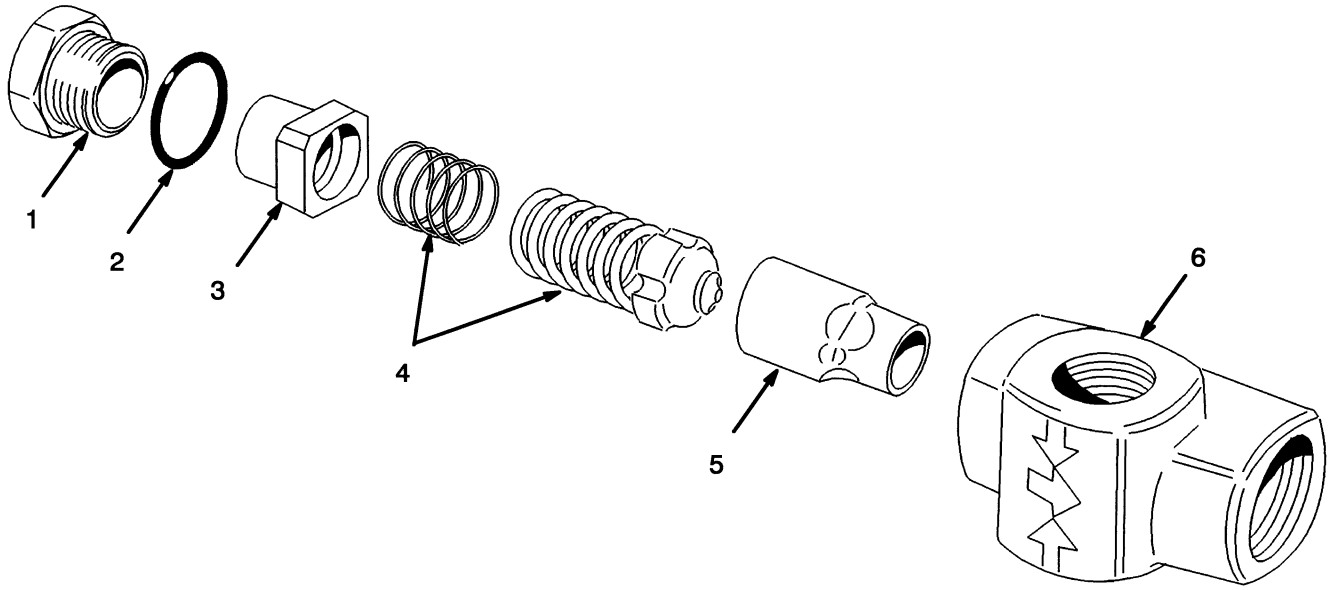

HP150375

ITEM	PART NO.	DESCRIPTION	QTY
	1346421	Relief Valve	4
1	1350997	Plug	1
2	1331081	O-Ring	1
3	1350710	Spacer	1
4	1350711	Cartridge	1
5	1350712	Housing	1
6	. . . . .	Body	1

©2011 HYSTER COMPANY

SHUTTLE VALVE (FIGURE 9-34)
(→ S/N E008E01984B)

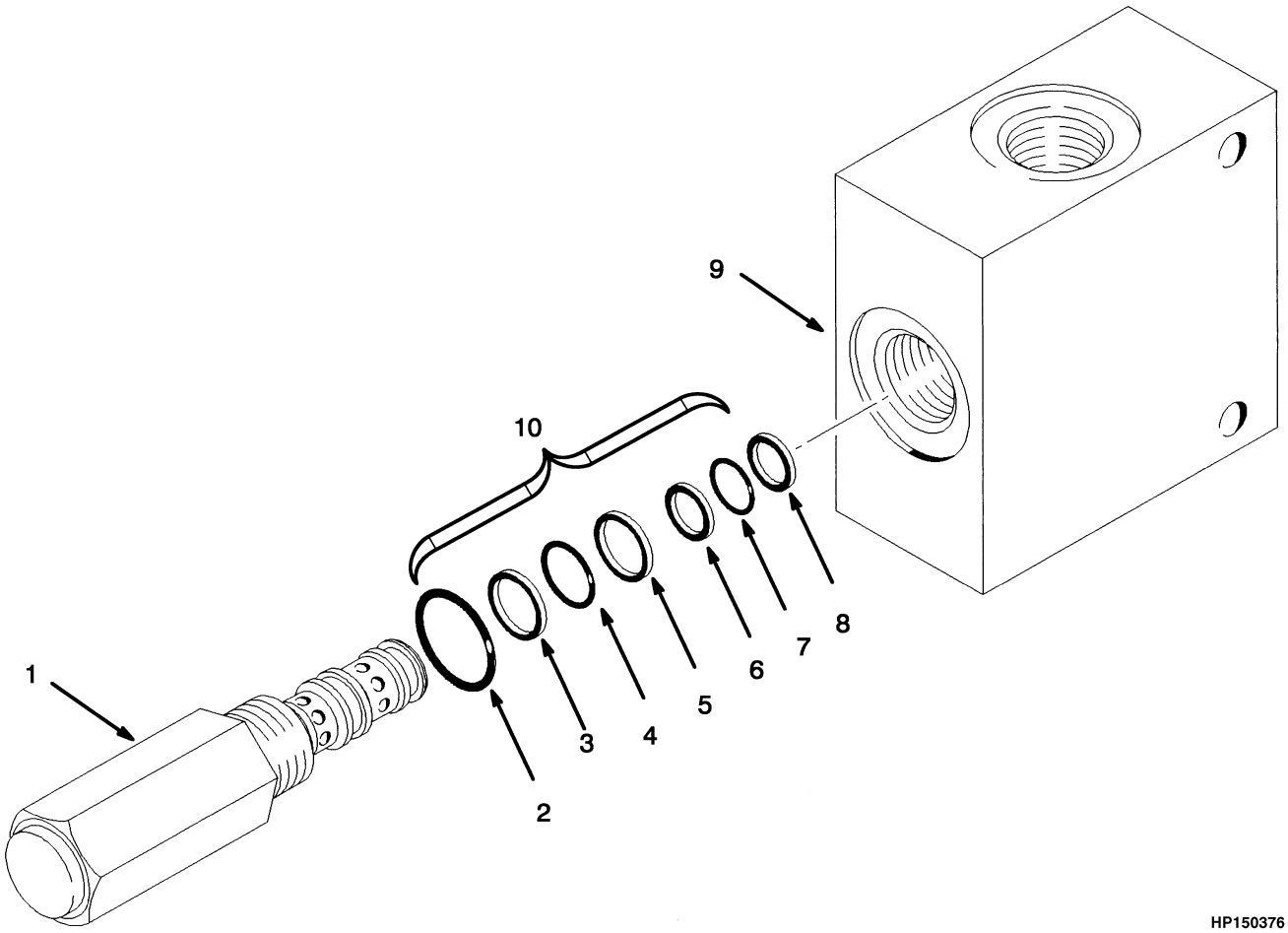

HP150376

ITEM	PART NO.	DESCRIPTION	QTY
	cd 816376	Valve	1
	ab 1355088	Valve	1
1	**ab** 1366648	Cartridge	1
1	**ab** 1454330	Cartridge	1
2	. . . . .	O-Ring	1
3	. . . . .	Back-Up Ring	1
4	. . . . .	O-Ring	1
5	. . . . .	Back-Up Ring	1
6	. . . . .	Back-Up Ring	1
7	. . . . .	O-Ring	1
8	. . . . .	Back-Up Ring	1
9	1343161	Body	1
10	371172	Kit-Seal	AR

FOOTNOTES:

a → S/N E008D01617
b → S/N E008E01712
c S/N E008D01618 →
d S/N E008E01713 →

©2011 HYSTER COMPANY

ATTACHMENT CONTROL VALVE (FIGURE 9-35)

(→ S/N E008E01753) (→ S/N E008D01602)

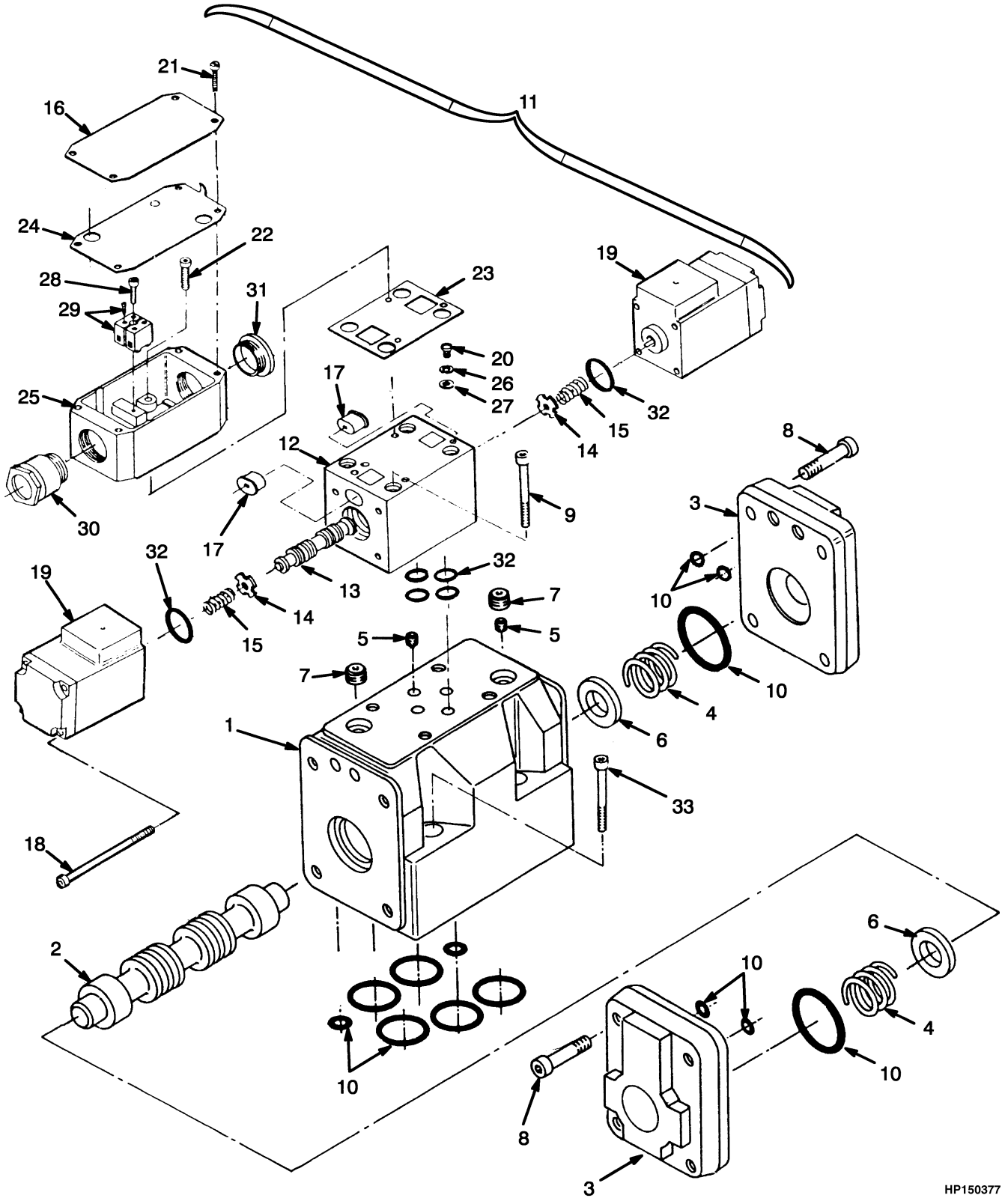

©2011 HYSTER COMPANY

ATTACHMENT CONTROL VALVE

(→ S/N E008E01753) (→ S/N E008D01602)

ITEM	PART NO.	DESCRIPTION	QTY
	1350574	Hydraulic Control Valve	1
1	1353860	Housing	1
2	1320230	Piston	1
3	1353861	Cover	2
4	1353864	Spring	2
5	1320234	Plug	2
6	1320235	Retainer	2
7	1320227	Plug	2
8	1353865	Capscrew	8
9	1320237	Capscrew	4
10	1320238	Kit-Seal	1
11	1320239	Check Valve	1
12	1320240	Housing	1
13	1320241	Piston	1
14	1320242	Washer	2
15	1320243	Spring	2
16	1320244	Identification Plate	1
17	1320245	Plug	2
18	1320246	Capscrew	8
19	1320247	Solenoid	2
20	1320248	Screw	1
21	1320249	Screw	4
22	1320850	Capscrew	2
23	1320251	Seal	1
24	1320252	Seal	1
25	1320253	Cover	1
26	1320254	Lockwasher	1
27	1320255	Washer	1
28	1320256	Capscrew	2
29	1320257	Terminal	2
30	1320258	Fitting	1
31	1320259	Plug	1
32	1320260	Kit-Seal	1
33	18126	Capscrew	4

©2011 HYSTER COMPANY

DIRECTIONAL CONTROL VALVE (FIGURE 9-36)

(S/N E008E01811X ↔ S/N E008E01984B)

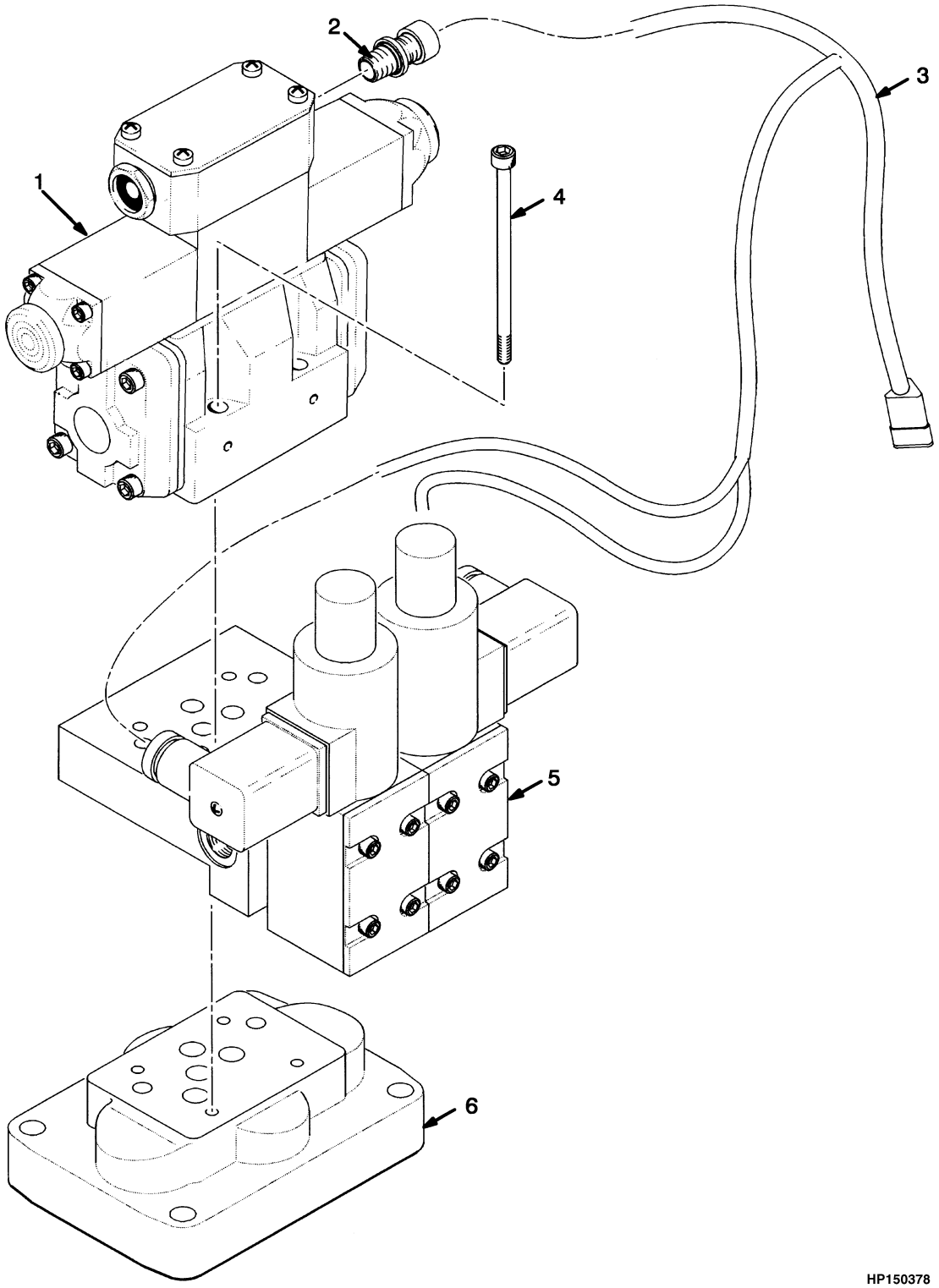

©2011 HYSTER COMPANY

DIRECTIONAL CONTROL VALVE
(S/N E008E01811X ↔ S/N E008E01984B)

KEY:
A: With Container Handling Attachment
B: Without Container Handling Attachment

ITEM	PART NO.	DESCRIPTION	QTY A	QTY B
	1461916	Hydraulic Control Valve	1	..
	1463998	Valve	..	1
1	1450912	Valve (☞Figure 9-37)	1	1
2	1310026	Fitting	1	..
3	1450913	Wire Harness (Valve)	..	1
3	1461917	Wire Harness (Valve)	1	..
4	18126	Capscrew	..	4
5	1462054	Valve	1	..
5	6990489	Manifold	1	..
5	6996504	Valve	2	..
5	6996122	Screw (Allen)	8	..
5	6996159	O-Ring	6	..
5	6996505	Bolt	4	..
5	1334632	Plug	2	..
6	1456830	Adapter	1	..

©2011 HYSTER COMPANY

CONTROL VALVE (FIGURE 9-37)

(S/N E008D01603 ↔ S/N E008E001984B) (S/N E008E01754 ↔ S/N E008E001984B)

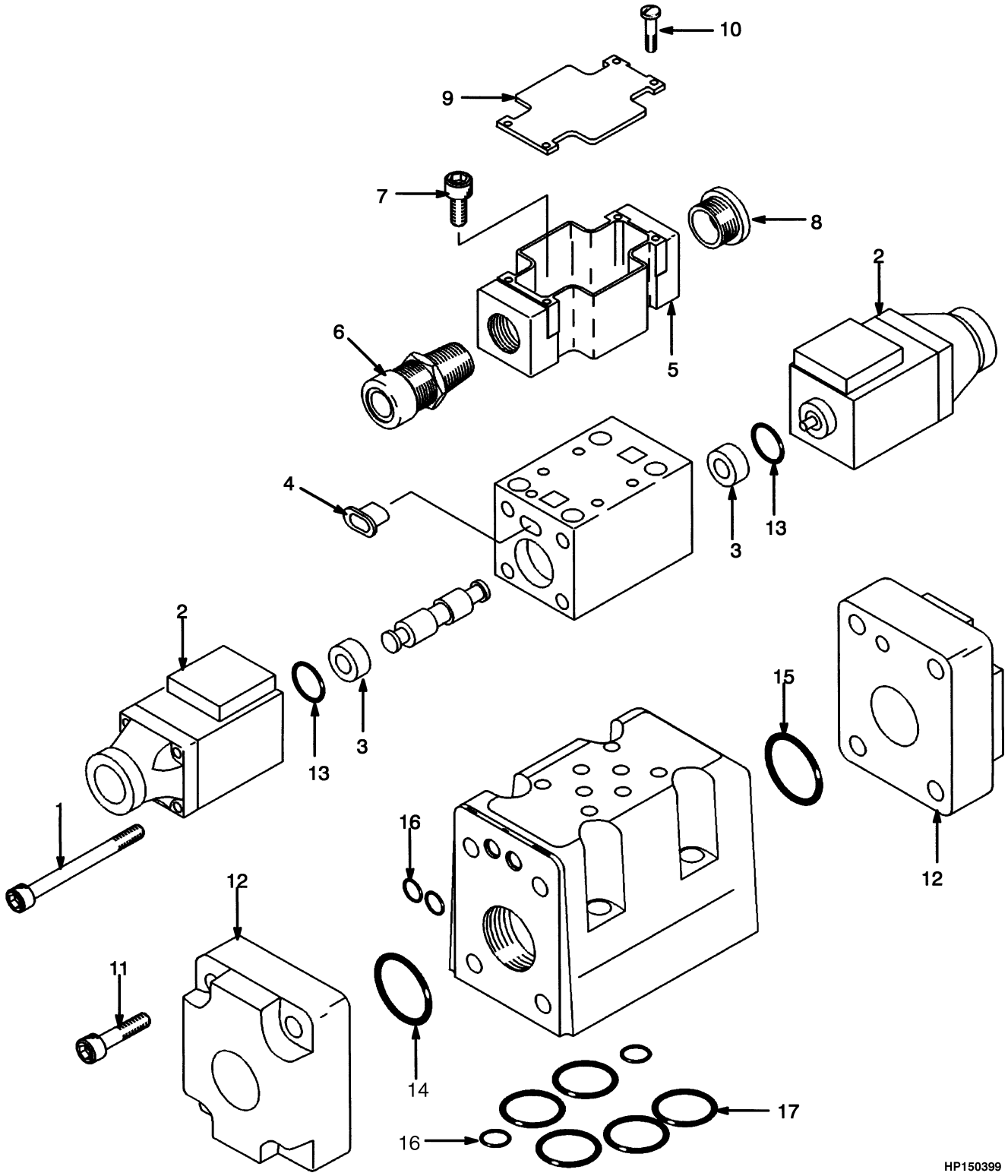

©2011 HYSTER COMPANY

CONTROL VALVE

(S/N E008D01603 ↔ S/N E008E001984B) (S/N E008E01754 ↔ S/N E008E001984B)

ITEM	PART NO.	DESCRIPTION	QTY
	1450912	Valve	1
1	1455662	Capscrew	2
2	1455663	Solenoid	2
3	1455664	Spacer	2
4	1455665	Washer	2
5	. . . . .	Housing	1
5	1466009	Terminal Board (Not Illustrated)	1
6	1455667	Fitting	1
7	1455668	Screw	2
8	1455669	Plug	1
9	1455670	Plate	1
10	1455671	Capscrew	4
11	1455672	Capscrew	8
12	. . . . .	Cover	2
13	1384413	Kit-Seal	1
14	. . . . .	O-Ring	2
15	. . . . .	O-Ring	4
16	. . . . .	O-Ring	5
17	. . . . .	O-Ring	2
	1320238	Kit-Seal	1

©2011 HYSTER COMPANY

SHUTTLE VALVE (FIGURE 9-38)
ATTACHING PARTS (→ S/N E008E01984B)

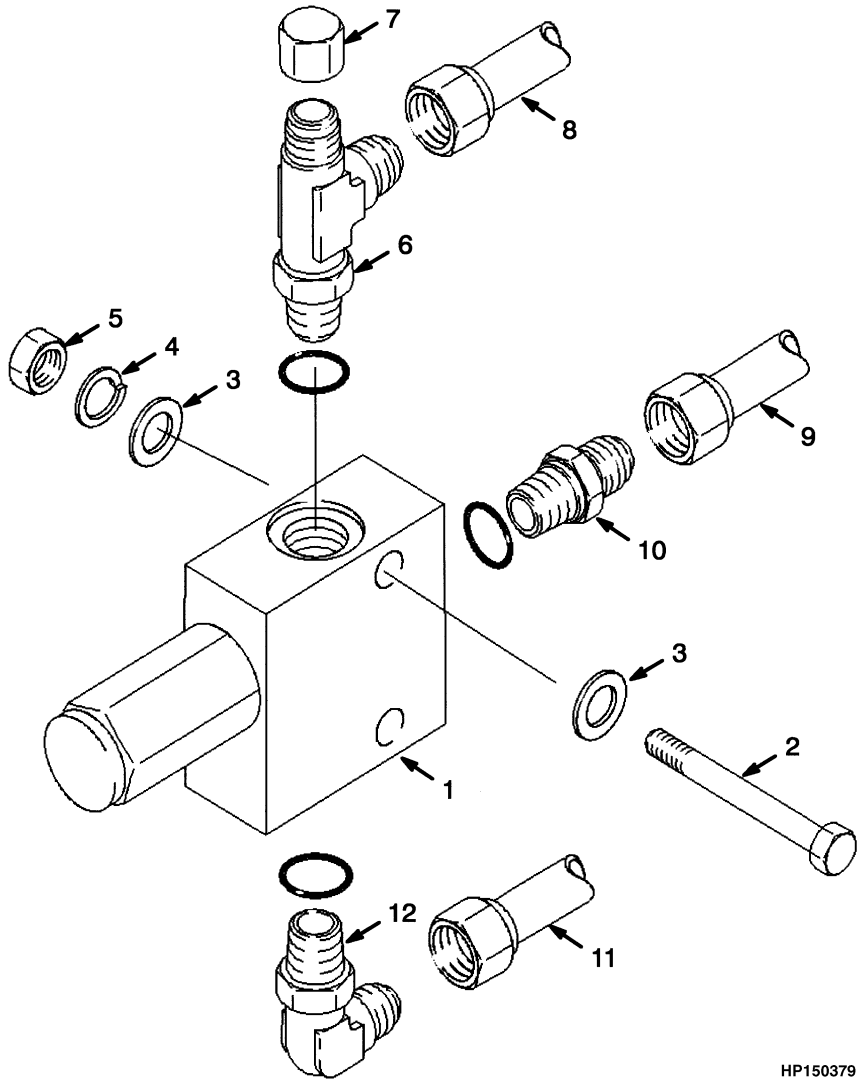

©2011 HYSTER COMPANY

SHUTTLE VALVE

ATTACHING PARTS (→ S/N E008E01984B)

ITEM	PART NO.	DESCRIPTION	QTY
1	1355088	Valve (☞Figure 9-34)	1
1	816376	Valve (☞Figure 9-34)	1
2	18471	Capscrew	2
3	15127	Washer	4
4	15154	Lockwasher	2
5	15054	Nut	1
6	16969	T-Fitting	1
6	16483	O-Ring	1
7	16693	Nut	1
8	815868	Hose Assy	1
9	815870	Tube Assy	1
10	16540	Connector	1
10	16483	O-Ring	1
11	188701	Hose Assy (Center Compartment)	1
11	73462	Hose Assy (Left Compartment)	1
12	16558	Fitting	1
12	16483	O-Ring	1

©2011 HYSTER COMPANY

HYDRAULIC PUMP (FIGURE 9-39)

STEERING AND AUXILIARY, HOIST AND TILT (→ S/N E008E01906Z)

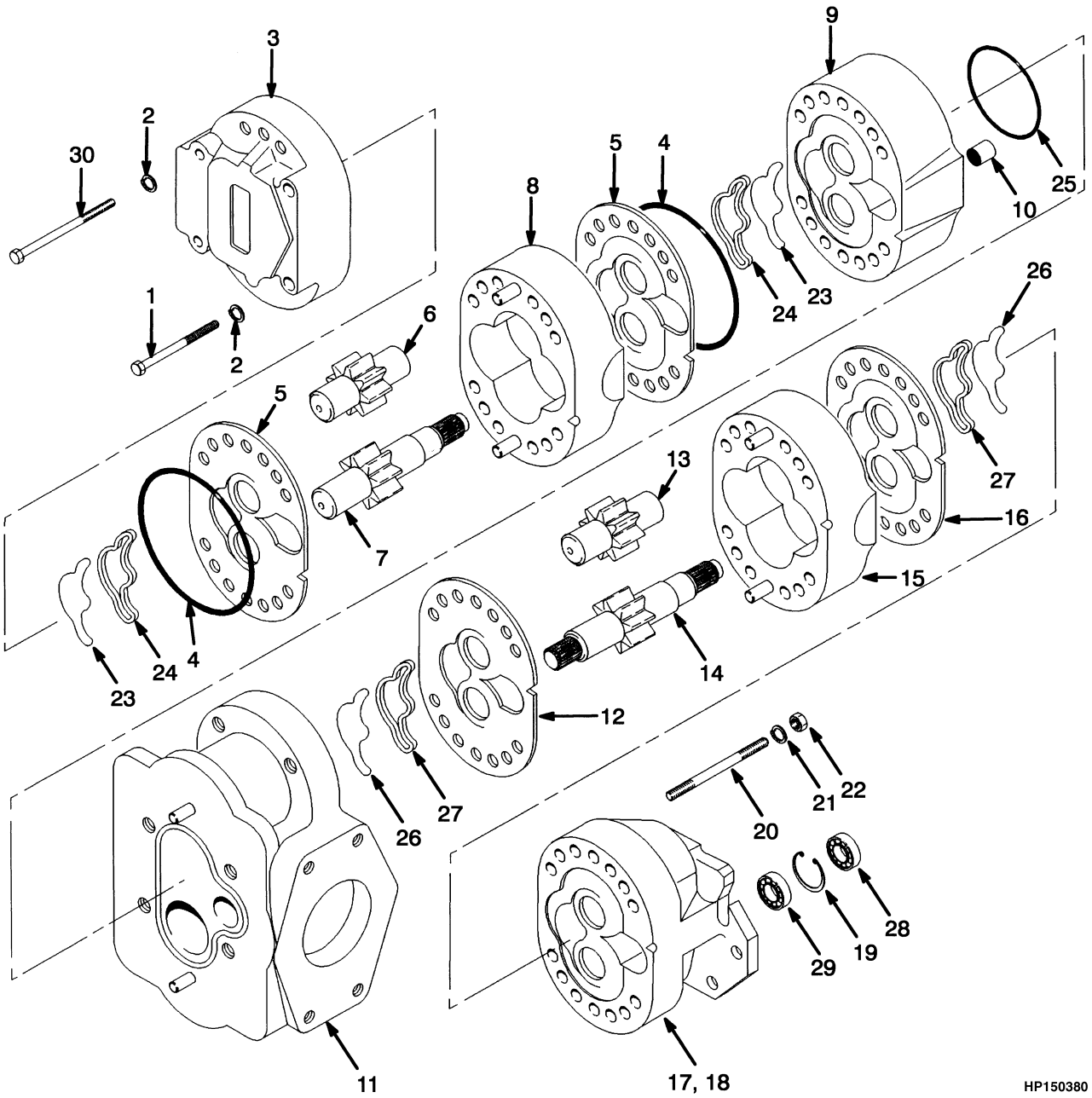

©2011 HYSTER COMPANY

HYDRAULIC PUMP

STEERING AND AUXILIARY, HOIST AND TILT (→ S/N E008E01906Z)

ITEM	PART NO.	DESCRIPTION	QTY
	1335719	Hydraulic Pump	1
1	1318623	Screw	4
2	1318606	Washer	8
3	1318607	Kit-Rear Cover	1
4	1318608	O-Ring	2
5	1318609	Wear Plate	2
6	. . . . .	Gear	1
7	. . . . .	Gear	1
8	1344778	Valve Section	1
9	1318610	Adapter	1
10	1318611	Coupling	1
11	1344779	Valve Section	1
12	1318613	Wear Plate	1
13	1318614	Gear	1
14	1318615	Shaft	1
15	1318616	Valve Section	1
16	1318617	Wear Plate	1
17	1319579	Cover	1
18	. . . . .	Plug	1
19	1318619	Retaining Ring	1
20	1318620	Stud	8
21	1318621	Lockwasher	8
22	221714	Nut	8
23	. . . . .	Seal	2
24	. . . . .	Retainer	2
25	. . . . .	O-Ring	1
26	. . . . .	Seal	2
27	. . . . .	Retainer	2
28	. . . . .	Seal	1
29	. . . . .	Seal	1
30	1344775	Capscrew	4
	382682	Kit-Seal	1
	294313	Kit-Seal (Shaft End)	1
	1384405	Kit-Rear Displacement	1

©2011 HYSTER COMPANY

HYDRAULIC PUMP (FIGURE 9-40)
STEERING AND AUXILIARY, HOIST AND TILT (S/N E008E01907Z →)

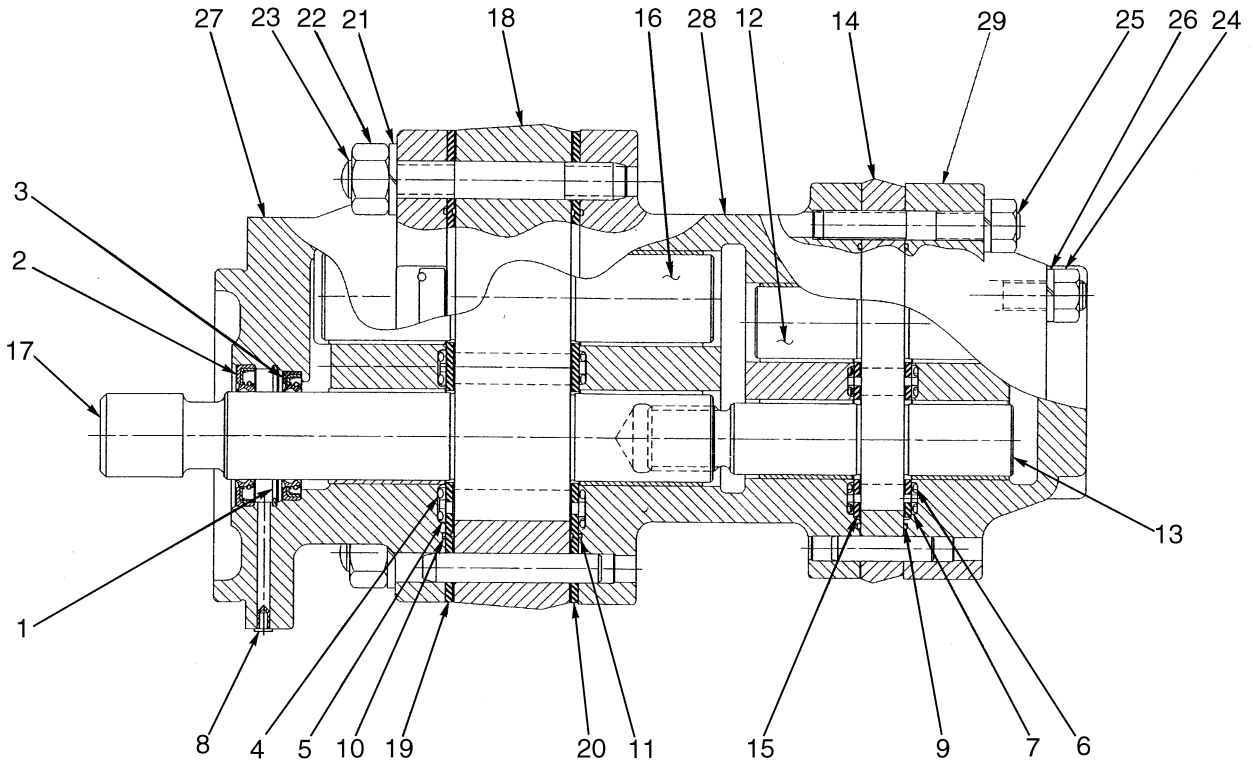

HP150880

©2011 HYSTER COMPANY

HYDRAULIC PUMP

STEERING AND AUXILIARY, HOIST AND TILT (S/N E008E01907Z →)

ITEM	PART NO.	DESCRIPTION	QTY
	1516902	Hydraulic Pump	1
	a 1516903	Hydraulic Pump (Optional)	1
1	1318619	Retaining Ring	1
2	. . . . .	Seal (Shaft)	1
3	. . . . .	Seal (Shaft)	1
4	. . . . .	Seal	2
5	. . . . .	Seal (Retainer)	2
6	. . . . .	Seal (Gland)	2
7	. . . . .	Seal (Retainer)	2
8	294309	Plug	1
9	1318608	O-Ring	2
10	. . . . .	Seal (Front Cover)	2
11	. . . . .	Seal (Rear Cover)	2
12	. . . . .	Drive Gear	1
13	. . . . .	Drive Gear (Rear)	1
14	. . . . .	Section (Center)	1
15	. . . . .	Wear Plate	2
16	. . . . .	Drive Gear	1
17	. . . . .	Drive Gear (Shaft End)	1
18	. . . . .	Section (Center)	1
19	. . . . .	Wear Plate (Front)	1
20	. . . . .	Wear Plate (Rear)	1
21	1318621	Lockwasher	8
22	221714	Nut	8
23	1318620	Stud	8
24	~~1450067~~		
	1450060	Bolt	4
25	1318623	Screw	4
26	1318606	Washer	8
27	1532298	Kit-Cover	1
28	1532299	Kit-Hyd Pump Section	1
29	1318607	Kit-Rear Cover	1
	1450062	Kit-Seal	1
	1384406	Kit-Rear Displacement	1
	1384407	Kit-Front Displacement	1
	1450064	Kit-Stud	1
	1450065	Kit-Capscrew	1

FOOTNOTES:

a S/N E008E02017B →

©2011 HYSTER COMPANY

HYDRAULIC PUMP (FIGURE 9-41)

BRAKE COOLING CIRCUIT, HOIST (→ S/N E008E01984B)

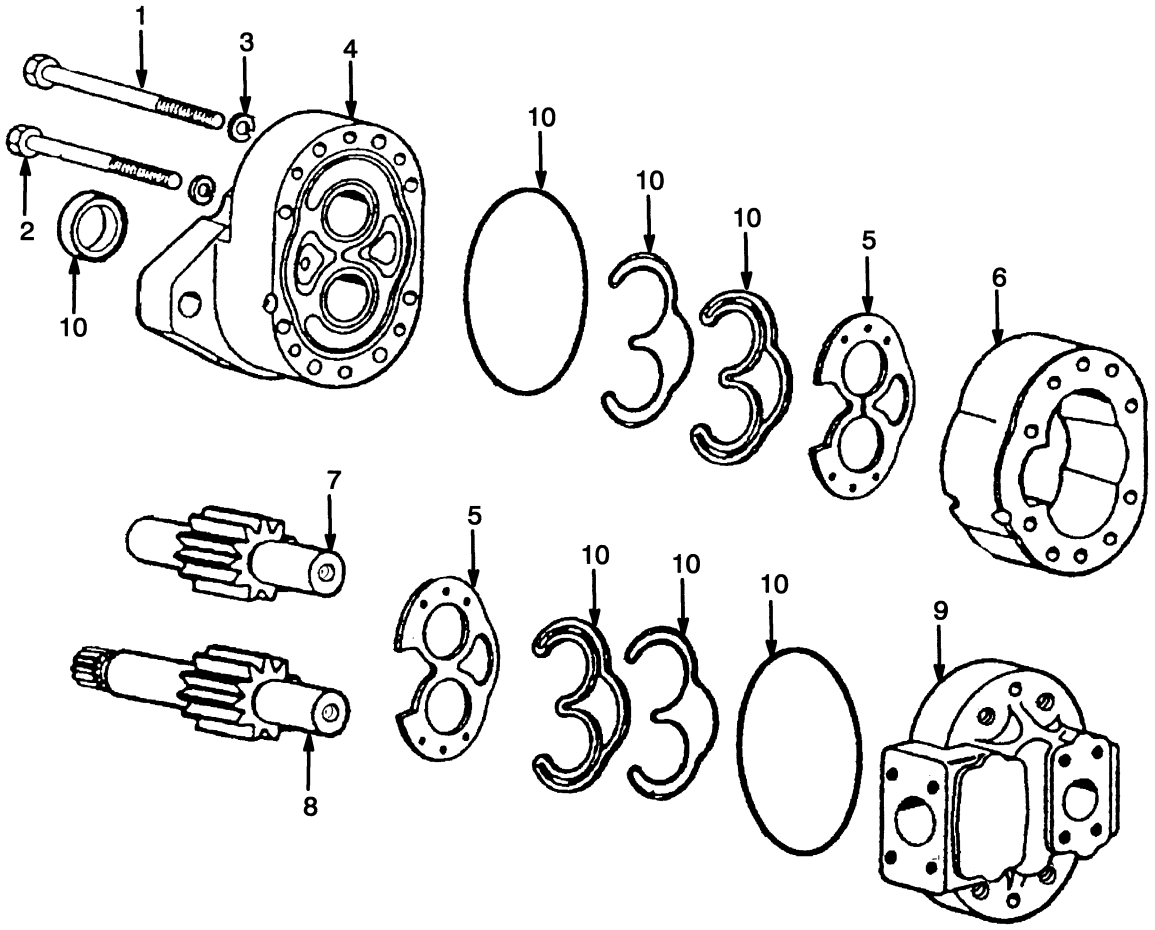

ITEM	PART NO.	DESCRIPTION	QTY
	1335718	Hydraulic Pump	1
1	1344780	Screw (Long)	4
2	1318623	Screw	4
3	1318606	Washer	8
4	1344781	Cover	1
5	1318609	Wear Plate	2
6	1319545	Valve Section	1
7	1318624	Gear	1
8	1344782	Drive Gear	1
9	1344783	Cover	1
10	1344784	Kit-Seal	1

©2011 HYSTER COMPANY

NOTES

©2011 HYSTER COMPANY

HYDRAULIC PUMP (FIGURE 9-42)

BRAKE COOLING CIRCUIT, HOIST (S/N E008E01985B ↔ S/N E008E02016B)

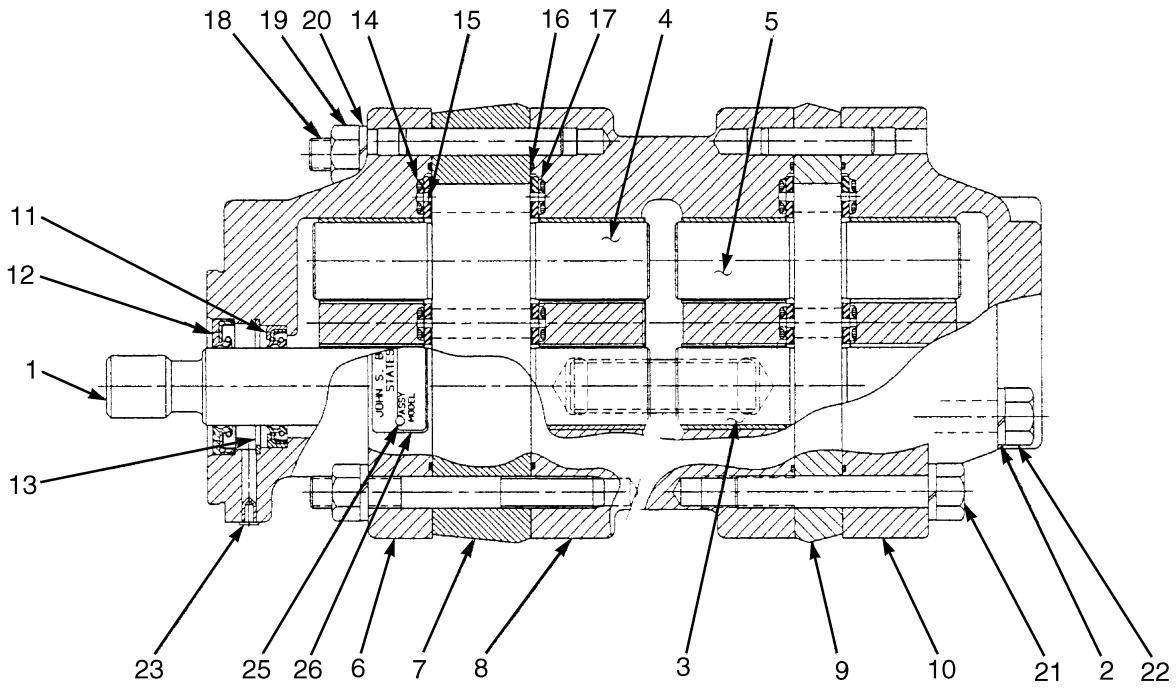

HP150982

©2011 HYSTER COMPANY

HYDRAULIC PUMP

BRAKE COOLING CIRCUIT, HOIST (S/N E008E01985B ↔ S/N E008E02016B)

ITEM	PART NO.	DESCRIPTION	QTY
	1538950	Hydraulic Pump	1
1	. . . . .	Drive Gear (Front)	1
2	. . . . .	Lockwasher	8
3	. . . . .	Drive Gear (Rear)	1
4	. . . . .	Drive Gear (Front)	1
5	. . . . .	Drive Gear (Rear)	1
6	1593678	Kit-Cover	1
7	. . . . .	Center Section	1
8	1593679	Kit-Hyd Pump Section	1
9	. . . . .	Center Section	1
10	1450055	Kit-Rear Cover	1
11	. . . . .	Shaft Seal (Inner)	1
12	. . . . .	Shaft Seal (Outer)	1
13	. . . . .	Retaining Ring	1
14	. . . . .	Seal (Gland)	4
15	. . . . .	Wear Plate	2
16	. . . . .	O-Ring	4
17	. . . . .	Retaining Seal	4
18	. . . . .	Nut	8
19	. . . . .	Nut	8
20	. . . . .	Lockwasher	8
21	. . . . .	Bolt	4
22	. . . . .	Capscrew	4
23	. . . . .	Plug	4
	1593675	Kit-Seal	1
	1593676	Valve Section (Rear)	1
	1593677	Valve Section (Front)	1
	1593680	Kit-Stud	1
	1450059	Kit-Capscrew	1

©2011 HYSTER COMPANY

HYDRAULIC PUMP (FIGURE 9-43)
BRAKE COOLING CIRCUIT, HOIST (S/N E008E02017B →)

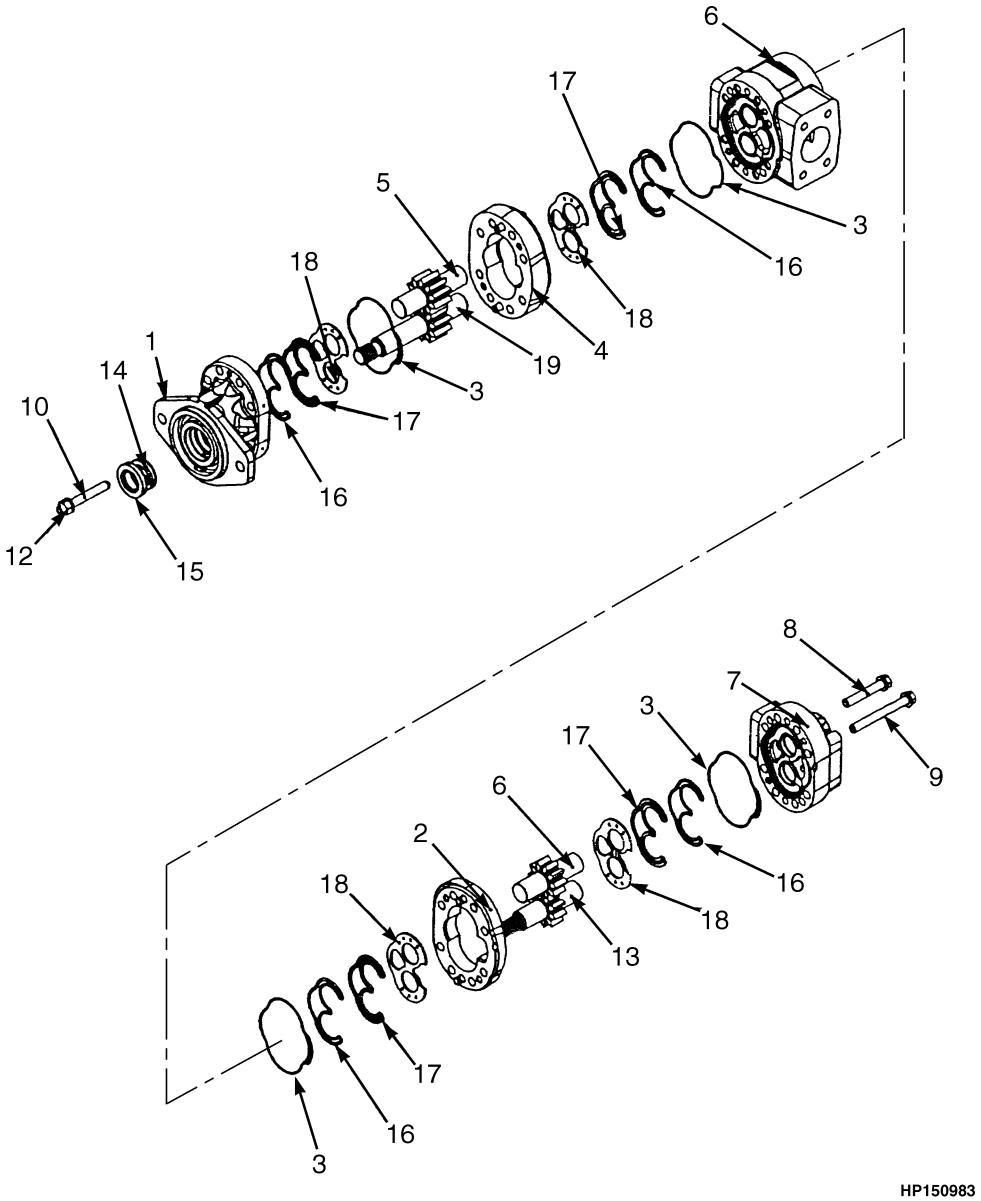

©2011 HYSTER COMPANY

HYDRAULIC PUMP

BRAKE COOLING CIRCUIT, HOIST (S/N E008E02017B →)

ITEM	PART NO.	DESCRIPTION	QTY
	1578831	Hydraulic Pump	1
1	1597266	Cover	1
2	1597267	Valve Section (9 GPM)	1
3	1318608	O-Ring	4
4	1597268	Valve Section (13 GPM)	1
5	. . . . .	Drive Gear	1
6	. . . . .	Drive Gear	1
7	1450055	Kit-Rear Cover	1
8	1597269	Bolt	1
9	~~1450067~~		
	1450060	Bolt	1
10	1597270	Stud	1
11	1318606	Washer	3
12	1450547	Nut	1
13	. . . . .	Drive Gear (Rear)	1
14	1344785	Seal	1
15	. . . . .	Shaft Seal (Outer)	1
16	. . . . .	Seal	4
17	. . . . .	Retainer Seal	4
18	1318609	Wear Plate	4
19	. . . . .	Shaft (Drive Gear)	1

©2011 HYSTER COMPANY

HYDRAULIC (FIGURE 9-44)
PRESSURE CHECK LINE (→ S/N E008E01984B)

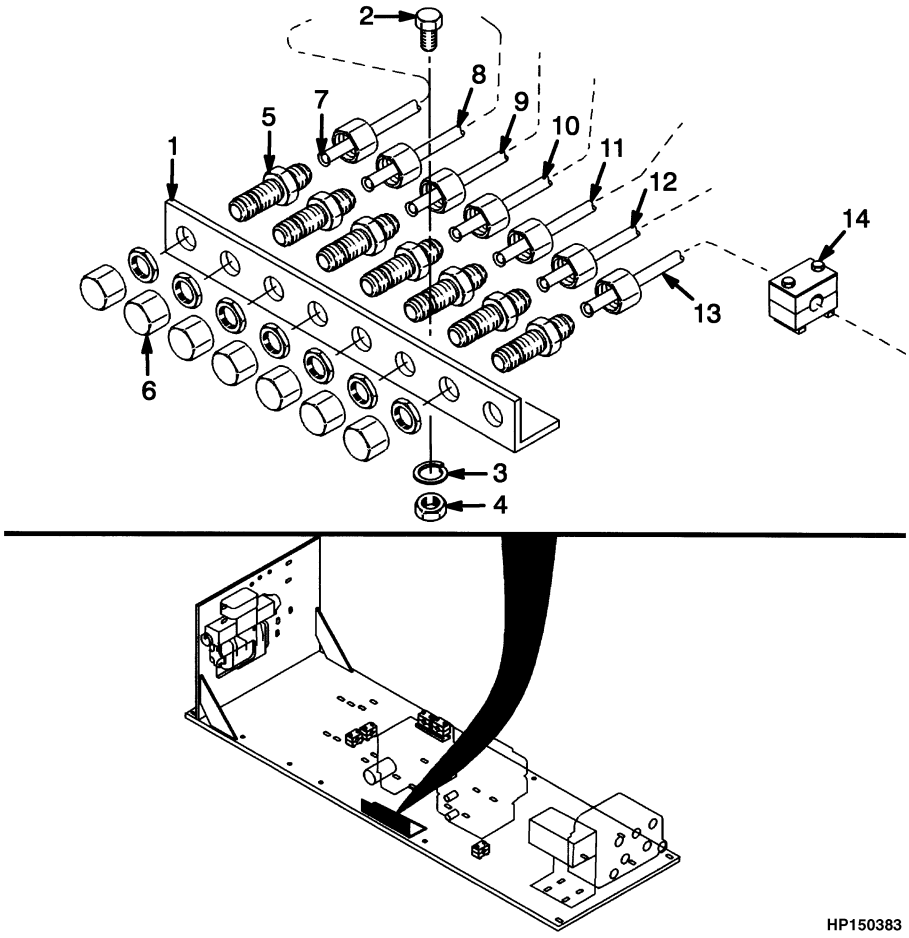

©2011 HYSTER COMPANY

HYDRAULIC

PRESSURE CHECK LINE (→ S/N E008E01984B)

ITEM	PART NO.	DESCRIPTION	QTY
1	1331793	Bracket	1
2	18465	Capscrew	2
3	15154	Lockwasher	2
4	15054	Nut	2
5	16445	Fitting	7
6	**ce** 16923	Nut	7
6	**gj** 816117	Quick Disconnect Fitting	7
7	**gj** 1324463	Hose Assy	1
7	**ce** 1331786	Tube Assy	1
8	1331779	Tube Assy	1
9	1331934	Tube Assy	1
10	1331780	Tube Assy	1
11	1331787	Tube Assy	1
12	1331788	Tube Assy	1
13	**ab** 1331770	Tube Assy	1
13	**dfh** 1336294	Tube Assy	1
13	**i** 816015	Tube Assy	1
14	**i** 816055	Clamp	3

FOOTNOTES:

a → S/N E008D01509
b → S/N E008D01531
c → S/N E008D01614
d → S/N E008E01618
e → S/N E008E01664
f S/N E008D01510 →
g S/N E008D01615 →
h S/N E008E01532 →
i S/N E008E01619 →
j S/N E008E01665 →

©2011 HYSTER COMPANY

RETURN MANIFOLD (FIGURE 9-45)

ATTACHING PARTS — SHEET 1 OF 2 (→ S/N E008E01984B)

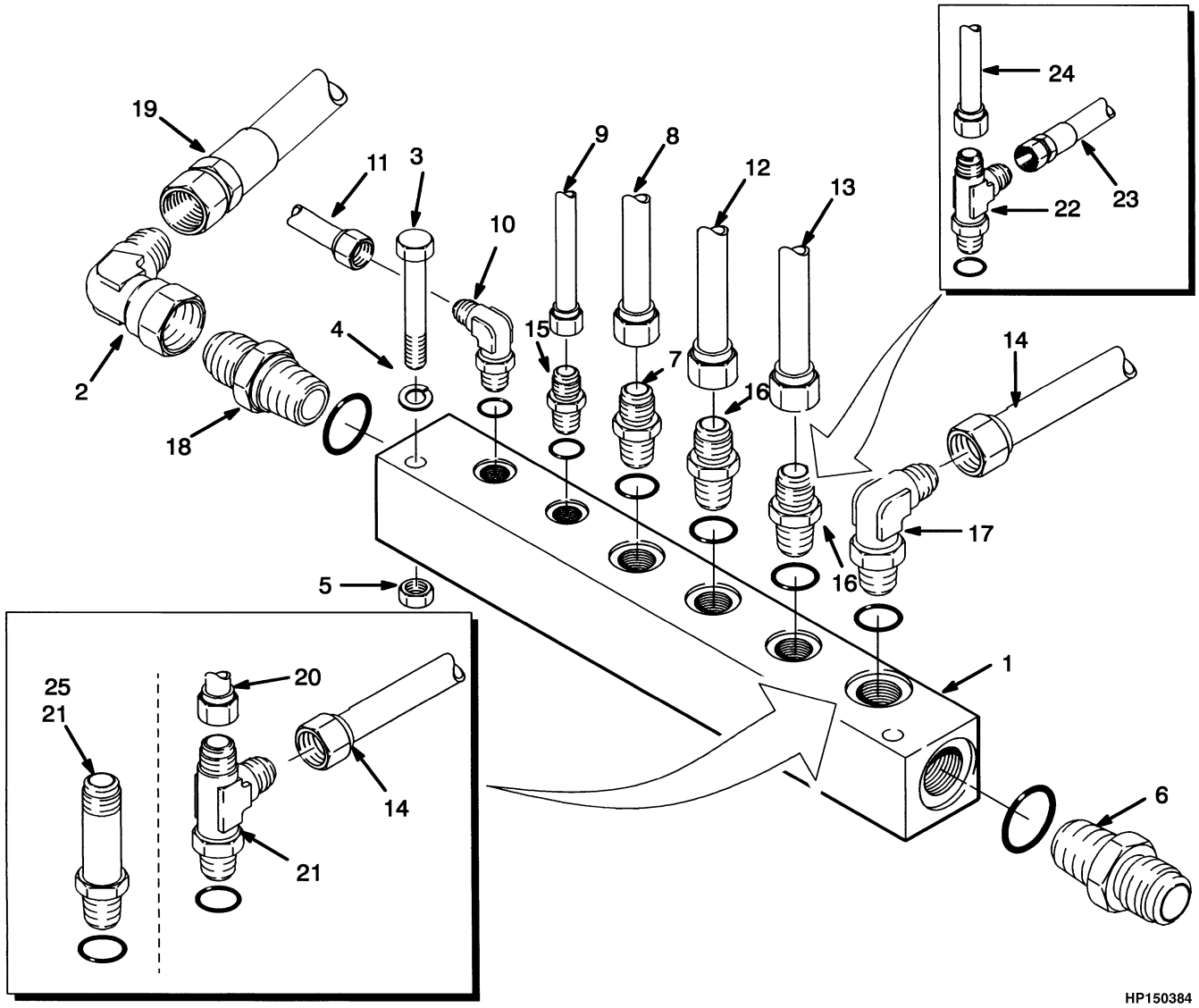

©2011 HYSTER COMPANY

RETURN MANIFOLD

ATTACHING PARTS – SHEET 1 OF 2 (→ S/N E008E01984B)

ITEM	PART NO.	DESCRIPTION	QTY
1	1332227	Manifold	1
2	16999	Fitting	1
3	18473	Capscrew	2
4	15154	Lockwasher	2
5	15054	Nut	2
6	206150	Fitting	1
6	16484	O-Ring	1
7	201779	Fitting	1
7	16481	O-Ring	1
8	815767	Tube Assy	1
9	815769	Tube Assy	1
10	16556	Fitting	1
10	16481	O-Ring	1
11	815770	Tube Assy	1
12	1339478	Tube Assy	1
13	**cd** 815768	Tube Assy	1
14	**efg** 1339476	Tube Assy	1
14	**ok** 1457427	Tube	1
15	16538	Connector	1
15	16481	O-Ring	1
16	**cd** 16540	Connector	2
16	16483	O-Ring	1
16	**hi** 16540	Connector	1
16	16483	O-Ring	1
16	**ok** 16969	T-Fitting	1
16	16483	O-Ring	1
17	16559	Fitting	1
17	16484	O-Ring	1
18	16745	Fitting	1
18	16484	O-Ring	1
19	**bcd** 1331946	Hose Assy	1
19	**acd** 1331947	Hose Assy	1
19	**bnj** 188698	Hose Assy	1
19	**anj** 197483	Hose Assy	1
20	**mp** 1457427	Tube	1
21	**ok** 16550	Fitting	1
21	16484	O-Ring	1
21	**mp** 16970	T-Fitting	1
21	16484	O-Ring	1
22	**nj** 16969	T-Fitting	1
22	16483	O-Ring	1
23	**ok** 129683	Hose Assy	1
23	**hi** 78010	Hose Assy	1
24	**nj** 1384820	Tube Assy	1
25	**l** 16970	T-Fitting	1
25	16484	O-Ring	1

©2011 HYSTER COMPANY

FOOTNOTES:

a Cab Center Mount
b Cab Left Mount
c → S/N E008D01588
d → S/N E008E01656
e → S/N E008E01664
f → S/N E008E01669
g → S/N E008E01738
h S/N E008D01588 ↔ S/N E008D01614
i S/N E008E01656 ↔ S/N E008E01664
j S/N E008E01657 →
k S/N E008E01665 →
l S/N E008E01789 → (Anti-Slipping Device)
m S/N E008D01518 →
n S/N E008D01589 →
o S/N E008D01615 →
p S/N E008E01544 →

©2011 HYSTER COMPANY

NOTES

©2011 HYSTER COMPANY

RETURN MANIFOLD (FIGURE 9-46)
ATTACHING PARTS — SHEET 2 OF 2 (→ S/N E008E01984B)

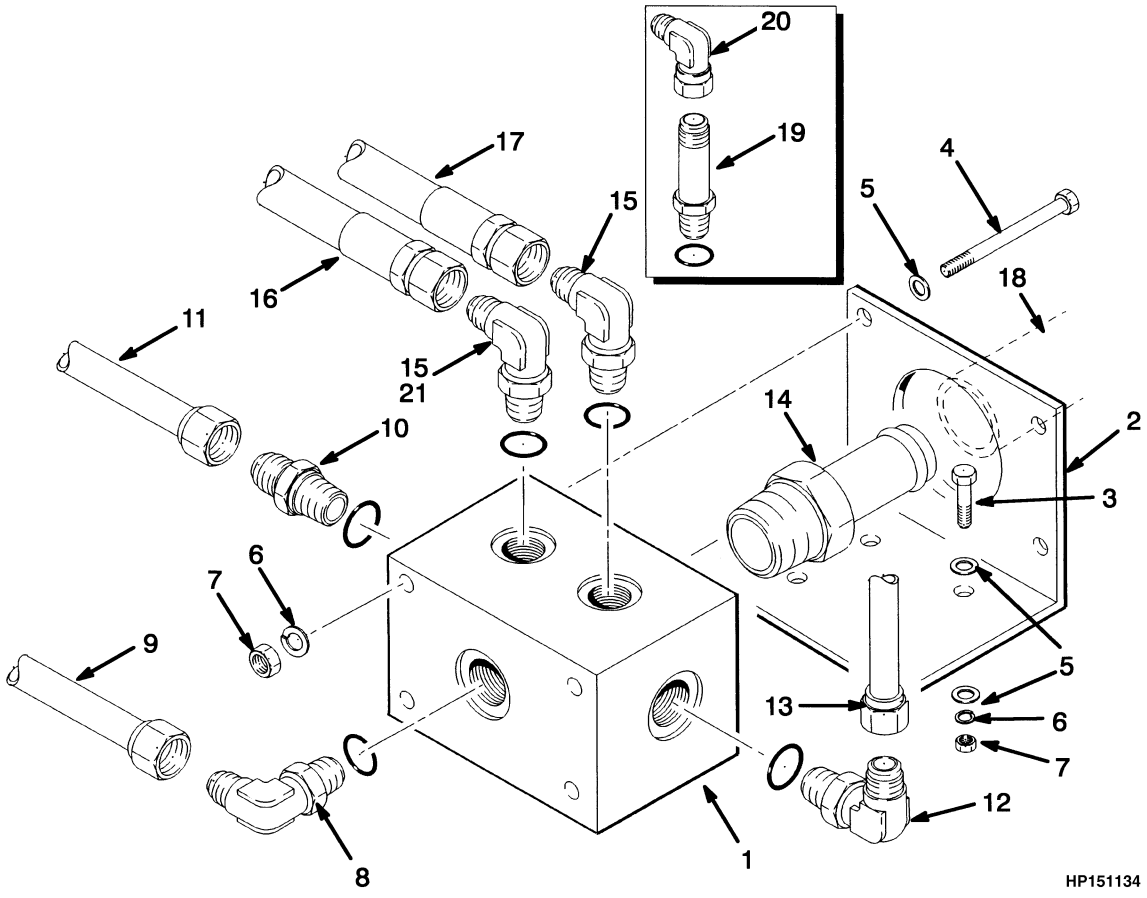

©2011 HYSTER COMPANY

RETURN MANIFOLD

ATTACHING PARTS – SHEET 2 OF 2 (→ S/N E008E01984B)

ITEM	PART NO.	DESCRIPTION	QTY
1	1331795	Manifold	1
2	1331796	Bracket	1
3	16828	Capscrew	4
4	18549	Capscrew	4
5	15134	Washer	12
6	15156	Lockwasher	8
7	15056	Nut	8
8	201784	Fitting	1
8	16486	O-Ring	1
9	1331764	Tube Assy	1
10	**om** 14604	Plug	1
10	**ad** 83846	Fitting	1
10	**om** 16487	O-Ring	1
11	**ad** 1339475	Tube Assy	1
12	1331937	Fitting	1
13	1331774	Tube Assy	1
14	**be** 222495	Fitting	1
14	18909	O-Ring	1
14	**be** 222507	Fitting	1
14	18909	O-Ring	1
15	**cf** 16544	Connector	2
15	16487	O-Ring	1
16	**cf** 1331891	Hose Assy	1
16	**ki** 1385280	Hose Assy	1
17	**cf** 1331892	Hose Assy	1
17	**ki** 1385281	Hose Assy	1
18	**pn** 1375056	Hose Assy	1
18	**cf** 1376834	Hose	1
18	**be** 184631	Hose	1
19	**gh** 16553	Fitting	1
19	16487	O-Ring	1
20	**lj** 165844	Fitting	1
20	**gh** 16992	Fitting	1
21	**ki** 16562	Fitting	2
21	16487	O-Ring	1

FOOTNOTES:

a → S/N E008D01509
b → S/N E008D01516
c → S/N E008D01588
d → S/N E008E01531
e → S/N E008E01550
f → S/N E008E01656
g S/N E008D01589 ↔ S/N E008D01614
h S/N E008E01589 ↔ S/N E008E01664
i S/N E008E01657 →
j S/N E008E01665 →
k S/N E008D01589 →
l S/N E008D01615 →
m S/N E008E01532 →
n S/N E008E01551 →
o S/N E008D01510 →
p S/N E008D01517 →

©2011 HYSTER COMPANY

PRESSURE REDUCING VALVE (FIGURE 9-47)

ATTACHING PARTS (→ S/N E008E01723)

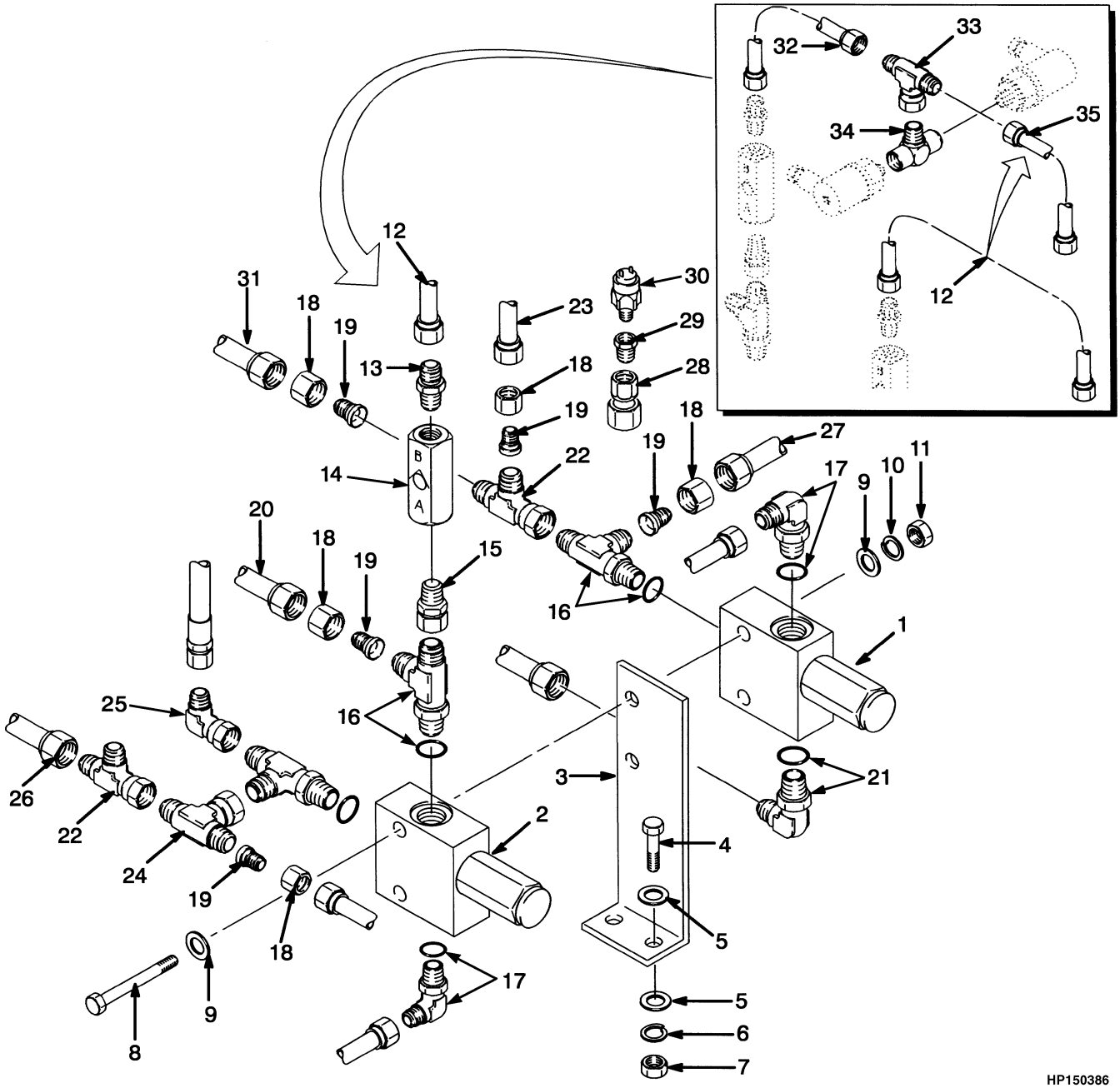

©2011 HYSTER COMPANY

PRESSURE REDUCING VALVE

ATTACHING PARTS (→ S/N E008E01723)

ITEM	PART NO.	DESCRIPTION	QTY
1	1332186	Valve (Park Brake) (☞Figure 9-26)	1
1	1383501	Pressure Valve (Park Brake) (☞Figure 9-26)	1
2	1330172	Valve (Pilot Circuit) (☞Figure 9-25)	1
2	1383500	Pressure Valve (Pilot Circuit) (☞Figure 9-25)	1
3	815773	Bracket	1
4	18797	Capscrew	2
5	18515	Washer	4
6	15155	Lockwasher	4
7	15055	Nut	2
8	18480	Capscrew	2
9	15127	Washer	4
10	15154	Lockwasher	2
11	15054	Nut	2
12	**bd** 1331782	Tube Assy	1
12	**gi** 1394069	Tube Assy	1
13	14678	Fitting	1
14	**bd** 1332155	Check Valve	1
14	**gi** 1394070	Check Valve	1
15	1332154	Fitting	1
16	16969	T-Fitting	3
16	16483	O-Ring	1
17	16558	Fitting	2
17	16483	O-Ring	1
18	**fh** 14489	Sleeve	4
18	**ac** 14489	Sleeve	5
19	**fh** 17776	Fitting	4
19	**ac** 17776	Fitting	5
20	815764	Tube Assy	1
21	201766	Fitting	1
21	16483	O-Ring	1
22	17061	Fitting	2
23	**ac** 815766	Tube Assy	1
24	17049	Fitting	1
25	16883	Fitting	1
26	**e** 1457429	Tube	1
26	**k** 1467982	Tube Assy	1
27	**fh** 1385626	Tube Assy	1
27	**ac** 815762	Tube Assy	1
28	**fh** 1385632	Fitting	1
29	**fh** 12843	Fitting	1
30	1385634	Pressure Switch	1
31	1331934	Tube Assy	1
32	**j** 816507	Tube Assy	1
33	**j** 222347	Fitting	1
34	**j** 17664	Fitting	1
35	**j** 816466	Tube Assy	1

©2011 HYSTER COMPANY

FOOTNOTES:

a → S/N E008D01581
b → S/N E008D01614
c → S/N E008E01655
d → S/N E008E01664
e → S/N E008E01865Y
f S/N E008D01582 →
g S/N E008D01615 →
h S/N E008E01656 →
i S/N E008E01665 →
j S/N E008E01789 →
k S/N E008E01866Y →

©2011 HYSTER COMPANY

NOTES

©2011 HYSTER COMPANY

PRESSURE REDUCING VALVE (FIGURE 9-48)

ATTACHING PARTS (S/N E008E01724 ↔ S/N E008E01984B)

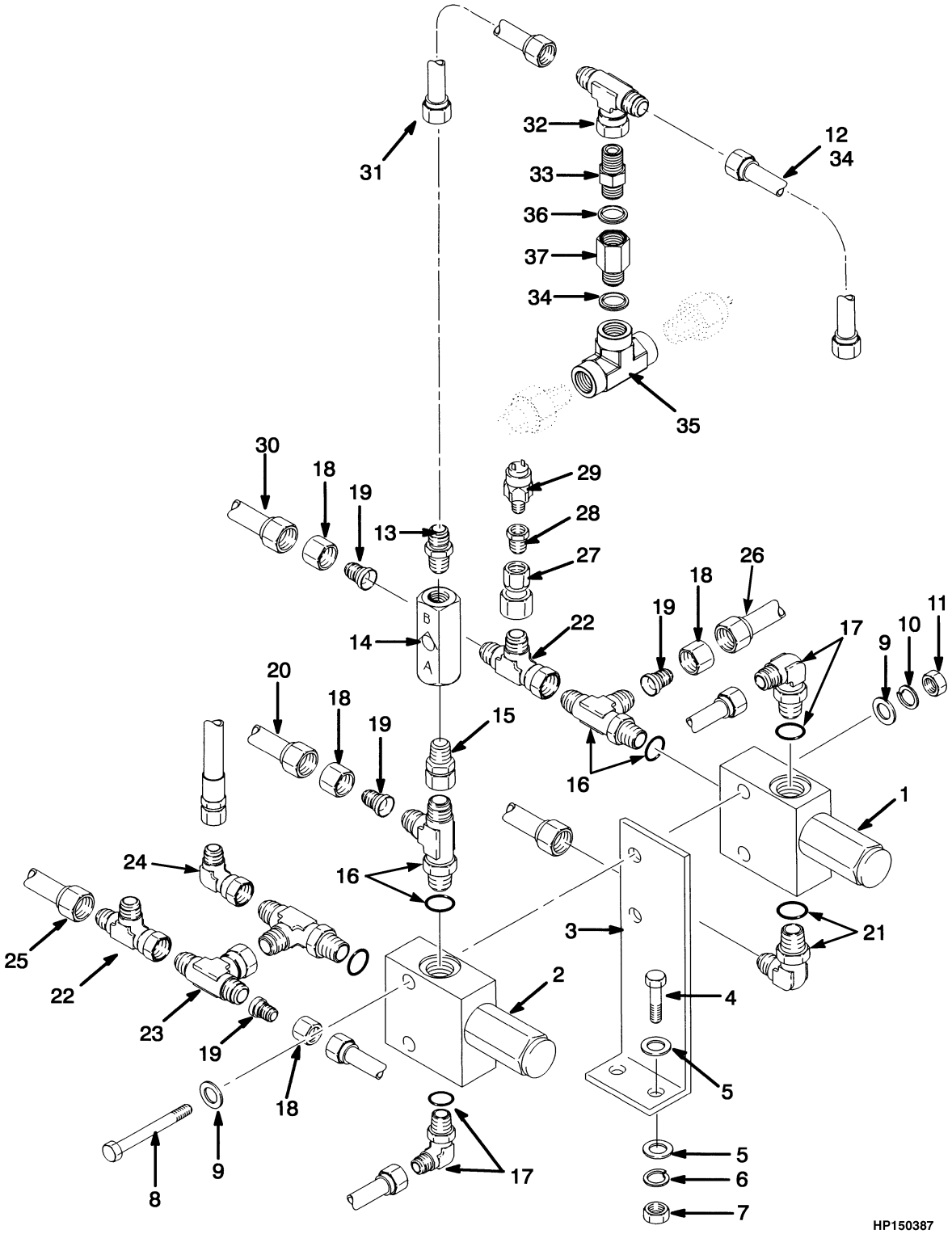

©2011 HYSTER COMPANY

PRESSURE REDUCING VALVE

ATTACHING PARTS (S/N E008E01724 ↔ S/N E008E01984B)

ITEM	PART NO.	DESCRIPTION	QTY
1	1332186	Valve (Park Brake) (☞Figure 9-26)	1
1	1383501	Pressure Valve (Park Brake) (☞Figure 9-26)	1
2	1330172	Valve (Pilot Circuit) (☞Figure 9-25)	1
2	1383500	Pressure Valve (Pilot Circuit) (☞Figure 9-25)	1
3	815773	Bracket	1
4	18797	Capscrew	2
5	18515	Washer	4
6	15155	Lockwasher	4
7	15055	Nut	2
8	18480	Capscrew	2
9	15127	Washer	4
10	15154	Lockwasher	2
11	15054	Nut	2
12	1394069	Tube Assy (Without Anti-Slipping Device)	1
13	14678	Fitting	1
14	1394070	Check Valve	1
15	1332154	Fitting	1
16	16969	T-Fitting	3
16	16483	O-Ring	1
17	16558	Fitting	2
17	16483	O-Ring	1
18	14489	Sleeve	4
19	17776	Fitting	4
20	815764	Tube Assy	1
21	201766	Fitting	1
21	16483	O-Ring	1
22	17061	Fitting	2
23	17049	Fitting	1
24	16883	Fitting	1
25	1467982	Tube Assy	1
26	1385626	Tube Assy	1
27	1385632	Fitting	1
28	12843	Fitting	1
29	1385634	Pressure Switch	1
30	1331934	Tube Assy	1
31	816507	Tube Assy	1
32	222347	Fitting	1
33	1478838	Fitting	1
34	816466	Tube Assy	1
35	1478837	Fitting	1
36	888329	Seal	4
37	1473967	Fitting	1

©2011 HYSTER COMPANY

PILOT VALVE (FIGURE 9-49)

ATTACHING PARTS (→ S/N E008E01655) (→ S/N E008D01581)

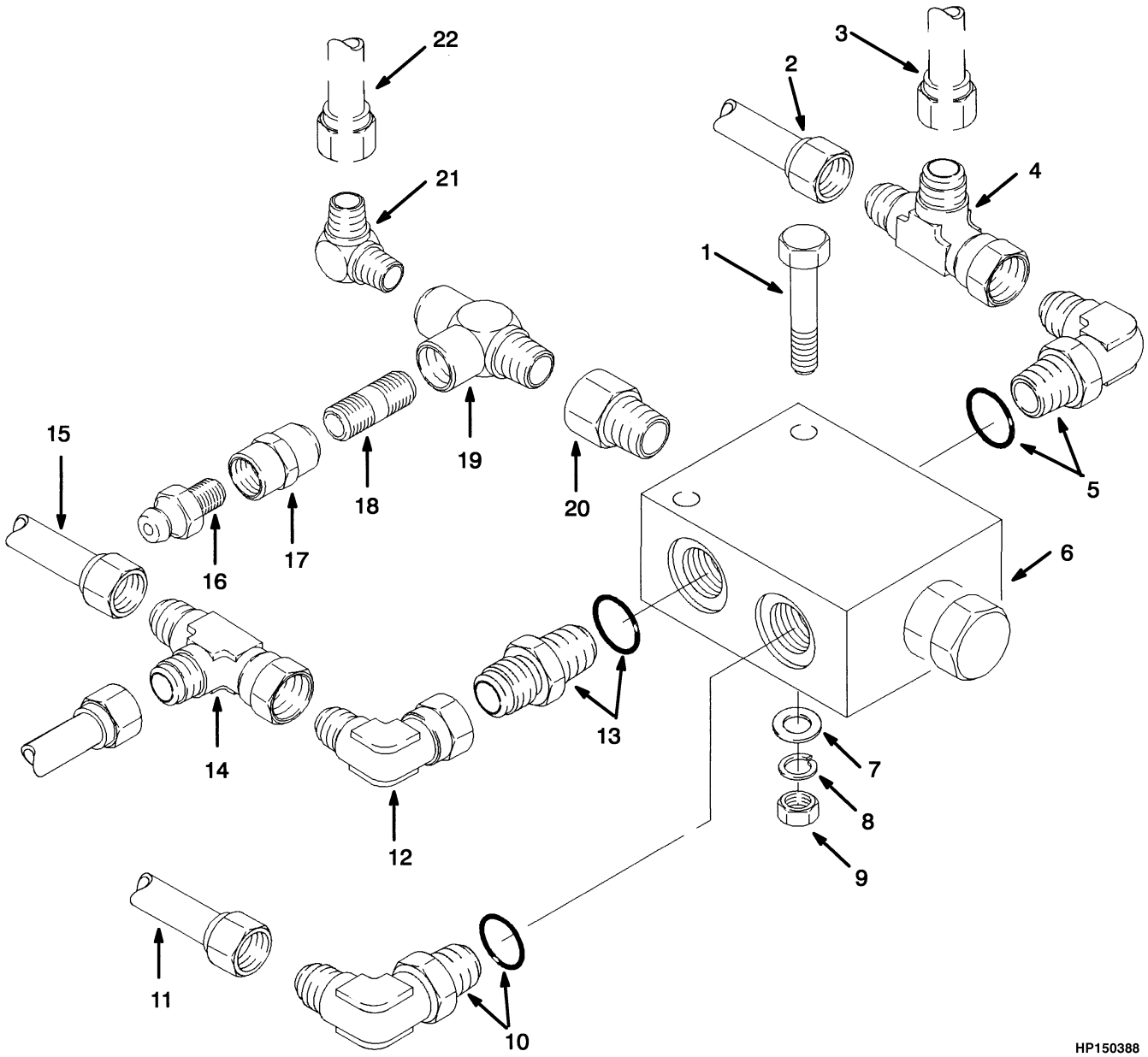

©2011 HYSTER COMPANY

PILOT VALVE

ATTACHING PARTS (→ S/N E008E01655) (→ S/N E008D01581)

ITEM	PART NO.	DESCRIPTION	QTY
1	18471	Capscrew	2
2	815765	Tube Assy	1
3	1337327	Hose Assy	1
4	17059	Fitting	1
5	162155	Fitting	1
5	16484	O-Ring	1
6	1307729	Pilot Valve (☞Figure 9-19)	1
7	15172	Washer	2
8	15154	Lockwasher	2
9	15054	Nut	2
10	110174	Fitting	1
10	16484	O-Ring	1
11	815762	Tube Assy	1
12	16883	Fitting	1
13	16745	Fitting	1
13	16484	O-Ring	1
14	17061	Fitting	1
15	1339479	Tube Assy	1
16	267262	Plug	1
17	14345	Fitting	1
18	15460	Fitting	1
19	17216	Fitting	1
20	1376847	Fitting	1
21	14501	Fitting	1
22	1350892	Hose Assy (Left Compartment)	1
22	815800	Hose Assy (Center Compartment)	1

©2011 HYSTER COMPANY

PARK BRAKE SOLENOID VALVE (FIGURE 9-50)
ATTACHING PARTS

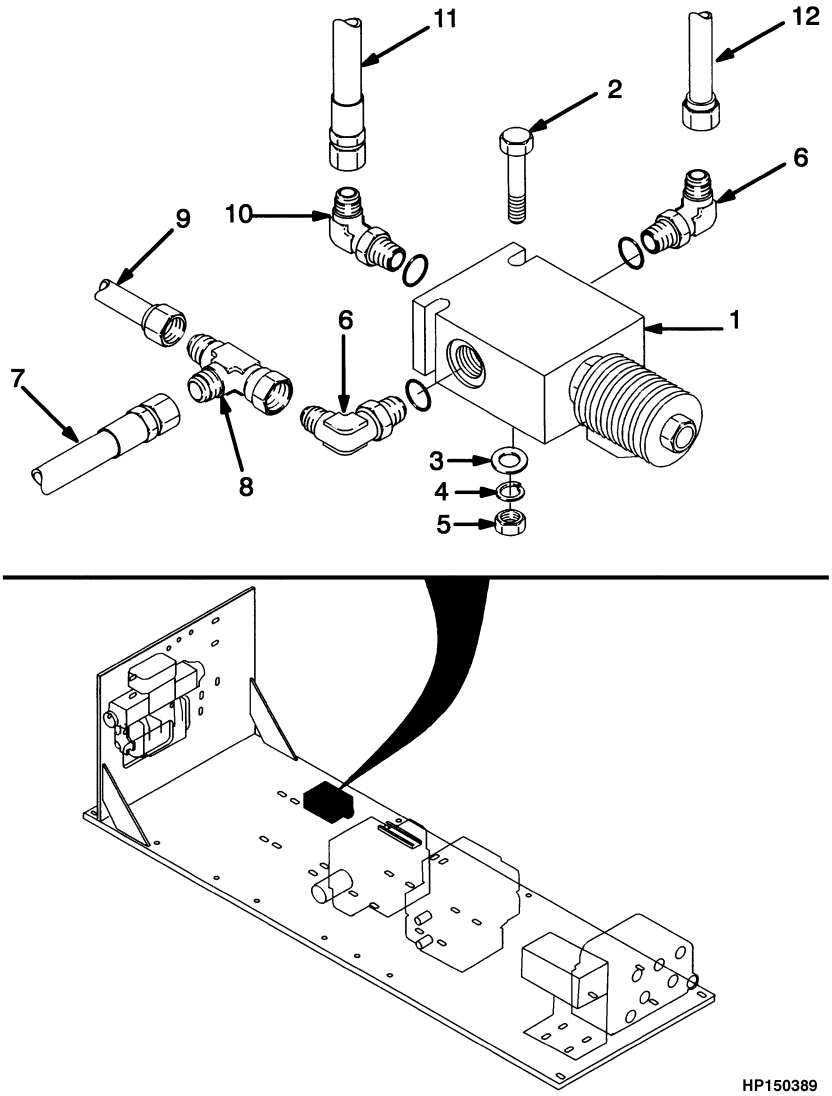

©2011 HYSTER COMPANY

PARK BRAKE SOLENOID VALVE
ATTACHING PARTS

ITEM	PART NO.	DESCRIPTION	QTY
1	1623871	Solenoid Valve (☞Figure 9-66)	1
2	18471	Capscrew	2
3	15127	Washer	2
4	15154	Lockwasher	2
5	15054	Nut	2
6	16558	Fitting	2
6	16483	O-Ring	1
7	815767	Tube Assy	1
8	17061	Fitting	1
9	1339479	Tube Assy	1
10	201766	Fitting	1
10	16483	O-Ring	1
11	**ab** 1337327	Hose Assy	1
11	**cd** 265325	Hose Assy	1
12	1385626	Tube Assy	1

FOOTNOTES:

a → S/N E008D01617
b → S/N E008E01665
c S/N E008D01618 →
d S/N E008E01666 →

©2011 HYSTER COMPANY

RELIEF VALVE (FIGURE 9-51)

ATTACHING PARTS (→ S/N E008E01664) (→ S/N E008D01614)

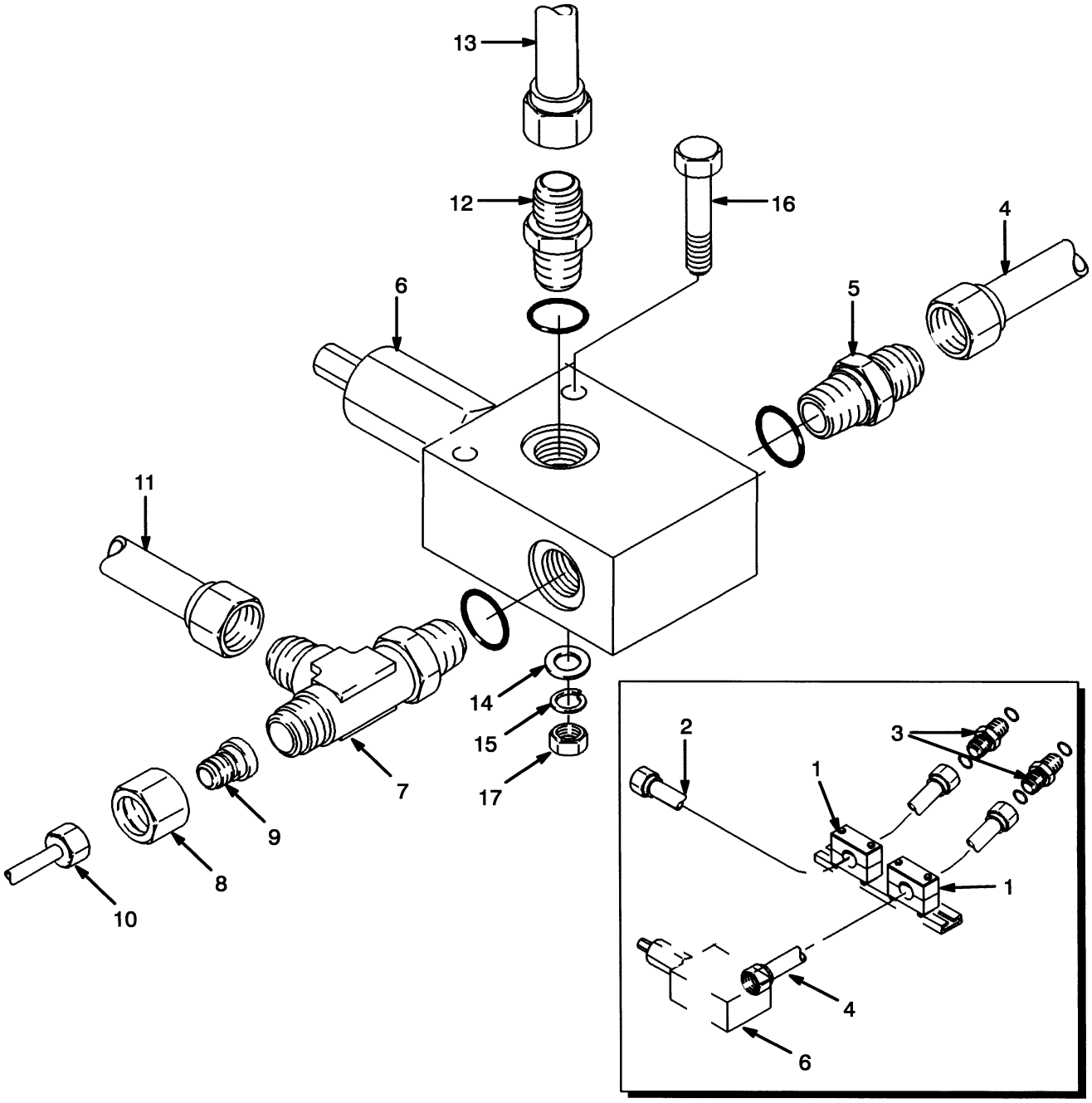

HP150390

©2011 HYSTER COMPANY

RELIEF VALVE

ATTACHING PARTS (→ S/N E008E01664) (→ S/N E008D01614)

ITEM	PART NO.	DESCRIPTION	QTY
1	1331851	Clamp	2
2	**ab** 1331771	Tube Assy	1
3	14694	Fitting	2
3	16486	O-Ring	2
4	1350872	Tube Assy	1
5	16543	Connector	1
5	16486	O-Ring	1
6	1394055	Relief Valve (☞Figure 9-28)	1
7	16971	T-Fitting	1
7	16486	O-Ring	1
8	167261	Sleeve	1
9	17779	Fitting	1
10	1331786	Tube Assy	1
11	1331769	Tube Assy	1
12	17761	Fitting	1
12	16486	O-Ring	1
13	1339476	Tube Assy	1
14	18515	Washer	2
15	15155	Lockwasher	2
16	18516	Capscrew	2
17	15055	Nut	2

FOOTNOTES:

a → S/N E008D01517

b → S/N E008E01543

©2011 HYSTER COMPANY

RELIEF VALVE (FIGURE 9-52)

ATTACHING PARTS (S/N E008D01518 ↔ S/N E008E001984B) (S/N E008E01544 ↔ S/N E008E001984B)

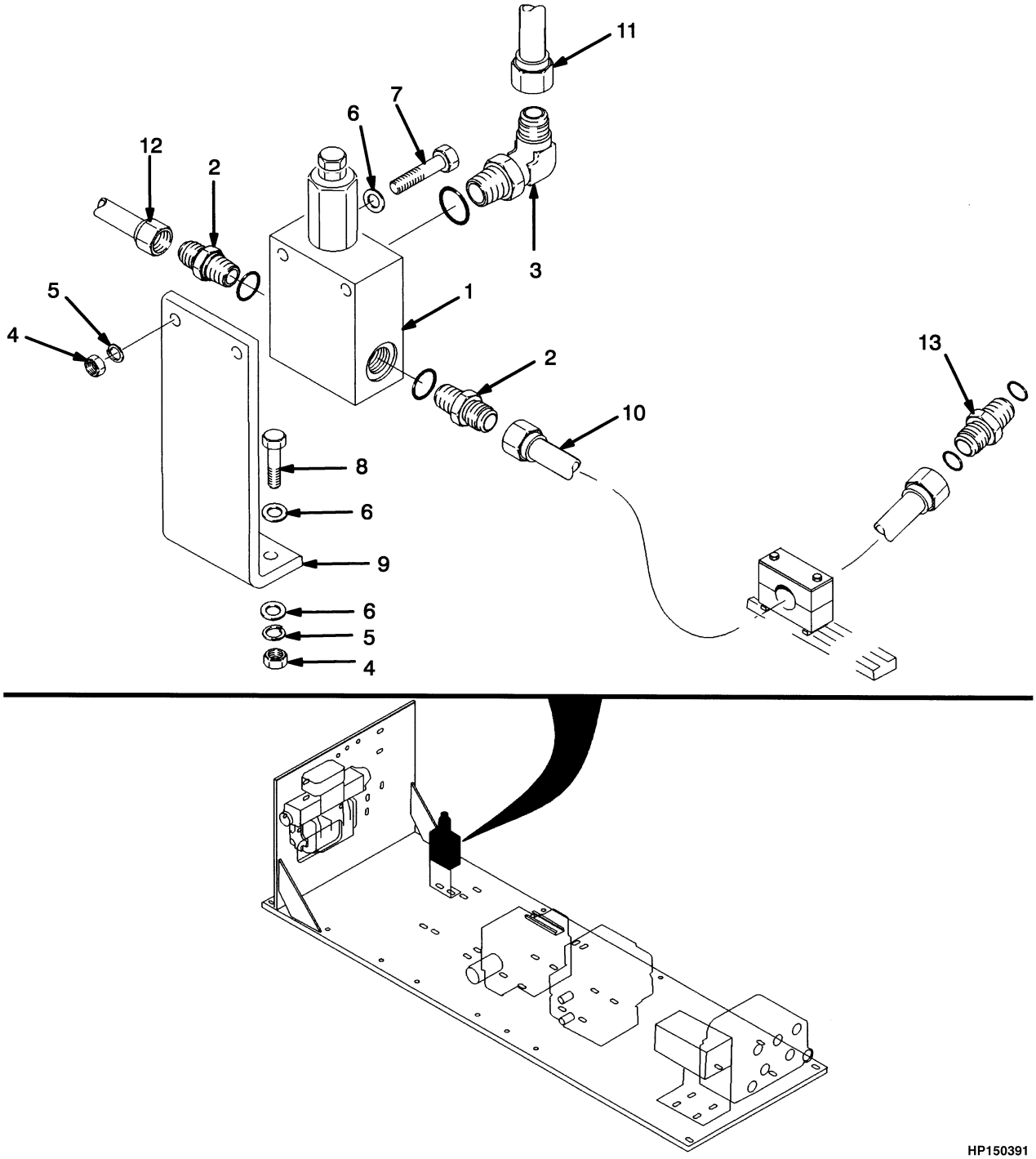

©2011 HYSTER COMPANY

RELIEF VALVE

ATTACHING PARTS (S/N E008D01518 ↔ S/N E008E001984B) (S/N E008E01544 ↔ S/N E008E001984B)

ITEM	PART NO.	DESCRIPTION	QTY
1	1394055	Relief Valve (☞Figure 9-28)	1
2	16543	Connector	2
2	16486	O-Ring	1
3	138811	Fitting	1
3	16486	O-Ring	1
4	15055	Nut	4
5	15155	Lockwasher	4
6	18515	Washer	6
7	18516	Capscrew	2
8	18497	Capscrew	2
9	1365111	Bracket	1
10	1365113	Tube Assy	1
11	136545	Pipe	1
12	1365114	Tube Assy	1
13	**ab** 14694	Fitting	1
13	16486	O-Ring	2

FOOTNOTES:

a → S/N E008D01614

b → S/N E008E01664

©2011 HYSTER COMPANY

ACCUMULATOR CHARGE VALVE (FIGURE 9-53)

ATTACHING PARTS (→ S/N E008E01984B)

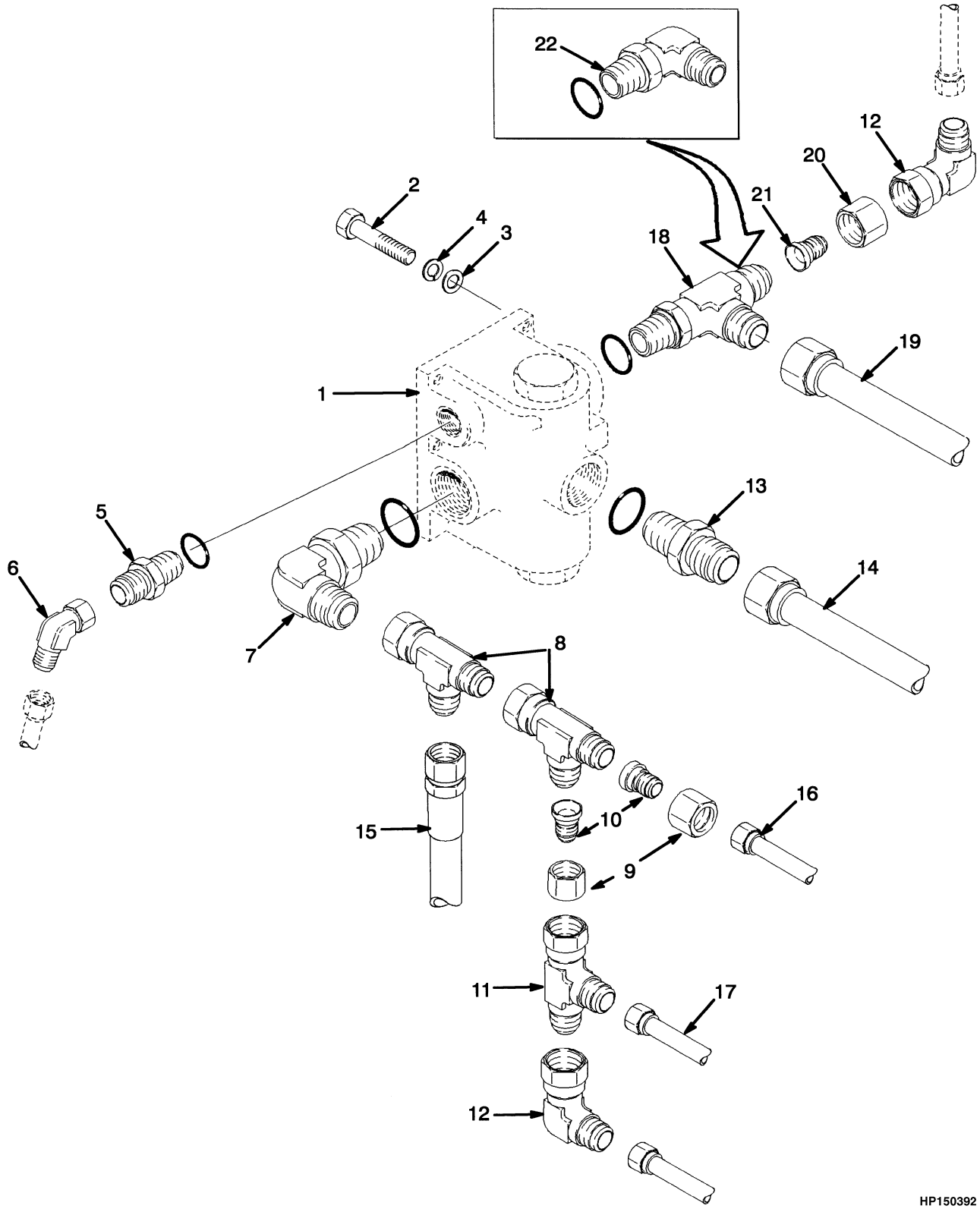

©2011 HYSTER COMPANY

ACCUMULATOR CHARGE VALVE

ATTACHING PARTS (→ S/N E008E01984B)

ITEM	PART NO.	DESCRIPTION	QTY
1	1330170	Valve (☞Figure 9-11)	1
1	1355114	Valve (☞Figure 9-12)	1
1	1371389	Valve (☞Figure 9-13)	1
2	16598	Capscrew	3
3	15134	Washer	3
4	15156	Lockwasher	3
5	222381	Fitting	1
5	16484	O-Ring	1
6	16997	Fitting	1
7	16559	Fitting	1
7	16484	O-Ring	1
8	17062	Fitting	2
9	17319	Fitting	2
10	17777	Fitting	2
11	17059	Fitting	1
12	**fh** 16987	Fitting	1
12	**ab** 16987	Fitting	2
13	16543	Connector	1
13	16486	O-Ring	1
14	**ck** 1331771	Tube Assy	1
14	**li** 1365114	Tube Assy	1
15	273150	Hose Assy	1
16	815764	Tube Assy	1
17	815763	Tube Assy	1
18	**ab** 16971	T-Fitting	1
18	16486	O-Ring	1
19	**gj** 1331772	Tube Assy	1
20	**ab** 167261	Sleeve	1
21	**ab** 17779	Fitting	1
22	**ed** 16561	Elbow	1
22	**ed** 16486	O-Ring	1
22	**gj** 167261	Sleeve	1
22	**gj** 17779	Fitting	1
22	**gj** 16987	Fitting	1

FOOTNOTES:

a → S/N E008D01523
b → S/N E008E01542
c → S/N E008E01543
d S/N E008E01543 ↔ S/N E008E01664
e S/N E008D01524 ↔ S/N E008D01614
f S/N E008D01524 →
g S/N E008D01615 →
h S/N E008E01543 →
i S/N E008E01544 →
j S/N E008E01665 →
k S/N E008D01517 →
l S/N E008D01518 →

©2011 HYSTER COMPANY

CONTROL VALVE ATTACHING PARTS (FIGURE 9-54)

ATTACHMENT CONTROL VALVE AND PRESSURE SWITCH (→ S/N E008E01810X)

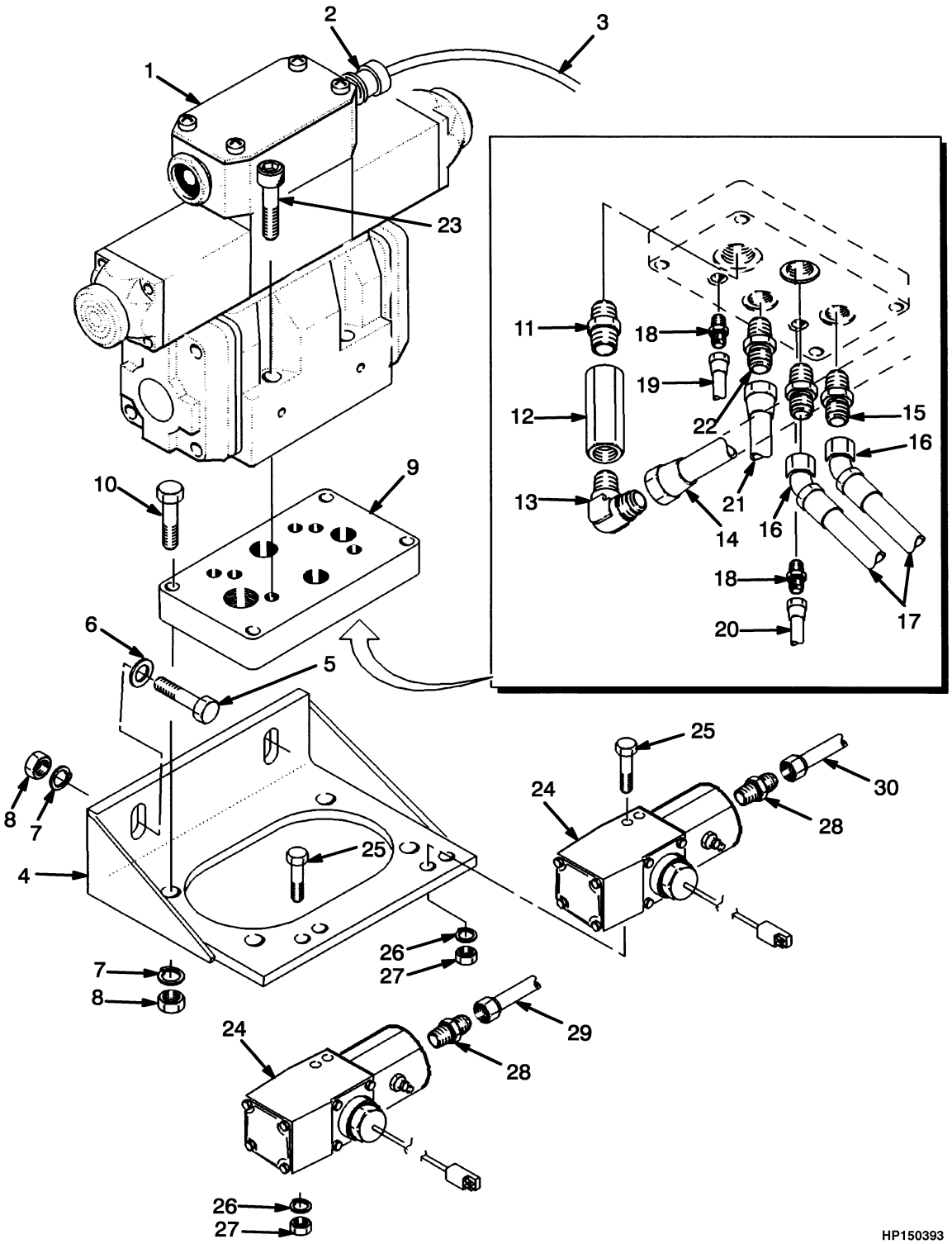

©2011 HYSTER COMPANY

CONTROL VALVE ATTACHING PARTS

ATTACHMENT CONTROL VALVE AND PRESSURE SWITCH (→ S/N E008E01810X)

ITEM	PART NO.	DESCRIPTION	QTY
1	1350574	Hydraulic Control Valve (☞Figure 9-35)	1
2	1310026	Fitting	1
3	**bd** 1336791	Wire Harness	1
3	**fh** 1450913	Wire Harness	1
4	**eg** 1385631	Bracket	1
4	**ac** 815775	Bracket	1
5	16828	Capscrew	2
6	15134	Washer	2
7	15156	Lockwasher	6
8	15056	Nut	6
9	1310035	Plate	1
10	16816	Capscrew	4
11	12833	Fitting	1
12	1307726	Check Valve	1
13	16561	Elbow	1
14	1457428	Tube	1
15	17345	Fitting	2
16	17038	Fitting	2
17	1307374	Hose Assy	2
18	14675	Fitting	2
19	1457429	Tube	1
20	1457430	Tube	1
21	1331769	Tube Assy	1
22	17346	Fitting	1
23	18126	Capscrew	4
24	**ac** 1336959	Pressure Switch	2
24	**ag** 1376839	Switch	2
25	**ac** 18128	Capscrew	4
26	15154	Lockwasher	4
27	15054	Nut	4
28	**ac** 14669	Fitting	2
29	**ac** 815765	Tube Assy	1
30	**ac** 815766	Tube Assy	1

FOOTNOTES:

a → S/N E008D01581
b → S/N E008D01602
c → S/N E008E01655
d → S/N E008E01753
e S/N E008D01582 →
f S/N E008D01603 →
g S/N E008E01655 →
h S/N E008E01754 →

©2011 HYSTER COMPANY

DIRECTIONAL CONTROL VALVE (FIGURE 9-55)

ATTACHING PARTS (S/N E008E01811X ↔ S/N E008E01984B)

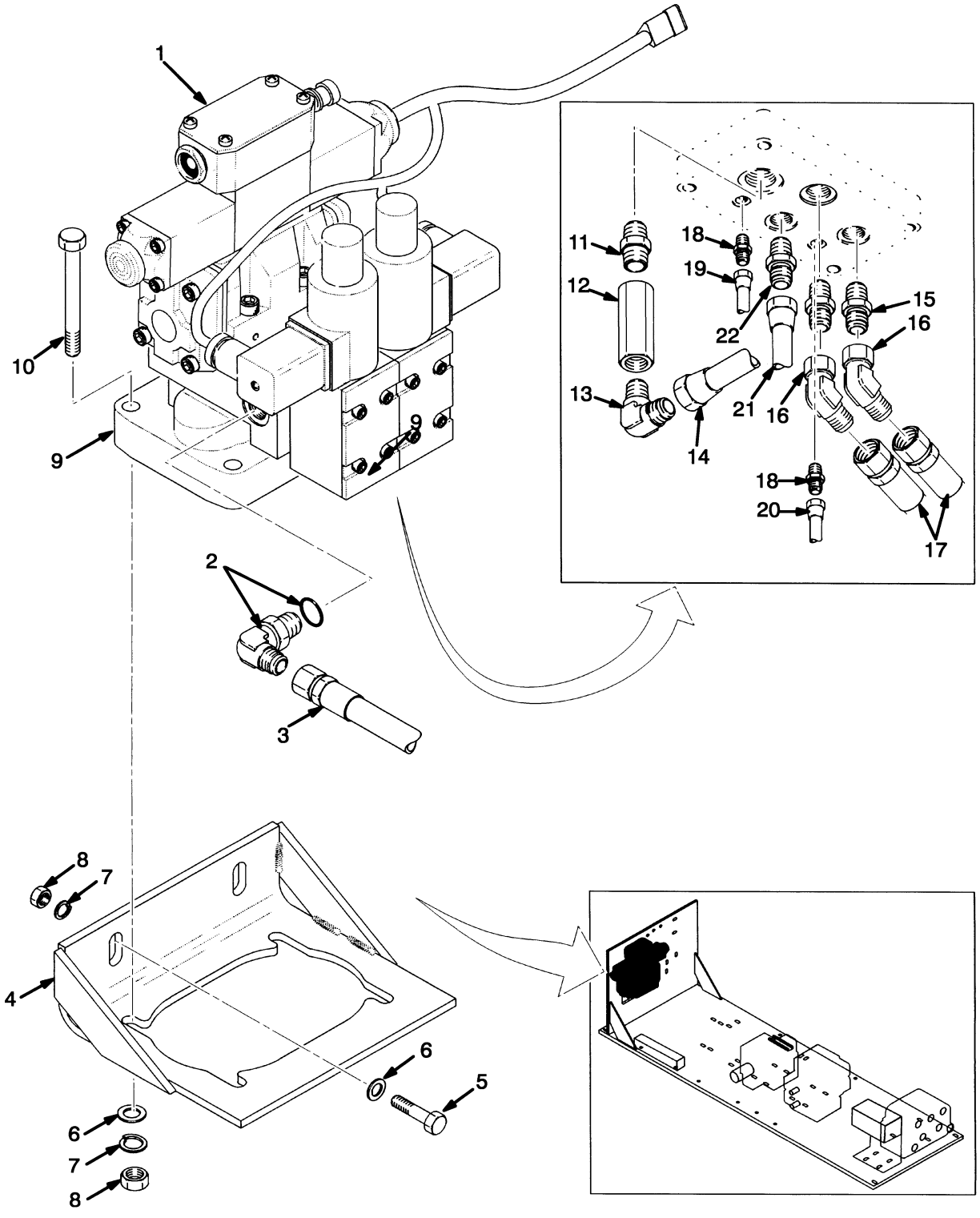

HP150394

©2011 HYSTER COMPANY

DIRECTIONAL CONTROL VALVE

ATTACHING PARTS (S/N E008E01811X ↔ S/N E008E01984B)

ITEM	PART NO.	DESCRIPTION	QTY
	1461916	Hydraulic Control Valve (☞Figure 9-36)	1
	1463998	Valve (☞Figure 9-36)	1
1	1450912	Valve (☞Figure 9-37)	1
2	201781	Fitting	1
2	16485	O-Ring	1
3	260773	Hose Assy	1
4	1385631	Bracket	1
5	16828	Capscrew	2
6	15134	Washer	6
7	15156	Lockwasher	6
8	15056	Nut	6
9	**a** 1310035	Plate	1
9	**c** 1455830	Plate	1
10	16816	Capscrew	4
11	12833	Fitting	1
12	1307726	Check Valve	1
13	16561	Elbow	1
14	1457428	Tube (☞Figure 9-57)	1
15	17345	Fitting	2
16	17038	Fitting	2
17	1307374	Hose Assy	2
18	14675	Fitting	2
19	**b** 1457429	Tube	1
19	**d** 1467982	Tube Assy	1
20	1457430	Tube	1
21	1365116	Tube Assy	1
22	17346	Fitting	1

FOOTNOTES:

a → S/N E008E01767
b → S/N E008E01865
c S/N E008E01768 →
d S/N E008E01866 →

©2011 HYSTER COMPANY

CONTROL VALVE ATTACHING PARTS (FIGURE 9-56)

ONE FUNCTION (→ S/N E008E01656) (→ S/N E008D01588)

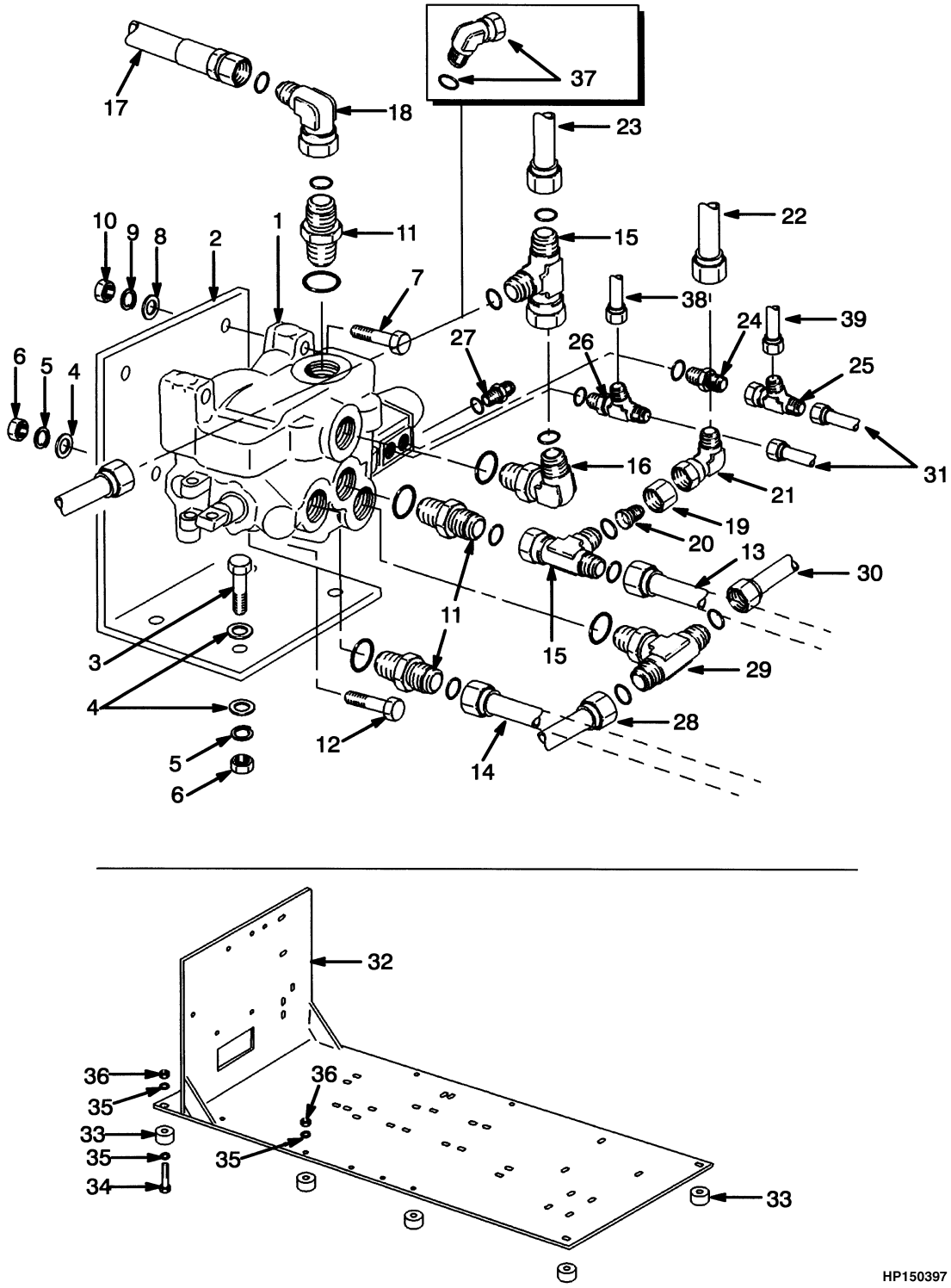

©2011 HYSTER COMPANY

CONTROL VALVE ATTACHING PARTS

ONE FUNCTION (→ S/N E008E01656) (→ S/N E008D01588)

ITEM	PART NO.	DESCRIPTION	QTY
1	1331802	Hydraulic Control Valve (☞Figure 9-23)	1
2	1331797	Bracket	1
3	16828	Capscrew	4
4	15134	Washer	8
5	15156	Lockwasher	4
6	15056	Nut	4
7	18590	Capscrew	2
8	15135	Washer	2
9	15158	Washer	2
10	15058	Nut	2
11	1331935	Fitting	3
11	16487	O-Ring	1
11	280156	O-Ring	1
12	16379	Capscrew	1
13	1331758	Tube Assy	1
13	1350863	Tube Assy (H440FS-H700FS)	1
14	1331759	Tube Assy	1
14	1350849	Tube Assy (H440FS-H700FS)	1
15	1337266	Fitting	2
15	280156	O-Ring	2
16	1331938	Fitting	1
16	16983	O-Ring	1
16	280156	O-Ring	1
17	1331891	Hose Assy	1
18	1350840	Fitting	1
18	280156	O-Ring	1
19	14494	Sleeve	1
20	222369	Fitting	1
21	16989	Fitting	1
22	1331782	Tube Assy	1
23	1331775	Tube Assy	1
24	16540	Connector	1
24	16483	O-Ring	1
25	17061	Fitting	1
26	16969	T-Fitting	1
26	16483	O-Ring	1
27	16538	Connector	1
27	16481	O-Ring	1
28	1331772	Tube Assy	1
29	222427	Fitting	1
29	16487	O-Ring	1
30	1331773	Tube Assy	1
31	1331946	Hose Assy (Left Compartment)	2
31	1331947	Hose Assy (Center Compartment)	2
32	**ab** 1331956	Mounting Plate (Valve)	1
32	**cd** 1385630	Plate Wldmt (Valve)	1
33	1307730	Mount	8
34	16598	Capscrew	4
35	15156	Lockwasher	12
36	15056	Nut	8

©2011 HYSTER COMPANY

CONTROL VALVE ATTACHING PARTS

ONE FUNCTION (→ S/N E008E01656) (→ S/N E008D01588)

ITEM	PART NO.	DESCRIPTION	QTY
37	1337331	Fitting (H440FS-H700FS)	1
37	280156	O-Ring (H440FS-H700FS)	1
38	1331776	Tube Assy	1
39	1331777	Tube Assy	1

FOOTNOTES:

a → S/N E008D01581
b → S/N E008E01655
c S/N E008D01582 →
d S/N E008E01656 →

©2011 HYSTER COMPANY

NOTES

©2011 HYSTER COMPANY

CONTROL VALVE ATTACHING PARTS (FIGURE 9-57)

ONE FUNCTION (S/N E008D01589 ↔ S/N E008E001984B) (S/N E008E01657 ↔ S/N E008E001984B)

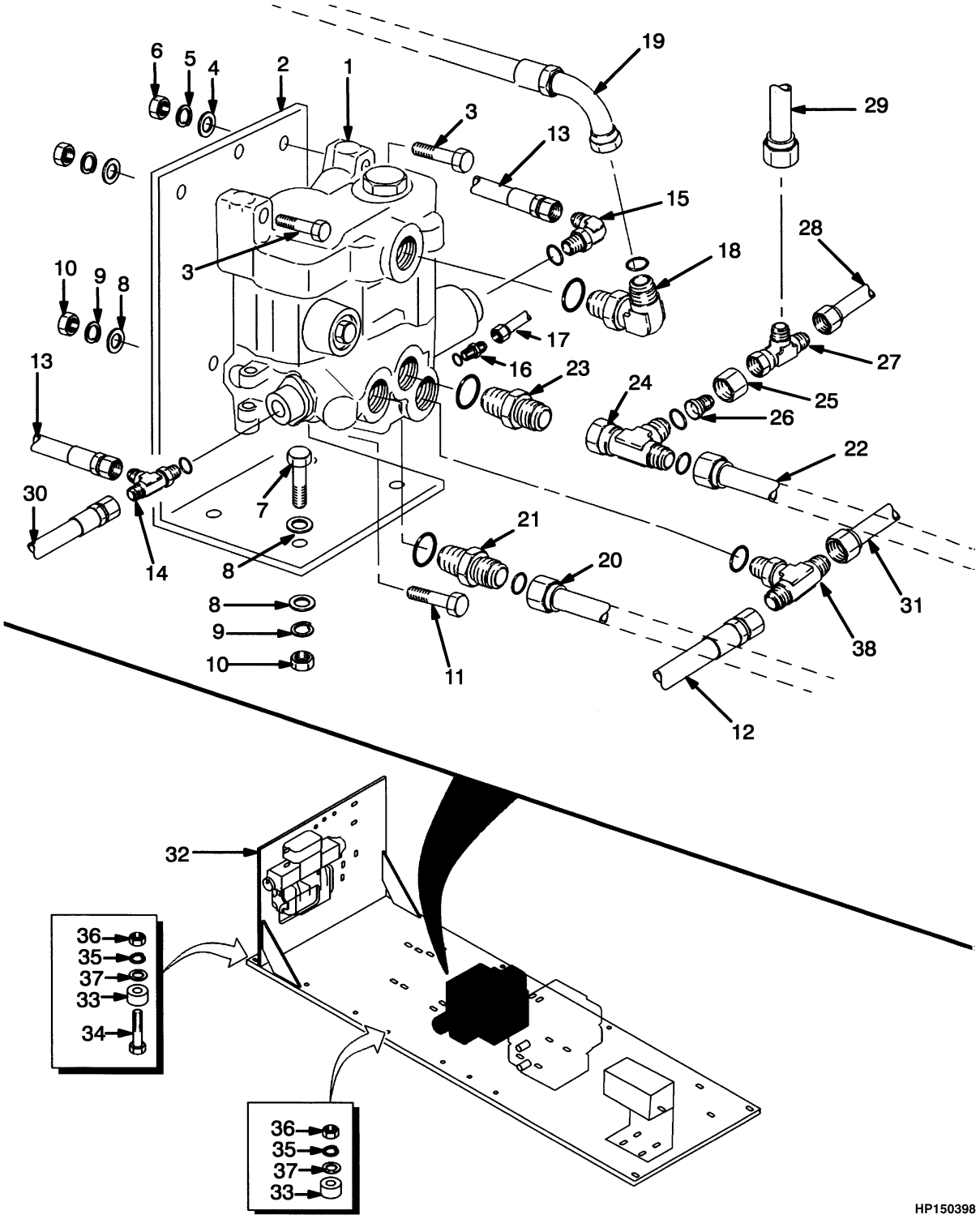

©2011 HYSTER COMPANY

CONTROL VALVE ATTACHING PARTS

ONE FUNCTION (S/N E008D01589 ↔ S/N E008E001984B) (S/N E008E01657 ↔ S/N E008E001984B)

ITEM	PART NO.	DESCRIPTION	QTY
1	1385284	Hydraulic Control Valve (☞Figure 9-24)	1
2	1383524	Bracket	1
3	18590	Capscrew	2
4	15135	Washer	2
5	15158	Washer	2
6	15058	Nut	2
7	16828	Capscrew	4
8	15134	Washer	6
9	15156	Lockwasher	5
10	15056	Nut	5
11	16379	Capscrew	1
12	**ab** 1331772	Tube Assy	1
12	**cd** 1394058	Tube	1
13	102906	Hose Assy	2
14	**cd** 16576	Fitting	1
14	16483	O-Ring	1
14	**ab** 16969	T-Fitting	1
15	16483	O-Ring	1
15	16558	Fitting	1
16	16538	Connector	1
16	16481	O-Ring	1
17	1331787	Tube Assy	1
18	222406	Fitting	1
18	16983	O-Ring	1
19	1385281	Hose Assy	1
20	1331759	Tube Assy (H550-H700F)	1
20	1350849	Tube Assy (H440FS-H700FS)	1
21	1331935	Fitting	1
21	16487	O-Ring	1
21	280156	O-Ring	1
22	1331758	Tube Assy (H550-H700F)	1
22	1350863	Tube Assy (H440FS-H700FS)	1
23	16544	Connector	1
23	16487	O-Ring	1
24	1337266	Fitting	1
24	280156	O-Ring	2
25	14494	Sleeve	1
26	222369	Fitting	1
27	17062	Fitting	1
28	**ab** 1384817	Tube Assy	1
28	**cd** 816289	Hose Assy	1
29	**ab** 1331782	Tube Assy	1
29	**cd** 1394069	Tube Assy	1
30	102906	Hose Assy (B)	1
31	1457428	Tube	1
32	1385630	Plate Wldmt (Valve Mount)	1
33	1307730	Mount	8
34	16598	Capscrew	4
35	15156	Lockwasher	8
36	15056	Nut	8

©2011 HYSTER COMPANY

CONTROL VALVE ATTACHING PARTS

ONE FUNCTION (S/N E008D01589 ↔ S/N E008E001984B) (S/N E008E01657 ↔ S/N E008E001984B)

ITEM	PART NO.	DESCRIPTION	QTY
37	15134	Washer	8
38	222427	Fitting	1
38	16487	O-Ring	1

FOOTNOTES:

a → S/N E008D01614
b → S/N E008E01664
c S/N E008D01615 →
d S/N E008E01665 →

©2011 HYSTER COMPANY

NOTES

©2011 HYSTER COMPANY

CONTROL VALVE ATTACHING PARTS (FIGURE 9-58)

TWO FUNCTION (→ S/N E008D01588) (→ S/N E008E01656)

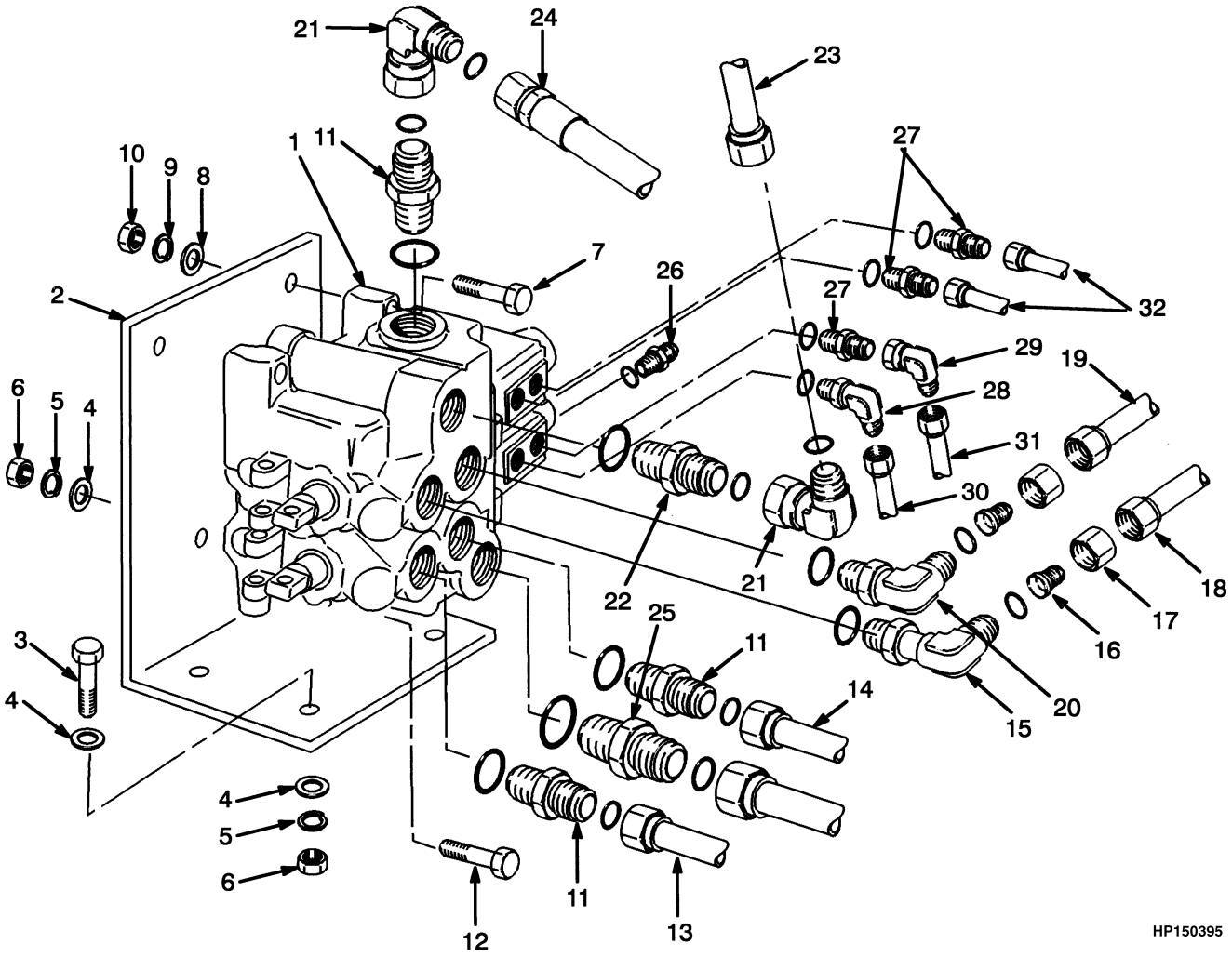

©2011 HYSTER COMPANY

CONTROL VALVE ATTACHING PARTS

TWO FUNCTION (→ S/N E008D01588) (→ S/N E008E01656)

ITEM	PART NO.	DESCRIPTION	QTY
1	1331801	Hydraulic Control Valve (☞Figure 9-23)	1
2	1331794	Bracket	1
3	16828	Capscrew	4
4	15134	Washer	8
5	15156	Lockwasher	4
6	15056	Nut	4
7	18590	Capscrew	2
8	15135	Washer	2
9	15158	Washer	2
10	15058	Nut	2
11	1331935	Fitting	3
11	16487	O-Ring	1
11	280156	O-Ring	1
12	16379	Capscrew	1
13	1331762	Tube Assy	1
13	1350867	Tube Assy (H440FS-H700FS)	1
14	1331763	Tube Assy	1
14	1350866	Tube Assy (H440FS-H700FS)	1
15	1350847	Fitting	1
15	16487	O-Ring	1
15	280156	O-Ring	1
16	17783	Fitting	2
17	14494	Sleeve	2
18	1331761	Tube Assy	1
18	1350865	Tube Assy (H440FS-H700FS)	1
19	1331760	Tube Assy	1
19	1350864	Tube Assy (H440FS-H700FS)	1
20	1331937	Fitting	1
20	16487	O-Ring	1
20	280156	O-Ring	1
21	1350840	Fitting	2
21	280156	O-Ring	1
22	1336053	Fitting	1
22	16983	O-Ring	1
22	280156	O-Ring	1
23	1331775	Tube Assy	1
24	1331892	Hose Assy	1
25	1331942	Fitting	1
25	1336254	O-Ring	1
25	16487	O-Ring	1
26	16538	Connector	1
26	16481	O-Ring	1
27	16540	Connector	3
27	16483	O-Ring	1
28	16558	Fitting	1
28	16483	O-Ring	1
29	16883	Fitting	1
30	1331776	Tube Assy	1
31	1331777	Tube Assy	1
32	1331947	Hose Assy (Left Compartment)	2

©2011 HYSTER COMPANY

CONTROL VALVE ATTACHING PARTS

TWO FUNCTION (→ S/N E008D01588) (→ S/N E008E01656)

ITEM	PART NO.	DESCRIPTION	QTY
32	815793	Hose Assy (Center Compartment)	2

©2011 HYSTER COMPANY

NOTES

©2011 HYSTER COMPANY

CONTROL VALVE ATTACHING PARTS (FIGURE 9-59)

TWO FUNCTION (S/N E008D01589 ↔ S/N E008E001984B) (S/N E008E01657 ↔ S/N E008E001984B)

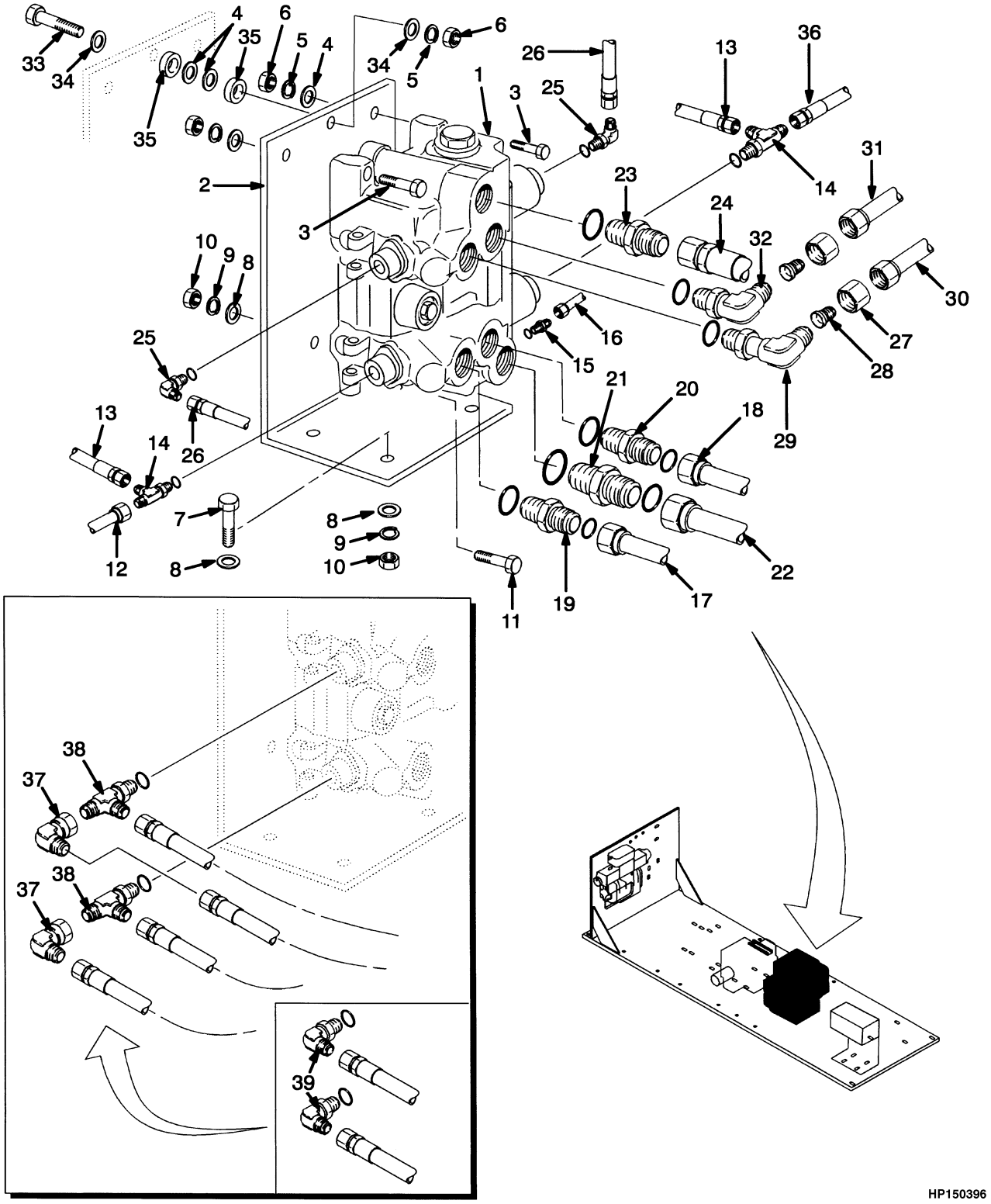

©2011 HYSTER COMPANY

CONTROL VALVE ATTACHING PARTS

TWO FUNCTION (S/N E008D01589 ↔ S/N E008E001984B) (S/N E008E01657 ↔ S/N E008E001984B)

KEY:
A: H550F-H700F
B: H440FS-H700FS

ITEM	PART NO.	DESCRIPTION	QTY A	QTY B
1	1385285	Hydraulic Control Valve (☞Figure 9-24)	1	1
2	1382949	Bracket	1	1
3	18590	Capscrew	2	2
4	15135	Washer	AR	AR
5	15158	Washer	2	2
6	15058	Nut	2	2
7	16828	Capscrew	4	4
8	15134	Washer	6	6
9	15156	Lockwasher	5	5
10	15056	Nut	5	5
11	16379	Capscrew	1	1
12	1384816	Tube Assy	1	1
13	102906	Hose Assy	2	2
14	16969	T-Fitting	2	2
14	16483	O-Ring	1	1
15	16538	Connector	1	1
15	16481	O-Ring	1	1
16	1331788	Tube Assy	1	1
17	1331762	Tube Assy	1	..
17	1350867	Tube Assy	..	1
18	1331763	Tube Assy	1	..
18	1350866	Tube Assy	..	1
19	1331935	Fitting	1	1
19	16487	O-Ring	1	1
19	280156	O-Ring	1	1
20	1350885	Fitting	1	1
20	16487	O-Ring	1	1
20	280156	O-Ring	1	1
21	1331942	Fitting	1	1
21	16983	O-Ring	1	1
21	280156	O-Ring	1	1
22	1339477	Tube Assy	1	1
23	16544	Connector	1	1
23	16983	O-Ring	1	1
24	1385280	Hose Assy	1	1
25	16558	Fitting	2	2
25	16483	O-Ring	1	1
26	197483	Hose Assy (E, F Left Compartment)	1	1
26	260803	Hose Assy (E, F Center Compartment)	1	1
27	14494	Sleeve	2	2
28	17783	Fitting	2	2
29	165844	Fitting	1	2
29	16487	O-Ring	1	1
30	1384822	Tube Assy	1	..
30	1391551	Tube Assy	..	1

©2011 HYSTER COMPANY

CONTROL VALVE ATTACHING PARTS

TWO FUNCTION (S/N E008D01589 ↔ S/N E008E001984B) (S/N E008E01657 ↔ S/N E008E001984B)

KEY:
A: H550F-H700F
B: H440FS-H700FS

ITEM	PART NO.	DESCRIPTION	QTY A	QTY B
31	1384821	Tube Assy	1	..
31	1391550	Tube Assy	..	1
32	16562	Fitting	1	1
32	16487	O-Ring	1	1
33	18592	Capscrew	1	1
34	221771	Washer	2	2
35	816130	Spacer	2	2
36	188698	Hose Assy (A Left Compartment)	1	1
36	197483	Hose Assy (A Center Compartment)	1	1
37	**a** 16883	Fitting	2	2
38	16969	T-Fitting	2	..
38	16483	O-Ring	1	..
39	16558	Fitting (Without Anti-Slipping Device)	1	..
39	16483	O-Ring	1	..

FOOTNOTES:

a S/N E008E01789 → (Anti-Slipping Device)

©2011 HYSTER COMPANY

NOTES

©2011 HYSTER COMPANY

ATTACHING PARTS (FIGURE 9-60)

SHUT-OFF COCK AND SHUTTLE VALVE (S/N E008D01589 ↔ S/N E008E001984B) (S/N E008E01657 ↔ S/N E008E001984B)

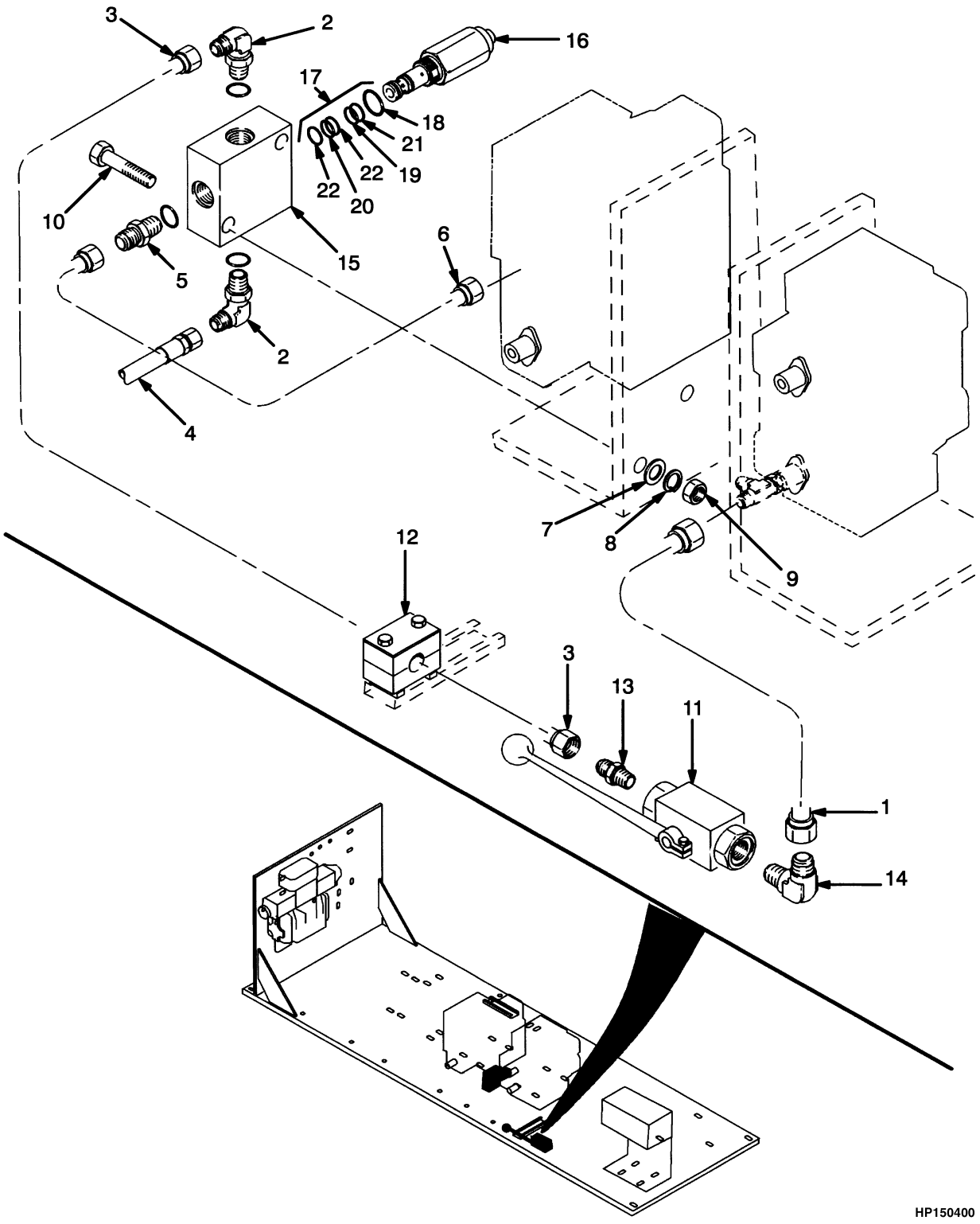

©2011 HYSTER COMPANY

ATTACHING PARTS

SHUT-OFF COCK AND SHUTTLE VALVE (S/N E008D01589 ↔ S/N E008E001984B) (S/N E008E01657 ↔ S/N E008E001984B)

ITEM	PART NO.	DESCRIPTION	QTY
1	**ab** 1384816	Tube Assy	1
1	**cd** 816291	Tube Assy	1
2	16558	Fitting	2
2	16483	O-Ring	1
3	**ab** 1384815	Tube Assy	1
3	**cd** 816292	Tube Assy	1
4	**cd** 129683	Hose Assy	1
4	**ab** 78010	Hose Assy	1
5	**ab** 131460	Fitting	1
5	16483	O-Ring	1
5	**cd** 131461	Fitting	1
5	16483	O-Ring	1
6	**ab** 1384817	Tube Assy	1
6	**cd** 815289	Bar	1
7	15134	Washer	2
8	15156	Lockwasher	2
9	15056	Nut	2
10	16379	Capscrew	2
11	**cd** 1384669	Drain Valve (Ball)	1
11	**ab** 1384818	Drain Valve	1
12	**ab** 1350862	Clamp	1
13	**ab** 14676	Fitting	1
13	**cd** 14677	Fitting	2
14	**ab** 14505	Fitting	1
15	1384819	Shuttle Valve	1
16	1391218	Cartridge	1
17	1391219	Kit-Seal	1
18	. . . . .	O-Ring	1
19	. . . . .	O-Ring	1
20	. . . . .	O-Ring	1
21	. . . . .	Back-Up Ring	1
22	. . . . .	Back-Up Ring	2

FOOTNOTES:

a → S/N E008D01614
b → S/N E008E01664
c S/N E008D01615 →
d S/N E008E01665 →

©2011 HYSTER COMPANY

CONTROL VALVE ATTACHING PARTS (FIGURE 9-61)

WITH ANTI-SLIPPING DEVICE AND LIFT INTERRUPT (S/N E008E01811X ↔ S/N E008E01984B)

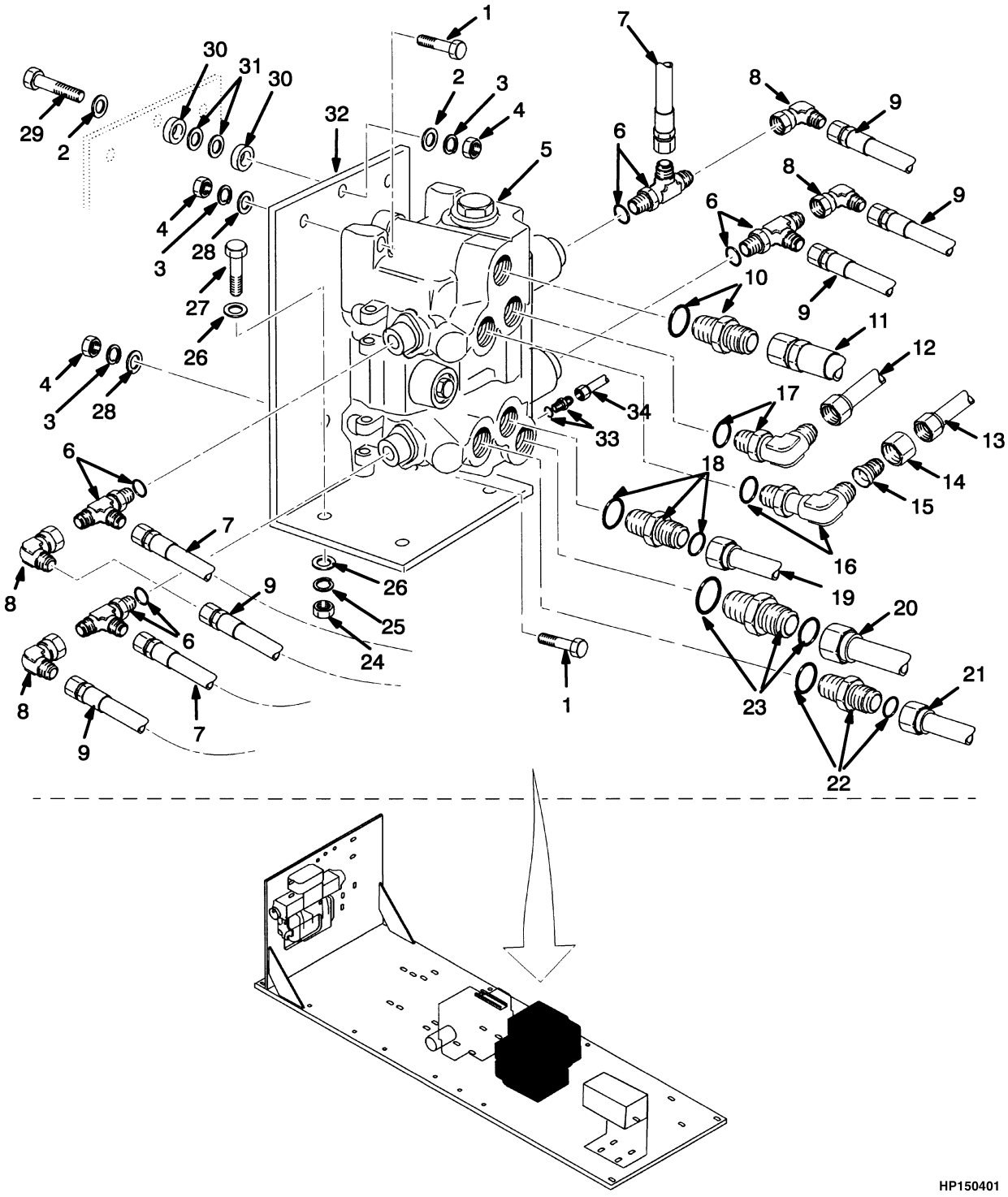

©2011 HYSTER COMPANY

CONTROL VALVE ATTACHING PARTS

WITH ANTI-SLIPPING DEVICE AND LIFT INTERRUPT (S/N E008E01811X ↔ S/N E008E01984B)

ITEM	PART NO.	DESCRIPTION	QTY
1	18590	Capscrew	4
2	221771	Washer	2
3	15158	Washer	5
4	15058	Nut	5
5	1385285	Hydraulic Control Valve (☞Figure 9-24)	1
6	16969	T-Fitting	4
6	16483	O-Ring	1
7	102906	Hose Assy	4
8	16883	Fitting	4
8	16483	O-Ring	1
9	111326	Hose Assy	4
10	97540	Fitting	1
10	16983	O-Ring	1
11	1385280	Hose Assy	1
12	1385287	Tube Assy	1
13	1385286	Tube Assy	1
14	14494	Sleeve	1
15	17783	Fitting	1
16	165844	Fitting	1
16	16487	O-Ring	1
17	16562	Fitting	1
17	16486	O-Ring	1
18	1350885	Fitting	1
18	16487	O-Ring	1
18	280156	O-Ring	1
19	1336288	Tube Assy	1
20	1339477	Tube Assy	1
21	1336289	Tube Assy	1
22	1331935	Fitting	1
22	16487	O-Ring	1
22	280156	O-Ring	1
23	1331942	Fitting	1
23	16983	O-Ring	1
23	280156	O-Ring	1
24	15056	Nut	4
25	15156	Lockwasher	4
26	15134	Washer	8
27	16828	Capscrew	4
28	15135	Washer	4
29	18592	Capscrew	1
30	816130	Spacer	2
31	15135	Washer	AR
32	1382949	Bracket	1
33	16583	Locknut	1
33	16481	O-Ring	1
34	1331788	Tube Assy	1

©2011 HYSTER COMPANY

FLOW AMPLIFIER (FIGURE 9-62)

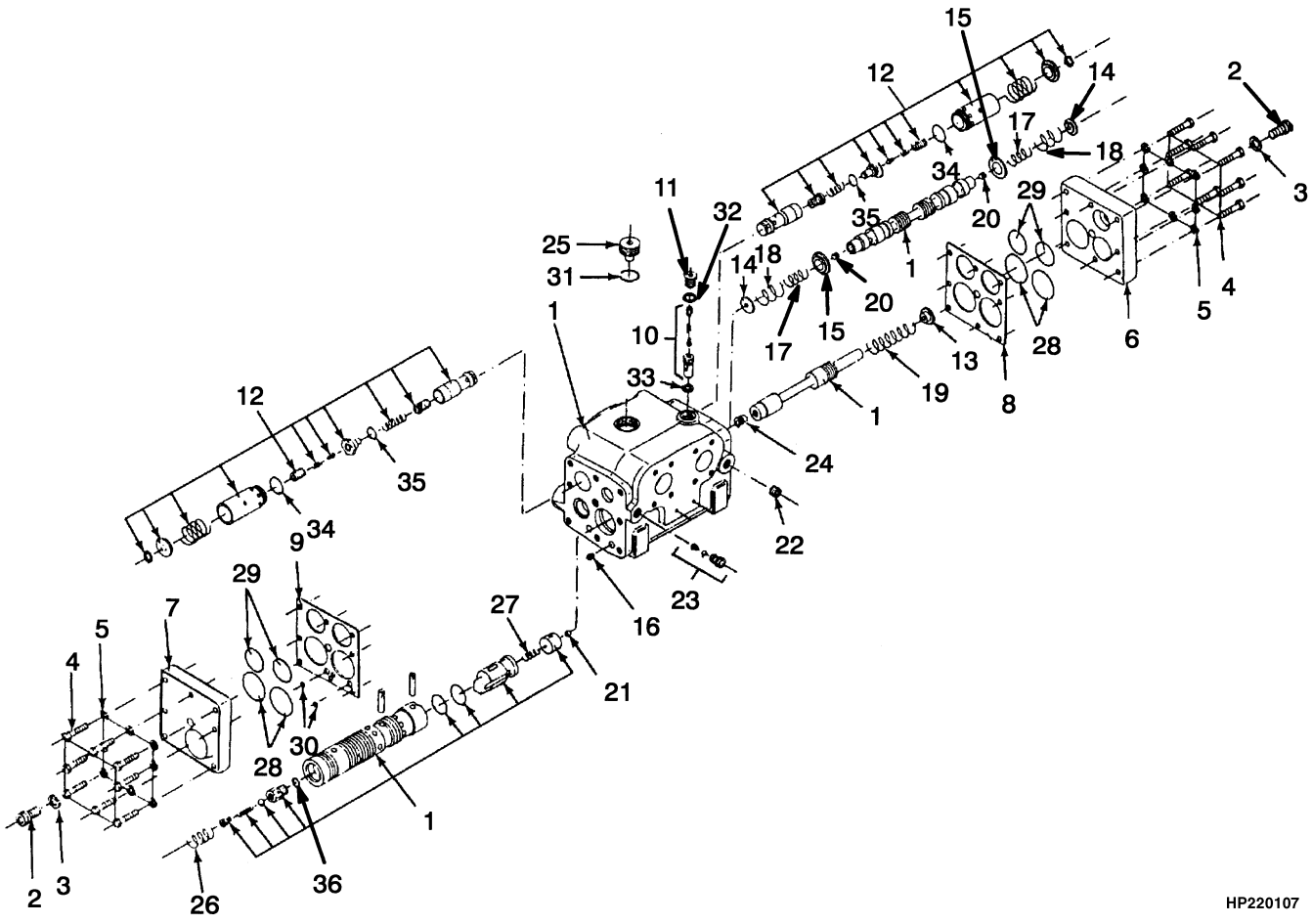

©2011 HYSTER COMPANY

FLOW AMPLIFIER

ITEM	PART NO.	DESCRIPTION	QTY
	384427	Flow Valve	1
1	. . . . .	Housing	1
2	1315783	Screw	2
3	1315784	Spring Washer	2
4	371961	Capscrew	16
5	1315785	Spring Washer	16
6	1315786	Cover	1
7	1315787	Cover	1
8	1315788	Plate	1
9	1315789	Plate	1
10	1315790	Relief Valve	1
11	1315791	Plug	1
12	1315792	Valve	2
13	1315793	Stop	1
14	1315794	Stop	2
15	1315795	Spring (Control)	2
16	1315796	Fitting	1
17	1315797	Spring	2
18	1315798	Spring	2
19	1315799	Spring	1
20	1316025	Fitting	2
21	1316026	Fitting	1
22	1316027	Fitting	1
23	1316028	Check Valve	1
24	1316029	Plug	1
25	1316030	Plug	1
26	1316031	Spring	1
27	1316032	Spring	1
28	. . . . .	O-Ring	4
29	. . . . .	O-Ring	4
30	. . . . .	O-Ring	2
31	. . . . .	O-Ring	1
32	. . . . .	Seal	1
33	. . . . .	Seal	1
34	. . . . .	O-Ring	1
35	. . . . .	O-Ring	1
36	. . . . .	O-Ring	1
	1315782	Kit-Seal	1

©2011 HYSTER COMPANY

FLOW AMPLIFIER (FIGURE 9-63)

ATTACHING PARTS (→ S/N E008E01984B)

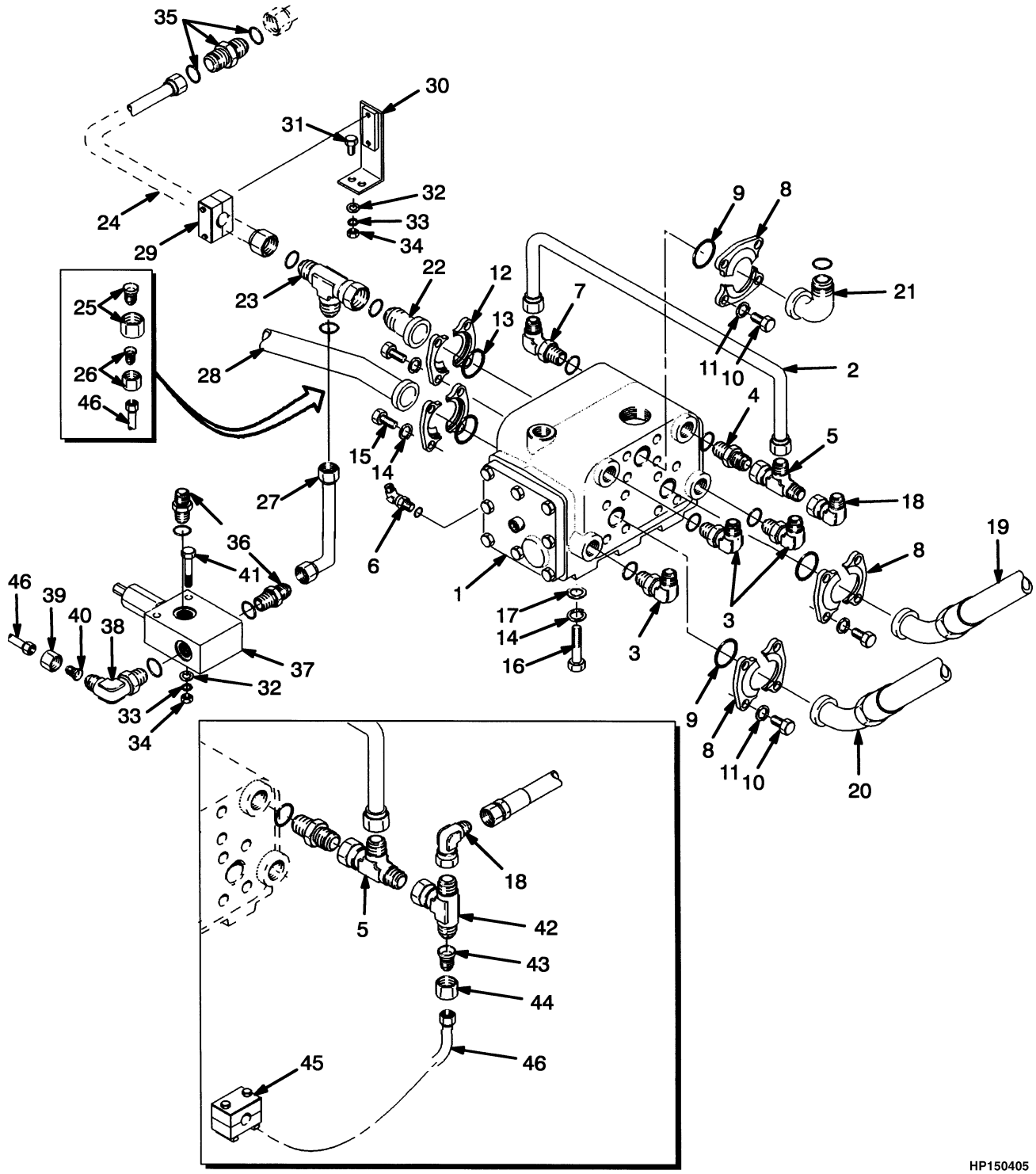

©2011 HYSTER COMPANY

FLOW AMPLIFIER

ATTACHING PARTS (→ S/N E008E01984B)

ITEM	PART NO.	DESCRIPTION	QTY
1	384427	Flow Valve	1
2	1307719	Tube Assy	1
3	16559	Fitting	3
3	16484	O-Ring	1
4	16745	Fitting	1
4	16484	O-Ring	1
5	17061	Fitting	1
6	16565	Fitting	1
6	16481	O-Ring	1
7	239784	Fitting	1
7	16481	O-Ring	1
8	190757	Clamp (Split Half)	6
9	169787	O-Ring	3
10	16828	Capscrew	12
11	15156	Lockwasher	12
12	17764	Clamp (Split Half)	4
13	199917	O-Ring	2
14	15157	Lockwasher	11
15	18557	Capscrew	8
16	16377	Capscrew	3
17	15129	Lockwasher	3
18	16883	Fitting	1
19	1331948	Hose Assy	1
20	1331949	Hose Assy	1
21	1331940	Fitting	1
21	280156	O-Ring	1
22	**b** 1376846	Adapter	1
22	**df** 1366707	Adapter	1
22	1336254	O-Ring	1
23	**d** 1337267	Fitting	1
23	1336254	O-Ring	2
24	**d** 1331767	Tube Assy	1
24	**h** 816056	Tube Assy	1
25	**d** 139716	Sleeve	1
25	**d** 17784	Fitting	1
26	**deg** 167261	Sleeve	1
26	**deg** 17779	Fitting	1
27	**ac** 1331766	Tube Assy	1
28	1339477	Tube Assy	1
29	**d** 1331852	Clamp	1
29	**h** 1331852	Clamp	2
30	**d** 1350844	Bracket Wldmt	1
30	**h** 1350844	Bracket Wldmt	2
31	18497	Capscrew	4
32	18515	Washer	4
33	15155	Lockwasher	4
34	15055	Nut	4
35	1331943	Fitting	1
35	1336254	O-Ring	2
36	**ac** 16543	Connector	2

©2011 HYSTER COMPANY

FLOW AMPLIFIER

ATTACHING PARTS (→ S/N E008E01984B)

ITEM	PART NO.	DESCRIPTION	QTY
36	**ac** 16486	O-Ring	1
37	**ac** 1394055	Relief Valve (☞Figure 9-28)	1
38	**ac** 138811	Fitting	1
38	**ac** 16484	O-Ring	1
39	**ac** 17319	Fitting	1
40	**ac** 17777	Fitting	1
41	**ac** 18516	Capscrew	2
42	**f** 17049	Fitting	1
43	**f** 17776	Fitting	1
44	**f** 14489	Sleeve	1
45	**f** 816055	Clamp	1
46	**ac** 1331770	Tube Assy	1
46	**deg** 1336294	Tube Assy	1
46	**h** 816015	Tube Assy	1

FOOTNOTES:

a → S/N E008D01509
b → S/N E008D01569
c → S/N E008E01531
d → S/N E008E01618
e S/N E008D01510 →
f S/N E008D01570 →
g S/N E008E01532 →
h S/N E008E01619 →

See Service Manual for service procedures.
©2011 HYSTER COMPANY

NOTES

©2011 HYSTER COMPANY

ANTI-SLACK DEVICE (FIGURE 9-64)

(→ S/N E008E01984B)

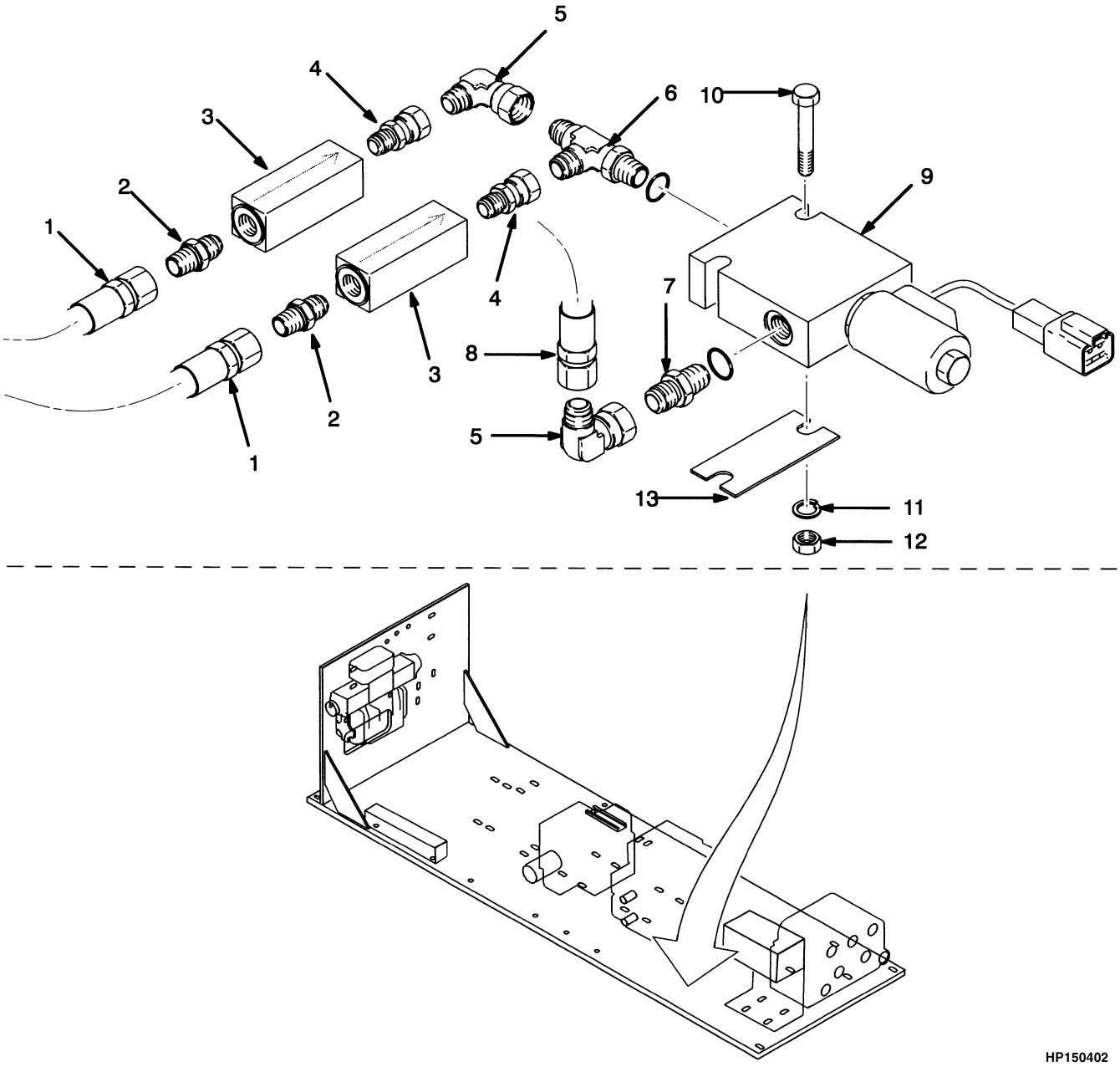

©2011 HYSTER COMPANY

ANTI-SLACK DEVICE

(→ S/N E008E01984B)

ITEM	PART NO.	DESCRIPTION	QTY
1	111326	Hose Assy	2
2	14675	Fitting	2
3	1394070	Check Valve	2
4	1332154	Fitting	2
5	16883	Fitting	2
6	16969	T-Fitting	1
6	16483	O-Ring	1
7	816489	Restrictor	1
8	1307369	Hose Assy	1
9	1383517	Solenoid Valve Assembly	1
10	18471	Capscrew	2
11	15154	Lockwasher	4
12	15054	Nut	2
13	1385639	Spacer	1

©2011 HYSTER COMPANY

ANTI-SLACK DEVICE AND LIFT INTERRUPT (FIGURE 9-65)

(S/N E008E01811X ↔ S/N E008E01984B)

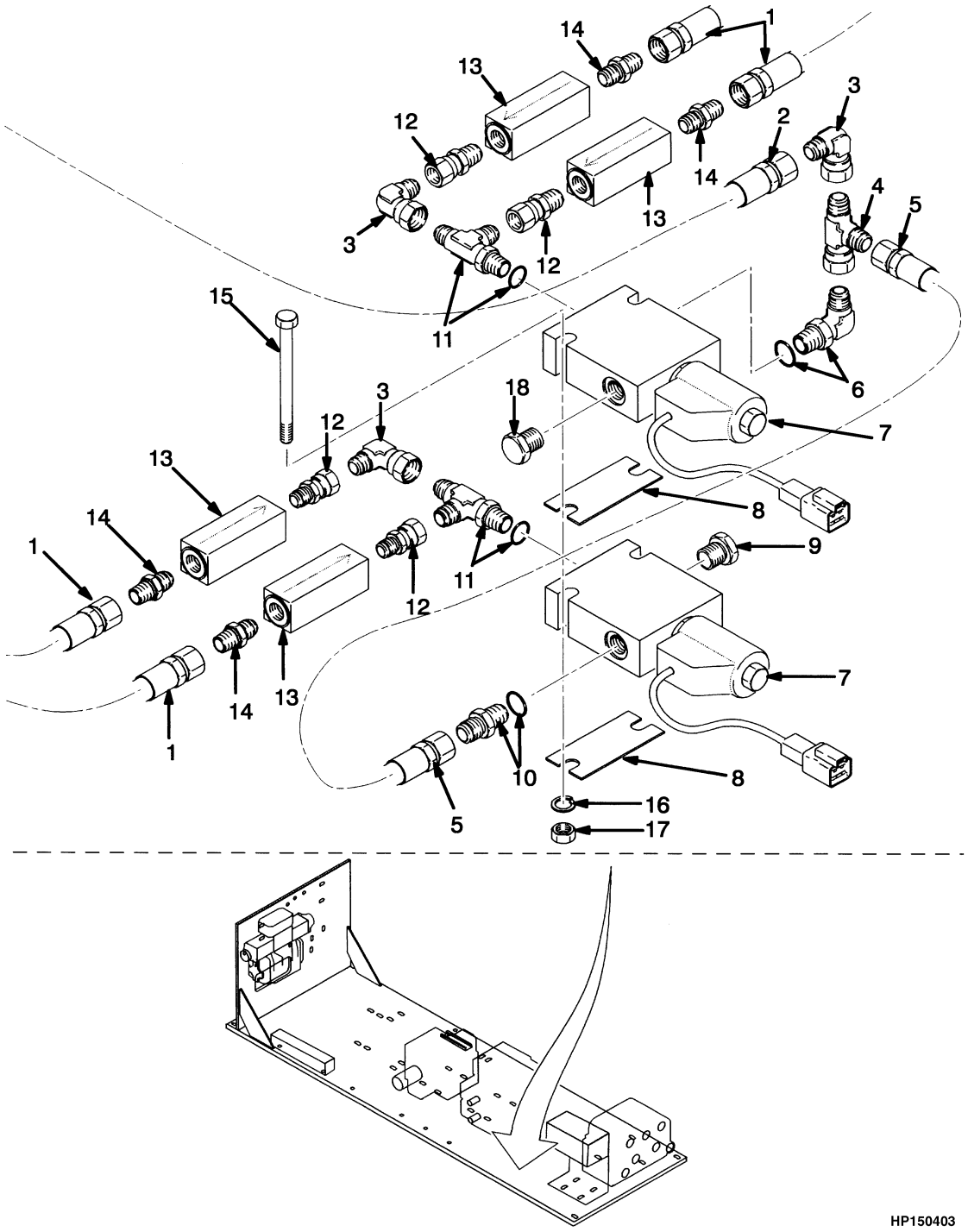

©2011 HYSTER COMPANY

ANTI-SLACK DEVICE AND LIFT INTERRUPT

(S/N E008E01811X ↔ S/N E008E01984B)

ITEM	PART NO.	DESCRIPTION	QTY
1	111326	Hose Assy	4
2	120779	Hose Assy	1
3	16883	Fitting	3
4	17061	Fitting	1
5	1307369	Hose Assy	1
6	16558	Fitting	1
6	16485	O-Ring	1
7	1383517	Solenoid Valve Assembly (☞Figure 9-29)	2
8	1385639	Spacer	2
9	14594	Plug	1
9	16483	O-Ring	1
10	816489	Restrictor	1
11	16969	T-Fitting	2
11	16483	O-Ring	1
12	1332154	Fitting	4
13	1394070	Check Valve	4
14	14675	Fitting	4
15	18486	Capscrew	2
16	15154	Lockwasher	4
17	15054	Nut	2
18	14594	Plug	1
18	16483	O-Ring	1

©2011 HYSTER COMPANY

SOLENOID VALVE (FIGURE 9-66)

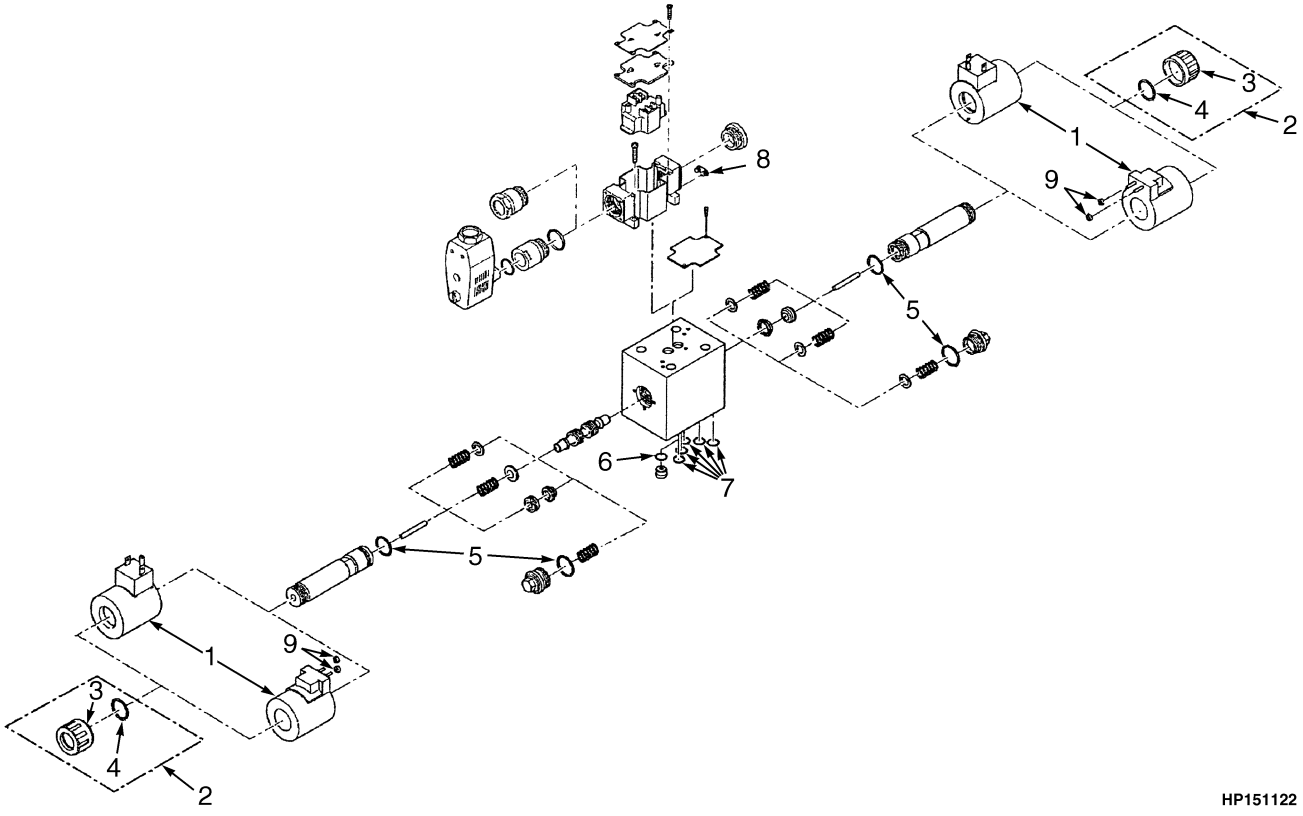

©2011 HYSTER COMPANY

SOLENOID VALVE

ITEM	PART NO.	DESCRIPTION	QTY
	1623871	Solenoid Valve	1
1	. . . . .	Coil	1
2	. . . . .	Coil Assembly	1
3	. . . . .	Nut	2
4	. . . . .	O-Ring	4
5	. . . . .	O-Ring	2
6	. . . . .	O-Ring	2
7	. . . . .	R-Ring	5
8	. . . . .	Stopper	1
9	. . . . .	Seal Ring	4
	1623411	Kit-Seal	1

©2011 HYSTER COMPANY

NOTES

©2011 HYSTER COMPANY

10 MAST-TWO STAGE VISTA

SECTION 10
MAST-TWO STAGE VISTA

DESCRIPTION	PAGE
CARRIAGE	10-28
ELECTRICAL	
STANDARD CARRIAGE	10-32
FORK POSITIONER	
STANDARD CARRIAGE	10-34
LIFT	10-10
LIFT CYLINDER	
H440FS, H550F, H550FS (→ S/N E008E01546X)	10-14
H440FS, H550F, H550FS (S/N E008E01547X →)	10-18
H620F, H650F, H700F, H620FS, H700FS (→ S/N E008E01546X)	10-22
H620F, H650F, H700F, H620FS, H700FS (S/N E008E01547X →)	10-24
MAST	
H440FS, H550F, H550FS	10-2
H620F, H650F, H700F, H620FS, H700FS	10-6

©2011 HYSTER COMPANY

MAST (FIGURE 10-1)

H440FS, H550F, H550FS

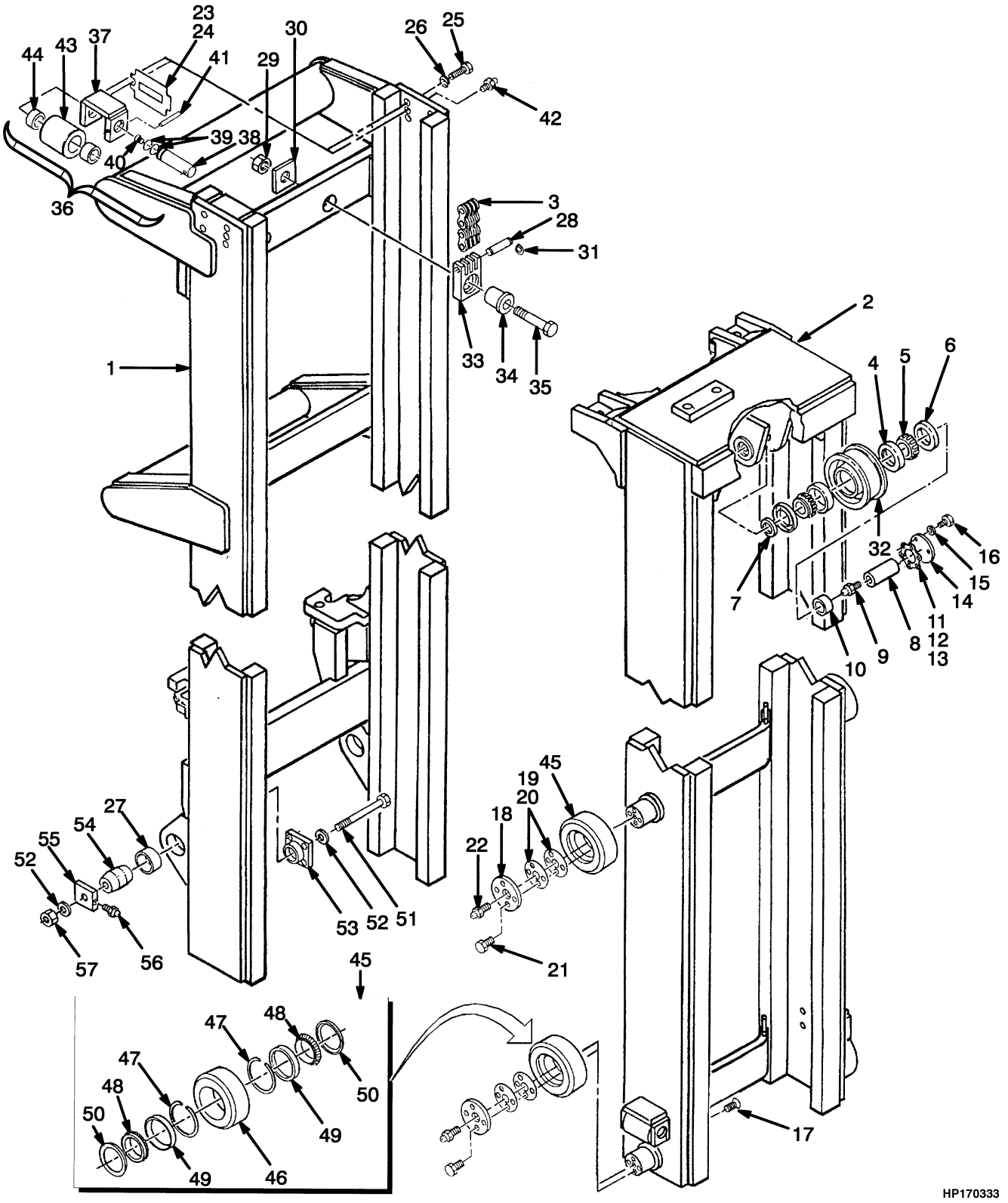

©2011 HYSTER COMPANY

MAST

H440FS, H550F, H550FS

H550F-H500FS

ITEM	DESCRIPTION 1 2 3 4	LIFT HEIGHT TO BOTTOM OF FORKS			
		3048 mm (120.0 in.)	4267 mm (168.0 in.)	4877 mm (192.0 in.)	5486 mm (216.0 in.)
	Mast Group Number	B531 3048	B531 4267	B531 4877	B531 5486
	Mast Assy	1350763	1350765	1350766	1350767
1	Outer Mast	1350782	1350784	1350785	1350786
2	Inner Mast	1350794	1350796	1350797	1350798
3	Chain	330005	330007	330008	330009

H550F-H500FS

ITEM	DESCRIPTION 1 2 3 4	LIFT HEIGHT TO BOTTOM OF FORKS	
		6096 mm (240.0 in.)	9144 mm (360.0 in.)
	Mast Group Number	B531 6096	B531 9144
	Mast Assy	1350768	1350773
1	Outer Mast	1350787	1350792
2	Inner Mast	1350799	1350804
3	Chain	330010	330015

ITEM	PART NO.	DESCRIPTION	QTY
	a	Mast Assy	1
1	**a**	Outer Mast	1
2	**a**	Inner Mast	1
3	**a**	Chain	2
4	159299	Bearing Cup	4
5	230408	Bearing Cone	4
6	159295	Oil Seal	4
7	159296	Spacer	2
8	314375	Shaft	2
9	16018	Grease Fitting	2
10	159297	Spacer	2
11	110931	Shim (0.005 in.)	AR
12	110932	Shim (0.007 in.)	AR
13	110933	Shim (0.020 in.)	AR
14	159258	Plate	2
15	15158	Washer	6
16	37562	Capscrew	6
17	164958	Capscrew	8
18	170369	Cap	4
19	170377	Shim (0.005 in.)	AR
20	170378	Shim (0.007 in.)	AR
21	221561	Capscrew	16

©2011 HYSTER COMPANY

MAST
H440FS, H550F, H550FS

ITEM	PART NO.	DESCRIPTION	QTY
22	16001	Grease Fitting	4
23	145062	Shim (0.060 in.)	AR
24	145063	Shim (0.030 in.)	AR
25	16645	Capscrew	8
26	15160	Washer	8
27	1331744	Bushing	2
28	334886	Pin	4
29	248320	Wheel Nut	2
30	375543	Washer	2
31	1194251	Snap Ring	8
32	330169	Sheave	2
33	314171	Chain Anchor	2
34	387610	Pin	2
35	18632	Capscrew	2
36	1326047	Side Roller	4
37	1326045	Bracket	1
38	116245	Pin	1
39	59229	O-Ring	2
40	15483	Fitting	1
41	19968	Roll Pin	1
42	16006	Grease Fitting	1
43	116242A	Side Roller	1
43	116243	Roller	1
44	116244	Bushing	2
45	314373	Load Roller Assembly	4
46	314374	Roller	1
47	170371	Snap Ring	2
48	170379	Bearing Cone	2
49	170380	Bearing Cup	2
50	170368	Shield (Bearing)	2
51	1355031	Capscrew	2
52	221777	Washer	4
53	1331742	Cap	2
54	1331743	Pin	2
55	1302871	Cap	2
56	16001	Grease Fitting	2
57	248320	Wheel Nut	2

FOOTNOTES:

a Refer to Table

©2011 HYSTER COMPANY

NOTES

©2011 HYSTER COMPANY

MAST (FIGURE 10-2)

H620F, H650F, H700F, H620FS, H700FS

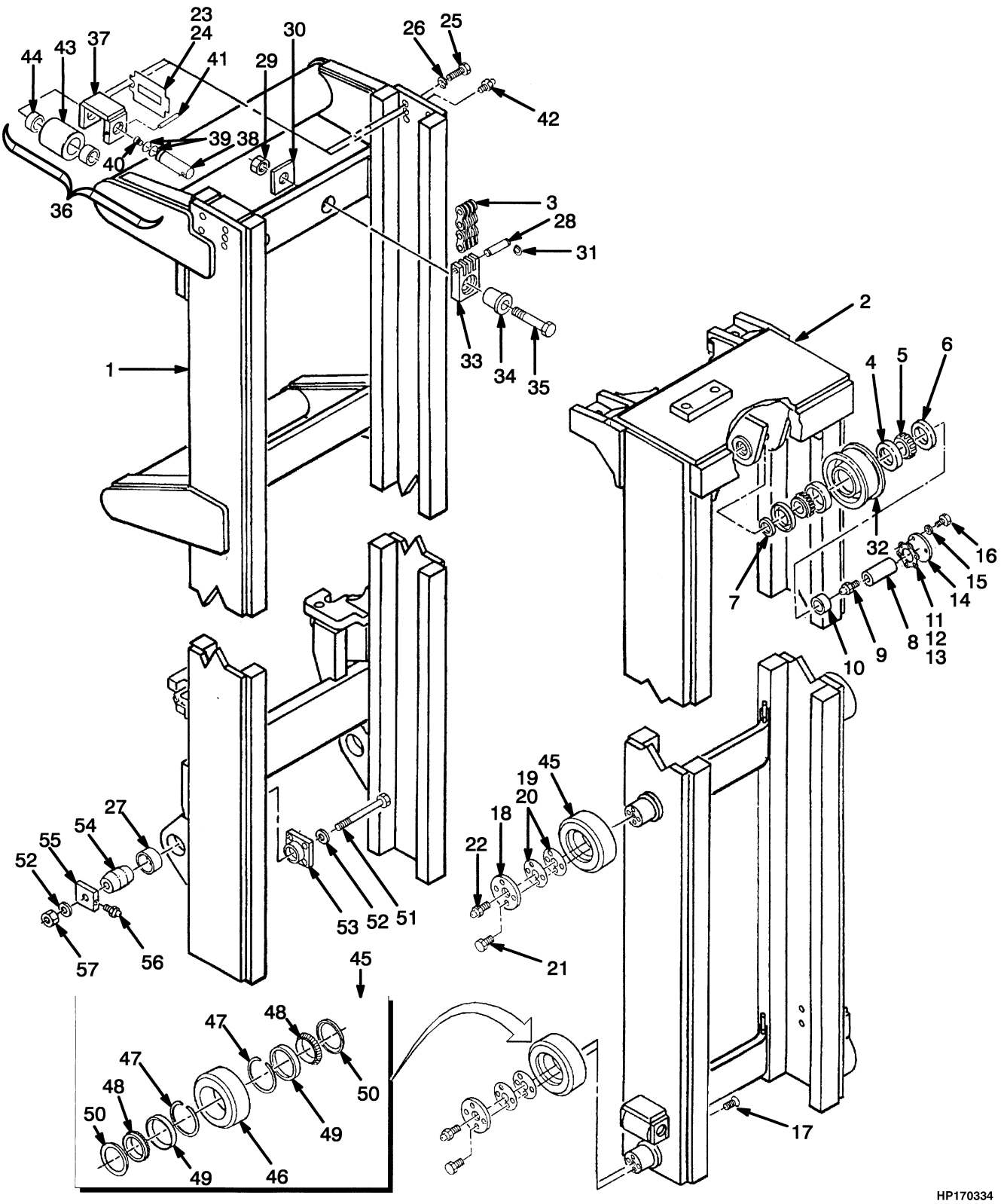

©2011 HYSTER COMPANY

MAST

H620F, H650F, H700F, H620FS, H700FS

H620F-H700FS

ITEM	DESCRIPTION 1 2 3 4	LIFT HEIGHT TO BOTTOM OF FORKS			
		3048 mm (120.0 in.)	4267 mm (168.0 in.)	5486 mm (216.0 in.)	6706 mm (264.0 in.)
	Mast Group Number	B531 3048	B531 4267	B531 5486	B531 6706
	Mast Assy	1350521	1350523	1350525	1350527
1	Outer Mast	1350430	1350432	1350434	1350436
2	Inner Mast	1350508	1350510	1350512	1350514
3	Chain	159290	168652	163488	184546

H620F-H700FS

ITEM	DESCRIPTION 1 2 3 4	LIFT HEIGHT TO BOTTOM OF FORKS	
		9144 mm (360.0 in.)	9754 mm (384.0 in.)
	Mast Group Number	B531 9144	B531 9754
	Mast Assy	1350531	1350532
1	Outer Mast	1350440	1350441
2	Inner Mast	1350518	1350519
3	Chain	330304	330302

ITEM	PART NO.	DESCRIPTION	QTY
	a	Mast Assy	1
1	**a**	Outer Mast	1
2	**a**	Inner Mast	1
3	**a**	Chain	2
4	159299	Bearing Cup	4
5	230408	Bearing Cone	4
6	159295	Oil Seal	4
7	159296	Spacer	2
8	314375	Shaft	2
9	16018	Grease Fitting	2
10	159297	Spacer	2
11	110931	Shim (0.005 in.)	AR
12	110932	Shim (0.007 in.)	AR
13	110933	Shim (0.020 in.)	AR
14	159258	Plate	2
15	15158	Washer	6
16	37562	Capscrew	6
17	144077	Capscrew	8
18	170369	Cap	4
19	170377	Shim (0.005 in.)	AR
20	170378	Shim (0.007 in.)	AR
21	221561	Capscrew	16

©2011 HYSTER COMPANY

MAST

H620F, H650F, H700F, H620FS, H700FS

ITEM	PART NO.	DESCRIPTION	QTY
22	16001	Grease Fitting	4
23	145062	Shim (0.060 in.)	AR
24	145063	Shim (0.030 in.)	AR
25	16645	Capscrew	8
26	15160	Washer	8
27	1331744	Bushing	2
28	334887	Pin	4
29	248320	Wheel Nut	2
30	375543	Washer	2
31	1194251	Snap Ring	8
32	303300	Sheave	2
33	330286	Chain Anchor	2
34	375545	Pin	2
35	18634	Capscrew	2
36	1326047	Side Roller	4
37	1326045	Bracket	1
38	116245	Pin	1
39	59229	O-Ring	2
40	15483	Fitting	1
41	19968	Roll Pin	1
42	16006	Grease Fitting	1
43	116242A	Side Roller	1
43	116243	Roller	1
44	116244	Bushing	2
45	314373	Load Roller Assembly	4
46	314374	Roller	1
47	170371	Snap Ring	2
48	170379	Bearing Cone	2
49	170380	Bearing Cup	2
50	170368	Shield (Bearing)	2
51	1355031	Capscrew	2
52	221777	Washer	4
53	1331742	Cap	2
54	1331743	Pin	2
55	1302871	Cap	2
56	16001	Grease Fitting	2
57	248320	Wheel Nut	2

FOOTNOTES:

a Refer to Table

©2011 HYSTER COMPANY

NOTES

©2011 HYSTER COMPANY

LIFT (FIGURE 10-3)

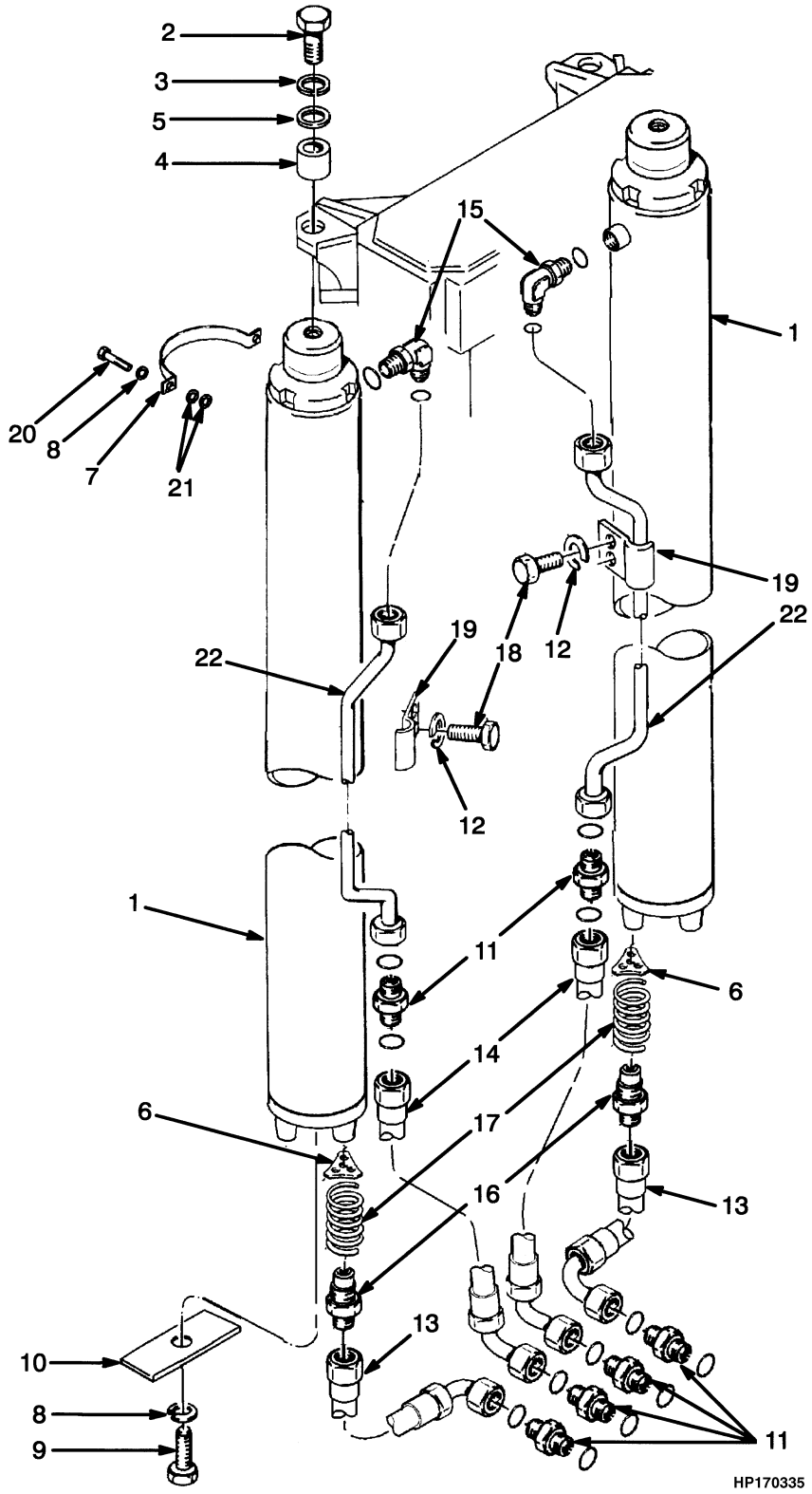

©2011 HYSTER COMPANY

LIFT

H550F-H500FS

ITEM	DESCRIPTION 1 2 3 4	LIFT HEIGHT TO BOTTOM OF FORKS			
		3048 mm (120.0 in.)	4267 mm (168.0 in.)	4877 mm (192.0 in.)	5486 mm (216.0 in.)
	Mast Group Number	B531 3048	B531 4267	B531 4877	B531 5486
	Mast Assy	1350763	1350765	1350766	1350767
22	Tube Assy	1344638	1344640	1344641	1344642

H550F-H500FS

ITEM	DESCRIPTION 1 2 3 4	LIFT HEIGHT TO BOTTOM OF FORKS	
		6096 mm (240.0 in.)	9144 mm (360.0 in.)
	Mast Group Number	B531 6096	B531 9144
	Mast Assy	1350768	1350773
22	Tube Assy	1344643	1344648

H620F-H700FS

ITEM	DESCRIPTION 1 2 3 4	LIFT HEIGHT TO BOTTOM OF FORKS			
		3048 mm (120.0 in.)	4267 mm (168.0 in.)	5486 mm (216.0 in.)	6706 mm (264.0 in.)
	Mast Group Number	B531 3048	B531 4267	B531 5486	B531 6706
	Mast Assy	1350521	1350523	1350525	1350527
22	Tube Assy	1337311	1337313	1337315	1337317

H620F-H700FS

ITEM	DESCRIPTION 1 2 3 4	LIFT HEIGHT TO BOTTOM OF FORKS	
		9144 mm (360.0 in.)	9754 mm (384.0 in.)
	Mast Group Number	B531 9144	B531 9754
	Mast Assy	1350531	1350532
22	Tube Assy	1337321	1337322

KEY:
A: H550F, H550FS
B: H620F, H650F, H700F, H620FS, H700FS

ITEM	PART NO.	DESCRIPTION	QTY A	QTY B
	a	Mast Assy	1	1
1	. . . . .	Lift Cylinder (☞Figure 10-4).....	2	2

©2011 HYSTER COMPANY

LIFT

KEY:
A: H550F, H550FS
B: H620F, H650F, H700F, H620FS, H700FS

ITEM	PART NO.	DESCRIPTION	QTY A	QTY B
2	14728	Capscrew	..	2
2	16052	Capscrew	2	..
3	15162	Lockwasher	2	..
3	15166	Lockwasher	..	2
4	125953	Spacer	2	..
4	336820	Spacer	..	2
5	15181	Washer	2	..
5	15183	Washer	..	2
6	309957	Washer	2	..
6	357951	Washer	..	2
7	375514	Clamp	..	2
7	387633	Clamp	2	..
8	15158	Washer	6	6
9	16830	Capscrew	2	2
10	1326105	Lockplate	2	2
11	1336054	Fitting	6	6
11	280156	O-Ring	2	2
12	15156	Lockwasher	8	8
13	1344649	Hose Assy	2	2
14	1337348	Hose Assy	2	2
15	1331937	Fitting	2	2
15	16487	O-Ring	1	1
15	280156	O-Ring	1	1
16	89894	Fitting	2	2
16	16487	O-Ring	1	1
17	89892	Spring	2	2
18	18535	Capscrew	8	8
19	228998	Clamp	4	4
20	18588	Capscrew	4	4
21	15135	Washer	AR	AR
22	**a**	Tube Assy	2	2

FOOTNOTES:

a Refer to Table

©2011 HYSTER COMPANY

NOTES

©2011 HYSTER COMPANY

LIFT CYLINDER (FIGURE 10-4)

H440FS, H550F, H550FS (→ S/N E008E01546X)

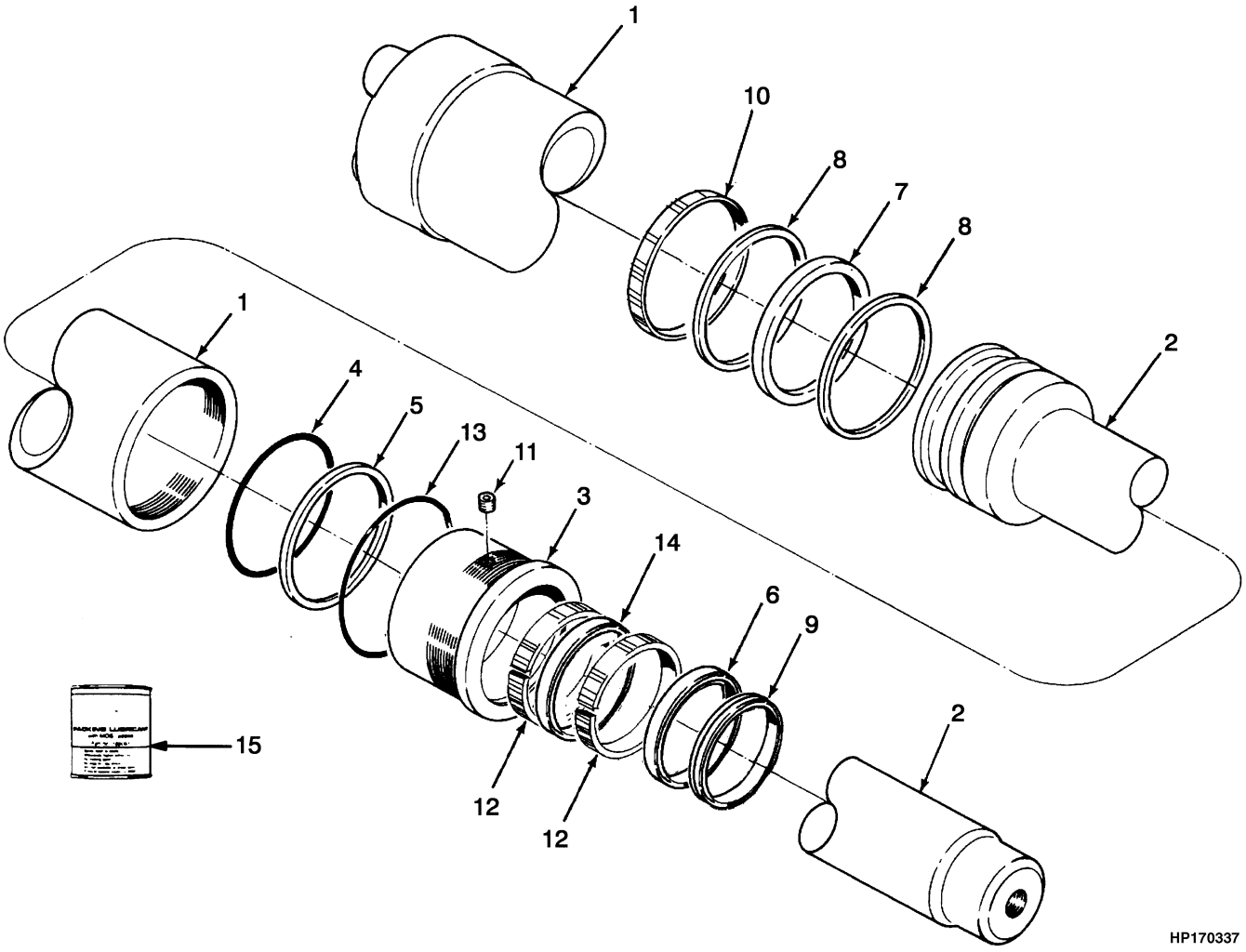

©2011 HYSTER COMPANY

LIFT CYLINDER

H440FS, H550F, H550FS (→ S/N E008E01546X)

H550F-H500FS

ITEM	DESCRIPTION 1 2 3 4	LIFT HEIGHT TO BOTTOM OF FORKS			
		3048 mm (120.0 in.)	4267 mm (168.0 in.)	4877 mm (192.0 in.)	5486 mm (216.0 in.)
	Mast Group Number	**B531 3048**	**B531 4267**	**B531 4877**	**B531 5486**
	Cylinder Group Number	**816202**	**816204**	**816205**	**816206**
	Cylinder Assy	816202	816204	816205	816206
1	Tube Wldmt-Cylinder	1322711	1322713	1322714	1322715
2	Cylinder Rod	1350751	1350753	1350754	1350755

H550F-H500FS

ITEM	DESCRIPTION 1 2 3 4	LIFT HEIGHT TO BOTTOM OF FORKS	
		6096 mm (240.0 in.)	9144 mm (360.0 in.)
	Mast Group Number	**B531 6096**	**B531 9144**
	Cylinder Group Number	**816207**	**816212**
	Cylinder Assy	816207	816212
1	Tube Wldmt-Cylinder	1322716	1322717
2	Cylinder Rod	1350756	1350761

ITEM	PART NO.	DESCRIPTION	QTY
	a	Cylinder Assy	2
1	**a**	Tube Wldmt-Cylinder	1
2	**a**	Cylinder Rod	1
3	816283	Cylinder Head	1
4	46389	O-Ring	1
5	19578	Back-Up Ring	1
6	816288	Seal	1
7	1326140	Rod Seal	1
7	246888	Rod Seal	1
8	257030	Piston Seal	2
9	816286	Seal	1
10	231989	Wear Ring	1
11	170625	Plug	2
12	385132	Wear Ring	2
13	15898	O-Ring	1
14	816287	Seal	1
15	186061	Lubricant	AR

©2011 HYSTER COMPANY

LIFT CYLINDER

H440FS, H550F, H550FS (→ S/N E008E01546X)

ITEM	PART NO.	DESCRIPTION	QTY
	b 816308	Kit-Seal	1

FOOTNOTES:

a Refer to Table

b → S/N E008E01546

©2011 HYSTER COMPANY

NOTES

©2011 HYSTER COMPANY

LIFT CYLINDER (FIGURE 10-5)

H440FS, H550F, H550FS (S/N E008E01547X →)

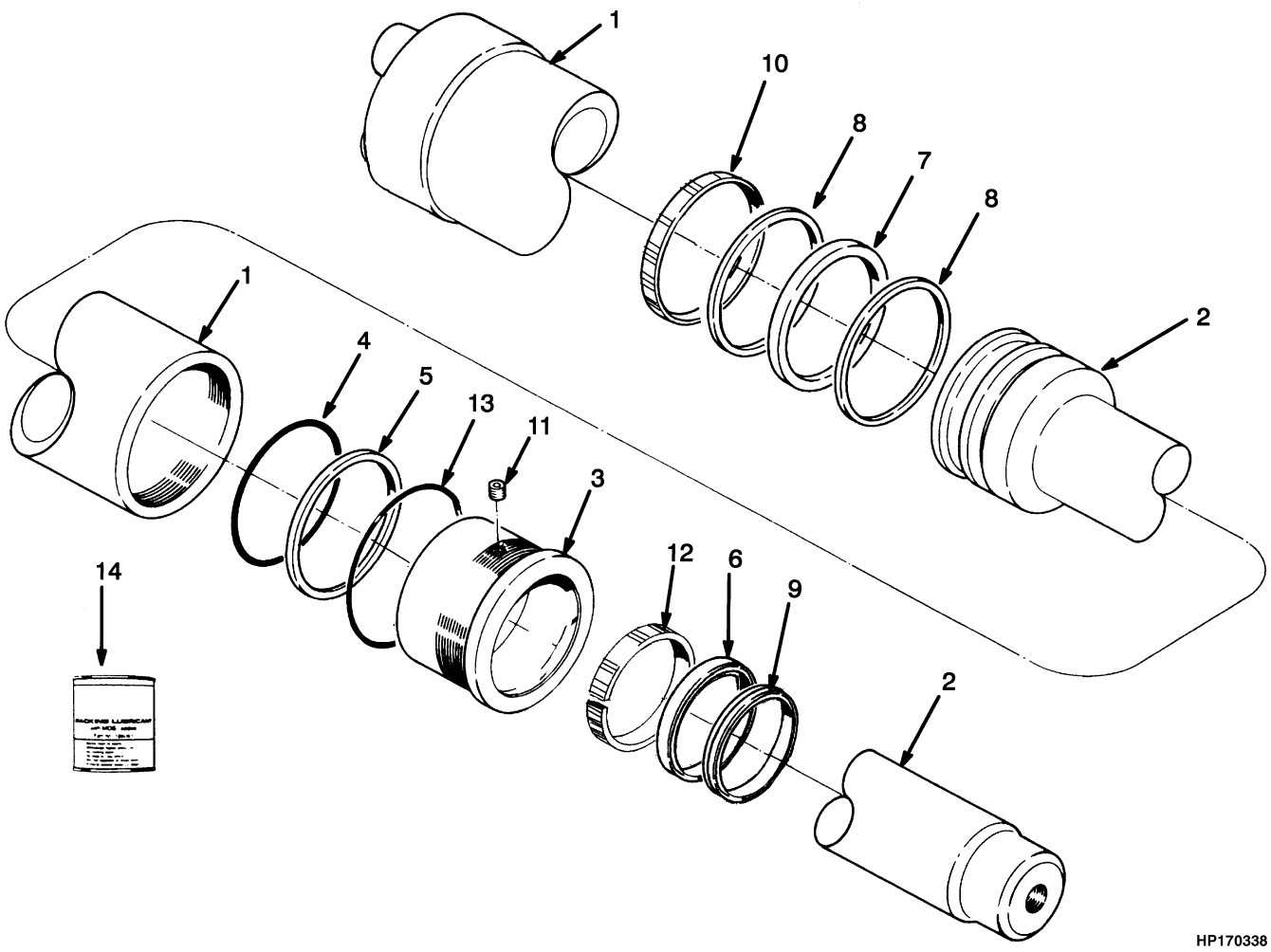

©2011 HYSTER COMPANY

LIFT CYLINDER

H440FS, H550F, H550FS (S/N E008E01547X →)

H550F-H500FS

ITEM	DESCRIPTION 1 2 3 4	LIFT HEIGHT TO BOTTOM OF FORKS			
		3048 mm (120.0 in.)	4267 mm (168.0 in.)	4877 mm (192.0 in.)	5486 mm (216.0 in.)
	Mast Group Number	**B531 3048**	**B531 4267**	**B531 4877**	**B531 5486**
	Cylinder Group Number	**1350806**	**1350808**	**1350809**	**1350810**
	Cylinder Assy	1350806	1350808	1350809	1350810
1	Tube Wldmt-Cylinder	1322711	1322713	1322714	1322715
2	Cylinder Rod	1350751	1350753	1350754	1350755

H550F-H500FS

ITEM	DESCRIPTION 1 2 3 4	LIFT HEIGHT TO BOTTOM OF FORKS	
		6096 mm (240.0 in.)	9144 mm (360.0 in.)
	Mast Group Number	**B531 6096**	**B531 9144**
	Cylinder Group Number	**1350811**	**1350816**
	Cylinder Assy	1350811	1350816
1	Tube Wldmt-Cylinder	1322716	1322721
2	Cylinder Rod	1350756	1350761

ITEM	PART NO.	DESCRIPTION	QTY
	a	Cylinder Assy	2
1	**a**	Tube Wldmt-Cylinder	1
2	**a**	Cylinder Rod	1
3	1322769	Gland	1
4	46389	O-Ring	1
5	19578	Back-Up Ring	1
6	816546	Rod Seal	1
7	1326140	Rod Seal	1
8	257030	Piston Seal	2
9	816547	Rod Wiper	1
10	231989	Wear Ring	1
11	170625	Plug	2
12	816463	Wear Ring	1
13	15898	O-Ring	1
14	186061	Lubricant	AR
	1322848	Kit-Seal	1

©2011 HYSTER COMPANY

FOOTNOTES:

a Refer to Table

©2011 HYSTER COMPANY

NOTES

©2011 HYSTER COMPANY

LIFT CYLINDER (FIGURE 10-6)

H620F, H650F, H700F, H620FS, H700FS (→ S/N E008E01546X)

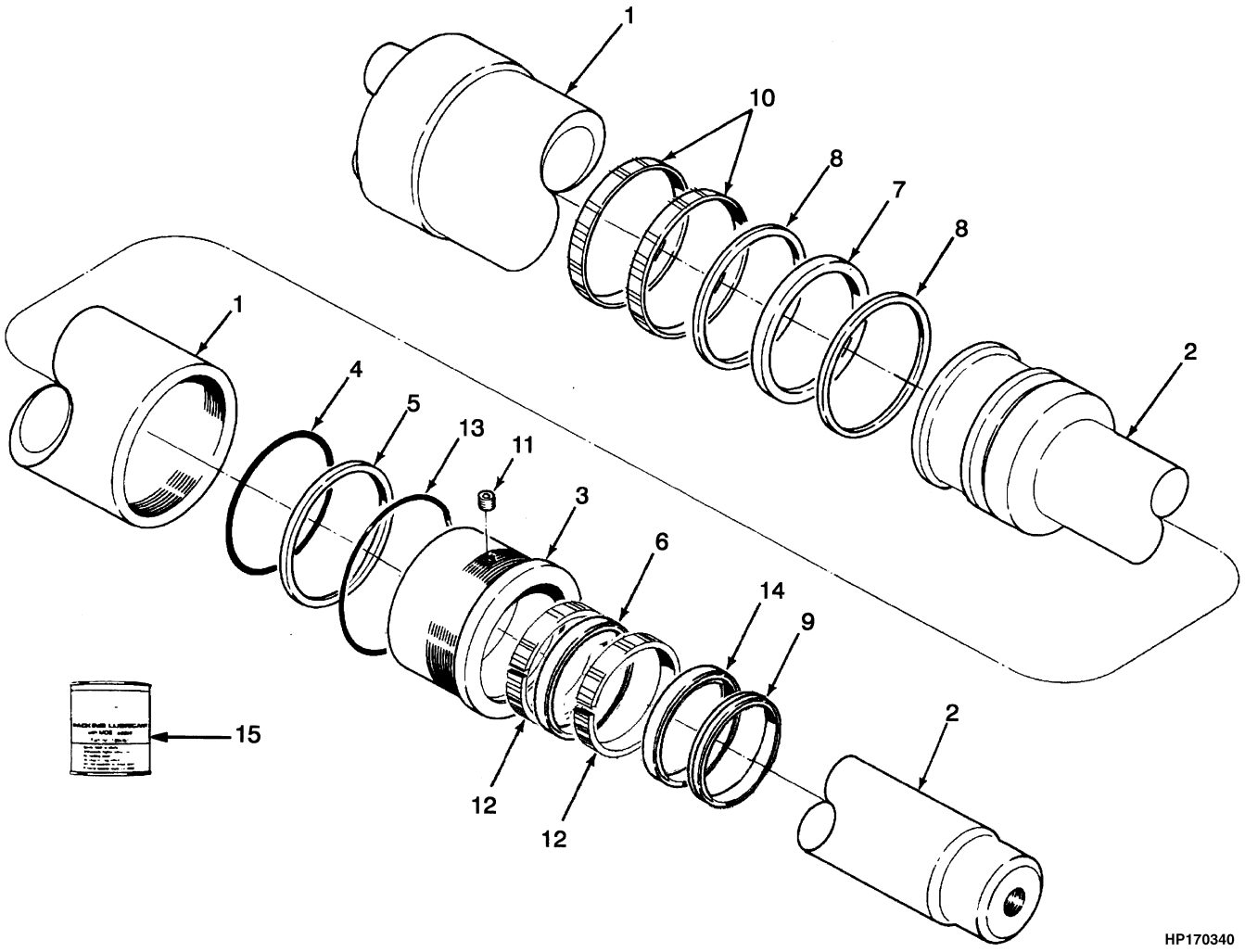

©2011 HYSTER COMPANY

LIFT CYLINDER

H620F, H650F, H700F, H620FS, H700FS (→ S/N E008E01546X)

H620F-H700FS

ITEM	DESCRIPTION 1 2 3 4	LIFT HEIGHT TO BOTTOM OF FORKS				
		3048 mm (120.0 in.)	5486 mm (216.0 in.)	6706 mm (264.0 in.)	9144 mm (360.0 in.)	9754 mm (384.0 in.)
	Mast Group Number	**B531 3048**	**B531 5486**	**B531 6706**	**B531 9144**	**B531 9754**
	Cylinder Group Number	**816190**	**816194**	**816196**	**816200**	**816201**
	Cylinder Assy	816190	816194	816196	816200	816201
1	Tube Wldmt-Cylinder	1322745	1322749	1322751	1322755	1322756
2	Cylinder Rod	1350534	1350538	1350540	1350544	1350545

ITEM	PART NO.	DESCRIPTION	QTY
	a	Cylinder Assy	2
1	**a**	Tube Wldmt-Cylinder	1
2	**a**	Cylinder Rod	1
3	816262	Cylinder Head	1
4	18954	O-Ring	1
5	19585	Back-Up Ring	1
6	816281	Seal	1
7	1326141	Rod Seal	1
7	246889	Rod Seal	1
8	280588	Piston Seal	2
9	816280	Seal	1
10	224948	Wear Ring	2
11	170625	Plug	2
12	385133	Wear Ring	2
13	18974	O-Ring	1
14	816282	Seal	1
15	186061	Lubricant	AR
	b 816278	Kit-Seal	1
	b 816279	Kit-Seal (High Temperature)	1

FOOTNOTES:

a Refer to Table

b → S/N E008E01546

©2011 HYSTER COMPANY

LIFT CYLINDER (FIGURE 10-7)

H620F, H650F, H700F, H620FS, H700FS (S/N E008E01547X →)

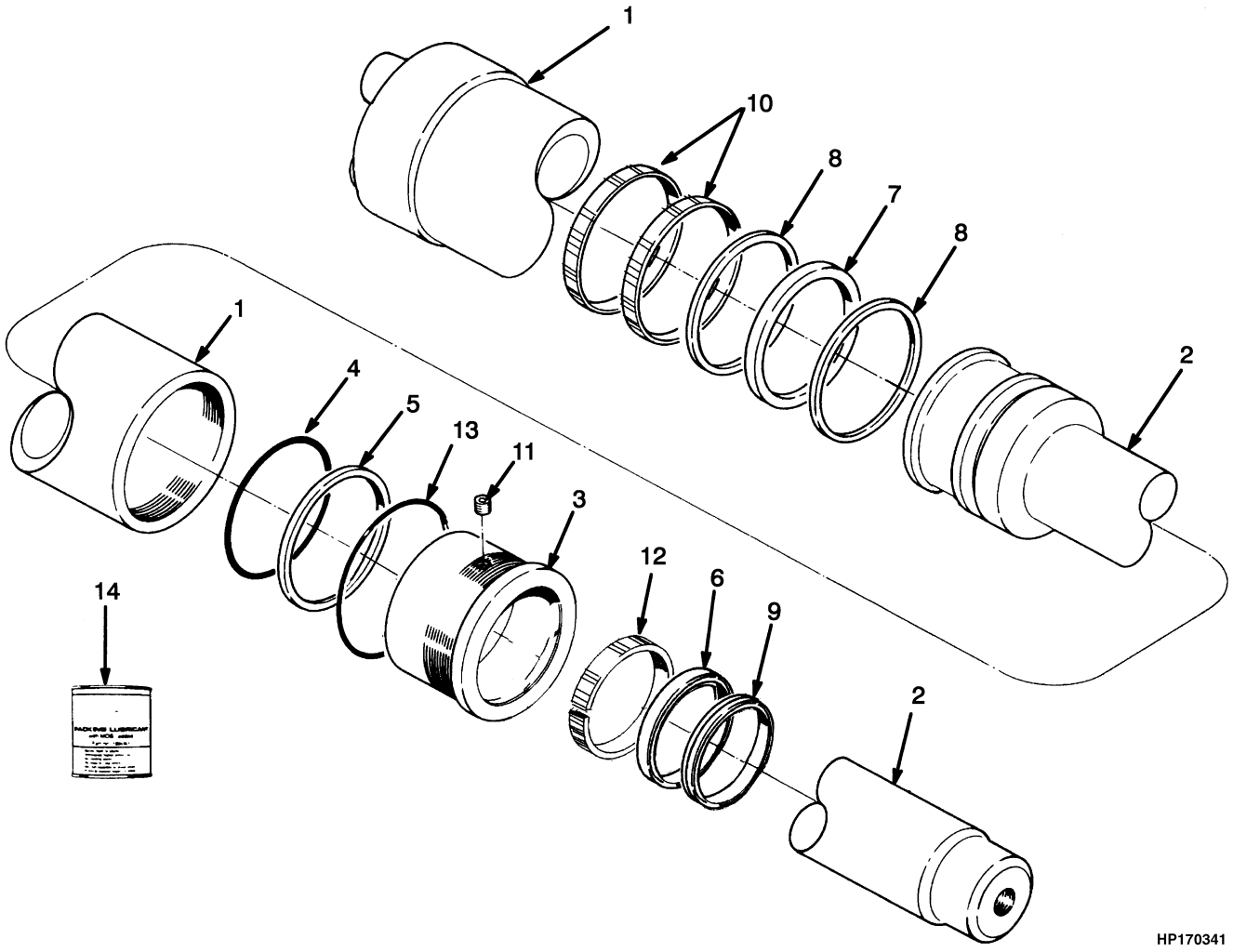

©2011 HYSTER COMPANY

LIFT CYLINDER

H620F, H650F, H700F, H620FS, H700FS (S/N E008E01547X →)

H620F-H700FS

ITEM	DESCRIPTION 1 2 3 4	LIFT HEIGHT TO BOTTOM OF FORKS			
		3048 mm (120.0 in.)	4267 mm (168.0 in.)	5486 mm (216.0 in.)	6706 mm (264.0 in.)
	Mast Group Number	**B531 3048**	**B531 4267**	**B531 5486**	**B531 6706**
	Cylinder Group Number	**1346463**	**1346465**	**1346467**	**1346469**
	Cylinder Assy	1346463	1346465	1346467	1346469
1	Tube Wldmt-Cylinder	1322745	1322747	1322749	1322751
2	Cylinder Rod	1350534	1350536	1350538	1350540

H620F-H700FS

ITEM	DESCRIPTION 1 2 3 4	LIFT HEIGHT TO BOTTOM OF FORKS	
		9144 mm (360.0 in.)	9754 mm (384.0 in.)
	Mast Group Number	**B531 9144**	**B531 9754**
	Cylinder Group Number	**1346473**	**816200**
	Cylinder Assy	1346473	1346474
1	Tube Wldmt-Cylinder	1322755	1322756
2	Cylinder Rod	1350544	1350545

ITEM	PART NO.	DESCRIPTION	QTY
	a	Cylinder Assy	2
1	**a**	Tube Wldmt-Cylinder	1
2	**a**	Cylinder Rod	1
3	1322770	Gland	1
4	18954	O-Ring	1
5	19585	Back-Up Ring	1
6	816548	Rod Seal	1
7	1326141	Rod Seal	1
8	280588	Piston Seal	2
9	816549	Rod Wiper	1
10	224948	Wear Ring	2
11	170625	Plug	2
12	816456	Wear Ring	1
13	18974	O-Ring	1
14	186061	Lubricant	AR
	1322849	Kit-Seal	1

©2011 HYSTER COMPANY

FOOTNOTES:

a Refer to Table

©2011 HYSTER COMPANY

NOTES

©2011 HYSTER COMPANY

CARRIAGE (FIGURE 10-8)

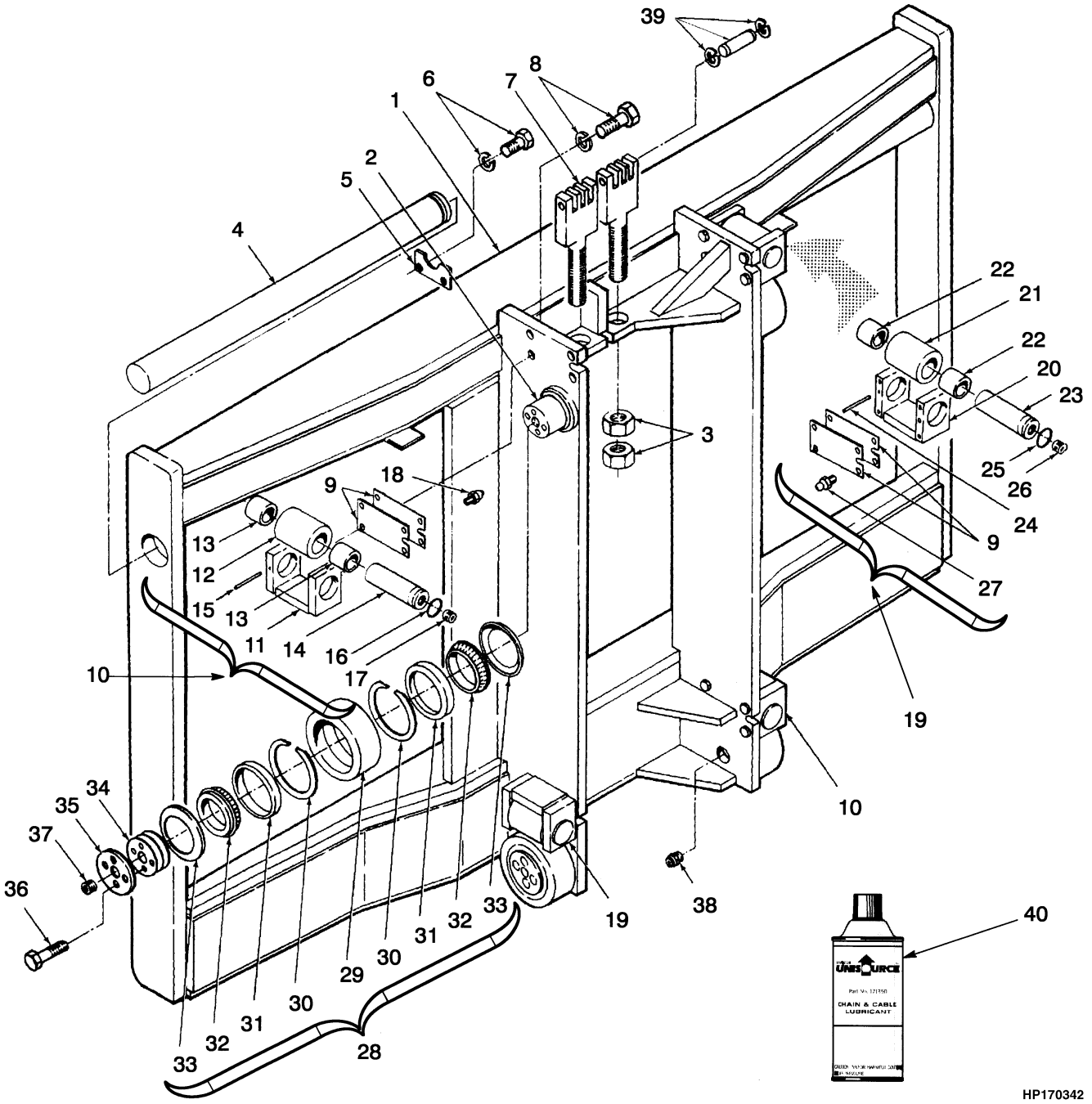

©2011 HYSTER COMPANY

CARRIAGE

KEY:
A: H550F, H550FS
B: H620F, H650F, H700F, H620FS, H700FS

ITEM	PART NO.	DESCRIPTION	QTY A	QTY B
	1351870	Carriage	1	..
	1351875	Carriage	..	1
1	1351806	Carriage Wldmt	..	1
1	1351866	Carriage	1	..
2	170372	Stubshaft	4	4
3	136405	Nut	4	..
3	159301	Nut	..	4
4	116251	Pin	2	..
4	175617	Pin	..	2
5	175613	Keeper	2	2
6	15160	Washer	4	4
6	16823	Capscrew	4	4
7	331311	Chain Anchor	..	2
7	331312	Chain Anchor	2	..
8	15160	Washer	16	16
8	18605	Capscrew	16	16
9	145062	Shim (0.060 in.)	AR	AR
9	145063	Shim (0.030 in.)	AR	AR
10	1326047	Side Roller	2	2
11	1326045	Bracket	1	1
12	116242A	Side Roller	1	1
12	116243	Roller	1	1
13	116244	Bushing	2	2
14	116245	Pin	1	1
15	19968	Roll Pin	1	1
16	59229	O-Ring	2	2
17	15483	Fitting	1	1
18	16006	Grease Fitting	1	1
19	1326048	Side Roller	2	2
20	1326046	Bracket	1	1
21	116243	Roller	1	1
22	116244	Bushing	2	2
23	116245	Pin	1	1
24	19968	Roll Pin	1	1
25	59229	O-Ring	2	2
26	15483	Fitting	1	1
27	16006	Grease Fitting	4	4
28	314373	Load Roller Assembly	4	4
29	314374	Roller	1	1
30	170371	Snap Ring	2	2
31	170380	Bearing Cup	2	2
32	170379	Bearing Cone	2	2
33	170368	Shield (Bearing)	2	2
34	170377	Shim (0.005 in.)	AR	AR
34	170378	Shim (0.007 in.)	AR	AR
35	170369	Cap	4	4

©2011 HYSTER COMPANY

CARRIAGE

KEY:
A: H550F, H550FS
B: H620F, H650F, H700F, H620FS, H700FS

ITEM	PART NO.	DESCRIPTION	QTY A	QTY B
36	221561	Capscrew	16	16
37	14349	Fitting (Pipe Plug)	4	4
38	16001	Grease Fitting	4	4
39	1194251	Snap Ring	AR	AR
39	334886	Pin	AR	..
39	334887	Pin	..	AR
40	171350	Lubricant	AR	..

©2011 HYSTER COMPANY

NOTES

©2011 HYSTER COMPANY

ELECTRICAL (FIGURE 10-9)
STANDARD CARRIAGE

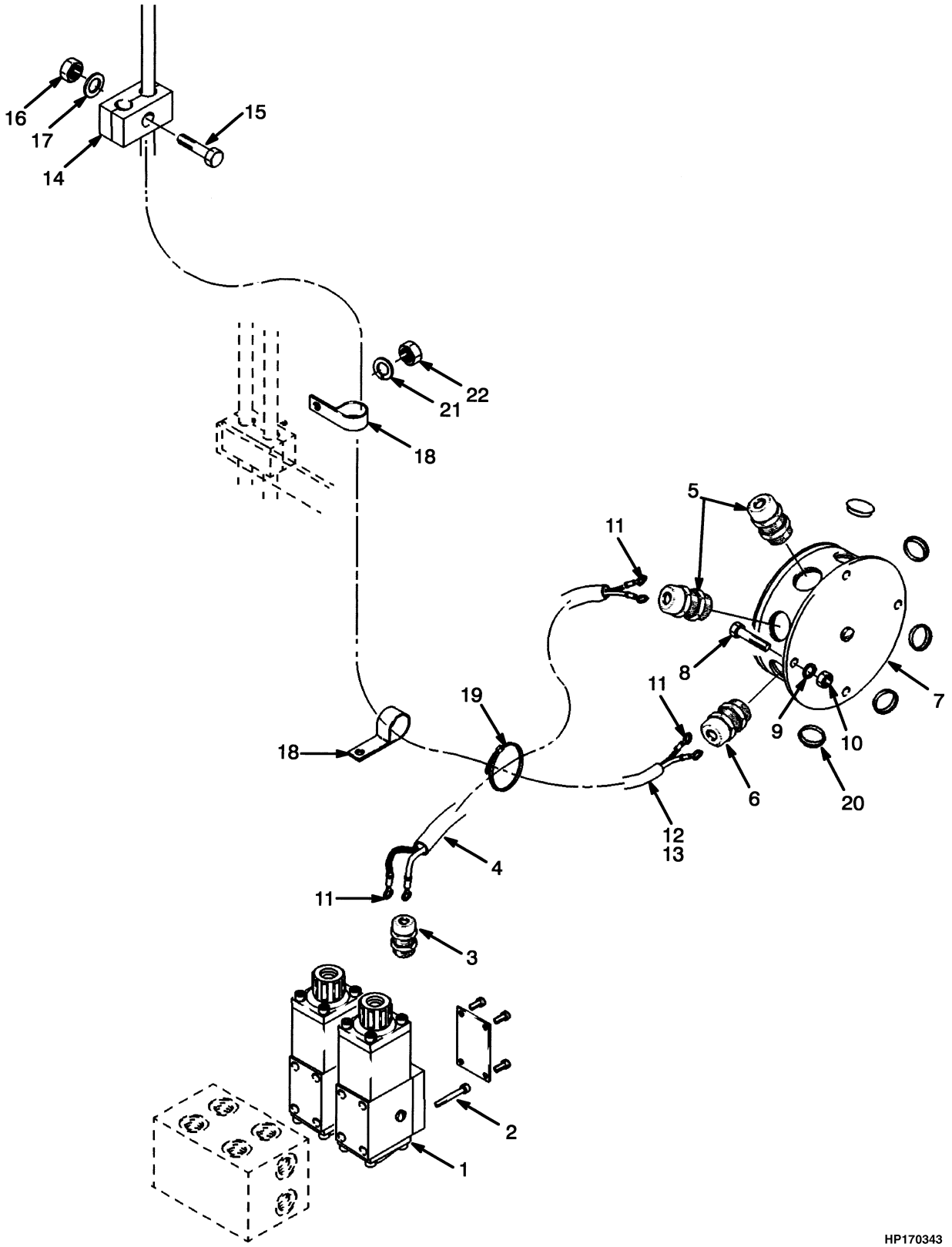

©2011 HYSTER COMPANY

ELECTRICAL
STANDARD CARRIAGE

ITEM	PART NO.	DESCRIPTION	QTY
1	1623871	Solenoid Valve (☞Figure 9-66)	2
2	18099	Capscrew	8
3	1310026	Fitting (Cable)	2
4	1344672	Wire Harness	2
5	1315880	Fitting (Cable)	2
6	1315881	Fitting (Cable)	1
7	1315883	Junction Block	1
8	220334	Screw	4
9	15156	Lockwasher	4
10	128436	Nut	4
11	129887	E-Ring	10
12	**a** 1337341	Wire Harness (Carriage)	1
12	**b** 1468075	Wire Harness (Carriage)	1
13	1627842	Hose (50 ft.)	AR
14	1373335	Clamp	1
15	18516	Capscrew	1
16	145639	Locknut	1
17	15175	Lockwasher	1
18	154278	Clamp	2
19	2004005	Strap Clamp	3
20	1315878	Plug	1
21	18515	Washer	2
22	15055	Nut	2

FOOTNOTES:

a → S/N E008E01810

b S/N E008E01811 →

©2011 HYSTER COMPANY

FORK POSITIONER (FIGURE 10-10)
STANDARD CARRIAGE

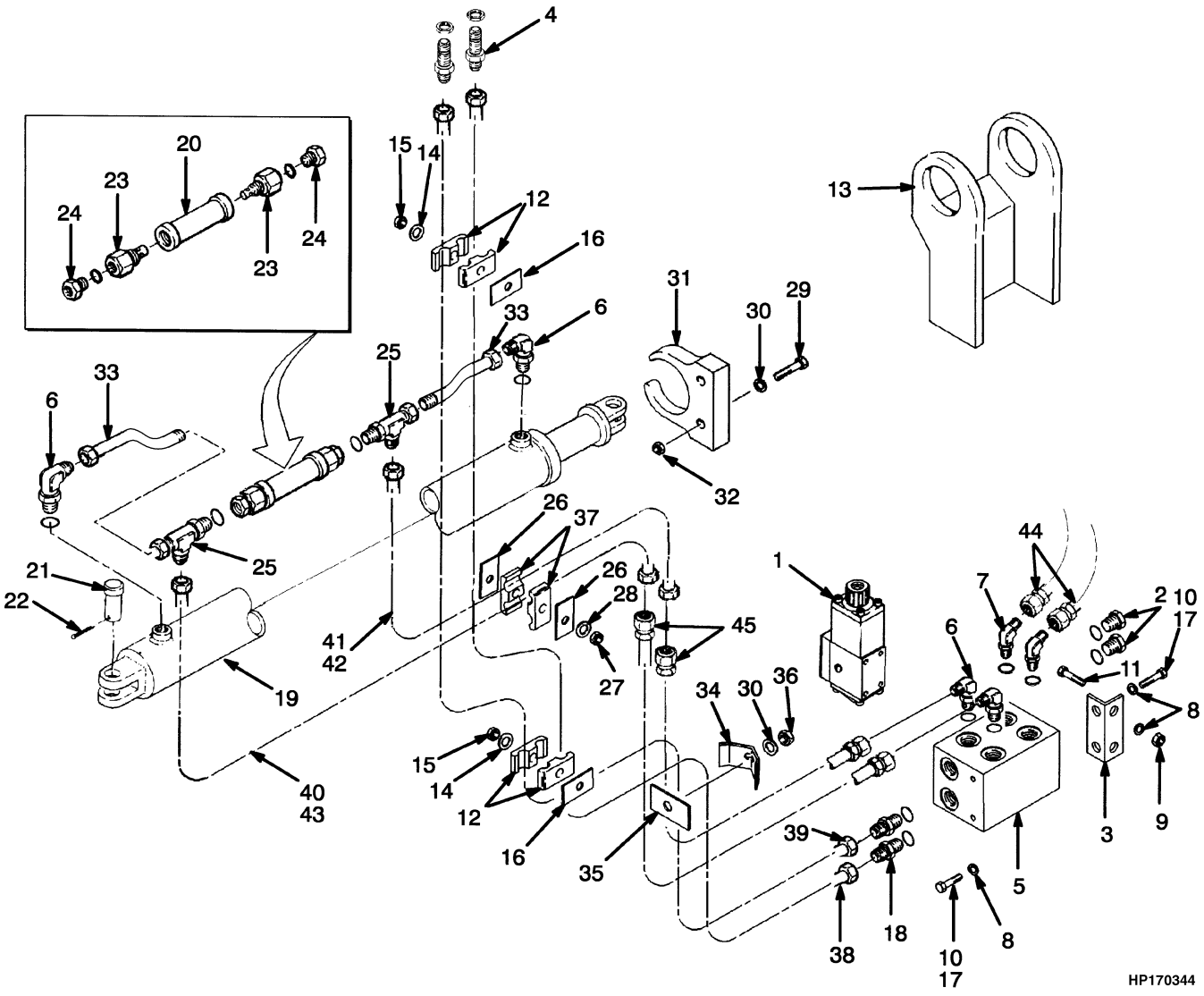

©2011 HYSTER COMPANY

FORK POSITIONER
STANDARD CARRIAGE

KEY:
A: H550F, H550FS
B: H620F, H650F, H700F, H620FS, H700FS

ITEM	PART NO.	DESCRIPTION	QTY A	QTY B
	1351870	Carriage (☞Figure 10-8)	1	..
	1351875	Carriage (☞Figure 10-8)	..	1
1	1623871	Solenoid Valve (☞Figure 9-66)	2	2
2	14603	Plug	2	2
2	16486	O-Ring	1	1
3	1323100	Angle	1	1
4	16448	Fitting	2	2
5	1315867	Manifold	1	1
6	16559	Fitting	6	6
6	16484	O-Ring	1	1
7	16559	Fitting	2	2
7	16484	O-Ring	1	1
8	15156	Lockwasher	6	6
9	15056	Nut	2	2
10	16597	Capscrew	4	4
11	16828	Capscrew	2	2
12	1393802	Clamp	4	4
13	**b** 1351836	Guide (LH)	1	..
13	**a** 1351838	Guide (LH)	1	..
13	**b** 1351840	Guide (RH)	1	..
13	1351841	Guide (RH)	..	1
13	**a** 1351842	Guide (RH)	1	..
13	1351843	Guide (LH)	..	1
14	18515	Washer	2	2
15	15055	Nut	2	2
16	1351885	Side Plate	2	2
17	226414	Loctite	AR	AR
18	17761	Fitting	2	2
18	16486	O-Ring	1	1
19	1349983	Cylinder Assy	2	2
19	1354027	Tube Wldmt-Cylinder	1	1
19	1354025	Piston	1	1
19	1354028	Gland	1	1
19	1324901	Collar	1	1
19	1354042	Rod Assy	1	1
19	1353824	Kit-Seal	1	1
20	370007	Manifold	2	2
21	334245	Pin	4	4
22	15253	Cotter Pin	4	4
23	1394054	Relief Valve	4	4
24	222456	Fitting	4	4
24	16486	O-Ring	1	1
25	1349994	Fitting	4	4
25	1366701	Nut	2	2
25	1366702	Sleeve	2	2

©2011 HYSTER COMPANY

FORK POSITIONER
STANDARD CARRIAGE

KEY:
A: H550F, H550FS
B: H620F, H650F, H700F, H620FS, H700FS

ITEM	PART NO.	DESCRIPTION	QTY A	QTY B
26	1349995	Plate	4	4
27	145639	Locknut	2	2
28	18515	Washer	2	2
29	16813	Capscrew	4	4
30	15135	Washer	5	5
31	1351814	Block (Guide)	2	2
32	15058	Nut	4	4
33	1349996	Tube Assy	4	4
34	343590	Clamp	1	1
35	138929	Plate	1	1
36	221354	Locknut	1	1
37	219302	Clamp	4	4
38	1351852	Tube Assy	1	..
38	1351876	Tube Assy	..	1
39	1351853	Tube Assy	1	..
39	1351877	Tube Assy	..	1
40	**d** 1351848	Tube Assy	1	..
40	**d** 1351881	Tube Assy	..	1
41	**d** 1351849	Tube Assy	1	..
41	**d** 1351880	Tube Assy	..	1
42	**c** 1351850	Tube Assy	1	..
42	**c** 1351878	Tube Assy	..	1
43	**c** 1351851	Tube Assy	1	..
43	**c** 1351879	Tube Assy	..	1
44	127575	Hose Assy	..	2
44	127584	Hose Assy	2	..
45	169596	Hose Assy	2	..
45	300595	Hose Assy	..	2

FOOTNOTES:

a Forks 102 x 280 mm (4 x 11 in.)
b Forks 114 x 203 mm (4.5 x 8 in.)
c LH Positioner
d RH Positioner

©2011 HYSTER COMPANY

11 OPTIONS

SECTION 11
OPTIONS

DESCRIPTION	PAGE
DRIVE TIRES AND WHEELS	
BRIDGESTONE TUBED PNEUMATIC TIRES - 14 X 24	11-2
BRIDGESTONE TUBELESS PNEUMATIC TIRES - 16 X 25	11-4
MICHELIN PNEUMATIC RADIAL TIRES - 14 X 24	11-6
TRELLEBORG TUBED PNEUMATIC TIRES - 14 X 24	11-7
ELECTRICAL	
SIDE-SHIFT CARRIAGE	11-22
FIRE EXTINGUISHER	11-32
FORK POSITIONER	
SIDE-SHIFT CARRIAGE	11-28
FORKS	11-31
HEADER HOSES	11-14
HYDRAULIC	
SIDE-SHIFT CARRIAGE	11-24
SIDE-SHIFT CARRIAGE	11-18
SIDE-SHIFT CYLINDER	
→ S/N E008E01810X	11-26
STEER TIRES AND WHEELS	
BRIDGESTONE TUBED PNEUMATIC TIRES - 14 X 24	11-8
BRIDGESTONE TUBELESS PNEUMATIC TIRES - 16 X 25	11-10
MICHELIN PNEUMATIC RADIAL TIRES - 14 X 24	11-13
TRELLEBORG TUBED PNEUMATIC TIRES - 14 X 24	11-12
STROBE LIGHT	
S/N E008E02226E →	11-33

©2011 HYSTER COMPANY

DRIVE TIRES AND WHEELS (FIGURE 11-1)

BRIDGESTONE TUBED PNEUMATIC TIRES — 14 X 24

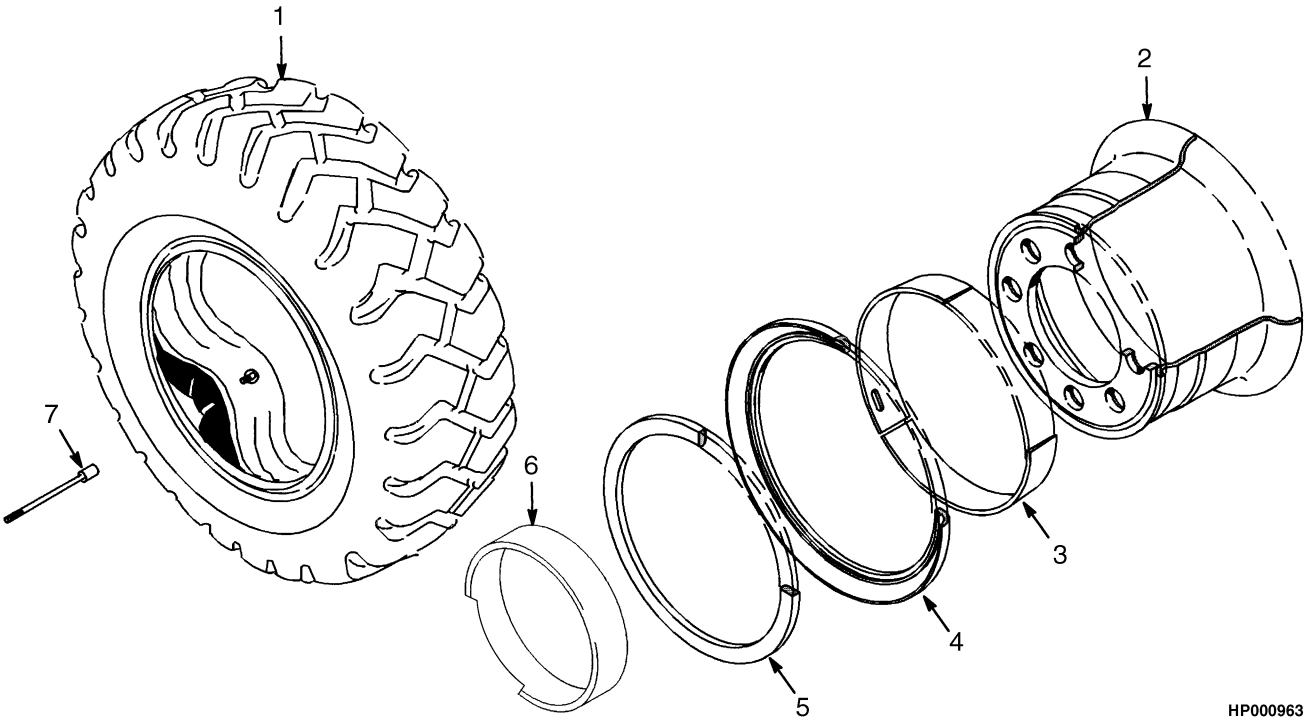

ITEM	PART NO.	DESCRIPTION	QTY
1	1486213	Pneumatic Tire (28 Bias Ply)	1
1	277569	Pneumatic Tire	1
1	1485936	Tube	1
1	1486210	Pneumatic Tire (20 Bias Ply)	1
1	115586	Pneumatic Tire	1
1	1485936	Tube	1
2	1391557	Wheel Rim	1
2	1391058	Rim	1
3	1452916	Ring (Conical)	1
4	1466004	Ring (Side)	1
5	1637809	Lockring	1
6	1384824	Spacer Band	2
7	~~1303417~~		
	49189	Extension (Valve Stem)	4

©2011 HYSTER COMPANY

NOTES

©2011 HYSTER COMPANY

DRIVE TIRES AND WHEELS (FIGURE 11-2)
BRIDGESTONE TUBELESS PNEUMATIC TIRES — 16 X 25

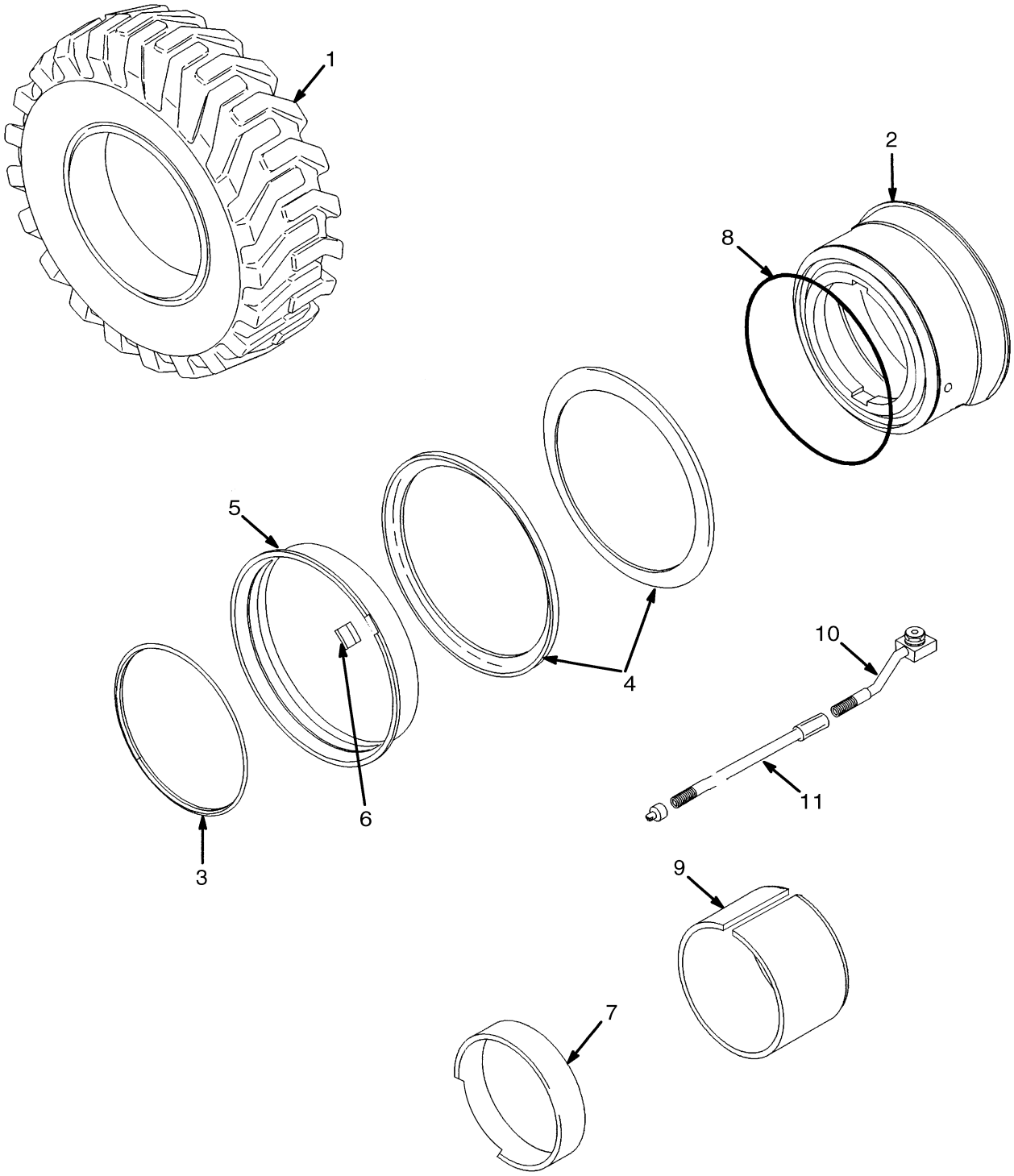

©2011 HYSTER COMPANY

DRIVE TIRES AND WHEELS

BRIDGESTONE TUBELESS PNEUMATIC TIRES – 16 X 25

ITEM	PART NO.	DESCRIPTION	QTY
1	1468394	Pneumatic Tire (28 Bias Ply, Bridgestone R-Lug S E4)	1
1	160339	Pneumatic Tire (28 Bias Ply, Bridgestone R-Lug)	1
2	1391556	Wheel Rim	1
2	1392395	Base	1
3	1392393	Lockring	1
4	1392394	Flange	2
5	1374127	Bead Seat	1
6	1392392	Lug (Driver)	1
7	1321910	Spacer Band	2
8	160286	O-Ring	1
9	388969	Wedge Band	2
10	160278	Valve	1
11	4022914	Extension (Valve)	2

©2011 HYSTER COMPANY

DRIVE TIRES AND WHEELS (FIGURE 11-3)

MICHELIN PNEUMATIC RADIAL TIRES — 14 X 24

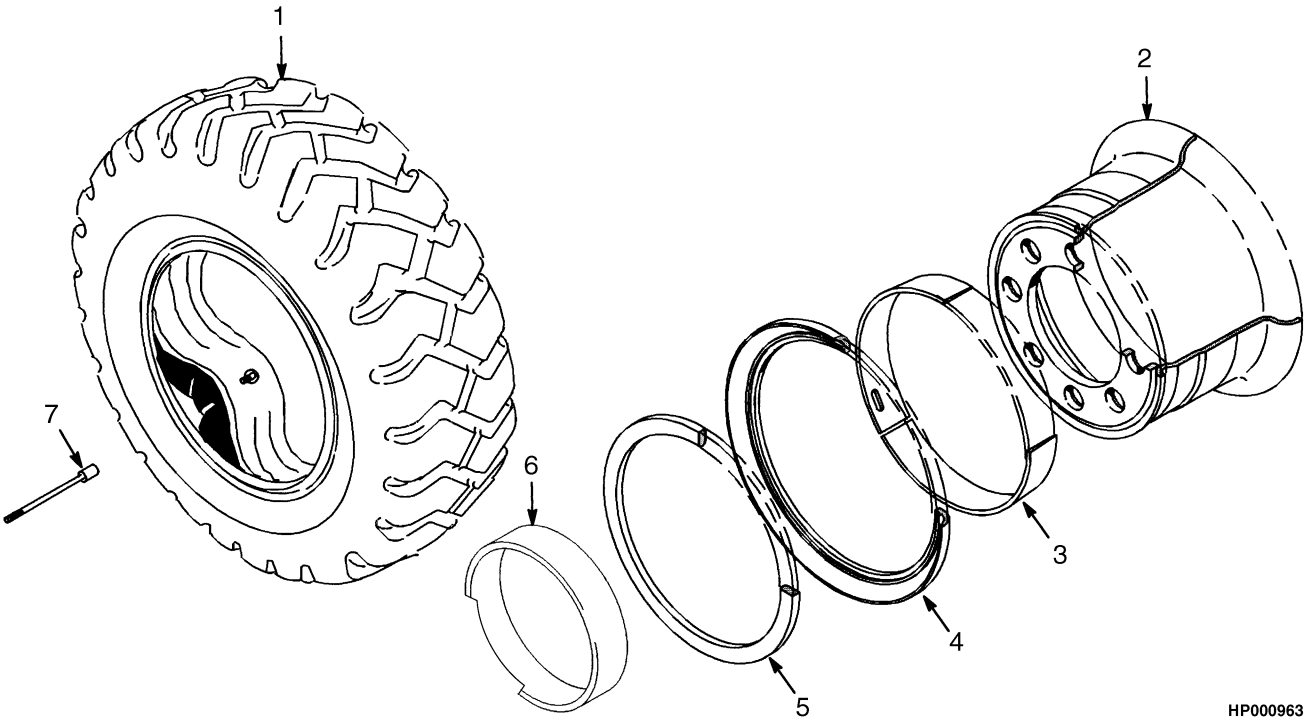

ITEM	PART NO.	DESCRIPTION	QTY
1	1460451	Pneumatic Tire	1
1	1460402	Pneumatic Tire	1
1	1460406	Tube	1
2	1391557	Wheel Rim	1
2	1391058	Rim	1
3	1452916	Ring (Conical)	1
4	1466004	Ring (Side)	1
5	1637809	Lockring	1
6	1384824	Spacer Band	2
7	~~1303417~~		
	49189	Extension (Valve Stem)	4

©2011 HYSTER COMPANY

DRIVE TIRES AND WHEELS (FIGURE 11-4)

TRELLEBORG TUBED PNEUMATIC TIRES — 14 X 24

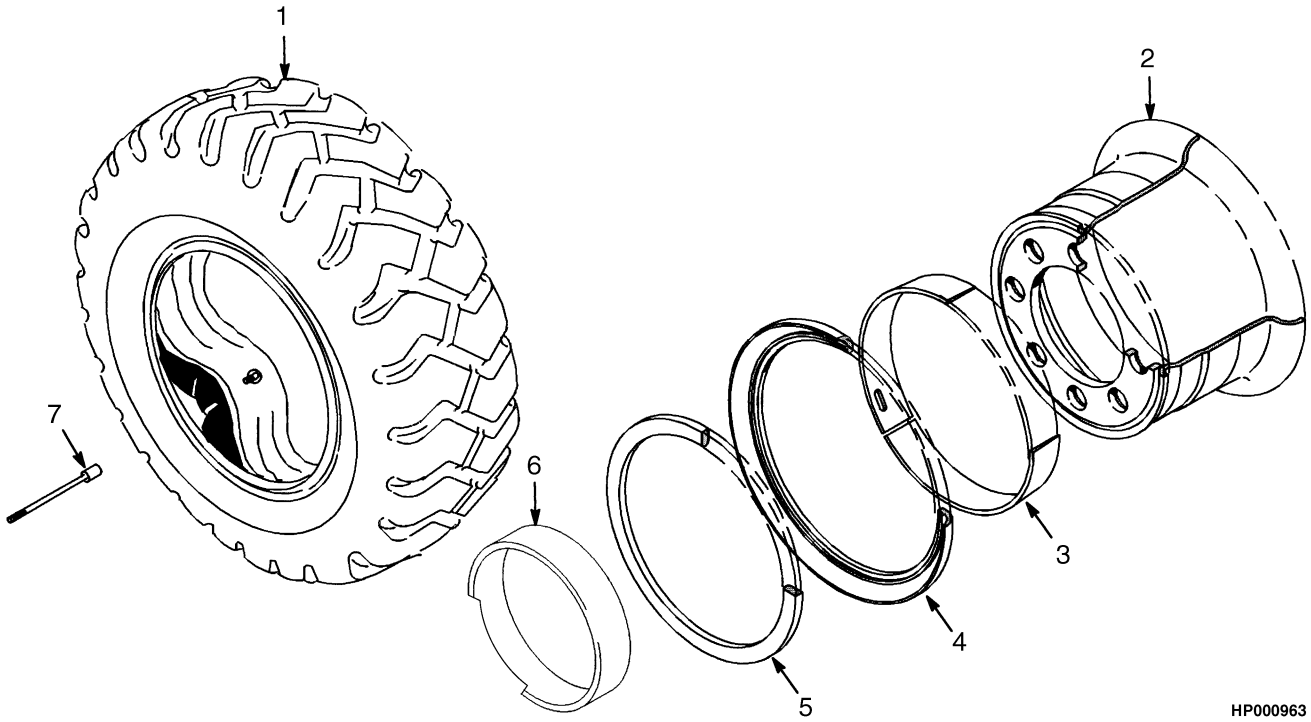

ITEM	PART NO.	DESCRIPTION	QTY
1	1595605	Wheel and Tire (28 Bias Ply)	1
1	1594935	Pneumatic Tire	1
1	1595481	Pneumatic Tire	1
1	1485936	Tube	1
1	1595604	Wheel and Tire (24 Bias Ply)	1
1	1594934	Pneumatic Tire	1
1	1595480	Pneumatic Tire	1
1	1485936	Tube	1
2	1391557	Wheel Rim	1
2	1391058	Rim	1
3	1452916	Ring (Conical)	1
4	1466004	Ring (Side)	1
5	1637809	Lockring	1
6	116030	Wheel Nut	24
6	1384824	Spacer Band	2
7	~~1303417~~		
	49189	Extension (Valve Stem)	4

STEER TIRES AND WHEELS (FIGURE 11-5)

BRIDGESTONE TUBED PNEUMATIC TIRES — 14 X 24

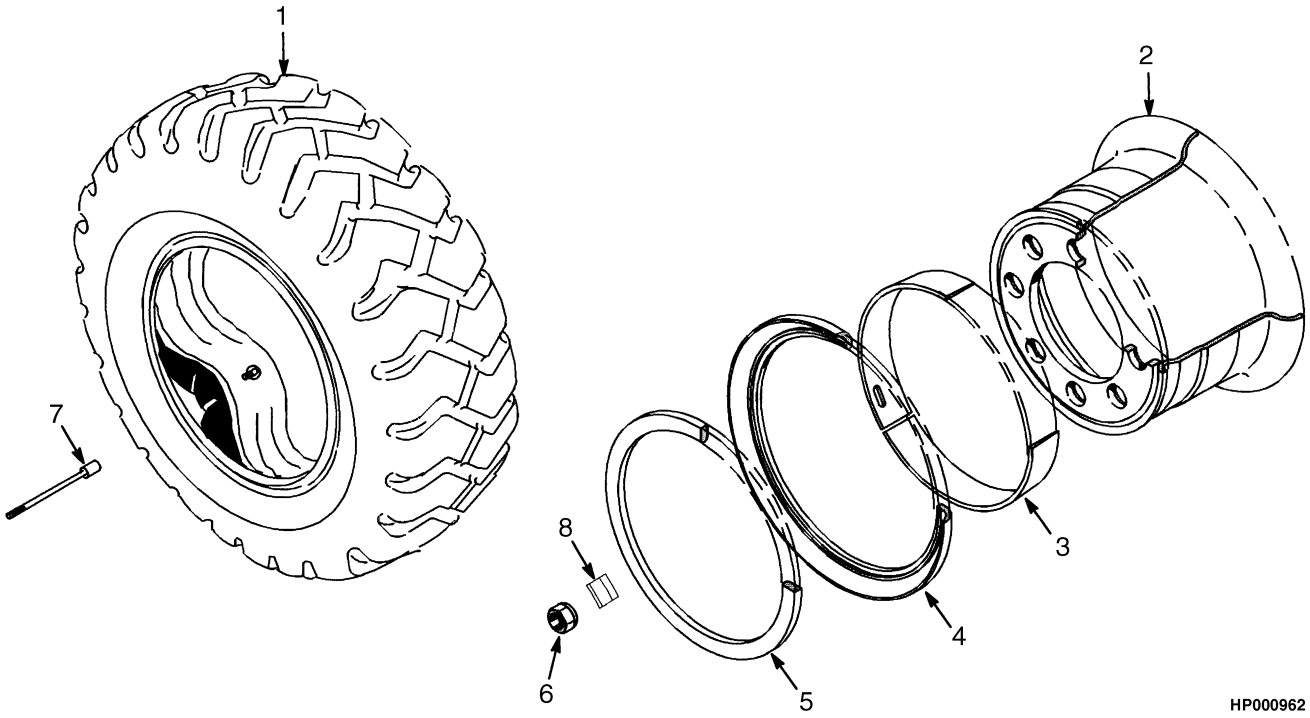

ITEM	PART NO.	DESCRIPTION	QTY
1	1486213	Pneumatic Tire (28 Bias Ply)	1
1	277569	Pneumatic Tire	1
1	1485936	Tube	1
1	1486210	Pneumatic Tire (20 Bias Ply)	1
1	115586	Pneumatic Tire	1
1	1485936	Tube	1
2	1391557	Wheel Rim	1
2	1391058	Rim	1
3	1452916	Ring (Conical)	1
4	1466004	Ring (Side)	1
5	1637809	Lockring	1
6	116030	Wheel Nut	24
7	116265	Valve Stem Extension	2
8	1343394	Clamp	24

©2011 HYSTER COMPANY

NOTES

©2011 HYSTER COMPANY

STEER TIRES AND WHEELS (FIGURE 11-6)
BRIDGESTONE TUBELESS PNEUMATIC TIRES — 16 X 25

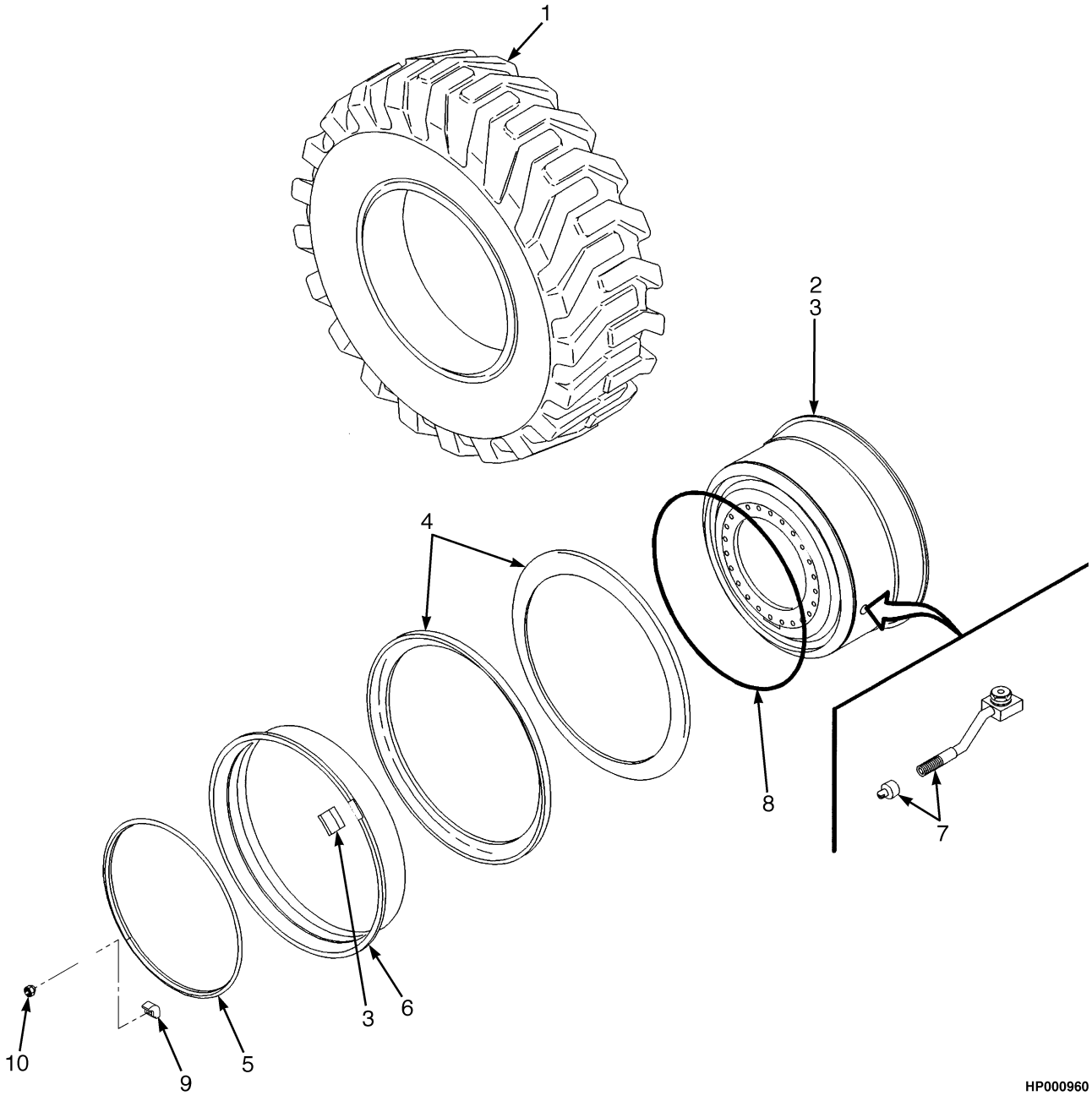

©2011 HYSTER COMPANY

STEER TIRES AND WHEELS

BRIDGESTONE TUBELESS PNEUMATIC TIRES – 16 X 25

ITEM	PART NO.	DESCRIPTION	QTY
1	160339	Pneumatic Tire (28 Bias Ply, Bridgestone R-Lug)	1
1	1468394	Pneumatic Tire (28 Bias Ply, Bridgestone R-Lug S E4)	1
2	1391556	Wheel Rim	1
2	1392395	Base	1
3	1392392	Lug (Driver)	1
4	1392394	Flange	2
5	1392393	Lockring	1
6	1374127	Bead Seat	1
7	177462	Valve Tire	1
8	160286	O-Ring	1
9	173240	Wheel Clamp	24
10	116030	Wheel Nut	24

©2011 HYSTER COMPANY

STEER TIRES AND WHEELS (FIGURE 11-7)

TRELLEBORG TUBED PNEUMATIC TIRES — 14 X 24

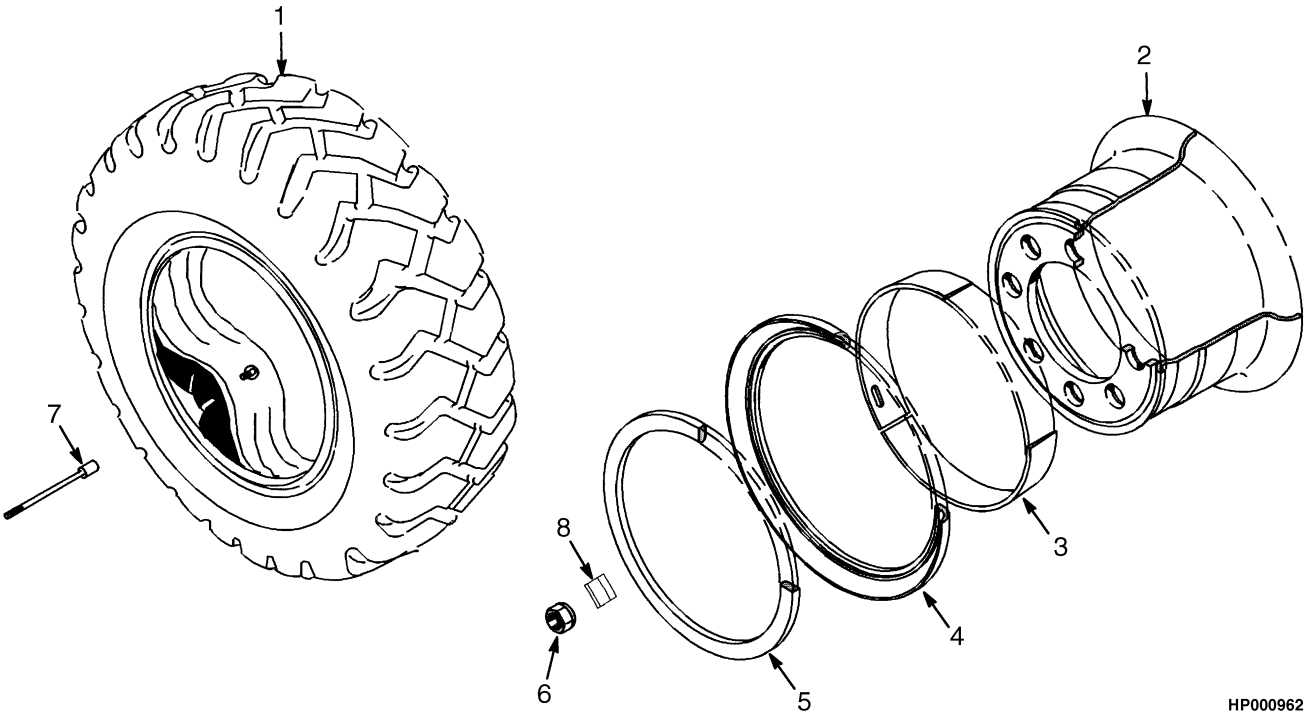

ITEM	PART NO.	DESCRIPTION	QTY
1	1595605	Wheel and Tire (28 Bias Ply)	1
1	1594935	Pneumatic Tire	1
1	1595481	Pneumatic Tire	1
1	1485936	Tube	1
1	1595604	Wheel and Tire (24 Bias Ply)	1
1	1594934	Pneumatic Tire	1
1	1595480	Pneumatic Tire	1
1	1485936	Tube	1
2	1391557	Wheel Rim	1
2	1391058	Rim	1
3	1452916	Ring (Conical)	1
4	1466004	Ring (Side)	1
5	1637809	Lockring	1
6	116030	Wheel Nut	24
7	116265	Valve Stem Extension	2
8	1343394	Clamp	24

©2011 HYSTER COMPANY

STEER TIRES AND WHEELS (FIGURE 11-8)

MICHELIN PNEUMATIC RADIAL TIRES — 14 X 24

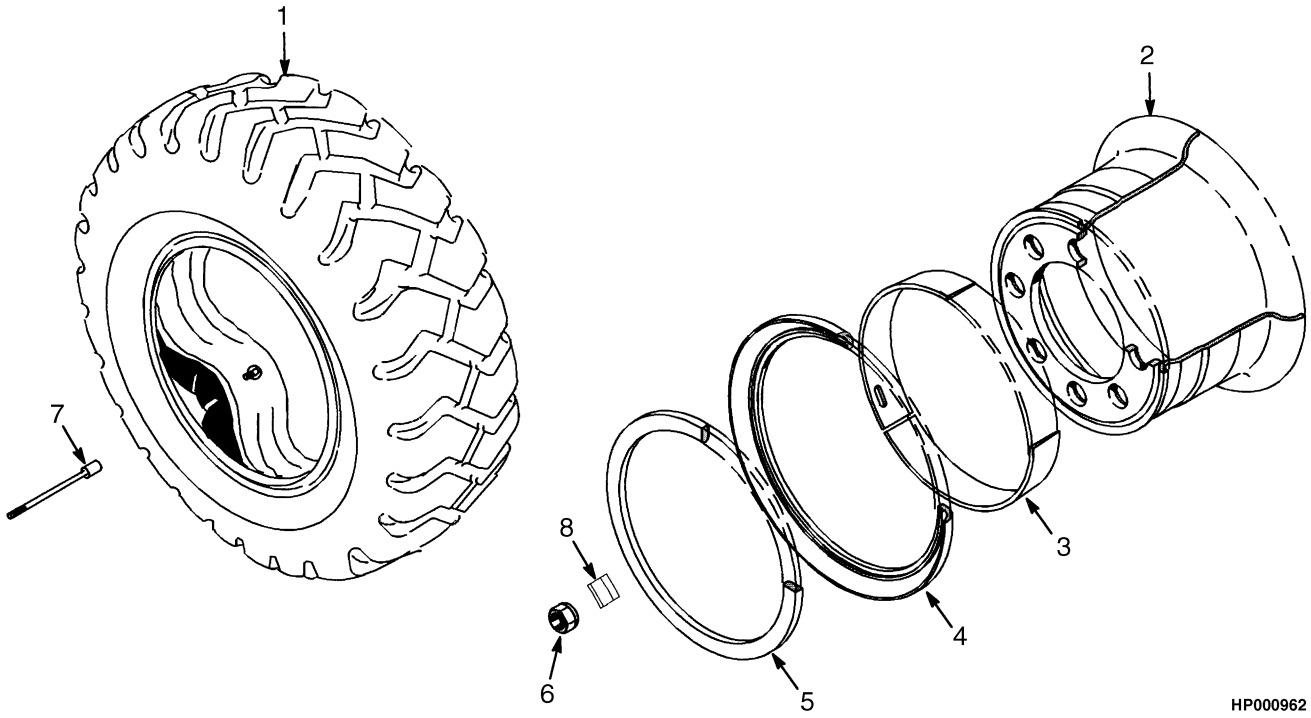

ITEM	PART NO.	DESCRIPTION	QTY
1	1460451	Pneumatic Tire	1
1	1460402	Pneumatic Tire	1
1	1460406	Tube	1
2	1391557	Wheel Rim	1
2	1391058	Rim	1
3	1452916	Ring (Conical)	1
4	1466004	Ring (Side)	1
5	1637809	Lockring	1
6	116030	Wheel Nut	24
7	116265	Valve Stem Extension	2
8	1343394	Clamp	24

HEADER HOSES (FIGURE 11-9)

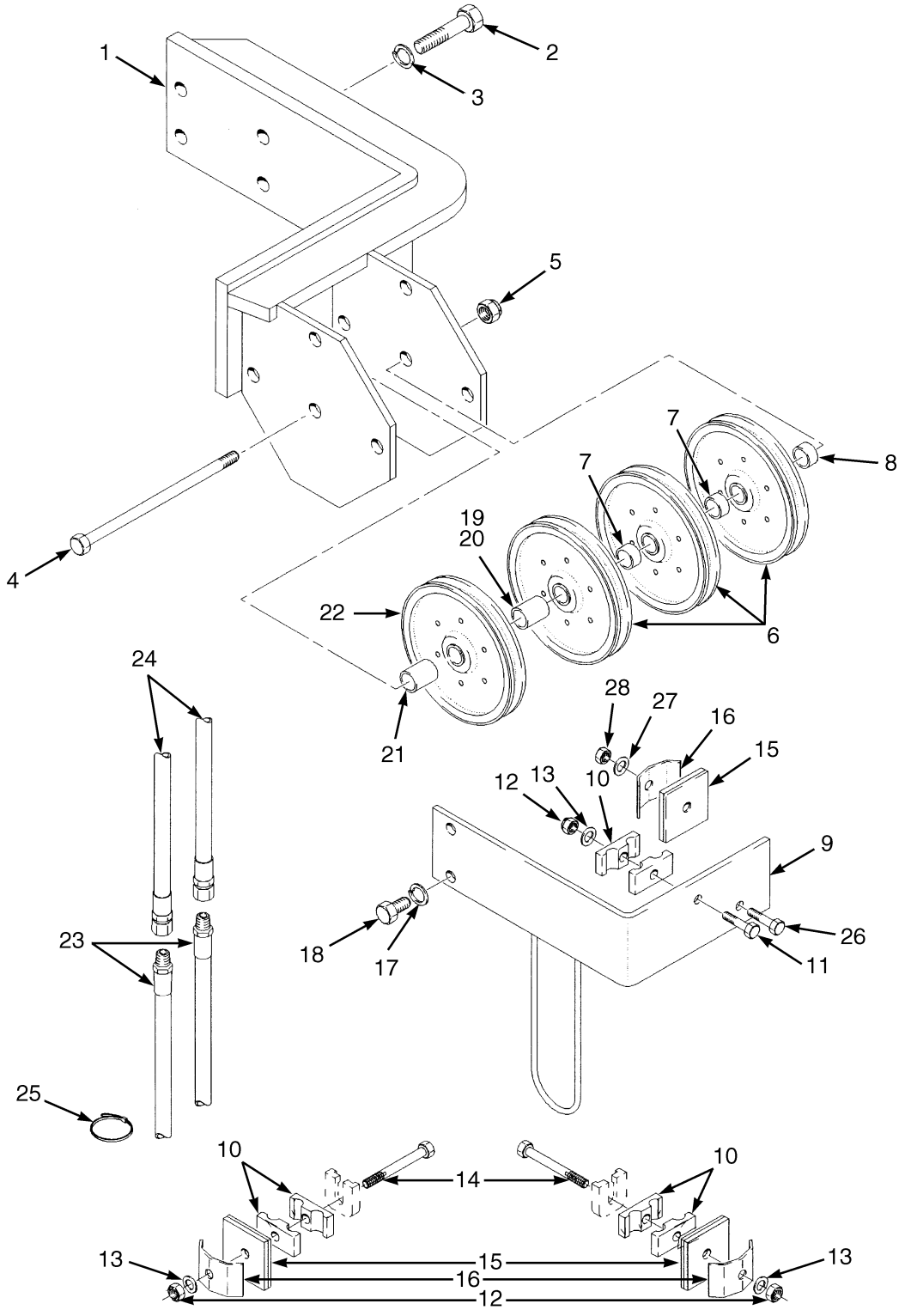

HP000177

©2011 HYSTER COMPANY

HEADER HOSES

KEY:
A: Lift Heights Below 192 in.
B: Lift Heights 192 in. to 264 in.
C: Lift Heights 288 in. and Up

ITEM	PART NO.	DESCRIPTION	QTY A	QTY B	QTY C
1	1350023	Bracket Wldmt	1	1	1
2	16831	Capscrew	4	4	4
3	15162	Lockwasher	4	4	4
4	14999	Capscrew	4	4	4
5	221357	Locknut	4	4	4
6	189451	Hose Sheave	3	3	3
7	280610	Spacer	2	2	2
8	1301650	Spacer	1	1	1
9	1337280	Bracket Wldmt	1	1	1
10	1310027	Clamp	..	..	3
10	1373335	Clamp	3	3	..
11	18516	Capscrew	1	1	1
12	145639	Locknut	3	4	5
13	15175	Lockwasher	3	4	5
14	18528	Capscrew	2	3	..
14	18595	Capscrew	..	..	4
15	138929	Plate	3	4	5
16	343590	Clamp	3	4	5
17	15158	Washer	2	2	2
18	16807	Capscrew	2	2	2
19	**o** 815932	Spacer	1	1	1
20	**n** 280610	Spacer	1	1	1
21	**n** 1311264	Spacer	1	1	1
22	**n** 189451	Hose Sheave	1	1	1
23	**em** 1307374	Hose Assy	..	2	2
23	**fm** 1338032	Hose Assy	..	2	2
23	**im** 1307374	Hose Assy	..	2	2
23	**jm** 1338031	Hose Assy	..	2	2
23	**km** 1338032	Hose Assy	..	2	2
23	**lm** 1338034	Hose Assy	..	2	2
24	**am** 1355032	Hose Assy	2	2	2
24	**bm** 1338034	Hose Assy	2	2	2
24	**cm** 1338035	Hose Assy	2	2	2
24	**dm** 815876	Hose Assy	2	2	2
24	**efm** 1338033	Hose Assy	2	2	2
24	**gm** 1338033	Hose Assy	2	2	2
24	**hm** 1338035	Hose Assy	2	2	2
24	**im** 1338033	Hose Assy	2	2	2
24	**jm** 1338034	Hose Assy	2	2	2
24	**km** 1338034	Hose Assy	2	2	2
24	**lm** 1338035	Hose Assy	2	2	2
25	397676	Strap Clamp	1	1	1
26	18591	Capscrew	1	1	1
27	221354	Locknut	1	1	1
28	15135	Washer	1	1	1

©2011 HYSTER COMPANY

FOOTNOTES:

a H550F, H550FS B531-3048
b H550F, H550FS B531-4267
c H550F, H550FS B531-4877
d H550F, H550FS B531-5486
e H550F, H550FS B531-6096
f H550F, H550FS B531-9144
g H620-700F, FS B531-3048
h H620-700F, FS B531-4267
i H620-700F, FS B531-5486
j H620-700F, FS B531-6706
k H620-700F, FS B531-9144
l H620-700F, FS B531-9754
m Refer to Table
n With Container Handler Attachment
o Without Container Handler Attachment

©2011 HYSTER COMPANY

NOTES

©2011 HYSTER COMPANY

SIDE-SHIFT CARRIAGE (FIGURE 11-10)

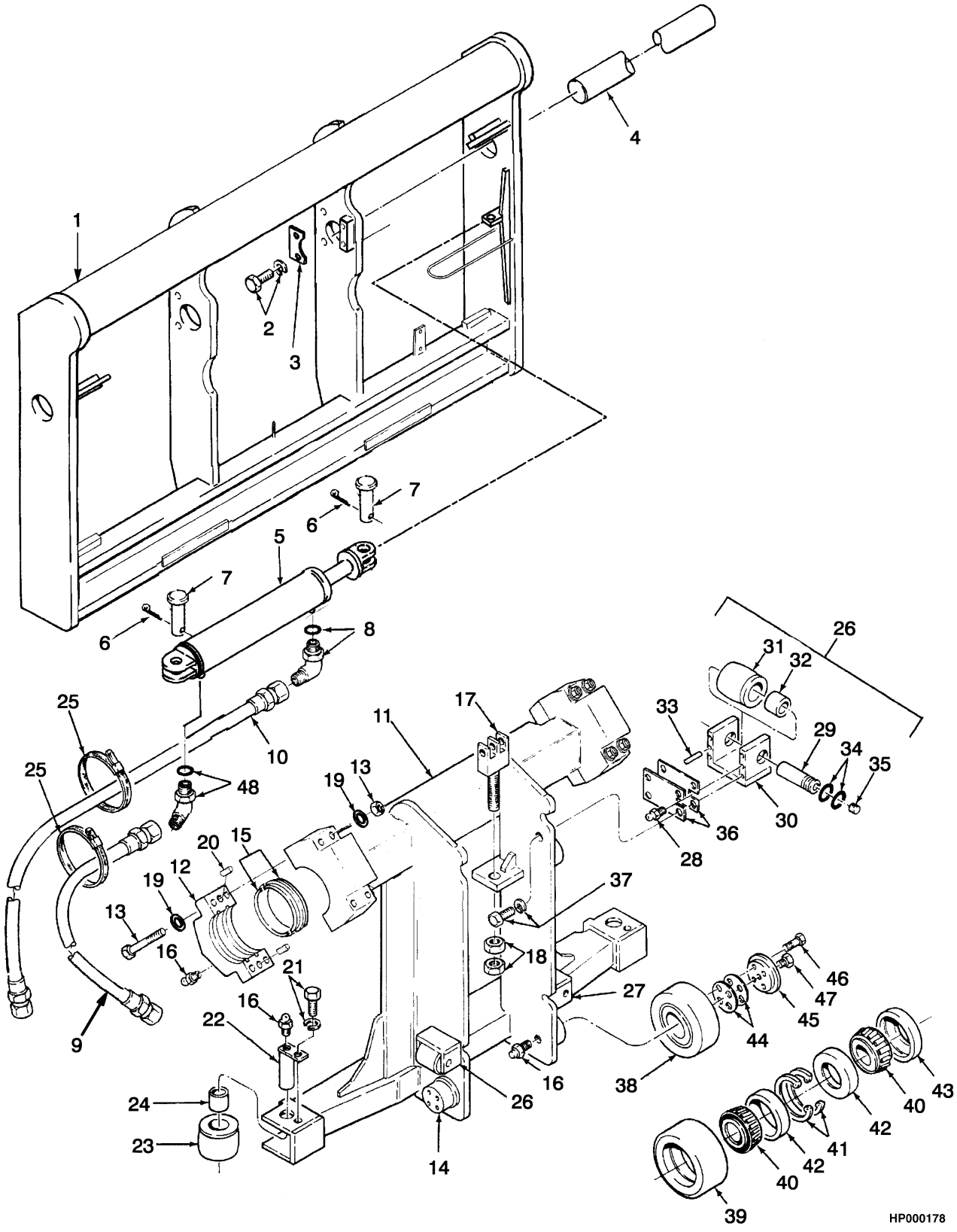

©2011 HYSTER COMPANY

SIDE-SHIFT CARRIAGE

KEY:
A: H550F, H550FS
B: H620F, H650F, H700F, H620FS, H700FS

ITEM	PART NO.	DESCRIPTION	QTY A	QTY B
	c 1349963	Side-Shift Carriage	..	1
	bd 1349964	Side-Shift Carriage	..	1
	ad 1349965	Side-Shift Carriage	..	1
	1351860	Side-Shift Carriage	1	..
1	**c** 1349959	Apron	..	1
1	**bd** 1349960	Apron	..	1
1	**ad** 1349961	Apron	..	1
1	1351862	Apron	1	..
2	15160	Washer	4	4
2	16823	Capscrew	4	4
3	175613	Keeper	2	2
4	116251	Pin	2	..
4	175617	Pin	..	2
5	343666	Sideshift Cylinder (☞Figure 11-13)	1	1
6	15253	Cotter Pin	2	2
7	334245	Pin	2	2
8	16559	Fitting	1	1
8	16484	O-Ring	1	1
9	1317458	Hose Assy	1	..
9	1337338	Hose Assy	..	1
10	1337339	Hose Assy	..	1
10	338455	Hose Assy	1	..
11	1349962	Frame (Low Mount Forks)	..	1
11	1351861	Side-Shift Carriage	1	..
12	350531	Block	2	2
13	350532	Capscrew	8	8
13	53156	Locknut	8	8
14	170372	Stubshaft	4	4
15	343663	Bushing	8	8
16	16001	Grease Fitting	10	10
17	334886	Pin	1	..
17	334887	Pin	..	1
17	358401	Chain Anchor	..	2
17	358431	Chain Anchor	2	..
18	136405	Nut	4	..
18	159301	Nut	..	4
19	221779	Washer	16	16
20	222767	Pin	4	4
21	15158	Washer	2	2
21	16820	Capscrew	2	2
22	330460	Shaft	2	2
23	119294A	Side Roller	2	2
24	119296	Bushing	2	2
25	273775	Strap Clamp	2	2
26	1326048	Side Roller (LH)	2	2
27	1326047	Side Roller (RH)	2	2

©2011 HYSTER COMPANY

SIDE-SHIFT CARRIAGE

KEY:
A: H550F, H550FS
B: H620F, H650F, H700F, H620FS, H700FS

ITEM	PART NO.	DESCRIPTION	QTY A	QTY B
28	16006	Grease Fitting	1	1
29	19968	Roll Pin	1	1
30	1326045	Bracket (Not Included With 1326048)	1	1
30	1326046	Bracket (Not Included With 1326047)	1	1
31	116242A	Side Roller	1	1
32	116244	Bushing	2	2
33	116245	Pin	1	1
34	59229	O-Ring	2	2
35	15483	Fitting	1	1
36	145062	Shim (0.060 in.)	AR	AR
36	145063	Shim (0.030 in.)	AR	AR
37	15160	Washer	16	16
37	18605	Capscrew	16	16
38	314373	Load Roller Assembly	4	4
39	314374	Roller	1	1
40	170379	Bearing Cone	2	2
41	170371	Snap Ring	2	2
42	170380	Bearing Cup	2	2
43	170368	Shield (Bearing)	2	2
44	170377	Shim (0.005 in.)	AR	AR
44	170378	Shim (0.007 in.)	AR	AR
45	170369	Cap	4	4
46	221561	Capscrew	16	16
47	14349	Fitting (Pipe Plug)	4	4
48	16559	Fitting	1	..
48	16568	Fitting	..	1
48	16484	O-Ring	1	1
48	16559	Fitting	1	..
48	16484	O-Ring	1	..

FOOTNOTES:

a High Mount Forks
b Low Mount Forks
c Standard Forks
d → S/N E008E01810

©2011 HYSTER COMPANY

NOTES

©2011 HYSTER COMPANY

ELECTRICAL (FIGURE 11-11)
SIDE-SHIFT CARRIAGE

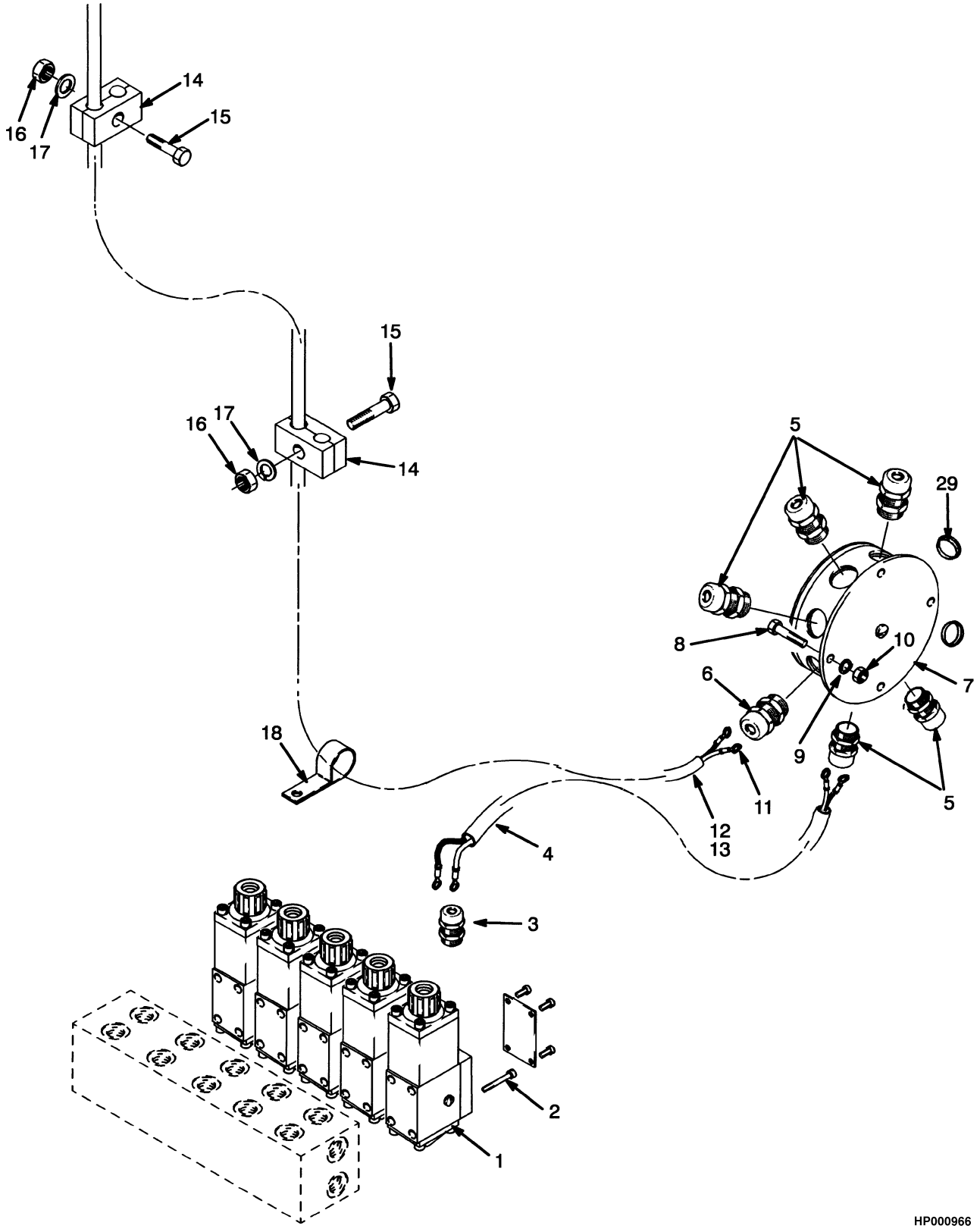

©2011 HYSTER COMPANY

ELECTRICAL
SIDE-SHIFT CARRIAGE

ITEM	PART NO.	DESCRIPTION	QTY
1	1623871	Solenoid Valve	3
2	18099	Capscrew	12
3	1310026	Fitting (Cable)	3
4	1344672	Wire Harness	3
5	1315880	Fitting (Cable)	3
6	1315881	Fitting (Cable)	1
7	1315883	Junction Block	1
8	220334	Screw	4
9	15156	Lockwasher	10
10	128436	Nut	4
11	129887	E-Ring	12
12	**a** 1337341	Wire Harness (Carriage)	1
12	**b** 1468075	Wire Harness (Carriage)	1
13	1627842	Hose (1524 cm)	AR
14	1373335	Clamp	2
15	18516	Capscrew	2
16	145639	Locknut	2
17	15175	Lockwasher	2
18	154278	Clamp	2

FOOTNOTES:

a → S/N E008E01810

b S/N E008E01811 →

©2011 HYSTER COMPANY

HYDRAULIC (FIGURE 11-12)
SIDE-SHIFT CARRIAGE

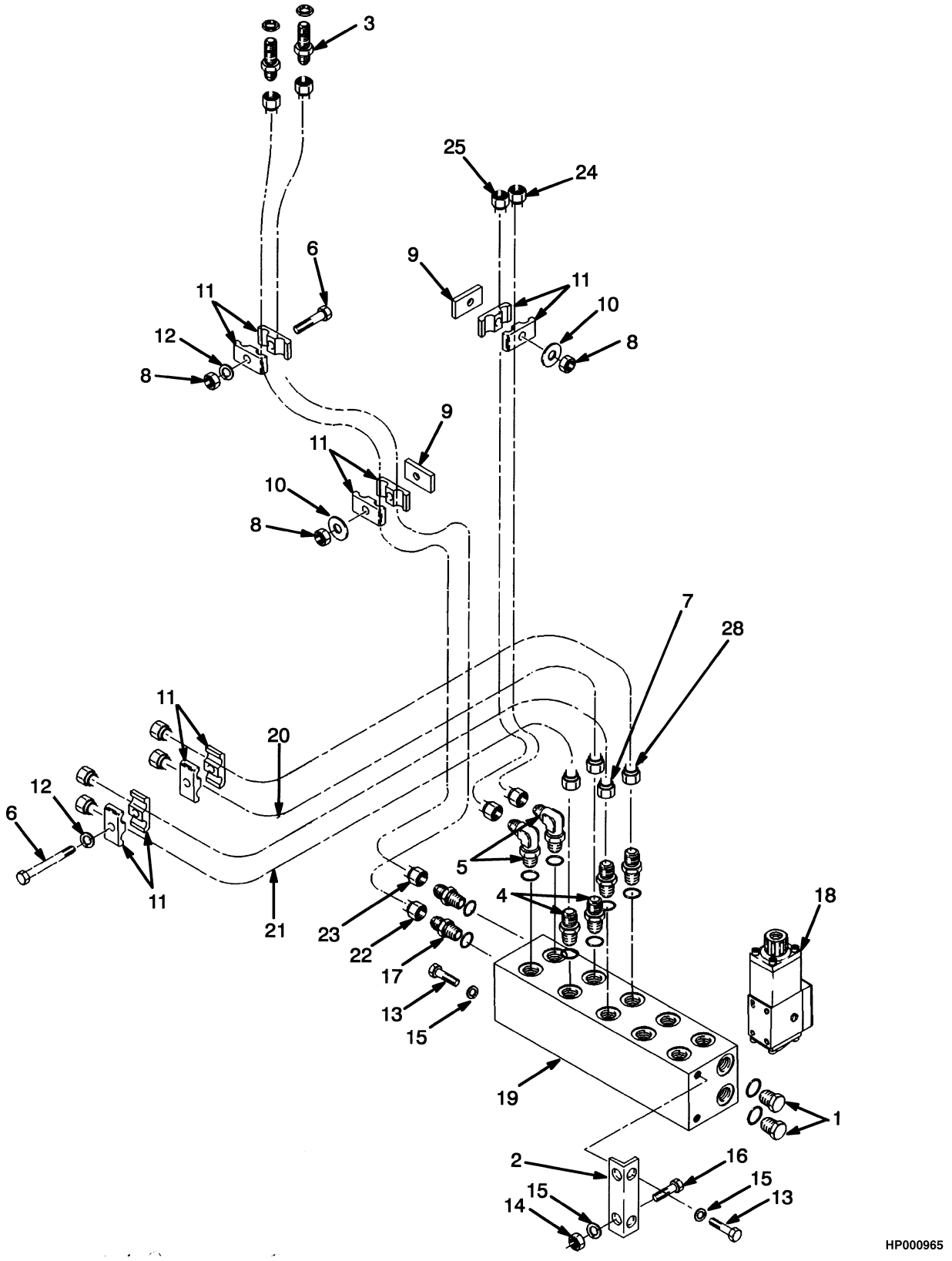

©2011 HYSTER COMPANY

HYDRAULIC
SIDE-SHIFT CARRIAGE

ITEM	PART NO.	DESCRIPTION	QTY
1	14603	Plug	2
1	16486	O-Ring	1
2	1323100	Angle	1
3	16448	Fitting	2
4	16541	Fitting	4
4	16484	O-Ring	1
5	16559	Fitting	2
5	16484	O-Ring	1
6	16835	Capscrew (2 in.)	3
7	1346427	Tube Assy	1
8	15055	Nut	3
9	1351885	Side Plate	2
10	18515	Washer	2
11	1393802	Clamp	10
12	15155	Lockwasher	1
13	16836	Capscrew	4
13	226414	Loctite	AR
14	15056	Nut	2
15	15156	Lockwasher	6
16	16828	Capscrew	2
17	17761	Fitting	2
17	16486	O-Ring	1
18	1623871	Solenoid Valve (☞Figure 9-66)	3
19	1315868	Manifold	1
20	1346428	Tube Assy	1
21	1346429	Tube Assy	1
22	**a** 1350561	Tube Assy	1
22	1351869	Tube Assy	1
23	**a** 1350560	Tube Assy	1
23	1351868	Tube Assy	1
24	**a** 1350566	Tube Assy	1
24	1351839	Tube Assy	1
25	**a** 1350565	Tube Assy	1
25	1351837	Tube Assy	1
26	1346430	Tube Assy	1
30	**b** 1346434	Tube Assy	..

FOOTNOTES:

a H620F, H650F, H700F, H620FS, H700FS

b → S/N E008E01810

©2011 HYSTER COMPANY

SIDE-SHIFT CYLINDER (FIGURE 11-13)
(→ S/N E008E01810X)

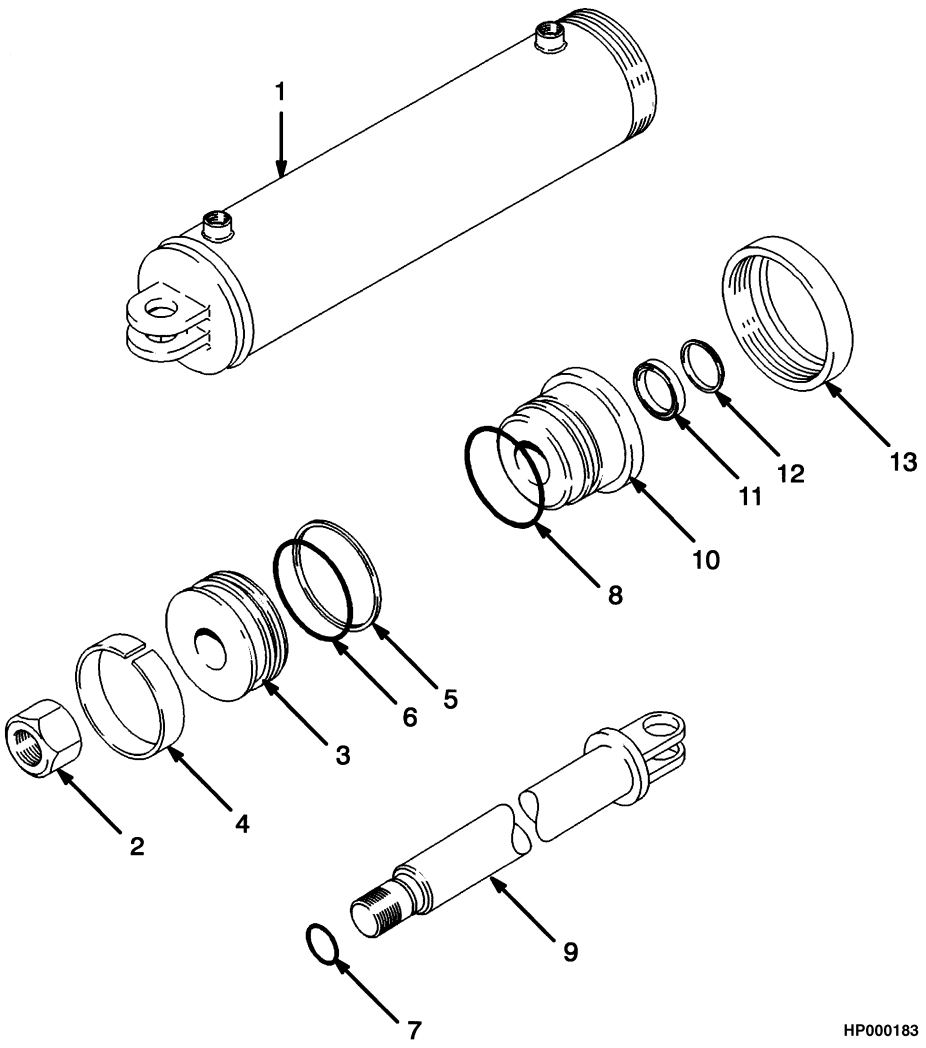

©2011 HYSTER COMPANY

SIDE-SHIFT CYLINDER
(→ S/N E008E01810X)

ITEM	PART NO.	DESCRIPTION	QTY
	343666	Sideshift Cylinder	1
1	355157	Tube Wldmt-Cylinder	1
2	221373	Locknut	1
3	341803	Piston	1
4	. . . . .	Wear Ring	1
5	. . . . .	Piston Seal	1
6	. . . . .	O-Ring	1
7	. . . . .	Rod Wiper	1
8	. . . . .	Seal	1
9	355158	Rod Assy	1
10	341804	Gland	1
11	. . . . .	Rod Wiper	1
12	. . . . .	Wiper	1
13	341807	Collar	1
	341808	Kit-Seal	1

©2011 HYSTER COMPANY

FORK POSITIONER (FIGURE 11-14)
SIDE-SHIFT CARRIAGE

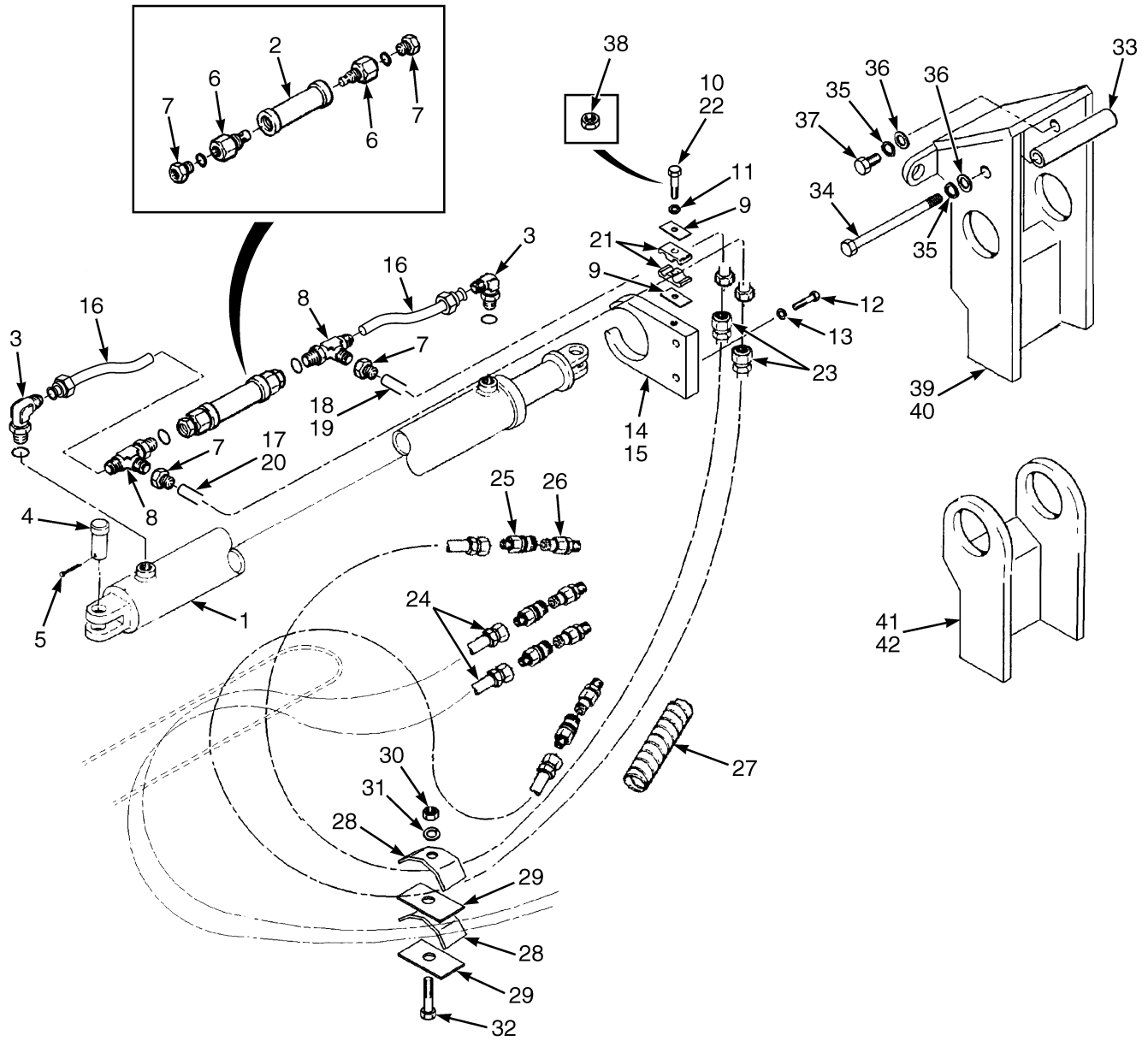

©2011 HYSTER COMPANY

FORK POSITIONER
SIDE-SHIFT CARRIAGE

KEY:
A: H620F, H650F, H700F, H620FS, H700FS
B: H550F, H550FS

ITEM	PART NO.	DESCRIPTION	QTY A	QTY B
1	1349982	Cylinder Assy	2	..
1	1349983	Cylinder Assy	..	2
1	1354027	Tube Wldmt-Cylinder	1	1
1	1354025	Piston	1	1
1	1354028	Gland	1	1
1	1324901	Collar	1	1
1	1354042	Rod Assy	1	1
1	1353824	Kit-Seal	1	1
2	1454347	Manifold (Optional)	2	2
2	370007	Manifold	2	2
3	16559	Fitting	4	4
3	16484	O-Ring	1	1
4	334245	Pin	4	4
5	15253	Cotter Pin	4	4
6	1394054	Relief Valve	4	4
7	222456	Fitting	4	4
7	16486	O-Ring	1	1
8	1349994	Fitting	4	4
8	1366701	Nut	2	2
8	1366702	Sleeve	2	2
9	1349995	Plate	4	6
10	16835	Capscrew	2	..
11	18515	Washer	2	3
12	16813	Capscrew	4	..
13	15135	Washer	4	..
14	1350015	Support (Cylinder)	1	..
15	1350016	Support (Cylinder)	1	..
16	1349996	Tube Assy	4	4
17	1349999	Tube Assy (RH Long)	1	..
17	815915	Tube Assy (RH Long)	..	1
18	1349998	Tube Assy (RH Short)	1	..
18	815916	Tube Assy (RH Short)	..	1
19	1350001	Tube Assy (LH Short)	1	..
19	815918	Tube Assy (LH Short)	..	1
20	1350000	Tube Assy (LH Long)	1	..
20	815917	Tube Assy (LH Long)	..	1
21	219302	Clamp	4	6
22	226414	Loctite	AR	..
23	815851	Hose Assy	2	..
23	815897	Hose Assy	..	2
24	815852	Hose Assy	2	..
24	155742	Hydraulic Hose Asm	..	2
25	343487	Coupler (Female)	4	4
26	356248	Fitting (Male)	4	4
27	239308	Sleeve (Coil)	3	3

©2011 HYSTER COMPANY

FORK POSITIONER
SIDE-SHIFT CARRIAGE

KEY:
A: H620F, H650F, H700F, H620FS, H700FS
B: H550F, H550FS

ITEM	PART NO.	DESCRIPTION	QTY A	QTY B
28	343590	Clamp	7	4
29	138929	Plate	7	4
30	221354	Locknut	7	3
31	15135	Washer	7	3
32	18595	Capscrew	1	1
33	**cde** 299305	Pipe	2	..
34	**cde** 299306	Bolt	2	..
34	**cfg** 815898	Bolt	2	..
35	**cde** 15166	Lockwasher	2	..
35	**cfg** 15170	Lockwasher	2	..
36	**cde** 15133	Washer	2	..
36	**cfg** 15187	Washer	2	..
37	**fg** 17461	Capscrew	2	..
37	**de** 18665	Capscrew	2	..
38	145639	Locknut	..	3
39	1349989	Guide (LH)	1	..
40	1349988	Guide (RH)	1	..
41	**b** 1351836	Guide (LH)	..	1
41	**a** 1351838	Guide (LH)	..	1
42	**b** 1351840	Guide (RH)	..	1
42	**a** 1351842	Guide (RH)	..	1

FOOTNOTES:

a Forks 102 x 280 mm (4 x 11 in.)
b Forks 114 x 203 mm (4.5 x 8 in.)
c High Mount Forks
d → S/N E008D01524
e → S/N E008E01531
f S/N E008D01525 →
g S/N E008E01532 →

©2011 HYSTER COMPANY

FORKS (FIGURE 11-15)

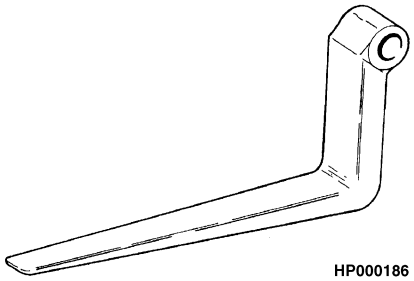

KEY:
A: 114 mm x 203 mm (4.5 in. x 8 in.)
B: 102 mm x 280 mm
C: 114 mm x 305 (4.5 in. x 12 in.)
D: 105 mm x 300 mm

ITEM	PART NO.	DESCRIPTION	QTY A	B	C	D
	bd 1350774	Fork (72 in.) (H550F, H550FS)	2	..	..	..
	bd 1350776	Fork (96 in.) (H550F, H550FS)	2	..	..	..
	bc 327520	Fork (72 in.) (H550F, H550FS)	2	..	..	..
	bc 327523	Fork (96 in.) (H550F, H550FS)	2	..	..	..
	d 1350570	Fork (96 in.)	..	2	..	..
	c 351424	Fork (96 in.)	..	2	..	..
	816235	Fork (96 in.) (2438 mm) (Forged)	..	2	..	..
	ad 1346416	Fork (90 in.) (H620F, H650F, H700F, H620FS, H700FS)	..	..	2	..
	ac 1302187	Fork (90 in.) (H620F, H650F, H700F, H620FS, H700FS)	..	..	2	..
	bd 1346417	Fork (72 in.)	..	..	2	..
	bd 1346418	Fork (96 in.)	..	..	2	..
	bc 1302188	Fork (72 in.)	..	..	2	..
	bc 1302189	Fork (96 in.)	..	..	2	..
	d 1346415	Fork (96 in.)	..	..	..	2
	c 338386	Fork (96 in.)	..	..	..	2
	1379841	Fork (96 in.) (35,000 lb)	..	..	..	2

FOOTNOTES:

a Low Mount
b Standard
c → S/N E8E01507
d S/N E8D01501 →

©2011 HYSTER COMPANY

FIRE EXTINGUISHER (FIGURE 11-16)

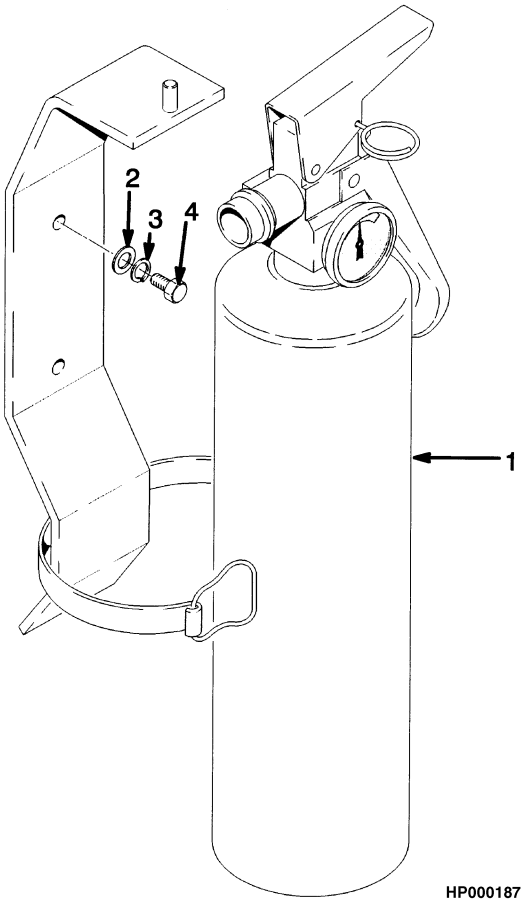

ITEM	PART NO.	DESCRIPTION	QTY
1	146540	Fire Extinguisher	1
2	197067	Washer	2
3	15152	Lockwasher	2
4	16750	Screw	2

©2011 HYSTER COMPANY

STROBE LIGHT (FIGURE 11-17)

(S/N E008E02226E →)

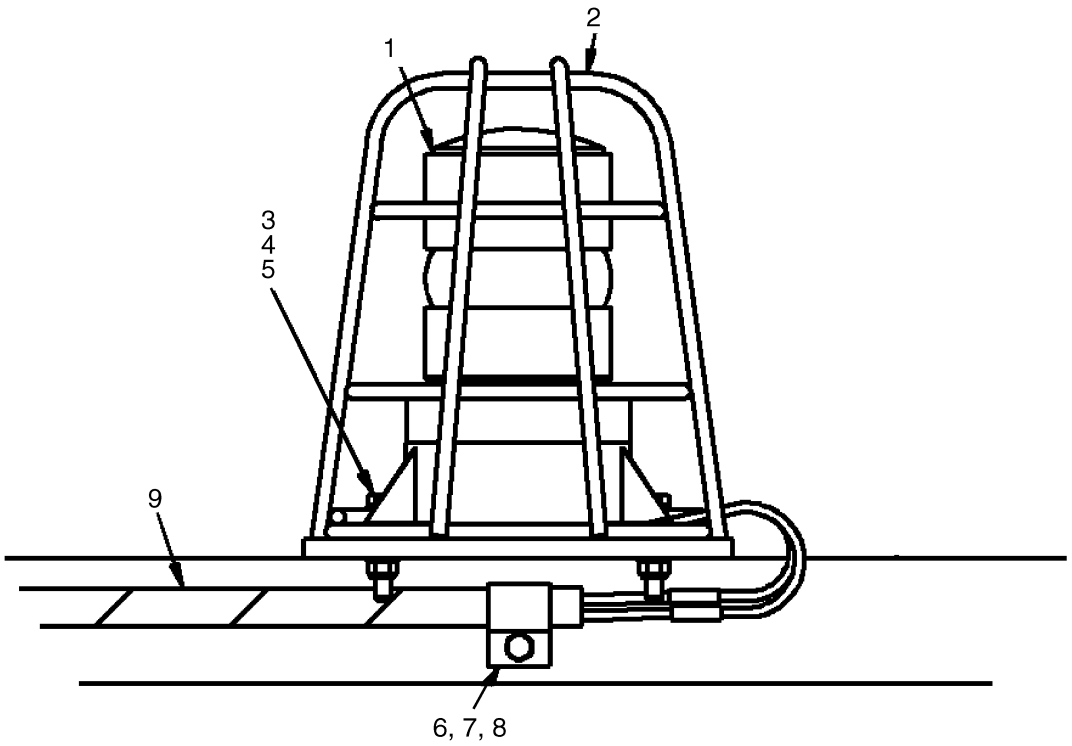

BP000365

ITEM	PART NO.	DESCRIPTION	QTY
1	1616202	Strobe Light Assembly	1
1	1616213	Strobe Light	1
1	1324308	Terminal	1
1	1324307	Terminal	1
1	1324310	Terminal	1
1	1324309	Sleeve	1
2	1302024	Guard	1
3	2072353	Capscrew	2
4	320155	Washer	4
5	302398	Locknut	2
6	164488	Clamp	1
7	292513	Capscrew	1
8	~~388049~~		
	292682	Lockwasher	1
9	1670661	Wire Harness (Strobe Light)	1
	a 137852	Strap Clamp	5
	a 1670846	Switch	1
	a 370646	Fuse (5 Amp)	1

FOOTNOTES:

a Not Illustrated

©2011 HYSTER COMPANY

NOTES

©2011 HYSTER COMPANY

12 FIELD CONVERSION KITS

SECTION 12
FIELD CONVERSION KITS

DESCRIPTION	PAGE
ENGINE OIL PRESSURE SENDER KIT	12-2

©2011 HYSTER COMPANY

ENGINE OIL PRESSURE SENDER KIT

DESCRIPTION	PART NUMBER
Pressure Sender	1652060

©2011 HYSTER COMPANY

13 NUMERICAL INDEX

SECTION 13
NUMERICAL INDEX

PART NO.	PAGE	ITEM
125	3-29	8
126	3-29	9
6059	7-3	23
6060	7-3	23
12815	2-141	2
	2-143	2
	2-145	24
	2-149	21
	2-151	35
	2-155	21
12817	3-3	7
	3-5	7
	3-9	6
	3-13	3
	3-15	8
12821	4-5	6
	4-7	81
	4-11	14
	4-15	13
	4-21	4
12824	1-33	44
	2-141	10
12833	9-133	11
	9-135	11
12837	3-13	4
	3-15	9
12838	5-51	16
12843	8-23	12
	8-27	12
	8-31	12
	9-117	29
	9-121	28
12845	4-5	4
	4-11	13
	4-15	8
	4-21	5
	9-43	15
12856	9-63	
12861	2-141	11
14345	9-123	17
14349	5-43	21
	5-51	18
	5-53	22
	5-61	23
	6-49	15
	6-53	15
	7-4	36
	8-16	33
	8-19	34
	8-35	33
	8-40	33
	8-43	33
	10-30	37
	11-20	47
14385	5-6	28
	5-33	20
14386	9-14	50
	9-22	59
	9-47	26
14387	2-141	6
	2-143	6
	5-53	23
	9-47	11
14489	8-9	11
	8-17	55
	8-19	32
	8-36	55
	8-40	60
	8-44	60
	9-117	18
	9-117	18
	9-121	18
	9-160	44
14494	9-137	19
	9-141	25
	9-145	17
	9-149	27
	9-155	14
14500	1-5	32
	8-9	4
14501	8-15	8
	8-19	8
	8-35	8
	8-39	8
	8-43	8
	9-123	21
14505	9-153	14
14516	7-4	43
14544	5-51	17
14550	5-51	13
14555	5-65	20
14591	5-45	24
14594	5-37	16
	9-165	9
	9-165	18
14595	5-37	
	9-83	16
	9-85	16
14602	1-5	32
14603	5-5	18
	9-83	8
	10-35	2
	11-25	1
14604	9-33	3
	9-115	10
14668	1-6	48
	7-4	45
	8-9	6
14669	9-133	28
14675	8-15	5
	8-19	5
	8-35	5
	8-39	5
	8-43	5
	9-133	18
	9-135	18
	9-163	2
	9-165	14
14676	9-5	1
	9-6	56
	9-13	32
	9-21	30
	9-153	13
14677	9-153	13
14678	9-117	13
	9-121	13
14689	1-6	43
14694	7-5	55
	9-9	35
	9-127	3
	9-129	13
14728	10-12	2
14999	11-15	4
15002	3-29	19
	4-11	15
	4-16	48
	4-21	7
	9-49	28
	9-53	28
15004	8-57	35
	8-61	35
15005	8-13	18
15007	5-33	36
15010	3-29	6
15011	9-43	19
	9-59	39
15021	7-3	14
15024	3-29	13
15026	1-6	55
	5-39	14
15049	4-68	47
	4-72	48
	4-75	15
	4-81	7
	4-81	33
	5-41	9
15052	1-59	21
	1-63	35
15054	1-39	20
	1-43	13
	3-29	26
	4-6	44
	4-11	24
	8-16	24
	8-19	24
	8-20	55
	8-35	24
	8-39	24
	8-43	24
	9-59	17
	9-97	5
	9-109	4
	9-111	5
	9-117	11
	9-121	11
	9-123	9
	9-125	5
	9-133	27
	9-163	12
	9-165	17
15055	1-59	27
	1-63	39
	4-5	23
	4-15	21
	4-15	31
	4-25	7
	9-6	46
	9-9	24
	9-10	47
	9-17	37
	9-25	36
	9-43	8
	9-54	42
	9-117	7
	9-121	7
	9-127	17

©2011 HYSTER COMPANY

NUMERICAL INDEX (continued)

PART NO.	PAGE	ITEM
	9-129	4
	9-159	34
	10-33	22
	10-35	15
	11-25	8
15056	1-6	50
	1-39	9
	1-59	34
	1-63	18
	1-67	8
	1-69	8
	2-131	6
	2-161	19
	3-3	18
	3-3	38
	3-5	18
	3-6	38
	3-9	14
	3-13	7
	3-15	15
	3-17	22
	3-21	11
	4-6	61
	4-9	18
	4-11	30
	4-15	5
	4-25	25
	4-64	34
	4-76	50
	4-95	22
	4-100	42
	4-195	25
	5-51	28
	5-53	13
	5-55	13
	5-57	11
	5-61	17
	5-65	13
	5-69	11
	5-73	11
	7-5	51
	8-17	56
	8-20	46
	8-24	63
	8-28	63
	8-36	56
	8-40	57
	8-44	57
	9-6	42
	9-10	51
	9-13	34
	9-17	40
	9-22	50
	9-22	57
	9-25	39
	9-29	18
	9-31	10
	9-31	10
	9-33	9
	9-35	12
	9-50	42
	9-54	42
	9-59	22
	9-115	7
	9-133	8
	9-135	8
	9-137	6
	9-137	36
	9-141	10
	9-141	36
	9-145	6
	9-149	10
	9-153	9
	9-155	24
	10-35	9
	11-25	14
15057	2-161	11
	8-24	70
15058	1-59	16
	1-60	43
	1-60	54
	1-63	11
	1-63	11
	1-63	28
	1-67	21
	1-69	26
	5-51	22
	9-17	42
	9-25	41
	9-43	10
	9-43	20
	9-59	38
	9-137	10
	9-141	6
	9-145	10
	9-149	6
	9-155	4
	10-36	32
15060	9-87	17
15062	2-137	8
	2-145	39
15088	1-47	6
15114	1-23	66
	1-23	66
15115	3-25	24
15127	1-39	18
	1-43	11
	3-29	28
	8-15	22
	8-16	52
	8-19	22
	8-20	53
	8-35	22
	8-39	22
	8-43	22
	9-97	3
	9-117	9
	9-121	9
	9-125	3
15128	9-59	18
15129	9-159	17
15133	11-30	36
15134	1-6	51
	1-39	5
	1-43	5
	1-67	7
	1-69	7
	2-131	9
	2-137	15
	2-145	36
	3-3	29
	3-5	29
	3-9	24
	3-13	17
	3-15	12
	3-21	9
	3-23	3
	3-25	22
	3-27	3
	4-9	5
	4-11	34
	4-22	42
	4-76	75
	4-95	20
	4-100	40
	9-22	48
	9-50	44
	9-54	44
	9-59	20
	9-83	22
	9-115	5
	9-131	3
	9-133	6
	9-135	6
	9-137	4
	9-141	8
	9-142	37
	9-145	4
	9-149	8
	9-153	7
	9-155	26
15135	1-59	17
	1-60	41
	1-60	52
	1-63	12
	1-63	12
	1-63	26
	1-67	19
	1-69	24
	5-51	23
	9-137	8
	9-141	4
	9-145	8
	9-149	4
	9-155	28
	9-155	31
	10-12	21
	10-36	30
	11-15	28
	11-29	13
	11-30	31
15136	2-137	10
	2-145	41
15152	1-21	25
	1-43	16
	1-59	22
	1-63	36
	3-29	18
	4-11	16
	4-16	49
	4-21	8
	9-47	5
	11-32	3
15154	1-39	19
	1-43	12
	1-60	50
	3-29	25
	4-6	43
	4-11	23
	4-76	71
	4-89	21
	4-93	26
	8-16	23
	8-19	23
	8-20	54
	8-35	23
	8-39	23
	8-43	23

©2011 HYSTER COMPANY

NUMERICAL INDEX (continued)

PART NO.	PAGE	ITEM
	8-57	34
	8-61	34
	9-59	19
	9-97	4
	9-109	3
	9-111	4
	9-117	10
	9-121	10
	9-123	8
	9-125	4
	9-133	26
	9-163	11
	9-165	16
15155	1-59	26
	1-63	38
	3-3	11
	4-5	22
	4-7	76
	4-15	30
	4-22	44
	4-25	8
	5-9	19
	8-13	17
	8-16	42
	8-36	42
	8-40	42
	8-44	42
	9-6	47
	9-9	25
	9-10	46
	9-17	38
	9-25	37
	9-43	7
	9-54	43
	9-117	6
	9-121	6
	9-127	15
	9-129	5
	9-159	33
	11-25	12
15156	1-5	3
	1-5	3
	1-39	8
	1-60	46
	1-63	23
	1-67	15
	1-69	15
	2-131	8
	2-137	14
	2-145	35
	2-161	18
	3-3	19
	3-3	39
	3-5	19
	3-6	39
	3-9	15
	3-13	6
	3-15	14
	3-17	21
	3-21	10
	3-23	4
	4-6	60
	4-9	4
	4-9	17
	4-11	29
	4-15	4
	4-25	24
	4-76	76
	4-95	21
	4-100	41
	4-195	26
	5-9	12
	5-14	47
	5-14	50
	5-17	11
	5-19	32
	5-21	32
	5-33	42
	5-37	14
	5-43	20
	5-45	26
	5-51	20
	5-53	12
	5-55	12
	5-57	10
	5-61	16
	5-65	12
	5-69	10
	5-73	10
	7-5	51
	8-17	57
	8-20	47
	8-23	45
	8-24	64
	8-28	45
	8-28	64
	8-36	57
	8-40	58
	8-44	58
	9-5	19
	9-9	4
	9-13	13
	9-17	5
	9-21	12
	9-22	49
	9-26	59
	9-29	19
	9-31	11
	9-31	11
	9-33	8
	9-35	11
	9-47	8
	9-50	43
	9-54	43
	9-59	21
	9-83	20
	9-87	21
	9-115	6
	9-131	4
	9-133	7
	9-135	7
	9-137	5
	9-137	35
	9-141	9
	9-141	35
	9-145	5
	9-149	9
	9-153	8
	9-155	25
	9-159	11
	10-12	12
	10-33	9
	10-35	8
	11-23	9
	11-25	15
15157	2-161	10
	5-5	8
	5-5	24
	5-9	24
	5-9	25
	5-13	1
	5-33	36
	5-33	41
	8-24	71
	9-9	11
	9-17	9
	9-25	8
	9-159	14
15158	1-60	42
	1-60	45
	1-60	53
	1-63	22
	1-63	27
	1-67	20
	1-69	25
	2-161	2
	4-7	67
	4-11	33
	4-21	10
	5-5	22
	5-51	14
	7-3	2
	7-4	26
	7-4	32
	9-5	10
	9-13	6
	9-17	1
	9-21	7
	9-25	1
	9-43	9
	9-137	9
	9-141	5
	9-145	9
	9-149	5
	9-155	3
	10-3	15
	10-7	15
	10-12	8
	11-15	17
	11-19	21
15160	3-29	7
	9-87	17
	10-4	26
	10-8	26
	10-29	6
	10-29	8
	11-19	2
	11-20	37
15162	2-137	9
	2-145	40
	2-161	16
	10-12	3
	11-15	3
15163	5-41	13
15165	3-29	22
15166	10-12	3
	11-30	35
15170	11-30	35
15172	9-123	7
15175	10-33	17
	11-15	13
	11-23	17
15176	1-6	41
	3-21	18
	3-25	25
	9-6	63
	9-10	52
	9-13	35

©2011 HYSTER COMPANY

NUMERICAL INDEX (continued)

PART NO.	PAGE	ITEM
	9-17	41
	9-22	58
	9-25	40
	9-29	17
	9-31	9
	9-33	6
	9-35	9
	9-59	24
15177	9-47	9
15178	1-44	50
	2-131	10
	2-133	18
	2-135	18
15180	3-29	3
15181	10-12	5
15183	10-12	5
15187	11-30	36
15200	3-29	10
15211	4-25	1
15212	7-9	24
15224	6-49	27
	6-53	27
	6-61	15
15253	10-35	22
	11-19	6
	11-29	5
15302	5-6	32
15304	5-9	20
15316	5-6	31
	5-9	20
	6-3	39
	6-7	2
	6-7	10
	6-11	2
	6-11	9
	6-13	3
	6-15	3
	6-22	36
	6-30	36
	6-41	35
	6-57	24
	6-59	24
15321	9-5	5
15345	5-9	23
15370	5-9	21
15460	9-123	18
15483	5-41	21
	5-53	22
	5-55	22
	5-57	18
	5-65	22
	5-69	18
	5-73	18
	6-57	8
	6-59	8
	10-4	40
	10-8	40
	10-29	17
	10-29	26
	11-20	35
15485	7-4	43
15860	5-45	19
15862	5-5	25
15863	5-9	10
15865	5-5	4
15871	9-83	26
	9-85	24
15895	9-87	9
15898	10-15	13
	10-19	13
15905	4-64	35
	4-68	50
	4-72	51
	4-76	51
	4-90	45
	4-93	18
	4-96	31
	4-100	32
15906	8-51	22
15924	5-13	14
15962	3-3	4
	3-5	4
	3-9	3
	3-13	8
	3-15	18
	7-4	27
16001	9-87	16
	10-4	22
	10-4	56
	10-8	22
	10-8	56
	10-30	38
	11-19	16
16006	10-4	42
	10-8	42
	10-29	18
	10-29	27
	11-20	28
16009	7-4	35
	7-4	35
16018	10-3	9
	10-7	9
16041	7-4	48
16052	10-12	2
16073	4-100	48
16080	5-39	9
16085	1-59	35
	1-60	51
	1-63	19
	1-63	19
	9-5	14
	9-13	9
	9-22	55
16115	8-15	17
	8-39	17
16116	3-3	40
	3-6	40
16142	8-15	7
	8-19	7
	8-35	7
	8-39	7
	8-43	7
16150	5-51	15
16151	4-5	11
16156	1-34	48
16186	4-5	10
16187	2-141	15
16199	4-5	9
16295	5-53	2
	5-55	2
	5-57	2
	5-65	2
	5-69	2
	5-73	2
16334	9-49	17
	9-53	17
16374	4-7	75
	4-22	43
	5-9	6
	5-9	6
	5-9	18
16376	1-59	32
	1-67	12
16377	5-33	37
	9-159	16
16379	9-137	12
	9-141	11
	9-145	12
	9-149	11
	9-153	10
16394	5-9	18
16445	9-109	5
16448	10-35	4
	11-25	3
16450	7-5	58
16472	1-6	33
16479	9-35	6
16480	9-76	63
16481	5-45	25
	7-10	41
	8-19	35
	8-36	59
	8-44	62
	9-10	36
	9-35	7
	9-111	7
	9-111	10
	9-111	15
	9-137	27
	9-141	16
	9-145	26
	9-149	15
	9-155	33
	9-159	6
	9-159	7
16482	8-13	4
16483	5-37	16
	5-51	4
	5-51	6
	5-51	9
	8-9	8
	8-9	13
	8-9	16
	8-9	18
	8-9	20
	8-13	2
	8-13	6
	8-15	2
	8-15	3
	8-16	34
	8-16	35
	8-16	37
	8-16	37
	8-16	47
	8-19	2
	8-35	2
	8-35	3
	8-36	34
	8-36	37
	8-36	47
	8-39	2
	8-39	3
	8-40	34
	8-40	35
	8-40	35
	8-40	37
	8-40	47
	8-43	2

See Service Manual for service procedures.
©2011 HYSTER COMPANY

NUMERICAL INDEX (continued)

PART NO.	PAGE	ITEM
	8-43	3
	8-43	34
	8-44	35
	8-44	35
	8-44	37
	8-44	47
	8-57	39
	8-61	39
	9-25	30
	9-49	23
	9-49	24
	9-49	25
	9-49	26
	9-53	23
	9-53	25
	9-53	26
	9-97	6
	9-97	10
	9-97	12
	9-111	16
	9-111	16
	9-111	16
	9-111	22
	9-117	16
	9-117	17
	9-117	21
	9-121	16
	9-121	17
	9-121	21
	9-125	6
	9-125	10
	9-137	24
	9-137	26
	9-141	14
	9-141	15
	9-145	27
	9-145	28
	9-149	14
	9-149	25
	9-150	38
	9-150	39
	9-153	2
	9-153	5
	9-153	5
	9-155	6
	9-155	8
	9-163	6
	9-165	9
	9-165	11
	9-165	18
16484	5-43	2
	5-51	7
	7-10	40
	9-43	23
	9-83	6
	9-83	7
	9-83	10
	9-83	11
	9-83	16
	9-111	6
	9-111	17
	9-111	18
	9-111	21
	9-111	21
	9-111	25
	9-123	5
	9-123	10
	9-123	13
	9-131	5
	9-131	7
	9-159	3
	9-159	4
	9-160	38
	10-35	6
	10-35	7
	11-19	8
	11-20	48
	11-20	48
	11-25	4
	11-25	5
	11-29	3
16485	5-37	5
	5-37	9
	5-45	6
	5-45	12
	7-13	
	9-64	48
	9-135	2
	9-165	6
16486	5-5	18
	5-55	26
	5-61	21
	5-61	24
	5-61	27
	5-61	31
	5-77	3
	5-78	7
	9-43	11
	9-83	4
	9-83	5
	9-83	8
	9-115	8
	9-127	3
	9-127	5
	9-127	7
	9-127	12
	9-129	2
	9-129	3
	9-129	13
	9-131	13
	9-131	18
	9-131	22
	9-155	17
	9-160	36
	10-35	2
	10-35	18
	10-35	24
	11-25	1
	11-25	17
	11-29	7
16487	5-78	6
	9-33	3
	9-35	5
	9-115	10
	9-115	15
	9-115	19
	9-115	21
	9-137	11
	9-137	29
	9-141	21
	9-141	23
	9-142	38
	9-145	11
	9-145	15
	9-145	20
	9-145	25
	9-149	19
	9-149	20
	9-149	29
	9-150	32
	9-155	16
	9-155	18
	9-155	22
	10-12	15
	10-12	16
16538	9-111	15
	9-137	27
	9-141	16
	9-145	26
	9-149	15
16540	5-51	9
	8-9	13
	8-13	6
	8-15	2
	8-16	47
	8-19	2
	8-23	7
	8-27	7
	8-31	7
	8-35	2
	8-36	47
	8-39	2
	8-40	37
	8-43	2
	8-44	37
	9-49	23
	9-97	10
	9-111	16
	9-111	16
	9-137	24
	9-145	27
16541	7-10	39
	11-25	4
16543	5-61	21
	9-83	5
	9-127	5
	9-129	2
	9-131	13
	9-159	36
16544	9-47	29
	9-115	15
	9-141	23
	9-149	23
16550	9-111	21
16553	9-115	19
16556	1-5	32
	7-10	41
	8-19	35
	8-36	59
	8-44	62
	9-9	36
	9-111	10
16558	5-51	4
	8-9	16
	8-13	2
	8-16	34
	8-23	6
	8-27	6
	8-31	6
	8-35	34
	8-40	34
	8-43	34
	9-10	49
	9-17	31
	9-25	30
	9-49	25
	9-97	12
	9-117	17

©2011 HYSTER COMPANY

NUMERICAL INDEX (continued)

PART NO.	PAGE	ITEM
	9-121	17
	9-125	6
	9-141	15
	9-145	28
	9-149	25
	9-150	39
	9-153	2
	9-165	6
16559	9-83	6
	9-111	17
	9-131	7
	9-159	3
	10-35	6
	10-35	7
	11-19	8
	11-20	48
	11-20	48
	11-25	5
	11-29	3
16561	5-53	26
	5-55	26
	5-57	17
	5-61	31
	5-65	26
	5-69	17
	5-73	17
	9-131	22
	9-133	13
	9-135	13
16562	5-78	6
	9-115	21
	9-150	32
	9-155	17
16565	9-159	6
16567	5-51	6
	8-9	8
16568	5-51	7
	11-20	48
16569	7-4	37
16570	5-53	27
16576	8-9	20
	8-13	4
	8-23	9
	8-27	9
	8-31	9
	9-141	14
16583	9-155	33
16594	5-14	49
16597	2-161	17
	5-9	12
	7-5	64
	7-9	6
	9-87	21
	10-35	10
16598	1-6	54
	3-5	13
	3-9	11
	3-17	20
	5-53	11
	5-55	11
	5-57	9
	5-61	15
	5-65	11
	5-69	9
	5-73	9
	9-29	24
	9-31	15
	9-59	23
	9-131	2
	9-137	34
	9-141	34
16645	10-4	25
	10-8	25
16656	5-43	7
16693	8-17	59
	8-36	55
	8-41	60
	8-44	60
	9-97	7
16704	9-47	5
16708	4-5	17
	4-16	44
16712	5-39	16
16741	3-13	22
	3-15	16
	5-37	15
16743	4-68	48
	4-72	49
	4-75	15
	4-81	7
	4-81	32
16745	9-111	18
	9-123	13
	9-159	4
16750	1-21	24
	11-32	4
16764	3-15	26
16793	2-161	13
16805	1-5	15
	1-39	4
	1-43	4
	2-131	7
	2-137	13
	2-145	34
	3-3	28
	3-5	28
	3-9	23
	4-7	69
	4-9	3
	4-11	35
	4-68	51
	4-72	52
	4-76	55
	4-90	46
	4-93	19
	4-100	33
	5-57	35
	5-69	35
	5-73	35
	9-33	7
	9-35	10
	9-47	10
	9-50	38
	9-54	38
16806	5-13	1
16807	11-15	18
16813	10-36	29
	11-29	12
16815	1-5	2
	1-63	16
	1-69	12
	3-3	2
	3-5	2
	3-9	1
	5-43	19
	6-57	30
	6-59	29
	7-9	7
	8-23	44
	8-28	44
	9-14	60
	9-22	71
16816	1-6	35
	9-133	10
	9-135	10
16820	11-19	21
16823	10-29	6
	11-19	2
16828	2-137	11
	2-145	32
	3-9	23
	3-13	18
	3-15	13
	9-5	18
	9-9	3
	9-13	12
	9-17	4
	9-21	11
	9-25	4
	9-115	3
	9-133	5
	9-135	5
	9-137	3
	9-141	7
	9-145	3
	9-149	7
	9-155	27
	9-159	10
	10-35	11
	11-25	16
16829	7-4	26
16830	5-13	14
	7-4	32
	9-13	21
	9-21	19
	10-12	9
16831	11-15	2
16834	5-9	24
16835	11-25	6
	11-29	10
16836	1-59	25
	1-63	37
	3-3	10
	11-25	13
16883	5-51	10
	8-9	27
	8-13	7
	8-16	39
	8-19	33
	8-23	5
	8-27	5
	8-31	5
	8-36	39
	8-36	55
	8-40	56
	8-41	60
	8-44	56
	8-44	60
	9-6	60
	9-13	44
	9-117	25
	9-121	24
	9-123	12
	9-145	29
	9-150	37
	9-155	8
	9-159	18
	9-163	5

©2011 HYSTER COMPANY

NUMERICAL INDEX (continued)

PART NO.	PAGE	ITEM
	9-165	3
16906	4-33	15
	4-35	15
	4-41	2
16918	9-43	21
	9-59	37
16923	9-109	6
16969	8-23	10
	8-27	10
	8-31	10
	9-97	6
	9-111	16
	9-111	22
	9-117	16
	9-121	16
	9-137	26
	9-141	14
	9-149	14
	9-150	38
	9-155	6
	9-163	6
	9-165	11
16970	9-43	23
	9-83	7
	9-111	21
	9-111	25
16971	9-127	7
	9-131	18
16982	9-71	8
	9-76	66
16983	9-5	3
	9-47	20
	9-137	16
	9-141	18
	9-145	22
	9-149	21
	9-149	23
	9-155	10
	9-155	23
16987	8-9	9
	9-131	12
	9-131	12
	9-131	22
16989	5-51	12
	9-43	25
	9-83	28
	9-137	21
16992	9-115	20
16997	1-5	32
	9-131	6
16999	5-51	5
	9-6	58
	9-13	31
	9-21	29
	9-111	2
17038	5-51	8
	9-133	16
	9-135	16
17040	5-62	34
17042	9-29	22
17049	8-9	14
	8-13	5
	8-23	8
	8-27	8
	8-31	8
	9-117	24
	9-121	23
	9-160	42
17050	8-9	7
	9-43	12
17059	8-9	10
	8-13	8
	8-16	39
	8-36	35
	8-40	35
	8-44	35
	9-123	4
	9-131	11
17061	8-9	25
	8-17	53
	8-20	49
	8-36	49
	8-40	39
	8-44	39
	9-6	57
	9-13	33
	9-21	31
	9-117	22
	9-121	22
	9-123	14
	9-125	8
	9-137	25
	9-159	5
	9-165	4
17062	9-83	27
	9-131	8
	9-141	27
17066	5-78	4
17174	3-5	5
	3-9	4
17177	3-5	22
17213	8-9	2
17216	9-123	19
17217	2-143	14
17220	2-141	8
17222	9-49	24
17302	5-51	11
17306	9-43	16
17319	9-131	9
	9-160	39
17343	2-143	32
	3-17	17
17345	9-133	15
	9-135	15
17346	5-53	24
	5-55	24
	5-57	24
	5-65	24
	5-69	24
	5-73	24
	9-133	22
	9-135	22
17353	2-141	15
	2-145	14
17461	11-30	37
17585	2-152	58
	2-155	19
17591	5-53	3
	5-55	3
	5-57	3
	5-65	3
	5-69	3
	5-73	3
17619	5-53	4
	5-55	4
	5-57	19
	5-65	4
	5-69	19
	5-73	19
17664	2-145	33
	9-117	34
17744	3-13	26
	3-15	24
17752	3-3	5
	3-5	5
17753	8-9	18
	8-16	37
	8-16	37
	8-36	37
	8-40	47
	8-44	47
17761	9-83	4
	9-127	12
	10-35	18
	11-25	17
17764	9-9	8
	9-17	6
	9-25	5
	9-159	12
17765	9-5	12
	9-13	7
	9-13	7
	9-22	53
	9-22	53
17776	8-9	12
	8-17	54
	8-36	55
	8-41	60
	8-44	60
	9-117	19
	9-117	19
	9-121	19
	9-160	43
17777	9-131	10
	9-160	40
17778	8-19	21
17779	9-127	9
	9-131	21
	9-131	22
	9-159	26
17783	9-145	16
	9-149	28
	9-155	15
17784	9-159	25
18097	9-50	41
	9-54	41
18099	10-33	2
	11-23	2
18126	9-91	33
	9-93	4
	9-133	23
18128	9-133	25
18337	1-5	24
18419	4-81	7
18425	3-29	12
	9-50	40
	9-54	40
18460	3-29	24
18462	1-60	49
18465	1-39	17
	1-43	10
	9-109	2
18470	1-59	29
	1-63	40
18471	8-16	25
	8-19	25
	8-35	25
	8-39	25

©2011 HYSTER COMPANY

NUMERICAL INDEX (continued)

PART NO.	PAGE	ITEM
	8-43	25
	9-97	2
	9-123	1
	9-125	2
	9-163	10
18473	9-111	3
18477	8-17	60
	8-20	56
	8-35	17
	8-41	61
	8-43	17
18480	9-59	16
	9-117	8
	9-121	8
18486	1-6	45
	9-165	15
18496	8-16	41
	8-36	41
	8-40	41
	8-44	41
18497	3-5	10
	3-9	9
	3-13	15
	3-15	6
	9-47	4
	9-129	8
	9-159	31
18498	4-6	56
	4-25	4
	8-47	7
18499	8-13	16
18508	8-47	14
18515	1-23	65
	1-23	65
	3-5	11
	3-9	10
	3-13	13
	3-15	4
	4-6	57
	4-25	5
	8-16	43
	8-36	43
	8-40	43
	8-44	43
	9-6	48
	9-10	45
	9-17	39
	9-25	38
	9-43	6
	9-54	44
	9-117	5
	9-121	5
	9-127	14
	9-129	6
	9-159	32
	10-33	21
	10-35	14
	10-36	28
	11-25	10
	11-29	11
18516	9-127	16
	9-129	7
	9-160	41
	10-33	15
	11-15	11
	11-23	15
18518	1-23	64
	1-23	64
18528	11-15	14
18535	3-23	10
	3-27	10
	10-12	18
18543	5-51	21
18547	1-5	21
18549	3-21	8
	3-25	23
	9-83	3
	9-85	3
	9-115	4
18557	9-159	15
18558	9-9	10
	9-17	8
	9-25	7
18559	2-161	9
18563	5-5	8
18572	5-9	25
18586	4-7	66
	4-11	32
	4-21	9
18588	1-40	46
	1-44	47
	2-161	1
	7-3	2
	9-5	9
	9-13	5
	9-21	6
	10-12	20
18589	1-40	45
18590	9-137	7
	9-141	3
	9-145	7
	9-149	3
	9-155	1
18591	11-15	26
18592	9-150	33
	9-155	29
18595	11-15	14
	11-30	32
18605	10-29	8
	11-20	37
18613	9-87	19
18622	2-161	16
18624	2-137	7
	2-145	38
18632	10-4	35
18634	10-8	35
18635	2-161	5
18665	11-30	37
18670	7-3	14
18707	1-39	14
	1-43	21
18709	1-43	15
18797	9-117	4
	9-121	4
18839	1-23	61
	1-23	61
18901	1-33	39
18905	4-196	45
18909	9-115	14
	9-115	14
18954	10-23	4
	10-25	4
18973	7-13	6
18974	10-23	13
	10-25	13
19578	10-15	5
	10-19	5
19585	10-23	5
	10-25	5
19636	5-53	1
	5-55	1
	5-57	1
	5-65	1
	5-69	1
	5-73	1
19968	10-4	41
	10-8	41
	10-29	15
	10-29	24
	11-20	29
21798	3-3	31
23908	9-26	58
24092	8-16	28
	8-16	28
	8-19	28
	8-35	28
	8-39	28
	8-40	28
	8-43	28
26283	4-6	40
26801	8-15	16
	8-15	16
	8-20	58
	8-35	16
	8-39	16
	8-39	16
	8-43	16
27133	9-87	20
29344	8-15	16
	8-15	16
	8-20	57
	8-35	16
	8-39	16
	8-39	16
	8-43	12
29582	8-16	26
	8-16	26
	8-19	26
	8-35	26
	8-39	26
	8-39	26
	8-43	26
29583	8-16	29
	8-16	29
	8-19	29
	8-35	29
	8-40	29
	8-40	29
	8-43	29
30062	6-17	9
	6-25	9
	6-33	17
30068	5-19	26
	5-21	35
30109	6-37	23
30124	7-3	16
	7-3	20
30257	6-3	29
	6-39	9
	6-43	8
30258	6-3	28
	6-39	12
	6-43	10
30295	6-21	31
	6-30	41
	6-30	57
30296	6-21	32
	6-30	42

See Service Manual for service procedures.
©2011 HYSTER COMPANY

NUMERICAL INDEX (continued)

PART NO.	PAGE	ITEM
	6-30	56
35504	5-5	27
37562	10-3	16
	10-7	16
39767	9-49	14
	9-53	14
40736	5-41	6
43209	5-13	3
46388	9-87	4
46389	10-15	4
	10-19	4
49189	11-2	7
	11-6	7
	11-7	7
50014	5-5	17
	5-5	20
53086	9-87	10
53092	7-13	7
53156	11-19	13
53769	6-21	10
	6-29	24
53770	6-21	10
	6-29	24
53771	6-21	10
	6-29	24
53772	6-21	10
	6-29	24
53773	6-21	10
	6-29	24
53774	6-21	10
	6-29	24
53775	6-21	10
	6-29	24
53776	6-21	10
	6-29	24
53777	6-21	10
	6-29	24
53778	6-21	10
	6-29	24
53779	6-21	10
	6-29	24
53786	6-21	20
	6-30	46
53789	6-22	39
	6-29	20
53791	6-21	14
	6-30	29
53798	6-21	30
	6-29	27
	6-30	40
53811	6-22	37
	6-30	32
54624	8-16	30
	8-16	30
	8-19	30
	8-35	30
	8-40	30
	8-40	30
	8-43	30
57568	5-41	11
57664	9-47	15
58902	6-21	15
	6-30	30
59229	10-4	39
	10-8	39
	10-29	16
	10-29	25
	11-20	34
60653	5-17	14
63105	5-41	12
63899	3-3	30
	3-5	30
	3-9	31
	3-13	35
	3-15	35
73462	8-9	28
	8-9	29
	8-13	13
	8-13	14
	9-6	59
	9-6	61
	9-97	11
75649	9-47	5
75775	5-41	7
78010	9-111	23
	9-153	4
78122	9-47	5
79473	6-21	3
	6-30	35
79481	6-21	7
	6-29	26
79482	6-21	6
	6-29	21
79483	6-21	9
	6-29	22
	6-29	25
79973	5-33	25
82270	7-4	31
83846	9-115	10
86007	6-4	43
	6-7	8
	6-11	6
	6-13	6
	6-15	5
86008	6-17	4
	6-25	4
	6-33	6
86520	1-37	19
87281	5-33	29
87758	1-47	7
87759	1-47	8
88195	9-29	11
88291	9-6	34
	9-13	16
	9-21	14
88292	9-13	37
88587	6-17	13
	6-17	19
	6-25	19
	6-29	3
	6-33	29
	6-37	4
	6-49	7
	6-53	7
89892	10-12	17
89894	10-12	16
90207	9-87	3
95033	7-3	4
95034	7-3	4
95490	7-3	25
97540	9-29	8
	9-155	10
100792	1-33	44
102906	9-141	13
	9-141	30
	9-149	13
	9-155	7
102919	3-5	31
	3-9	2
	3-13	28
102990	4-64	43
	4-64	49
	4-64	50
	4-72	61
	4-72	66
	4-76	49
	4-77	101
	4-95	27
	4-95	27
	4-99	3
	4-99	3
	4-195	21
103013	6-21	13
	6-30	29
104506	5-9	14
104940	9-6	39
	9-13	38
110153	2-152	56
110174	9-123	10
110322	2-151	1
110931	10-3	11
	10-7	11
110932	10-3	12
	10-7	12
110933	10-3	13
	10-7	13
111326	9-155	9
	9-163	1
	9-165	1
111561	4-5	16
	4-16	47
112902	9-47	4
112989	2-141	1
	2-143	1
	2-145	8
	9-5	22
	9-13	20
	9-21	18
113341	3-3	37
	3-6	37
114312	1-6	53
	1-37	24
114555	5-53	20
	5-55	20
114662	4-5	12
	4-11	10
	4-16	51
	4-25	30
115586	11-2	1
	11-8	1
115953	6-4	48
	6-13	10
115954	6-4	46
	6-13	8
116030	7-5	60
	11-7	6
	11-8	6
	11-11	10
	11-12	6
	11-13	6
116031	7-3	21
116243	10-4	43
	10-8	43
	10-29	12
	10-29	21
116244	10-4	44
	10-8	44
	10-29	13

©2011 HYSTER COMPANY

NUMERICAL INDEX (continued)

PART NO.	PAGE	ITEM
	10-29	22
	11-20	32
116245	10-4	38
	10-8	38
	10-29	14
	10-29	23
	11-20	33
116251	10-29	4
	11-19	4
116265	11-8	7
	11-12	7
	11-13	7
117265	9-6	61
	9-10	50
	9-13	41
	9-18	55
117582	5-51	3
119055	2-141	14
	2-143	10
	2-145	16
	2-149	3
	2-151	25
	2-155	3
119236	2-143	17
	9-5	23
	9-13	20
	9-21	18
119296	11-19	24
119344	2-141	12
	2-143	8
120779	9-165	2
124297	2-143	34
	2-145	13
124359	1-5	30
124608	5-27	31
	5-31	31
124788	3-3	25
	3-5	25
	3-9	20
	3-13	19
	3-15	20
125428	6-17	26
	6-21	19
	6-21	26
	6-21	29
	6-26	26
	6-29	16
	6-30	44
	6-30	54
	6-33	42
	6-37	26
	6-37	34
125590	6-8	41
125953	10-12	4
126262	2-145	5
127045	9-29	12
127575	10-36	44
127584	10-36	44
127656	9-75	33
127852	1-34	47
128408	1-6	52
	2-149	22
	2-151	28
	2-155	22
	3-3	34
	4-7	79
	4-9	13
	4-76	74
	4-83	5
	4-84	5
	4-87	
	4-95	19
	4-100	39
128436	10-33	10
	11-23	10
129563	2-141	19
	2-143	15
	2-145	11
	2-149	35
	2-151	27
	2-155	35
	2-156	42
	3-3	6
	3-5	6
	3-9	5
	3-13	20
	3-15	21
129683	9-111	23
	9-153	4
129886	4-123	9
	4-127	13
	4-137	13
	4-139	27
	4-141	29
	4-143	29
	4-145	4
129887	4-33	20
	4-35	20
	4-51	3
	4-53	3
	4-55	3
	4-57	2
	4-58	18
	10-33	11
	11-23	11
129889	4-149	18
129894	4-49	8
	4-51	7
	4-53	8
	4-55	8
	4-57	4
130415	4-122	5
130625	5-5	25
	5-33	16
130845	1-33	38
	2-141	17
	2-143	13
	2-145	9
	2-149	18
	2-151	30
	2-155	18
	3-3	26
	3-5	26
	3-9	21
130849	6-21	8
	6-29	23
130850	6-21	33
	6-29	28
130851	6-22	33
	6-29	28
130852	6-22	33
	6-29	28
131357	1-5	13
131358	1-5	7
131460	9-153	5
131461	9-153	5
131878	2-131	3
	2-133	3
	2-135	3
132003	5-33	15
132451	6-29	7
	6-49	2
	6-53	2
	6-59	20
	8-7	18
132860	2-143	24
	5-53	8
	5-57	6
	5-61	12
	5-65	8
	5-65	39
	5-69	6
	5-73	6
	5-78	10
132861	1-40	51
	1-44	42
	4-11	3
133481	4-195	3
	4-198	5
133683	7-9	23
133699	4-175	29
	4-177	29
134131	1-33	43
134803	8-28	52
	8-32	52
134810	1-21	23
	4-63	22
	4-63	23
	4-67	23
	4-71	23
	4-75	29
	4-89	12
	4-95	6
	4-99	13
	4-123	8
	4-124	8
	4-127	11
	4-129	11
	4-137	30
	4-139	22
	4-141	23
	4-143	23
	4-145	33
	4-159	3
	4-211	10
134811	4-137	27
	4-139	21
	4-141	21
	4-143	21
	4-145	35
	4-212	8
134812	4-33	19
	4-35	18
	4-105	4
	4-109	10
	4-137	26
	4-139	20
	4-141	20
	4-143	20
	4-145	31
	4-149	12
	4-163	15
	4-171	37
	4-173	7
	4-195	3
	4-204	2
	4-208	7
	4-212	9

See Service Manual for service procedures.
©2011 HYSTER COMPANY

NUMERICAL INDEX (continued)

PART NO.	PAGE	ITEM
134881	2-131	25
	2-133	12
	2-135	12
	3-17	7
	3-25	9
136405	10-29	3
	11-19	18
136516	3-5	16
	4-7	62
	4-9	14
	4-15	10
	4-15	16
	4-21	38
136545	9-129	11
136681	1-33	8
	4-195	27
	7-9	30
136687	1-30	37
	1-33	30
	1-37	3
	1-40	58
	3-29	32
	4-5	33
	4-16	39
	4-19	20
	4-21	26
	4-67	13
	4-71	13
	4-75	19
	4-89	4
	4-93	10
136692	1-23	55
	1-23	55
	1-23	55
	1-49	17
	1-51	17
	1-57	36
	2-143	23
	2-145	31
	3-17	30
	4-76	73
	4-83	6
	4-84	6
	4-87	
	4-96	41
	4-100	56
	4-195	10
	5-53	34
	5-55	34
	5-57	15
	5-61	4
	5-65	34
	5-69	15
	5-73	15
	9-49	6
	9-53	6
	9-59	8
136704	7-9	26
	7-9	36
136718	2-137	18
136749	1-64	53
	2-133	6
	2-135	6
	3-33	4
	4-67	29
	4-71	29
	4-76	40
	4-89	14
	4-93	15
	8-23	28
	8-27	28
	8-31	28
136985	1-22	52
	1-39	26
	1-43	26
	1-49	11
	1-51	20
	1-64	64
	2-143	20
	2-145	28
	2-152	53
	2-155	1
	3-27	11
137652	4-72	71
137852	1-71	7
	3-33	7
	4-6	46
	4-9	10
	4-11	26
	4-15	23
	4-22	39
	4-25	11
	4-25	19
	4-64	38
	4-68	46
	4-72	47
	4-75	14
	4-76	45
	4-77	113
	4-82	36
	4-95	13
	4-99	22
	4-195	5
	11-33	
138710	1-34	48
138811	9-43	11
	9-129	3
	9-160	38
138929	10-36	35
	11-15	15
	11-30	29
139024	3-29	11
139716	9-159	25
139721	1-5	16
140612	9-13	45
141501	6-21	23
141933	6-21	4
	6-30	37
142270	8-7	15
142871	4-195	3
143452	5-5	17
144067	4-25	27
	5-53	10
	5-55	10
	5-57	8
	5-61	14
	5-65	10
	5-69	8
	5-73	8
144077	10-7	17
144157	3-17	9
145062	10-4	23
	10-8	23
	10-29	9
	11-20	36
145063	10-4	24
	10-8	24
	10-29	9
	11-20	36
145367	2-141	4
145639	10-33	16
	10-36	27
	11-15	12
	11-23	16
	11-30	38
145641	9-50	37
	9-54	37
146047	4-7	70
146236	1-6	39
	1-6	40
146540	11-32	1
147007	2-141	13
	2-143	9
147983	3-17	6
147985	3-17	6
148605	4-33	7
	4-35	7
	4-49	19
	4-51	15
	4-53	14
	4-55	14
148606	4-33	6
	4-35	6
148607	4-33	16
	4-35	16
	4-109	5
	4-131	13
	4-153	17
	4-155	20
	4-157	20
	4-163	8
	4-171	29
	4-173	14
	4-203	1
	4-211	8
148609	4-33	17
	4-35	17
148611	4-57	13
	4-141	30
	4-143	30
	4-145	5
148612	4-49	1
148615	4-141	31
	4-143	31
	4-145	6
148616	4-49	16
148648	4-105	10
	4-137	32
	4-139	30
	4-141	32
	4-143	32
	4-145	7
	4-145	29
	4-163	12
	4-204	3
	4-208	5
148649	4-137	33
	4-139	32
	4-141	40
	4-143	40
	4-145	28
148800	4-139	29
149616	5-23	4
	5-27	4
	5-31	4
150157	9-71	14
150179	4-63	29
	4-72	62

©2011 HYSTER COMPANY

NUMERICAL INDEX (continued)

PART NO.	PAGE	ITEM
	4-76	48
	4-96	38
	4-100	34
151920	1-40	44
	1-44	48
	2-131	11
	2-133	19
	2-135	16
153597	6-7	32
153667	9-50	45
	9-54	45
154278	4-195	32
	10-33	18
	11-23	18
154782	6-4	43
155328	7-5	65
155742	11-29	24
156133	1-5	4
	1-59	36
	1-63	20
	2-137	12
	8-16	46
	8-20	51
	8-23	25
	8-27	25
	8-31	25
	8-36	46
	8-40	46
	8-44	46
	9-85	20
156478	3-17	16
157065	4-49	3
	4-51	1
	4-53	1
	4-55	1
	4-58	19
157156	8-9	17
159175	7-3	3
159179	7-3	5
159180	7-3	6
159181	7-3	8
159183	7-3	12
159258	10-3	14
	10-7	14
159290	10-7	3
159295	10-3	6
	10-7	6
159296	10-3	7
	10-7	7
159297	10-3	10
	10-7	10
159299	10-3	4
	10-7	4
159301	10-29	3
	11-19	18
159367	2-161	12
159368	2-161	13
159831	1-47	3
160245	4-53	7
	4-55	7
	4-57	4
160255	6-8	47
	6-15	8
160266	9-5	20
	9-13	14
	9-21	13
160278	11-5	10
160286	11-5	8
	11-11	8
160339	11-5	1
	11-11	1
160863	1-59	8
	1-63	5
	1-63	5
	1-67	10
	1-69	10
160865	1-59	9
	1-63	6
	1-63	6
	1-67	11
	1-69	11
161686	6-22	38
	6-30	31
162155	9-123	5
162231	9-6	33
	9-13	36
162234	9-47	7
162572	5-13	25
163488	10-7	3
163521	1-33	43
164488	3-3	16
	4-7	74
	4-9	15
	4-15	6
	4-195	7
	11-33	6
164507	4-85	17
	4-87	15
164657	5-53	30
164658	4-72	63
	4-76	56
	4-95	24
	4-100	35
164958	10-3	17
165278	9-83	12
165504	9-10	37
165844	9-115	20
	9-149	29
	9-155	16
165991	3-21	13
	3-23	6
	3-25	19
	3-27	6
166112	4-7	64
	4-9	11
	4-11	31
166209	9-77	1
	9-78	1
166818	1-67	5
	1-69	5
	1-71	18
166857	2-141	7
	2-145	10
	2-149	4
	2-151	29
	2-155	4
	3-3	21
	3-17	19
167178	6-8	38
	6-11	32
	6-41	16
	6-45	12
167182	6-7	28
	6-11	26
	6-41	31
	6-45	30
167190	6-7	26
	6-11	24
	6-41	17
	6-45	15
167201	6-7	17
	6-11	16
	6-41	30
	6-45	21
167261	9-127	8
	9-131	20
	9-131	22
	9-159	26
168054	6-3	33
	6-39	5
	6-57	19
168652	10-7	3
168718	2-143	7
	3-3	35
	3-5	35
	3-17	19
169596	10-36	45
169759	4-67	4
	4-71	4
	4-75	7
	4-81	20
169775	4-77	118
	4-81	21
169776	4-5	5
	4-11	9
	4-15	12
	4-21	3
169781	4-67	1
	4-71	1
	4-75	4
	4-81	17
169784	4-63	16
	4-81	14
	4-81	25
169785	4-63	7
	4-63	16
	4-67	5
	4-71	5
	4-75	8
	4-81	14
	4-81	25
169787	9-5	17
	9-9	2
	9-13	11
	9-17	3
	9-21	10
	9-25	3
	9-159	9
169874	1-6	46
170368	10-4	50
	10-8	50
	10-29	33
	11-20	43
170369	10-3	18
	10-7	18
	10-29	35
	11-20	45
170371	10-4	47
	10-8	47
	10-29	30
	11-20	41
170372	10-29	2
	11-19	14
170377	10-3	19
	10-7	19
	10-29	34
	11-20	44
170378	10-3	20

See Service Manual for service procedures.
©2011 HYSTER COMPANY

NUMERICAL INDEX (continued)

PART NO.	PAGE	ITEM
	10-7	20
	10-29	34
	11-20	44
170379	10-4	48
	10-8	48
	10-29	32
	11-20	40
170380	10-4	49
	10-8	49
	10-29	31
	11-20	42
170625	10-15	11
	10-19	11
	10-23	11
	10-25	11
171350	10-30	40
172661	4-208	4
172988	9-5	11
	9-14	52
173240	7-5	61
	11-11	9
173247	4-7	63
	4-9	12
174374	2-141	18
	2-143	11
175613	10-29	5
	11-19	3
175617	10-29	4
	11-19	4
175899	4-149	21
176134	6-21	27
	6-29	19
176451	9-6	40
176453	2-149	17
	2-151	37
	2-155	17
	9-10	44
	9-54	45
176455	1-34	49
	7-5	63
	8-17	58
	8-20	45
	8-35	12
	8-40	59
	8-44	59
	9-6	54
	9-54	45
176640	2-146	51
	2-151	20
	2-155	15
	3-25	12
	4-195	14
	4-196	48
	8-23	2
	8-28	61
	8-32	45
177051	5-53	36
	5-55	36
	5-57	22
	5-61	30
	5-65	36
	5-69	22
	5-73	22
177462	11-11	7
177948	5-5	22
	5-5	24
177989	1-59	28
	1-63	31
177991	1-59	24
	1-63	33
178015	7-5	66
178119	9-6	41
	9-14	45
178901	1-5	26
181045	1-21	23
	4-63	22
	4-63	23
	4-67	23
	4-71	23
	4-75	29
	4-77	117
	4-89	12
	4-95	6
	4-99	13
	4-123	7
	4-124	7
	4-125	1
	4-127	10
	4-129	10
	4-137	31
	4-139	23
	4-141	24
	4-143	24
	4-145	34
	4-159	4
	4-211	9
181046	4-33	18
	4-35	19
	4-64	33
	4-95	11
	4-100	
	4-105	5
	4-107	3
	4-109	9
	4-113	5
	4-117	5
	4-137	25
	4-139	19
	4-141	19
	4-143	19
	4-145	30
	4-149	11
	4-153	10
	4-155	10
	4-157	10
	4-161	1
	4-163	16
	4-169	11
	4-171	36
	4-173	6
	4-204	1
	4-208	6
	4-212	7
181351	5-51	2
183779	7-5	63
184324	3-3	8
	3-5	8
	3-9	7
184546	10-7	3
184631	9-5	24
	9-115	18
184761	5-65	38
	5-78	3
185074	7-4	33
	7-4	33
185178	7-3	9
	7-3	18
	7-3	22
185179	7-3	10
	7-5	72
185180	7-3	24
185183	7-4	42
185184	7-4	42
185211	7-3	13
186061	10-15	15
	10-19	14
	10-23	15
	10-25	14
186304	4-67	25
	4-71	25
188698	9-49	30
	9-111	19
	9-150	36
188701	8-9	28
	8-9	29
	8-13	13
	8-13	14
	9-6	59
	9-6	61
	9-97	11
189370	9-6	59
	9-10	50
	9-21	39
	9-26	55
189451	11-15	6
	11-15	22
190189	9-5	32
190252	4-5	8
190481	5-39	13
190757	8-23	42
	8-28	42
	9-5	16
	9-9	1
	9-13	10
	9-14	58
	9-17	2
	9-21	9
	9-22	69
	9-25	2
	9-159	8
191519	9-6	38
191534	1-59	11
	1-63	8
	2-137	19
	3-3	32
	3-5	32
	3-9	25
	3-13	10
	3-15	23
192077	1-5	22
	9-83	21
192970	1-5	5
195489	4-49	13
	4-51	14
	4-53	13
	4-55	13
	4-57	8
195566	1-5	7
196898	1-60	44
	1-63	21
196959	3-17	6
197067	4-83	8
	4-84	8
	4-87	10
	4-195	4
	5-39	15
	11-32	2
197068	1-37	5

©2011 HYSTER COMPANY

NUMERICAL INDEX (continued)

PART NO.	PAGE	ITEM
197483	9-49	31
	9-49	32
	9-111	19
	9-149	26
	9-150	36
197853	1-39	7
	1-59	6
	1-63	3
	1-67	6
	1-69	6
197858	1-67	9
	1-69	9
198518	9-14	54
	9-21	46
198675	3-3	17
	3-5	17
198691	9-9	23
	9-17	34
	9-25	33
198733	4-175	18
	4-177	18
199085	8-23	43
	8-28	43
	9-14	59
	9-22	70
199917	9-9	9
	9-17	7
	9-25	6
	9-159	13
200439	6-21	21
200445	6-4	44
	6-13	5
200452	6-3	27
	6-39	15
	6-43	16
200454	1-60	40
	1-63	25
	1-67	18
	1-69	23
200467	6-7	19
	6-11	17
	6-41	24
	6-45	27
200471	6-3	1
	6-39	34
	6-43	23
200495	6-7	25
200972	6-17	7
	6-25	7
	6-33	16
200982	6-17	24
	6-26	24
	6-33	40
201757	2-141	9
201766	8-16	35
	8-36	35
	8-40	35
	8-44	35
	9-117	21
	9-121	21
	9-125	10
201779	9-111	7
201781	9-135	2
201784	9-115	8
201800	2-145	6
	2-149	19
201807	7-5	59
204208	4-196	58
204223	4-6	47
	4-21	16
206026	4-153	16
	4-155	19
	4-157	19
206027	4-49	20
	4-51	16
	4-53	15
	4-55	15
	4-57	14
	4-81	14
	4-81	25
206150	9-111	6
206164	1-47	4
208107	6-3	15
	6-39	25
	6-43	34
208631	6-37	2
208646	6-7	3
	6-11	3
	6-15	2
210641	9-5	21
	9-13	15
	9-22	54
210642	9-5	13
	9-13	8
	9-13	8
	9-21	8
	9-21	8
210850	9-83	13
212786	9-31	8
213024	2-149	5
	2-152	57
214195	6-3	41
	6-13	2
214336	3-17	6
216590	7-13	
216735	4-64	50
	4-195	17
	7-9	11
216877	2-143	29
	2-145	27
	7-9	18
219302	9-6	50
	10-36	37
	11-29	21
220334	10-33	8
	11-23	8
220418	5-41	16
220449	3-29	17
220470	5-41	18
220475	5-41	14
220497	3-29	17
220500	1-59	20
	1-63	34
220789	5-5	20
220903	9-83	25
	9-85	23
221341	1-59	30
	1-63	41
221351	6-47	19
	6-49	35
	6-53	35
221354	1-40	43
	1-44	49
	6-29	18
	6-49	6
	6-53	6
	10-36	36
	11-15	27
	11-30	30
221355	6-49	6
221357	11-15	5
221358	2-161	6
221359	6-29	18
	6-49	3
	6-53	3
	8-7	19
221373	11-27	2
221376	6-4	47
	6-8	44
	6-13	9
	6-15	9
221458	5-5	2
221496	5-17	10
221532	5-5	22
221561	10-3	21
	10-7	21
	10-30	36
	11-20	46
221573	6-53	10
221623	6-3	13
	6-39	37
	6-43	35
221635	3-29	5
221659	6-11	40
221695	6-3	34
221707	4-22	41
221710	5-5	24
221714	9-99	22
	9-101	22
221717	6-7	31
	6-11	30
	6-41	15
	6-45	32
221728	6-13	9
	6-15	9
221767	1-59	33
	1-63	17
	1-67	13
	1-69	13
	3-3	36
	3-5	36
	3-9	28
	6-57	29
	6-59	28
221771	9-150	34
	9-155	2
221777	2-161	15
	10-4	52
	10-8	52
221779	11-19	19
221780	7-4	39
221786	6-13	11
	6-15	10
221972	5-39	4
222029	1-71	35
222347	9-117	33
	9-121	32
222369	9-137	20
	9-141	26
222381	9-131	5
222392	5-78	7
222406	9-141	18
222427	9-137	29
	9-142	38
222441	9-35	6
222442	9-35	7
222443	8-57	39
	8-61	39

See Service Manual for service procedures.
©2011 HYSTER COMPANY

NUMERICAL INDEX (continued)

PART NO.	PAGE	ITEM
	9-49	26
	9-53	26
	9-63	41
222444	9-83	8
222456	9-83	10
	9-85	9
	10-35	24
	11-29	7
222466	9-29	10
222473	3-9	2
	3-13	5
	3-15	11
222479	9-5	4
	9-13	1
	9-21	2
222495	9-115	14
222502	3-6	46
	3-9	18
	3-13	29
	3-15	28
222507	9-115	14
222524	1-40	39
222531	9-14	53
	9-22	52
	9-67	8
222590	9-13	24
	9-22	63
222767	11-19	20
223216	9-10	53
224948	10-23	10
	10-25	10
225334	9-87	13
226414	5-39	10
	5-61	5
	9-49	18
	10-35	17
	11-25	13
	11-29	22
226774	1-23	60
227113	4-76	70
	4-89	20
	4-93	25
227131	4-81	7
227210	3-29	23
227220	3-17	6
	3-17	8
227221	3-17	10
228820	7-5	53
228998	10-12	19
230408	10-3	5
	10-7	5
230685	6-21	2
	6-30	34
231012	6-8	35
	6-11	33
	6-41	12
	6-41	17
	6-45	11
	6-45	15
231958	4-5	14
	4-11	12
231989	10-15	10
	10-19	10
233683	9-35	5
233693	5-37	9
	5-45	5
	5-45	11
	9-64	48
234038	6-17	5
	6-21	5
235691	5-43	2
236900	4-153	20
238810	4-5	29
	4-15	24
	9-5	26
	9-13	23
	9-17	10
	9-21	21
	9-25	9
239150	5-39	8
239308	5-53	29
	5-55	29
	5-61	28
	5-65	29
	8-24	52
	8-28	50
	8-32	50
	11-29	27
239503	1-33	9
	1-39	22
	1-43	18
	1-59	19
	1-63	14
	2-133	5
	2-135	5
	2-146	50
	3-33	5
	4-11	4
	4-67	31
	4-71	31
	4-76	42
	4-89	16
	4-93	17
	4-195	28
	4-196	46
	5-57	48
	5-70	48
	5-74	48
239784	9-159	7
240683	6-17	30
	6-26	30
	6-33	9
241878	4-6	41
	4-9	16
	4-15	3
	4-196	57
243272	4-77	117
246001	1-64	60
	2-151	16
	2-155	37
246108	1-34	45
246869	5-6	31
246888	10-15	7
246889	10-23	7
248196	4-153	11
	4-155	11
	4-157	11
248320	2-161	15
	6-7	31
	10-4	29
	10-4	57
	10-8	29
	10-8	57
249557	9-87	14
251979	7-5	71
256226	9-47	13
257030	10-15	8
	10-19	8
258590	5-53	15
	5-55	15
	5-57	20
	5-61	18
	5-69	20
	5-73	20
	8-24	69
260045	4-76	77
	4-83	3
	4-84	3
	4-87	
	4-96	39
	4-100	54
260773	9-135	3
260803	9-49	33
	9-149	26
261162	9-10	54
264134	5-53	35
	5-55	35
	5-57	16
	5-65	35
	5-69	16
	5-73	16
	9-53	18
264148	1-39	15
	1-43	22
264150	8-16	52
	8-19	39
	8-36	51
	8-40	53
	8-44	51
264159	9-5	8
	9-13	4
	9-21	5
264168	1-71	15
264297	4-5	28
265325	1-6	40
	8-19	37
	8-36	58
	8-44	63
	9-125	11
265732	7-9	4
265817	1-22	43
266401	9-47	21
266409	9-47	25
266410	9-47	23
266411	9-47	19
266413	9-47	16
266414	9-47	14
266415	9-47	12
267262	8-17	61
	8-35	21
	8-41	62
	8-43	21
	9-123	16
268133	7-10	47
268356	4-175	25
	4-177	25
268619	9-6	35
	9-13	18
	9-21	16
268789	3-5	10
	3-9	27
	3-13	14
	3-15	5
268980	6-3	32
	6-8	46
	6-11	39
	6-39	6
	6-43	14

©2011 HYSTER COMPANY

NUMERICAL INDEX (continued)

PART NO.	PAGE	ITEM
	6-49	32
	6-53	32
	6-57	20
	8-7	14
270871	4-63	20
	4-72	81
273150	9-43	13
	9-131	15
273775	5-51	26
	5-53	19
	5-55	19
	5-57	21
	5-65	19
	5-69	21
	5-73	21
	9-49	11
	9-53	11
	11-19	25
273969	6-3	9
	6-7	18
	6-39	27
	6-41	26
	6-43	19
	6-45	20
274847	4-175	20
	4-177	20
277279	1-5	31
	1-40	49
	1-44	40
277280	1-44	56
277569	11-2	1
	11-8	1
279740	1-37	26
	4-100	53
279752	1-33	37
280156	5-61	6
	5-61	8
	5-61	24
	5-61	25
	5-61	26
	9-5	3
	9-6	43
	9-9	33
	9-9	34
	9-137	11
	9-137	15
	9-137	16
	9-137	18
	9-138	37
	9-141	21
	9-141	24
	9-145	11
	9-145	15
	9-145	20
	9-145	21
	9-145	22
	9-149	19
	9-149	20
	9-149	21
	9-155	18
	9-155	22
	9-155	23
	9-159	21
	10-12	11
	10-12	15
280472	1-3	
	1-21	28
	1-33	6
	4-195	18
280588	10-23	8
	10-25	8
280610	11-15	7
	11-15	20
280644	1-25	12
281066	5-33	17
	5-49	7
281562	9-47	24
281563	9-47	24
282972	9-47	17
282973	9-47	22
282974	9-47	18
284078	4-63	19
	4-72	80
284094	4-5	19
	4-15	28
284534	9-87	15
284847	3-35	
286901	4-195	8
287750	5-57	46
	5-69	46
	5-73	46
287805	9-31	2
287816	3-29	30
287851	1-33	31
	5-66	46
287854	1-23	72
	1-49	16
	1-51	16
	1-57	35
	4-76	72
	4-83	4
	4-84	4
	4-87	
	4-96	40
	4-100	55
	4-195	33
	9-49	5
	9-53	5
287860	4-195	12
	9-59	7
288394	1-26	36
289166	4-7	80
291528	6-21	28
	6-30	51
292500	1-22	48
	4-100	52
292501	1-25	11
	1-33	28
	1-40	56
	2-151	2
	3-29	31
	4-19	18
	4-22	48
292502	4-6	34
292505	1-25	15
292508	1-64	57
292513	1-22	52
	1-22	52
	4-195	23
	11-33	7
292514	2-131	18
	3-17	29
292519	2-131	21
	5-53	31
	5-55	31
	5-57	12
	5-61	1
	5-65	31
	5-69	12
	5-73	12
292522	2-145	43
	2-149	25
	2-151	10
	2-155	25
292526	4-6	59
292527	1-64	62
	5-58	49
	5-70	49
	5-74	49
292528	2-143	37
	2-145	25
292529	7-9	16
292535	1-6	36
292538	1-6	36
292584	2-151	13
292620	2-151	12
292668	1-25	9
	1-30	31
	1-37	8
	4-6	53
	4-9	20
	4-19	4
	4-85	21
	4-87	5
	4-90	53
	4-93	22
	4-196	38
292678	1-69	20
292679	1-21	8
	1-30	32
	1-33	41
	1-37	9
	4-6	52
	4-9	21
	4-19	3
	4-76	63
	4-81	3
	4-85	20
	4-87	4
	4-196	37
292680	1-21	12
	1-30	38
	1-33	29
	1-37	4
	3-29	33
	4-5	32
	4-16	38
	4-19	19
	4-21	25
	5-53	32
292681	1-33	32
	1-39	23
	1-43	19
	2-133	7
	2-135	7
	2-146	49
	3-33	6
	4-11	2
	4-76	59
	4-81	6
	4-83	13
	4-85	13
	4-87	12
	4-195	16
	4-196	47
	5-57	45
	5-69	45
	5-73	45

See Service Manual for service procedures.
©2011 HYSTER COMPANY

NUMERICAL INDEX (continued)

PART NO.	PAGE	ITEM
	7-9	32
	8-23	27
	8-27	27
	8-31	27
292682	1-22	54
	1-22	54
	1-22	54
	1-39	27
	1-49	18
	1-51	18
	1-57	37
	2-131	19
	2-137	17
	2-143	22
	2-145	30
	2-149	24
	2-151	11
	2-155	24
	3-17	32
	4-195	11
	4-196	34
	5-55	32
	5-57	13
	5-61	2
	5-65	32
	5-69	13
	5-73	13
	7-9	8
	9-49	9
	9-53	9
	9-59	9
	11-33	8
292683	2-143	25
	2-145	26
	3-29	22
	4-6	58
	5-53	9
	5-57	7
	5-61	13
	5-65	9
	5-69	7
	5-73	7
	5-78	11
292693	1-47	12
293643	3-29	21
293646	3-29	21
293654	6-17	14
	6-25	14
	6-33	22
293716	6-17	2
	6-25	2
	6-33	3
293758	4-76	62
	4-81	2
293771	1-47	14
293780	1-64	52
293781	5-55	9
293782	7-9	19
294309	9-101	8
294313	9-99	
295529	2-155	5
296026	5-55	8
296128	8-57	37
	8-61	37
296149	1-69	18
296380	4-11	6
	4-67	30
	4-71	30
	4-76	41
	4-89	15
	4-93	16
296396	1-21	10
296421	3-9	28
296422	6-37	7
296423	1-21	4
296431	8-5	13
296464	1-21	9
296472	1-25	6
	1-37	2
296844	6-17	29
	6-26	29
	6-33	10
298132	3-5	34
	3-5	34
	3-9	16
	3-13	1
	3-15	19
298536	7-13	5
298548	7-13	2
298829	5-65	15
	9-29	16
	9-31	8
298832	3-3	3
	3-5	3
	3-9	30
	3-13	34
	3-15	34
299305	11-30	33
299306	11-30	34
300088	1-59	31
	1-63	15
	1-63	30
	1-67	14
	1-69	14
300427	6-22	
300541	1-33	43
300595	10-36	45
300937	1-6	37
300939	1-6	38
302033	4-93	36
302036	1-37	7
	4-90	52
	4-93	21
	4-196	39
302048	4-21	24
	4-87	21
302236	1-21	26
302244	1-22	42
	1-33	40
302246	4-83	7
	4-84	7
	4-87	9
302248	1-21	7
	1-25	14
	1-30	30
	4-6	54
	4-9	23
	4-19	5
	4-76	65
	4-85	19
	4-87	3
302256	1-21	13
302398	1-25	17
	4-21	34
	4-93	37
	11-33	5
302399	1-21	5
	1-25	7
	2-151	3
	4-87	23
302400	2-151	19
	2-155	16
	3-25	13
	5-66	47
	8-23	4
	8-27	4
	8-31	4
	9-21	44
	9-31	3
302401	2-151	15
	2-155	9
	3-27	12
302402	1-64	59
	2-135	14
	2-151	17
	2-155	30
302408	1-47	13
302449	5-43	27
302501	7-5	62
302512	7-4	46
302522	7-4	47
303300	10-8	32
304513	5-41	5
304527	5-6	36
	5-23	2
	5-27	2
304884	5-41	23
305914	2-149	6
	2-151	5
	2-156	43
306258	9-79	1
306952	1-57	32
306954	1-57	20
306957	1-57	9
307811	6-7	4
	6-11	4
309062	9-87	12
309171	8-9	3
309637	1-25	22
	4-64	42
	4-72	82
	4-76	54
	4-96	30
309656	3-3	23
	3-5	23
309666	1-21	20
309957	10-12	6
311245	3-3	3
	3-9	32
	3-13	35
	3-15	35
313221	2-143	19
313828	1-49	15
	1-51	15
	1-57	1
	7-9	27
314166	3-29	16
314170	3-29	27
314171	10-4	33
314373	10-4	45
	10-8	45
	10-29	28
	11-20	38
314374	10-4	46
	10-8	46
	10-29	29
	11-20	39
314375	10-3	8

©2011 HYSTER COMPANY

NUMERICAL INDEX (continued)

PART NO.	PAGE	ITEM
	10-7	8
316448	1-72	46
316596	9-21	45
	9-31	17
316678	4-77	111
	4-83	14
	4-85	14
	4-87	13
316695	2-152	55
316826	9-49	34
	9-53	34
316829	7-13	4
316833	4-76	67
	4-83	10
	4-84	10
	4-87	11
318352	1-22	46
320154	1-69	19
320155	1-25	13
	1-30	33
	4-6	55
	4-9	22
	4-19	6
	4-76	66
	4-90	54
	4-93	23
	8-57	38
	8-61	38
	9-49	35
	9-54	35
	11-33	4
320156	1-22	49
	1-25	10
	1-33	3
	1-40	57
	2-151	4
	4-6	35
	4-19	17
	4-21	23
	4-67	12
	4-71	12
	4-75	18
	4-87	22
	4-89	3
	4-93	9
	4-100	49
	8-57	33
	8-61	33
320157	1-33	33
	1-40	52
	1-44	43
	1-64	54
	1-64	58
	2-133	8
	2-135	8
	2-146	48
	2-151	21
	2-156	45
	3-25	11
	3-33	2
	4-11	5
	4-67	11
	4-71	11
	4-75	17
	4-89	2
	4-93	8
	4-195	29
	5-57	47
	5-69	47
	5-73	47
320158	3-33	3
	4-77	112
	4-83	12
	4-85	12
	4-87	14
	5-66	48
	7-9	31
	8-23	3
	8-28	62
	8-32	44
	9-31	14
320159	1-22	53
	1-22	53
	1-22	53
	1-43	27
	1-64	63
	2-143	21
	2-145	29
	2-152	52
	2-156	44
	3-17	31
	3-27	4
	4-25	18
	9-49	8
	9-53	8
	9-59	10
320160	2-145	47
	4-195	24
320161	1-64	61
	2-135	19
	2-143	30
	2-151	18
	2-156	46
	2-156	46
	5-57	29
	5-65	40
	5-69	29
	5-73	29
320162	2-161	3
320169	2-151	14
320181	1-47	1
	1-47	15
320184	1-47	5
321004	4-5	15
	4-16	46
321158	4-5	24
	4-15	26
321167	9-47	3
321290	6-3	4
	6-39	33
	6-43	26
321293	6-3	12
	6-3	40
	6-7	5
	6-7	29
	6-11	5
	6-11	27
	6-13	4
	6-15	7
	6-39	38
	6-41	34
	6-45	34
321487	4-15	15
	4-25	26
322668	1-71	7
322784	4-196	59
323864	1-34	46
	4-76	52
	9-5	15
	9-17	14
	9-21	24
	9-22	51
	9-25	13
324896	7-9	21
325789	4-49	9
	4-51	8
	4-53	9
	4-55	9
	4-57	5
	4-109	11
	4-159	1
325791	4-171	22
327487	1-71	14
327488	1-71	14
327520	11-31	
327523	11-31	
328987	6-37	24
329067	1-3	30
	1-26	38
	1-37	11
	1-40	38
	1-44	38
329073	2-141	13
329273	5-61	22
329420	6-4	42
	6-21	18
	6-30	43
329421	6-21	18
	6-30	43
329422	6-22	
	6-30	
330005	10-3	3
330007	10-3	3
330008	10-3	3
330009	10-3	3
330010	10-3	3
330015	10-3	3
330100	9-49	21
	9-53	21
330169	10-4	32
330286	10-8	33
330302	10-7	3
330304	10-7	3
330435	8-16	48
	8-20	52
	8-23	24
	8-27	24
	8-31	24
	8-36	48
	8-40	48
	8-44	48
	9-83	17
	9-85	17
330460	11-19	22
330501	5-6	34
330504	5-5	6
	5-9	3
	5-9	3
330505	5-5	7
330506	5-5	5
330507	5-5	3
330508	5-5	9
330511	5-5	23
	5-17	13
	5-19	27
	5-21	27
	5-37	6
	5-43	24

See Service Manual for service procedures.
©2011 HYSTER COMPANY

NUMERICAL INDEX (continued)

PART NO.	PAGE	ITEM
330512	5-5	26
330513	5-6	30
330514	5-6	29
330517	5-9	16
330518	5-9	2
330519	5-9	4
330520	5-9	5
330521	5-9	15
330522	5-9	7
330523	5-9	13
330524	5-9	8
330525	5-9	9
330526	5-9	12
330527	5-9	22
330530	5-13	4
330531	5-13	5
330532	5-13	19
330533	5-13	18
330534	5-13	17
330536	5-13	13
330539	5-13	8
	5-13	15
	5-21	10
330546	5-13	27
330547	5-13	28
330552	5-14	44
330555	5-14	44
330558	5-14	36
330562	5-13	32
330564	5-13	30
330570	5-6	36
	5-23	2
	5-27	2
	5-31	2
330574	5-17	6
	5-19	12
	5-23	10
	5-27	9
	5-31	9
330577	5-23	27
	5-27	26
	5-31	26
330578	5-23	26
	5-27	20
	5-31	20
330579	5-23	25
	5-27	21
	5-31	21
330580	5-27	27
	5-31	27
330581	5-27	28
	5-31	28
330582	5-27	29
	5-31	29
330583	5-27	30
	5-31	30
330586	5-23	6
330588	5-17	1
	5-19	19
	5-21	19
330590	5-23	11
	5-27	10
	5-31	10
330593	5-14	46
	5-17	11
	5-19	15
	5-21	15
330594	5-27	34
	5-31	34
330596	5-5	13
	5-17	28
330600	5-17	15
330606	5-5	14
330617	5-17	26
	5-19	7
	5-21	7
	5-23	15
	5-27	14
	5-31	14
330618	5-17	25
	5-19	6
	5-21	6
	5-23	16
	5-27	15
330619	5-17	24
	5-19	5
	5-21	5
330620	5-19	4
	5-21	4
	5-23	18
	5-27	16
	5-31	17
330622	5-17	21
330623	5-17	20
	5-19	1
	5-21	3
	5-23	21
	5-27	22
	5-31	22
330629	5-33	35
330630	5-33	34
330631	5-33	18
330632	5-33	21
330633	5-33	22
330634	5-33	23
330635	5-33	24
330636	5-33	26
330638	5-33	28
330640	5-33	31
330641	5-33	32
330642	5-33	33
330643	5-33	19
330645	5-33	1
330646	5-33	7
330647	5-33	8
330648	5-33	10
330657	5-33	12
330658	5-33	13
330659	5-33	14
330674	5-37	12
331311	10-29	7
331312	10-29	7
331490	9-33	4
331536	1-71	33
334200	9-33	4
	9-35	4
334229	1-30	25
334230	1-30	26
334233	1-30	24
334234	1-30	23
334245	10-35	21
	11-19	7
	11-29	4
334325	9-49	16
	9-53	16
334340	1-23	63
	1-23	63
	9-49	7
	9-53	7
334886	10-4	28
	10-30	39
	11-19	17
334887	10-8	28
	10-30	39
	11-19	17
334922	1-59	9
335989	1-71	36
335991	1-71	37
336820	10-12	4
336821	1-59	15
	1-63	10
338240	3-29	15
338386	11-31	
338455	11-19	10
338544	9-33	2
338568	9-76	65
338569	9-75	31
338570	9-75	30
338926	9-76	67
339637	7-4	39
340044	1-37	23
	4-64	45
	4-72	60
	4-76	44
	4-95	26
	4-100	38
340387	7-4	44
340388	7-5	49
340481	6-22	
	6-30	
340739	9-79	
341803	11-27	3
341804	11-27	10
341807	11-27	13
341808	11-27	
342677	8-13	12
	8-23	15
	8-27	15
	8-31	15
343487	11-29	25
343590	10-36	34
	11-15	16
	11-30	28
343663	11-19	15
343666	11-19	5
	11-27	
344242	3-35	9
344243	3-35	4
344244	3-35	6
344245	3-35	3
344246	3-35	5
344247	3-35	2
345355	4-196	40
345369	4-196	41
345400	3-35	10
345408	7-15	2
345409	7-15	3
345410	7-15	4
345411	7-15	5
345412	7-15	6
345413	7-15	7
345414	7-15	8
345416	7-15	9
345418	7-15	13
345421	7-15	
345423	7-9	5
345424	7-15	12
345735	8-57	36

©2011 HYSTER COMPANY

NUMERICAL INDEX (continued)

PART NO.	PAGE	ITEM
	8-61	36
	9-57	11
345929	9-57	9
345951	1-71	14
345957	1-71	14
348476	5-9	11
348480	5-14	34
348485	5-17	11
348486	5-17	7
348487	5-17	5
348488	5-17	4
349365	3-17	18
350483	4-5	18
	4-16	45
350531	11-19	12
350532	11-19	13
351278	6-7	15
	6-11	14
	6-41	28
	6-45	23
351424	11-31	
351711	4-5	19
	4-15	28
351943	9-33	2
352783	1-34	47
353143	3-29	15
353144	1-21	16
	1-30	36
353379	4-195	13
353453	5-66	45
	9-31	4
354390	4-177	2
355157	11-27	1
355158	11-27	9
356248	11-29	26
356741	4-196	51
356821	1-49	
357951	10-12	6
358099	6-4	45
	6-7	9
	6-11	7
	6-13	7
	6-15	6
	6-21	25
	6-30	55
358401	11-19	17
358414	3-3	33
	3-5	33
	3-9	26
	3-13	9
	3-15	22
358431	11-19	17
359756	8-54	
	9-35	2
	9-77	
	9-78	
359767	1-49	1
362255	4-7	82
	7-9	9
362816	7-9	5
365337	1-22	45
365344	1-21	14
366066	7-9	4
366067	7-15	10
366068	7-15	11
366069	7-15	14
366327	7-13	12
366328	7-13	11
367540	4-41	1
	4-215	1
367953	4-63	14
	4-81	7
367960	4-147	12
	4-149	19
367966	4-63	5
	4-63	14
	4-81	7
367968	4-149	20
368470	1-47	10
369242	4-196	53
	7-9	13
369804	8-28	53
	8-32	53
369813	2-155	6
370007	10-35	20
	11-29	2
370009	4-6	48
	4-11	27
	4-21	17
370175	9-87	5
370176	9-87	11
370196	9-87	6
370197	9-87	2
370471	4-63	9
	4-81	7
370646	4-67	18
	4-71	18
	4-72	56
	4-75	24
	4-77	105
	4-89	9
	4-89	34
	4-93	4
	4-93	6
	11-33	
370647	4-21	33
	4-49	
	4-67	17
	4-71	17
	4-75	23
	4-89	8
	4-93	3
370648	4-67	19
	4-71	19
	4-77	106
	4-89	35
	4-93	5
	4-93	7
	4-93	38
370727	4-147	11
	4-149	16
370728	4-147	10
	4-149	13
370730	4-49	5
	4-51	4
	4-53	5
	4-55	5
	4-57	3
	4-58	17
	4-203	3
370921	5-51	25
	8-9	19
371172	8-40	54
	9-77	
	9-78	
	9-81	4
	9-89	10
371344	7-15	15
371666	7-9	2
371961	9-157	4
373057	9-17	15
	9-26	60
	9-83	2
	9-85	2
373063	9-83	15
373091	4-196	49
373106	4-196	35
373107	4-196	36
374021	4-196	44
375514	10-12	7
375543	10-4	30
	10-8	30
375545	10-8	34
375629	7-10	48
376064	1-21	31
376137	1-33	12
376276	1-29	3
376504	7-9	10
376505	7-9	12
376506	7-9	20
376510	7-9	15
376840	1-22	47
376867	1-21	32
376868	1-21	32
376922	1-22	33
376947	1-3	27
	1-29	8
376948	1-3	24
	1-29	7
376949	1-3	28
	1-29	6
	4-63	24
	4-72	74
	4-75	12
	4-95	9
	4-99	18
376953	1-30	28
376954	1-30	29
376968	1-25	3
376970	1-25	16
376971	1-25	2
376972	1-25	1
377618	1-71	5
378128	5-61	10
378137	5-78	5
378149	4-113	2
	4-153	13
	4-169	9
378344	2-137	3
378345	2-137	4
378451	4-109	12
378500	2-137	5
378501	2-137	6
378522	5-78	5
379650	1-49	21
	4-67	27
	4-71	27
	4-76	38
	4-82	42
	9-49	3
379674	7-9	26
379675	4-196	54
379697	7-9	17
379902	4-67	25
	4-71	25
	4-76	36
	4-82	39
380114	2-131	4

©2011 HYSTER COMPANY

NUMERICAL INDEX (continued)

PART NO.	PAGE	ITEM
380121	4-63	22
	4-63	23
	4-95	4
	4-95	5
	4-99	14
	4-99	15
380292	9-49	20
	9-53	20
381846	4-105	11
	4-113	6
	4-115	5
	4-117	2
	4-133	20
	4-135	9
	4-137	22
	4-139	13
	4-141	15
	4-143	15
	4-145	36
	4-146	4
	4-161	3
	4-163	14
	4-169	12
	4-171	23
	4-204	4
381847	4-105	12
	4-137	24
	4-139	12
	4-141	14
	4-143	14
	4-145	38
	4-163	13
	4-171	24
	4-204	5
381919	4-33	14
	4-35	8
	4-37	7
	4-39	5
	4-41	3
	4-49	6
	4-51	6
	4-53	6
	4-55	6
	4-109	4
	4-123	13
	4-124	13
	4-127	12
	4-129	12
	4-131	12
	4-137	12
	4-139	14
	4-141	28
	4-143	28
	4-149	10
	4-153	22
	4-159	2
	4-163	4
	4-171	14
	4-173	5
	4-204	6
	4-207	6
	4-211	5
	4-212	6
	4-213	8
	4-215	2
	4-218	5
382212	5-6	33
382213	5-6	35
382215	5-5	10
382216	5-5	11
382217	5-13	3
382218	5-13	12
382220	5-13	33
382252	5-14	37
382253	5-14	39
382254	5-14	40
382259	5-23	3
	5-27	3
	5-31	3
382260	5-23	5
	5-27	5
	5-31	5
382261	5-23	7
	5-27	6
	5-31	6
382262	5-23	8
	5-27	7
	5-31	7
382263	5-23	17
	5-27	17
	5-31	16
382264	5-27	23
382266	5-23	24
	5-27	25
	5-31	25
382268	5-23	13
	5-27	12
	5-31	12
382269	5-23	12
	5-27	11
	5-31	11
382270	5-27	32
	5-31	32
382271	5-27	33
382273	5-23	29
382274	5-23	28
382276	5-23	22
382277	5-23	30
382278	5-17	19
382279	5-17	9
382281	5-17	3
382282	5-17	27
382283	5-17	2
382284	5-17	18
382285	5-17	17
382286	5-17	12
382288	5-17	18
382289	5-6	38
382290	5-6	39
382291	5-6	40
382292	5-5	12
382293	5-5	15
382294	5-5	16
382295	5-5	19
382296	5-5	21
382297	5-33	4
382298	5-33	3
382299	5-33	2
382300	5-33	6
382301	5-33	5
382309	5-43	6
382310	5-43	8
382311	5-43	11
382312	5-43	12
382313	5-43	13
382319	5-43	26
382330	5-33	40
382331	5-33	39
382333	5-37	5
382334	5-37	4
382335	5-37	3
382336	5-37	2
382337	5-37	8
382392	5-53	33
	5-55	33
	5-57	14
	5-61	3
	5-65	33
	5-69	14
	5-73	14
382627	5-43	15
382628	5-43	16
382629	5-43	17
382682	9-99	
384014	4-196	50
384345	5-43	25
384427	9-59	29
	9-67	27
	9-157	
	9-159	1
384428	7-9	3
	7-15	
384449	2-141	12
385005	4-76	68
	4-83	9
	4-84	9
385107	5-51	29
385132	10-15	12
385133	10-23	12
385456	5-15	4
385465	5-15	3
385516	1-49	24
	1-51	24
387225	7-5	68
387610	10-4	34
387633	10-12	7
388969	11-5	9
389435	7-9	4
389688	1-71	20
389926	8-9	21
390063	8-16	27
	8-16	27
	8-19	27
	8-35	27
	8-39	27
	8-39	27
	8-43	27
391484	4-7	65
	4-15	35
392016	3-29	20
392620	1-64	50
392877	9-21	34
394101	9-49	27
	9-53	27
397676	11-15	25
806425	4-49	2
	4-51	2
	4-53	2
	4-55	16
	4-58	19
806426	4-49	21
	4-51	17
	4-53	16
	4-55	2
	4-57	13
	4-58	19
	4-139	31
	4-141	33

©2011 HYSTER COMPANY

NUMERICAL INDEX (continued)

PART NO.	PAGE	ITEM
	4-143	33
	4-145	8
806562	9-87	18
806667	1-39	21
	1-43	17
	1-59	18
	1-63	13
815289	9-153	6
815647	8-57	32
	8-61	32
815670	9-80	
815682	1-40	50
	1-44	41
815762	9-117	27
	9-123	11
815763	9-131	17
815764	9-117	20
	9-121	20
	9-131	16
815765	9-123	2
	9-133	29
815766	9-117	23
	9-133	30
815767	9-111	8
	9-125	7
815768	9-111	13
815769	9-111	9
815770	8-16	40
	8-36	40
	8-40	40
	8-44	40
	9-111	11
815773	9-117	3
	9-121	3
815775	9-133	4
815779	7-10	44
815780	7-10	46
815784	9-9	28
815785	9-9	31
815786	9-9	27
815787	9-9	32
815788	9-9	29
815789	9-9	30
815790	5-51	1
815791	9-6	37
815793	9-49	33
	9-146	32
815794	7-10	46
815795	7-10	44
815796	7-10	45
815798	5-51	25
	8-9	19
	8-13	9
815799	8-9	23
	8-20	44
815800	8-9	5
	9-123	22
815828	9-43	1
815829	9-43	2
815830	9-43	17
815848	1-40	39
815850	1-40	39
815851	11-29	23
815852	11-29	24
815866	9-43	4
815867	8-16	31
	8-19	36
	8-35	31
	8-40	36
	8-44	36
815868	9-97	8
815869	8-19	20
	8-39	20
	8-43	20
815870	8-40	55
	8-44	49
	9-97	9
815871	8-36	38
	8-40	38
	8-44	38
815872	8-19	4
	8-39	4
	8-43	4
815873	1-33	43
815876	11-15	24
815877	8-9	30
815897	11-29	23
815898	11-30	34
815914	4-196	51
815915	11-29	17
815916	11-29	18
815917	11-29	20
815918	11-29	19
815932	11-15	19
815996	1-6	47
816015	9-109	13
	9-160	46
816045	1-30	24
816046	1-30	26
816055	9-109	14
	9-160	45
816056	9-159	24
816087	3-29	4
816107	1-60	47
816117	8-19	12
	8-36	55
	8-41	60
	8-44	60
	9-109	6
816124	1-60	48
816125	1-60	48
816128	7-4	34
816130	9-150	35
	9-155	30
816131	9-10	55
816190	10-23	
816194	10-23	
816196	10-23	
816200	10-23	
816201	10-23	
816202	10-15	
816204	10-15	
816205	10-15	
816206	10-15	
816207	10-15	
816212	10-15	
816232	8-23	38
	8-27	38
	8-31	38
	9-29	9
816235	11-31	
816262	10-23	3
816278	10-23	
816279	10-23	
816280	10-23	9
816281	10-23	6
816282	10-23	14
816283	10-15	3
816286	10-15	9
816287	10-15	14
816288	10-15	6
816289	9-141	28
816290	8-20	42
	8-36	54
	8-44	54
816291	9-153	1
816292	9-153	3
816301	1-59	1
	1-63	43
816302	1-59	2
816308	10-16	
816323	8-19	38
	8-36	50
	8-44	50
816344	1-5	14
	1-19	
816345	1-5	9
	1-13	
816346	1-6	47
816376	9-89	
	9-97	1
816377	1-23	70
816378	1-23	71
816410	4-153	4
	4-155	4
	4-157	4
816442	4-195	9
816450	1-59	1
816451	1-59	2
816455	9-6	36
816456	10-25	12
816457	9-5	30
816463	10-19	12
816466	9-117	35
	9-121	34
816467	4-5	1
816472	4-9	27
	4-19	1
	4-202	
816478	4-6	38
	4-9	7
	4-27	
816484	4-6	38
	4-9	9
	4-42	
816489	9-163	7
	9-165	10
816496	9-5	24
816507	9-117	32
	9-121	31
816534	4-11	7
816544	7-13	2
816545	7-13	5
816546	10-19	6
816547	10-19	9
816548	10-25	6
816549	10-25	9
816574	1-6	38
833388	7-5	50
	7-5	54
833389	7-5	50
	7-5	54
833390	7-5	50
	7-5	54
886552	5-57	42
	5-69	42
	5-73	42
888090	9-22	61

©2011 HYSTER COMPANY

NUMERICAL INDEX (continued)

PART NO.	PAGE	ITEM
888329	9-121	36
888333	5-69	34
	5-73	34
	9-47	2
895468	7-10	49
918924	6-49	29
	6-53	29
918925	6-49	29
	6-53	29
1151378	3-6	43
	3-9	37
1152816	4-9	6
	4-11	21
116242A	10-4	43
	10-8	43
	10-29	12
	11-20	31
119294A	11-19	23
1194251	10-4	31
	10-8	31
	10-30	39
1194630	1-5	11
1195634	9-43	13
	9-43	24
1199286	9-71	13
1199287	9-71	12
1300057	4-49	15
	4-77	87
	4-89	36
	4-93	30
1300117	7-9	14
1300165	7-9	33
1300231	4-137	23
	4-139	11
	4-141	13
	4-143	13
	4-145	37
1300757	4-63	31
	4-72	68
	4-77	104
	4-95	12
	4-100	30
1300978	1-21	3
1300979	1-21	3
1300995	1-21	2
1300996	1-21	2
1301001	1-33	35
1301020	1-33	13
	1-35	
1301026	1-25	18
	3-29	29
1301027	1-25	19
1301054	1-40	37
	1-44	37
1301066	1-30	35
1301113	1-3	7
1301121	1-33	17
1301127	1-33	5
1301154	4-115	4
	4-117	1
	4-122	6
	4-123	12
	4-124	12
	4-125	2
	4-127	17
	4-129	17
	4-133	19
	4-135	10
	4-137	34
	4-139	26
	4-141	27
	4-143	27
	4-145	32
	4-207	1
1301155	4-158	4
1301156	4-67	39
1301157	4-67	38
	4-77	88
	4-90	39
1301177	1-3	19
	1-29	12
	1-33	34
	8-9	22
	9-49	3
	9-53	3
1301184	1-22	41
1301188	1-33	16
1301189	1-3	26
	1-29	14
1301195	1-29	17
1301224	4-67	36
	4-71	36
	4-77	96
	4-85	22
	4-87	2
	4-89	29
	4-93	27
	4-93	35
1301228	4-37	5
	4-123	10
	4-124	10
	4-127	15
	4-129	15
1301229	4-133	18
	4-211	6
1301235	4-67	10
	4-71	10
1301254	1-21	21
1301255	1-3	23
	1-29	16
1301256	1-21	22
1301263	1-3	32
	1-26	31
1301264	1-3	33
	1-26	32
1301265	1-3	36
1301282	4-67	21
	4-71	21
1301284	1-33	42
	4-67	16
	4-71	16
	4-75	22
	4-76	47
	4-77	91
	4-89	7
	4-89	17
	4-89	25
	4-89	30
	4-93	12
	4-93	32
1301286	1-3	22
	1-29	15
1301288	1-29	10
	1-60	55
1301292	1-3	37
	1-29	19
1301293	1-3	38
	1-29	20
1301296	4-67	14
	4-71	14
	4-75	20
	4-89	5
	4-93	13
1301297	1-3	31
	1-26	39
1301299	4-5	7
1301310	1-33	7
1301323	1-33	4
1301326	1-33	1
1301372	1-22	36
1301374	1-22	38
1301375	1-22	39
1301389	1-33	11
1301393	1-33	14
1301395	1-33	19
1301396	1-33	20
1301397	1-33	21
1301398	1-33	22
1301399	1-33	26
1301400	1-33	27
1301404	1-33	23
1301405	1-33	24
1301419	1-25	27
1301422	7-9	5
1301424	4-63	28
	4-72	69
	4-77	100
	4-95	28
	4-100	36
1301425	7-9	28
1301426	7-9	25
1301437	7-9	22
1301554	1-3	35
1301585	7-9	37
1301587	1-33	10
1301589	1-33	25
1301593	1-37	22
	4-64	44
	4-72	59
	4-76	43
	4-95	25
	4-100	37
1301598	1-33	36
1301613	4-67	28
	4-71	28
	4-77	102
	4-90	38
	4-99	5
1301615	4-77	88
	4-90	39
	4-99	4
1301617	4-67	38
1301619	4-67	39
1301640	4-67	32
	4-71	32
	4-76	46
	4-90	47
	4-93	28
	4-96	33
	4-100	29
1301645	4-63	1
1301650	11-15	8
1301675	4-90	38
1301676	7-9	34
1301685	1-37	21
1301686	1-37	13
1301700	1-21	27
	1-39	12

©2011 HYSTER COMPANY

NUMERICAL INDEX (continued)

PART NO.	PAGE	ITEM
	1-43	23
1301704	4-67	15
	4-71	15
	4-75	21
	4-89	6
	4-93	14
1301705	1-21	17
1301706	1-21	19
1301707	1-21	18
1301708	1-33	2
	1-39	25
	1-43	25
1301714	1-25	28
	1-25	30
1301717	4-195	30
1301720	4-49	4
	4-51	5
	4-53	4
	4-55	4
	4-57	3
	4-58	17
1301727	1-37	14
	4-63	30
	4-72	67
	4-77	103
	4-95	1
	4-99	2
1301739	4-67	26
	4-71	26
	4-76	37
	4-82	41
1301744	1-71	6
1301746	1-26	35
1302024	11-33	2
1302187	11-31	
1302188	11-31	
1302189	11-31	
1302800	9-47	6
1302871	10-4	55
	10-8	55
1303440	7-10	45
1303550	6-21	24
	6-30	48
	6-37	31
1303551	6-3	10
	6-7	12
	6-11	11
	6-39	28
	6-41	33
	6-43	20
	6-45	28
1303576	5-41	3
1303577	5-41	1
1303581	5-41	10
1303582	5-41	20
1303583	5-41	19
1303584	5-41	15
1303762	7-4	29
	7-13	
1303766	7-13	8
1303767	7-13	9
1303769	7-13	1
1303770	7-13	13
1303774	7-13	10
1303787	7-15	7
1304400	7-13	3
1304410	5-41	2
1304549	5-53	28
	5-61	29
1304615	7-10	47
1304971	1-30	41
1305436	2-143	33
	2-145	7
1305693	5-43	22
1305839	2-131	1
1305840	2-131	2
1305904	3-29	2
1305909	3-29	1
1305915	5-39	11
1305920	5-39	5
1305924	5-39	3
1306270	4-157	18
1306271	4-173	20
1306902	1-29	22
1307006	4-90	38
1307007	1-29	4
1307051	1-21	22
1307110	4-67	8
	4-71	8
	4-75	10
	4-81	15
	4-81	23
1307121	4-6	42
	4-11	22
	4-15	14
	4-19	14
	4-21	30
1307123	4-111	1
	4-113	1
1307369	9-163	8
	9-165	5
1307374	9-6	51
	9-133	17
	9-135	17
	11-15	23
	11-15	23
1307682	4-81	29
1307683	4-72	76
	4-75	2
1307684	4-72	77
	4-75	1
	4-81	7
1307687	4-5	1
	4-6	50
	4-9	26
	4-19	7
	4-64	51
	4-68	43
	4-71	44
	4-76	53
	4-77	90
	4-77	95
	4-89	18
	4-89	24
	4-89	27
	4-89	28
	4-90	49
	4-93	11
	4-93	33
	4-93	34
1307694	4-67	22
	4-71	22
	4-75	27
	4-89	10
	4-99	6
1307706	9-83	19
1307716	7-9	38
1307719	9-159	2
1307726	9-133	12
	9-135	12
1307729	9-49	19
	9-53	19
	9-57	
	9-123	6
1307730	9-59	3
	9-137	33
	9-141	33
1307732	5-41	4
1307734	7-13	
1307736	7-10	42
1307737	1-3	34
	1-26	40
	1-60	56
	7-10	43
1307755	1-21	23
1307775	9-49	4
	9-53	4
1307776	9-49	1
1307784	9-49	2
1307802	9-9	32
1307816	4-5	28
	9-5	25
	9-13	22
	9-21	20
1307820	9-49	29
1307969	5-14	35
1307970	5-13	25
1308500	5-39	6
1308501	5-39	7
1308504	5-39	2
1308520	5-41	22
1308521	5-41	8
1308786	9-87	
1309102	6-8	40
1309103	6-7	30
1309105	6-7	11
	6-41	32
	6-45	33
1309115	8-3	4
	8-5	4
	8-7	4
1309117	8-5	9
1309120	6-47	20
	6-49	15
	6-50	55
	6-53	15
	6-54	55
	6-61	16
	8-3	2
	8-5	2
	8-7	2
1309122	8-3	5
	8-5	5
	8-7	5
1309205	9-17	17
	9-25	16
1309206	9-17	16
	9-25	15
1309824	1-21	6
1309851	8-5	14
1309853	6-3	20
	6-7	24
	6-11	22
	6-39	22
	6-41	21
	6-43	30
	6-45	18
1309868	6-37	29

©2011 HYSTER COMPANY

NUMERICAL INDEX (continued)

PART NO.	PAGE	ITEM
1309950	1-59	7
	1-63	4
1309993	1-59	5
	1-63	2
1310026	4-39	8
	9-93	2
	9-133	2
	10-33	3
	11-23	3
1310027	9-6	45
	11-15	10
1310035	9-133	9
	9-135	9
1310143	4-149	17
1310611	5-57	41
	5-69	41
	5-73	41
	8-24	62
	8-28	65
1310625	4-77	93
	4-89	31
	4-89	32
	4-95	7
	4-95	8
	4-99	19
1310626	4-67	41
	4-72	73
	4-77	88
	4-90	39
1310627	4-67	38
	4-67	39
1310630	4-67	20
	4-67	40
	4-71	20
	4-72	57
	4-75	25
	4-89	33
	4-90	48
	4-93	5
	4-93	31
	4-93	38
1310638	4-196	56
1310641	4-90	38
	4-90	39
	4-196	43
1310667	4-195	1
1310668	4-195	2
1310688	4-67	3
	4-71	3
	4-75	6
	4-81	19
1310689	4-5	25
1310692	4-63	15
	4-67	6
	4-71	6
	4-75	9
	4-81	13
	4-81	24
1310709	9-49	15
1310710	9-49	12
	9-53	12
1310712	4-63	22
	4-95	4
	4-99	14
1310713	4-63	23
	4-95	5
	4-99	15
1310714	4-71	39
	4-77	84
	4-95	4
	4-99	14
1310715	9-49	13
	9-53	13
1310721	4-195	31
1310723	4-71	40
	4-77	85
	4-95	5
	4-99	15
1311217	1-3	25
	1-29	9
	7-10	47
1311256	4-196	52
1311260	1-37	12
1311264	11-15	21
1311267	1-37	1
1311268	4-63	32
	4-72	65
	4-77	108
	4-95	29
	4-99	20
	4-203	
1311273	1-33	18
1311287	1-3	21
	1-29	21
1311288	1-3	20
	1-29	13
1311295	1-37	15
1311296	1-37	16
1311297	1-37	17
1311300	1-37	20
1311302	1-22	40
1311303	1-22	40
1311346	1-30	40
	1-63	42
1311388	1-3	18
	1-29	11
1311398	4-5	13
	4-11	11
1311403	4-68	45
	4-72	46
	4-75	13
	4-81	31
1311430	1-26	31
1311432	1-25	24
1311433	1-25	24
1311538	5-37	
1312055	6-21	16
	6-30	53
1312056	6-21	1
	6-30	33
1312063	6-7	1
1312064	6-7	11
1312065	6-7	13
1312066	6-7	14
	6-11	13
	6-41	29
	6-45	24
1312067	6-7	16
	6-11	15
	6-41	27
	6-45	22
1312068	6-7	20
	6-11	18
	6-41	23
1312069	6-7	23
1312071	6-7	33
1312072	6-3	22
	6-8	36
	6-11	35
	6-39	13
	6-41	11
	6-41	17
	6-43	11
	6-45	10
	6-45	15
1312073	6-8	37
	6-11	36
	6-41	8
	6-45	13
1312074	6-8	39
	6-11	37
1312075	6-8	43
1312076	6-8	45
	6-11	44
	6-41	1
1312078	8-5	1
1312083	6-18	36
	6-29	1
	6-33	25
	6-49	11
	6-53	11
1312084	6-22	35
	6-29	15
1312086	6-7	6
1312087	6-7	21
	6-11	19
	6-41	22
	6-45	25
1312088	6-7	22
	6-11	20
	6-41	19
1312089	6-7	24
1312090	6-7	27
	6-11	25
	6-11	29
	6-41	14
	6-45	29
	6-49	26
	6-53	26
	6-61	13
1312091	6-8	42
1312094	6-21	12
	6-29	1
	6-53	12
1312192	1-39	24
	1-43	24
1312201	3-17	4
	3-21	17
	3-23	7
	3-25	20
	3-27	7
1312209	1-39	30
	1-43	30
1312337	4-63	10
1312338	4-63	11
	4-81	9
1312339	4-63	3
	4-63	12
	4-81	10
1312340	4-63	4
	4-63	13
	4-81	11
1312344	4-63	2
1312373	5-14	43
1312376	5-13	26
1312450	1-21	6
1312473	4-63	3
	4-63	12

©2011 HYSTER COMPANY

NUMERICAL INDEX (continued)

PART NO.	PAGE	ITEM
	4-81	10
1312616	6-26	36
	6-26	39
	6-33	8
1313733	1-35	1
1313734	1-35	2
1313735	1-35	4
1313736	1-35	5
1313737	1-35	6
1313744	1-35	3
1313898	6-8	42
1313907	5-9	
	5-14	
1313908	5-2	
	5-33	43
1313921	5-15	2
1313922	5-13	22
1314149	4-11	18
	4-22	47
	4-25	9
	4-61	7
	5-6	
1314255	6-37	9
1315594	5-45	15
1315641	1-57	2
1315643	1-53	2
1315782	9-157	
1315783	9-157	2
1315784	9-157	3
1315785	9-157	5
1315786	9-157	6
1315787	9-157	7
1315788	9-157	8
1315789	9-157	9
1315790	9-157	10
1315791	9-157	11
1315792	9-157	12
1315793	9-157	13
1315794	9-157	14
1315795	9-157	15
1315796	9-157	16
1315797	9-157	17
1315798	9-157	18
1315799	9-157	19
1315830	1-71	38
1315832	5-39	12
1315835	5-53	14
	5-55	14
1315836	5-61	20
	5-78	1
1315837	4-63	18
	4-72	79
1315867	10-35	5
1315868	11-25	19
1315871	4-6	45
	4-11	25
1315872	4-71	38
	4-71	41
	4-75	29
	4-77	83
	4-77	94
	4-89	12
	4-95	2
	4-95	6
	4-99	13
	4-99	16
1315877	4-67	23
	4-71	23
	4-75	29
	4-89	12
	4-95	6
	4-99	13
1315878	10-33	20
1315880	10-33	5
	11-23	5
1315881	10-33	6
	11-23	6
1315883	10-33	7
	11-23	7
1315918	1-59	23
	1-63	32
1316025	9-157	20
1316026	9-157	21
1316027	9-157	22
1316028	9-157	23
1316029	9-157	24
1316030	9-157	25
1316031	9-157	26
1316032	9-157	27
1316395	9-57	7
1316396	8-57	30
	8-61	30
1316397	9-57	8
1316398	9-57	10
1316496	3-3	22
1316527	4-63	21
	4-63	25
	4-63	26
	4-63	27
	4-72	72
	4-77	93
	4-77	99
	4-89	31
	4-95	7
	4-95	8
	4-99	11
	4-99	19
	4-99	19
	4-99	19
	4-99	19
1316536	1-47	9
1316537	1-47	9
1316538	4-7	72
	4-15	20
	4-159	
1316542	1-71	30
1316543	1-71	29
1316544	1-71	28
1316593	1-37	6
	4-64	48
1317393	4-63	5
1317394	4-63	7
1317458	11-19	9
1318022	8-57	27
	8-61	27
1318023	8-57	28
	8-61	28
1318024	8-57	29
	8-61	29
1318025	8-57	1
	8-61	1
	9-57	4
1318026	8-61	31
	9-57	5
1318027	8-61	31
	9-57	5
1318029	8-57	6
	8-61	6
1318030	8-57	6
	8-61	6
1318031	8-57	8
	8-61	8
1318032	8-57	9
	8-61	9
1318033	8-57	9
	8-61	9
1318034	8-57	10
	8-61	10
1318036	8-57	13
	8-61	13
1318037	8-57	13
	8-61	13
1318038	8-57	13
	8-61	13
1318044	9-57	2
1318045	8-57	23
	8-61	23
	9-57	3
1318047	8-57	24
	8-61	24
	9-57	6
1318048	8-57	25
	8-61	25
1318049	8-57	26
	8-61	26
1318301	8-57	23
	8-61	23
1318302	8-57	23
	8-61	23
1318303	8-57	23
	8-61	23
1318304	8-57	23
	8-61	23
1318443	1-30	34
1318606	9-99	2
	9-101	26
	9-102	3
	9-107	11
1318607	9-99	3
	9-101	29
1318608	9-99	4
	9-101	9
	9-107	3
1318609	9-99	5
	9-102	5
	9-107	18
1318610	9-99	9
1318611	9-99	10
1318613	9-99	12
1318614	9-99	13
1318615	9-99	14
1318616	9-99	15
1318617	9-99	16
1318619	9-99	19
	9-101	1
1318620	9-99	20
	9-101	23
1318621	9-99	21
	9-101	21
1318623	9-99	1
	9-101	25
	9-102	2
1318624	9-102	7
1319177	1-21	11
1319190	4-5	3
	4-11	8
	4-15	9
	4-21	6

©2011 HYSTER COMPANY

NUMERICAL INDEX (continued)

PART NO.	PAGE	ITEM
	4-25	31
1319540	5-37	13
1319545	9-102	6
1319579	9-99	17
1320001	4-63	6
	4-63	8
1320227	9-91	7
1320230	9-91	2
1320234	9-91	5
1320235	9-91	6
1320237	9-91	9
1320238	9-91	10
	9-95	
1320239	9-91	11
1320240	9-91	12
1320241	9-91	13
1320242	9-91	14
1320243	9-91	15
1320244	9-91	16
1320245	9-91	17
1320246	9-91	18
1320247	9-91	19
1320248	9-91	20
1320249	9-91	21
1320251	9-91	23
1320252	9-91	24
1320253	9-91	25
1320254	9-91	26
1320255	9-91	27
1320256	9-91	28
1320257	9-91	29
1320258	9-91	30
1320259	9-91	31
1320260	9-91	32
1320669	4-238	5
1320850	9-91	22
1321910	11-5	7
1321912	1-30	27
1322010	2-131	15
	2-133	11
	2-135	11
1322023	7-3	1
1322038	4-61	6
1322673	4-149	14
	4-203	2
1322711	10-15	1
	10-19	1
1322713	10-15	1
	10-19	1
1322714	10-15	1
	10-19	1
1322715	10-15	1
	10-19	1
1322716	10-15	1
	10-19	1
1322717	10-15	1
1322721	10-19	1
1322745	10-23	1
	10-25	1
1322747	10-25	1
1322749	10-23	1
	10-25	1
1322751	10-23	1
	10-25	1
1322755	10-23	1
	10-25	1
1322756	10-23	1
	10-25	1
1322769	10-19	3
1322770	10-25	3
1322848	10-19	
1322849	10-25	
1323052	9-49	10
	9-53	10
1323100	10-35	3
	11-25	2
1323115	1-49	22
	1-51	22
1323116	1-49	25
	1-51	25
1323117	1-49	23
	1-51	23
1323127	4-5	31
1323130	4-5	30
1323132	4-6	36
1323576	4-49	26
	4-51	25
	4-53	19
	4-55	19
1323577	4-45	1
	4-47	7
1323579	4-155	13
	4-157	13
	4-171	16
	4-213	7
1323583	4-45	2
	4-47	8
	4-155	16
	4-157	16
	4-171	19
1323586	4-49	25
	4-51	24
	4-53	18
	4-55	18
1323994	4-90	38
	4-90	39
1324084	1-22	40
	1-22	40
1324307	11-33	1
1324308	11-33	1
1324309	11-33	1
1324310	11-33	1
1324463	9-109	7
1324518	4-7	83
	4-11	17
	4-15	25
	4-21	11
1324790	5-47	4
1324799	6-7	30
	6-11	28
	6-41	13
	6-45	31
1324901	10-35	19
	11-29	1
1324996	4-76	60
	4-81	5
1325346	1-49	13
	1-51	13
1325519	1-5	25
1325548	1-33	16
1325550	1-29	2
1325557	1-40	37
	1-44	37
1325564	7-9	29
1325567	1-25	20
1325576	1-25	21
1325582	1-25	23
1325585	1-33	15
1325597	1-29	2
1325600	1-29	18
1325623	1-26	34
1325624	1-26	33
1325725	1-3	8
	1-29	4
1325726	1-26	33
1325729	1-26	34
1325731	1-25	27
1326045	10-4	37
	10-8	37
	10-29	11
	11-20	30
1326046	10-29	20
	11-20	30
1326047	10-4	36
	10-8	36
	10-29	10
	11-19	27
1326048	10-29	19
	11-19	26
1326105	10-12	10
1326108	4-67	2
	4-71	2
	4-75	5
1326140	10-15	7
	10-19	7
1326141	10-23	7
	10-25	7
1326289	5-43	3
1326290	5-43	4
1326292	5-43	5
1326297	5-14	42
1326298	5-14	41
1326299	5-14	45
1326375	5-14	38
1326393	5-43	26
1327164	4-155	15
	4-157	15
	4-171	18
1327895	7-9	1
1328205	1-71	34
1328548	8-57	11
	8-61	11
	9-57	1
1328656	8-3	11
	8-5	10
1328669	6-21	22
	6-30	50
	6-37	33
1328707	8-57	20
	8-61	20
1329015	7-3	19
1329017	7-3	19
1329147	4-45	3
	4-47	9
1329148	4-57	1
1329152	4-57	1
1330134	9-87	
1330148	7-3	11
1330165	9-43	1
1330167	8-13	1
	8-47	
1330168	4-197	4
1330169	8-16	44
	8-36	44
	8-40	44
	8-44	44
	8-53	
1330170	9-37	

©2011 HYSTER COMPANY

NUMERICAL INDEX (continued)

PART NO.	PAGE	ITEM
	9-131	1
1330171	8-15	1
	8-19	1
	8-35	1
	8-39	1
	8-43	
	8-54	
1330172	9-77	
	9-117	2
	9-121	2
1330355	4-55	33
	4-58	19
	4-213	3
1330356	4-55	34
	4-58	19
	4-213	4
1330357	4-213	2
1330409	4-27	4
	4-29	12
	4-31	9
	4-33	1
	4-35	4
	4-43	1
	4-103	4
	4-105	16
	4-107	9
	4-113	3
	4-115	1
	4-131	1
	4-133	10
	4-135	14
	4-137	20
	4-139	16
	4-141	16
	4-143	16
	4-145	21
	4-161	6
	4-163	9
	4-169	13
	4-171	20
	4-173	8
	4-195	1
	4-195	3
	4-199	4
	4-212	1
	4-216	7
	4-218	6
	9-81	5
1330410	4-27	8
	4-29	9
	4-31	7
	4-36	1
	4-37	1
	4-120	4
	4-121	3
	4-122	4
	4-123	5
	4-124	5
	4-125	7
	4-127	8
	4-129	8
	4-131	7
	4-133	12
	4-135	7
	4-137	10
	4-139	9
	4-141	11
	4-143	11
	4-145	19
	4-165	17
	4-197	1
	4-215	6
	4-216	1
	4-218	10
1330411	4-27	1
	4-29	14
	4-31	5
	4-33	3
	4-35	1
	4-103	1
	4-105	3
	4-107	4
	4-109	7
	4-122	4
	4-125	5
	4-127	5
	4-129	5
	4-133	14
	4-135	5
	4-137	8
	4-139	7
	4-141	8
	4-143	8
	4-145	39
	4-165	5
	4-167	3
	4-169	7
	4-171	8
	4-207	3
	4-208	1
	4-212	4
1330412	4-27	6
	4-29	16
	4-31	3
	4-33	21
	4-35	21
	4-107	6
	4-122	1
	4-123	1
	4-124	1
	4-133	16
	4-135	3
	4-137	5
	4-139	5
	4-147	1
	4-149	1
	4-151	5
	4-165	9
	4-169	22
	4-171	12
	4-234	2
1330413	4-27	10
	4-31	1
	4-47	1
	4-106	1
	4-107	1
	4-109	1
	4-135	12
	4-137	16
	4-139	33
	4-141	4
	4-143	4
	4-145	9
	4-151	3
	4-165	3
	4-169	1
	4-171	1
1330414	4-27	5
	4-29	13
	4-31	10
	4-33	2
	4-35	5
	4-43	2
	4-103	5
	4-105	15
	4-107	10
	4-113	4
	4-115	2
	4-131	2
	4-133	11
	4-135	15
	4-137	21
	4-139	17
	4-141	17
	4-143	17
	4-145	22
	4-161	7
	4-163	10
	4-169	14
	4-171	21
	4-173	9
	4-195	1
	4-195	3
	4-199	5
	4-212	2
	4-216	8
	4-218	7
	9-81	6
1330415	4-27	9
	4-29	10
	4-31	8
	4-36	2
	4-37	2
	4-120	5
	4-121	4
	4-123	6
	4-124	6
	4-125	8
	4-127	9
	4-129	9
	4-131	8
	4-133	13
	4-135	8
	4-137	11
	4-139	10
	4-141	12
	4-143	12
	4-145	20
	4-165	18
	4-197	2
	4-215	7
	4-216	2
	4-218	11
1330416	4-27	2
	4-29	15
	4-31	6
	4-33	4
	4-35	2
	4-103	2
	4-105	2
	4-107	5
	4-109	8
	4-119	4
	4-122	5
	4-125	6
	4-127	6
	4-129	6
	4-133	15

See Service Manual for service procedures.
©2011 HYSTER COMPANY

NUMERICAL INDEX (continued)

PART NO.	PAGE	ITEM
	4-135	6
	4-137	9
	4-139	8
	4-141	9
	4-143	9
	4-145	40
	4-165	6
	4-167	4
	4-169	8
	4-171	9
	4-207	4
	4-208	2
	4-212	5
1330417	4-27	7
	4-29	17
	4-31	4
	4-33	22
	4-35	22
	4-107	7
	4-122	2
	4-123	2
	4-124	2
	4-133	17
	4-135	4
	4-137	6
	4-139	6
	4-147	2
	4-149	2
	4-151	6
	4-165	10
	4-169	23
	4-171	13
	4-238	3
1330418	4-27	11
	4-31	2
	4-47	2
	4-106	3
	4-107	2
	4-109	2
	4-135	13
	4-137	17
	4-139	34
	4-141	5
	4-143	5
	4-145	10
	4-151	4
	4-165	4
	4-169	2
	4-171	2
1330419	4-9	1
	4-29	1
	4-33	23
	4-35	23
	4-39	4
	4-41	5
	4-42	1
	4-43	4
	4-103	6
	4-105	13
	4-118	1
	4-119	1
	4-120	1
	4-121	1
	4-131	5
	4-133	7
	4-135	16
	4-137	14
	4-139	24
	4-141	25
	4-143	25
	4-145	23
	4-153	7
	4-155	7
	4-157	7
	4-158	1
	4-165	11
	4-199	1
	4-201	1
	4-202	2
	4-215	3
	4-216	4
1330420	4-36	3
	4-37	3
	4-39	1
	4-42	3
	4-105	6
	4-117	3
	4-119	3
	4-121	5
	4-131	10
	4-137	18
	4-139	39
	4-141	38
	4-143	38
	4-145	17
	4-147	6
	4-149	5
	4-165	13
	4-201	4
	4-211	1
	4-218	13
1330421	4-33	33
	4-35	26
	4-45	4
	4-47	3
	4-89	13
	4-111	4
	4-146	1
	4-161	4
	4-163	6
	4-165	7
	4-167	5
	4-169	5
	4-171	5
	4-198	2
	4-200	1
	4-211	11
	4-236	1
1330422	4-29	7
	4-31	13
	4-45	6
	4-47	5
	4-111	2
	4-123	14
	4-124	9
	4-133	5
	4-135	1
	4-137	1
	4-139	3
	4-141	1
	4-143	1
	4-145	1
	4-147	4
	4-165	1
	4-169	3
	4-171	10
	4-218	1
	4-234	5
	4-235	1
1330423	4-29	4
	4-31	11
	4-33	31
	4-35	28
	4-61	1
	4-109	16
	4-133	1
	4-149	3
	4-165	15
	4-167	1
	4-169	16
	4-171	27
	4-173	12
1330424	4-9	1
	4-29	2
	4-33	24
	4-35	24
	4-39	7
	4-41	6
	4-42	2
	4-43	5
	4-103	7
	4-105	14
	4-118	2
	4-119	2
	4-120	2
	4-121	2
	4-131	6
	4-133	8
	4-135	17
	4-137	15
	4-139	25
	4-141	26
	4-143	26
	4-145	24
	4-153	8
	4-155	8
	4-157	8
	4-158	2
	4-165	12
	4-199	2
	4-201	2
	4-202	3
	4-215	4
	4-216	5
1330426	4-36	4
	4-37	4
	4-39	2
	4-42	4
	4-105	7
	4-117	4
	4-121	6
	4-131	11
	4-137	19
	4-139	40
	4-141	39
	4-143	39
	4-145	18
	4-147	9
	4-149	6
	4-165	14
	4-201	5
	4-211	2
	4-218	4
1330427	4-33	34
	4-35	27
	4-45	5
	4-47	4
	4-89	13

©2011 HYSTER COMPANY

NUMERICAL INDEX (continued)

PART NO.	PAGE	ITEM
	4-111	5
	4-146	2
	4-161	5
	4-163	7
	4-165	8
	4-167	6
	4-169	6
	4-171	6
	4-198	3
	4-200	2
	4-211	12
	4-236	2
1330428	4-29	8
	4-31	12
	4-45	7
	4-47	6
	4-111	3
	4-133	6
	4-135	2
	4-137	2
	4-139	4
	4-141	2
	4-143	2
	4-145	2
	4-147	5
	4-165	2
	4-169	4
	4-171	11
	4-218	2
	4-234	4
	4-235	2
1330429	4-29	5
	4-31	16
	4-33	32
	4-35	29
	4-61	3
	4-133	2
	4-149	4
	4-165	16
	4-167	2
	4-169	17
	4-171	28
	4-173	13
1330434	4-42	5
	4-45	8
1330437	4-27	3
	4-36	6
	4-43	3
	4-49	12
	4-51	11
	4-53	24
	4-55	24
	4-57	6
	4-103	3
	4-105	1
	4-106	2
	4-115	3
	4-122	3
	4-133	4
	4-141	7
	4-143	7
	4-145	25
	4-147	3
	4-171	3
	4-195	3
	4-197	3
	4-199	6
	4-212	3
	4-216	9
	4-218	8
1330438	4-6	39
	4-9	1
	4-33	9
	4-35	10
	4-36	5
	4-43	6
	4-49	23
	4-51	22
	4-53	26
	4-55	26
	4-57	12
	4-89	13
	4-103	8
	4-105	8
	4-111	6
	4-118	3
	4-120	3
	4-133	3
	4-146	3
	4-147	7
	4-158	3
	4-171	7
	4-198	4
	4-199	3
	4-200	3
	4-201	3
	4-211	3
	4-218	3
	4-235	3
	4-236	3
1330439	4-27	12
	4-29	6
	4-33	10
	4-35	11
	4-41	7
	4-49	
	4-51	20
	4-53	25
	4-55	25
	4-57	9
	4-57	10
	4-58	15
	4-58	16
	4-105	9
	4-107	8
	4-109	15
	4-111	7
	4-123	4
	4-124	4
	4-127	4
	4-129	4
	4-131	4
	4-133	9
	4-137	4
	4-139	15
	4-141	6
	4-143	6
	4-145	14
	4-147	8
	4-149	9
	4-153	15
	4-155	18
	4-171	4
	4-173	4
	4-201	6
	4-211	4
	4-233	1
	4-234	1
	4-237	3
1330574	4-63	17
	4-72	78
	4-75	3
	4-81	16
	4-81	30
	7-9	35
1330917	1-71	3
1330920	1-71	8
1331037	7-10	42
1331081	9-88	2
1331233	4-37	6
	4-123	11
	4-124	11
	4-127	16
	4-129	16
	4-131	15
	4-137	29
	4-139	18
	4-141	18
	4-143	18
	4-145	26
	4-163	2
	4-171	26
	4-207	2
	4-211	7
1331671	9-37	3
	9-39	3
	9-41	3
1331673	9-37	5
	9-39	5
1331674	9-37	7
	9-39	7
1331676	9-37	8
	9-39	8
	9-41	8
1331677	9-37	9
	9-39	9
1331678	9-37	10
1331679	9-37	11
1331680	9-37	15
	9-39	15
	9-41	15
1331681	9-37	13
	9-39	13
	9-41	13
1331682	9-37	6
	9-39	6
	9-41	6
1331683	9-37	22
	9-39	11
	9-41	11
1331684	9-37	21
	9-39	21
	9-41	21
1331685	9-37	20
	9-39	20
	9-41	20
1331686	9-37	19
	9-39	19
	9-41	19
1331687	9-37	18
	9-39	18
	9-41	18
1331689	9-37	16
	9-39	16
	9-41	16
1331691	9-37	12
	9-39	12
	9-41	12

See Service Manual for service procedures.
©2011 HYSTER COMPANY

NUMERICAL INDEX (continued)

PART NO.	PAGE	ITEM
1331725	9-9	12
	9-33	1
1331742	10-4	53
	10-8	53
1331743	10-4	54
	10-8	54
1331744	10-4	27
	10-8	27
1331758	9-10	38
	9-137	13
	9-141	22
1331759	9-10	39
	9-137	14
	9-141	20
1331760	9-10	41
	9-145	19
1331761	9-10	40
	9-145	18
1331762	9-10	42
	9-145	13
	9-149	17
1331763	9-10	43
	9-145	14
	9-149	18
1331764	9-115	9
1331766	9-159	27
1331767	9-159	24
1331769	9-127	11
	9-133	21
1331770	9-109	13
	9-160	46
1331771	9-127	2
	9-131	14
1331772	9-131	19
	9-137	28
	9-141	12
1331773	9-137	30
1331774	9-115	13
1331775	9-137	23
	9-145	23
1331776	9-138	38
	9-145	30
1331777	9-138	39
	9-145	31
1331779	9-109	8
1331780	9-109	10
1331782	9-117	12
	9-137	22
	9-141	29
1331786	9-109	7
	9-127	10
1331787	9-109	11
	9-141	17
1331788	9-109	12
	9-149	16
	9-155	34
1331793	9-109	1
1331794	9-145	2
1331795	9-115	1
1331796	9-115	2
1331797	9-137	2
1331801	9-71	
	9-72	
	9-145	1
1331802	9-71	
	9-72	
	9-137	1
1331851	9-9	5
	9-127	1
1331852	9-9	7
	9-159	29
	9-159	29
1331861	2-161	7
1331862	2-161	8
1331886	1-5	27
1331891	9-115	16
	9-137	17
1331892	9-115	17
	9-145	24
1331898	9-5	31
1331899	9-5	30
1331900	9-6	36
1331907	3-17	12
1331909	2-131	14
	2-133	10
	2-135	10
1331912	3-17	13
1331916	3-17	3
	3-23	18
1331917	3-17	5
1331920	1-6	49
1331921	1-6	49
1331928	3-17	2
1331934	9-109	9
	9-117	31
	9-121	30
1331935	9-137	11
	9-141	21
	9-145	11
	9-149	19
	9-155	22
1331937	9-115	12
	9-145	20
	10-12	15
1331938	9-5	3
	9-137	16
1331939	5-61	24
1331940	9-159	21
1331942	9-145	25
	9-149	21
	9-155	23
1331943	9-159	35
1331946	9-49	30
	9-111	19
	9-137	31
1331947	9-49	31
	9-49	32
	9-111	19
	9-137	31
	9-145	32
1331948	9-159	19
1331949	9-159	20
1331955	3-17	15
1331956	9-137	32
1332154	9-117	15
	9-121	15
	9-163	4
	9-165	12
1332155	9-117	14
1332177	8-16	38
1332186	9-78	
	9-117	1
	9-121	1
1332187	8-9	1
	8-51	
1332190	4-5	1
1332196	1-71	40
1332199	9-43	5
1332200	9-43	4
1332202	9-49	22
	9-53	22
1332204	8-9	24
1332206	4-7	73
	9-63	31
1332207	8-15	3
	8-35	3
	8-39	3
	8-43	3
1332227	9-9	26
	9-111	1
1332230	1-71	22
1332235	8-23	17
	8-27	17
	8-31	17
	8-35	31
	8-44	36
1332236	8-36	36
	8-43	31
1332237	8-23	19
	8-27	19
	8-31	19
1332241	4-5	2
1332244	9-43	2
1332245	9-43	3
1332796	6-49	10
1332797	6-29	6
	6-49	1
	6-53	1
1332801	6-29	12
	6-49	30
	6-53	30
1332802	6-49	33
	6-53	33
1332803	6-49	9
	6-53	9
1332805	6-29	11
	6-49	31
	6-53	31
1332941	7-9	38
1333065	1-5	5
1333437	3-3	9
	3-5	9
	3-9	8
	3-13	11
	3-15	2
1333460	3-3	1
	3-5	1
	3-9	36
	3-13	2
1334458	1-49	2
1334461	1-49	4
	1-51	4
1334462	1-49	10
	1-51	10
1334463	1-49	5
	1-51	5
1334464	1-49	8
	1-51	8
1334465	1-49	6
	1-51	6
1334466	1-49	9
	1-51	9
1334467	1-49	14
	1-51	11
1334468	1-49	7
1334470	1-49	3
1334632	9-93	5
1335126	1-71	10

©2011 HYSTER COMPANY

NUMERICAL INDEX (continued)

PART NO.	PAGE	ITEM
1335137	1-71	19
1335146	1-72	45
1335575	1-49	12
1335578	1-49	3
	1-51	3
1335579	1-49	5
1335657	1-5	14
	1-17	
1335658	1-5	9
	1-9	
1335659	1-5	1
	1-14	
1335661	1-5	6
1335667	9-83	1
	9-87	
1335671	9-87	8
1335675	9-87	1
1335681	2-161	4
1335701	2-141	4
1335702	2-141	5
1335703	2-137	16
1335712	5-61	7
1335718	9-5	6
	9-102	
1335719	9-5	7
	9-99	
1335733	5-51	19
1335742	9-17	29
	9-25	28
	9-33	5
	9-35	8
1335868	7-4	40
1335869	7-4	41
1336038	1-39	16
	1-43	9
1336044	1-40	48
1336051	9-5	2
1336053	9-145	22
1336054	9-9	34
	10-12	11
1336066	2-131	5
1336079	2-131	12
1336082	3-29	1
1336083	3-29	1
1336085	4-5	28
	9-5	27
	9-14	57
	9-25	10
1336088	3-29	14
1336089	2-126	1
1336090	1-6	34
1336104	9-83	18
	9-85	18
1336105	9-83	14
1336107	1-60	38
1336112	9-83	11
	9-85	10
1336114	1-60	39
1336119	7-5	50
1336120	7-5	54
1336121	7-5	57
1336122	7-5	56
1336173	4-213	6
1336201	1-40	35
	1-44	35
1336207	1-39	32
	1-43	32
1336225	5-61	27
1336228	4-5	26
1336229	4-5	27
1336230	4-67	34
	4-212	
1336231	4-6	49
1336238	4-64	46
	4-72	58
	4-76	39
	4-96	32
	4-99	27
1336254	5-61	8
	9-9	33
	9-145	25
	9-159	22
	9-159	23
	9-159	35
1336275	8-5	12
1336288	9-155	19
1336289	9-155	21
1336294	9-109	13
	9-160	46
1336353	1-29	1
1336354	1-29	1
1336356	1-29	5
1336357	1-29	5
1336360	7-4	38
1336369	7-5	57
1336370	7-5	56
1336373	1-25	25
1336374	1-25	28
1336378	1-59	14
1336380	1-59	10
	1-63	7
1336402	1-59	3
1336408	1-59	12
1336409	1-59	13
	1-63	9
1336414	1-59	4
	1-63	1
1336425	1-59	37
1336426	1-59	37
1336441	8-15	11
1336442	8-15	14
1336443	8-15	10
1336444	8-15	13
1336445	8-15	4
1336446	2-137	2
1336447	2-137	1
1336605	1-71	27
1336675	8-51	1
1336677	8-51	3
1336678	8-51	4
1336679	8-51	5
1336680	8-51	6
1336681	8-51	7
1336683	8-51	9
1336685	8-51	11
1336686	8-51	12
1336687	8-51	13
1336688	8-51	14
1336689	8-51	15
1336690	8-51	16
1336691	8-51	17
1336692	8-51	18
1336693	8-47	13
	8-51	19
	8-53	12
1336694	8-51	20
1336695	8-51	24
1336696	8-51	25
1336697	8-51	26
1336698	8-51	27
1336699	8-51	28
1336701	8-47	2
1336702	8-47	3
1336703	8-47	4
1336704	8-47	5
1336706	8-47	9
1336708	8-47	12
1336709	8-47	11
1336710	8-47	25
1336711	8-47	28
	8-53	8
1336712	8-47	16
1336720	8-47	32
1336722	8-47	
1336723	8-53	1
1336724	8-53	2
1336726	8-53	5
1336727	8-53	6
1336728	8-53	7
1336730	8-53	13
1336731	8-53	
1336749	9-37	5
	9-39	5
1336753	9-37	17
	9-39	17
	9-41	17
1336755	9-37	14
	9-39	14
	9-41	14
1336764	9-37	7
	9-39	7
1336765	9-37	7
	9-39	7
	9-41	7
1336767	8-51	23
1336772	8-47	8
1336773	8-47	15
1336774	8-53	3
1336775	4-6	38
1336777	4-64	40
	4-67	37
	4-106	
1336778	4-7	71
	4-64	41
	4-68	49
	4-111	
1336781	4-195	3
1336783	4-195	6
	4-201	
1336784	4-64	37
	4-64	37
	4-67	33
	4-71	33
	4-75	33
	4-115	
1336785	4-64	36
	4-72	64
	4-75	32
	4-118	
	4-195	15
1336786	4-64	39
	4-68	44
1336787	4-196	42
	4-200	
1336788	4-67	24
	4-71	24
	4-76	35
	4-147	

©2011 HYSTER COMPANY

NUMERICAL INDEX (continued)

PART NO.	PAGE	ITEM
1336789	4-196	55
	4-236	
1336790	4-67	7
	4-158	
1336791	9-133	3
1336793	4-6	51
	4-36	
1336796	4-67	9
	4-71	9
	4-75	11
	4-146	
1336797	4-64	47
1336798	5-41	17
1336799	5-39	1
	5-41	
1336907	1-5	19
1336908	8-16	45
	8-20	50
	8-36	45
	8-40	45
	8-44	45
1336910	1-5	23
1336911	1-39	32
	1-43	32
1336912	1-39	33
	1-43	33
1336914	1-40	35
	1-44	35
1336915	8-15	18
	8-19	18
	8-35	18
	8-39	18
	8-43	18
1336916	8-15	19
	8-19	19
	8-35	19
	8-39	19
	8-43	19
1336917	8-15	20
1336920	1-5	12
1336921	1-5	10
1336939	1-40	54
1336940	1-40	53
1336942	1-39	13
	1-43	20
1336943	8-9	24
1336947	8-9	23
	8-13	9
	8-20	44
1336950	4-7	68
	4-68	42
	4-211	
1336959	4-197	
	8-16	32
	8-35	32
	8-40	32
	8-43	32
	9-133	24
1336960	6-3	
1336968	4-6	37
	4-175	
1336986	1-26	32
1337197	4-76	36
	4-82	40
1337254	1-40	36
	1-44	36
1337259	1-5	28
1337260	1-5	29
1337266	9-137	15
	9-141	24
1337267	9-159	23
1337280	11-15	9
1337281	1-6	42
1337286	3-3	14
	3-5	14
1337287	3-3	15
1337291	3-3	20
1337295	8-16	50
	8-40	50
1337300	1-6	39
1337302	8-15	21
	8-39	21
1337303	8-15	9
	8-19	9
	8-35	9
	8-39	9
	8-43	9
1337311	10-12	22
1337313	10-12	22
1337315	10-12	22
1337317	10-12	22
1337321	10-12	22
1337322	10-12	22
1337323	8-16	51
	8-20	43
	8-36	52
	8-40	51
	8-44	52
1337327	8-9	26
	8-16	31
	8-16	36
	8-19	31
	8-36	36
	8-40	31
	8-43	31
	9-123	3
	9-125	11
1337328	5-61	6
1337329	5-61	8
	9-9	33
1337330	5-53	16
	5-55	16
	5-61	25
	5-65	16
1337331	5-53	17
	5-55	17
	5-61	26
	5-65	17
	9-138	37
1337332	5-61	19
1337333	5-61	20
1337334	8-15	15
1337335	8-15	12
	8-15	12
	8-39	12
1337338	11-19	9
1337339	11-19	10
1337341	4-235	
	10-33	12
	11-23	12
1337348	10-12	14
1337588	9-71	29
1337593	9-71	33
1337595	9-71	32
	9-75	18
	9-76	50
1337597	9-71	18
1337628	8-3	3
	8-5	3
	8-7	3
1337952	9-75	16
1337957	9-71	24
1337958	9-71	25
1337959	9-71	26
1337970	9-76	72
1338027	9-9	15
	9-17	27
	9-25	26
1338028	9-9	14
	9-17	26
	9-25	25
1338029	9-9	16
	9-17	28
	9-25	27
1338031	11-15	23
1338032	11-15	23
	11-15	23
1338033	11-15	24
	11-15	24
	11-15	24
1338034	11-15	23
	11-15	24
	11-15	24
	11-15	24
1338035	11-15	24
	11-15	24
	11-15	24
1338037	9-6	44
	9-9	22
	9-17	32
	9-25	31
1338038	9-9	13
	9-17	25
	9-25	24
1338676	1-17	29
1338691	1-17	2
1338692	1-17	4
1338693	1-17	5
1338694	1-17	6
1338695	1-17	7
1338696	1-17	8
1338697	1-17	9
1338698	1-17	10
1338699	1-17	11
1338700	1-17	12
1338701	1-17	13
1338702	1-17	14
1338703	1-17	15
1338704	1-17	16
1338705	1-17	17
1338706	1-17	18
1338707	1-17	19
1338708	1-17	20
1338709	1-17	21
1338710	1-17	22
1338711	1-17	23
1338712	1-17	24
1338713	1-17	25
1338714	1-17	26
1338715	1-17	27
1338716	1-17	28
1338717	1-17	30
1338718	1-17	31
1338719	1-9	1
1338720	1-9	2
	1-13	2
1338721	1-9	3
1338723	1-9	

©2011 HYSTER COMPANY

NUMERICAL INDEX (continued)

PART NO.	PAGE	ITEM
	1-11	
1339113	6-49	22
	6-53	22
	6-61	11
1339114	6-49	23
	6-53	23
	6-61	12
1339115	6-49	21
	6-53	21
	6-61	6
1339116	6-49	20
	6-53	20
	6-61	7
	8-7	7
1339117	6-49	19
	6-53	19
1339118	6-49	18
	6-53	18
	6-61	9
1339119	6-49	17
	6-53	17
	6-61	8
1339120	6-49	14
	6-53	14
1339121	6-49	16
	6-53	16
	6-61	4
1339124	8-3	6
	8-5	6
	8-7	6
1339248	8-51	21
1339364	5-13	31
1339365	5-13	29
1339366	5-13	20
1339367	5-13	21
1339369	5-13	24
1339370	5-14	48
1339371	5-13	23
1339374	5-17	23
	5-23	18
	5-27	16
1339475	9-115	11
1339476	9-111	14
	9-127	13
1339477	9-149	22
	9-155	20
	9-159	28
1339478	9-111	12
1339479	9-123	15
	9-125	9
1339480	9-9	6
1339482	1-39	34
	1-43	34
1339489	4-195	19
	4-199	
1339490	4-195	20
	4-199	
1339491	4-195	20
	4-199	
1339499	1-71	14
1339500	1-71	14
1339513	3-29	4
1339515	3-17	11
1339516	3-17	14
1339532	1-6	44
1339533	2-131	13
1339535	2-131	16
1339536	2-131	20
1339538	8-15	14
1339539	8-15	13
1339540	8-15	10
1339541	8-15	11
1339557	1-37	10
1339590	1-40	41
1339607	1-40	40
1339614	6-7	
1339956	5-23	23
	5-27	24
	5-31	24
1339958	5-9	17
1342500	5-51	27
1342503	5-43	1
1342504	5-43	14
1342507	5-43	23
1342515	5-37	11
1342517	5-33	11
1342518	5-13	7
1342522	5-6	37
1342524	5-17	22
	5-23	19
	5-27	18
1342601	9-80	2
1342602	9-80	3
1342603	9-80	1
1342605	9-80	5
1342607	9-80	4
1342644	8-57	5
1342660	1-21	29
1342664	1-3	29
	1-26	37
1342701	8-58	
	8-62	
1342702	8-57	2
1343112	6-49	13
	6-53	13
1343113	6-47	1
	6-49	37
	6-53	37
1343114	6-47	18
	6-49	36
	6-53	36
1343115	6-47	17
1343116	6-47	16
1343117	6-47	10
1343118	6-47	15
1343119	6-47	14
1343120	6-47	13
1343121	6-47	12
1343122	6-47	11
1343123	6-47	9
1343124	6-47	8
1343134	6-50	50
	6-54	50
1343135	6-50	50
	6-54	50
1343137	6-47	25
	6-50	52
	6-54	52
1343139	6-47	26
	6-50	54
	6-54	54
1343140	6-47	27
	6-50	53
	6-54	53
1343141	6-47	21
	6-50	56
	6-54	56
1343142	6-47	23
	6-50	57
	6-54	57
1343143	6-47	22
	6-50	58
	6-54	58
1343144	6-49	4
	6-54	59
1343145	6-49	28
	6-53	28
	6-61	14
1343148	6-49	25
	6-53	25
	6-61	5
1343149	6-49	24
	6-53	24
	6-61	10
1343150	8-5	7
1343151	8-3	12
	8-5	11
	8-7	12
1343153	6-50	
	6-54	
1343155	8-5	
1343157	9-79	6
1343158	9-78	1
1343159	9-78	7
1343160	9-77	1
1343161	8-40	54
	8-54	7
	9-77	7
	9-78	7
	9-81	3
	9-89	9
1343162	8-54	1
1343166	6-47	5
	6-50	51
	6-54	51
1343374	1-39	29
	1-43	29
1343387	1-39	11
	1-43	8
1343394	7-5	61
	11-8	8
	11-12	8
	11-13	8
1343396	1-37	18
1343650	7-3	15
1343651	7-3	15
1343660	3-3	27
	3-5	27
	3-9	22
	3-13	16
	3-15	7
1344037	3-17	1
1344038	3-17	1
1344044	6-64	2
1344212	1-39	2
1344215	1-39	1
1344217	1-39	6
1344219	1-39	10
	1-43	6
1344222	1-40	47
1344233	1-39	3
	1-43	3
1344237	1-40	42
	1-44	46
1344238	1-39	31
	1-43	31
1344239	1-39	28
	1-43	28

See Service Manual for service procedures.
©2011 HYSTER COMPANY

NUMERICAL INDEX (continued)

PART NO.	PAGE	ITEM
1344254	6-64	3
1344255	4-175	1
1344256	4-175	2
1344257	4-175	3
1344258	4-175	4
	4-177	4
1344259	4-175	5
	4-177	5
1344261	4-175	7
1344262	4-175	8
	4-177	8
1344263	4-175	9
	4-177	9
1344264	4-175	10
	4-177	10
1344265	4-175	11
	4-177	11
1344266	4-175	12
	4-177	12
1344267	4-175	13
	4-177	13
1344268	4-175	14
	4-177	14
1344269	4-175	15
	4-177	15
1344270	4-175	16
	4-177	16
1344271	4-175	17
	4-177	17
1344273	4-175	19
1344274	4-175	21
	4-177	21
1344284	1-5	18
1344289	9-47	1
1344294	8-13	15
	8-23	14
	8-27	14
	8-31	14
1344612	5-61	9
1344613	5-53	7
	5-55	7
	5-61	11
	5-65	7
1344618	9-83	24
	9-85	22
1344619	9-83	23
	9-85	21
1344638	10-12	22
1344640	10-12	22
1344641	10-12	22
1344642	10-12	22
1344643	10-12	22
1344648	10-12	22
1344649	10-12	13
1344672	10-33	4
	11-23	4
1344675	4-5	20
	4-15	32
1344679	4-5	21
	4-15	29
1344694	9-83	1
	9-85	1
	9-87	
1344697	9-87	8
1344698	9-87	1
1344700	4-175	22
	4-177	22
1344701	4-175	23
	4-177	23
1344702	4-175	26
	4-177	26
1344703	4-175	27
	4-177	27
1344704	4-175	30
	4-177	30
1344705	4-175	28
1344721	4-175	24
	4-177	24
1344775	9-99	30
1344778	9-99	8
1344779	9-99	11
1344780	9-102	1
1344781	9-102	4
1344782	9-102	8
1344783	9-102	9
1344784	9-102	10
1344785	9-107	14
1345029	4-39	6
	4-41	4
	4-109	5
	4-127	14
	4-129	14
	4-137	35
	4-149	15
	4-163	3
	4-207	7
1345736	1-71	9
1345939	1-71	16
1346081	6-21	
1346084	6-21	16
1346088	6-21	11
	6-30	52
1346364	6-7	
1346375	9-9	18
1346376	9-9	17
1346377	9-9	19
1346379	9-9	21
1346380	9-9	20
1346388	1-26	41
1346389	1-26	42
1346391	1-25	1
1346394	1-26	43
1346396	9-6	52
	9-17	43
1346397	9-6	53
	9-17	44
1346401	9-5	28
1346402	9-5	29
1346408	9-6	49
	9-17	35
	9-25	34
1346410	9-6	43
1346415	11-31	
1346416	11-31	
1346417	11-31	
1346418	11-31	
1346421	9-83	9
	9-88	
1346422	1-22	34
1346423	1-30	42
1346424	1-22	35
1346425	1-22	37
1346426	1-21	30
1346427	11-25	7
1346428	11-25	20
1346429	11-25	21
1346430	11-25	26
1346434	11-25	30
1346452	1-30	39
1346454	1-30	39
1346460	1-21	1
1346463	10-25	
1346465	10-25	
1346467	10-25	
1346469	10-25	
1346473	10-25	
1346474	10-25	
1346601	6-29	4
1346631	6-7	23
	6-11	21
	6-41	18
	6-45	16
1346635	6-7	13
	6-11	12
	6-25	22
	6-41	25
	6-45	19
1346636	6-3	35
	6-8	41
	6-11	43
	6-39	3
	6-41	3
	6-43	3
	6-45	3
	6-45	8
1346804	7-3	17
1347224	4-9	25
	4-131	14
	4-135	11
	4-137	28
	4-139	28
	4-141	22
	4-143	22
	4-145	27
	4-161	2
	4-163	1
	4-169	15
	4-171	25
	4-173	10
	4-202	1
1347586	6-3	38
1347588	6-3	41
1347589	6-3	36
1347590	6-3	14
	6-39	36
	6-43	17
1347592	8-3	
	8-7	
1347597	6-3	26
	6-39	14
	6-43	13
1347599	6-3	31
1347608	6-49	34
	6-53	34
1347611	6-47	7
1347750	8-3	1
1347751	6-47	2
	8-3	9
	8-7	9
1347752	8-3	10
	8-7	10
1347753	8-3	8
	8-5	8
	8-7	8
1347756	8-7	11
1347768	6-17	
1347769	6-17	1
1347770	6-17	3

©2011 HYSTER COMPANY

NUMERICAL INDEX (continued)

PART NO.	PAGE	ITEM
	6-25	3
	6-33	2
1347772	6-17	10
	6-25	10
	6-25	10
	6-33	15
1347773	6-49	5
1347774	6-17	8
	6-25	8
	6-33	14
1347776	6-3	30
1347777	6-3	11
	6-39	18
	6-43	27
1347780	6-3	19
	6-39	19
	6-43	28
1347781	6-3	23
	6-39	17
	6-43	12
1347782	6-3	18
	6-39	20
	6-43	29
1347783	6-3	37
1347784	6-3	17
	6-39	23
	6-43	32
1347785	6-3	16
	6-39	24
	6-43	33
1347786	6-3	37
	6-39	1
	6-43	1
1347787	6-3	
	6-39	26
	6-43	18
1347791	6-3	2
	6-39	29
	6-43	22
1347792	6-39	30
	6-43	24
1347794	6-3	7
1347795	6-3	3
	6-39	35
	6-43	21
1347800	6-18	
	6-26	
	6-33	18
1347812	6-17	6
	6-25	6
	6-33	19
1347813	6-18	
	6-26	
	6-26	
	6-33	12
1347814	6-17	34
	6-26	34
	6-26	34
1347815	6-17	34
	6-26	34
	6-26	34
1347816	6-18	34
	6-26	34
	6-26	34
1347817	6-18	34
	6-26	34
	6-26	34
1347819	6-37	11
1347821	6-18	
	6-26	
1347822	6-17	25
	6-26	25
	6-33	41
1347823	6-17	27
1347824	6-17	12
1347826	6-17	15
1347827	6-17	15
	6-25	15
	6-33	33
1347831	6-17	18
	6-25	18
	6-33	35
1347835	6-17	23
	6-26	23
	6-33	39
1347839	6-17	31
	6-26	31
	6-33	30
1347842	6-18	35
	6-26	35
1347843	6-49	8
1347846	6-11	10
	6-41	32
	6-45	33
1347915	5-13	9
1347921	5-62	32
1349783	1-6	49
1349784	1-6	49
1349786	2-141	16
1349788	2-141	3
1349793	9-87	7
1349797	1-44	55
1349798	1-44	55
1349952	1-47	1
1349953	1-47	2
1349959	11-19	1
1349960	11-19	1
1349961	11-19	1
1349962	11-19	11
1349963	11-19	
1349964	11-19	
1349965	11-19	
1349982	11-29	1
1349983	10-35	19
	11-29	1
1349988	11-30	40
1349989	11-30	39
1349994	10-35	25
	11-29	8
1349995	10-36	26
	11-29	9
1349996	10-36	33
	11-29	16
1349998	11-29	18
1349999	11-29	17
1350000	11-29	20
1350001	11-29	19
1350014	9-49	29
	9-53	29
1350015	11-29	14
1350016	11-29	15
1350023	11-15	1
1350314	8-5	
1350430	10-7	1
1350432	10-7	1
1350434	10-7	1
1350436	10-7	1
1350440	10-7	1
1350441	10-7	1
1350508	10-7	2
1350510	10-7	2
1350512	10-7	2
1350514	10-7	2
1350518	10-7	2
1350519	10-7	2
1350521	10-7	
	10-11	
1350523	10-7	
	10-11	
1350525	10-7	
	10-11	
1350527	10-7	
	10-11	
1350531	10-7	
	10-11	
1350532	10-7	
	10-11	
1350534	10-23	2
	10-25	2
1350536	10-25	2
1350538	10-23	2
	10-25	2
1350540	10-23	2
	10-25	2
1350544	10-23	2
	10-25	2
1350545	10-23	2
	10-25	2
1350560	11-25	23
1350561	11-25	22
1350565	11-25	25
1350566	11-25	24
1350570	11-31	
1350574	9-91	
	9-133	1
1350650	6-7	1
	6-11	1
1350652	8-7	16
1350653	8-7	
1350654	6-8	43
	6-11	41
1350655	6-7	6
	6-11	42
1350656	6-7	33
	6-11	34
1350657	6-8	40
	6-11	38
1350662	8-3	
1350663	8-7	1
1350671	6-53	8
1350710	9-88	3
1350711	9-88	4
1350712	9-88	5
1350714	9-72	
1350719	9-76	70
1350720	9-76	71
1350723	9-71	37
1350724	9-71	36
1350751	10-15	2
	10-19	2
1350753	10-15	2
	10-19	2
1350754	10-15	2
	10-19	2
1350755	10-15	2
	10-19	2
1350756	10-15	2
	10-19	2

See Service Manual for service procedures.
©2011 HYSTER COMPANY

NUMERICAL INDEX (continued)

PART NO.	PAGE	ITEM
1350761	10-15	2
	10-19	2
1350763	10-3	
	10-11	
1350765	10-3	
	10-11	
1350766	10-3	
	10-11	
1350767	10-3	
	10-11	
1350768	10-3	
	10-11	
1350773	10-3	
	10-11	
1350774	11-31	
1350776	11-31	
1350782	10-3	1
1350784	10-3	1
1350785	10-3	1
1350786	10-3	1
1350787	10-3	1
1350792	10-3	1
1350794	10-3	2
1350796	10-3	2
1350797	10-3	2
1350798	10-3	2
1350799	10-3	2
1350804	10-3	2
1350806	10-19	
1350808	10-19	
1350809	10-19	
1350810	10-19	
1350811	10-19	
1350816	10-19	
1350840	5-78	2
	9-29	23
	9-137	18
	9-145	21
1350844	9-159	30
	9-159	30
1350847	9-145	15
1350849	5-78	8
	9-10	39
	9-137	14
	9-141	20
1350850	1-72	41
1350851	1-72	43
1350852	1-72	47
1350857	9-14	55
	9-22	73
	9-25	14
1350858	9-13	28
	9-21	25
1350860	9-17	18
	9-25	17
1350861	9-13	29
	9-21	26
1350862	8-20	40
	8-40	52
	8-44	55
	9-153	12
1350863	9-10	38
	9-137	13
	9-141	22
1350864	9-10	41
	9-145	19
1350865	9-10	40
	9-145	18
1350866	9-10	43
	9-145	14
	9-149	18
1350867	9-10	42
	9-145	13
	9-149	17
1350871	9-5	33
1350872	9-127	4
1350873	9-5	30
1350874	9-5	31
1350875	9-6	36
1350877	8-39	14
1350878	8-15	14
	8-19	14
	8-35	14
	8-39	14
	8-43	14
1350879	8-39	13
1350880	8-15	13
	8-19	13
	8-35	13
	8-39	13
	8-43	13
1350881	8-39	10
1350882	8-15	10
	8-19	10
	8-35	10
	8-39	10
	8-43	10
1350883	8-39	11
1350884	8-15	11
	8-19	11
	8-35	11
	8-39	11
	8-43	11
1350885	9-149	20
	9-155	18
1350890	8-15	15
	8-19	15
	8-35	15
	8-39	15
	8-43	15
1350891	8-15	12
	8-39	12
1350892	8-9	5
	9-123	22
1350893	9-6	52
	9-25	42
1350894	9-6	53
	9-25	43
1350895	9-9	27
1350896	9-9	28
1350897	9-9	29
1350898	9-9	30
1350899	9-9	31
1350911	9-22	47
1350914	4-25	17
1350955	4-100	44
	8-19	17
1350975	9-71	34
	9-75	20
	9-76	52
1350979	9-71	39
1350980	9-71	40
1350981	9-71	41
1350982	9-71	38
	9-75	19
	9-76	51
1350994	9-71	35
1350997	9-88	1
1351068	4-33	29
	4-35	30
	4-51	18
	4-53	20
	4-55	20
	4-125	3
	4-127	1
	4-129	1
	4-173	1
	4-233	2
1351069	4-33	30
	4-35	31
	4-51	19
	4-53	21
	4-55	21
	4-125	4
	4-127	2
	4-129	2
	4-173	2
1351681	4-77	80
1351806	10-29	1
1351814	10-36	31
1351836	10-35	13
	11-30	41
1351837	11-25	25
1351838	10-35	13
	11-30	41
1351839	11-25	24
1351840	10-35	13
	11-30	42
1351841	10-35	13
1351842	10-35	13
	11-30	42
1351843	10-35	13
1351848	10-36	40
1351849	10-36	41
1351850	10-36	42
1351851	10-36	43
1351852	10-36	38
1351853	10-36	39
1351860	11-19	
1351861	11-19	11
1351862	11-19	1
1351866	10-29	1
1351868	11-25	23
1351869	11-25	22
1351870	10-29	
	10-35	
1351875	10-29	
	10-35	
1351876	10-36	38
1351877	10-36	39
1351878	10-36	42
1351879	10-36	43
1351880	10-36	41
1351881	10-36	40
1351885	10-35	16
	11-25	9
1351959	8-7	17
1351960	6-7	32
	6-11	31
	6-41	31
	6-45	35
1351966	8-7	
1351992	5-23	14
	5-27	13
	5-31	13
1351995	5-17	8
1352026	6-50	
	6-54	

©2011 HYSTER COMPANY

NUMERICAL INDEX (continued)

PART NO.	PAGE	ITEM
1352190	1-71	11
1352202	9-49	15
	9-53	15
1352228	3-17	24
1352230	3-17	25
1352231	2-131	23
1352232	2-131	24
1352234	2-131	22
1352256	3-17	23
1352266	3-17	26
1352267	3-17	27
1352273	6-64	
1352498	6-3	21
	6-7	25
	6-11	23
	6-39	21
	6-41	20
	6-43	31
	6-45	17
1352602	4-109	13
	4-127	18
	4-129	13
	4-139	35
	4-141	34
	4-143	34
	4-145	12
	4-153	5
	4-155	5
	4-157	5
	4-233	5
1352603	4-109	14
	4-139	36
	4-141	35
	4-143	35
	4-145	13
	4-153	6
	4-155	6
	4-157	6
	4-233	4
	4-237	3
1352606	4-76	79
	4-83	1
	4-84	1
1352704	9-72	
1352711	9-72	49
	9-75	5
	9-76	47
1352712	9-72	48
	9-75	6
	9-76	48
1352713	9-71	1
1352716	9-71	10
1352717	9-71	15
1352718	9-71	16
1352719	9-71	17
1352720	9-71	11
1352722	9-71	6
1352723	9-76	41
1352724	9-76	42
1352760	9-47	1
1352783	3-3	1
	3-5	1
	3-9	36
	3-15	1
1353800	9-72	47
	9-75	13
	9-76	60
1353806	9-71	9
1353807	9-71	4
	9-75	14
	9-76	61
1353809	9-71	7
	9-75	15
1353813	9-71	1
1353824	10-35	19
	11-29	1
1353860	9-91	1
1353861	9-91	3
1353864	9-91	4
1353865	9-91	8
1353927	1-67	16
1353937	1-67	17
1353939	3-3	14
	3-5	14
1353940	2-141	3
1353946	1-5	23
1353979	1-67	22
1353980	1-67	22
1353981	6-64	
1353996	1-67	3
1353998	1-67	4
	1-69	4
1353999	1-67	1
1354025	10-35	19
	11-29	1
1354027	10-35	19
	11-29	1
1354028	10-35	19
	11-29	1
1354038	9-71	22
1354042	10-35	19
	11-29	1
1354436	8-3	
1354450	1-67	2
1354459	1-43	2
1354461	1-43	1
1354463	8-15	15
	8-19	15
	8-35	15
	8-39	15
	8-43	15
1354470	1-43	14
1354472	1-44	44
1354483	4-6	38
1354487	4-7	77
1354488	1-44	45
1354496	1-44	52
1354497	4-49	7
1354500	4-5	27
	4-11	39
	4-15	36
	4-21	19
	4-25	16
1354501	4-5	30
	4-11	40
	4-15	33
	4-21	13
1354502	1-44	51
1354515	1-44	39
1354548	1-5	6
1354812	3-35	7
1354813	3-35	8
1354816	6-64	1
1354817	6-64	1
1355003	1-71	12
1355024	4-64	47
	4-77	82
	4-122	
1355027	1-25	29
1355028	1-25	26
1355029	2-131	17
1355031	10-4	51
	10-8	51
1355032	11-15	24
1355033	7-4	49
1355034	7-4	44
1355035	7-3	1
1355036	6-7	
1355037	9-21	33
1355038	9-49	36
	9-54	36
1355039	8-57	
1355040	8-57	31
1355041	9-17	19
	9-25	18
1355042	9-17	20
	9-25	19
1355043	9-17	21
	9-25	20
1355044	9-17	22
	9-25	21
1355073	7-4	36
1355074	7-4	36
1355076	7-4	30
1355088	8-40	54
	8-44	61
	9-89	
	9-97	1
1355106	4-6	38
	4-9	9
	4-42	
1355108	4-9	7
1355110	1-25	25
1355111	1-25	28
1355113	1-39	34
	1-43	34
1355114	9-39	
	9-131	1
1355115	9-43	1
1355123	9-37	
	9-39	
	9-41	
1355124	9-39	10
	9-41	10
1355317	2-141	3
1355326	7-15	8
1355345	6-29	2
1355346	6-29	9
	6-49	33
	6-53	33
1356811	1-44	53
1356812	1-44	54
1356817	1-40	39
1356823	4-6	49
1356834	6-64	1
1356943	1-23	57
1356948	1-23	58
1357026	7-15	9
1357100	9-10	48
	9-17	30
	9-25	29
	9-35	
1357166	9-17	23
	9-21	28
	9-25	22
1357167	9-17	24
	9-25	23
1357170	8-23	16

See Service Manual for service procedures.
©2011 HYSTER COMPANY

NUMERICAL INDEX (continued)

PART NO.	PAGE	ITEM
	8-27	16
	8-31	16
1357210	4-68	54
	4-72	55
1357722	9-33	2
1357731	6-50	
1357734	6-17	28
	6-26	28
	6-33	26
	6-49	12
1357735	6-50	
1358212	6-21	
1358216	2-141	3
1358734	1-23	59
1359434	1-5	8
1359435	1-5	17
1359439	3-3	13
1359440	3-3	24
	3-5	24
	3-9	19
	3-13	12
	3-15	3
1359442	3-29	16
1359444	1-5	20
1359659	1-29	1
1360164	9-22	62
1360658	1-6	47
1360659	4-64	39
	4-68	44
	4-75	34
	4-133	
1360660	4-196	52
1360674	8-15	4
	8-20	48
	8-35	4
1360777	1-21	11
1360788	6-21	
1360789	6-22	34
	6-29	17
	6-53	4
1360790	6-29	5
	6-53	8
1360791	6-53	10
1363885	4-29	11
	4-33	5
	4-35	3
	4-37	8
	4-109	3
	4-123	3
	4-124	3
	4-127	7
	4-129	7
	4-131	3
	4-137	7
	4-139	2
	4-141	10
	4-143	10
	4-145	11
	4-147	3
	4-149	7
	4-153	14
	4-155	17
	4-157	17
	4-163	11
	4-195	1
	4-207	5
	4-208	3
	4-215	8
	4-216	3
	4-233	3
	4-237	3
	4-238	3
1363886	4-29	3
	4-33	25
	4-35	25
	4-37	9
	4-39	3
	4-41	8
	4-49	24
	4-51	21
	4-53	27
	4-55	27
	4-57	12
	4-127	3
	4-129	3
	4-131	9
	4-137	3
	4-139	1
	4-141	3
	4-143	3
	4-145	3
	4-146	3
	4-147	7
	4-149	8
	4-153	18
	4-155	21
	4-157	21
	4-163	5
	4-173	3
	4-215	5
	4-216	6
	4-234	3
1365109	8-15	20
	8-35	20
1365111	9-129	9
1365113	9-129	10
1365114	9-129	12
	9-131	14
1365116	9-135	21
1365119	3-3	12
	3-5	12
1365120	3-17	1
1366648	8-40	54
	9-89	1
1366701	10-35	25
	11-29	8
1366702	10-35	25
	11-29	8
1366707	9-159	22
1367121	9-35	3
1367122	9-35	2
1367123	9-35	3
1367250	8-9	21
	8-13	11
	9-43	14
	9-43	22
1367251	8-9	21
	8-13	3
	9-43	14
	9-43	22
1367252	8-9	15
	8-23	13
	8-27	13
	8-31	13
1367275	9-72	
1367281	4-6	39
	4-9	1
1367282	4-6	39
	4-11	20
	4-15	1
1367292	1-67	22
1367293	1-67	22
1367294	1-59	37
1367295	1-59	37
1367296	4-6	38
	4-9	7
	4-27	
1367298	4-9	2
	4-43	
1367302	4-6	38
	4-9	8
	4-45	
1367305	4-7	77
1367311	9-43	
1367317	8-15	10
	8-19	10
	8-35	10
	8-39	10
	8-43	10
1367318	8-15	13
	8-19	13
	8-35	13
	8-39	13
	8-43	13
1367319	8-15	14
	8-19	14
	8-35	14
	8-39	14
	8-43	14
1367320	8-15	11
	8-19	11
	8-35	11
	8-39	11
	8-43	11
1367338	4-6	37
	4-177	
1367339	1-5	9
	1-11	
1367341	8-61	
1367342	2-137	16
1367343	5-53	18
	5-55	18
	5-61	20
	5-65	18
1367344	3-5	15
1367345	3-5	15
1367347	2-143	18
1367348	8-62	40
1367349	2-143	31
1367352	2-143	28
1367353	2-143	27
1367354	2-143	12
1367355	2-143	26
1367357	2-143	16
1367360	5-61	19
1367363	2-131	16
1367364	2-131	23
1367365	5-61	19
1367369	3-5	21
1367370	3-5	20
	3-9	33
1367371	3-6	45
1367372	5-2	1
	5-5	
	5-9	
	5-13	
	5-17	
	5-23	

©2011 HYSTER COMPANY

NUMERICAL INDEX (continued)

PART NO.	PAGE	ITEM
	5-27	
	5-37	
	5-51	
	5-61	
1367480	9-37	13
	9-39	13
	9-41	13
1367748	8-3	14
1368151	1-33	10
1369149	7-5	67
1369496	1-22	50
1371239	5-33	9
1371240	5-33	9
1371376	7-4	34
1371378	7-4	36
1371379	7-4	36
1371388	8-9	21
	8-13	11
	9-43	14
	9-43	22
1371389	9-41	
	9-60	43
	9-63	28
	9-131	1
1371397	7-5	69
1371398	7-5	70
1373335	9-17	33
	9-25	32
	10-33	14
	11-15	10
	11-23	14
1373415	3-6	41
	3-9	13
1373416	3-6	42
	3-9	12
1373510	8-20	41
	8-36	53
	8-44	53
1373604	8-23	1
	8-49	
1373684	3-6	44
	3-9	29
1374097	6-26	37
	6-33	7
1374127	11-5	5
	11-11	6
1374245	9-72	50
1374246	9-72	51
1374247	9-72	52
1374428	1-23	56
1374550	6-26	27
	6-33	43
	6-37	25
1374551	6-37	28
1374554	6-25	15
1374558	6-25	22
	6-25	22
1374588	6-17	22
	6-33	38
1374750	1-49	20
	1-51	21
1375045	6-53	13
	6-54	
1375046	6-53	14
1375050	7-3	11
1375051	7-3	12
1375056	9-115	18
1375057	9-6	64
1375058	9-5	24
	9-5	24
1375059	9-6	55
1375944	1-30	42
1375947	1-21	1
1375984	1-22	40
1375985	1-22	40
1376831	9-6	62
	9-13	26
	9-21	23
	9-22	64
1376834	9-5	24
	9-115	18
1376836	9-5	28
1376838	4-197	4
1376839	4-197	
	8-16	32
	8-35	32
	8-40	32
	8-43	32
	9-133	24
1376844	9-43	18
	9-60	40
1376846	9-159	22
1376847	9-123	20
1376890	5-23	1
	5-27	1
1376933	9-45	7
1376934	9-45	11
1376936	9-41	5
1376939	9-41	27
1377068	1-49	1
1377125	5-23	9
	5-27	8
	5-31	8
1377186	4-63	22
	4-95	4
	4-99	14
1377187	4-67	23
	4-71	23
	4-75	29
	4-89	12
	4-95	6
	4-99	13
1377188	4-63	23
	4-95	5
	4-99	15
1377189	4-75	29
	4-89	12
	4-95	4
	4-95	5
	4-95	6
	4-99	13
	4-99	14
	4-99	15
1377271	1-22	40
	1-22	40
1377702	1-22	40
	1-22	40
1377703	1-22	40
	1-22	40
1377704	1-22	40
	1-22	40
1377726	1-21	2
1377727	1-21	2
1377728	1-25	24
1377729	1-25	24
1378429	1-23	67
	1-23	67
1378430	1-23	68
1378436	1-23	69
	1-23	69
1378439	1-23	62
	1-23	62
1378537	2-145	4
1378661	4-75	26
	4-238	4
1378884	6-7	
1378888	6-7	
1378889	6-3	
	6-25	
1379452	4-153	1
	4-155	1
	4-157	1
1379725	6-21	
1379726	6-29	10
	6-49	32
	6-53	32
1379728	8-3	
1379729	8-3	
	8-7	
1379748	6-54	
1379749	6-49	19
	6-53	19
	6-61	2
1379750	6-49	29
	6-53	29
	6-61	3
1379751	6-18	
	6-26	
1379753	6-17	21
	6-25	21
	6-33	37
1379754	6-50	
	6-54	
1379755	6-49	14
	6-53	14
	6-61	1
1379833	5-53	5
	5-55	5
	5-57	4
1379836	5-53	6
	5-55	6
	5-57	5
1379841	11-31	
1380777	6-25	5
	6-33	4
1380784	6-3	42
	6-13	2
1380787	6-21	
1380789	6-49	13
	6-53	13
	6-54	
	6-61	
1380793	6-25	12
1380794	6-25	15
1380796	6-18	
	6-26	
1380797	6-17	20
	6-25	20
	6-33	36
1380798	6-25	1
	6-33	1
1382057	6-3	38
1382397	4-89	13
	4-198	1
1382867	4-195	1
1382902	6-57	18
	6-57	26
	6-59	18

See Service Manual for service procedures.
©2011 HYSTER COMPANY

NUMERICAL INDEX (continued)

PART NO.	PAGE	ITEM
	6-59	25
1382949	9-149	2
	9-155	32
1383500	9-77	
	9-117	2
	9-121	2
1383501	9-78	
	9-117	1
	9-121	1
1383516	9-5	5
1383517	9-81	
	9-163	9
	9-165	7
1383523	9-47	28
1383524	9-141	2
1383607	9-77	1
1383608	9-78	1
1383804	4-213	5
1383831	4-68	53
	4-72	54
	4-75	31
	4-89	13
	4-99	7
	4-198	
1383998	4-195	1
1384009	9-29	
1384010	9-29	
1384011	9-29	2
1384012	9-29	2
1384013	9-29	
1384014	9-29	3
1384405	9-99	
1384406	9-101	
1384407	9-101	
1384413	9-95	13
1384669	3-9	7
	3-13	25
	3-15	10
	9-153	11
1384815	9-153	3
1384816	9-149	12
	9-153	1
1384817	9-141	28
	9-153	6
1384818	9-153	11
1384819	9-153	15
1384820	9-111	24
1384821	9-10	41
	9-150	31
1384822	9-10	40
	9-149	30
1384824	11-2	6
	11-6	6
	11-7	6
1384852	6-41	5
	6-45	7
1384854	6-41	6
1384859	6-57	17
	6-59	17
1384861	6-57	16
	6-59	16
1384862	6-57	21
	6-59	21
1384863	6-57	4
	6-57	22
	6-59	22
1384864	6-57	23
	6-59	23
1384867	6-57	25
	6-59	25
1384870	6-57	13
	6-59	13
1384871	6-57	14
	6-59	14
1384872	6-59	12
1384873	6-57	10
	6-59	10
1384876	6-59	1
1384878	6-59	3
1384879	6-59	4
1384880	6-59	5
1384881	6-59	6
1384882	6-57	9
	6-59	9
1384883	6-59	7
1384884	6-59	2
1384894	6-3	24
	6-39	11
	6-43	9
1385181	4-77	110
	4-83	11
	4-85	11
	4-87	1
1385183	4-153	12
	4-169	10
1385280	9-115	16
	9-149	24
	9-155	11
1385281	9-115	17
	9-141	19
1385283	9-14	51
	9-22	60
	9-47	27
1385284	9-59	4
	9-67	42
	9-75	
	9-141	1
1385285	9-59	4
	9-75	
	9-149	1
	9-155	5
1385286	9-155	13
1385287	9-155	12
1385288	9-13	30
	9-21	27
1385519	4-19	21
	4-21	27
1385625	4-68	42
	4-71	43
	4-75	28
	4-103	
1385626	9-117	27
	9-121	26
	9-125	12
1385630	9-137	32
	9-141	32
1385631	9-133	4
	9-135	4
1385632	8-23	11
	8-27	11
	8-31	11
	9-117	28
	9-121	27
1385633	1-71	40
1385634	4-68	52
	4-72	53
	4-75	30
	4-96	37
	9-117	30
	9-121	29
1385636	1-29	5
1385637	1-29	5
1385639	9-163	13
	9-165	8
1388214	4-153	21
1388219	4-61	2
	4-153	9
	4-155	9
	4-157	9
1388286	4-11	19
	4-25	10
	4-61	5
1388287	4-22	46
	4-61	4
1388294	8-23	18
	8-27	18
	8-31	18
1388379	9-81	1
1388380	9-81	2
1389125	5-45	18
1389129	5-6	
1389130	5-6	
1389131	5-6	
1389144	5-6	32
1389317	5-45	13
1389321	5-45	14
1389525	3-6	45
	3-9	33
1389981	5-49	18
1389993	5-45	27
1390151	9-77	1
	9-78	1
1390701	8-27	39
	8-31	39
1390702	8-27	40
	8-31	40
1390718	4-151	2
	4-153	2
	4-155	2
	4-157	2
1390750	4-177	19
1390751	4-175	32
	4-177	32
1390752	4-177	28
1390754	4-177	1
1390755	4-177	3
1390756	4-177	7
1391058	11-2	2
	11-6	2
	11-7	2
	11-8	2
	11-12	2
	11-13	2
1391218	9-153	16
1391219	9-153	17
1391550	9-10	41
	9-150	31
1391551	9-10	40
	9-149	30
1391556	11-5	2
	11-11	2
1391557	11-2	2
	11-6	2
	11-7	2
	11-8	2
	11-12	2
	11-13	2
1391558	8-15	6

©2011 HYSTER COMPANY

NUMERICAL INDEX (continued)

PART NO.	PAGE	ITEM
	8-39	6
1391729	8-27	1
	8-31	1
	8-49	19
1391741	8-27	3
	8-31	3
	8-49	31
1391744	8-27	2
	8-31	2
	8-49	
1391745	8-27	1
	8-31	1
	8-49	
1391861	9-14	48
	9-22	68
	9-29	20
	9-31	12
1391862	9-14	49
	9-22	66
	9-29	21
	9-31	13
1391864	4-19	10
	4-21	29
1392392	11-5	6
	11-11	3
1392393	11-5	3
	11-11	5
1392394	11-5	4
	11-11	4
1392395	11-5	2
	11-11	2
1393118	8-19	6
	8-35	6
	8-43	6
1393366	9-75	2
1393369	9-75	7
1393371	9-75	27
1393372	9-75	28
1393374	9-75	34
1393375	9-75	35
1393376	9-76	39
1393377	9-76	40
	9-76	59
1393378	9-75	29
1393379	9-75	7
1393381	9-75	8
1393382	9-75	9
1393383	9-75	10
1393384	9-75	11
1393385	9-75	11
1393386	9-75	11
1393387	9-75	11
1393388	9-75	11
1393389	9-75	11
1393390	9-75	12
1393391	9-76	44
1393394	9-75	17
	9-76	49
1393395	9-75	21
	9-76	53
1393396	9-75	22
	9-76	54
1393397	9-76	
1393398	9-76	62
1393399	9-76	68
1393400	9-76	69
1393417	5-9	1
	5-13	6
1393418	5-5	1
1393420	8-61	2
1393748	1-22	51
	1-22	51
1393788	4-5	5
	4-11	9
	4-15	12
	4-21	3
1393802	9-17	36
	9-25	35
	10-35	12
	11-25	11
1394008	2-149	10
	2-151	34
	2-155	10
	9-13	19
	9-21	17
1394054	10-35	23
	11-29	6
1394055	9-80	
	9-127	6
	9-129	1
	9-160	37
1394058	9-141	12
1394059	9-47	30
1394061	9-47	1
1394062	9-21	1
	9-47	1
1394063	7-4	30
1394069	9-117	12
	9-121	12
	9-141	29
1394070	9-117	14
	9-121	14
	9-163	3
	9-165	13
1394076	4-9	28
1394083	5-53	21
	5-55	21
	5-57	25
	5-65	21
	5-69	25
	5-73	25
1394086	5-53	25
	5-55	25
	5-57	23
	5-65	25
	5-69	23
	5-73	23
1394087	5-6	32
	5-6	32
1394088	5-77	
	5-78	9
1394093	2-4	1
	2-143	
	4-189	
1394094	2-4	1
	2-143	
	4-189	
1399400	2-145	12
1402888	4-57	1
1450055	9-105	10
	9-107	7
1450059	9-105	
1450060	9-101	24
	9-107	9
1450062	9-101	
1450064	9-101	
1450065	9-101	
1450193	9-75	32
1450195	9-75	24
	9-76	56
1450196	9-75	25
	9-76	57
1450197	9-75	26
	9-76	58
1450199	9-75	36
1450201	9-76	38
1450279	8-61	5
1450360	9-75	1
1450361	9-75	1
1450390	8-27	1
	8-31	1
	8-49	
1450547	9-107	12
1450657	5-13	16
1450658	5-13	11
1450659	5-17	16
	5-19	29
	5-21	29
1450672	9-43	
1450675	9-43	
1450861	6-25	13
	6-25	19
	6-33	23
	6-33	34
	6-37	12
1450912	9-93	1
	9-95	
	9-135	1
1450913	9-93	3
	9-133	3
1451327	4-11	1
1451328	4-11	1
1451416	1-71	4
1452221	1-13	3
1452222	1-13	
1452226	1-19	1
1452227	1-19	2
1452228	1-19	3
1452229	1-19	4
1452230	1-19	5
1452351	2-143	5
	2-145	3
1452425	2-143	3
1452566	2-131	17
1452594	3-17	28
1452916	11-2	3
	11-6	3
	11-7	3
	11-8	3
	11-12	3
	11-13	3
1453031	1-33	10
1453590	2-143	4
1453798	1-49	
1453799	1-49	
1453800	1-51	14
1454002	1-49	1
1454003	1-49	1
1454004	1-49	2
	1-51	2
1454006	1-49	3
1454177	9-49	1
	9-53	1
1454180	9-49	2
	9-53	2
1454330	9-89	1
1454347	11-29	2
1454950	5-2	1

©2011 HYSTER COMPANY

NUMERICAL INDEX (continued)

PART NO.	PAGE	ITEM
	5-5	
	5-9	
	5-13	
	5-17	
	5-23	
	5-27	
	5-37	
	5-51	
	5-53	
	5-61	
1455064	4-9	24
	4-19	
	4-78	
1455662	9-95	1
1455663	9-95	2
1455664	9-95	3
1455665	9-95	4
1455667	9-95	6
1455668	9-95	7
1455669	9-95	8
1455670	9-95	9
1455671	9-95	10
1455672	9-95	11
1455830	9-135	9
1455928	4-76	58
	4-81	4
1456552	1-26	30
1456624	3-21	12
	3-25	26
1456830	9-93	6
1456932	6-47	4
1457235	7-5	52
1457427	9-111	14
	9-111	20
1457428	9-133	14
	9-135	14
	9-141	31
1457429	9-117	26
	9-133	19
	9-135	19
1457430	9-133	20
	9-135	20
1458111	1-23	68
1458115	1-23	68
1458197	1-43	32
1458297	9-80	4
1458358	3-21	15
	3-23	9
	3-25	3
	3-27	9
1458361	3-21	15
	3-23	9
	3-25	3
	3-27	9
1458373	4-75	16
	4-89	1
	4-93	1
1459254	8-23	37
	8-27	37
	8-31	37
1460200	5-77	
1460201	5-77	13
1460402	11-6	1
	11-13	1
1460406	11-6	1
	11-13	1
1460451	11-6	1
	11-13	1
1460477	2-149	9
	3-23	12
1460927	4-233	
1460958	4-64	40
	4-71	37
	4-77	86
	4-89	22
	4-95	17
	4-107	
1460962	1-25	27
1460984	1-29	5
1460985	1-29	5
1461008	4-72	50
	4-77	89
	4-90	41
	4-95	15
	4-161	
1461011	4-64	47
	4-71	7
	4-77	82
	4-95	14
	4-125	
1461072	4-9	19
	4-19	2
1461419	4-195	22
1461420	4-195	22
1461425	1-29	1
1461426	1-29	1
1461476	1-71	39
1461477	1-71	32
1461478	1-71	31
1461691	4-72	83
	4-89	23
	4-99	26
1461739	4-6	51
	4-11	28
	4-37	
1461916	9-93	
	9-135	
1461917	9-93	3
1462054	9-93	5
1462282	1-29	5
1462357	7-3	1
1462359	7-4	36
1462362	7-4	36
1462364	7-3	3
1462492	9-79	
1462733	1-3	1
1462890	7-9	4
1462891	7-9	4
1463136	4-171	32
1463137	4-171	35
	4-173	17
1463184	4-169	20
	4-171	30
	4-173	18
1463189	4-169	18
	4-171	33
	4-173	15
1463193	4-169	21
	4-171	31
	4-173	19
1463196	4-47	1
	4-169	19
	4-171	34
	4-173	16
1463263	1-21	1
1463536	4-72	70
	4-77	81
	4-90	42
	4-95	16
	4-99	24
	4-204	
1463773	1-22	34
1463912	1-69	21
1463943	1-25	25
1463945	1-26	30
1463998	9-93	
	9-135	
1464312	4-71	33
	4-75	33
	4-117	
1464313	4-64	36
	4-75	32
	4-120	
	4-195	15
1464622	8-13	10
1464640	3-29	1
1464869	1-71	40
1465374	1-40	36
	1-44	36
1465401	1-53	
1465402	1-53	
1465404	1-40	36
	1-44	36
1465405	1-40	36
	1-44	36
1465468	4-155	12
	4-157	12
	4-171	15
1465469	4-155	14
	4-157	14
	4-171	17
1465583	5-2	1
	5-5	
	5-9	
	5-13	
	5-17	
	5-23	
	5-27	
	5-37	
	5-51	
	5-53	
	5-61	
1465590	1-29	5
1465846	8-19	16
1465877	4-64	47
	4-71	7
	4-77	82
	4-95	14
	4-122	
1466004	11-2	4
	11-6	4
	11-7	4
	11-8	4
	11-12	4
	11-13	4
1466009	9-95	5
1466305	1-29	1
1466327	1-6	49
1466330	1-6	49
1466656	4-72	75
	4-77	92
	4-95	10
	4-99	12
1466657	4-71	42
	4-77	98
	4-95	3
	4-99	17
1467051	1-39	32

©2011 HYSTER COMPANY

NUMERICAL INDEX (continued)

PART NO.	PAGE	ITEM
	1-43	32
1467054	1-25	25
1467055	1-25	28
1467413	4-76	79
	4-83	1
	4-84	1
1467480	4-6	38
	4-9	7
	4-29	
1467481	4-71	34
	4-113	
1467586	1-37	25
1467588	1-37	19
1467746	4-64	39
	4-72	45
	4-75	34
	4-135	
1467783	4-64	36
	4-75	32
	4-95	23
	4-100	31
	4-119	
	4-195	15
1467784	4-64	36
	4-75	32
	4-95	23
	4-100	31
	4-121	
	4-195	15
1467982	9-117	26
	9-121	25
	9-135	19
1468075	4-234	
	10-33	12
	11-23	12
1468319	4-221	11
1468394	11-5	1
	11-11	1
1469183	9-59	2
1469188	9-17	13
	9-59	27
	9-59	27
1469189	9-17	12
	9-22	61
	9-25	11
	9-59	26
1470271	1-29	1
1470850	9-31	5
1470852	5-57	32
	5-65	43
	5-69	32
	5-73	32
	9-31	5
1471494	1-39	32
	1-43	32
1471762	1-25	25
1471763	1-26	30
1471956	4-165	22
1471957	4-165	20
1471958	4-165	23
1471959	4-165	21
1471960	4-165	19
1472697	4-6	38
	4-6	39
	4-9	8
	4-47	
1472703	4-76	57
	4-165	
1472704	4-77	109
	4-169	
1472705	4-68	42
	4-75	28
	4-89	11
	4-96	36
	4-99	8
	4-105	
1472706	4-6	38
	4-9	7
	4-31	
1473617	1-53	26
1473618	1-53	32
1473630	1-53	4
1473631	1-53	23
	1-53	31
	1-53	37
1473632	1-53	22
1473633	1-53	25
1473636	1-57	6
1473637	1-57	5
1473638	1-57	8
1473639	1-57	7
1473640	1-57	11
1473641	1-57	12
1473643	1-57	10
1473644	1-57	13
1473647	1-57	15
1473648	1-57	16
1473649	1-57	17
1473650	1-57	18
1473652	1-57	14
1473653	1-57	21
1473654	1-57	22
1473656	1-57	23
1473657	1-57	24
1473658	1-57	25
1473659	1-57	26
1473660	1-57	27
1473661	1-57	19
1473662	1-57	29
1473663	1-57	30
1473664	1-57	31
1473666	1-57	28
1473668	1-57	33
1473670	1-57	3
1473671	1-57	4
1473674	1-53	5
1473676	1-53	7
1473677	1-53	8
1473678	1-53	9
1473679	1-53	10
1473681	1-53	11
1473683	1-53	13
1473684	1-53	12
1473685	1-53	14
1473688	1-54	44
1473689	1-53	18
1473691	1-54	43
1473692	1-53	19
1473693	1-53	21
1473694	1-53	15
1473698	1-53	38
1473699	1-53	1
1473700	1-53	2
1473701	1-53	3
1473703	1-53	16
1473704	1-53	24
1473705	1-53	27
1473706	1-53	28
	1-53	33
1473707	1-53	29
1473708	1-53	30
	1-53	34
1473709	1-53	35
1473710	1-53	36
1473713	1-53	20
1473714	1-53	39
1473715	1-53	40
1473716	1-54	41
1473717	1-53	17
1473718	1-54	42
1473719	6-37	5
1473777	6-15	1
1473839	6-29	2
1473872	9-63	33
1473873	9-63	33
1473874	9-67	9
1473875	9-63	29
1473877	9-64	49
1473878	9-63	15
1473879	9-63	42
1473880	9-67	25
1473881	9-63	10
1473882	9-63	40
	9-67	14
1473883	9-63	2
1473887	7-10	39
	7-10	40
	9-63	13
	9-67	17
	9-85	4
1473888	5-55	27
	5-57	27
	5-65	27
	5-69	27
	5-73	27
	5-74	52
	9-59	15
	9-59	30
	9-63	8
	9-63	11
	9-85	5
1473889	9-67	47
	9-68	57
1473890	9-63	9
1473892	9-63	7
1473893	9-67	6
	9-67	29
1473894	9-63	18
1473895	9-63	32
1473897	9-63	19
	9-67	18
	9-85	6
1473898	5-55	23
	5-57	28
	5-65	30
	5-69	28
	5-73	28
	8-23	29
	8-27	29
	8-31	29
	9-59	14
	9-63	24
1473899	9-67	45
1473901	9-63	6
	9-63	25
1473903	9-63	5
1473909	9-63	26
1473910	9-63	27

See Service Manual for service procedures.
©2011 HYSTER COMPANY

NUMERICAL INDEX (continued)

PART NO.	PAGE	ITEM
1473918	9-67	11
	9-68	58
1473919	9-67	1
1473923	9-67	39
1473926	9-67	36
1473927	9-67	37
1473933	9-67	7
	9-67	31
1473936	9-67	49
1473939	9-67	43
1473941	9-67	44
1473944	9-67	21
1473945	9-67	22
1473947	9-67	10
1473948	9-67	19
1473949	9-67	20
1473960	9-64	45
1473965	9-64	44
1473967	9-121	37
1473968	9-68	52
1473971	9-67	15
	9-68	50
1473976	9-64	43
	9-67	40
1473985	4-9	28
	4-19	8
1474624	1-53	1
1474626	1-53	3
1474647	1-53	6
	1-54	45
1474655	1-57	34
1474822	4-165	24
1474922	9-63	20
1474924	9-60	
1474925	9-59	34
1474926	9-63	4
	9-64	47
1474927	9-64	46
	9-64	47
1474928	9-59	35
1474930	9-59	35
1474932	9-59	33
1475137	5-57	34
	5-69	34
	5-73	34
1475141	9-47	5
1475419	6-3	25
	6-39	16
	6-43	15
1475420	6-17	32
	6-26	32
	6-33	31
1475421	6-17	33
	6-26	33
	6-33	32
1476441	1-29	5
1476461	9-17	13
	9-25	12
	9-25	12
	9-59	27
1476462	9-59	28
1476489	7-3	1
1476614	4-195	1
1476740	4-202	4
1476852	4-15	22
1477400	4-213	1
1477439	3-5	21
	3-9	35
	3-9	35
1478760	6-25	
	6-47	
	6-61	
1478761	6-11	
	6-29	
	6-47	
	6-61	
1478777	7-3	15
1478780	7-3	19
1478781	7-3	15
1478782	7-3	19
1478837	9-121	35
1478838	9-121	33
1479105	4-77	116
	4-82	37
1479226	4-77	117
1479227	4-77	117
	4-82	38
1479477	1-71	25
1479822	5-5	1
1479823	5-5	1
1479824	5-5	1
1479830	5-14	42
1479832	5-14	44
1479836	5-23	28
1479838	5-17	21
	5-19	2
	5-21	2
	5-23	20
	5-27	19
	5-31	19
1479839	5-17	19
	5-19	21
	5-21	21
1479840	5-17	19
1479841	5-17	19
1479842	5-17	19
1479845	5-33	27
1479848	5-33	38
1480320	4-6	37
	4-11	41
	4-15	7
	4-21	1
	4-179	
1480432	4-49	14
1480539	4-77	114
	4-81	8
1480747	5-57	33
	5-69	33
	5-73	33
1482663	4-55	31
	4-58	19
1482668	4-55	32
	4-58	19
1483178	7-13	1
	7-13	13
1483179	7-13	
1483645	4-25	29
1483709	7-3	1
1483741	6-37	1
1483779	6-37	17
1483793	6-37	35
1483797	6-37	32
1483803	6-39	10
	6-41	9
	6-43	5
1483804	6-57	28
	6-59	27
1483805	6-57	27
	6-59	26
1483901	5-57	43
	5-69	43
	5-73	43
1484308	2-149	32
	2-149	38
	2-151	7
	2-155	32
	2-155	32
1484377	4-49	
	4-51	
	4-53	
	4-55	29
1484397	4-57	9
	4-58	15
1484685	4-25	12
1484686	4-25	13
1484715	4-237	2
	4-238	2
1485420	1-72	42
1485936	11-2	1
	11-2	1
	11-7	1
	11-7	1
	11-8	1
	11-8	1
	11-12	1
	11-12	1
1486210	11-2	1
	11-8	1
1486213	11-2	1
	11-8	1
1486558	9-53	24
1486706	2-161	
1486739	8-23	20
	8-27	20
	8-31	20
1486740	9-53	23
	9-63	12
1486742	8-23	32
	8-27	32
	8-31	32
1486746	8-23	21
	8-27	21
	8-31	21
1486754	8-23	22
	8-27	22
	8-31	22
1486772	9-60	42
1487063	9-53	25
	9-63	3
	9-67	48
	9-68	51
	9-68	53
1487065	8-23	30
	8-27	30
	8-31	30
1487075	8-23	31
	8-27	31
	8-31	31
1487095	9-85	25
1487097	9-63	38
1487099	5-57	39
	5-69	39
	5-73	39
1487908	4-81	18
1488421	8-28	51
	8-32	51
1488464	9-63	39
	9-67	35

©2011 HYSTER COMPANY

NUMERICAL INDEX (continued)

PART NO.	PAGE	ITEM
1489285	6-17	1
1489308	6-25	14
1489408	6-63	
1491260	1-29	23
1491286	4-179	13
	4-179	14
	4-179	16
1491290	4-179	20
1491360	1-44	
	2-151	8
1492279	7-3	23
1493183	6-25	12
	6-33	13
1493237	8-27	2
	8-31	2
1493430	4-57	12
1493434	4-57	10
1494312	9-47	5
1495139	9-29	1
1495142	4-33	8
	4-35	9
1495149	4-90	
	4-99	10
	4-207	
1495168	1-47	11
1495623	6-63	1
1495624	6-63	2
1495625	6-63	3
1495626	6-63	4
1495627	6-63	5
1495628	6-63	6
1495629	6-63	7
1495630	6-63	8
1495631	6-63	9
1495632	6-63	10
1495633	6-63	11
1495634	6-63	12
1495635	6-63	13
1495636	6-63	14
1495637	6-63	15
1495638	6-63	16
1495639	6-63	17
1495640	6-63	18
1495641	6-63	19
1495642	6-63	20
1495643	6-63	21
1495644	6-63	22
1495645	6-63	23
1495646	6-63	24
1495647	6-63	25
1495648	6-63	26
1495828	9-47	6
1495970	4-179	1
1495971	4-179	2
1495972	4-179	3
1495973	4-175	6
	4-177	6
	4-179	4
1495974	4-179	5
1495975	4-179	6
1496236	4-179	7
	4-179	8
1496238	4-179	9
1496239	4-179	10
1496240	4-179	11
1496241	4-179	12
1496242	4-179	13
1496243	4-179	14
1496244	4-179	15
1496245	4-179	17
1496246	4-179	18
1496247	4-179	19
1496248	4-179	21
1496249	4-179	22
1496250	4-179	23
1496251	4-179	24
1496252	4-179	25
1496253	4-179	26
1496254	4-179	27
1496255	4-179	13
	4-180	28
1496256	4-180	29
1496496	9-43	1
	9-45	
	9-59	36
1498893	4-179	12
1498894	4-179	12
1498895	4-179	12
1498896	4-179	12
1498897	4-179	12
1498898	4-179	12
1498900	4-179	13
1498901	4-179	13
1498902	4-179	13
1498903	4-179	13
	4-179	14
1498904	4-179	13
1498905	4-179	13
	4-179	14
1498907	4-179	13
1498911	4-179	14
1498912	4-179	14
1498913	4-179	14
1499053	4-15	21
	4-213	
1499071	4-75	33
	4-89	26
	4-95	18
	4-99	1
	4-115	
1499324	2-4	1
	2-7	
	2-11	
	2-15	
	2-18	
	2-21	
	2-24	
	2-25	
	2-26	
	2-29	
	2-34	
	2-35	
	2-39	
	2-43	
	2-46	
	2-49	
	2-50	
	2-53	
	2-57	
	2-61	
	2-65	
	2-66	
	2-69	
	2-92	
	2-95	
	2-98	
	2-101	
	2-105	
	2-109	
	2-112	
	2-115	
	2-117	
	2-119	
	2-123	
	2-125	
	2-126	
	2-127	
	2-145	
	2-157	
	2-159	
1499353	4-75	33
	4-89	26
	4-95	18
	4-99	1
	4-117	
1499559	6-25	10
1499598	4-77	107
	4-90	37
	4-93	2
1500925	4-237	3
1500974	4-15	2
	4-19	13
	4-43	
1501323	3-15	29
1501919	4-55	30
	4-58	19
1501996	3-13	21
	3-15	32
1502038	2-149	20
	2-151	36
	2-155	20
1502125	6-47	
1502126	6-47	3
1502127	6-47	24
1502128	6-47	28
1502132	6-25	12
1502133	6-3	7
	6-39	32
	6-43	25
1502136	8-3	
1502137	8-3	7
1502336	6-29	
1502337	6-30	49
1502339	6-30	
1502543	2-149	16
1502551	9-63	33
1502552	9-63	20
	9-63	42
1502553	9-63	29
1502554	9-63	15
	9-64	49
1502712	4-33	28
	4-35	32
	4-49	11
	4-51	10
	4-53	23
	4-55	23
	4-57	6
	4-58	16
	4-218	12
	4-238	3
1502752	6-13	
	6-25	
	6-39	
	6-57	
1502753	6-15	
	6-29	
	6-41	

See Service Manual for service procedures.
©2011 HYSTER COMPANY

NUMERICAL INDEX (continued)

PART NO.	PAGE	ITEM
	6-59	
1502879	9-45	
1502883	9-45	4
1502887	9-45	9
1502888	9-45	12
1503633	4-49	27
	4-51	26
	4-53	22
	4-55	22
1503634	4-49	22
	4-51	23
	4-53	17
	4-55	17
1503995	1-29	5
1504229	5-9	25
1504383	1-29	22
1504400	5-47	3
1504471	1-3	9
	1-29	5
1504636	2-145	15
1505026	9-59	12
1505085	9-47	13
1505180	9-59	6
1506665	4-100	50
1506666	4-100	51
1506667	4-221	10
1506668	4-221	9
1506669	4-221	4
1506670	4-221	7
1506671	4-221	6
1506672	4-221	8
1506673	4-221	3
1506674	4-100	46
	4-221	
1506738	4-221	5
1506758	3-21	6
1506761	3-21	7
1506773	3-21	2
	3-23	2
	3-25	27
	3-27	2
1506806	3-21	1
	3-23	1
	3-25	1
	3-27	1
1506832	3-21	15
	3-23	9
	3-25	3
	3-27	9
1506984	1-60	38
	1-63	24
1507163	4-100	47
1507210	4-81	27
1507234	3-21	1
	3-23	1
	3-25	1
	3-27	1
1507235	3-21	1
	3-23	1
	3-25	1
	3-27	1
1507236	4-81	34
	4-147	
1507248	1-60	39
	1-63	24
1507251	2-161	14
1507268	3-21	14
	3-23	8
	3-25	2
	3-27	8
1507359	4-81	28
1507361	3-21	4
1507362	3-21	5
1507391	3-21	1
	3-23	1
	3-25	1
	3-27	1
1507725	4-49	28
	4-51	27
	4-53	28
	4-55	28
	4-57	11
1507767	1-6	49
1507768	1-6	49
1507830	2-131	13
	2-133	14
1508108	1-40	34
	1-44	34
1508250	1-39	33
	1-43	33
1508251	4-76	79
	4-83	1
	4-84	1
1508252	4-76	61
	4-83	2
	4-151	
1508253	4-76	57
	4-167	
1508254	4-7	84
	4-9	29
	4-61	
1508300	4-19	9
	4-21	28
1508451	3-33	1
	3-37	
1508452	4-76	78
1508454	1-49	19
	1-51	19
	1-57	38
1508460	3-29	34
1508476	4-85	16
	4-87	16
	4-100	43
	4-218	
1508478	4-15	18
	4-19	11
	4-31	
1508522	4-85	18
	4-87	17
1508523	4-25	32
1508524	1-71	40
1508671	9-59	5
1509033	2-145	23
	5-55	38
	5-66	49
1509061	2-145	1
1509062	2-145	2
1509189	2-131	16
	2-133	16
1509203	5-43	
	5-51	27
1509205	5-43	9
1509206	5-43	28
1509832	1-71	40
1510117	3-23	11
1510383	3-17	25
1510388	2-145	42
	2-149	23
1511748	1-40	55
1511749	1-39	1
1511938	9-21	42
1511943	9-21	43
1511952	2-7	2
	2-9	2
	2-34	1
	2-69	3
	2-71	3
	2-125	1
1511953	2-163	4
1511961	3-49	4
	3-49	17
1511976	2-49	6
1511977	4-183	4
	4-187	3
1511978	4-183	5
	4-187	4
1511979	2-163	3
1511989	2-50	2
1511998	3-53	5
1512003	4-183	1
	4-187	1
1512004	2-86	1
	2-89	2
	2-105	3
	2-107	3
	2-112	1
	2-113	1
	3-60	1
	4-223	11
	4-225	6
1512005	2-79	5
	2-123	1
	2-124	1
1512006	4-183	3
	4-187	2
1512011	2-86	2
1512012	2-86	3
	2-89	4
	2-91	4
1512015	2-65	2
1512024	2-65	3
1512025	2-65	4
1512026	2-65	6
1512027	2-65	5
1512029	3-59	10
1512033	2-31	6
1512045	2-57	9
	2-59	9
1512046	2-57	12
	2-59	12
1512047	2-57	10
	2-59	10
1512048	2-57	11
	2-59	11
1512049	2-57	3
1512050	2-57	4
	2-59	4
1512051	2-55	6
	2-61	9
	2-63	9
	2-101	2
	3-51	2
	4-223	12
	4-225	9
	4-227	7
	4-229	8
	4-231	8
1512053	2-57	7

©2011 HYSTER COMPANY

NUMERICAL INDEX (continued)

PART NO.	PAGE	ITEM
	2-59	7
1512056	2-57	8
	2-59	8
1512097	4-227	5
1512106	2-26	3
	2-27	3
1512107	2-26	4
	2-27	4
1512111	4-225	8
1512134	2-61	16
	2-63	
1512135	2-61	12
	2-63	12
1512137	2-61	3
	2-63	3
1512138	2-61	6
	2-63	6
1512161	2-35	2
1512163	2-35	4
	2-36	4
1512287	2-66	1
1512292	2-9	
	2-34	2
	2-69	2
	2-71	2
	2-77	5
	2-79	2
	2-81	5
	2-119	1
	2-125	2
1512304	2-9	3
1512312	2-89	3
	2-91	3
1512327	2-49	8
1512328	2-49	9
	2-65	9
	3-39	2
	3-41	2
	3-43	2
1512330	2-49	2
1512336	2-49	7
1512418	2-157	1
	2-158	3
1512423	2-95	2
	2-97	5
	3-65	4
	4-231	6
1512445	2-26	2
	2-27	2
1512448	2-69	4
	2-71	4
1512456	2-46	2
	2-47	2
1512461	2-89	9
	2-91	9
1512463	2-89	7
	2-91	7
1512464	2-89	8
	2-91	8
1512488	2-41	13
1512503	3-49	18
	3-60	2
1512584	2-121	1
1512589	3-49	16
1512740	3-45	4
	3-49	2
	3-49	15
1513116	2-7	3
1513191	2-98	1
1513337	2-109	4
	2-111	3
1513338	2-109	5
	2-111	4
1513427	3-49	3
1513430	2-105	8
	2-107	8
1513455	2-79	4
	3-39	6
	3-41	14
1513457	2-79	1
1513637	3-45	3
	3-49	14
1513696	2-101	1
1513706	2-25	2
1513709	2-49	3
1513712	2-103	1
	4-225	5
	4-229	6
	4-231	5
1513719	4-187	5
1513722	2-159	2
1513727	2-65	8
1513730	2-57	2
	2-59	2
1513732	2-57	6
	2-59	6
1513742	3-60	5
1513743	2-86	5
	2-89	10
1513749	2-43	2
	2-45	2
	2-45	
	2-103	3
	3-47	1
	3-53	3
	4-227	10
	4-229	10
	4-231	10
1513751	2-53	3
	2-55	3
1513753	2-157	2
1513757	2-69	1
1513758	2-69	3
1513759	2-69	20
	2-71	20
1513761	2-69	6
	2-71	6
1513763	2-69	7
	2-71	7
1513764	2-69	8
	2-71	8
1513765	2-69	9
	2-71	9
1513766	2-69	10
	2-71	10
1513767	2-69	11
1513768	2-69	12
	2-71	12
1513769	2-61	5
	2-63	5
	2-69	13
	2-71	13
1513770	2-69	14
1513771	2-69	15
1513772	2-69	16
	2-71	16
1513773	2-69	17
	2-71	17
1513774	2-69	18
	2-71	18
1513776	2-84	1
1513777	2-82	2
	2-84	2
1513778	2-84	4
1513779	2-84	5
1513780	2-84	6
1513781	2-84	7
1513782	2-43	3
	2-45	3
1513787	2-89	1
	2-91	1
1513788	2-7	15
	2-9	15
	2-91	2
1513789	2-43	
	2-45	
1513791	2-61	1
	2-63	1
1513792	2-61	2
	2-63	2
	2-103	2
1513793	2-61	4
	2-63	4
	2-89	6
	2-91	6
	4-227	6
	4-229	7
	4-231	7
1513794	2-61	5
	2-61	5
	2-63	5
1513795	2-61	7
	2-63	7
1513796	2-61	14
	2-63	14
1513797	2-61	8
	2-63	8
1513798	2-61	13
	2-63	13
1513799	2-61	15
1513800	2-61	10
1513801	2-61	11
1513806	2-39	8
1513815	2-7	13
	2-9	13
1513816	2-7	14
	2-9	14
1513817	2-125	3
1513818	2-7	17
1513819	2-7	16
	2-9	16
1513820	2-7	18
1513822	2-7	1
	2-9	1
1513823	2-24	1
	2-45	7
1513824	4-189	1
	4-190	1
	4-193	1
1513836	4-227	4
1513849	2-79	3
	2-81	6
1513878	2-7	8
	2-9	8
1513879	2-7	9
	2-9	9
1513880	2-7	10
	2-9	10

See Service Manual for service procedures.
©2011 HYSTER COMPANY

NUMERICAL INDEX (continued)

PART NO.	PAGE	ITEM
1513881	2-7	19
	2-7	19
1513882	2-7	
	2-9	
1513885	2-111	
	2-126	2
1513898	2-131	4
	2-133	4
	2-135	4
1513899	2-131	2
	2-133	2
	2-135	2
1513902	2-131	1
	2-133	1
	2-135	1
1514236	2-143	36
1514237	2-143	35
1514331	6-63	
1514332	2-7	11
	2-9	11
1514339	2-11	15
	2-13	13
	2-105	5
	2-163	2
1514344	2-18	1
1514345	2-18	2
	2-19	2
1514346	2-18	3
	2-19	3
1514347	2-21	
	2-23	
1514353	2-18	4
	2-19	4
1514354	2-18	5
	2-19	5
1514371	3-51	1
	3-53	1
1514382	3-53	2
	3-55	1
1514432	2-131	12
	2-133	9
	2-135	9
1514439	4-77	109
	4-171	
1514483	3-60	3
	3-63	3
1514497	3-65	8
1514498	3-65	9
1514501	3-65	10
1514502	3-65	11
1514504	3-65	13
	4-225	10
1514519	2-15	1
1514520	2-15	2
	2-17	2
1514521	2-15	3
	2-17	3
1514522	2-15	4
1514523	2-15	5
1514525	2-15	8
	2-17	8
1514526	2-15	9
1514527	2-15	10
1514528	2-15	5
1514529	2-15	5
1514530	2-15	5
1514531	2-15	5
1514535	2-97	9
1514541	2-11	12
	2-13	10
1514558	2-11	20
	2-13	20
1514565	2-105	10
	2-107	10
1514603	4-57	10
1514838	1-6	49
1514839	1-6	49
1514867	3-5	22
	3-9	17
	3-13	30
	3-15	27
1514903	3-25	8
	3-27	16
1514910	9-29	7
1514947	4-81	26
	4-90	44
	4-146	
1514948	4-77	97
	4-81	22
	4-208	
1514976	2-131	5
	2-133	13
	2-135	13
1514978	2-131	22
	2-133	13
	2-135	13
1514980	9-29	13
1515429	4-96	34
	4-135	
1515475	1-71	13
1515497	5-2	1
	5-5	
	5-9	
	5-13	
	5-15	
	5-19	
	5-23	
	5-27	
	5-55	
	5-57	
	5-61	
1515579	1-6	49
1515694	4-229	2
	4-231	14
1515754	3-5	12
	3-9	34
	3-13	31
1515787	2-98	2
1515795	3-60	11
	3-63	1
1515845	3-43	1
1515917	4-81	12
	4-90	40
	4-93	29
	4-96	35
	4-173	
1515918	4-84	2
	4-90	43
	4-100	45
	4-155	
1516084	9-6	34
	9-13	17
	9-21	15
1516198	8-23	34
	8-27	34
	8-31	34
1516204	8-23	33
	8-27	33
	8-31	33
1516208	5-57	31
	5-69	31
	5-73	31
	8-23	35
	8-27	35
	8-31	35
1516214	8-23	36
	8-27	36
	8-31	36
1516227	4-76	79
	4-83	1
	4-84	1
1516889	1-40	47
1516891	1-43	7
1516902	9-5	7
	9-13	3
	9-21	4
	9-101	
1516903	9-101	
1516981	2-77	8
	2-101	1
1516983	2-101	4
1516984	2-101	5
1516985	2-101	6
1516986	2-101	7
1516994	2-115	1
1516995	2-115	2
1516997	4-183	8
	4-187	6
1516998	4-183	9
	4-187	7
1517000	2-159	1
1517002	2-65	1
1517003	2-65	7
1517007	2-77	6
	2-81	1
	3-39	1
	3-41	1
1517008	3-39	8
	3-41	3
1517009	3-39	7
	3-41	4
1517010	2-7	6
	2-9	6
	2-11	2
	3-39	9
	3-41	5
	3-59	6
1517011	2-7	7
	2-9	7
	2-11	3
	3-39	10
	3-41	6
	3-43	14
	3-49	7
	3-59	7
1517012	3-41	9
1517013	3-41	7
1517014	3-41	10
1517016	3-41	12
1517017	3-41	15
1517019	3-45	1
1517020	3-45	2
1517021	3-45	5
1517022	3-45	6
	3-49	1
1517023	3-45	7
1517024	3-45	8
1517027	3-60	7

©2011 HYSTER COMPANY

NUMERICAL INDEX (continued)

PART NO.	PAGE	ITEM
	3-63	5
1517028	3-60	8
	3-63	7
1517029	3-60	9
1517031	3-60	11
1517033	3-59	4
1517034	3-59	5
1517046	3-59	8
1517061	3-49	5
1517064	4-173	11
1517069	2-105	7
	2-107	7
1517070	3-49	13
1517081	3-53	6
1517084	2-43	1
	2-45	1
1517085	2-43	5
	2-45	5
1517086	2-43	6
1517090	2-92	1
1517091	2-92	2
1517093	2-98	3
1517094	2-98	4
1517097	2-157	3
1517098	2-157	4
1517104	2-82	1
	2-84	3
	2-85	3
1517105	2-82	3
1517110	2-86	4
	2-89	5
1517114	4-223	1
1517116	4-223	3
1517118	4-223	6
1517119	2-7	5
	2-9	5
1517120	4-223	8
	4-225	3
1517122	4-223	13
1517172	4-223	14
1517178	2-35	1
1517179	2-35	3
1517180	2-35	5
	2-36	5
1517182	2-11	1
1517183	2-11	5
1517184	2-11	6
1517185	2-11	8
	2-13	4
1517186	2-11	7
1517187	2-11	9
	2-13	5
1517188	2-11	10
	2-13	6
1517189	2-11	13
	2-13	11
1517190	2-11	18
	2-13	16
1517191	2-11	19
1517193	3-65	2
1517194	3-65	3
1517195	3-65	5
1517196	3-65	6
1517197	3-65	7
1517198	3-65	12
1517199	3-65	14
1517200	3-65	15
1517201	3-65	16
1517202	3-65	17
1517203	3-65	18
1517204	3-65	19
1517205	3-65	20
1517206	3-65	21
1517207	3-65	22
1517208	3-65	23
1517209	3-65	24
1517210	3-65	25
1517238	2-109	3
	2-111	2
1517240	2-39	1
	2-41	1
1517241	2-39	2
1517242	2-39	3
	2-41	3
1517243	2-39	4
1517244	2-39	5
	2-41	5
1517245	2-39	6
1517246	2-41	8
1517248	2-39	7
1517250	2-120	1
1517256	2-127	1
	2-128	1
1517257	2-127	2
	2-127	2
	2-128	2
1517258	2-127	4
1517259	2-127	5
	2-128	5
1517261	2-72	2
1517262	2-72	1
	2-73	2
	2-74	2
1517263	2-72	3
1517266	4-227	3
1517267	2-105	1
1517268	2-105	2
	2-107	2
1517269	2-105	4
1517270	2-105	9
	2-107	9
1517271	2-105	11
1517276	2-29	4
1517277	2-29	3
1517279	2-79	6
1517280	2-79	7
1517281	2-79	8
1517282	2-79	10
1517283	2-79	11
1517285	2-112	2
	2-113	3
1517286	2-112	3
1517288	2-123	2
1517290	2-118	1
1517291	2-117	2
	2-118	2
1517293	2-162	1
	4-185	1
1517295	4-185	3
1517297	4-227	2
	4-229	1
	4-231	1
1517299	4-229	3
	4-231	2
1517300	4-229	9
	4-231	9
1517301	4-229	11
	4-231	11
1517542	4-99	25
	4-127	
1517552	4-49	10
	4-51	9
	4-53	10
	4-55	10
	4-57	6
1517914	4-99	28
	4-163	
1517924	4-99	23
	4-109	
1517963	9-6	33
	9-21	32
1517976	1-29	22
1517977	4-15	19
	4-25	22
	4-39	
1518112	4-33	11
	4-35	12
	4-57	9
	4-58	15
	4-218	9
1518354	1-64	46
1518360	3-21	3
1518464	4-11	42
	4-19	12
	4-47	
1518578	9-29	6
1518717	3-21	16
	3-23	5
	3-23	17
	3-25	6
	3-25	21
	3-27	5
1518935	4-81	34
	4-149	
1518955	9-67	38
1519028	1-64	44
1519029	1-64	47
1519030	1-59	37
	1-63	29
1519031	1-59	37
	1-63	29
1519032	1-64	45
1519033	1-64	51
1519034	1-64	48
1519035	1-64	49
1519129	4-16	40
	4-16	50
	4-25	20
	4-215	
1519136	2-29	6
1519284	2-7	21
1519286	2-7	12
1519287	2-53	1
	2-55	1
1519290	2-23	3
1519291	2-53	2
	2-55	2
1519292	2-53	4
1519293	2-32	1
1519294	2-9	20
1519576	4-49	18
1519577	4-49	17
1519578	2-145	44
	2-152	48
1519579	2-145	45
1519581	2-145	20
1519586	2-145	19
1519588	2-145	18

See Service Manual for service procedures.
©2011 HYSTER COMPANY

NUMERICAL INDEX (continued)

PART NO.	PAGE	ITEM
1519589	2-145	17
1519636	2-145	22
1519637	2-145	21
1519649	2-145	37
1519855	2-145	46
	2-149	8
	2-152	54
	2-155	8
1520346	4-84	2
	4-90	43
	4-153	
1520356	4-77	93
	4-89	31
	4-95	7
	4-95	8
	4-99	19
1520485	5-55	30
	5-57	26
	5-65	23
	5-69	26
	5-73	26
1520487	5-55	28
	5-65	28
	5-74	50
1520488	5-55	37
	5-65	37
	5-74	51
1520765	4-19	15
1520767	4-16	37
	4-19	16
	4-21	31
1520769	4-5	30
	4-11	37
	4-15	33
	4-21	12
1520771	4-5	27
	4-11	36
	4-15	36
	4-21	18
	4-25	15
1520772	4-6	49
	4-11	38
	4-15	17
	4-25	2
	4-25	3
1520831	7-3	7
1520849	9-75	23
	9-76	55
1520867	4-16	40
	4-16	50
	4-22	40
	4-25	21
	4-215	
1521112	4-5	25
	4-15	27
1521113	4-5	26
	4-15	34
1521310	4-16	41
1521528	4-83	15
	4-85	15
1521695	2-7	4
	2-9	4
1521876	4-225	11
1521921	4-227	8
1521960	2-105	6
	2-107	6
1521962	2-107	5
1521981	4-229	4
	4-231	3
1521982	4-229	5
	4-231	4
1522441	9-17	46
1523700	7-4	36
1523701	7-4	36
1524173	7-9	4
1524213	7-9	3
	7-15	
1525412	4-75	34
	4-137	
1525484	6-30	47
1525589	4-238	3
1526591	9-35	4
1527404	4-89	32
	4-99	9
1527813	9-53	24
1527816	9-53	24
1527880	1-69	16
	2-149	15
1527885	2-149	1
1527888	2-149	37
1527979	3-13	33
	3-15	31
1528597	9-59	30
1528606	8-23	40
1528888	2-133	20
	2-149	30
1529052	4-57	12
1529308	4-11	42
	4-19	12
	4-49	
1529560	4-25	14
1529581	4-21	22
1529589	5-55	28
	5-55	37
	5-57	30
	5-69	30
	5-73	30
1530507	5-9	1
	5-13	6
1530508	5-5	8
1530582	5-5	1
1530585	5-5	11
1530610	5-23	19
	5-27	18
1530611	5-19	3
1530612	5-27	23
1530613	5-27	33
	5-31	33
1530619	5-23	16
	5-27	15
	5-31	15
1530620	5-19	3
1530621	5-19	8
	5-21	8
1530622	5-23	22
1530626	5-21	23
1530687	5-19	9
	5-21	9
1530688	5-19	10
	5-21	18
1530689	5-19	11
	5-21	11
1530690	5-19	13
	5-21	13
1530691	5-19	14
	5-21	14
1530692	5-19	16
	5-21	12
1530693	5-19	17
	5-21	17
1530694	5-19	18
	5-21	16
1530695	5-19	22
1530696	5-19	23
1530697	5-19	24
	5-21	24
1530699	5-19	25
	5-21	25
	5-45	9
1530700	5-19	20
1530702	5-19	26
	5-21	26
1530703	5-19	30
	5-21	34
1530704	5-19	30
	5-21	34
1530705	5-19	30
	5-21	34
1530706	5-19	30
	5-21	34
1530707	5-19	31
	5-21	31
1530708	5-19	31
	5-21	30
1530709	5-19	28
	5-21	28
1530723	5-45	
1530724	5-49	
1530725	5-45	10
1530726	5-45	4
	5-47	1
1530727	5-47	2
1530728	5-45	3
1530729	5-45	8
1530730	5-45	1
1530731	5-45	7
1530732	5-47	5
1530733	5-47	6
1530734	5-47	7
1530735	5-47	8
1530736	5-47	9
1530737	5-47	10
1530738	5-45	2
1530739	5-45	16
1530740	5-45	17
1530741	5-45	20
1530742	5-45	21
1530743	5-45	22
1530744	5-45	23
1530745	5-49	6
1530746	5-49	5
1530747	5-49	3
1530749	5-49	1
1530751	5-49	2
1530753	5-49	8
1530754	5-49	9
1530755	5-49	10
1530756	5-49	11
1530758	5-49	14
1530759	5-49	12
1530760	5-49	13
1530761	5-49	15
1530762	5-49	16
1530763	5-49	17
1530772	5-49	4
1531418	4-21	14
1531748	9-29	25
1532251	6-57	11

©2011 HYSTER COMPANY

See Service Manual for service procedures.

NUMERICAL INDEX (continued)

PART NO.	PAGE	ITEM
	6-59	11
1532298	9-101	27
1532299	9-101	28
1532628	2-4	1
	2-7	
	2-11	
	2-15	
	2-18	
	2-21	
	2-24	
	2-25	
	2-26	
	2-29	
	2-32	
	2-34	
	2-35	
	2-39	
	2-43	
	2-46	
	2-49	
	2-50	
	2-53	
	2-57	
	2-61	
	2-65	
	2-66	
	2-69	
	2-72	
	2-77	
	2-82	
	2-86	
	2-92	
	2-95	
	2-98	
	2-101	
	2-105	
	2-109	
	2-112	
	2-115	
	2-117	
	2-119	
	2-120	
	2-123	
	2-125	
	2-126	
	2-127	
	2-157	
	2-159	
	3-39	
	3-45	
	3-49	
	3-53	
	3-57	
	3-60	
	3-65	
	4-185	
	4-187	
	4-190	
	4-223	
	4-229	
1532664	4-57	9
	4-57	15
1532693	5-15	1
1534660	1-71	24
1534781	5-43	18
1534782	5-43	18
1534793	4-21	36
1535033	2-46	1
1535376	6-64	
1536343	9-59	1
	9-63	
	9-67	
1538226	4-21	20
1538863	4-22	45
1538950	9-13	2
	9-21	3
	9-105	
1539987	9-59	5
1541171	1-44	39
1541226	1-69	22
1541228	1-69	22
1541336	1-44	45
1541960	8-24	58
	8-28	57
1541964	8-24	48
	8-28	46
	8-32	46
1541965	8-24	51
	8-28	49
	8-32	49
1541969	8-24	61
1541978	8-23	23
	8-27	23
	8-31	23
1542034	3-9	38
	3-15	30
1542184	8-24	59
	8-28	58
	8-32	58
1542186	8-24	60
	8-28	59
	8-32	59
1542240	9-59	11
1542383	2-4	1
	2-7	
	2-11	
	2-15	
	2-18	
	2-21	
	2-24	
	2-25	
	2-26	
	2-29	
	2-32	
	2-34	
	2-35	
	2-39	
	2-43	
	2-46	
	2-49	
	2-50	
	2-53	
	2-57	
	2-61	
	2-65	
	2-66	
	2-69	
	2-73	
	2-79	
	2-84	
	2-89	
	2-92	
	2-95	
	2-98	
	2-101	
	2-105	
	2-109	
	2-112	
	2-115	
	2-117	
	2-119	
	2-121	
	2-123	
	2-125	
	2-126	
	2-127	
	2-149	
	2-157	
	2-159	
	3-41	
	3-45	
	3-49	
	3-53	
	3-57	
	3-60	
	3-65	
	4-185	
	4-187	
	4-190	
	4-223	
	4-231	
1542510	1-43	32
1542825	9-85	11
1542826	9-85	12
1542827	9-85	19
1542828	9-85	14
1542829	9-85	13
1542830	9-85	15
1542849	8-24	50
	8-28	48
	8-32	48
1542981	2-133	15
	2-135	15
1542982	2-133	17
1543328	2-77	1
1543354	2-9	6
	3-43	13
	3-59	6
1543359	3-53	4
1543362	2-57	5
	2-59	5
	2-101	2
1543375	8-23	41
	8-27	41
	8-31	41
1543434	4-223	6
1543435	4-223	5
	4-223	7
	4-223	10
	4-225	18
1543439	4-223	4
1543440	4-223	4
1543556	8-24	47
1543557	8-24	46
1543558	8-24	68
1543566	8-23	26
	8-27	26
	8-31	26
1543569	2-149	26
1543570	8-24	65
1543571	3-23	13
1543574	3-23	14
1543746	3-23	15
1544028	2-149	11
1544043	2-149	12
	2-151	32
	2-155	12
1544044	2-149	13

See Service Manual for service procedures.
©2011 HYSTER COMPANY

NUMERICAL INDEX (continued)

PART NO.	PAGE	ITEM
	2-151	9
	2-155	13
1544045	4-12	42
	4-15	11
	4-21	2
	4-25	6
	4-51	
1544046	2-149	14
	2-151	33
	2-155	14
1544220	8-24	66
1544221	8-24	67
1544423	7-10	50
1544424	7-10	47
1544425	7-10	46
1544428	7-10	45
	7-10	46
1544429	7-10	44
1544432	7-10	50
1544433	7-10	45
	7-10	47
1544435	7-10	44
1544436	7-10	45
	7-10	46
1544437	7-10	44
	7-10	45
	7-10	47
1544438	7-10	50
1544560	4-15	18
	4-25	28
	4-33	
1544565	4-81	35
	4-139	
1544568	7-10	50
1544571	7-10	44
1544574	7-10	47
1544576	7-10	46
1544663	9-59	31
1544685	8-23	39
1544729	4-33	26
	4-35	33
	4-51	12
	4-53	11
	4-55	11
	4-57	7
1544730	4-33	27
	4-35	34
	4-51	13
	4-53	12
	4-55	12
	4-57	7
1544731	4-33	12
	4-35	13
	4-139	37
	4-141	36
	4-143	36
	4-145	15
1544733	4-33	13
	4-35	14
	4-139	38
	4-141	37
	4-143	37
	4-145	16
1544776	9-21	41
1544777	9-13	43
1544778	4-21	21
1544779	4-21	15
1544782	9-13	40
	9-17	45
1544783	9-21	36
	9-25	44
1544905	4-21	37
1545019	8-24	49
	8-28	47
	8-32	47
1545080	8-24	56
	8-28	54
	8-32	54
1545081	8-24	54
	8-28	55
	8-32	55
1545082	8-24	53
	8-24	55
	8-28	56
	8-32	56
1545083	8-24	57
	8-28	54
	8-32	54
1545084	8-24	54
	8-28	55
	8-32	55
1545085	8-24	53
	8-24	55
	8-28	56
	8-32	56
1545086	8-24	56
1545087	8-24	57
1545088	8-24	54
1545089	8-24	57
1545090	8-24	54
1545210	9-13	25
	9-21	22
1545211	9-21	35
1545212	9-21	37
	9-25	45
1545213	9-21	38
	9-26	54
1545214	9-13	39
1545215	9-14	56
1545217	9-25	47
1545218	9-25	46
1545221	9-17	47
1545222	9-17	48
1545223	9-17	49
1545224	9-18	50
1545410	5-57	36
	5-69	36
	5-73	36
1545411	5-57	37
	5-69	37
	5-73	37
1545412	5-57	38
	5-69	38
	5-73	38
1545418	9-13	27
	9-22	56
1545436	9-59	32
1545807	9-59	25
1545834	9-18	51
1545835	9-18	52
1545836	9-18	53
1545837	9-18	54
1545840	9-26	52
1545841	9-26	53
1545843	9-17	11
	9-26	57
1546291	9-59	13
1546299	9-14	46
	9-22	67
	9-29	14
1546300	9-14	47
	9-22	65
	9-29	15
1546301	9-29	15
1546446	9-59	31
1546525	1-69	27
1546526	1-69	27
1546530	2-149	2
	2-152	50
	2-155	2
1546533	2-149	27
	2-155	27
1546534	2-149	28
	2-155	28
1546535	2-149	29
	2-155	29
1546561	1-69	17
1546622	1-69	2
1546717	1-69	1
1546744	1-69	3
1547171	9-21	40
1547266	9-13	42
1547276	9-26	56
1547277	9-18	56
1547285	9-53	32
1547286	9-53	30
	9-53	33
	9-54	47
1547287	9-53	31
	9-53	32
1547288	9-53	30
	9-54	46
1547289	9-53	32
1547291	9-53	33
1547293	9-54	46
1547294	9-53	30
	9-54	46
1547303	9-53	33
1547304	9-53	31
1547908	7-5	54
1547909	7-5	50
1548046	7-3	23
1550841	9-59	5
1550842	9-59	5
1550937	2-149	33
	2-152	51
	2-155	33
1550965	2-149	7
	2-155	7
1551213	2-149	41
	2-156	41
1551266	2-149	31
1551444	2-149	36
	2-155	36
1551688	2-149	40
	2-155	40
1551690	2-149	39
	2-155	39
1551691	2-149	34
	2-155	34
1552288	4-223	16
1552482	4-16	43
	4-25	23
	4-41	
1552483	3-23	16
1552687	4-64	47
	4-99	25
	4-123	

©2011 HYSTER COMPANY

NUMERICAL INDEX (continued)

PART NO.	PAGE	ITEM
1552863	4-81	35
	4-99	21
	4-141	
1553315	5-57	40
	5-69	40
	5-73	40
1553320	5-57	44
	5-69	44
	5-73	44
1553358	2-149	33
	2-151	23
	2-155	33
1553381	9-53	32
1553382	9-53	33
1553383	9-53	30
1553384	9-54	47
1553385	9-54	46
1553387	9-54	47
1553388	9-54	47
1553413	1-71	23
1553746	1-29	1
1553747	1-29	1
1553748	1-3	6
1553768	3-63	6
1553781	2-69	5
	2-71	5
1553828	1-71	40
1553919	1-72	44
1553954	2-39	12
1553956	2-39	9
1553959	2-39	10
1554093	9-63	21
1554156	4-221	
1554334	6-13	1
1554338	6-26	35
	6-33	21
1554339	6-33	24
	6-49	8
1554340	6-33	27
1554341	6-33	28
	6-37	3
	6-49	10
1554348	6-39	1
	6-43	1
1554349	6-39	2
	6-43	2
1554350	6-39	4
	6-43	4
1554351	6-39	7
	6-43	6
1554502	6-39	8
	6-43	7
1554503	6-29	
1554505	6-29	5
1554507	6-57	1
1554512	6-57	2
1554513	6-57	3
1554514	6-57	5
1554516	6-57	6
1554517	6-57	7
1554520	6-57	12
1554523	6-57	15
1554525	6-57	15
1554527	6-29	14
	6-29	14
	6-53	5
1554529	6-29	17
1554730	6-15	1
1554732	6-15	2
1554739	6-41	2
	6-45	2
1554740	6-41	4
	6-45	4
1554744	6-41	7
	6-45	14
1554800	6-41	10
	6-45	9
1554819	6-59	15
1554821	6-59	15
1554920	6-59	19
1556985	5-23	1
	5-27	1
	5-31	1
1556990	5-5	17
	5-5	20
1561567	3-25	15
	3-27	17
1561604	6-63	
1564349	9-85	8
1564873	2-101	3
1564947	2-25	1
1564964	2-65	1
1564972	3-39	3
1564973	3-39	4
1564974	3-39	5
1564978	2-49	1
1564991	2-57	1
	2-59	1
1564992	2-19	4
	2-57	3
1564993	2-59	3
1565007	2-95	1
	4-225	7
1565008	2-95	3
1565009	2-95	4
1565010	2-95	6
1565016	2-95	5
1565035	2-61	11
	2-63	11
1565040	4-223	9
	4-225	18
1565045	2-127	2
1565046	2-127	3
1565648	2-50	1
1565649	3-60	4
1565650	3-60	6
1565651	3-60	10
1565680	3-57	1
1565684	3-59	12
1565709	2-7	
1565718	3-49	
1565733	2-69	15
	2-71	15
1565889	2-15	6
1565918	2-105	12
1565947	2-77	3
1565948	2-77	2
	2-81	2
1565949	2-77	4
	2-81	4
1565950	2-77	7
1565951	2-77	9
	2-81	3
1565952	2-77	10
1565955	4-185	2
1565956	4-231	12
1565958	4-229	12
	4-231	13
1566125	6-25	14
1566466	5-65	42
	9-31	1
1566714	5-37	
	5-51	24
1568104	5-65	44
1568217	8-28	60
	8-32	57
1568218	8-28	66
	8-32	43
1568238	8-28	67
	8-32	42
1568677	9-22	62
1568692	2-97	1
1569595	9-29	4
1569596	9-29	5
1570450	4-12	42
	4-15	11
	4-21	2
	4-25	6
	4-53	
1570452	4-81	35
	4-99	21
	4-143	
1570453	4-15	18
	4-25	28
	4-35	
1571805	4-221	2
1571806	4-221	1
1573113	4-237	1
	4-238	1
1573114	4-237	1
	4-238	1
1573115	4-237	1
	4-238	1
1573116	4-237	4
1578831	9-13	2
	9-21	3
	9-107	
1578957	9-14	52
1578994	9-13	38
	9-21	34
1579407	8-27	1
	8-31	1
1582280	9-31	7
1582281	9-31	6
1582282	9-31	6
1582283	9-31	7
1582284	5-65	14
1583626	5-65	41
	9-31	16
1583685	4-84	1
1583745	4-16	40
	4-16	50
	4-25	21
	4-216	
1583746	4-16	40
	4-16	50
	4-25	21
	4-216	
1584427	6-15	
	6-37	
	6-45	
	6-59	
1584428	6-13	
	6-33	
	6-43	
	6-57	
1584546	3-51	4
	3-55	3

See Service Manual for service procedures.
©2011 HYSTER COMPANY

NUMERICAL INDEX (continued)

PART NO.	PAGE	ITEM
1584910	3-65	1
1584914	3-65	26
1585283	2-9	4
1586183	2-109	2
1587034	2-18	4
1588053	4-185	2
1588054	2-7	
	2-11	
	2-43	
	2-53	
	2-57	
	2-61	
	2-69	
	2-72	
	2-73	
	2-79	
	2-86	
	2-89	
	2-117	
	3-39	
	3-41	
	3-45	
	3-49	
	3-53	
	3-60	
	4-223	
1588056	2-7	
	2-11	
	2-29	
	2-86	
	2-89	
	2-95	
	2-98	
	2-105	
	2-127	
	3-39	
	3-41	
	3-49	
	4-223	18
1588058	2-117	
1588059	2-105	1
	2-107	1
1588064	3-41	11
1588065	2-101	4
1588066	2-11	10
	2-13	6
1588067	2-15	5
	2-17	5
1588069	2-29	1
1588070	2-101	5
1588071	2-69	19
1588072	2-29	2
1588074	2-109	1
1588556	2-101	6
1588557	2-101	7
1588565	2-57	2
1588728	3-59	13
1588786	2-105	12
1588788	2-29	5
1588792	2-21	
	2-23	
1588794	2-23	3
1588796	2-21	
	2-23	
1588798	2-23	3
1588800	2-21	
	2-23	
1588802	2-23	3
1588804	2-21	
	2-23	
1588806	2-23	3
1588809	2-21	3
1588810	2-21	3
1588811	2-21	3
1588814	3-53	7
1588815	2-43	
1588816	2-71	9
1588820	4-11	41
	4-15	7
	4-21	1
	4-181	1
1589199	2-71	17
1589200	2-63	
1589202	2-11	1
1589203	2-11	4
1589206	2-11	11
	2-13	9
1589207	2-11	14
	2-13	12
1589208	2-13	14
1589582	2-95	5
1589583	2-89	11
	2-91	5
1589584	2-73	1
	2-74	1
1589586	2-123	2
	2-124	2
1589587	2-79	9
1589588	2-105	11
1592027	4-21	31
1592852	9-60	41
	9-85	7
1593675	9-105	
1593676	9-105	
1593677	9-105	
1593678	9-105	6
1593679	9-105	8
1593680	9-105	
1593855	4-190	3
	4-193	
1593856	4-189	2
	4-190	2
	4-190	2
	4-193	2
1594934	11-7	1
	11-12	1
1594935	11-7	1
	11-12	1
1595480	11-7	1
	11-12	1
1595481	11-7	1
	11-12	1
1595604	11-7	1
	11-12	1
1595605	11-7	1
	11-12	1
1597266	9-107	1
1597267	9-107	2
1597268	9-107	4
1597269	9-107	8
1597270	9-107	10
1597430	4-21	32
	4-238	
1597460	3-41	
1597806	2-98	5
1597807	2-117	3
	2-118	3
1597829	2-69	1
	2-71	1
1597830	2-7	18
	2-9	18
1597831	2-7	17
	2-9	17
1597834	2-7	12
1597976	2-18	1
1598354	2-26	1
1601870	3-13	24
	3-15	33
1602497	2-49	4
1603626	5-2	1
	5-5	
	5-9	
	5-13	
	5-19	
	5-23	
	5-27	
	5-65	
	5-69	
	5-73	
1603915	7-4	36
1603916	7-4	36
1606249	4-84	2
	4-87	7
	4-157	
1606672	4-12	42
	4-15	11
	4-21	2
	4-25	6
	4-55	
1606762	2-4	1
	2-7	
	2-11	
	2-15	
	2-18	
	2-21	
	2-24	
	2-25	
	2-26	
	2-29	
	2-32	
	2-34	
	2-35	
	2-39	
	2-43	
	2-46	
	2-49	
	2-50	
	2-53	
	2-57	
	2-61	
	2-65	
	2-66	
	2-69	
	2-72	
	2-77	
	2-82	
	2-86	
	2-92	
	2-95	
	2-98	
	2-101	
	2-105	
	2-109	
	2-112	
	2-115	
	2-117	
	2-119	
	2-120	

©2011 HYSTER COMPANY

NUMERICAL INDEX (continued)

PART NO.	PAGE	ITEM
	2-123	
	2-125	
	2-126	
	2-127	
	2-157	
	2-159	
	4-181	
1607372	2-4	1
	2-7	
	2-11	
	2-15	
	2-18	
	2-21	
	2-24	
	2-25	
	2-26	
	2-29	
	2-32	
	2-34	
	2-35	
	2-39	
	2-43	
	2-46	
	2-49	
	2-50	
	2-53	
	2-57	
	2-61	
	2-65	
	2-66	
	2-69	
	2-73	
	2-79	
	2-84	
	2-89	
	2-92	
	2-95	
	2-98	
	2-101	
	2-105	
	2-109	
	2-112	
	2-115	
	2-117	
	2-119	
	2-121	
	2-123	
	2-125	
	2-126	
	2-127	
	2-157	
	2-159	
1607526	4-238	
1607700	9-63	22
1607701	9-63	23
1607702	9-67	12
1607703	9-67	13
1607704	9-67	3
	9-67	30
1607705	9-67	4
	9-67	32
1607711	9-67	23
1607712	9-67	24
1607714	9-63	37
1607717	9-63	34
1607718	9-63	35
1607720	9-63	14
1607721	9-63	16
	9-68	56
1607722	9-63	36
1607723	9-67	5
	9-67	33
1607724	9-68	54
1607726	9-68	55
1607727	9-67	46
1607728	9-67	41
1607729	9-67	28
1607736	9-63	17
1607737	9-63	1
1607738	9-67	26
1607739	9-67	34
1607772	4-57	9
	4-58	15
1607778	4-237	1
	4-238	1
1607835	5-6	31
	5-6	
1607836	5-5	1
1607920	5-23	19
	5-27	18
1607921	5-19	33
	5-21	33
	5-23	31
	5-31	35
1607922	5-31	23
1607927	5-19	3
1607928	5-19	22
	5-21	22
1607929	5-23	22
1607930	5-19	20
	5-21	20
1607939	5-23	22
1608642	9-68	60
1608643	9-67	2
1608644	9-67	16
1608649	5-2	
1608692	9-68	59
1611639	1-51	
1611640	1-51	
1612790	2-97	2
1613651	6-7	7
	6-11	8
	6-15	4
1613831	1-51	1
1613832	1-51	1
1613833	1-51	3
1613834	1-51	7
1613835	1-51	12
1614515	3-63	4
	3-67	1
1614516	2-9	
1616202	11-33	1
1616213	11-33	1
1616235	4-131	16
1617843	5-65	5
	5-69	4
	5-73	4
1617844	5-65	6
	5-69	5
	5-73	5
1618131	6-13	1
1618222	6-57	1
1618223	6-57	3
1618318	6-15	1
1618320	6-15	2
1618321	6-15	2
1618341	6-37	21
1618342	6-37	16
1618343	6-37	16
1618344	6-37	16
1618345	6-37	16
1618346	6-37	22
1618347	6-37	13
1618349	6-37	14
1618350	6-37	15
1618352	6-37	10
1618353	6-37	19
1618354	6-37	20
1618356	6-37	18
1618360	6-37	27
1618363	6-37	30
1618364	6-37	8
1618365	6-37	6
1618371	6-45	1
1618372	6-45	1
1618373	6-45	26
1618751	3-25	18
	3-27	13
1618752	3-25	5
	3-27	14
1619371	4-223	15
1623149	3-25	7
1623411	9-167	
1623871	9-125	1
	9-167	
	10-33	1
	10-35	1
	11-23	1
	11-25	18
1625338	2-161	
1627842	10-33	13
	11-23	13
1628436	3-13	27
	3-15	25
1628943	2-139	
	2-151	38
	2-155	26
1628945	2-135	17
1628947	2-135	15
1628951	2-135	17
1629077	3-27	15
1629081	3-27	18
1629351	2-151	26
	2-155	23
1632267	2-151	31
	2-155	11
1632268	2-155	38
1632269	2-155	31
1632273	2-151	39
1632274	2-152	49
1632275	2-151	40
1632280	2-151	24
1632281	2-151	22
1632783	4-21	2
	4-57	
1632864	4-57	11
1632865	4-57	10
1632866	4-58	16
1632867	4-58	16
1633192	2-151	41
1633193	2-151	42
1633194	2-151	43
1633195	2-151	44
1633196	2-151	45
1633197	2-151	46
1633198	2-151	47
1633199	2-151	6
1633622	4-15	

©2011 HYSTER COMPANY

NUMERICAL INDEX (continued)

PART NO.	PAGE	ITEM
1634341	1-64	45
1634519	1-64	47
1634812	1-69	27
1634813	1-69	27
1634954	1-64	55
1635053	4-21	31
1635262	4-183	7
1635277	4-225	13
1635278	4-225	14
1635279	3-55	2
1635280	4-225	15
1635303	3-43	7
1635304	3-67	4
1635325	4-225	12
1635337	4-183	13
1635342	2-55	5
1635345	4-225	17
1635387	4-225	19
1635421	4-225	21
1635457	4-225	1
1635598	6-15	
	6-37	
	6-45	
	6-59	
1635608	1-64	56
1635619	6-13	
	6-33	
	6-43	
	6-57	
1636482	3-13	23
	3-15	17
1636613	3-13	32
1636871	2-139	8
1637643	9-14	61
	9-31	6
1637644	9-31	7
1637646	9-14	62
	9-22	74
1637809	11-2	5
	11-6	5
	11-7	5
	11-8	5
	11-12	5
	11-13	5
1637934	3-67	11
1638217	9-63	30
1638437	4-84	1
1638833	9-22	72
	9-31	6
1638834	9-31	7
1639854	2-139	1
1639855	2-139	2
1639856	2-139	3
1639857	2-139	4
1639858	2-139	5
1639859	2-139	6
1639860	2-139	7
1639861	2-139	9
1641748	3-55	10
1642010	6-45	6
1642014	6-45	5
1642015	6-59	7
1642099	6-26	38
	6-33	20
	6-49	5
1642102	6-33	36
1643814	3-43	9
1643815	3-59	18
1643838	2-103	5
1643839	2-55	4
1643841	2-103	4
1643854	2-19	1
1643855	2-33	1
1643856	2-9	
1643857	2-9	
1643858	2-55	5
1643859	2-9	12
1643861	2-9	19
1643863	2-103	6
1643864	2-97	7
1643865	2-97	8
1643866	2-13	18
1644010	3-43	3
1644011	2-63	14
1644012	3-47	2
1644013	3-67	9
1644015	4-227	12
1644016	2-158	1
1644017	2-158	2
1644018	3-51	3
1644019	2-17	4
1644020	2-36	1
1644021	2-36	1
1644023	3-67	17
1644025	4-227	1
1644026	4-227	11
1644027	3-43	11
	3-59	3
1644028	3-51	11
1644029	2-97	3
1644030	2-97	4
1644031	2-163	1
1644032	2-113	2
1644034	3-67	10
1644035	4-225	16
1644036	2-71	19
1644037	2-45	6
1644038	2-97	6
1644039	2-71	14
1644041	2-31	
1644043	2-85	1
1644044	2-85	1
1644045	2-36	2
1644048	3-43	12
1644051	2-13	19
1644052	3-59	21
1644053	3-59	17
1644055	2-63	10
1644056	2-41	14
1644057	2-31	2
1644058	2-36	3
1644059	2-13	8
1644060	4-227	13
1644061	4-227	14
1644062	4-227	
1644065	2-13	7
1644068	2-71	11
1644069	2-71	14
1644070	2-107	4
1644072	2-41	15
1644074	2-13	15
1644075	3-51	10
1644076	2-31	3
1644078	2-118	
1644079	2-41	6
1644080	2-41	7
1644083	2-128	4
1644084	2-128	3
1644085	3-67	4
1644087	3-59	9
1644089	2-63	15
1644090	2-17	6
1644092	2-17	7
1644093	2-63	
1644094	2-63	
1644095	2-125	2
1644100	3-59	
1644102	3-51	9
1644103	2-47	1
1644107	2-17	1
1644108	2-17	1
1644109	2-41	2
1644110	2-63	14
1644111	3-59	20
1644113	4-183	2
1644115	3-63	2
1644116	4-183	6
1644117	4-227	9
1644118	2-97	10
1644119	2-71	21
1644120	2-31	6
1644122	3-67	16
1644123	4-225	4
1644124	2-41	9
1644125	2-31	1
1644126	3-59	11
1644128	4-225	2
1644129	4-225	2
1644131	4-225	2
1644133	4-225	20
1644136	2-41	4
1644137	4-183	11
1644138	3-63	8
1644139	4-183	12
1644141	3-59	22
1644143	2-162	2
1644147	3-51	6
1644148	3-51	7
1644149	4-225	23
1644150	3-47	4
1644151	3-47	3
1644152	4-225	22
1644153	3-67	5
1644154	3-67	6
1644155	3-67	7
1644156	3-67	8
1644157	3-67	10
1644159	2-85	2
1644160	2-107	11
1644163	3-51	8
1644164	2-13	3
1644165	2-13	17
1644166	3-43	10
	3-51	5
	3-55	4
	3-59	2
1644314	3-43	8
1644389	3-59	16
1644943	2-17	9
1644966	2-111	
1645272	2-111	1
1645273	2-19	1
1645274	2-23	3
1645275	2-23	3
1645276	2-23	3
1645378	3-59	19
1645379	3-59	18
1646667	2-97	11

©2011 HYSTER COMPANY

NUMERICAL INDEX (continued)

PART NO.	PAGE	ITEM
1646671	2-19	
	2-45	
	2-55	
	2-59	
	2-63	
	2-71	
	2-113	
	2-118	
1649346	2-98	5
1649347	4-225	
1649349	4-11	41
	4-15	7
	4-21	1
	4-183	14
1649350	2-13	1
1649351	2-13	2
1649353	3-67	3
1649393	2-122	1
1649403	2-27	1
1649726	2-65	8
1649727	2-162	
1649732	2-13	
	2-31	
	2-41	
	2-55	
	2-63	
	2-97	
	2-103	
	2-107	
	2-128	
	3-51	
	3-67	
	4-225	
1650188	2-116	1
1650567	3-59	
1654069	3-25	10
1654071	3-25	4
1654494	3-25	14
1654495	3-25	17
1654496	3-25	16
1656479	9-25	48
1656480	9-26	49
1656481	9-26	50
1656482	9-26	51
1659016	4-90	51
	4-93	20
1659572	4-223	2
1661205	4-225	19
1663666	2-4	1
	2-9	
	2-13	
	2-17	
	2-19	
	2-23	
	2-25	
	2-27	
	2-31	
	2-33	
	2-36	
	2-41	
	2-45	
	2-47	
	2-55	
	2-59	
	2-63	
	2-65	
	2-66	
	2-71	
	2-74	
	2-81	
	2-85	
	2-91	
	2-92	
	2-97	
	2-98	
	2-103	
	2-107	
	2-111	
	2-113	
	2-116	
	2-118	
	2-119	
	2-122	
	2-124	
	2-125	
	2-128	
	2-151	
	2-155	
	2-158	
	2-159	
	2-162	
	2-163	
	3-43	
	3-47	
	3-51	
	3-55	
	3-59	
	3-63	
	3-67	
	4-183	
	4-193	
	4-225	
	4-227	
1667222	9-64	
1670661	11-33	9
1670741	4-82	35
	4-145	
1670846	11-33	
1670896	1-72	40
1671922	4-11	7
1684475	4-129	
1684476	4-124	
1684579	4-87	8
	4-131	
1684629	9-59	34
1686801	4-163	
1691873	4-223	9
	4-225	18
1699364	5-2	1
	5-5	
	5-9	
	5-13	
	5-21	
	5-23	
	5-31	
1704196	5-13	10
	5-13	10
1704197	5-13	27
1704299	5-13	2
	5-13	2
1704505	5-23	19
	5-31	18
1704574	5-21	1
1704649	5-33	30
1704651	5-33	1
1704665	5-45	3
2003181	4-39	9
2003745	4-153	19
	4-155	22
	4-157	22
2003859	4-67	35
	4-71	35
	4-77	115
	4-90	50
2004005	10-33	19
2005059	7-9	9
2032229	7-15	
2034459	1-71	17
2036895	4-76	64
	4-81	1
2038590	1-71	2
2038895	4-76	69
	4-89	19
	4-93	24
2043634	4-16	42
2048273	5-62	33
	5-66	50
	5-70	
	5-74	
2062055	4-21	32
	4-237	
2072353	4-21	35
	11-33	3
2084159	1-71	26
3047329	1-25	4
3047330	1-25	8
3047417	1-25	5
3047418	1-21	15
3047451	1-39	2
	1-39	6
	1-43	2
	1-67	16
	1-67	17
	9-47	1
3047452	1-39	1
	1-39	10
	1-40	47
	1-40	47
	1-43	1
	1-43	6
	1-43	7
4004394	3-67	15
4005374	4-87	20
4005696	4-87	19
4005697	4-87	18
4006043	4-87	6
	4-239	
4006406	4-239	3
4006409	4-239	3
4006410	4-239	2
	4-239	3
4006506	4-239	3
4006507	4-239	3
4006626	4-239	5
4006627	4-239	5
4006765	4-239	4
4006766	4-239	4
4007377	4-239	1
4007378	4-239	1
4007619	2-13	19
4009266	4-239	1
4009267	4-239	1
4009508	1-72	44
4012350	4-183	10
	4-187	5
4012437	2-43	1
	2-45	1
4012463	3-67	4

©2011 HYSTER COMPANY

NUMERICAL INDEX (continued)

PART NO.	PAGE	ITEM
4013332	3-59	1
4016302	3-33	1
4016659	4-21	32
	4-238	
4017884	2-149	2
	2-152	50
	2-155	2
4018821	3-59	14
4018822	3-59	15
4020872	4-11	41
	4-15	7
	4-21	1
	4-183	14
4022914	11-5	11
4023965	3-67	2
4027736	5-65	42
	9-31	1
4027737	5-65	42
	9-31	1
4027738	5-65	42
	9-31	1
4027739	5-65	42
	9-31	1
4609580	4-238	
6990489	9-93	5
6996122	9-93	5
6996159	9-93	5
6996504	9-93	5
6996505	9-93	5

©2011 HYSTER COMPANY

NUMERICAL INDEX (continued)

NOTES

©2011 HYSTER COMPANY


HYSTER