RUTHZIL TRATOR COMERCIAL DE PEÇAS LTDA 11 97083-6812 ROLANDO

PARTS MANUAL

HYSTER

CHALLENGER H45-50-55-60-65XM

(D177)

CUSTOMER EDITION

HYSTER

897468
02/00

©2000 HYSTER COMPANY

ILLUSTRATED CONTENTS

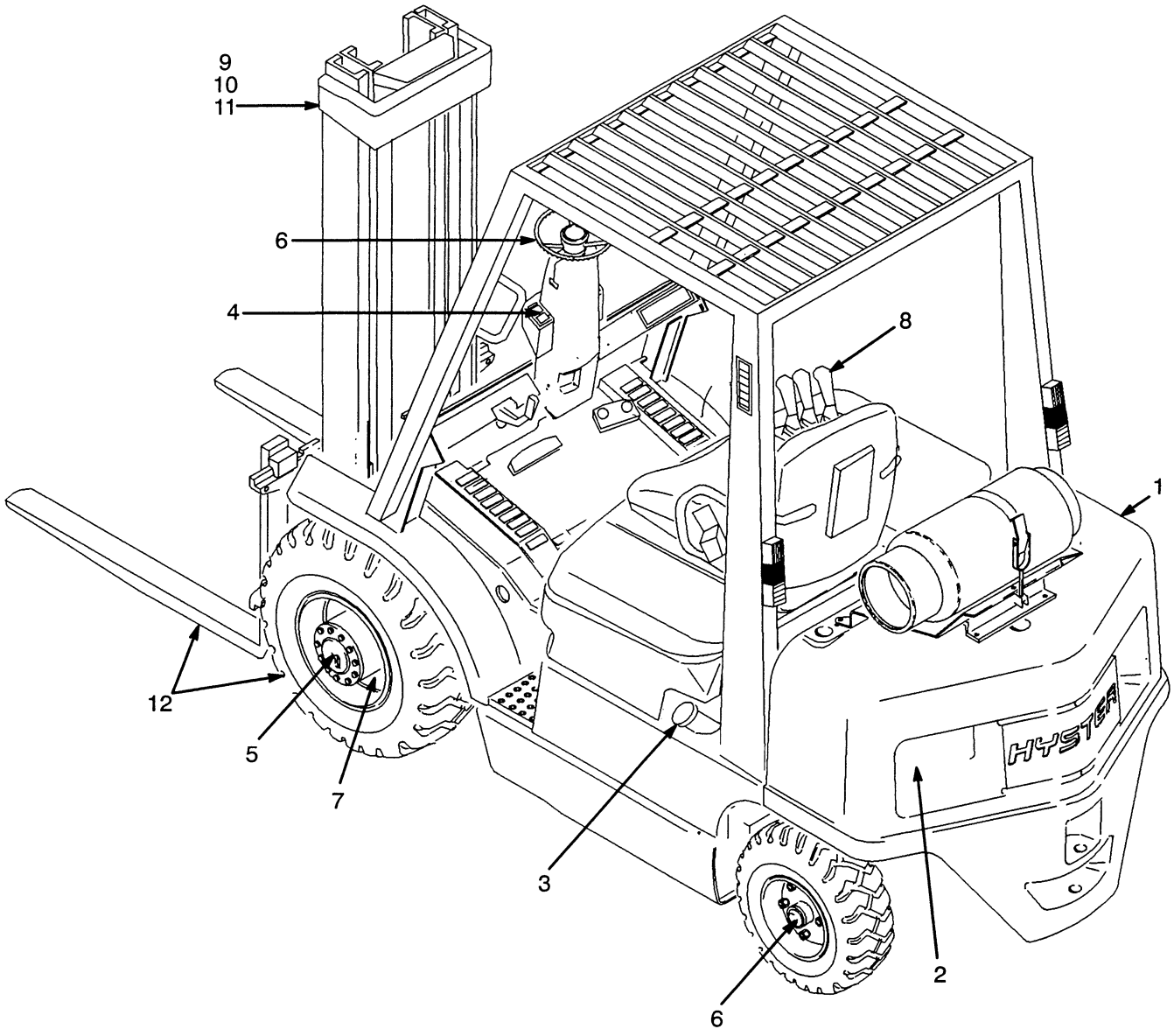

REF	SECTION	PAGE
1	Frame	1
2	Engine	13
3	Fuel System	107
4	Electrical System	175
5	Transmission	285
6	Steering System	307
7	Brake System	315
8	Hydraulic System	323
9	Two Stage Limited Free-Lift Mast	347
10	Three Stage Full Free-Lift Mast	369
11	Two Stage Full Free-Lift Mast	403
12	Optional	435
13	Numerical Index	481

©2000 HYSTER COMPANY

See Service Manual for service procedures

TABLE OF CONTENTS

DESCRIPTION **PAGE NO.**

A

ACCESSORIES (Figure 243)
CAB ..... Page 460

AIR FILTER AND BREATHER (Figure 89)
GASOLINE & LPG 3.0L ..... Page 152

AIR FILTER (Figure 88)
GASOLINE AND LPG 2.0L & 2.2L ..... Page 150

AIR FILTER (Figure 90)
DIESEL ..... Page 154

ALTERNATOR (Figure 141)
GASOLINE & LPG 2.0L ..... Page 260

ALTERNATOR (Figure 142)
GASOLINE & LPG 2.2L ..... Page 261

ALTERNATOR (Figure 143)
GASOLINE & LPG 3.0L
LAST USED ON S/N D177B41709 ..... Page 262

ALTERNATOR (Figure 144)
GASOLINE & LPG 3.0L
FIRST USED ON S/N D177B-41710 ..... Page 264

ALTERNATOR (Figure 145)
DIESEL 2.4L ..... Page 266

ALTERNATOR (Figure 146)
DIESEL 2.8L & 3.1L ..... Page 268

ALTERNATOR (Figure 147)
TYPES GS, LPS & DS
LAST USED ON S/N D177B-42119 ..... Page 270

©2000 HYSTER COMPANY

TABLE OF CONTENTS

DESCRIPTION **PAGE NO.**

A (Continued)

ALTERNATOR (Figure 148)
TYPES GS, LPS & DS
FIRST USED ON S/N D177B-42120 ..... Page 272

AUDIBLE ALARMS (Figure 252) ..... Page 471

AUXILIARY TUBE EXTENSION KIT (Figure 253)
TWO-STAGE LFL ..... Page 472

AUXILIARY TUBE EXTENSION KIT (Figure 254)
TWO-STAGE & THREE-STAGE FFL ..... Page 474

B

BRAKE (Figure 173) ..... Page 318

BRAKE LINES (Figure 174) ..... Page 320

BRAKE PEDAL LINKAGE (Figure 172) ..... Page 316

C

CAB KIT (Figure 238)
WITH DOORS MOUNTED INSIDE OVERHEAD GUARD ..... Page 452

CAB KIT (Figure 239)
WITH DOORS MOUNTED AGAINST OUT-BOARD SIDE OF
OVERHEAD GUARD ..... Page 454

CAB KIT (Figure 240)
PVC ..... Page 456

CAB SOUND LINERS (Figure 245) ..... Page 464

©2000 HYSTER COMPANY

TABLE OF CONTENTS

DESCRIPTION **PAGE NO.**

C (Continued)

CAMSHAFT & OIL PAN (Figure 32)
GASOLINE & LPG 3.0L ..... Page 54

CAMSHAFT & TIMING GEAR (Figure 23)
GASOLINE & LPG 2.2L ..... Page 40

CAMSHAFT & VALVES (Figure 13)
GASOLINE & LPG 2.0L ..... Page 27

CAMSHAFT & VALVES (Figure 41)
DIESEL 2.4L ..... Page 69

CAMSHAFT & VALVES (Figure 51)
DIESEL 2.8L
LAST USED ON S/N D177B-8291 ..... Page 84

CAMSHAFT & VALVES (Figure 61)
DIESEL 3.1L
FIRST USED ON S/N D177B-8292 ..... Page 100

CARBURETOR (Figure 82)
GASOLINE 2.0L ..... Page 139

CARBURETOR (Figure 83)
LPG 2.0L ..... Page 140

CARBURETOR (Figure 85)
LPG 2.2L ..... Page 144

CARBURETOR (Figure 86)
LPG 3.0L ..... Page 146

CARRIAGE (Figure 194)
TWO STAGE LFL
FOUR ROLLER ..... Page 358

©2000 HYSTER COMPANY

TABLE OF CONTENTS

DESCRIPTION **PAGE NO.**

C (Continued)

CARRIAGE (Figure 195)
TWO STAGE LFL
SIX ROLLER ..... Page 359

CARRIAGE (Figure 208)
THREE STAGE FFL
SIX ROLLER (LAST USED ON S/N B508V-4186, B563V-2161) ..... Page 391

CARRIAGE (Figure 209)
THREE STAGE FFL
SIX ROLLER (FIRST USED ON S/N B508V-4187, B563V-2162) ..... Page 392

CARRIAGE (Figure 222)
TWO STAGE FFL
FOUR ROLLER ..... Page 423

CARRIAGE (Figure 223)
TWO STAGE FFL
SIX ROLLER ..... Page 424

CLUTCH FORWARD AND REVERSE (Figure 159)
LAST USED ON TRANSMISSION S/N T51,T52,T53,T78 ..... Page 290

CLUTCH-FORWARD & REVERSE (Figure 160)
FIRST USED ON TRANSMISSION S/N T80M-1501,
T81M-1501,T83M-1501 ..... Page 292

CONTROL VALVE (Figure 163)
TRANSMISSION ..... Page 298

CONTROL VALVE (Figure 187)
THREE FUNCTION ..... Page 342

COOLING (Figure 19)
GASOLINE & LPG 2.0L ..... Page 33

TABLE OF CONTENTS

DESCRIPTION **PAGE NO.**

C (Continued)

COOLING (Figure 27)
GASOLINE & LPG 2.2L ..... Page 45

COOLING (Figure 31)
GASOLINE & LPG 3.0L ..... Page 52

COUNTERWEIGHT (Figure 3) ..... Page 6

CRANKCASE & OIL PAN (Figure 40)
DIESEL 2.4L ..... Page 68

CRANKCASE & OIL PAN (Figure 53)
DIESEL 2.8L
LAST USED ON S/N D177B-8291 ..... Page 88

CRANKCASE & OIL PAN (Figure 63)
DIESEL 3.1L
FIRST USED ON S/N D177B-8292 ..... Page 103

CRANKSHAFT & PISTON (Figure 12)
GASOLINE & LPG 2.0L ..... Page 26

CRANKSHAFT & PISTON (Figure 28)
GASOLINE & LPG 3.0L ..... Page 46

CRANKSHAFT & PISTON (Figure 42)
DIESEL 2.4L ..... Page 70

CRANKSHAFT & PISTON (Figure 52)
DIESEL 2.8L
LAST USED ON S/N D177B-8291 ..... Page 86

CRANKSHAFT & PISTON (Figure 62)
DIESEL 3.1L
FIRST USED ON S/N D177B-8292 ..... Page 102

©2000 HYSTER COMPANY

TABLE OF CONTENTS

DESCRIPTION **PAGE NO.**

C (Continued)

CYLINDER BLOCK (Figure 10)
GASOLINE & LPG 2.0L ..... Page 24

CYLINDER BLOCK (Figure 21)
GASOLINE & LPG 2.2L ..... Page 36

CYLINDER BLOCK (Figure 37)
DIESEL 2.4L ..... Page 62

CYLINDER BLOCK (Figure 49)
DIESEL 2.8L
LAST USED ON S/N D177B-8291 ..... Page 80

CYLINDER BLOCK (Figure 59)
DIESEL 3.1L
FIRST USED ON S/N D177B-8292 ..... Page 96

CYLINDER (Figure 192)
TWO STAGE LFL
H45-55XM ..... Page 354

CYLINDER (Figure 193)
TWO STAGE LFL
H60-65XM ..... Page 356

CYLINDER HEAD (Figure 11)
GASOLINE & LPG 2.0L ..... Page 25

CYLINDER HEAD (Figure 22)
GASOLINE & LPG 2.2L ..... Page 38

CYLINDER HEAD (Figure 29)
GASOLINE & LPG 3.0L ..... Page 48

©2000 HYSTER COMPANY

TABLE OF CONTENTS

DESCRIPTION **PAGE NO.**

C (Continued)

CYLINDER HEAD (Figure 39)
DIESEL 2.4L ..... Page 66

CYLINDER HEAD (Figure 50)
DIESEL 2.8L
LAST USED ON S/N D177B-8291 ..... Page 82

CYLINDER HEAD (Figure 60)
DIESEL 3.1L
FIRST USED ON S/N D177B-8292 ..... Page 98

D

DIFFERENTIAL (Figure 161)
LAST USED ON TRANSMISSION S/N T51,T52,T53,T78 ..... Page 294

DIFFERENTIAL (Figure 162)
FIRST USED ON TRANSMISSION S/N T80M-1501,
T81M-1501,T83M-1501 ..... Page 296

DISTRIBUTOR (Figure 139)
GASOLINE & LPG 2.0L ..... Page 258

DISTRIBUTOR (Figure 140)
GASOLINE & LPG 3.0L ..... Page 259

DRIVE & REAR LIGHT (Figure 237) ..... Page 451

DRIVE AXLE (Figure 167) ..... Page 304

DUAL FUEL (Figure 71)
3.0L ..... Page 118

TABLE OF CONTENTS

DESCRIPTION **PAGE NO.**

E

ELECTRICAL CONNECTORS (Figure 156)
LESS TERMINALS ..... Page 284

ELECTRICAL (Figure 112)
GASOLINE & LPG 2.2L ..... Page 196

ELECTRICAL (Figure 113)
GASOLINE & LPG 3.0L
LAST USED ON S/N D177B-35854 ..... Page 200

ELECTRICAL (Figure 114)
GM 3.0L GASOLINE
FIRST USED ON S/N D177B-35855 ..... Page 204

ELECTRICAL (Figure 115)
GM 3.0L LPG
FIRST USED ON S/N D177B-35855 ..... Page 206

ELECTRICAL (Figure 116)
GASOLINE & LPG 2.0L ..... Page 210

ELECTRICAL (Figure 117)
DIESEL ..... Page 212

ELECTRICAL (Figure 136)
LPG FIELD CONVERSION 2.2L ..... Page 250

ELECTRICAL (Figure 137)
TYPES GS,LPS & DS ..... Page 252

ELECTRICAL (Figure 138)
TYPES GS & LPS 3.0L ..... Page 256

ELECTRICAL (Figure 17)
GASOLINE & LPG 2.0L ..... Page 31

©2000 HYSTER COMPANY

TABLE OF CONTENTS

DESCRIPTION **PAGE NO.**

E (Continued)

ELECTRICAL (Figure 30)
GASOLINE & LPG 3.0L ..... Page 50

ELECTRICAL-COWL (Figure 103)
LAST USED ON S/N D177B-35854 ..... Page 180

ELECTRICAL-COWL (Figure 104)
FIRST USED ON S/N D177B-35855 ..... Page 182

EMISSION CONTROL (Figure 38)
DIESEL ..... Page 64

ENGINE HARNESS (Figure 124)
GASOLINE 2.2L ..... Page 226

ENGINE HARNESS (Figure 126)
GASOLINE 3.0L
LAST USED ON S/N D177B-35854 ..... Page 230

ENGINE HARNESS (Figure 127)
GASOLINE 3.0L
FIRST USED ON S/N D177B-35855 ..... Page 232

ENGINE HARNESS (Figure 128)
LPG 2.2L ..... Page 234

ENGINE HARNESS (Figure 131)
LPG 3.0L WITHOUT MSTS
FIRST USED ON S/N D177B-39472 ..... Page 240

ENGINE HARNESS (Figure 132)
LPG 3.0L WITH MSTS
FIRST USED ON S/N D177B-39472 ..... Page 242

©2000 HYSTER COMPANY

TABLE OF CONTENTS

DESCRIPTION PAGE NO.

E (Continued)

ENGINE HARNESS-LPS (Figure 134)
LPG 2.2L ..... Page 246

ENGINE MOUNT (Figure 33)
DIESEL ..... Page 56

ENGINE MOUNT (Figure 5)
GASOLINE & LPG 2.0L & 2.2L ..... Page 18

ENGINE MOUNT (Figure 6)
GASOLINE & LPG 3.0L ..... Page 19

EXHAUST (Figure 34)
DIESEL 2.4L ..... Page 57

EXHAUST (Figure 35)
DIESEL 2.8L & 3.1L ..... Page 58

EXHAUST (Figure 7)
GASOLINE & LPG ..... Page 20

EXHAUST (Figure 8)
OVERHEAD ..... Page 21

F

FENDERS (Figure 230) ..... Page 438

FILTER & LOCK-OFF VALVE (Figure 94)
LPG ..... Page 162

FIRE EXTINGUISHER (Figure 251) ..... Page 470

©2000 HYSTER COMPANY

TABLE OF CONTENTS

DESCRIPTION **PAGE NO.**

F (Continued)

FLOW VALVE (Figure 182)
LAST USED ON S/N D177B-15601 ..... Page 334

FLOW VALVE (Figure 183)
FIRST USED ON S/N D177B-15602 ..... Page 335

FLYWHEEL (Figure 20)
GASOLINE & LPG ..... Page 34

FLYWHEEL (Figure 48)
DIESEL 2.4L, 2.8L & 3.1L ..... Page 78

FORKS (Figure 200)
TWO STAGE LFL ..... Page 366

FORKS (Figure 213)
THREE STAGE FFL ..... Page 400

FORKS (Figure 228)
TWO STAGE FFL ..... Page 432

FRAME & FLOORPLATES (Figure 1) ..... Page 2

FREE LIFT (Figure 205)
THREE STAGE FFL ..... Page 378

FREE LIFT (Figure 217)
TWO STAGE FFL ..... Page 410

FREE LIFT
TWO STAGE FFL
(Figure 217 Continued) ..... Page 412

©2000 HYSTER COMPANY

TABLE OF CONTENTS

DESCRIPTION **PAGE NO.**

F (Continued)

FREE-LIFT CYLINDER (Figure 207)
THREE STAGE FFL ..... Page 384

FREE-LIFT CYLINDER (Figure 220)
TWO STAGE FFL ..... Page 416

FUEL & ELECTRICAL (Figure 25)
GASOLINE & LPG 2.2L ..... Page 42

FUEL (Figure 18)
GASOLINE & LPG 2.0L ..... Page 32

FUEL (Figure 69)
LPG 3.0L
LAST USED ON S/N D177B-39471 ..... Page 114

FUEL (Figure 70)
LPG 3.0L
FIRST USED ON S/N D177B-39472 ..... Page 116

FUEL (Figure 74)
LPG FIELD CONVERSION 2.2L ..... Page 124

FUEL (Figure 75)
LPG 2.0L ..... Page 126

FUEL (Figure 76)
GASOLINE 2.0L ..... Page 128

FUEL (Figure 77)
GASOLINE 2.2L ..... Page 130

FUEL (Figure 78)
GASOLINE 3.0L ..... Page 132

©2000 HYSTER COMPANY

TABLE OF CONTENTS

DESCRIPTION **PAGE NO.**

F (Continued)

FUEL (Figure 79)
DIESEL 2.4L ..... Page 134

FUEL (Figure 80)
DIESEL 3.1L ..... Page 136

FUEL INJECTION (Figure 91)
DIESEL 2.4L ..... Page 156

FUEL INJECTION (Figure 92)
DIESEL 2.8L
LAST USED ON S/N D177B-8291 ..... Page 158

FUEL INJECTION (Figure 93)
DIESEL 3.1L
FIRST USED ON S/N D177B-8292 ..... Page 160

FUEL SYSTEM (Figure 68)
LPG 2.2L ..... Page 112

G

GOVERNOR (Figure 72)
LPG 3.0L
LAST USED ON S/N D177B-39471 ..... Page 120

GOVERNOR (Figure 81)
GASOLINE & LPG 2.0L ..... Page 138

H

HARNESS AND SWITCH (Figure 133)
DUAL FUEL 3.0L ..... Page 244

HARNESS (Figure 105)
COWL
LAST USED ON S/N D177B-35854 ..... Page 184

©2000 HYSTER COMPANY

TABLE OF CONTENTS

DESCRIPTION **PAGE NO.**

H (Continued)

HARNESS (Figure 106)
COWL
FIRST USED ON S/N D177B-35855 ..... Page 186

HARNESS (Figure 107)
CLUSTER
LAST USED ON S/N D177B-35854 ..... Page 188

HARNESS (Figure 108)
CLUSTER
FIRST USED ON S/N D177B-35855 ..... Page 189

HARNESS (Figure 109)
CLUSTER POWER ..... Page 190

HARNESS (Figure 110)
LIGHTING
LAST USED ON S/N D177B-35854 ..... Page 192

HARNESS (Figure 111)
FORWARD/REVERSE LEVER ..... Page 195

HARNESS (Figure 118)
DIESEL
LAST USED ON S/N D177B-35854 ..... Page 214

HARNESS (Figure 119)
DIESEL
FIRST USED ON S/N D177B-35855 ..... Page 216

HARNESS (Figure 120)
CHASSIS
LAST USED ON S/N D177B-35854 ..... Page 218

HARNESS (Figure 121)
CHASSIS
FIRST USED ON S/N D177B-35855 ..... Page 220

©2000 HYSTER COMPANY

TABLE OF CONTENTS

DESCRIPTION **PAGE NO.**

H (Continued)

HARNESS (Figure 122)
GASOLINE & LPG 2.0L
LAST USED ON S/N D177B-35854 ..... Page 222

HARNESS (Figure 123)
GASOLINE & LPG 2.0L
FIRST USED ON S/N D177B-35855 ..... Page 224

HARNESS (Figure 135)
LPG FIELD CONVERSION 2.2L ..... Page 248

HARNESS (Figure 246)
WIPER ..... Page 465

HARNESS (Figure 247)
CAB (REAR) ..... Page 466

HARNESS (Figure 248)
CAB (COWL) ..... Page 467

HARNESS (Figure 256)
POWERTRAIN PROTECTION ..... Page 478

HARNESS ROUTING (Figure 242)
CAB ..... Page 459

HARNESS-REAR (Figure 249)
CHASSIS ..... Page 468

HEADER HOSE (Figure 199)
TWO STAGE LFL ..... Page 364

HEADER HOSE (Figure 212)
THREE STAGE FFL ..... Page 396

©2000 HYSTER COMPANY

TABLE OF CONTENTS

DESCRIPTION **PAGE NO.**

H (Continued)

HEADER HOSE (Figure 227)
TWO STAGE FFL ..... Page 428

HEATER (Figure 244)
CAB ..... Page 462

HOOD (Figure 2) ..... Page 4

HYDRAULIC (Figure 177) ..... Page 324

HYDRAULIC PUMP (Figure 178)
SINGLE GEAR ..... Page 326

HYDRAULIC PUMP (Figure 179)
SINGLE GEAR ..... Page 328

HYDRAULIC PUMP (Figure 180)
DOUBLE GEAR ..... Page 330

HYDRAULIC PUMP (Figure 181)
DOUBLE GEAR ..... Page 332

I

INJECTION PUMP (Figure 87)
DIESEL 2.4L, 2.8L & 3.1L ..... Page 149

INNER MAST (Figure 190)
TWO STAGE LFL ..... Page 350

INNER MAST (Figure 203)
THREE STAGE FFL ..... Page 374

TABLE OF CONTENTS

DESCRIPTION **PAGE NO.**

I (Continued)

INNER MAST (Figure 215)
TWO STAGE FFL ..... Page 406

INSTRUMENT CLUSTER (Figure 153) ..... Page 280

INSTRUMENT PANEL (Figure 152) ..... Page 278

INTERMEDIATE MAST (Figure 202)
THREE STAGE FFL ..... Page 372

L

LABELS ..... Page 10

LIFT EYE (Figure 229) ..... Page 437

LIFT (Figure 191)
TWO STAGE LFL ..... Page 352

LIGHTS (Figure 155) ..... Page 283

LOAD BACKREST EXTENSION (Figure 196)
TWO STAGE LFL ..... Page 360

LOAD BACKREST EXTENSION (Figure 210)
THREE STAGE FFL ..... Page 393

LOAD BACKREST EXTENSION (Figure 224)
TWO STAGE FFL ..... Page 425

LOAD BACKREST EXTENSION (Figure 233)
48 INCH (1220 mm) ..... Page 443

©2000 HYSTER COMPANY

TABLE OF CONTENTS

DESCRIPTION PAGE NO.

L (Continued)

LPG CONVERTER (Figure 95)
LAST USED ON S/N D177B-10965 ..... Page 163

LPG CONVERTER (Figure 96)
FIRST ON S/N D177B-10966 ..... Page 164

LPG MIXER (Figure 73)
DUAL FUEL 3.0L ..... Page 122

LPG TANK (Figure 67) ..... Page 110

LUBRICATION SYSTEM (Figure 66)
DIESEL 3.1L
FIRST USED ON S/N D177B-8292 ..... Page 106

M

MAIN CYLINDER (Figure 206)
THREE STAGE FFL ..... Page 382

MAIN CYLINDER (Figure 218)
TWO STAGE FFL
LEFT HAND ..... Page 414

MAIN CYLINDER (Figure 219)
TWO STAGE FFL
RIGHT HAND ..... Page 415

MAIN LIFT (Figure 204)
THREE STAGE FFL ..... Page 376

MAIN LIFT (Figure 216)
TWO STAGE FFL ..... Page 408

©2000 HYSTER COMPANY

TABLE OF CONTENTS

DESCRIPTION **PAGE NO.**

M (Continued)

MANIFOLD (Figure 15)
GASOLINE & LPG 2.0L ..... Page 29

MANIFOLD (Figure 24)
GASOLINE & LPG 2.2L ..... Page 41

MANIFOLD (Figure 44)
DIESEL 2.4L ..... Page 73

MANIFOLD (Figure 55)
DIESEL 2.8L
LAST USED ON S/N D177B-8291 ..... Page 90

MANIFOLDS (Figure 65)
DIESEL 3.1L
FIRST USED ON S/N D177B-8292 ..... Page 105

MAST INSTALLATION (Figure 197)
TWO STAGE LFL ..... Page 361

MAST INSTALLATION (Figure 198)
TWO STAGE LFL ..... Page 362

MAST INSTALLATION (Figure 211)
THREE STAGE FFL ..... Page 394

MAST INSTALLATION (Figure 225)
TWO STAGE FFL ..... Page 426

MAST INSTALLATION (Figure 226)
TWO STAGE FFL ..... Page 427

MASTER CYLINDER (Figure 176) ..... Page 322

©2000 HYSTER COMPANY

TABLE OF CONTENTS

DESCRIPTION PAGE NO.

M (Continued)

MIRROR (Figure 250) ..... Page 469

MONOTROL PEDAL (Figure 102) ..... Page 173

O

OIL FILTER (Figure 46)
DIESEL 2.4L ..... Page 76

OIL FILTER (Figure 57)
DIESEL 2.8L & 3.1L ..... Page 94

OIL PUMP & FILTER (Figure 16)
GASOLINE & LPG 2.0L ..... Page 30

OIL PUMP (Figure 26)
GASOLINE & LPG 2.2L ..... Page 43

OIL PUMP (Figure 47)
DIESEL 2.4L ..... Page 77

OIL PUMP (Figure 58)
DIESEL 2.8L & 3.1L ..... Page 95

OUTER MAST (Figure 189)
TWO STAGE LFL ..... Page 348

OUTER MAST (Figure 201)
THREE STAGE FFL ..... Page 370

OUTER MAST (Figure 214)
TWO STAGE FFL ..... Page 404

©2000 HYSTER COMPANY

TABLE OF CONTENTS

DESCRIPTION **PAGE NO.**

P

PARK BRAKE (Figure 175) ..... Page 321

PEDAL LINKAGE (Figure 101) ..... Page 172

POWERTRAIN PROTECTION SYSTEM (Figure 255) ..... Page 476

PUMP DRIVE (Figure 164)
LAST USED ON TRANSMISSION S/N T80M-1644 ..... Page 300

PUMP DRIVE (Figure 165)
FIRST USED ON S/N T80M-1645 ..... Page 301

R

RADIATOR & HOSES (Figure 36)
DIESEL ..... Page 60

RADIATOR & HOSES (Figure 9)
GASOLINE & LPG ..... Page 22

S

SEAT (Figure 4) ..... Page 8

SHIFT LEVER (Figure 154) ..... Page 282

SIDESHIFT CARRIAGE (Figure 231) ..... Page 440

SIDESHIFT CYLINDER (Figure 232) ..... Page 442

STARTER (Figure 149)
GASOLINE & LPG 2.0L ..... Page 274

©2000 HYSTER COMPANY

TABLE OF CONTENTS

DESCRIPTION PAGE NO.

S (Continued)

STARTER (Figure 150)
DIESEL 2.4L, 2.8L & 3.1L ..... Page 275

STARTER (Figure 151)
GASOLINE & LPG 2.2L & 3.0L ..... Page 276

STEERING AXLE (Figure 169) ..... Page 310

STEERING CONTROL UNIT (Figure 170) ..... Page 312

STEERING CYLINDER (Figure 171) ..... Page 313

STEERING POD (Figure 168) ..... Page 308

STROBE LIGHT (Figure 236) ..... Page 450

T

THROTTLE BODY INJECTION (Figure 84)
GASOLINE 2.2L ..... Page 142

THROTTLE LINKAGE (Figure 100)
GASOLINE & LPG 2.0L ..... Page 171

THROTTLE LINKAGE (Figure 97)
DIESEL ..... Page 165

THROTTLE LINKAGE (Figure 98)
GASOLINE & LPG 2.2L ..... Page 167

THROTTLE LINKAGE (Figure 99)
GASOLINE & LPG 3.0L ..... Page 169

TABLE OF CONTENTS

DESCRIPTION **PAGE NO.**

T (Continued)

TILT CYLINDER (Figure 184)
GROUP NUMBER 8601501 ..... Page 337

TIMING GEAR COVER & OIL PAN (Figure 14)
GASOLINE & LPG 2.0L ..... Page 28

TIMING GEAR (Figure 43)
DIESEL 2.4L ..... Page 72

TIMING GEAR (Figure 54)
DIESEL 2.8L
LAST USED ON S/N D177B-8291 ..... Page 89

TIMING GEAR (Figure 64)
DIESEL 3.1L
FIRST USED ON S/N D177B-8292 ..... Page 104

TIRE & WHEEL (Figure 234)
DRIVE WHEEL ..... Page 444

TIRE & WHEEL (Figure 235)
STEER WHEEL ..... Page 448

TRANSMISSION COOLING (Figure 166) ..... Page 303

TRANSMISSION (Figure 157)
LAST USED ON TRANSMISSION S/N T51,T52,T53,T78 ..... Page 286

TRANSMISSION (Figure 158)
FIRST USED ON TRANSMISSION S/N T80M-1501,
T81M-1501,T83M-1501 ..... Page 288

TYPE GS HARNESS (Figure 125)
GASOLINE 2.2L ..... Page 228

TABLE OF CONTENTS

DESCRIPTION **PAGE NO.**

V

VALVE ATTACHING PARTS (Figure 185)
PUSH AWAY LEVERS ..... Page 338

VALVE ATTACHING PARTS (Figure 186)
DIRECT ACTING LEVERS ..... Page 340

VALVE (Figure 188)
FOUR FUNCTION ..... Page 344

W

WATER PUMP (Figure 45)
DIESEL 2.4L ..... Page 74

WATER PUMP (Figure 56)
DIESEL 2.8L & 3.1L ..... Page 92

WINDOWS (Figure 241)
CAB ..... Page 458

NOTES

©2000 HYSTER COMPANY

HOW TO USE THE ILLUSTRATED PARTS MANUAL

This parts manual describes and illustrates assemblies, subassemblies, and detail parts needed for service replacement.

The different constructions are indicated by keys, symbols and footnotes.

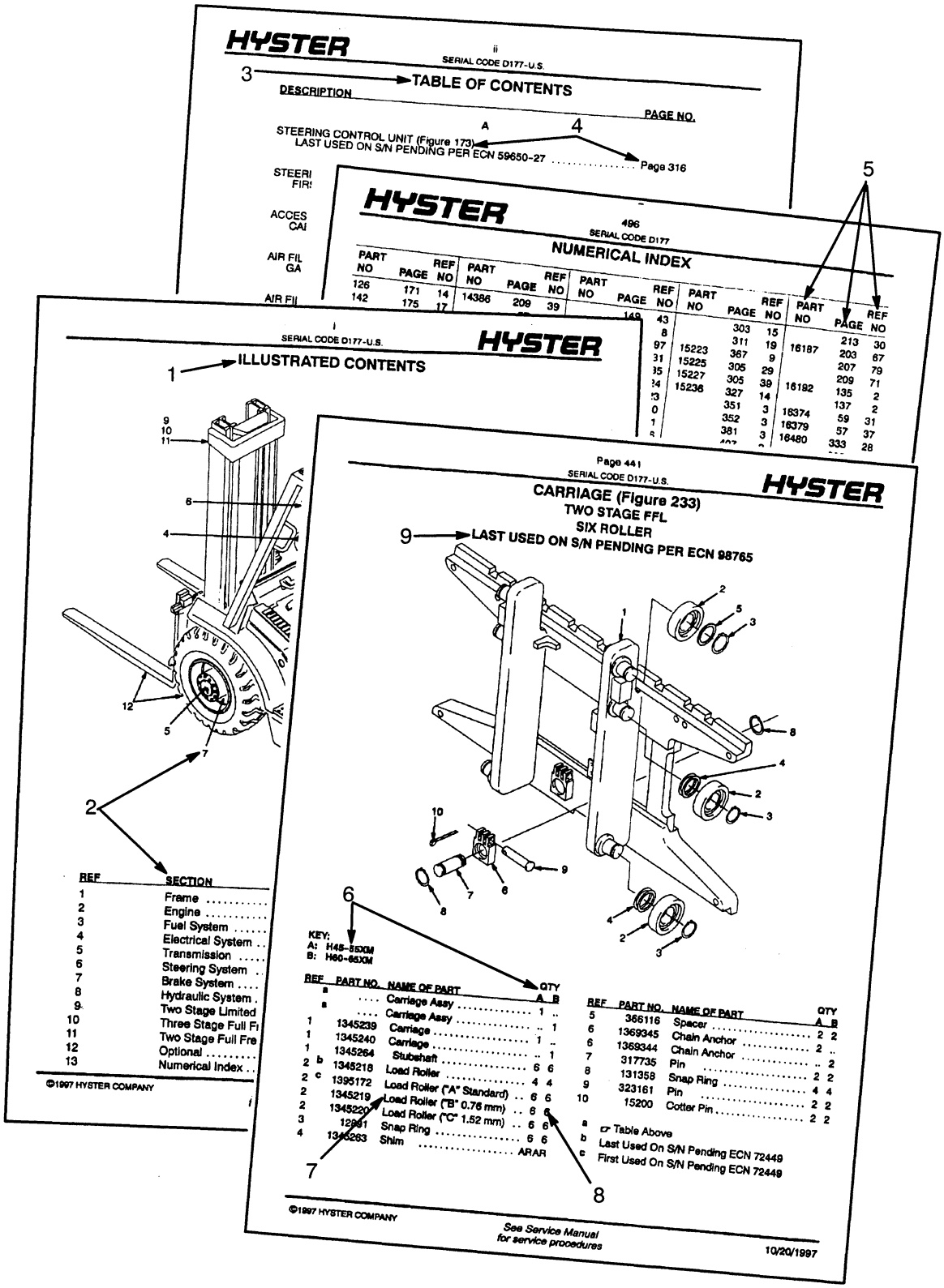

HOW TO FIND THE DESIRED PART NUMBER

WHEN THE PART NUMBER AND THE NEXT HIGHER ASSEMBLY IS NOT KNOWN:

1. Determine the function and application of the part required. Turn to the illustrated index page immediately behind the front cover. Choose the general area of reference most likely to include the part.
2. Find the page number for the reference number you choose and turn to that page. Use the division index to determine the assembly which would normally contain the part required. Then locate the part on the assembly breakdown page.

WHEN THE PART NUMBER IS NOT KNOWN AND THE NEXT HIGHER ASSEMBLY IS KNOWN:

3. Determine the assembly the required part is used on. Turn to the Master Index immediately following the Illustrated Index.
4. Locate the assembly the required part is used on and turn to the page indicated for that assembly. Then locate the part on the assembly breakdown page.

WHEN THE PART NUMBER IS KNOWN:

5. Use the numerical index at the back of the manual to find the part number. Turn to the figure listed and locate the part as indicated by the reference number.

GENERAL:

The assembly breakdowns include part numbers, description, quantities required, keys and footnotes to help in selecting the correct parts.

6. Keys are used to show effective serial numbers for two or more similar assemblies, RH and LH assembly parts, etc. Select the appropriate key, "A", "B", "C" or "D" and the corresponding quantity column to find the required parts.
7. Indented descriptions under "Name of Part" are used to indicate assemblies and sub-parts of assemblies. In the example, *LOAD ROLLER* (Item 7) is a subpart of the major assembly *CARRIAGE*.
8. Quantities shown are for one assembly. The quantities of the subpart *LOAD ROLLER* are indicated as six and six. This means six per *CARRIAGE* assembly.
9. Engineering change notice (ECN) numbers for pending serial numbers are shown to allow for the inclusion of the most current parts information. Contact your local dealer for Hyster lift trucks for serial number information listed by ECN number.
10. Additional fork lengths are available. Contact your dealer for Hyster lift trucks.

ORDERING PARTS:

When ordering replacement parts, give the unit serial number, part number, name of part and quantity required.

For any further information on parts, service, or ordering, consult your local dealer for Hyster lift trucks.

IDENTIFICATION OF TRUCK SERIAL NUMBERS

X OOO X OOOO X
(1) (2) (3) (4) (5)

(1) & (2) The first letter and three numbers indicate the truck model code.

(3) The second letter indicates the plant of manufacture.

(4) The four or five digit number series indicates the serial number of the truck.

(5) The final letter indicates the year of manufacture starting with "A" in 1957 and 1980. The letters "I", "O", and "Q" will not be used.

For pending serial numbers contact your local dealer for Hyster lift trucks.

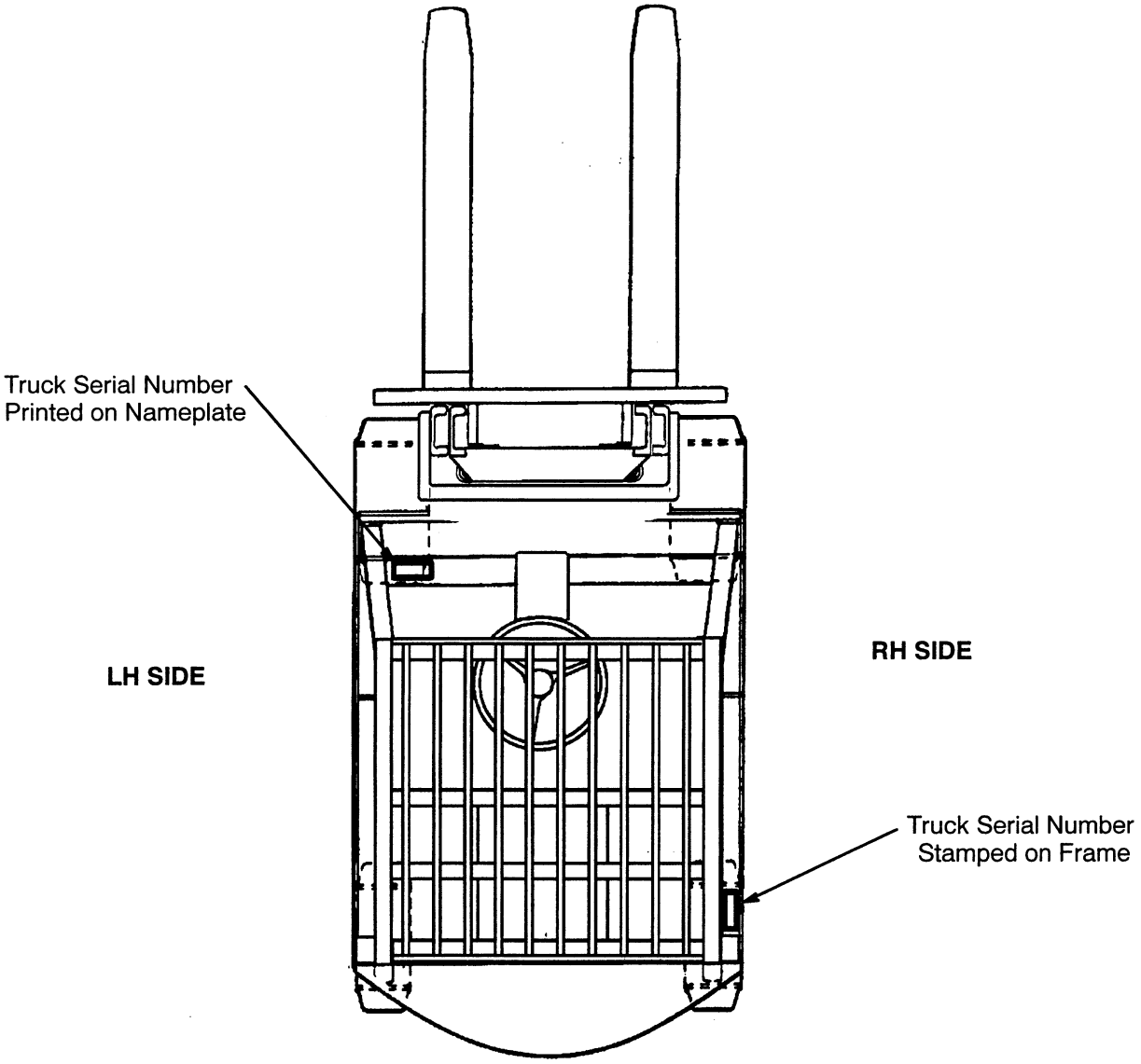

Parts referred to in this book as right or left hand parts are in accordance with the illustration above.

IDENTIFICATION OF MAST SERIAL NUMBERS

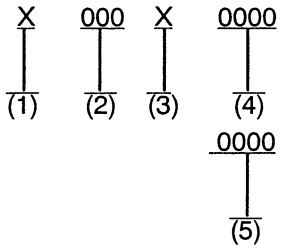

(1) & (2) The first letter and number indicates the mast model code.

(3) The second letter indicates the plant of manufacture.

(4) The four or five digit number series indicates the serial number of the mast.

(5) Lift Height in Millimeters stamped just below the serial number

Mast Group Identification consists of mast unit code (1) & (2) plus lift height (5).

For pending serial numbers contact your local dealer for Hyster lift trucks.

LIFT EQUIPMENT IDENTIFICATION

1. Fork part number, capacity rating, plant code letter and date of manufacture are stamped approximately six inches below the top of most forks.
2. The carriage group number is stamped on the right hand side of the top crossmember (pin type) or on the back of the right hand end of the bottom crossmember (hook type). A date code has two letters in line with or below the carriage group number.
3. The mast identification number has a model code, a letter indicating the plant of manufacture, and a serial number. Underneath the serial number is a four digit number that indicates the total lift height for the mast in millimeters.
4. Tilt and lift cylinder group numbers are stamped on the cylinder shell.

   Always refer to the group, serial or part number when ordering service parts.

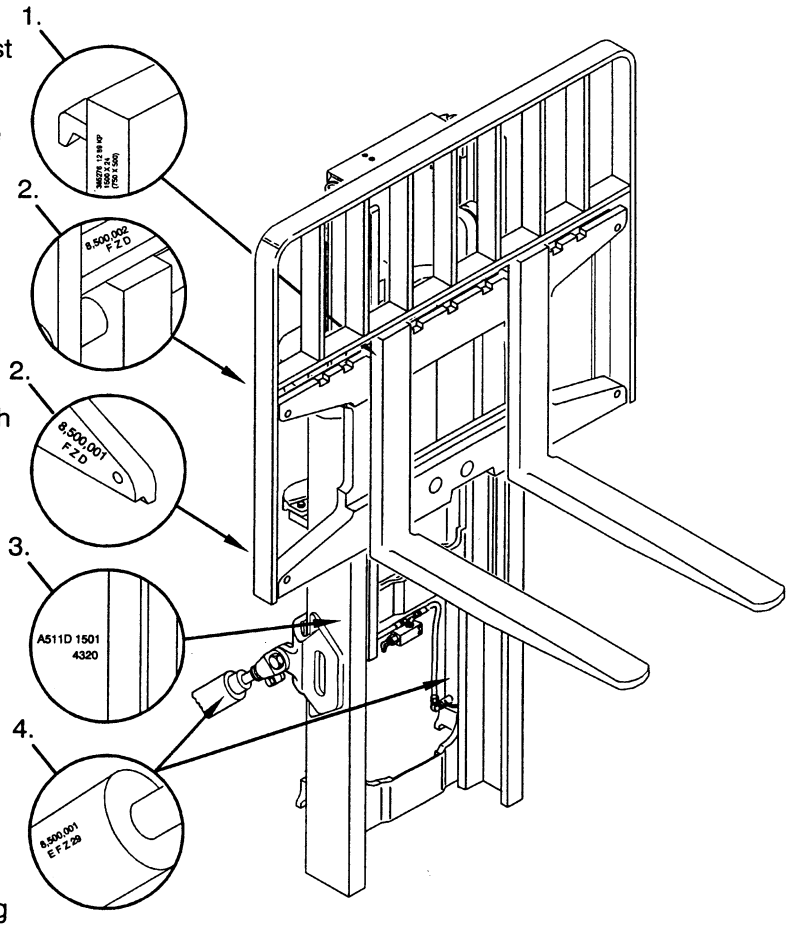

Modification of masts and carriages by SPED (Special Products Engineering Department) are identified by a model prefix code beginning with the letter "S". Contact your dealer for Hyster lift trucks for information on these assemblies.

IDENTIFICATION OF ATTACHMENT AND SIDE-SHIFT CARRIAGE SERIAL NUMBERS

X 000 X 0000
(1) (2) (3) (4)

(1) & (2) The first letter and three numbers indicate the attachment model code.

(3) The second letter indicates the plant of manufacture.

(4) The four or five digit number series indicates the serial number.

For pending serial numbers contact your local dealer for Hyster lift trucks.

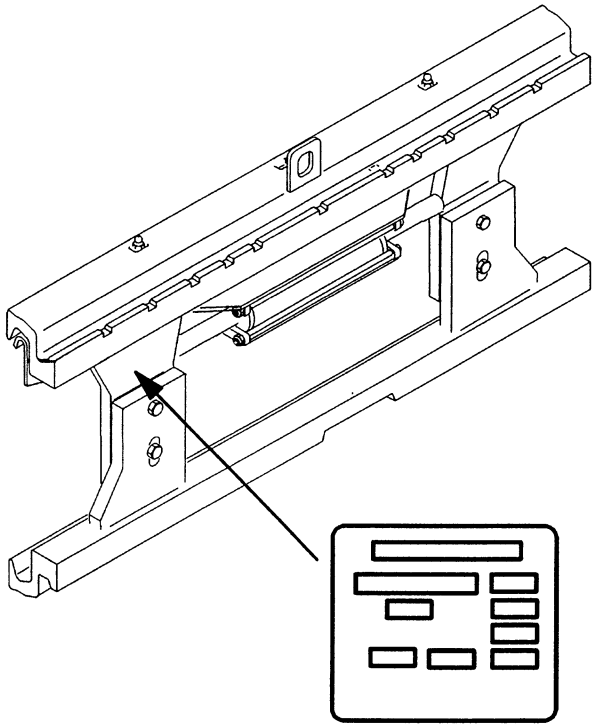

NAMEPLATE

Side-Shift Carriages and Attachments have nameplates. Use the serial number found on the nameplate to identify the attachment.

Always refer to the group, serial or part number when ordering service parts.

Modifications of attachments and side-shift carriages by SPED (Special Products Engineering Department) are identified by a model prefix code beginning with the letter "S". Contact your dealer for Hyster lift trucks for information on these assemblies.

NOTES

ABBREVIATIONS QUICK REFERENCE SHEET

Listed Below Are Abbreviations Used In Parts Manuals To Denote The Following Expressions:

2-STG	Two Stage Mast
3-STG	Three Stage Mast
4-STG	Four Stage Mast
Amp	Amperes
AR	As Required
BCS	Box Car Special
BWI	Brush Wear Indicator
CE	Commutator End
CRE	Corrosive Environment
dbA	Decibel "A" Scale
DE	Drive End
EC or ECH	Empty Container Handler Europe Empty Container Handler U.S.
EC-3 ECH-3	Empty Container Handler-3 High Stacking
EC-4 ECH-4	Empty Container Handler-4 High Stacking
EC-5 ECH-5	Empty Container Handler-5 High Stacking
EC-6 ECH-6	Empty Container Handler-6 High Stacking
EC-7 ECH-7	Empty Container Handler-7 High Stacking
ECM	Electronic Control Module
ECN	Engineering Change Notice
EEPROM	Electrically Erasable Programable Read Only Memory
EPROM	Electrically Programable Read Only Memory
FFL	Full Free Lift
FLT	Fork Lift Truck
FRE	Freezer Environment
in.	inches
LFL	Limited Free Lift
LPG	Liquified Petroleum Gas
MAP	Manifold Absolute Pressure
mm	millimeters
MSTS	Microprocessor Spark Timing System

NC	Normally Closed
NDE	Not Drive End (Commutator End)
NFL	No Free Lift
NI	Not Illustrated
NO	Normally Open
NPT	National Pipe Threads
NS	Neutral Start
O/S	Oversize
OC	Oil Clutch Transmission
PS	Powershift Transmission
PTO	Power Take Off
RPM	Revolutions per Minute
S/N	Serial Number
SFL	Semi-Free Lift
TMM	Truck Management Module
Type D	UL Type D, Diesel-Powered Safety Rating
Type DS	UL Type DS, Diesel-Powered Safety Rating
Type E	UL Type E, Battery Powered Safety Rating
Type EE	UL Type EE, Battery-Powered Safety Rating
Type ES	UL Type ES, Battery-Powered Safety Rating
Type G	UL Type G, Gasoline-Powered Safety Rating
Type GS	UL Type GS, Gasoline-Powered Safety Rating
Type LP	UL Type LP, LP Gas-Powered Safety Rating
Type LPS	UL Type LPS, LP Gas-Powered Safety Rating
U/S	Undersize
UL	Underwriters Laboratory
UK	United Kingdom
U.S.	United States
V	Volts
Xmsn	Transmission

PUBLICATIONS

Every new lift truck is provided with at least three publications. These publications are the PARTS MANUAL, the OPERATING MANUAL, and the section of the SERVICE MANUAL called Periodic Maintenance.

The OPERATING MANUAL must always be available on every lift truck. This manual has information that the operator must know for inspection and operation of the lift truck. The section Periodic Maintenance has a recommended schedule of service intervals and the procedures for servicing the lift truck.

These manuals, other publications and programs are available from your Dealer for Hyster Lift Trucks to help you operate and maintain your lift truck professionally. See the list that follows for reference to items for lift trucks in this PARTS MANUAL.

Operating Manual	**Hyster Part Number**
English	897740
Service Manual (complete)	897469
Parts Manual	897468

FRAME

COUNTERWEIGHT (Figure 3) ..... Page 6

FRAME AND FLOORPLATES (Figure 1) ..... Page 2

HOOD (Figure 2) ..... Page 4

LABELS ..... Page 10

SEAT (Figure 4) ..... Page 8

©2000 HYSTER COMPANY

FRAME AND FLOORPLATES (Figure 1)

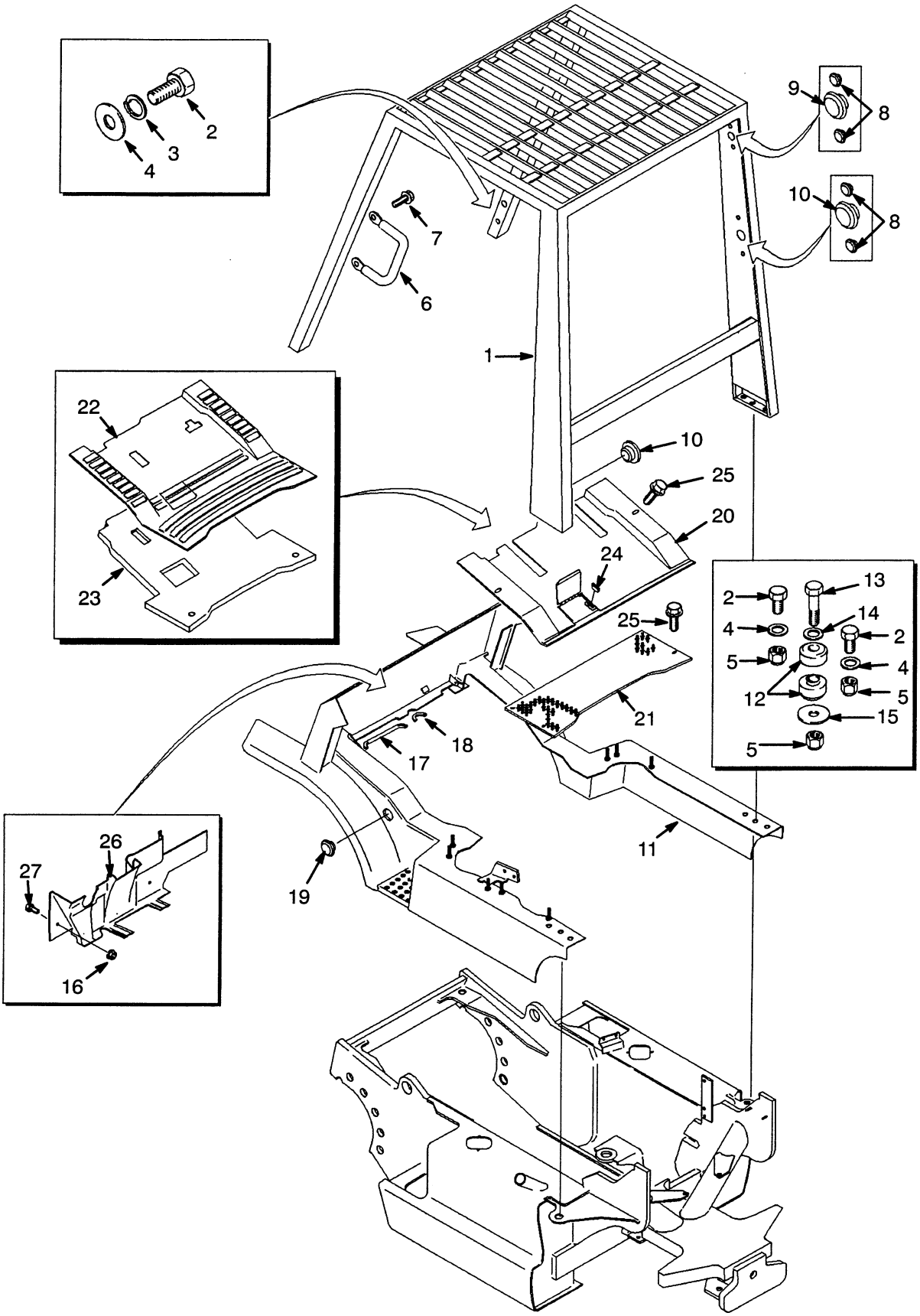

©2000 HYSTER COMPANY

See Service Manual for service procedures

FRAME AND FLOORPLATES

REF		PART NO.	NAME OF PART	QTY
1		1337179	Overhead Guard	1
2		292528	Capscrew	8
3		292683	Lockwasher	4
4		296423	Washer	8
5		300937	Nut	8
6		1343647	Handle	1
7		329067	Screw	2
8		1363916	Plug	12
9		1363917	Plug	5
10		1363918	Plug	2
11		1360718	Operator Module	1
12	a	1352578	Mount	4
12	b	1383559	Mount	4
13	a	292535	Capscrew	4
13	b	292536	Capscrew	4
14		320161	Washer (Rear Only)	2
14	b	320161	Washer (Front Only)	2
15		300939	Washer	4
16		1359600	Nut	2
17		1347160	Trim	1
18		1347161	Trim	1
19		1350321	Plug	2

REF		PART NO.	NAME OF PART	QTY
20		1339777	Floorplate (Front)	1
21		1339773	Floorplate (Rear)	1
22		1354090	Floormat	1
23	h	1354109	Barrier	1
23	fg	1390611	Barrier	1
24		1339776	Magnet	1
25		1356100	Capscrew	4
26	c	1339719	Cover	1
26	d	1390614	Cover	1
26	e	1390607	Cover	1
27		292501	Capscrew	2

a Last Used On D177B-26743
b First Used On D177B-26744
c Last Used On D177B-32699
d Used On D177B-32700 Thru S/N D177B-36715
e First Used On S/N D177B-36716
f Diesel
g First Used On S/N D177B-38774
h Last Used On S/N D177B-38775

©2000 HYSTER COMPANY

HOOD (Figure 2)

PARTS-SERVICE GRAM	
Item	Gram
15	D-E-19

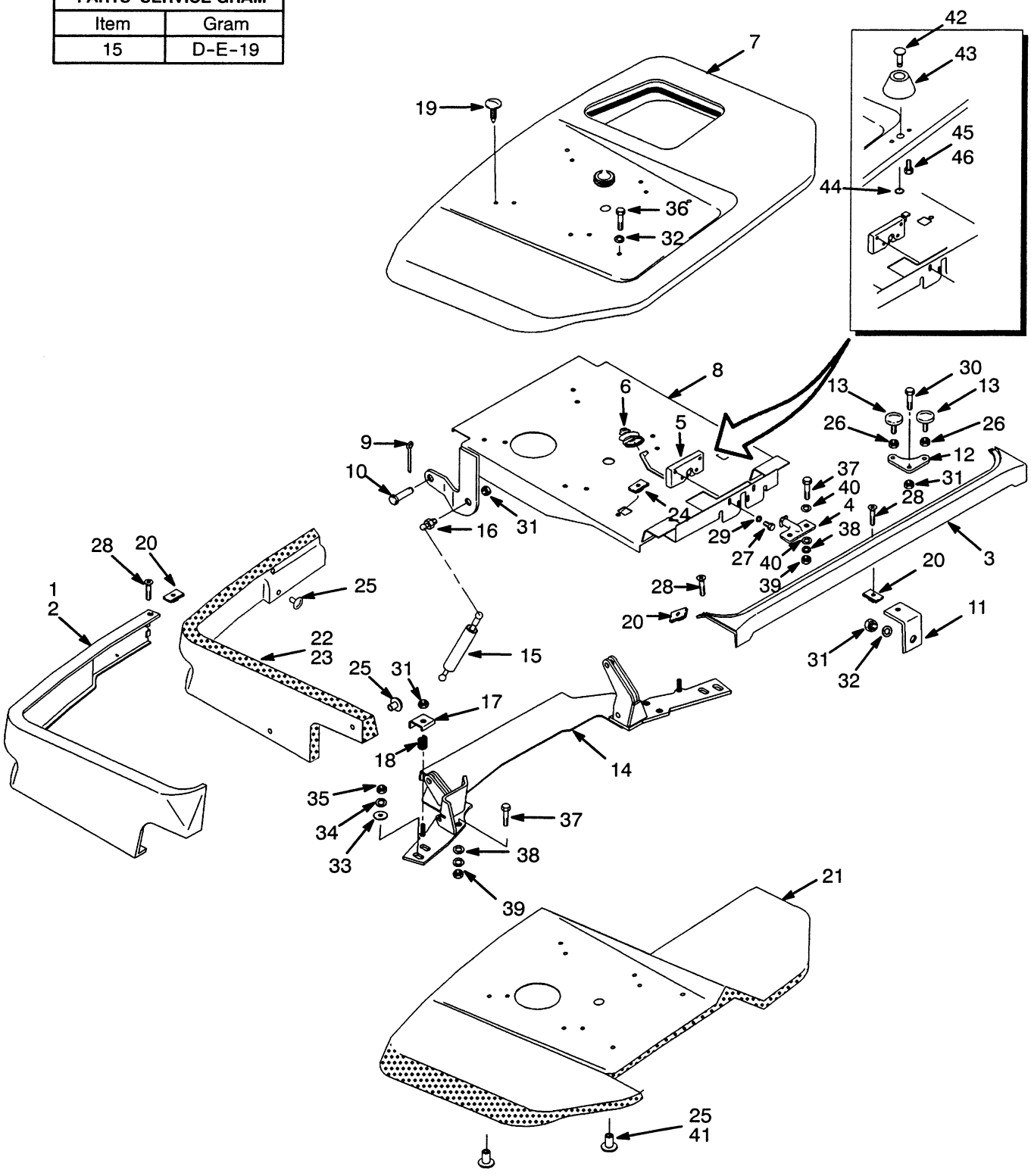

HOOD

REF		PART NO.	NAME OF PART	QTY
1	a	1343458	Lower Panel (LH)	1
1	b	1347096	Lower Panel (LH)	1
2		1343473	Lower Panel (RH)	1
3		1332670	Panel	1
4		1337148	Striker	1
5	f	1337181	Latch	1
5	g	1386216	Latch	1
6		1339786	Boot	1
7	f	1332667	Hood	1
7	g	1386217	Hood	1
8	d	1347175	Seat Pan	1
8	e	1375186	Seat Pan	1
8	k	1376672	Seat Pan	1
9		1362714	Pin	2
10		237947	Rod End Pin	2
11		1351008	Mounting Plate	1
12		1347110	Plate	2
13		1347088	Stop Screw	4
14		1339694	Crossmember	1
15		1377992	Gas Spring	2
16		1350285	Ball Stud	4
17		1347018	Clamp	6
18		1350241	Spring	6
19		1347045	Fastener	4
20		1350215	Nut	4
21		1352124	Liner	1
22	np	1352125	Liner, RH	1
23	np	1352126	Liner, LH	1
24		1350282	Nut	2
25	np	280644	Button	12
26		15001	Nut	4
27		199563	Capscrew	4
28		1339793	Screw	4
29		320156	Washer	4
30		136749	Capscrew	4
31		302400	Nut	13
32		320158	Washer	3
33		332755	Washer	4
34		292681	Lockwasher	4
35		239503	Nut	4
36		1354380	Capscrew	2
37		292515	Capscrew	6
38		292682	Lockwasher	6
39		136692	Nut	6
40		320159	Washer	4
41	c	1382306	Washer (Nylon)	2
41	g	15931	Washer	2
42	g	1386221	Button	2
43	g	1386220	Guard	2
44	g	12898	E-Ring	2
43		1386220	Guard	1
44		12898	E-Ring	1
45		227155	Screw	2
46		15931	Washer	2

a Gasoline And Diesel
b LPG
c First Used On S/N D177B-18350
d Last Used On S/N D177B-16153
e Used On S/N D177B-16154 Thru D177B-18283
f Last Used On S/N D177B-26598
g First Used On S/N D177B-26599
k First Used On S/N D177B-18284
n Diesel
p First Used On S/N D177B-38775

©2000 HYSTER COMPANY

COUNTERWEIGHT (Figure 3)

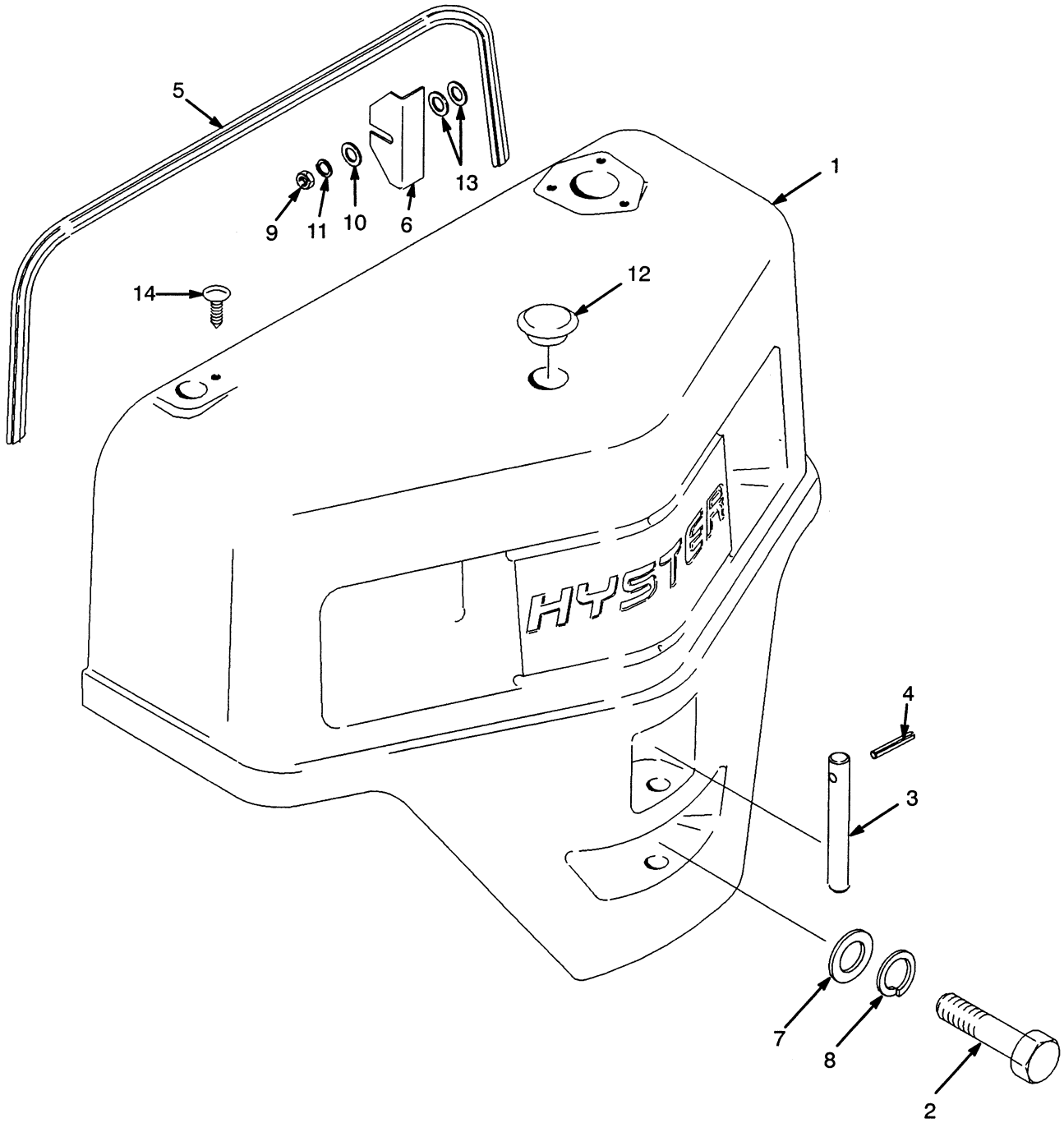

©2000 HYSTER COMPANY

COUNTERWEIGHT

REF NO.	NAME OF PART	TRUCK MODEL					QTY
		H45XM	H50XM	H55XM	H60XM	H65XM	
1	Counterweight (1623mm) Counterweight (1700mm)	1351014	1335752	1351016	1335754	 1335756	1 1
2	Capscrew (1623mm) Capscrew (1700mm)	292607	292612	292613	292616	 292613	1 1

REF		PART NO.	NAME OF PART	QTY
1	a	.....	Counterweight	1
2	a	.....	Capscrew	1
3		1335761	Tow Pin	1
4		302492	Pin	1
5		1335762	Seal	1
6		1335763	Shim	AR
7		1375214	Washer	1
8		292689	Washer	1
9		239503	Nut	4

REF		PART NO.	NAME OF PART	QTY
10		320158	Washer	4
11		292681	Lockwasher	4
12		1350231	Plug	1
12	b	1350231	Plug	2
13		320159	Washer	8
14	b	1347045	Fastener	1

a ☞ Table Above
b Gasoline And Diesel

©2000 HYSTER COMPANY

SEAT (Figure 4)

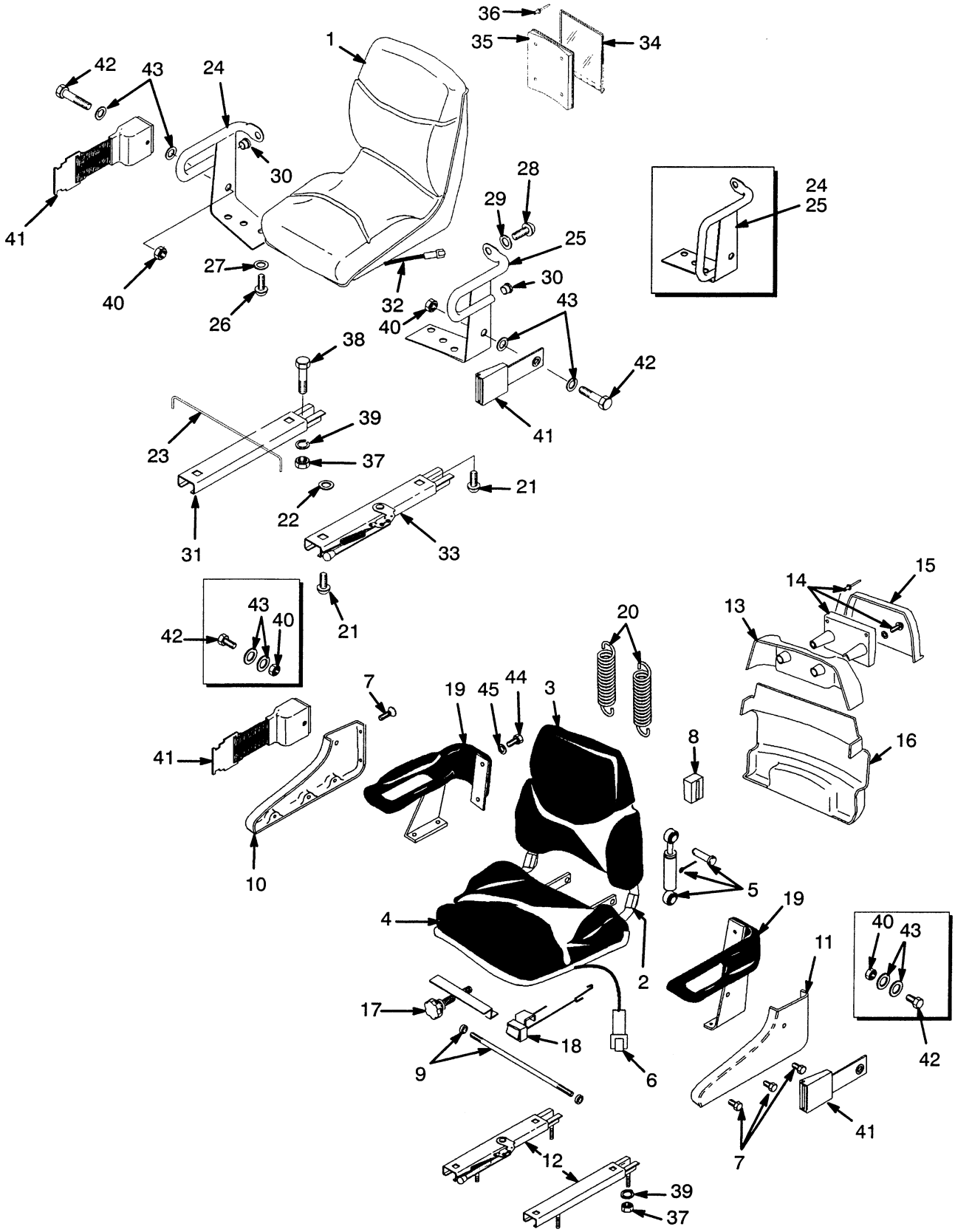

SEAT

KEY:
A: Semi-Suspension
B: Standard

REF		PART NO.	NAME OF PART	QTY A	QTY B
1		1351431	Seat (Vinyl)	..	1
1		1351432	Seat (Fabric)	..	1
2		1376675	Semi-Suspension Seat (Vinyl)	1	..
2		1376676	Semi-Suspension Seat (Fabric)	1	..
3		1382111	Back Cushion (Vinyl)	1	..
3		1382113	Back Cushion (Fabric)	1	..
4		1382112	Seat Cushion (Vinyl)	1	..
4		1382114	Seat Cushion (Fabric)	1	..
5		1362049	Shock Absorber	1	..
6		1354140	Switch Assembly	1	..
6		1330409	Connector	1	..
6		1330414	Lock	1	..
6		1330433	Pin	2	..
7		1362065	Cover Hardware Kit	4	..
8		1362052	Slider Block	2	..
9		1362053	Shaft Kit	1	..
10		1392496	Cover (RH)	1	..
11		1392495	Cover (LH)	1	..
12		1459173	Seat Rail	1	..
13		1374188	Cover	1	..
14		1362058	Holder	1	..
15		1374190	Cover	1	..
16		1360872	Rear Cover	1	..
17		1362061	Knob Kit	1	..
18		1362062	Tape Kit	1	..
19		1362063	Hip Restraint (LH)	1	..
19		1362064	Hip Restraint (RH)	1	..
20		1367137	Spring Kit	1	..
21		364914	Capscrew	..	4
22		221733	Washer	..	2
23		1300107	Rod	..	1
24	a	1306585	Restraint (RH)	..	1
24	b	364807	Restraint (RH)	..	1
25	a	1306588	Restraint (LH)	..	1
25	b	364808	Restraint (LH)	..	1
26		18727	Capscrew	..	4
27		18515	Washer	..	4
28		379197	Capscrew	..	2
29		379198	Washer	..	2
30		364854	Plug	..	2
31		383116	Rail, RH	..	1
32		1354140	Switch	..	1
33		335553	Rail, LH	..	1
34		335991	Information Cover	..	1
35		335988	Information Base	..	1
36		222029	Rivet	..	4
37		145639	Locknut	4	4
38		18498	Capscrew (Front)	..	2
38		18496	Capscrew (Rear)	..	2
39		15175	Washer	4	4
40		379698	Nut	2	2
41	a	1337800	Seat Belt	1	1
41	b	1374750	Seat Belt	1	1
42		379199	Capscrew	2	2
43		379697	Washer	4	4
44		1367148	Bolt	8	..
45		1367154	Washer	8	..

a Last Used On S/N D177B-18419
b First Used On S/N D177B-18420

©2000 HYSTER COMPANY

LABELS

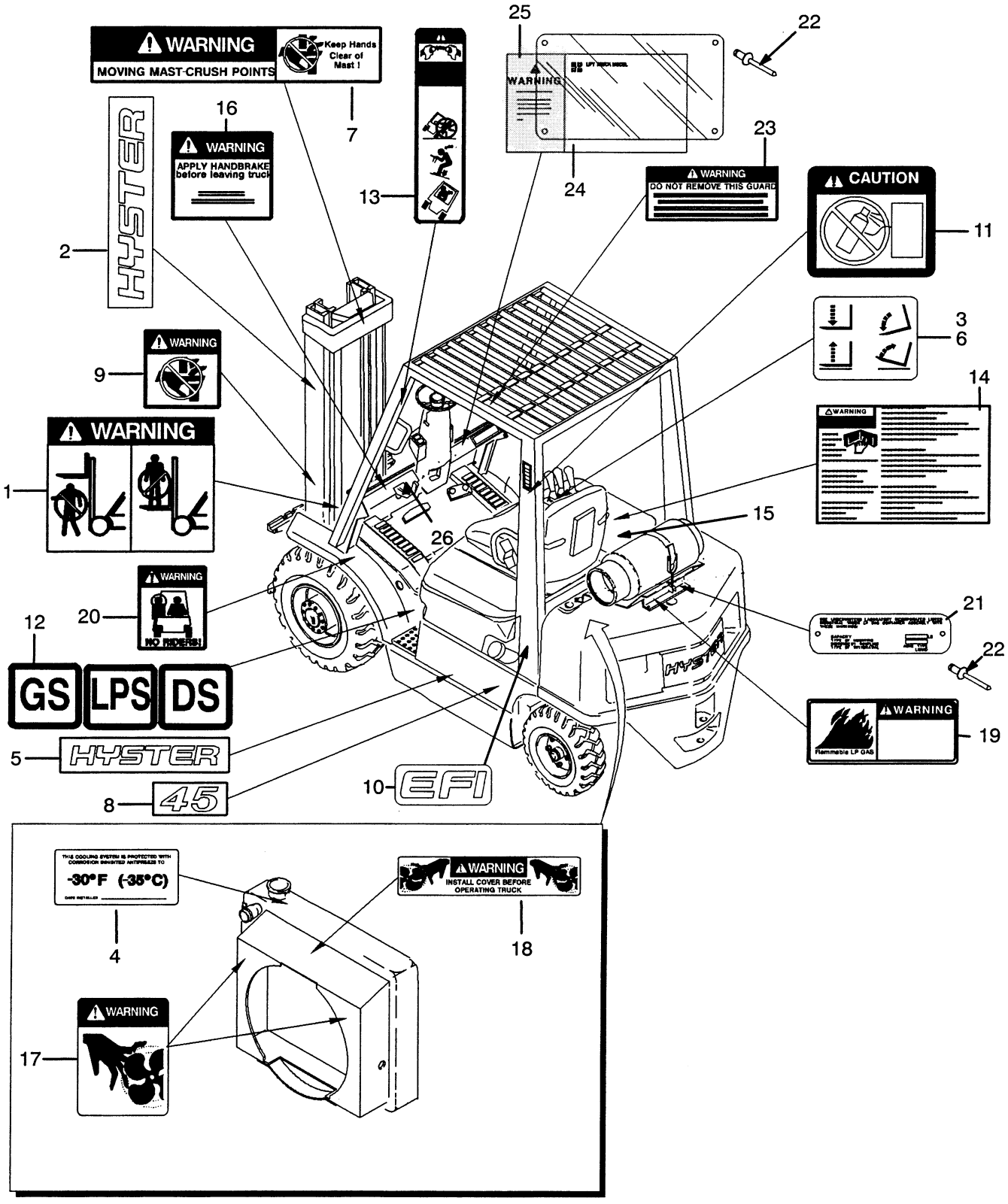
WARNING
MOVING MAST-CRUSH POINTS
Keep Hands Clear of Mast !
WARNING
APPLY HANDBRAKE before leaving truck
WARNING
DO NOT REMOVE THIS GUARD
CAUTION
WARNING
WARNING
WARNING
WARNING
NO RIDERS!
WARNING
Flammable LP GAS
WARNING
INSTALL COVER BEFORE OPERATING TRUCK
WARNING
-30°F (-35°C)
GS
LPS
DS
HYSTER
45
EFI
1
2
3
4
5
6
7
8
9
10
11
12
13
14
15
16
17
18
19
20
21
22
23
24
25
26

LABELS

REF		PART NO.	NAME OF PART	QTY
1	d	1338178	Label-Mast Warning	2
2	d	1339672	Label-Hyster	2
3	a	.....	Label-Auxiliary Function	1
4	d	1354165	Label-Antifreeze	1
5	d	1339674	Label-Hyster	2
6	d	1356137	Label-Lift & Tilt	1
7	d	1330919	Label-Mast Warning	1
8		1354153	Label-45	2
8		1354155	Label-50	2
8		1354157	Label-55	2
8		1354159	Label-60	2
8		1354343	Label-65	2
9	d	1335129	Label-Pinch Point	2
10	bd	1345998	Label-EFI	2
11	d	2034459	Label-Ether Caution	1
12		154065	Label-GS	2
12		154066	Label-LPS	2
12		154067	Label-DS	2
13	d	1330917	Label-Tipover Warning	2
14	d	1336605	Label-Operator Warning	1
15	d	1374549	Label-Radial Tire Warning	1
16	d	2309799	Label-Park Brake	1
17	d	1345939	Label-Fan	2
18	d	1325271	Label-Fan	1
19	d	1354171	Label-Flammable Lp Gas	1
20	d	1330920	Label-No Riders	2
21	d	329029	Label-LPG Tank	1
22		170658	Rivet	AR
23		1335147	Label-Overhead Guard	1
24		389688	Cover	1
25	c	.....	Label-Capacity Plate	1
26		864740	Label-Gas Fuel Change-1/4 Full	1

a ☞ Chart Below
b Gasoline Trucks Only
c Contact Your Local Dealer For Hyster Lift Trucks
d included In Service Kit 996414

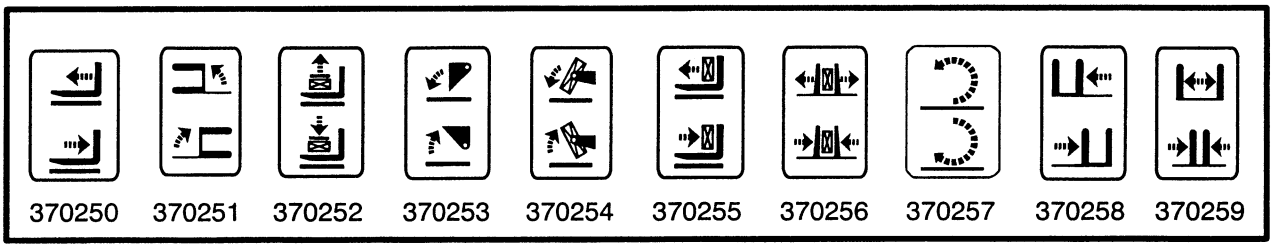

NOTES

©2000 HYSTER COMPANY

ENGINE

CAMSHAFT AND OIL PAN (Figure 32)
GASOLINE AND LPG 3.0L ..... Page 54

CAMSHAFT AND TIMING GEAR (Figure 23)
GASOLINE AND LPG 2.2L ..... Page 40

CAMSHAFT AND VALVES (Figure 13)
GASOLINE AND LPG 2.0L ..... Page 27

CAMSHAFT AND VALVES (Figure 41)
DIESEL 2.4L ..... Page 69

CAMSHAFT AND VALVES (Figure 51)
DIESEL 2.8L
LAST USED ON S/N D177B-8291 ..... Page 84

CAMSHAFT AND VALVES (Figure 61)
DIESEL 3.1L
FIRST USED ON S/N D177B-8292 ..... Page 100

COOLING (Figure 19)
GASOLINE AND LPG 2.0L ..... Page 33

COOLING (Figure 27)
GASOLINE AND LPG 2.2L ..... Page 45

COOLING (Figure 31)
GASOLINE AND LPG 3.0L ..... Page 52

CRANKCASE AND OIL PAN (Figure 40)
DIESEL 2.4L ..... Page 68

CRANKCASE AND OIL PAN (Figure 53)
DIESEL 2.8L
LAST USED ON S/N D177B-8291 ..... Page 88

CRANKCASE AND OIL PAN (Figure 63)
DIESEL 3.1L
FIRST USED ON S/N D177B-8292 ..... Page 103

CRANKSHAFT AND PISTON (Figure 12)
GASOLINE AND LPG 2.0L ..... Page 26

©2000 HYSTER COMPANY

ENGINE (CONTINUED)

CRANKSHAFT AND PISTON (Figure 28)
GASOLINE AND LPG 3.0L ..... Page 46

CRANKSHAFT AND PISTON (Figure 42)
DIESEL 2.4L ..... Page 70

CRANKSHAFT AND PISTON (Figure 52)
DIESEL 2.8L
LAST USED ON S/N D177B-8291 ..... Page 86

CRANKSHAFT AND PISTON (Figure 62)
DIESEL 3.1L
FIRST USED ON S/N D177B-8292 ..... Page 102

CYLINDER BLOCK (Figure 10)
GASOLINE AND LPG 2.0L ..... Page 24

CYLINDER BLOCK (Figure 21)
GASOLINE AND LPG 2.2L ..... Page 36

CYLINDER BLOCK (Figure 37)
DIESEL 2.4L ..... Page 62

CYLINDER BLOCK (Figure 49)
DIESEL 2.8L
LAST USED ON S/N D177B-8291 ..... Page 80

CYLINDER BLOCK (Figure 59)
DIESEL 3.1L
FIRST USED ON S/N D177B-8292 ..... Page 96

CYLINDER HEAD (Figure 11)
GASOLINE AND LPG 2.0L ..... Page 25

CYLINDER HEAD (Figure 22)
GASOLINE AND LPG 2.2L ..... Page 38

CYLINDER HEAD (Figure 29)
GASOLINE AND LPG 3.0L ..... Page 48

©2000 HYSTER COMPANY

ENGINE (CONTINUED)

CYLINDER HEAD (Figure 39)
DIESEL 2.4L ..... Page 66

CYLINDER HEAD (Figure 50)
DIESEL 2.8L
LAST USED ON S/N D177B-8291 ..... Page 82

CYLINDER HEAD (Figure 60)
DIESEL 3.1L
FIRST USED ON S/N D177B-8292 ..... Page 98

ELECTRICAL (Figure 17)
GASOLINE AND LPG 2.0L ..... Page 31

ELECTRICAL (Figure 30)
GASOLINE AND LPG 3.0L ..... Page 50

EMISSION CONTROL (Figure 38)
DIESEL ..... Page 64

ENGINE MOUNT (Figure 33)
DIESEL ..... Page 56

ENGINE MOUNT (Figure 5)
GASOLINE AND LPG 2.0L & 2.2L ..... Page 18

ENGINE MOUNT (Figure 6)
GASOLINE AND LPG 3.0L ..... Page 19

EXHAUST (Figure 34)
DIESEL 2.4L ..... Page 57

EXHAUST (Figure 35)
DIESEL 2.8L AND 3.1L ..... Page 58

EXHAUST (Figure 7)
GASOLINE AND LPG ..... Page 20

EXHAUST (Figure 8)
OVERHEAD ..... Page 21

©2000 HYSTER COMPANY

ENGINE (CONTINUED)

FLYWHEEL (Figure 20)
GASOLINE AND LPG ..... Page 34

FLYWHEEL (Figure 48)
DIESEL 2.4L, 2.8L AND 3.1L ..... Page 78

FUEL AND ELECTRICAL (Figure 25)
GASOLINE AND LPG 2.2L ..... Page 42

FUEL (Figure 18)
GASOLINE AND LPG 2.0L ..... Page 32

LUBRICATION SYSTEM (Figure 66)
DIESEL 3.1L
FIRST USED ON S/N D177B-8292 ..... Page 106

MANIFOLD (Figure 15)
GASOLINE AND LPG 2.0L ..... Page 29

MANIFOLD (Figure 24)
GASOLINE AND LPG 2.2L ..... Page 41

MANIFOLD (Figure 44)
DIESEL 2.4L ..... Page 73

MANIFOLD (Figure 55)
DIESEL 2.8L
LAST USED ON S/N D177B-8291 ..... Page 90

MANIFOLDS (Figure 65)
DIESEL 3.1L
FIRST USED ON S/N D177B-8292 ..... Page 105

OIL FILTER (Figure 46)
DIESEL 2.4L ..... Page 76

OIL FILTER (Figure 57)
DIESEL 2.8L AND 3.1L ..... Page 94

OIL PUMP & FILTER (Figure 16)
GASOLINE AND LPG 2.0L ..... Page 30

©2000 HYSTER COMPANY

ENGINE (CONTINUED)

OIL PUMP (Figure 26)
GASOLINE AND LPG 2.2L ..... Page 43

OIL PUMP (Figure 47)
DIESEL 2.4L ..... Page 77

OIL PUMP (Figure 58)
DIESEL 2.8L AND 3.1L ..... Page 95

RADIATOR AND HOSES (Figure 36)
DIESEL ..... Page 60

RADIATOR & HOSES (Figure 9)
GASOLINE AND LPG ..... Page 22

TIMING GEAR COVER AND OIL PAN (Figure 14)
GASOLINE AND LPG 2.0L ..... Page 28

TIMING GEAR (Figure 43)
DIESEL 2.4L ..... Page 72

TIMING GEAR (Figure 54)
DIESEL 2.8L
LAST USED ON S/N D177B-8291 ..... Page 89

TIMING GEAR (Figure 64)
DIESEL 3.1L
FIRST USED ON S/N D177B-8292 ..... Page 104

WATER PUMP (Figure 45)
DIESEL 2.4L ..... Page 74

WATER PUMP (Figure 56)
DIESEL 2.8L AND 3.1L ..... Page 92

©2000 HYSTER COMPANY

ENGINE MOUNT (Figure 5)

GASOLINE AND LPG 2.0L AND 2.2L

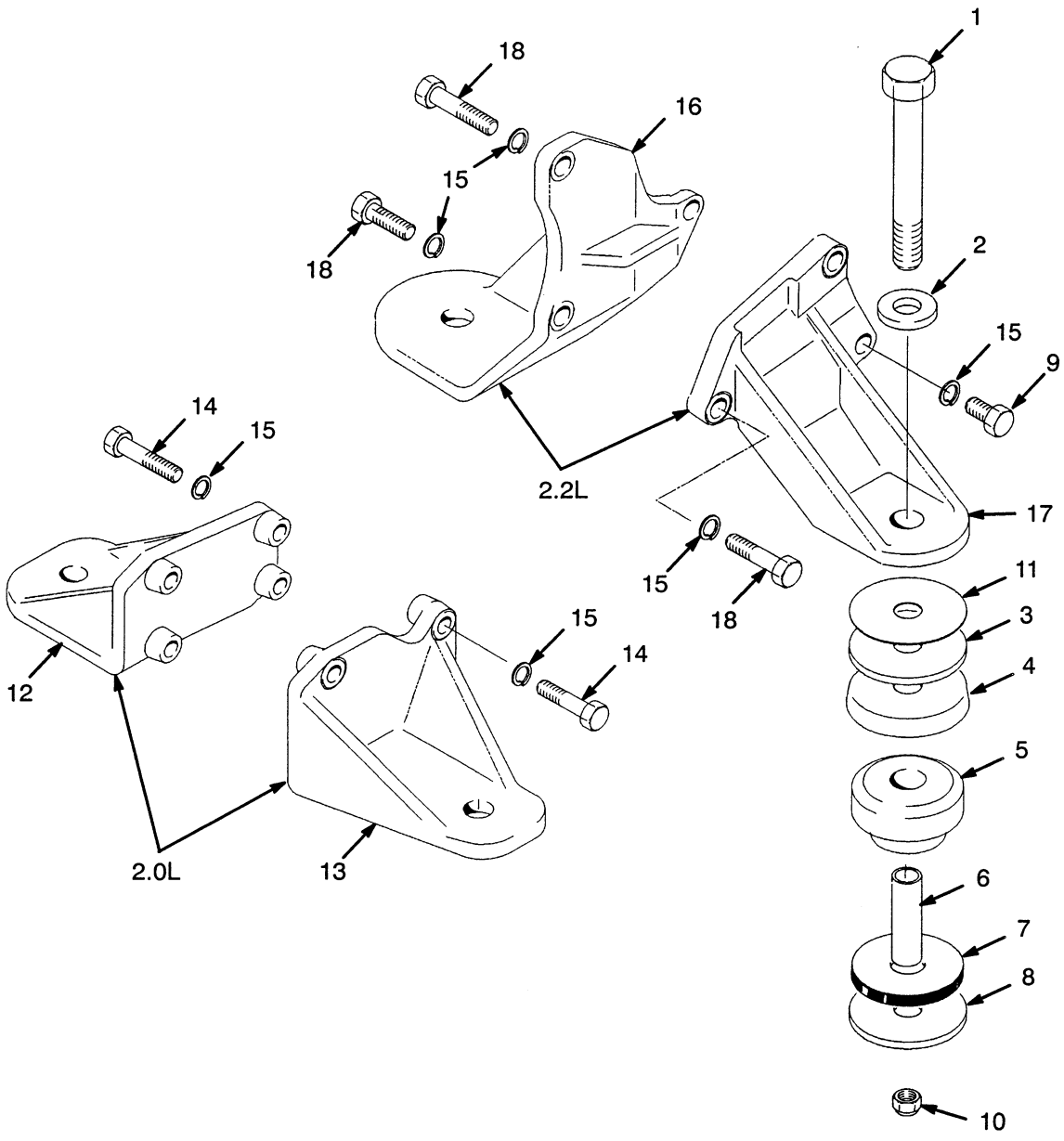

KEY:
A: 2.0L Engine
B: 2.2L Engine

REF	PART NO.	NAME OF PART	QTY A	QTY B
1	293658	Capscrew	2	2
2	300932	Washer	2	2
3	340796	Washer	2	2
4	1351098	Cup	2	2
5	1351096	Isolator	2	2
6	1351061	Spacer	2	2
7	1351060	Bumper	2	2
8	300939	Washer	2	2
9	293631	Capscrew	..	2
10	300937	Nut	2	2
11	1351017	Spacer	AR	AR
12	1337014	Bracket (LH)	1	..
13	1337012	Bracket (RH)	1	..
14	1347119	Capscrew	8	..
15	292682	Lockwasher	8	6
16	1335961	Bracket (LH)	..	1
17	1335960	Bracket (RH)	..	1
18	293630	Capscrew	..	4

©2000 HYSTER COMPANY

ENGINE MOUNT (Figure 6)

GASOLINE AND LPG 3.0L

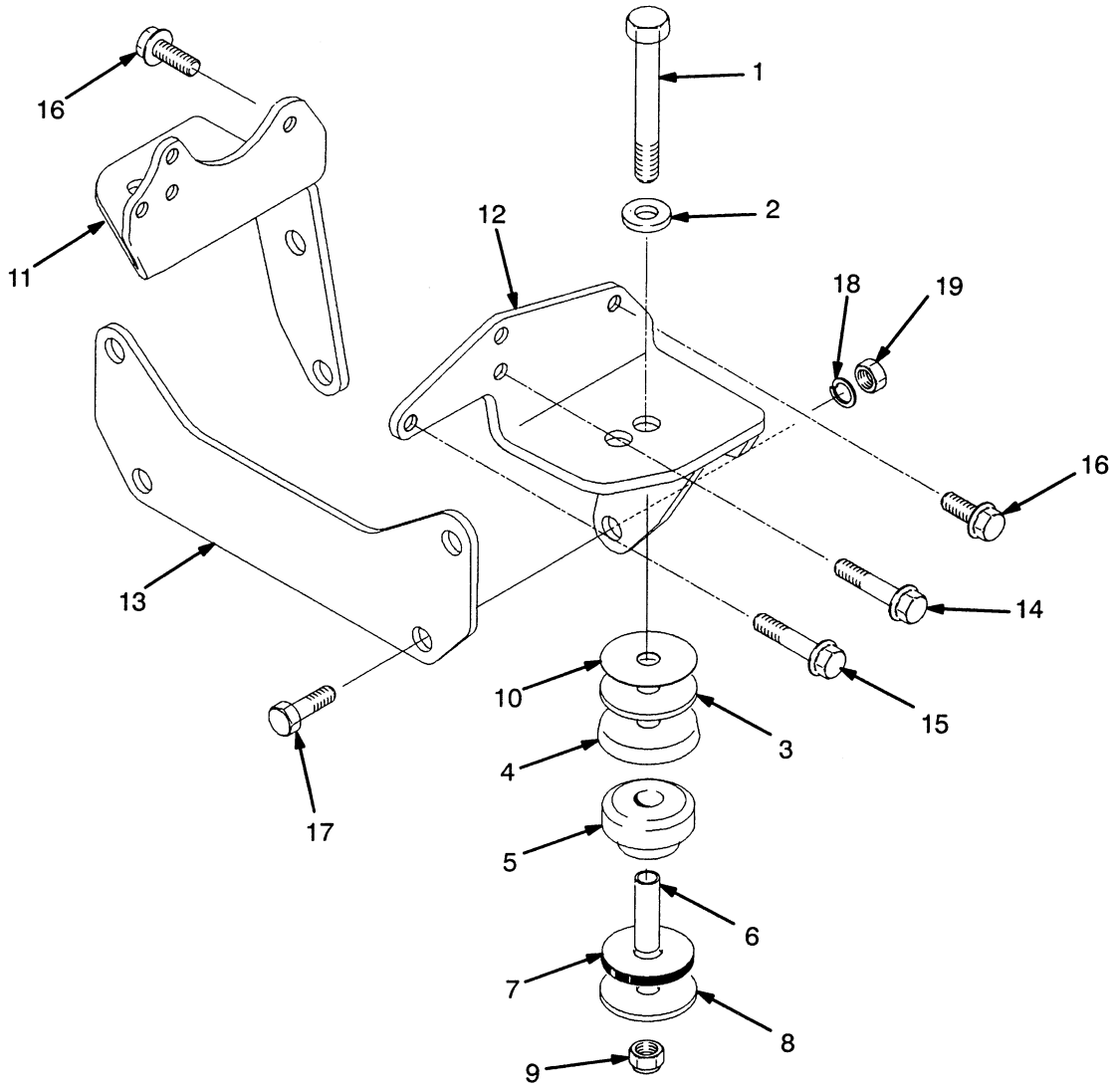

REF	PART NO.	NAME OF PART	QTY
1	293658	Capscrew	2
2	300932	Washer	2
3	340796	Washer	2
4	1351098	Cup	2
5	1351096	Isolator	2
6	1351061	Spacer	2
7	1351060	Bumper	2
8	300939	Washer	2
9	300937	Locknut	2
10	1351017	Spacer	AR

REF	PART NO.	NAME OF PART	QTY
11	1375125	Bracket (LH)	1
12	1375129	Bracket (RH)	1
13	1375128	Plate	1
14	196898	Screw	1
15	197853	Screw	1
16	174413	Screw	6
17	293686	Capscrew	4
18	296426	Washer	4
19	316828	Locknut	4

©2000 HYSTER COMPANY

EXHAUST (Figure 7)
GASOLINE AND LPG

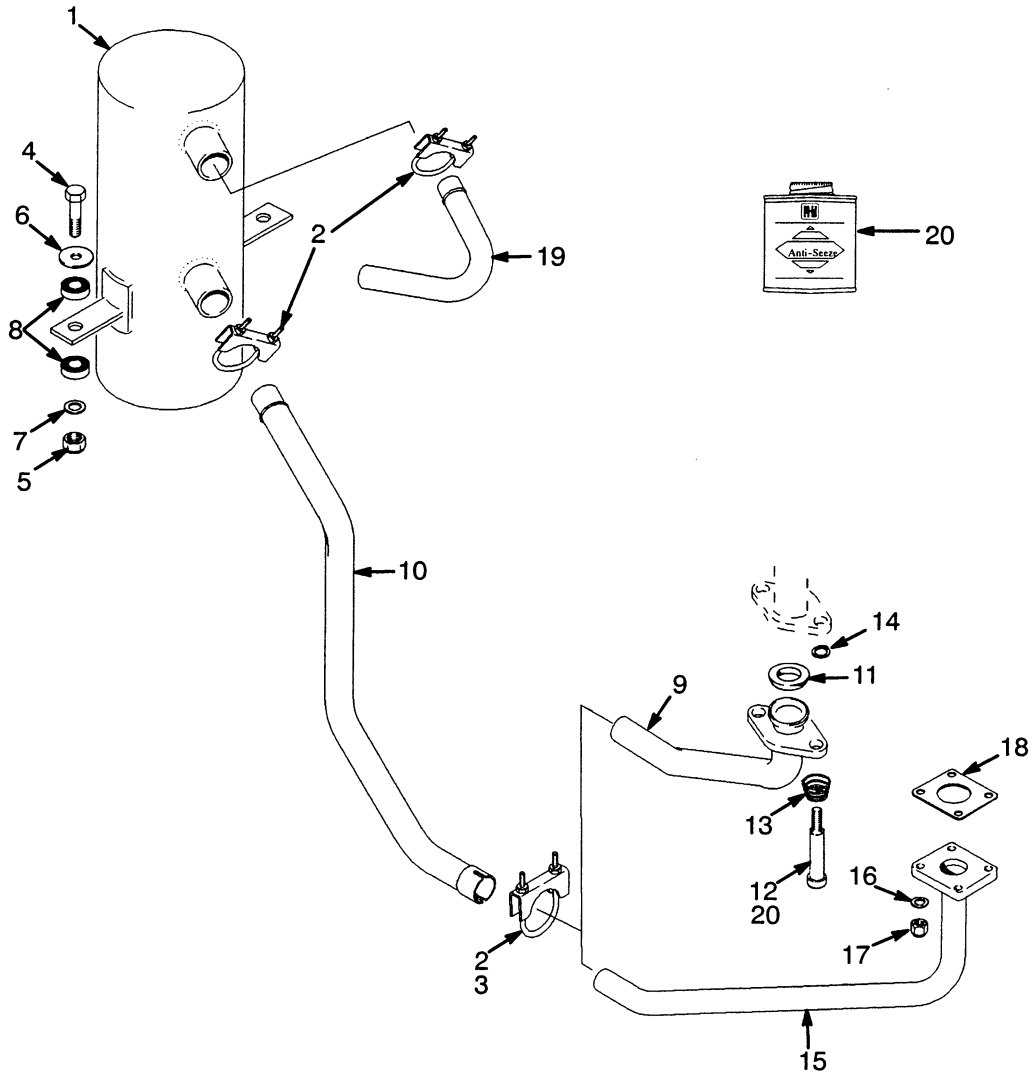

KEY:
A: 2.2L Engine
B: 2.0L Engine
C: 3.0L Engine

REF		PART NO.	NAME OF PART	QTY A	B	C
1		1338282	Muffler	1	1	1
1	a	1350261	Muffler	1	1	1
2		68968	Clamp	3	2	3
3		195769	Clamp	..	1	..
4		292517	Capscrew	2	2	2
5		316826	Nut	2	2	2
6		1351176	Washer	2	2	2
7		320159	Washer	2	2	2
8		1351177	Spacer	4	4	4
9		1338332	Pipe	1	..	..
9		1375155	Pipe	..	..	1
10		1347125	Tube	1	..	..
10		1347126	Tube	..	1	..
10		1383012	Tube	..	..	1

REF	PART NO.	NAME OF PART	QTY A	B	C
11	1338258	Seal	1	..	..
11	1375189	Seal	..	..	1
12	1337118	Capscrew	2	..	..
12	1376766	Capscrew	..	..	2
13	1335898	Spring	2	..	2
14	292682	Lockwasher	2	..	..
15	1338300	Pipe	..	1	..
16	292681	Lockwasher	..	4	..
17	239503	Nut	..	4	..
18	1338308	Gasket	..	1	..
19	1338276	Pipe	1	1	1
20	251979	Lubricant	AR	AR	AR

a Types GS And LPS

©2000 HYSTER COMPANY

EXHAUST (Figure 8)

OVERHEAD

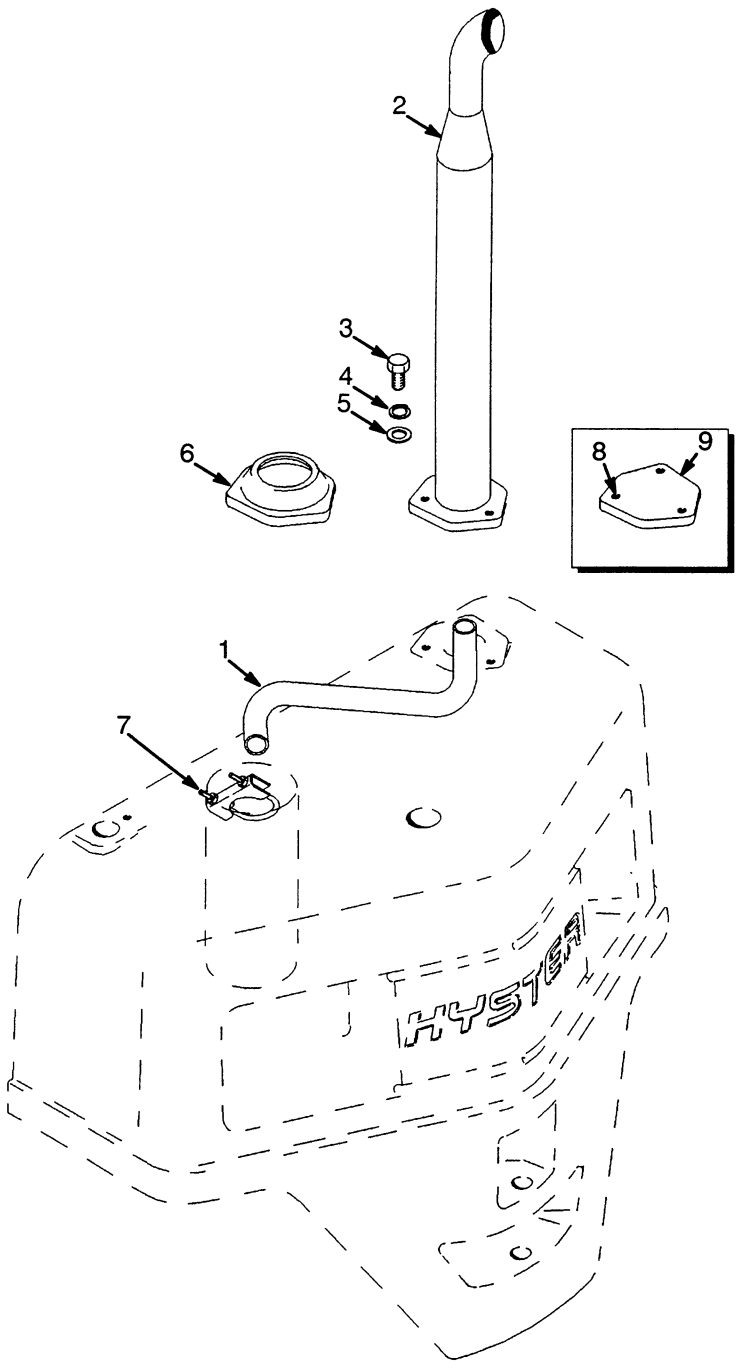

REF		PART NO.	NAME OF PART	QTY
1		1335764	Tube	1
2		1335765	Tailpipe	1
3		287854	Capscrew	3
4		292682	Lockwasher	3
5		320159	Washer	3
6		1351178	Cover	1
6	a	1365887	Cover	1

REF		PART NO.	NAME OF PART	QTY
7		68968	Clamp	1
8	b	1347045	Fastener	3
9	b	1347043	Cover	1

a 2.0L LPG

b Used With Counterweight Exhaust

©2000 HYSTER COMPANY

RADIATOR AND HOSES (Figure 9)

GASOLINE AND LPG

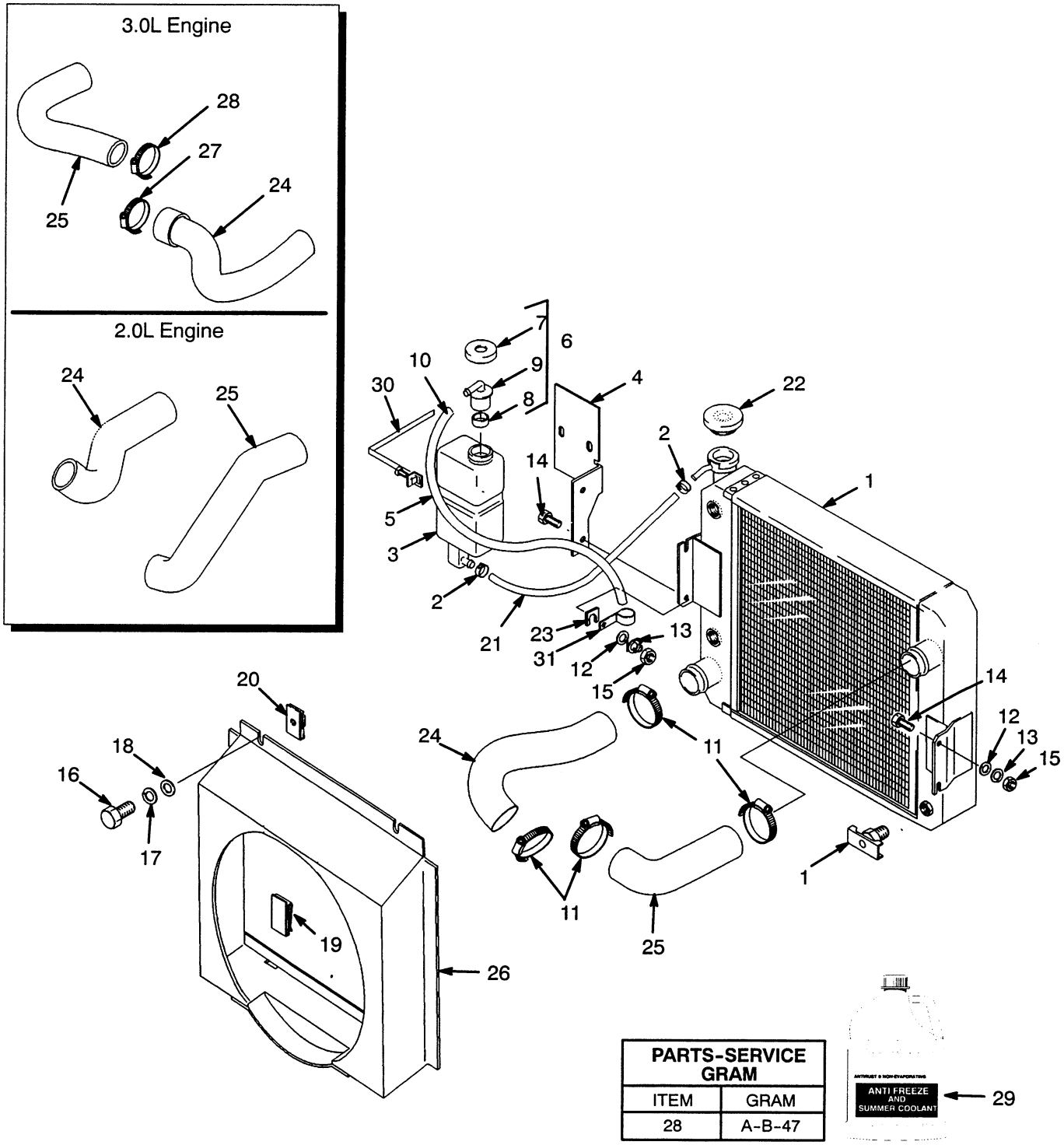

PARTS-SERVICE GRAM	
ITEM	GRAM
28	A-B-47

RADIATOR AND HOSES

GASOLINE AND LPG

KEY:
A: 2.0L
B: 2.2L
C: 3.0L

REF		PART NO.	NAME OF PART	QTY A	B	C
1		1338328	Radiator (10 Fins/Inch)	1	1	..
1		1337002	Radiator (10 Fins/Inch)	..	..	1
1	a	1343623	Radiator (6.5 Fins/Inch)	1	1	..
1	a	1343618	Radiator (6.5 Fins/Inch)	..	..	1
1		1357716	Oil Cooler	1	1	..
1		1357717	Oil Cooler	..	..	1
1		1357721	Draincock	1	1	1
2		168718	Clamp	2	2	2
3		1347026	Reservoir	1	1	1
4		1347072	Bracket	1	1	1
5		1457312	Hose	1	1	1
6		1359581	Outlet Assembly	1	1	1
7		345454	Cap	1	1	1
8		336550	Bushing	1	1	1
9		345453	Outlet	1	1	1
10		1457312	Hose	1	1	1
11		127045	Clamp	4	4	..
11		127045	Clamp	..	..	2
12		292682	Lockwasher	3	3	3
13		320159	Washer	3	3	3
14		136985	Capscrew	3	3	3
15		136692	Nut	3	3	3
16		302235	Screw	2	2	2
17		1347076	Washer	2	2	2
18		292678	Lockwasher	2	2	2
19		1329271	Clip	2	2	2
20		1329272	Nut	2	2	2
21		1359580	Tube	1	1	1
22		1352140	Radiator Cap	1	1	1
23		1331152	Shim	AR	AR	AR
24		133651	Hose (Lower)	1	..	..
24		1339272	Hose (Lower)	..	1	..
24		1376722	Hose (Lower)	..	..	1
25		1368949	Hose (Upper)	1	..	..
25		1339271	Hose (Upper)	..	1	..
25		1375132	Hose (Upper)	..	..	1
26		1339635	Shroud	1	..	..
26		1339273	Shroud	..	1	..
26		1375134	Shroud	..	..	1
27		119236	Clamp	..	..	1
28		369804	Clamp	..	..	1
29		3002338	Antifreeze (1 Gallon)	AR	AR	AR
30		1345825	Strap	1	1	1
31		173247	Clamp	1	1	1

[a] Optional

©2000 HYSTER COMPANY

CYLINDER BLOCK (Figure 10)

GASOLINE AND LPG 2.0L

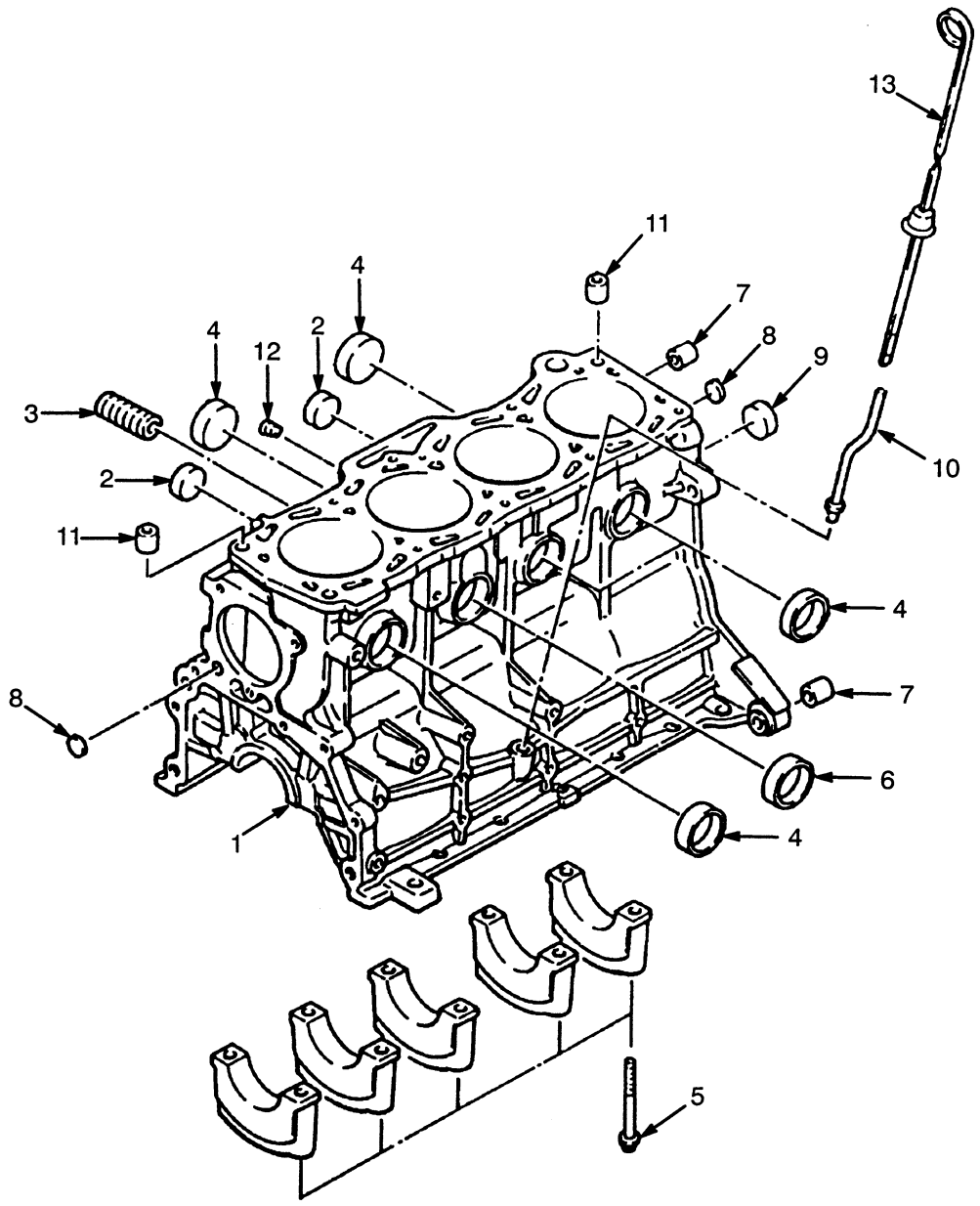

REF	PART NO.	NAME OF PART	QTY
a	1335944	Engine (Gasoline)	1
b	1382681	Engine (Gasoline)	1
a	1356547	Engine (LPG)	1
b	1382680	Engine (LPG)	1
1	1360897	Cylinder Block	1
2	1362005	Plug	2
3	1360898	Fitting	1
4	1362003	Plug	4
5	1361676	Bolt	10
6	1362007	Plug	2
7	1362008	Pin	2
8	1361675	Plug	2
9	1362009	Plug	1
10	1360899	Pipe	1
11	1360896	Pin	2
12	1362006	Plug	2
13	1361677	Dipstick	1

a Last Used On S/N D177B-34601
b First Used On S/N D177B-34602

©2000 HYSTER COMPANY

CYLINDER HEAD (Figure 11)
GASOLINE AND LPG 2.0L

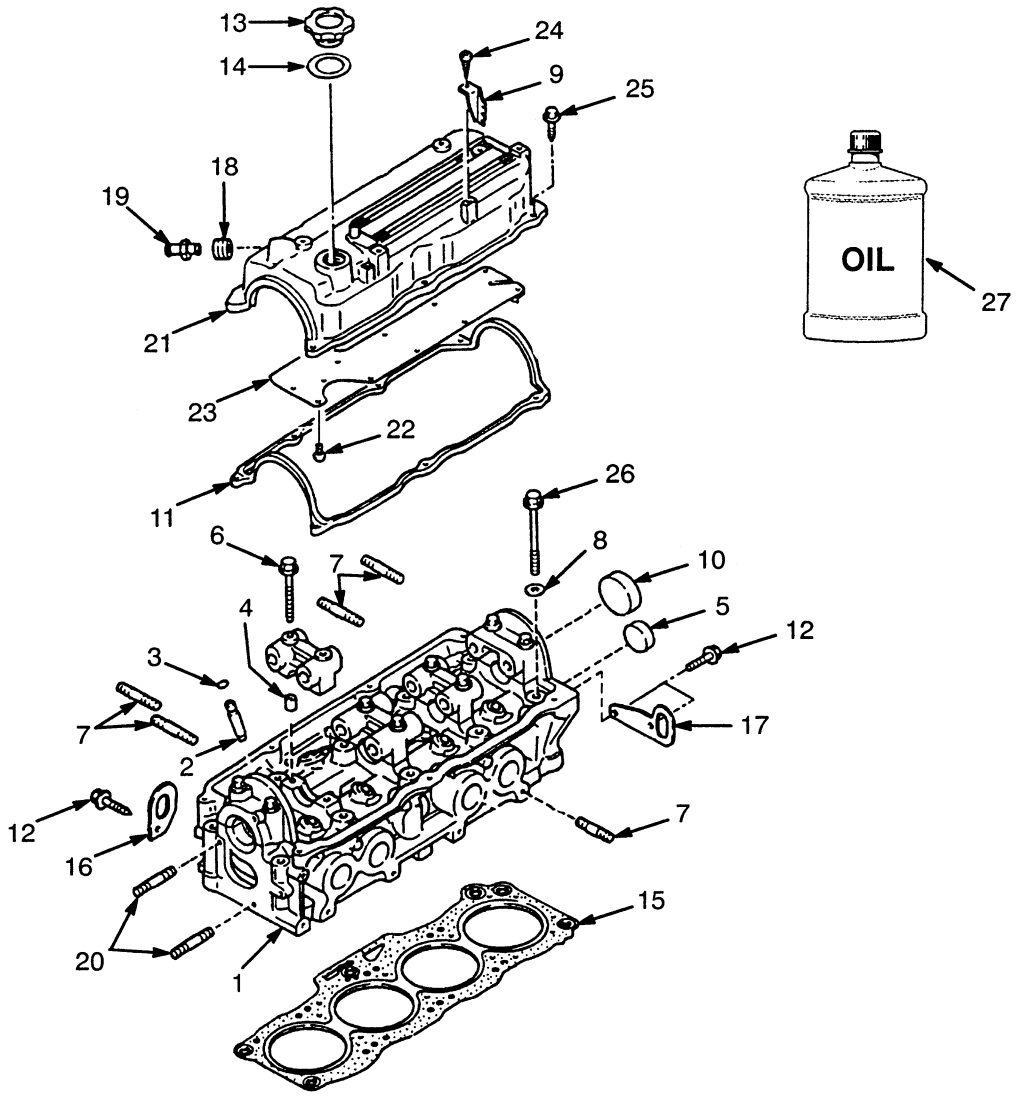

REF		PART NO.	NAME OF PART	QTY
1		1360878	Cylinder Head	1
2		1360895	Valve Guide	8
3		1360879	Clip	8
4		1362002	Pin	10
5		1362003	Plug	1
6		1361894	Bolt	10
7		1361897	Stud	8
8		1360881	Washer	10
9		1360885	Protector	2
10		1360882	Cap	8
11	a	1360886	Gasket	1
12		1361898	Bolt	2
13		1360887	Cap	1
14		1360888	Gasket	1
15	a	1360889	Gasket	1
16		1360890	Front Hanger	1
17		1360891	Rear Hanger	1

REF	PART NO.	NAME OF PART	QTY
18	1360892	Seal	1
19	1360893	PCV Valve	1
20	1361889	Stud	4
21	1360883	Cover	1
22	1361896	Screw	12
23	1360884	Plate	1
24	1362000	Screw	2
25	1362001	Bolt	7
26	1360880	Bolt	10
27	3021390	Engine Oil (Bulk)	AR
27	3021391	Engine Oil (55 Gallon)	AR
27	3021392	Engine Oil (12 Quart Case)	AR

a Included In Gasket Set 1367190

Note: The Above Parts Are Included With Engines 1335944,1356547, 1382680, And 1382681

©2000 HYSTER COMPANY

CRANKSHAFT AND PISTON (Figure 12)

GASOLINE AND LPG 2.0L

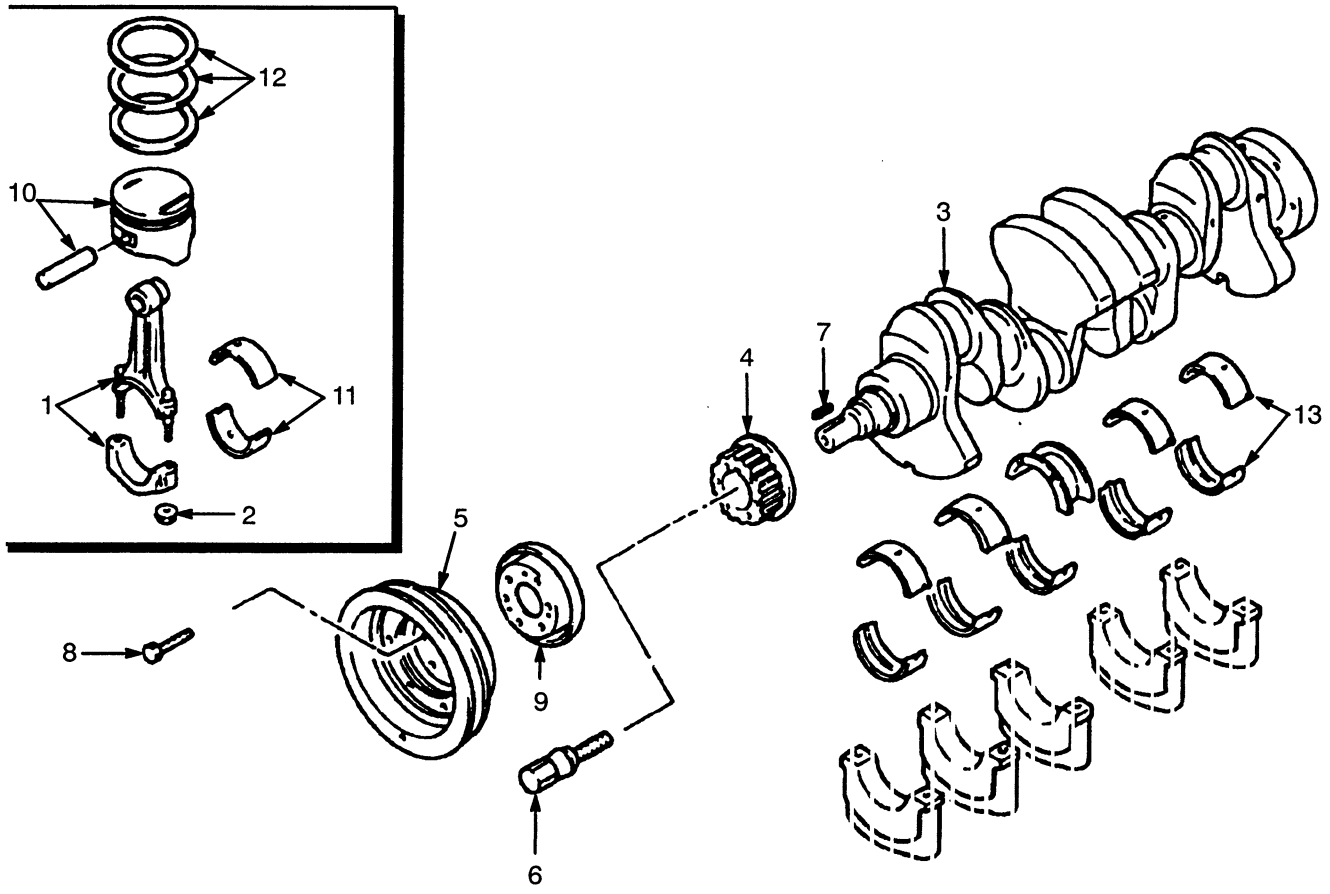

REF	PART NO.	NAME OF PART	QTY
1	1361694	Connecting Rod	4
2	1361695	Nut	8
3	1361696	Crankshaft	1
4	1361698	Pulley	1
5	1361699	Pulley	1
6	1361701	Bolt	1
7	1361697	Key	1
8	1361700	Bolt	6
9	1361702	Plate	1
10	1361714	Piston (Standard)	4
10	1361715	Piston (0.25 mm)	4
10	1361716	Piston (0.50 mm)	4
11	1361703	Bearing (Standard)	1

REF	PART NO.	NAME OF PART	QTY
11	1361704	Bearing (0.25 mm)	1
11	1361705	Bearing (0.50 mm)	1
11	1361706	Bearing (0.75 mm)	1
12	1361707	Piston Ring (Standard)	1
12	1361709	Piston Ring (0.25 mm)	1
12	1361708	Piston Ring (0.50 mm)	1
13	1361710	Bearing (Standard)	1
13	1361713	Bearing (0.25 mm)	1
13	1361711	Bearing (0.50 mm)	1
13	1361712	Bearing (0.75 mm)	1

Note: The Above Parts Are Included With Engines 1335944,1356547, 1382680, And 1382681

©2000 HYSTER COMPANY

CAMSHAFT AND VALVES (Figure 13)

GASOLINE AND LPG 2.0L

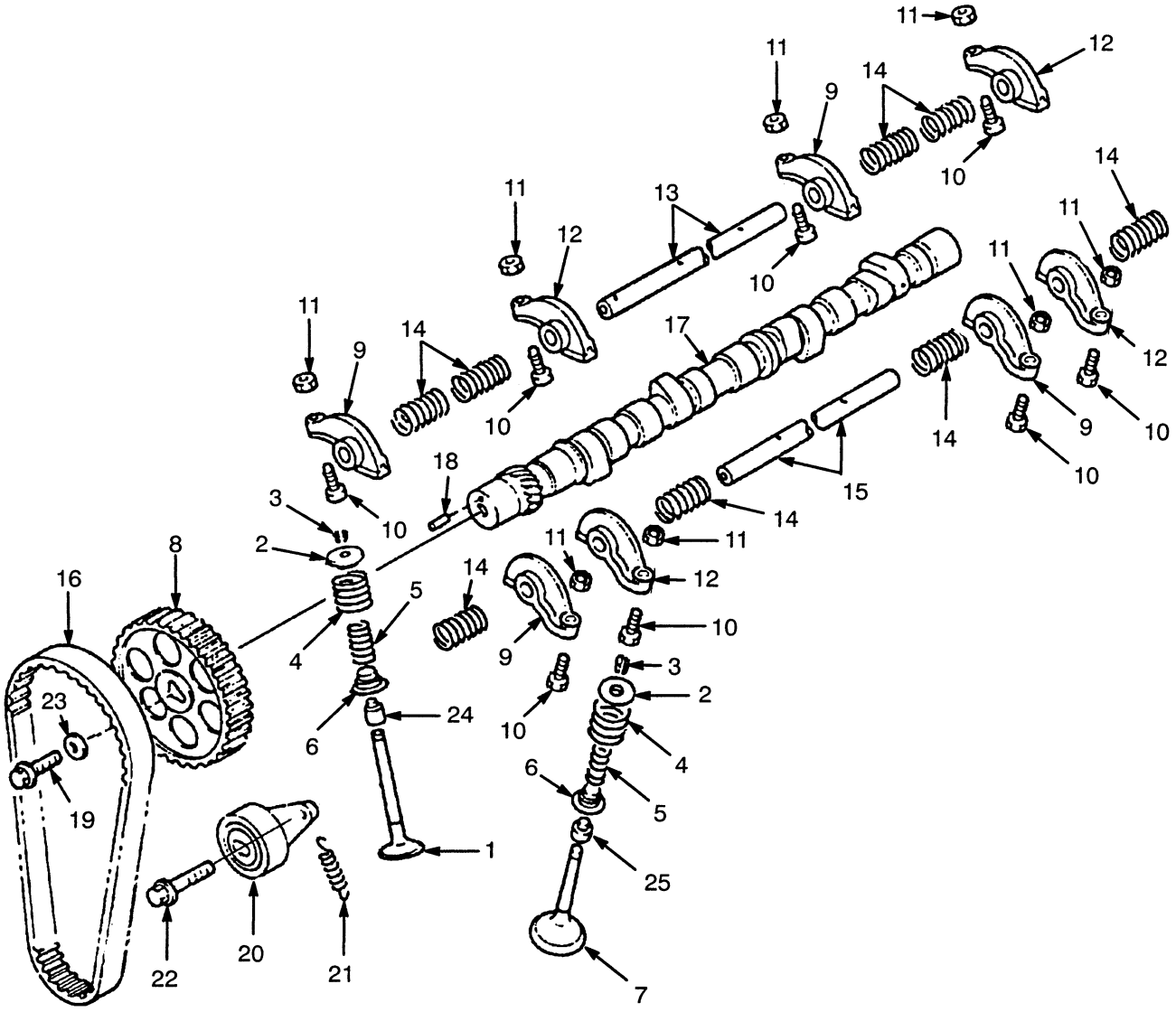

REF	PART NO.	NAME OF PART	QTY
1	1361720	Intake Valve	4
2	1361721	Seat	8
3	326612	Sleeve	8
4	1361722	Spring	8
5	1361723	Spring	8
6	1361724	Seat	8
7	1361725	Exhaust Valve	4
8	1361735	Pulley	1
9	1361726	Rocker Arm	4
10	1361727	Screw	8
11	1361728	Nut	8
12	1361729	Rocker Arm	4
13	1361730	Shaft	1
14	1361731	Spring	8
15	1361732	Shaft	1

REF		PART NO.	NAME OF PART	QTY
16		1361733	Timing Belt	1
17		1361734	Camshaft	1
18		1361717	Pin	1
19		1361736	Bolt	1
20		1361738	Tensioner	1
21		1361739	Spring	1
22		1362016	Bolt	1
23		1361737	Washer	1
24	a	1361718	Seal	4
25	a	1361719	Seal	4

a Included In Gasket Set 1367190

Note: The Above Parts Are Included With Engines 1335944,1356547, 1382680, And 1382681

©2000 HYSTER COMPANY

TIMING GEAR COVER AND OIL PAN (Figure 14)

GASOLINE AND LPG 2.0L

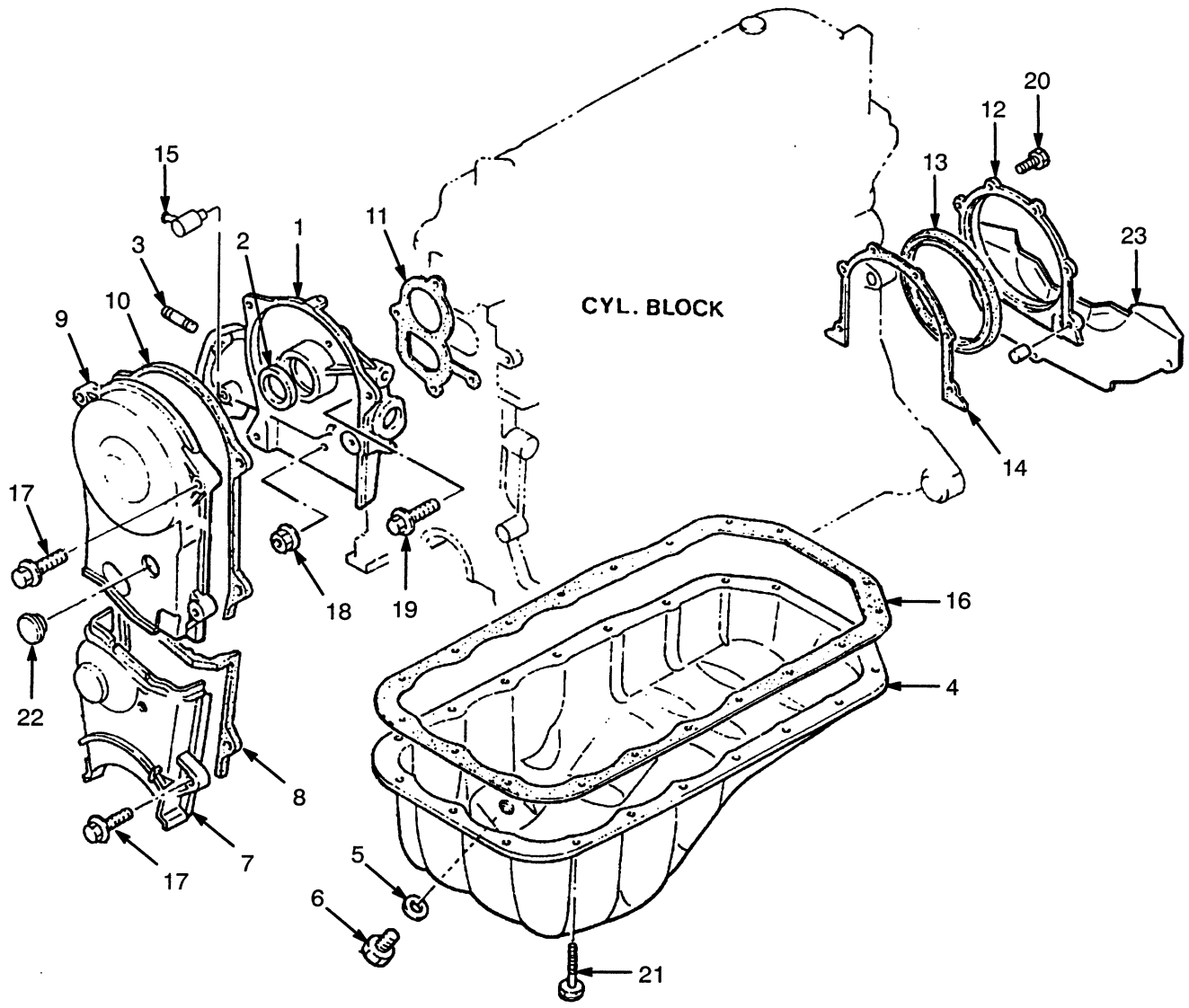

REF		PART NO.	NAME OF PART	QTY
1		1361678	Housing	1
2	a	1361688	Oil Seal	1
3		1362012	Stud	2
4		1361680	Oil Pan	1
5		1362015	Gasket	1
6		1361681	Drain Plug	1
7		1361683	Cover	1
8	a	1361684	Gasket	1
9		1361686	Cover	1
10	a	1361687	Gasket	1
11	a	1361679	Gasket	1
12		1361689	Cover	1
13	a	1361691	Rear Oil Seal	1
14	a	1361690	Gasket	1

REF		PART NO.	NAME OF PART	QTY
15		1361692	Connector Hose	1
16	a	1361682	Gasket	1
17		1362001	Bolt	6
18		326504	Nut	2
19		1362013	Bolt	2
20		1362011	Bolt	6
21		1370736	Bolt	19
22		1361685	Plug	1
23		1371652	Cover	1

a Included In Gasket Set 1367190

Note: The Above Parts Are Included With Engines 1335944,1356547, 1382680, And 1382681

©2000 HYSTER COMPANY

See Service Manual for service procedures

MANIFOLD (Figure 15)

GASOLINE AND LPG 2.0L

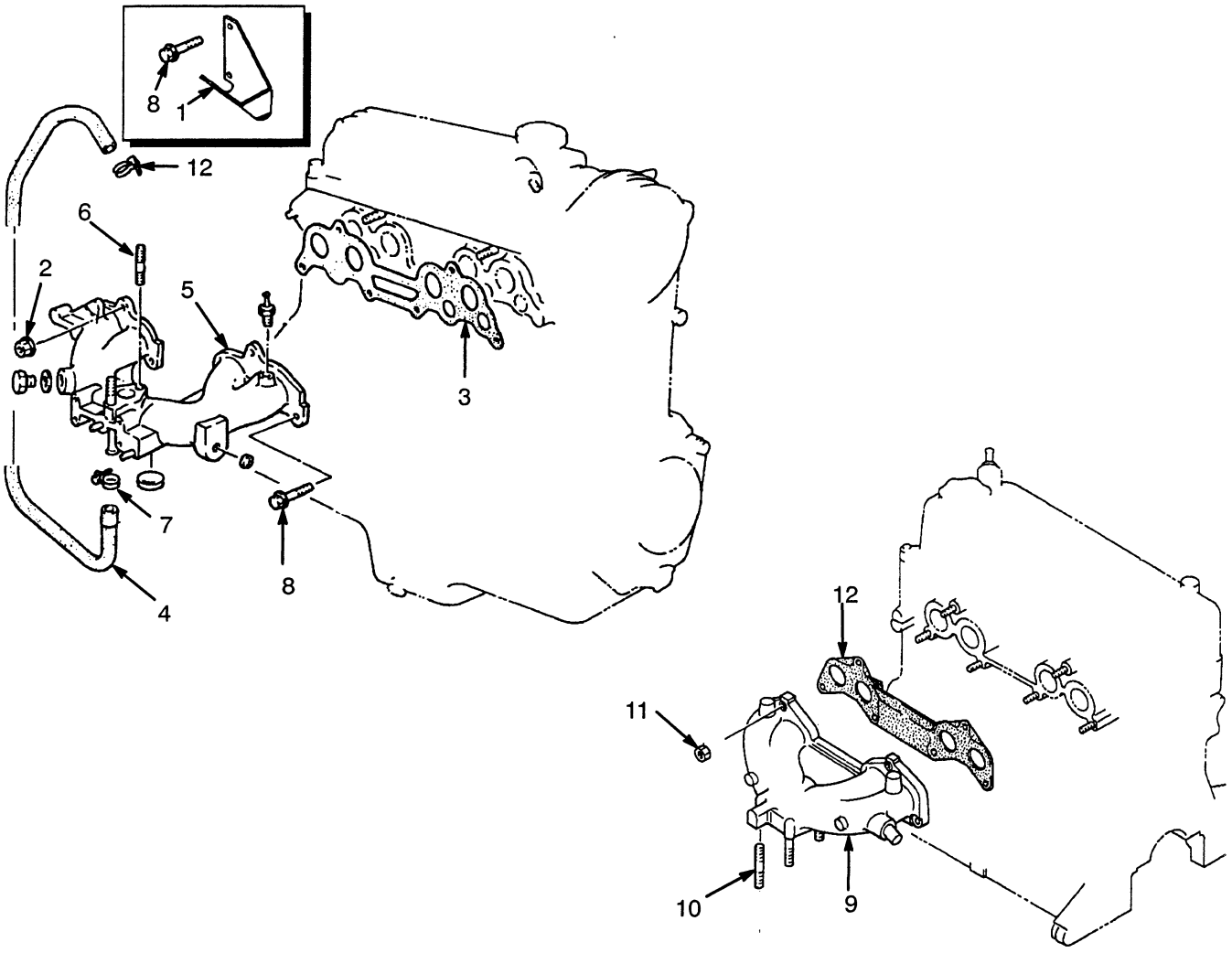

REF		PART NO.	NAME OF PART	QTY
1		1361743	Bracket (Gasoline)	1
1		1376620	Bracket (LPG)	1
2		326504	Nut	4
3		1361742	Gasket	1
4	a	1361791	Hose-Water	1
5		1361740	Inlet Manifold	1
6		1362017	Stud	2
7		1361873	Clamp	2
8		1361885	Bolt	4
9		1361744	Exhaust Manifold	1
10		1361745	Stud	4
11		1361746	Nut	6
12		1361747	Gasket	1

a Gasoline

Note: The Above Parts Are Included With Engines 1335944,1356547, 1382680, And 1382681

©2000 HYSTER COMPANY

OIL PUMP AND FILTER (Figure 16)

GASOLINE AND LPG 2.0L

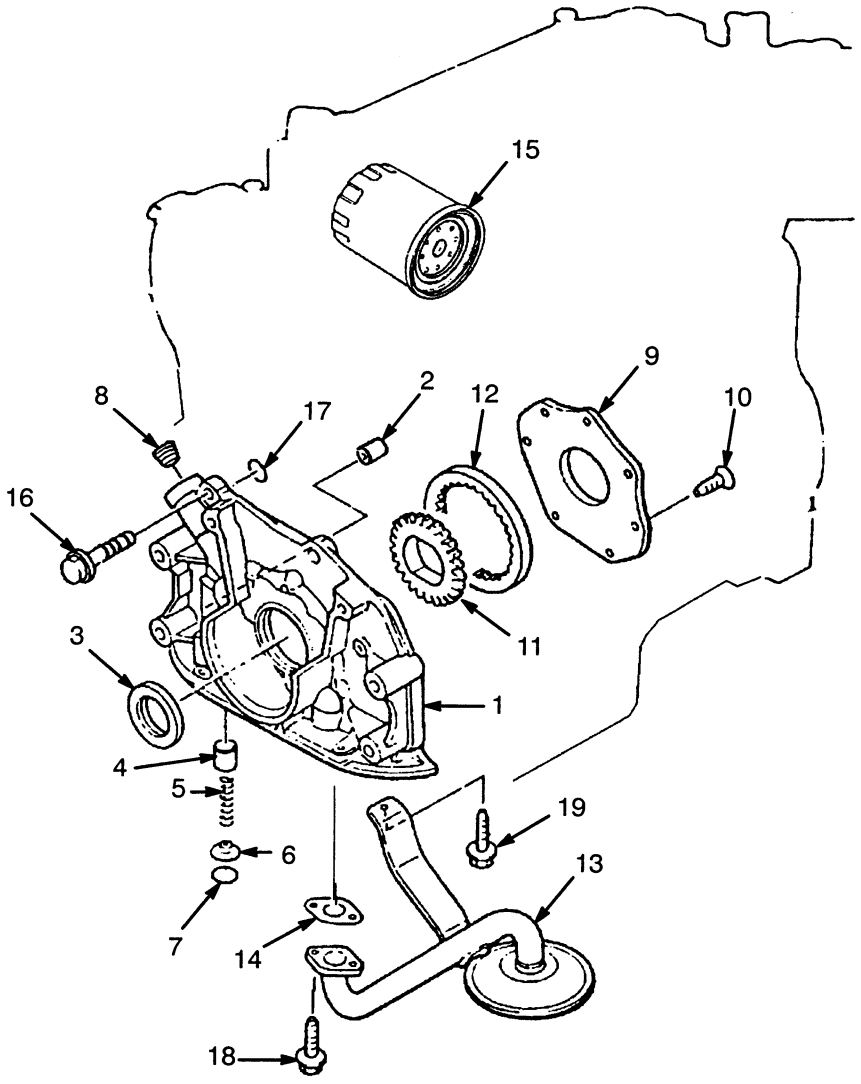

REF		PART NO.	NAME OF PART	QTY
1		1455675	Oil Pump	1
2		1361798	Pin	2
3	a	1361688	Oil Seal	1
4		1455674	Plunger	1
5		326748	Spring	1
6		326749	Seat	1
7		1361879	Retaining Ring	1
8		1368790	Plug	1
9		1361802	Cover	1
10		1545677	Screw	7
11		1361804	Drive Gear	1
12		1361805	Driven Gear	1

REF		PART NO.	NAME OF PART	QTY
13		1361806	Strainer	1
14	a	1361807	Gasket	1
15		324692	Oil Filter	1
16		1361875	Bolt	2
17	a	1361801	O-Ring	1
18		1361878	Bolt	2
19		1361868	Bolt	1

a Included In Gasket Set 1367190

Note: The Above Parts Are Included With Engines 1335944,1356547, 1382680, And 1382681

©2000 HYSTER COMPANY

See Service Manual for service procedures

ELECTRICAL (Figure 17)

GASOLINE AND LPG 2.0L

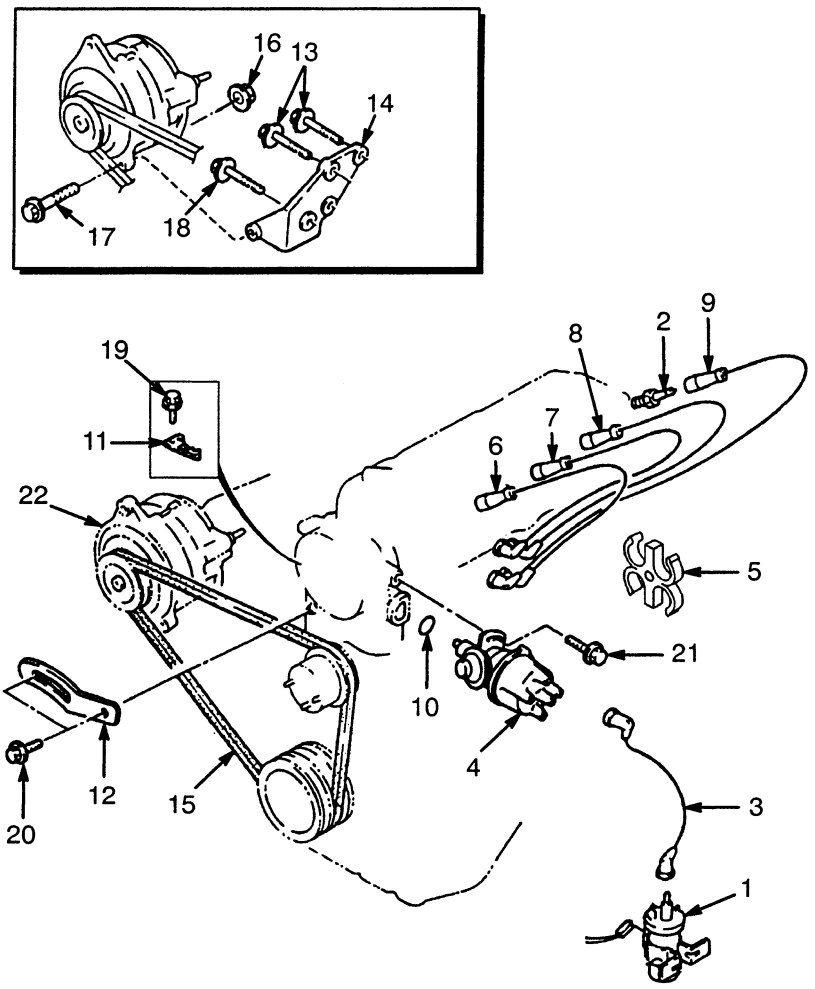

REF		PART NO.	NAME OF PART	QTY
1		.....	Ignition Coil	1
			☞ Figure 116	
2		1361837	Spark Plug	4
3		1361839	Ignition Cable	1
4		.....	Distributor	1
			☞ Figure 139	
5		1361838	Supporter	1
6		1361840	Ignition Cable #1	1
7		1361841	Ignition Cable #2	1
8		1361842	Ignition Cable #3	1
9		1361843	Ignition Cable #4	1
10	a	326850	O-Ring	1
11		1361844	Protector	1
12		1361845	Strap	1
13		1361891	Bolt	2
14		1361846	Bracket	1
15		b1361847	Belt	1
15		c1384008	V-Belt	1
16		1361890	Nut	1
17		1361889	Bolt	1
18		1361888	Bolt	2
19		1361893	Bolt	1
20		1361881	Bolt	2
21		1361895	Bolt	1
22		.....	Alternator	1
			☞ Figure 141	

a Included In Gasket Kit 1367190
b Last Used On S/N D177B-34601
c First Used On S/N D177B-34602

Note: The Above Parts Are Included With Engines 1335944,1356547, 1382680, And 1382681

©2000 HYSTER COMPANY

FUEL (Figure 18)

GASOLINE AND LPG 2.0L

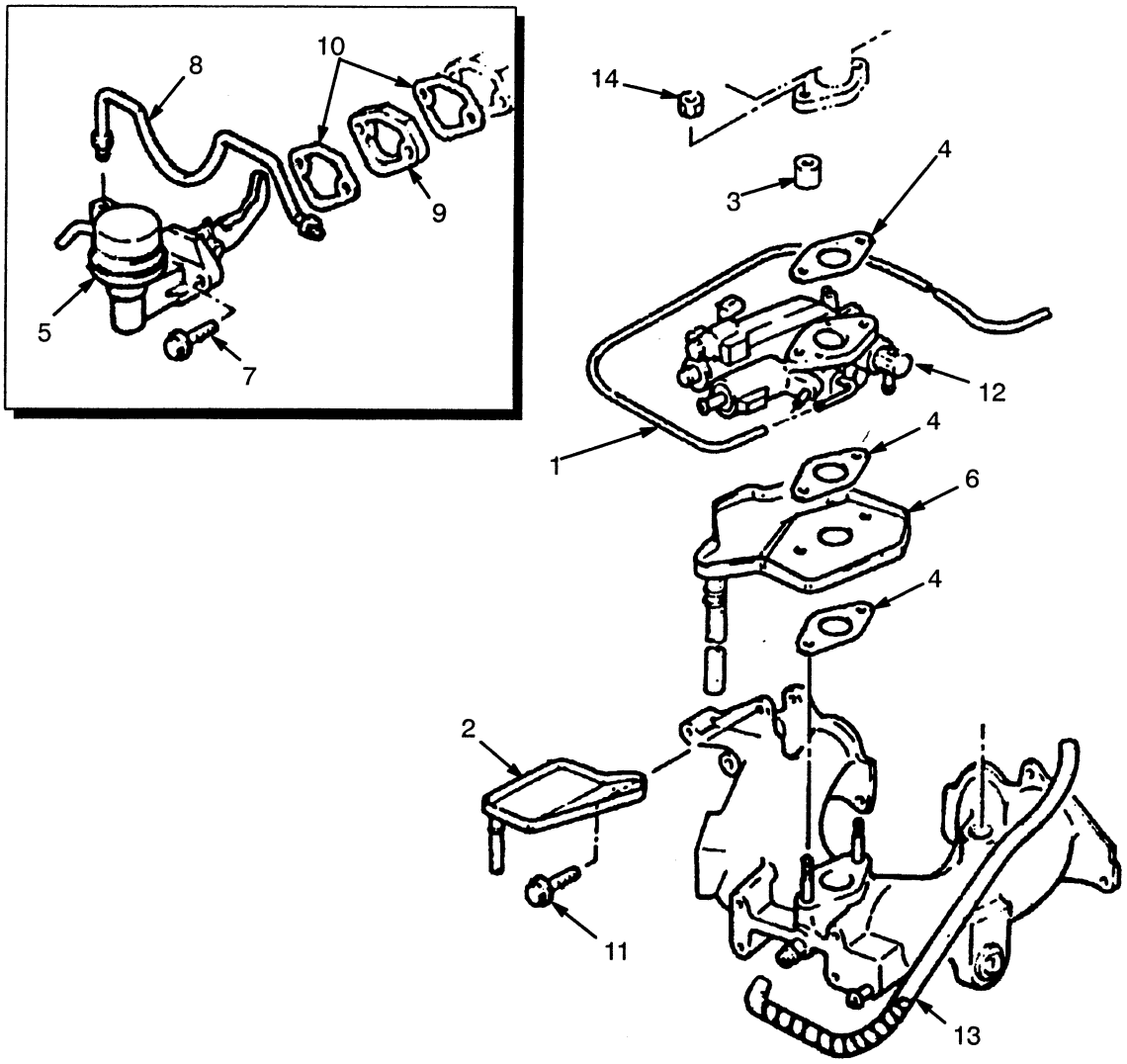

KEY:
A: LPG
B: Gasoline

REF	PART NO.	NAME OF PART	QTY A	QTY B
1	1361773	Hose	1	1
2	1361754	Deflector	..	1
3	1361761	Spacer	2	..
4	1361752	Gasket	2	3
5	1361753	Fuel Pump	..	1
6	1361750	Deflector	..	1
7	1361885	Bolt	..	2
7	1361898	Bolt	2	..
8	1361760	Pipe	..	1
9	1361749	Cover	1	..
9	1361755	Insulator	..	1
10	1361756	Gasket	1	2
11	1361868	Bolt	..	2
12	.....	Governor ☞ Figure 81	1	..
13	1360894	Hose (PVC)	1	1
14	326504	Nut	2	2

Note: The Above Parts Are Included With Engines 1335944,1356547, 1382680, And 1382681

©2000 HYSTER COMPANY

COOLING (Figure 19)
GASOLINE AND LPG 2.0L

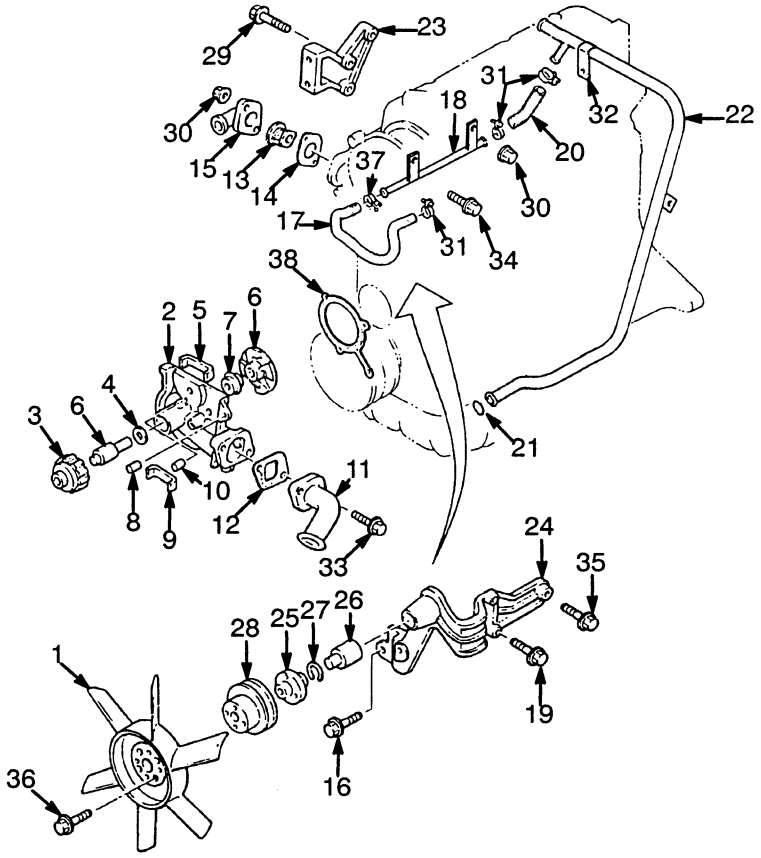

REF		PART NO.	NAME OF PART	QTY
1		1361817	Fan	1
2		1361811	Water Pump	1
3		1361816	Pulley	1
4		1361815	Plate	1
5	a	1361810	Rubber Seal	1
6		.....	Shaft & Impeller	1
7		1361814	Seal	1
8		1361880	Pin	1
9	a	1361809	Rubber Seal	1
10		1361834	Pin	1
11		1361818	Inlet Pipe	1
12	a	1361819	Gasket	1
13		1361820	Thermostat	1
14	a	1367191	Gasket	1
15		1361821	Outlet Cover	1
16		324707	Bolt	2
17		1361825	Hose	1
18		1361823	Pipe	1
19		1361884	Bolt	3
20		1361824	Hose	1
21	a	1361827	O-Ring	1
22		1361828	Pipe	1
23		1361829	Bracket	1
24		1361830	Idler	1

REF		PART NO.	NAME OF PART	QTY
25		1361813	Hub	1
26		1361832	Shaft	1
27		1361835	Ring	1
28	b	1361831	Pulley	1
28	c	1384006	Pulley	1
29		1361885	Bolt	3
30		326504	Nut	3
31		1361873	Hose Clamp	3
32		1361826	Clamp	1
33		1361881	Bolt	2
34		1361885	Bolt	1
35		1361882	Bolt	1
36		1361878	Bolt	1
37		1361833	Clamp	1
38	a	1361812	Gasket	1

a Included In Gasket Kit 1367190

b Last Used On S/N D177B-34601

c First Used On S/N D177B-34602

Note: The Above Parts Are Included With Engines 1335944,1356547, 1382680, And 1382681

©2000 HYSTER COMPANY

FLYWHEEL (Figure 20)

GASOLINE AND LPG 2.0L

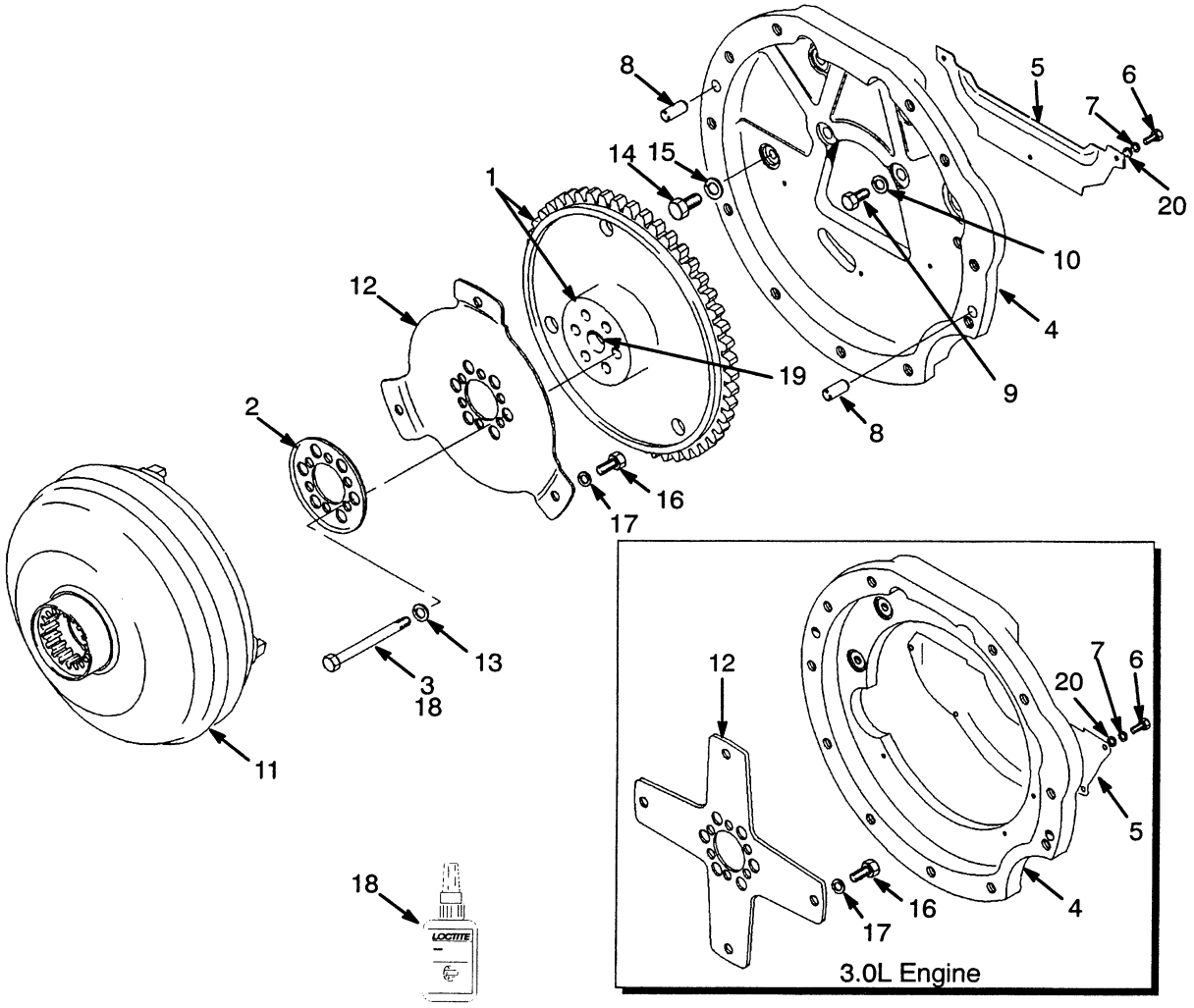

FLYWHEEL

GASOLINE AND LPG

KEY:
A: 2.2L
B: 2.0L
C: 3.0L

REF		PART NO.	NAME OF PART	QTY A	QTY B	QTY C
1		1365923	Flywheel	1	..	..
1		1337107	Ring Gear	1	..	..
1	a	1352550	Flywheel	..	1	..
1	a	1359983	Ring Gear	..	1	..
1	b	1378558	Flywheel	..	1	..
1	g	1378555	Spacer	..	1	..
1	d	1386800	Spacer	..	1	..
1	a	1375141	Flywheel	..	..	1
1	a	1371595	Ring Gear	..	..	1
1	b	1389359	Flywheel	..	..	1
1	h	1389488	Spacer	..	..	1
1	f	1386799	Spacer	..	..	1
2		1337093	Flexplate Washer	1	1	..
2		1375144	Flexplate Washer	..	..	1
3		1337106	Capscrew	6	..	..
3		1347157	Capscrew	..	6	..
3		221544	Capscrew	..	..	6
4		1335927	Housing	1	..	..
4		1335937	Housing	..	1	..
4		1375145	Housing	..	..	1
5		1337182	Cover	1	..	..
5		1371652	Cover	..	1	..
5		1371584	Cover	..	..	1
6		148962	Capscrew	5	5	..
6		292513	Capscrew	..	..	3
7		292680	Spring Washer	5	5	..
7		292682	Lockwasher	..	..	3
8		302385	Pin	2	2	2
9		293648	Capscrew	6	..	..
9		305371	Capscrew	..	6	..
9		177461	Capscrew	..	..	6
10		296422	Washer	6	..	..
10		296424	Washer	..	6	..
10		221767	Washer	..	..	6
11		1334714	Torque Converter (3.170)	1	..	..
11	c	1343586	Torque Converter (3.480)	..	1	..
11	df	1386795	Torque Converter (3.15)	..	1	1
11	e	1374620	Torque Converter (3.006)	..	..	1
12		1337008	Flexplate	1	..	..
12	c	1337001	Flexplate	..	1	..
12	df	1394915	Flexplate	..	1	1
12	e	1375140	Flexplate	..	..	1
13		296422	Washer	..	6	..
13	f	221769	Washer	..	..	6
14		293614	Capscrew	..	1	..
15		296418	Washer	..	1	..
16		15942	Bolt	4	3	4
17		261379	Washer	4	3	4
18		360387	Adhesive	AR	AR	AR
19		251979	Lubricant	AR	AR	AR
20		18500	Washer	2	2	..

a Last Used On S/N D177B-36284 (2.2L/3.0L), D177B-36289 (2.0L)

b First Used On S/N D177B-36285 (2.2L/3.0L), D177B-36290 (2.0L)

c Last Used On S/N D177B-41853 (2.0L/2.2L)

d First Used On S/N D177B-41854 (2.0L/2.2L)

e Last Used On S/ND177B-43355 (3.0L)

f First Used On S/N D177B-43356 (3.0L)

g Used On S/N D177B-36285 (2.2L/3.0L), D177B-36290 (2.0L) Thru S/N D177B-41854

h Used On S/N D177B-36285 (2.2L/3.0L), D177B-36290 (2.0L) Thru S/N D177B-43357

©2000 HYSTER COMPANY

CYLINDER BLOCK (Figure 21)
GASOLINE AND LPG 2.2L

PARTS-SERVICE GRAM	
Item	Gram
27, 28	A-A-96

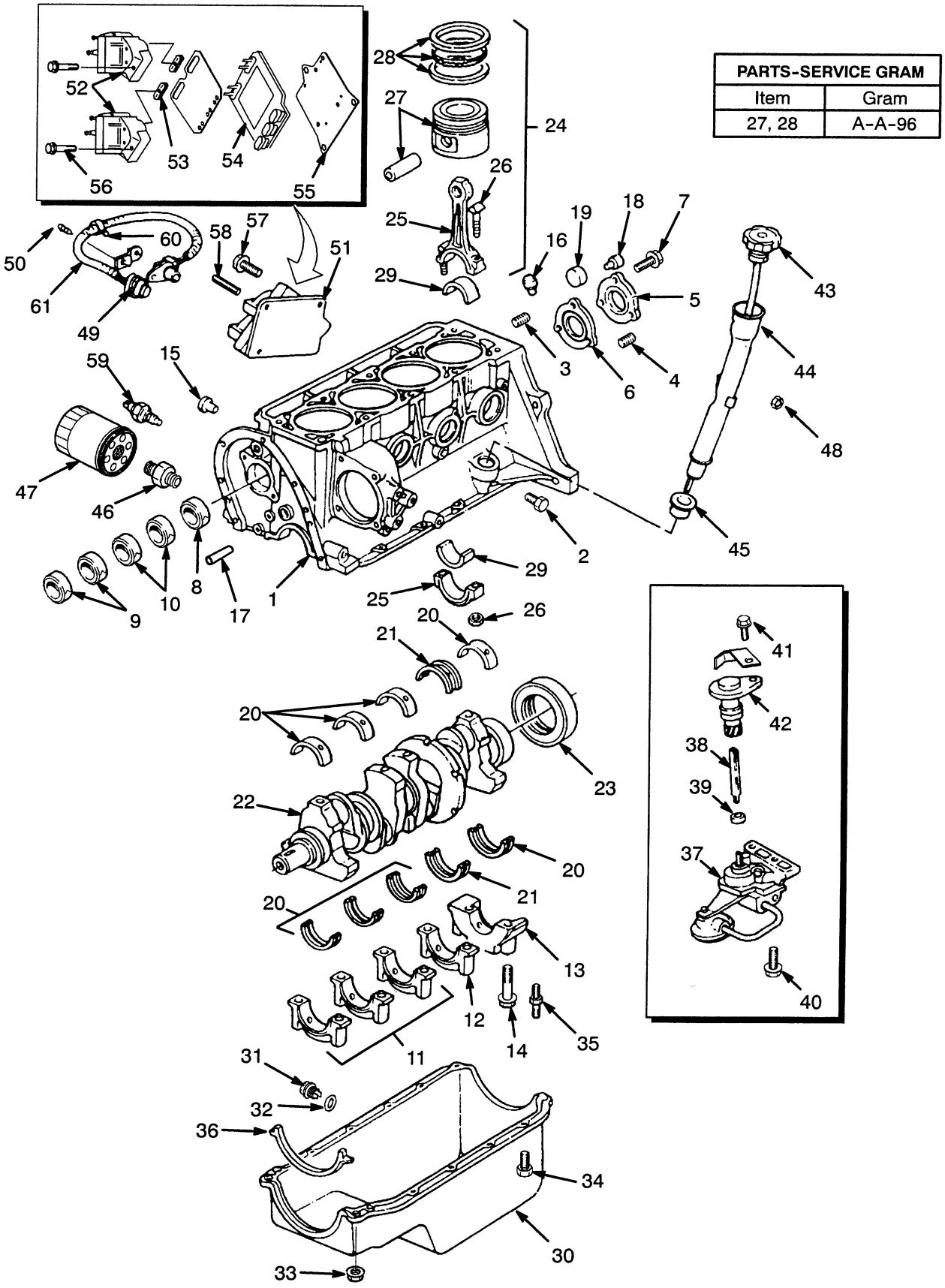

CYLINDER BLOCK

GASOLINE AND LPG

2.2L

KEY:
A: 1993 Engines 1335942 (Gas), 1335943 (LPG)
B: 1994-1995 Engines 1375902 (Gas), 1375901 (LPG)

REF		PART NO.	NAME OF PART	QTY A	QTY B
1		.....	Cylinder Block	1	..
1	a	.....	Cylinder Block	..	1
2	a	1360203	Plug	4	4
3	a	1358096	Plug	1	1
4	a	1335480	Plug	1	1
5	a	1358097	Cover	1	1
6	a	1358098	Gasket	1	1
7	a	1358099	Bolt	3	3
8	a	1358150	Bearing (Camshaft)	1	1
9	a	1358151	Bearing (Camshaft)	2	2
10	a	1360204	Bearing (Camshaft)	2	2
11	a	.....	Bearing Cap	3	3
12	a	1358153	Bearing Cap (4)	1	1
13		.....	Bearing Cap (5)	1	1
14	a	1358155	Bolt (Bearing Cap)	10	10
15	a	1358156	Oil By-Pass Valve	1	1
16	a	1358157	Pin	2	2
17	a	1358158	Pin (Front Cover)	2	2
18	a	1358159	Pin	2	2
19	a	274232	Plug	1	1
20	a	1358161	Bearing	8	8
21	a	1358162	Bearing	2	2
22	a	1389097	Crankshaft	1	1
23		1358284	Oil Seal	1	1
24	a	.....	Piston & Rod Assy	4	4
25	a	1339128	Connecting Rod	1	1
26	a	1358287	Bolt	2	2
26	a	1358288	Nut	2	2
27		1339131	Piston (Standard)	1	..
27	a	1377014	Piston (Standard)	..	1
27		1339132	Piston (0.04 mm)	1	..
27	a	1377016	Piston (0.04 mm)	..	1
27		1339133	Piston (0.5 mm)	1	..
27		1377017	Piston (0.5 mm)	..	1
27		1339134	Piston (1.0 mm)	1	..
27		1377018	Piston (1.0 mm)	..	1
28		1339135	Piston Ring Kit (Standard)	1	1
28		1339139	Piston Ring Kit (0.5 mm)	1	1
28		1339144	Piston Ring Kit (1.0 mm)	1	1
29	a	265522	Rod Bearing	8	8
30		1358293	Oil Pan (Assembly)	1	1
31		1358295	Drain Plug	1	1
32		388305	Plug Gasket	1	1
33		1358297	Nut	4	4
34		1358298	Bolt	10	10
35		1360210	Stud	2	2
36		1358299	Seal	1	1
37		.....	Oil Pump	1	1
			☞ Figure 26		
38		1358501	Shaft	1	1
39		1358502	Retainer	1	1
40		1358503	Bolt	1	1
41		1358504	Bolt	2	2
42		1358505	Oil Pump Drive	1	1
43		1358506	Oil Fill Cap	1	1
44		1358507	Tube	1	1
45		1358508	Seal	1	1
46		1358510	Fitting	1	1
47		1380576	Oil Filter	1	1
48		1358509	Nut	1	1
49		1358628	Sensor	1	1
50		1358629	Stud	1	1
51		1360730	Ignition Coil	1	1
52		1362114	Coil	2	2
53		1362115	Seal	2	2
54		1362116	Module	1	1
55		1362117	Plate	1	1
56		1362118	Screw	4	4
57		1358635	Bolt	2	2
58		1358636	Stud	1	1
59		1375878	Fuel Pump Switch	1	1
60		1392536	Clip	..	1
61		1392538	Harness	..	1

a Included In Short Block Assy P/N 1389096 For Engines 1375901 And 1375902

CYLINDER HEAD (Figure 22)

GASOLINE AND LPG 2.2L

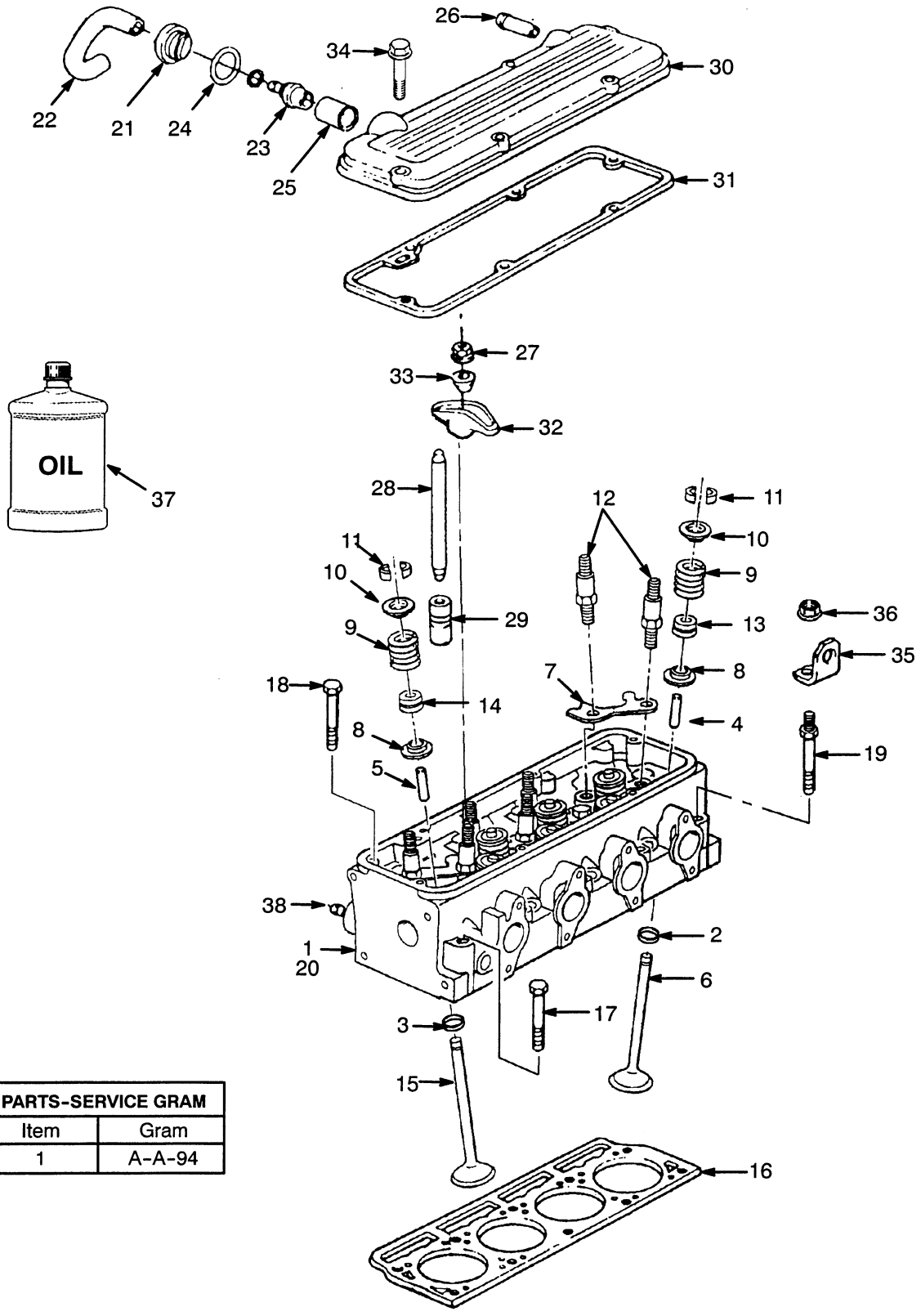

PARTS-SERVICE GRAM	
Item	Gram
1	A-A-94

CYLINDER HEAD

GASOLINE AND LPG 2.2L

KEY
A: **Engines 1335942, 1335943**
B: **Engines 1375901, 1375902**

REF		PART NO.	NAME OF PART	QTY A	QTY B
		1377023	Cylinder Head Assembly With Valves	1	1
1	c	1339159	Cylinder Head	1	..
1	a	1339159	Cylinder Head	..	1
1	b	1376952	Cylinder Head	..	1
2		1358164	Exhaust Insert Valve	4	4
3		1339160	Inlet Insert Valve	4	4
4	c	1339162	Valve Guide (Exhaust)	4	4
5		1339161	Valve Guide (Inlet)	4	4
6		1367542	Exhaust Valve (Standard)	4	..
6	a	1367542	Exhaust Valve (Standard)	..	4
6	b	1378329	Exhaust Valve (Standard)	..	4
6		1339164	Exhaust Valve (0.075 mm)	4	..
6	a	1339164	Exhaust Valve (0.075 mm)	..	4
6	b	1378330	Exhaust Valve (0.127 mm)	..	4
6		1339165	Exhaust Valve (0.150 mm)	4	..
6	a	1339165	Exhaust Valve (0.150 mm)	..	4
6		1339166	Exhaust Valve (0.300 mm)	4	..
6	a	1339166	Exhaust Valve (0.300 mm)	..	4
7		1358166	Guide (Push Rod)	4	4
8		1339163	Seat (Valve Spring)	8	..
8	a	1339163	Seat (Valve Spring)	..	8
8	b	1378322	Seat (Valve Spring)	..	8
9		1331340	Spring & Damper Assembly	8	..
9	a	1331340	Spring & Damper Assembly	..	8
9	b	1378323	Spring	..	8
10		1339153	Cap (Valve Spring)	8	..
10	a	1339153	Cap (Valve Spring)	..	8
10	b	1378324	Cap (Valve Spring)	..	8
11		1339157	Valve Key	16	..
11	a	1339157	Valve Key	..	16
11	b	1378325	Valve Key	..	16
12		1358173	Stud (Valve)	8	..
12	a	1358173	Stud (Valve)	..	8
12	b	1378331	Stud (Valve)	..	8
13		1339154	Oil Valve Stem Seal (Exhaust)	4	..
13		1339154	Oil Valve Stem Seal (Exhaust)	..	4
14		1339155	Oil Seal Valve Stem (Intake)	4	..
14	a	1339155	Oil Seal Valve Stem (Intake)	..	4
14	b	1378326	Oil Seal Valve Stem (Intake)	..	8
15		1367541	Inlet Valve (Standard)	4	..
15	a	1367541	Inlet Valve (Standard)	..	4
15	b	1378327	Inlet Valve (Standard)	..	4
15		1339167	Inlet Valve (0.075 mm)	4	..
15	a	1339167	Inlet Valve (0.075 mm)	..	4
15	b	1378328	Inlet Valve (0.127 mm)	..	4
15		1339168	Inlet Valve (0.150 mm)	4	..
15	a	1339168	Inlet Valve (0.150 mm)	..	4
15		1339169	Inlet Valve (0.300 mm)	4	..
15	a	1339169	Inlet Valve (0.300 mm)	..	4
16		1358276	Gasket	1	1
17		1358277	Bolt (Short)	5	5
18		1358278	Bolt (Long)	1	1
19		1358279	Stud	4	4
20		1335241	Plug	2	2
21		1358512	Retainer	1	1
22		1360211	Hose	1	1
23		1358514	Valve	1	1
24		1358515	Fitting	1	1
25		1358517	Grommet	1	1
26		1358892	Tube	1	1
27		1360729	Nut	8	8
28		1360726	Push Rod	8	8
29		1360727	Lifter	8	8
30		1358574	Rocker Arm Cover	1	1
31		1358625	Gasket	1	1
32		1360728	Rocker Arm	8	8
33		1358626	Ball	8	8
34		1358524	Bolt	6	6
35		....	Bracket	1	1
36		1358282	Nut	1	1
37		3021390	Engine Oil (Bulk)	AR	AR
37		3021391	Engine Oil (55 Gallons)	AR	AR
37		3021392	Engine Oil (12 Quart Case)	AR	AR
38		1383922	Plug	..	1

a Last Used On Date Code TO2143WB

b First Used On Date Code TO2144WB (Identified By An "S" At The End Of The Eight Digit Casting Number On The Cylinder Head)

c Use Replacement Part 1377023

©2000 HYSTER COMPANY

See Service Manual for service procedures

CAMSHAFT AND TIMING GEAR (Figure 23)
GASOLINE AND LPG 2.2L

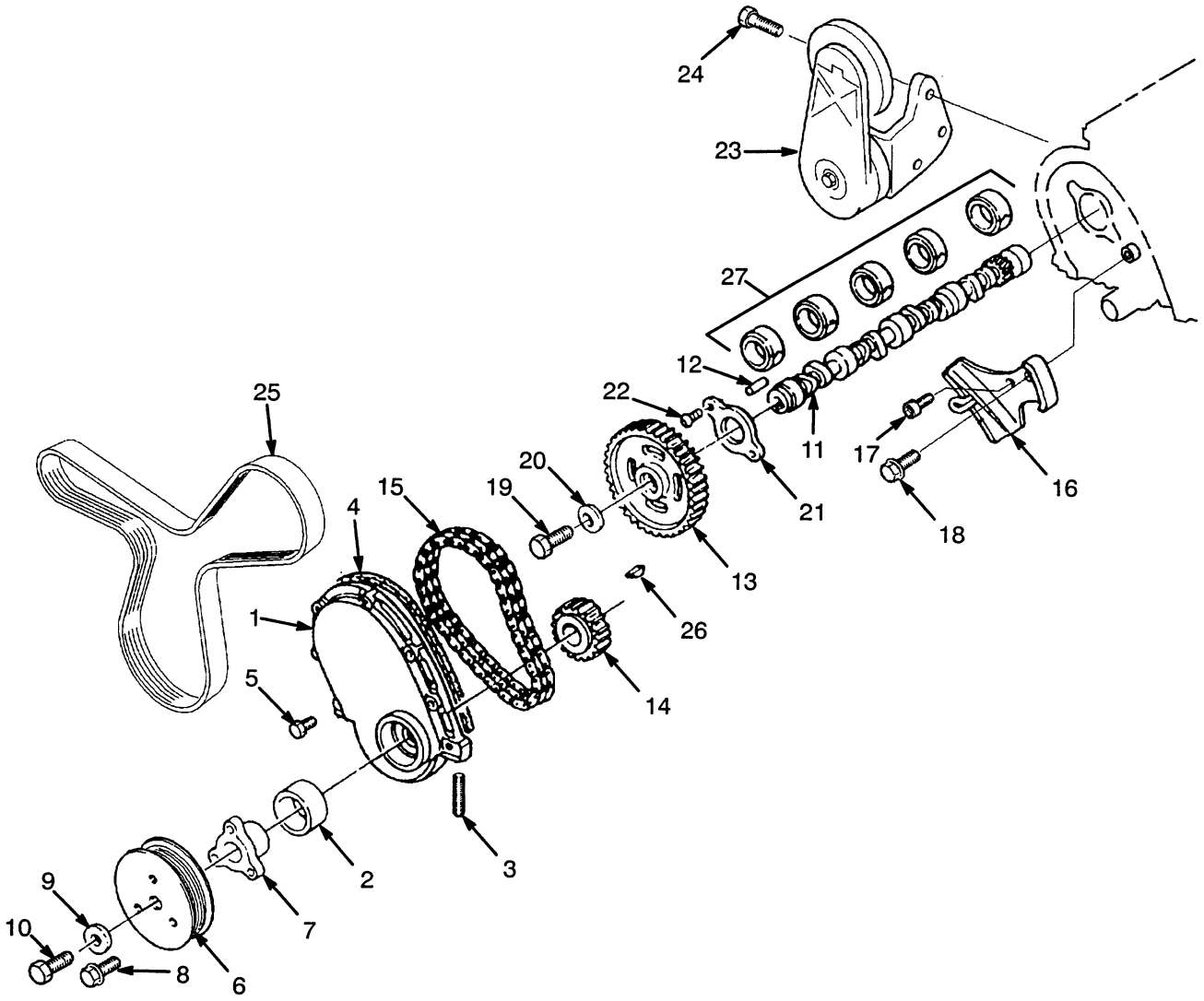

REF	PART NO.	NAME OF PART	QTY
1	1358520	Cover (Front End)	1
2	1358521	Seal (Front Oil)	1
3	1358522	Stud	2
4	1358523	Seal	1
5	1358524	Bolt	7
6	1358525	Pulley (Crankshaft)	1
7	1358526	Hub	1
8	1339149	Bolt	3
8	15134	Washer	3
9	1358527	Washer	1
10	1358528	Bolt	1
11	1360220	Camshaft	1
12	1360221	Pin	1
13	1360222	Sprocket (Camshaft)	1
14	1358562	Sprocket (Crankhaft)	1
15	1358563	Timing Chain	1

REF	PART NO.	NAME OF PART	QTY
16	1358564	Tensioner	1
17	1358565	Bolt	1
18	1358566	Bolt	1
19	1360224	Bolt	1
20	1360725	Washer	1
21	1356838	Thrust Plate (Camshaft)	1
22	1358569	Bolt	2
23	1360735	Tensioner (Belt)	1
24	1360736	Bolt	3
25	1360734	Belt (Type G,LP)	1
25	1365825	Belt (Type GS,LPS)	1
26	7882	Key	2
27	.....	Camshaft Bearings	4
		☞ Figure 21	

Note: The Above Parts Are Included With Engines 1335942 And 1335943

©2000 HYSTER COMPANY

MANIFOLD (Figure 24)

GASOLINE AND LPG 2.2L

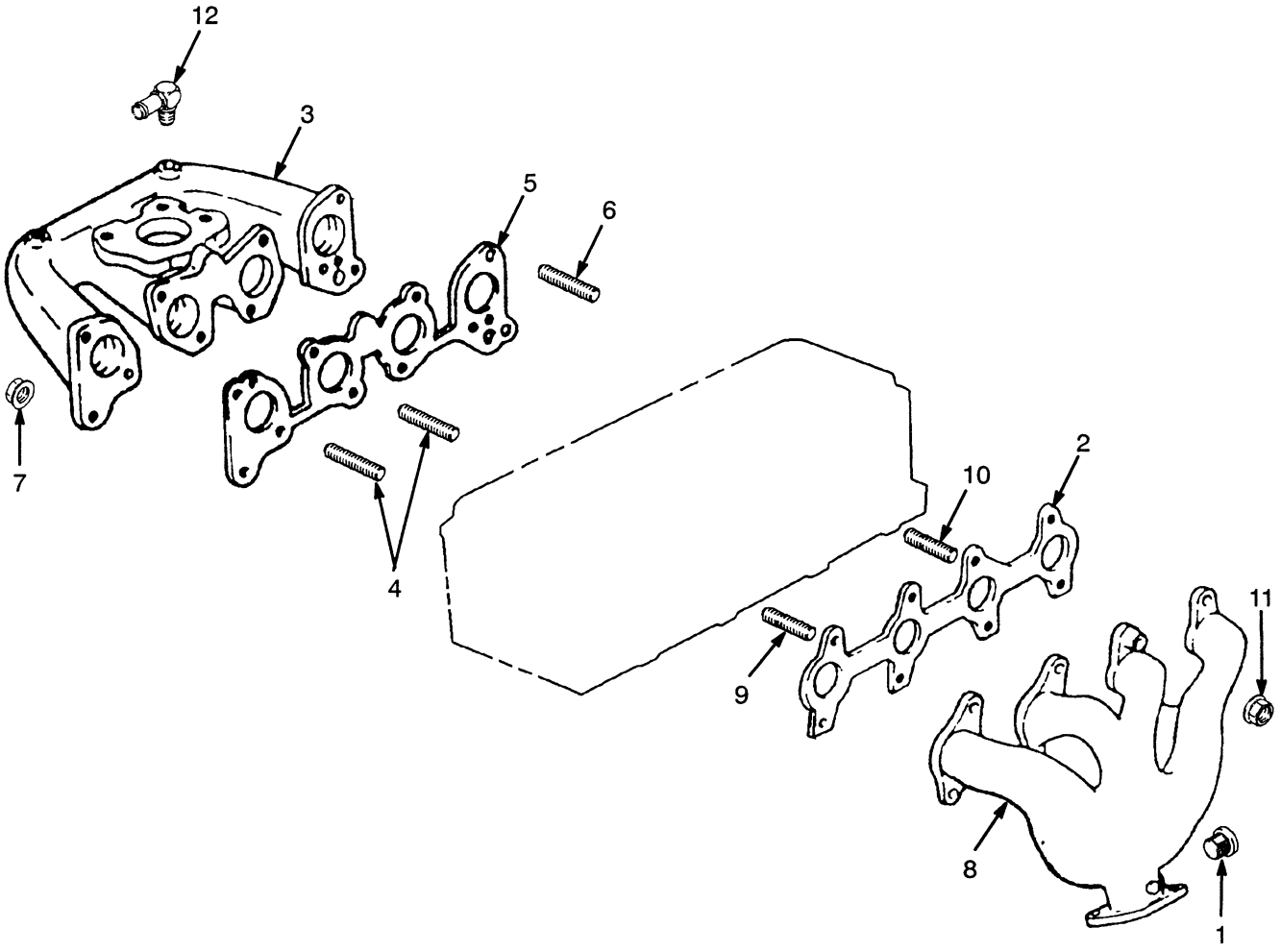

REF	PART NO.	NAME OF PART	QTY
1	1358639	Plug	1
2	1358557	Gasket	1
3	1358547	Intake Manifold	1
3	1358548	Plug	2
4	1358549	Stud	2
5	1358550	Gasket	1
6	1358551	Stud	8
7	1358552	Nut	12

REF	PART NO.	NAME OF PART	QTY
8	1358553	Exhaust Manifold	1
9	1358554	Stud	5
10	1358555	Stud	3
11	1358509	Nut	8
12	15962	Fitting	1

Note: The Above Parts Are Included With Engines 1335942 And 1335943

©2000 HYSTER COMPANY

FUEL AND ELECTRICAL (Figure 25)

GASOLINE AND LPG 2.2L

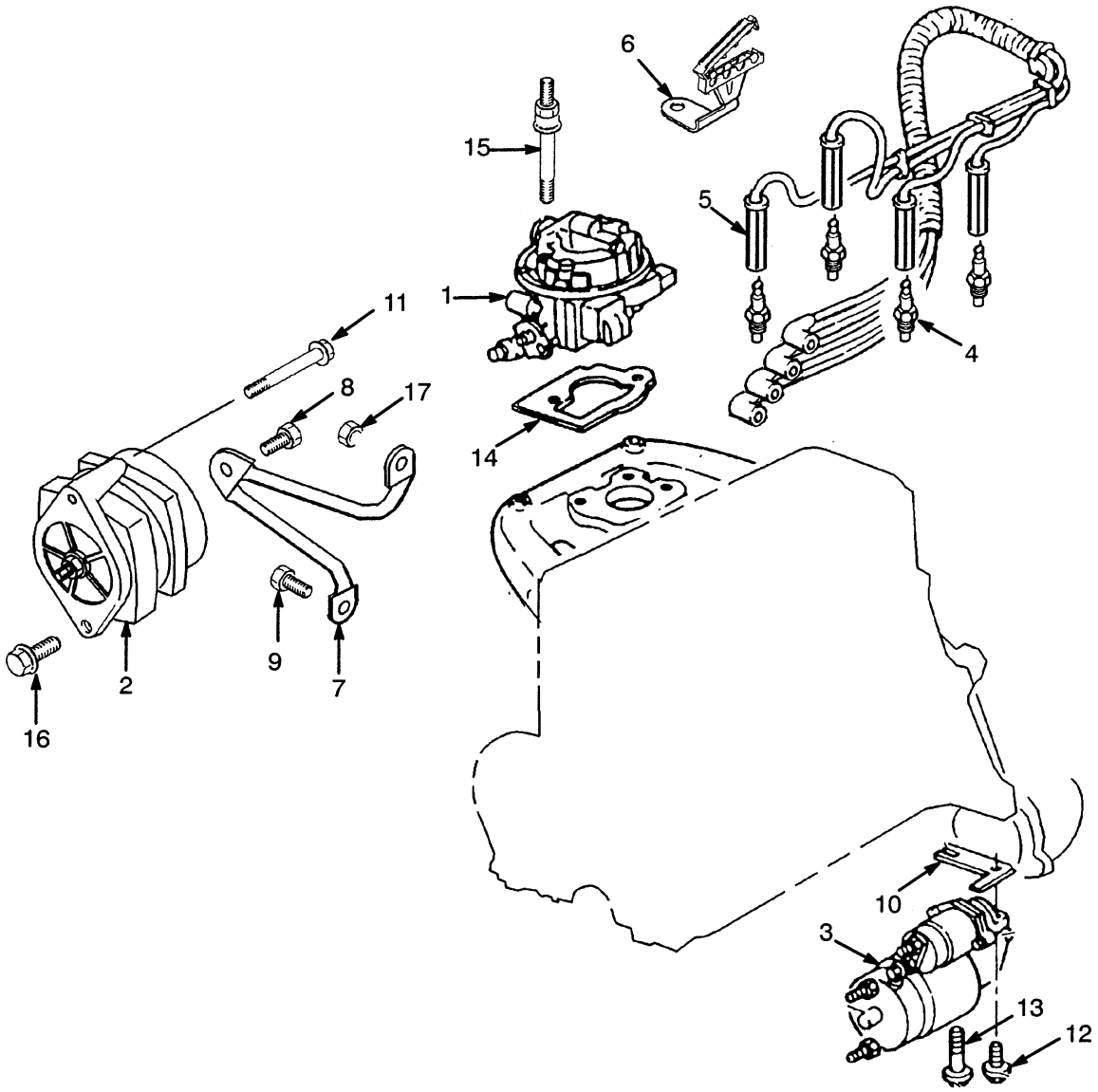

REF		PART NO.	NAME OF PART	QTY
1	a	.....	Throttle Body	1
			☞ Figure 84	
2		.....	Alternator	1
			☞ Figure 142	
3		.....	Starter	1
			☞ Figure 151	
4		1378300	Spark Plug	4
5		1360731	Spark Plug Wire Harness	1
6		1358638	Bracket	1
7	b	1360740	Bracket	1
8	b	1360741	Bolt	1
9	bc	1360743	Bolt	1
9	bd	1377069	Bolt	1
10		1360744	Spacer	1

REF		PART NO.	NAME OF PART	QTY
11	b	1360745	Bolt	1
12		1360746	Bolt	1
13		1360747	Bolt	1
14		.....	Gasket	1
			☞ Figure 84	
15		1360749	Stud	2
16		1377069	Capscrew	1
17		1358552	Nut	1

a Gasoline Only
b Types G, LP
c Engine 1335942 And 1335943
d Engine 1375902 And 1375901

©2000 HYSTER COMPANY

OIL PUMP (Figure 26)

GASOLINE AND LPG 2.2L

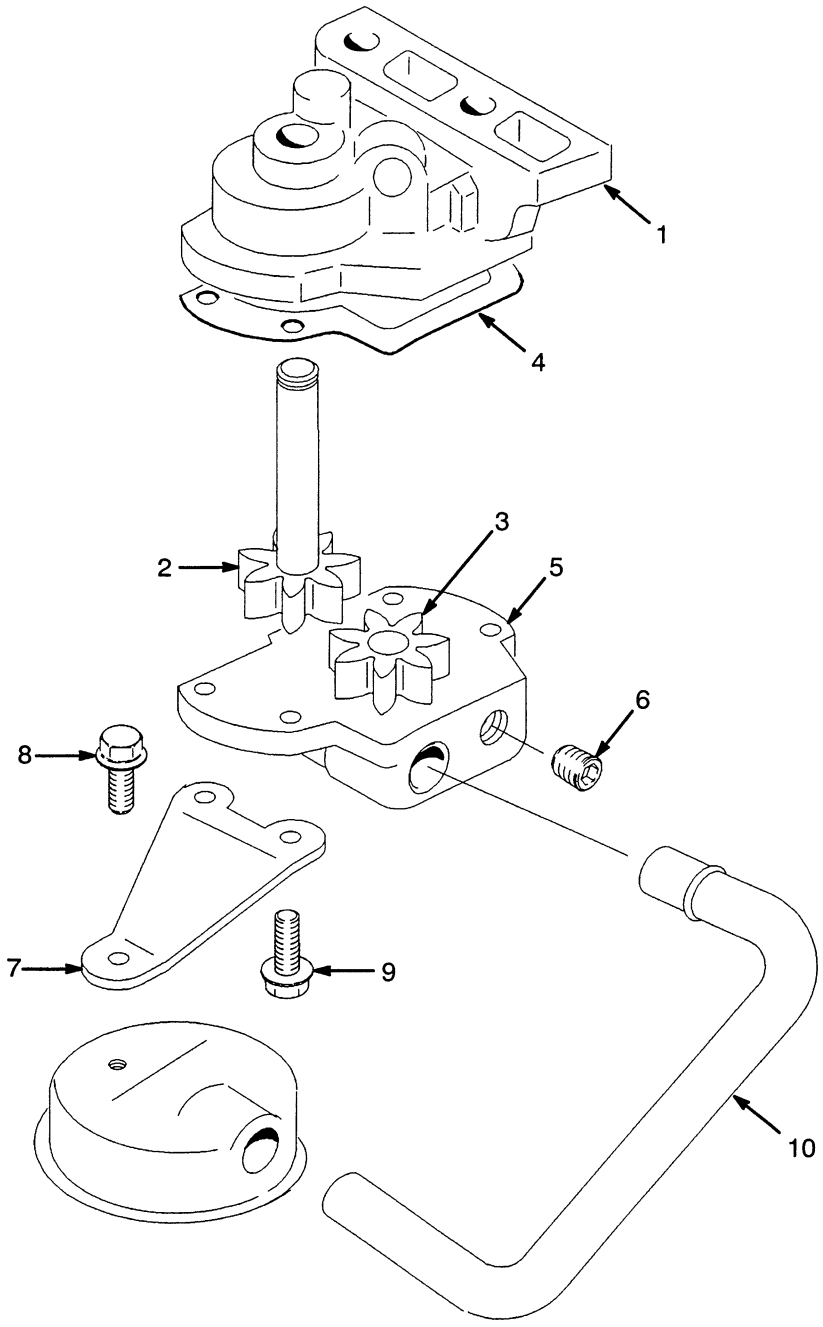

REF	PART NO.	NAME OF PART	QTY
	1358500	Oil Pump	1
1	.....	Housing	1
2	.....	Gear (Drive)	1
3	.....	Gear (Driven)	1
4	1360859	Gasket	1
5	1360860	Cover	1
5	1338223	Valve Stop	1
5	268573	Pressure Regulator Valve	1
5	1360862	Spring	1
5	1330453	Pin	1
6	1304786	Plug	1
7	1360864	Brace	1
8	1360865	Bolt	1
9	1360866	Bolt	4
10	.....	Tube	1

Note: The Above Parts Are Included With Engines 1335942 And 1335943

©2000 HYSTER COMPANY

NOTES

©2000 HYSTER COMPANY

COOLING (Figure 27)

GASOLINE AND LPG 2.2L

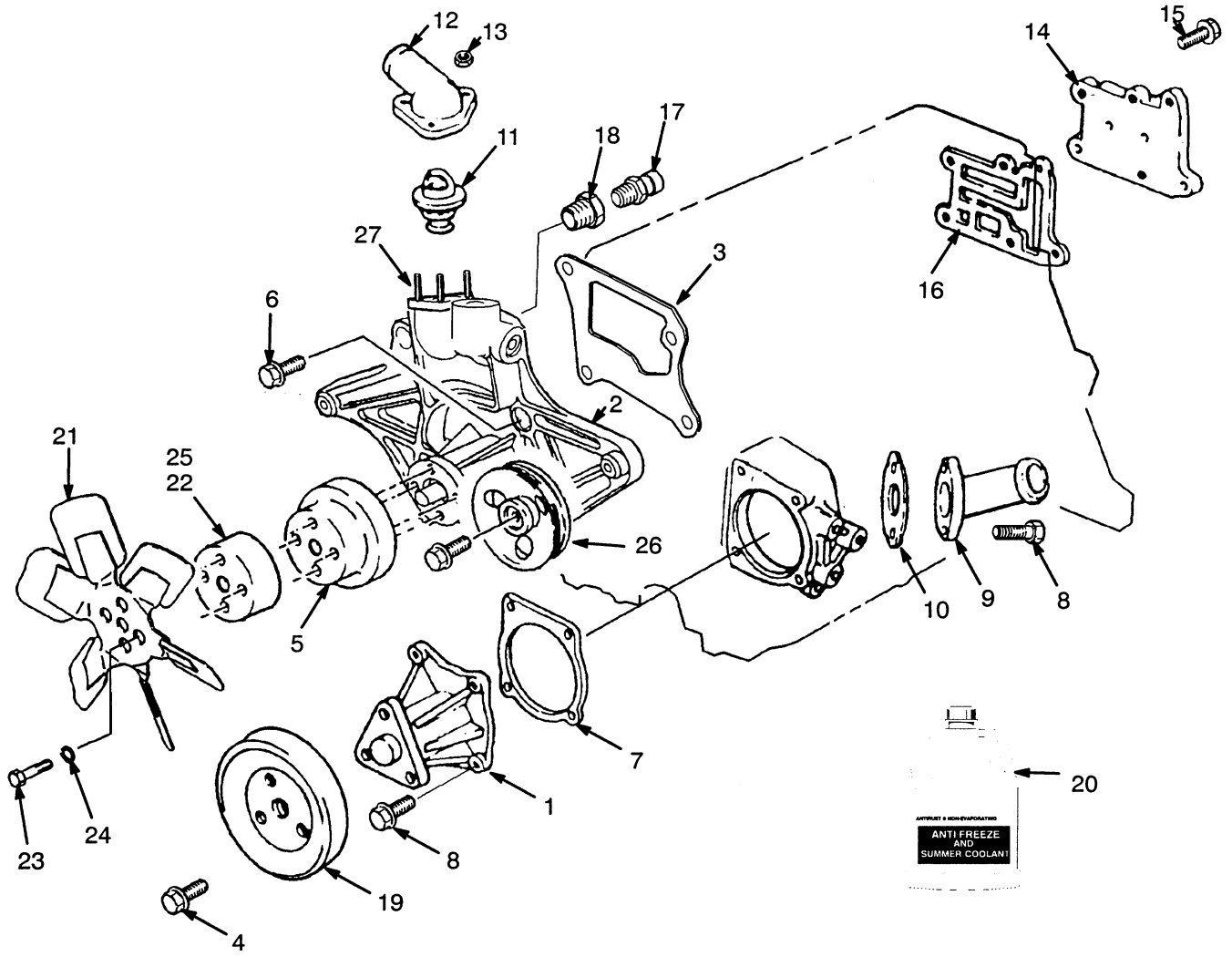

REF		PART NO.	NAME OF PART	QTY
1		1358529	Water Pump	1
2	a	1360213	Bracket	1
2		1358532	Bearing	1
2		1360215	Hub	1
3	a	1358534	Gasket (Fan)	1
4		1360738	Bolt	3
5		1358891	Pulley (Fan)	1
6		1452424	Bolt	4
7		1358536	Water Pump Gasket	1
8		1360216	Bolt	6
9		1360217	Water Inlet	1
10		1358539	Gasket	1
11		1358540	Thermostat	1
11		1339152	Seal	1
12		1358541	Water Outlet	1
13		1358543	Nut	3
14		1339156	Cover	1

REF	PART NO.	NAME OF PART	QTY
15	1358545	Bolt	6
16	1367543	Gasket	1
17	1314381	Coolant Sensor	1
18	1358640	Reducer	1
19	1360737	Water Pump Pulley	1
20	3002338	Antifreeze (1 Gallon)	AR
21	1347051	Fan	1
22	1339691	Spacer	1
23	18521	Capscrew	4
24	15155	Lockwasher	4
25	1368928	Spacer	1
26	1360733	Pulley	1
27	1358522	Stud	3

a Included In Kit 864848

Note: The Above Parts Are Included With Engines 1335942 And 1335943

©2000 HYSTER COMPANY

CRANKSHAFT AND PISTON (Figure 28)

GASOLINE AND LPG 3.0L

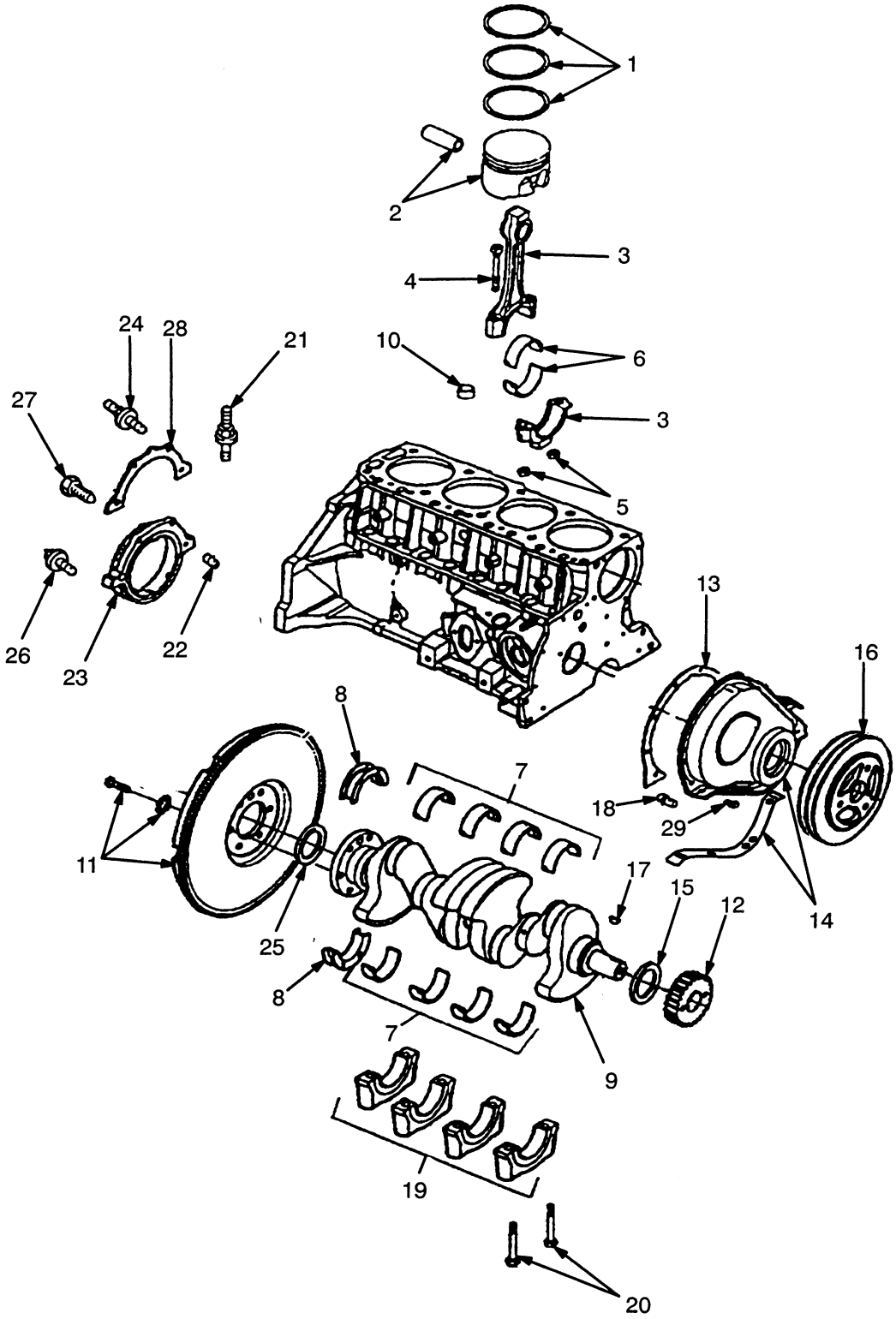

©2000 HYSTER COMPANY

CRANKSHAFT AND PISTON

GASOLINE AND LPG 3.0L

KEY:
A: 1996
B: 1997
C: 1998

REF		PART NO.	NAME OF PART	QTY A	B	C
	b	1380583	Engine	1	..	..
	c	1393580	Engine	..	1	..
	e	1453580	Engine	..	..	1
1	ad	306774	Piston Ring Set (Standard)	4	4	4
1		375550	Piston Ring Set (0.760 mm)	4	4	4
2	ad	304619	Piston & Pin (Standard)	4	4	4
2		304620	Piston & Pin (0.510 mm)	4	4	4
3	ad	301190	Rod Assembly	4	4	4
4	ad	289344	Bolt	2	2	2
5	ad	1375954	Nut	2	2	2
6	ad	169964	Rod Bearing (Standard)	8	8	8
6		169966	Rod Bearing (0.051 mm)	8	8	8
6		169752	Rod Bearing (0.510 mm)	8	8	8
6		169965	Rod Bearing (0.025 mm)	8	8	8
6		169967	Rod Bearing (0.250 mm)	8	8	8
7	ad	1331335	Main Bearing (Standard)	4	4	4
7		1331336	Main Bearing (0.025 mm)	4	4	4
7		149814	Main Bearing (0.250 mm)	4	4	4
7		160602	Main Bearing (0.510 mm)	4	4	4
7		149816	Main Bearing (0.760 mm)	4	4	4
8	ad	149805	Main Bearing (Standard)	1	1	1
8		1331325	Main Bearing (0.025 mm)	1	1	1
8		1378320	Main Bearing (0.640 mm)	1	1	1
9	ad	1331342	Crankshaft	1	1	..
9	e	1455601	Crankshaft	..	..	1
10	ad	164022	Plug	1	1	1
11		.....	Flywheel	1	1	1
			☞ Figure 20			
12		265509	Gear	1	1	1
13		388321	Gasket	1	1	1
14		189609	Cover Assembly	1	1	1
15		1374107	Oil Seal (Front)	1	1	1
16		169942	Damper	1	1	1
17	a	7882	Key	1	1	1
18	ad	148827	Oil Nozzle	1	1	1
19	ad	244903	Main Bearing Cap	4	4	4
20	ad	159973	Bolt	10	10	10
21	a	164023	Stud	1	1	1
22		375601	Pin	1	1	1
23		1335227	Retainer Assembly	1	1	..
23	e	375572	Retainer Assembly	..	..	1
24		388364	Stud	2	2	2
25		1335228	Seal	1	1	..
25	e	375555	Seal	..	..	1
26		1375953	Bolt	1	1	1
27		1330459	Bolt	2	2	2
28		1335212	Gasket	1	1	1
29		370169	Screw & Washer	8	8	8

a Included In Short Block 1331338
b Last Used On S/N D177B-34696
c Used On S/N D177B-34697 Thru S/N D177B-39730
d Included In Short Block 1393427
e First Used On S/N D177B-39731

©2000 HYSTER COMPANY

CYLINDER HEAD (Figure 29)

GASOLINE AND LPG 3.0L

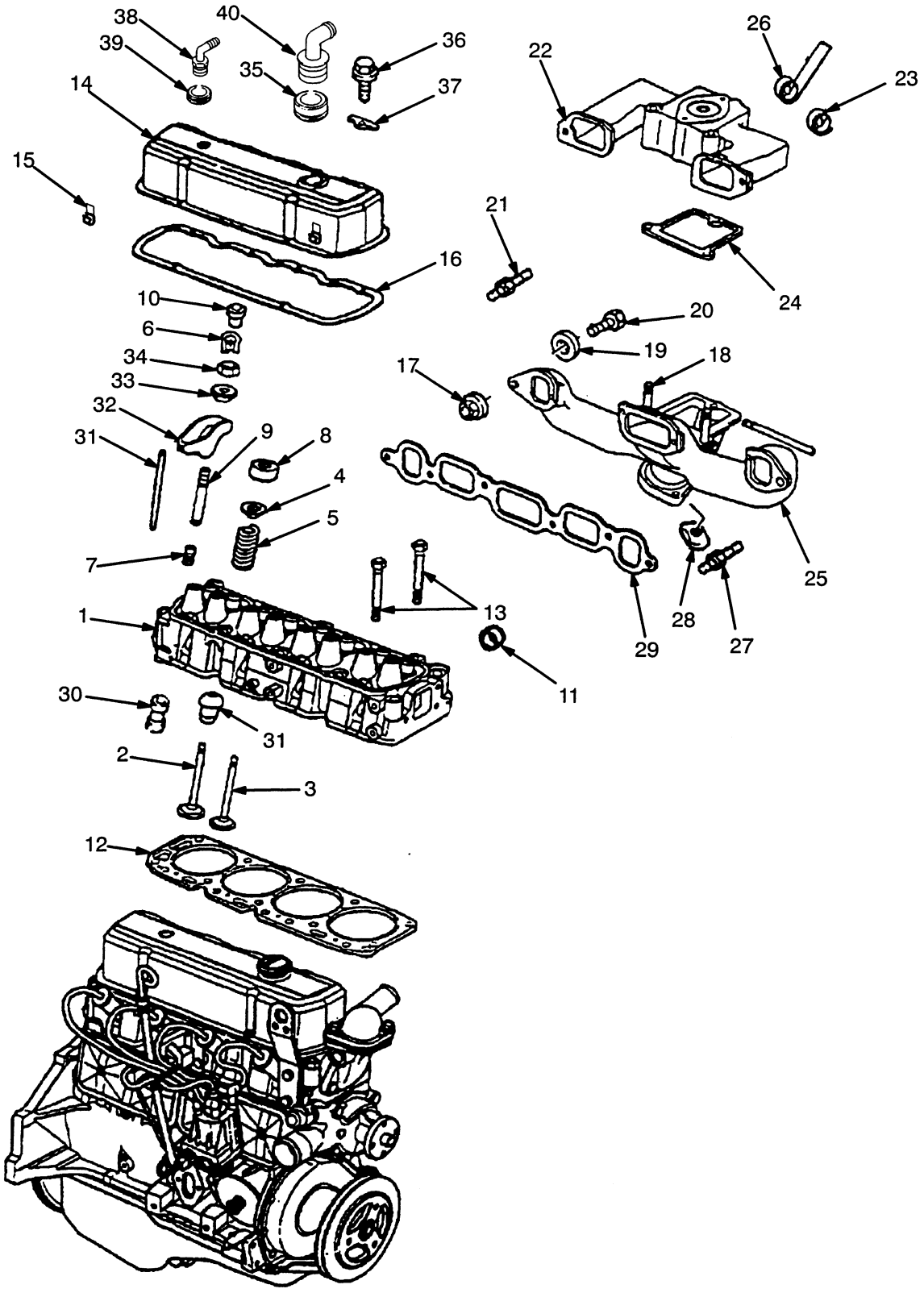

©2000 HYSTER COMPANY

CYLINDER HEAD

GASOLINE AND LPG 3.0L

KEY:
A: 1996
B: 1997
C: 1998

REF		PART NO.	NAME OF PART	QTY A	B	C
	b	1380583	Engine	1	..	..
	c	1393580	Engine	..	1	..
	d	1453580	Engine	..	..	1
1		1378317	Cylinder Head	1	1	1
2		244909	Inlet Valve (Standard)	4	4	4
2		149864	Inlet Valve (0.076 mm)	4	4	4
2		244910	Inlet Valve (0.380 mm)	4	4	4
2		244911	Inlet Valve (0.760 mm)	4	4	4
3		381250	Exhaust Valve (Standard)	4	4	4
3		381270	Exhaust Valve (0.380 mm)	4	4	4
3		381271	Exhaust Valve (0.760 mm)	4	4	4
4		149868	Cap	8	8	8
5		145172	Valve Spring	8	8	8
6		263750	Valve Key	16	16	16
7		145173	Valve Seal	8	8	8
8		314539	Shield	8	8	8
9		149857	Stud (0.076 mm)	8	8	8
9	a	149858	Stud (0.330 mm)	8	8	8
10		149867	Rotator	4	4	4
11		160361	Plug	2	2	2
12		1331343	Gasket	1	1	1
13		149977	Bolt	10	10	10
14		1331344	Valve Cover	1	1	1
15		1335825	Clip	2	2	..
16		388323	Gasket	1	1	1
17		1375954	Nut	8	8	8
18		149889	Stud	2	2	2
19		15157	Lockwasher	6	6	..
19	d	1335219	Lockwasher	..	..	6
20		1331349	Bolt	6	6	6
21		254686	Stud	1	1	1
22		244922	Inlet Manifold	1	1	1
23		244925	Thermostat	1	1	1
24		1330772	Gasket	1	1	1
25		271949	Exhaust Manifold	1	1	1
26		160377	Spring	1	1	1
27		1300295	Stud	2	2	2
28		149888	Clamp	4	4	4
29		1354046	Gasket	1	1	1
30		263839	Hydraulic Lifter	8	8	8
31		1354047	Pushrod Assembly	8	8	8
32		245202	Rocker Arm	8	8	8
33		189614	Ball	8	8	8
34		301195	Nut	8	8	8
35		1376789	Grommet	1	1	1
36		1374108	Bolt	4	4	4
37		149978	Special Washer	5	5	5
38		321734	Vent Valve	1	1	1
38		85766	Hose	1	1	1
39		164050	Grommet	1	1	1
40		379407	Fitting	1	1	1

a Optional
b Last Used On S/N D177B-34696
c Used On S/N D177B-34697 Thru S/N D177B-39730
d First Used On S/N D177B-39731

©2000 HYSTER COMPANY

ELECTRICAL (Figure 30)

GASOLINE AND LPG 3.0L

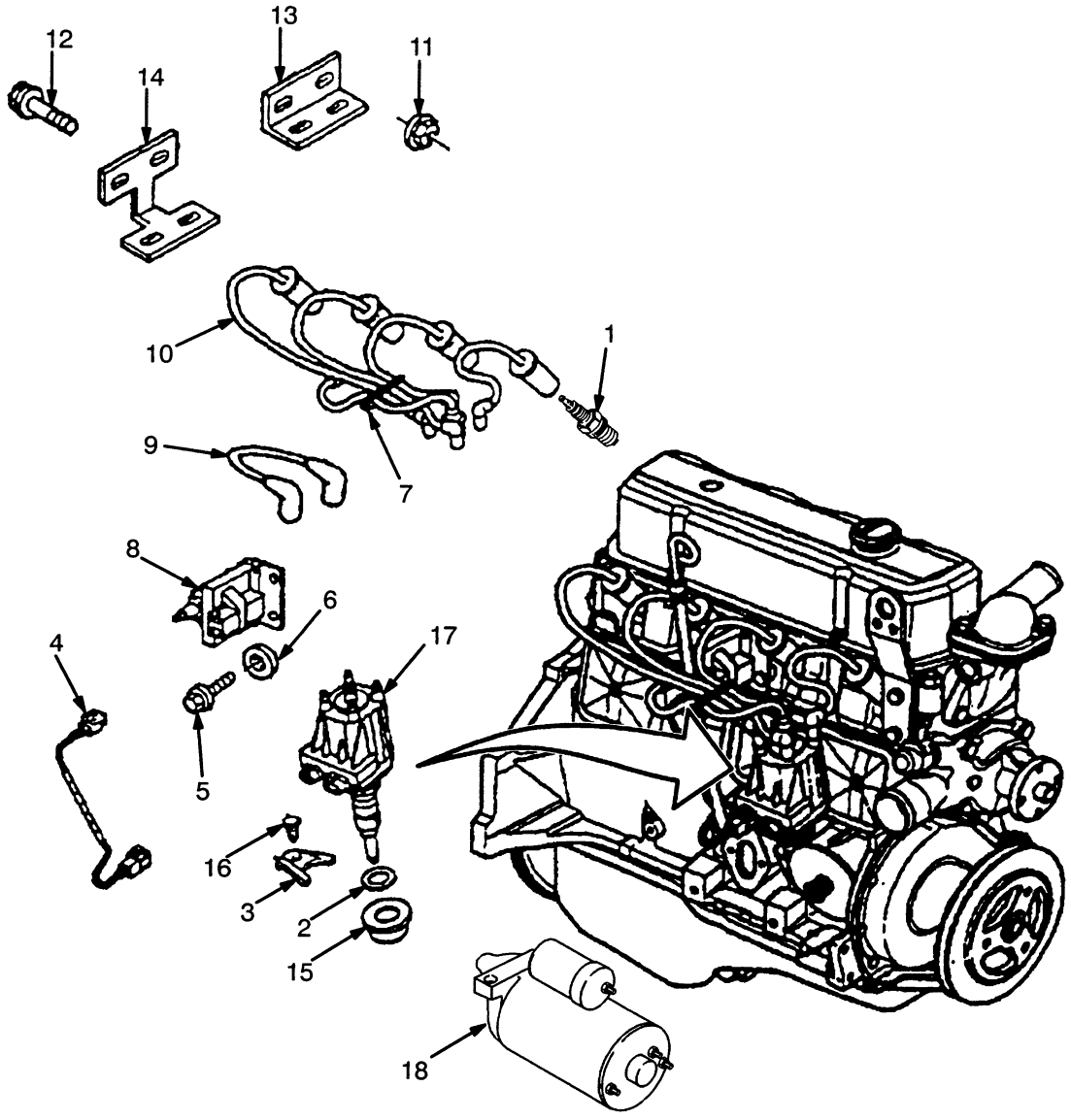

ELECTRICAL

GASOLINE AND LPG 3.0L

KEY:
A: 1996
B: 1997
C: 1998

REF		PART NO.	NAME OF PART	QTY A	B	C
	b	1380583	Engine	1	..	..
	c	1393580	Engine	..	1	..
	d	1453580	Engine	..	..	1
1		281844	Spark Plug	4	4	4
2		1330467	Gasket	1	1	1
3		274247	Clamp	1	1	1
4		1331329	Wire Assembly	1	1	1
5		1335827	Bolt	2	2	..
5	d	1455602	Bolt	..	..	2
6		15134	Washer	2	2	2
7		1335828	Retainer	1	1	1
8		1331331	Ignition Coil	1	1	1
9		1337665	Wire Assembly	1	1	1
10		1337666	Spark Plug Harness	1	1	1
11		1374323	Nut	4	4	..
12		1371237	Bolt	4	4	..
13		1378318	Bracket (Top)	1	1	1
14		1378319	Bracket (Bottom)	1	1	1
15	a	159974	Washer	1	1	1
16		1331349	Screw	1	1	1
17		.....	Distributor ☞ Figure 140	1	1	1
18		.....	Starter ☞ Figure 151	1	1	1

a Included In Short Block 1393427
b Last Used On S/N D177B-34696
c Used On S/N D177B-34697 Thru S/N D177B-39730
d First Used On S/N D177B-39731

COOLING (Figure 31)

GASOLINE AND LPG 3.0L

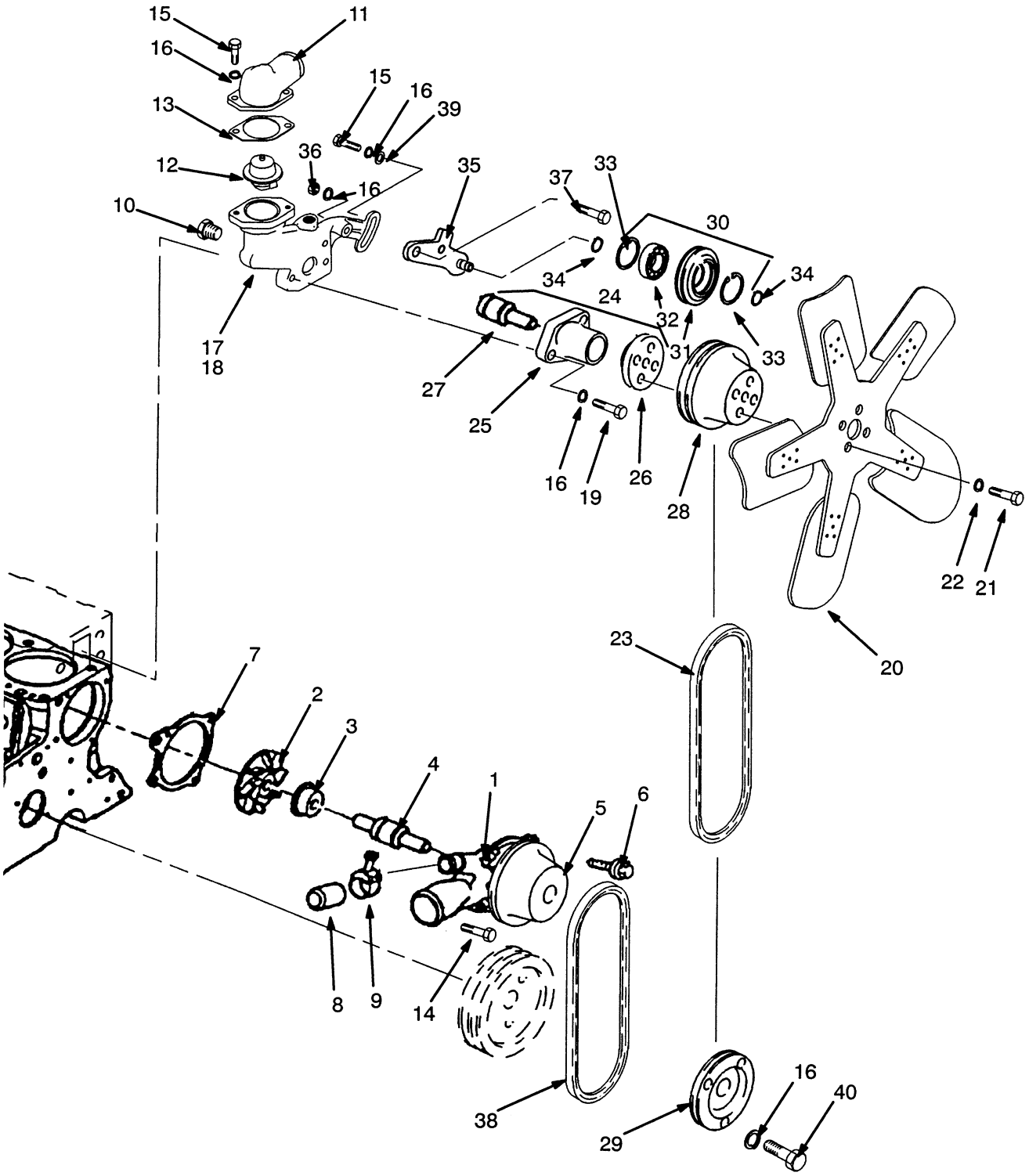

COOLING

GASOLINE AND LPG 3.0L

KEY:
A: 1996
B: 1997
C: 1998

REF		PART NO.	NAME OF PART	QTY A	B	C
	b	1380583	Engine	1	..	..
	c	1393580	Engine	..	1	..
	d	1453580	Engine	..	..	1
1	a	.....	Water Pump	1	1	1
2	a	.....	Impeller	1	1	1
3	a	.....	Seal	1	1	1
4	a	.....	Bearing	1	1	1
5	a	.....	Pulley	1	1	1
6		221455	Capscrew	2	2	2
7	a	1330456	Gasket	1	1	1
8		149929	Cap	1	1	1
9		1335224	Clamp	1	1	1
10		14386	Plug	1	1	1
11		1317468	Outlet	1	1	1
12		1450696	Thermostat (180° F)	1	1	1
13		1330725	Gasket	1	1	1
14		18508	Capscrew	2	2	2
15		16805	Capscrew	3	3	3
16		15156	Lockwasher	10	10	10
17		1371582	Thermostat Housing	1	1	1
18		264159	Adhesive	AR	AR	AR
19		18538	Capscrew	3	3	3
20		1375642	Fan	1	1	1
21		16825	Capscrew	4	4	4
22		15155	Lockwasher	4	4	4
23		191845	V-Belt	1	1	1
24		1375604	Drive (Fan)	1	1	1
24		1456071	Drive (Fan) Sub assembly	1	1	1
25		....	Housing	1	1	1
26		1360215	Hub	1	1	1
27		1358532	Bearing	1	1	1
28		1371524	Fan Pulley	1	1	1
29		1375196	Crankshaft Pulley	1	1	1
30		1359103	Idler Assembly	1	1	1
31		1359102	Pulley	1	1	1
32		1479128	Bearing	1	1	1
33		12928	Snap Ring	2	2	2
34		54123	Snap Ring	2	2	2
35		1359100	Bracket	1	1	1
36		15056	Nut	1	1	1
37		16379	Capscrew	1	1	1
38		188643	V-Belt (Pump)	1	1	1
39		296421	Washer	1	1	1
40		16814	Capscrew	3	3	3

a Included In Water Pump Kit 1383997
b Last Used On S/N D177B-34696
c Used On S/N D177B-34697 Thru S/N D177B-39730
d First Used On S/ND177B-39731

©2000 HYSTER COMPANY

CAMSHAFT AND OIL PAN (Figure 32)

GASOLINE AND LPG 3.0L

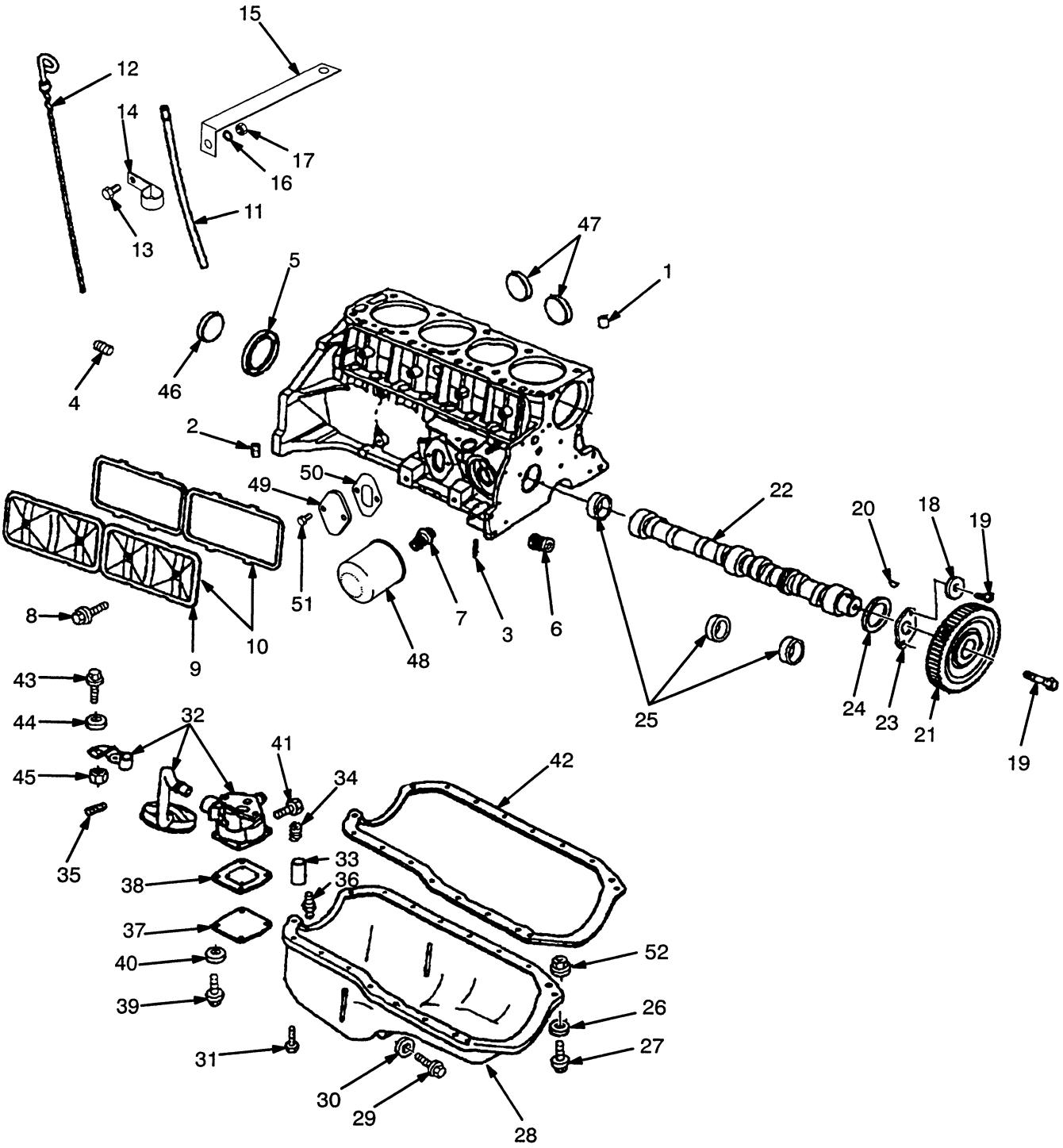

CAMSHAFT AND OIL PAN

GASOLINE AND LPG 3.0L

KEY:
A: 1996
B: 1997
C: 1998

REF		PART NO.	NAME OF PART	QTY A	B	C
	b	1380583	Engine	1	..	..
	c	1393580	Engine	..	1	..
	d	1453580	Engine	..	..	1
1	a	1354814	Pump Shaft Bearing	1	1	1
2	a	1331341	Plug	1	1	1
3	a	159977	Pin	8	8	8
4	a	1335499	Pin	2	2	2
5	a	164017	Plug	1	1	1
6	a	1375952	By-pass Valve	1	1	1
7		159942	Fitting	1	1	1
8		149976	Bolt	4	4	4
9		244933	Cover	1	1	1
10		388322	Gasket	1	1	1
10	c	1457062	Sealant	1	1	1
11		1458089	Tube	1	1	1
12		1335222	Dipstick	1	1	1
13	e	292500	Capscrew	1	1	1
14	e	132131	Clamp	1	1	1
15	ef	1376763	Brace	1	1	1
16	e	292680	Lockwasher	1	1	1
17	e	136687	Nut	1	1	1
18		15923	Washer	2	2	2
19		133469	Capscrew	3	3	3
20		7882	Key	1	1	1
21		244927	Gear	1	1	1
21	c	149898	Gear	1	1	1
22		1362070	Camshaft	1	1	1
23		1356838	Thrust Plate	1	1	1
24		1324006	Spacer	1	1	1
25	a	149819	Bearing	3	3	3
26		15154	Lockwasher	14	14	14
27		1376876	Bolt	14	14	14
28		1360759	Oil Pan	1	1	1
29		308624	Screw	1	1	1
30		388305	Gasket	1	1	1
31		16374	Capscrew	2	2	2
32		1312813	Oil Pump	1	1	1
33		145176	Oil Pressure Valve	1	1	1
34		145177	Spring	1	1	1
35		1330453	Pin	1	1	1
36		177563	Plug	1	1	1
37		149846	Cover	1	1	1
38		149847	Gasket	1	1	1
39		16709	Screw	4	4	4
40		15154	Lockwasher	4	4	4
41		221453	Capscrew	3	3	3
42		1330452	Gasket	1	1	1
43		221420	Capscrew	1	1	1
44		388316	Washer	1	1	1
45		145641	Nut	1	1	1
46	a	169719	Plug	1	1	1
47	a	169718	Plug	2	2	2
48		127644	Oil Filter	1	1	1
49		145949	Cover	1	1	1
50		149934	Gasket	1	1	1
51		199566	Capscrew	2	2	2
52		15055	Nut	2	2	2

a Included In Short Block 1331338 & 1393427
b Last Used On S/N D177B-34696
c Used On S/N D177B-34697 Thru S/N D177B-39730
d First Used On S/N D177B-39731
e Last Used On S/N D177B-45156
f Service Use Only

©2000 HYSTER COMPANY

ENGINE MOUNT (Figure 33)

DIESEL

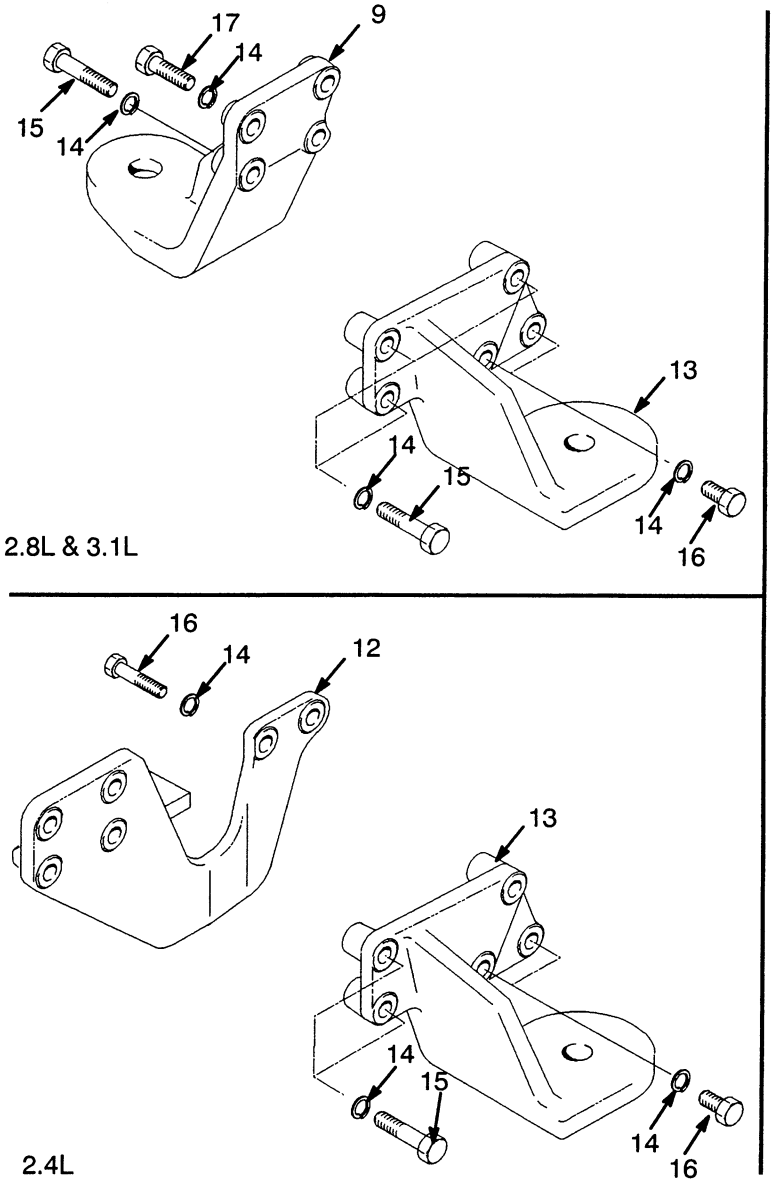

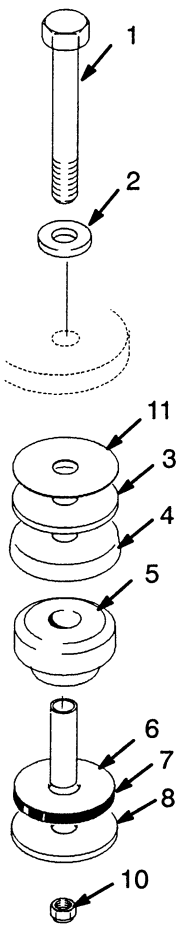

KEY:
A: 2.4L Engine
B: 2.8L & 3.1L Engine

REF	PART NO.	NAME OF PART	QTY A	QTY B
1	293658	Capscrew	2	2
2	300932	Washer	2	2
3	340796	Washer	2	2
4	1351098	Cup	2	2
5	1351096	Isolator	2	2
6	1351061	Spacer	2	2
7	1351060	Bumper	2	2
8	300939	Washer	2	2
9	1339743	Bracket (LH)	..	1
10	300937	Nut	2	2
11	1351017	Spacer	AR	AR
12	1335981	Bracket (LH)	1	..
13	1335983	Bracket (RH)	1	1
14	292682	Lockwasher	10	9
15	1329259	Capscrew	2	5
16	309740	Capscrew	8	2
17	1329258	Capscrew	..	2

©2000 HYSTER COMPANY

EXHAUST (Figure 34)

DIESEL 2.4L

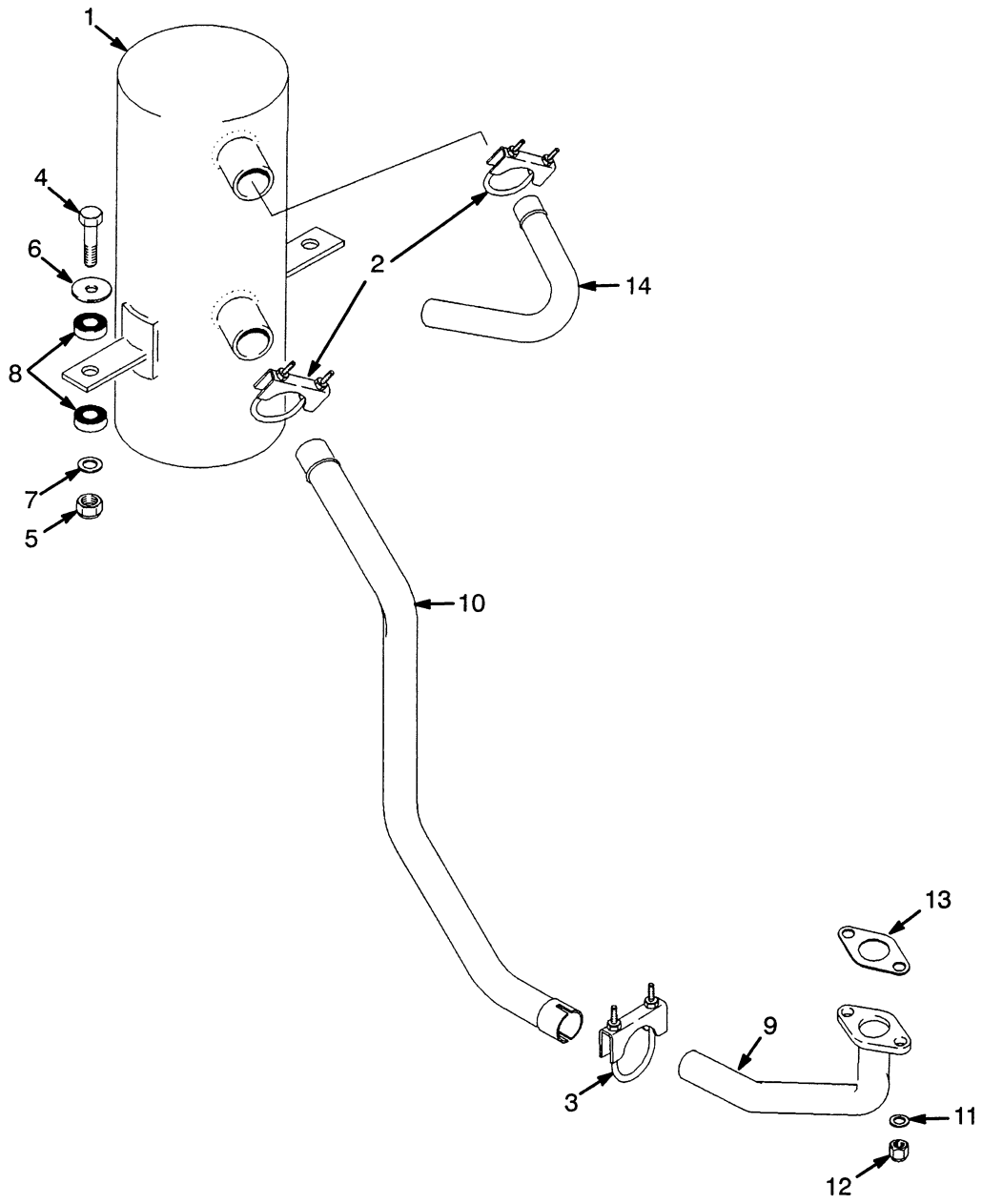

REF		PART NO.	NAME OF PART	QTY
1		1338282	Muffler	1
1	a	1350261	Muffler	1
2		68968	Clamp	1
3		195769	Clamp	1
4		292517	Capscrew	2
5		316826	Nut	2
6		1351176	Washer	2
7		320159	Washer	2
8		1351177	Spacer	4

REF	PART NO.	NAME OF PART	QTY
9	1339328	Pipe	1
10	1347128	Tube	1
11	292682	Lockwasher	2
12	303118	Nut	2
13	308995	Gasket	1
14	1338276	Pipe	1

a Type DS

©2000 HYSTER COMPANY

EXHAUST (Figure 35)

DIESEL 2.8L & 3.1L

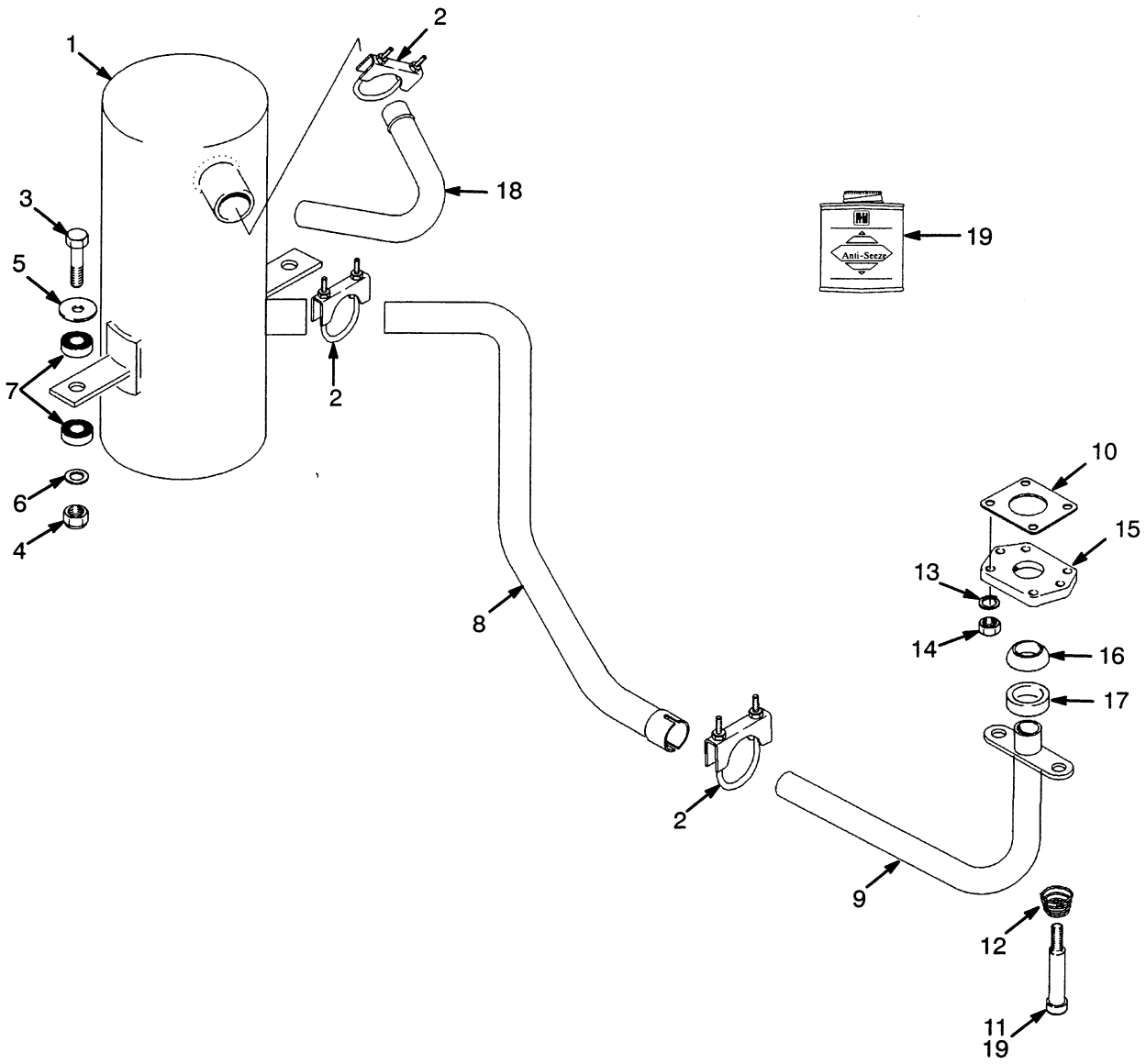

REF		PART NO.	NAME OF PART	QTY
1		1338278	Muffler	1
1	a	1350260	Muffler	1
2		68968	Clamp	3
3		292517	Capscrew	2
4		316826	Nut	2
5		1351176	Washer	2
6		320159	Washer	2
7		1351177	Spacer	4
8	b	1374603	Pipe	1
8	c	1383013	Pipe	1
9	b	1343471	Tube	1
9	c	1374604	Tube	1
10		1335954	Gasket	1

REF	PART NO.	NAME OF PART	QTY
11	1337118	Capscrew	2
12	1335898	Spring	2
13	292682	Lockwasher	4
14	136692	Nut	4
15	1343466	Adaptor	1
16	1338268	Seal	1
17	1338264	Spacer	1
18	1338276	Pipe	1
19	251979	Lubricant	AR

a Type DS
b Last Used On S/N D177B-16011
c First Used On S/N D177B-16012

©2000 HYSTER COMPANY

NOTES

©2000 HYSTER COMPANY

RADIATOR AND HOSES (Figure 36)

DIESEL

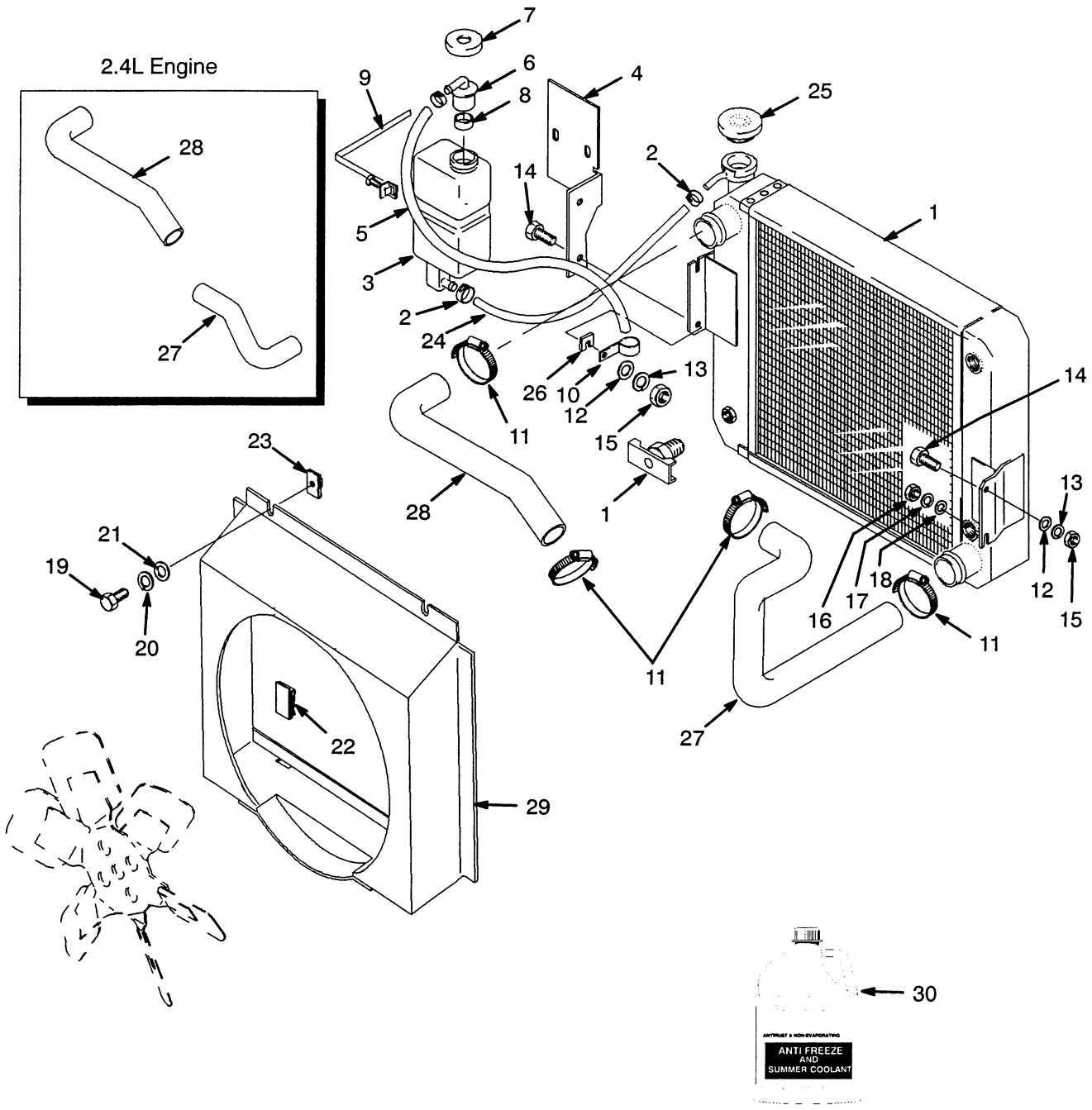

RADIATOR AND HOSES

DIESEL

KEY:
A: 2.4L
B: 2.8L & 3.1L

REF		PART NO.	NAME OF PART	QTY A	QTY B
1		1337002	Radiator (10 Fins/Inch)	1	1
1	a	1343618	Radiator (6.5 Fins/Inch)	1	1
1		1357717	Oil Cooler	1	1
1		1357721	Draincock	1	1
2		168718	Clamp	2	2
3		1347026	Reservoir	1	1
4		1347072	Bracket	1	1
5		1457312	Hose	1	1
6		345453	Outlet	1	1
7		345454	Cap	1	1
8		336550	Bushing	1	1
9		1345825	Strap	1	1
10		173247	Clamp	1	1
11		127045	Clamp	4	4
12		292682	Lockwasher	3	3
13		320159	Washer	3	3
14		136985	Capscrew	3	3
15		136692	Nut	3	3
16		239503	Nut	1	1
17		292681	Washer	1	1
18		320158	Washer	1	1
19		302235	Screw	2	2
20		1347076	Washer	2	2
21		292678	Lockwasher	2	2
22		1329271	Clip	2	2
23		1329272	Nut	2	2
24		1359580	Tube	1	1
25		1352140	Radiator Cap	1	1
26		1331152	Shim	AR	AR
27		1361586	Hose (Lower)	1	..
27		1361627	Hose (Lower)	..	1
28		1339655	Hose (Upper)	1	..
28		1343453	Hose (Upper)	..	1
29		1339657	Shroud	1	..
29		1339690	Shroud	..	1
30		3002338	Antifreeze (1 Gallon)	AR	AR

a Optional
b Last Used On S/N D177B-12749
c Used On S/N D177B-12750

CYLINDER BLOCK (Figure 37)

DIESEL 2.4L

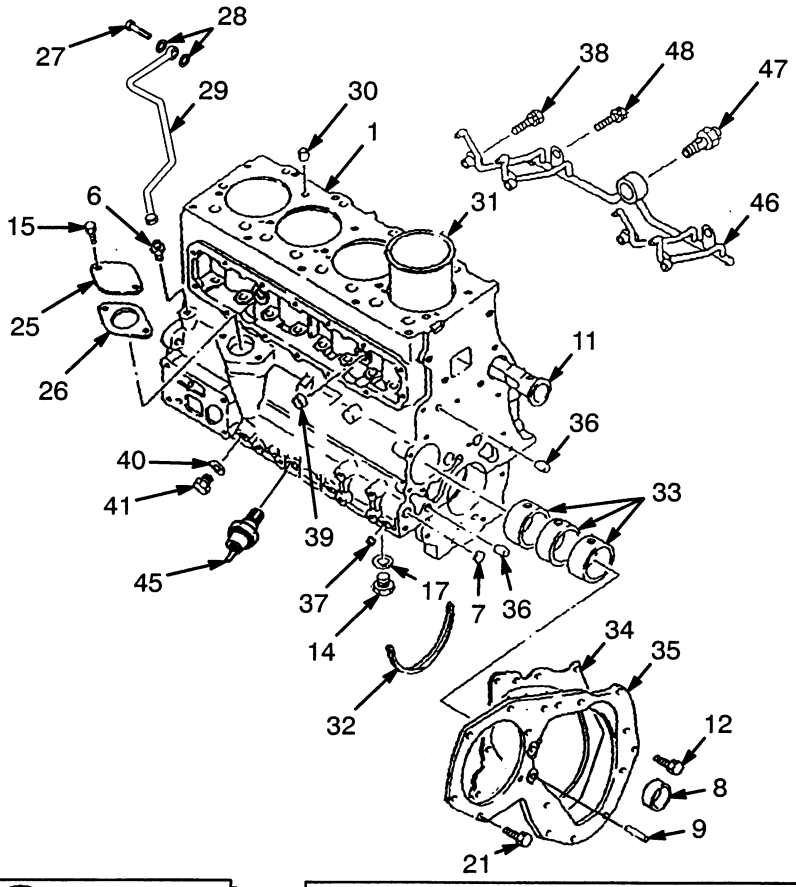

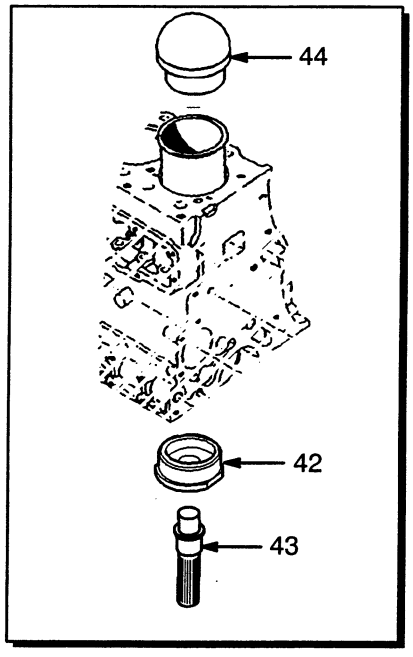

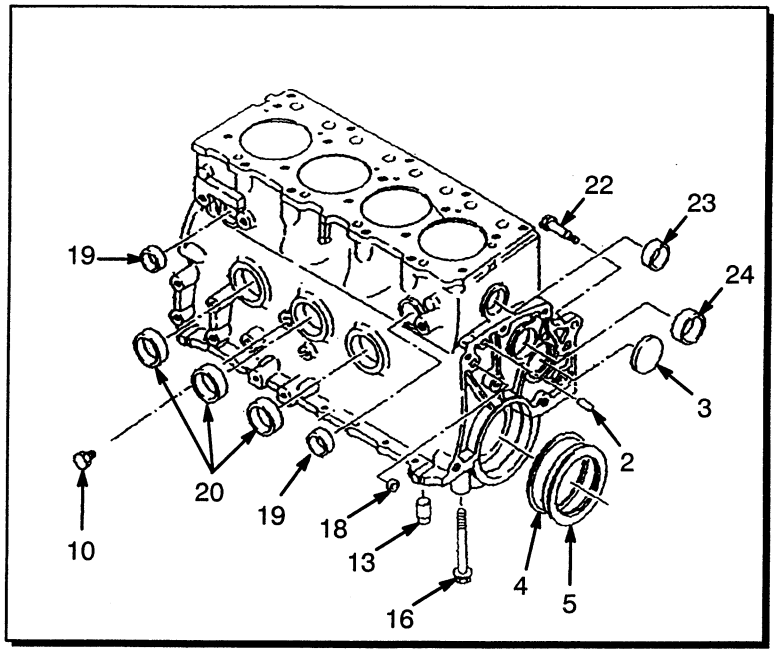

CYLINDER BLOCK

DIESEL 2.4L

REF		PART NO.	NAME OF PART	QTY
		1335948	Engine	1
1	a	1360808	Short Block	1
2		324155	Pin	1
3		324144	Plug	1
4		324163	Spacer	1
5	bc	324164	Seal	1
6		324154	Fitting	1
7		323816	Cup	2
8		324278	Bearing	1
9		324153	Pin	2
10		14385	Fitting	1
11		1361520	Water Duct	1
12		1338456	Capscrew	5
13		324161	Pin	2
14		348427	Plug	1
15		1338780	Capscrew	16
16	a	324169	Capscrew	10
17		348428	Gasket	1
18	a	323818	Cup	1
19	a	324141	Cup	2
20	a	323815	Cup	3
21		324170	Capscrew	3
22		324173	Capscrew	1
23	a	.....	Cup	1
24	a	324140	Cup	1
25		324156	Cover	1
26	bc	324157	Packing Seal	1
27		324352	Bolt	1
28	bc	324353	Gasket	2
29		324351	Pipe	1
30		1329318	Dowel	2
31	a	1456588	Liner (1-AX)	4
31	a	1456589	Liner (1-CX)	4
31	a	1456590	Liner (2-AX)	4
31	a	1456591	Liner (2-CX)	4
31	a	1456592	Liner (3-AX)	4
31	a	1456593	Liner (3-CX)	4
31	a	1456594	Liner (4-AX)	4
31	a	1456595	Liner (4-CX)	4
32	bc	324165	Seal	2
33		324143	Cam Bearing Kit	1
34	bc	324152	Gasket	1
35		1361521	Plate	1
36	a	1361525	Pin	2
37		324146	Plug	2
38		1361538	Bolt	4
39		324138	Plug	2
39	a	323817	Plug	2
40	b	324412	Gasket	1
41		324385	Plug	1
42		320901	Remover (Liner)	1
43		320902	Grip (Liner)	1
44		320903	Tool (Liner)	1
45		1329367	Switch Assembly	1
45		340868	Oil Switch	1
45		1329369	Adapter	1
46		1361535	Pipe	1
47		1361536	Valve	1
48		1361537	Bolt	2

a ☞ Figure 41 & Figure 42 For Further Components For Short Block Assembly
b Included In Bottom Gasket Kit 346530
c Included In Seal Kit 1457015

©2000 HYSTER COMPANY

EMISSION CONTROL (Figure 38)

DIESEL

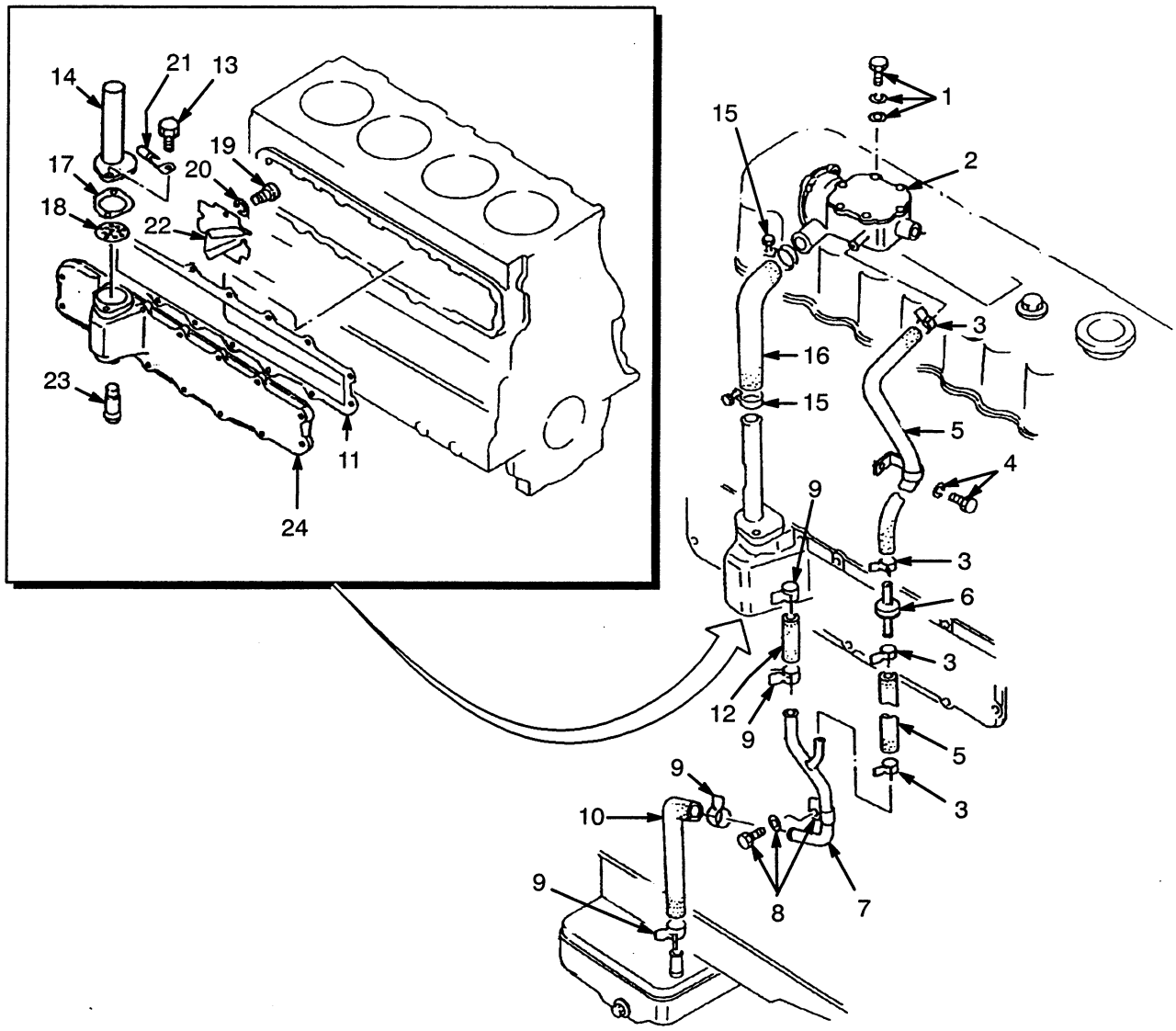

©2000 HYSTER COMPANY

EMISSION CONTROL

DIESEL

REF		PART NO.	NAME OF PART	QTY
1		382509	Bolt	2
1		292680	Washer	2
1		382511	Washer	2
2		382503	PVC Valve	1
3		382502	Clip	4
4		1361526	Bolt	1
4		292681	Washer	1
5		1305789	Hose	2
6		382499	Check Valve	1
7		382495	Connector	1
8		324262	Bolt	1
8		292682	Washer	1
8		382508	Clip	1
9		382498	Clip	4
10		382497	Hose	1
11	a	348442	Seal	1
12		382494	Hose	1
13		1361524	Bolt	2
14		382493	Breather Pipe	1
15		382505	Clip	2
16		382504	Hose	1
17		1361522	Gasket	1
18		382487	Baffle	1
19		1361523	Screw	2
20		292679	Washer	2
21		382488	Clip	1
22		382486	Baffle	1
23		382491	Nipple	1
24		388291	Cover	1

a Included In Seal Kit 1457015

©2000 HYSTER COMPANY

CYLINDER HEAD (Figure 39)

DIESEL 2.4L

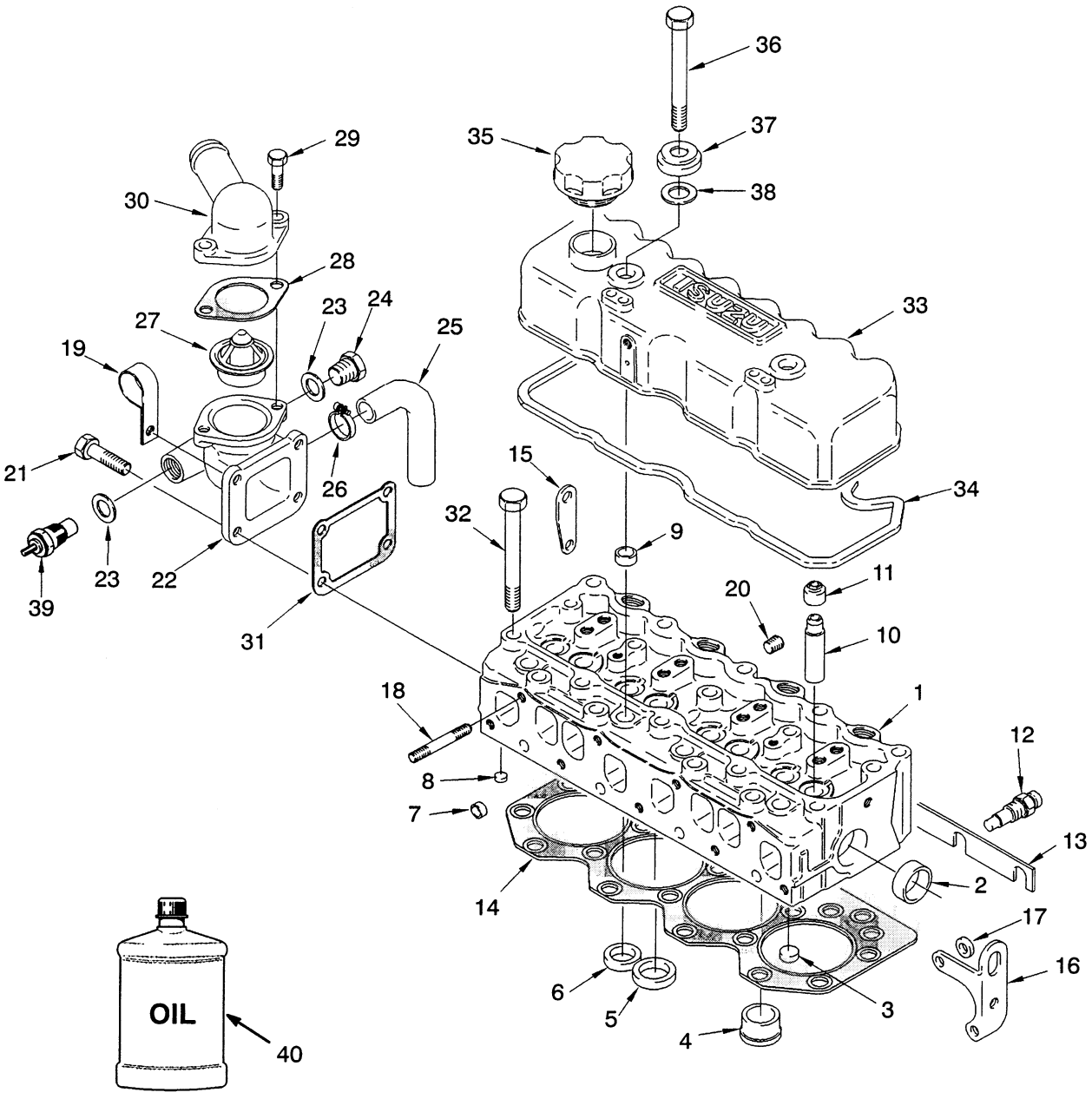

CYLINDER HEAD

DIESEL 2.4L

REF		PART NO.	NAME OF PART	QTY
1		323814	Cylinder Head	1
2		323815	Cup	1
3		323816	Cup	4
4		323824	Plug	4
5		323820	Inlet valve Insert	4
6		323821	Exhaust valve Insert	4
7		323818	Cup	4
8		323819	Plug	4
9		323817	Plug	5
10		323822	Valve Guide	8
11	a	323823	Seal-Valve Stem Oil	8
12		1360812	Glow Plug	4
13		324603	Connector	1
14		1361508	Gasket	1
15		324435	Hanger (Front)	1
16		324436	Hanger (Rear)	1
17		324437	Spacer	2
18		324125	Stud (35 mm)	3
18		324126	Stud (40 mm)	3
18		324127	Stud (45 mm)	1
19		324382	Clamp	1
20		324167	Plug	1
21		324378	Bolt	4
22		342741	Housing	1
23		324375	Gasket	2
24		324374	Plug	1
25		373660	Hose	1
26		130845	Clamp	2
27		324370	Thermostat (170° F)	1
28		1334272	Gasket	1
29		324373	Bolt	2
30		324369	Outlet	1
31	a	1391232	Gasket	1
32		1334663	Bolt	19
33		1361509	Cover	1
34	a	324133	Gasket	1
35		354789	Cap	1
36		324166	Capscrew	2
37		324135	Washer	2
38	a	324134	Gasket	2
39		1369439	Temperature Switch	1
40		3021238	Engine Oil (Bulk)	AR
40		3021239	Engine Oil (55 Gallon)	AR
40		3021240	Engine Oil (12 Quart Case)	AR

a Included In Seal Kit 1457015

©2000 HYSTER COMPANY

CRANKCASE AND OIL PAN (Figure 40)

DIESEL 2.4L

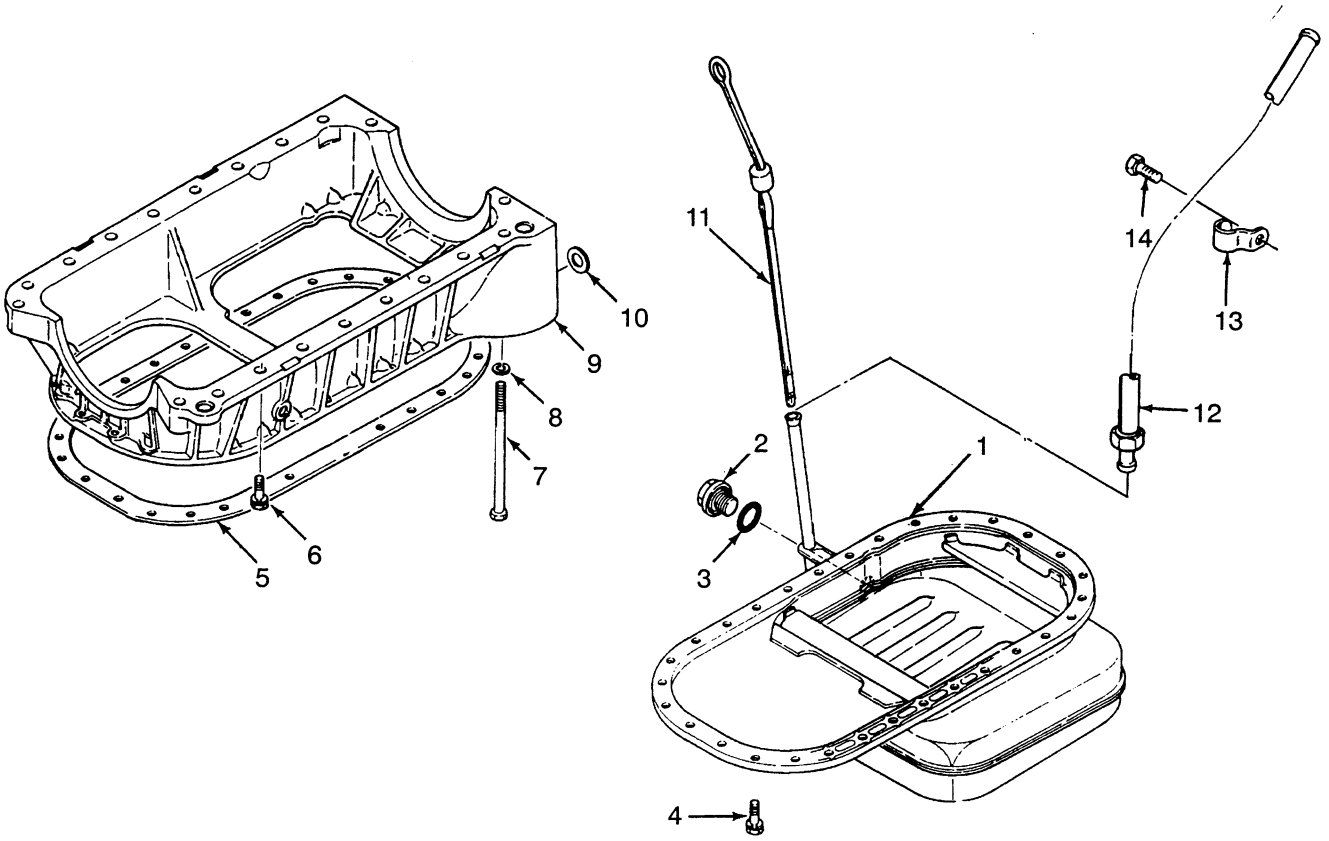

REF		PART NO.	NAME OF PART	QTY
1		1361529	Oil Pan	1
2		324228	Plug	1
3	a	1329327	O-Ring	1
4		324246	Bolt	30
4		1329328	Bolt	2
5	ab	324245	Gasket	1
6		1369443	Bolt	2
6		1338456	Bolt	14
6		1334675	Bolt	2
7		324248	Bolt	2
8		292681	Lockwasher	2
9		324230	Crankcase	1
10		324233	Shim (0.30 mm)	AR
10		324234	Shim (0.35 mm)	AR
10		324235	Shim (0.40 mm)	AR
10		324236	Shim (0.45 mm)	AR

REF		PART NO.	NAME OF PART	QTY
10		324237	Shim (0.50 mm)	AR
10		324238	Shim (0.55 mm)	AR
10		324239	Shim (0.60 mm)	AR
10		324240	Shim (0.65 mm)	AR
10		324241	Shim (0.70 mm)	AR
10		324242	Shim (0.75 mm)	AR
10		324243	Shim (0.80 mm)	AR
10		324244	Shim (0.90 mm)	AR
10		348436	Shim (0.85 mm)	AR
11		348450	Dipstick	1
12		348451	Tube	1
13		348452	Clip	1
14		348453	Bolt	1

a Included In Bottom Gasket Kit 346530
b Included In Seal Kit 1457015

©2000 HYSTER COMPANY

CAMSHAFT AND VALVES (Figure 41)

DIESEL 2.4L

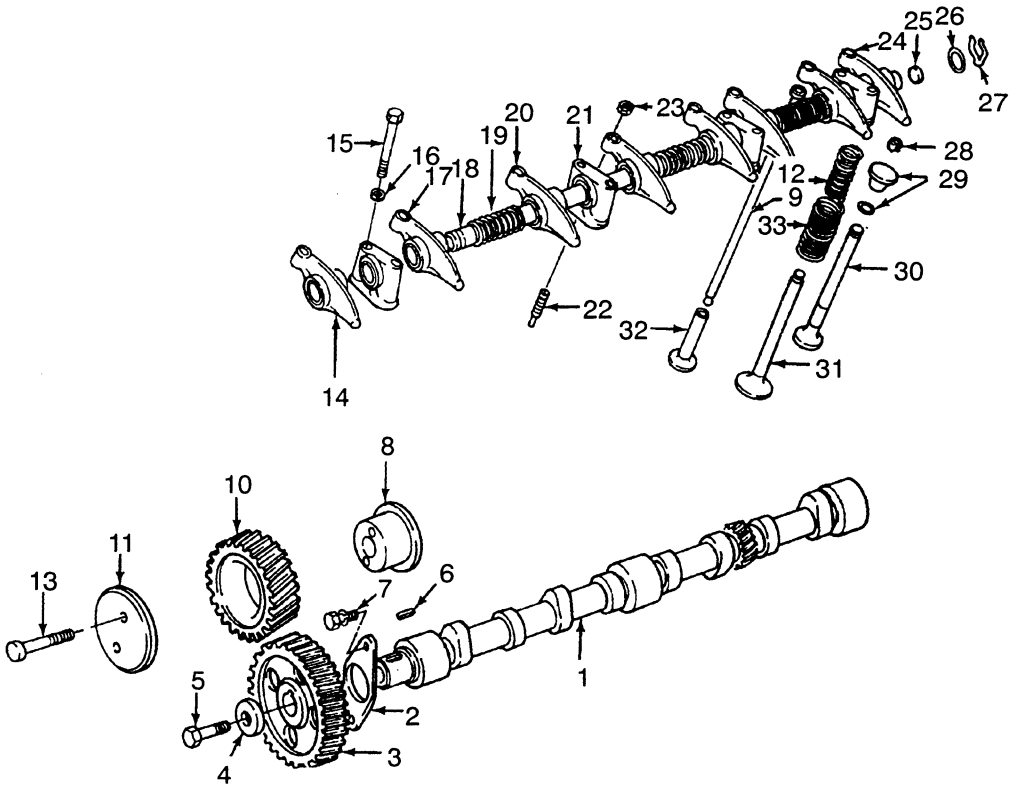

REF	PART NO.	NAME OF PART	QTY
1	1352015	Camshaft	1
2	1352016	Thrust Plate	1
3	324291	Gear	1
4	324294	Washer	1
5	324293	Bolt	1
6	324292	Key	1
7	324296	Bolt	2
8	324297	Shaft	1
9	324308	Push Rod	8
10	1361534	Gear (With Bushing)	1
11	324299	Plate	1
12	324304	Spring (Inner)	8
13	373663	Capscrew	2
14	324309	Rocker Arm	1
15	292509	Capscrew	8
16	324259	Washer	8
17	324312	Rocker Arm	3
18	348462	Rocker Shaft	1
19	324318	Spring	3
20	324311	Rocker Arm	3
21	324317	Bracket	4
22	388280	Screw	8
23	324314	Nut	8
24	324310	Rocker Arm	1
25	324316	Plug	2
26	324321	Washer	2
27	324319	Snap Ring	2
28	324306	Keeper Valve	16
29 [a]	1369039	Seat	8
29	324305	Seal Ring	1
30	324302	Exhaust Valve	4
31	324301	Inlet Valve	4
32	324307	Tappet	8
33	324303	Spring (Outer)	8

[a] Included In Seal Kit 1457015

CRANKSHAFT AND PISTON (Figure 42)

DIESEL 2.4L

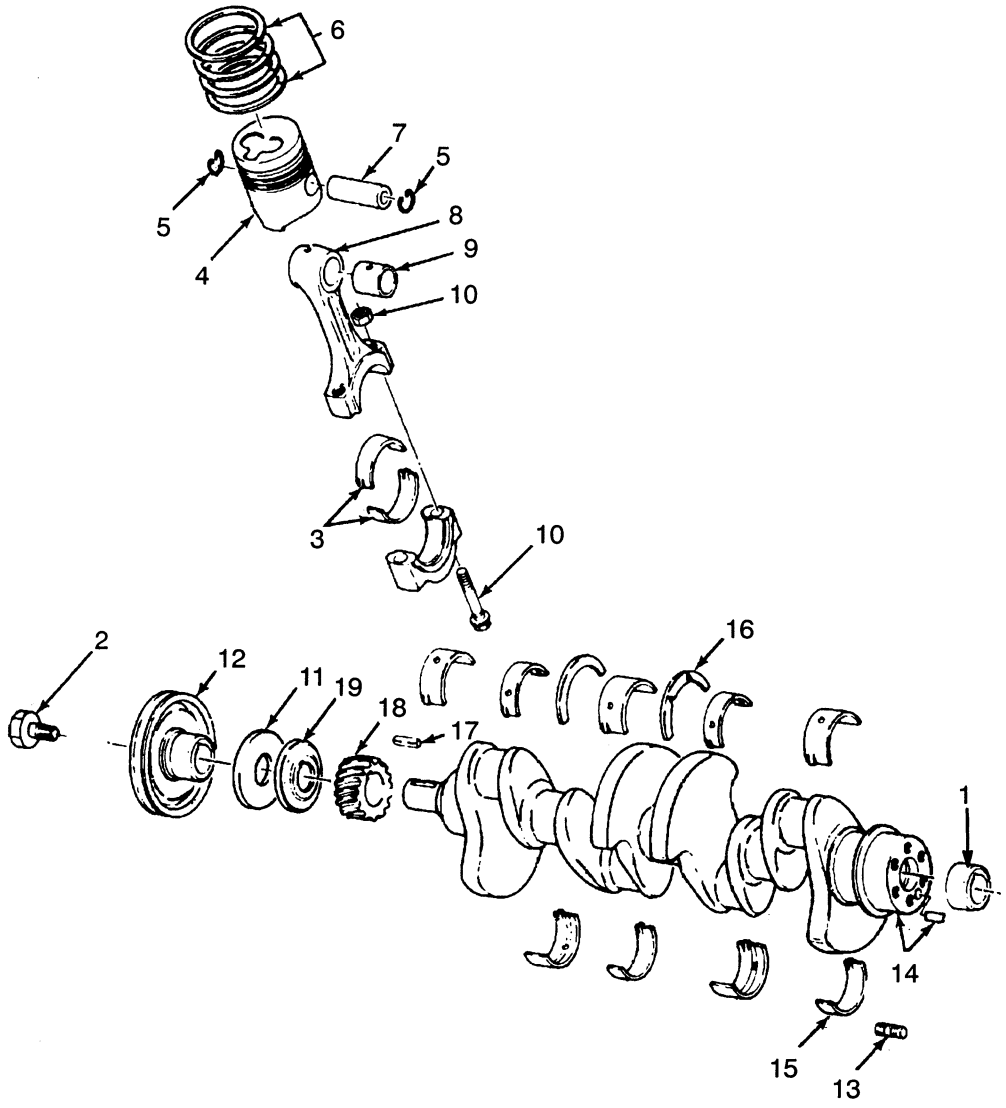

CRANKSHAFT AND PISTON

DIESEL 2.4L

REF		PART NO.	NAME OF PART	QTY
1		324278	Bearing	1
2		1361533	Bolt	1
3	a	362120	Rod Bearing (Standard)	4
3		362121	Rod Bearing (0.25 mm)	4
3		362122	Rod Bearing (0.50 mm)	4
4	b	1456565	Piston (Standard)	4
4	c	1456566	Piston (Standard)	4
5	a	324271	Snap Ring	8
6	a	1360802	Ring Set (Standard)	4
7	a	1361531	Pin	4
8	a	348454	Connector Rod	4
9	a	1360804	Bushing	1
10	a	1360805	Bolt	2
10	a	1360806	Nut	2
11		324288	Dust Slinger	1
12		1361532	Pulley	1
13		324222	Stud	2
14	a	362450	Crankshaft	1
14	a	324277	Pin	1
15	a	324264	Main Bearing (Standard)	1
15		324265	Main Bearing (0.25 mm)	1
15		324266	Main Bearing (0.50 mm)	1
16	a	1330003	Bearing	2
17	a	348437	Tapered Key	1
18		324284	Gear	1
19		324285	Oil Slinger	1

a Included In Short Block 1360808
b With 'A' Or 'B' Stamp
c With 'C' Or 'D' Stamp

©2000 HYSTER COMPANY

TIMING GEAR (Figure 43)

DIESEL 2.4L

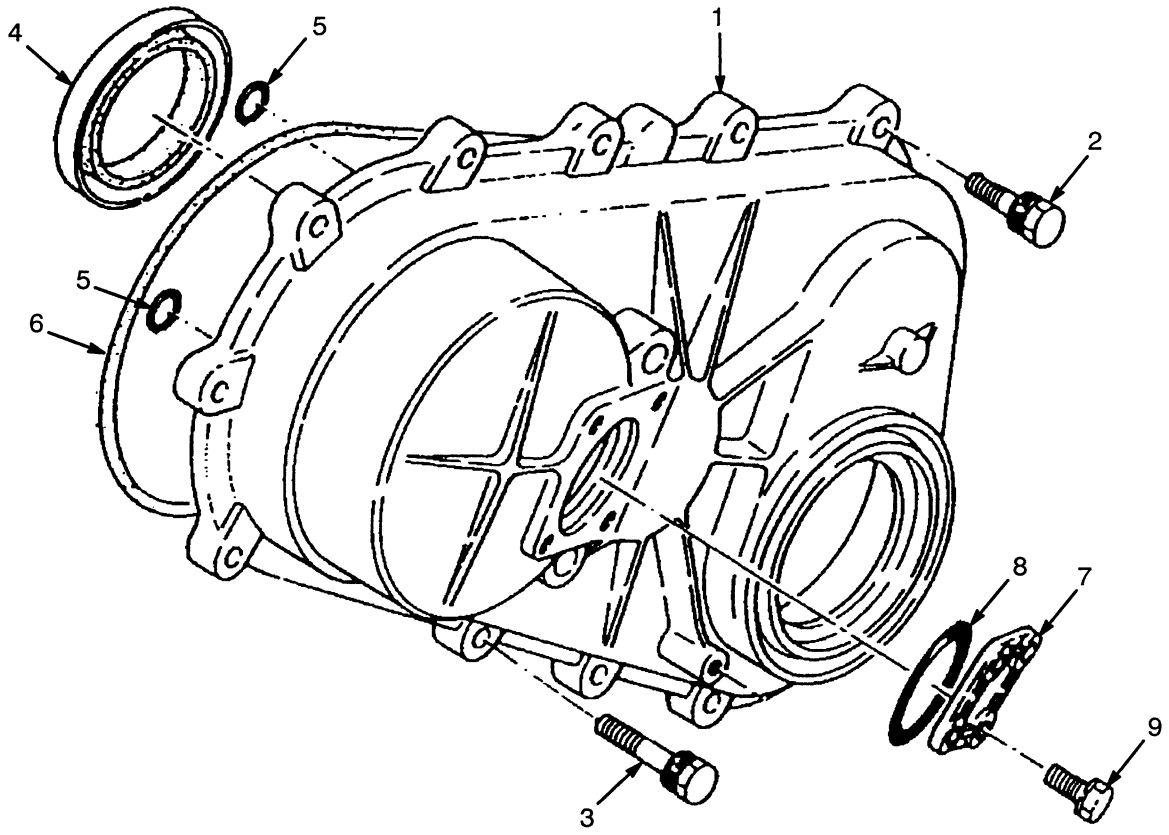

REF		PART NO.	NAME OF PART	QTY
1		1361527	Case	1
2		1337694	Bolt (45 mm)	7
3		1337696	Bolt (30 mm)	2
4	ab	1374645	Oil Seal	1
5	b	1363006	Gasket	2
6	b	1361528	Gasket	1
7		1363003	Cover	1
8	b	1363004	Gasket	1
9		1361524	Bolt	4

a Included In Bottom Gasket Kit 346530
b Included In Seal Kit 1457015

©2000 HYSTER COMPANY

MANIFOLD (Figure 44)

DIESEL 2.4L

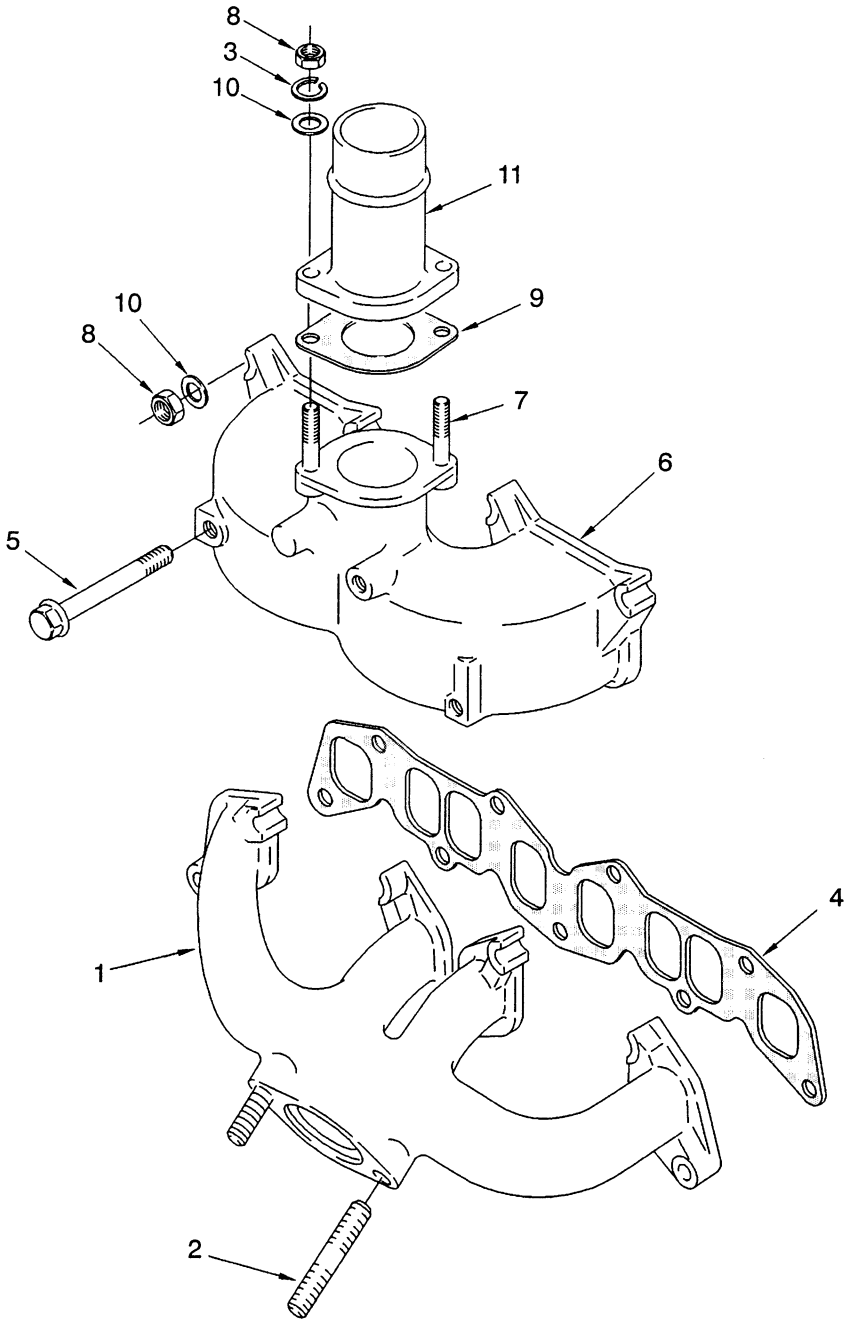

REF	PART NO.	NAME OF PART	QTY
1	324387	Exhaust Manifold	1
2	324388	Stud	2
3	292681	Lockwasher	2
4	1361541	Gasket	1
5	1369443	Bolt (100 mm)	2
6	373661	Inlet Manifold	1
7	1329344	Stud	2

REF	PART NO.	NAME OF PART	QTY
8	239503	Nut	6
9 a	324397	Gasket	2
10	388293	Washer	6
11	1361542	Pipe	1

a Included In Seal Kit 1457015

©2000 HYSTER COMPANY

See Service Manual for service procedures

WATER PUMP (Figure 45)

DIESEL 2.4L

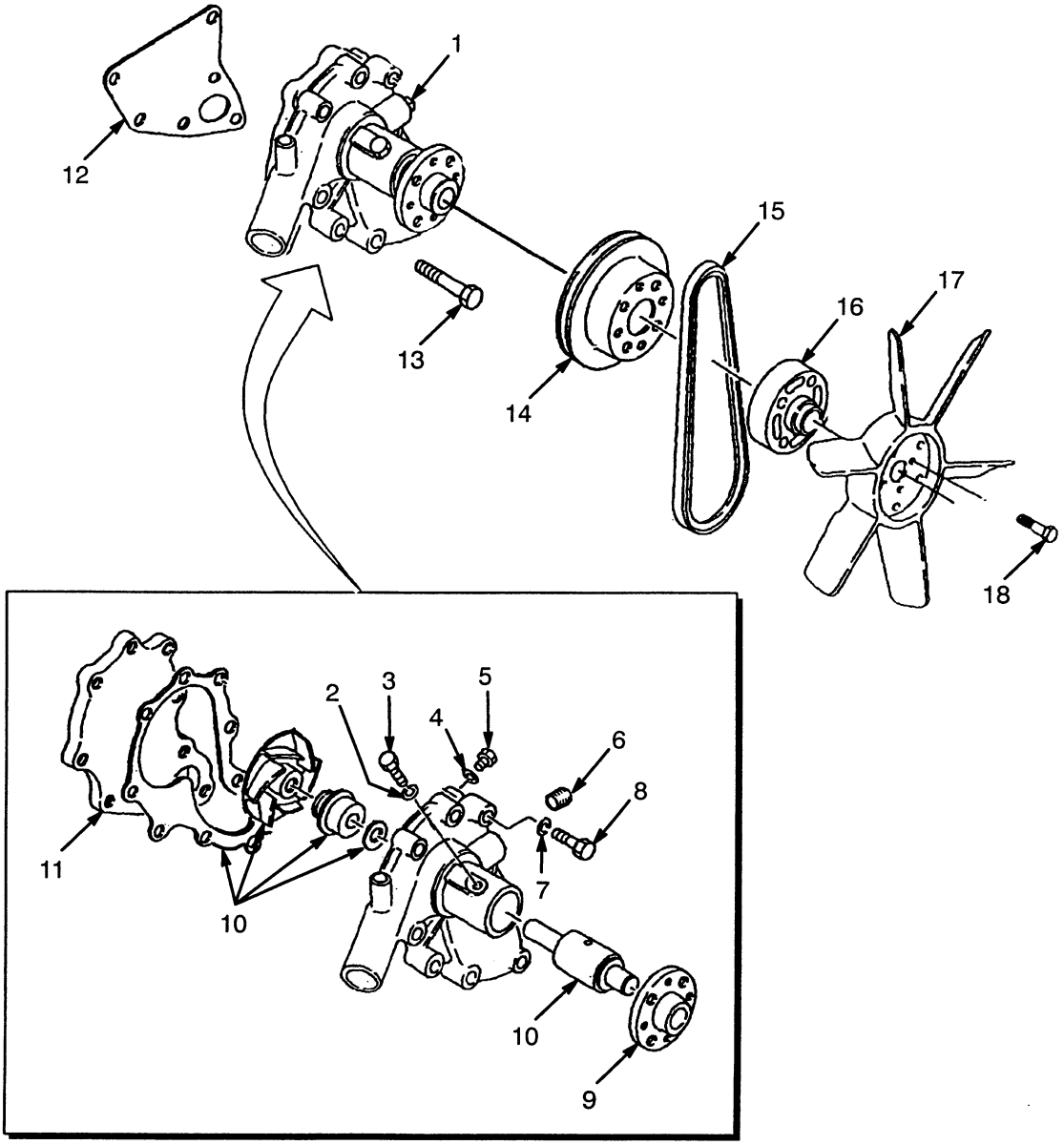

WATER PUMP

DIESEL 2.4L

KEY:
A: Water Pump 1375989 (Optional)
B: Water Pump 1309829

REF		PART NO.	NAME OF PART	QTY A	QTY B
1		1375989	Water Pump	1	..
1	a	1309829	Water Pump (Optional)	..	1
2		292681	Lockwasher	..	1
3		324642	Setscrew	..	1
4		324648	Gasket	..	1
5		324647	Bolt	..	1
6		324167	Plug	..	1
7		292681	Lockwasher	..	3
8		324646	Bolt	..	3
9		324644	Mount	..	1
10	b	.....	Bearing Unit	..	1
10	b	.....	Impeller	..	1
10	b	.....	Packing Seal	..	1
10	b	.....	Seal Unit	..	1
10	b	.....	Bearing Thrower	..	1
11		1330979	Cover	..	1
12	bc	324361	Gasket	1	1
13		324362	Capscrew (60 mm)	1	1
13		367339	Capscrew (65 mm)	1	1
14		1367649	Pulley	1	1
15		1361139	Belt	1	1
16		324366	Spacer	1	1
17		1338472	Fan	1	1
18		1338456	Bolt	4	4

a Remanufactured Water Pump 3002534 R
b Included In Repair Kit 1329336
c Included In Seal Kit 1457015

©2000 HYSTER COMPANY

OIL FILTER (Figure 46)

DIESEL 2.4L

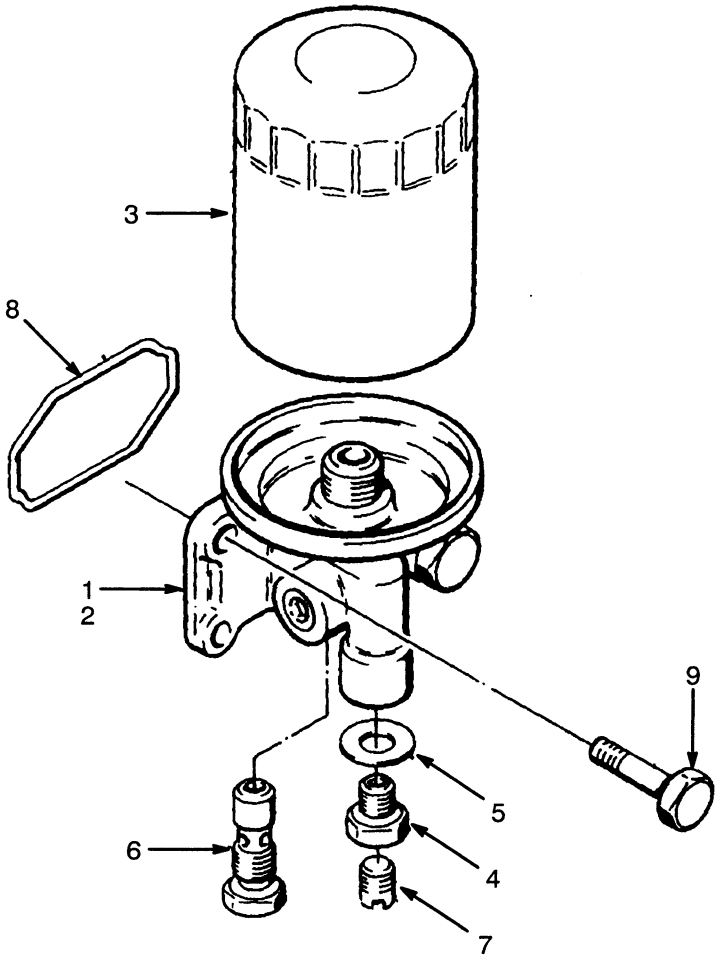

REF	PART NO.	NAME OF PART	QTY
1	374895	Filter	1
2	374896	Body	1
3	360974	Element	1
4	324340	Adapter	1
5	374899	Packing	1
6	324345	Valve	1

REF	PART NO.	NAME OF PART	QTY
7	324342	Plug	1
8 a	1374932	Packing	1
9	388294	Bolt	4

a Included In Seal Kit 1457015

©2000 HYSTER COMPANY

OIL PUMP (Figure 47)

DIESEL 2.4L

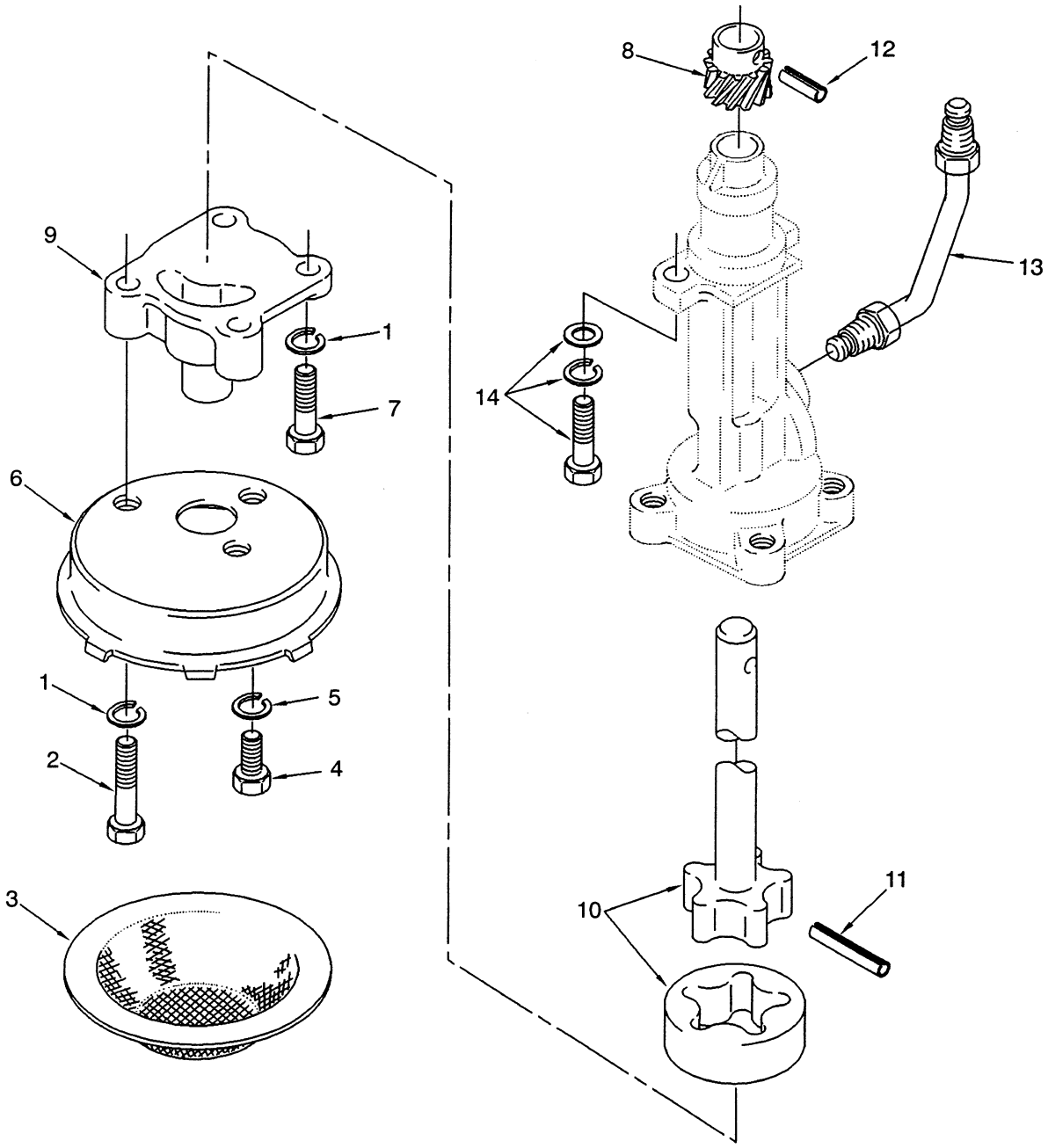

REF	PART NO.	NAME OF PART	QTY
	1329314	Oil Pump	1
1	292681	Lockwasher	4
2	388278	Bolt	2
3	324260	Screen	1
4	324262	Bolt	1
5	292681	Lockwasher	1
6	324261	Case	1
7	287805	Capscrew	2
8	324256	Drive Pinion	1
9	324257	Cover	1
10	388277	Rotor Assembly	1
11	324255	Pin	1
12	324254	Pin	1
13	324350	Pipe	1
14	324263	Bolt	2
14	324259	Washer	2
14	292681	Lockwasher	2

©2000 HYSTER COMPANY

See Service Manual for service procedures

FLYWHEEL (Figure 48)
DIESEL 2.4L, 2.8L, AND 3.1L

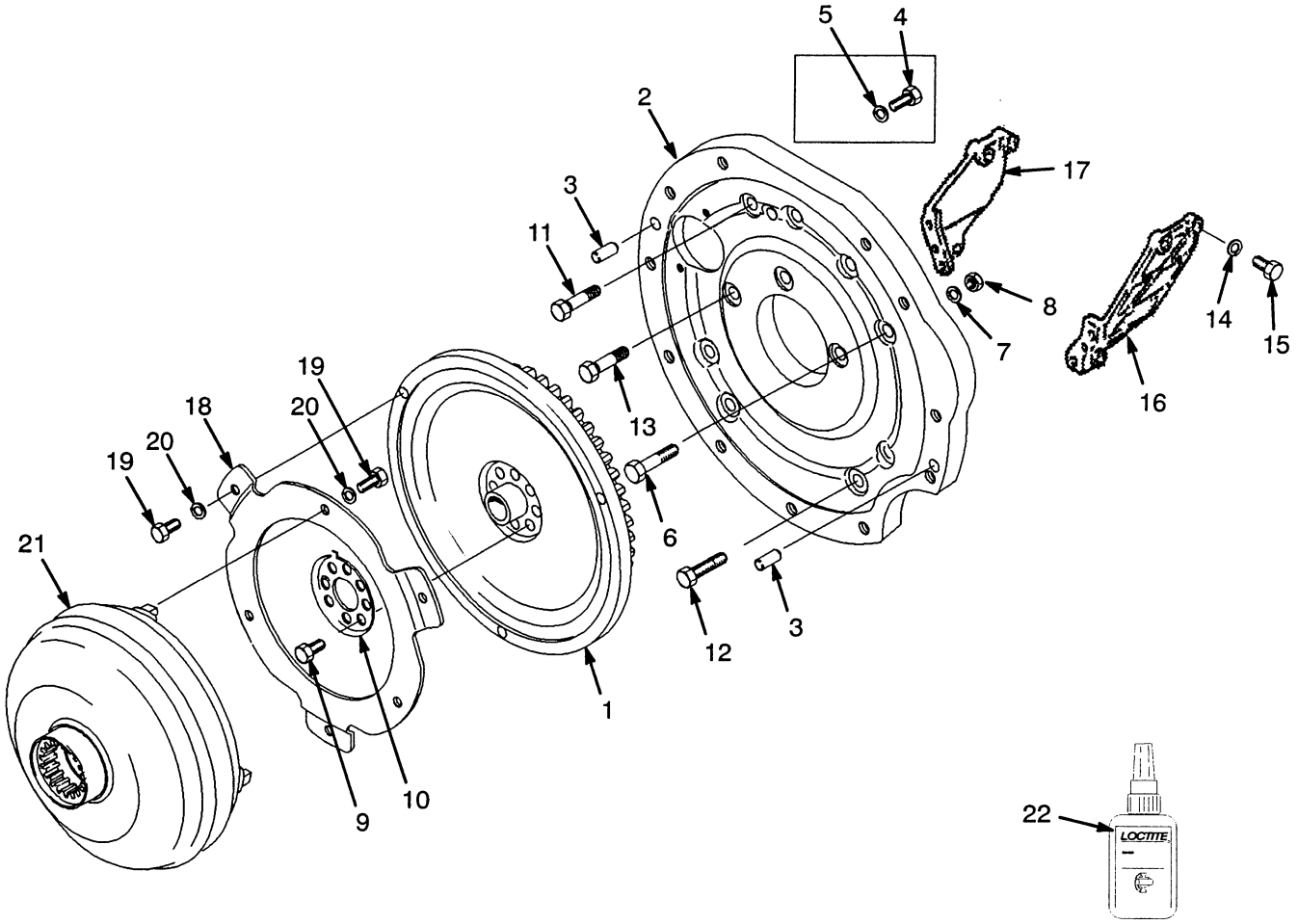

KEY:
A: 2.4L
B: 2.8L & 3.1L

REF	PART NO.	NAME OF PART	QTY A	QTY B
1	1386791	Flywheel	1	..
1	1361111	Flywheel	..	1
1	1361112	Ring Gear	1	1
2	1337138	Housing	1	1
3	302385	Pin	2	2
4	292528	Capscrew	2	2
5	320161	Washer	2	2
6	324173	Reamer Bolt	1	1
7	292682	Washer	2	2
8	303109	Nut	1	1
9	1339639	Bolt	6	8
10	324282	Washer	1	..
10	1329234	Washer	..	1

REF	PART NO.	NAME OF PART	QTY A	QTY B
11	1338779	Bolt	3	3
12	324225	Bolt	2	4
13	324213	Bolt	3	3
14	296420	Washer	..	4
15	1329258	Capscrew	..	4
16	1332637	Stiffener (RH)	..	1
17	1332638	Stiffener (LH)	..	1
18	1337000	Flexplate	1	1
19	15942	Bolt	6	6
20	261379	Washer	6	6
21	1386795	Torque Converter	1	..
21	1343585	Torque Converter (3.58)	..	1
22	360387	Adhesive	ARAR	

©2000 HYSTER COMPANY

NOTES

©2000 HYSTER COMPANY

CYLINDER BLOCK (Figure 49)

DIESEL 2.8L

LAST USED ON S/N D177B-8291

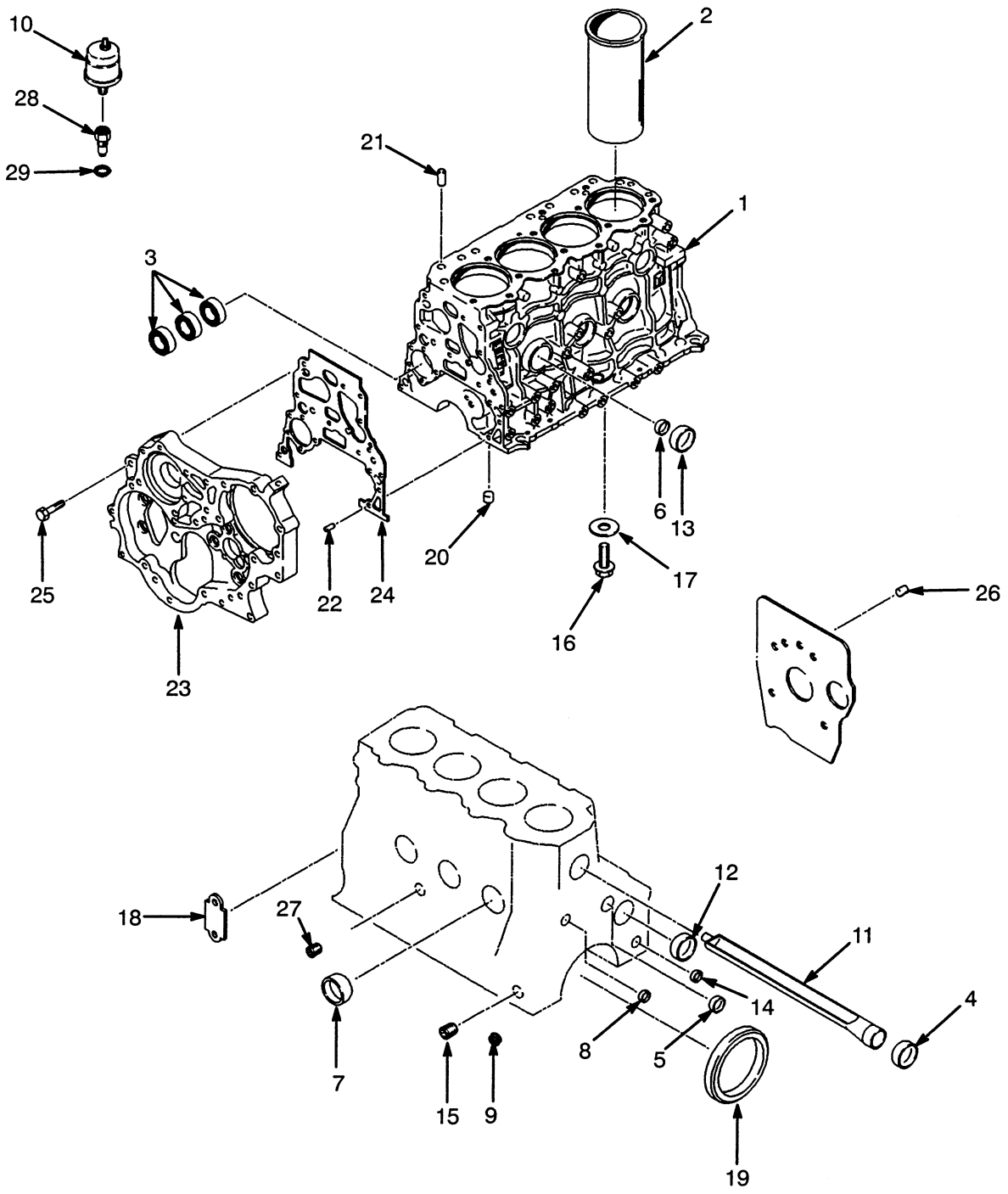

CYLINDER BLOCK

DIESEL 2.8L

LAST USED ON S/N D177B-8291

REF	PART NO.	NAME OF PART	QTY
	1332575	Engine	1
1	1360811	Block	1
2	1456569	Cylinder liner (1-AX)	4
2	1456570	Cylinder liner (1-CX)	4
2	1456571	Cylinder liner (2-AX)	4
2	1456572	Cylinder liner (2-CX)	4
2	1456573	Cylinder liner (3-AX)	4
2	1456574	Cylinder liner (3-CX)	4
2	1456575	Cylinder liner (4-AX)	4
2	1456576	Cylinder liner (4-CX)	4
3	1337678	Bearing	1
4	324139	Cup	1
5	324140	Cup	1
6	323817	Plug	3
7	323815	Cup	3
8	323818	Cup	1
9	324141	Cup	2
10	340868	Oil Pressure Switch	1
11	1361545	Water Duct	1
12	324144	Cup	1
13	324139	Cup	3
14	323816	Cup	2
15	324146	Plug	3
16	324374	Screw	1
17	348428	Gasket	1
18	1337680	Seal	1
19	1337681	Oil Seal	1
20	324161	Pin	2
21	1329318	Dowel	2
22	1337693	Pin	2
23	1374643	Plate (Front)	1
24	1337684	Gasket	1
25	1337685	Bolt	7
26	324155	Pin	1
27	14385	Water Drain Plug	1
28	1338788	Adaptor	1
29	1338790	O-Ring	1

©2000 HYSTER COMPANY

CYLINDER HEAD (Figure 50)

DIESEL 2.8L

LAST USED ON S/N D177B-8291

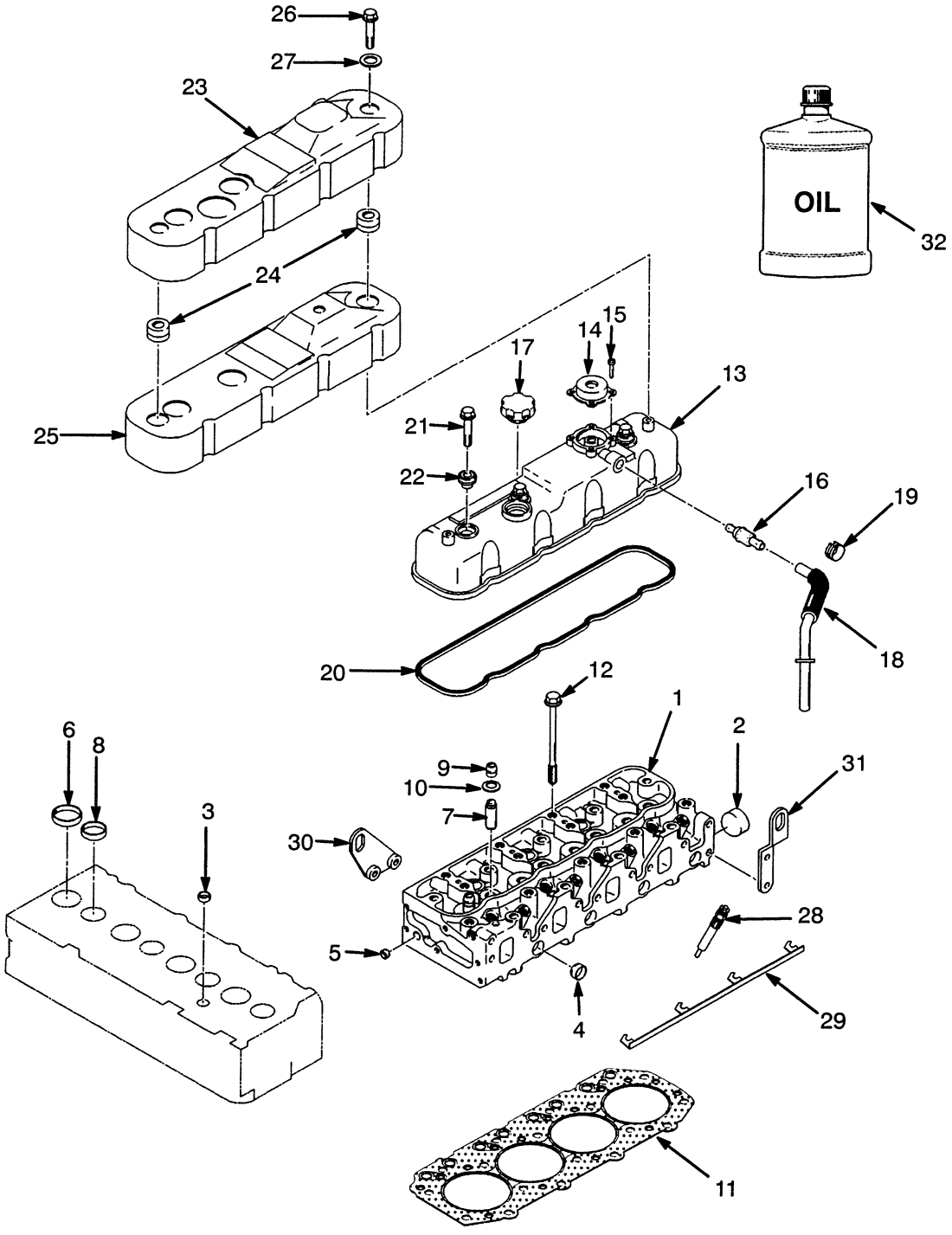

©2000 HYSTER COMPANY

CYLINDER HEAD

DIESEL 2.8L

LAST USED ON S/N D177B-8291

REF	PART NO.	NAME OF PART	QTY
1	1334670	Cylinder Head	1
2	323815	Cup	1
3	323816	Cup	3
4	1334651	Cup	7
5	323818	Cup	5
6	1334655	Inlet Insert	4
7	323822	Guide	8
8	1334656	Exhaust Insert	4
9	323823	Seal	8
10	1334653	Seat	8
11	1334668	Gasket	1
12	1334663	Bolt	18
13	1360823	Cover	1
14	1334665	Ventillator valve	1
15	1334672	Screw	4
16	1334666	Breather Pipe	1
17	1334657	Oil Filler Cap	1
18	1334669	Hose	1
19	1334654	Clamp	2
20	1334664	Gasket	1
21	1360824	Nut	3
22	1334661	Packing	3
23	1334658	Cover	1
24	1334667	Grommet	2
25	1334660	Spacer	1
26	1334650	Bolt	2
27	1334673	Washer	2
28	1360816	Glow Plug	4
29	1338787	Connector	1
30	1338776	Hanger (Front)	1
31	1338777	Hanger (Rear)	1
32	3021238	Engine Oil (Bulk)	AR
32	3021239	Engine Oil (55 Gallon)	AR
32	3021240	Engine Oil (12 Quart Case)	AR

©2000 HYSTER COMPANY

CAMSHAFT AND VALVES (Figure 51)

DIESEL 2.8L

LAST USED ON S/N D177B-8291

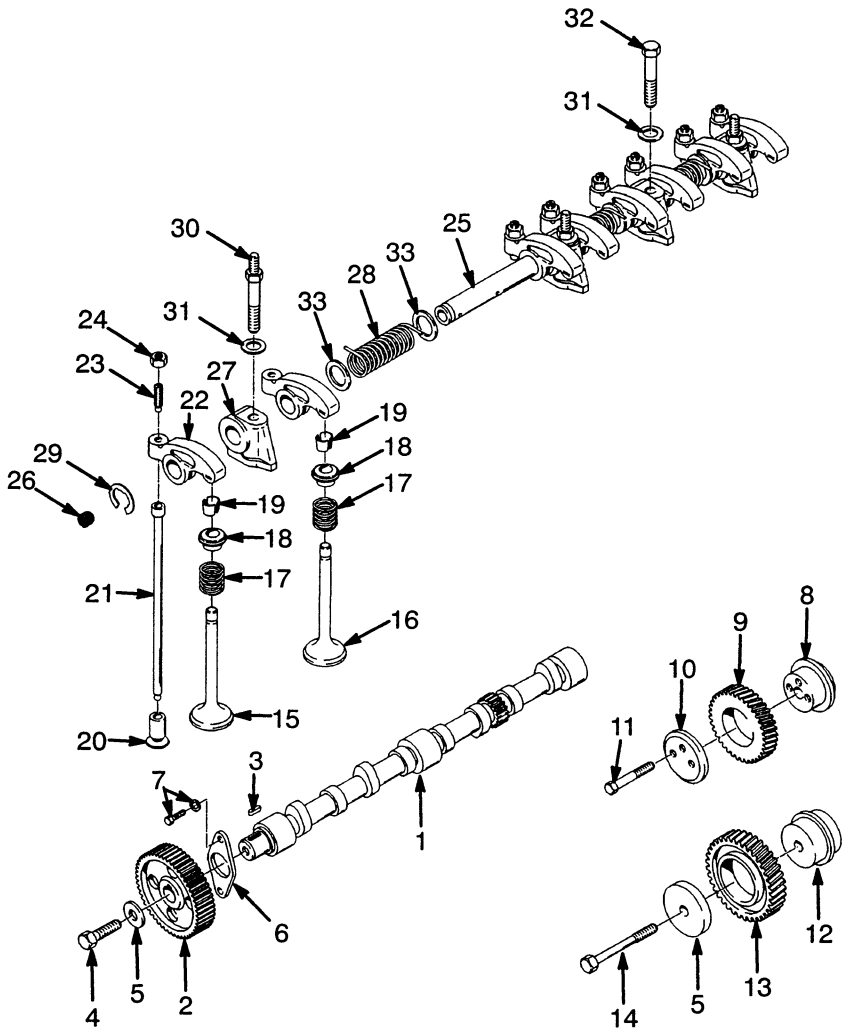

REF	PART NO.	NAME OF PART	QTY
1	1338406	Camshaft	1
2	1338407	Gear	1
3	324292	Key	1
4	1338408	Bolt	1
5	324294	Washer	2
6	1338409	Thrust Plate	1
7	1338410	Bolt	2
8	1338411	Shaft	1
9	1338412	Gear	1
10	1338413	Collar	1
11	373663	Bolt	2
12	1338415	Shaft	1
13	1338416	Gear	1
14	1338417	Bolt	1
15	1338418	Inlet Valve	4
16	1338419	Exhaust Valve	4
17	1338420	Spring (Outer)	8
18	1374926	Seat	8
19	324306	Collar	16
20	1338422	Tappet	8
21	1374927	Push Rod	8
22	1338424	Rocker Arm	8
23	388280	Adjusting Screw	8
24	324314	Nut	8
25	1338427	Rocker Shaft	1
26	324316	End Plug	2
27	1338428	Bracket	4
28	1338429	Spring	3
29	324319	Snap Ring	2
30	1338430	Bolt	3
31	1338431	Washer	4
32	1338432	Bolt	1
33	1338433	Washer	6

©2000 HYSTER COMPANY

NOTES

©2000 HYSTER COMPANY

CRANKSHAFT AND PISTON (Figure 52)

DIESEL 2.8L

LAST USED ON S/N D177B-8291

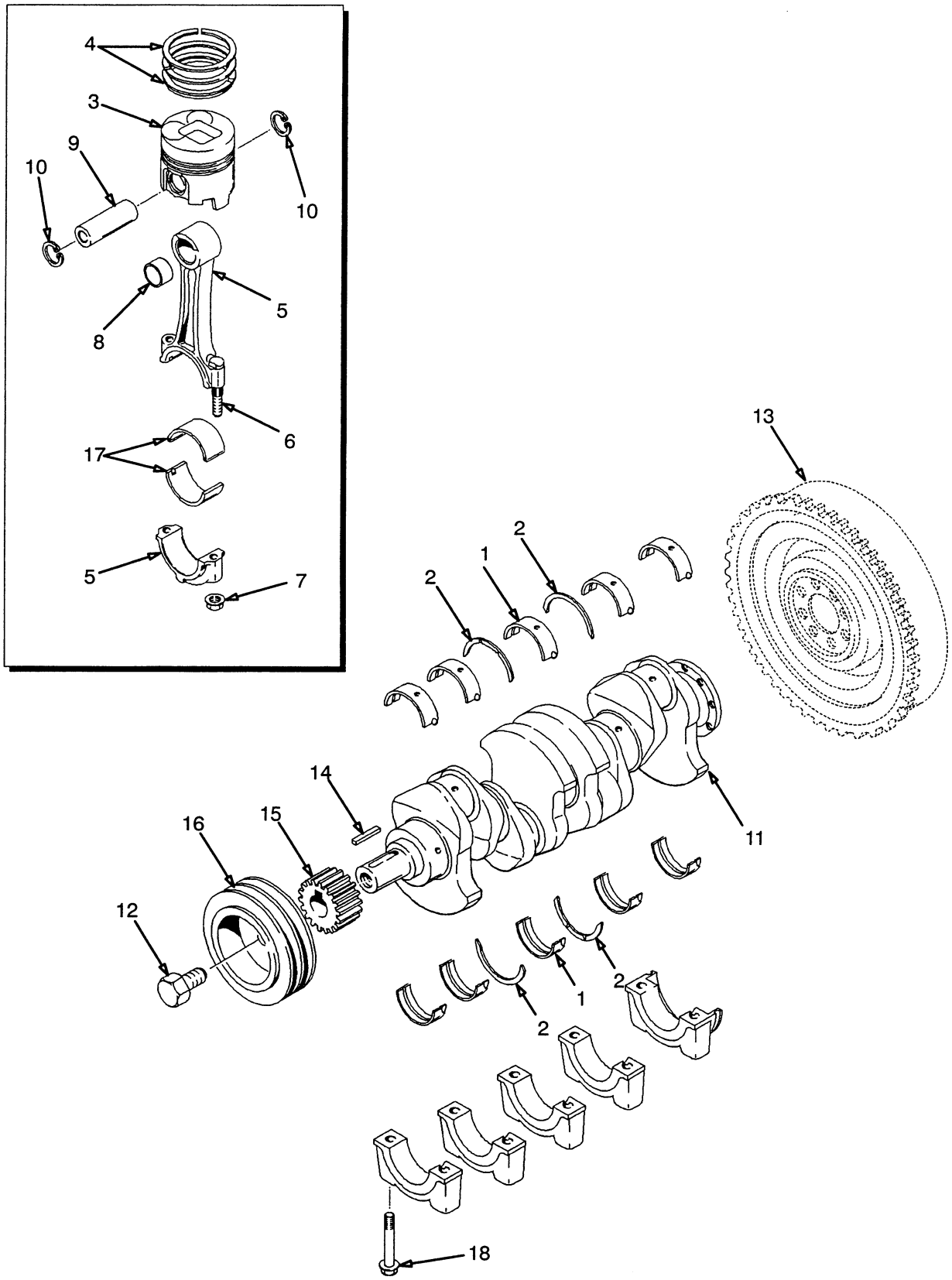

CRANKSHAFT AND PISTON

DIESEL 2.8L

LAST USED ON S/N D177B-8291

REF		PART NO.	NAME OF PART	QTY
1		1334691	Bearing (Crankhaft)	1
2		1334692	Thrust Bearing	1
3	a	1456567	Piston	4
3	b	1456568	Piston	4
4		1334694	Piston Ring Set	4
5		1334695	Connecting Rod	4
6		1334696	Bolt	2
7		348457	Nut	2
8		1369286	Bushing	1
9		1334698	Piston Pin	4
10		1334699	Snap Ring	8
11		1338400	Crankshaft	1
12		1338405	Bolt	1
13		.....	Flywheel ☞ Figure 48	1
14		348437	Key	1
15		1338403	Gear	1
16		1338404	Pulley	1
17		1334697	Bearing (Connecting Rod)	4
18		1337677	Bolt	10

a With 'A' Or 'B' Stamp
b With 'C' Or 'D' Stamp

©2000 HYSTER COMPANY

CRANKCASE AND OIL PAN (Figure 53)

DIESEL 2.8L

LAST USED ON S/N D177B-8291

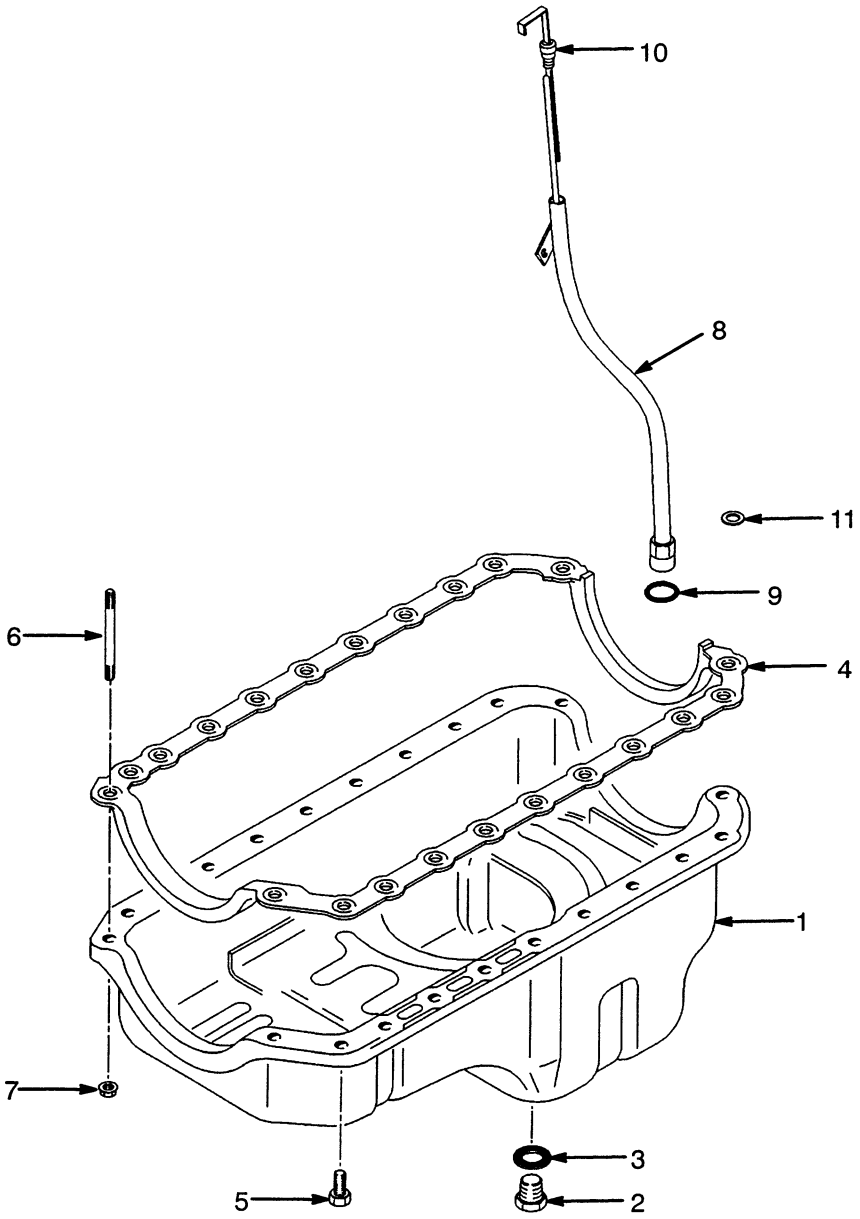

REF	PART NO.	NAME OF PART	QTY
1	1334676	Oil Pan	1
2	1334679	Drain Plug	1
3	1334678	O-Ring	1
4	1374652	Gasket	1
5	1334680	Bolt	12
6	1334681	Stud	10
7	1334682	Nut	10
8	1374653	Oil Level Tube	1
9	1338449	O-Ring	1
10	1334685	Oil Level Guage	1
11	324434	Flatwasher	1

©2000 HYSTER COMPANY

See Service Manual for service procedures

TIMING GEAR (Figure 54)

DIESEL 2.8L

LAST USED ON S/N D177B-8291

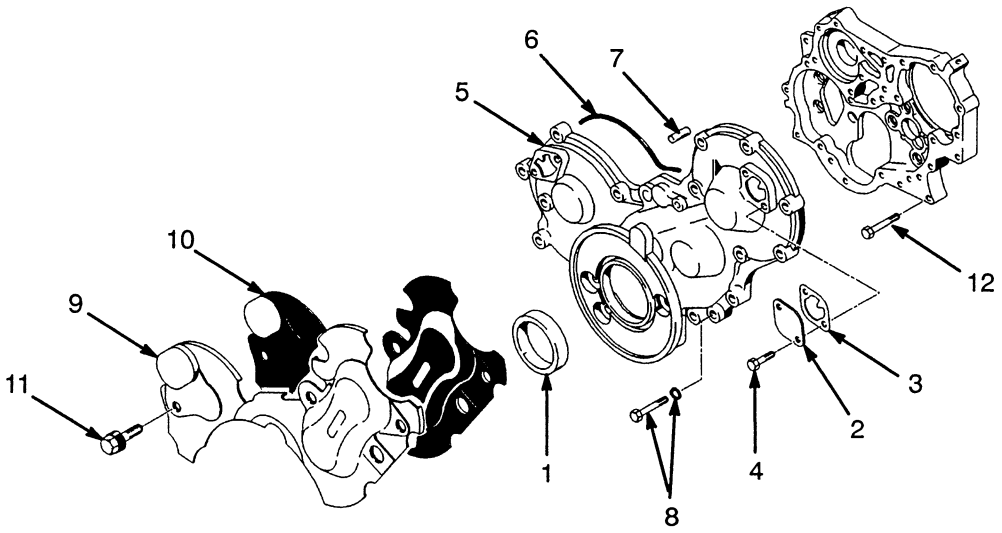

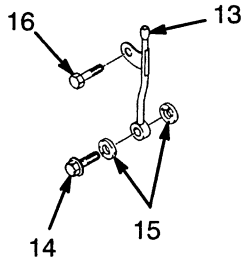

REF	PART NO.	NAME OF PART	QTY
1	1374645	Oil Seal	1
2	324200	Cover	2
3	1337690	Gasket	2
4	324504	Bolt	4
5	1337691	Cover	1
6	1337692	O-Ring	1
7	1337693	Pin	2
8	1337694	Bolt	8

REF	PART NO.	NAME OF PART	QTY
9	1337697	Cover	1
10	1337698	Spacer	1
11	1337699	Bolt	4
12	1334675	Bolt	3
13	1338453	Pipe	1
14	1338454	Bolt	1
15	324412	Seal	1
16	1338456	Bolt	1

©2000 HYSTER COMPANY

MANIFOLD (Figure 55)

DIESEL 2.8L

LAST USED ON S/N D177B-8291

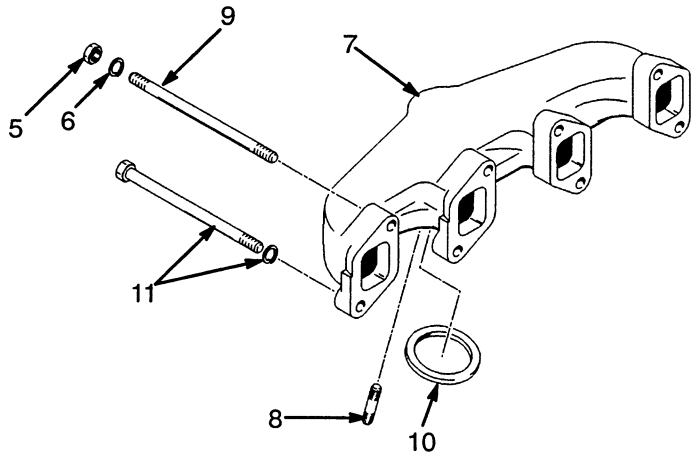

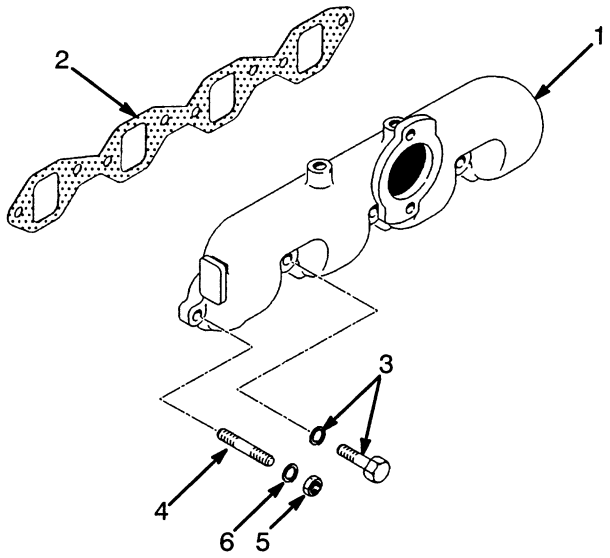

REF	PART NO.	NAME OF PART	QTY
1	1338752	Inlet Manifold	1
2	1361546	Gasket	1
3	1338754	Bolt and Washer	6
4	1329344	Stud	2
5	239503	Nut	4
6	292681	Spring Washer	4

REF	PART NO.	NAME OF PART	QTY
7	1374951	Exhaust Manifold	1
8	1361547	Stud	4
9	324125	Stud	2
10	1335954	Gasket	1
11	1338468	Bolt and Washer	6

©2000 HYSTER COMPANY

NOTES

©2000 HYSTER COMPANY

WATER PUMP (Figure 56)

DIESEL 2.8L AND 3.1L

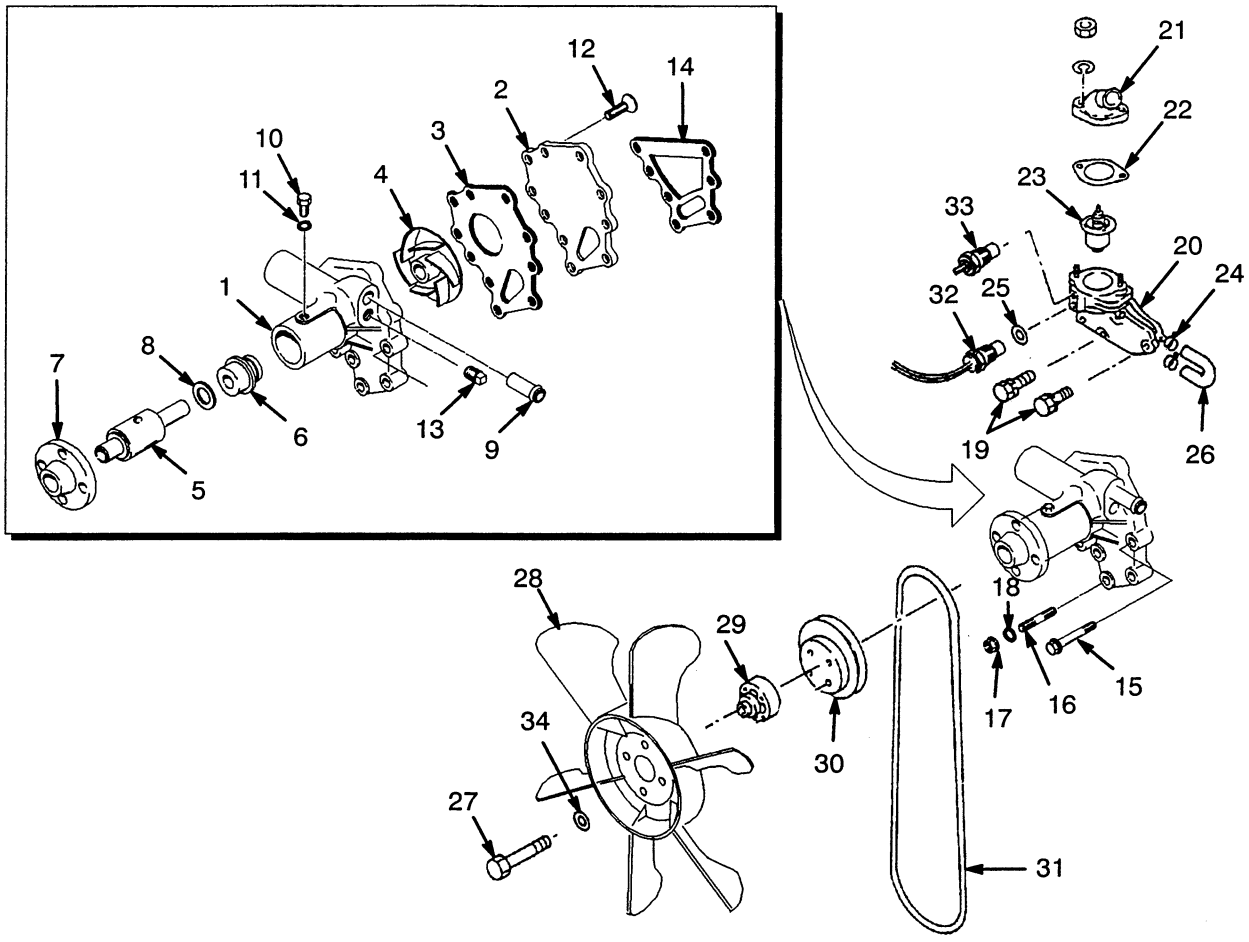

©2000 HYSTER COMPANY

WATER PUMP

DIESEL 2.8L AND 3.1L

REF		PART NO.	NAME OF PART	QTY
1		1338457	Water Pump	1
2		1374948	Cover	1
3	a	1342613	Gasket	1
4	a	1329333	Impeller	1
5	a	1329332	Bearing	1
6	a	1329337	Seal	1
7		324644	Mount	1
8	a	1329339	Bearing	1
9		1342614	Fitting	2
10		1342615	Setscrew	1
11		292681	Washer	1
12		1374949	Screw	3
13		324167	Screw	1
14		1338458	Gasket	1
15		1338459	Capscrew	2
15		1338460	Capscrew	1
16		324126	Stud	3
17		239503	Nut	3
18		292681	Washer	3
19		1338468	Capscrew	2
19		1337685	Capscrew	3
20	b	1338463	Housing	1
20	c	1374941	Housing	1
20	b	1338467	Gasket	1
20	ch	1374943	Gasket	1
21		1338461	Water Outlet	1
22	fk	1334272	Gasket	1
22	gh	1334272	Gasket	1
23	b	1338462	Thermostat (180° F)	1
23	c	1374940	Thermostat (180° F)	1
24	b	1338466	Clamp	2
24	c	1374942	Clamp	2
25		324375	O-Ring	1
26		1338465	By-pass Hose	1
27	b	1338468	Capscrew	1
27	c	1374946	Capscrew	1
28	d	1338472	Fan	1
28	e	1375151	Fan	1
29	b	1338471	Spacer	1
29	c	324366	Spacer	1
30	b	1338470	Fan Pulley	1
30	c	1374944	Fan Pulley	1
31		1376448	Belt	1
32	b	1361549	Temperature Switch	1
32	c	1369439	Temperature Switch	1
33	c	1320939	Temperature Sender	1
34	c	1374947	Washer	4

a Included In Repair Kit 1342611
b 2.8L Last Used On S/N D177B-8291
c 3.1L First Used On S/N D177B-8292
d Last Used On S/N D177B-12749
e First Used On S/N D177B-12750
f 2.8L
g 3.1L
h Included In Seal Kit 1457161
k Included In Seal Kit 1457015

©2000 HYSTER COMPANY

OIL FILTER (Figure 57)

DIESEL 2.8L AND 3.1L

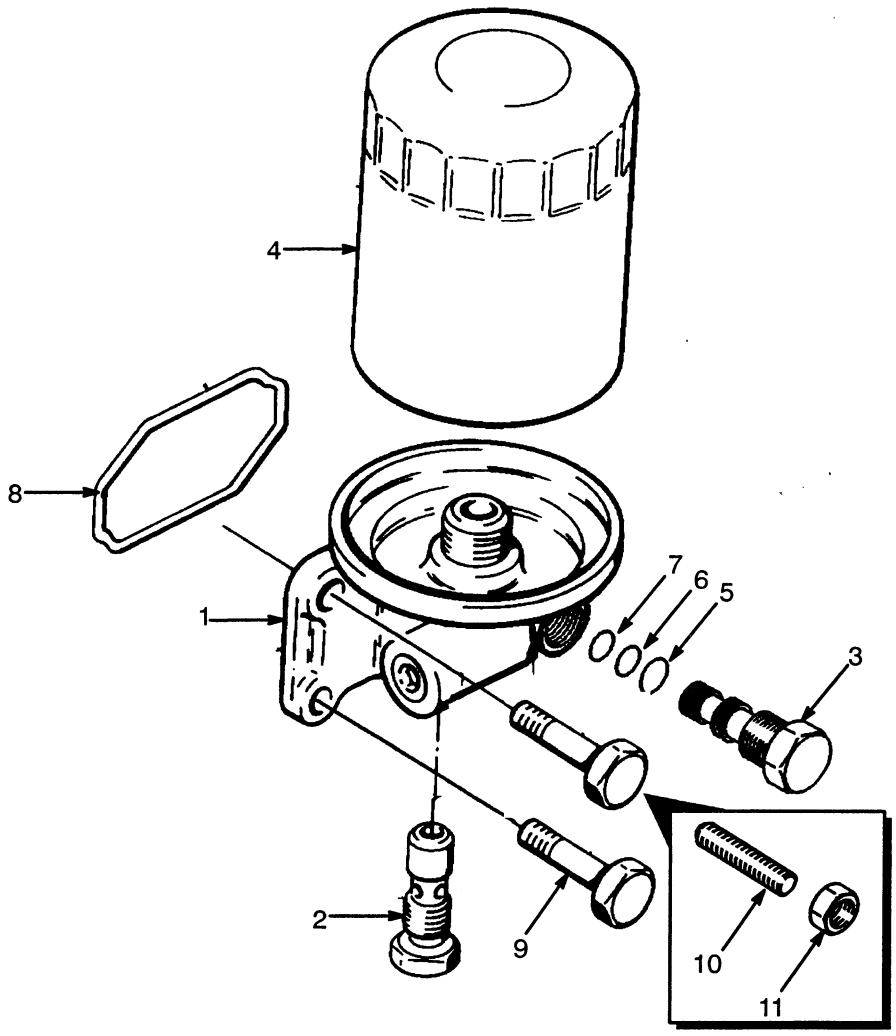

REF		PART NO.	NAME OF PART	QTY
		1338434	Oil Filter	1
1		1338435	Housing	1
2		1338436	Check Valve	1
3		1338437	Plug	1
4		1374939	Oil Filter	1
5		1338439	O-Ring	1
6		1338440	O-Ring	1
7		1338441	O-Ring	1
8	a	1374932	Gasket	1
8	bc	1374932	Gasket	1
9	a	1338442	Capscrew	4
9	b	1374649	Capscrew	2
10	b	1329344	Stud	2
11	b	1374933	Nut	2

a 2.8L
b 3.1L
c Included In Seal Kit 1457161

©2000 HYSTER COMPANY

OIL PUMP (Figure 58)

DIESEL 2.8L AND 3.1L

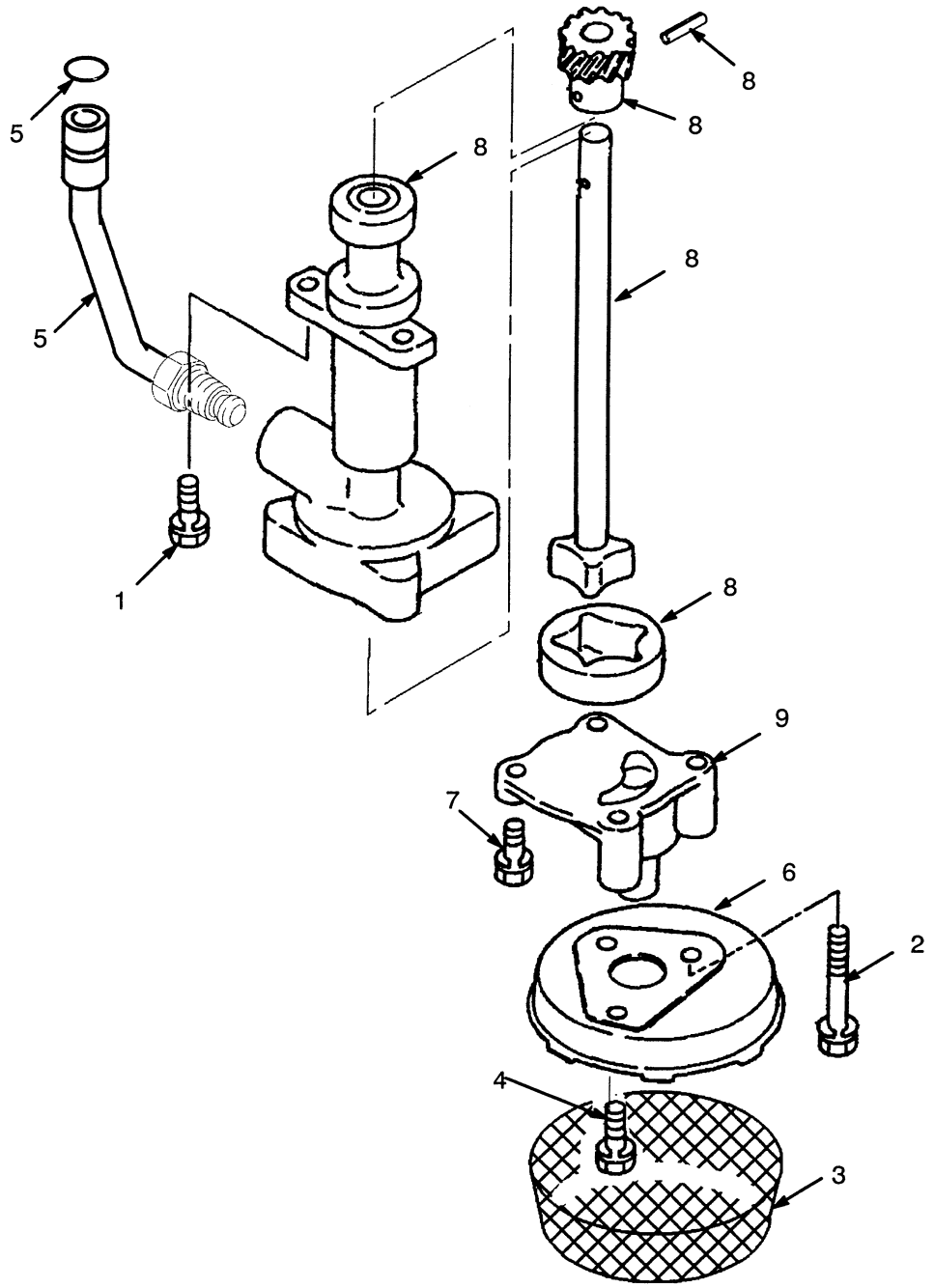

REF		PART NO.	NAME OF PART	QTY
		1329314	Oil Pump	1
1		324263	Capscrew	2
2		388278	Capscrew	2
3		324260	Screen	1
4		1374655	Capscrew	1
5		1338448	Pipe	1
5	a	1338449	O-Ring	1
5	bc	1338449	O-Ring	1

REF	PART NO.	NAME OF PART	QTY
6	324261	Case	1
7	373658	Capscrew	2
8	1342600	Pump Rotor	1
9	324257	Cover	1

a 2.8L
b 3.1L
c Included In Seal Kit 1457161

©2000 HYSTER COMPANY

CYLINDER BLOCK (Figure 59)
DIESEL 3.1L
FIRST USED ON S/N D177B-8292

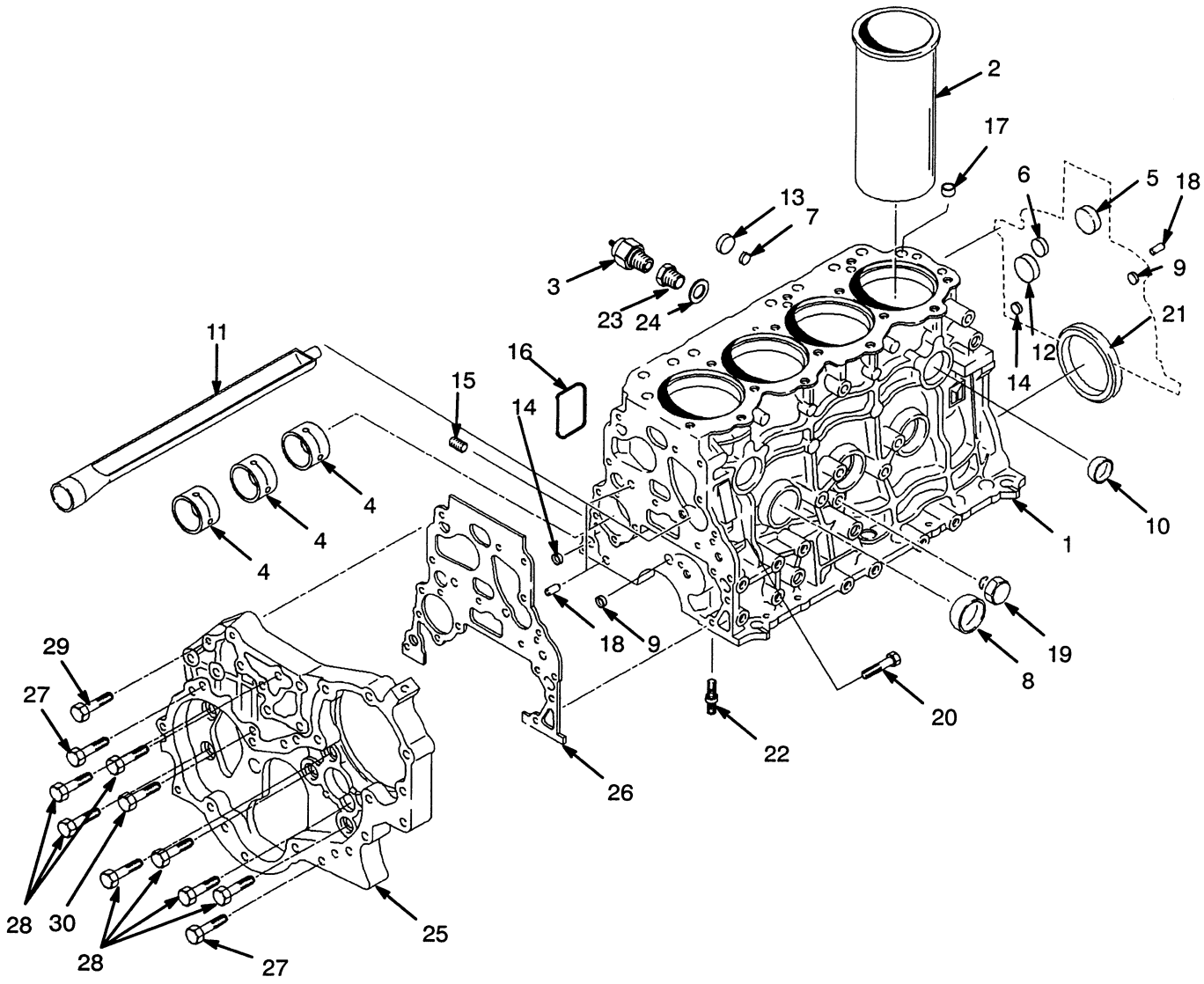

CYLINDER BLOCK

DIESEL 3.1L

FIRST USED ON S/N D177B-8292

REF		PART NO.	NAME OF PART	QTY
		1356396	Engine	1
1		1374638	Cylinder Block	1
2		1456577	Cylinder Liner (1-AX)	4
2		1456581	Cylinder Liner (1-CX)	4
2		1456582	Cylinder Liner (2-AX)	4
2		1456583	Cylinder Liner (2-CX)	4
2		1456584	Cylinder Liner (3-AX)	4
2		1456585	Cylinder Liner (3-CX)	4
2		1456586	Cylinder Liner (4-AX)	4
2		1456587	Cylinder Liner (4-CX)	4
3		1374971	Oil Pressure Switch	1
4		1337678	Bearing Kit (Standard)	1
4		1374978	Bearing Kit (0.50 mm)	1
4		1374979	Bearing Kit (1.00 mm)	1
5		324139	Cup	1
6		324140	Cup	1
7		323817	Plug	3
8		323815	Cup	3
9		323818	Cup	1
10		324141	Cup	2
11		1374640	Water Duct	1
12		324144	Cup	1
13		324139	Cup	3
14		323816	Cup	2
15		324146	Plug	3
16		1337680	Seal	1
17		1329318	Dowel	2
18		1337693	Pin	3
19		14385	Fitting	1
20		324173	Bolt	1
21	a	1374642	Seal	1
22		1334681	Stud	10
23		1361544	Connector	1
24	a	324148	Washer	1
25		1374643	Case	1
26	a	1374644	Packing	1
27		1334675	Bolt	10
28		1337685	Bolt	7
29		1374649	Bolt	1
30		1338460	Bolt	1

a Included In Seal Kit 1457161

©2000 HYSTER COMPANY

CYLINDER HEAD (Figure 60)

DIESEL 3.1L

FIRST USED ON S/N D177B-8292

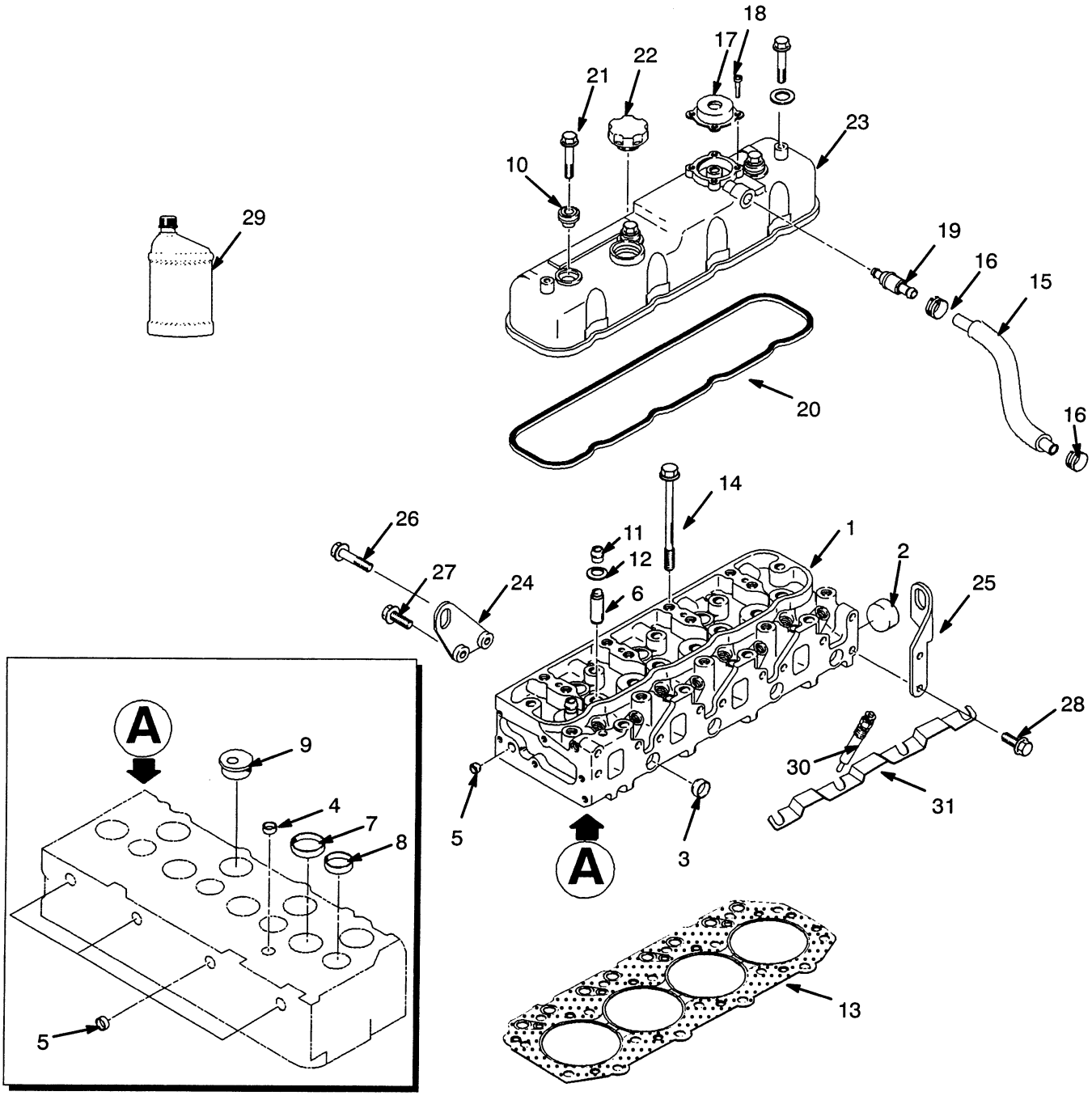

CYLINDER HEAD

DIESEL 3.1L

FIRST USED ON S/N D177B-8292

REF		PART NO.	NAME OF PART	QTY
1		1374630	Cylinder Head	1
2		323815	Cup	1
3		1334651	Cup	7
4		323816	Cup	3
5		323818	Cup	5
6		323822	Guide	8
7		1374631	Insert	4
8		1334656	Insert	4
9		1374632	Plug	4
10	a	1334661	Packing	3
11	a	323823	Seal	8
12		1334653	Spring Seat	8
13		1374633	Gasket (1.50 mm Grade A)	1
13	a	1374974	Gasket (1.55 mm Grade B)	1
13		1374975	Gasket (1.60 mm Grade C)	1
14		1374634	Bolt	18
15		1374636	Hose	1
16		1334654	Clip	2
17		1334665	Oil Cap	1
18		1334672	Screw	4
19		1334666	Breather Pipe	1
20	a	1334664	Gasket	1
21		1334662	Nut Cap	3
22		1334657	Cap	1
22	a	1457164	Gasket	1
23		1374635	Cover	1
24		1338776	Bracket (Front)	1
25		1374965	Bracket (Rear)	1
26		1338754	Bolt	1
27		1374966	Bolt	1
28		1338780	Bolt	2
29		3021240	Engine Oil (12 Quart)	AR
30		1374969	Glow Plug	4
31		1374970	Connector	1

a Included In Seal Kit 1457161

©2000 HYSTER COMPANY

CAMSHAFT AND VALVES (Figure 61)

DIESEL 3.1L

FIRST USED ON S/N D177B-8292

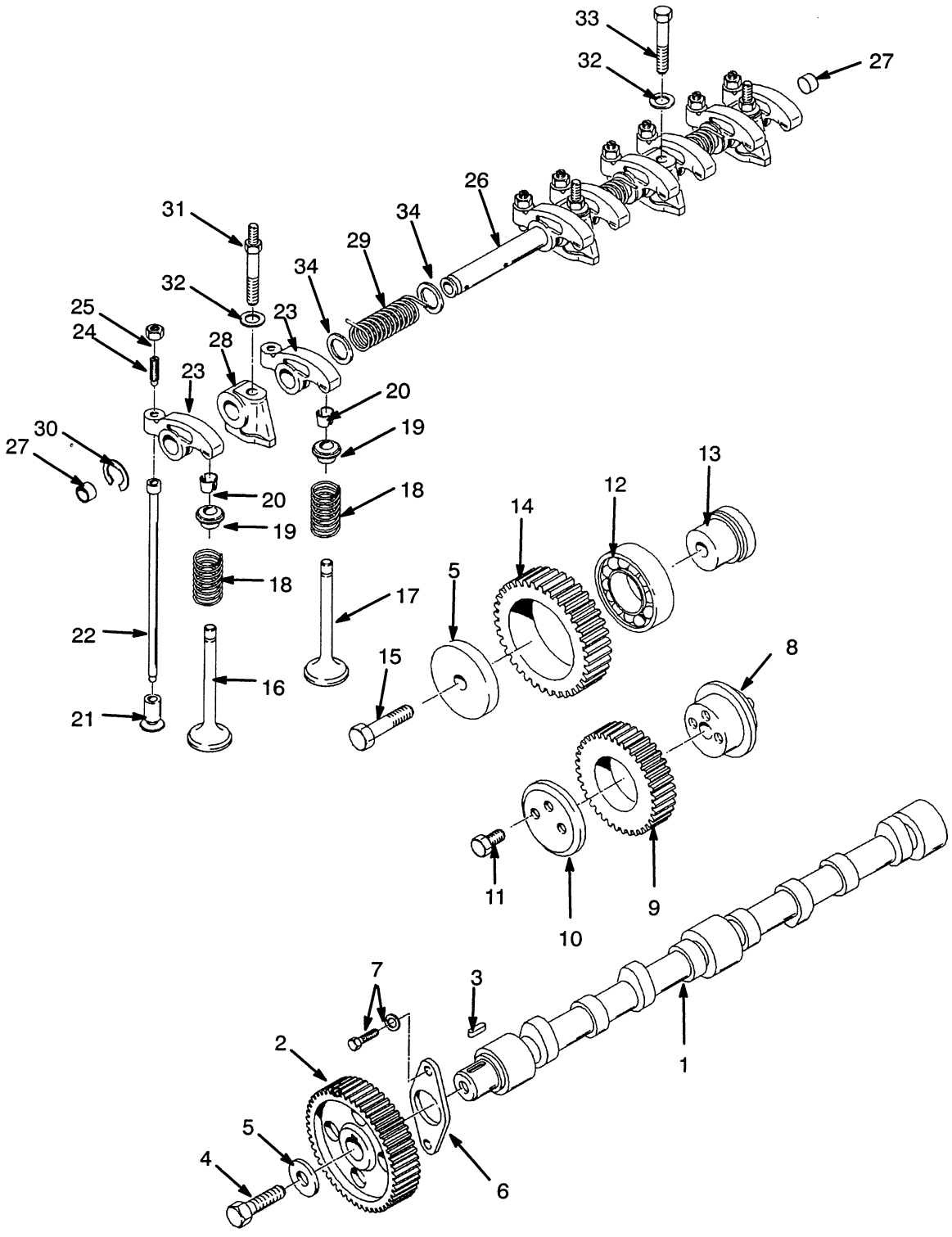

CAMSHAFT AND VALVES

DIESEL 3.1L

FIRST USED ON S/N D177B-8292

REF	PART NO.	NAME OF PART	QTY
1	1374669	Camshaft	1
2	1374670	Gear	1
3	324292	Key	1
4	324293	Bolt	1
5	324294	Washer	2
6	1338409	Thrust Plate	1
7	1338410	Bolt and Washer	2
8	1338411	Shaft	1
9	1374671	Gear	1
10	1338413	Thrust Plate	1
11	373663	Bolt	2
12	1374672	Bearing	1
13	1338415	Shaft	1
14	1374673	Gear	1
15	1338417	Bolt	1
16	1374674	Inlet Valve	4
17	1374925	Exhaust Valve	4
18	1338420	Spring	8
19	1374926	Spring Seat	8
20	324306	Collar	16
21	1338422	Tappet	8
22	1374927	Push Rod	8
23	1338424	Rocker Arm	8
24	388280	Adjusting Screw	8
25	324314	Nut	8
26	1374928	Shaft	1
27	324316	Plug	2
28	1338428	Bracket	4
29	1374929	Spring	3
30	324319	Snap Ring	2
31	1338430	Bolt	3
32	1338431	Washer	4
33	1338432	Bolt	1
34	1338433	Washer	6

©2000 HYSTER COMPANY

CRANKSHAFT AND PISTON (Figure 62)

DIESEL 3.1L

FIRST USED ON S/N D177B-8292

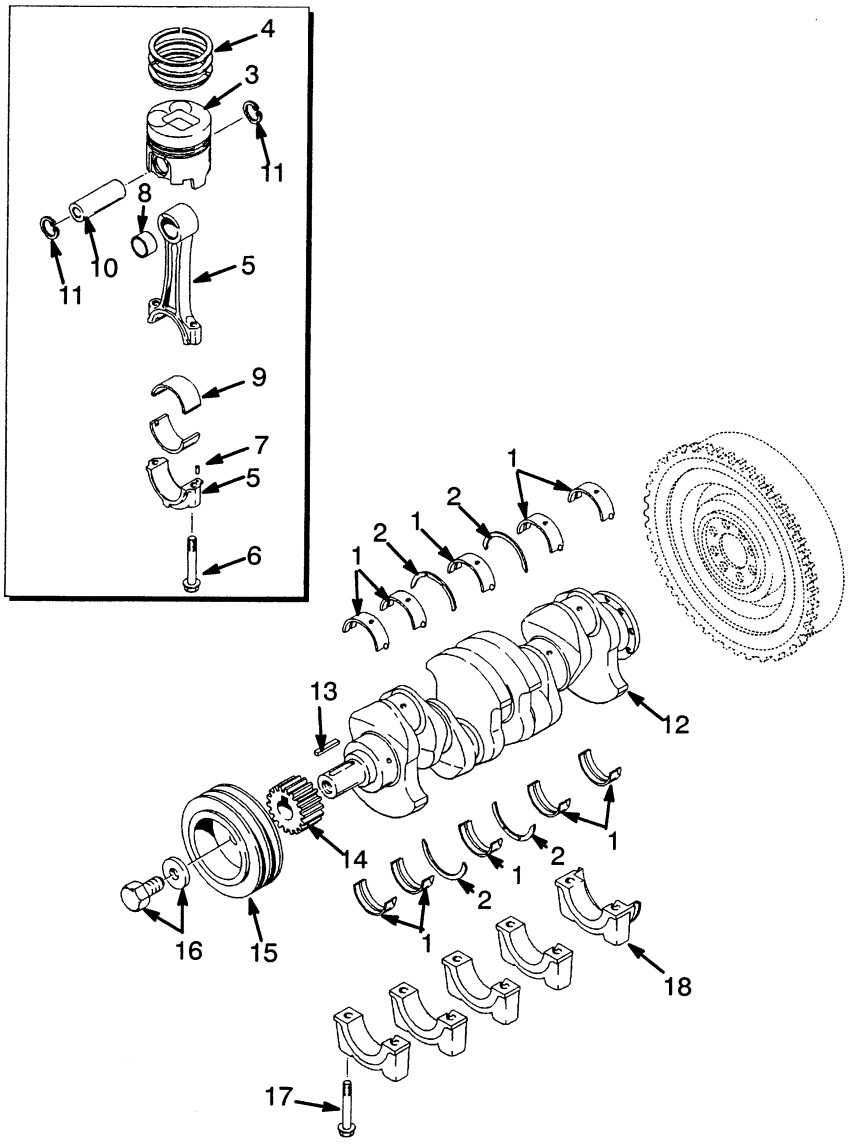

REF		PART NO.	NAME OF PART	QTY
1	a	1374657	Bearing Set (Blue)	AR
1	a	1374976	Bearing Set (Black)	AR
1	a	1374977	Bearing Set (Green)	AR
2		1330003	Bearing	2
3	b	1458350	Piston	4
3	c	1458351	Piston	4
4		1374659	Piston Ring Set	4
5		1374660	Connecting Rod	4
6		1374661	Bolt	2
7		1374662	Pin	2
8		1374663	Bushing	1
9		1334697	Bearing Set	4
10		1374664	Pin	4

REF	PART NO.	NAME OF PART	QTY
11	1374665	Snap Ring	8
12	1374666	Crankshaft	1
13	348437	Key	1
14	1374667	Gear	1
15	1338404	Pulley	1
16	1338405	Bolt	1
17	1337677	Bolt	10
18	....	Cap	5

a Bearing Sets Are Select To Fit. See Service Manual.
b With 'A' Or 'B' Stamp
c With 'C' Or 'D' Stamp

©2000 HYSTER COMPANY

CRANKCASE AND OIL PAN (Figure 63)

DIESEL 3.1L

FIRST USED ON S/N D177B-8292

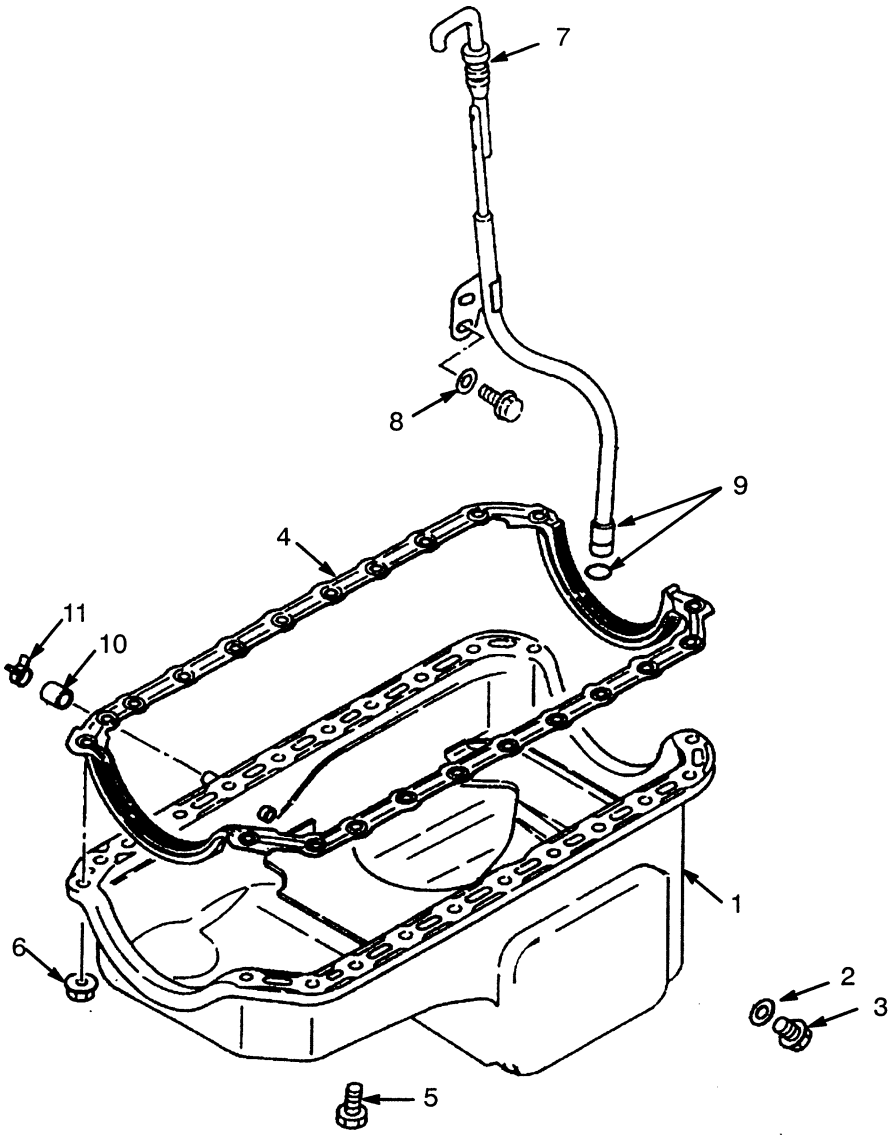

REF		PART NO.	NAME OF PART	QTY
1		1374651	Oil Pan	1
2	a	1334678	Packing	1
3		1334679	Drain Plug	1
4	a	1374652	Packing	1
5		1334680	Bolt	12
6		1334682	Nut	10
7		1334685	Oil Level Tube	1

REF	PART NO.	NAME OF PART	QTY
8	324434	Washer	1
9	1374653	Oil Level Tube	1
10	1360822	Cap	1
11	1374654	Clip	1

a Included In Seal Kit 1457161

TIMING GEAR (Figure 64)

DIESEL 3.1L

FIRST USED ON S/N D177B-8292

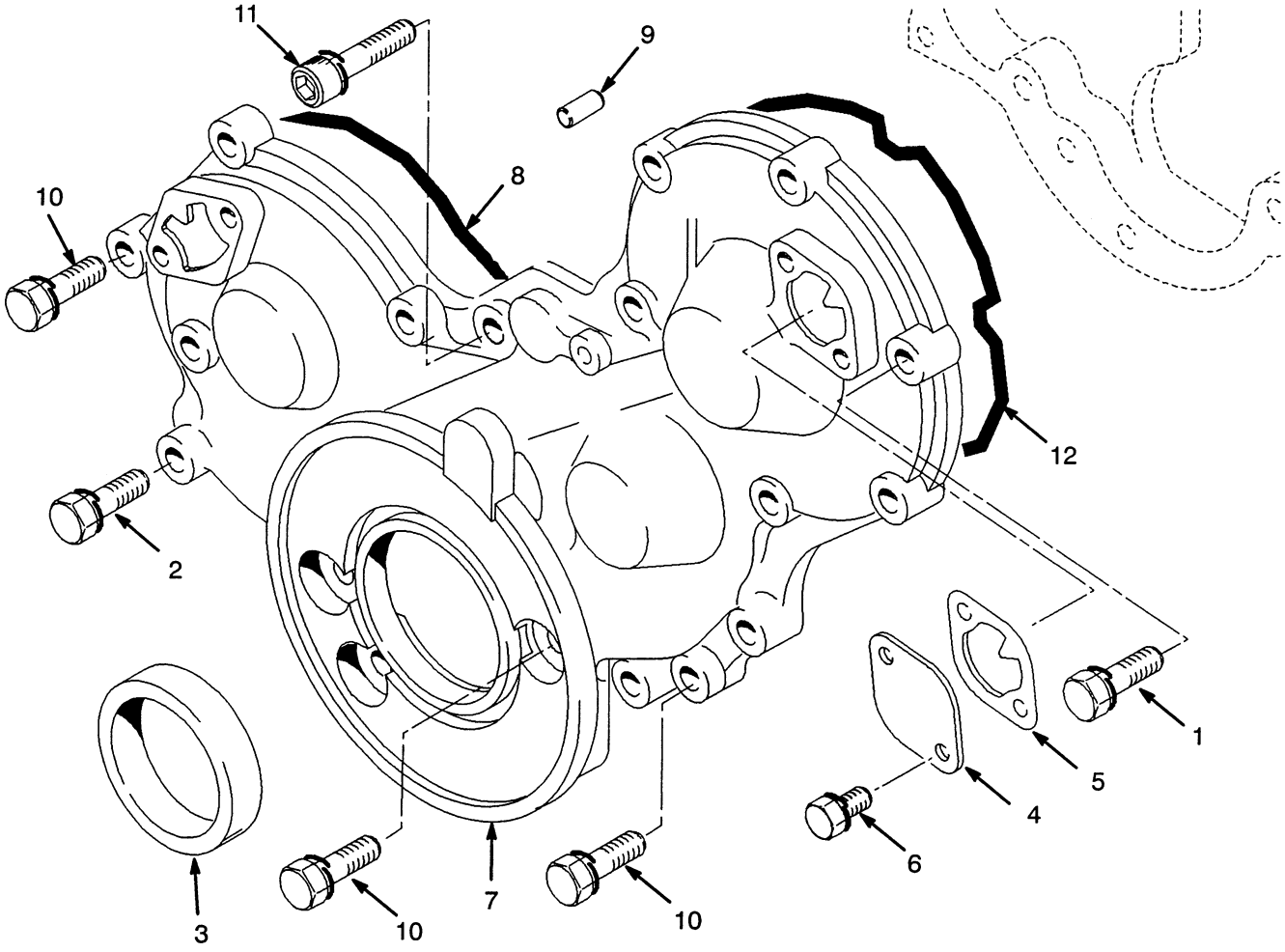

REF		PART NO.	NAME OF PART	QTY
1		1337696	Bolt	6
2		1374648	Bolt	1
3	a	1374645	Seal	1
4		324200	Cover	2
5	a	324201	Packing	2
6		1361524	Bolt	4
7		1337691	Cover	1

REF		PART NO.	NAME OF PART	QTY
8	a	1337692	O-Ring	1
9		1337693	Pin	2
10		1337694	Bolt	8
11		1337695	Bolt	1
12	a	1459382	O-Ring	1

a Included In Seal Kit 1457161

©2000 HYSTER COMPANY

See Service Manual for service procedures

MANIFOLDS (Figure 65)

DIESEL 3.1L

FIRST USED ON S/N D177B-8292

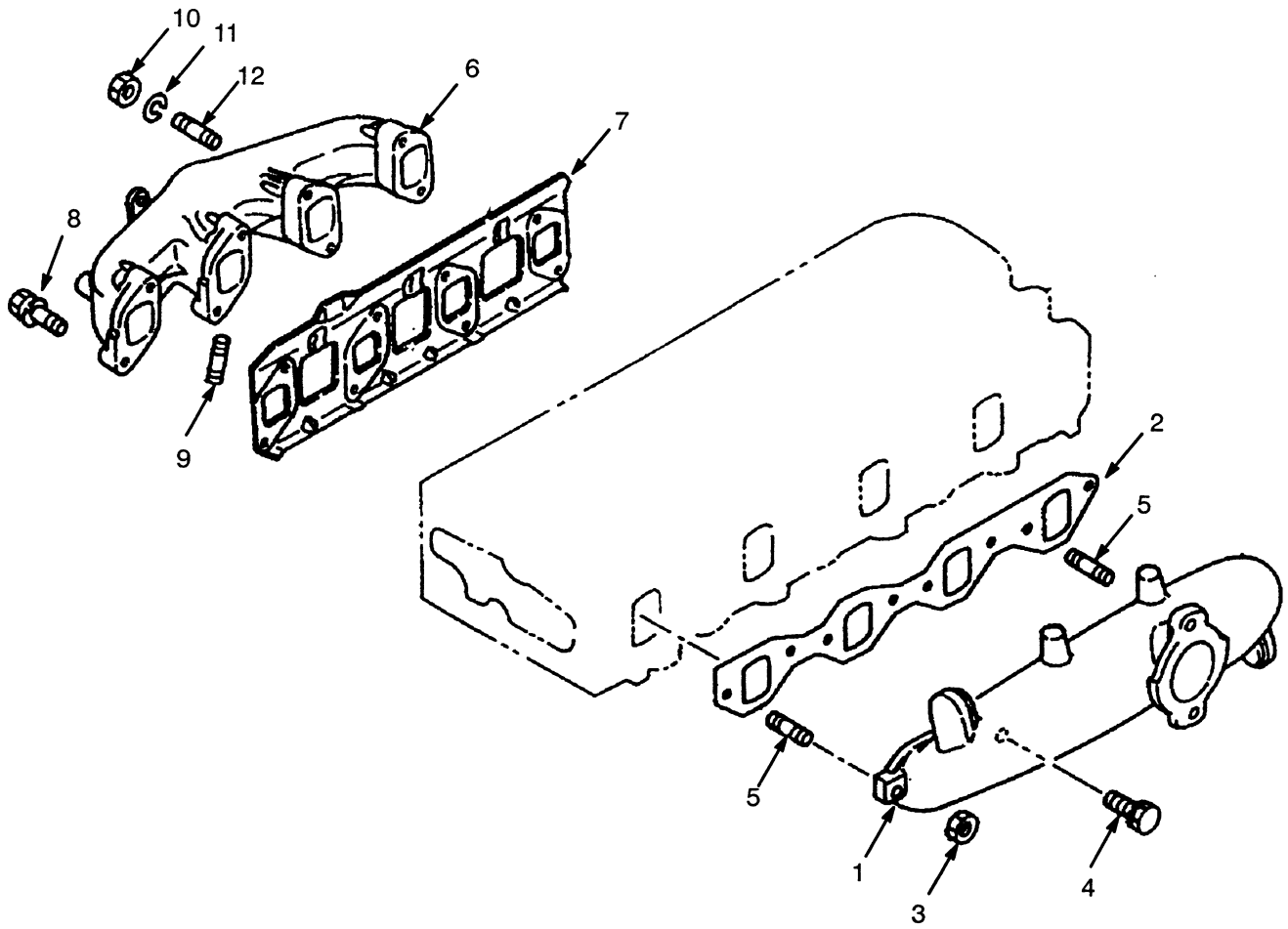

REF		PART NO.	NAME OF PART	QTY
1		1338752	Inlet Manifold	1
2	a	1361546	Gasket	1
3		1374954	Nut	2
4		1338754	Bolt	6
5		1329344	Stud	2
6		1374951	Exhaust Manifold	1
7	a	1388391	Gasket	1

REF	PART NO.	NAME OF PART	QTY
8	1374955	Bolt	6
9	1374956	Stud	4
10	239503	Nut	2
11	292681	Washer	2
12	1374953	Stud	2

a Included In Seal Kit 1457161

©2000 HYSTER COMPANY

LUBRICATION SYSTEM (Figure 66)

DIESEL 3.1L

FIRST USED ON S/N D177B-8292

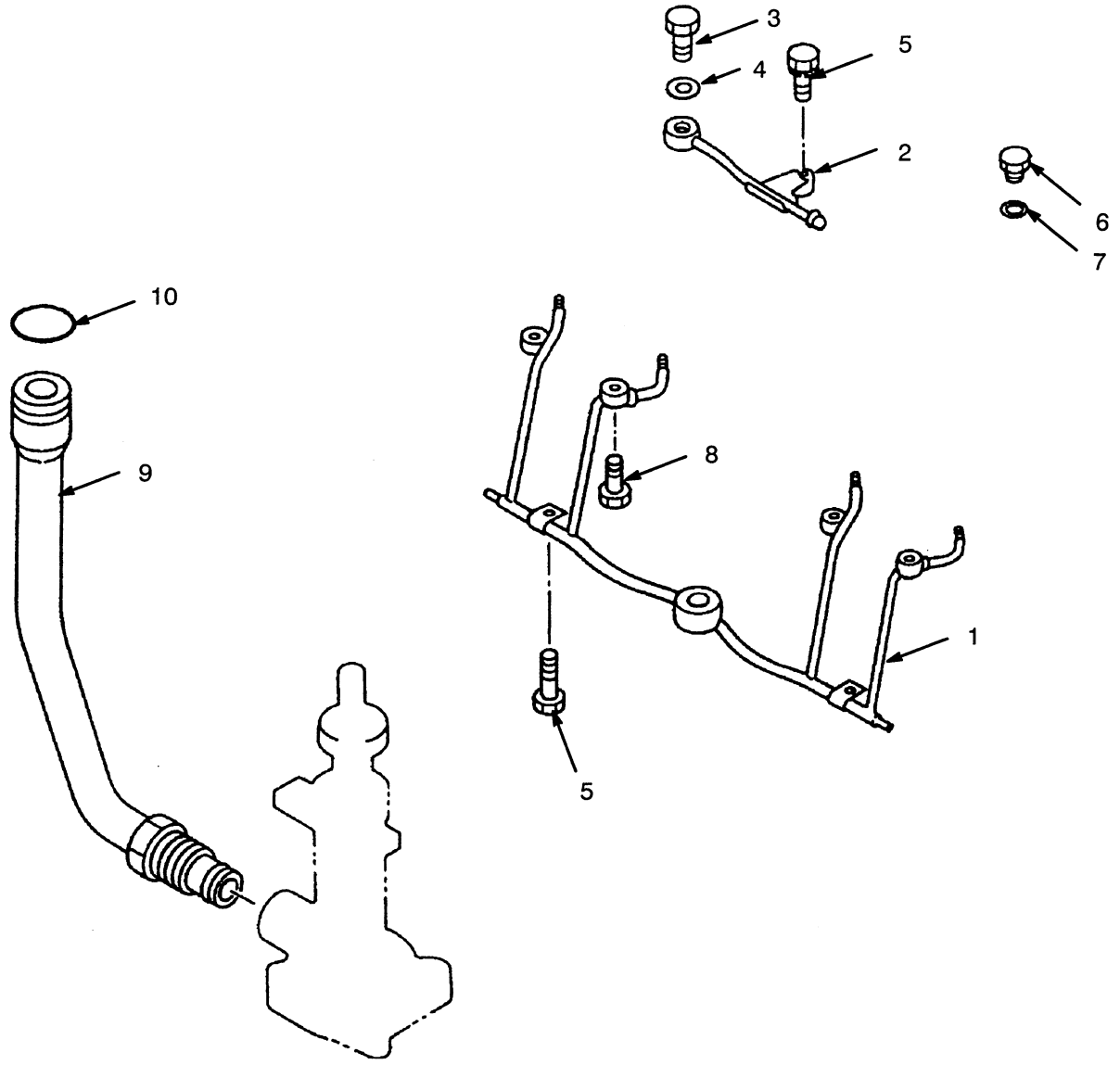

REF		PART NO.	NAME OF PART	QTY
1		1374935	Pipe	1
2		1338453	Pipe	1
3		1338454	Bolt	1
4	a	324412	Seal	1
5		1361537	Bolt	3
6		324385	Plug	1
7	a	324356	Seal	1

REF	PART NO.	NAME OF PART	QTY
8	1374936	Bolt	4
9	....	Pipe ☞ Figure 58	1
10	....	O-Ring ☞ Figure 58	1

a Included In Seal Kit 1457161

FUEL SYSTEM

AIR FILTER AND BREATHER (Figure 89)
GASOLINE AND LPG 3.0L ..... Page 152

AIR FILTER (Figure 88)
GASOLINE AND LPG 2.0L AND 2.2L ..... Page 150

AIR FILTER (Figure 90)
DIESEL ..... Page 154

CARBURETOR (Figure 82)
GASOLINE 2.0L ..... Page 139

CARBURETOR (Figure 83)
LPG 2.0L ..... Page 140

CARBURETOR (Figure 85)
LPG 2.2L ..... Page 144

CARBURETOR (Figure 86)
LPG 3.0L ..... Page 146

DUAL FUEL (Figure 71)
3.0L ..... Page 118

FILTER AND LOCK-OFF VALVE (Figure 94)
LPG ..... Page 162

FUEL (Figure 69)
LPG 3.0L
LAST USED ON S/N D177B-39471 ..... Page 114

FUEL (Figure 70)
LPG 3.0L
FIRST USED ON S/N D177B-39472 ..... Page 116

FUEL (Figure 74)
LPG FIELD CONVERSION 2.2L ..... Page 124

FUEL (Figure 75)
LPG 2.0L ..... Page 126

©2000 HYSTER COMPANY

FUEL SYSTEM (CONTINUED)

FUEL (Figure 76)
GASOLINE 2.0L ..... Page 128

FUEL (Figure 77)
GASOLINE 2.2L ..... Page 130

FUEL (Figure 78)
GASOLINE 3.0L ..... Page 132

FUEL (Figure 79)
DIESEL 2.4L ..... Page 134

FUEL (Figure 80)
DIESEL 3.1L ..... Page 136

FUEL INJECTION (Figure 91)
DIESEL 2.4L ..... Page 156

FUEL INJECTION (Figure 92)
DIESEL 2.8L
LAST USED ON S/N D177B-8291 ..... Page 158

FUEL INJECTION (Figure 93)
DIESEL 3.1L
FIRST USED ON S/N D177B-8292 ..... Page 160

FUEL SYSTEM (Figure 68)
LPG 2.2L ..... Page 112

GOVERNOR (Figure 72)
LPG 3.0L
LAST USED ON S/N D177B-39471 ..... Page 120

GOVERNOR (Figure 81)
GASOLINE AND LPG 2.0L ..... Page 138

INJECTION PUMP (Figure 87)
DIESEL 2.4L, 2.8L, AND 3.1L ..... Page 149

LPG CONVERTER (Figure 95)
LAST USED ON S/N D177B-10965 ..... Page 163

©2000 HYSTER COMPANY

FUEL SYSTEM (CONTINUED)

LPG CONVERTER (Figure 96)
FIRST ON S/N D177B-10966 ..... Page 164

LPG MIXER (Figure 73)
DUAL FUEL 3.0L ..... Page 122

LPG TANK (Figure 67) ..... Page 110

MONOTROL PEDAL (Figure 102) ..... Page 173

PEDAL LINKAGE (Figure 101) ..... Page 172

THROTTLE BODY INJECTION (Figure 84)
GASOLINE 2.2L ..... Page 142

THROTTLE LINKAGE (Figure 100)
GASOLINE AND LPG 2.0L ..... Page 171

THROTTLE LINKAGE (Figure 97)
DIESEL ..... Page 165

THROTTLE LINKAGE (Figure 98)
GASOLINE AND LPG 2.2L ..... Page 166

THROTTLE LINKAGE (Figure 99)
GASOLINE AND LPG 3.0L ..... Page 168

©2000 HYSTER COMPANY

LPG TANK (Figure 67)

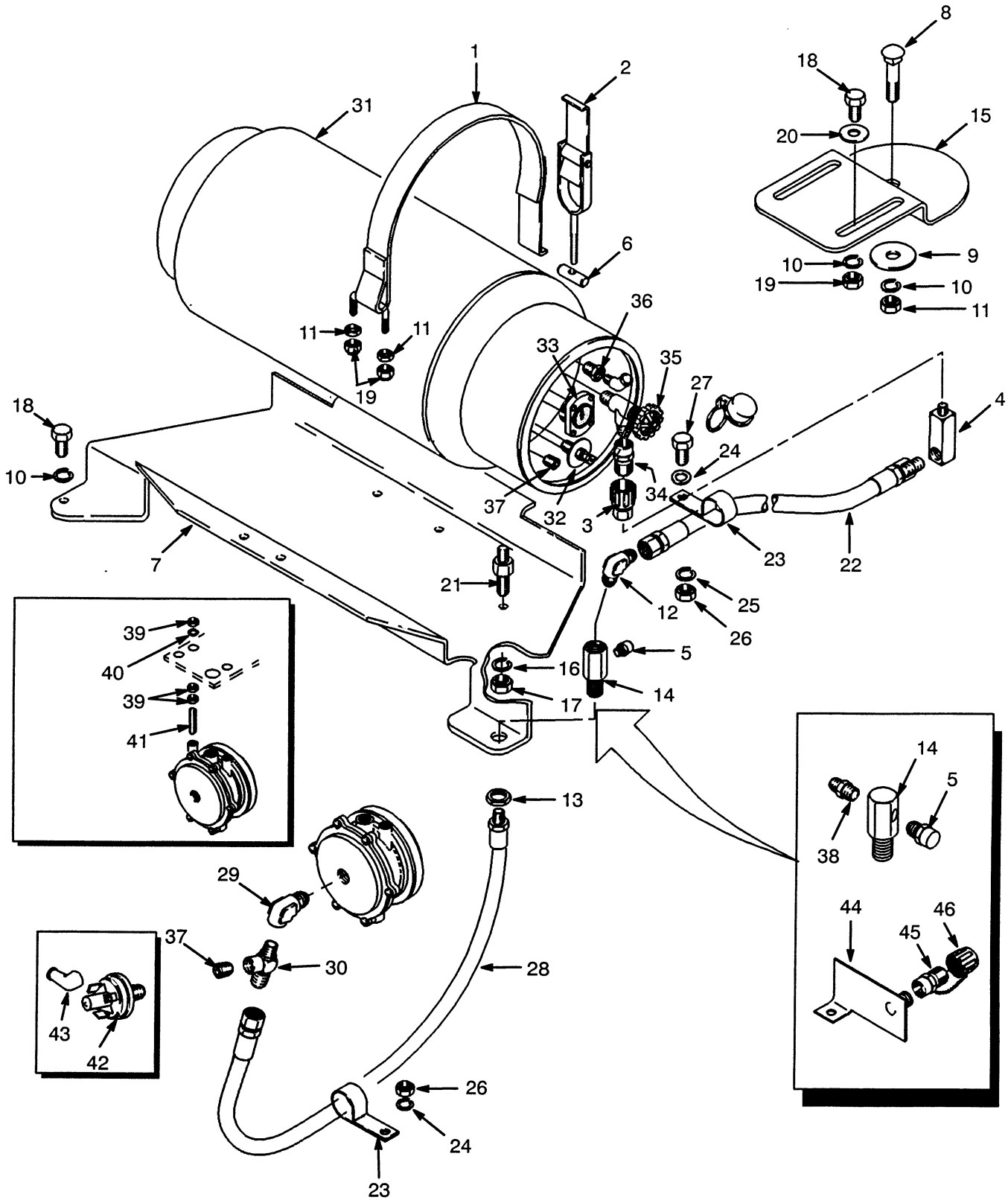

LPG TANK

REF		PART NO.	NAME OF PART	QTY
1	a	1339769	Strap	1
1	b	1375240	Strap	1
2	m	196297	Latch	1
2	f	1383574	Latch	1
3		97999	Disconnect	1
4	a	1327554	Fitting	1
4	e	1375231	Fitting	1
4	f	12822	Fitting	1
5		101809	Relief Valve	1
6		147294	Nut	1
7	a	1343434	Bracket	1
7	e	1375201	Bracket	1
7	f	1383571	Bracket	1
8		1339706	Bolt	1
9		300939	Spacer	1
10		292682	Lockwasher	5
11		136692	Nut	3
12	a	16863	Fitting	1
13		15034	Nut	1
14	a	1325033	Fitting	1
14	b	1374601	Fitting	1
15		1343421	Bracket	1
16	a	292683	Lockwasher	1
17	a	296130	Nut	1
18		287854	Capscrew	4
19		316826	Nut	4
20		320159	Washer	3
21	m	1300066	Pin	1
21	f	2022566	Pin	1
22	a	252927	Hose	1
22	b	1375230	Hose	1
23	a	1347202	Clamp	1
24	a	320157	Washer	2
25	a	292681	Lockwasher	1
26	a	239503	Nut	2
27	a	136681	Capscrew	1
28	h	1325037	Hose	1
28	k	1388579	Hose	1
28	h	864809	Hose	1
29		1351145	Fitting	1
30		1351146	Fitting	1
31	c	1328890	Tank (LPG, Fuel)	1
31	d	1328892	LPG Tank	1
32		1337641	Sight Gauge	1
33		1337642	Float Gauge	1
34		1337643	Valve	1
35		1337644	Service Valve	1
36		1337645	Fill Valve	1
37		15483	Fitting	2
38	b	16134	Fitting	1
39		221703	Nut	6
40		15154	Lockwasher	2
41		220961	Setscrew	1
42	g	1351133	Switch	1
43	g	190383	Boot	1
44	g	864858	Bracket	1
45	g	864737	Connector	1
46	g	1369737	Cap	1

a Last Used On S/N D177B-15258
b First Used On S/N D177B-15259
c Steel Construction
d Aluminium Construction
e Used On S/N D177B-15259 Thru D177B-23328
f First Used On S/N D177B-23329
g Dual Fuel System
h Last Used On S/N D177B-35299
k First Used On S/N D177B-35300
m Last Used On S/N D177B-23328

©2000 HYSTER COMPANY

FUEL SYSTEM (Figure 68)

LPG 2.2L

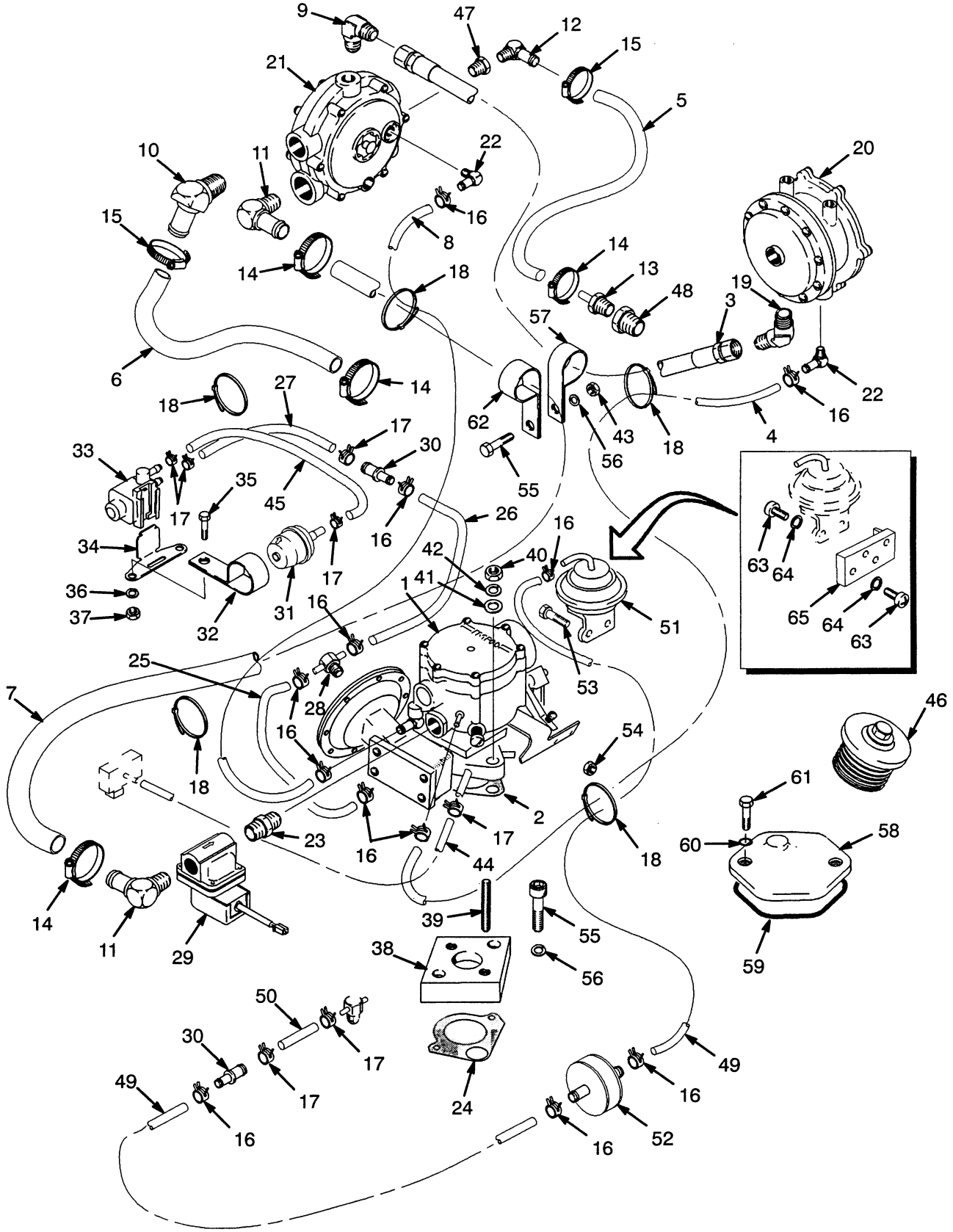

FUEL SYSTEM

LPG 2.2L

REF		PART NO.	NAME OF PART	QTY
1		.....	Carburetor	1
			☞ Figure 85	
2		1359452	Gasket	1
3	a	329700	Hose	1
3	b	1381921	Hose	1
4		1347166	Hose	1
5		193772	Hose	1
6		1363896	Hose	1
7		1351084	Hose	1
8		298874	Hose	1
9		14358	Fitting	1
10		1336135	Fitting	1
11		201800	Fitting	2
12		17215	Fitting	1
13		17217	Fitting	1
14		130845	Clamp	4
15		168718	Clamp	2
16		366473	Clamp	4
17		369815	Clamp	8
18		137852	Strap Clamp	8
19		16863	Fitting	1
20		.....	Filter & Lock-Off Valve	1
			☞ Figure 94	
21		.....	LPG Converter	1
			☞ Figure 95, Figure 96	
22		175347	Fitting	2
23		15351	Fitting	1
24		1343648	Gasket	1
25		377209	Hose	1
26		377210	Hose	1
27		1354113	Hose	1
28		1329146	Fitting	1
29		1354203	Solenoid Valve	1
29		1369456	Coil	1
29		1369457	Seal Kit	1
30		1347164	Fitting	2
31		1334847	Filter	1
32		1334845	Clamp	1
33		1345677	Solenoid Valve	1
34		1345676	Bracket	1
35		287816	Capscrew	2
36		292680	Washer	2
37		136687	Nut	2
38		1356391	Spacer	1
39		1354092	Stud	2
40		136692	Nut	2
41		320159	Washer	2
42		292682	Washer	2
43		239503	Nut	1
44		1354114	Hose	1
45		1354117	Hose	1
46		1352123	Fuel Cap	1
47		63108	Fitting	1
48		69815	Fitting	1
49		372002	Hose	2
50		1356454	Hose	1
51		1346872	Actuator	1
52		1350400	Valve	1
53		293743	Capscrew	2
54		316825	Nut	2
55		136681	Capscrew	3
56		292681	Washer	3
57		178119	Clamp	1
58		1343414	Cover	1
59		1343449	Seal	1
60		353000	O-Ring	2
61		329067	Screw	2
62		1347202	Clamp	1
63	c	16712	Screw	4
64	c	15152	Lockwasher	4
65	c	1376609	Spacer	1

a Last Used On S/N D177B-16998
b First Used On S/N D177B-16999
c High Altitude Performance

©2000 HYSTER COMPANY

FUEL (Figure 69)

LPG 3.0L

LAST USED ON S/N D177B-39471

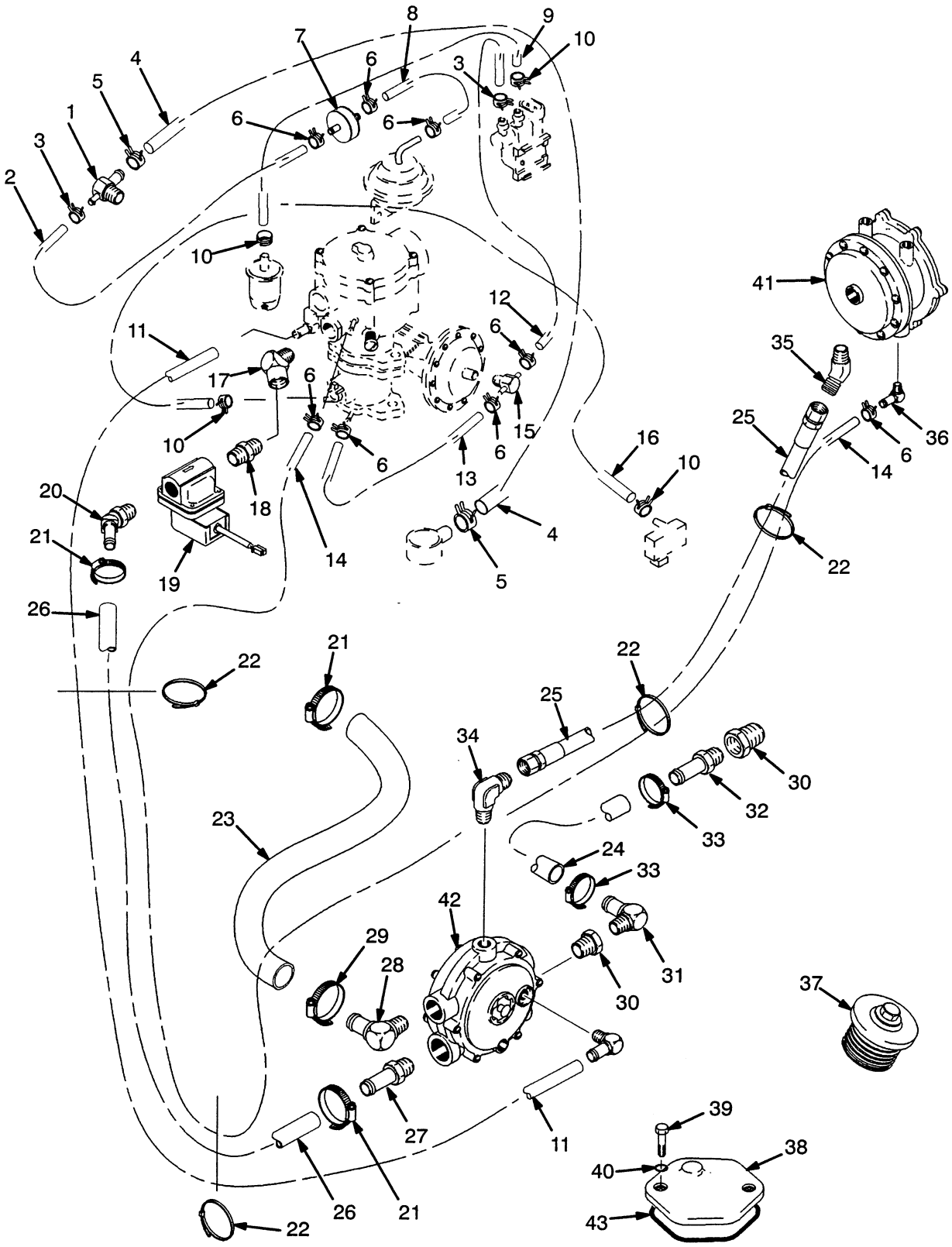

FUEL

LPG 3.0L

LAST USED ON S/N S/N D177B-39471

REF		PART NO.	NAME OF PART	QTY
1		1358515	Fitting	1
2		1360841	Hose	1
3		1333840	Clamp	3
4		1378537	Hose	1
5		353198	Clamp	2
6		366473	Clamp	7
7		1346874	Check Valve	1
8		372002	Hose	1
9		1354117	Hose	1
10		369815	Clamp	4
11		1375711	Hose	1
12		1376570	Hose	1
13		377209	Hose	1
14		1375713	Hose	1
15		1329146	Fitting	1
16		1376571	Hose	1
17		15351	Fitting	1
18		12824	Fitting	1
19		1354203	Solenoid Valve	1
19		1369456	Coil	1
19		1369457	Seal Kit	1
20		349366	Fitting	1
21		130845	Clamp	3
22		137852	Strap Clamp	6
23		1376666	Hose	1
24		193008	Hose	1
25		113011	Hose	1
26		1376568	Hose	1
27		201797	Fitting	1
28		125305	Fitting	1
29		130845	Clamp	1
30		63108	Fitting	2
31		17215	Fitting	1
32		17217	Fitting	1
33		168718	Clamp	2
34		14358	Fitting	1
35		16863	Fitting	1
36		175347	Fitting	1
37		1352123	Cap	1
38	a	1343414	Cover	1
38	b	1451568	Plate	1
38	b	288394	Sealant	AR
39		329067	Screw	2
40	a	353000	O-Ring	2
41		.....	Filter & Lock-Off Valve ☞ Figure 94	1
42		.....	LPG Converter ☞ Figure 96	1
43	a	1343449	Seal	1

a Last Used On S/N D177B-83919
b First Used On S/N D177B-83920

©2000 HYSTER COMPANY

FUEL (Figure 70)

LPG 3.0L

FIRST USED ON S/N D177B-39471

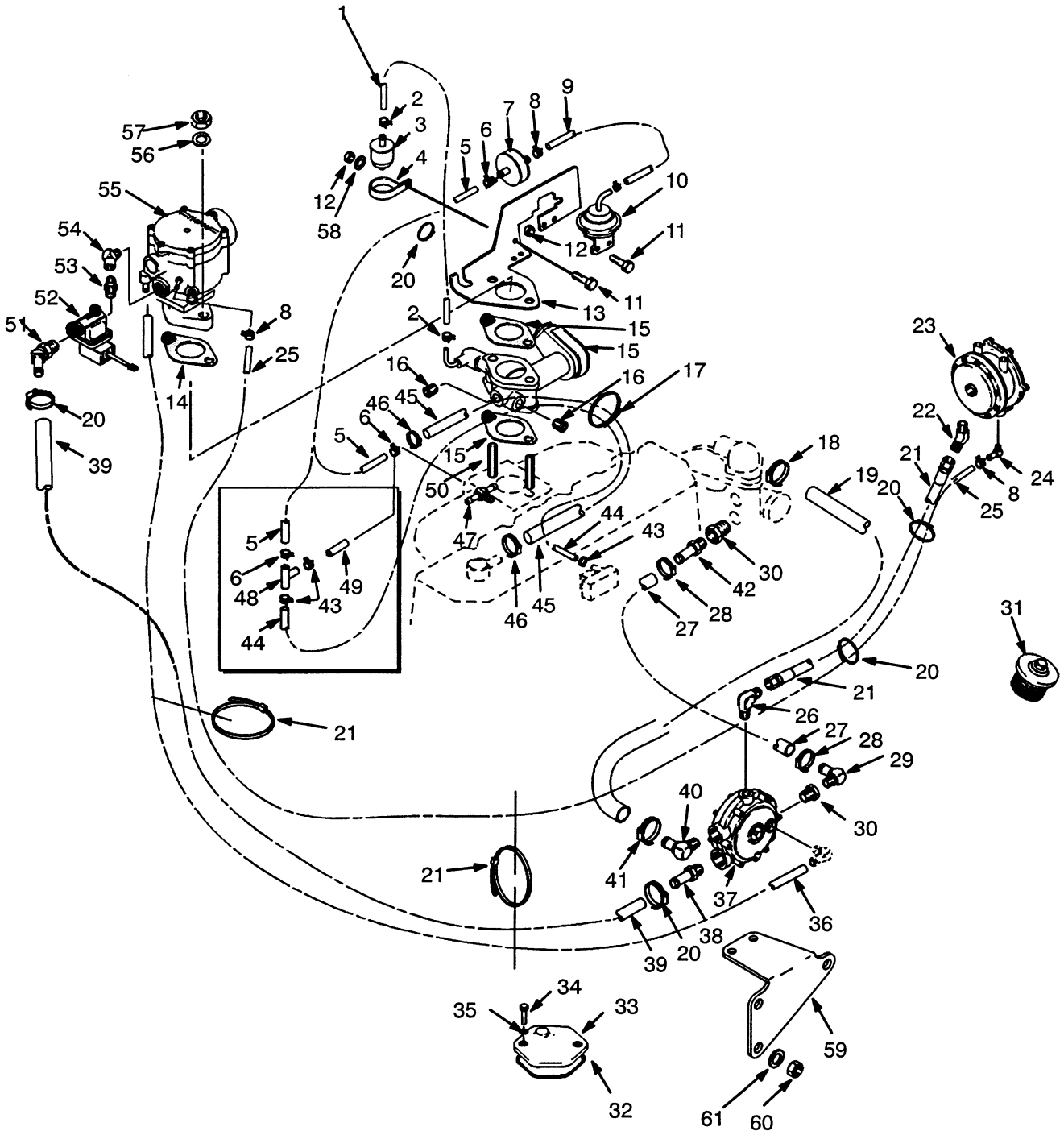

FUEL

LPG 3.0L

FIRST USED ON S/N D177B-39471

REF		PART NO.	NAME OF PART	QTY
1		1354117	Hose	1
2		369815	Clamp	4
3		1334847	Filter	3
4		1334845	Clamp	1
5		1360841	Hose	1
6		1333840	Clamp	2
6	a	1333840	Clamp	1
7		1350400	Check Valve	1
8		366473	Clamp	7
9		377209	Hose	1
10		1346872	Actuator	1
11		293743	Capscrew	2
12		316825	Nut	2
13		1389497	Bracket	1
14		195771	Gasket	1
15		340405	Governor	1
15		181763	Gasket	2
16		14349	Fitting	2
16		246108	Sealant	AR
17		137852	Strap Clamp	2
18		130845	Clamp	4
19		1376666	Hose	1
20		137852	Strap Clamp	6
21		113011	Hose	1
22		16863	Fitting	1
23		.....	Filter & Lock-Off Valve	1
			☞ Figure 94	
24		175347	Fitting	1
25		1375713	Hose	1
26		14358	Fitting	1
27		193008	Hose	1
28		168718	Clamp	2
29		17215	Fitting	1
30		63108	Fitting	2
31		1352123	Cap	1
32	b	1343449	Seal	1
33	b	1343414	Cover	1
33	c	1451568	Plate	1
33	c	288394	Sealant	AR
34		329067	Screw	2
35	b	353000	O-Ring	2
36		1375711	Hose	1
37		.....	LPG Converter	1
			☞ Figure 96,	
38		201797	Fitting	1
39		1376568	Hose	1
40		125305	Fitting	1
41		130845	Clamp	3
42		17217	Fitting	1
43	a	369815	Clamp	4
44	a	1376571	Hose	1
45		329073	Hose	1
46		353198	Clamp	2
47		1358515	Fitting	1
48	a	2034520	Fitting	1
49	a	1356454	Hose	1
50		175323	Stud	2
51		349366	Fitting	1
52		1354203	Solenoid Valve	1
52		1369456	Coil	1
52		1369457	Seal Kit	1
53		15351	Fitting	1
54		12824	Fitting	1
55		.....	Carburetor	1
			☞ Figure 86	
56		15920	Washer	2
57		15006	Nut	2
58		197067	Washer	1
59	a	1356513	Bracket	1
60	a	313828	Nut	3
61	a	320158	Washer	3

a With MSTS
b Last Used On S/N D177B-83919
c First Used On S/N D177B-83920

©2000 HYSTER COMPANY

DUAL FUEL (Figure 71)

3.0L

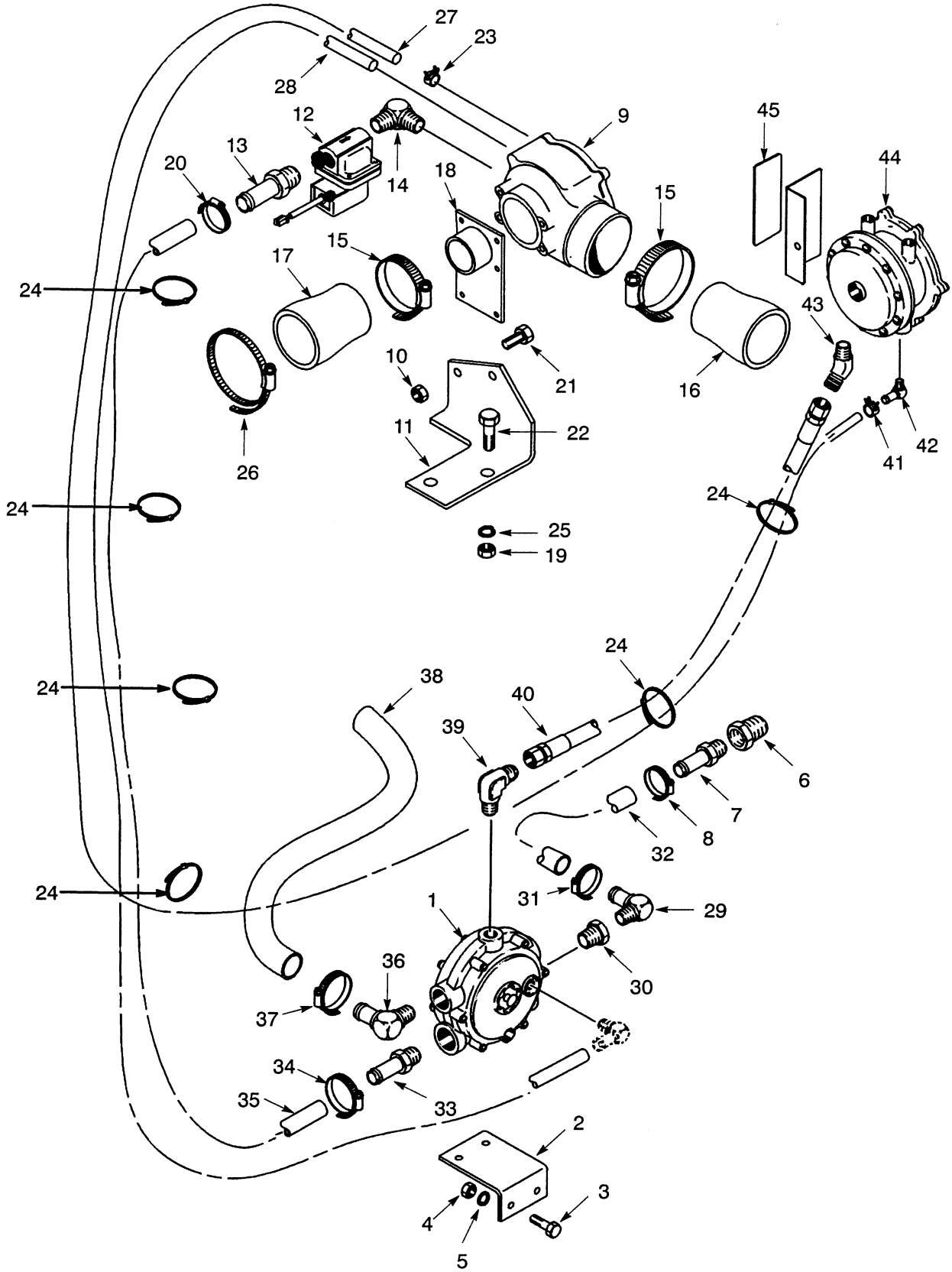

DUAL FUEL

3.0L

REF	PART NO.	NAME OF PART	QTY
1	1376792	Regulator Assembly	1
2	1376794	Bracket	1
3	287816	Capscrew	2
4	136687	Nut	2
5	292680	Washer	2
6	63108	Fitting	1
7	17217	Hose Nipple	1
8	168718	Clamp	1
9	1376795	Carburetor Assembly	1
9	.....	LPG Mixer	1
		☞ Figure 73	
10	316825	Nut	2
11	1378464	Bracket	1
12	1354203	Solenoid	1
12	1369456	Coil	1
12	1369457	Seal Kit	1
13	201797	Fitting	1
14	17176	Fitting	1
15	112989	Clamp	2
16	1384837	Hose	1
17	1378465	Hose	1
18	1378463	Adapter	1
19	239503	Nut	2
20	130845	Clamp	1
21	293743	Capscrew	2
22	136749	Capscrew	2
23	366473	Clamp	1
24	137852	Clamp	10
25	292681	Washer	2
26	112989	Clamp	1
27	1378636	Hose	1
28	1378625	Hose	1
29	17215	Fitting	1
30	63108	Fitting	1
31	168718	Clamp	1
32	193008	Hose	1
33	201797	Fitting	1
34	130845	Clamp	1
35	1378470	Hose	1
36	125305	Fitting	1
37	130845	Clamp	1
38	1376666	Hose	1
39	14358	Fitting	1
40	113011	Hose	1
41	366473	Clamp	1
42	175347	Fitting	1
43	16863	Fitting	1
44	864839	Lockoff Assembly	1
44	.....	Lock And Filter	1
		☞ Figure 94	
45	1358327	Plate	1

©2000 HYSTER COMPANY

GOVERNOR (Figure 72)

LPG 3.0L

LAST USED ON S/N D177B-39472

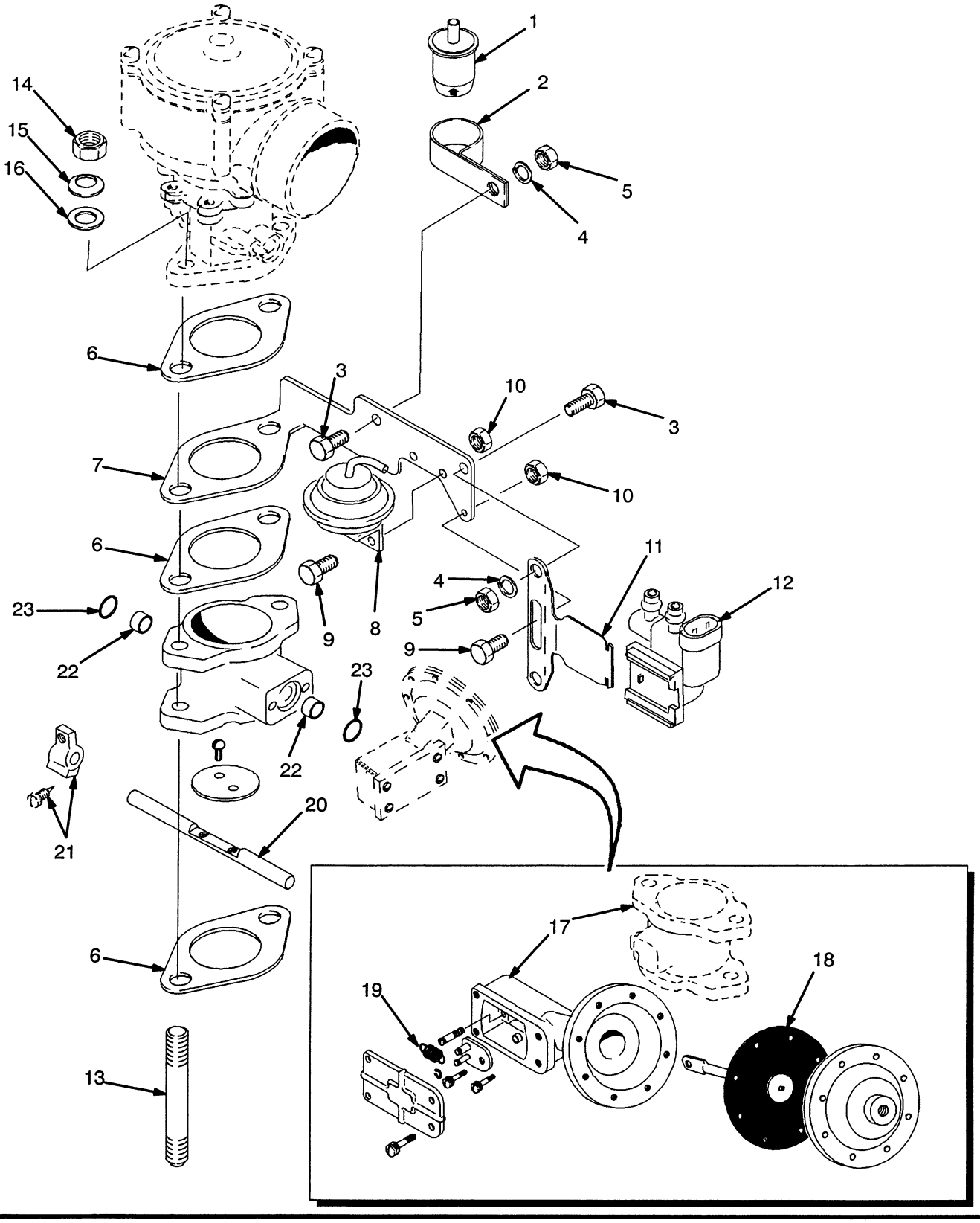

©2000 HYSTER COMPANY

See Service Manual for service procedures

GOVERNOR

LPG 3.0L

LAST USED ON S/N D177B-39472

REF	PART NO.	NAME OF PART	QTY
1	1334847	Filter	1
2	1334845	Clamp	1
3	292500	Capscrew	2
4	292680	Lockwasher	2
5	136687	Nut	2
6	195771	Gasket	3
7	1371599	Bracket	1
8	1346872	Actuator (Idle Control)	1
9	293743	Capscrew	3
10	316825	Nut	3
11	1345676	Bracket	1
12	1345677	Solenoid Valve	1
13	175323	Stud	2
14	15006	Nut	2
15	377259	Washer	2
16	15920	Washer	2
17	346329	Governor	1
18	1339102	Diaphragm Assembly	1
19	1333986	Spring	1
20	1333987	Throttle Shaft	1
21	374706	Lever Assembly	1
22	374708	Bearing	2
23	374709	Ring	2

©2000 HYSTER COMPANY

LPG MIXER (Figure 73)

DUAL FUEL 3.0L

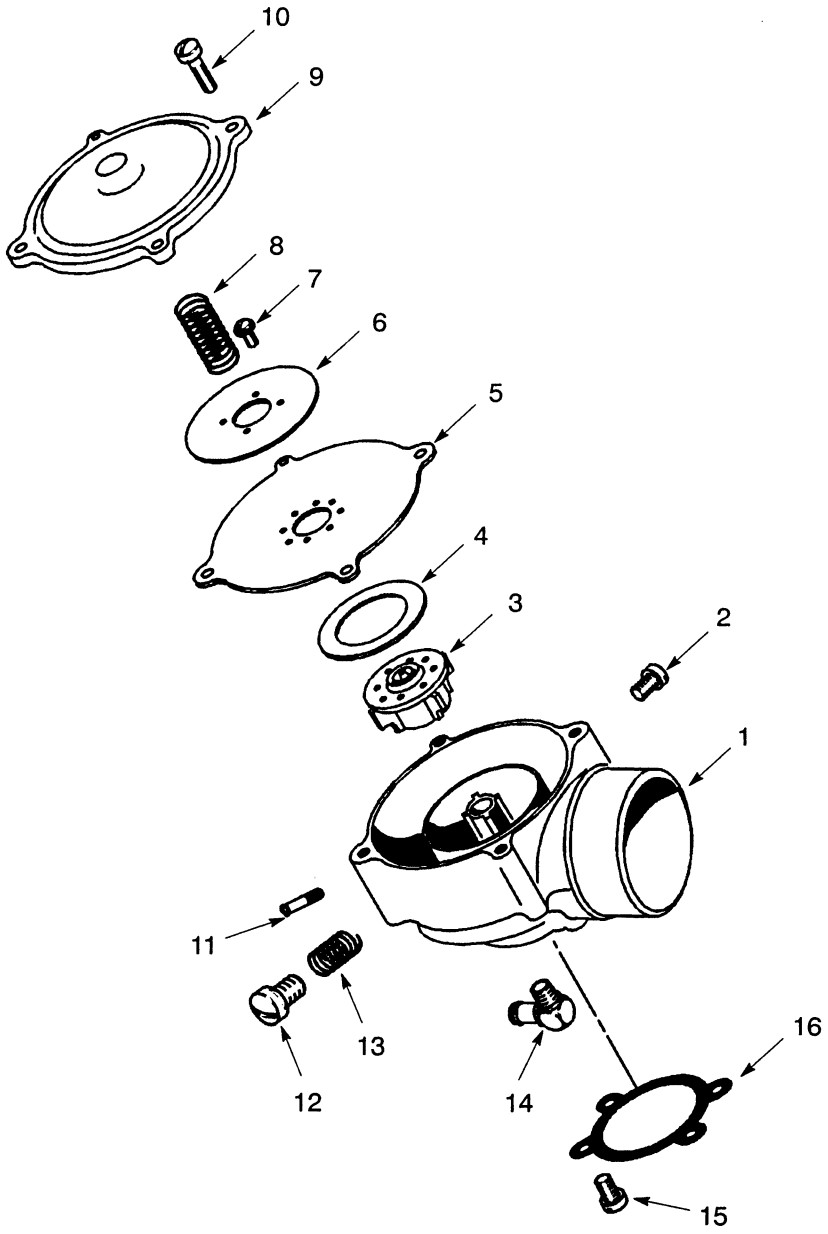

REF	PART NO.	NAME OF PART	QTY
	1378647	Mixer Assembly	
1	250371	Body Assembly	1
2	326926	Screw	1
3	.....	Valve	1
4	204858	Ring	1
5	1369450	Diaphragm	1
6	.....	Plate	1
7	220283	Screw	1
8	374713	Spring	1

REF	PART NO.	NAME OF PART	QTY
9	204780	Cover	1
10	132473	Screw	4
11	323541	Fitting	1
12	326516	Screw	1
13	332277	Spring	1
14	1361164	Fitting	1
15	204790	Screw	4
16	204787	Gasket	1

©2000 HYSTER COMPANY

See Service Manual for service procedures

NOTES

©2000 HYSTER COMPANY

FUEL (Figure 74)

LPG FIELD CONVERSION 2.2L

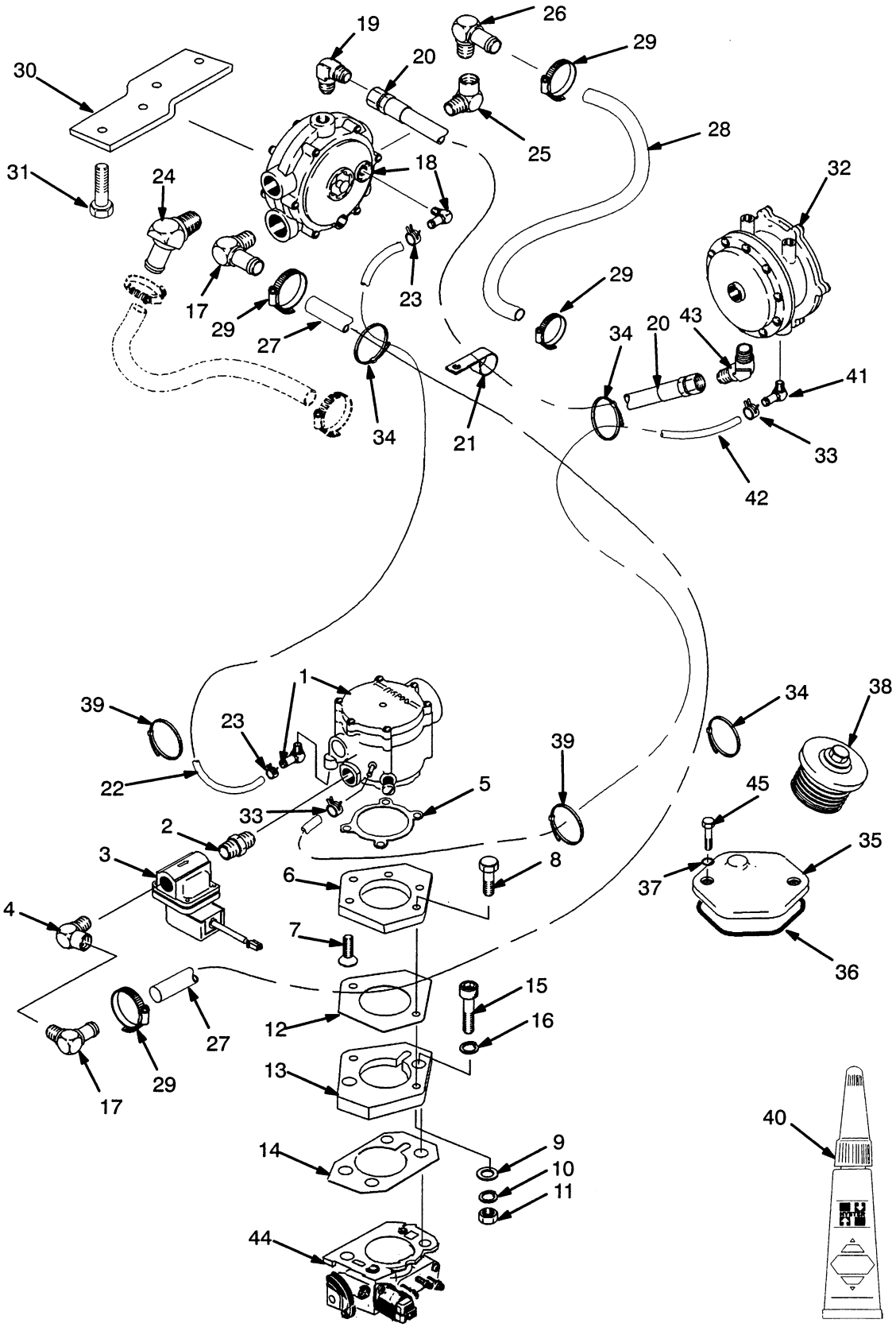

FUEL

LPG FIELD CONVERSION 2.2L

REF	PART NO.	NAME OF PART	QTY
1	1368054	Carburetor (LPG)	1
1	1361164	Fitting (LPG)	1
2	15351	Fitting	1
3	1354203	Solenoid Valve	1
3	1369456	Coil	1
3	1369457	Seal Kit	1
4	17324	Fitting	1
5	204787	Gasket	1
6	1367433	Plate	1
7	220714	Screw	4
8	16815	Capscrew	2
9	15134	Washer	2
10	15156	Lockwasher	2
11	15056	Nut	2
12	1367434	Gasket	1
13	1365894	Plate	1
14	1367435	Gasket	1
15	296021	Capscrew	2
16	293780	Lockwasher	2
17	201800	Fitting	2
18	.....	LPG Converter ☞ Figure 96,	1
19	14358	Fitting	1
20	1381921	Hose	1
21	1347202	Clamp	1
22	864814	Hose (Vacuum)	1
23	369815	Clamp	2
24	864816	Fitting	1
25	12947	Fitting	1
26	16155	Fitting	1
27	864815	Hose	1
28	864817	Hose	1
29	130845	Clamp	4
30	864818	Plate	1
31	287816	Capscrew	2
32	.....	Filter & Lock-Off Valve ☞ Figure 94	1
33	366473	Clamp	2
34	137852	Strap Clamp	5
35	1343414	Cover	1
36	1343449	Seal	1
37	353000	O-Ring	2
38	1352123	Cap	1
39	2004005	Strap Clamp	2
40	273338	Thread Sealant (50 cc)	AR
41	864810	Fitting	1
42	864811	Hose (Vacuum)	1
43	16863	Fitting	1
44	.....	Throttle Body ☞ Figure 85	1
45	329067	Screw	2

©2000 HYSTER COMPANY

FUEL (Figure 75)

LPG 2.0L

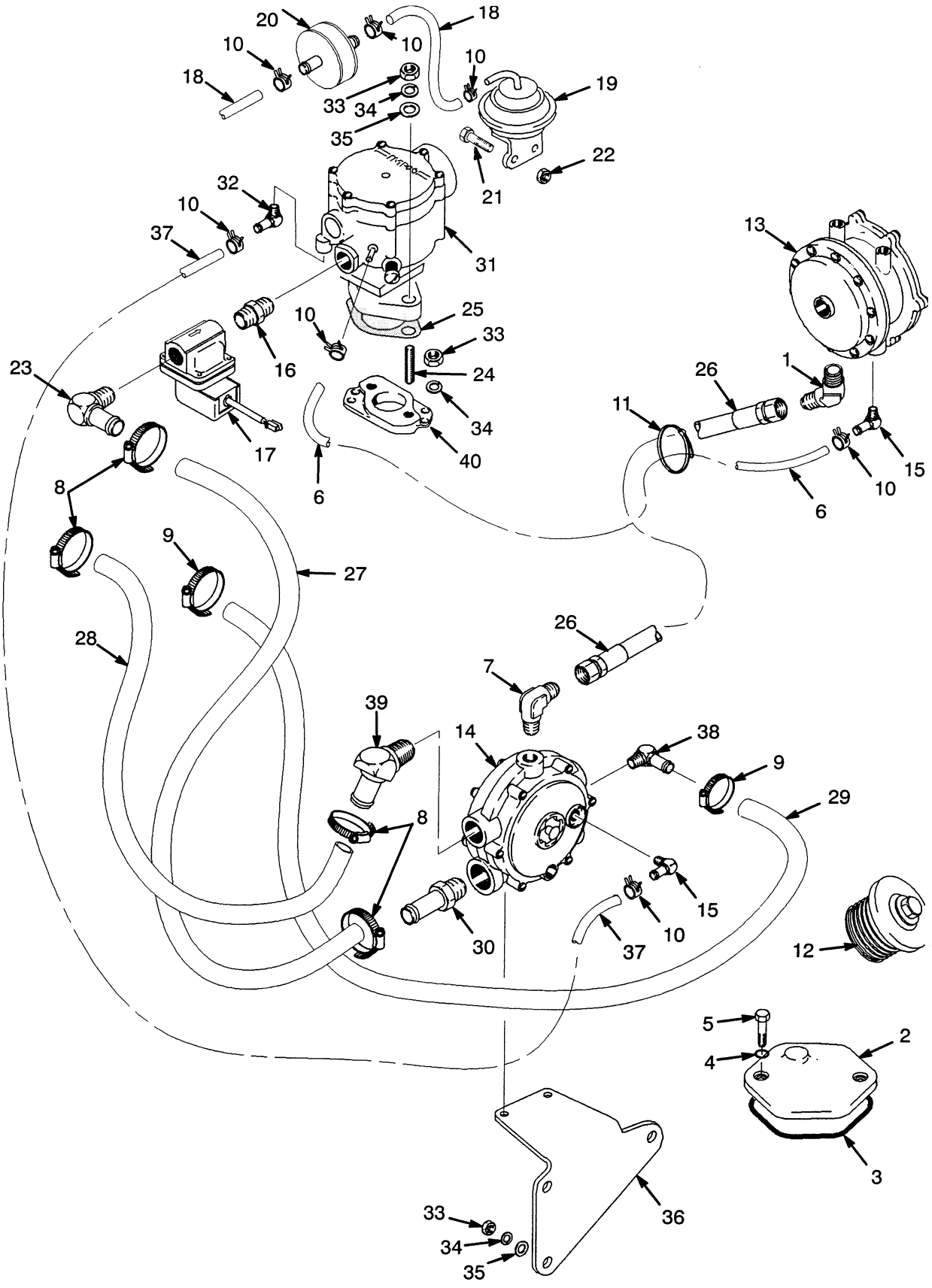

FUEL

LPG 2.0L

REF		PART NO.	NAME OF PART	QTY
1		16863	Fitting	1
2	a	1343414	Cover	1
2	b	1451568	Plate	1
2	b	288394	Sealant	AR
3	a	1343449	Seal	1
4	a	353000	O-Ring	2
5		329067	Screw	2
6		1347166	Hose	1
7		14358	Fitting	1
8		130845	Clamp	4
9		168718	Clamp	2
10		366473	Clamp	8
11		137852	Strap Clamp	6
12		1352123	Fuel Cap	1
13		.....	Fuel Lock & Filter ☞ Figure 94	1
14		.....	LPG Converter ☞ Figure 95, Figure 96	1
15		175347	Fitting	2
16		15351	Fitting	1
17		1354203	Solenoid Valve	1
17		1369456	Coil	1
17		1369457	Seal Kit	1
18		372002	Hose	2
19		1346872	Actuator	1
20		1350400	Valve	1
21		293743	Capscrew	2
22		316825	Nut	2
23		201800	Fitting	1
24		1359460	Stud	2
25		1354336	Gasket	1
26		113011	Hose	1
27	a	1361088	Hose	1
27	b	1336137	Hose	1
28		318375	Hose	1
29		85785	Hose	1
30		201797	Fitting	1
31		.....	Carburetor ☞ Figure 83	1
32		175347	Fitting	1
33		239503	Nut	7
34		292681	Lockwasher	7
35		296418	Washer	5
36		1356513	Bracket	1
37		377211	Hose	1
38		201808	Fitting	1
39		1336135	Fitting	1
40		1356514	Spacer	1

a Last Used On S/N D177B-83919

b First Used On S/N D177B-83920

©2000 HYSTER COMPANY

FUEL (Figure 76)

GASOLINE 2.0L

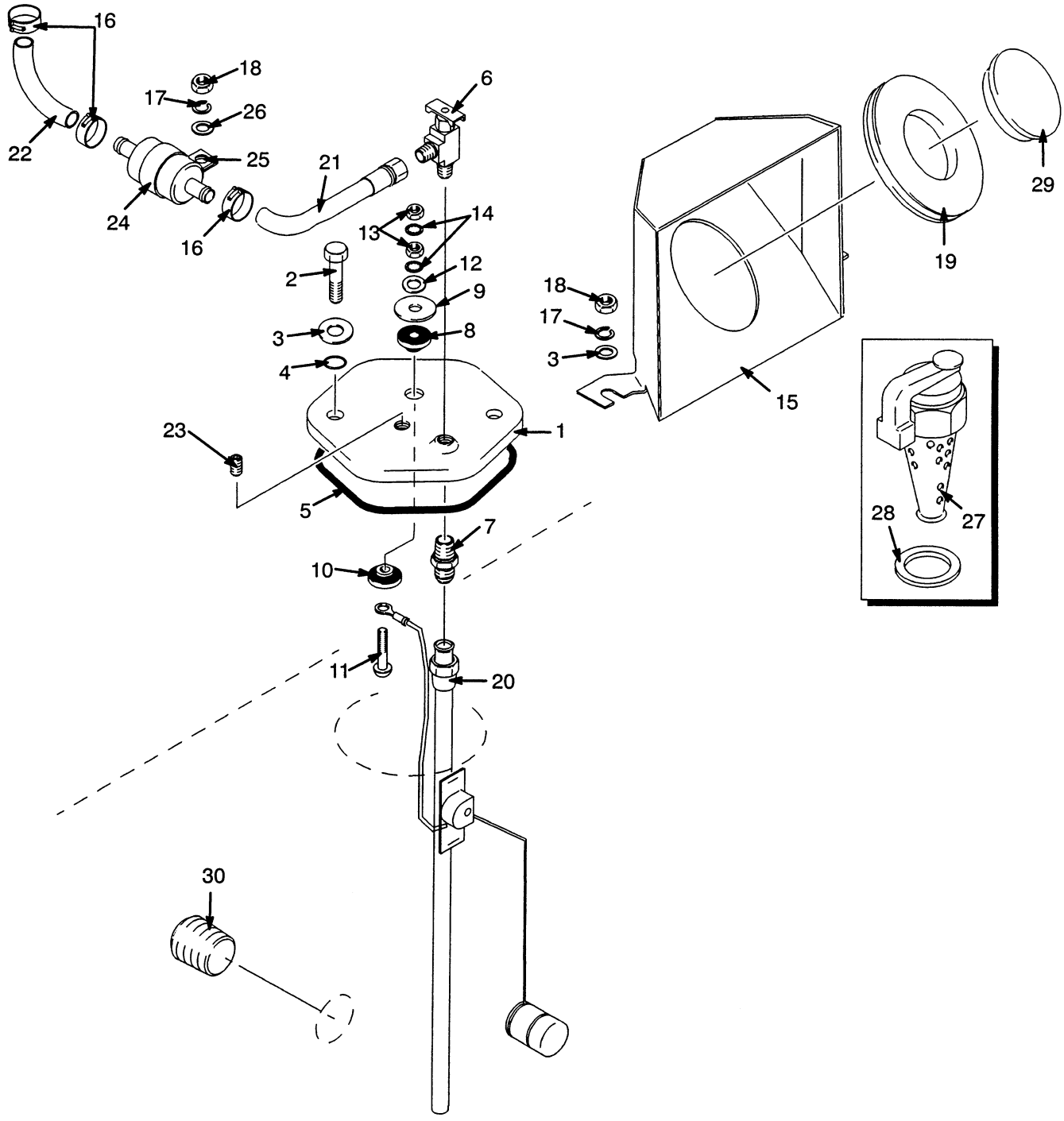

FUEL

GASOLINE 2.0L

REF		PART NO.	NAME OF PART	QTY
1		1343448	Cover	1
2		329067	Screw	2
3		320157	Washer	4
4		353000	O-Ring	2
5		1343449	Seal	1
6		1350286	Valve	1
7		14303	Fitting	1
8		1350291	Washer	1
9		1350290	Washer	1
10		1351000	Washer	1
11		1356459	Screw	1
12		197067	Washer	1
13		1350298	Nut	2
14		1350299	Lockwasher	2
15		1343550	Shield	1
16		168718	Clamp	4
17		292681	Lockwasher	3
18		239503	Nut	3
19		1339720	Grommet	1
20		1347153	Fuel Sender	1
21		1351089	Hose	1
22		1389365	Hose	1
23		15483	Fitting	1
24		1304950	Filter	1
25		1316496	Clamp	1
26		320158	Washer	1
27	a	63899	Safety Cap	1
28	a	138880	Shim	AR
29		160773	Fuel Cap	1
30		15964	Fitting	1

a Optional

©2000 HYSTER COMPANY

FUEL (Figure 77)

GASOLINE 2.2L

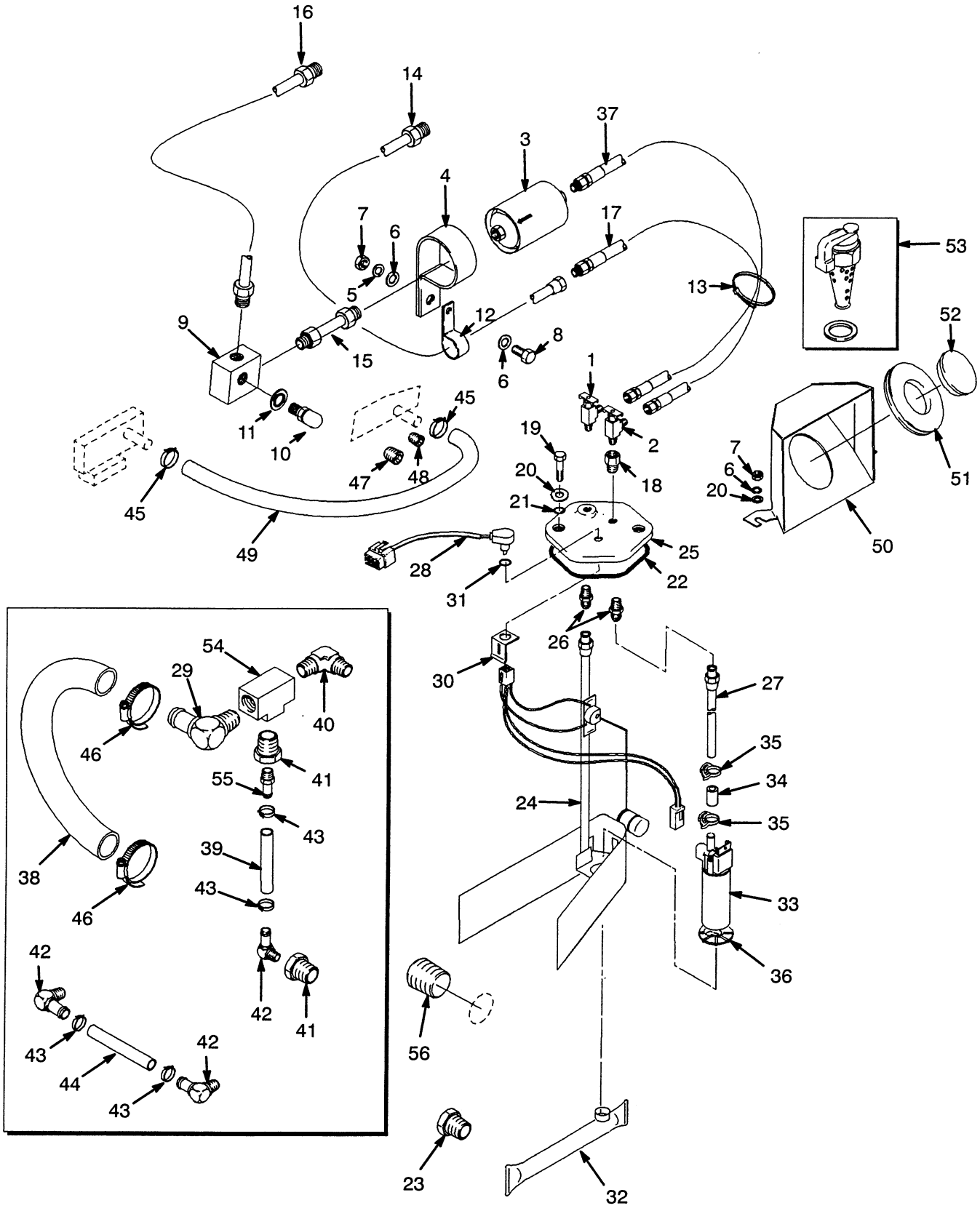

FUEL

GASOLINE 2.2L

REF	PART NO.	NAME OF PART	QTY
1	1350286	Valve	1
2	16192	Valve	1
3	1330342	Gasoline Filter	1
4	176451	Clamp	1
5	320158	Washer	1
6	292681	Lockwasher	4
7	239503	Nut	3
8	136681	Capscrew	1
9	1339425	Fitting	1
10	1345991	Pressure Valve	1
11	1339438	Seal	1
12	198675	Clamp	1
13	129563	Clamp	1
14	1352098	Tube	1
15	1352099	Tube	1
16	1352100	Tube	1
17	1352101	Hose	1
18	1354259	Fitting	1
19	329067	Screw	2
20	320157	Washer	4
21	353000	O-Ring	2
22	1343449	Seal	1
23	17636	Fitting	1
24	1339789	Fuel Sender	1
25	1343448	Cover	1
26	14303	Fitting	2
27	1339759	Tube	1
28	1330383	Wire Harness	1
29	201800	Fitting	1
30	1330326	Clipnut	1
31	1330325	O-Ring	1
32	1327961	Strainer	1
33 a	.....	Pump	1
34 a	.....	Coupling	1
35 a	.....	Clamp	2
36 a	.....	Isolator	1
37	1352144	Hose	1
38	129995	Hose	1
39	217407	Hose	1
40	1356369	Fitting	1
41	12844	Fitting	2
42	17343	Fitting	1
43	366473	Clamp	4
44	1354356	Hose	1
45	1333840	Clamp	2
46	166857	Clamp	2
47	1333825	Plug	1
48	1354265	Plug	1
49	1354114	Hose	1
50	1343550	Shield	1
51	1339720	Grommet	1
52	160773	Fuel Cap	1
53 b	138880	Shim	AR
53 b	63899	Safety Cap	1
54	12840	Fitting	1
55	16746	Fitting	1
56	15964	Fitting	1

a Included In Fuel Pump Kit 1330324
b Optional

©2000 HYSTER COMPANY

FUEL (Figure 78)

GASOLINE 3.0L

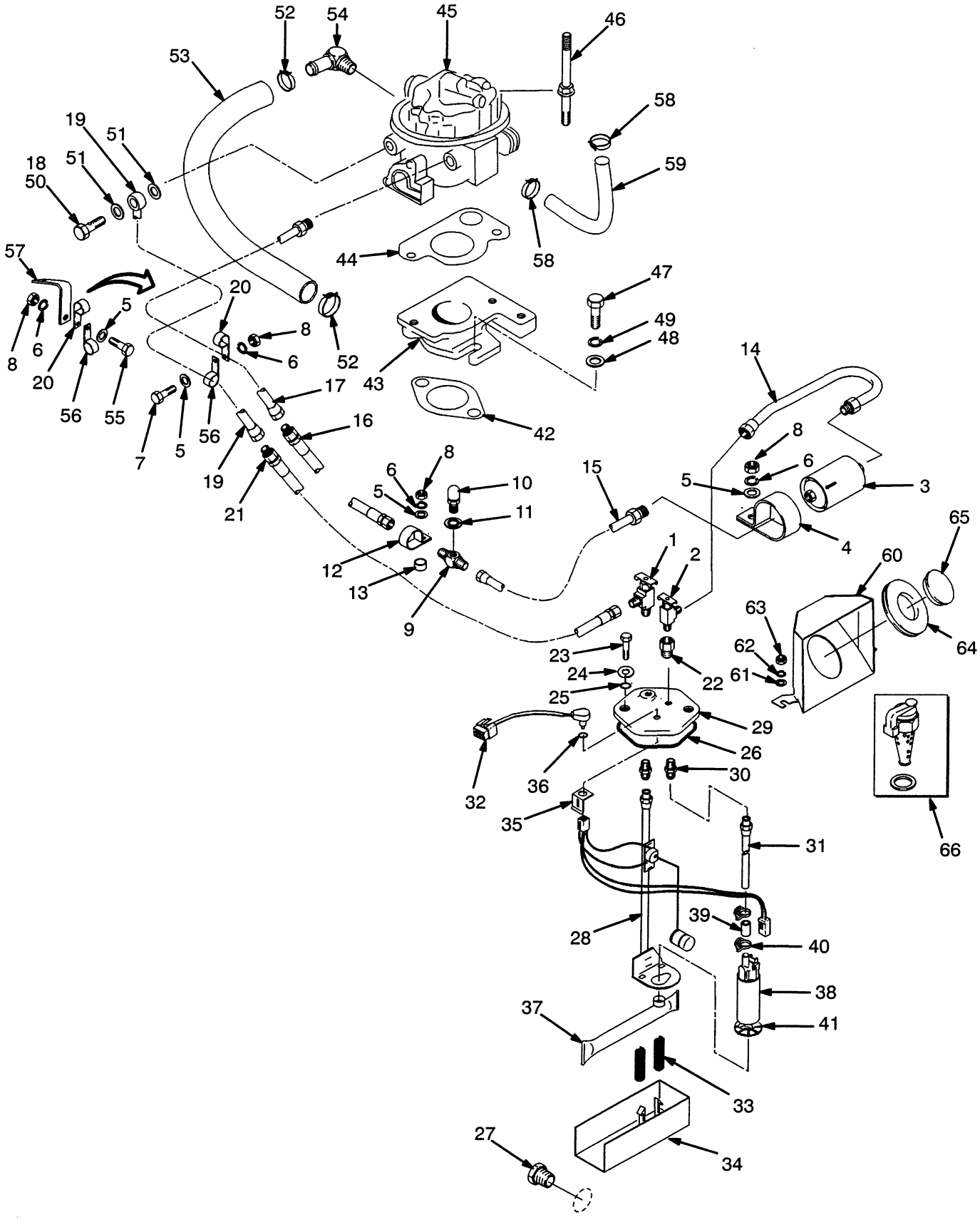

FUEL

GASOLINE 3.0L

REF		PART NO.	NAME OF PART	QTY
1		1350286	Valve	1
2		16192	Valve	1
3		1330342	Filter	1
4		176451	Clamp	1
5		320158	Washer	4
6		292681	Lockwasher	4
7		136681	Capscrew	1
8		239503	Nut	4
9		1376725	Fitting	1
10		1345991	Pressure Valve	1
11		1339438	Seal	1
12		89220	Clamp	1
13		1301016	Spacer	1
14		1376769	Tube Assembly	1
15		1376770	Tube Assembly	1
16		1376771	Hose	1
17		1376731	Tube Assembly	1
18		360387	Adhesive	AR
19		1376730	Tube Assembly	1
20		164488	Clamp	2
21		1376777	Hose (Return)	1
22		1354259	Fitting	1
23		329067	Screw	2
24		320157	Washer	2
25		353000	O-Ring	2
26		1343449	Seal	1
27		15964	Fitting	1
28		1339789	Fuel Sender	1
29		1343448	Cover	1
30		14303	Fitting	2
31		1339759	Tube Assembly	1
32		1330383	Wire Harness	1
33		1361596	Spring	2
34		1363862	Baffle	1
35		1330326	Clip	1
36		1330325	O-Ring	1
37		1327961	Strainer	1
38	a	.....	Pump	1
39	a	.....	Coupling	1
40	a	.....	Clamp	2
41	a	.....	Isolator	1
42		195771	Gasket	1
43		1375779	Adapter	1
44		1343648	Gasket	1
45		1376572	Throttle Body Injection	1
45		1383994	Gasket Kit	1
45		1350988	Fuel Injector Kit	1
45		1383995	Throttle Position Sensor Kit	1
45		1383996	Idle Air Valve Kit	1
45		1350991	Fuel Inlet/Outlet Nut Kit	1
45		1358682	Screw Package	1
46		1377021	Stud	2
47		16805	Capscrew	2
48		15134	Washer	2
49		15156	Lockwasher	2
50		1376614	Screw	1
51		1376616	Seal	2
52		353198	Clamp	2
53		85766	Hose	1
54		201808	Fitting	1
55		136749	Capscrew	1
56		1376727	Clamp	2
57		1376779	Bracket	1
58		369815	Clamp	2
59		1350682	Hose (Silicone)	1
60		1343550	Shield	1
61		320157	Washer	2
62		292681	Lockwasher	2
63		239503	Nut	2
64		1339720	Grommet	1
65		160773	Cap	1
66	b	63899	Cap	1
66	b	138880	Shim	1

a Included In Fuel Pump Kit 1330324
b Optional

©2000 HYSTER COMPANY

FUEL (Figure 79)

DIESEL 2.4L

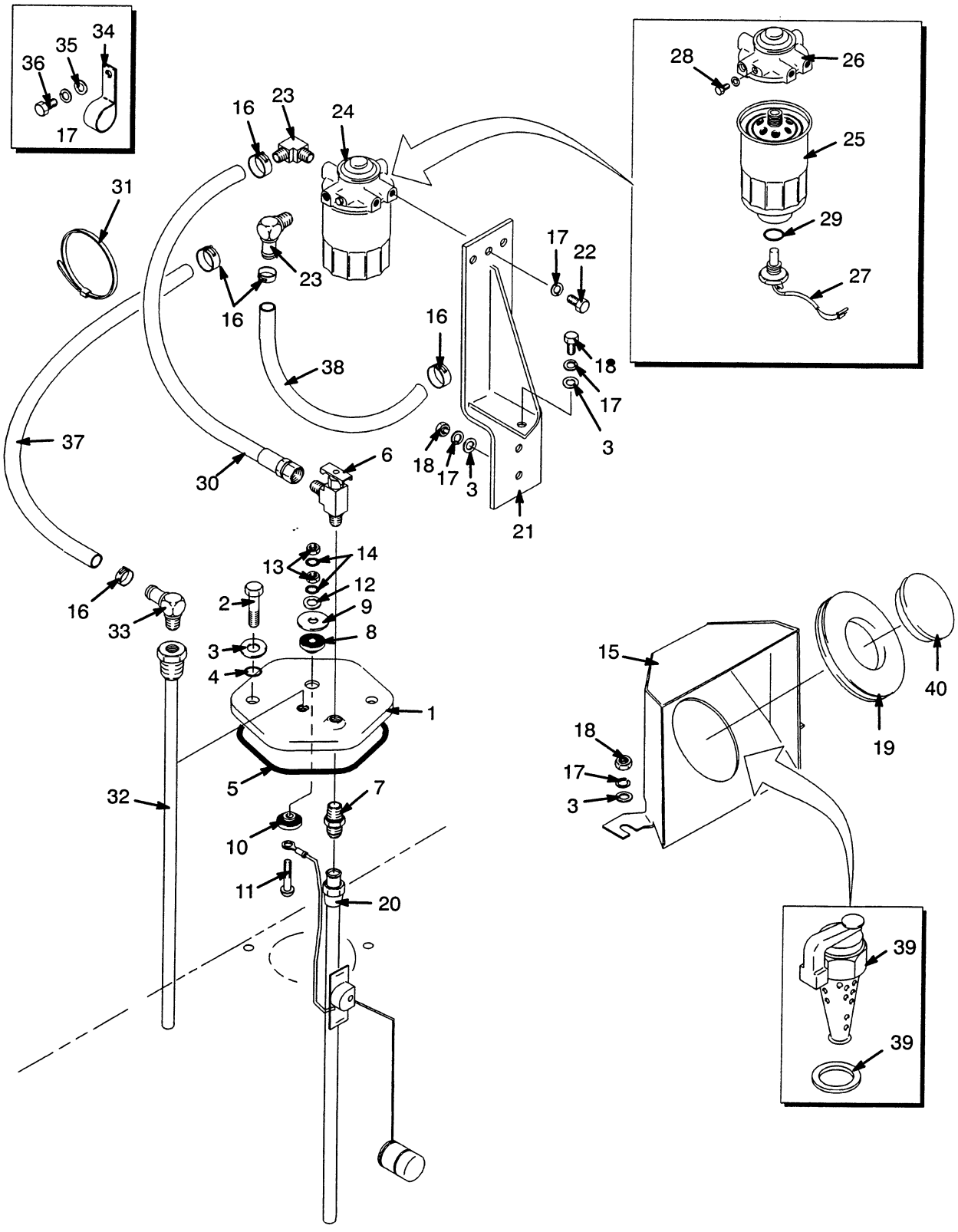

FUEL

DIESEL 2.4L

REF	PART NO.	NAME OF PART	QTY
1	1343448	Cover	1
2	329067	Screw	2
3	320157	Washer	7
4	353000	O-Ring	2
5	1343449	Seal	1
6	1350286	Valve	1
7	14303	Fitting	1
8	1350291	Washer	1
9	1350290	Washer	1
10	1351000	Washer	1
11	1356459	Screw	1
12	197067	Washer	1
13	1350298	Nut	2
14	1350299	Lockwasher	2
15	1343550	Shield	1
16	168718	Clamp	5
17	292681	Lockwasher	8
18	239503	Nut	5
19	1339720	Grommet	1
20	1347153	Fuel Sender	1
21	1350226	Bracket	1
22	136681	Capscrew	2
23	222480	Fitting	2
24	1327898	Fuel Filter	1
25	1334350	Cartridge Kit	1
25 b	1330033	Cartridge	1
25 b	1334352	Label	1
26	1374930	Housing	1
27	1330035	Sensor	1
28	1330036	Plug	1
29 b	1330037	Gasket	1
30	1351011	Hose	1
31	137852	Clamp	2
32	1350292	Pipe	1
33	17343	Fitting	1
34	1374611	Clamp	2
35	296418	Washer	2
36	296418	Screw	2
37	1320922	Hose	1
38	1301601	Hose	1
39 a	63899	Safety Cap	1
39 a	138880	Shim	AR
40	157704	Cap	1

a Optional
b Included In Repair Kit 996423

©2000 HYSTER COMPANY

FUEL (Figure 80)

DIESEL 3.1L

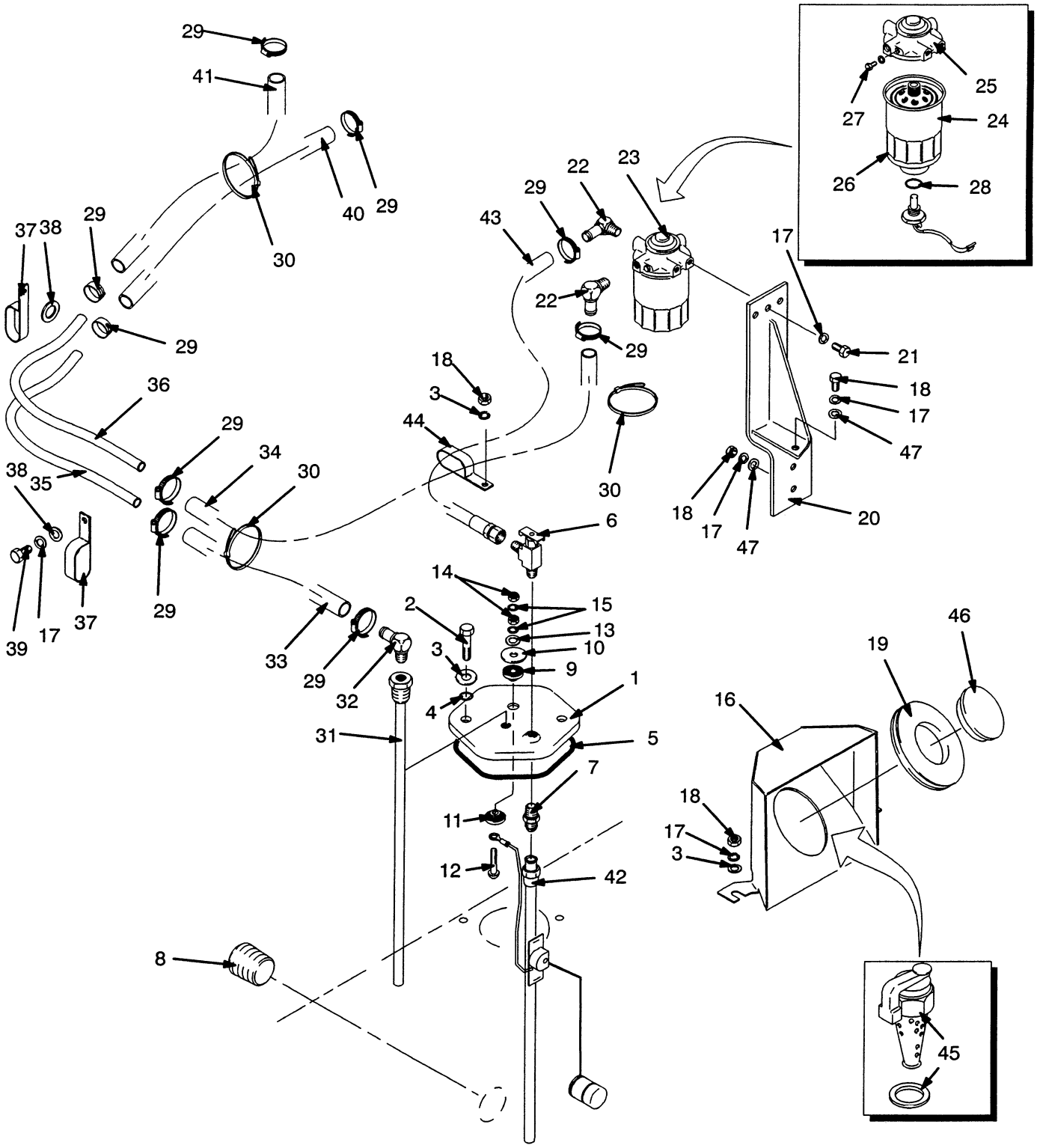

FUEL

DIESEL 3.1L

REF		PART NO.	NAME OF PART	QTY
1		1343448	Cover	1
2		329067	Screw	2
3		320157	Washer	7
4		353000	O-Ring	2
5		1343449	Seal	1
6		1350286	Valve	1
7		14303	Fitting	1
8		15964	Fitting	1
9		1350291	Washer	1
10		1350290	Washer	1
11		1351000	Washer	1
12		1356459	Screw	1
13		197067	Washer	1
14		1350298	Nut	2
15		1350299	Lockwasher	2
16		1343550	Splash Shield	1
17		292681	Lockwasher	8
18		239503	Nut	5
19		1339720	Grommet	1
20		1350226	Bracket	1
21		136681	Capscrew	2
22		222480	Fitting	2
23		1327898	Fuel Filter	1
24		1334350	Cartridge Kit	1
24	b	1330033	Cartridge	1
24	b	1334352	Label	1
25		1374930	Housing	1
26		1330035	Sensor	1
27		1330036	Plug	1
28	b	1330037	Gasket	1
29		168718	Clamp	9
30		137852	Strap Clamp	3
31		1350292	Pipe	1
32		17343	Fitting	1
33		1303195	Hose	1
34		392800	Hose	1
35		1373822	Fuel Line	1
36		1373823	Fuel Line	1
37		1374611	Clamp	2
38		296418	Washer	2
39		287851	Capscrew	1
40		1374615	Hose	1
41		1301601	Hose	1
42		1347153	Fuel Sender	1
43		1359437	Hose	1
44		119074	Clamp	1
45	a	63899	Safety Cap	1
45	a	138880	Shim	AR
46		157704	Cap	1
47		320158	Washer	2

a Optional

b Included In Repair Kit 996423

GOVERNOR (Figure 81)

GASOLINE AND LPG 2.0L

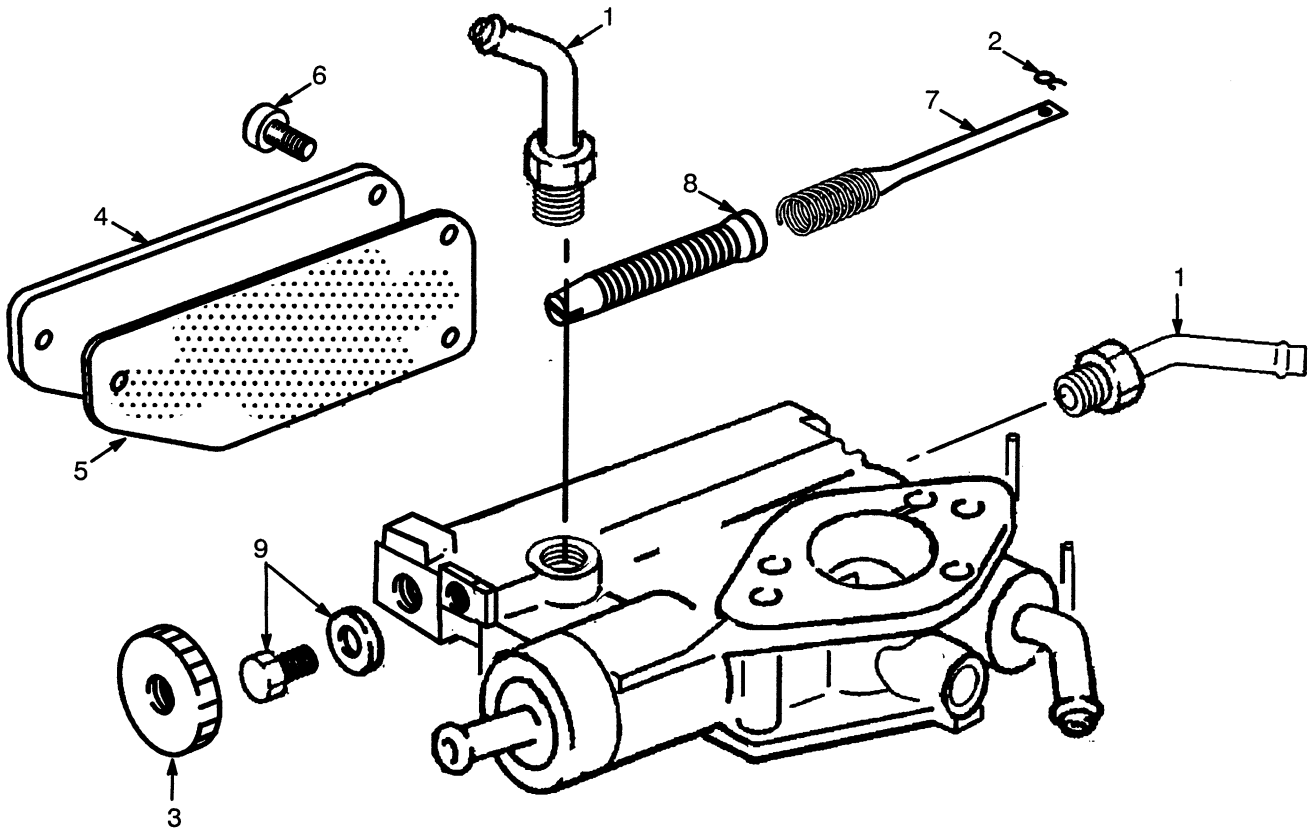

REF	PART NO.	NAME OF PART	QTY
	1361751	Governor	1
1	1367517	Connector	2
2	1367519	Snap Ring	1
3	1367520	Bushing	1
4	1367522	Cover	1
5	1367523	Gasket	1
6	1367524	Screw	3
7	1367525	Spring	1
8	1367526	Screw	1
9	1367527	Bolt	1

©2000 HYSTER COMPANY

CARBURETOR (Figure 82)

GASOLINE 2.0L

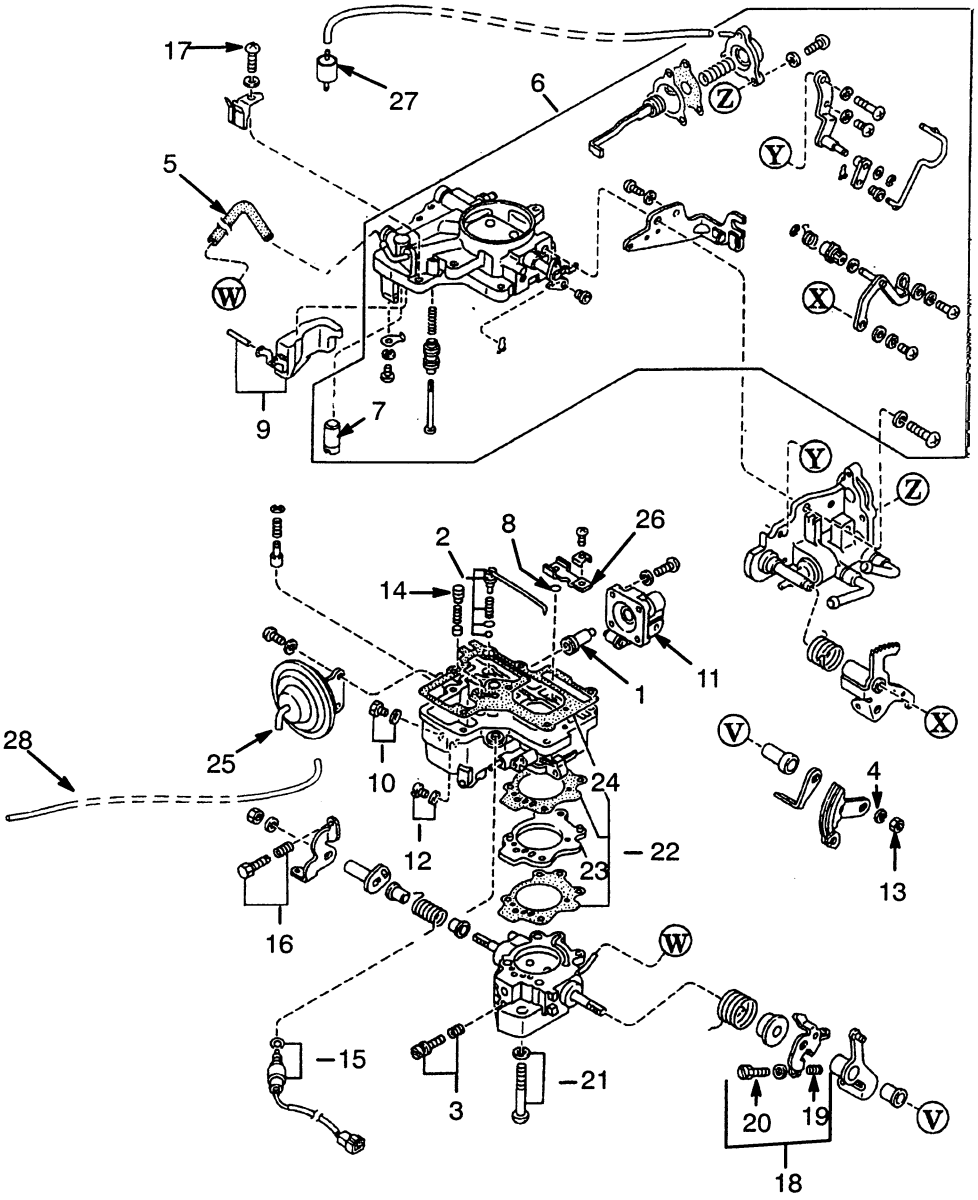

REF	PART NO.	NAME OF PART	QTY
	1460225	Carburetor	1
1	1361768	Plunger Set	1
2	1361769	Nozzle Set	1
3	1361770	Screw Set	1
4	1361772	Washer	2
5	1361773	Vacuum Hose	1
6	1361774	Air Horn	1
7	1361771	Power Jet	1
8	1361775	O-Ring	1
9	1361776	Float	1
10	1361777	Drain Plug	1
11	1382673	Pump Arm	1
12	1361779	Main Jet	1
13	1361780	Nut	2

REF	PART NO.	NAME OF PART	QTY
14	1361781	Slow Jet	1
15	1361782	Solenoid Valve	1
16	1361783	Idle Screw	1
17	1361784	Screw & Washer	1
18	1361785	Throttle Adjustment Screw	1
19	2037064	Screw	1
20	2037065	Screw	1
21	1361786	Screw Set	1
22	1361787	Gasket Set	1
23	2037066	Gasket	1
24	2037067	Insulator	1
25	1361788	Vacuum Diaphragm	1
26	1361789	Idle Compensator	1
27	1390858	Cushion Jet	1
28	.....	Tube (Vacuum)	1

©2000 HYSTER COMPANY

See Service Manual for service procedures

CARBURETOR (Figure 83)

LPG 2.0L

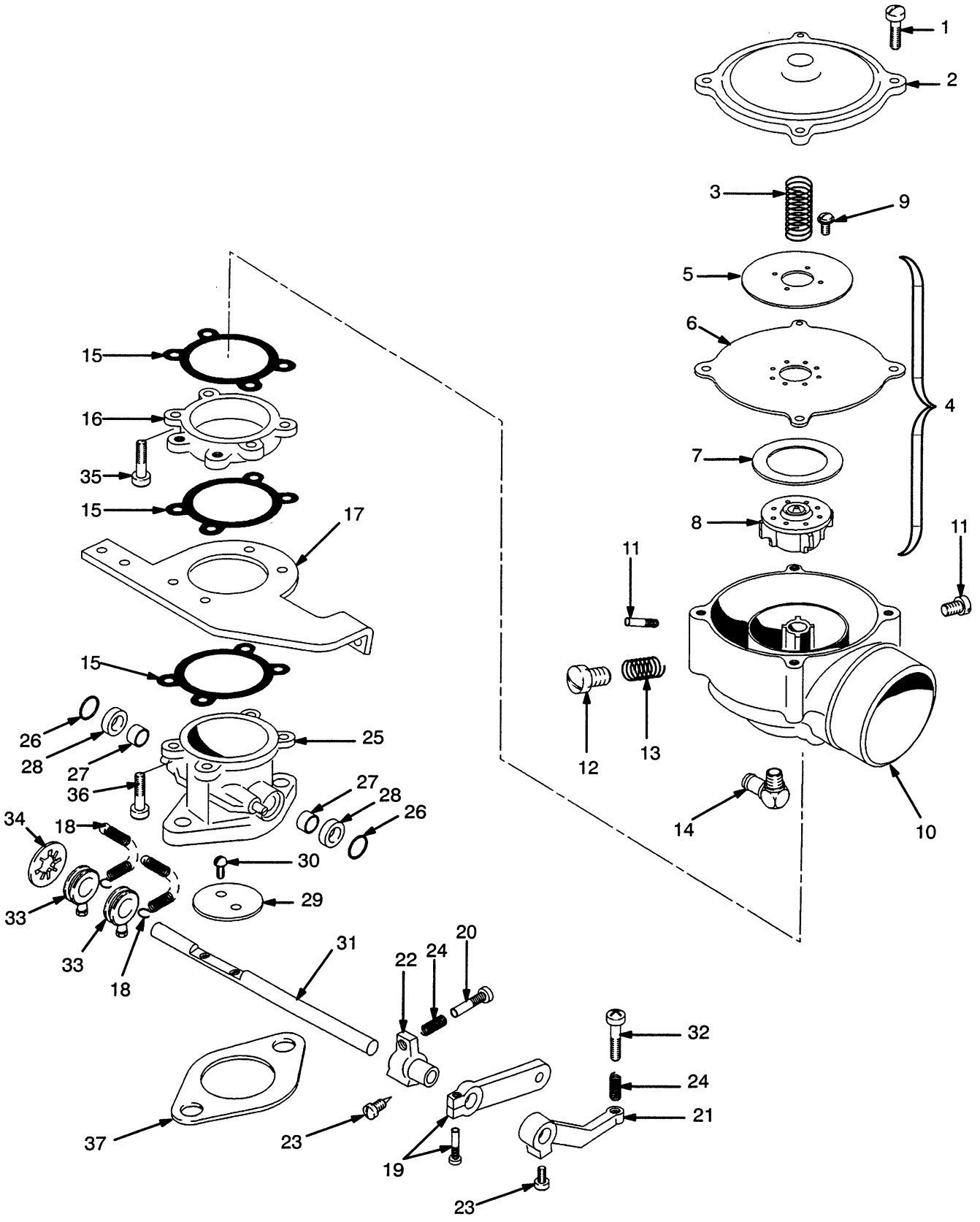

CARBURETOR

LPG 2.0L

KEY:
A: Last Used On S/N D177B-15620
B: First Used On S/N D177B-15621
C: 3-Way Type Carburetor

REF	PART NO.	NAME OF PART	QTY A	QTY B	QTY C
	1356523	Carburetor	1	..	..
	1376621	Carburetor	..	1	..
	1377689	Carburetor	..	..	1
1	132473	Screw	4	4	4
2	204780	Cover	1	1	1
3	374713	Spring	1	1	1
4	1453779	Valve & Diaphragm Kit	1	1	..
4	1382974	Valve & Diaphragm Kit	..	..	1
5	.....	Back-Up Plate	1	1	..
6	1369038	Diaphragm	1	1	..
7	204858	Ring	1	1	..
8	.....	Valve	1	1	..
9	220283	Screw	4	4	..
10	250371	Air Horn	1	1	..
10	1383600	Air Horn	..	..	1
11	326926	Screw	1	1	..
12	326516	Idle Screw	1	1	..
12	1383601	Idle Screw	..	..	1
13	332277	Spring	1	1	..
13	1383602	Nut	..	..	1
14	1361164	Fitting	1	1	..
14	323541	Fitting	..	..	2
15	204787	Gasket	3	3	3
16	303072	Spacer	1	1	1
17	1358239	Bracket	1	1	1
18	1358245	Spring	2	2	2
19	1358238	Lever	1	..	..
19	1375905	Lever	..	1	..
19	.....	Lever	..	..	1
20	1358244	Screw	1	..	..
20	16751	Screw	..	1	1
21	1358241	Floating Lever	1	1	1
22	1358242	Stop Lever	1	1	1
23	1358243	Screw	4	4	2
24	204824	Spring	2	2	2
25	1358240	Throttle Body	1	1	1
26	204797	Retainer	2	2	2
27	204796	Seal	2	..	..
27	1382059	Seal	..	2	2
28	214121	Bearing	2	2	2
29	241074	Fly	1	1	1
30	12490	Screw	2	2	2
31	.....	Shaft	1	1	1
32	1374057	Screw	1	1	..
32	1358244	Screw	..	..	1
33	387478	Bushing	1	2	..
34	387480	Retainer	1	1	..
35	387481	Screw	4	4	4
36	204790	Screw	4	4	4
37	195771	Mounting Gasket	1	1	1

©2000 HYSTER COMPANY

THROTTLE BODY INJECTION (Figure 84)

GASOLINE 2.2L

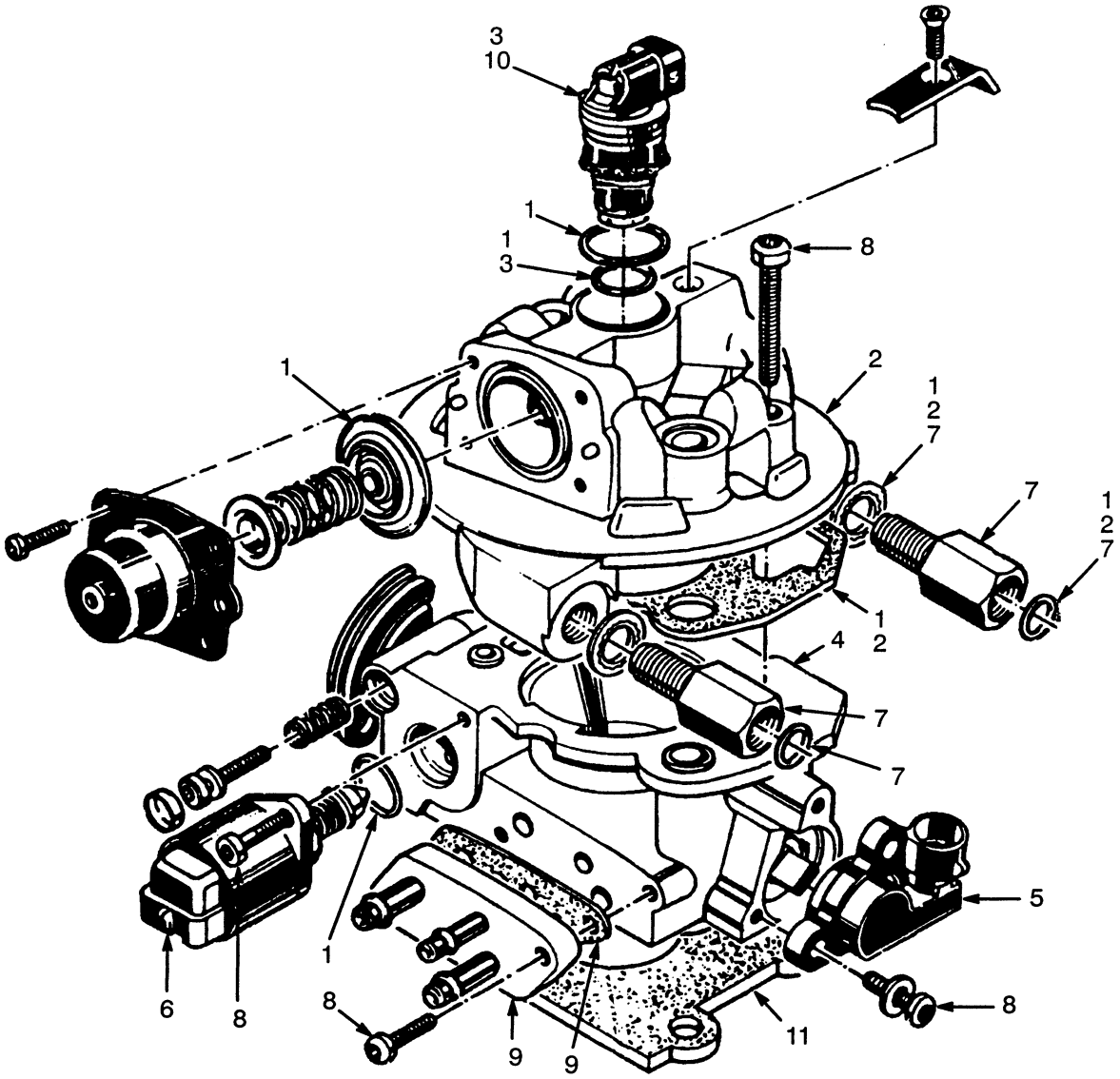

REF	PART NO.	NAME OF PART	QTY
	1343643	Throttle Body Injection	1
1	1350986	Throttle Body Injection Kit	1
2	1350987	Fuel Meter Kit	1
3	1350988	Fuel Injector Kit	1
4	1350989	Throttle Body Kit	1
5	1337978	Throttle Position Sensor Kit	1
6	1350990	Idle Air Control Kit	1
7	1350991	Fuel Inlet & Outlet Nut Kit	1

REF		PART NO.	NAME OF PART	QTY
8		1358682	Screw Package	1
9		1358683	Tube Module Package	1
10		1358684	Throttle Body Replacement Kit	1
11	a	1360748	Gasket	1
11	b	1377022	Gasket	1

a Engine 1335942
b Engine 1375902

©2000 HYSTER COMPANY

NOTES

©2000 HYSTER COMPANY

CARBURETOR (Figure 85)

LPG 2.2L

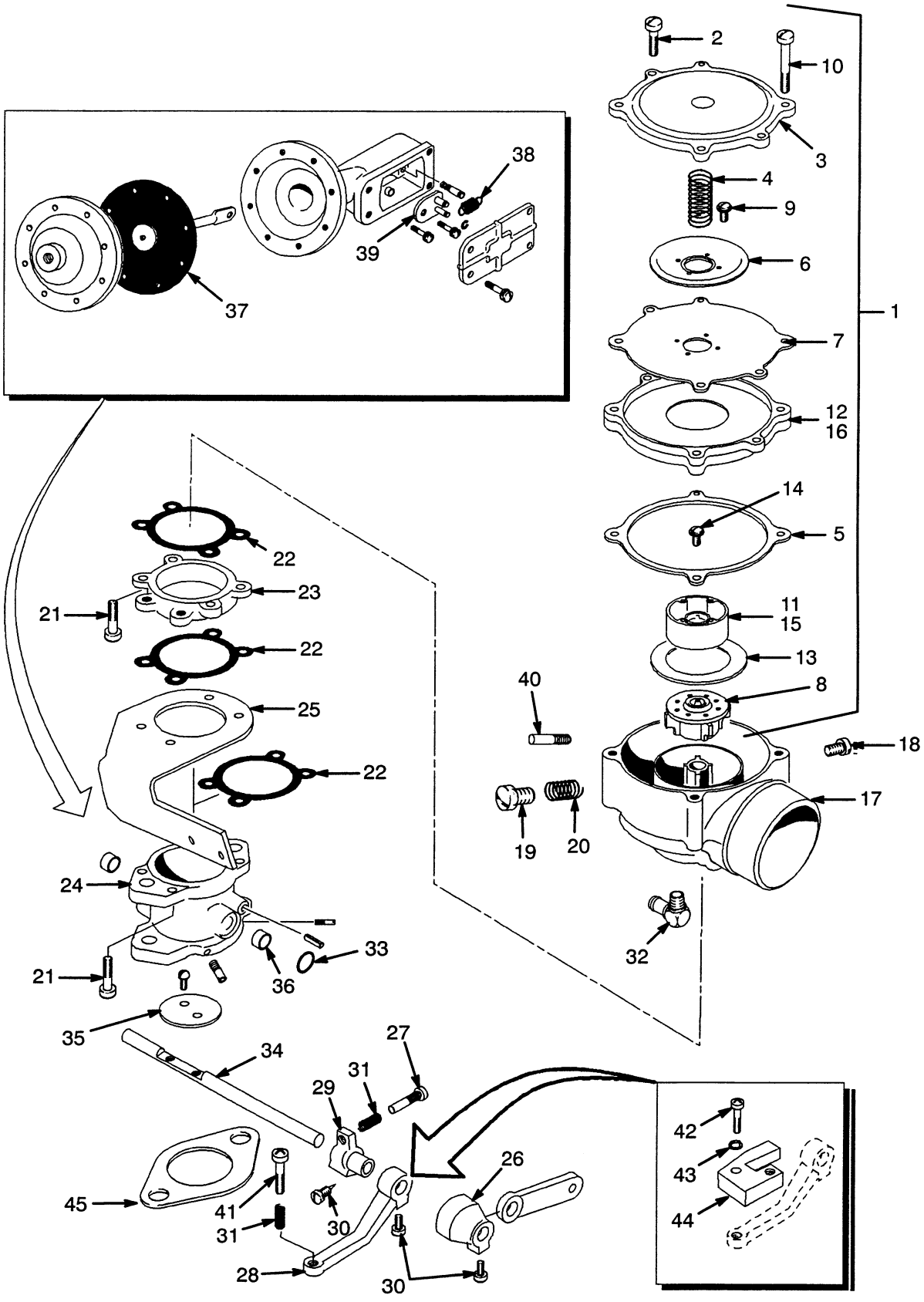

CARBURETOR

LPG 2.2L

KEY:
A: Standard
B: High Altitude Performance

REF		PART NO.	NAME OF PART	QTY A	QTY B
	a	1354096	Carburetor	1	..
	b	1368981	Carburetor		1
1	b	1374056	Mixer Assembly	1	..
2		132473	Screw	2	2
3		.....	Cover	1	1
4		204781	Spring	1	1
5		1358233	Gasket	1	1
6		1358235	Back-Up Plate	1	1
7		1358231	Diaphragm	1	1
8		1369049	Valve	1	..
8		.....	Valve	..	1
9		12490	Screw	4	4
10		1358236	Screw	4	4
11		1358237	Spacer	1	..
12		1358234	Plate	1	..
13		204858	Ring	1	1
13		1369048	Ring	3	3
14		220283	Screw	4	4
15		.....	Spacer	..	1
16		.....	Plate	..	1
17		250371	Air Horn	1	1
18		326926	Screw	1	1
19		326516	Screw (Idle)	1	1
20		332277	Spring	1	1
21		204790	Screw	8	8
22		204787	Gasket	3	3
23		303072	Spacer	1	1
24		1358228	Governor	1	1
25		.....	Bracket	1	1
26		1342997	Clamp (Lever)	1	1
27		1358244	Screw	1	1
28		1358241	Floating Lever	1	1
29		1358242	Stop Lever	1	1
30		1358243	Screw	3	3
31		204824	Spring	2	2
32		1361164	Fitting	1	1
33		374709	Ring	1	1
34		.....	Shaft	1	1
35		.....	Fly	1	1
36		374708	Bearing	2	2
37		1339102	Diaphragm	1	1
38		1370941	Spring	1	1
39		.....	Lever	1	1
40		323541	Fitting	1	1
41		1374057	Screw	1	1
42		16703	Screw	..	1
43		15152	Lockwasher	..	1
44		1376607	Spacer	..	1
45		195771	Mounting Gasket	1	1

a Last Used On S/N D177B-6314
b First Used On S/N D177B-6315

CARBURETOR (Figure 86)

LPG 3.0L

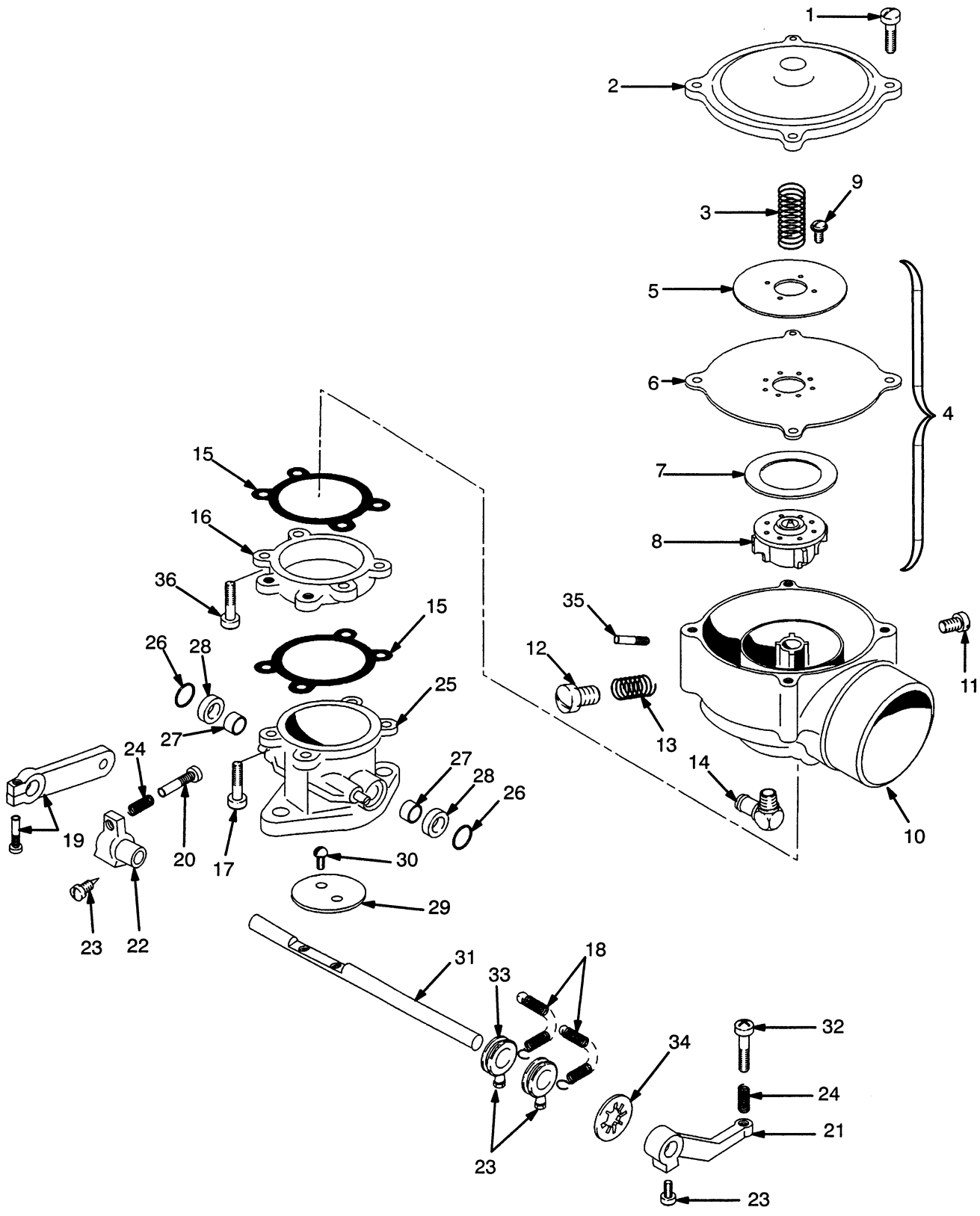

CARBURETOR

LPG 3.0L

REF		PART NO.	NAME OF PART	QTY
	a	1371592	Carburetor	1
	b	1389498	Carburetor	1
1		132473	Screw	4
2		204780	Cover	1
3		374713	Spring	1
4	a	1385712	Air-Gas Valve Assembly	1
4	b	1452798	Air-Gas Valve Assembly	1
5		.....	Back-Up Plate	1
6		1369450	Diaphragm	1
7		204858	Ring	1
8		.....	Valve	1
9		220283	Screw	4
10		250371	Air Horn	1
11		326926	Screw	1
12		326516	Idle Screw	1
13		332277	Spring	1
14		1361164	Fitting	1
15		204787	Gasket	2
16		303072	Spacer	1
17		387481	Screw	4
18		1358245	Spring	2
19		1380268	Throttle Assembly	1
20		16751	Screw	1
21		1358241	Floating Lever	1
22		1358242	Stop Lever	1
23		1358243	Screw	4
24		204824	Spring	2
25	a	1385719	Throttle Body	1
25	b	1455262	Throttle Body	1
26	a	204797	Retainer	2
27	a	1382059	Seal	2
28	a	214121	Bearing	2
29	a	241074	Fly	1
30	a	12490	Screw	2
31	a	.....	Shaft	1
32		1374057	Screw	1
33		387478	Bushing	2
34		387480	Retainer	1
35		323541	Fitting	1
36		204790	Screw	4

a Last Used On S/N D177B-39471
b First Used On S/N D177B-39472

©2000 HYSTER COMPANY

NOTES

©2000 HYSTER COMPANY

INJECTION PUMP (Figure 87)

DIESEL 2.4L, 2.8L, AND 3.1L

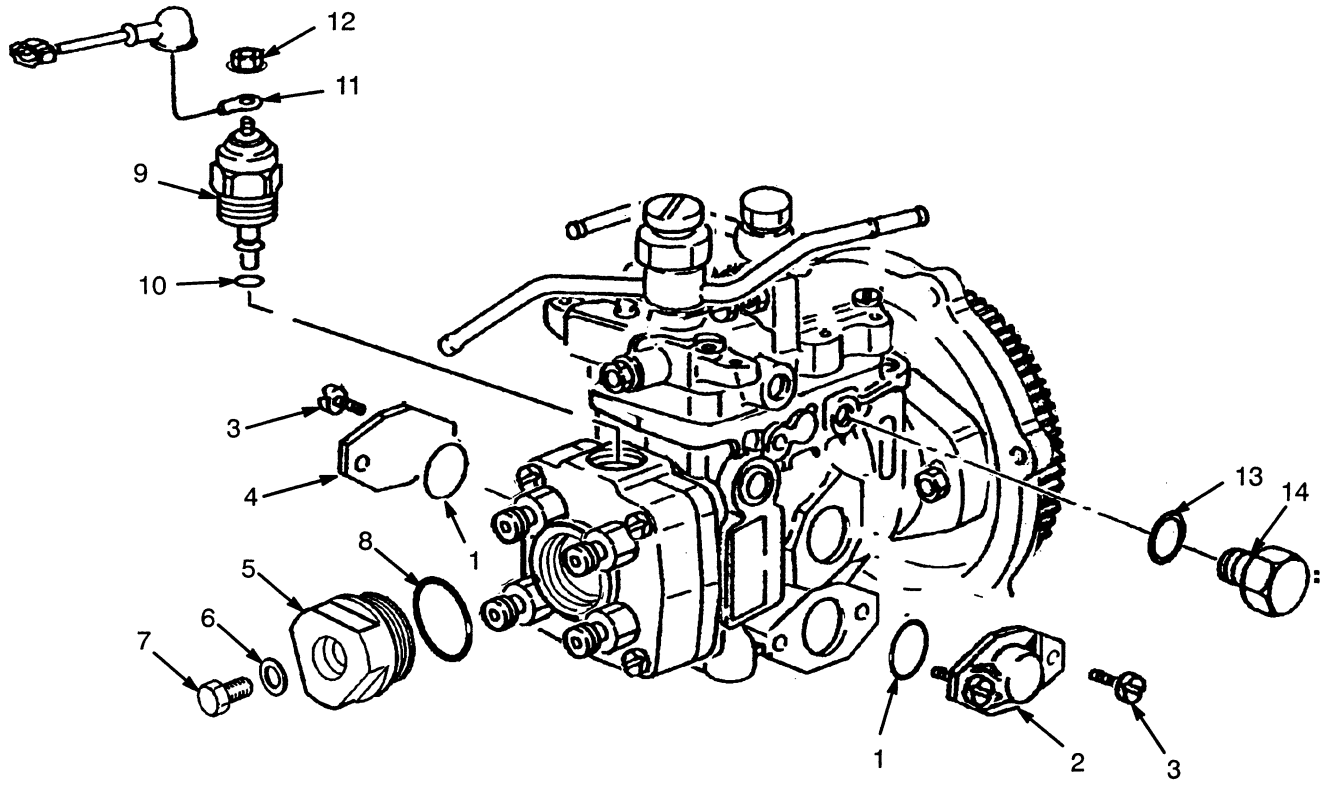

KEY:
A: Last Used On S/N D177B-8291
B: First Used On S/N D177B-8292
C: Used On Engine 1335948

REF	PART NO.	NAME OF PART	QTY A	QTY B	QTY C
	1342752	Injection Pump (2.8L)	1	..	..
	1374967	Injection Pump (3.1L)	..	1	..
	1357184	Injection Pump (2.4L)	..	..	1
1	1334026	O-Ring	2	2	2
2	1334027	Cover	1	1	1
3	1334028	Bolt	4	4	4
4	1334029	Cover	1	1	1
5	1342786	Plug	1	..	..
5	1334199	Plug	..	1	1
6	1334142	Gasket	1	1	1
7	1342787	Bolt	1	..	..
7	1334200	Bolt	..	1	1
8	1334201	O-Ring	1	1	1
9	1334212	Solenoid (Fuel Shut-Off)	1	1	1
10	1334213	O-Ring	1	1	1
11	1334214	Wire	1	1	1
12	1334215	Nut	1	1	1
13	1334232	O-Ring	1	1	1
14	1342819	Plug	1	1	..
14	1334231	Plug	..	..	1

©2000 HYSTER COMPANY

AIR FILTER (Figure 88)

GASOLINE AND LPG 2.0L AND 2.2L

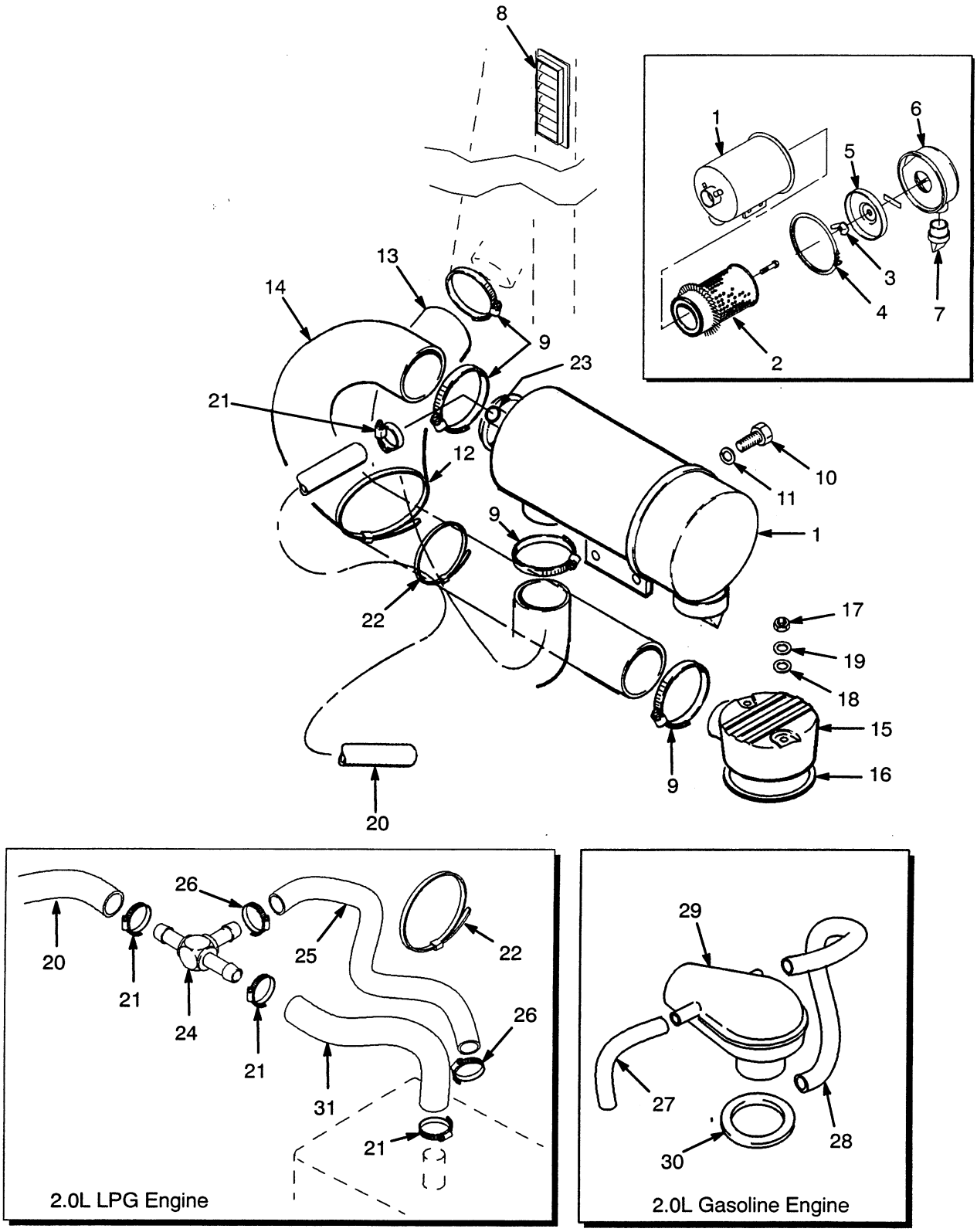

AIR FILTER

GASOLINE AND LPG 2.0L AND 2.2L

KEY:
A: 2.2L Engine
B: 2.0L Engine

REF		PART NO.	NAME OF PART	QTY A	QTY B
1		1343635	Air Filter	1	1
2	c	305080	Element	1	1
3		125847	Nut And Gasket	1	1
4		290734	Clamp	1	1
5		290735	Baffle	1	1
6		374922	Cup	1	1
7		374923	Valve	1	1
8		1339265	Grill	1	1
9		112989	Clamp	4	4
10		287854	Capscrew	2	2
11		292682	Lockwasher	2	2
12		273775	Strap Clamp	1	1
13		1343638	Hose	1	1
14		1368980	Hose	1	..
14	a	1368917	Hose	..	1
14	b	1368980	Hose	..	1
15	a	1347013	Air Bonnet	1	..
16	a	1347021	Bonnet Gasket	1	..
17	a	313828	Nut	2	..
18	a	145831	Washer	2	..
19	a	320157	Washer	2	..
20		120857	Hose	1	..
20	b	1374917	Hose	..	2
21		166857	Clamp	1	4
22	b	2004005	Strap Clamp	..	1
22		2004005	Strap Clamp	3	..
23	a	1359608	Plug	..	1
24	b	1374916	Fitting	..	1
25	b	193008	Hose	..	1
26	b	168718	Clamp	..	1
27		1361794	Hose	..	1
28		1361797	Hose	..	1
29	a	1361766	Elbow	..	1
30	a	1361765	Seal	..	1
31		1365895	Hose	..	1

a Gasoline
b LPG
c Included In Repair Kit 996423

©2000 HYSTER COMPANY

AIR FILTER AND BREATHER (Figure 89)

GASOLINE AND LPG 3.0L

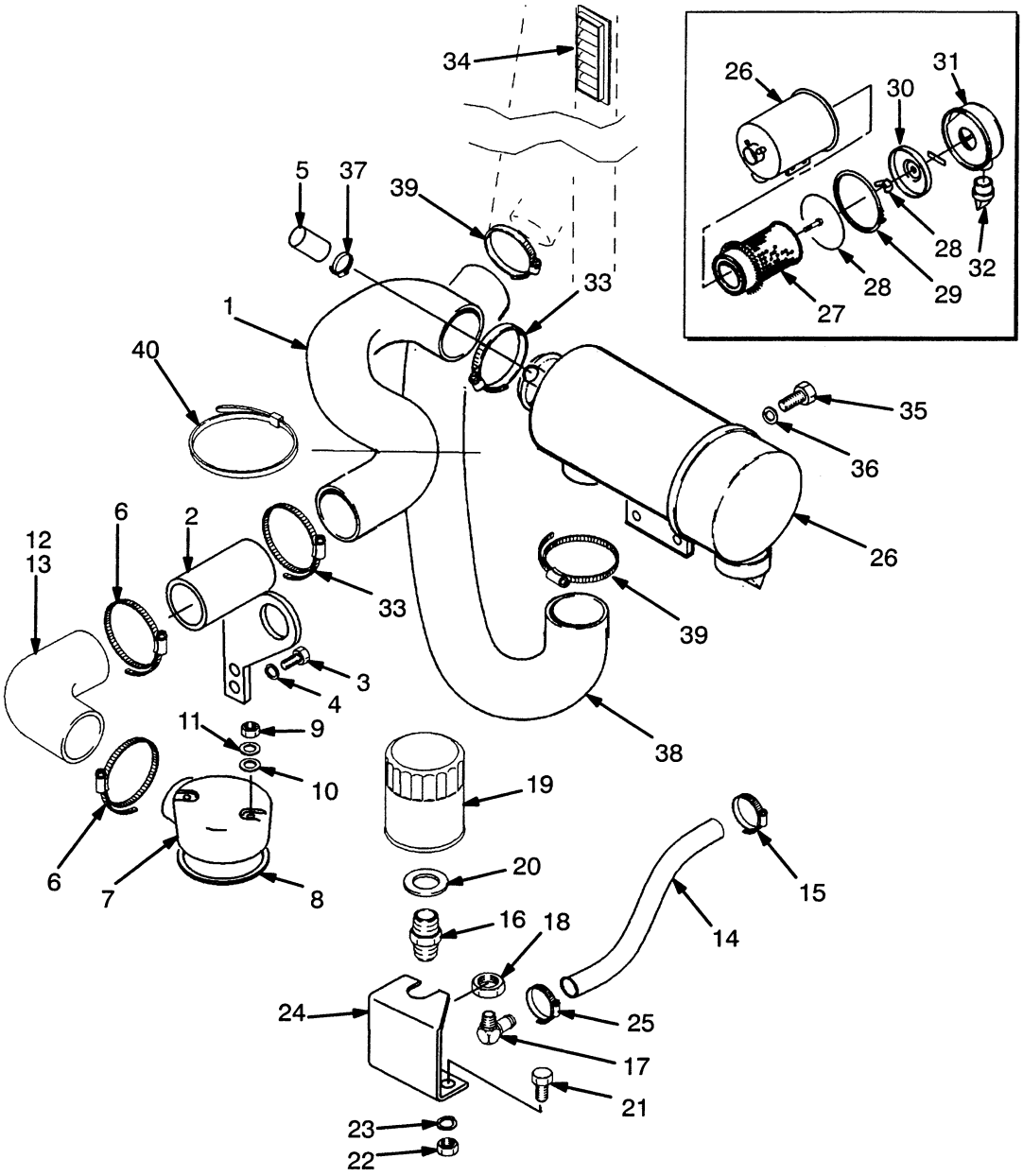

AIR FILTER AND BREATHER

GASOLINE AND LPG 3.0L

KEY:
A: Gasoline
B: LPG

REF		PART NO.	NAME OF PART	QTY A	QTY B
1		1375174	Hose (Intake)	1	1
2		1375696	Tube	1	1
3		16598	Capscrew	2	2
4		15156	Lockwasher	2	2
5		1359608	Plug	1	1
6		112989	Clamp	2	2
7		1375722	Air Bonnet	1	..
8		1347021	Gasket	1	..
9		313828	Locknut	2	..
10		109919	Washer (Seal)	2	..
11		320157	Washer	2	..
12	a	1375744	Hose	1	..
13	a	1375693	Hose	..	1
14		1376726	Hose	1	1
15		130845	Clamp	1	1
16		1350042	Adapter	1	1
17		16788	Fitting	1	1
18		14761	Nut	1	1
19		1350036	Filter	1	1
20		1300152	Washer (Seal)	1	1
21		292500	Capscrew	2	2
22		136687	Nut	2	2
23		292680	Lockwasher	2	2
24		1376576	Bracket	1	1
25		166857	Clamp	1	1
26		1343635	Air Filter	1	1
27	b	305080	Element	1	1
28		125847	Nut & Gasket	1	1
29		290734	Clamp	1	1
30		290735	Baffle	1	1
31		374922	Cup	1	1
32		374923	Valve	1	1
33		112989	Clamp	2	2
34		1339265	Grill	1	1
35		287854	Capscrew	2	2
36		292682	Lockwasher	2	2
37		166857	Clamp	1	1
38		1343638	Hose	1	1
39		112989	Clamp	2	2
40		323864	Strap Clamp	1	1

a Not Used With Dual Fuel System
b Included In Repair Kit 996423

©2000 HYSTER COMPANY

AIR FILTER (Figure 90)

DIESEL

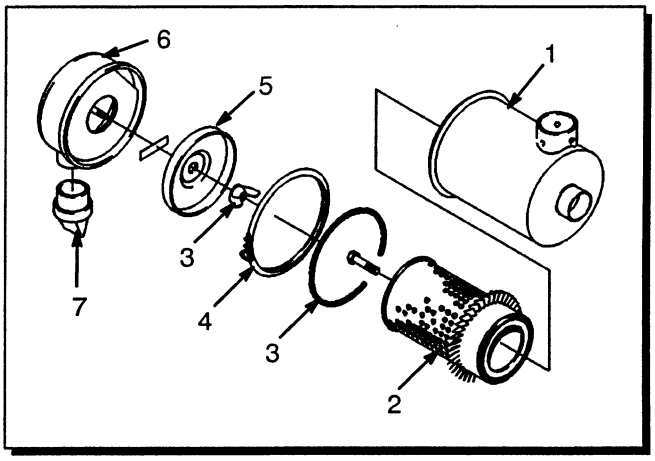

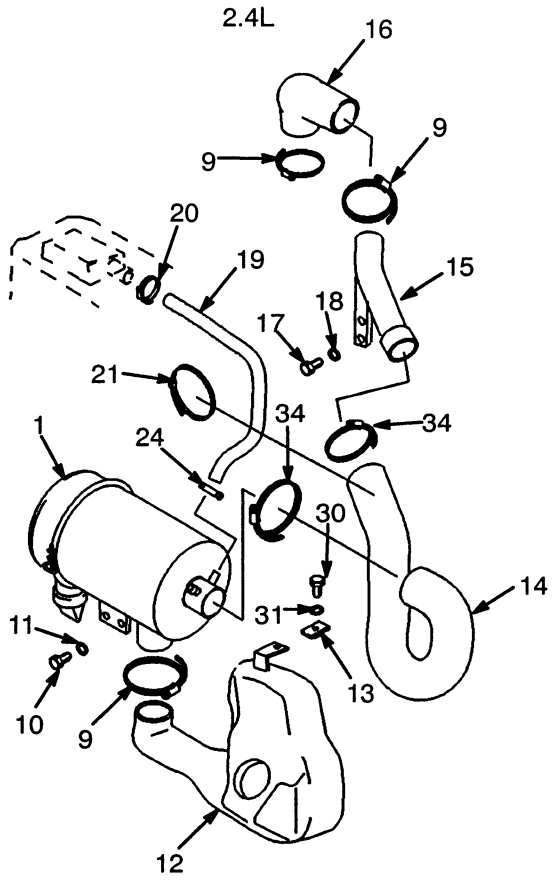

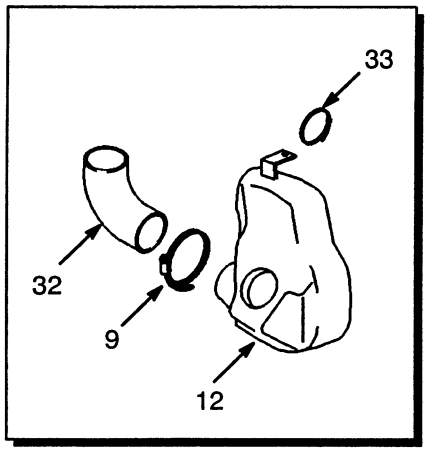

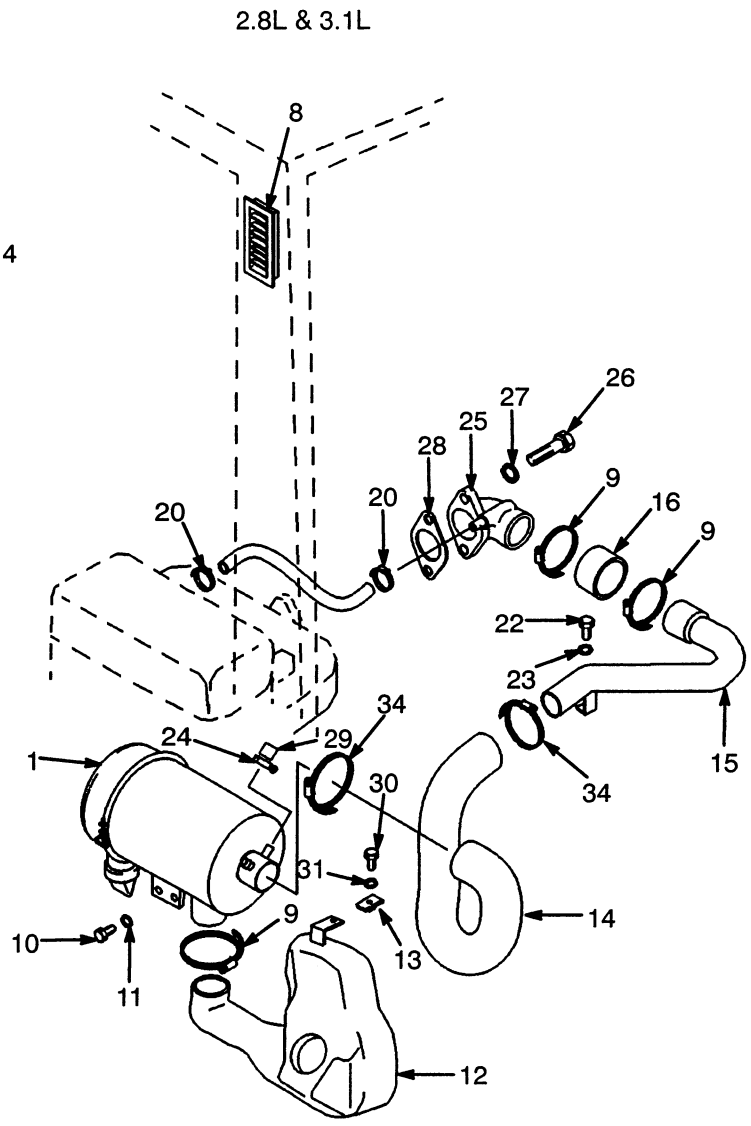

AIR FILTER

DIESEL

KEY:
A: 2.4L Engine
B: 2.8L & 3.1L Engine

REF		PART NO.	NAME OF PART	QTY A	QTY B
1		1343635	Air Filter	1	1
2	c	305080	Element	1	1
3		125847	Nut & Gasket	1	1
4		290734	Clamp	1	1
5		290735	Baffle	1	1
6		374922	Cup	1	1
7		374923	Valve	1	1
8		1339265	Grill	1	1
9		112989	Clamp	4	4
10		287854	Capscrew	2	2
11		292682	Lockwasher	2	2
12	a	1359569	Silencer	1	1
12	b	1383783	Silencer	1	1
13		1350215	Nut	1	1
14		1361104	Hose	1	1
14		1347100	Hose	..	1
15		1347101	Tube	1	..
15		1347106	Tube	..	1
16		1347105	Hose	1	..
16		1347108	Hose	..	1
17		136681	Capscrew	2	..
18		292681	Lockwasher	2	..
19		1347133	Hose	1	..
20		130845	Clamp	1	..
21		2004005	Strap Clamp	1	..
22		136681	Capscrew	..	1
23		292681	Lockwasher	..	1
24		166857	Clamp	1	1
25		1347075	Air Bonnet	..	1
26		287860	Capscrew	..	2
27		292682	Lockwasher	..	2
28		1338761	Gasket	..	1
29		1359608	Plug	..	1
30		292500	Capscrew	1	1
31		292680	Washer	1	1
32	b	1383784	Elbow	1	1
33		114312	Clamp	1	1
34		1394008	Clamp	2	2

a Last Used On S/N D177B-31975
b First Used On S/N D177B-31976
c Included In Repair Kit 996423

FUEL INJECTION (Figure 91)

DIESEL 2.4L

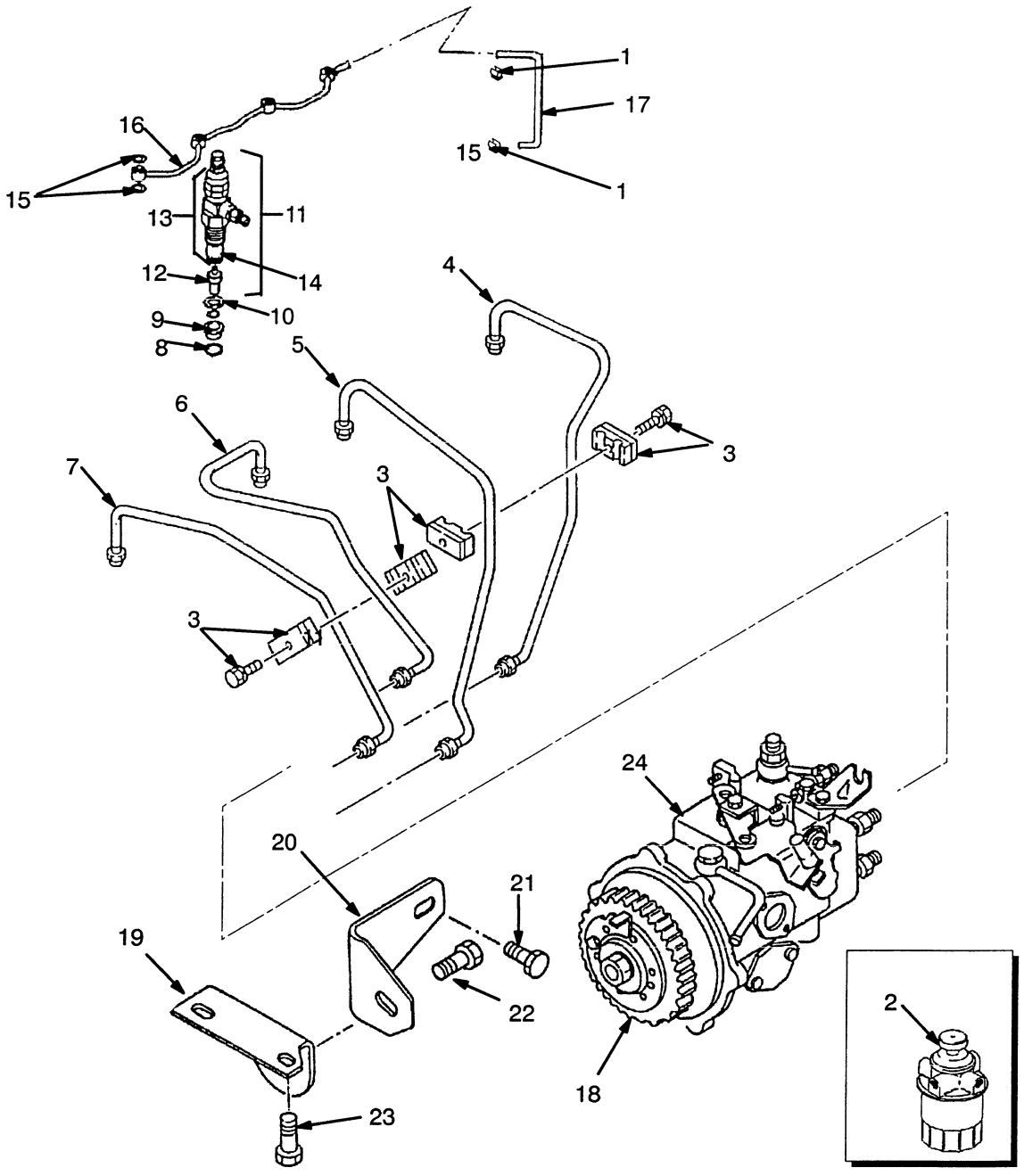

FUEL INJECTION

DIESEL 2.4L

REF		PART NO.	NAME OF PART	QTY
1		1329353	Clip	2
2		.....	Fuel Filter	1
			☞ Figure 79	
3		1329352	Clamp	5
4		1329349	Pipe	1
5		1329348	Pipe	1
6		1329347	Pipe	1
7		1329346	Pipe	1
8		324410	Washer	4
9		324408	Shield	4
10	a	324411	Washer	4
11		1376449	Nozzle (Assembly)	4
12		324407	Nozzle	1
13		323807	Holder	1
14		1370927	Retainer (Nut)	1
15	a	324412	Seal	8
16		1329350	Pipe	1
17		1329351	Hose	1
18		1329362	Gear	1
19		1329363	Bracket	1
20		1329364	Bracket	1
21		1329359	Bolt	2
22		1329365	Bolt	1
23		1329366	Bolt	2
24		.....	Injection Pump	1
			☞ Figure 87	

a Included In Seal Kit 1457161

FUEL INJECTION (Figure 92)

DIESEL 2.8L

LAST USED ON S/N D177B-8291

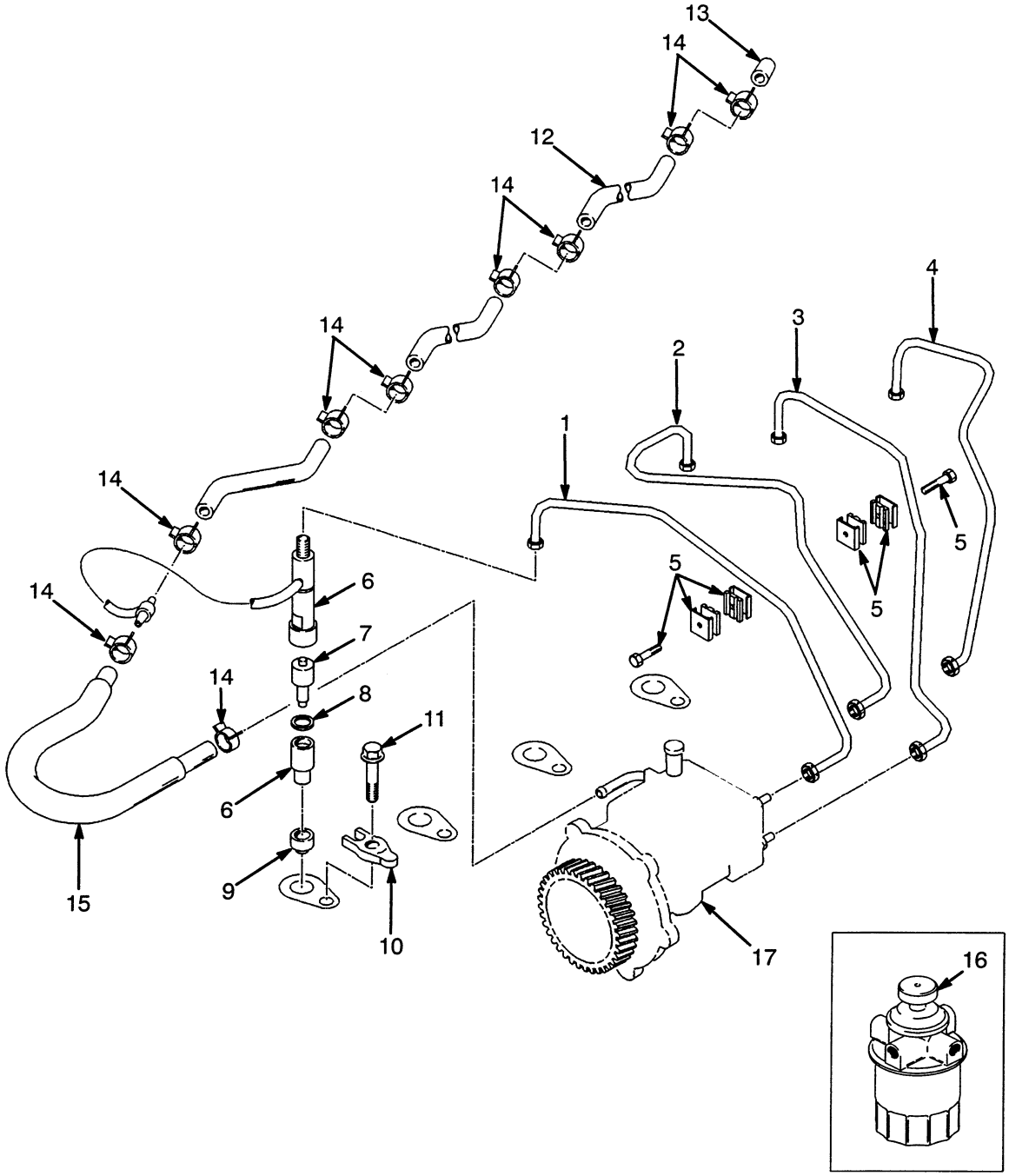

FUEL INJECTION

DIESEL 2.8L

LAST USED ON S/N D177B-8291

REF	PART NO.	NAME OF PART	QTY
1	1338763	Injection Pipe #1	1
2	1338764	Injection Pipe #2	1
3	1338765	Injection Pipe #3	1
4	1338766	Injection Pipe #4	1
5	1329352	Clamp Assembly	3
6	1338768	Nozzle Holder	4
7	1338767	Nozzle	4
8	1338769	O-Ring	4
9	1338770	Gasket	4
10	1338771	Bracket	4
11	1338772	Bolt	4
12	1338773	Hose	3
13	1338774	Cap	1
14	1329353	Clamp	9
15	1338775	Hose	1
16	.....	Fuel Filter ☞ Figure 79	1
17	.....	Injection Pump ☞ Figure 87	1

©2000 HYSTER COMPANY

FUEL INJECTION (Figure 93)

DIESEL 3.1L

FIRST USED ON S/N D177B-8292

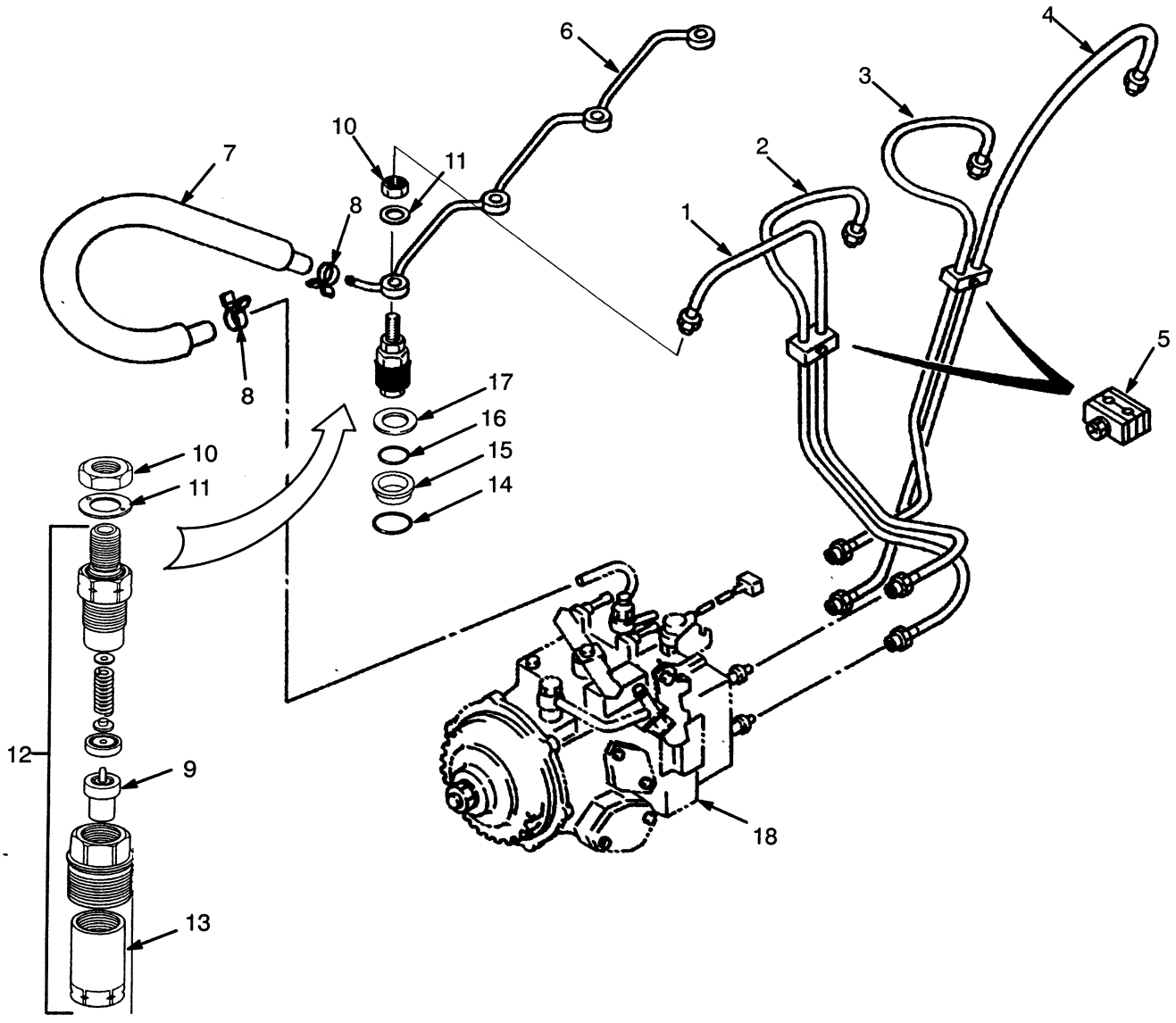

©2000 HYSTER COMPANY

FUEL INJECTION

DIESEL 3.1L

FIRST USED ON S/N D177B-8292

REF		PART NO.	NAME OF PART	QTY
1		1374958	Injection Pipe #1	1
2		1374959	Injection Pipe #2	1
3		1374960	Injection Pipe #3	1
4		1374961	Injection Pipe #4	1
5		1329352	Clamp	2
6		1374962	Pipe Assembly	1
7		1374963	Hose	1
8		1329353	Clamp	2
9		1374983	Nozzle	4
10		1374984	Nut	4
11	a	1374985	Gasket	4
12		1374986	Nozzle Holder	4
13		1374987	Nut	1
14	a	1379763	Washer	4
15	a	1456641	Shield	4
16	a	1379761	Wave Washer	4
17	a	1456640	Washer	4
18		.....	Injection Pump ☞ Figure 87	1

a Included In Seal Kit 1457161

©2000 HYSTER COMPANY

FILTER AND LOCK-OFF VALVE (Figure 94)

LPG

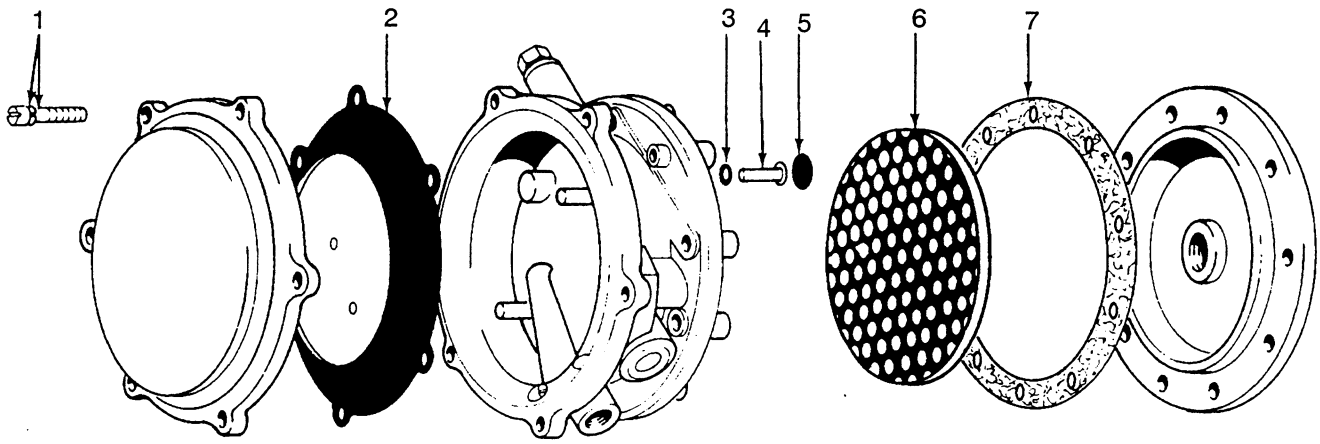

REF	PART NO.	NAME OF PART	QTY
	258321	Lock-Off Filter	1
1 [a]	.....	Screw	2
1 [a]	.....	Washer	2
2 [a]	.....	Diaphragm	1
3 [a]	.....	O-Ring	1
4 [a]	.....	Screw	1
5 [a]	.....	Valve Seat	1
6 [a]	263962	Filter	1
7 [a]	.....	Gasket	1

[a] Included In Repair Kit 263958

LPG CONVERTER (Figure 95)

LAST USED ON S/N D177B-10965

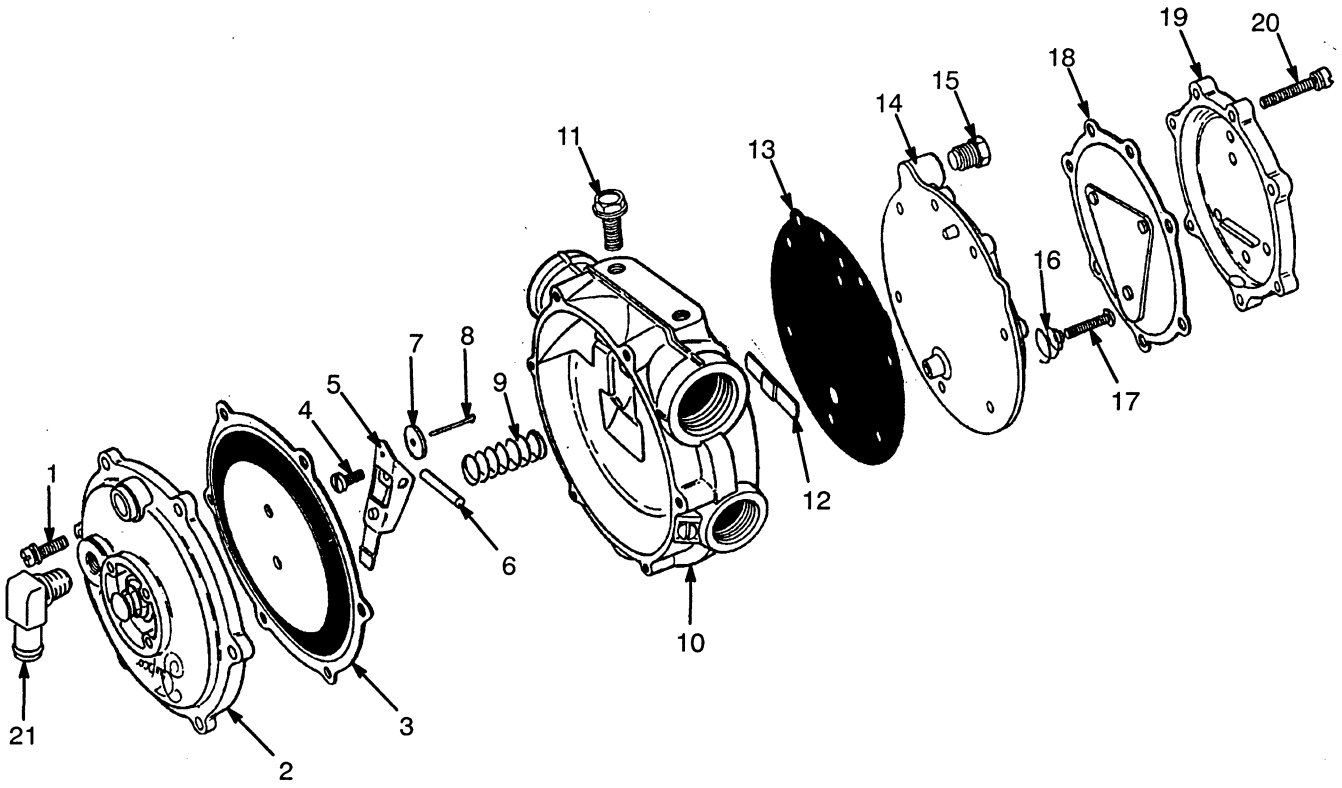

REF		PART NO.	NAME OF PART	QTY
		1354076	Converter (LPG)	1
1	a	12445	Capscrew	6
1		....	Lockwasher	6
2		1357740	Cover	1
3	a	1357742	Diaphragm	1
4	a	16719	Screw	1
4		.....	Lockwasher	1
5		1357746	Lever	1
6		204830	Pin	1
7	a	.....	Seat	1
8		.....	Pin	1
9		204831	Spring	1
10		1357739	Body	1
11		.....	Screw	2

REF		PART NO.	NAME OF PART	QTY
11		.....	Lockwasher	2
12	a	1357703	Seat	1
13	a	1357745	Gasket	1
14		1357748	Plate	1
15		1357749	Fitting Plug	1
16		204835	Spring	1
17	a	1357747	Pin	1
18	a	1357741	Diaphragm	1
19		1357743	Cover	1
20	a	16849	Screw	7
20		.....	Lockwasher	7
21	a	1369066	Check Valve	1

a Included In Repair Kit 1367119

©2000 HYSTER COMPANY

LPG CONVERTER (Figure 96)

FIRST ON S/N D177B-10966

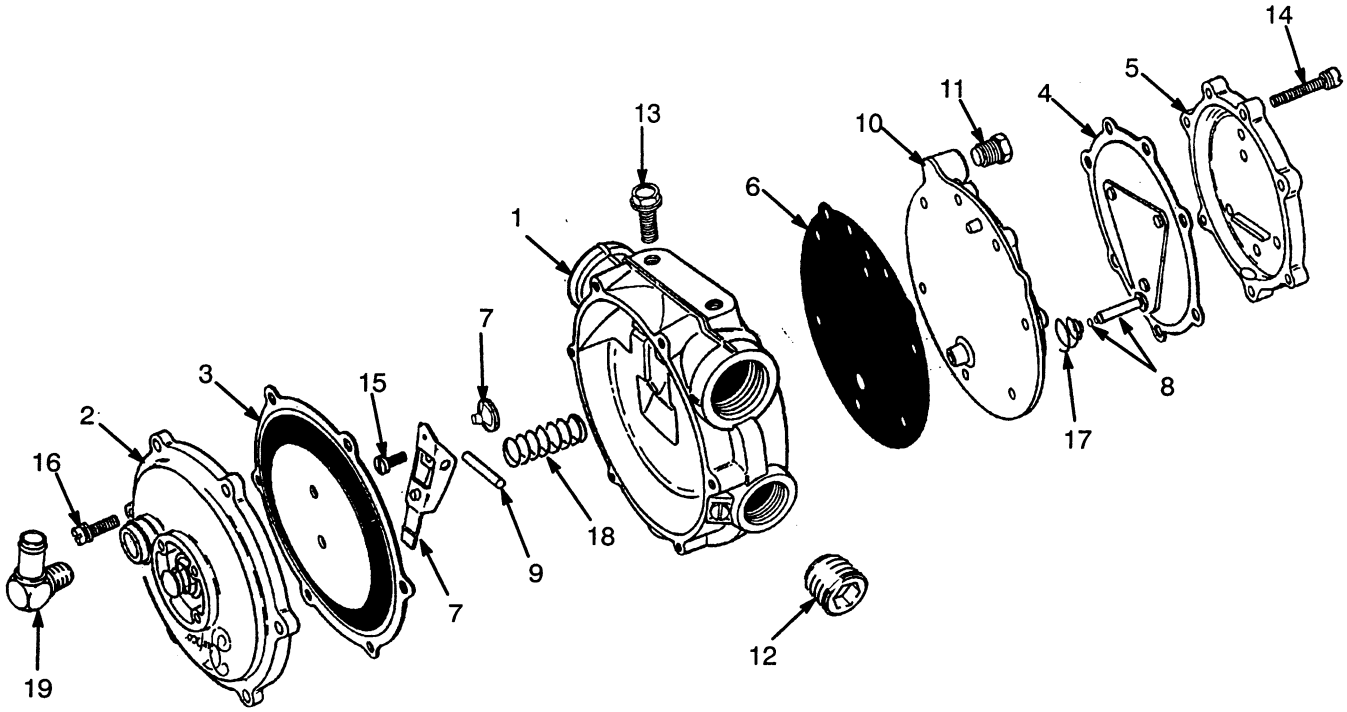

REF		PART NO.	NAME OF PART	QTY
	b	1369572	Converter Assembly	1
1		1455310	Body	1
2		.....	Cover	1
3	a	1375047	Diaphragm (Secondary)	1
4	a	.....	Diaphragm (Primary)	1
5		1375037	Cover (Primary)	1
6	a	.....	Gasket	1
7		204829	Lever (Secondary)	1
7	a	.....	Seat	1
8	a	1376429	Pin Assembly	1
9		204830	Pin	1
10		1375029	Plate	1
11		1357749	Plug	1
12		1357707	Plug	1
13		1369065	Screw	2
14	a	1450126	Screw	2
15		1455306	Screw	1
16	a	1450126	Screw	2
17		1375030	Spring	1
18		204831	Spring	1
19		1369066	Check Valve	1

a Included In Repair Kit 1375031
b Service With Converter 1457964

©2000 HYSTER COMPANY

THROTTLE LINKAGE (Figure 97)

DIESEL

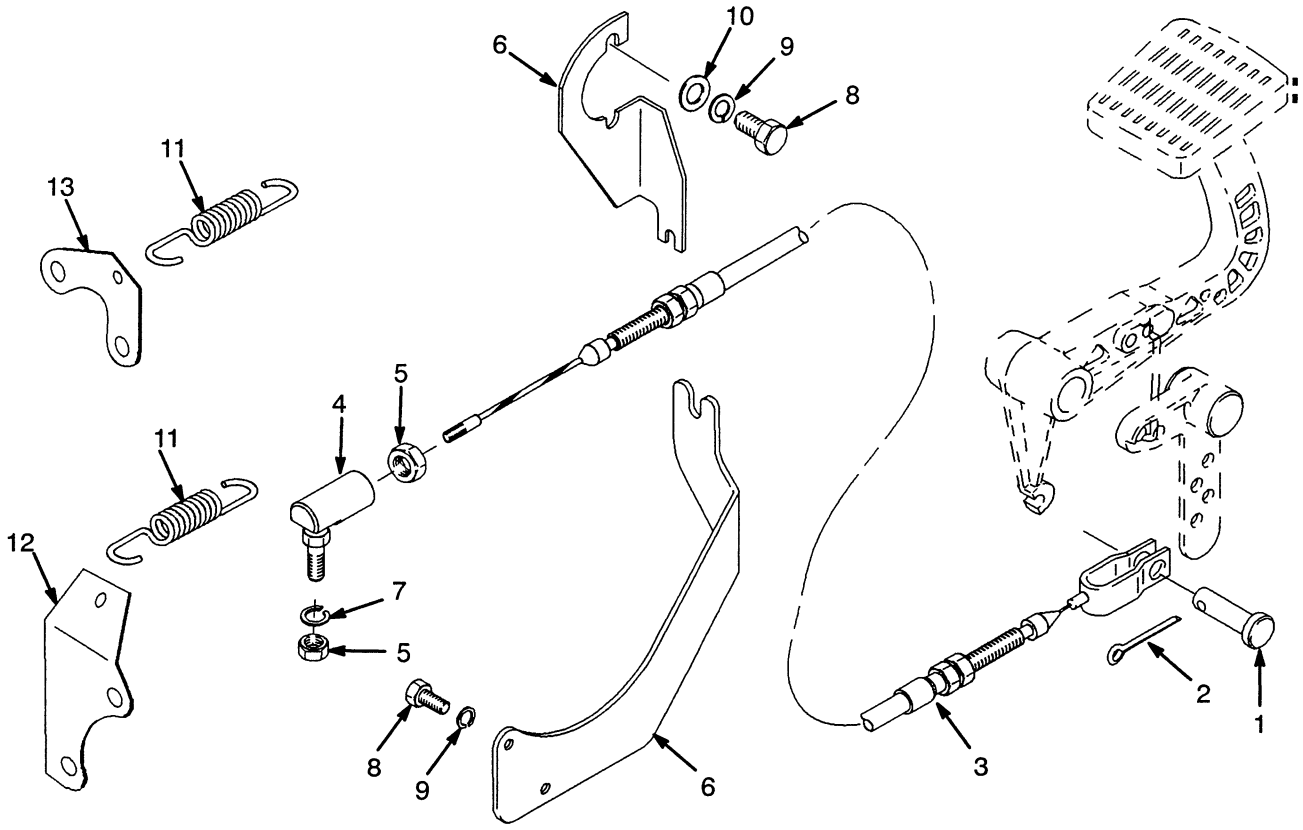

KEY:
A: 2.4L Engine
B: 2.8L & 3.1L Engine

REF	PART NO.	NAME OF PART	QTY A	QTY B
1	162836	Rod End Pin	1	1
2	15212	Pin	1	1
3	1356522	Cable	1	..
3	1339632	Cable	..	1
4	203010	Ball Joint	1	1
5	15002	Nut	2	2
6	1320766	Bracket	1	..
6	1329285	Bracket	..	1
7	292679	Washer	1	1
8	292500	Capscrew	2	..
8	292515	Capscrew	..	2
9	292680	Lockwasher	2	..
9	292682	Lockwasher	..	2
10	320159	Washer	..	2
11	1363958	Spring	1	1
12	1363956	Plate	1	..
13	1363957	Plate	..	1

THROTTLE LINKAGE (Figure 98)

GASOLINE AND LPG 2.2L

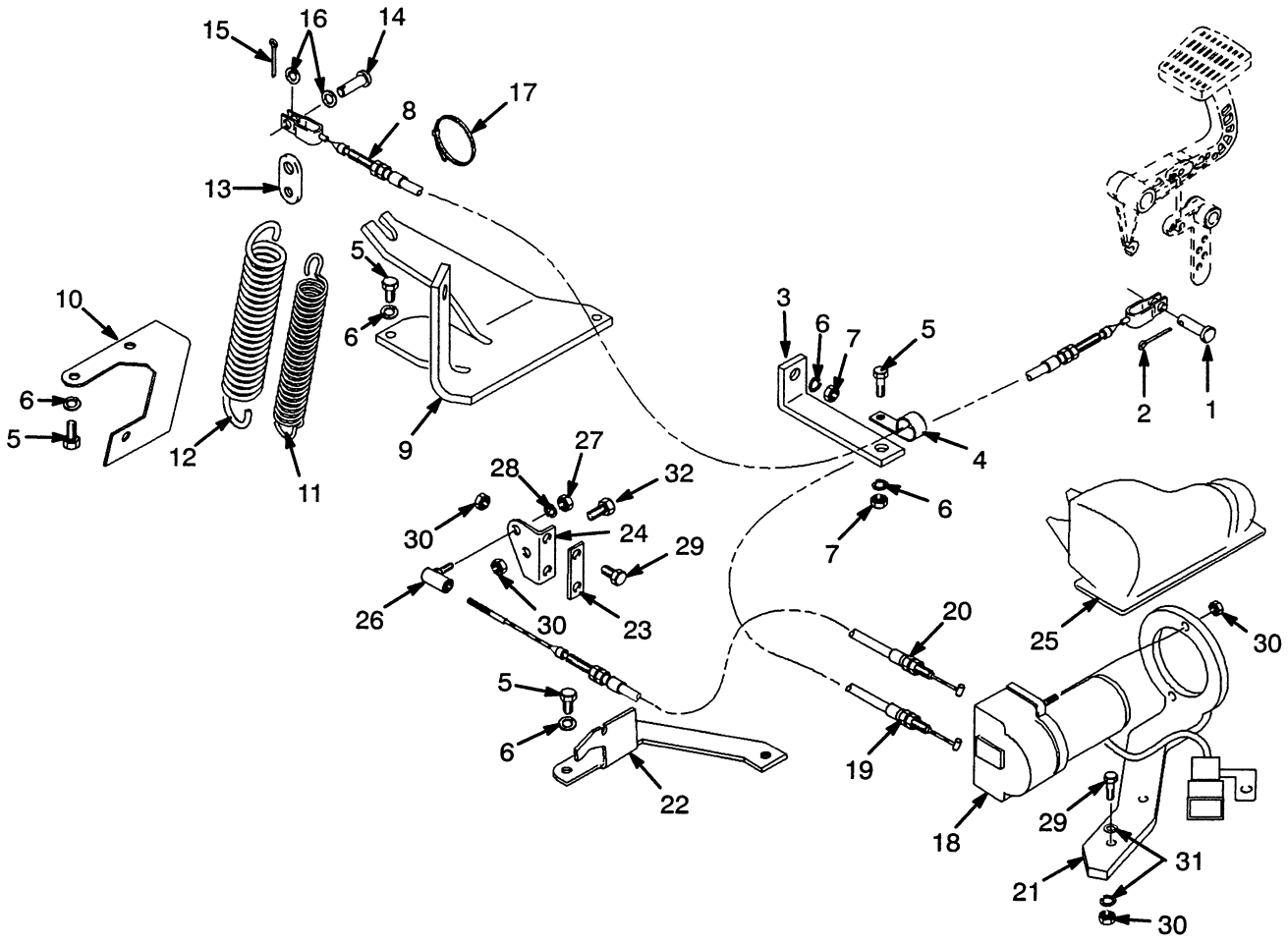

THROTTLE LINKAGE

GASOLINE AND LPG 2.2L

KEY:
A: Gasoline
B: LPG

REF		PART NO.	NAME OF PART	QTY A	QTY B
1		162836	Rod End Pin	1	1
2		15212	Pin	1	1
3		1356438	Cable Bracket	1	1
4		198675	Clamp	1	1
5		136681	Capscrew	2	4
6		292681	Washer	3	5
7		239503	Nut	2	2
8		1339628	Throttle Cable	..	1
9		1354253	Throttle Bracket	..	1
10		1356390	Spring Bracket	..	1
11		1356404	Spring	..	1
12		1363921	Spring	..	1
13		1345022	Link	..	1
13	a	1376613	Link	..	1
14		126	Rod End Pin	..	1
15		15200	Pin	..	1
16		320156	Washer	..	2
17		137852	Strap Clamp	..	1
18		1359450	Actuator	1	..
19		1352641	Throttle Cable (To Pedal Assy)	1	..
20		1352642	Throttle Cable (To Throttle)	1	..
21		1356115	Actuator Bracket	1	..
22		1354254	Throttle Bracket	1	..
23		1354251	Plate	1	..
24		1354252	Plate	1	..
25		1356437	Cover	1	..
26		203010	Ball Joint	1	..
27		15002	Nut	2	..
28		292679	Washer	1	..
29		292501	Capscrew	4	..
30		313805	Nut	6	..
31		320156	Washer	2	..
32		287816	Capscrew	1	..

a High Altitude Performance

©2000 HYSTER COMPANY

THROTTLE LINKAGE (Figure 99)

GASOLINE AND LPG 3.0L

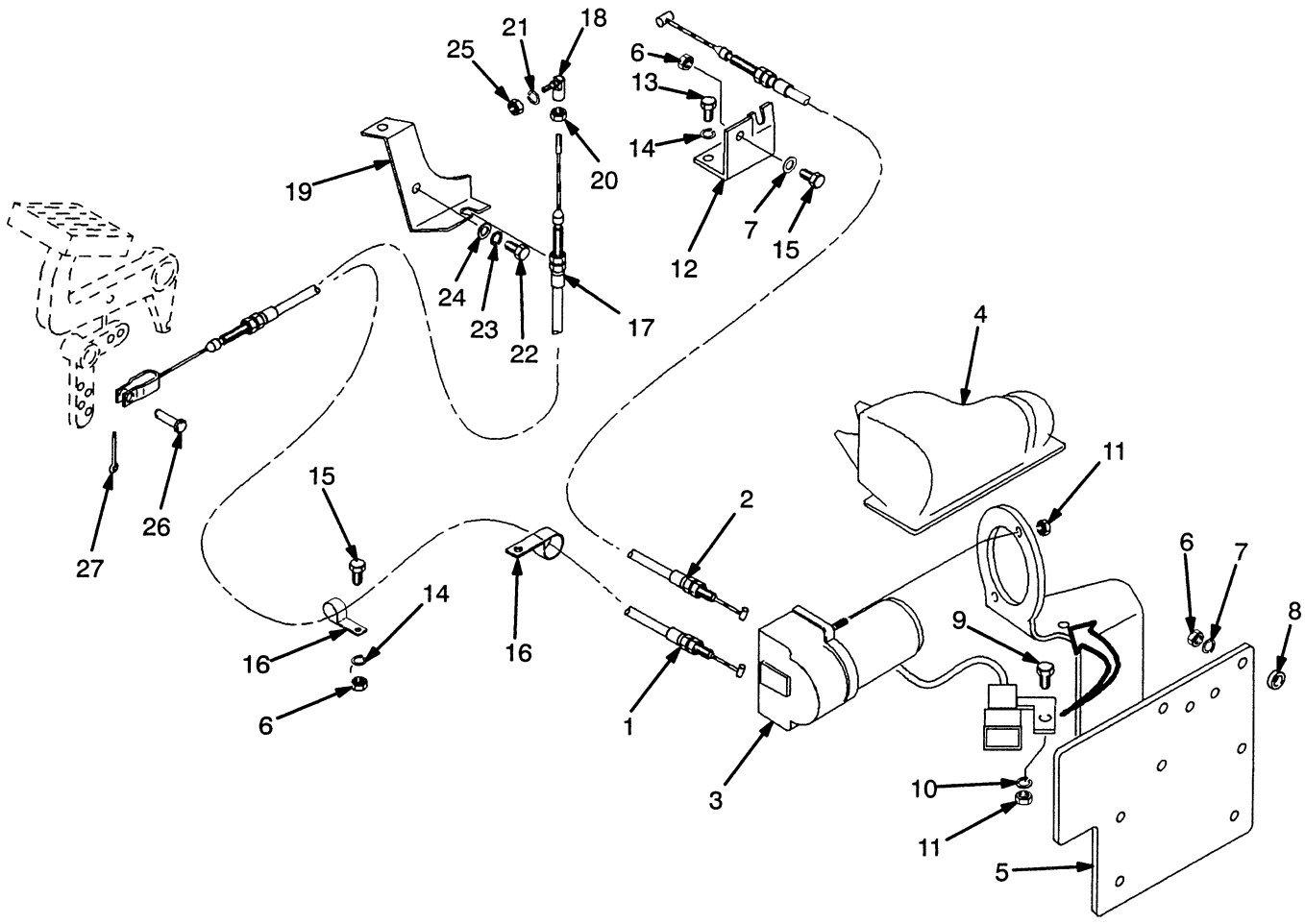

©2000 HYSTER COMPANY

See Service Manual for service procedures

THROTTLE LINKAGE

GASOLINE AND LPG 3.0L

KEY:
A: Gasoline
B: LPG

REF	PART NO.	NAME OF PART	QTY A	QTY B
1	1375834	Throttle Cable	1	..
2	1375835	Throttle Cable	1	..
3	1359450	Actuator	1	..
4	1356437	Cover	1	..
5	1375826	Bracket	1	..
6	313828	Locknut	5	..
7	320158	Washer	4	..
8	1375848	Spacer	3	..
9	287816	Capscrew	1	..
10	320156	Washer	1	..
11	313805	Locknut	3	..
12	1375786	Bracket	1	..
13	136681	Capscrew	1	..
14	292681	Lockwasher	2	..
15	136681	Capscrew	2	..
16	1376782	Clamp	2	..
17	1339632	Cable	..	1
18	161252	Ball Joint	..	1
19 a	1376577	Bracket	..	1
19 b	1389499	Bracket	..	1
20	15002	Nut	..	1
21	15154	Lockwasher	..	1
22	16836	Capscrew	..	1
23	15155	Lockwasher	..	1
24	18515	Washer	..	1
25	15004	Nut	..	1
26	162836	Pin	1	1
27	15212	Cotter Pin	1	1

a Last Used On S/N D177B-39471
b First Used On S/N D177B-39472

©2000 HYSTER COMPANY

NOTES

©2000 HYSTER COMPANY

THROTTLE LINKAGE (Figure 100)

GASOLINE AND LPG 2.0L

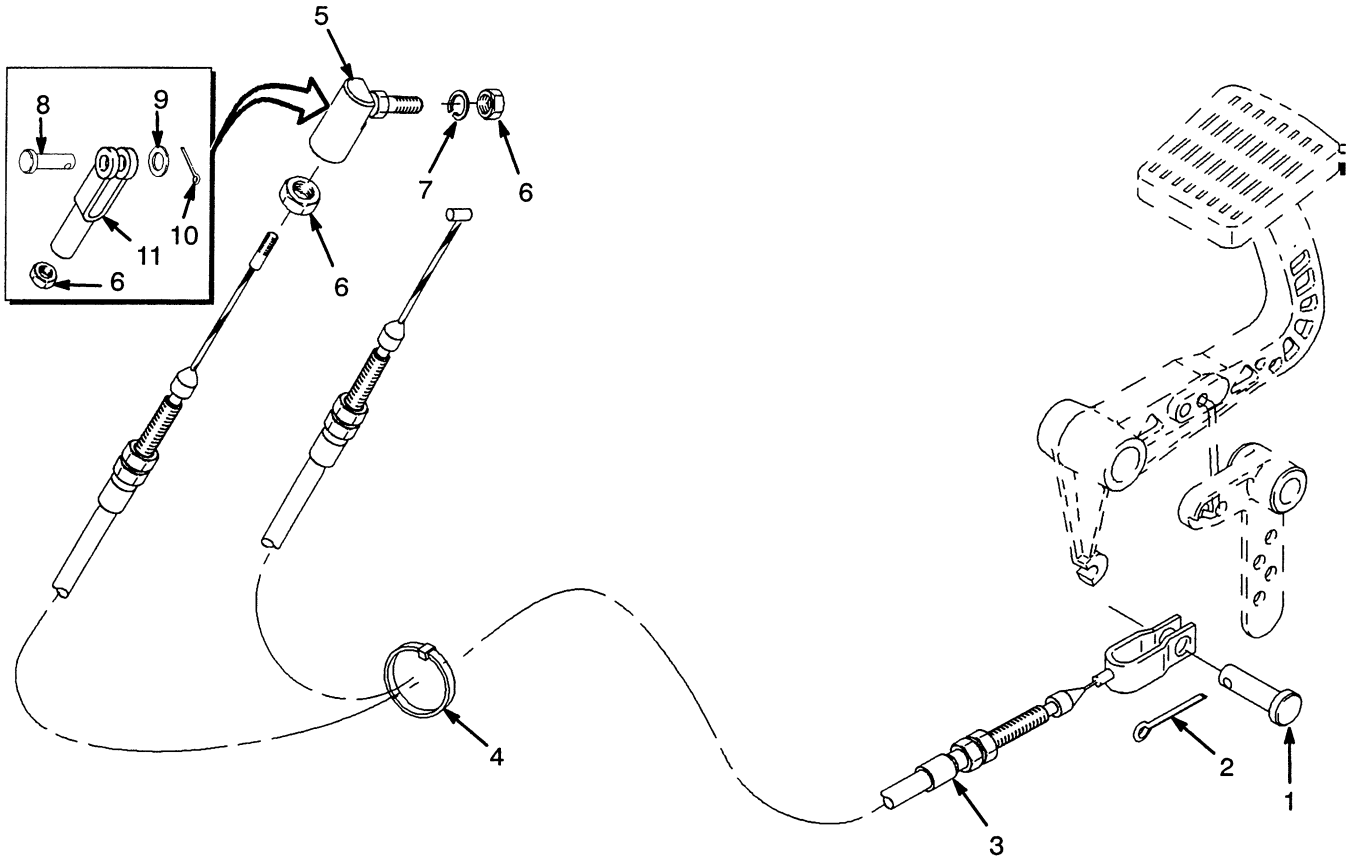

KEY:
A: Gasoline
B: LPG

REF		PART NO.	NAME OF PART	QTY A	QTY B
1		162836	Rod End Pin	1	1
2		15212	Pin	1	1
3		1339626	Cable	1	..
3		1356522	Cable	..	1
4		137852	Strap Clamp	1	1
5	a	203010	Ball Joint	..	1
6	a	15002	Nut	..	2
6	b	15002	Nut	..	1
7		292679	Lockwasher	..	1
8	b	309109	Pin	..	1
9	b	320155	Washer	..	1
10	b	15200	Cotter Pin	..	1
11	b	161617	Rod End	..	1

a Last Used On S/N D177B-15620
b First Used On S/N D177B-15621

©2000 HYSTER COMPANY

PEDAL LINKAGE (Figure 101)

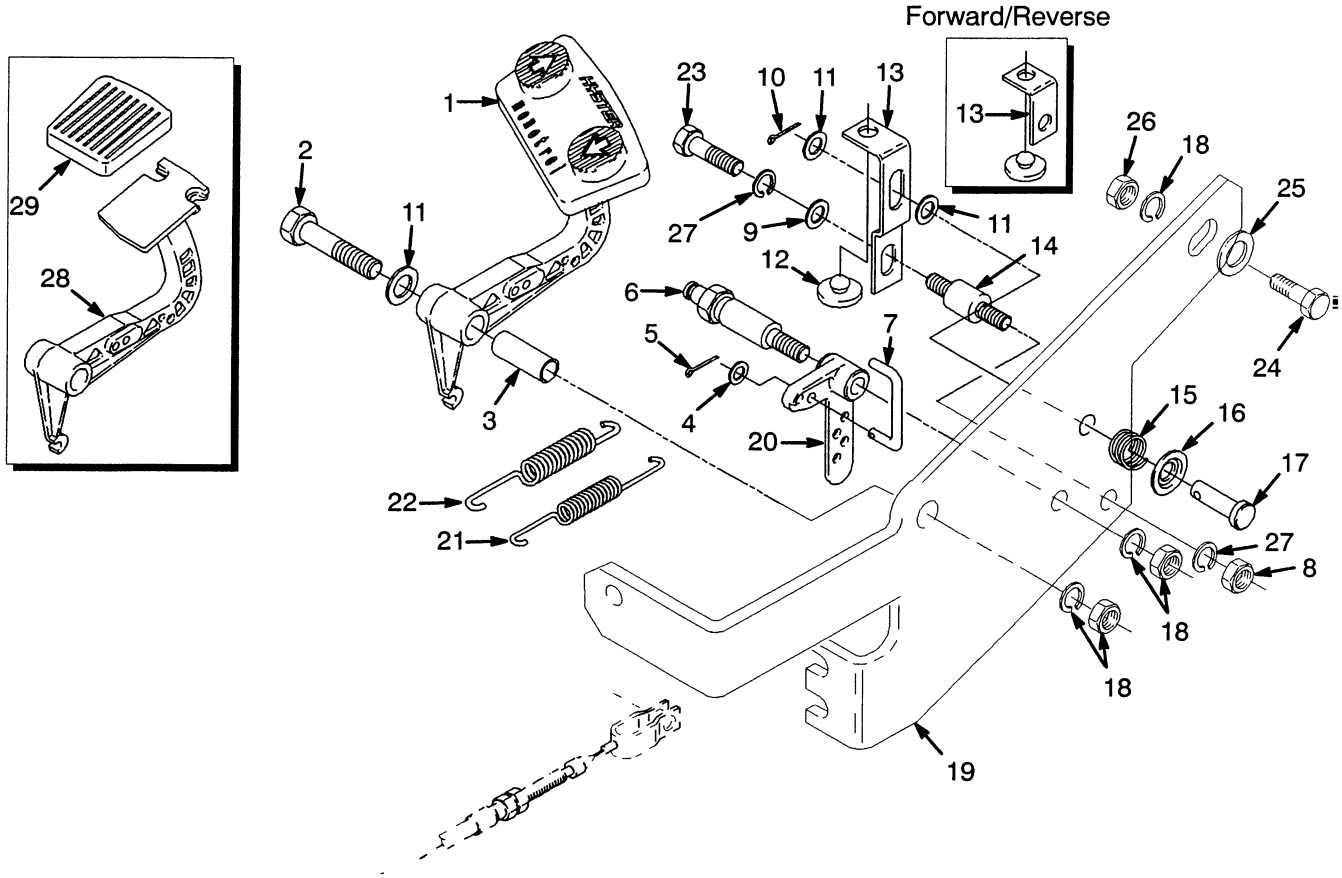

KEY:
A: Monotrol Pedal
B: Forward/Reverse Lever

REF	PART NO.	NAME OF PART	QTY A	QTY B
1	.....	Monotrol Pedal	1	..
		☞ Figure 102		
2	292523	Capscrew	1	..
2	292521	Capscrew	..	1
3	353141	Tube	1	..
3	325708	Tube	..	1
4	320156	Washer	1	1
5	15200	Pin	1	1
6	352485	Shaft	1	1
7	1347159	Rod	1	1
8	239503	Nut	1	..
8	296128	Nut	..	1
9	320158	Washer	1	..
10	15212	Pin	1	..
11	320160	Washer	3	2
12	353195	Bumper	1	1
13	352950	Bracket	1	..
13	353159	Bracket	..	1
14	353453	Mount	1	..

REF	PART NO.	NAME OF PART	QTY A	QTY B
15	353172	Spring	1	..
16	353230	Cap	1	..
17	142	Pin	1	..
18	292682	Lockwasher	4	4
18	136692	Nut	2	2
19	1339717	Bracket	1	1
20	353164	Crank	1	1
21	353142	Spring	1	1
22	353143	Spring	1	1
23	287851	Capscrew	1	..
23	287854	Capscrew	..	1
24	136985	Capscrew	2	2
25	320159	Washer	2	2
26	136692	Nut	2	2
27	292681	Lockwasher	2	..
27	292682	Lockwasher	..	1
28	352499	Pedal	..	1
29	352885	Pad	..	1

©2000 HYSTER COMPANY

MONOTROL PEDAL (Figure 102)

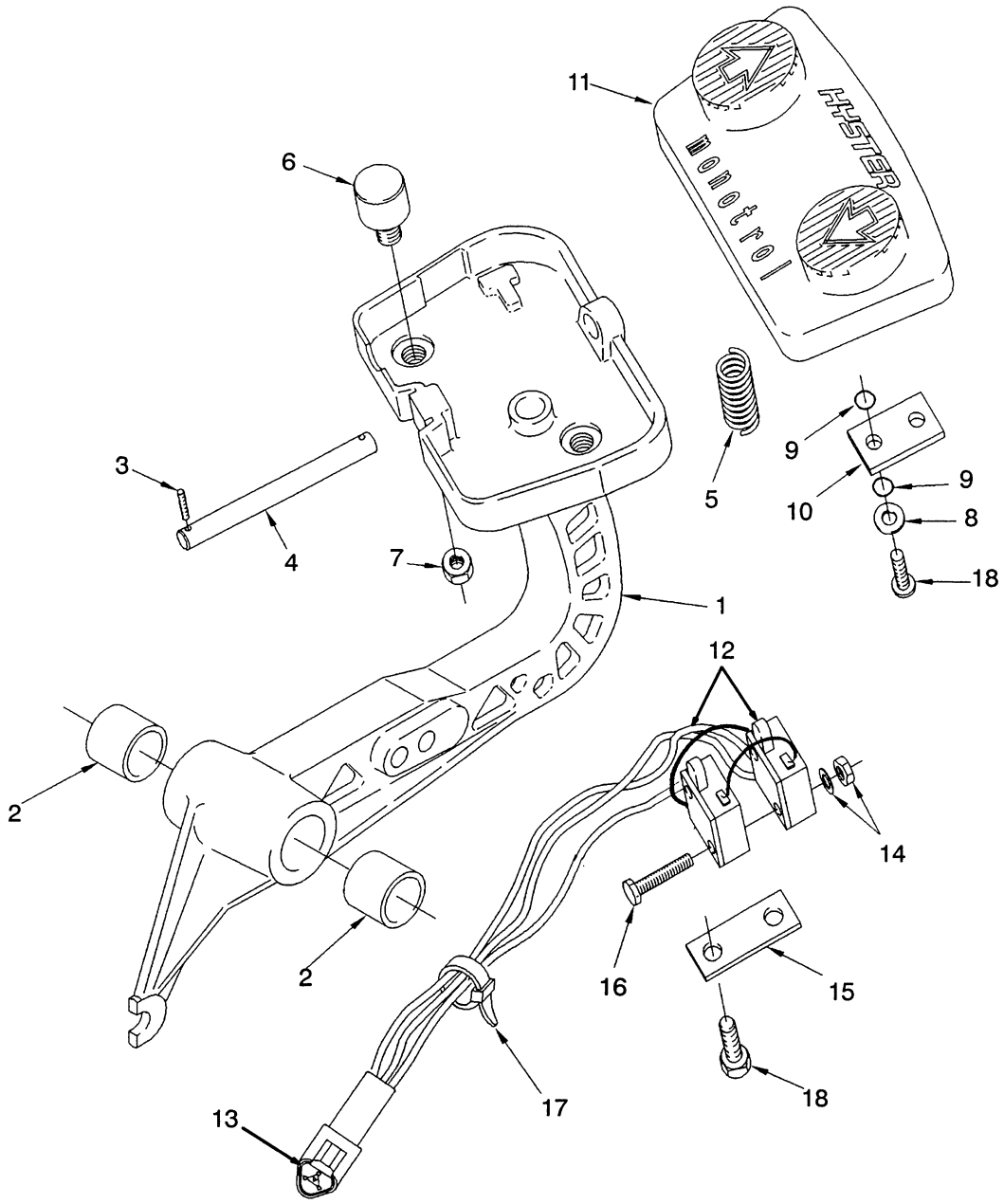

REF	PART NO.	NAME OF PART	QTY
	1352575	Pedal	1
1	353397	Pedal	1
2	135685	Bushing	2
3	220932	Screw	2
3	360387	Loctite	AR
4	353154	Pin	1
5	353168	Spring	1
6	353422	Magnet	2
7	353432	Nut	2
8	353448	Washer	4
9	57568	O-Ring	8
10	359207	Plate	2

REF	PART NO.	NAME OF PART	QTY
11	353175	Monotrol Pad	1
12	1352090	Switch Assembly	1
12	....	Harness	1
13	1330410	Connector	1
13	1330415	Lock	1
13	1330435	Terminal	3
14	53162	Lockwasher	2
14	16865	Nut	2
15	353165	Retainer	1
16	220434	Screw	2
17	114312	Strap Clamp	3
18	352969	Screw	6

©2000 HYSTER COMPANY

NOTES

©2000 HYSTER COMPANY

ELECTRICAL SYSTEM

ALTERNATOR (Figure 141)
GASOLINE AND LPG 2.0L ..... Page 260

ALTERNATOR (Figure 142)
GASOLINE AND LPG 2.2L ..... Page 261

ALTERNATOR (Figure 143)
GASOLINE AND LPG 3.0L
LAST USED ON S/N D177B41709 ..... Page 262

ALTERNATOR (Figure 144)
GASOLINE AND LPG 3.0L
FIRST USED ON S/N D177B-41710 ..... Page 264

ALTERNATOR (Figure 145)
DIESEL 2.4L ..... Page 266

ALTERNATOR (Figure 146)
DIESEL 2.8L AND 3.1L ..... Page 268

ALTERNATOR (Figure 147)
TYPES GS, LPS AND DS
LAST USED ON S/N D177B-42119 ..... Page 270

ALTERNATOR (Figure 148)
TYPES GS, LPS AND DS
FIRST USED ON S/N D177B-42120 ..... Page 272

DISTRIBUTOR (Figure 139)
GASOLINE AND LPG 2.0L ..... Page 258

DISTRIBUTOR (Figure 140)
GASOLINE AND LPG 3.0L ..... Page 259

ELECTRICAL CONNECTORS (Figure 156)
LESS TERMINALS ..... Page 284

ELECTRICAL (Figure 112)
GASOLINE AND LPG 2.2L ..... Page 196

ELECTRICAL (Figure 113)
GASOLINE AND LPG 3.0L
LAST USED ON S/N D177B-35854 ..... Page 200

ELECTRICAL (Figure 114)
GM 3.0L GASOLINE
FIRST USED ON S/N D177B-35855 ..... Page 204

©2000 HYSTER COMPANY

ELECTRICAL SYSTEM (CONTINUED)

ELECTRICAL (Figure 115)
GM 3.0L LPG
FIRST USED ON S/N D177B-35855 ..... Page 206

ELECTRICAL (Figure 116)
GASOLINE AND LPG 2.0L ..... Page 210

ELECTRICAL (Figure 117)
DIESEL ..... Page 212

ELECTRICAL (Figure 136)
LPG FIELD CONVERSION 2.2L ..... Page 250

ELECTRICAL (Figure 137)
TYPES GS,LPS AND DS ..... Page 252

ELECTRICAL (Figure 138)
TYPES GS AND LPS 3.0L ..... Page 256

ELECTRICAL-COWL (Figure 103)
LAST USED ON S/N D177B-35854 ..... Page 180

ELECTRICAL-COWL (Figure 104)
FIRST USED ON S/N D177B-35855 ..... Page 182

ENGINE HARNESS (Figure 124)
GASOLINE 2.2L ..... Page 226

ENGINE HARNESS (Figure 126)
GASOLINE 3.0L
LAST USED ON S/N D177B-35854 ..... Page 230

ENGINE HARNESS (Figure 127)
GASOLINE 3.0L
FIRST USED ON S/N D177B-35855 ..... Page 232

ENGINE HARNESS (Figure 128)
LPG 2.2L ..... Page 234

ENGINE HARNESS (Figure 129)
LPG 3.0L
LAST USED ON S/N D177B-35854 ..... Page 236

ENGINE HARNESS (Figure 130)
LPG 3.0L
USED ON S/N D177B-35855 THRU S/N D177B-39471 ..... Page 238

©2000 HYSTER COMPANY

ELECTRICAL SYSTEM (CONTINUED)

ENGINE HARNESS (Figure 131)
LPG 3.0L WITHOUT MSTS
FIRST USED ON S/N D177B-39472 ..... Page 240

ENGINE HARNESS (Figure 132)
LPG 3.0L WITH MSTS
FIRST USED ON S/N D177B-39472 ..... Page 242

ENGINE HARNESS-LPS (Figure 134)
LPG 2.2L ..... Page 246

HARNESS AND SWITCH (Figure 133)
DUAL FUEL 3.0L ..... Page 244

HARNESS (Figure 105)
COWL
LAST USED ON S/N D177B-35854 ..... Page 184

HARNESS (Figure 106)
COWL
FIRST USED ON S/N D177B-35855 ..... Page 186

HARNESS (Figure 107)
CLUSTER
LAST USED ON S/N D177B-35854 ..... Page 188

HARNESS (Figure 108)
CLUSTER
FIRST USED ON S/N D177B-35855 ..... Page 189

HARNESS (Figure 109)
CLUSTER POWER ..... Page 190

HARNESS (Figure 110)
LIGHTING
LAST USED ON S/N D177B-35854 ..... Page 192

HARNESS (Figure 111)
FORWARD/REVERSE LEVER ..... Page 195

HARNESS (Figure 118)
DIESEL
LAST USED ON S/N D177B-35854 ..... Page 214

HARNESS (Figure 119)
DIESEL
FIRST USED ON S/N D177B-35855 ..... Page 216

©2000 HYSTER COMPANY

ELECTRICAL SYSTEM (CONTINUED)

HARNESS (Figure 120)
CHASSIS
LAST USED ON S/N D177B-35854 ..... Page 218

HARNESS (Figure 121)
CHASSIS
FIRST USED ON S/N D177B-35855 ..... Page 220

HARNESS (Figure 122)
GASOLINE AND LPG 2.0L
LAST USED ON S/N D177B-35854 ..... Page 222

HARNESS (Figure 123)
GASOLINE AND LPG 2.0L
FIRST USED ON S/N D177B-35855 ..... Page 224

HARNESS (Figure 135)
LPG FIELD CONVERSION 2.2L ..... Page 248

INSTRUMENT CLUSTER (Figure 153) ..... Page 280

INSTRUMENT PANEL (Figure 152) ..... Page 278

LIGHTS (Figure 155) ..... Page 283

SHIFT LEVER (Figure 154) ..... Page 282

STARTER (Figure 149)
GASOLINE AND LPG 2.0L ..... Page 274

STARTER (Figure 150)
DIESEL 2.4L, 2.8L & 3.1L ..... Page 275

STARTER (Figure 151)
GASOLINE AND LPG 2.2L & 3.0L ..... Page 276

TYPE GS HARNESS (Figure 125)
GASOLINE 2.2L ..... Page 228

©2000 HYSTER COMPANY

NOTES

©2000 HYSTER COMPANY

ELECTRICAL-COWL (Figure 103)

LAST USED ON S/N D177B-35854

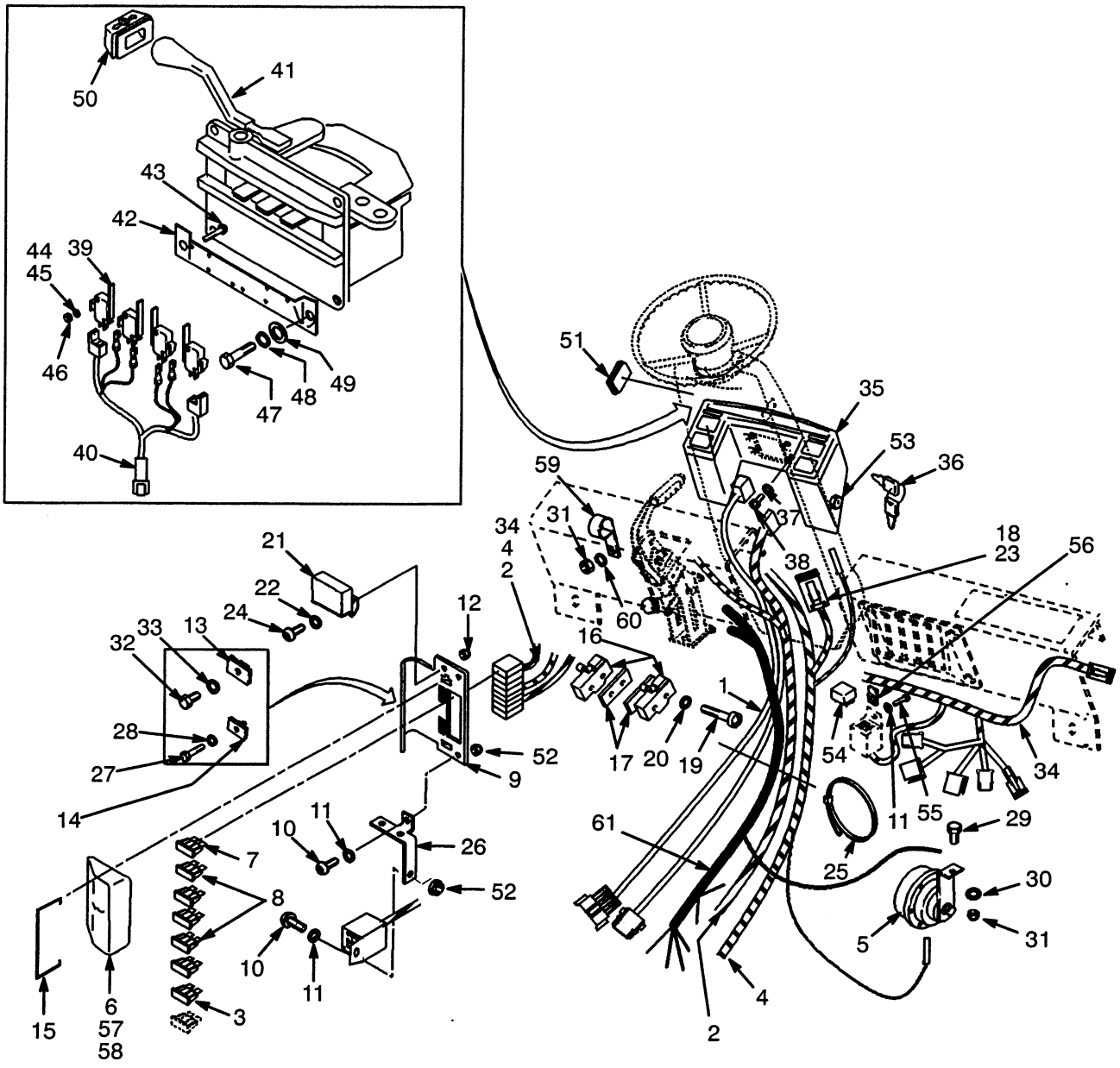

ELECTRICAL-COWL

LAST USED ON S/N D177B-35854

REF		PART NO.	NAME OF PART	QTY
1		.....	Harness-Cluster	1
			☞ Figure 107	
2		.....	Harness-Cluster Power	1
			☞ Figure 109	
3		1320669	Fuse (30 Amp)	1
4		.....	Harness-Cowl	1
			☞ Figure 105	
5		1383778	Horn	1
6		370863	Cover	1
7		370646	Fuse (5 Amp)	1
8		370647	Fuse (10 Amp)	2
9		1354088	Bracket	1
10		302244	Capscrew	4
11		320155	Washer	8
12		316833	Nut	3
13		1350282	Nut	1
14		1354323	Nut	1
15		370864	Latch	1
16		370868	Switch	2
16	a	387869	Boot	2
17		316132	Spacer	2
18	b	1330412	Connector	1
19		86510	Screw	4
20		138573	Lockwasher	4
21		157554	Horn Relay	1
21	a	272155	Boot	1
22		197067	Washer	2
23	b	1330439	Plug	6
24		296151	Capscrew	2
25		273775	Clamp	AR
26		1354264	Bracket	1
27		292501	Screw	1
28		320156	Washer	1
29		176640	Capscrew	1
30		320158	Washer	1
31		292654	Nut	3
32		136681	Capscrew	1
33		320157	Washer	1
34		.....	Harness-Lighting	1
			☞ Figure 110	
35		.....	Instrument Cluster	1
			☞ Figure 153	
36		1337197	Key	1
37		292680	Spring Washer	4
38		292500	Capscrew	4
39	c	1343636	Switch	4
40	c	.....	Harness (Fwd/Rev)	1
			☞ Figure 111	
41	c	.....	Shift Lever	1
			☞ Figure 154	
42	c	1343595	Plate	1
43	c	220426	Screw	8
44	c	53162	Lockwasher	8
45	c	18419	Lockwasher	8
46	c	16865	Nut	8
47	c	292500	Capscrew	4
48	c	292680	Lockwasher	4
49	c	320156	Washer	4
50	c	1343596	Bracket	1
51	b	1343597	Plug	1
52		1376581	U Nut	2
53		.....	Ignition Switch	1
			☞ Figure 153	
54	d	1347114	Reverse Light Relay	1
55	d	302245	Screw	1
56	d	1376581	U Nut	1
57		1365859	Label (Fuse Panel)	1
58		1365860	Label (Cab Fuses)	1
59		196395	Clamp	2
60		292681	Washer	2
61		.....	Wire Harness (Optional)	1
			☞ Figure 256	

a Types GS,LPS and DS
b Monotrol Pedal
c Forward/Reverse Lever
d First Used On S/N D177B-10149

©2000 HYSTER COMPANY

ELECTRICAL-COWL (Figure 104)

FIRST USED ON S/N D177B-35855

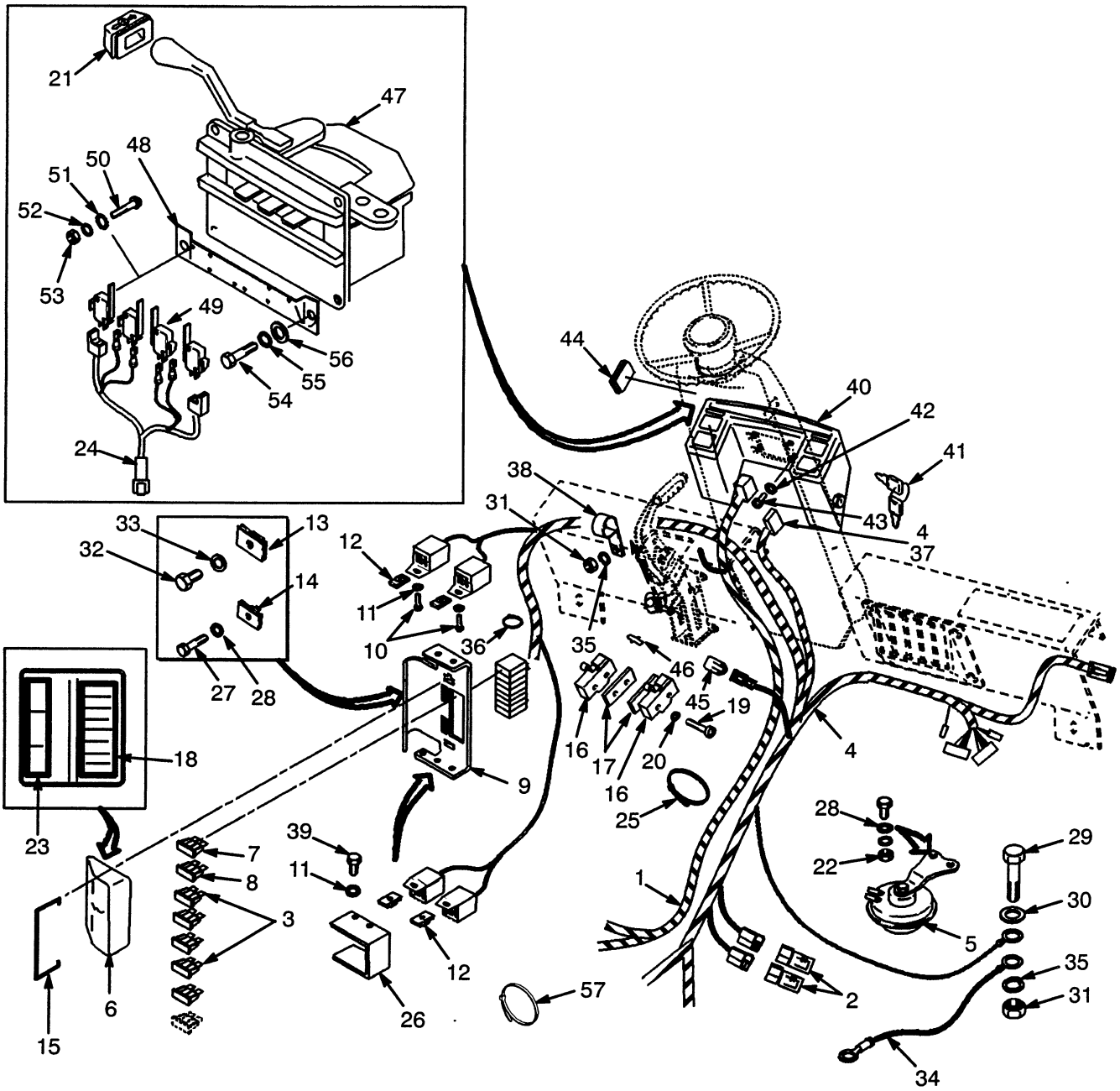

ELECTRICAL-COWL

FIRST USED ON S/N D177B-35855

REF		PART NO.	NAME OF PART	QTY
1		.....	Harness-Cluster	1
			☞ Figure 109	
2		1361305	Diode	2
3		1320669	Fuse (30 Amp)	2
4		.....	Harness-Cowl	1
			☞ Figure 106	
5		2021957	Horn	1
6		370863	Cover	1
7		370646	Fuse (5 Amp)	1
8		370647	Fuse (10 Amp)	1
9		1376748	Bracket	1
10		302244	Screw	1
11		320155	Washer	3
12		1376581	U Nut	3
13		1350282	Nut	1
14		1354323	Nut	1
15		370864	Latch	1
16		370868	Switch	1
16		370868	Switch (Monotrol Pedal)	2
16	a	387869	Boot (Monotrol Pedal)	2
17		316132	Spacer	1
17		316132	Spacer (Monotrol Pedal)	2
18		1389485	Label (Fuse Panel)	1
19		86510	Screw	2
19		86510	Screw (Monotrol Pedal)	4
20		138573	Washer	2
20		138573	Washer (Monotrol Pedal)	2
21		1343596	Bracket (Forward/Reverse Lever)	1
22		313805	Nut	2
23		1365860	Label (Accessory Fuses)	1
24		.....	Harness (Forward/Reverse Lever)	1
			☞ Figure 111	
25		129563	Strap Clamp	AR
26		1389475	Bracket	1
27		292501	Capscrew	3
28		320156	Washer	3
29		176640	Capscrew	1
30		320158	Washer	1
31		292654	Nut	3
32		136681	Capscrew	1
33		320157	Washer	1
34		387892	Wire Assy	1
35		292681	Lockwasher	3
36		137852	Strap Clamp	1
37		322784	Silicone Grease	AR
38		196395	Clamp	2
39		302245	Screw	2
40		.....	Instrument Cluster	1
			☞ Figure 153	
41		1337197	Key Set	1
42		292680	Lockwasher	4
43		292500	Capscrew	4
44		1343597	Plug (Monotrol Pedal)	1
45		1351683	End Cap Connector (Monotrol Pedal)	1
46		1361121	Connector (Blade) (Forward/Reverse Lever)	1
47		1347004	Shift Lever Assy (Forward/Reverse Lever)	1
48		1343595	Switch Plate (Forward/Reverse Lever)	1
49		1343636	Switch (Forward/Reverse Lever)	4
50		220426	Screw (Forward/Reverse Lever)	8
51		53162	Lockwasher (Forward/Reverse Lever)	8
52		18419	Lockwasher (Forward/Reverse Lever)	8
53		16865	Nut (Forward/Reverse Lever)	8
54		292500	Capscrew (Forward/Reverse Lever)	4
55		262680	Lockwasher (Forward/Reverse Lever)	4
56		320156	Washer (Forward/Reverse Lever)	4
57		1352606	Clamp	1

a Types GS, LPS, And DS

©2000 HYSTER COMPANY

HARNESS (Figure 105)

COWL

LAST USED ON S/N D177B-35854

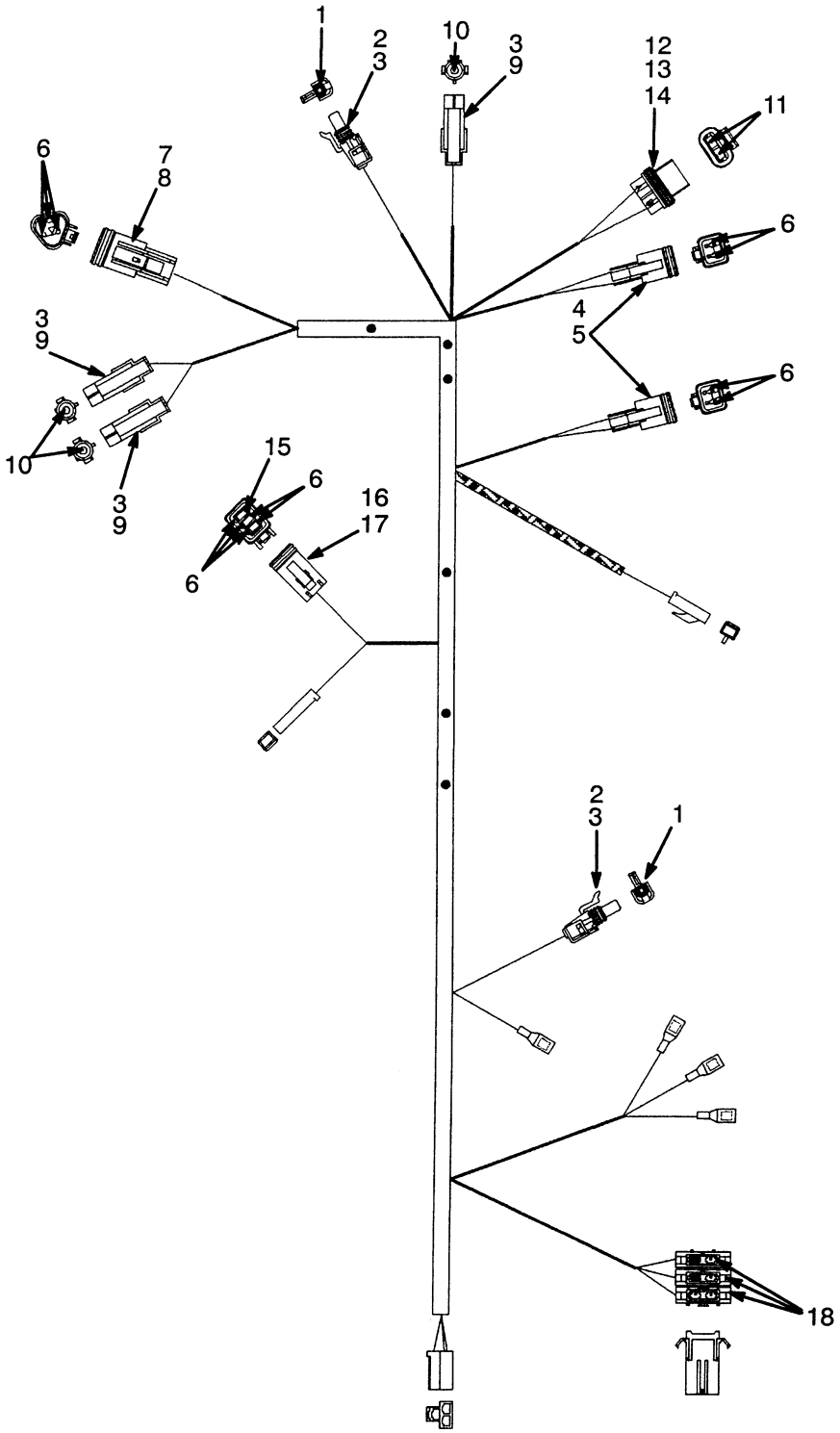

©2000 HYSTER COMPANY

HARNESS

COWL

LAST USED ON S/N D177B-35854

REF	PART NO.	NAME OF PART	QTY
	1347137	Harness-Cowl	1
1	1330299	Connector	2
2	1336173	Socket	2
3	1329147	Seal	5
4	1330419	Plug	2
5	1330424	Lock	2
6	1330434	Socket	12
7	1330420	Plug	1
8	1330426	Lock	1
9	1330298	Body	3
10	1334999	Pin	3
11	1337392	Terminal	2
12	1336870	Connector	1
13	1336871	Lock	1
14	1336874	Seal	1
15	1330439	Plug	1
16	1330422	Connector	1
17	1330428	Lock	1
18	381846	Fuse Holder	3

©2000 HYSTER COMPANY

HARNESS (Figure 106)

COWL

FIRST USED ON S/N D177B-35855

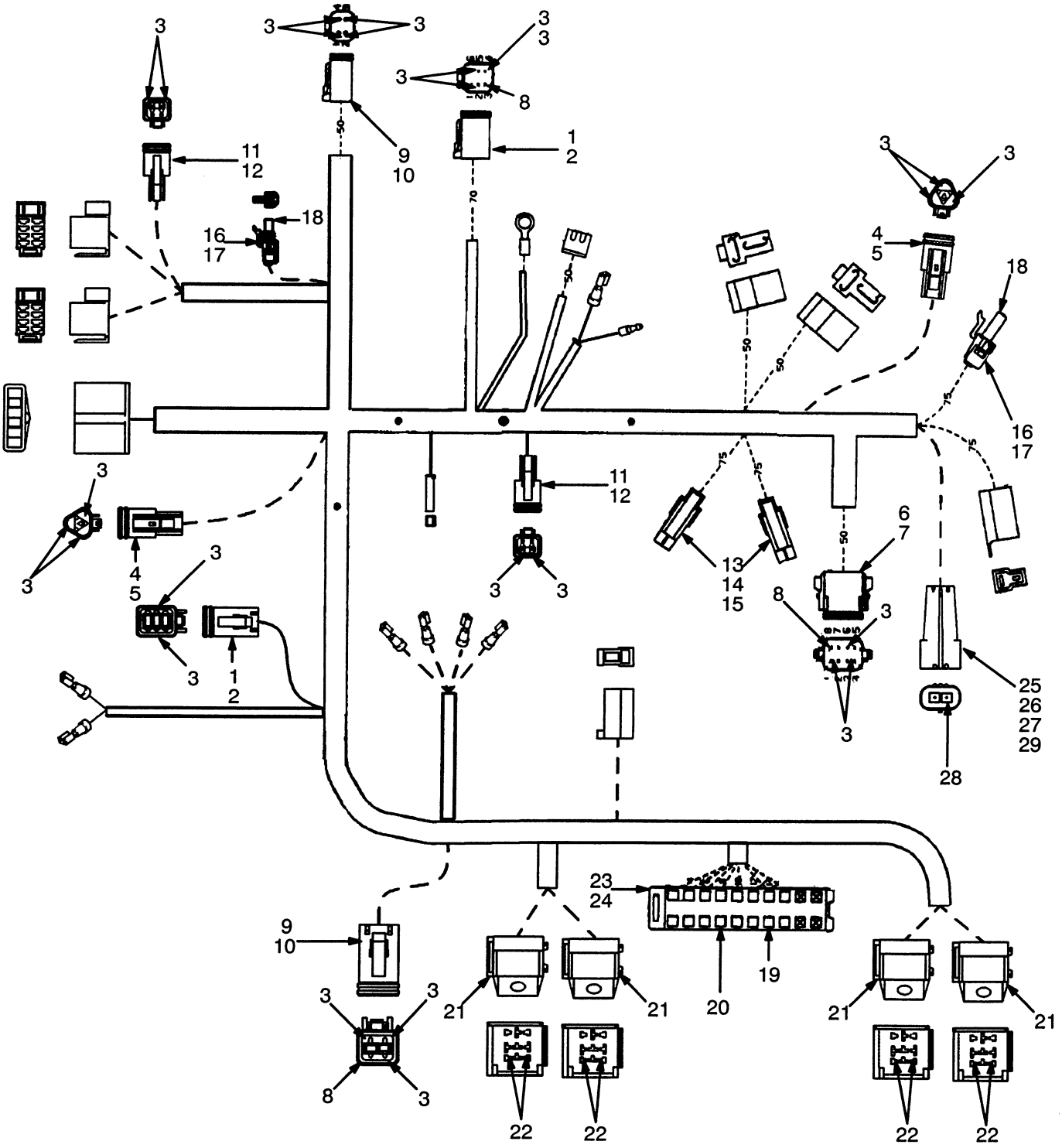

HARNESS

COWL

FIRST USED ON S/N D177B-35855

REF	PART NO.	NAME OF PART	QTY
	1376732	Harness-Cowl	1
1	1330422	Connector	2
2	1330428	Lock	2
3	1330438	Socket	35
4	1330420	Connector	2
5	1330426	Lock	2
6	1330423	Connector	1
7	1330429	Lock	1
8	1330439	Plug	3
9	1330421	Connector	2
10	1330427	Lock	2
11	1330419	Connector	2
12	1330424	Lock	2
13	1330298	Connector	2
14	1334999	Pin	2
15	1329147	Seal	2
16	1330299	Connector	2
17	1329147	Seal	2
18	1336173	Socket	2
19	1389479	Terminal	14
20	1389480	Terminal	2
21	1347224	Relay Socket	4
22	1331233	Terminal	18
23	1389476	Fuse Holder	1
24	1389477	Lock	1
25	1336870	Connector	1
26	1336871	Lock	1
27	1336874	Seal	1
28	1337393	Terminal	1
29	1323581	Plug	1

©2000 HYSTER COMPANY

HARNESS (Figure 107)

CLUSTER

LAST USED ON S/N D177B-35854

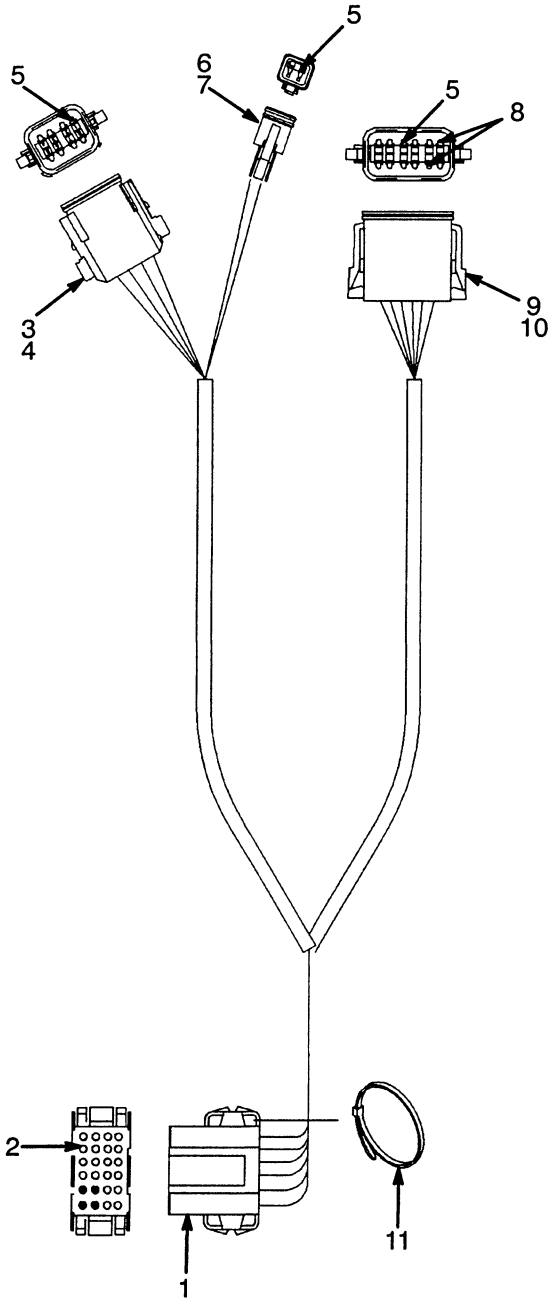

REF	PART NO.	NAME OF PART	QTY
	1352605	Harness-Cluster	1
1	1352599	Connector Body	1
2	1352600	Socket	20
3	1330413	Connector	1
4	1330418	Lock	1
5	1330433	Pin	20
6	1330409	Connector	1
7	1330414	Lock	1
8	1330439	Plug	2
9	1352602	Connector	1
10	1352603	Lock	1
11	1352606	Tie Strap	1

©2000 HYSTER COMPANY

See Service Manual for service procedures

HARNESS (Figure 108)

CLUSTER

FIRST USED ON S/N D177B-35855

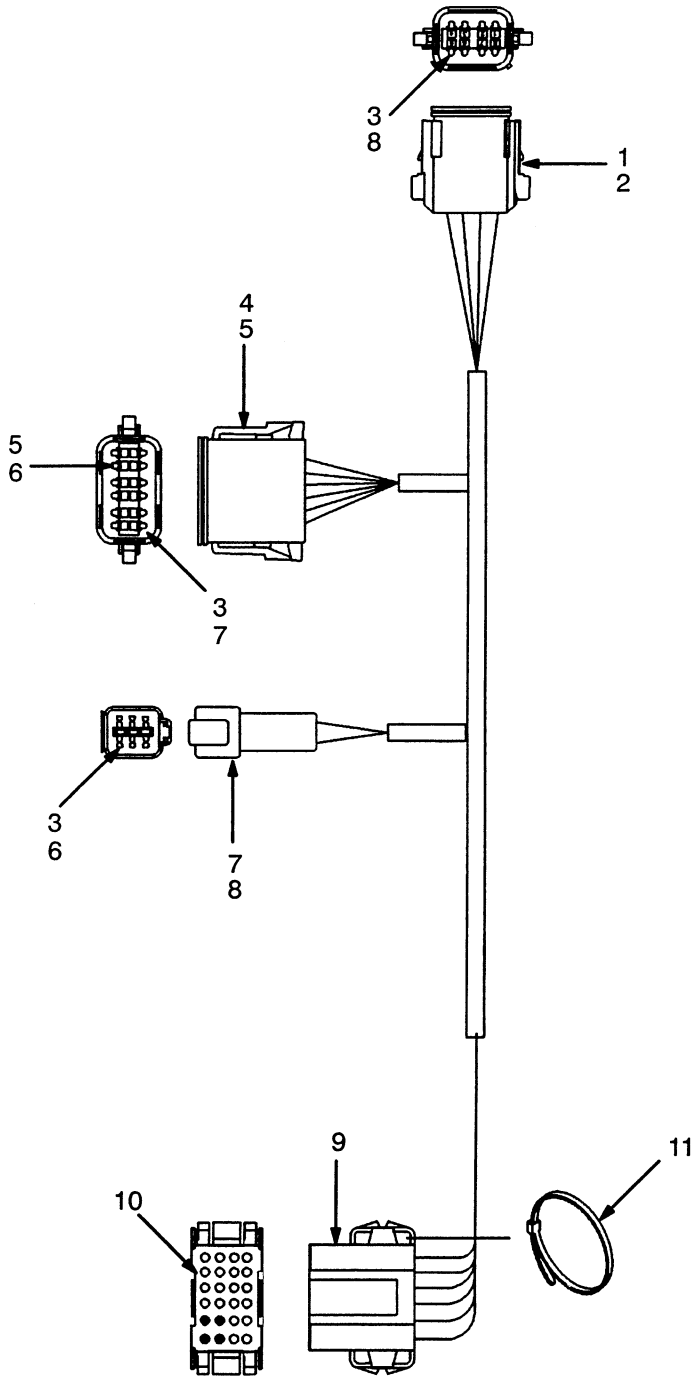

REF	PART NO.	NAME OF PART	QTY
	1375703	Harness-Cluster	1
1	1330413	Connector	1
2	1330418	Lock	1
3	1330433	Pin	21
4	1352602	Connector	1
5	1352603	Lock	1
6	1330439	Plug	5
7	1330412	Connector	1
8	1330417	Lock	1
9	1352599	Housing	1
10	1340958	Pin	20
11	1352606	Strap Clamp	1

©2000 HYSTER COMPANY

HARNESS (Figure 109)

CLUSTER POWER

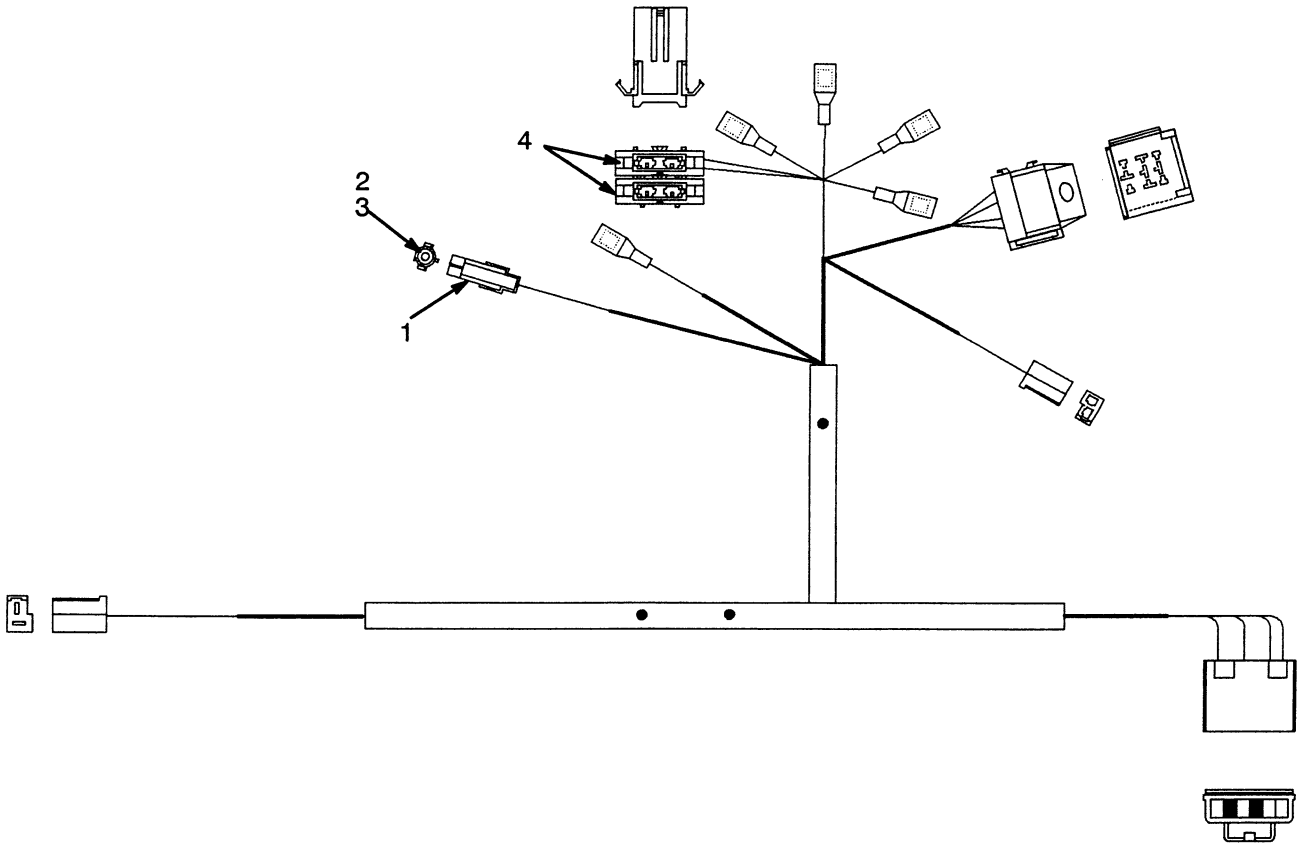

REF	PART NO.	NAME OF PART	QTY
	1352617	Harness-Cluster Power	1
a	1450702	Harness-Cluster Power	1
a	1367472	Relay	1
1	1330298	Connector	1
2	1329147	Seal	1
3	1334999	Pin	1
4	381846	Fuse Holder	2

a Last Used On S/N D177B-35854

©2000 HYSTER COMPANY

NOTES

©2000 HYSTER COMPANY

HARNESS (Figure 110)
LIGHTING
LAST USED ON S/N D177B-35854

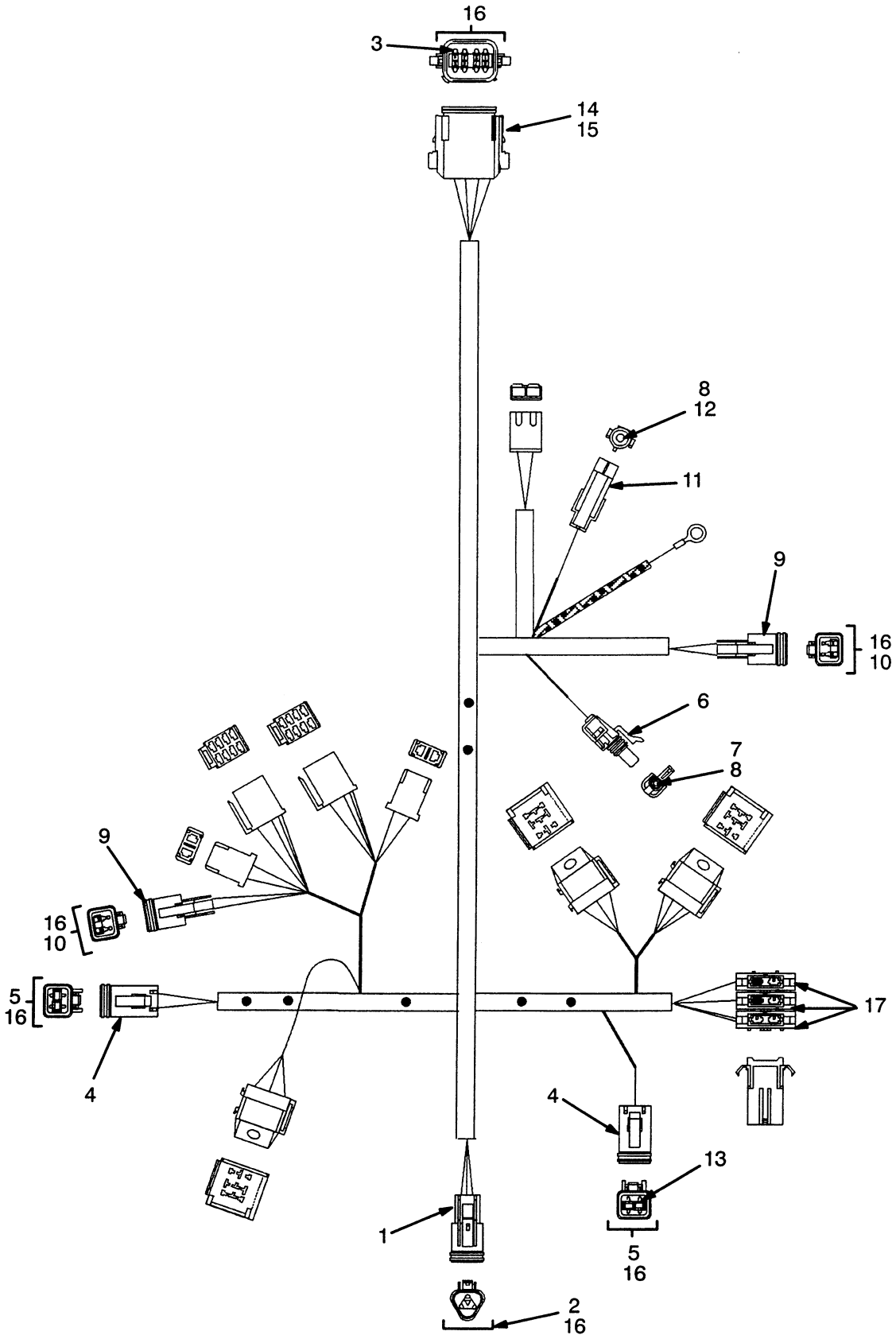

©2000 HYSTER COMPANY

HARNESS

LIGHTING

LAST USED ON S/N D177B-35854

REF	PART NO.	NAME OF PART	QTY
	1376590	Harness-Lighting	1
1	1330420	Plug	1
2	1330426	Lock	1
3	1330436	Socket	1
4	1330421	Connector	2
5	1330427	Lock	2
6	1330299	Connector	1
7	1336173	Socket	1
8	1329147	Seal	2
9	1330419	Connector	2
10	1330424	Lock	2
11	1330298	Connector	1
12	1334999	Pin	1
13	1330439	Plug	1
14	1330423	Connector	1
15	1330429	Lock	1
16	1330438	Socket	21
17	381846	Fuse Holder	3

©2000 HYSTER COMPANY

NOTES

©2000 HYSTER COMPANY

HARNESS (Figure 111)

FORWARD AND REVERSE LEVER

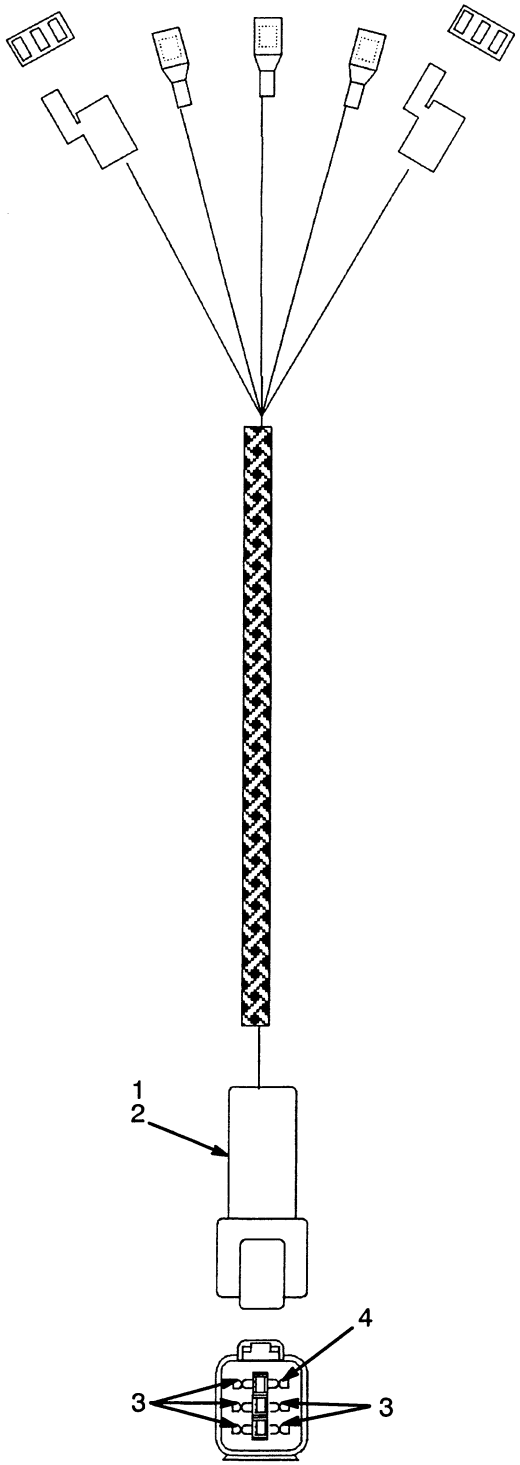

REF	PART NO.	NAME OF PART	QTY
	1352088	Harness-Fwd/Rev	1
1	1330412	Connector	1
2	1330417	Lock	1
3	1330435	Pin	5
4	1330439	Plug	1

ELECTRICAL (Figure 112)
GASOLINE AND LPG 2.2L

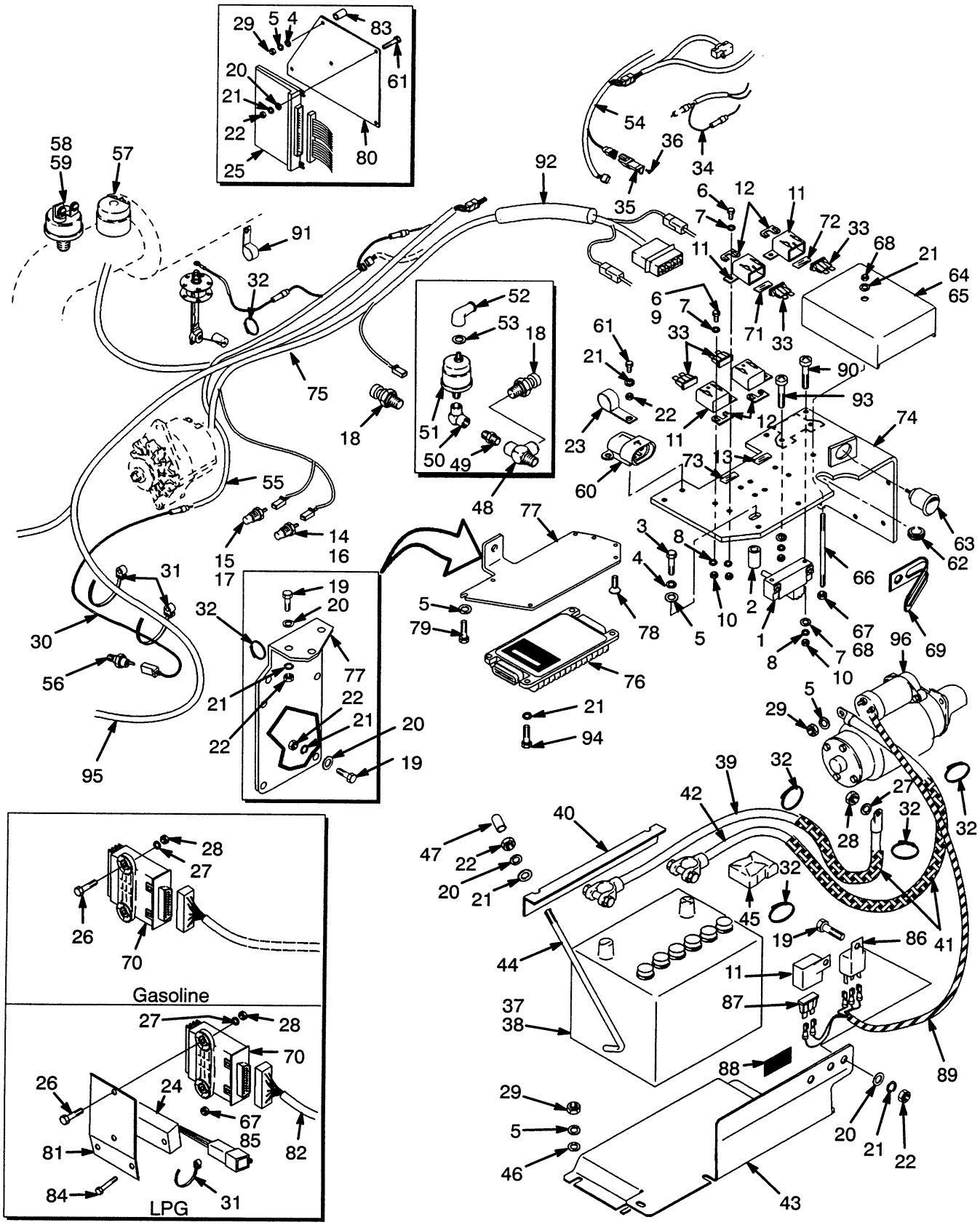

©2000 HYSTER COMPANY

ELECTRICAL

GASOLINE AND LPG 2.2L

KEY:
A: Gasoline
B: LPG

REF		PART NO.	NAME OF PART	QTY A	QTY B
1		1314387	Sensor	1	1
2		1351059	Spacer	1	1
3		136704	Capscrew	1	1
4		320158	Washer	1	3
5		292681	Washer	7	7
6		16708	Screw	10	2
7		197067	Washer	12	4
8		15152	Washer	12	4
9		14503	Screw	2	2
10		15002	Nut	12	4
11		1330293	Fuse Cover	5	2
12		1339444	Clip	4	1
13		1352612	Label	1	1
14		.....	Coolant Sensor ☞ Figure 27	1	1
15		273338	Thread Sealant	AR	AR
16		.....	Reducer ☞ Figure 27	1	1
17		1319190	Temperature Sender	1	1
18		.....	Fuel Pump Switch ☞ Figure 21	1	1
19		292501	Capscrew	7	2
20		320156	Washer	8	8
21		292680	Lockwasher	10	8
22		136687	Nut	11	8
23		122175	Clamp	1	..
24		1354125	Rev Limiter	..	1
25		2035530	MSTS Controller	..	1
26		302250	Screw	2	2
27		292679	Washer	3	3
28		292668	Nut	3	3
29		239503	Nut	4	6
30		1354202	Low Coolant Harness	1	1
31		1356125	Clamp	2	2
32		273775	Strap Clamp	AR	AR
33		370647	Blade Fuse	4	1
34		1354385	Diode Harness	2	2
35		1330410	Connector Body	1	1
36		1330439	Plug	3	3
37	f	1383331	Wet Battery	1	1
37	ae	309153	Wet Battery	1	1
38	a	177894	Dry Battery	1	1
39		153933	Battery Cable	1	1
40		1354379	Battery Bracket	1	1
41		275499	Conduit	AR	AR
42		986236	Battery Cable	1	1
43		1458009	Battery Tray	1	1
44		309124	Battery Holddown Link	2	2
45		257241	Boot	1	1
46		320157	Washer	3	3
47		1326939	Cap	2	2
48	a	17216	Fitting	1	1
49	a	16167	Fitting	1	1
50	a	69392	Fitting	1	1
51	a	1356108	Oil Pressure Sender	1	1
52	a	190383	Boot	1	1
53	a	197067	Washer	1	1
54	b	1352066	Neutral Start Harness	1	1
55		.....	Chassis Harness ☞ Figure 120	1	1
56		1356105	Low Coolant Sender	1	1
57		1347067	Air Filter Sender	1	1
58		1351133	Low Pressure Switch	..	1
59		190383	Boot	..	2
60		1330301	Fuel Pump Relay	1	..
61		292500	Capscrew	2	3
62		279737	Grommet	1	..
63		.....	Power Connector	1	..
63		1369499	Power Connector	1	..
63		251099	Sealant	AR	..
64		1339434	Cover	1	..
65		1339459	Label	1	..
66		1368074	Stud	1	..
67		1368071	Adhesive	AR	AR
68		302399	Nut	2	..
69		2022013	Clamp	1	1
70		1327951	Governor Module	1	..
70		1352645	Governor Module	..	1

CONTINUED ON NEXT PAGE

©2000 HYSTER COMPANY

ELECTRICAL

GASOLINE AND LPG 2.2L

(Figure 112 Continued)

KEY:
A: Gasoline
B: LPG

REF		PART NO.	NAME OF PART	QTY A	QTY B
71		1354373	Label	1	..
72		1352178	Label	1	..
73		1339461	Label	1	..
74		1351094	Bracket	1	..
74		1351095	Bracket	..	1
75	c	.....	Engine Harness ☞ Figure 124	1	..
75	d	.....	Engine Harness ☞ Figure 124	1	..
75		.....	Engine Harness ☞ Figure 128	..	1
76		1376718	Control Module	1	..
76		1376719	Control Module (High Altitude)	1	..
77	c	1367462	Bracket	1	..
77	d	1368998	Bracket	1	..
78	c	296215	Capscrew	2	..
79		136749	Capscrew	2	..
80		1367474	Bracket	..	1
81		1356313	Plate	..	1
82		1352625	Governor Harness	..	1
83		376505	Spacer	..	2
84		302027	Screw	..	2
85		292667	Nut	..	2
86		1367472	Relay (70A)	1	1
87		1320669	Fuse (30A)	1	1
88		1367640	Label	1	1
89		1367473	Harness	1	1
90		16704	Screw	2	2
91		136516	Clamp	1	..
92		275497	Conduit	AR	..
92		275496	Conduit	..	AR
93		220318	Screw	2	..
94	c	287817	Screw	4	..
95		1359624	Light Harness (Chassis)	1	1
96	g	.....	Starter Motor ☞ Figure 151	1	1
96	h	.....	Starter Motor ☞ Figure 151	1	1

a Optional
b Monotrol Pedal
c Last Used On S/N D177B-6045
d First Used On S/N D177B-6046
e Last Used On S/N D177B-22587
f First Used On S/N D177B-22588
g Last Used On S/N Pending Per ECN 72863
h First Used On S/N Pending Per ECN 72863

©2000 HYSTER COMPANY

NOTES

©2000 HYSTER COMPANY

ELECTRICAL (Figure 113)
GASOLINE AND LPG 3.0L
LAST USED ON S/N D177B-35854

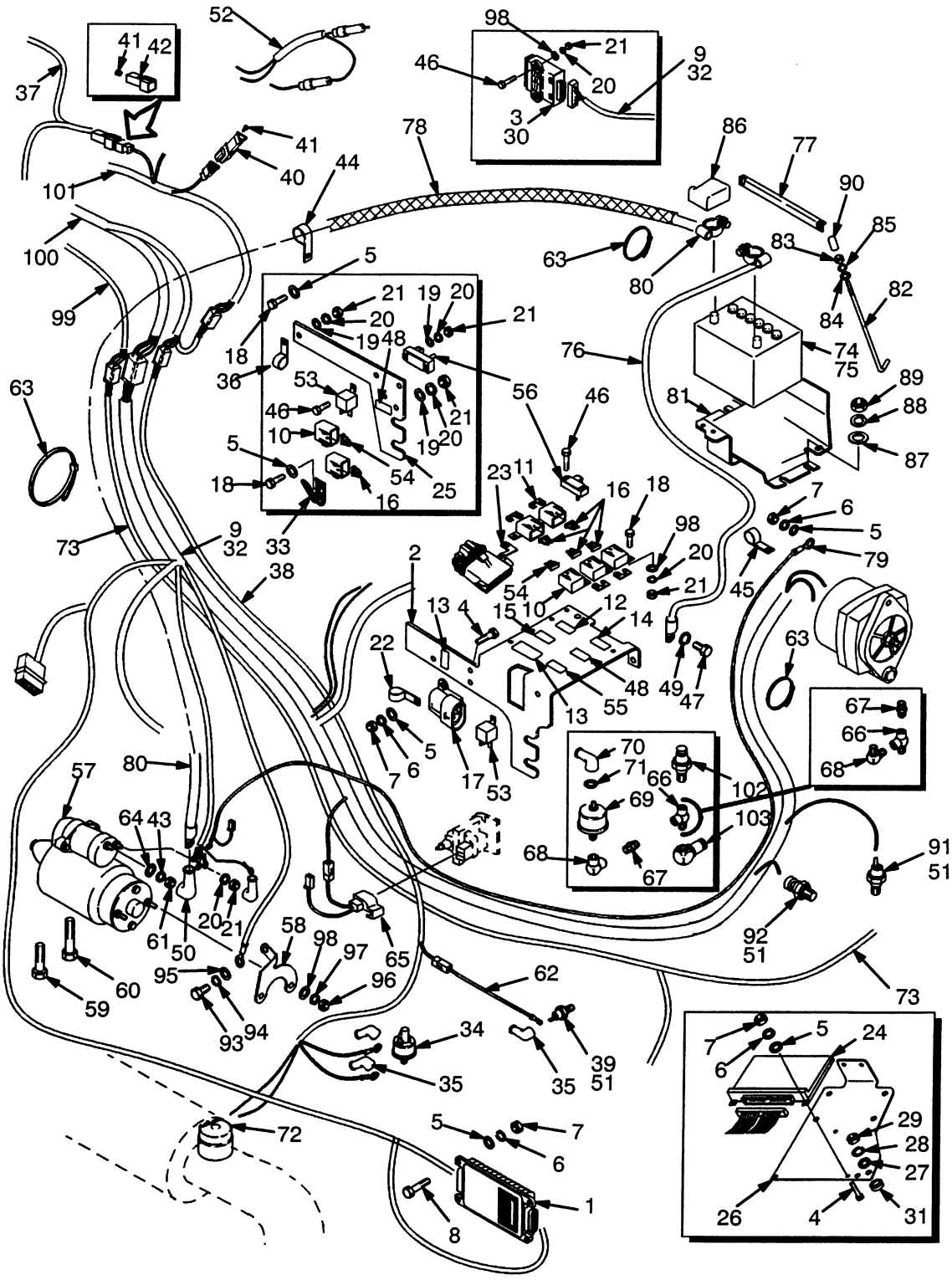

ELECTRICAL

GASOLINE AND LPG 3.0L

LAST USED ON S/N D177B-35854

KEY:
A: Gasoline
B: LPG

REF		PART NO.	NAME OF PART	QTY A	QTY B
1		1376712	Control Module	1	..
1	d	1376713	Control Module (Low Noise)	1	..
2		1375787	Bracket	1	..
3		1327951	Governor Module	1	..
4		292500	Capscrew	3	3
5		320156	Washer	8	7
6		292680	Lockwasher	8	4
7		136687	Nut	8	4
8		292503	Capscrew	4	..
9		.....	Engine Harness	1	..
			☞ Figure 126		
10		1330293	Fuse Holder	5	2
11		1339444	Clip	4	..
12		1339461	Label	1	..
13		1339459	Label	1	..
14		1352178	Label	1	..
15		1354373	Label	1	..
16		370647	Fuse (10 Amp)	4	1
17		1330301	Relay (Fuel Pump)	1	..
18		302246	Screw	7	3
19		320155	Washer	5	1
20		292679	Lockwasher	12	8
21		292668	Nut	12	8
22		101625	Clamp	1	..
23		1376661	Clip	1	..
24		2035531	MSTS Controller	..	1
25		1375847	Bracket	..	1
26		1376655	Bracket	..	1
27		320158	Washer	..	3
28		292681	Lockwasher	..	3
29		239503	Nut	..	3
30		1352645	Governor Module	..	1
30	d	1376706	Governor Module (Low Noise)	..	1
31		1375848	Spacer	..	3
32		.....	Engine Harness	..	1
			☞ Figure 129		
33		1360146	Clamp	..	3
34		1351133	Low Pressure Switch	..	1
35		190383	Boot	1	3
36		101625	Clamp	..	1
37	a	1352066	Neutral Start Harness	1	1
38		1351083	Chassis Wire Harness	1	1
39		1356105	Low Coolant Sender	1	1
40	c	1330410	Connector	1	1
41	c	1330439	Plug	5	5
42	c	1330409	Connector	1	1
43		292681	Lockwasher	1	1
44		325897	Clamp	1	1
45		122175	Clamp	1	1
46		302250	Screw	4	4
47		18535	Capscrew	1	1
48		1352612	Label	1	1
49		15156	Lockwasher	1	1
50		204223	Boot	1	1
51		273338	Sealant	ARAR	
52		1354385	Diode Harness	2	2
53		1375844	Relay (60 Amp)	1	1
54		1320669	Fuse (30 Amp)	1	1
55		1367640	Label	1	1
56		1314387	Sensor	1	1
57		.....	Starter	1	1
			☞ Figure 151		
58		1375135	Bracket	1	1
59		1375157	Capscrew	1	1
60		1375158	Capscrew	1	1
61		239503	Nut	1	1
62		1354201	Harness	1	1
63		273775	Strap Clamp	ARAR	
64		320157	Washer	1	1
65		1314392	Wire Assy	1	1
66	b	17216	Fitting	1	1
67	bg	16167	Fitting	1	1
67	bh	16187	Fitting	1	1
68	bg	69392	Fitting	1	1
68	bh	17314	Fitting	1	1
69	b	1356108	Oil Pressure Switch	1	1

CONTINUED ON NEXT PAGE

©2000 HYSTER COMPANY

ELECTRICAL

GASOLINE AND LPG 3.0L

LAST USED ON S/N D177B-35854

(Figure 113 Continued)

KEY:
A: Gasoline
B: LPG

REF		PART NO.	NAME OF PART	QTY A	QTY B
70	b	190383	Boot	1	1
71	b	197067	Washer	1	1
72	b	1347067	Air Filter Sender	1	1
73		1359624	Light Harness (Chassis)	1	1
74	f	1383331	Battery (Wet)	1	1
74	be	309153	Battery (Wet)	1	1
75	b	177894	Battery (Dry)	1	1
76		267530	Battery Cable	1	1
77		1354379	Plate	1	1
78		275496	Conduit	AR	AR
79		1376612	Harness (Starter Alternator)	1	1
80		119388	Battery Cable	1	1
81		1458009	Battery Tray	1	1
82		309124	Link	2	2
83		136687	Nut	2	2
84		18500	Washer	2	2
85		292680	Lockwasher	2	2
86		257241	Boot	1	1
87		320158	Washer	3	3
88		292681	Lockwasher	3	3
89		239503	Nut	3	3
90		1326939	Cap	2	2
91		1319190	Temperature Sender	1	1
92		1314381	Coolant Sensor	1	1
93		18496	Capscrew	1	1
94		15155	Lockwasher	1	1
95		18515	Washer	1	1
96		15052	Nut	2	2
97		15152	Lockwasher	2	2
98		197067	Washer	8	8
99		.....	Light Harness (Cowl) ☞ Figure 103	1	1
100		.....	Cluster Harness ☞ Figure 107	1	1
101		.....	Cluster Power Harness ☞ Figure 109	1	1
102		1375878	Oil Pressure Switch	1	1
103		1376767	Fitting	1	1

a Monotrol Pedal
b Optional
c Forward/Reverse Lever
d D177B-20580
e Last Used On S/N D177B-22587
f First Used On S/N D177B-22588
g Last Used On S/N D177B-20579
h First Used On S/N D177B-20580

©2000 HYSTER COMPANY

NOTES

©2000 HYSTER COMPANY

ELECTRICAL (Figure 114)
GM 3.0L GASOLINE
FIRST USED ON S/N D177B-35855

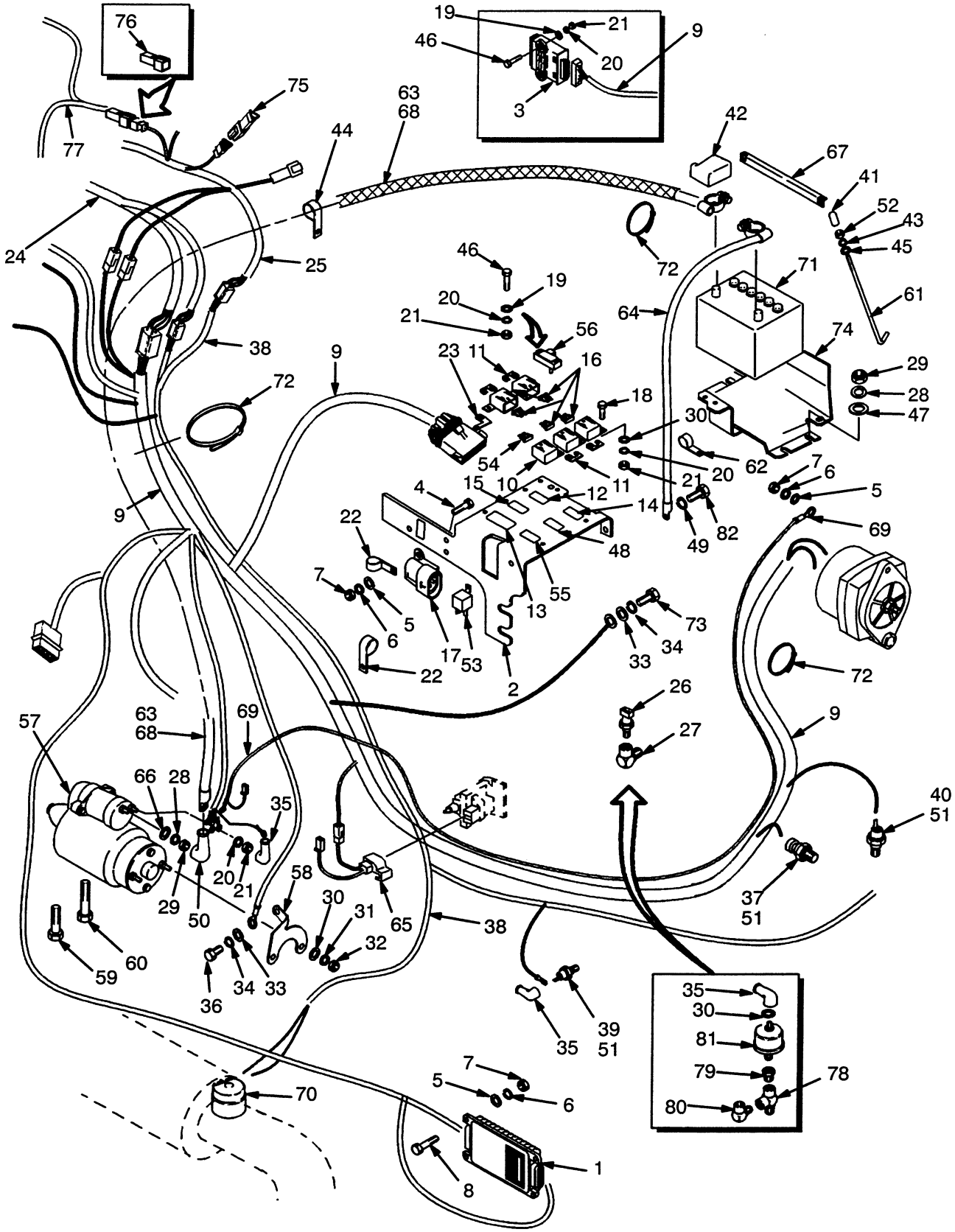

ELECTRICAL

GM 3.0L GASOLINE

FIRST USED ON S/N D177B-35855

REF	PART NO.	NAME OF PART	QTY
1	1376712	Control Module	1
1	1376713	Control Module (Low Noise)	1
2	1375787	Bracket	1
3	1327951	Governor Module	1
4	292500	Capscrew	3
5	320156	Washer	8
6	292680	Lockwasher	8
7	136687	Nut	8
8	287844	Capscrew	4
9	.....	Harness-Engine	1
		☞ Figure 127	
10	1330293	Fuse Holder	5
11	1339444	Clip	4
12	1339461	Label	1
13	1339459	Label	1
14	1352178	Label	1
15	1354373	Label	1
16	370647	Fuse (10 Amp)	4
17	1330301	Relay (Fuel Pump)	1
18	302246	Screw	6
19	320155	Washer	4
20	292679	Lockwasher	11
21	292668	Nut	11
22	101625	Clamp	2
23	1376661	Clip	1
24	.....	Harness-Cluster	1
		☞ Figure 108	
25	.....	Harness-Cowl	1
		☞ Figure 106	
26	1375878	Oil Pressure Switch	1
27	1376767	Fitting	1
28	292681	Lockwasher	4
29	239503	Nut	4
30	197067	Washer	7
31	15152	Lockwasher	2
32	15052	Nut	2
33	18515	Washer	2
34	15155	Lockwasher	2
35	190383	Boot	2
36	2033592	Capscrew	1
37	1314381	Coolant Sensor	1
38	.....	Harness-Chassis	1
		☞ Figure 121	
39	1356105	Low Coolant Sender	1
40	1319190	Temperature Sender	1
41	1326939	Cap	2
42	257241	Boot	1
43	292680	Lockwasher	2
44	325897	Clamp	1
45	320156	Washer	2
46	302250	Screw	4
47	320158	Washer	3
48	1352612	Label	1
49	15156	Lockwasher	1
50	204223	Boot	1
51	273338	Sealant	AR
52	136687	Nut	2
53	1375844	Relay (60 Amp)	1
54	1320669	Fuse (30 Amp)	1
55	1367640	Label	1
56	1314387	MAP Sensor	1
57	.....	Starter	1
		☞ Figure 151	
58	1375135	Bracket	1
59	1375157	Capscrew	1
60	1375158	Capscrew	1
61	309124	Link	2
62	122175	Clamp	1
63	119388	Battery Cable (+)	1
64	1379481	Battery Cable (-)	1
65	1314392	Wire Assembly	1
66	320157	Washer	1
67	1354379	Battery Hold Down	1
68	275496	Conduit	AR
69	1385863	Harness-Starter/Alternator	1
70	1347067	Air Filter Sender (Optional)	1
71	1383331	Battery (Wet)	1
72	129563	Strap Clamp	AR
73	16836	Capscrew	1
74	1458009	Tray	1
75	1351682	End Cap Connector (Forward/Reverse Lever)	1
76	1351681	End Cap Connector (Forward/Reverse Lever)	1
77	1352066	Harness-Neutral Start (Monotrol Pedal)	1
78	17216	Fitting (Optional)	1
79	16187	Fitting (Optional)	1
80	17314	Fitting (Optional)	1
81	1356108	Oil Pressure Sender (Optional)	1
82	18535	Capscrew	2

©2000 HYSTER COMPANY

ELECTRICAL (Figure 115)
GM 3.0L LPG
FIRST USED ON S/N D177B-35855

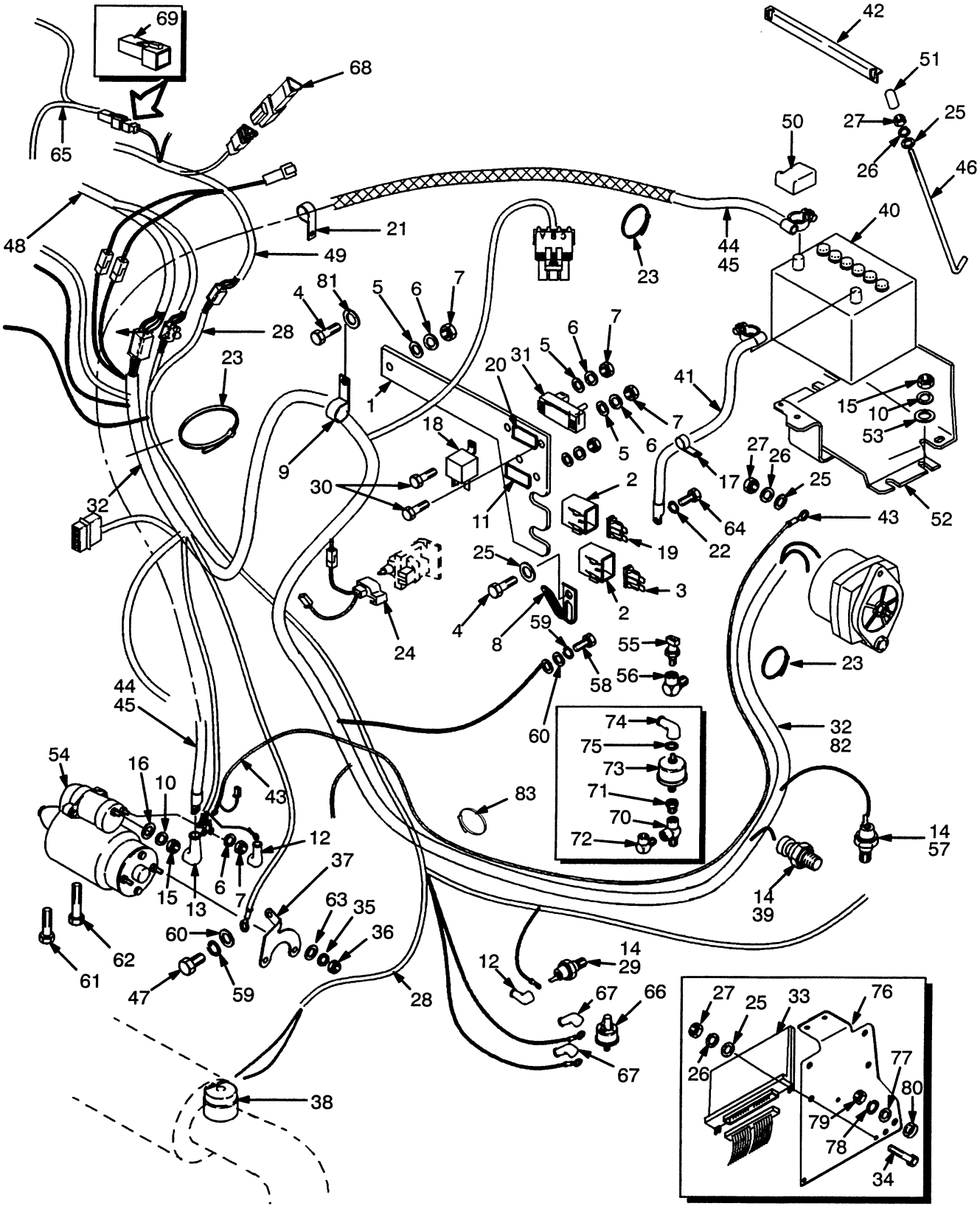

ELECTRICAL

GM 3.0L LPG

FIRST USED ON S/N D177B-35855

REF		PART NO.	NAME OF PART	QTY
1		1375847	Bracket	1
2		1330293	Fuse Holder	2
3		370647	Fuse (10 Amp)	1
4		302246	Screw	3
5		320155	Washer	2
6		292679	Lockwasher	6
7		292668	Nut	6
8		1360146	Clamp	2
9		136516	Clamp (Without MSTS)	1
9		89220	Clamp (With MSTS)	1
10		292681	Lockwasher	4
11		1352612	Label	1
12		190383	Boot	2
13		204223	Boot	1
14		273338	Sealant	AR
15		239503	Nut	4
16		320157	Washer	1
17		122175	Clamp	1
18		1375844	Relay (60 Amp)	1
19		1320669	Fuse (30 Amp)	1
20		1367640	Label	1
21		325897	Clamp	1
22		15156	Lockwasher	1
23		129563	Strap Clamp	AR
24		1314392	Wire Assembly	1
25		320156	Washer	3
26		292680	Lockwasher	6
27		136687	Nut	6
28		.....	Harness-Chassis	1
			☞ Figure 121	
29		1356105	Low Coolant Sender	1
30		302250	Screw (With MSTS)	2
30		302245	Screw (Without MSTS)	2
31		1314387	MAP Sensor (With MSTS)	1
32		.....	Harness-LPG Engine (With MSTS)	1
33		1460824	MSTS Controller Assembly	1
33		1460764	MSTS Controller	1
33		1459037	Label	1
34		292501	Capscrew	3
35		15152	Lockwasher	2
36		15052	Nut	2
37	a	1375135	Bracket	1
37	b	1457120	Bracket	1
38		1347067	Air Filter Sender (Optional)	1
39		14386	Plug (Without MSTS)	1
39		1314381	Coolant Sensor (With MSTS)	1
40		1383331	Battery (Wet)	1
41		1379481	Battery Cable (-)	1
42		1354379	Battery Hold Down	1
43		1385863	Harness-Starter/Alternator	1
44		119388	Battery Cable (+)	1
45		275496	Conduit	AR
46		309124	Link	2
47		18496	Capscrew	1
48		.....	Harness-Cluster	1
			☞ Figure 108	
49		.....	Harness-Cowl	1
			☞ Figure 106	
50		257241	Boot	1
51		1326939	Cap	2
52		1458009	Tray	1
53		320158	Washer	3
54	a	.....	Starter	1
			☞ Figure 151	
54	b	.....	Starter	1
			☞ Figure 151	
55		1375878	Oil Pressure Switch	1
56		1376767	Fitting	1
57		1319190	Temperature Sender	1
58		16836	Capscrew	1
59		15155	Lockwasher	2

CONTINUED ON NEXT PAGE

©2000 HYSTER COMPANY

ELECTRICAL

GM 3.0L LPG

FIRST USED ON S/N D177B-35855

REF	PART NO.	NAME OF PART	QTY
60	18515	Washer	2
61	1375157	Capscrew	1
62	1375158	Capscrew	1
63	197067	Washer	2
64	18535	Capscrew	1
65	1352066	Harness-Neutral Start (Monotrol Pedal)	1
66	1351133	Pressure Switch	1
67	190383	Boot	1
68	1351682	End Cap Connector (Forward/Reverse Lever)	1
69	1351681	End Cap Connector (Forward/Reverse Lever)	1
70	17216	Fitting (Optional)	1
71	16187	Fitting (Optional)	1
72	17314	Fitting (Optional)	1
73	1356108	Oil Pressure Sender (Optional)	1
74	190383	Boot	1
75	197067	Washer	1
76	1376655	Bracket	1
77	320158	Washer	3
78	292681	Lockwasher	3
79	239503	Nut	3
80	1375848	Spacer	3
81	197067	Washer	3
82	275498	Conduit	1
83	114312	Strap Clamp	AR

a Last Used On S/N Pending Per ECN 72863

b First Used On S/N Pending Per ECN 72863

©2000 HYSTER COMPANY

NOTES

ELECTRICAL (Figure 116)

GASOLINE AND LPG 2.0L

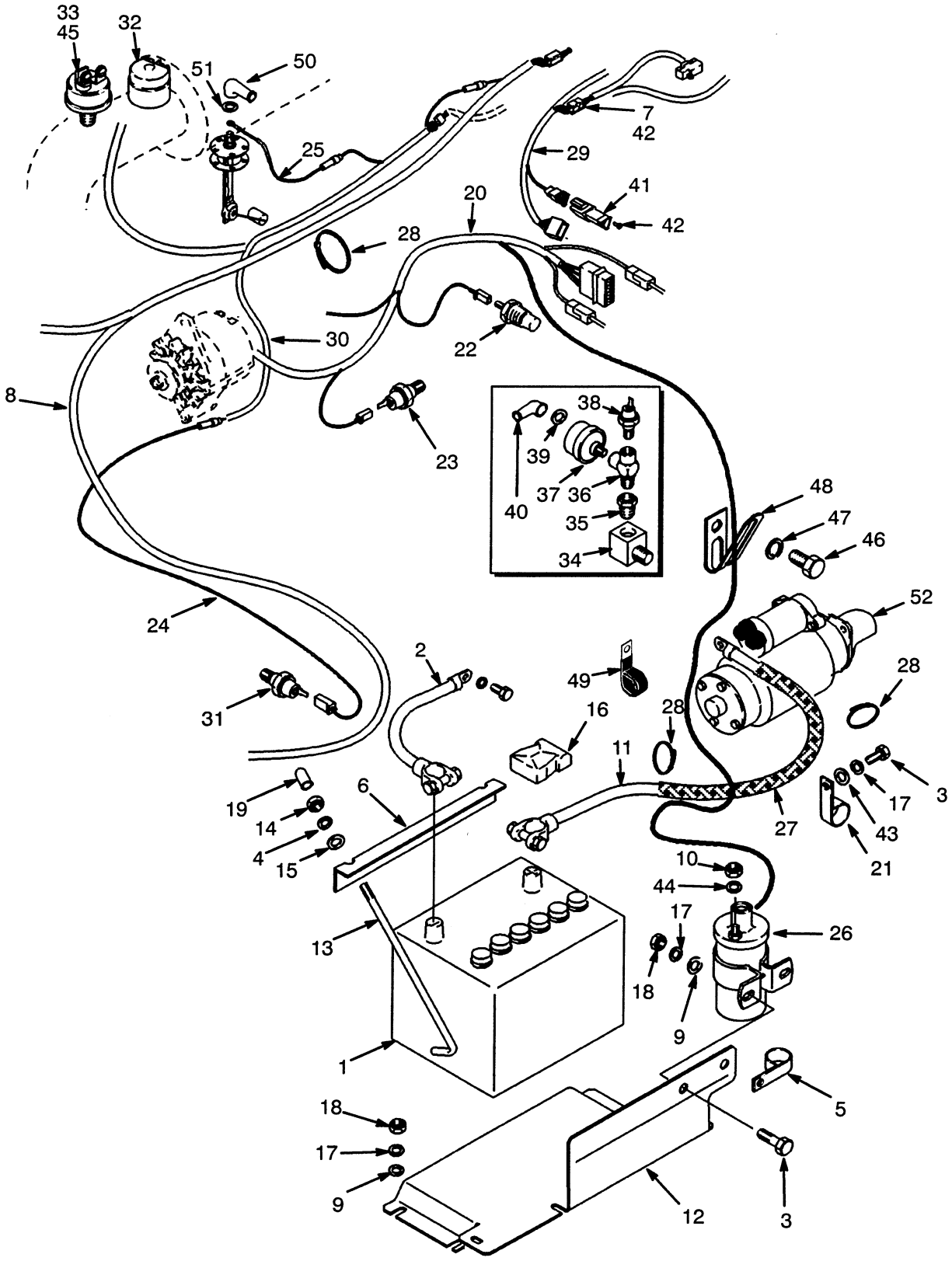

ELECTRICAL

GASOLINE AND LPG 2.0L

REF		PART NO.	NAME OF PART	QTY
1	ak	309153	Wet Battery	1
1	m	1383331	Wet Battery	1
1	a	177894	Dry Battery	1
2		153931	Battery Cable	1
3	d	136681	Capscrew	4
3	e	136681	Capscrew	2
4		292680	Washer	2
5	d	1310611	Clamp	1
6		1354379	Battery Bracket	1
7	hp	1351681	Connector Body	1
7	hn	1330409	Connector Body	1
8	n	1359624	Harness-Chassis Lighting	1
9		320158	Washer	3
10		292668	Nut	2
11		1450104	Battery Cable	1
12		1458009	Battery Tray	1
13		309124	Battery Holddown Link	2
14		136687	Nut	2
15		18500	Washer	2
16		257241	Boot	1
17	d	292681	Washer	7
17	e	292681	Washer	5
18		239503	Nut	5
19		1326939	Cap	2
20	b	1352069	Engine Harness	1
20	r	.....	Engine Harness ☞ Figure 122	1
20	p	.....	Engine Harness ☞ Figure 123	1
21	d	176910	Clamp	2
21	e	128408	Clamp	1
22		1360086	Oil Pressure Switch	1
22	a	2026608	Oil Pressure Switch	1
23	b	1361140	Temperature Sender	1
23	c	1367633	Temperature Sender	1
24	n	1354202	Coolant Level Harness	1
25		1356131	Fuel Probe Harness (Gas)	1
26		1324278	Ignition Coil	1
27	d	275496	Conduit (22.5 in)	1
27	e	275496	Conduit (51 in)	1
28		273775	Strap Clamp	AR
29	f	1352066	Neutral Start Harness	1
30	n	.....	Chassis Harness ☞ Figure 120	1
30	p	.....	Chassis Harness ☞ Figure 121	1
31		1356105	Low Coolant Sender	1
32		1347067	Air Filter Sender	1
33	g	1351133	Low Pressure Switch	1
34	a	16151	Fitting	1
35	a	367224	Adapter	1
36	a	16186	Fitting	1
37	a	1356108	Oil Pressure Sender	1
38	a	1368983	Oil Pressure Switch	1
39	a	18500	Washer	1
40	a	190383	Boot	1
41	hp	1351682	Connector Body	1
41	hn	1330410	Connector Body	1
42	hn	1330439	Cavity Plug	5
43	d	296418	Washer	2
44		292679	Washer	2
45		190383	Boot	2
46	s	148962	Capscrew	2
47	e	18500	Washer	1
48	s	2022013	Clamp	3
49		1360146	Clamp	2
50		190383	Boot	1
51		18500	Washer	1
52		.....	Starter Motor ☞ Figure 149	1

- **a** Optional
- **b** Last Used On S/N D177B-15834
- **c** First Used On S/N D177B-15835
- **d** Last Used On S/N D177B-6401
- **e** First Used On S/N D177B-6402
- **f** Monotrol Pedal
- **g** LPG
- **h** Forward/Reverse Lever
- **k** Last Used On S/N D177B-22587
- **n** Last Used On S/N D177B-35854
- **p** First Used On S/N D177B-35855
- **r** Used On S/N D177B-15835 Thru D117B-35854
- **s** Used On S/N D177B-6402 Thru D177B-35854

©2000 HYSTER COMPANY

ELECTRICAL (Figure 117)

DIESEL

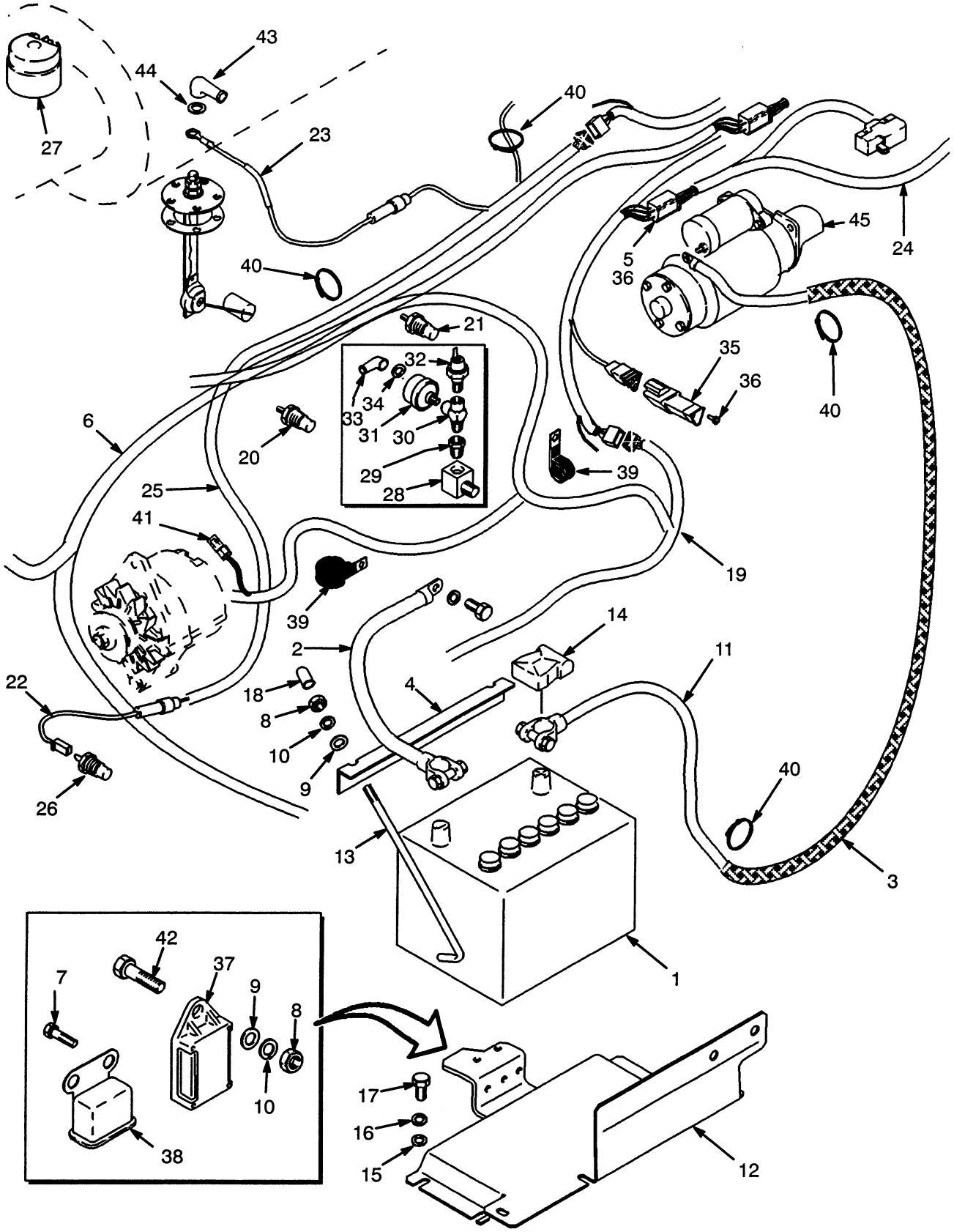

ELECTRICAL

DIESEL

KEY:
A: 2.4L
B: 2.8L
C: 3.1L

REF		PART NO.	NAME OF PART	QTY A	B	C
1	a	1377998	Wet Battery	1	1	1
2		153931	Battery Cable	1	1	1
3		275496	Conduit	AR	AR	AR
4		1354379	Battery Hold Down	1	1	1
5	ce	1351681	Connector Body	1	1	1
5	cd	1330409	Connector Body	1	1	1
6	d	1359624	Harness-Chassis Lighting	1	1	1
7		292501	Capscrew	3	3	3
8		136687	Nut	5	5	5
9		320156	Washer	3	3	3
10		292680	Washer	5	5	5
11		153932	Battery Cable	1	1	1
12		1458009	Battery Tray	1	1	1
13		309124	Battery Holddown Link	2	2	2
14		257241	Boot	1	1	1
15		320158	Washer	3	3	3
16		292681	Washer	3	3	3
17		239503	Nut	3	3	3
18		1326939	Cap	2	2	2
19	d	.....	Engine Harness ☞ Figure 118	1	1	1
19	e	.....	Engine Harness ☞ Figure 119	1	1	1
20		1320939	Water Temperature Sender	1	1	1
21		1360086	Oil Pressure Switch	1	1	1
21		2026608	Oil Pressure Switch	1	1	1
22	d	1354201	Low Coolant Harness	1	1	1
23		1356131	Fuel Probe Harness	1	1	1
24	b	1352066	Neutral Start Harness	1	1	1
25	d	.....	Chassis Harness ☞ Figure 120	1	1	1
25	e	.....	Chassis Harness	1	1	1
			☞ Figure 121			
26		1356105	Low Coolant Sender	1	1	1
27		1347067	Air Filter Restricted Sender	1	1	1
28	a	324740	Connector	1	1	1
29	a	367224	Adapter	1	1	1
30	a	16186	Fitting	1	1	1
31	a	1356108	Oil Pressure Sender	1	1	1
32	a	366687	Oil Pressure Switch	1	1	1
33	a	190383	Boot	1	1	1
34		18500	Washer	2	2	2
35	ce	1351682	Connector Body	1	1	1
35	cd	1330410	Connector Body	1	1	1
36	cd	1330439	Cavity Plug	5	5	5
37		1347121	Relay Timer	1	..	1
37		1350200	Relay Timer	..	1	..
38		1347122	Glow Plug Relay	1	1	1
39		1360146	Clamp	3	2	2
40		273775	Strap Clamp	AR	AR	AR
41		1361305	Diode	1	1	1
42		287816	Capscrew	1	1	1
43		190383	Boot	1	1	1
44		18500	Washer	1	1	1
45		.....	Starter Motor ☞Figure 149	1	1	1

a Optional
b Monotrol Pedal
c Forward/Reverse Lever
d Last Used On S/N D177B-35854
e First Used On S/N D177B-35855

©2000 HYSTER COMPANY

HARNESS (Figure 118)

DIESEL

LAST USED ON S/N D177B-35854

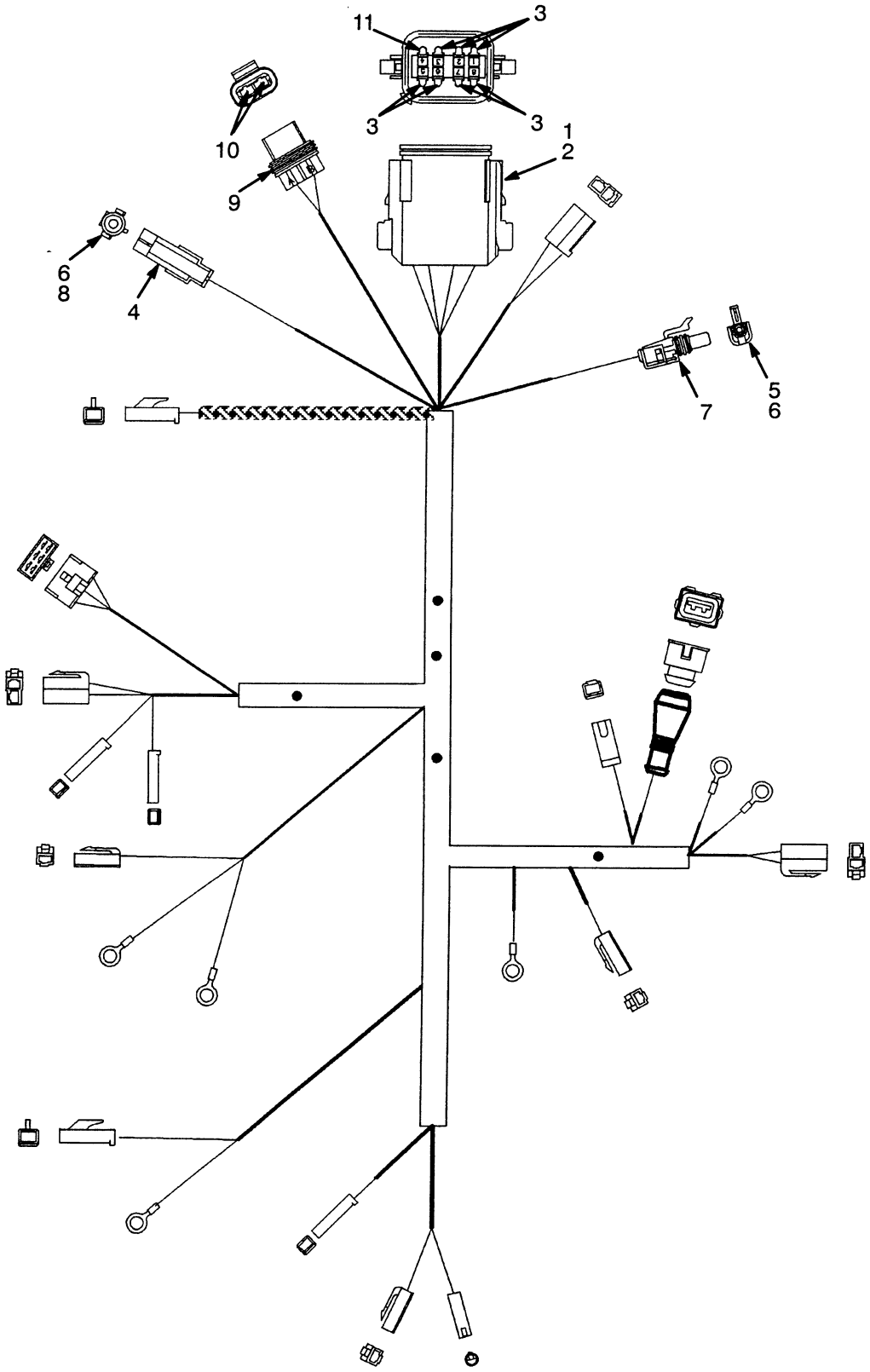

©2000 HYSTER COMPANY

See Service Manual for service procedures

HARNESS

DIESEL

LAST USED ON S/N D177B-35854

REF	PART NO.	NAME OF PART	QTY
	1352558	Engine Harness	1
1	1330423	Connector Body	1
2	1330429	Lock	1
3	1330438	Socket	7
4	1330299	Connector Body	1
5	1334999	Pin	1
6	1329147	Seal	2
7	1330298	Connector Body (Starter)	1
8	1336173	Socket	1
9	1329152	Connector Body	1
10	1329148	Terminal	2
11	1330439	Plug	1

©2000 HYSTER COMPANY

HARNESS (Figure 119)

DIESEL

FIRST USED ON S/N D177B-35855

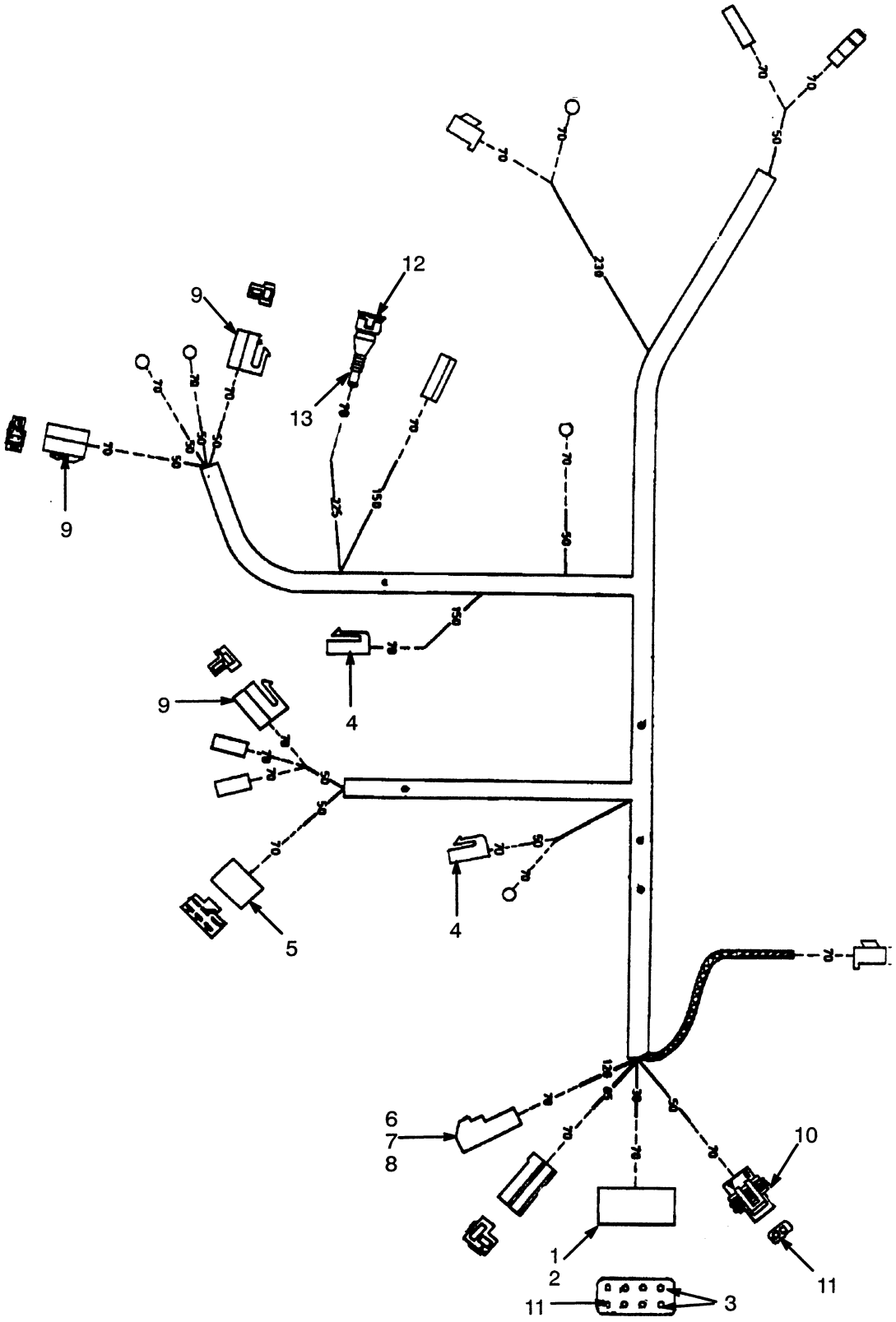

©2000 HYSTER COMPANY

HARNESS

DIESEL

FIRST USED ON S/N D177B-35855

REF	PART NO.	NAME OF PART	QTY
	1385859	Engine Harness	1
1	1330423	Connector Body	1
2	1330429	Lock	1
3	1330438	Socket	7
4	1324311	Connector Body	2
5	314766	Connector Body	1
6	1330298	Connector Body	1
7	1334999	Pin	1
8	1329147	Seal	1
9	1308259	Connector Body	3
10	1330292	Connector Body	1
11	1330439	Plug	2
12	1354382	Connector Body	1
13	1354383	Boot	1

©2000 HYSTER COMPANY

HARNESS (Figure 120)

CHASSIS

LAST USED ON S/N D177B-35854

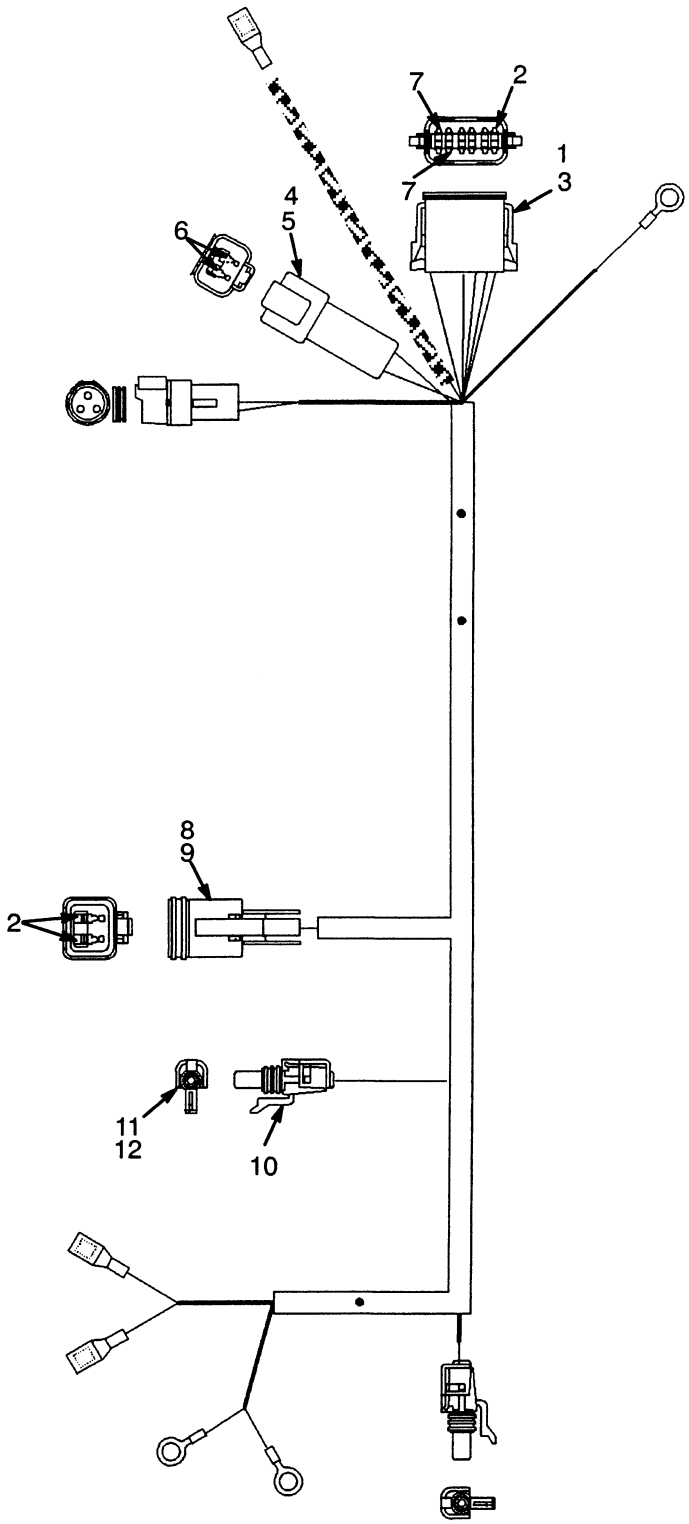

HARNESS

CHASSIS

LAST USED ON S/N D177B-35854

REF	PART NO.	NAME OF PART	QTY
	1351083	Chassis Harness	1
1	1351068	Connector Body (Cluster Harness)	1
2	1330438	Socket	12
3	1351069	Lock	1
4	1330409	Connector Body (Turn Signal)	1
5	1330414	Lock	1
6	1330437	Pin	2
7	1330439	Plug	2
8	1330419	Connector Body (Seat Switch)	1
9	1330424	Lock	1
10	1330299	Connector Body	2
11	1323583	Socket	2
12	1323579	Seal	2

©2000 HYSTER COMPANY

HARNESS (Figure 121)

CHASSIS

FIRST USED ON S/N D177B-35855

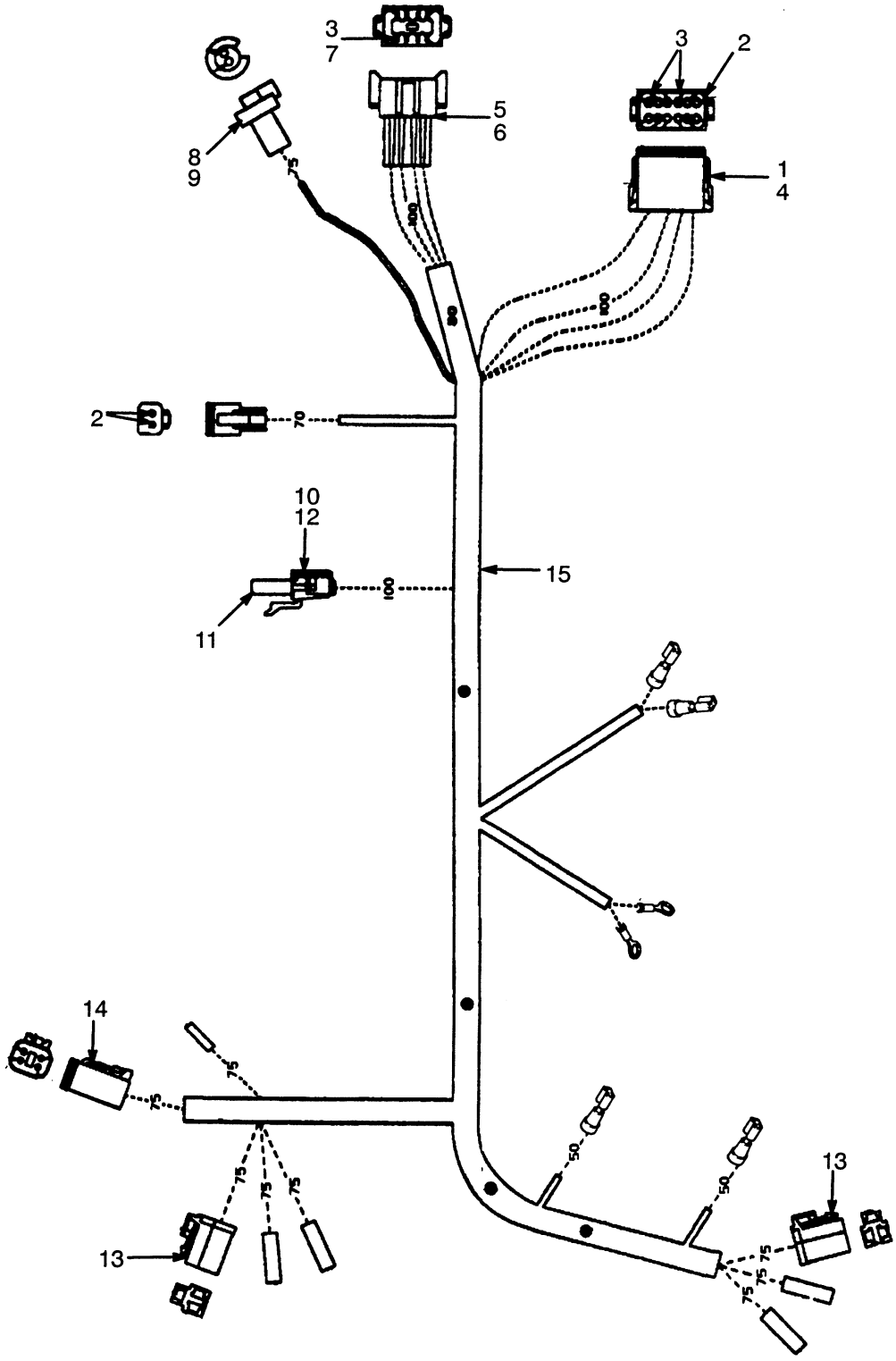

HARNESS

CHASSIS

FIRST USED ON S/N D177B-35855

REF	PART NO.	NAME OF PART	QTY
	1376747	Chassis Harness	1
1	1351068	Connector Body	1
2	1330438	Socket	11
3	1330439	Plug	8
4	1351069	Lock	1
5	1330413	Connector Body	1
6	1330418	Lock	1
7	1330437	Pin	7
8	1351070	Connector Body	1
9	1351076	Seal	1
10	1330299	Connector Body	1
11	1323583	Socket	1
12	1323579	Seal	1
13	1351099	Connector Body	2
14	1330421	Connector Body	1
15	275498	Conduit	1

©2000 HYSTER COMPANY

HARNESS (Figure 122)

GASOLINE AND LPG 2.0L

LAST USED ON S/N D177B-35854

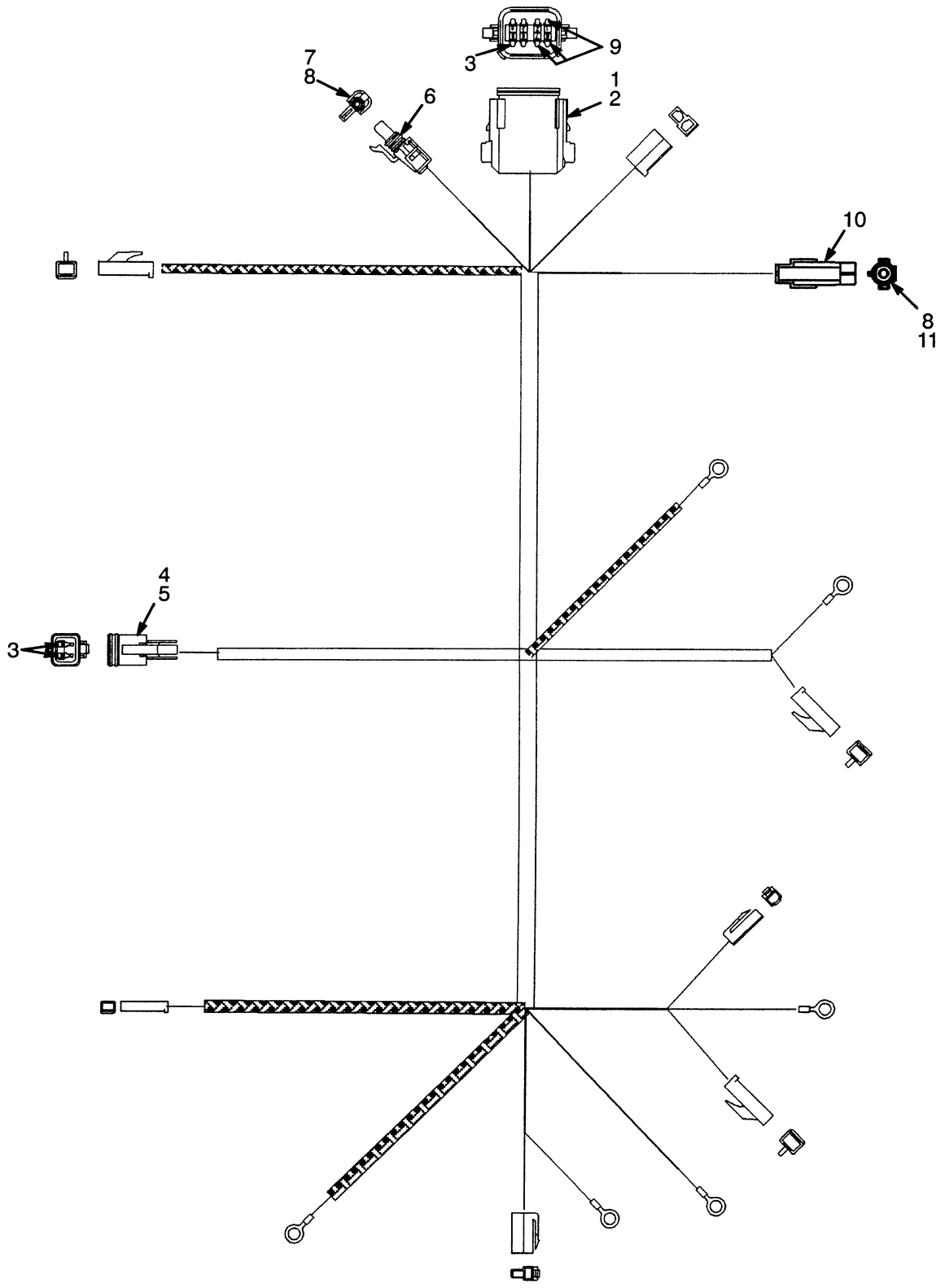

©2000 HYSTER COMPANY

See Service Manual for service procedures

HARNESS

GASOLINE AND LPG 2.0L

LAST USED ON S/N D177B-35854

REF	PART NO.	NAME OF PART	QTY
a	1352069	Engine Harness	1
b	1379454	Engine Harness	1
1	1330423	Connector Body	1
2	1330429	Lock	1
3	1330438	Socket	5
4	1330419	Connector Body (LPG Harness)	1
5	1330424	Lock	1
6	1330299	Connector Body (Light Harness)	1
7	1336173	Socket	1
8	1329147	Seal	2
9	1330439	Plug	3
10	1330298	Connector Body	1
11	1334999	Pin	1

a Last Used On S/N D177B-15834
b First Used On S/N D177B-15835

©2000 HYSTER COMPANY

HARNESS (Figure 123)

GASOLINE AND LPG 2.0L

FIRST USED ON S/N D177B-35855

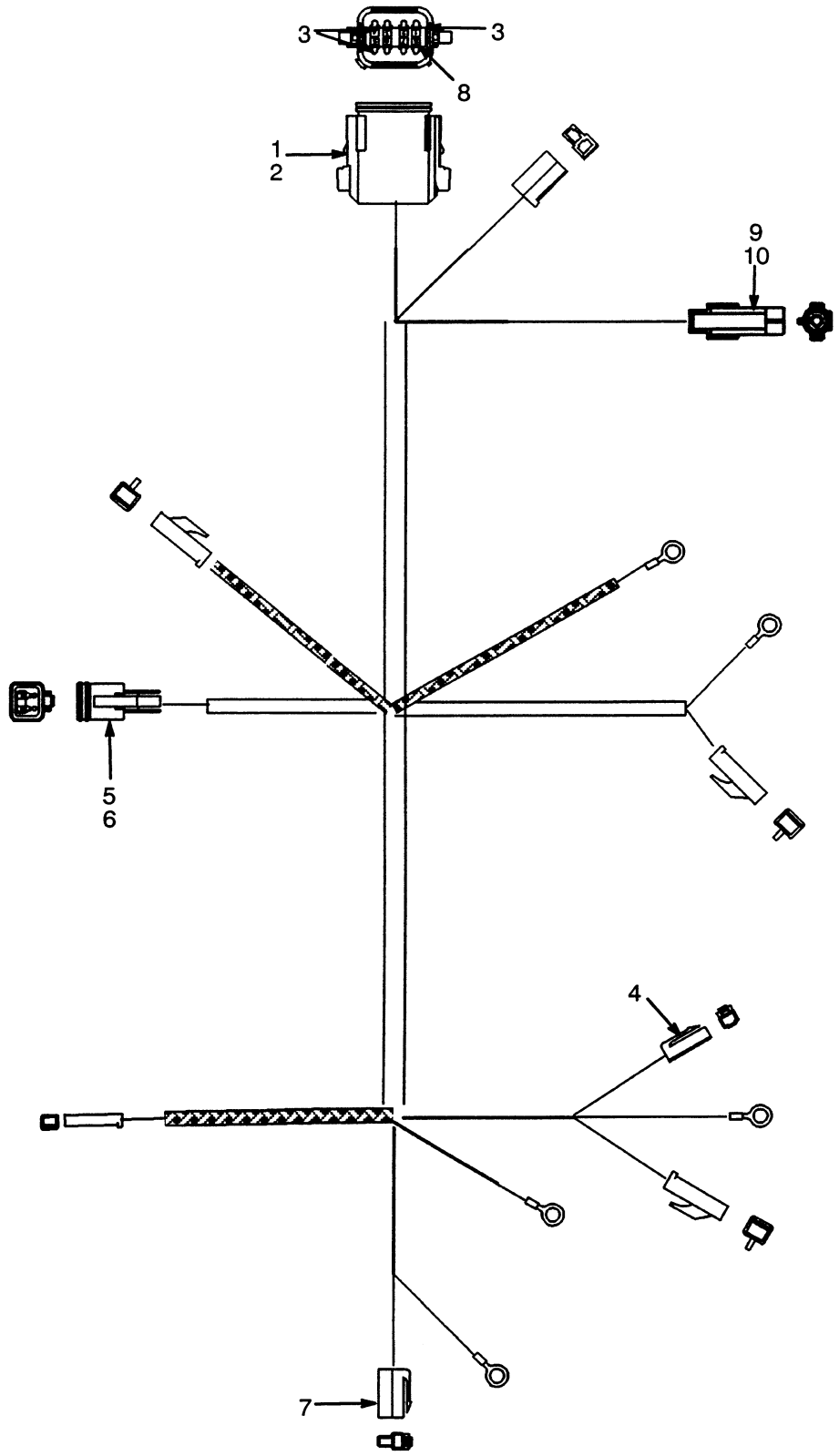

HARNESS

GASOLINE AND LPG 2.0L

FIRST USED ON S/N D177B-35855

REF	PART NO.	NAME OF PART	QTY
	1385862	Engine Harness	1
1	1330423	Connector Body	1
2	1330428	Lock	1
3	1330438	Socket	5
4	1324311	Connector Body	1
5	1330419	Connector Body	1
6	1330424	Lock	1
7	1308259	Connector Body	1
8	1330439	Plug	3
9	1330298	Connector Body	1
10	1334999	Pin	1

©2000 HYSTER COMPANY

ENGINE HARNESS (Figure 124)

GASOLINE 2.2L

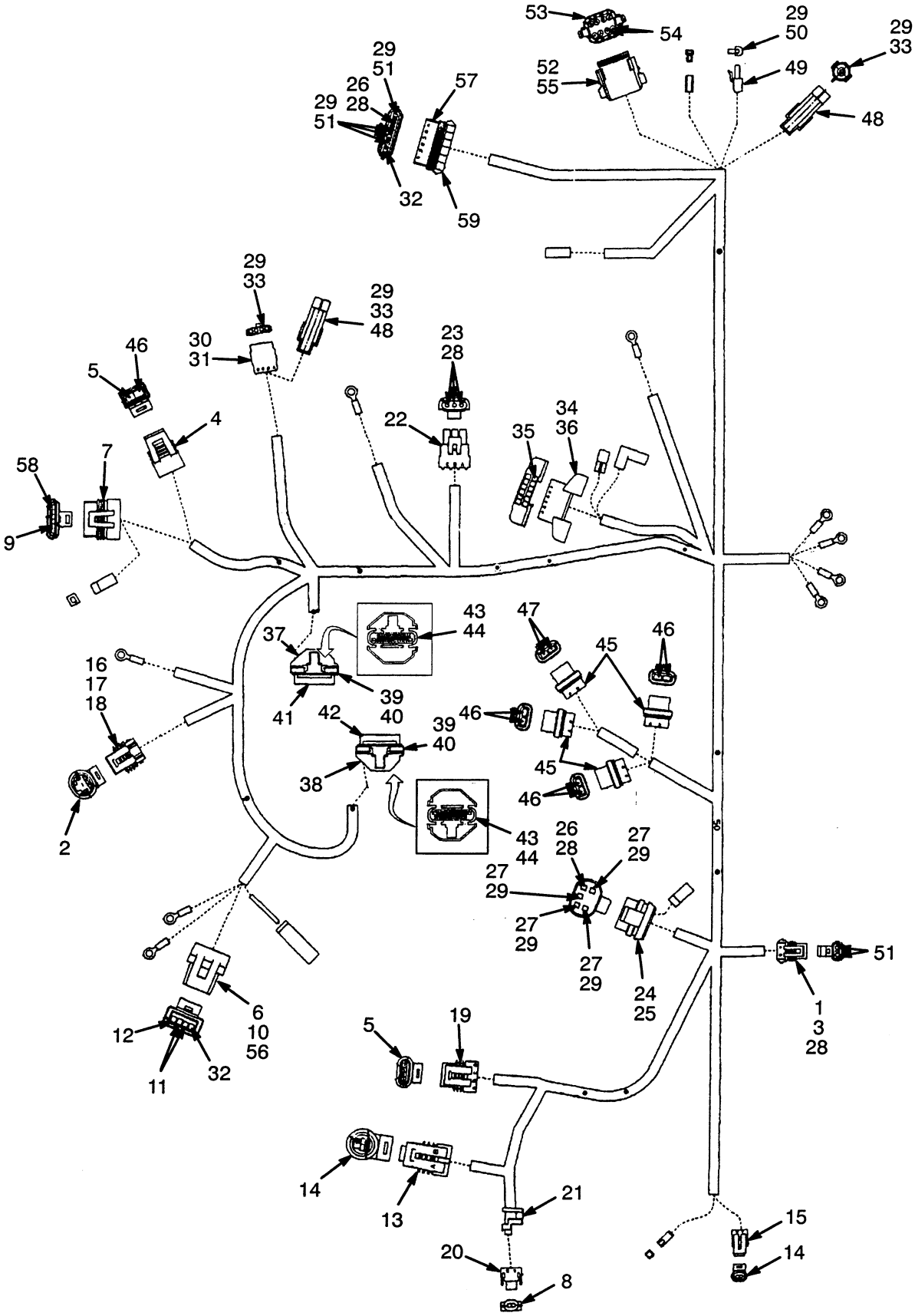

ENGINE HARNESS

GASOLINE 2.2L

REF	PART NO.	NAME OF PART	QTY
a	1352145	Engine Harness	1
b	1373813	Engine Harness	1
1	1329152	Connector	1
2	1330355	Terminal	3
3	1329151	Lock	1
4	1347205	Connector (Distributor)	1
5	1323576	Terminal	5
6	1347209	Seal	1
7	1347204	Connector (Distributor)	1
8	1330296	Terminal	2
9	1323581	Plug	1
10	1347206	Connector (Alternator)	1
11	1363885	Terminal	2
12	1351139	Plug	2
13	1327957	Connector	1
14	1354237	Terminal	5
15	1323586	Connector (ECM Temperature Sender	1
16	1347210	Connector (Oil Pressure Switch)	1
17	1330357	Lock	1
18	1330356	Seal	3
19	1323575	Connector (IAC Valve)	1
20	1327960	Connector (Injector)	1
21	1356501	Grommet	1
22	1327958	Connector (MAP Sensor)	1
23	1323578	Terminal	3
24	1330302	Plug	1
25	1330303	Lock	1
26	1330281	Terminal	3
27	1330304	Terminal	3
28	1323579	Seal	8
29	1329147	Seal	12
30	1337789	Lock	1
31	1334998	Connector (Fuel Pump & Sender)	1
32	1327164	Plug	2
33	1334999	Pin	5
34	1327956	Plug	1
35	1330279	Terminal	2
36	1330294	Lock	1
37	1350218	Relief (LH)	1
38	1350219	Relief (RH)	1
39	1350220	Connector	2
40	1350221	Seal	2
41	1350222	Terminal Cap (Clear)	1
42	1350223	Terminal Cap (Black)	1
43	1352104	Terminal	28
44	1352105	Plug	36
45	1330292	Plug	4
46	1330283	Terminal	6
47	1354204	Terminal	3
48	1330298	Connector	2
49	1330299	Connector (Light Harness)	1
50	1336173	Socket	1
51	1329148	Terminal	6
52	1330423	Connector (Cluster Harness)	1
53	1330434	Socket	6
54	1330439	Plug	2
55	1330429	Lock	1
56	1347208	Lock	1
57	1327959	Plug (Governor Module)	1
58	1352142	Terminal	5
59	1330297	Lock	1

a Last Used On S/N D177B-6045

b First Used On S/N D177B-6046

©2000 HYSTER COMPANY

TYPE GS HARNESS (Figure 125)

GASOLINE 2.2L

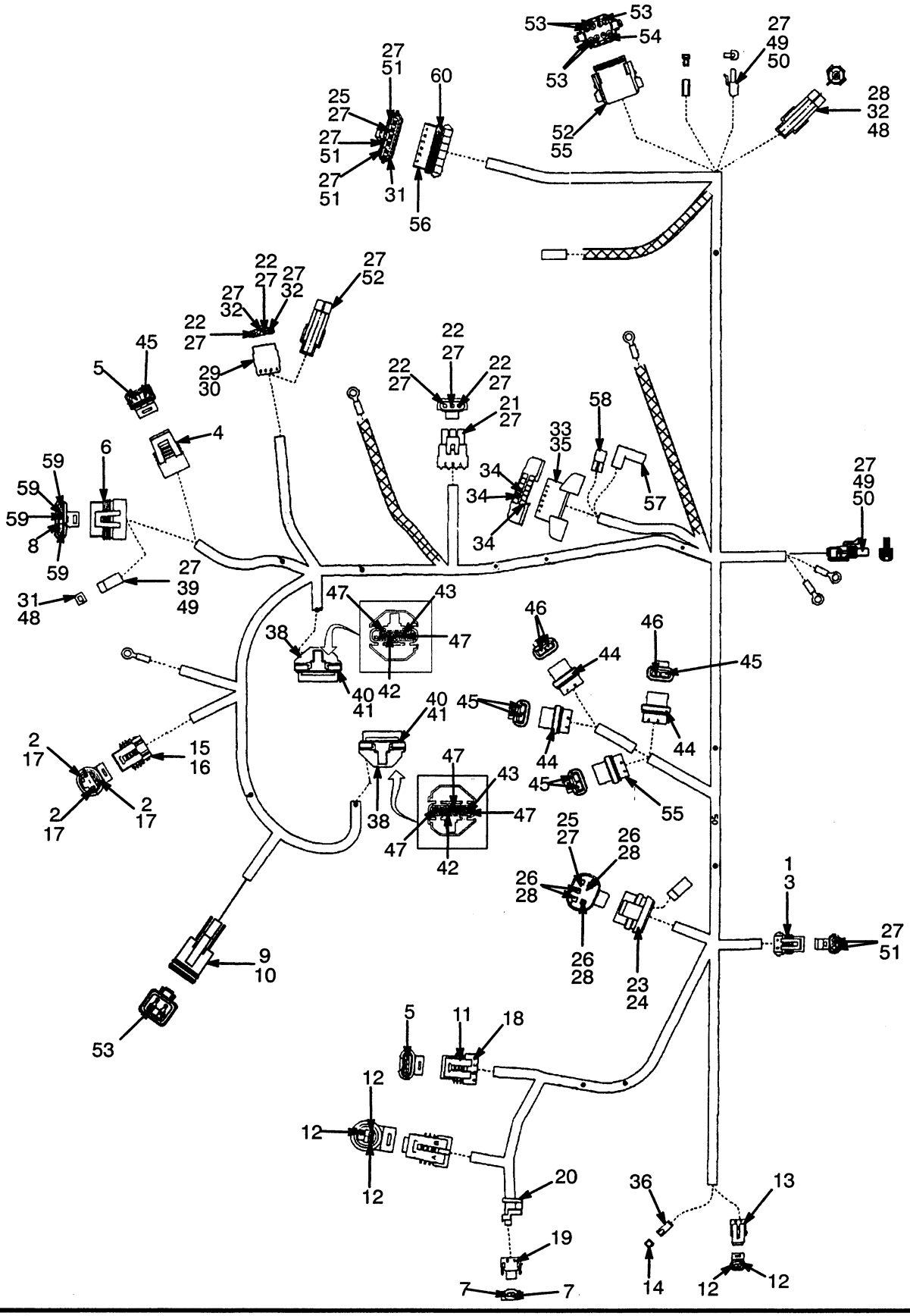

TYPE GS HARNESS

GASOLINE 2.2L

REF	PART NO.	NAME OF PART	QTY
a	1368929	Safety Harness	1
b	1373814	Safety Harness	1
1	1329152	Connector (Governor Motor)	1
2	1330355	Terminal	3
3	1329151	Lock	1
4	1347205	Connector (Distributor)	1
5	1323576	Terminal	5
6	1347204	Connector (Distributor)	1
7	1330296	Terminal	2
8	1323581	Seal	1
9	1330419	Connector (Alternator)	1
10	1330424	Lock	1
11	1327957	Connector	1
12	1354237	Terminal	5
13	1323586	Connector (ECM Temperature Sender)	1
14	370730	Fitting	1
15	1347210	Connector (Oil Pressure Switch)	1
16	1330357	Lock	1
17	1330356	Seal	3
18	1323575	Connector (IAC Valve)	1
19	1327960	Connector (Injector)	1
20	1356501	Grommet	1
21	1327958	Connector (MAP Sensor)	1
22	1323578	Terminal	5
23	1330302	Connector (Fuel Pump Relay)	1
24	1330303	Lock	1
25	1330281	Terminal	3
26	1330304	Terminal	3
27	1323579	Seal	20
28	1329147	Seal	1
29	1337789	Lock	1
30	1334998	Connector (Fuel Pump And Sender)	1
31	1327164	Plug	2
32	1334999	Pin	4
33	1327956	Plug	1
34	1330279	Terminal	3
35	1330294	Lock	2
36	1301720	Connector	1
37	1337386	Seal	3
38	1350218	Relief	2
39	1323583	Socket	1
40	1350220	Connector	2
41	1350221	Seal	2
42	1352104	Terminal	13
43	1352105	Seal	36
44	1330292	Connector	2
45	1330283	Terminal	6
46	1354204	Fitting	3
47	1368073	Terminal	15
48	1330298	Fitting	3
49	1330299	Fitting	3
50	1336173	Socket	2
51	1329148	Fitting	6
52	1330423	Connector (Cluster Harness)	1
53	1330438	Socket	6
54	1330439	Plug	2
55	1330429	Lock	1
56	1327959	Plug (Governor Module)	1
57	1339448	Fitting	1
58	1339447	Fitting	1
59	1352142	Fitting	5
60	1330297	Fitting	1

a Last Used On S/N D177B-6045

b First Used On S/N D177B-6046

©2000 HYSTER COMPANY

ENGINE HARNESS (Figure 126)

GASOLINE 3.0L

LAST USED ON S/N D177B-35854

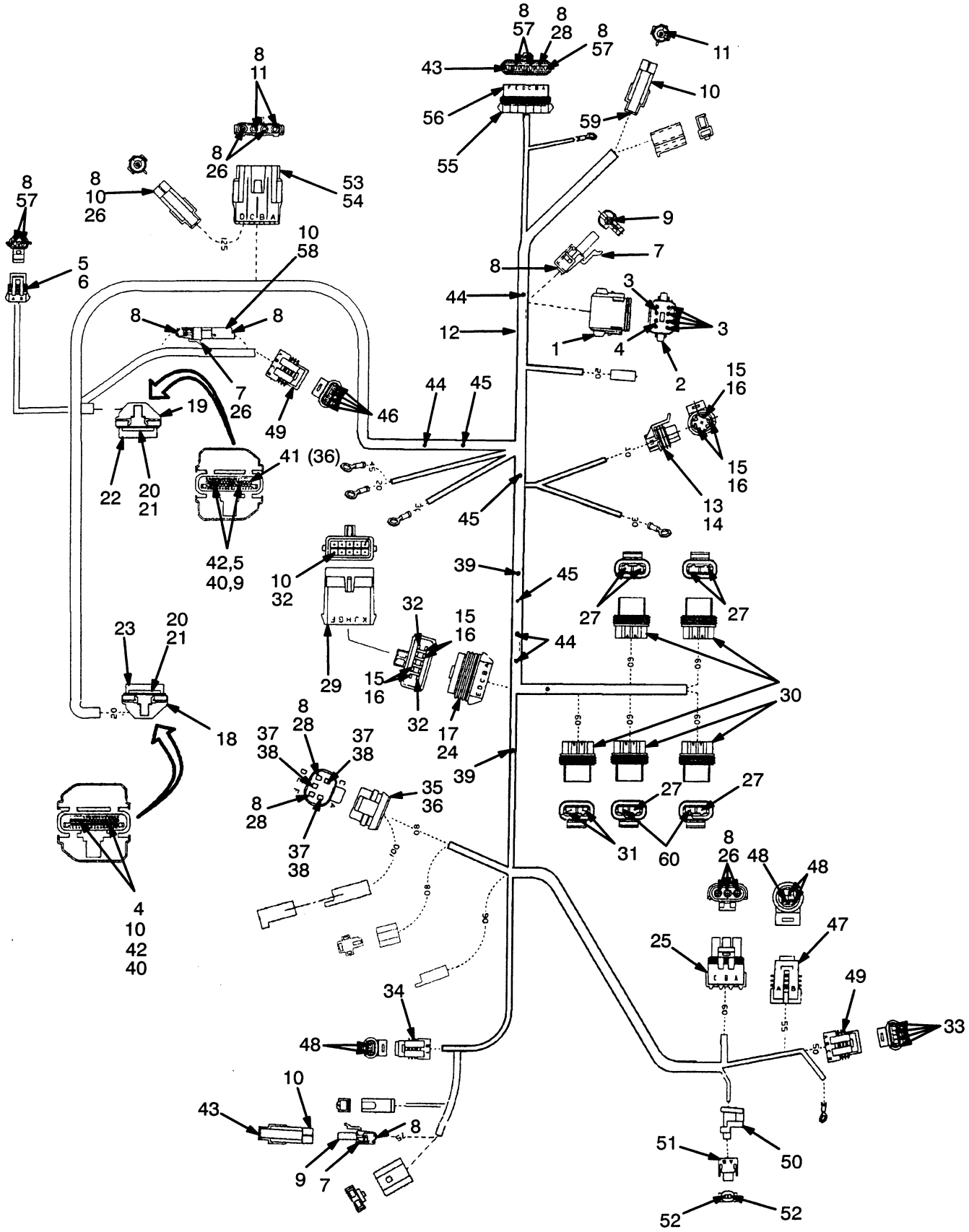

ENGINE HARNESS

GASOLINE 3.0L

LAST USED ON S/N D177B-35854

REF	PART NO.	NAME OF PART	QTY
	1378413	Engine Harness	1
1	1330423	Connector (Cluster Harness)	1
2	1330429	Lock	1
3	1330438	Socket	6
4	1330439	Plug	2
5	1329152	Connector (Governor Motor)	1
6	1329151	Lock	2
7	1330299	Connector	3
8	1323579	Seal	21
9	1336173	Socket	2
10	1330298	Connector	4
11	1334999	Pin	3
12	381919	Conduit	AR
13	1347210	Connector (Oil Pressure Switch)	1
14	1330357	Lock	1
15	1330355	Terminal	7
16	1330356	Seal	7
17	1376617	Connector (Diagnostic Handset)	1
18	1350218	Strain Relief (LH)	1
19	1350219	Strain Relief (RH)	1
20	1350220	Connector	2
21	1350221	Seal	2
22	1350222	Terminal Cap (Clear)	1
23	1350223	Terminal Cap (Black)	1
24	1376619	Lock	1
25	1327958	Connector (MAP Sensor)	1
26	1323578	Pin	7
27	1330283	Terminal	6
28	1330281	Terminal	3
29	1376618	Receptacle	1
30	1330292	Connector (Plug)	5
31	1336171	Terminal	2
32	1351139	Plug	16
33	1330296	Terminal	4
34	1323586	Connector (Temperature Sender) (MSTS Controller)	1
35	1330302	Connector (Fuel Pump Relay)	1
36	1330303	Lock	1
37	1330304	Terminal	3
38	1337386	Seal	3
39	1345027	Splice	2
40	1352104	Terminal	13
41	1352105	Seal	36
42	1368073	Terminal	15
43	1327164	Plug	2
44	1345029	Splice	5
45	1345026	Splice	3
46	1352142	Terminal	4
47	1327957	Connector (Throttle Position Sensor)	1
48	1354237	Terminal	5
49	1323575	Connector	2
50	1356501	Grommet	1
51	1327960	Connector (Injector)	1
52	1330296	Terminal	2
53	1337789	Lock	1
54	1334998	Connector (Fuel Pump & Sender)	1
55	1330297	Lock	1
56	1327959	Connector (Governor Module)	1
57	1329148	Terminal	5
58	1323583	Socket	1
59	1329147	Seal	1
60	1354204	Terminal	2

©2000 HYSTER COMPANY

ENGINE HARNESS (Figure 127)
GASOLINE 3.0L
FIRST USED ON S/N D177B-35855

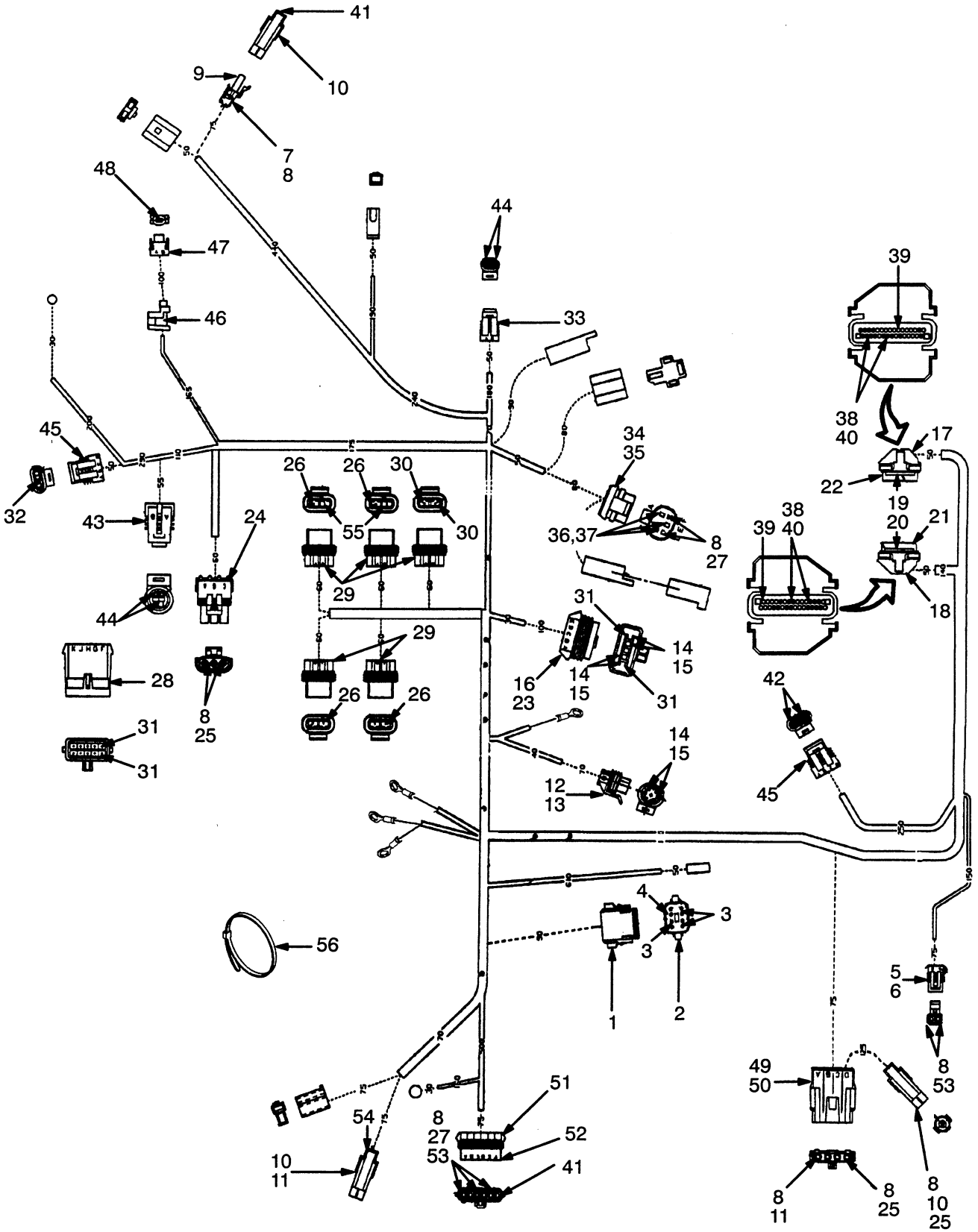

ENGINE HARNESS

GASOLINE 3.0L

FIRST USED ON S/N D177B-35855

REF	PART NO.	NAME OF PART	QTY
	1385860	Engine Harness	1
1	1330423	Connector	1
2	1330429	Lock	1
3	1330438	Socket	6
4	1330439	Plug	2
5	1329152	Connector	1
6	1329151	Lock	2
7	1330299	Connector	1
8	1323579	Seal	18
9	1336173	Socket	1
10	1330298	Connector	3
11	1334999	Pin	3
12	1347210	Connector	1
13	1330357	Lock	1
14	1330355	Terminal	7
15	1330356	Seal	7
16	1376617	Connector	1
17	1350218	Strain Relief (LH)	1
18	1350219	Strain Relief (RH)	1
19	1350220	Connector	2
20	1350221	Seal	2
21	1350222	Terminal Cap (Clear)	1
22	1350223	Terminal Cap (Black)	1
23	1376619	Lock	1
24	1327958	Connector	1
25	1323578	Pin	6
26	1330283	Terminal	6
27	1330281	Terminal	3
28	1376618	Receptacle (For iitem 16)	1
29	1330292	Connector	5
30	1336171	Terminal	2
31	1351139	Plug	16
32	1330296	Terminal	4
33	1323586	Connector	1
34	1330302	Connector	1
35	1330303	Lock	1
36	1330304	Terminal	3
37	1337386	Seal	3
38	1352104	Terminal	13
39	1352105	Plug	36
40	1368073	Terminal	15
41	1327164	Plug	2
42	1352142	Terminal	4
43	1327957	Connector	1
44	1354237	Terminal	5
45	1323575	Connector	2
46	1356501	Grommet	1
47	1327960	Connector	1
48	1330296	Terminal	2
49	1337789	Lock	1
50	1334998	Connector	1
51	1330297	Lock	1
52	1327959	Connector	1
53	1329148	Terminal	5
54	1329147	Seal	1
55	1354204	Terminal	2
56	114312	Strap Clamp	AR

©2000 HYSTER COMPANY

ENGINE HARNESS (Figure 128)

LPG 2.2L

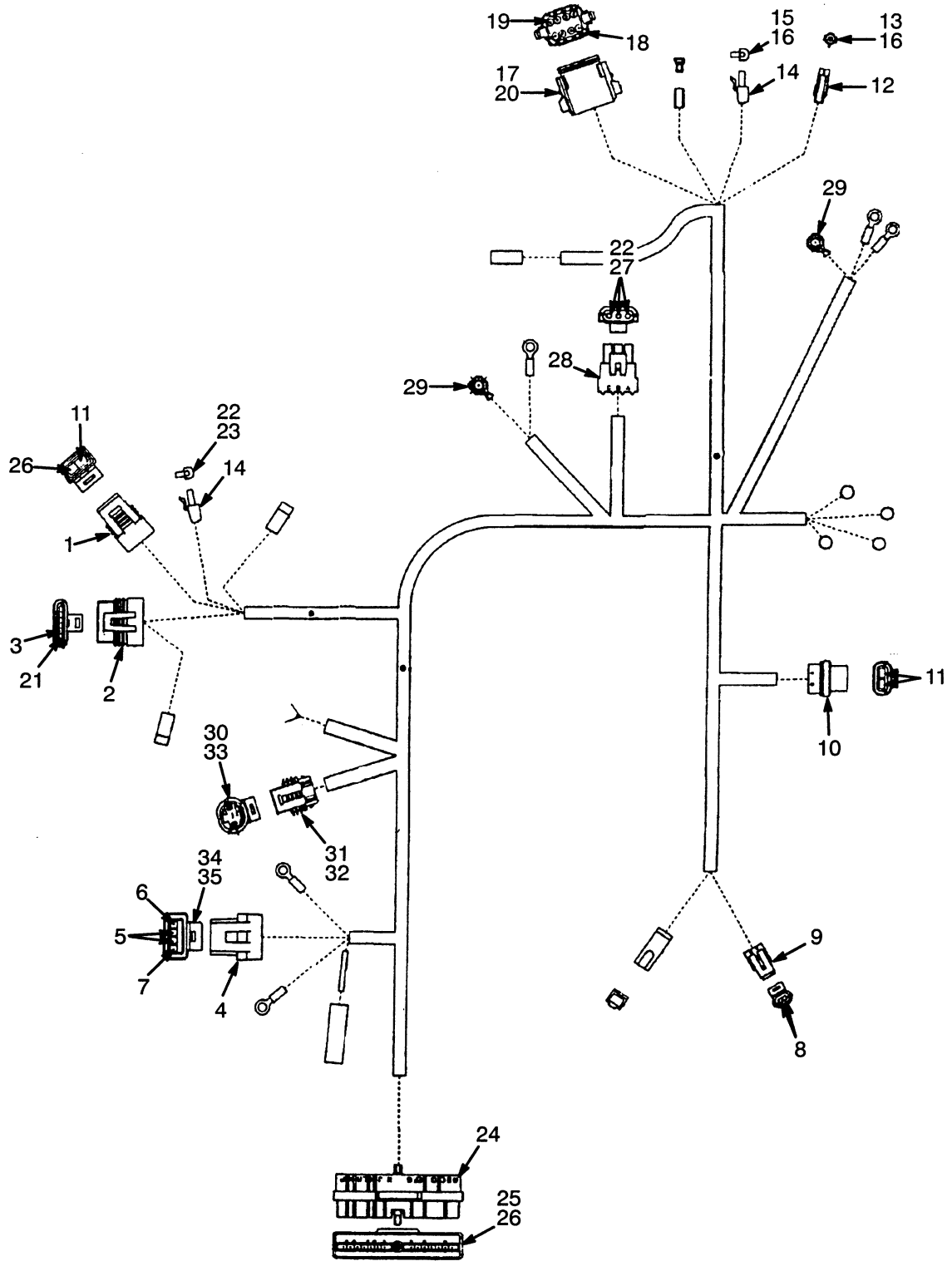

©2000 HYSTER COMPANY

ENGINE HARNESS

LPG 2.2L

REF	PART NO.	NAME OF PART	QTY
	1352171	Engine Harness	1
1	1347205	Connector (Distributor)	1
2	1347204	Connector (Distributor)	1
3	1323581	Plug	1
4	1347206	Connector (Alternator)	1
5	1363885	Terminal	1
6	1351139	Plug	4
7	1347209	Seal	1
8	1354237	Terminal	2
9	1323586	Connector (ECM Temperature Sender)	1
10	1330292	Plug	1
11	1330283	Terminal	3
12	1330298	Connector (Starter Relay Harness)	1
13	1334999	Pin	1
14	1330299	Connector	4
15	1336173	Socket	3
16	1329147	Seal	2
17	1330423	Connector (Cluster Harness)	1
18	1330434	Socket	5
19	1330439	Plug	3
20	1330429	Lock	1
21	1352142	Terminal	5
22	1323579	Seal	7
23	1323583	Socket	1
24	1323581	Plug	4
25	1323580	Plug	1
26	1323576	Terminal	11
27	1323578	Pin	3
28	1327958	Connector (MAP Sensor)	1
29	1337350	Terminal	2
30	1330355	Terminal	1
31	1347210	Connector (Oil Pressure Light)	1
32	1330357	Lock	1
33	1330356	Seal	1
34	1347208	Lock	1
35	1347209	Seal	1

©2000 HYSTER COMPANY

ENGINE HARNESS (Figure 129)

LPG 3.0L

LAST USED ON S/N D177B-35854

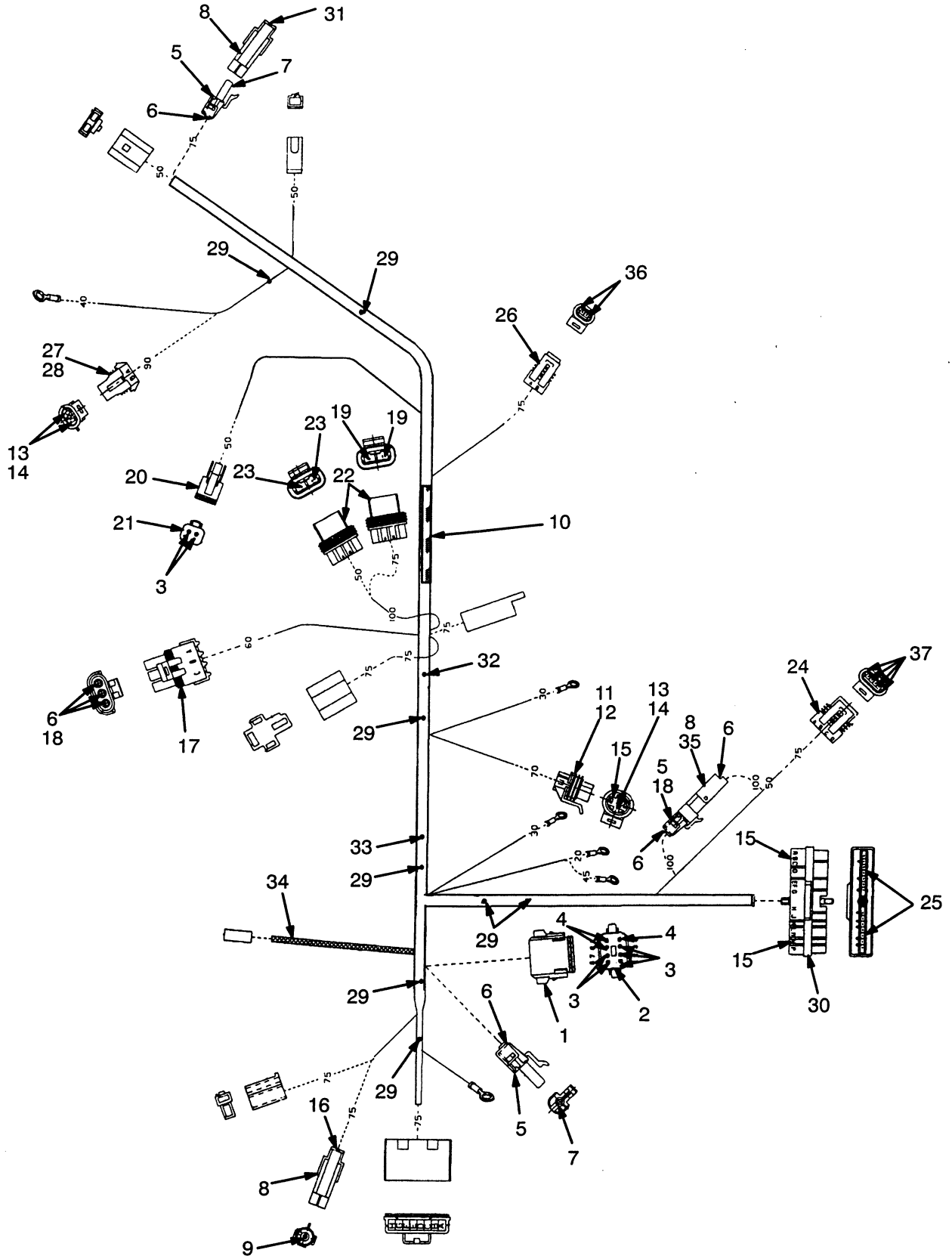

ENGINE HARNESS

LPG 3.0L

LAST USED ON S/N D177B-35854

REF	PART NO.	NAME OF PART	QTY
	1376608	Engine Harness	1
1	1330423	Connector (Cluster Harness)	1
2	1330429	Lock	1
3	1330438	Socket	7
4	1330439	Plug	3
5	1330299	Connector	3
6	1323579	Seal	7
7	1336173	Socket	2
8	1330298	Connector	3
9	1334999	Pin	1
10	381919	Conduit	AR
11	1347210	Connector (Oil Pressure Switch)	1
12	1330357	Lock	1
13	1330355	Terminal	3
14	1330356	Seal	3
15	1323581	Seal	6
16	1329147	Seal	1
17	1327958	Connector (MAP Sensor)	1
18	1323578	Pin	4
19	1330283	Terminal	2
20	1330419	Connector (LPG Solenoid Valve)	1
21	1330424	Lock	1
22	1330292	Plug	2
23	1336171	Terminal	2
24	1323575	Connector (Distributor)	1
25	1323576	Terminal	10
26	1323586	Connector (Temperature Sender) (MSTS Controller)	1
27	1345689	Connector (Governor Solenoid Valve)	1
28	1345690	Lock	1
29	1345027	Splice	8
30	1323580	Connector (MSTS Controller)	1
31	1327164	Plug	1
32	1345029	Splice	1
33	1345026	Splice	1
34	16906	Conduit (650 mm)	1
35	1323583	Socket	1
36	1354237	Terminal	2
37	1352142	Terminal	4

©2000 HYSTER COMPANY

ENGINE HARNESS (Figure 130)

LPG 3.0L

USED ON S/N D177B-35855 THRU S/N D177B-39471

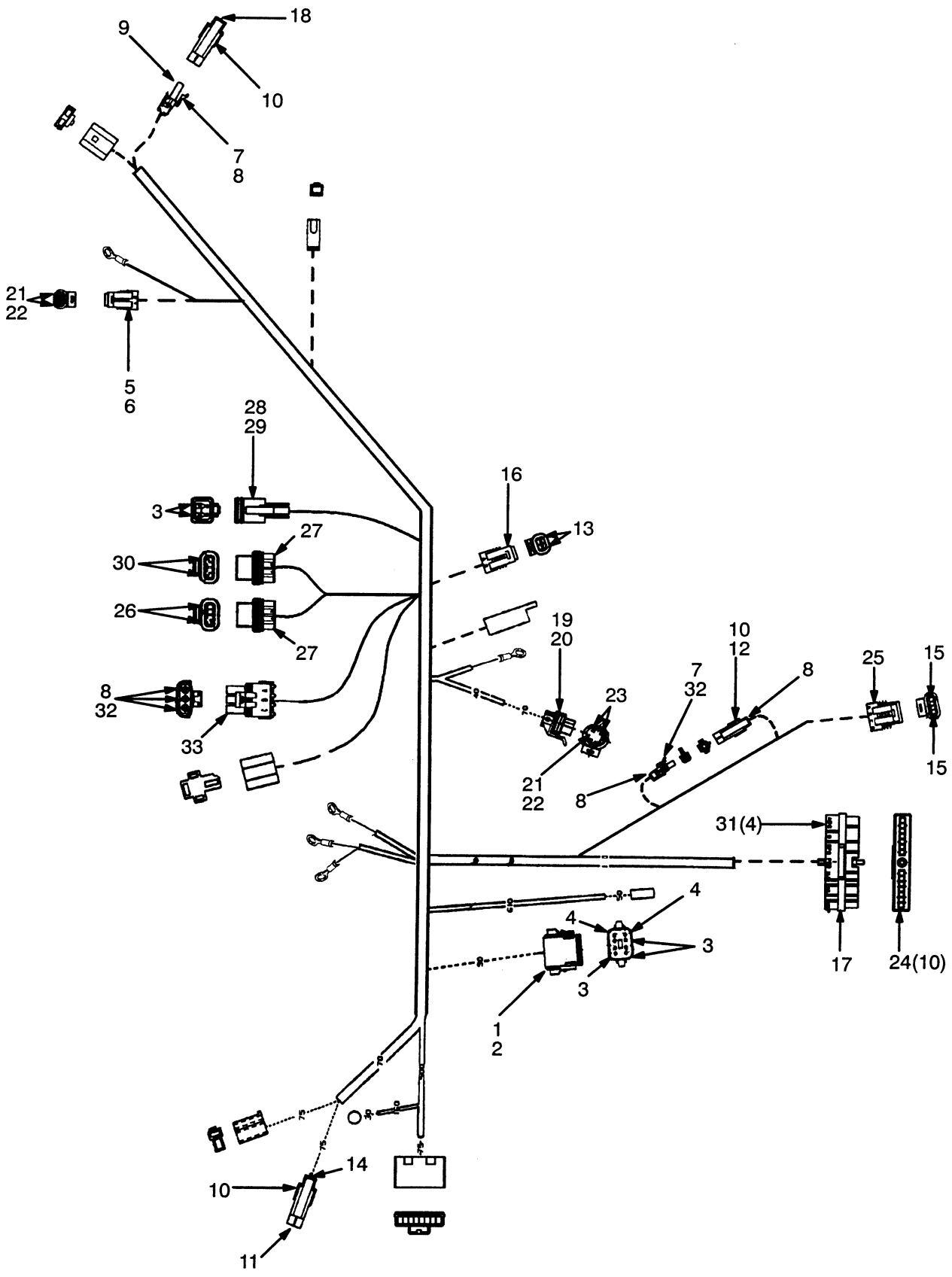

ENGINE HARNESS

LPG 3.0L

USED ON S/N D177B-35855 THRU S/N D177B-39471

REF	PART NO.	NAME OF PART	QTY
	1385861	Engine Harness	1
1	1330423	Connector	1
2	1330429	Lock	1
3	1330438	Socket	7
4	1330439	Plug	3
5	1345689	Connector	1
6	1345690	Lock	1
7	1330299	Connector	2
8	1323579	Seal	6
9	1336173	Socket	1
10	1330298	Connector	3
11	1334999	Pin	1
12	1323583	Socket	1
13	1354237	Terminal	2
14	1329147	Seal	1
15	1352142	Terminal	4
15	1354237	Terminal (Optional)	4
16	1323586	Connector	1
17	1323580	Connector	1
18	1327164	Plug	1
19	1347210	Connector	1
20	1330357	Lock	1
21	1330355	Terminal	3
22	1330356	Seal	3
23	1323581	Plug	2
24	1323576	Terminal	10
25	1323575	Connector	1
26	1336171	Terminal	2
27	1330292	Connector	2
28	1330424	Lock	1
29	1330419	Connector	1
30	1330283	Terminal	2
31	1323581	Plug	4
32	1323578	Pin	4
33	1327958	Connector	1

©2000 HYSTER COMPANY

ENGINE HARNESS (Figure 131)

LPG 3.0L WITHOUT MSTS

FIRST USED ON S/N D177B-39472

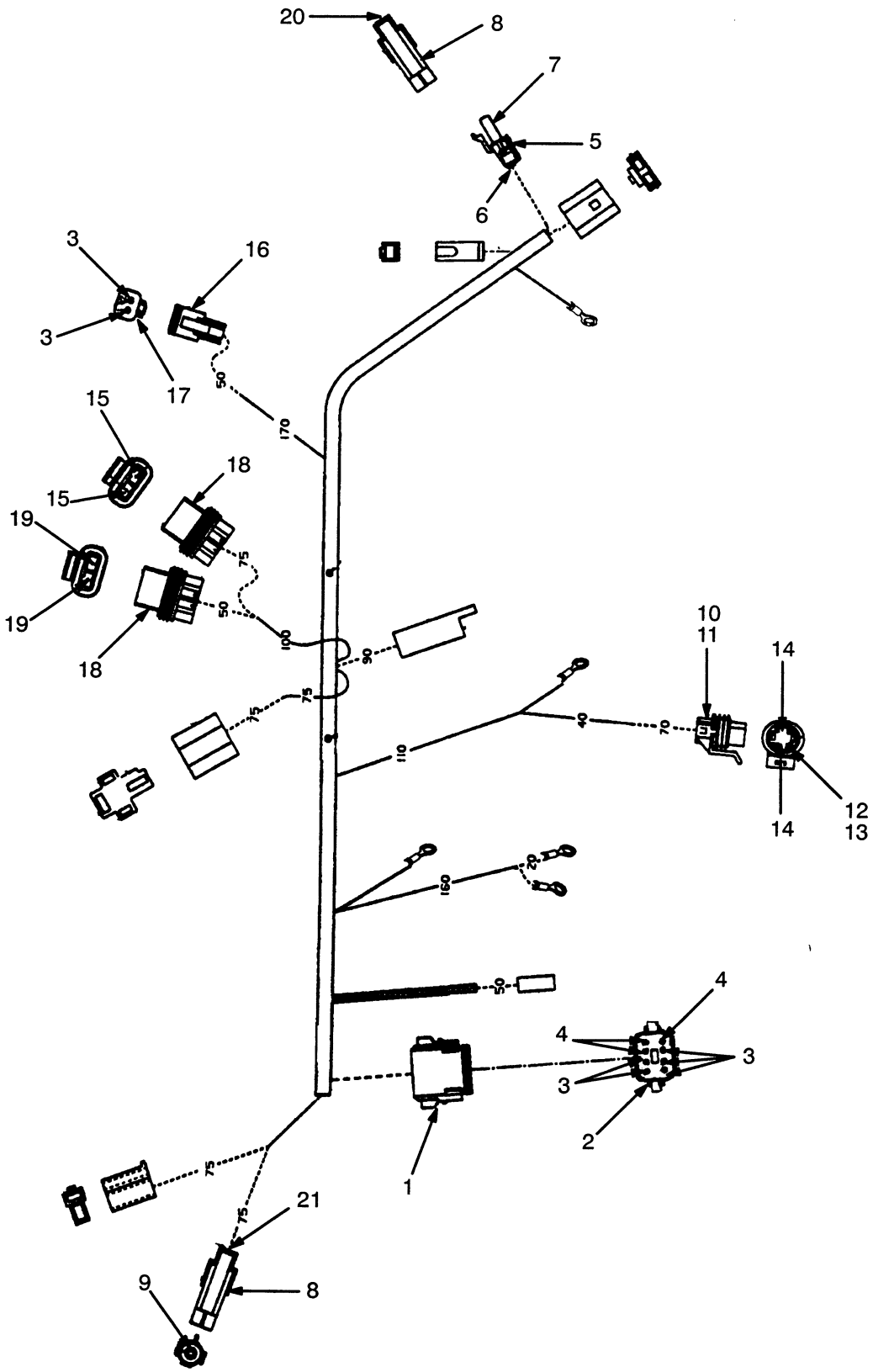

ENGINE HARNESS

LPG 3.0L WITHOUT MSTS

FIRST USED ON S/N D177B-39472

REF	PART NO.	NAME OF PART	QTY
	1383401	Harness (LPG Engine)	1
1	1330423	Connector	1
2	1330429	Lock	1
3	1330438	Socket	7
4	1330439	Plug	3
5	1330299	Connector	1
6	1323579	Seal	1
7	1336173	Socket	1
8	1330298	Connector	2
9	1334999	Pin	1
10	1347210	Connector	1
11	1330357	Lock	1
12	1330355	Terminal	1
13	1330356	Seal	1
14	1323581	Plug	2
15	1330283	Terminal	2
16	1330419	Connector	1
17	1330424	Lock	1
18	1330292	Connector	2
19	1336171	Terminal	2
20	1327164	Plug	1
21	1329147	Seal	1

©2000 HYSTER COMPANY

ENGINE HARNESS (Figure 132)

LPG 3.0L WITH MSTS

FIRST USED ON S/N D177B-39472

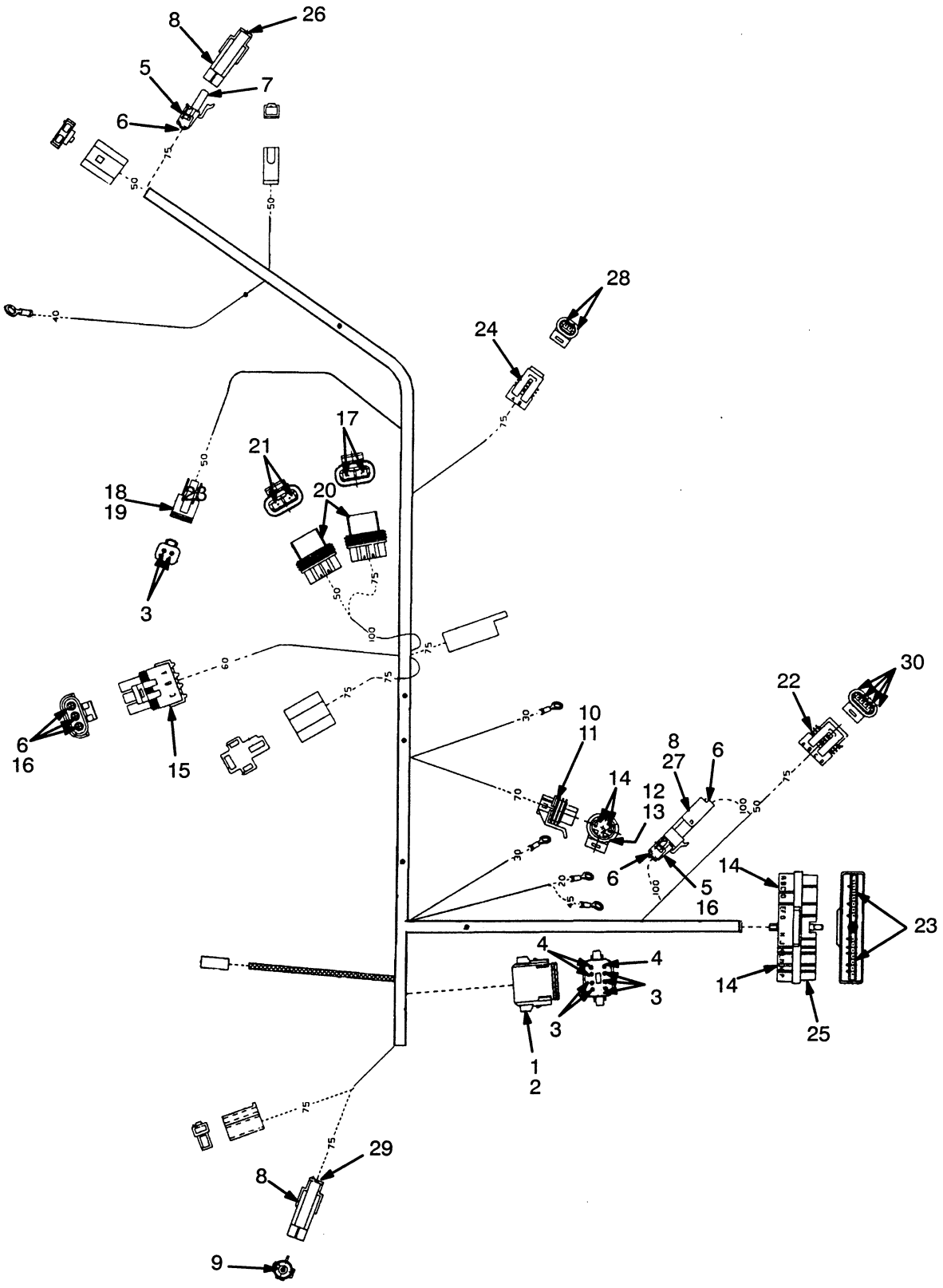

ENGINE HARNESS

LPG 3.0L WITH MSTS

FIRST USED ON S/N D177B-39472

REF	PART NO.	NAME OF PART	QTY
	1383421	Harness (LPG Engine) (With MSTS)	1
1	1330423	Connector	1
2	1330429	Lock	1
3	1330438	Socket	7
4	1330439	Plug	3
5	1330299	Connector	2
6	1323579	Seal	6
7	1336173	Socket	1
8	1330298	Connector	3
9	1334999	Pin	1
10	1347210	Connector	1
11	1330357	Lock	1
12	1330355	Terminal	1
13	1330356	Seal	1
14	1323581	Plug	6
15	1327958	Connector	1
16	1323578	Pin	4
17	1330283	Terminal	2
18	1330419	Connector	1
19	1330424	Lock	1
20	1330292	Connector	2
21	1336171	Terminal	2
22	1323575	Connector	1
23	1323576	Terminal	10
24	1323586	Connector	1
25	1323580	Connector	1
26	1327164	Plug	1
27	1323583	Socket	1
28	1354237	Terminal	2
29	1329147	Seal	1
30	1352142	Terminal	4
30	1354237	Terminal (Optional)	4

©2000 HYSTER COMPANY

HARNESS AND SWITCH (Figure 133)
DUAL FUEL 3.0L

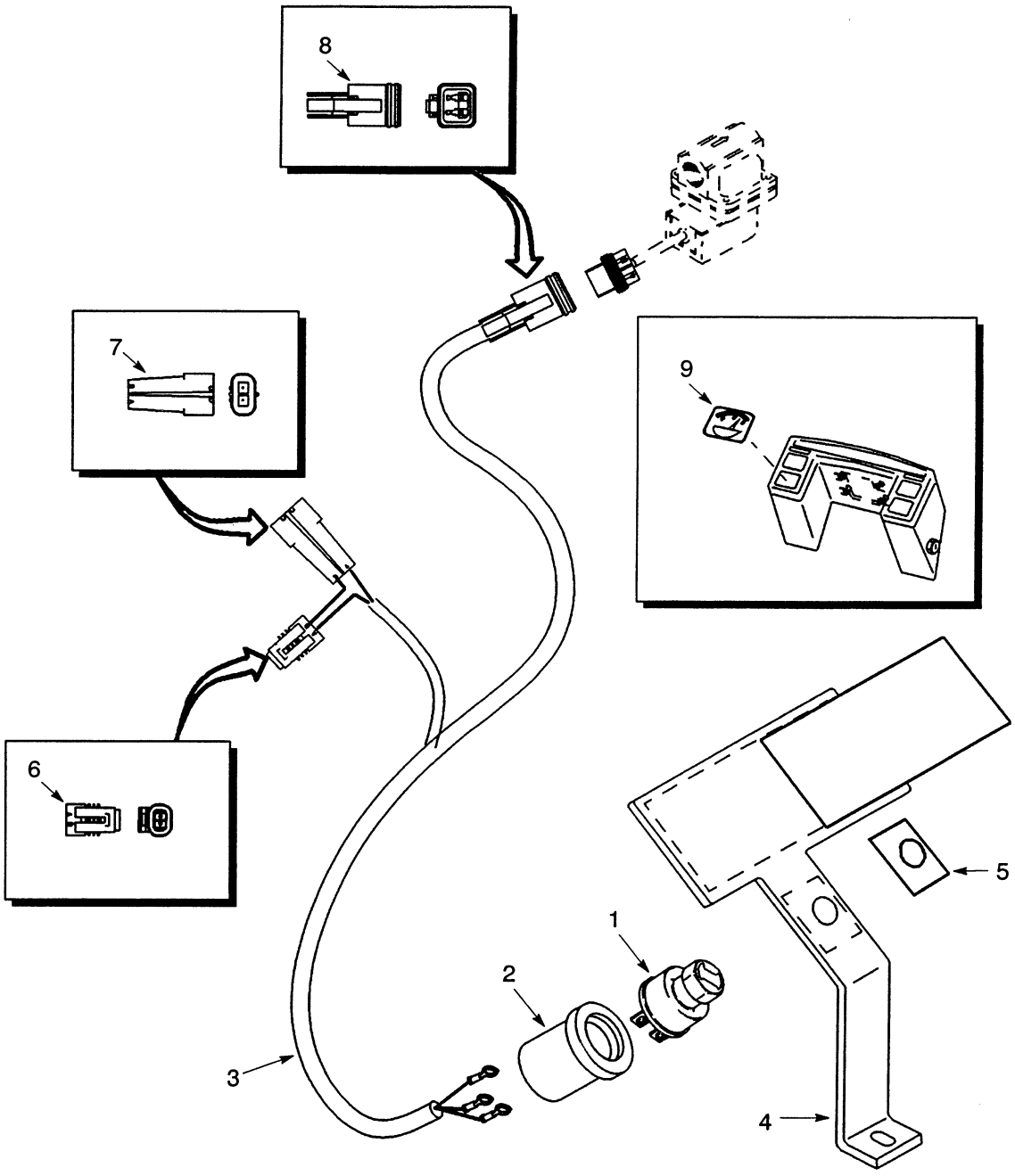

REF	PART NO.	NAME OF PART	QTY
1	1369470	Switch	1
2	864764	Boot	1
3	865216	Harness	1
4	1378515	Bracket	1
5	864763	Nameplate	1
6	1336870	Connector	1
7	1330292	Connector	1
8	1330419	Connector	1
9	864740	Decal	1

©2000 HYSTER COMPANY

NOTES

©2000 HYSTER COMPANY

ENGINE HARNESS-LPS (Figure 134)

LPG 2.2L

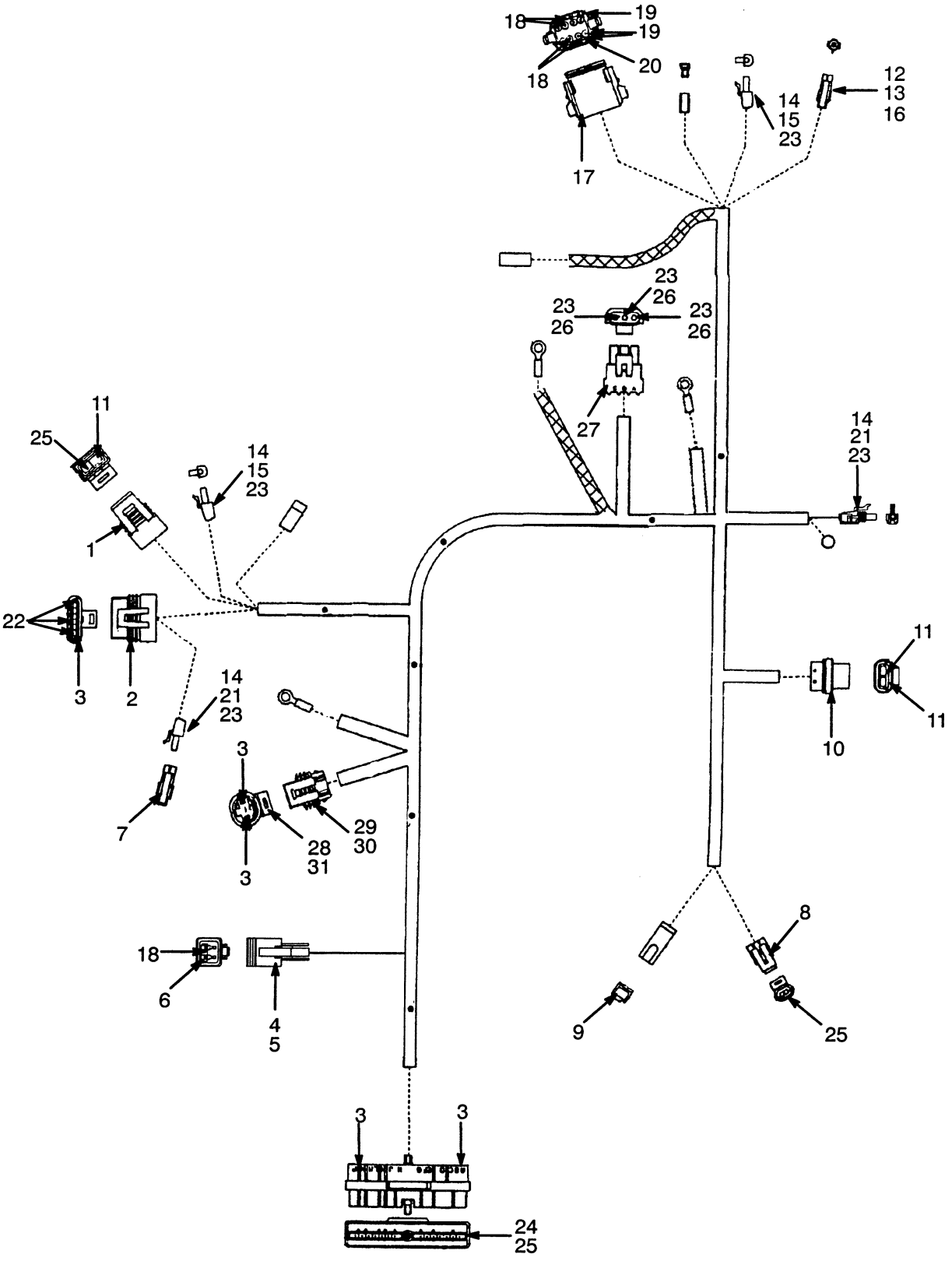

ENGINE HARNESS-LPS

LPG 2.2L

REF	PART NO.	NAME OF PART	QTY
	1368930	Wire Harness	1
1	1347205	Connector (Distributor)	1
2	1347204	Connector (Distributor)	1
3	1323581	Plug	7
4	1330419	Connector (Alternator)	1
5	1330424	Lock	1
6	1363886	Socket	2
7	1327164	Plug	1
8	1323586	Connector (ECM Temperature Sender)	1
9	370730	Fitting	1
10	1330292	Plug	1
11	1330283	Terminal	3
12	1330298	Fitting	2
13	1334999	Pin	1
14	1330299	Fitting	4
15	1336173	Socket	3
16	1329147	Seal	1
17	1330423	Connector (Cluster Harness)	1
18	1330438	Socket	5
19	1330439	Plug	3
20	1330429	Lock	1
21	1323583	Socket	1
22	1330296	Fitting	5
23	1323579	Seal	7
24	1323580	Plug	1
25	1323576	Fitting	13
26	1323578	Fitting	3
27	1327958	Fitting	1
28	1330355	Terminal	1
29	1347210	Connector (Oil Pressure Light)	1
30	1330357	Lock	1
31	1330356	Seal	1

©2000 HYSTER COMPANY

HARNESS (Figure 135)

LPG FIELD CONVERSION 2.2L

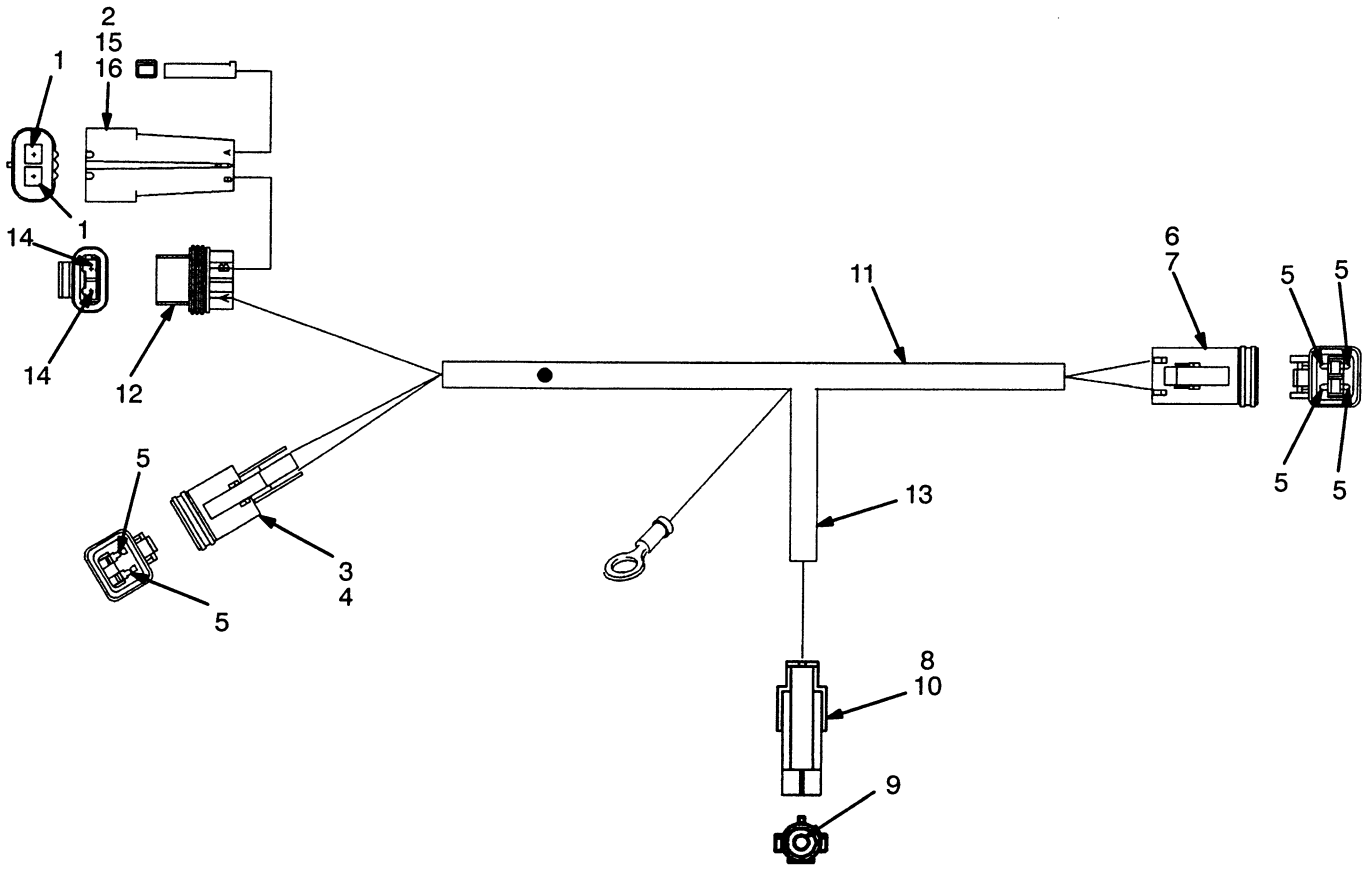

REF	PART NO.	NAME OF PART	QTY
	1374623	Wire Harness	1
1	1337392	Terminal	2
2	1336874	Seal	1
3	1330419	Connector (Governor Solenoid Valve)	1
4	1330424	Lock	1
5	1330438	Terminal (Socket)	6
6	1330421	Connector (RPM Limiter)	1
7	1330427	Lock	1

REF	PART NO.	NAME OF PART	QTY
8	1330298	Connector (Tachometer)	1
9	1323578	Terminal	1
10	1323579	Seal	1
11	381919	Conduit	AR
12	1330292	Connector (Fuse)	1
13	30492	Conduit (175 mm)	1
14	1330283	Terminal	2
15	1336870	Connector	1
16	1336871	Lock	1

©2000 HYSTER COMPANY

NOTES

ELECTRICAL (Figure 136)

LPG FIELD CONVERSION 2.2L

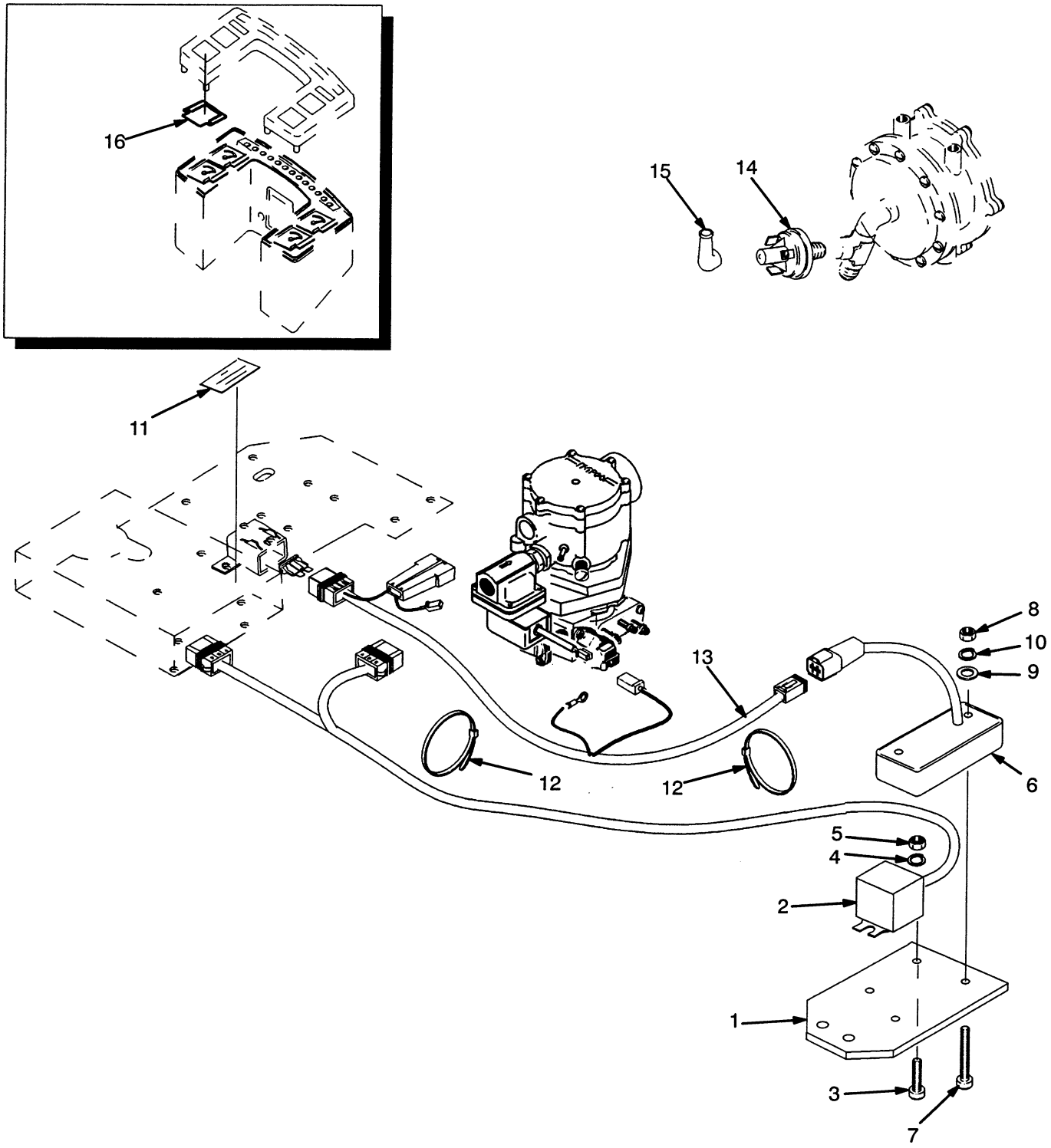

ELECTRICAL

LPG FIELD CONVERSION 2.2L

REF	PART NO.	NAME OF PART	QTY
1	864829	Bracket	1
2	1374622	Timing Optimizer	1
3	220289	Screw	2
4	15151	Lockwasher	2
5	15049	Nut	2
6	1354125	Rev Limiter Assembly	1
7	220314	Screw	2
8	15039	Nut	2
9	197066	Washer	2
10	15163	Lockwasher	2
11	864824	Label (Lockoff Solenoid Fuse)	1
12	137852	Strap Clamp	2
13	.....	Harness (LPG Conversion) ☞ Figure 135	1
14	1351133	Low Pressure Switch	1
15	190383	Boot	1
16	1365888	Cover	1

©2000 HYSTER COMPANY

ELECTRICAL (Figure 137)
TYPES GS, LPS, AND DS

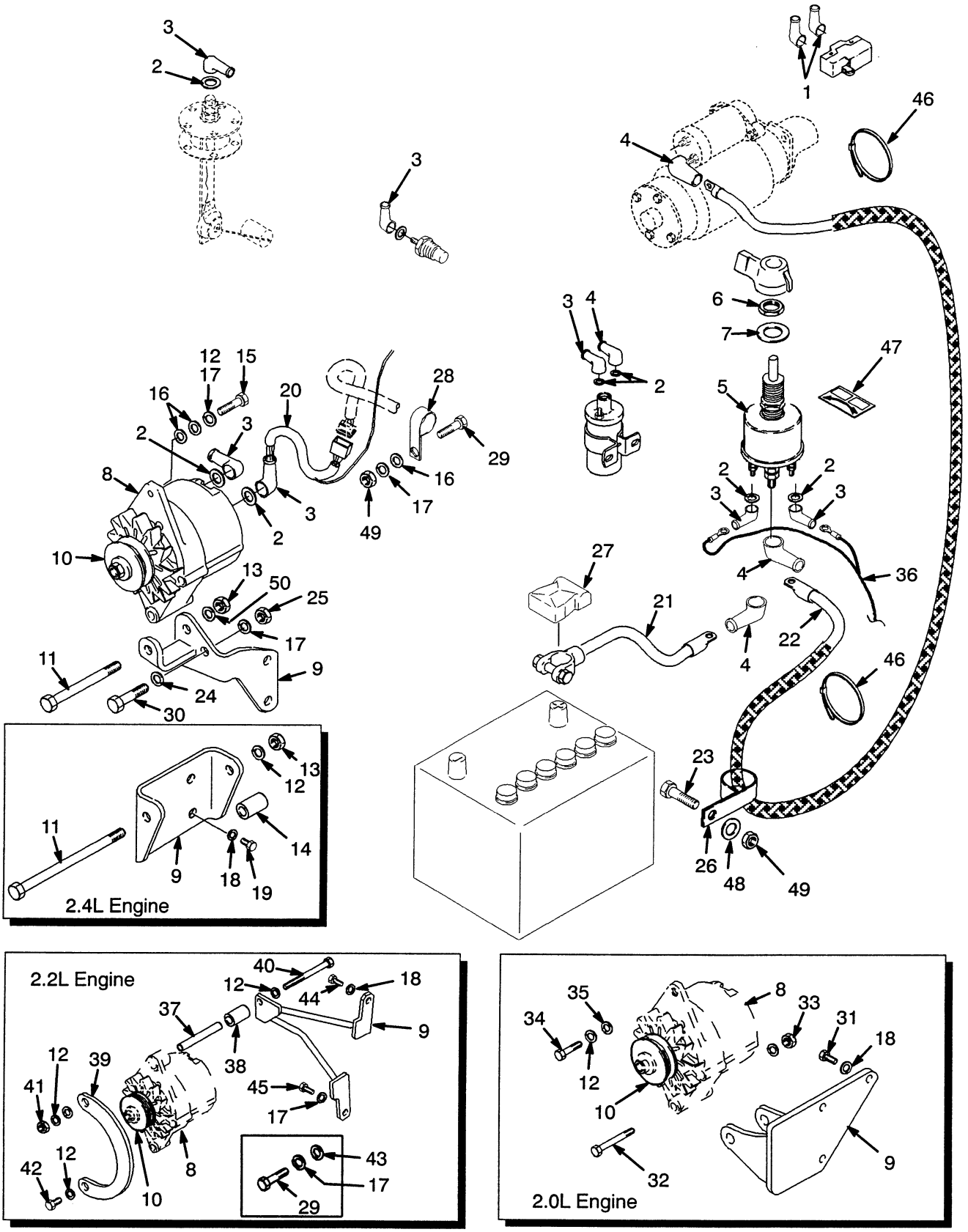

ELECTRICAL

TYPES GS, LPS, AND DS

KEY:
A: Diesel 2.4L
B: Diesel 2.8L & 3.1L
C: Gasoline & LPG 2.0L
D: Gasoline & LPG 2.2L

REF		PART NO.	NAME OF PART	QTY A	B	C	D
1		387869	Boot	2	2	2	2
2		18500	Washer	3	3	5	2
3		190383	Boot	5	5	7	6
4		204223	Boot	3	3	4	4
5		1324517	Disconnect Switch	1	1	1	1
6		1352191	Nut	2	2	2	2
7		15136	Washer	1	1	1	1
8		.....	Alternator	1	1	1	1
			☞ Figure 147				
9		1352569	Alternator Bracket	1	..	..	..
9	c	1352571	Alternator Bracket	..	1	..	..
9	d	1383563	Alternator Bracket	..	1	..	..
9		1352189	Alternator Bracket	..	..	1	..
9		1352184	Alternator Bracket	..	..	..	1
10	e	353291	Pulley	1	..	1	..
10	g	1452145	Pulley	..	..	1	..
10	a	353291	Pulley	..	1	..	..
10	b	1373821	Pulley	..	1	..	..
10		1352188	Pulley	..	..	..	1
11		218585	Capscrew	1	..	..	..
11	c	221482	Capscrew	..	1	..	..
11	d	221487	Capscrew	..	1	..	..
12		15155	Washer	1	1	1	3
13	c	221705	Nut	1	1	..	..
13	d	145639	Nut	..	1	..	..
14		1352568	Spacer	1	..	..	..
15		221455	Capscrew	1	1	..	..
16		320157	Washer	1	..	..	..
16		198956	Washer	..	3	..	..

REF		PART NO.	NAME OF PART	QTY A	B	C	D
17		292681	Washer	1	2	..	3
18		292682	Washer	2	..	3	1
19		287503	Capscrew	2	..	..	..
20		1354227	Alternator Harness	1	..	..	..
20		1354228	Alternator Harness	..	1	..	..
20		2034902	Alternator Harness	..	..	1	1
21		1368061	Battery Cable	1	1	..	..
21		1368061	Battery Cable	..	..	1	1
22		121335	Battery Cable	1	1	..	..
22		1354209	Battery Cable	..	..	1	..
22		86377	Battery Cable	..	..	..	1
23		287851	Capscrew	1	..	..	1
24	c	320158	Washer	..	1	..	..
25	c	239503	Nut	..	1	..	..
25	d	239503	Nut	..	1	..	..
26		1310611	Clamp	1	1	..	..
26		1301721	Clamp	..	..	..	1
27		321158	Boot	1	1	1	1
28		1360146	Clamp	..	1	..	..
29		136749	Capscrew	..	1	..	1
30	c	292508	Capscrew	..	1	..	..
30	d	176640	Capscrew	..	1	..	..
31		287503	Capscrew	..	..	3	..
32		18518	Capscrew	..	..	1	..
33		145639	Nut	..	..	1	..
34		18497	Capscrew	..	..	1	..
35		18515	Washer	..	..	AR	..
36		1354229	Harness Disconnect Switch	..	..	..	1
37		1354248	Sleeve	..	..	..	1

CONTINUED ON NEXT PAGE

©2000 HYSTER COMPANY

ELECTRICAL

TYPES GS, LPS, AND DS

REF	PART NO.	NAME OF PART	QTY A	B	C	D
38	1352187	Spacer	..	..	..	1
39	1352185	Strap Bracket	..	..	..	1
40	18530	Capscrew	..	..	..	1
41	221705	Nut	..	..	..	1
42	18496	Capscrew	..	..	..	1
43	313828	Nut	..	..	..	1
44	292515	Capscrew	..	..	..	1
45	132861	Capscrew	..	..	..	1
46	273775	Strap Clamp	AR	AR	AR	AR
47	1352190	Label Battery Disconnect	1	1	1	1
48	320158	Washer	1	1	..	1
49	239503	Nut	1	1	..	1
50 d	198956	Washer	..	1	..	..

a 2.8L
b 3.1L
c Last Used On S/N D177B-32751
d First Used On S/N D177B-32752
e Last Used On S/N D177B-42119
g First Used On S/N D177B-42120

©2000 HYSTER COMPANY

NOTES

©2000 HYSTER COMPANY

ELECTRICAL (Figure 138)

TYPES GS AND LPS 3.0L

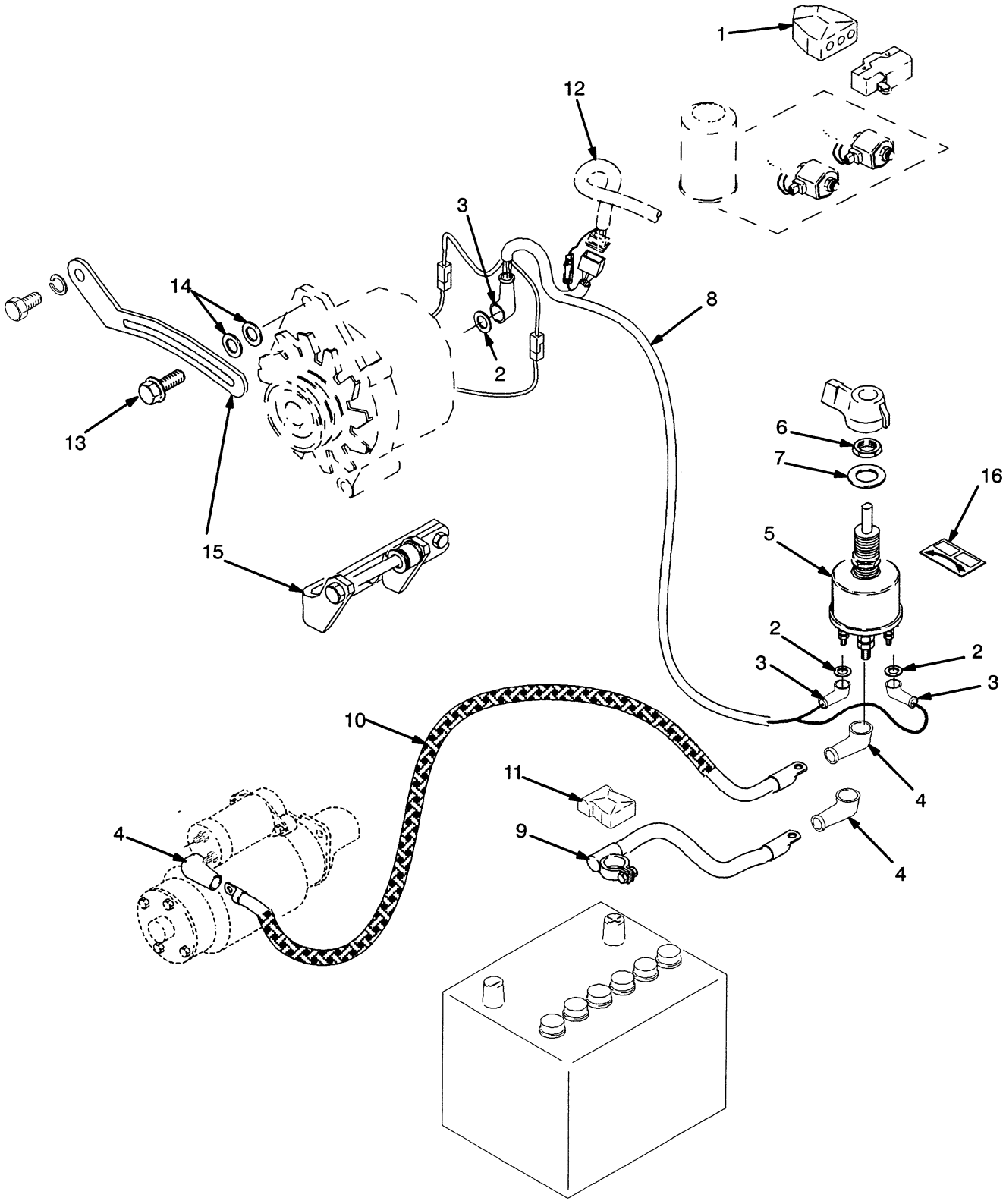

©2000 HYSTER COMPANY

ELECTRICAL

TYPES GS AND LPS 3.0L

REF	PART NO.	NAME OF PART	QTY
1	190380	Boot	1
2	18500	Washer	3
3	190383	Boot	3
4	204223	Boot	3
5	1324517	Disconnect Switch	1
6	1352191	Nut	2
7	15136	Washer	1
8	1377867	Harness (Alternator)	1
9	1368061	Battery Cable	1
10	1376654	Battery Cable	1
11	257241	Boot	1
12	.....	Engine Harness ☞ Figure 126, Figure 129	1
13	170554	Screw	1
14	18515	Washer	2
15	.....	Mount (Alternator) ☞ Figure 143	1
16	1352190	Label (Battery Disconnect)	1

a Last Used On S/N D177B-42119
b First Used On S/N D177B-42120

©2000 HYSTER COMPANY

DISTRIBUTOR (Figure 139)

GASOLINE AND LPG 2.0L

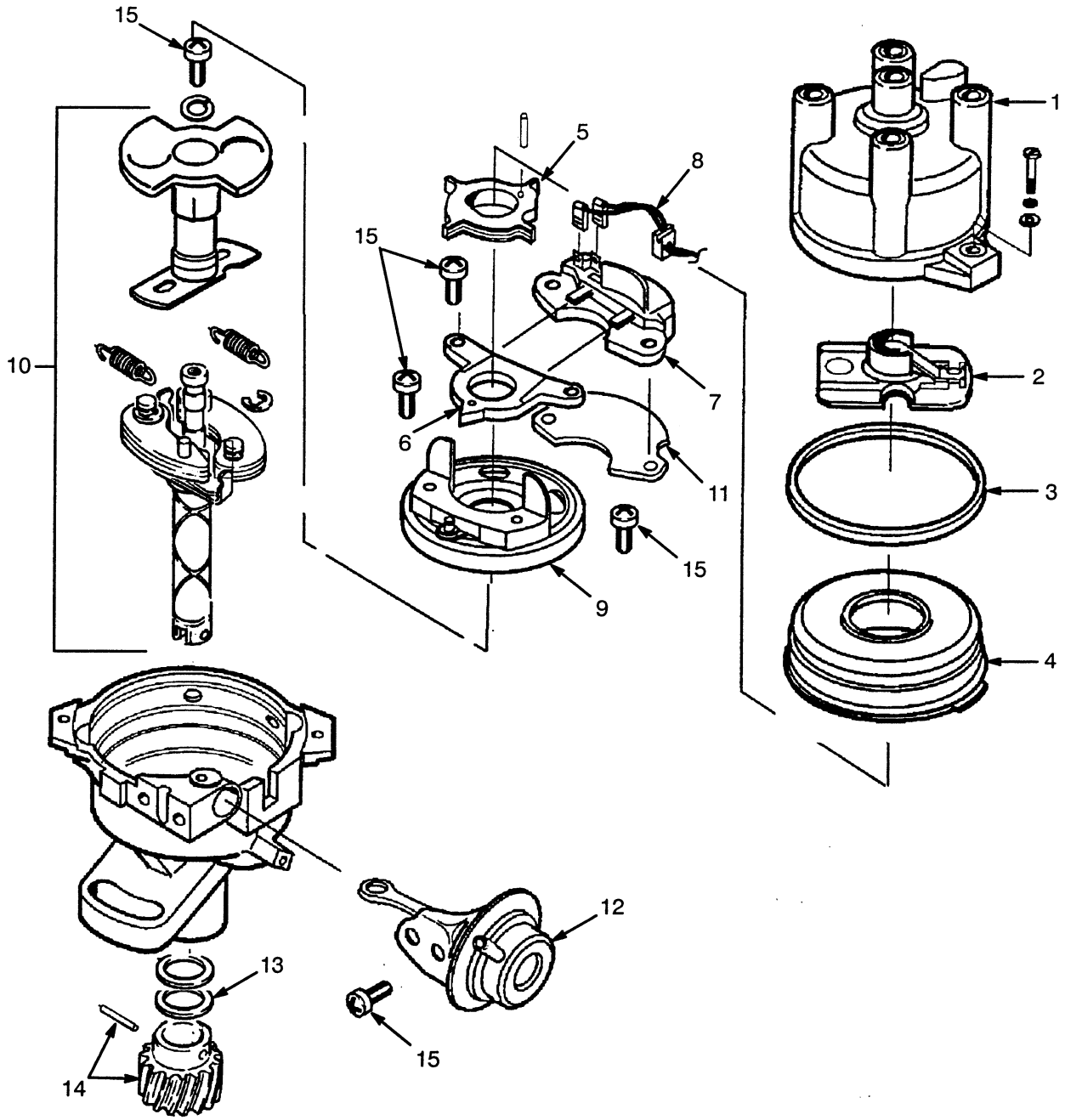

REF	PART NO.	NAME OF PART	QTY
	1453562	Distributor	1
1	1326394	Cap	1
2	1326395	Rotor	1
3	1326396	Packing	1
4	1326397	Cover	1
5	1326398	Signal Rotor	1
6	1326399	Pick-Up Set	1
7	1326536	Igniter Set	1
8	1362037	Lead Wire	1
9	1326537	Breaker	1
10	1362036	Governor Set	1
11	1326538	Heatsink	1
12	1362038	Vacuum Set	1
13	1362039	Oil Seal	1
14	1362042	Coupling	1
15	1362040	Screw Set	1

©2000 HYSTER COMPANY

See Service Manual for service procedures

DISTRIBUTOR (Figure 140)

GASOLINE AND LPG 3.0L

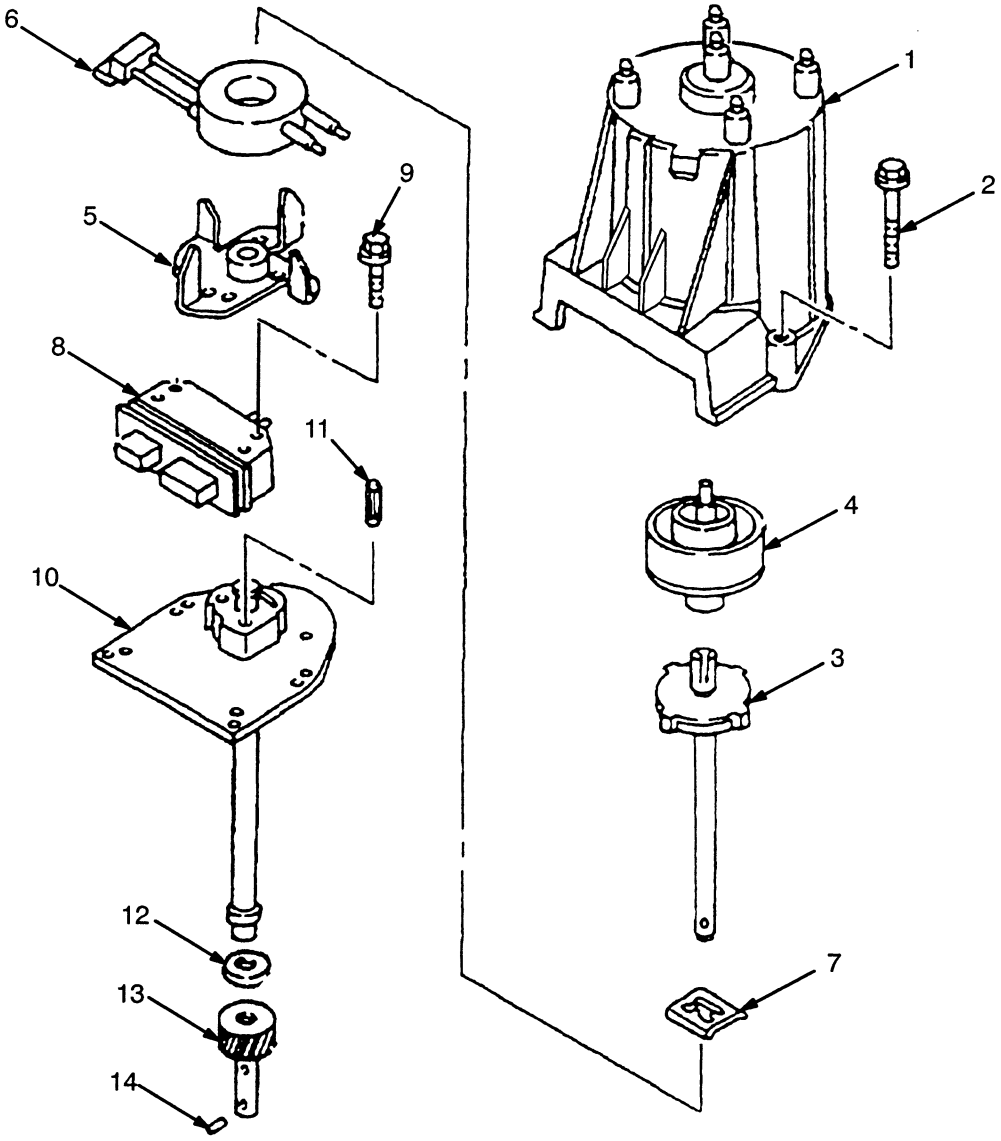

REF		PART NO.	NAME OF PART	QTY
		1331330	Distributor	1
1	a	1334400	Cap	1
2		1334401	Screw	2
3		1334402	Shaft	1
4	a	1334403	Rotor	1
5		1334404	Pole Piece	1
6		1334405	Coil	1
7		1334406	Retainer	1
8		1334407	Module	1
9		1334408	Screw	2
10		1334409	Housing	1
11		1334410	Pin	1
12		1334411	Seal	1
13		1334412	Gear	1
14		1334413	Pin	1

a Included In Minor Tune-Up Kit 996336

ALTERNATOR (Figure 141)

GASOLINE AND LPG 2.0L

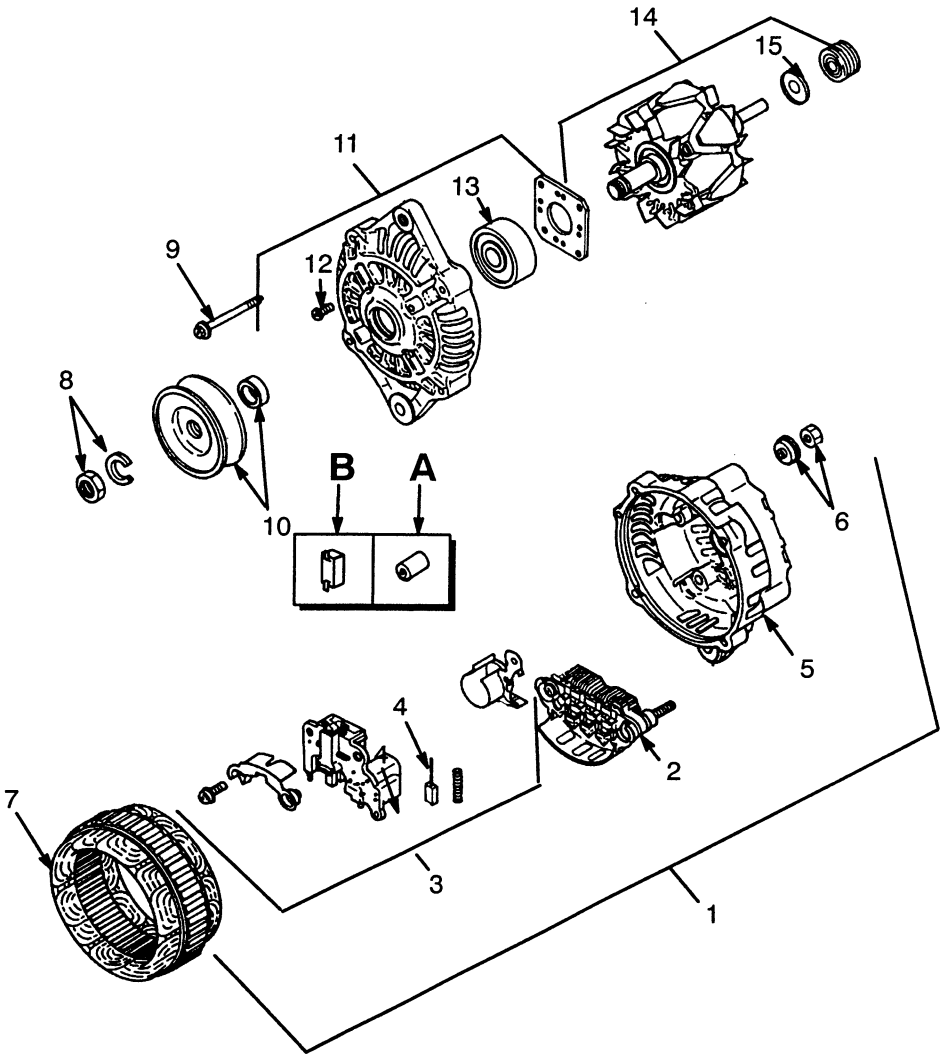

KEY:
A: Canister Condensor
B: Resin Condensor

REF	PART NO.	NAME OF PART	QTY A	QTY B
	1361853	Alternator	1	..
	1450928	Alternator	..	1
1	1361851	Rear Cover	1	..
1	1450929	Rear Cover	..	1
2	1361856	Rectifier	1	..
2	1450930	Rectifier	..	1
3	1361858	Regulator	1	..
3	1450931	Regulator	..	1
4	1361859	Brush	2	2
5	1361852	Cover	1	1
6	1361862	Nut Kit	1	1
7	1361854	Stator	1	1
8	1361863	Nut Kit	1	1
9	1361864	Screw Kit	1	1
10	1361861	Pulley	1	1
11	1361850	Front Cover	1	1
12	1361860	Screw Kit	1	1
13	1361857	Bearing	1	1
14	1361865	Rotor	1	1
15	1361855	Bearing	1	1

©2000 HYSTER COMPANY

ALTERNATOR (Figure 142)

GASOLINE AND LPG 2.2L

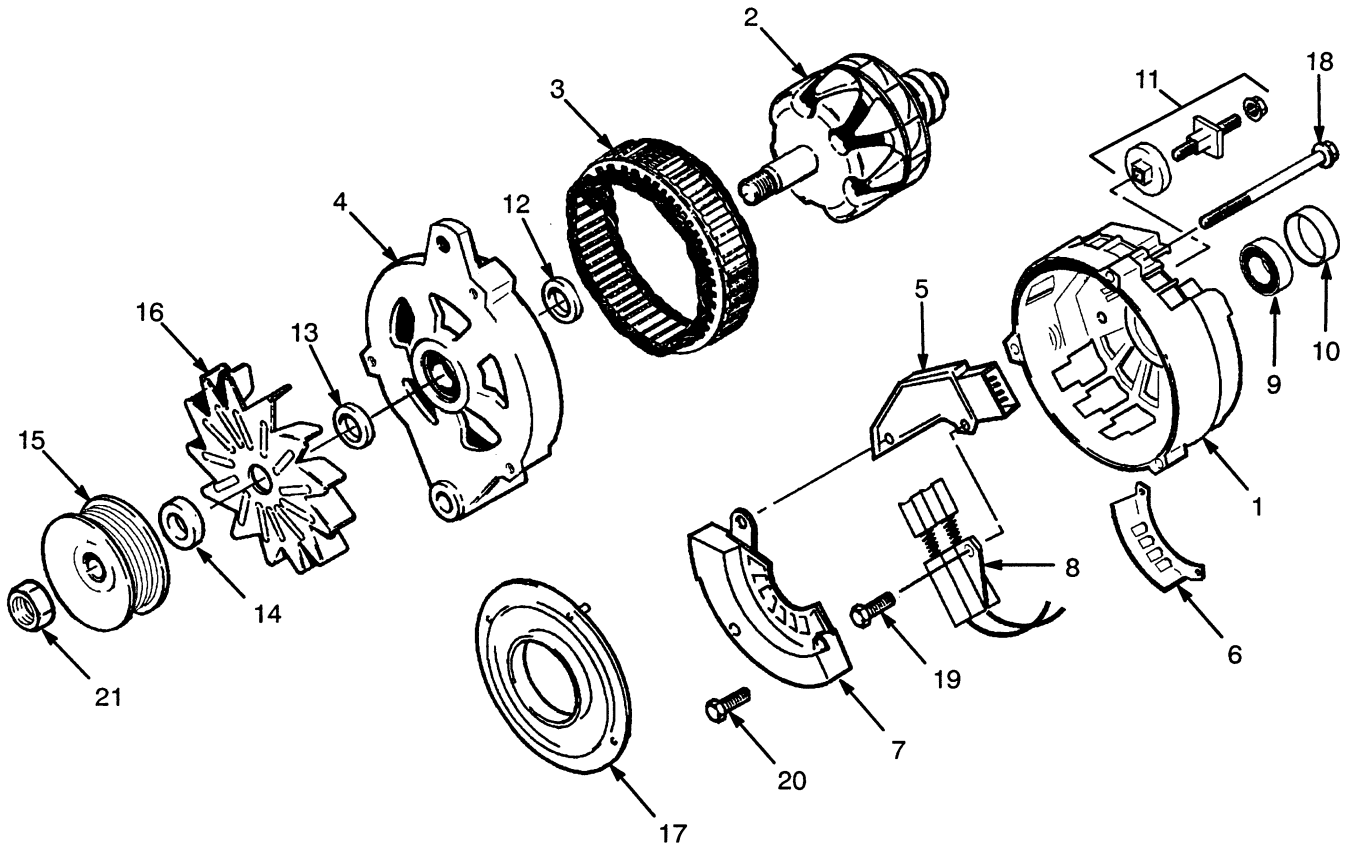

REF	PART NO.	NAME OF PART	QTY
	1339174	Alternator	1
1	1358837	Frame	1
2	1358838	Rotor	1
3	1358839	Stator	1
4	1358840	Frame & Bearing	1
5	1358841	Regulator	1
6	1358842	Cover	1
7	1358843	Rectifier Bridge	1
8	1358844	Brush & Holder	1
9	1358845	Ball Bearing	1
10	1358846	Ring	1
11	1358847	Terminal Set	1
12	1358848	Inside Collar	1
13	1358849	Outside Collar	1
14	1358850	Collar	1
15	1358851	Pulley	1
16	1358852	Fan	1
17	1358853	Baffle	1
18	1358854	Bolt	3
19	1358855	Screw	1
20	1358856	Screw	1
21	55580	Nut	1
21	383789	Adhesive	AR

©2000 HYSTER COMPANY

ALTERNATOR (Figure 143)

GASOLINE AND LPG 3.0L

LAST USED ON S/N D177B41709

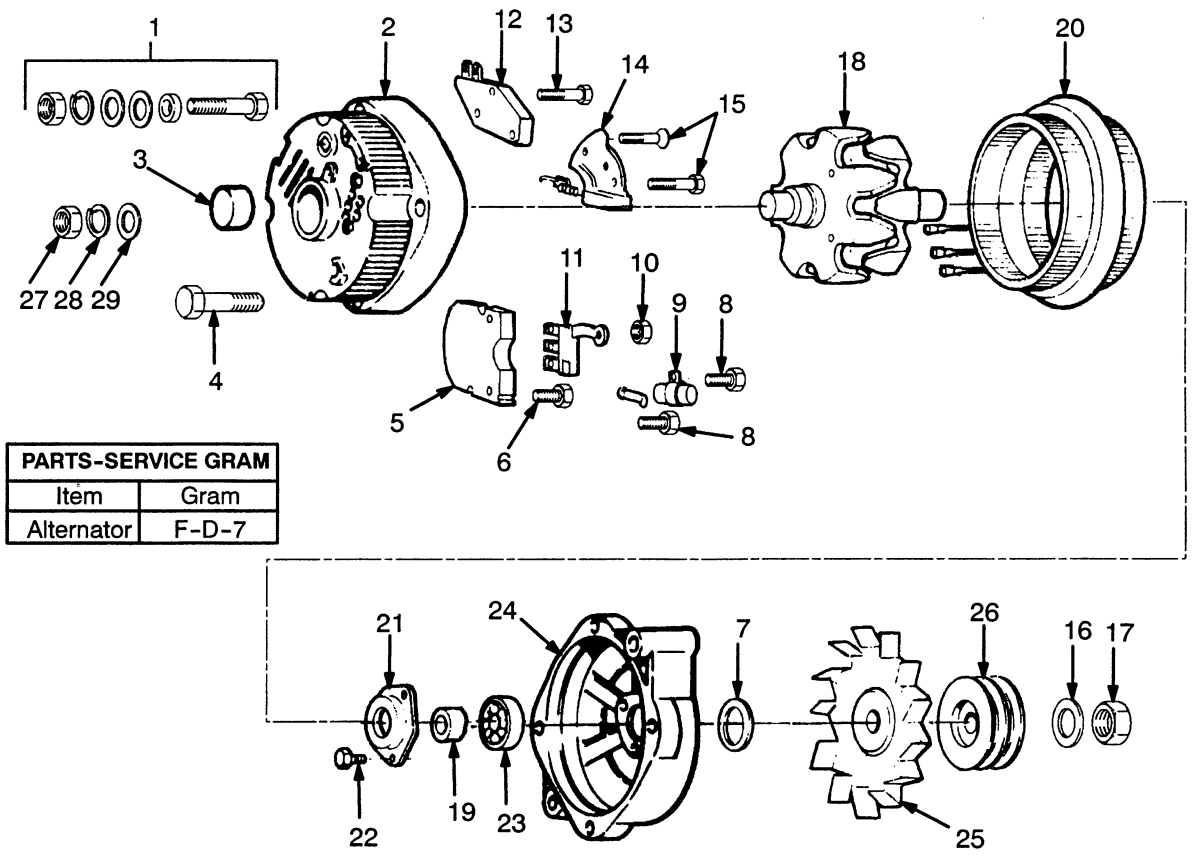

PARTS-SERVICE GRAM	
Item	Gram
Alternator	F-D-7

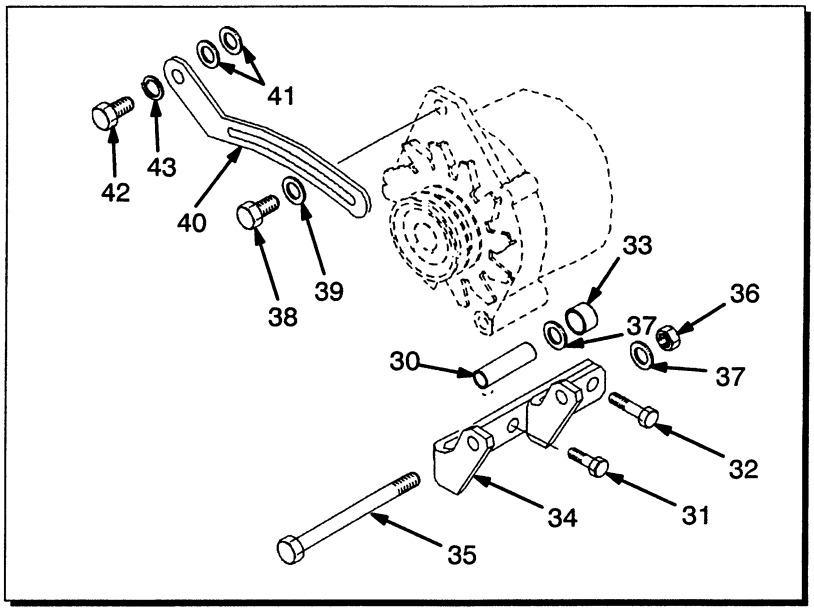

ALTERNATOR

GASOLINE AND LPG 3.0L

LAST USED ON S/N D177B41709

REF	PART NO.	NAME OF PART	QTY
[a]	339599	Alternator	1
1	310081	Battery Terminal Kit	1
2	343038	Frame (CE)	1
3	128838	Bearing	1
4	128852	Bolt	4
5	343031	Rectifier	1
6	343032	Screw & Washer	1
7	322177	Collar	1
8	198410	Screw	2
9	198401	Capacitor	2
10	15039	Nut	3
11	343040	Diode Trio	1
12	290303	Voltage Regulator	1
13	343042	Screw	1
14	343041	Brush Assy	1
14	334970	Brush Spring	2
15	268356	Screw	2
16	128835	Washer	1
17	55580	Nut	1
18	343046	Rotor	1
19	343029	Collar	1
20	343039	Stator	1
21	202003	Retainer	1
22	344234	Screw	3
23	290509	Bearing	1
24	343033	Frame (DE)	1
25	126358	Fan	1
26	208483	Pulley	1
27	136687	Nut	1
28	292680	Lockwasher	1
29	320156	Washer	1
30	305100	Sleeve	1
31	197853	Capscrew	1
32	196898	Capscrew	1
33	189338	Spacer	1
34	179920	Bracket	1
35	18546	Capscrew	1
36	139743	Nut	1
37	261379	Washer	2
38	176640	Screw	1
39	320157	Washer	1
40	1326931	Strap	1
41	18515	Washer	2
42	18498	Capscrew	1
43	15155	Lockwasher	1

[a] Remanufactured Alternator 3012611 R

©2000 HYSTER COMPANY

ALTERNATOR (Figure 144)

GASOLINE AND LPG 3.0L

FIRST USED ON S/N D177B-41710

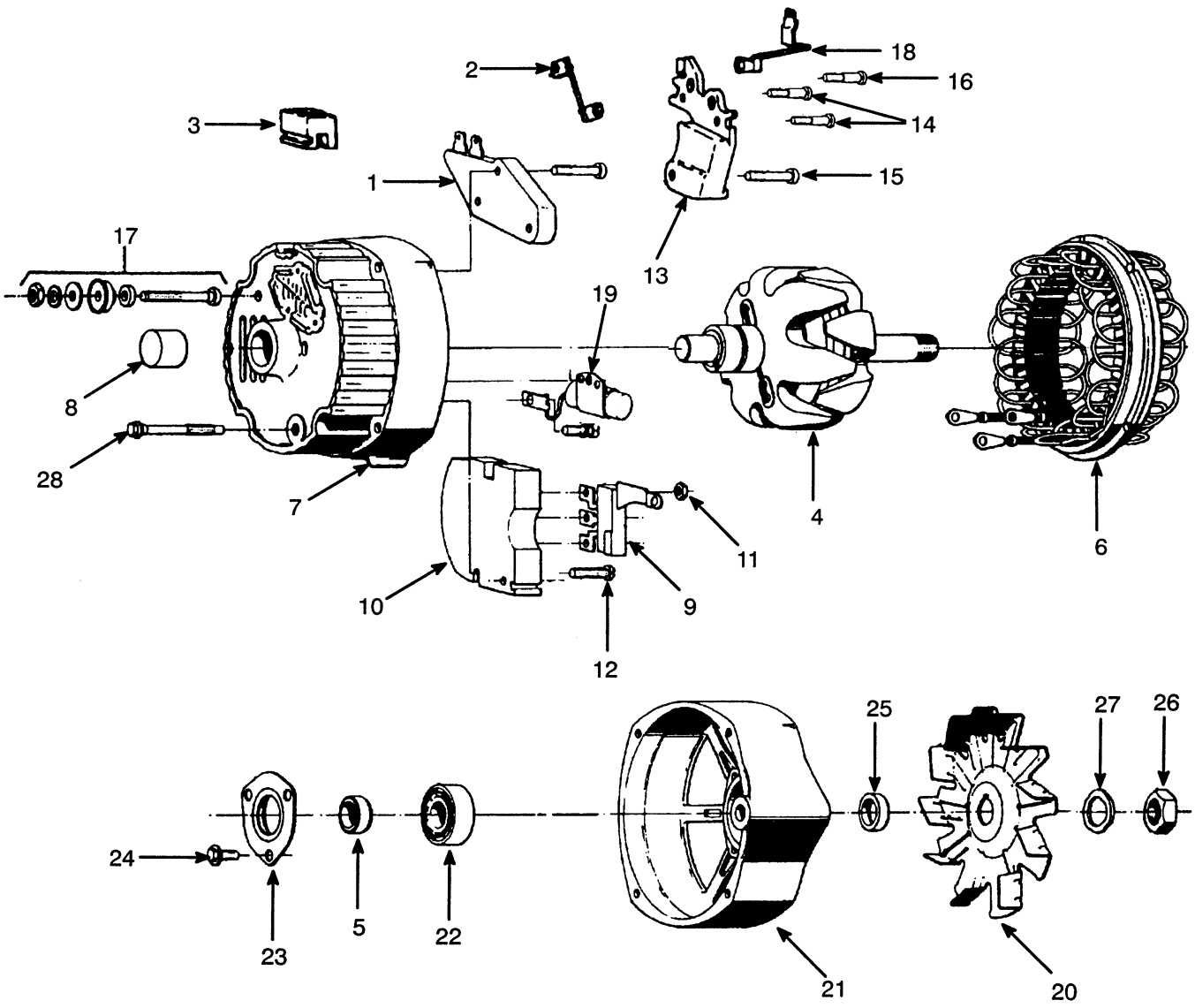

ALTERNATOR

GASOLINE AND LPG 3.0L

FIRST USED ON S/N D177B-41710

REF	PART NO.	NAME OF PART	QTY
	1358911	Alternator	1
1	290303	Regulator	1
2	1377067	Resistor	1
3	274648	Boot	1
4	1377047	Rotor	1
5	343029	Collar (DE)	1
6	1377048	Stator	1
7	310085	Frame (CE)	1
8	290508	Bearing (CE)	1
9	223095	Diode Trio	1
10	343031	Rectifier Bridge	1
11	1344274	Nut	3
12	343032	Screw & Washer	1
13	290300	Brush Holder	1
13	1377050	Brush Spring	2
14	268356	Screw (Brush)	2
15	290369	Screw (Brush Holder)	1
16	290370	Screw (Brush Holder)	1
17	310081	Kit-Terminal	1
18	344233	Terminal Relay	1
19	1377052	Capacitor	1
20	1377051	Fan	1
21	1377049	Frame	1
22	290509	Ball Bearing	1
23	1377053	Plate	1
24	344234	Screw (Retaining Plate)	3
25	310088	Collar (DE)	1
26	55580	Nut	1
27	128835	Lock Washer	1
28	128852	Bolt	4

©2000 HYSTER COMPANY

ALTERNATOR (Figure 145)

DIESEL 2.4L

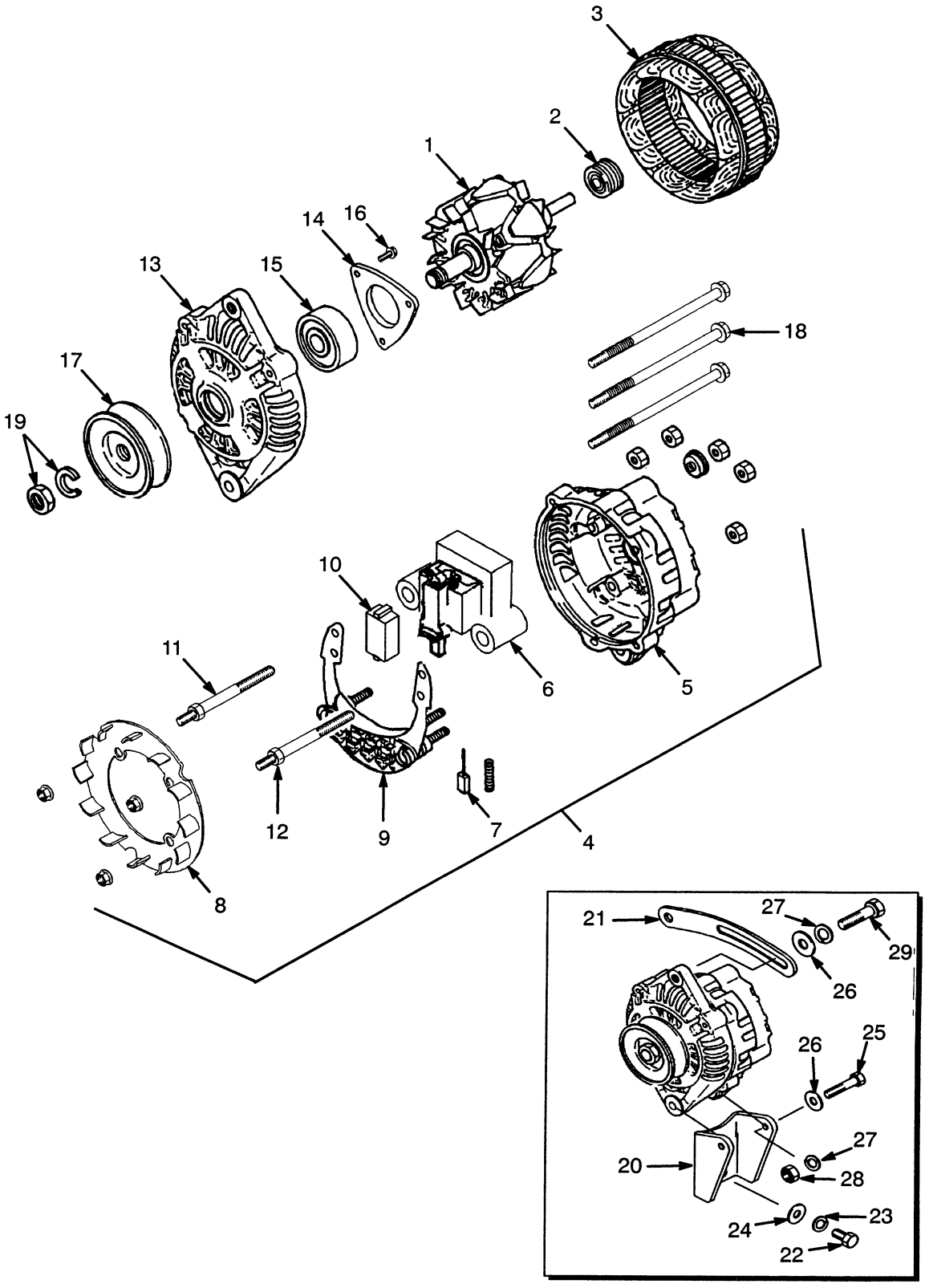

ALTERNATOR

DIESEL 2.4L

REF	PART NO.	NAME OF PART	QTY
1	1361137	Alternator	1
1	1363018	Rotor	1
2	1363019	Ball Bearing	1
3	1363020	Stator	1
4	1363021	Housing Assembly (Rear)	1
5	1363022	Housing (Rear)	1
6	1363023	Regulator	1
7	1363024	Kit-Brush	2
8	1365250	Fan	1
9	1365251	Diode	1
10	1365252	Condenser	1
11	1365253	Bolt	1
12	1365254	Bolt	1
13	1365255	Housing Assembly (Front)	1
14	1365256	Retainer	1
15	1365257	Ball Bearing	1
16	1365258	Kit-Screw	1
17	1365259	Pulley	1
18	1365260	Bolt	3
19	1365261	Nut	1
20	1361138	Bracket	1
21	1361539	Strap	1
22	287503	Hex Head Bolt	2
23	292682	Lockwasher	2
24	320159	Washer	2
25	292508	Hex Head Bolt	2
26	320157	Washer	3
27	292681	Lockwasher	3
28	239503	Nut	2
29	136749	Hex Head Bolt	1

©2000 HYSTER COMPANY

ALTERNATOR (Figure 146)

DIESEL 2.8L AND 3.1L

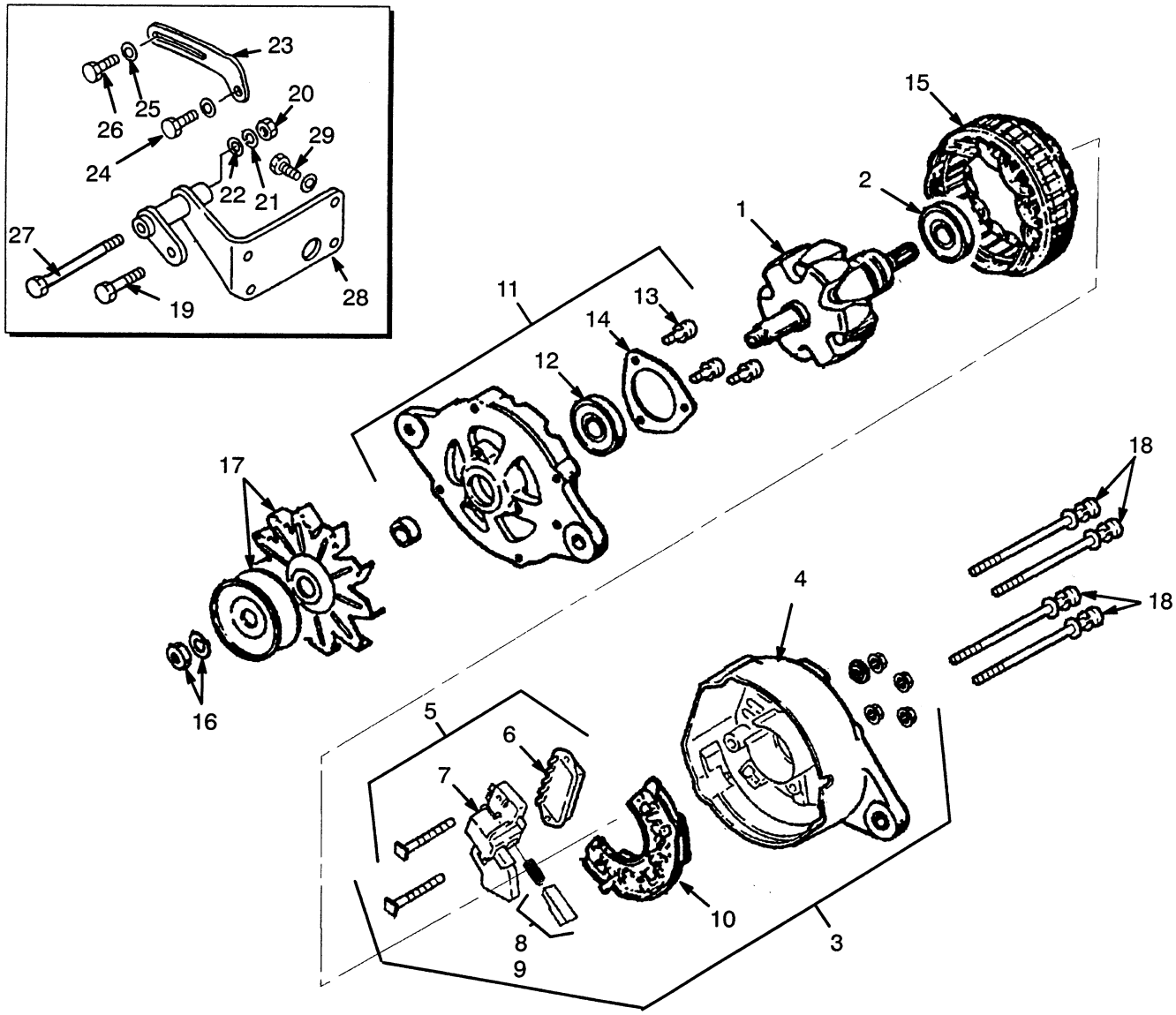

©2000 HYSTER COMPANY

ALTERNATOR

DIESEL 2.8L AND 3.1L

REF	PART NO.	NAME OF PART	QTY
	1360815	Alternator	1
1	1362459	Rotor	1
2	1362460	Ball Bearing	1
3	1362462	Cover (Rear)	1
4	1362463	Cover	2
5	1362464	Regulator	1
6	1362465	Regulator	1
7	1362467	Brush Assembly	1
8	1374972	Packing	1
9	1362468	Brush Set	1
10	1362466	Diode	1
11	1362469	Cover (Front)	1
12	1362471	Ball Bearing	1
13	1374973	Screw Kit	1
14	1362470	Retainer	1
15	1362461	Stator	1
16	1363000	Nut	1
17	1362472	Pulley	1
18	1300892	Bolt	4
19 a	324248	Bolt	1
19 b	1338754	Bolt	1
20	239503	Nut	1
21	292681	Lockwasher	1
22	296418	Washer	1
23	1338473	Adjusting Strap	1
24 a	1338456	Bolt	1
24 b	1338456	Bolt	1
25	324434	Washer	1
26 a	1338456	Bolt	1
26 b	1338754	Bolt	1
27	324248	Bolt	1
28	1361548	Bracket	1
29	1333587	Bolt	4

a 2.8L
b 3.1L

©2000 HYSTER COMPANY

ALTERNATOR (Figure 147)

TYPES GS, LPS, AND DS

LAST USED ON S/N D177B-42119

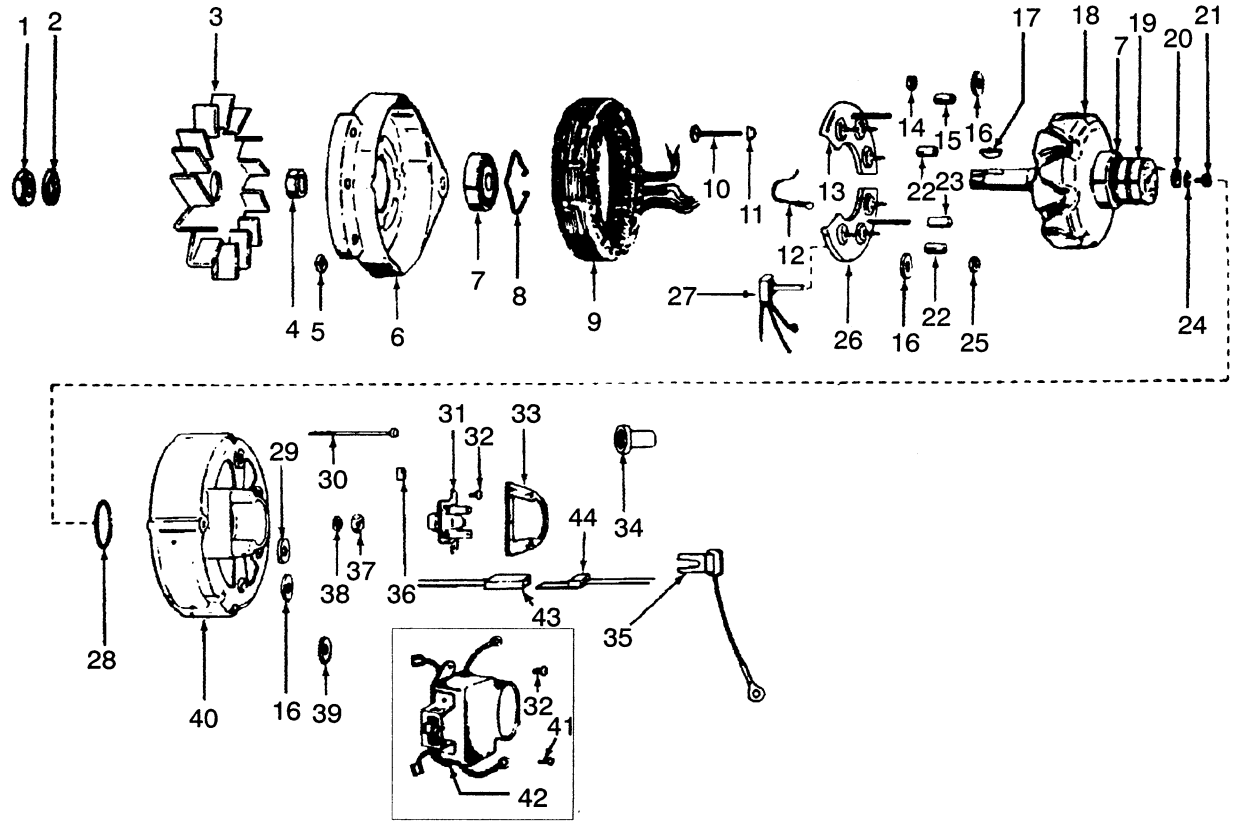

ALTERNATOR

TYPES GS, LPS, AND DS

LAST USED ON S/N D177B-42119

REF	PART NO.	NAME OF PART	QTY
	388501	Alternator	1
1	248147	Nut	1
2	246943	Lockwasher	1
3	248127	Fan	1
4	248135	Fan Spacer	1
5	248148	Square Nut	3
6	....	Housing	1
7	248128	Bearing	2
8	248129	Retainer	1
9	382633	Stator	1
10	255073	Bolt	1
11	226589	Insulator	1
12	382638	Cable	1
13	382635	Diode (-)	1
14	15052	Nut	4
15	382644	Sleeve	1
16	248143	Washer	5
17	246944	Key	1
18	382632	Rotor	1
19	248137	Slip Ring	1
20	....	Washer	3
21	248149	Screw	1
22	248141	Sleeve	1
23	382643	Sleeve	1
24	15152	Lockwasher	3
25	382646	Nut	2
26	382636	Diode (+)	1
27	382639	Diode (Field)	1
28	382634	Retainer	1
29	382642	Washer	2
30	382641	Bolt	4
31	248134	Brush	1
32	387488	Screw	4
33	382637	Gasket	1
34	255073	Bolt	2
35	382647	Capacitor	1
36	248145	Locknut	3
37	248146	Nut	2
38	246942	Lockwasher	2
39	382642	Insulator	1
40	.....	Housing	1
41	18082	Capscrew	2
42	382640	Regulator	1
43	181046	Connector	1
44	134812	Connector	1

©2000 HYSTER COMPANY

ALTERNATOR (Figure 148)

TYPES GS, LPS, AND DS

FIRST USED ON S/N D177B-42120

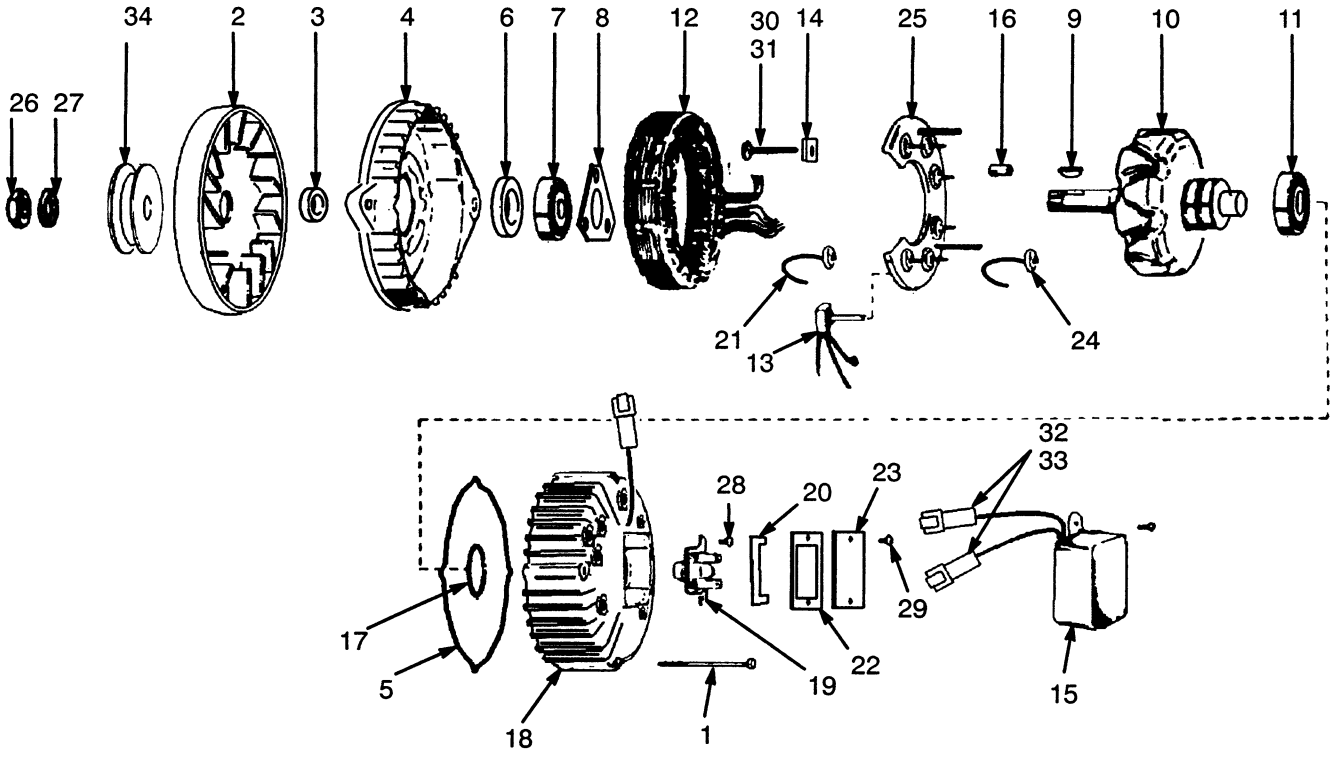

ALTERNATOR

TYPES GS, LPS, AND DS

FIRST USED ON S/N D177B-42120

REF	PART NO.	NAME OF PART	QTY
	1394002	Alternator (Altered)	1
	1394003	Alternator	1
1	1453364	Bolt	4
2	225673	Fan	1
3	1453352	Spacer	1
4	1453351	Front Housing	1
5	226582	Gasket	1
6	1453358	Seal	1
7	248128	Front Bearing	1
8	226576	Retainer	1
9	1453354	Woodruff Key	1
10	1371208	Rotor	1
11	386071	Rear Bearing	1
12	1371209	Stator	1
13	2022532	Diode (Field)	1
14	1371214	Insulation	1
15	1453386	Voltage Regulator	1
16	1371212	Sleeve	1
17	1371211	Retainer	1
18	295802	Rear Housing	1
19	2022534	Brush Assembly	1
20	2022535	Insulation	1
21	226584	Diode (+)	1
22	1453387	Gasket	1
23	2022538	Brush Cover	1
24	226583	Diode (-)	1
25	226578	Heat Sink	1
26	1453375	Nut	1
27	1453385	Lockwasher	1
28	1453377	Screw	2
29	1453379	Screw	2
30	1453362	Bolt (1.38 in)	1
31	1453363	Bolt (1.75 in)	1
32	181045	Connector	1
33	181046	Connector	1
34	.....	Pulley	1
		☞ Figure 137, Figure 138	

STARTER (Figure 149)

GASOLINE AND LPG 2.0L

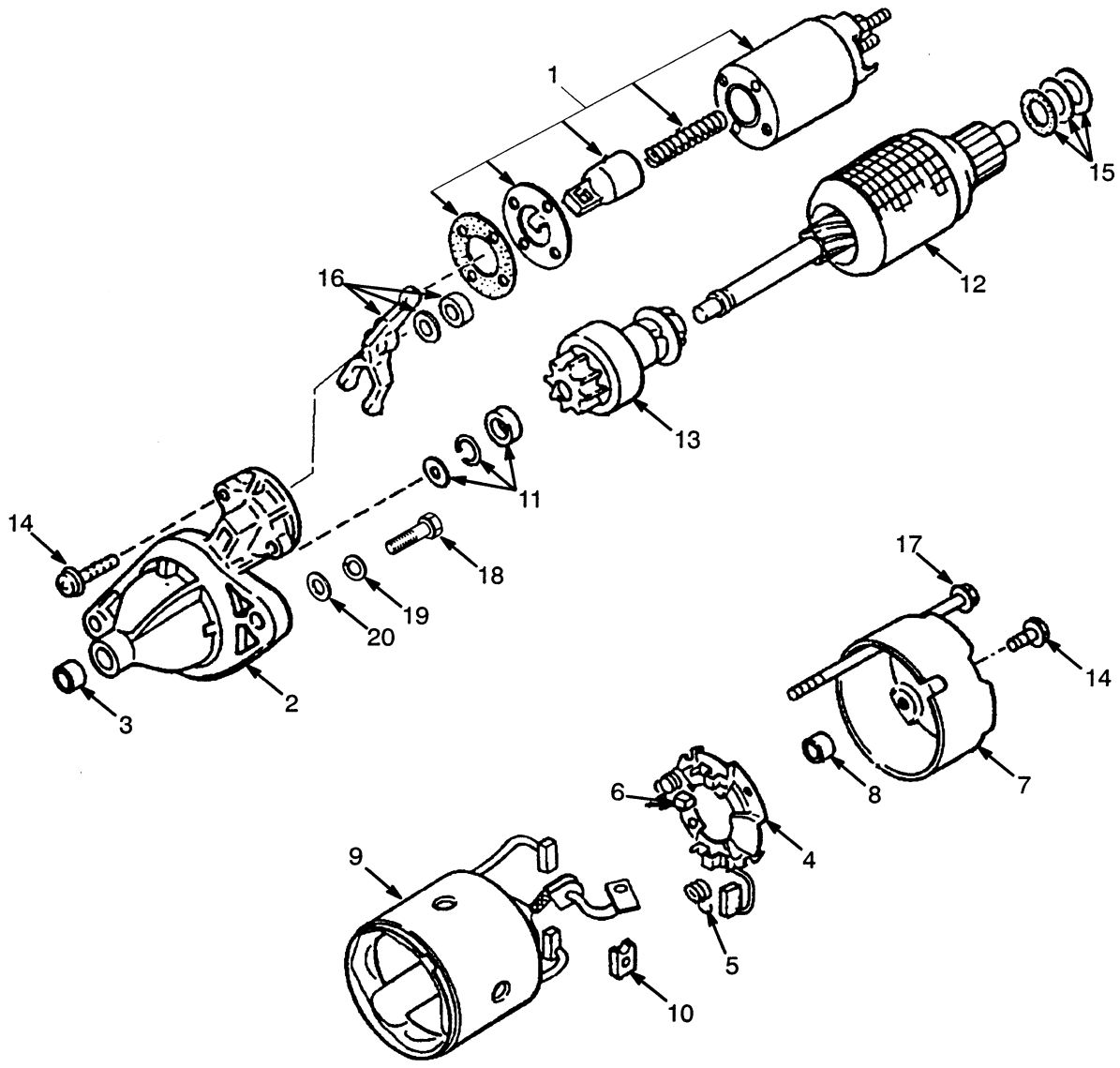

REF	PART NO.	NAME OF PART	QTY
a	1362069	Starter	1
1	1368862	Switch	1
2	1368849	Bracket	1
3	1368858	Sleeve	1
4	1368860	Brush Holder	1
5	326889	Brush Spring	3
6	1368861	Brush	1
7	1368857	Bracket	1
8	1368859	Sleeve	1
9	1368848	Yoke	1
10	1368863	Brush	2
11	1368850	Stopper Set	1

REF	PART NO.	NAME OF PART	QTY
12	1368851	Armature	1
13	1368852	Clutch	1
14	1368853	Screw Kit	1
15	1368854	Washer Kit	1
16	1368855	Lever	1
17	1368856	Bolt	2
18	1356103	Bolt	2
19	292682	Lockwasher	2
20	320159	Washer	2

a Service 1362069 with 2034921

Note: Service 2034921 As A Complete Assembly

©2000 HYSTER COMPANY

See Service Manual for service procedures

STARTER (Figure 150)

DIESEL 2.4L, 2.8L AND 3.1L

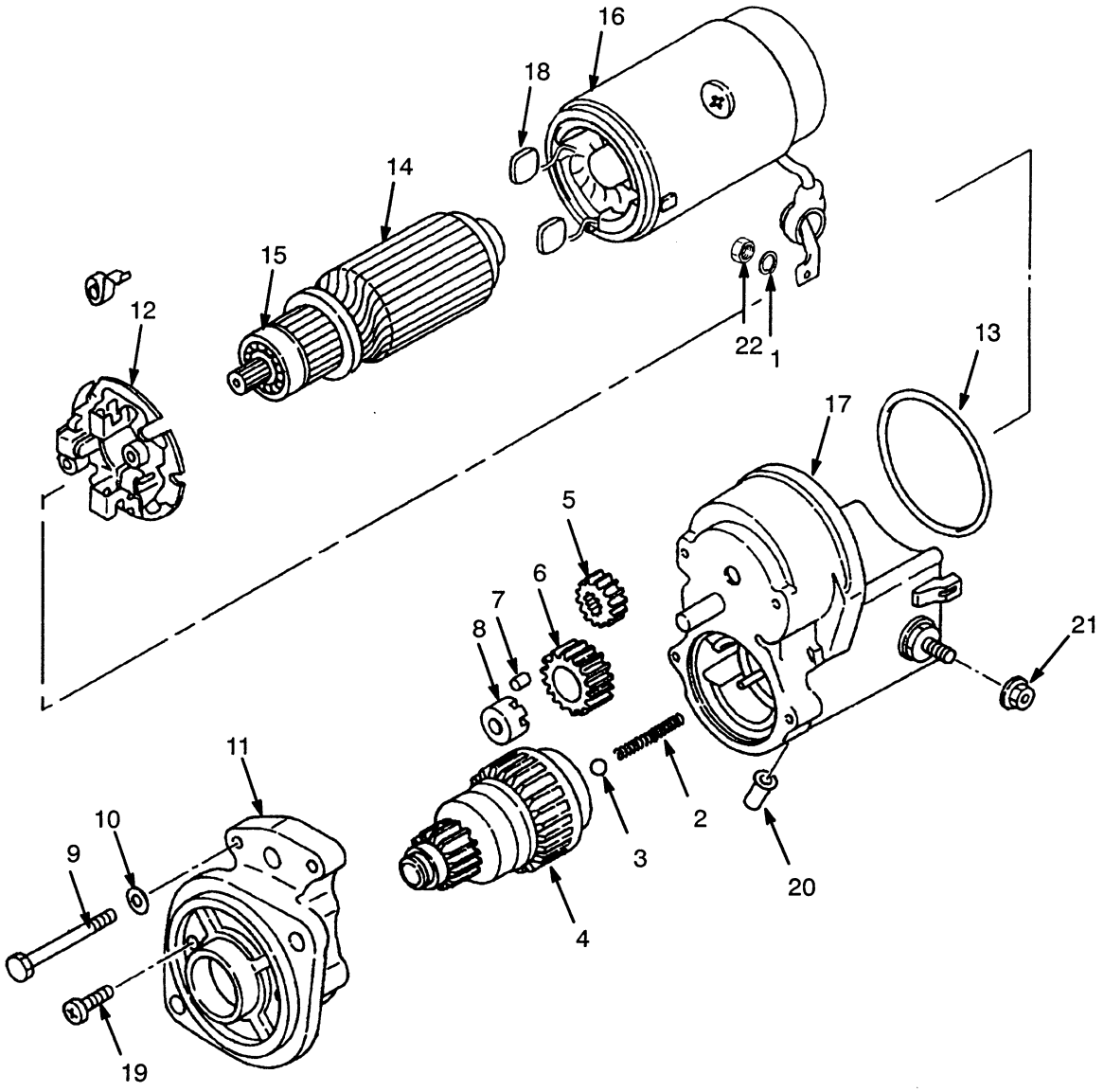

REF	PART NO.	NAME OF PART	QTY
	1347064	Starter	1
1	292681	Lockwasher	1
2	324636	Spring	1
3	324637	Ball	1
4	324638	Drive	1
5	324632	Pinion	1
6	1357048	Gear	1
7	324634	Roller	5
8	324635	Retainer	1
9	1357179	Screw	2
10	1357178	Washer	2
11	1357180	Housing	1

REF	PART NO.	NAME OF PART	QTY
12	1357176	Brush Holder	1
12	326986	Spring	4
13	1357049	Washer	1
14	1367100	Armature	1
15	1367102	Bearing	1
16	1357046	Housing	1
17	1367103	Solenoid	1
18	1367101	Brush	2
19	1367106	Bolt	2
20	1367107	Plug	1
21	1367104	Nut	1
22	324314	Nut	1

©2000 HYSTER COMPANY

STARTER (Figure 151)

GASOLINE AND LPG 2.2L AND 3.0L

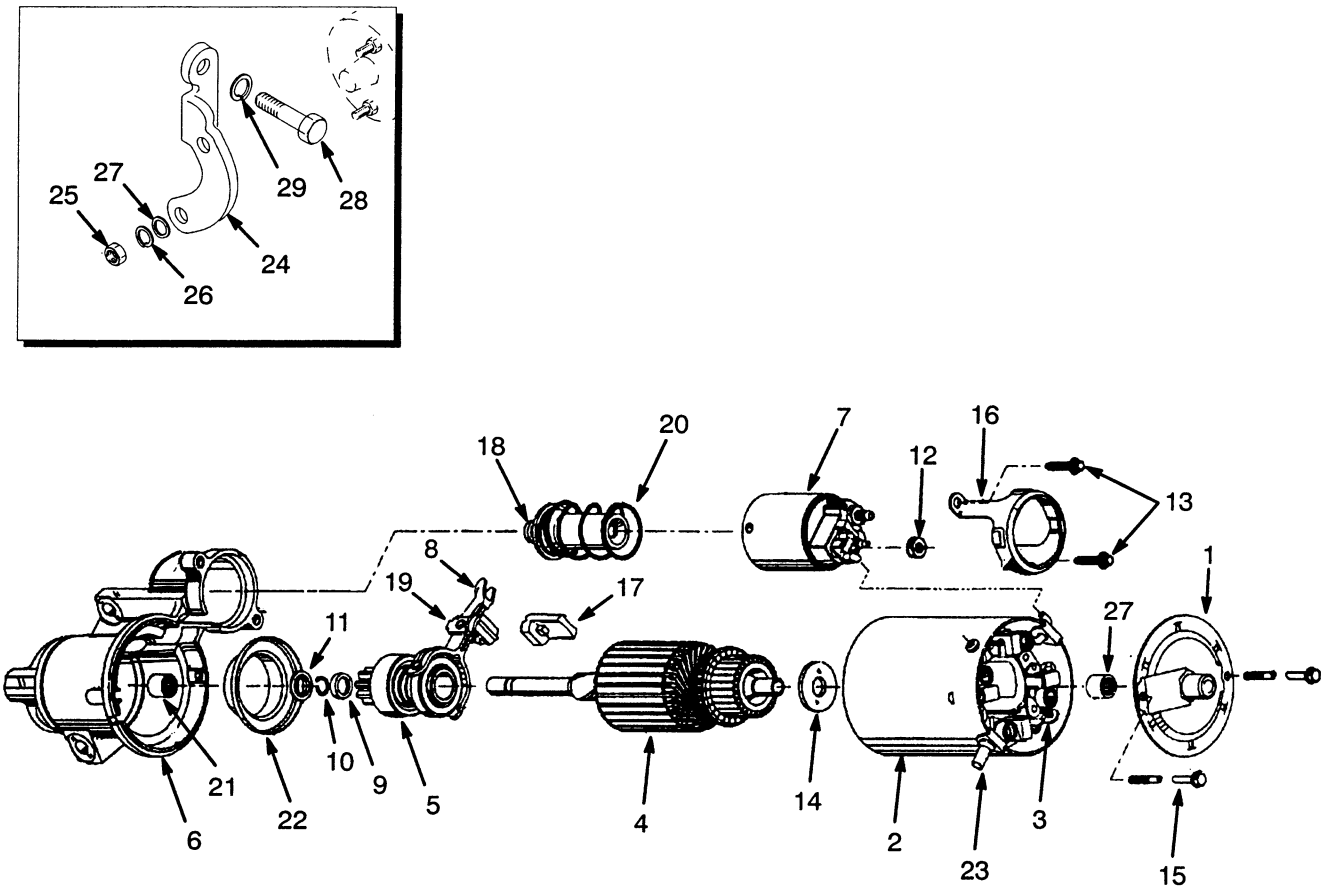

STARTER

GASOLINE AND LPG 2.2L AND 3.0L

KEY:
A: Gasoline & LPG 2.2L
B: Gasoline & LPG 3.0L

REF		PART NO.	NAME OF PART	QTY A	QTY B
	a	1358859	Starter	1	..
	a	1374621	Starter	..	1
	bc	1450122	Starter	1	..
	bc	1391321	Starter	..	1
	d	1457048	Starter	1	..
	d	1457047	Starter	..	1
1	ac	1358861	CE Frame	1	..
1	ac	1383999	CE Frame	..	1
2	ac	1358863	Frame & Brushes	1	..
2	ac	1384037	Frame & Brushes	..	1
3	ac	1358864	Grommet	1	1
4	ac	1358865	Armature	1	..
4	ac	1384000	Armature	..	1
5	ac	1358866	Drive Gear	1	1
6	ac	1358867	Housing (DE)	1	..
6	ac	1384001	Housing (DE)	..	1
7	ac	1358868	Solenoid Switch	1	1
8	ac	1358869	Shift Lever	1	1
9	ac	97499	Collar	1	1
10	ac	97498	Retainer Ring	1	1
11	ac	97497	Washer	1	1
12	ac	1358870	Nut	1	1
13	ac	1358871	Screw	2	2
14	ac	1358872	Washer	1	1
15	ac	1358873	Thru Bolt	2	2
15	ac	1362084	Thru Bolt	..	2
16	ac	1358874	Solenoid Clamp	1	1
17	ac	1358875	Plug	1	1
18	ac	1358876	Plunger	1	1
19	ac	1358877	Retainer	1	1
20	ac	1358878	Spring	1	1
21	ac	1358862	Bearing	..	2
22	ac	1384005	Shield	..	2
23	ac	1384003	Tube	..	1
24	ac	1338283	Bracket	1	..
25	ac	15052	Nut	2	..
26	ac	15152	Washer	2	..
27	ac	197067	Washer	2	..
28	ac	293631	Capscrew	2	..
29	ac	292682	Washer	6	..

a Last Used On Date Code 9/10/96
b First Used On Date Code 9/10/96
c Last Used On Date Code 12/12/97
d First Used On Date Code 12/12/97

Note: Service 1391321 And 1450122 As Complete Assemblies
Note: Service 1391321 With 1457047 And Bracket 1457120

©2000 HYSTER COMPANY

INSTRUMENT PANEL (Figure 152)

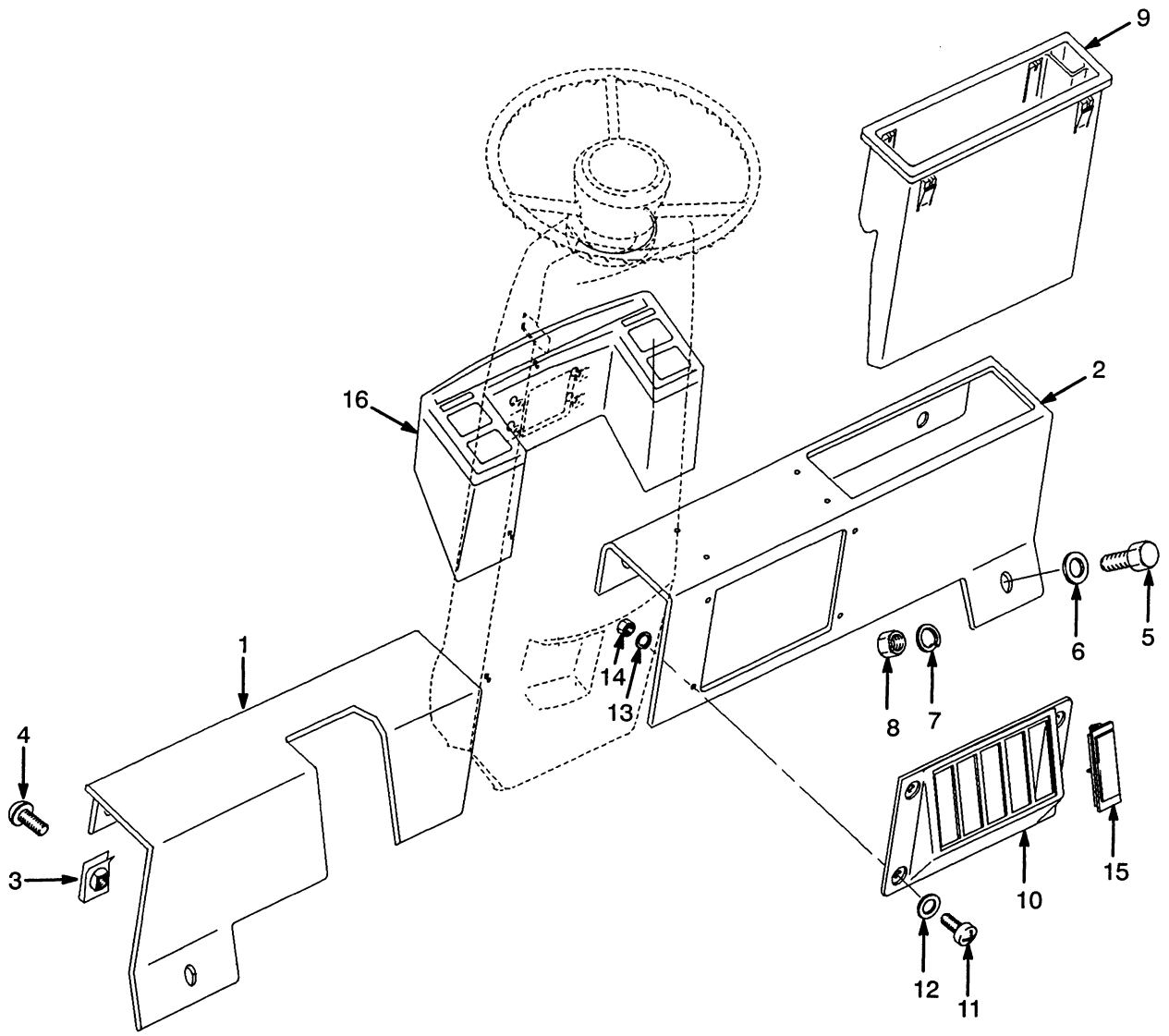

REF	PART NO.	NAME OF PART	QTY
1	1365876	Instrument Panel	1
2	1365877	Instrument Panel	1
3	1350282	Retainer	4
4	369242	Capscrew	4
5	136681	Capscrew	1
6	320157	Washer	1
7	292681	Lockwasher	1
8	239503	Nut	1
9	1338286	Information Case	1

REF	PART NO.	NAME OF PART	QTY
10	1339637	Bezel	1
11	1337196	Screw	4
12	320154	Washer	4
13	292678	Lockwasher	4
14	292667	Nut	4
15	376949	Cover	5
16	.....	Instrument Cluster	1
		☞ Figure 153	

©2000 HYSTER COMPANY

NOTES

©2000 HYSTER COMPANY

INSTRUMENT CLUSTER (Figure 153)

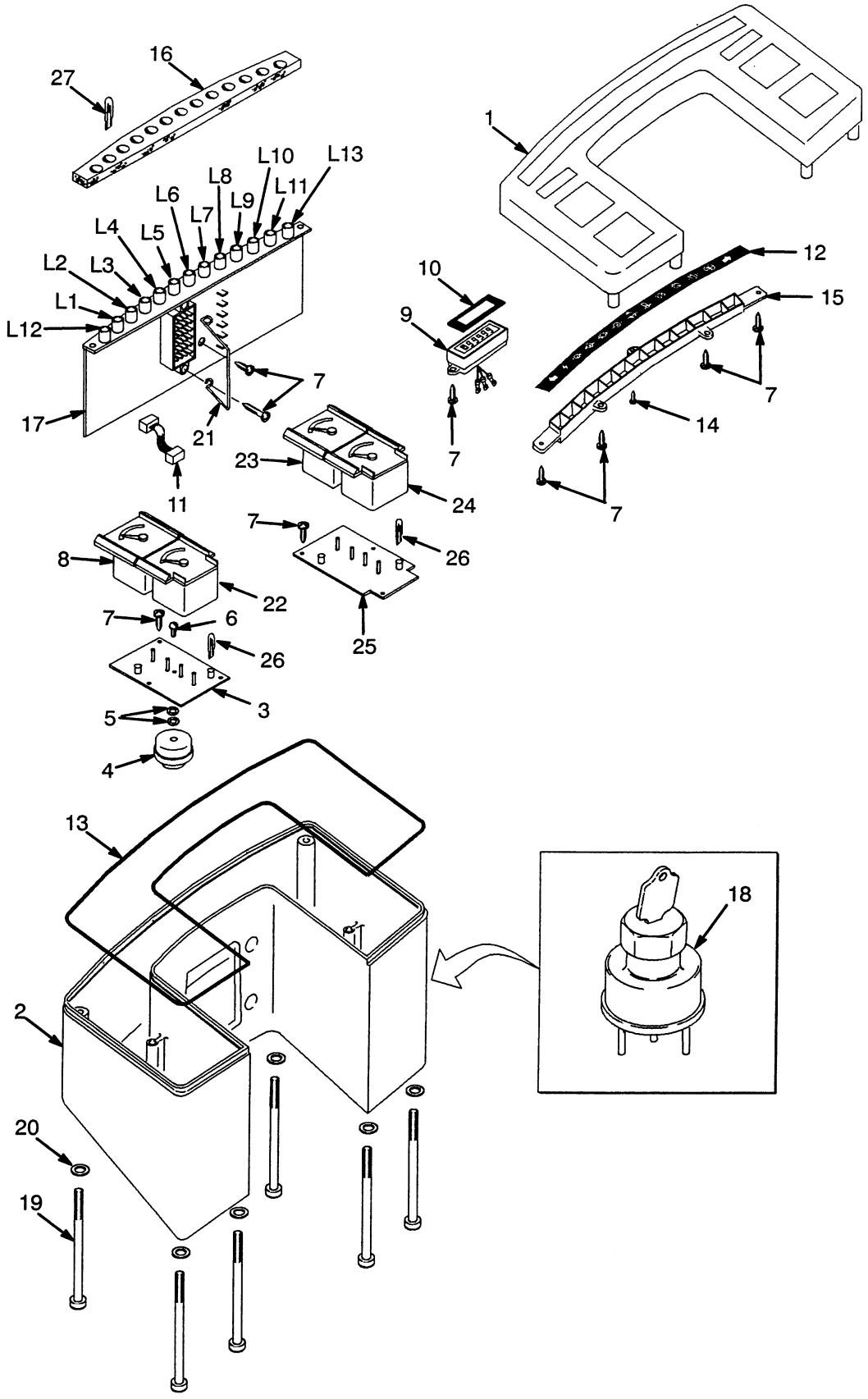

INSTRUMENT CLUSTER

PART NO.	DESCRIPTION	INCLUDES REF NO.'S	REF NO. 26 QTY	REF NO. 27 QTY	REF NO. 27 & LOCATION
1335975	[c] Instrument Cluster-Gasoline	1-22, 26 & 27	2	7	L1-L6, L9
1335976	[c] Instrument Cluster-LPG	1-21, 26 &27	1	7	L1-L6, L10
1335977	[c] Instrument Cluster-Diesel	1-22, 26 & 27	2	8	L1-L8
1335978	[b] Instrument Cluster-Gasoline	1-27	4	10	L1-L6, L9, L11-L13
1335979	[b] Instrument Cluster-LPG	1-21, 23-27	3	10	L1-L6, L10-L13
1335980	[b] Instrument Cluster-Diesel	1-27	4	11	L1-L8, L11-L13
1343612	[c] Instrument Cluster-Gasoline	1-22, 26, & 27	2	8	L1-L5, L9, L11-L13
1343613	[c] Instrument Cluster-LPG	1-21, 26, & 27	1	8	L1-L5, L10, L11-L13
1343614	[c] Instrument Cluster-Diesel	1-22, 26, & 27	2	9	L1-L5, L7-L8, L11-L13

[b] Includes Optional Gauges [c] Includes Standard Gauges

KEY:
A: Optional Gauges
B: Standard Gauges

REF		PART NO.	NAME OF PART	QTY A	QTY B
	[a]	....	Instrument Cluster	1	1
1		1354775	Cover-Top	1	1
2		1354776	Case	1	1
3		1354049	Circuit Board (LH)	1	1
4		1354804	Buzzer	1	1
5		1354780	Washer (Fibre)	1	1
6		189756	Screw	1	1
7		227131	Screw	17	14
8		1354778	Water Temperature Gauge ..	1	1
9		1354783	Hourmeter	1	1
10		1354782	Gasket	1	1
11		1354805	Jumper Harness	1	1
12		1354784	Warning Lamp Filter	1	1
13		1354785	Gasket	1	1
14		1354786	Screw	1	1
15		1354787	Warning Lamp Housing	1	1
16		1354788	Foam Gasket	1	1
17		1354806	Circuit Board	1	1
18		1337114	Ignition Switch	1	1
19		1453153	Screw Kit	1	1
20		320154	Washer	8	8
21		1358858	Clip	1	1
22		1354777	Fuel Gauge	1	1
23		1354792	Oil Gauge	1	1
24		1354793	Voltmeter Gauge	1	1
25		1354807	Circuit Board (RH)	1	1
26	[a]	1354796	Lamp	..	..
27	[a]	1357367	Lamp	..	..

[a] ☞ Table Above

©2000 HYSTER COMPANY

SHIFT LEVER (Figure 154)

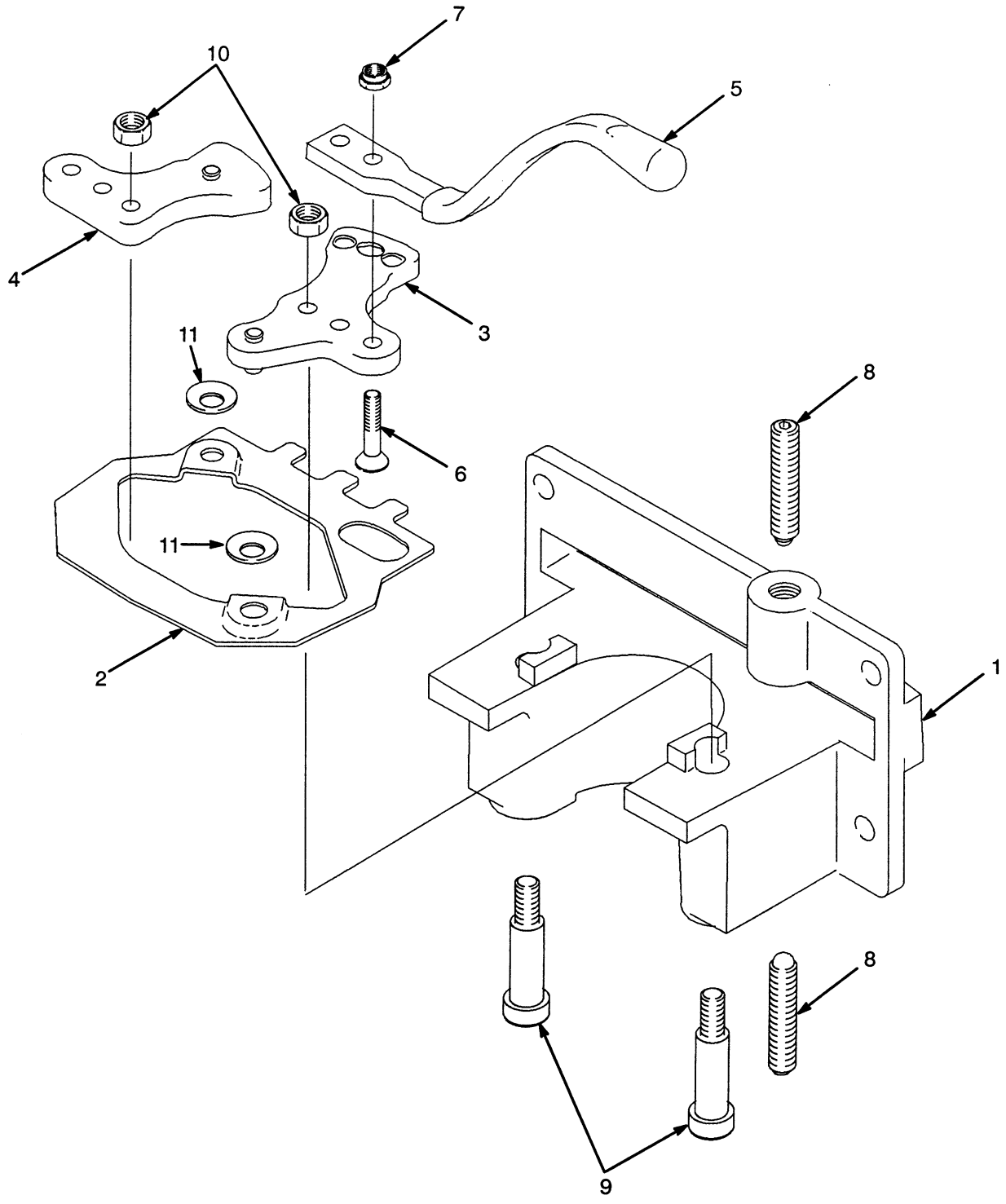

REF	PART NO.	NAME OF PART	QTY
	1347004	Shift Lever Assembly	1
1	1343577	Base	1
2	1343578	Link	1
3	1343579	Crank	1
4	1343598	Crank	1
5	1343593	Shift Lever	1
6	296205	Capscrew	2
7	302398	Nut	2
8	1338291	Spring Plunger	2
9	1343594	Bolt	2
10	136687	Nut	2
11	1354300	Spring Washer	4

©2000 HYSTER COMPANY

See Service Manual for service procedures

LIGHTS (Figure 155)

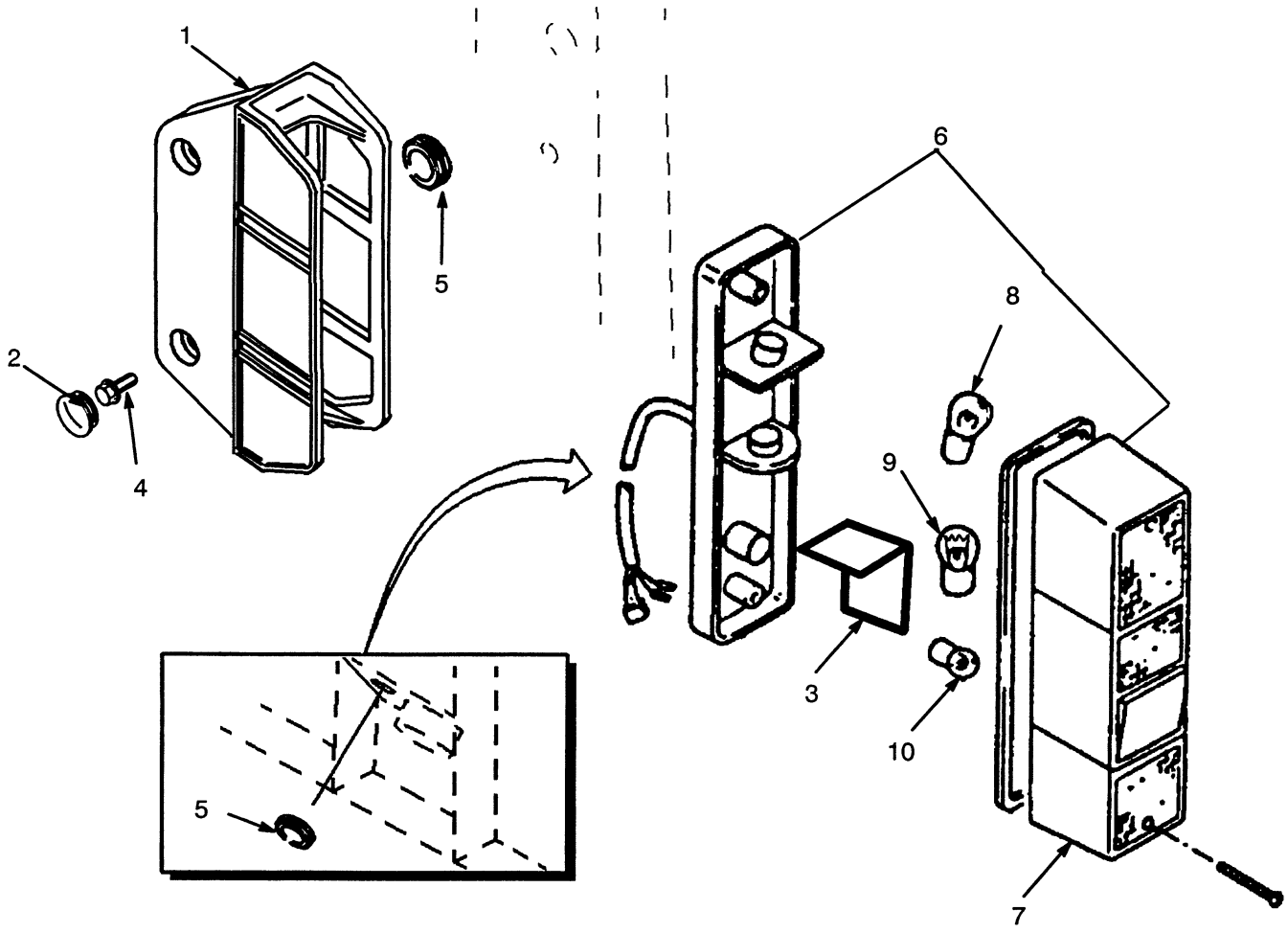

REF		PART NO.	NAME OF PART	QTY
1	a	1354105	Bracket	2
1	b	1450293	Bracket	2
1	c	878152	Bracket	2
2		1450356	Plug	2
3		1375173	Shield	2
4		316678	Screw	4
5		1367639	Bushing	3
6	a	1343887	Light Assembly	2
6	b	1376749	Light Assembly	2
7	a	1344798	Lens	1
7	b	1380757	Lens (Amber)	1

REF		PART NO.	NAME OF PART	QTY
7	b	1376439	Lens (Clear)	1
7	b	1376440	Lens (Red)	1
8	a	207495	Bulb	1
8	b	1302258	Bulb	2
9		177521	Bulb (12 Volt)	1
10	a	1344799	Bulb	1

a Last Used On S/N D177B-3080
b First Used On S/N D177B-3081
c With Steel Cab Kit 895973

©2000 HYSTER COMPANY

ELECTRICAL CONNECTORS (Figure 156)

LESS TERMINALS

1300231-TERMINAL(10-14GA) 381847-TERMINAL (14-16GA)  381846-FUSEHOLDER	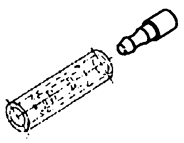 42958-CONNECTOR	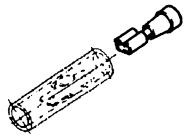 148660-CONNECTOR	256291-CONN. BODY 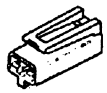
148657-CONN. BODY (F) 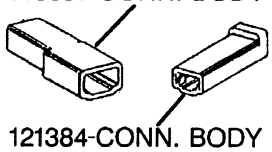 121384-CONN. BODY (M)	181045-CONN. BODY (F) 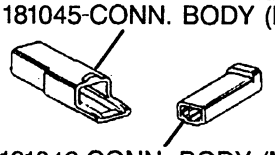 181046-CONN. BODY (M)	345474-CONN. BODY 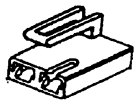	126381-CONN. BODY 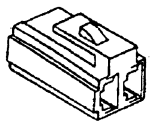
181047-CONN. BODY (F) 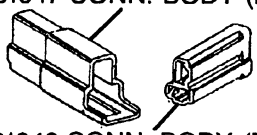 181048-CONN. BODY (M)	148658-CONN. BODY (F) 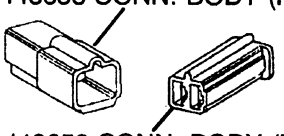 148659-CONN. BODY (M)	329432-CONN. BODY (F) 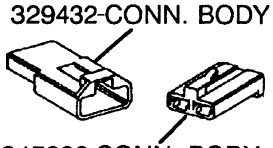 245996-CONN. BODY (M)	1350575-CONN. BODY (F) 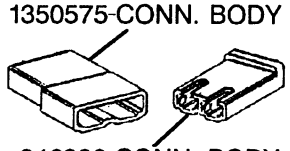 346330-CONN. BODY (M)
152728-CONN. BODY (F) 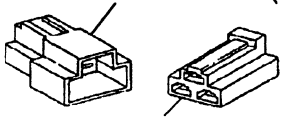 126319-CONN.BODY (M)	181049-CONN. BODY (F) 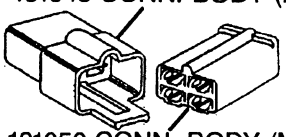 181050-CONN. BODY (M)	1328311-"Y"-PLUG 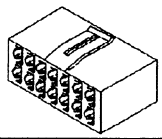	1328309-PLUG 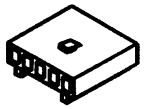 (DASH DISPLAY)
181051-CONN. BODY (F) 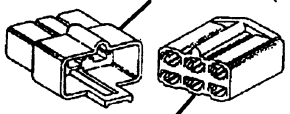 181052-CONN. BODY (M)	154476-CONN. BODY (F) 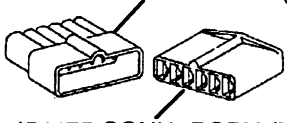 154475-CONN. BODY (M)	144011-CONNECTOR SET 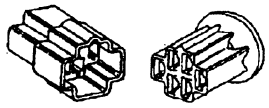	370728-CONN. BODY  (IGNITION SWITCH)
181053-CONN. BODY (F) 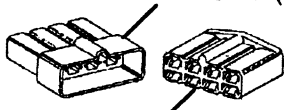 181054-CONN. BODY (M)	1308549-ELEC. FTG. PLUG 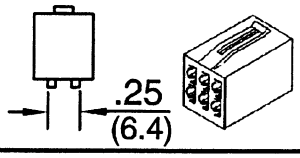 .25 (6.4)	1308544-ELEC. FTG. PLUG 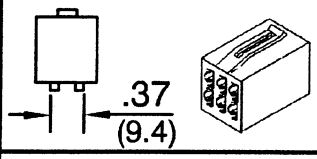 .37 (9.4)	134813-CONN. BODY (F) 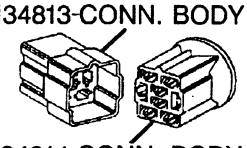 134814-CONN. BODY (M)
164431-CONNECTOR 	164433-CONNECTOR 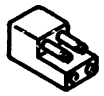	192529-CONNECTOR (F) 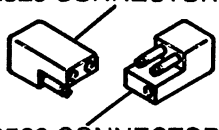 192528-CONNECTOR (M)	169321-CONNECTOR (F) 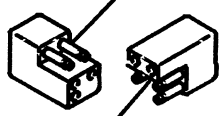 169320-CONNECTOR (M)
164436-CONNECTOR (F) 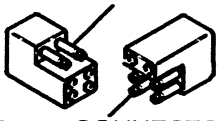 164435-CONNECTOR (M)	257252-CONNECTOR (M) 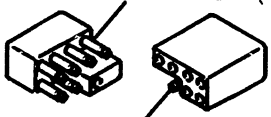 257253-CONNECTOR (M)	248536-CONNECTOR (F) 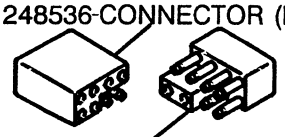 248535-CONNECTOR (M)	

©2000 HYSTER COMPANY

TRANSMISSION

CLUTCH FORWARD AND REVERSE (Figure 159)
LAST USED ON TRANSMISSION S/N T51,T52,T53,T78 ..... Page 290

CLUTCH-FORWARD AND REVERSE (Figure 160)
FIRST USED ON TRANSMISSION S/N T80M-1501,
T81M-1501,T83M-1501 ..... Page 292

CONTROL VALVE (Figure 163)
TRANSMISSION ..... Page 298

DIFFERENTIAL (Figure 161)
LAST USED ON TRANSMISSION S/N T51,T52,T53,T78 ..... Page 294

DIFFERENTIAL (Figure 162)
FIRST USED ON TRANSMISSION S/N T80M-1501,
T81M-1501,T83M-1501 ..... Page 296

DRIVE AXLE (Figure 167) ..... Page 304

PUMP DRIVE (Figure 164)
LAST USED ON TRANSMISSION S/N T80M-1644 ..... Page 300

PUMP DRIVE (Figure 165)
FIRST USED ON S/N T80M-1645 ..... Page 301

TRANSMISSION COOLING (Figure 166) ..... Page 303

TRANSMISSION (Figure 157)
LAST USED ON TRANSMISSION S/N T51,T52,T53,T78 ..... Page 286

TRANSMISSION (Figure 158)
FIRST USED ON TRANSMISSION S/N T80M-1501,
T81M-1501,T83M-1501 ..... Page 288

©2000 HYSTER COMPANY

TRANSMISSION (Figure 157)

LAST USED ON TRANSMISSION S/N T51,T52,T53,T78

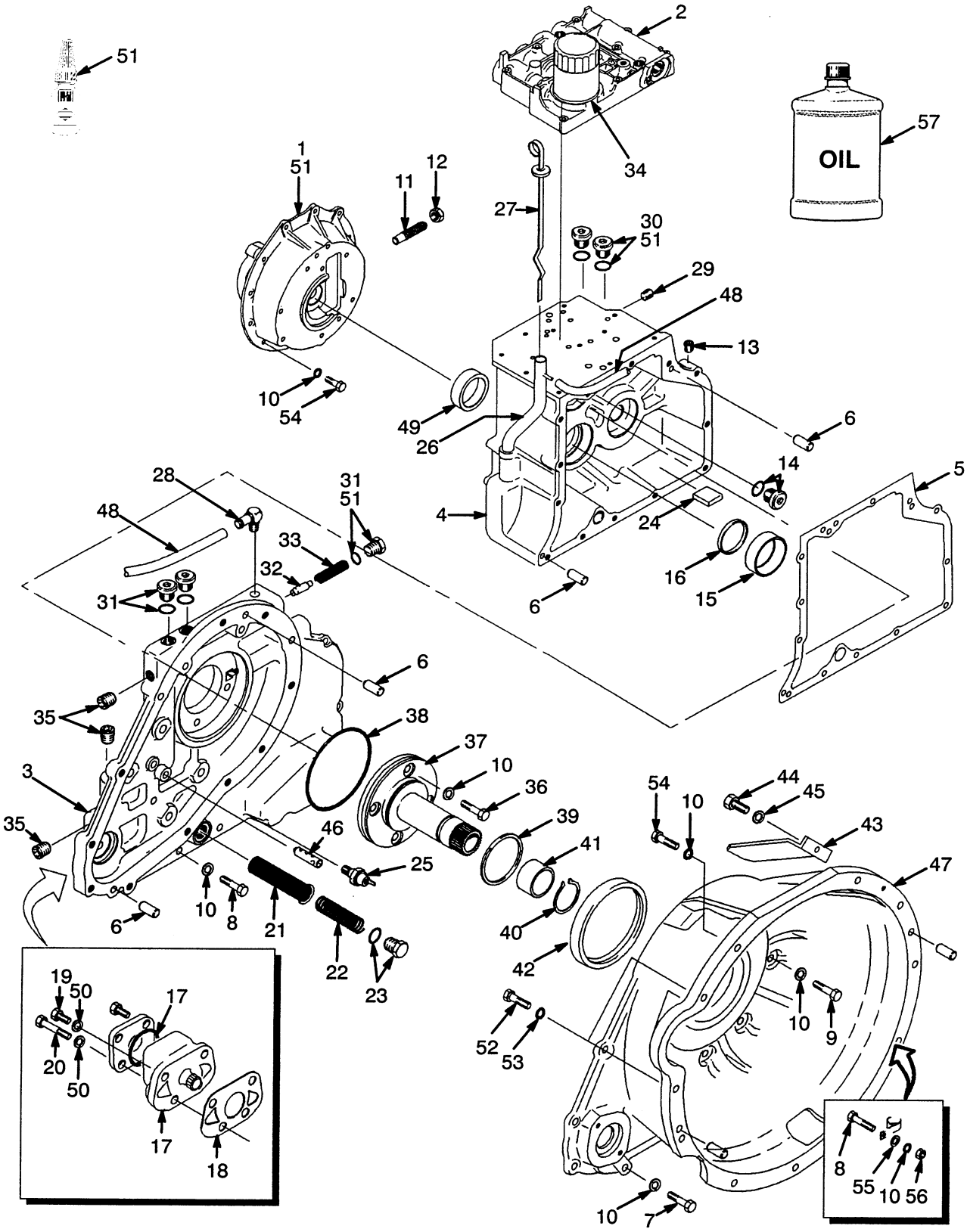

©2000 HYSTER COMPANY

TRANSMISSION
LAST USED ON TRANSMISSION S/N T51,T52,T53,T78

KEY:
A: Gasoline And LPG 2.0L/2.2L . Including Diesel 2.4L, 2.5L
B: Diesel 3.0L And 3.1L
C: GM Gasoline And LPG 3.0L
D: Gasoline And LPG 2.0L And 2.2L (Transmission First Used D177B-41754) Including Diesel 2.6L

REF		PART NO.	NAME OF PART	QTY A	B	C	D
	e	1337069	Transmission (T51)	1	..	..	..
	f	1391543	Transmission (T51)	1	..	..	..
	e	1337070	Transmission (T53)	..	1	..	..
	f	1391545	Transmission (T53)	..	1	..	..
	a	1356309	Transmission (T52)	..	..	1	..
	b	1375193	Transmission (T52)	..	..	1	..
	g	1391544	Transmission (T52)	..	..	1	..
		1394930	Transmission (T78)	..	..	..	1
1		.....	Differential ☞ Figure 161	1	1	1	1
2		.....	Control Valve ☞ Figure 163	1	1	1	1
3		1367430	Cover	1	1	1	1
4		1334717	Housing	1	1	1	1
5	d	1334772	Gasket	1	1	1	1
6		302385	Pin	4	4	4	4
7		292516	Capscrew	16	16	16	16
8		292519	Capscrew	3	..	3	3
8	c	292519	Capscrew	4	4	..	..
9		292524	Capscrew	4	4	4	4
10		292682	Lockwasher	48	48	48	48
11		334571	Screw	1	1	1	1
12		15032	Nut	1	1	1	1
13		15483	Fitting	1	1	1	1
14		222443	Fitting	1	1	1	1
14		16483	O-Ring	1	1	1	1
15	d	137282	Bearing Cup	1	1	1	1
16	d	286788	Seal	1	1	1	1
17	d	1335921	Charge Pump	1	1	1	1
17		1355348	Seal	1	1	1	1
18	d	1334771	Pump Gasket	1	1	1	1
19		176640	Capscrew	2	2	2	2
20		136703	Capscrew	2	2	2	2
21		334450	Screen	1	1	1	1
22		334452	Spring	1	1	1	1
23		14604	Plug	1	1	1	1
23	d	16487	O-Ring	1	1	1	1
24		334560	Magnet	1	1	1	1
25	d	1322627	Temperature Switch	1	1	1	1
26		1338259	Tube	1	1	1	1
27		1343533	Dipstick	1	1	1	1
28		1316809	Fitting	1	1	1	1
29		15347	Fitting	1	1	1	1
30		134436	Fitting	2	2	2	2
30	d	16482	O-Ring	1	1	1	1
31		235691	Fitting	3	3	3	3
31	d	16484	O-Ring	1	1	1	1
32		287472	Spool	1	1	1	1
33		1334786	Spring	1	1	1	1
34	d	1328692	Oil Filter	1	1	1	1
35		15314	Fitting	3	3	3	3
36		136985	Capscrew	4	4	4	4
37		1334785	Stator	..	1	1	..
37	g	1394923	Stator	1	..	..	1
38	d	1337051	O-Ring	1	1	1	1
39	d	1339332	Seal Ring	1	1	1	1
40		12891	Snap Ring	1	1	1	1
41		1339334	Spacer	1	1	1	1
42	d	1337052	Oil Seal	1	1	1	1
43	a	1335973	Cover	2	2	2	2
43	b	1375148	Cover	2	2	2	2
44		287817	Capscrew	2	2	2	2
45		292680	Lockwasher	..	2	2	2
46		1343557	Tube	1	1	1	1
47	a	1335972	Converter Housing	1	1	1	..
47	b	1375183	Converter Housing	1	1	1	1
48		193772	Hose	1	1	1	1
48		1389608	Hose (Optional)	1	1	1	1
49	d	230419	Bearing Cup	1	1	1	1
50		292681	Lockwasher	4	4	4	4
51	d	313022	Adhesive	AR	AR	AR	AR
52		292528	Capscrew	2	2	2	2
53		292683	Lockwasher	2	2	2	2
54		287860	Capscrew	21	..	21	21
54	c	287860	Capscrew	20	20	..	..
55	c	320159	Washer	1	1	..	..
56	c	136692	Nut	1	1	..	..
57		336830	Transmission Oil (1 Qt)	AR	AR	AR	AR
57		336831	Transmission Oil (2 Gal)	AR	AR	AR	AR
57		336832	Transmission Oil (5 Gal)	AR	AR	AR	AR
57		336833	Transmission Oil (55 Gal)	AR	AR	AR	AR

a Last Used On S/N D177B-16153
b First Used On S/N D177B-16154
c Diesel Only
d Included in Transmission Overhaul Kit 996297
e Transmission Last Used On S/N D177B-41853
f Transmission First Used On S/N D177B-41854
g Used S/N D177B-16154 Thru D177B-43357

©2000 HYSTER COMPANY

TRANSMISSION (Figure 158)

FIRST USED ON TRANSMISSION S/N T80M-1501, T81M-1501,T83M-1501

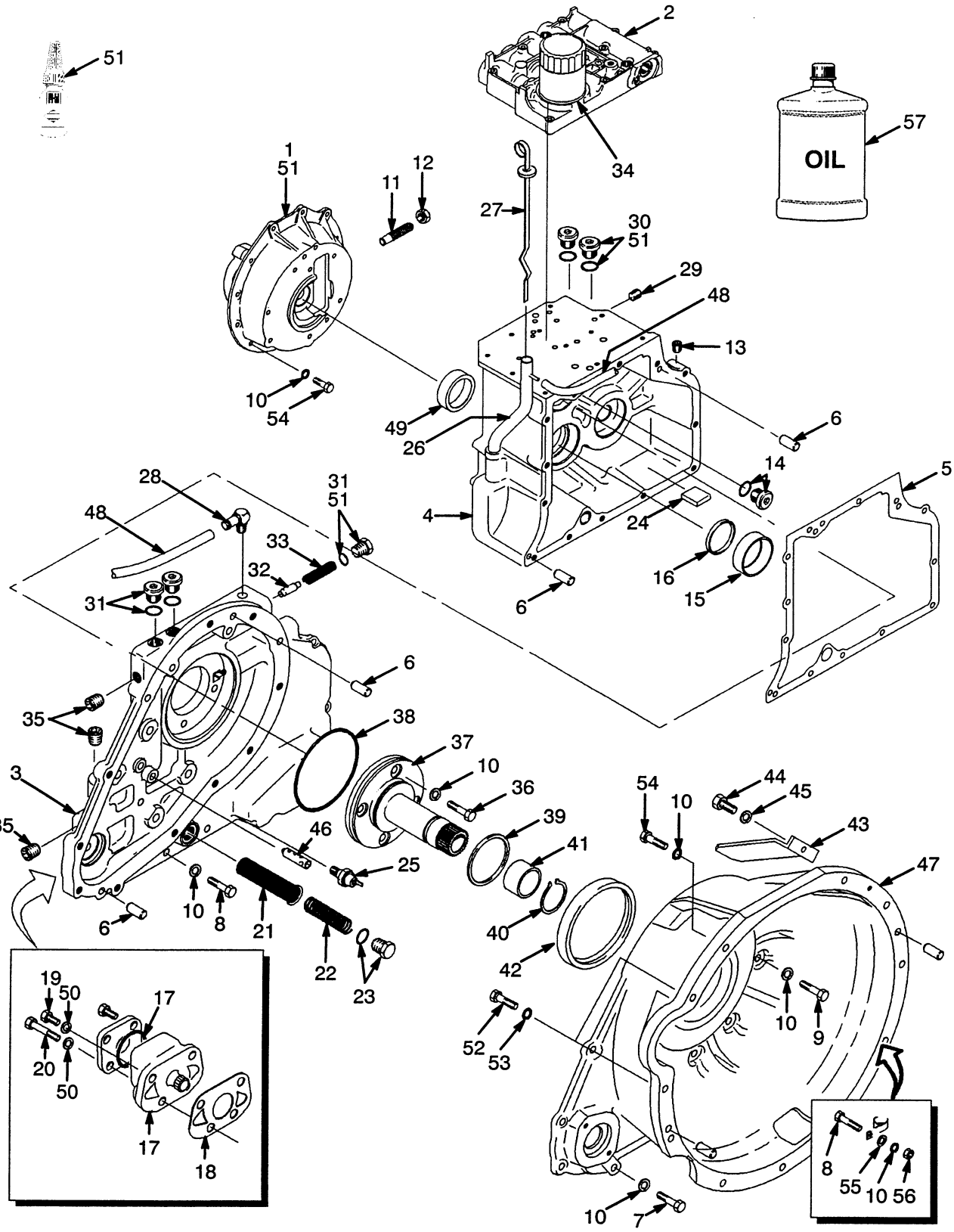

TRANSMISSION

FIRST USED ON TRANSMISSION S/N T80M-1501, T81M-1501,T83M-1501

KEY:
A: Gasoline And LPG 2.0L, 2.2L, 3.0L (Exedy Torque Converter)
B: Diesel 2.4L (Exedy Torque Converter)
C: Diesel 3.0L (Borg And Beck Torque Converter)

REF		PART NO.	NAME OF PART	QTY A	B	C
		1394942	Transmission (T80)	1	1	..
		1394943	Transmission (T81)	..	..	1
1		.....	Differential	1	1	1
			☞ Figure 161			
2		.....	Control Valve	1	1	1
			☞ Figure 163			
3		1367430	Cover	1	1	1
4		1334717	Housing	1	1	1
5		1334772	Gasket	1	1	1
6		302385	Pin	4	4	4
7		292516	Capscrew	16	16	16
8		292519	Capscrew	3	3	3
8	C	292519	Capscrew	4	4	4
9		292524	Capscrew	4	4	4
10		292682	Lockwasher	27	27	27
11		334571	Screw	1	1	1
12		15032	Nut	1	1	1
13		15483	Fitting	1	1	1
14		222443	Fitting	1	1	1
14		16483	O-Ring	1	1	1
15		137282	Bearing Cup	1	1	1
16		286788	Seal	1	1	1
17		1335921	Charge Pump	1	1	1
17		1355348	Seal	1	1	1
18		1334771	Pump Gasket	1	1	1
19		176640	Capscrew	2	2	2
20		136703	Capscrew	2	2	2
21		334450	Screen	1	1	1
22		334452	Spring	1	1	1
23		14604	Plug	1	1	1
23		16487	O-Ring	1	1	1
24		334560	Magnet	1	1	1
25		1322627	Temperature Switch	1	1	1
26		1338259	Tube	1	1	1
27		1343533	Dipstick	1	1	1
28		1316809	Fitting	1	1	1
29		15347	Fitting	1	1	1
30		134436	Fitting	2	2	2
30		16482	O-Ring	1	1	1
31		235691	Fitting	3	3	3
31		16484	O-Ring	1	1	1
32		287472	Spool	1	1	1
33		1334786	Spring	1	1	1
34		1328692	Oil Filter	1	1	1
35		15314	Fitting	3	3	3
36		136985	Capscrew	4	4	4
37		1394923	Stator	1	1	..
37		1334785	Stator	..	..	1
38		1337051	O-Ring	1	1	1
39		1339332	Seal Ring	1	1	1
40		12891	Snap Ring	1	1	1
41		1339334	Spacer	1	1	1
42		1337052	Oil Seal	1	1	1
43		1375148	Cover	2	2	2
44		287817	Capscrew	2	2	2
45		292680	Lockwasher	..	2	2
46		1343557	Tube	1	1	1
47		1375183	Converter Housing	1	1	1
48		193772	Hose	1	1	1
48		1389608	Hose (Optional)	1	1	1
49		230419	Bearing Cup	1	1	1
50		292681	Lockwasher	4	4	4
51		264159	Adhesive	AR	AR	AR
52		292528	Capscrew	2	2	2
53		292683	Lockwasher	2	2	2
54		287860	Capscrew	21	21	21
55		320159	Washer	1	1	1
56		136692	Nut	1	1	1
57		336830	Transmission Oil (1 Qt)	AR	AR	AR
57		336831	Transmission Oil (2 Gal)	AR	AR	AR
57		336832	Transmission Oil (5 Gal)	AR	AR	AR
57		336833	Transmission Oil (55 Gal)	AR	AR	AR

©2000 HYSTER COMPANY

CLUTCH FORWARD AND REVERSE (Figure 159)

LAST USED ON TRANSMISSION S/N T51,T52,T53,T78

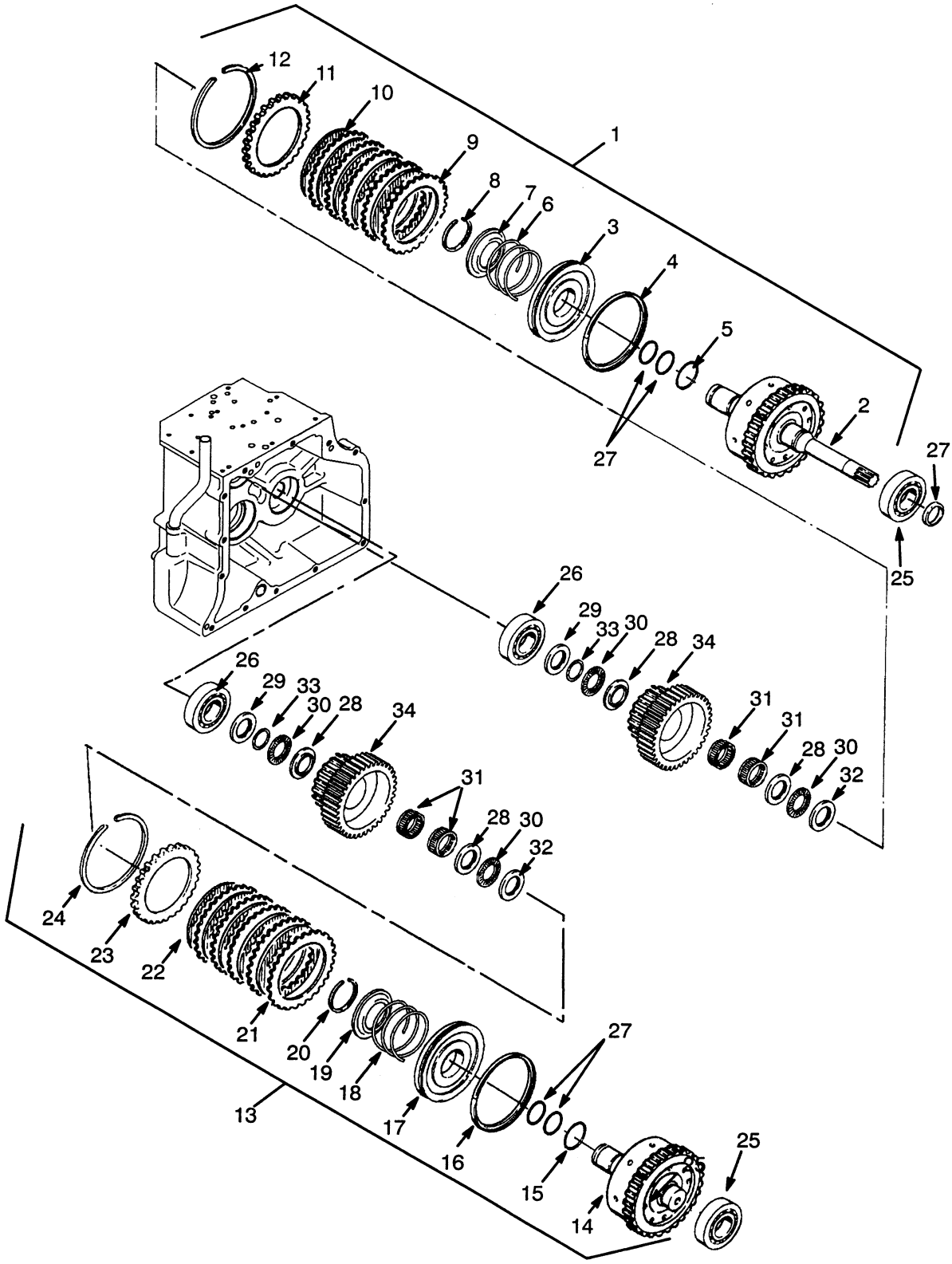

FORWARD AND REVERSE CLUTCH

LAST USED ON TRANSMISSION S/N T51,T52,T53,T78

REF		PART NO.	NAME OF PART	QTY
1		1334579	Clutch (Forward)	1
1	f	1394932	Clutch (Forward)	1
2		1334760	Input Shaft Assembly	1
2	f	1394931	Input Shaft Assembly	1
3		334439	Piston	1
4	ae	334402	Seal	1
5	ae	346795	O-Ring	1
6		334595	Spring	1
7		334449	Spring Guide	1
8	e	334480	Snap Ring	1
9	e	334417	Separator Plate	5
10	e	346796	Friction Plate	5
11	e	334442	Pressure Plate	1
12	e	334475	Snap Ring	1
13		361895	Reverse Clutch	1
14		361893	Counter Shaft	1
15	ae	346795	O-Ring	1
16	ae	334402	Seal	1
17		334439	Piston	1
18		334595	Spring	1
19		334449	Spring Guide	1
20	e	334480	Snap Ring	1
21	e	334417	Separator Plate	5
22	e	346796	Friction Plate	5
23	e	334442	Pressure Plate	1
24	e	334475	Snap Ring	1
25	e	43207	Bearing	2
26	e	43307	Bearing	2
27	e	334429	Ring (Seal)	5
28	e	347767	Washer	4
29	e	347768	Washer	2
30	e	78826	Bearing	4
31	e	334454	Bearing	4
32	e	347770	Washer	2
33	e	347773	Snap Ring	2
34	b	1335888	Gear (Clutch Output)	2
34	cg	360318	Gear (Clutch Output)	2
34	d	1335890	Gear (Clutch Output)	2

a Included In Gasket Kit 352075

b Used With Gasoline And LPG 2.0L Up To S/N D177B-41854 And Diesel 2.4L

c Used With Gasoline And LPG 2.2L And 3.0L

d Used With Diesel 2.8L And 3.1L

e Included in Transmission Overhaul Kit 996297

f First Used With Gasoline And LPG 2.0L, 2.2L And 3.0L Engines On S/N D177B-41854 And D177B-43357

g First Used With 2.0L Engine D177B-43357

Note: The Above Parts Are Included With Transmissions 1337069, 1337070, 1356309, And 1394930

©2000 HYSTER COMPANY

CLUTCH-FORWARD AND REVERSE (Figure 160)

FIRST USED ON TRANSMISSION S/N T80M-1501, T81M-1501,T83M-1501

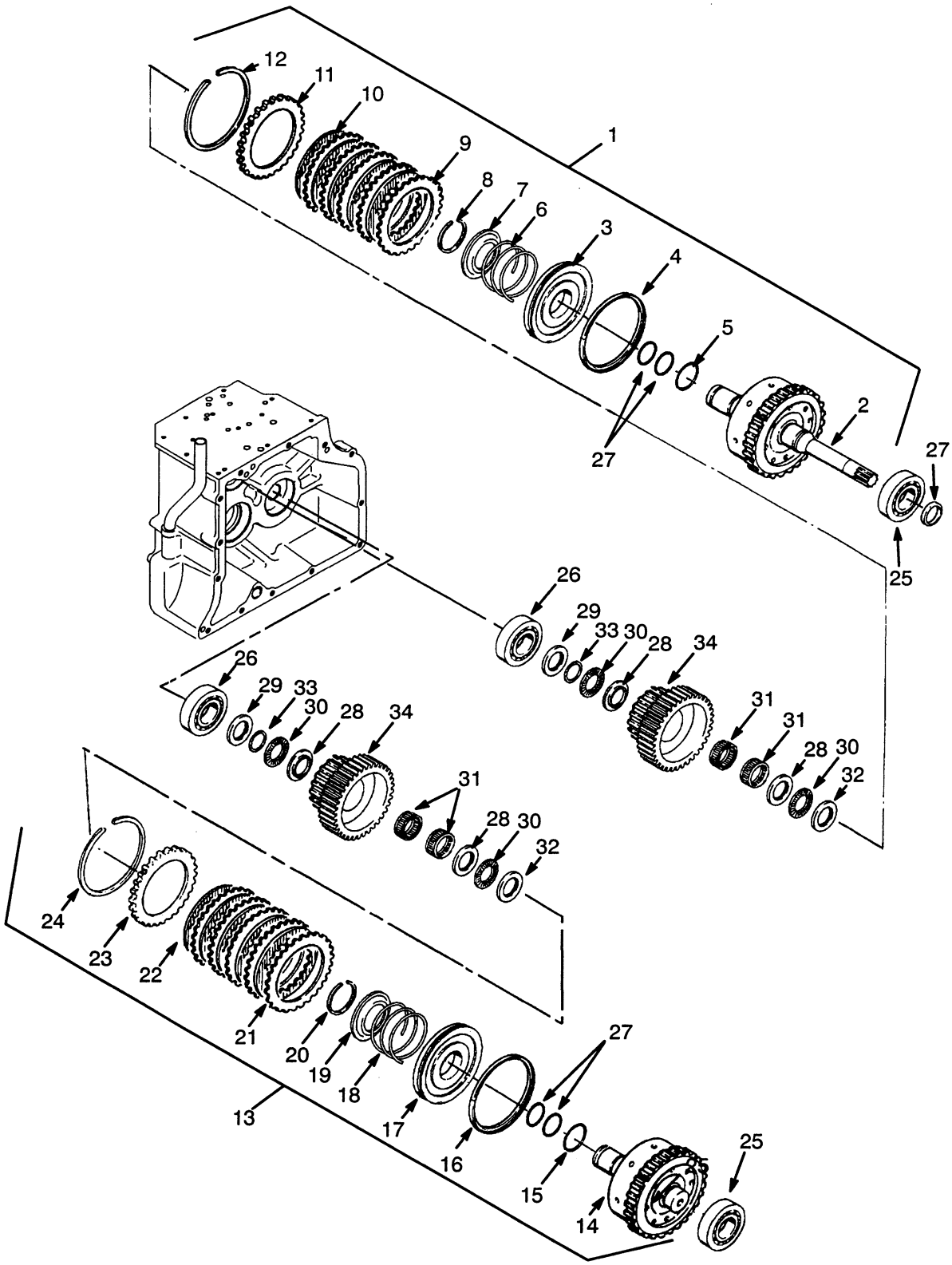

CLUTCH-FORWARD AND REVERSE

FIRST USED ON TRANSMISSION S/N T80M-1501, T81M-1501,T83M-1501

KEY:
A: Gasoline And LPG 2.0L, 2.2L, 3.0L (Exedy Torque Converter)
B: Diesel 2.4L (Exedy Torque Converter)
C: Diesel 3.0L (Borg And Beck Torque Converter)

REF	PART NO.	NAME OF PART	QTY A	B	C
1	1394902	Clutch (Forward)	1	..	..
1	1394901	Clutch (Forward)	..	1	1
2	1394908	Input Shaft Assembly	1	..	..
2	1394907	Input Shaft Assembly	..	1	1
3	1394885	Piston	1	1	1
4	334402	Seal	1	1	1
5	1394879	O-Ring	1	1	1
6	1394882	Spring	1	1	1
7	1394893	Spring Guide	1	1	1
8	1394912	Snap Ring	1	1	1
9	334417	Separator Plate	5	5	5
10	346796	Friction Plate	5	5	5
11	1394881	Pressure Plate	1	1	1
12	334475	Snap Ring	1	1	1
13	1394903	Reverse Clutch	1	1	1
14	1394909	Counter Shaft	1	1	1
15	1394879	O-Ring	1	1	1
16	334402	Seal	1	1	1
17	1394885	Piston	1	1	1
18	1394882	Spring	1	1	1
19	1394893	Spring Guide	1	1	1
20	1394912	Snap Ring	1	1	1
21	334417	Separator Plate	5	5	5
22	346796	Friction Plate	5	5	5
23	1394881	Pressure Plate	1	1	1
24	334475	Snap Ring	1	1	1
25	43207	Bearing	2	2	2
26	43307	Bearing	2	2	2
27	334429	Ring (Seal)	5	5	5
28	1394888	Washer	4	4	4
29	1394894	Washer	2	2	2
30	1394887	Bearing	4	4	4
31	1394886	Bearing	4	4	4
32	1394895	Spacer	2	2	2
33	347773	Snap Ring	2	2	2
34	1394884	Gear (Clutch Output)	2	2	..
34	1394899	Gear (Clutch Output)	..	..	2

Note: The Above Parts Are Included With Transmissions 1394942 And 1394943

©2000 HYSTER COMPANY

DIFFERENTIAL (Figure 161)

LAST USED ON TRANSMISSION S/N T51,T52,T53,T78

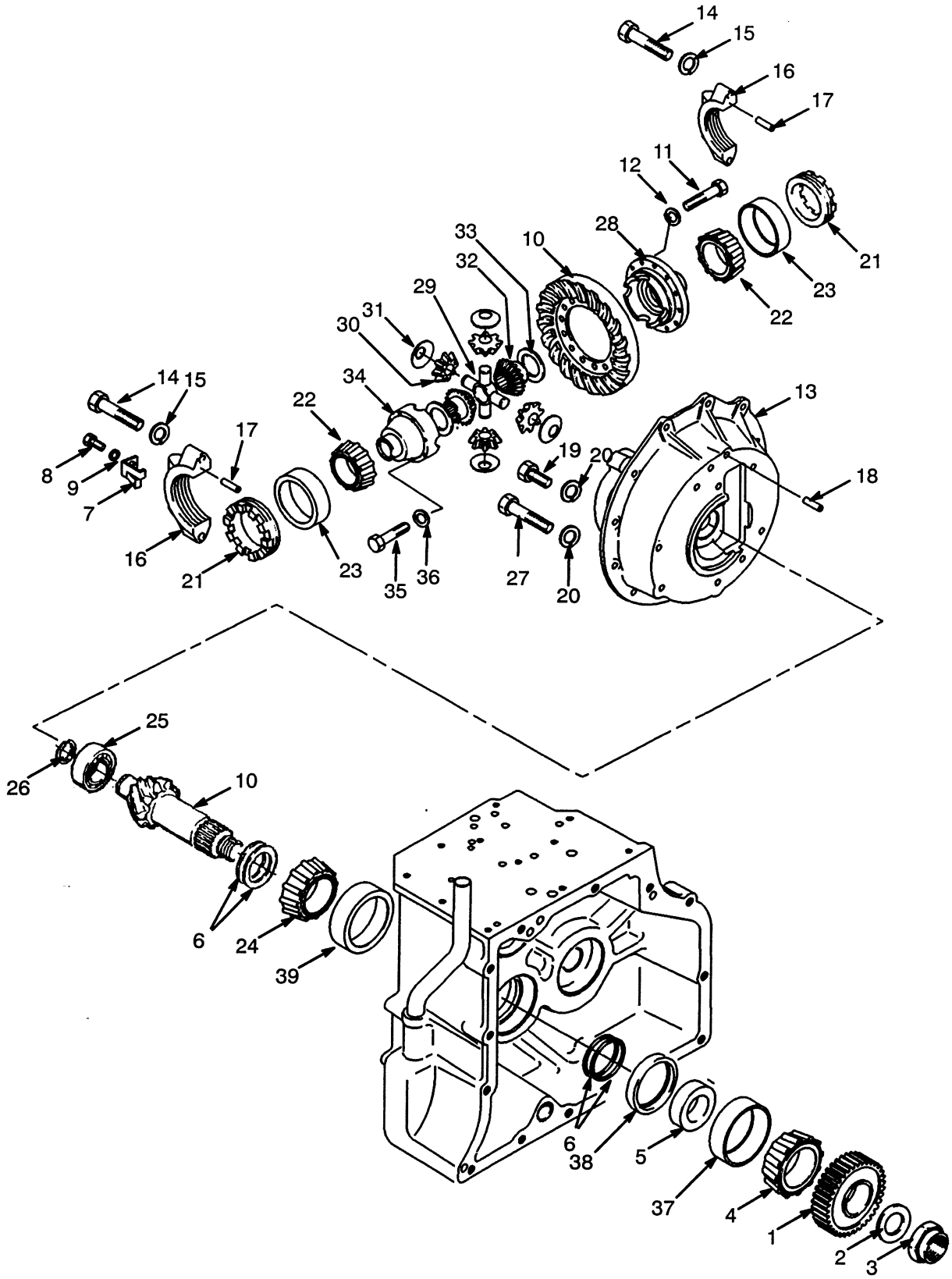

©2000 HYSTER COMPANY

See Service Manual for service procedures

DIFFERENTIAL

LAST USED ON TRANSMISSION S/N T51,T52,T53,T78

REF		PART NO.	NAME OF PART	QTY
1	a	1335894	Gear (Output)	1
1	be	334406	Gear (Output)	1
1	c	1335892	Gear (Output)	1
1	f	1386806	Gear (Output)	1
2	d	334587	Washer	1
3	d	304406	Nut	1
4	d	137283	Bearing Cone	1
5		334453	Spacer	1
6	d	346842	Shim (0.356 mm)	2
6	d	346843	Shim (0.381 mm)	2
6	d	346844	Shim (0.406 mm)	4
6	d	346845	Shim (0.508 mm)	4
6	d	346846	Shim (0.559 mm)	3
6	d	346847	Shim (0.635 mm)	3
7		334447	Plate	2
8		287851	Capscrew	2
9		292681	Lockwasher	2
10		1343219	Gear Set	1
11		97577	Bolt	12
12		221771	Washer	12
13		1334796	Differential Housing	1
14		218599	Capscrew	4
15		221773	Flat Washer	4
16		367475	Bearing Cap	2
17		234038	Dowel Pin	4
18		309831	Pin	1
19		136985	Capscrew	8
20		292682	Lockwasher	10
21		347746	Nut	2
22	d	78584	Bearing Cone	2
23	d	45733	Bearing Cup	2
24	d	342734	Bearing Cone	1
25	d	135158	Bearing	1
26	d	320264	Ring	1
27		292519	Capscrew	2
28		380478	Differential	1
28		.....	Housing	1
29		380489	Spider	1
30		380486	Pinion	4
31	d	380488	Washer	4
32		380483	Gear (Side)	2
33	d	380485	Washer	2
34		.....	Housing	1
35		221550	Capscrew	8
36		334580	Washer	8
37		137282	Bearing Cup	1
38		286788	Oil Seal	1
39		230419	Bearing Cup	1

a Used With Gasoline And LPG 2.0L Up To S/N D177B-41854 And Diesel 2.4L

b Used With Gasoline And LPG 2.2L And 3.0L

c Used With Diesel 2.8L And 3.1L

d Included in Transmission Overhaul Kit 996297

e Used With 2.0L Engine On S/N D177B-41854 Thru Transmission S/N T51,T52,T53,T78

f First Used On Transmission S/N T80M-1501, T81M-1501,T83M-1501

Note: The Above Parts Are Included With Transmission 1337069, 1337070, 1356309, And 1394930

©2000 HYSTER COMPANY

DIFFERENTIAL (Figure 162)

FIRST USED ON TRANSMISSION S/N T80M-1501, T81M-1501,T83M-1501

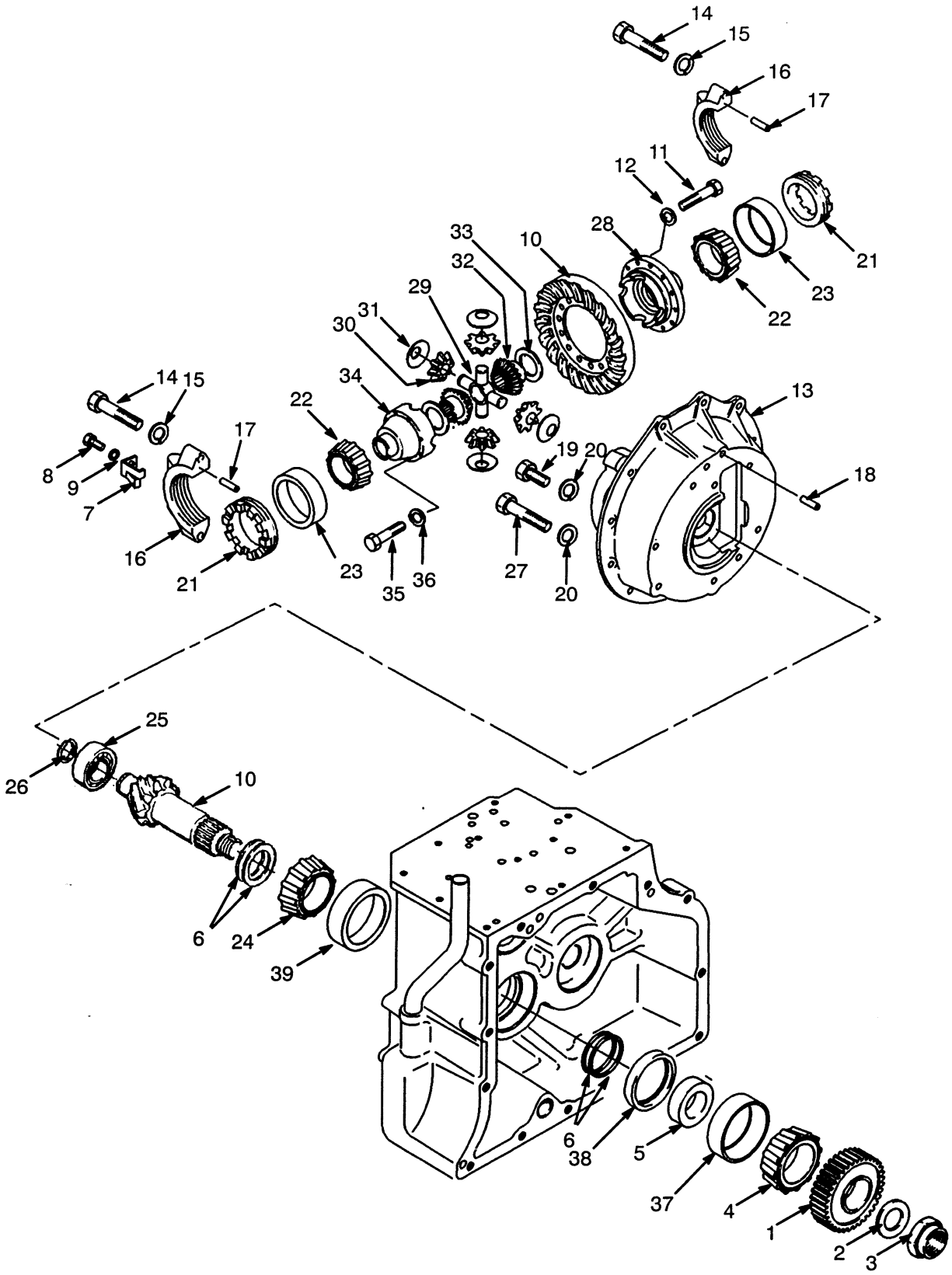

DIFFERENTIAL

FIRST USED ON TRANSMISSION S/N T80M-1501, T81M-1501,T83M-1501

KEY:
A: Gasoline And LPG 2.0L, 2.2L, 3.0L (Exedy Torque Converter)
B: Diesel 2.4L (Exedy Torque Converter)
C: Diesel 3.0L (Borg And Beck Torque Converter)

REF	PART NO.	NAME OF PART	QTY A	B	C
1	1386806	Gear (Output)	1	1	..
1	1386807	Gear (Output)	..	..	1
2	334587	Washer	1	1	1
3	304406	Nut	1	1	1
4	137283	Bearing Cone	1	1	1
5	334453	Spacer	1	1	1
6	346842	Shim (0.356 mm)	2	2	2
6	346843	Shim (0.381 mm)	2	2	2
6	346844	Shim (0.406 mm)	4	4	4
6	346845	Shim (0.508 mm)	4	4	4
6	346846	Shim (0.559 mm)	3	3	3
6	346847	Shim (0.635 mm)	3	3	3
7	334447	Plate	2	2	2
8	287851	Capscrew	2	2	2
9	292681	Lockwasher	2	2	2
10	1343219	Gear Set	1	1	1
11	97577	Bolt	12	12	12
12	221771	Washer	12	12	12
13	1334796	Differential Housing	1	1	1
14	218599	Capscrew	4	4	4
15	221773	Flat Washer	4	4	4
16	367475	Bearing Cap	2	2	2
17	234038	Dowel Pin	4	4	4
18	309831	Pin	1	1	1
19	136985	Capscrew	8	8	8
20	292682	Lockwasher	10	10	10
21	347746	Nut	2	2	2
22	78584	Bearing Cone	2	2	2
23	45733	Bearing Cup	2	2	2
24	342734	Bearing Cone	1	1	1
25	135158	Bearing	1	1	1
26	320264	Ring	1	1	1
27	292519	Capscrew	2	2	2
28	1383450	Differential	1	1	1
28	.....	Housing	1	1	1
29	1383461	Spider	1	1	1
30	1383458	Pinion	4	4	4
31	1343460	Washer	4	4	4
32	1383455	Gear (Side)	2	2	2
33	1383457	Washer	2	2	2
34	.....	Housing	1	1	1
35	293657	Capscrew	8	8	8
36	1383466	Washer	8	8	8
37	137282	Bearing Cup	1	1	1
38	286788	Oil Seal	1	1	1
39	230419	Bearing Cup	1	1	1

Note: The Above Parts Are Included With Transmissions 1394942 And 1394943

©2000 HYSTER COMPANY

CONTROL VALVE (Figure 163)

TRANSMISSION

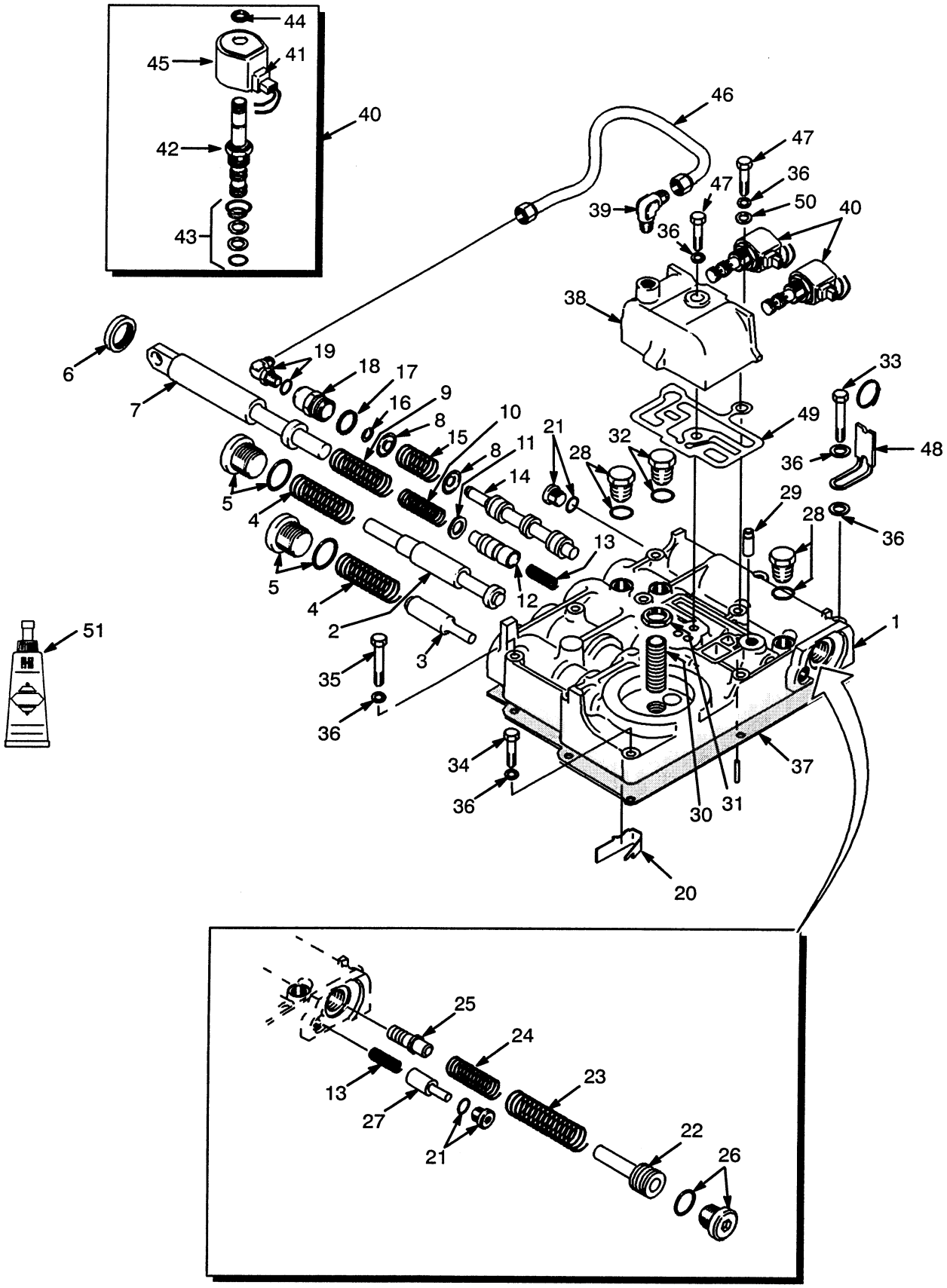

CONTROL VALVE
TRANSMISSION

KEY:
A: Last Used on Transmission S/N T051-M21379, T51B-13932,T52B-4008, T53B-3806
B: First Used on Transmission S/N T051-M21380, T51B-13933,T52B-4009, T53B-3807

REF		PART NO.	NAME OF PART	QTY A	QTY B
		1308057	Control Valve	1	..
		1391377	Control Valve	..	1
1		.....	Body	1	1
2		359223	Spool	1	1
3		334524	Spool	1	1
4	b	334525	Spring	2	2
5		235691	Fitting	2	2
5	ab	16484	O-Ring	1	1
6	ab	334500	Oil Seal	1	1
7		1337817	Inching Spool	1	1
8	b	346648	Spring Cap	2	2
9	b	334531	Spring	1	1
10	b	1347300	Spring	1	1
11		296418	Washer	1	1
12		334532	Spool	1	1
13	b	334543	Spring	2	2
14		369922	Spool (Fwd/Rev)	1	1
15	b	346645	Center Spring	1	1
16		346650	Snap Ring	1	1
17	ab	367945	Gasket	1	1
18		375986	Cap	1	1
19		16556	Fitting	1	1
19	ab	16481	O-Ring	1	1
20		350484	Inching Stop	1	1
21		222443	Fitting	2	2
21	ab	16483	O-Ring	1	1
22		334582	Spool	1	1
23	b	361877	Spring	1	1
24	b	361876	Spring	1	1
25		359221	Spool	1	1
26		200659	Fitting	1	1
26	ab	16982	O-Ring	1	1
27		334542	Spool	1	1
28		14592	Fitting	2	2
28	ab	16482	O-Ring	1	1
29		369921	Pin	1	..
30		181766	Nipple	1	1
31		15032	Nut	1	1
32		134436	Fitting	1	1
32	ab	16482	O-Ring	1	1
33		136704	Capscrew	3	3
34		292508	Capscrew	1	1
35		292509	Capscrew	3	3
36		320157	Washer	12	12
37		1350276	Gasket	1	1
38		1350274	Manifold Valve	1	..
38		1391375	Manifold Valve	..	1
39		14500	Fitting	1	1
40	c	1350275	Solenoid Valve	2	2
40	d	1390610	Solenoid Valve	2	2
41		1452595	Coil	1	1
42		1452596	Cartridge	1	1
43		1393160	Seal Kit	1	1
44		.....	Nut	1	1
45		1365276	Housing	1	1
46		1302973	Tube	1	1
47		346656	Capscrew	4	4
48		1385873	Strap	1	1
49		1388573	Manifold Gasket	1	1
50		15932	Lockwasher	1	1
51		273338	Sealant	AR	AR

a Included In Seal Kit 373833

b Included in Transmission Overhaul Kit 996297

c Last Used On Transmission S/N T51M-21379, T51B-14127, T52B-4167 And T53B-3851

d First Used On Transmission S/N T51M-21380, T51B-14128, T52B-4168 And T53B-3852

Note: The Above Parts Are Included With Transmissions 1337069, 1337070, 1356309, And 1394930

©2000 HYSTER COMPANY

PUMP DRIVE (Figure 164)

LAST USED ON TRANSMISSION S/N T80M-1644

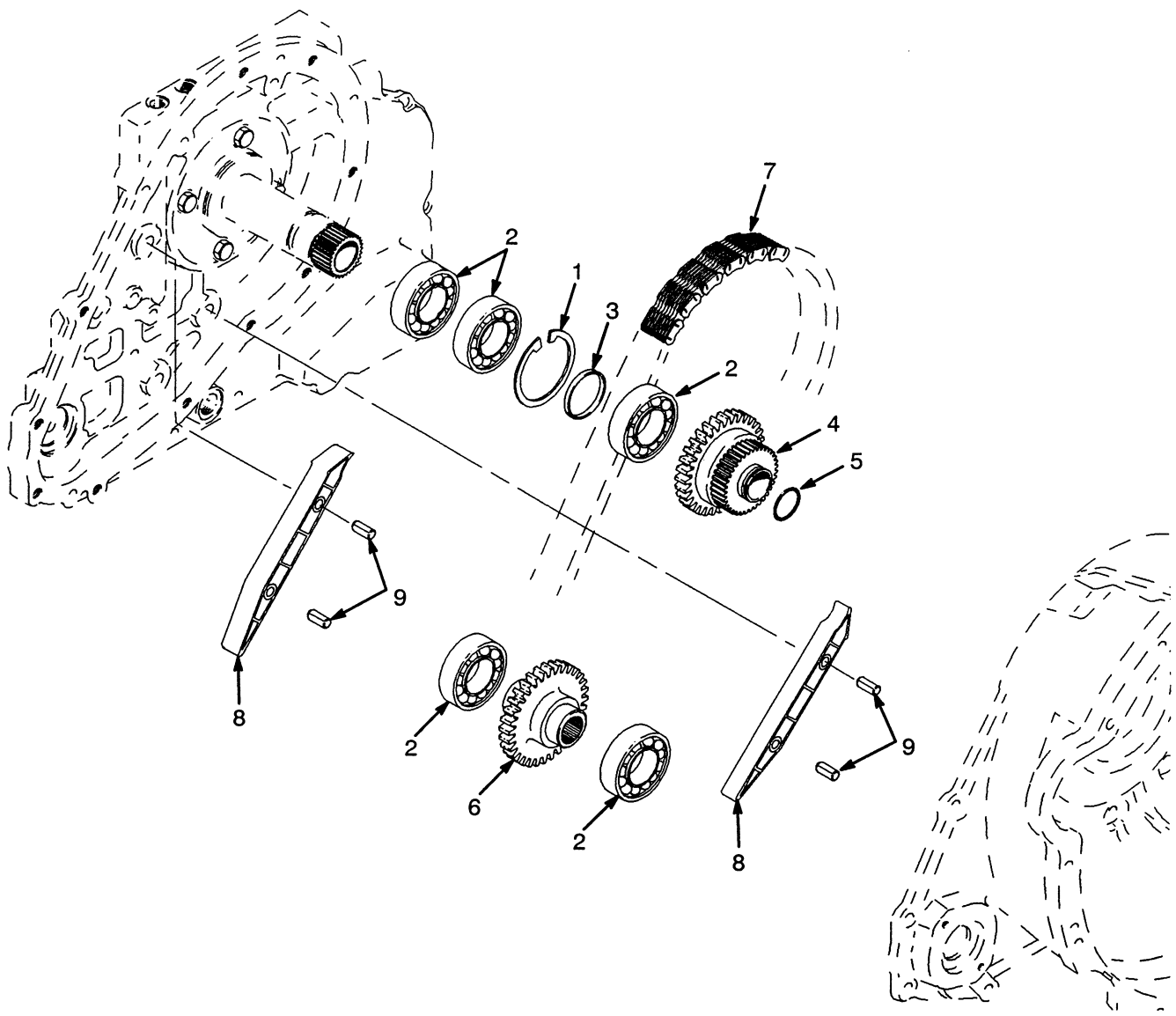

REF	PART NO.	NAME OF PART	QTY
1	12894	Snap Ring	1
2	44308	Bearing Ball	5
3	1339333	Spacer	1
4	1343479	SInput Sprocket	1
5	1338296	O-Ring	1
6	1343480	Pump Sprocket	1
7	1343478	Chain	1
8	1347158	Snubber	2
9	80952	Pin	4

©2000 HYSTER COMPANY

PUMP DRIVE (Figure 165)

FIRST USED ON S/N T80M-1645

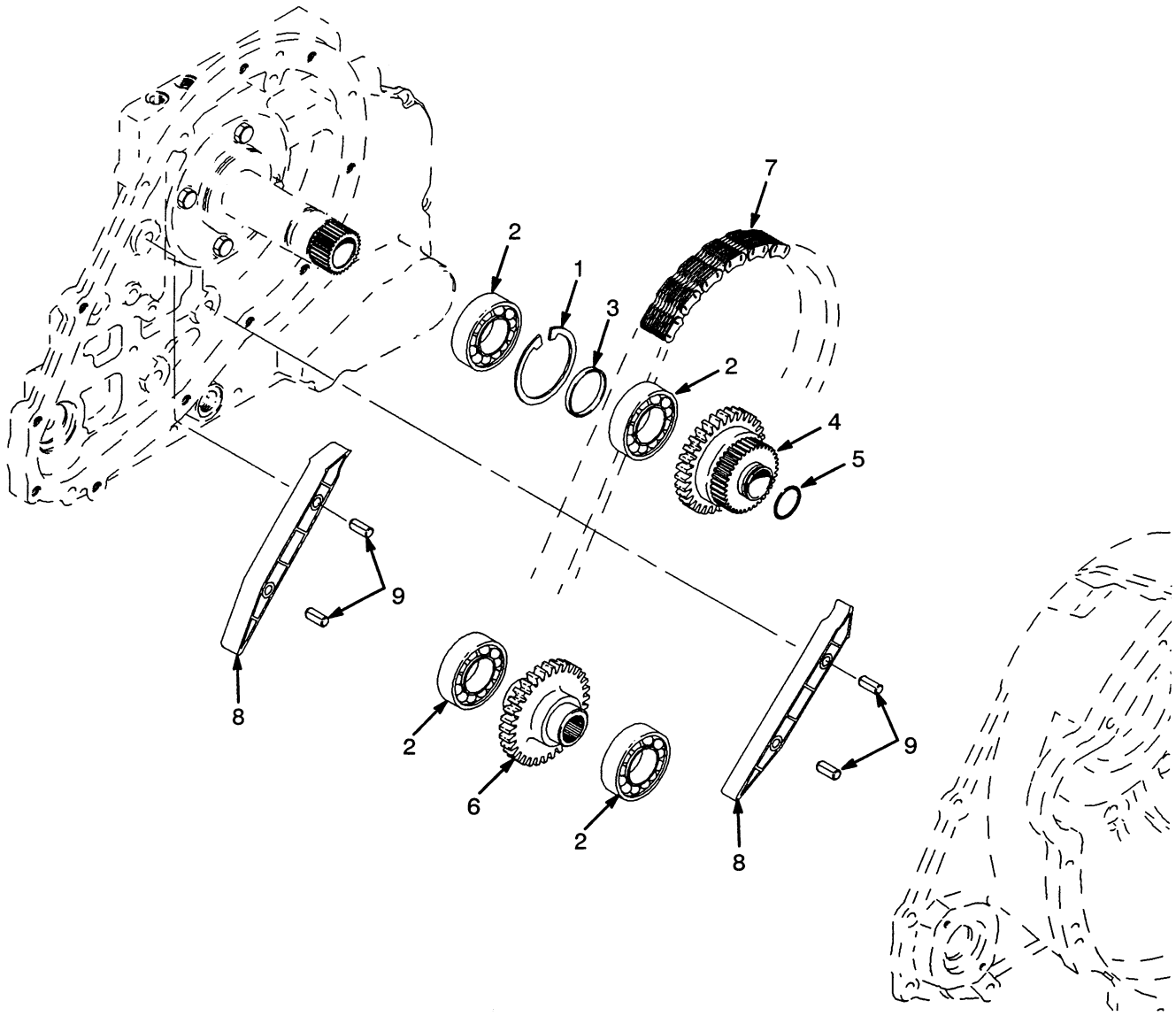

REF	PART NO.	NAME OF PART	QTY
1	12894	Snap Ring	1
2	44308	Bearing Ball	4
3	1394904	Spacer	1
4	1343479	SInput Sprocket	1
5	1338296	O-Ring	1
6	1343480	Pump Sprocket	1

REF	PART NO.	NAME OF PART	QTY
7	1343478	Chain	1
8	1347158	Snubber	2
9	80952	Pin	4

Note: The Above Parts Are Included With Transmissions 1394942, 1394942

©2000 HYSTER COMPANY

NOTES

©2000 HYSTER COMPANY

TRANSMISSION COOLING (Figure 166)

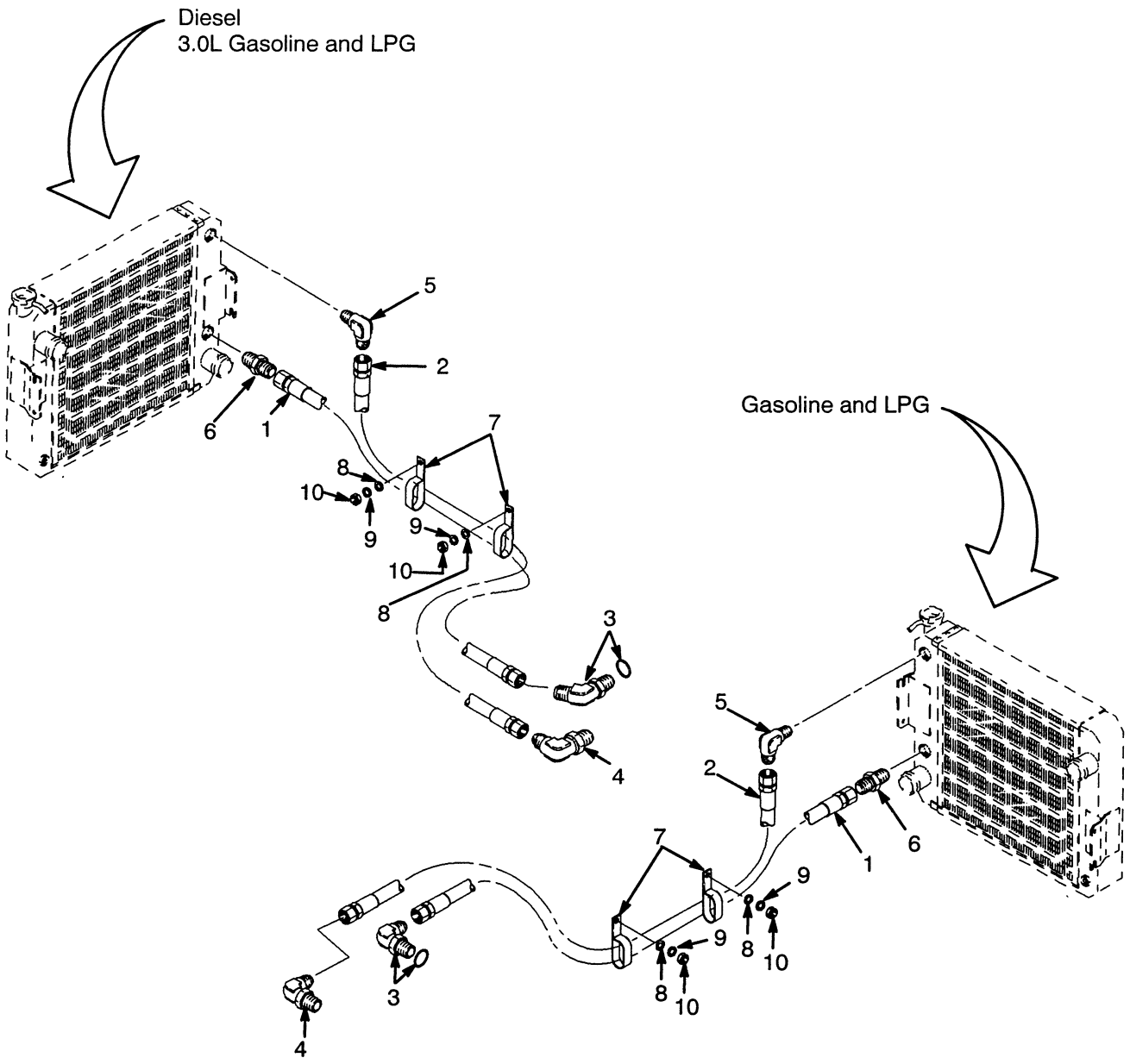

KEY:
A: Gasoline And LPG 2.0L And 2.2L
B: Diesel; Gasoline, And LPG 3.0L

REF	PART NO.	NAME OF PART	QTY A	QTY B
1	[a]1344146	Hose	1	..
1	[b]1382320	Hose	1	..
1	1351134	Hose	..	1
2	[a]1331162	Hose	1	..
2	[b]1371429	Hose	1	..
2	1371429	Hose	1	..
2	1351135	Hose	..	1
3	16568	Fitting	1	..
3	17167	Fitting	..	1
3	16484	O-Ring	1	1
4	14506	Fitting	1	1
5	17309	Fitting	1	1
6	17315	Fitting	1	1
7	140660	Clamp	2	2
8	320157	Washer	2	2
9	292681	Lockwasher	2	2
10	239503	Nut	2	2

[a] Last Used On S/N D177B-23279
[b] First Used On S/N D177B-23280

©2000 HYSTER COMPANY

DRIVE AXLE (Figure 167)

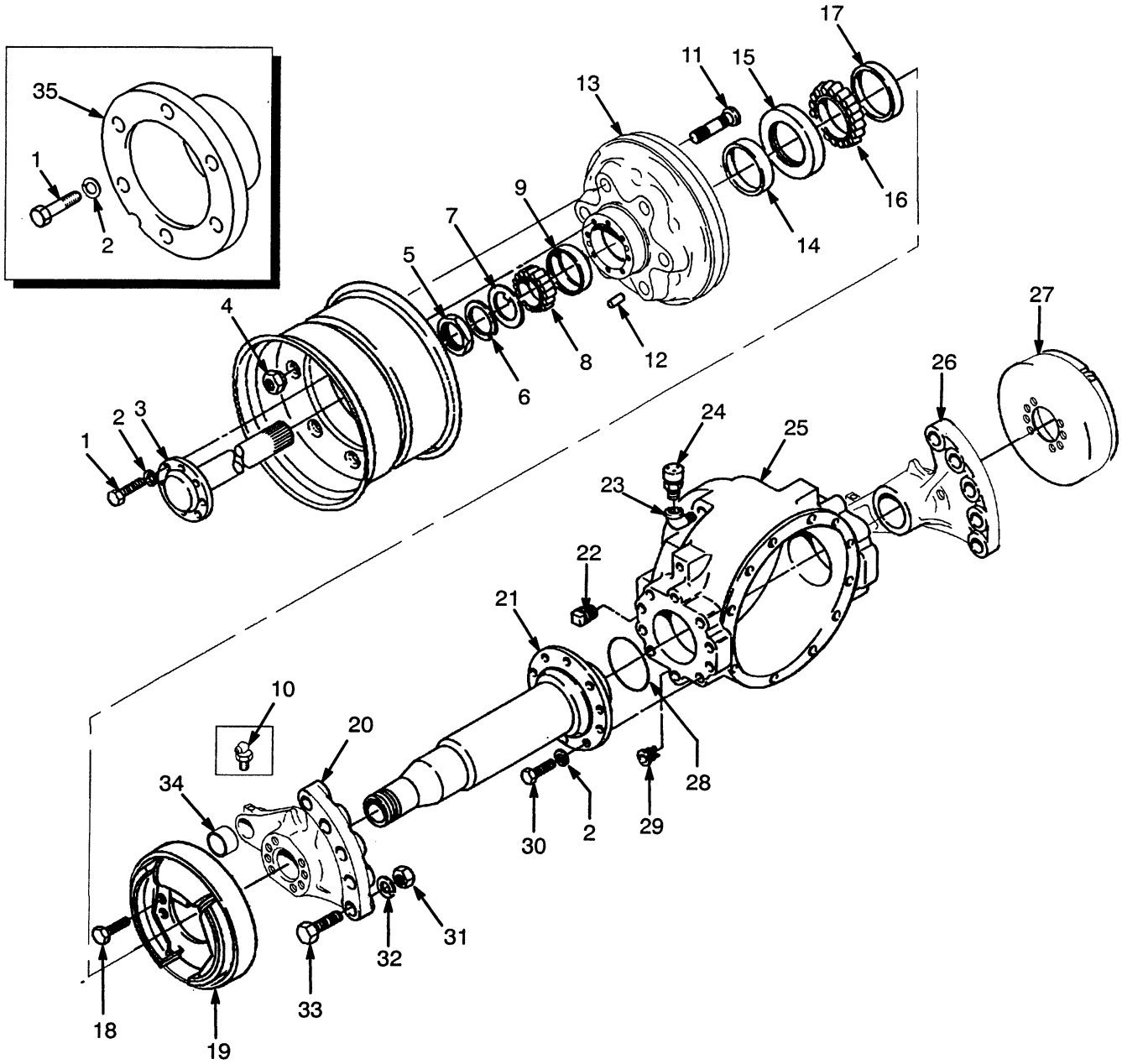

DRIVE AXLE

REF		PART NO.	NAME OF PART	QTY
1		300794	Capscrew	16
1	a	326488	Capscrew	16
2		292683	Lockwasher	36
3		1383463	Axle Shaft	2
3		313022	Sealant	AR
4		11276	Nut	12
5		33657	Locknut	2
6		145978	Lockwasher	2
7		85885	Washer	2
8		264892	Bearing Cone	2
9		264893	Bearing Cup	2
10		16009	Lube Fitting	2
11		137154	Stud	12
12		328390	Dowel Pin	4
13		1335986	Brake Drum	2
14		300800	Seal	2
15		224571	Bearing Cup	2
16		224570	Bearing Cone	2
17		300801	Seal	2
18		1327246	Bolt	16
19		.....	Brake	1
			☞ Figure 173	
20		1335503	Bracket	1
21		300758	Spindle	2
21		251979	Lubricant	AR
22		15303	Fitting	1
23		16151	Fitting	1
24		21420	Breather Plug	1
25		1334791	Axle Housing	1
25		313022	Adhesive	AR
26		1335502	Bracket	1
27		.....	Brake	1
			☞ Figure 173	
28		39714	O-Ring	2
29		15290	Fitting	1
30		292528	Capscrew	20
31		292620	Nut	10
32		292687	Lockwasher	10
33		292588	Capscrew	10
34		1333385	Bushing	2
35	a	1347020	Spacer	2

a Dual Wheels

NOTES

©2000 HYSTER COMPANY

STEERING SYSTEM

STEERING AXLE (Figure 169) ..... Page 310

STEERING CONTROL UNIT (Figure 170) ..... Page 312

STEERING CYLINDER (Figure 171) ..... Page 313

STEERING POD (Figure 168) ..... Page 308

©2000 HYSTER COMPANY

STEERING POD (Figure 168)

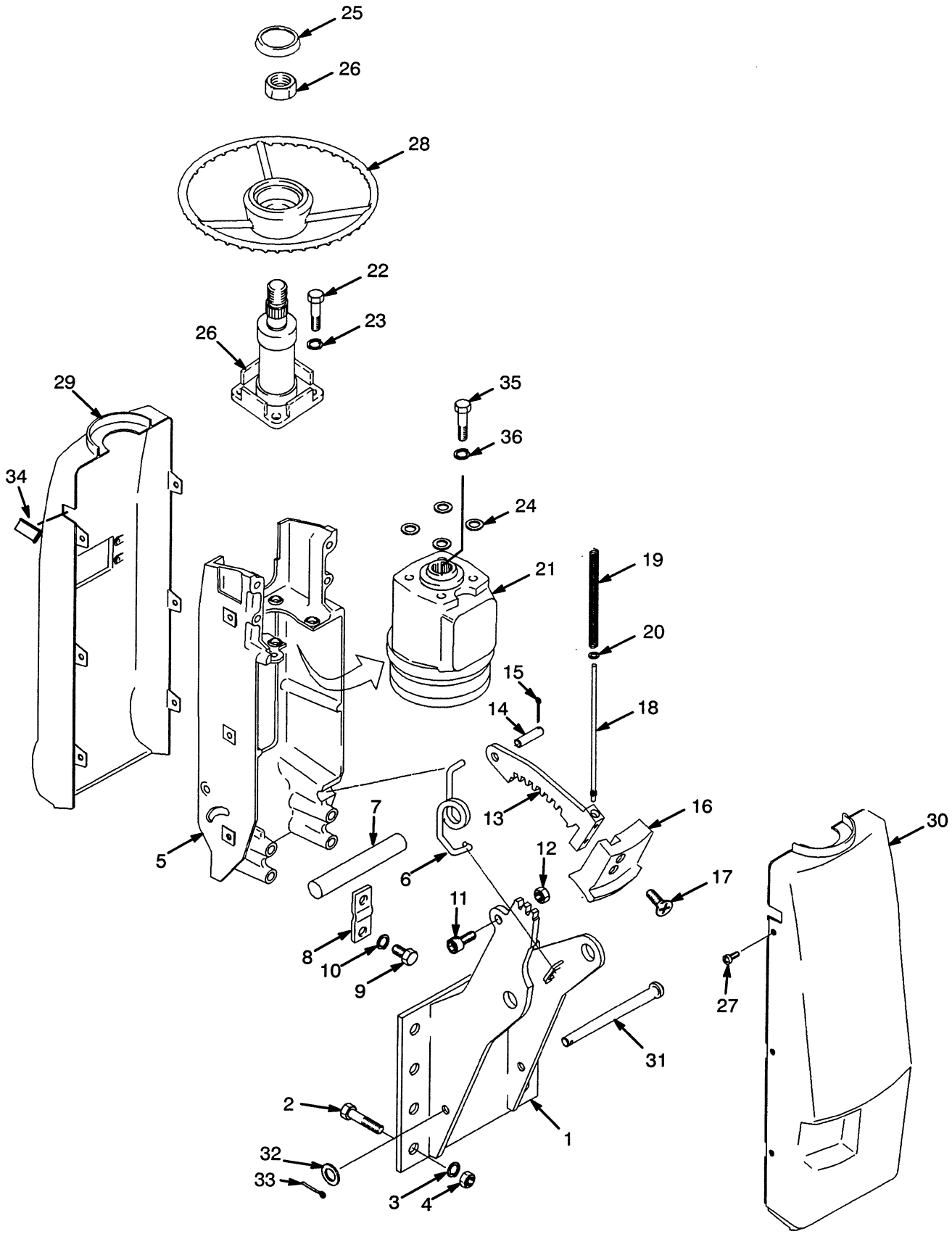

STEERING POD

REF	PART NO.	NAME OF PART	QTY
1	1337043	Bracket	1
2	136985	Capscrew	4
3	292682	Lockwasher	4
4	136692	Nut	4
5	1343573	Bracket	1
6	1378600	Spring	1
7	1335987	Shaft	1
8	1335967	Plate	2
9	136749	Capscrew	4
10	292681	Lockwasher	4
11	296010	Capscrew	1
12	302400	Nut	1
13	1364271	Gear Latch	1
14	1343607	Pin	1
15	15212	Pin	1
16	1343574	Anchor	1
17	296472	Screw	2
18	1343572	Rod	1
19	1343537	Spring	1
20	320155	Washer	1
21	.....	Steering Control Unit ☞ Figure 170	1
22	16815	Capscrew	4
23	15156	Lockwasher	4
24	15134	Washer	4
25	1347135	Horn Button	1
26	1347025	Steering Column	1
26	345423	Nut	1
27	1337196	Screw	6
28	1329250	Steering Wheel	1
29	1376744	Cover (Upper)	1
30	1376745	Cover (Lower)	1
31	1352616	Pin	1
32	320156	Washer	1
33	18824	Cotter Pin	1
34	1376743	Plug	1
35	293762	Screw	4
36	293779	Washer	4

©2000 HYSTER COMPANY

STEERING AXLE (Figure 169)

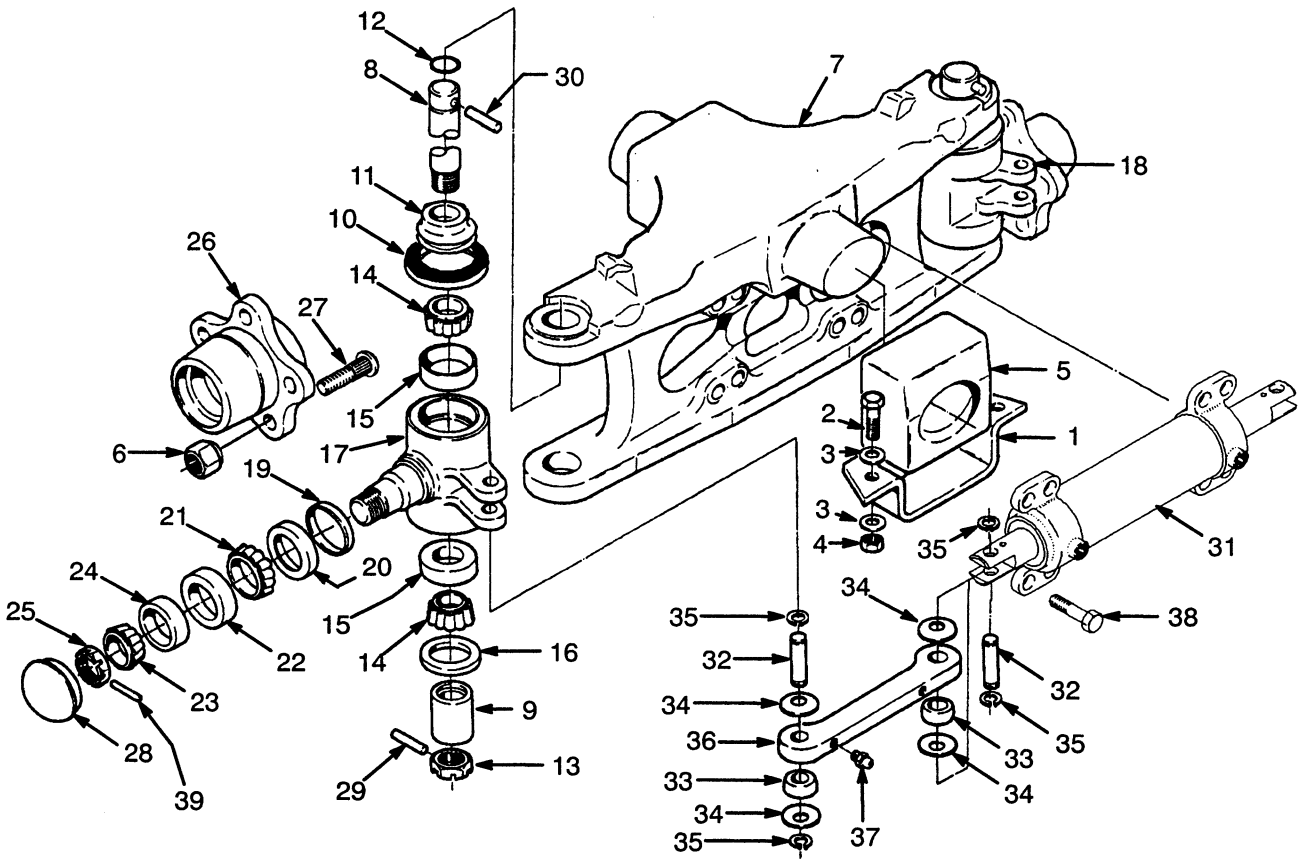

STEERING AXLE

REF		PART NO.	NAME OF PART	QTY
1		1334723	Plate	2
2		293648	Capscrew	4
3		320161	Washer	8
4		300937	Nut	4
5		1343831	Mount	2
6		60949	Nut	10
7		1334718	Steering Axle	1
8	a	300765	Kingpin	2
9	a	300766	Sleeve	2
10	a	264973	Seal	2
11	a	300767	Spacer	2
12	a	39352	O-Ring	2
13		249289	Slotted Nut	2
14	a	156195	Bearing Cone	4
15	a	156194	Bearing Cup	4
16	a	98525	Seal	2
17		1310599	Spindle (LH)	1
18		1315425	Spindle (RH)	1
19		44542	Oil Seal	2
20	a	164639	Wear Sleeve	2
21		30273	Bearing Cone	2
22		163970	Bearing Cup	2
23		317076	Bearing Cone	2
24		317075	Bearing Cup	2
25		1383777	Nut	2
26		300738	Hub	2
27		339529	Wheel Stud	10
28		69029	Hub Cap	2
29		15225	Pin	2
30	a	226986	Grooved Pin	2
31		.....	Steering Cylinder ☞ Figure 171	1
32		326498	Pin	4
33		300751	Bushing	4
34		300752	Washer	8
35		58903	Snap Ring	8
36		381298	Tie Rod	2
37		13957	Grease Fitting	6
38		293686	Capscrew	8
39		15227	Pin	2

a Included In Kingpin Kit 334717
For One Side

©2000 HYSTER COMPANY

STEERING CONTROL UNIT (Figure 170)

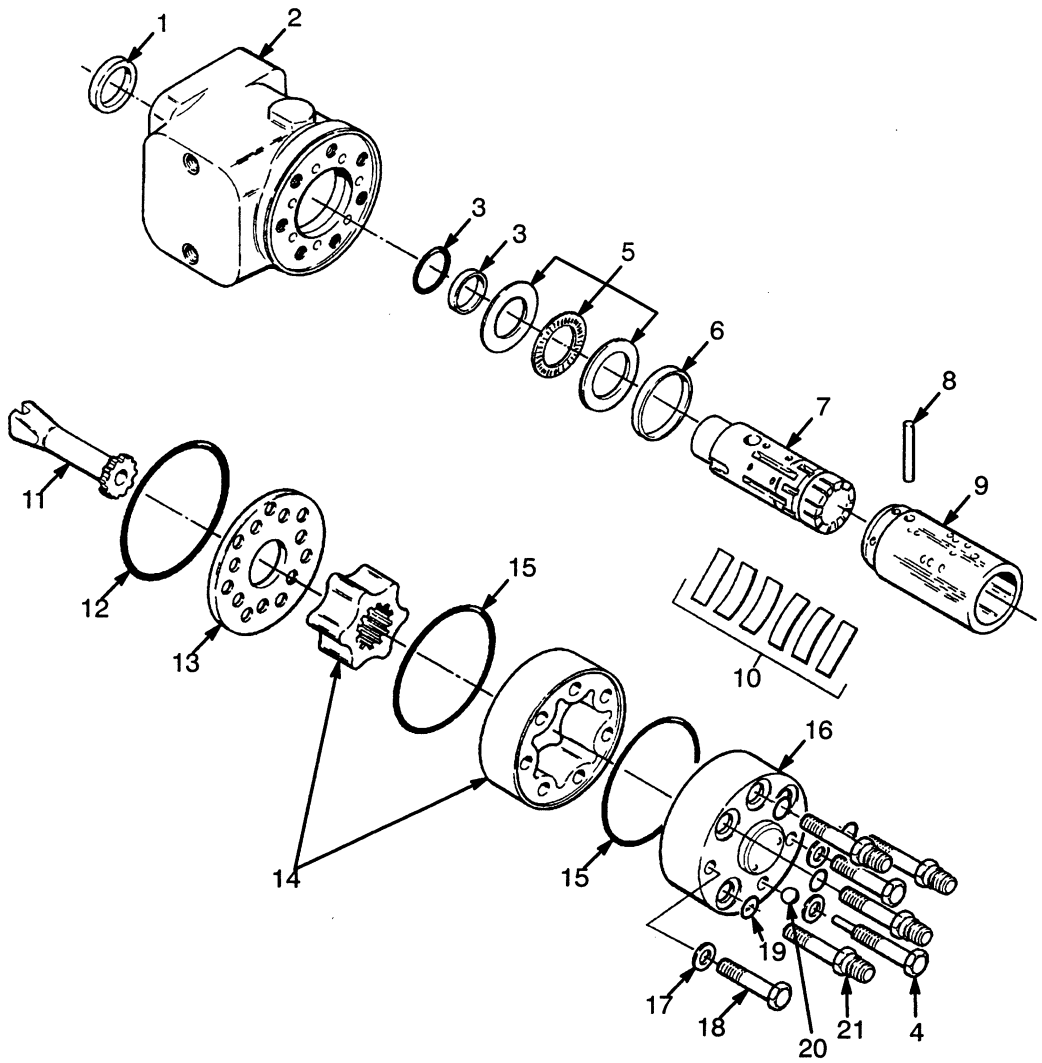

REF		PART NO.	NAME OF PART	QTY
		1347024	Steering Control Unit	1
1		1355322	Seal Ring	1
2		.....	Housing	1
3	ab	1384429	Seal	1
3	ab	.....	O-Ring	1
3	ab	.....	Ring	1
3	ac	2032230	Seal	1
4		346208	Screw	1
5		345410	Bearing	1
6		345411	Ring	1
7		.....	Spool	1
8		345412	Pin	1
9		.....	Sleeve	1
10		1303787	Spring Set	1
11		1355326	Shaft	1

REF		PART NO.	NAME OF PART	QTY
12	a	1355327	O-Ring	1
13		1355328	Plate	1
14		1355329	Gear Set	1
15	a	1355330	O-Ring	2
16		1355331	Cover-End	1
17	a	381370	Washer	3
18		346205	Capscrew	2
19	a	1355332	O-Ring	4
20		1355335	Ball	1
21		1355334	Screw	4

a Included In Seal Kit 1355337

b Last Used On Steering Control Unit Date Code 96/02

c First Used On Steering Control Unit Date Code 96/03

©2000 HYSTER COMPANY

STEERING CYLINDER (Figure 171)

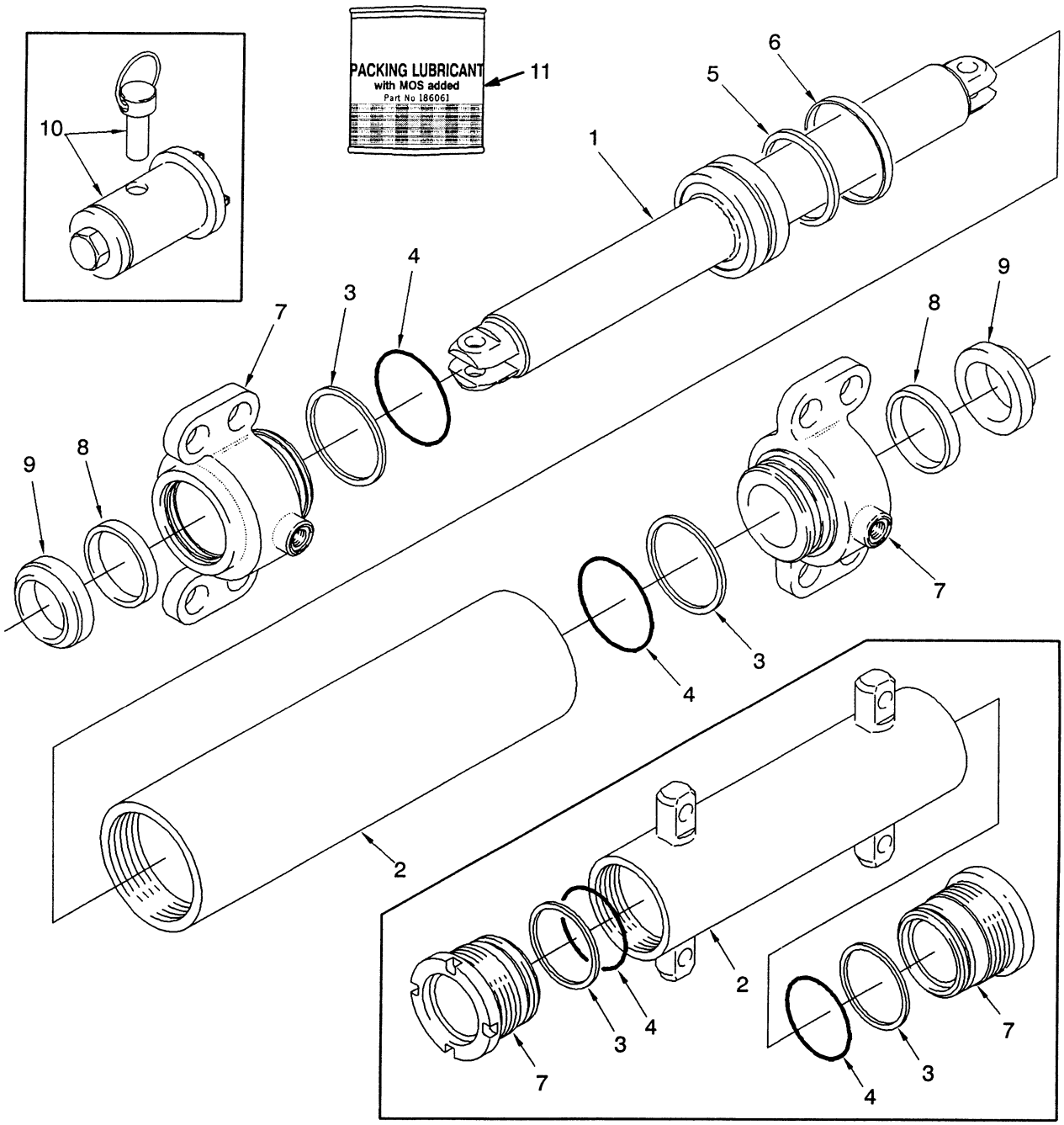

REF		PART NO.	NAME OF PART	QTY
		1321174	Cylinder	1
1		375634	Rod And Piston	1
2		375635	Shell	1
3	a	147973	Back-Up Ring	2
4	a	130825	O-Ring	2
5	a	243190	Quadrant Ring	1
6	a	199851	Seal	1
7		1321149	End Cap	2
8	a	210183	Rod Seal	2
9	a	203071	Wiper	2
10		332495	Tool Kit	1
11		186061	Packing Lubricant	AR

a Included In Seal Kit 360299

©2000 HYSTER COMPANY

See Service Manual for service procedures

NOTES

©2000 HYSTER COMPANY

BRAKE

BRAKE (Figure 173) ..... Page 318

BRAKE LINES (Figure 174) ..... Page 320

BRAKE PEDAL LINKAGE (Figure 172) ..... Page 316

MASTER CYLINDER (Figure 176) ..... Page 322

PARK BRAKE (Figure 175) ..... Page 321

©2000 HYSTER COMPANY

BRAKE PEDAL LINKAGE (Figure 172)

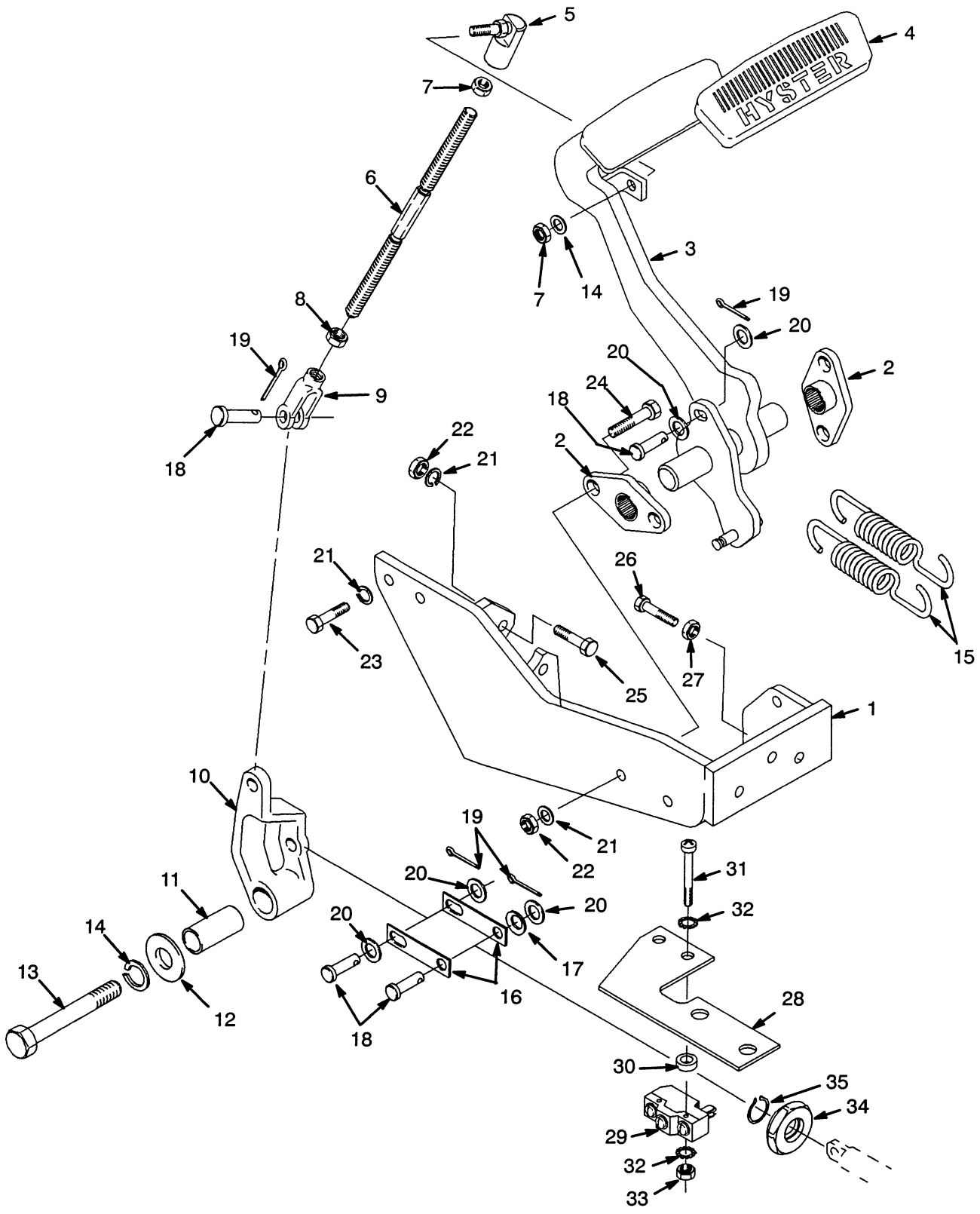

©2000 HYSTER COMPANY

See Service Manual for service procedures

BRAKE PEDAL LINKAGE

REF		PART NO.	NAME OF PART	QTY
1		1343541	Bracket	1
2		1327161	Bushing	2
3		1343540	Pedal	1
4		1343630	Pad	1
5		1338260	Ball Joint	1
6		2033602	Link	1
7		15025	Nut	2
8		16897	Nut	1
9		1338262	Rod End	1
10		1343553	Inching Crank	1
11		1337108	Spacer	1
12		332755	Washer	1
13		136703	Capscrew	1
14		292681	Lockwasher	2
15		1343508	Spring	2
16		1337091	Half Link	2
17		375984	Spring Washer	1
18		142	Pin	4
19		15212	Pin	4
20		320159	Washer	7
21		292682	Lockwasher	6
22		136692	Nut	4
23		287854	Capscrew	6
24		136985	Capscrew	2
25		287860	Capscrew	2
26		292533	Capscrew	1
27		296130	Nut	1
28		1324557	Bracket	1
29	a	1320893	Switch	1
30	a	316132	Spacer	1
31	a	86510	Screw	2
32	a	16743	Washer	4
33	a	15049	Nut	2
34	a	387455	Disc	1
35	a	209417	Snap Ring	1

a Monotrol Pedal

©2000 HYSTER COMPANY

BRAKE (Figure 173)

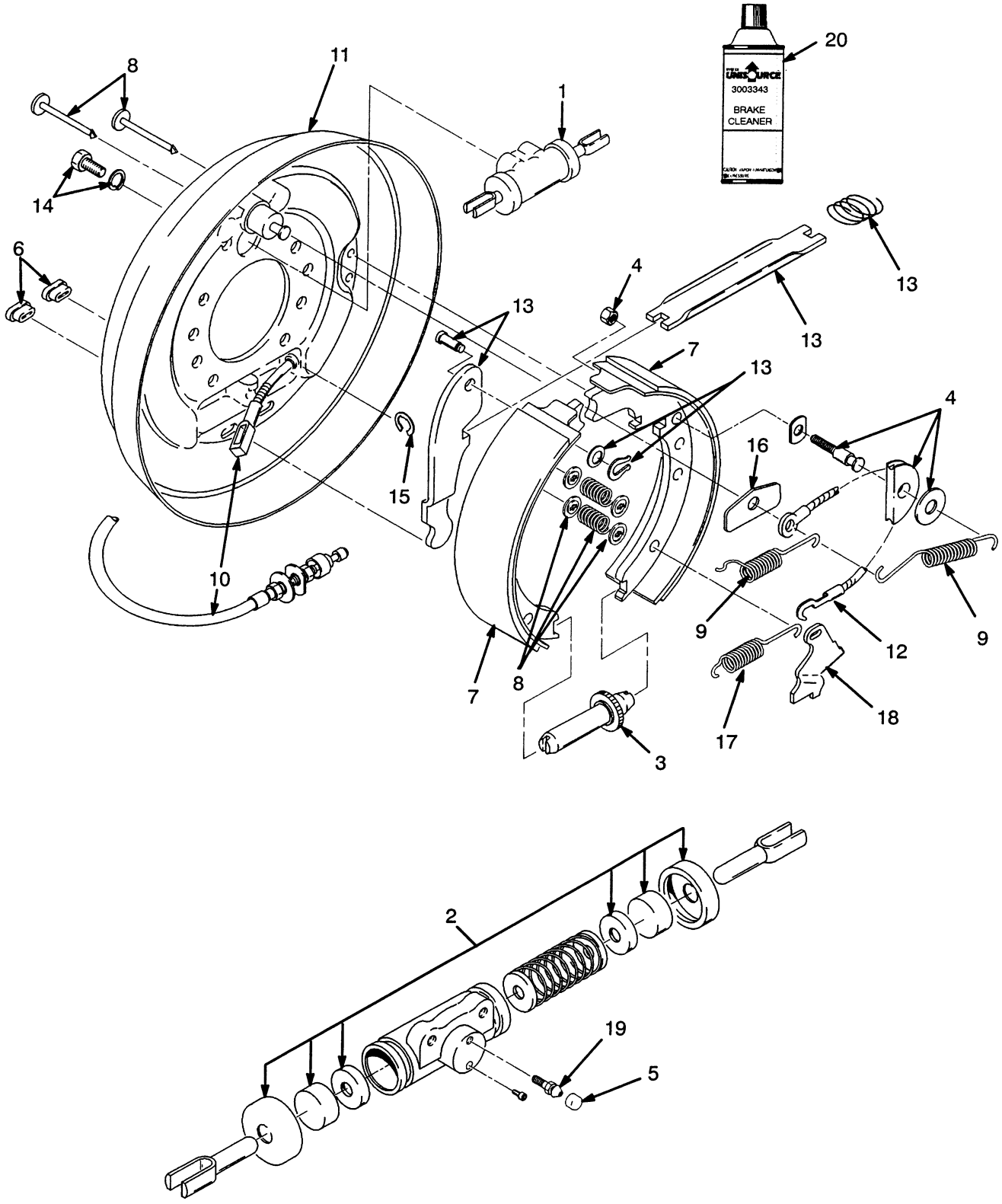

©2000 HYSTER COMPANY

BRAKE

KEY:
A: RH Brake
B: LH Brake

REF	PART NO.	NAME OF PART	QTY A	QTY B
	1338255	Brake	1	..
	1338256	Brake	..	1
1	1334648	Wheel Cylinder	1	1
2	1334647	Kit-Wheel Cylinder	1	1
3	1334646	Adjuster	..	1
3	1334645	Adjuster	1	..
4	1379758	Kit (Sheave)	1	1
5	1361504	Cap	1	1
6	1334642	Cover	2	2
7	1358223	Kit-Shoe/Lining	1	1
8	1334639	Kit-Shoe Hold Down	1	1
9	1334638	Kit-Spring	1	1
10	1358225	Cable (LH Parking)	..	1
10	1358224	Cable (RH Parking)	1	..
11	1347971	Backing Plate	1	..
11	1347970	Backing Plate	..	1
12	1360792	Cable & Fitting Assembly	1	1
13	1375048	Kit-Parking Brake (LH)	..	1
13	1375049	Kit-Parking Brake (RH)	1	..
14	1360798	Bolt Assy	1	1
15	1361502	Snap Ring	1	1
16	1361501	Plate	1	1
17	1360793	Spring	1	1
18	1360794	Lever (RH)	1	..
18	1361505	Lever (LH)	..	1
19	1361503	Bleeder Screw	1	1
20	3003343	Brake Cleaner	AR	AR

©2000 HYSTER COMPANY

BRAKE LINES (Figure 174)

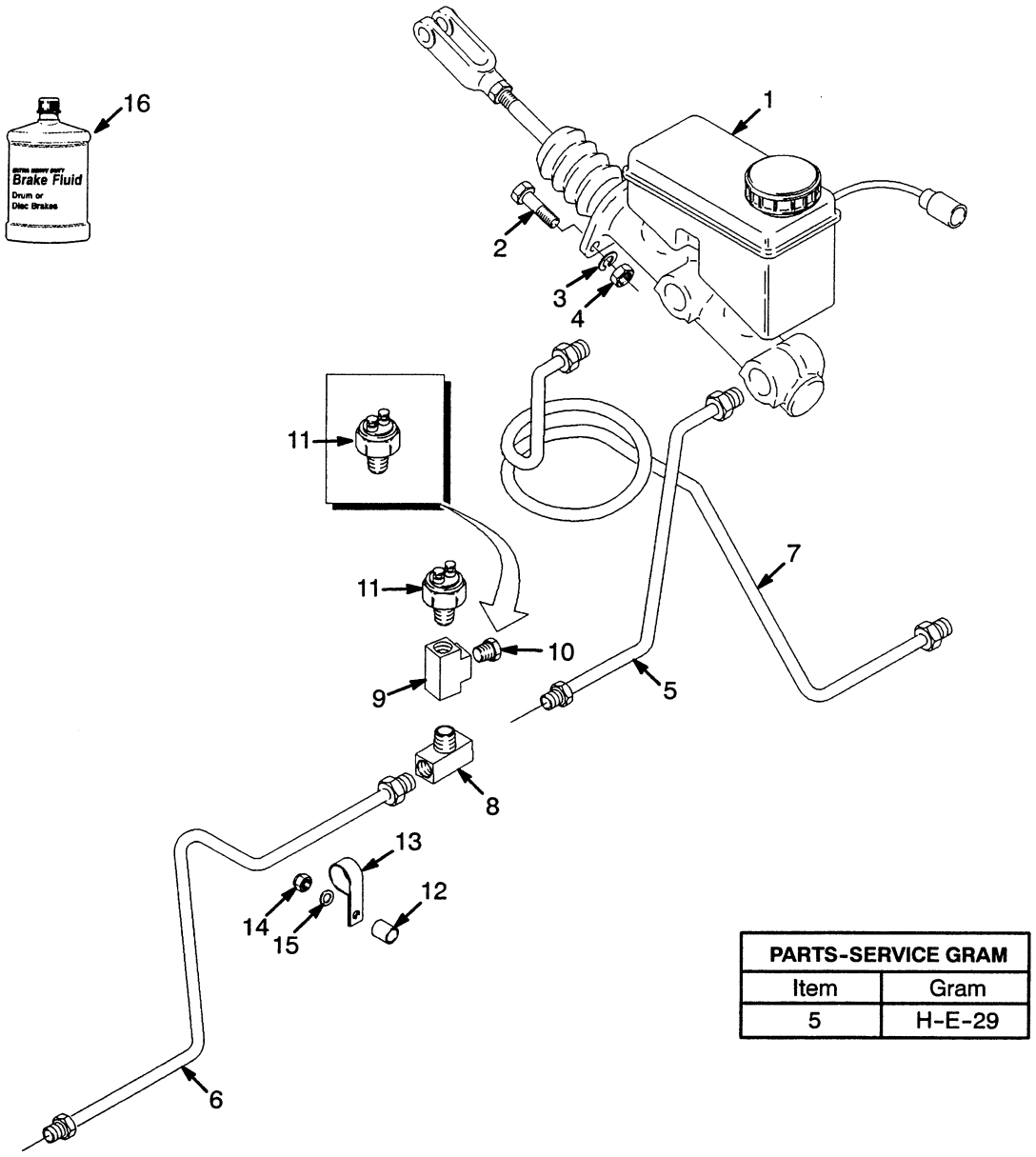

PARTS-SERVICE GRAM	
Item	Gram
5	H-E-29

REF		PART NO.	NAME OF PART	QTY
1		.....	Master Cylinder	1
			☞ Figure 176	
2		287860	Capscrew	2
3		292682	Lockwasher	2
4		136692	Nut	2
5	c	1347113	Tube (RH).	1
5	d	1381923	Hose Assy	1
6		1347091	Tube (RH).	1
7		1347090	Tube (LH)	1
8		14899	Fitting	1
9		12838	Fitting	1
10	a	14349	Fitting	1
11	a	387867	Switch	1

REF		PART NO.	NAME OF PART	QTY
11	b	387867	Switch	2
12		1337382	Spacer	1
13		1347116	Clamp	1
14		302400	Nut	1
15		320158	Washer	1
16		357956	Brake Fluid (1 Gallon)	AR
16		357973	Brake Fluid (1 Quart)	AR
16		26758	Brake Fluid (12 Ounces)	AR

a Forward/Reverse Lever
b Monotrol Pedal
c First Used On S/N D177B-2342
d Last Used On S/N D177B-2343

©2000 HYSTER COMPANY

PARK BRAKE (Figure 175)

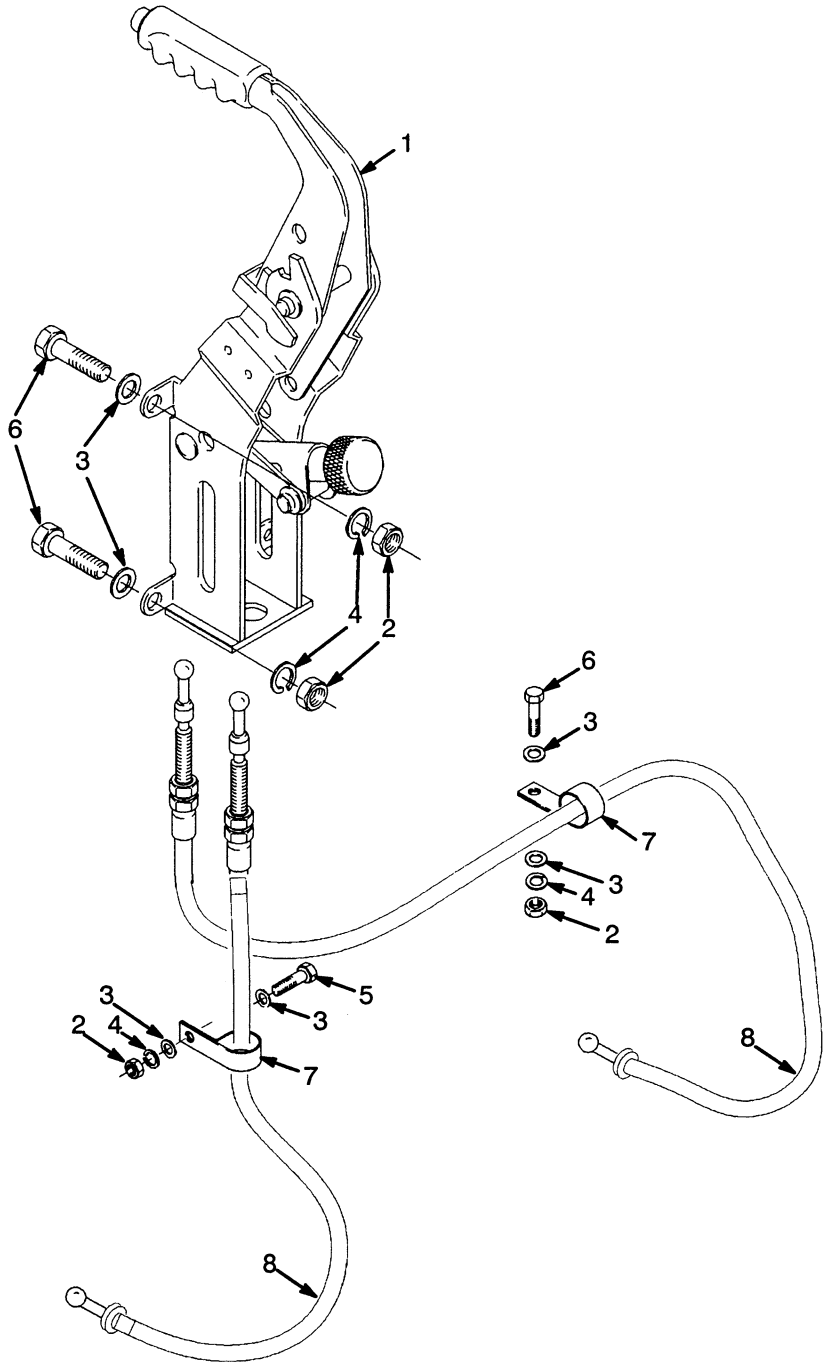

REF	PART NO.	NAME OF PART	QTY
1	1376557	Park Brake	1
2	239503	Nut	6
3	320157	Washer	8
4	292681	Lockwasher	6
5	176640	Capscrew	1
6	136749	Capscrew	5
7	124297	Clamp	2
8 [a]	.....	Cable	2

[a] Note: Cables Are Included With Service Brake Assemblies

©2000 HYSTER COMPANY

See Service Manual for service procedures

MASTER CYLINDER (Figure 176)

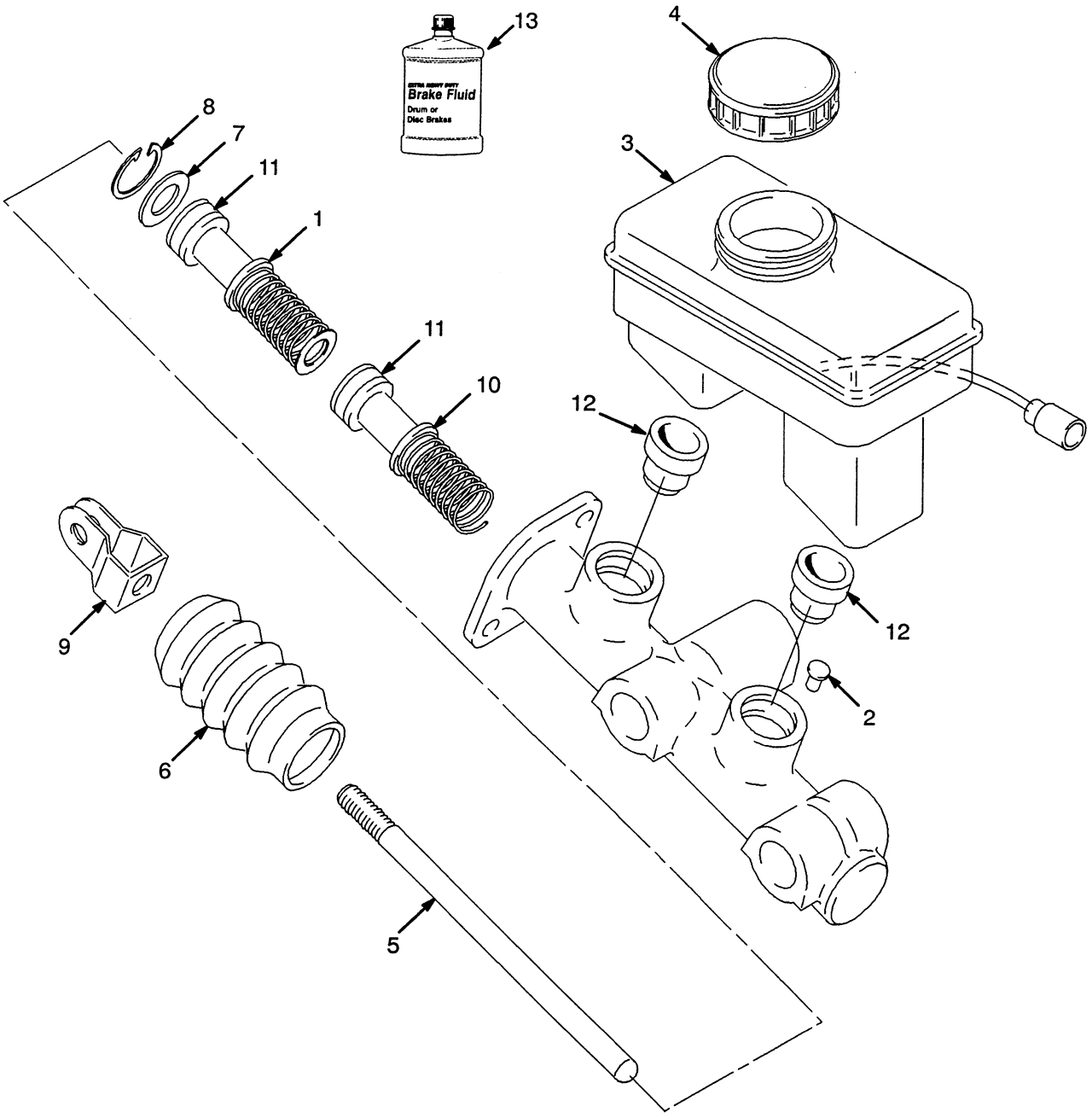

REF	PART NO.	NAME OF PART	QTY
	1347048	Master Cylinder	1
1	1357197	Piston	1
2	1324029	Pin	1
3	1357199	Reservoir	1
4	1324048	Cap	1
5	1357201	Rod	1
6	1324040	Cover	1
7	1324041	Washer	1
8	1324042	Snap Ring	1
9	1324035	Clevis	1
10	1357196	Piston	1
11 a	.....	Seal	2
12 a	.....	Seal	2
13	357956	Brake Fluid (1 Gallon)	AR
13	357973	Brake Fluid (1 Quart)	AR
13	26758	Brake Fluid (12 Ounces)	AR

a Included In Seal Kit 1355305

©2000 HYSTER COMPANY

See Service Manual for service procedures

HYDRAULIC SYSTEM

CONTROL VALVE (Figure 187)
THREE FUNCTION ..... Page 342

FLOW VALVE (Figure 182)
LAST USED ON S/N D177B-15601 ..... Page 334

FLOW VALVE (Figure 183)
FIRST USED ON S/N D177B-15602 ..... Page 335

HYDRAULIC (Figure 177) ..... Page 324

HYDRAULIC PUMP (Figure 178)
SINGLE GEAR ..... Page 326

HYDRAULIC PUMP (Figure 179)
SINGLE GEAR ..... Page 328

HYDRAULIC PUMP (Figure 180)
DOUBLE GEAR ..... Page 330

HYDRAULIC PUMP (Figure 181)
DOUBLE GEAR ..... Page 332

TILT CYLINDER (Figure 184)
GROUP NUMBER 8601501 ..... Page 337

VALVE ATTACHING PARTS (Figure 185)
PUSH AWAY LEVERS ..... Page 338

VALVE ATTACHING PARTS (Figure 186)
DIRECT ACTING LEVERS ..... Page 340

VALVE (Figure 188)
FOUR FUNCTION ..... Page 344

©2000 HYSTER COMPANY

HYDRAULIC (Figure 177)

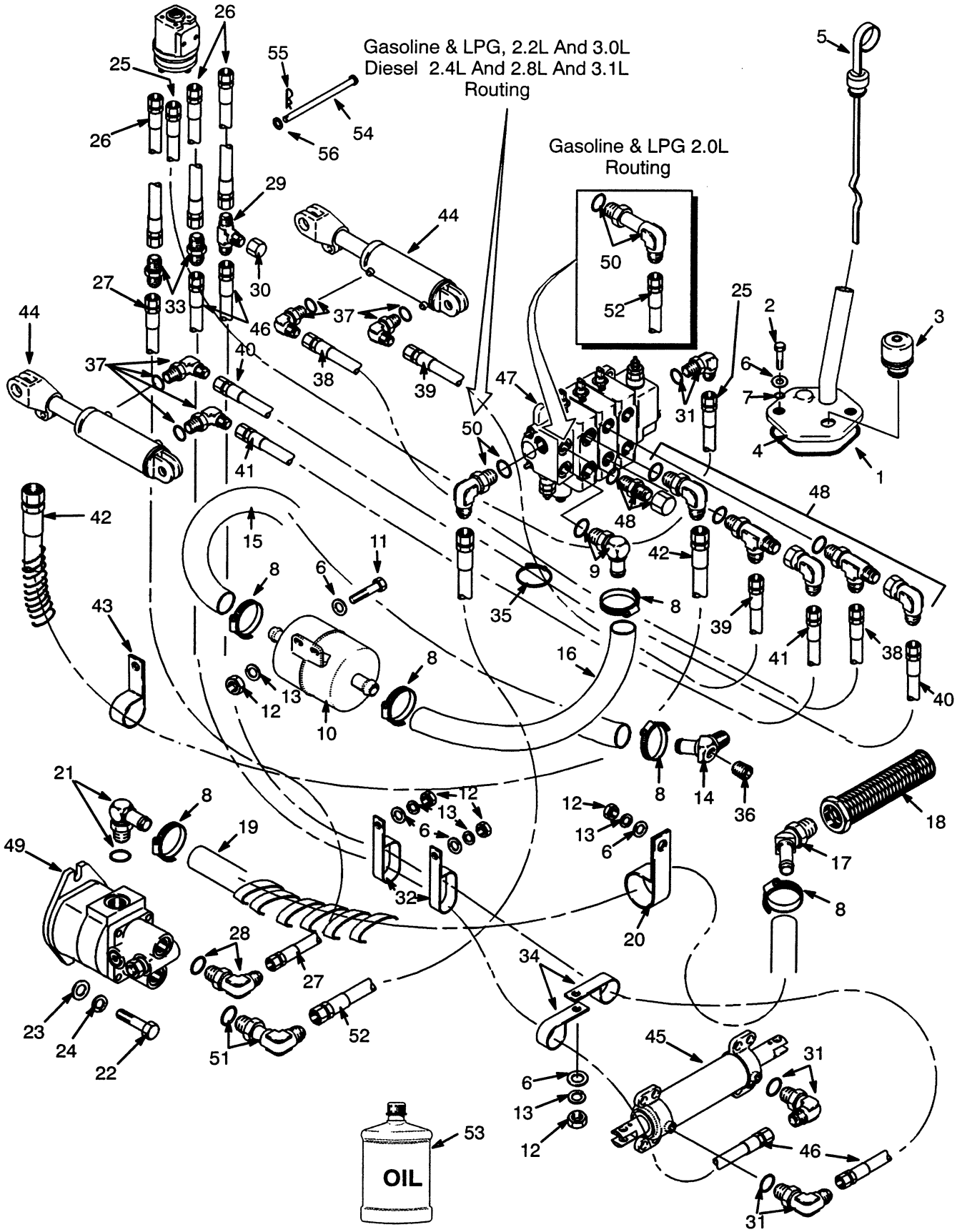

HYDRAULIC

REF		PART NO.	NAME OF PART	QTY
1		1343449	Seal	1
2		329067	Screw	2
3		1356393	Breather	1
4		1339700	Tank Cover	1
5		1339647	Dipstick	1
6		320157	Washer	12
7		353000	O-Ring	2
8		127045	Clamp	6
9		1343452	Fitting	1
10		1337159	Filter	1
11		136749	Capscrew	2
12		239503	Nut	8
13		292681	Lockwasher	8
14		1343560	Fitting	1
15		1367431	Hose	1
16		878574	Hose	1
17		222477	Fitting	1
18		1328680	Suction Screen	1
19		1339791	Suction Hose	1
20		335047	Clamp	1
21		1350273	Fitting	1
22		1356103	Screw	2
23		292682	Lockwasher	2
24		320159	Washer	2
25		1347156	Hose	1
26	e	278510	Hose	3
26		78010	Hose	3
27	e	171098	Hose	1
27	f	168389	Hose	1
28		110174	Fitting	1
28		16484	O-Ring	1
29		1347212	Fitting	1
30		16923	Fitting	1
31		16558	Fitting	3
31		16484	O-Ring	3
32		110322	Clamp	2
33		14691	Fitting	2
34		101625	Clamp	2
35		137852	Clamp	3
36		15347	Fitting	1
37		16556	Fitting	4
37		16481	O-Ring	4
38		1347027	Hose	1
39		1347028	Hose	1
40		1347029	Hose	1
41		1347030	Hose	1
42		1351077	Hose	1
43		176452	Clamp	1
44		.....	Tilt Cylinder ☞ Figure 184	2
45		.....	Steering Cylinder ☞ Figure 171	1
46	e	1350234	Hose	2
46	f	1382316	Hose	2
47		.....	Control Valve ☞ Figure 187, Figure 188	1
48		.....	Fittings ☞ Figure 185, Figure 186	..
49		.....	Hydraulic Pump ☞ Figure 178, Figure 180	1
50	a	1352157	Fitting	1
50	b	16560	Fitting	1
50	b	16485	O-Ring	1
51	c	222413	Fitting	1
51	c	16485	O-Ring	1
51	d	16560	Fitting	1
51	d	16485	O-Ring	1
52		1361584	Hose (Diesel)	1
52		1351140	Hose (Gas & LPG)	1
53		3021203	Hydraulic Oil 55 Gallon	AR
54		1352616	Pin	1
55		18824	Pin	1
56		320156	Washer	1

a Used With Gasoline & LPG 2.0L

b Used With Gasoline & LPG 2.2L & 3.0L And All Diesel

c Used With All Gasoline & LPG (Single Gear Pump)

d Used With All Gasoline & LPG (Double Gear Pump) And All Diesel

e Last Used On S/N D177B-23279

f First Used On S/N D177B-23280

g First Used On S/N D177B-23280 Thru S/N Pending Per ECN 59560-25

©2000 HYSTER COMPANY

HYDRAULIC PUMP (Figure 178)

SINGLE GEAR

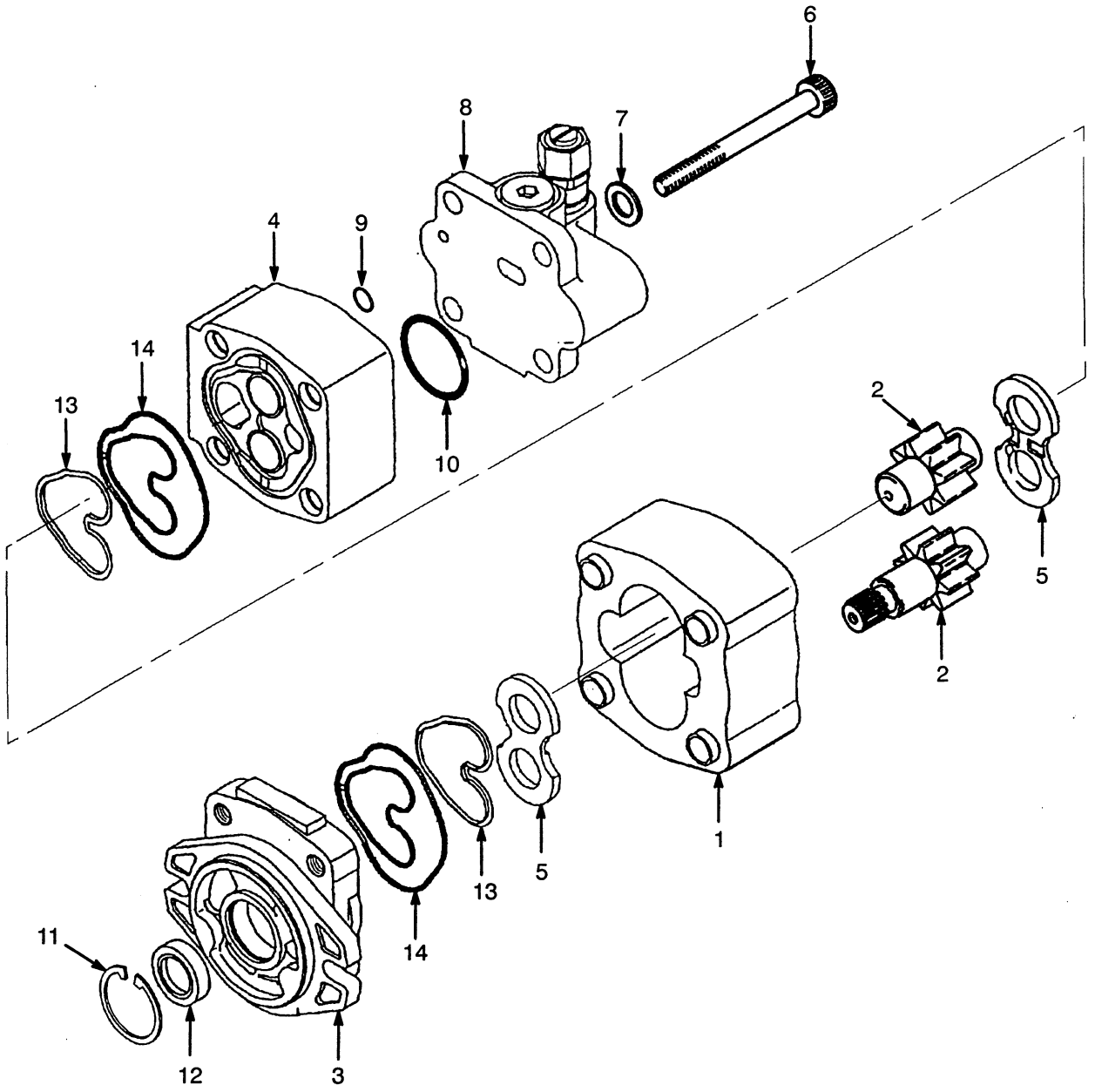

HYDRAULIC PUMP

SINGLE GEAR

KEY:
A: Gasoline And LPG 2.0L, 2.2L, And Gasoline 3.0L, And Diesel 2.4L
B: Diesel 2.8L And 3.1L
C: LPG 3.0L

REF		PART NO.	NAME OF PART	QTY A	B	C
	a	1335922	Hydraulic Pump	1	..	..
	b	1375160	Hydraulic Pump	1	..	..
	a	1335924	Hydraulic Pump	..	1	..
	b	1375162	Hydraulic Pump	..	1	..
	d	1375161	Hydraulic Pump	..	..	1
1		....	Gear Plate	1	1	1
2		1377266	Gear Set	1	..	..
2		1377265	Gear Set	..	1	..
2		1377264	Gear Set	..	..	1
3		1352040	Flange	1	1	1
4		1352041	Cover	1	1	1
5		1352042	Pressure Plate	2	2	2
6		1352048	Screw	4	..	..
6		1352453	Screw	..	4	..
6		1352456	Screw	..	..	4
7		1352049	Washer	4	4	4
8		....	Flow Valve	1	1	1
			☞ Figure 182			
9	c	....	O-Ring	1	1	1
10	c	....	O-Ring	1	1	1
11	c	....	Snap Ring	1	1	1
12	c	....	Oil Seal	1	1	1
13	c	....	Back-Up Ring	2	2	2
14	c	....	Plate Seal	2	2	2

a Last Used On S/N D177B-15601
b First Used On S/N D177B-15602
c Included In Seal Kit 1352463
d First Used On S/N D177B-39472

©2000 HYSTER COMPANY

HYDRAULIC PUMP (Figure 179)

SINGLE GEAR

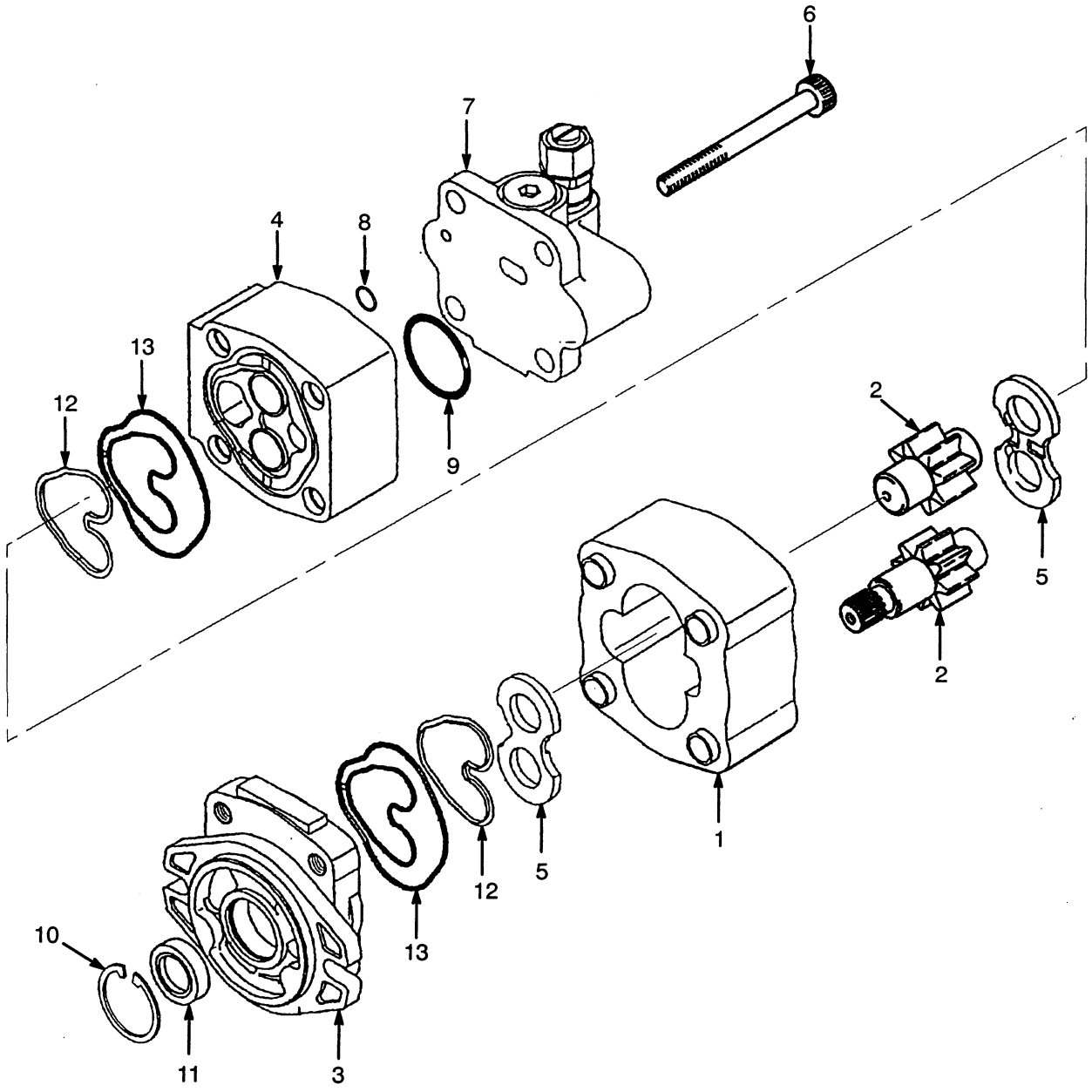

©2000 HYSTER COMPANY

HYDRAULIC PUMP

SINGLE GEAR

KEY:
A: Gasoline And LPG 2.0L, And Gasoline 3.0L
B: LPG 3.0L

REF	PART NO.	NAME OF PART	QTY A	QTY B
	1455404	Hydraulic Pump	1	..
	1455405	Hydraulic Pump	..	1
1	....	Gear Plate	1	1
2	1377266	Gear Set	1	..
2	1377264	Gear Set	..	1
3	1458802	Flange	1	1
4	1458803	Cover	1	1
5	1458804	Pressure Plate	2	2
6	1458813	Screw	4	..
6	1458805	Screw	..	4
7		Flow Valve	1	1
		☞ Figure 183		
8 [a]	....	O-Ring	1	1
9 [a]	....	O-Ring	1	1
10 [a]	....	Snap Ring	1	1
11 [a]	....	Oil Seal	1	1
12 [a]	....	Back-Up Ring	2	2
13 [a]	....	Plate Seal	2	2

[a] Included In Seal Kit 1352463

©2000 HYSTER COMPANY

HYDRAULIC PUMP (Figure 180)
DOUBLE GEAR

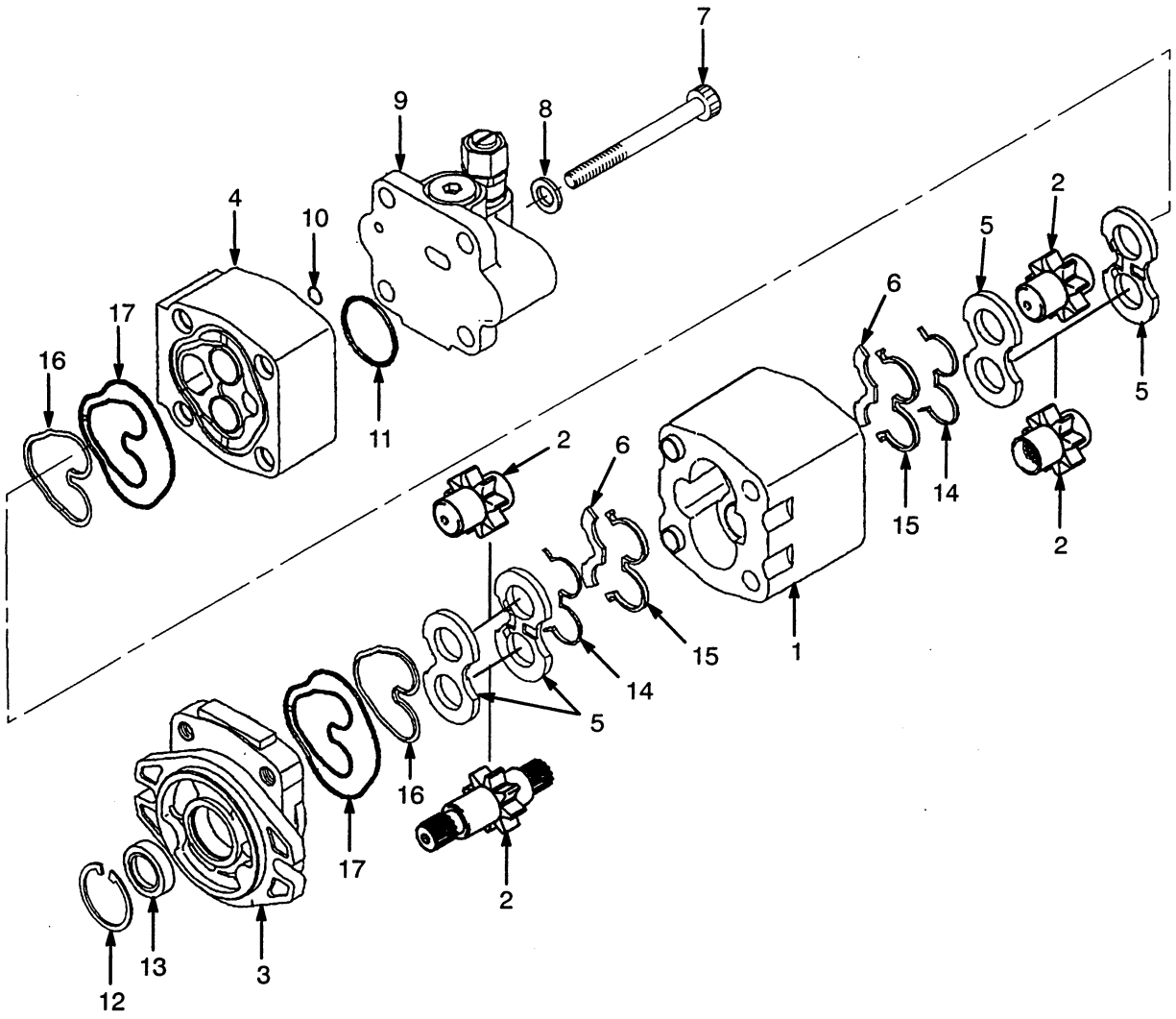

©2000 HYSTER COMPANY

HYDRAULIC PUMP

DOUBLE GEAR

KEY:
A: Gasoline And LPG 2.0L, 2.2L, And Gasoline 3.0L, And Diesel 2.4L
B: Diesel 2.8L And 3.1L
C: LPG 3.0L

REF		PART NO.	NAME OF PART	QTY A	B	C
	a	1350236	Hydraulic Pump	1	..	..
	b	1375163	Hydraulic Pump	1	..	..
	a	1350238	Hydraulic Pump	..	1	..
	b	1375165	Hydraulic Pump	..	1	..
	d	1375164	Hydraulic Pump	..	..	1
1		....	Gear Plate	1	1	1
2		1377267	Gear Set	1	..	..
2		1377269	Gear Set	..	1	..
2		1377268	Gear Set	..	..	1
3		1354746	Flange	1	1	1
4		1352041	Cover	1	1	1
5		1354748	Pressure Plate	4	4	4
6		1352470	Isolation Plate	2	2	2
7		1352472	Screw	4	..	..
7		1352471	Screw	..	4	..
7		1352482	Screw	..	..	4
8		1352049	Washer	4	4	4
9		....	Flow Valve	1	1	1
			☞ Figure 182, Figure 183			
10	c	....	O-Ring	1	1	1
11	c	....	O-Ring	1	1	1
12	c	....	Snap Ring	1	1	1
13	c	....	Oil Seal	1	1	1
14	c	....	Back-Up Ring	2	2	2
15	c	....	Seal	2	2	2
16	c	....	Back-Up Ring	2	2	2
17	c	....	Seal	2	2	2

a Last Used On S/N D177B-15601
b First Used On S/N D177B-15602 And All 3.0L
c Included In Seal Kit 1352465
d First Used ON S/N D177B-29472

©2000 HYSTER COMPANY

HYDRAULIC PUMP (Figure 181)
DOUBLE GEAR

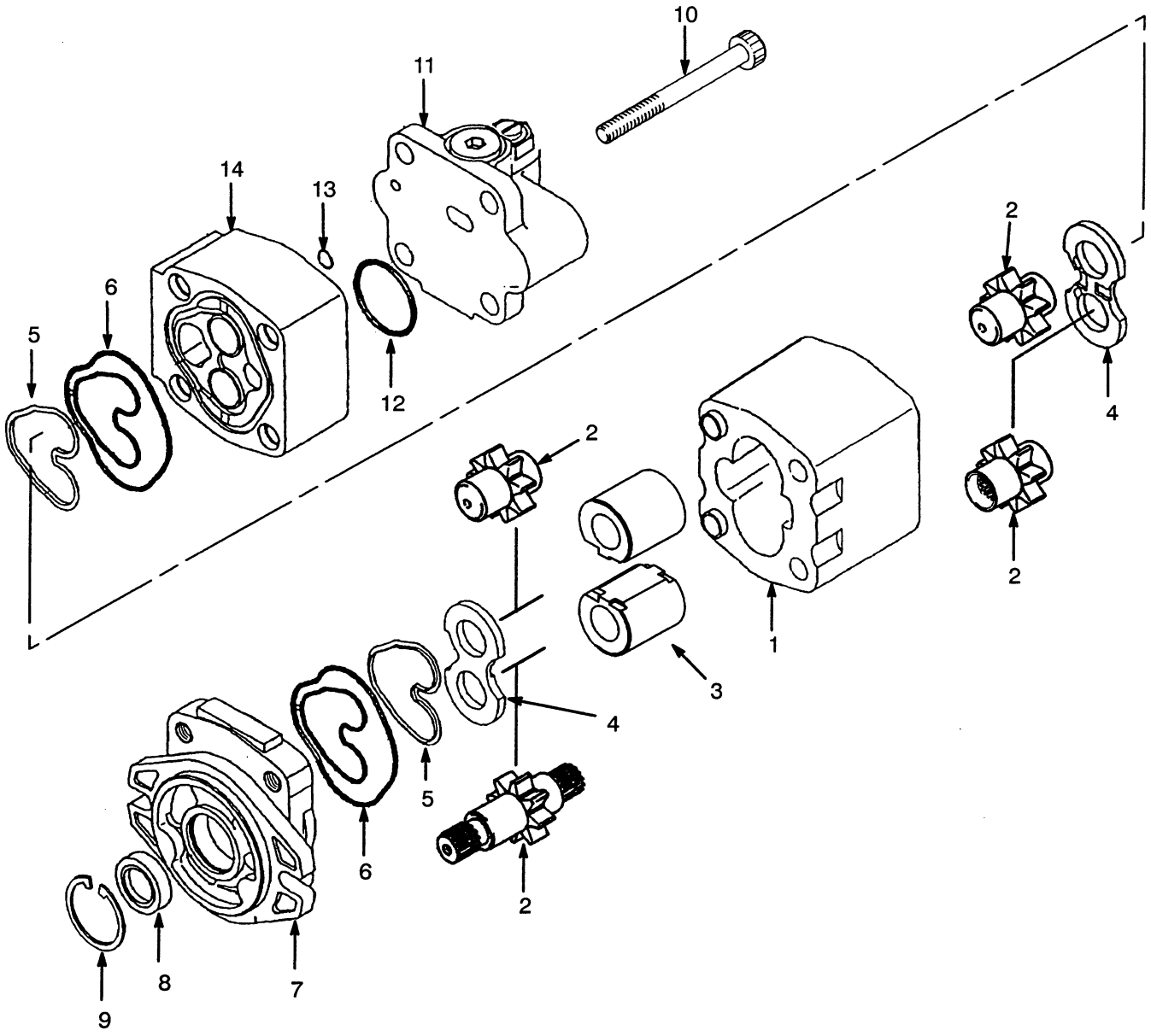

©2000 HYSTER COMPANY

HYDRAULIC PUMP
DOUBLE GEAR

KEY:
A: Gasoline And LPG 2.0L, 2.2L, And Gasoline 3.0L, And Diesel 2.4L
B: Diesel 2.8L And 3.1L
C: LPG 3.0L

REF		PART NO.	NAME OF PART	QTY A	B	C
		1456472	Hydraulic Pump	1	..	..
		1456474	Hydraulic Pump	..	1	..
		1456473	Hydraulic Pump	..	..	1
1		....	Gear Plate	1	1	1
2		1458814	Gear Set	1	..	..
2		1458819	Gear Set	..	1	..
2		1458806	Gear Set	..	..	1
3		....	Bush	2	2	2
4		1458804	Pressure Plate	2	2	2
5	a	....	Back-Up Ring	2	2	2
6	a	....	Seal	2	2	2
7		1458810	Flange	1	1	1
8	a	....	Oil Seal	1	1	1
9	a	....	Snap Ring	1	1	1
10		1458818	Screw	4	..	..
10		1458823	Screw	..	4	..
10		1458811	Screw	..	..	4
11			Flow Valve	1	1	1
			☞ Figure 182, Figure 183			
12	a	....	O-Ring	1	1	1
13	a	....	O-Ring	1	1	1
14		1458803	Cover	1	1	1

a Included In Seal Kit 1352463

©2000 HYSTER COMPANY

FLOW VALVE (Figure 182)

LAST USED ON S/N D177B-15601

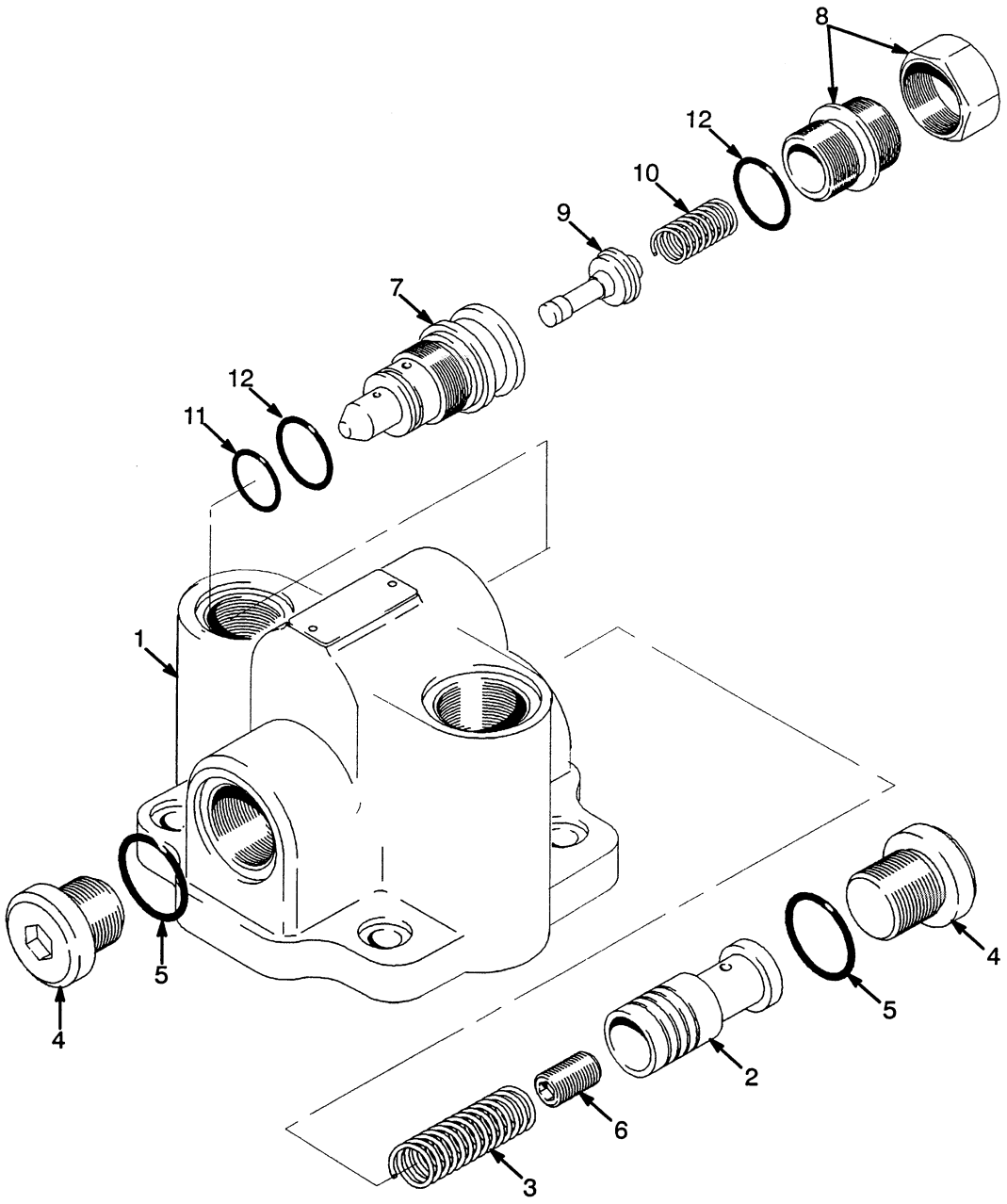

REF	PART NO.	NAME OF PART	QTY
	1352036	Valve	1
1	....	Body	1
2	....	Plunger	1
3	321797	Spring	1
4	321792	Plug	2
5	16485	O-Ring	2
6	1328822	Plug	1
7	1352032	Relief Valve	1

REF		PART NO.	NAME OF PART	QTY
8		1328824	Kit-Adjuster	1
9		....	Poppet	1
10		1328826	Spring	1
11	a	1328828	O-Ring	1
12	a	1328829	O-Ring	2

a Included In Seal Kit 1337626

©2000 HYSTER COMPANY

See Service Manual for service procedures

FLOW VALVE (Figure 183)

FIRST USED ON S/N D177B-15602

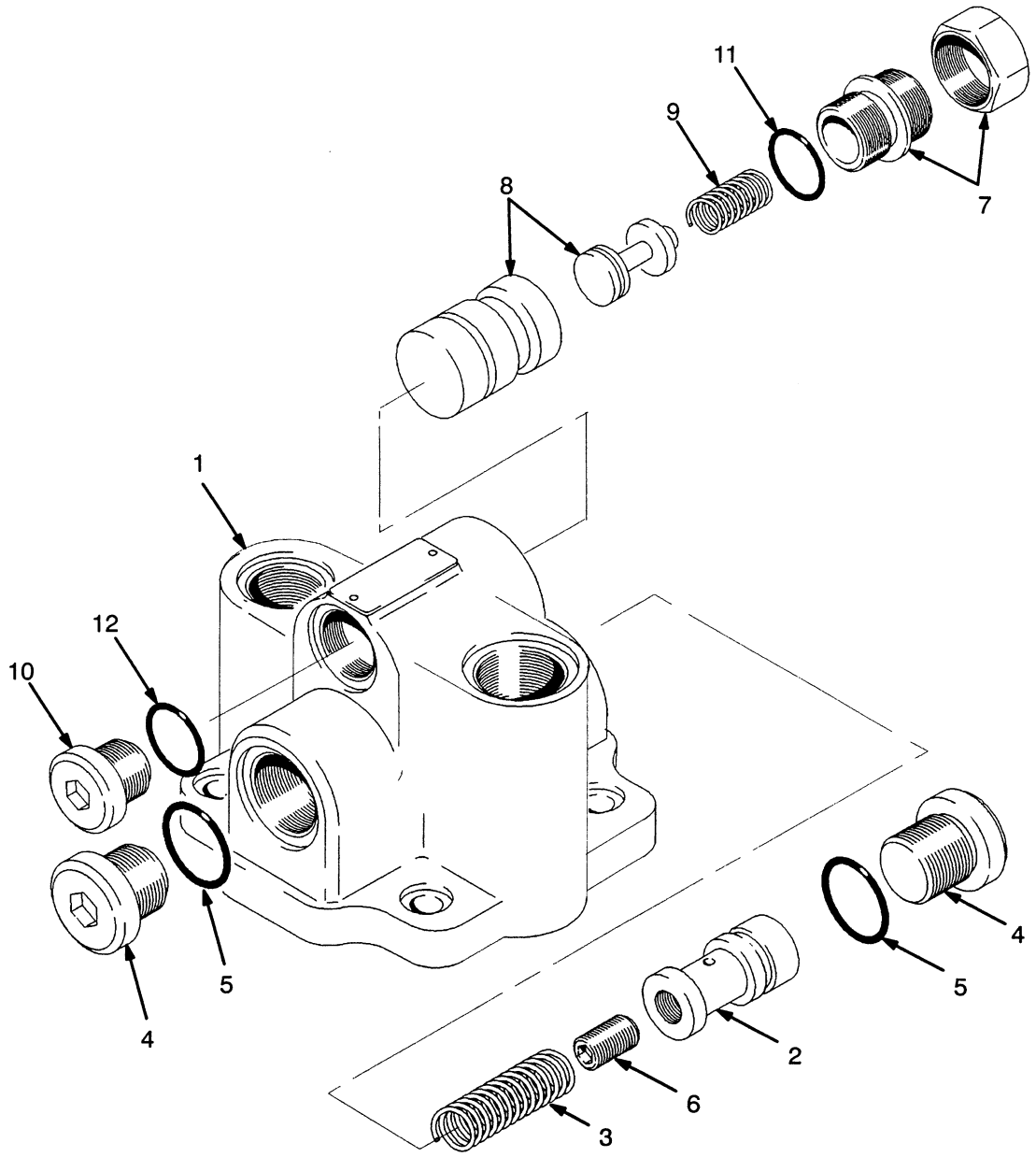

REF		PART NO.	NAME OF PART	QTY
		1377255	Valve	1
1		....	Body	1
2		....	Plunger	1
3		321797	Spring	1
4		321792	Plug	2
5	a	16485	O-Ring	2
6		1328822	Plug	1
7		1377256	Adjuster Kit	1
8		1377261	Kit-B	1

REF		PART NO.	NAME OF PART	QTY
8		....	Housing	1
8		....	Poppet	1
9		1377257	Spring	1
10		342703	Plug	1
11	a	1377259	O-Ring	1
12	a	1377260	O-Ring	1

a Included In Seal Kit 1377258

©2000 HYSTER COMPANY

See Service Manual for service procedures

NOTES

©2000 HYSTER COMPANY

TILT CYLINDER (Figure 184)

GROUP NUMBER 8601501

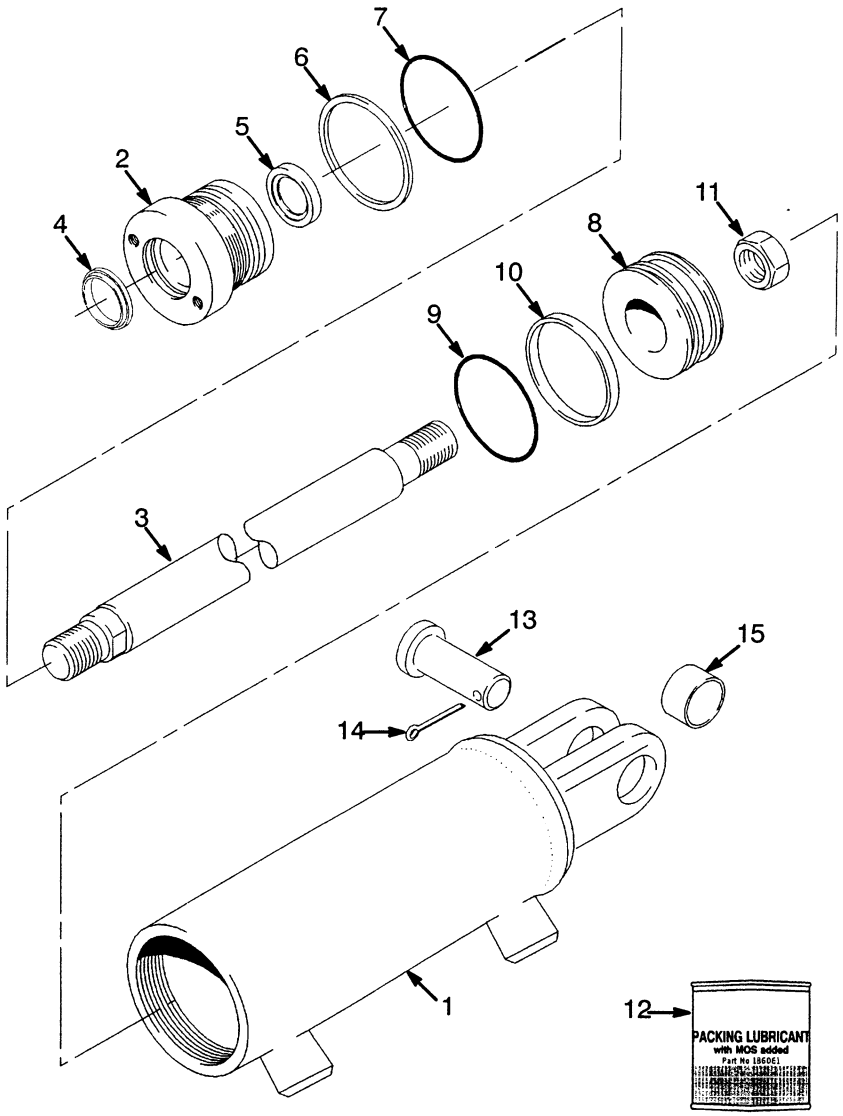

REF		PART NO.	NAME OF PART	QTY
		1338742	Tilt Cylinder	1
1		1338743	Shell	1
2		1338744	Gland	1
3		1338740	Piston Rod	1
4	a	1338739	Wiper Ring	1
5	a	637151	Seal	1
6	a	154375	Back-Up Ring	1
7	a	46388	O-Ring	1
8		1338741	Piston	1
9	a	59583	O-Ring	1
10	a	293922	Seal Ring	1
11		2302899	Nut	1
12		186061	Lubricant	AR
13		1345354	Pin-Rod End	2
14		15236	Pin	2
15		300982	Bushing	2

a Included In Seal Kit 1356746

©2000 HYSTER COMPANY

VALVE ATTACHING PARTS (Figure 185)

PUSH AWAY LEVERS

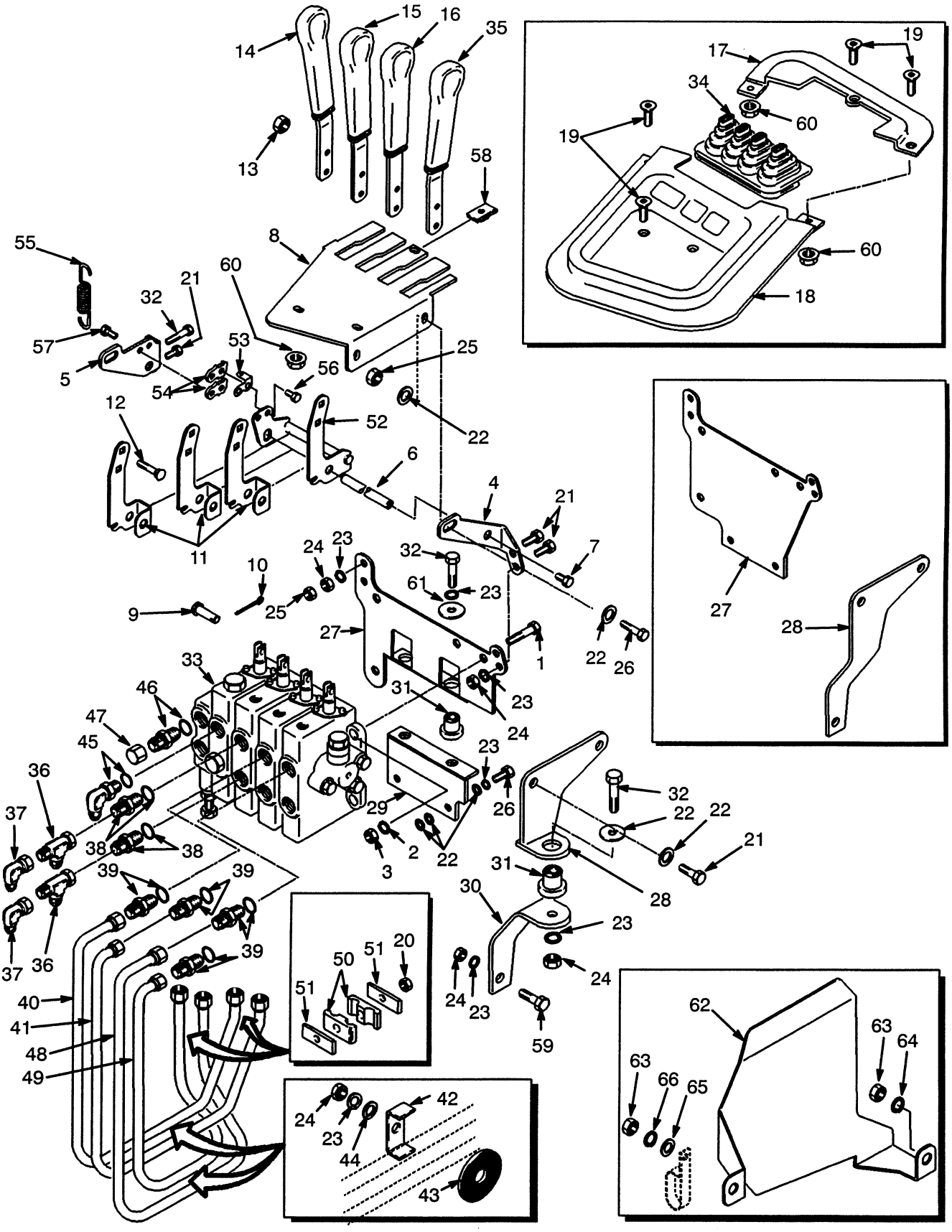

VALVE ATTACHING PARTS

PUSH AWAY LEVERS

KEY:
A: Three Function
B: Four Function

REF		PART NO.	NAME OF PART	QTY A	QTY B
1		287860	Capscrew	3	3
2		292682	Lockwasher	3	3
3		136692	Nut	3	3
4		1339723	Bracket, RH	1	1
5		1339724	Bracket, LH	1	1
6		1343443	Pivot	1	1
7		1328930	Capscrew	2	2
8		1339702	Panel	1	1
8	a	1361101	Panel	1	1
9		309109	Pin	3	4
10		15200	Cotter Pin	3	4
11		1339749	Crank	2	3
12		308980	Bolt	6	8
13		316834	Nut	6	8
14		1339725	Handlever (Lift)	1	1
15		1339727	Handlever (Tilt)	1	1
16		1339729	Handlever (3rd Function)	1	1
17		1338292	Cover	1	1
18		1339300	Cover	1	1
18	a	1361102	Cover	1	1
19		1339793	Screw	5	5
20		316835	Locknut	1	2
21		136749	Capscrew	8	8
21	b	136749	Capscrew	6	6
22		320158	Washer	8	8
22	b	221733	Washer	5	5
23		292681	Lockwasher	11	11
23	b	292681	Lockwasher	13	14
24		239503	Nut	9	9
24	b	239503	Nut	9	10
25		313828	Nut	4	4
26		176640	Capscrew	1	1
26	b	176640	Capscrew	3	3
27		1339737	Bracket	1	1
27	b	1351047	Bracket	1	1
28		1339715	Strut	1	1
28	b	1351048	Strut	1	1
29	b	1351049	Bracket	1	1
30	b	1351043	Plate	1	1
31	b	1351064	Mount	3	3
32	b	132861	Capscrew	4	4
33		....	Control Valve	1	1
			☞ Figure 187, Figure 188		
34		1339799	Boot	1	..
34		1339636	Boot	..	1
35		1339731	Handlever (4th Function)	..	1
36		17059	Fitting	2	2
37		16987	Fitting	2	2
38		222381	Fitting	2	2
38		16484	O-Ring	2	2
39		16541	Fitting	2	4
39		16484	O-Ring	2	4
40		1343461	Tube	1	1
41		1343481	Tube	1	1
42		1343531	Clamp	1	2
43		1347112	Washer (Rubber)	1	2
44		320157	Washer	2	4
45		17197	Fitting	1	1
45		16484	O-Ring	1	1
46		17756	Fitting	1	1
46		16485	O-Ring	1	1
47		16923	Fitting	1	1
48	d	1343482	Tube Assy	..	1
48	e	1379506	Tube Assy	..	1
49	d	1343484	Tube	..	1
49	e	1379507	Tube	..	1
50		1359620	Clamp	2	4
51		1361142	Plate	2	4
52		1339770	Crank	1	..
52		1339748	Crank	..	1
53		1339746	Plate	1	1
54		1339745	Plate	2	2
55		1339713	Spring	1	1
56		293612	Capscrew	2	2
57		293611	Capscrew	2	2
58		1350215	Nut	1	1
59		136681	Capscrew	1	1
59	b	136681	Capscrew	2	2
60		1452270	Nut	4	4
61	b	221733	Washer	3	3
62	c	1373819	Heat Shield	1	1
63		239503	Nut	2	2
64	c	320157	Washer	1	1
65		320158	Washer	2	2
66		292681	Lockwasher	1	1

a Used With Types GS, LPS & DS
b Used With Diesel 2.8L & 3.1L
c Gasoline & LPG 2.0L
d Last Used On S/N D177B-16576
e First Used On S/N D177B-16577

©2000 HYSTER COMPANY

VALVE ATTACHING PARTS (Figure 186)

DIRECT ACTING LEVERS

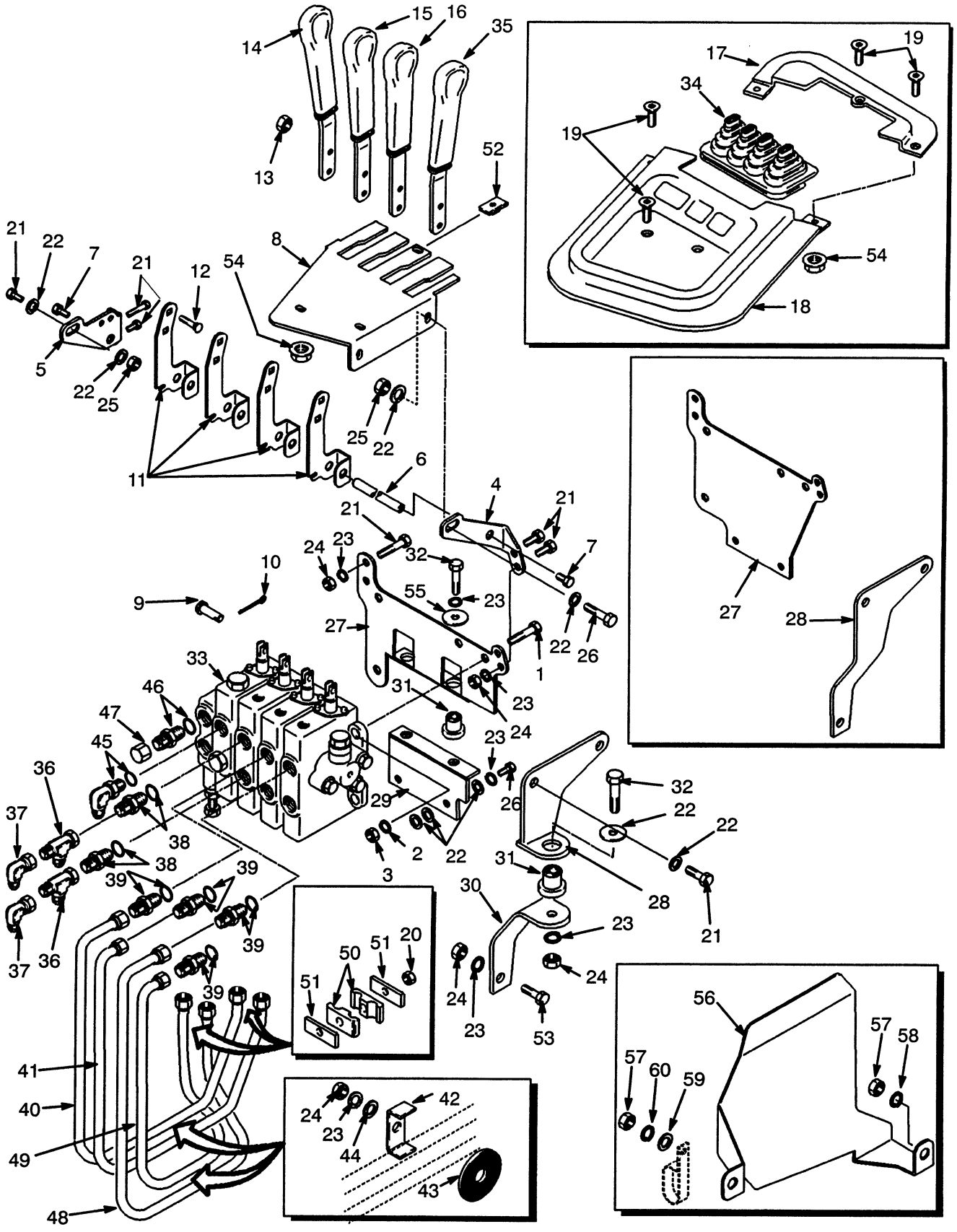

VALVE ATTACHING PARTS

DIRECT ACTING LEVERS

KEY:
A: Three Function
B: Four Function

REF		PART NO.	NAME OF PART	QTY A	QTY B
1		287860	Capscrew	3	3
2		292682	Lockwasher	3	3
3		136692	Nut	3	3
4		1339723	Bracket, RH	1	1
5		1339724	Bracket, LH	1	1
6		1343443	Pivot	1	1
7		1328930	Capscrew	2	2
8		1339702	Panel	1	1
8	a	1361101	Panel	1	1
9		309109	Pin	3	4
10		15200	Cotter Pin	3	4
11		1339749	Crank	3	4
12		308980	Bolt	6	8
13		316834	Nut	6	8
14		1339725	Handlever (Lift)	1	1
15		1339727	Handlever (Tilt)	1	1
16		1339729	Handlever (3rd Function)	1	1
17		1338292	Cover	1	1
18		1339300	Cover	1	1
18	a	1361102	Cover	1	1
19		1339793	Screw	5	5
20		316835	Locknut	1	2
21		136749	Capscrew	8	8
21	b	136749	Capscrew	6	6
22		320158	Washer	8	8
22	b	221733	Washer	5	5
23		292681	Lockwasher	9	11
23	b	292681	Lockwasher	13	14
24		239503	Nut	7	9
24	b	239503	Nut	9	10
25		313828	Nut	3	3
26		176640	Capscrew	1	1
26	b	176640	Capscrew	3	3
27		1339737	Bracket	1	1
27	b	1351047	Bracket	1	1
28		1339715	Strut	1	1
28	b	1351048	Strut	1	1
29	b	1351049	Bracket	1	1
30	b	1351043	Plate	1	1
31	b	1351064	Mount	3	3
32	b	132861	Capscrew	3	3
33		....	Control Valve ☞ Figure 187, Figure 188	1	1
34		1339799	Boot	1	..
34		1339636	Boot	..	1
35		1339731	Handlever (4th Function)	..	1
36		17059	Fitting	2	2
37		16987	Fitting	2	2
38		222381	Fitting	2	2
38		16484	O-Ring	2	2
39		16541	Fitting	2	4
39		16484	O-Ring	2	4
40		1343461	Tube	1	1
41		1343481	Tube	1	1
42		1343531	Clamp	1	2
43		1347112	Washer (Rubber)	1	2
44		320157	Washer	2	4
45		17197	Fitting	1	1
45		16484	O-Ring	1	1
46		17756	Fitting	1	1
46		16485	O-Ring	1	1
47		16923	Fitting	1	1
48	d	1343482	Tube Assy	..	1
48	e	1379506	Tube Assy	..	1
49	d	1343484	Tube	..	1
49	e	1379507	Tube	..	1
50		1359620	Clamp	2	4
51		1361142	Plate	2	4
52		1350215	Nut	1	1
53		136681	Capscrew	1	1
53	b	136681	Capscrew	2	2
54		1452270	Nut	4	4
55	b	221733	Washer	3	3
56	c	1373819	Heat Shield	1	1
57		239503	Nut	2	2
58	c	320157	Washer	1	1
59		320158	Washer	2	2
60		292681	Lockwasher	1	1

a Used With Types GS, LPS & DS
b Used With Diesel 2.8L & 3.1L
c Gasoline & LPG 2.0L
d Last Used On S/N D177B-15153
e First Used On S/N D177B-15154

©2000 HYSTER COMPANY

CONTROL VALVE (Figure 187)

THREE FUNCTION

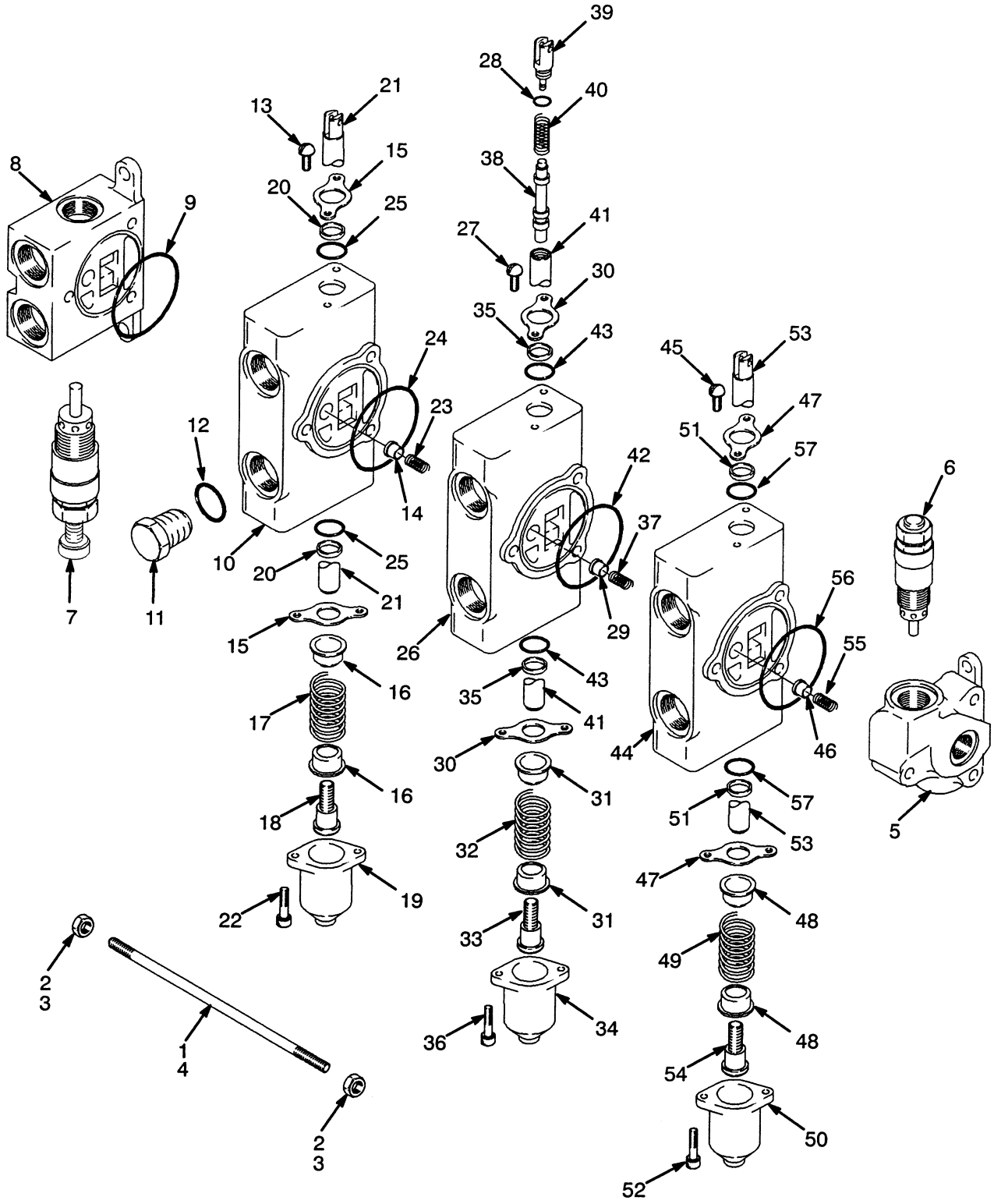

CONTROL VALVE
THREE FUNCTION

REF	PART NO.	NAME OF PART	QTY
a	1337104	Control Valve	1
b	2033502	Control Valve	1
1	1350707	Rod	1
2	188534	Nut	2
3	15055	Nut	4
4	1350706	Rod	2
5a	1357356	Outlet Section	1
5b	1451092	Outlet Section	1
6	378424	Relief Valve	1
6	1309419	Kit-Seal	1
7	350485	Relief Valve	1
7	1357369	Kit-Seal	1
8	1357352	Inlet Section	1
9	57664	O-Ring	1
10	1357354	Spool Section	1
11	199524	Plug	1
12	16484	O-Ring	1
13	16706	Screw	2
14	205120	Poppet	1
15	205121	Seal Plate	2
16	188516	Spring Seat	2
17	385855	Spring	1
18	188518	Spool End	1
19	188519	Cap	1
20	205122	Wiper	2
21	....	Spool	1
22	12949	Capscrew	2
23	205123	Spring	1
24	57664	O-Ring	1
25	1357361	O-Ring	2
26	1357355	Spool Section	1
27	16706	Screw	2
28	16480	O-Ring	1
29	205120	Poppet	1
30	205121	Seal Plate	2
31	188516	Spring Seat	1
32	385855	Spring	1
33	188518	Spool End	1
34	188519	Cap	1
35	205122	Wiper	2
36	12949	Capscrew	2
37	205123	Spring	1
38	....	Piston	1
39	1357364	Piston End	1
40	341462	Spring	1
41	....	Spool	1
42	57664	O-Ring	1
43	1357361	O-Ring	2
44	1357353	Spool Section	1
45	16706	Screw	2
46	205120	Poppet	1
47	205121	Seal Plate	2
48	188516	Spring Seat	2
49	385855	Spring	1
50	188519	Cap	1
51	205122	Wiper	2
52	12949	Capscrew	2
53	....	Spool	1
54	188518	Spool End	1
55	205123	Spring	1
56	57664	O-Ring	1
57	1357361	O-Ring	2

a Last Used On S/N D177B-35722
b First Used On S/N D177B-35723

©2000 HYSTER COMPANY

VALVE (Figure 188)

FOUR FUNCTION

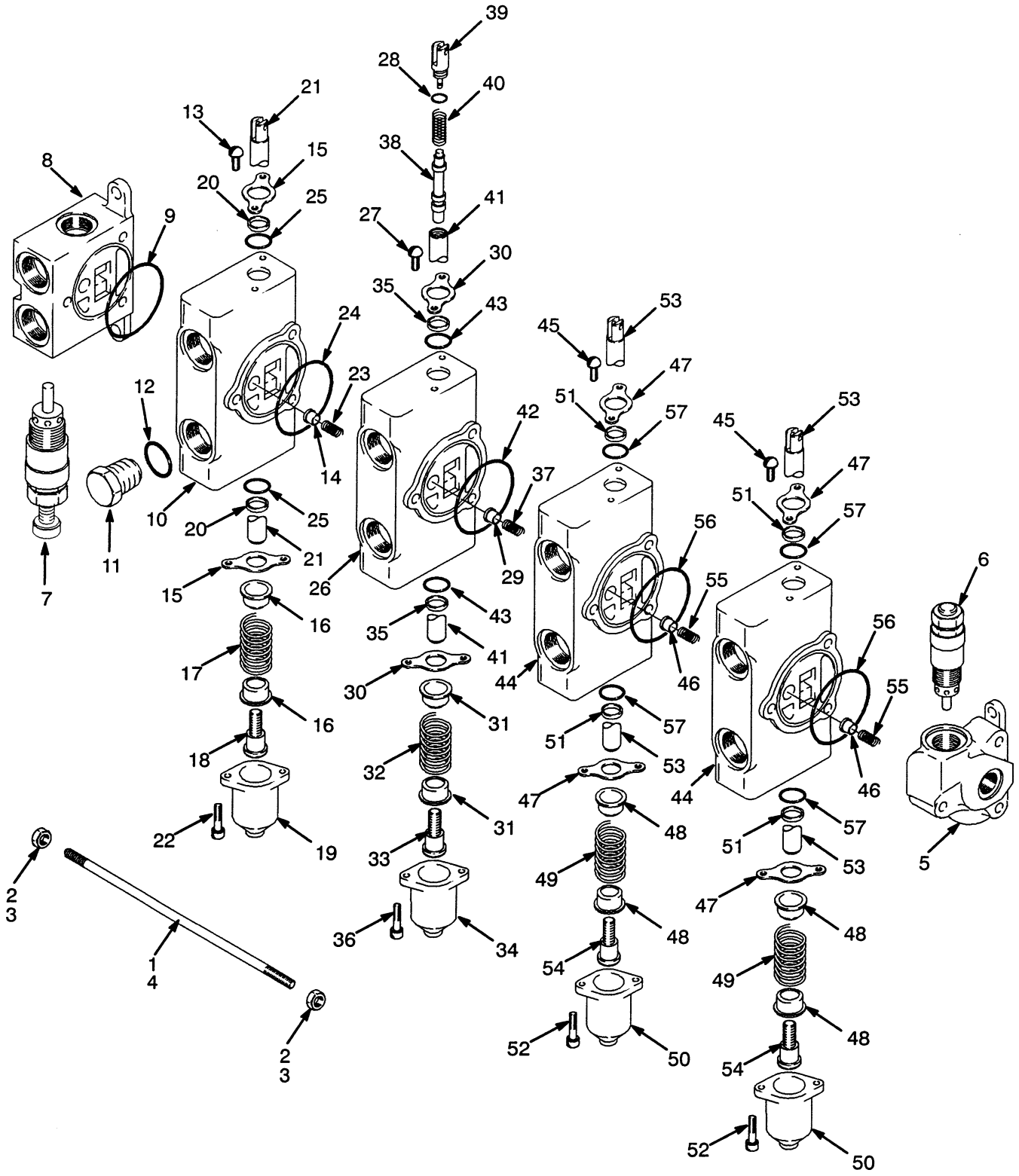

VALVE

FOUR FUNCTION

REF		PART NO.	NAME OF PART	QTY
	a	1338333	Control Valve	1
	b	2033503	Control Valve	1
1		1327415	Rod	1
2		188534	Nut	2
3		15055	Nut	4
4		1327414	Rod	2
5	a	1357356	Outlet Section	1
5	b	1451092	Outlet Section	1
6		378424	Relief Valve	1
6		1309419	Kit-Seal	1
7		350485	Relief Valve	1
7		1357369	Kit-Seal	1
8		1357352	Inlet Section	1
9		57664	O-Ring	1
10		1357354	Spool Section	1
11		199524	Plug	1
12		16484	O-Ring	1
13		16706	Screw	2
14		205120	Poppet	1
15		205121	Seal Plate	2
16		188516	Spring Seat	2
17		385855	Spring	1
18		188518	Spool End	1
19		188519	Cap	1
20		205122	Wiper	2
21		....	Spool	1
22		12949	Capscrew	2
23		205123	Spring	1
24		57664	O-Ring	1
25		1357361	O-Ring	2
26		1357355	Spool Section	1
27		16706	Screw	2
28		16480	O-Ring	1
29		205120	Poppet	1
30		205121	Seal Plate	2
31		188516	Spring Seat	1
32		385855	Spring	1
33		188518	Spool End	1
34		188519	Cap	1
35		205122	Wiper	2
36		12949	Capscrew	2
37		205123	Spring	1
38		....	Piston	1
39		1357364	Piston End	1
40		341462	Spring	1
41		....	Spool	1
42		57664	O-Ring	1
43		1357361	O-Ring	2
44		1357353	Spool Section	2
45		16706	Screw	2
46		205120	Poppet	1
47		205121	Seal Plate	2
48		188516	Spring Seat	2
49		385855	Spring	1
50		188519	Cap	1
51		205122	Wiper	2
52		12949	Capscrew	2
53		....	Spool	1
54		188518	Spool End	1
55		205123	Spring	1
56		57664	O-Ring	1
57		1357361	O-Ring	2

a Last Used On S/N D177B-35560
b First Used On S/N D177B-35561

©2000 HYSTER COMPANY

NOTES

©2000 HYSTER COMPANY

TWO STAGE LIMITED FREE-LIFT

CARRIAGE (Figure 194)
TWO STAGE LIMITED FREE-LIFT
FOUR ROLLER ..... Page 358

CARRIAGE (Figure 195)
TWO STAGE LIMITED FREE-LIFT
SIX ROLLER ..... Page 359

CYLINDER (Figure 192)
TWO STAGE LIMITED FREE-LIFT
H45-55XM ..... Page 354

CYLINDER (Figure 193)
TWO STAGE LIMITED FREE-LIFT
H60-65XM ..... Page 356

FORKS (Figure 200)
TWO STAGE LIMITED FREE-LIFT ..... Page 366

HEADER HOSE (Figure 199)
TWO STAGE LIMITED FREE-LIFT ..... Page 364

INNER MAST (Figure 190)
TWO STAGE LIMITED FREE-LIFT ..... Page 350

LIFT (Figure 191)
TWO STAGE LIMITED FREE-LIFT ..... Page 352

LOAD BACKREST EXTENSION (Figure 196)
TWO STAGE LIMITED FREE-LIFT ..... Page 360

MAST INSTALLATION (Figure 197)
TWO STAGE LIMITED FREE-LIFT ..... Page 361

MAST INSTALLATION (Figure 198)
TWO STAGE LIMITED FREE-LIFT ..... Page 362

OUTER MAST (Figure 189)
TWO STAGE LIMITED FREE-LIFT ..... Page 348

©2000 HYSTER COMPANY

OUTER MAST (Figure 189)

TWO STAGE LIMITED FREE-LIFT

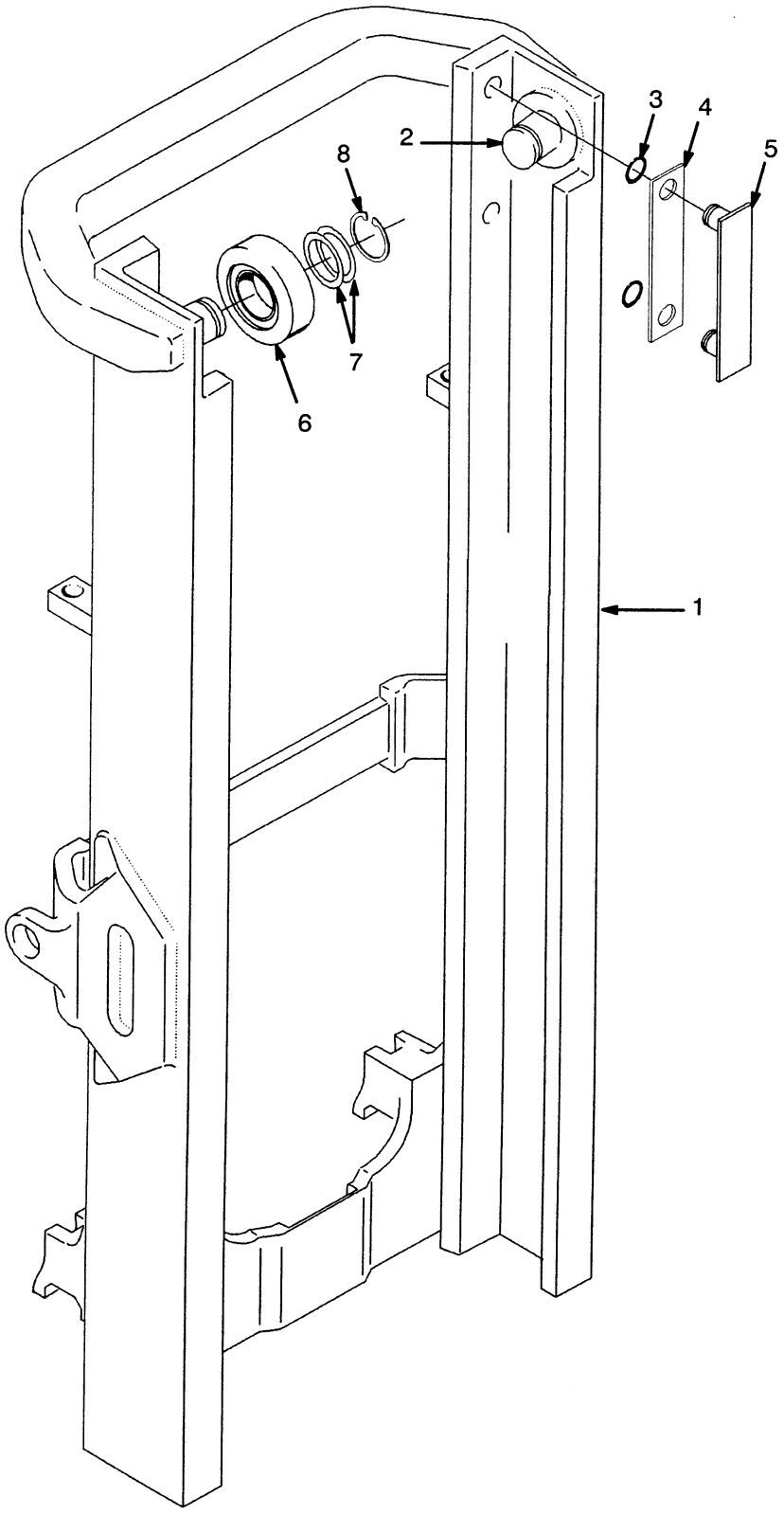

©2000 HYSTER COMPANY

See Service Manual for service procedures

OUTER MAST

TWO STAGE LFL

H45-55XM

Ref No	Name Of Part 1 2 3 4	Lift Height To Bottom Of Forks				
		117.8 in	129.6 in	149.3 in	169.0 in	188.7 in
	Mast Group No.	**B507 2992**	**B507 3292**	**B507 3792**	**B507 4292**	**B507 4792**
1	Outer Mast	1341005	1341008	1341013	1341019	1341024

H60-65XM

Ref No	Name Of Part 1 2 3 4	Lift Height To Bottom Of Forks				
		112.6 in	124.4 in	144.1 in	163.7 in	183.4 in
	Mast Group No.	**B562 2859**	**B562 3159**	**B562 3659**	**B562 4159**	**B562 4659**
1	Outer Mast	1341005	1341008	1341013	1341019	1341024

REF	PART NO.	NAME OF PART	QTY
a	.....	Mast	1
1 a	.....	Outer Mast	1
2	1345216	Stub Shaft	2
3	104506	O-Ring	4
4	131716	Shim (0.020 in)	4
5	215211	Bearing Strip	2
6	1395168	Load Roller ("A" Standard)	2
6	1333396	Load Roller ("B" 0.76 mm)	2
6	1333397	Load Roller ("C" 1.52 mm)	2
7	129387	Shim (0.020 in)	AR
8	58901	Snap Ring	2

a ☞ Table Above

©2000 HYSTER COMPANY

INNER MAST (Figure 190)

TWO STAGE LIMITED FREE-LIFT

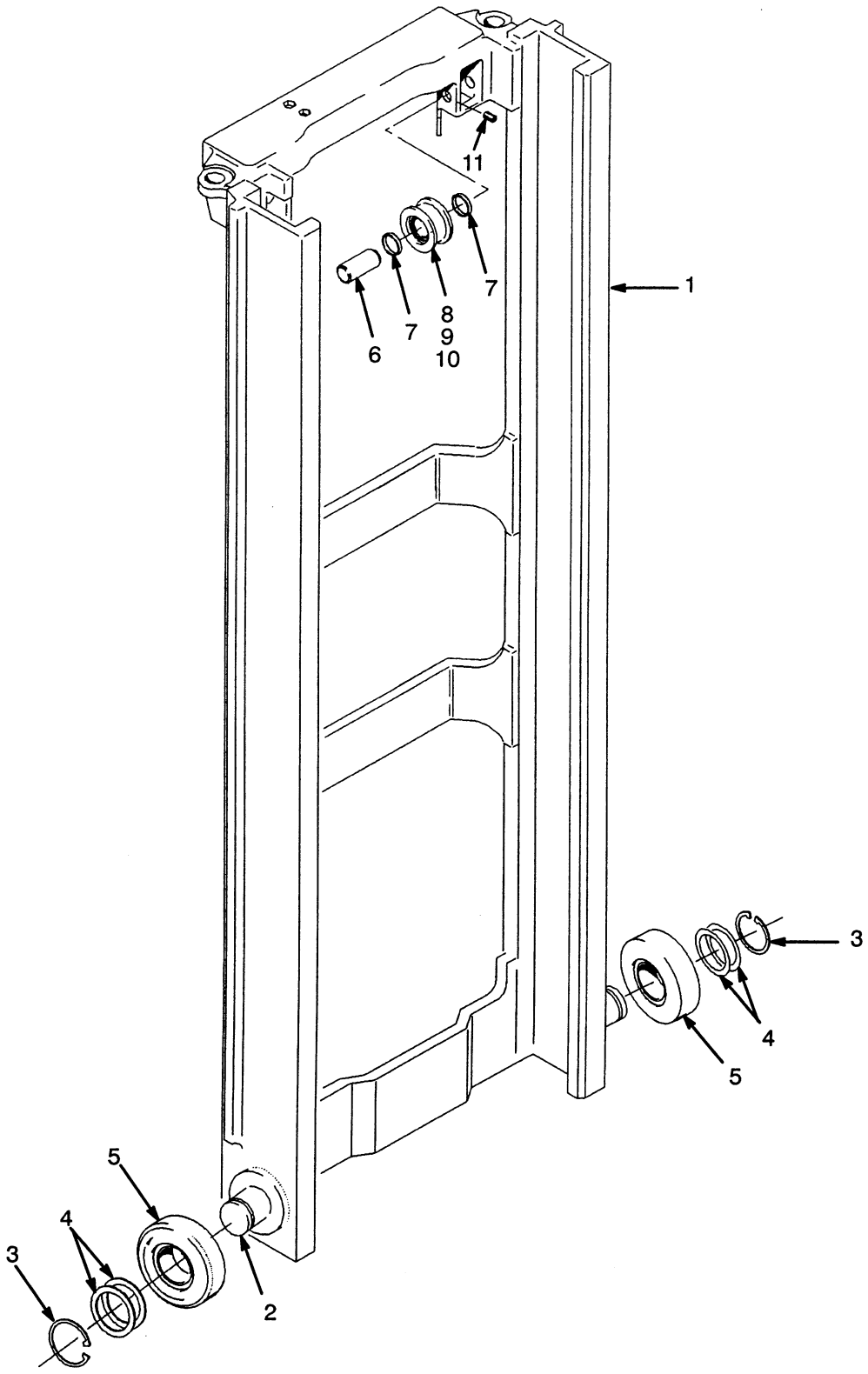

©2000 HYSTER COMPANY

See Service Manual for service procedures

INNER MAST

TWO STAGE LIMITED FREE-LIFT

H45-55XM

Ref No	Name Of Part 1 2 3 4	Lift Height To Bottom Of Forks				
		117.8 in	129.6 in	149.3 in	169.0 in	188.7 in
	Mast Group No.	**B507 2992**	**B507 3292**	**B507 3792**	**B507 4292**	**B507 4792**
1	Inner Mast	1341210	1341213	1341218	1341223	1341228

H60-65XM

Ref No	Name Of Part 1 2 3 4	Lift Height To Bottom Of Forks				
		112.6 in	124.4 in	144.1 in	163.7 in	183.4 in
	Mast Group No.	**B562 2859**	**B562 3159**	**B562 3659**	**B562 4159**	**B562 4659**
1	Inner Mast	1341210	1341213	1341218	1341223	1341228

REF		PART NO.	NAME OF PART	QTY
	a	.....	Mast	1
1	a	.....	Inner Mast	1
2		1345216	Stub Shaft	2
3		58901	Snap Ring	2
4		129387	Shim (0.020 In)	AR
5		1395168	Load Roller ("A" Standard)	2
5		1333396	Load Roller ("B" 0.76 mm)	2
5		1333397	Load Roller ("C" 1.52 mm)	2
6	b	1333389	Pin	2
6	c	1368656	Pin	2
7	d	1333644	Spacer	4
7	e	1378691	Spacer	4
8	d	1345183	Chain Sheave	2
8		1345181	Sheave	1
8		37752	Snap Ring	2
8		231020	Bearing	1
9	e	1379685	Chain Sheave (H45-55XM)	2
9		1378698	Sheave	1
9		37752	Snap Ring	1
9		1378699	Bearing	1
10	e	1379684	Chain Sheave (H60-65XM)	2
10		1378694	Sheave	1
10		37752	Snap Ring	1
10		1378699	Bearing	1
11	b	302144	Setscrew	4
11	c	302462	Pin	2

a ☞ Tables Above

b Last Used On Mast S/N B507B-5469 & B562B-5469

c First Used On Mast S/N B507B-5470, B507V-1501, B562B-5470 & B562V-1511

d Last Used On S/N B507A-1920, B507B-7408 & B562V-1565, B562B-5197

e First Used On S/N B507A-1921, B507B-7409 & B562V-1566, B562B-5198

©2000 HYSTER COMPANY

LIFT (Figure 191)

TWO STAGE LIMITED FREE-LIFT

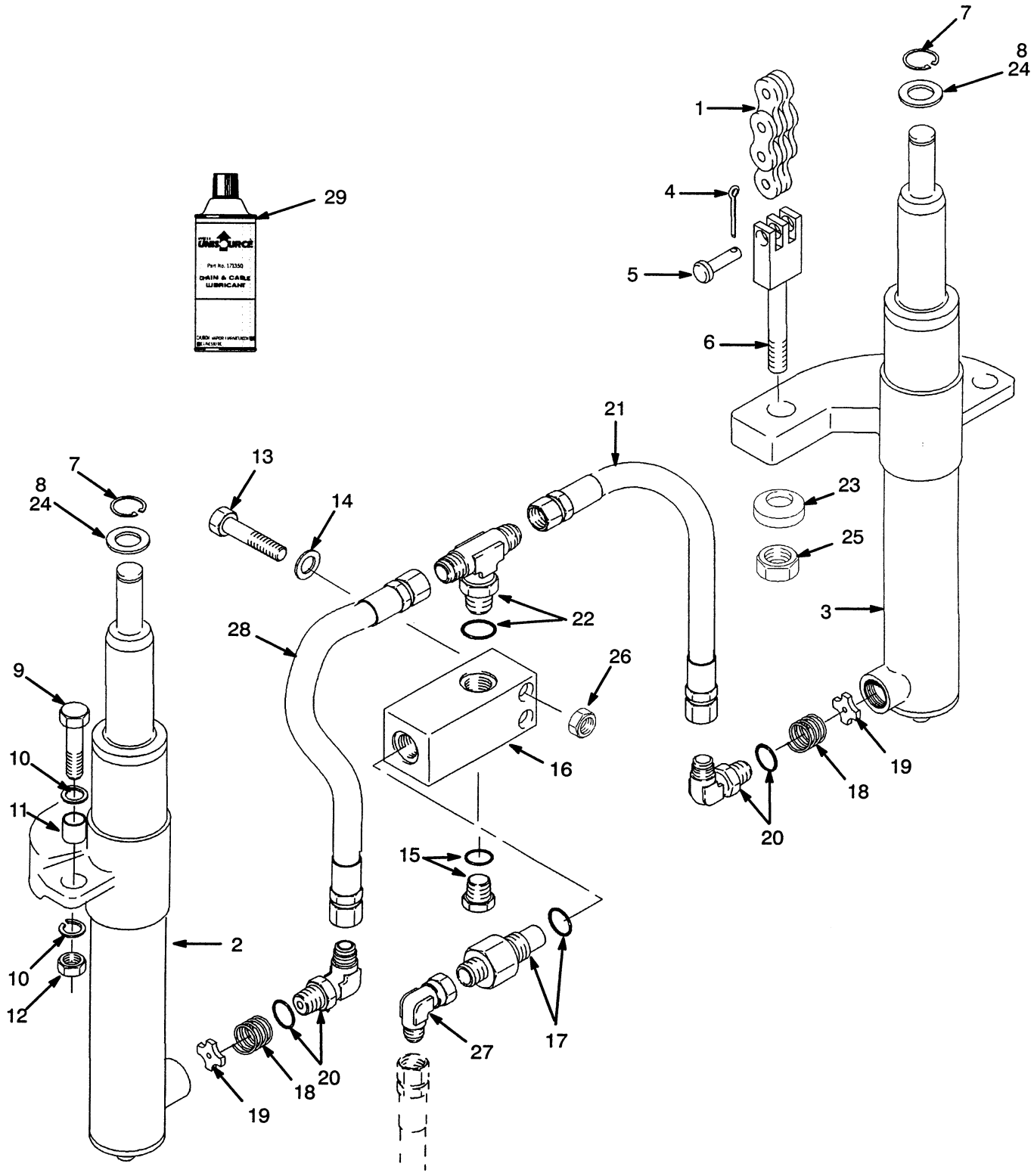

LIFT

TWO STAGE LFL

H45-55XM

Ref No	Name Of Part 1 2 3 4	Lift Height To Bottom Of Forks				
		117.8 in	129.6 in	149.3 in	169.0 in	188.7 in
	Mast Group No.	**B507 2992**	**B507 3292**	**B507 3792**	**B507 4292**	**B507 4792**
1	Lift Chain	180057	337174[c] 223389[d]	135588[c] 1301870[d]	214444[c] 246994[d]	129358[c] 336393[d]

H60-65XM

Ref No	Name Of Part 1 2 3 4	Lift Height To Bottom Of Forks				
		112.6 in	124.4 in	144.1 in	163.7 in	183.4 in
	Mast Group No.	**B562 2859**	**B562 3159**	**B562 3659**	**B562 4159**	**B562 4659**
1	Lift Chain	1342121	1342124[c] 1342383[d]	1342129[c] 1342393[d]	1342134[c] 1359234[d]	1342139[c] 1342392[d]

REF		PART NO.	NAME OF PART	QTY
	a	.....	Mast	1
1	a	.....	Lift Chain	2
2		.....	Cylinder, RH	1
			☞ Figure 192, Figure 193	
3		.....	Cylinder, LH	1
			☞ Figure 192, Figure 193	
4		15200	Cotter Pin	2
5		323161	Pin	2
6	bc	320313	Chain Anchor	2
6	bd	1369357	Chain Anchor	2
6	ec	1333328	Chain Anchor	2
6	ed	1369356	Chain Anchor	2
7		131358	Snap Ring	2
8		1333382	Washer	AR
9		292532	Capscrew	2
10		296422	Lockwasher	4
11		323090	Spacer	2
12		300937	Nut	2
13		136704	Capscrew	2
14		320157	Washer	2
15	g	14603	Fitting	1
15		16486	O-Ring	1
16		1379687	Valve Housing	1
16	g	1333392	Valve Housing	1
17	h	2309766	Lowering Control Valve	1
17	k	316306	Lowering Control Valve	1
17		16982	O-Ring	1
18		337179	Spring	2

REF		PART NO.	NAME OF PART	QTY
19		357749	Special Washer	2
20		189595	Fitting	2
20		16485	O-Ring	1
21		1345403	Hose	1
22		16578	Fitting	1
22		16485	O-Ring	1
23		297649	Base Ring	2
24	f	1354915	Washer (0.25 mm)	AR
24	f	1354916	Washer (0.75 mm)	AR
24	f	1354917	Washer (1.50 mm)	AR
25		161003	Nut	2
26		313828	Nut	2
27		16882	Fitting	1
28		1462551	Hose	1
29		171350	Chain Lubricant	AR

a ☞ Table Above
b For Mast S/N B507
c Last Used On Mast S/N B507B-5469 & B562B-5469
d First Used On Mast S/N B507B-5470, B507V-1501, B562B-5470 & B562V-1511
e For Mast S/N B562
f Used With Item 8 Between Cylinder Rod And Inner Mast As Required
g Optional
h H45-55 XM
k H60-65 XM

©2000 HYSTER COMPANY

CYLINDER (Figure 192)

TWO STAGE LIMITED FREE-LIFT

H45-55XM

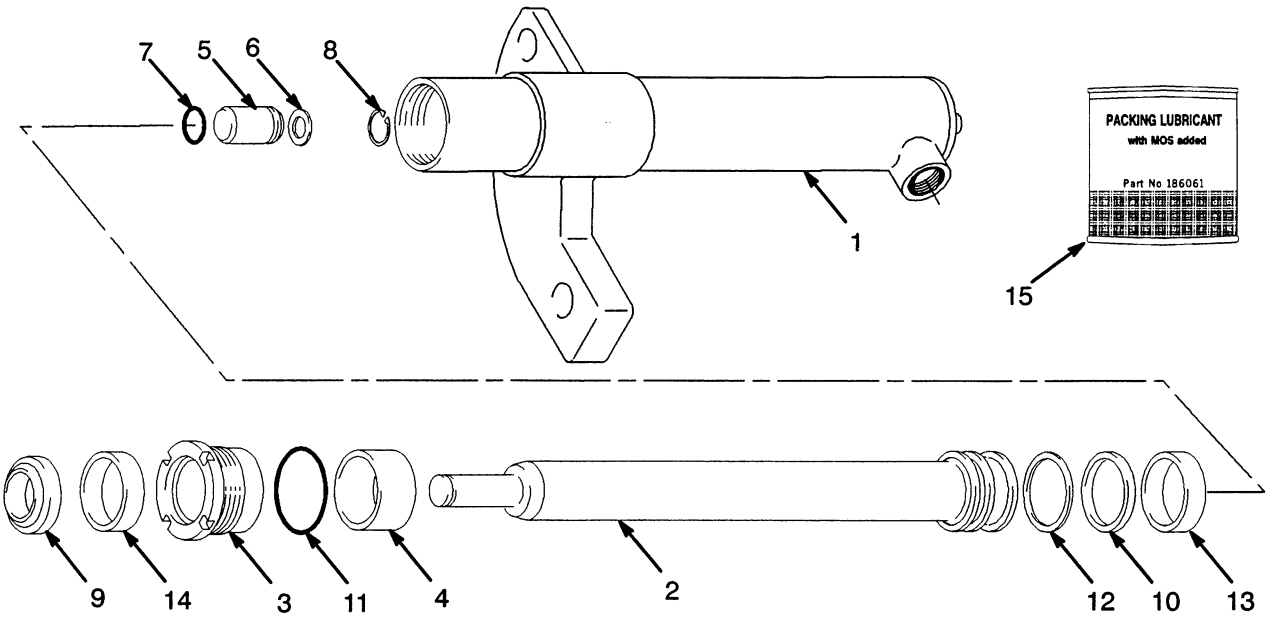

©2000 HYSTER COMPANY

CYLINDER

TWO STAGE LIMITED FREE-LIFT

H45-55XM

Ref No	Name Of Part 1 2 3 4	Lift Height To Bottom Of Forks				
		117.8 in	129.6 in	149.3 in	169.0 in	188.7 in
	Mast Group No.	**B507 2992**	**B507 3292**	**B507 3792**	**B507 4292**	**B507 4792**
	Group # Cylinder RH	8600056 1341395	8600059 1341398	8600064 1341403	8600070 1341408	8600151 1341413
1	Shell	1355148	1355160	1355180	1355200	1355222
2	Rod	1355146	1355158	1355178	1355199	1355217
	Group # Cylinder LH	8600006 1341432	8600009 1341435	8600014 1341440	8600020 1341445	8600101 1341450
1	Shell	1355145	1355157	1355177	1355198	1355219
2	Rod	1355146	1355158	1355178	1355199	1355217

REF		PART NO.	NAME OF PART	QTY
	a	.....	Cylinder	1
1	a	.....	Shell	1
2	a	.....	Rod	1
3	b	1355127	Retainer	1
3	c	1355220	Retainer	1
4	d	1355189	Spacer	1
4	c	1355221	Spacer	1
5		257913	Check Valve	1
6		297531	Washer	1
7	ef	39348	O-Ring	1
8		187388	Snap Ring	1
9	be	1319668	Wiper	1
9	cf	1310370	Wiper	1
10	ef	2013075	Seal	1
11	ef	92861	O-Ring	1
12	ef	638246	Back-Up Ring	1
13	ef	1356750	Wear Ring	1
14	be	1356749	Rod Seal	1
14	cf	1356752	Rod Seal	1
15		186061	Packing Lubricant	AR

a ☞ Table Above
b For Lift Heights Below 188.7 in
c For 188.7 in Lift Height
d For 169.0 Lift Height
e Included In Seal Kit 1355276
f Included In Seal Kit 1355277

©2000 HYSTER COMPANY

CYLINDER (Figure 193)

TWO STAGE LIMITED FREE-LIFT

H60-65XM

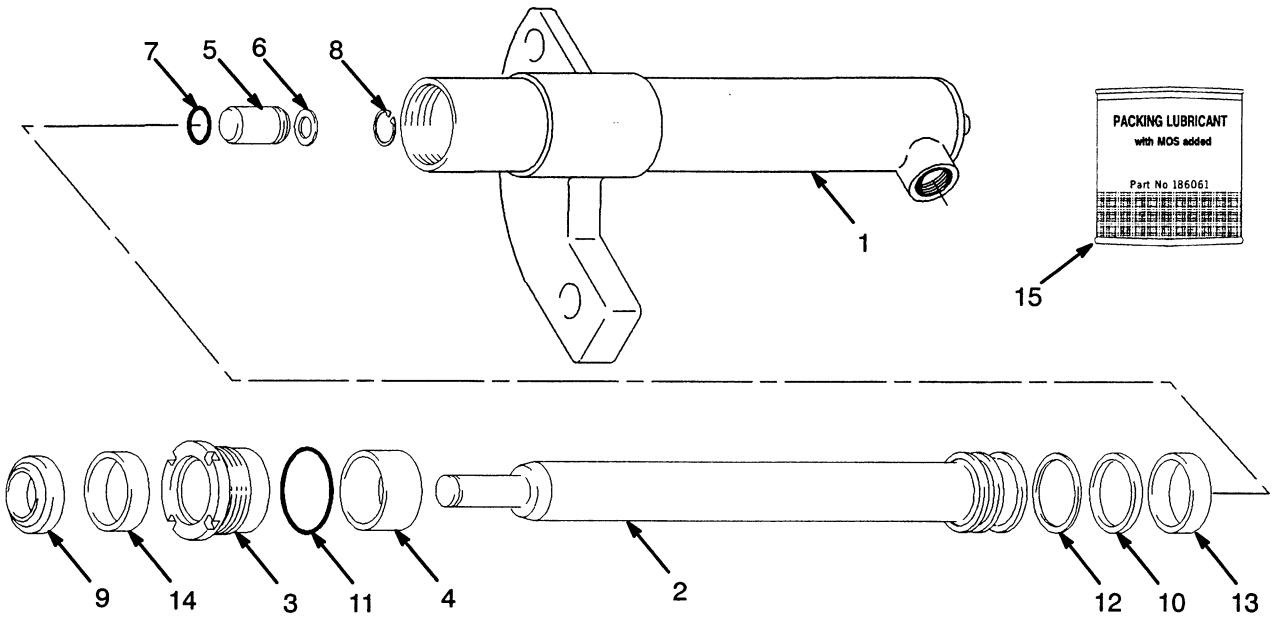

CYLINDER
TWO STAGE LFL
H60-65XM

Ref No	Name Of Part 1 2 3 4	Lift Height To Bottom Of Forks				
		112.6 in	124.4 in	144.1 in	163.7 in	183.4 in
	Mast Group No.	**B562 2859**	**B562 3159**	**B562 3659**	**B562 4159**	**B562 4659**
	Group # Cylinder RH	8600256 1341469	8600259 1341472	8600264 1341477	8600352 1341482	8600357 1341487
1	Shell	1355357	1355369	1355393	1355416	1355436
2	Rod	1355355	1355367	1355391	1355414	1355434
	Group # Cylinder LH	8600206 1341506	8600209 1341509	8600214 1341514	8600302 1341519	8600307 1341524
1	Shell	1355354	1355366	1355390	1355413	1355433
2	Rod	1355355	1355367	1355391	1355414	1355434

REF		PART NO.	NAME OF PART	QTY
	a	.....	Cylinder	1
1	a	.....	Shell	1
2	a	.....	Rod	1
3	b	1355284	Retainer	1
3	c	1355409	Retainer	1
4	b	1355285	Spacer	1
4	c	1355410	Spacer	1
5		257913	Check Valve	1
6		297531	Washer	1
7	de	39348	O-Ring	1
8		187388	Snap Ring	1
9	bd	1319668	Wiper	1
9	ce	1310370	Wiper	1
10	de	334156	Seal	1
11	de	59229	O-Ring	1
12	de	335012	Back-Up Ring	1
13	de	1356751	Wear Ring	1
14	bd	1356749	Rod Seal	1
14	ce	1356752	Rod Seal	1
15		186061	Packing Lubricant	AR

a ☞ Table Above
b For Lift Heights To 144.1 in
c For Lift Heights 163.7 in. And 183.4 In.
d Included In Seal Kit 1355286
e Included In Seal Kit 1355411

©2000 HYSTER COMPANY

CARRIAGE (Figure 194)
TWO STAGE LIMITED FREE-LIFT
FOUR ROLLER

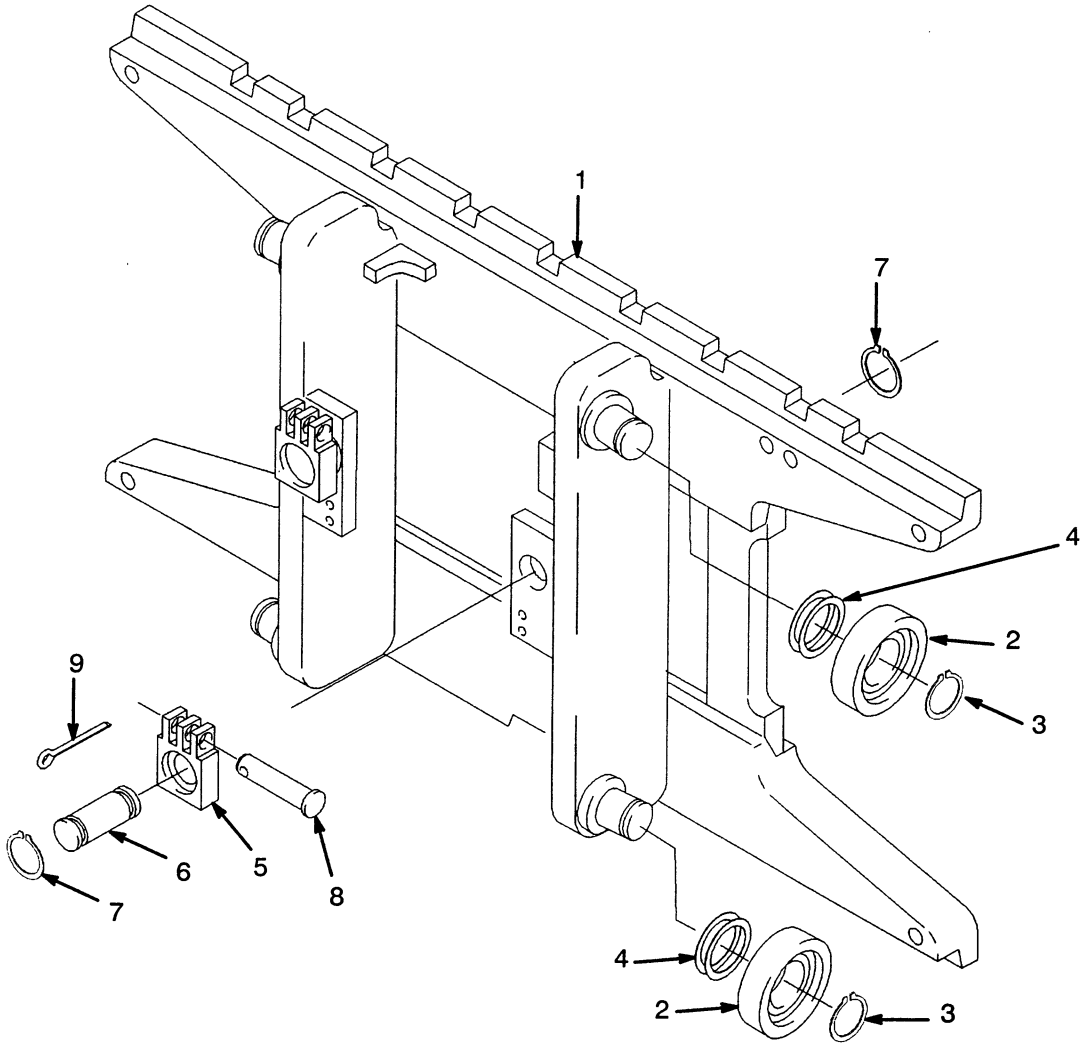

	H45-55XM	H60-65XM
Group No.	8500007	8500008
Carriage	1343838	1343841

KEY:
A: H45-55XM
B: H60-65XM

REF		PART NO.	NAME OF PART	QTY A	QTY B
	a	.....	Carriage Assy	1	..
	a	.....	Carriage Assy	..	1
1		1337940	Carriage	1	..
1		1337943	Carriage	..	1
1		1345264	Stubshaft	4	4
2	b	1345218	Load Roller	6	6
2		1345219	Load Roller ("B" 0.76 mm) ..	4	4
2		1345220	Load Roller ("C" 1.52 mm) ..	4	4
3		12891	Snap Ring	4	4
4		1345263	Shim	AR	AR
5		1369345	Chain Anchor	2	..
5		1369344	Chain Anchor	..	2
6		1345352	Pin	2	2
7		131358	Snap Ring	4	4
8		323161	Pin	2	2
9		15200	Cotter Pin	2	2

a ☞ Table Above

©2000 HYSTER COMPANY

CARRIAGE (Figure 195)

TWO STAGE LIMITED FREE-LIFT

SIX ROLLER

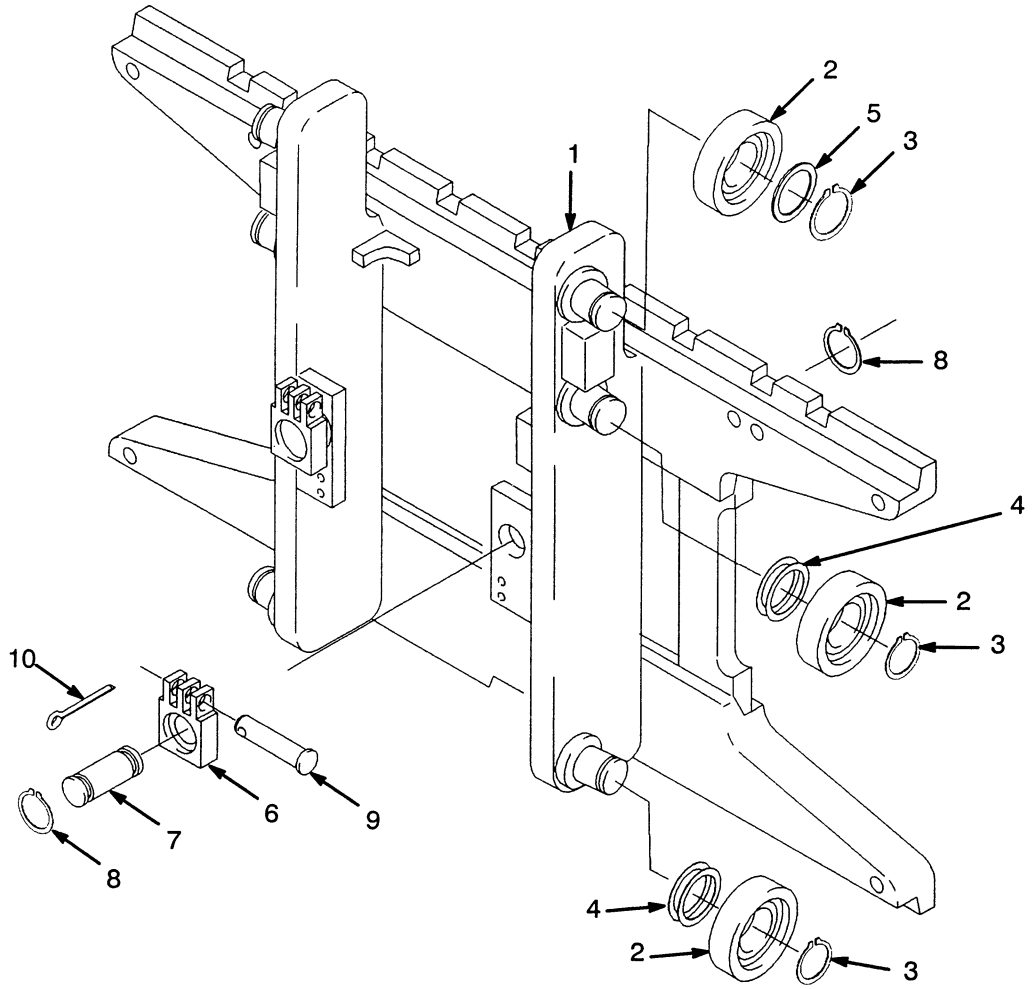

	H45-55XM	H60-65XM
Group No.	8500013	8500014
Carriage	1343846	1343847

KEY:
A: H45-55XM
B: H60-65XM

REF		PART NO.	NAME OF PART	QTY A	QTY B
	a	.....	Carriage Assy	1	..
	a	....	Carriage Assy	..	1
1		1338616	Carriage	1	..
1		1338618	Carriage	..	1
1		1345264	Stubshaft	6	6
2	b	1345218	Load Roller	6	6
2	c	1395172	Load Roller ("A" Standard) ..	6	6
2		1345219	Load Roller ("B" 0.76 mm) ..	6	6
2		1345220	Load Roller ("C" 1.52 mm) ..	6	6
3		12891	Snap Ring	6	6
4		1345263	Shim	ARAR	
5		366116	Spacer	2	2
6		1369345	Chain Anchor	2	..
6		1369344	Chain Anchor	..	2
7		1345352	Pin	2	2
8		131358	Snap Ring	4	4
9		323161	Pin	2	2
10		15200	Cotter Pin	2	2

a ☞ Table Above
b Last Used On S/N Pending ECN 72449
c First Used On S/N Pending ECN 72449 Above

©2000 HYSTER COMPANY

LOAD BACKREST EXTENSION (Figure 196)

TWO STAGE LIMITED FREE-LIFT

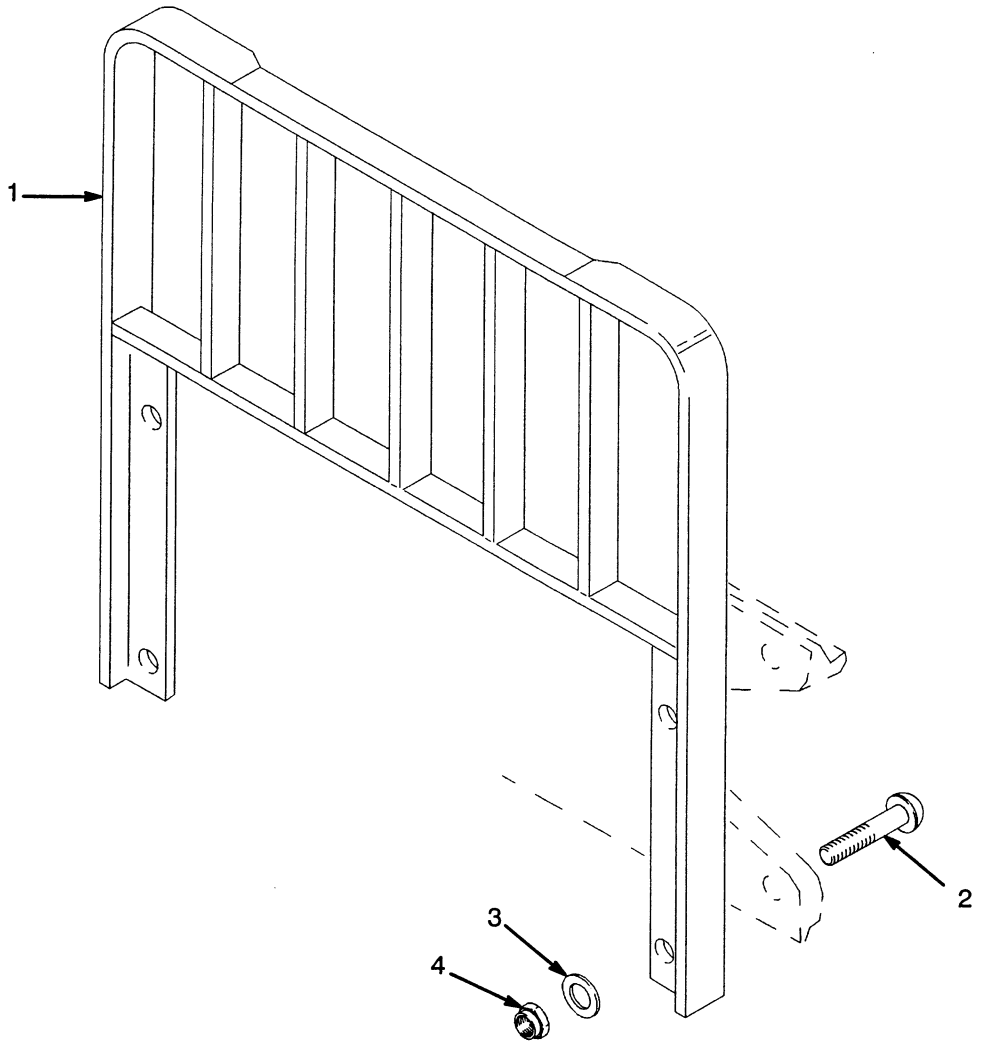

KEY:
A: H45-55XM
B: H60-65XM

REF		PART NO.	NAME OF PART	QTY A	QTY B
1		1338642	Load Backrest Extension	1	..
1		1338645	Load Backrest Extension	..	1
1	a	1345267	Load Backrest Extension	..	1
2		1343990	Capscrew	4	..
2		1354923	Capscrew	..	4
3		221771	Washer	4	4
3	b	296423	Washer	4	4
4		300937	Nut	4	4

a For Polished Forks With Full Bottom Taper
b Optional

MAST INSTALLATION (Figure 197)

TWO STAGE LIMITED FREE-LIFT

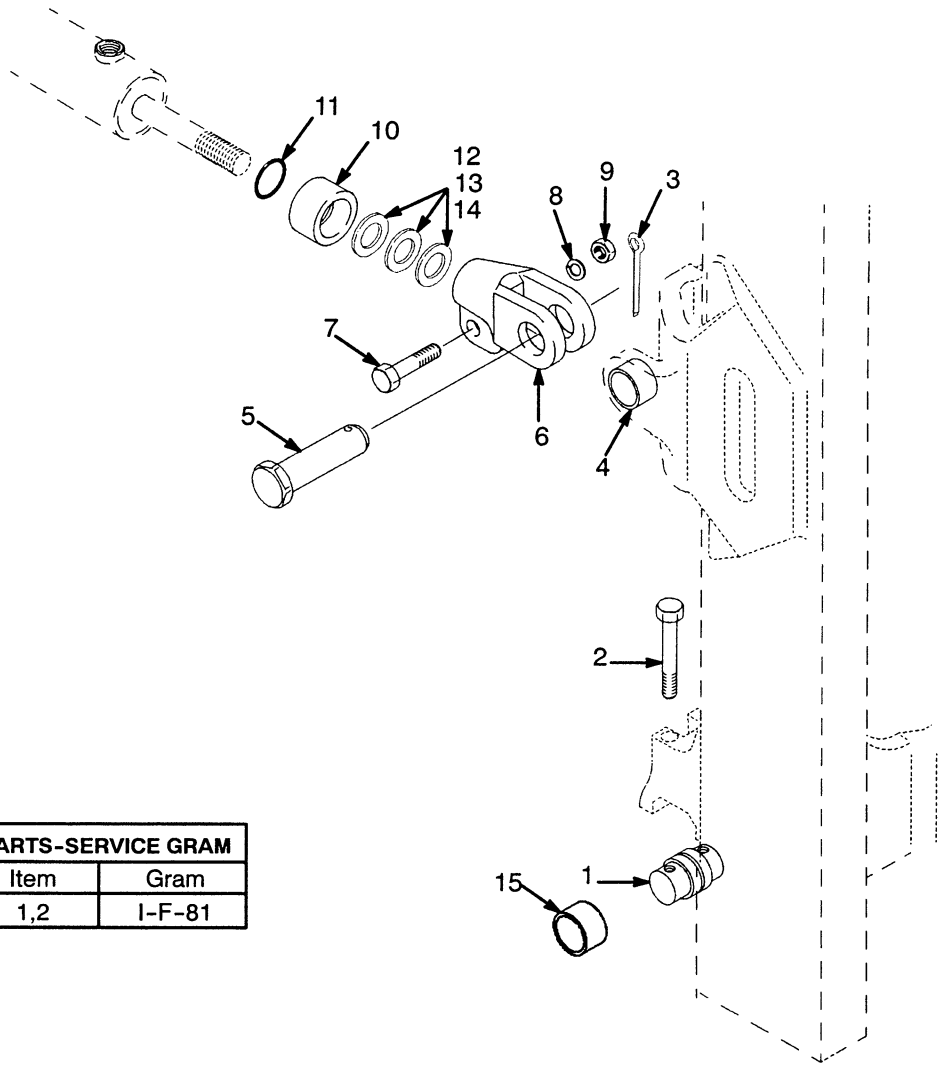

PARTS-SERVICE GRAM	
Item	Gram
1,2	I-F-81

KEY:
A: 6° Forward Tilt/10° Back Tilt
B: 6° Forward Tilt/6° Back Tilt
C: 6° Forward Tilt/5° Back Tilt

REF		PART NO.	NAME OF PART	QTY A	B	C
1	a	1333386	Pin	2	2	2
1	b	1376424	Pin	2	2	2
2	a	293659	Capscrew	4	4	4
2	b	1376423	Capscrew	4	4	4
3		15236	Cotter Pin	2	2	2
4		300982	Bushing	2	2	2
5		1345354	Pin	2	2	2
6		1307641	Rod End	2	2	2
7		293650	Capscrew	2	2	2
8		292683	Lockwasher	2	2	2
9		216877	Nut	2	2	2

REF	PART NO.	NAME OF PART	QTY A	B	C
10	1451788	Spacer	..	2	..
10	384101	Spacer	..	..	2
11	55434	O-Ring	..	2	..
12	134675	Shim	..	AR	AR
13	1325119	Shim	..	AR	AR
14	1361948	Shim	..	..	AR
15	1333385	Bushing	2	2	2
15	1380115	Bushing (Optional)	2	2	2

a First Used On S/N D177B-19806
b Last Used On S/N D177B-19807

©2000 HYSTER COMPANY

MAST INSTALLATION (Figure 198)

TWO STAGE LIMITED FREE-LIFT

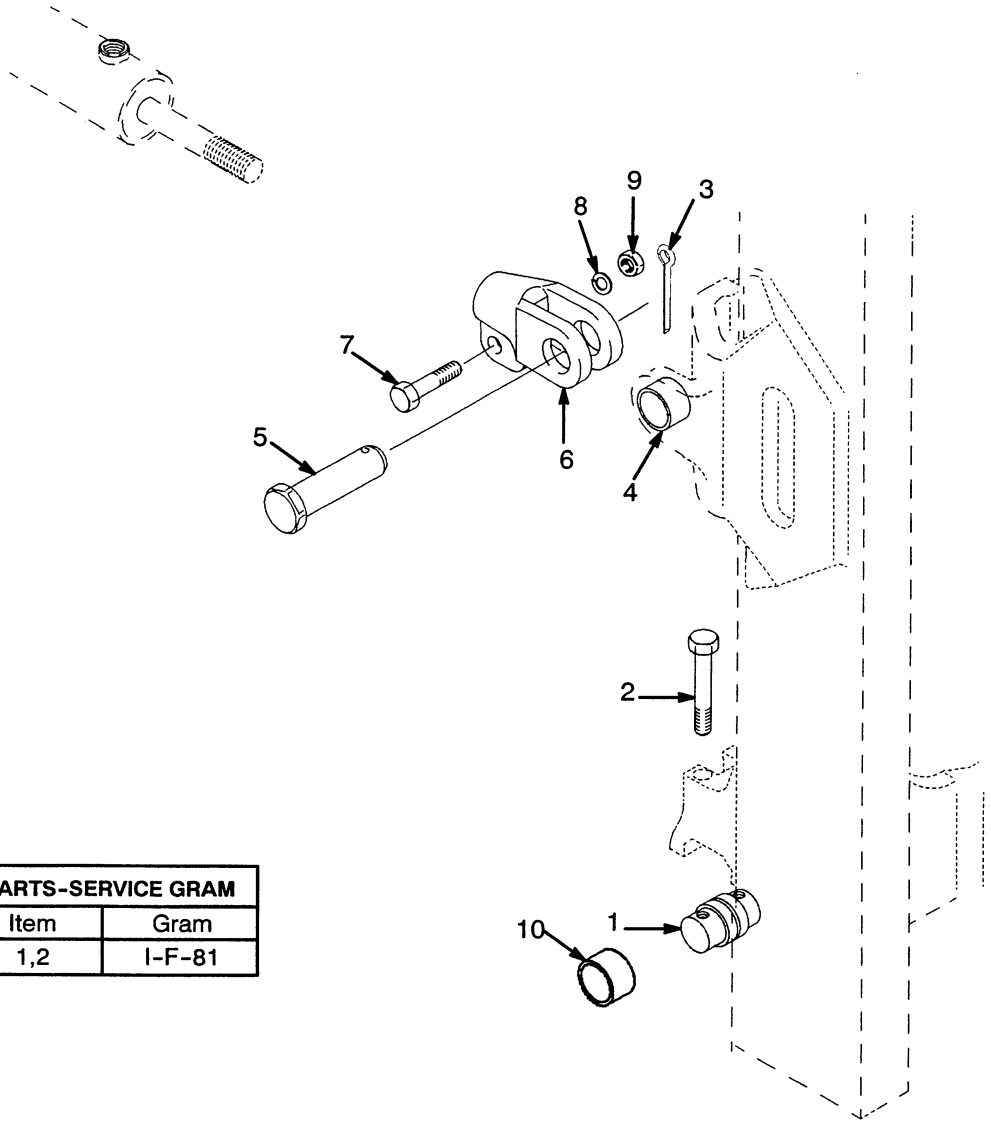

PARTS-SERVICE GRAM	
Item	Gram
1,2	I-F-81

KEY:
10° Forward Tilt/6° Back Tilt

REF		PART NO.	NAME OF PART	QTY
1	a	1333386	Pin	2
1	b	1376424	Pin	2
2	a	293659	Capscrew	4
2	b	1376423	Capscrew	4
3		15236	Cotter Pin	2
4		300982	Bushing	2
5		1345354	Pin	2
6		1356318	Rod End.	2

REF	PART NO.	NAME OF PART	QTY
7	293650	Capscrew	2
8	292683	Lockwasher	2
9	216877	Nut	2
10	1333385	Bushing	2
10	1380115	Bushing (Optional)	2

a First Used On S/N D177B-19806
b Last Used On S/N D177B-19807

©2000 HYSTER COMPANY

NOTES

©2000 HYSTER COMPANY

HEADER HOSE (Figure 199)

TWO STAGE LIMITED FREE-LIFT

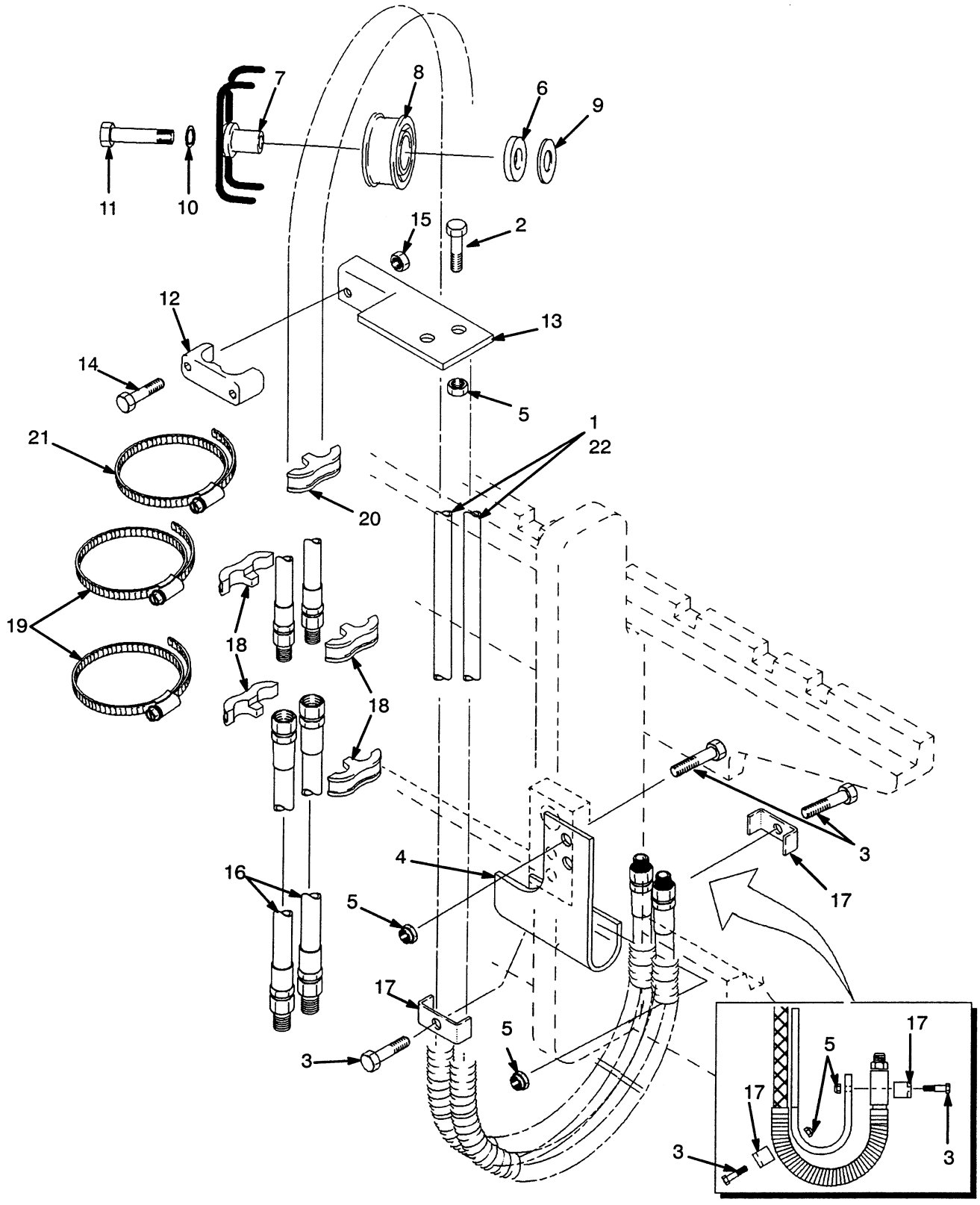

HEADER HOSE

TWO STAGE LIMITED FREE-LIFT

H45-55XM

Ref No	Name Of Part 1 2 3 4	Lift Height To Bottom Of Forks				
		117.8 in	129.6 in	149.3 in)	169.0 in	188.7 in
	Mast Group No.	**B507 2992**	**B507 3292**	**B507 3792**	**B507 4292**	**B507 4792**
1	Hose	[a]1345496 [b]1368313	[a]1345499 [b]1369606	[a]1369604 [b]1369611	[a]1369609 [b]1345516	[a] 1369613 [b]1369617
20	Clamp	----	----	1353530	1353530	1353530
21	Clamp	----	----	1360507	1360507	1360507

[a] Last Used On S/N B507V-3171
[b] First Used On S/N B507V-3172

H60-65XM

Ref No	Name Of Part 1 2 3 4	Lift Height To Bottom Of Forks				
		112.6 in	124.4 in	144.1 in	163.7 in	183.4 in
	Mast Group No.	**B562 2859**	**B562 3159**	**B562 3659**	**B562 4159**	**B562 4659**
1	Hose	[a]1345496 [b]1368313	[a]1345499 [b]1369606	[a]1369604 [b]1369611	[a]1369609 [b]1345516	[a] 1369613 [b]1369617
20	Clamp	----	----	1353530	1353530	1353530
21	Clamp	----	----	1360507	1360507	1360507
22	Hose	[b]1398493	1368314	1398512	1398645	1398541

[a] Last Used On S/N B562V-2417
[b] First Used On S/N B562V-2418

KEY:
A: Three Function
B: Four Function

REF		PART NO.	NAME OF PART	QTY A	QTY B
1	a	....	Hose	2	2
2		136704	Capscrew	2	4
3		292508	Capscrew	4	8
4		1345412	Bracket, RH	1	1
4		1345413	Bracket, LH	..	1
5		313828	Nut	6	12
6		1360549	Spacer	1	2
7		1360548	Stubshaft	1	2
8		1381595	Sheave	1	2
9		1345190	Special Washer	1	2
10		292683	Washer	1	2
11		292533	Capscrew	1	2
12		1360386	Clamp	1	2
13		1354919	Bracket, RH	1	1
13		1354921	Bracket, LH	..	1
14		292502	Capscrew	2	4
15		313805	Nut	2	4
16		1354922	Hose, RH	2	2
16		1354904	Hose, LH	..	2
17		1345348	Clamp	2	4
18		1353530	Clamp	4	8
19		1360507	Clamp	2	4
20	a	....	Clamp	1	2
21	a	....	Clamp	1	2
22	a	....	Hose	..	2

[a] ☞ Table Above

©2000 HYSTER COMPANY

FORKS (Figure 200)

TWO STAGE LIMITED FREE-LIFT

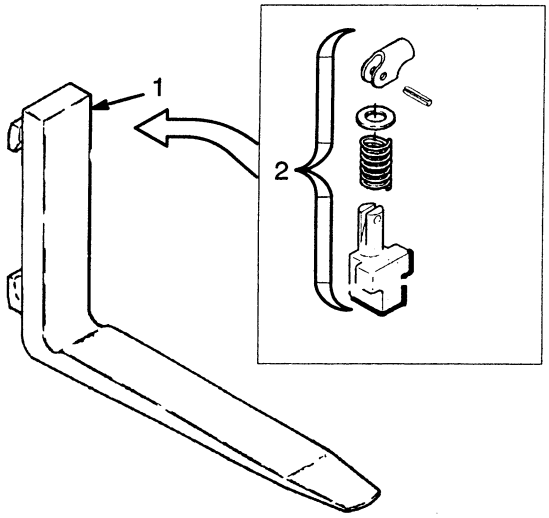

H45-55XM

Ref No	Name Of Part 1 2 3 4	Standard Taper		Full Bottom Taper	Qty
	Fork	125 mm x 40 mm	100 mm x 40 mm	125 mm x 40 mm	
	762 mm (30 in)	1326660	384210		2
	914 mm (36 in)	1326661	384211	1338087	2
1	1067 mm (42 in)	1326663	384213	1338088	2
	1219 mm (48 in)	1326664	384214	1338089	2
	1372 mm (54 in)	1326665	384215		2
	1524 mm (60 in)	1326666	384216		2
2	Latch	369795	369795	369795	1

NOTE: OTHER FORK DIMENSIONS AVAILABLE ON REQUEST, CONTACT YOUR HYSTER DEALER.

©2000 HYSTER COMPANY

FORKS

TWO STAGE LIMITED FREE-LIFT

(Figure 200 Continued)

H60-65XM

Ref No	Name Of Part 1 2 3 4	Standard Taper		Full Bottom Taper	Qty
1	Fork	100 mm x 45 mm	125 mm x 50 mm	180 mm x 45 mm	
	914 mm (36 in)	1333018	367419		2
	1067 mm (42 in)	1333020	367420		2
	1207 mm (42.5 in)			1338098	2
	1219 mm (48 in)	1333021	367421		2
	1372 mm (54 in)		367422	1332745	2
	1524 mm (60 in)		367423		2
	1829 mm (72 in)	1333024	367424		2
2	Latch	369796	369796	369796	1

NOTE: OTHER FORK DIMENSIONS AVAILABLE ON REQUEST, CONTACT YOUR HYSTER DEALER.

©2000 HYSTER COMPANY

NOTES

©2000 HYSTER COMPANY

THREE STAGE FULL FREE-LIFT

CARRIAGE (Figure 208)
THREE STAGE FULL FREE-LIFT
SIX ROLLER (LAST USED ON S/N B508V-4186, B563V-2161) ..... Page 391

CARRIAGE (Figure 209)
THREE STAGE FULL FREE-LIFT
SIX ROLLER (FIRST USED ON S/N B508V-4187, B563V-2162) ..... Page 392

FORKS (Figure 213)
THREE STAGE FULL FREE-LIFT ..... Page 400

FREE LIFT (Figure 205)
THREE STAGE FULL FREE-LIFT ..... Page 378

FREE-LIFT CYLINDER (Figure 207)
THREE STAGE FULL FREE-LIFT ..... Page 384

HEADER HOSE (Figure 212)
THREE STAGE FULL FREE-LIFT ..... Page 396

INNER MAST (Figure 203)
THREE STAGE FULL FREE-LIFT ..... Page 374

INTERMEDIATE MAST (Figure 202)
THREE STAGE FULL FREE-LIFT ..... Page 372

LOAD BACKREST EXTENSION (Figure 210)
THREE STAGE FULL FREE-LIFT ..... Page 393

MAIN CYLINDER (Figure 206)
THREE STAGE FULL FREE-LIFT ..... Page 382

MAIN LIFT (Figure 204)
THREE STAGE FULL FREE-LIFT ..... Page 376

MAST INSTALLATION (Figure 211)
THREE STAGE FULL FREE-LIFT ..... Page 394

OUTER MAST (Figure 201)
THREE STAGE FULL FREE-LIFT ..... Page 370

©2000 HYSTER COMPANY

OUTER MAST (Figure 201)

THREE STAGE FULL FREE-LIFT

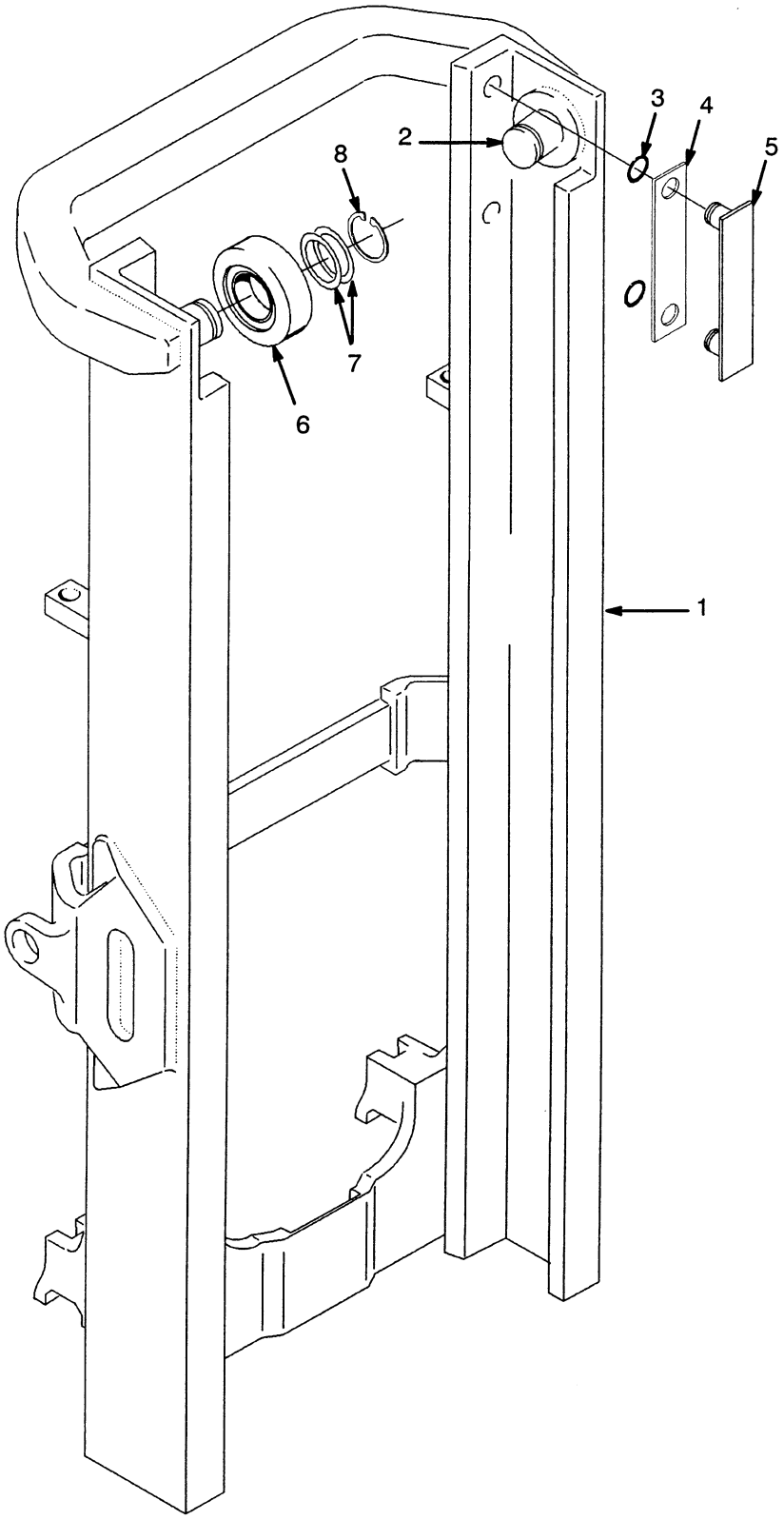

©2000 HYSTER COMPANY

See Service Manual for service procedures

OUTER MAST

THREE STAGE FULL FREE-LIFT

H45-55XM

Ref No	Name Of Part 1 2 3 4	Lift Height To Bottom Of Forks			
		169.7 in	187.4 in	199.2 in	216.9 in
	Mast Group No.	**B508 4310**	**B508 4760**	**B508 5060**	**B508 5510**
1	Outer Mast	1341004	1341007	1341010	1341013

H60-65XM

Ref No	Name Of Part 1 2 3 4	Lift Height To Bottom Of Forks			
		162.1 in	179.8 in	191.7 in	209.4 in
	Mast Group No.	**B563 4118**	**B563 4568**	**B563 4868**	**B563 5318**
1	Outer Mast	1341004	1341007	1341010	1341013

REF		PART NO.	NAME OF PART	QTY
	a	.....	Mast	1
1	a	.....	Outer Mast	1
2		1345216	Stub Shaft	2
3		104506	O-Ring	4
4		131716	Shim (0.020 in)	4
5		215211	Bearing Strip	2
6		1395168	Load Roller ("A" Standard)	2
6		1333396	Load Roller ("B" 0.76 mm)	2
6		1333397	Load Roller ("C" 1.52 mm)	2
7		129387	Shim (0.020 in)	AR
8		58901	Snap Ring	2

a ☞Table Above

©2000 HYSTER COMPANY

INTERMEDIATE MAST (Figure 202)

THREE STAGE FULL FREE-LIFT

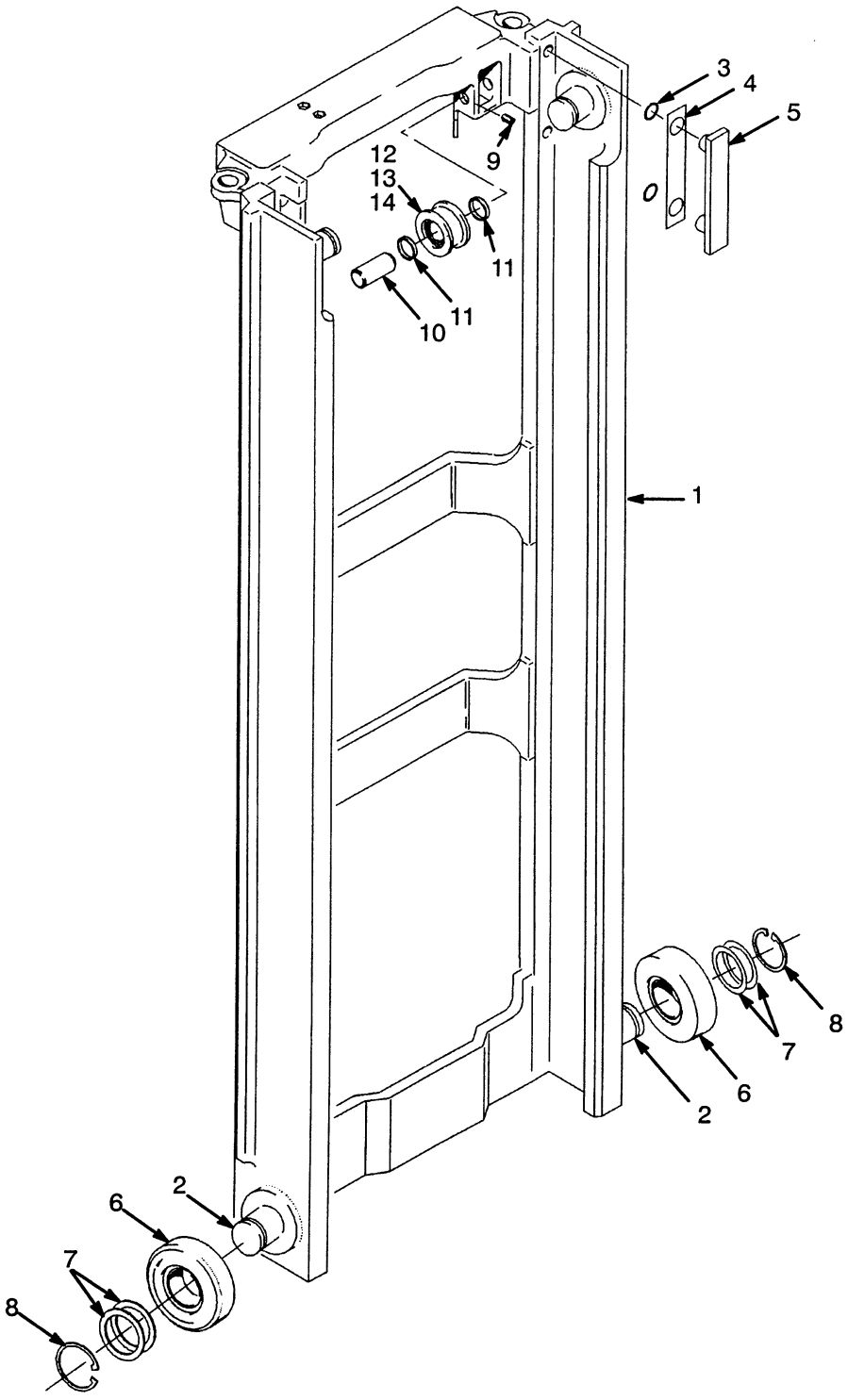

©2000 HYSTER COMPANY

INTERMEDIATE MAST

THREE STAGE FULL FREE-LIFT

H45-55XM

Ref No	Name Of Part 1 2 3 4	Lift Height To Bottom Of Forks			
		169.7 in	187.4 in	199.2 in	216.9 in
	Mast Group No.	**B508 4310**	**B508 4760**	**B508 5060**	**B508 5510**
1	Intermed. Mast	1341714	1341717	1341719	1341722

H60-65XM

Ref No	Name Of Part 1 2 3 4	Lift Height To Bottom Of Forks			
		162.1 in	179.8 in	191.7 in	209.4 in
	Mast Group No.	**B563 4118**	**B563 4568**	**B563 4868**	**B563 5318**
1	Intermed. Mast	1341714	1341717	1341719	1341722

REF		PART NO.	NAME OF PART	QTY
	a	.....	Mast	1
1	a	.....	Intermediate Mast	1
2		1345216	Stubshaft	4
3		104506	O-Ring	4
4		131716	Shim (0.020in)	4
5		215211	Bearing	2
6		1395168	Load Roller ("A" Standard)	4
6		1333396	Load Roller ("B" 0.76 mm)	4
6		1333397	Load Roller ("C" 1.52 mm)	4
7		129387	Shim	AR
8		58901	Snap Ring	4
9	b	302144	Setscrew	4
9	c	302462	Pin	2
10	b	1333389	Pin	2
10	c	1368656	Pin	2
11	d	1333644	Spacer	4
11	e	1378691	Spacer	4
12	d	1345183	Chain Sheave	2

REF		PART NO.	NAME OF PART	QTY
12		1345181	Sheave	1
12		37752	Snap Ring	2
12		231020	Bearing	1
13	e	1379685	Chain Sheave (H45-55XM)	2
13		1378698	Sheave	2
13		37752	Snap Ring	1
13		1378699	Bearing	1
14	e	1379684	Chain Sheave (H60-65XM)	2
14		1378694	Sheave	1
14		37752	Snap Ring	1
14		1378699	Bearing	1

a ☞ Table Above

b Last Used On Mast S/N B508B-9234, B508V-1513 & B563B-4904

c First Used On Mast S/N B508B-9235, B508V-1514, B563B-4905 & B563V-1501

d Last Used On S/N B508V-3250, B563V-2041

e First Used On S/N B508V-3251, B563V-2042

©2000 HYSTER COMPANY

INNER MAST (Figure 203)

THREE STAGE FULL FREE-LIFT

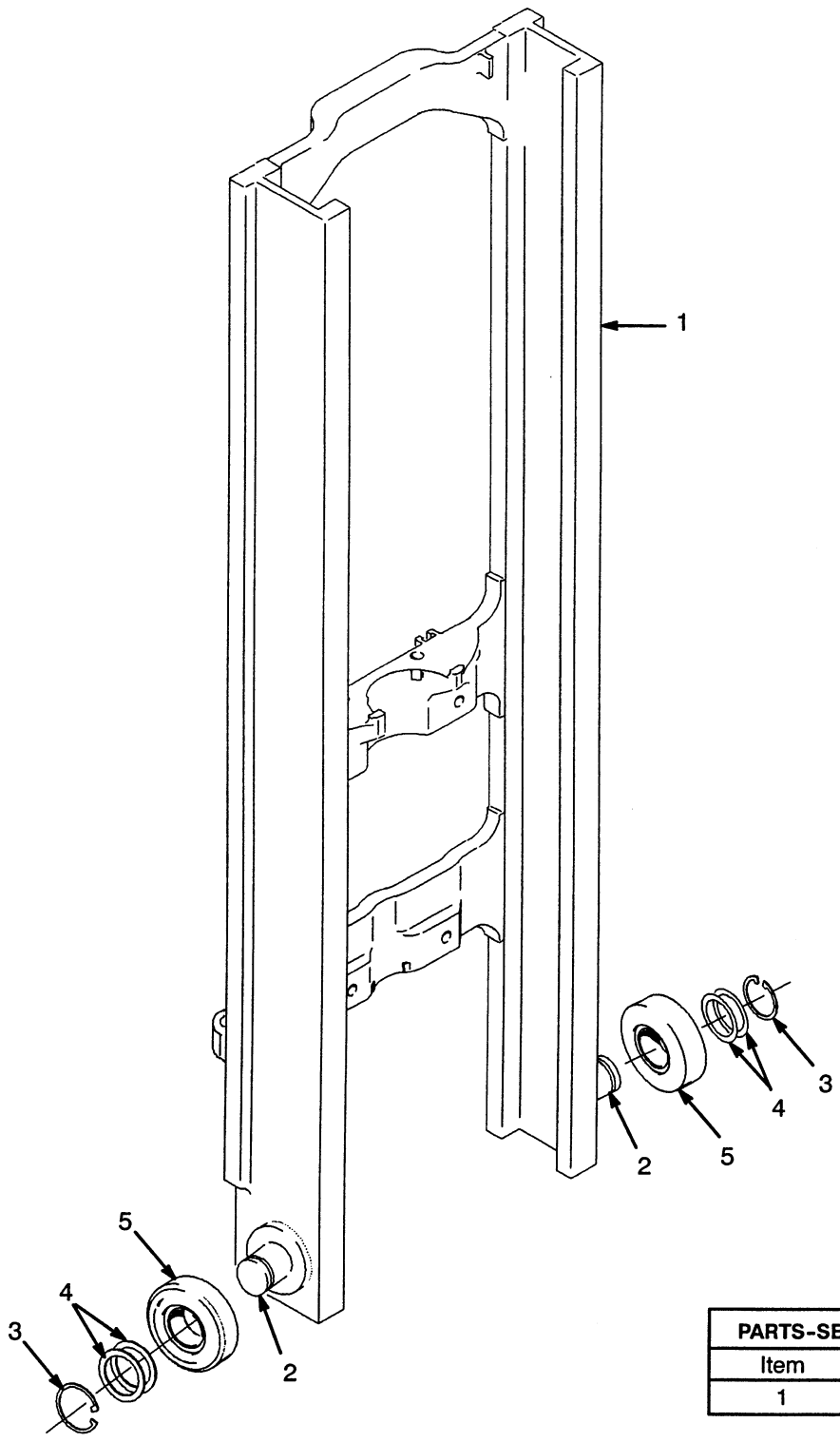

PARTS-SERVICE GRAM	
Item	Gram
1	I-E-37

©2000 HYSTER COMPANY

INNER MAST

THREE STAGE FULL FREE-LIFT

H45-55XM

Ref No	Name Of Part 1 2 3 4	Lift Height To Bottom Of Forks			
		169.7 in	187.4 in	199.2 in	216.9 in
	Mast Group No.	**B508 4310**	**B508 4760**	**B508 5060**	**B508 5510**
1	Inner Mast	[b]1341879 [c]1381354	[b]1341882 [c]1381357	[b]1341884 [c]1381359	[b]1341887 [c]1381362

b Last Used On S/N B508V-4186
c First Used On S/N B508V-4187

H60-65XM

Ref No	Name Of Part 1 2 3 4	Lift Height To Bottom Of Forks			
		162.1 in	179.8 in	191.7 in	209.4 in
	Mast Group No.	**B563 4118**	**B563 4568**	**B563 4868**	**B563 5318**
1	Inner Mast	[d]1341879 [e]1381354	[d]1341882 [e]1381357	[d]1341884 [e]1381359	[d]1341887 [e]1381362

d Last Used On S/N B563V-2161
e First Used On S/N B563V-2162

REF		PART NO.	NAME OF PART	QTY
	a	.....	Mast	1
1	a	.....	Inner Mast	1
2		1345216	Stubshaft	2
3		58901	Snap Ring	2
4		129387	Shim	AR
5		1395168	Load Roller ("A" Standard)	2
5		1333396	Load Roller ("B" 0.76 mm)	2
5		1333397	Load Roller ("C" 1.52 mm)	2

a ☞ Tables Above

MAIN LIFT (Figure 204)

THREE STAGE FULL FREE-LIFT

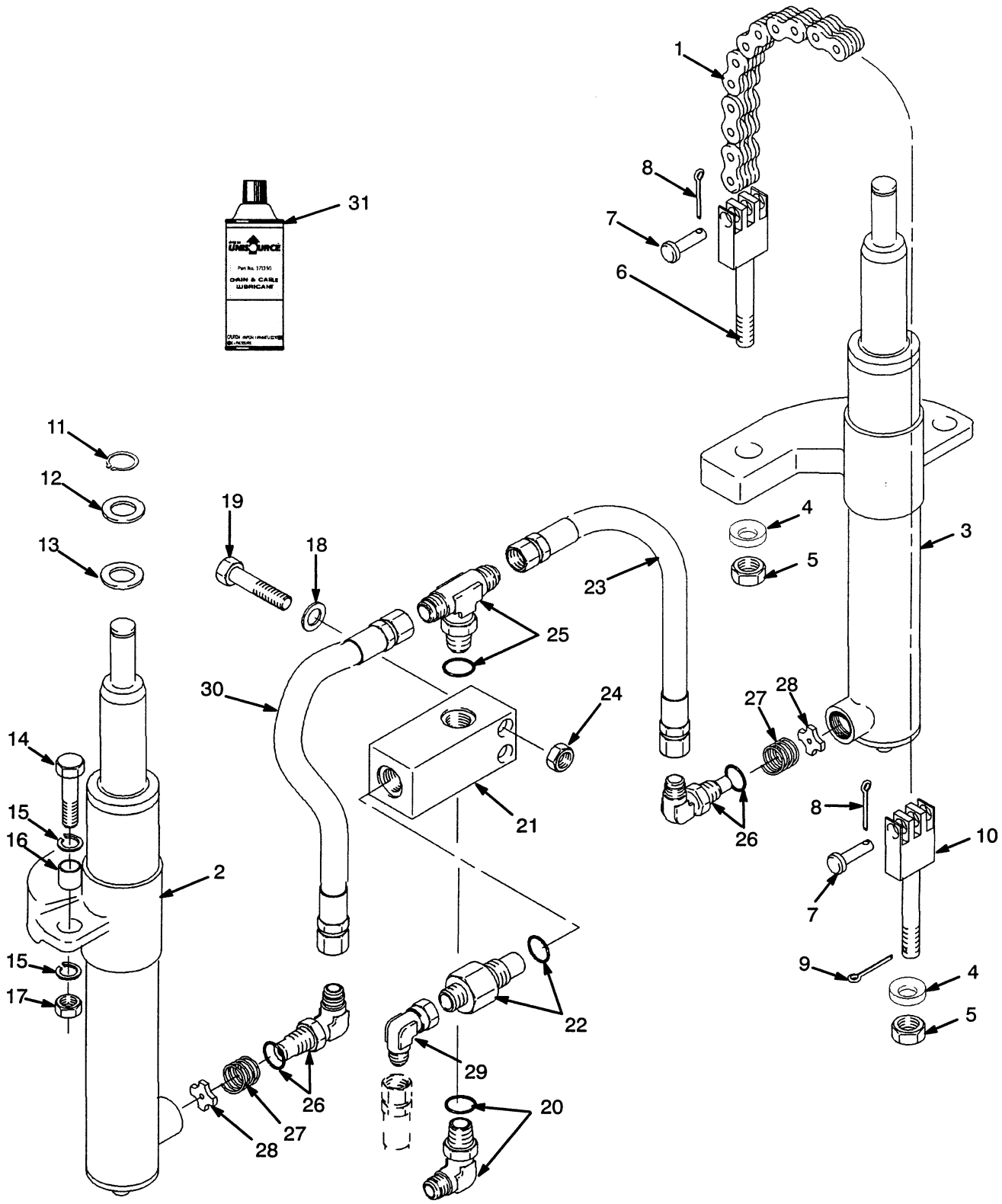

MAIN LIFT

THREE STAGE FULL FREE-LIFT

H45-55XM

REF NO	NAME OF PART 1 2 3 4	LIFT HEIGHT TO BOTTOM OF FORKS			
		169.7 in	187.4 in	199.2 in	216.9 in
	Mast Group No.	**B508 4310**	**B508 4760**	**B508 5060**	**B508 5510**
1	Chain	182343	135634	129361	135588

H60-65XM

REF NO	NAME OF PART 1 2 3 4	LIFT HEIGHT TO BOTTOM OF FORKS			
		162.1 in	179.8 in	191.7 in	209.4 in
	Mast Group No.	**B563 4118**	**B563 4568**	**B563 4868**	**B563 5318**
1	Chain	1342120	1342123	1342384	1342129

REF		PART NO.	NAME OF PART	QTY
		.....	Mast	1
1	a	.....	Chain	2
2		.....	Cylinder (RH)	1
			☞ Figure 206	
3		.....	Cylinder (LH)	1
			☞ Figure 206	
4		297649	Base Ring	4
5		161003	Nut	4
6	b	320313	Chain Anchor	2
6	c	1333328	Chain Anchor	2
7		323161	Pin	4
8		15200	Cotter Pin	4
9		15223	Cotter Pin	2
10	b	1365140	Chain Anchor	2
10	c	1333329	Chain Anchor	2
11		131358	Snap Ring	2
12		1333382	Washer	2
13		1354915	Washer	AR
13		1354916	Washer	AR
13		1354917	Washer	AR
14		292532	Capscrew	2
15		296422	Washer	4
16		323090	Spacer	2
17		300937	Nut	2
18		320157	Washer	2
19		214364	Capscrew	2
20		184761	Fitting	1
20		16486	O-Ring	1
21		1333392	Valve Housing	1
22	b	2309766	Lowering Control Valve	1
22	c	316306	Lowering Control Valve	1
22		16982	O-Ring	1
23		1345403	Hose	1
24		313828	Nut	2
25		16578	Fitting	1
25		16485	O-Ring	1
26		189595	Fitting	2
26		16485	O-Ring	1
27		337179	Spring	2
28		357749	Special Washer	2
29		16882	Fitting	1
30		1462551	Hose	1
31		171350	Chain Lubricant	AR

a ☞ Table Above
b H45-55XM
c H60-65XM

©2000 HYSTER COMPANY

FREE LIFT (Figure 205)

THREE STAGE FULL FREE-LIFT

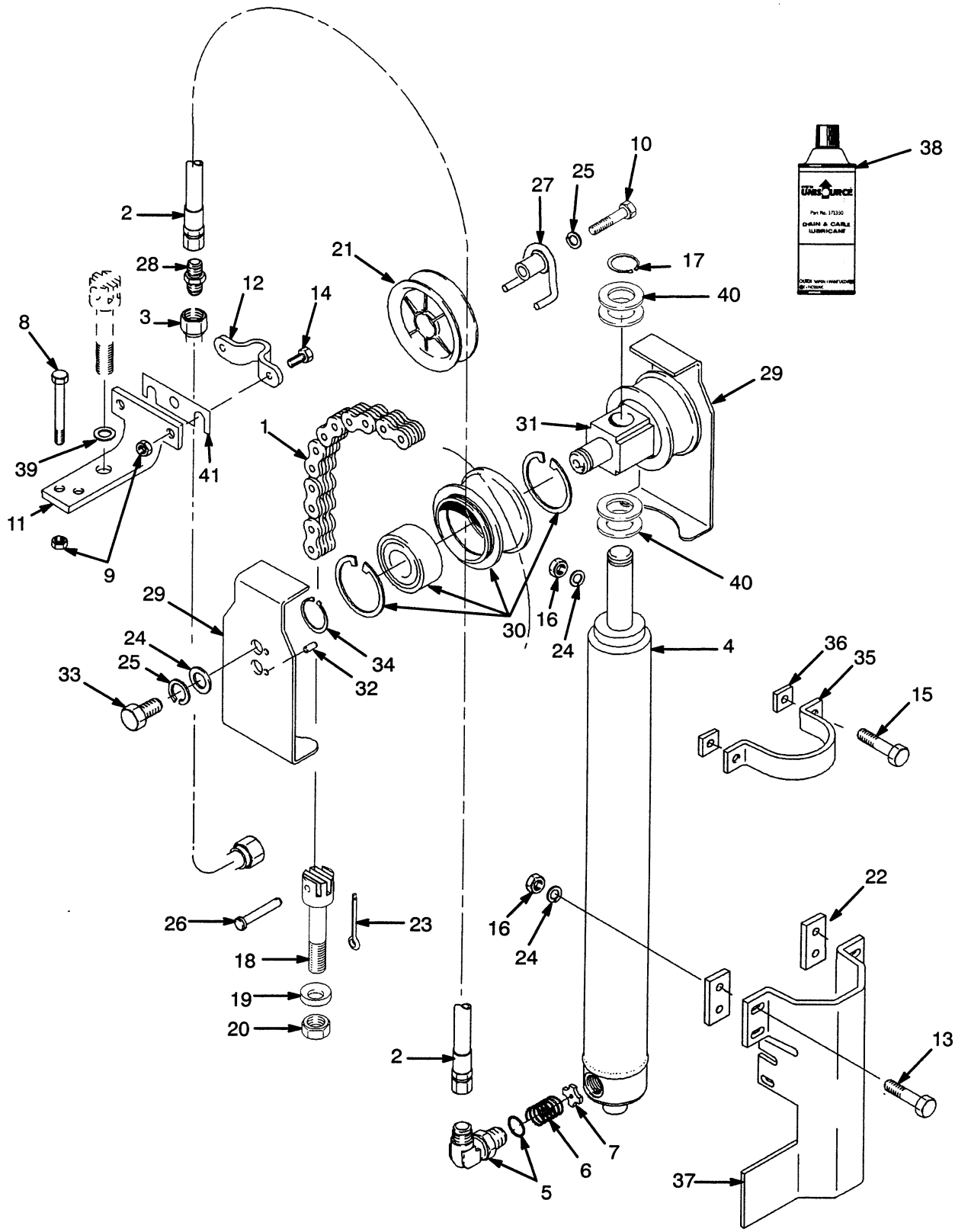

©2000 HYSTER COMPANY

See Service Manual for service procedures

FREE LIFT

THREE STAGE FULL FREE-LIFT

H45-55XM

Ref No	Name Of Part 1 2 3 4	Lift Height To Bottom Of Forks			
		169.7 in	187.4 in	199.2 in	216.9 in
	Mast Group No.	**B508 4310**	**B508 4760**	**B508 5060**	**B508 5510**
1	Chain	231082[a] 197345[b]	161059[a] 180177[b]	182332[a] 180029[b]	182343[a] 180057[b]
2	Hose	1342407	1342410	1342412	1342415
3	Tube	1345359	1345362	1345364	1345367

REF		PART NO.	NAME OF PART	QTY
		.....	Mast	1
1	c	.....	Chain	2
2	c	.....	Hose	1
3	c	.....	Tube	1
4		.....	Free-Lift Cylinder	1
			☞ Figure 207	
5		238637	Fitting	1
5		16485	O-Ring	1
6		154355	Spring	1
7		356505	Special Washer	1
8		136704	Capscrew	2
9		313828	Nut	4
10		292533	Capscrew	1
11		1362390	Bracket	1
12		1345401	Clamp	1
13		287837	Capscrew	4
14		136681	Capscrew	2
15	e	292529	Capscrew	2
15	d	292530	Capscrew	2
16		300937	Nut	6
17		131358	Snap Ring	1
18	ef	320313	Chain Anchor	2
18	eg	1369357	Chain Anchor	2
18	df	1333328	Chain Anchor	2
18	dg	1369356	Chain Anchor	2
19		297649	Base Ring	2
20		161003	Nut	2
21		1343989	Hose Sheave	1
22	d	1354903	Spacer	2
23		15200	Cotter Pin	2
24		320161	Washer	8
25		292683	Lockwasher	3
26		323161	Pin	2
27		1360534	Stubshaft	1
28		17635	Fitting	1
29		1395285	Chain Guard	2
30	h	1354912	Chain Sheave	2
30		1354911	Sheave	1
30		37752	Snap Ring	2
30		231020	Bearing	1
30	k	1379682	Chain Sheave	2
30		1378692	Sheave	1
30		37752	Snap Ring	1
30		1378699	Bearing	1
31	h	1337905	Crosshead	1
31	k	1378690	Crosshead	1
32		302461	Pin	2
33		292527	Capscrew	2
34		304526	Snap Ring	2
35		1465504	Clamp	1
36	d	1354902	Spacer	2
37		1354962	Cylinder Guard Bracket	1
38		171350	Chain Lubricant	AR
39		320165	Washer	1
40	b	1362433	Spacer	4
41		325616	Spacer	AR

a Last Used On Mast S/N B508B-9234, B508V-1513

b First Used On Mast S/N B508B-9235, B508V-1514

c ☞ Table Above

d H60-65XM

e H45-55XM

f Last Used On Mast S/N B508B-6199

g First Used On Mast S/N B508B-6200

h Last Used On S/N B508V-3250

k First Used On S/N B508V-3251

CONTINUED ON NEXT PAGE

©2000 HYSTER COMPANY

FREE LIFT

THREE STAGE FULL FREE-LIFT

(Figure 205 Continued)

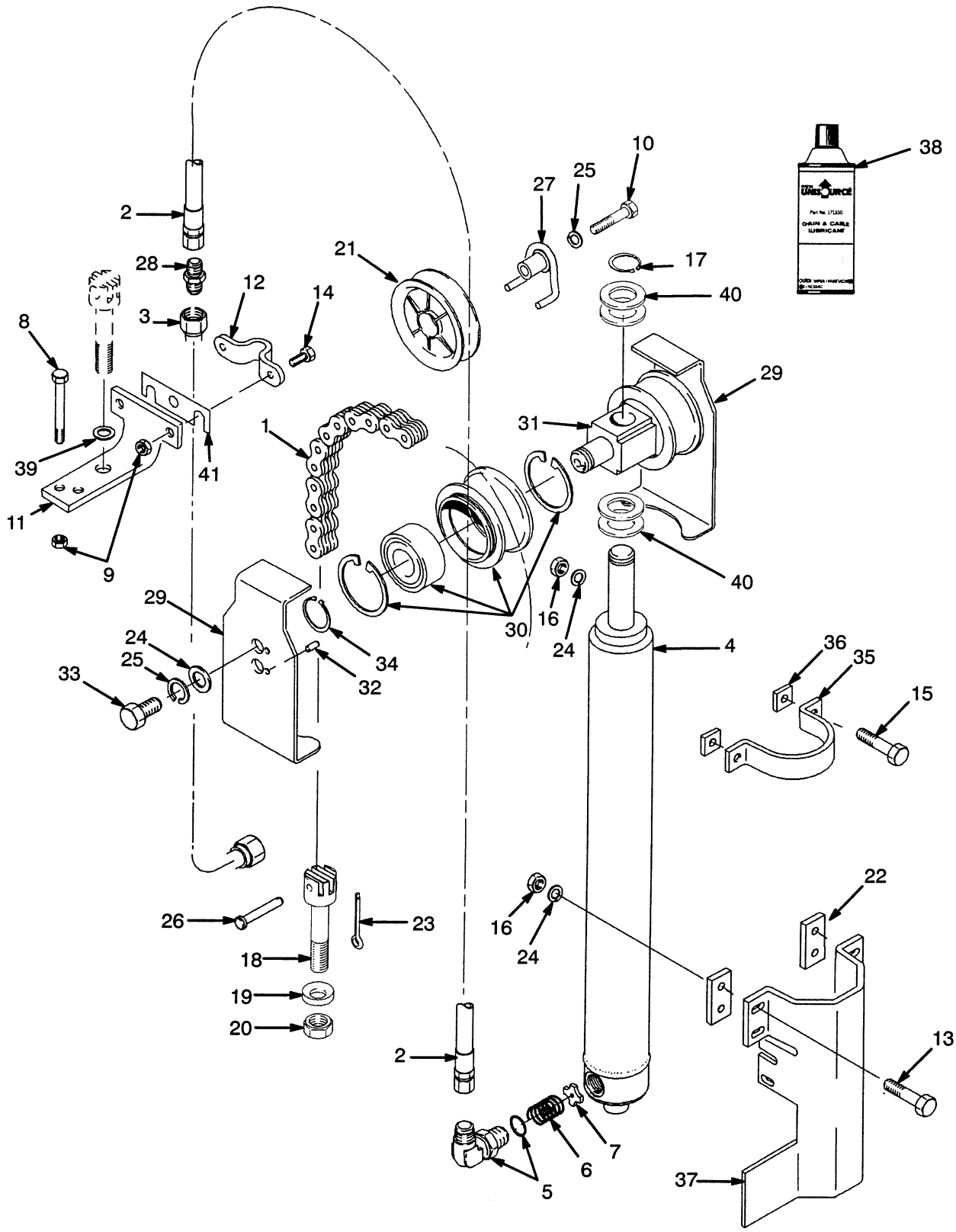

©2000 HYSTER COMPANY

FREE LIFT

THREE STAGE FULL FREE-LIFT

(Figure 205 Continued)

H60-65XM

Ref No	Name Of Part 1 2 3 4	Lift Height To Bottom Of Forks			
		162.1 in	179.8 in	191.7 in	209.4 in
	Mast Group No.	**B563 4118**	**B563 4568**	**B563 4868**	**B563 5318**
1	Chain	1342374[a] 1342391[b]	1342377[a] 1369328[b]	1342379[a] 1342118[b]	1342120[a] 1342121[b]
2	Hose	1342407	1342410	1342412	1342415
3	Tube	1345359	1345362	1345364	1345367

REF		PART NO.	NAME OF PART	QTY
		....	Mast	1
1	c	....	Chain	2
2	c	....	Hose	1
3	c	....	Tube	1
4		....	Free-Lift Cylinder ☞ Figure 207	1
5		238637	Fitting	1
5		16485	O-Ring	1
6		154355	Spring	1
7		356505	Special Washer	1
8		136704	Capscrew	2
9		313828	Nut	4
10		292533	Capscrew	1
11		1362390	Bracket	1
12		1345401	Clamp	1
13		287837	Capscrew	4
14		136681	Capscrew	2
15	e	292529	Capscrew	2
15	d	292530	Capscrew	2
16		300937	Nut	6
17		131358	Snap Ring	1
18	ef	320313	Chain Anchor	2
18	eg	1369357	Chain Anchor	2
18	df	1333328	Chain Anchor	2
18	dg	1369356	Chain Anchor	2
19		297649	Base Ring	2
20		161003	Nut	2
21		1343989	Hose Sheave	1
22	d	1354903	Spacer	2
23		15200	Cotter Pin	2
24		320161	Washer	8
25		292683	Lockwasher	3
26		323161	Pin	2
27		1360534	Stubshaft	1
28		17635	Fitting	1
29		1395285	Chain Guard	2
30	h	....	Chain Sheave	2
30		1345201	Sheave	1
30		37752	Snap Ring	2
30		231020	Bearing	1
30	k	1379683	Chain Sheave	2
30		1378693	Sheave	1
30		37752	Snap Ring	1
30		1378699	Bearing	1
31	h	1337905	Crosshead	1
31	k	1378690	Crosshead	1
32		302461	Pin	2
33		292527	Capscrew	2
34		304526	Snap Ring	2
35		1465504	Clamp	1
36	d	1354902	Spacer	2
37		1354962	Cylinder Guard Bracket	1
38		171350	Chain Lubricant	AR
39		320165	Washer	1
40	b	1362433	Spacer	4
41		325616	Spacer	AR

a Last Used On Mast S/N B563B-4904
b First Used On Mast S/N B563B-4905, B563V-1501
c ☞ Table Above
d H60-65XM
e H45-55XM
f Last Used On Mast S/N 563B-3499
g First Used On Mast S/N 563B-3500
h Last Used On S/N B563V-2041
k First Used On S/N B563V-2042

©2000 HYSTER COMPANY

MAIN CYLINDER (Figure 206)

THREE STAGE FULL FREE-LIFT

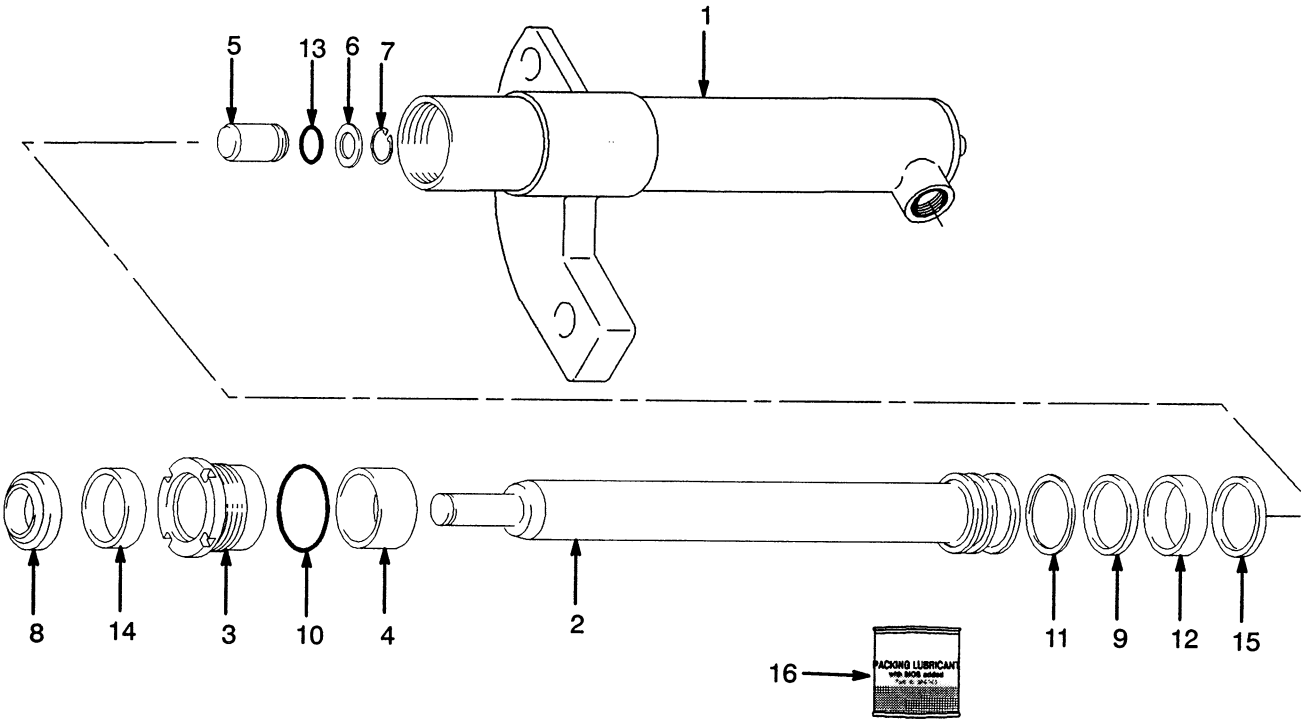

©2000 HYSTER COMPANY

MAIN CYLINDER

THREE STAGE FULL FREE-LIFT

Ref No	Name Of Part 1 2 3 4	Lift Height To Bottom Of Forks			
		169.7 in	187.4 in	199.2 in	216.9 in
	Mast Group No.	**B508 4310**	**B508 4760**	**B508 5060**	**B508 5510**
	Group # Cylinder (RH)	8600455 1341542	8600458 1341545	8600460 1341547	8600463 1341550
1	Shell	1355589	1355601	1355609	1355622
2	Rod	1355587	1355599	1355607	1355620
	Group # Cylinder (LH)	8600405 1341575	8600408 1341578	8600410 1341580	8600413 1341583
1	Shell	1358973	1355598	1355606	1355619
2	Rod	1355587	1355599	1355607	1355620
		162.1 in	179.8 in	191.7 in	209.4 in
	Mast Group No.	**B563 4118**	**B563 4568**	**B563 4868**	**B563 5318**
	Group # Cylinder (RH)	8600555 1341608	8600558 1341611	8600560 1341613	8600563 1341616
1	Shell	1355731	1355743	1355752	1355760
2	Rod	1355729	1355741	1355749	1355758
	Group # Cylinder (LH)	8600505 1341641	8600508 1341644	8600510 1341646	8600513 1341649
1	Shell	1355728	1355740	1355748	1355757
2	Rod	1355729	1355741	1355749	1355758

KEY:
A: H45-55XM
B: H60-65XM

REF		PART NO.	NAME OF PART	QTY A	QTY B
	a	.....	Mast	1	1
	a	.....	Main Cylinder	1	1
1	a	.....	Shell	1	1
2	a	.....	Rod	1	1
3		1355496	Retainer	1	..
3		1355713	Retainer	..	1
4	b	1355610	Spacer	1	..
4	c	1355711	Spacer	..	1
4	d	1355751	Spacer	..	1
5		257913	Check Valve	1	1
6		297531	Washer	1	1
7		187388	Snap Ring	1	1
8	ef	1319668	Wiper	1	1
9	e	2013075	Seal	1	..
9	f	334156	Seal	..	1
10	e	92861	O-Ring	1	..
10	f	59229	O-Ring	..	1
11	e	638246	Back-Up Ring	1	..
11	f	335012	Back-Up Ring	..	1
12	e	1356750	Wear Ring	1	..
12	f	1356751	Wear Ring	..	1
13	ef	39348	O-Ring	1	1
14	ef	1356749	Rod Seal	1	1
15	f	1356748	Piston Ring	..	1
15	e	1360127	Piston Ring	1	..
16		186061	Packing Lubricant	ARAR	

a ☞ Table Above
b For Lift Heights 199.2 in. And 216.9 in.
c For Lift Heights 162.1 in. And 179.8 in.
d For Lift Heights 191.7 in. And 209.4 in.
e Included In Seal Kit 1355497
f Included In Seal Kit 1355714

©2000 HYSTER COMPANY

FREE-LIFT CYLINDER (Figure 207)

THREE STAGE FULL FREE-LIFT

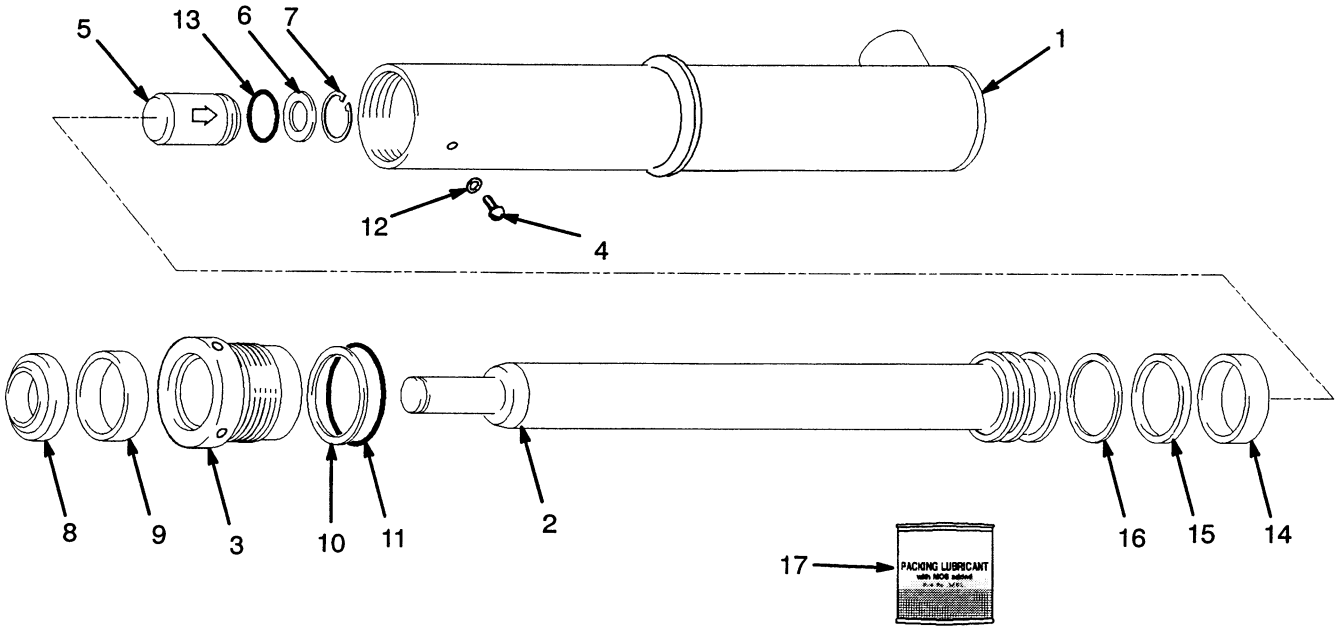

©2000 HYSTER COMPANY

FREE-LIFT CYLINDER
THREE STAGE FULL FREE-LIFT
H45-55XM

Last Used On Mast S/N B508B-9234, B508V-1513

Ref No	Name Of Part 1 2 3 4	Lift Height To Bottom Of Forks			
		169.7 in	187.4 in	199.2 in	216.9 in
	Mast Group No.	**B508 4310**	**B508 4760**	**B508 5060**	**B508 5510**
	Group # Cylinder	8601106 1342045	8601109 1342048	8601112 1342051	8601115 1342054
1	Shell	1356556	1356565	1356574	1356583
2	Rod	1356557	1356566	1356575	1356584

Used On Mast S/N B508B-9235, B508V-1514, Thru S/N B508V-18484 Except B508V-B508V-18477

Ref No	Name Of Part 1 2 3 4	Lift Height To Bottom Of Forks			
		169.7 in	187.4 in	199.2 in	216.9 in
	Mast Group No.	**B508 4310**	**B508 4760**	**B508 5060**	**B508 5510**
	Group # Cylinder	8603406 2309480	8603409 2303951	8603412 2302115	8603415 2303489
1	Shell	2303871	2311434	2310036	2309770
2	Rod	2306774	2311141	2302486	2309044

First Used On Mast S/N B508V-18484 Including B508V-18477

Ref No	Name Of Part 1 2 3 4	Lift Height To Bottom Of Forks			
		169.7 in	187.4 in	199.2 in	216.9 in
	Mast Group No.	**B508 4310**	**B508 4760**	**B508 5060**	**B508 5510**
	Group # Cylinder	8602406 1366733	8602409 1366736	8602412 1366739	8602415 1366742
1	Shell	2303871	2311434	2310036	2309770
2	Rod	1356560	1366569	1356578	1371631

CONTINUED ON NEXT PAGE

©2000 HYSTER COMPANY

FREE-LIFT CYLINDER
THREE STAGE FULL FREE-LIFT
H45-55XM

KEY:
A: H45-55XM
B: H60-65XM

REF		PART NO.	NAME OF PART	QTY A	QTY B
	c	.....	Mast	1	1
	c	.....	Free-Lift Cylinder	1	1
1	c	.....	Shell	1	1
2	c	.....	Rod	1	1
3		1356292	Retainer	1	..
3		1356661	Retainer	..	1
4	a	295649	Screw	1	1
4	b	1361302	Screw	1	1
5		257913	Check Valve	1	1
6		297531	Washer	1	1
7		187388	Snap Ring	1	1
8	de	2013099	Rod Wiper	1	1
9	de	1358970	Rod Seal	1	1
10	d	147973	Back-Up Ring	1	..
10	e	164840	Back-Up Ring	..	1
11	d	90263	O-Ring	1	..
11	e	15880	O-Ring	..	1
12	de	190887	Seal	1	1
13	de	39348	Seal	1	1
14	d	1358972	Wear Ring	1	..
14	e	636941	Wear Ring	..	1
15	d	2013088	Seal	1	..
15	e	309062	Seal	..	1
16	d	2013089	Back-Up Ring	1	..
16	e	637565	Back-Up Ring	..	1
17		186061	Packing Lubricant	AR	AR

a Last Used On Mast S/N B508B-9234, B508V-1513 & B563B-4904
b First Used On Mast S/N B508B-9235, B508V-1514, B563B-4905 & B563V-1501
c ☞ Table Above
d Included In Seal Kit 1358969
e Included In Seal Kit 1356662

©2000 HYSTER COMPANY

NOTES

©2000 HYSTER COMPANY

FREE-LIFT CYLINDER
THREE STAGE FULL FREE-LIFT
(Figure 207 Continued)

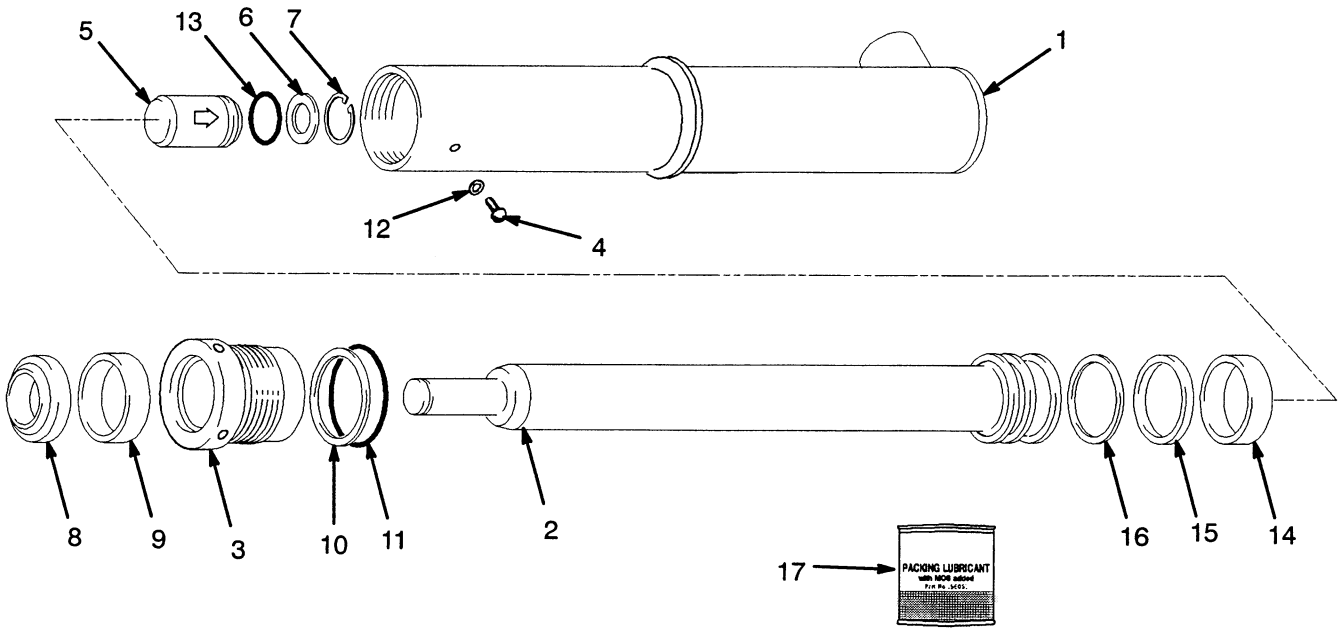

©2000 HYSTER COMPANY

FREE-LIFT CYLINDER
THREE STAGE FULL FREE-LIFT
H60-65XM
(Figure 207 Continued)

Last Used On Mast S/N B563B-4904

Ref No	Name Of Part 1 2 3 4	Lift Height To Bottom Of Forks			
		162.1 in	179.8 in	191.7 in	209.4 in
	Mast Group No.	**B563 4118**	**B563 4568**	**B563 4868**	**B563 5318**
	Group # Cylinder	8601207 1341676	8601210 1341679	8601213 1341682	8601216 1341685
1	Shell	1356678	1356687	1356061	1356070
2	Rod	1356679	1356688	1356062	1356071

Used On Mast S/N B563V-1501 Thru S/N B563V-7094

Ref No	Name Of Part 1 2 3 4	Lift Height To Bottom Of Forks			
		162.1 in	179.8 in	191.7 in	209.4 in
	Mast Group No.	**B563 4118**	**B563 4568**	**B563 4868**	**B563 5318**
	Group # Cylinder	8603507 2310270	8603510 2302410	8603513 2303532	8603516 2307773
1	Shell	2311691	2305742	2309026	2309353
2	Rod	2303824	2304216	2309410	2303899

First Used On Mast S/N B563V-7095

Ref No	Name Of Part 1 2 3 4	Lift Height To Bottom Of Forks			
		162.1 in	179.8 in	191.7 in	209.4 in
	Mast Group No.	**B563 4118**	**B563 4568**	**B563 4868**	**B563 5318**
	Group # Cylinder	8602507 1369549	8602510 1371602	8602513 1371605	8602516 1371608
1	Shell	2311691	2305742	2309026	2309353
2	Rod	1356682	1356691	1356065	1356074

CONTINUED ON NEXT PAGE

©2000 HYSTER COMPANY

FREE-LIFT CYLINDER
THREE STAGE FULL FREE-LIFT
H60-65XM
(Figure 207 Continued)

KEY:
A: H45-55XM
B: H60-65XM

REF		PART NO.	NAME OF PART	QTY A	QTY B
	c	.....	Mast	1	1
	c	.....	Free-Lift Cylinder	1	1
1	c	.....	Shell	1	1
2	c	.....	Rod	1	1
3		1356292	Retainer	1	..
3		1356661	Retainer	..	1
4	a	295649	Screw	1	1
4	b	1361302	Screw	1	1
5		257913	Check Valve	1	1
6		297531	Washer	1	1
7		187388	Snap Ring	1	1
8	de	2013099	Rod Wiper	1	1
9	de	1358970	Rod Seal	1	1
10	d	147973	Back-Up Ring	1	..
10	e	164840	Back-Up Ring	..	1
11	d	90263	O-Ring	1	..
11	e	15880	O-Ring	..	1
12	de	190887	Seal	1	1
13	de	39348	Seal	1	1
14	d	1358972	Wear Ring	1	..
14	e	636941	Wear Ring	..	1
15	d	2013088	Seal	1	..
15	e	309062	Seal	..	1
16	d	2013089	Back-Up Ring	1	..
16	e	637565	Back-Up Ring	..	1
17		186061	Packing Lubricant	AR	AR

a Last Used On Mast S/N B508B-9234, B508V-1513 & B563B-4904

b First Used On Mast S/N B508B-9235, B508V-1514, B563B-4905 & B563V-1501

c ☞ Table Above

d Included In Seal Kit 1358969

e Included In Seal Kit 1356662

©2000 HYSTER COMPANY

CARRIAGE (Figure 208)

THREE STAGE FULL FREE-LIFT

SIX ROLLER (LAST USED ON S/N B508V-4186, B563V-2161)

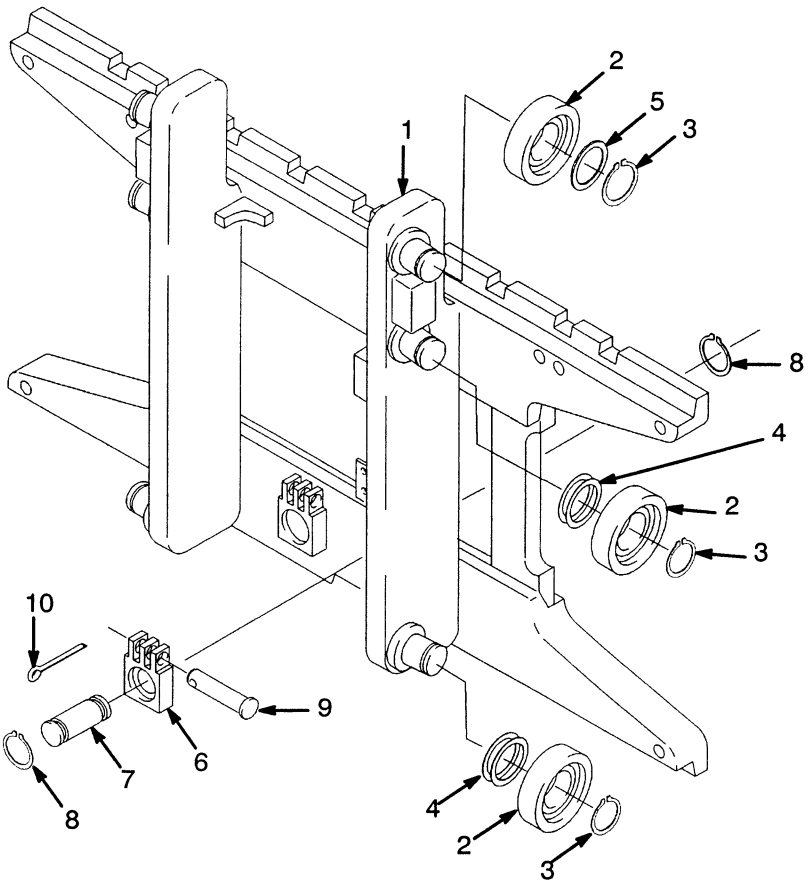

	H45-55XM	H60-65XM
Group No.	8500009	8500010
Carriage	1343842	1343843

KEY:
A: H45-55XM
B: H60-65XM

REF	PART NO.	NAME OF PART	QTY A	QTY B
a	.....	Carriage Assy	1	..
a	.....	Carriage Assy	..	1
1	1338528	Carriage	1	..
1	1338530	Carriage	..	1
1	1345216	Stubshaft	6	6
2	1333398	Load Roller	6	6
2	1395169	Load Roller ("A" Standard) ..	6	6
2	1333399	Load Roller ("B" 0.76 mm) ..	6	6
2	1337900	Load Roller ("C" 1.52 mm) ..	6	6
3	58901	Snap Ring	6	6
4	129387	Shim	AR	AR
5	366115	Spacer	2	2
6	1369345	Chain Anchor	2	..
6	1369344	Chain Anchor	..	2
7	317735	Pin	2	2
8	131358	Snap Ring	4	4
9	323161	Pin	2	2
10	15200	Cotter Pin	2	2

a ☞ Table Above

©2000 HYSTER COMPANY

CARRIAGE (Figure 209)

THREE STAGE FULL FREE-LIFT

SIX ROLLER (FIRST USED ON S/N B508V-4187, B563V-2162)

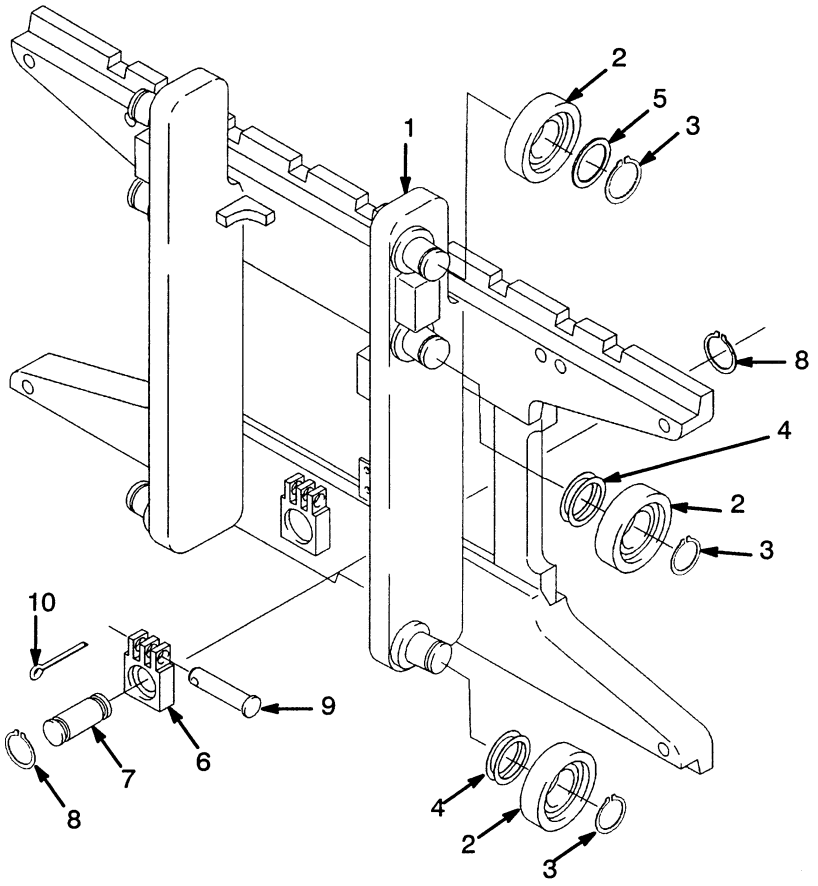

	H45-55XM	H60-65XM
Group No.	8500276	8500275
Carriage	1379459	1379460

KEY:
A: H45-55XM
B: H60-65XM

REF	PART NO.	NAME OF PART	QTY A	QTY B
a	.....	Carriage Assy	1	..
a	.....	Carriage Assy	..	1
1	1381560	Carriage	1	..
1	1381561	Carriage	..	1
1	1345216	Stubshaft	6	6
2	1333398	Load Roller	6	6
2	1395169	Load Roller ("A" Standard) ..	6	6
2	1333399	Load Roller ("B" 0.76 mm) ..	6	6
2	1337900	Load Roller ("C" 1.52 mm) ..	6	6
3	58901	Snap Ring	6	6
4	129387	Shim	AR	AR
5	366115	Spacer	2	2
6	1369345	Chain Anchor	2	..
6	1369344	Chain Anchor	..	2
7	317735	Pin	2	2
8	131358	Snap Ring	4	4
9	323161	Pin	2	2
10	15200	Cotter Pin	2	2

a ☞ Table Above

©2000 HYSTER COMPANY

LOAD BACKREST EXTENSION (Figure 210)

THREE STAGE FULL FREE-LIFT

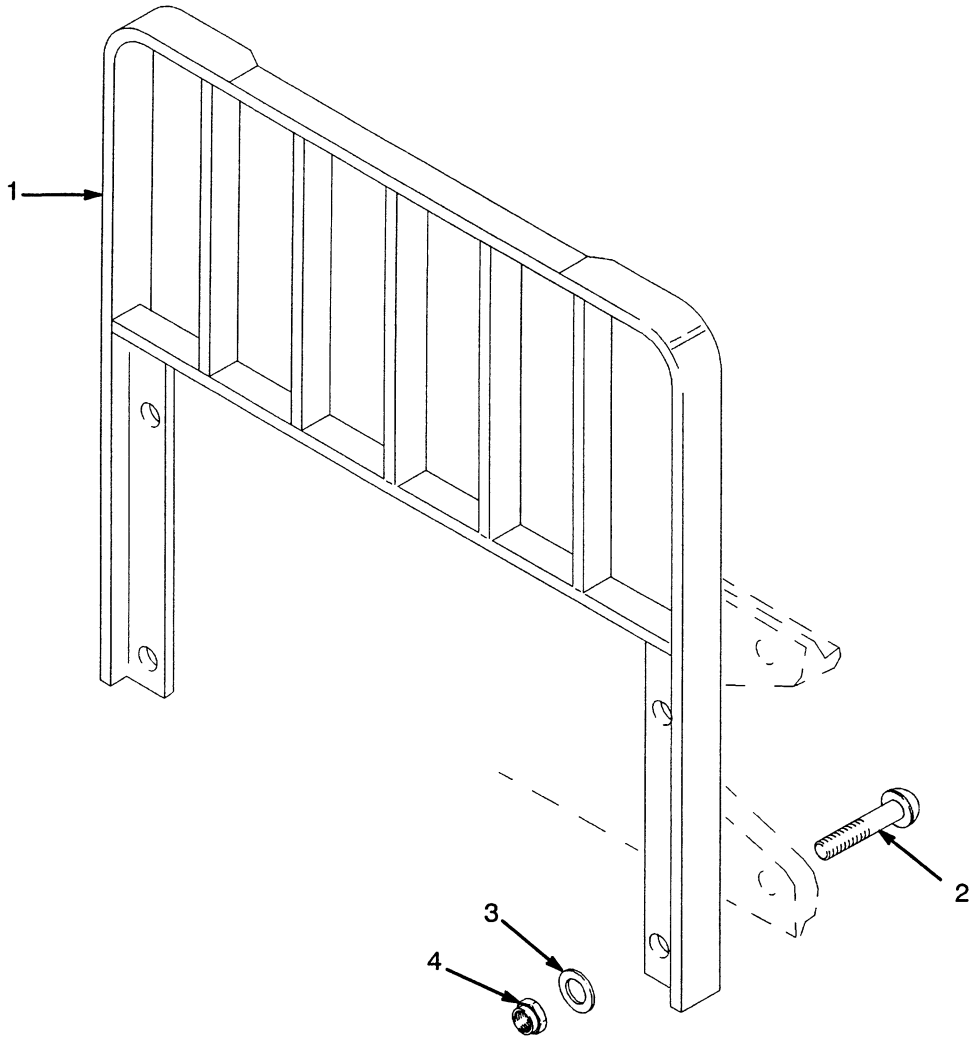

KEY:
A: H45-55XM
B: H60-65XM

REF		PART NO.	NAME OF PART	QTY A	QTY B
1		1338642	Load Backrest Extension	1	..
1		1338645	Load Backrest Extension	..	1
1	a	1345267	Load Backrest Extension	..	1
2		1343990	Capscrew	4	..
2		1354923	Capscrew	..	4
3		221771	Washer	4	4
3	b	296423	Washer	4	4
4		300937	Nut	4	4

a For Polished Forks W/Full Bottom Taper
b Optional

MAST INSTALLATION (Figure 211)

THREE STAGE FULL FREE-LIFT

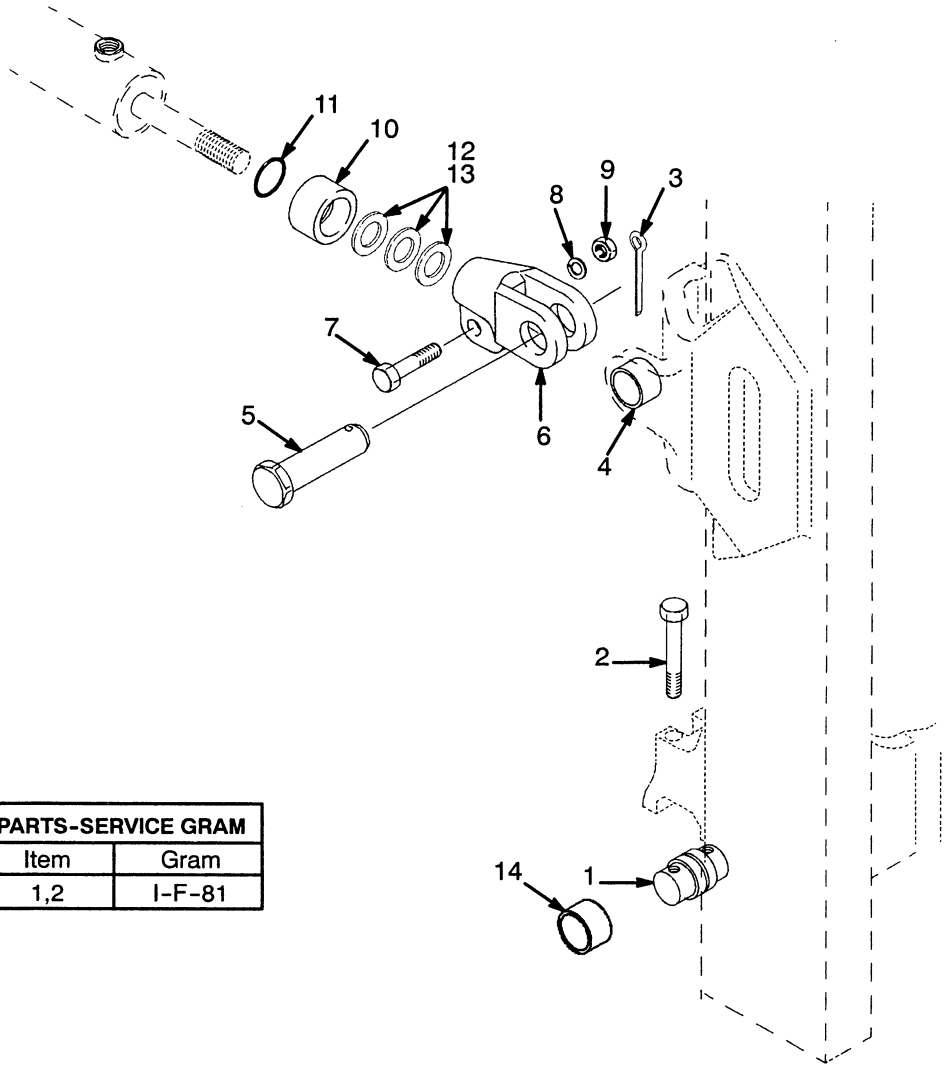

PARTS-SERVICE GRAM	
Item	Gram
1,2	I-F-81

KEY:
A: 6° Forward Tilt/10° Back Tilt
B: 6° Forward Tilt/6° Back Tilt
C: 6° Forward Tilt/5° Back Tilt

REF		PART NO.	NAME OF PART	QTY A	B	C
1	a	1333386	Pin	2	2	2
1	b	1376424	Pin	2	2	2
2	a	293659	Capscrew	4	4	4
2	b	1376423	Capscrew	4	4	4
3		15236	Cotter Pin	2	2	2
4		300982	Bushing	2	2	2
5		1345354	Pin	2	2	2
6		1307641	Rod End	2	2	2
7		293650	Capscrew	2	2	2
8		292683	Lockwasher	2	2	2
9		216877	Nut	2	2	2

REF	PART NO.	NAME OF PART	QTY A	B	C
10	1451788	Spacer	..	2	..
10	384101	Spacer	..	..	2
11	55434	O-Ring	..	2	2
12	134675	Shim	..	AR	AR
13	1325119	Shim	..	AR	AR
13	1361948	Shim	..	...	AR
14	1333385	Bushing	2	2	2
14	1380115	Bushing (Optional)	2	2	2

a First Used On S/N D177B-19806
b Last Used On S/N D177B-19807

©2000 HYSTER COMPANY

NOTES

©2000 HYSTER COMPANY

HEADER HOSE (Figure 212)

THREE STAGE FULL FREE-LIFT

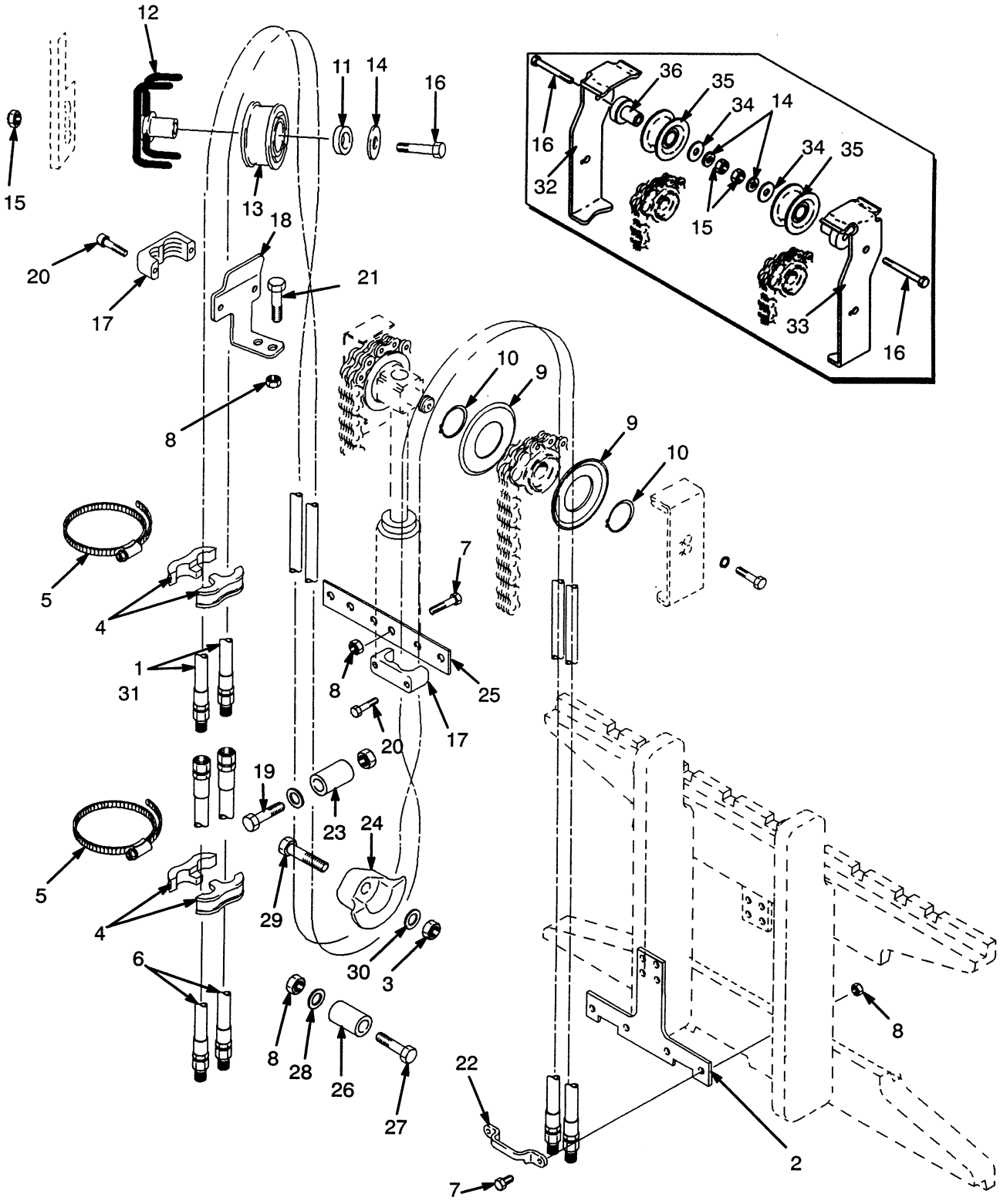

HEADER HOSE

THREE STAGE FULL FREE-LIFT

Ref No	Name Of Part 1 2 3 4	Lift Height To Bottom Of Forks			
		169.7 in	187.4 in	199.2 in	216.9 in
	Mast Group No.	**B508 4310**	**B508 4760**	**B508 5060**	**B508 5510**
1	Hose	[d]1358352	[d]1369625	[d]1358355	[d]1369627
1	Hose	[e]1368411	[e]1376131	[e]1376161	[e]1376164
2	Bracket	[b]1369323	[b]1369323	[b]1369323	[b]1369323
2	Bracket	[c]1381771	[c]1381771	[c]1381771	[c]1381771
		162.1 in	179.8 in	191.7 in	209.4 in
	Mast Group No.	**B563 4118**	**B563 4568**	**B563 4868**	**B563 5318**
1	Hose	[d]1358352	[d]1369625	[d]1358355	[d]1369627
1	Hose	[e]1368411	[e]1376131	[e]1376161	[e]1376164
2	Bracket	[b]1369324	[b]1369324	[b]1369324	[b]1369324
2	Bracket	[c]1381772	[c]1381772	[c]1381772	[c]1381772
31	Hose	[e]1368445	[e]1398951	[e]1396943	[e]1398595

[b] Last Used on S/N B508V-12601, B563V-4769
[c] First Used on S/N B508V-12602, B563V-4770
[d] Last Used On S/N B508V-24129, B563V-9115
[e] First Used On S/N B508V-24130, B563V-9116

KEY:
A: Three Function
B: Four Function

REF	PART NO.	NAME OF PART	QTY A	QTY B
	.....	Mast	1	1
1 [a]	.....	Hose	2	4
2 [a]	.....	Bracket	1	1
3	316826	Nut	1	2
4	1353530	Clamp	4	8
5	1360507	Clamp	2	4
6	1354922	Hose, RH	2	2
6	1354904	Hose, LH	..	2
7	136749	Capscrew	8	10
8	313828	Locknut	9	12
9	1345199	Hose Guide	2	4
10	1345204	Snap Ring	2	4

CONTINUED ON NEXT PAGE

©2000 HYSTER COMPANY

HEADER HOSE

THREE STAGE FULL FREE-LIFT

KEY:
A: Three Function
B: Four Function

REF		PART NO.	NAME OF PART	QTY A	QTY B
11		1360549	Spacer	1	2
12		1362387	Stubshaft	1	2
13		1381595	Hose Sheave	1	2
14		1345190	Washer	1	2
15		1390182	Nut	1	2
16		292533	Capscrew	1	2
17		1360386	Clamp	2	4
18		1354906	Bracket, RH	1	1
18		1354907	Bracket, LH	..	1
19		292534	Capscrew	1	2
20		293795	Capscrew	4	8
21		136704	Capscrew	2	4
22		1369333	Clamp	1	2
23		1360538	Tube	1	2
24		1360536	Hose Guide (RH)	1	1
24		1360537	Hose Guide (LH)	..	1
25		1353464	Plate	1	1
26		1354961	Hose Restraint	1	2
27		214364	Capscrew	1	2
28		320158	Washer	1	2
29		287860	Capscrew	1	2
30		320160	Washer	1	2
31		.....	Hose	..	2
32		1395291	Hose Guide Bracket RH	1	1
33	e	1395292	Hose Guide Bracket LH	..	1
34	e	1396407	Spacer	1	2
35	e	1345190	Sheave	1	2
36	e	1396406	Stubshaft	1	2

a ☞ Table Above

©2000 HYSTER COMPANY

NOTES

©2000 HYSTER COMPANY

FORKS (Figure 213)

THREE STAGE FULL FREE-LIFT

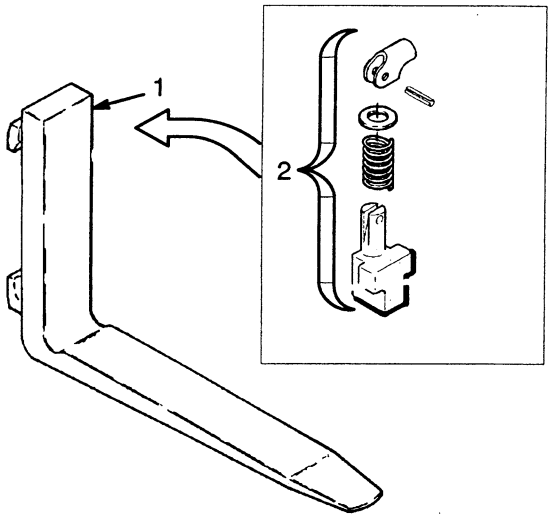

H45-55XM

Ref No	Name Of Part 1 2 3 4	Standard Taper		Full Bottom Taper	Qty
1	Fork	125 mm x 40 mm	100 mm x 40 mm	125 mm x 40 mm	
	762 mm (30 in)	1326660	384210		2
	914 mm (36 in)	1326661	384211	1338087	2
	1067 mm (42 in)	1326663	384213	1338088	2
	1219 mm (48 in)	1326664	384214	1338089	2
	1372 mm (54 in)	1326665	384215		2
	1524 mm (60 in)	1326666	384216		2
2	Latch	369795	369795	369795	1

NOTE: OTHER FORK DIMENSIONS AVAILABLE ON REQUEST, CONTACT YOUR HYSTER DEALER.

©2000 HYSTER COMPANY

FORKS
THREE STAGE FULL FREE-LIFT MAST
(Figure 213 Continued)

H60-65XM

Ref No	Name Of Part 1 2 3 4	Standard Taper		Full Bottom Taper	Qty
1	Fork	100 mm x 45 mm	125 mm x 50 mm	180 mm x 45 mm	
	914 mm (36 in)	1333018	367419		2
	1067 mm (42 in)	1333020	367420		2
	1207 mm (42.5 in)			1338098	2
	1219 mm (48 in)	1333021	367421		2
	1372 mm (54 in)		367422	1332745	2
	1524 mm (60 in)		367423		2
	1829 mm (72 in)	1333024	367424		2
2	Latch	369796	369796	369796	1

NOTE: OTHER FORK DIMENSIONS AVAILABLE ON REQUEST, CONTACT YOUR HYSTER DEALER.

©2000 HYSTER COMPANY

NOTES

©2000 HYSTER COMPANY

TWO STAGE FULL FREE-LIFT

CARRIAGE (Figure 222)
TWO STAGE FULL FREE-LIFT
FOUR ROLLER ..... Page 423

CARRIAGE (Figure 223)
TWO STAGE FULL FREE-LIFT
SIX ROLLER ..... Page 424

FORKS (Figure 228)
TWO STAGE FULL FREE-LIFT ..... Page 432

FREE LIFT (Figure 217)
TWO STAGE FULL FREE-LIFT ..... Page 410

FREE LIFT
TWO STAGE FULL FREE-LIFT
(Figure 217 Continued) ..... Page 412

FREE-LIFT CYLINDER (Figure 220)
TWO STAGE FULL FREE-LIFT ..... Page 416

HEADER HOSE (Figure 227)
TWO STAGE FULL FREE-LIFT ..... Page 428

INNER MAST (Figure 215)
TWO STAGE FULL FREE-LIFT ..... Page 406

LOAD BACKREST EXTENSION (Figure 224)
TWO STAGE FULL FREE-LIFT ..... Page 425

MAIN CYLINDER (Figure 218)
TWO STAGE FULL FREE-LIFT
LEFT HAND ..... Page 414

MAIN CYLINDER (Figure 219)
TWO STAGE FULL FREE-LIFT
RIGHT HAND ..... Page 415

MAIN LIFT (Figure 216)
TWO STAGE FULL FREE-LIFT ..... Page 408

MAST INSTALLATION (Figure 225)
TWO STAGE FULL FREE-LIFT ..... Page 426

MAST INSTALLATION (Figure 226)
TWO STAGE FULL FREE-LIFT ..... Page 427

OUTER MAST (Figure 214)
TWO STAGE FULL FREE-LIFT ..... Page 404

©2000 HYSTER COMPANY

OUTER MAST (Figure 214)

TWO STAGE FULL FREE-LIFT

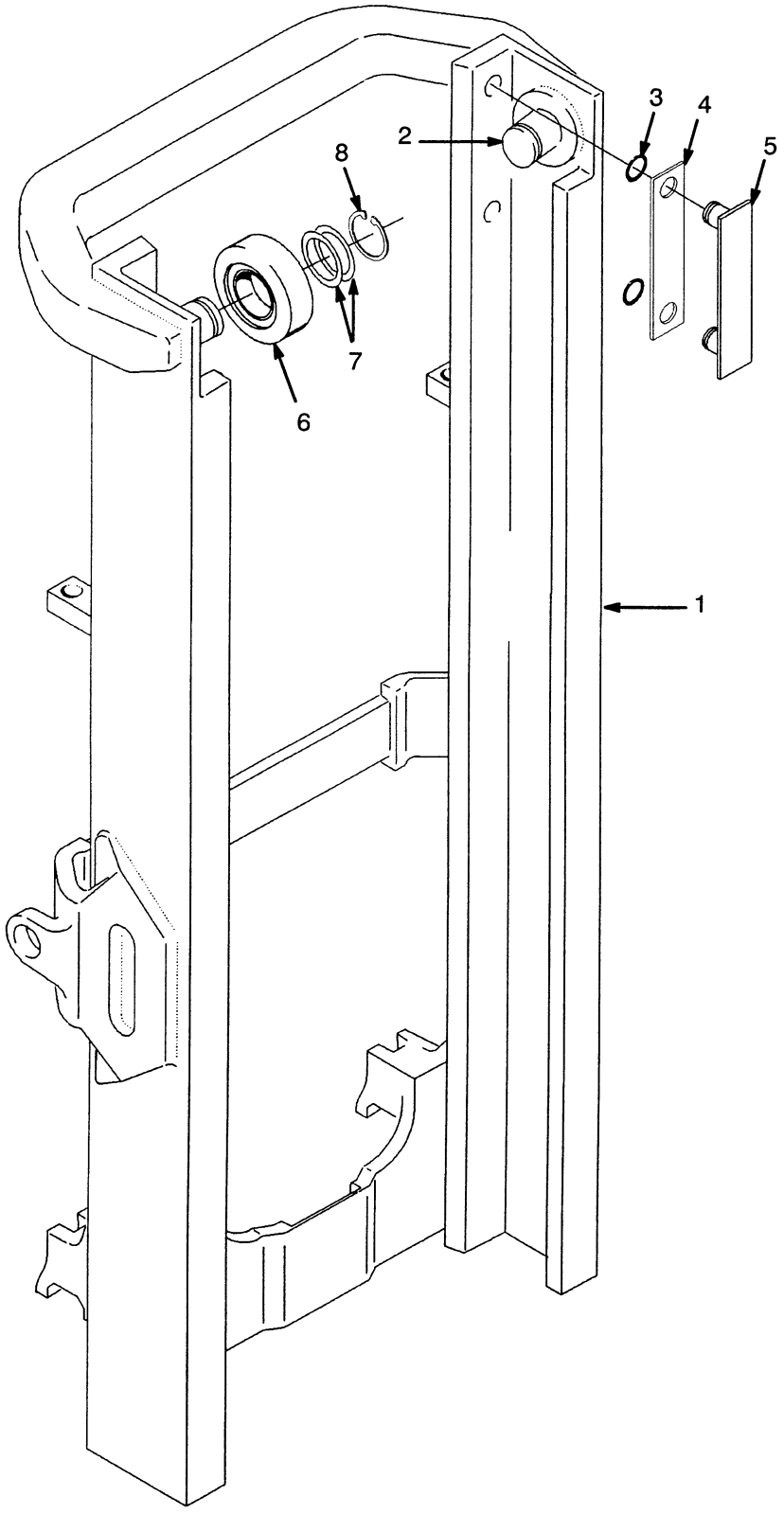

©2000 HYSTER COMPANY

OUTER MAST

TWO STAGE FULL FREE-LIFT

H45-55XM

Ref No	Name Of Part	Lift Height To Bottom Of Forks		
	1 2 3 4	117.4 in	129.2 in	148.9 in
	Mast Group No.	**B509 2982**	**B509 3282**	**B509 3782**
1	Outer Mast	1341005	1341008	1341013

H60-65XM

Ref No	Name Of Part	Lift Height To Bottom Of Forks		
	1 2 3 4	112.6 in	124.4 in	144.1 in
	Mast Group No.	**B564 2860**	**B564 3160**	**B564 3660**
1	Outer Mast	1341005	1341008	1341013

REF	PART NO.	NAME OF PART	QTY
a	....	Mast	1
1 a	....	Outer Mast	1
2	1345216	Stub Shaft	2
3	104506	O-Ring	4
4	131716	Shim (0.020 in)	4
5	215211	Bearing Strip	2
6	1395168	Load Roller ("A" Standard)	2
6	1333396	Load Roller ("B" 0.76 mm)	2
6	1333397	Load Roller ("C" 1.52 mm)	2
7	129387	Shim (0.020 in)	AR
8	58901	Snap Ring	2

a ☞ Table Above

©2000 HYSTER COMPANY

INNER MAST (Figure 215)

TWO STAGE FULL FREE-LIFT

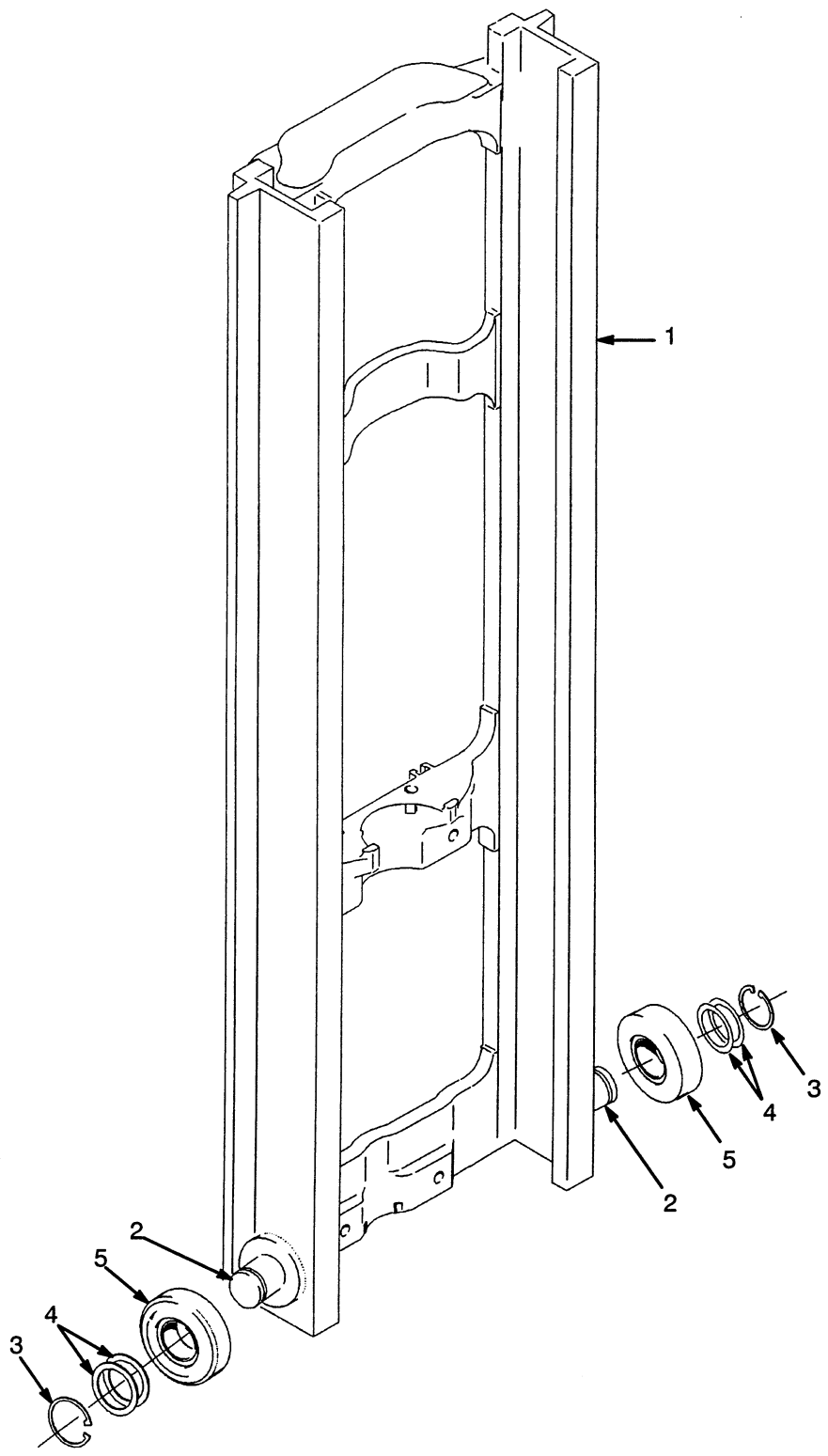

©2000 HYSTER COMPANY

See Service Manual for service procedures

INNER MAST

TWO STAGE FULL FREE-LIFT

H45-55XM

Ref No	Name Of Part 1 2 3 4	Lift Height To Bottom Of Forks		
		117.4 in	129.2 in	148.9 in
	Mast Group No.	**B509 2982**	**B509 3282**	**B509 3782**
1	Inner Mast	1342474	1342477	1342482

H60-65XM

Ref No	Name Of Part 1 2 3 4	Lift Height To Bottom Of Forks		
		112.6 in	124.4 in	144.1 in
	Mast Group No.	**B564 2860**	**B564 3160**	**B564 3660**
1	Inner Mast	1342474	1342477	1342482

REF		PART NO.	NAME OF PART	QTY
	a	.....	Mast	1
1	a	.....	Inner Mast	1
2		1345216	Stub Shaft	2
3		58901	Snap Ring	2
4		129387	Shim	AR

REF	PART NO.	NAME OF PART	QTY
5	1395168	Load Roller ("A" Standard)	2
5	1333396	Load Roller ("B" 0.76 mm)	2
5	1333397	Load Roller ("C" 1.52 mm)	2

a ☞ Table Above

©2000 HYSTER COMPANY

MAIN LIFT (Figure 216)

TWO STAGE FULL FREE-LIFT

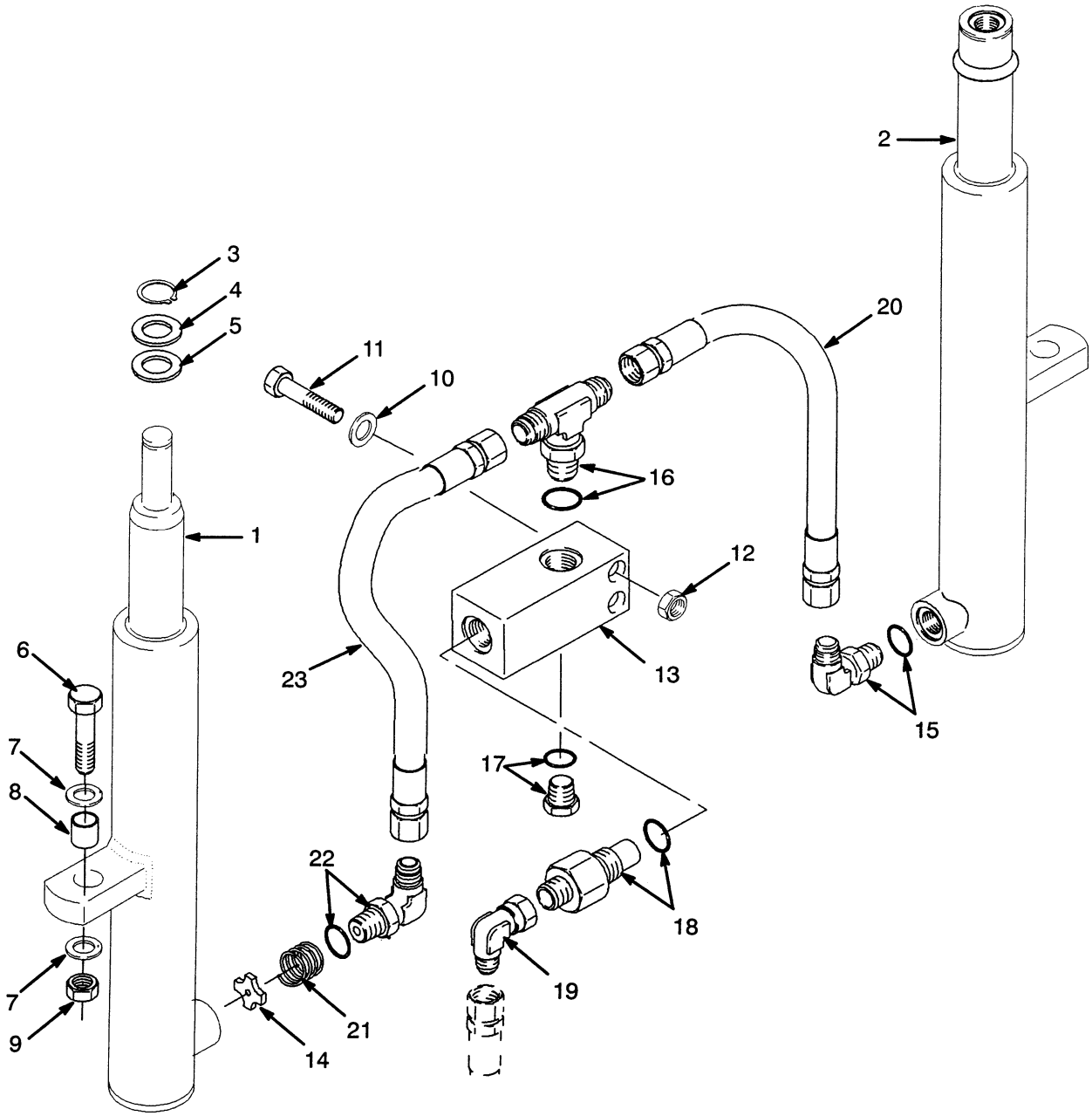

©2000 HYSTER COMPANY

See Service Manual for service procedures

MAIN LIFT

TWO STAGE FULL FREE-LIFT

REF		PART NO.	NAME OF PART	QTY
1		.....	Cylinder, RH	1
			☞ Figure 219	
2		.....	Cylinder, LH	1
			☞ Figure 218	
3		131358	Snap Ring	1
4		1333382	Washer	1
5		1354915	Washer	AR
5		1354916	Washer	AR
5		1354917	Washer	AR
6		292532	Capscrew	2
7		296422	Washer	4
8		323090	Spacer	2
9		300937	Nut	2
10		320157	Lockwasher	2
11		214364	Capscrew	2
12		313828	Nut	2
13	a	1333392	Valve Housing	1
13		1379687	Valve Housing	1
14		357749	Washer	1
15		16560	Fitting	1
15		16485	O-Ring	1
16		16578	Fitting	1
16		16485	O-Ring	1
17	a	14603	Fitting	1
17	a	16486	O-Ring	1
18	b	2309766	Lowering Control Valve	1
18	c	316306	Lowering Control Valve	1
18		16982	O-Ring	1
19		16882	Fitting	1
20		1345403	Hose	1
21		337179	Spring	1
22		189595	Fitting	1
22		16485	O-Ring	1
23		1462551	Hose	1

a Optional
b H45-55XM
c H60-65XM

©2000 HYSTER COMPANY

FREE LIFT (Figure 217)

TWO STAGE FULL FREE-LIFT

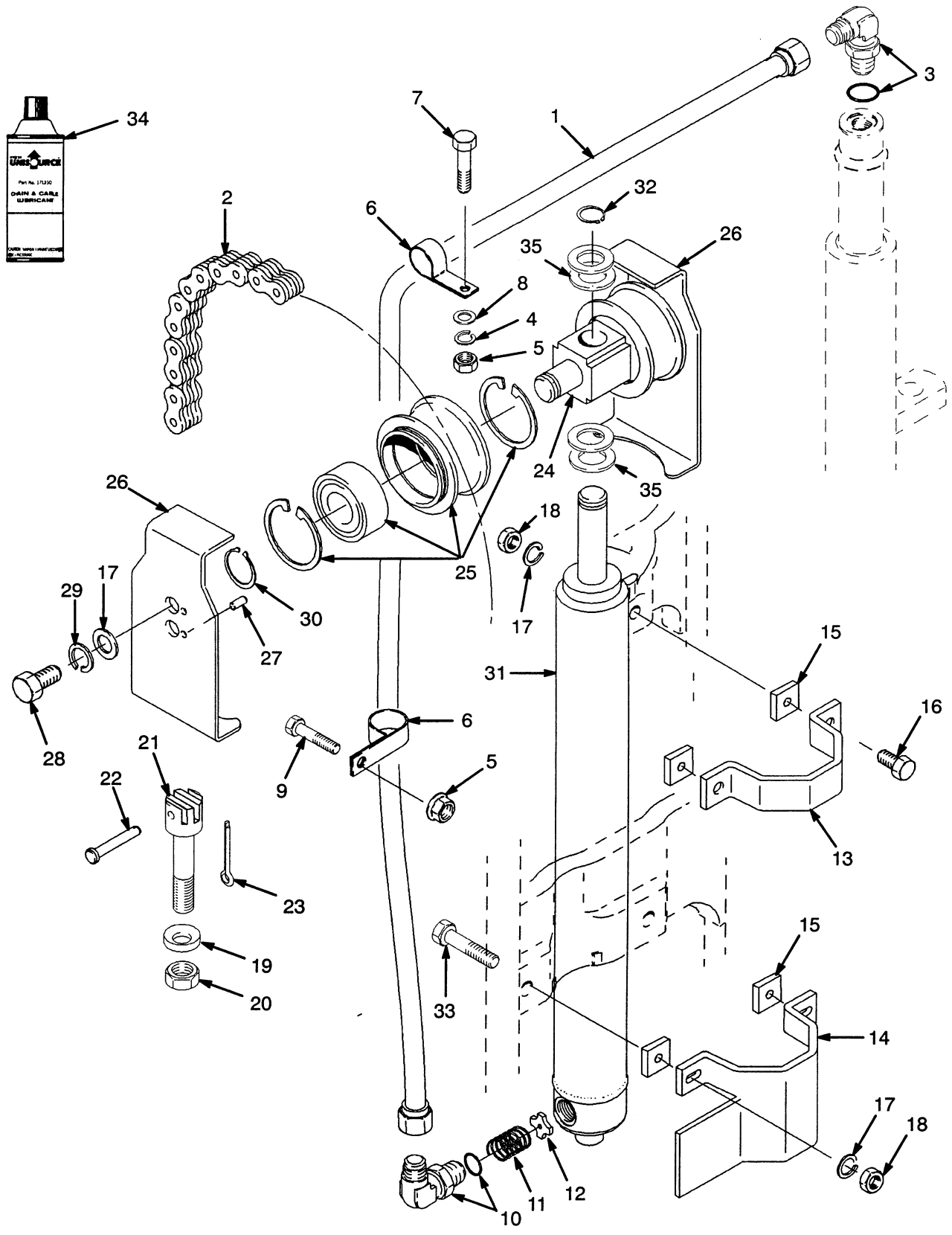

FREE LIFT
TWO STAGE FULL FREE-LIFT

H45-55XM

Ref No	Name Of Part 1 2 3 4	Lift Height To Bottom Of Forks		
		117.4 in	129.2 in	148.9 in
	Mast Group No.	**B509 2982**	**B509 3282**	**B509 3782**
1	Tube	1345311	1345314	1345319
2	Chain	231082[a] 197345[b]	161059[a] 180177[b]	180217[a] 182343[b]

REF		PART NO.	NAME OF PART	QTY
	c	.....	Mast	1
1	c	.....	Tube	1
2	c	.....	Chain	2
3		1380036	Fitting	1
3		16485	O-Ring	1
4		292682	Lockwasher	1
5		316826	Nut	2
6		178119	Clamp	2
7		296028	Capscrew	1
8		320159	Washer	1
9		136985	Capscrew	1
10		1354956	Fitting	1
10		16485	O-Ring	1
11		154355	Spring	1
12		356505	Washer	1
13		1465504	Clamp	1
14		1354967	Bracket	1
15	d	1354902	Spacer	4
16		292529	Capscrew	2
17		320161	Washer	6
18		300937	Nut	4
19		297649	Base Ring	2
20		161003	Nut	2
21	e	320313	Chain Anchor	2
21	f	1369357	Chain Anchor	2
22		323161	Pin	2
23		15200	Cotter Pin	2
24	g	1337905	Crosshead	1
24	h	1378690	Crosshead	1

REF		PART NO.	NAME OF PART	QTY
25	g	.....	Chain Sheave	2
25		1354911	Sheave	1
25		37752	Snap Ring	2
25		231020	Bearing	1
25	h	1379682	Chain Sheave	2
25		1378692	Sheave	1
25		37752	Snap Ring	1
25		1378699	Bearing	1
26		1395285	Chain Guard	2
27		302461	Pin	2
28		292527	Capscrew	2
29		292683	Lockwasher	2
30		304526	Snap Ring	3
31		.....	Free-Lift Cylinder ☞ Figure 220	1
32		131358	Snap Ring	1
33		287837	Capscrew	2
34		171350	Chain Lubricant	AR
35	b	1362433	Spacer	4

a Last Used On Mast S/N B509B-4069
b First Used On Mast S/N B509B-4070, B509V-1501
c ☞ Table Above
d H60-65XM
e Last Used On Mast S/N B509B-1959
f First Used On Mast S/N B509B-1960
g Last Used On Mast S/N B509V-1666
h First Used On Mast S/N B509V-1667

CONTINUED ON NEXT PAGE

©2000 HYSTER COMPANY

FREE LIFT

TWO STAGE FULL FREE-LIFT

(Figure 217 Continued)

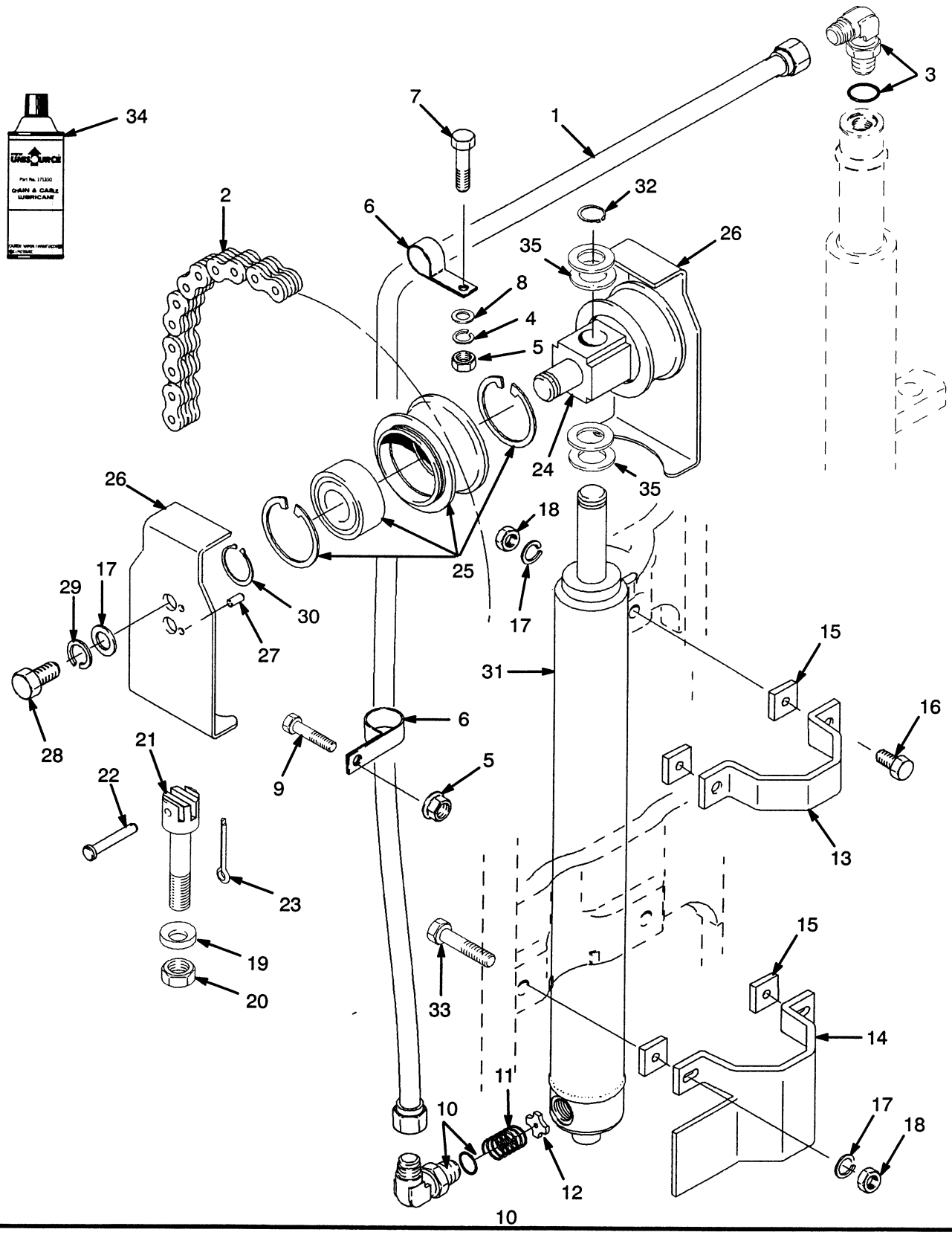

FREE LIFT
TWO STAGE FULL FREE-LIFT
(Figure 217 Continued)

H60-65XM

Ref No	Name Of Part 1 2 3 4	Lift Height To Bottom Of Forks		
		112.6 in	124.4 in	144.1 in
	Mast Group No.	**B564 2860**	**B564 3160**	**B564 3660**
1	Tube	1345311	1345314	1345319
2	Chain	1342373[a] 1342374[b]	1342376[a] 1342377[b]	1342118[a] 1342380[b]

REF		PART NO.	NAME OF PART	QTY
	c	.....	Mast	1
1	c	.....	Tube	1
2	c	.....	Chain	2
3		1380036	Fitting	1
3		16485	O-Ring	1
4		292682	Lockwasher	1
5		316826	Nut	2
6		178119	Clamp	2
7		296028	Capscrew	1
8		320159	Washer	1
9		136985	Capscrew	1
10		1354956	Fitting	1
10		16485	O-Ring	1
11		154355	Spring	1
12		356505	Washer	1
13		1465504	Clamp	1
14		1354967	Bracket	1
15		1354902	Spacer	4
16		292530	Capscrew	2
17		320161	Washer	6
18		300937	Nut	4
19		297649	Base Ring	2
20		161003	Nut	2
21	d	1333328	Chain Anchor	2
21	e	1369356	Chain Anchor	2
22		323161	Pin	2
23		15200	Cotter Pin	2
24	f	1337905	Crosshead	1
24	g	1378690	Crosshead	1
25	f	.....	Chain Sheave	2
25		1345201	Sheave	1
25		37752	Snap Ring	2
25		231020	Bearing	1
25	g	1379683	Chain Sheave	2
25		1378693	Sheave	1
25		37752	Snap Ring	1
25		1378699	Bearing	1
26		1360544	Chain Guard	2
27		302461	Pin	2
28		292527	Capscrew	2
29		292683	Lockwasher	2
30		304526	Snap Ring	3
31		.....	Free-Lift Cylinder ☞ Figure 220	1
32		131358	Snap Ring	1
33		287837	Capscrew	2
34		171350	Chain Lubricant	AR
35	b	1362433	Spacer	4

a Last Used On Mast S/N B564B-1854
b First Used On Mast S/N B564B-1855, B564V-1501
c ☞ Table Above
d Last Used On Mast S/N B564B-1529
e First Used On Mast S/N B564B-1530
f Last Used On Mast S/N B564V-1650
g First Used On Mast S/N B564V-1651

©2000 HYSTER COMPANY

MAIN CYLINDER (Figure 218)
TWO STAGE FULL FREE-LIFT
LEFT HAND

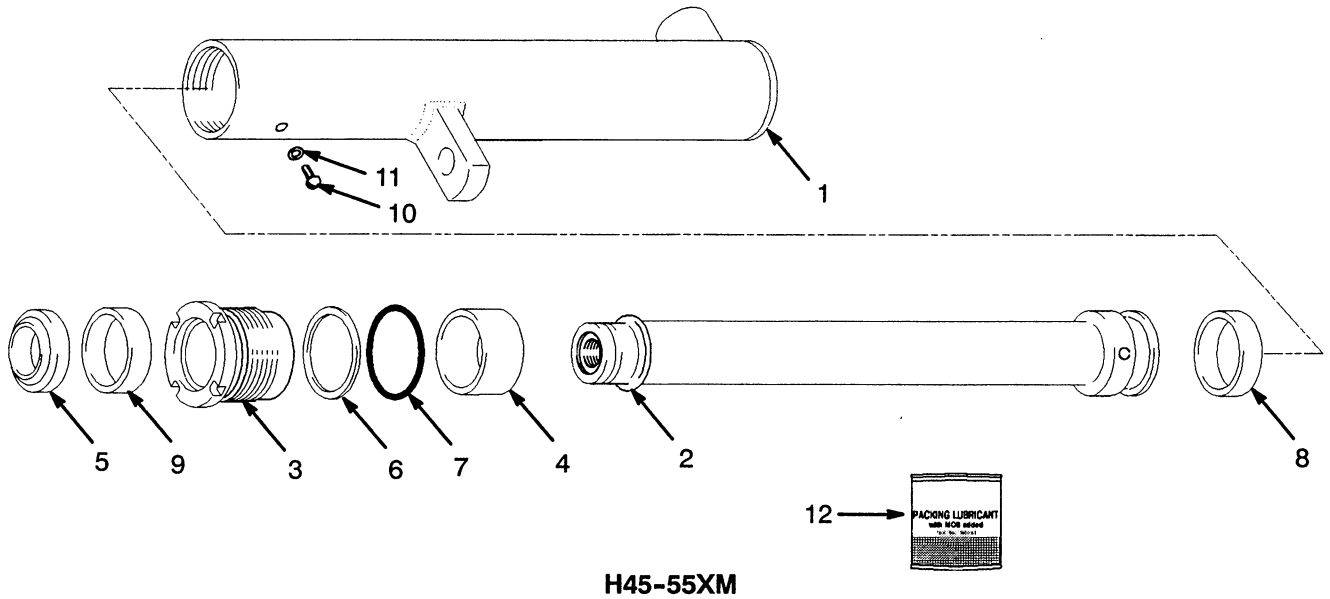

H45-55XM

Ref No	Name Of Part 1 2 3 4	Lift Height To Bottom Of Forks		
		117.4 in	129.2 in	148.9 in
	Mast Group No.	**B509 2982**	**B509 3282**	**B509 3782**
	Group # Cylinder (LH)	8600706 1342222	8600709 1342225	8600714 1342230
1	Shell	1355910	1355928	1355958
2	Rod	1355911	1355929	1355959
H60-65XM				
		112.6 in	124.4 in	144.1 in
	Mast Group No.	**B564 2860**	**B564 3160**	**B564 3660**
	Group # Cylinder (LH)	8600906 1342280	8600909 1342283	8600914 1342288
1	Shell	1355910	1355928	1355958
2	Rod	1355911	1355929	1355959

REF		PART NO.	NAME OF PART	QTY
	a	.....	Mast	1
	a	.....	Main Cylinder (LH)	1
1	a	.....	Shell	1
2	a	.....	Rod	1
3		1355284	Retainer	1
4	b	1356058	Spacer	1
5	c	1319668	Rod Wiper	1
6	c	147972	Back-Up Ring	1
7	c	59229	O-Ring	1

REF		PART NO.	NAME OF PART	QTY
8	c	1356747	Wear Ring	1
9	c	1356749	Rod Seal	1
10		295649	Screw	1
11	c	190887	Seal	1
12		186061	Packing Lubricant	AR

a ☞ Table Above
b Mast S/N B564 Only
c Included In Seal Kit 1358963

©2000 HYSTER COMPANY

MAIN CYLINDER (Figure 219)
TWO STAGE FULL FREE-LIFT
RIGHT HAND

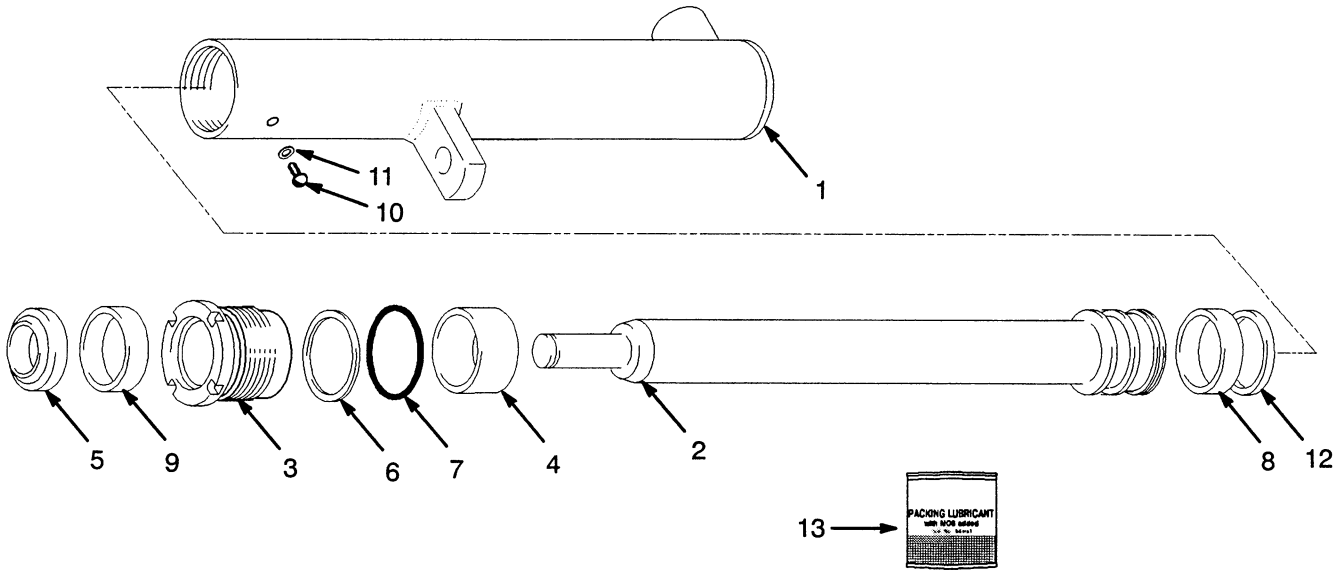

H45-55XM

Ref No	Name Of Part 1 2 3 4	Lift Height To Bottom Of Forks		
		117.4 in	129.2 in	148.9 in
	Mast Group No.	**B509 2982**	**B509 3282**	**B509 3782**
	Group # Cylinder (RH)	8600806 1356759	8600809 1356762	8600814 1356767
1	Shell	1356783	1356786	1356791
2	Rod	1358937	1358940	1358945
	H60-65XM			
		112.6 in	124.4 in	144.1 in
	Mast Group No.	**B564 2860**	**B564 3160**	**B564 3660**
	Group # Cylinder (RH)	8601006 1342251	8601009 1361276	8601014 1361281
1	Shell	1356783	1356786	1356791
2	Rod	1358937	1358940	1358945

REF		PART NO.	NAME OF PART	QTY
	a	.....	Mast	1
	a	.....	Main Cylinder (RH)	1
1	a	.....	Shell	1
2	a	.....	Rod	1
3		1355284	Retainer	1
4	b	1356058	Spacer	1
5	c	1319668	Rod Wiper	1
6	c	147972	Back-Up Ring	1
7	c	59229	O-Ring	1
8	c	1356747	Wear Ring	1
9	c	1356749	Rod Seal	1
10		295649	Screw	1
11	c	190887	Seal	1
12	c	1356748	Piston Ring	1
13		186061	Packing Lubricant	AR

a ☞ Table Above
b Mast S/N B564 Only
c Included In Seal Kit 1360142

©2000 HYSTER COMPANY

FREE-LIFT CYLINDER (Figure 220)

TWO STAGE FULL FREE-LIFT

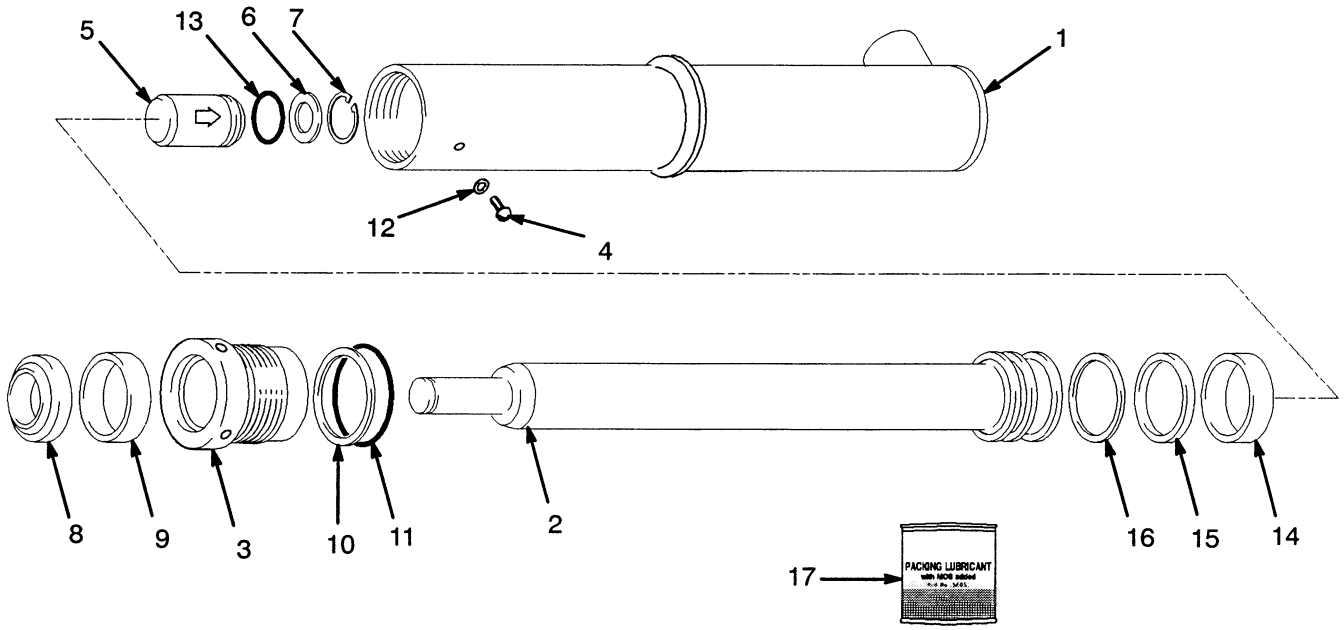

©2000 HYSTER COMPANY

FREE-LIFT CYLINDER

TWO STAGE FULL FREE-LIFT

H45-55XM

Last Used On Mast S/N B509B-4069

Ref No	Name Of Part 1 2 3 4	Lift Height To Bottom Of Forks		
		117.4 in	129.2 in	148.9 in
	Mast Group No.	**B509 2982**	**B509 3282**	**B509 3782**
	Group # Cylinder	8601106 1342045	8601109 1342048	8601114 1342053
1	Shell	1356556	1356565	1356580
2	Rod	1356557	1356566	1356581

Used On Mast S/N B509B-4070, B509V-1501 Thru S/N B509V-3231

Ref No	Name Of Part 1 2 3 4	Lift Height To Bottom Of Forks		
		117.4 in	129.2 in	148.9 in
	Mast Group No.	**B509 2982**	**B509 3282**	**B509 3782**
	Group # Cylinder	8603406 2309480	8603409 2303951	8603414 2303455
1	Shell	2303871	2311434	2307580
2	Rod	2306774	2311141	2304977

First Used On Mast S/N B509V-3232

Ref No	Name Of Part 1 2 3 4	Lift Height To Bottom Of Forks		
		117.4 in	129.2 in	148.9 in
	Mast Group No.	**B509 2982**	**B509 3282**	**B509 3782**
	Group # Cylinder	8602406 1366733	8602409 1366736	8602414 1366741
1	Shell	2303871	2311434	2307580
2	Rod	1356560	1366569	1356584

CONTINUED ON NEXT PAGE

©2000 HYSTER COMPANY

FREE-LIFT CYLINDER

TWO STAGE FULL FREE-LIFT

H45-55XM

KEY:
A: H45-55XM
B: H60-65XM

REF		PART NO.	NAME OF PART	QTY A	QTY B
	c	.....	Mast	1	1
	c	.....	Free-Lift Cylinder	1	1
1	c	.....	Shell	1	1
2	c	.....	Rod	1	1
3		1356292	Retainer	1	..
3		1356661	Retainer	..	1
4	a	295649	Screw	1	1
4	b	1361302	Screw	1	1
5		257913	Check Valve	1	1
6		297531	Washer	1	1
7		187388	Snap Ring	1	1
8	de	2013099	Rod Wiper	1	1
9	de	1358970	Rod Seal	1	1
10	d	147973	Back-Up Ring	1	..
10	e	164840	Back-Up Ring	..	1
11	d	90263	O-Ring	1	..
11	e	15880	O-Ring	..	1
12	de	190887	Seal	1	1
13	de	39348	O-Ring	1	1
14	d	1358972	Wear Ring	1	..
14	e	636941	Wear Ring	..	1
15	d	2013088	Seal	1	..
15	e	309062	Seal	..	1
16	d	2013089	Back-Up Ring	1	..
16	e	637565	Back-Up Ring	..	1
17		186061	Packing Lubricant	AR	AR

a Last Used On Mast S/N B509B-4069 & B564B-1854

b First Used On Mast S/N B509B-4070, B509V-1501, B564V-1501

c ☞ Table Above

d Included In Seal Kit 1358969

e Included In Seal Kit 1356662

©2000 HYSTER COMPANY

NOTES

©2000 HYSTER COMPANY

FREE-LIFT CYLINDER (Figure 221)

TWO STAGE FULL FREE-LIFT

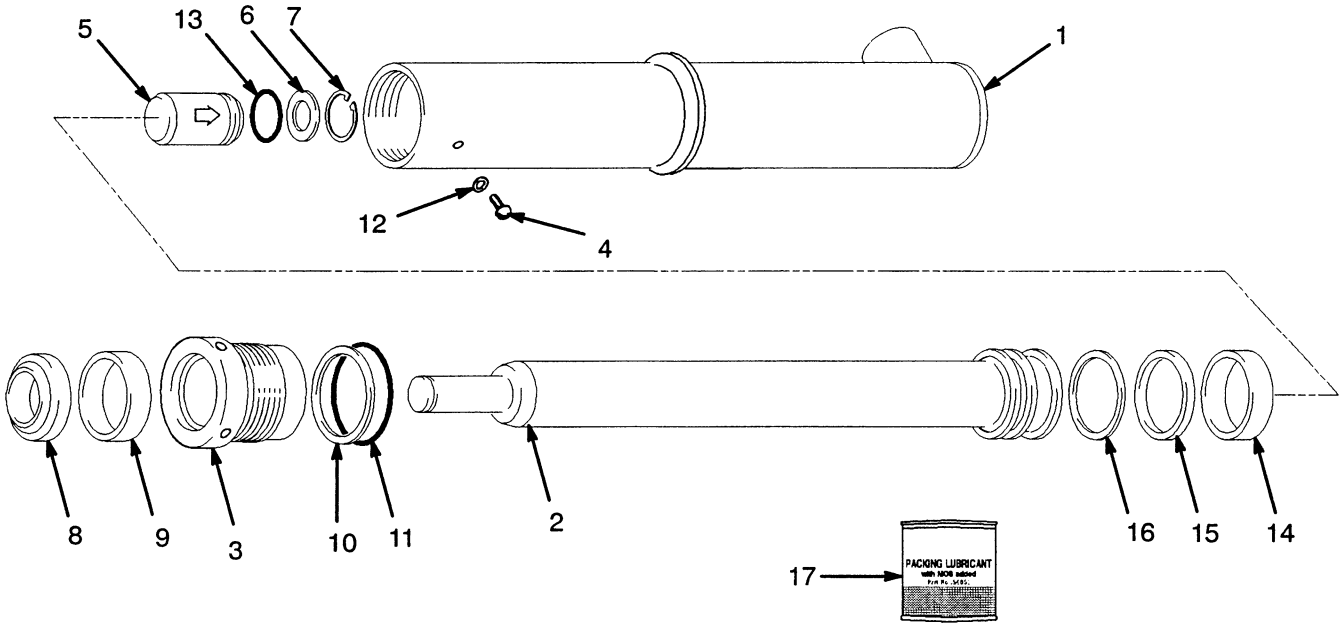

FREE-LIFT CYLINDER

TWO STAGE FULL FREE-LIFT

H60-65XM

Last Used On Mast S/N B564B-1854

Ref No	Name Of Part 1 2 3 4	Lift Height To Bottom Of Forks		
		112.6 in	124.4 in	144.1 in
	Mast Group No.	**B564 2860**	**B564 3160**	**B564 3660**
	Group # Cylinder	8601206 1341675	8601209 1341678	8601214 1341683
1	Shell	1356675	1356696	1356064
2	Rod	1356676	1356697	1356065

Used On Mast S/N B564B-1855, B564V-1501 Thru S/N B564V-2525

Ref No	Name Of Part 1 2 3 4	Lift Height To Bottom Of Forks		
		112.6 in	124.4 in	144.1 in
	Mast Group No.	**B564 2860**	**B564 3160**	**B564 3660**
	Group # Cylinder	8603506 2305335	8603509 2304960	8603514 2307561
1	Shell	2304592	2304575	2304802
2	Rod	2309221	2310912	2306235

First Used On Mast S/N B564V-2526

Ref No	Name Of Part 1 2 3 4	Lift Height To Bottom Of Forks		
		112.6 in	124.4 in	144.1 in
	Mast Group No.	**B564 2860**	**B564 3160**	**B564 3660**
	Group # Cylinder	8602506 1369548	8602509 1371601	8602514 1371606
1	Shell	2304592	2304575	2304802
2	Rod	1356679	1356688	1356068

CONTINUED ON NEXT PAGE

FREE-LIFT CYLINDER

TWO STAGE FULL FREE-LIFT

H60-65XM

KEY:
A: H45-55XM
B: H60-65XM

REF		PART NO.	NAME OF PART	QTY A	QTY B
	c	.....	Mast	1	1
	c	.....	Free-Lift Cylinder	1	1
1	c	.....	Shell	1	1
2	c	.....	Rod	1	1
3		1356292	Retainer	1	..
3		1356661	Retainer	..	1
4	a	295649	Screw	1	1
4	b	1361302	Screw	1	1
5		257913	Check Valve	1	1
6		297531	Washer	1	1
7		187388	Snap Ring	1	1
8	de	2013099	Rod Wiper	1	1
9	de	1358970	Rod Seal	1	1
10	d	147973	Back-Up Ring	1	..
10	e	164840	Back-Up Ring	..	1
11	d	90263	O-Ring	1	..
11	e	15880	O-Ring	..	1
12	de	190887	Seal	1	1
13	de	39348	O-Ring	1	1
14	d	1358972	Wear Ring	1	..
14	e	636941	Wear Ring	..	1
15	d	2013088	Seal	1	..
15	e	309062	Seal	..	1
16	d	2013089	Back-Up Ring	1	..
16	e	637565	Back-Up Ring	..	1
17		186061	Packing Lubricant	ARAR	

a Last Used On Mast S/N B509B-4069 & B564B-1854
b First Used On Mast S/N B509B-4070, B509V-1501, B564B-1855 & B564V-1501
c ☞ Table Above
d Included In Seal Kit 1358969
e Included In Seal Kit 1356662

©2000 HYSTER COMPANY

CARRIAGE (Figure 222)
TWO STAGE FULL FREE-LIFT
FOUR ROLLER

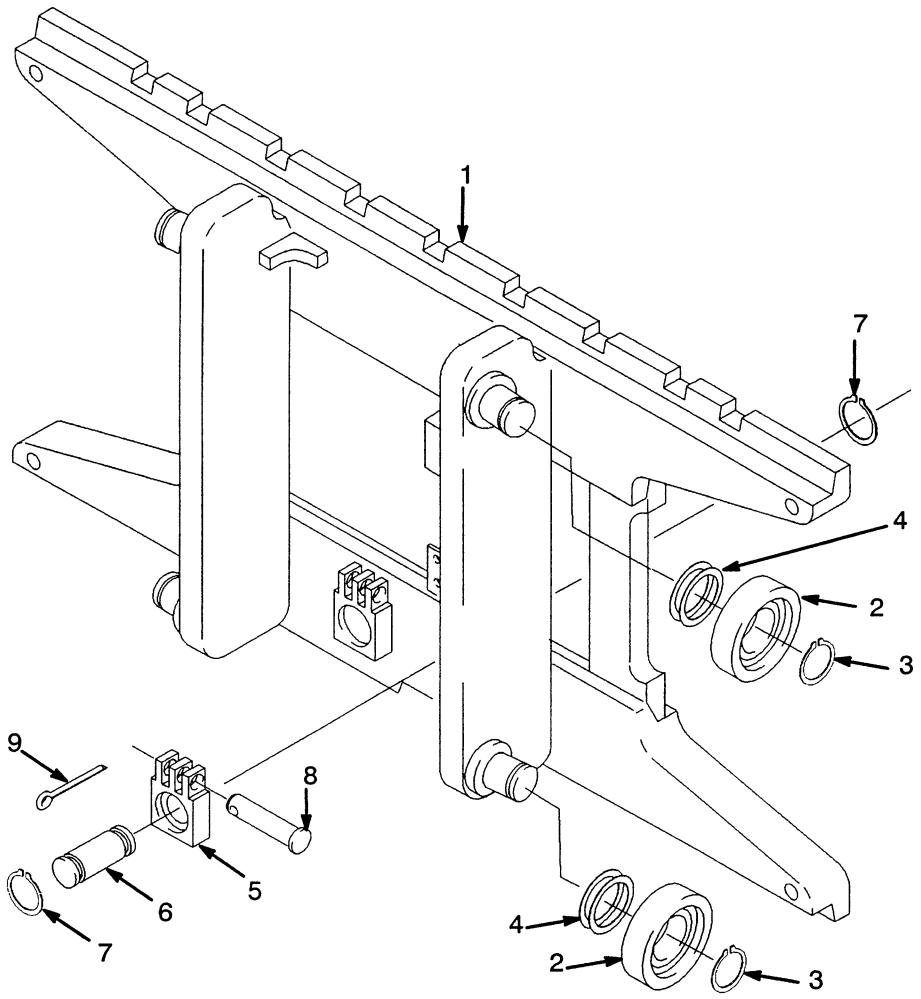

	H45-55XM	H60-65XM
Group No.	8500005	8500006
Carriage	1343839	1343840

KEY:
A: H45-55XM
B: H60-65XM

REF	PART NO.	NAME OF PART	QTY A	QTY B
a	.....	Carriage Assembly	1	..
a	.....	Carriage Assembly	..	1
1	1345225	Carriage	1	..
1	1345226	Carriage	..	1
1	1345264	Stubshaft	4	4
2	1345218	Load Roller	4	4
2	1395172	Load Roller ("A" Standard) ..	4	4
2	1345219	Load Roller ("B" 0.76 mm) ..	4	4
2	1345220	Load Roller ("C" 1.52 mm) ..	4	4
3	12891	Snap Ring	4	4
4	1345263	Shim	AR	AR
5	1369345	Chain Anchor	2	..
5	1369344	Chain Anchor	..	2
6	317735	Pin	2	2
7	131358	Snap Ring	4	4
8	323161	Pin	2	2
9	15200	Cotter Pin	2	2

a ☞ Table Above

©2000 HYSTER COMPANY

CARRIAGE (Figure 223)
TWO STAGE FULL FREE-LIFT
SIX ROLLER

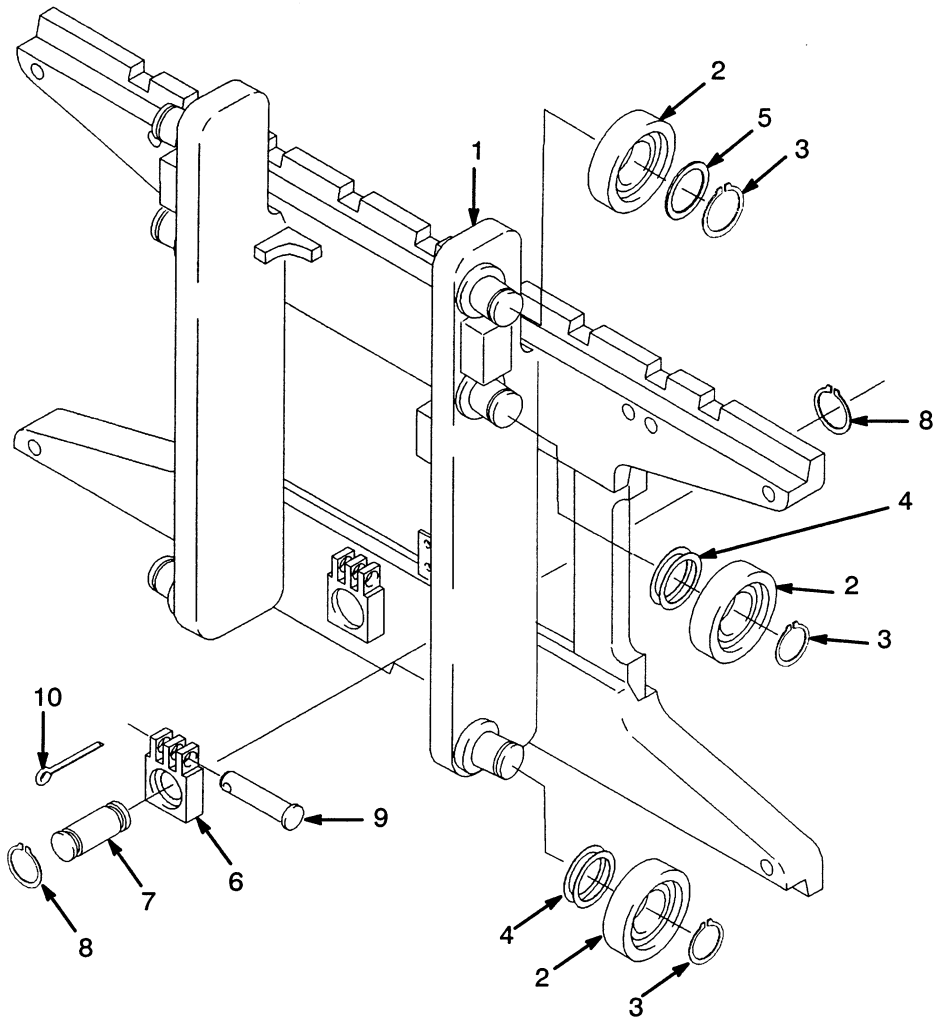

	H45-55XM	H60-65XM
Group No.	8500011	8500012
Carriage	1343844	1343845

KEY:
A: H45-55XM
B: H60-65XM

REF	PART NO.	NAME OF PART	QTY A	QTY B
a	.....	Carriage Assembly	1	..
a	.....	Carriage Assembly	..	1
1	1345239	Carriage	1	..
1	1345240	Carriage	..	1
1	1345264	Stubshaft	6	6
2	1345218	Load Roller	4	4
2	1395172	Load Roller ("A" Standard) ..	6	6
2	1345219	Load Roller ("B" 0.76 mm) ..	6	6
2	1345220	Load Roller ("C" 1.52 mm) ..	6	6
3	12891	Snap Ring	6	6

REF	PART NO.	NAME OF PART	QTY A	QTY B
4	1345263	Shim	AR	AR
5	366116	Spacer	2	2
6	1369345	Chain Anchor	2	..
6	1369344	Chain Anchor	..	2
7	317735	Pin	2	2
8	131358	Snap Ring	4	4
9	323161	Pin	2	2
10	15200	Cotter Pin	2	2

a ☞ Table Above

©2000 HYSTER COMPANY

LOAD BACKREST EXTENSION (Figure 224)

TWO STAGE FULL FREE-LIFT

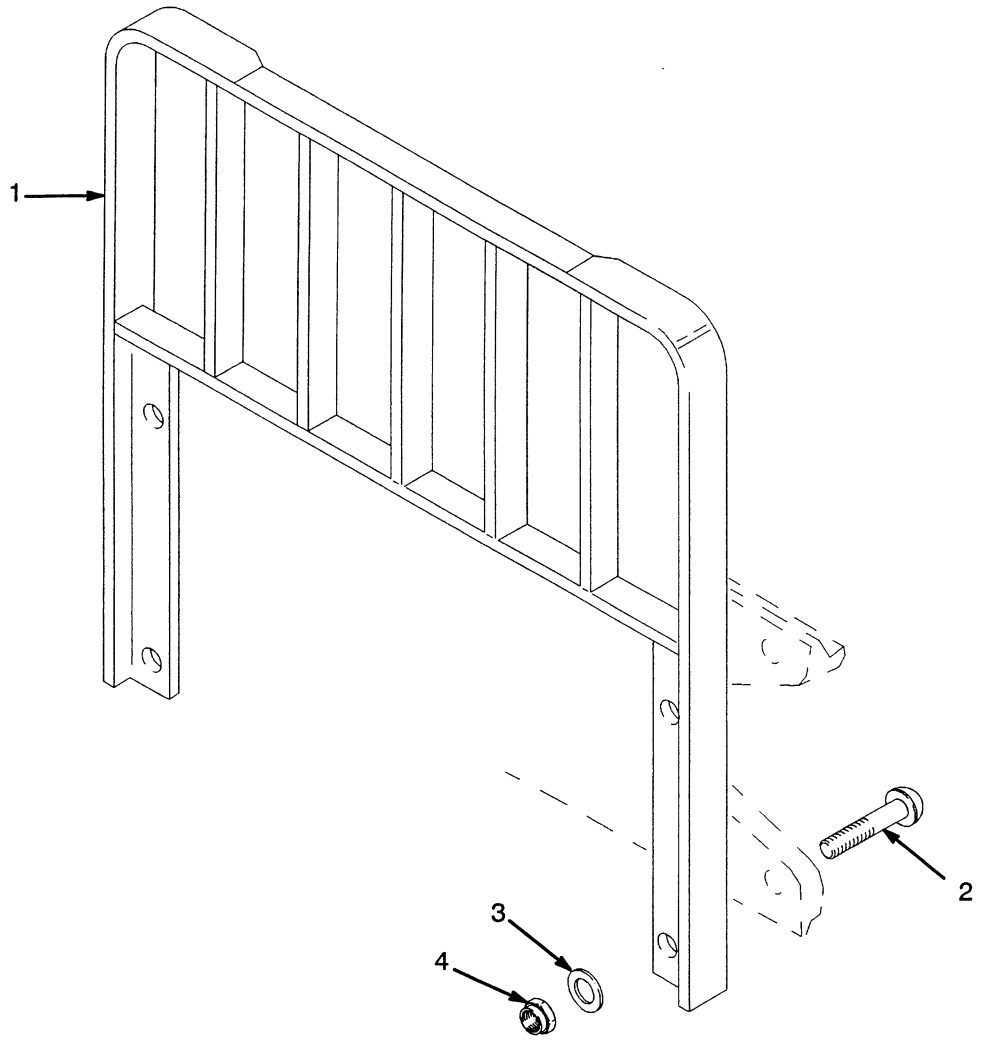

KEY:
A: H45-55XM
B: H60-65XM

REF		PART NO.	NAME OF PART	QTY A	QTY B
1		1338642	Load Backrest Extension	1	..
1		1338645	Load Backrest Extension	..	1
1	a	1345267	Load Backrest Extension	..	1
2		1343990	Capscrew	4	..
2		1354923	Capscrew	..	4
3		221771	Washer	4	4
3	b	296423	Washer	4	4
4		300937	Nut	4	4

a For Polished Forks W/Full Bottom Taper
b Optional

MAST INSTALLATION (Figure 225)

TWO STAGE FULL FREE-LIFT

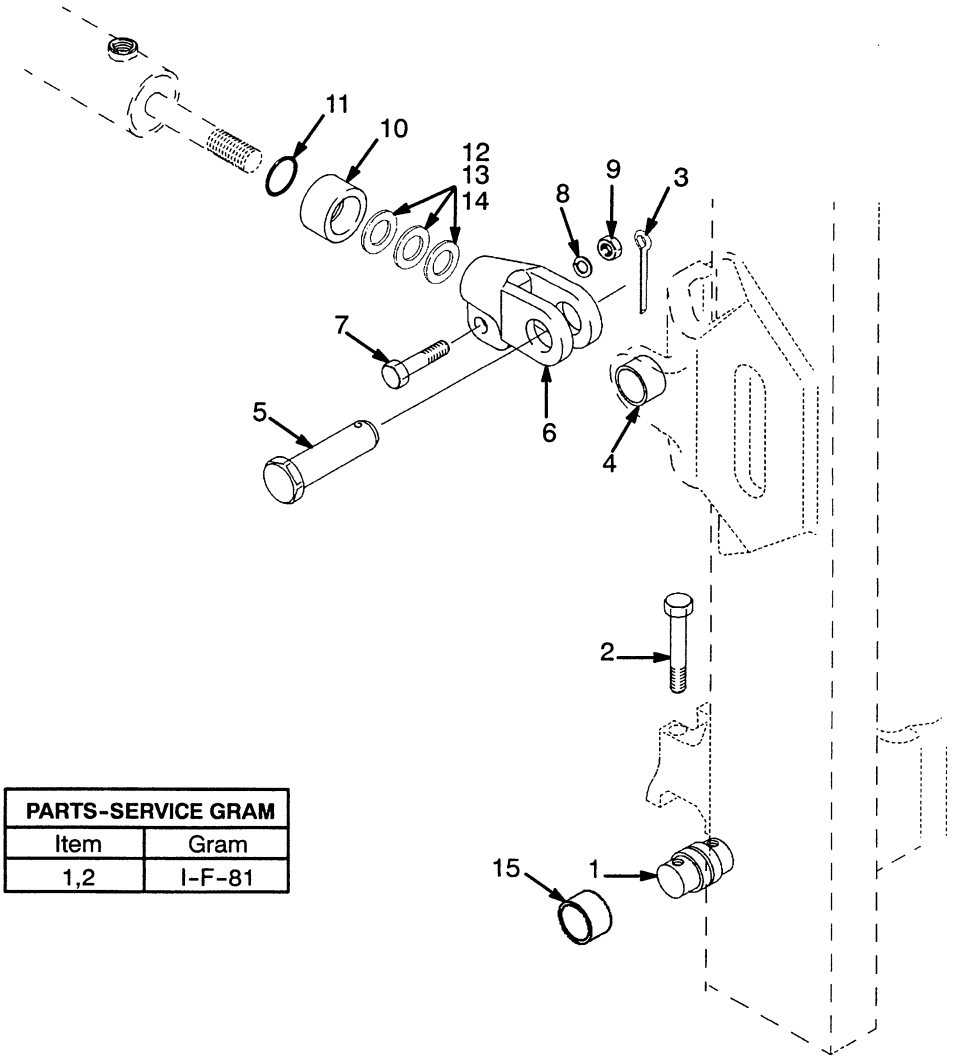

PARTS-SERVICE GRAM	
Item	Gram
1,2	I-F-81

KEY:
A: 6° Forward Tilt/10° Back Tilt
B: 6° Forward Tilt/6° Back Tilt
C: 6° Forward Tilt/5° Back Tilt

REF		PART NO.	NAME OF PART	QTY A	B	C
1	a	1333386	Pin	2	2	2
1	b	1376424	Pin	2	2	2
2	a	293659	Capscrew	4	4	4
2	b	1376423	Capscrew	4	4	4
3		15236	Cotter Pin	2	2	2
4		300982	Bushing	2	2	2
5		1345354	Pin	2	2	2
6		1307641	Rod End	2	2	2
7		293650	Capscrew	2	2	2
8		292683	Lockwasher	2	2	2
9		216877	Nut	2	2	2

REF	PART NO.	NAME OF PART	QTY A	B	C
10	1451788	Spacer	..	2	..
10	384101	Spacer	..	..	2
11	55434	O-Ring	..	2	2
12	134675	Shim	..	AR	AR
13	1325119	Shim	..	AR	AR
14	1361948	Shim	..	..	AR
15	1333385	Bushing	2	2	2
15	1380115	Bushing (Optional)	2	2	2

a First Used On S/N D177B-19806
b Last Used On S/N D177B-19807

©2000 HYSTER COMPANY

MAST INSTALLATION (Figure 226)

TWO STAGE FULL FREE-LIFT

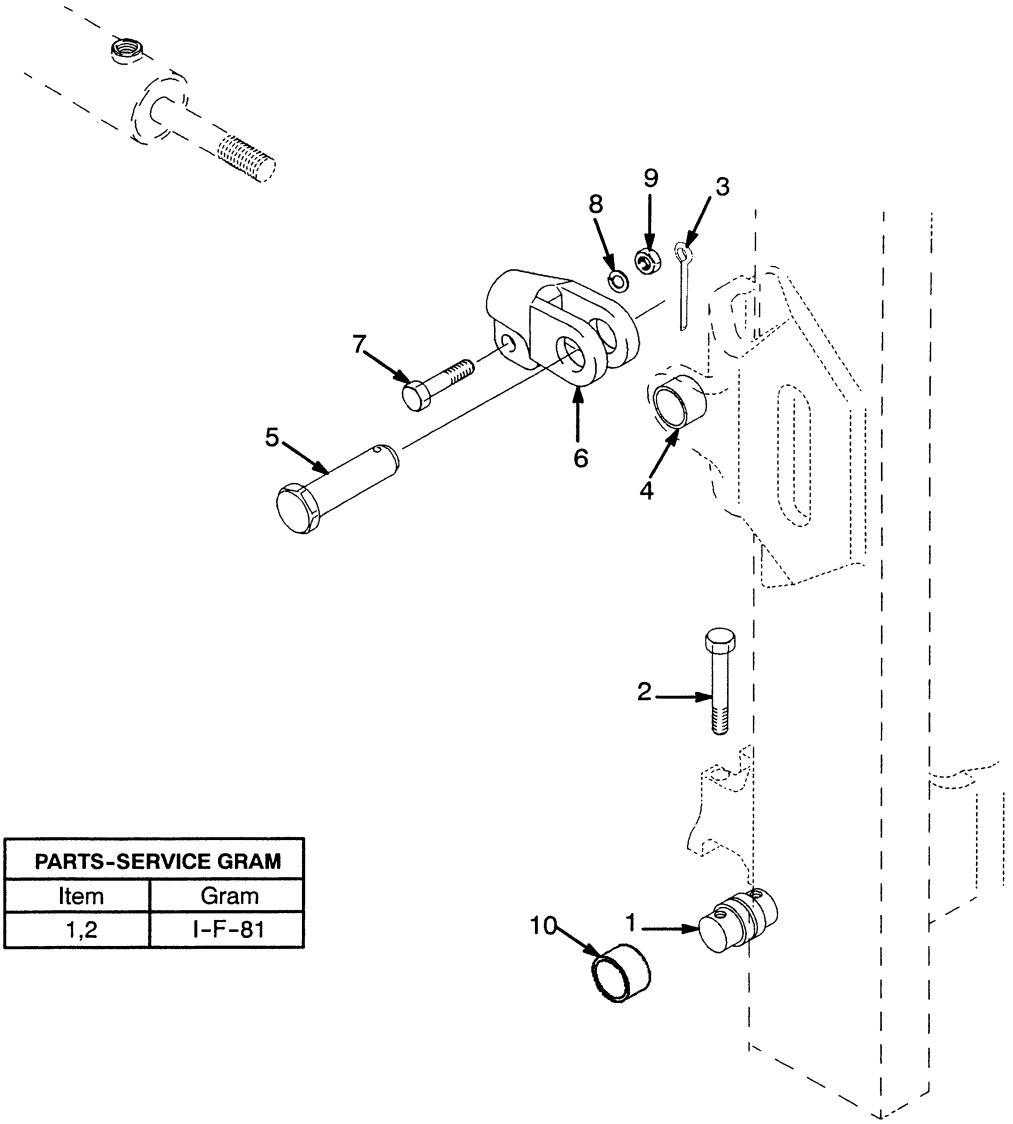

PARTS-SERVICE GRAM	
Item	Gram
1,2	I-F-81

KEY:
10° Forward Tilt/6° Back Tilt

REF		PART NO.	NAME OF PART	QTY
1	a	1333386	Pin	2
1	b	1376424	Pin	2
2	a	293659	Capscrew	4
2	b	1376423	Capscrew	4
3		15236	Cotter Pin	2
4		300982	Bushing	2
5		1345354	Pin	2
6		1356318	Rod End	2

REF	PART NO.	NAME OF PART	QTY
7	293650	Capscrew	2
8	292683	Lockwasher	2
9	216877	Nut	2
10	1333385	Bushing	2
10	1380115	Bushing (Optional)	2

a First Used On S/N D177B-19806
b Last Used On S/N D177B-19807

©2000 HYSTER COMPANY

HEADER HOSE (Figure 227)

TWO STAGE FULL FREE-LIFT

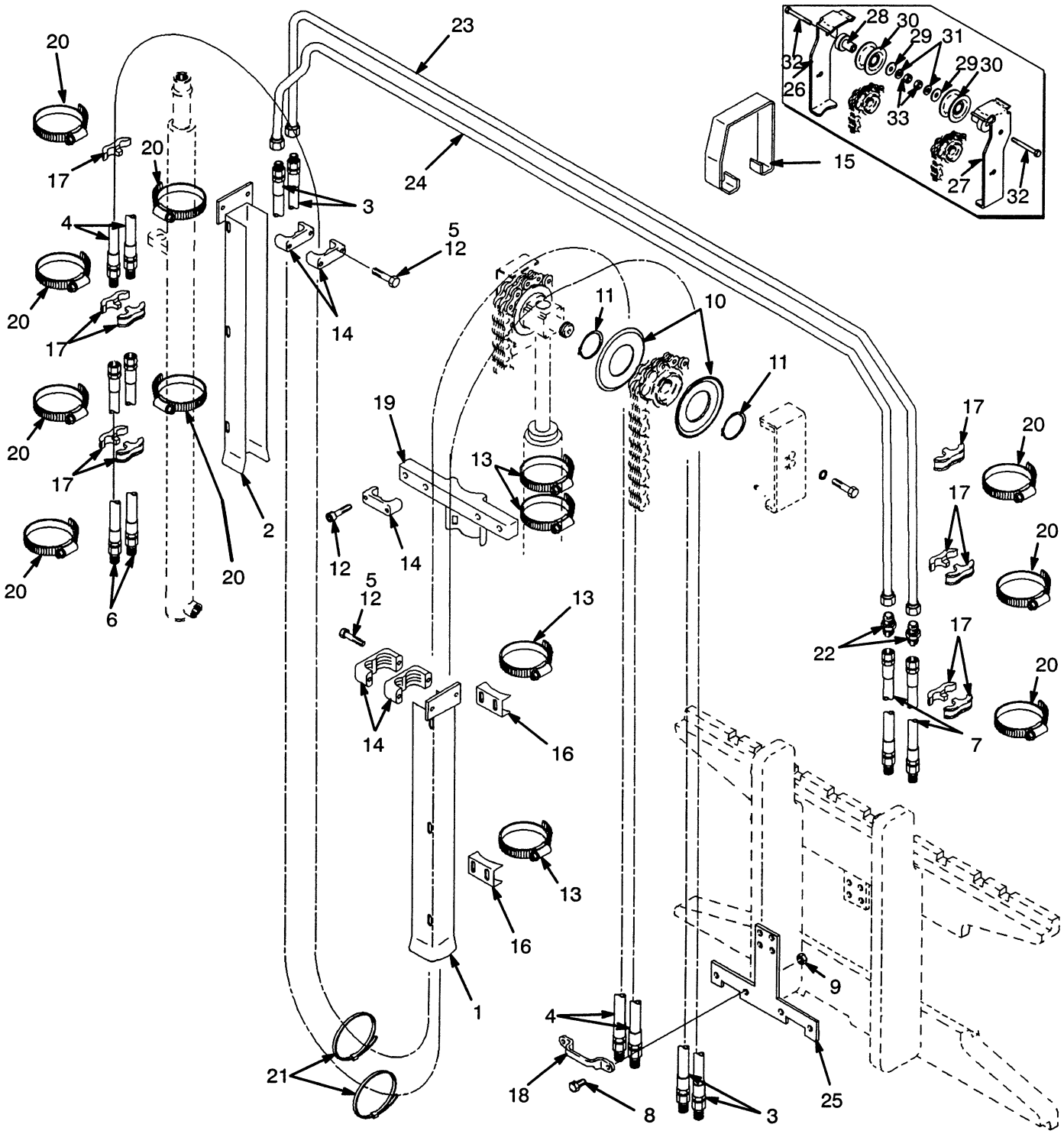

HEADER HOSE
TWO STAGE FULL FREE-LIFT

H45-55XM

Ref No	Name Of Part 1 2 3 4	Lift Height To Bottom Of Forks		
		117.4 in	129.2 in	148.9 in
	Mast Group No.	**B509 2982**	**B509 3282**	**B509 3782**
1	Channel	1365500	1365502	1365505
2	Channel	1365514	1365517	1365523
3	Hose	[b]1345568 [c]1390425 1345571	[d]1369632 [e]1368400	[d]1345573 [e]1390417
4	Hose	[b]1358351 [c]1390416 [e]1345575	[d]1345574 [e]1376120	[d]1369613 [e]1369640
23	Tube	1360331	1360334	1360339
24	Tube	1360361	1360364	1360369
25	Bracket	[b]1369323	[b]1369323	[b]1369323
25	Bracket	[c]1381771	[c]1381771	[c]1381771

H60-65XM

Ref No	Name Of Part 1 2 3 4	Lift Height To Bottom Of Forks		
		112.6 in	124.4 in	144.1 in
	Mast Group No.	**B564 2860**	**B564 3160**	**B564 3660**
1	Channel	1365500	1365502	1365504
2	Channel	1365514	1365517	1365523
3	Hose	[b]1345568 [c]1390425 1345571	[d]1369632 1368400	[d]1345573 1369640
4	Hose	[b]1358351 [c]1390416 1345575	[d]1345574 [e]1376120	[d]1369613 [e]1369640
23	Tube	1360331	1360334	1360339
24	Tube	1360361	1360364	1360369
25	Bracket	[b]1369324	[b]1369324	[b]1369324
25	Bracket	[c]1381772	[c]1381772	[c]1381772

[b] Last Used on S/N B509V-2643, B564V-2196
[c] Used on S/N B509V-2644, B564V-2197 ⇒ S/N B509V-3722, B564V-5761
[d] Last Used On S/N B509V-3722, B564V-5761
[e] First Used On S/N B509V-3723, B564V-5762

©2000 HYSTER COMPANY

HEADER HOSE
TWO STAGE FULL FREE-LIFT
(Figure 227 Continued)

KEY:
A: Three Function
B: Four Function

REF		PART NO.	NAME OF PART	QTY A	QTY B
	a	.....	Mast	1	1
1	a	.....	Channel	1	1
2	a	.....	Channel	1	1
3	a	.....	Hose	2	2
4	a	.....	Hose	..	2
5		296001	Capscrew	..	4
6		1354904	Hose	..	2
7		1354922	Hose	2	2
8		136749	Capscrew	6	8
9		313828	Nut	6	8
10		1345199	Hose Guide	2	4
11		1345204	Snap Ring	2	4
12		293796	Capscrew	6	4
13		1360508	Clamp	4	4
14		1360386	Clamp	3	6
15		1365062	Clip	1	1
16		1345423	Clamp	2	2
17		1353530	Clamp	5	10
18		1369333	Clamp	1	2
19		1354918	Bracket	1	1
20		1360507	Clamp	5	8
21		2004005	Strap Clamp	1	1
22		14692	Fitting	2	2
23	a	.....	Tube	1	1
24	a	.....	Tube	1	1
25	a	.....	Bracket	1	1
26	b	1395291	Guard (RH)	1	1
27	b	1395292	Guard (LH)	..	1
28	b	1396406	Stubshaft	1	2
29	b	1396407	Spacer	1	2
30	b	1345194	Sheave	1	2
31	b	1345190	Washer	1	2
32	b	292533	Capscrew	1	2
33	b	300937	Nut	1	2

a ☞ Table Above
b First Used On S/N B509V-3723, B564V-5762

©2000 HYSTER COMPANY

NOTES

©2000 HYSTER COMPANY

FORKS (Figure 228)

TWO STAGE FULL FREE-LIFT

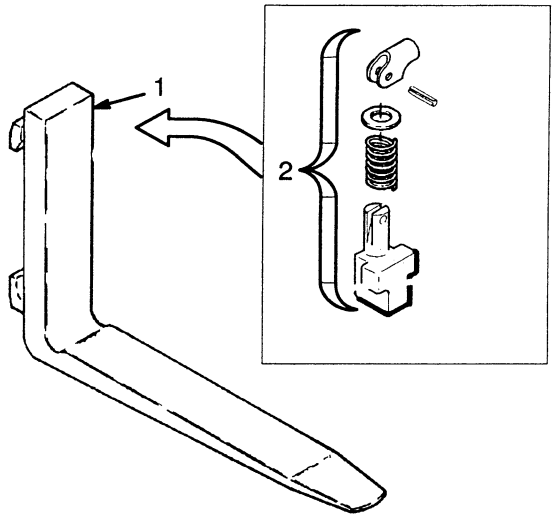

H45-55XM

Ref No	Name Of Part 1 2 3 4	Standard Taper		Full Bottom Taper	Qty
	Fork	125 mm x 40 mm	100 mm x 40 mm	125 mm x 40 mm	
1	762 mm (30 in)	1326660	384210		2
	914 mm (36 in)	1326661	384211	1338087	2
	1067 mm (42 in)	1326663	384213	1338088	2
	1219 mm (48 in)	1326664	384214	1338089	2
	1372 mm (54 in)	1326665	384215		2
	1524 mm (60 in)	1326666	384216		2
2	Latch	369795	369795	369795	1

NOTE: OTHER FORK DIMENSIONS AVAILABLE ON REQUEST, CONTACT YOUR HYSTER DEALER.

©2000 HYSTER COMPANY

FORKS

TWO STAGE FULL FREE-LIFT MAST

(Figure 228 Continued)

H60-65XM

Ref No	Name Of Part 1 2 3 4	Standard Taper		Full Bottom Taper	Qty
1	Fork	100 mm x 45 mm	125 mm x 50 mm	180 mm x 45 mm	
	914 mm (36 in)	1333018	367419		2
	1067 mm (42 in)	1333020	367420		2
	1207 mm (42.5 in)			1338098	2
	1219 mm (48 in)	1333021	367421		2
	1372 mm (54 in)		367422	1332745	2
	1524 mm (60 in)		367423		2
	1829 mm (72 in)	1333024	367424		2
2	Latch	369796	369796	369796	1

NOTE: OTHER FORK DIMENSIONS AVAILABLE ON REQUEST, CONTACT YOUR HYSTER DEALER.

©2000 HYSTER COMPANY

NOTES

©2000 HYSTER COMPANY

OPTIONAL

ACCESSORIES (Figure 243)
CAB ..... Page 460

AUDIBLE ALARMS (Figure 252) ..... Page 471

AUXILIARY TUBE EXTENSION KIT (Figure 253)
TWO-STAGE LFL ..... Page 472

AUXILIARY TUBE EXTENSION KIT (Figure 254)
TWO-STAGE & THREE-STAGE FFL ..... Page 474

CAB KIT (Figure 238)
WITH DOORS MOUNTED INSIDE OVERHEAD GUARD ..... Page 452

CAB KIT (Figure 239)
WITH DOORS MOUNTED AGAINST OUT-BOARD SIDE OF OVERHEAD GUARD ..... Page 454

CAB KIT (Figure 240)
PVC ..... Page 456

CAB SOUND LINERS (Figure 245) ..... Page 464

DRIVE & REAR LIGHT (Figure 237) ..... Page 451

FENDERS (Figure 230) ..... Page 438

FIRE EXTINGUISHER (Figure 251) ..... Page 470

HARNESS (Figure 246)
WIPER ..... Page 465

HARNESS (Figure 247)
CAB (REAR) ..... Page 466

HARNESS (Figure 248)
CAB (COWL) ..... Page 467

©2000 HYSTER COMPANY

OPTIONAL (Continued)

HARNESS (Figure 256)
POWERTRAIN PROTECTION ..... Page 478

HARNESS ROUTING (Figure 242)
CAB ..... Page 459

HARNESS-REAR (Figure 249)
CHASSIS ..... Page 468

HEATER (Figure 244)
CAB ..... Page 462

LIFT EYE (Figure 229) ..... Page 437

LOAD BACKREST EXTENSION (Figure 233)
48 INCH (1220 mm) ..... Page 443

MIRROR (Figure 250) ..... Page 469

POWERTRAIN PROTECTION SYSTEM (Figure 255) ..... Page 476

SIDESHIFT CARRIAGE (Figure 231) ..... Page 440

SIDESHIFT CYLINDER (Figure 232) ..... Page 442

STROBE LIGHT (Figure 236) ..... Page 450

TIRE & WHEEL (Figure 234)
DRIVE WHEEL ..... Page 444

TIRE & WHEEL (Figure 235)
STEER WHEEL ..... Page 448

WINDOWS (Figure 241)
CAB ..... Page 458

©2000 HYSTER COMPANY

LIFT EYE (Figure 229)

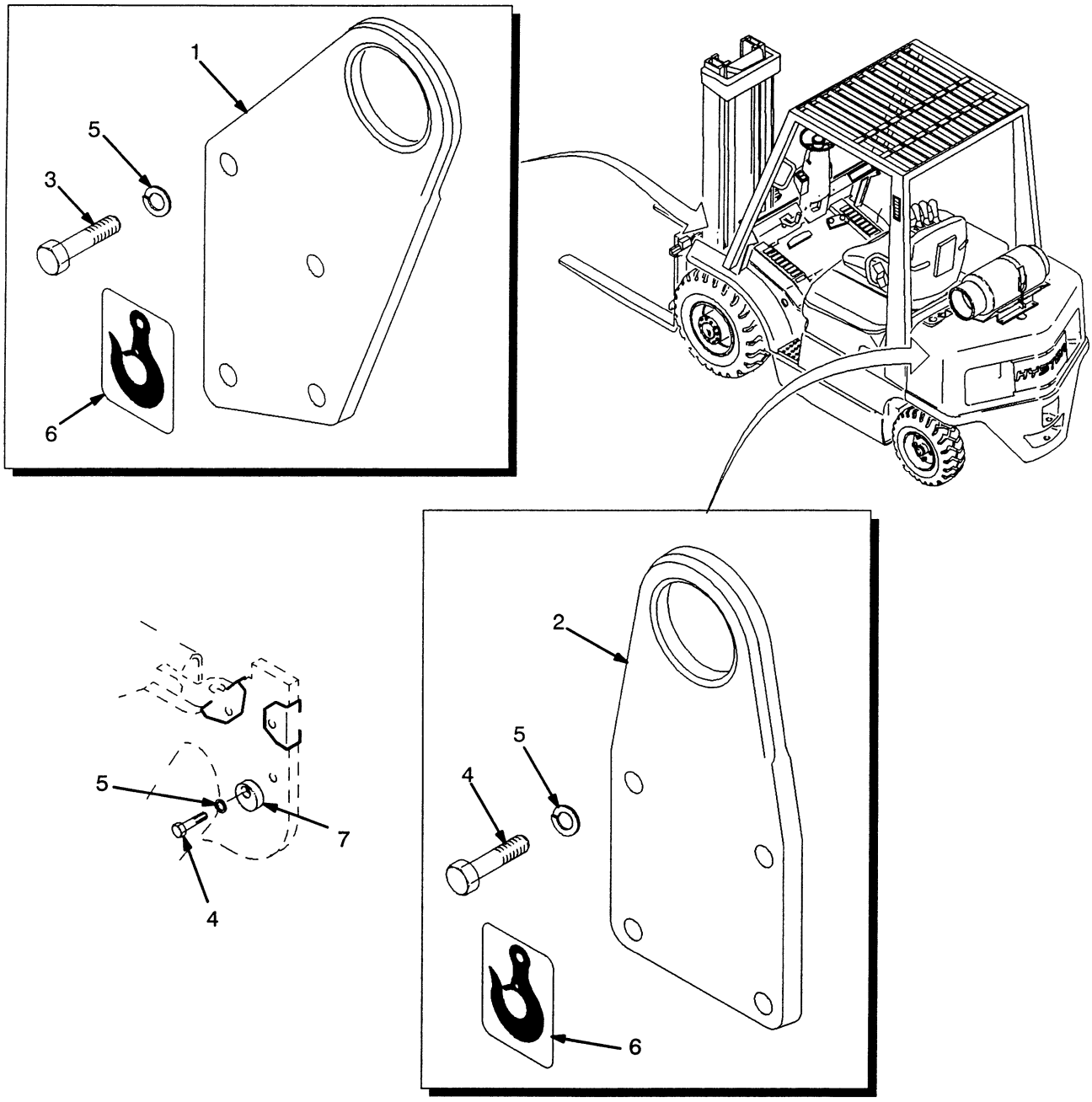

REF	PART NO.	NAME OF PART	QTY
1	1356400	Plate	4
2	1356401	Plate	8
3	293645	Capscrew	8
4	293647	Capscrew	18
5	292683	Washer	18
6	316448	Lifting Eyes Label	4
7	1369709	Cam	2

FENDERS (Figure 230)

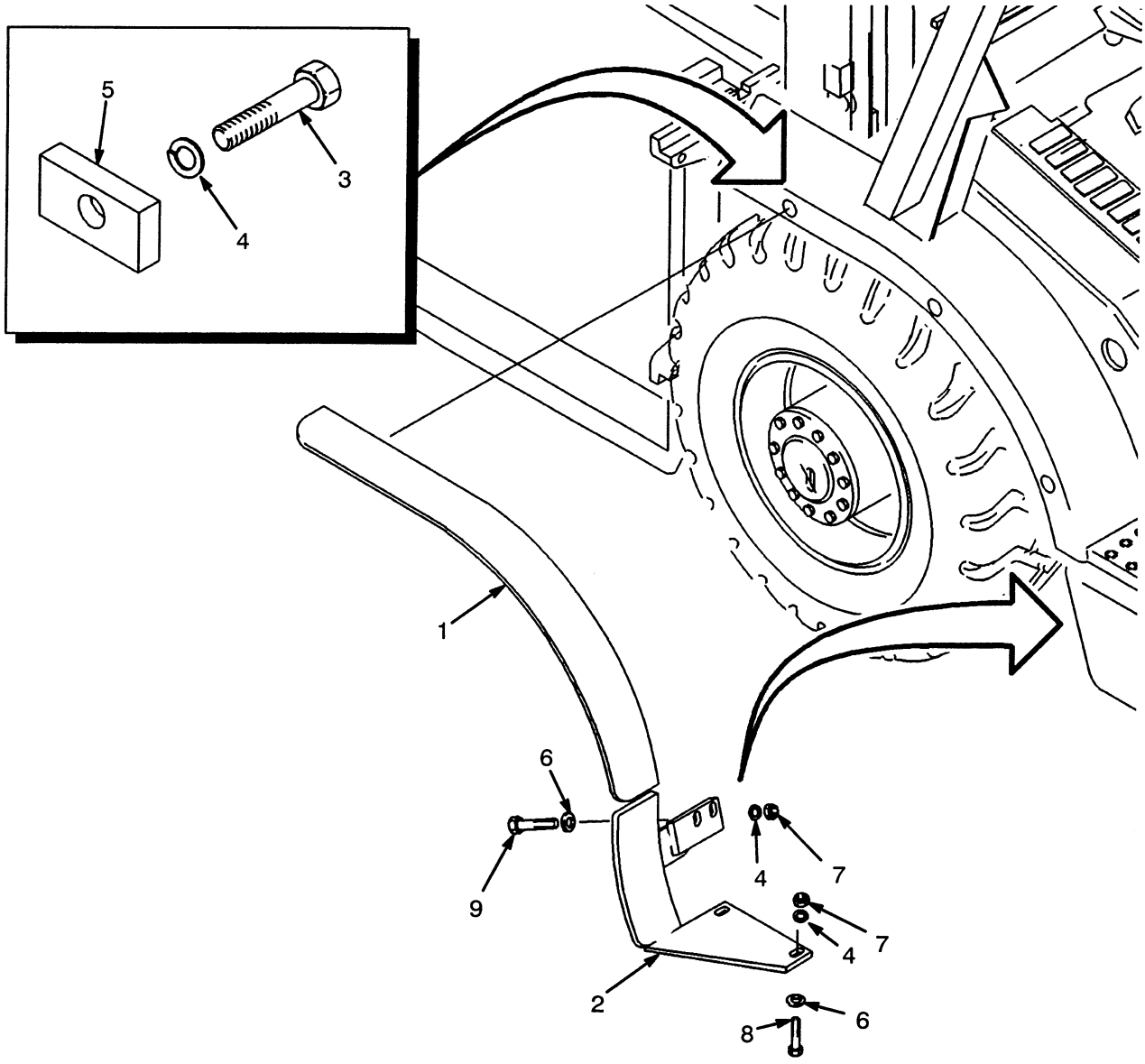

KEY:
A: Wide Tire
B: Dual Tire

REF	PART NO.	NAME OF PART	QTY A	QTY B
1	1347142	Fender (Upper LH)	1	..
1	1347143	Fender (Upper RH)	1	..
1	1347196	Fender (Upper LH)	..	1
1	1347197	Fender (Upper RH)	..	1
2	1347145	Fender (Lower LH)	1	..
2	1347146	Fender (Lower RH)	1	..
2	1347198	Fender (Lower LH)	..	1
2	1347201	Fender (Lower RH)	..	1

REF	PART NO.	NAME OF PART	QTY A	QTY B
3	292516	Capscrew	6	6
4	292682	Washer	14	10
5	1347144	Load Bar	6	6
6	320160	Washer	8	4
7	136692	Nut	8	4
8	287860	Capscrew	4	4
9	292515	Capscrew	4	..

©2000 HYSTER COMPANY

NOTES

©2000 HYSTER COMPANY

SIDESHIFT CARRIAGE (Figure 231)

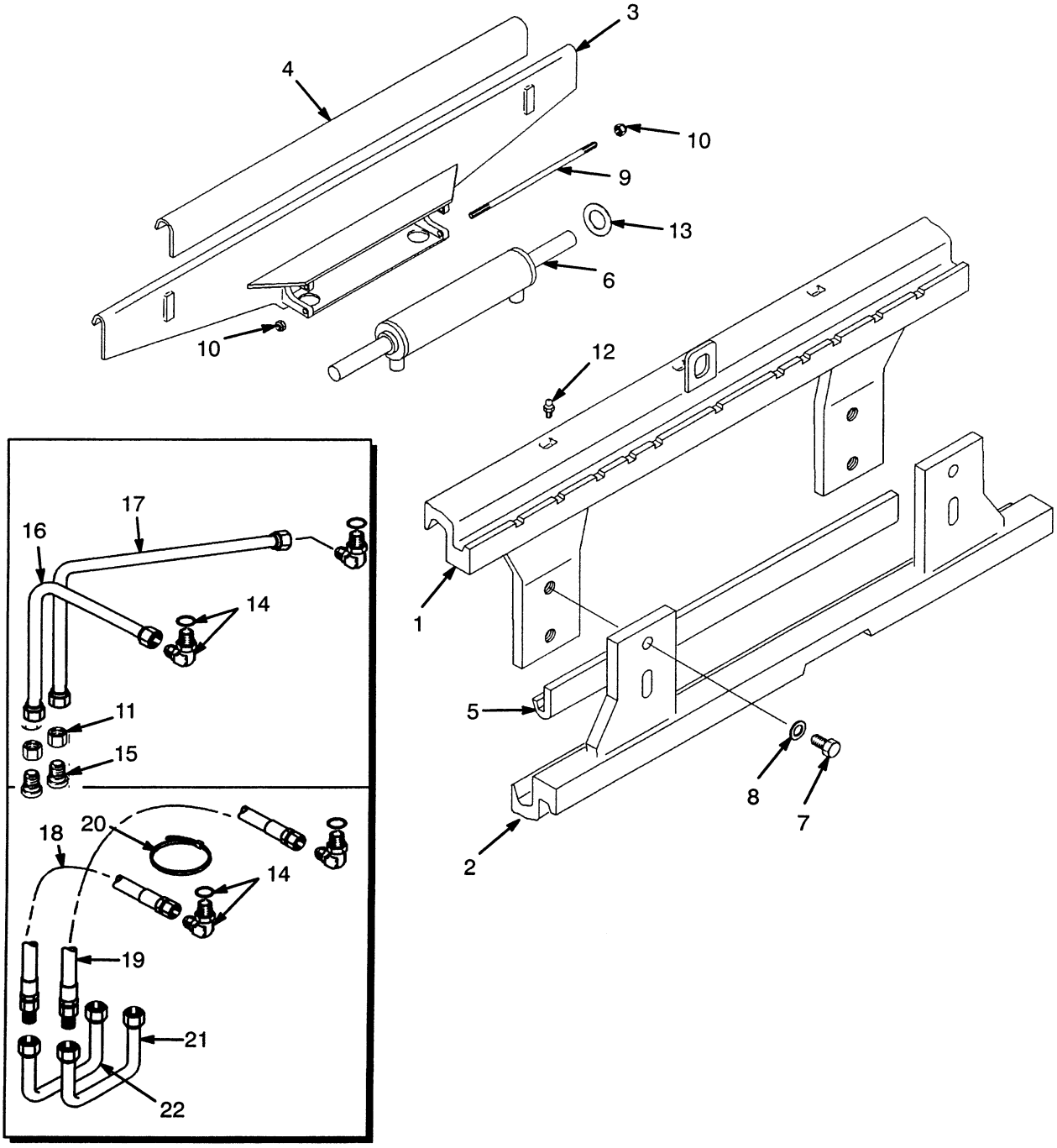

SIDESHIFT CARRIAGE

KEY:
A: H45-55XM 1067 mm (42 Inch)
B: H45-55XM 1220 mm (48 Inch)
C: H60-65XM 1067 mm (42 Inch)

REF		PART NO.	NAME OF PART	QTY A	B	C
	h	1356918	Sideshift Carriage	1	..	..
	k	1399041	Sideshift Carriage	1	..	..
	h	1376340	Sideshift Carriage	..	1	..
	k	1399044	Sideshift Carriage	..	1	.
	h	1356882	Sideshift Carriage	..	..	1
	k	1399048	Sideshift Carriage	..	..	1
1		1355523	Top Apron	1	..	..
1		1376341	Top Apron	..	1	..
1		1355547	Top Apron	..	..	1
2	d	1356873	Bottom Apron	1	..	..
2	e	1378055	Bottom Apron	1	..	..
2	k	1396431	Shim	6	..	..
2	d	1376342	Bottom Apron	..	1	..
2	e	1378057	Bottom Apron	..	1	..
2	k	1396434	Shim	..	6	..
2	d	1356892	Bottom Apron	..	..	1
2	e	1378072	Bottom Apron	..	..	1
2	k	1396431	Shim	..	..	6
3	h	1397265	Cylinder Support	1	..	..
3	k	1399006	Cylinder Support	1	..	..
3	h	1397267	Cylinder Support	..	1	..
3	k	1399008	Cylinder Support	..	6	..
3	h	1397277	Cylinder Support	..	..	1
3	k	1399023	Cylinder Support	..	..	6
4	h	1356867	Top Bearing	1	..	..
4	k	1396460	Top Bearing	1	..	..
4	h	1376344	Top Bearing	..	1	..
4	k	1396462	Top Bearing	..	1	.
4	h	1356902	Top Bearing	..	..	1
4	k	1396472	Top Bearing	..	..	1
5	d	1356863	Bottom Bearing	1	..	..
5	e	1378065	Bottom Bearing	1	..	..
5	d	1376345	Bottom Bearing	..	1	..
5	e	1356863	Bottom Bearing	..	1	..
5	d	1356897	Bottom Bearing	..	..	1
5	e	1378082	Bottom Bearing	..	..	1
6		....	Sideshift Cylinder ☞ Figure 232	1	1	1
7		293704	Capscrew	4	4	..
7		1360229	Capscrew	..	..	4
8		296431	Washer	4	4	..
8		296435	Washer	..	..	4

REF		PART NO.	NAME OF PART	QTY A	B	C
9		1371289	Capscrew	2	2	2
9	a	1358809	Rod	2	2	2
10		313828	Nut	2	2	2
10	a	313828	Nut	4	4	4
11		17319	Fitting	2	..	2
12		16041	Lube Fitting	3	3	3
13		1358821	Shim	AR	AR	AR
14		239784	Fitting	2	2	1
14		16481	O-Ring	1	1	1
15		17218	Fitting	2	..	2
16	bf	1369334	Tube	1	1	..
16	bf	1369336	Tube	..	..	1
16	c	1358814	Tube	1	1	..
16	c	1358816	Tube	..	..	1
17	bf	1369335	Tube	1	1	..
17	bf	1369337	Tube	..	..	1
17	c	1358815	Tube	1	1	..
17	c	1358817	Tube	..	..	1
18	bg	1390365	Hose	1	1	..
18	bg	1390367	Hose	..	..	1
19	bg	1390366	Hose	1	1	..
19	bg	1390368	Hose	..	..	1
20	bg	129563	Strap Clamp	1	1	1
21	bg	1381765	Tube	1	1	1
22	bg	1381766	Tube	1	1	1
23	bg	16565	Fitting	..	..	1
23	bg	16481	O-Ring	..	..	1

a Optional
b Two Stage FFL & Three Stage FFL
c Two Stage LFL
d Last Used On Attachment S/N B601B-11719, B603B-7259, B603D-1738 (48 inch) & B603D-1717 (60 inch)
e First Used On Attachment S/N B601B-11720, B603B-7260, B603D-1739 (48 inch) & B603D-1718 (60 inch)
f Last Used on S/N B508V-12601, B509V-2644 B563V-4769, B56V-2196
g First Used on S/N B508V-12602, B509V-2645 B563V-4770, B564V-2197
h Last Used on S/N B601V-5325, B603V-3011
k First Used on S/N B601V-5326, B603V-3012

©2000 HYSTER COMPANY

SIDESHIFT CYLINDER (Figure 232)

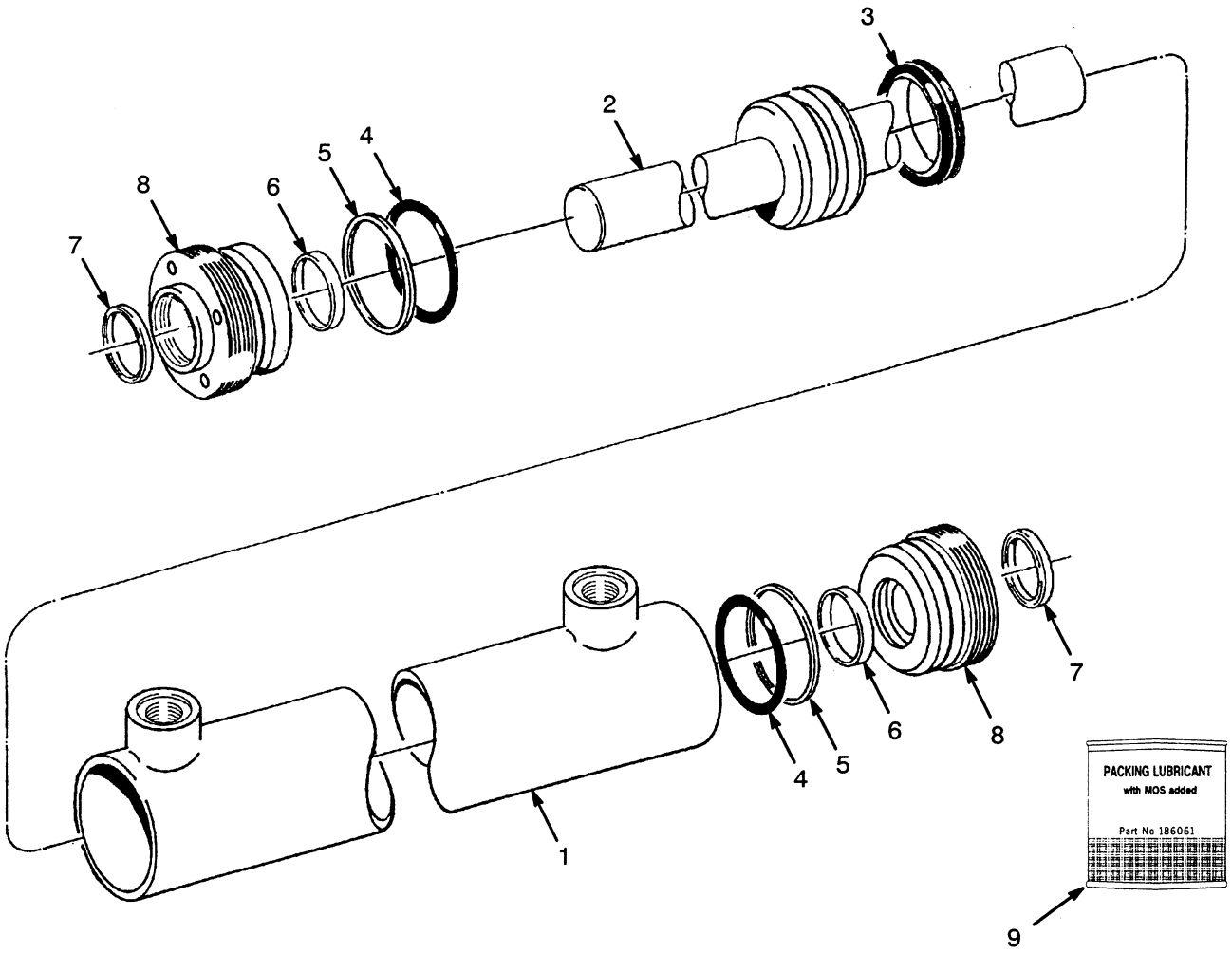

KEY:
A: H45-55XM
B: H60-65XM

REF		PART NO.	NAME OF PART	QTY A	QTY B
		1360125	Cylinder	1	..
		1360126	Cylinder	..	1
1		2311471	Tube	1	..
1		2304345	Tube	..	1
2		2309719	Rod	1	..
2		2303634	Rod	..	1
3	a	2306755	Piston Seal	1	..
3	b	1351184	Piston Seal	..	1
4	a	55407	O-Ring	2	..
4	b	59229	O-Ring	..	2
5	a	153919	Back-Up Ring	2	..
5	b	615130	Back-Up Ring	..	2
6	ab	294643	Seal	2	2
7	ab	636851	Wiper Ring	2	2
8		2310768	Gland	2	..
8		2306283	Gland	..	2
8		383789	Sealant	ARAR	
9		186061	Packing Lubricant	ARAR	

a Included In Seal Kit 2311624
b Included In Seal Kit 2307647

LOAD BACKREST EXTENSION (Figure 233)

48 INCH (1220 mm)

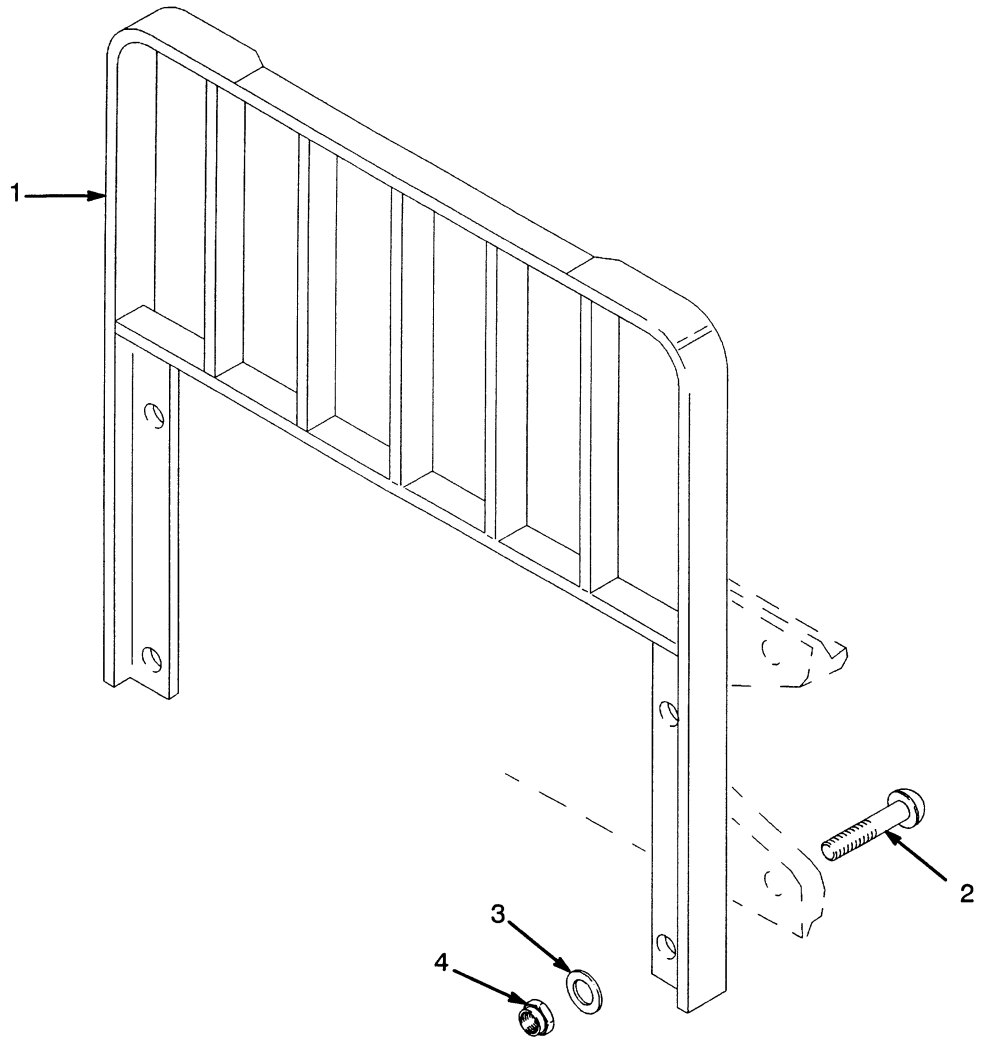

REF		PART NO.	NAME OF PART	QTY
1		1376338	Load Backrest Extension	1
2		1343990	Capscrew	4
3		221771	Washer	4
3	a	296423	Washer	4
4		300937	Nut	4

a Optional

TIRE & WHEEL (Figure 234)

DRIVE WHEEL

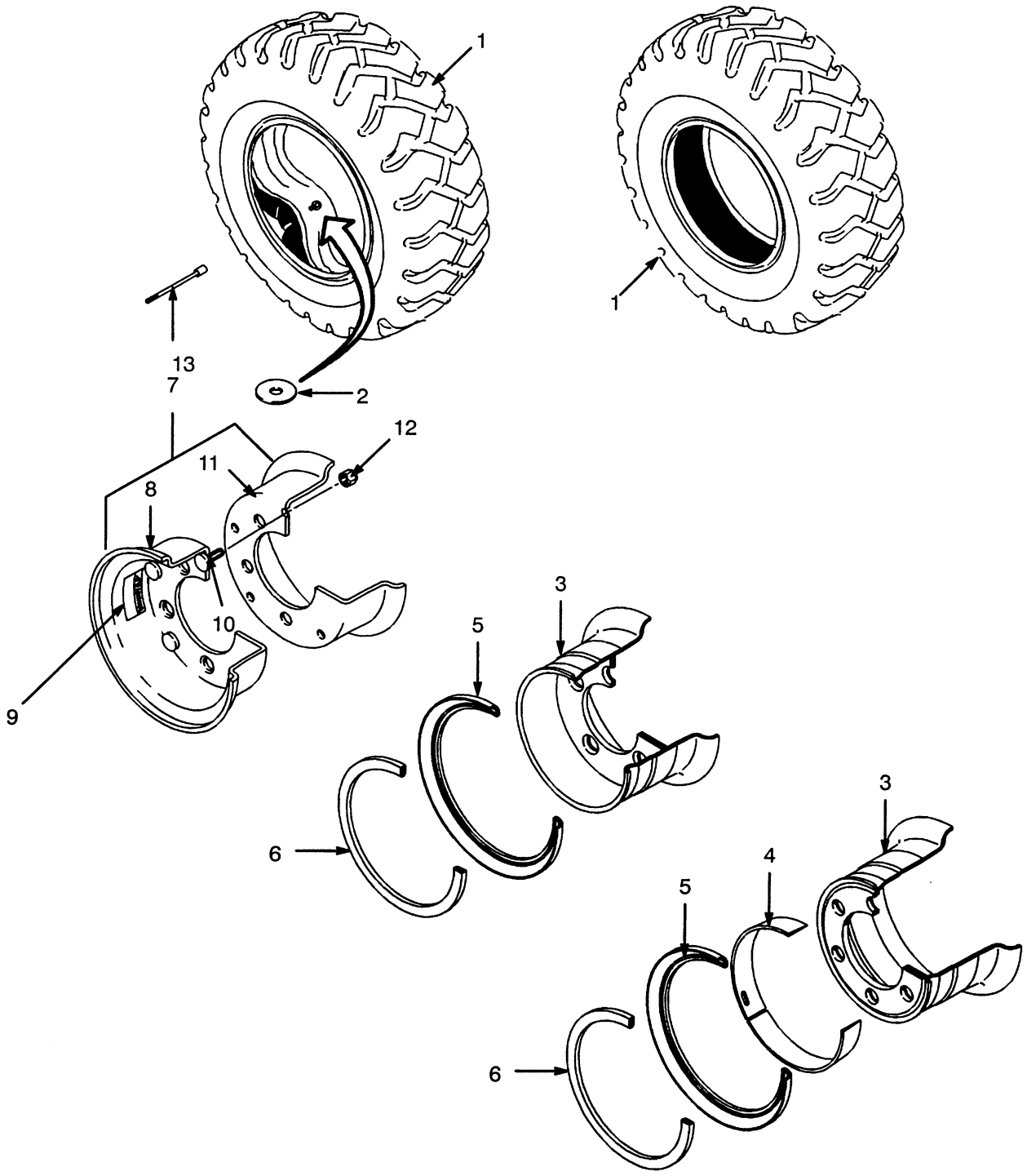

TIRE & WHEEL

DRIVE WHEEL

(Continued On Next Page)

Ref No.	Name Of Part	H45-50XM Single	H45-55XM Wide	QTY	H45-65XM Dual	QTY
		7.00 x 12	7.00 x 12		7.00 x 12	
1	Tire-Solid Soft Ride Tire-Solid Std Hardness	336087 174209	336087 174209	2 2	174209	4
1	Tire/Tube-Bias Tire/Flap Tube	130619 45736 45737	130619 45736 45737	2 1 1	130619 45736 45737	4 1 1
1	Tire/Tube-Radial Tire/Flap Flap Tube	1337743 1358179 1358019 1358190	1337743 1358179 1358019 1358190	2 1 1 1	1337743 1358179 1358019 1358190	4 1 1 1
2	Washer	[b]1376007	[b]1376007	2	[b]1376007	4
3	Wheel 5.00 x 12	[ab]1347190	[ab]329064	2	[ab]1347190	4
4	Shoulder Ring	[a]806556	[a]806556	1	[a]806556	1
5	Side Ring	[a]161890	[a]161890	1	[a]161890	1
6	Lock Ring	[a]161889	[a]161889	1	[a]161889	1
7	Wheel (2-Piece)	377846		2	377846	4
8	Outer Wheel	377844		1	377844	1
9	Label-Warning	288638		2	288638	2
10	Bolt	377841		6	377841	6
11	Inner Wheel	377845		1	377845	1
12	Nut	53163		6	53163	6
13	Valve Extension				326477	1

a 4 Piece Design (Required for Bergougnan Tire)

b Required on Radial Tire

©2000 HYSTER COMPANY

TIRE & WHEEL

DRIVE WHEEL

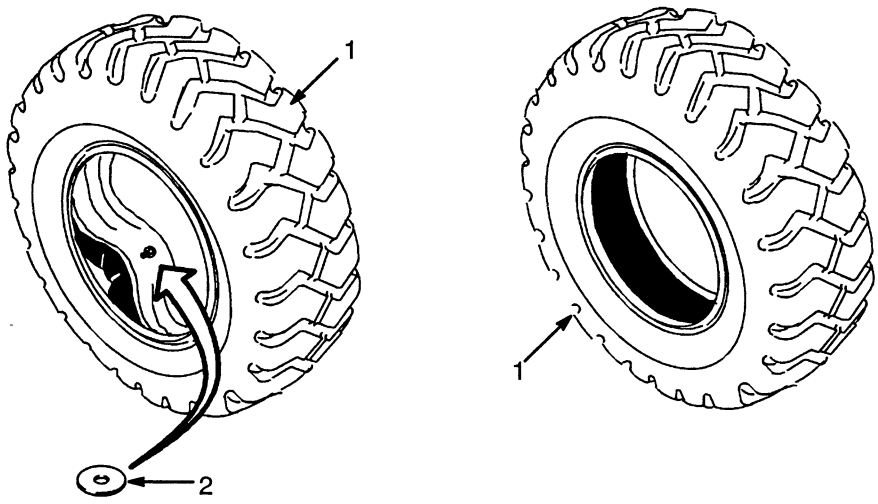

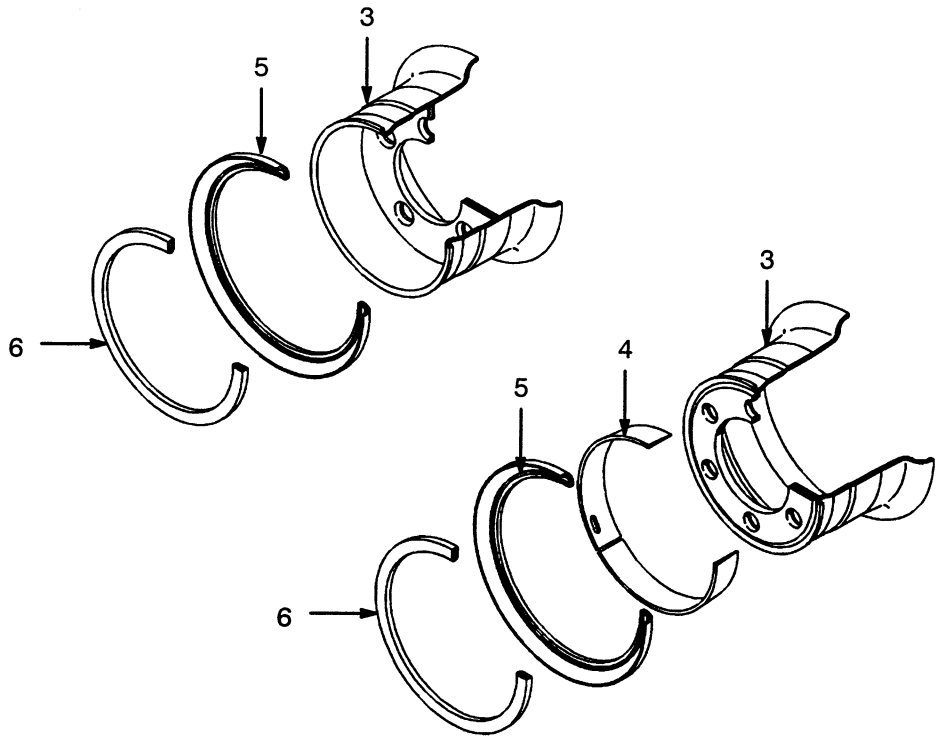

©2000 HYSTER COMPANY

TIRE & WHEEL

DRIVE WHEEL

Ref No.	Name Of Part	H45-65XM Standard	H45-65XM Wide	QTY
		28 x 9-15	28 x 9-15	
1	Tire-Solid Soft Ride Tire-Solid Std Hardness-Pneu	336094 174211	336094 174211	2 2
1	Tire/Tube-Bias Tire/Flap Tube Tire	145096 145097 145157	145096 145097 145157	2 1 1
1	Tire/Tube-Radial Tire/Flap Flap Tube	1357300 1358183 1358016 1358194	1357300 1358183 1358016 1358194	2 1 1 1
2	Washer	[c]1376007	[c]1376007	2
3	Wheel 7.00 x 15	[a]1334818 [b]1334813 [da]1334815	[a]381004 [b]381002	2 2
4	Shoulder Ring	[b]806557	[b]806557	1
5	Side Ring	160653 [da]322637	[a]322637 [b]161890	1
6	Lock Ring	980542 [da]322638	[a]322638 [b]980542	1

a 3 Piece Design
b 4 Piece Design (Required for Bergougnan Tire)
c Required on Radial Tire
d Optional

©2000 HYSTER COMPANY

TIRE & WHEEL (Figure 235)

STEER WHEEL

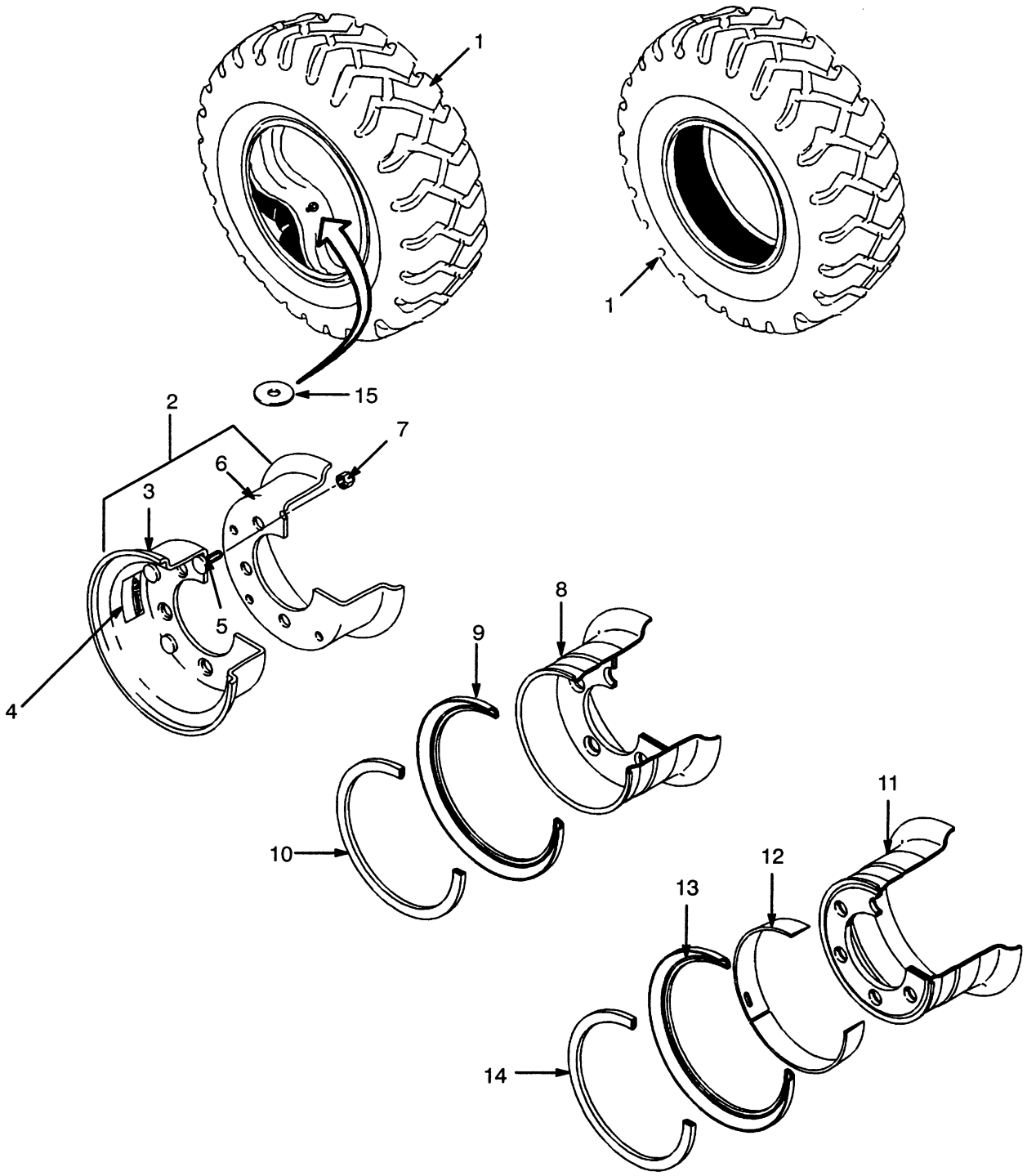

TIRE & WHEEL

STEER WHEEL

KEY:
A: Solid
B: Standard/Premium
C: Radial

Ref No.	Name Of Part	H45-50XM 6.00 X 9	H55-65XM 6.50 X 10	Qty		
				A	B	C
1	Tire-Solid	195417	174208	2		
1	Tire/Tube-Standard Tire/Flap Tube	306209 29588 306200	137138 137139 135920		2 1 1	
1	Tire/Tube-Premium Tire/Flap Flap Tube	1367440 1367444 45069 306200	1367441 1367445 135921 135920		2 1 1 1	
1	Tire Assembly-Radial Tire Flap Tube	1357302 1358177 1358018 1358188	1337746 1358178 1358020 1358189			2 1 1 1
2	Wheel Assembly (2-Piece)	61220	236437	..	2	..
3	Wheel (Outer)	60948	135915	..	1	..
4	Label-Warning)	288638	288638	..	2	..
5	Stud	377841	.....	..	5	..
5	Stud	.....	135917	..	10	..
6	Wheel (Inner)	291912	291915	..	1	..
7	Nut	53163	.....	..	5	..
7	Nut	.....	221355	..	10	..
8	Wheel Assembly (3-Piece)	.....	323594	2	..	2
9	Side Ring	.....	323599	1	..	1
10	Lock Ring	.....	323598	1	..	1
11	Wheel Assembly (4-Piece)	.....	1360932	..	2	..
12	Shoulder Ring	.....	806555	..	1	..
13	Side Ring	.....	161895	..	1	..
14	Lock Ring	.....	161894	..	1	..
11	Wheel Assembly (4-Piece)	359340	345897	2	..	2
12	Shoulder Ring	359341	806555	1	..	1
13	Side Ring	161885	161895	1	..	1
14	Lock Ring	161884	161894	1	..	1
15	Washer	.....	1376007	..	..	1

©2000 HYSTER COMPANY

STROBE LIGHT (Figure 236)

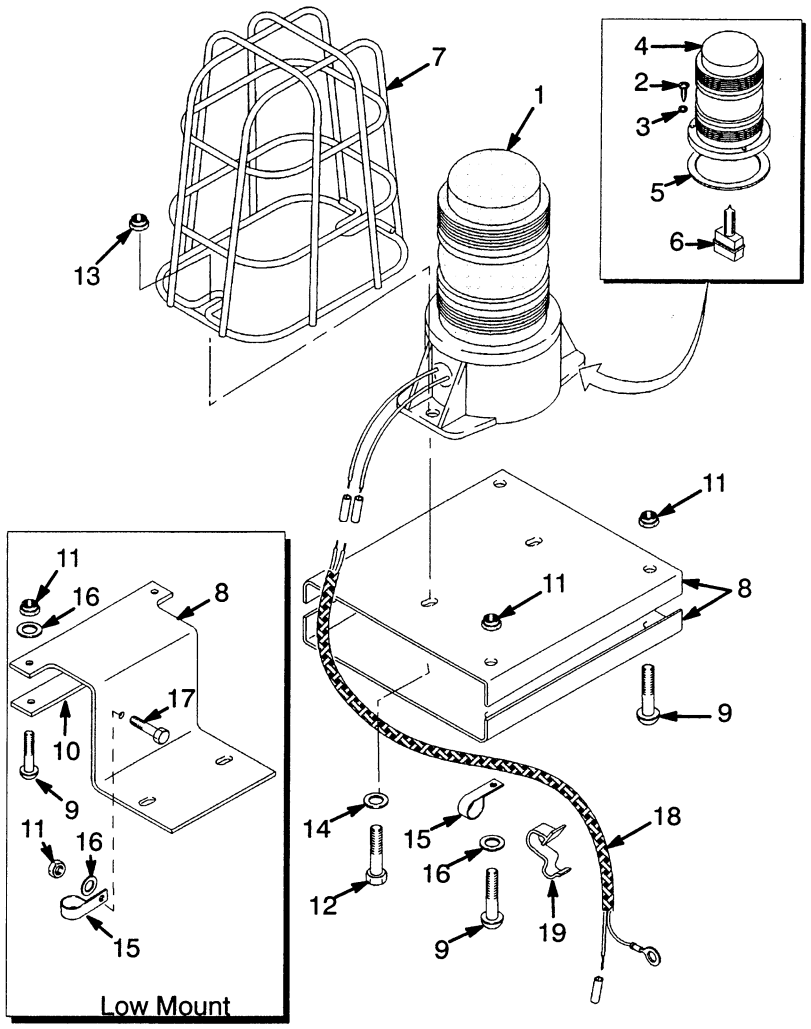

KEY:
A: Low Mount
B: High Mount

REF		PART NO.	NAME OF PART	QTY A	QTY B
1	b	1374922	Strobe Light	1	1
1	c	1382130	Strobe Light	1	1
1	a	1385522	Strobe Light	1	1
2		227132	Screw	3	3
3		15855	O-Ring	3	3
4	b	1309776	Lens	1	1
4	c	1382131	Lens	1	1
5		39359	O-Ring	1	1
6		1309775	Bulb	1	1
7		1302024	Guard	1	1
8		1356541	Bracket	1	..
8		1356342	Bracket	..	1
9		302054	Screw	2	4
10		1356540	Bar	1	..
11		313805	Nut	3	..
12		220498	Screw	2	2
13		230882	Nut	2	2
14		197067	Washer	2	2
15		164488	Clamp	1	1
16		320156	Washer	3	1
17		302047	Screw	1	..
18		1356543	Harness	1	1
19		1301727	Clamp	4	4

a Optional
b Last Used On S/N D177B-35734
c First Used On S/N D177B-35735

©2000 HYSTER COMPANY

DRIVE & REAR LIGHT (Figure 237)

PARTS-SERVICE GRAM	
Item	Gram
7	F-F-42

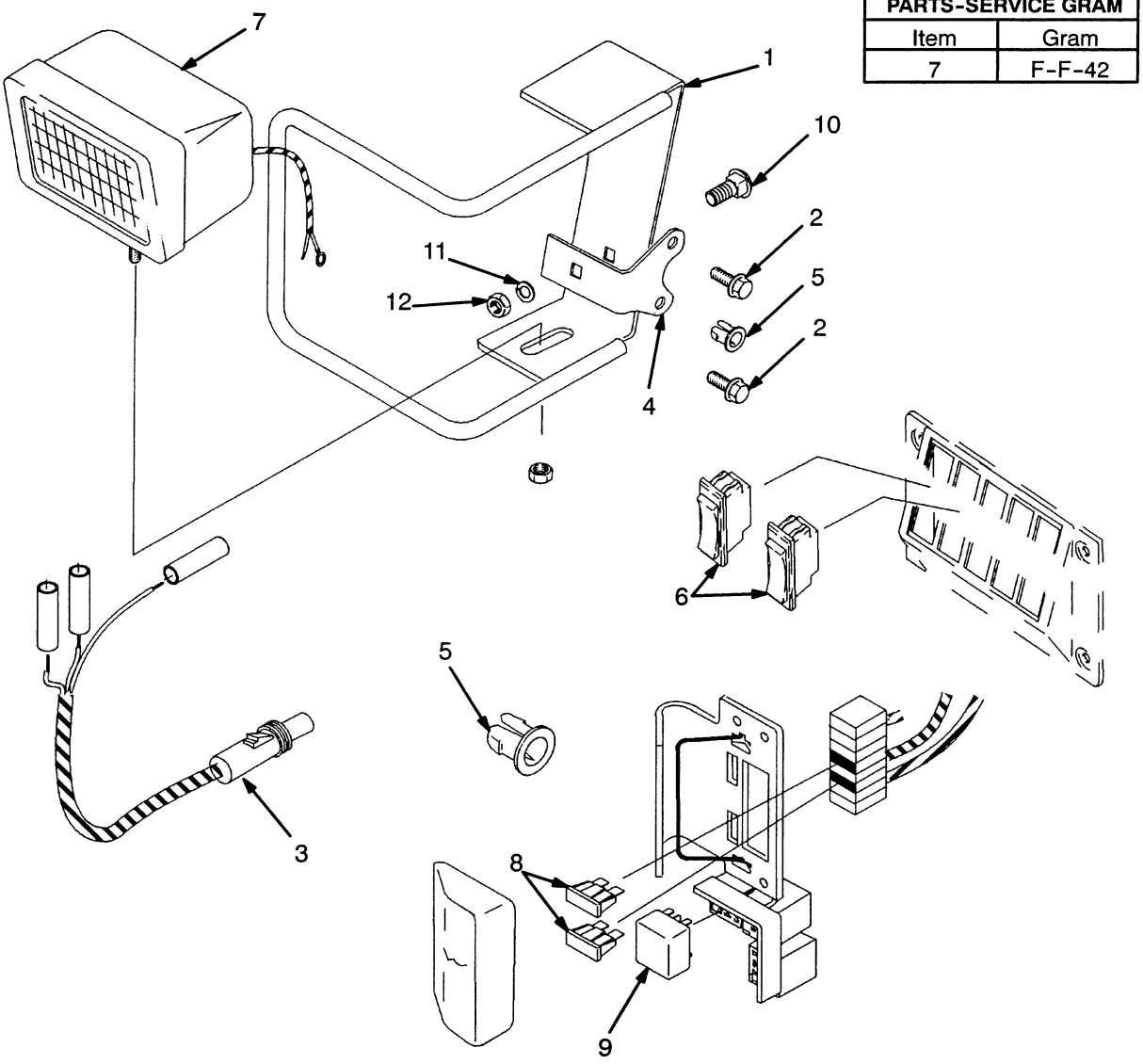

REF		PART NO.	NAME OF PART	QTY
1		1375172	Bracket (LH)	1
1		1375171	Bracket (RH)	1
1	c	878138	Bracket	2
1		1376579	Rear Bracket	1
2		316678	Screw	6
2	c	292500	Capscrew	4
3		1356328	Harness-Wire	3
4		1375169	Plate	3
5		1367645	Bushing	5
5	c	878232	Grommet	2
6		1301160	Switch	2
6		1301156	Lens	1
7		1354119	Light	3
7		1379799	Bulb	1

REF		PART NO.	NAME OF PART	QTY
7		1363016	Lens	1
7		1363016	Lens	1
8	a	1300134	Fuse (25 Amp)	2
8	b	1310630	Fuse (15 Amp)	2
9	a	1347114	Relay	1
10		1375168	Bolt	3
11		296418	Washer	3
11	c	320156	Washer	4
12		316835	Locknut	3
12	c	136687	Nut	4

a Last Used On S/N D177B-35854
b First Used On S/N D177B-35855
c Used With Cab Kit 895972

©2000 HYSTER COMPANY

CAB KIT (Figure 238)

WITH DOORS MOUNTED INSIDE OVERHEAD GUARD

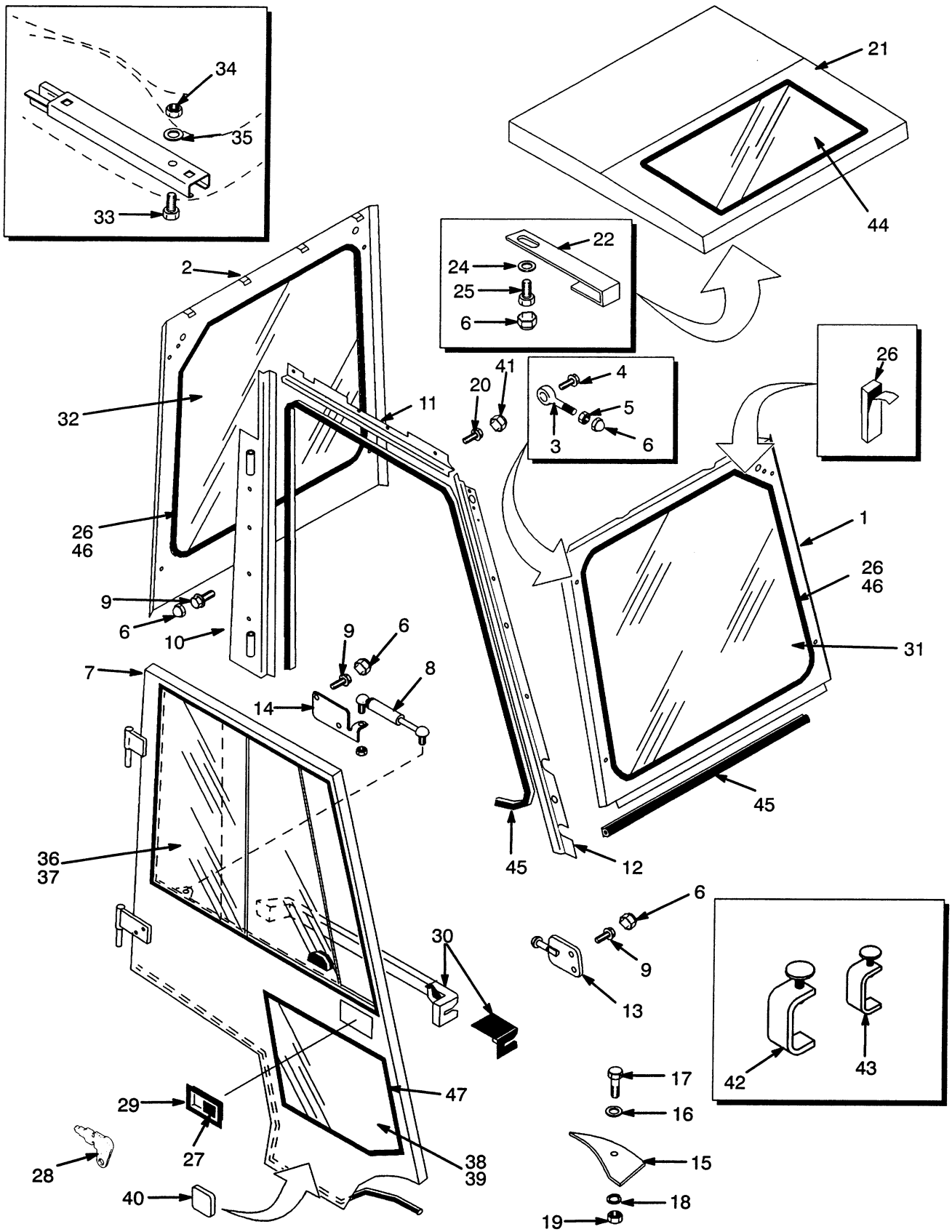

CAB KIT

WITH DOORS MOUNTED INSIDE OVERHEAD GUARD

KEY:
A: Front Panel
B: Rear Panel
C: Door
D: Top

REF		PART NO.	NAME OF PART	QTY A	B	C	D
1		1369067	Panel	1	..	..	..
2		1366604	Panel	..	1	..	..
3		1365293	Eyebolt	4	4	..	..
4		1365294	Screw	4	4	..	..
5		316835	Nut	4	4	..	..
6		1365296	Cap	21	4	..	4
7	c	1366608	Door	..	..	1	..
7	d	1366613	Door	..	..	1	..
8		1366618	Gas Spring	..	..	2	..
9		1366624	Screw	..	..	6	..
10		1366615	Plate, LH	..	..	1	..
10		1366610	Plate, RH	..	..	1	..
11		1366616	Top Plate, LH	..	..	1	..
11		1366611	Top Plate, RH	..	..	1	..
12		1366617	Plate, LH	..	..	1	..
12		1366612	Plate, RH	..	..	1	..
13		1368950	Striker Plate, LH	..	..	1	..
13		1368951	Striker Plate, RH	..	..	1	..
14		1367109	Plate, LH	..	..	1	..
14		1367110	Plate, RH	..	..	1	..
15	d	1359510	Panel	..	..	1	..
15	c	1359509	Panel	..	..	1	..
16		1368957	Spacer	..	..	2	..
17		292509	Capscrew	..	..	2	..
18		320157	Washer	..	..	2	..
19		316835	Nut	..	..	2	..
20		1365294	Screw	..	..	4	..
21	a	1368965	Panel	..	..	..	1
21	b	1368966	Panel	..	..	..	1
22		1366632	Bracket	..	..	..	4
23		1382056	Strip	..	..	2	..
24		292681	Washer	..	..	..	4
25		136681	Capscrew	..	..	..	4
26		1365290	Strip	AR	AR	..	..
27	c	1366609	Lock	..	..	1	..
27	d	1366614	Lock	..	..	1	..
28		1367111	Key	..	..	4	..
29		1366620	Lock Plate	..	..	2	..
30	c	1374065	Grip	..	..	1	..
30	d	1374066	Grip	..	..	1	..
31		1369471	Windshield	1	..	..	..
32		1369472	Windshield	..	1	..	..
33		136681	Capscrew	..	1	..	..
34		239503	Nut	..	1	..	..
35		292681	Washer	..	1	..	..
36	c	1369425	Sliding Window	..	..	1	..
36		1380754	Latch-Window	..	..	1	..
36		1380754	Latch-Window	..	..	1	..
37	d	1369427	Sliding Window	..	..	1	..
38	c	1369426	Window (Bottom)	..	..	1	..
39	d	1369428	Window (Bottom)	..	..	1	..
40		1366621	Rubber Stop	..	..	2	..
41		1368961	Cap	..	..	4	..
42		1366619	Hook (Rear)	..	..	2	..
43		1369474	Hook (Front)	..	..	2	..
44		1366627	Windshield	..	..	..	1
45		1365291	Molding	1	..	..	..
45		1374078	Molding	..	..	1	..
46		1365292	Strip	1	..	..	..
46		1374079	Strip	..	1	..	..

a Standard Height
b Raised Height
c Right Hand
d Left Hand

©2000 HYSTER COMPANY

CAB KIT (Figure 239)

WITH DOORS MOUNTED AGAINST OUT-BOARD SIDE OF OVERHEAD GUARD

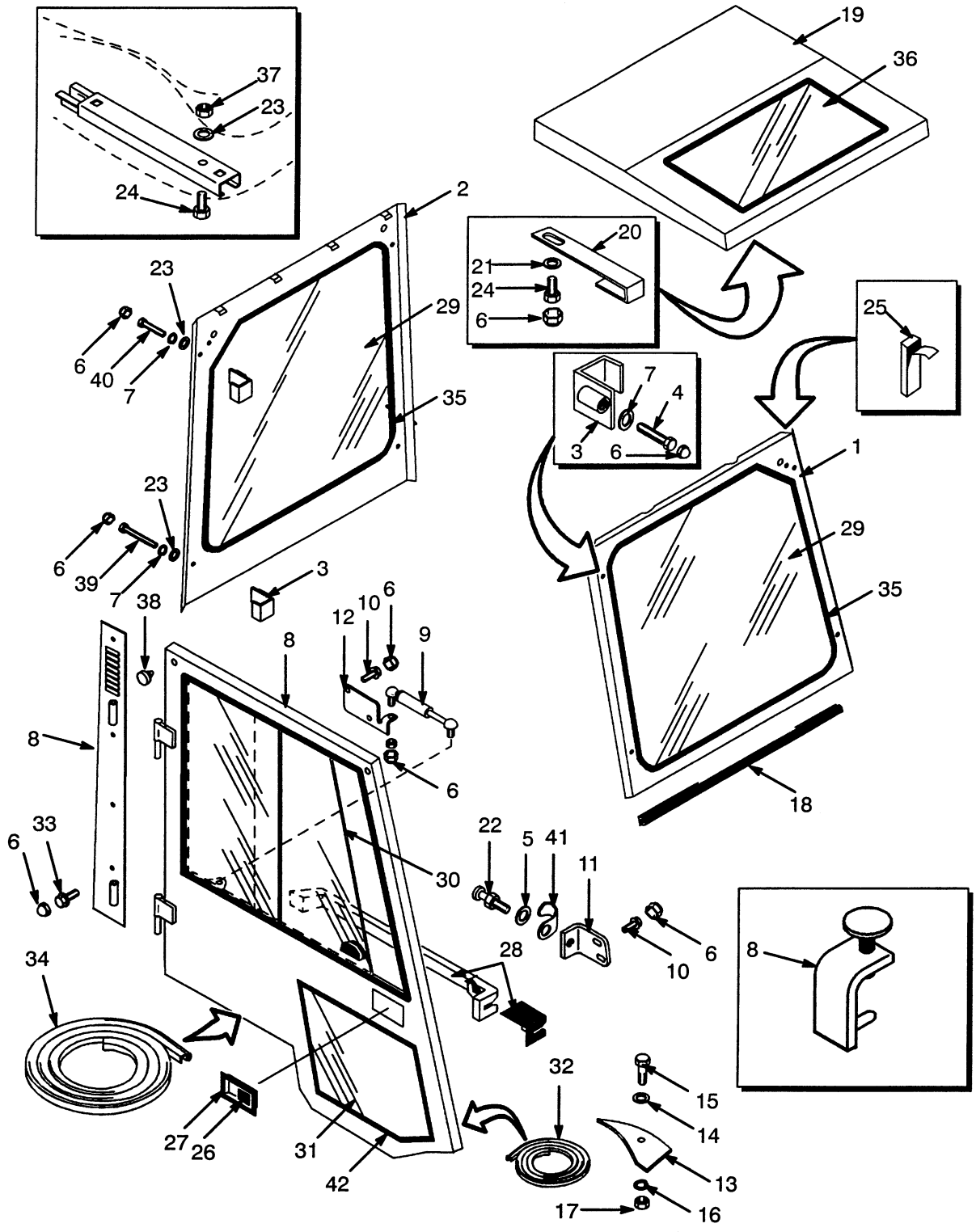

CAB KIT

WITH DOOR MOUNTED AGAINST OUT-BOARD SIDE OF OVERHEAD GUARD

KEY:
A: Kit- 895972 Front Panel
B: Kit-895973 Rear Panel
C: Kit-895974 Door
D: Kit 1356410 Std Height Top and 1356411 Raised Height Top

REF		PART NO.	NAME OF PART	QTY A	B	C	D
1		1393168	Panel	1	..	..	..
2		1393169	Panel	..	1	..	..
3		878133	Screen Retaining Clamp	4	4	..	..
4		1393167	Screw	4	..	..	..
5		878907	Washer	..	..	2	..
6		1365296	Cap	4	4	18	4
7		320157	Washer	4	4	4	..
8		878226	Door, RH	..	..	1	..
8		878227	Door, LH	..	..	1	..
8		1366619	Mounting Hook (Front)	..	..	4	..
8		1369474	Mounting Hook (Rear)	..	..	4	..
9		1366618	Gas Spring	..	..	2	..
10		1366624	Screw	..	..	6	..
11		878904	Striker Plate, LH	..	..	1	..
11		878903	Striker Plate, RH	..	..	1	..
12		878092	Plate, LH	..	..	1	..
12		878091	Plate, RH	..	..	1	..
13		1359510	Panel, LH	..	..	1	..
13		1359509	Panel, RH	..	..	1	..
14		1368957	Spacer	..	..	2	..
15		292509	Capscrew	..	..	2	..
16		320157	Washer	..	..	2	..
17		316835	Nut	..	..	2	..
18		1365291	Edge Protection	AR	..	..	..
19	a	1368965	Panel	..	..	..	1
19	b	1368966	Panel	..	..	..	1
20		1366632	Bracket	..	..	..	4
21		320157	Washer	..	..	..	4
22		878908	Lock Pin	..	..	2	..
23		292681	Washer	..	5	..	4
24		136681	Capscrew	..	1	..	4
25		1365290	Strip	AR	AR	..	..
26		878490	DoorLock Assembly, RH	..	..	1	..
26		1450744	Lever	..	..	1	..
26		878491	DoorLock Assembly, LH	..	..	1	..
26		1450744	Lever	..	..	1	..
26		1367111	Key	..	..	4	..
27		878906	Lock Plate	..	..	2	..
28		878143	Grip, RH	..	..	1	..
28		1374066	Grip, LH	..	..	1	..
29		1369471	Windshield	1	..	..	..
29		1369472	Windshield	..	1	..	..
30		1369425	Sliding Window, RH	..	..	1	..
30		1380754	Latch-Window	..	..	1	..
30		1369427	Sliding Window, LH	..	..	1	..
30		1380754	Latch-Window	..	..	1	..
31		1369426	Window (Bottom), RH	..	..	1	..
31		1369428	Window (Bottom), LH	..	..	1	..
32		878148	Seal	..	..	2	..
33		1366624	Capscrew	..	..	18	..
34		878233	Joining Rubber	..	..	2	..
35		1365292	Strip	AR	AR	..	..
36		1366627	Windshield	..	..	..	1
37		239503	Nut	..	1	..	..
38		1367639	Grommet	..	..	4	..
39		1334820	Capscrew	..	2	..	..
40		346656	Capscrew	..	2	..	..
41		878909	Hook	..	..	2	..
42		1382056	Strip	..	..	2	..

a Standard Height
b Raised Height

CAB KIT (Figure 240)

PVC

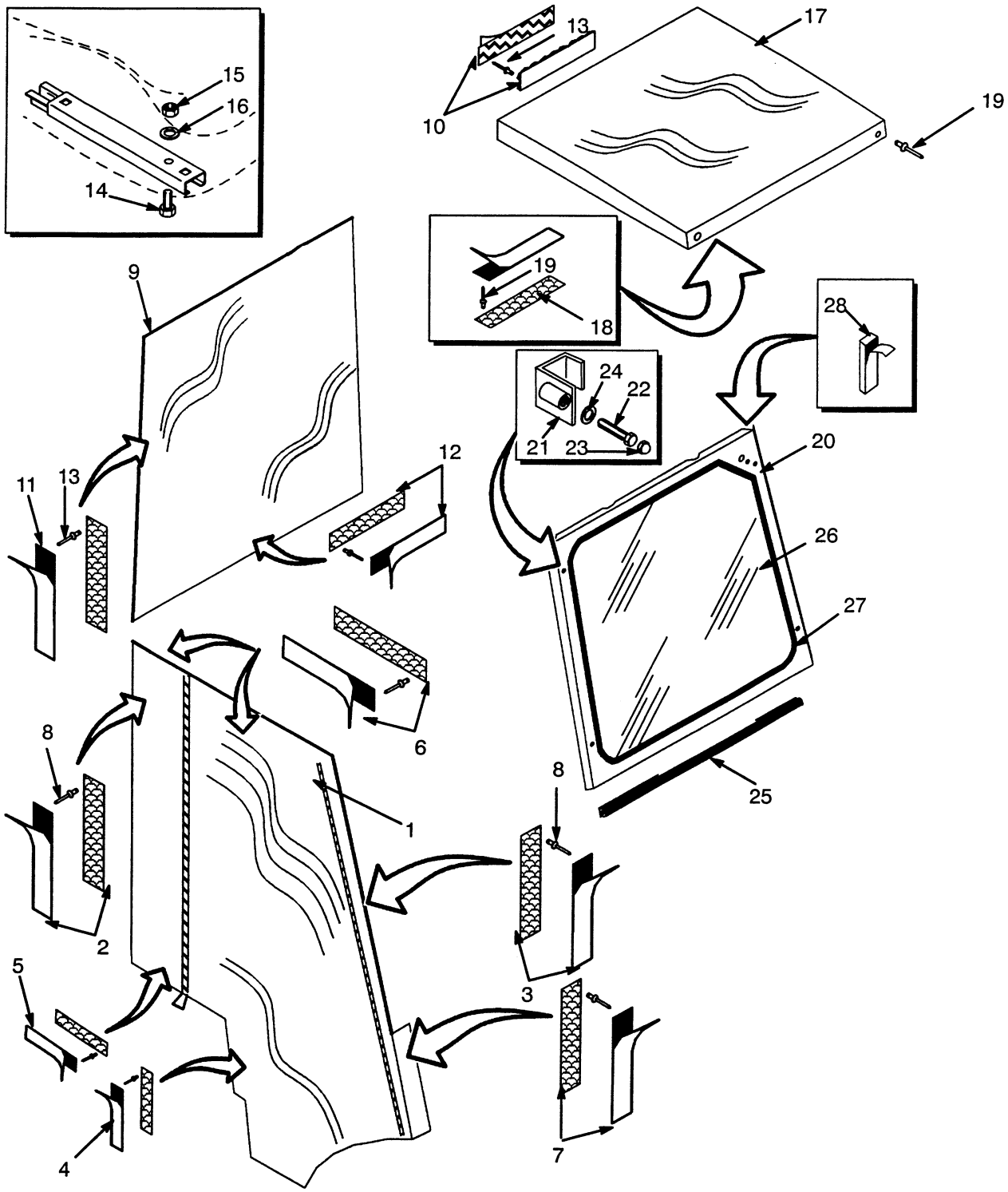

CAB KIT

PVC

REF	PART NO.	NAME OF PART	QTY
	1356412	Door Kit	2
1	1366625	PVC Side Panel (RH)	1
1	1366626	PVC Side Panel (LH)	1
2	1374068	Strip (40 mm x 900 mm)	1
3	1374072	Strip (20 mm x 1350 mm)	1
4	1374071	Strip (40 mm x 100 mm)	1
5	1374070	Strip (40 mm x 200 mm)	1
6	1374069	Strip (20 mm x 1229 mm)	1
7	1374073	Strip (40 mm x 410 mm)	1
8	1374074	Rivet	12
9	1356511	Rear Panel	1
10	1374076	Strip (40 mm x 888 mm)	1
11	1374077	Strip (40 mm x 1125 mm)	1
12	1374070	Strip (40 mm x 200 mm)	1
13	1374074	Rivet	8
14	136681	Capscrew	1
15	239503	Nut	1
16	292681	Capscrew	1
17	1356509	Top Panel (STD)	1
17	1356510	Top Panel (Raised)	1
18	1374075	Strip (40 mm x 1010 mm)	1
19	1374074	Rivet	2
20	895972	Front Panel Kit	1
20	1393168	Front Panel	1
21	878133	Retaining Clamps	4
22	1393167	Screw	4
23	1365296	Cap	4
24	320157	Washer	4
25	1365291	Strip	1
26	1369471	Windshield	1
27	1365292	Strip	1
28	1365290	Strip	1

©2000 HYSTER COMPANY

WINDOWS (Figure 241)

CAB

TOP SCREEN IS TO BE 6mm THICK SCRATCH-RESISTANT-COATED POLYCARBONATE

Exact dimensions unavailable.

FRONT GLASS IS TO BE 5.9-7.5 mm THICK SAFETY GLASS OR GREEN TINTED SAFETY GLASS PER ANSI Z26.1 WITH ALL EDGES TO BE GROUND PER SAE J673b

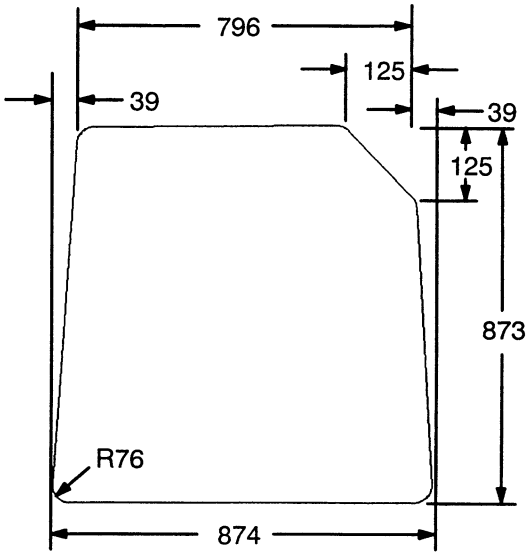

REAR AND SIDE GLASS IS TO BE 5.6-6.5 mm THICK SAFETY GLASS OR GREEN TINTED SAFETY GLASS PER ANSI Z26.1 WITH ALL EDGES TO BE GROUND PER SAE J673b

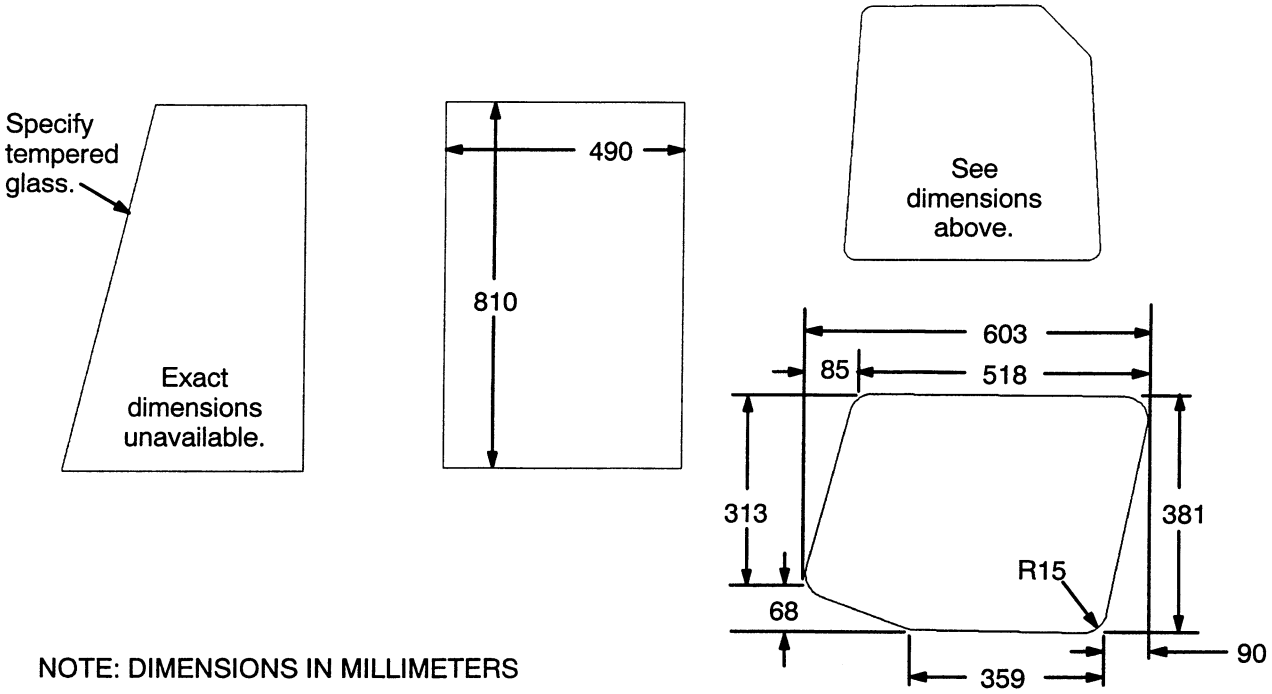

NOTE: DIMENSIONS IN MILLIMETERS

HARNESS ROUTING (Figure 242)

CAB

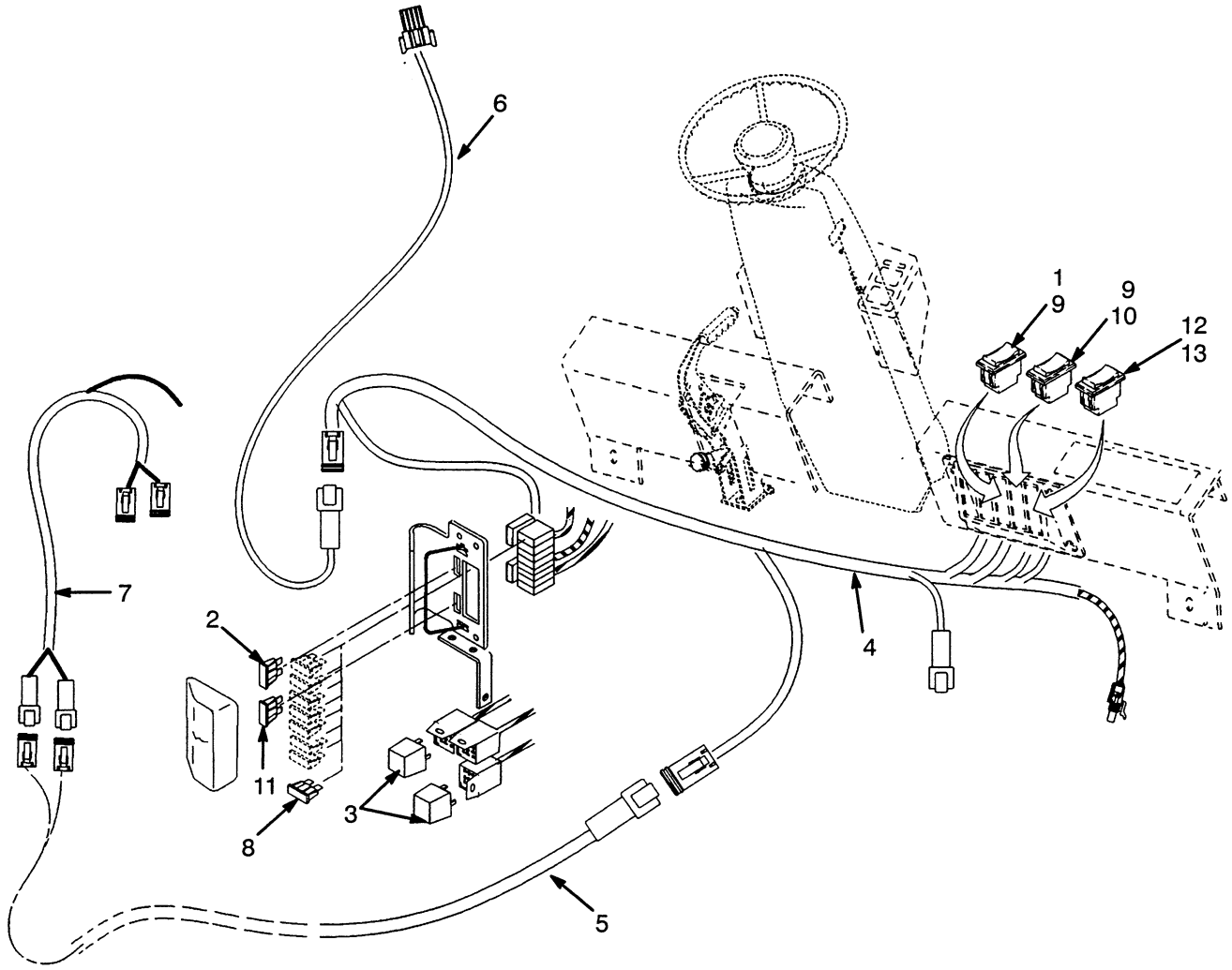

KEY:
A: Kit-Front Panel
B: Kit-Rear Panel
C: Kit-Heater

REF	PART NO.	NAME OF PART	QTY A	B	C
	1356407	Kit-Front Panel	1	..	..
	1356408	Kit-Rear Panel	..	1	..
	1356414	Kit-Heater	..	..	1
1	1301675	Cover	1	..	..
2	1300134	Fuse (25 Amp)	1	..	..
3	1301233	Relay	1	..	..
4	.....	Cowl Harness	1	..	..
		☞ Figure 248			
5	.....	Chassis Wire Harness	1	..	..
		☞ Figure 249			
6	.....	Wiper Wire Harness	1	..	..
		☞ Figure 246			
7	.....	Cab Wire Harness	1	..	..
		☞ Figure 247			
8	1320669	Fuse (30 Amp)	1	..	..
9	1301150	Switch	1	1	..
10	1366607	Lens	..	1	..
11	1310630	Fuse (15 Amp)	..	1	..
12	1331245	Switch	..	..	1
13	1366633	Lens	..	..	1

ACCESSORIES (Figure 243)

CAB

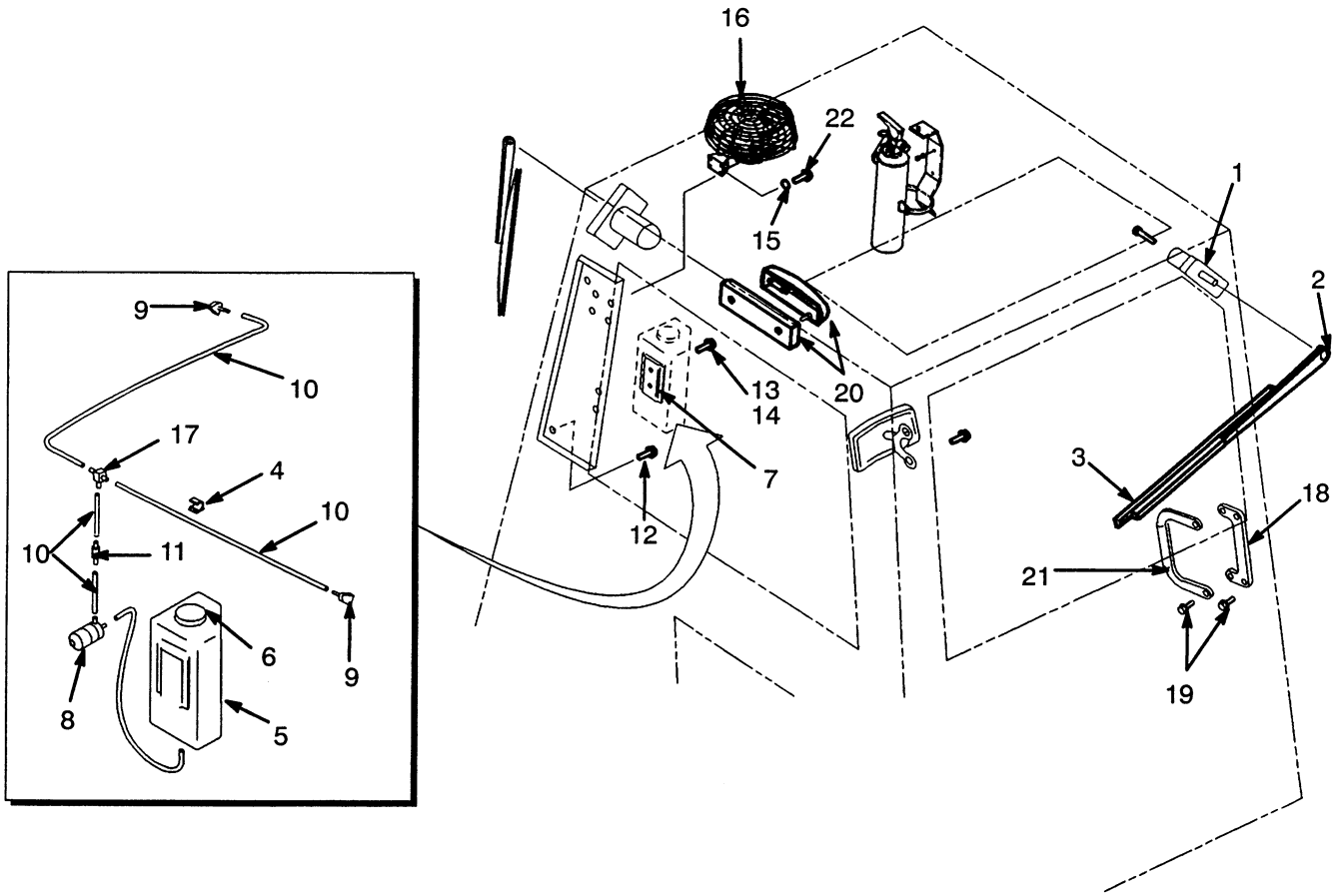

ACCESSORIES

CAB

KEY:
A: Dome Light Kit 895978
B: Fan Assy Kit 895977
C: Front Panel Kit 895972 And Rear Panel Kit 895973
D: Washer Kit 895976

REF	PART NO.	NAME OF PART	QTY A	B	C	D
1	1365282	Wiper Motor	..	..	1	..
2	1365283	Wiper Arm	..	..	1	..
3	1365284	Wiper Blade	..	..	1	..
4	1366603	Clamp	..	..	..	10
5	1365286	Reservoir	..	..	..	1
6	1368137	Cap	..	..	..	1
7	1365287	Bracket	..	..	..	1
8	1365288	Pump	..	..	..	1
9	1365289	Windshield Washer	..	..	..	1
10	1366601	Hose	..	..	..	1
11	1365299	Check Valve	..	..	..	1
12	1368140	Bolt	2	..	..	..
13	320156	Washer	..	..	..	2
14	1368953	Screw	2	..	..	2
15	292679	Washer	4	4	..	..
16	1359562	Fan	..	1	..	..
17	1366600	Fitting	..	..	..	1
18	1366623	Bracket	..	..	1	..
19	1366624	Screw	2	..	4	..
20	1366622	Inner Lighting Kit	1	..	..	..
20	878141	Bracket	1	..	..	..
21	1343647	Handle (Standard)	..	..	2	..
22	878163	Screw	..	4	..	..

©2000 HYSTER COMPANY

HEATER (Figure 244)

CAB

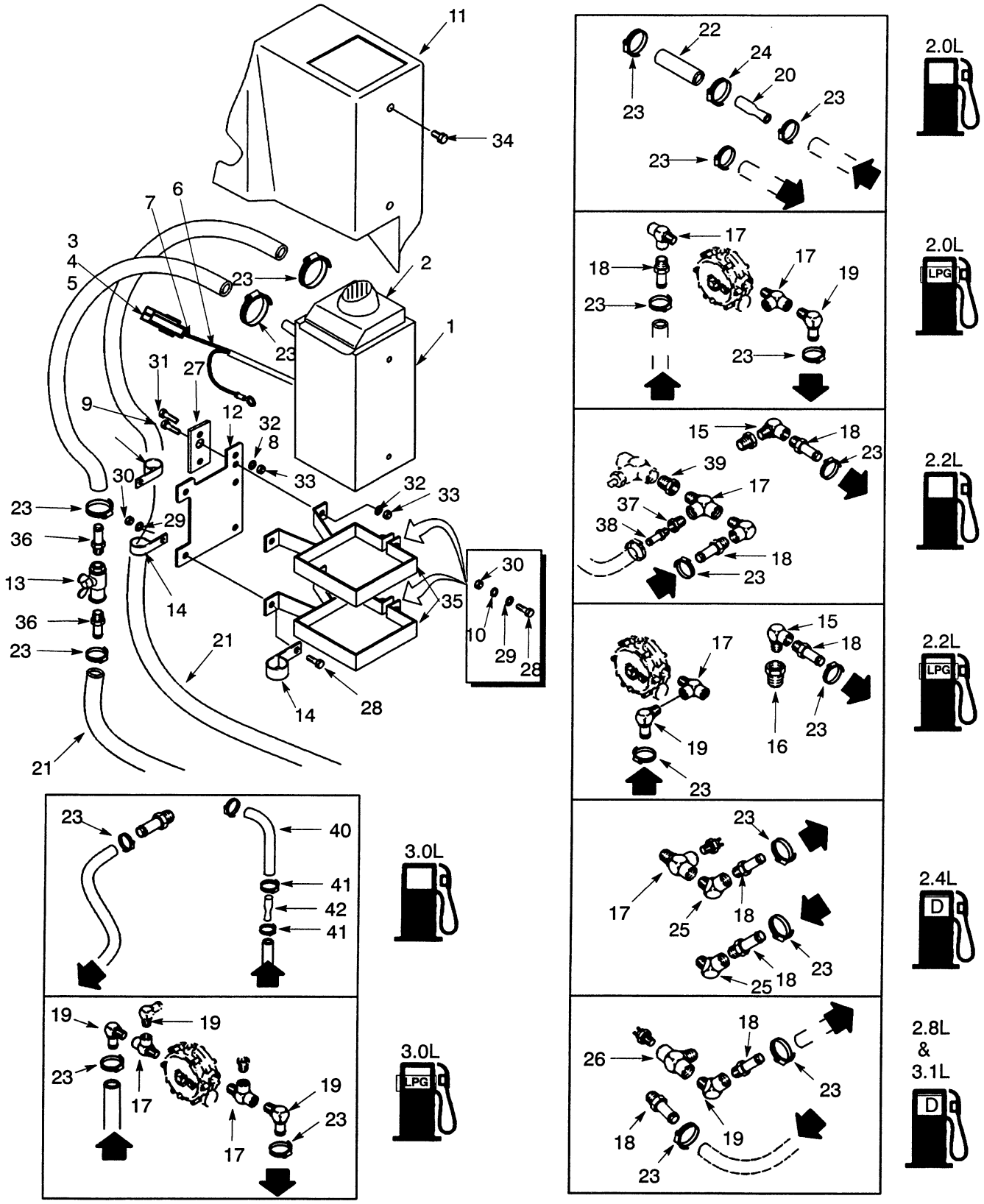

HEATER

CAB

REF	PART NO.	NAME OF PART	QTY
	1359565	Heater Assembly	1
1	1359564	Heater	1
2	1369429	Defroster	1
3	1330298	Connector	1
4	1334999	Terminal Pin	1
5	1329147	Cable Seal	1
6	16906	Conduit	AR
7	175944	Heat Shrink	1
8	320157	Washer	1
9	292502	Capscrew	1
10	292680	Washer	7
11	1359523	Cover	1
12	1368136	Plate	1
13	1368110	Valve	1
14	181089	Clamp	3
15	12837	Fitting	1
16	12817	Fitting	1
17	154452	Fitting	2
18	102919	Fitting	2
19	102898	Fitting	1
20	1368105	Adapter	1
21	114310	Hose	2
22	258344	Hose	1
23	166857	Clamp	6
24	130845	Clamp	2
25	12823	Fitting	2
26	17665	Fitting	1
27	1368952	Plate	1
28	287816	Capscrew	4
29	320156	Washer	4
30	136687	Nut	7
31	132861	Capscrew	1
32	292682	Washer	1
33	239503	Nut	1
34	1368968	Capscrew	2
35	1368967	Bracket	2
36	1368955	Fitting	2
37	63108	Fitting	1
38	17217	Fitting	1
39	16116	Fitting	1
40	1376666	Hose	1
41	130845	Clamp	2
42	1368105	Adapter	1

©2000 HYSTER COMPANY

CAB SOUND LINERS (Figure 245)

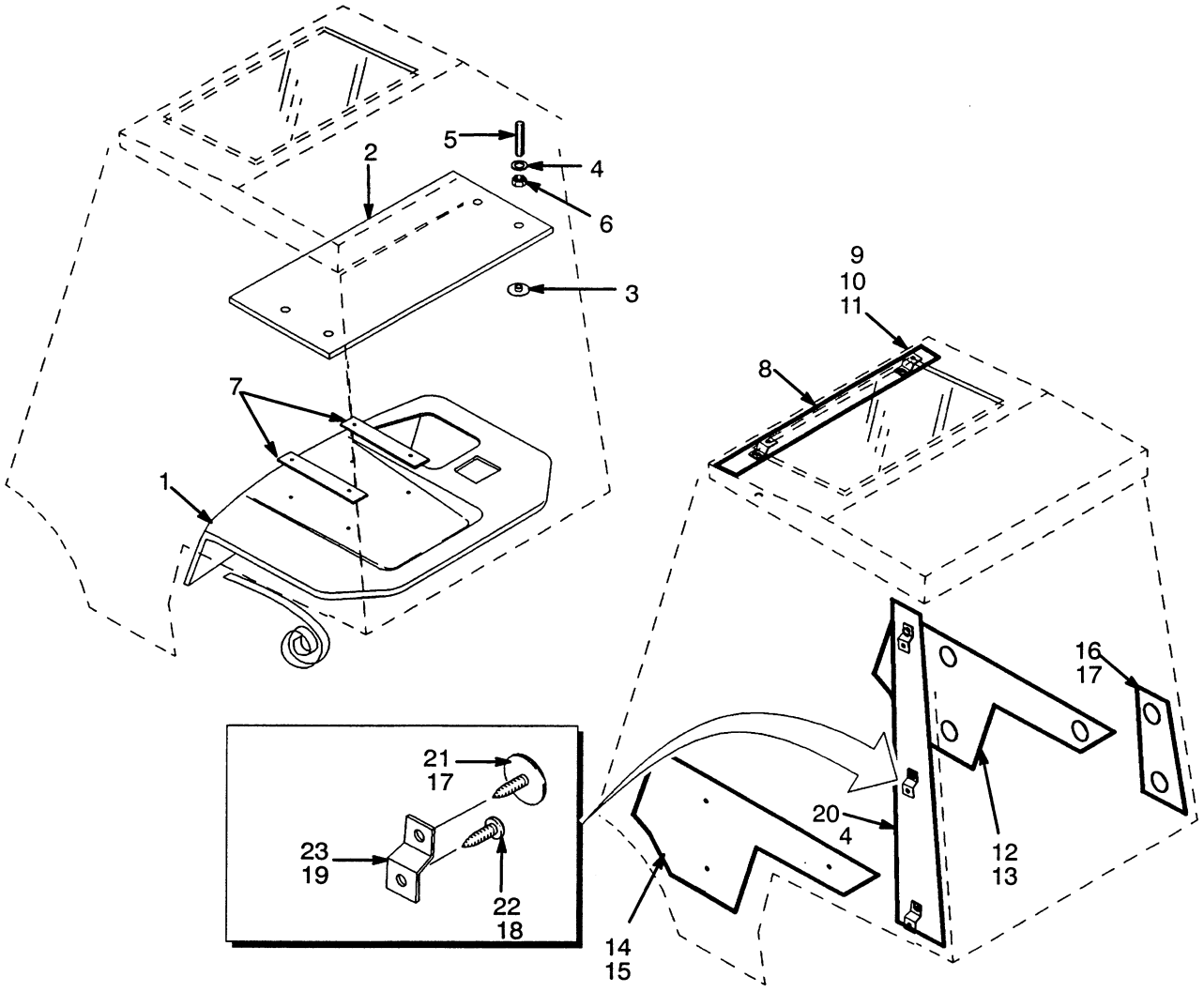

KEY:
A: Kit-Sound Liner
B: Kit-Low Noise

REF	PART NO.	NAME OF PART	QTY A	QTY B
	1356413	Kit-Sound Liner	1	..
	1365900	Kit-Low Noise	..	1
1	1368144	Cover	1	..
2	1359524	Headliner	1	..
3	1361087	Button	4	..
4	292681	Washer	4	..
5	1366628	Stud	4	..
6	316835	Nut	4	..
7	1368964	Plate	2	..
8	1368145	Cover	..	1
9	1368100	Clip	..	2
10	1368956	Bracket	..	2
11	1365294	Screw	..	2
12	1368146	Door Cover (RH)	..	1
13	1368100	Clip	..	3
14	1368147	Door Cover (LH)	..	1
15	1368100	Clip	..	3
16	1368148	Cover	..	1
17	1368100	Clip	..	2
18	1365294	Screw	..	2
19	1370942	Bracket	..	2
20	1368149	Cover	..	1
21	1368100	Clip	..	3
22	1365294	Screw	..	3
23	1370942	Bracket	..	3

©2000 HYSTER COMPANY

HARNESS (Figure 246)

WIPER

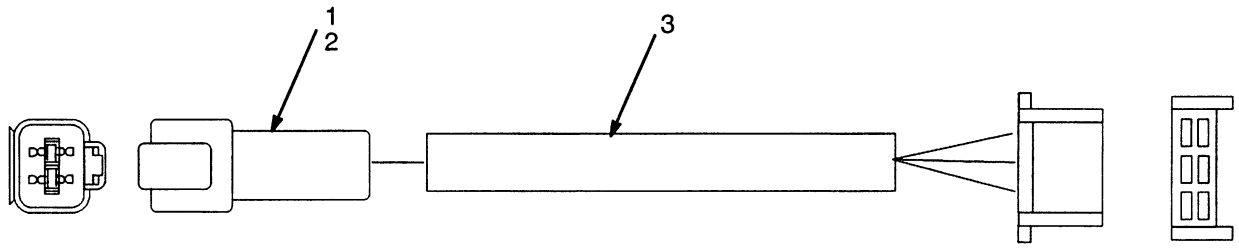

REF	PART NO.	NAME OF PART	QTY
	1359559	Harness	1
1	1330411	Connector	1
2	1330416	Lock	1
3	1359496	Wire Harness	1

©2000 HYSTER COMPANY

HARNESS (Figure 247)

CAB (REAR)

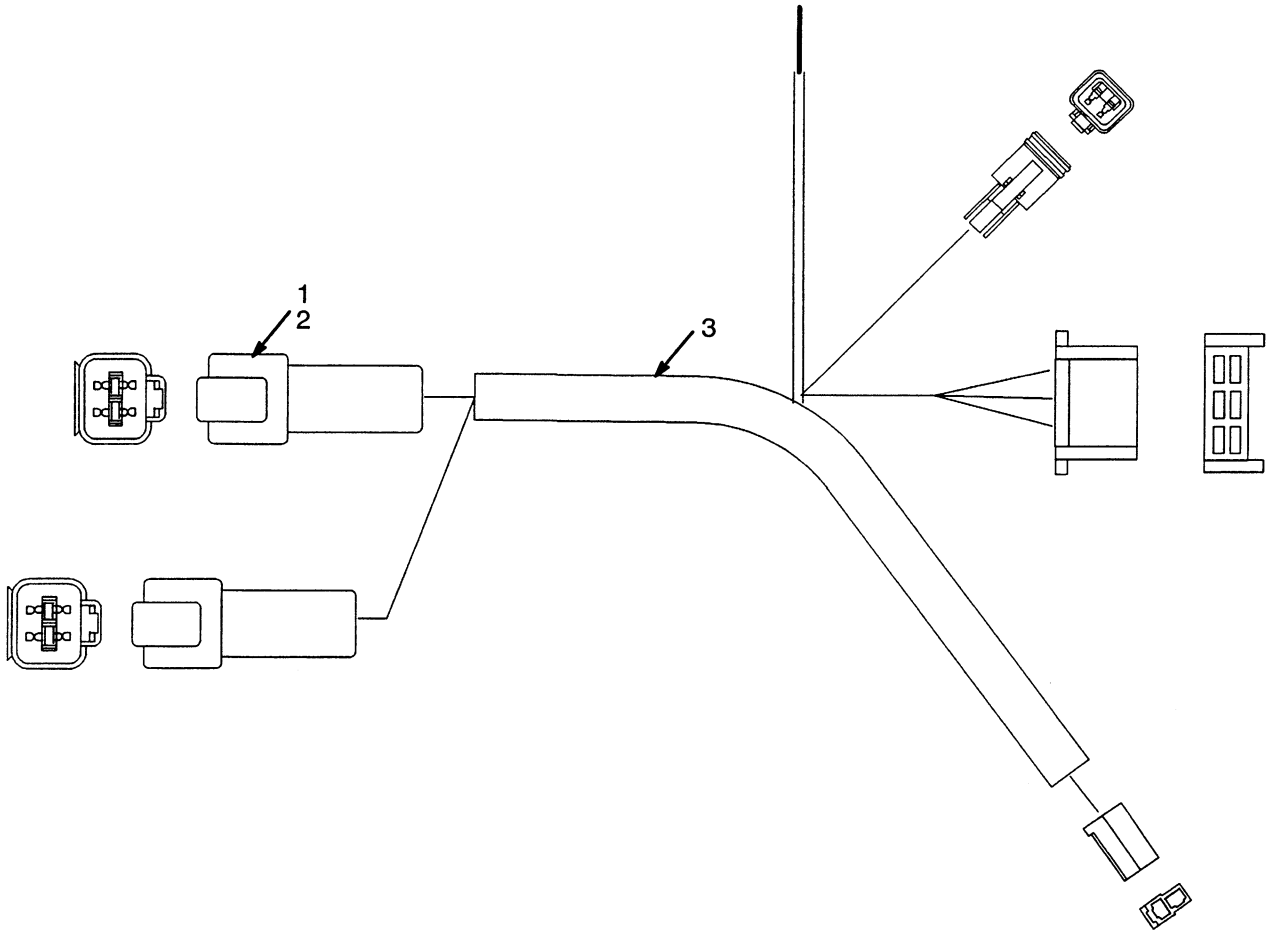

REF	PART NO.	NAME OF PART	QTY
	1359560	Harness	1
1	1330411	Connector	1
2	1330416	Lock	1
3	1359497	Wire Harness	1

HARNESS (Figure 248)

CAB (COWL)

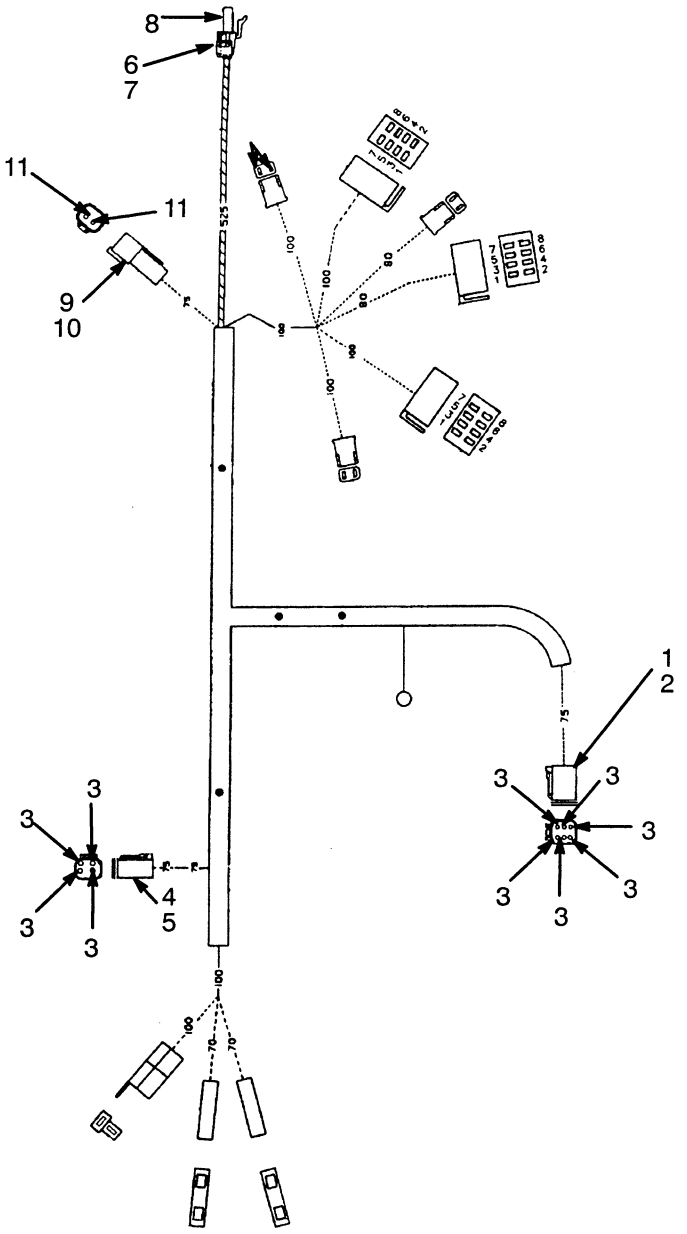

REF	PART NO.	NAME OF PART	QTY
	1455987	Harness	1
1	1330422	Connector	1
2	1330428	Lock	1
3	1330438	Socket	10
4	1330421	Connector	1
5	1330427	Lock	1
6	1330299	Connector	1
7	1329147	Seal	1
8	1336173	Socket	1
9	1330409	Connector	1
10	1330414	Lock	1
11	1330437	Pin	2

©2000 HYSTER COMPANY

HARNESS-REAR (Figure 249)

CHASSIS

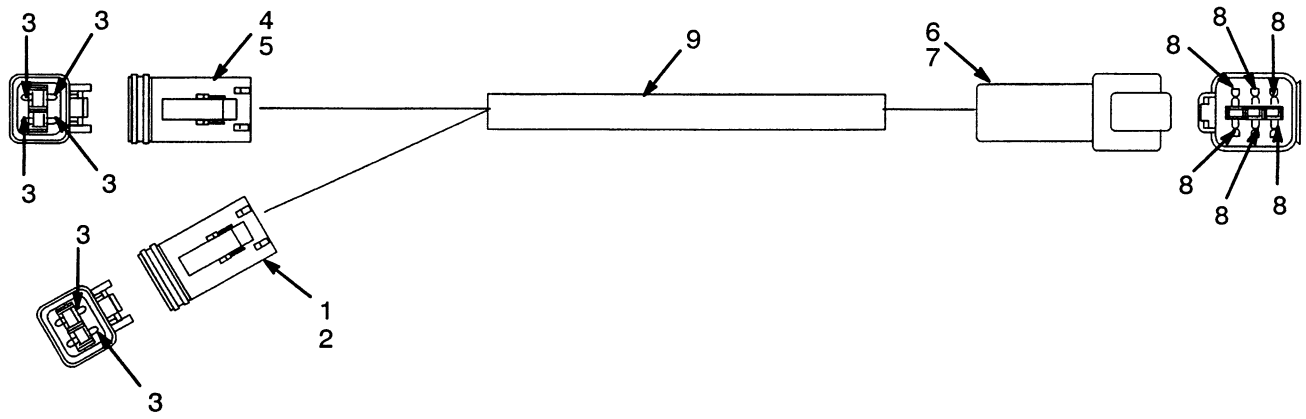

REF	PART NO.	NAME OF PART	QTY
	1361143	Harness	1
1	1330419	Connector	1
2	1330424	Lock	1
3	1330438	Socket	6
4	1330421	Connector	1
5	1330427	Lock	1
6	1330412	Connector	1
7	1330417	Lock	1
8	1330437	Pin	6
9	381919	Wire Covering	AR

©2000 HYSTER COMPANY

MIRROR (Figure 250)

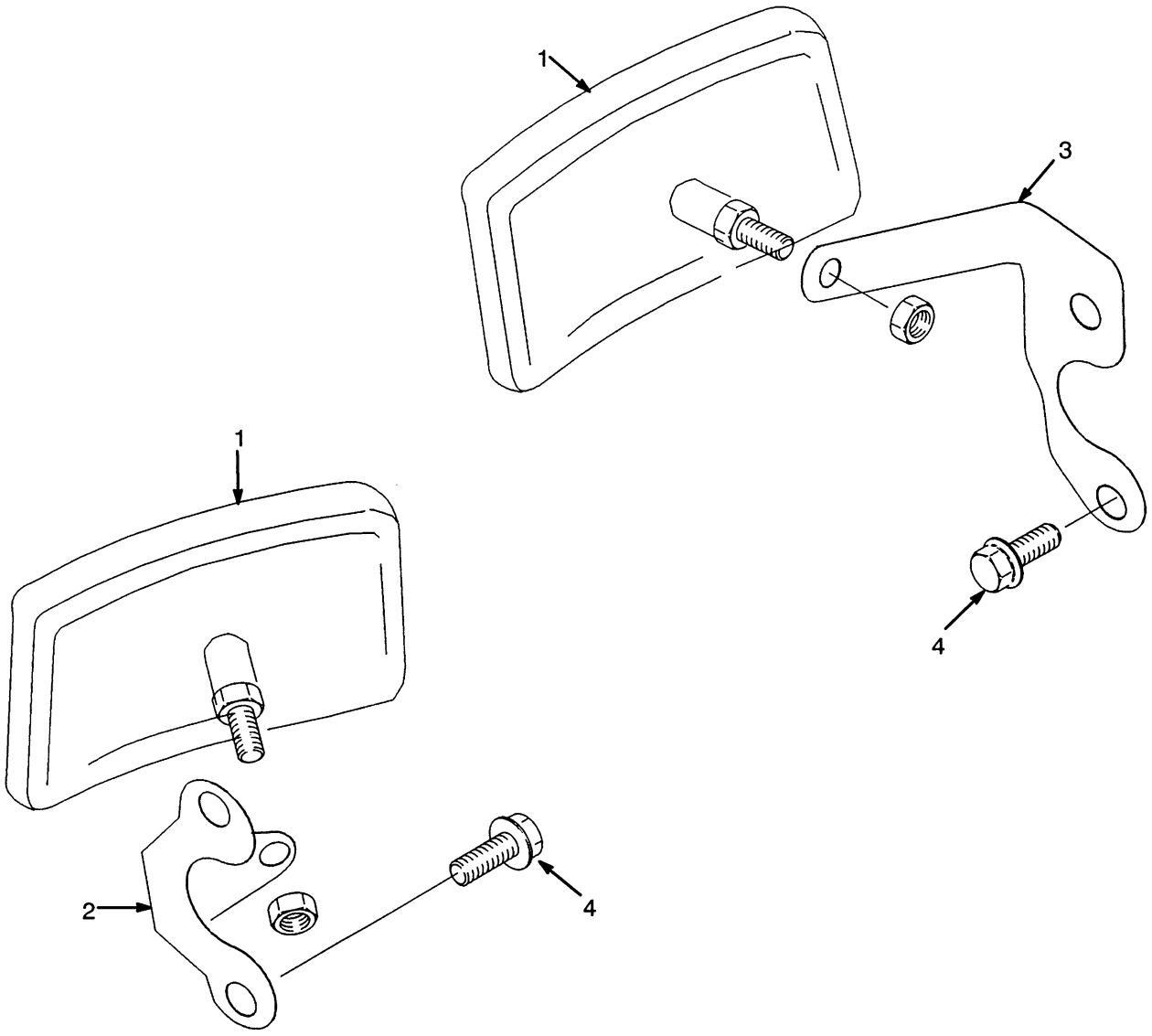

KEY:
A: With Cab
B: Without Cab

REF	PART NO.	NAME OF PART	QTY A	QTY B
1	1301286	Mirror Assembly	2	2
2	1356520	Bracket	1	2
3	1361561	Bracket	1	..
4	316678	Rolling Screw	4	4

FIRE EXTINGUISHER (Figure 251)

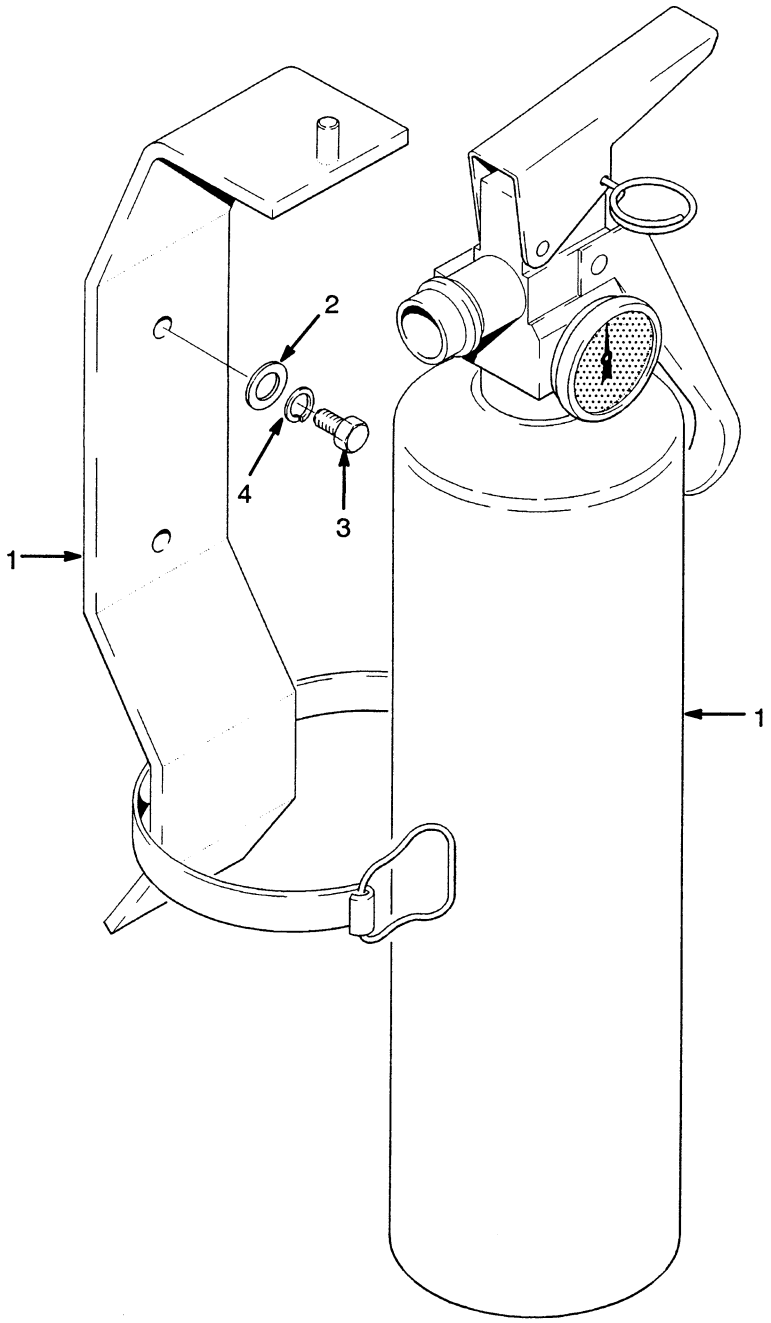

REF	PART NO.	NAME OF PART	QTY
1	146540	Fire Extinguisher & Bracket	1
2	292679	Washer	2
3	296508	Screw	2
4	320155	Washer	2

AUDIBLE ALARMS (Figure 252)

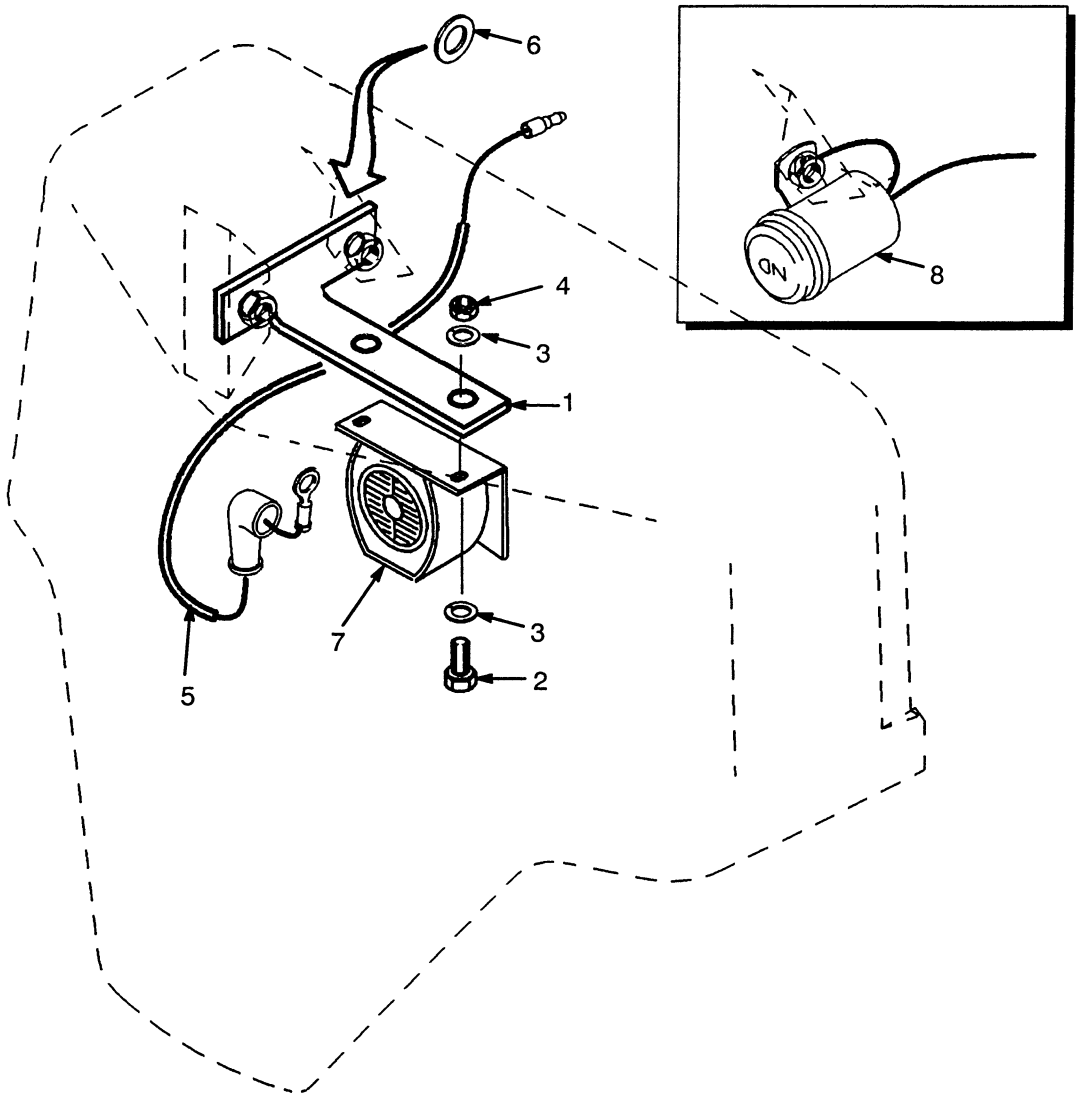

REF		PART NO.	NAME OF PART	QTY
1	a	1361126	Bracket	1
2	a	292500	Capscrew	2
3	a	296417	Washer	4
4	a	302399	Nut	2
5	a	1361552	Wire Harness	1
6	a	320158	Washer	AR
7		1350733	Audible Alarm (87 dbA)	1

REF	PART NO.	NAME OF PART	QTY
7	1350734	Audible Alarm (97 dbA)	1
7	1350735	Audible Alarm (102 dbA)	1
7	1350736	Audible Alarm (107 dbA)	1
7	1339947	Audible Alarm (82-102 dbA)	1
8	1343892	Audible Alarm (90 dbA)	1

a Included in Kit 1375597

©2000 HYSTER COMPANY

AUXILIARY TUBE EXTENSION KIT (Figure 253)

TWO STAGE LIMITED FREE-LIFT

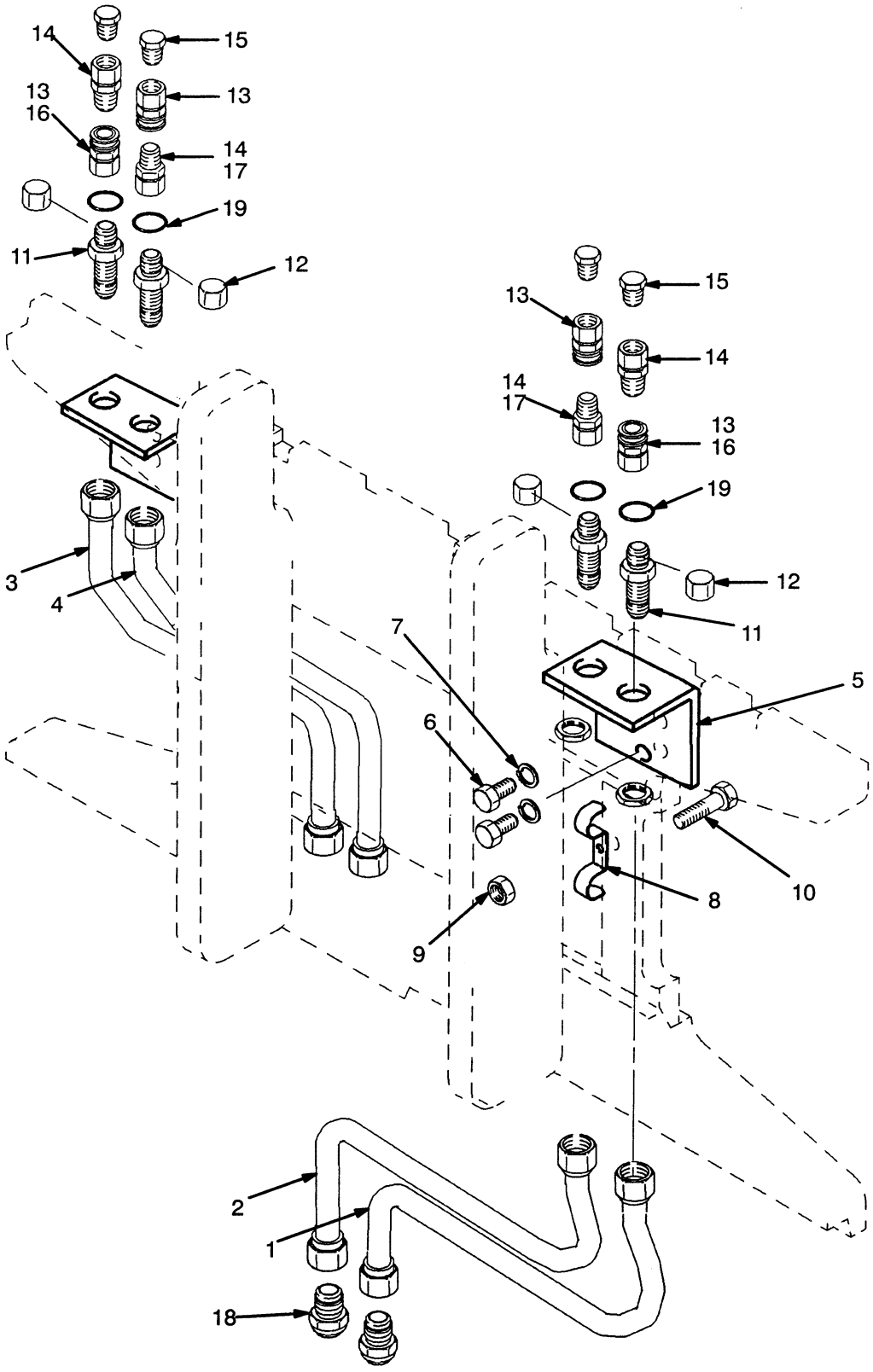

©2000 HYSTER COMPANY

AUXILIARY TUBE EXTENSION KIT
TWO STAGE LIMITED FREE-LIFT

MAST	KIT NO.	THIRD FUNCTION		FOURTH FUNCTION	
		Ref 1 Tube	Ref 2 Tube	Ref 3 Tube	Ref 4 Tube
B507	1362416 [d]1377959	1370489 [d]1377935	1370488 [d]1377936	----	----
	1362417	----	----	1370490	1370491
B562	1362418 [d]1377960	1370493 [d]1377937	1370492 [d]1377938	----	----
	1362419	----	----	1370495	1370494

REF		PART NO.	NAME OF PART	QTY
1	a	....	Tube	1
2	a	....	Tube	1
3	a	....	Tube	1
4	a	....	Tube	1
5	b	1370479	Bracket	1
5	d	1377925	Bracket	1
6	b	136681	Capscrew	2
7	b	292681	Lockwasher	2
8	b	114369	Clamp	1
8	d	1377928	Clamp	1
9	b	313828	Nut	1
10	b	296484	Capscrew	1
11	b	16447	Fitting	2
11	d	16448	Fitting	2
12	b	16693	Cap	2
12	d	16925	Cap	2
13	c	1362422	Socket	2
14	c	1362423	Nipple	2
15	c	16933	Plug	2
16	c	229348	Cap	1
17	c	229349	Plug	1
18	d	1377945	Fitting	2
19		16483	O-Ring	2

a ☞ Table Above
b Included In Kit
c Included In Quick Disconnect Kit 1362426
d With Rotator

©2000 HYSTER COMPANY

AUXILIARY TUBE EXTENSION KIT (Figure 254)

TWO STAGE AND THREE STAGE FULL FREE-LIFT

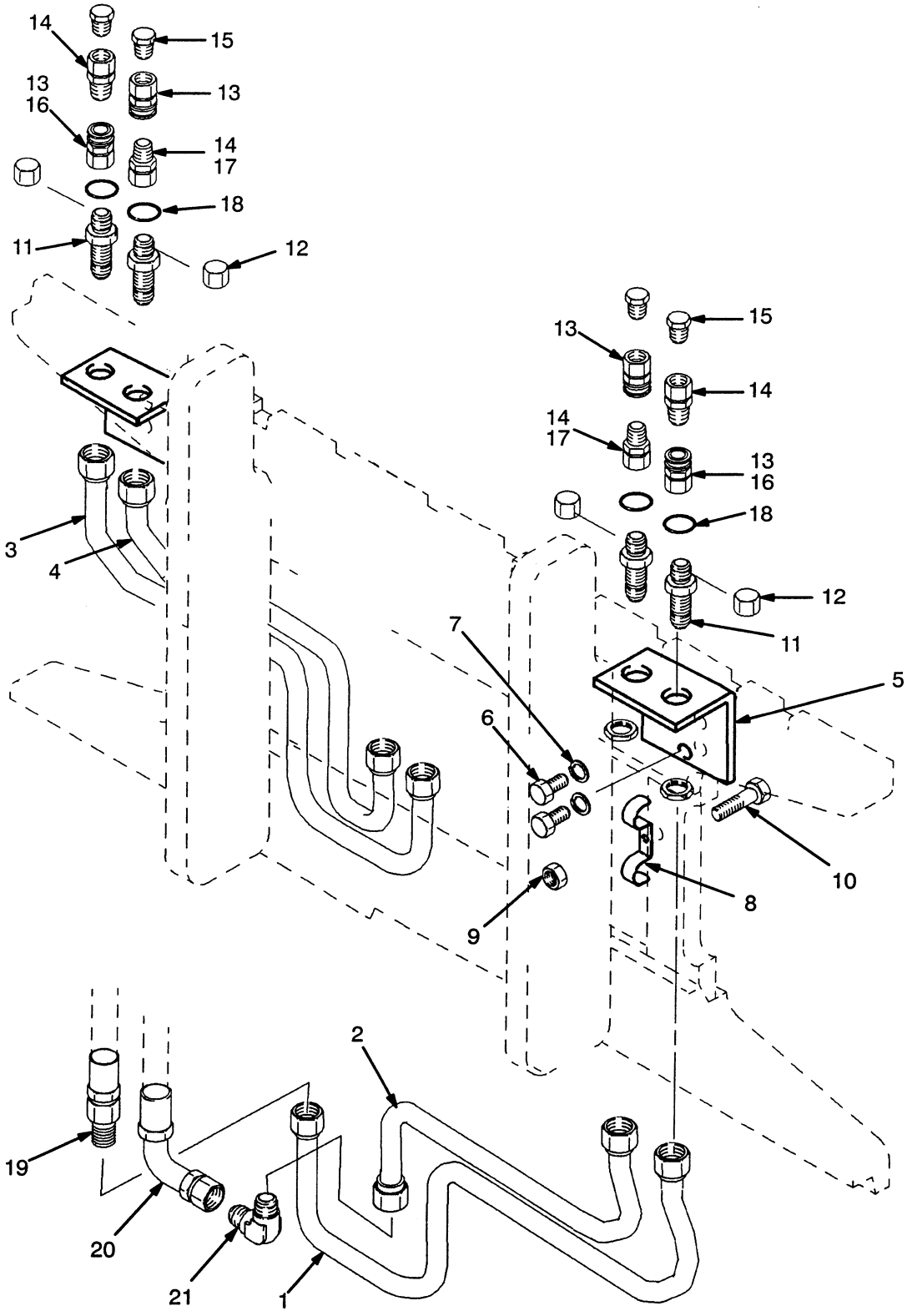

©2000 HYSTER COMPANY

AUXILIARY TUBE EXTENSION KIT

TWO STAGE AND THREE STAGE FULL FREE-LIFT

MAST	KIT NO.	THIRD FUNCTION		FOURTH FUNCTION	
		Ref 1 Tube	Ref 2 Tube	Ref 3 Tube	Ref 4 Tube
B508 B509	1362406 [d]1377955	1370483 [d]1377926	1370482 [d]1377929	----	----
	1362407	----	----	1370481	1370480
B563 B564	1362408 [d]1377956	1370486 [d]1377927	1370484 [d]1377930	----	----
	1362409	----	----	1370487	1370485

REF		PART NO.	NAME OF PART	QTY
1	a	....	Tube	1
2	a	....	Tube	1
3	a	....	Tube	1
4	a	....	Tube	1
5	b	1370479	Bracket	1
5	d	1377925	Bracket	1
6	b	136681	Capscrew	2
7	b	292681	Lockwasher	2
8	b	114369	Clamp	1
8	d	1377928	Clamp	1
9	b	313828	Nut	1
10	b	296484	Capscrew	1
11	b	16447	Fitting	2
11	d	16448	Fitting	2
12	b	16693	Cap	2
12	d	16925	Cap	2
13	c	1362422	Socket	2
14	c	1362423	Nipple	2
15	c	16933	Plug	2
16	c	229348	Cap	1
17	c	229349	Plug	1
18		16483	O-Ring	2
19	de	3009159	Fitting	1
19	df	316879	Fitting	1
20	de	1377949	Fitting	1
20	df	1377948	Fitting	1
21	d	14480	Fitting	1

a ☞ Table
b Included In Kit
c Included In Quick Disconnect Kit 1362426
d With Rotator
e Parker Hose
f Synflex Hose

©2000 HYSTER COMPANY

POWERTRAIN PROTECTION SYSTEM (Figure 255)

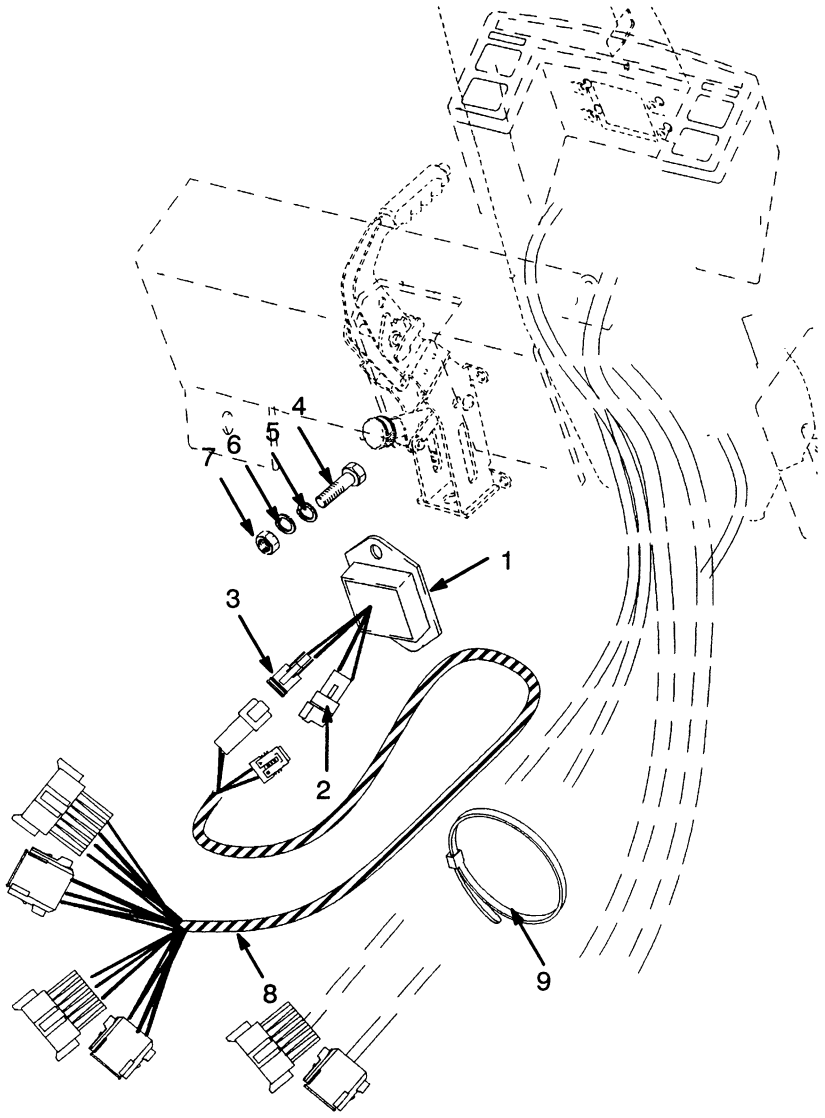

REF		PART NO.	NAME OF PART	QTY
1	a	1375822	Powertrain Protection Module	1
2		1330411	Connector	1
3		1329150	Connector	1
4	a	302248	Capscrew	2
5	a	320155	Washer	2
6	a	292679	Washer	2
7	a	292668	Nut	2
8	a	.....	Harness-Powertrain Protection ☞ Figure 256	1
9		1352606	Strap Clamp	AR

a Included in Kit 1388305

©2000 HYSTER COMPANY

NOTES

HARNESS (Figure 256)
POWERTRAIN PROTECTION

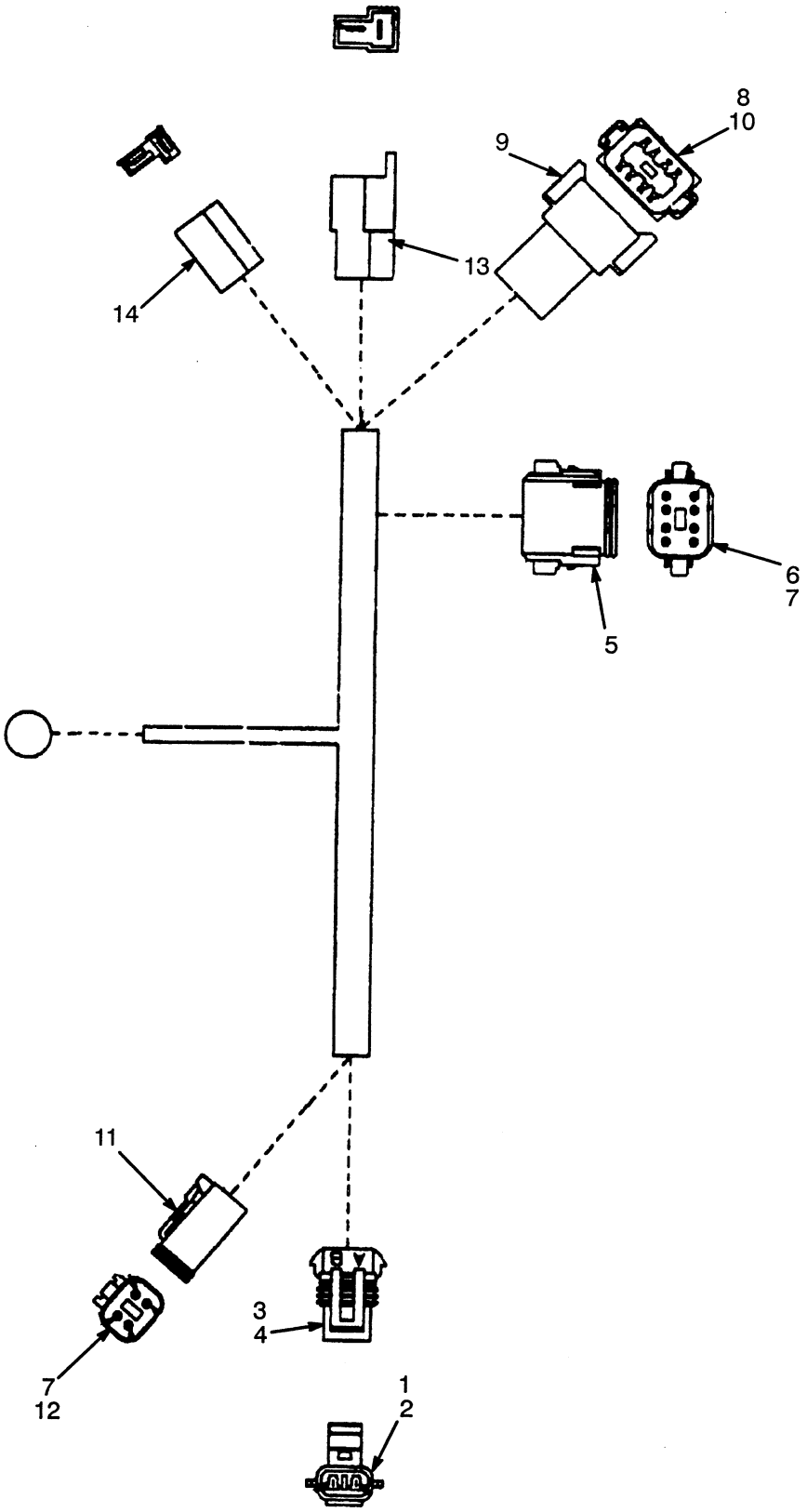

©2000 HYSTER COMPANY

HARNESS

POWERTRAIN PROTECTION

REF	PART NO.	NAME OF PART	QTY
	1388304	Harness-Powertrain Protection	1
1	1329147	Seal	2
2	1329148	Terminal	2
3	1329152	Connector	1
4	1329151	Lock	1
5	1330423	Connector	1
6	1330429	Lock	1
7	1330438	Socket	10
8	1330437	Pin	6
9	1330413	Connector	1
10	1330418	Lock	1
11	1330421	Connector	1
12	1330427	Lock	1
13	181047	Connector	1
14	181048	Connector	1

©2000 HYSTER COMPANY

NOTES

©2000 HYSTER COMPANY

NUMERICAL INDEX

PART NO	PAGE	REF NO	PART NO	PAGE	REF NO	PART NO	PAGE	REF NO	PART NO	PAGE	REF NO	PART NO	PAGE	REF NO
126	168	14		97	19	15152	113	64		172	10	16186	211	36
142	172	17	14386	207	39		145	43		309	15		213	30
	317	18		53	10		197	8		317	19	16187	201	67
7882	40	26	14500	299	39		202	97	15223	377	9		205	79
	47	17	14503	197	9		205	31	15225	311	29		208	71
	55	20	14506	303	4		207	35	15227	311	39	16192	131	2
11276	305	4	14592	299	28		271	24	15236	337	14		133	2
12445	163	1	14603	353	15		277	23		361	3	16374	55	31
12490	141	30		409	17	15154	111	40		362	3	16379	53	37
	145	9	14604	287	23		170	21		394	3	16480	343	28
	147	30		289	23		55	26		426	3		345	28
12822	111	4	14691	325	33		55	40		427	3	16481	299	19
12824	115	18	14692	430	22	15155	170	23	15290	305	29		325	37
	117	54	14761	153	18		202	94	15303	305	22	16482	287	30
12838	320	9	14899	320	8		205	34	15314	287	35		289	30
12840	131	54	15001	5	26		207	59		289	35		299	28
12844	131	41	15002	165	5		253	12	15347	287	29		299	32
12891	287	40		168	27		263	43		289	29	16483	287	14
	289	40		170	20		45	24		325	36		289	14
	358	3		171	6		53	22	15351	113	23		299	21
	359	3		171	6	15156	125	10		115	17	16484	287	31
	423	3		197	10		133	49		117	53		289	31
	424	3	15004	170	25		153	4		125	2		299	5
12894	300	1	15006	117	57		201	49		127	16		303	3
	301	1		121	14		205	49	15483	111	37		339	38
12898	5	44	15025	317	7		207	22		129	23		339	39
	5	44	15032	287	12		309	23		287	13		339	45
12928	53	33		289	12		53	16		289	13		341	38
12947	125	25		299	31	15157	49	19	15880	386	11		341	39
12949	343	22	15034	111	13	15163	251	10		390	11		341	45
	343	36	15039	251	8	15175	9	39		418	11		343	12
	343	52		263	10	15200	168	15		422	11		345	12
	345	22	15049	251	5		171	11	15920	117	56	16485	325	50
	345	36		317	33		172	5		121	16		325	51
	345	52	15052	202	96		339	10	15923	55	18		325	51
13668	205	7		205	32		341	10	15931	5	41		334	5
13957	311	37		207	36		353	4		5	46		335	5
14303	129	7		271	14		358	9	15932	299	50		339	46
	131	26		277	22		359	10	15942	35	16		341	46
	133	30	15055	343	3		377	8		78	19		353	20
	135	7		345	3		379	23	15962	41	12		353	22
	137	7		55	52		381	23	15964	129	30		377	25
14349	117	16	15056	125	11		391	10		131	56		377	26
	320	10		53	36		392	10		133	27		379	5
14358	113	9	15134	125	9		411	23		137	8		381	5
	115	34		133	48		413	23	16009	305	10		409	15
	117	26		309	24		423	9	16134	111	38		409	16
	119	39		40	8		424	10	16151	211	34		409	22
	125	19		51	6	15212	165	2		305	23		411	10
	127	7	15136	253	7		168	2	16155	125	26		411	3
14385	63	10		257	7		170	27	16167	197	49		413	10
	81	27	15151	251	4		171	2		201	67		413	3

©1997 HYSTER COMPANY

NUMERICAL INDEX

PART NO	PAGE	REF NO	PART NO	PAGE	REF NO	PART NO	PAGE	REF NO	PART NO	PAGE	REF NO	PART NO	PAGE	REF NO
16486	353	15	16865	173	14		183	52		379	30		392	3
	377	20		181	46	18496	202	93		379	30		405	8
	409	17		183	53		207	47		381	30		407	3
16487	287	23	16882	353	27		254	42		381	30	58903	311	35
	289	23		377	29		9	38		411	25	59229	357	11
16541	339	39		409	19	18497	253	34		411	25		383	10
	341	39	16897	317	8	18498	263	42		413	25		414	7
16556	299	19	16906	237	34		9	38		413	25		415	7
	325	37	16923	325	30	18500	202	84	39348	355	7	59583	337	9
16558	325	31		339	47		211	15		357	7	60949	311	6
16560	325	50		341	47		211	39		383	13	63108	113	47
	325	51	16982	299	26		211	47		386	13		115	30
	409	15		353	17		211	51		390	13		117	30
16568	303	3		377	22		213	34		418	13		119	30
16578	353	22		409	18		213	44		422	13		119	6
	377	25	16987	339	37		253	2	39352	311	12	63899	129	27
	409	16		341	37		257	2	39714	305	28		131	53
16598	153	3	17059	339	36		35	20	43207	291	25		133	66
16703	145	42		341	36	18508	53	14		293	25		135	39
16704	198	90	17167	303	3	18515	170	24	43307	291	26		137	45
16706	343	13	17176	119	21		202	95		293	26	68968	20	2
	343	27	17197	339	45		205	33	44308	300	2		21	7
	343	45		341	45		208	60		301	2		57	2
	345	13	17215	113	12		253	35	44542	311	19		58	2
	345	27		115	31		257	14	45733	295	23	69029	311	28
	345	45		117	29		263	41		297	23	69392	197	50
16708	197	6		119	29		9	27	46388	337	7		201	68
16709	55	39	17216	197	48	18518	253	32	53162	173	14	69815	113	48
16712	113	63		201	66	18521	45	23		181	44	78010	325	26
16719	163	4		205	78	18530	254	40		183	51	78584	295	22
16743	317	32		208	70	18535	201	47	54123	53	34		297	22
16746	131	55	17217	113	13		205	82	55434	361	11	78826	291	30
16751	141	20		115	32		208	64		394	11	80952	300	9
	147	20		117	42	18538	53	19		426	11		301	9
16788	153	17		119	7	18546	263	35	55580	261	21	85766	133	53
16805	133	47	17309	303	5	18727	9	26		263	17	85785	127	29
	53	15	17314	201	68	18824	309	33		265	26	85885	305	7
16814	53	40		205	80		325	56	57568	173	9	86377	253	22
16815	125	8		208	72	21420	305	24	57664	343	24	86510	181	19
	309	22	17315	303	6	26758	320	16		343	42		183	19
16825	53	21	17324	125	4		322	13		343	56		317	31
16836	170	22	17343	131	42	30273	311	21		343	9	89220	133	12
	205	73		135	33	30492	248	13		345	24		207	9
	207	58		137	32	30915	202	74		345	42	90263	386	11
16849	163	20	17635	379	28	32907	117	45		345	56		390	11
16863	111	12		381	28	33657	305	5		345	9		418	11
	113	19	17636	131	23	37752	351	10	58901	349	8		422	11
	115	35	17756	339	46		351	8		351	3	92861	355	11
	117	22		341	46		351	9		371	8		383	10
	119	43	17789	202	75		373			373	8	97497	277	11
	125	43	18082	271	41		373			375	3	97498	277	10
	127	1	18419	181	45		373	12		391	3	97499	277	9

©1997 HYSTER COMPANY

NUMERICAL INDEX

PART NO	PAGE	REF NO	PART NO	PAGE	REF NO	PART NO	PAGE	REF NO	PART NO	PAGE	REF NO	PART NO	PAGE	REF NO
97577	295	11		325	8		371	4		121	5		23	14
	297	11		61	11		373	4		153	22		287	36
97999	111	3	127644	55	48		405	4		197	22		289	36
98525	311	16	128408	211	21	132131	55	14		201	7		295	19
101625	201	22	128835	263	16	132473	122	10		202	83		297	19
	201	36		265	27		141	1		205	52		309	2
	205	22	128838	263	3		145	2		207	27		317	24
	325	34	128852	263	4		147	1		211	14		411	9
101809	111	5		265	28	132861	254	45		213	8		413	9
104506	349	3	129358	353			339	32		263	27		61	14
	371	3	129361	377			341	32		282	10	137154	305	11
	373	3	129387	349	7	133469	55	19		55	17	137282	287	15
	405	3		351	4	133651	23	24	136692	111	11		289	15
109919	153	10		371	7	134436	287	30		113	40		295	37
110174	325	28		373	7		289	30		172	18		297	37
110322	325	32		375	4		299	32		172	26	137283	295	4
112989	119	22		391	4	134675	361	12		23	15		297	4
	119	26		392	4		394	12		287	56	137852	113	18
	151	9		405	7		426	12		289	56		115	22
	153	33		407	4	134812	271	44		309	4		117	17
	153	39	129563	131	13	135158	295	25		317	22		117	20
	153	6		183	25		297	25		320	4		119	17
	155	9		205	72	135588	353			339	3		125	34
113011	115	25		207	23		377			341	3		127	11
	117	21	129995	131	38	135634	377			58	14		135	31
	119	40	130825	313	4	135685	173	2		5	39		137	30
	127	26	130845	113	14	136516	198	91		61	15		168	17
114312	155	33		115	21		207	9	136703	287	20		171	4
	173	17		115	29	136681	111	27		289	20		183	36
	208	83		117	18		113	55		317	13		251	12
	233	56		119	13		131	8	136704	197	3		325	35
119074	137	44		119	34		133	7		299	33	138075	455	30
119236	23	27		119	37		135	22		353	13	138333	202	74
119388	202	80		125	29		137	21		365	2	138573	181	20
	205	63		127	8		155	17		379	8		183	20
	207	44		153	15		155	22		381	8	138880	129	28
120857	151	20		155	20		168	5		397	21		131	53
121335	253	22		67	26		170	13	136749	119	10		133	66
122175	197	23	131358	353	7		170	15		133	55		135	39
	201	45		358	7		181	32		198	79		137	45
	205	62		359	8		183	32		253	29	139743	263	36
	207	17		377	11		211	3		309	9	140660	303	7
124297	321	7		379	17		211	3		321	6	145172	49	5
125305	115	28		381	17		278	5		325	11	145173	49	7
	117	40		391	8		339	59		339	21	145176	55	33
	119	36		392	8		339	59		339	21	145177	55	34
125847	151	3		409	3		341	53		341	21	145639	253	13
	153	28		411	32		341	53		341	21		253	33
	155	3		413	32		379	14		397	7		9	37
126358	263	25		423	7		381	14		430	8	145641	55	45
127045	23	11		424	8	136687	113	37		5	30	145831	151	18
	23	11	131716	349	4		119	4	136985	172	24	145949	55	49

©1997 HYSTER COMPANY

NUMERICAL INDEX

PART NO	PAGE	REF NO	PART NO	PAGE	REF NO	PART NO	PAGE	REF NO	PART NO	PAGE	REF NO	PART NO	PAGE	REF NO
145978	305	6	160361	49	11	169942	47	16	180177	379		189338	263	33
147294	111	6	160377	49	26	169964	47	6		411		189595	353	20
147972	414	6	160602	47	7	169965	47	6	180217	411			377	26
	415	6	160773	129	29	169966	47	6	181045	273	32		409	22
147973	313	3		131	52	169967	47	6	181046	271	43	189609	47	14
	386	10		133	65	170554	257	13		273	33	189614	49	33
	390	10	161003	353	25	170658	11	22	181763	117	15	189756	281	6
	418	10		377	5	171098	325	27	181766	299	30	190380	257	1
	422	10		379	20	171350	353	29	182332	379		190383	111	43
148827	47	18		381	20		377	31	182343	377			197	52
148962	211	46		411	20		379	38		379			197	59
	35	6		413	20		381	38		411			201	35
149805	47	8	161059	379			411	34	184761	377	20		202	70
149814	47	7		411			413	34	186061	313	11		205	35
149816	47	7	161252	170	18	173247	23	31		337	12		207	12
149819	55	25	161617	171	12		61	10		355	15		208	67
149846	55	37	162836	165	1	174413	19	16		357	15		208	74
149847	55	38		168	1	175323	117	50		383	16		211	40
149857	49	9		170	26		121	13		386	17		211	45
149858	49	9		171	1	175347	113	22		390	17		211	50
149864	49	2	163970	311	22		115	36		414	12		213	33
149867	49	10	164017	55	5		117	24		415	13		213	43
149868	49	4	164022	47	10		119	42		418	17		251	15
149888	49	28	164023	47	21		127	15		422	17		253	3
149889	49	18	164050	49	39		127	32	187388	355	8		257	3
149898	55	21	164488	133	20	176451	131	4		357	8	190887	386	12
149929	53	8	164639	311	20		133	4		383	7		390	12
149934	55	50	164840	386	10	176452	325	43		386	7		414	11
149976	55	8		390	10	176640	181	29		390	7		415	11
149977	49	13		418	10		183	29		418	7		418	12
149978	49	37		422	10		253	30		422	7		422	12
153931	211	2	166857	131	46		263	38	188516	343	16	191845	53	23
	213	2		151	21		287	19		343	31	193008	115	24
153932	213	11		153	25		289	19		343	48		117	27
153933	197	39		153	37		321	5		345	16		119	32
154065	11	12		155	24		339	26		345	31		151	25
154066	11	12	168389	325	27		339	26		345	48	193772	113	5
154067	11	12	168718	113	15		341	26	188518	343	18		287	48
154355	379	6		115	33		341	26		343	33		289	48
	381	6		117	28	176910	211	21		343	54	195769	20	3
	411	11		119	31	177461	35	9		345	18		57	3
	413	11		119	8	177521	283	9		345	33	195771	117	14
154375	337	6		127	9	177563	55	36		345	54		121	6
156194	311	15		129	16	177894	197	38	188519	343	19		133	42
156195	311	14		135	16		211	1		343	34		141	37
157554	181	21		137	29	178119	113	57		343	50		145	45
157704	135	40		151	26		411	6		345	19	196297	111	2
	137	46		23	2		413	6		345	34	196395	181	59
159942	55	7		61	2	179920	263	34		345	50		183	38
159973	47	20	169718	55	47	180029	379		188534	343	2	196898	19	14
159974	51	15	169719	55	46	180057	353			345	2		263	32
159977	55	3	169752	47	6		379		188643	53	38	197066	251	9

©1997 HYSTER COMPANY

NUMERICAL INDEX

PART NO	PAGE	REF NO	PART NO	PAGE	REF NO	PART NO	PAGE	REF NO	PART NO	PAGE	REF NO	PART NO	PAGE	REF NO
197067	117	58		141	2	208483	263	26	221769	35	13		381	5
	129	12		147	2	209417	317	35	221771	295	12	239503	105	10
	135	12	204781	145	4	210183	313	8		297	12		111	26
	137	13	204787	122	16	214121	141	28		360	3		113	43
	181	22		125	5		147	28		393	3		119	12
	197	53		141	15	214364	377	19		425	3		127	33
	197	7		145	22		398	27	221773	295	15		129	18
	202	71		147	15		409	11		297	15		131	7
	202	98	204790	122	15	214444	353		222029	9	36		133	63
	205	30		141	36	215211	349	5	222381	339	38		133	8
	208	63		145	21		371	5		341	38		135	18
	208	75		147	36		373	5	222413	325	51		137	18
	208	81	204796	141	27		405	5	222443	287	14		168	7
	277	24	204797	141	26	216877	361	9		289	14		172	8
197345	379			147	26		362	9		299	21		197	29
	411		204824	141	24		394	9	222477	325	17		201	29
197853	19	15		145	31		426	9	222480	135	23		201	61
	263	31		147	24		427	9		137	22		202	89
198401	263	9	204829	164	7	217407	131	39	223095	265	9		205	29
198410	263	8	204830	163	6	218585	253	11	223389d	353			207	15
198675	131	12		164	9	218599	295	14	224570	305	16		208	79
	168	4	204831	163	9		297	14	224571	305	15		20	17
198956	253	16		164	18	220283	122	7	225673	273	2		211	18
	254	50	204835	163	16		141	9	226576	273	8		213	17
199524	343	11	204858	122	4		145	14	226578	273	25		253	25
	345	11		141	7		147	9	226582	273	5		253	25
199563	5	27		145	13	220289	251	3	226583	273	24		254	49
199566	55	51		147	7	220314	251	7	226584	273	21		269	20
199851	313	6	205120	343	14	220318	198	93	226589	271	11		278	8
200659	299	26		343	29	220426	181	43	226986	311	30		303	10
201797	115	27		343	46		183	50	227131	281	7		321	2
	117	38		345	14	220434	173	16	227155	5	41		325	12
	119	20		345	29	220714	125	7		5	45		339	24
	119	33		345	46	220932	173	3	230419	287	49		339	24
	127	30	205121	343	15	220961	111	41		289	49		339	63
201800	113	11		343	30	221420	55	43		295	39		341	24
	125	17		343	47	221453	55	41		297	39		341	24
	127	23		345	15	221455	253	15	231020	351	8		341	57
	131	29		345	30		53	6		373	12		5	35
201808	127	38		345	47	221482	253	11		379	30		61	16
	133	54	205122	343	20	221487	253	11		381	30		73	8
202003	263	21		343	35	221544	35	3		411	25		7	9
203010	165	4		343	51	221550	295	35		413	25		90	5
	168	26		345	20	221703	111	39	231082	379			93	17
	171	5		345	35	221705	253	13		411		241074	141	29
203071	313	9		345	51		254	41	234038	295	17		147	29
204223	201	50	205123	343	23	221733	339	22		297	17	243190	313	5
	205	50		343	37		339	61	235691	287	31	244903	47	19
	207	13		343	55		341	22		289	31	244909	49	2
	253	4		345	23		341	55		299	5	244910	49	2
	257	4		345	37		9	22	237947	5	10	244911	49	2
204780	122	9		345	55	221767	35	10	238637	379	5	244922	49	22

©1997 HYSTER COMPANY

NUMERICAL INDEX

PART NO	PAGE	REF NO	PART NO	PAGE	REF NO	PART NO	PAGE	REF NO	PART NO	PAGE	REF NO	PART NO	PAGE	REF NO
244925	49	23		125	32	280644	5	25		265	1		297	27
244927	55	21		162		281844	51	1	290369	265	15	292521	172	2
244933	55	9	261379	263	37	286788	287	16	290370	265	16	292523	172	2
245202	49	32		35	17		289	16	290508	265	8	292524	287	9
246108	117	16		78	20		295	38	290509	263	23		289	9
246942	271	38	262680	183	55		297	38		265	22	292527	379	33
246943	271	2	263750	49	6	287472	287	32	290734	151	4		381	33
246944	271	17	263839	49	30		289	32		153	29		411	28
246994	353		263958	162		287503	253	19		155	4		413	28
248127	271	3	263962	162	6		253	31	290735	151	5	292528	287	52
248128	271	7	264159	289	51	287805	77	7		153	30		289	52
	273	7		53	18	287816	113	35		155	5		305	30
248129	271	8	264892	305	8		119	3	292500	121	3		3	2
248134	271	31	264893	305	9		125	31		153	21		78	4
248135	271	4	264973	311	10		168	33		155	30	292529	379	15
248137	271	19	265509	47	12		170	9		165	8		381	15
248141	271	22	265522	37	29		213	42		181	38		411	16
248143	271	16	267530	202	76	287817	198	94		181	47	292530	379	15
248145	271	36	268356	263	15		287	44		183	43		381	15
248146	271	37		265	14		289	44		183	54		413	16
248147	271	1	268573	43	5	287837	379	13		197	61	292532	353	9
248148	271	5	271949	49	25		381	13		201	4		377	14
248149	271	21	272155	181	21		411	33		205	4		409	6
249289	311	13	273338	125	40		413	33		55	13	292533	317	26
250371	122	1		197	15	287844	205	8	292501	168	29		365	11
	141	10		201	51	287851	137	39		181	27		379	10
	145	17		205	51		172	23		183	27		381	10
	147	10		207	14		253	23		197	19		397	16
251099	197	63		299	51		295	8		207	34	292534	397	19
251979	20	20	273775	151	12		297	8		213	7	292535	3	13
	305	21		181	25	287854	111	18		3	27	292536	3	13
	35	19		197	32		151	10	292502	365	14	292588	305	33
	58	19		201	63		153	35	292503	201	8	292607	7	
252927	111	22		211	28		155	10	292508	253	30	292612	7	
254686	49	21		213	40		172	23		299	34	292613	7	
255073	271	10		254	46		21	3		365	3		7	
	271	34	274232	37	19		317	23	292509	299	35	292616	7	
257241	197	45	274247	51	3	287860	155	26		69	15	292620	305	31
	202	86	274648	265	3		287	54	292513	35	6	292654	181	31
	205	42	275496	198	92		287	54	292515	165	8		183	31
	207	50		202	78		289	54		254	44	292667	198	85
	211	16		205	68		317	25		5	37		278	14
	213	14		207	45		320	2	292516	287	7	292668	197	28
	257	11		211	27		339	1		289	7		201	21
257913	355	5		211	27		341	1	292517	20	4		205	21
	357	5		213	3		398	29		57	4		207	7
	383	5	275497	198	92	288394	115	38		58	3		211	10
	386	5	275498	208	82		117	33	292519	287	8	292678	23	18
	390	5		221	15		127	2		287	8		278	13
	418	5	275499	197	41	289344	47	4		289	8		61	21
	422	5	278510	325	26	290300	265	13		289	8	292679	165	7
258321	117	23	279737	197	62	290303	263	12		295	27		168	28

©1997 HYSTER COMPANY

NUMERICAL INDEX

PART NO	PAGE	REF NO	PART NO	PAGE	REF NO	PART NO	PAGE	REF NO	PART NO	PAGE	REF NO	PART NO	PAGE	REF NO
	171	7		205	28		23	12		426	7		35	10
	197	27		207	10		253	18		427	7		35	13
	201	20		208	78		274	19	293657	297	35		377	15
	205	20		20	16		277	26	293658	18	1		409	7
	207	6		211	17		287	10		19	1	296423	360	3
	211	44		211	17		289	10		56	1		393	3
	65	20		213	16		295	20	293659	361	2		3	4
292680	113	36		253	17		297	20		362	2		425	3
	119	5		269	21		309	3		394	2	296424	35	10
	121	4		275	1		317	21		426	2	296426	19	18
	153	23		278	7		320	3		427	2	296472	309	17
	155	31		287	50		325	23	293686	19	17	297531	355	6
	165	9		289	50		339	2		311	38		357	6
	181	37		295	9		341	2	293743	113	53		383	6
	181	48		297	9		35	7		117	11		386	6
	183	42		303	9		411	4		119	14		390	6
	197	21		309	10		413	4		121	9		418	6
	201	6		317	14		56	14		127	21		422	6
	202	85		321	4		57	11	293762	309	35	297649	353	23
	205	43		325	13		58	13	293779	309	36		377	4
	205	6		339	23		5	38	293780	125	16		379	19
	207	26		339	23		61	12	293795	397	20		381	19
	211	4		339	66		65	8	293796	430	12		411	19
	213	10		341	23		78	7	293922	337	10		413	19
	263	28		341	23	292683	111	16	295649	386	4	298874	113	8
	287	45		341	60		287	53		390	4	300738	311	26
	289	45		5	34		289	53		414	10	300751	311	33
	35	7		61	17		305	2		415	10	300752	311	34
	55	16		65	4		361	8		418	4	300758	305	21
	65	1		68	8		362	8		422	4	300765	311	8
292681	105	11		73	3		365	10	295802	273	18	300766	311	9
	111	25		75	2		379	25	296001	430	5	300767	311	11
	113	56		75	7		381	25	296010	309	11	300794	305	1
	119	11		77	1		394	8	296021	125	15	300800	305	14
	127	34		77	14		3	3	296028	411	7	300801	305	17
	129	17		77	5		411	29		413	7	300932	18	2
	131	6		7	11		413	29	296128	172	8		19	2
	133	6		90	6		426	8	296130	111	17		56	2
	133	62		93	11		427	8		317	27	300937	18	10
	135	17		93	18	292687	305	32	296151	181	24		19	9
	137	17	292682	111	10	292689	7	8	296205	282	6		311	4
	155	18		113	42	293611	339	57	296215	198	78		353	12
	155	23		151	11	293612	339	56	296418	127	35		360	4
	168	6		153	36	293614	35	14		135	36		377	17
	170	14		155	11	293630	18	18		137	38		379	16
	172	27		155	27	293631	18	9		211	43		381	16
	181	60		165	9		277	25		269	22		393	4
	183	35		172	18	293648	311	2		299	11		3	5
	197	5		172	27		35	9		35	15		409	9
	201	28		18	15	293650	361	7	296420	78	14		411	18
	201	43		20	14		362	7	296421	53	39		413	18
	202	88		21	4		394	7	296422	353	10		425	4

©1997 HYSTER COMPANY

NUMERICAL INDEX

PART NO	PAGE	REF NO	PART NO	PAGE	REF NO	PART NO	PAGE	REF NO	PART NO	PAGE	REF NO	PART NO	PAGE	REF NO
	56	10	304406	295	3		341	25	320156	168	16		137	49
300939	111	9		297	3		353	26		168	32		170	7
	18	8	304526	379	34		365	5		170	10		172	9
	19	8		381	34		377	24		172	4		181	30
	3	15		411	30		379	9		181	28		183	30
	56	8		413	30		381	9		181	49		197	4
300982	337	15	304619	47	2		397	8		183	28		201	27
	361	4	304620	47	2		409	12		183	56		202	87
	362	4	305080	151	2		430	9		197	20		205	47
	394	4		153	27	314539	49	8		201	5		207	53
	426	4		155	2	314766	217	5		205	45		208	77
	427	4	305100	263	30	316132	181	17		205	5		211	9
301190	47	3	305371	35	9		183	17		207	25		213	15
301195	49	34	306774	47	1		317	30		213	9		253	24
302027	198	84	308624	55	29	316306	353	17		263	29		254	48
302144	351	11	308980	339	12		377	22		309	32		320	15
	373	9		341	12		409	18		325	55		339	22
302235	23	16	308995	57	13	316678	283	4		5	29		339	65
	61	19	309062	386	15	316825	113	54	320157	111	24		341	22
302244	181	10		390	15		117	12		129	3		341	59
	183	10		418	15		119	15		131	20		398	28
302245	181	55		422	15		121	10		133	24		5	32
	183	39	309109	171	9		127	22		133	61		61	18
	207	30		339	9	316826	111	19		135	3		7	10
302246	201	18		341	9		20	5		137	3	320159	111	20
	205	18	309124	197	44		397	3		151	19		113	41
	207	4		202	82		411	5		153	11		165	10
302250	197	26		205	61		413	5		181	33		172	25
	201	46		207	46		57	5		183	33		20	7
	205	46		211	13		58	4		197	46		21	5
	207	30		213	13	316828	19	19		201	64		23	13
302385	287	6	309153	197	37	316833	181	12		205	66		274	20
	289	6	309740	56	16	316834	339	13		207	16		287	55
	35	8	309831	295	18		341	13		253	16		289	55
	78	3		297	18	316835	339	20		263	39		317	20
302398	282	7	310081	263	1		341	20		278	6		325	24
302399	197	68		265	17	317075	311	24		299	36		411	8
302400	309	12	310085	265	7	317076	311	23		303	8		413	8
	320	14	310088	265	25	317735	391	7		321	3		57	7
	5	31	313022	287	51		392	7		325	6		58	6
302461	379	32		305	25		423	6		339	44		5	40
	381	32		305	3		424	7		339	64		61	13
	411	27	313805	168	30	318375	127	28		341	44		7	13
	413	27		170	11	320154	278	12		341	58	320160	172	11
302462	351	11		183	22		281	20		353	14		398	30
	373	9		365	15	320155	171	10		377	18	320161	311	3
302492	7	4	313828	117	60		181	11		409	10		379	24
303072	141	16		151	17		183	11	320158	117	41		381	24
	145	23		153	9		201	19		117	61		3	14
	147	16		170	6		205	19		129	26		3	14
303109	78	8		254	43		207	5		131	5		411	17
303118	57	12		339	25		309	20		133	5		413	17

©1997 HYSTER COMPANY

NUMERICAL INDEX

PART NO	PAGE	REF NO	PART NO	PAGE	REF NO	PART NO	PAGE	REF NO	PART NO	PAGE	REF NO	PART NO	PAGE	REF NO
	78	5		97	14	324154	63	6		95	3	324318	69	19
320165	379	39		99	4	324155	63	2	324261	77	6	324319	101	30
	381	39	323817	63	39		81	26		95	6		69	27
320264	295	26		67	9	324156	63	25	324262	65	8		84	29
	297	26		81	6	324157	63	26		77	4	324321	69	26
320313	377	6		97	7	324161	63	13	324263	77	14	324340	76	4
	379	18	323818	63	18		81	20		95	1	324342	76	7
	381	18		67	7	324163	63	4	324264	71	15	324345	76	6
	411	21		81	8	324164	63	5	324265	71	15	324350	77	13
320901	63	42		83	5	324165	63	32	324266	71	15	324351	63	29
320902	63	43		97	9	324166	67	36	324271	71	5	324352	63	27
320903	63	44		99	5	324167	67	20	324277	71	14	324353	63	28
320910	69	34	323819	67	8		75	6	324278	63	8	324356	106	7
321158	253	27	323820	67	5		93	13		71	1	324361	75	12
321734	49	38	323821	67	6	324169	63	16	324282	78	10	324362	75	13
321792	334	4	323822	67	10	324170	63	21	324284	71	18	324366	75	16
	335	4		83	7	324173	63	22	324285	71	19		93	29
321797	334	3		99	6		78	6	324288	71	11	324369	67	30
	335	3	323823	67	11		97	20	324291	69	3	324370	67	27
322177	263	7		83	9	324200	104	4	324292	101	3	324373	67	29
322784	183	37		99	11		89	2		69	6	324374	67	24
323090	353	11	323824	67	4	324201	104	5		84	3		81	16
	377	16	323864	153	40	324213	78	13	324293	101	4	324375	67	23
	409	8	324125	67	18	324222	71	13		69	5		93	25
323161	353	5		90	9	324225	78	12	324294	101	5	324378	67	21
	358	8	324126	67	18	324228	68	2		69	4	324382	67	19
	359	9		93	16	324230	68	9		84	5	324385	106	6
	377	7	324127	67	18	324233	68	10	324296	69	7		63	41
	379	26	324133	67	34	324234	68	10	324297	69	8	324387	73	1
	381	26	324134	67	38	324235	68	10	324299	69	11	324388	73	2
	391	9	324135	67	37	324236	68	10	324301	69	31	324397	73	9
	392	9	324138	63	39	324237	68	10	324302	69	30	324407	157	13
	411	22	324139	81	13	324238	68	10	324303	69	33	324408	157	9
	413	22		81	4	324239	68	10	324304	69	12	324410	157	8
	423	8		97	13	324240	68	10	324305	69	29	324411	157	10
	424	9		97	5	324241	68	10	324306	101	20	324412	106	4
323541	122	11	324140	63	24	324242	68	10		69	28		157	16
	141	14		81	5	324243	68	10		84	19		63	40
	145	40		97	6	324244	68	10	324307	69	32		89	15
	147	35	324141	63	19	324245	68	5	324308	69	9	324434	103	8
323807	157	14		81	9	324246	68	4	324309	69	14		269	25
323814	67	1		97	10	324248	269	19	324310	69	24		88	11
323815	63	20	324143	63	33		269	27	324311	69	20	324435	67	15
	67	2	324144	63	3		68	7	324312	69	17	324436	67	16
	81	7		81	12	324254	77	12	324314	101	25	324437	67	17
	83	2		97	12	324255	77	11		275	22	324504	89	4
	97	8	324146	63	37	324256	77	8		69	23	324603	67	13
	99	2		81	15	324257	77	9		84	24	324632	275	5
323816	63	7		97	15		95	9	324316	101	27	324634	275	7
	67	3	324148	97	24	324259	69	16		69	25	324635	275	8
	81	14	324152	63	34		77	14		84	26	324636	275	2
	83	3	324153	63	9	324260	77	3	324317	69	21	324637	275	3

©1997 HYSTER COMPANY

NUMERICAL INDEX

PART NO	PAGE	REF NO	PART NO	PAGE	REF NO	PART NO	PAGE	REF NO	PART NO	PAGE	REF NO	PART NO	PAGE	REF NO
324638	275	4		141	13	334580	295	36	343040	263	11		81	17
324642	75	3		145	20	334582	299	22	343041	263	14	348436	68	10
324644	75	9		147	13	334587	295	2	343042	263	13	348437	102	13
	93	7	332495	313	10		297	2	343046	263	18		71	17
324646	75	8	332745	433		334595	291	18	344233	265	18		87	14
324647	75	5	332755	317	12		291	6	344234	263	22	348442	65	11
324648	75	4		5	33	334717	311			265	24	348450	68	11
324692	30	15	334156	357	10	334970	263	14	345410	312	5	348451	68	12
324707	33	16		383	9	335012	357	12	345411	312	6	348452	68	13
324740	213	28	334402	291	16		383	11	345412	312	8	348453	68	14
325616	379	41		291	4	335047	325	20	345423	309	26	348454	71	8
	381	41		293	16	335553	9	33	345453	23	9	348457	87	7
325708	172	3		293	4	335988	9	35		61	6	348462	69	18
325897	201	44	334406	295	1	335991	9	34	345454	23	7	349366	115	20
	205	44	334417	291	21	336393d	353			61	7		117	51
	207	21		291	9	336550	23	8	346205	312	18	350484	299	20
326488	305	1		293	21		61	8	346208	312	4	350485	343	7
326498	311	32		293	9	336830	287	57	346329	121	17		345	7
326504	28	18	334429	291	27		289	57	346530	63		352485	172	6
	29	2		293	27	336831	287	57		68		352499	172	28
	32	14	334439	291	17		289	57		72		352885	172	29
	33	30		291	3	336832	287	57	346645	299	15	352950	172	13
326516	122	12	334442	291	11		289	57	346648	299	8	352969	173	18
	141	12		291	23	336833	287	57	346650	299	16	353000	113	60
	145	19	334447	295	7		289	57	346656	299	47		115	40
	147	12		297	7	337174	353		346795	291	15		117	35
326612	27	3	334449	291		337179	353	18		291	5		125	37
326748	30	5		291	7		377	27	346796	291	10		127	4
326749	30	6	334450	287	21		409	21		291	22		129	4
326850	31	10		289	21	339529	311	27		293	10		131	21
326889	274	5	334452	287	22	339599	263			293	22		133	25
326926	122	2		289	22	340405	117	15	346842	295	6		135	4
	141	11	334453	295	5	340796	18	3		297	6		137	4
	145	18		297	5		19	3	346843	295	6		325	7
	147	11	334454	291	31		56	3		297	6	353141	172	3
326986	275	12	334475	291	12	340868	63	45	346844	295	6	353142	172	21
328390	305	12		291	24		81	10		297	6	353143	172	22
329029	11	21		293	12	341462	343	40	346845	295	6	353154	173	4
329067	113	61		293	24		345	40		297	6	353159	172	13
	115	39	334480	291	20	342703	335	10	346846	295	6	353164	172	20
	117	34		291	8	342734	295	24		297	6	353165	173	15
	125	45	334500	299	6		297	24	346847	295	6	353168	173	5
	127	5	334524	299	3	342741	67	22		297	6	353172	172	15
	129	2	334525	299	4	343029	263	19	347746	295	21	353175	173	11
	131	19	334531	299	9		265	5		297	21	353195	172	12
	133	23	334532	299	12	343031	263	5	347767	291	28	353198	115	5
	135	2	334542	299	27		265	10	347768	291	29		117	46
	137	2	334543	299	13	343032	263	6	347770	291	32		133	52
	325	2	334560	287	24		265	12	347773	291	33	353230	172	16
	3	7		289	24	343033	263	24		293	33	353291	253	10
329700	113	3	334571	287	11	343038	263	2	348427	63	14		253	10
332277	122	13		289	11	343039	263	20	348428	63	17	353294	257	16

©1997 HYSTER COMPANY

NUMERICAL INDEX

PART NO	PAGE	REF NO	PART NO	PAGE	REF NO	PART NO	PAGE	REF NO	PART NO	PAGE	REF NO	PART NO	PAGE	REF NO
353397	173	1		213	29	370647	181	8		115	13	382637	271	33
353422	173	6	367339	75	13		183	8		117	9	382638	271	12
353432	173	7	367419	367			197	33	377210	113	26	382639	271	27
353448	173	8		401			201	16	377211	127	37	382640	271	42
353453	172	14		433			205	16	377259	121	15	382641	271	30
354789	67	35	367420	367			207	3	378424	343	6	382642	271	29
356505	379	7		401		370730	229	14		345	6		271	39
	381	7		433			247	9	379197	9	28	382643	271	23
	411	12	367421	367		370863	181	6	379198	9	29	382644	271	15
	413	12		401			183	6	379199	9	42	382646	271	25
357749	353	19		433		370864	181	15	379407	49	40	382647	271	35
	377	28	367422	367			183	15	379697	9	43	383116	9	31
	409	14		401		370868	181	16	379698	9	40	383789	261	21
357956	320	16		433			183	16	380478	295	28	384101	361	10
	322	13	367423	367		372002	113	49	380483	295	32		394	10
357973	320	16		401			115	8	380485	295	33		426	10
	322	13		433			127	18	380486	295	30	384210	366	
359207	173	10	367424	367		373658	95	7	380488	295	31		400	
359221	299	25		401		373660	67	25	380489	295	29		432	
359223	299	2		433		373661	73	6	381250	49	3	384211	366	
360318	291	34	367475	295	16	373663	101	11	381270	49	3		400	
360387	133	18		297	16		69	13	381271	49	3		432	
	173	3	367945	299	17		84	11	381298	311	36	384213	366	
	35	18	369242	278	4	373833	299		381370	312	17		400	
	78	22	369795	366		374706	121	21	381846	185	18		432	
360974	76	3		400		374708	121	22		190	4	384214	366	
361876	299	24		432			145	36		193	17		400	
361877	299	23	369796	367		374709	121	23	381919	231	12		432	
361893	291	14		401			145	33		237	10	384215	366	
361895	291	13		433		374713	122	8		248	11		400	
362120	71	3	369804	23	28		141	3	382486	65	22		432	
362121	71	3	369815	113	17		147	3	382487	65	18	384216	366	
362122	71	3		115	10	374895	76	1	382488	65	21		400	
362450	71	14		117	2	374896	76	2	382491	65	23		432	
364807	9	24		117	43	374899	76	5	382493	65	14	385855	343	17
364808	9	25		125	23	374922	151	6	382494	65	12		343	32
364854	9	30		133	58		153	31	382495	65	7		343	49
364914	9	21	369921	299	29		155	6	382497	65	10		345	17
366115	391	5	369922	299	14	374923	151	7	382498	65	9		345	32
	392	5	370169	47	29		153	32	382499	65	6		345	49
366116	359	5	370250	11			155	7	382502	65	3	386071	273	11
	424	5	370251	11		375550	47	1	382503	65	2	387455	317	34
366473	113	16	370252	11		375555	47	25	382504	65	16	387478	141	33
	115	6	370253	11		375572	47	23	382505	65	15		147	33
	117	8	370254	11		375601	47	22	382508	65	8	387480	141	34
	119	16	370255	11		375634	313	1	382509	65	1		147	34
	119	41	370256	11		375635	313	2	382511	65	1	387481	141	35
	125	33	370257	11		375984	317	17	382632	271	18		147	17
	127	10	370258	11		375986	299	18	382633	271	9	387488	271	32
	131	43	370259	11		376505	198	83	382634	271	28	387867	320	11
366687	213	32	370646	181	7	376949	278	15	382635	271	13		320	11
367224	211	35		183	7	377209	113	25	382636	271	26	387869	181	16

©1997 HYSTER COMPANY

NUMERICAL INDEX

PART NO	PAGE	REF NO	PART NO	PAGE	REF NO	PART NO	PAGE	REF NO	PART NO	PAGE	REF NO	PART NO	PAGE	REF NO
	183	16	878152	283	1		205	56		235	27		247	8
	253	1	878574	325	16		207	31		237	18	1324006	55	24
387892	183	34	895973	283		1314392	201	65		239	32	1324029	322	2
388277	77	10	986236	197	42		205	65		243	16	1324035	322	9
388278	77	2	990615	157	11		207	24		247	26	1324040	322	6
	95	2	996297	287		1315425	311	18		248	9	1324041	322	7
388280	101	24		291		1316496	129	25	1323579	219	12	1324042	322	8
	69	22		295		1316809	287	28		221	12	1324048	322	4
	84	23		299			289	28		227	28	1324278	211	26
388291	65	24	996336	259		1317468	53	11		229	27	1324311	217	4
388293	73	10	1300066	111	21	1319190	197	17		231	8		225	4
388294	76	9	1300107	9	23		202	91		233	8	1324517	253	5
388305	37	32	1300152	153	20		205	40		235	22		257	5
	55	30	1300295	49	27		207	57		237	6	1324557	317	28
388316	55	44	1300892	267	9	1319668	355	9		239	8	1325033	111	14
388321	47	13		269	18		357	9		241	6	1325037	111	28
388322	55	10	1301016	133	13		383	8		243	6	1325119	361	13
388323	49	16	1301601	135	38		414	5		247	23		394	13
388364	47	24		137	41		415	5		248	10		426	13
388501	271		1301720	229	36	1320669	181	3	1323580	235	25	1325271	11	18
389688	11	24	1301721	253	26		183	3		237	30	1326394	258	1
392800	137	34	1301870	353			198	87		239	17	1326395	258	2
636941	386	14	1302973	299	46		201	54		243	25	1326396	258	3
	390	14	1303195	137	33		205	54		247	24	1326397	258	4
	418	14	1303787	312	10		207	19	1323581	187	29	1326398	258	5
	422	14	1304091	305	5	1320766	165	6		227	9	1326399	258	6
637151	337	5	1304786	43	6	1320893	317	29		229	8	1326536	258	7
637565	386	16	1304950	129	24	1320922	135	37		235	24	1326537	258	9
	390	16	1305789	65	5	1320939	213	20		235	3	1326538	258	11
	418	16	1306585	9	24		93	33		237	15	1326660	366	
	422	16	1306588	9	25	1321149	313	7		239	23		400	
638246	355	12	1307641	361	6	1321174	313			239	31		432	
	383	11		394	6	1322627	287	25		241	14	1326661	366	
864737	111	45		426	6		289	25		243	14		400	
864740	11	27	1308057	299		1323575	227	19		247	3		432	
	244	9	1308259	217	9		229	18	1323583	219	11	1326663	366	
864763	244	5		225	7		231	49		221	11		400	
864764	244	2	1309419	343	6		233	45		229	39		432	
864809	111	28		345	6		237	24		231	58	1326664	366	
864810	125	41	1309829	75	1		239	25		235	23		400	
864811	125	42	1310370	355	9		243	22		237	35		432	
864814	125	22		357	9	1323576	227	5		239	12	1326665	366	
864815	125	27	1310599	311	17		229	5		243	27		400	
864816	125	24	1310611	211	5		235	26		247	21		432	
864817	125	28		253	26		237	25	1323586	227	15	1326666	366	
864818	125	30	1312813	55	32		239	24		229	13		400	
864824	251	11	1314381	202	92		243	23		231	34		432	
864829	251	1		205	37		247	25		233	33	1326931	263	40
864839	119	44		207	39	1323578	227	23		235	9	1326939	197	47
864848	45			45	17		229	22		237	26		202	90
864858	111	44	1314387	197	1		231	26		239	16		205	41
865216	244	3		201	56		233	25		243	24		207	51

©1997 HYSTER COMPANY

NUMERICAL INDEX

PART NO	PAGE	REF NO
	211	19
	213	18
1327161	317	2
1327164	227	32
	229	31
	231	43
	233	41
	237	31
	239	18
	241	20
	243	26
	247	7
1327246	305	18
1327414	345	4
1327415	345	1
1327554	111	4
1327898	135	24
	137	23
1327951	197	70
	201	3
	205	3
1327956	227	34
	229	33
1327957	227	13
	229	11
	231	47
	233	43
1327958	227	22
	229	21
	231	25
	233	24
	235	28
	237	17
	239	33
	243	15
	247	27
1327959	227	57
	229	56
	231	56
	233	52
1327960	227	20
	229	19
	231	51
	233	47
1327961	131	32
	133	37
1328680	325	18
1328692	287	34
	289	34
1328822	334	6
	335	6
1328824	334	8
1328826	334	10
1328828	334	11
1328829	334	12
1328890	111	31
1328892	111	31
1328930	339	7
	341	7
1329146	113	28
	115	15
1329147	185	3
	187	15
	187	17
	190	2
	193	8
	215	6
	217	8
	223	8
	227	29
	229	28
	231	59
	233	54
	235	16
	237	16
	239	14
	241	21
	243	29
	247	16
1329148	215	10
	227	51
	229	51
	231	57
	233	53
1329151	227	3
	229	3
	231	6
	233	6
1329152	215	9
	227	1
	229	1
	231	5
	233	5
1329234	78	10
1329250	309	28
1329258	56	17
	78	15
1329259	56	15
1329271	23	19
	61	22
1329272	23	20
	61	23
1329285	165	6
1329314	77	
	95	
1329318	63	30
	81	21
	97	17
1329327	68	3
1329328	68	4
1329332	93	5
1329333	93	4
1329336	75	
1329337	93	6
1329339	93	8
1329344	105	5
	73	7
	90	4
	94	10
1329346	157	7
1329347	157	6
1329348	157	5
1329349	157	4
1329350	157	17
1329351	157	18
1329352	157	3
	159	5
	161	5
1329353	157	1
	159	14
	161	8
1329359	157	22
1329362	157	19
1329363	157	20
1329364	157	21
1329365	157	23
1329366	157	24
1329367	63	45
1329369	63	45
1330003	102	2
	71	16
1330033	135	25
	137	24
1330035	135	27
	137	26
1330036	135	28
	137	27
1330037	135	29
	137	28
1330279	227	35
	229	34
1330281	227	26
	229	25
	231	28
	233	27
1330283	227	46
	229	45
	231	27
	233	26
	235	11
	237	19
	239	30
	241	15
	243	17
	247	11
	248	14
1330292	217	10
	227	45
	229	44
	231	30
	233	29
	235	10
	237	22
	239	27
	241	18
	243	20
	244	7
	247	10
	248	12
1330293	197	11
	201	10
	205	10
	207	2
1330294	227	36
	229	35
1330296	227	8
	229	7
	231	33
	231	52
	233	32
	233	48
	247	22
1330297	227	59
	229	60
	231	55
	233	51
1330298	185	9
	187	13
	190	1
	193	11
	215	7
	217	6
	223	10
	225	9
	227	48
	229	48
	231	10
	233	10
	235	12
	237	8
	239	10
	241	8
	243	8
	247	12
	248	8
1330299	185	1
	187	16
	193	6
	215	4
	219	10
	221	10
	223	6
	227	49
	229	49
	231	7
	233	7
	235	14
	237	5
	239	7
	241	5
	243	5
	247	14
1330301	197	60
	201	17
	205	17
1330302	227	24
	229	23
	231	35
	233	34
1330303	227	25
	229	24
	231	36
	233	35
1330304	227	27
	229	26
	231	37
	233	36
1330324	131	
	133	
1330325	131	31
	133	36
1330326	131	30
	133	35
1330342	131	3
	133	3
1330355	227	2
	229	2
	231	15
	233	14
	235	30

©1997 HYSTER COMPANY

NUMERICAL INDEX

PART NO	PAGE	REF NO
	237	13
	239	21
	241	12
	243	12
	247	28
1330356	227	18
	229	17
	231	16
	233	15
	235	33
	237	14
	239	22
	241	13
	243	13
	247	31
1330357	227	17
	229	16
	231	14
	233	13
	235	32
	237	12
	239	20
	241	11
	243	11
	247	30
1330383	131	28
	133	32
1330409	188	6
	201	42
	211	7
	213	5
	219	4
	9	6
1330410	173	13
	197	35
	201	40
	211	41
	213	35
1330412	181	18
	189	7
	195	1
1330413	188	3
	189	1
	221	5
1330414	188	7
	219	5
	9	6
1330415	173	13
1330417	189	8
	195	2
1330418	188	4
	189	2
	221	6
1330419	185	4
	187	11
	193	9
	219	8
	223	4
	225	5
	229	9
	237	20
	239	29
	241	16
	243	18
	244	8
	247	4
	248	3
1330420	185	7
	187	4
	193	1
1330421	187	9
	193	4
	221	14
	248	6
1330422	185	16
	187	1
1330423	187	6
	193	14
	215	1
	217	1
	223	1
	225	1
	227	52
	229	52
	231	1
	233	1
	235	17
	237	1
	239	1
	241	1
	243	1
	247	17
1330424	185	5
	187	12
	193	10
	219	9
	223	5
	225	6
	229	10
	237	21
	239	28
	241	17
	243	19
	247	5
	248	4
1330426	185	8
	187	5
	193	2
1330427	187	10
	193	5
	248	7
1330428	185	17
	187	2
	225	2
1330429	187	7
	193	15
	215	2
	217	2
	223	2
	227	55
	229	55
	231	2
	233	2
	235	20
	237	2
	239	2
	241	2
	243	2
	247	20
1330433	188	5
	189	3
	9	6
1330434	185	6
	227	53
	235	18
1330435	173	13
	195	3
1330436	193	3
1330437	219	6
	221	7
1330438	187	3
	193	16
	215	3
	217	3
	219	2
	221	2
	223	3
	225	3
	229	53
	231	3
	233	3
	237	3
	239	3
	241	3
	243	3
	247	18
	248	5
1330439	181	23
	185	15
	187	8
	188	8
	189	6
	193	13
	195	4
	197	36
	201	41
	211	42
	213	36
	215	11
	217	11
	219	7
	221	3
	223	9
	225	8
	227	54
	229	54
	231	4
	233	4
	235	19
	237	4
	239	4
	241	4
	243	4
	247	19
1330452	55	42
1330453	43	5
	55	35
1330456	53	7
1330459	47	27
1330467	51	2
1330725	53	13
1330772	49	24
1330917	11	13
1330919	11	7
1330920	11	20
1330979	75	11
1331152	23	23
	61	26
1331162	303	2
1331233	187	22
1331325	47	8
1331329	51	4
1331330	259	
1331331	51	8
1331335	47	7
1331336	47	7
1331338	47	
	55	
1331340	39	9
	39	9
1331341	55	2
1331342	47	9
1331343	49	12
1331344	49	14
1331349	49	20
	51	16
1332575	81	
1332637	78	16
1332638	78	17
1332667	5	7
1332670	5	3
1332745	367	
	401	
1333018	367	
	401	
	433	
1333020	367	
	401	
	433	
1333021	367	
	401	
	433	
1333024	367	
	401	
	433	
1333328	353	6
	377	6
	379	18
	381	18
	413	21
1333329	377	10
1333382	353	8
	377	12
	409	4
1333385	305	34
	361	16
	362	11
	394	15
	426	16
	427	11
1333386	361	1
	362	1
	394	1
	426	1
	427	1
1333389	351	6
	373	10
1333392	353	16
	377	21
	409	13

©1997 HYSTER COMPANY

NUMERICAL INDEX

PART NO	PAGE	REF NO
1333396	349	6
	351	5
	371	6
	373	6
	375	5
	405	6
	407	5
1333397	349	6
	351	5
	371	6
	373	6
	375	5
	405	6
	407	5
1333398	391	2
	392	2
1333399	391	2
	392	2
1333587	269	29
1333644	351	7
	373	11
1333825	131	47
1333840	115	3
	117	6
	117	6
	131	45
1333986	121	19
1333987	121	20
1334026	149	1
1334027	149	2
1334028	149	3
1334029	149	4
1334142	149	6
1334199	149	5
1334200	149	7
1334201	149	8
1334212	149	9
1334213	149	10
1334214	149	11
1334215	149	12
1334231	149	14
1334232	149	13
1334272	67	28
	93	22
	93	22
1334350	135	25
	137	24
1334352	135	25
	137	24
1334400	259	1
1334401	259	2
1334402	259	3
1334403	259	4
1334404	259	5
1334405	259	6
1334406	259	7
1334407	259	8
1334408	259	9
1334409	259	10
1334410	259	11
1334411	259	12
1334412	259	13
1334413	259	14
1334579	291	1
1334638	319	9
1334639	319	8
1334642	319	6
1334645	319	3
1334646	319	3
1334647	319	2
1334648	319	1
1334650	83	26
1334651	83	4
	99	3
1334653	83	10
	99	12
1334654	83	19
	99	16
1334655	83	6
1334656	83	8
	99	8
1334657	83	17
	99	22
1334658	83	23
1334660	83	25
1334661	83	22
	99	10
1334662	99	21
1334663	67	32
	83	12
1334664	83	20
	99	20
1334665	83	14
	99	17
1334666	83	16
	99	19
1334667	83	24
1334668	83	11
1334669	83	18
1334670	83	1
1334672	83	15
	99	18
1334673	83	27
1334675	68	6
	89	12
	97	27
1334676	88	1
1334678	103	2
	88	3
1334679	103	3
	88	2
1334680	103	5
	88	5
1334681	88	6
	97	22
1334682	103	6
	88	7
1334685	103	7
	88	10
1334691	87	1
1334692	87	2
1334694	87	4
1334695	87	5
1334696	87	6
1334697	102	9
	87	17
1334698	87	9
1334699	87	10
1334714	35	11
1334717	287	4
	289	4
1334718	311	7
1334723	311	1
1334760	291	2
1334771	287	18
	289	18
1334772	287	5
	289	5
1334785	287	37
	289	37
1334786	287	33
	289	33
1334791	305	25
1334796	295	13
	297	13
1334845	113	32
	117	4
	121	2
1334847	113	31
	117	3
	121	1
1334998	227	31
	229	30
	231	54
	233	50
1334999	185	10
	187	14
	190	3
	193	12
	215	5
	217	7
	223	11
	225	10
	227	33
	229	32
	231	11
	233	11
	235	13
	237	9
	239	11
	241	9
	243	9
	247	13
1335129	11	9
1335147	11	23
1335212	47	28
1335219	49	19
1335222	55	12
1335224	53	9
1335227	47	23
1335228	47	25
1335241	39	20
1335480	37	4
1335499	55	4
1335502	305	26
1335503	305	20
1335752	7	
1335754	7	
1335756	7	
1335761	7	3
1335762	7	5
1335763	7	6
1335764	21	1
1335765	21	2
1335825	49	15
1335827	51	5
1335828	51	7
1335888	291	34
1335890	291	34
1335892	295	1
1335894	295	1
1335898	20	13
	58	12
1335921	287	17
	289	17
1335922	327	
1335924	327	
1335927	35	4
1335937	35	4
1335942	142	
	40	
	41	
	42	
	43	
	45	
1335943	40	
	41	
	42	
	43	
	45	
1335944	24	
	25	
	26	
	27	
	28	
	29	
	30	
	31	
	32	
	33	
1335948	63	
1335954	58	10
	90	10
1335960	18	17
1335961	18	16
1335967	309	8
1335972	287	47
1335973	287	43
1335975	281	
1335976	281	
1335977	281	
1335978	281	
1335979	281	
1335980	281	
1335981	56	12
1335983	56	13
1335986	305	13
1335987	309	7
1336135	113	10
	127	39
1336137	127	27
1336171	231	31
	233	30
	237	23
	239	26
	241	19
	243	21
1336173	185	2
	187	18
	193	7

©1997 HYSTER COMPANY

NUMERICAL INDEX

PART NO	PAGE	REF NO	PART NO	PAGE	REF NO	PART NO	PAGE	REF NO	PART NO	PAGE	REF NO	PART NO	PAGE	REF NO
	215	8	1337138	78	2	1337697	89	9	1338292	339	17	1338434	94	
	223	7	1337148	5	4	1337698	89	10		341	17	1338435	94	1
	227	50	1337159	325	10	1337699	89	11	1338296	300	5	1338436	94	2
	229	50	1337179	3	1	1337789	227	30		301	5	1338437	94	3
	231	9	1337181	5	5		229	29	1338300	20	15	1338439	94	5
	233	9	1337182	35	5		231	53	1338308	20	18	1338440	94	6
	235	15	1337196	278	11		233	49	1338328	23	1	1338441	94	7
	237	7		309	27	1337800	9	41	1338332	20	9	1338442	94	9
	239	9	1337197	181	36	1337817	299	7	1338333	345	a	1338448	95	5
	241	7		183	41	1337900	391	2	1338400	87	11	1338449	88	9
	243	7	1337350	235	29		392	2	1338403	87	15		95	5
	247	15	1337382	320	12	1337905	379	31	1338404	102	15		95	5
1336605	11	14	1337386	229	37		381	31		87	16	1338453	106	2
1336870	185	12		231	38		411	24	1338405	102	16		89	13
	187	25		233	37		413	24		87	12	1338454	106	3
	244	6	1337392	185	11	1337940	358	1	1338406	84	1		89	14
	248	15		248	1	1337943	358	1	1338407	84	2	1338456	269	24
1336871	185	13	1337393	187	28	1337978	142	5	1338408	84	4		269	24
	187	26	1337626	334		1338087	366		1338409	101	6		269	26
	248	16	1337641	111	32		400			84	6		63	12
1336874	185	14	1337642	111	33		432		1338410	101	7		68	6
	187	27	1337643	111	34	1338088	366			84	7		75	18
	248	2	1337644	111	35		400		1338411	101	8		89	16
1337000	78	18	1337645	111	36		432			84	8	1338457	93	1
1337001	35	12	1337665	51	9	1338089	366		1338412	84	9	1338458	93	14
1337002	23	1	1337666	51	10		400		1338413	101	10	1338459	93	15
	61	1	1337677	102	17		432			84	10	1338460	93	15
1337008	35	12		87	18	1338098	367		1338415	101	13		97	30
1337012	18	13	1337678	81	3		401			84	12	1338461	93	21
1337014	18	12		97	4		433		1338416	84	13	1338462	93	23
1337043	309	1	1337680	81	18	1338178	11	1	1338417	101	15	1338463	93	20
1337051	287	38		97	16	1338223	43	5		84	14	1338465	93	26
	289	38	1337681	81	19	1338255	305	27	1338418	84	15	1338466	93	24
1337052	287	42	1337684	81	24		319		1338419	84	16	1338467	93	20
	289	42	1337685	81	25	1338256	305	19	1338420	101	18	1338468	90	11
1337069,	295			93	19		319			84	17		93	19
1337069	287			97	28	1338258	20	11	1338422	101	21		93	27
	291		1337690	89	3	1338259	287	26		84	20	1338470	93	30
	299		1337691	104	7		289	26	1338424	101	23	1338471	93	29
1337070	287			89	5	1338260	317	5		84	22	1338472	75	17
	291		1337692	104	8	1338262	317	9	1338427	84	25		93	28
	295			89	6	1338264	58	17	1338428	101	28	1338473	269	23
	299		1337693	104	9	1338268	58	16		84	27	1338528	391	1
1337091	317	16		81	22	1338276	20	19	1338429	84	28	1338530	391	1
1337093	35	2		89	7		57	14	1338430	101	31	1338616	359	1
1337104	343			97	18		58	18		84	30	1338618	359	1
1337106	35	3	1337694	104	10	1338278	58	1	1338431	101	32	1338642	360	1
1337107	35	1		72	2	1338282	20	1		84	31		393	1
1337108	317	11		89	8		57	1	1338432	101	33		425	1
1337114	281	18	1337695	104	11	1338283	277	21		84	32	1338645	360	1
1337118	20	12	1337696	104	1	1338286	278	9	1338433	101	34		393	1
	58	11		72	3	1338291	282	8		84	33		425	1

©1997 HYSTER COMPANY

NUMERICAL INDEX

PART NO	PAGE	REF NO	PART NO	PAGE	REF NO	PART NO	PAGE	REF NO	PART NO	PAGE	REF NO	PART NO	PAGE	REF NO
1338739	337	4		39	10		201	13	1339746	339	53	1341487	357	
1338740	337	3	1339154	39	13		205	13	1339748	339	52	1341506	357	
1338741	337	8		39	13	1339461	198	73	1339749	339	11	1341509	357	
1338742	337		1339155	39	14		201	12		341	11	1341514	357	
1338743	337	1		39	14		205	12	1339759	131	27	1341519	357	
1338744	337	2	1339156	45	14	1339626	171	3		133	31	1341524	357	
1338752	105	1	1339157	39	11	1339628	168	8	1339769	111	1	1341542	383	
	90	1		39	11	1339632	165	3	1339770	339	52	1341545	383	
1338754	105	4	1339159	39	1		170	17	1339773	3	21	1341547	383	
	269	19		39	1	1339635	23	26	1339776	3	24	1341550	383	
	269	26	1339160	39	3	1339636	339	34	1339777	3	20	1341575	383	
	83	32	1339161	39	5		341	34	1339786	5	6	1341578	383	
	90	3	1339162	39	4	1339637	278	10	1339789	131	24	1341580	383	
	99	26	1339163	39	8	1339639	78	9		133	28	1341583	383	
1338761	155	28		39	8	1339647	325	5	1339791	325	19	1341608	383	
1338763	159	1	1339164	39	6	1339655	61	28	1339793	339	19	1341611	383	
1338764	159	2		39	6	1339657	61	29		341	19	1341613	383	
1338765	159	3	1339165	39	6	1339672	11	2		5	28	1341616	383	
1338766	159	4		39	6	1339674	11	5	1339799	339	34	1341641	383	
1338767	159	7	1339166	39	6	1339690	61	29		341	34	1341644	383	
1338768	159	6		39	6	1339691	45	22	1340958	189	10	1341646	383	
1338769	159	8	1339167	39	15	1339694	5	14	1341004	371		1341649	383	
1338770	159	9		39	15	1339700	325	4	1341005	349		1341675	421	
1338771	159	10	1339168	39	15	1339702	339	8		405		1341676	389	
1338772	159	11		39	15		341	8	1341007	371		1341678	421	
1338773	159	12	1339169	39	15	1339706	111	8	1341008	349		1341679	389	
1338774	159	13		39	15	1339713	339	55		405		1341682	389	
1338775	159	15	1339174	261		1339715	339	28	1341010	371		1341683	421	
1338776	83	30	1339265	151	8		341	28	1341013	349		1341685	389	
	99	24		153	34	1339717	172	19		371		1341714	373	
1338777	83	31		155	8	1339719	3	26		405		1341717	373	
1338779	78	11	1339271	23	25	1339720	129	19	1341019	349		1341719	373	
	83	32	1339272	23	24		131	51	1341024	349		1341722	373	
1338780	63	15	1339273	23	26		133	64	1341210	351		1341879	375	
	83	33	1339300	339	18		135	19	1341213	351			375	
	99	28		341	18		137	19	1341218	351		1341882	375	
1338787	83	29	1339328	57	9	1339723	339	4	1341223	351			375	
1338788	81	28	1339332	287	39		341	4	1341228	351		1341884	375	
1338790	81	29		289	39	1339724	339	5	1341395	355			375	
1339102	121	18	1339333	300	3		341	5	1341398	355		1341887	375	
	145	37	1339334	287	41	1339725	339	14	1341403	355			375	
1339128	37	25		289	41		341	14	1341408	355		1342045	385	
1339131	37	27	1339425	131	9	1339727	339	15	1341413	355			417	
1339132	37	27	1339434	197	64		341	15	1341432	355		1342048	385	
1339133	37	27	1339438	131	11	1339729	339	16	1341435	355			417	
1339134	37	27		133	11		341	16	1341440	355		1342051	385	
1339135	37	28	1339444	197	12	1339731	339	35	1341445	355		1342053	417	
1339139	37	28		201	11		341	35	1341450	355		1342054	385	
1339144	37	28		205	11	1339737	339	27	1341469	357		1342118	381	
1339149	40	8	1339447	229	58		341	27	1341472	357			413	
1339152	45	11	1339448	229	57	1339743	56	9	1341477	357		1342120	377	
1339153	39	10	1339459	197	65	1339745	339	54	1341482	357			381	

©1997 HYSTER COMPANY

NUMERICAL INDEX

PART NO	PAGE	REF NO
1342121	353	
	381	
1342123	377	
1342124	353	
1342129c	353	
1342129	377	
1342134	353	
1342139	353	
1342222	414	
1342225	414	
1342230	414	
1342251	415	
1342280	414	
1342283	414	
1342288	414	
1342373	413	
1342374	381	
	413	
1342376	413	
1342377	381	
	413	
1342379	381	
1342380	413	
1342383d	353	
1342384	377	
1342391	381	
1342392	353	
1342393	353	
1342407	379	
	381	
1342410	379	
	381	
1342412	379	
	381	
1342415	379	
	381	
1342474	407	
1342477	407	
1342482	407	
1342600	95	8
1342611	93	
1342613	93	3
1342614	93	9
1342615	93	10
1342752	149	
1342786	149	5
1342787	149	7
1342819	149	14
1342997	145	26
1343219	295	10
	297	10
1343414	113	58
	115	38
	117	33
	125	35
	127	2
1343421	111	15
1343434	111	7
1343443	339	6
	341	6
1343448	129	1
	131	25
	133	29
	135	1
	137	1
1343449	113	59
	115	45
	117	32
	125	36
	127	3
	129	5
	131	22
	133	26
	135	5
	137	5
	325	1
1343452	325	9
1343453	61	28
1343458	5	1
1343460	297	31
1343461	339	40
	341	40
1343466	58	15
1343471	58	9
1343473	5	2
1343478	300	7
	301	7
1343479	300	4
	301	4
1343480	300	6
	301	6
1343481	339	41
	341	41
1343482	339	48
	341	48
1343484	339	49
	341	49
1343508	317	15
1343531	339	42
	341	42
1343533	287	27
	289	27
1343537	309	19
1343540	317	3
1343541	317	1
1343550	129	15
	131	50
	133	60
	135	15
	137	16
1343553	317	10
1343557	287	46
	289	46
1343560	325	14
1343572	309	18
1343573	309	5
1343574	309	16
1343577	282	1
1343578	282	2
1343579	282	3
1343585	78	21
1343586	35	11
1343593	282	5
1343594	282	9
1343595	181	42
	183	48
1343596	181	50
	183	21
1343597	181	51
	183	44
1343598	282	4
1343607	309	14
1343612	281	
1343613	281	
1343614	281	
1343618	23	1
	61	1
1343623	23	1
1343630	317	4
1343635	151	1
	153	26
	155	1
1343636	181	39
	183	49
1343638	151	13
	153	38
1343643	142	
1343647	3	6
1343648	113	24
	133	44
1343831	311	5
1343838	358	
1343839	423	
1343840	423	
1343841	358	
1343842	391	
1343843	391	
1343844	424	
1343845	424	
1343846	359	
1343847	359	
1343887	283	6
1343989	379	21
	381	21
1343990	360	2
	393	2
	425	2
1344146	303	1
1344274	265	11
1344798	283	7
1344799	283	10
1345022	168	13
1345026	231	45
	237	33
1345027	231	39
	237	29
1345029	231	44
	237	32
1345181	351	8
	373	12
1345183	351	8
	373	12
1345190	365	9
	397	14
1345199	397	9
	430	10
1345201	381	30
	413	25
1345204	397	10
	430	11
1345216	349	2
	351	2
	371	2
	373	2
	375	2
	391	1
	392	1
	405	2
	407	2
1345218	358	2
	359	2
	423	2
	424	2
1345219	358	2
	359	2
	423	2
	424	2
1345220	358	2
	359	2
1345225	423	1
1345226	423	1
1345239	424	1
1345240	424	1
1345263	358	4
	359	4
	423	4
	424	4
1345264	358	1
	359	1
	423	1
	424	1
1345267	360	1
	393	1
	425	1
1345311	411	
	413	
1345314	411	
	413	
1345319	411	
	413	
1345348	365	17
1345352	358	6
	359	7
1345354	337	13
	361	5
	362	5
	394	5
	426	5
	427	5
1345359	379	
	381	
1345362	379	
	381	
1345364	379	
	381	
1345367	379	
	381	
1345401	379	12
	381	12
1345403	353	21
	377	23
	409	20
1345412	365	4
1345413	365	4
1345423	430	16
1345496	365	
	365	
1345499	365	

©1997 HYSTER COMPANY

NUMERICAL INDEX

PART NO	PAGE	REF NO
	365	
1345516	365	
1345568	429	
1345571	429	
1345573	429	
1345574	429	
1345575	429	
1345676	113	34
	121	11
1345677	113	33
	121	12
1345689	237	27
	239	5
1345690	237	28
	239	6
1345825	23	30
	61	9
1345939	11	17
1345991	131	10
	133	10
1345998	11	10
1346872	113	51
	117	10
	121	8
	127	19
1346874	115	7
1347004	183	47
	282	
1347013	151	15
1347018	5	17
1347020	305	35
1347021	151	16
	153	8
1347024	312	
1347025	309	26
1347026	23	3
	61	3
1347027	325	38
1347028	325	39
1347029	325	40
1347030	325	41
1347043	21	9
1347045	21	8
	5	19
	7	14
1347048	322	
1347051	45	21
1347064	275	
1347067	197	57
	205	70
	207	38
	211	32
	213	27
1347072	23	4
	61	4
1347075	155	25
1347076	23	17
	61	20
1347088	5	13
1347090	320	7
1347091	320	6
1347096	5	1
1347100	155	14
1347101	155	15
1347105	155	16
1347106	155	15
1347108	155	16
1347110	5	12
1347112	339	43
	341	43
1347113	320	5
1347114	181	54
1347116	320	13
1347119	18	14
1347121	213	37
1347122	213	38
1347125	20	10
1347126	20	10
1347128	57	10
1347133	155	19
1347135	309	25
1347137	185	
1347153	129	20
	135	20
	137	42
1347156	325	25
1347157	35	3
1347158	300	8
	301	8
1347159	172	7
1347160	3	17
1347161	3	18
1347164	113	30
1347166	113	4
	127	6
1347175	5	8
1347202	111	23
	113	62
	125	21
1347204	227	7
	229	6
	235	2
	247	2
1347205	227	4
	229	4
	235	1
	247	1
1347206	227	10
	235	4
1347208	227	56
	235	34
1347209	227	6
	235	35
	235	7
1347210	227	16
	229	15
	231	13
	233	12
	235	31
	237	11
	239	19
	241	10
	243	10
	247	29
1347212	325	29
1347224	187	21
1347300	299	10
1347970	319	11
1347971	319	11
1350036	153	19
1350042	153	16
1350200	213	37
1350215	155	13
	339	58
	341	52
	5	20
1350218	227	37
	229	38
	231	18
	233	17
1350219	227	38
	231	19
	233	18
1350220	227	39
	229	40
	231	20
	233	19
1350221	227	40
	229	41
	231	21
	233	20
1350222	227	41
	231	22
	233	21
1350223	227	42
	231	23
	233	22
1350226	135	21
	137	20
1350231	7	12
	7	12
1350234	325	46
1350236	331	
1350238	331	
1350241	5	18
1350260	58	1
1350261	20	1
	57	1
1350273	325	21
1350274	299	38
1350275	299	40
1350276	299	37
1350282	181	13
	183	13
	278	3
	5	24
1350285	5	16
1350286	129	6
	131	1
	133	1
	135	6
	137	6
1350290	129	9
	135	9
	137	10
1350291	129	8
	135	8
	137	9
1350292	135	32
	137	31
1350298	129	13
	135	13
	137	14
1350299	129	14
	135	14
	137	15
1350321	3	19
1350400	113	52
	117	7
	127	20
1350682	133	59
1350706	343	4
1350707	343	1
1350986	142	1
1350987	142	2
1350988	133	45
	142	3
1350989	142	4
1350990	142	6
1350991	133	45
	142	7
1351000	129	10
	135	10
	137	11
1351008	5	11
1351011	135	30
1351014	7	
1351016	7	
1351017	18	11
	19	10
	56	11
1351043	339	30
	341	30
1351047	339	27
	341	27
1351048	339	28
	341	28
1351049	339	29
	341	29
1351059	197	2
1351060	18	7
	19	7
	56	7
1351061	18	6
	19	6
	56	6
1351064	339	31
	341	31
1351068	219	1
	221	1
1351069	219	3
	221	4
1351070	221	8
1351076	221	9
1351077	325	42
1351083	201	38
	219	
1351084	113	7
1351089	129	21
1351094	198	74
1351095	198	74
1351096	18	5
	19	5
	56	5
1351098	18	4
	19	4
	56	4
1351099	221	13
1351133	111	42
	197	58

©1997 HYSTER COMPANY

NUMERICAL INDEX

PART NO	PAGE	REF NO	PART NO	PAGE	REF NO	PART NO	PAGE	REF NO	PART NO	PAGE	REF NO	PART NO	PAGE	REF NO
	201	34	1352090	173	12		329		1354105	283	1		133	22
	208	66	1352098	131	14		333		1354109	3	23	1354264	181	26
	211	33	1352099	131	15	1352465	331		1354113	113	27	1354265	131	48
	251	14	1352100	131	16	1352470	331	6	1354114	113	44	1354300	282	11
1351134	303	1	1352101	131	17	1352471	331	7		131	49	1354323	181	14
1351135	303	2	1352104	227	43	1352472	331	7	1354117	113	45		183	14
1351139	227	12		229	42	1352482	331	7		115	9	1354336	127	25
	231	32		231	40	1352550	35	1		117	1	1354343	11	8
	233	31		233	38	1352558	215		1354125	197	24	1354356	131	44
	235	6	1352105	227	44	1352568	253	14		251	6	1354373	198	71
1351140	325	52		229	43	1352569	253	9	1354140	9	32		201	15
1351145	111	29		231	41	1352571	253	9		9	6		205	15
1351146	111	30		233	39	1352575	173		1354153	11	8	1354379	197	40
1351176	20	6	1352123	113	46	1352578	3	12	1354155	11	8		202	77
	57	6		115	37	1352599	188	1	1354157	11	8		205	67
	58	5		117	31		189	9	1354159	11	8		207	42
1351177	20	8		125	38	1352600	188	2	1354165	11	4		211	6
	57	8		127	12	1352602	188	9	1354171	11	19		213	4
	58	7	1352124	5	21		189	4	1354201	201	62	1354380	5	36
1351178	21	6	1352125	5	22	1352603	188	10		213	22	1354382	217	12
1351431	9	1	1352126	5	23		189	5	1354202	197	30	1354383	217	13
1351432	9	1	1352140	23	22	1352605	188			211	24	1354385	197	34
1351681	205	76		61	25	1352606	183	57	1354203	113	29		201	52
	208	69	1352142	227	58		188	11		115	19	1354746	331	3
	211	7		229	59		189	11		117	52	1354748	331	5
	213	5		231	46	1352612	197	13		119	19	1354775	281	1
1351682	205	75		233	42		201	48		125	3	1354776	281	2
	208	68		235	21		205	48		127	17	1354777	281	22
	211	41		237	37		207	11	1354204	227	47	1354778	281	8
	213	35		239	15	1352616	309	31		229	46	1354780	281	5
1351683	183	45		243	30		325	54		231	60	1354782	281	10
1352015	69	1	1352144	131	37	1352617	190			233	55	1354783	281	9
1352016	69	2	1352145	198	75	1352625	198	82	1354209	253	22	1354784	281	12
1352032	334	7		227		1352641	168	19	1354227	253	20	1354785	281	13
1352036	334		1352157	325	50	1352642	168	20	1354228	253	20	1354786	281	14
1352040	327	3	1352171	198	75	1352645	197	70	1354229	253	36	1354787	281	15
1352041	327	4		235			201	30	1354237	227	14	1354788	281	16
	331	4	1352178	198	72	1353464	398	25		229	12	1354792	281	23
1352042	327	5		201	14	1353530	365			231	48	1354793	281	24
1352048	327	6		205	14		365			233	44	1354796	281	26
1352049	327	7	1352184	253	9		365			235	8	1354804	281	4
	331	8	1352185	254	39		365	18		237	36	1354805	281	11
1352066	197	54	1352187	254	38		397	4		239	13	1354806	281	17
	201	37	1352188	253	10		430	17		239	15	1354807	281	25
	205	77	1352189	253	9	1354046	49	29		243	28	1354814	55	1
	208	65	1352190	254	47	1354047	49	31		243	30	1354902	379	36
	211	29		257	18	1354049	281	3	1354248	253	37		381	36
	213	24	1352191	253	6	1354076	163		1354251	168	23		411	15
1352069	211	20		257	6	1354088	181	9	1354252	168	24		413	15
	223		1352453	327	6	1354090	3	22	1354253	168	9	1354903	379	22
1352088	183	24	1352456	327	6	1354092	113	39	1354254	168	22		381	22
	195		1352463	327		1354096	145		1354259	131	18	1354904	365	16

©1997 HYSTER COMPANY

NUMERICAL INDEX

PART NO	PAGE	REF NO	PART NO	PAGE	REF NO	PART NO	PAGE	REF NO	PART NO	PAGE	REF NO	PART NO	PAGE	REF NO
	397	6	1355220	355	3	1355598	383		1356068	421			233	46
	430	6	1355221	355	4	1355599	383		1356070	389		1356513	117	59
1354906	397	18	1355222	355			383		1356071	389			127	36
1354907	397	18	1355276	355		1355601	383		1356074	389		1356514	127	40
1354911	379	30	1355277	355		1355606	383		1356100	3	25	1356522	165	3
	411	25	1355284	357	3	1355607	383		1356103	274	18		171	3
1354915	353	24		414	3		383			325	22	1356523	141	
	377	13		415	3	1355609	383		1356105	197	56	1356547	24	
	409	5	1355285	357	4	1355610	383	4		201	39		25	
1354916	353	24	1355286	357		1355619	383			205	39		26	
	377	13	1355305	322		1355620	383			207	29		27	
	409	5	1355322	312	1		383			211	31		28	
1354917	353	24	1355326	312	11	1355622	383			213	26		29	
	377	13	1355327	312	12	1355711	383	4	1356108	197	51		30	
	409	5	1355328	312	13	1355713	383	3		201	69		31	
1354918	430	19	1355329	312	14	1355714	383			205	81		32	
1354919	365	13	1355330	312	15	1355728	383			208	73		33	
1354921	365	13	1355331	312	16	1355729	383			211	37	1356556	385	
1354922	365	16	1355332	312	19		383			213	31		417	
	397	6	1355334	312	21	1355731	383		1356115	168	21	1356557	385	
	430	7	1355335	312	20	1355740	383		1356125	197	31		417	
1354923	360	2	1355337	312		1355741	383		1356131	211	25	1356560	385	
	393	2	1355348	287	17		383			213	23		417	
	425	2		289	17	1355743	383		1356137	11	6	1356565	385	
1354956	411	10	1355354	357		1355748	383		1356292	386	3		417	
	413	10	1355355	357		1355749	383			390	3	1356566	385	
1354961	398	26		357			383			418	3		417	
1354962	379	37	1355357	357		1355751	383	4		422	3	1356574	385	
	381	37	1355366	357		1355752	383		1356309	287		1356575	385	
1354967	411	14	1355367	357		1355757	383			291		1356578	385	
	413	14		357		1355758	383			295		1356580	417	
1355127	355	3	1355369	357			383			299		1356581	417	
1355145	355		1355390	357		1355760	383		1356313	198	81	1356583	385	
1355146	355		1355391	357		1355910	414		1356318	362	6	1356584	385	
	355			357			414			427	6		417	
1355148	355		1355393	357		1355911	414		1356369	131	40	1356661	386	3
1355157	355		1355409	357	3		414		1356390	168	10		390	3
1355158	355		1355410	357	4	1355928	414		1356391	113	38		418	3
	355		1355411	357			414		1356393	325	3		422	3
1355160	355		1355413	357		1355929	414		1356396	97		1356662	386	
1355177	355		1355414	357			414		1356404	168	11		390	
1355178	355			357		1355958	414		1356437	168	25		422	
	355		1355416	357			414			170	4	1356675	421	
1355180	355		1355433	357		1355959	414		1356438	168	3	1356676	421	
1355189	355	4	1355434	357			414		1356454	113	50	1356678	389	
1355198	355			357		1356058	414	4		117	49	1356679	389	
1355199	355		1355436	357			415	4	1356459	129	11		421	
	355		1355496	383	3	1356061	389			135	11	1356682	389	
1355200	355		1355497	383		1356062	389			137	12	1356687	389	
1355217	355		1355587	383		1356064	421		1356501	227	21	1356688	389	
	355			383		1356065	389			229	20		421	
1355219	355		1355589	383			421			231	50	1356691	389	

©1997 HYSTER COMPANY

NUMERICAL INDEX

PART NO	PAGE	REF NO
1356696	421	
1356697	421	
1356746	337	
1356747	414	8
	415	8
1356748	383	15
	415	12
1356749	355	14
	357	14
	383	14
	414	9
	415	9
1356750	355	13
	383	12
1356751	357	13
	383	12
1356752	355	14
	357	14
1356759	415	
1356762	415	
1356767	415	
1356783	415	
	415	
1356786	415	
	415	
1356791	415	
1356838	40	21
	55	23
1357046	275	16
1357048	275	6
1357049	275	13
1357176	275	12
1357178	275	10
1357179	275	9
1357180	275	11
1357184	149	
1357196	322	10
1357197	322	1
1357199	322	3
1357201	322	5
1357352	343	8
	345	8
1357353	343	44
	345	44
1357354	343	10
	345	10
1357355	343	26
	345	26
1357356	343	5a
	345	5
1357361	343	25
	343	43
	343	57
	345	25
	345	43
	345	57
1357364	343	39
	345	39
1357367	281	27
1357369	343	7
	345	7
1357703	163	12
1357707	164	12
1357716	23	1
1357717	23	1
	61	1
1357721	23	1
	61	1
1357739	163	10
1357740	163	2
1357741	163	18
1357742	163	3
1357743	163	19
1357745	163	13
1357746	163	5
1357747	163	17
1357748	163	14
1357749	163	15
	164	11
1358096	37	3
1358097	37	5
1358098	37	6
1358099	37	7
1358150	37	8
1358151	37	9
1358153	37	12
1358155	37	14
1358156	37	15
1358157	37	16
1358158	37	17
1358159	37	18
1358161	37	20
1358162	37	21
1358164	39	2
1358166	39	7
1358173	39	12
	39	12
1358223	319	7
1358224	319	10
1358225	319	10
1358228	145	24
1358231	145	7
1358233	145	5
1358234	145	12
1358235	145	6
1358236	145	10
1358237	145	11
1358238	141	19
1358239	141	17
1358240	141	25
1358241	141	21
	145	28
	147	21
1358242	141	22
	145	29
	147	22
1358243	141	23
	145	30
	147	23
1358244	141	20
	141	32
	145	27
1358245	141	18
	147	18
1358276	39	16
1358277	39	17
1358278	39	18
1358279	39	19
1358282	39	36
1358284	37	23
1358287	37	26
1358288	37	26
1358293	37	30
1358295	37	31
1358297	37	33
1358298	37	34
1358299	37	36
1358327	119	45
1358351	429	
1358352	397	
	397	
1358355	397	
	397	
1358500	43	
1358501	37	38
1358502	37	39
1358503	37	40
1358504	37	41
1358505	37	42
1358506	37	43
1358507	37	44
1358508	37	45
1358509	37	48
	41	11
1358510	37	46
1358512	39	21
1358514	39	23
1358515	115	1
	117	47
	39	24
1358517	39	25
1358520	40	1
1358521	40	2
1358522	40	3
	45	27
1358523	40	4
1358524	39	34
	40	5
1358525	40	6
1358526	40	7
1358527	40	9
1358528	40	10
1358529	45	1
1358532	45	2
	53	27
1358534	45	3
1358536	45	7
1358539	45	10
1358540	45	11
1358541	45	12
1358543	45	13
1358545	45	15
1358547	41	3
1358548	41	3
1358549	41	4
1358550	41	5
1358551	41	6
1358552	41	7
	42	17
1358553	41	8
1358554	41	9
1358555	41	10
1358557	41	2
1358562	40	14
1358563	40	15
1358564	40	16
1358565	40	17
1358566	40	18
1358569	40	22
1358574	39	30
1358625	39	31
1358626	39	33
1358628	37	49
1358629	37	50
1358635	37	57
1358636	37	58
1358638	42	6
1358639	41	1
1358640	45	18
1358682	133	45
	142	8
1358683	142	9
1358684	142	10
1358837	261	1
1358838	261	2
1358839	261	3
1358840	261	4
1358841	261	5
1358842	261	6
1358843	261	7
1358844	261	8
1358845	261	9
1358846	261	10
1358847	261	11
1358848	261	12
1358849	261	13
1358850	261	14
1358851	261	15
1358852	261	16
1358853	261	17
1358854	261	18
1358855	261	19
1358856	261	20
1358858	281	21
1358859	198	96
	277	
1358861	277	1
1358862	277	27
1358863	277	2
1358864	277	3
1358865	277	4
1358866	277	5
1358867	277	6
1358868	277	7
1358869	277	8
1358870	277	12
1358871	277	13
1358872	277	14
1358873	277	15
1358874	277	16
1358875	277	17
1358876	277	18
1358877	277	19
1358878	277	20
1358891	45	5
1358892	39	26
1358911	265	
1358937	415	
	415	
1358940	415	

©1997 HYSTER COMPANY

NUMERICAL INDEX

PART NO	PAGE	REF NO	PART NO	PAGE	REF NO	PART NO	PAGE	REF NO	PART NO	PAGE	REF NO	PART NO	PAGE	REF NO
	415			53	26	1360747	42	13	1360899	24	10	1361536	63	47
1358945	415		1360216	45	8	1360748	142	11	1361088	127	27	1361537	106	5
1358969	386		1360217	45	9	1360749	42	15	1361101	339	8		63	48
	390		1360220	40	11	1360759	55	28		341	8	1361538	63	38
	422		1360221	40	12	1360792	319	12	1361102	339	18	1361541	73	4
1358970	386	9	1360222	40	13	1360793	319	17		341	18	1361542	73	11
	390	9	1360224	40	19	1360794	319	18	1361104	155	14	1361544	97	23
	418	9	1360331	429		1360798	319	14	1361111	78	1	1361545	81	11
	422	9	1360334	429		1360802	71	6		87	13	1361546	105	2
1358972	386	14	1360339	429		1360804	71	9	1361112	78	1		90	2
	390	14	1360361	429		1360805	71	10	1361121	183	46	1361547	90	8
	418	14	1360364	429		1360806	71	10	1361139	75	15	1361548	269	28
	422	14	1360369	429		1360808	63	1	1361140	211	23	1361549	93	32
1358973	383		1360386	365	12		71		1361142	339	51	1361584	325	52
1359100	53	35		397	17	1360811	81	1		341	51	1361586	61	27
1359102	53	31		430	14	1360812	67	12	1361164	122	14	1361596	133	33
1359103	53	30	1360507	365		1360815	267			125	1	1361627	61	27
1359234	353			365			269			141	14	1361675	24	8
1359437	137	43		365		1360816	83	28		145	32	1361676	24	5
1359450	168	18		365	19	1360822	103	10		147	14	1361677	24	13
	170	3		397	5	1360823	83	13	1361276	415		1361678	28	1
1359452	113	2		430	20	1360824	83	21	1361281	415		1361679	28	11
1359460	127	24	1360508	430	13	1360841	115	2	1361302	386	4	1361680	28	4
1359569	155	12	1360534	379	27		117	5		390	4	1361681	28	6
1359580	23	21		381	27	1360859	43	4		418	4	1361682	28	16
	61	24	1360536	398	24	1360860	43	5		422	4	1361683	28	7
1359581	23	6	1360537	398	24	1360862	43	5	1361305	183	2	1361684	28	8
1359600	3	16	1360538	397	23	1360864	43	7		213	41	1361685	28	22
1359608	151	23	1360544	413	26	1360865	43	8	1361501	319	16	1361686	28	9
	153	5	1360548	365	7	1360866	43	9	1361502	319	15	1361687	28	10
	155	29	1360549	365	6	1360872	9	16	1361503	319	19	1361688	28	2
1359620	339	50		397	11	1360878	25	1	1361504	319	5		30	3
	341	50	1360718	3	11	1360879	25	3	1361505	319	18	1361689	28	12
1359624	198	95	1360725	40	20	1360880	25	26	1361508	67	14	1361690	28	14
	202	73	1360726	39	28	1360881	25	8	1361509	67	33	1361691	28	13
	211	8	1360727	39	29	1360882	25	10	1361520	63	11	1361692	28	15
	213	6	1360728	39	32	1360883	25	21	1361521	63	35	1361694	26	1
1359983	35	1	1360729	39	27	1360884	25	23	1361522	65	17	1361695	26	2
1360086	211	22	1360730	37	51	1360885	25	9	1361523	65	19	1361696	26	3
	213	21	1360731	42	5	1360886	25	11	1361524	104	6	1361697	26	7
1360127	383	15	1360733	45	26	1360887	25	13		65	13	1361698	26	4
1360146	201	33	1360734	40	25	1360888	25	14		72	9	1361699	26	5
	207	8	1360735	40	23	1360889	25	15	1361525	63	36	1361700	26	8
	211	49	1360736	40	24	1360890	25	16	1361526	65	4	1361701	26	6
	213	39	1360737	45	19	1360891	25	17	1361527	72	1	1361702	26	9
	253	28	1360738	45	4	1360892	25	18	1361528	72	6	1361703	26	11
1360203	37	2	1360740	42	7	1360893	25	19	1361529	68	1	1361704	26	11
1360204	37	10	1360741	42	8	1360894	32	13	1361531	71	7	1361705	26	11
1360210	37	35	1360743	42	9	1360895	25	2	1361532	71	12	1361706	26	11
1360211	39	22	1360744	42	10	1360896	24	11	1361533	71	2	1361707	26	12
1360213	45	2	1360745	42	11	1360897	24	1	1361534	69	10	1361708	26	12
1360215	45	2	1360746	42	12	1360898	24	3	1361535	63	46	1361709	26	12

©1997 HYSTER COMPANY

NUMERICAL INDEX

PART NO	PAGE	REF NO	PART NO	PAGE	REF NO	PART NO	PAGE	REF NO	PART NO	PAGE	REF NO	PART NO	PAGE	REF NO
1361710	26	13	1361771	139	7	1361833	33	37	1361893	31	19	1362387	397	12
1361711	26	13	1361772	139	4	1361834	33	10	1361894	25	6	1362390	379	11
1361712	26	13	1361773	139	5	1361835	33	27	1361895	31	21		381	11
1361713	26	13		32	1	1361837	31	2	1361896	25	22	1362433	379	40
1361714	26	10	1361774	139	6	1361838	31	5	1361897	25	7		381	40
1361715	26	10	1361775	139	8	1361839	31	3	1361898	25	12		411	35
1361716	26	10	1361776	139	9	1361840	31	6		32	7		413	35
1361717	27	18	1361777	139	10	1361841	31	7	1361948	361	14	1362459	267	1
1361718	27	24	1361779	139	12	1361842	31	8		394	13		269	1
1361719	27	25	1361780	139	13	1361843	31	9		426	14	1362460	267	2
1361720	27	1	1361781	139	14	1361844	31	11	1362000	25	24		269	2
1361721	27	2	1361782	139	15	1361845	31	12	1362001	25	25	1362461	267	3
1361722	27	4	1361783	139	16	1361846	31	14		28	17		269	15
1361723	27	5	1361784	139	17	1361847	31	15	1362002	25	4	1362462	269	3
1361724	27	6	1361785	139	18	1361850	260	11	1362003	24	4	1362463	269	4
1361725	27	7	1361786	139	21	1361851	260	1		25	5	1362464	269	5
1361726	27	9	1361787	139	22	1361852	260	5	1362005	24	2	1362465	269	6
1361727	27	10	1361788	139	25	1361853	260		1362006	24	12	1362466	269	10
1361728	27	11	1361789	139	26	1361854	260	7	1362007	24	6	1362467	269	7
1361729	27	12	1361791	29	4	1361855	260	15	1362008	24	7	1362468	269	9
1361730	27	13	1361794	151	27	1361856	260	2	1362009	24	9	1362469	267	4
1361731	27	14	1361797	151	28	1361857	260	13	1362011	28	20		269	11
1361732	27	15	1361798	30	2	1361858	260	3	1362012	28	3	1362470	267	5
1361733	27	16	1361801	30	17	1361859	260	4	1362013	28	19		269	14
1361734	27	17	1361802	30	9	1361860	260	12	1362015	28	5	1362471	267	6
1361735	27	8	1361804	30	11	1361861	260	10	1362016	27	22		269	12
1361736	27	19	1361805	30	12	1361862	260	6	1362017	29	6	1362472	267	8
1361737	27	23	1361806	30	13	1361863	260	8	1362036	258	10		269	17
1361738	27	20	1361807	30	14	1361864	260	9	1362037	258	8	1362714	5	9
1361739	27	21	1361809	33	9	1361865	260	14	1362038	258	12	1363000	267	10
1361740	29	5	1361810	33	5	1361868	30	19	1362039	258	13		269	16
1361742	29	3	1361811	33	2		32	11	1362040	258	15	1363003	72	7
1361743	29	1	1361812	33	38	1361873	29	7	1362042	258	14	1363004	72	8
1361744	29	9	1361813	33	25		33	31	1362049	9	5	1363006	72	5
1361745	29	10	1361814	33	7	1361875	30	16	1362052	9	8	1363862	133	34
1361746	29	11	1361815	33	4	1361878	30	18	1362053	9	9	1363885	227	11
1361747	29	12	1361816	33	3		33	36	1362058	9	14		235	5
1361749	32	9	1361817	33	1	1361879	30	7	1362061	9	17	1363886	247	6
1361750	32	6	1361818	33	11	1361880	33	8	1362062	9	18	1363896	113	6
1361751	138		1361819	33	12	1361881	31	20	1362063	9	19	1363916	3	8
1361752	32	4	1361820	33	13		33	33	1362064	9	19	1363917	3	9
1361753	32	5	1361821	33	15	1361882	33	35	1362065	9	7	1363918	3	10
1361754	32	2	1361823	33	18	1361884	33	19	1362069	211	52	1363921	168	12
1361755	32	9	1361824	33	20	1361885	29	8		213	45	1363956	165	13
1361756	32	10	1361825	33	17		32	7		274		1363957	165	14
1361760	32	8	1361826	33	32		33	29	1362070	55	22	1363958	165	12
1361761	32	3	1361827	33	21		33	34	1362084	277	15	1364271	309	13
1361765	151	30	1361828	33	22	1361888	31	18	1362114	37	52	1365062	430	15
1361766	151	29	1361829	33	23	1361889	25	20	1362115	37	53	1365140	377	10
1361768	139	1	1361830	33	24		31	17	1362116	37	54	1365276	299	45
1361769	139	2	1361831	33	28	1361890	31	16	1362117	37	55	1365500	429	
1361770	139	3	1361832	33	26	1361891	31	13	1362118	37	56	1365502	429	

©1997 HYSTER COMPANY

NUMERICAL INDEX

PART NO	PAGE	REF NO
1365505	429	
1365514	429	
1365517	429	
1365523	429	
1365825	40	25
1365859	181	57
1365860	181	58
	183	23
1365876	278	1
1365877	278	2
1365887	21	6
1365888	251	16
1365894	125	13
1365895	151	31
1365923	35	1
1366569	385	
	417	
1366733	385	
	417	
1366736	385	
	417	
1366739	385	
1366741	417	
1366742	385	
1367100	275	14
1367101	275	18
1367102	275	15
1367103	275	17
1367104	275	21
1367106	275	19
1367107	275	20
1367119	163	
1367137	9	20
1367148	9	44
1367154	9	45
1367190	25	
	27	
	28	
	30	
	31	
	33	
1367191	33	14
1367430	287	3
	289	3
1367431	325	15
1367433	125	6
1367434	125	12
1367435	125	14
1367462	198	77
1367472	190	
	198	86
1367473	198	89
1367474	198	80
1367517	138	1
1367519	138	2
1367520	138	3
1367522	138	4
1367523	138	5
1367524	138	6
1367525	138	7
1367526	138	8
1367527	138	9
1367541	39	15
	39	15
1367542	39	6
	39	6
1367543	45	16
1367633	211	23
1367639	283	5
1367640	198	88
	201	55
	205	55
	207	20
1367649	75	14
1368054	125	1
1368061	253	21
	253	21
	257	9
1368071	197	67
1368073	229	47
	231	42
	233	40
1368074	197	66
1368313	365	
1368314	365	
1368400	429	
1368411	397	
	397	
1368445	397	
1368656	351	6
	373	10
1368790	30	8
1368848	274	9
1368849	274	2
1368850	274	11
1368851	274	12
1368852	274	13
1368853	274	14
1368854	274	15
1368855	274	16
1368856	274	17
1368857	274	7
1368858	274	3
1368859	274	8
1368860	274	4
1368861	274	6
1368862	274	1
1368863	274	10
1368917	151	14
1368928	45	25
1368929	229	
1368930	247	
1368949	23	25
1368980	151	14
	151	14
1368981	145	
1368983	211	38
1368998	198	77
1369038	141	6
1369039	69	29
1369048	145	13
1369049	145	8
1369065	164	13
1369066	163	21
	164	19
1369286	87	8
1369323	397	
	397	
	397	
	397	
	429	
	429	
	429	
1369324	397	
	397	
	397	
	397	
	429	
1369328	381	
1369333	397	22
	430	18
1369344	358	5
	359	6
	391	6
	392	6
	423	5
	424	6
1369345	358	5
	359	6
	391	6
	392	6
	423	5
	424	6
1369356	353	6
	379	18
	381	18
	413	21
1369357	353	6
	379	18
	381	18
	411	21
1369439	67	39
	93	32
1369443	68	6
	73	5
1369450	122	5
	147	6
1369456	113	29
	115	19
	117	52
	119	19
	125	3
	127	17
1369457	113	29
	115	19
	117	52
	119	19
	125	3
	127	17
1369470	244	1
1369499	197	63
1369548	421	
1369549	389	
1369572	117	37
	125	18
	164	
1369604	365	
	365	
1369606	365	
1369609	365	
	365	
1369611	365	
1369613	365	
	365	
	429	
1369617	365	
1369625	397	
	397	
1369627	397	
	397	
1369632	429	
1369640	429	
1369737	111	46
1370736	28	21
1370927	157	15
1370941	145	38
1371208	273	10
1371209	273	12
1371211	273	17
1371212	273	16
1371214	273	14
1371237	51	12
1371429	303	2
	303	2
1371524	53	28
1371582	53	17
1371584	35	5
1371592	147	
1371595	35	1
1371599	121	7
1371601	421	
1371602	389	
1371605	389	
1371606	421	
1371608	389	
1371631	385	
1371652	28	23
	35	5
1373813	198	75
	227	
1373814	229	
1373819	339	62
	341	56
1373821	253	10
1373822	137	35
1373823	137	36
1374056	145	1
1374057	141	32
	145	41
	147	32
1374107	47	15
1374108	49	36
1374188	9	13
1374190	9	15
1374323	51	11
1374549	11	15
1374601	111	14
1374603	58	8
1374604	58	9
1374611	135	34
	137	37
1374615	137	40
1374620	35	11
1374621	201	57
	277	
	51	17
1374622	251	2
1374623	248	
	251	13
1374630	99	1

©1997 HYSTER COMPANY

NUMERICAL INDEX

PART NO	PAGE	REF NO	PART NO	PAGE	REF NO	PART NO	PAGE	REF NO	PART NO	PAGE	REF NO	PART NO	PAGE	REF NO
1374631	99	7		137	25	1375037	164	5		117	36	1376429	164	8
1374632	99	9	1374932	76	8	1375047	164	3	1375713	115	14	1376439	283	7
1374633	99	13		94	8	1375048	319	13		117	25	1376440	283	7
1374634	99	14		94	8	1375049	319	13	1375722	153	7	1376448	93	31
1374635	99	23	1374933	94	11	1375125	19	11	1375744	153	12	1376449	157	12
1374636	99	15	1374935	106	1	1375128	19	13	1375779	133	43	1376557	321	1
1374638	97	1	1374936	106	8	1375129	19	12	1375786	170	12	1376568	115	26
1374640	97	11	1374939	94	4	1375132	23	25	1375787	201	2		117	39
1374642	97	21	1374940	93	23	1375134	23	26		205	2	1376570	115	12
1374643	81	23	1374941	93	20	1375135	201	58	1375826	170	5	1376571	115	16
	97	25	1374942	93	24		205	58	1375834	170	1		117	44
1374644	97	26	1374943	93	20		207	37	1375835	170	2	1376572	133	45
1374645	104	3	1374944	93	30	1375140	35	12	1375844	201	53	1376576	153	24
	72	4	1374946	93	27	1375141	35	1		205	53	1376577	170	19
	89	1	1374947	93	34	1375144	35	2		207	18	1376581	181	52
1374648	104	2	1374948	93	2	1375145	35	4	1375847	201	25		181	56
1374649	94	9	1374949	93	12	1375148	287	43		207	1		183	12
	97	29	1374951	105	6		289	43	1375848	170	8	1376590	193	
1374651	103	1		90	7	1375151	93	28		201	31	1376607	145	44
1374652	103	4	1374953	105	12	1375155	20	9		208	80	1376608	201	32
	88	4	1374954	105	3	1375157	201	59	1375878	202	102		237	
1374653	103	9	1374955	105	8		205	59		205	26	1376609	113	65
	88	8	1374956	105	9		208	61		207	55	1376612	202	79
1374654	103	11	1374958	161	1	1375158	201	60		37	59	1376613	168	13
1374655	95	4	1374959	161	2		205	60	1375901	37		1376614	133	50
1374657	102	1	1374960	161	3		208	62		42		1376616	133	51
1374659	102	4	1374961	161	4	1375160	327		1375902	142		1376617	231	17
1374660	102	5	1374962	161	6	1375161	327			37			233	16
1374661	102	6	1374963	161	7	1375162	327			42		1376618	231	29
1374662	102	7	1374965	99	25	1375163	331		1375905	141	19		233	28
1374663	102	8	1374966	99	27	1375164	331		1375952	55	6	1376619	231	24
1374664	102	10	1374967	149		1375165	331		1375953	47	26		233	23
1374665	102	11	1374969	99	30	1375173	283	3	1375954	47	5	1376620	29	1
1374666	102	12	1374970	99	31	1375174	153	1		49	17	1376621	141	
1374667	102	14	1374971	97	3	1375183	287	47	1375989	75	1	1376654	257	10
1374669	101	1	1374972	269	8		289	47	1376120	429		1376655	201	26
1374670	101	2	1374973	267	7	1375186	5	8	1376131	397			208	76
1374671	101	9		269	13	1375189	20	11		397		1376661	201	23
1374672	101	12	1374974	99	13	1375193	287		1376161	397			205	23
1374673	101	14	1374975	99	13	1375196	53	29		397		1376666	115	23
1374674	101	16	1374976	102	1	1375201	111	7	1376164	397			117	19
1374750	9	41	1374977	102	1	1375214	7	7		397			119	38
1374916	151	24	1374978	97	4	1375230	111	22	1376423	361	2	1376672	5	8
1374917	151	20	1374979	97	4	1375231	111	4		362	2	1376675	9	2
1374925	101	17	1374983	161	9	1375240	111	1		394	2	1376676	9	2
1374926	101	19	1374984	161	10	1375597	471			426	2	1376706	201	30
	84	18	1374985	161	11	1375604	53	24		427	2	1376712	201	1
1374927	101	22	1374986	161	12	1375642	53	20	1376424	361	1		205	1
	84	21	1374987	161	13	1375693	153	13		362	1	1376713	201	1
1374928	101	26	1375029	164	10	1375696	153	2		394	1		205	1
1374929	101	29	1375030	164	17	1375703	189			426	1	1376718	198	76
1374930	135	26	1375031	164		1375711	115	11		427	1	1376719	198	76

©1997 HYSTER COMPANY

NUMERICAL INDEX

PART NO	PAGE	REF NO	PART NO	PAGE	REF NO	PART NO	PAGE	REF NO	PART NO	PAGE	REF NO	PART NO	PAGE	REF NO
1376722	23	24	1377259	335	11	1378692	379	30		55			26	
1376725	133	9	1377260	335	12		411	25	1380754	453	36		27	
1376726	153	14	1377261	335	8	1378693	381	30	1380757	283	7		28	
1376727	133	56	1377264	327	2		413	25	1381354	375			29	
1376730	133	19		329	2	1378694	351	10		375			30	
1376731	133	17	1377265	327	2		373	14	1381357	375			31	
1376732	187		1377266	327	2	1378698	351	9		375			32	
1376743	309	34		329	2		373	13	1381359	375			33	
1376744	309	29	1377267	331	2	1378699	351	10		375		1382974	141	4
1376745	309	30	1377268	331	2		351	9	1381362	375		1383012	20	10
1376747	221		1377269	331	2		373	13		375		1383013	58	8
1376748	183	9	1377689	141			373	14	1381560	392	1	1383331	197	37
1376749	283	6	1377867	257	8		379	30	1381561	392	1		205	71
1376763	55	15	1377992	5	15		381	30	1381595	365	8		207	40
1376766	20	12	1377998	213	1		411	25		397	13		211	1
1376767	202	103	1378300	42	4		413	25	1381771	397		1383401	241	
	205	27	1378307	9	20	1379454	211	20		397		1383421	243	
	207	56	1378317	49	1		223			397		1383450	297	28
1376769	133	14	1378318	51	13	1379459	392			397		1383455	297	32
1376770	133	15	1378319	51	14	1379460	392			429		1383457	297	33
1376771	133	16	1378320	47	8	1379481	205	64		429		1383458	297	30
1376777	133	21	1378322	39	8		207	41		429		1383461	297	29
1376779	133	57	1378323	39	9	1379506	339	48	1381772	397		1383463	305	3
1376782	170	16	1378324	39	10		341	48		397		1383466	297	36
1376789	49	35	1378325	39	11	1379507	339	49		397		1383559	3	12
1376792	119	1	1378326	39	14		341	49		397		1383563	253	9
1376794	119	2	1378327	39	15	1379682	379	30		429		1383571	111	7
1376795	119	9	1378328	39	15		411	25	1381921	113	3	1383574	111	2
1376876	55	27	1378329	39	6	1379683	381	30		125	20	1383600	141	10
1376952	39	1	1378330	39	6		413	25	1381923	320	5	1383601	141	12
1377014	37	27	1378331	39	12	1379684	351	10	1382059	141	27	1383602	141	13
1377016	37	27	1378413	201	9		373	14		147	27	1383777	311	25
1377017	37	27		231		1379685	351	9	1382111	9	3	1383778	181	5
1377018	37	27	1378463	119	25		373	13	1382112	9	4	1383783	155	12
1377021	133	46	1378464	119	18	1379687	353	16	1382113	9	3	1383784	155	32
1377022	142	11	1378465	119	24		409	13	1382114	9	4	1383922	39	38
1377023	39		1378470	119	35	1379758	319	4	1382306	5	41	1383994	133	45
	39		1378515	244	4	1379761	161	16	1382316	325	46	1383995	133	45
1377047	265	4	1378537	115	4	1379763	161	14	1382320	303	1	1383996	133	45
1377048	265	6	1378555	35	1	1380036	411	3	1382673	139	11	1383997	53	
1377049	265	21	1378558	35	1		413	3	1382680	24		1383999	277	1
1377050	265	13	1378600	309	6	1380115	361	16		25		1384000	277	4
1377051	265	20	1378625	119	28		362	11		26		1384001	277	6
1377052	265	19	1378636	119	27		394	15		27		1384003	277	29
1377053	265	23	1378647	122			426	16		28		1384005	277	28
1377067	265	2		122			427	11		29		1384006	33	28
1377069	42	16	1378690	379	31	1380268	147	19		30		1384008	31	15
	42	9		381	31	1380576	37	47		31		1384037	277	2
1377255	335			411	24	1380583	47			32		1384429	312	3
1377256	335	7		413	24		49			33		1384837	119	23
1377257	335	9	1378691	351	7		51		1382681	24		1385712	147	4
1377258	335			373	11		53			25		1385719	147	25

©1997 HYSTER COMPANY

NUMERICAL INDEX

PART NO	PAGE	REF NO	PART NO	PAGE	REF NO	PART NO	PAGE	REF NO	PART NO	PAGE	REF NO	PART NO	PAGE	REF NO
1385859	217		1391321	205	57	1394915	35	12	1451092	343	5b	1456567	87	3
1385860	233			207	54	1394923	287	37		345	5	1456568	87	3
1385861	239			277			289	37	1451568	115	38	1456569	81	2
1385862	211	20		277		1394930	287			117	33	1456570	81	2
	225			277			291			127	2	1456571	81	2
1385863	205	69	1391375	299	38		295		1451788	361	10	1456572	81	2
	207	43	1391377	299			299			394	10	1456573	81	2
1385873	299	48	1391543	287		1394931	291	2		426	10	1456574	81	2
1386216	5	5	1391544	287		1394932	291	1	1452143	257	16	1456575	81	2
1386217	5	7	1391545	287		1394942	289		1452145	253	10	1456576	81	2
1386220	5	43	1392495	9	11		293		1452270	339	60	1456577	97	2
	5	43	1392496	9	10		297			341	54	1456581	97	2
1386221	5	42	1392536	37	60		301		1452424	45	6	1456582	97	2
	5	42	1392538	37	61		301		1452595	299	41	1456583	97	2
1386791	78	1	1393160	299	43	1394943	289		1452596	299	42	1456584	97	2
1386795	35	11	1393427	47			293		1452798	147	4	1456585	97	2
	78	21		51			297		1453153	281	19	1456586	97	2
1386799	35	1		55		1395168	349	6	1453351	273	4	1456587	97	2
1386800	35	1	1393580	47			351	5	1453352	273	3	1456588	63	31
1386806	295	1		49			371	6	1453354	273	9	1456589	63	31
	297	1		51			373	6	1453358	273	6	1456590	63	31
1386807	297	1		53			375	5	1453362	273	30	1456591	63	31
1388391	105	7		55			405	6	1453363	273	31	1456592	63	31
1388573	299	49	1394002	273			407	5	1453364	273	1	1456593	63	31
1388579	111	28	1394003	273		1395169	391	2	1453375	273	26	1456594	63	31
1389096	37		1394008	155	34		392	2	1453377	273	28	1456595	63	31
1389097	37	22	1394879	293	15	1395172	359	2	1453379	273	29	1456640	161	17
1389359	35	1		293	5		423	2	1453385	273	27	1456641	161	15
1389365	129	22	1394881	293	11		424	2	1453386	273	15	1457015	63	
1389475	183	26		293	23	1395285	379	29	1453387	273	22		65	
1389476	187	23	1394882	293	18		381	29	1453562	258			67	
1389477	187	24		293	6		411	26	1453580	47			68	
1389479	187	19	1394884	293	34	1396943	397			49			69	
1389480	187	20	1394885	293	17	1398493	365			51			72	
1389485	183	18		293	3	1398512	365			53			73	
1389488	35	1	1394886	293	31	1398541	365			55			75	
1389497	117	13	1394887	293	30	1398595	397		1453779	141	4		76	
1389498	117	55	1394888	293	28	1398645	365		1455262	147	25		93	
	147		1394893	293	19	1398951	397		1455306	164	15	1457047	207	54
1389499	170	19		293	7	1450104	211	11	1455310	164	1		277	
1389608	287	48	1394894	293	29	1450122	277		1455404	329		1457048	277	
	289	48	1394895	293	32		277		1455405	329		1457062	55	10
1390182	397	15	1394899	293	34	1450126	164	14	1455601	47	9	1457120	207	37
1390416	429		1394901	293	1		164	16	1455602	51	5	1457161	103	
1390417	429		1394902	293	1	1450293	283	1	1455674	30	4		104	
1390425	429		1394903	293	13	1450356	283	2	1455675	30	1		105	
1390607	3	26	1394904	301	3	1450696	53	12	1456071	53	24		106	
1390610	299	40	1394907	293	2	1450702	190		1456472	333			157	
1390611	3	23	1394908	293	2	1450928	260		1456473	333			161	
1390614	3	26	1394909	293	14	1450929	260	1	1456474	333			93	
1390858	139	27	1394912	293	20	1450930	260	2	1456565	71	4		94	
1391232	67	31		293	8	1450931	260	3	1456566	71	4		95	

©1997 HYSTER COMPANY

NUMERICAL INDEX

PART NO	PAGE	REF NO
	97	
	99	
1457164	99	22
1457312	23	10
	23	5
	61	5
1458009	197	43
	202	81
	205	74
	207	52
	211	12
	213	12
1458089	55	11
1458350	102	3
1458351	102	3
1458802	329	3
1458803	329	4
	333	14
1458804	329	5
	333	4
1458805	329	6
1458806	333	2
1458810	333	7
1458811	333	10
1458813	329	6
1458814	333	2
1458818	333	10
1458819	333	2
1458823	333	10
1459037	207	33
1459173	9	12
1459382	104	12
1460225	139	
1460824	207	33
1462551	353	28
	377	30
	409	23
1465504	379	35
	381	35
	411	13
	413	13
1479128	53	32
1545677	30	10
2004005	125	39
	151	22
	151	22
	155	21
	430	21
2013075	355	10
	383	9
2013088	386	15
	390	15
	418	15
	422	15
2013089	386	16
	390	16
	418	16
	422	16
2013099	386	8
	390	8
	418	8
	422	8
2021957	183	5
2022013	197	69
	211	48
2022532	273	13
2022534	273	19
2022535	273	20
2022538	273	23
2022566	111	21
2026608	211	22
	213	21
2032230	312	3
2033502	343	
	343	b
2033503	345	
2033592	205	36
2033602	317	6
2034459	11	11
2034520	117	48
2034902	253	20
2034921	274	
	274	
2035530	197	25
2035531	201	24
2037064	139	19
2037065	139	20
2037066	139	23
2037067	139	24
2302115	385	
2302410	389	
2302486	385	
2302899	337	11
2303455	417	
2303489	385	
2303532	389	
2303824	389	
2303871	385	
	385	
	417	
	417	
2303899	389	
2303951	385	
	417	
2304216	389	
2304575	421	
	421	
2304592	421	
	421	
2304802	421	
	421	
2304960	421	
2304977	417	
2305335	421	
2305742	389	
	389	
2306235	421	
2306774	385	
	417	
2307561	421	
2307580	417	
	417	
2307773	389	
2309026	389	
	389	
2309044	385	
2309221	421	
2309353	389	
	389	
2309410	389	
2309480	385	
	417	
2309766	353	17
	377	22
	409	18
2309770	385	
	385	
2309799	11	16
2310036	385	
	385	
2310270	389	
2310912	421	
2311141	385	
	417	
2311434	385	
	385	
	417	
	417	
2311691	389	
	389	
3002338	23	29
	45	20
	61	30
3002534	75	
3003343	319	20
3012611	263	
3021203	325	53
3021238	67	40
	83	32
3021239	67	40
	83	32
3021240	67	40
	83	32
	99	29
3021390	25	27
	39	37
3021391	25	27
	39	37
3021392	25	27
	39	37
8500005	423	
8500006	423	
8500007	358	
8500008	358	
8500009	391	
8500010	391	
8500011	424	
8500012	424	
8500013	359	
8500014	359	
8500275	392	
8500276	392	
8600006	355	
8600009	355	
8600014	355	
8600020	355	
8600056	355	
8600059	355	
8600064	355	
8600070	355	
8600101	355	
8600151	355	
8600206	357	
8600209	357	
8600214	357	
8600256	357	
8600259	357	
8600264	357	
8600302	357	
8600307	357	
8600352	357	
8600357	357	
8600405	383	
8600408	383	
8600410	383	
8600413	383	
8600455	383	
8600458	383	
8600460	383	
8600463	383	
8600505	383	
8600508	383	
8600510	383	
8600513	383	
8600555	383	
8600558	383	
8600560	383	
8600563	383	
8600706	414	
8600709	414	
8600714	414	
8600806	415	
8600809	415	
8600814	415	
8600906	414	
8600909	414	
8600914	414	
8601006	415	
8601009	415	
8601014	415	
8601106	385	
	417	
8601109	385	
	417	
8601112	385	
8601114	417	
8601115	385	
8601206	421	
8601207	389	
8601209	421	
8601210	389	
8601213	389	
8601214	421	
8601216	389	
8602406	385	
	417	
8602409	385	
	417	
8602412	385	
8602414	417	
8602415	385	
8602506	421	
8602507	389	
8602509	421	
8602510	389	
8602513	389	
8602514	421	
8602516	389	
8603406	385	
	417	

©1997 HYSTER COMPANY

NUMERICAL INDEX

PART NO	PAGE	REF NO	PART NO	PAGE	REF NO	PART NO	PAGE	REF NO	PART NO	PAGE	REF NO	PART NO	PAGE	REF NO
8603409	385		8603507	389										
	417		8603509	421										
8603412	385		8603510	389										
8603414	417		8603513	389										
8603415	385		8603514	421										
8603506	421		8603516	389										

©1997 HYSTER COMPANY